RUTHZIL TRATOR COMERCIAL DE PEÇAS LTDA 11 97083-6812 ROLANDO CITRANGULO

Parts Manual
S450 Skid-Steer Loader

JANEIRO 2018

S/N B1E611001 & Above

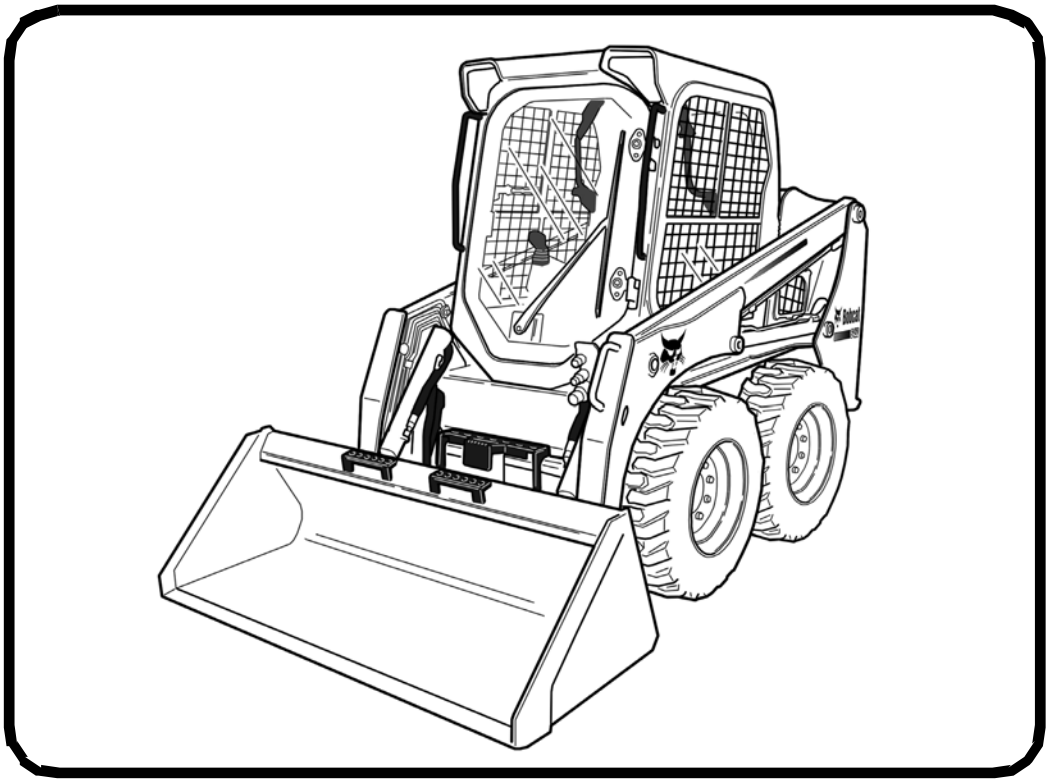

EQUIPPED WITH BOBCAT INTERLOCK CONTROL SYSTEM (BICS™)

6990825 (01-18) (G)

Printed in Belgium

© Bobcat Company 2018

MEA S3A

GENERAL INFORMATION

Before ordering parts, ALWAYS provide dealer with your product model number and complete serial number information. Before ordering parts, verify correct part numbers and / or serial numbers with your dealer. When using the machine serial number, use the complete number.

The number shown in the quantity column in this manual is the number of parts needed for the illustration on the page. For some parts, an "x" is shown in the quantity column. This "x" indicates that the quantity to be ordered / used is "As Needed".

When references to LH (Left Hand) and RH (Right Hand) are used in this manual, they apply when an operator is situated in the operator's seat in the operating position.

When "See Illustration…." appears in the Remarks column, refer to the Contents page for the illustration title to find page number location.

When "See BTI…." appears in the remarks column, contact a Bobcat dealer.

For additional information on the Bobcat website visit:
www.bobcat.com **or** www.bobcat.eu

TRANSLATED DECAL KITS

AR = Argentina (Spanish)
BR = Brazil (Portuguese)
CA = French Canadian
JP = Japanese

DISPOSITION

(Found in the Remarks Column)
[A] = Use Up
[B] = Use Up on Other Applications
[C] = File SDR Report with Bobcat Parts Sales
[D] = Part Number Error

ABBREVIATIONS/ACRONYM LIST

AC = Air Condition
ACD = Active Center Differential
ACS = Advanced Control System
AGM = Absorbent Glass Mat
AHC = Advanced Hand Controls
AIC = Air Idle Control
ALTNTR = Alternator
AMP = Ampere
ASSY = Assembly
AUX = Auxiliary
AWS = All Wheel Steer
BICS= Bobcat Interlock Control System
BPV = Bucket Positioning Valve
BT = Bluetooth®
BTI = Bobcat Technical Information Bulletin
CD = Compact Disk
C/I = Construction/Industrial
COMPL = Complete
CRS = Common Rail System
CT = Compact Tractor
CTL = Compact Track Loader
CVT = Continuously Variable Transmission
CYL = Cylinder
DEF = Diesel Exhaust Fluid
DIA = Diameter
DIFF = Differential
DIN = (German Institute for Standardization)
DIR = Directory
DLX = Deluxe
DOC = Diesel Oxidation Catalyst
DPF = Diesel Particulate Filter
ECU = Electronic Control Unit
EF = EarthForce™
EGR = Exhaust Gas Recirculation
ELHYD = Electro-Hydraulic
ELEC = Electrical
EMEA = Europe/Middle East/Africa
ENG = Engine
EPA = Environmental Protection Agency
EU = Europe
EXC = Excavator
EXT = Extendable
FF = Flush Face
FM = Front Mounted
FOPS = Falling Object Protective Structure
FSR = Forward, Stop, Reverse
FT = Feet
GA = Gauge
GAL = Gallon
GCR = Grade Control Receiver
GFCI = Ground Fault Circuit Interrupter
GPM = Gallons per Minute
GPS = Global Positioning System
HD = Heavy Duty
HEX = Hexagon
HI-LO = High-Low
HP = Horse Power
HYDRST = Hydrostatic
HVAC = Heating Ventilation & Air Condition
HYDR = Hydraulic
HZ = Hertz
ID = Inside Diameter
IGN = Ignition
IN = Inches
INDL = Industrial
INJ = Injection
ISO = International Organization for Standardization
IT4 = Interim Tier Four
JPS = Joystick Pattern Selector
KG = Kilogram
KM/H = Kilometers per Hour
KW = Kilowatt
L = Liter
LA = Long Arm
LASD = Lift Arm Safety Device
LB = Pound
LCD = Liquid Crystal Display
LDR = Loader
LED = Light Emitting Diode
LF = Large Frame
LH = Left Hand
LORS™ = Lateral Operator Restrain System
L/min. = Liters per Minute
L/P = Low Profile
MAX = Maximum
MEA = Middle East Africa
MNFRM = Main Frame
MID = Middle
MLS = Mita Load Sensing
MM = Millimeters
MSHA = Mine Safety & Health Administration
N/A = Not Applicable
NA = North America
NIA = No Illustration Available
NLA = No Longer Available
NSS = Not Serviced Separately

ABBREVIATIONS/ACRONYM LIST

NO = Number
OD = Outside Diameter
OHB = Operator's Handbook
OM = Operation & Maintenance Manual
OZ = Ounce
PKG = Package
PM = Parts Manual
POLY = Polycarbonate
PRESS = Pressure
PSI = Pounds per Square Inch
PT = Point
PTO = Power Take Off
PVC = Polyvinyl Chloride
PWM = Pulse Width Modulation
QT = Quart
QTY = Quantity
RD = Round Drive
REF = Reference
REM = Remanufactured
RFID = Radio Frequency Identification
RH = Right Hand
ROC = Rated Operating Capacity
ROPS = Rollover Protective Structure
RPM = Revolutions per Minute
SA = Standard Arm
SALES = (Order through Sales Department)
SCPA = Standard Controls W/Power Assist
SCR = Selective Catalytic Reduction
SD = Severe Duty
SDR = Shipping Discrepancy Report
SEA = Southeast Asia
SF = Small Frame
SJC = Selectable Joystick Controls
SL = Service Letter
SM = Service Manual
SSL = Skid Steer Loader
STC = Snap To Connect
STD = Standard
STG = Stage
STRG = Steering
T1 = Tier 1
T2 = Tier 2
T3 = Tier 3
T4 = Tier 4
TEMP = Temperature
THL = (Control Pattern)
THRU = Through
TICS = Toolcat® Interlock Control System
XMSN = Transmission
UBS = Universal Bearing Stress
USB = Universal Serial Bus
UTV = Utility Vehicle
VEH = Vehicle
W/A = Welded Assembly
W/ = With
W/O = Without
WM = Work Machine

CONTENTS

MAINTENANCE ITEMS..... 1-12
MAINTENANCE ITEMS..... 1-12
MAIN FRAME..... 13-48
MAIN FRAME..... 13
CAB REPLACEMENT..... 15
OPERATOR CAB..... 17-32
SEAT BAR..... 33-36
SEAT & SEAT BELT..... 37
PANELS..... 39-42
REAR DOOR..... 43
LIFT ARM & BOB-TACH..... 45
BOB-TACH..... 47
DRIVE TRAIN..... 49-54
DRIVE TRAIN..... 49
AXLE..... 51
DISC BRAKE..... 53
HYDRAULIC SYSTEM..... 55-108
HYDRAULIC CIRCUITRY..... 55-62
MANUAL LIFT RELEASE SYSTEM..... 63
AUXILIARY HYDRAULICS..... 65-68
TILT CYLINDER..... 69-72
LIFT CYLINDER..... 73-76
CONTROL PEDALS..... 77
HYDRAULIC CONTROL VALVE..... 79-106
MANUAL LIFT RELEASE VALVE..... 107
HYDROSTATIC SYSTEM..... 109-172
HYDROSTATIC CIRCUITRY..... 109-124
RADIATOR/COOLER ASSEMBLY..... 125
HAND CONTROLS..... 127-130
HYDROSTATIC MOTOR..... 131-138
HYDROSTATIC PUMP/GEAR PUMP..... 139
HYDROSTATIC PUMP..... 141-162
GEAR PUMP..... 163
COOLING FAN MOTOR KIT..... 165
COOLING FAN MOTOR..... 167-172
ELECTRICAL SYSTEM..... 173-218
CAB ELECTRICAL CIRCUITRY..... 173-178
ENGINE ELECTRICAL CIRCUITRY..... 179-194
CONTROLS ELECTRICAL..... 195-212
ALTERNATOR..... 213
STARTER..... 215-218
POWER UNIT..... 219-292
COOLING SYSTEM..... 219-224
ENGINE & ATTACHING PARTS..... 225-238
FUEL SYSTEM..... 239-242
ENGINE SPEED CONTROL..... 243-248
ENGINE & GASKET KITS..... 249
UPPER GASKET KIT..... 251
LOWER GASKET KIT..... 253
CRANKCASE..... 255
PISTON & CRANKSHAFT..... 257-260
CAMSHAFT..... 261
OIL PAN..... 263
GEARCASE..... 265
WATER PUMP..... 267
WATER FLANGE & THERMOSTAT..... 269
CYLINDER HEAD..... 271
VALVE AND ROCKER ARM..... 273
ROCKER ARM COVER..... 275
MANIFOLDS..... 277
INJECTOR NOZZLES..... 279
FUEL AND INJECTION PUMP..... 281

CONTENTS (Cont'd)

POWER UNIT..... 219-292
FUEL CAMSHAFT..... 283
ENGINE STOP LEVER..... 285
GOVERNOR..... 287
SPEED CONTROL PLATE..... 289
AIR CLEANER..... 291
ACCESSORIES & OPTIONS..... 293-546
ACCESS COVER..... 293
ACCESSORIES HARNESS KIT..... 295
BACK-UP ALARM KIT..... 297-300
BEACON..... 301
BLOCK HEATER..... 303
NEUTRAL LIGHTING OPTION..... 305-438
BUCKET POSITION VALVE..... 307
BUCKET POSITIONING KIT..... 309
CAB DOOR..... 311-332
CAB ENCLOSURE..... 333
CAB SEAL KIT..... 335
CAB WINDOWS..... 337-348
COUNTERWEIGHT KIT..... 349
CUP HOLDER KIT..... 351
DECALS..... 353-364
DELUXE HEADLINER KIT..... 365
DELUXE INTERIOR KIT..... 367-370
ELECTRICAL CONTROLS KIT..... 371-374
FOPS KIT..... 375
FOPS WINDOW KIT..... 377
FIRE EXTINGUISHER..... 379-382
FLASHER LIGHTS..... 383
FUEL SEDIMENT BOWL KIT..... 385
GAS SPRING KIT..... 387
HEATER & A/C..... 389-408
HEPA FILTER KIT..... 409
HORN KIT..... 411-414
HOSE GUIDE ASSY..... 415
INTERMITTENT WIPER KIT..... 417
KEYLESS PANEL KIT..... 419-422
LIFT KIT..... 423-426
LIGHT GUARD KIT..... 427-430
LOADER LED LIGHT KIT..... 431
MAINTENANCE PLATFORM KIT..... 433
MINE SAFETY & HEALTH ADMINISTRATION..... 435
OTT TRACKS..... 439
PEDAL EXTENDERS..... 441
POWER BOB-TACH..... 443-452
POWER BOBTACH..... 453-456
RADIO KIT..... 457
REAR AUXILIARY KIT..... 459-462
REAR CAMERA KIT..... 463
REAR DOOR LOCK..... 465
REAR WIPER KIT..... 467-470
REMOTE CONTROL KIT..... 471
RESEALING KIT..... 473
RIDE CONTROL KIT..... 475-478
SEAT..... 479-482
SEAT - 80 mm..... 483-486
SEAT BELT - 2"..... 487
SEAT BELT - 3"..... 489-492
SEAT BELT KIT - 3"..... 493
SEAT COVERS..... 495-498
SEAT KIT - 80 mm..... 499-504
SELF LEVEL KIT..... 505

CONTENTS (Cont'd)

ACCESSORIES & OPTIONS..... 293-546
SHIELD KIT..... 507-510
SOUND DELUXE KIT..... 511
SOUND DELUXE SJC KIT..... 513
SOUND REDUCTION KIT..... 515
SOUND/NOISE REDUCTION..... 517-520
SOUND/NOISE REDUCTION OPTION..... 521-526
SPRING DAMPER KIT..... 527
STEERING DAMPENER KIT..... 529
STEERING LINK ISOLATOR KIT..... 531
STROBE LIGHT..... 533
TILT CYLINDER TUBELINE SHIELD..... 535
TIRES & RIMS..... 537-540
VINYL CAB KIT..... 541
WASHER TENSIONER KIT..... 543
WHITE DECAL KIT..... 545
NUMERICAL INDEX..... 547-607

MAINTENANCE ITEMS
(Service Parts)

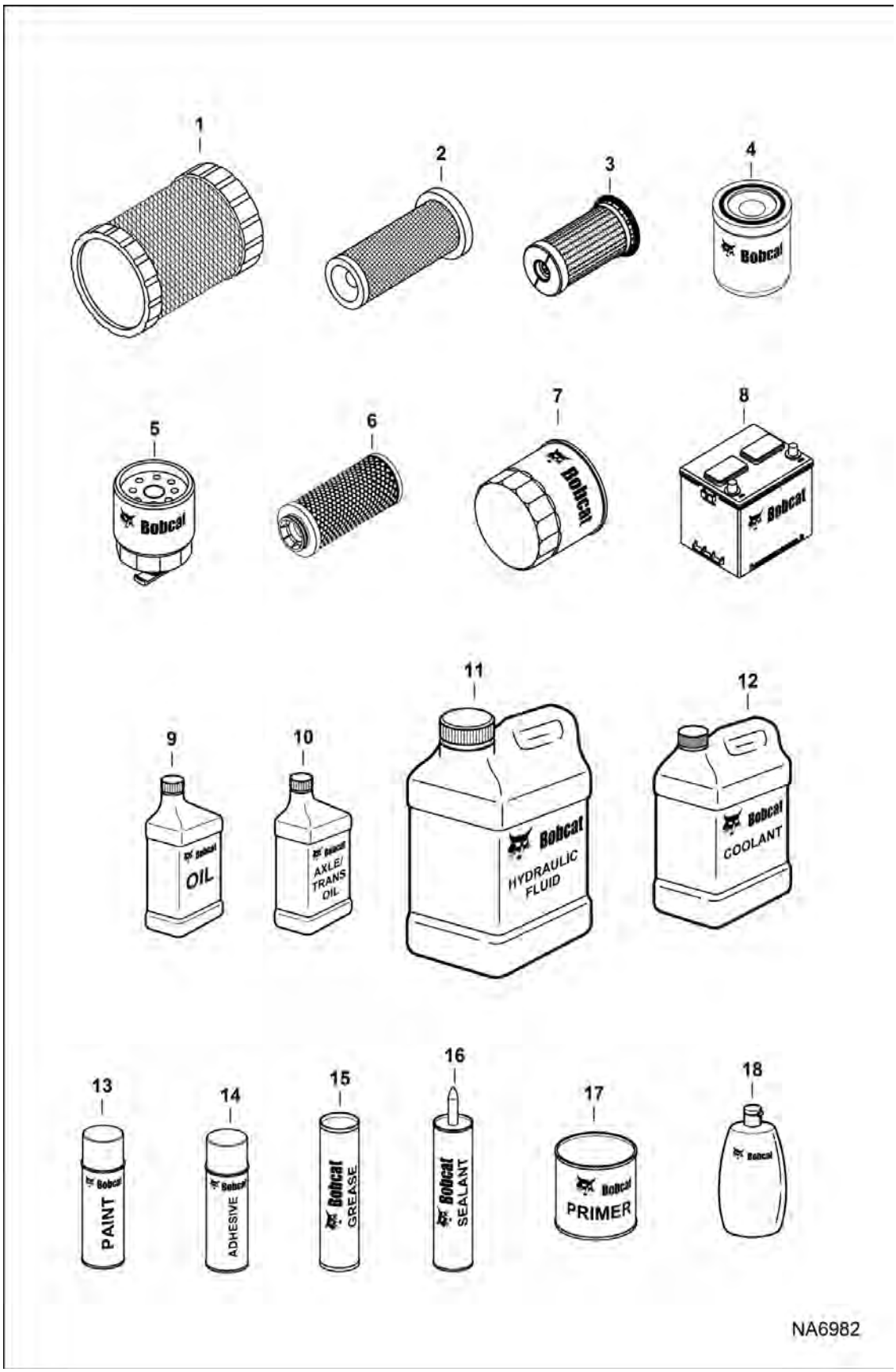

MAINTENANCE ITEMS (Cont'd)

(Service Parts)

Ref No	Part Number	Description	Remarks	Serial Number	Qty
1	6666375	FILTER, AIR OUTER	See Illustration AIR CLEANER / NA8569 Was 6666333 [B,D]		1
2	6666376	FILTER, AIR INNER	See Illustration AIR CLEANER / NA8569 Was 6666334 [B,D]		1
3	6692337	FILTER, HYD CARTRIDGE	See Illustration COOLING FAN MOTOR / NA6655 - cooling fan motor - canister filter		1
4	7319444	ELEMENT FILTER	See Illustration COOLING FAN MOTOR / NA10786 - cooling fan motor - spin-on filter - Was 6686926 [A], See Illustration COOLING FAN MOTOR / NA12779 - cooling fan motor - spin-on filter - Was 6686926 [A]		1
5	6667352	FILTER, FUEL W/SEPARATOR 12	See Illustration FUEL SYSTEM / NA8707		1
6	7024037	FILTER, OIL HYD ELEMENT	See Illustration HYDROSTATIC CIRCUITRY / NA8540		1
7	6675517	FILTER, OIL ENG 12			1
8	6673865	BATTERY, WET 600CCA	See Illustration ENGINE ELECTRICAL CIRCUITRY / NA8547 Was 6674687 [B]		1
9		OIL, 30W 5L 4	NLA - Order 6987818A oil - Was 6987796A [D]		x
9		OIL, 30W 20L	NLA - Order 6987818B oil - Was 6987796B [D]		x
9		OIL, 30W 205L	Was 6987500C NLA - Order 6987818C oil - Was 6987796C [D]		x
9		OIL, 30W 1000L	NLA - Order 6987818D oil - Was 6987796D [D]		x
9	6987789A	OIL, 10W30 5L 4	Was 6904840A [A]		x
9	6987789B	OIL, 10W30 20L	Was 6904840B [A]		x
9	6987789C	OIL, 10W30 205L	Was 6904840C [A]		x
9	6987789D	OIL, 10W30 1000L	Was 6904840D [A]		x
9	6987790A	OIL, 15W40 5L 4	Was 6904841A [A]		x
9	6987790B	OIL, 15W40 20L	Was 6904841B [A]		x
9	6987790C	OIL, 15W40 205L	Was 6904841C [A]		x
9	6987790D	OIL, 15W40 1000L	Was 6904841D [A]		x
9		OIL, 20W50 5L 4	Was 6987501A NLA - Order 6987819A oil - Was 6987797A [D]		x
9		OIL, 20W50 20L	NLA - Order 6987819B oil - Was 6987797B [D]		x
9		OIL, 20W50 205L	NLA - Order 6987819C oil - Was 6987797C [D]		x
9		OIL, 20W50 1000L	NLA - Order 6987819D oil - Was 6987797D [D]		x
10	6987805A	OIL, TRANSMISSION AXLE 5L 4	Was 6987602A [A]		x
10	6987794A	OIL, TRANSMISSION 5L 4	Was 6904845A [A]		x
10	6987805B	OIL, TRANSMISSION AXLE 20L	Was 6987602B [A]		x
10	6987794B	OIL, TRANSMISSOIN 20L	Was 6904845B [A]		x
10	6987805C	OIL, TRANSMISSION AXLE 205L	Was 6987602C [A]		x

MAINTENANCE ITEMS (Cont'd)
(Service Parts)

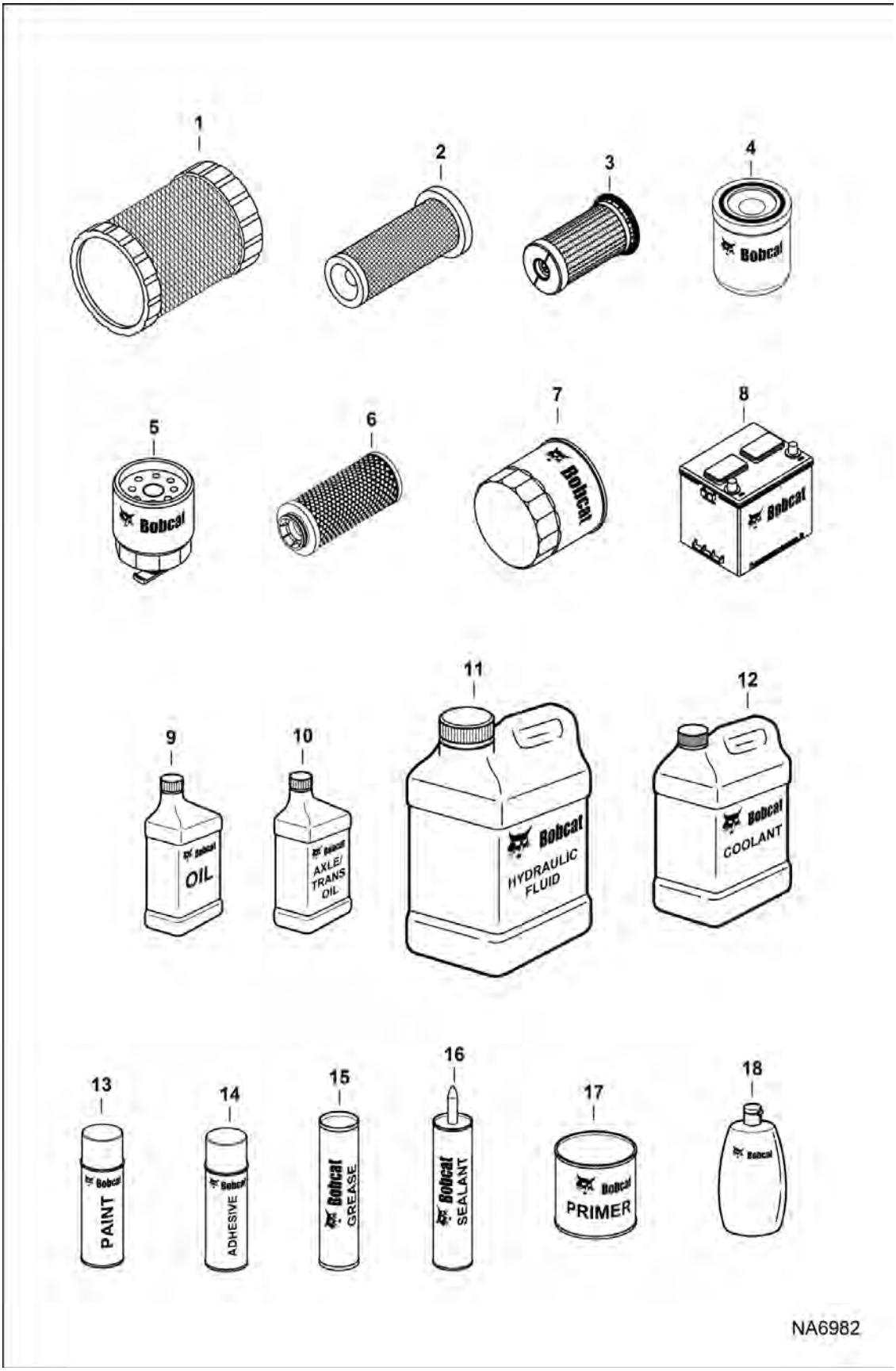

MAINTENANCE ITEMS (Cont'd)
(Service Parts)

Ref No	Part Number	Description	Remarks	Serial Number	Qty
10	6987794C	OIL, TRANSMISSOIN 205L	Was 6904845C [A]		x
10	6987805D	OIL, TRANSMISSION AXLE 1000L	Was 6987602D [A]		x
10	6904845D	TRANSMISSION OIL, 1000L			x
11	6987791A	FLUID, OIL HYD 5L 4	Was 6904842A [A]		x
11	6987791B	FLUID, OIL HYD 20L	Was 6904842B [A]		x
11	6987791C	FLUID, OIL HYD 205L	Was 6904842C [A]		x
11	6987791D	FLUID, OIL HYD 1000L	Was 6904842D [A]		x
11	6987792A	FLUID, OIL HYD BIO 5L 4	Was 6904843A [A]		x
11	6987792B	FLUID, OIL HYD BIO 20L	Was 6904843B [A]		x
11	6987792C	FLUID, OIL HYD BIO 205L	Was 6904843C [A]		x
11	6987792D	FLUID, OIL HYD BIO 1000L	Was 6904843D [A]		x
12	6987646A	COOLANT, ANTIFREEZE PG			x
12	6987646B	COOLANT, ANTIFREEZE PG			x
12	6987646C	COOLANT, ANTIFREEZE PG			x
12	6987646D	COOLANT, ANTIFREEZE PG			x
12	6987793A	ANTIFREEZE/COOLANT, PG 53/47 PREMIX 5L 4	Was 6904844A [A]		x
12	6987793B	ANTIFREEZE/COOLANT, PG 53/47 PREMIX 20L	Was 6904844B [A]		x
12	6987793C	ANTIFREEZE/COOLANT, PG 53/47 PREMIX 205L	Was 6904844C [A]		x
12	6987793D	ANTIFREEZE/COOLANT, PG 53/47 PREMIX 1000L	Was 6904844D [A]		x
12	6987803A	ANTIFREEZE/COOLANT, EG CONCENTRATE 5L 4	Was 6987596A [A]		x
12	6987803B	ANTIFREEZE/COOLANT, EG CONCENTRATE 20L	Was 6987596B [A]		x
12	6987803C	ANTIFREEZE/COOLANT, EG CONCENTRATE 210L	Was 6987596C [A]		x

MAINTENANCE ITEMS (Cont'd)
(Service Parts)

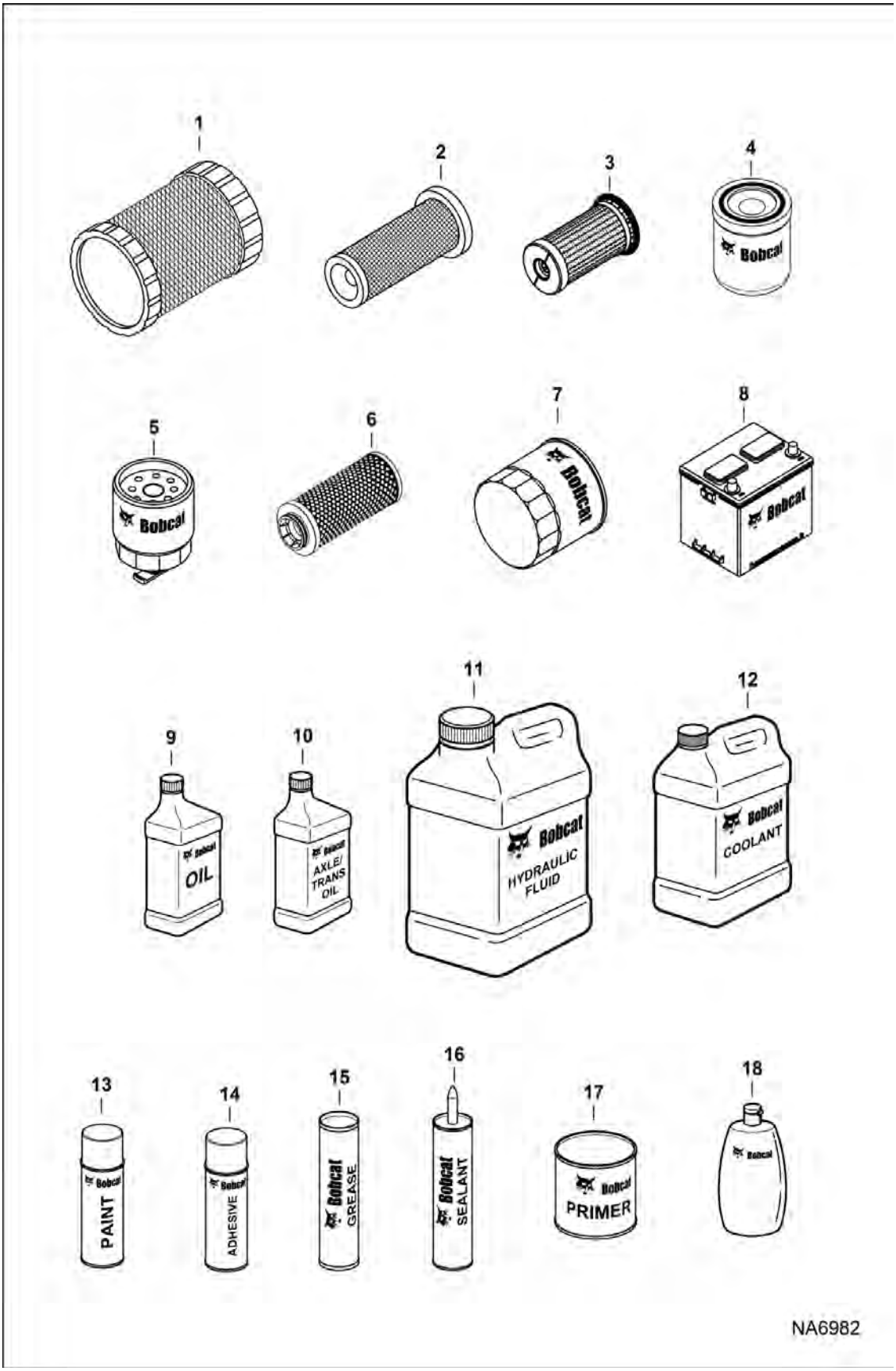

MAINTENANCE ITEMS (Cont'd)

(Service Parts)

Ref No	Part Number	Description	Remarks	Serial Number	Qty
12	6987803D	ANTIFREEZE/COOLANT, EG CONCENTRATE 1000L	Was 6987596D [A]		x
12	6987804A	ANTIFREEZE/COOLANT, EG 53/47 PREMIX 5L 4	Was 6987597A [A]		x
12	6987804B	ANTIFREEZE/COOLANT, EG 53/47 PREMIX 20L	Was 6987597B [A]		x
12	6987804C	ANTIFREEZE/COOLANT, EG 53/47 PREMIX 205L	Was 6987597C [A]		x
12	6987804D	ANTIFREEZE/COOLANT, EG 53/47 PREMIX 1000L	Was 6987597D [A]		x
13	7251690	PAINT, ORANGE SPRAY CAN 6	original shade - EMEA		x
13	7305844	PAINT ORANGE SPRAY CAN 6	updated shade		x
13	7251691	PAINT, ORANGE .5 OZ	original shade - EMEA		x
13	7305843	PAINT ORANGE .5 OZ	updated shade		x
13	7251689	PAINT, ORANGE QT 6	original shade - EMEA		x
13	7305845	PAINT ORANGE QT 6	updated shade		x
13	7251693	PAINT, CHARCOAL SPRAY CAN 6	Was 6902229 [A]		x
13	7251694	PAINT, CHARCOAL .5 OZ	Was 6736641 [A]		x
13	7251692	PAINT, CHARCOAL QT 6	Was 6902234 [A]		x
13	7251701	PAINT, WHITE SPRAY CAN 6	Was 6902230 [A]		x
13	7251702	PAINT, WHITE .5 OZ	Was 6736642 [A]		x
13	7251695	PAINT, WHITE QT 6	Was 6902235 [A]		x
13	7251704	PAINT, RED .5 OZ	Was 6736645 [A]		x
13	6650083	PAINT, SPRAY BLUE CAN			x
14	6675380	ADHESIVE, SPRAY 10.5 oz			x
14		ADHESIVE	NLA - Was 6650407 [A]		x
15	6987888	GREASE, MULTIPURPOSE #2 - 10	Was 6903122 [B]		x
15	6987889	GREASE, HD SUPREME 10	Was 6687884 [B]		x
15	6987890	GREASE, HP EXTREME 10	Was 6687885 [B]		x

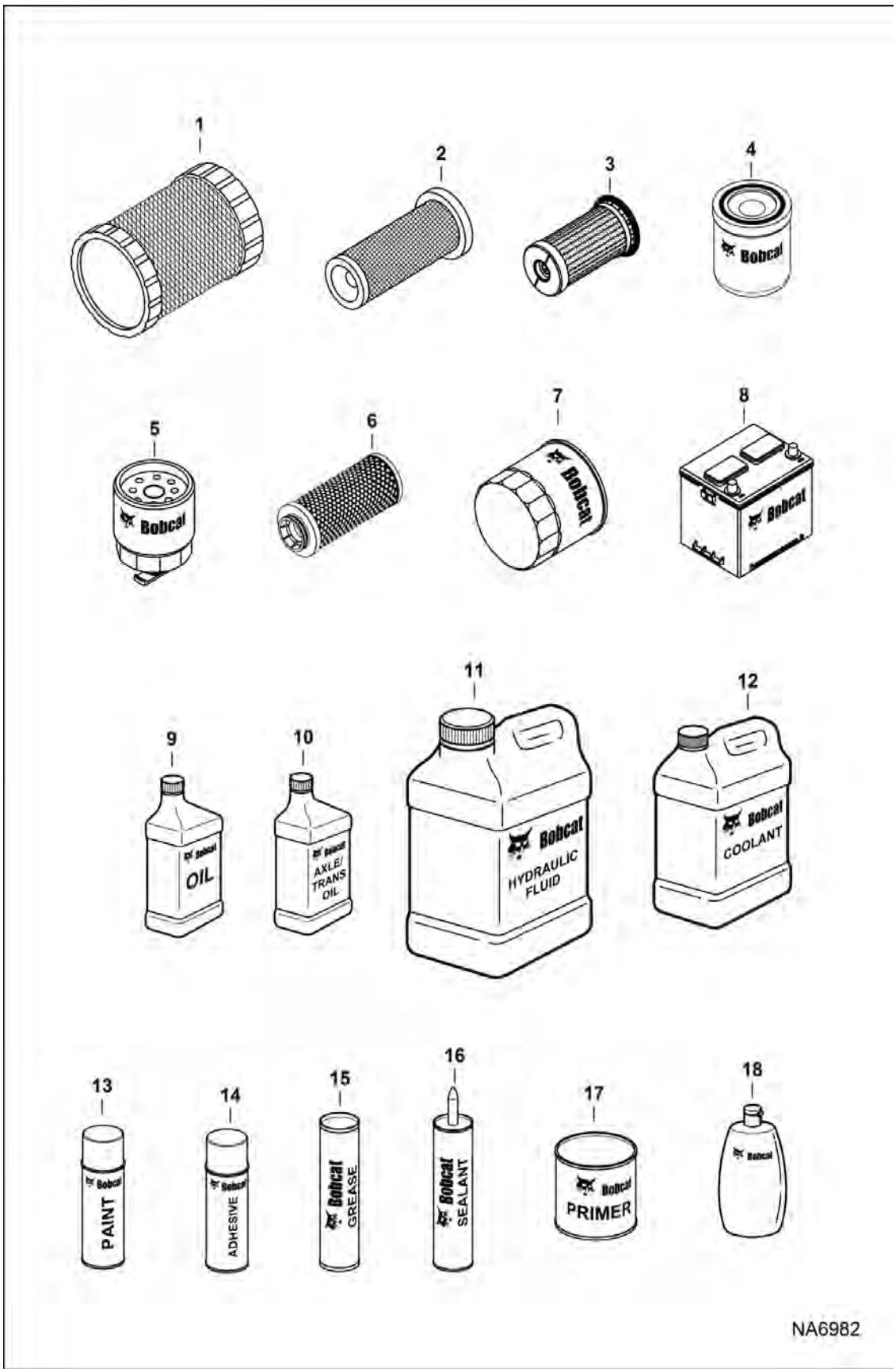
1
2
3
4
Bobcat
5
Bobcat
6
7
Bobcat
8
Bobcat
9
Bobcat
OIL
10
Bobcat
AXLE/
TRANS
OIL
11
Bobcat
HYDRAULIC
FLUID
12
Bobcat
COOLANT
13
Bobcat
PAINT
14
Bobcat
ADHESIVE
15
Bobcat
GREASE
16
Bobcat
SEALANT
17
Bobcat
PRIMER
18
Bobcat
NA6982

MAINTENANCE ITEMS (Cont'd)
(Service Parts)

Ref No	Part Number	Description	Remarks	Serial Number	Qty
16	6633583	SEALANT, POLYURETHANE 300 ML			x
16	6988018	SEALANT, GASKET LIQUID 50ML			x
16	6599360	SEALANT, ELEC .3 OZ			x
16	6987941	SILICONE, RTV 5920 - COPPER - 80ml	Was 7260849 [A]		x
17	7251706	PRIMER, SPRAY CAN 6	Was 6902232 [A]		x
17	7251705	PRIMER, QT 6	Was 6902236 [A]		x
18	6630188	POLISH			x
18	6630189	POLISH			x

MAINTENANCE ITEMS
(Literature)

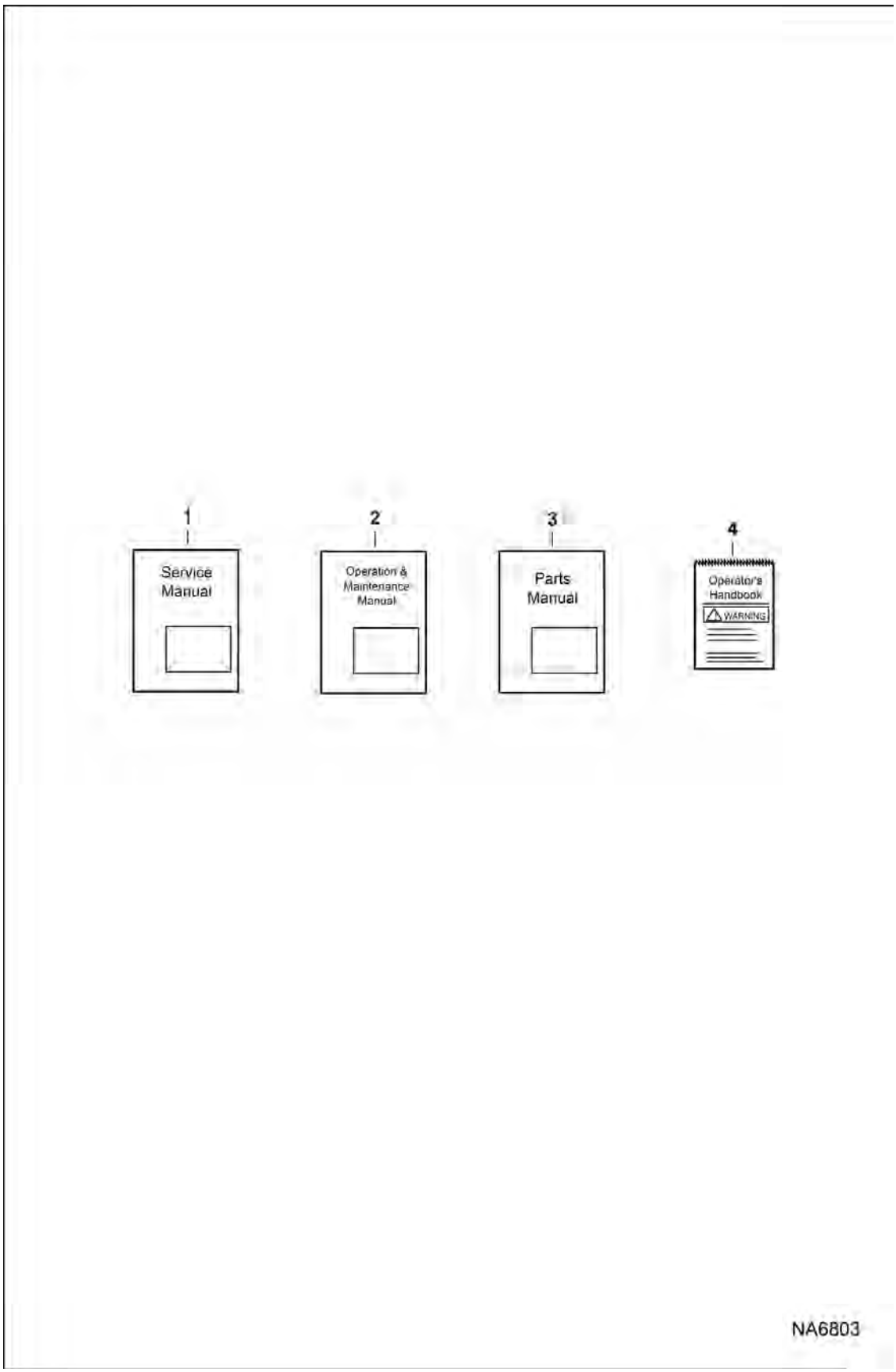

Illustration NA6803

MAINTENANCE ITEMS (Cont'd)

(Literature)

Ref No	Part Number	Description	Remarks	Serial Number	Qty
1	6990808ENUS	SM, S450 LDR	printed		1
2	6990810ENGB	OM, S450 LDR	printed		1
2	6990810PTBR	OM S450 LDR	printed		1
2	6990810ESAR	OM, S450 LDR	printed		1
3	6990825	PM, S450 LDR	printed		1
4	6987174ENUS	OHB, W/WIRE ROPE	Was 6987174		1
4	6987174ESAR	OHB, W/WIRE ROPE			1
4	6987174PTBR	OHB, W/WIRE ROPE			1
4	6987174FRCA	OHB, W/WIRE ROPE			1
4	6987174KOKR	OHB, W/WIRE ROPE			1
4	6987174ENGB	OHB, W/WIRE ROPE			1

MAINTENANCE ITEMS
(Scheduled Maintenance)

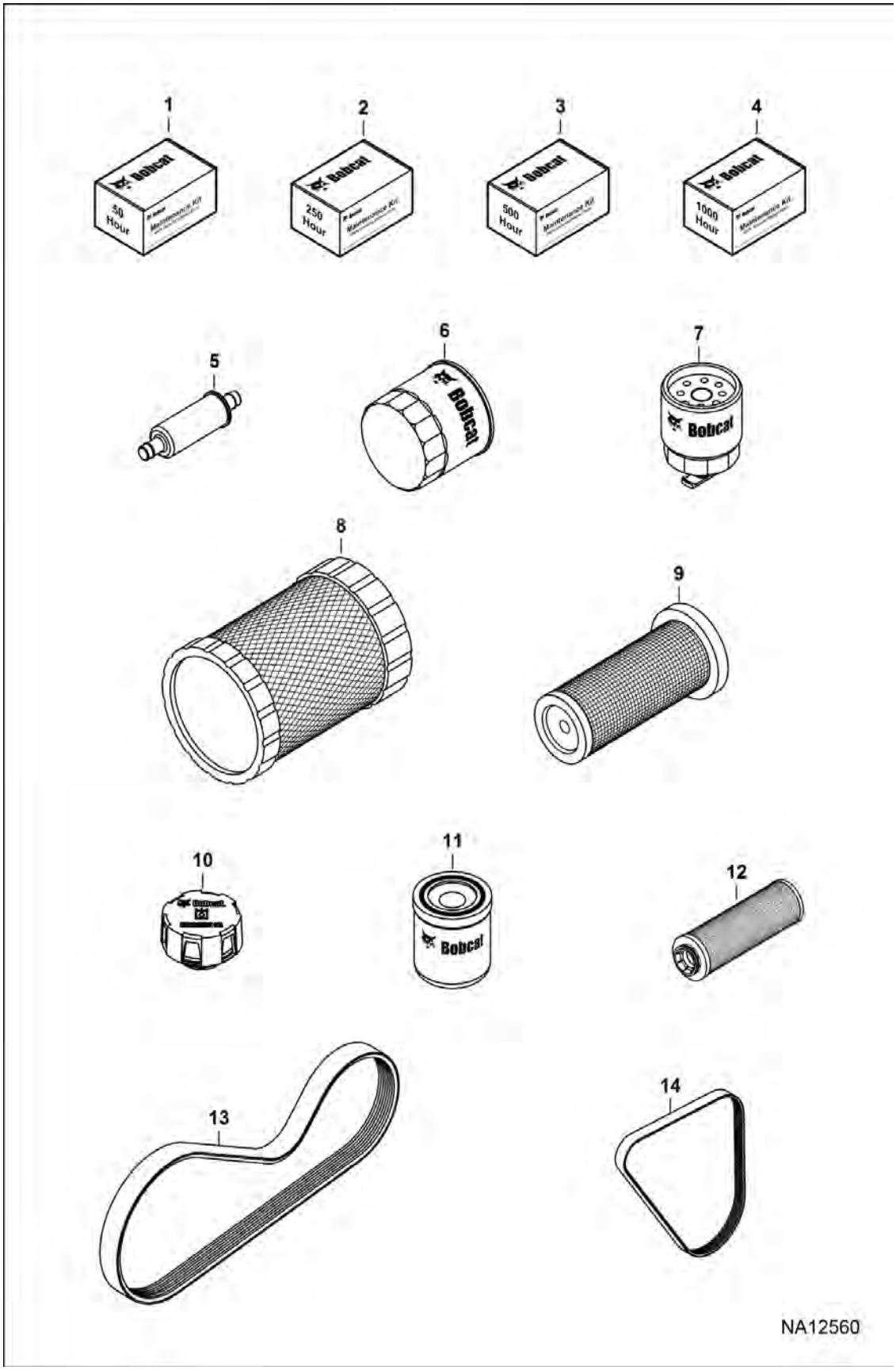

Illustration NA12560

MAINTENANCE ITEMS (Cont'd)

(Scheduled Maintenance)

Ref No	Part Number	Description	Remarks	Serial Number	Qty
1	7310097	KIT, MAINTENANCE 50 HR	Ref. 6		1
2	7310098	KIT MAINTENANCE 250 HR	Ref. 5-8		1
3	7310099	KIT MAINTENANCE 500 HR	Ref. 5-11		1
4	7310100	KIT MAINTENANCE 1000 HR	Ref. 5-12		1
5	6683101	ASSEMBLY FILTER FUEL			1
6	6675517	FILTER, OIL ENG 12			1
7	6667352	FILTER, FUEL W/SEPARATOR 12			1
8	6666375	FILTER, AIR OUTER			1
9	6666376	FILTER, AIR INNER			1
10	6727475	CAP HYDRAULIC			1
11	7319444	ELEMENT FILTER	Was 6686926 [A]		1
12	7024037	FILTER, OIL HYD ELEMENT			1
13	7286547	BELT, DRIVE			1
14	7100104	BELT, ALT			1

MAIN FRAME

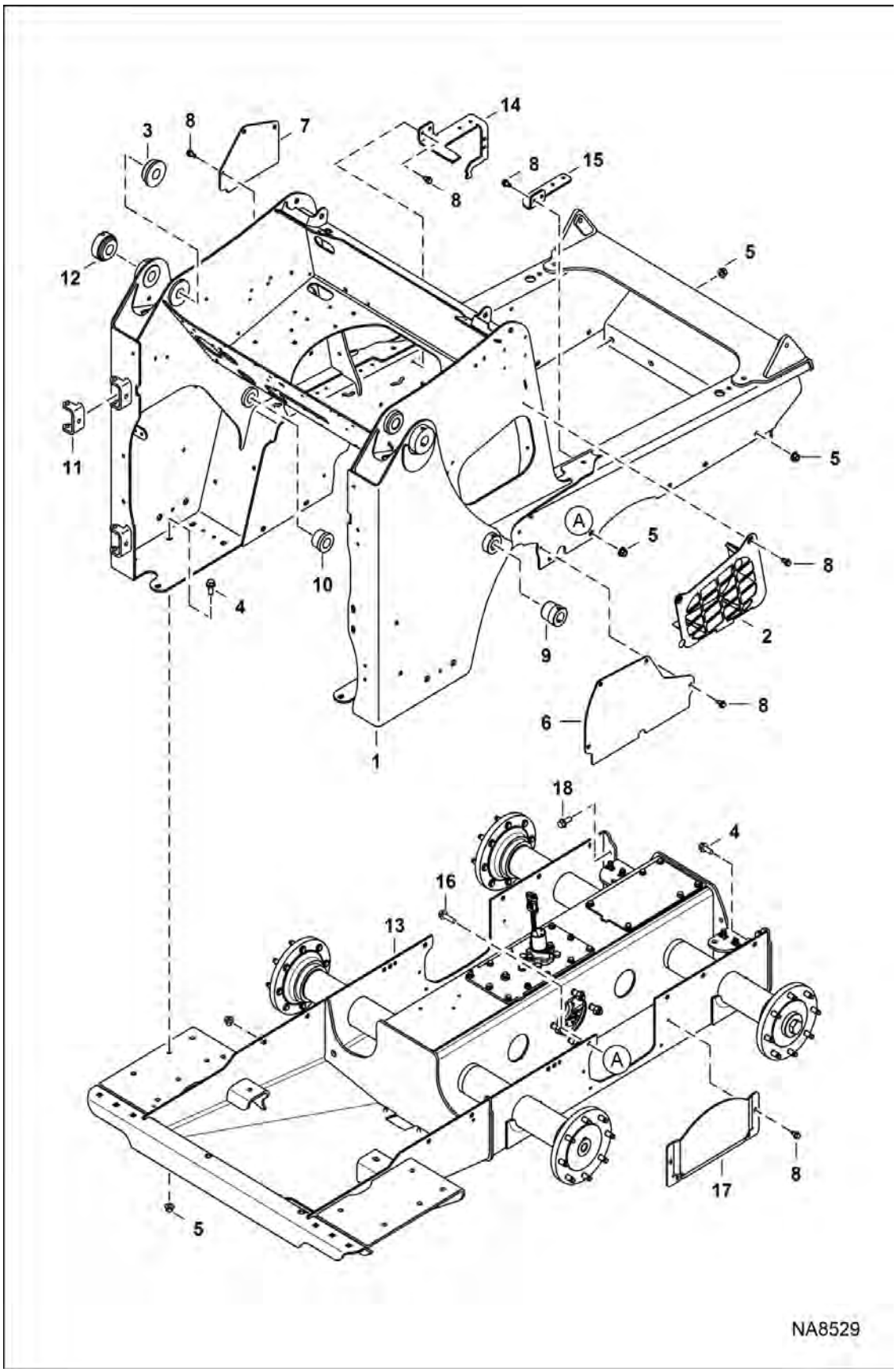

MAIN FRAME (Cont'd)

Ref No	Part Number	Description	Remarks	Serial Number	Qty
1	7195084	MAIN FRAME	W/ Ref. 3 & 9-12		1
2	7197003	LOUVER	RH		1
2	7197004	LOUVER	LH		1
3	7140749	BUSHING, WELD-ON	inside upright weld-on		2
4	31C820	BOLT			22
5	83D8	NUT 5			27
6	7275241	COVER, PUMP	single speed - Was 7218172		1
7	7197507	COVER			1
8	84G3712	BOLT 5			23
9	7111448	BUSHING, PIVOT	outside upright		2
10	7115700	BUSHING, PIVOT	inside upright		2
11	6708987	HINGE, WELD-ON			2
12	7229193	BUSHING, PIVOT	outside upright		2
13		CHAINCASE	See Illustration DRIVE TRAIN / NA8527		1
14	7276579	BRACKET, LIFT	LH - Was 7227550 [A]		1
15	7202800	BRACKET, SUPPORT	RH		1
16	31C828	BOLT			1
17	7239841	COVER, MOTOR			2
18	31C824	BOLT 10			4

CAB REPLACEMENT

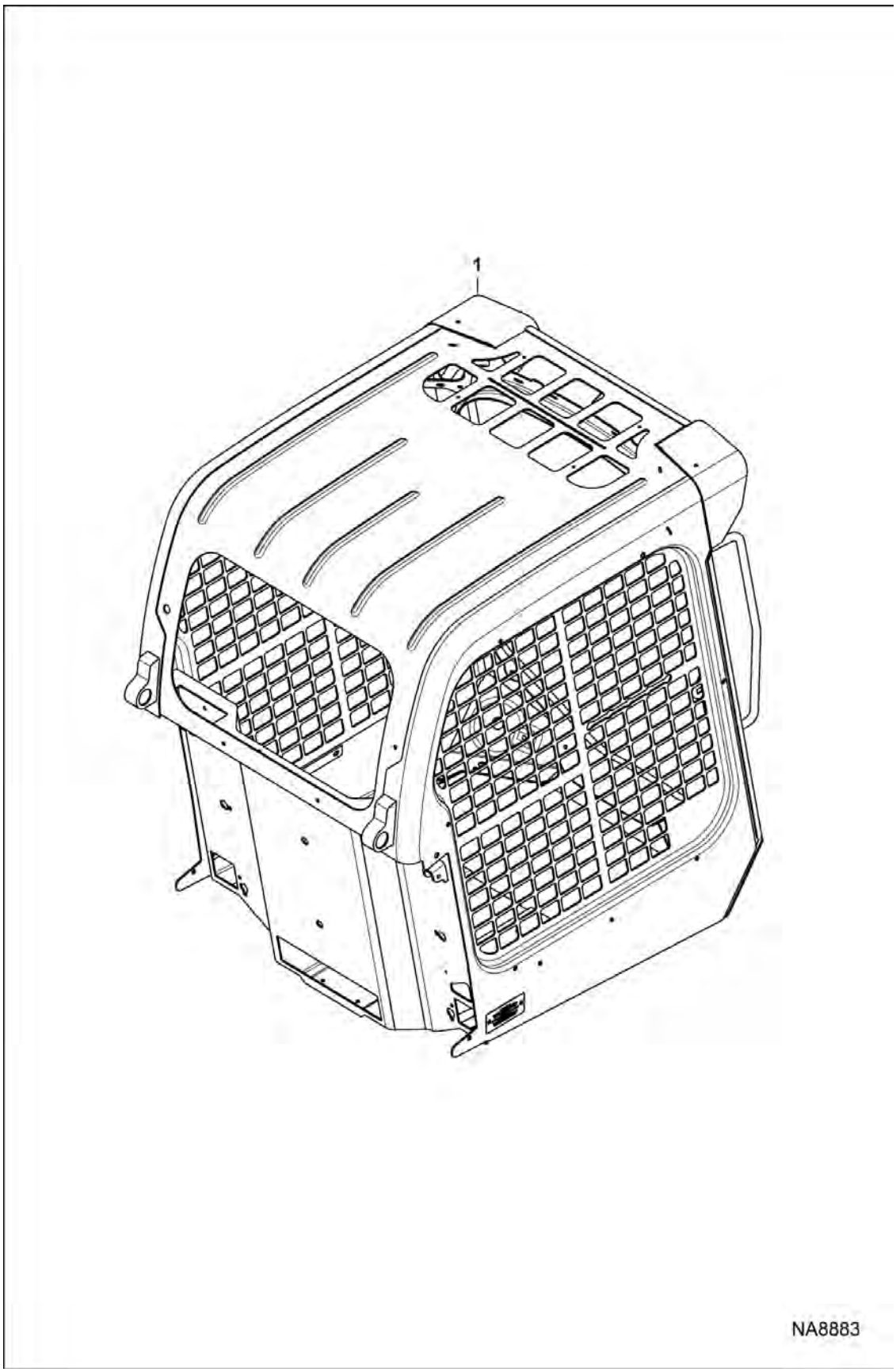

Illustration NA8883

CAB REPLACEMENT (Cont'd)

Ref No	Part Number	Description	Remarks	Serial Number	Qty
1	7307978	CAB ASSY	does not include cab decals - decals must be installed matching the loader's rated operating capacity, lift arm type & operation controls thus order decals separately - Was 7215840 [B]		1

OPERATOR CAB

(Gas Spring)

(S/N B1E611001 - B1E617609)

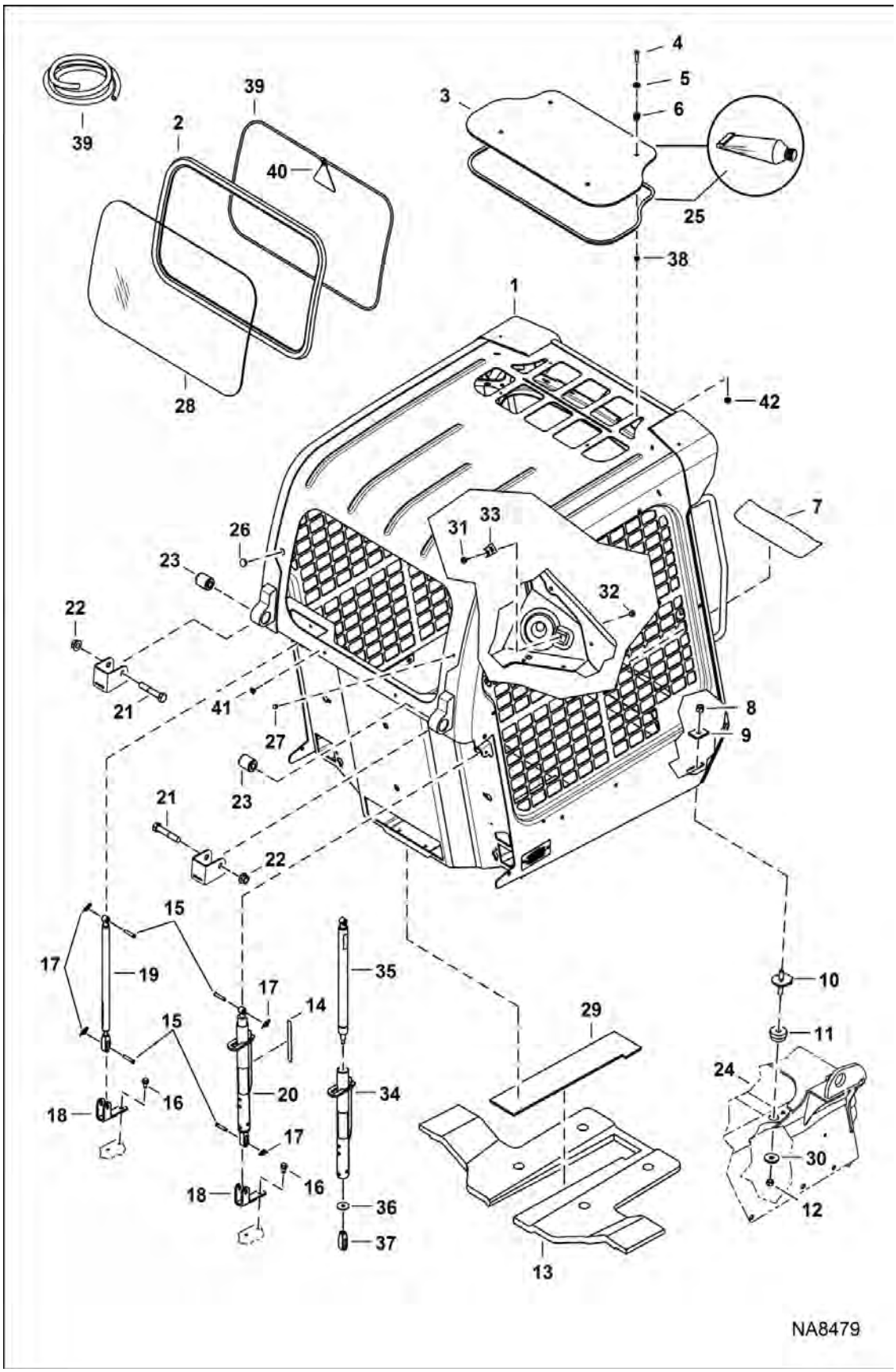

OPERATOR CAB (Cont'd)

(Gas Spring)
(S/N B1E611001 - B1E617609)

Ref No	Part Number	Description	Remarks	Serial Number	Qty
1		ASSY CAB	See Illustration CAB REPLACEMENT / NA8883		1
2	7219972	SEAL, WINDOW REAR			1
3	7120411	WINDOW, CAB TOP			1
4	1C416	BOLT			4
5	25E13	WASHER 5			4
6	6675545	GROMMET			4
7	7169747	TREAD, SAFETY			1
8	59D8	NUT 5			2
9	6553709	WASHER	rectangular		2
10	6702971	BOLT ASSY			2
11	6560633	DAMPER, VIBRATION			2
12	85D8	NUT, 5			2
13	7176603	INSULATION, PANEL SEAT			1
14	7169877	DECAL	push		1
15	6567743	PIN			4
16	84G3712	BOLT 5			2
17	6631418	RING, RETAINING			4
18	7144859	MOUNT, GAS SPRING			2
19	7167437	SPRING, GAS STD	LH - Also Order 7169291 decal		1
20	7234468	GAS SPRING	W/lock		1
21	17C1088	BOLT	Was 17C1056 [B]		2
22	53D10	NUT			2
23	6562602	BUSHING			2
24		MAIN FRAME	See Illustration MAIN FRAME / NA8529		1
25	7233439	SEALANT, GASKET LIQUID	apply 0.39" bead of sealant to top window 0.375" from the edge of top window		1
26	6657719	PLUG	0.75" dia hole		1
27	7188745	PLUG	radio		1
28	7219974	WINDOW, CAB REAR			1
29	7174787	INSULATION, PAN SEAT			1
30	6515817	WASHER			2
31	55D5	NUT			1
32	35C516	BOLT 10			1
33	6684641	MOUNT			1
34	7149091	TUBE			1
35	7149093	SPRING			1
36	7157958	WASHER			1
37	7169606	CONNECTOR, SLOTTED			1
38	7215374	BUSHING, NYLON			4
39	6554149	CORD, BULK/FT	1961,4mm (77") - sold per foot		x

OPERATOR CAB (Cont'd)

(Gas Spring)

(S/N B1E611001 - B1E617609)

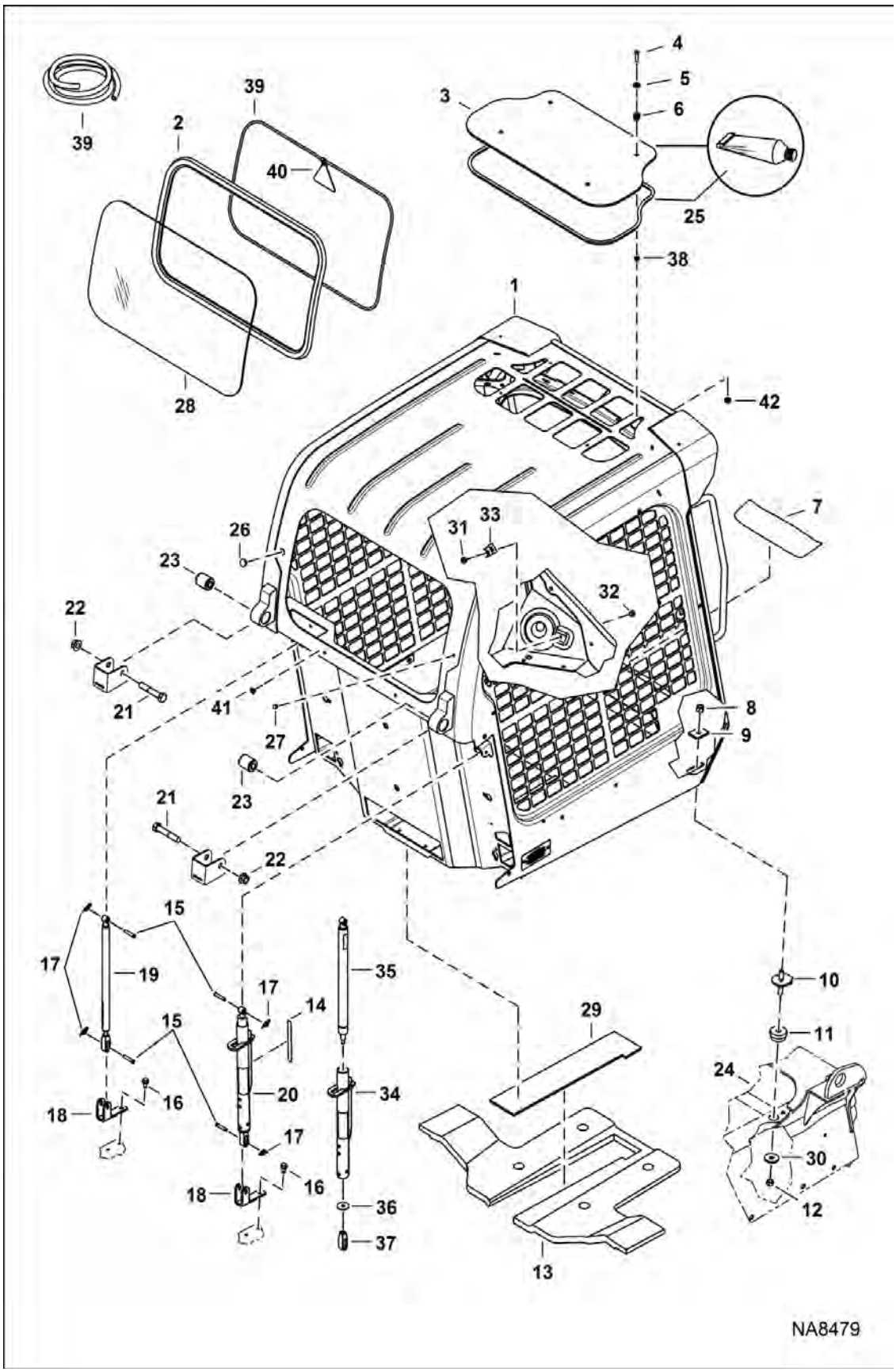

OPERATOR CAB (Cont'd)

(Gas Spring)

(S/N B1E611001 - B1E617609)

Ref No	Part Number	Description	Remarks	Serial Number	Qty
40	6731478	TAG EXIT			1
41	7188745	PLUG			2
42	55D4	NUT			4

OPERATOR CAB

(Gas Spring)
(S/N B1E617610 & Above)

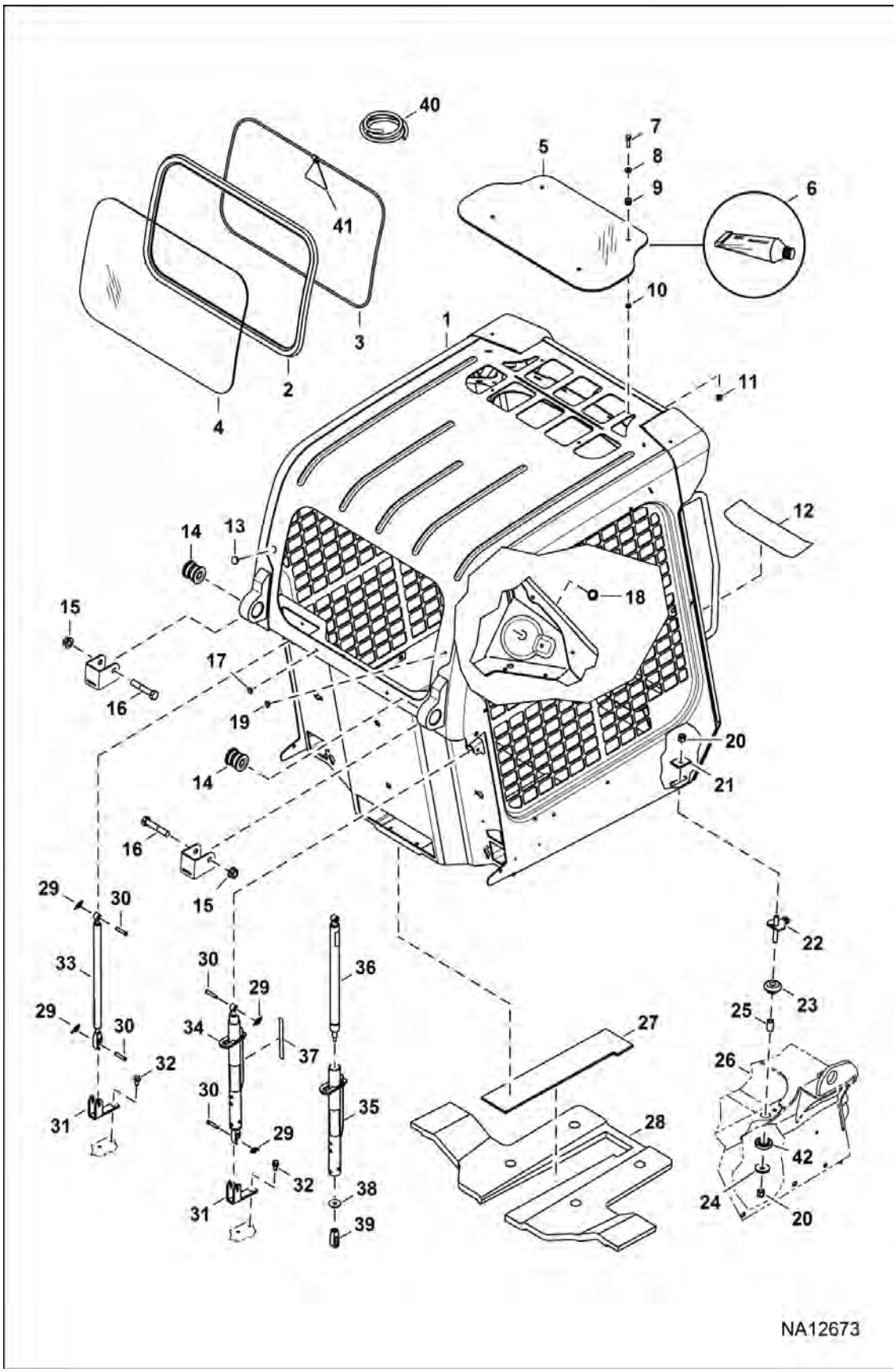

OPERATOR CAB (Cont'd)

(Gas Spring)
(S/N B1E617610 & Above)

Ref No	Part Number	Description	Remarks	Serial Number	Qty
1		CAB, ASSY	See Illustration CAB REPLACEMENT / NA8883		1
2	7219972	SEAL, WINDOW REAR			1
3		CORD	NLA - 1961,4 mm (77.2") long - Order Ref. 40		x
4	7219974	WINDOW, CAB REAR			1
5	7120411	WINDOW, CAB TOP			1
6	7233439	SEALANT, GASKET LIQUID	apply 0.38" bead of sealant to top window 0.50" from the edge of top window		x
7	1C416	BOLT			4
8	25E13	WASHER 5			4
9	6675545	GROMMET			4
10	7215374	BUSHING, NYLON			4
11	55D4	NUT			4
12	7169747	TREAD, SAFETY			1
13	6657719	PLUG	0.75" dia hole		1
14	6562602	BUSHING			2
15	53D10	NUT			2
16	1C1056	SCREW HEX CAP			2
17	7188745	PLUG			2
18	6697942	PLUG, NYLON			1
19	7188745	PLUG	radio		1
20	59D8	NUT 5			4
21	6553709	WASHER	rectangular		2
22	7314341	ASSY BOLT W/WASHER			2
23	7286606	ISOLATOR VIBRATION			2
24	6515817	WASHER			2
25	7303649	SPACER TUBE			2
26		MAIN FRAME	See Illustration MAIN FRAME / NA8529		1
27	7174787	INSULATION, PAN SEAT			1
28	7176603	INSULATION, PANEL SEAT			1
29	6631418	RING, RETAINING			4
30	6567743	PIN			4
31	7144859	MOUNT, GAS SPRING			2
32	84G3712	BOLT 5			4
33	7167437	SPRING, GAS STD	LH - Also Order 7169291 decal		1
33	7167438	GAS SPRING	Deluxe Gas Spring		1
34	7234468	GAS SPRING	locking		1
35	7149091	TUBE			1
36	7149093	SPRING			1
37	7169877	DECAL	push		1
38	7157958	WASHER			1

OPERATOR CAB (Cont'd)

(Gas Spring)
(S/N B1E617610 & Above)

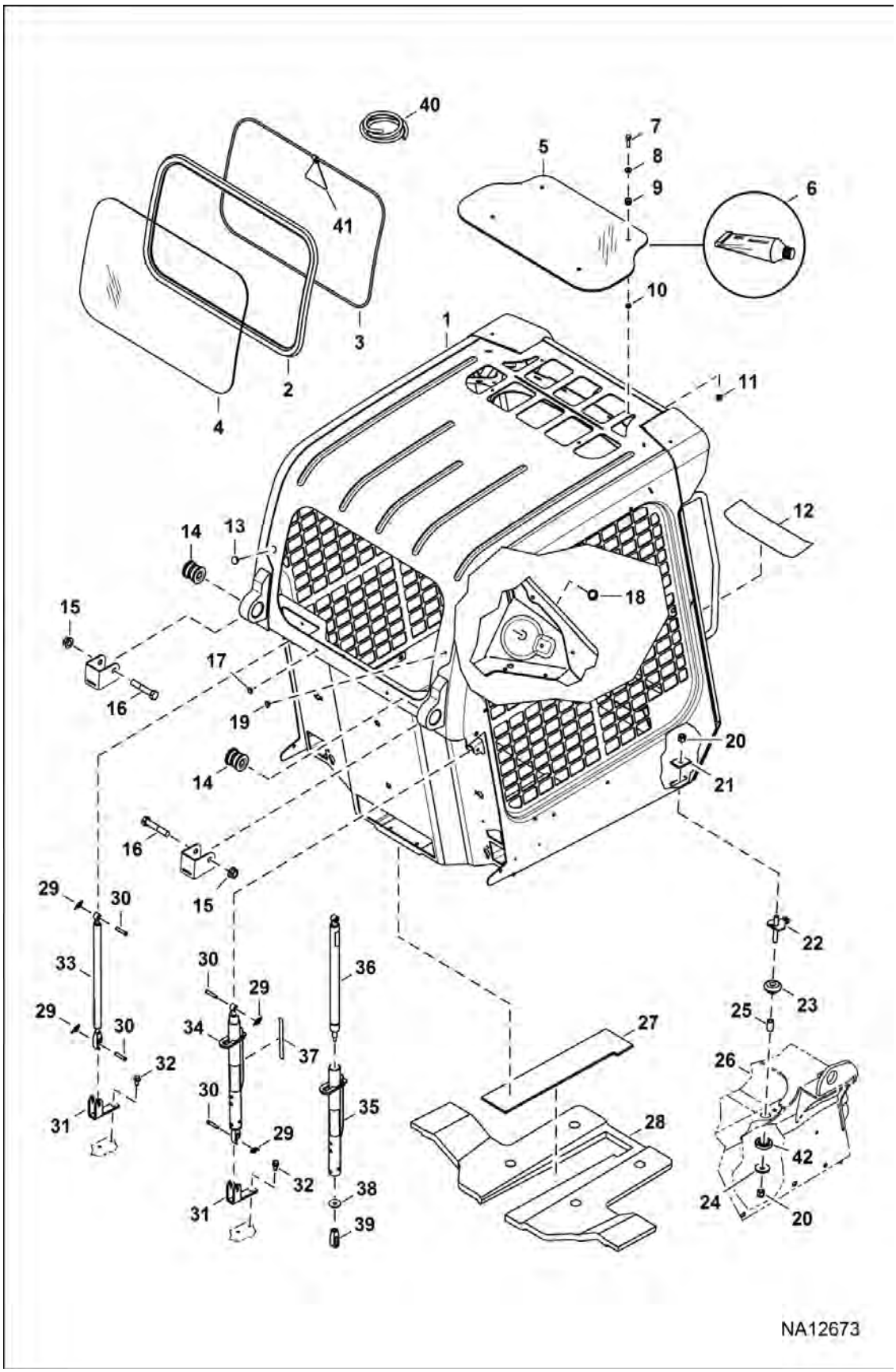

OPERATOR CAB (Cont'd)

(Gas Spring)
(S/N B1E617610 & Above)

Ref No	Part Number	Description	Remarks	Serial Number	Qty
39	7169606	CONNECTOR, SLOTTED			1
40	6554149	CORD, BULK/FT	bulk - sold per foot		x
41	6731478	TAG EXIT			1
42	7286607	ISOLATOR VIBRATION			2

OPERATOR CAB
(Cab Interior) (Standard)

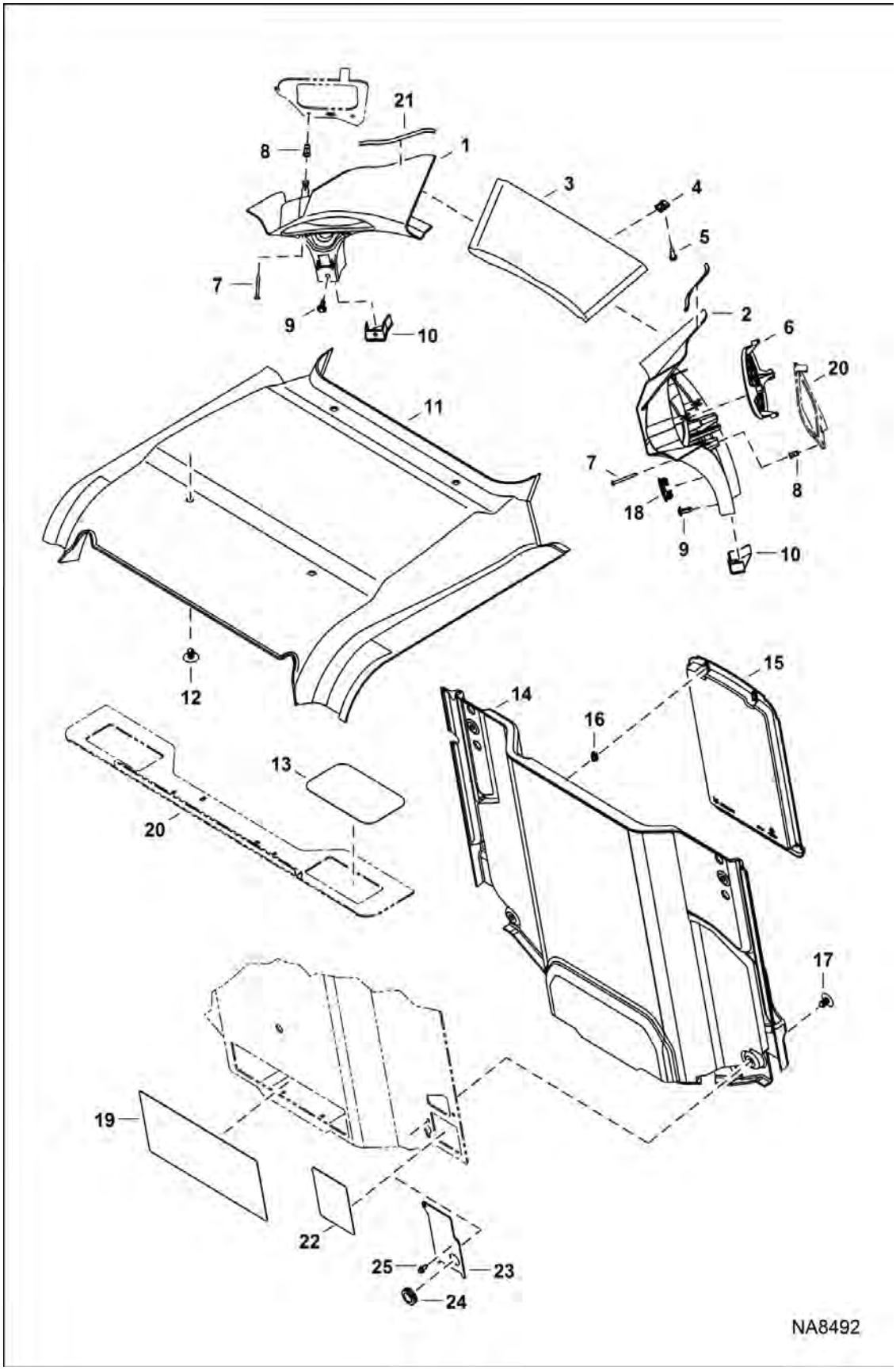

OPERATOR CAB (Cont'd)

(Cab Interior) (Standard)

Ref No	Part Number	Description	Remarks	Serial Number	Qty
1	7155792	PANEL, LH			1
2	7155791	PANEL, RH			1
3	7223412	PANEL, DASH			1
4	7142762	CLIP			2
5	6669224	TAP SCREW			2
6	7002985	INSERT, BLANK	W/Bobcat head - if loader is equipped W/SJC & text decals, Also Order Ref. 2 & 7168114 decal - if loader is equipped W/SJC & no text decals, Also Order Ref. 2 & 7177707 decal		1
7	7165799	SCREW			4
8	6675033	INSERT, THREADED			4
9	7160382	RIVET, BIRD CAGE			2
10	7165037	CAP, INST PANEL RH			1
10	7165038	CAP, INST PANEL LH			1
11	7155786	HEADLINER,STD			1
12	6674895	RETAINER			4
13	7168610	COVER			1
14	7176134	PANEL, CAB INTERIOR			1
15	6725301	COVER,OM			1
16	6675524	CLIP			2
17	6674895	RETAINER			4
18	6665314	PLUG			1
19	7178954	COVER, HVAC			1
20		CAB ASSY	See Illustration OPERATOR CAB / NA8479		1
21	7187104	SEAL			2
22	7197972	COVER	W/ heat & hvac		1
23	7269229	PLUG THROTTLE CABLE	Order Ref. 24 & 25 - W/O heat & hvac		1
24	7113425	GROMMET			1
25	26GM6016	BOLT			2

OPERATOR CAB
(Cab Interior) (Deluxe)

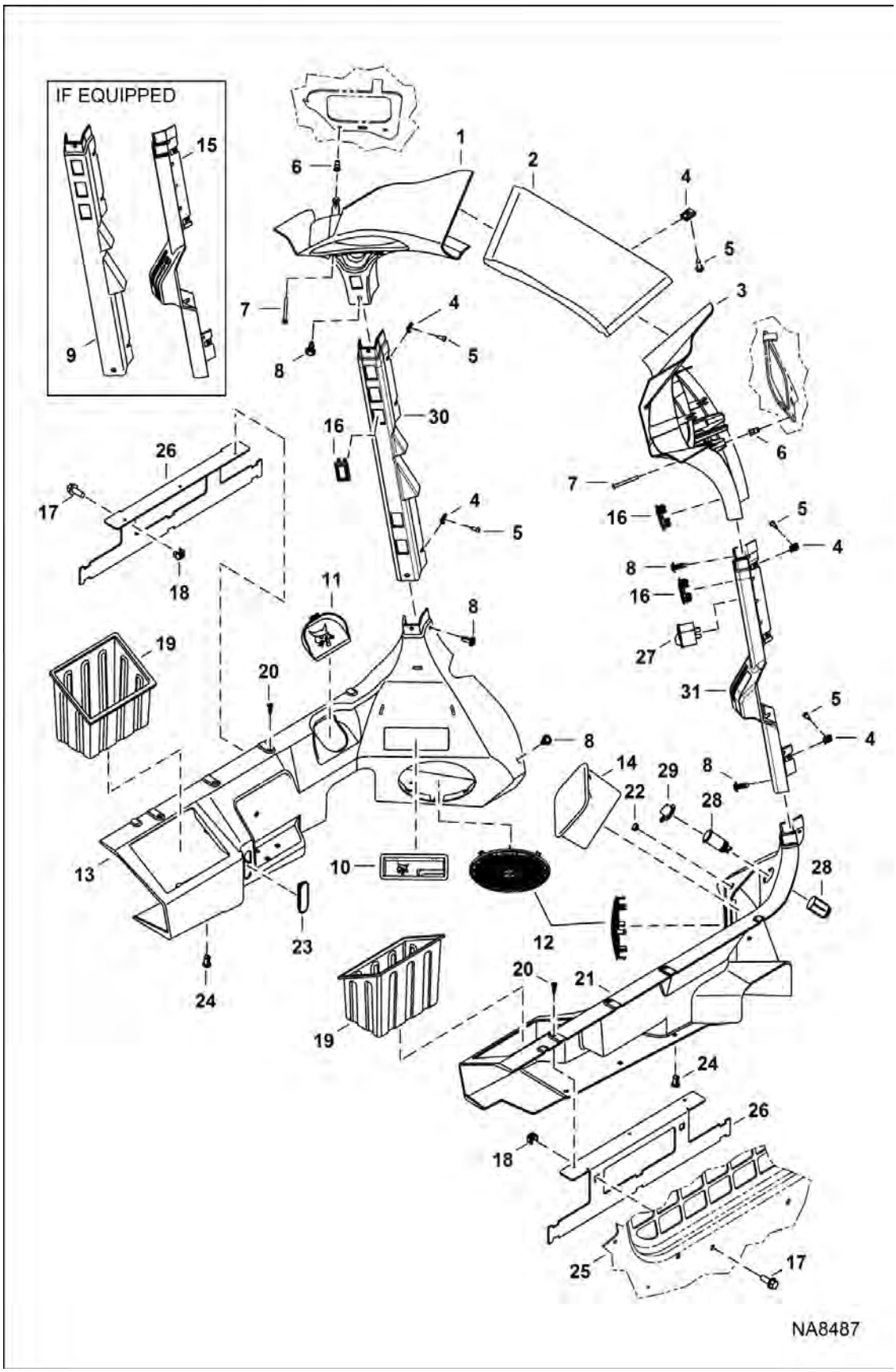

Illustration NA8487

Model S450 MT2KAMEA
6990825

OPERATOR CAB (Cont'd)

(Cab Interior) (Deluxe)

Ref No	Part Number	Description	Remarks	Serial Number	Qty
1	7155792	PANEL, LH			1
2	7223412	PANEL, DASH			1
3	7155791	PANEL, RH			1
4	7142762	CLIP			8
5	6669224	TAP SCREW			8
6	6675033	INSERT, THREADED			4
7	7165799	SCREW			4
8	7160382	RIVET, BIRD CAGE			8
9		COLUMN, FRONT LEFT	NLA - Order Ref 30 - Was 7164348 [A]		1
10	7165344	STORAGE			1
11	7165345	DOOR, COVER			1
12	7161939	GRILL			2
13	7155643	FENDER, PANEL L.H.			1
14	7154285	BOX,RADIO DELETE			1
15		COLUMN, FRONT RIGHT	NLA - Order Ref 31 - Was 7164347 [A]		1
16	6665314	PLUG	Use W/Ref 9, 15		5
16	6665314	PLUG	Use W/Ref 30, 31		8
17	35C616	BOLT 5			4
18	7149204	NUT			4
19	7145268	CONTAINER, STORAGE			2
20	7160381	RIVET, BIRD CAGE			6
21	7155642	FENDER, PANEL RH			1
22	7182942	PLUG			1
23	7165346	DOOR, COVER			1
24	7160383	RIVET, BIRD CAGE			10
25		CAB ASSY	See Illustration OPERATOR CAB / NA8479		1
26	7193021	BRACKET			2
27	6668742	SWITCH	EMEA		1
28	6664223	OUTLET			1
29	6664224	CAP			1
30	7265545	COLUMN, FRONT LEFT			1
31	7282966	COLUMN, FRONT RIGHT			1

OPERATOR CAB

(Cab Interior) (Deluxe) (Headliner)

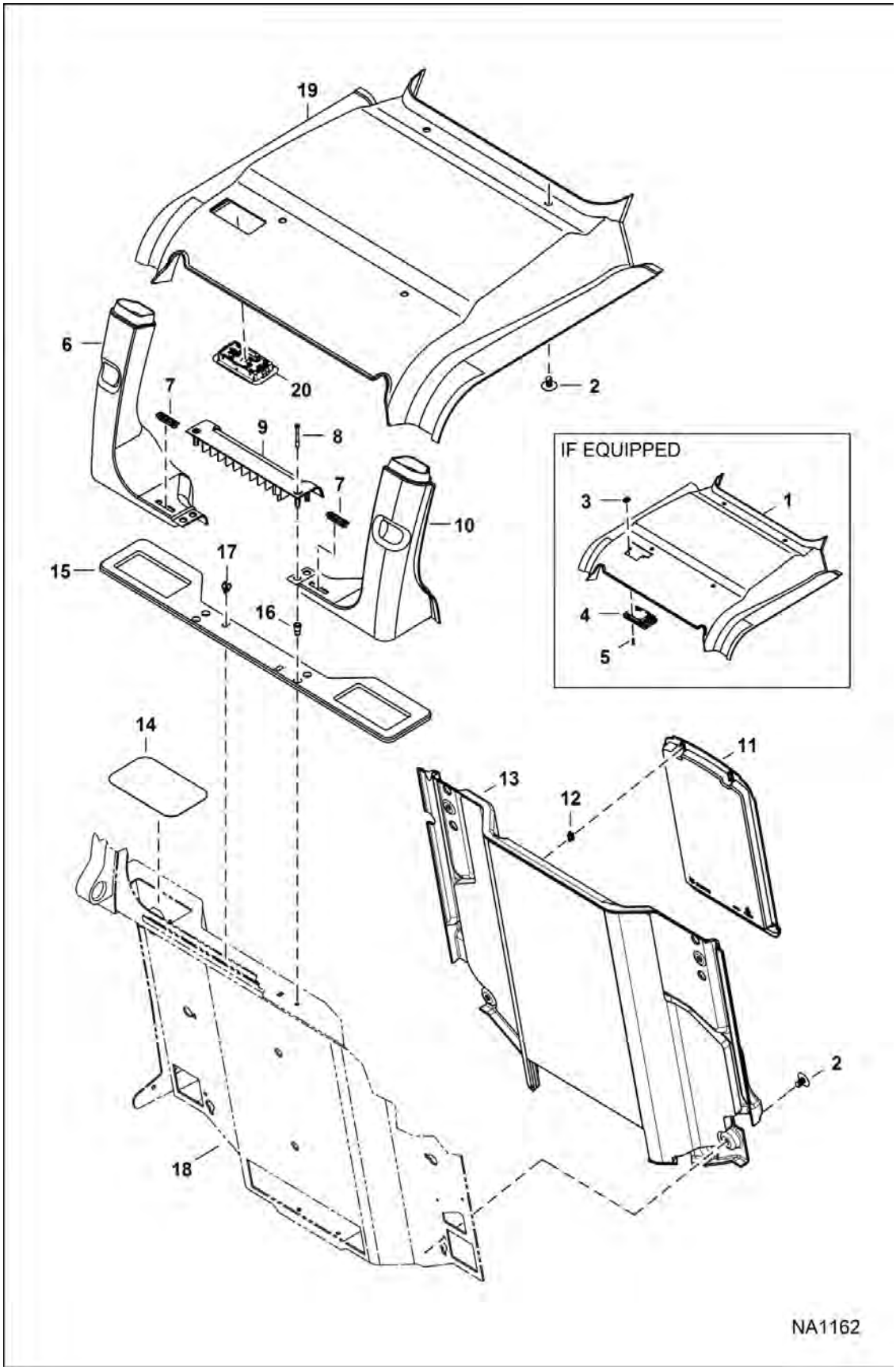

OPERATOR CAB (Cont'd)

(Cab Interior) (Deluxe) (Headliner)

Ref No	Part Number	Description	Remarks	Serial Number	Qty
1	7155798	HEADLINER HVAC DLX			1
2	6674895	RETAINER			8
3	7142762	CLIP			2
4		LIGHT	NLA - 3-positioin switch - Order 7166629 light - Was 7155797 [A]		1
4	7166629	LIGHT, CAB HEADLINER	2 position switch		1
5	7170114	SCREW			2
6	100334SUB	DUCT, AIR	LH - W/Ref. 3		1
7	7145885	VENT, DEFROST			2
8	7165799	SCREW			2
9	7165332	SHELF, REAR			1
10	100333SUB	DUCT, AIR	RH - W/Ref. 3		1
11	6725301	COVER,OM			1
12	6675524	CLIP			2
13	7176133	PANEL, CAB INTERIOR			1
14	7168610	COVER			2
15	7153832	SEAL, SHELF REAR			1
16	6675033	INSERT, THREADED			2
17	7165333	CLIP			2
18		CAB ASSY			1
19	7234061	HEADLINER DLX			1
20	7229539	LIGHT, CAB HEADLINER			1

OPERATOR CAB
(Cab Interior) (HVAC) (Headliner)

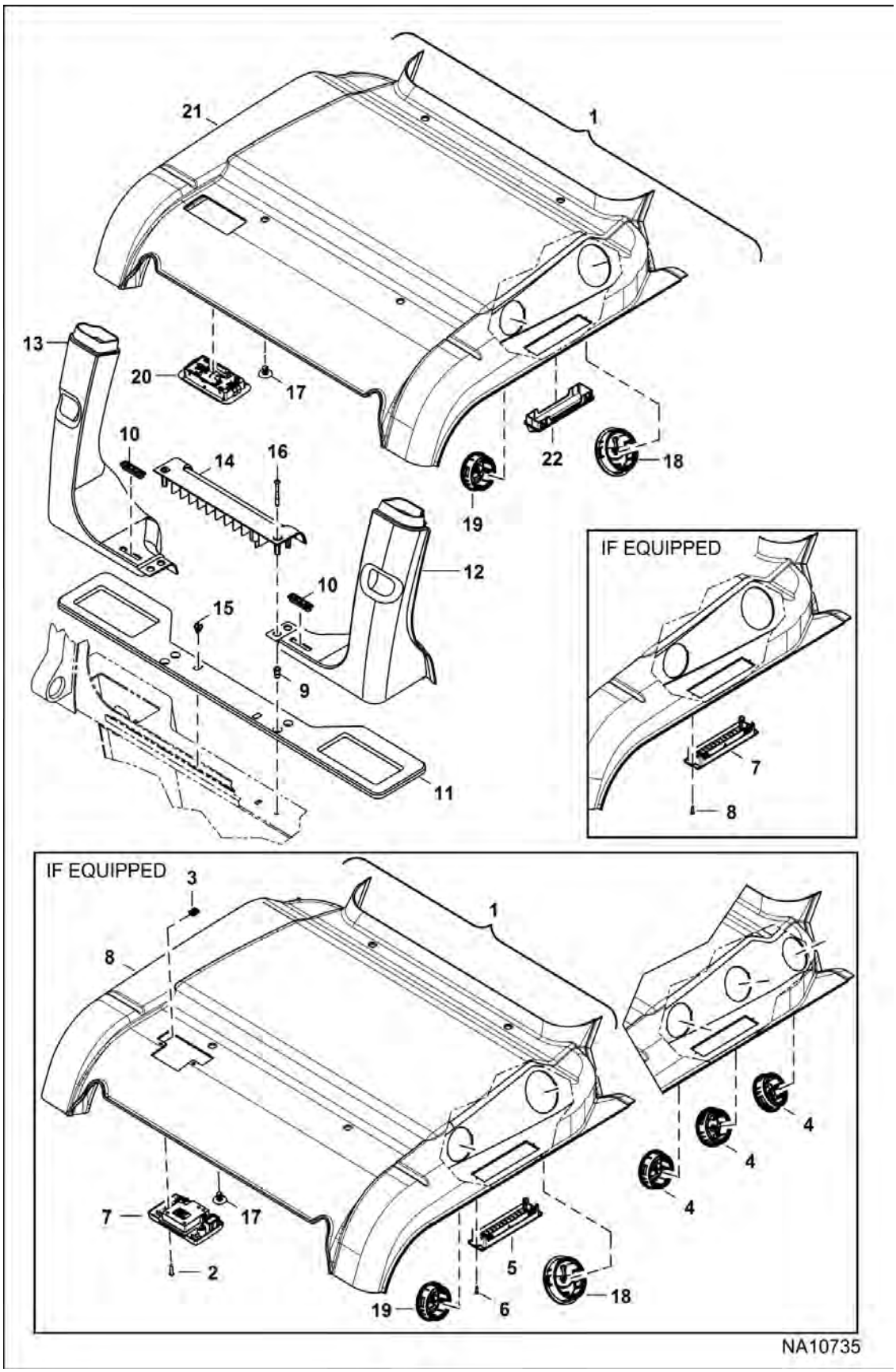

OPERATOR CAB (Cont'd)

(Cab Interior) (HVAC) (Headliner)

Ref No	Part Number	Description	Remarks	Serial Number	Qty
1	7155785	HEADLINER HVAC ASSY	W/Ref. 2-8		1
2	7170114	SCREW	Was 6669224 [B]		2
3	7142762	CLIP			2
4	7155794	LOUVER, ROUND	70 mm (2.75") dia		6
5	7155796	LOUVER, RECTANGLE			2
6	7155799	SCREW			4
7	7166629	LIGHT, CAB HEADLINER	Was 7155797 [A]		1
8	7155787	HEADLINER HVAC DLX	HVAC		1
9	6675033	INSERT, THREADED			2
10	7145885	VENT, DEFROST			2
11	7153832	SEAL, SHELF REAR			1
12	100333SUB	DUCT, AIR	RH		1
13	100334SUB	DUCT, AIR	LH		1
14	7165332	SHELF, REAR			1
15	7165333	CLIP			2
16	7165799	SCREW			2
17	6674895	RETAINER			4
18	7222397	LOUVER, ROUND	85 mm (3.35") dia		2
19	7155794	LOUVER, ROUND	70 mm (2.75") dia		2
20	7229539	LIGHT, CAB HEADLINER			1
21	7234064	HEADLINER DLX	HVAC		1
22	7261903	LOUVER			2

SEAT BAR
(Manual Controls)

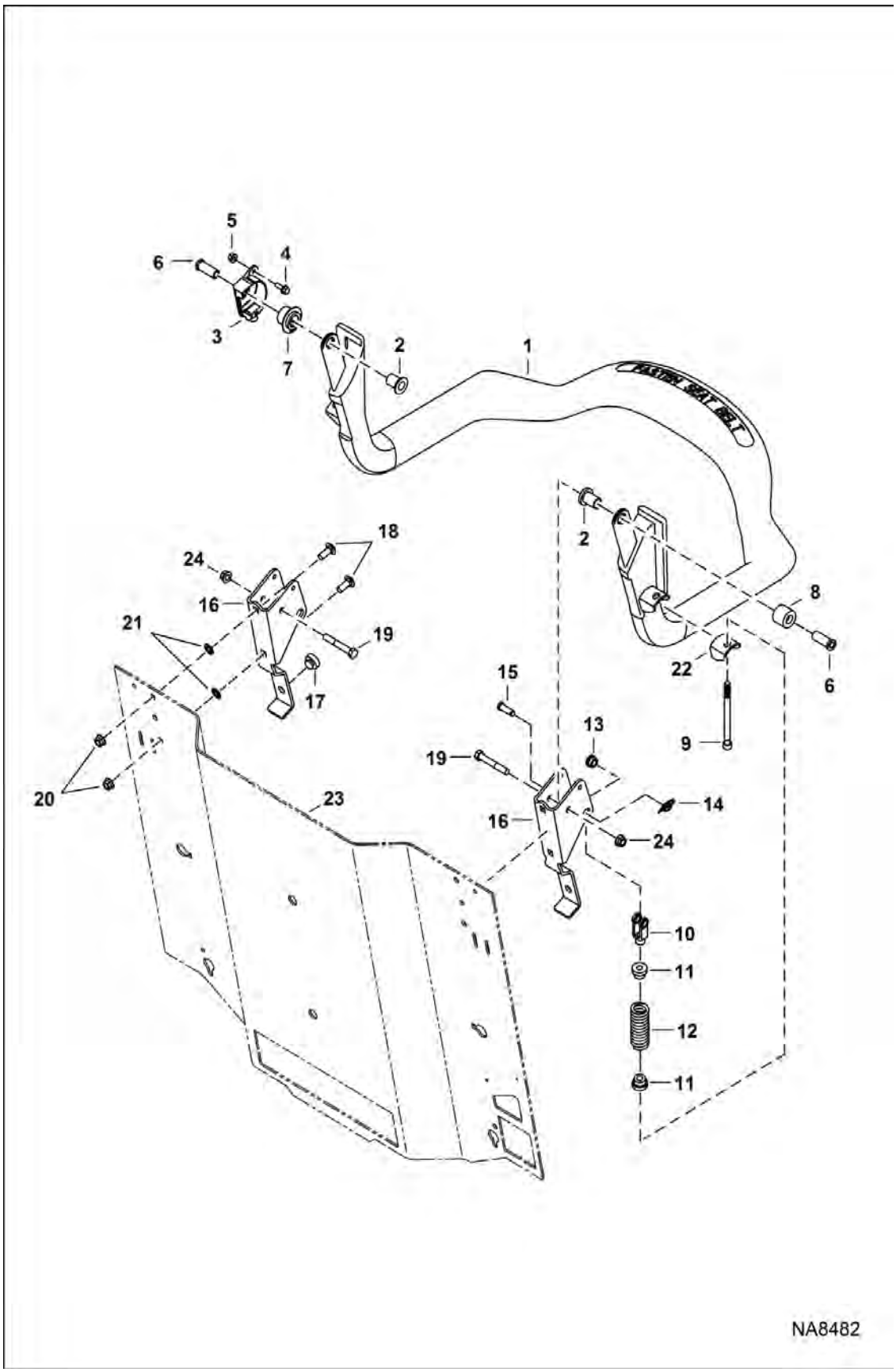

SEAT BAR (Cont'd)
(Manual Controls)

Ref No	Part Number	Description	Remarks	Serial Number	Qty
1	7143971	SEATBAR			1
2	6680441	BUSHING			2
3	6691714	SENSOR, SEATBAR BICS			1
4	35C412	BOLT			1
5	83D4	NUT 10			1
6	6715865	BUSHING			2
7	6680443	BUSHING, MAGNET			1
8	6715866	BUSHING			1
9	6713887	BOLT			2
10	6713589	CLEVIS			2
11	6710659	BUSHING			4
12	6701535	SPRING, CENTERING			2
13	6715864	BUSHING			2
14	6631418	RING, RETAINING			2
15	4F6106	PIN			2
16	7329955	BRACKET	Was 7157719 [A]		2
17	6519178	BUMPER			2
18	10C616	BOLT 10			4
19	17C640	BOLT			2
20	53D6	NUT			4
21	6674894	NUT, LOCK			4
22		MOUNT	NLA - Order Ref. 1		1
23		CAB ASSY	See Illustration OPERATOR CAB / NA8479		1
24	97D6	NUT 10			2

SEAT BAR
(Selectable Joystick Controls)

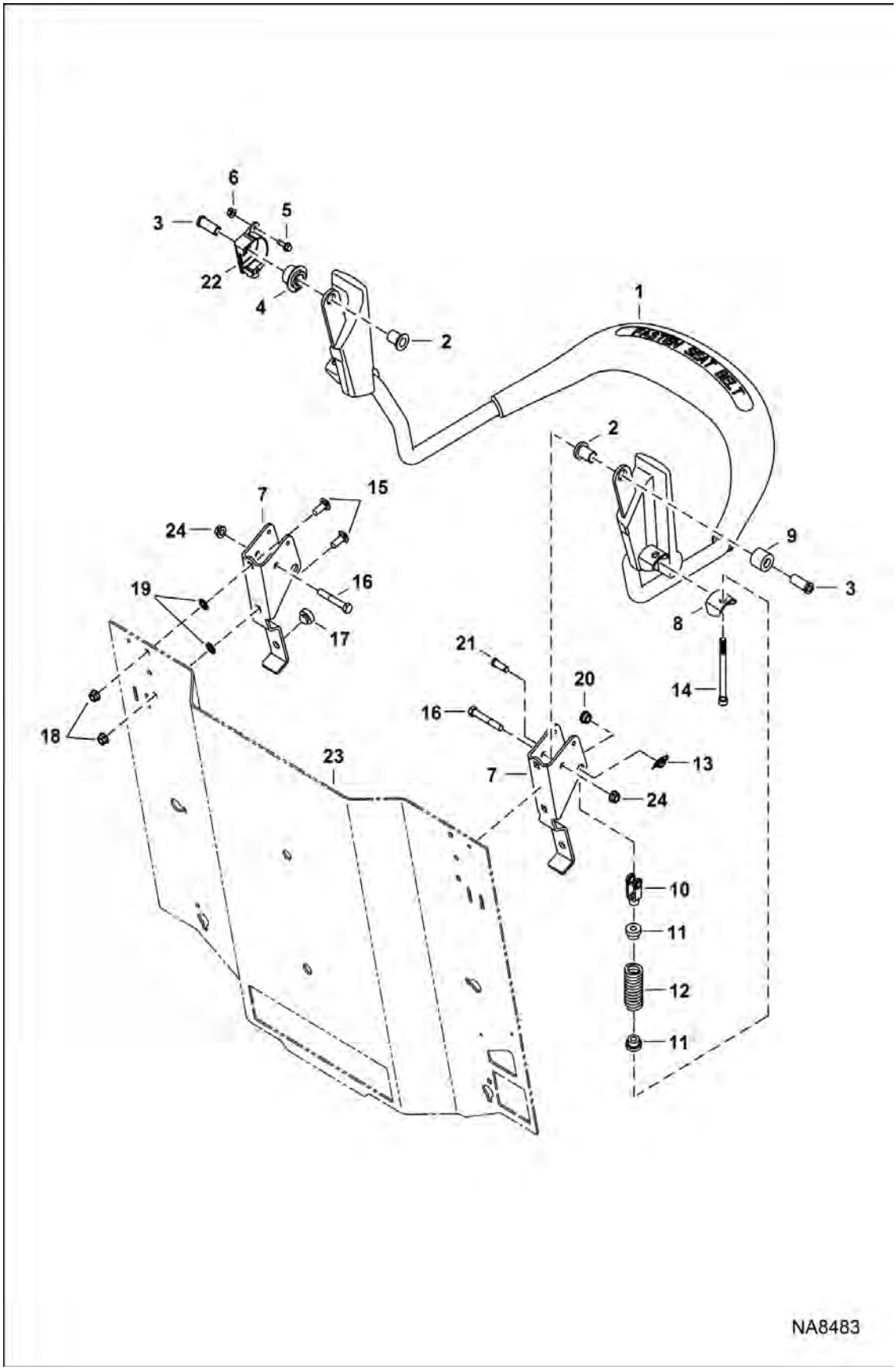

SEAT BAR (Cont'd)
(Selectable Joystick Controls)

Ref No	Part Number	Description	Remarks	Serial Number	Qty
1	7203389	SEAT BAR	SJC		1
2	6680441	BUSHING			2
3	6715865	BUSHING			2
4	6680443	BUSHING, MAGNET			1
5	35C412	BOLT			1
6	83D4	NUT 10			1
7	7329955	BRACKET	Was 7157719 [A]		2
8		MOUNT	NLA - Order Ref. 1		1
9	6715866	BUSHING			1
10	6713589	CLEVIS			2
11	6710659	BUSHING			4
12	6701535	SPRING, CENTERING			2
13	6631418	RING, RETAINING			2
14	6713887	BOLT			2
15	10C616	BOLT 10			4
16	17C640	BOLT			2
17	6519178	BUMPER			2
18	53D6	NUT			4
19	6674894	NUT, LOCK			4
20	6715864	BUSHING			2
21	4F6106	PIN			2
22	6691714	SENSOR, SEATBAR BICS			1
23		CAB ASSY	See Illustration OPERATOR CAB / NA8479		1
24	97D6	NUT 10			2

SEAT & SEAT BELT

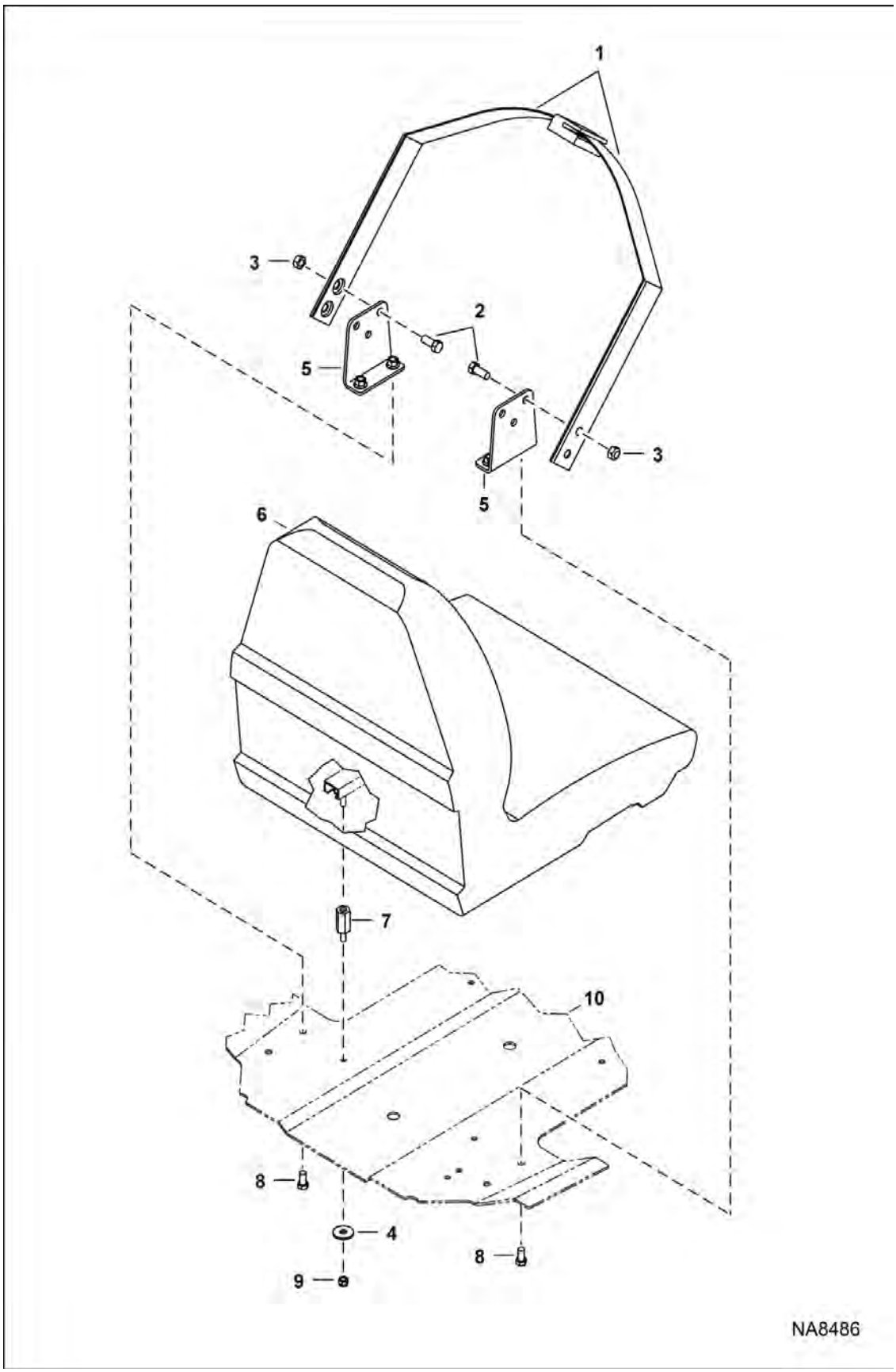

SEAT & SEAT BELT (Cont'd)

Ref No	Part Number	Description	Remarks	Serial Number	Qty
1		SEAT BELT	See Illustration SEAT BELT - 3" / NA2043 lap , See Illustration SEAT BELT - 2" / NA2044 lap , See Illustration SEAT BELT - 3" / NA2046 lap		1
2	1C716	SCREW HEX CAP			4
3	95D7	NUT			4
4	619021	WASHER, 5			4
5	7173159	BRACKET, BELT SEAT			2
6	6669135	SEAT, OPERATOR VINYL	See Illustration SEAT COVERS / NA10386		1
7	7170337	STAND, SEAT			4
8	43C612	BOLT			4
9	59D5	NUT 5			4
10		CAB ASSY	See Illustration OPERATOR CAB / NA8479		1

PANELS

(Floor Pan) (Manual Controls, AHC & ACS)

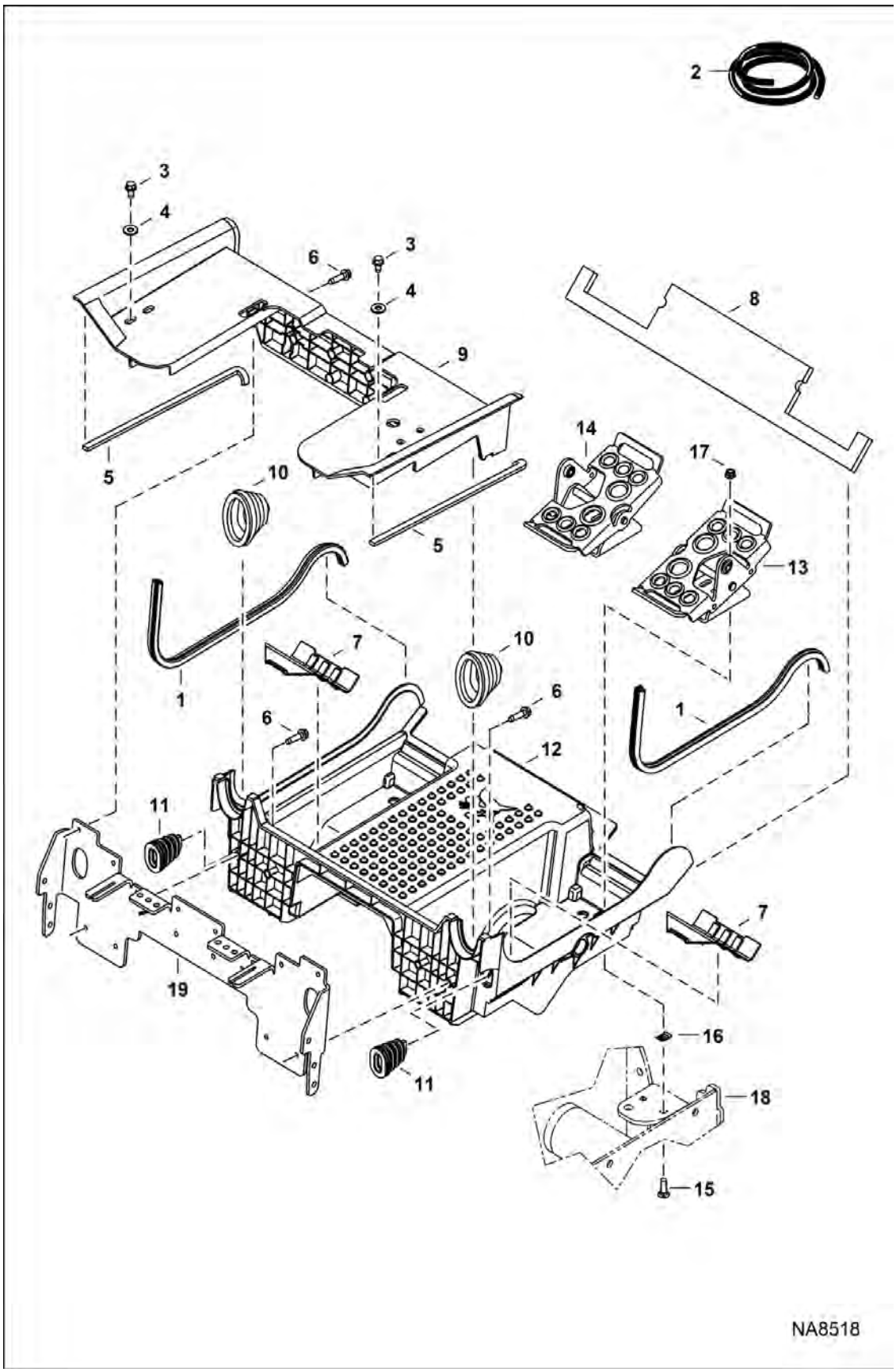

PANELS (Cont'd)

(Floor Pan) (Manual Controls, AHC & ACS)

Ref No	Part Number	Description	Remarks	Serial Number	Qty
1		SEAL	NLA - 712mm (28") - Order Ref. 2		1
2	7177959	SEAL, BULK BULB	sold per foot		x
3	84G3712	BOLT 5			4
4	25E18	WASHER			4
5	7200047	INSULATION	Was 7166196 [D]		2
6	84G3724	BOLT			12
7	7164345	COVER, PAN FLOOR			2
8	7200039	INSULATION	Was 7163132 [D]		1
9	7200044	PANEL, STEERING			1
10	7147815	BOOT			2
11	7153503	BOOT			2
12	7200045	PAN, FLOOR			1
13		PEDAL ASSEMBLY	See Illustration CONTROL PEDALS / NA8502 - RH		1
14		PEDAL ASSEMBLY	See Illustration CONTROL PEDALS / NA8502 - LH		1
15	37C620	BOLT			4
16	6684033	NUT			4
17	57D6	NUT 5			4
18		CHAINCASE	See Illustration DRIVE TRAIN / NA8527		1
19	7205888	MOUNT, BELLCRANK			1

PANELS

(Floor Pan) (Selectable Joystick Controls)

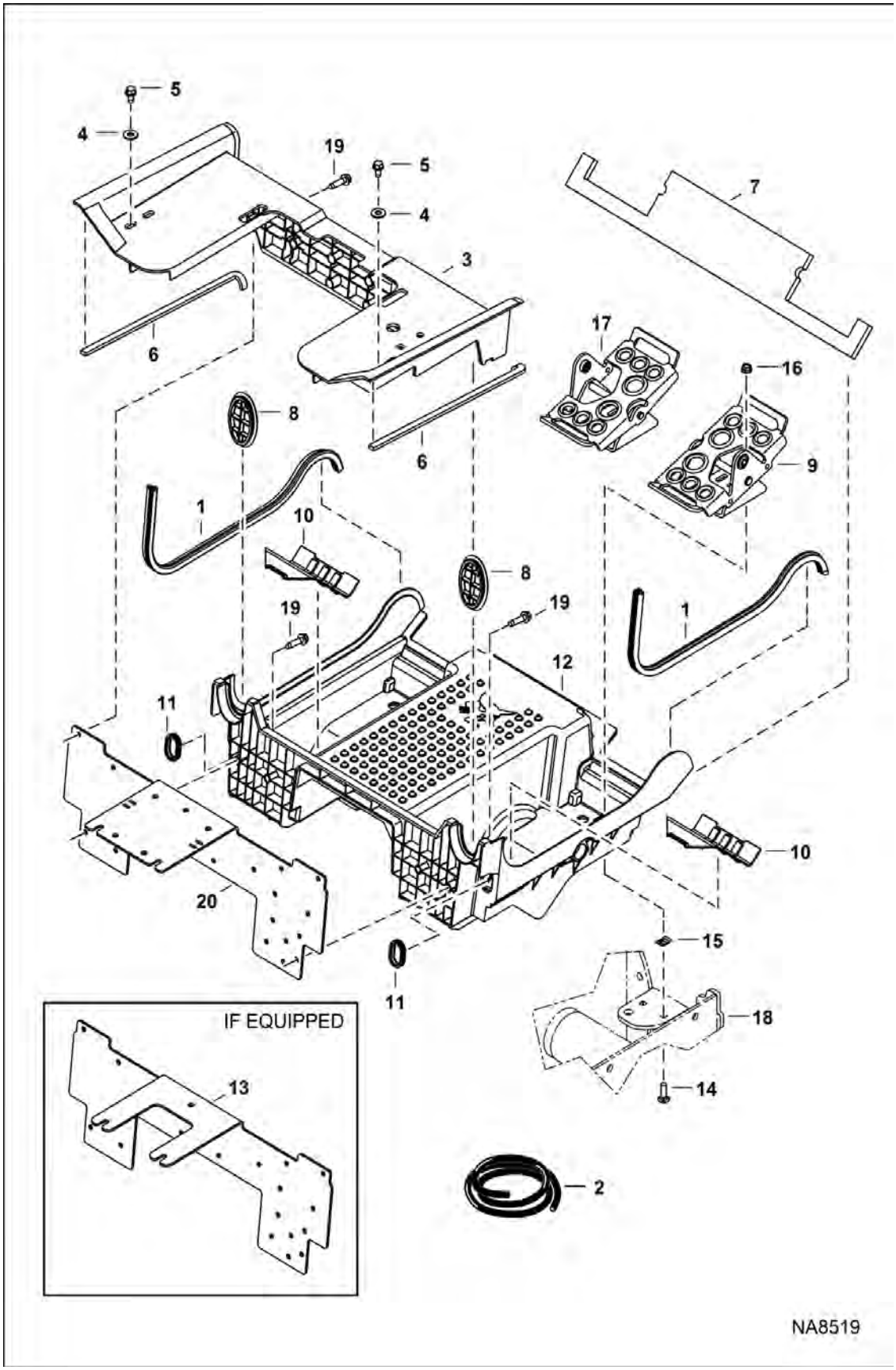

PANELS (Cont'd)

(Floor Pan) (Selectable Joystick Controls)

Ref No	Part Number	Description	Remarks	Serial Number	Qty
1		SEAL	NLA - 712mm (28") - Order Ref. 2		1
2	7177959	SEAL, BULK BULB	sold per foot		x
3	7200044	PANEL, STEERING			1
4	25E18	WASHER			4
5	84G3712	BOLT 5			4
6	7200047	INSULATION	Was 7166196 [D]		2
7	7200039	INSULATION	Was 7163132 [D]		1
8	7161131	COVER, LEVER			2
9	7205247	PEDAL, RH	RH		1
10	7164345	COVER, PAN FLOOR			2
11	7161130	COVER			2
12	7200045	PAN, FLOOR			1
13	7205237	PANEL, MOUNTING			1
14	37C620	BOLT			4
15	6684033	NUT			4
16	57D6	NUT 5			4
17	7205251	PEDAL, LH	LH		1
18		CHAINCASE	See Illustration DRIVE TRAIN / NA8527		1
19	84G3724	BOLT			14
20	7288645	PANEL MOUNTING			1

REAR DOOR

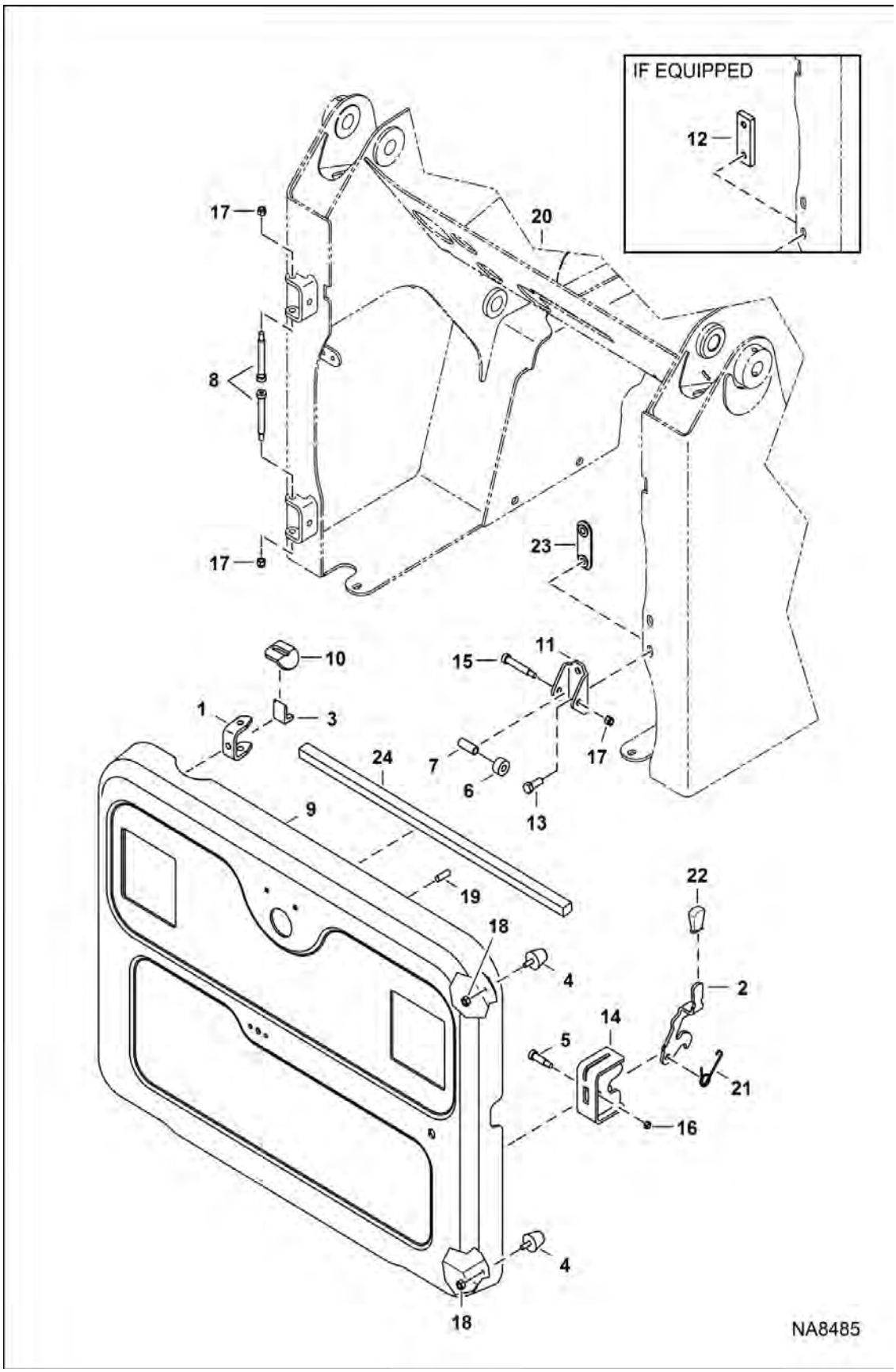
IF EQUIPPED
12
17
20
8
17
23
10
15
11
1
3
7
6
17
13
24
9
19
22
18
4
2
14
5
21
16
4
18
NA8485

REAR DOOR (Cont'd)

Ref No	Part Number	Description	Remarks	Serial Number	Qty
1	6733575	HINGE, REAR DOOR	weld-on		2
2	7250892	HANDLE, LATCH DOOR			1
3	6719766	STOP			1
4	6733616	BUMPER			2
5	38C820	SCREW			1
6	6809726	ROLLER			1
7	7184677	BUSHING	striker		1
8	6809845	BOLT			2
9	7233218	COVER, ENG	W/ Ref. 1, 2, 5, 14, 16, 19 & 21		1
10	7160704	STOP			1
11	7160705	CHANNEL			1
12		BAR	NLA - threaded striker - Order Ref. 23 - Was 7160706 [A]		1
13	17C820	BOLT 5			2
14	7218276	PLATE, LATCH	weld-on		1
15	38C840	BOLT	carriage		1
16	85D6	NUT, 5			1
17	59D6	NUT			3
18	61D5	NUT 10			2
19	56G412	STUD			6
20		MAIN FRAME	See Illustration MAIN FRAME / NA8529		1
21	6810132	SPRING			1
22	6564452	LEVERGRIP			1
23	7247445	NUT BAR ASSY			1
24	7233665	INSULATION			1

LIFT ARM & BOB-TACH

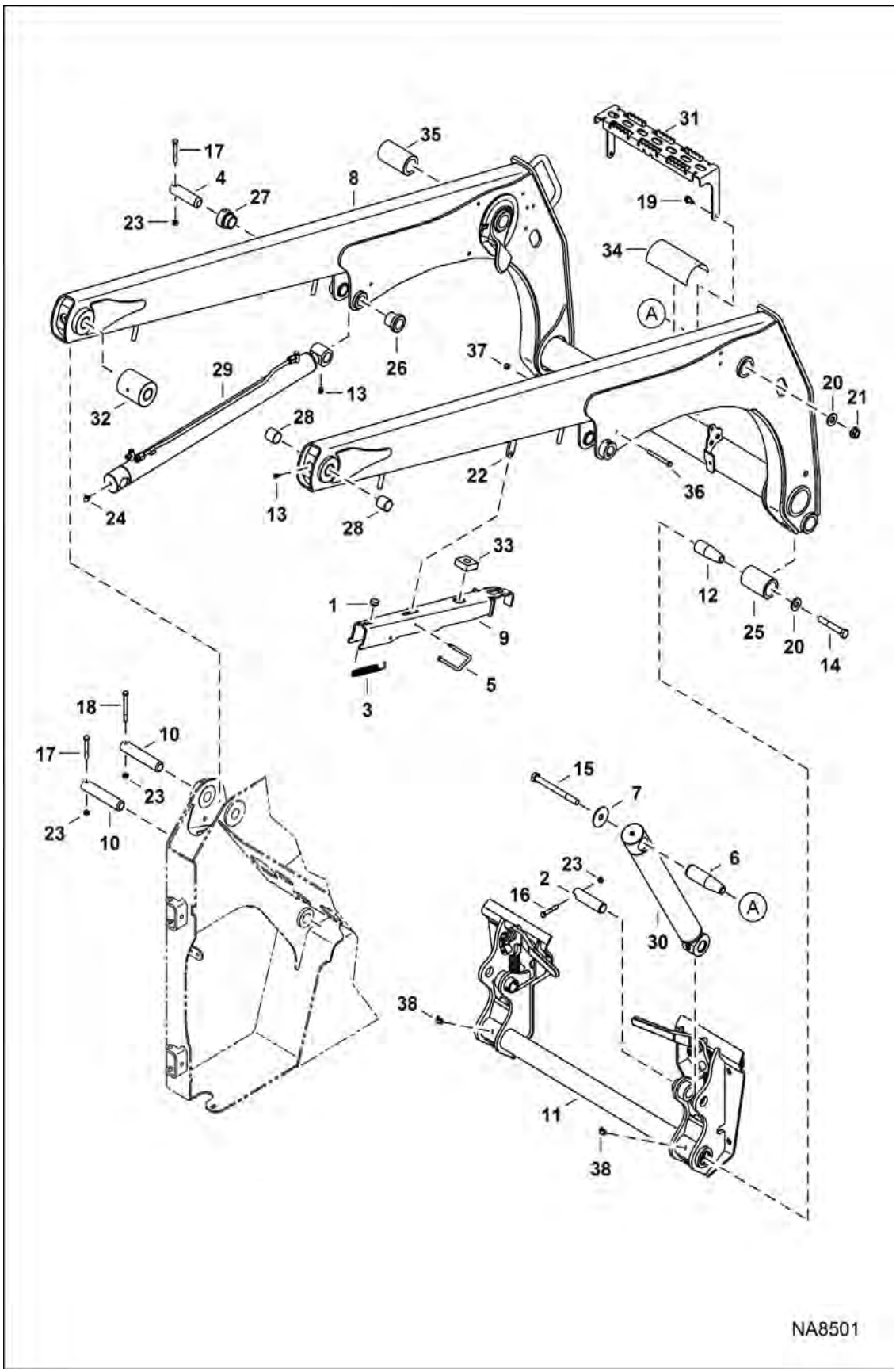

LIFT ARM & BOB-TACH (Cont'd)

Ref No	Part Number	Description	Remarks	Serial Number	Qty
1	6519178	BUMPER	if equiped		1
2	6577954	PIN, PIVOT	rod end - tilt cylinder		2
3	6700743	SPRING			1
4	6718789	PIN, PIVOT	rod end - lift cylinder		2
5	6714810	PIN, RETAINER	retainer		1
6	7148031	PIN, PIVOT TAPERED	tilt cylinder - base end		2
7	6731160	WASHER			2
8	7195987	LIFT ARM			1
9	7213950	SUPPORT, LIFT ARM		B1E611001 - B1E617875	1
9	7328457	SUPPORT LIFT ARM		B1E617876 & Above	1
10	7170357	PIN, PIVOT	lift cylinder - base end		4
11		BOB-TACH	See Illustration BOB-TACH / NA8491		1
12	7101078	PIN, PIVOT TAPERED	lift arm to bobtach - Use W/ Ref.14 (47C1064 bolt)	B1E611001 - B1E617324	2
12	7279183	PIN, PIVOT TAPERED	lift arm to bobtach - Use W/ Ref.14 (55CM16100 bolt)	B1E617325 & Above	2
13	10H25	FITTING, GREASE 5			2
14	47C1064	BOLT		B1E611001 - B1E617324	2
14	55CM16100	BOLT		B1E617325 & Above	2
15	17C10112	BOLT			2
16	17C636	BOLT			2
17	17C644	BOLT			4
18	17C660	BOLT			2
19	84G3712	BOLT 5			3
20	27E10	WASHER			4
21	53D10	NUT			2
22	7135693	MOUNT	weld-on		1
23	85D6	NUT, 5			8
24	12H15	FITTING, GREASE 5			2
25	7196000	BUSHING, TAPERED	weld-on		2
26	7111299	BUSHING, PIVOT	weld-on		2
27	7111298	BUSHING, PIVOT	weld-on		2
28	6717562	BUSHING, WEAR			4
29		CYLINDER, LIFT	See Illustration LIFT CYLINDER / NA8500		2
30		CYLINDER, TILT	See Illustration TILT CYLINDER / NA8499		2
31	7251385	STEP	Was 7233244 [A]		1
32	7219892	BUSHING, PIVOT	W/Ref. 28		2
33	7133444	BUMPER SQ			1
34	6553976	TREAD, SAFETY			1
35	7196010	BUSHING, TAPERED			2
36	1C656	BOLT			1
37	61D6	NUT 5			1
38	11H15	FITTING10			2

BOB-TACH

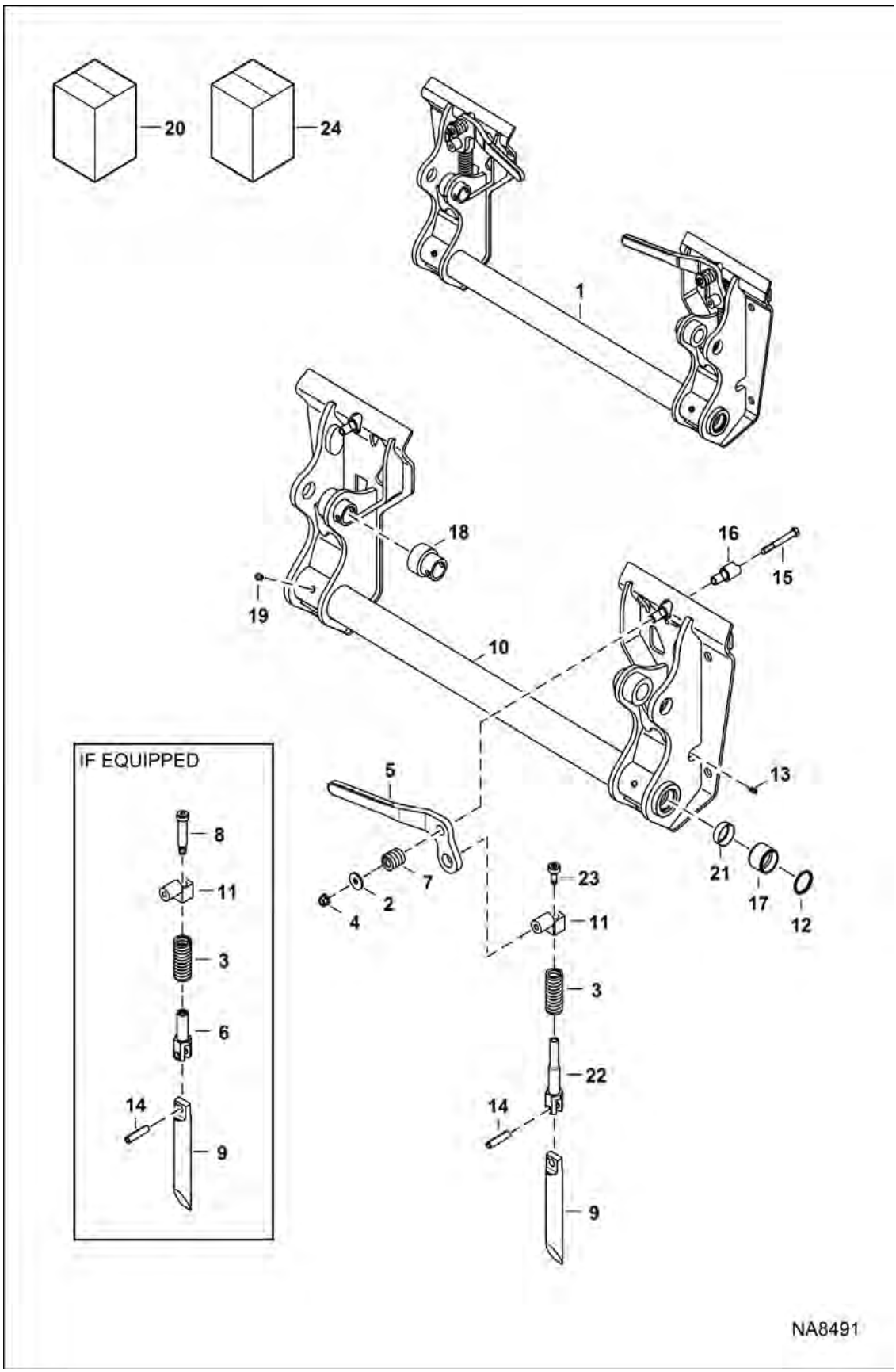
20
24
1
18
19
16
15
10
5
13
21
17
12
7
2
4
23
11
3
22
14
9
IF EQUIPPED
8
11
3
6
14
9
NA8491

BOB-TACH (Cont'd)

Ref No	Part Number	Description	Remarks	Serial Number	Qty
1	7196775	BOB-TACH	Ref. 2-23 - Was 7196777 [D]		1
2	619021	WASHER, 5			2
3	6578253	SPRING, COMPRESSION			2
4	85D6	NUT, 5	Was 83D6 [B]		2
5	6702904	LEVER, BOB-TACH RH			1
5	6702903	LEVER, BOB-TACH LH			1
6	6704248	PIVOT, WEDGE			2
7	7221255	SPRING			2
8	6728473	BOLT, SHOULDER	57,15 mm (2.25") shoulder - pre-applied thread locker		2
9	6737191	WEDGE, BOB-TACH			2
10		BOBTACH	NLA - Order Ref. 1		1
11	7146538	PIVOT BOB-TACH			2
12	6631067	SEAL, OIL	install flush to Ref. 19		2
13	10H35	FITTING, GREASE 10			2
14	7277777	PIN	Was 14J5032 [B]		2
15	17C652	BOLT			2
16	6702958	BUSHING, WELD-ON			2
17	6730997	BUSHING, WEAR			2
18	7214804	BUSHING, PIVOT			2
19	11H15	FITTING10	Was 10H25 [A]		2
20		KIT, LEVER	NLA		1
21	7115769	RETAINER, GREASE			2
22	7252989	PIVOT, WEDGE	156 mm (6.15") long		2
23	7255136	SCREW, SOCKET HEAD	28,58 mm (1.125") long		2
24	7302297	KIT BOB-TACH UPPER (M SERIES)	Ref. 2, 4, 7, 15 & 16		1
24	7302293	KIT PIVOT BOB-TACH	Ref. 6, 8 & 14 (14J5032 pin)		1
24	7302293	KIT PIVOT BOB-TACH	Ref. 14 (7277777 pin), 22 & 23		1

DRIVE TRAIN

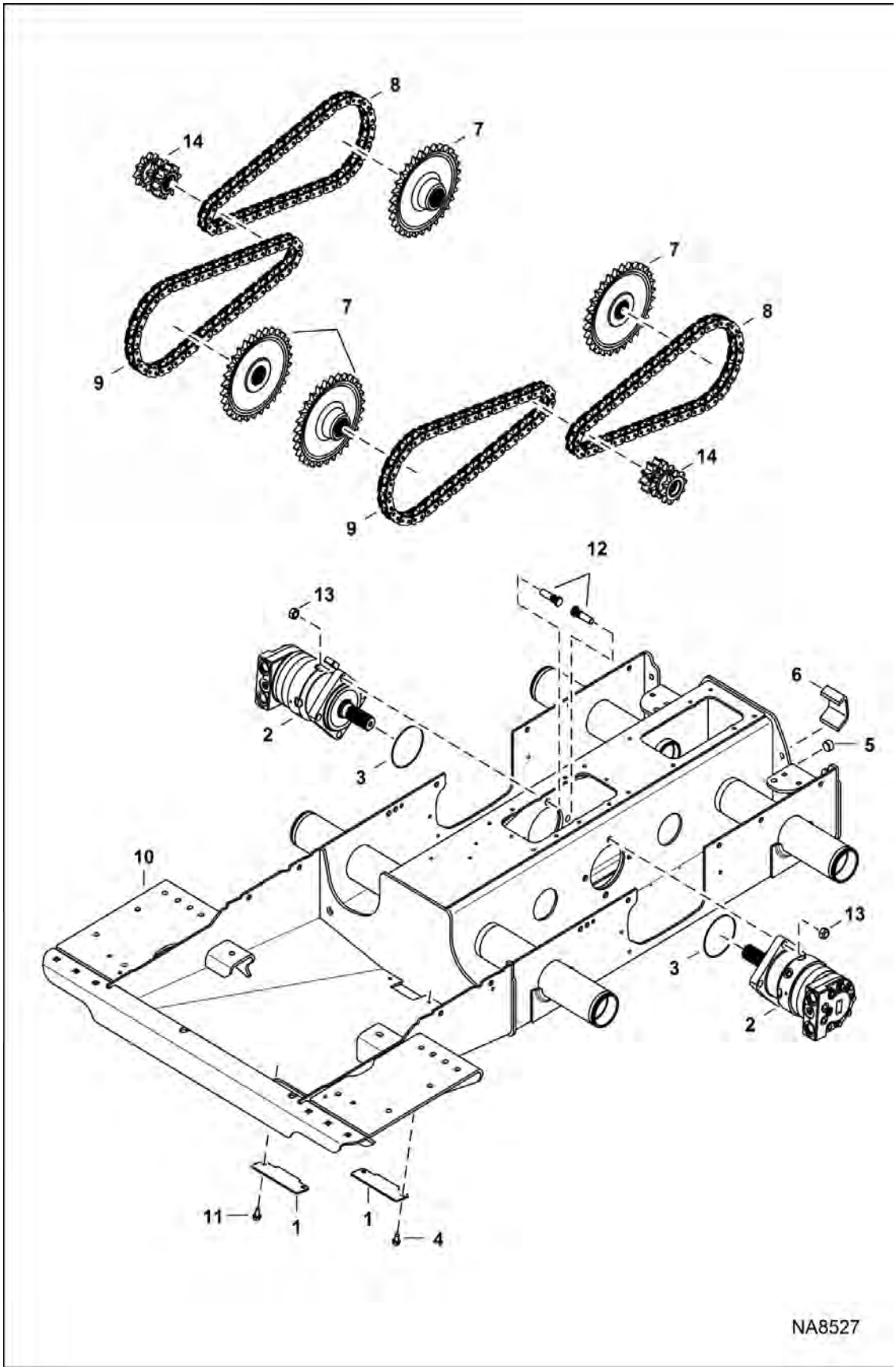

DRIVE TRAIN (Cont'd)

Ref No	Part Number	Description	Remarks	Serial Number	Qty
1	7232526	COVER, PLATE			2
2		MOTOR	See Illustration HYDROSTATIC MOTOR / NA9493 single speed - manual controls & ACS , See Illustration HYDROSTATIC MOTOR / NA10947 single speed - manual controls & ACS		2
2		MOTOR	See Illustration HYDROSTATIC MOTOR / NA9493A 2-speed , See Illustration HYDROSTATIC MOTOR / NA10947A 2-speed		2
3	7221646	O-RING			2
4	84G3712	BOLT 5			2
5	6731121	PLUG	chaincase fill		1
6	6706485	BRACKET	weld-on		2
7		SPROCKET	See Illustration AXLE / NA8494		4
8	7211353	CHAIN			2
8		CHAIN, DRIVEX			x
8	6690709	LINK	connecting		x
9	7211353	CHAIN			2
9		CHAIN			x
9	6690709	LINK	connecting		x
10	7194027	CHAINCASE			1
11	84G3712	BOLT 5			2
12	7225908	BOLT			8
13	86D10	NUT			8
14	7214062	SPROCKET			2

AXLE

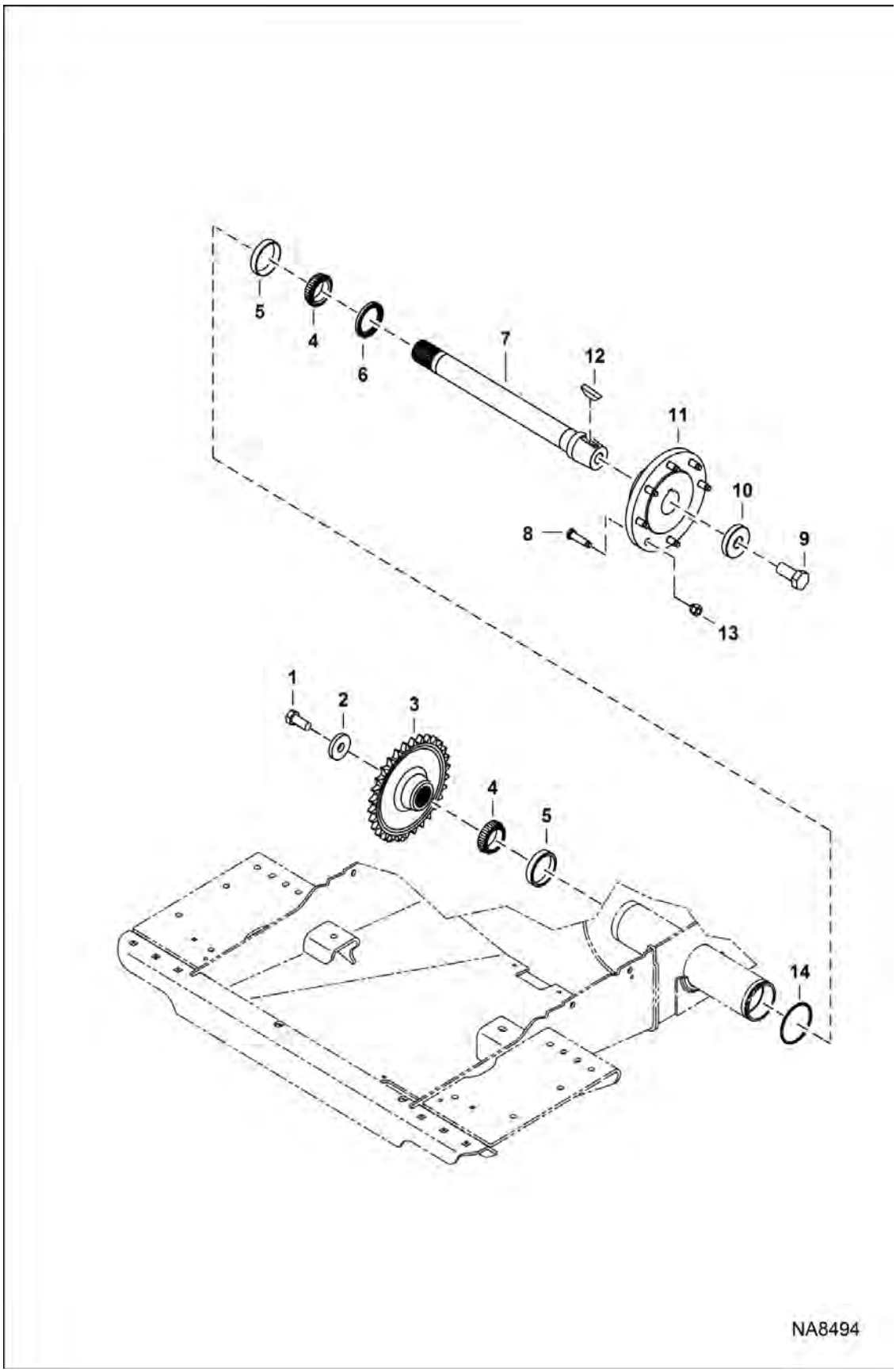

AXLE (Cont'd)

Ref No	Part Number	Description	Remarks	Serial Number	Qty
1	48C1228	SCREW HEX CAP	plated - pre-applied threadlocker - 44,5 mm (1.75") long		4
2	6552871	WASHER			4
3	7270546	SPROCKET MACHINED	Was 7211351 [A]		4
4	7001463	BEARING, AXLE	Was 6689775 [B]		8
5	7001464	CUP, BEARING	Was 6689638 [B]		8
6	7231090	AXLE SHAFT SEAL			4
7	6569465	SHAFT, AXLE			4
8	6709170	BOLT, WHEEL			32
9	18C1636	SCREW HEX HD GR8	2.25" (57,2 mm) long		4
10	6716843	WASHER	recessed		4
11	7270107	ASSY, HUB	W/Ref. 8 - Was 6578689 [B]		4
12	6J1664	KEY WOODRUFF			4
13	6564669	NUT, 10	wheel		32
14		O-RING	NSS - if equipped - for production use only - Was 7230291 [A]		4

DISC BRAKE

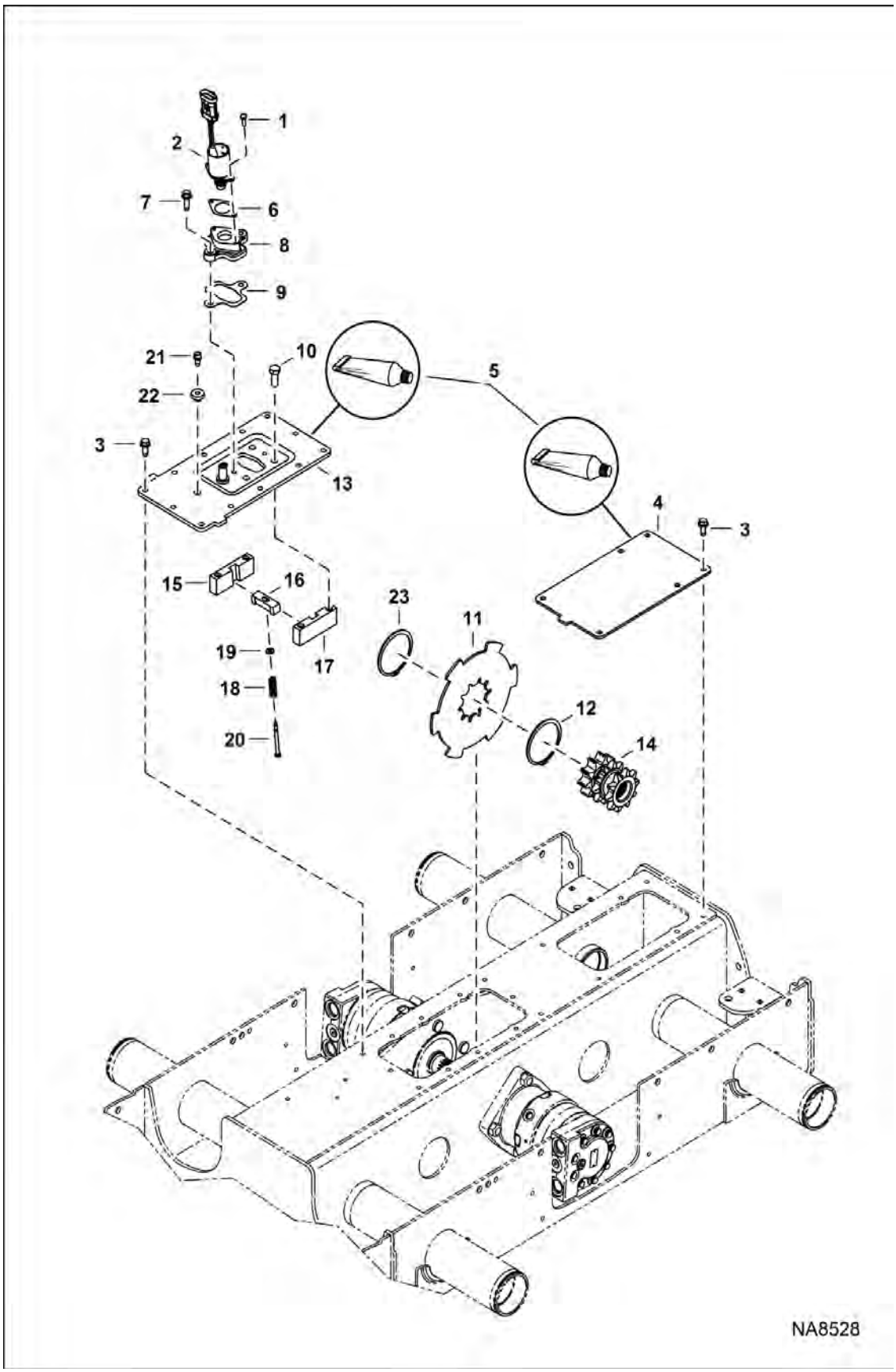

DISC BRAKE (Cont'd)

Ref No	Part Number	Description	Remarks	Serial Number	Qty
1	17C412	BOLT 5			2
2	7136559	SOLENOID ASMBLY	Was 6681512 [A]		1
3	84G3716	SCREW 5			19
4	7231335	COVER, TRANSMISSION			1
5	6987941	SILICONE, RTV 5920 - COPPER - 80ml	Was 7260849 [A]		x
6	6706737	GASKET SOLENOID			1
7	84G3720	BOLT			2
8	6706718	MOUNT			1
9	6708016	GASKET COVER			1
10	47C820	BOLT			4
11	7211352	DISC, BRAKE TRACTION LOCK	disc		2
12	6658672	RING, RETAINER			1
13	7156265	COVER	M stamped	B1E611001 - B1E615869	1
13	7281321	COVER, BRAKE		B1E615870 & Above	1
14	7214062	SPROCKET			2
15	6719056	BLOCK(LH)	guide - LH		1
16	6714278	WEDGE, LOCK TRACTION			1
17	6719057	BLOCK(RH)	guide - RH		1
18	6708018	SPRING			1
19	25E13	WASHER 5			1
20	6708267	BOLT			1
21	6680970	BREATHER			1
22	6553411	BUSHING, PRESS FIT 5			1
23	6658672	RING, RETAINER	Was 6691500 [B,D]		1

HYDRAULIC CIRCUITRY
(W/BPV Junction Block)

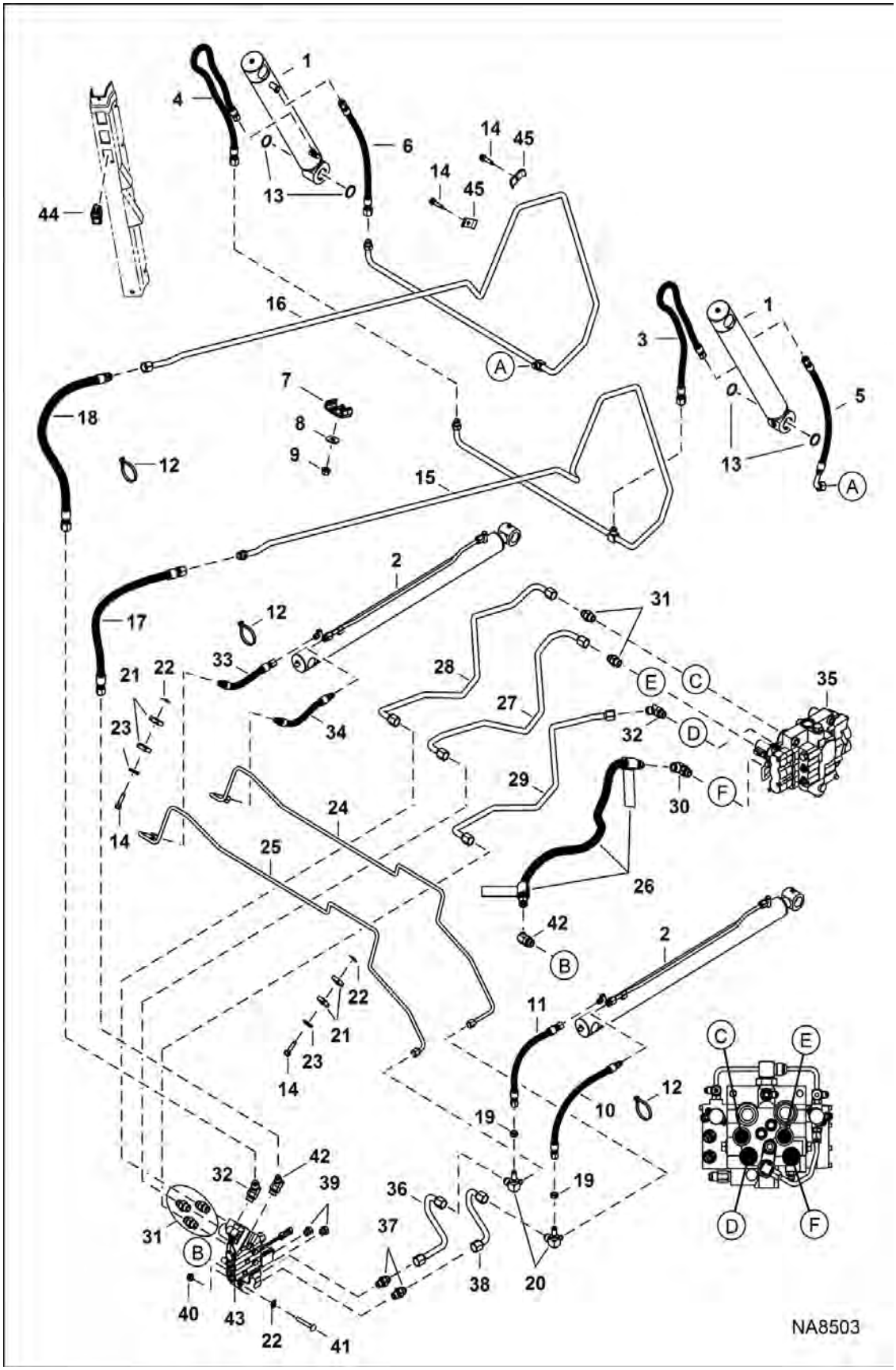

HYDRAULIC CIRCUITRY (Cont'd)

(W/BPV Junction Block)

Ref No	Part Number	Description	Remarks	Serial Number	Qty
1		CYLINDER, TILT	See Illustration TILT CYLINDER / NA8499 NA Wahpeton cylinder - W/Ref 13	B1E611001 - B1E617875	2
1		CYLINDER, TILT	See Illustration TILT CYLINDER / NA14127 EMEA Roquet cylinder - replace both	B1E617876 & Above	2
2		CYLINDER, LIFT	See Illustration LIFT CYLINDER / NA8500 NA Wahpeton cylinder	B1E611001 - B1E617875	2
2		CYLINDER, LIFT	See Illustration LIFT CYLINDER / NA14126 EMEA Roquet cylinder - replace both	B1E617876 & Above	2
3	7238767	HOSE, HYD			1
4	7238769	HOSE, HYD			1
5	7238766	HOSE, HYD			1
6	7238768	HOSE, HYD			1
7	6717933	CLAMP			2
8	17EM120	WASHER			2
9	51DM10	NUT HX THDLK PREAPPL	Was 83D8 [B]		2
10	7199301	HOSE, HYD			1
11	7199302	HOSE, HYD			1
12	6624289	STRAP, TIE			8
13	225855	SEAL, OIL 10	Use W/Ref. 1 Wahpeton cylinder, tilt		4
14	84G3724	BOLT			4
15	7240302	TUBELINE HYD			1
16	7227589	TUBELINE HYD			1
17	7240300	HOSE, HYD			1
18	7228781	HOSE, HYD			1
19	86F5	NUT			2
20	7240056	FITTING, HYD TEE			2
21	7115645	CLAMP			4
22	6684033	NUT			4
23	619021	WASHER, 5	0.13" thick - 32 mm (1.25") OD		2
24	7228787	TUBELINE HYD			1
25	7228788	TUBELINE HYD			1
26	7240860	HOSE, HYD	Available only as an assembly W/one danger decal installed on both ends		1
26	7170355	DECAL, DANGER			2
27	7233715	TUBELINE HYD			1
28	7233716	TUBELINE HYD			1
29	7233717	TUBELINE HYD			1
30	6814531	ELBOW			1
30	79K8	O RING 10			1
31	15KB1010	FITTING, HYD CONNECTOR			5
31	79K10	O RING 10			5
32	18KB1010	FITTING, HYD ELBOW			2
33	7228777	HOSE, HYD			1
34	7228778	HOSE, HYD			1
35		VALVE, CONTROL	See Illustration HYDRAULIC CONTROL VALVE / NA8520		1

HYDRAULIC CIRCUITRY (Cont'd)
(W/BPV Junction Block)

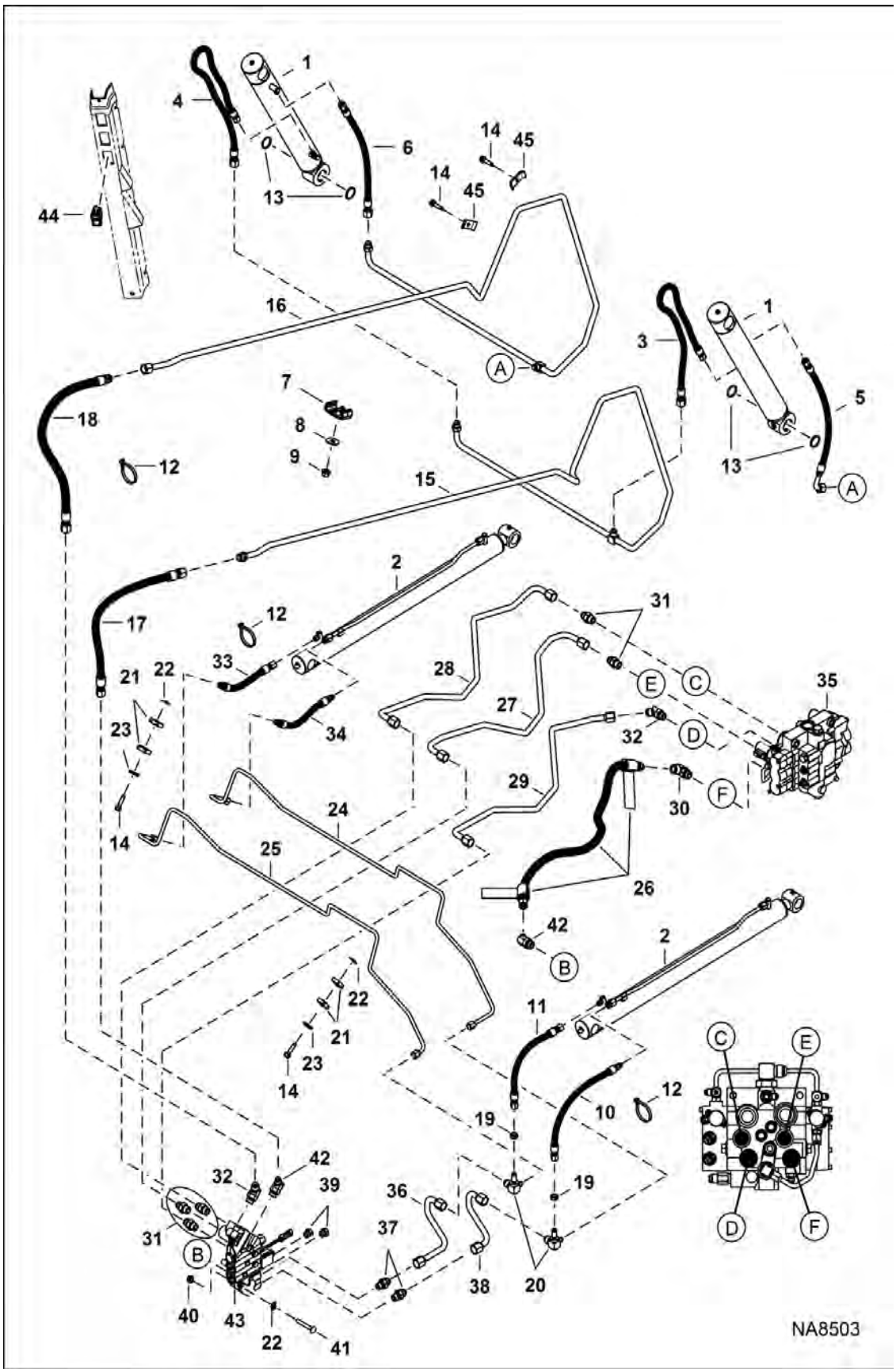

Illustration NA8503

HYDRAULIC CIRCUITRY (Cont'd)

(W/BPV Junction Block)

Ref No	Part Number	Description	Remarks	Serial Number	Qty
35		VALVE, CONTROL	See Illustration HYDRAULIC CONTROL VALVE / NA8521		1
36	7240247	TUBELINE HYD			1
37	15KB1008	FITTING, HYD CONNECTOR			2
37	79K10	O RING 10			2
38	7240246	TUBELINE HYD			1
39	24K6	FITTING			2
40	83D6	NUT 5			2
41	37C644	BOLT			2
42	18KB0810	FITTING, HYD ELBOW			2
43	7011059	VALVE, BPV	See Illustration BUCKET POSITION VALVE / NA2550		1
44	6690947	SWITCH, BPV			1
45	6502426	CLAMP			2

HYDRAULIC CIRCUITRY
(W/O BPV Junction Block)

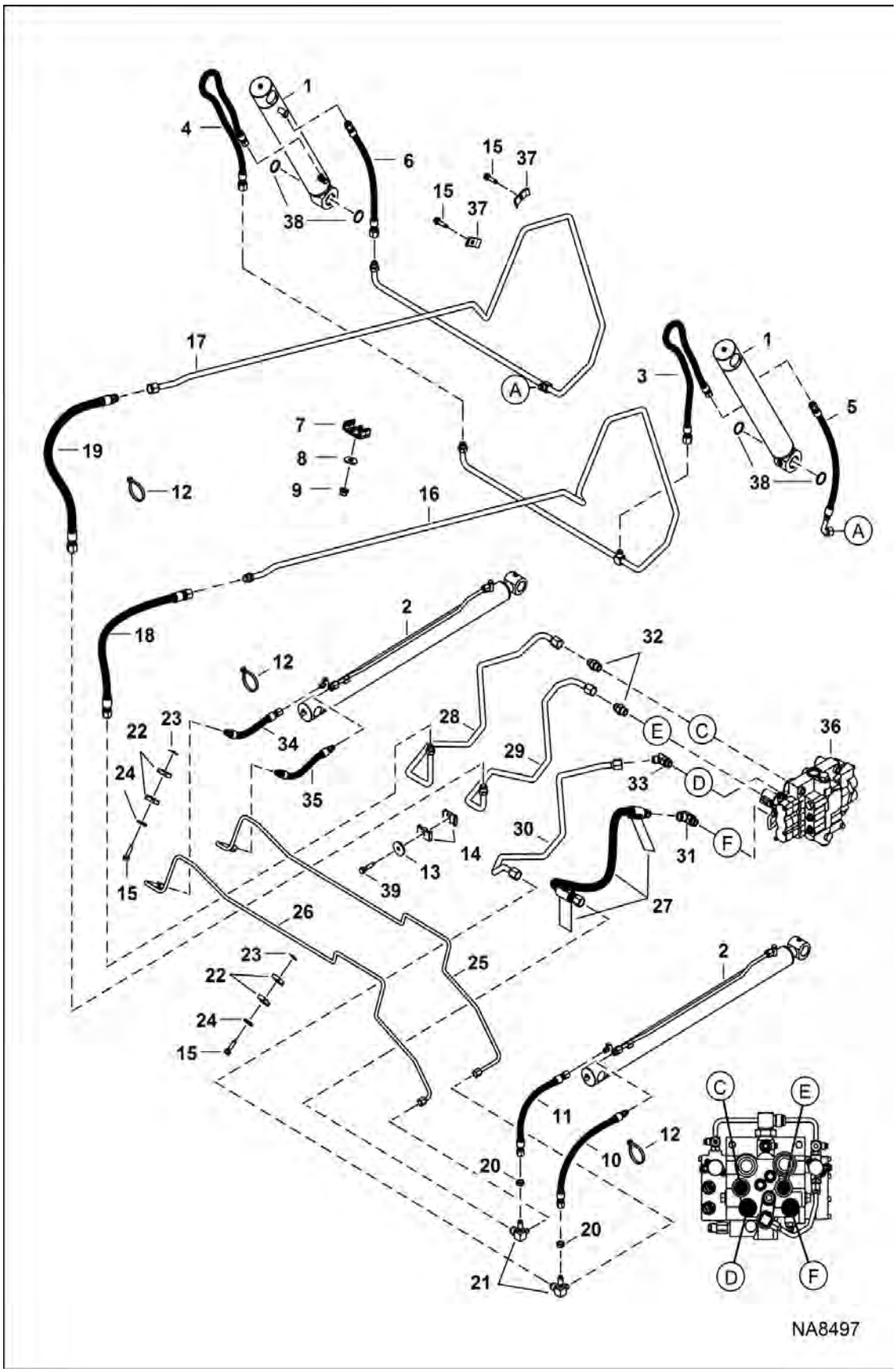

HYDRAULIC CIRCUITRY (Cont'd)

(W/O BPV Junction Block)

Ref No	Part Number	Description	Remarks	Serial Number	Qty
1		CYLINDER, TILT	See Illustration TILT CYLINDER / NA8499 NA Wahpeton cylinder - W/Ref 38	B1E611001 - B1E617875	2
1		CYLINDER, TILT	See Illustration TILT CYLINDER / NA14127 EMEA Roquet cylinder - replace both	B1E617876 & Above	2
2		CYLINDER, LIFT	See Illustration LIFT CYLINDER / NA8500 NA Wahpeton cylinder	B1E611001 - B1E617875	2
2		CYLINDER, LIFT	See Illustration LIFT CYLINDER / NA14126 EMEA Roquet cylinder - replace both	B1E617876 & Above	2
3	7238767	HOSE, HYD	- R		1
4	7238769	HOSE, HYD	- L		1
5	7238766	HOSE, HYD	- R		1
6	7238768	HOSE, HYD	- L		1
7	6717933	CLAMP			2
8	17EM120	WASHER			2
9	51DM10	NUT HX THDLK PREAPPL	Was 83D8 [B]		2
10	7199301	HOSE, HYD			1
11	7199302	HOSE, HYD			1
12	6624289	STRAP, TIE			8
13	872229	WASHER	0.19" thick - 44.5 mm (1.75") OD		1
14	6701893	CLAMP			2
15	84G3724	BOLT			4
16	7240302	TUBELINE HYD			1
17	7227589	TUBELINE HYD			1
18	7240300	HOSE, HYD			1
19	7228781	HOSE, HYD			1
20	86F5	NUT			2
21	7240056	FITTING, HYD TEE			2
22	7115645	CLAMP			4
23	6684033	NUT			2
24	619021	WASHER, 5			2
25	7228787	TUBELINE HYD			1
26	7228788	TUBELINE HYD			1
27	7233713	HOSE, HYD	Available only as an assembly W/one danger decal installed on both ends		1
27	7170355	DECAL, DANGER			2
28	7254949	TUBELINE HYDRAULIC			1
29	7254948	TUBELINE HYDRAULIC			1
30	7233712	TUBELINE HYD			1
31	6814531	ELBOW			1
31	79K8	O RING 10			1
32	15KB1010	FITTING, HYD CONNECTOR			2
32	79K10	O RING 10			2
33	18KB1010	FITTING, HYD ELBOW			1
34	7228777	HOSE, HYD			1
35	7228778	HOSE, HYD			1

HYDRAULIC CIRCUITRY (Cont'd)
(W/O BPV Junction Block)

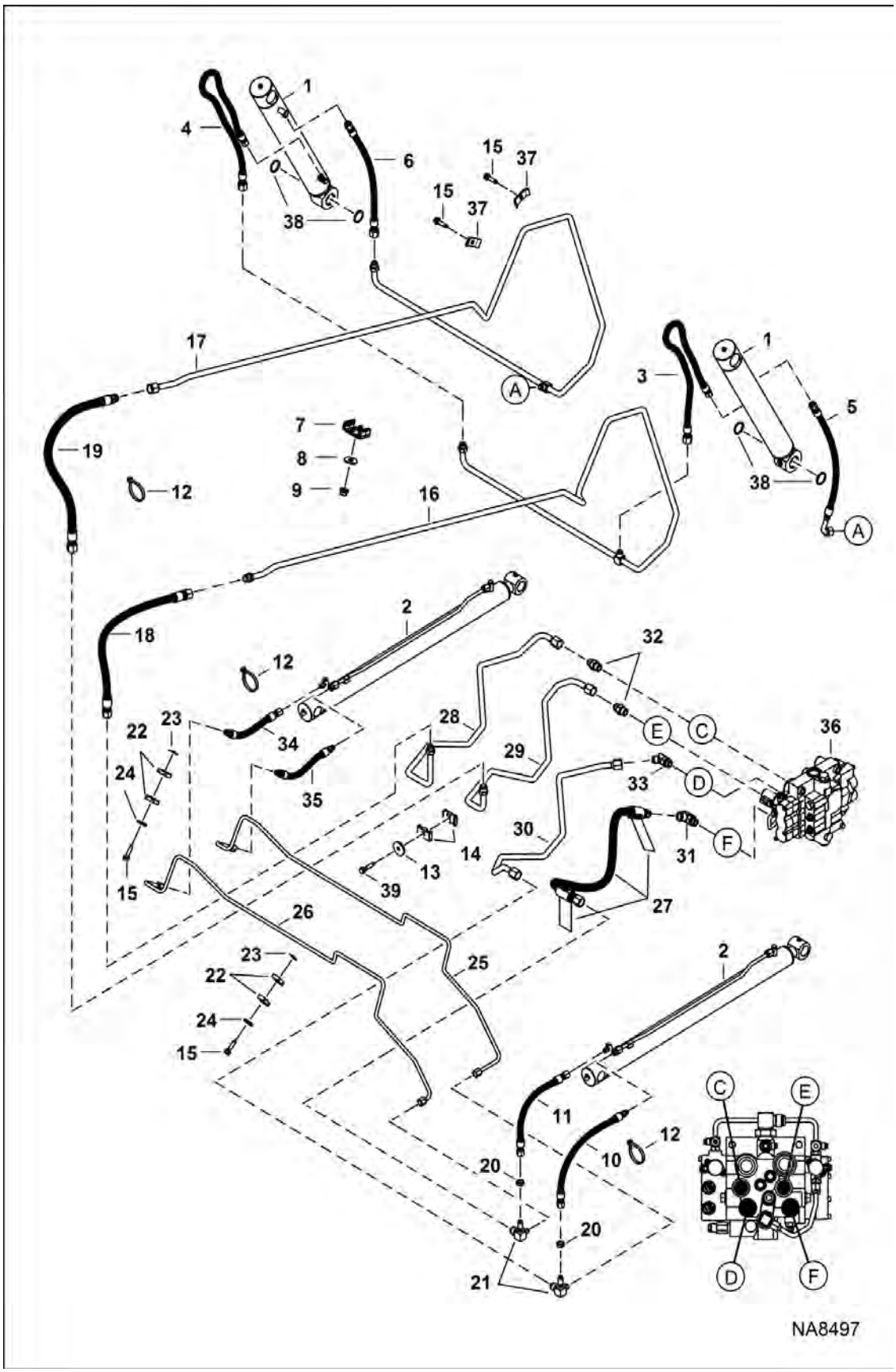

HYDRAULIC CIRCUITRY (Cont'd)

(W/O BPV Junction Block)

Ref No	Part Number	Description	Remarks	Serial Number	Qty
36		VALVE, CONTROL	See Illustration HYDRAULIC CONTROL VALVE / NA8520 (Manual Controls) (One Piece Detent Block)		1
36		VALVE, CONTROL	See Illustration HYDRAULIC CONTROL VALVE / NA8521 (AHC, ACS & SJC)		1
36		VALVE, CONTROL	See Illustration HYDRAULIC CONTROL VALVE / NA8611 No front auxiliary		1
37	6502426	CLAMP			2
38	225855	SEAL, OIL 10	Use W/Ref. 1 Wahpeton cylinder, tilt		4
39	84G3728	BOLT			1

MANUAL LIFT RELEASE SYSTEM

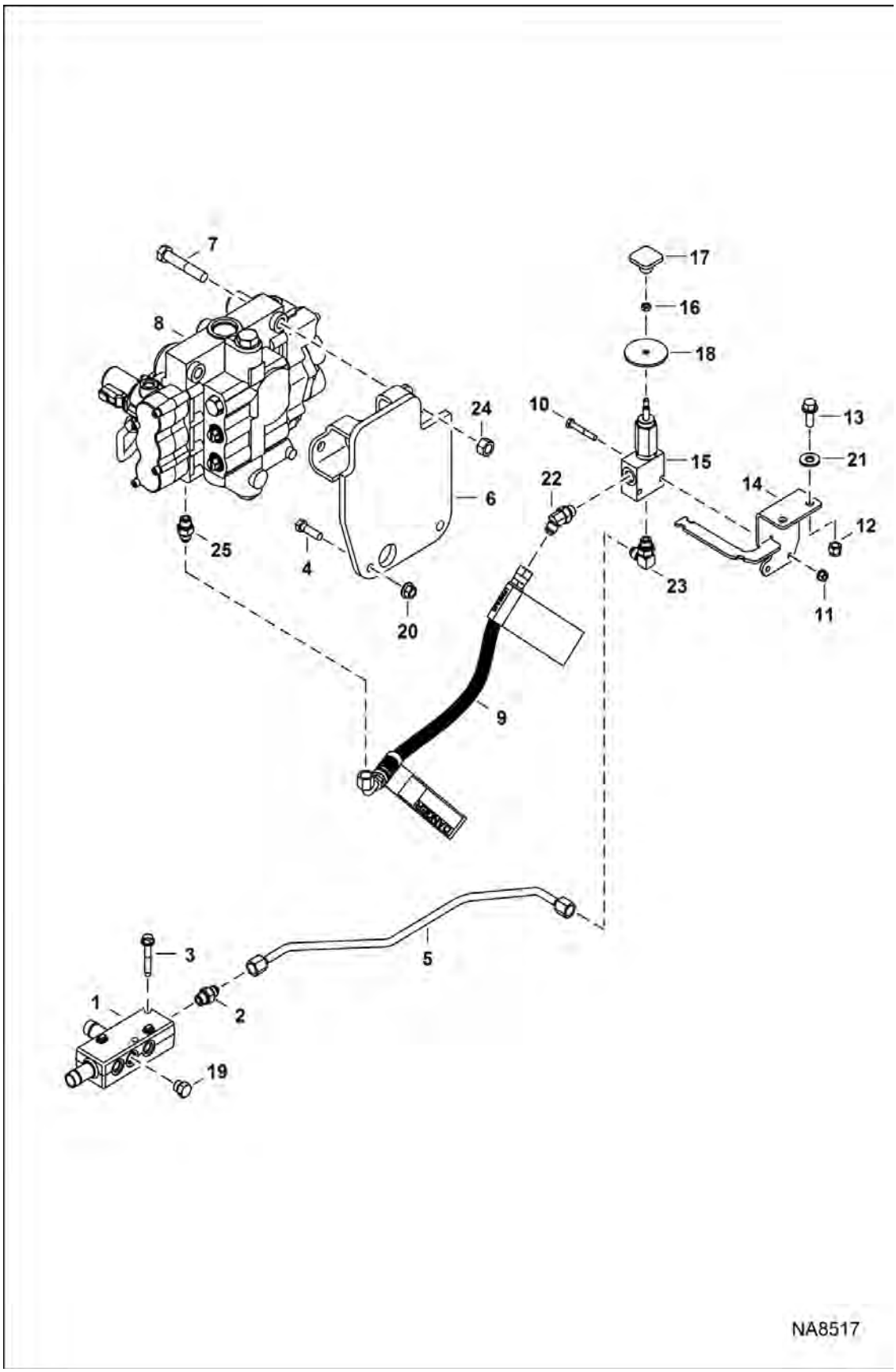

MANUAL LIFT RELEASE SYSTEM (Cont'd)

Ref No	Part Number	Description	Remarks	Serial Number	Qty
1	7296507	MANIFOLD DRAIN CASE	See Illustration HYDROSTATIC CIRCUITRY / NA8516 - Was 7201981 [B], See Illustration HYDROSTATIC CIRCUITRY / NA12385 - Was 7201981 [B], See Illustration ENGINE ELECTRICAL CIRCUITRY / NA8555 - Was 7201981 [B], See Illustration HYDROSTATIC CIRCUITRY / NA8539 - Was 7201981 [B]		1
2	15KB0606	FITTING, HYD CONNECTOR			1
2	79K6	O RING 10			x
3	84G3132	SCREW			2
4	31C620	BOLT			2
5	7228791	TUBELINE HYD			1
6	7214841	MOUNT, VALVE			1
7	17C844	BOLT			2
8		VALVE, CONTROL	See Illustration HYDRAULIC CONTROL VALVE / NA8520 - manual controls - W/ Ref. 25		1
8		VALVE, CONTROL	See Illustration HYDRAULIC CONTROL VALVE / NA8521 - ACS & SJC - W/ Ref. 25		1
9	7215368	HOSE, HYD	available only as an assembly W/two danger decals installed		1
9	7170355	DECAL, DANGER			2
10	17C428	BOLT			2
11	83D4	NUT 10			2
12	59D6	NUT			2
13	35C616	BOLT 5			2
14	7228739	MOUNT, BOOM DOWN			1
15		VALVE ASSY	See Illustration MANUAL LIFT RELEASE VALVE / PE1547 - manual lift release		1
16	7D4	NUT HEX JAM			1
17	6737524	HANDLE CONTROL			1
18	6707101	SEAL	neoprene		1
19	24K5	PLUG			1
19		FITTING, HYD CONNECTOR			1
20	83D6	NUT 5			2
21	25E18	WASHER			2
22	18KB0606	FITTING, HYD ELBOW			1
23	17KB0606	FITTING			1
24	63D8	NUT			2
25	15KB0606	FITTING, HYD CONNECTOR			1

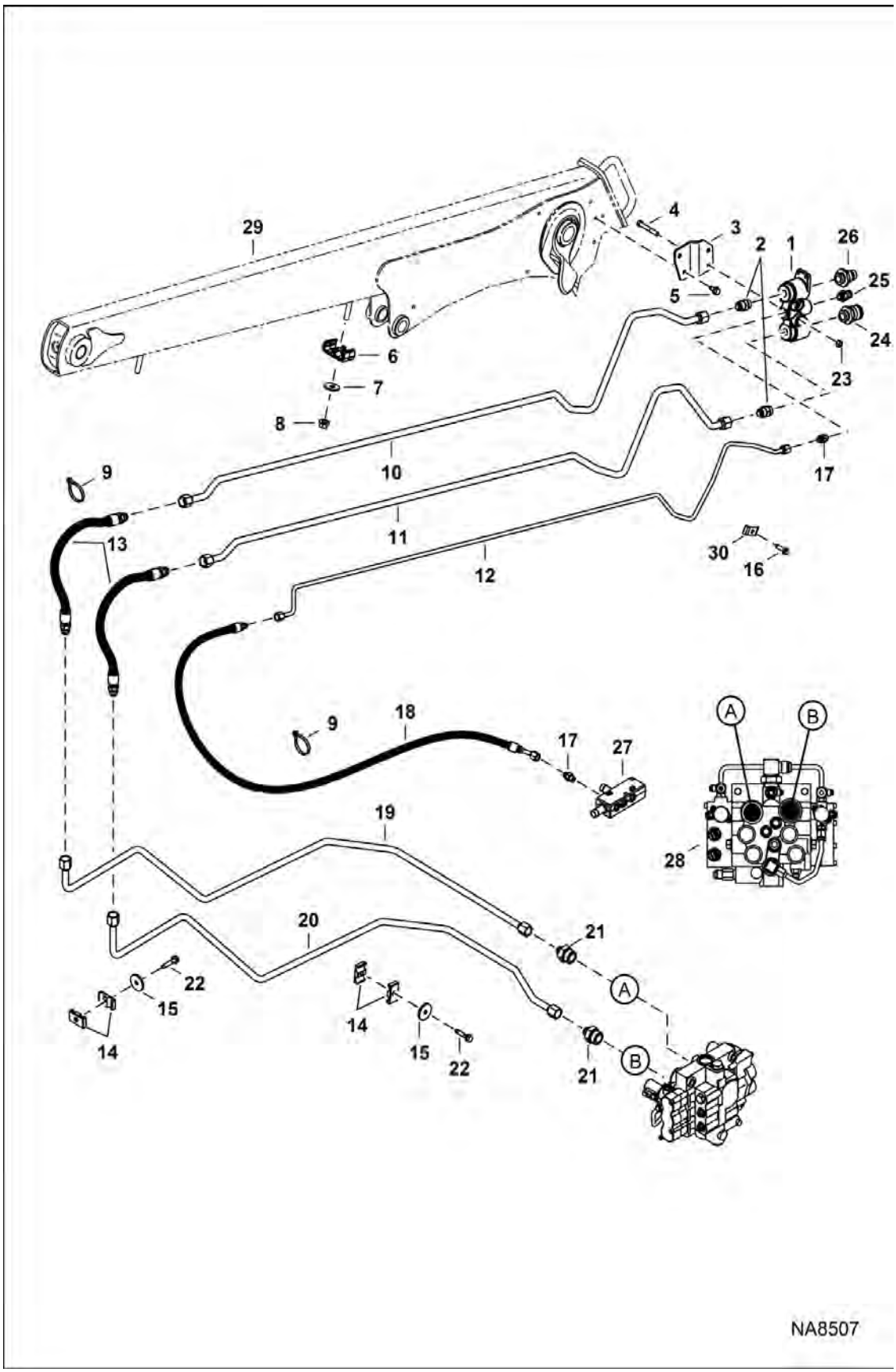
29
4
3
2
1
26
25
24
23
5
6
7
8
9
10
11
12
13
17
30
16
18
27
28
19
20
21
22
15
14
A
B
NA8507

AUXILIARY HYDRAULICS (Cont'd)

Ref No	Part Number	Description	Remarks	Serial Number	Qty
1		BLOCK, COUPLER ASSY	Contact your Local Dealer for Bobcat Technical Information BTI432 - Ref. 2, 17 & 24-26 - 7246785 or 6678951 [A]		1
2		FITTING, HYD CONNECTOR	Contact your Local Dealer for Bobcat Technical Information BTI432 - W/spring - 7246801 or 6679836		2
2	79K12	O RING 10			1
3	7251002	MOUNT	Was 7213750 [A]		1
4	17C640	BOLT			2
5	84G3712	BOLT 5			2
6	6717933	CLAMP			2
7	17EM120	WASHER			2
8	83D8	NUT 5	Was 51DM10 [B,D]		2
9	6624289	STRAP, TIE			4
10	7234463	TUBELINE HYD			1
11	7234464	TUBELINE HYD			1
12	7234465	TUBELINE HYD			1
13	7228775	HOSE, HYD			2
14	6701893	CLAMP			4
15	872229	WASHER			3
16	84G3724	BOLT			1
17	15KB0606	FITTING, HYD CONNECTOR			2
17	79K6	O RING 10			2
18	7242565	HOSE, HYD			1
19	7239866	TUBELINE, HYD			1
20	7239867	TUBELINE, HYD			1
21	15KB1016	FITTING, HYD CONNECTOR			2
22	84G3728	BOLT			2
23	63D6	NUT			2
24		COUPLER, FF FEMALE	Contact your Local Dealer for Bobcat Technical Information BTI432 - 7246802 or 6680018		1
24		KIT, SEAL	Contact your Local Dealer for Bobcat Technical Information BTI432 - (3) O-rings & (3) back-up washers - 6680020		1
25		COUPLER, FF MALE	Contact your Local Dealer for Bobcat Technical Information BTI432 - casedrain - W/valve, spring, seal & O-ring - 7246798 or 6679838		1
25		SEAL	Contact your Local Dealer for Bobcat Technical Information BTI432 - blue - front - 7251808 or 6679840		1
26		COUPLER, FF MALE	Contact your Local Dealer for Bobcat Technical Information BTI432 - 7246799 or 6679837		1
26		SEAL	Contact your Local Dealer for Bobcat Technical Information BTI432 - blue - front - 7251807 or 6679841		1
26		KIT, SEAL	Contact your Local Dealer for Bobcat Technical Information BTI432 - (3) O-rings & (3) back-up washers - 6680020		1
27		MANIFOLD, CASE DRAIN	See Illustration HYDROSTATIC CIRCUITRY / NA8516		1
28		VALVE	See Illustration HYDRAULIC CONTROL VALVE / NA8520		1

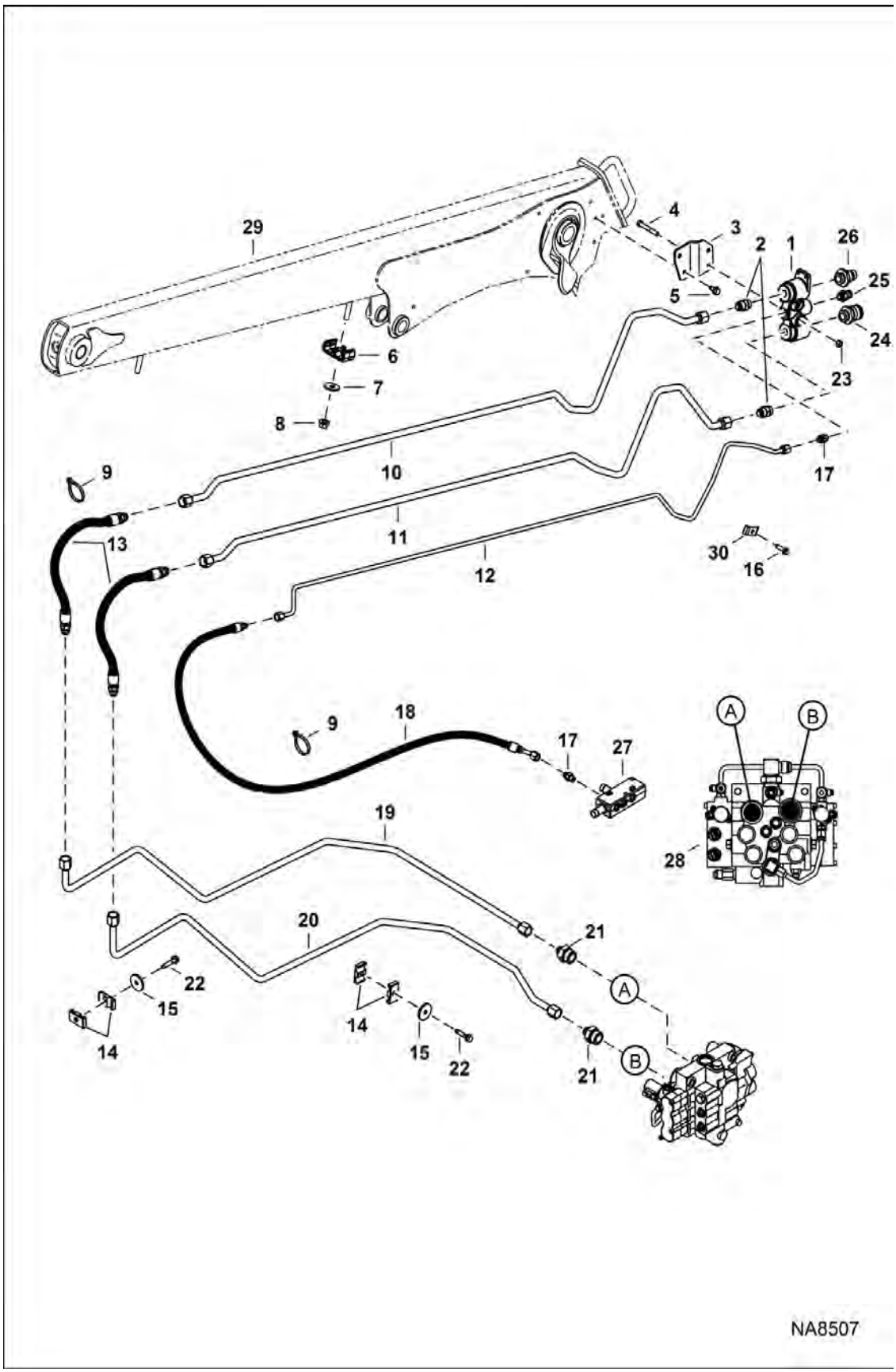
29
4
3
2
1
26
25
24
23
5
6
7
8
9
10
11
12
13
17
30
16
18
27
28
19
20
21
22
15
14
A
B
NA8507

AUXILIARY HYDRAULICS (Cont'd)

Ref No	Part Number	Description	Remarks	Serial Number	Qty
28		VALVE	See Illustration HYDRAULIC CONTROL VALVE / NA8521		1
28		VALVE	See Illustration HYDRAULIC CONTROL VALVE / NA8611		1
29		ARM, LIFT ASSY	See Illustration LIFT ARM & BOB-TACH / NA8501		1
30	6502426	CLAMP			1

TILT CYLINDER
(Wahpeton)

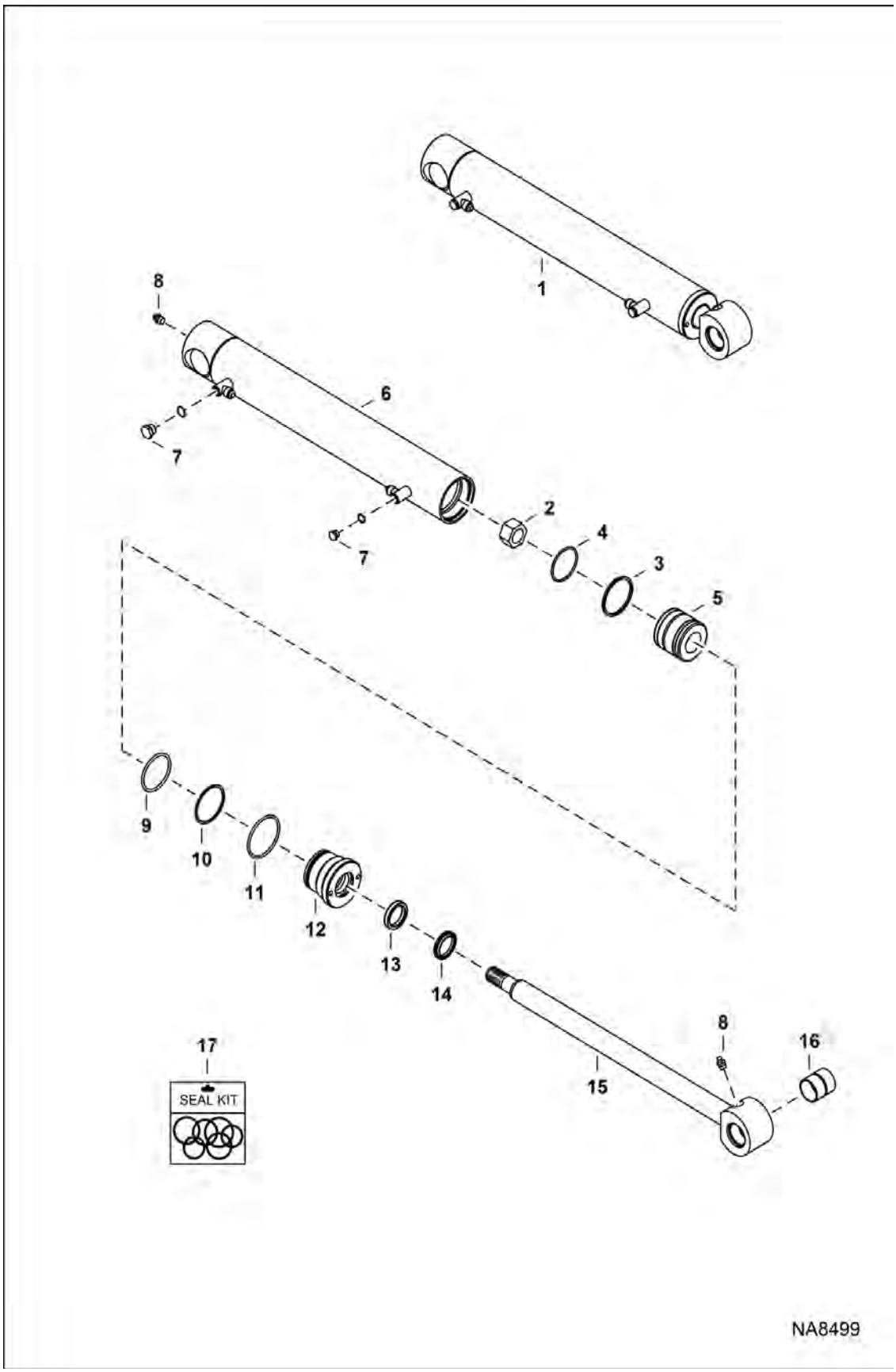

TILT CYLINDER (Cont'd)
(Wahpeton)

Ref No	Part Number	Description	Remarks	Serial Number	Qty
1	7209958	CYLINDER, HYD	Ref. 2-8, 9-17		1
2	92D14	NUT			1
3	6536642	RING			1
4	54K30130	O'RING	Was 25K30130 [A]		1
5	7209960	PISTON			1
6	7209962	TUBE, ASSY SERVICE			1
7	6812170	PLUG			2
8	10H25	FITTING, GREASE 5			2
9	54K40204	O'RING	Was 25K40204 [A]		1
10	73K227	RING	back-up		1
11	82K229	ORING			1
12	6587958	HEAD, CYL SWING			1
13	6667324	SEAL			1
14	6665208	WIPER, ROD CYL			1
15	7209963	SHAFT, W/A			1
16	6805453	Bushing wear	wear - Was 7150182 [D]		1
17	7236275	KIT, SEAL	Ref. 2-4, 12, 14 & 15		1

TILT CYLINDER
(Roquet)

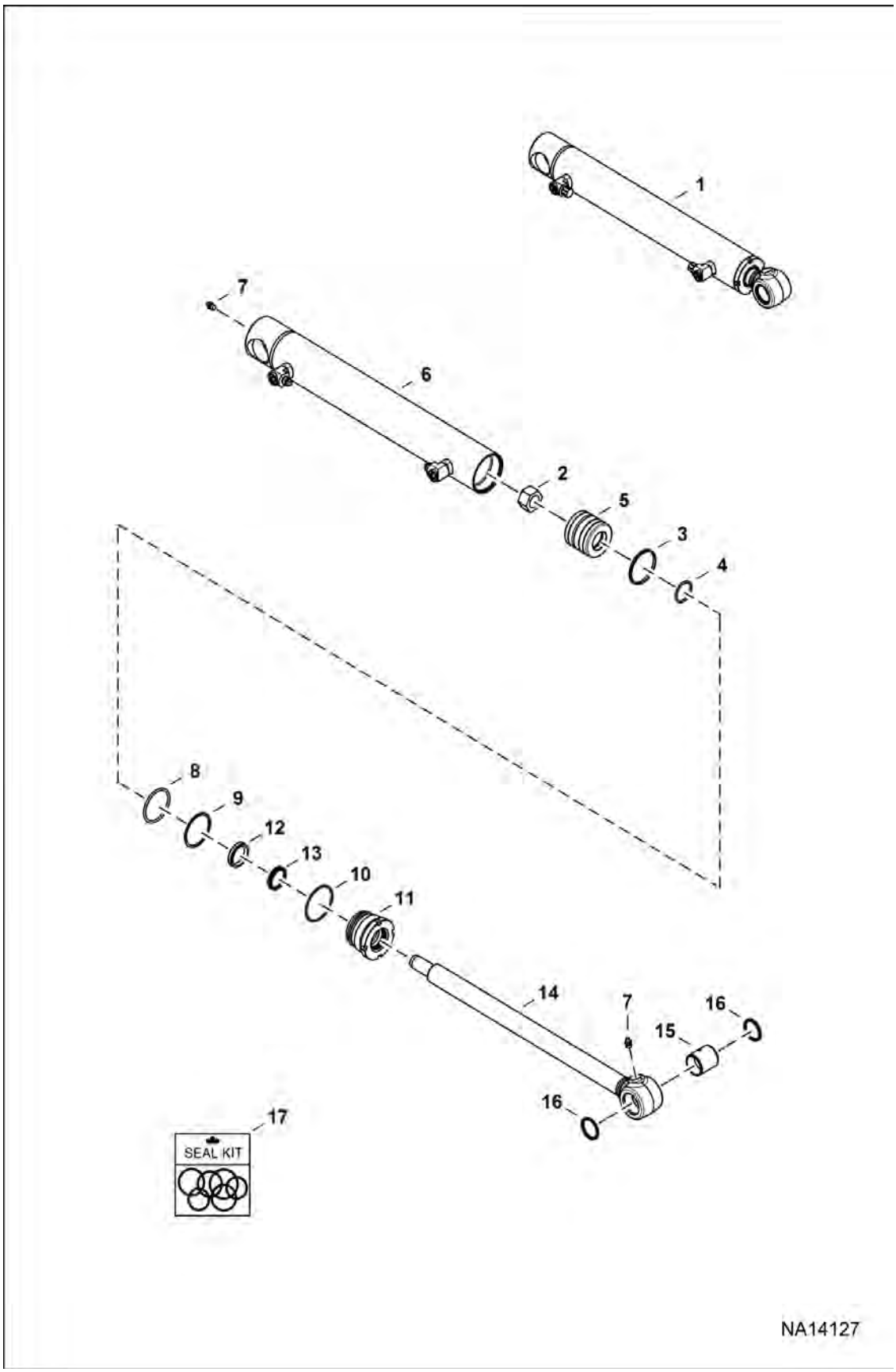

TILT CYLINDER (Cont'd)
(Roquet)

Ref No	Part Number	Description	Remarks	Serial Number	Qty
1	7275995	CYLINDER HYDRAULIC	Ref. 2-17		1
2	7325303	NUT LOCKING			1
3		SEAL	NSS - Order Ref 17		1
4		O RING 10	NSS - Order Ref 17		1
5	7325312	PISTON CYLINDER TILT			1
6	7325306	ASSY CYLINDER			1
7	10H25	FITTING, GREASE 5			2
8		RING,O	NSS - Order Ref 17		1
9		RING	NSS - back-up - Order Ref 17		1
10		ORING	NSS - Order Ref 17		1
11	7325313	BUSHING CYLINDER			1
12		SEAL	NSS - Order Ref 17		1
13		WIPER, ROD CYL	NSS - Order Ref 17		1
14	7325307	ROD CYLINDER ASSY			1
15	7325310	BEARING ROD	wear		1
16	7325309	NUT LOCKING			2
17	7325308	KIT SEAL	Ref. 3, 4, 8-10, 12 & 13		1

LIFT CYLINDER
(Wahpeton)

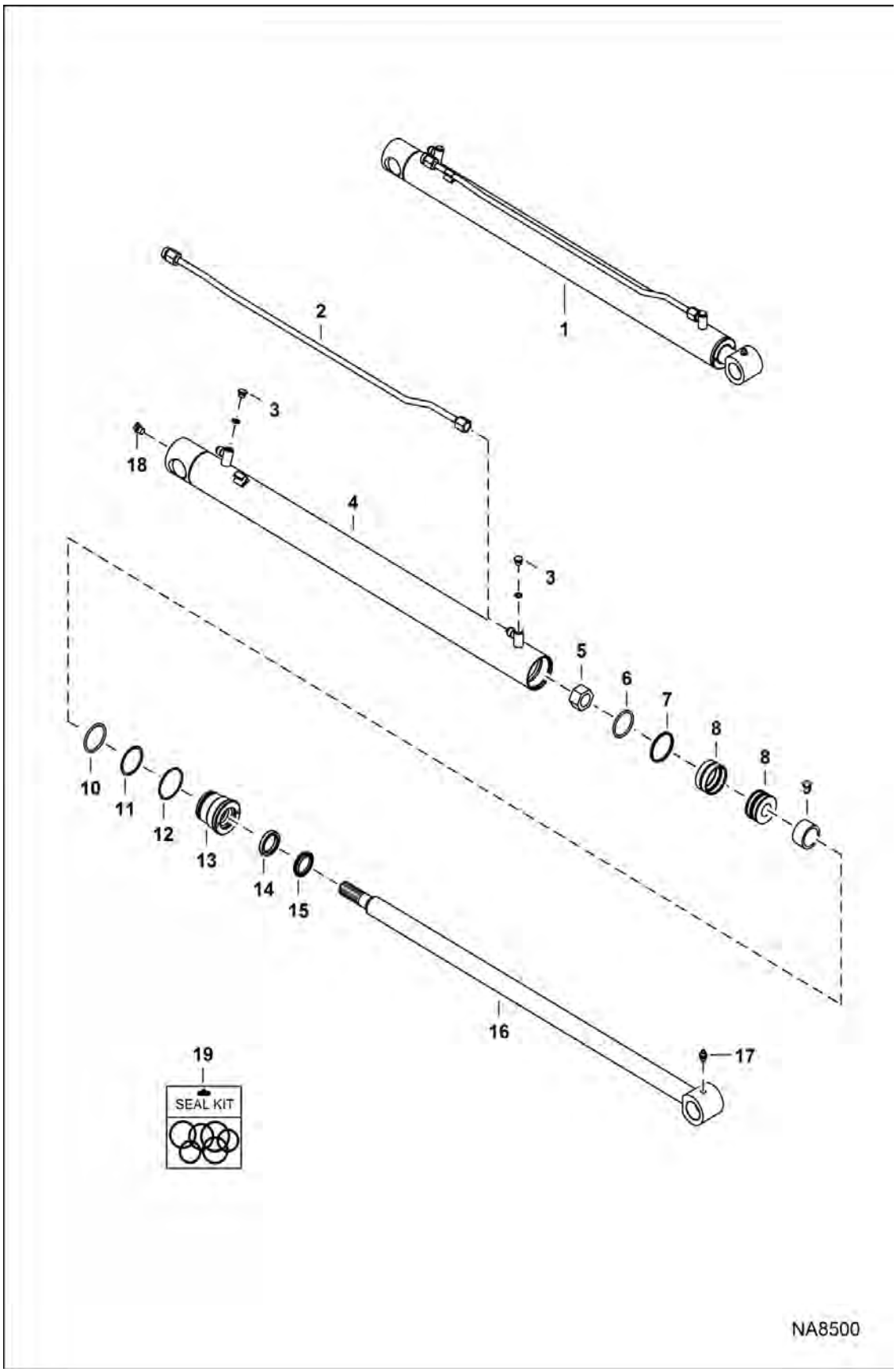

LIFT CYLINDER (Cont'd)
(Wahpeton)

Ref No	Part Number	Description	Remarks	Serial Number	Qty
1	7200227	CYLINDER, ASSY HYDRAULIC	Ref. 2-18		1
2	7200271	TUBELINE, HYD			1
3	6812170	PLUG			2
4		TUBE, ASSY SERVICE	NLA - Was 7200228		1
5	92D14	NUT			1
6	6516231	SEAL			1
7	54K30118	O-RING	Was 25K30118 [A]		1
8	6677195	PISTON	W/Ref. 6 & 7		1
9	7207410	SPACER			1
10	54K40124	O-RING			1
11	73K224	O-RING	back-up		1
12	82K136	O-RING			1
13	6539323	HEAD, CYL LIFT			1
14	6667324	SEAL	back-up		1
15	6665208	WIPER, ROD CYL			1
16	7200229	SHAFT, W/A			1
17	10H25	FITTING, GREASE 5			1
18	12H15	FITTING, GREASE 5			1
19	7137770	KIT, SEAL CYLINDER	Ref. 5-7, 12, 14 & 15		1

LIFT CYLINDER
(Roquet)

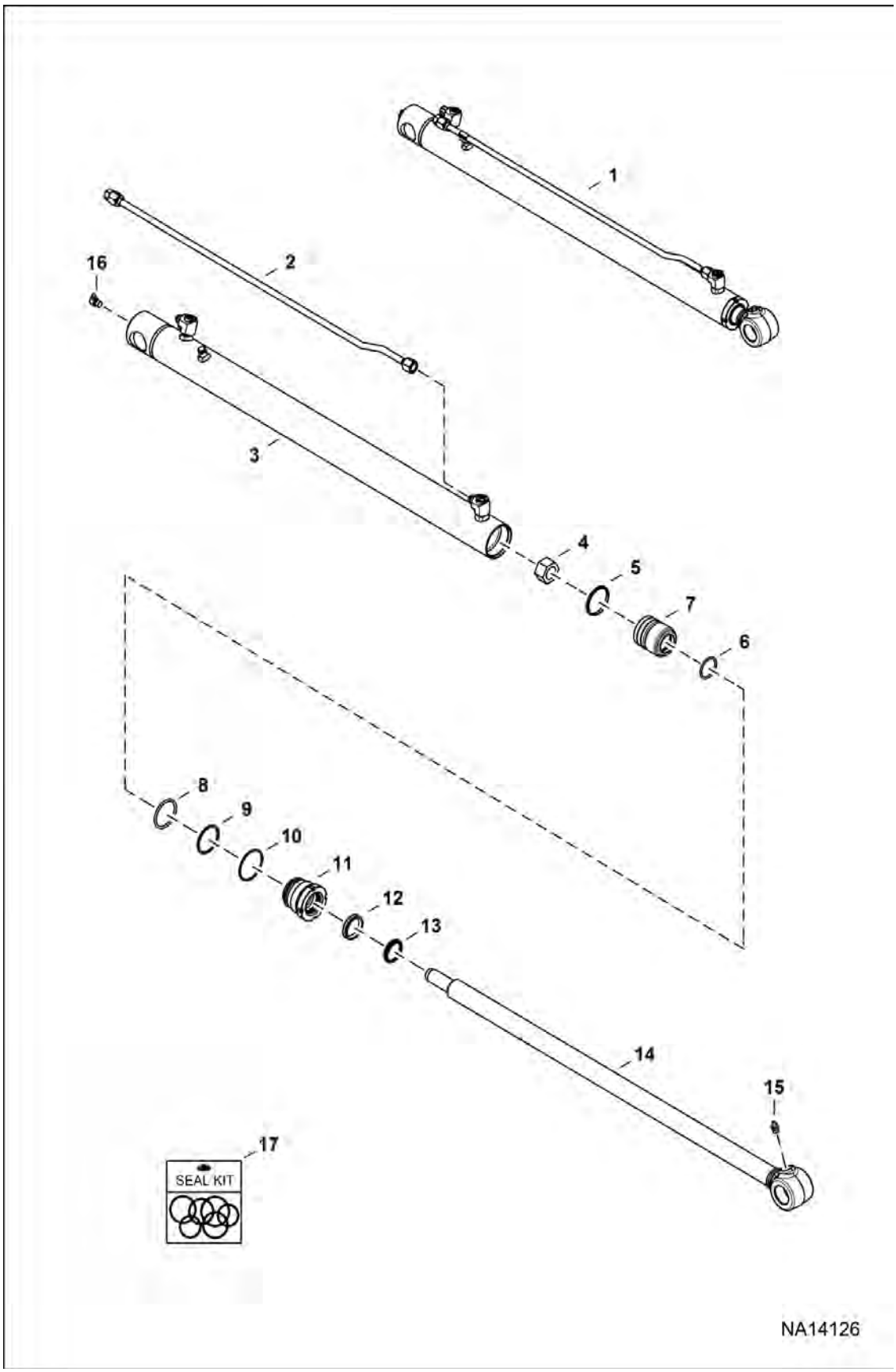

LIFT CYLINDER (Cont'd)
(Roquet)

Ref No	Part Number	Description	Remarks	Serial Number	Qty
1	7275994	CYLINDER HYDRAULIC	Ref. 2-17		1
2	7325301	PIPE OIL			1
3	7325299	ASSY CYLINDER			1
4	7325303	NUT LOCKING			1
5		SEAL	NSS - Order Ref 17		1
6		O RING 10	NSS - Order Ref 17		1
7	7325304	PISTON CYLINDER LIFT			1
8		RING,O	NSS - Order Ref 17		1
9		O-RING	NSS - back-up - Order Ref 17		1
10		RING,O	NSS - Order Ref 17		1
11	7325305	BUSHING CYLINDER			1
12		SEAL	NSS - back-up - Order Ref 17		1
13		WIPER, ROD CYL	NSS - Order Ref 17		1
14	7325300	ROD CYLINDER ASSY			1
15	10H25	FITTING, GREASE 5			1
16	12H15	FITTING, GREASE 5			1
17	7325302	KIT SEAL	Ref. 5, 6, 8-10, 12 & 13		1

CONTROL PEDALS

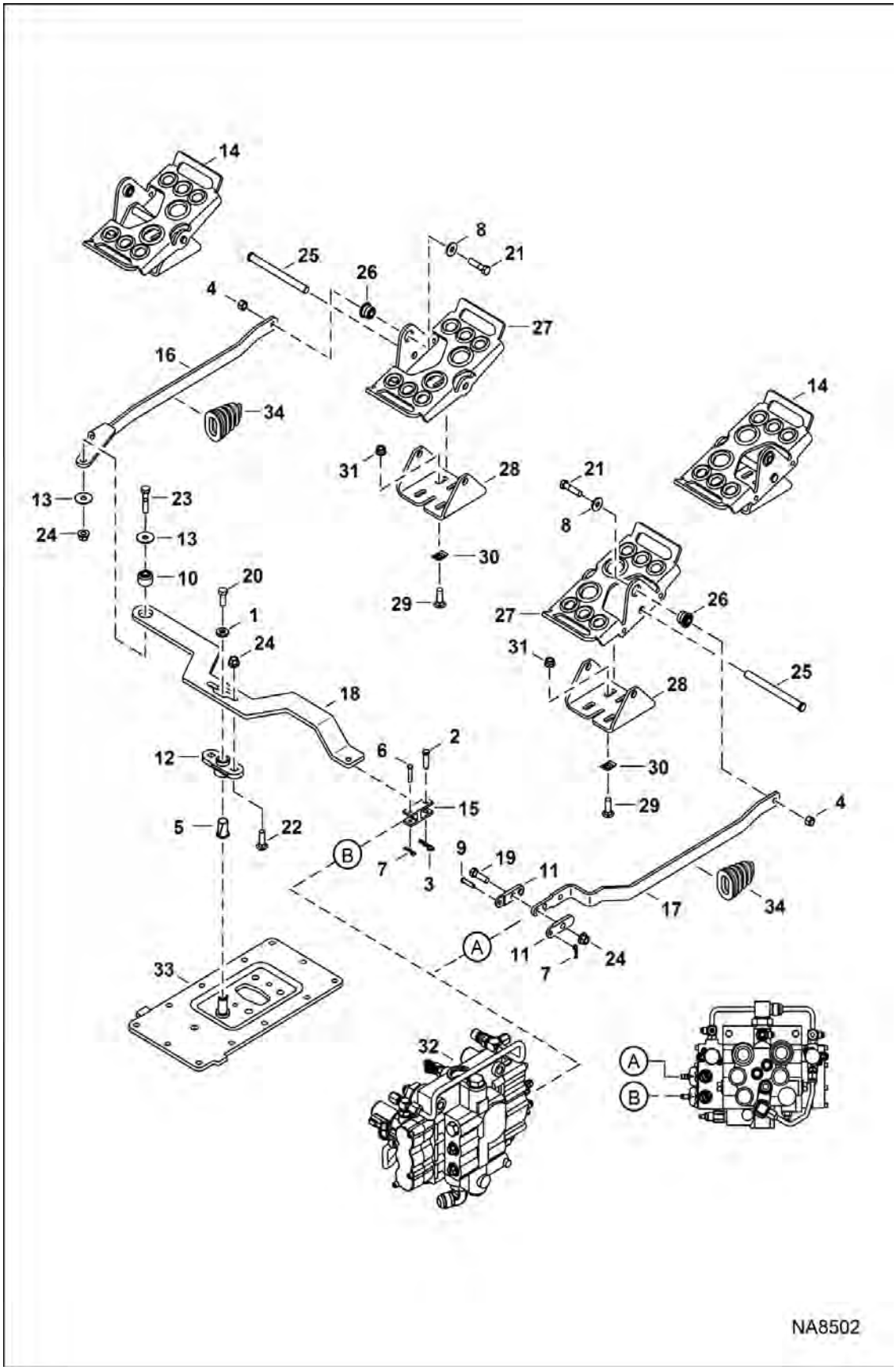

CONTROL PEDALS (Cont'd)

Ref No	Part Number	Description	Remarks	Serial Number	Qty
1	6557831	WASHER			1
2	7191333	PIN, CLEVIS			1
3	1306637	CLIP			1
4	95D6	NUT			2
5	6512026	BUSHING			1
6	7191334	PIN, CLEVIS			1
7	7325025	COTTER PIN	Was 6513495 [B]		2
8	6563914	WASHER			2
9	6564654	PIN, CLEVIS			1
10	6685060	BUSHING TORSION			1
11	6708009	LINK			2
12	6708043	FLANGE			1
13	6737388	WASHER			2
14	7163421	PEDAL ASSY	Ref. 26-29		2
15	7191332	YOKE, FLANGE			1
16	7255536	LINK, PEDAL	Was 7200776 [A]		1
17	7200765	LINK			1
18	7255537	LINK	Was 7200775 [A]		1
19	17C620	BOLT			1
20	17C616	BOLT 5			1
21	17C626	BOLT			2
22	37C620	BOLT			2
23	17C628	BOLT			1
24	83D6	NUT 5			4
25		PIN	NLA - Order Ref. 14		2
26	6665701	BUSHING, PRESS FIT			2
27		PEDAL	NLA - Order Ref. 14		2
28		MOUNT	NLA - Order Ref. 14		2
29	37C620	BOLT			4
30	6684033	NUT			4
31	57D6	NUT 5			4
32		VALVE	See Illustration HYDRAULIC CONTROL VALVE / NA8521 - ACS, SJC		1
32		VALVE	See Illustration HYDRAULIC CONTROL VALVE / NA8520 - manual controls		1
33		COVER	See Illustration DISC BRAKE / NA8528		1
34	7153503	BOOT			2

HYDRAULIC CONTROL VALVE

(Manual Controls) (D Series Coil)

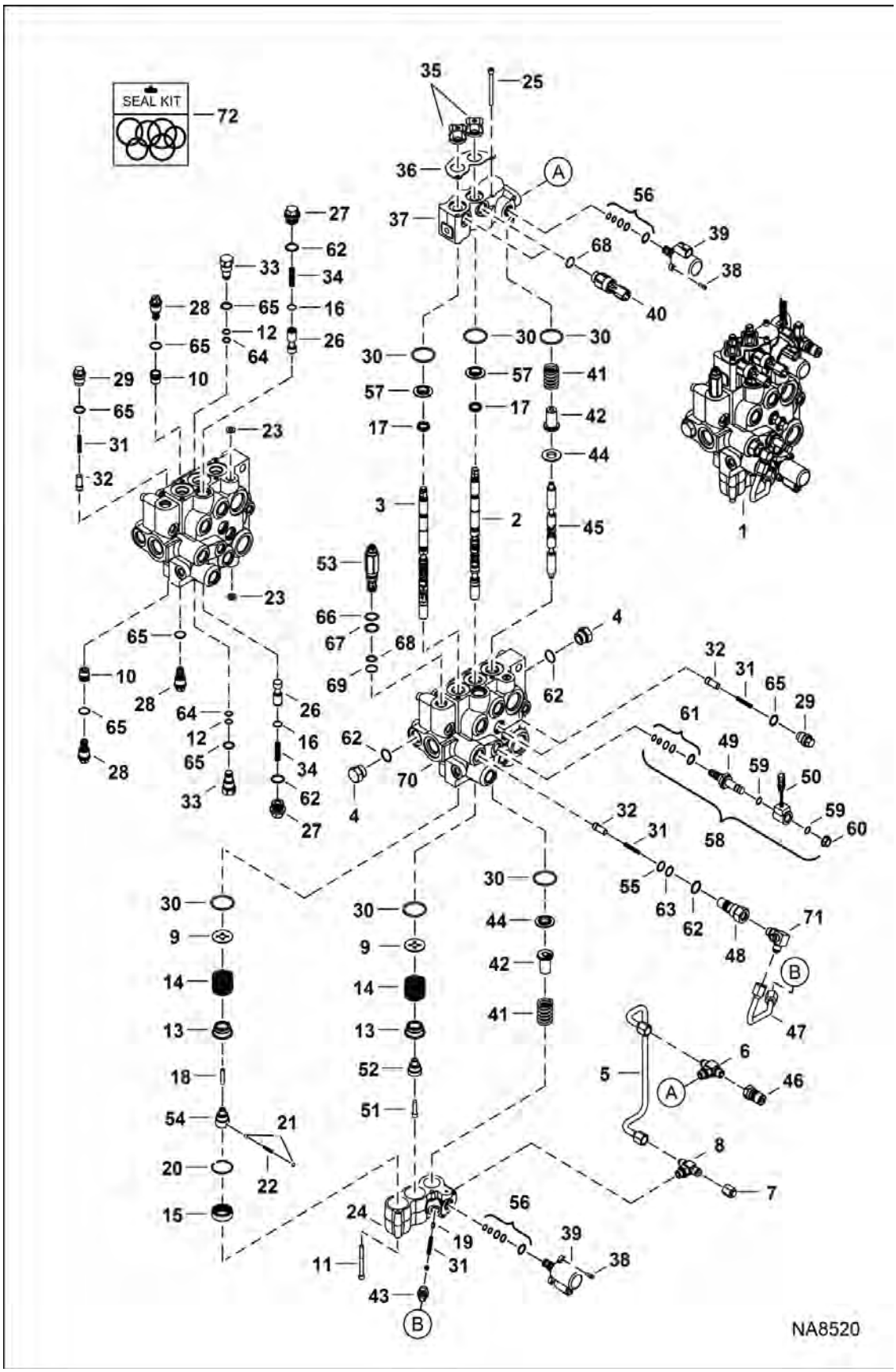

HYDRAULIC CONTROL VALVE (Cont'd)

(Manual Controls) (D Series Coil)

Ref No	Part Number	Description	Remarks	Serial Number	Qty
1		VALVE, CONTROL	See Illustration HYDRAULIC CONTROL VALVE / NA12535 - NLA - Ref. 2-49, 51-57 & 61-71 - Order 7297079 control valve & 7272732 coil - Was 7219839 [A]		1
2	6815152	SPOOL, TILT			1
3	7266559	SPOOL, LIFT LOCK	Was 7209497 [A]		1
4	24K7	PLUG	W/Ref. 65		2
5	7157291	TUBELINE			1
6	7232515	FITTING, HYD TEE			1
7	36K5	CAP			1
8	19KB0606	FITTING, HYD TEE			1
8	79K6	O RING 10			2
9	7211397	WASHER, SPRING			2
10	7208227	SEAT, RELIEF PORT			2
11	29G444	BOLT			4
12	58K013	O-RING 10			2
13	6592100	COLLAR			2
14	6587580	SPRING			2
15	7211400	SLEEVE, DETENT			1
16	7214312	RING, RETAINING			2
17	7031367	SEAL, SPOOL			2
18	6586918	SCREW, DETENT			1
19	7280785	VALVE, POPPET	Was 7214722 [A]		1
20	7214856	RING, RETAINING			1
21	6592107	SPRING, DETENT 5			1
22	6592105	BALL 5			2
23	55K204	O RING 10			2
24	7214959	BLOCK, VALVE CONTROL HYD			1
25	29G444	BOLT			4
26	7217075	SPOOL, BICS			2
27	7219703	PLUG, BICS	W/Ref. 65		2
28	6684646	VALVE, ANTI-CAV	anti-cav - W/Ref. 68		x
29	7134520	PLUG	check valve		3
29		VALVE, ANTI-CAV	See attachment Operation & Maintenance manual for correct relief valve combination		x
30	7219080	O-RING			6
31	7166339	SPRING, LOAD CHECK	44,4 mm (1.75") long - Was 7239824 [C]		5
32	7166047	SEAT, CHECK VALVE			4
33	6816549	PLUG ASSY PORT RLF	W/Ref. 12, 48 & 64		2
34	7203643	SPRING, VALVE			2
35	6587763	BOOT			2

HYDRAULIC CONTROL VALVE (Cont'd)

(Manual Controls) (D Series Coil)

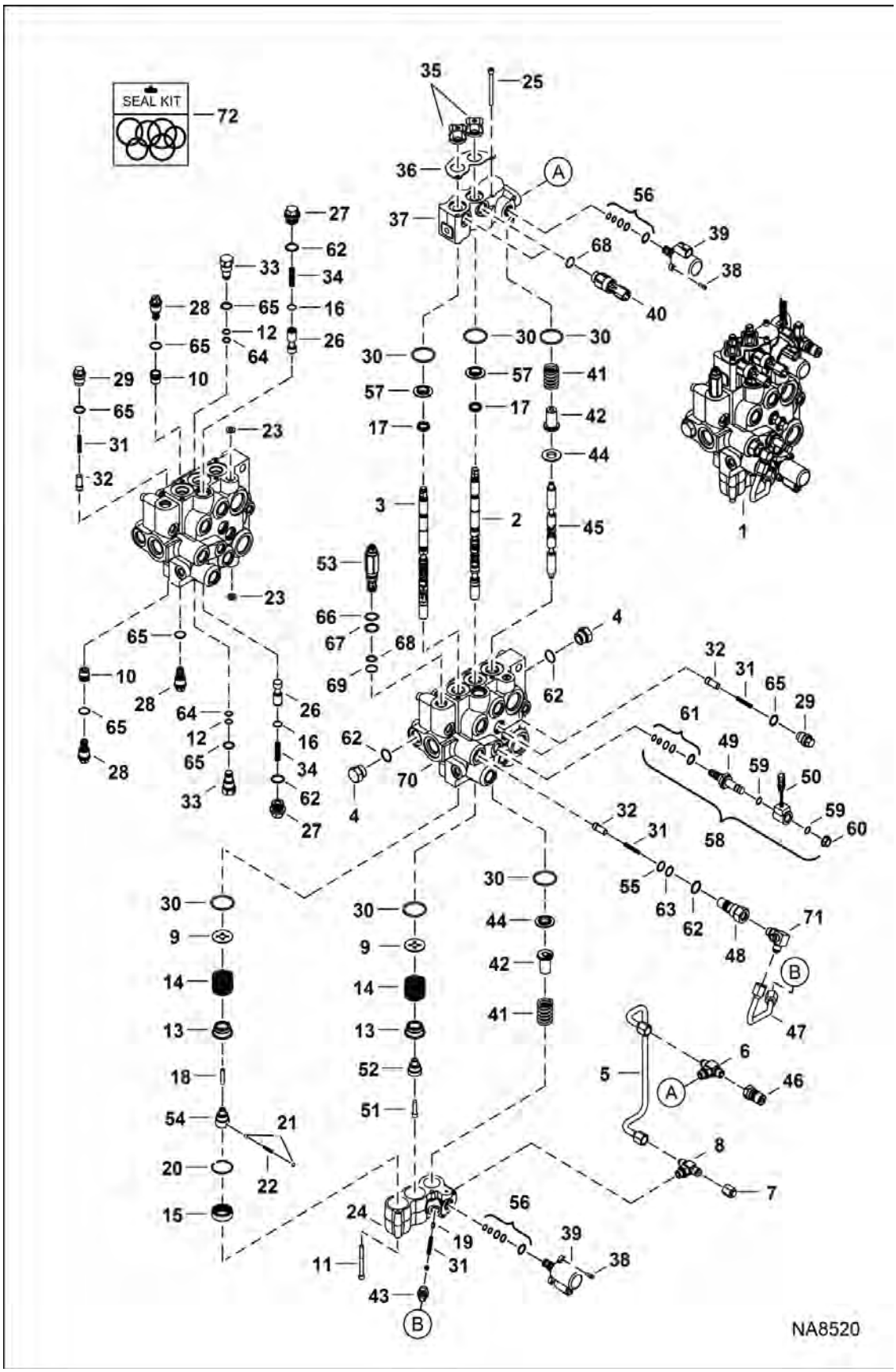

HYDRAULIC CONTROL VALVE (Cont'd)

(Manual Controls) (D Series Coil)

Ref No	Part Number	Description	Remarks	Serial Number	Qty
36	6813153	PLATE	retainer		1
37	7157286	BODY			1
38	7002716	SCREW			2
39	6698434	VALVE, PROPORTIONAL			1
40	6676029	SOLENOID, LOCK SPOOL			2
41	7121399	SPRING			2
42	6814694	RETAINER			2
43	7202329	FITTING, HYD CONNECTOR W/SCREEN			1
43	79K6	O RING 10			1
44	7138376	BUSHING			2
45	7112383	AUX SPOOL			1
46	6684125	COUPLER			1
46	6684125EF	COUPLER ISO MALE B 3/8 BDY 3/8 SAE			1
47	7202325	TUBELINE, HYD VALVE CONTROL			1
48	7134522	PLUG	W/Ref. 56, 65 & 66		1
49	6667687	VALVE, STEM SOLENOID	W/Ref. 61		1
50	6675559	COIL	W/Ref. 59 & 60 - D series - black case - metri pack connector		1
51	7102652	SCREW			1
52	6592109	ADAPTER			1
53	7219324	VALVE, RELIEF	W/ O-rings - pressure to be set in field - Was 7219323 [D]		1
54	7211394	ADAPTER, DETENT			1
55	58K016	O-RING 10			1
56	7008771	KIT, SEAL			2
57	7211393	RETAINER, SEAL			2
58	6672471	VALVE, SOLENOID	Ref. 49 & 50		1
59	54K20028	O RING 10			2
60	6668820	NUT			1
61	6669732	KIT, SEAL			1
62	79K10	O RING 10			x
63	73K016	RING, BACK-UP			1
64	73K013	RING, BACK-UP			2
65	79K8	O RING 10			x
66	58K017	O-RING 10			1
67	6665569	RING, BACK-UP			1
68	25K20016	O RING 10			1
69	6665570	CLYD RING			1
70		BODY	NSS		1
71	6725182	TEE			1
72	7218923	KIT, SEAL COMPLETE			1

HYDRAULIC CONTROL VALVE (Cont'd)

(Manual Controls) (D Series Coil)

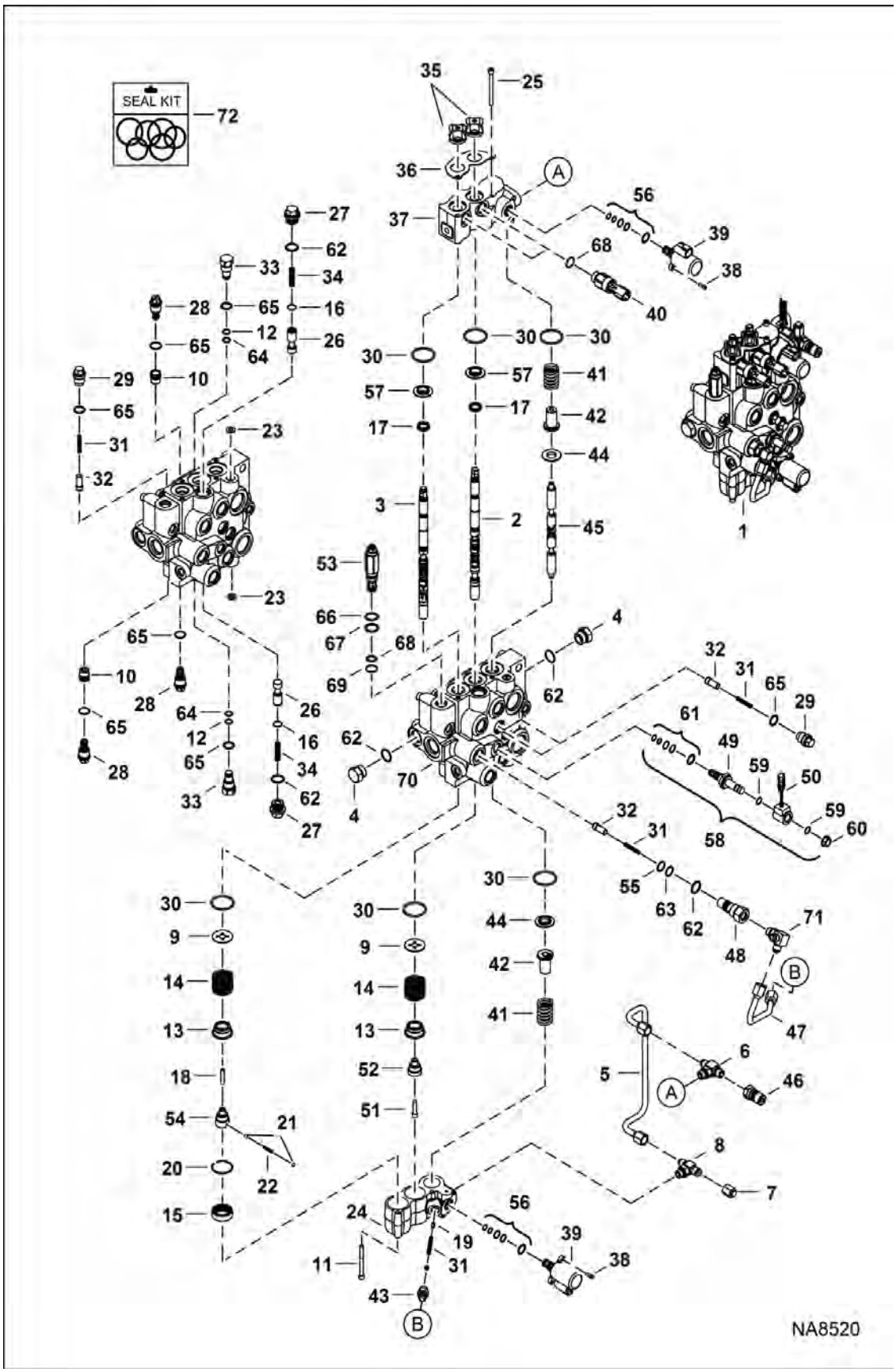

HYDRAULIC CONTROL VALVE (Cont'd)

(Manual Controls) (D Series Coil)

Ref No	Part Number	Description	Remarks	Serial Number	Qty
72	7218924	KIT, SEAL	Ref. 17, 23, 30, 35 & 65		1
72	7123965	KIT, SEAL	external fitting - Ref. 12, 55, 59 & 62-65		1
72	6632279	KIT, SEAL	Ref. 66-69 - Was 6670634 [B,D]		1

HYDRAULIC CONTROL VALVE

(Manual Controls) (E Series Coil)

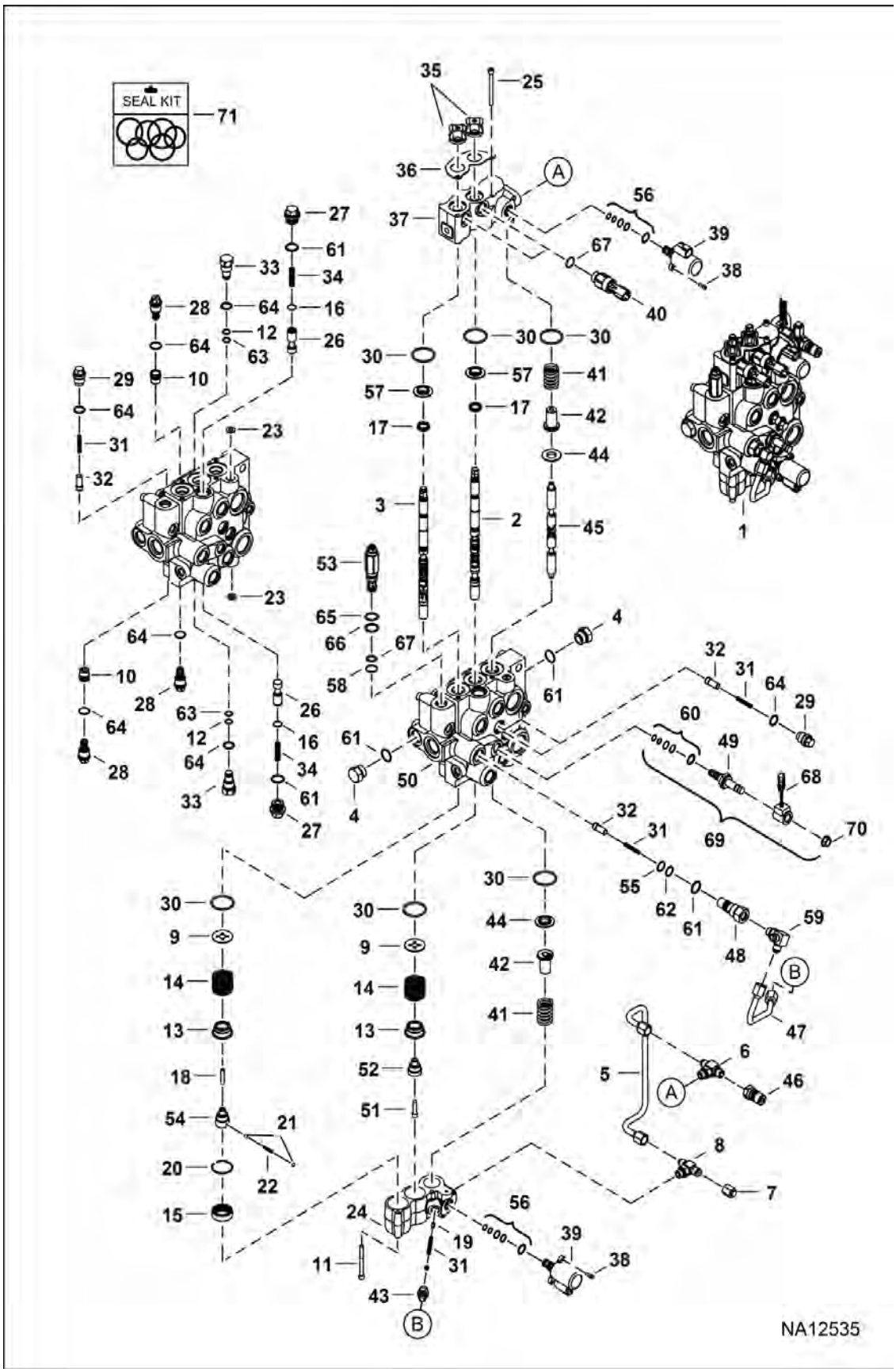

HYDRAULIC CONTROL VALVE (Cont'd)

(Manual Controls) (E Series Coil)

Ref No	Part Number	Description	Remarks	Serial Number	Qty
1	7297079	VALVE	Ref. 2-67		1
2	6815152	SPOOL, TILT			1
3	7266559	SPOOL, LIFT LOCK	Was 7209497 [A]		1
4	24K7	PLUG	W/Ref. 65		2
5	7157291	TUBELINE			1
6	7232515	FITTING, HYD TEE			1
7	36K5	CAP			1
8	19KB0606	FITTING, HYD TEE			1
8	79K6	O RING 10			2
9	7211397	WASHER, SPRING			2
10	7208227	SEAT, RELIEF PORT			2
11	29G444	BOLT			4
12	58K013	O-RING 10			2
13	6592100	COLLAR			2
14	6587580	SPRING			2
15	7211400	SLEEVE, DETENT			1
16	7214312	RING, RETAINING			2
17	7031367	SEAL, SPOOL			2
18	6586918	SCREW, DETENT			1
19	7280785	VALVE, POPPET	Was 7214722 [A]		1
20	7214856	RING, RETAINING			1
21	6592107	SPRING, DETENT 5			1
22	6592105	BALL 5			2
23	55K204	O RING 10			2
24	7214959	BLOCK, VALVE CONTROL HYD			1
25	29G444	BOLT			4
26	7217075	SPOOL, BICS			2
27	7219703	PLUG, BICS	W/Ref. 65		2
28	6684646	VALVE, ANTI-CAV	anti-cav - W/Ref. 58		x
29	7134520	PLUG	check valve		3
29		VALVE, ANTI-CAV	See attachment Operation & Maintenance manual for correct relief valve combination		x
30	7219080	O-RING			6
31	7166339	SPRING, LOAD CHECK	44,4 mm (1.75") long - Was 7239824 [C]		5
32	7166047	SEAT, CHECK VALVE			4
33	6816549	PLUG ASSY PORT RLF	W/Ref. 12, 48 & 64		2
34	7203643	SPRING, VALVE			2
35	6587763	BOOT			2
36	6813153	PLATE	retainer		1
37	7157286	BODY			1

HYDRAULIC CONTROL VALVE (Cont'd)

(Manual Controls) (E Series Coil)

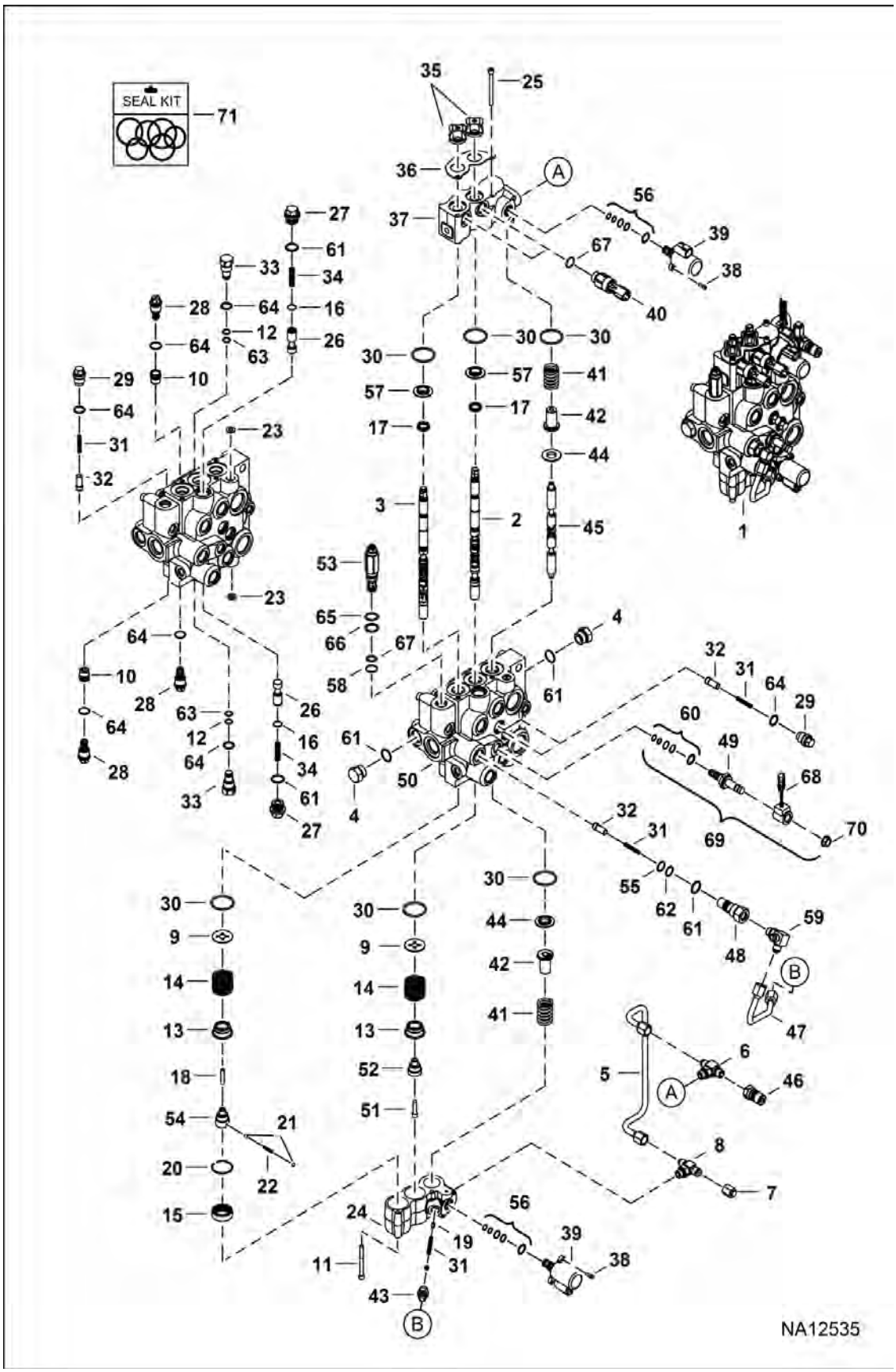

HYDRAULIC CONTROL VALVE (Cont'd)

(Manual Controls) (E Series Coil)

Ref No	Part Number	Description	Remarks	Serial Number	Qty
38	7002716	SCREW			2
39	6698434	VALVE, PROPORTIONAL			1
40	6676029	SOLENOID, LOCK SPOOL			2
41	7121399	SPRING			2
42	6814694	RETAINER			2
43	7202329	FITTING, HYD CONNECTOR W/SCREEN			1
43	79K6	O RING 10			1
44	7138376	BUSHING			2
45	7112383	AUX SPOOL			1
46	6684125	COUPLER			1
46	6684125EF	COUPLER ISO MALE B 3/8 BDY 3/8 SAE			1
47	7202325	TUBELINE, HYD VALVE CONTROL			1
48	7134522	PLUG	W/Ref. 56, 65 & 66		1
49	7272731	VALVE, SOLENOID	W/Ref. 60		1
50		BODY	NSS		1
51	7102652	SCREW			1
52	6592109	ADAPTER			1
53	7219324	VALVE, RELIEF	W/ O-rings - pressure to be set in field - Was 7219323 [D]		1
54	7211394	ADAPTER, DETENT			1
55	58K016	O-RING 10			1
56	7008771	KIT, SEAL			2
57	7211393	RETAINER, SEAL			2
58	6665570	CLYD RING			1
59	6725182	TEE	Was 7166338 [A]		1
60	6669732	KIT, SEAL			1
61	79K10	O RING 10			x
62	73K016	RING, BACK-UP			1
63	73K013	RING, BACK-UP			2
64	79K8	O RING 10			x
65	58K017	O-RING 10			1
66	6665569	RING, BACK-UP			1
67	25K20016	O RING 10			1
68	7272732	ASSY, COIL SOLENOID	W/Ref. 70 - E series - silver case - 208 mm (8.2") lead - metri pack connector		1
68	7301672	COIL SOLENOID	W/Ref. 70 - E series - silver case - integrated Deutsch connector		1
69	7304852	VALVE, CARTRIDGE	Ref. 49, 60, 68 (7272732 coil) & 70		1
69	7314079	VALVE CARTRIDGE	Ref. 49, 60, 68 (7301672 coil) & 70		1
70	7020647	NUT			1

HYDRAULIC CONTROL VALVE (Cont'd)

(Manual Controls) (E Series Coil)

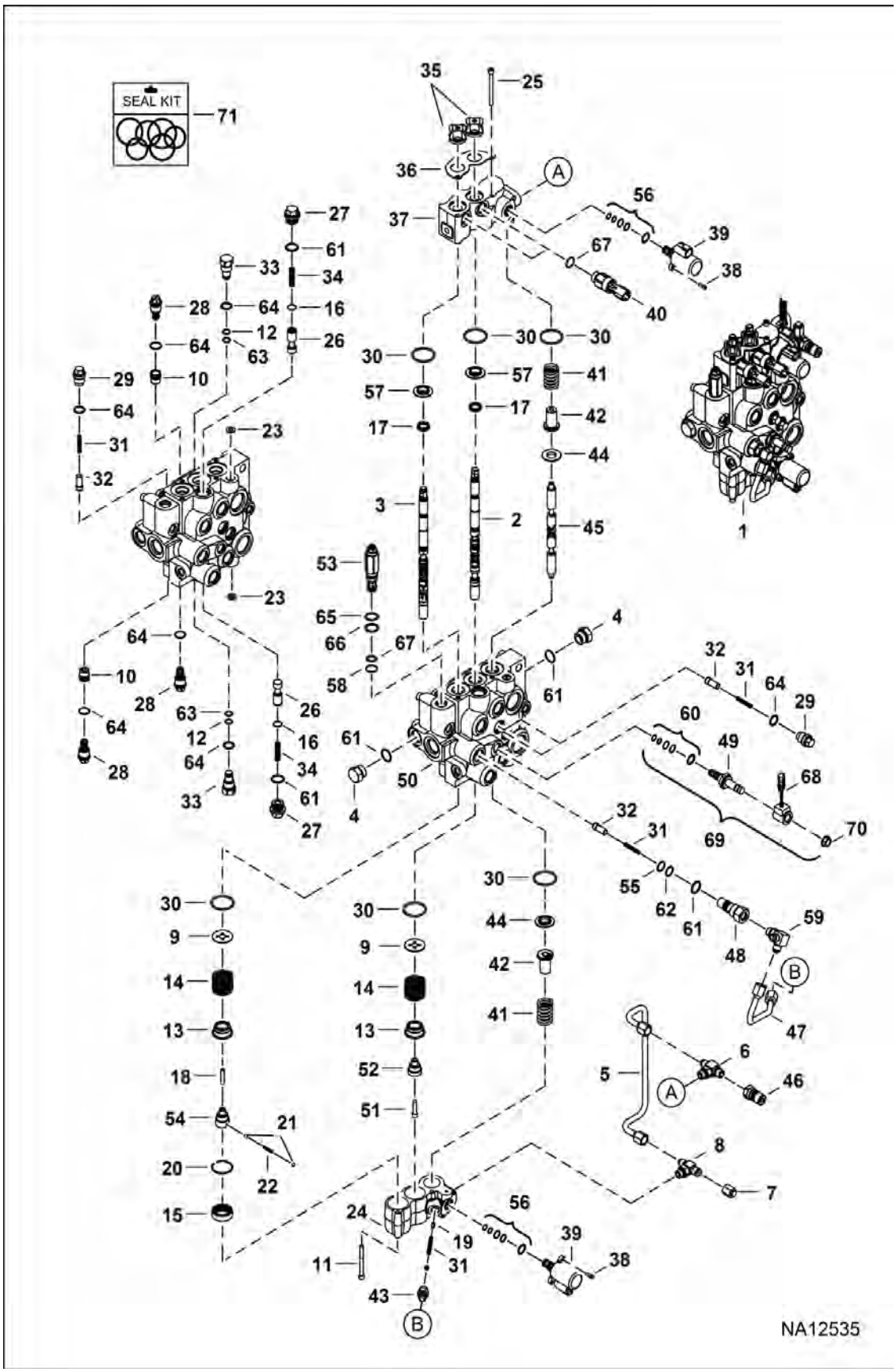

HYDRAULIC CONTROL VALVE (Cont'd)

(Manual Controls) (E Series Coil)

Ref No	Part Number	Description	Remarks	Serial Number	Qty
71	7218923	KIT, SEAL COMPLETE			1
71	7218924	KIT, SEAL	Ref. 17, 23, 30, 35 & 64		1
71	7123965	KIT, SEAL	external fitting - Ref. 49, 58, 61 & 65-67		1
71	6670634	SEAL KIT			1

HYDRAULIC CONTROL VALVE

(Manual Controls) (D Series Coil)
(No Front Aux)

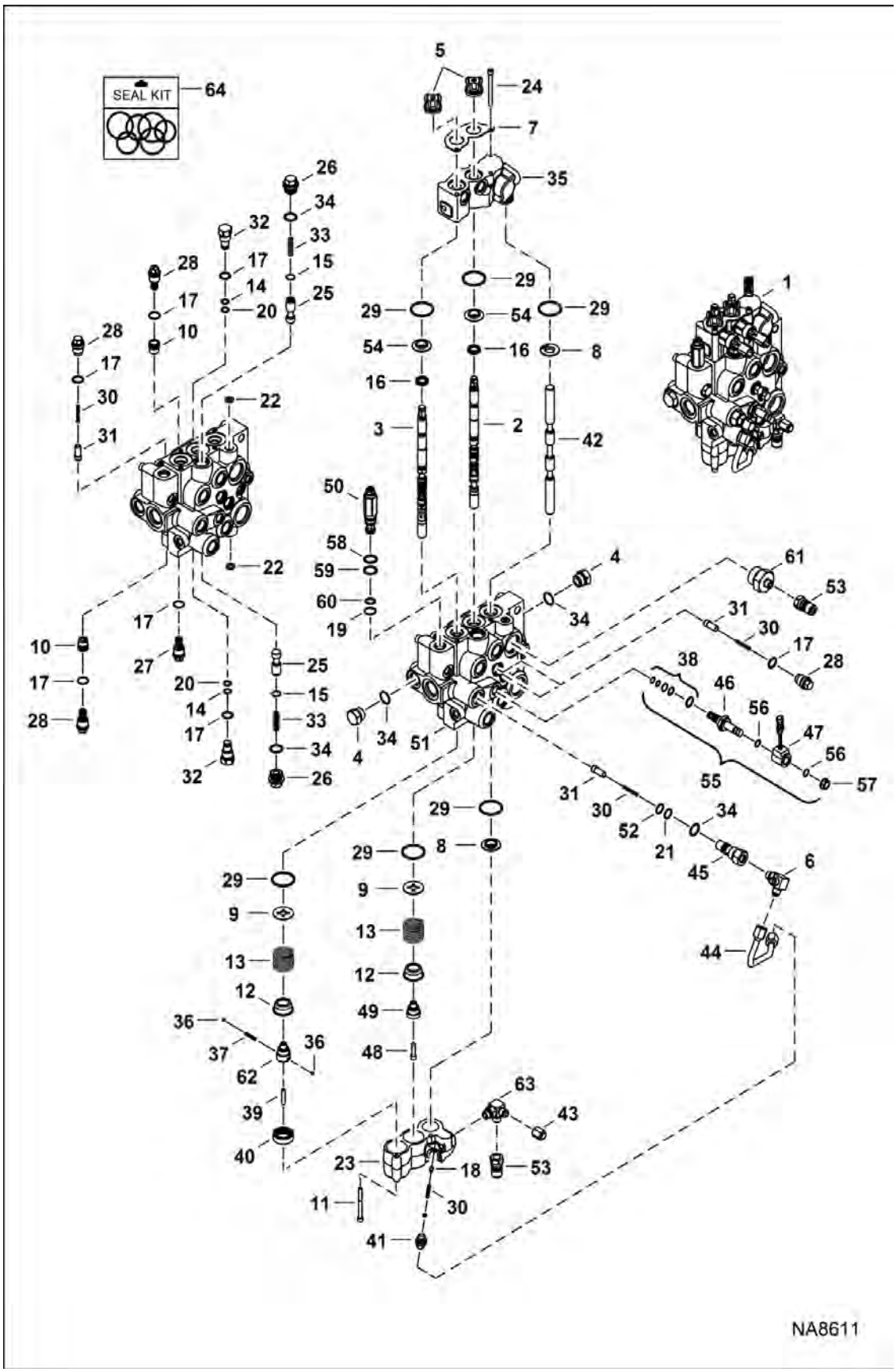

HYDRAULIC CONTROL VALVE (Cont'd)

(Manual Controls) (D Series Coil)
(No Front Aux)

Ref No	Part Number	Description	Remarks	Serial Number	Qty
1		VALVE	See Illustration HYDRAULIC CONTROL VALVE / NA12539 - NLA - Ref. 2-63 - Order 7297077 control valve & 7272732 coil - Was 7233984 [A]		1
2	6815152	SPOOL, TILT			1
3	7266559	SPOOL, LIFT LOCK	Was 7209497 [A]		1
4	24K7	PLUG	W/Ref. 34		2
5	6587763	BOOT			2
6	6725182	TEE	Was 17KB0606 [B]		1
7	6813153	PLATE			1
8	7138376	BUSHING			2
9	7211397	WASHER, SPRING			2
10	7208227	SEAT, RELIEF PORT			2
11	29G444	BOLT			4
12	6592100	COLLAR			2
13	6587580	SPRING			2
14	58K013	O-RING 10			2
15	7214312	RING, RETAINING			2
16	7031367	SEAL, SPOOL			2
17	79K8	O RING 10			x
18	7280785	VALVE, POPPET	Was 7214722 [A]		1
19	6665570	CLYD RING			1
20	73K013	RING, BACK-UP			2
21	73K016	RING, BACK-UP			1
22	55K204	O RING 10			2
23	7233981	COVER, SPRING NO AUX			1
24	29G444	BOLT	[A]		6
25	7217075	SPOOL, BICS			2
26	7219704	PLUG, BICS	W/Ref. 34		2
27	6684646	VALVE, ANTI-CAV	anti-cav - W/Ref. 17		x
28	7134520	PLUG	check valve - W/Ref. 17		3
29	7219080	O-RING			6
30	7166339	SPRING, LOAD CHECK	44,4 mm (1.75") long - Was 7239824 [C]		5
31	7166047	SEAT, CHECK VALVE			4
32	6816550	PLUG, PORT RELIEF	W/Ref. 14, 17 & 20 - Was 6816550 [A]		2
33	7203643	SPRING, VALVE			2
34	79K10	O RING 10			x
35	7233983	COVER, VALVE ASSY			1
36	6592105	BALL 5			2
37	6592107	SPRING, DETENT 5			1
38	6669732	KIT, SEAL			1
39	6586918	SCREW, DETENT			1

HYDRAULIC CONTROL VALVE (Cont'd)

(Manual Controls) (D Series Coil)
(No Front Aux)

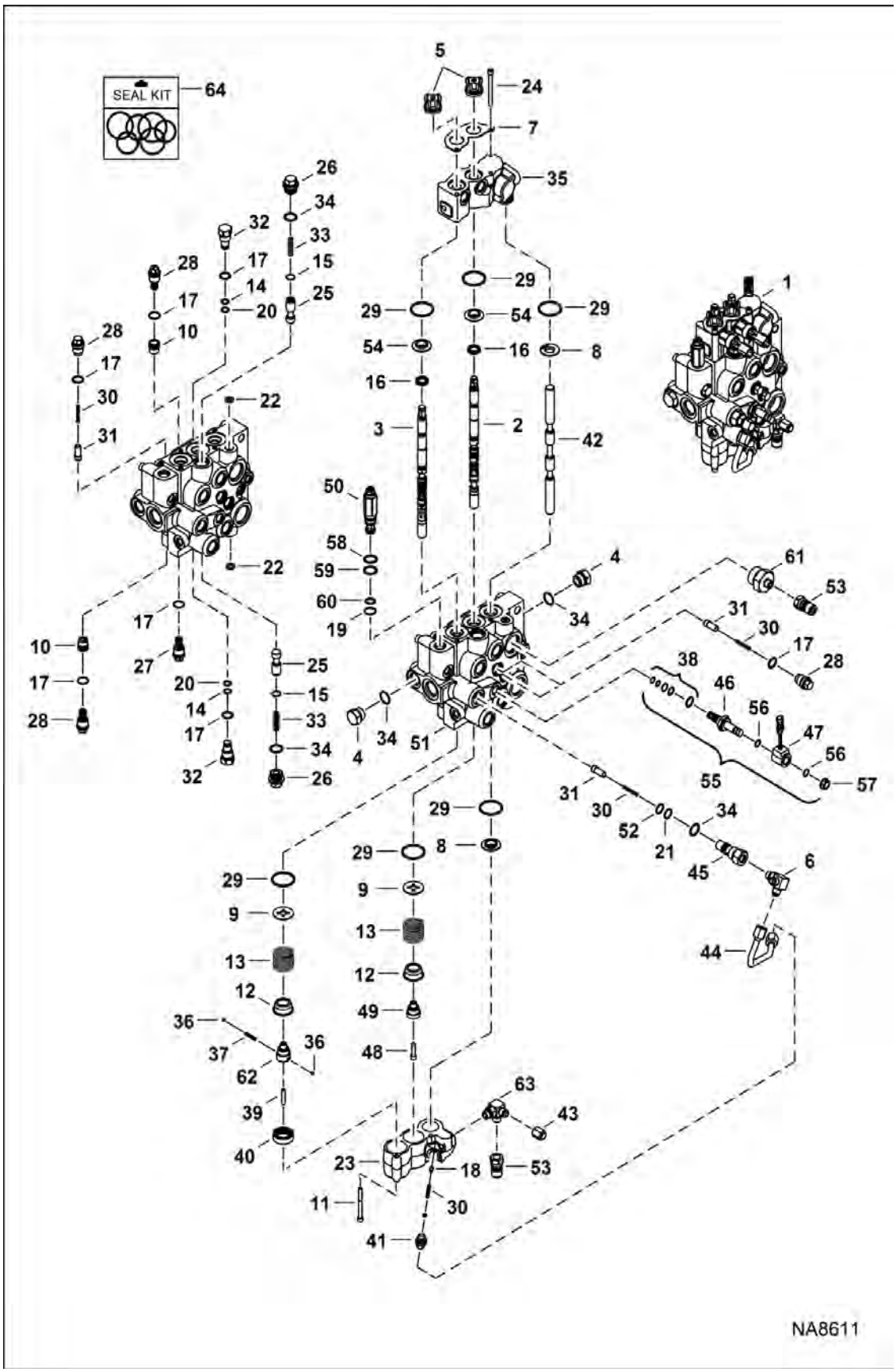

HYDRAULIC CONTROL VALVE (Cont'd)

(Manual Controls) (D Series Coil)
(No Front Aux)

Ref No	Part Number	Description	Remarks	Serial Number	Qty
40	7211400	SLEEVE, DETENT			1
41	7202329	FITTING, HYD CONNECTOR W/SCREEN			1
42		SPOOL, AUX	NLA - Was 7227651		1
43	36K5	CAP			1
44	7202325	TUBELINE, HYD VALVE CONTROL			1
45	7134523	PLUG	W/Ref. 21, 34 & 53		1
46	6667687	VALVE, STEM SOLENOID	W/Ref. 38		1
47	6675559	COIL	W/Ref. 57 & 58 - D series - black case - metri pack connector		1
48	7102652	SCREW			2
49	6592109	ADAPTER			2
50	7219324	VALVE, RELIEF	W/ O-rings - pressure to be set in field		1
51		BODY	NLA		1
52	58K016	O-RING 10			1
53	6684125	COUPLER			1
53	6684125EF	COUPLER ISO MALE B 3/8 BDY 3/8 SAE			1
54	7211393	RETAINER, SEAL			2
55	6672471	VALVE, SOLENOID	Ref. 38, 46, 47, 56 & 57		1
56	54K20028	O RING 10			2
57	6668820	NUT			1
58	58K017	O-RING 10			1
59	6665569	RING, BACK-UP			1
60	25K20016	O RING 10			1
61	7233982	FITTING, HYD CONNECTOR			1
62	7211394	ADAPTER, DETENT			1
63	7239230	FITTING, HYD TEE			1
64	7218923	KIT, SEAL COMPLETE			1
64	7218924	KIT, SEAL	Ref. 16, 17, 22 & 29		1
64	7123965	KIT, SEAL	external fitting - Ref. 14, 17, 20, 22 & 34		1

HYDRAULIC CONTROL VALVE

(Manual Controls) (E Series Coil)
(No Front Aux)

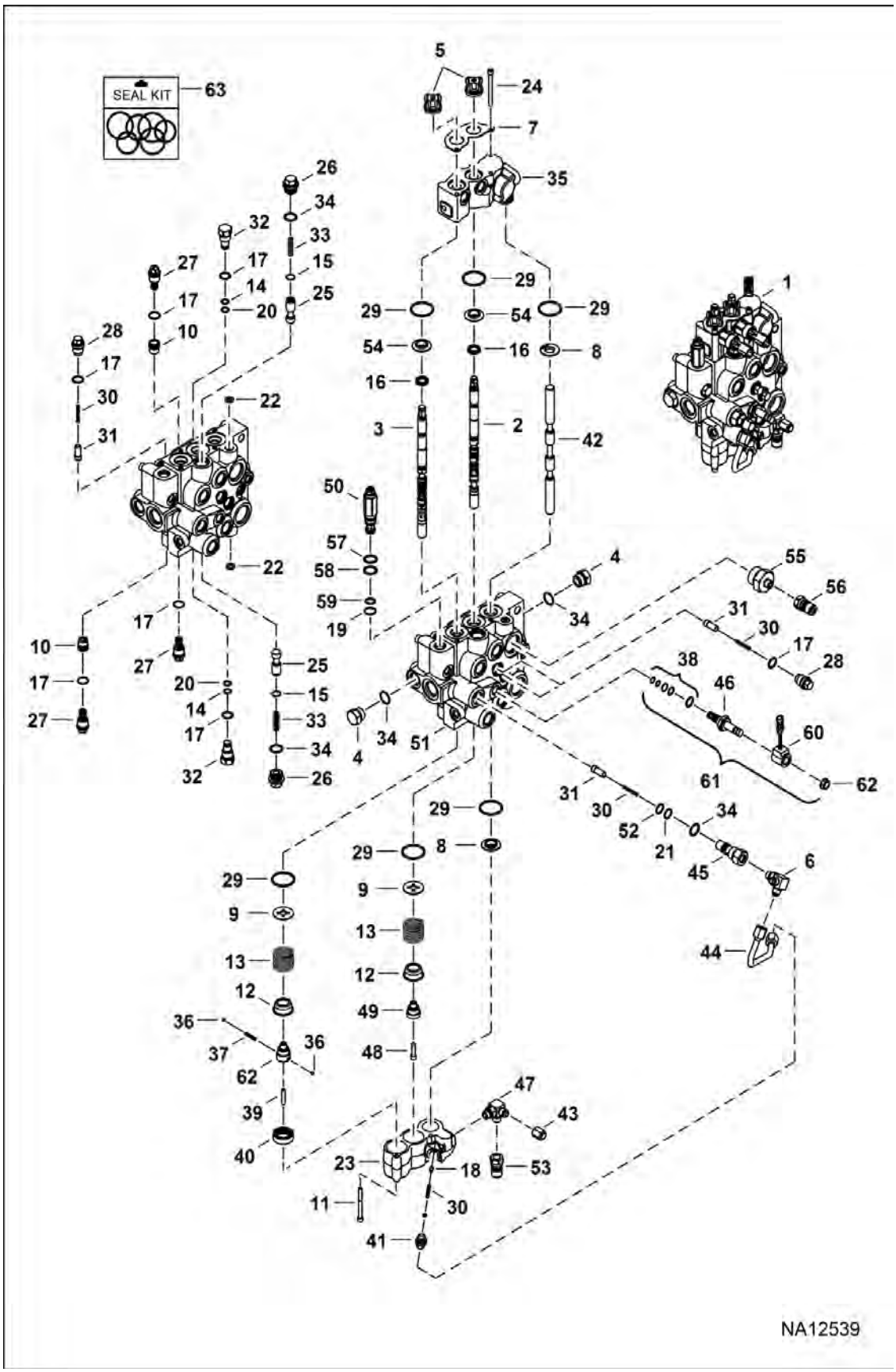

HYDRAULIC CONTROL VALVE (Cont'd)

(Manual Controls) (E Series Coil)
(No Front Aux)

Ref No	Part Number	Description	Remarks	Serial Number	Qty
1		VALVE	NLA - Ref. 2-59 - Was 7297077		1
2	6815152	SPOOL, TILT			1
3	7266559	SPOOL, LIFT LOCK	Was 7209497 [A]		1
4	24K7	PLUG	W/Ref. 34		2
5	6587763	BOOT			2
6	6725182	TEE	Was 17KB0606 [B]		1
7	6813153	PLATE			1
8	7138376	BUSHING			2
9	7211397	WASHER, SPRING			2
10	7208227	SEAT, RELIEF PORT			2
11	29G444	BOLT			4
12	6592100	COLLAR			2
13	6587580	SPRING			2
14	58K013	O-RING 10			2
15	7214312	RING, RETAINING			2
16	7031367	SEAL, SPOOL			2
17	79K8	O RING 10			x
18	7280785	VALVE, POPPET	Was 7214722 [A]		1
19	6665570	CLYD RING			1
20	73K013	RING, BACK-UP			2
21	73K016	RING, BACK-UP			1
22	55K204	O RING 10			2
23	7233981	COVER, SPRING NO AUX			1
24	29G444	BOLT			6
25	7217075	SPOOL, BICS			2
26	7219704	PLUG, BICS	W/Ref. 34		2
27	6684646	VALVE, ANTI-CAV	anti-cav - W/Ref. 17		x
28	7134520	PLUG	check valve - W/Ref. 17		3
28		VALVE, ANTI-CAV	See attachment Operation & Maintenance manual for correct relief valve combination		x
29	7219080	O-RING			6
30	7166339	SPRING, LOAD CHECK	44,4 mm (1.75") long - Was 7239824 [C]		5
31	7166047	SEAT, CHECK VALVE			4
32	6816550	PLUG, PORT RELIEF	W/Ref. 14, 17 & 20 - Was 6816550 [A]		2
33	7203643	SPRING, VALVE			2
34	79K10	O RING 10			x
35	7233983	COVER, VALVE ASSY			1
36	6592105	BALL 5			2
37	6592107	SPRING, DETENT 5			1
38	6669732	KIT, SEAL			1

HYDRAULIC CONTROL VALVE (Cont'd)

(Manual Controls) (E Series Coil)
(No Front Aux)

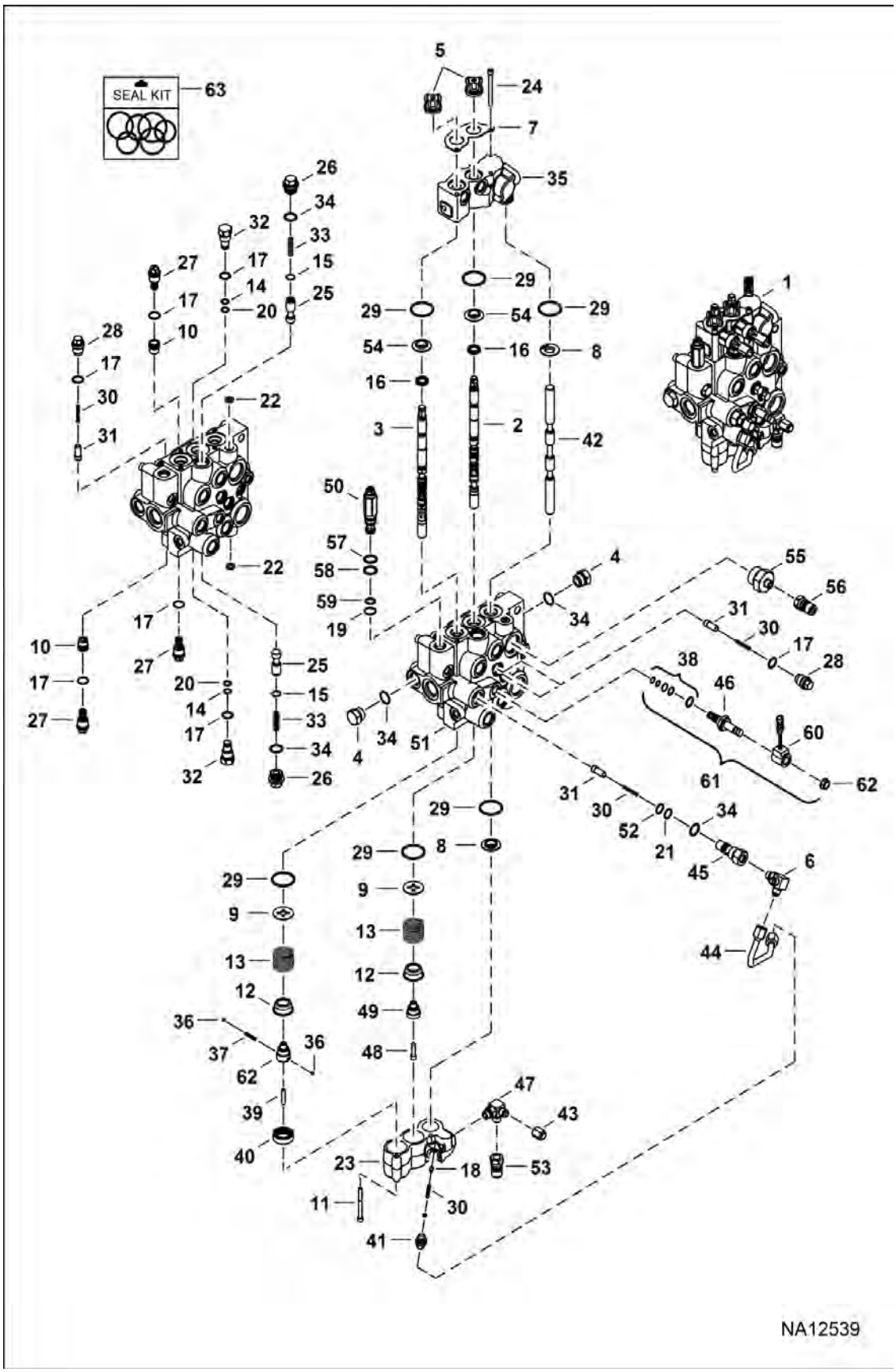

HYDRAULIC CONTROL VALVE (Cont'd)

(Manual Controls) (E Series Coil)
(No Front Aux)

Ref No	Part Number	Description	Remarks	Serial Number	Qty
39	6586918	SCREW, DETENT			1
40	7211400	SLEEVE, DETENT			1
41	7202329	FITTING, HYD CONNECTOR W/SCREEN			1
42		SPOOL, AUX	NLA - Was 7227651		1
43	36K5	CAP			1
44	7202325	TUBELINE, HYD VALVE CONTROL			1
45	7134523	PLUG	W/Ref. 21, 34 & 53		1
46	7272731	VALVE, SOLENOID	W/Ref. 38		1
47	7239230	FITTING, HYD TEE			1
48	7102652	SCREW			2
49	6592109	ADAPTER			2
50	7219324	VALVE, RELIEF	W/ O-rings - pressure to be set in field		1
51		BODY	NSS		1
52	58K016	O-RING 10			1
53	6684125	COUPLER			1
53	6684125EF	COUPLER ISO MALE B 3/8 BDY 3/8 SAE			1
54	7211393	RETAINER, SEAL			2
55	7211394	ADAPTER, DETENT			1
56	7233982	FITTING, HYD CONNECTOR			1
57	58K017	O-RING 10			1
58	6665569	RING, BACK-UP			1
59	25K20016	O RING 10			1
60	7272732	ASSY, COIL SOLENOID	W/Ref. 62 - E series - silver case - 208 mm (8.2") lead - metri pack connector		1
60	7301672	COIL SOLENOID	W/Ref. 62 - E series - silver case - integrated Deutsch connector		1
61	7304852	VALVE, CARTRIDGE	Ref. 38, 46, 60 (7272732 coil) & 62		1
61	7314079	VALVE CARTRIDGE	Ref. 38, 46, 60 (7301672 coil) & 62		1
62	7020647	NUT	Was 6668820 [B,D]		1
63	7218923	KIT, SEAL COMPLETE			1
63	7218924	KIT, SEAL	Ref. 16, 17, 22 & 29		1
63	7123965	KIT, SEAL	external fitting - Ref. 14, 17, 20, 22 & 34		1

HYDRAULIC CONTROL VALVE
(AHC, ACS & SJC) (D Series Coil)

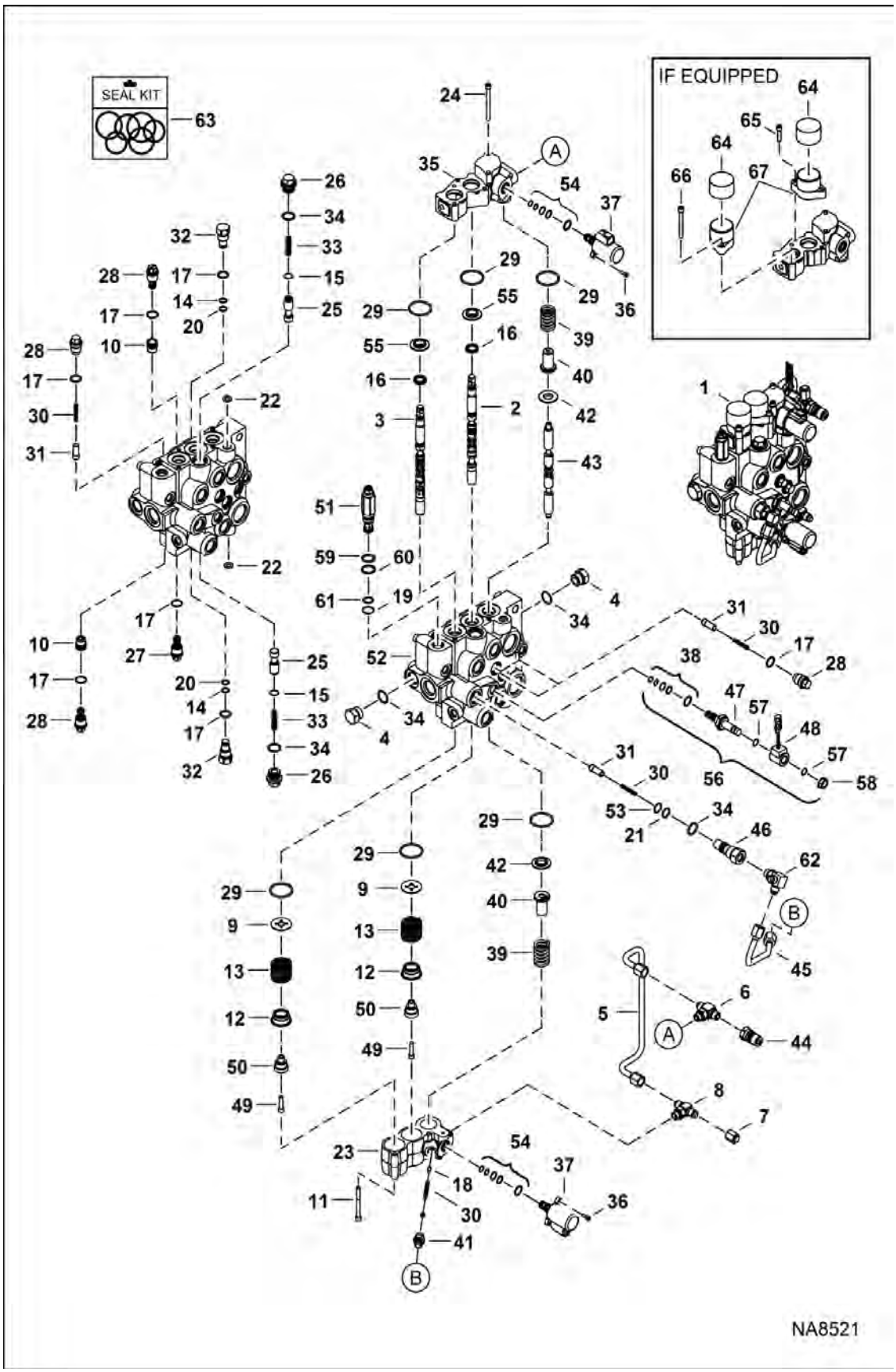

HYDRAULIC CONTROL VALVE (Cont'd)

(AHC, ACS & SJC) (D Series Coil)

Ref No	Part Number	Description	Remarks	Serial Number	Qty
1		VALVE, CONTROL	See Illustration HYDRAULIC CONTROL VALVE / NA12538 - NLA - Ref. 2-62 - Order 7297078 control valve & 7272732 coil - Was 7219842 [A]		1
2	7108242	SPOOL, TILT			1
3	7266560	SPOOL, LIFT	Was 7209496 [A]		1
4	24K7	PLUG	W/Ref. 34		2
5	7157291	TUBELINE			1
6	7232515	FITTING, HYD TEE			1
7	36K5	CAP			1
8	19KB0606	FITTING, HYD TEE			1
8	79K6	O RING 10			1
9	7211397	WASHER, SPRING			2
10	7208227	SEAT, RELIEF PORT			2
11	29G444	BOLT			3
12	6592100	COLLAR			2
13	6587580	SPRING			2
14	58K013	O-RING 10			2
15	7214312	RING, RETAINING			2
16	7031367	SEAL, SPOOL			2
17	79K8	O RING 10			x
18	7280785	VALVE, POPPET	Was 7214722 [A]		1
19	6665570	CLYD RING			1
20	73K013	RING, BACK-UP			2
21	73K016	RING, BACK-UP			1
22	55K204	O RING 10			2
23	7222562	BLOCK, VALVE CONTROL HYD			1
24	29G444	BOLT			3
25	7217075	SPOOL, BICS			2
26	7219703	PLUG, BICS	W/Ref. 34		2
27	6684646	VALVE, ANTI-CAV	anti-cav - W/Ref. 17		x
28	7134520	PLUG	check valve - W/Ref. 17		3
28		VALVE, ANTI-CAV	See attachment Operation & Maintenance manual for correct relief valve combination		x
29	7219080	O-RING			6
30	7166339	SPRING, LOAD CHECK	44,4 mm (1.75") long - Was 7239824 [C]		5
31	7166047	SEAT, CHECK VALVE			4
32	6816549	PLUG ASSY PORT RLF	W/Ref. 14, 17 & 20		2
33	7203643	SPRING, VALVE			2
34	79K10	O RING 10			x
35	7166388	ASSY, ACS			1
36	7002716	SCREW			2
37	6698434	VALVE, PROPORTIONAL			1

HYDRAULIC CONTROL VALVE (Cont'd)
(AHC, ACS & SJC) (D Series Coil)

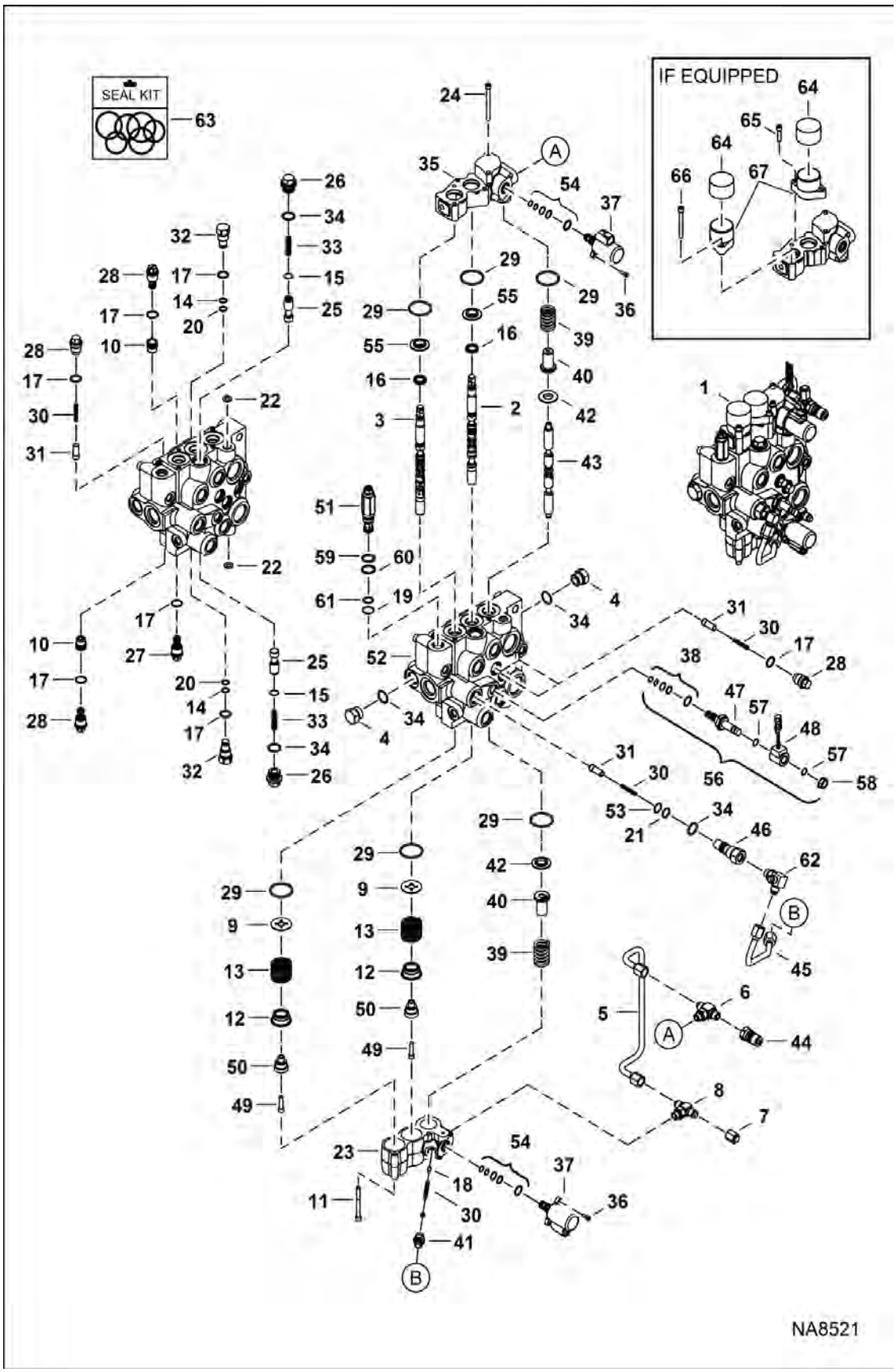

HYDRAULIC CONTROL VALVE (Cont'd)

(AHC, ACS & SJC) (D Series Coil)

Ref No	Part Number	Description	Remarks	Serial Number	Qty
38	6669732	KIT, SEAL			1
39	7121399	SPRING			2
40	6814694	RETAINER			2
41	7202329	FITTING, HYD CONNECTOR W/SCREEN			1
42	7138376	BUSHING			2
43	7112383	AUX SPOOL			1
44	6684125	COUPLER			1
44	6684125EF	COUPLER ISO MALE B 3/8 BDY 3/8 SAE			1
45	7202325	TUBELINE, HYD VALVE CONTROL			1
46	7134522	PLUG	W/Ref. 21, 34 & 53		1
47	6667687	VALVE, STEM SOLENOID	W/Ref. 38		1
48	6675559	COIL	W/Ref. 57 & 58 - D series - black case - metri pack connector		1
49	7102652	SCREW			2
50	6592109	ADAPTER			2
51	7219324	VALVE, RELIEF	W/ O-rings - pressure to be set in field - Was 7219323 [D]		1
52		BODY	NLA		1
53	58K016	O-RING 10			1
54	7008771	KIT, SEAL			2
55	7211393	RETAINER, SEAL			2
56	6672471	VALVE, SOLENOID	Ref. 38, 47, 48 & 57		1
57	54K20028	O RING 10			2
58	6668820	NUT			1
59	58K017	O-RING 10			1
60	6665569	RING, BACK-UP			1
61	25K20016	O RING 10			1
62	6725182	TEE			1
63	7218923	KIT, SEAL COMPLETE			1
63	7218924	KIT, SEAL	Ref. 16, 17, 22 & 29		1
63	7123965	KIT, SEAL	external fitting - Ref. 14, 17, 20, 22 & 34		1
64	6662848	CAP			2
65	29G416	BOLT			2
66	69G436	BOLT			2
67	7101345	BONNET, DETENT HYD VALVE			2

HYDRAULIC CONTROL VALVE
(AHC, ACS & SJC) (E Series Coil)

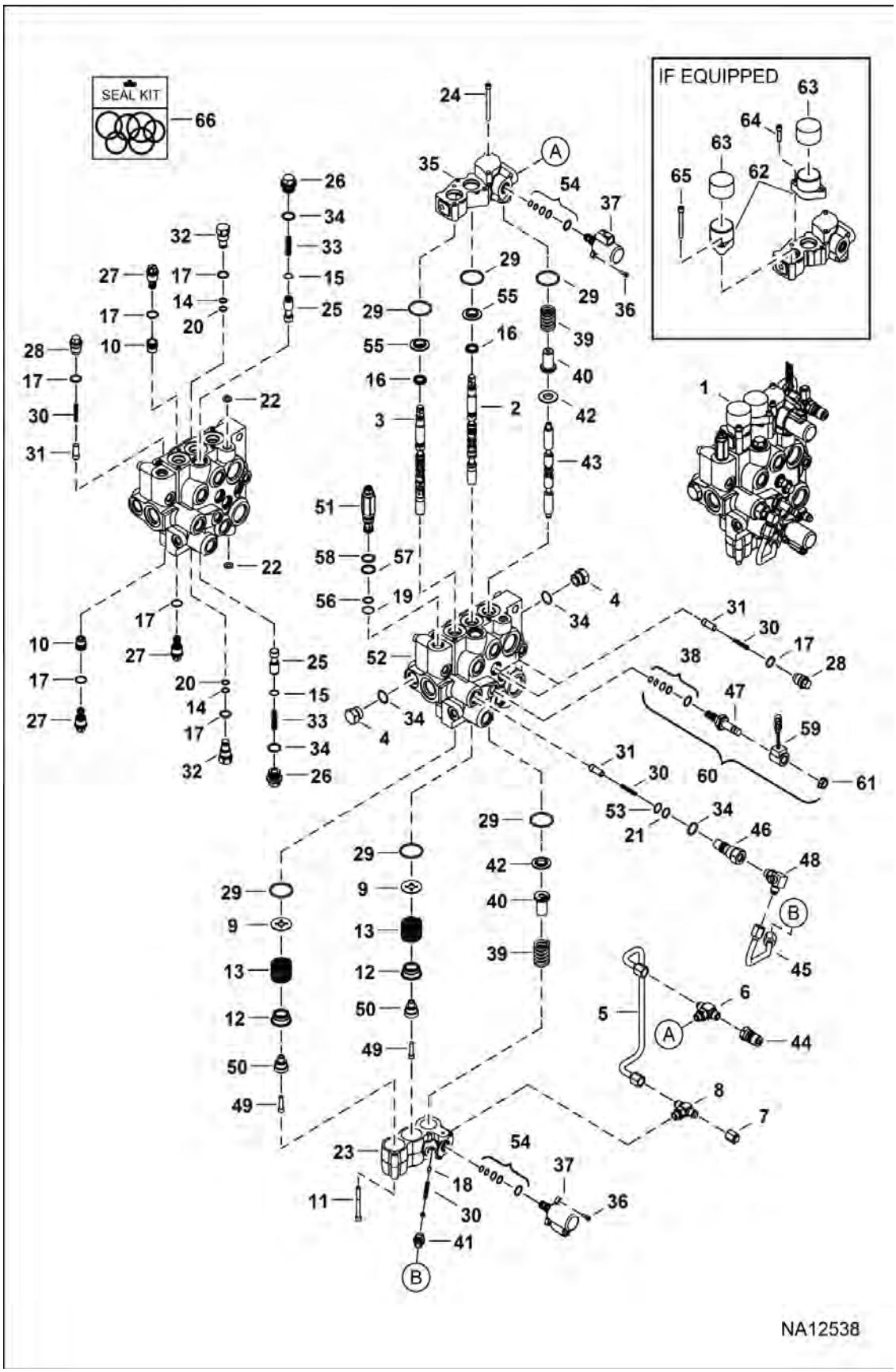

HYDRAULIC CONTROL VALVE (Cont'd)

(AHC, ACS & SJC) (E Series Coil)

Ref No	Part Number	Description	Remarks	Serial Number	Qty
1	7297078	VALVE, CONTROL	Ref. 2-58		1
2	7108242	SPOOL, TILT			1
3	7266560	SPOOL, LIFT	Was 7209496 [A]		1
4	24K7	PLUG	W/Ref. 34		2
5	7157291	TUBELINE			1
6	7232515	FITTING, HYD TEE			1
7	36K5	CAP			1
8	19KB0606	FITTING, HYD TEE			1
8	79K6	O RING 10			1
9	7211397	WASHER, SPRING			2
10	7208227	SEAT, RELIEF PORT			2
11	29G444	BOLT			3
12	6592100	COLLAR			2
13	6587580	SPRING			2
14	58K013	O-RING 10			2
15	7214312	RING, RETAINING			2
16	7031367	SEAL, SPOOL			2
17	79K8	O RING 10			x
18	7280785	VALVE, POPPET	Was 7214722 [A]		1
19	6665570	CLYD RING			1
20	73K013	RING, BACK-UP			2
21	73K016	RING, BACK-UP			1
22	55K204	O RING 10			2
23	7222562	BLOCK, VALVE CONTROL HYD			1
24	29G444	BOLT			3
25	7217075	SPOOL, BICS			2
26	7219703	PLUG, BICS	W/Ref. 34		2
27	6684646	VALVE, ANTI-CAV	anti-cav - W/Ref. 17		x
28	7134520	PLUG	check valve - W/Ref. 17		3
28		VALVE, ANTI-CAV	See attachment Operation & Maintenance manual for correct relief valve combination		x
29	7219080	O-RING			6
30	7166339	SPRING, LOAD CHECK	44,4 mm (1.75") long - Was 7239824 [C]		5
31	7166047	SEAT, CHECK VALVE			4
32	6816549	PLUG ASSY PORT RLF	W/Ref. 14, 17 & 20		2
33	7203643	SPRING, VALVE			2
34	79K10	O RING 10			x
35	7166388	ASSY, ACS			1
36	7002716	SCREW			2
37	6698434	VALVE, PROPORTIONAL			1

HYDRAULIC CONTROL VALVE (Cont'd)
(AHC, ACS & SJC) (E Series Coil)

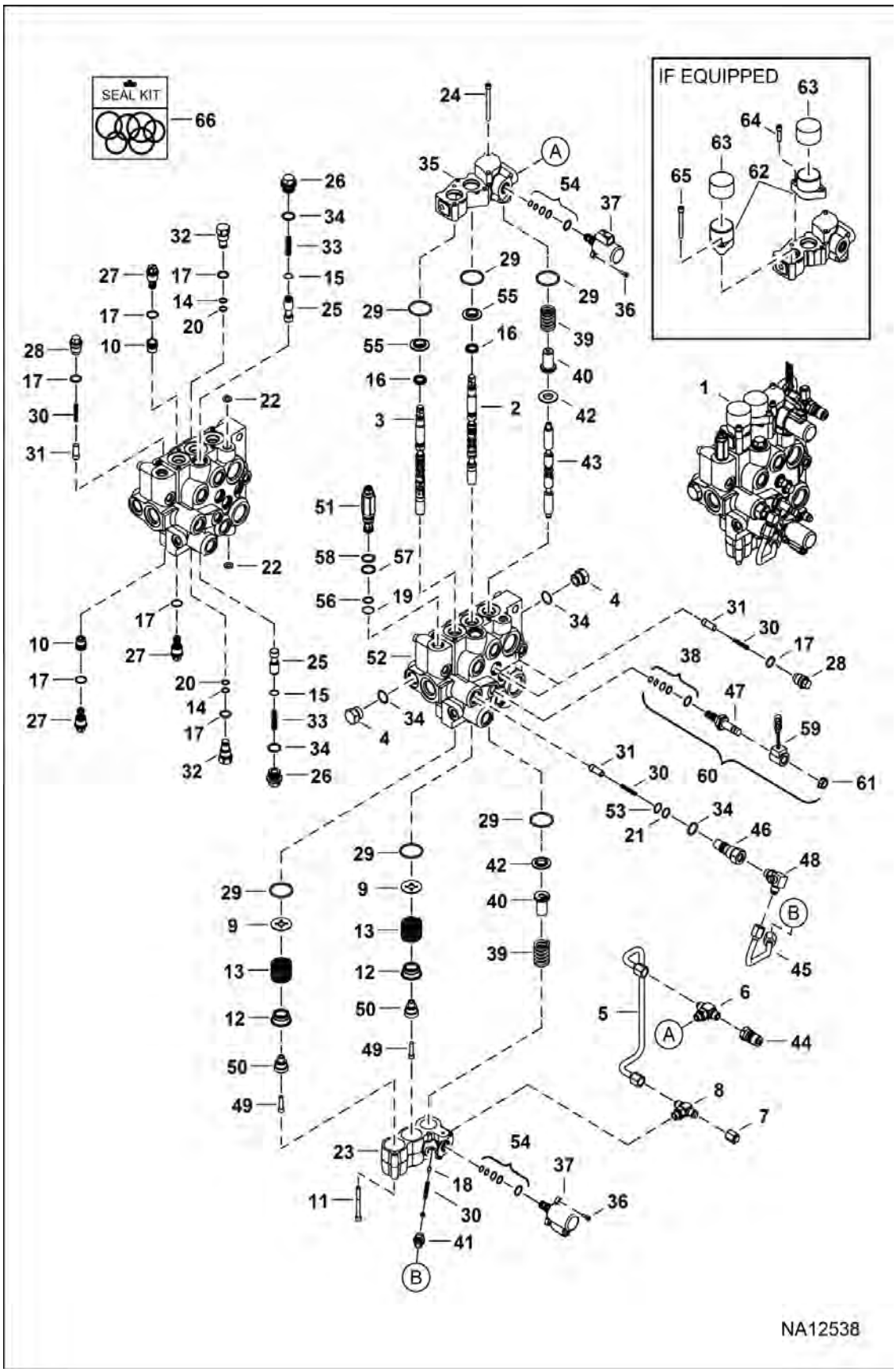

HYDRAULIC CONTROL VALVE (Cont'd)

(AHC, ACS & SJC) (E Series Coil)

Ref No	Part Number	Description	Remarks	Serial Number	Qty
38	6669732	KIT, SEAL			1
39	7121399	SPRING			2
40	6814694	RETAINER			2
41	7202329	FITTING, HYD CONNECTOR W/SCREEN			1
42	7138376	BUSHING			2
43	7112383	AUX SPOOL			1
44	6684125	COUPLER			1
44	6684125EF	COUPLER ISO MALE B 3/8 BDY 3/8 SAE			1
45	7202325	TUBELINE, HYD VALVE CONTROL			1
46	7134522	PLUG	W/Ref. 21, 34 & 53		1
47	7272731	VALVE, SOLENOID	W/Ref. 38		1
48	6725182	TEE			1
49	7102652	SCREW			2
50	6592109	ADAPTER			2
51	7219324	VALVE, RELIEF	W/ O-rings - pressure to be set in field - Was 7219323 [D]		1
52		BODY	NLA		1
53	58K016	O-RING 10			1
54	7008771	KIT, SEAL			2
55	7211393	RETAINER, SEAL			2
56	25K20016	O RING 10			1
57	6665569	RING, BACK-UP			1
58	58K017	O-RING 10			1
59	7272732	ASSY, COIL SOLENOID	W/Ref. 61 - E series - silver case - 208 mm (8.2") lead - metri pack connector		1
59	7301672	COIL SOLENOID	W/Ref. 61 - E series - silver case - integrated Deutsch connector		1
60	7304852	VALVE, CARTRIDGE	Ref. 38, 47, 59 (7272732 coil) & 61		1
60	7314079	VALVE CARTRIDGE	Ref. 38, 47, 59 (7301672 coil) & 61		1
61	7020647	NUT	Was 6668820 [B,D]		1
62	7101345	BONNET, DETENT HYD VALVE			2
63	6662848	CAP			2
64	29G416	BOLT			2
65	69G436	BOLT			2
66	7218923	KIT, SEAL COMPLETE			1
66	7218924	KIT, SEAL	Ref. 16, 17, 22 & 29		1
66	7123965	KIT, SEAL	external fitting - Ref. 14, 17, 20, 22 & 34		1

MANUAL LIFT RELEASE VALVE

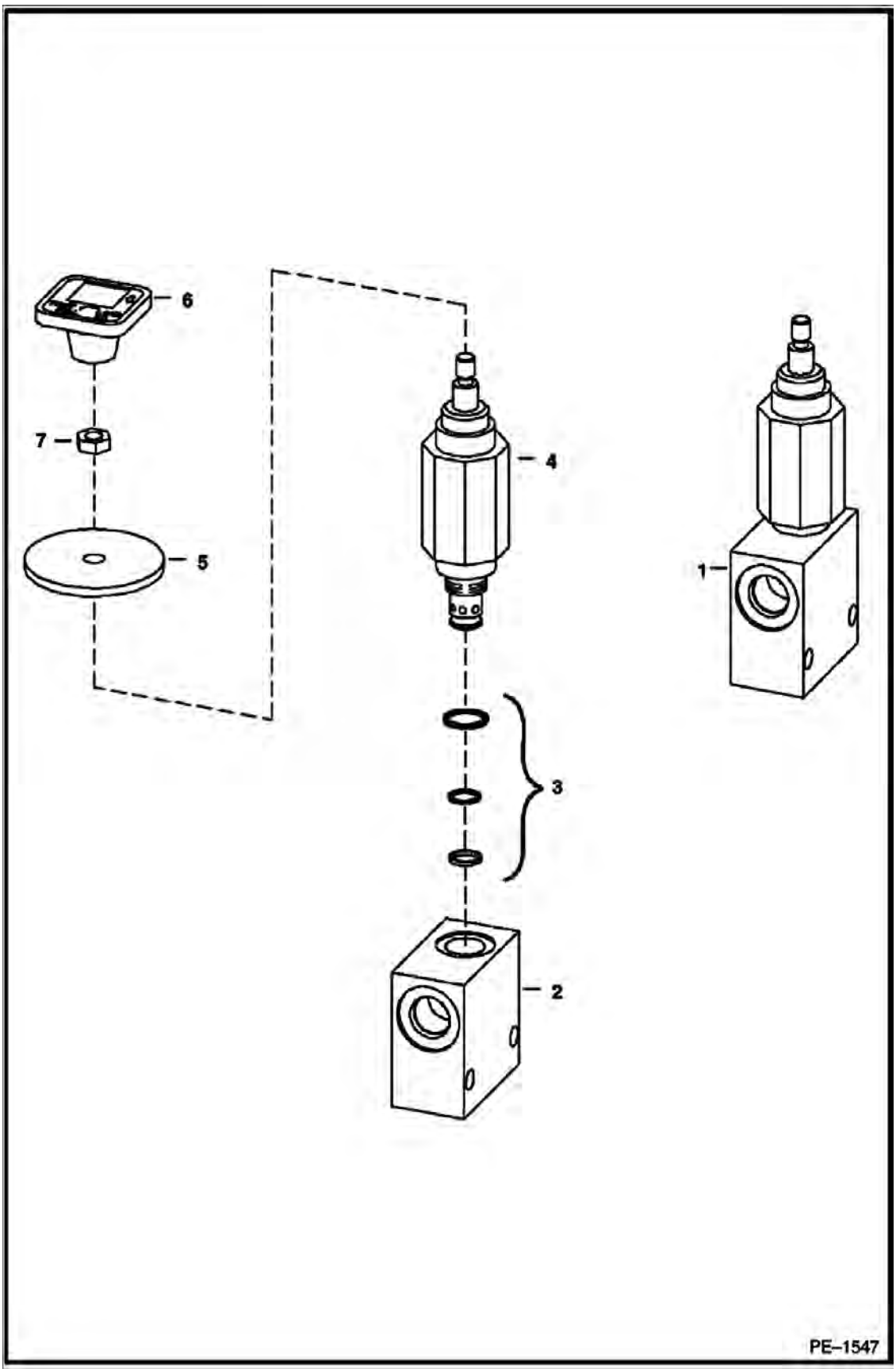

MANUAL LIFT RELEASE VALVE (Cont'd)

Ref No	Part Number	Description	Remarks	Serial Number	Qty
1	7230495	LIFTARM BYPASS	Ref. 2-4		1
2		BLOCK	NSS - Order Ref. 1		1
3	6669087	SEAL KIT			1
4		VALVE	NSS - Order Ref. 1		1
5	6707101	SEAL	neoprene		1
6	6737524	HANDLE CONTROL	red square		1
7	7D4	NUT HEX JAM			1

HYDROSTATIC CIRCUITRY
(Tank & Filter)

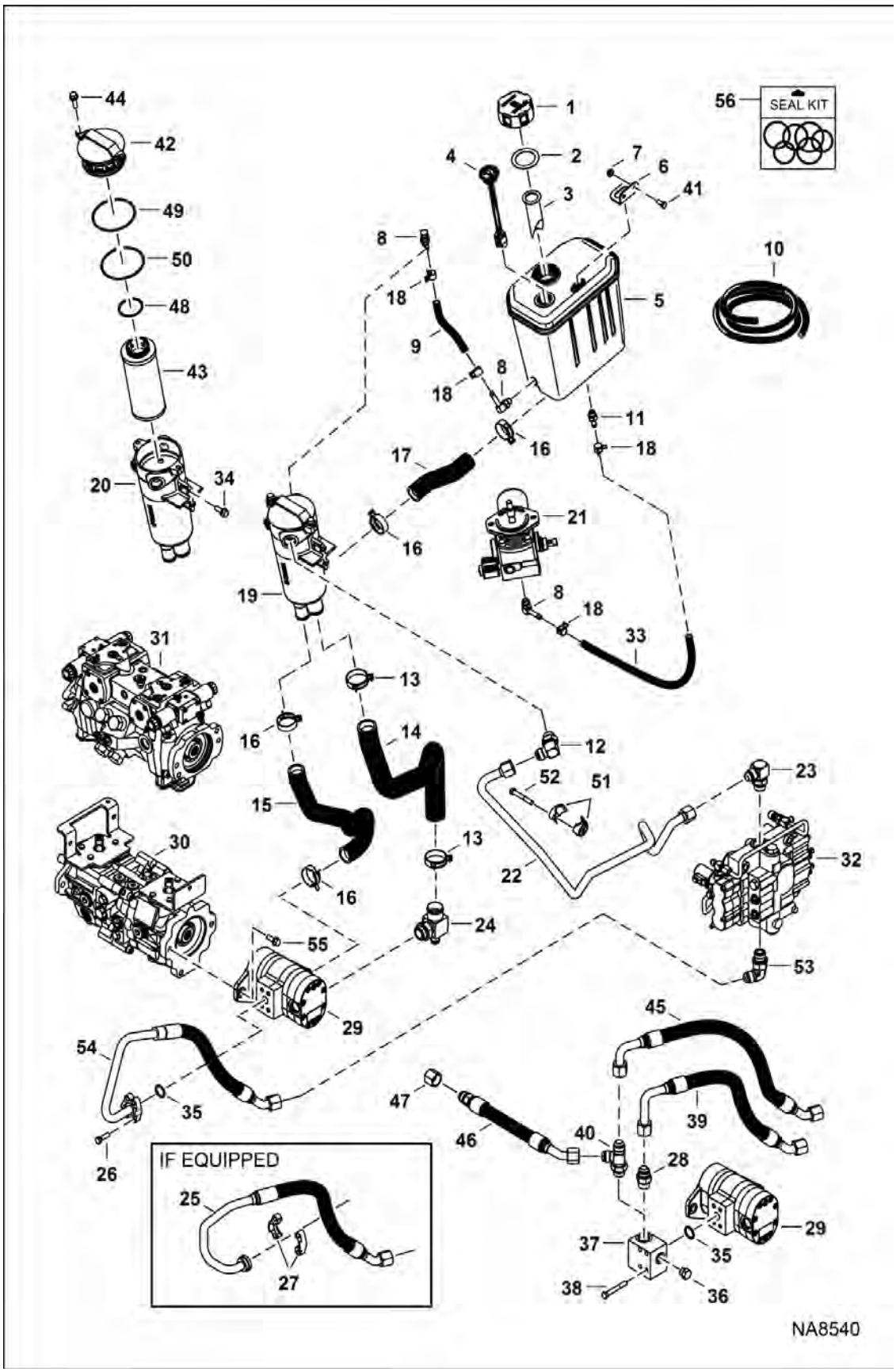

Illustration NA8540

Model S450 MT2KAMEA
6990825

HYDROSTATIC CIRCUITRY (Cont'd)

(Tank & Filter)

Ref No	Part Number	Description	Remarks	Serial Number	Qty
1	6727475	CAP HYDRAULIC			1
2	6700631	GASKET CAP TANK HYDR			1
3	7003487	SCREEN			1
4	7244201	GAUGE, SIGHT			1
5	7199370	TANK, HYD			1
6	7199376	BRACKET			1
7	57D5	NUT			2
8	6727313	FITTING, ELBOW			3
8	79K6	O RING 10			x
9		HOSE	NLA - 200 mm (7.9") - Order Ref. 10		1
10	6586251	HOSE, BULK	sold per foot		x
11	7158632	CONNECTOR			1
12	17KB1212	FITTING, HYD ELBOW			1
12	79K12	O RING 10			x
13	5HM47	CLAMP			2
14	7199372	HOSE, HYD FORMED			1
15	7199373	HOSE, HYD FORMED			1
16	5HM42	HOSECLAMP			4
17	7183694	HOSE, HYD FORMED			1
18	5HM16	CLAMP			4
19	7024035	FILTER, OIL HYD ASSY	Ref. 42-44 & 48-50		1
20		FILTER, OIL HYD ASSY	NSS - Order Ref. 19 - Was 7024035 [A]		1
21		MOTOR, HYD COOLING FAN	See Illustration COOLING FAN MOTOR / NA6655		1
22	7199371	TUBELINE HYD			1
23	7101371	ELBOW			1
23	79K16	O RING 10			x
24		FITTING	See Illustration HYDROSTATIC CIRCUITRY / NA8516 - Was 7158921 [B]		1
24	79K12	O RING 10			x
25	7243717	TUBELINE, HYD			1
26	17C620	BOLT			4
27	19J12	CLAMP			2
28	15KB1212	FITTING, HYD CONNECTOR			1
28	79K12	O RING 10			x
29		PUMP, GEAR	See Illustration GEAR PUMP / NA8739 - standard flow hydraulics		1
30		PUMP, HYD	See Illustration HYDROSTATIC PUMP/GEAR PUMP / NA8524 - manual, AHC, ACS		1
31		PUMP, HYD	See Illustration HYDROSTATIC PUMP/GEAR PUMP / NA8524 - SJC		1
32		VALVE, CONTROL	See Illustration HYDRAULIC CONTROL VALVE / NA8520 - manual controls		1

HYDROSTATIC CIRCUITRY (Cont'd)
(Tank & Filter)

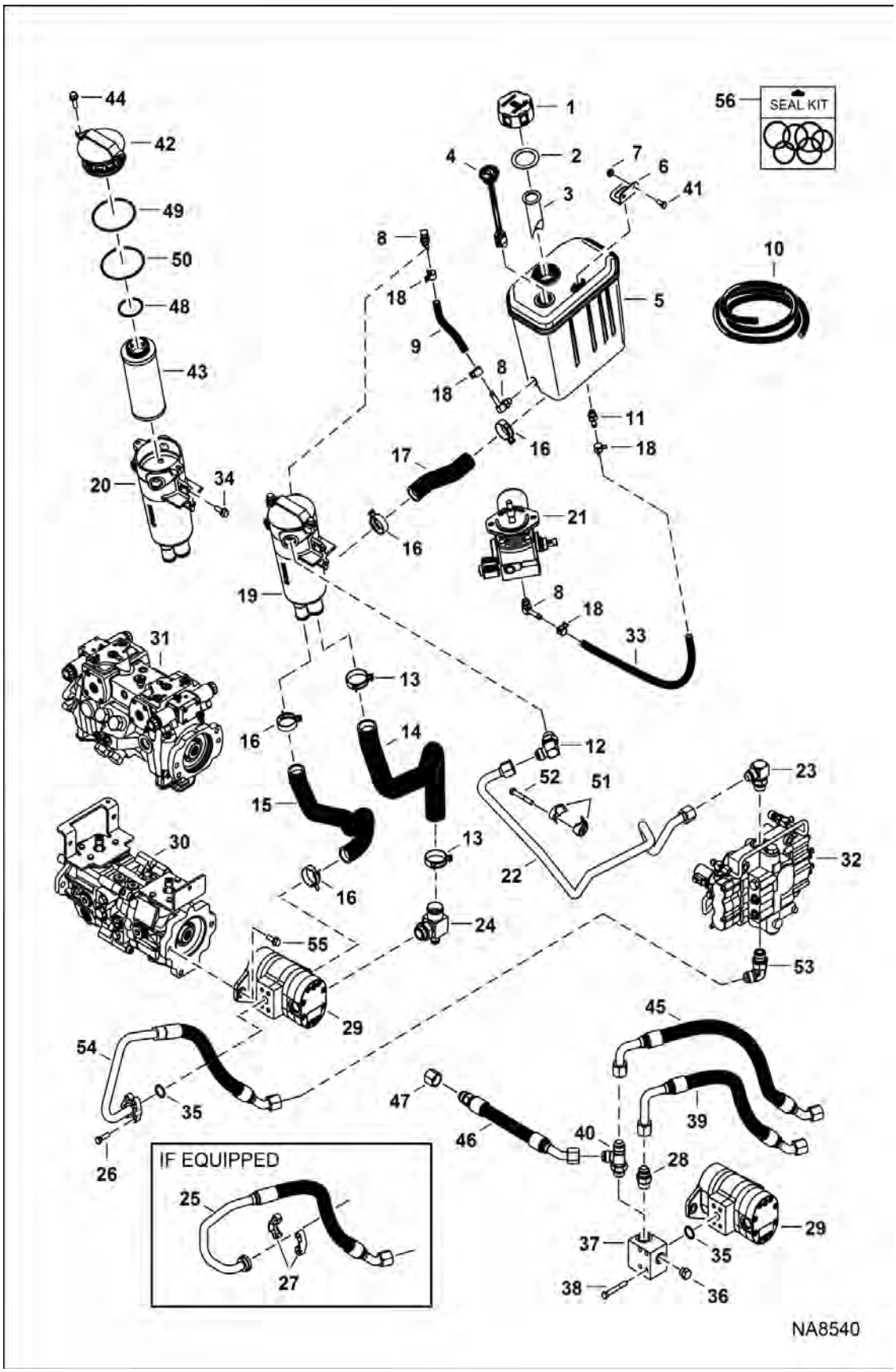

Illustration NA8540

Model S450 MT2KAMEA
6990825

HYDROSTATIC CIRCUITRY (Cont'd)

(Tank & Filter)

Ref No	Part Number	Description	Remarks	Serial Number	Qty
32		VALVE, CONTROL	See Illustration HYDRAULIC CONTROL VALVE / NA8521 - ACS, AHC & SJC		1
33		HOSE	NLA - 766 mm (30.2") - Order Ref. 10		1
34	35C616	BOLT 5			2
35	55K214	O-RING			2
36	24K6	FITTING			1
37	7226207	MANIFOLD, OUTLET PUMP	See Illustration SOUND/NOISE REDUCTION OPTION / NA8235		1
37		VALVE, POWER BOB-TACH	See Illustration POWER BOB-TACH / NA2823 , See Illustration POWER BOB-TACH / NA10383		1
38	17C644	BOLT			4
39	7233375	HOSE, HYD			1
40	21KB1212	FITTING, HYD TEE			1
40	79K12	O RING 10			x
41	35C512	BOLT			2
42	7024038	FILTER, OIL HYD CANISTER COVER	W/Ref. 49 & 50		1
43	7024037	FILTER, OIL HYD ELEMENT	W/Ref. 48		1
44	7024429	BOLT			2
45	7233394	HOSE, HYD			1
46	7227584	HOSE, HYD			1
47	36K8	CAP			1
48		O-RING	NSS - Order Ref. 43		1
49		O-RING	NSS - Order Ref. 56 - top - Was 7260063 [D]		1
50		O-RING	NSS - Order Ref. 56 - bottom - Was 7025124 [A]		1
51	7100462	CLAMP			2
52	84G3132	SCREW			1
53	7101797	ELBOW			1
54	7256320	HOSE, HYD ASSY			1
55	45C828	SCREW HEX FLNG W/T			2
56	7309470	KIT SEAL	W/Ref. 49 & 50		1

HYDROSTATIC CIRCUITRY
(Cooler)

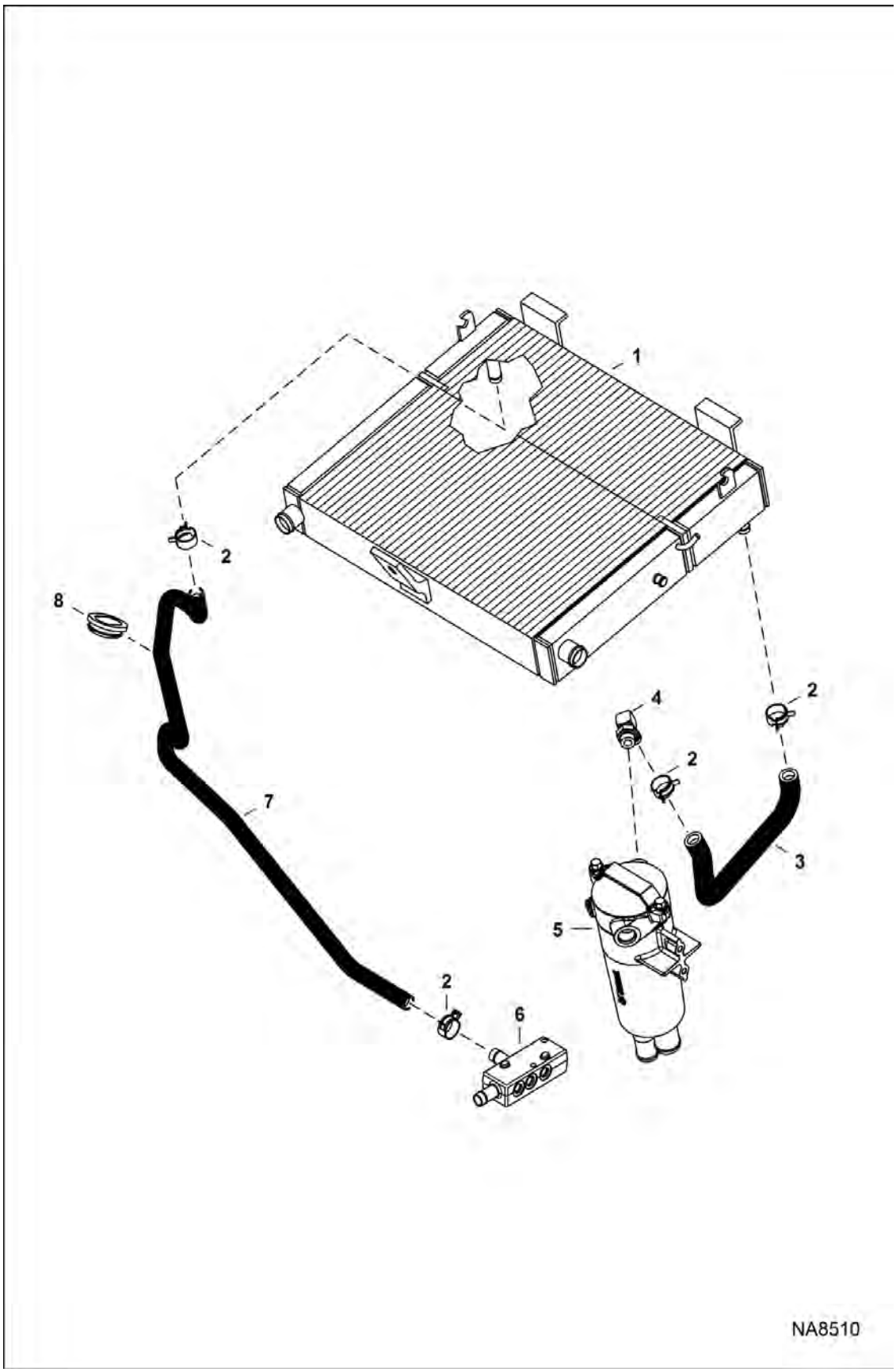

Illustration NA8510

Model S450 MT2KAMEA
6990825

HYDROSTATIC CIRCUITRY (Cont'd)
(Cooler)

Ref No	Part Number	Description	Remarks	Serial Number	Qty
1		EXCHANGER, OIL WATER AIR	See Illustration RADIATOR/COOLER ASSEMBLY / NA8541		1
2	5HM27	CLAMP			4
3	7230451	HOSE, HYD FORMED			1
4	6587230	ELBOW			1
4	79K10	O RING 10			x
5		FILTER, OIL HYD TANK ASSY	See Illustration HYDROSTATIC CIRCUITRY / NA8540		1
6		MANIFOLD, DRAIN CASE	See Illustration HYDROSTATIC CIRCUITRY / NA8516		1
7	7236071	HOSE, HYD FORMED			1
8	7245552	GROMMET			1

HYDROSTATIC CIRCUITRY
(Cooling Fan)

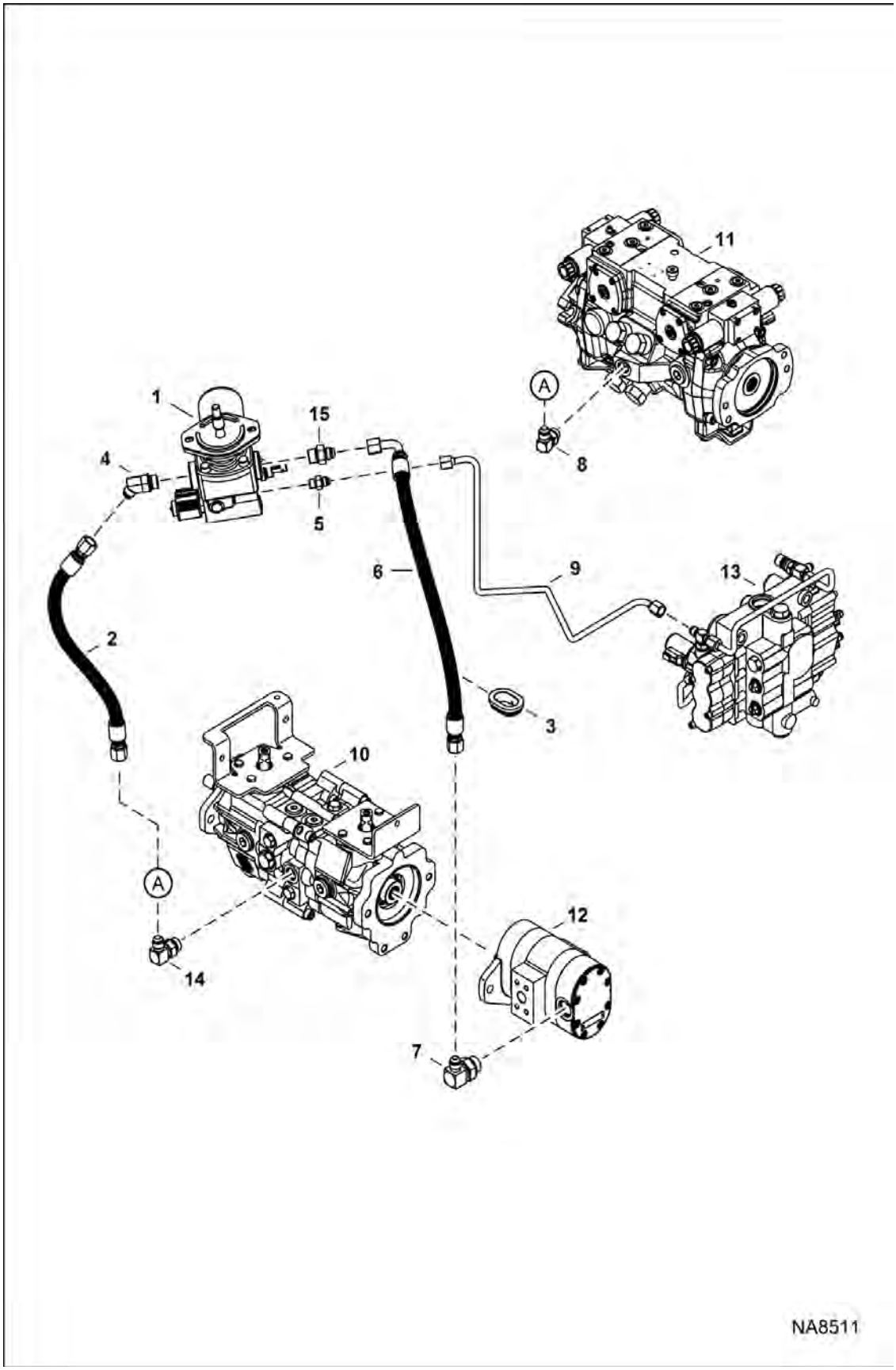

Illustration NA8511

HYDROSTATIC CIRCUITRY (Cont'd)
(Cooling Fan)

Ref No	Part Number	Description	Remarks	Serial Number	Qty
1		MOTOR, HYD COOLING FAN	See Illustration COOLING FAN MOTOR / NA6655		1
2	7243662	HOSE, HYD			1
3	7002740	GROMMET			2
4	18KB0810	FITTING, HYD ELBOW			1
4	79K10	O RING 10			x
5	15KB0606	FITTING, HYD CONNECTOR			1
5	79K6	O RING 10			x
6	7243577	HOSE, HYD			1
7	17KB0812	FITTING, HYD ELBOW			1
7	79K8	O RING 10			x
8	17KB0808	FITTING, HYD ELBOW			1
8	79K8	O RING 10			x
9	7201325	TUBELINE HYD			1
10		PUMP, HYD	See Illustration HYDROSTATIC PUMP/GEAR PUMP / NA8524 - manual controls, AHC, ACS		1
11		PUMP, HYD	See Illustration HYDROSTATIC PUMP/GEAR PUMP / NA8524 - SJC		1
12		PUMP, GEAR	See Illustration GEAR PUMP / NA8739 - standard flow hydraulics		1
13		VALVE, CONTROL	See Illustration HYDRAULIC CONTROL VALVE / NA8521 - ACS, AHC & SJC		1
13		VALVE, CONTROL	See Illustration HYDRAULIC CONTROL VALVE / NA8520 - manual controls		1
14	17KB0810	FITTING, HYD ELBOW			1
14	79K8	O RING 10			x
15	15KB0810	FITTING, HYD CONNECTOR			1
15	79K10	O RING 10			x

HYDROSTATIC CIRCUITRY
(Cooling Fan)

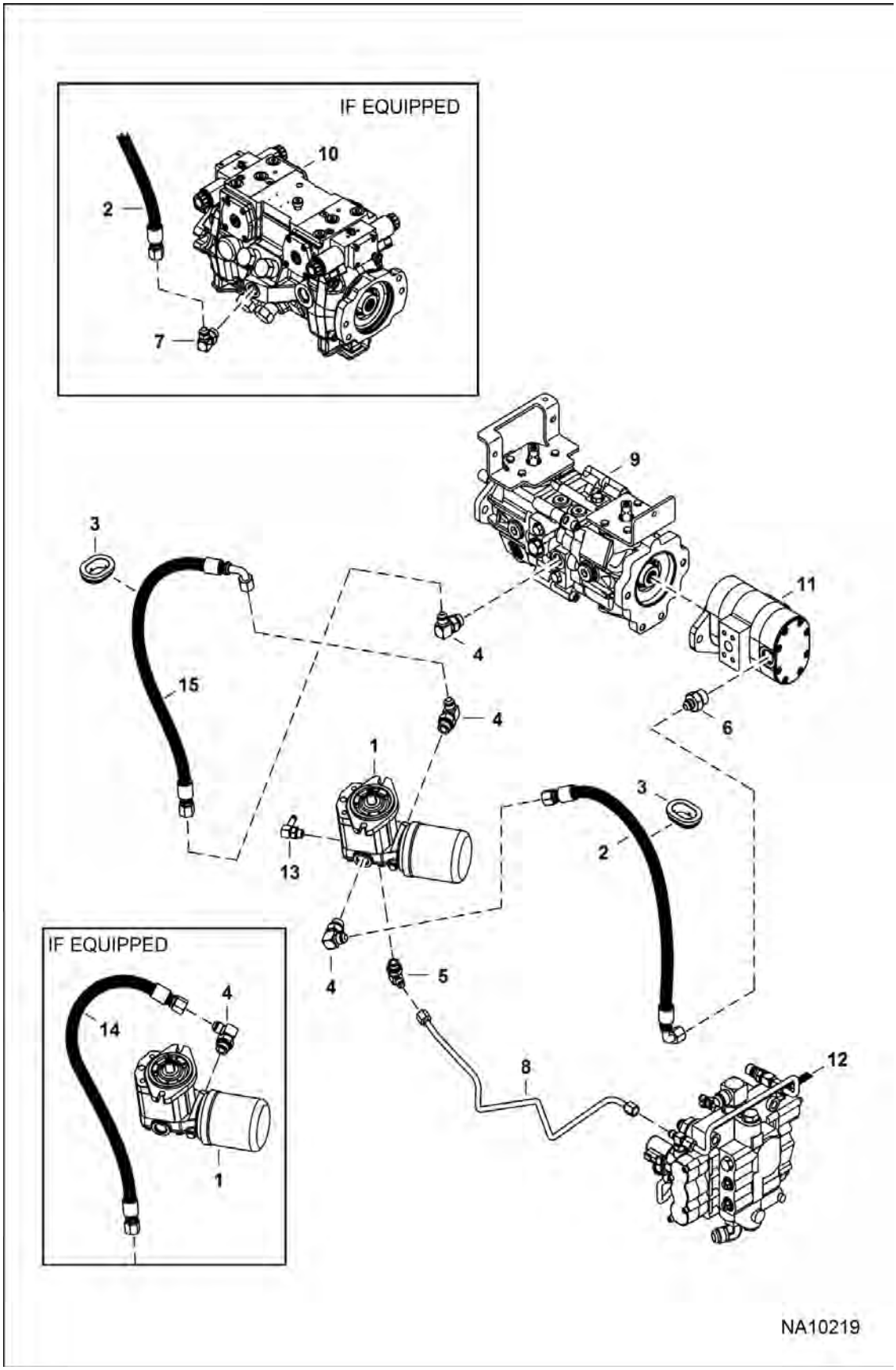

HYDROSTATIC CIRCUITRY (Cont'd)
(Cooling Fan)

Ref No	Part Number	Description	Remarks	Serial Number	Qty
1		MOTOR, HYD COOLING FAN	See Illustration COOLING FAN MOTOR / NA12779		1
2	7246498	HOSE, HYD ASSY			1
3	7002740	GROMMET			2
4	17KB0810	FITTING, HYD ELBOW			3
4	79K10	O RING 10			x
5	7245503	FITTING, HYD ELBOW			1
6	15KB0812	FITTING, HYD CONNECTOR			1
6	79K12	O RING 10			x
7	17KB0808	FITTING, HYD ELBOW			1
7	79K8	O RING 10			x
8	7235766	TUBELINE		B1E611001 - 14162	1
8	7261862	TUBELINE, HYD		B1E614163 & Above	1
9		PUMP,HYD	See Illustration HYDROSTATIC PUMP/GEAR PUMP / NA8524		1
10		PUMP,HYD	See Illustration HYDROSTATIC PUMP/GEAR PUMP / NA8524		1
11		PUMP, GEAR	See Illustration GEAR PUMP / NA8739		1
12		VALVE, CONTROL	See Illustration HYDRAULIC CONTROL VALVE / NA8521		1
12		VALVE, CONTROL	See Illustration HYDRAULIC CONTROL VALVE / NA8520		1
13	6727313	FITTING, ELBOW			1
14	7246497	HOSE, HYD ASSY		B1E611001 - B1E618197	1
15	7246498	HOSE, HYD ASSY		B1E618198 & Above	1

HYDROSTATIC CIRCUITRY

(Hydrostatic Pump) (Case Drain Manifold)
(S/N B1E611001 - B1E611730)

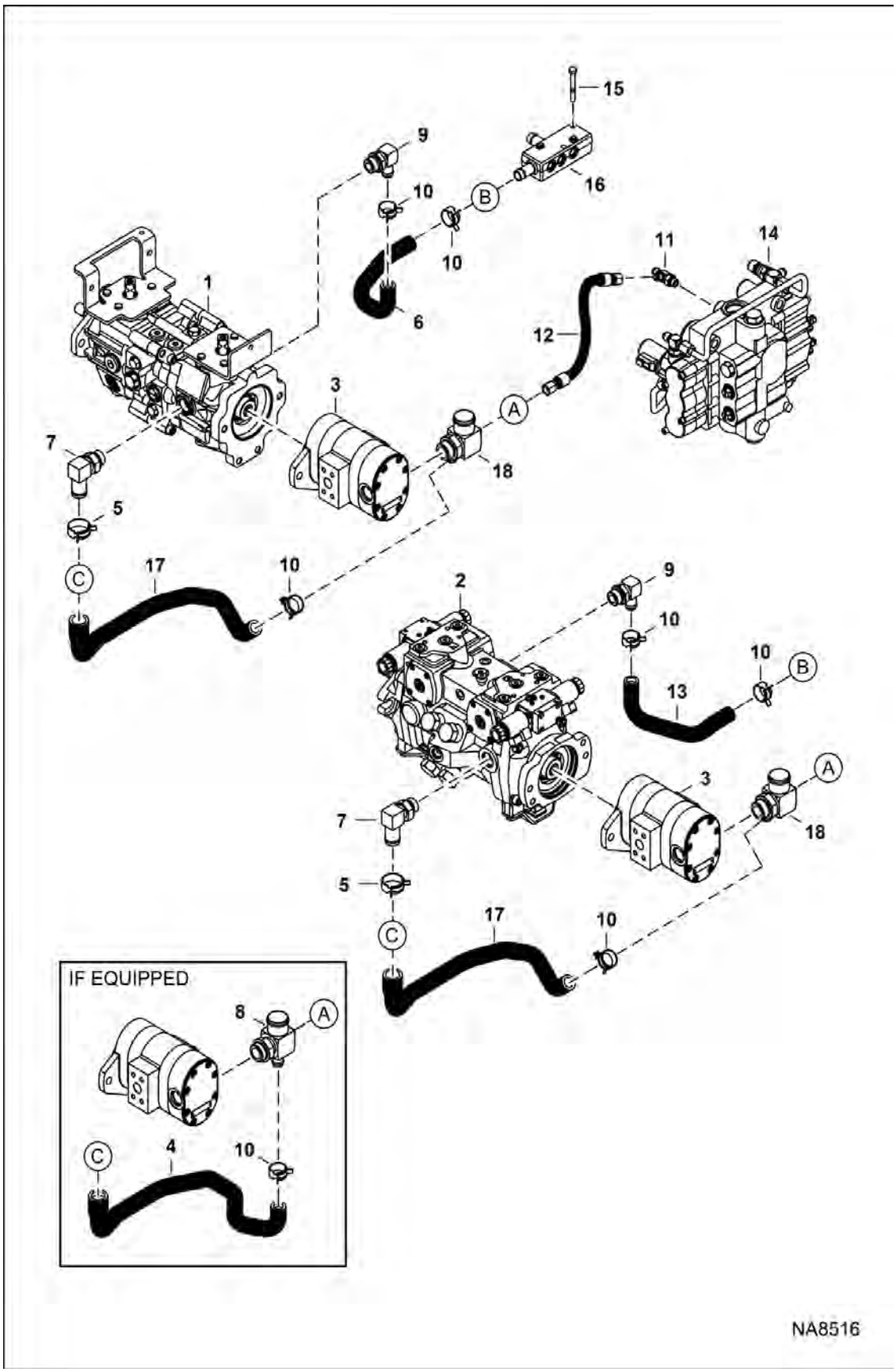

HYDROSTATIC CIRCUITRY (Cont'd)

(Hydrostatic Pump) (Case Drain Manifold)
(S/N B1E611001 - B1E611730)

Ref No	Part Number	Description	Remarks	Serial Number	Qty
1		PUMP, HYD	See Illustration HYDROSTATIC PUMP/GEAR PUMP / NA8524 - manual controls, AHC, ACS		1
2		PUMP, HYD	See Illustration HYDROSTATIC PUMP/GEAR PUMP / NA8524 - SJC		1
3		PUMP, GEAR	See Illustration GEAR PUMP / NA8739 - standard flow hydraulics		1
4	7203000	HOSE, HYD FORMED		B1E611001 - B1E615315	1
5	5HM35	HOSECLAMP			1
6	7196827	HOSE, DRAIN			1
7	7015518	VALVE, CHECK			1
8	7158921	FITTING	See Illustration HYDROSTATIC CIRCUITRY / NA8540	B1E611001 - B1E615315	1
8	79K12	O RING 10			x
9	7113631	ELBOW			1
9	79K12	O RING 10			x
10	5HM27	CLAMP			3
11	6817529	TEE	See Illustration HYDROSTATIC CIRCUITRY / NA8539		1
11	79K6	O RING 10			x
12	7213590	HOSE, HYD			1
13	7196826	HOSE, DRAIN			1
14		VALVE, CONTROL	See Illustration HYDRAULIC CONTROL VALVE / NA8520 - manual controls		1
14		VALVE, CONTROL	See Illustration HYDRAULIC CONTROL VALVE / NA8521 - ACS, AHC & SJC		1
14		VALVE, CONTROL	See Illustration HYDRAULIC CONTROL VALVE / NA8611 - no front auxiliary valve		1
15	84G3132	SCREW			1
16		MANIFOLD, DRAIN CASE	See Illustration MANUAL LIFT RELEASE SYSTEM / NA8517 - Was 7201981 [B], See Illustration HYDROSTATIC CIRCUITRY / NA8539 - Was 7201981 [B], See Illustration HYDROSTATIC CIRCUITRY / NA12385 - Was 7201981 [B], See Illustration ENGINE ELECTRICAL CIRCUITRY / NA8555 - Was 7201981 [B]		1
17	7257350	HOSE, HYD FORMED		B1E615315 - B1E611730	1
18	7257351	FITTING		B1E615315 - B1E611730	1
18	79K12	O RING 10			x

HYDROSTATIC CIRCUITRY

(Hydrostatic Pump) (Case Drain Manifold)
(S/N B1E611731 & Above)

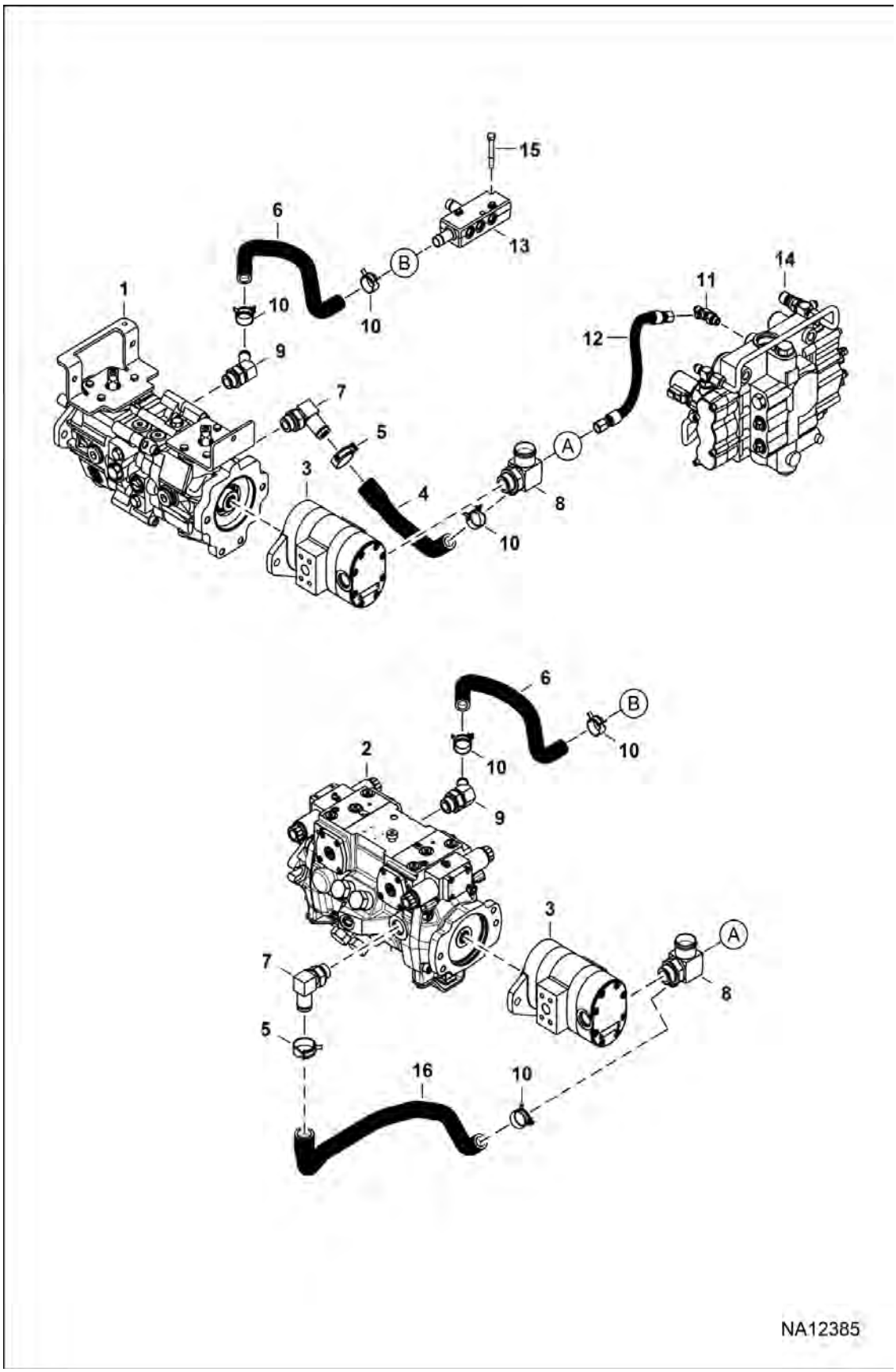

HYDROSTATIC CIRCUITRY (Cont'd)

(Hydrostatic Pump) (Case Drain Manifold)
(S/N B1E611731 & Above)

Ref No	Part Number	Description	Remarks	Serial Number	Qty
1		PUMP, HYD	See Illustration HYDROSTATIC PUMP/GEAR PUMP / NA8524 - manual controls, AHC, ACS		1
2		PUMP, HYD	See Illustration HYDROSTATIC PUMP/GEAR PUMP / NA8524 - SJC		1
3		PUMP, GEAR	See Illustration GEAR PUMP / NA8739 - standard flow hydraulics		1
4	7268946	HOSE, DRAIN			1
5	5HM35	HOSECLAMP			1
6	7261886	HOSE, DRAIN			1
7	7015518	VALVE, CHECK			1
8	7257351	FITTING	See Illustration HYDROSTATIC CIRCUITRY / NA8540		1
8	79K12	O RING 10			x
9	7261916	FITTING			1
9	79K12	O RING 10			x
10	5HM27	CLAMP			3
11	6817529	TEE	See Illustration HYDROSTATIC CIRCUITRY / NA8539		1
11	79K6	O RING 10			x
12	7213590	HOSE, HYD			1
13		MANIFOLD, DRAIN CASE	See Illustration MANUAL LIFT RELEASE SYSTEM / NA8517 - Was 7201981 [B], See Illustration HYDROSTATIC CIRCUITRY / NA8539 - Was 7201981 [B], See Illustration HYDROSTATIC CIRCUITRY / NA8516 - Was 7201981 [B], See Illustration ENGINE ELECTRICAL CIRCUITRY / NA8555 - Was 7201981 [B]		1
14		VALVE, CONTROL	See Illustration HYDRAULIC CONTROL VALVE / NA8520 - manual controls		1
14		VALVE, CONTROL	See Illustration HYDRAULIC CONTROL VALVE / NA8521 - ACS, AHC & SJC		1
15	84G3132	SCREW			1
16	7257350	HOSE, HYD FORMED			1

HYDROSTATIC CIRCUITRY
(Drive Motor)

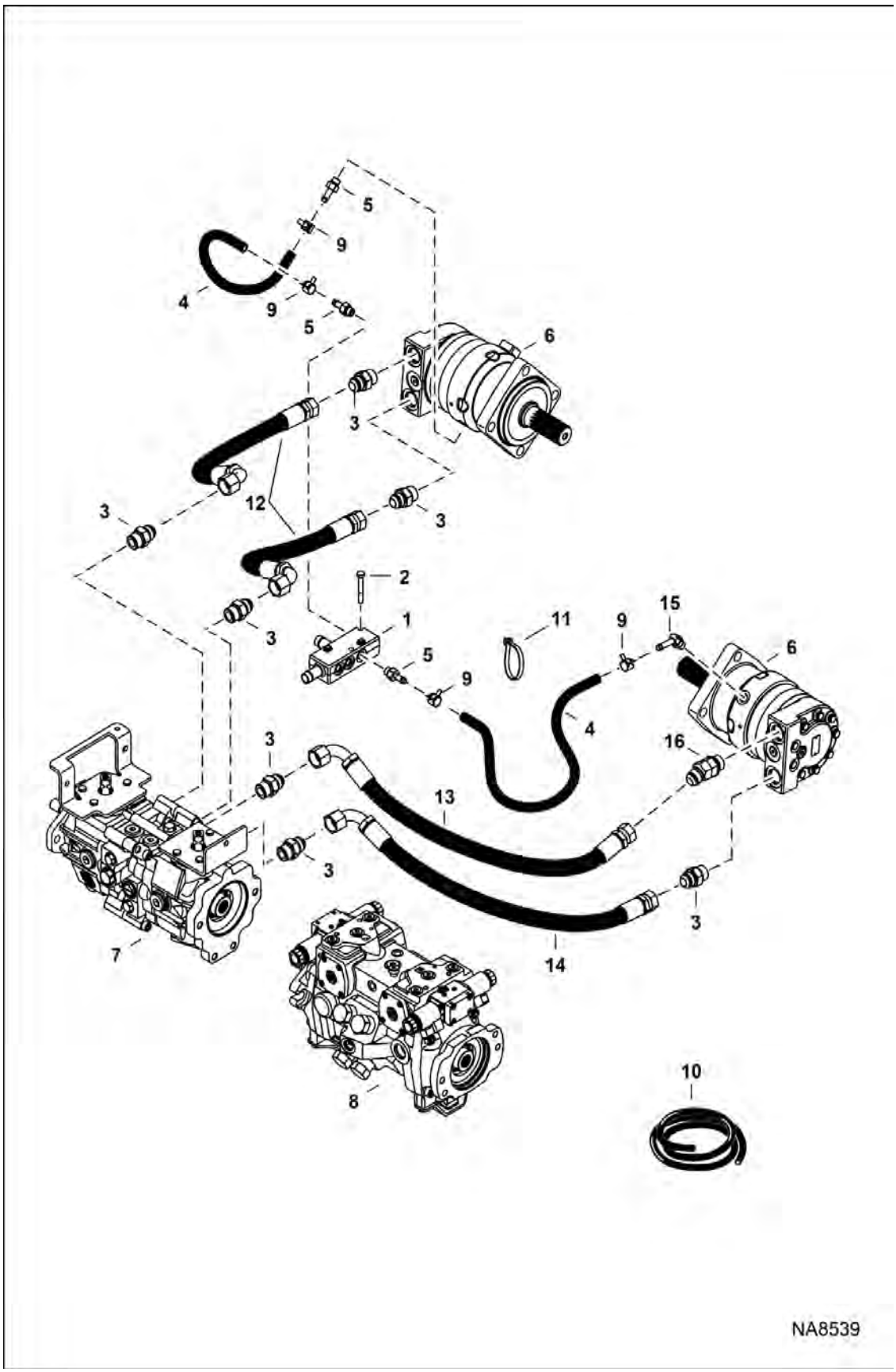

HYDROSTATIC CIRCUITRY (Cont'd)

(Drive Motor)

Ref No	Part Number	Description	Remarks	Serial Number	Qty
1		MANIFOLD, DRAIN CASE	See Illustration HYDROSTATIC CIRCUITRY / NA8516 - Was 7201981 [B], See Illustration MANUAL LIFT RELEASE SYSTEM / NA8517 - Was 7201981 [B], See Illustration HYDROSTATIC CIRCUITRY / NA12385 - Was 7201981 [B], See Illustration ENGINE ELECTRICAL CIRCUITRY / NA8555 - Was 7201981 [B]		1
2	84G3132	SCREW			2
3	15KB1212	FITTING, HYD CONNECTOR			7
3	79K12	O RING 10			x
4		HOSE, HYD	NLA - Order 533 mm (21") of Ref. 10		2
5	7158632	CONNECTOR			3
5	79K6	O RING 10			x
6		MOTOR, DRIVE HYD	See Illustration HYDROSTATIC MOTOR / NA9493 - single speed - Was 7227179	B1E611001 - B1E613515	2
6	7267719	MOTOR, DRIVE HYD	See Illustration HYDROSTATIC MOTOR / NA10947 - single speed	B1E613516 & Above	2
6		MOTOR, DRIVE HYD	See Illustration HYDROSTATIC MOTOR / NA9493A - 2-speed - Was 7227178	B1E611001 - B1E613515	2
6	7267718	MOTOR, DRIVE HYD	See Illustration HYDROSTATIC MOTOR / NA10947A - 2-speed	B1E613516 & Above	2
7		PUMP, HYD	See Illustration HYDROSTATIC PUMP/GEAR PUMP / NA8524 - manual controls, AHC & ACS		1
8		PUMP, HYD	See Illustration HYDROSTATIC PUMP/GEAR PUMP / NA8524 - SJC		1
9	5HM16	CLAMP			4
10	6586251	HOSE, BULK	sold per foot		x
11	6624289	STRAP, TIE			2
12	7196740	HOSE, HYD	NA		2
12	7271318	HOSE, HYD	EMEA		2
13	7211402	HOSE, HYD	NA		1
13	7271320	HOSE, HYD	EMEA		1
14	7196741	HOSE, HYD		B1E611001 - B1E615115	1
14	7297015	HOSE, HYD ASSY	Was 7271318 [A]	B1E615116 & Above	1
15	7244288	FTG HYD BEADED 45			1
16	7233368	FITTING, HYD ELBOW			1

RADIATOR/COOLER ASSEMBLY

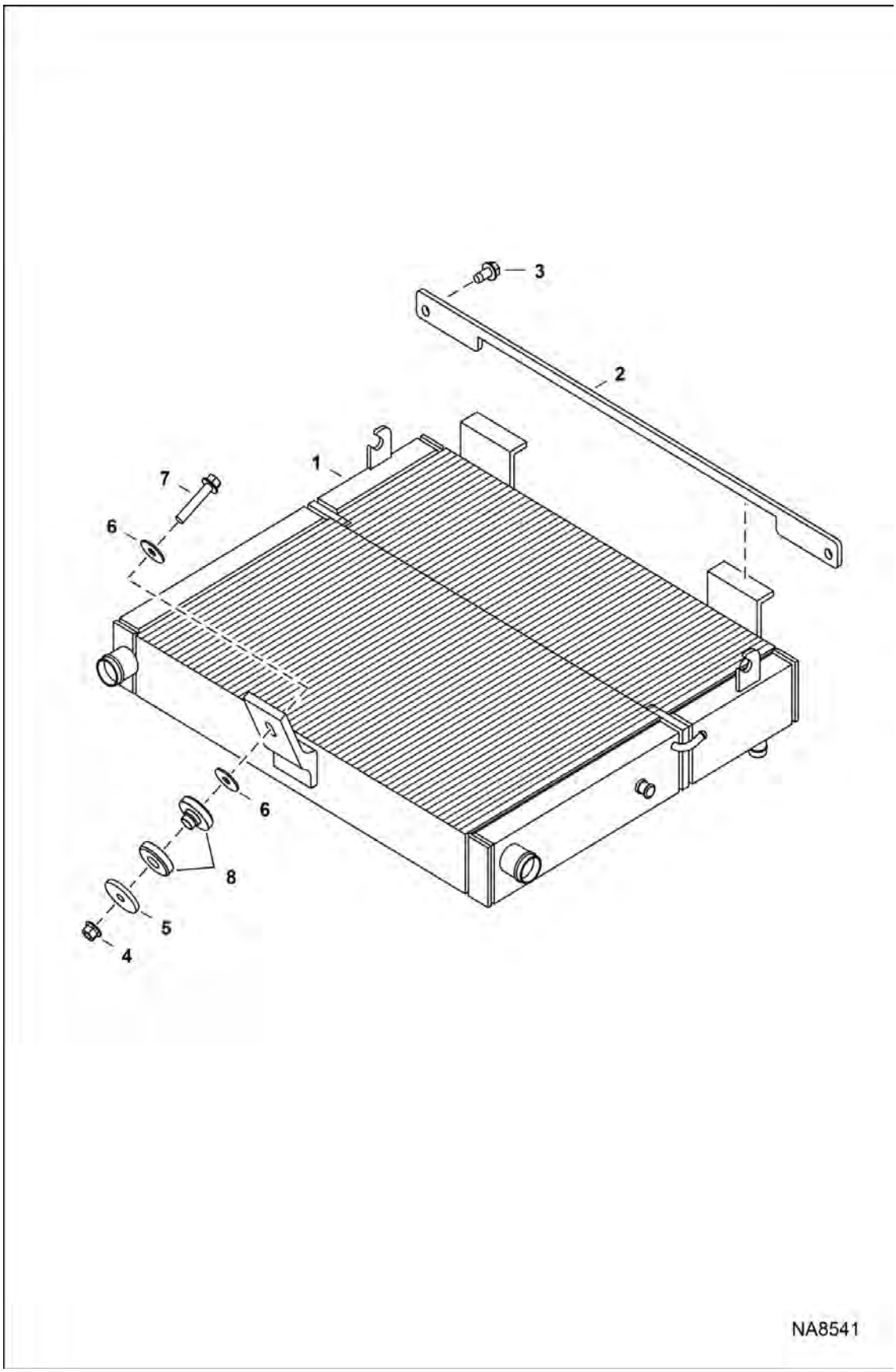

RADIATOR/COOLER ASSEMBLY (Cont'd)

Ref No	Part Number	Description	Remarks	Serial Number	Qty
1	7225354	EXCHANGER, OIL WATER AIR			1
2	7241386	PLATE, RETAINER	if equipped		1
3	84G3712	BOLT 5	if equipped		2
4	83D6	NUT 5			1
5	6737388	WASHER			1
6	872229	WASHER			1
7	35C632	BOLT			1
8	7237725	MOUNT, ISOLATOR			1

HAND CONTROLS

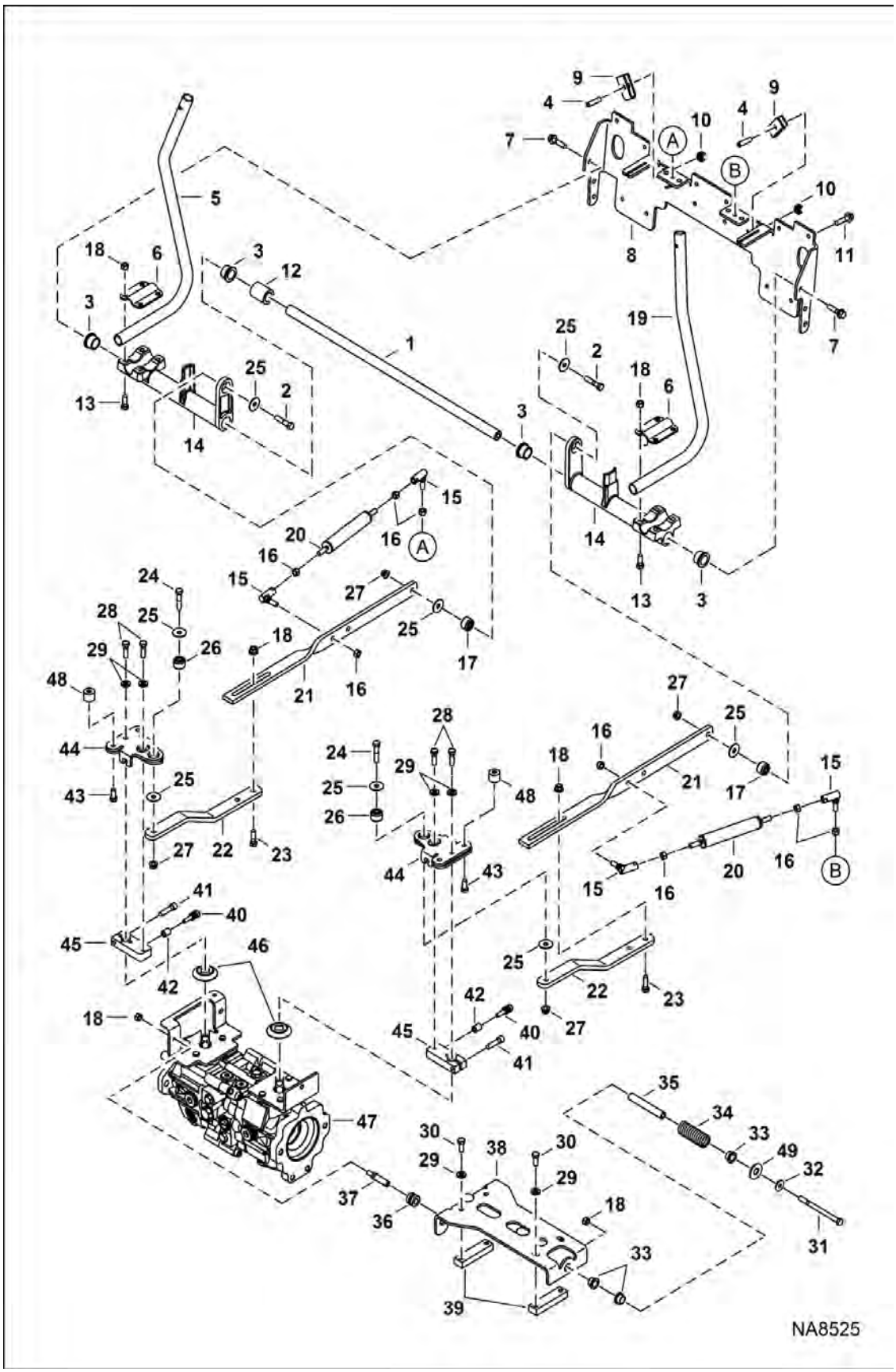

HAND CONTROLS (Cont'd)

Ref No	Part Number	Description	Remarks	Serial Number	Qty
1	7189893	SHAFT, STEERING			1
2	17C628	BOLT			2
3	7159624	BUSHING			4
4	15G624	SCREW			2
5	7145147	LEVER, STEERING	RH - Was 7145146 [D]		1
6	7156761	PLATE			2
7	49C624	SCREW			2
8	7205888	MOUNT, BELLCRANK			1
9	7247290	RETAINER, BOLT	Was 7121779		2
10	6685663	NUT, RETAINING			2
11	84G3724	BOLT			12
12	7316249	SPACER STEERING	Was 7189894 [A]		1
13	17C616	BOLT 5			8
14	7151889	BELLCRANK			2
15	6599744	BALL, JOINT			4
16	62D6	NUT 5			8
17	6685060	BUSHING TORSION			2
18	83D6	NUT 5			15
19	7153379	LEVER, STEERING	LH - Was 7145145 [D]		1
20	7188108	GAS SPRING			2
21	7231591	LINK, STEERING			2
22	7204924	LINK			2
23	17C620	BOLT			4
24	17C628	BOLT			2
25	6737388	WASHER			8
26	6685060	BUSHING TORSION			2
27	53D6	NUT			4
28	47C620	BOLT			4
29	7103217	WASHER			8
30	17C616	BOLT 5			4
31	17C680	BOLT			1
32	6563914	WASHER			1
33	6715163	BUSHING, PRESS FIT			3
34	6701535	SPRING, CENTERING			1
35	6715164	SLEEVE, SPRING			1
36	6706098	GUIDE, PRESS FIT			2
37	6577058	PIN, HAND CONTROL			2
38	6734298	BRACKET			1
39	6702716	BLOCK, WEAR			2
40	7103711	BOLT			2
41	73G624	BOLT			2

HAND CONTROLS (Cont'd)

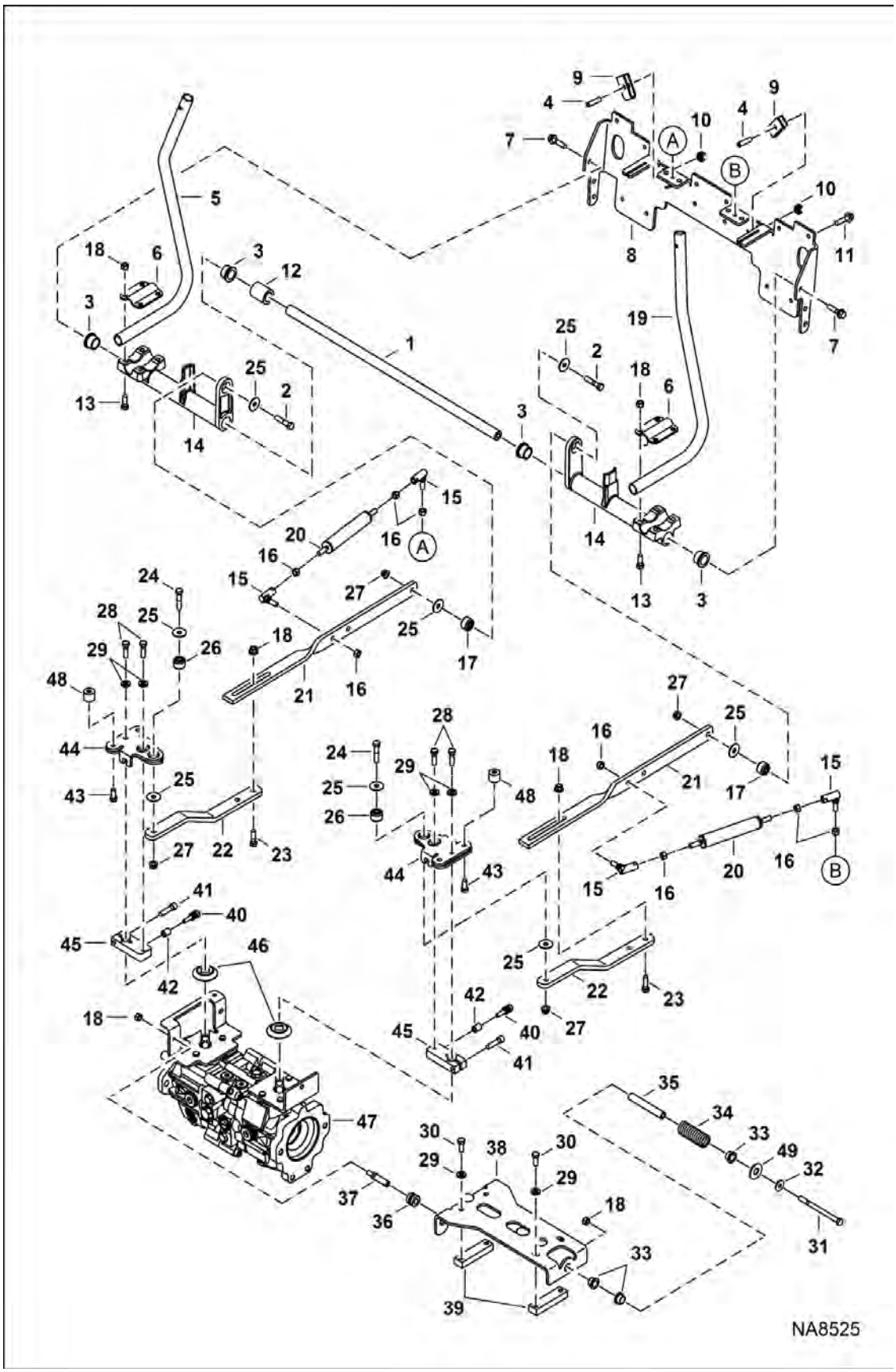

Illustration NA8525

HAND CONTROLS (Cont'd)

Ref No	Part Number	Description	Remarks	Serial Number	Qty
42	7105223	SPACER			2
43	17C612	BOLT 5			4
44	7110365	ARM, PINTLE			2
45	7103708	BRACKET	pintle arm		2
46	6687913	SEAL			2
47		PUMP, HYD	See Illustration HYDROSTATIC PUMP/GEAR PUMP / NA8524 - manual controls, AHC & ACS		1
48	6711643	CAM, WEAR	manual controls		4
49	25E24	WASHER	ACS		1

HYDROSTATIC MOTOR
(Single Speed)

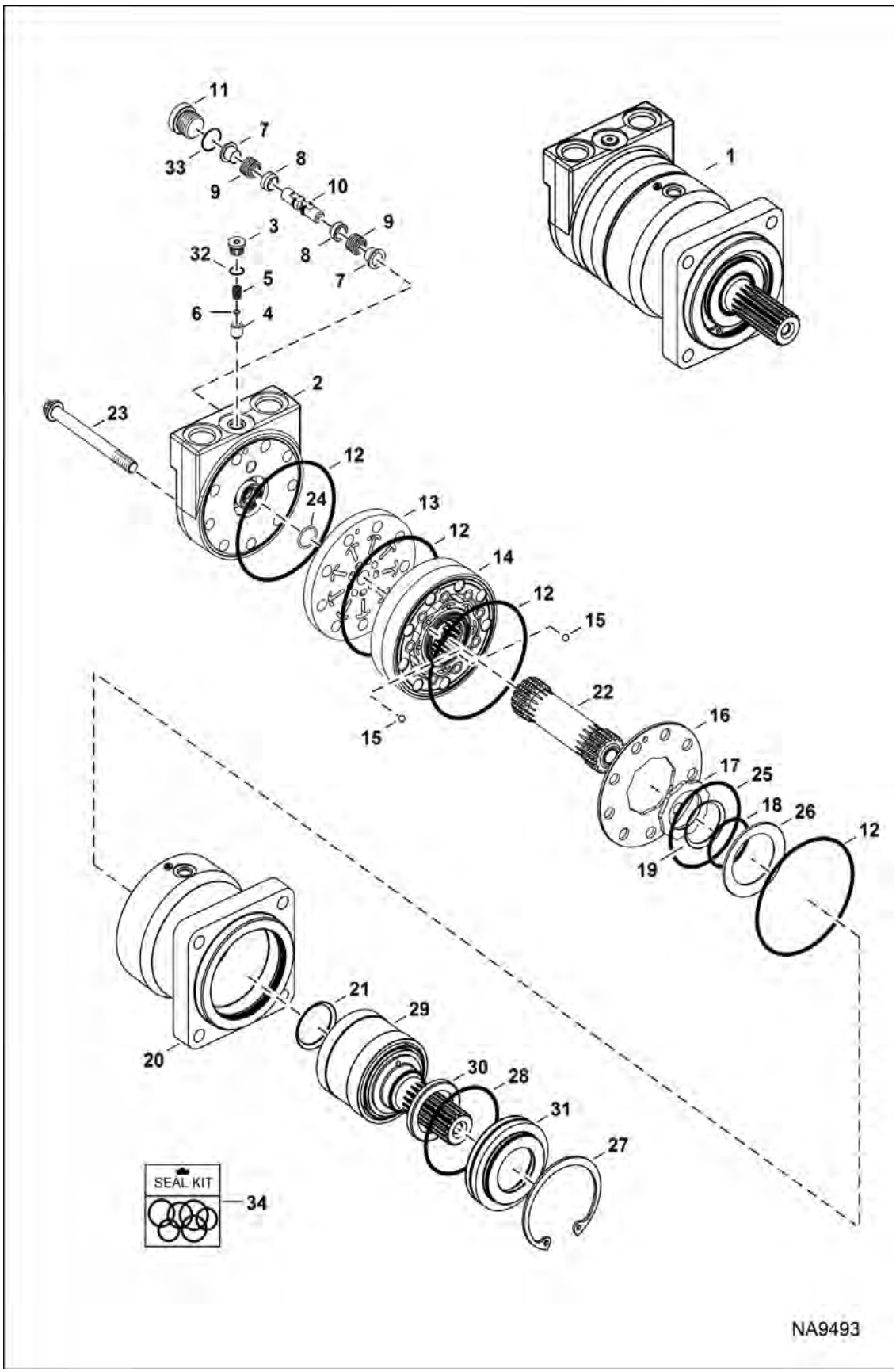

HYDROSTATIC MOTOR (Cont'd)
(Single Speed)

Ref No	Part Number	Description	Remarks	Serial Number	Qty
1		MOTOR, DRIVE HYD	See Illustration HYDROSTATIC MOTOR / NA10947 NLA - Ref. 2-33 - 7227179 [A]		1
2	6689697	HOUSING, MOTOR			1
3	6668079	PLUG, MOTOR			1
4	6668082	POPPET	Was 6685064 [A]		1
5	6688521	SPRING			1
6	6668080	SHIM			x
7	6685065	SHUTTLE			2
8	6513532	POPPET	Was 6692530 [A]		2
9	6513533	SPRING	Was 6692528 [A]		2
10	6668088	PISTON	Was 6685066 [A]		1
11	6668089	PLUG, MOTOR			1
12	6678000	SEAL			4
13	6689698	PLATE			1
14	6691343	GEROLER			1
15	6651542	BALL, STEEL			2
16	6689700	PLATE			1
17	6678004	PLATE BALANCING			1
18	6682860	O-RING			1
19	6678006	RING, BACK-UP			1
20	7265776	HOUSING, BEARING			1
21	6664815	SEAL, OIL	Was 6691564 [A]		1
22	6682862	SHAFT, DRIVE			1
23	6682863	BOLT			9
24	6669452	O-RING			1
25	6682897	SEAL			1
26	6685069	DISK, SPRING			1
27	6691337	RING, RETAINING			1
28	6513524	SEAL,O-RING	Was 6679818 [A]		1
29	7265777	ASSY, SHAFT			1
30	7277821	SEAL, SHAFT	Was 6691339 [A]		1
31	7025101	RETAINER, BEARING			1
32	79K5	O RING 10	Was 6669443 [A]		1
33	6669445	O'RING			1
34	6691341	SEAL KIT	Ref. 12, 18, 19, 21, 24, 25, 30, 32 & 33		1

HYDROSTATIC MOTOR
(Single Speed)

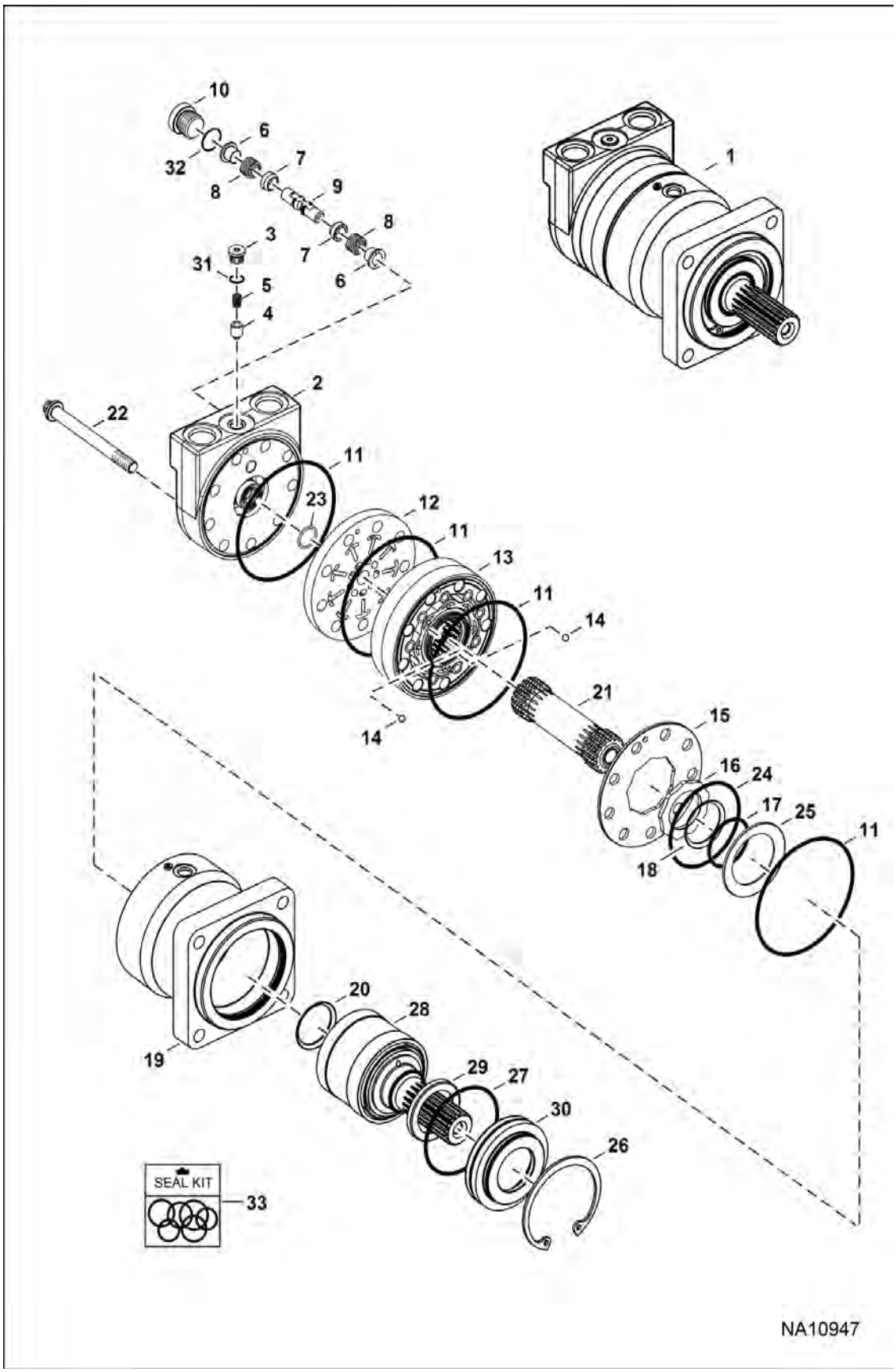

HYDROSTATIC MOTOR (Cont'd)
(Single Speed)

Ref No	Part Number	Description	Remarks	Serial Number	Qty
1	7267719	MOTOR, DRIVE HYD	Ref. 2-32		1
2	6689697	HOUSING, MOTOR			1
3	6668079	PLUG, MOTOR			1
4	6668082	POPPET	Was 6685064 [A]		1
5	6688521	SPRING			1
6	6685065	SHUTTLE			2
7	6513532	POPPET	Was 6692530 [A]		2
8	6513533	SPRING	Was 6692528 [A]		2
9	6668088	PISTON	Was 6685066 [A]		1
10	6668089	PLUG, MOTOR			1
11	6678000	SEAL			4
12	6689698	PLATE			1
13	7265694	GEROLER			1
14	6651542	BALL, STEEL			2
15	6689700	PLATE			1
16	6678004	PLATE BALANCING			1
17	6682860	O-RING			1
18	6678006	RING, BACK-UP			1
19	7265776	HOUSING, BEARING	Was 7265775 [B,D]		1
20	6664815	SEAL, OIL	Was 6691564 [A]		1
21	6689741	DRIVE			1
22	6689742	BOLT			9
23	6669452	O-RING			1
24	6682897	SEAL			1
25	6685069	DISK, SPRING			1
26	6691337	RING, RETAINING			1
27	6513524	SEAL,O-RING	Was 6679818 [A]		1
28	7265777	ASSY, SHAFT			1
29	7277821	SEAL, SHAFT			1
30	7025101	RETAINER, BEARING			1
31	79K5	O RING 10			1
32	6669445	O'RING			1
33	6691341	SEAL KIT	Ref. 11, 17, 18, 20, 23, 24, 29, 31 & 32		1

HYDROSTATIC MOTOR
(2-Speed)

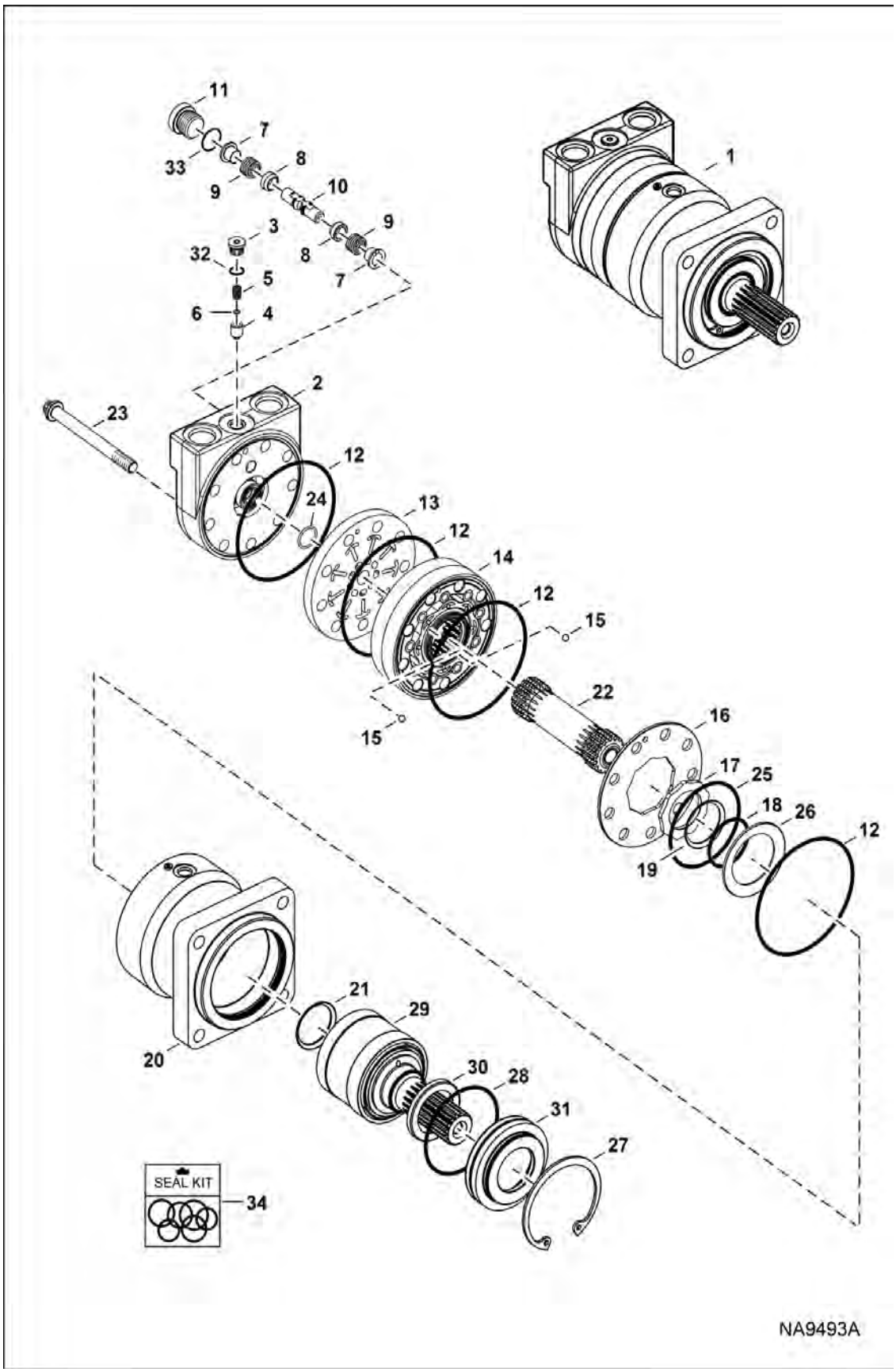

HYDROSTATIC MOTOR (Cont'd)
(2-Speed)

Ref No	Part Number	Description	Remarks	Serial Number	Qty
1		MOTOR, DRIVE HYD	See Illustration HYDROSTATIC MOTOR / NA10947A NLA - Ref. 2-33 - Was 7227178 [A]		1
2	6689697	HOUSING, MOTOR			1
3	6668079	PLUG, MOTOR			1
4	6668082	POPPET	Was 6685064 [A]		1
5	6688521	SPRING			1
6	6668080	SHIM			x
7	6685065	SHUTTLE			2
8	6513532	POPPET	Was 6692530 [A]		2
9	6513533	SPRING	Was 6692528 [A]		2
10	6668088	PISTON	Was 6685066 [A]		1
11	6668089	PLUG, MOTOR			1
12	6678000	SEAL			4
13	6689698	PLATE			1
14	7265694	GEROLER			1
15	6651542	BALL, STEEL			2
16	6689700	PLATE			1
17	6678004	PLATE BALANCING			1
18	6682860	O-RING			1
19	6678006	RING, BACK-UP			1
20	7265775	HOUSING, BEARING			1
21	6664815	SEAL, OIL	Was 6691564 [A]		1
22	6689741	DRIVE			1
23	6689742	BOLT			9
24	6669452	O-RING			1
25	6682897	SEAL			1
26	6685069	DISK, SPRING			1
27	6691337	RING, RETAINING			1
28	6513524	SEAL,O-RING	Was 6679818 [A]		1
29	7265777	ASSY, SHAFT			1
30	7277821	SEAL, SHAFT	Was 6691339 [A]		1
31	7025101	RETAINER, BEARING			1
32	79K5	O RING 10	Was 6669443 [A]		1
33	6669445	O'RING			1
34	6691341	SEAL KIT	Ref. 12, 18, 19, 21, 24, 25, 30, 32 & 33		1

HYDROSTATIC MOTOR
(2-Speed)

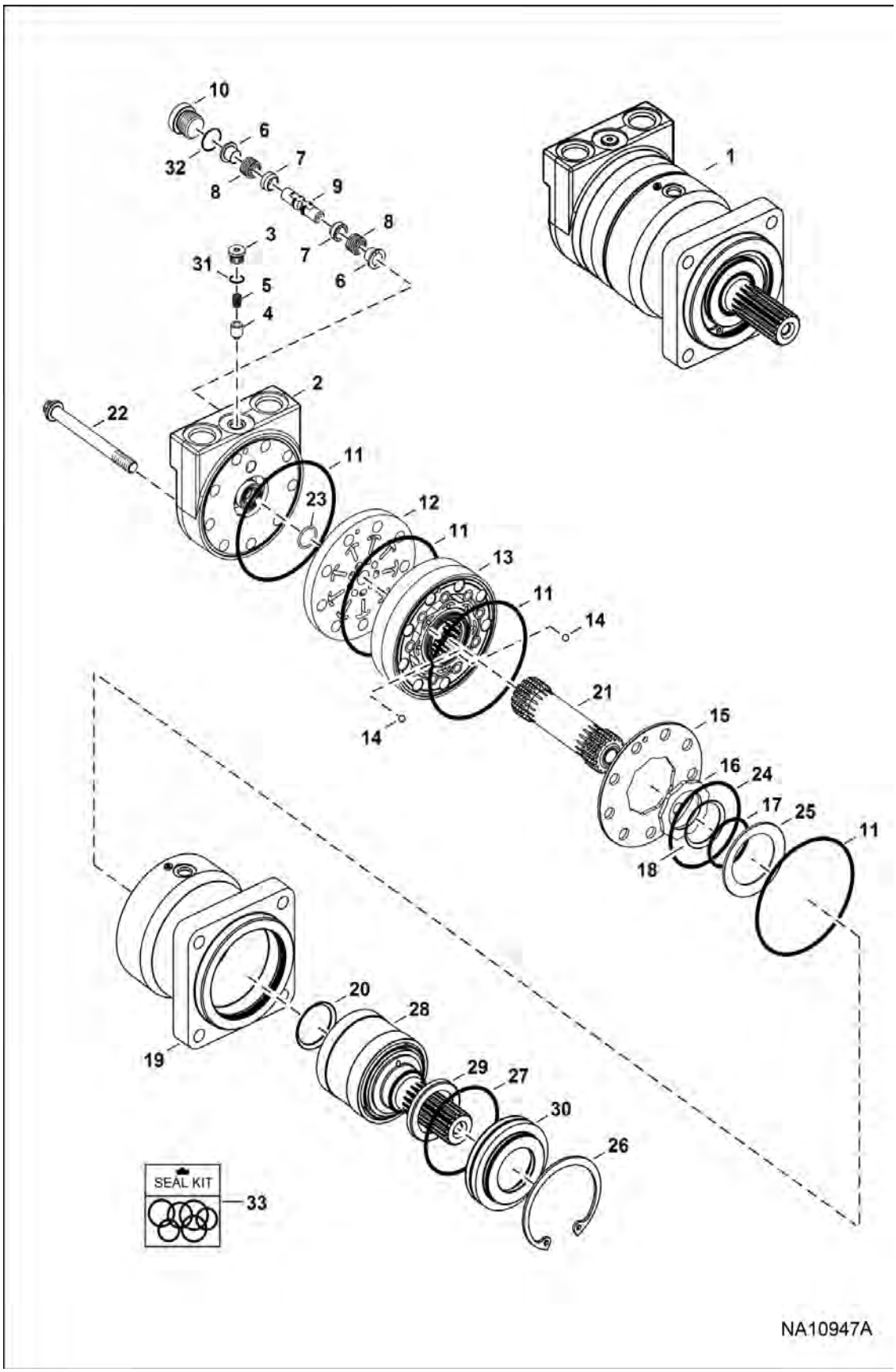

HYDROSTATIC MOTOR (Cont'd)

(2-Speed)

Ref No	Part Number	Description	Remarks	Serial Number	Qty
1	7267718	MOTOR, DRIVE HYD	Ref. 2-32		1
2	6689697	HOUSING, MOTOR			1
3	6668079	PLUG, MOTOR			1
4	6668082	POPPET	Was 6685064 [A]		1
5	6688521	SPRING			1
6	6685065	SHUTTLE			2
7	6513532	POPPET	Was 6692530 [A]		2
8	6513533	SPRING	Was 6692528 [A]		2
9	6668088	PISTON	Was 6685066 [A]		1
10	6668089	PLUG, MOTOR			1
11	6678000	SEAL			4
12	6689698	PLATE			1
13	6691343	GEROLER			1
14	6651542	BALL, STEEL			2
15	6689700	PLATE			1
16	6678004	PLATE BALANCING			1
17	6682860	O-RING			1
18	6678006	RING, BACK-UP			1
19	7265775	HOUSING, BEARING	Was 7265776 [B,D]		1
20	6665815	FITTING	Was 6691564 [A]		1
21	6682862	SHAFT, DRIVE			1
22	6682863	BOLT			9
23	6669452	O-RING			1
24	6682897	SEAL			1
25	6685069	DISK, SPRING			1
26	6691337	RING, RETAINING			1
27	6513524	SEAL,O-RING	Was 6679818 [A]		1
28	7265777	ASSY, SHAFT			1
29	7277821	SEAL, SHAFT			1
30	7025101	RETAINER, BEARING			1
31	79K5	O RING 10			1
32	6669445	O'RING			1
33	6691341	SEAL KIT	Ref. 11, 17, 18, 20, 23, 24, 29, 31 & 32		1

HYDROSTATIC PUMP/GEAR PUMP
(Identification)

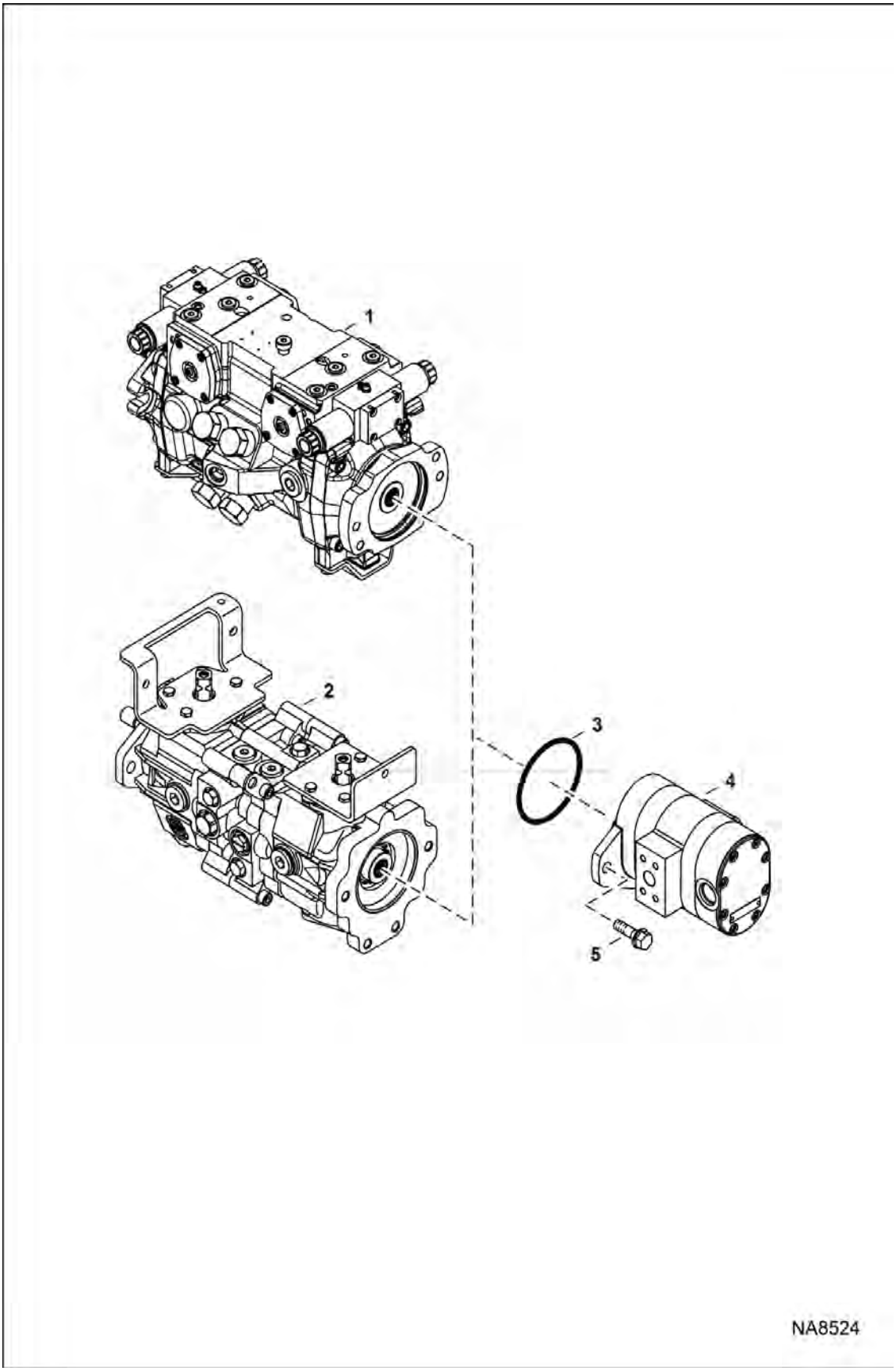

Illustration NA8524

HYDROSTATIC PUMP/GEAR PUMP (Cont'd)

(Identification)

Ref No	Part Number	Description	Remarks	Serial Number	Qty
1		PUMP, HYD	See Illustration HYDROSTATIC PUMP / NA8538 - SJC		1
2		PUMP, HYD	See Illustration HYDROSTATIC PUMP / NA8588 - manual controls, AHC & ACS , See Illustration HYDROSTATIC PUMP / NA10935 - manual controls, AHC & ACS		1
3	6671520	O-RING	manual controls, AHC & ACS		1
3	6671520	O-RING	SJC - 6682949 [B,D]		1
4		PUMP, GEAR DOUBLE	See Illustration GEAR PUMP / NA8739 - standard flow hydraulics		1
5	45C828	SCREW HEX FLNG W/T	manual controls, AHC & ACS		2
5	7131273	SCREW	SJC		2

HYDROSTATIC PUMP

(Manual Controls, AHC & ACS) (Left Half)

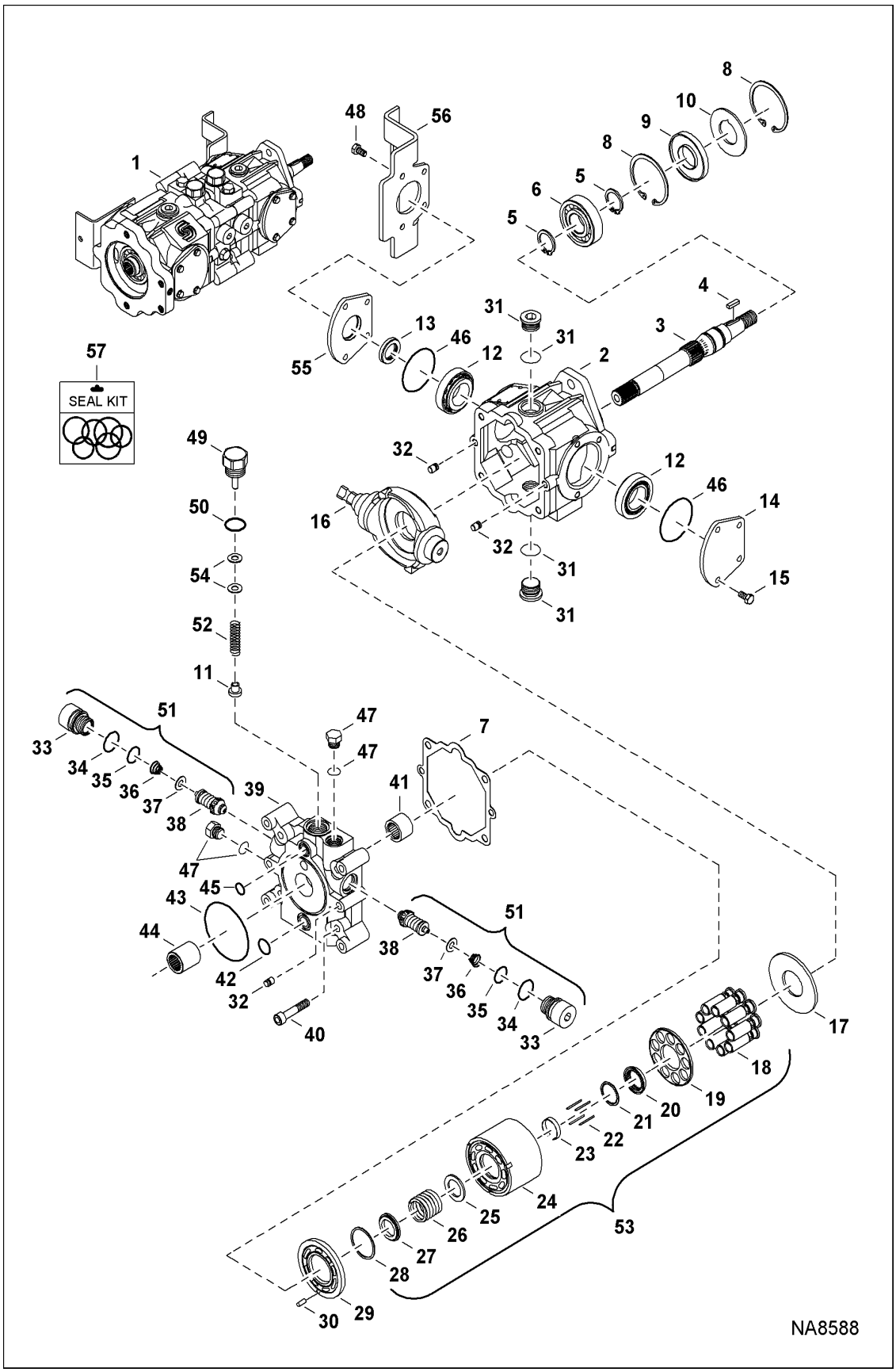

Illustration NA8588

Model S450 MT2KAMEA
6990825

HYDROSTATIC PUMP (Cont'd)

(Manual Controls, AHC & ACS) (Left Half)

Ref No	Part Number	Description	Remarks	Serial Number	Qty
1	7215434	PUMP, HYD TANDEM W/O GEAR PUMP	Model 83017442		1
2	6669402	HOUSING			1
3	6682260	FRONT SHAFT	W/square key		1
4	6682261	KEY			1
5	6921585	RING RETAINING			2
6	654299	BEARING			1
7	6650634	GASKET			1
8	669863	RING, SNAP			2
9	7296603	SEAL, SHAFT	Was 6687191 [A]		1
10	7024884	WASHER	Was 6669409 [A]		1
11	6650652	CH.RELIEF	charge relief		1
12	6669411	BEARING			2
13	6678226	SEAL, OIL	Was 6673881		1
14	6657068	COVER			1
15	6650668	BOLT			4
16	7284937	SWASHPLATE	W/threaded shaft hole - Was 6685344 [A]		1
17	6650627	PLATE THR			1
18	7023548	PISTON, ASSY			9
19	6657072	RETAINER			1
20	6657073	GUIDE, RETAINER			1
21	6666338	WASHER			1
22	6650629	PIN			4
23	6650630	RETAINER			1
24	6683167	CYLINDER BLOCK			1
25	6667724	WASHER			1
26	6667725	SPRING			1
27	6666882	WASHER			1
28	6666881	RING, SEAL			1
29	6687774	PLATE, PUMP HYD			1
30	6650636	PIN			1
31	47K8	PLUG			2
31	79K12	O RING 10			1
32	6675342	PIN			4
33		PLUG	NLA - Order Ref. 51		2
34	6657028	O-RING			2
35	79K8	O RING 10			2
36		SPRING	NLA - Order Ref. 51		2
37		RETAINER	NLA - Order Ref. 51		2
38		CHECK VALVE	NLA - poppet - Order Ref. 51		1
39	7023162	CAP, END			1
40	6650637	BOLT			4
41	6650635	BEARING			1
42	6650647	O-RING			1
43	6645081	O-RING			1
44	6650675	COUPLER			1

HYDROSTATIC PUMP (Cont'd)
(Manual Controls, AHC & ACS) (Left Half)

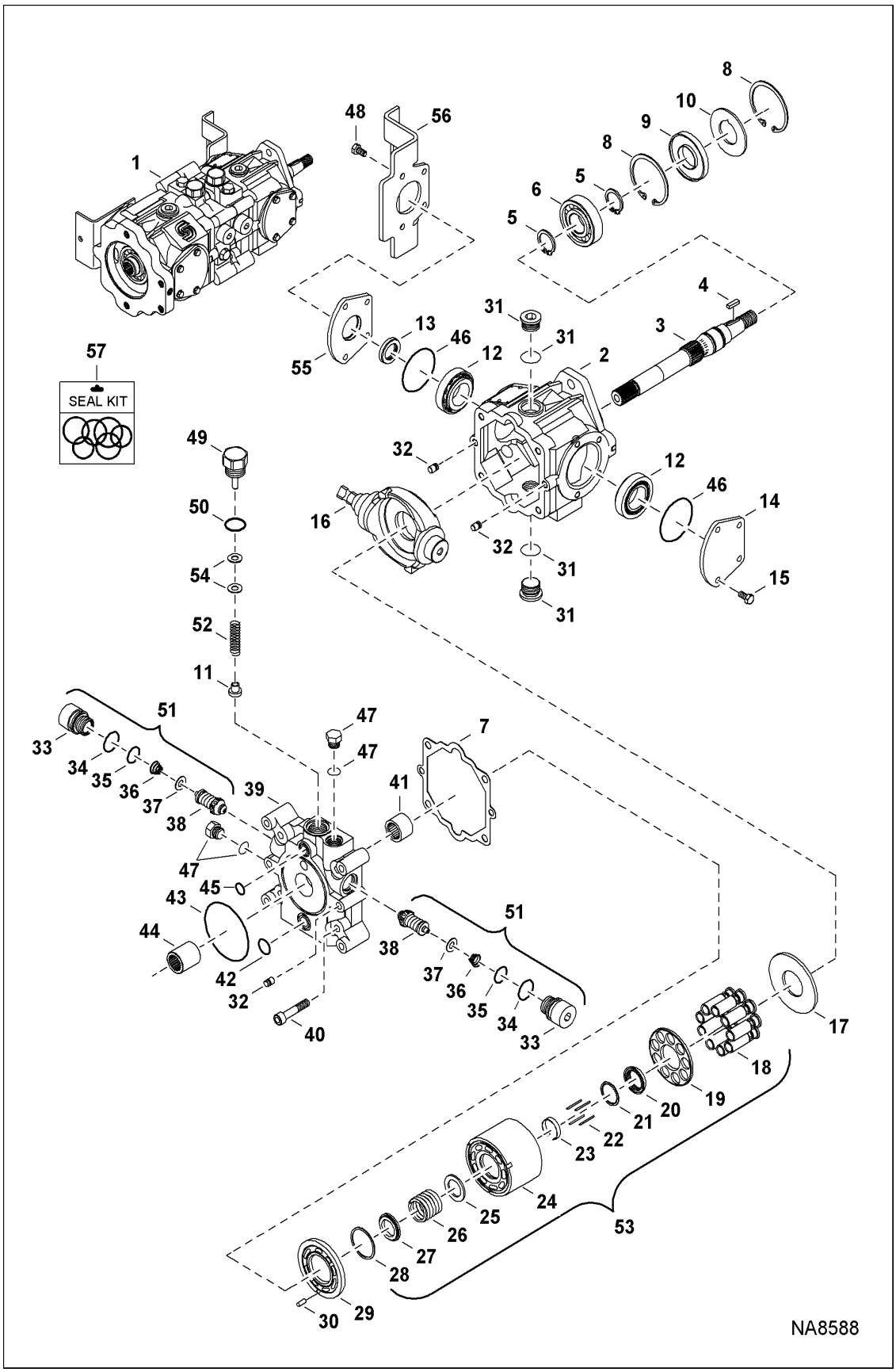

Illustration NA8588

Model S450 MT2KAMEA
6990825

HYDROSTATIC PUMP (Cont'd)
(Manual Controls, AHC & ACS) (Left Half)

Ref No	Part Number	Description	Remarks	Serial Number	Qty
45	6650646	O-RING			1
46	6660814	RING, QUAD			2
47	6645086	PLUG			2
47	6661481	O-RING			1
48	6671518	BOLT			4
49	6650648	PLUG	charge relief - W/Ref. 50		1
50	79K10	O RING 10			1
51	7281334	VALVE, RELIEF	Ref. 33-38		2
52	7008823	SPRING			1
53	6671512	GROUP, ROTARY			1
54	6669410	KIT, SHIM	for Ref. 49 - (2) each of .010, .020 and .050 thick		1
55	6657067	COVER	W/Ref. 13		1
56	7024887	BRACKET			1
57	6671516	KIT, SEAL	See Illustration HYDROSTATIC PUMP / NA10935 - Ref. 2, 3, 12, 31 & 41 - Also includes Ref. 7, 9, 13, 31, 34, 35, 42, 45, 46, 47 & 50 on this page - Was 7296604 [D]		1

HYDROSTATIC PUMP
(Manual Controls & ACS) (Right Half)

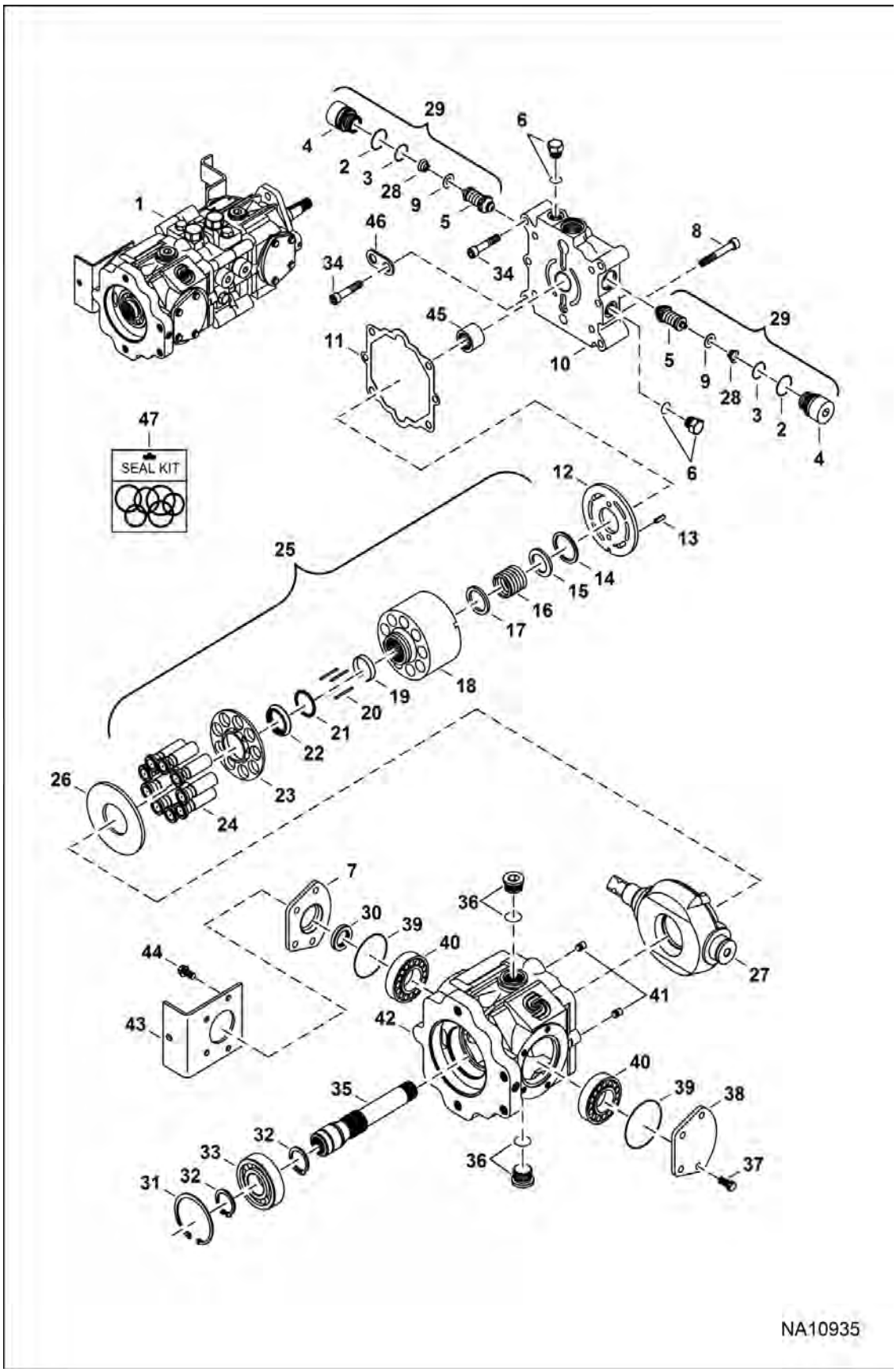

HYDROSTATIC PUMP (Cont'd)
(Manual Controls & ACS) (Right Half)

Ref No	Part Number	Description	Remarks	Serial Number	Qty
1	7215434	PUMP, HYD TANDEM W/O GEAR PUMP	Model 83017442		1
2	6657028	O-RING			2
3	79K8	O RING 10			2
4		PLUG	NLA - Order Ref. 29		2
5		VALVE, RELIEF	NLA - 4060 PSI (280 bar) - Order Ref. 29		2
6	6645086	PLUG			2
6	6661481	O-RING			1
7	6657067	COVER	W/Ref. 30		1
8	6650637	BOLT			4
9		RETAINER	NLA - Order Ref. 29		4
10	6669405	CAP, END			1
11	6650634	GASKET			1
12	6687773	PLATE, PUMP HYD			1
13	6650636	PIN			2
14	6666881	RING, SEAL			1
15	6666882	WASHER			1
16	6667725	SPRING			1
17	6667724	WASHER			1
18	6683167	CYLINDER BLOCK			1
19	6650630	RETAINER			1
20	6650629	PIN			4
21	6666338	WASHER			1
22	6657073	GUIDE, RETAINER			1
23	6657072	RETAINER			1
24	7023548	PISTON, ASSY			9
25	6671512	GROUP, ROTARY	W/Ref. 14-24		1
26	6650627	PLATE THR			1
27	7284937	SWASHPLATE	W/threaded shaft hole - Was 6685344 [A]		1
28		SPRING	NLA - Order Ref. 29		2
29	7281334	VALVE, RELIEF	Ref. 2-5, 9, & 28		2
30	6678226	SEAL, OIL			1
31	669863	RING, SNAP			1
32	6921585	RING RETAINING			2
33	654299	BEARING			1
34	7024885	BOLT			4
35	6682264	SHAFT REAR			1
36	47K8	PLUG			2
36	79K12	O RING 10			1
37	6650668	BOLT			4
38	6657068	COVER			1
39	6660814	RING, QUAD			2
40	6669411	BEARING			2
41	6675342	PIN			2
42	6682262	HOUSING			1
43	7024890	BRACKET			1

HYDROSTATIC PUMP (Cont'd)
(Manual Controls & ACS) (Right Half)

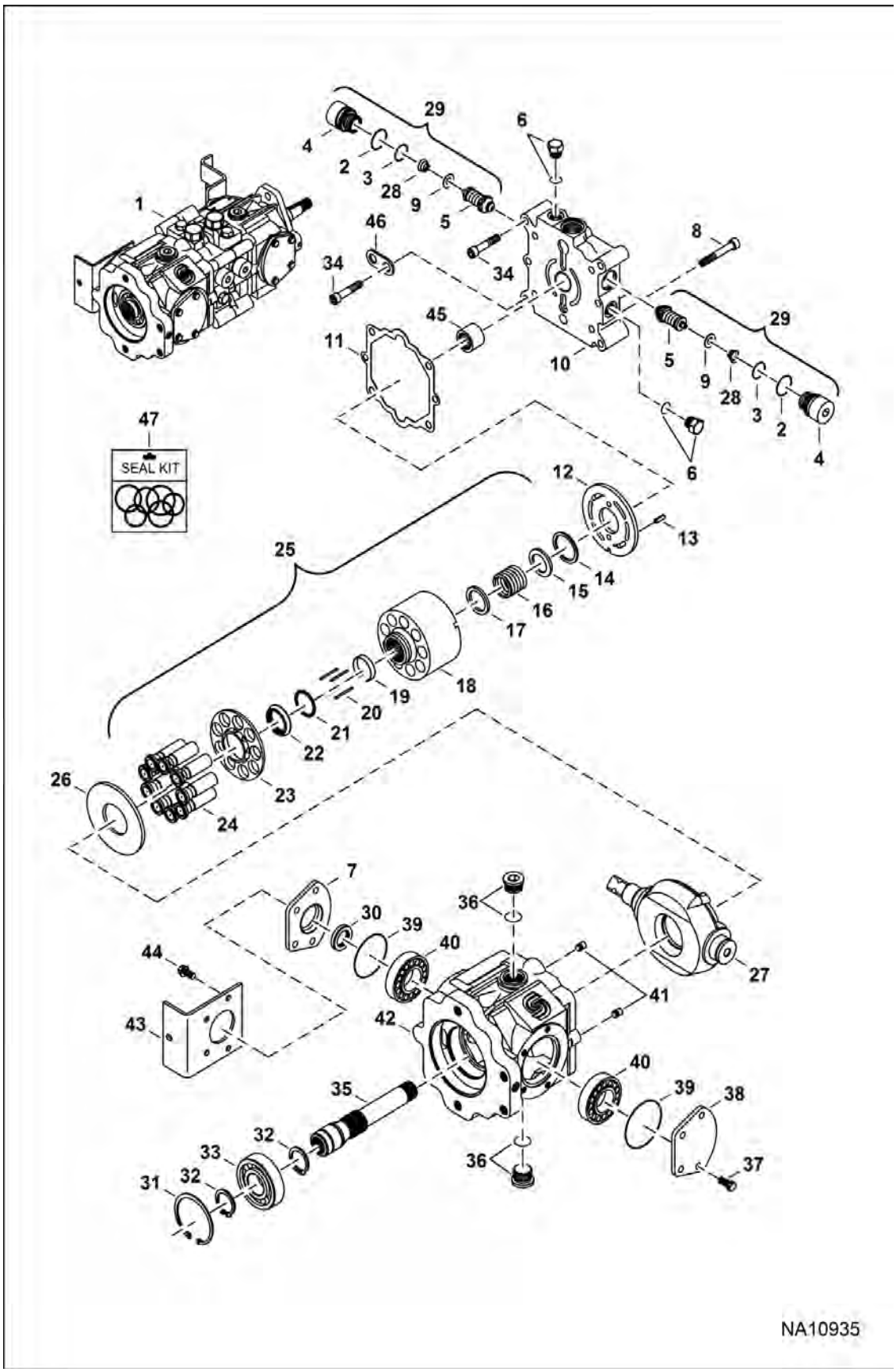

HYDROSTATIC PUMP (Cont'd)
(Manual Controls & ACS) (Right Half)

Ref No	Part Number	Description	Remarks	Serial Number	Qty
44	6671518	BOLT			4
45	6650635	BEARING			1
46	6662126	BRACKET	Was 6662426 [B,D]		1
47	6671516	KIT, SEAL	See Illustration HYDROSTATIC PUMP / NA8588 - Ref. 7, 9, 13, 31, 34, 35, 42, 45, 46, 47 & 50 - Also includes Ref. 2, 3, 6, 11, 30, 36 & 39 on this page - Was 7296604 [D]		1

HYDROSTATIC PUMP
(Selectable Joystick Controls)
(R902202746)

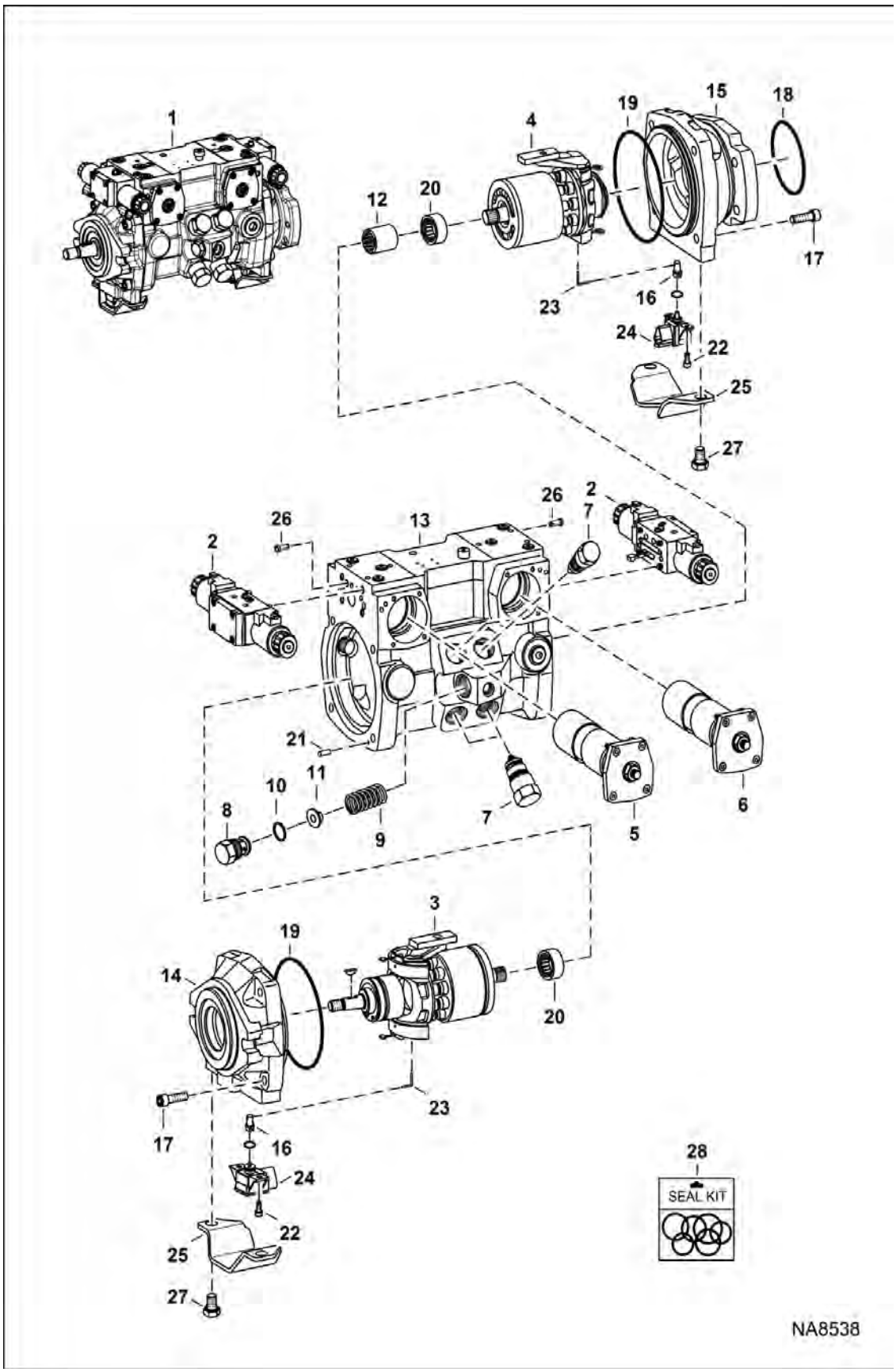

HYDROSTATIC PUMP (Cont'd)

(Selectable Joystick Controls)
(R902202746)

Ref No	Part Number	Description	Remarks	Serial Number	Qty
1	7023794	PUMP, HYD TANDEM W/O GEAR PUMP	Model R902202746 - Ref. 2-25		1
2		MODULE, CONTROL			2
3		GROUP, ROTATING	See Illustration HYDROSTATIC PUMP / NA8909 - LH rotation		1
4		GROUP, ROTATING	See Illustration HYDROSTATIC PUMP / NA8908 - RH rotation		1
5		CONTROL	See Illustration HYDROSTATIC PUMP / NA8910 - LH assy		1
6		CONTROL	See Illustration HYDROSTATIC PUMP / NA8911 - RH assy		1
7		VALVE	See Illustration HYDROSTATIC PUMP / B25014		4
8	6687938	VALVE	Uses O-ring 6682936 - Was 7254834 [A]		1
9	6967536	SPRING			1
10	6682936	O-RING			1
11	6688017	SHIM	0.3 mm		1
11	6967539	SHIM	0.5 mm		1
11	7008767	SHIM	1.0 mm		1
12	7254835	COUPLER			1
13		HOUSING	NLA - Was 7254833 [A]		1
14	7008111	FLANGE, LH			1
15	7008112	FLANGE, RH			1
16	7254838	SHAFT			2
17	6688008	SCREW			8
18	6682949	O-RING	Was 6688019 [A]		1
19	6688009	SEAL			2
20	6688040	BEARING			2
21	7254837	PIN			2
22	7008114	SCREW			4
23	7008802	WIRE			2
24	7008115	SENSOR	triangle connector		2
25	7010227	COVER			2
26	7254836	FILTER			6
27	6688003	SCREW			4
28	7254817	KIT, SEAL			1

HYDROSTATIC PUMP

(Rotary Group) (LH) (Selectable Joystick Controls)
(R902202746)

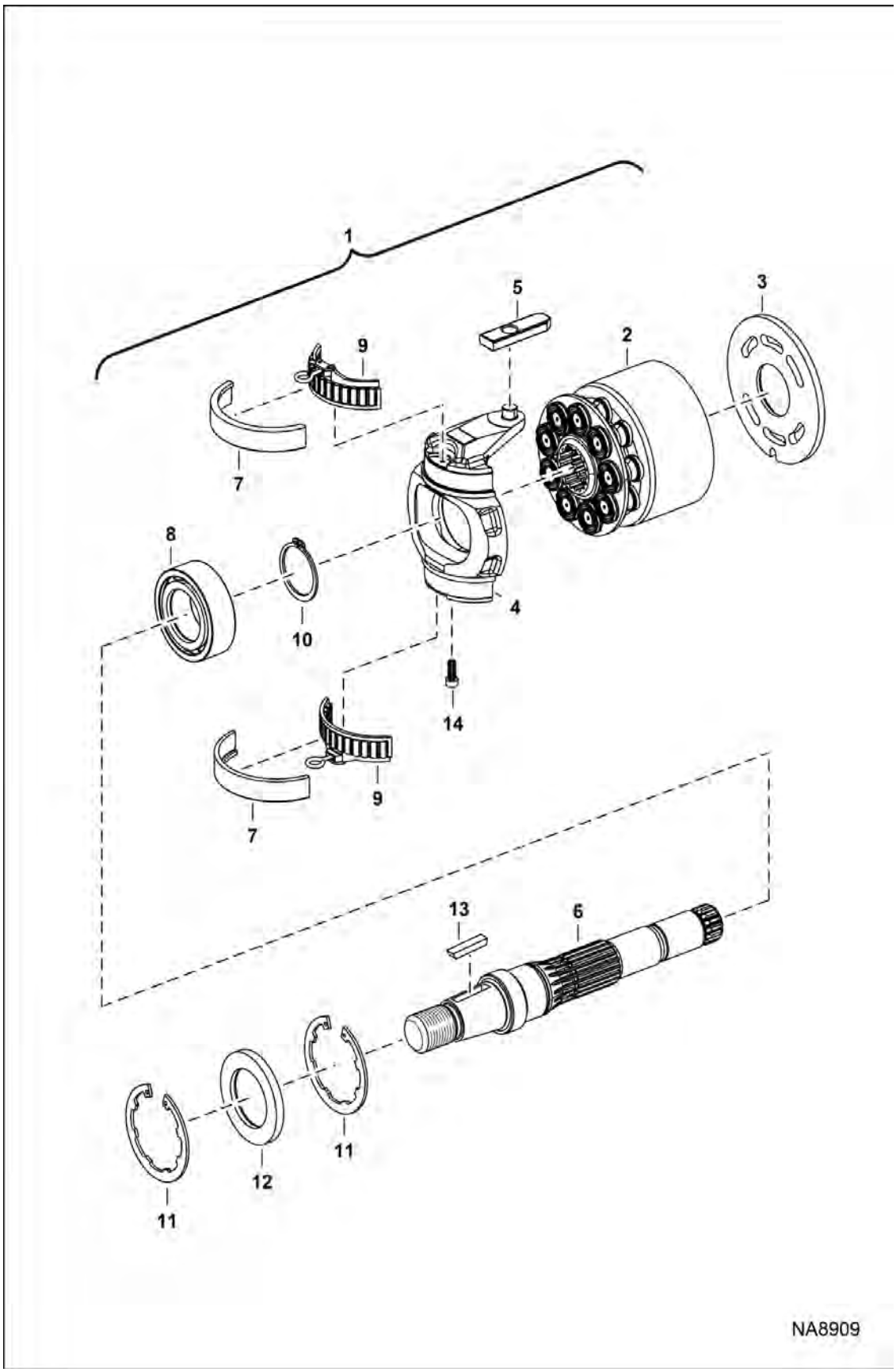

HYDROSTATIC PUMP (Cont'd)

(Rotary Group) (LH) (Selectable Joystick Controls)
(R902202746)

Ref No	Part Number	Description	Remarks	Serial Number	Qty
1	7254818	GROUP, ROTATING	Ref. 2-14 - LH rotation		1
2	7254822	GROUP, ROTATING	W/Ref. 3		1
3	7254831	PLATE, CONTROL			1
4	7008117	SWASHPLATE	Was 7254828 [A]		1
5	6687940	PLATE			1
6	6687959	SHAFT			1
7	6687956	2 HALF BEARINGS			2
8	7254827	BEARING			1
9	7008118	BEARING			2
10	6687999	RING, SNAP			1
11	6671741	SNAP RING	Was 6688042 [A]		2
12	6693876	SEAL, SHAFT			1
13	6687991	KEY			1
14	7254829	BUSHING	plastic		1

HYDROSTATIC PUMP
(Rotary Group) (RH) (Selectable Joystick Controls)
(R902202746)

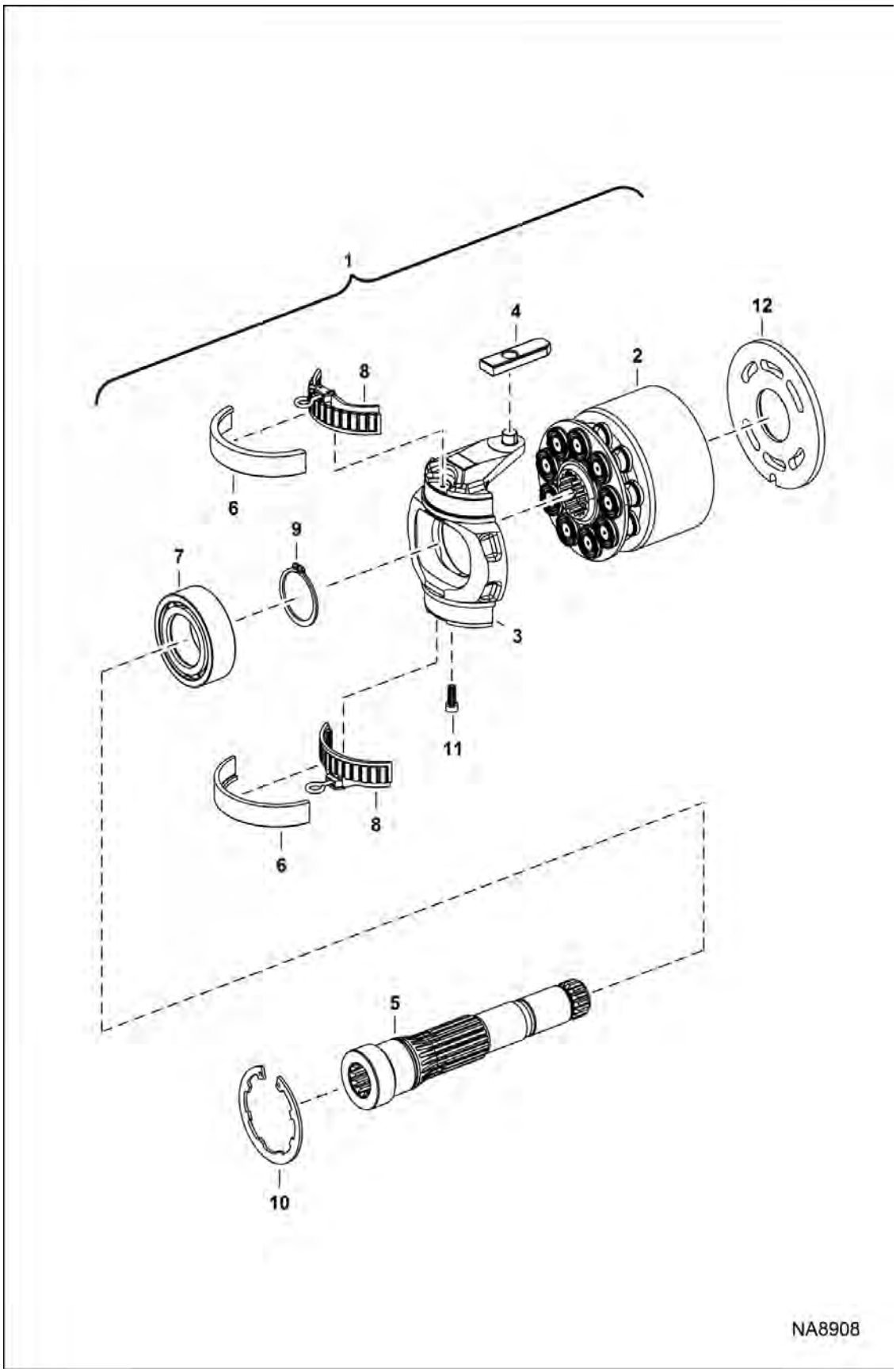

HYDROSTATIC PUMP (Cont'd)

(Rotary Group) (RH) (Selectable Joystick Controls)
(R902202746)

Ref No	Part Number	Description	Remarks	Serial Number	Qty
1	7254811	GROUP, ROTATING	Ref. 2-12 - RH rotation		1
2	7254825	GROUP, ROTATING	W/Ref. 12		1
3	7008117	SWASHPLATE	Was 7254828 [A]		1
4	6687940	PLATE			1
5	6687943	SHAFT			1
6	6687956	2 HALF BEARINGS			2
7	7254827	BEARING			1
8	7008118	BEARING			2
9	6687999	RING, SNAP			1
10	6671741	SNAP RING	Was 6688042 [A]		1
11	7254829	BUSHING	plastic		1
12	7254832	PLATE, CONTROL			1

HYDROSTATIC PUMP
(Control) (LH) (Selectable Joystick Controls)
(R902202746)

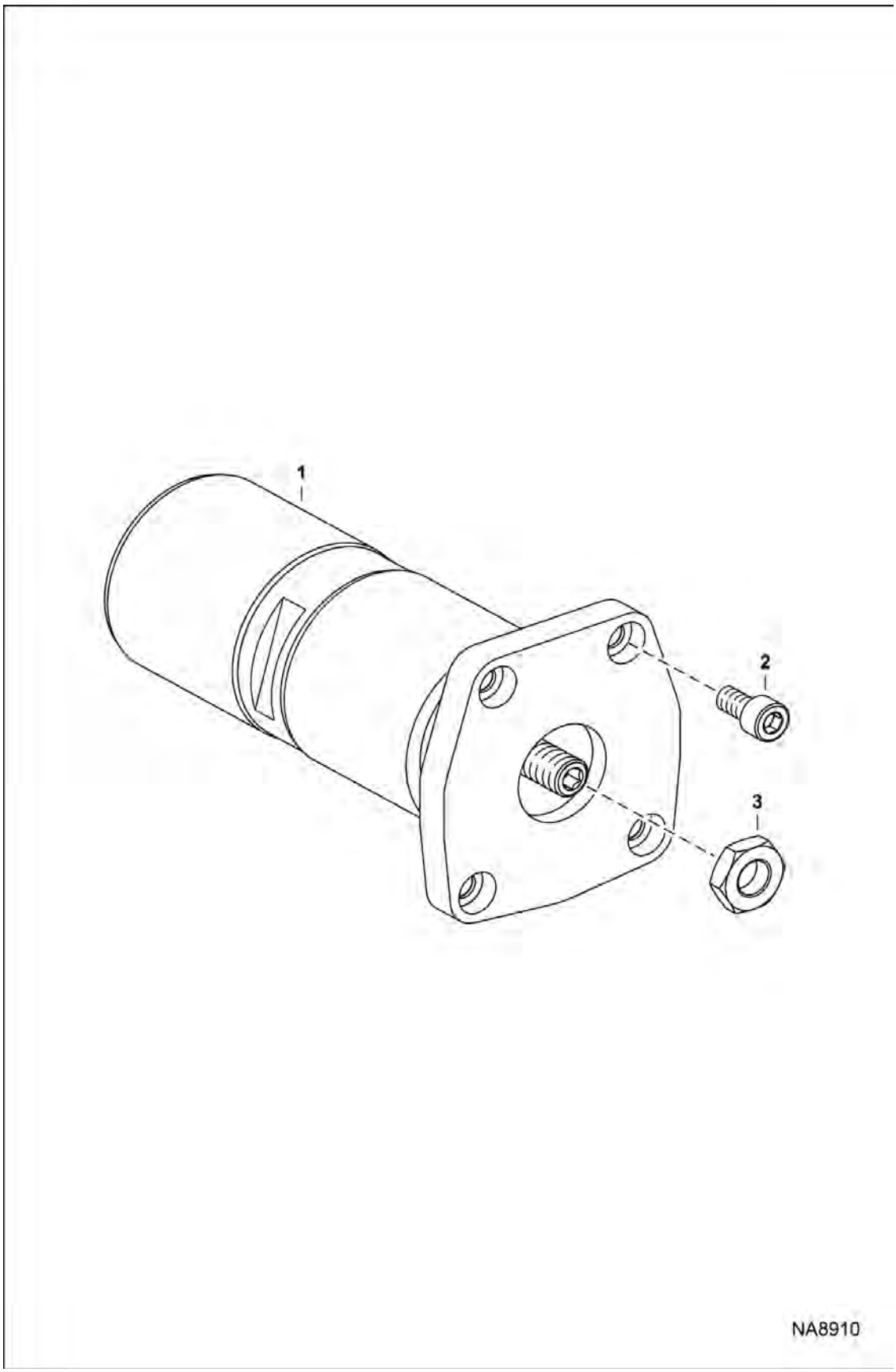

Illustration NA8910

HYDROSTATIC PUMP (Cont'd)

(Control) (LH) (Selectable Joystick Controls)
(R902202746)

Ref No	Part Number	Description	Remarks	Serial Number	Qty
1	7254812	CONTROL	W/Ref. 2 & 3		1
2	6682968	SCREW	Was 6687995 [A]		4
3	6674907	NUT	Was 6687925 [A]		1

HYDROSTATIC PUMP
(Control) (RH) (Selectable Joystick Controls)
(R902202746)

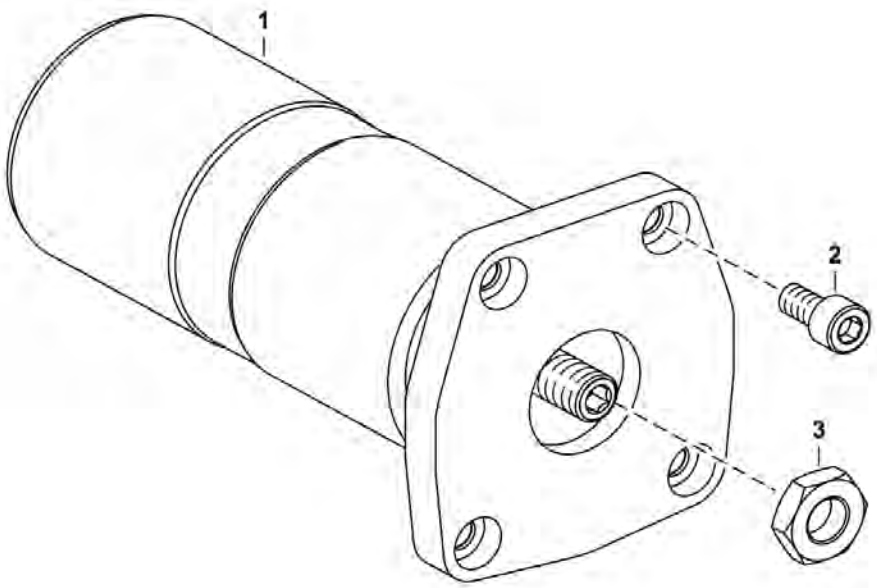

Illustration NA8911

HYDROSTATIC PUMP (Cont'd)

(Control) (RH) (Selectable Joystick Controls)
(R902202746)

Ref No	Part Number	Description	Remarks	Serial Number	Qty
1	7254813	CONTROL	W/ Ref. 2-3		1
2	6682968	SCREW	Was 6687995 [A]		4
3	6674907	NUT	Was 6687925 [A]		1

HYDROSTATIC PUMP

(Control Module) (Selectable Joystick Controls)
(R902202746)

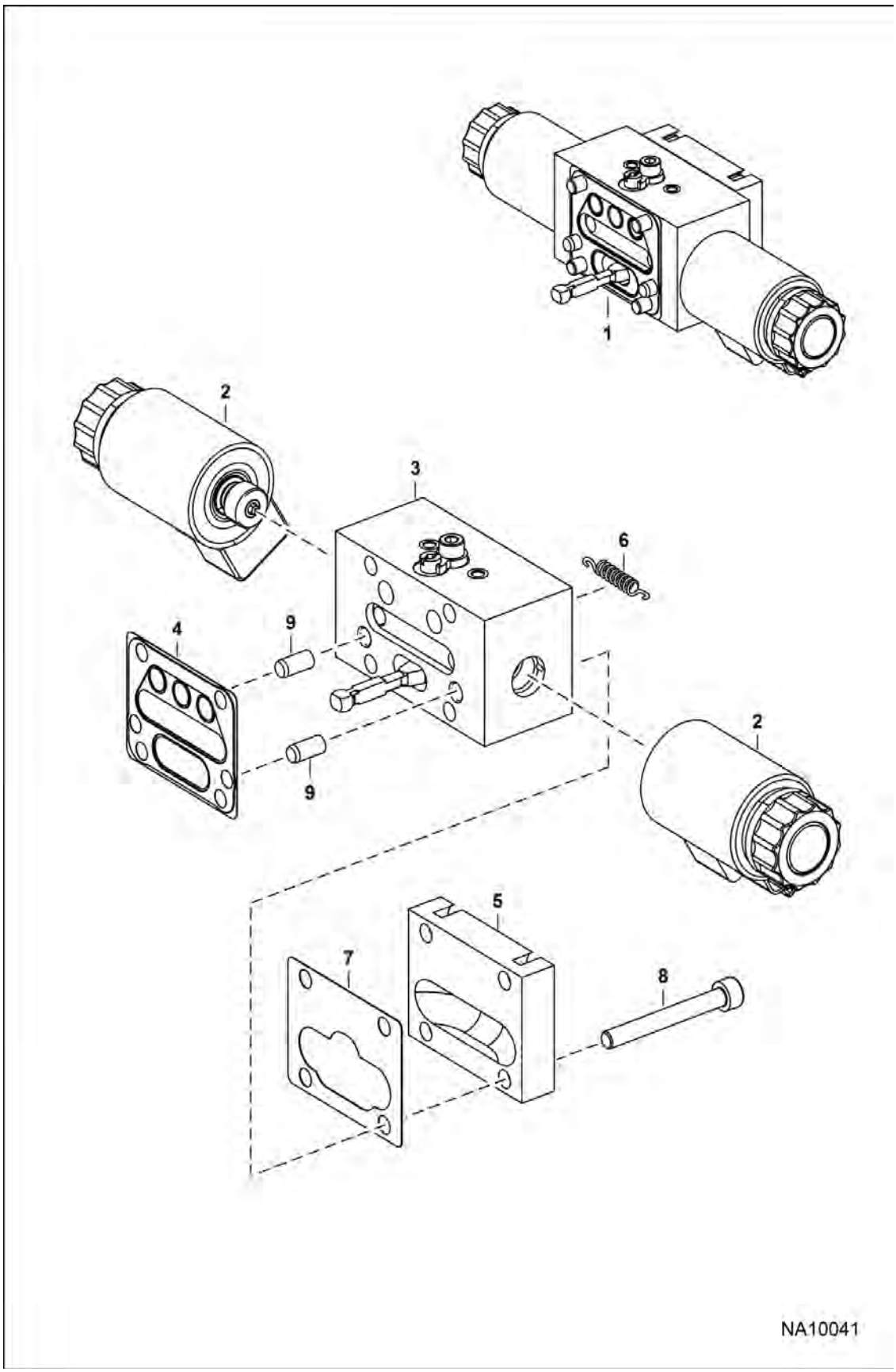

HYDROSTATIC PUMP (Cont'd)

(Control Module) (Selectable Joystick Controls)
(R902202746)

Ref No	Part Number	Description	Remarks	Serial Number	Qty
1	7008109	MODULE, CONTROL	Ref. 2-9		1
2	6697960	SOLENOID	Solenoid Nut 7021343		2
3	7008120	HOUSING	NLA		1
4	7008806	GASKET			1
5	7008122	COVER			1
6	7257756	SPRING			1
7	7008123	GASKET			1
8	6671725	BOLT			4
9	6688010	PIN			2

HYDROSTATIC PUMP
(Charge Pressure Relief Valve)
(R902202746)

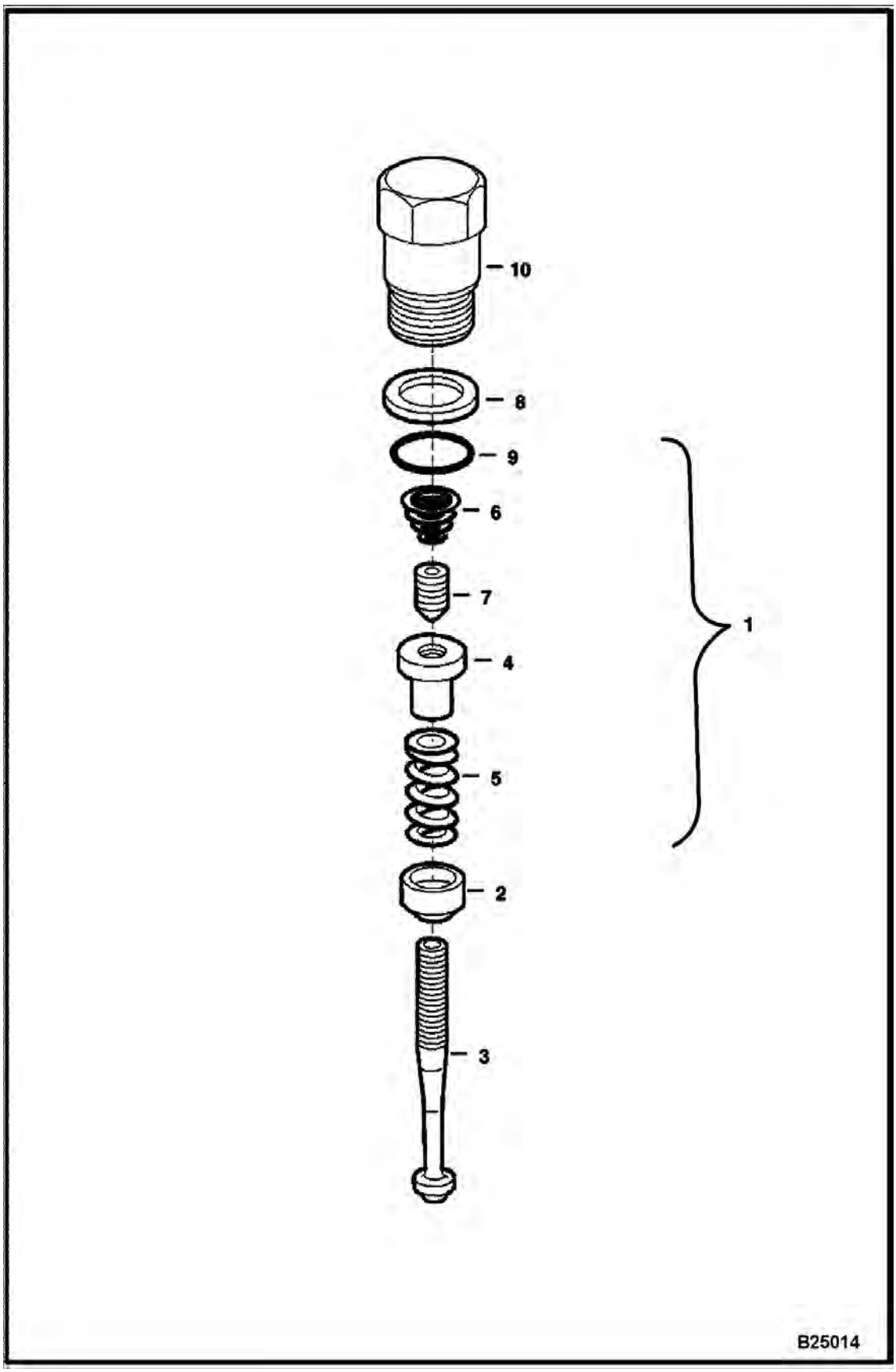

Illustration B25014

HYDROSTATIC PUMP (Cont'd)

(Charge Pressure Relief Valve)
(R902202746)

Ref No	Part Number	Description	Remarks	Serial Number	Qty
1	7283468	VALVE, RELIEF	preset at 350 bar - Was 6692332 [A]		1
2	6687921	COLLAR			1
3	6967523	SPINDLE	Was 6687920 [A]		1
4	6687922	NUT			1
5	6967525	SPRING	Was 6688043 [A]		1
6	6967526	SPRING	Was 6688021 [A]		1
7	6967527	PIN	Was 6687923 [A]		1
8	6682930	RING, BACK-UP	Was 6688041 [A]		1
9	6682929	O-RING	Was 6688000 [A]		1
10	6688034	SCREW			1

GEAR PUMP
(Double)

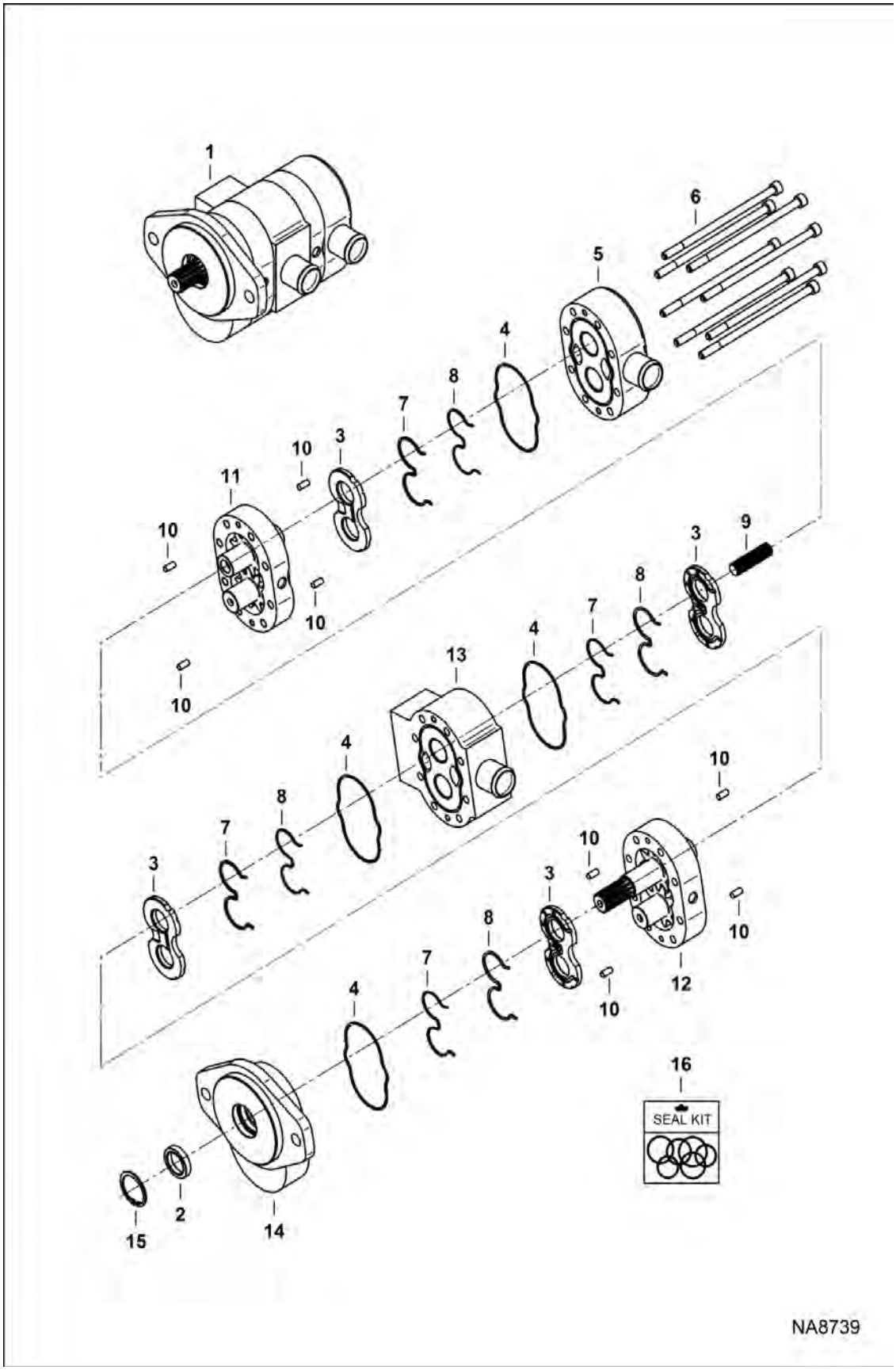

GEAR PUMP (Cont'd)
(Double)

Ref No	Part Number	Description	Remarks	Serial Number	Qty
1	7024735	PUMP, GEAR DOUBLE	EMEA - Model GHD0-22,5/17L		1
2		SEAL, SHAFT	NSS		1
3		WEAR PLATE	NSS		3
4		SEAL, SECTION	NSS		4
5		HOUSING, REAR	NSS		1
6		BOLT	NSS		8
7		SEAL, PRE-LOAD	NSS		4
8		SEAL, LOAD	NSS		4
9		CONNECTOR, SPLINE	NSS		2
10		PIN	NSS		8
11		HOUSING, GEAR	NSS		1
12		HOUSING, GEAR	NSS		1
13		HOUSING, CENTER	NSS		1
14		HOUSING, FRONT	NSS		1
15		RING, SNAP	NSS		1
16	7031411	KIT, SEAL	Ref. 2, 4, 7 & 8		1

COOLING FAN MOTOR KIT

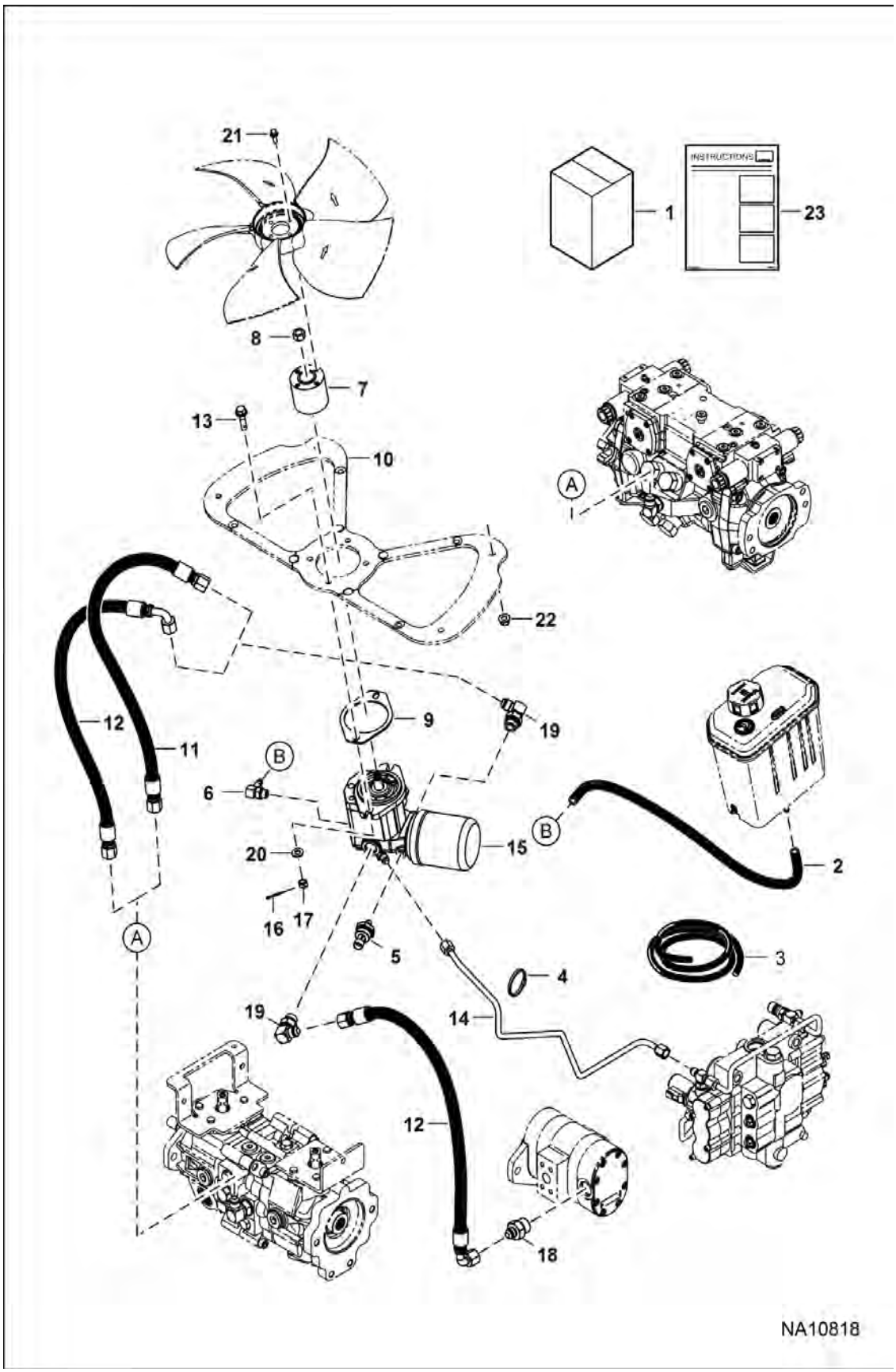

COOLING FAN MOTOR KIT (Cont'd)

Ref No	Part Number	Description	Remarks	Serial Number	Qty
1	7268584	KIT, MOTOR FAN	Ref. 2-23		1
2		HOSE	NLA - 766 mm (30.16") long - Order Ref. 3		1
3	6586251	HOSE, BULK	sold per foot		x
4	6624289	STRAP, TIE			1
5	6674316	SWITCH, PRESS OIL HYD			1
6	6727313	FITTING, ELBOW			1
7	7233891	HUB			1
8	7240968	NUT			1
9	7242068	GASKET			1
10	7243649	MOUNT, FAN			1
11	7246497	HOSE, HYD ASSY			1
12	7246498	HOSE, HYD ASSY			2
13	7249974	BOLT			2
14	7261862	TUBELINE, HYD			1
15	7265577	MOTOR, FAN DRIVE	See Illustration COOLING FAN MOTOR / NA10786 Was 7265579		1
16	1F416	PIN			2
17	3D6	NUT			2
18	15KB0812	FITTING, HYD CONNECTOR			1
19	17KB0810	FITTING, HYD ELBOW			2
20	25E17	WASHER 5			2
21	49C412	BOLT			4
22	83D6	NUT 5	Was 89D6 [B,D]		4
23	7268640ENUS	INSTRUCTIONS	Was 7268640		1

COOLING FAN MOTOR
(Canister Element) (Square Solenoid Coil)

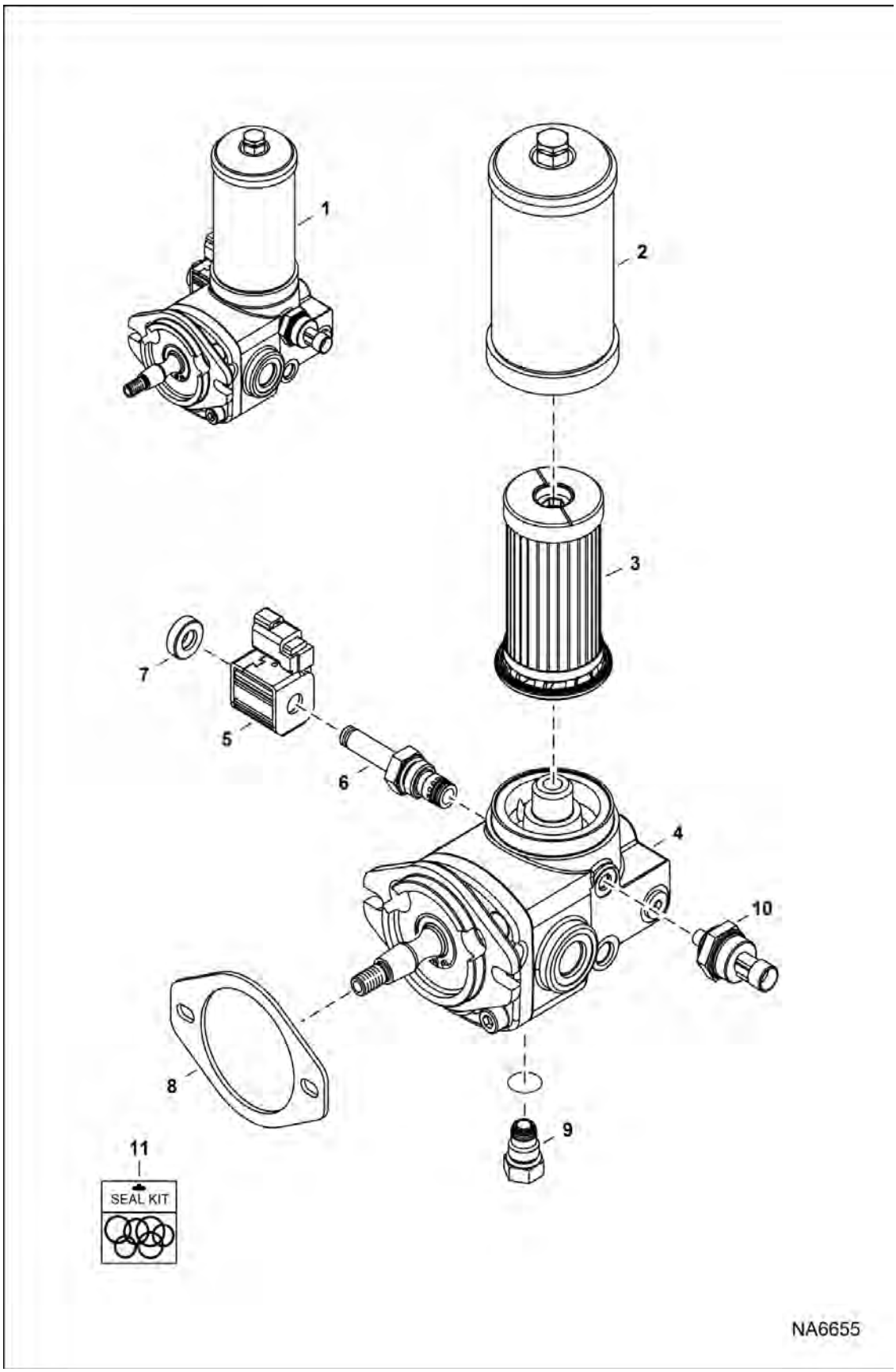

COOLING FAN MOTOR (Cont'd)

(Canister Element) (Square Solenoid Coil)

Ref No	Part Number	Description	Remarks	Serial Number	Qty
1		MOTOR, FAN	See Illustration COOLING FAN MOTOR KIT / NA10818 - NLA - cast iron - Ref. 2-10 - Order 7268584 kit - Was 7010793 [A]		1
2	6698066	HOUSING, FILTER CARTRIDGE			1
3	6692337	FILTER, HYD CARTRIDGE	- cooling fan motor - canister filter		1
4		MOTOR	NSS - Order Ref. 1		1
5	6698065	COIL, CPP012H			1
6	7010979	VALVE, CHECK	cartridge - W/Ref. 7 - Was 7008810 [B,D]		1
6	6698591	KIT, SEAL			1
7		NUT, COIL SOLENOID	NLA - Order Ref. 6		1
8	6698062	GASKET, MOTOR			1
9	7000974	PLUG, MOTOR			1
10	6674316	SWITCH, PRESS OIL HYD	3-pin molded connector		1
11		KIT, SEAL	NSS - Order Ref. 1		1

COOLING FAN MOTOR

(Spin-on Element) (Round Solenoid Coil)

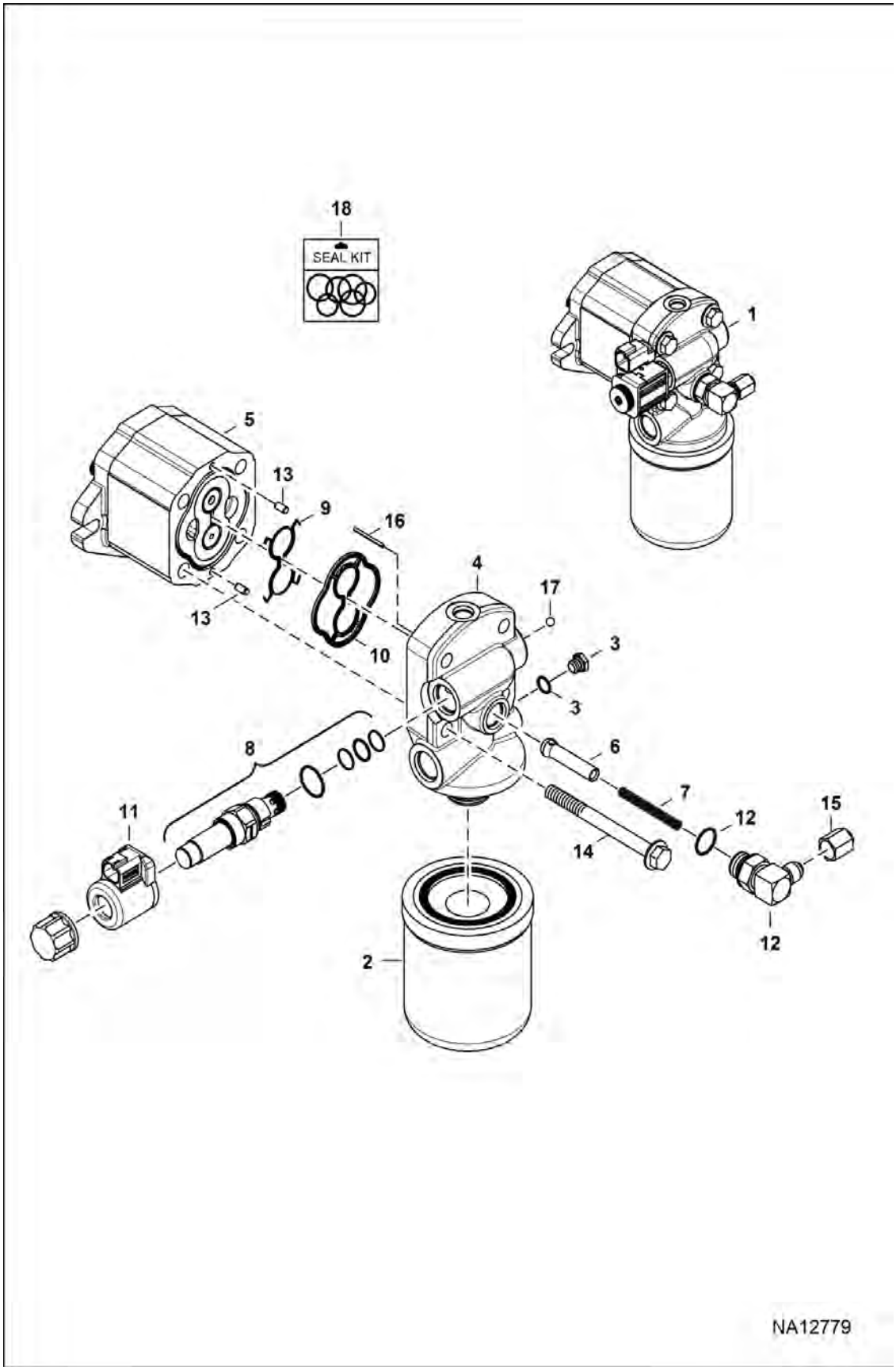

COOLING FAN MOTOR (Cont'd)

(Spin-on Element) (Round Solenoid Coil)

Ref No	Part Number	Description	Remarks	Serial Number	Qty
1		MOTOR, FAN DRIVE	See Illustration COOLING FAN MOTOR / NA10786 - NLA - Ref. 2-18 - Was 7231534 [A]		1
2	7319444	ELEMENT FILTER	Was 6686926 [A]		1
3	6812170	PLUG			1
3	75K3	O-RING			1
4	7314404	BLOCK FILTER	Was 7231189 [A]		1
5	7302973	MOTOR, FAN	Was 7231471 [A]		1
6	7235925	VALVE, CHECK			1
7	7239168	SPRING			1
8		VALVE, PROPORTIONAL	See Illustration COOLING FAN MOTOR / NA10786 - NLA - Was 7240865 [A]		1
9		SEAL	NSS - Order Ref. 16		1
10		SEAL	NSS - Order Ref. 16		1
11		COIL, SOLENOID	See Illustration COOLING FAN MOTOR / NA10786 - NLA - Was 7242855 [A]		1
12	7236735	FITTING, HYD ELBOW	Was 7245503 [D]		1
12	79K12	O RING 10			1
13	21JM510	PIN			2
14	29CM10110	BOLT			4
15	36K5	CAP			1
16	14J0715	PIN			1
17	6592105	BALL 5			1
18	7250289	KIT, SEAL	Ref. 9 & 10		1

COOLING FAN MOTOR
(Spin-on Element)

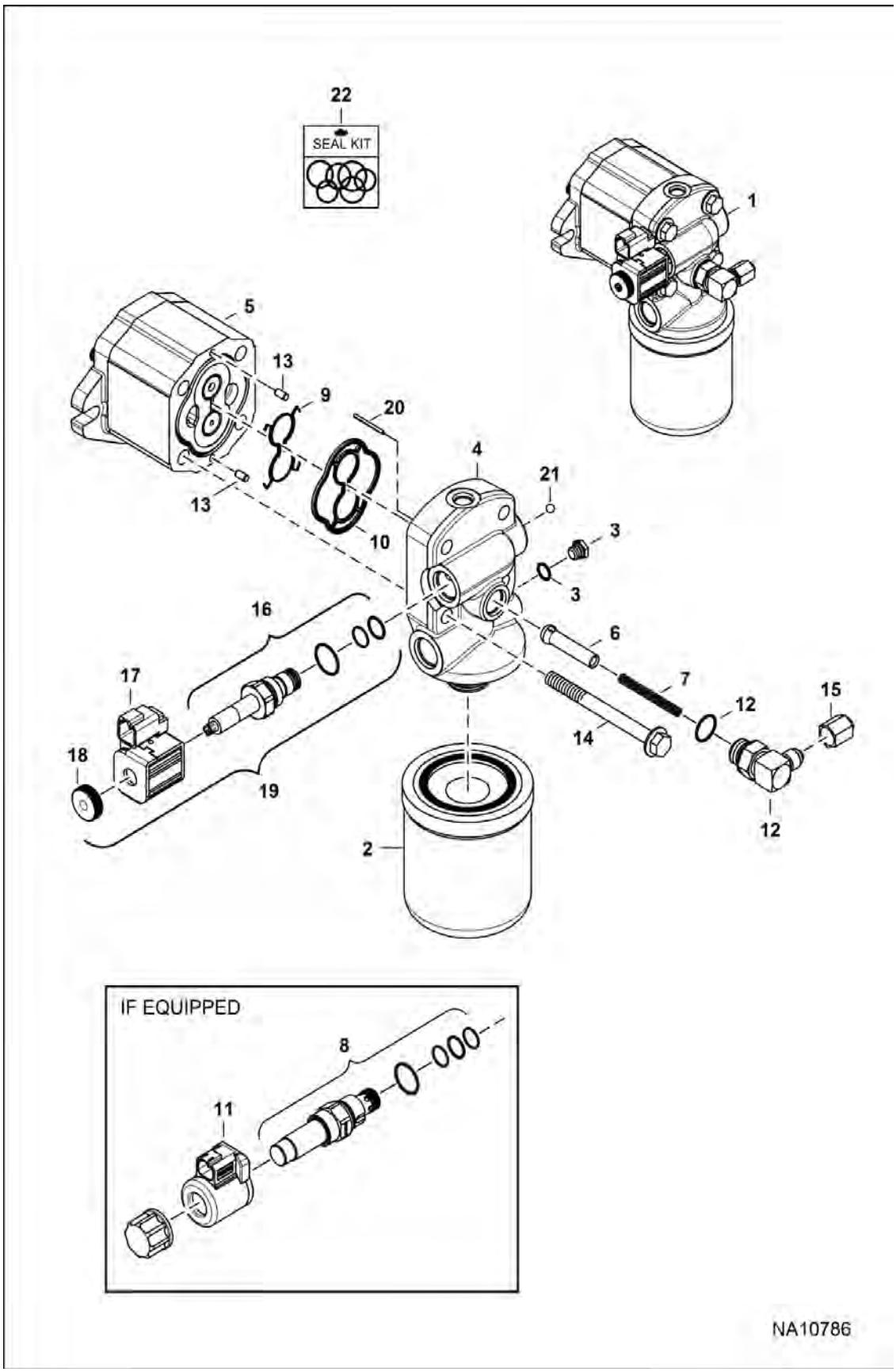

COOLING FAN MOTOR (Cont'd)

(Spin-on Element)

Ref No	Part Number	Description	Remarks	Serial Number	Qty
1		MOTOR, FAN DRIVE	NLA - Ref. 2-15, 20 & 21 - Order 7265577 motor - Was 7265579 [A]		1
1	7265577	MOTOR, FAN DRIVE	Ref. 2-7, 9, 10 & 12-21		1
2	7319444	ELEMENT FILTER	Was 6686926 [A]		1
3	6812170	PLUG			1
3	75K3	O-RING			x
4	7314404	BLOCK FILTER	Was 7231189 [A]		1
5	7302973	MOTOR, FAN	Was 7231471 [A]		1
6	7235925	VALVE, CHECK			1
7	7239168	SPRING			1
8	7274494	VALVE, PROPORTIONAL			1
9		SEAL	NSS - Order Ref. 16		1
10		SEAL	NSS - Order Ref. 16		1
11	7274493	COIL, SOLENOID			1
12	7236735	FITTING, HYD ELBOW			1
12	79K12	O RING 10	Was 79K8 [B,D]		x
13	21JM510	PIN			2
14	29CM10110	BOLT			4
15	36K5	CAP			1
16	7316520	VALVE PROPORTIONAL	Was 7008810 [A]		1
17	6698065	COIL, CPP012H			1
18		NUT	NSS - Order Ref. 16		1
19	7316521	ASSY VALVE	Ref. 16-18 - Was 7270873 [A]		1
20	14J0715	PIN			1
21	6592105	BALL 5			1
22	7250289	KIT, SEAL	Ref. 9 & 10		1

CAB ELECTRICAL CIRCUITRY
(Standard)

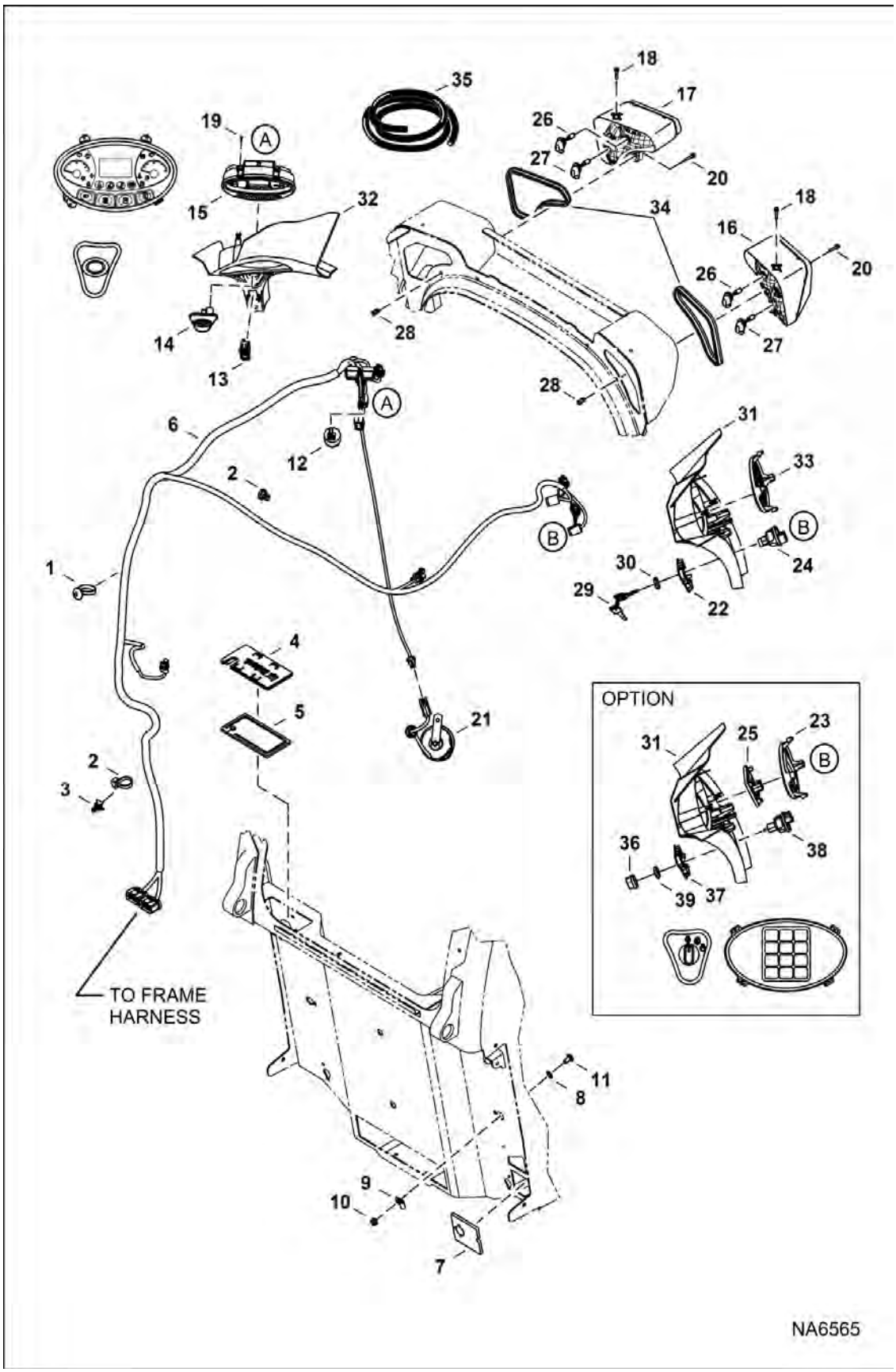

CAB ELECTRICAL CIRCUITRY (Cont'd)

(Standard)

Ref No	Part Number	Description	Remarks	Serial Number	Qty
1	6675734	TIE STRAP			1
2	6624289	STRAP, TIE			5
3	7015668	MOUNT, STRAP TIE	push in - Use W/tie strap		1
4	7179136	PLUG, HARNESS CAB STD			1
5	7179137	FOAM			1
6	7259313	HARNESS, CAB	Was 7210557 [B]		1
7	7185150	PLUG, HARNESS CAB			1
8	6674894	NUT, LOCK			1
9	30H20	CLIP			1
10	57D6	NUT 5			1
11	10C612	BOLT	Was 31C612 [B]		1
12	6692489	ALARM, BUZZER			1
13	6690948	SWITCH PARK BRAKE			1
14	7003032	SWITCH, OVERRIDE TRACTION			1
15	7025320	DISPLAY, DLX	Was 7022670		1
16	7251340	ASSY, LIGHT HEAD RH	Was 7138040 [C]		1
16	7008814	BULB, 37.5W	Was 7276034 - 37.5W		x
17	7251341	ASSY, LIGHT HEAD LH	Was 7138041 [A]		1
17	7008814	BULB, 37.5W	Was 7276034 - 37.5W		x
18	35C410	BOLT 5			2
19	7179008	SCREW, PLASTIC			3
20	31C420	BOLT 5			2
21		HORN, ALARM	See Illustration HORN KIT / NA8403 manual controls, AHC & ACS		1
21		HORN, ALARM	See Illustration HORN KIT / NA8402 selectable joystick controls		1
22	7163589	INSERT, SWITCH			1
23	7003027	INSERT, KEYPAD	if loader is equipped W/SJC & text decals, Also Order Ref. 33 & 7168114 decal - if loader is equipped W/SJC & no text decals, Also Order Ref. 33 & 7177707 decal		1
24	6693245	SWITCH, IGN	W/Ref. 30		1
25	6693712	KEYPAD, PANEL			1
26	7008814	BULB, 37.5W	- 37.5W		2
27	6675336	LIGHT, BULB 50W			2
28	7154910	INSERT, THREADED			2
29	6693241	KEY (2)	ignition - single key W/O ring		1
30	7009081	NUT			1
31	7155791	PANEL, RH			1
32	7155792	PANEL, LH			1

CAB ELECTRICAL CIRCUITRY (Cont'd)
(Standard)

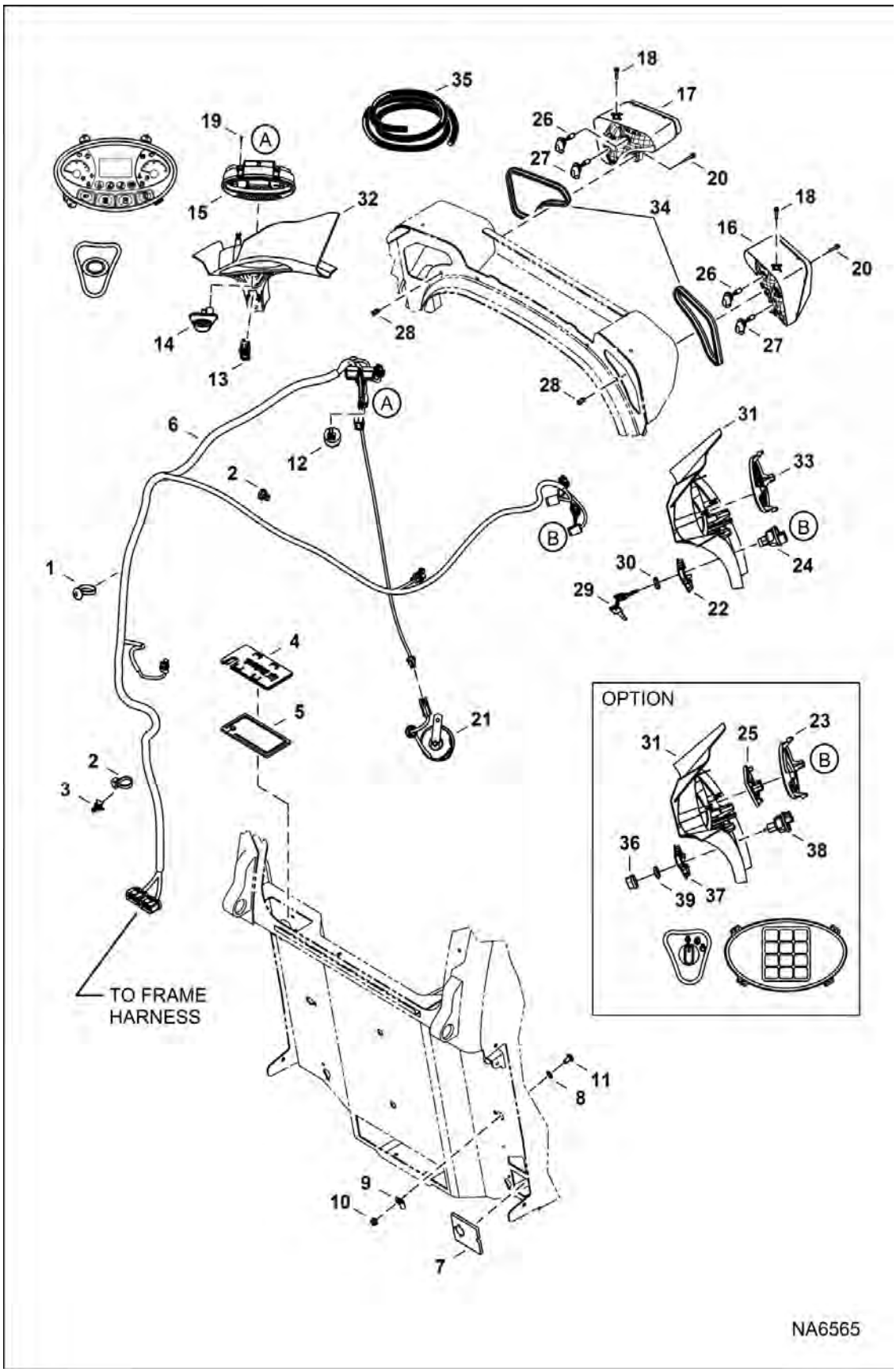

CAB ELECTRICAL CIRCUITRY (Cont'd)

(Standard)

Ref No	Part Number	Description	Remarks	Serial Number	Qty
33	7002985	INSERT, BLANK	W/Bobcat head - if loader is equipped W/SJC & text decals, Also Order Ref. 33 & 7168114 decal - if loader is equipped W/SJC & no text decals, Also Order Ref. 33 & 7177707 decal		1
34		SEAL	NLA - 609,6 mm (24") long - Order Ref. 35		2
35	7202956	SEAL, BULK	bulk - sold per foot		x
36	7023588	KNOB			1
37	7163589	INSERT, SWITCH			1
38	7023022	SWITCH ROTARY	W/Ref. 39		1
39	7009081	NUT			1

CAB ELECTRICAL CIRCUITRY
(Deluxe)

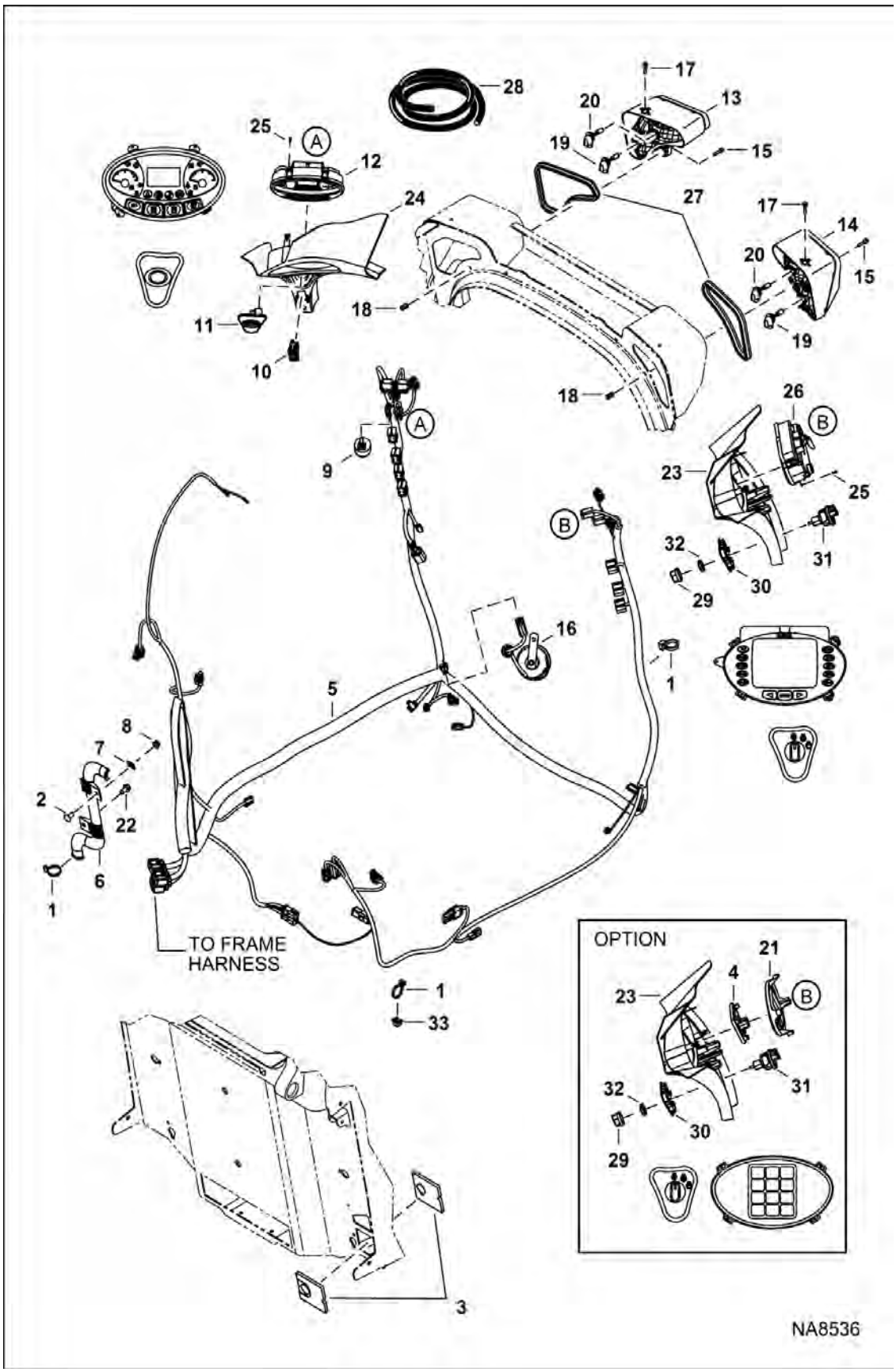

Illustration NA8536

Model S450 MT2KAMEA
6990825

CAB ELECTRICAL CIRCUITRY (Cont'd)

(Deluxe)

Ref No	Part Number	Description	Remarks	Serial Number	Qty
1	6624289	STRAP, TIE			20
2	10C612	BOLT	Was 31C612 [B,D]		1
3	7185150	PLUG, HARNESS CAB			2
4	6693712	KEYPAD, PANEL			1
5	7305100	HARNESS CAB DLX	NLA - Was 7235340 [A]		1
6	7164073	GUIDE			1
7	6684033	NUT			1
8	57D6	NUT 5			1
9	6692489	ALARM, BUZZER			1
10	6690948	SWITCH PARK BRAKE			1
11	7003032	SWITCH, OVERRIDE TRACTION			1
12	7025320	DISPLAY, DLX	Was 7022670		1
13	7251341	ASSY, LIGHT HEAD LH	Was 7138041 [A]		1
13	7008814	BULB, 37.5W	Was 7276034 - 37.5W		x
14	7251340	ASSY, LIGHT HEAD RH	Was 7138040 [C]		1
14	7008814	BULB, 37.5W	Was 7276034 - 37.5W		x
15	31C420	BOLT 5			2
16		HORN, ALARM	See Illustration HORN KIT / NA8403 manual controls, AHC & ACS		1
16		HORN, ALARM	See Illustration HORN KIT / NA8402 selectable joystick controls		1
17	35C410	BOLT 5			2
18	7154910	INSERT, THREADED			2
19	6675336	LIGHT, BULB 50W			2
20	7008814	BULB, 37.5W	- 37.5W		2
21	7003027	INSERT, KEYPAD	if loader is equipped W/SJC & text decals, Also Order Ref. 23 & 7168114 decal - if loader is equipped W/SJC & no text decals, Also Order Ref. 23 & 7177707 decal		1
22	84G3712	BOLT 5			1
23	7155791	PANEL, RH			1
24	7155792	PANEL, LH			1
25	7179008	SCREW, PLASTIC			6
26	6693413	DISPLAY, DLX			1
27		SEAL	NLA - 609,6 mm (24") long - Order Ref. 28		2
28	7202956	SEAL, BULK	bulk - sold per foot		x
29	7023588	KNOB			1
30	7163589	INSERT, SWITCH			1
31	7023022	SWITCH ROTARY	W/Ref. 32		1
32	7009081	NUT			1
33	7010600	MOUNT TREE FIR			1

ENGINE ELECTRICAL CIRCUITRY
(Frame Harness & Filter Sensors)

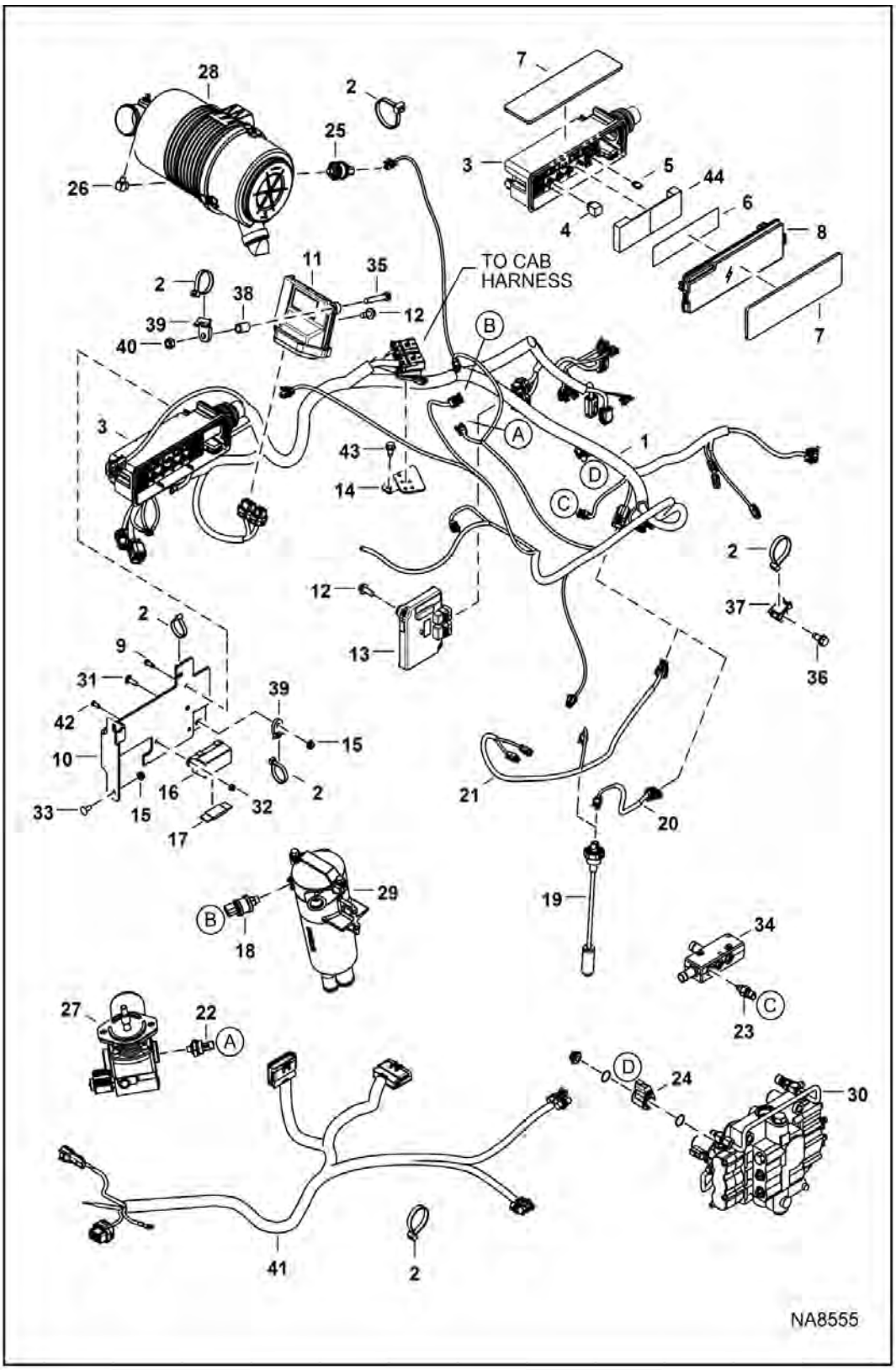

Illustration NA8555

Model S450 MT2KAMEA
6990825

ENGINE ELECTRICAL CIRCUITRY (Cont'd)

(Frame Harness & Filter Sensors)

Ref No	Part Number	Description	Remarks	Serial Number	Qty
1	7205994	HARNESS, ENG	See Illustration CAB ELECTRICAL CIRCUITRY / NA6565 - manual controls	B1E611001 - B1E613471	1
1	7257218	HARNESS, MFR SF MANUAL	- manual controls	B1E613472 - B1E617148	1
1	7301530	HARNESS MFR SF MANUAL	- manual controls - Was 7297200 [D]	B1E617149 & Above	1
1	7222384	HARNESS, MFR	See Illustration CAB ELECTRICAL CIRCUITRY / NA8536 - SJC, AHC & ACS	B1E611001 - B1E613471	1
1	7257217	HARNESS, MFR SF CONTROL	- SJC, AHC & ACS	B1E613472 - B1E617148	1
1	7301532	HARNESS MFR SF CONTROL	- SJC, AHC & ACS - Was 7297202 [D]	B1E617149 - B1E617304	1
1	7305112	HARNESS MFR SF CONTROL	SJC, AHC & ACS	B1E617305 & Above	1
2	6624289	STRAP, TIE			29
2	6624289	STRAP, TIE	Contact your Local Dealer for Service Letter SL15211		11
3	7207542	HOUSING, FUSE CENTER			1
4	6679820	SWITCH, RELAY MAGNETIC			4
4	7219044	RELAY, ELECTRICAL			5
5	6654806	FUSE, 15A			2
5	6625575	FUSE, 20A	if equipped		1
5	6702444	FUSE 25A 5			5
5	6718034	FUSE, 30A			2
5	6803264	FUSE			1
5	6707621	FUSE, 15A MINI 5			2
5	6707623	FUSE, 25A MINI 5			7
5	7131022	FUSE, 30A MINI 5			1
6	7232310	DECAL, FUSE	manual controls	B1E611001 & Above	1
6	7232310	DECAL, FUSE	SJC, AHC & ACS	B1E611001 - B1E617304	1
6	7308512	DECAL FUSE RELAY	SJC, AHC & ACS	B1E617305 & Above	1
7	7244382	INSULATION			2
8	7207541	COVER, FUSE BOX			1
9	6702642	BOLT 5			7
10	7200451	BRACKET			1
11	7260936	CONTROLLER, GATEWAY	Bobcat - Was 6693353 [A]		1
12	7168429	BOLT, CONTROLLER	flanged head - M10 x 25 mm		3
13	7277987	CONTROLLER, AUX CONTROL	Was 7260937 [A]		1
14	7222563	BRACKET			1
15	55D5	NUT			3
16	6675154	HOLDER	high amp fuse		1
17	6675155	FUSE, 100A	mega		1
18	7002980	SWITCH, PRESSURE			1

ENGINE ELECTRICAL CIRCUITRY (Cont'd)

(Frame Harness & Filter Sensors)

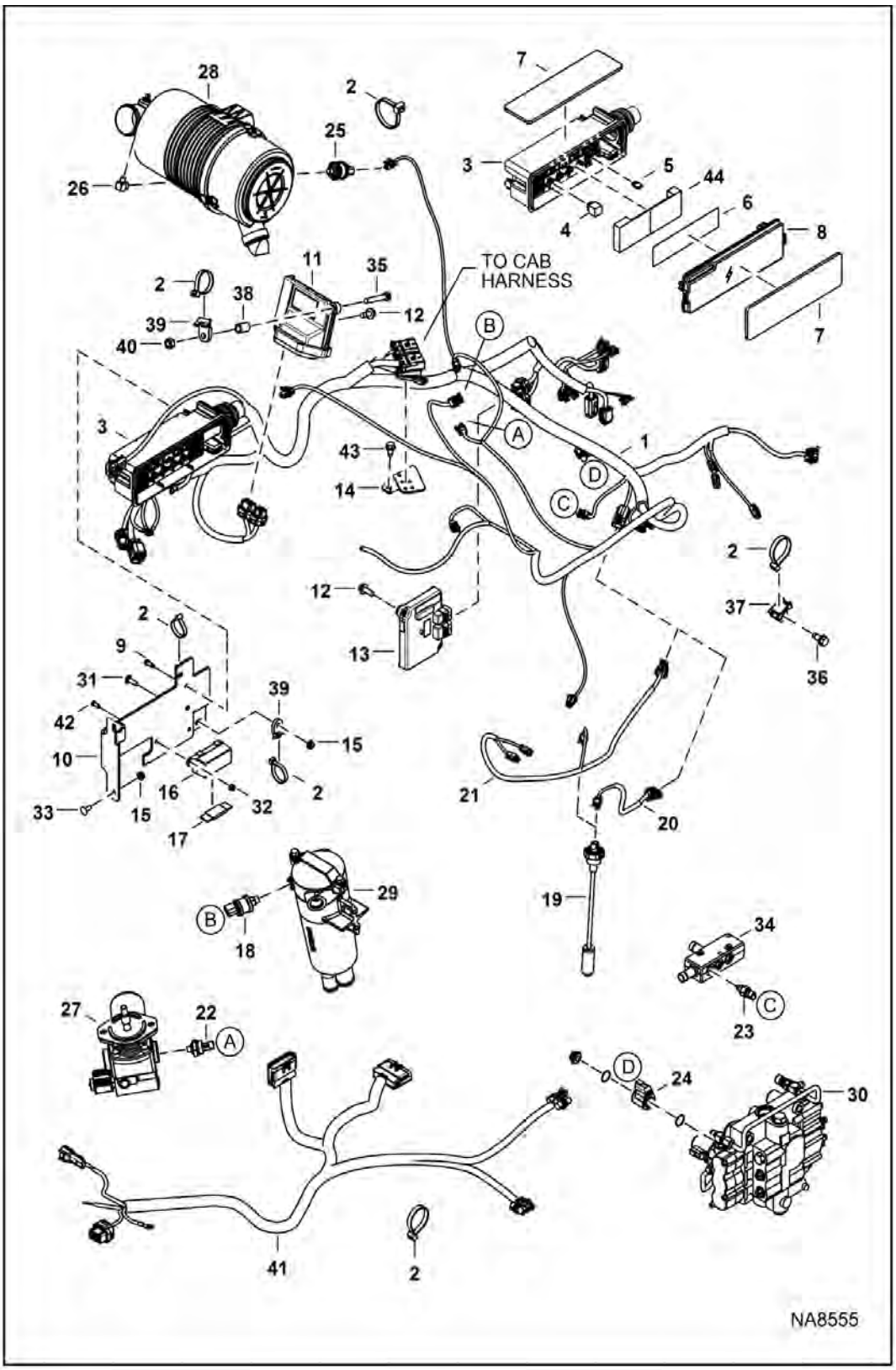

ENGINE ELECTRICAL CIRCUITRY (Cont'd)

(Frame Harness & Filter Sensors)

Ref No	Part Number	Description	Remarks	Serial Number	Qty
19	7287028	SENSOR, FUEL	Was 7216452 [A]		1
19	6717579	GASKET			1
20	7200449	HARNESS, FUEL	std cab		1
21	7200460	HARNESS, FUEL	dlx cab		1
22	6674316	SWITCH, PRESS OIL HYD	3-pin molded connector		1
23	6727869	SENDER,HYD TEMP			1
23	79K6	O RING 10			x
24	6675559	COIL	See Illustration HYDRAULIC CONTROL VALVE / NA8520 - D series - black case - metri pack connector , See Illustration HYDRAULIC CONTROL VALVE / NA8521 - D series - black case - metri pack connector		1
24	7272732	ASSY, COIL SOLENOID	See Illustration HYDRAULIC CONTROL VALVE / NA12535 - E series - silver case - 208 mm (8.2") lead - metri pack connector , See Illustration HYDRAULIC CONTROL VALVE / NA12538 - E series - silver case - 208 mm (8.2") lead - metri pack connector		1
24	7301672	COIL SOLENOID	See Illustration HYDRAULIC CONTROL VALVE / NA12535 - E series - silver case - integrated Deutsch connector - Was 6688356 [A], See Illustration HYDRAULIC CONTROL VALVE / NA12538 - E series - silver case - integrated Deutsch connector - Was 6688356 [A]	B1E617149 & Above	1
25	6665371	SWITCH, VACUUM			1
26	7191672	ELBOW			1
27		MOTOR, HYD COOLING FAN	See Illustration COOLING FAN MOTOR / NA6655		1
28		FILTER, AIR CLEANER ASSY	See Illustration ENGINE & ATTACHING PARTS / NA8557		1
29		FILTER, HYD ASSY	See Illustration HYDROSTATIC CIRCUITRY / NA8540		1
30		VALVE, CONTROL	See Illustration HYDRAULIC CONTROL VALVE / NA8520		1
30		VALVE, CONTROL	See Illustration HYDRAULIC CONTROL VALVE / NA8521		1
31	37C516	BOLT	Was 10C516 [B]		1
32	59D4	NUT 5			2
33	37C516	BOLT	Was 10C512 [B]		2
34		MANIFOLD, DRAIN CASE	See Illustration MANUAL LIFT RELEASE SYSTEM / NA8517 - Was 7201981 [B]		1
35	4CM1065	BOLT			1
36	84G3112	BOLT 5			1
37	6678818	MOUNT			1
38	7144076	SPACER			1
39	6679034	MOUNT			1
40	4DM10	NUT HEX			1
41	7252969	HARNESS, RELAY SWITCH	Contact your Local Dealer for Service Letter SL15211 Relay 7251745		1
41	7251745	SWITCH, MAGNETIC			2
42	25G410	CAPSCREW			2

ENGINE ELECTRICAL CIRCUITRY (Cont'd)

(Frame Harness & Filter Sensors)

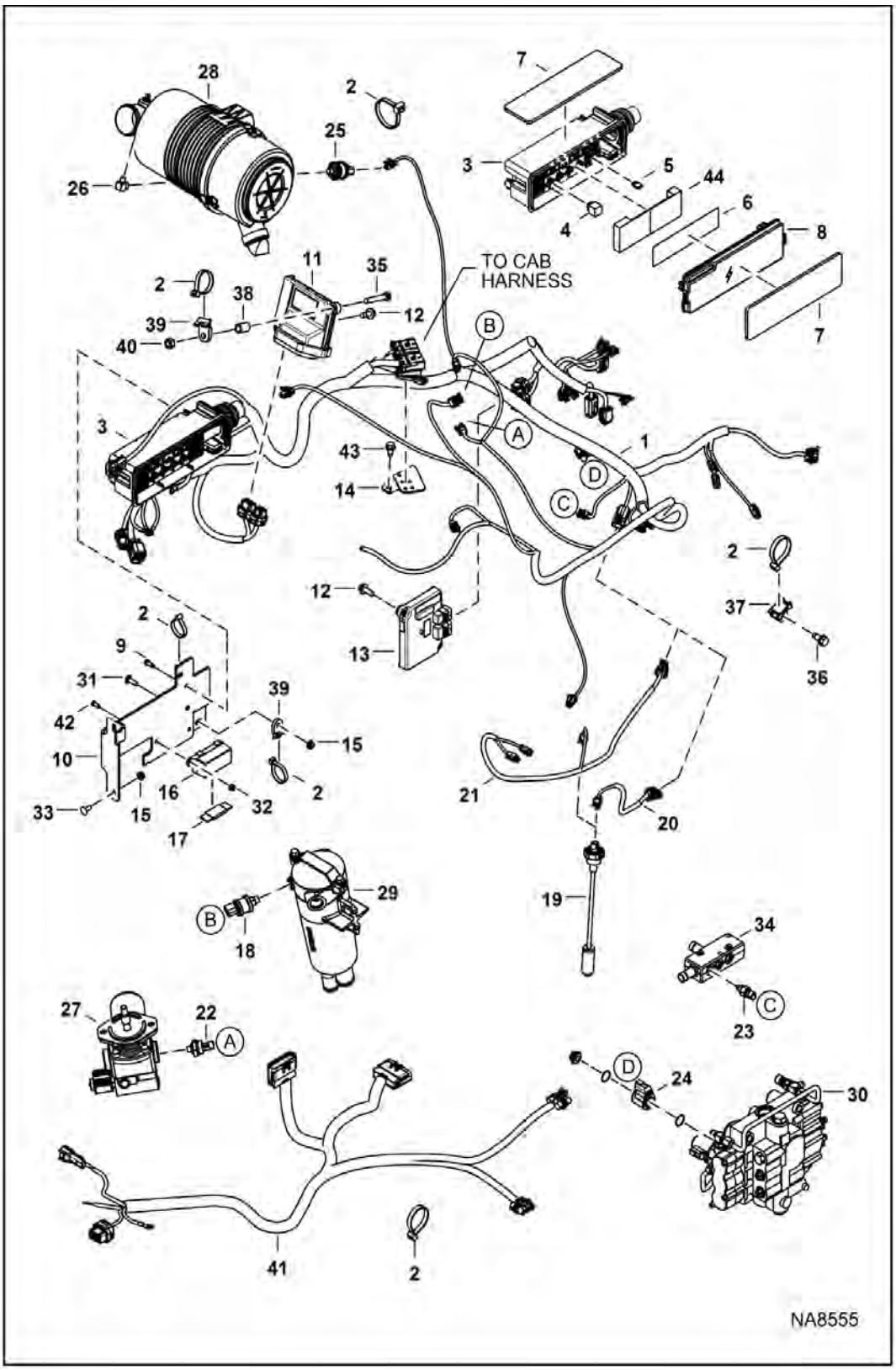

ENGINE ELECTRICAL CIRCUITRY (Cont'd)

(Frame Harness & Filter Sensors)

Ref No	Part Number	Description	Remarks	Serial Number	Qty
43	84G3712	BOLT 5			2
44	7276657	FOAM	if equipped		1

ENGINE ELECTRICAL CIRCUITRY

(Engine Sensors, Battery, Alt & Starter)
(S/N B1E611001 - B1E618212)

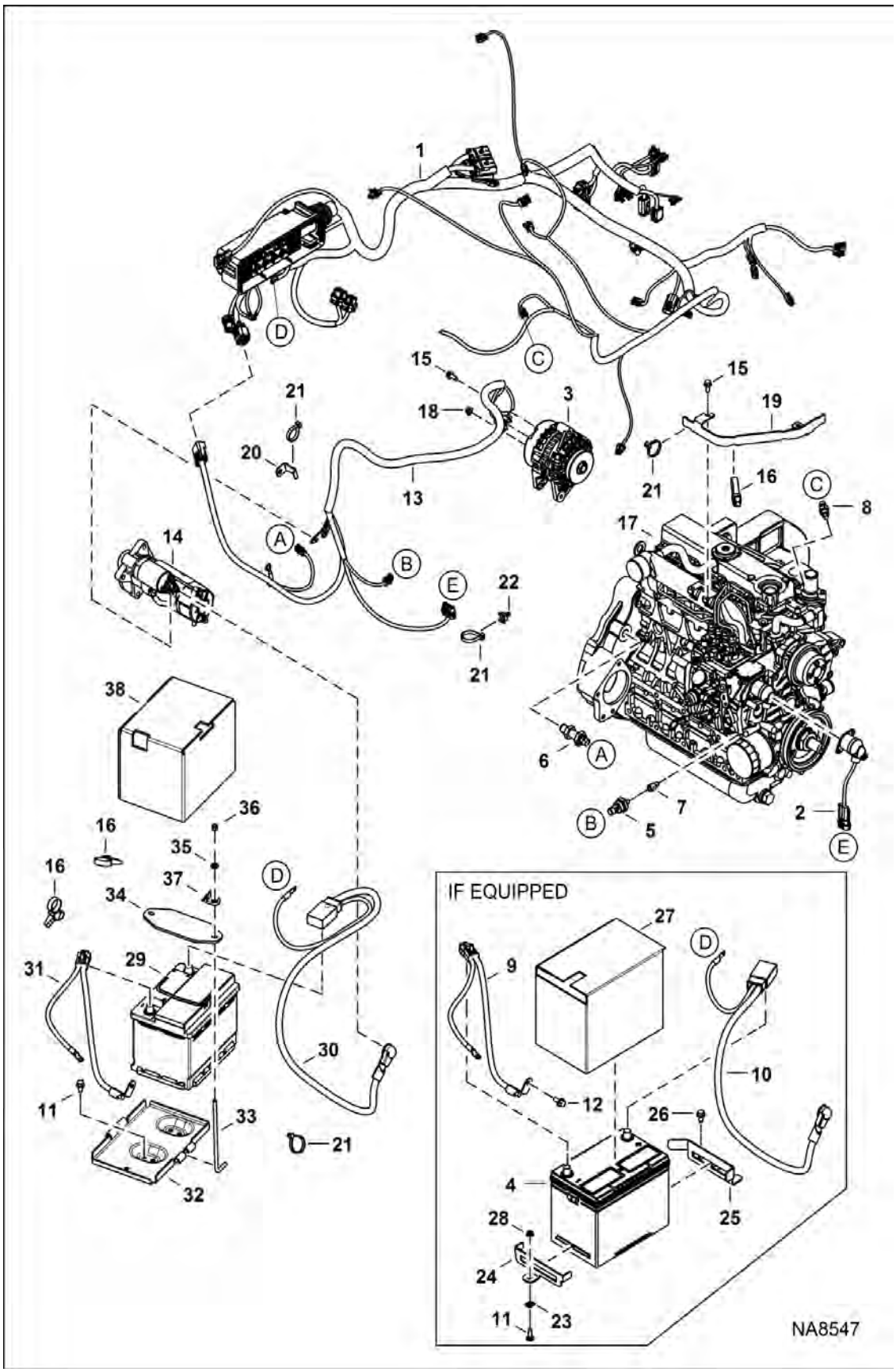

ENGINE ELECTRICAL CIRCUITRY (Cont'd)

(Engine Sensors, Battery, Alt & Starter)
(S/N B1E611001 - B1E618212)

Ref No	Part Number	Description	Remarks	Serial Number	Qty
1		HARNESS, MFR	See Illustration ENGINE ELECTRICAL CIRCUITRY / NA8555		1
2	6691498	SOLENOID, SHUTOFF FUEL	240 mm (9.45") lead - Was 7000769 [B,D]		1
3		ALTERNATOR	See Illustration ALTERNATOR / C3529		1
4	6673865	BATTERY, WET 600CCA		B1E611001 - B1E617392	1
5	7321588	SENSOR, PRESSURE	Was 6697920		1
6	6693921	SENSOR, RPM			1
7	7102451	FITTING			1
8	6718414	SENDER, TEMP ENG			1
9	7213697	CABLE, NEGATIVE		B1E611001 - B1E617392	1
10	7162967	CABLE, POSITIVE		B1E611001 - B1E617392	1
11	84G3712	BOLT 5			3
12	35C612	BOLT 5			1
13	7200465	HARNESS, ENG			1
14		STARTER	See Illustration STARTER / B16488R		1
15	29CM820	SCREW FLNGE HEX CAP			3
16	6678668	STRAP			3
17		ENGINE	See Illustration ENGINE & GASKET KITS / NA6703		1
18	43DM8	NUT FLANGED HEX			1
19	7194203	BRACKET, HARNESS			1
20	7164564	BRACKET, A/C			1
21	6624289	STRAP, TIE			6
22	7015668	MOUNT, STRAP TIE			1
23	774220	NUT		B1E611001 - B1E617392	1
24	7228386	CLAMP		B1E611001 - B1E617392	1
25	7228387	CLAMP		B1E611001 - B1E617392	1
26	37C516	BOLT		B1E611001 - B1E617392	1
27	7303141	SHIELD BATTERY	Was 7242069 [A]	B1E611001 - B1E617392	1
28	57D5	NUT		B1E611001 - B1E617392	1
29	7306047	BATTERY, 700A EU	(EMEA)	B1E617393 & Above	1
30	7241952	CABLE POSITIVE		B1E617393 & Above	1
31	7241954	CABLE NEGATIVE		B1E617393 & Above	1

ENGINE ELECTRICAL CIRCUITRY (Cont'd)

(Engine Sensors, Battery, Alt & Starter)
(S/N B1E611001 - B1E618212)

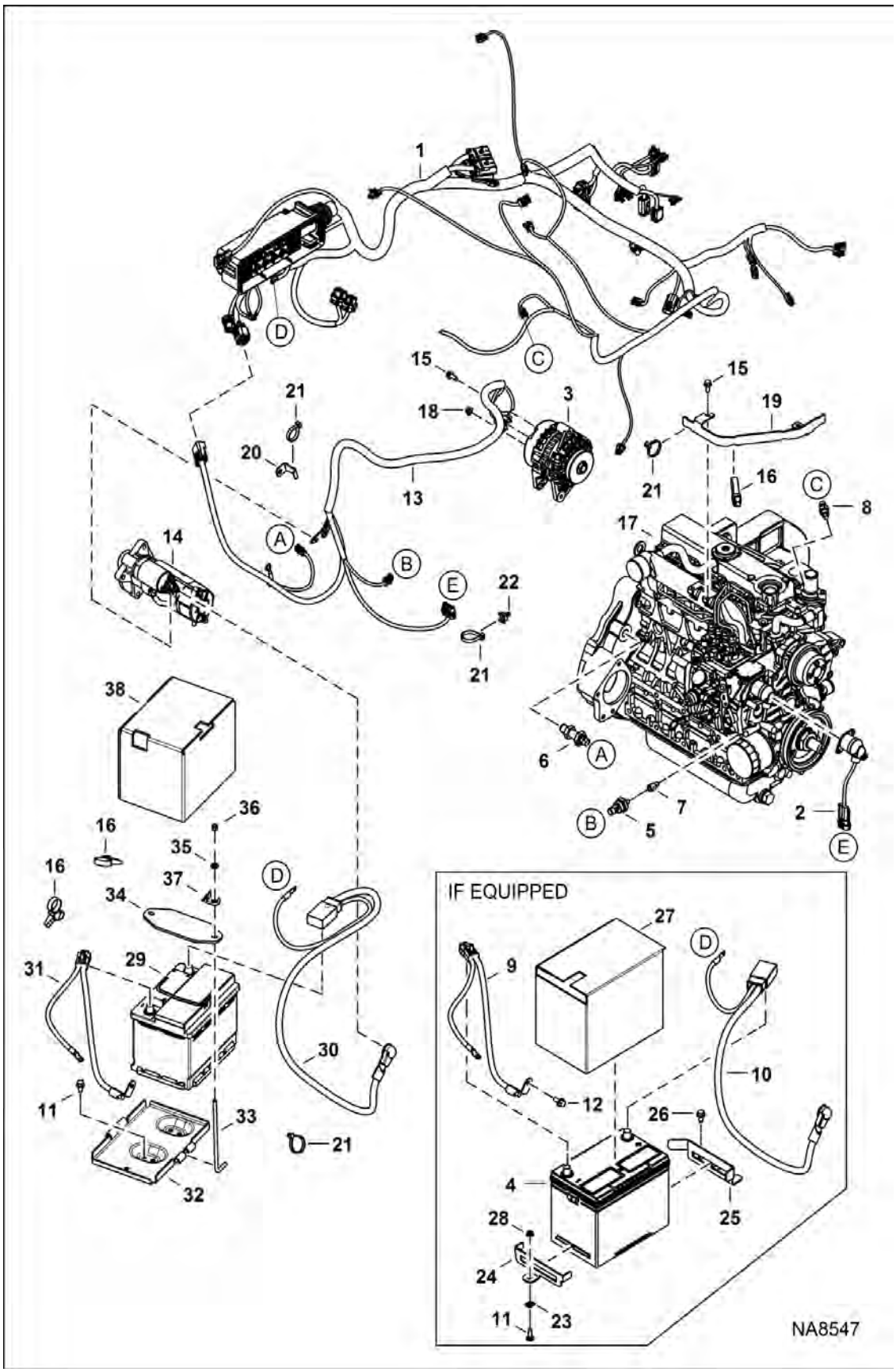

ENGINE ELECTRICAL CIRCUITRY (Cont'd)

(Engine Sensors, Battery, Alt & Starter)
(S/N B1E611001 - B1E618212)

Ref No	Part Number	Description	Remarks	Serial Number	Qty
32	6718260	BATTERY PAN		B1E617393 & Above	1
33	7306018	BOLT ADJUSTING		B1E617393 & Above	2
34	7306019	BRACKET BATTERY TIE DOWN		B1E617393 & Above	1
35	25E15	WASHER 5		B1E617393 & Above	2
36	59D5	NUT 5		B1E617393 & Above	2
37	6684641	MOUNT		B1E617393 & Above	1
38	7308574	SHIELD BATTERY		B1E617393 & Above	1

ENGINE ELECTRICAL CIRCUITRY

(Engine Sensors, Battery, Alt & Starter)
(S/N B1E618213 & Above)

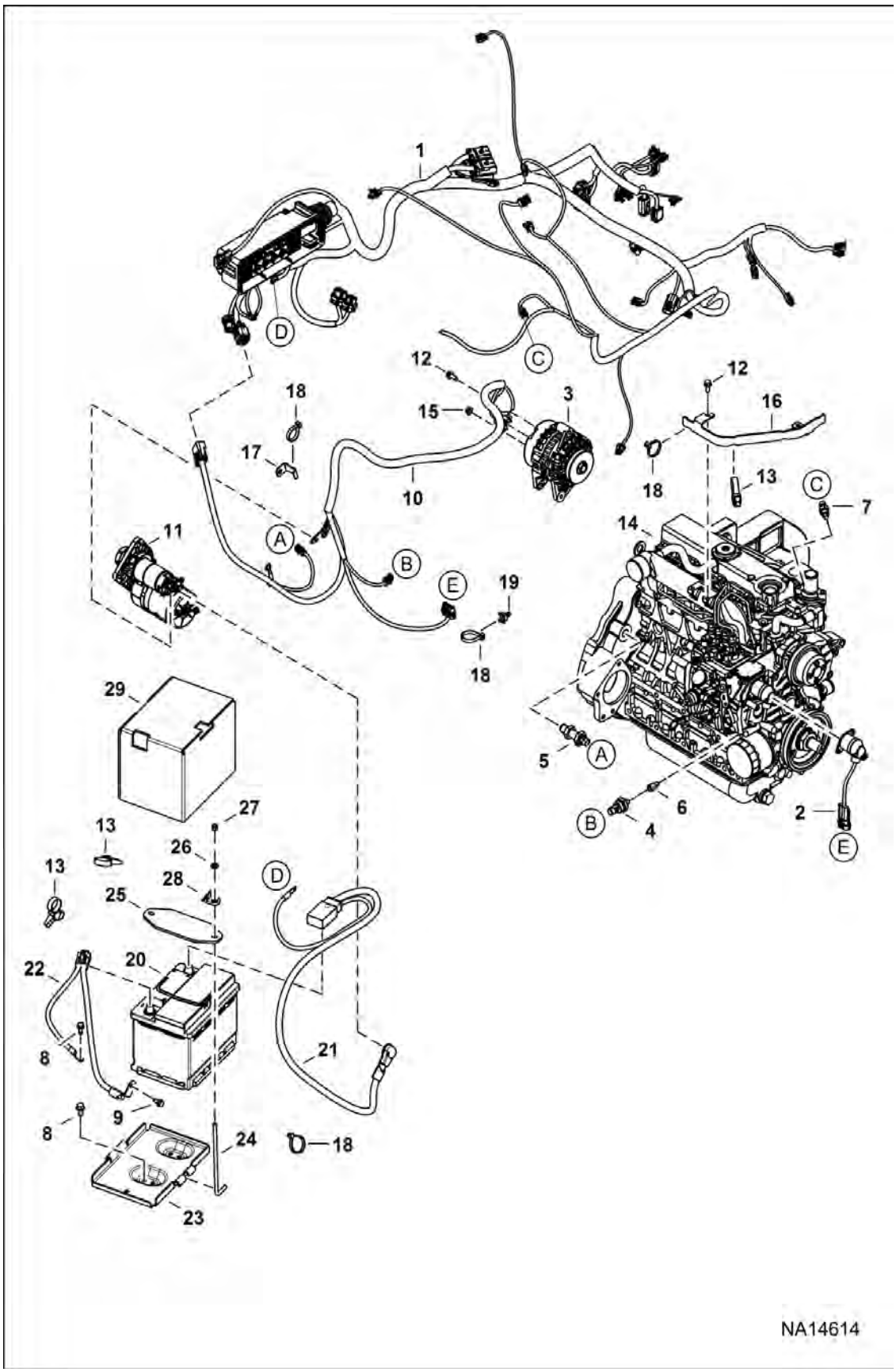

ENGINE ELECTRICAL CIRCUITRY (Cont'd)

(Engine Sensors, Battery, Alt & Starter)
(S/N B1E618213 & Above)

Ref No	Part Number	Description	Remarks	Serial Number	Qty
1		HARNESS, MFR	See Illustration ENGINE ELECTRICAL CIRCUITRY / NA8555		1
2	6691498	SOLENOID, SHUTOFF FUEL	240 mm (9.45") lead		1
3		ALTERNATOR	See Illustration ALTERNATOR / C3529		1
4	7321588	SENSOR, PRESSURE			1
5	6693921	SENSOR, RPM			1
6	7102451	FITTING			1
7	6718414	SENDER, TEMP ENG			1
8	84G3712	BOLT 5			3
9	35C612	BOLT 5			1
10	7200465	HARNESS, ENG			1
11		STARTER	See Illustration STARTER / NA14599		1
12	29CM820	SCREW FLNGE HEX CAP			3
13	6678668	STRAP			3
14		ENGINE	See Illustration ENGINE & GASKET KITS / NA6703		1
15	43DM8	NUT FLANGED HEX			1
16	7194203	BRACKET, HARNESS			1
17	7164564	BRACKET, A/C			1
18	6624289	STRAP, TIE			6
19	7015668	MOUNT, STRAP TIE			1
20	7306047	BATTERY, 700A EU	(EMEA)		1
21	7241952	CABLE POSITIVE			1
22	7241954	CABLE NEGATIVE			1
23	6718260	BATTERY PAN			1
24	7306018	BOLT ADJUSTING			2
25	7306019	BRACKET BATTERY TIE DOWN			1
26	25E15	WASHER 5			2
27	59D5	NUT 5			2
28	6684641	MOUNT			1
29	7308574	SHIELD BATTERY			1

ENGINE ELECTRICAL CIRCUITRY
(Rear Lights & Back-up Alarm)

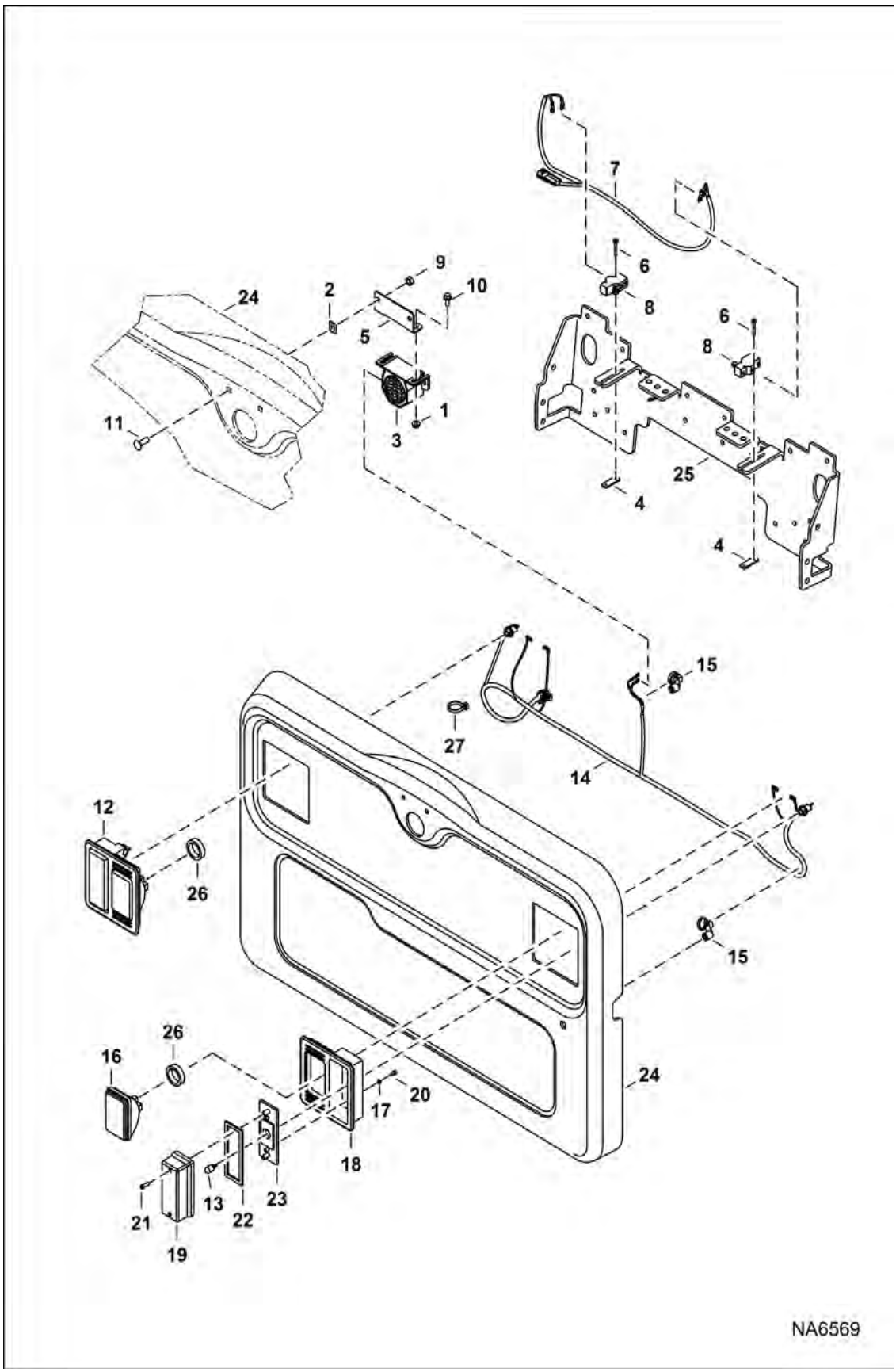

ENGINE ELECTRICAL CIRCUITRY (Cont'd)

(Rear Lights & Back-up Alarm)

Ref No	Part Number	Description	Remarks	Serial Number	Qty
1	97D4	NUT			2
2	774220	NUT			2
3	6651512	ALARM, BACK-UP			1
3	6737189	DECAL, WARNING	backup alarm - Was 7180087 [B,D]		1
4	6702593	SPACER			2
5	7246876	MOUNT	Was 7167871 [A]		1
6	84G1320	SCREW THD ROLLING TT			4
7	7175017	HARNESS, ALARM BACK-UP			1
8	6646781	SWITCH, ALARM BACK-UP			2
9	61D5	NUT 10			2
10	35C410	BOLT 5			2
11	37C516	BOLT			2
12	6670284	LIGHT, REAR ASSY			2
13	6649481	LIGHT, WEDGE BASE			2
14	7217484	HARNESS, REAR DOOR			1
15	7002988	TIE, STUD MOUNT			6
16	6661353	LIGHT, HOUSING ASSY	W/bulb - white		2
16	898731	1156 BULB			2
17	6672272	WASHER			4
18	6672279	MOUNT, LIGHT RUBBER			2
19	6672276	LENS, LIGHT RED			2
20	6672274	SCREW			4
21	6672273	SCREW			4
22	6672275	GASKET			2
23	6672277	BRACKET			2
24		REAR DOOR	See Illustration REAR DOOR / NA8485		1
25		MOUNT	See Illustration PANELS / NA8518		2
26	7310945	WASHER DIVERTER	Was 7305994		2
27	6624289	STRAP, TIE	if equipped		1

ENGINE ELECTRICAL CIRCUITRY

(Rear Lights & Back-up Alarm)
(Euro Tail Lights)

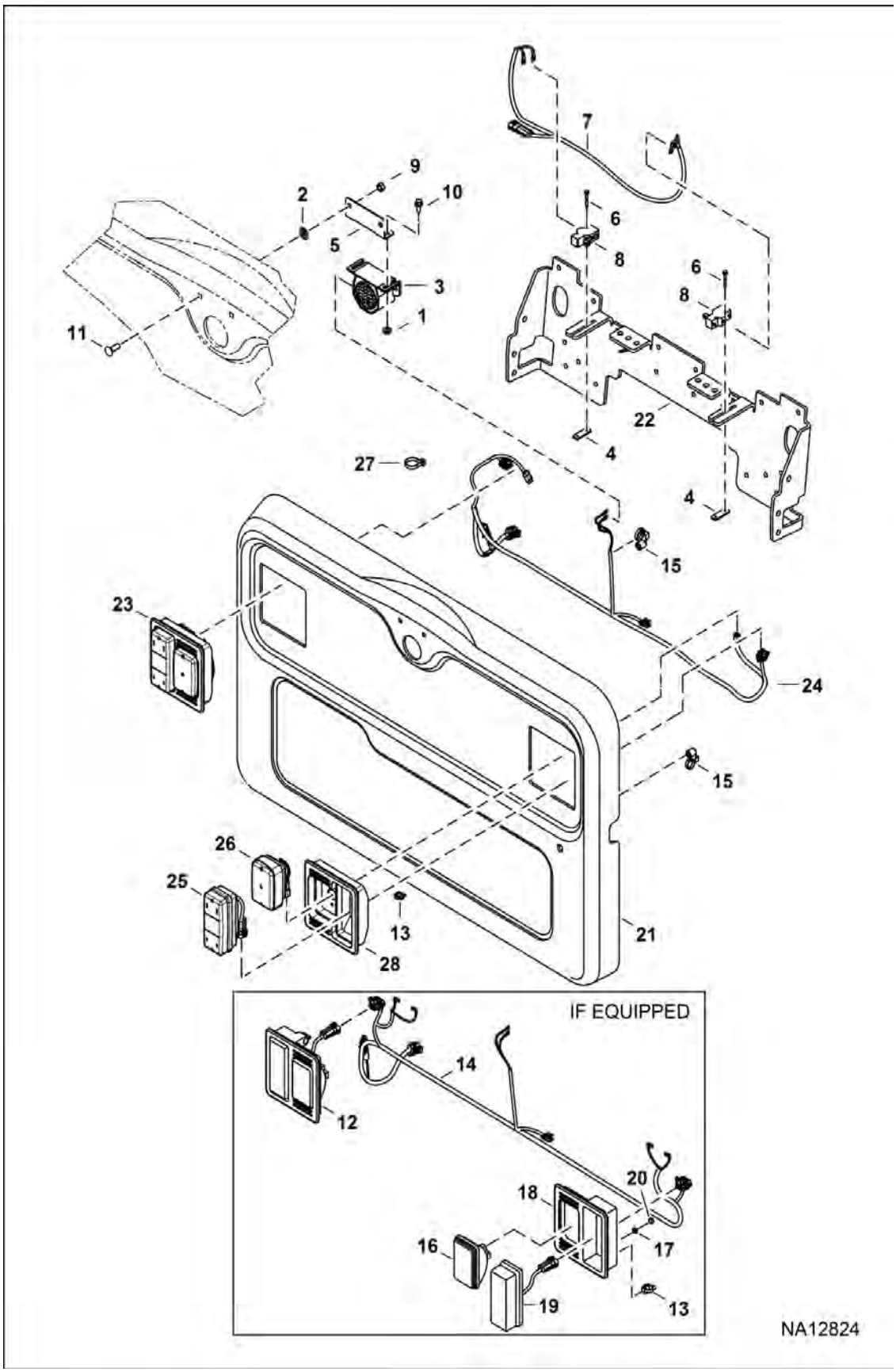

Illustration NA12824

ENGINE ELECTRICAL CIRCUITRY (Cont'd)

(Rear Lights & Back-up Alarm)
(Euro Tail Lights)

Ref No	Part Number	Description	Remarks	Serial Number	Qty
1	97D4	NUT			2
2	774220	NUT			2
3	6651512	ALARM, BACK-UP			1
3	6737189	DECAL, WARNING	backup alarm		1
4	6702593	SPACER			2
5	7246876	MOUNT	Was 7167871 [A]		1
6	84G1320	SCREW THD ROLLING TT			4
7	7175017	HARNESS, ALARM BACK-UP			1
8	6646781	SWITCH, ALARM BACK-UP			2
9	61D5	NUT 10			2
10	35C410	BOLT 5			2
11	37C516	BOLT			2
12	7104671	LIGHT	LH - W/Ref. 16, 17, 19 & 20		1
12	7104670	LIGHT	RH - W/Ref. 16, 17, 19 & 20		1
13	6688637	MOUNT			2
14	7217483	HARNESS, REAR DOOR			1
15	7002988	TIE, STUD MOUNT			7
16	6661353	LIGHT, HOUSING ASSY	W/bulb - white		2
16	898731	1156 BULB			2
17	7025141	WASHER			4
18	6672279	MOUNT, LIGHT RUBBER			2
19		LIGHT, ASSY REAR	NLA - whole red/amber light assembly - Order RH or LH light assembly PN 7104670 or 7104671 - Was 7101384 [A]		2
20	7025140	NUT			4
21		REAR DOOR	See Illustration REAR DOOR / NA8485		1
22		MOUNT	See Illustration PANELS / NA8518		2
23	7308795	LIGHT ASSEMBLY EURO LH	EMEA - W/Ref. 25, 26 & 28		1
23	7308794	LIGHT ASSEMBLY EURO RH	EMEA - W/Ref. 25, 26 & 28		1
24	7311065	HARNESS REAR DOOR	EMEA		1
25	7308796	LIGHT REAR TURN SIGNAL			2
25	7334237	LENS REFLECTIVE			1
26	7308797	LIGHT WORK			2
27	6624289	STRAP, TIE			1
28	7308800	MOUNT, LIGHT			2

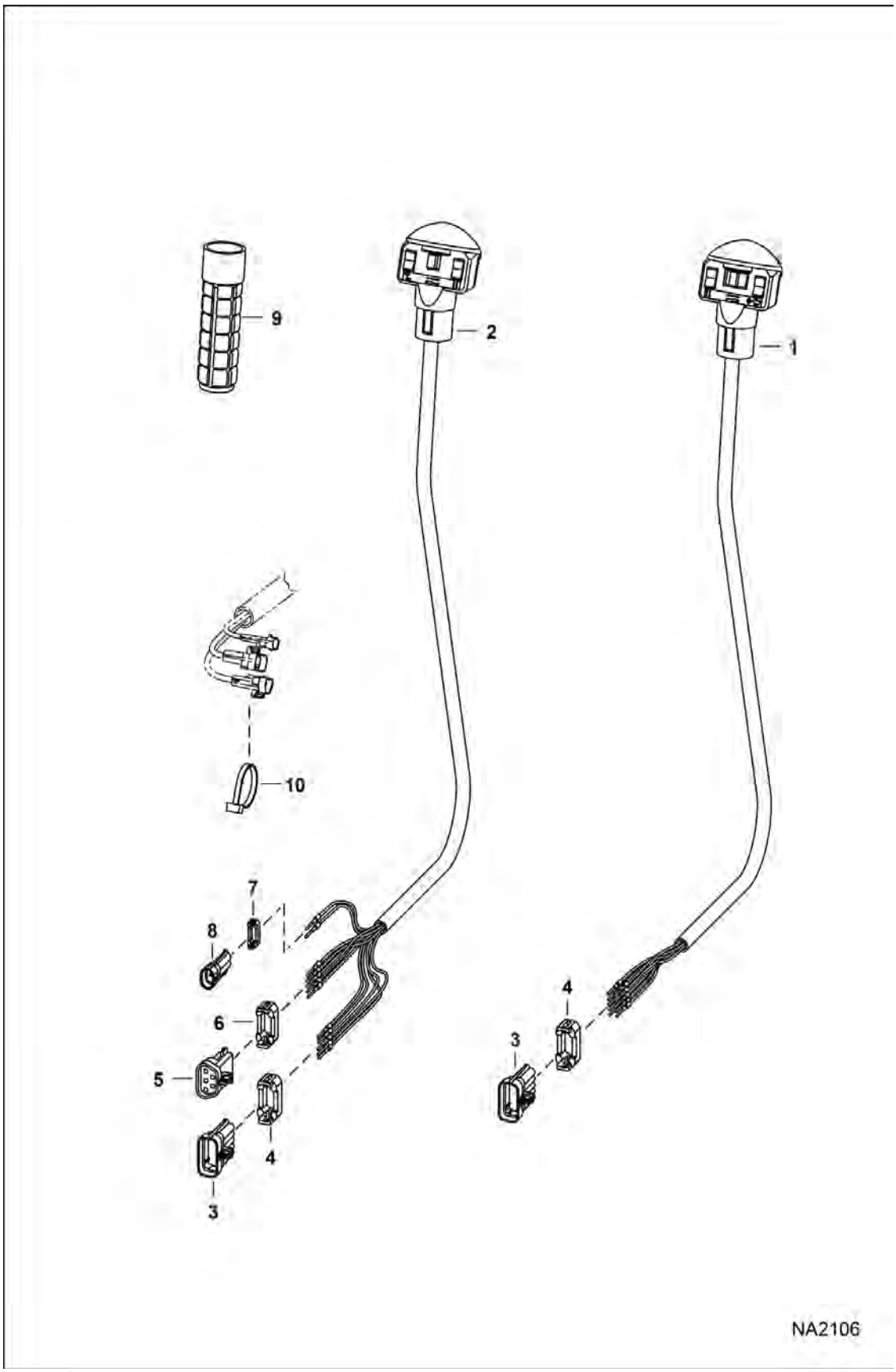

Illustration NA2106

CONTROLS ELECTRICAL (Cont'd)

(Manual Controls)

Ref No	Part Number	Description	Remarks	Serial Number	Qty
1	6680418	ASSY, HANDLE	RH - Also Order Ref. 3 & 4		1
1	6640690	PIN			9
1	6641176	SEAL			9
2	6680419	HANDLE	LH - Also Order Ref. 3-8		1
2	6640690	PIN			10
2	6641176	SEAL			10
2	6680447	DECAL			1
3	6640692	CONNECTOR	10-pin		2
4	6640694	LOCK	Use W/ 10-pin connector		2
5	6667144	CONNECTOR	5-pin		1
6	6667145	LOCK	Use W/ 5-pin connector		1
7	6641180	LOCK 5	Use W/ 2-pin connector		1
8	6641179	CONECTR 5	2-pin		2
9	6702621	GRIP			2
10	6624289	STRAP, TIE			3

CONTROLS ELECTRICAL
(Selectable Joystick Controls)

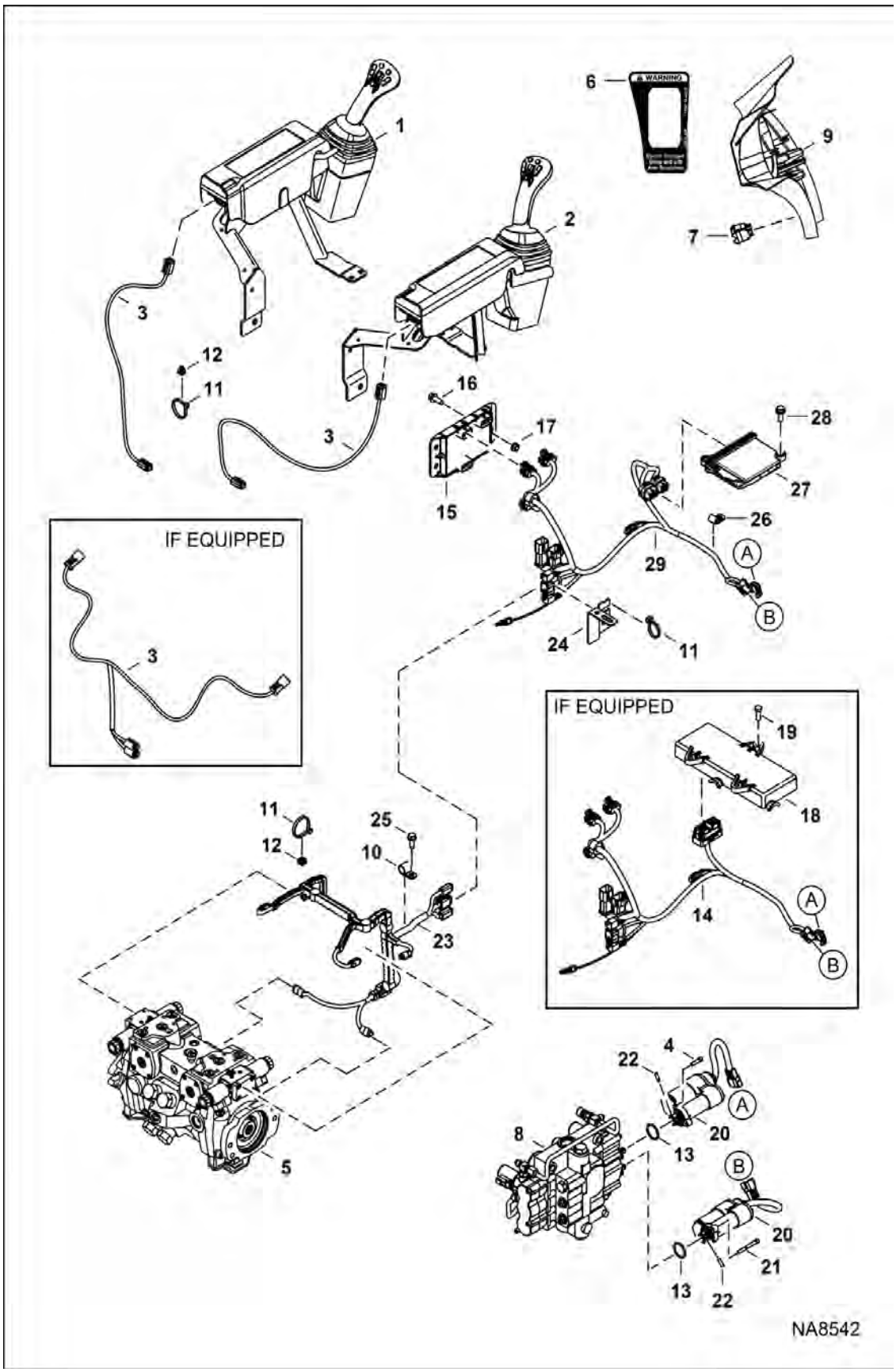

CONTROLS ELECTRICAL (Cont'd)

(Selectable Joystick Controls)

Ref No	Part Number	Description	Remarks	Serial Number	Qty
1		JOYSTICK, SJC LH	See Illustration CONTROLS ELECTRICAL / NA8549	B1E611001 - B1E616226	1
1		JOYSTICK, SJC LH	See Illustration CONTROLS ELECTRICAL / NA10992	B1E616227 & Above	1
2		JOYSTICK, SJC RH	See Illustration CONTROLS ELECTRICAL / NA8549	B1E611001 - B1E616226	1
2		JOYSTICK, SJC RH	See Illustration CONTROLS ELECTRICAL / NA10992	B1E616227 & Above	1
3		HARNESS, JOYSTICK	-NLA - Was 7266829 [A]		1
3	7284703	HARNESS, JOYSTICK			2
4	29G416	BOLT			2
5		PUMP, HYD	See Illustration HYDROSTATIC PUMP/GEAR PUMP / NA8524		1
6	7168114	DECAL, SWITCH			1
7	7001710	SWITCH, ISO			1
8		VALVE, CONTROL	See Illustration HYDRAULIC CONTROL VALVE / NA8521		1
9		PANEL, RH	See Illustration OPERATOR CAB / NA8487		1
10	30H42	CLAMP			1
11	6690690	STRAP, TIE			6
12	6690689	MOUNT, FIR TREE			6
13	58K120	O-RING			2
14	7200463	HARNESS, SJC	1 connector for drive controller - Use W/ Ref 18		1
15	6680410	CONTROLLER, ACS	plastic - W/ 3-connector plug		1
16	31C616	SCREW			2
17	97D6	NUT 10			2
18	6679485	CONTROLLER, DRIVE			1
19	43C616	BOLT			3
20	7101672	ACTUATOR	W/Ref. 13		2
21	69G436	BOLT			2
22	7108236	PIN			2
23	7188448	HARNESS, PUMP			1
24	7122359	BRACKET			1
25	84G3712	BOLT 5			1
26	30H31	CLAMP 10			2
27	7274909	CONTROLLER			1
28	7168429	BOLT, CONTROLLER			2
29	7288675	HARNESS SJC	2 connectors for drive controller - Use W/ Ref 27		1

CONTROLS ELECTRICAL

(SJC) (Armrest Assembly)
(S/N B1E611001 - B1E616226)

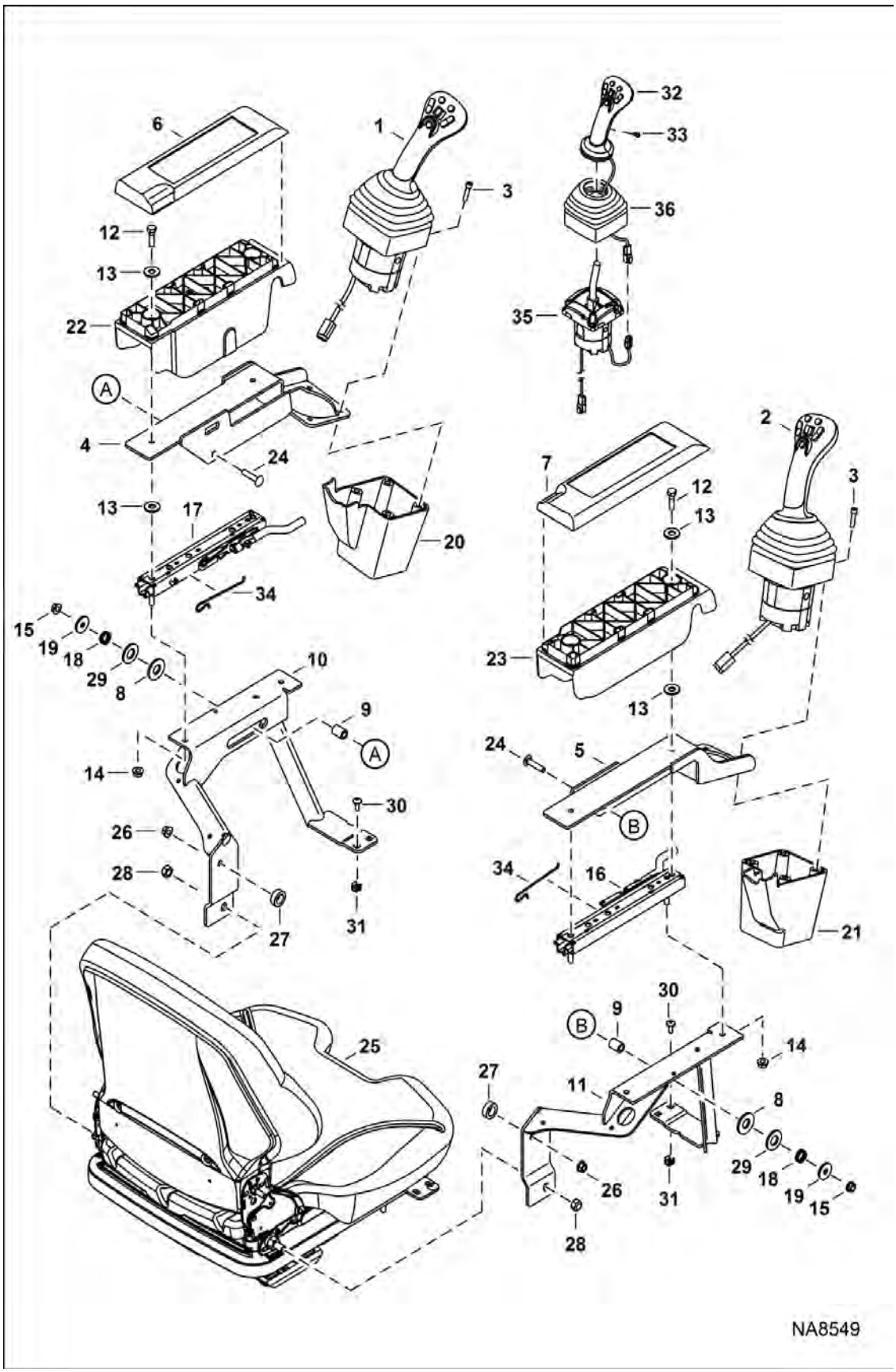

CONTROLS ELECTRICAL (Cont'd)

(SJC) (Armrest Assembly)
(S/N B1E611001 - B1E616226)

Ref No	Part Number	Description	Remarks	Serial Number	Qty
1	7023150	JOYSTICK, LH ASSY	Ref. 32, 33, 35 & 36		1
2	7023149	JOYSTICK, RH ASSY	Ref. 32, 33, 35 & 36		1
3	29G416	BOLT			8
4	7197922	MOUNT, CONTROLS LH			1
5	7197921	MOUNT, CONTROLS RH			1
6	7157704	COVER ARMREST LH			1
7	7157671	COVER ARMREST, RH			1
8	7165634	WASHER, PLASTIC			2
9	7197916	SPACER			2
10	7229392	ARMREST LH	Was 7197925 [A]		1
11	7229391	ARMREST RH	Was 7197924 [A]		1
12	1CM830	SCREW			4
13	25E18	WASHER			8
14	51DM8	NUT HX THDLK PREAPPL			4
15	97D5	NUT			2
16	7242905	SLIDE	long release lever - W/O torsion spring - Also Order Ref. 34 - Was 7200887 [A]		1
17	7242906	SLIDE	long release lever - W/O torsion spring - Also Order Ref. 34 - Was 7200888 [A]		1
18	7197915	SPRING, COMPRESSION			2
19	6701174	WASHER			2
20	7146265	COVER, LH SJC			1
21	7146264	COVER, RH SJC			1
22	7177197	SHELL, ARMREST LH			1
23	7177196	SHELL, ARMREST RH			1
24	10C524	BOLT			2
25		SEAT	See Illustration SEAT & SEAT BELT / NA8486 - std.		1
25		SEAT	See Illustration SEAT - 80 mm / NA2430 - suspension		1
25		SEAT	See Illustration SEAT / NA2429 - air suspension		1
26	51DM8	NUT HX THDLK PREAPPL			2
27	7162176	SPACER			2
28	86D7	NUT			2
29	25E25	WASHER 10			2
30	6803202	SCREW			4
31	7170765	NUT			4
32	6689922	HANDLE	LH		1
32	6689923	HANDLE	RH		1
33	6689927	BOLT			2

CONTROLS ELECTRICAL (Cont'd)

(SJC) (Armrest Assembly)
(S/N B1E611001 - B1E616226)

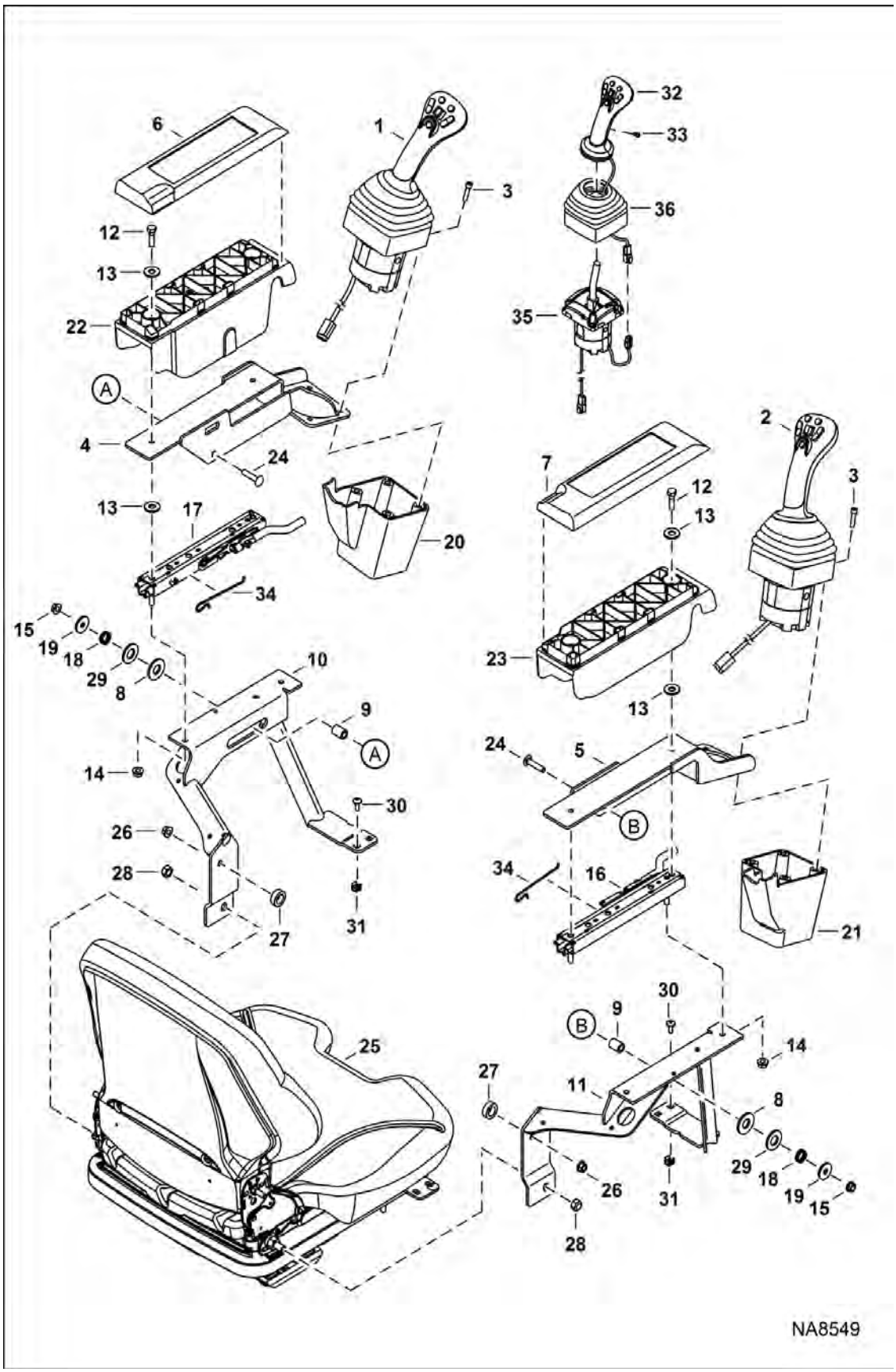

CONTROLS ELECTRICAL (Cont'd)

(SJC) (Armrest Assembly)
(S/N B1E611001 - B1E616226)

Ref No	Part Number	Description	Remarks	Serial Number	Qty
34	7199853	SPRING, TORSION			2
35	7023152	BASE, JOYSTICK LH	LH		1
35	7023151	BASE, JOYSTICK RH	RH		1
36	7023154	BOOT, RUBBER LH	LH - 4 pleat boot		1
36	7023153	BOOT, RUBBER RH	RH - 4 pleat boot		1

CONTROLS ELECTRICAL

(SJC) (Armrest Assembly)
(S/N B1E616227 & Above)

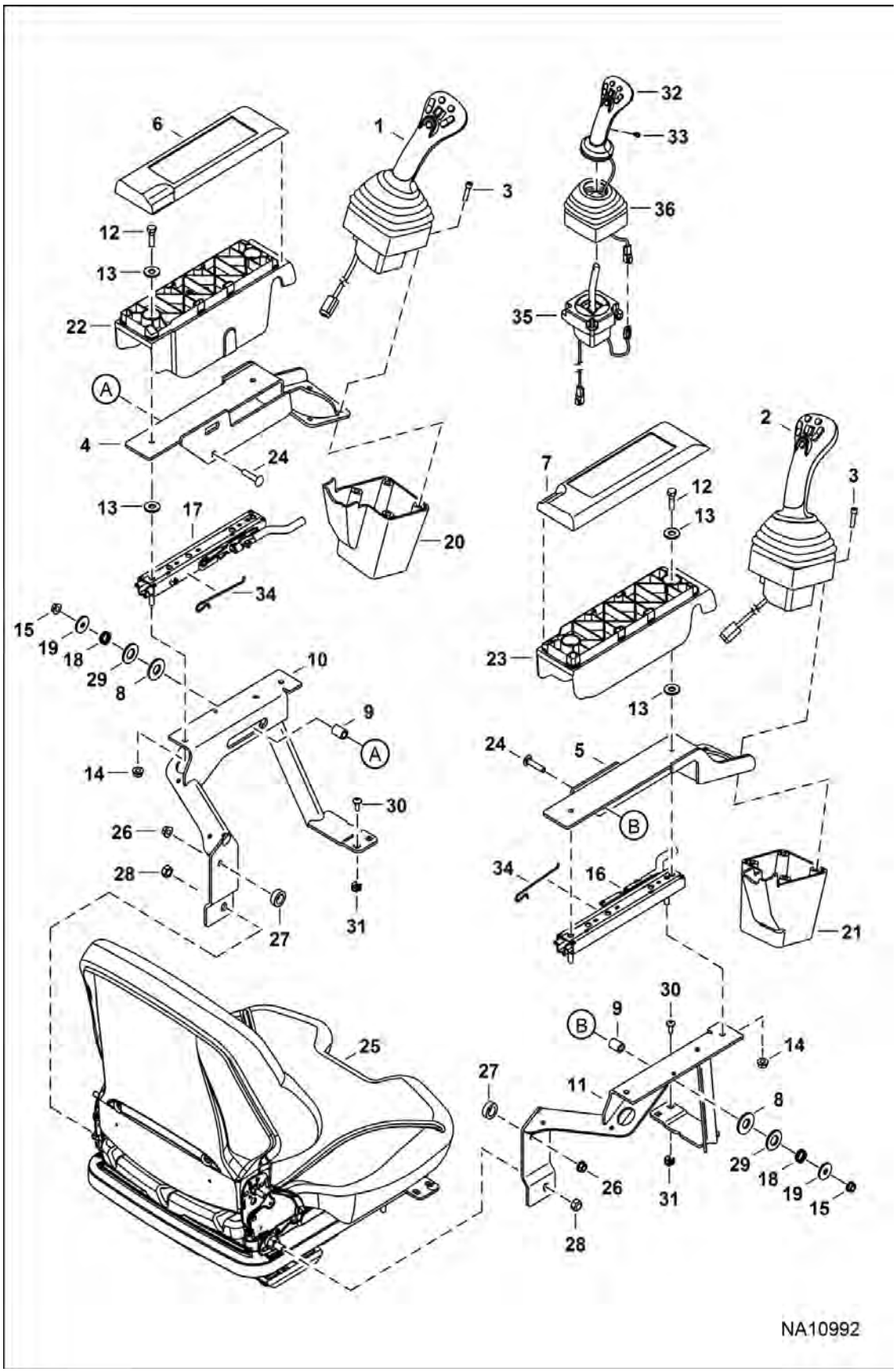

CONTROLS ELECTRICAL (Cont'd)

(SJC) (Armrest Assembly)
(S/N B1E616227 & Above)

Ref No	Part Number	Description	Remarks	Serial Number	Qty
1	7266825	JOYSTICK, LH ASSY	Ref. 32, 33, 35 & 36		1
2	7266826	JOYSTICK, RH ASSY	Ref. 32, 33, 35 & 36		1
3	29G416	BOLT			8
4	7197922	MOUNT, CONTROLS LH			1
5	7197921	MOUNT, CONTROLS RH			1
6	7157704	COVER ARMREST LH			1
7	7157671	COVER ARMREST, RH			1
8	7165634	WASHER, PLASTIC			2
9	7197916	SPACER			2
10	7229392	ARMREST LH	Was 7197925 [A]		1
11	7229391	ARMREST RH	Was 7197924 [A]		1
12	1CM830	SCREW			4
13	25E18	WASHER			8
14	51DM8	NUT HX THDLK PREAPPL			4
15	97D5	NUT			2
16	7242905	SLIDE	long release lever - W/O torsion spring - Also Order Ref. 34 - Was 7200887 [B,D]		1
17	7242906	SLIDE	long release lever - W/O torsion spring - Also Order Ref. 34 - Was 7200888 [B,D]		1
18	7197915	SPRING, COMPRESSION			2
19	6701174	WASHER			2
20	7146265	COVER, LH SJC			1
21	7146264	COVER, RH SJC			1
22	7177197	SHELL, ARMREST LH			1
23	7177196	SHELL, ARMREST RH			1
24	10C524	BOLT			2
25		SEAT	- std.		1
25		SEAT	See Illustration SEAT - 80 mm / NA2430 - suspension		1
25		SEAT	See Illustration SEAT / NA2429 - air suspension		1
26	51DM8	NUT HX THDLK PREAPPL			2
27	7162176	SPACER			2
28	86D7	NUT	Was 25E18 [B,D]		2
29	25E25	WASHER 10			2
30	6803202	SCREW			4
31	7170765	NUT			4
32	6689922	HANDLE	LH		1
32	6689923	HANDLE	RH		1
33	6689927	BOLT			2

CONTROLS ELECTRICAL (Cont'd)

(SJC) (Armrest Assembly)
(S/N B1E616227 & Above)

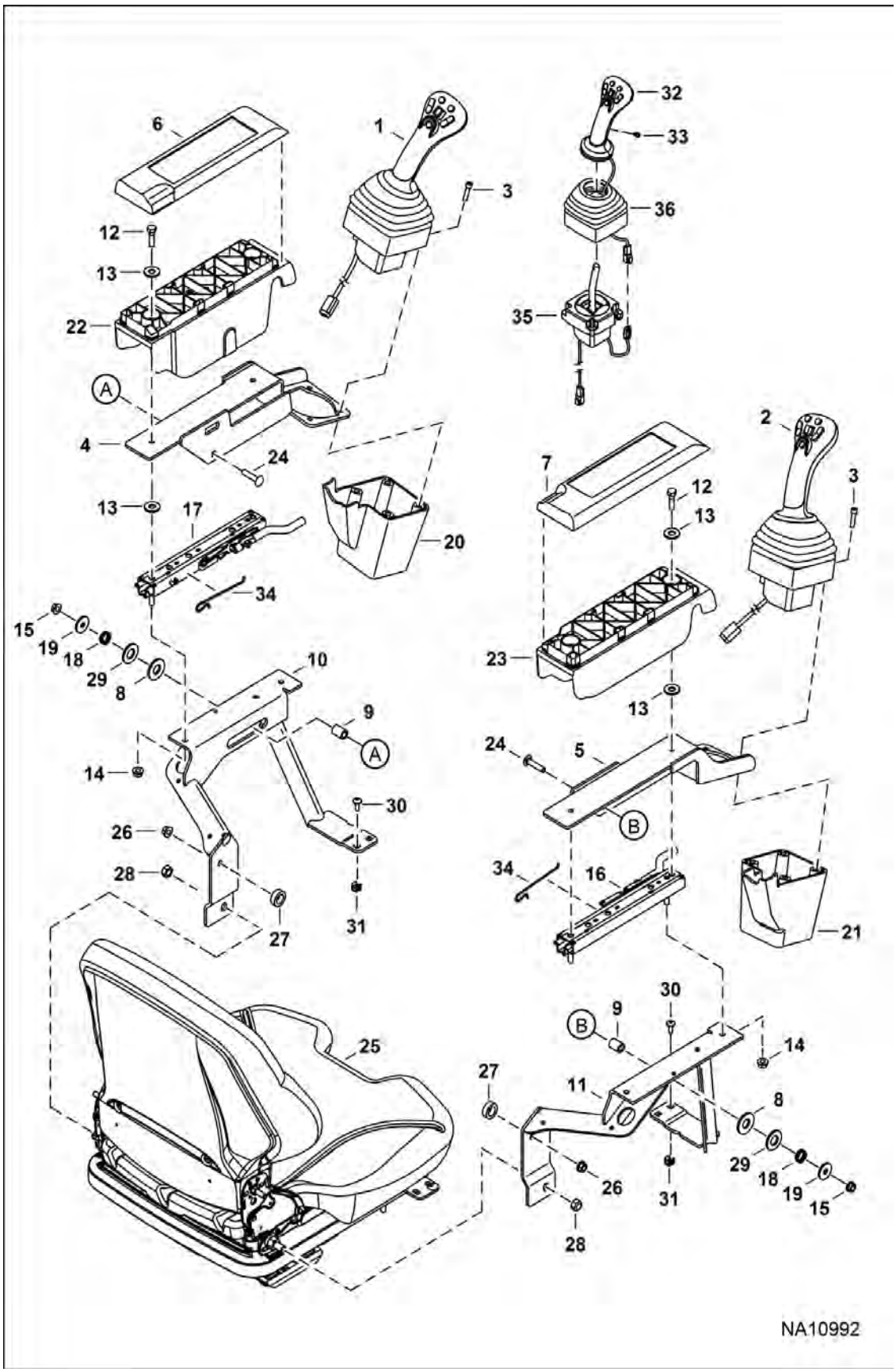

CONTROLS ELECTRICAL (Cont'd)

(SJC) (Armrest Assembly)
(S/N B1E616227 & Above)

Ref No	Part Number	Description	Remarks	Serial Number	Qty
34	7199853	SPRING, TORSION			2
35	7266827	BASE, JOYSTICK LH	LH		1
35	7266828	BASE, JOYSTICK RH	RH		1
36	7023154	BOOT, RUBBER LH	LH - 4 pleat boot		1
36	7023153	BOOT, RUBBER RH	RH - 4 pleat boot		1

CONTROLS ELECTRICAL
(ACS)

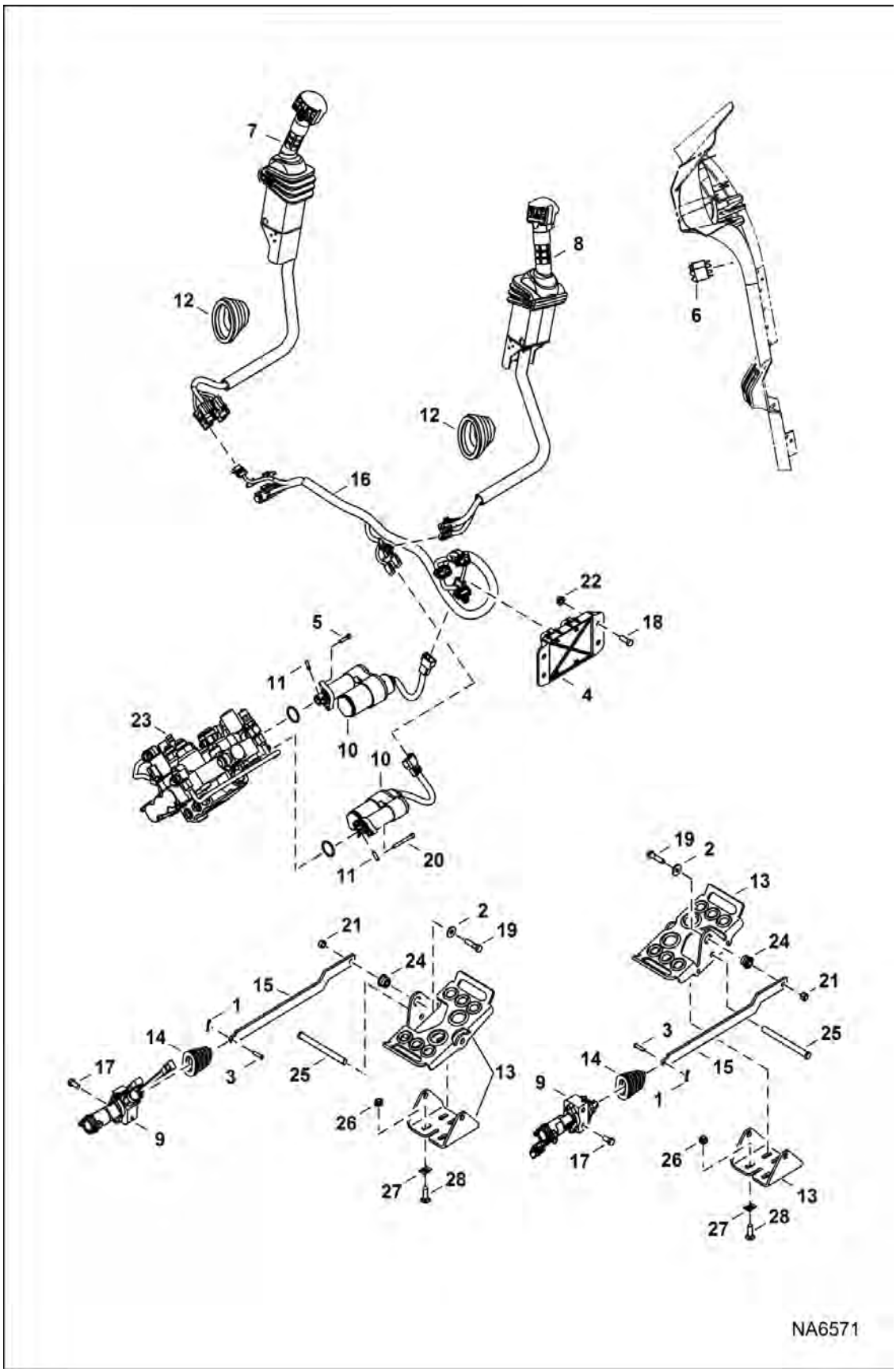

CONTROLS ELECTRICAL (Cont'd)
(ACS)

Ref No	Part Number	Description	Remarks	Serial Number	Qty
1	7325025	COTTER PIN	Was 6513495 [B]		2
2	6563914	WASHER			2
3	6564654	PIN, CLEVIS			2
4	6680410	CONTROLLER, ACS	plastic - W/ 3-connector plug		1
5	29G416	BOLT			2
6	7001713	SWITCH			1
7		LEVER, RH	See Illustration CONTROLS ELECTRICAL / NA2799		1
8		LEVER, LH	See Illustration CONTROLS ELECTRICAL / NA2799		1
9	7003496	SENSOR			2
10	7101672	ACTUATOR			2
11	7108236	PIN			2
12	7147815	BOOT			2
13	7163421	PEDAL ASSY	- LH		2
14	7153503	BOOT			2
15	7205887	LINK, PEDAL			2
16	7222766	HARNESS, ACS			1
17	17C612	BOLT 5			4
18	31C616	SCREW			2
19	17C624	BOLT 5			2
20	69G436	BOLT			2
21	83D6	NUT 5			2
22	97D6	NUT 10			2
23		VALVE, CONTROL	See Illustration HYDRAULIC CONTROL VALVE / NA8521		1
24	6665701	BUSHING, PRESS FIT			2
25	7124815	PIN, PIVOT			2
26	57D6	NUT 5			4
27	6684033	NUT			4
28	37C620	BOLT			4

CONTROLS ELECTRICAL
(ACS) (Handle Assembly)

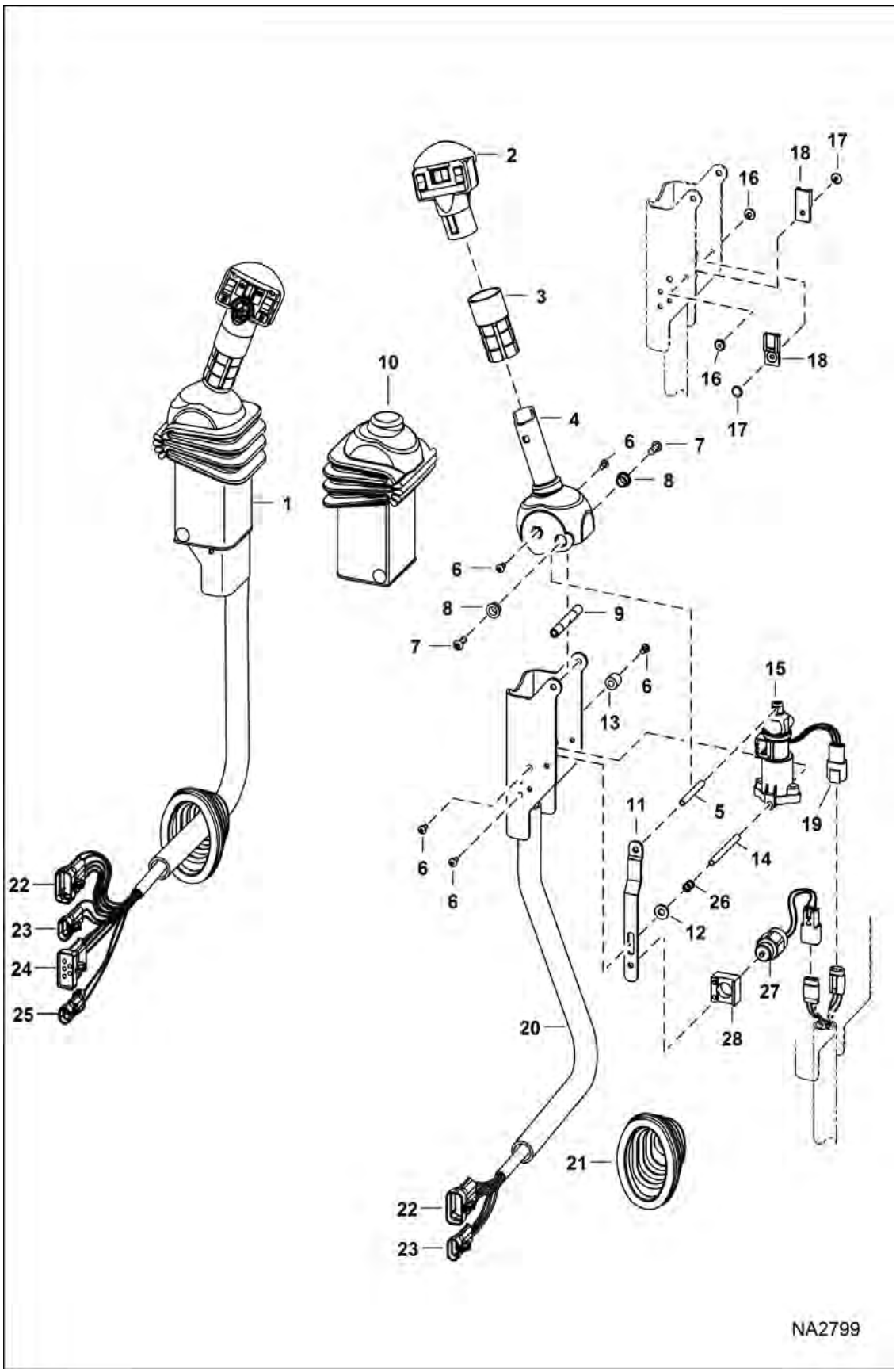

CONTROLS ELECTRICAL (Cont'd)

(ACS) (Handle Assembly)

Ref No	Part Number	Description	Remarks	Serial Number	Qty
1	7003495	LEVER, LH	lift		1
1	7003494	LEVER, RH	tilt		1
2	6680462	HANDLE, ACS RH	tilt - RH		1
2	6680417	HANDLE, AHC	lift - LH		1
3		GRIP	NLA - Order 6702621 grip & cut to 2.8" (71,1 mm) long		2
4	6729594	HANDLE	RH		1
4	6729595	HANDLE	LH		1
5	6680469	SPACER	threaded		1
6	6727065	SCREW			6
7	25GT410	SCREW			8
8	6702990	BUSHING			4
9	6713043	SPACER			4
10	6680471	BOOT			2
11	6680477	STRAP	stop		1
12	25E13	WASHER 5			1
13	6719835	SLEEVE			4
14	6719834	SPACER	threaded		2
15	6684910	SENSOR, ELEC AHC			2
15	6670706	CONNECTOR			1
15	6670715	SOCKET			3
15	6670710	PLUG			1
16	6665322	RIVET	female		2
17	6665321	RIVET	male		2
18	6665000	CLIP			2
19	6670707	CONNECTOR			1
19	6670715	SOCKET			3
19	6670711	LOCK			1
20	7018011	CHANNEL	RH		1
20	7018012	CHANNEL	LH		1
21	7147815	BOOT			2
22	6640692	CONNECTOR	10-pin		1
22	6640690	PIN			8
22	6640694	LOCK	Use W/ 10-pin connector		1
22	6641176	SEAL			8
22	6646582	PLUG	cavity		7
23	6640699	CONECTR 5	3-pin		2
23	6640690	PIN			3
23	6641176	SEAL			3
23	6640700	LOCK 5			3
24	6667144	CONNECTOR	5-pin		2
24	6640690	PIN			3
24	6641176	SEAL			3
24	6646582	PLUG	cavity		1
24	6641180	LOCK 5	Use W/ 2-pin connector		1
25	6641179	CONECTR 5	2-pin		1
25	6640690	PIN			2
25	6641176	SEAL			2
25	6641180	LOCK 5	Use W/ 2-pin connector		1

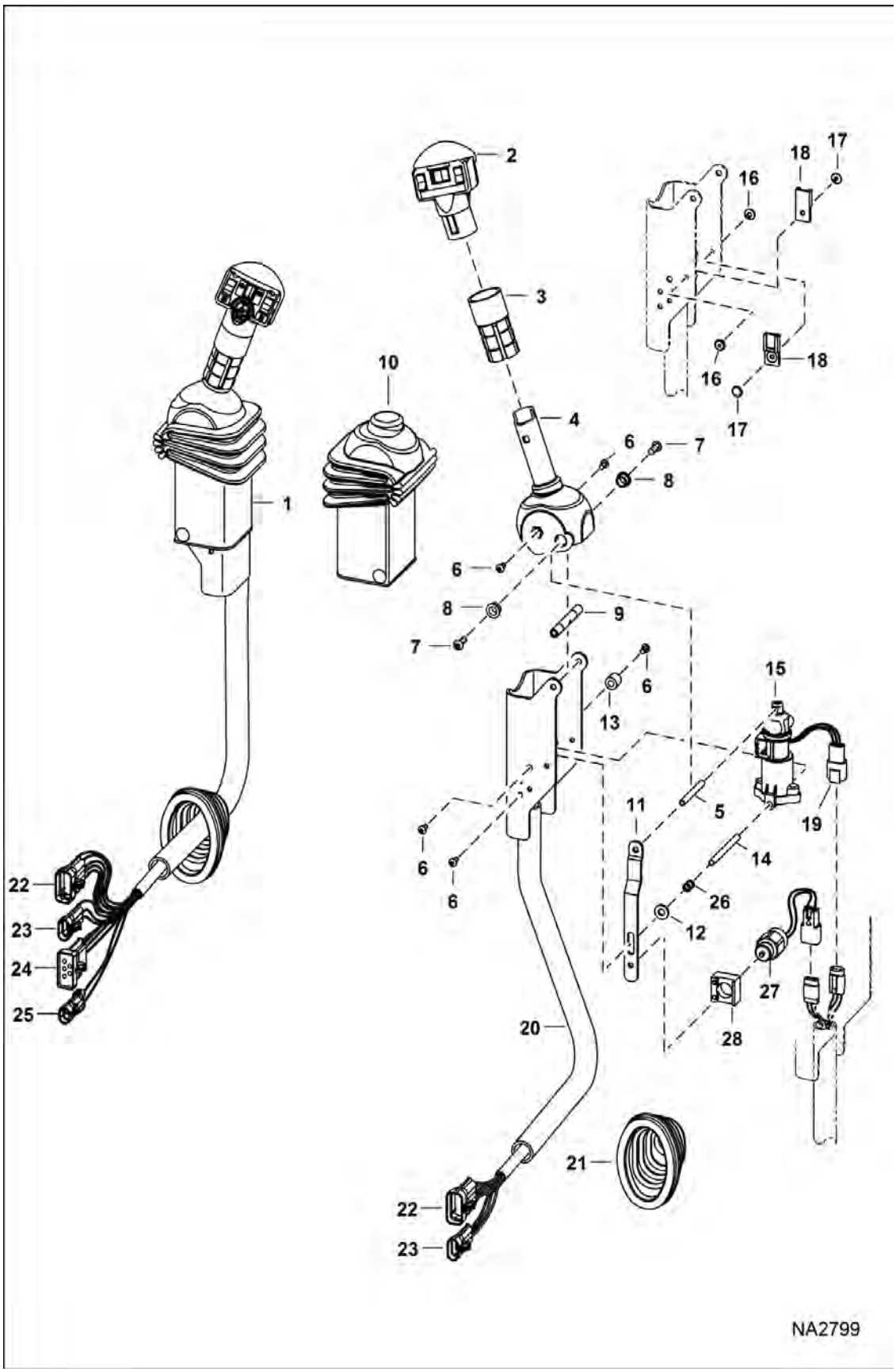
1
2
3
4
5
6
7
8
9
10
11
12
13
14
15
16
17
18
19
20
21
22
23
24
25
26
27
28
NA2799

CONTROLS ELECTRICAL (Cont'd)

(ACS) (Handle Assembly)

Ref No	Part Number	Description	Remarks	Serial Number	Qty
26	6680470	SPRING			1
27	6676029	SOLENOID, LOCK SPOOL			1
28	6680468	STRAP			1

ALTERNATOR

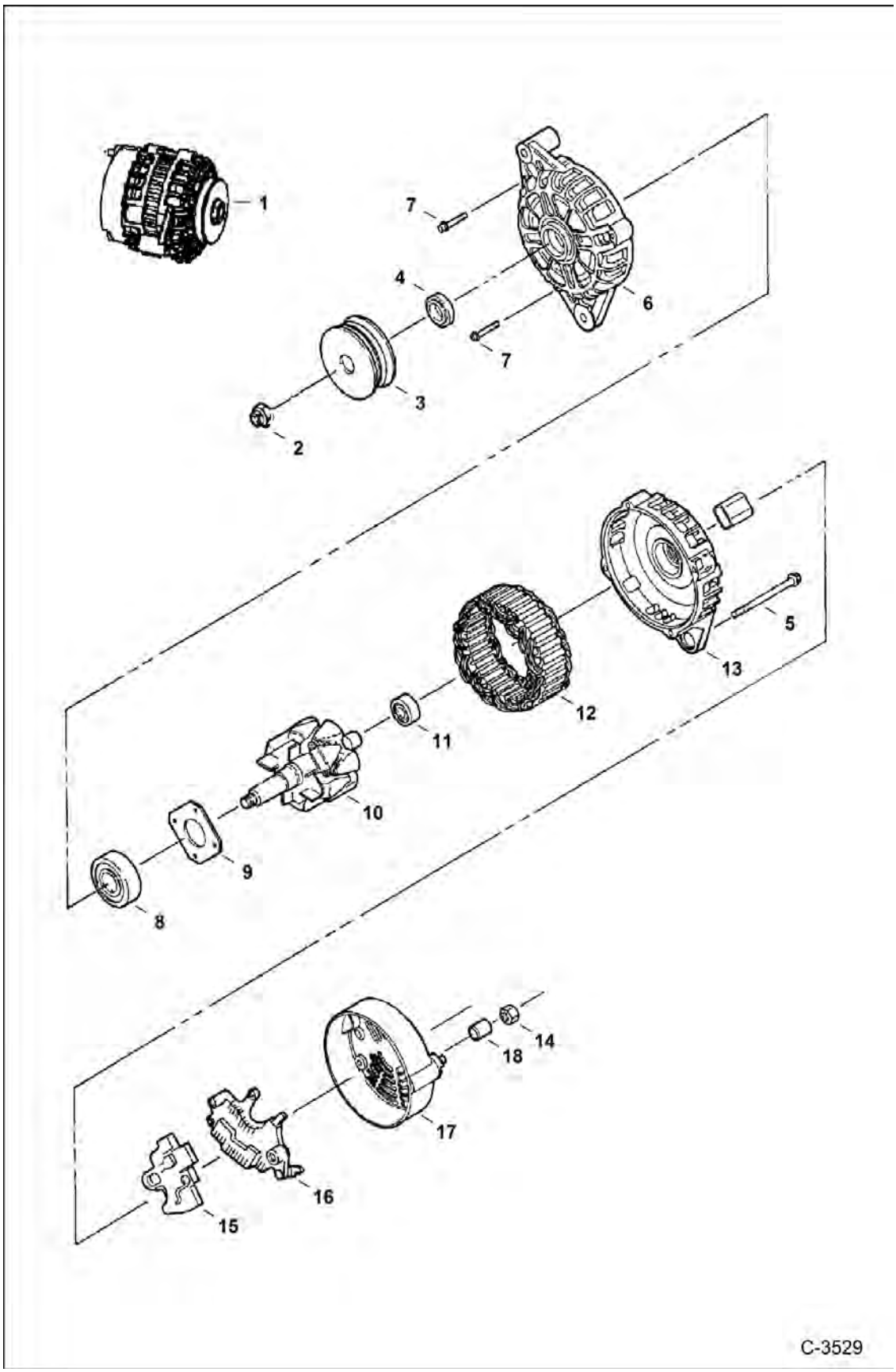

ALTERNATOR (Cont'd)

Ref No	Part Number	Description	Remarks	Serial Number	Qty
1	6678205	ALTERNATOR, 90 AMP	90 amp		1
1	6678205REM	ALTERNATOR, 90 AMP	90 amp - Ref. 2-18		1
1	6678205	ALTERNATOR, 90 AMP	Was 6678205EF		1
2	6691539	HEX. NUT	Was 6677497 [A]		1
3	6677496	PULLEY			1
4	6677495	SPACER	front		1
5	6684397	BOLT			4
6	6677491	BRACKETFRT	rear		1
7	6677817	SCREW			4
8	6677818	BEARING			1
9	6677819	RETAINER			1
10	6677492	ASSY, ROTOR			1
11	6677820	BEARING			1
12	6677493	STATOR			1
13	6677490	BRACKETREAR			1
14	6677486	NUT			1
15	6677489	REGULATOR ASSY			1
16	6677488	RECTIFIRE ASSY			1
17	6677487	COVER			1
18	6677485	SPACER	rear		1

STARTER
(Valeo)

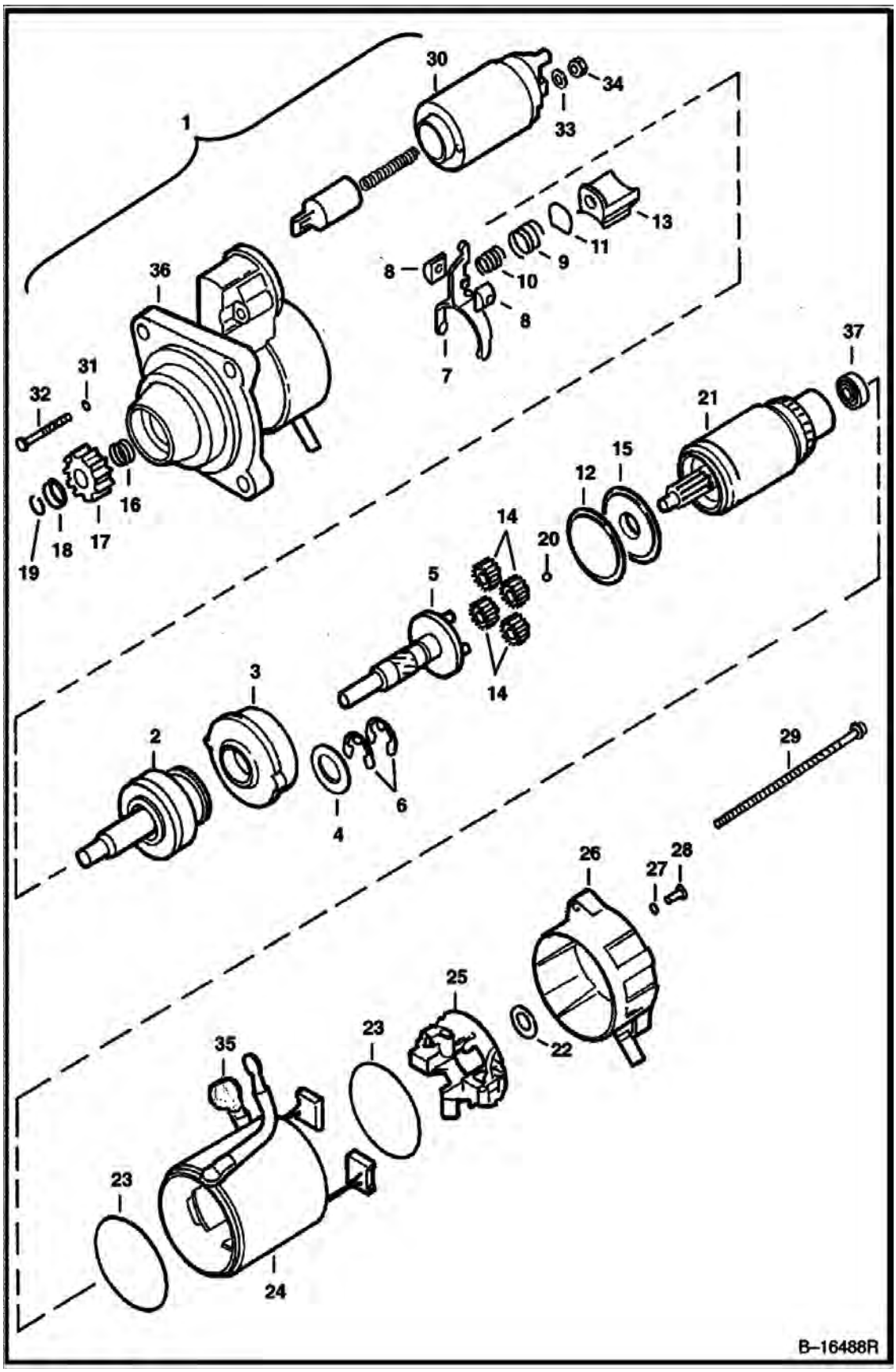

Illustration B16488R

Model S450 MT2KAMEA
6990825

STARTER (Cont'd)
(Valeo)

Ref No	Part Number	Description	Remarks	Serial Number	Qty
1	6685190	STARTER	Ref. 2-37		1
1	6685190REM	STARTER			1
1	6685190	STARTER	Was 6685190EF		1
2	6680375	SHAFT ORC ASSY	ORC assy		1
3	6680367	GEAR			1
4	6680378	WASHER			1
5	6680365	SHAFT			1
6	6680368	RING STOP			2
7	6680364	LEVER			1
8	6680357	HOLDER			2
9	6680381	SPRING			1
10	6680382	SPRING			1
11	6680370	PLATE			1
12	6680369	SEAL			1
13	6680371	LEVER			1
14	6680366	GEAR			4
15	6680372	BRACKET			1
16	6680361	SPRING			1
17	6680390	GEAR			1
18	6680360	STOP			1
19	6680359	RING STOP			1
20	6680362	BALL			1
21	6680374	ARMATURE	W/Ref. 37		1
22	6680363	WASHER			1
23	6680380	SEAL			2
24	6680373	YOKE			1
25	6680377	HOLDER			1
26	6680389	BRACKET			1
27	6680358	RING RUBBER	rubber		2
28	6680384	BOLT			2
29	6680356	BOLT			2
30	6680376	SWITCH			1
31	6680379	SEAL			2
32	6680383	BOLT			2
33	6EM80	WASHER, SPRING			1
34	4DM8	NUT HEX			1
35	6680355	CAP			1
36	6680388	BRACKET	includes ball bearing, drain tube, front bracket & oil seal		1
37		BEARING	NLA - Order Ref. 21		1

STARTER
(Magneton)

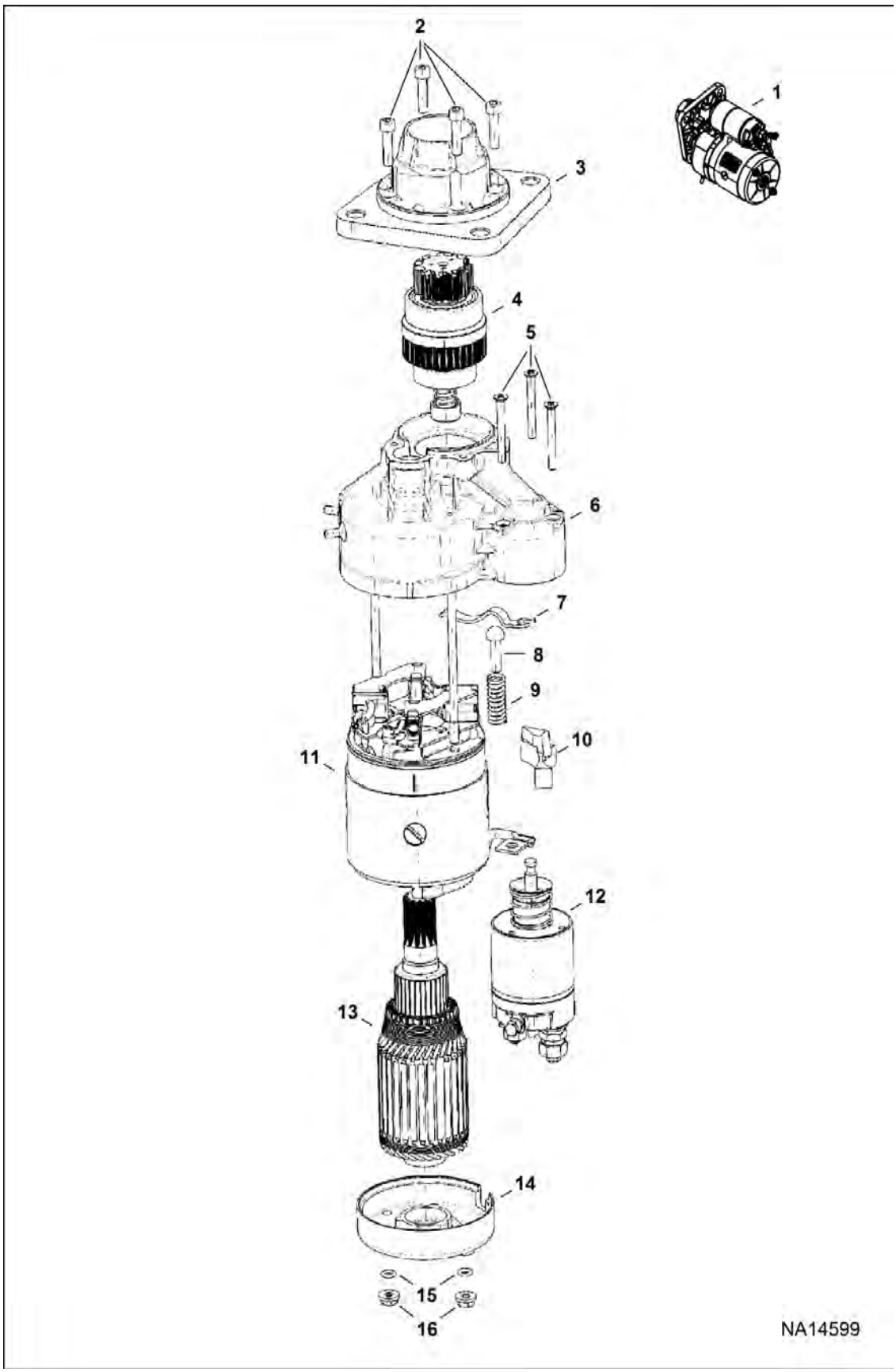

STARTER (Cont'd)
(Magneton)

Ref No	Part Number	Description	Remarks	Serial Number	Qty
1	7283321	STARTER	Ref. 2-16		1
2		BOLT	NSS		4
3		FRONT BRACKET	NSS		1
4		GEAR SHAFT	NSS		1
5		BOLT	NSS		3
6		BRACKET	NSS		1
7		LEVER	NSS		1
8		ROD	NSS		1
9		SPRING	NSS		1
10		HOLDER	NSS		1
11		YOKE	NSS		1
12		SWITCH	NSS		1
13		ARMATURE	NSS		1
14		COVER	NSS		1
15		NUT	NSS		2
16		RUBBER RING	NSS		2

COOLING SYSTEM
(S/N B1E611001 - B1E618197)

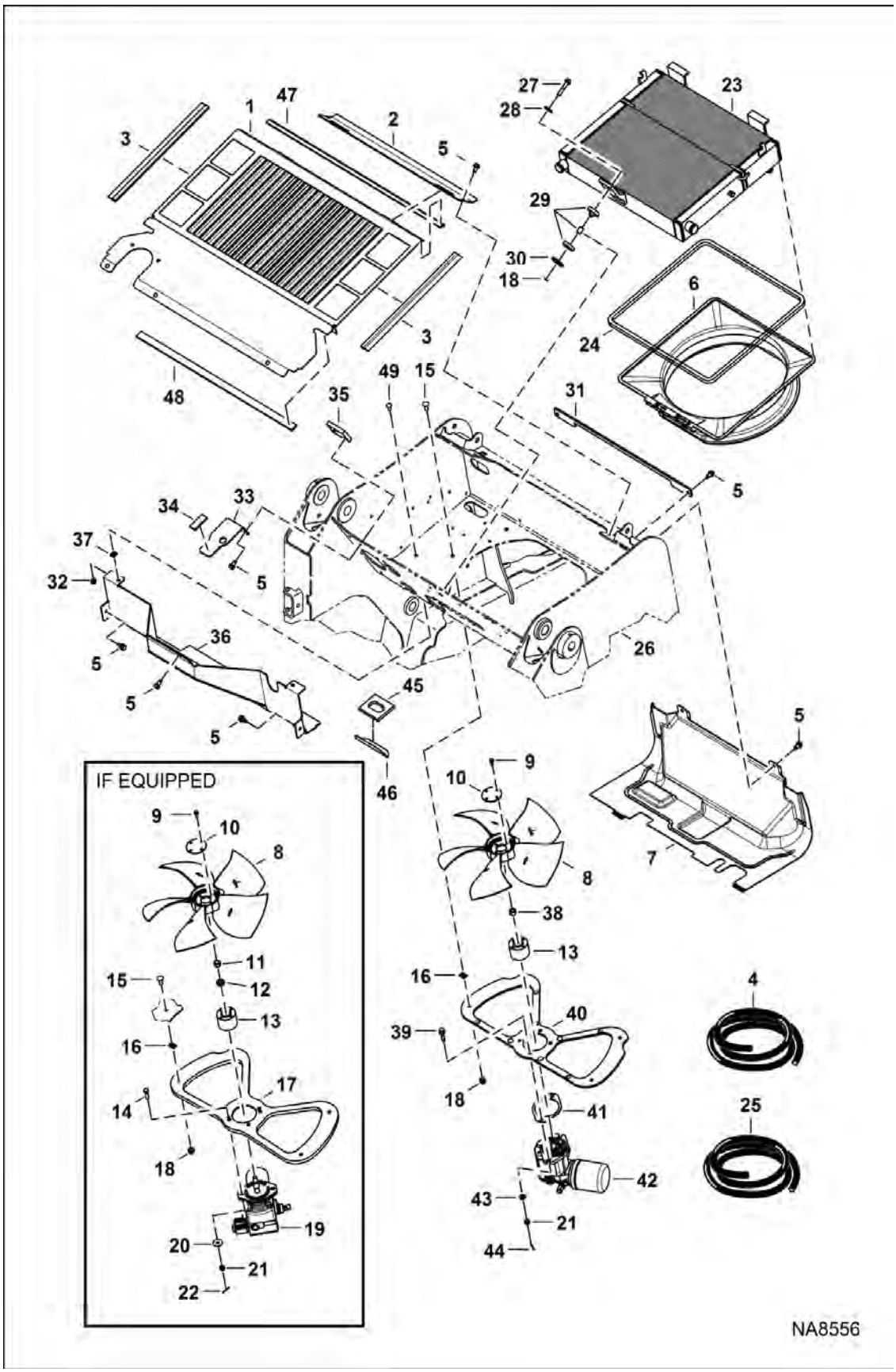

COOLING SYSTEM (Cont'd)
(S/N B1E611001 - B1E618197)

Ref No	Part Number	Description	Remarks	Serial Number	Qty
1	7243663	W/A, SCREEN			1
2	7243666	SHIELD, DEBRIS			1
3		SEAL	NLA - 455mm (17.9") - Order Ref. 4		2
4	6646705	MOULDING BULK/FT	sold per foot		x
5	84G3712	BOLT 5			11
5	84G3712	BOLT 5	if equipped - Use W/Ref. 31		13
6	7218479	SHROUD, FAN			1
7	7227863	DUCT, AIR			1
8	7236799	FAN, COOLING			1
9	49C412	BOLT			4
10	7125948	PLATE			1
11	96D8	NUT			1
12	6701097	WASHER			1
13	7247020	HUB, FAN COOLING	Was 7199118	B1E611001 - B1E614162	1
13	7233891	HUB		B1E614163 & Above	1
14	7147826	BOLT, CROSS DRILLED	26.3mm (1.04") - Use W/ 7241911		2
14	7244971	BOLT	28.6mm (1.13") - Use W/ 7254526		2
15	10C616	BOLT 10			4
16	6684033	NUT	retaining		4
17	7241911	MOUNT	W/ 6 center mount holes		1
17	7254526	MOUNT	W/ 2 center mount holes		1
18	83D6	NUT 5			5
19		MOTOR, HYD COOLING FAN	See Illustration COOLING FAN MOTOR / NA6655 - Canister Element		1
19		MOTOR, HYD COOLING FAN	See Illustration COOLING FAN MOTOR / NA12779 - Spin-On Element		1
20	6737388	WASHER	Was 872229 - Use W/ 7147826 [B,D]		2
20	6557831	WASHER	Use W/ 7244971		2
21	3D6	NUT			2
22	1F316	PIN			2
23		EXCHANGER, WATER RADIATOR	See Illustration ENGINE & ATTACHING PARTS / NA8571		1
24		SEAL	NLA - 1862 (73.3") - Order Ref. 35		1
25	7243938	SEAL, BULK	sold per foot		x
26		MAIN FRAME	See Illustration MAIN FRAME / NA8529		1
27	35C632	BOLT			1
28	872229	WASHER			1
29	7237725	MOUNT, ISOLATOR			1
30	6737388	WASHER			1
31	7241386	PLATE, RETAINER	if equipped		1
32	83D5	NUT 5			2
33	7232150	BRACKET			2
34	7266219	SEAL FOAM			2
35	7232149	SEAL, FOAM			2

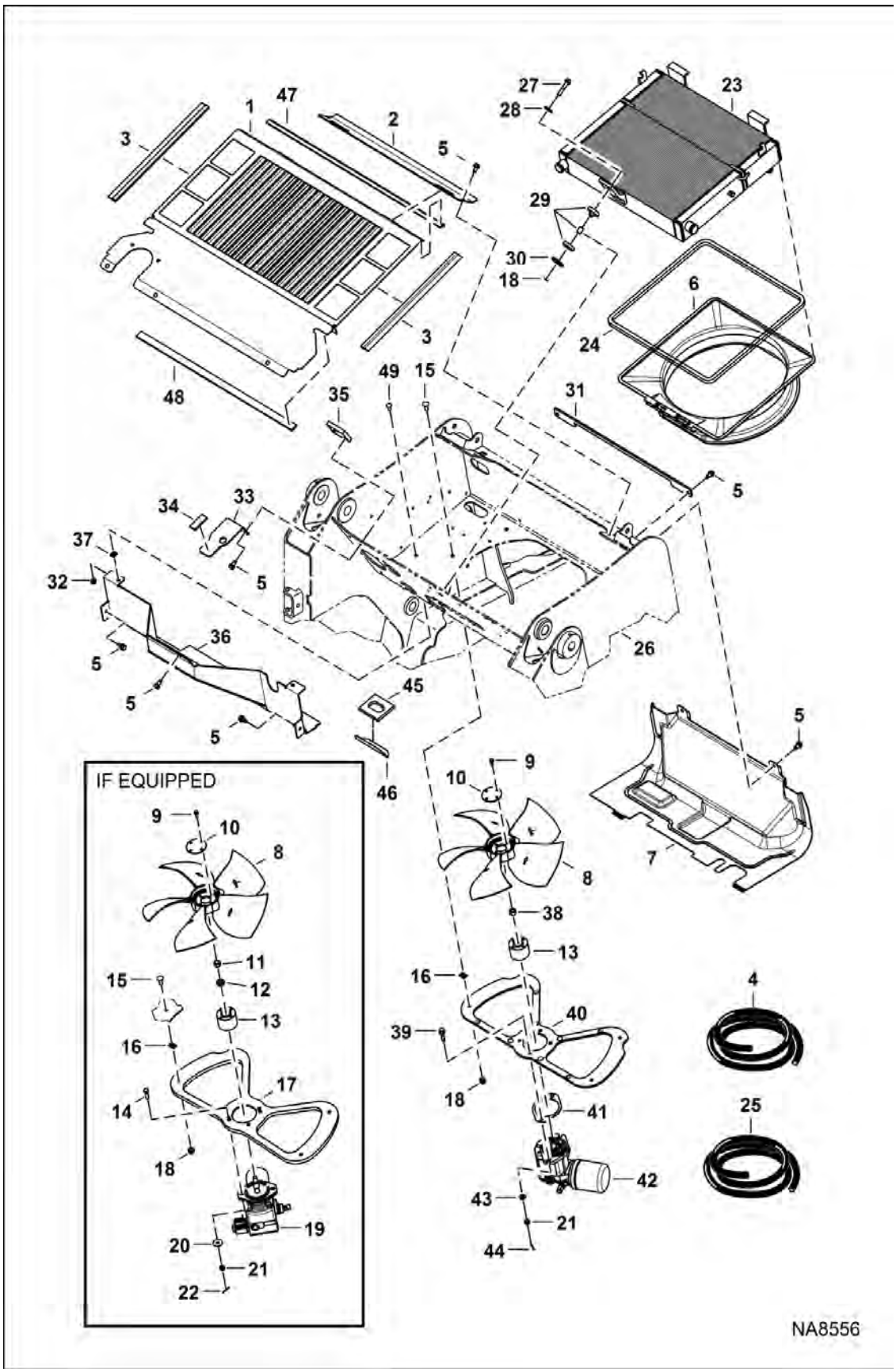
IF EQUIPPED
NA8556

COOLING SYSTEM (Cont'd)
(S/N B1E611001 - B1E618197)

Ref No	Part Number	Description	Remarks	Serial Number	Qty
36	7243659	DUCT, AIR			1
37	774220	NUT			2
38	7240968	NUT			1
39	7249974	BOLT		B1E614163 & Above	2
40	7243649	MOUNT, FAN	W/ 4 center mount holes	B1E614163 & Above	1
41	7242068	GASKET			1
42		MOTOR, HYD COOLING FAN	See Illustration COOLING FAN MOTOR / NA10786	B1E612875 & Above	1
43	25E17	WASHER 5		B1E614163 & Above	2
44	1F316	PIN	Was 1F416 [B]		2
45	7244911	SHIELD			1
46	7244883	COVER, HOSE			1
47	7266220	SEAL FOAM			1
48	7266229	SEAL FOAM			1
49	10C512	BOLT			2

COOLING SYSTEM
(S/N B1E618198 & Above)

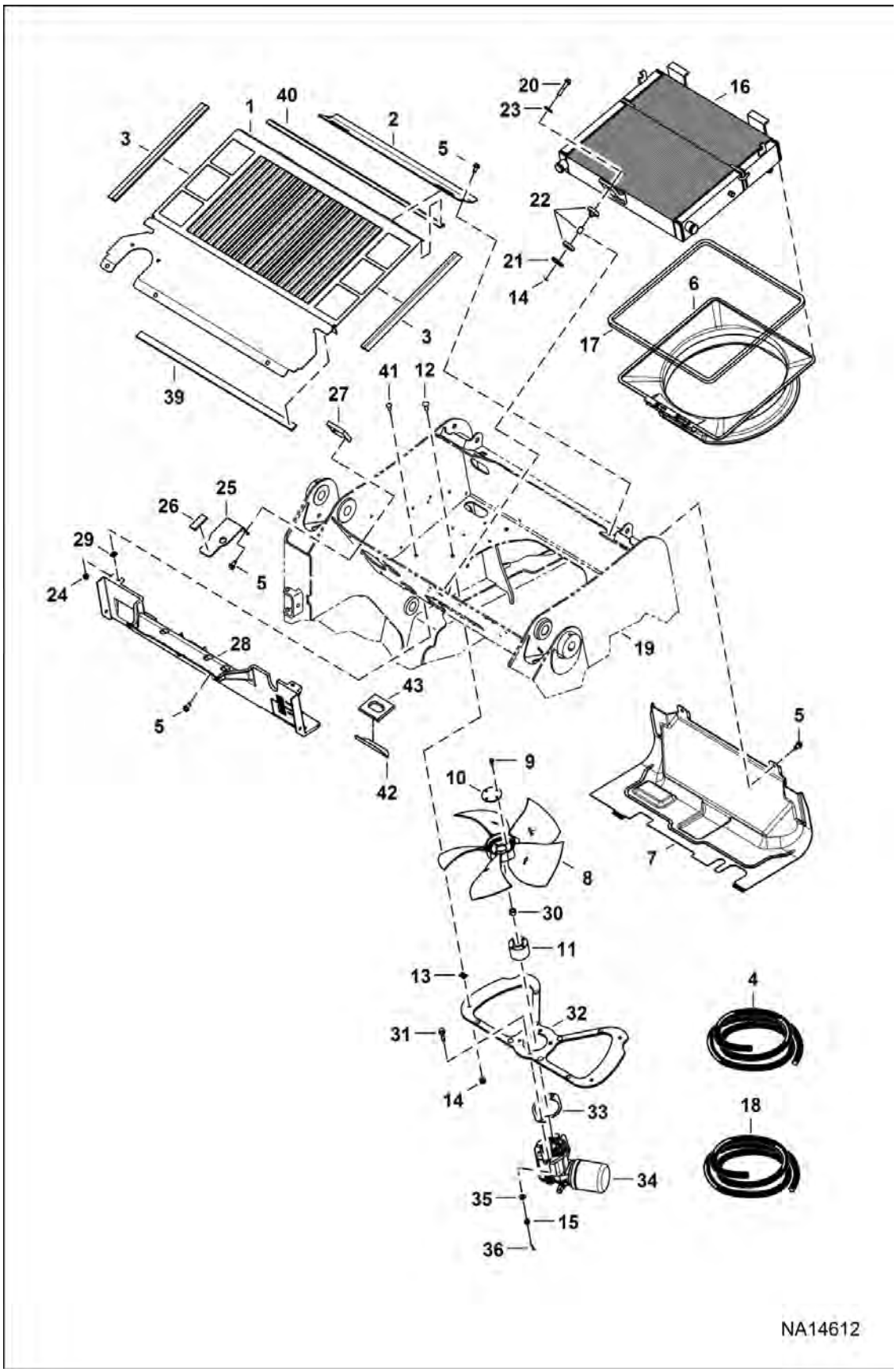

COOLING SYSTEM (Cont'd)
(S/N B1E618198 & Above)

Ref No	Part Number	Description	Remarks	Serial Number	Qty
1	7243663	W/A, SCREEN			1
2	7243666	SHIELD, DEBRIS			1
3		SEAL	NLA - 455mm (17.9") - Order Ref. 4		2
4	6646705	MOULDING BULK/FT	sold per foot		x
5	84G3712	BOLT 5			11
6	7218479	SHROUD, FAN			1
7	7227863	DUCT, AIR			1
8	7236799	FAN, COOLING			1
9	49C412	BOLT			4
10	7125948	PLATE			1
11	7233891	HUB			1
12	10C616	BOLT 10			4
13	6684033	NUT	retaining		4
14	83D6	NUT 5			5
15	3D6	NUT			2
16		EXCHANGER, WATER RADIATOR			1
17		SEAL	NLA - 1862 (73.3") - Order Ref. 18		1
18	7243938	SEAL, BULK	sold per foot		x
19		MAIN FRAME			1
20	35C632	BOLT			1
21	872229	WASHER			1
22	7237725	MOUNT, ISOLATOR			1
23	6737388	WASHER			1
24	83D5	NUT 5			2
25	7232150	BRACKET			2
26	7266219	SEAL FOAM			2
27	7232149	SEAL, FOAM			2
28	7266269	DUCT, REAR AIR			1
29	774220	NUT			2
30	7240968	NUT			1
31	7249974	BOLT			2
32	7243649	MOUNT, FAN	W/ 4 center mount holes		1
33	7242068	GASKET			1
34		MOTOR, HYD COOLING FAN			1
35	25E17	WASHER 5			2
36	1F316	PIN	Was 1F416 [B]		2
37	7244911	SHIELD			1
38	7244883	COVER, HOSE			1
39	7266220	SEAL FOAM			1
40	7266229	SEAL FOAM			1
41	10C512	BOLT			2
42	7244883	COVER, HOSE			1
43	7244911	SHIELD			1

ENGINE & ATTACHING PARTS
(Radiator Water Exchanger)

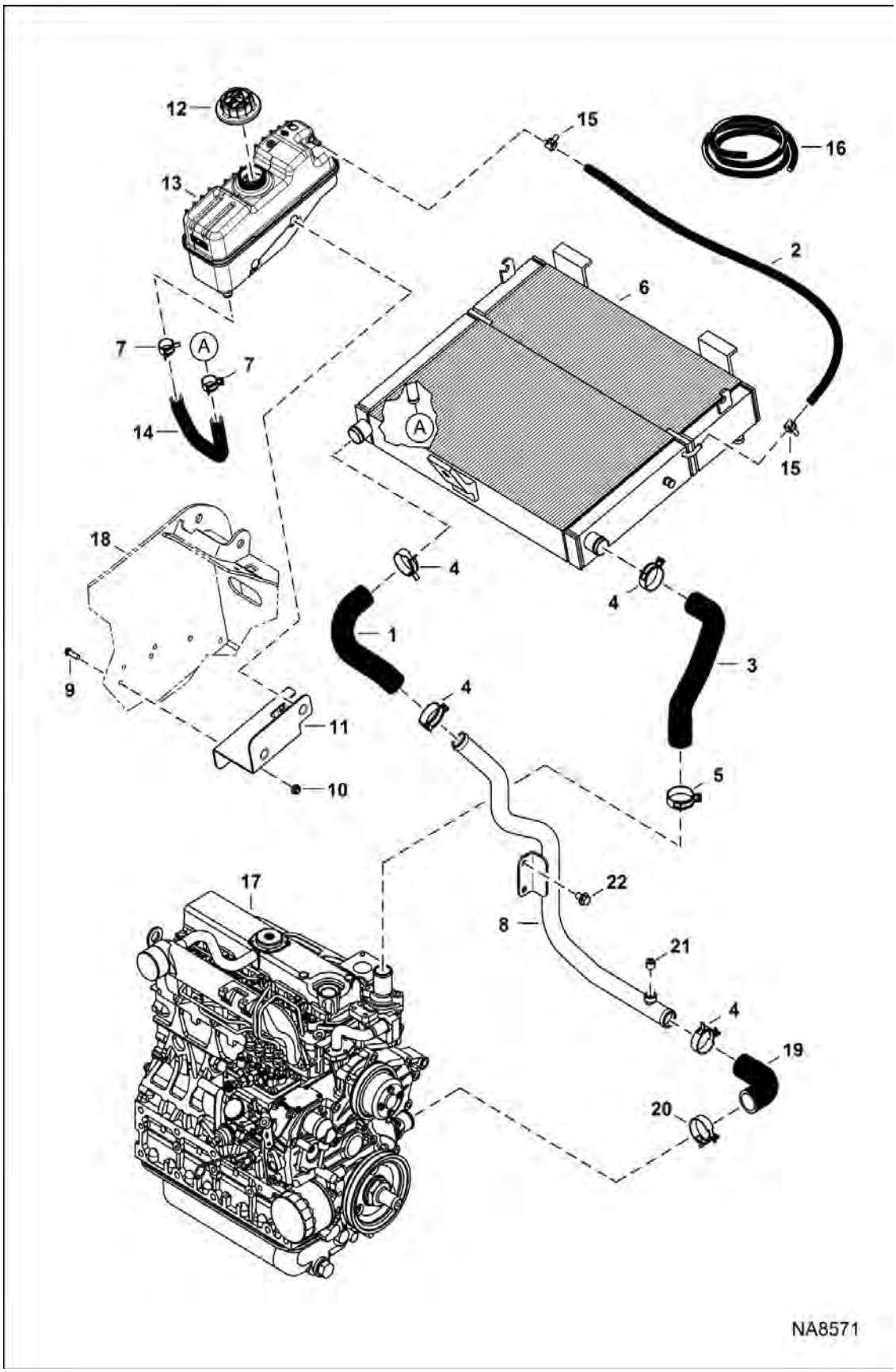

ENGINE & ATTACHING PARTS (Cont'd)

(Radiator Water Exchanger)

Ref No	Part Number	Description	Remarks	Serial Number	Qty
1	7225353	HOSE, WATER			1
2		HOSE, WATER	NLA - 31" (789,9mm) long - Order Ref. 16		1
3	7225352	HOSE, WATER			1
4	5HM42	HOSECLAMP			4
5	5HM44	CLAMP			1
6	7225354	EXCHANGER, OIL WATER AIR			1
7	5HM24	CLAMP			2
8	7199241	TUBE, COOLING			1
9	29CM1025	SCREW FLGD HEX CAP	Was 53C516		2
10	7024737	NUT	Was 6678765		2
11	7220031	MOUNT, TANK COOLANT			1
12	6733429	CAP			1
13	7220028	TANK, WATER COOLANT			1
14	7236073	HOSE, WATER			1
15	5HM14	CLAMP			2
16	6577822	HOSE, BULK	sold per foot		x
17		ENGINE	See Illustration ENGINE & GASKET KITS / NA6703 See Ilustration ENGINE & GASKET KITS		1
18		MAIN FRAME	See Illustration MAIN FRAME / NA8529 See Illustration MAIN FRAME		1
19	7100024	HOSE			1
20	5HM44	CLAMP			1
21	16F6	PLUG			1
22	29CM1016	SCREW FLANGE HEX CAP			2

ENGINE & ATTACHING PARTS
(Air Cleaner & Muffler)

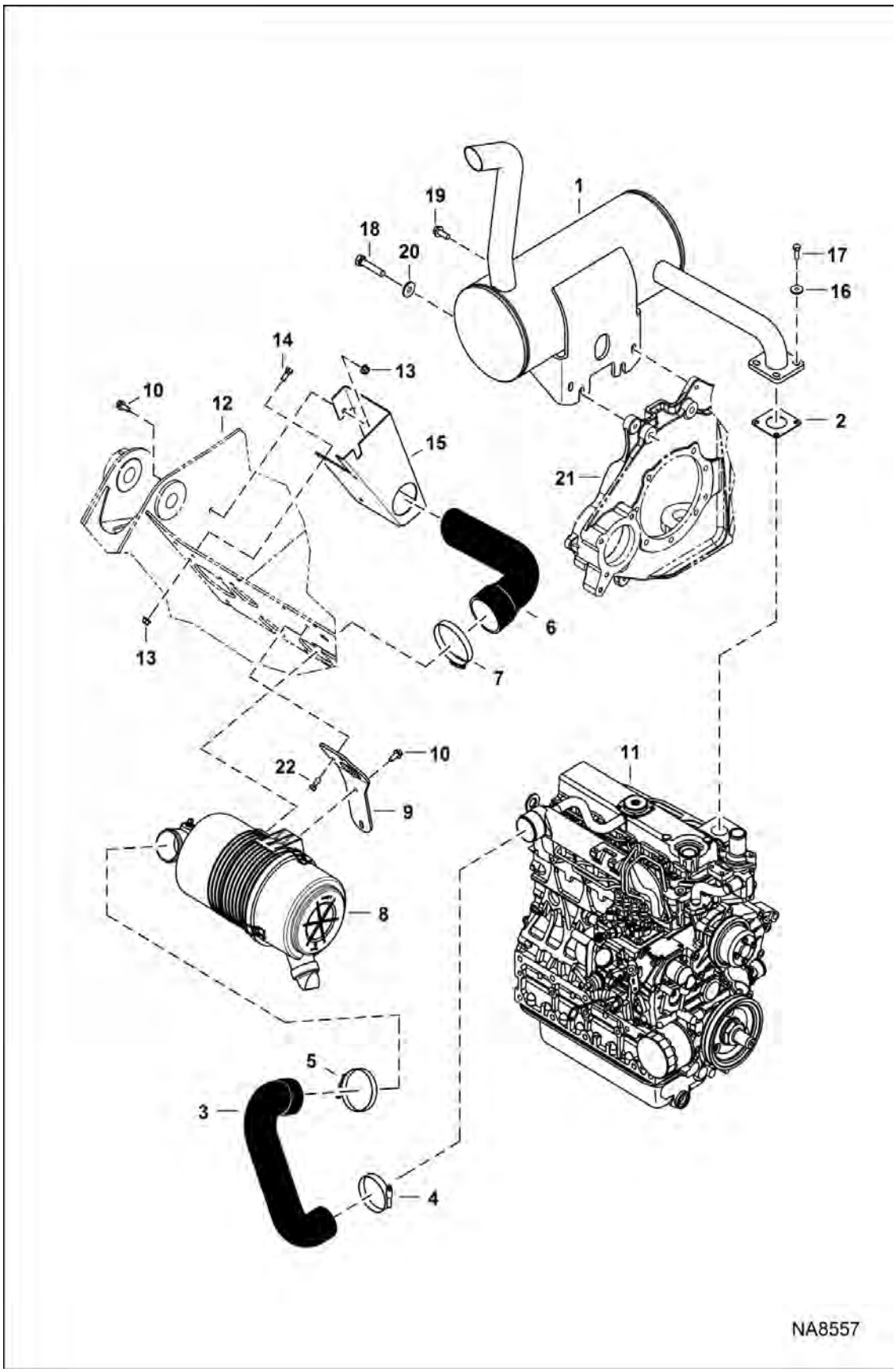

Illustration NA8557

Model S450 MT2KAMEA
6990825

ENGINE & ATTACHING PARTS (Cont'd)

(Air Cleaner & Muffler)

Ref No	Part Number	Description	Remarks	Serial Number	Qty
1	7244396	MUFFLER			1
2	6727753	GASKET			1
3	7212325	HOSE, AIR FORMED			1
4	42HC300	CLAMP			1
5	42HC325	CLAMP			1
6	7227642	HOSE, AIR FORMED			1
7	42H52	CLAMP			1
8	7222498	FILTER, AIR CLEANER ASSY	See Illustration AIR CLEANER / NA8569		1
9	7223504	BRACKET, AIR CLEANER			1
10	29CM820	SCREW FLNGE HEX CAP			3
11		ENGINE	See Illustration ENGINE & GASKET KITS / NA6703		1
12		MAIN FRAME	See Illustration MAIN FRAME / NA8529		1
13	43DM8	NUT FLANGED HEX			4
14	4CM820	SCREW HEX HD 8.8	Was 1CM820 [A]		3
15	7243668	SHIELD, AIR INTAKE			1
16	6563914	WASHER			4
17	4CM825	BOLT HEX HEAD	Was 1CM825 [A]		4
18	6CM1260	SCREW			2
19	29CM1025	SCREW FLGD HEX CAP			2
20	7152658	WASHER			2
21		MOUNT, ENG/PUMP	See Illustration ENGINE & ATTACHING PARTS / NA8551		1
22	84G3712	BOLT 5			2

ENGINE & ATTACHING PARTS

(Belt Drive System)

(B1E611001 - B1E617453)

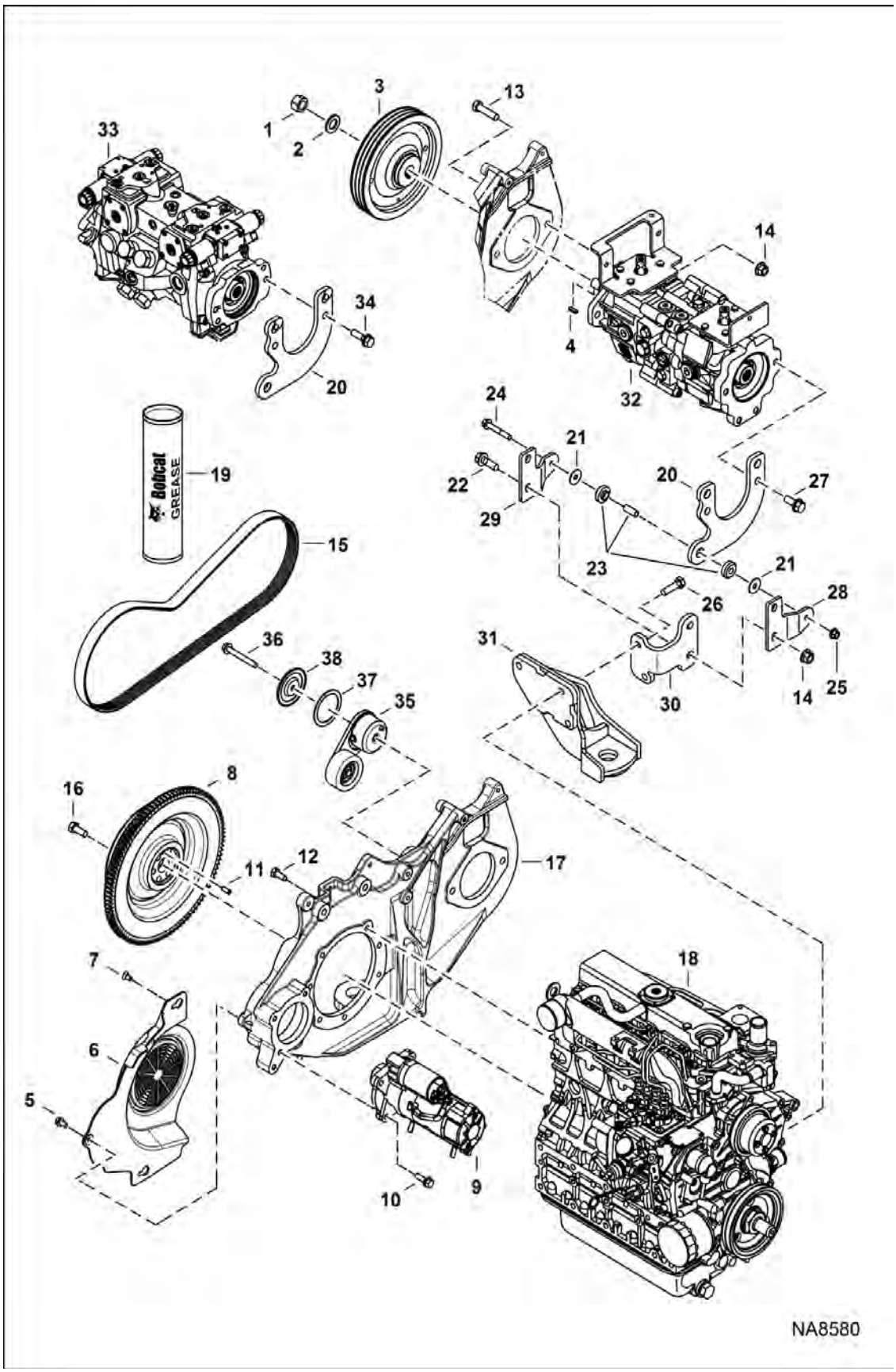

ENGINE & ATTACHING PARTS (Cont'd)

(Belt Drive System)
(B1E611001 - B1E617453)

Ref No	Part Number	Description	Remarks	Serial Number	Qty
1	96D12	NUT			1
2	6576033	WASHER 5			1
3	7195828	PULLEY, PUMP			1
3	7230695	PULLEY, A/C	W/Air Conditioning		1
4	6J807	KEY, WOODRUFF	SJC		1
4	6682261	KEY	manual controls		1
5	59CM816	BOLT			1
6	7210574	SHIELD, BELT			1
7	7155238	BOLT			2
8	7206933	FLYWHEEL, ENG ASSY	W/ring gear		1
8	6510470	GEAR, RING STARTER			1
9		STARTER	See Illustration STARTER / B16488R		1
10	45C620	BOLT			3
11	7008888	PIN, STRAIGHT			1
12	6CM1260	SCREW			6
13	17C832	BOLT	hyd pump mount		2
14	83D8	NUT 5			5
15	7286547	BELT, DRIVE	Was 7233409 [A]		1
16	6598275	BOLT	flywheel		6
17		MOUNT, PUMP	See Illustration ENGINE & ATTACHING PARTS / NA8551		1
18		ENGINE	See Illustration ENGINE & GASKET KITS / NA6703		1
19	6987888	GREASE, MULTIPURPOSE #2 - 10	Was 6903122 [B]		x
20	7193687	BRACKET, MOUNTING			1
21	6737388	WASHER			2
22	35C824	BOLT	[B]		2
23	7223184	MOUNT, LOAD ISOLATOR			1
24	35C640	BOLT 10			1
25	83D6	NUT 5	[B]		1
26	6CM1245	SCREW			2
27	45C828	SCREW HEX FLNG W/T			2
28	7282803	BRACKET, MOUNTING	Was 7222080 [B]		1
29	7282804	BRACKET, MOUNTING	Was 7222081 [B]		1
30	7238712	MOUNT, PUMP	Was 7223017 [C]		1
31		MOUNT, ENG	See Illustration ENGINE & ATTACHING PARTS / NA8551		1
32		PUMP ASSY	See Illustration HYDROSTATIC PUMP/GEAR PUMP / NA8524 Manual Control		2
33		PUMP ASSY	SJC		1
34	7131273	SCREW			2
35	6689611	IDLER MICRO-V			1
36	59CM1080	SCREW			1

ENGINE & ATTACHING PARTS (Cont'd)

(Belt Drive System)
(B1E611001 - B1E617453)

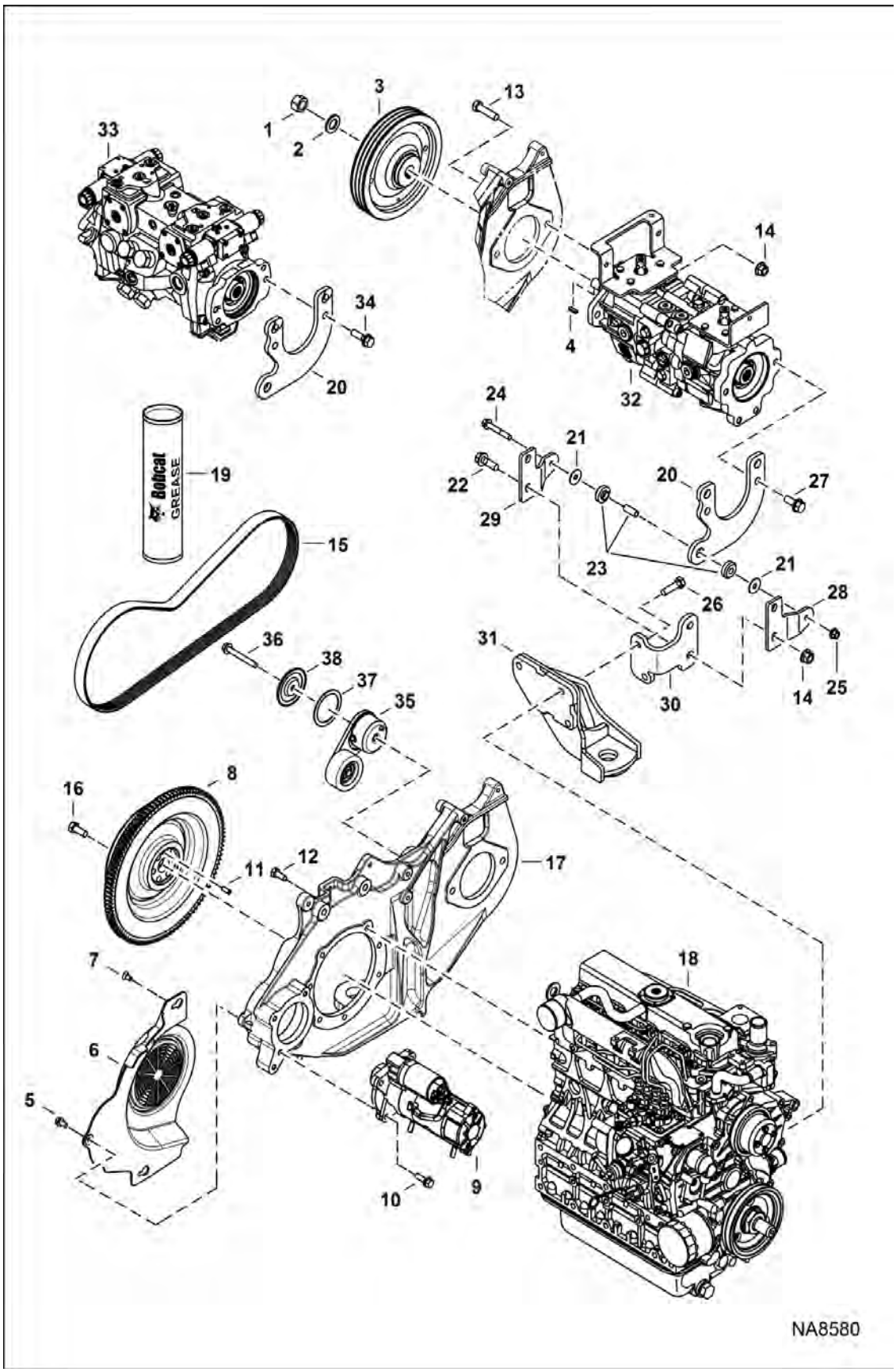

Illustration NA8580

ENGINE & ATTACHING PARTS (Cont'd)

(Belt Drive System)
(B1E611001 - B1E617453)

Ref No	Part Number	Description	Remarks	Serial Number	Qty
37	7295934	WASHER	if equipped	(S/N B1E616897 & Above)	1
38	7295933	PLATE, TENSIONER	if equipped	(S/N B1E616897 & Above)	1

ENGINE & ATTACHING PARTS

(Belt Drive System)
(B1E617454 & Above)

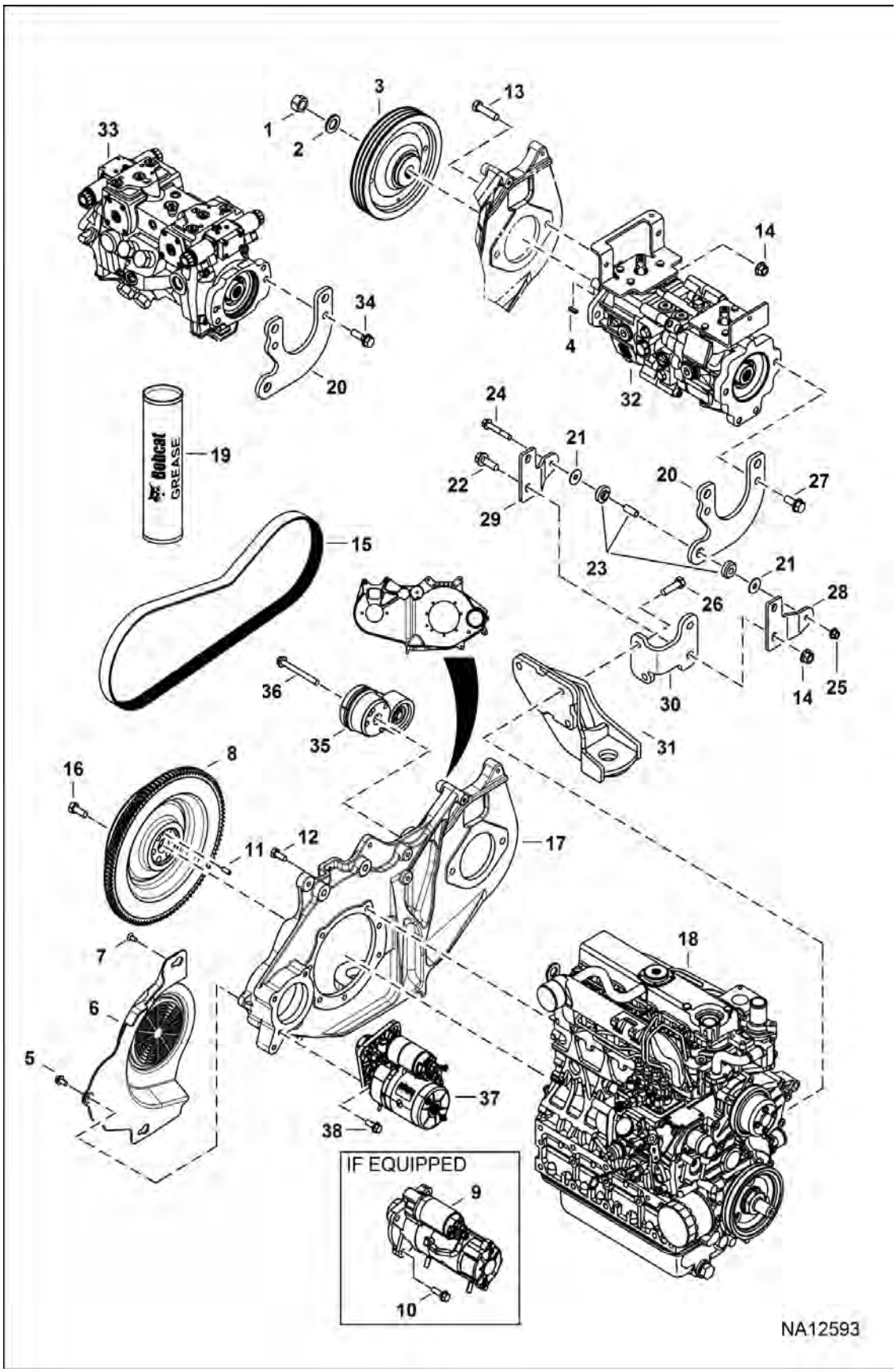

ENGINE & ATTACHING PARTS (Cont'd)

(Belt Drive System)
(B1E617454 & Above)

Ref No	Part Number	Description	Remarks	Serial Number	Qty
1	96D12	NUT			1
2	6576033	WASHER 5			1
3	7195828	PULLEY, PUMP			1
3	7230695	PULLEY, A/C	W/Air Conditioning		1
4	6J807	KEY, WOODRUFF	SJC		1
4	6682261	KEY	manual controls		1
5	59CM816	BOLT			1
6	7210574	SHIELD, BELT			1
7	7155238	BOLT			2
8	7206933	FLYWHEEL, ENG ASSY	W/ring gear		1
8	6510470	GEAR, RING STARTER			1
9		STARTER	See Illustration STARTER / B16488R	B1E611001 - B1E618212	1
10	45C620	BOLT		B1E611001 - B1E618212	3
11	7008888	PIN, STRAIGHT			1
12	5CM1025	SCREW FL THD HEX CAP	Was 6CM1260 [B,D]		7
13	17C832	BOLT	hyd pump mount		2
14	83D8	NUT 5			4
15	7286548	BELT, DRIVE			1
16	6598275	BOLT	flywheel		6
17		MOUNT, PUMP	See Illustration ENGINE & ATTACHING PARTS / NA8551		1
18		ENGINE	See Illustration ENGINE & GASKET KITS / NA6703		1
19	6987888	GREASE, MULTIPURPOSE #2 - 10	Was 6903122 [B]		x
20	7193687	BRACKET, MOUNTING			1
21	6737388	WASHER			2
22	35C824	BOLT			2
23	7223184	MOUNT, LOAD ISOLATOR			1
24	35C640	BOLT 10			1
25	83D6	NUT 5			1
26	6CM1245	SCREW			2
27	45C828	SCREW HEX FLNG W/T			2
28	7282803	BRACKET, MOUNTING			1
29	7282804	BRACKET, MOUNTING			1
30	7238712	MOUNT, PUMP			1
31		MOUNT, ENG	See Illustration ENGINE & ATTACHING PARTS / NA8551		1
32		PUMP ASSY	See Illustration HYDROSTATIC PUMP/GEAR PUMP / NA8524 Manual Control		2
33		PUMP ASSY	SJC		1

ENGINE & ATTACHING PARTS (Cont'd)

(Belt Drive System)
(B1E617454 & Above)

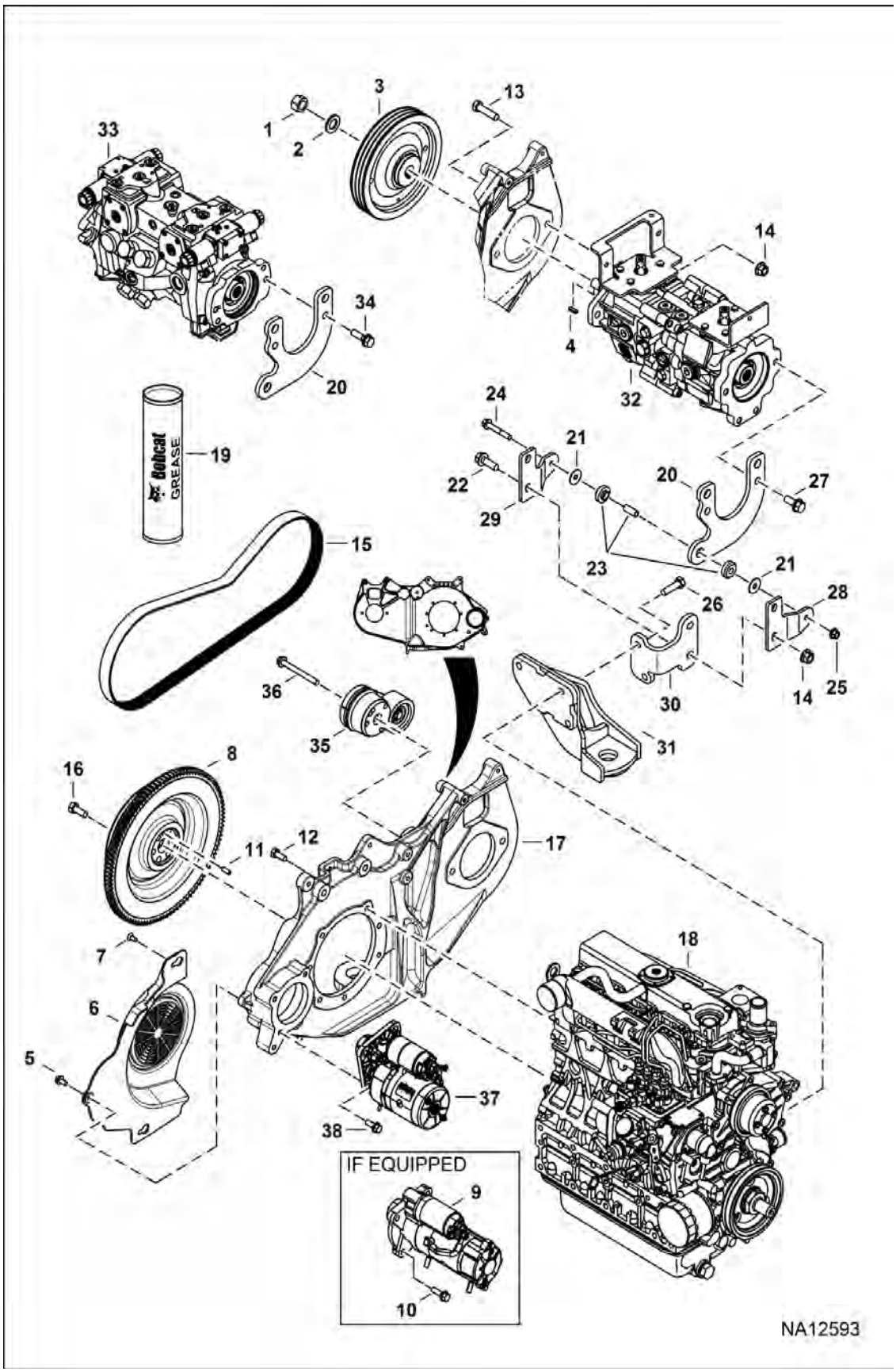

ENGINE & ATTACHING PARTS (Cont'd)

(Belt Drive System)
(B1E617454 & Above)

Ref No	Part Number	Description	Remarks	Serial Number	Qty
34	7131273	SCREW			2
35	7253514	TENSIONER, DRIVE BELT			1
36	59CM10100	SCREW HEX			1
37		STARTER	See Illustration STARTER / NA14599	B1E618213 & Above	1
38	45C616	BOLT		B1E618213 & Above	3

ENGINE & ATTACHING PARTS
(Engine Mounts)

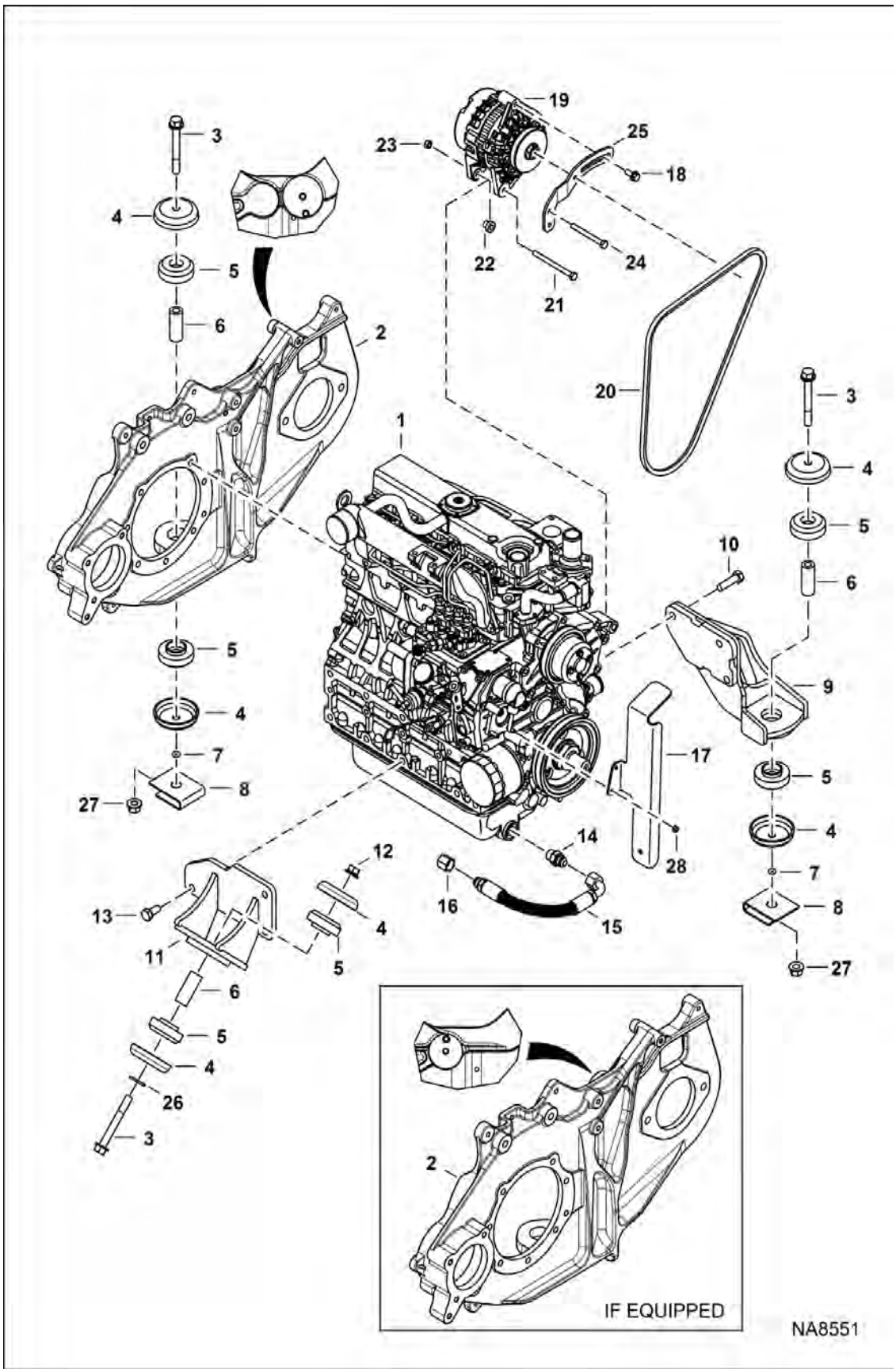

ENGINE & ATTACHING PARTS (Cont'd)

(Engine Mounts)

Ref No	Part Number	Description	Remarks	Serial Number	Qty
1		ENGINE	See Illustration ENGINE & GASKET KITS / NA6703		1
2	7210520	MOUNT, ENG/PUMP	See Illustration ENGINE & ATTACHING PARTS / NA8580	B1E611001 - B1E617453	1
2	7299230	MOUNT ENGINE PUMP	See Illustration ENGINE & ATTACHING PARTS / NA12593	B1E617454 & Above	1
3	31C864	BOLT			3
4	7116851	CUP			6
5	7000489	DAMPER			6
6	7141405	BUSHING			3
7	7120149	O-RING, RETAINING			2
8	7152037	NUT, RETAINING	W/Ref. 27		2
9	7237131	MOUNT, ENG	Was 7223015 [C]		1
10	6CM1235	BOLT			1
11	7208849	MOUNT, ENG			1
12	83D8	NUT 5			1
13	6CM1225	SCREW FL THD HEX CAP			3
14	15KB0808	FITTING, HYD CONNECTOR			1
15	7273025	HOSE, DRAIN	Was 7215765 [B]		1
16	36K6	CAP			1
17	7194153	SHIELD, BELT			1
18	29CM820	SCREW FLNGE HEX CAP			1
19		ALTERNATOR, 90 AMP	See Illustration ALTERNATOR / C3529		1
20	7100104	BELT, ALT			1
21	1CM8100	SCREW HEX CAP			1
22	6817566	BUSHING			1
23	53DM8	NUT HX THDLK PREAPPL			1
24	1CM880	SCREW HEX HD 8.8			1
25	6730867	MOUNT, ALT			1
26	7152658	WASHER			1
27	83D8	NUT 5			2
28	1DM6	NUT			2

FUEL SYSTEM

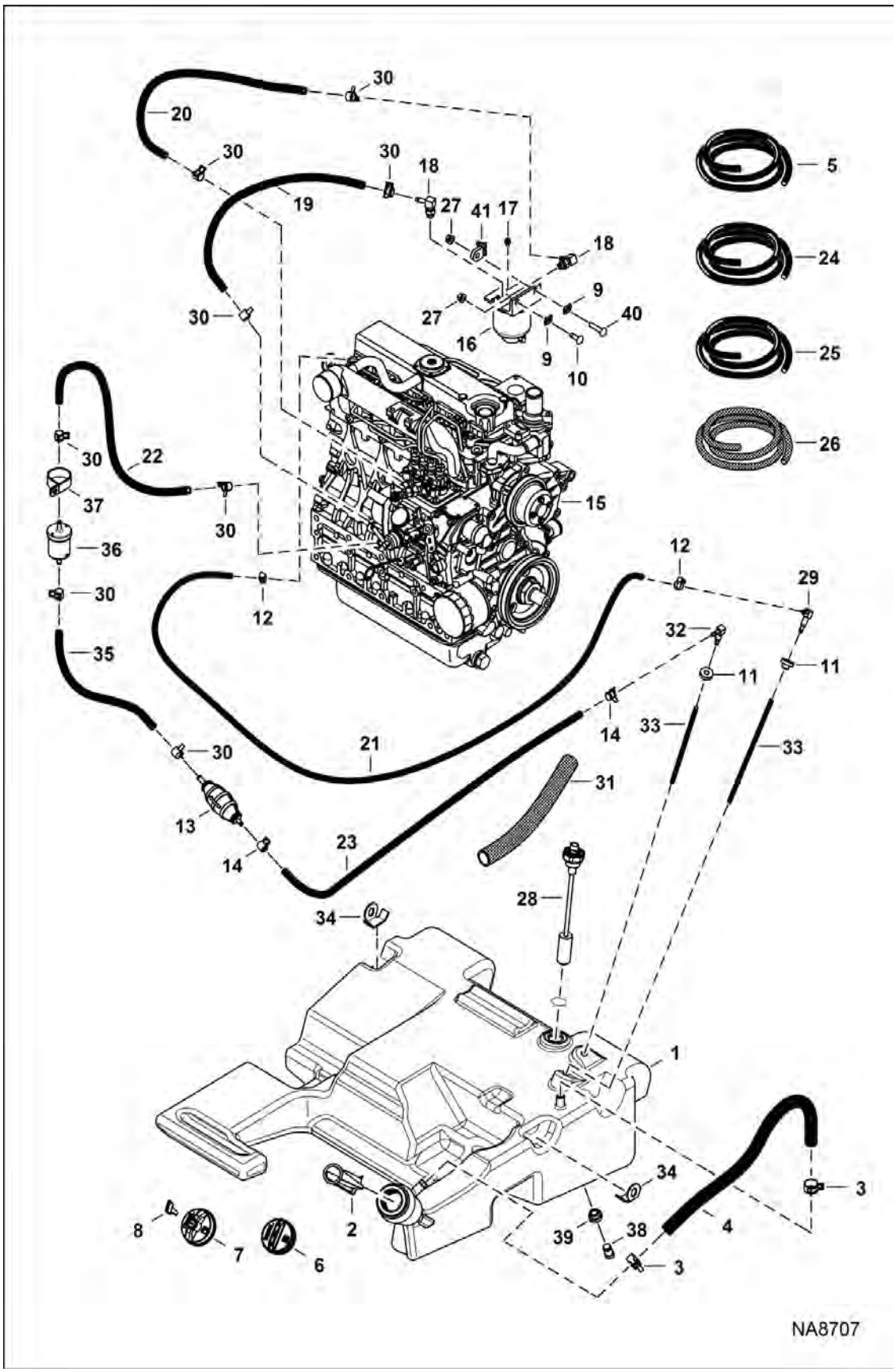
30
20
30
30
18
19
27
41
17
18
5
24
25
26
9
40
27
16
9
10
30
22
37
30
36
30
35
15
12
12
29
32
11
11
14
33
33
21
30
31
13
14
23
28
34
1
34
3
2
39
38
4
8
7
6
3
NA8707

FUEL SYSTEM (Cont'd)

Ref No	Part Number	Description	Remarks	Serial Number	Qty
1	7209701	TANK, FUEL	W/O fuel drain hole	B1E611001 - B1E613898	1
1		TANK, FUEL	NLA - W/Fuel drain hole - Use W/Ref. 38 & 39 - Was 7266362 [A]	B1E613899 - B1E617846	1
1	7300621	TANK, FUEL	W/Fuel drain hole - Use W/Ref. 38 & 39	B1E617847 & Above	1
2	7235324	SCREEN, FUEL PICKUP			1
3	5HM24	CLAMP			2
4		HOSE	NLA - 749 mm (29.5") long - Order Ref. 5		1
5	6578172	HOSE, BULK	sold per foot		x
6	7113340	CAP, DIESEL 3 PSI	non-locking - European		1
7	7023550	CAP, DIESEL LOCKING			1
8	6693241	KEY (2)	ignition - single key W/O ring		1
9	774220	NUT	Was 7212685 [B]		2
10	28CM825	BOLT CARRIAGE 8.8	Was 35C516 [B]		1
11	6553411	BUSHING, PRESS FIT 5	Was 6735696 [B]		2
12	42HS04	CLAMP HOSE TYPE M			2
13	6657734	PUMP, PRIMER HAND	barbed fittings for 6,35 mm (.25") ID hose - barbed fittings for 6,35 mm (.25") ID hose		1
13	7219755	PUMP, PRIMER HAND	(1) barbed fitting for 6,35 mm (.25") ID hose & (1) barbed fitting for 7,94 mm (.3125") ID hose		1
14	5HM13	CLAMP	Use W/Ref. 26		2
15		ENGINE	See Illustration ENGINE & GASKET KITS / NA6703		1
16	6667353	FILTER, FUEL ASSY	W/Ref. 18		1
16	6667352	FILTER, FUEL W/SEPARATOR 12			1
16	72F1	FITTING			1
17	6658180	PLUG, BLEED			1
18	6715183	ELBOW			2
18	79K5	O RING 10			x
19		HOSE	NLA - 584 mm (23") Order Ref. 25		1
20		HOSE	NLA - 394 mm (15.5") long- Order Ref. 25		1
21		HOSE	NLA - 1625 mm (64") long - Order Ref. 26		1
22		HOSE	NLA - 490 mm (19.3") - Order Ref. 25		1
23		HOSE	NLA - 989,1 mm (38.94") long - Order Ref. 24		1
24	6577821	HOSE, BULK	sold per foot - 0.25" ID		x
25	6577822	HOSE, BULK	sold per foot - .3125" ID		x
26	6578169	HOSE, BULK/FT	sold per foot - 0.19" ID		x
27	51DM8	NUT HX THDLK PREAPPL	Was 83D5 [B]		2
28	7287028	SENSOR, FUEL	Was 7216452 [A]		1
29	7101291	ELBOW			1
30	5HM14	CLAMP			8
31	7208338	GUARD, HOSE	343 mm (13.5") long		1
32	7213028	FITTING, ELBOW			1

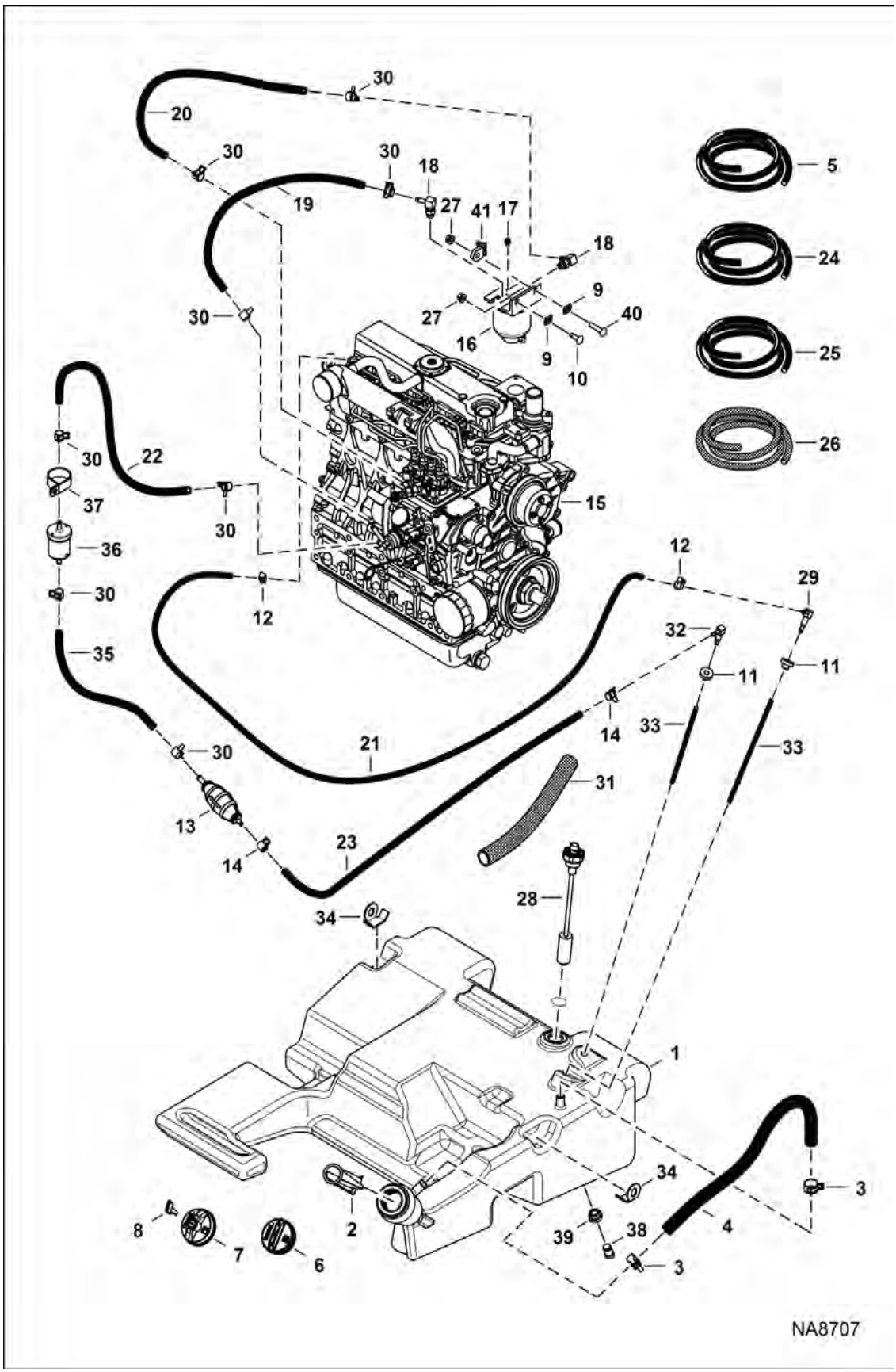
30
20
30
30
18
19
27
41
17
18
5
24
25
26
9
40
27
16
9
10
30
22
37
30
36
30
35
15
12
12
29
32
11
11
14
33
33
21
30
31
13
14
23
28
34
1
34
3
8
7
6
2
39
38
4
3
NA8707

FUEL SYSTEM (Cont'd)

Ref No	Part Number	Description	Remarks	Serial Number	Qty
33	7208233	TUBE, FUEL	226,1 mm (8.9") long		2
34	7254364	BRACKET, FUEL			2
35		HOSE	NLA - 290 mm (11.4") long - Order Ref. 25		1
36	6683101	ASSEMBLY FILTER FUEL	Was 7247169 [A]		1
37	30H85	CLAMP			1
38	7203382	PLUG, STEEL	Was 6717401 [A]	B1E613900 - Above	1
39	6717402	BUSHING		B1E613900 - Above	1
40	28CM830	BOLT			1
41	6679034	MOUNT			1

ENGINE SPEED CONTROL
(Manual Controls, AHC & ACS) (Single Cable)

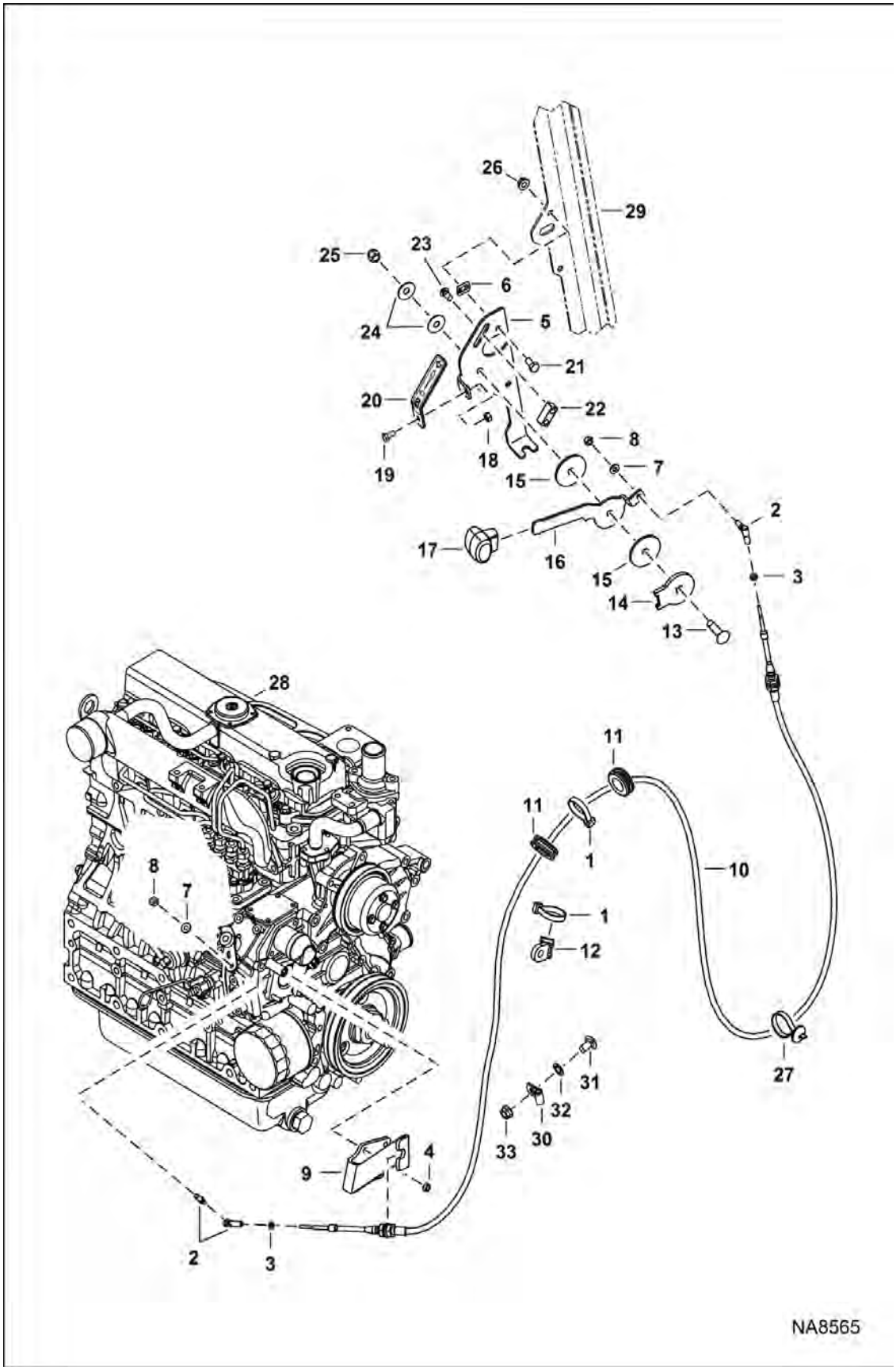

ENGINE SPEED CONTROL (Cont'd)

(Manual Controls, AHC & ACS) (Single Cable)

Ref No	Part Number	Description	Remarks	Serial Number	Qty
1	6624289	STRAP, TIE			2
2	6644965	BALL JOINT			2
3	14D10	NUT HEX MACH SCREW			2
4	1DM6	NUT			4
5	7166171	BRACKET			1
6	774220	NUT			2
7	25E11	WASHER			2
8	62D4	NUT			2
9	7238771	BRACKET, THROTTLE			1
10	7222517	CABLE, THROTTLE HAND			1
11	7221861	GROMMET			2
12	6679034	MOUNT			1
13	37C624	BOLT			1
14	7166269	WASHER			1
15	7159386	WASHER			2
16	7166172	HANDLE			1
17	7166173	HANDLE			1
18	61D4	NUT 5			1
19	17C408	BOLT			1
20	7169911	DECAL PLATE			1
21	17C510	BOLT			2
22	7166174	BLOCK			1
23	25G510	BOLT			2
24	6630038	WASHER			2
25	59D6	NUT			1
26	55D5	NUT			2
27	6675734	TIE STRAP			1
28		ENGINE	See Illustration ENGINE & GASKET KITS / NA6703		1
29		CAB, ASSY	See Illustration OPERATOR CAB / NA8479		1
30	30H20	CLIP			1
31	10C612	BOLT			1
32	6674894	NUT, LOCK			1
33	57D6	NUT 5			1

ENGINE SPEED CONTROL

(SJC) (4224 mm) (166.3") Hand Cable - (2469 mm) (97.2") Foot Cable

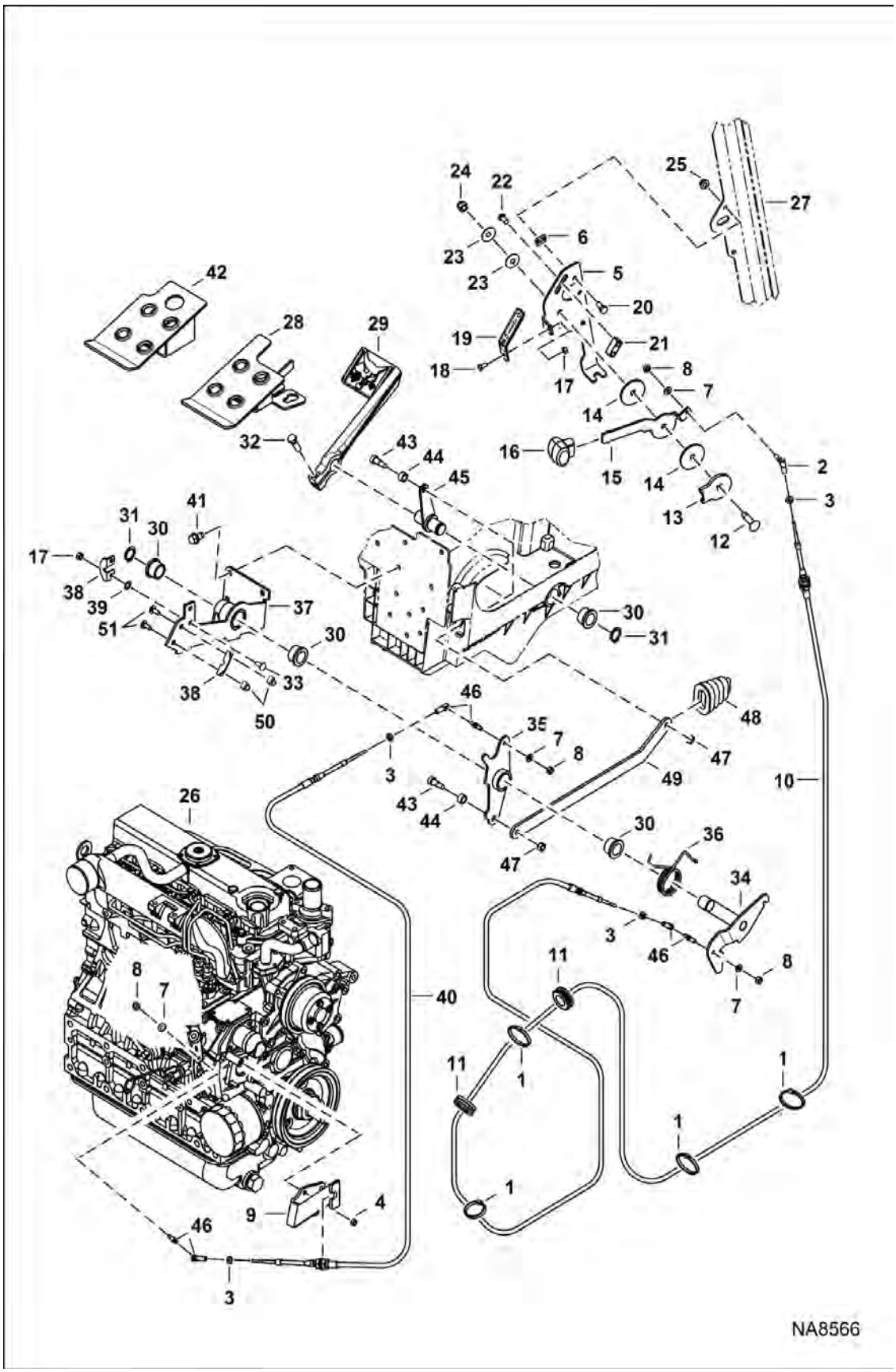

ENGINE SPEED CONTROL (Cont'd)

(SJC) (4224 mm) (166.3") Hand Cable - (2469 mm) (97.2") Foot Cable

Ref No	Part Number	Description	Remarks	Serial Number	Qty
1	6624289	STRAP, TIE			4
2	6644965	BALL JOINT			1
3	14D10	NUT HEX MACH SCREW			4
4	1DM6	NUT			4
5	7166171	BRACKET			1
6	774220	NUT			2
7	25E11	WASHER			4
8	62D4	NUT			4
9	7238771	BRACKET, THROTTLE			1
10	7209518	CABLE, THROTTLE HAND	hand cable - 3899,7 mm (153.53")		1
11	7221861	GROMMET			2
12	37C624	BOLT			1
13	7166269	WASHER			1
14	7159386	WASHER			2
15	7166172	HANDLE			1
16	7166173	HANDLE			1
17	61D4	NUT 5			2
18	17C408	BOLT			1
19	7169911	DECAL PLATE			1
20	17C510	BOLT			2
21	7166174	BLOCK			1
22	25G510	BOLT			2
23	6630038	WASHER			2
24	59D6	NUT			1
25	55D5	NUT			2
26		ENGINE	See Illustration ENGINE & GASKET KITS / NA6703		1
27		CAB, ASSY	See Illustration OPERATOR CAB / NA8479		1
28	7205247	PEDAL, RH			1
29	7164294	PEDAL, FOOT THROTTLE			1
30	7159624	BUSHING			4
31	6534668	SNAP RING			2
32	17C620	BOLT			1
33	10C410	BOLT			2
34	7237062	LEVER			1
35	7237060	LEVER			1
36	7213411	SPRING, TORSION			1
37	7237057	MOUNT			1
38	7213396	CLAMP, CABLE			2
39	6675212	RETAINER, BOLT			2
40	7209517	CABLE, THROTTLE	foot cable - 1715,3 mm (67.53")		1
41	84G3712	BOLT 5			4
42	7205251	PEDAL, LH			1
43	38C608	SCREW			2
44	6564343	SPACER			2

ENGINE SPEED CONTROL (Cont'd)

(SJC) (4224 mm) (166.3") Hand Cable - (2469 mm) (97.2") Foot Cable

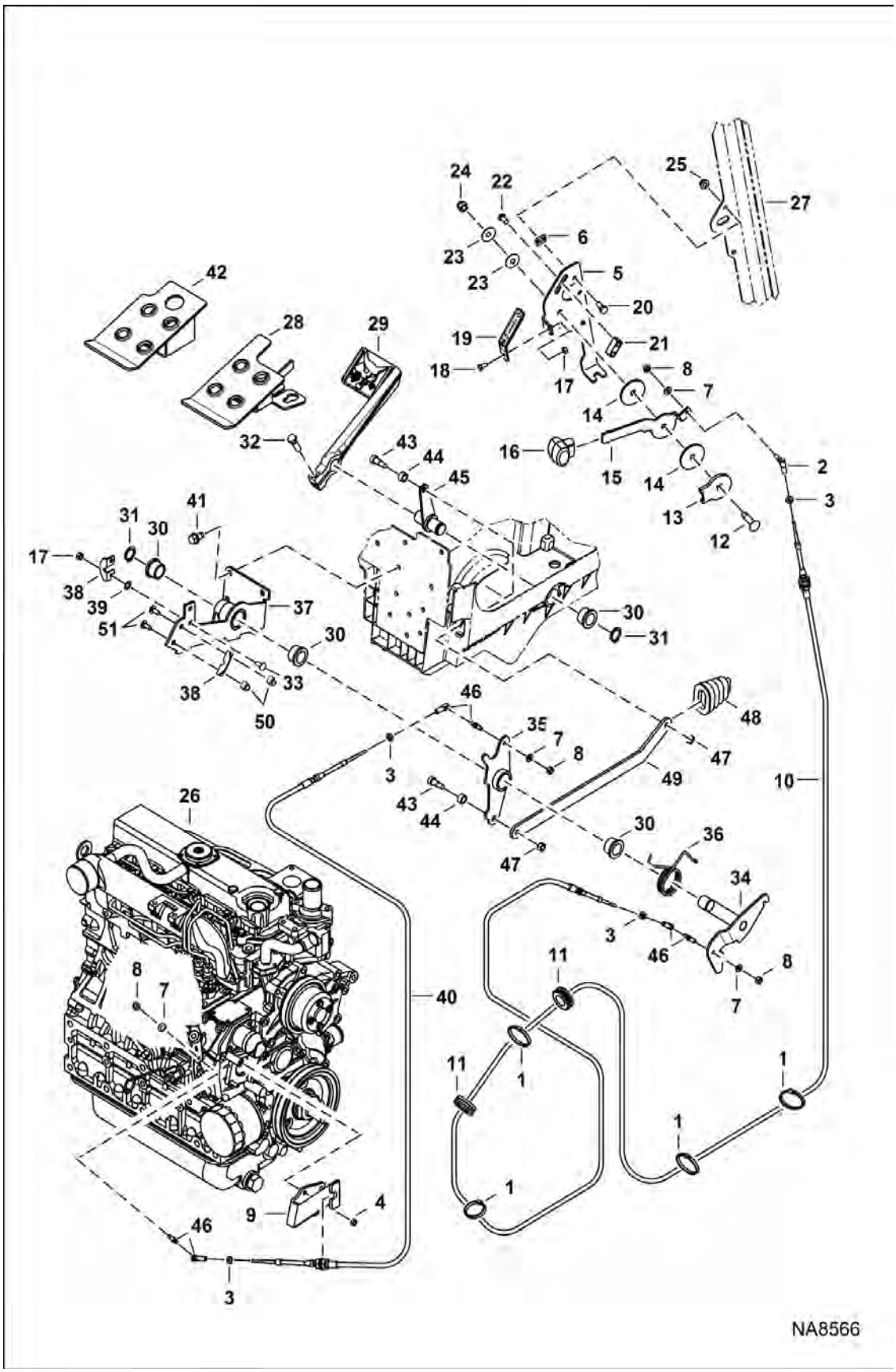

Illustration NA8566

ENGINE SPEED CONTROL (Cont'd)

(SJC) (4224 mm) (166.3") Hand Cable - (2469 mm) (97.2") Foot Cable

Ref No	Part Number	Description	Remarks	Serial Number	Qty
45	7205245	LEVER			1
46	6644965	BALL JOINT			3
47	95D5	NUT			2
48	7153503	BOOT			1
49	7205239	LINK, PEDAL			1
50	6676026	NUT			2
51	7165621	SCREW LOW HEAD			2

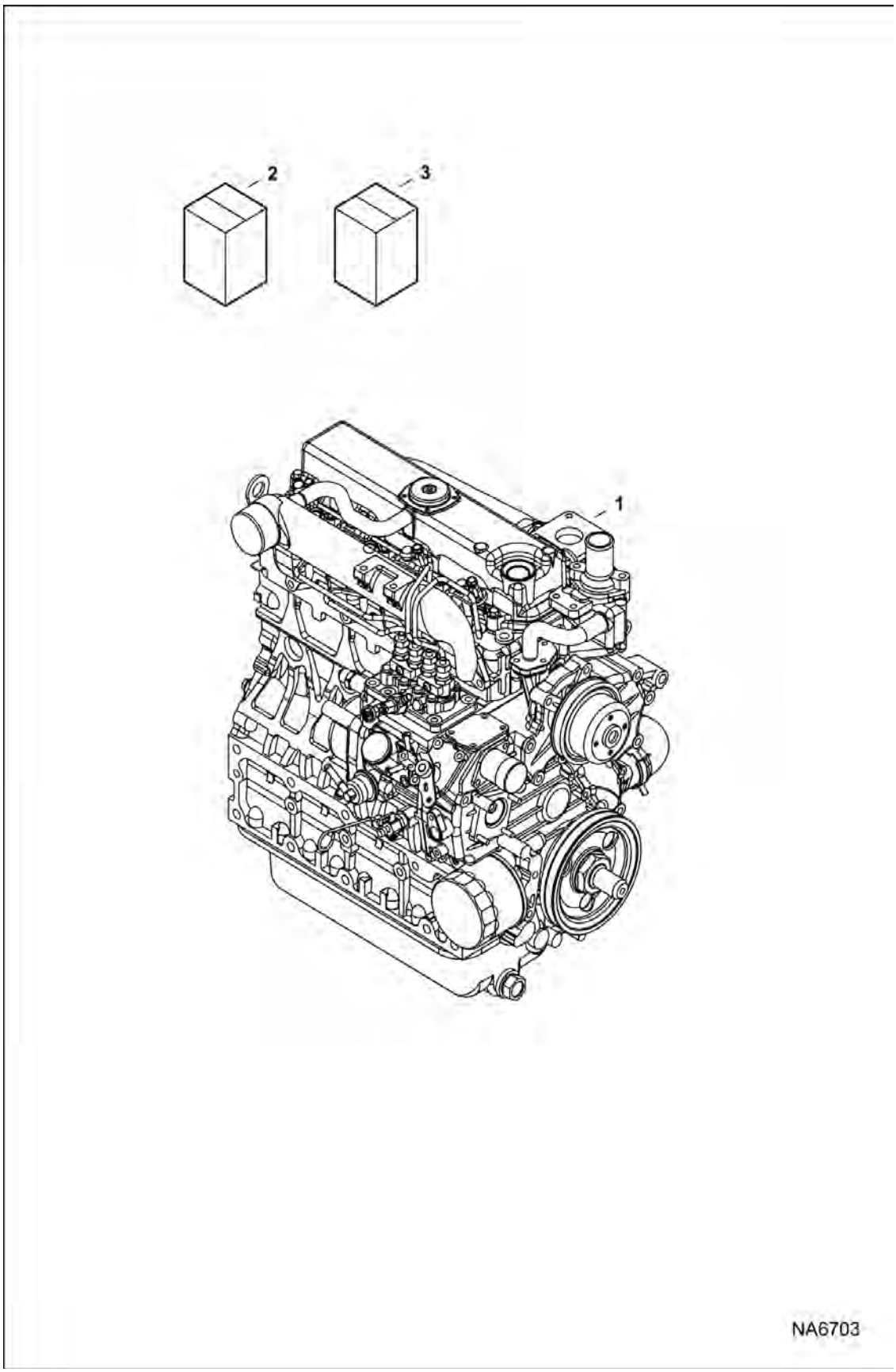

Illustration NA6703

ENGINE & GASKET KITS (Cont'd)

Ref No	Part Number	Description	Remarks	Serial Number	Qty
1	7022149	ENG, V2203MDI 48.8 HP EPA T2 / EU STG II			1
2	6689012	KIT, GASKET UPPER T2 ENG			1
3	7013263	KIT, GASKET ENG LOWER			1

UPPER GASKET KIT

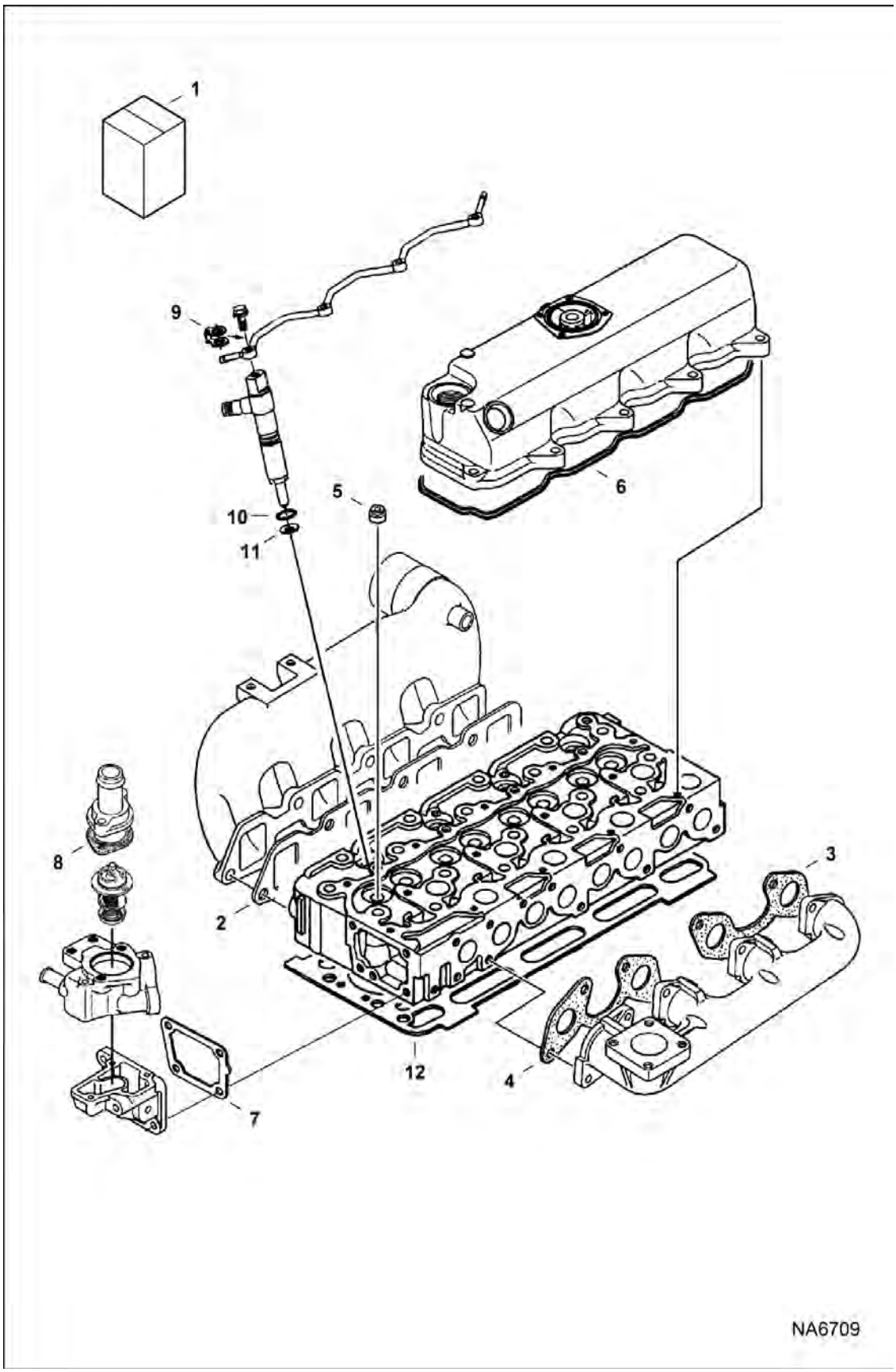

UPPER GASKET KIT (Cont'd)

Ref No	Part Number	Description	Remarks	Serial Number	Qty
1	6689012	KIT, GASKET UPPER T2 ENG	Ref. 2-12 - does not include head gasket		1
2	6684877	GASKET	- intake manifold		1
3	6666791	GASKET	- exhaust - rear		1
4	6666781	GASKET	- exhaust - front		1
5	6653830	SEAL, STEM VALVE			8
6	6684780	GASKET	- rocker arm cover		1
7	6666802	GASKET	- water flange		1
8	6684863	GASKET	- thermostat		1
9	6685498	GASKET	- return line		4
10	6670769	O-RING	- injector nozzle		4
11	6969824	GASKET, NOZZLE INJ	- heat shield		4
12		GASKET, HEAD	- not in kit		x

LOWER GASKET KIT

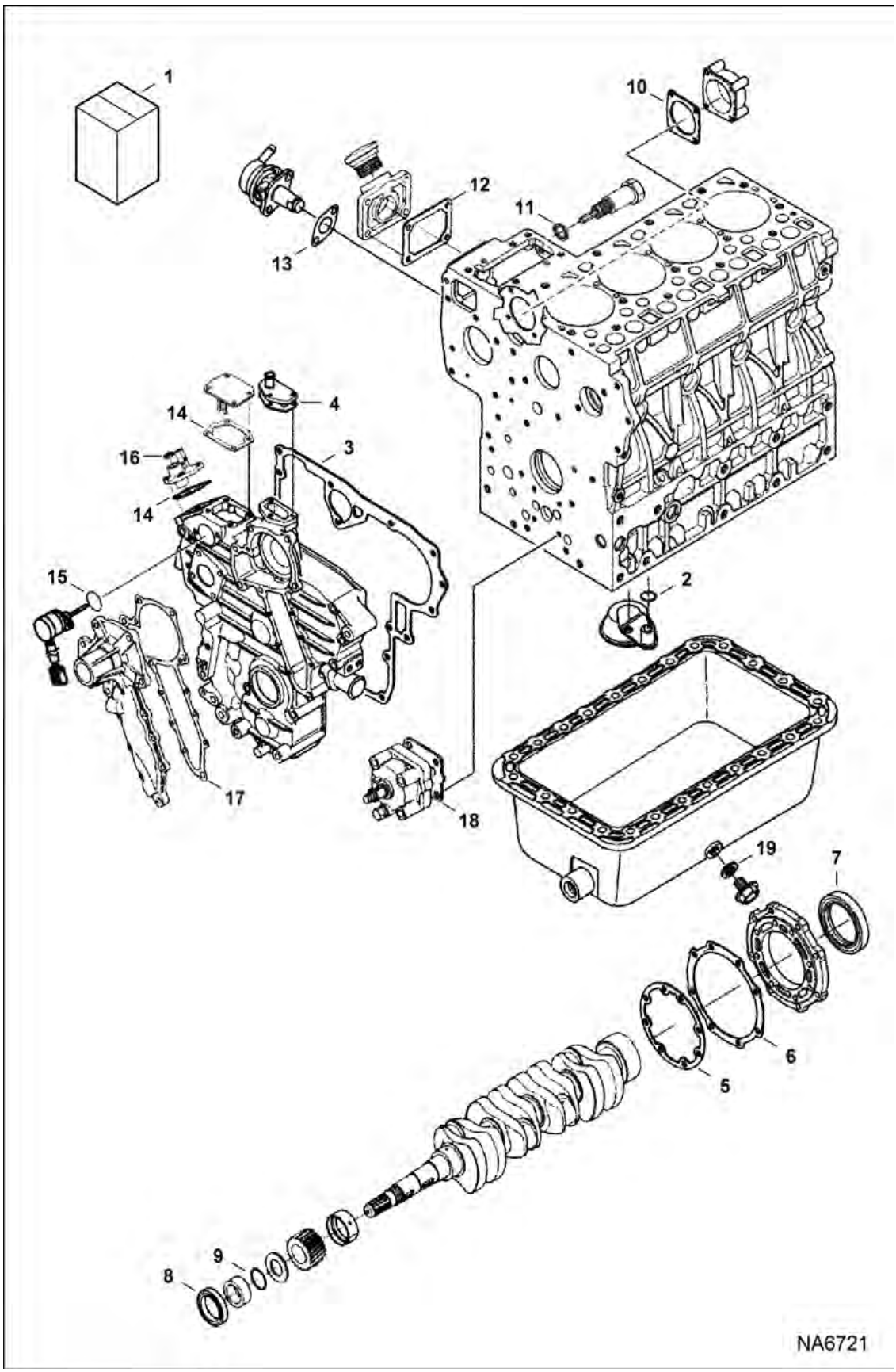

LOWER GASKET KIT (Cont'd)

Ref No	Part Number	Description	Remarks	Serial Number	Qty
1	7013263	KIT, GASKET ENG LOWER	Ref. 2-19		1
2	6684754	O-RING	See Illustration OIL PAN / NA6705 - oil screen		1
3	7010599	GASKET, GEARCASE	See Illustration GEARCASE / NA2518		1
4	6666803	GASKET	See Illustration GEARCASE / NA2518 - return flange		1
5	6684788	GASKET	See Illustration PISTON & CRANKSHAFT / B27068 - bearing case		1
6	6666814	GASKET	See Illustration PISTON & CRANKSHAFT / B27068 - case cover		1
7	6684789	SEAL, OIL	See Illustration PISTON & CRANKSHAFT / B27068 - oil		1
8	7024826	SEAL, OIL	See Illustration PISTON & CRANKSHAFT / B27068 - frt main		1
9	3974577	O-RING	See Illustration PISTON & CRANKSHAFT / B27068 - crankshaft frt		1
10	6692386	GASKET	See Illustration FUEL CAMSHAFT / B27069 - fuel camshaft cover		1
11	6684818	SEAL	See Illustration SPEED CONTROL PLATE / B27076 - idle adj. bolt		1
12	6666783	GASKET	See Illustration CRANKCASE / B27063 - pump cover		1
13	6686037	GASKET	See Illustration FUEL AND INJECTION PUMP / B27077 - fuel pump		1
14	6684841	GASKET	See Illustration ENGINE STOP LEVER / B27074 - plate		2
15	6685465	O-RING	See Illustration ENGINE STOP LEVER / B27074 - stop solenoid		1
16	6685476	SEAL	See Illustration SPEED CONTROL PLATE / B27076 - speed control lever		1
17	6684870	GASKET	See Illustration WATER PUMP / B27071 - water pump		1
18	6666782	GASKET	See Illustration CRANKCASE / B27063 - oil pump		1
19	6680484	GASKET	See Illustration OIL PAN / NA6705 - drain plug		1

CRANKCASE

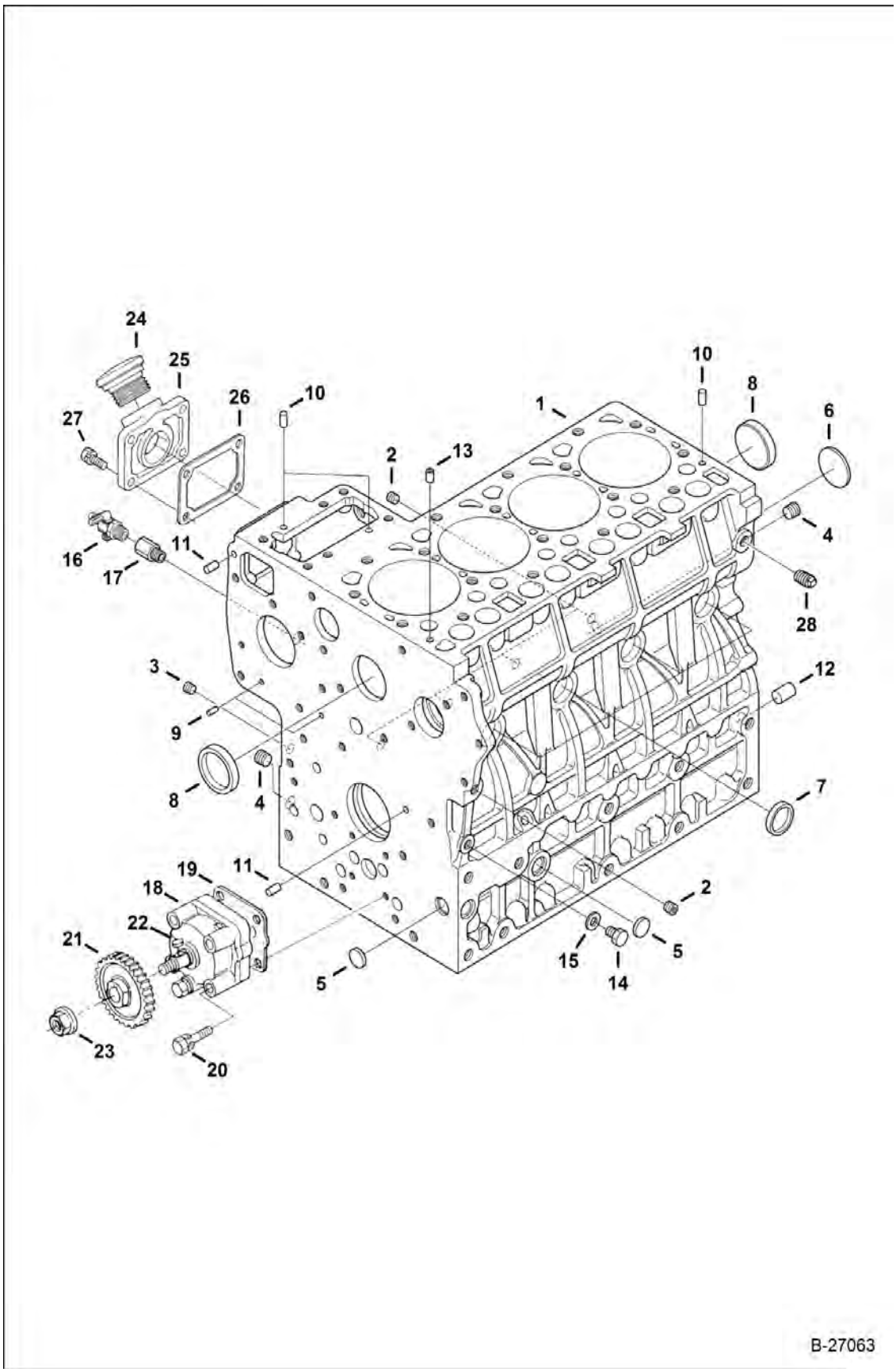
24
25
26
10
27
2
13
1
10
8
6
16
17
11
4
28
3
12
9
8
4
7
19
11
18
22
21
2
5
15
14
5
23
20
B-27063

CRANKCASE (Cont'd)

Ref No	Part Number	Description	Remarks	Serial Number	Qty
1	6685522	CRANKCASE	W/Ref. 2-15		1
2	6652574	PLUG			5
3	6655869	PLUG			1
4	6652575	PLUG			2
5	6667418	PLUG			3
6	6657663	PLUG			1
7	3974389	PLUG			6
8	3974390	PLUG			2
9	3974393	PIN			2
10	3974394	PIN			3
11	3974395	PIN			2
12	3974868	PIN			1
13	3974037	PIN			1
14	7022679	PLUG			1
15	3974095	GASKET, METAL			1
16	6672190	VALVE, DRAIN			1
17	3974871	CONNECTOR			1
18	6689441	PUMP, OIL ENG			1
19	6666782	GASKET			1
20	4CM650	HEX BOLT			4
21	3975441	GEAR, CAMSHAFT			1
22	6969805	KEY,FEATHER			1
23	6653888	NUT			1
24	7015273	PLUG, FILL	oil fill		1
25	6685478	FLANGE			1
26	6666783	GASKET			1
27	6652580	BOLT			4
28	16F2	PLUG			1

PISTON & CRANKSHAFT

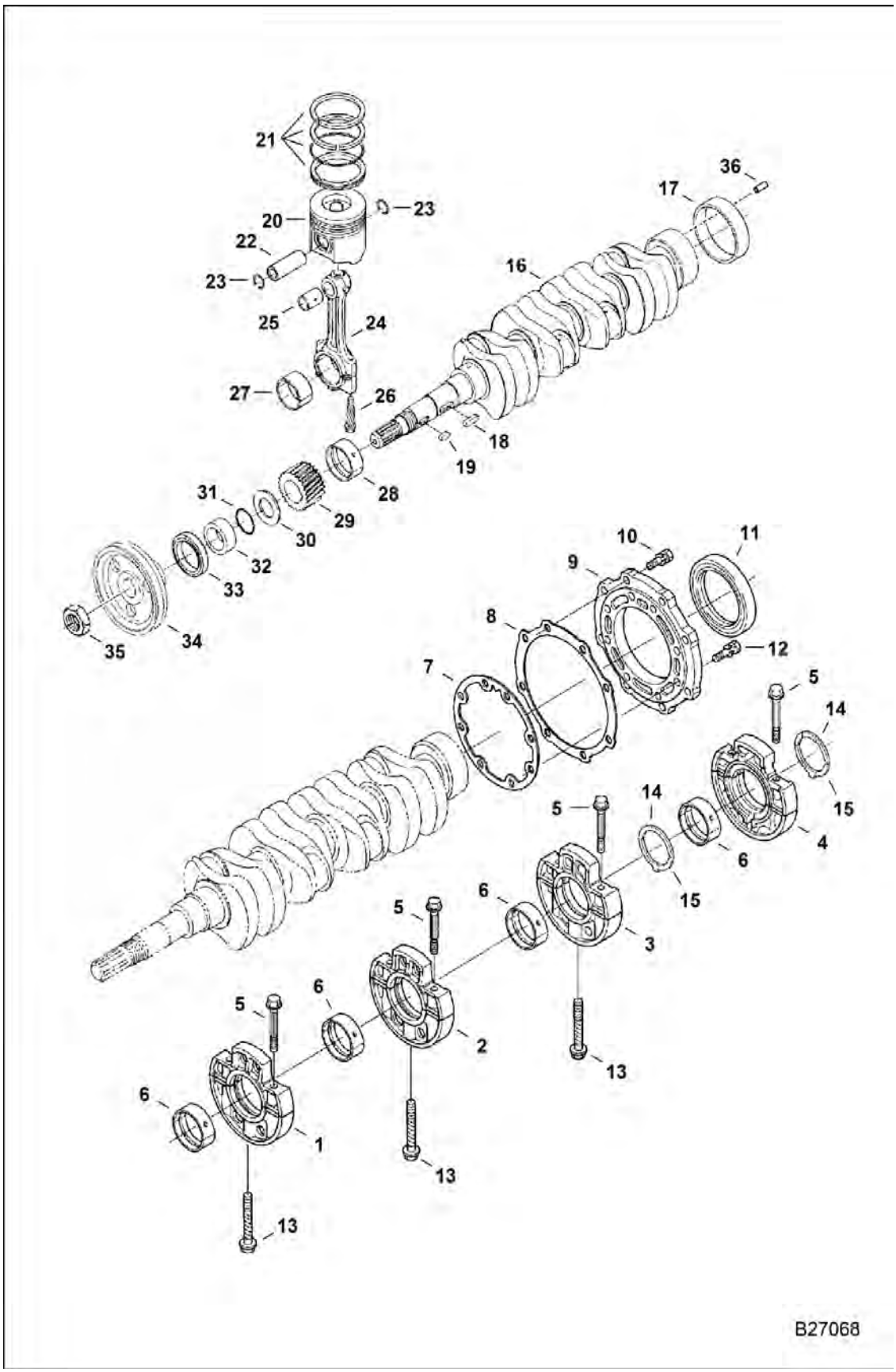

PISTON & CRANKSHAFT (Cont'd)

Ref No	Part Number	Description	Remarks	Serial Number	Qty
1	6685483	CASE, MAIN BRG.	W/Ref. 5 & 6		1
2	6685484	CASE, MAIN BRG.	W/Ref. 5 & 6		1
3	6685485	CASE, MAIN BRG.	W/Ref. 5 & 6		1
4	6689503	CASE MAIN BRG	W/Ref. 5 & 6		1
5	6685482	BOLT			2
6	7015265	BEARING, ENG CRANKSHAFT	main - std		4
6	6685492	BEARING, MAIN	main (-0,20 mm)		1
6	6685493	BEARING, MAIN	main (-0,40 mm)		1
7	6684788	GASKET			1
8	6666814	GASKET			1
9	6655166	COVER			1
10	4CM825	BOLT HEX HEAD	Was 1CM825 [A]		8
11	6684789	SEAL, OIL			1
12	6969808	BOLT			8
13	6653821	BOLT			3
14	7015266	WASHER, THRUST	side thrust - std [A]		2
14	6685494	WASHER, THRUST	side thrust - (+0,20 mm)		2
14	6685495	WASHER, THRUST	side thrust - (+0,40 mm)		2
15	7015267	WASHER, THRUST	std		2
15	6685496	WASHER, THRUST	side thrust - (+0,20 mm)		2
15	6685497	WASHER, THRUST	side thrust - (+0,40 mm)		2
16	7010238	CRANKSHAFT, ENG	W/Ref. 17		1
17	6653859	SLEEVE, WEAR			1
18	6685469	KEY			1
19	3974546	KEY			1
20	6688644	PISTON	std (1G796-2111)		4
20	6693920	PISTON	+0,25 mm (1G796-2111 OS25)		4
21	6685095	RING, PISTON	piston - std		4
21	6685096	PISTON RING	piston - (+0,25 mm)		4
22	6655179	PIN, PISTON ENG	piston		4
23	6686997	CIR-CLIP			8
24	6655181	ROD, CONNECTING	W/Ref. 25-27		4
25	7023121	BUSHING, PISTON PIN			4
26	7020998	BOLT			8
27	7015270	BEARING, ENG ROD CONNECTING	rod - std		4
27	6655236	BEARING, ROD	rod (-0,20 mm)		4
27	6655237	BEARING, ROD	rod (-0,40 mm)		4

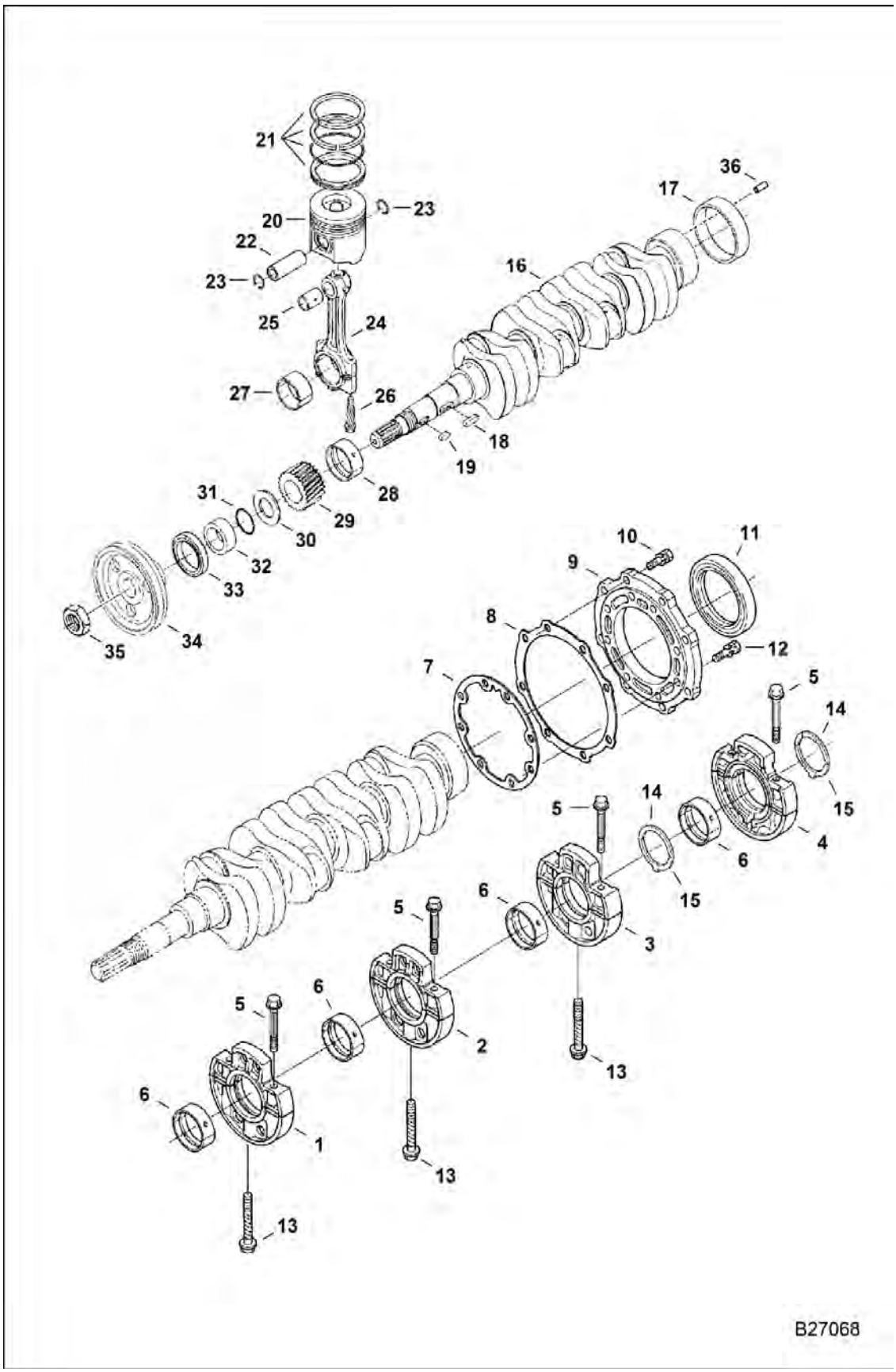
21
20
22
23
23
25
24
27
26
36
17
16
18
19
28
31
29
30
32
33
35
34
10
11
9
8
12
7
5
14
15
4
6
5
14
15
6
5
6
3
5
6
2
13
6
1
13
13
B27068

PISTON & CRANKSHAFT (Cont'd)

Ref No	Part Number	Description	Remarks	Serial Number	Qty
28	7015264	BEARING, ENG CRANKSHAFT	main - std		1
28	6685490	BEARING, MAIN	main (-0,20 mm)		1
28	6685491	BEARING, MAIN	main (-0,40 mm		1
29	6685481	GEAR			1
30	6653861	SLINGER OIL			1
31	3974577	O-RING			1
32	3975337	COLLAR			1
33	7024826	SEAL, OIL	frt main		1
34	6685521	PULLEY			1
35	3974671	NUT			1
36	7008888	PIN, STRAIGHT			1

CAMSHAFT

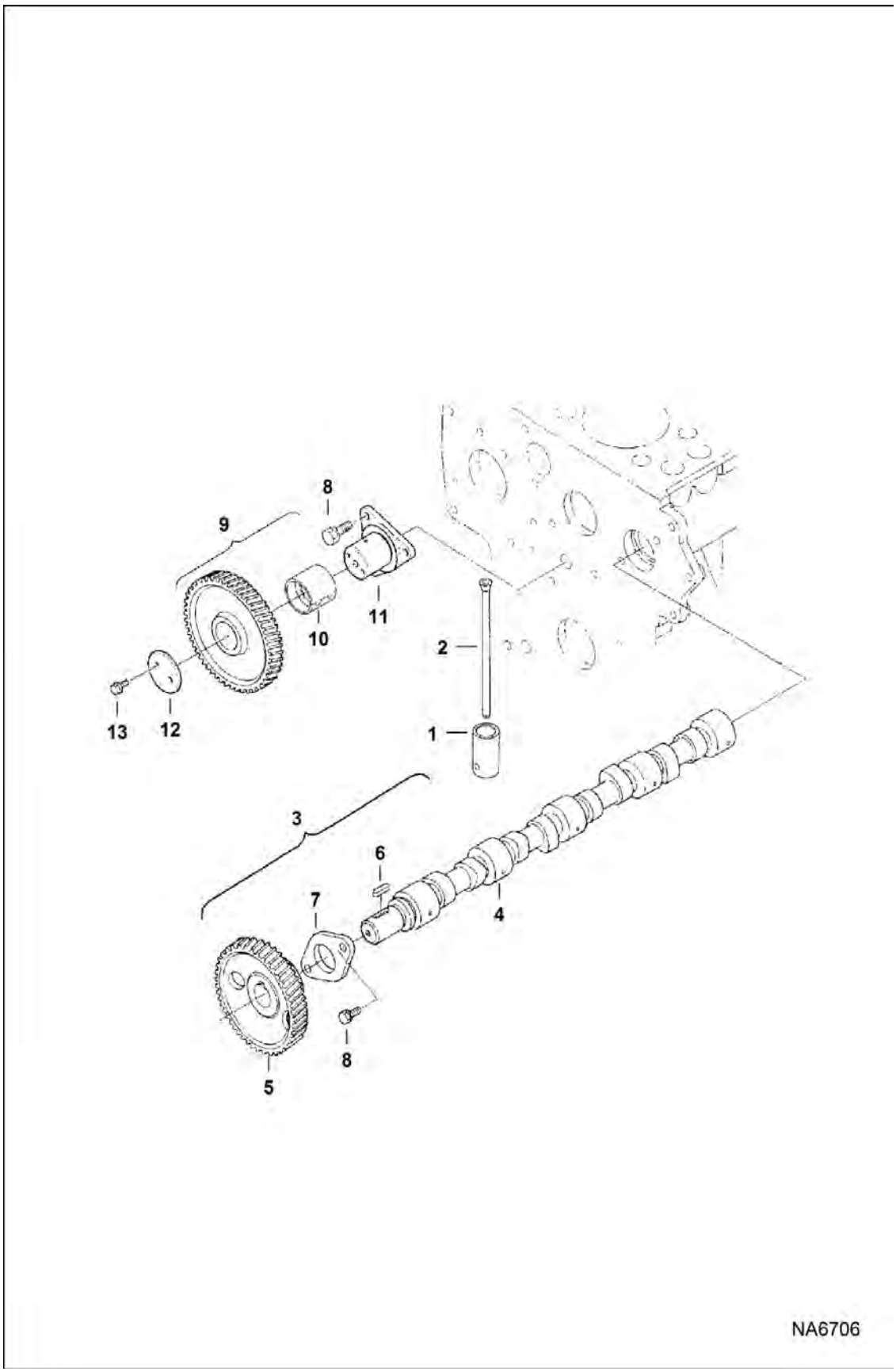

CAMSHAFT (Cont'd)

Ref No	Part Number	Description	Remarks	Serial Number	Qty
1	7015269	TAPPET			8
2	6655176	ROD			8
3	6684791	CAMSHAFT	assy. - Ref. 4-7		1
4		CAMSHAFT	NLA - Was 6655384 [A]		1
5	6684792	GEAR	camshaft		1
6	3974546	KEY			1
7	3974547	STOPPER	camshaft		1
8	1CM818	BOLT			5
9	6684793	GEAR	idle - W/Ref. 11 & 12		1
10	6684794	BUSHING	idle gear		1
11	7023925	SHAFT, GEAR IDLE			1
12	7023924	COLLAR			1
13	6653578	BOLT			2

OIL PAN

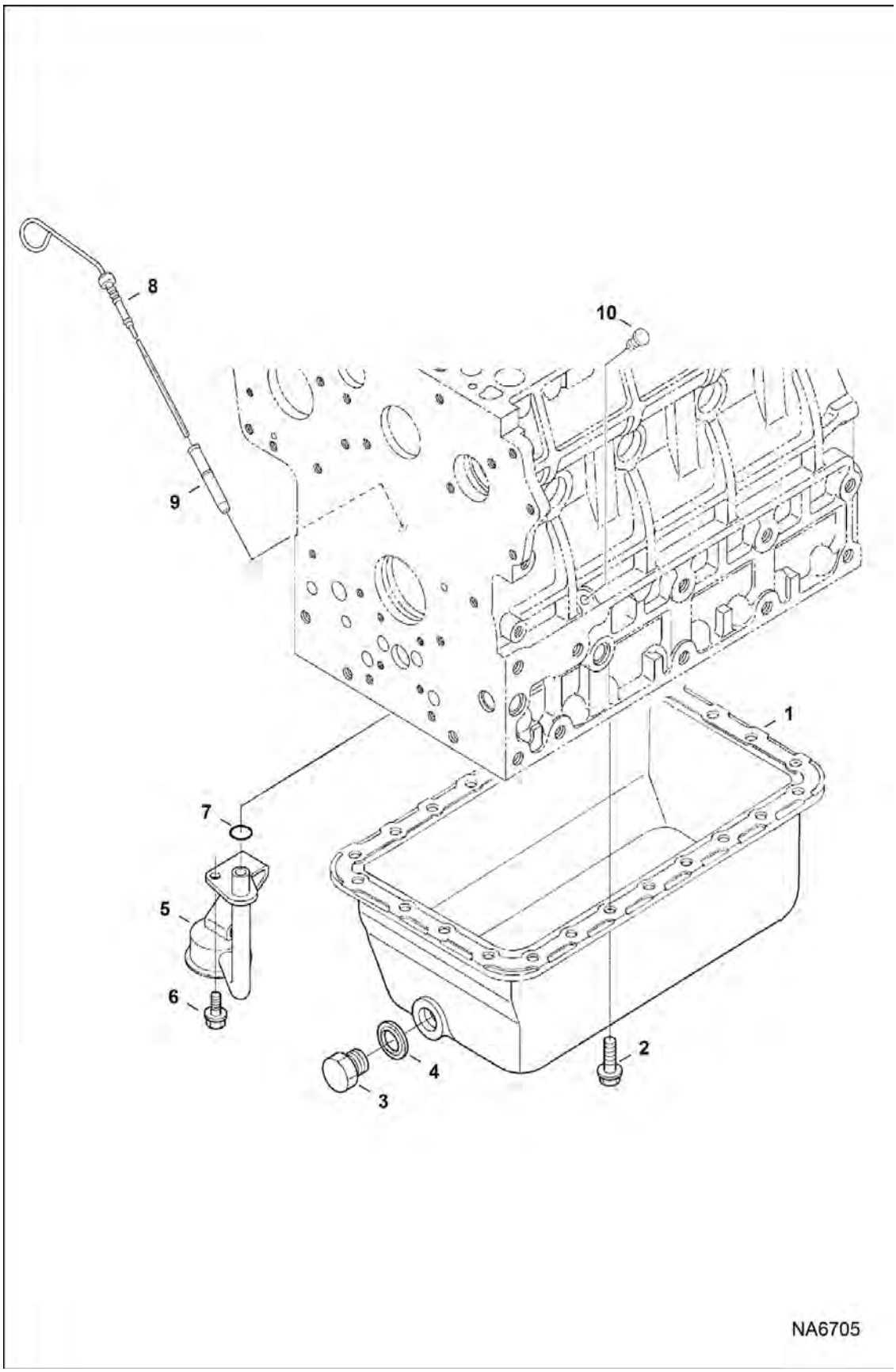

OIL PAN (Cont'd)

Ref No	Part Number	Description	Remarks	Serial Number	Qty
1	6685518	OIL PAN			1
2	7001922	BOLT			24
3	6680657	PLUG			1
4	6631046	GASKET			1
5	6682500	FILTER			1
6	6685109	BOLT FLANGE			1
7	6684754	O-RING			1
8	7019201	DIPSTICK, ENG OIL			1
9	6677203	TUBE,DIPSTICK			1
10	6969804	PLUG,OIL GAUGE			1

GEARCASE

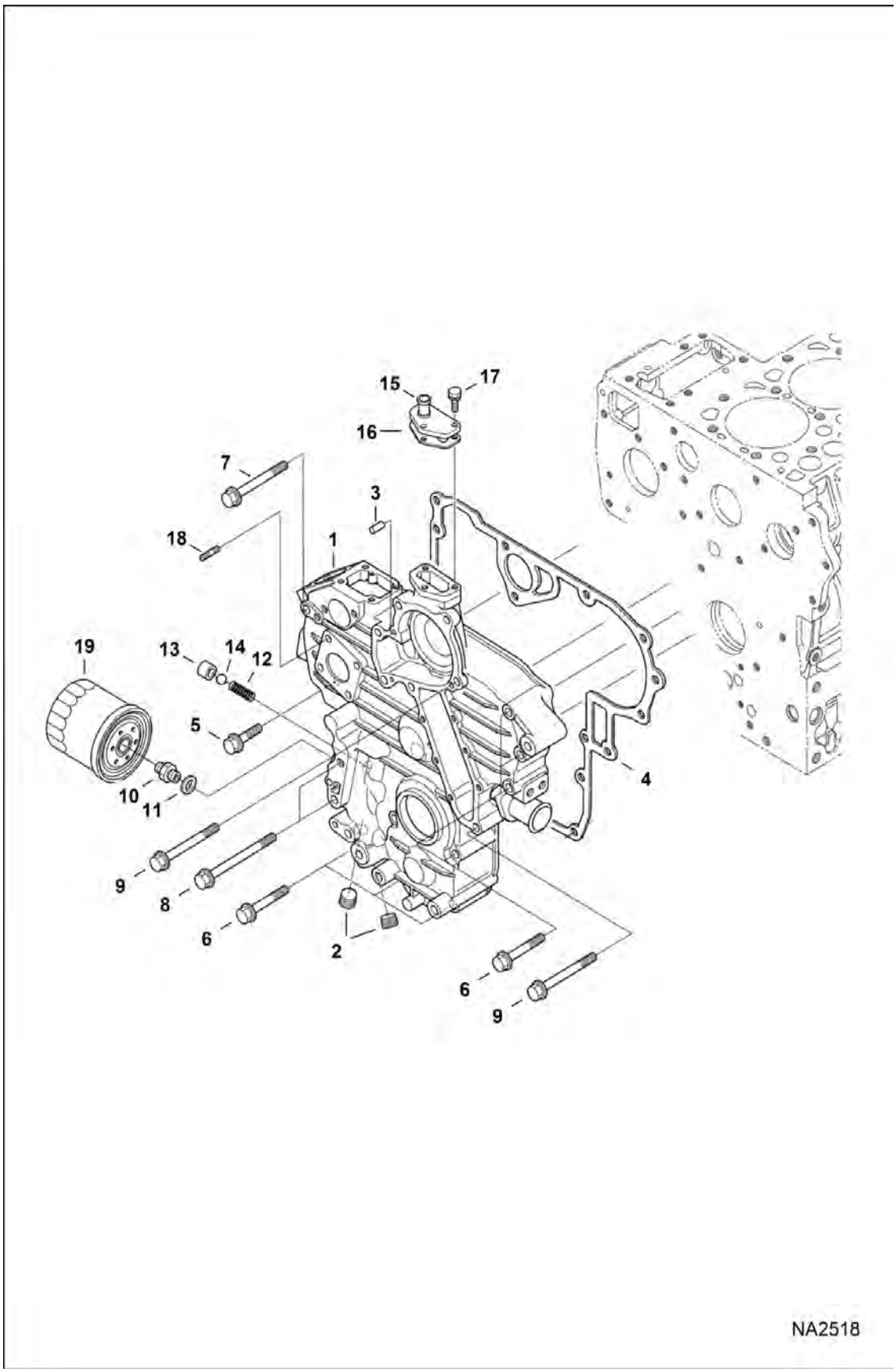

GEARCASE (Cont'd)

Ref No	Part Number	Description	Remarks	Serial Number	Qty
1	7012337	HOUSING, GEAR	W/Ref. 2		1
2	6672360	PLUG			2
3	3974395	PIN			2
4	7010599	GASKET, GEARCASE			1
5	6680706	BOLT			1
6	6692375	BOLT			7
7	6680686	BOLT			1
8	6692376	BOLT			2
9	6692377	BOLT			4
10	6653809	CON PIPE			1
11	6685501	WASHER			1
12	6652652	SPRING			1
13	3974893	SEAT			1
14	10J13	BALL			1
15	3974894	FLANGE			1
16	6666803	GASKET			1
17	4CM620	BOLT	Was 1CM620 [A]		3
18	6652764	STUD			4
19	6675517	FILTER, OIL ENG 12			1

WATER PUMP

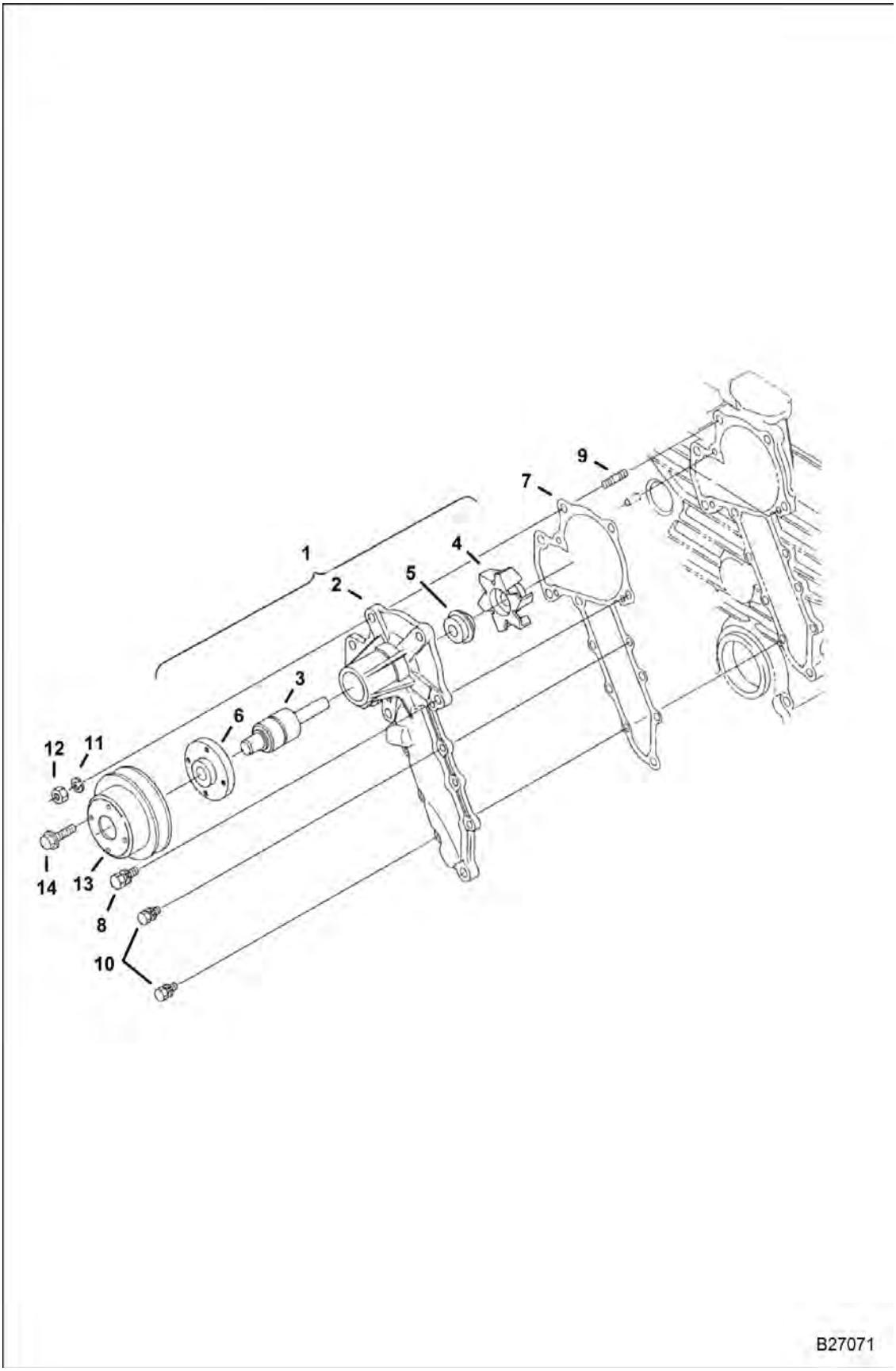

WATER PUMP (Cont'd)

Ref No	Part Number	Description	Remarks	Serial Number	Qty
1	6685105	PUMP WATER	Ref. 2-6		1
2		HOUSING	NLA - Order Ref. 1		1
3	6685474	BEARING			1
4	6667460	IMPELLER			1
5	6684868	SEAL			1
6	6684869	FLANGE			1
7	6684870	GASKET			1
8	4CM828	BOLT			2
9	3974267	STUD			1
10	6652580	BOLT			6
11	6EM80	WASHER, SPRING	spring		1
12	6652792	NUT			1
13	6674169	PULLEY	water pump		1
14	29CM612	BOLT, FLANGED			4

WATER FLANGE & THERMOSTAT

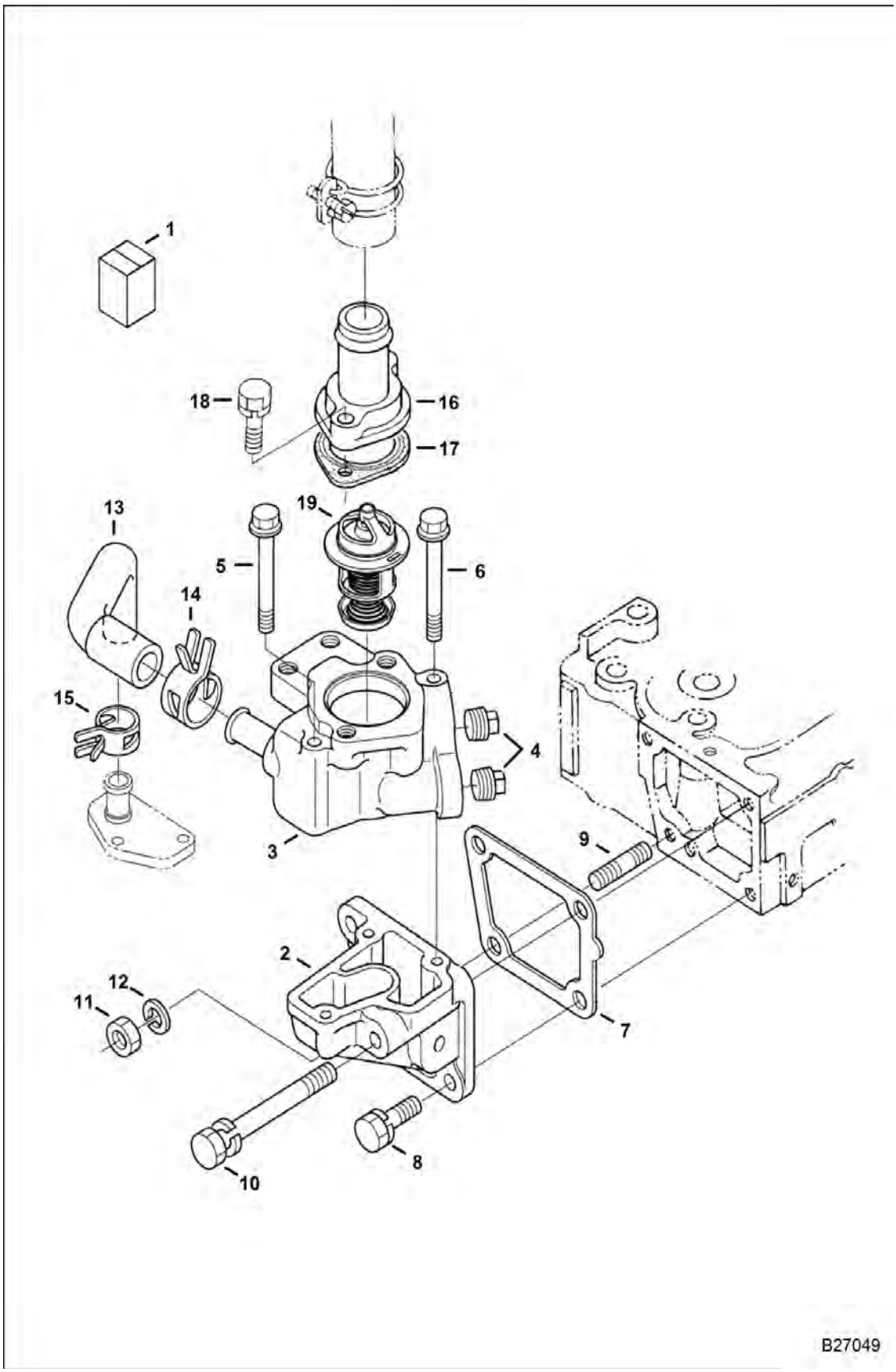

WATER FLANGE & THERMOSTAT (Cont'd)

Ref No	Part Number	Description	Remarks	Serial Number	Qty
1	6684854	FLANGE	water - Ref. 2-6		1
2		FLANGE, WATER LOWER	NSS - Order Ref. 1		1
3		FLANGE, WATER UPPER	NSS - Order Ref. 1		1
4	6684857	PLUG			2
5	6684858	BOLT			2
6	6685104	BOLT FLANGE			1
7	6666802	GASKET	flange to head		1
8	6657415	BOLT			2
9	6652670	STUD 5			1
10	6684861	BOLT			1
11	6652792	NUT			1
12	6EM80	WASHER, SPRING	spring		1
13	6684862	PIPE	water return		1
14	6698115	CLAMP, HOSE			1
15	6684889	CLAMP			1
16	6598118	COVER	thermostat		1
17	6684863	GASKET	thermostat		1
18	1CM835	BOLT			2
19	6685520	THERMOSTAT			1

CYLINDER HEAD

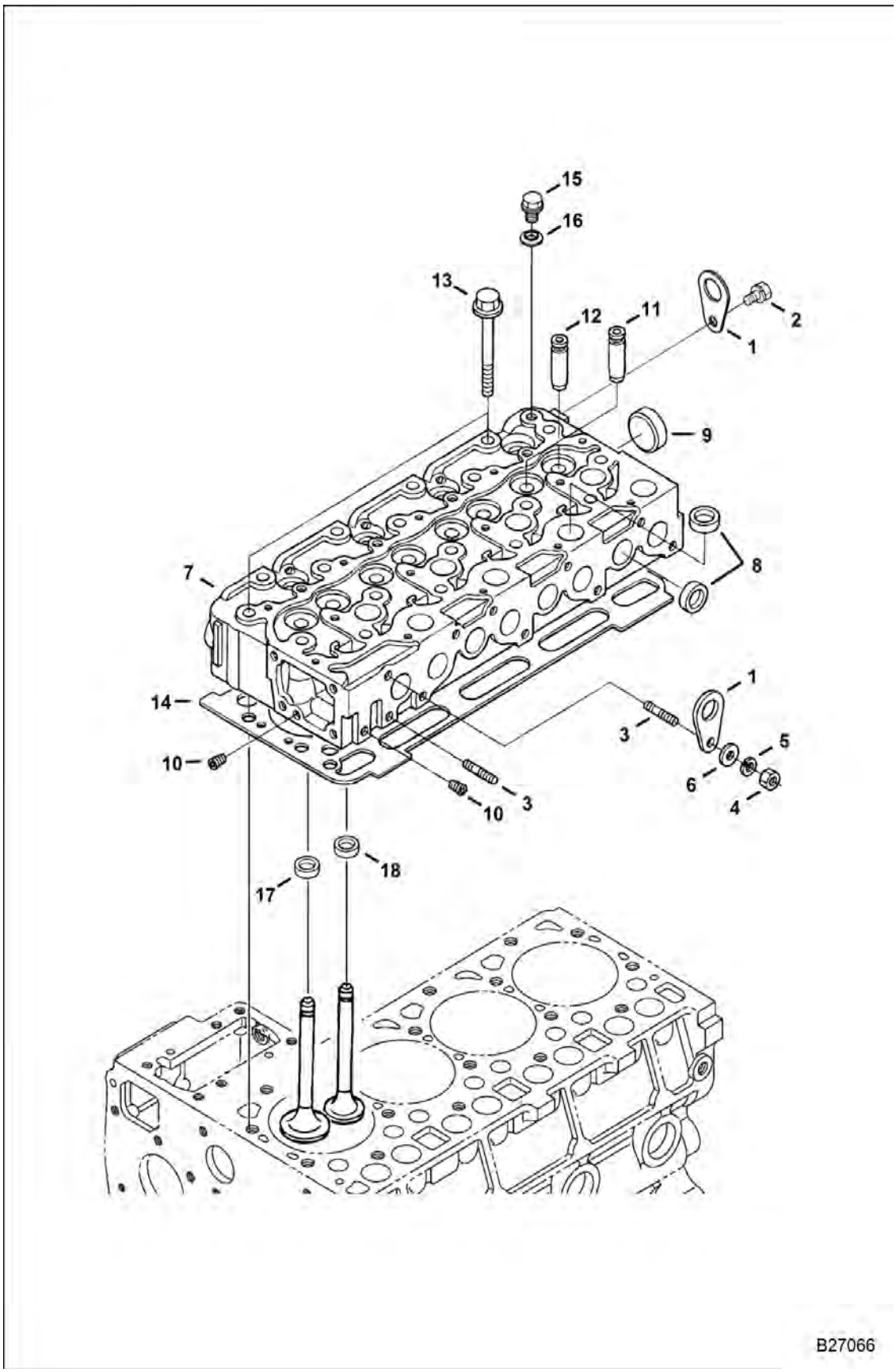

CYLINDER HEAD (Cont'd)

Ref No	Part Number	Description	Remarks	Serial Number	Qty
1	3974882	HOOK			2
2	4CM816	SCREW HEX HD 8.8	Was 1CM816 [A]		1
3	6598156	STUD			2
4	6652792	NUT			1
5	6EM80	WASHER, SPRING			1
6	1EM80	WASHER PLAIN			1
7	6685503	HEAD, CYL.	W/Ref. 8-12, 17 & 18		1
7	6685503REM	HEAD CYLINDER ENGINE			1
8	3974432	PLUG			12
9	3974433	PLUG			1
10	6598116	PLUG			2
11	6655154	GUIDE, VALVE			4
12	6969990	GUIDE			4
13	6655158	BOLT			18
14	6685078	GASKET	.045 inch (1.15mm) thick		1
14	6685077	GASKET	.047 inch (1.20mm) thick		1
14	6685079	GASKET	.049 inch (1.25mm) thick		1
14	6685080	GASKET	.051 inch (1.30mm) thick		1
14	6685081	GASKET	.053 inch (1.35mm) thick		1
15	6655160	PLUG			1
16	6655161	WASHER	W/rubber		1
17	6684762	SEAT	valve inlet		4
18	6684763	SEAT	exhaust valve		4

VALVE AND ROCKER ARM

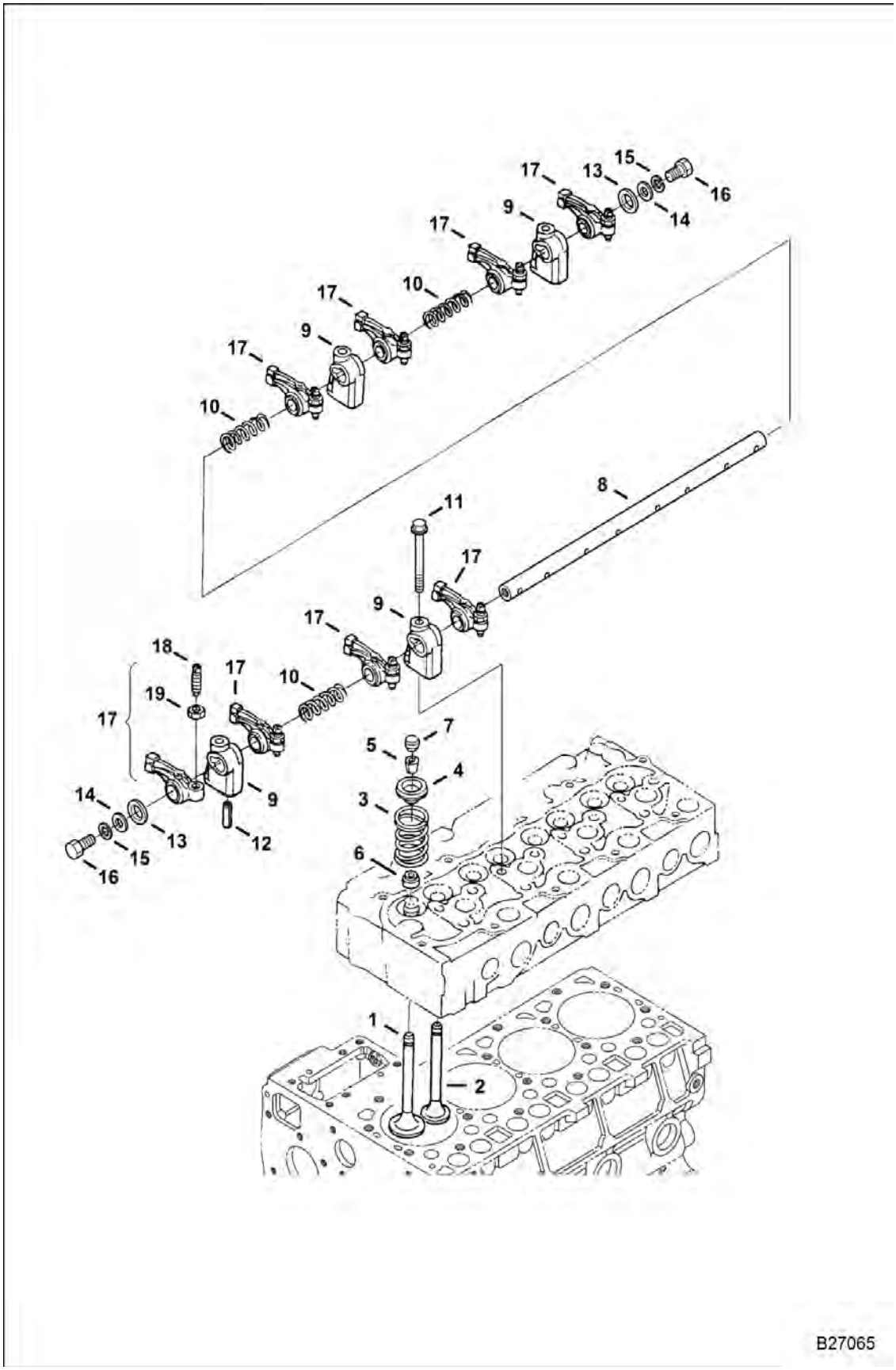

VALVE AND ROCKER ARM (Cont'd)

Ref No	Part Number	Description	Remarks	Serial Number	Qty
1		VALVE	NLA - intake - Order 7031256 intake valve & 7031255 valve cap - Was 6684872 [A]		4
2		VALVE	NLA - exhaust - Order 7245897 exhaust valve & 7031255 valve cap - Was 7020386 [A]		4
3	3974514	SPRING 5	valve		8
4	3974515	RETAINER	valve spring		8
5	6684874	COLLAR	valve spring - set of 2		8
6	6653830	SEAL, STEM VALVE			8
7	3974518	CAP	valve		8
8	6684875	SHAFT	rocker arm		1
9	3974521	ARM, ROCKER	rocker arm		4
10	6653833	SPRING	rocker arm		3
11	6680685	BOLT			4
12	6667461	SPRNG PIN	spring		1
13	3974524	WASHER	rocker arm		2
14	1EM80	WASHER PLAIN	plain		2
15	6EM80	WASHER, SPRING			2
16	5CM812	BOLT			2
17	6655870	ROCK ARM	W/Ref. 18 & 19		8
18	7024267	SCREW, ADJUSTING	adjusting		8
19	2DM8	NUT			8

ROCKER ARM COVER

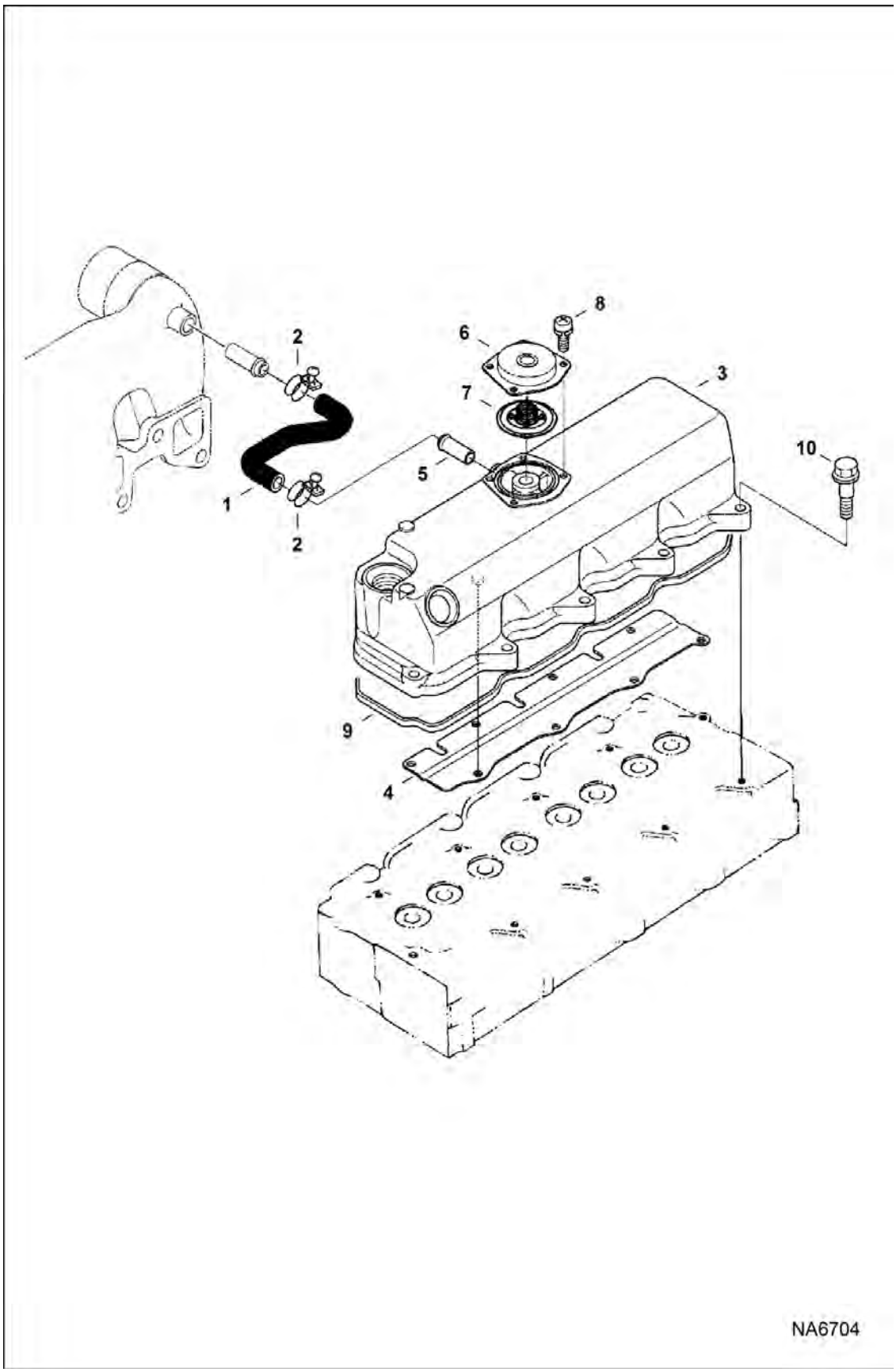

ROCKER ARM COVER (Cont'd)

Ref No	Part Number	Description	Remarks	Serial Number	Qty
1	7025111	HOSE, BREATHER			1
2	6969996	CLAMP,HOSE			2
3	7010356	COVER, HEAD CYL ENG	W/Ref. 4-8		1
4		SHIELD	NLA - breather - Order Ref. 3		1
5	6655880	PIPE			1
6	6969803	COVER, BREATHER			1
7	6685087	VALVE			1
8	6686168	BOLT			4
9	6684780	GASKET			1
10	6684781	BOLT			10

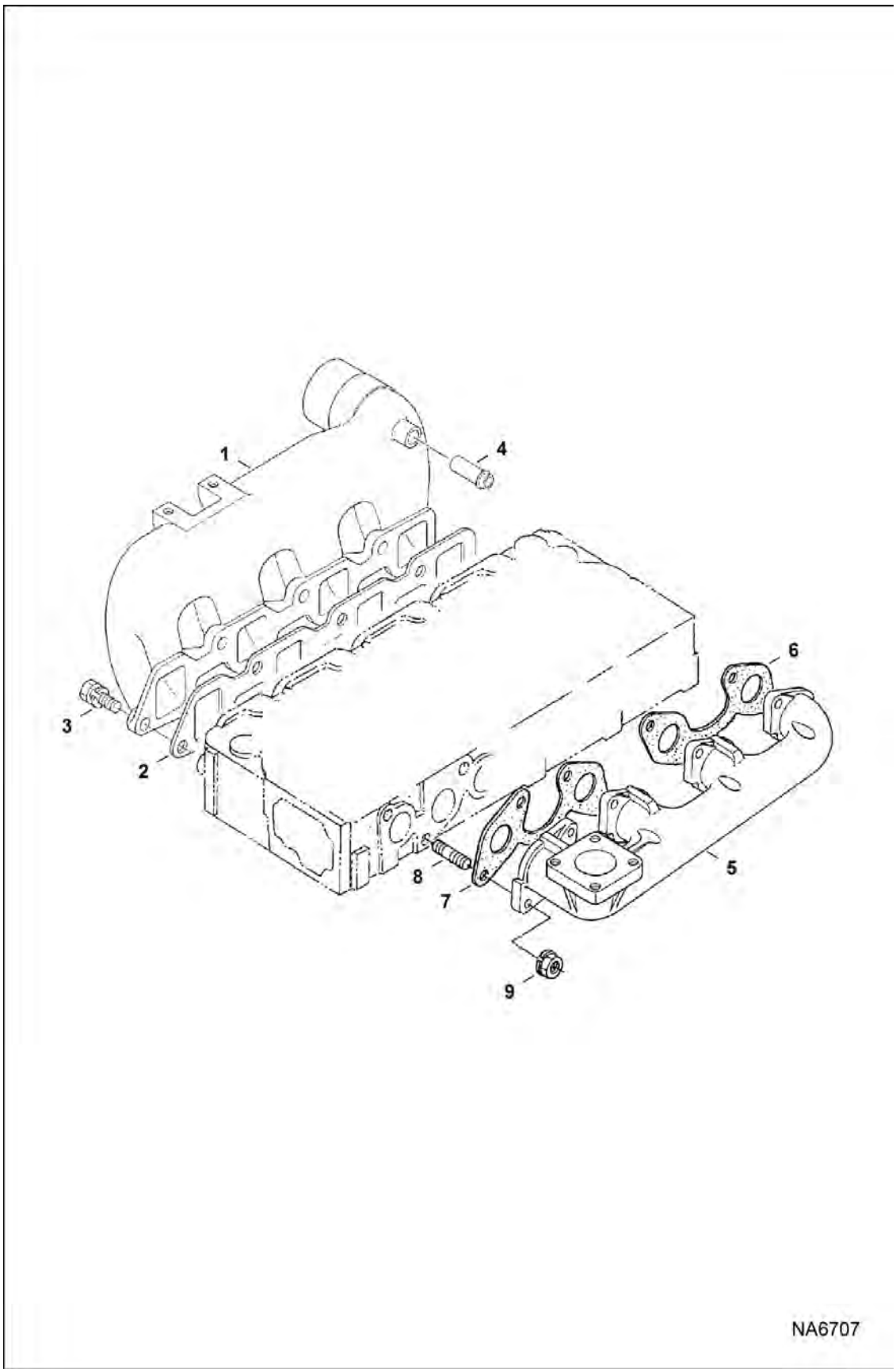

Illustration NA6707

MANIFOLDS (Cont'd)

Ref No	Part Number	Description	Remarks	Serial Number	Qty
1	7025113	MANIFOLD, INTAKE	intake - W/Ref. 4		1
2	6684877	GASKET	intake manifold		1
3	4CM822	BOLT			7
4	6655880	PIPE			1
5	7008378	MANIFOLD,EXHAUST			1
6	6666791	GASKET	exhaust - rear		1
7	6666781	GASKET	exhaust - front		1
8	6652670	STUD 5			8
9	6682532	NUT			8

INJECTOR NOZZLES

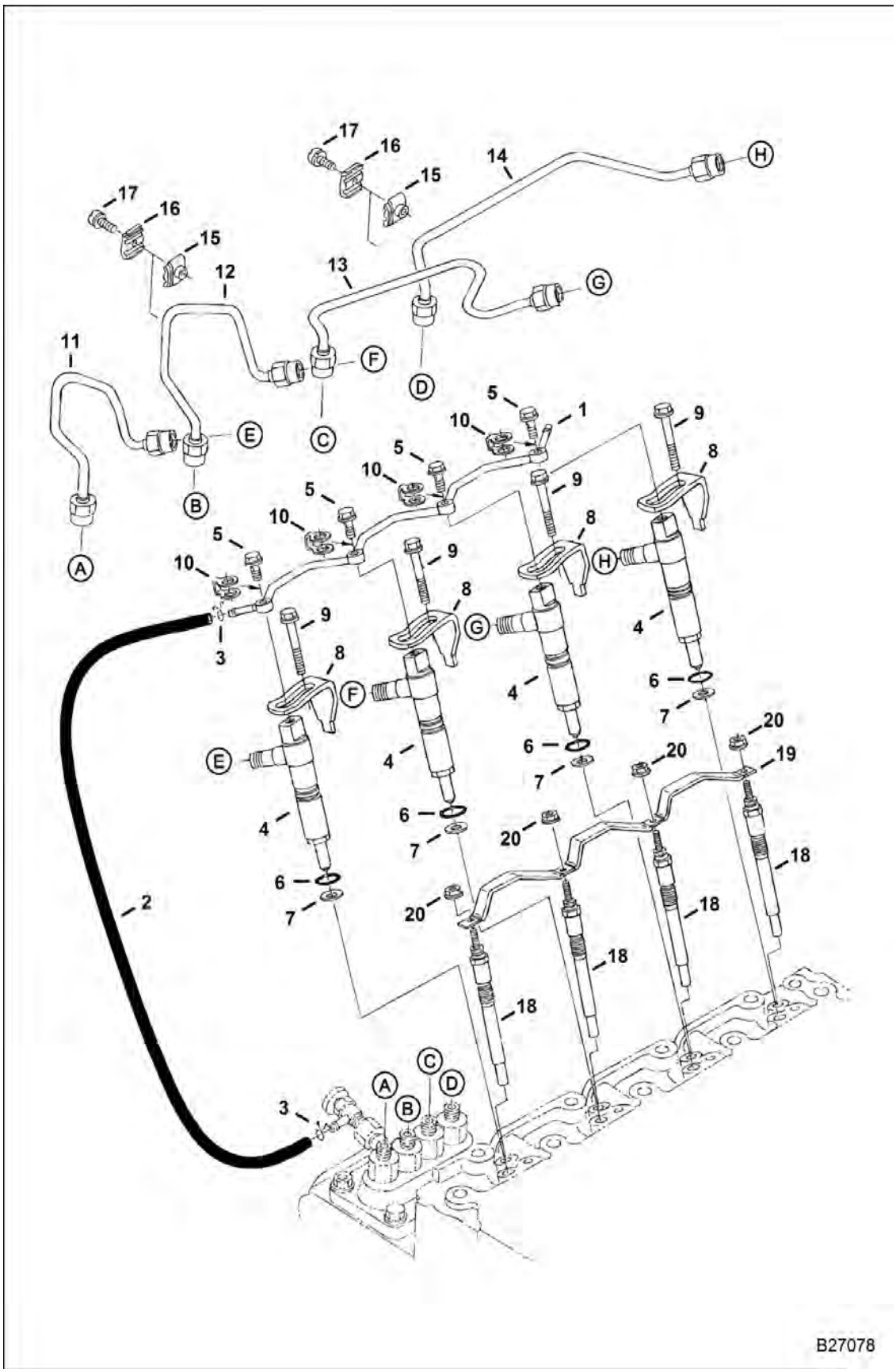

INJECTOR NOZZLES (Cont'd)

Ref No	Part Number	Description	Remarks	Serial Number	Qty
1	6684842	PIPE			1
2	6974656	ASSY PIPE,OVER FLOW	W/Ref. 3		1
3	6654718	CLAMP 5			2
4	6685512	INJECTOR, FUEL ASSY			4
5	6680788	BOLT			4
6	6670769	O-RING			4
7	6969824	GASKET, NOZZLE INJ			4
8	7015275	CLAMP, INJECTION			4
9	6684844	BOLT			4
10	6685498	GASKET			4
11	6685102	PIPE			1
12	6685103	PIPE			1
13	6684848	PIPE			1
14	6684849	PIPE			1
15	6652688	CLAMP			2
16	6652689	CLAMP			2
17	3974260	SCREW			2
18	6684850	GLOW PLUG			4
19	6969825	CORD, GLOW PLUG			1
20	6670472	NUT			4

FUEL AND INJECTION PUMP

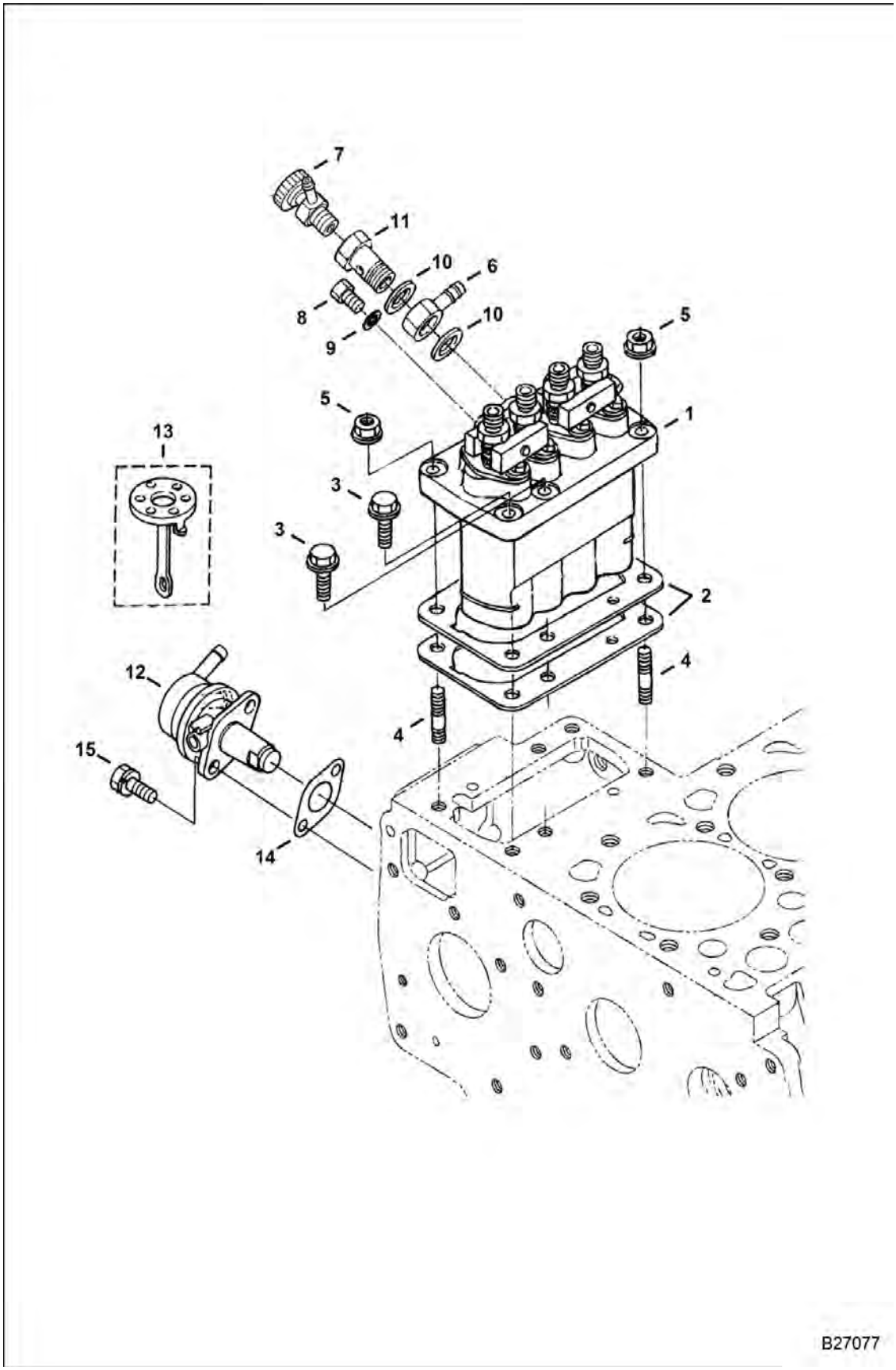

FUEL AND INJECTION PUMP (Cont'd)

Ref No	Part Number	Description	Remarks	Serial Number	Qty
1	7020868	PUMP, FUEL INJ	assy		1
2	6698119	SHIM, PUMP INJ	0,175 mm - injection pump		1
2	3974626	SHIM	0,20 mm - injection pump		1
2	6682515	SHIM	0,25 mm - injection pump		1
2	6655210	SHIM	0,30 mm - injection pump		1
2	6684829	SHIM	0,35 mm - injection pump		1
3	6680801	BOLT			4
4	6652670	STUD 5			2
5	6969819	NUT, FLANGE			2
6	6513707	FITTING, BANJO	eye		1
7	6598102	VALVE, PUMP INJ	jet start		1
8	6599084	SCREW	bleed		2
9	6685471	GASKET			2
10	7019024	GASKET			2
11	7019023	BOLT, EYE 12MM			1
12	6655216	PUMP, FUEL	W/Ref. 13		1
13	6667458	DIAPHRAM	replacement		1
14	6686037	GASKET	fuel pump		1
15	1CM616	SCREW HEX CAP	Was 4CM616 [A]		2

FUEL CAMSHAFT

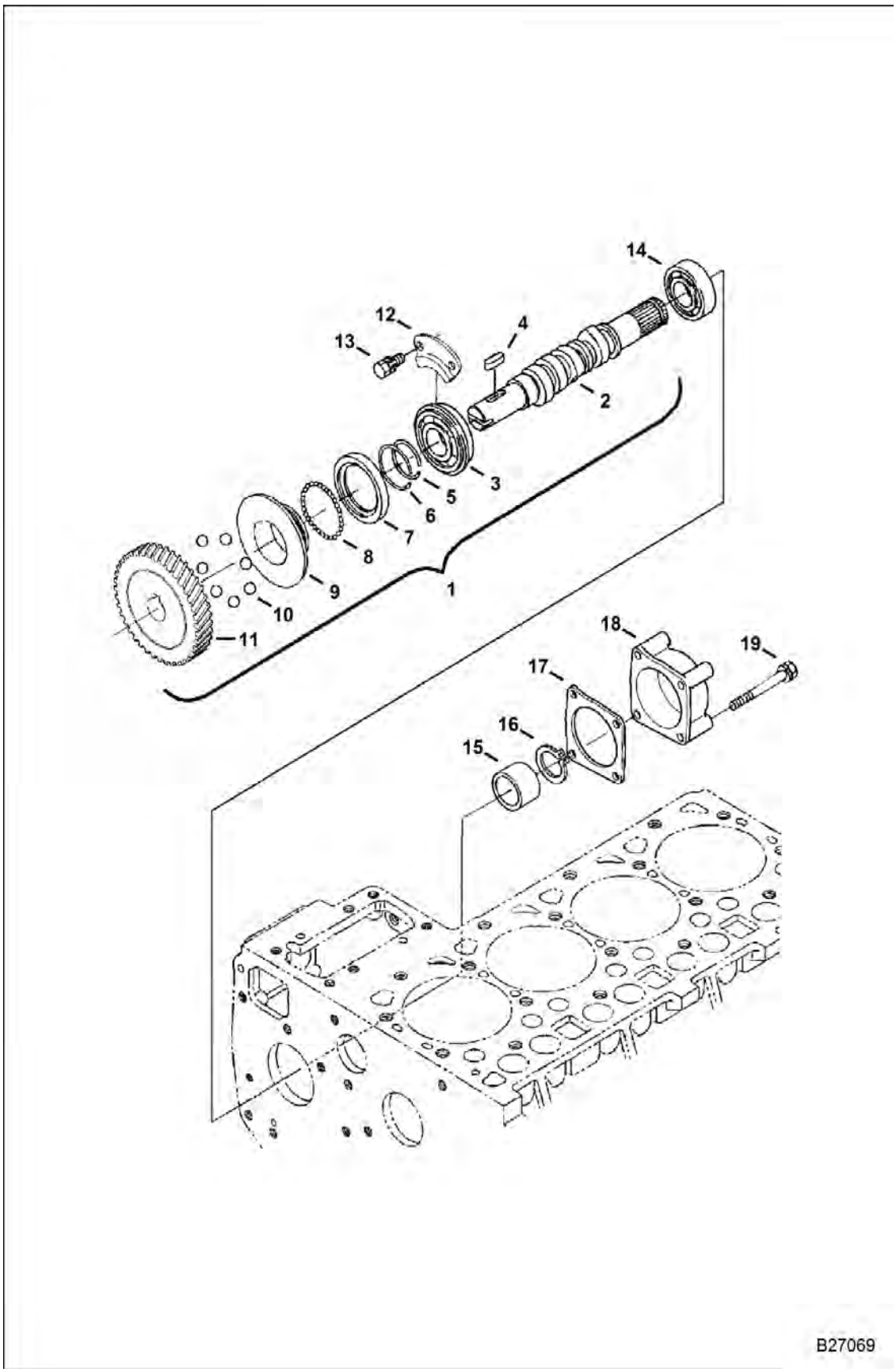

FUEL CAMSHAFT (Cont'd)

Ref No	Part Number	Description	Remarks	Serial Number	Qty
1	7009541	CAMSHAFT, FUEL	Ref. 2-11		1
2		CAMSHAFT	NSS - Order Ref. 1		1
3	7025112	BEARING, BALL			1
4	6598099	KEY			1
5	3974618	RING, SNAP	governor sleeve		1
6	3974620	CIRCLIP			1
7	6692385	CASE	governor ball		1
8	6969817	BALL			39
9	6655213	SLEEVE	governor		1
10	6655215	BALL			7
11	6655212	GEAR, PUMP INJ			1
12	6685517	STOPPER	fuel camshaft		1
13	1CM814	BOLT	Was 4CM814 [A]		2
14	6685479	BEARING			1
15	6685516	COLLAR			1
16	5JM25	CIR-CLIP			1
17	6692386	GASKET	cover		1
18	3974996	COVER	fuel camshaft		1
19	6651934	BOLT			4

ENGINE STOP LEVER

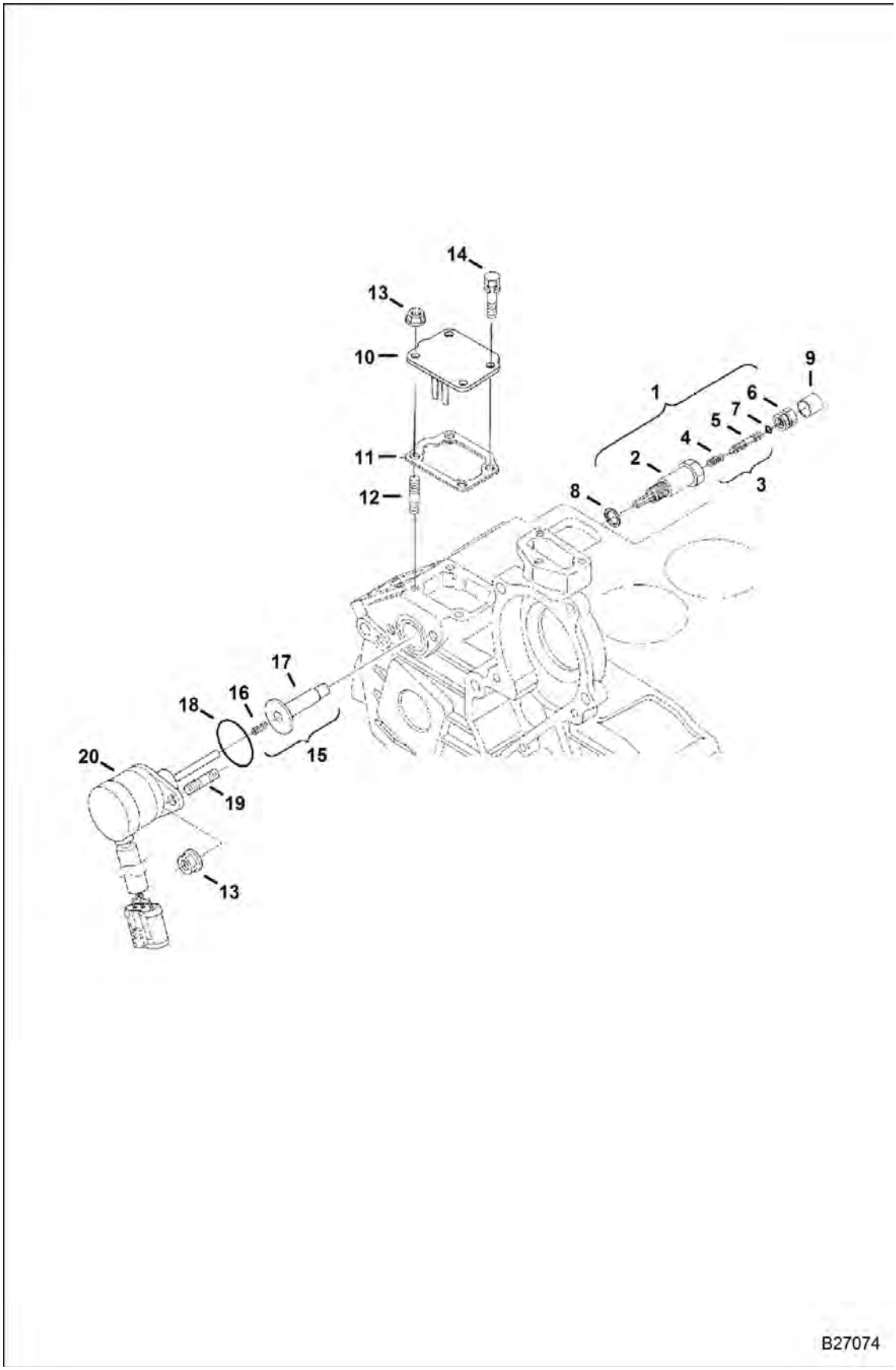

ENGINE STOP LEVER (Cont'd)

Ref No	Part Number	Description	Remarks	Serial Number	Qty
1	6686334	IDLE APPARATUS	Ref. 2-6		1
2		APPARATUS, IDLE	NSS - Order Ref. 1		1
3	6685513	BOLT, ADJ.	assy - Ref. 4 & 5		1
4		SPRING	NSS - Order Ref. 3		1
5		BOLT, ADJUSTING	NSS - Order Ref. 3		1
6	6684817	NUT	spring		1
7	6684891	SEAL			1
8	6684818	SEAL			1
9	6684819	CAP			1
10	6698116	COVER	boost housing		1
11	6684841	GASKET	boost housing		1
12	6683087	STUD			2
13	6670533	NUT			4
14	1CM616	SCREW HEX CAP	Was 4CM616 [A]		2
15	6684825	GUIDE, SOLENOID			1
16		SPRING	NSS - Order Ref. 15		1
17		PLUNGER	NSS - Order Ref. 15		1
18	6685465	O-RING			1
19	6652764	STUD			2
20	6691498	SOLENOID, SHUTOFF FUEL	240 mm (9.45") lead		1

GOVERNOR

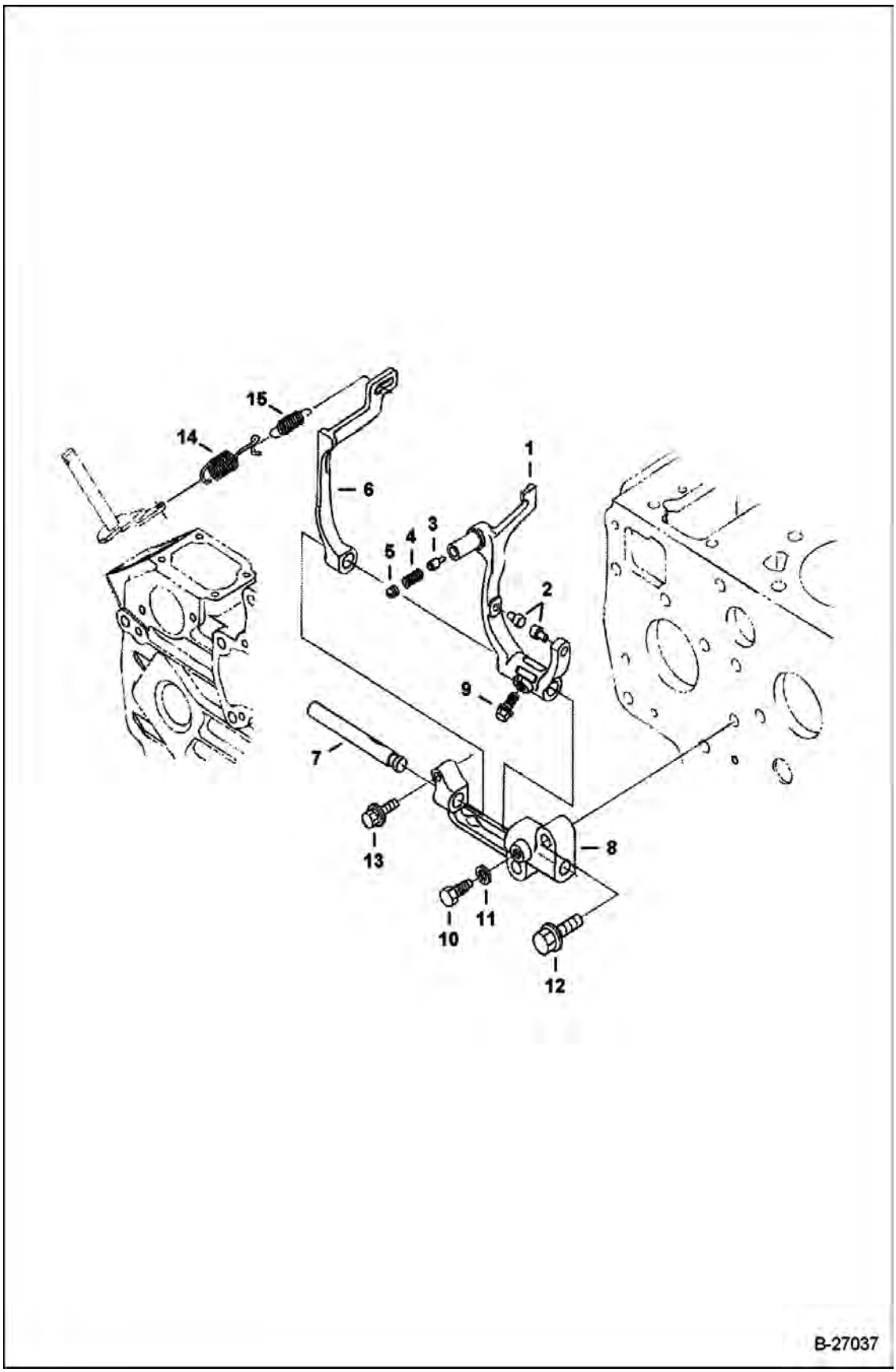

GOVERNOR (Cont'd)

Ref No	Part Number	Description	Remarks	Serial Number	Qty
1	7009357	LEVER, FORK ASSY	W/Ref. 2-11		1
2		PIN	NSS - Order Ref. 1		2
3		PIN	NSS - Order Ref. 1		1
4		SPRING	NSS - Order Ref. 1		1
5		SCREW, SET	NSS - Order Ref. 1		1
6	6684832	LEVER	fork		1
7	6684833	SHAFT	fork lever		1
8	6653916	HOLDER	fork lever		1
9	6680830	BOLT			1
10	3974662	BOLT			1
11	6EM60	WASHER			1
12	6680706	BOLT			2
13	6685464	BOLT			1
14	6689599	SPRING	governor		1
15	6685514	SPRING	governor		1

SPEED CONTROL PLATE

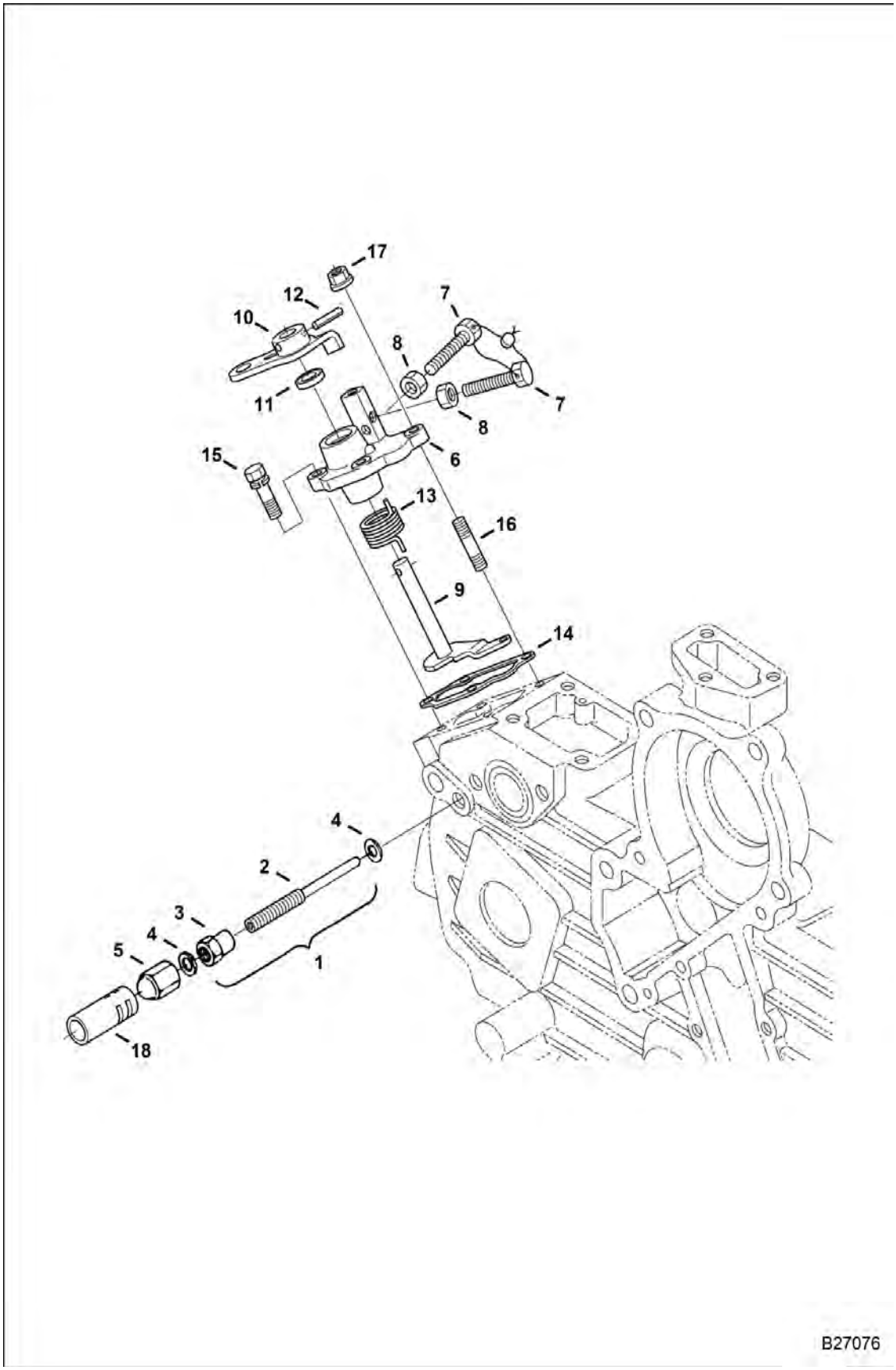

SPEED CONTROL PLATE (Cont'd)

Ref No	Part Number	Description	Remarks	Serial Number	Qty
1	6684836	BOLT	assy - Ref. 2 & 3		1
2	6686985	BOLT			1
3	3974971	NUT			1
4	3974972	GASKET			2
5	6655223	CAP			1
6	6685526	PLATE, CONTROL	W/Ref. 7-13		1
7	7010195	BOLT, ADJUSTMENT			2
8	1DM6	NUT			2
9	6684838	GOVERNOR	governor		1
10	6684839	LEVER	speed control		1
11	6685476	SEAL	oil		1
12	6598098	PIN	spring		1
13	6684823	SPRING	return		1
14	6684841	GASKET	control plate		1
15	4CM620	BOLT	Was 1CM620 [A]		2
16	6652764	STUD			2
17	6670533	NUT			2
18		CAP, SECURITY	NLA		1

AIR CLEANER

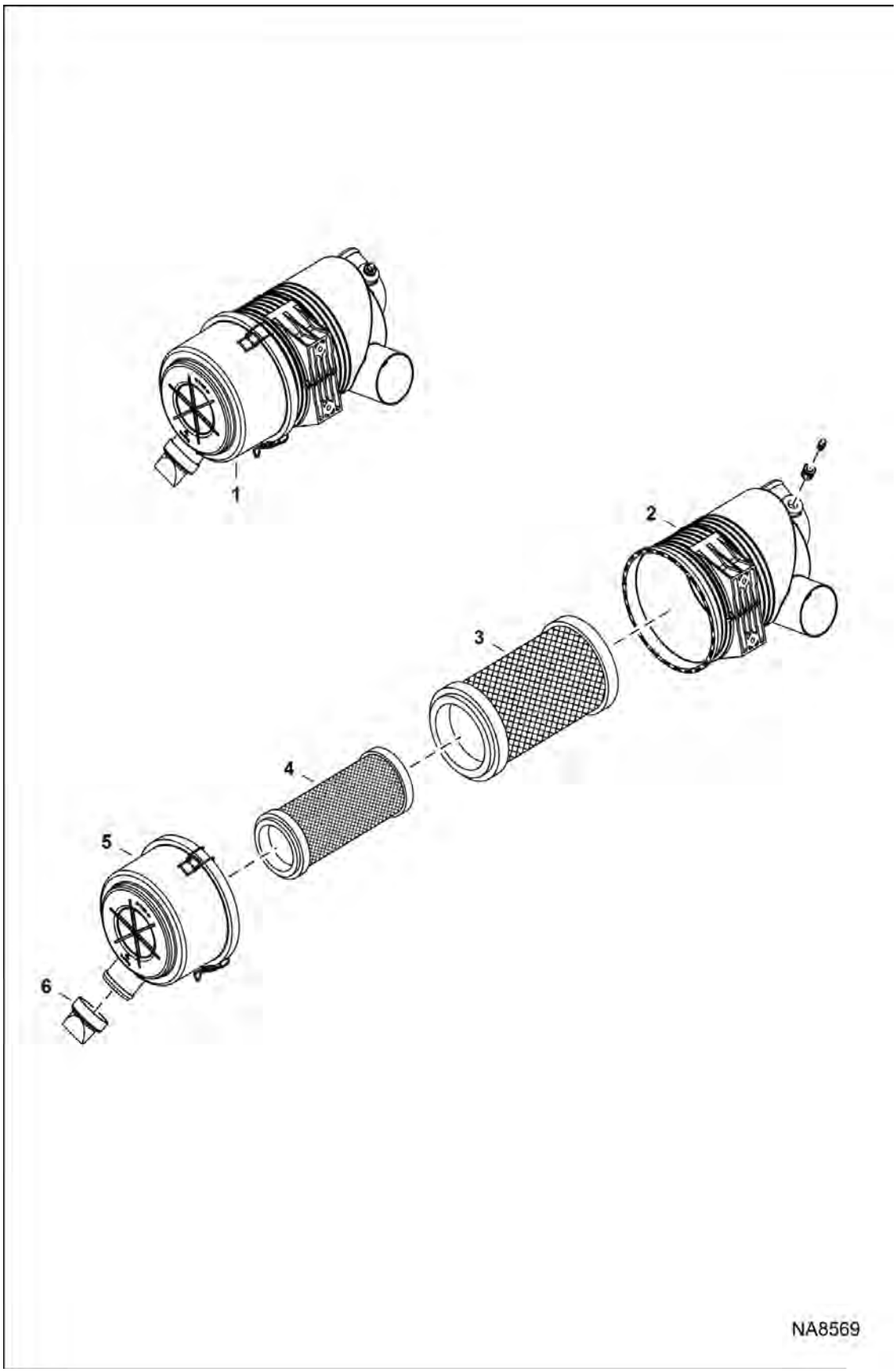

AIR CLEANER (Cont'd)

Ref No	Part Number	Description	Remarks	Serial Number	Qty
1	7222498	FILTER, AIR CLEANER ASSY	W/Ref. 2-6		1
2		TANK	NSS - Order Ref. 1		1
3	6666375	FILTER, AIR OUTER	Was 7025562 [A]		1
4	6666376	FILTER, AIR INNER	Was 7025561 [A]		1
5	6666377	COVER	Was 7246029 [A]		1
6	6666378	VALVE			1

ACCESS COVER

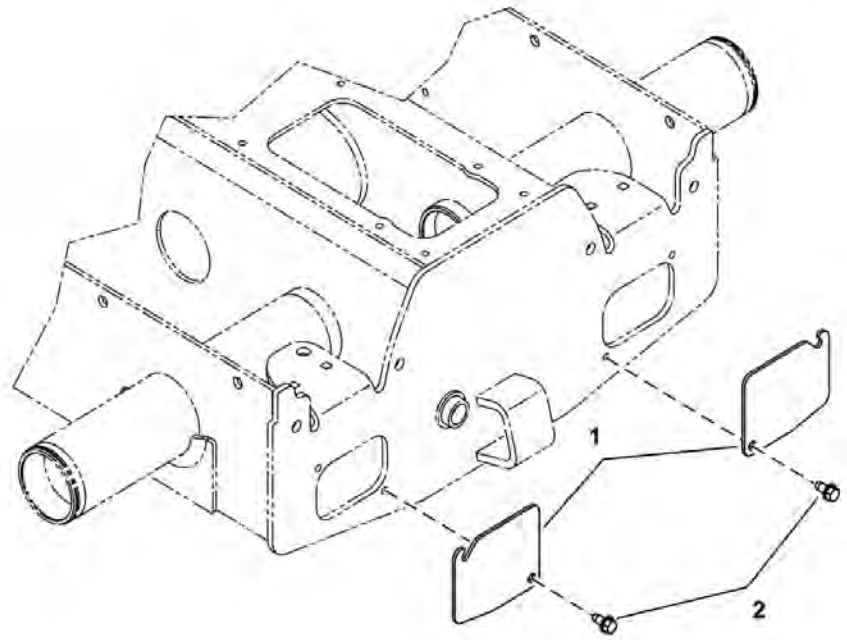

NA8570

ACCESS COVER (Cont'd)

Ref No	Part Number	Description	Remarks	Serial Number	Qty
1	7234124	COVER, ACCESS	[A]		2
2	84G3712	BOLT 5			4

ACCESSORIES HARNESS KIT

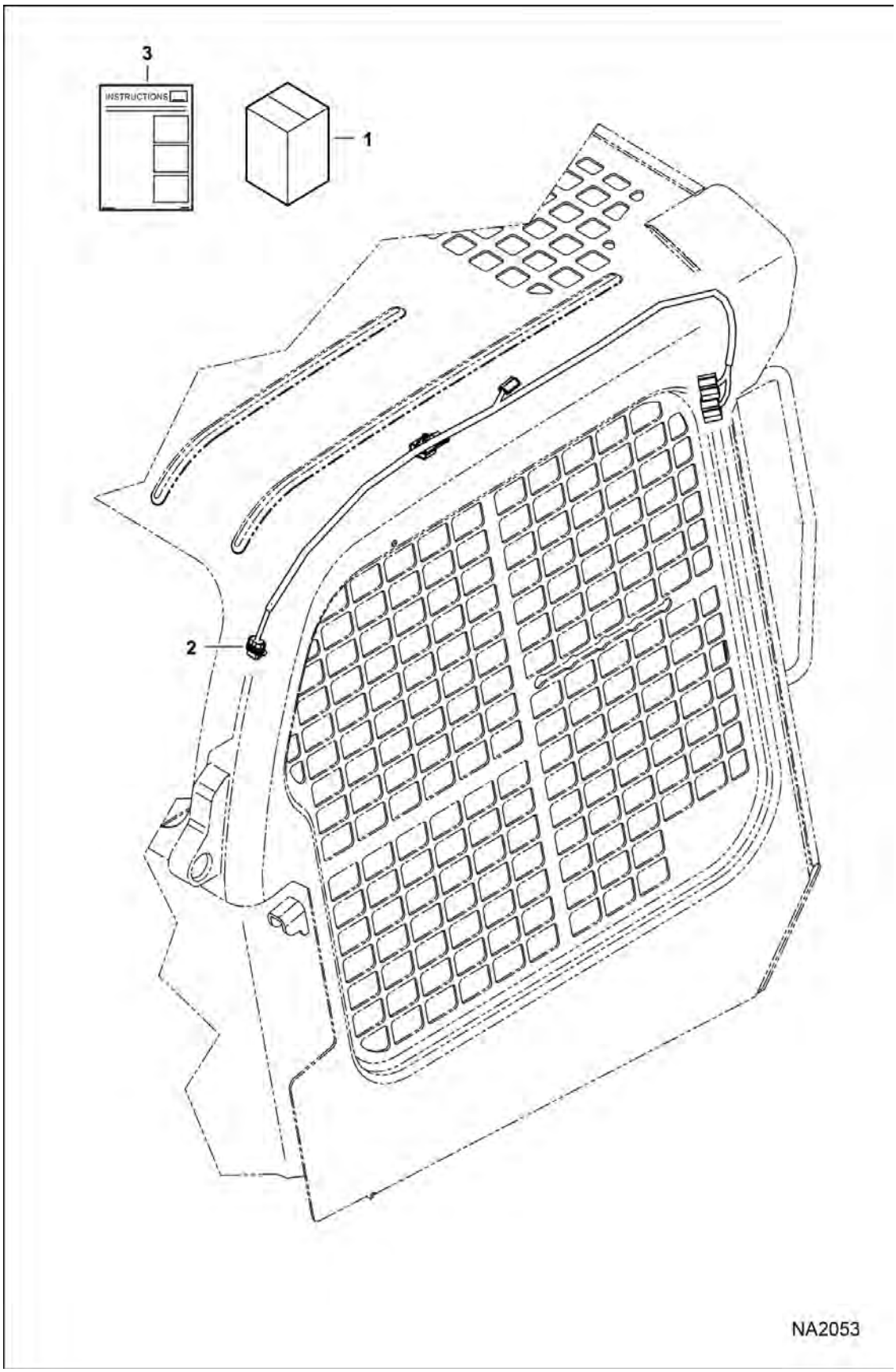

ACCESSORIES HARNESS KIT (Cont'd)

Ref No	Part Number	Description	Remarks	Serial Number	Qty
1		KIT, STD OPT ADAPTER	NLA - Order components		1
2	7169130	HARNESS ACCESSORY			1
3	6987252ENUS	INSTRUCTIONS	Was 6987252 [A]		1

BACK-UP ALARM KIT
(Manual Controls, AHC & ACS)

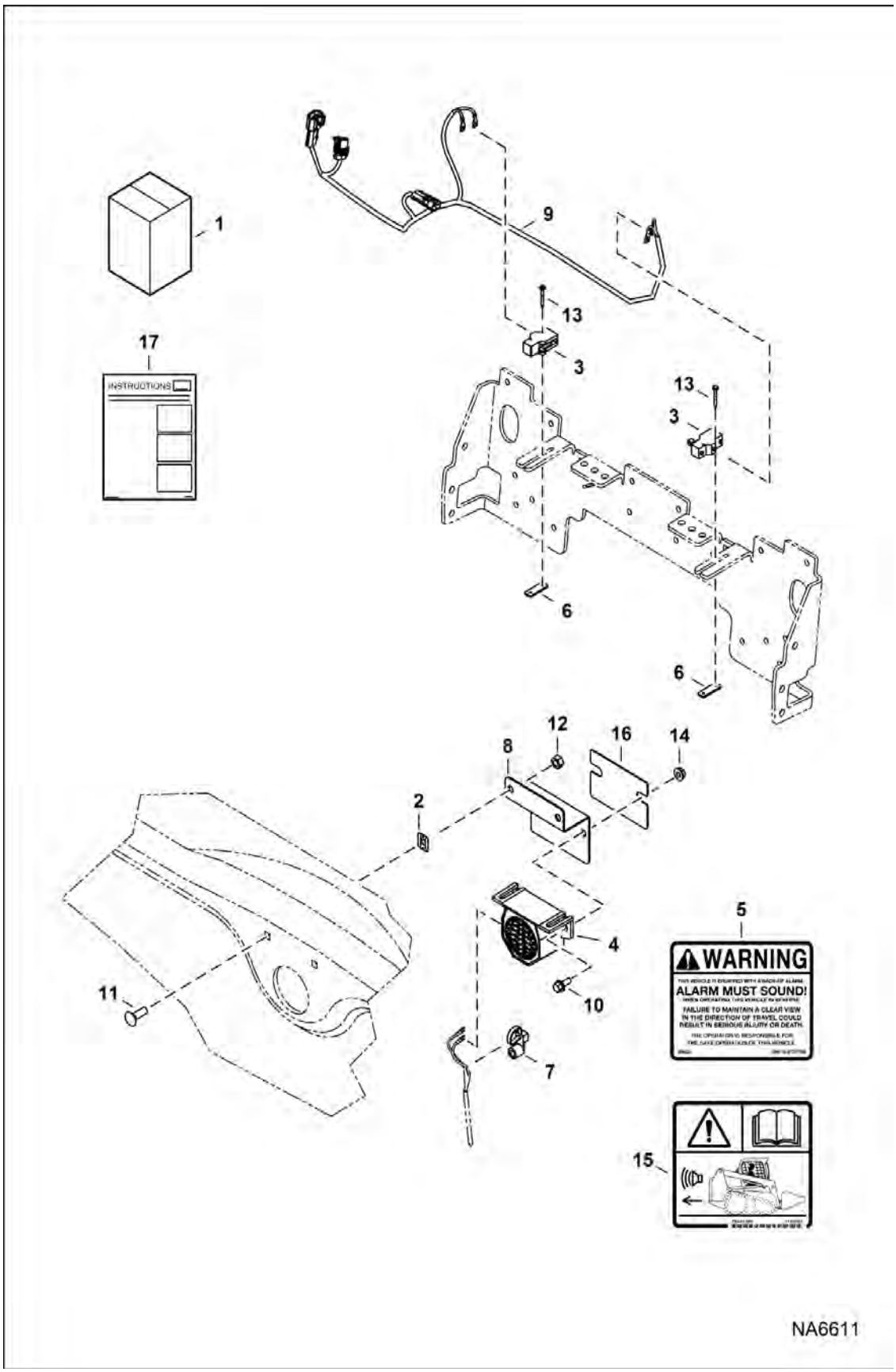

BACK-UP ALARM KIT (Cont'd)

(Manual Controls, AHC & ACS)

Ref No	Part Number	Description	Remarks	Serial Number	Qty
1	7173592	KIT, ALARM BACK-UP	Ref, 2 & 3-17		1
2	774220	NUT			2
3	6646781	SWITCH, ALARM BACK-UP			2
4	6651512	ALARM, BACK-UP			1
5	6737189	DECAL, WARNING	backup alarm		1
6	6702593	SPACER			2
7	7002988	TIE, STUD MOUNT			1
8	7189077	MOUNT			1
9	7175017	HARNESS, ALARM BACK-UP			1
10	35C410	BOLT 5			2
11	37C516	BOLT			2
12	61D5	NUT 10			2
13	84G1320	SCREW THD ROLLING TT			4
14	97D4	NUT			2
15	7180087	DECAL, WARNING			1
16	7191385	SHIELD, ALARM			1
17	6987235ENUS	INSTRUCTIONS	WAS 6987235 [A]		1

BACK-UP ALARM KIT
(Selectable Joystick Controls)

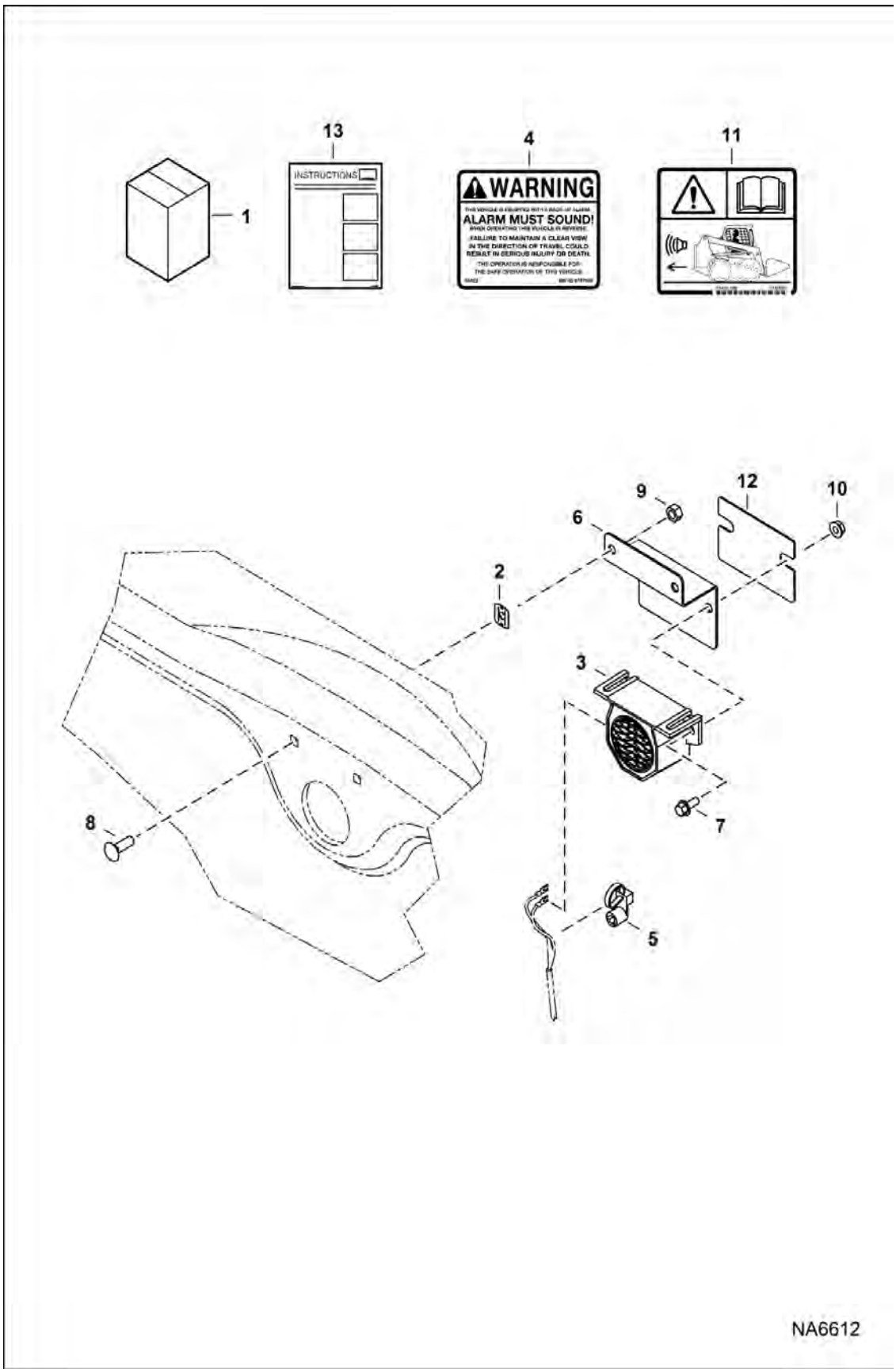

BACK-UP ALARM KIT (Cont'd)

(Selectable Joystick Controls)

Ref No	Part Number	Description	Remarks	Serial Number	Qty
1	7173593	KIT, ALARM BACK-UP	Ref. 2 & 3-13		1
2	774220	NUT			2
3	6651512	ALARM, BACK-UP			1
4	6737189	DECAL, WARNING	backup alarm		1
5	7002988	TIE, STUD MOUNT			1
6	7189077	MOUNT			1
7	35C410	BOLT 5			2
8	37C516	BOLT			2
9	61D5	NUT 10			2
10	97D4	NUT			2
11	7180087	DECAL, WARNING			1
12	7191385	SHIELD, ALARM			1
13	6987235ENUS	INSTRUCTIONS	WAS 6987235 [A]		1

BEACON

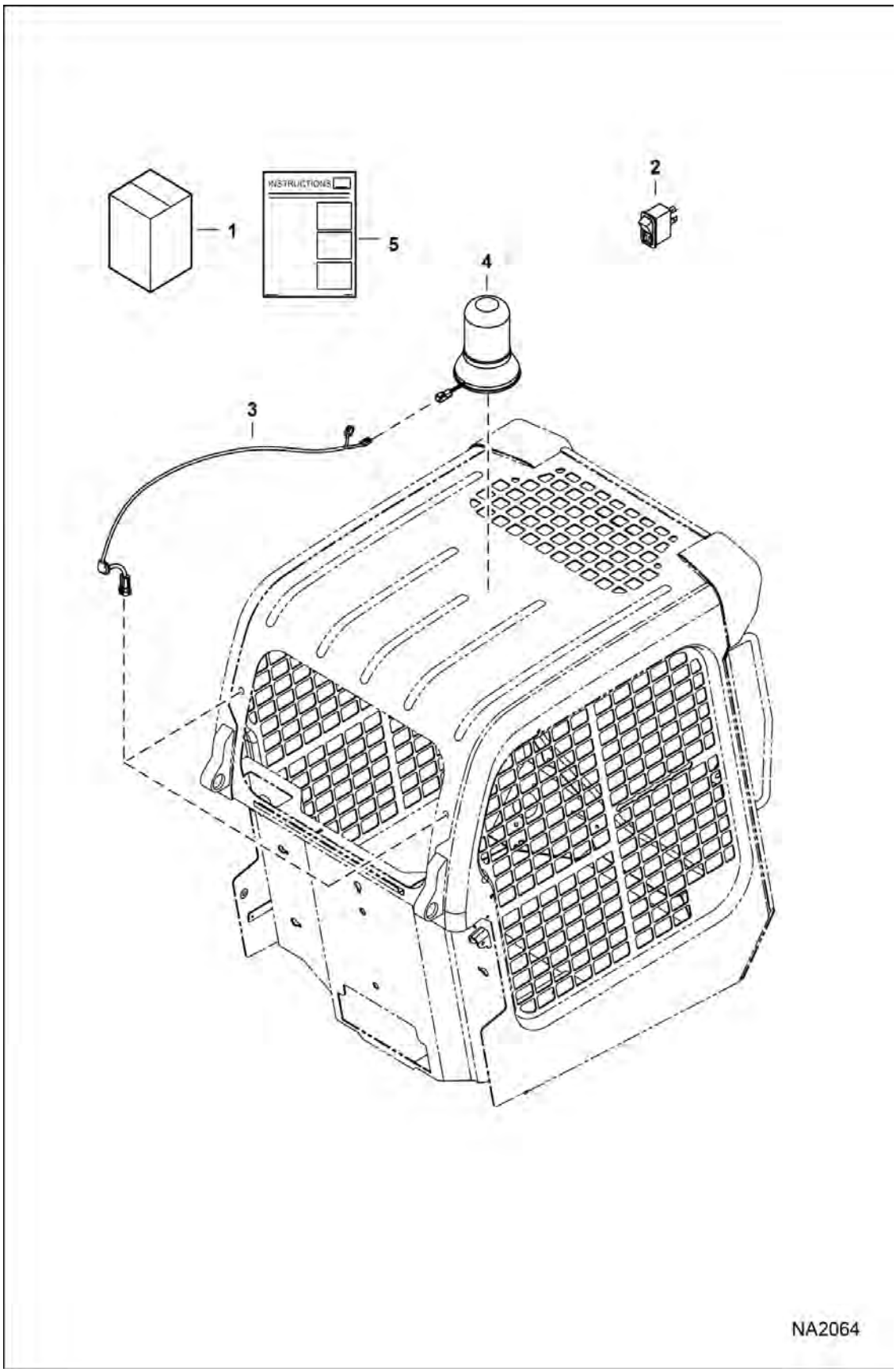

BEACON (Cont'd)

Ref No	Part Number	Description	Remarks	Serial Number	Qty
1	7129299	KIT, BEACON LIGHT	Ref. 2-5 - if equipped W/standard cab harness Also Order 7169130 harness & 6987252 instructions		1
2	6668816	SWITCH			1
3	6718872	HARNESS			1
4	7341779	LIGHT BEACON	Was 6675523 [A]		1
5	6987225ENUS	INSTRUCTIONS	WAS 6987225 [A]		1

BLOCK HEATER
(Engine)

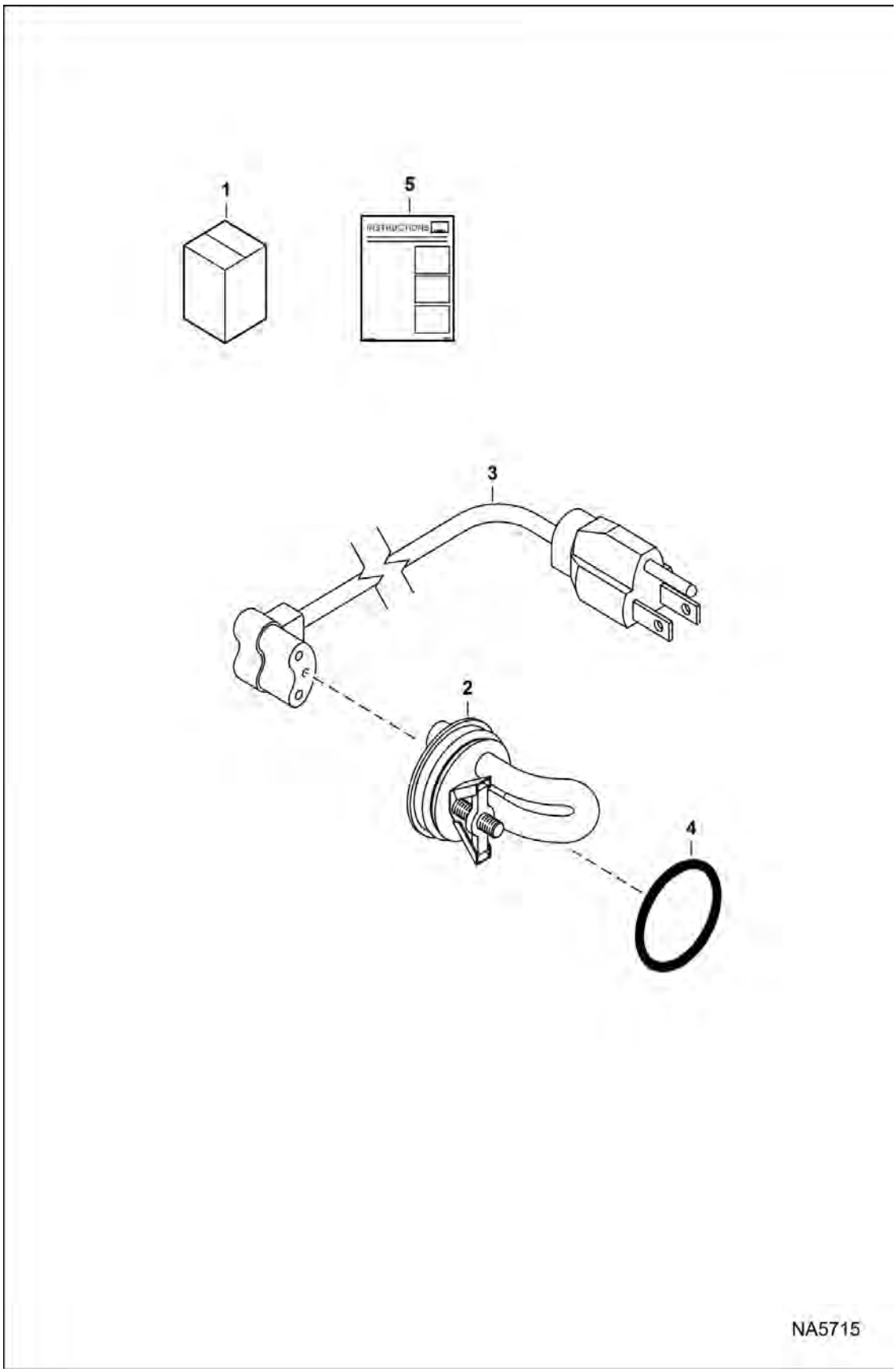

BLOCK HEATER (Cont'd)
(Engine)

Ref No	Part Number	Description	Remarks	Serial Number	Qty
1		KIT, HEATER BLOCK ENG	NLA - Order Ref. 2 & 4		1
2	6720736	HEATER, BLOCK ENG PLUG SOFT	W/NLA O-ring, Ref. 3 & 5 - Was 6810814		1
2		O-ring	NLA - Order Ref. 4		1
3	6668881	CORD			1
4	79K14	O RING 10			1
5	6720038ENUS	INSTRUCTIONS	- Was 6720038 [A]		1

NEUTRAL LIGHTING OPTION
(Manual controls)

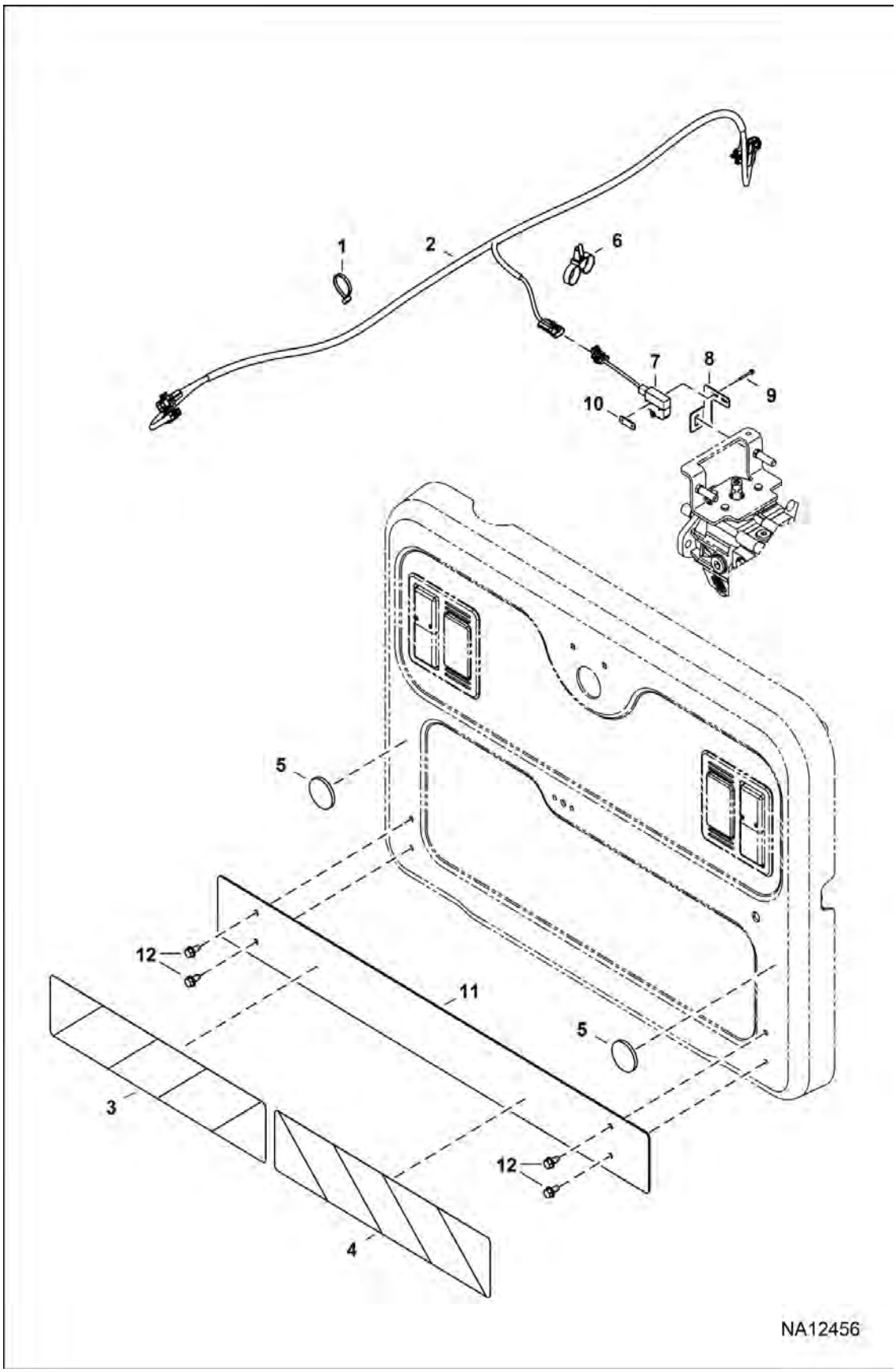

NEUTRAL LIGHTING OPTION (Cont'd)

(Manual controls)

Ref No	Part Number	Description	Remarks	Serial Number	Qty
1	6624289	STRAP, TIE			7
2	7219294	HARNESS, SWITCH NEUTRAL			1
3	7220348	DECAL, REFLECTIVE			1
4	7220344	DECAL, REFLECTIVE			1
5	7191035	LENS, REFLECTIVE			2
6	6678668	STRAP			1
7	6661150	SWITCH, ROLLER MICRO			1
8	7155044	BRACKET	Was 7214874 [B]		1
9	84G1320	SCREW THD ROLLING TT			2
10	6702593	SPACER			1
11	7272066	BRACKET, DECALS			1
12	84G3712	BOLT 5			4

BUCKET POSITION VALVE

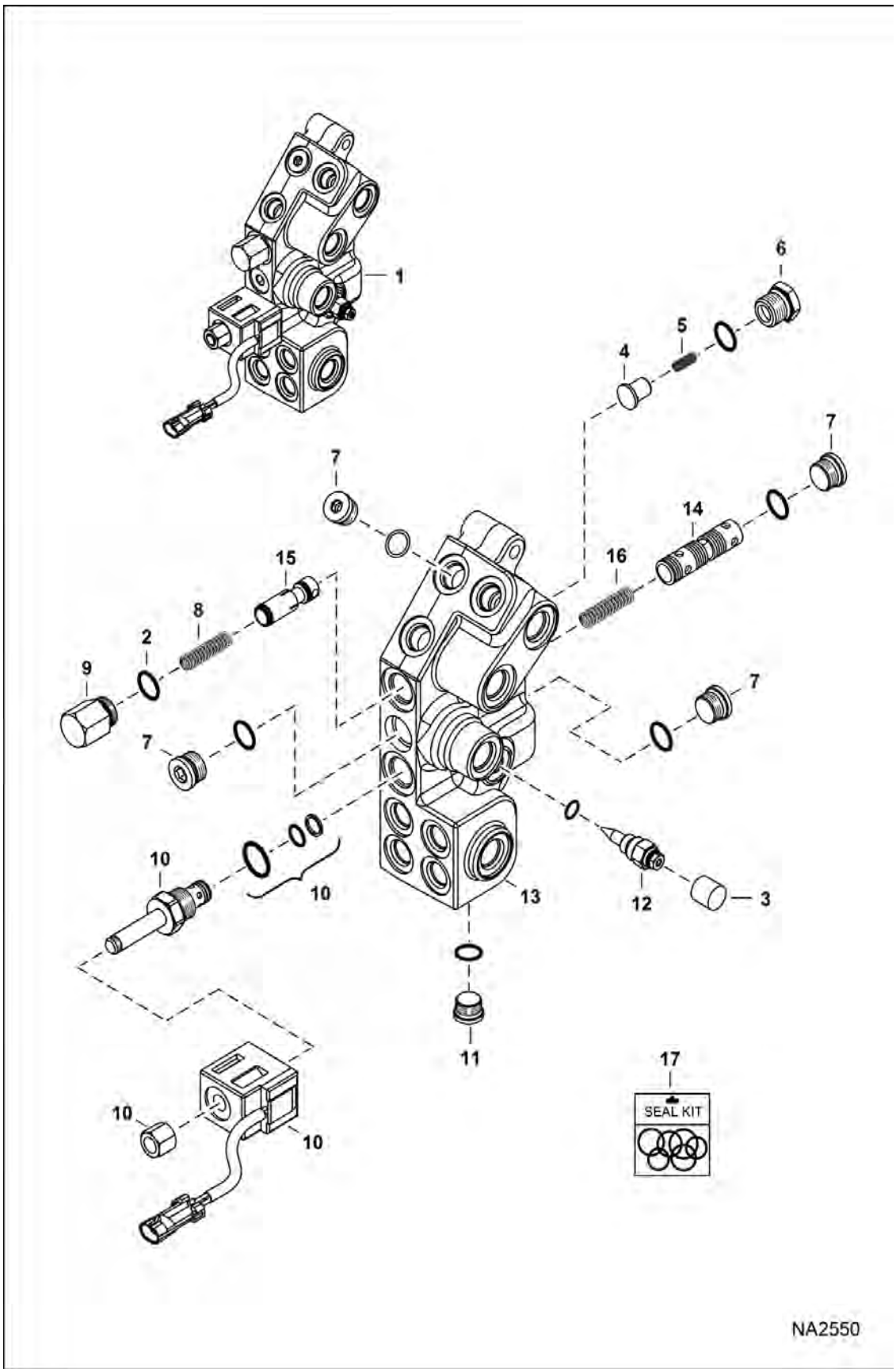

BUCKET POSITION VALVE (Cont'd)

Ref No	Part Number	Description	Remarks	Serial Number	Qty
1	7011059	VALVE, BPV	Ref. 2-16		1
2	6667680	SNAP RING			1
3	6667676	COVER			1
4	6647783	LOADCHECK			1
5	6647785	SPRING			1
6	6647784	PLUG			1
6	79K10	O RING 10			x
7	6676543	PLUG			4
8	6648294	SPRING			1
9	6667176	PLUG			1
10	6672863	VALVE, SOLENOID			1
10	6671527	NUT			1
10	6670634	SEAL KIT			1
10	6675781	Coil			1
10	6675780	Cartridge			1
11	7013201	PLUG			2
12	7010283	VALVE, REGULATOR			1
13		BLOCK	NSS - Order Ref. 1		1
14		SPOOL	NSS - Order Ref. 1		1
15		SPOOL	NSS - Order Ref. 1		1
16	6660775	SPRING			1
17	7013203	KIT, SEAL			1

BUCKET POSITIONING KIT

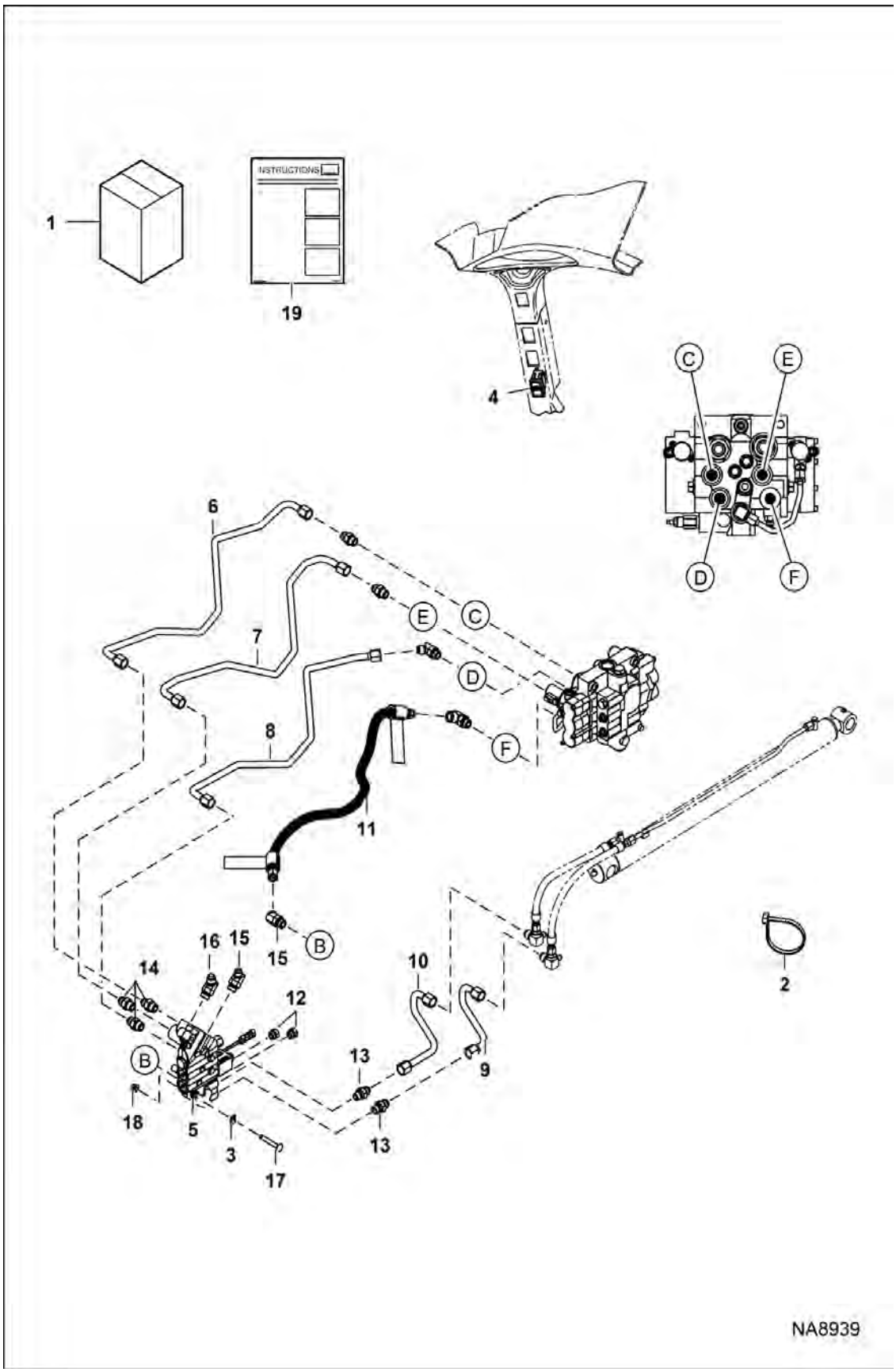

BUCKET POSITIONING KIT (Cont'd)

Ref No	Part Number	Description	Remarks	Serial Number	Qty
1	7254136	KIT, BUCKET POS	W/ Ref. 2-19		1
2	6624289	STRAP, TIE			3
3	6684033	NUT			2
4	6690947	SWITCH, BPV			1
5	7011059	VALVE, BPV			1
6	7233715	TUBELINE HYD			1
7	7233716	TUBELINE HYD			1
8	7233717	TUBELINE HYD			1
9	7240246	TUBELINE HYD			1
10	7240247	TUBELINE HYD			1
11	7240860	HOSE, HYD			1
12	24K6	FITTING			2
13	15KB1008	FITTING, HYD CONNECTOR			2
14	15KB1010	FITTING, HYD CONNECTOR			3
15	18KB0810	FITTING, HYD ELBOW			2
16	18KB1010	FITTING, HYD ELBOW			1
17	37C644	BOLT			2
18	83D6	NUT 5			2
19	7255678ENUS	INSTRUCTIONS	Was 7255678 [A]		1

CAB DOOR

(175 mm (6.90”) Long Wiper Motor Mounting Bracket)

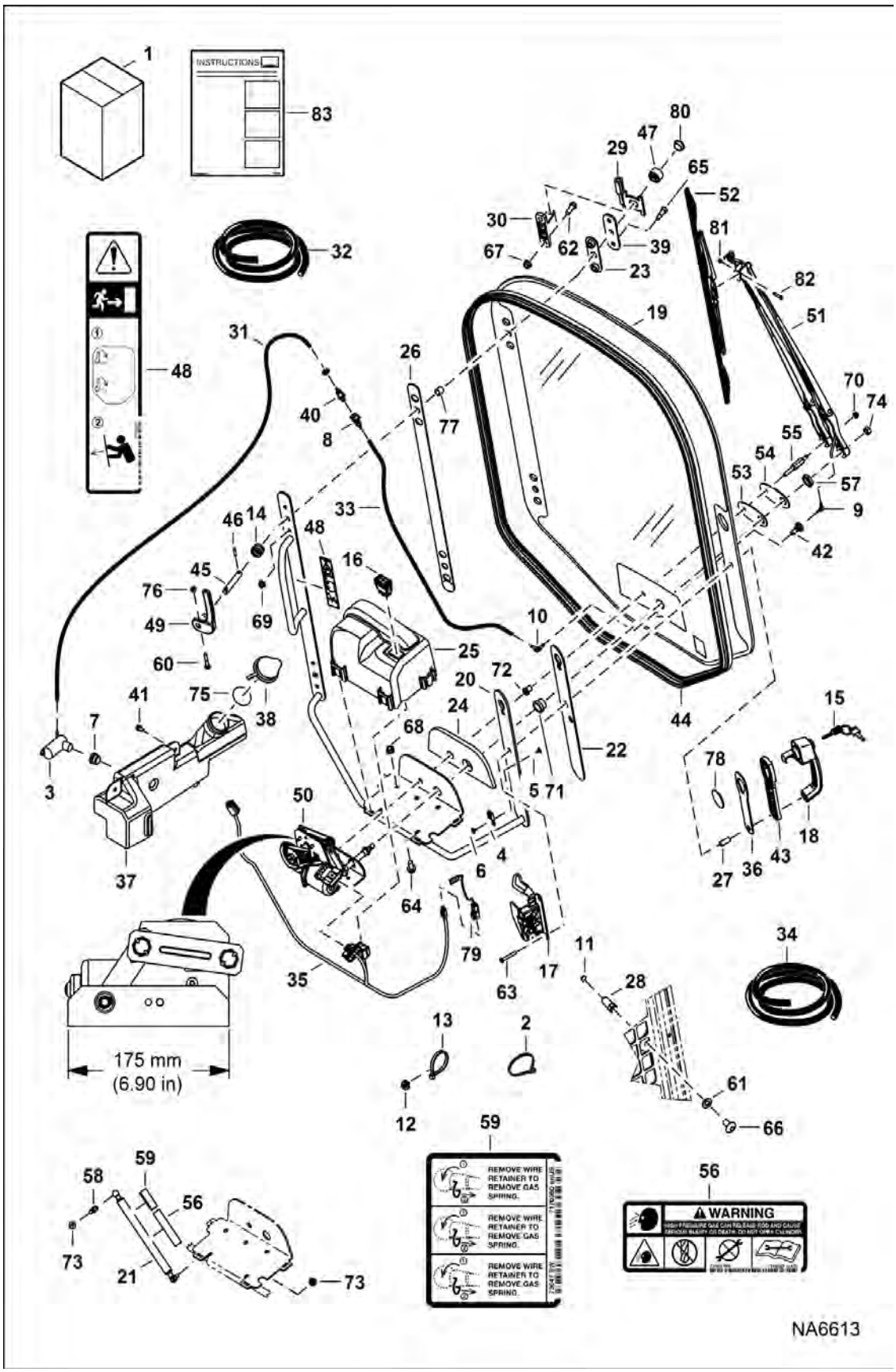

CAB DOOR (Cont'd)

(175 mm (6.90”) Long Wiper Motor Mounting Bracket)

Ref No	Part Number	Description	Remarks	Serial Number	Qty
1		KIT, DOOR	See Illustration CAB DOOR / NA11055 - NLA -Ref. 2-83 - Was 7128393 [A]		1
2	6610510	STRAP, TIE 10			3
3	6664554	PUMP, WIPER WASHER			1
4	6665000	CLIP			1
5	6665321	RIVET			1
6	6665322	RIVET			1
7	6666766	GROMMET			1
8	6675298	COUPLER, BODY			1
9	6676500	ELBOW			1
10	6676917	ELBOW			1
11	6677192	SENSOR, MAGNETIC			1
12	6690688	TREE MOUNT			6
13	6690690	STRAP, TIE	203 mm (8") long - not in kit		10
13	6624289	STRAP, TIE	387,4 mm (15.25") long		5
14	6704453	SPRING 5			2
15	6693241	KEY (2)	ignition - single key W/O ring		1
16	7001709	SWITCH FRONT WIPER			1
17	7109661	LATCH, DOOR W/SENSOR	W/Ref. 79		1
18	7109662	HANDLE, LATCH DOOR			1
19	7120401	GLASS, DOOR	Also Order 7258389 plug		1
19	7120401PK	GLASS DOOR (25)	bulk - sold per package of 25		1
20	7120402	FRAME, DOOR CAB			1
21	7142371	SPRING GAS DOOR	Also Order Ref. 56 & 59		1
22	7148287	SEAL DOOR HANDLE			1
23	7148289	SEAL DOOR HINGE			2
24	7174837	GASKET, WIPER			1
25	7149827	COVER, WIPER			1
26	7150719	SEAL DOOR FRAME			1
27	7174841	SPACER, HANDLE			2
28	7175151	STRIKER, DOOR			1
29	7193725	HINGE, DOOR CAB	NA		2
29		HINGE, DOOR CAB	NLA - (EMEA) - Order 7193725 hinge - Was 7305388 [A]		2
30	7305580	HINGE	Was 7176593 [A]		2
31		HOSE	NLA - 1219 mm (48") long - Order Ref. 32		1
32	6708310	HOSE, BULK/FT 100	clear - 0.154" ID - sold per foot		x
33		HOSE	NLA - 787 mm (31") long - Order Ref. 34		1

CAB DOOR (Cont'd)

(175 mm (6.90”) Long Wiper Motor Mounting Bracket)

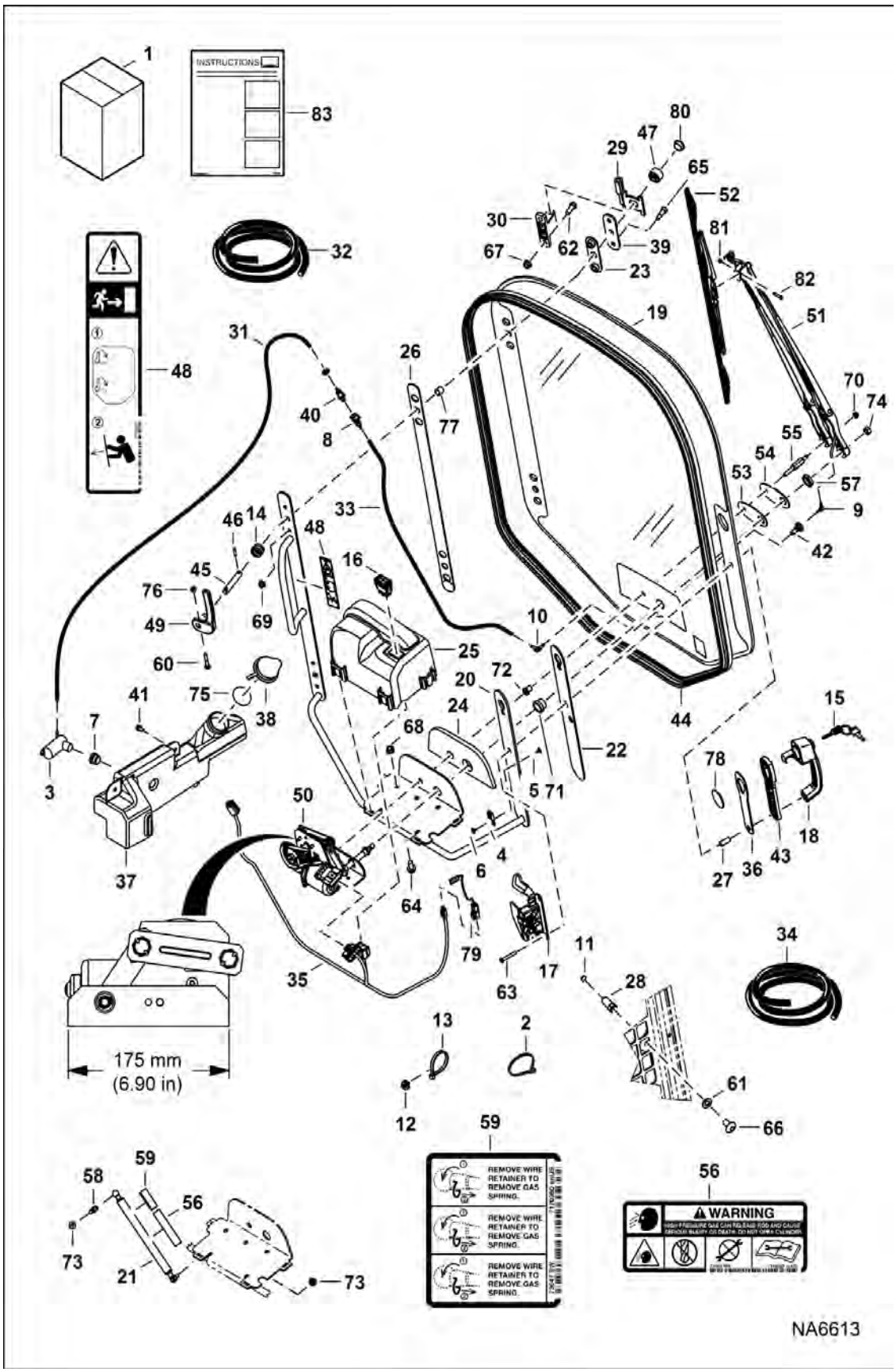

Illustration NA6613

Model S450 MT2KAMEA
6990825

CAB DOOR (Cont'd)

(175 mm (6.90”) Long Wiper Motor Mounting Bracket)

Ref No	Part Number	Description	Remarks	Serial Number	Qty
34	6676003	HOSE, BULK/FT	black - 0.109" ID - sold per foot		x
35	7155024	HARNESS DOOR			1
36	7160841	SEAL HANDLE DOOR			1
37	7232658	TANK, WASHER	Was 7163259 [A]		1
38	7163263	CAP WASHER BOTTLE			1
39		DOOR PLATE	NLA - Order 7283637 plate & (2) of Ref. 65 (38C612 bolt) - Was 7164590		2
39	7283637	PLATE, DOOR	NA		2
39		PLATE, DOOR	NLA - (EMEA) - Order 7283637 plate - Was 7305385 [A]		2
40	7165972	COUPLER INSERT			2
41	7166190	SCREW THREAD ROLLING			3
42	7167177	GROMMET WIPER			1
43	7166205	SPACER HANDLE			1
44	7281063	SEAL, DOOR	Was 7222790 [A]		1
45	7167844	SHAFT			2
46	7167845	PIN			2
47	7167846	WASHER CAST			2
48	7168025	DECAL EMERGENCY DOOR			1
49	7186972	LEVER			2
50	7168952	WIPER MOTOR	175 mm (6.90”) long mounting bracket		1
51	7168953	ARM WIPER ASSY			1
52	7168954	BLADE WIPER ASSY			1
53	7168955	GASKET			1
54	7168956	PLATE ADAPTOR			1
55	7168957	PLATE STUD ADAPTOR			1
56	7169291	DECAL	warning		1
57	6681905	NUT			1
58	7169849	FITTING BALLSTUD			1
59	7170360	DECAL, SPRING REMOVAL			1
60	17C428	BOLT			2
61	18EM1224	WASHER HARDENED PLN			1
62	35C516	BOLT 10			4
63	1CM640	SCREW HEX CAP			2
64	31C612	BOLT			3
65	38C610	BOLT	Use W/Ref. 39 (NLA/ 7164590 plate)		4
65	38C612	BOLT	Use W/Ref. 39 (7283637 plate & 7305385 plate)		4
66	10C816	BOLT			1
67	59D5	NUT 5			4

CAB DOOR (Cont'd)

(175 mm (6.90”) Long Wiper Motor Mounting Bracket)

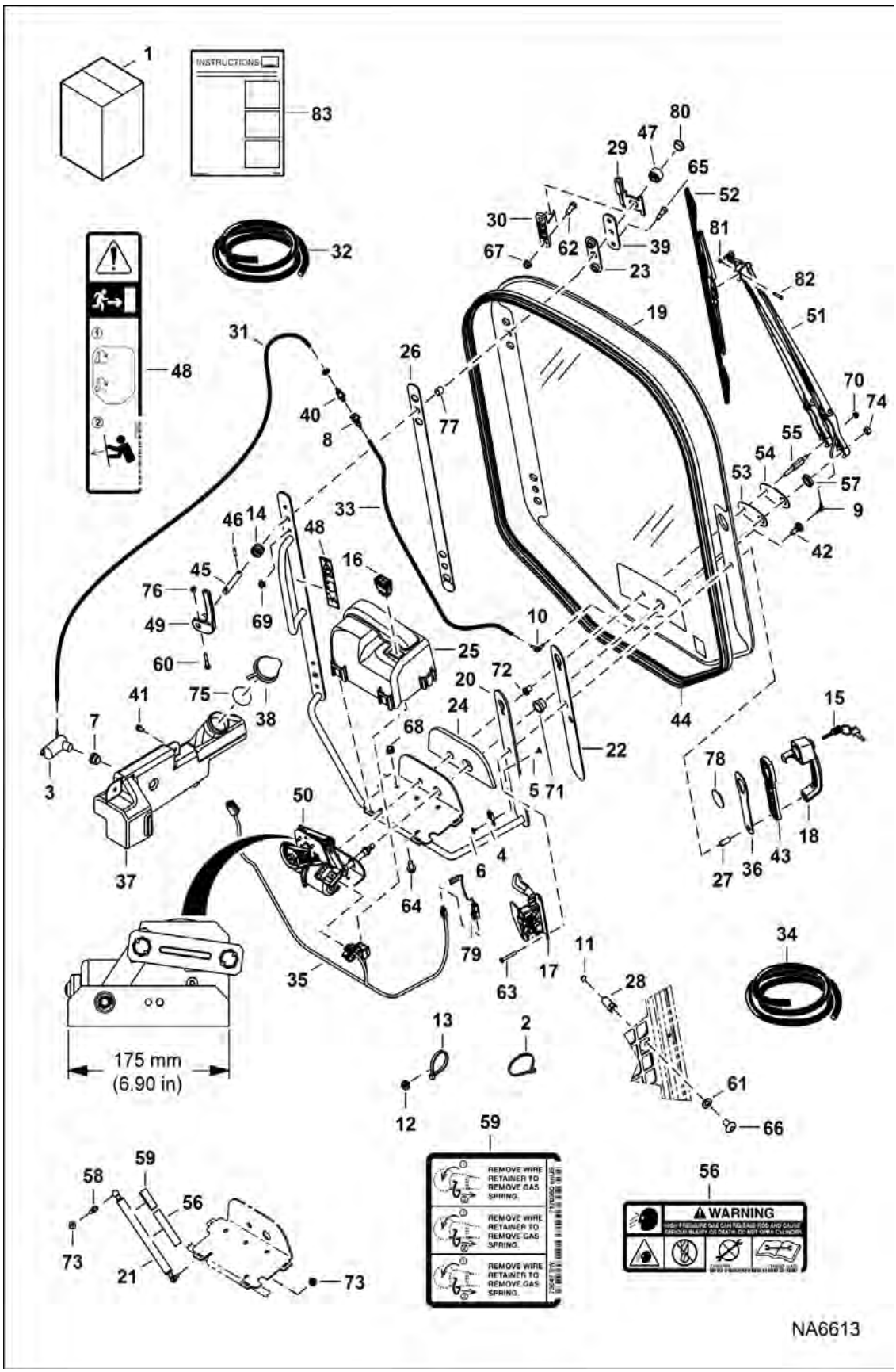

Illustration NA6613

Model S450 MT2KAMEA
6990825

CAB DOOR (Cont'd)

(175 mm (6.90”) Long Wiper Motor Mounting Bracket)

Ref No	Part Number	Description	Remarks	Serial Number	Qty
68	97D6	NUT 10			3
69	97D5	NUT			4
70	51DM6	NUT HX THDLK PREAPPL			1
71	7174838	SPACER			1
72	7174839	SPACER			1
73	59D5	NUT 5			2
74	2DM10	NUT			1
75	7188097	SEAL			1
76	59D4	NUT 5			2
77	7196015	BUSHING, PLASTIC			2
78	7196017	DISK, PLASTIC			1
79	6728459	SENSOR, DOOR	Also Order (2) 6677193 rivet		1
79	6677193	RIVET			2
80	7161429	PLUG	if equipped		2
81	7020354	NUT	Was 7274762 [B,D]		1
82	7020355	BOLT	Was 7274763 [B,D]		1
83	6987230ENUS	INSTRUCTIONS	Was 7278971ENUS [B,D]		1

CAB DOOR

(159 mm) (6.25”) Wiper Motor Mounting Bracket
(Bottom Mounted Washer Nozzle)

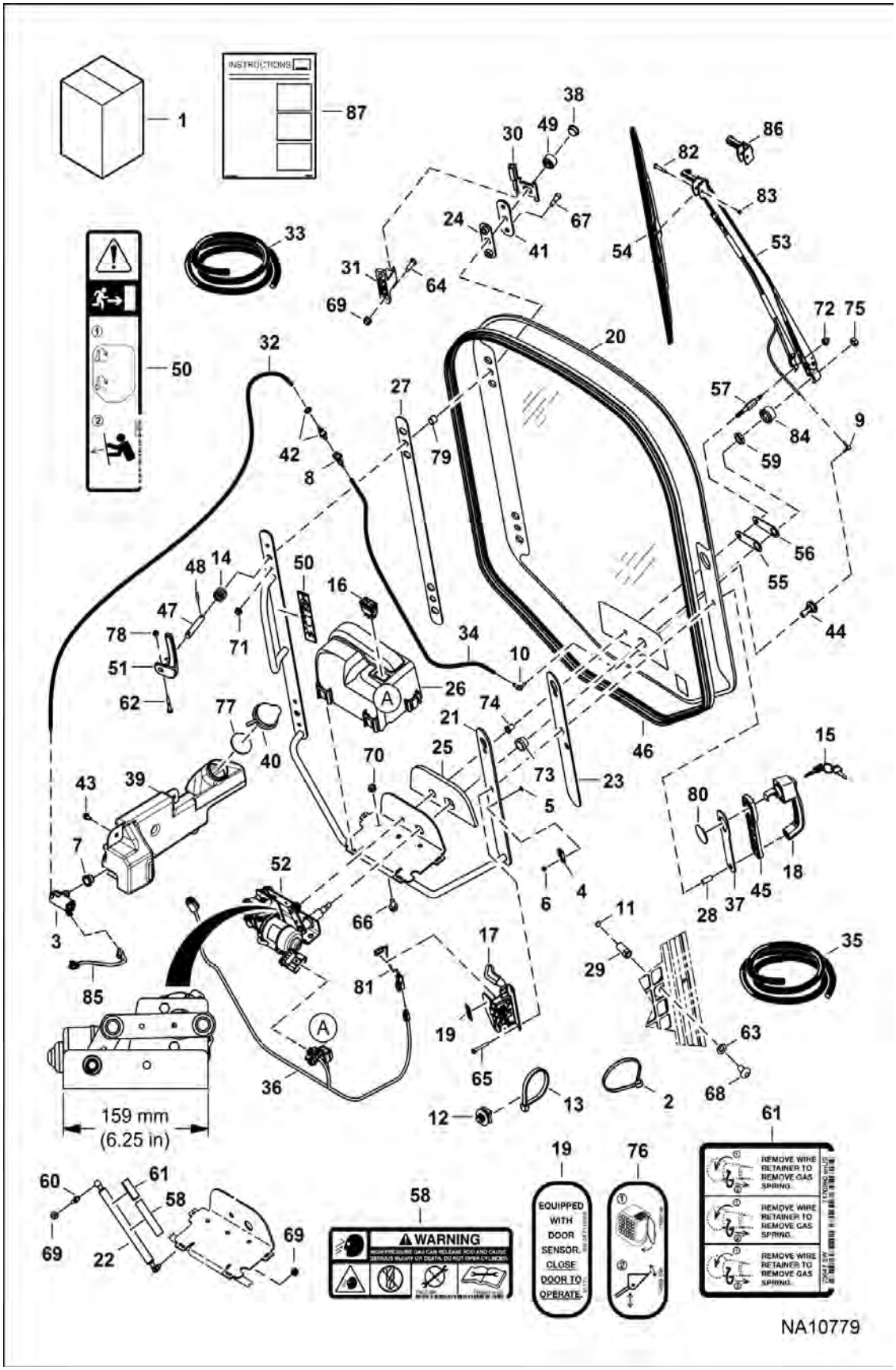

CAB DOOR (Cont'd)

(159 mm) (6.25”) Wiper Motor Mounting Bracket
(Bottom Mounted Washer Nozzle)

Ref No	Part Number	Description	Remarks	Serial Number	Qty
1		KIT, DOOR	See Illustration CAB DOOR / NA11055 - NLA - Ref. 2-86 - Was 7128393 [A]		1
1	100644SUB	ASSY DOOR	Ref. 4-6, 13-28, 30, 36-38, 41, 45-62, 65-67, 69-75 & 78-84 - fully assembled		1
2	6610510	STRAP, TIE 10			3
3	6664554	PUMP, WIPER WASHER			1
4	6665000	CLIP			1
5	6665321	RIVET			1
6	6665322	RIVET			1
7	6666766	GROMMET			1
8	6675298	COUPLER, BODY			1
9	6676500	ELBOW			1
10	6676917	ELBOW			1
11	6677192	SENSOR, MAGNETIC			1
12	6690688	TREE MOUNT			6
13	6690690	STRAP, TIE	203 mm (8") long - not in kit		10
13	6624289	STRAP, TIE	387,4 mm (15.25") long		5
14	6704453	SPRING 5			2
15	6693241	KEY (2)	ignition - single key W/O ring		1
16	7001709	SWITCH FRONT WIPER			1
17	7109661	LATCH, DOOR W/SENSOR	W/Ref. 81		1
18	7109662	HANDLE, LATCH DOOR			1
19		DECAL, SAFETY	NLA - door sensor - Was 7110316 [A]		1
20	7120401	GLASS, DOOR	Also Order 7258389 plug		1
20	7120401PK	GLASS DOOR (25)	bulk - sold per package of 25		1
21	7120402	FRAME, DOOR CAB			1
22	7142371	SPRING GAS DOOR	Also Order Ref. 58 & 61		1
23	7148287	SEAL DOOR HANDLE			1
24	7148289	SEAL DOOR HINGE			2
25	7174837	GASKET, WIPER			1
26	7149827	COVER, WIPER			1
27	7150719	SEAL DOOR FRAME			1
28	7174841	SPACER, HANDLE			2
29	7175151	STRIKER, DOOR			1
30	7193725	HINGE, DOOR CAB	NA - Was 7150817 [A]		2
30		HINGE, DOOR CAB	NLA - (EMEA) - Order 7193725 hinge - Was 7305388 [A]		2
31	7305580	HINGE	Was 7176593 [A]		2

CAB DOOR (Cont'd)

(159 mm) (6.25”) Wiper Motor Mounting Bracket
(Bottom Mounted Washer Nozzle)

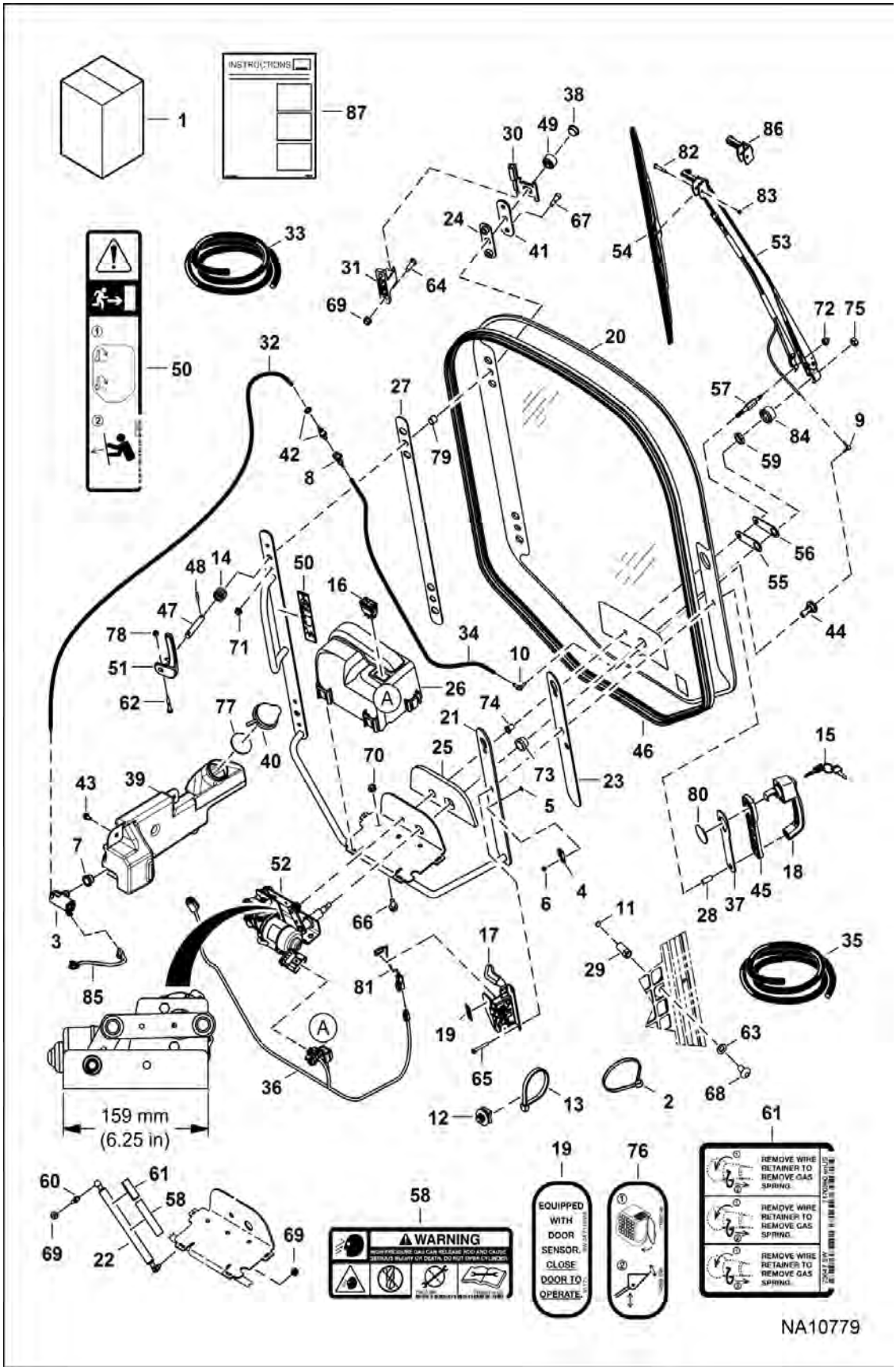

CAB DOOR (Cont'd)

(159 mm) (6.25”) Wiper Motor Mounting Bracket
(Bottom Mounted Washer Nozzle)

Ref No	Part Number	Description	Remarks	Serial Number	Qty
32		HOSE	NLA - 1219 mm (48") long - Order Ref. 33		1
33	6708310	HOSE, BULK/FT 100	clear - 0.154" ID - sold per foot		x
34		HOSE	NLA - 787 mm (31") long - Order Ref. 35		1
35	6676003	HOSE, BULK/FT	black - 0.109" ID - sold per foot		x
36	7155024	HARNESS DOOR			1
37	7160841	SEAL HANDLE DOOR			1
38	7161429	PLUG			2
39	7232658	TANK, WASHER	Was 7163259 [A]		1
40	7163263	CAP WASHER BOTTLE			1
41		DOOR PLATE	NLA - Order 7283637 plate & (2) of Ref. 67 (38C612 bolt) - Was 7164590		2
41	7283637	PLATE, DOOR	NA		2
41		PLATE, DOOR	NLA - (EMEA) - Order 7283637 plate - Was 7305385 [A]		2
42	7165972	COUPLER INSERT			2
43	7166190	SCREW THREAD ROLLING			3
44	7167177	GROMMET WIPER			1
45	7166205	SPACER HANDLE			1
46	7281063	SEAL, DOOR	Was 7222790 [A]		1
47	7167844	SHAFT			2
48	7167845	PIN			2
49	7167846	WASHER CAST			2
50	7168025	DECAL EMERGENCY DOOR			1
51	7186972	LEVER	Was 7168288 [A]		2
52	7234174	MOTOR, WIPER	159 mm (6.25”) long mounting bracket		1
53	7251263	ASSY, WIPER ARM	W/Ref. 86		1
54	7251264	BLADE, WIPER			1
55	7251265	GASKET			1
56	7251266	PLATE, ADAPTER			1
57	7251267	STUD			1
58	7169291	DECAL	warning		1
59	7251279	NUT			1
60	7169849	FITTING BALLSTUD			1
61	7170360	DECAL, SPRING REMOVAL			1
62	17C428	BOLT	Was 17C424 [B]		2
63	18EM1224	WASHER HARDENED PLN			1
64	35C516	BOLT 10	Was 17C516 [B]		4
65	1CM640	SCREW HEX CAP			2

CAB DOOR (Cont'd)

(159 mm) (6.25”) Wiper Motor Mounting Bracket
(Bottom Mounted Washer Nozzle)

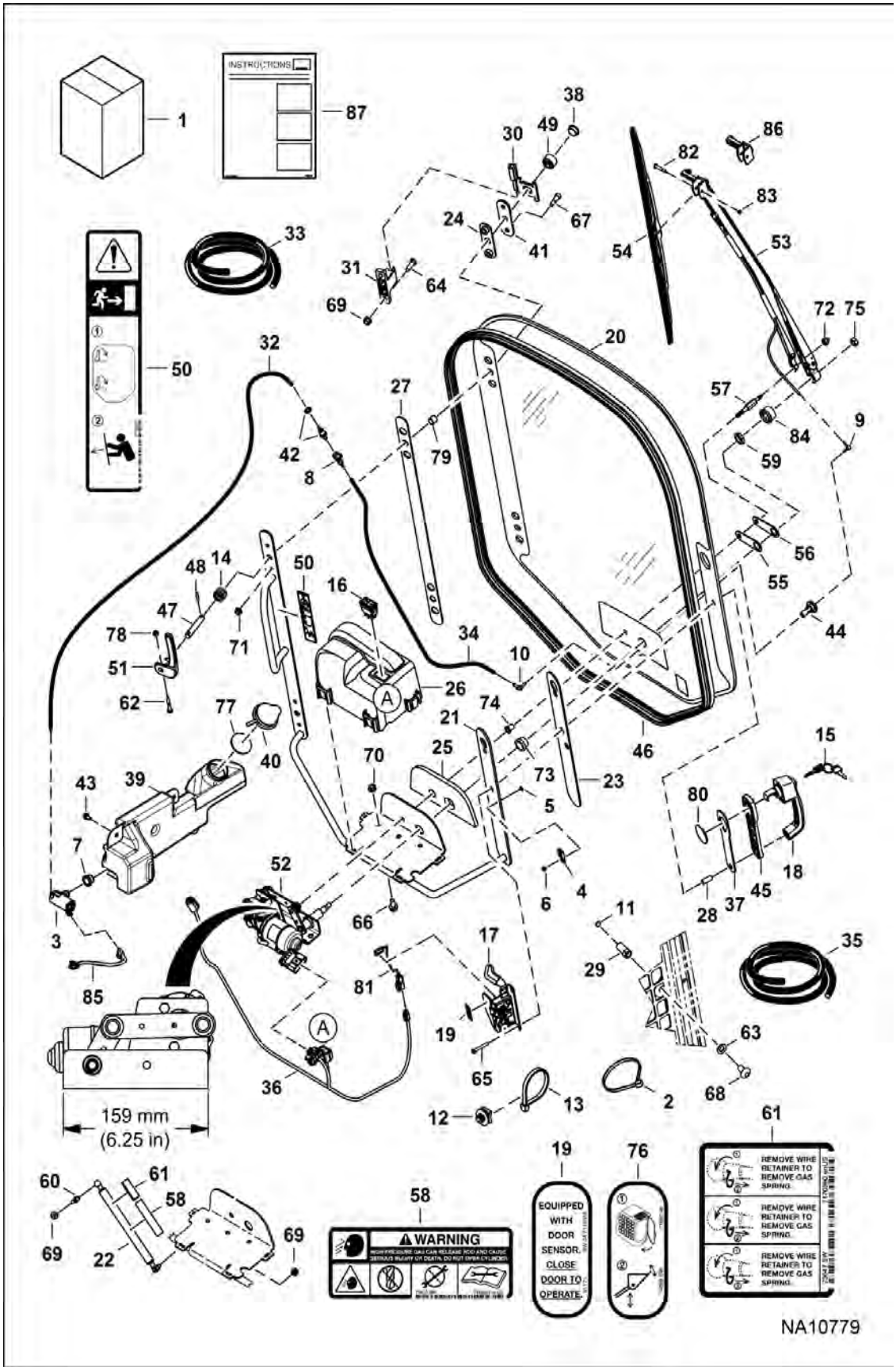

CAB DOOR (Cont'd)

(159 mm) (6.25”) Wiper Motor Mounting Bracket
(Bottom Mounted Washer Nozzle)

Ref No	Part Number	Description	Remarks	Serial Number	Qty
66	31C612	BOLT			3
67	38C610	BOLT	Use W/Ref. 41 (NLA/ 7164590 plate)		4
67	38C612	BOLT	Use W/Ref. 41 (7283637 plate & 7305385 plate)		4
68	10C816	BOLT			1
69	59D5	NUT 5			6
70	97D6	NUT 10			3
71	97D5	NUT			4
72	7251278	NUT			1
73	7174838	SPACER			1
74	7174839	SPACER			1
75	2DM10	NUT			1
76		DECAL, SAFETY	NLA - EMEA - no-text - Was 7168146 [A]		1
77	7188097	SEAL			1
78	59D4	NUT 5			2
79	7196015	BUSHING, PLASTIC			2
80	7196017	DISK, PLASTIC			1
81	6728459	SENSOR, DOOR	Also Order (2) 6677193 rivet		1
81	6677193	RIVET			2
82	7274763	SCREW			1
83	7274762	NUT, HEX			1
84	7254248	BUSHING			1
85	7253378	HARNESS, JUMPER			1
86	7319634	SADDLE WIPER			1
87	6987230ENUS	INSTRUCTIONS			1

CAB DOOR

(159 mm) (6.25”) Wiper Motor Mounting Bracket
(Top Mounted Washer Nozzle)

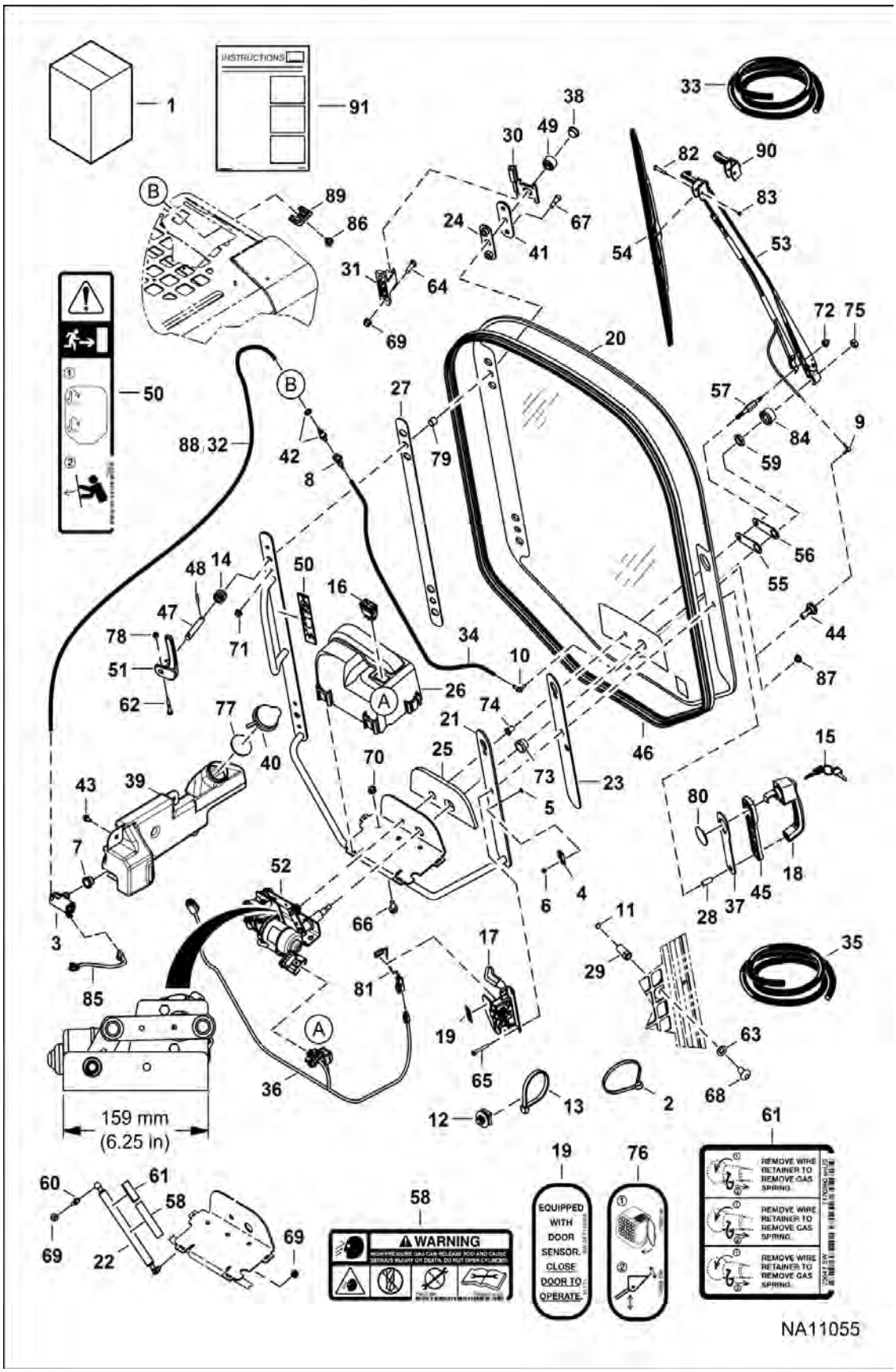

CAB DOOR (Cont'd)

(159 mm) (6.25”) Wiper Motor Mounting Bracket
(Top Mounted Washer Nozzle)

Ref No	Part Number	Description	Remarks	Serial Number	Qty
1	7279636	KIT, DOOR CAB	Ref. 2-91		1
1	100644SUB	ASSY DOOR	Ref. 4-6, 12-28, 30, 36-38, 41, 45-62, 65-67, 69-75 & 78-84 - fully assembled - glass does not come equipped for bottom mounted washer nozzle		1
2	6610510	STRAP, TIE 10			3
3	6664554	PUMP, WIPER WASHER			1
4	6665000	CLIP			1
5	6665321	RIVET			1
6	6665322	RIVET			1
7	6666766	GROMMET			1
8	6675298	COUPLER, BODY			1
9	6676500	ELBOW			1
10	6676917	ELBOW			1
11	6677192	SENSOR, MAGNETIC			1
12	6690688	TREE MOUNT			1
13	6690690	STRAP, TIE	203 mm (8") long		1
13	6624289	STRAP, TIE	387,4 mm (15.25") long		2
14	6704453	SPRING 5			2
15	6693241	KEY (2)	ignition - single key W/O ring		1
16	7001709	SWITCH FRONT WIPER			1
17	7109661	LATCH, DOOR W/SENSOR	W/Ref. 81		1
18	7109662	HANDLE, LATCH DOOR			1
19		DECAL, SAFETY	NLA - door sensor - Was 7110316 [A]		1
20	7120401	GLASS, DOOR	Also Order Ref. 87		1
20	7120401PK	GLASS DOOR (25)	bulk - sold per package of 25		1
21	7120402	FRAME, DOOR CAB			1
22	7142371	SPRING GAS DOOR	Also Order Ref. 58 & 61		1
23	7148287	SEAL DOOR HANDLE			1
24	7148289	SEAL DOOR HINGE			2
25	7174837	GASKET, WIPER			1
26	7149827	COVER, WIPER			1
27	7150719	SEAL DOOR FRAME			1
28	7174841	SPACER, HANDLE			2
29	7175151	STRIKER, DOOR			1
30	7193725	HINGE, DOOR CAB	(NA) - Was 7150817 [A]		2
30		HINGE, DOOR CAB	NLA - (EMEA) - Order 7193725 hinge - Was 7305388 [A]		2
31	7305580	HINGE	Was 7176593 [A]		2

CAB DOOR (Cont'd)

(159 mm) (6.25”) Wiper Motor Mounting Bracket
(Top Mounted Washer Nozzle)

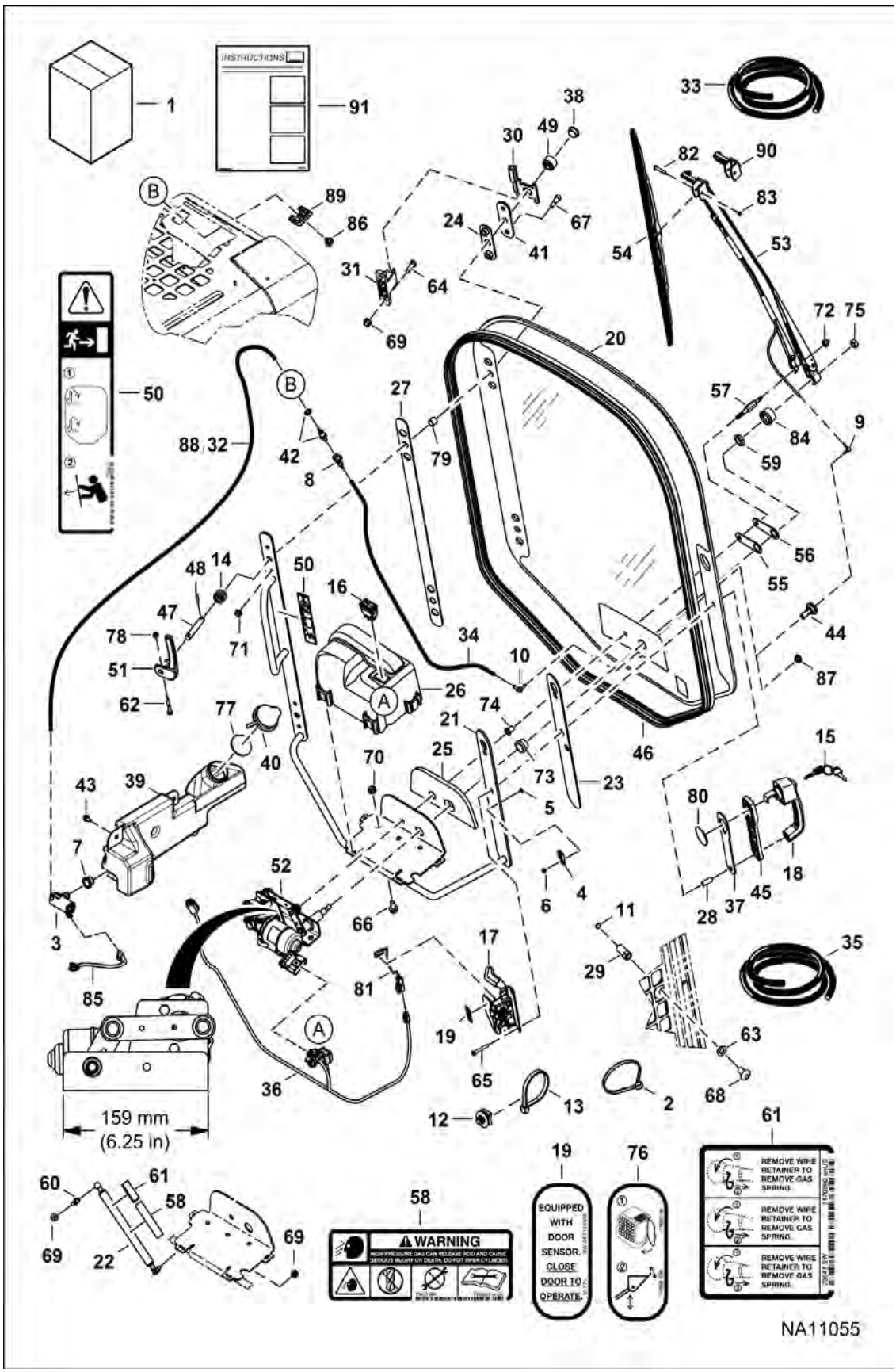

CAB DOOR (Cont'd)

(159 mm) (6.25”) Wiper Motor Mounting Bracket
(Top Mounted Washer Nozzle)

Ref No	Part Number	Description	Remarks	Serial Number	Qty
32		HOSE	NLA - 1219 mm (48") long - Order Ref. 33		1
33	6708310	HOSE, BULK/FT 100	clear - 0.154" ID - sold per foot		x
34		HOSE	NLA - 787 mm (31") long - Order Ref. 35		1
35	6676003	HOSE, BULK/FT	black - 0.109" ID - sold per foot		x
36	7155024	HARNESS DOOR			1
37	7160841	SEAL HANDLE DOOR			1
38	7161429	PLUG			2
39	7232658	TANK, WASHER	Was 7163259 [A]		1
40	7163263	CAP WASHER BOTTLE			1
41	7283637	PLATE, DOOR	(NA) - Was 7164590 [A]		2
41		PLATE, DOOR	NLA - (EMEA) - Order 7283637 plate - Was 7305385 [A]		2
42	7165972	COUPLER INSERT			2
43	7166190	SCREW THREAD ROLLING			3
44	7167177	GROMMET WIPER			1
45	7166205	SPACER HANDLE			1
46	7281063	SEAL, DOOR	Was 7222790 [A]		1
47	7167844	SHAFT			2
48	7167845	PIN			2
49	7167846	WASHER CAST			2
50	7168025	DECAL EMERGENCY DOOR			1
51	7186972	LEVER	Was 7168288 [A]		2
52	7234174	MOTOR, WIPER	159 mm (6.25”) long mounting bracket		1
53	7251263	ASSY, WIPER ARM	W/Ref. 90		1
54	7251264	BLADE, WIPER			1
55	7251265	GASKET			1
56	7251266	PLATE, ADAPTER			1
57	7251267	STUD			1
58	7169291	DECAL	warning		1
59	7251279	NUT			1
60	7169849	FITTING BALLSTUD			1
61	7170360	DECAL, SPRING REMOVAL			1
62	17C428	BOLT	Was 17C424 [B]		2
63	18EM1224	WASHER HARDENED PLN			1
64	35C516	BOLT 10	Was 17C516 [B]		4
65	1CM640	SCREW HEX CAP			2
66	31C612	BOLT			3
67	38C612	BOLT	Was 38C610 [B]		4

CAB DOOR (Cont'd)

(159 mm) (6.25”) Wiper Motor Mounting Bracket
(Top Mounted Washer Nozzle)

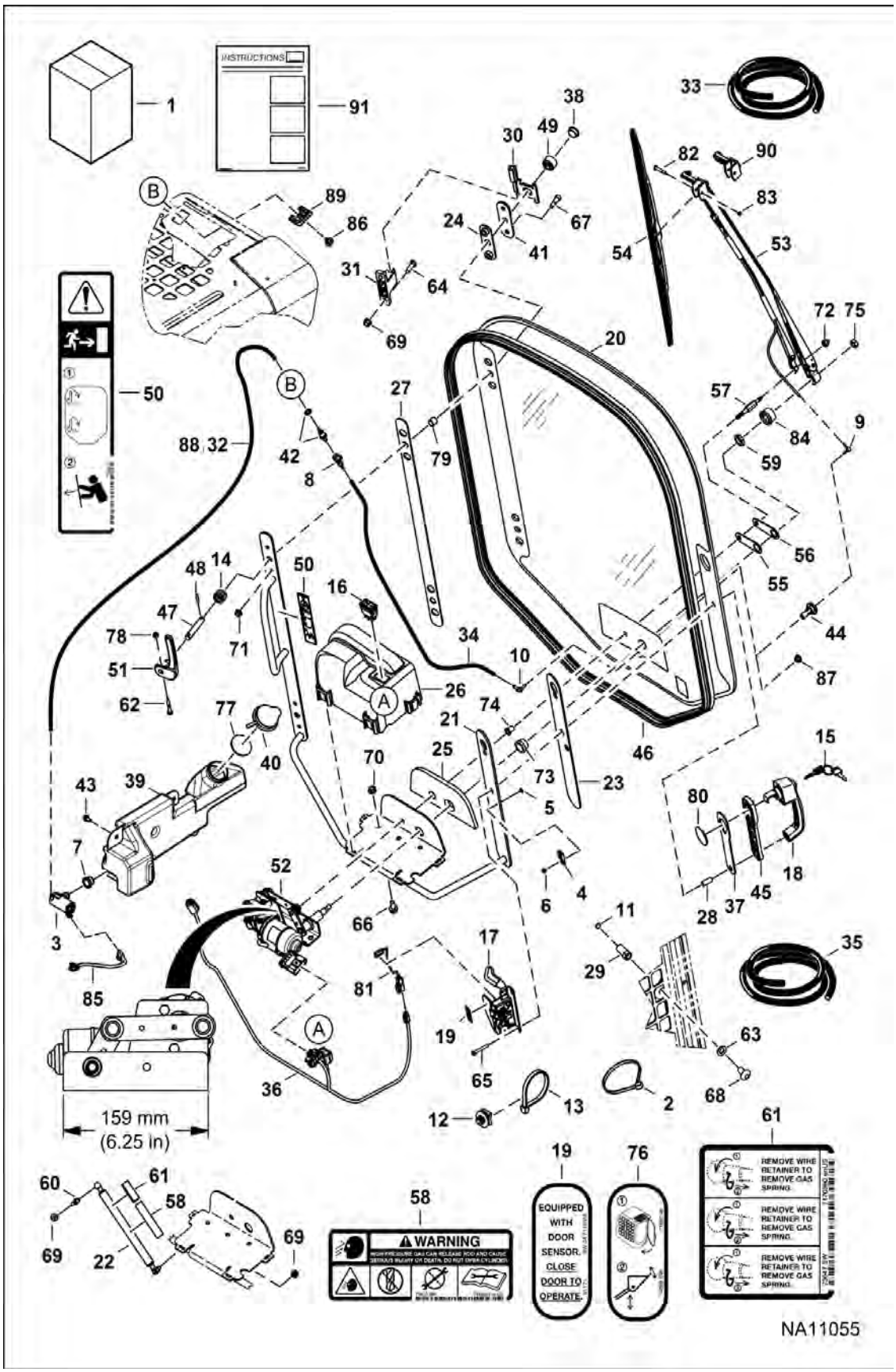

CAB DOOR (Cont'd)

(159 mm) (6.25”) Wiper Motor Mounting Bracket
(Top Mounted Washer Nozzle)

Ref No	Part Number	Description	Remarks	Serial Number	Qty
68	10C816	BOLT			1
69	59D5	NUT 5			6
70	97D6	NUT 10			3
71	97D5	NUT			4
72	7251278	NUT			1
73	7174838	SPACER			1
74	7174839	SPACER			1
75	2DM10	NUT			1
76		DECAL, SAFETY	NLA - EMEA - no-text - Was 7168146 [A]		1
77	7188097	SEAL			1
78	59D4	NUT 5			2
79	7196015	BUSHING, PLASTIC			2
80	7196017	DISK, PLASTIC			1
81	6728459	SENSOR, DOOR	Also Order (2) 6677193 rivet		1
81	6677193	RIVET			2
82	7274763	SCREW			1
83	7274762	NUT, HEX			1
84	7254248	BUSHING			1
85	7253378	HARNESS, JUMPER			1
86	7253043	NOZZLE, SPRAY			1
87	7258389	PLUG			1
88		HOSE	NLA - 2007 mm (79") long - Order Ref. 33		1
89	7250870	GROMMET			1
90	7319634	SADDLE WIPER			1
91	7278971ENUS	INSTRUCTIONS	Was 7278971 [A]		1

CAB DOOR
(Special Applications)

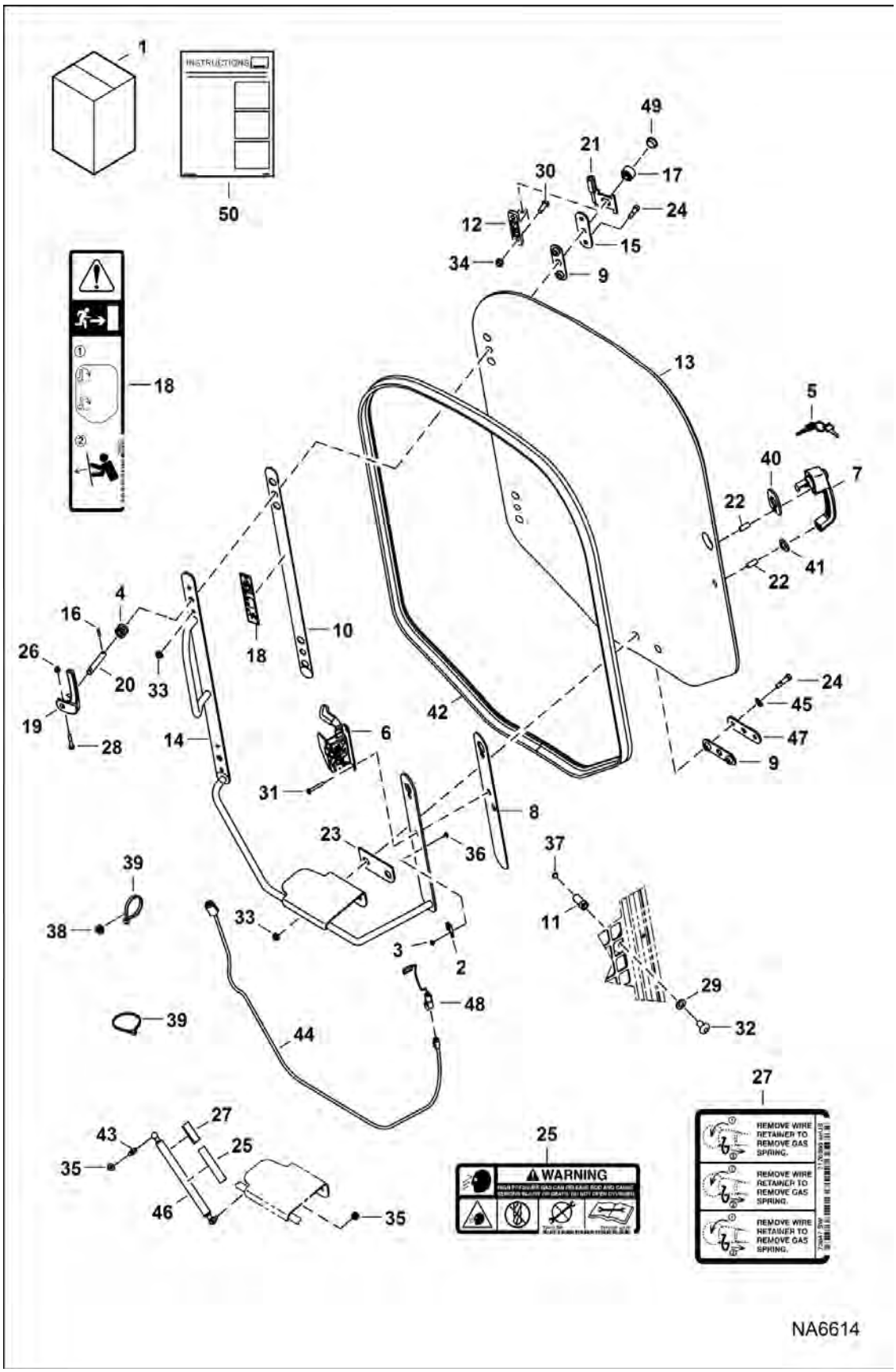

CAB DOOR (Cont'd)
(Special Applications)

Ref No	Part Number	Description	Remarks	Serial Number	Qty
1	7128395	KIT, DOOR CAB SPECIAL APPS	Ref. 2-50		1
2	6665000	CLIP			1
3	6665322	RIVET			1
4	6704453	SPRING 5			2
5	6693241	KEY (2)	ignition - single key W/O ring		1
6	7109661	LATCH, DOOR W/SENSOR	W/Ref. 48		1
7	7109662	HANDLE, LATCH DOOR			1
8	7148287	SEAL DOOR HANDLE			1
9	7148289	SEAL DOOR HINGE			3
10	7150719	SEAL DOOR FRAME			1
11	7175151	STRIKER, DOOR			1
12	7305580	HINGE	Was 7176593 [A]		2
13	7155308	WINDOW			1
14	7155359	FRAME, DOOR CAB			1
15	7283637	PLATE, DOOR	Was 7164590 [A]		2
16	7167845	PIN			2
17	7167846	WASHER CAST			2
18	7168025	DECAL EMERGENCY DOOR			1
19	7186972	LEVER			2
20	7168836	SHAFT			2
21	7168837	HINGE, DOOR			1
22	7168839	SPACER			2
23	7168841	SEAL			1
24	38C616	SCREW			6
25	7169291	DECAL			1
26	59D4	NUT 5			2
27	7170360	DECAL, SPRING REMOVAL			1
28	17C428	BOLT			2
29	18EM1224	WASHER HARDENED PLN			1
30	35C516	BOLT 10			4
31	1CM640	SCREW HEX CAP			2
32	10C816	BOLT			1
33	97D5	NUT			6
34	59D5	NUT 5			4
35	59D5	NUT 5			2
36	6665321	RIVET			1
37	6677192	SENSOR, MAGNETIC			1
38	6690688	TREE MOUNT			6
39	6690690	STRAP, TIE	203 mm (8") long - not in kit		10

CAB DOOR (Cont'd)
(Special Applications)

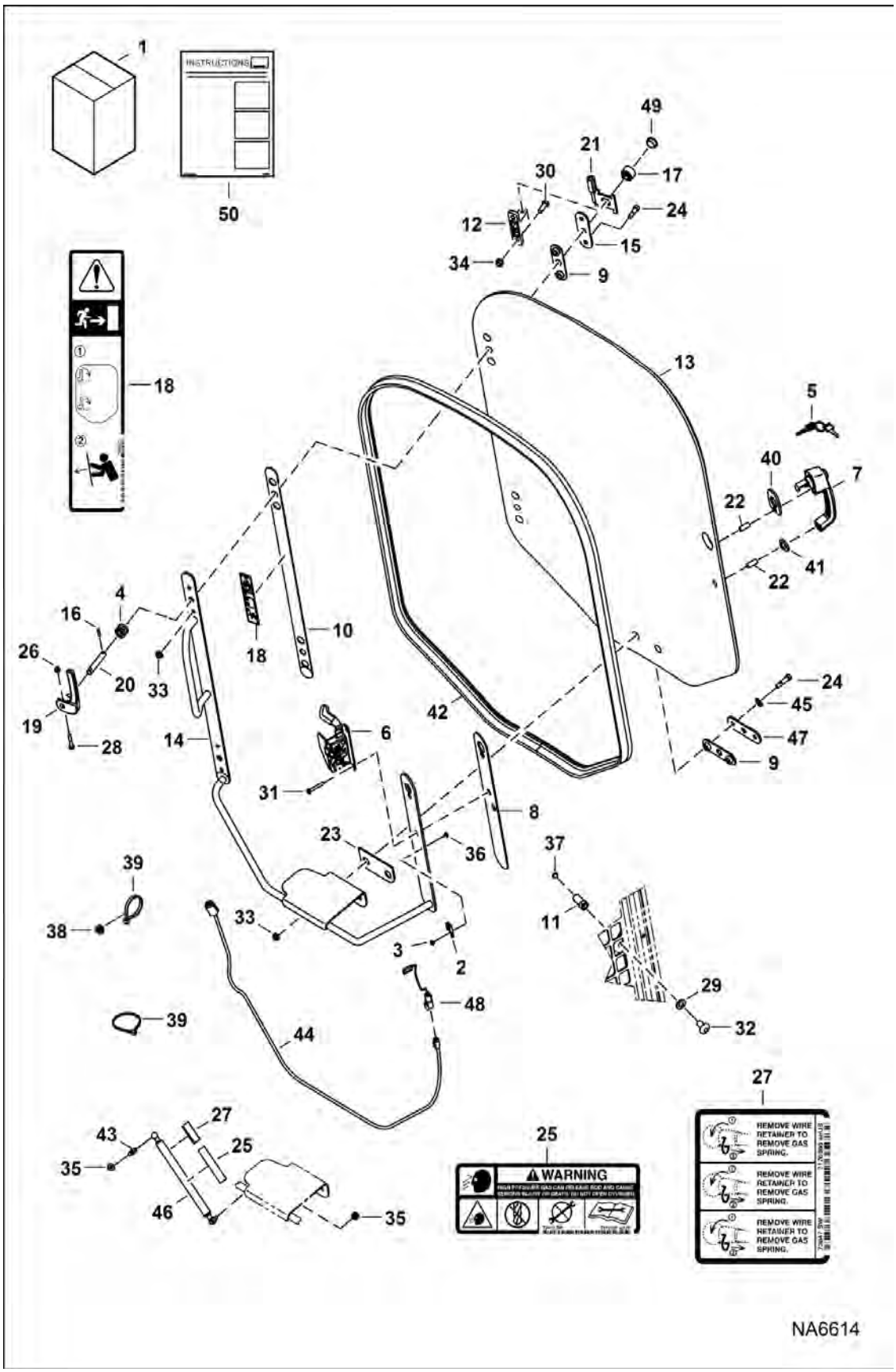

CAB DOOR (Cont'd)
(Special Applications)

Ref No	Part Number	Description	Remarks	Serial Number	Qty
39	6624289	STRAP, TIE	387,4 mm (15.25") long		5
40	7150745	SPACER	top		1
41	7150746	SPACER	bottom		1
42	7281063	SEAL, DOOR	Was 7222790 [A]		1
43	7169849	FITTING BALLSTUD			1
44	7170531	HARNESS, CAB			1
45	619021	WASHER, 5			2
46	7142371	SPRING GAS DOOR			1
47	7183158	PLATE			1
48	6728459	SENSOR, DOOR	Also Order (2) 6677193 rivet		1
48	6677193	RIVET			2
49	7161429	PLUG			2
50	6987232ENUS	INSTRUCTIONS	Was 6987232 [A]		1

CAB ENCLOSURE
(Special Applications)

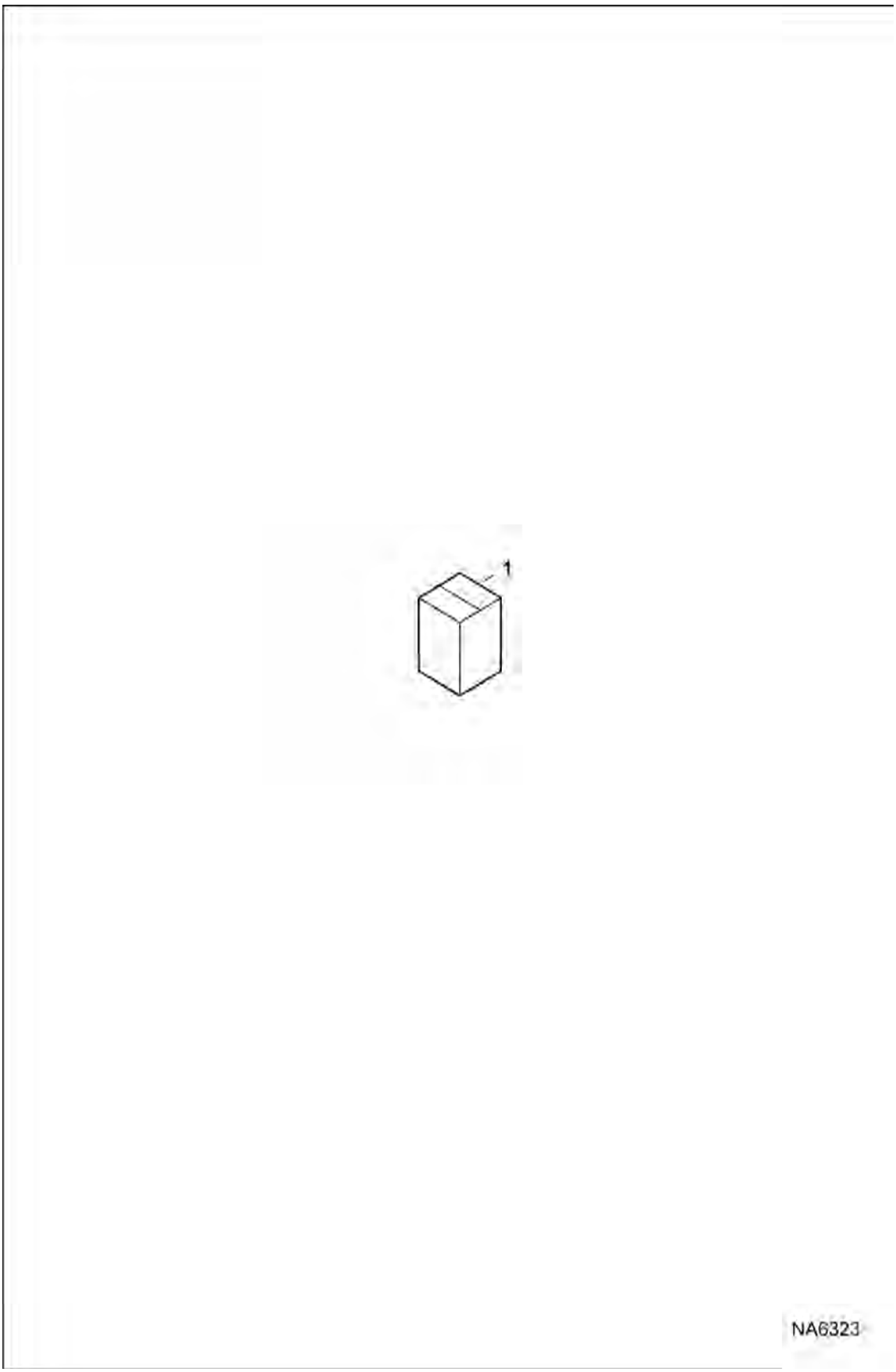

Illustration NA6323

CAB ENCLOSURE (Cont'd)

(Special Applications)

Ref No	Part Number	Description	Remarks	Serial Number	Qty
1		KIT, ENCL CAB SPCL	See Illustration CAB DOOR / NA6614 - NLA - Order 7128395 cab door kit &7214673 rear window kit - 678 mm (26.7") x 390 mm (15.37") rear window opening - Was 7204789 [A], See Illustration CAB WINDOWS / NA2052 - NLA - Order 7128395 cab door kit &7214673 rear window kit - 678 mm (26.7") x 390 mm (15.37") rear window opening - Was 7204789 [A]		1
1		KIT, ENCL CAB SPCL	See Illustration CAB WINDOWS / NA8179 - NLA - Order 7128395 cab door kit & 7214673 rear window kit - 666 mm (26.2") x 379 mm (14.92") rear window opening - Was 7225132 [A], See Illustration CAB DOOR / NA6614 - NLA - Order 7128395 cab door kit & 7214673 rear window kit - 666 mm (26.2") x 379 mm (14.92") rear window opening - Was 7225132 [A]		1

CAB SEAL KIT

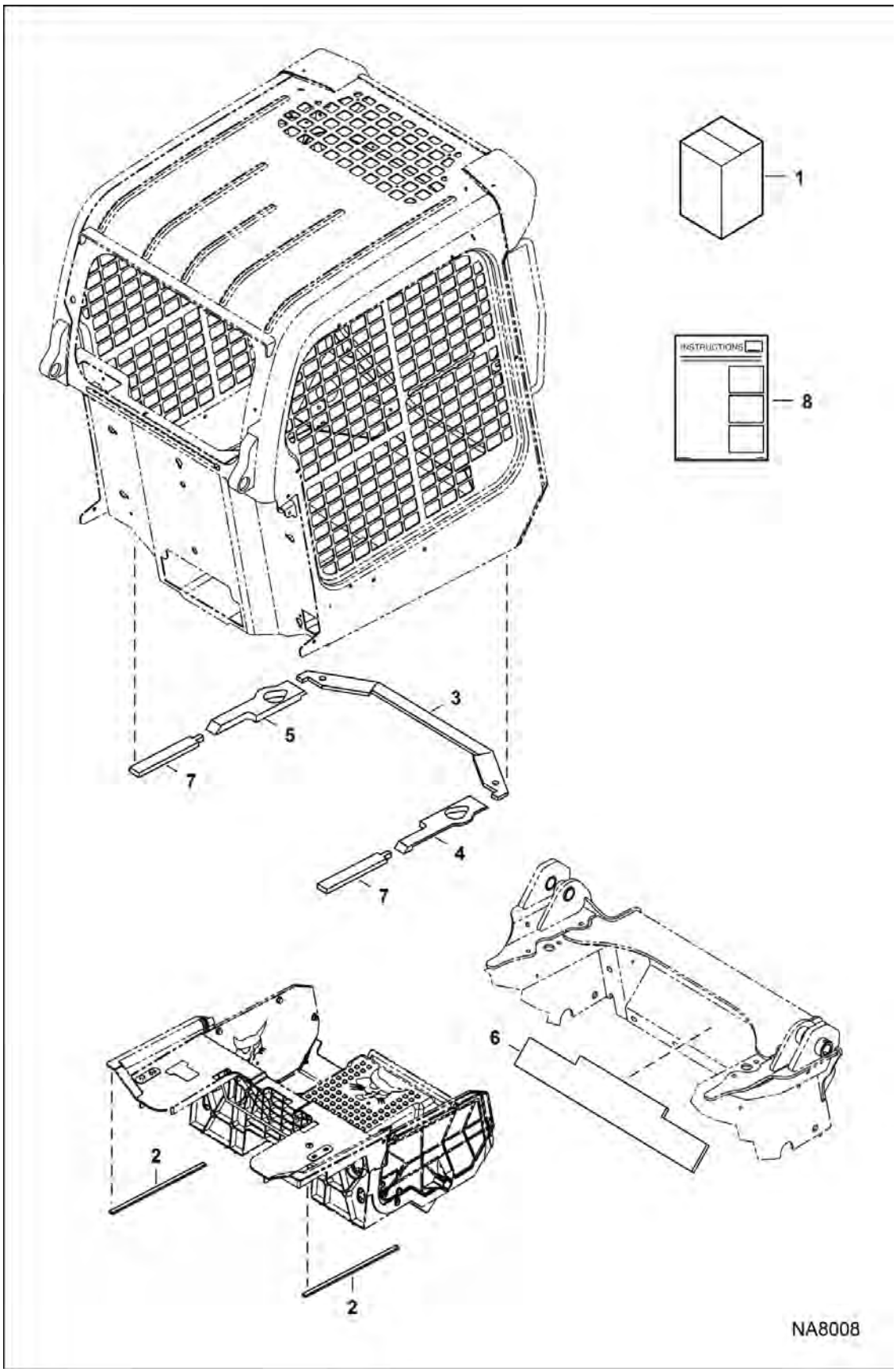

CAB SEAL KIT (Cont'd)

Ref No	Part Number	Description	Remarks	Serial Number	Qty
1	7227849	KIT, SEAL CAB	Ref. 2-8		1
2	7166196	FOAM, PANEL			2
3	7245476	SEAL	Was 7142875 [A]		1
4	7156087	SEAL	RH		1
5	7161789	SEAL	LH		1
6	7235751	FOAM, FRONT	Was 7163132 [A]		1
7	7245475	SEAL	Was 7142873 [A]		2
8	6987388ENUS	INSTRUCTIONS	Was 6987388 [A]		1

CAB WINDOWS

(Rear) (Polycarbonate) (666 mm) (26.2") x (379 mm) (14.92") Cab Opening

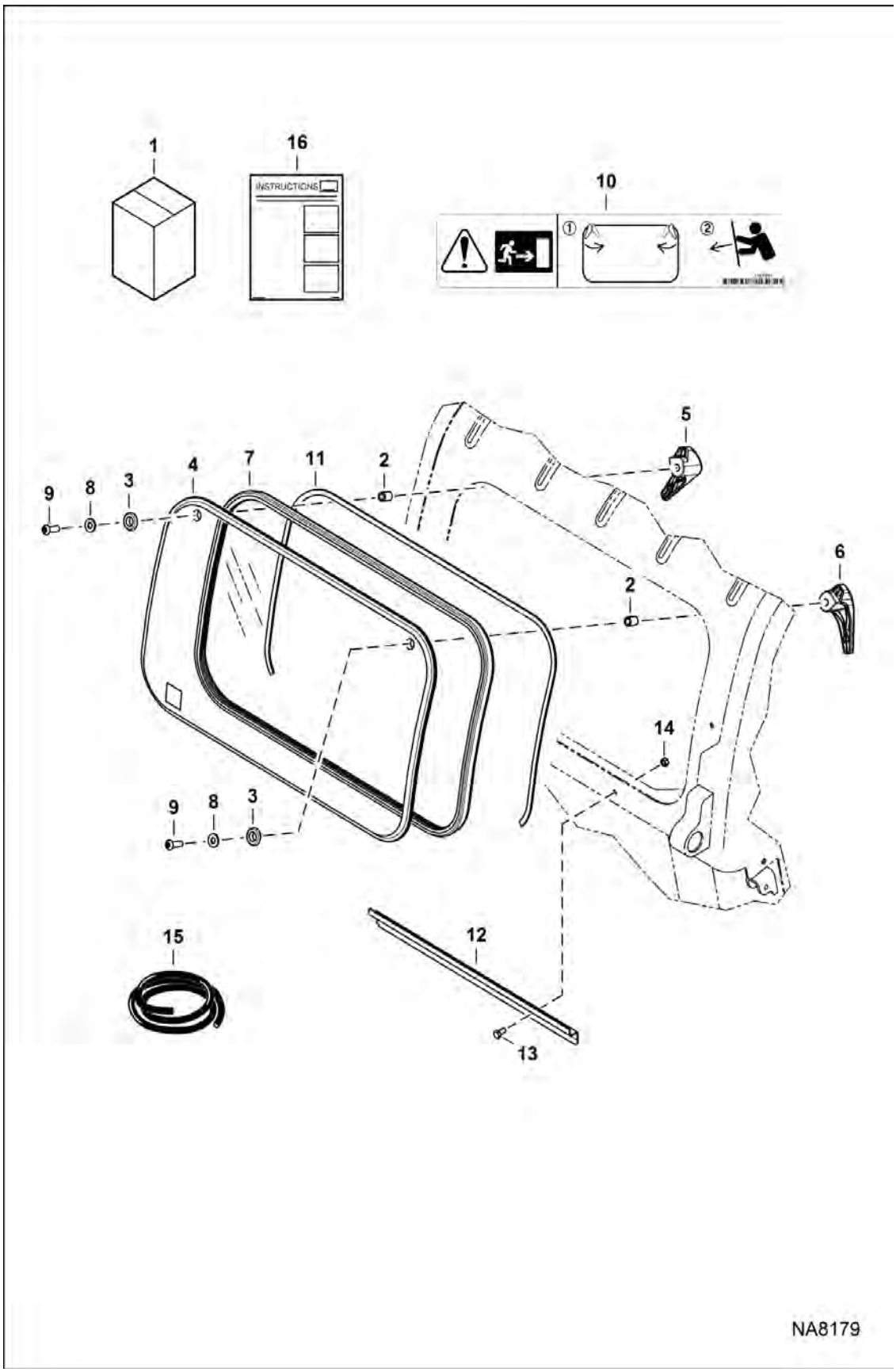

CAB WINDOWS (Cont'd)

(Rear) (Polycarbonate) (666 mm) (26.2") x (379 mm) (14.92") Cab Opening

Ref No	Part Number	Description	Remarks	Serial Number	Qty
1	7214673	KIT, WINDOW REAR	polycarbonate - Ref. 2-16		1
2	7185137	SPACER			2
3	7121425	BUSHING			2
4	7214138	WINDOW, CAB REAR			1
5	7150151	LATCH, WINDOW LEFT			1
6	7150152	LATCH, WINDOW RIGHT			1
7	7163988	SEAL, WINDOW REAR			1
8	25E14	WSHR			2
9	53C516	BOLT			2
10	7167991	DECAL, EXIT REAR			1
11		SEAL, FOAM	NLA - 1372 mm (54") - Order Ref. 15 - Was 7201402 [A]		1
12	7224369	CHANNEL			1
13	17C510	BOLT			2
14	95D5	NUT			2
15	6648416	SEAL BULK /FT	sold per foot		x
16	6990916ENUS	INSTRUCTIONS	WAS 6990916 [A]		1

CAB WINDOWS

(Rear) (Polycarbonate) (678 mm) (26.7") x (390 mm) (15.37") Cab Opening

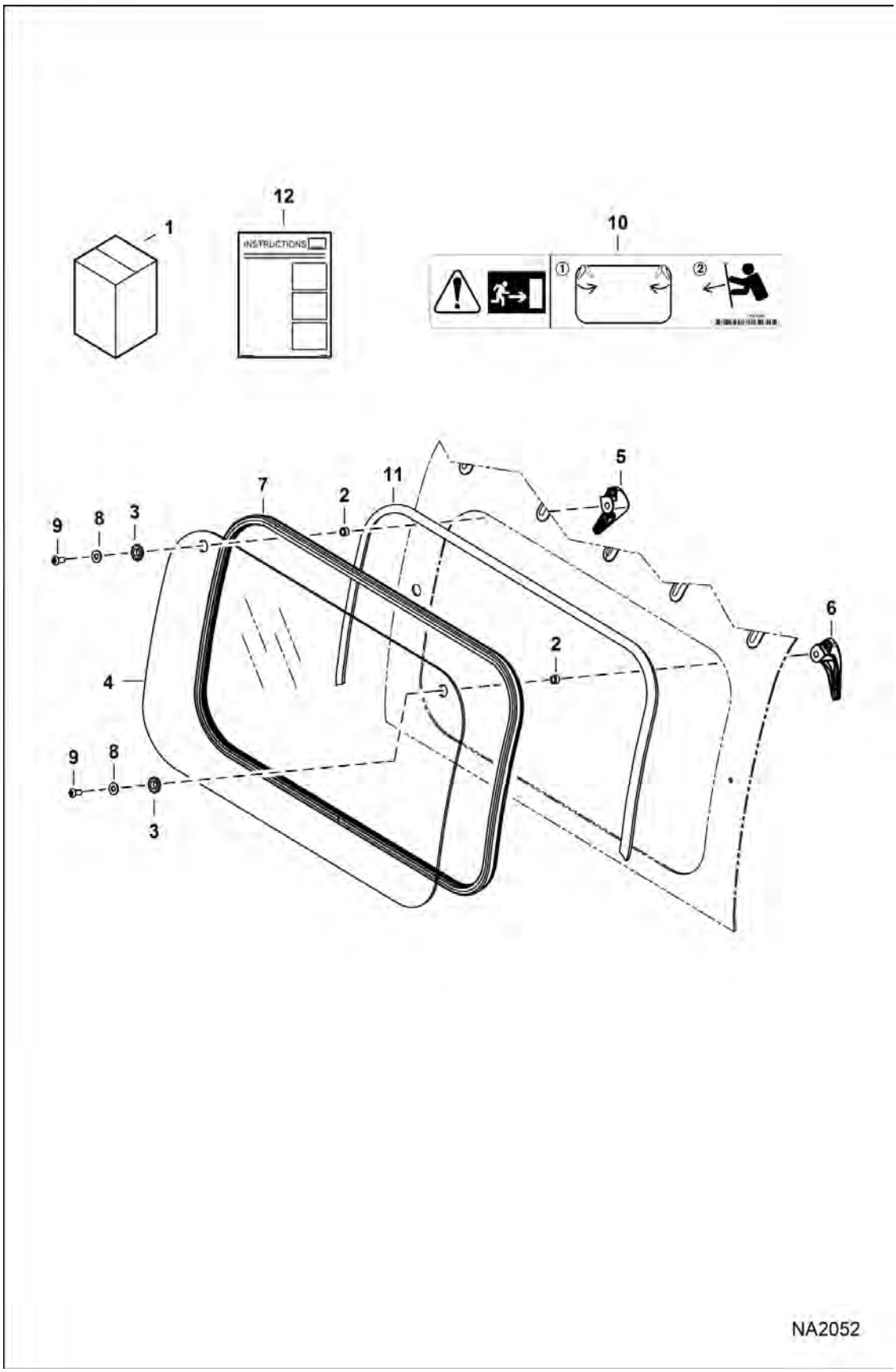

CAB WINDOWS (Cont'd)

(Rear) (Polycarbonate) (678 mm) (26.7") x (390 mm) (15.37") Cab Opening

Ref No	Part Number	Description	Remarks	Serial Number	Qty
1		KIT, WINDOW REAR	See Illustration CAB WINDOWS / NA8179 - NLA - polycarbonate - Ref. 2-12 - Order 7214673 rear window kit - Was 7128389 [C]		1
2	7185137	SPACER			2
3	7121425	BUSHING			2
4		WINDOW, CAB REAR	See Illustration CAB WINDOWS / NA8179 - NLA - Order 7214138 - Was 7183022 [C]		1
5	7150151	LATCH, WINDOW LEFT			1
6	7150152	LATCH, WINDOW RIGHT			1
7	7163988	SEAL, WINDOW REAR			1
8	25E14	WSHR			2
9	53C516	BOLT			2
10	7167991	DECAL, EXIT REAR			1
11	6648416	SEAL BULK /FT	1371,6mm (54") - sold per foot		x
12	6987229	INSTRUCTIONS			1

CAB WINDOWS
(Rear Window Removal Kit)

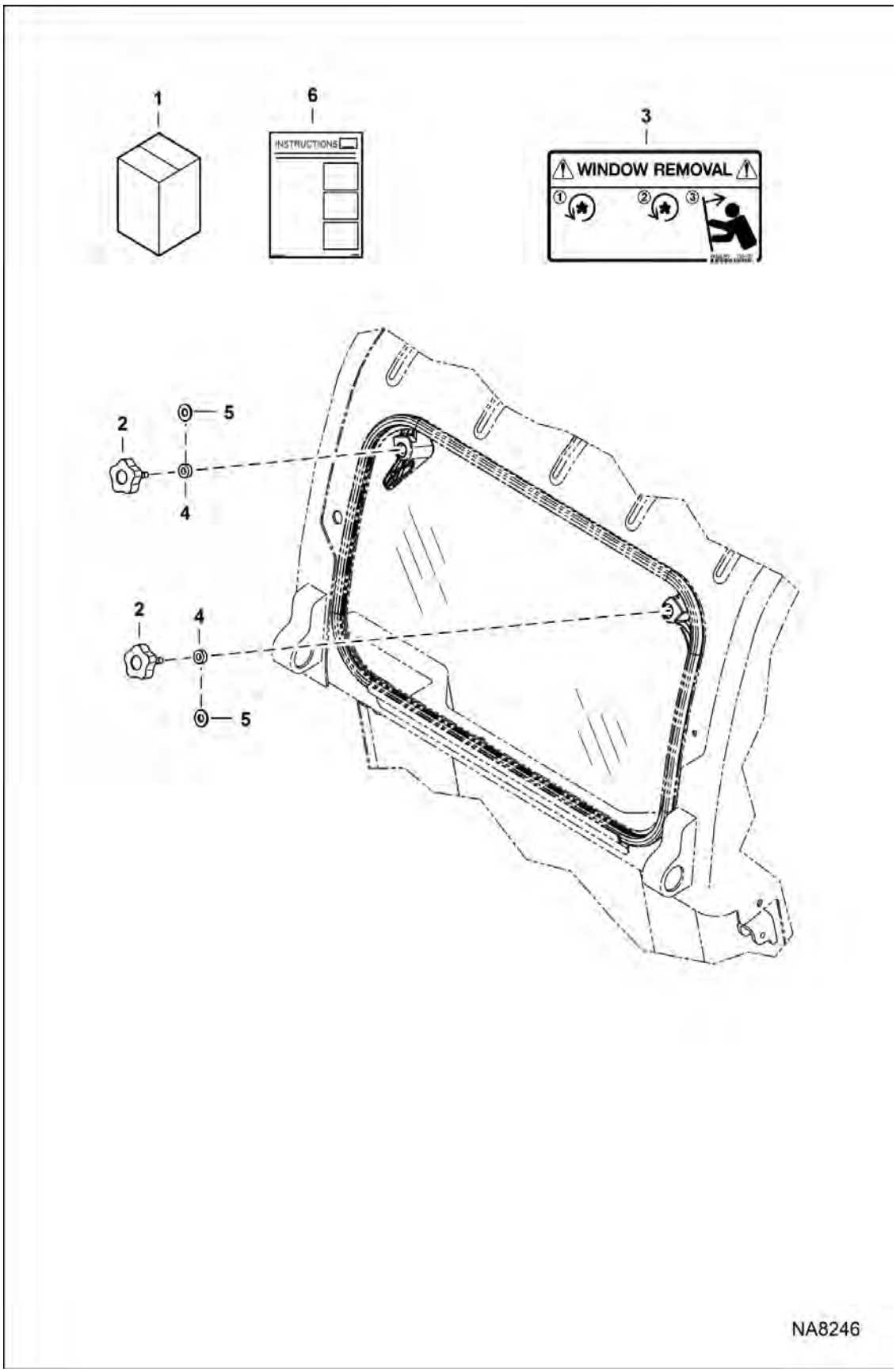

CAB WINDOWS (Cont'd)

(Rear Window Removal Kit)

Ref No	Part Number	Description	Remarks	Serial Number	Qty
1	7234899	KIT, REMOVAL WINDOW	Ref. 2-4 & 6		1
2	7234926	KNOB			2
3	7234007	DECAL, REMOVAL WINDOW			1
4	7234943	SPACER			2
5	25E14	WSHR	not in kit - polycarbonate window only		2
6	6990802ENUS	INSTRUCTIONS	Was 6990802 [A]		1

CAB WINDOWS
(Rear Window Removal Kit)

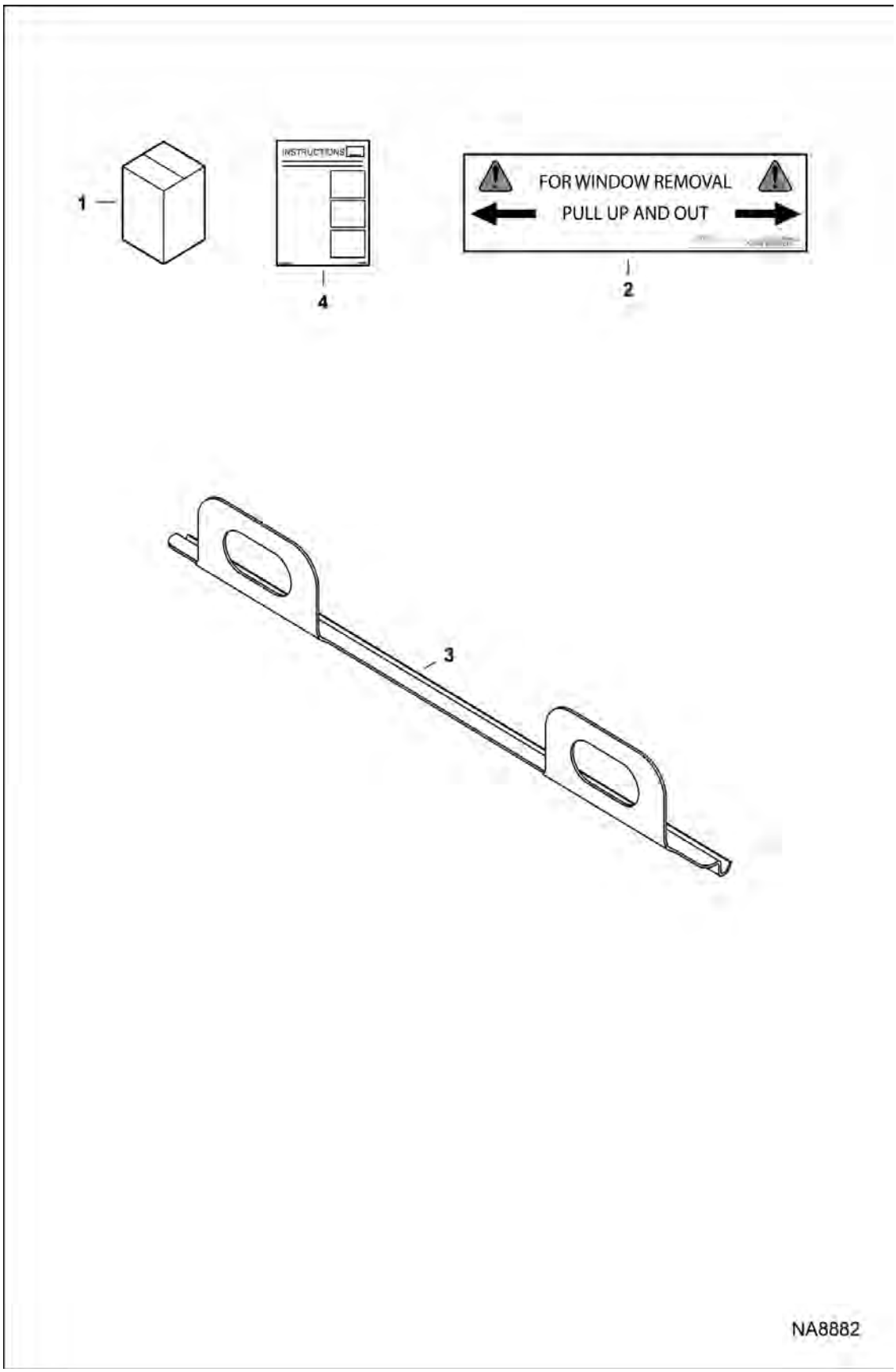

CAB WINDOWS (Cont'd)

(Rear Window Removal Kit)

Ref No	Part Number	Description	Remarks	Serial Number	Qty
1	6725946	KIT, WINDOW REAR			1
2	6726303	DECAL, OPERATION			1
3	6725421	HANDLE			1
4	6901029ENUS	INSTRUCTIONS	Was 6901029 [C]		1

CAB WINDOWS
(Side) (Glass)

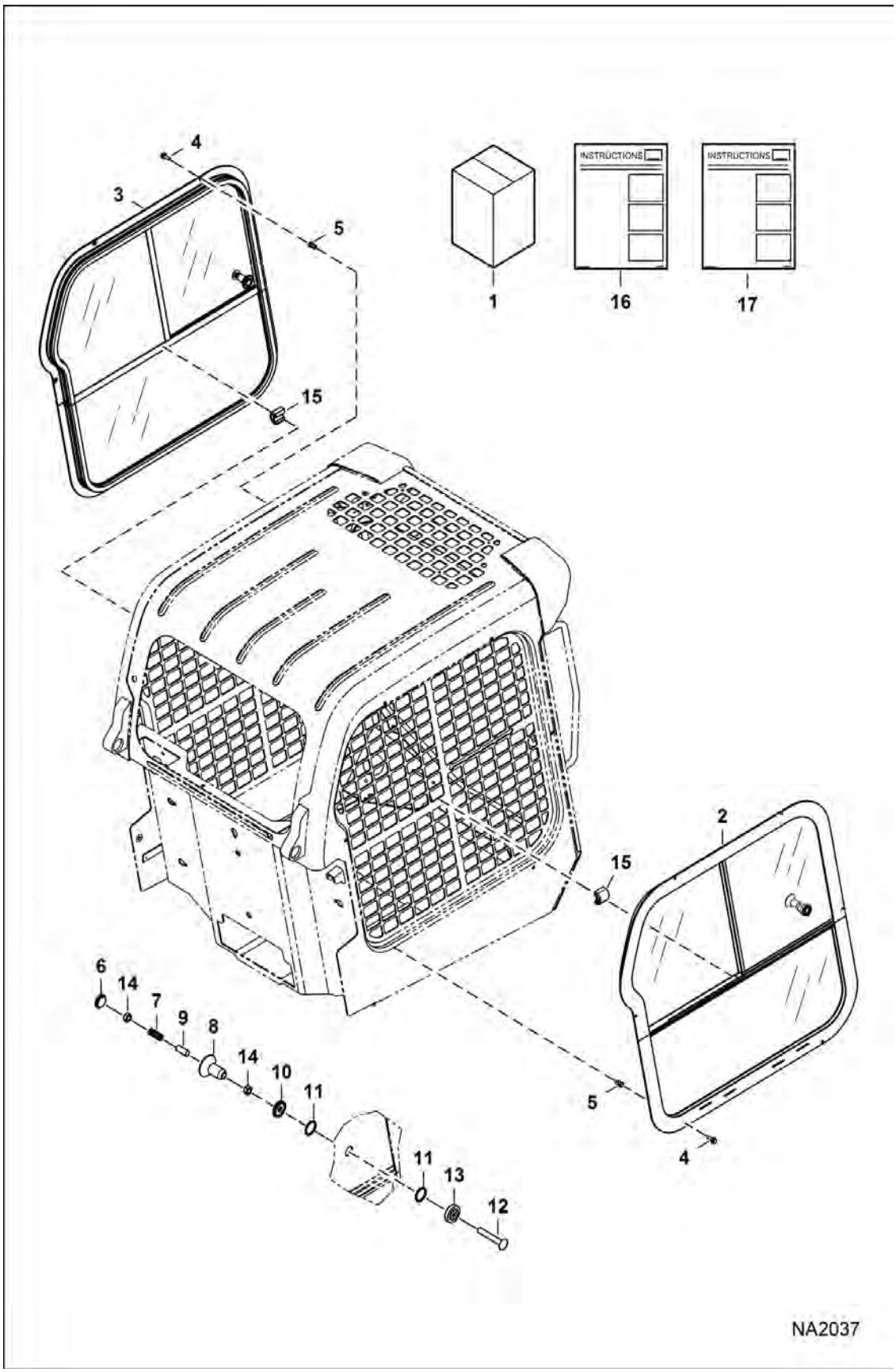

CAB WINDOWS (Cont'd)

(Side) (Glass)

Ref No	Part Number	Description	Remarks	Serial Number	Qty
1	7128342	KIT, WINDOW SIDE	Ref. 2-16		1
2	7148068	WINDOW ASSY	RH - W/Ref. 10-13		1
2	7261608	GLASS, LOWER	W/Ref. 17		1
2	7261609	GLASS, REAR FIXED RH	W/vertical wiper seal - Also includes Ref. 17		1
2	7261610	GLASS, FORWARD SLIDING RH	W/channel - Also includes Ref. 17		1
2	7265522	LATCH, WINDOW CAB	Ref. 6-14		1
3	7148069	WINDOW ASSY	LH - W/Ref. 10-13		1
3	7261608	GLASS, LOWER	W/Ref. 17		1
3	7266739	GLASS, REAR FIXED LH	W/vertical wiper seal - Also includes Ref. 17		1
3	7266740	GLASS, FORWARD SLIDING LH	W/channel - Also includes Ref. 17		1
3	7265522	LATCH, WINDOW CAB	Ref. 6-14		1
4	35C412	BOLT			12
5	7154910	INSERT, THREADED			10
6	7010357	CAP, END			2
7	7010358	SPRING			2
8	7010359	KNOB			2
9	7010360	SLEEVE			2
10		BUSHING	NLA - inner - Order Ref. 2 or 3		1
11		SEAL	NLA - Order Ref. 2 or 3		2
12		BOLT	NLA - Order Ref. 2 or 3		1
13		BUSHING	outer - Order Ref. 2 or 3		1
14	7010365	NUT			4
15	7254421	BUMPER			2
16	6987228ENUS	INSTRUCTIONS	Was 6987228 [A]		1
17	7265242ENUS	INSTRUCTIONS			1

CAB WINDOWS
(Side) (Polycarbonate)

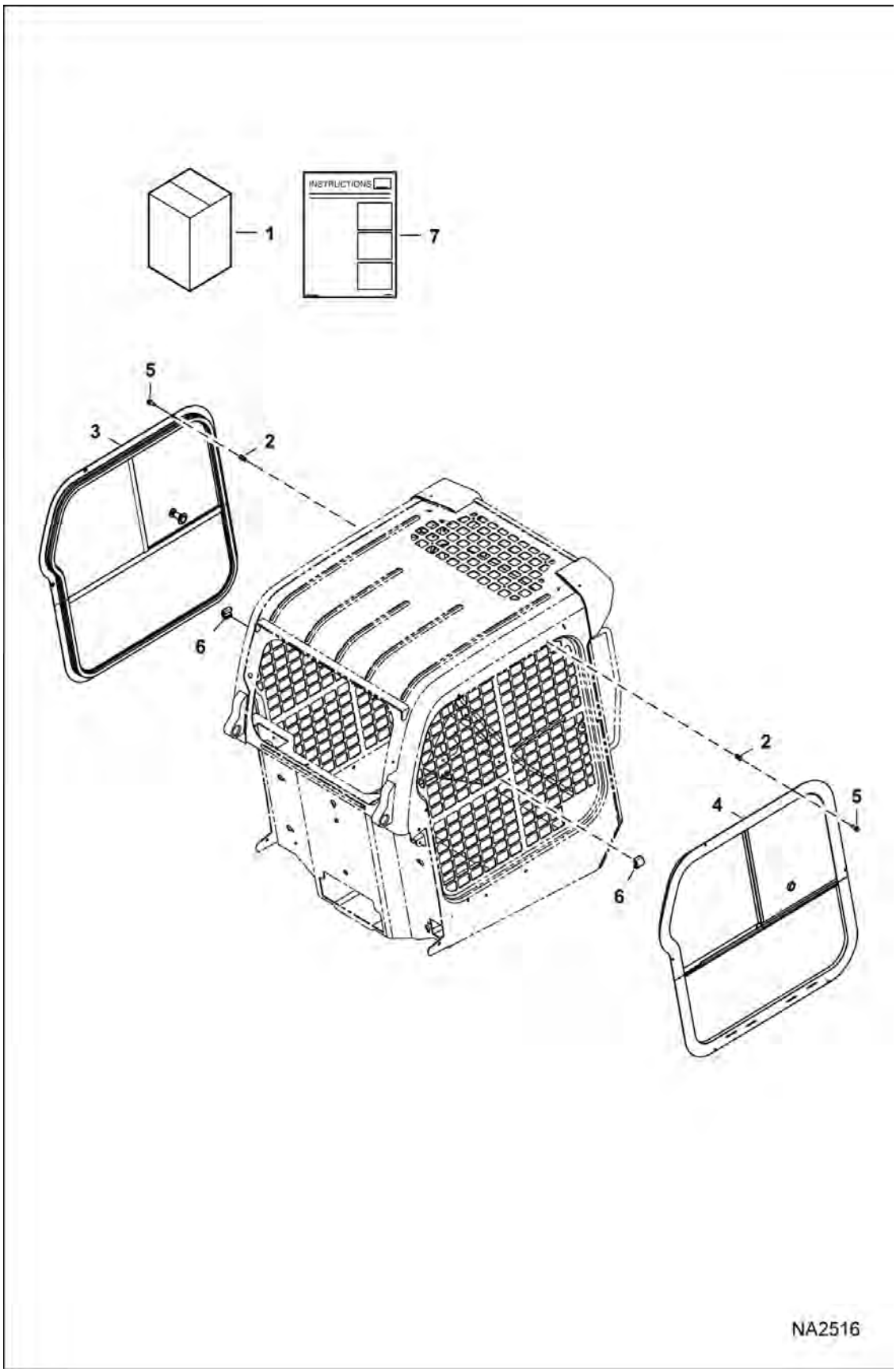

CAB WINDOWS (Cont'd)

(Side) (Polycarbonate)

Ref No	Part Number	Description	Remarks	Serial Number	Qty
1	7182335	KIT, WINDOW SIDE	Ref. 2-6		1
2	7154910	INSERT, THREADED			10
3	7180126	WINDOW, CAB SLIDING	polycarbonate		1
4	7180127	WINDOW, CAB SLIDING	polycarbonate		1
5	31C412	BOLT			12
6	7254421	BUMPER			2
7	6989418ENUS	INSTRUCTIONS	Was 6989418 [A]		1

COUNTERWEIGHT KIT
(Front Axle)

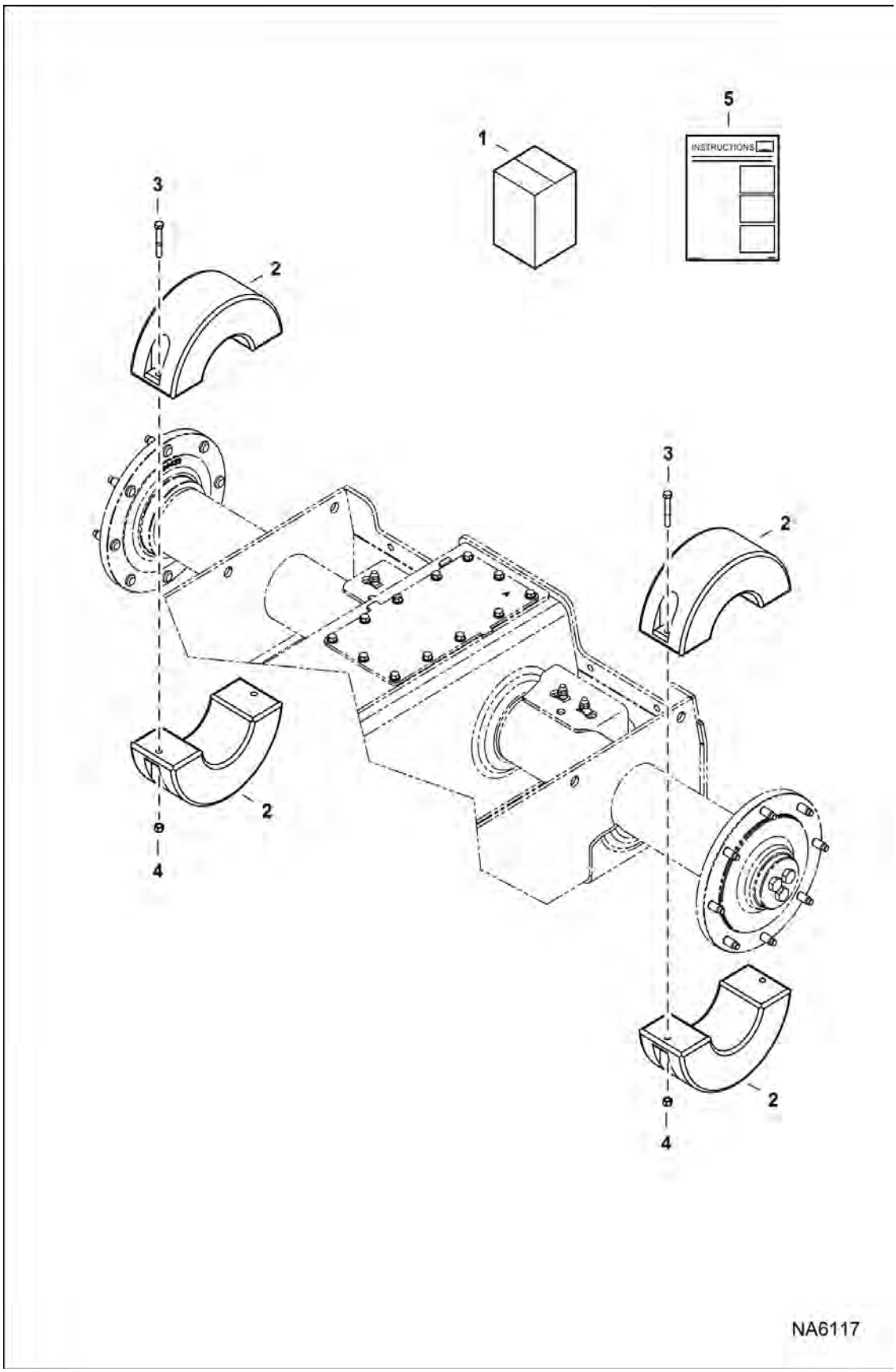

COUNTERWEIGHT KIT (Cont'd)
(Front Axle)

Ref No	Part Number	Description	Remarks	Serial Number	Qty
1	7204315	KIT, AXLE WEIGHT	Ref. 2-5		1
2	6714361	COUNTERWEIGHT, AXLE	front		4
3	17C640	BOLT			4
4	61D6	NUT 5			4
5	6990145ENUS	INSTRUCTIONS	Was 6990145 [A]		1

CUP HOLDER KIT

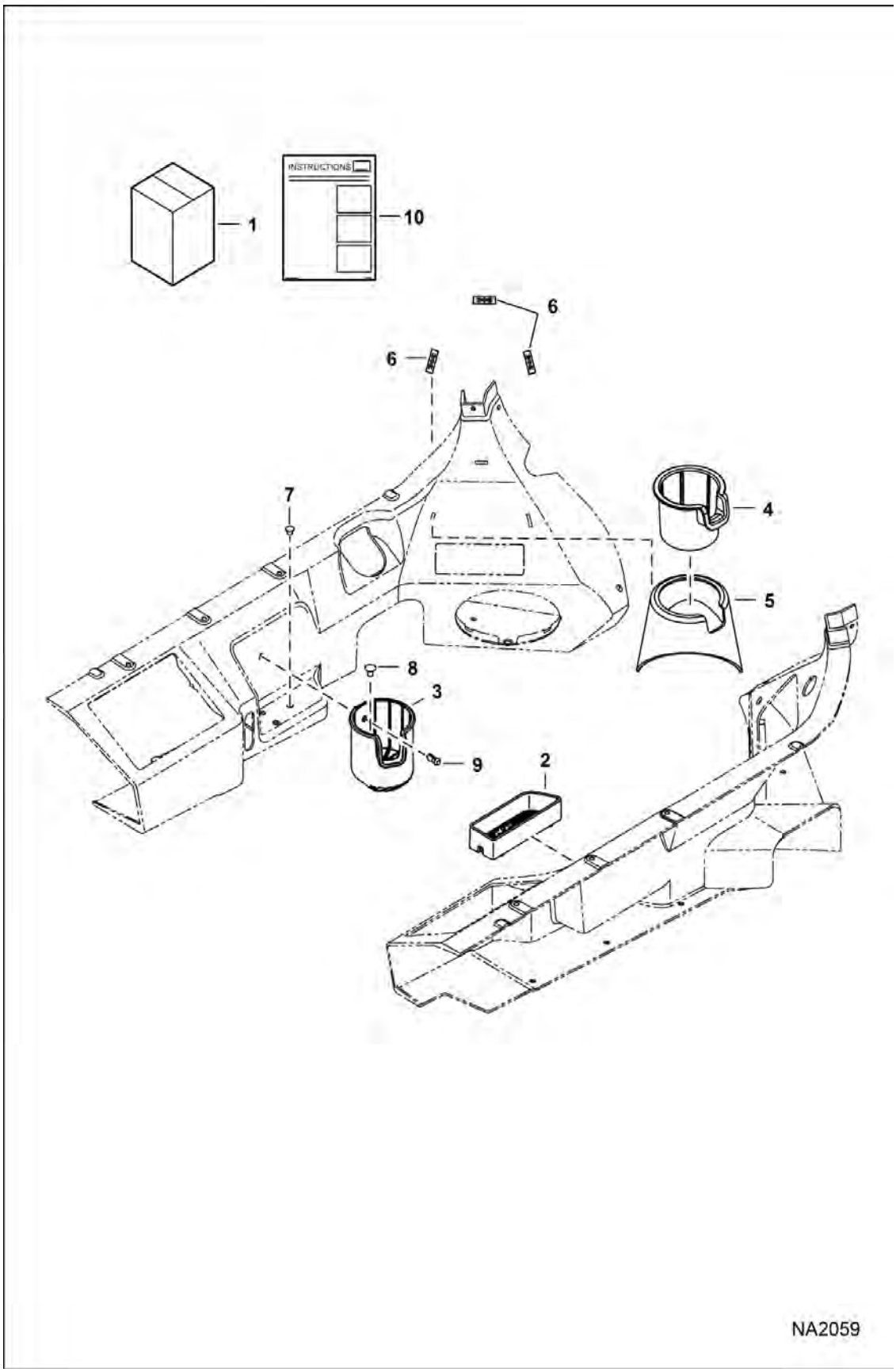

CUP HOLDER KIT (Cont'd)

Ref No	Part Number	Description	Remarks	Serial Number	Qty
1	7167395	KIT, CUP HOLDER	Ref. 3-10		1
2	7154404	CONTAINER	not in kit		1
3	7140441	HOLDER, CUP			1
4	7155649	HOLDER, CUP			1
5	7160320	HOLDER, CUP			1
6	7167003	CLIP			3
7	7188745	PLUG			8
8	6674895	RETAINER			1
9	7160383	RIVET, BIRD CAGE			1
10	6987227ENUS	INSTRUCTIONS	Was 6987227 [A]		1

DECALS
(Inside)

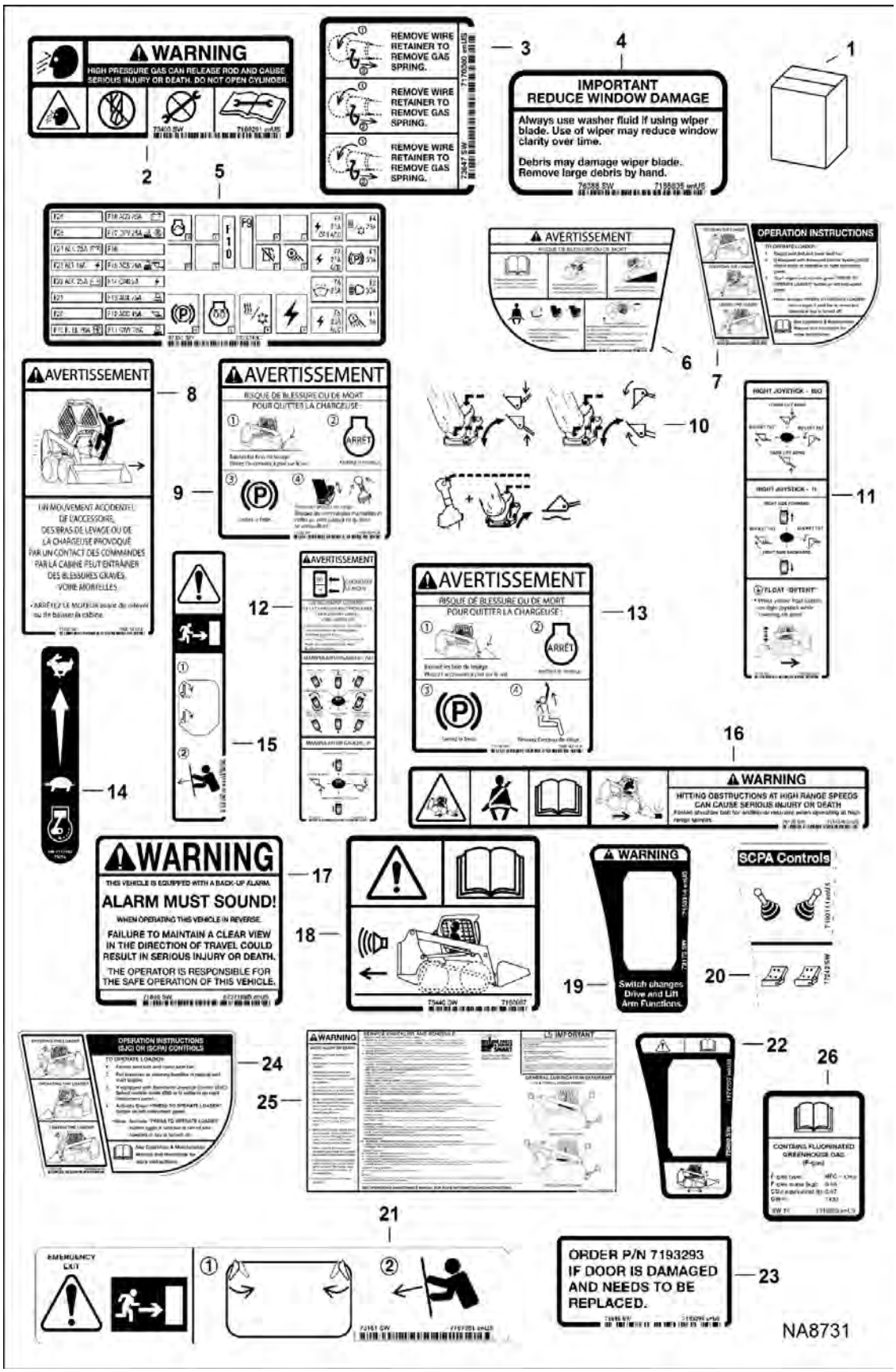

DECALS (Cont'd)
(Inside)

Ref No	Part Number	Description	Remarks	Serial Number	Qty
1	7249561	KIT, DECAL	See Illustration DECALS / NA8732 Ref. 2-25		1
2	7169291	DECAL			1
3	7170360	DECAL, SPRING REMOVAL			1
4	7185835	DECAL, IMPORTANT			1
5	7232310	DECAL, FUSE			1
6	7167994	DECAL, WARNING			1
6	7168038	DECAL, WARNING	no text - not in kit		1
7	7168136	DECAL			1
7	7329990	DECAL OPERATION	no text - not in kit - Was 7168137 [A]		1
8	7168138	DECAL, WARNING			1
8	7168139	DECAL, WARNING	no text - not in kit		1
9	7168140	DECAL, WARNING			1
9	7168141	DECAL, WARNING	no text - not in kit		1
10	7168272	DECAL			1
10	7168273	DECAL, CONTROL	no text - not in kit		1
11	7168023	DECAL			1
11	7168081	DECAL, OPERATION	no text - not in kit		1
12	7168024	DECAL			1
12	7168082	DECAL, OPERATION	no text - not in kit		1
13	7168142	DECAL, WARNING			1
13	7168143	DECAL, WARNING	no text - not in kit		1
14	7177742	DECAL			1
15	7168025	DECAL EMERGENCY DOOR			1
16	7184346	DECAL WARNING			1
17	6737189	DECAL, WARNING			1
18	7180087	DECAL, WARNING			1
19	7168114	DECAL, SWITCH			1
20	7190111	DECAL, CONTROL			1
21	7167991	DECAL, EXIT REAR			1
22	7177707	DECAL			1
23	7193294	DECAL, SERVICE			1
24	7168144	DECAL			1

DECALS (Cont'd)
(Inside)

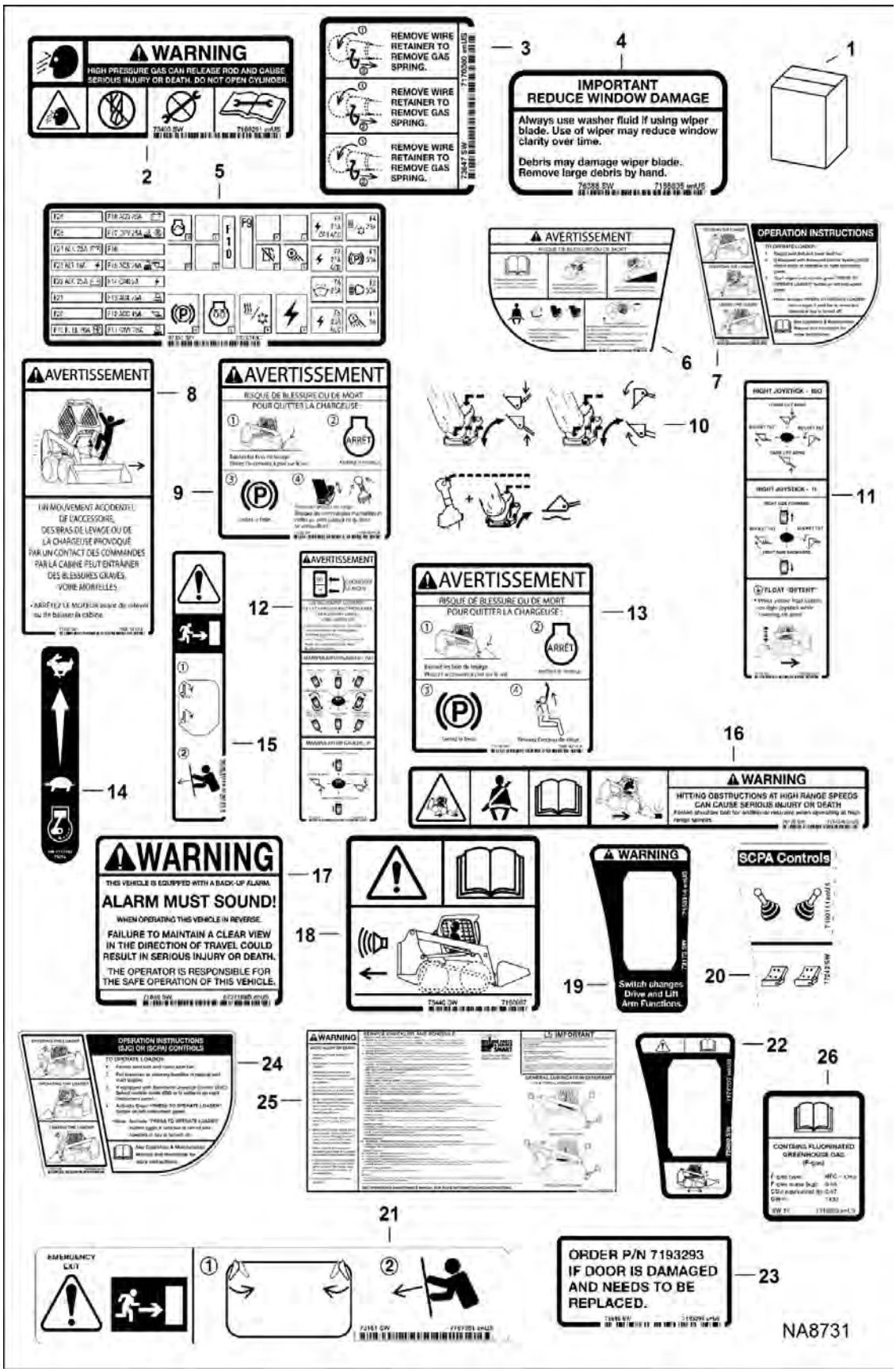

DECALS (Cont'd)
(Inside)

Ref No	Part Number	Description	Remarks	Serial Number	Qty
24	7329991	DECAL OPERATION	no text - not in kit - Was 7168145 [A]		1
25	7242070	DECAL, SERVICE			1
25	7205727	DECAL, SERVICE	no text - not in kit		1
26	7318895	DECAL HVAC	EMEA		1

DECALS
(Inside) (No Text)

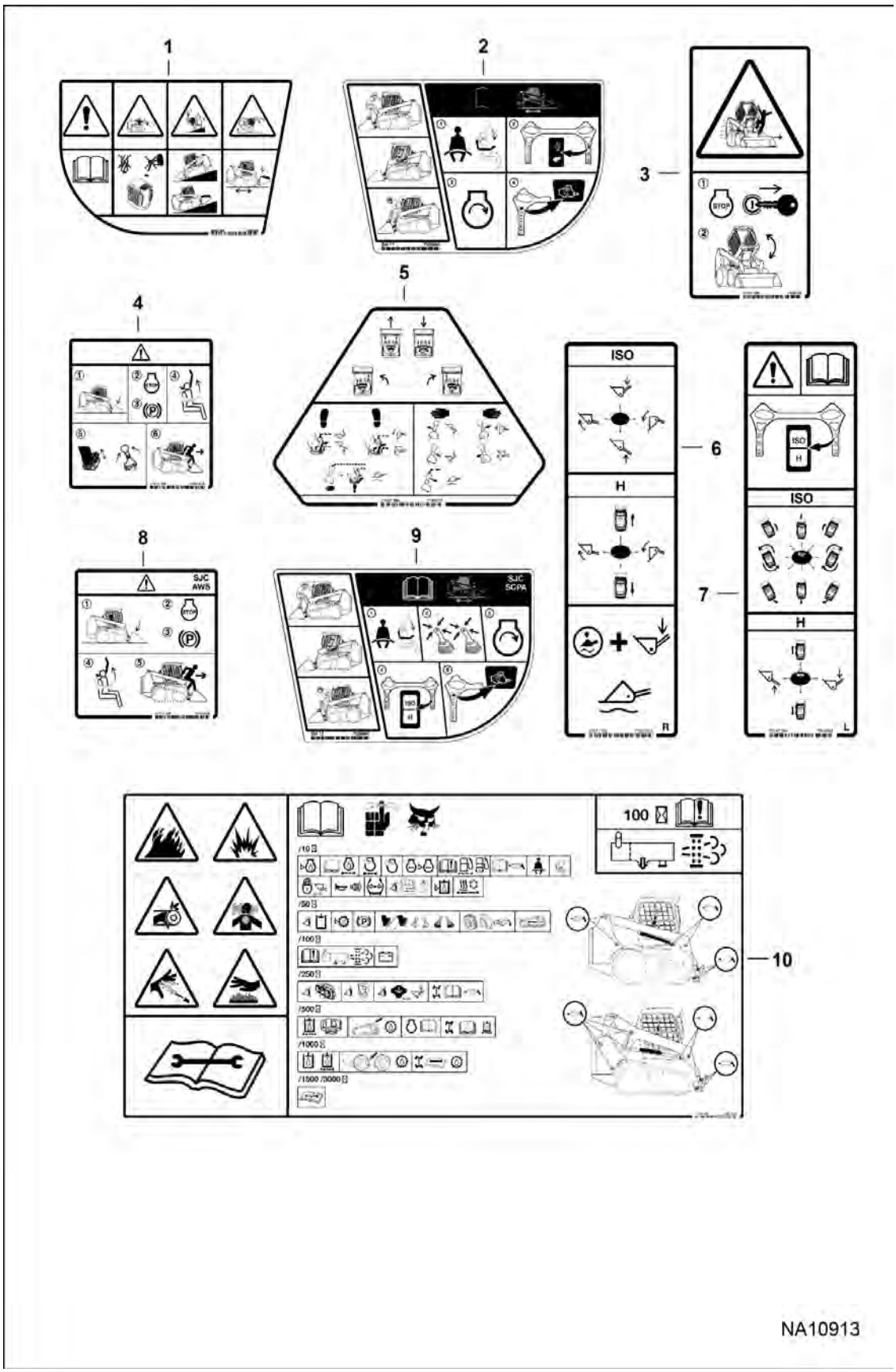

DECALS (Cont'd)
(Inside) (No Text)

Ref No	Part Number	Description	Remarks	Serial Number	Qty
1	7168038	DECAL, WARNING			1
2	7329990	DECAL OPERATION	Was 7168137 [A]		1
3	7168139	DECAL, WARNING			1
4	7168141	DECAL, WARNING			1
5	7168273	DECAL, CONTROL			1
6	7168081	DECAL, OPERATION			1
7	7168082	DECAL, OPERATION			1
8	7168143	DECAL, WARNING			1
9	7329991	DECAL OPERATION	Was 7168145 [A]		1
10	7205727	DECAL, SERVICE			1

DECALS
(Outside)

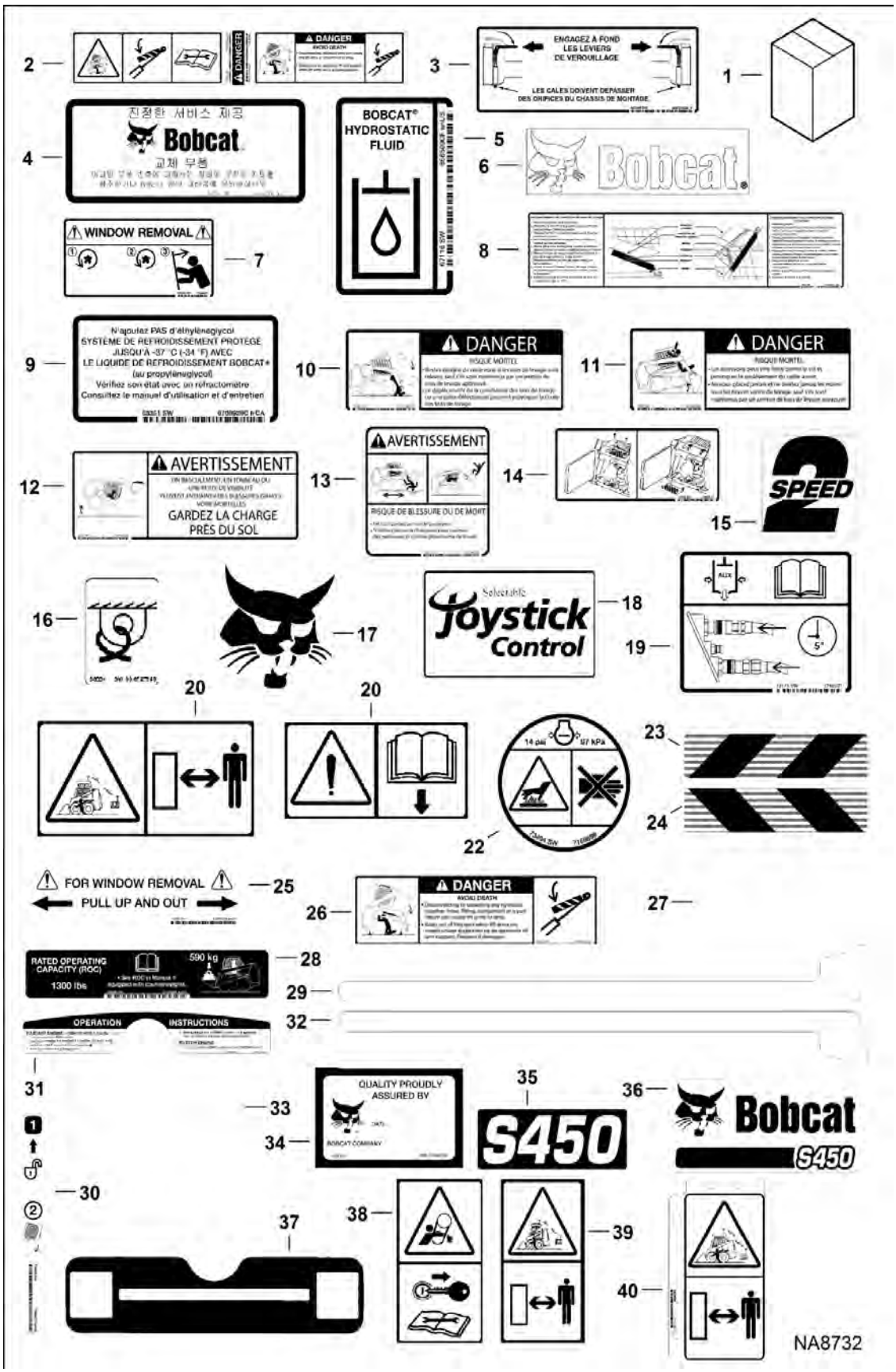

DECALS (Cont'd)
(Outside)

Ref No	Part Number	Description	Remarks	Serial Number	Qty
1	7249561	KIT, DECAL	See Illustration DECALS / NA8731 Ref. 2-19, 22-37		1
2	7170355	DECAL, DANGER			2
3	6561383	DECAL, OPERATION 5			1
4	6565200	DECAL, FILTER			1
4	7120569	DECAL, FILTER	no text - not in kit		1
5	6565990	DECAL, OIL HYD 5			1
5	7120570	DECAL	no text - not in kit		1
6	6735901	DECAL, LOGO BOBCAT HEAD			1
7	7234007	DECAL, REMOVAL WINDOW			1
8	6706558	DECAL, OPERATION			1
8	7168036	DECAL	no text - not in kit		1
9	6708929	DECAL, COOLANT			1
9	7120573	DECAL	no text - not in kit		1
10	7167989	DECAL, DANGER			1
10	7168033	DECAL, DANGER	no text - not in kit		1
11	7167990	DECAL, DANGER			1
11	7168034	DECAL, DANGER	no text - not in kit		1
12	7167993	DECAL, WARNING			1
13	7167996	DECAL, WARNING			1
13	7168040	DECAL, WARNING	no text - not in kit		1
14	7188542	DECAL, INSTRUCTIONS			1
15	6729078	DECAL	2-speed		1
16	6727595	DECAL, TIE-DOWN			1
17	7116870	DECAL, LOGO BOBCAT HEAD			1
18	7145528	DECAL	SJC - R/C ready		1
18	6737626	DECAL SJC	non R/C ready - Was 7145528 [B]		1
19	7168031	DECAL			1
20	6692757	DECAL, "REMOTE CONTROL OPERATION", LARGE	not in kit		1
21	6692763	DECAL WARNING, "READ THE MANUAL"	not in kit		1
22	7169699	DECAL			1
23	7220344	DECAL, REFLECTIVE			1

DECALS (Cont'd)
(Outside)

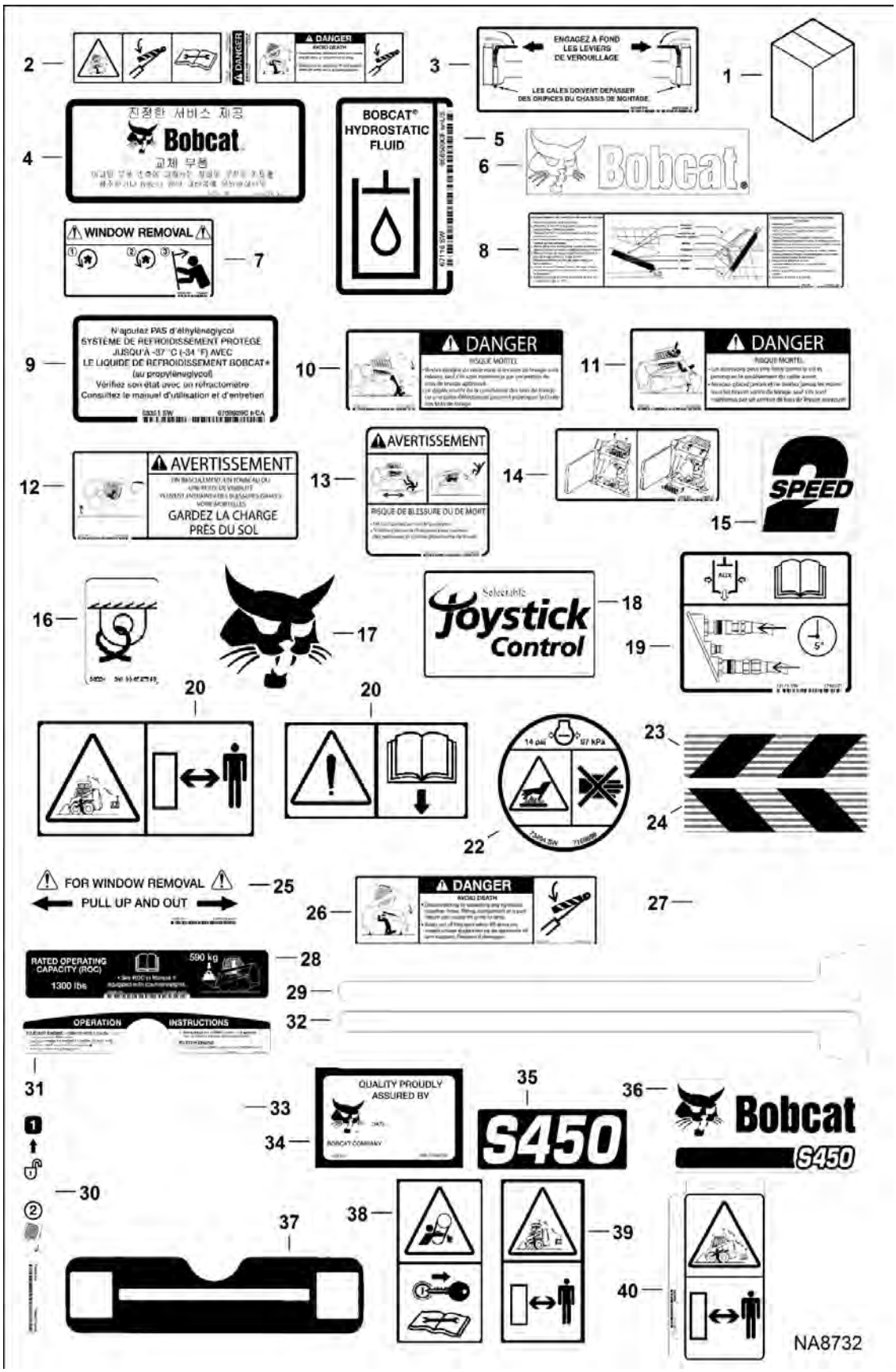

DECALS (Cont'd)
(Outside)

Ref No	Part Number	Description	Remarks	Serial Number	Qty
24	7220348	DECAL, REFLECTIVE			1
25	6726303	DECAL, OPERATION			1
26	7167988	DECAL, DANGER			1
27	7140927	DECAL			1
28	7219038	DECAL			1
29	7141375	DECAL			1
30	7169877	DECAL			1
31	7141235	DECAL			1
32	7174328	DECAL			1
33	7174537	DECAL			1
34	7106218	DECAL QUALITY APPRVL			2
35	7219035	DECAL			1
36	7219036	DECAL			2
37	7236918	DECAL, TAILGATE BASE			1
38	6692767	DECAL, "ROTATING PARTS"	not in kit		1
39	6692768	DECAL, "REMOTE CONTROL OPERATION", SMALL	not in kit		1
40	7135569	DECAL	tag - not in kit		1

DECALS
(Outside) (No Text)

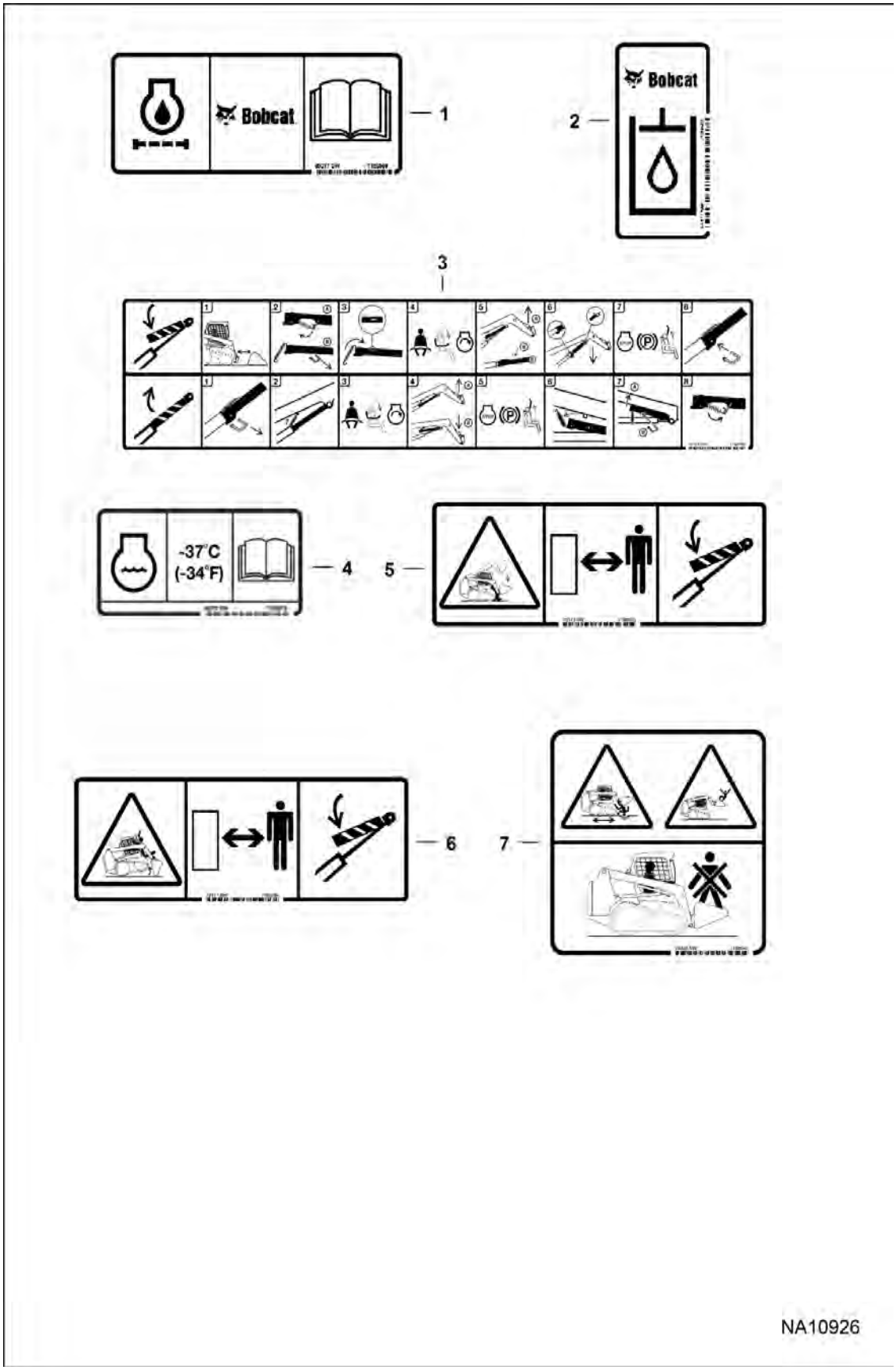

Illustration NA10926

DECALS (Cont'd)
(Outside) (No Text)

Ref No	Part Number	Description	Remarks	Serial Number	Qty
1	7120569	DECAL, FILTER			1
2	7120570	DECAL			1
3	7168036	DECAL			1
4	7120573	DECAL			1
5	7168033	DECAL, DANGER			1
6	7168034	DECAL, DANGER			1
7	7168040	DECAL, WARNING			1

DELUXE HEADLINER KIT

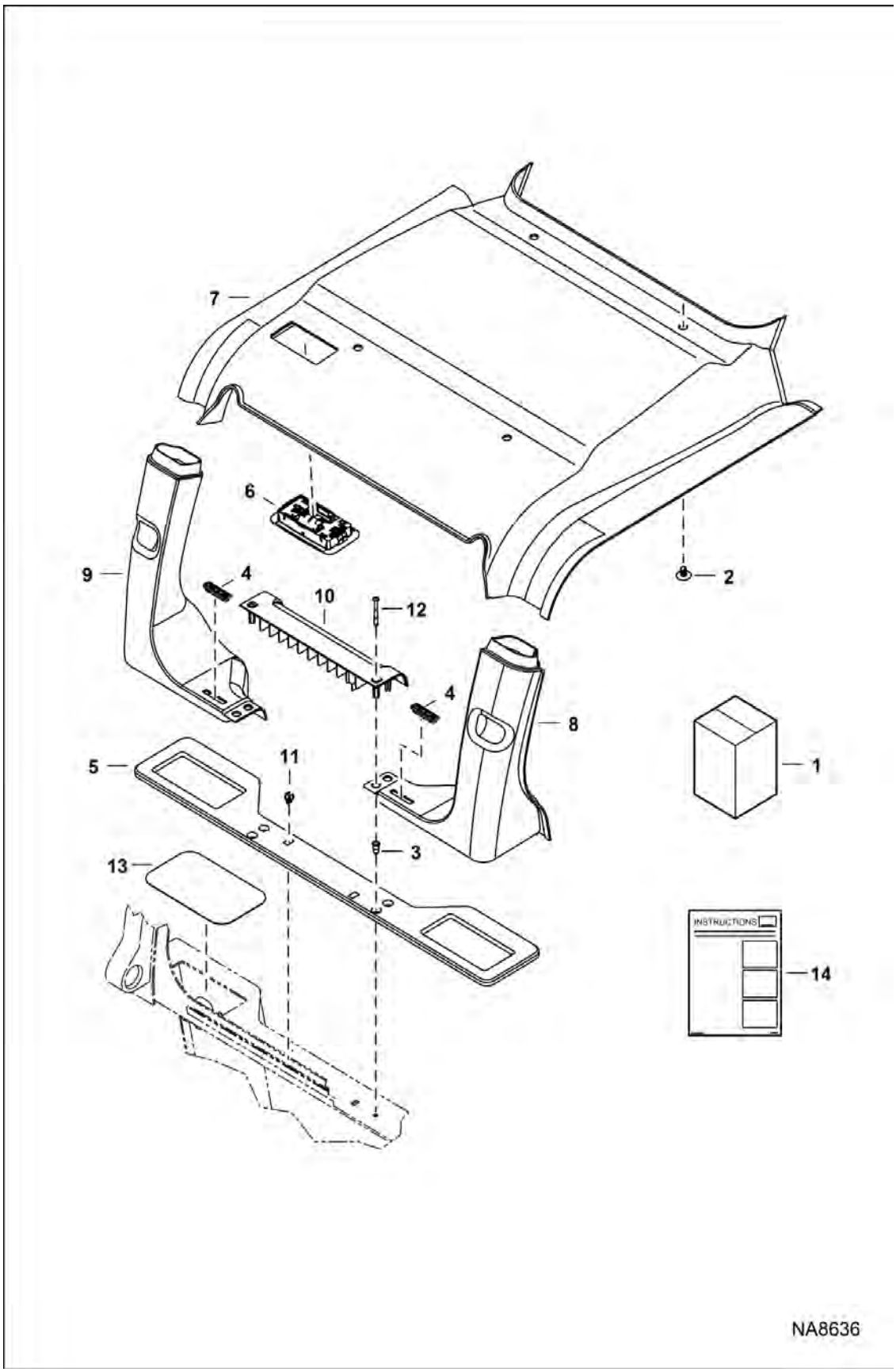

DELUXE HEADLINER KIT (Cont'd)

Ref No	Part Number	Description	Remarks	Serial Number	Qty
1	7156253	KIT, HEADLINER DLX	Ref. 2-14		1
2	6674895	RETAINER			4
3	6675033	INSERT, THREADED			2
4	7145885	VENT, DEFROST			2
5	7153832	SEAL, SHELF REAR			1
6	7229539	LIGHT, CAB HEADLINER	2 position switch		1
6		LIGHT	NLA - 3-position switch - Order 7166629 light - Was 7155797 [A]		1
7	7234061	HEADLINER DLX			1
8	100333SUB	DUCT, AIR	RH - W/Ref. 3 - Was 7165330		1
9	100334SUB	DUCT, AIR	LH - W/Ref. 3 - Was 7165331		1
10	7165332	SHELF, REAR			1
11	7165333	CLIP			2
12	7165799	SCREW			2
13	7168610	COVER			2
14	6987355ENUS	INSTRUCTIONS	Was 6987355 [A]		1

DELUXE INTERIOR KIT
(3-Connector Harness)

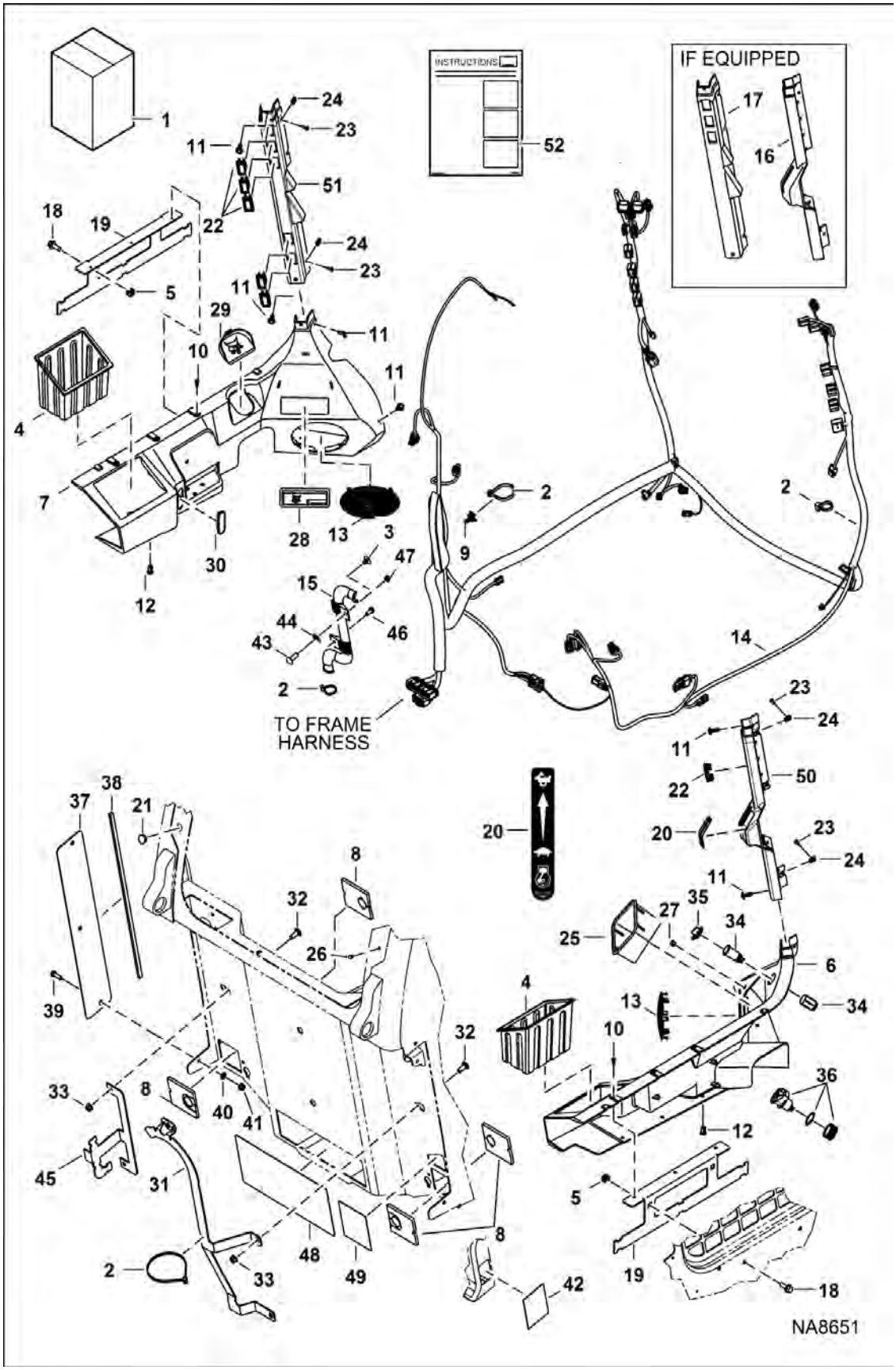

DELUXE INTERIOR KIT (Cont'd)

(3-Connector Harness)

Ref No	Part Number	Description	Remarks	Serial Number	Qty
1	7241484	KIT, HEADLINER DLX	Ref. 2-7, 9-13, 15-35 & 37-50		1
2	6624289	STRAP, TIE			23
3	6674895	RETAINER	600, 700 & 800's		2
4	7145268	CONTAINER, STORAGE			2
5	7149204	NUT			4
6	7155642	FENDER, PANEL RH			1
7	7155643	FENDER, PANEL L.H.			1
8	7185150	PLUG, HARNESS CAB	not in kit		4
9	7015668	MOUNT, STRAP TIE			2
10	7160381	RIVET, BIRD CAGE			6
11	7160382	RIVET, BIRD CAGE			8
12	7160383	RIVET, BIRD CAGE			10
13	7161939	GRILL			2
14		HARNESS, CAB DLX	See Illustration CAB ELECTRICAL CIRCUITRY / NA8536 - not in kit		1
15	7164073	GUIDE			1
16		COLUMN, FRONT RIGHT	NLA - Order Ref 50 - Was 7164347 [A]		1
17		COLUMN, FRONT LEFT	NLA - Order Ref 51 - Was 7164348 [A]		1
18	35C616	BOLT 5			4
19	7193021	BRACKET			2
20	7177742	DECAL	throttle		1
21	6657719	PLUG	0.75" dia hole		2
22	6665314	PLUG	Use W/Ref 16, 17		5
22	6665314	PLUG	Use W/Ref 50, 51		8
23	6669224	TAP SCREW			6
24	7142762	CLIP			6
25	7154285	BOX,RADIO DELETE			1
26	7188745	PLUG			1
27	7182942	PLUG			1
28	7165344	STORAGE			1
29	7165345	DOOR, COVER			1
30	7165346	DOOR, COVER			1
31	7199044	BRACKET			1
32	10C616	BOLT 10			5
33	97D6	NUT 10			6
34	6664223	OUTLET			1
35	6664224	CAP			1
36	7001664	PLUG, POWER	not in kit		1
37	7166544	COVER, HVAC			2
38	7182796	SEAL, FOAM			2

DELUXE INTERIOR KIT (Cont'd)
(3-Connector Harness)

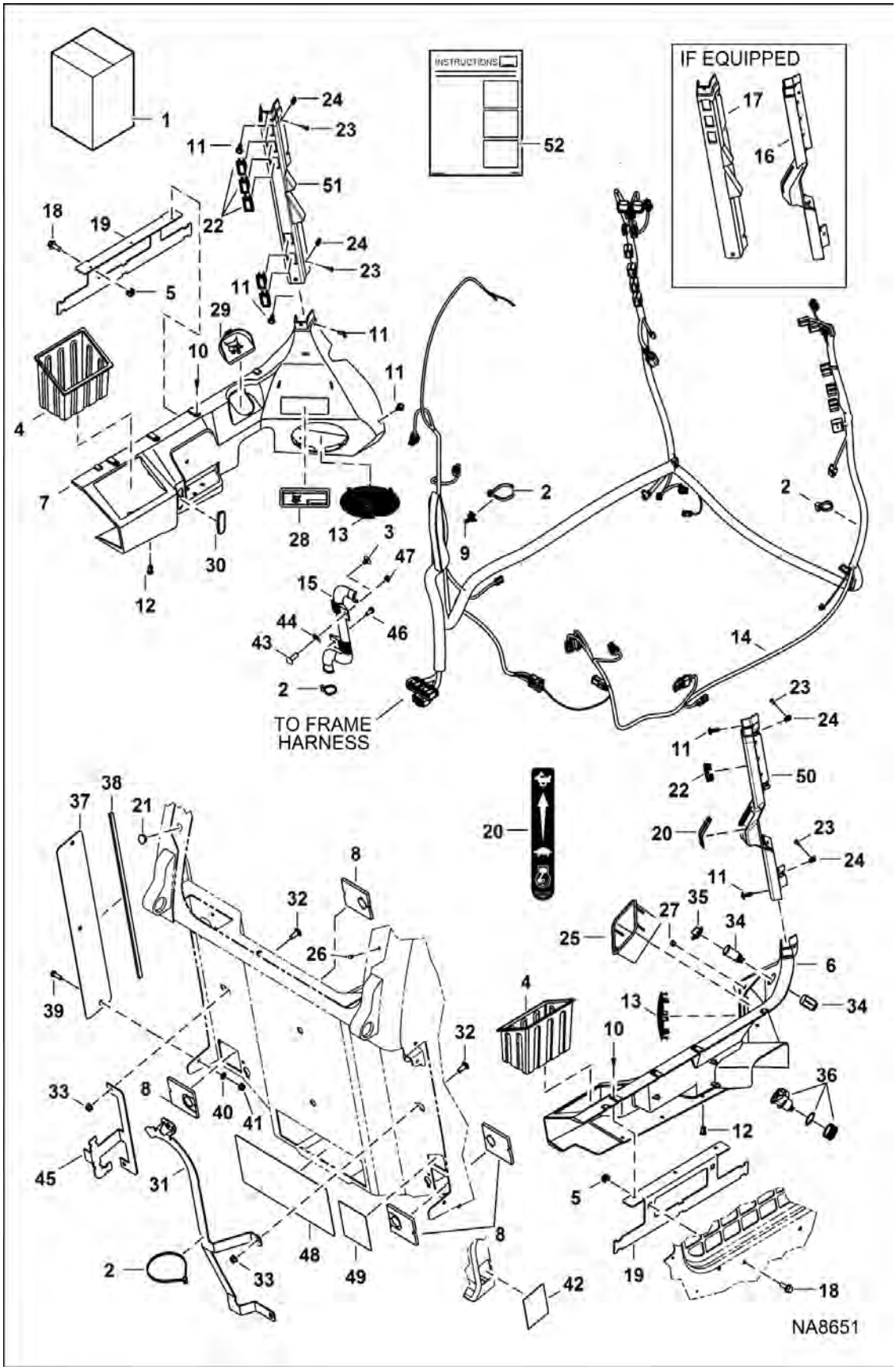

Illustration NA8651

Model S450 MT2KAMEA
6990825

DELUXE INTERIOR KIT (Cont'd)

(3-Connector Harness)

Ref No	Part Number	Description	Remarks	Serial Number	Qty
39	4CM825	BOLT HEX HEAD	Was 1CM825 [A]		4
40	1EM80	WASHER PLAIN			4
41	1DM8	NUT			4
42	7197973	COVER			1
43	10C612	BOLT	500's		1
44	6684033	NUT	500's		1
45	7226854	BRACKET			1
46	84G3712	BOLT 5	500's		1
47	57D6	NUT 5	500's		1
48	7178954	COVER, HVAC			1
49	7197972	COVER			1
50	7282966	COLUMN, FRONT RIGHT			1
51	7265545	COLUMN, FRONT LEFT			1
52	6990988ENUS	INSTRUCTIONS	Was 6990988 [A]		1

ELECTRICAL CONTROLS KIT
(7-Pin)

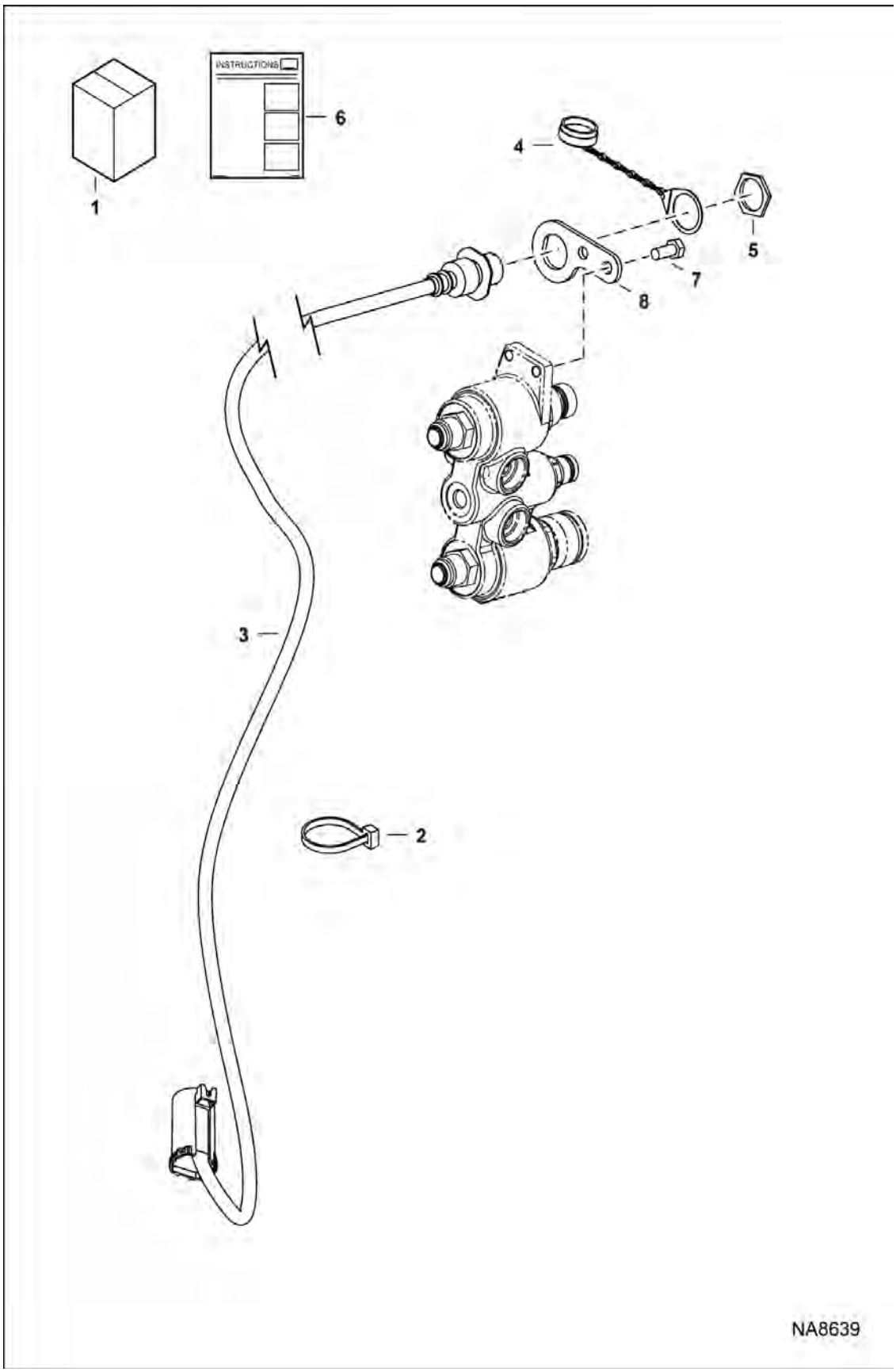

ELECTRICAL CONTROLS KIT (Cont'd)

(7-Pin)

Ref No	Part Number	Description	Remarks	Serial Number	Qty
1	7229102	KIT, ACD 7-PIN	Ref. 2-8		1
2	6624289	STRAP, TIE			1
3	7229104	HARNESS, ACD 7-PIN	W/Ref. 4-5 - 119" (3025 mm) long		1
4	6675026	CAP, CONNECTOR			1
5	6688338	NUT	jam		1
6	6990856ENUS	INSTRUCTIONS	Was 6990856		1
7	1C512	BOLT			2
8	7229105	MOUNT, ELEC COUPLER			1

ELECTRICAL CONTROLS KIT
(14-Pin)

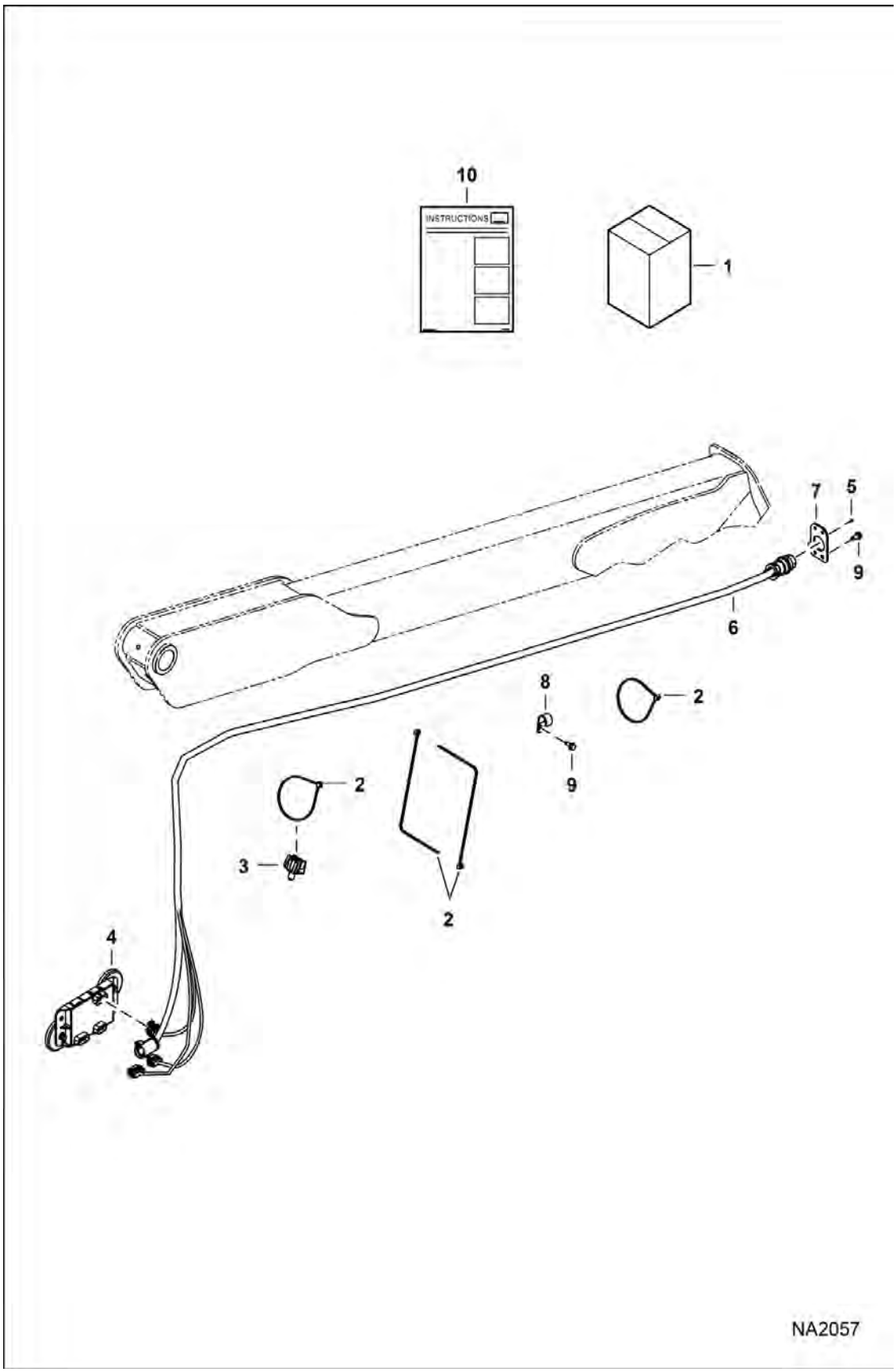

Illustration NA2057

Model S450 MT2KAMEA
6990825

ELECTRICAL CONTROLS KIT (Cont'd)

(14-Pin)

Ref No	Part Number	Description	Remarks	Serial Number	Qty
1	6733136	KIT, ATTACHMENT 14-PIN	Ref. 2-10		1
2	6624289	STRAP, TIE			9
3	6675281	MOUNT			1
4	6678675	CONTROLLER, ACD DLX	3 connector - W/O magnets		1
4	6719448	MAGNET, CONTROL ATTACH	45 kg (100 lb) force		2
4	25G612	SCREW			2
4	83D6	NUT 5			2
5	6704892	RIVET			1
6	6732730	HARNESS			1
7	6733144	MOUNT			1
8	30H50	CLAMP			6
9	84G3112	BOLT 5			8
10	6901872ENUS	INSTRUCTIONS			1

FOPS KIT

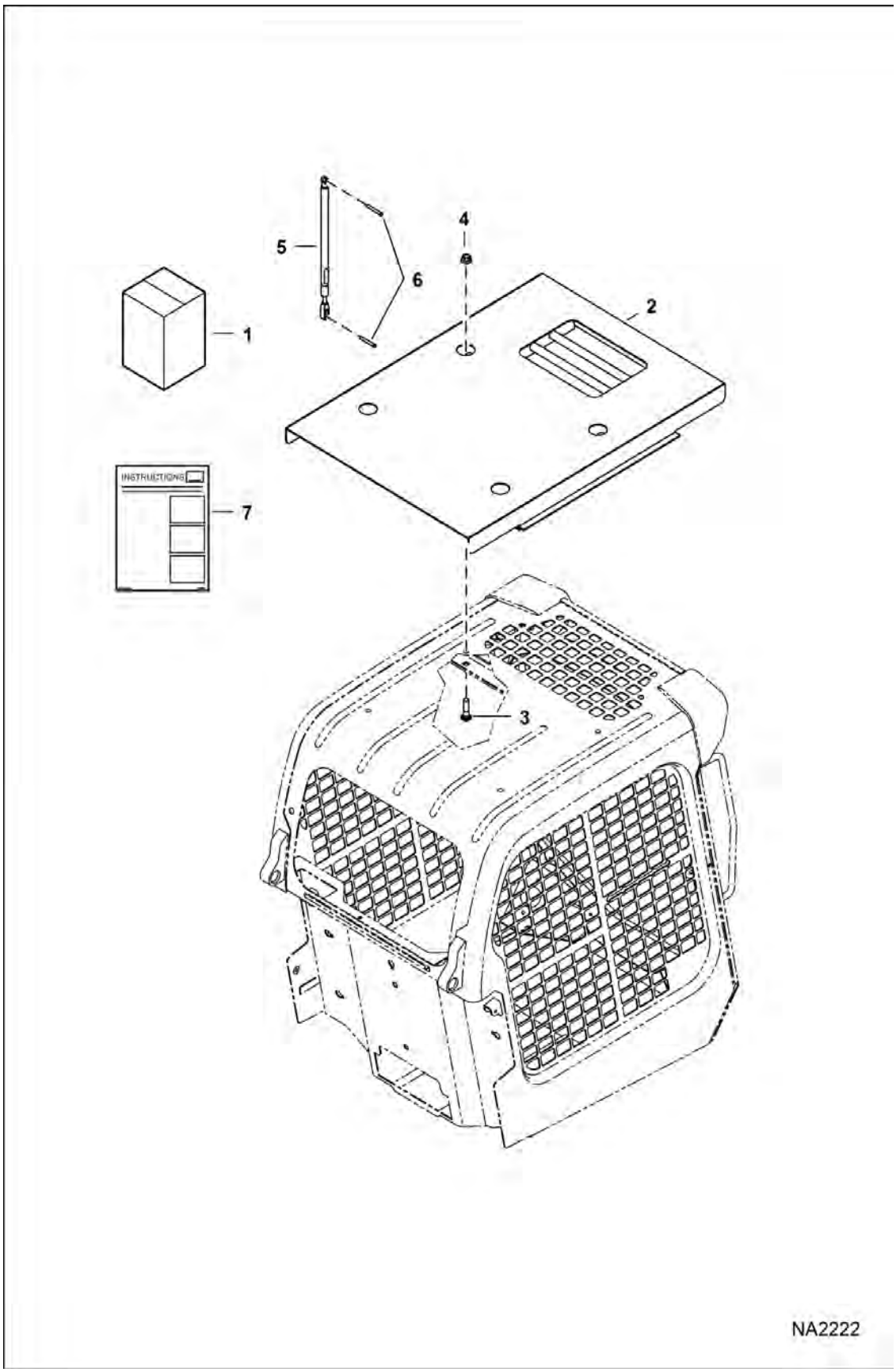

FOPS KIT (Cont'd)

Ref No	Part Number	Description	Remarks	Serial Number	Qty
1	7129293	KIT, FOPS TOP	Ref. 2-7		1
1		RESEALING PLUG KIT	See Illustration RESEALING KIT / NA2775		1
2	7167506	SHIELD, ASSY			1
3	7164686	BOLT, CARRIAGE			4
4	53D10	NUT			4
5	7167437	SPRING, GAS STD			1
6	7194471	PIN, CLEVIS			2
7	6987216ENUS	INSTRUCTIONS	Was 6987216 [A]		1

FOPS WINDOW KIT

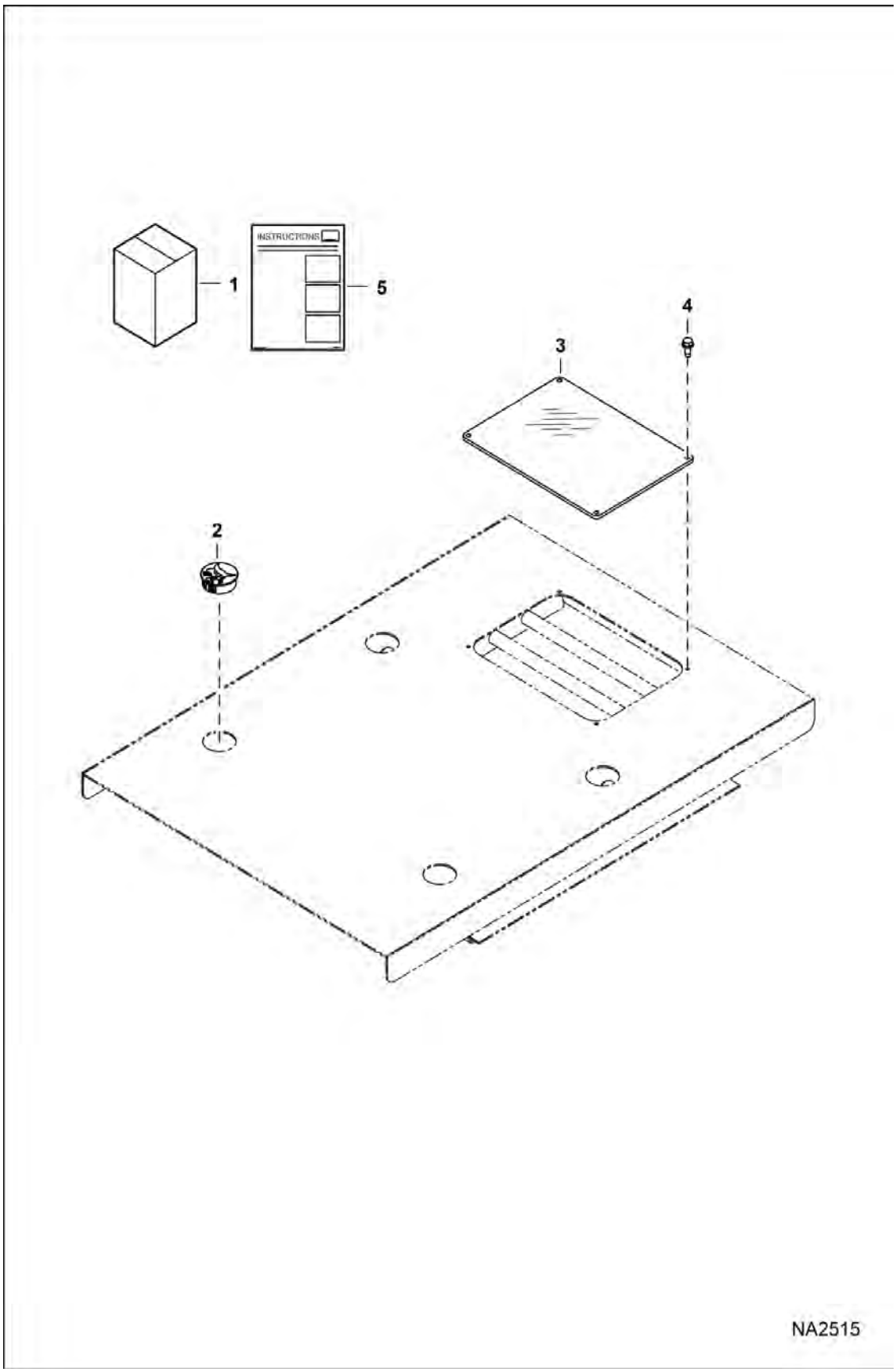

FOPS WINDOW KIT (Cont'd)

Ref No	Part Number	Description	Remarks	Serial Number	Qty
1	7186723	KIT, WINDOW FOPS	Ref. 2-5		1
2	6718796	PLUG			4
3	7186644	WINDOW, FOPS			1
4	84G3112	BOLT 5			4
5	6989520ENUS	INSTRUCTIONS	Was 6989520 [C]		1

FIRE EXTINGUISHER
(Kit)

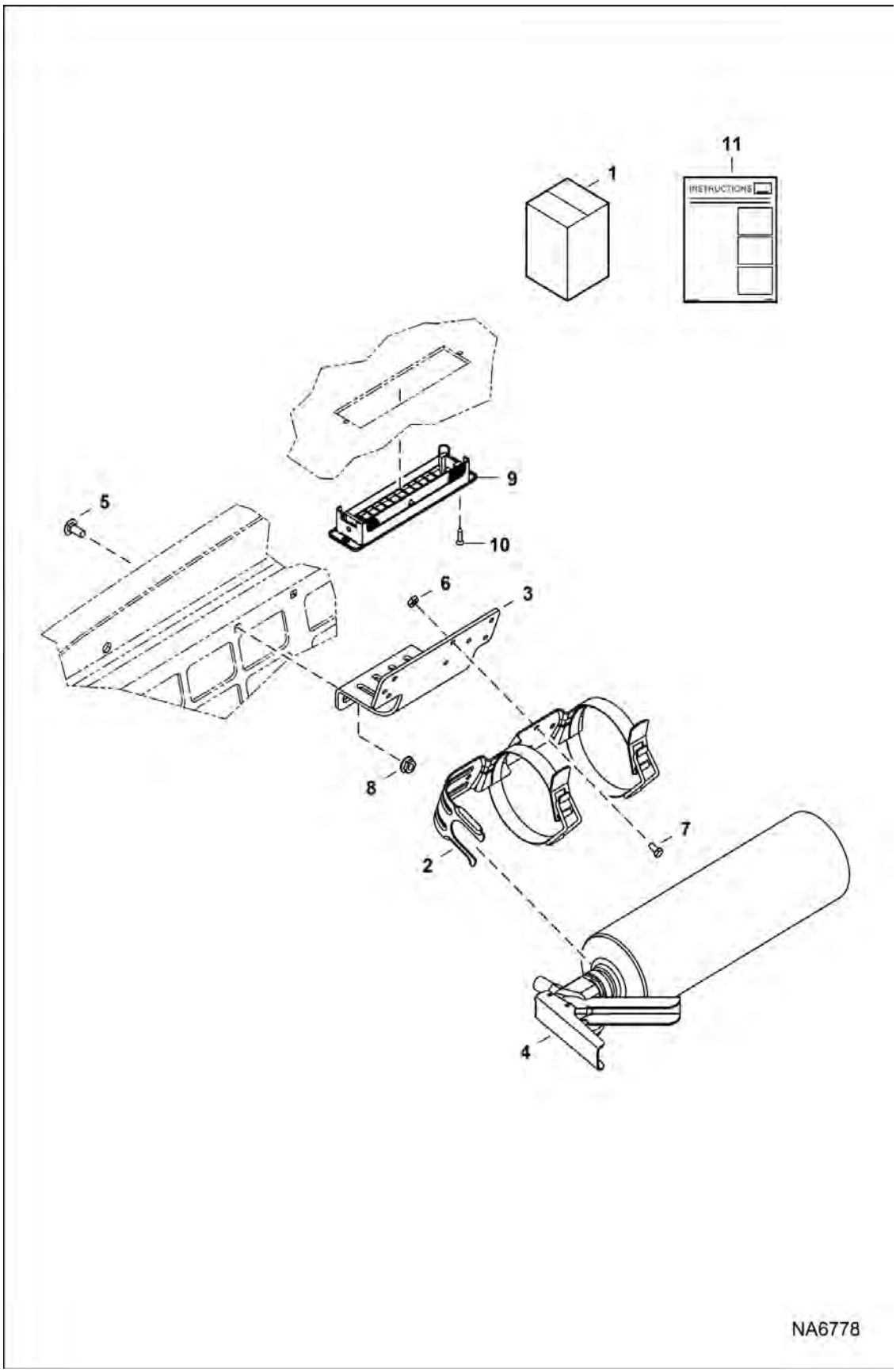

FIRE EXTINGUISHER (Cont'd)
(Kit)

Ref No	Part Number	Description	Remarks	Serial Number	Qty
1	7129307	KIT, EXTINGUISHER FIRE	Ref. 2-11		1
2	7224665	BRACKET, EXTINGUISHER FIRE			1
3	7223715	BRACKET, MOUNTING			1
4	7224664	EXTINGUISHER, FIRE	W/Ref. 2		1
5	10C410	BOLT			2
6	12D10	NUT			4
7	45G1006	BOLT			4
8	55D4	NUT			2
9	7155796	LOUVER, RECTANGLE			1
10	7155799	SCREW			2
11	6987223ENUS	INSTRUCTIONS	Was 6987223 [A]		1

FIRE EXTINGUISHER

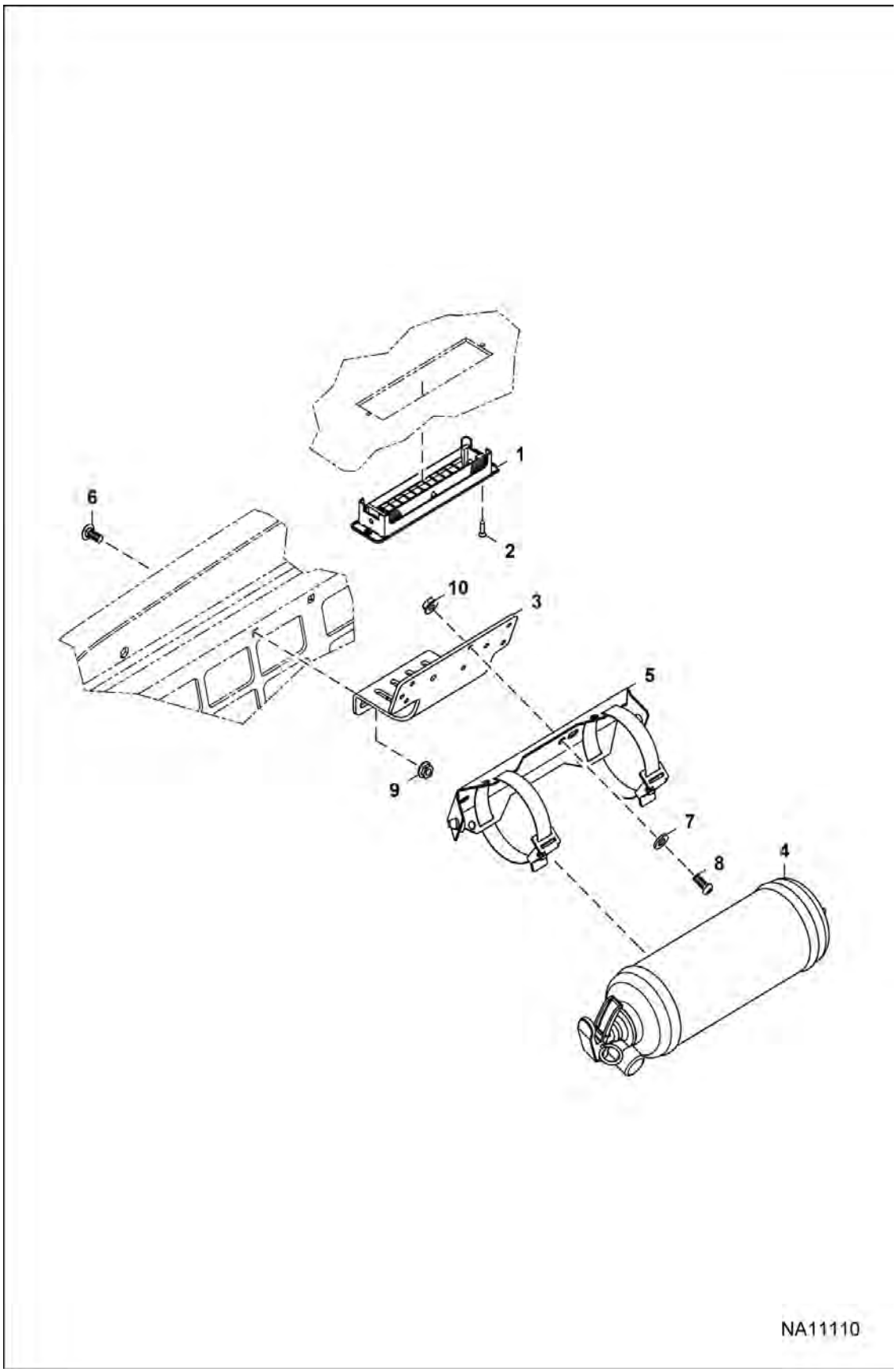

FIRE EXTINGUISHER (Cont'd)

Ref No	Part Number	Description	Remarks	Serial Number	Qty
1	7155796	LOUVER, RECTANGLE			1
2	7155799	SCREW			2
3	7223715	BRACKET, MOUNTING			1
4	7280129	EXTINGUISHER, FIRE	W/Ref. 5		1
5	7288358	BRACKET			1
6	10C410	BOLT			2
7	25E13	WASHER 5			2
8	25G410	CAPSCREW			2
9	55D4	NUT			2
10	97D4	NUT			2

FLASHER LIGHTS
(4-Way)

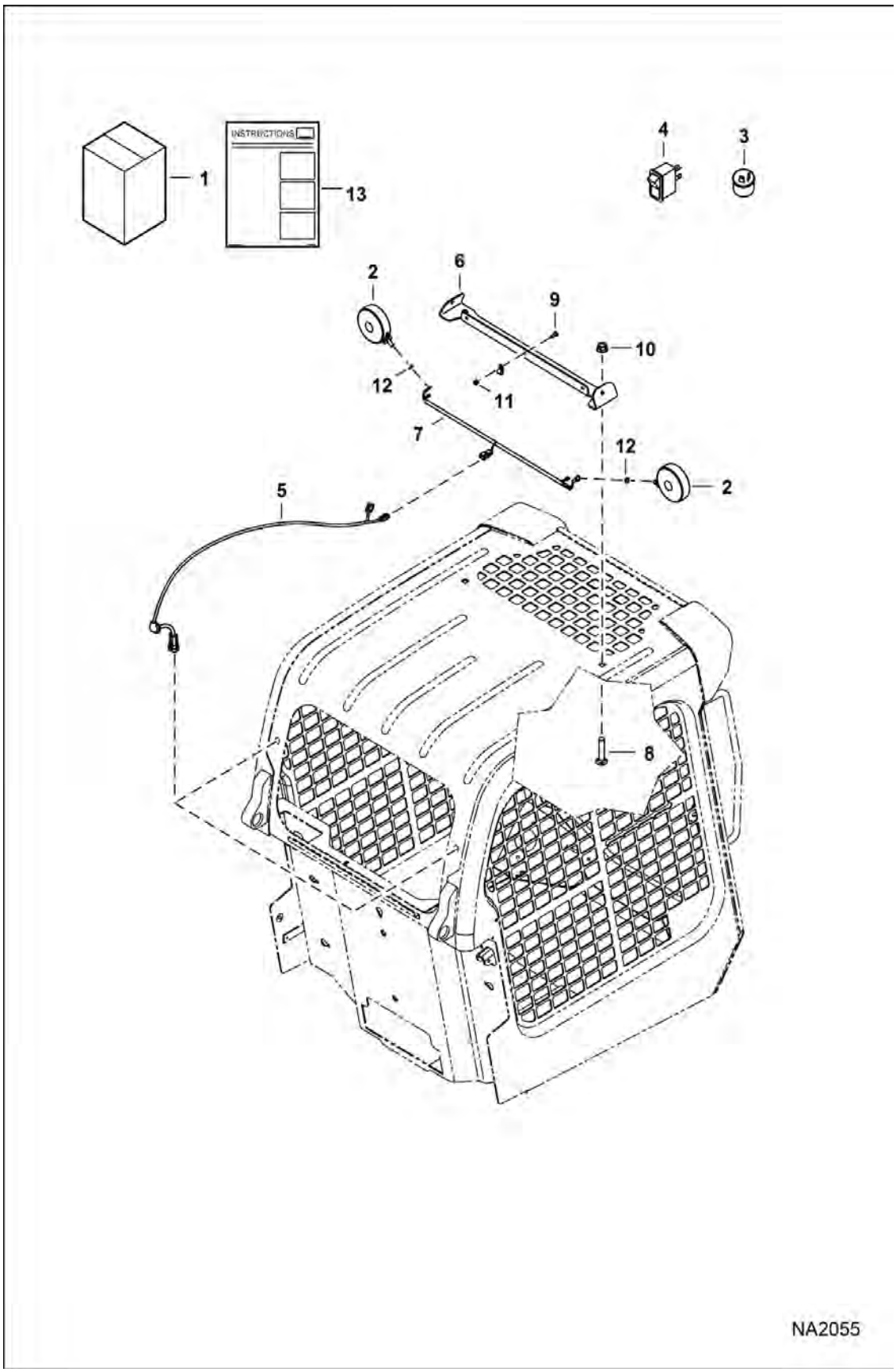

Illustration NA2055

Model S450 MT2KAMEA
6990825

FLASHER LIGHTS (Cont'd)
(4-Way)

Ref No	Part Number	Description	Remarks	Serial Number	Qty
1	7128338	KIT, FLASHER 4-WAY	Ref. 2-13		1
1		RESEALING PLUG KIT	See Illustration RESEALING KIT / NA2775		1
2	6517516	LGHT ASY			2
3	6557904	FLASHER			1
4	6668815	SWITCH	See Ref. 13 for proper placement		1
5	6718872	HARNESS			1
6	7166832	MOUNT			1
7	7169753	HARNESS, FLASHER 4-WAY			1
8	37C1032	BOLT			2
9	37C412	BOLT			3
10	55D10	NUT			2
11	59D4	NUT 5			3
12	6E5	WASHER			2
13	6987224ENUS	INSTRUCTIONS	Was 6987224 [A]		1

FUEL SEDIMENT BOWL KIT

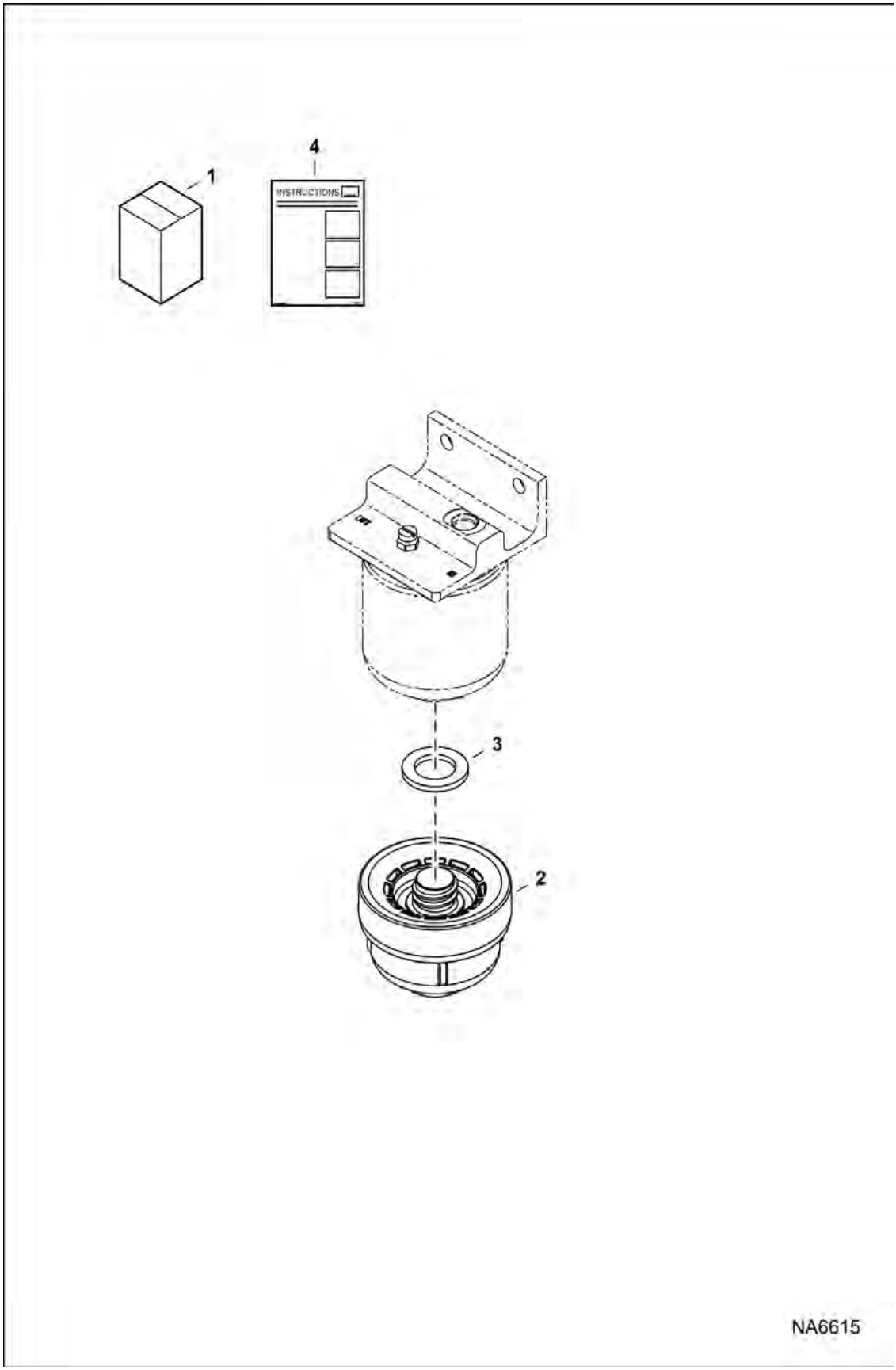

FUEL SEDIMENT BOWL KIT (Cont'd)

Ref No	Part Number	Description	Remarks	Serial Number	Qty
1		KIT, BOWL FUEL	NLA - Order components - Was 7177215 [A]		1
2	7167163	BOWL, FUEL	W/Ref. 3		1
3	7177212	GASKET			1
4	6987336ENUS	INSTRUCTIONS	Was 6987336 [A]		1

GAS SPRING KIT

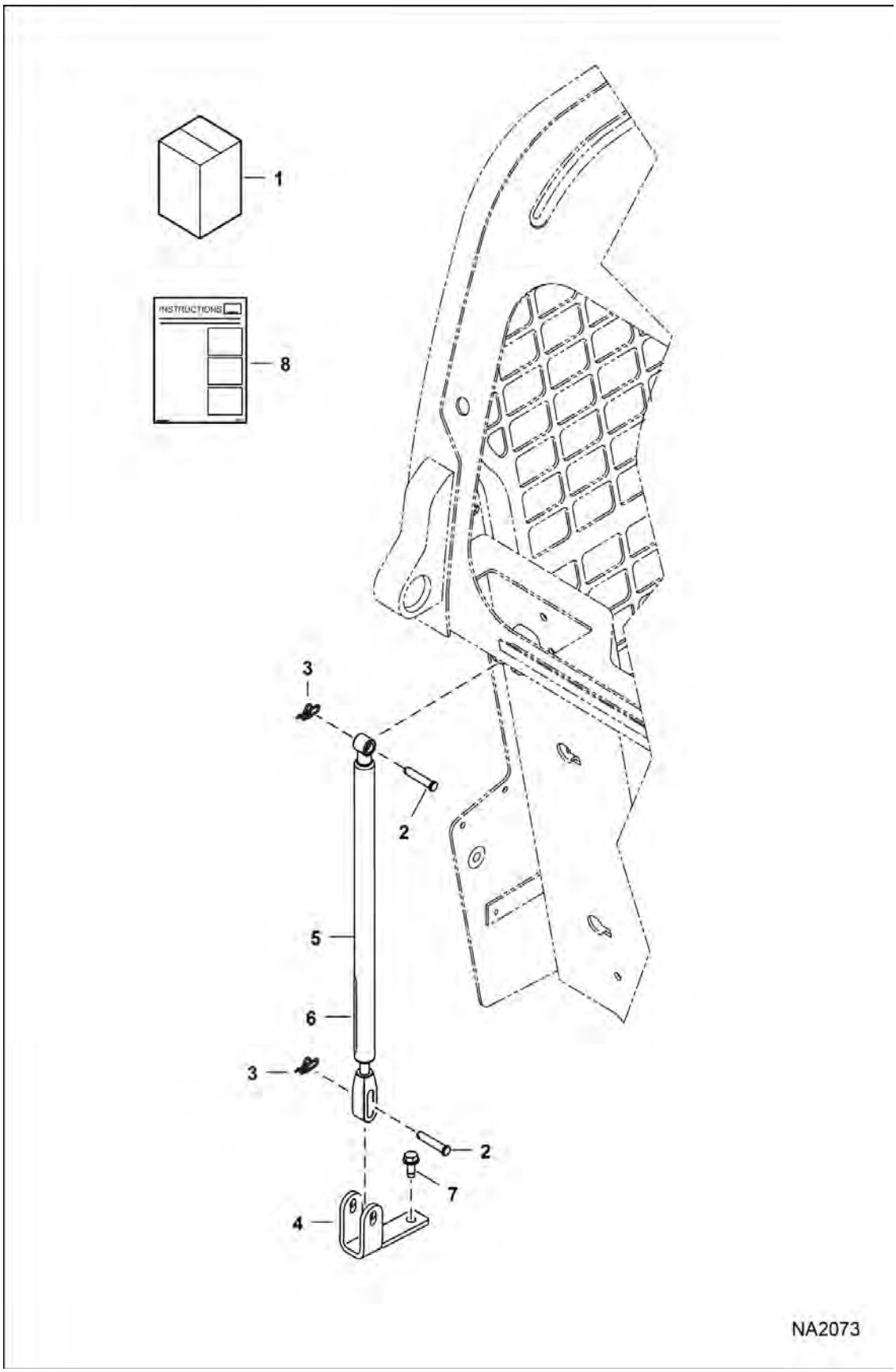

GAS SPRING KIT (Cont'd)

Ref No	Part Number	Description	Remarks	Serial Number	Qty
1	7170782	KIT, GAS SPRING DLX	Ref. 2-8		1
2	6567743	PIN			2
3	6631418	RING, RETAINING			2
4	7144859	MOUNT, GAS SPRING			1
5	7167438	GAS SPRING	Deluxe Gas Spring - Also Order Ref. 6		1
6	7169291	DECAL			1
7	84G3712	BOLT 5			2
8	6987279ENUS	INSTRUCTIONS	Was 6987279 [A]		1

HEATER & A/C

(Heater Kit) (Plastic Housing)

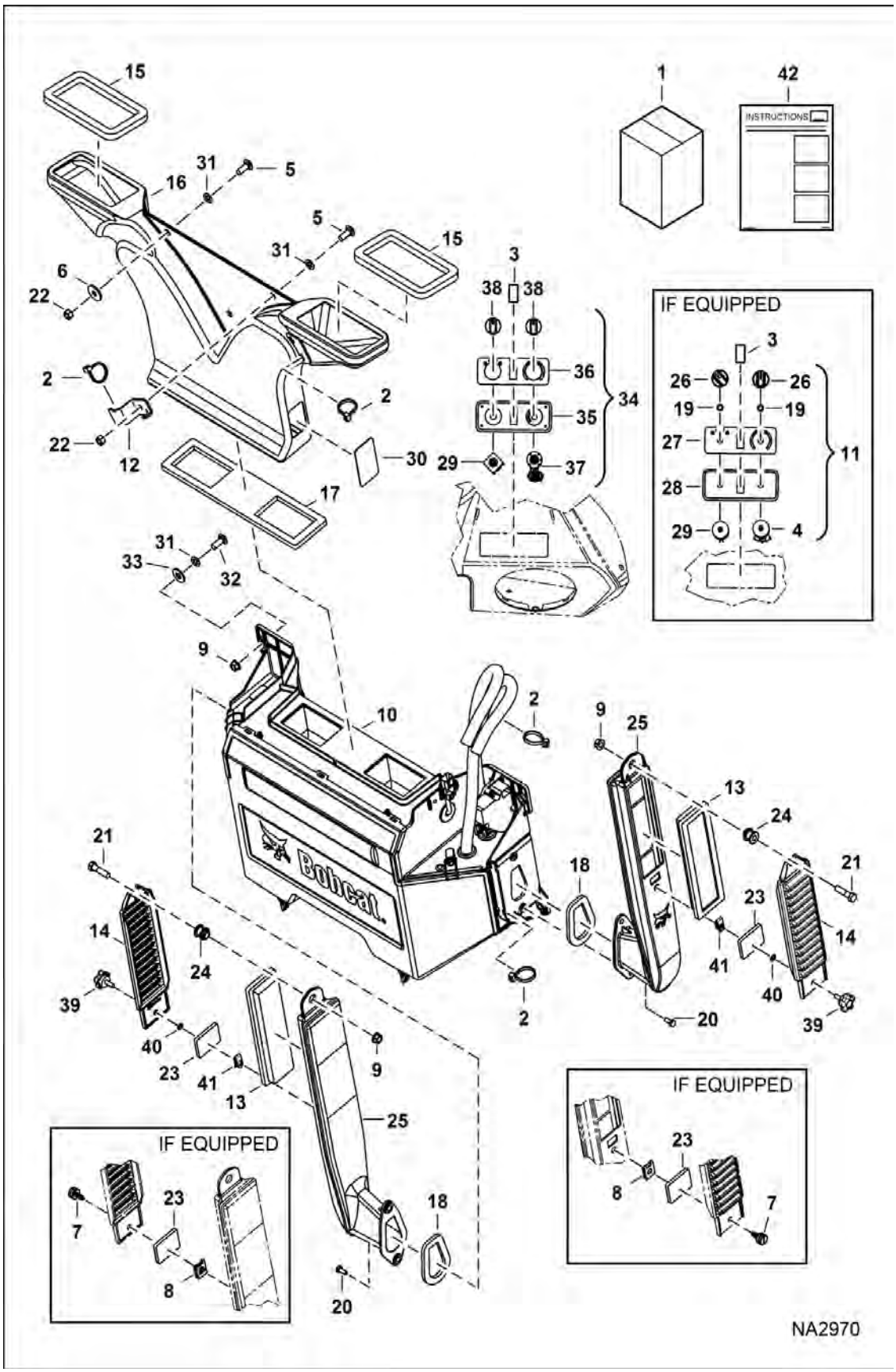

HEATER & A/C (Cont'd)

(Heater Kit) (Plastic Housing)

Ref No	Part Number	Description	Remarks	Serial Number	Qty
1	7128484	KIT, HEATER	Ref, 2, 5-10, 13-18, 21-25 & 29-39		1
2	6624289	STRAP, TIE			6
3	6675181	PLUG SWITCH HOLE	not in kit		1
4	7168604	RESISTOR	temp control - W/Ref. 19 - not in kit		1
5	10C616	BOLT 10			2
6	619021	WASHER, 5			2
7	7000983	SCREW	W/Ref. 8		2
8	7000984	CLIP			2
9	97D6	NUT 10			6
10		ASSY, HEATER	See Illustration HEATER & A/C / NA2969		1
11		PANEL, CONTROL	W/Ref. 4 & 26-29 - Order Ref. 34 - Was 7176309 [A]		1
12	7192569	BRACKET	not in kit		1
13	7176099	FILTER, AIR FRESH 10			2
14	7176100	COVER			2
15	7165673	SEAL, CAB DUCT			2
16	7257309	DUCT	Was 7197262 [A]		1
17	7257310	SEAL, DUCT CENTER	Was 7167405 [A]		1
18	7176579	SEAL, FOAM			2
19		NUT	NSS - not in kit		2
20	6702642	BOLT 5	Was 7166190 [B]		4
21	17C624	BOLT 5			2
22	95D6	NUT			2
23	7176943	SEAL, COVER			2
24	7176942	SPACER			2
25	7176101	DUCT, AIR			2
26	6675177	KNOB	not in kit		2
27	7011061	DECAL	not in kit		1
28	7011062	PANEL, CONTROL	not in kit		1
29	6675176	SWITCH	blower motor		1
30	7197973	COVER			1
31	6674894	NUT, LOCK			6
32	10C620	BOLT			4
33	25E18	WASHER			4
34	7240823	PANEL, CONTROL	W/Ref. 35-38 & 29		1
35	7254992	PANEL, CONTROL			1
36	7254993	DECAL			1
37	7244206	POTENTIOMETER, HVAC			1
38	7244207	KNOB			2
39	7301022	SCREW KNOB	W/Ref. 40 & 41		2
40	6675212	RETAINER, BOLT			2
41	7160765	NUT			2
42	6990847ENUS	INSTRUCTIONS	Was 6990847 [A]		1

HEATER & A/C

(Heater Assembly) (Plastic Housing)

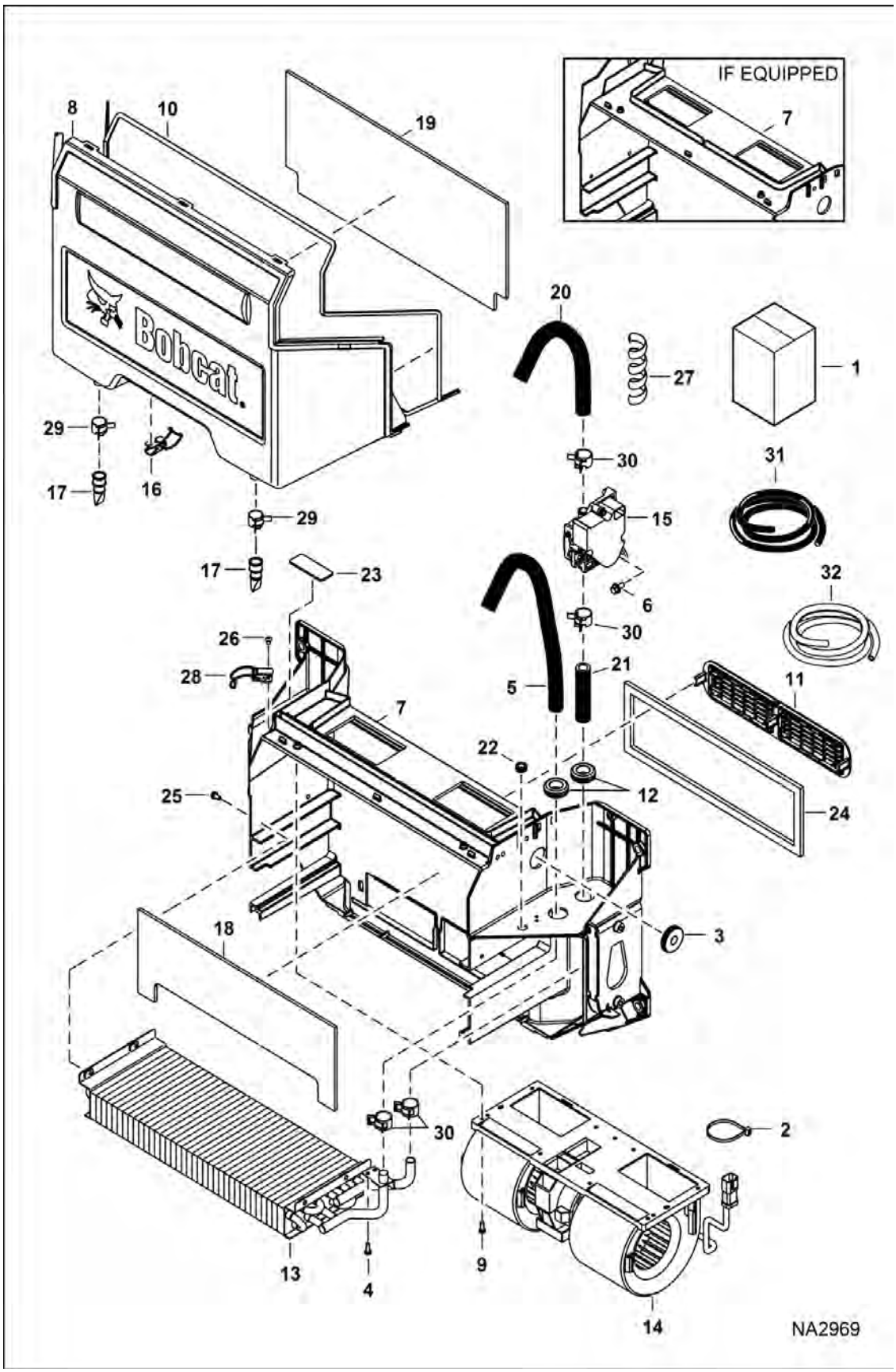

HEATER & A/C (Cont'd)

(Heater Assembly) (Plastic Housing)

Ref No	Part Number	Description	Remarks	Serial Number	Qty
1		ASSY, HEATER	Contact your Local Dealer for Bobcat Technical Information BTI437 - NLA - Ref. 2-32		1
1	7331403	ASSY HEATER	Ref. 2-32		1
2	6624289	STRAP, TIE			1
3	6682697	GROMMET			1
4	7162770	SCREW			2
5		HOSE, HEATER	NLA - 521 mm (20.5") long - Order Ref. 31		1
6	7166190	SCREW THREAD ROLLING			2
7		HOUSING	Contact your Local Dealer for Bobcat Technical Information BTI437 - NLA		1
8	7328161	COVER HVAC	Was 7185848 [A]		1
9	7192287	BOLT			2
10	7192408	SEAL			1
11	7193354	FILTER, AIR RECIRCULATING			1
12	7193532	GROMMET			2
13	7193534	COIL, HEATER			1
14		BLOWER, HEATER & A/C	See Illustration HEATER & A/C / NA2155A		1
15	7003456	VALVE, MOTORIZED ASSY			1
16	7193540	LATCH			2
17	7193541	DRAIN, WATER SEAT			2
18	7193542	SEAL			1
19	7193543	SEAL			1
20		HOSE, WATER	NLA - 610 mm (24") long - Order Ref. 31		1
21		HOSE, HEATER	NLA - 85 mm (3.35") long - Order Ref. 31		1
22	7010397	PLUG, FILL			1
23	7193782	COVER			1
24	7193783	SEAL, FOAM			1
25	6691532	SCREW			4
26	7010691	POP RIVET			4
27		WRAPAROUND	NLA - 457 mm (18") long - Order Ref. 32		2
28	7196889	LATCH			2
29	5HM18	CLAMP			2
30	5HM20	CLAMP	Was 42HL91 [B,D]		4
31	6565977	HOSE, BULK	sold per foot		x
32	7194262	WRAPAROUND	bulk - sold per foot		x

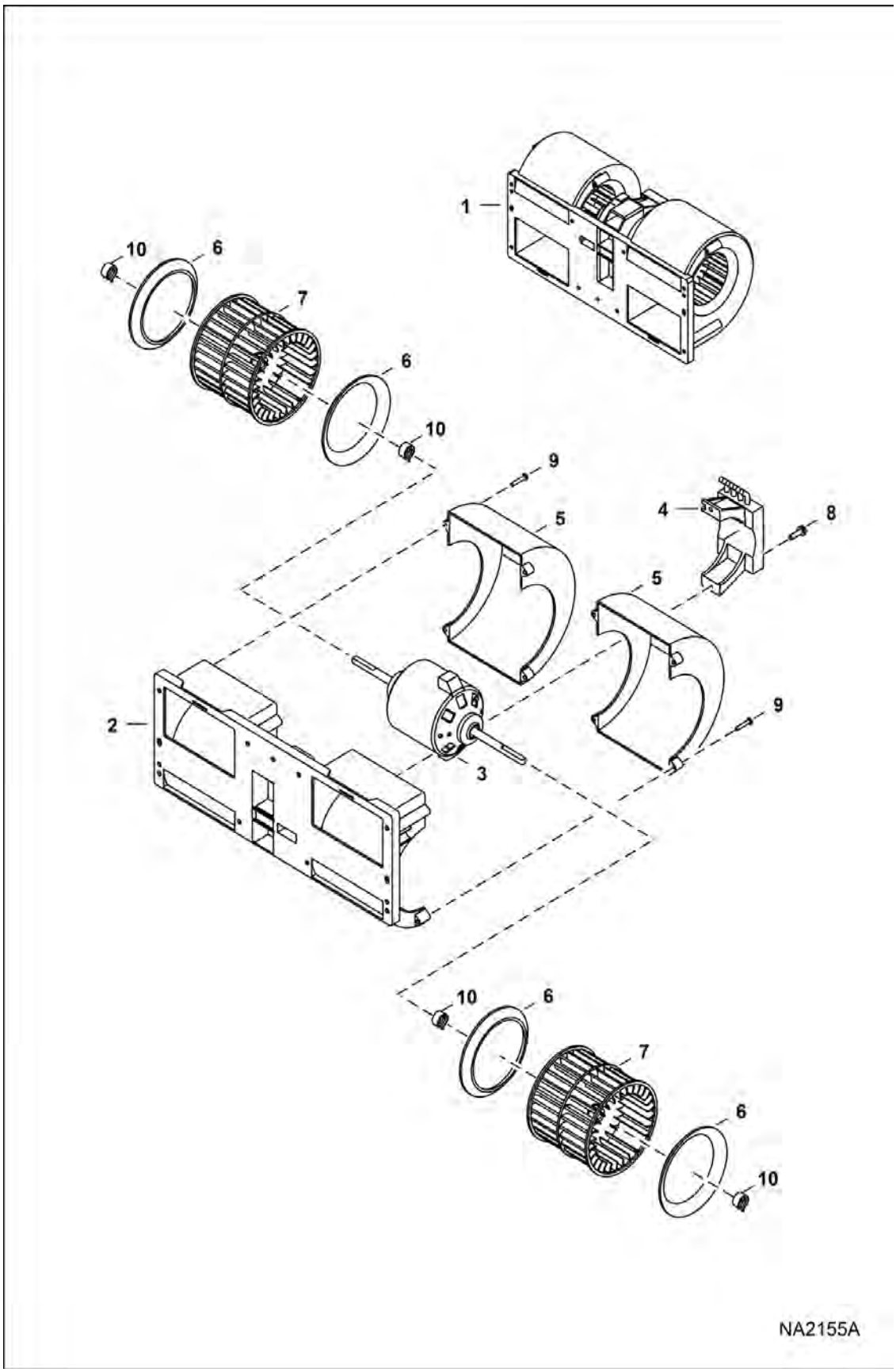
1
10
6
7
6
10
9
5
4
8
5
2
3
9
10
6
7
6
10
NA2155A

HEATER & A/C (Cont'd)

(Blower Assembly) (Heaters W/Plastic Housing)

Ref No	Part Number	Description	Remarks	Serial Number	Qty
1		BLOWER	NLA - Ref. 2-10 - W/O Drain Holes - Was 7193536 [A]		1
1	7282145	FAN, HVAC 3 SPD	Ref. 2-10 - W/reistor & drain holes - Was 7249527 [A]		1
2	7010162	HOUSING, BLOWER			1
3	7010163	MOTOR, FAN			1
4	7021380	RESISTOR			1
5	7010165	COVER			2
6	7010166	RING, INNER			4
7	7010167	BLOWER, WHEEL			2
8	7003471	SCREW			2
9	7010168	SCREW			8
10	7010169	CLAMP, HOSE			4

HEATER & A/C
(Heater Plumbing Kit)

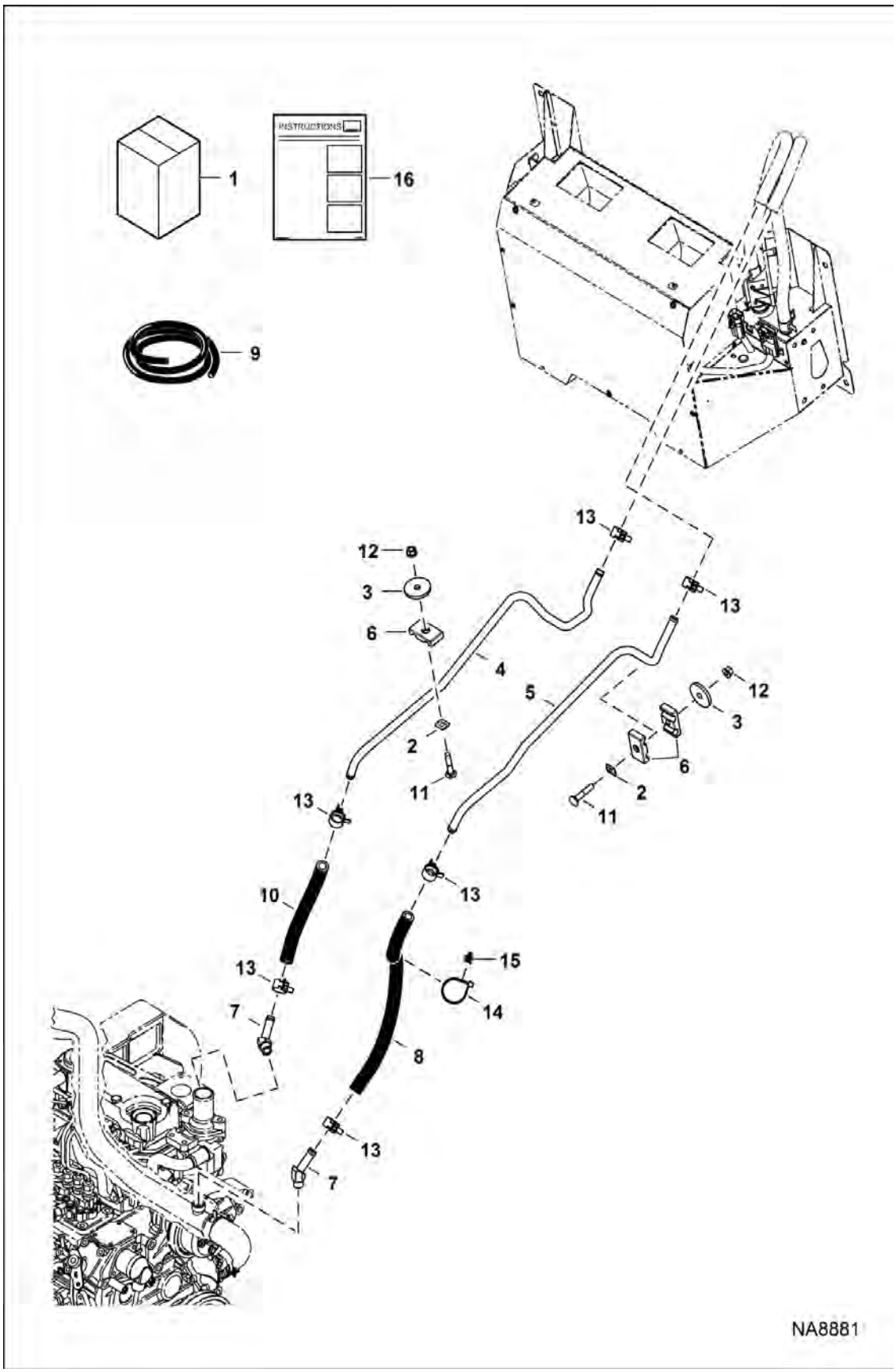

HEATER & A/C (Cont'd)

(Heater Plumbing Kit)

Ref No	Part Number	Description	Remarks	Serial Number	Qty
1	7244630	KIT, HEATER PLUMBING	Ref. 2-16		1
2	774220	NUT			2
3	872229	WASHER			2
4	7233641	TUBELINE, HEATER			1
5	7236074	TUBELINE, HEATER			1
6	6701892	CLAMP			3
7	6731085	ELBOW			2
8		HOSE	NLA - 482,6 mm (19") long - Order Ref. 9		1
9	6565977	HOSE, BULK	sold per foot		x
10		HOSE	NLA - 190 mm (7.48") long - Order Ref. 9		1
11	37C528	BOLT			2
12	83D5	NUT 5			2
13	42HL91	CLAMP HOSE TYPE MX	Was 5HM20		6
14	6690690	STRAP, TIE			1
15	6690689	MOUNT, FIR TREE			1
16	7248052ENUS	INSTRUCTIONS	Was 7248052		1

HEATER & A/C
(A/C Kit)

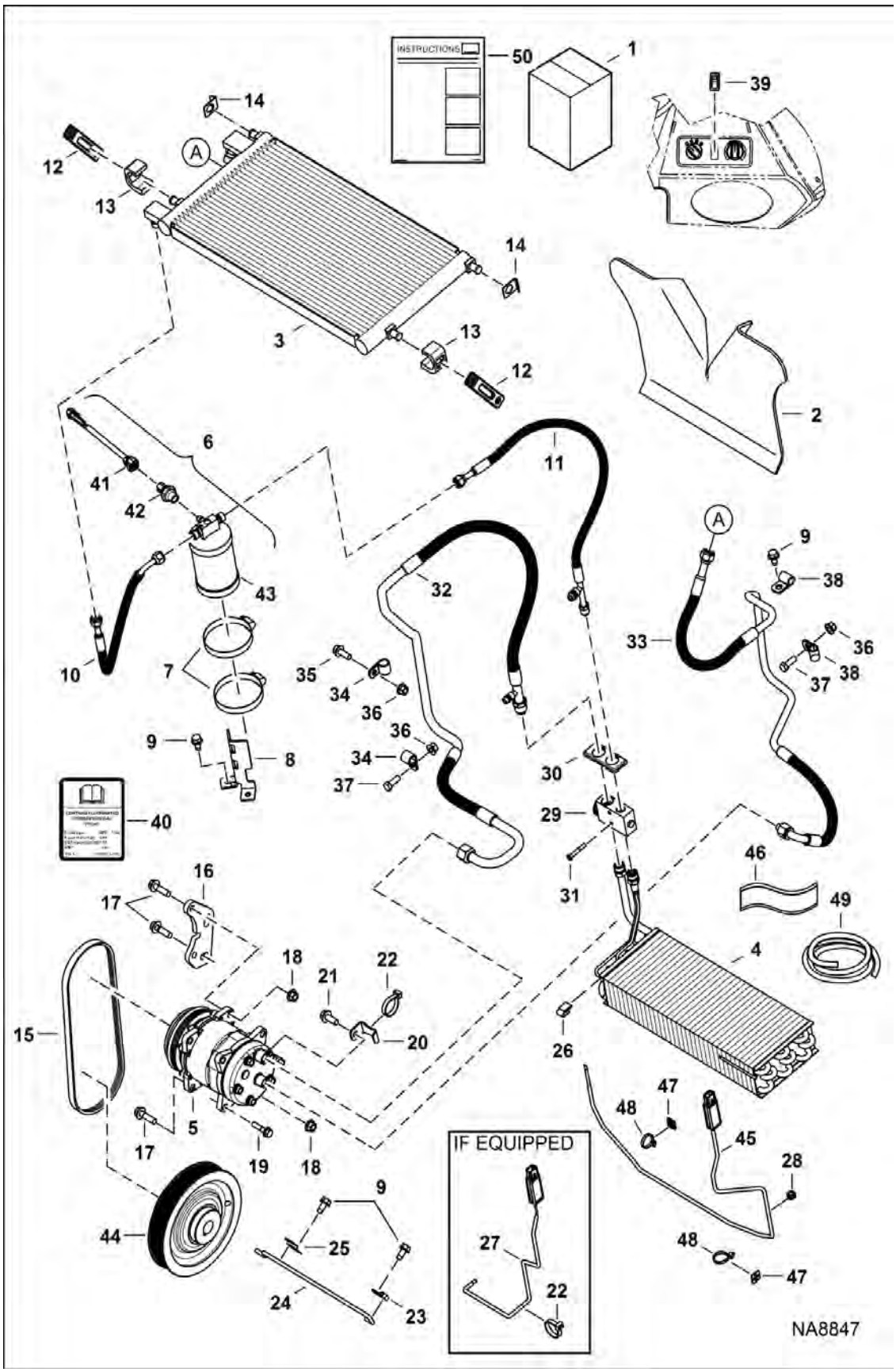

Illustration NA8847

Model S450 MT2KAMEA
6990825

HEATER & A/C (Cont'd)
(A/C Kit)

Ref No	Part Number	Description	Remarks	Serial Number	Qty
1	7244632	KIT, A/C	Ref. 2-50		1
2	7173651	INSULATION, HEATER			1
3	7238772	CONDENSER, A/C			1
4	7193535	EVAPORATOR			1
5	7280493	COMPRESSOR, A/C	Was 7023584 [A]		1
6	7286432	DRIER, A/C ASSY	Ref. 41-43 - 198 mm (7.75") harness - not in kit		1
6	7286433	RECEIVER, DRIER A/C	Ref. 41-43 - 698 mm (27.5") harness		1
7	44H48	CLAMP			2
8	7228298	BRACKET			1
9	84G3712	BOLT 5			5
10	7233644	HOSE, A/C ASSY			1
11	6697915	HOSE			1
12	7197614	STRAP, HOLD DOWN			2
13	7233371	MOUNT, CONDENSER			2
14	7243982	RETAINER, HOLDER			2
15	7237345	BELT, COMPRESSOR A/C			1
16	7220174	BRACKET, COMPRESSOR A/C			1
17	29CM1035	SCREW HEX 10MMX35MM			4
18	51DM10	NUT HX THDLK PREAPPL			3
19	29CM835	BOLT			1
20	7164564	BRACKET, A/C			1
21	29CM1025	SCREW FLGD HEX CAP			1
22	6624289	STRAP, TIE			2
23	30H12	CLIP			1
24	7242126	ROD, PROP UP			1
25	7235510	SPRING, CLIP			1
26	6676539	CLIP PANEL	Was 7193785 [A]		2
27		THERMOSTAT	NLA - 440 mm (17.32") lead - Order Ref. 45, 46, (4) of Ref. 47 & (6) of Ref. 48 - Was 7193539 [A]		1
28	7193531	GROMMET			1
29	6675534	BLOCK, VALVE A/C	Was 7193538 [A]		1
30	7193533	GROMMET			1
31	7192371	BOLT			2
32	7252095	ASSY, AC TUBELINE HOSE	Was 7233640		1
33	7252096	ASSY, AC TUBELINE HOSE	Was 7242147		1
34	30H38	CLIP			2

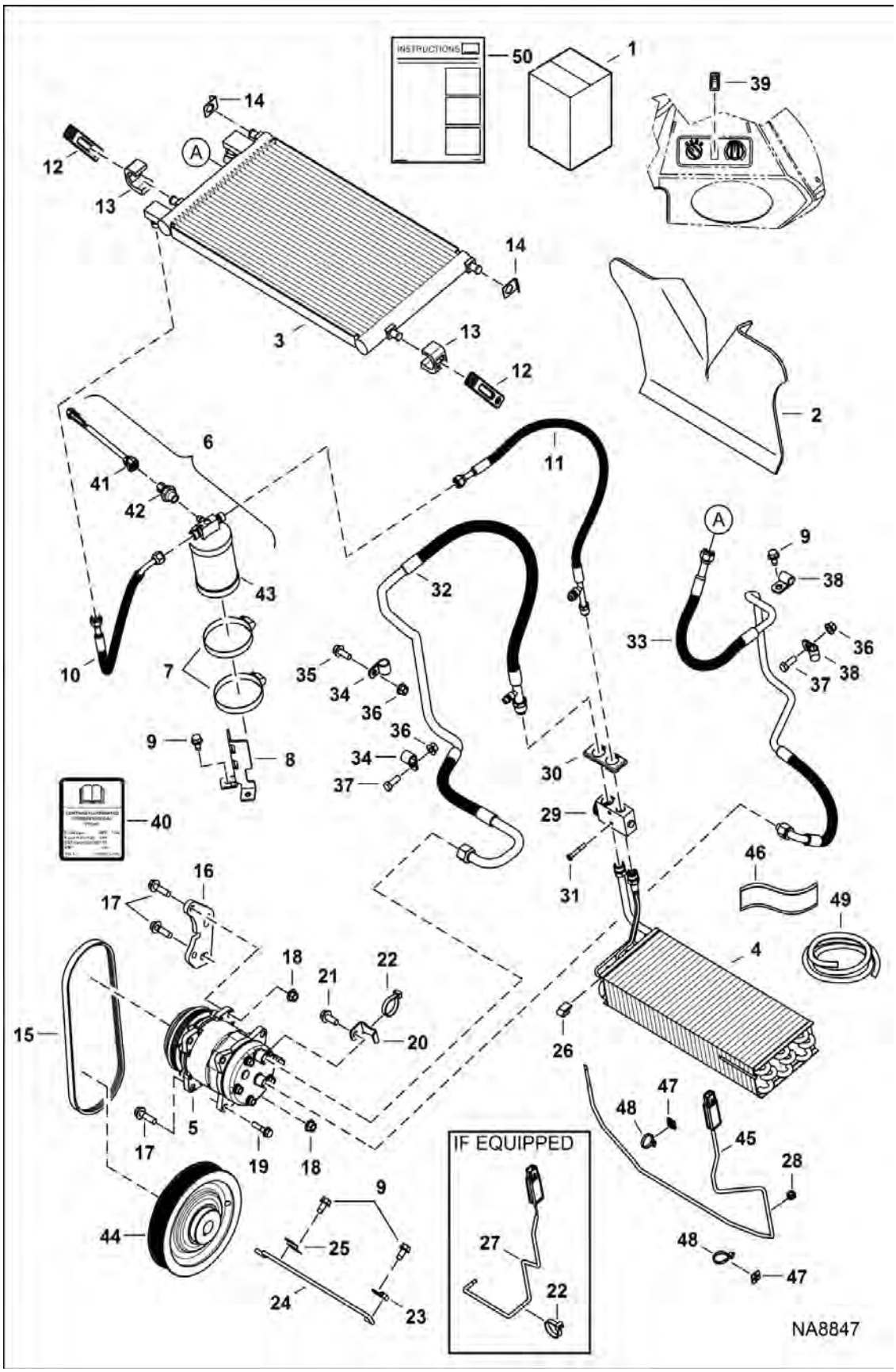
INSTRUCTIONS
50
1
39
14
12
13
A
14
3
13
12
2
6
11
41
42
43
32
A
9
38
33
36
37
38
10
7
35
34
36
36
34
37
9
8
30
29
31
40
46
49
16
17
4
18
21
22
15
20
26
5
17
19
18
47
48
45
28
48
47
44
9
25
24
23
IF EQUIPPED
27
22
NA8847

HEATER & A/C (Cont'd)
(A/C Kit)

Ref No	Part Number	Description	Remarks	Serial Number	Qty
35	35C616	BOLT 5			1
36	83D6	NUT 5			3
37	1C616	BOLT			2
38	30H32	CLIP			2
39	7169112	SWITCH, ROCKER A/C			1
40	7318895	DECAL HVAC			1
41	7286434	HARNESS, A/C	198 mm (7.75") long		1
41	7286435	HARNESS, A/C	698 mm (27.5") long		1
42	7286436	SWITCH, PRESS			1
43		DRIER, A/C ASSY	NSS - Order Ref. 6		1
44	7230695	PULLEY, A/C			1
46		TAPE INSULATING	NLA - 178 mm (7") long - Order Ref. 49 - Was 7332919 [A]		1
47	7333169	MOUNT STRAP TIE			4
48	7334202	STRAP TIE			6
49	6676538	INSULATION TAPE FT	bulk - sold per foot		x
50	7248058ENUS	INSTRUCTIONS	- Was 7248058 [A]		1

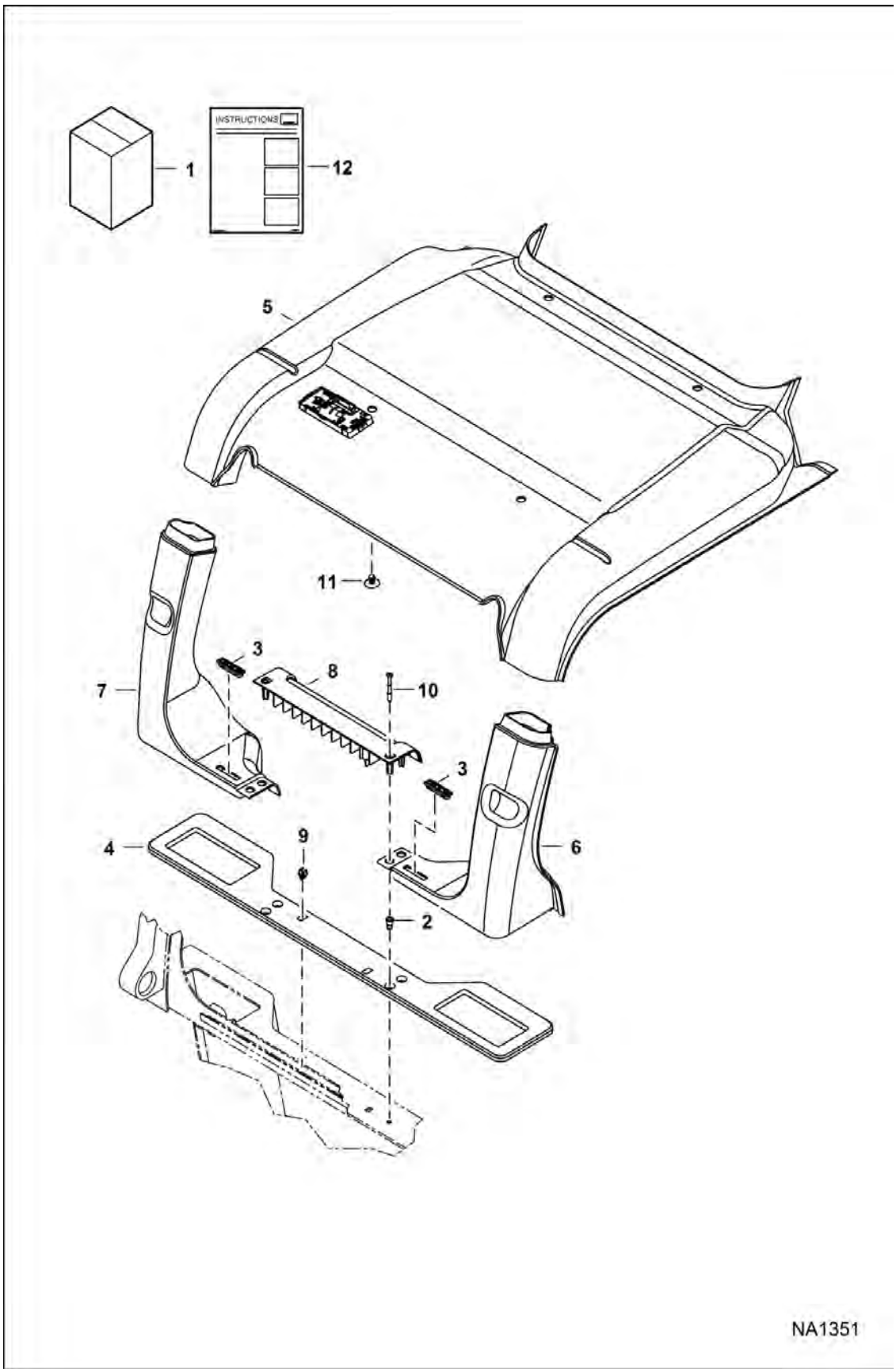
INSTRUCTIONS
1
12
5
11
3
8
10
7
3
4
9
6
2
NA1351

HEATER & A/C (Cont'd)

(HVAC Headliner Kit)

Ref No	Part Number	Description	Remarks	Serial Number	Qty
1	7174171	KIT, HEADLINER HVAC			1
2	6675033	INSERT, THREADED			2
3	7145885	VENT, DEFROST			2
4	7153832	SEAL, SHELF REAR			1
5	7155785	HEADLINER HVAC ASSY			1
6	100333SUB	DUCT, AIR	RH - W/Ref. 3		1
7	100334SUB	DUCT, AIR	LH - W/Ref. 3		1
8	7165332	SHELF, REAR			1
9	7165333	CLIP			2
10	7165799	SCREW			2
11	6674895	RETAINER			4
12	6987356ENUS	INSTRUCTIONS	Was 6987356 [A]		1

HEATER & A/C
(HVAC Assembly)

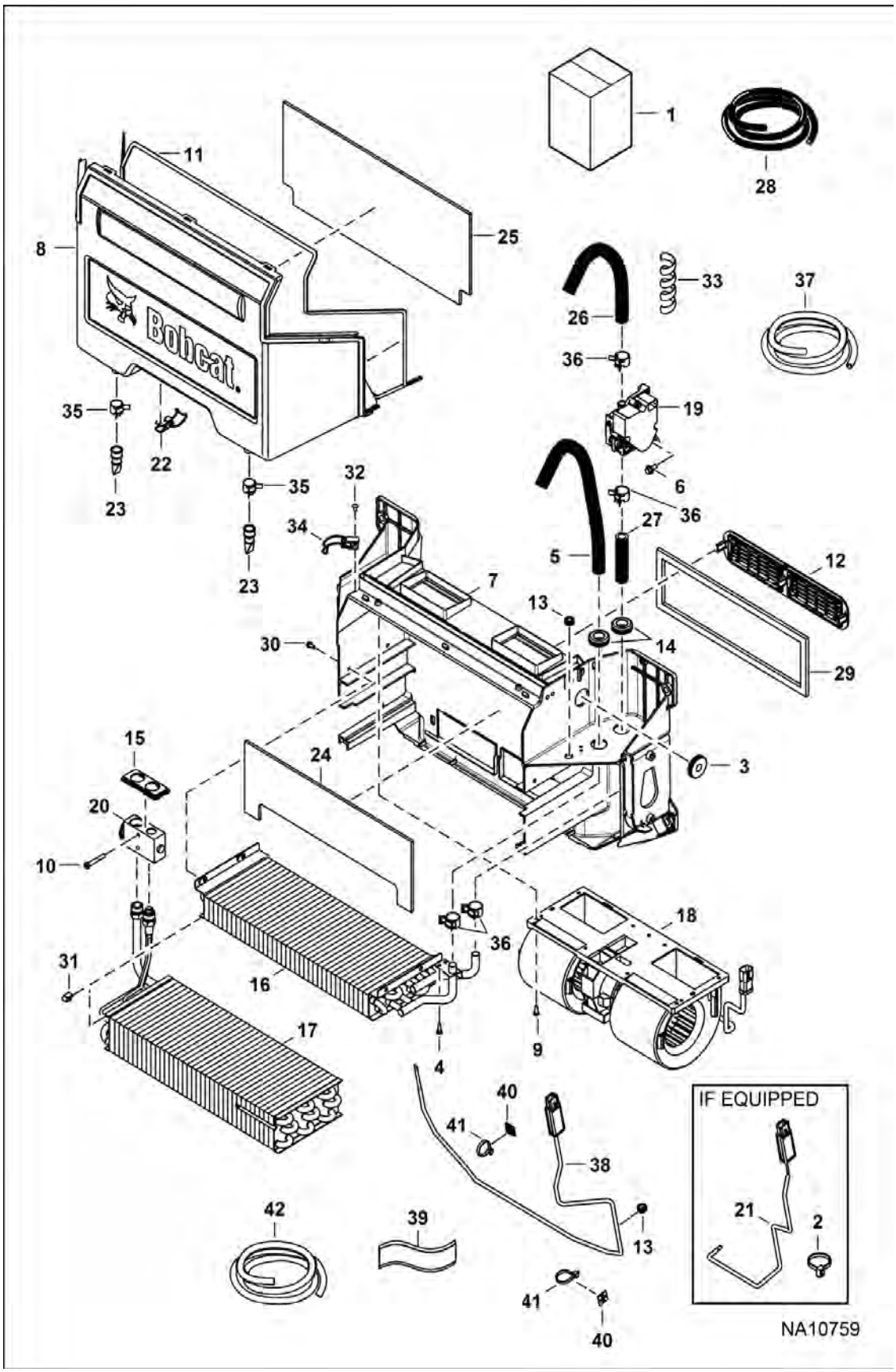

HEATER & A/C (Cont'd)
(HVAC Assembly)

Ref No	Part Number	Description	Remarks	Serial Number	Qty
1		HVAC ASSY	NLA - Ref. 2-37 - Order 7331402 HVAC - Was 7282143 [A]		1
1	7331402	HVAC ASSY	Ref. 3-20 & 22-42		1
2	6624289	STRAP, TIE			2
3	6682697	GROMMET			1
4	7162770	SCREW			2
5		HOSE, HEATER	NLA - 520,7 mm (20.5") long - Order Ref. 28		1
6	7166190	SCREW THREAD ROLLING			2
7	7256230	HOUSING			1
8	7328161	COVER HVAC	Was 7185848 [A]		1
9	7192287	BOLT			2
10	7192371	BOLT			2
11	7192408	SEAL			1
12	7193354	FILTER, AIR RECIRCULATING			1
13	7193531	GROMMET			1
14	7193532	GROMMET			2
15	7193533	GROMMET			1
16	7193534	COIL, HEATER			1
17	7193535	EVAPORATOR			1
18	7282145	FAN, HVAC 3 SPD	W/resistor & drain holes - Was 7249527 [A]		1
19	7003456	VALVE, MOTORIZED ASSY			1
20	6675534	BLOCK, VALVE A/C	Was 7193538 [A]		1
21		THERMOSTAT	NLA - 440 mm (17.32") lead - Order Ref. 38, 39, (4) of Ref. 40 & (6) of Ref. 41 - Was 7193539 [A]		1
22	7193540	LATCH			2
23	7193541	DRAIN, WATER SEAT			2
24	7193542	SEAL			1
25	7193543	SEAL			1
26		HOSE, HEATER	NLA - 609,6 mm (24") long - Order Ref. 28		1
27		HOSE, HEATER	NLA - 85 mm (3.35") long - Order Ref. 28		1
28	6565977	HOSE, BULK	sold per foot		x
29	7193783	SEAL, FOAM			1
30	7193784	BOLT			4
31	6676539	CLIP PANEL	Was 7193785 [A]		2
32	7193786	RIVET, POP			4
33		WRAPAROUND	NLA - 457 mm (18") long - Order Ref. 37		2
34	7196889	LATCH			2
35	5HM18	CLAMP			2
36	5HM20	CLAMP			4
37	7194262	WRAPAROUND	bulk - sold per foot		x
38	7332632	THERMOSTAT ASSY	1260 mm (49.6") lead		1
39		TAPE INSULATING	NLA - 178 mm (7") long - Order Ref. 42 - Was 7332919 [A]		1

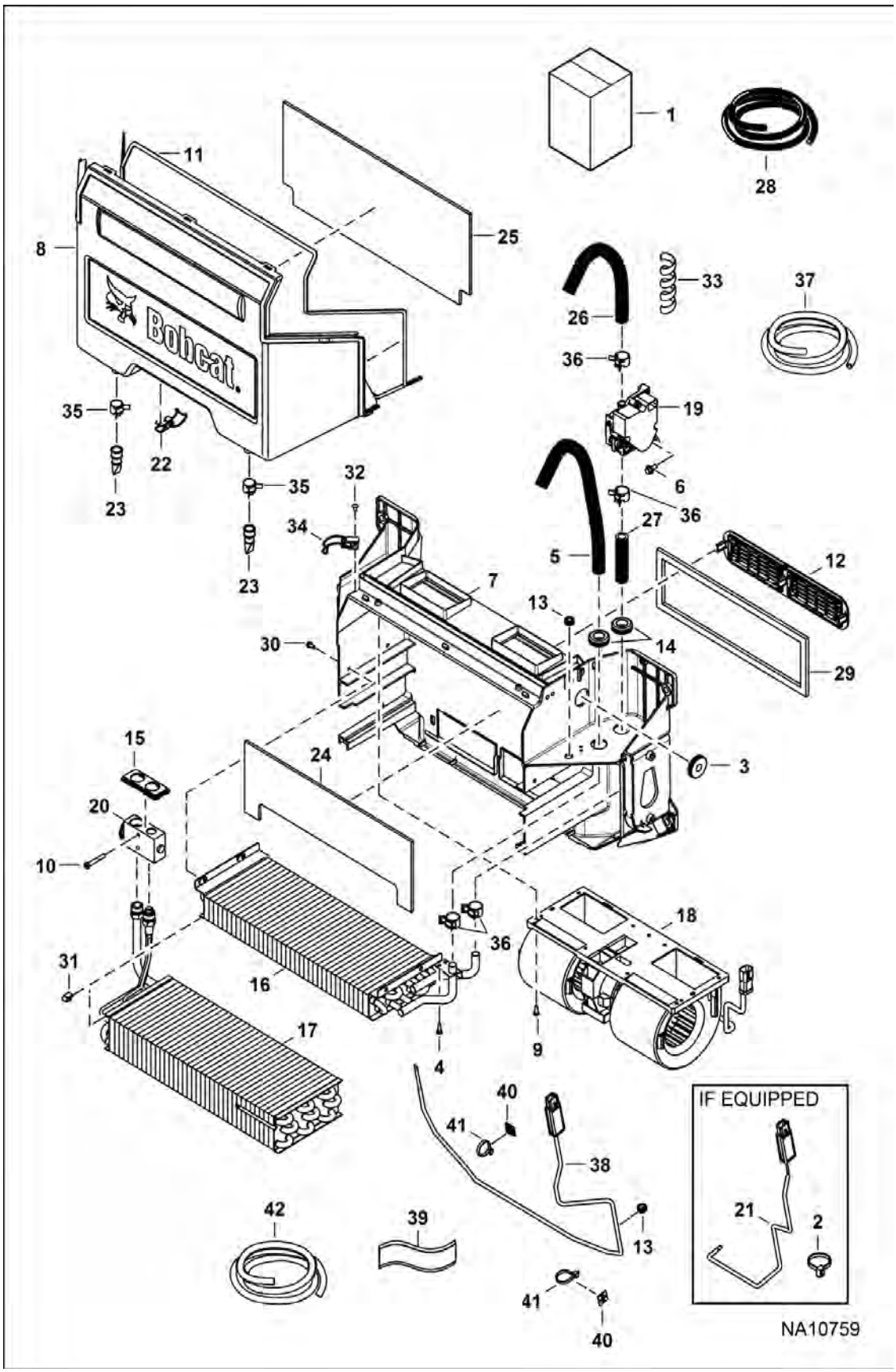
1
28
11
25
8
Bobcat.
33
37
26
36
19
35
22
6
23
32
35
36
34
27
5
12
7
13
14
30
29
23
15
24
3
20
10
18
36
31
16
17
4
9
40
41
38
IF EQUIPPED
21
2
42
39
13
41
40
NA10759

Ref No	Part Number	Description	Remarks	Serial Number	Qty
40	7333169	MOUNT STRAP TIE			4
41	7334202	STRAP TIE			6
42	6676538	INSULATION TAPE FT	bulk - sold per foot		x

HEATER & A/C
(Lower Duct Kit)

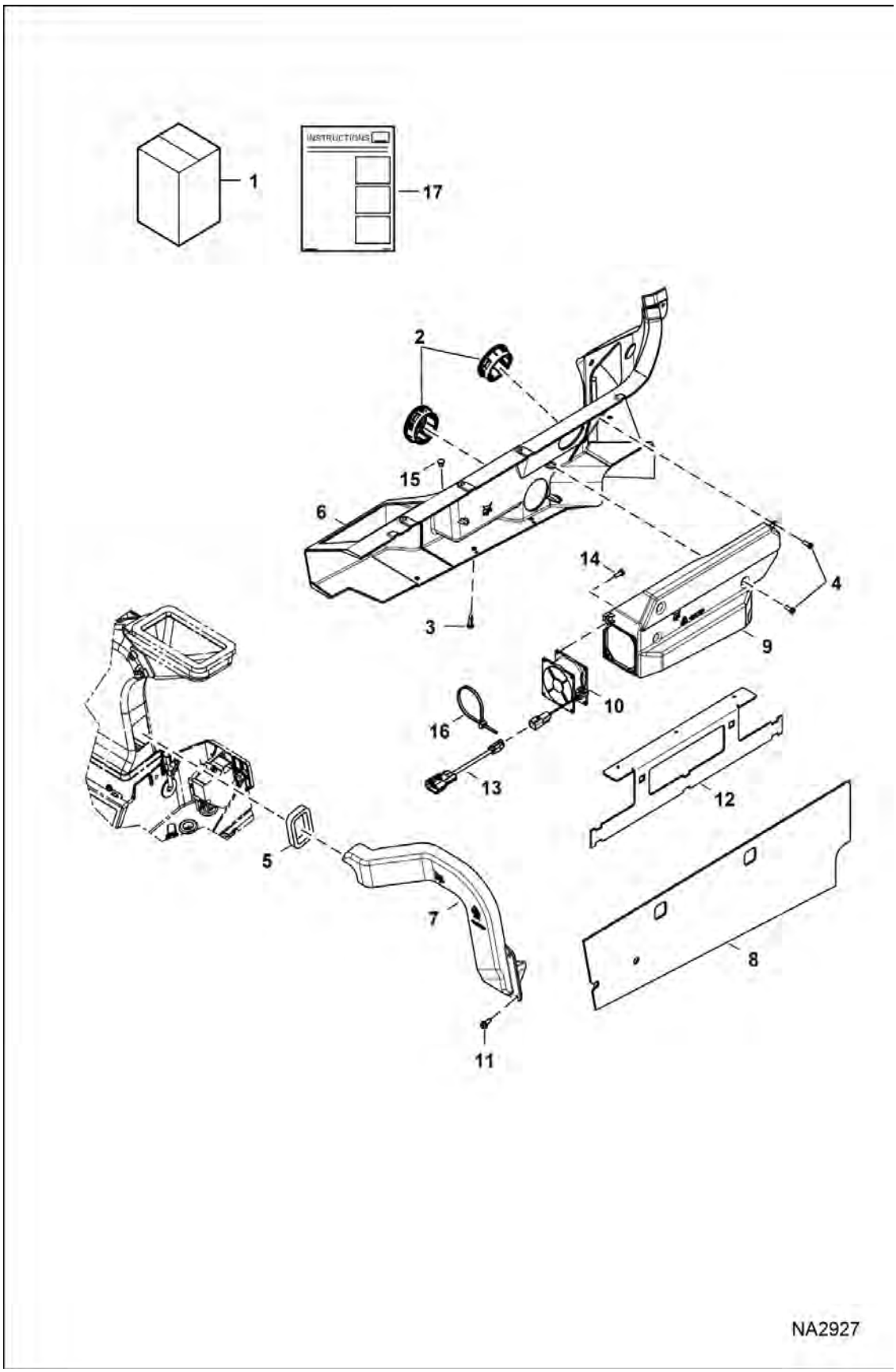

HEATER & A/C (Cont'd)

(Lower Duct Kit)

Ref No	Part Number	Description	Remarks	Serial Number	Qty
1	7200657	KIT, DUCT	Ref. 2-11, 14 & 15 - Also Order Ref. 12 & 13		1
2	7155794	LOUVER, ROUND			2
3	7160381	RIVET, BIRD CAGE			2
4	7318495	SCREW PLASTIC	Was 7162770 [B]		6
5	7193018	SEAL			1
6	7193019	PANEL, DUCT			1
7	7193020	DUCT, AIR			1
8	7193022	INSULATION			1
9	7193023	DUCT, AIR			1
10	7197733	FAN			1
11	26GM6016	BOLT			3
12	7193021	BRACKET	not in kit		1
13	7200883	HARNESS, JUMPER FAN	not in kit		1
14	7192287	BOLT			4
15	7188745	PLUG			4
16	6624289	STRAP, TIE			1
17	6990079ENUS	INSTRUCTIONS	WAS 6990079 [A]		1

HEPA FILTER KIT

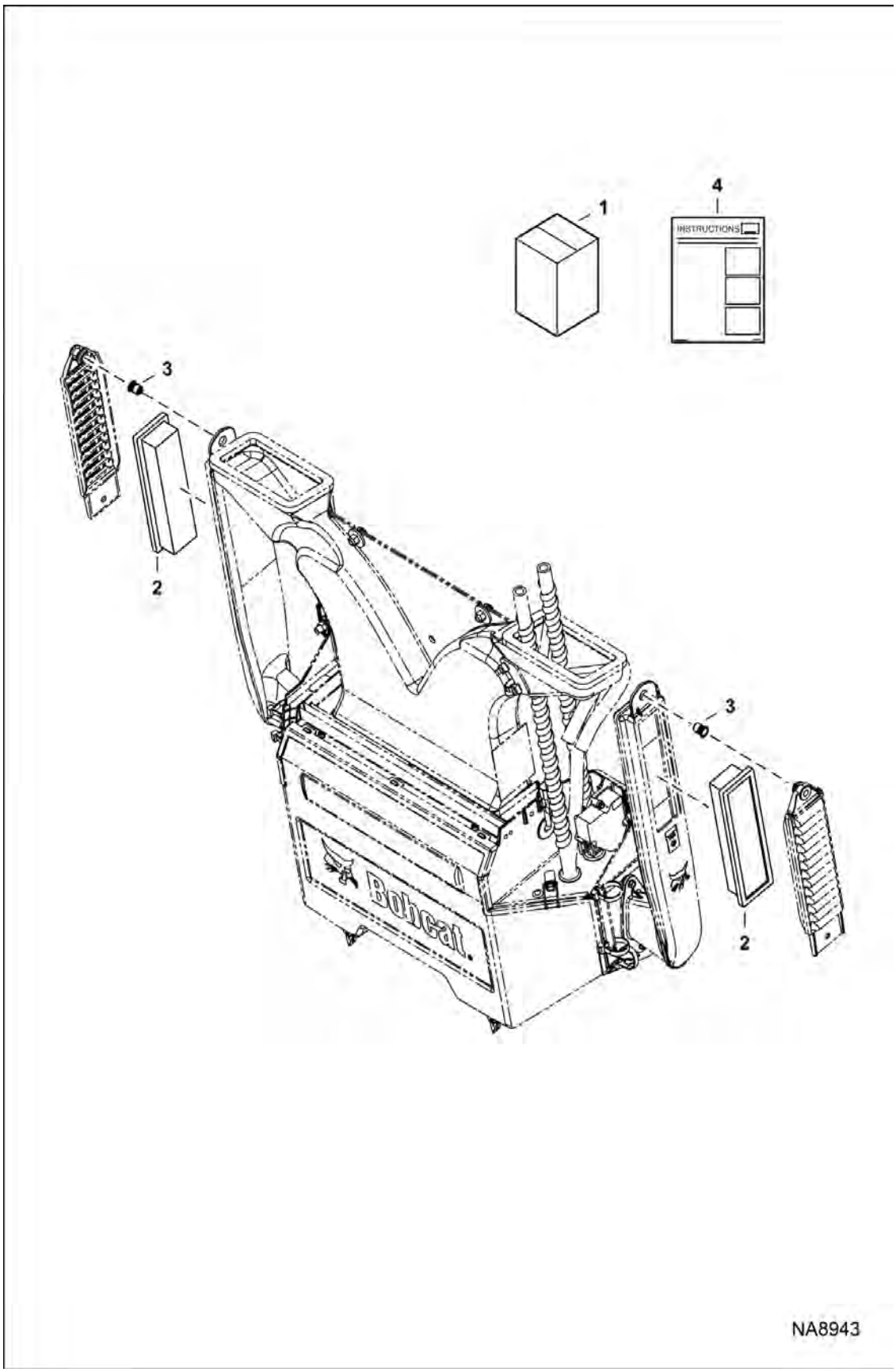

HEPA FILTER KIT (Cont'd)

Ref No	Part Number	Description	Remarks	Serial Number	Qty
1		KIT, HEPA FILTER	NLA - Order components - Was 7238900 [A]		1
2	7231496	FILTER, AIR HEATER CAB			2
3	7246559	INSERT, THREADED			2
4	7255728ENUS	INSTRUCTIONS			1

HORN KIT
(Manual Controls, AHC & ACS)

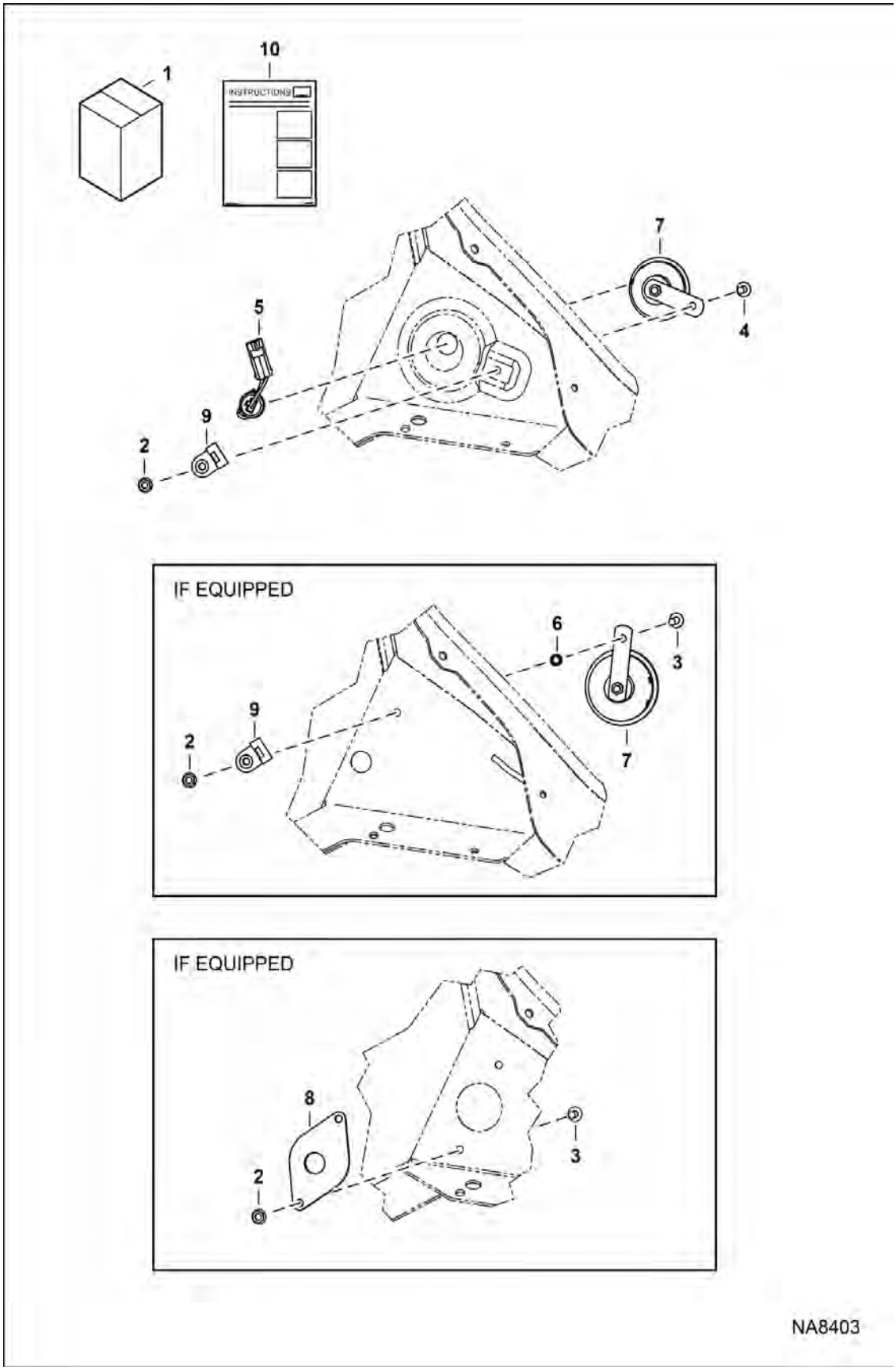

HORN KIT (Cont'd)
(Manual Controls, AHC & ACS)

Ref No	Part Number	Description	Remarks	Serial Number	Qty
1	7223271	KIT, HORN	W/Ref. 2-10		1
2	55D5	NUT			1
2	55D5	NUT	not in kit		2
3	35C524	BOLT			1
3	35C524	BOLT	not in kit		2
4	35C516	BOLT 10			1
5	7225718	HARNESS, HORN	180 mm (7") long		1
5	7183295	HARNESS, HORN	225 mm (9") long - not in kit		1
6	7222767	SPACER			1
7	7221530	HORN, ALARM			1
8	7177690	MOUNT			1
9	6684641	MOUNT			1
10	6990338ENUS	INSTRUCTIONS	WAS 6990338 [A]		1

HORN KIT
(Selectable Joystick Controls)

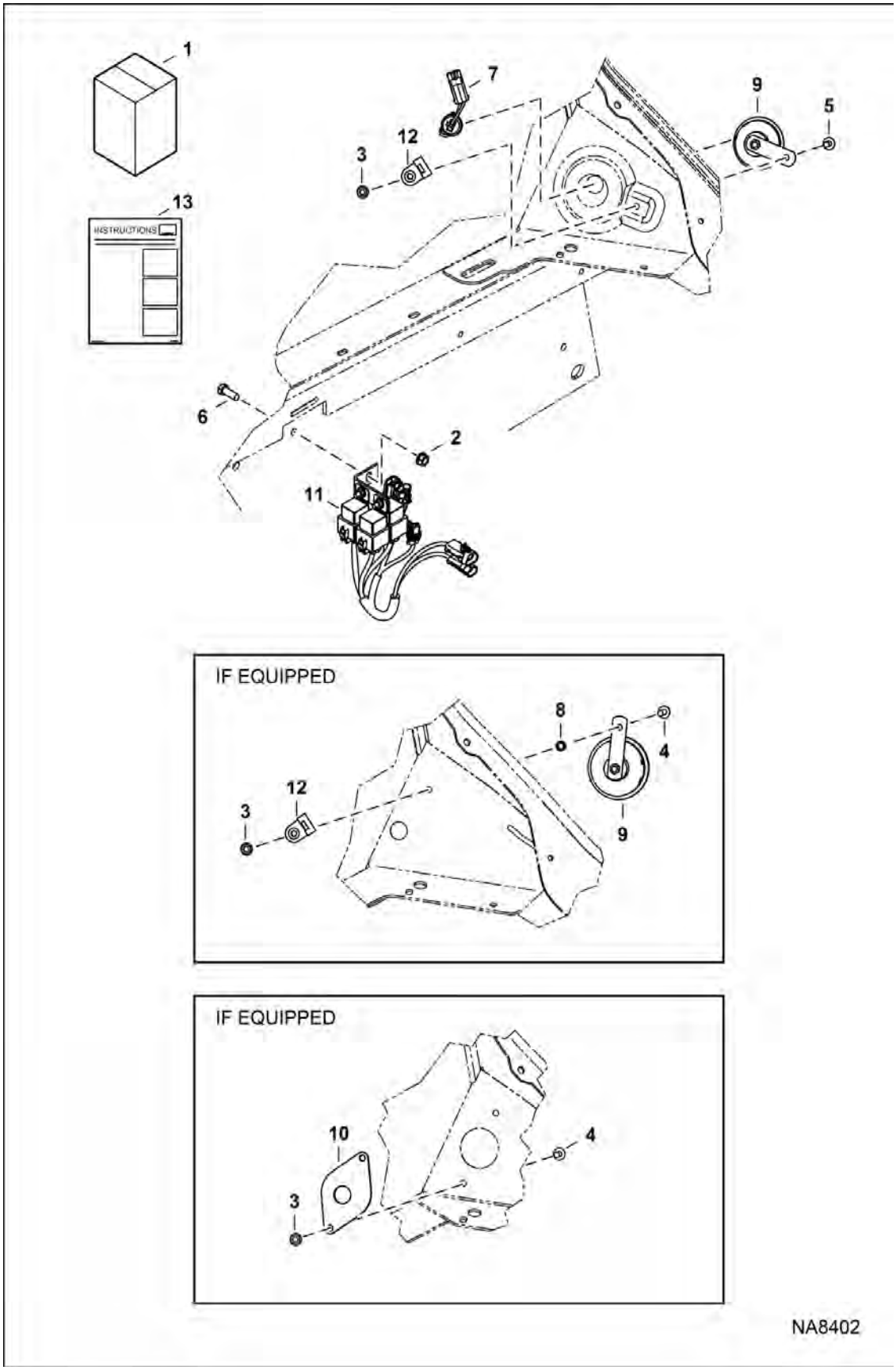

Illustration NA8402

Model S450 MT2KAMEA
6990825

HORN KIT (Cont'd)
(Selectable Joystick Controls)

Ref No	Part Number	Description	Remarks	Serial Number	Qty
1	7223272	KIT, HORN W/JOYSTICK	W/Ref. 2-13		1
2	97D6	NUT 10			1
3	55D5	NUT			1
3	55D5	NUT	not in kit		2
4	35C524	BOLT			1
4	35C524	BOLT	not in kit		2
5	35C516	BOLT 10			1
6	17C616	BOLT 5			1
7	7225718	HARNESS, HORN	180 mm (7") long		1
7	7183295	HARNESS, HORN	225 mm (9") long - not in kit		1
8	7222767	SPACER			1
9	7221530	HORN, ALARM			1
10	7177690	MOUNT			1
11	7151940	HARNESS, HORN			1
12	6684641	MOUNT			1
13	6990338ENUS	INSTRUCTIONS	WAS 6990338 [A]		1

HOSE GUIDE ASSY

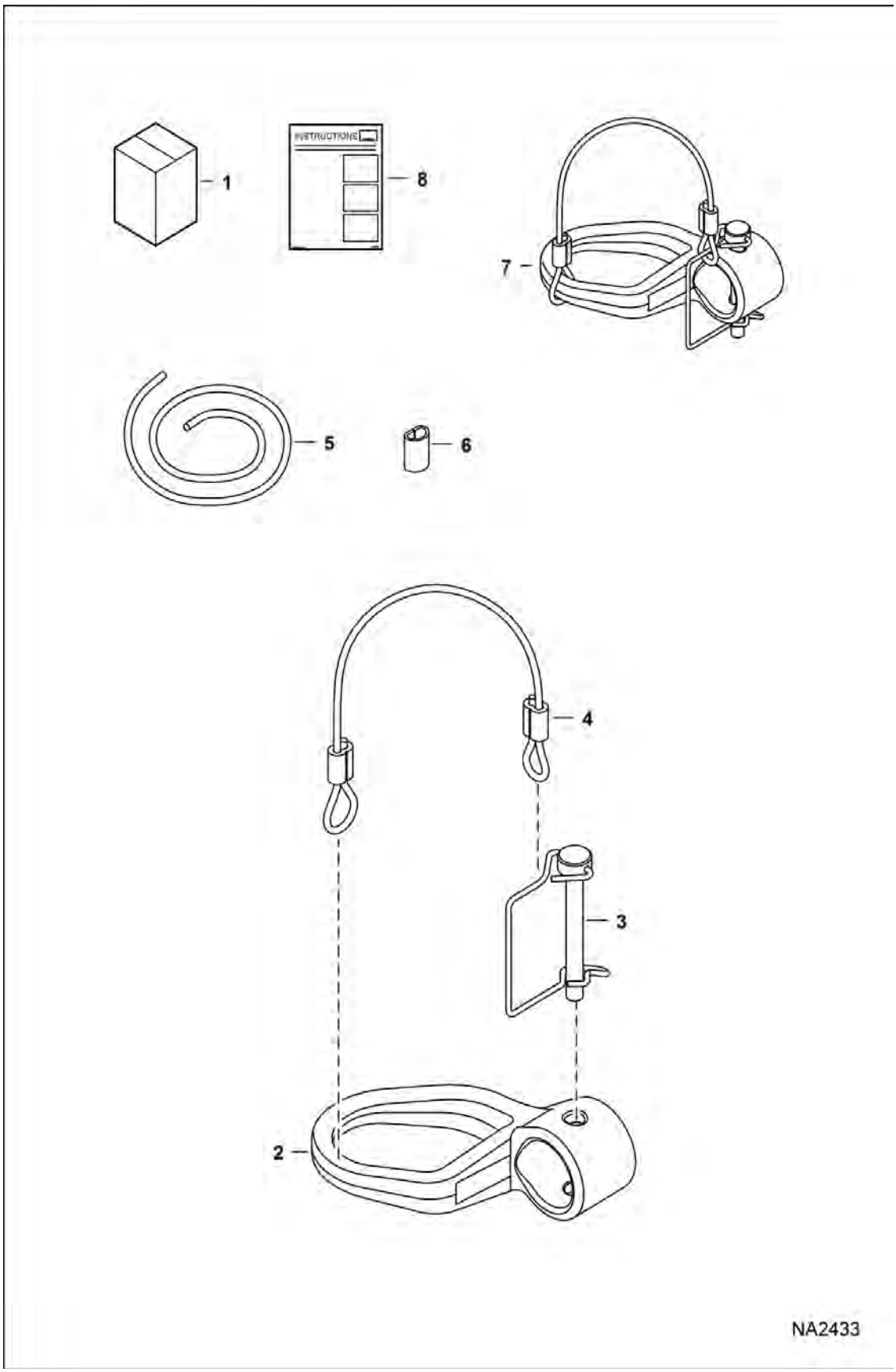

HOSE GUIDE ASSY (Cont'd)

Ref No	Part Number	Description	Remarks	Serial Number	Qty
1	7187118	KIT, GUIDE HOSE	Ref. 7 & 8		1
2		GUIDE	NSS - Order Ref. 7		1
3	7161559	PIN, SNAPPER			1
4		CABLE ASSY	NSS - 304,8 mm (12") long - Order Ref. 5 & 6		1
5	6558309	CABLE BULK/FT	bulk - sold per foot		x
6	6558310	SLEEVE			2
7	7161953	GUIDE, HOSE ASSY	Ref. 2-4		1
8	6989526ENUS	INSTRUCTIONS	Was 6989526 [A]		1

INTERMITTENT WIPER KIT
(Cab Door)

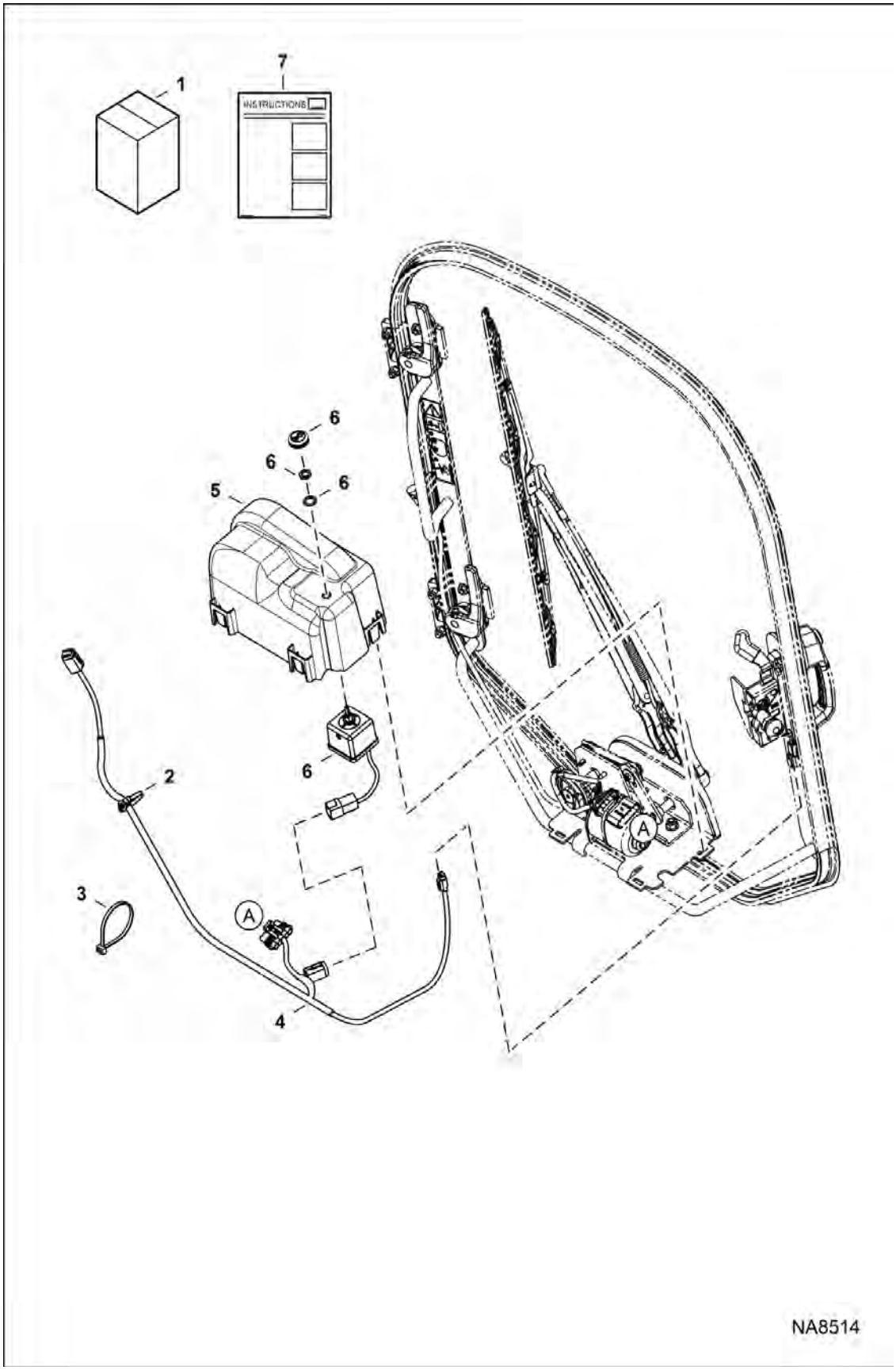

Illustration NA8514

Model S450 MT2KAMEA
6990825

INTERMITTENT WIPER KIT (Cont'd)

(Cab Door)

Ref No	Part Number	Description	Remarks	Serial Number	Qty
1	7240148	KIT, WIPER INTERMITTENT	W/Ref. 2-7		1
2	6610510	STRAP, TIE 10			3
3	6624289	STRAP, TIE			5
4	7231771	HARNESS, WIPER			1
5	7232529	COVER, WIPER			1
6	7237096	CONTROL, WIPER			1
7	6990939ENUS	INSTRUCTIONS	Was 6990939 [A]		1

KEYLESS PANEL KIT
(Deluxe) (Rotary Switch)

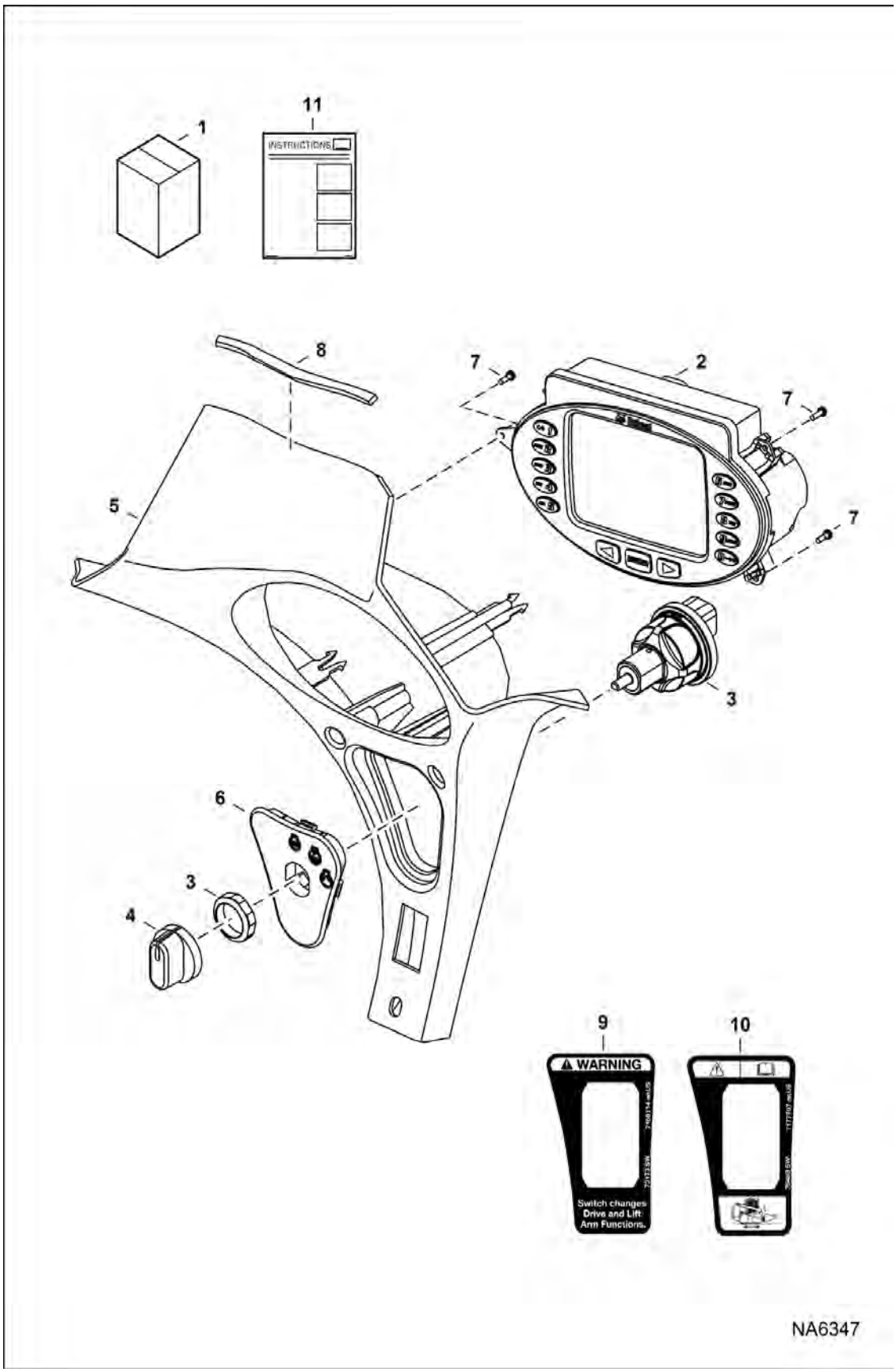

KEYLESS PANEL KIT (Cont'd)

(Deluxe) (Rotary Switch)

Ref No	Part Number	Description	Remarks	Serial Number	Qty
1	7213928	KIT, PANEL DLX	Ref. 2-8, & 11		1
2	6693413	DISPLAY, DLX			1
3	7023022	SWITCH ROTARY			1
4	7023588	KNOB			1
5	7155791	PANEL, RH			1
6	7163589	INSERT, SWITCH			1
7	7179008	SCREW, PLASTIC			3
8	7187104	SEAL			1
9	7168114	DECAL, SWITCH	not in kit		1
10	7177707	DECAL	not in kit - EMEA no-text		1
11	6990343ENUS	INSTRUCTIONS	WAS 6990343 [A]		1

KEYLESS PANEL KIT
(Rotary Switch)

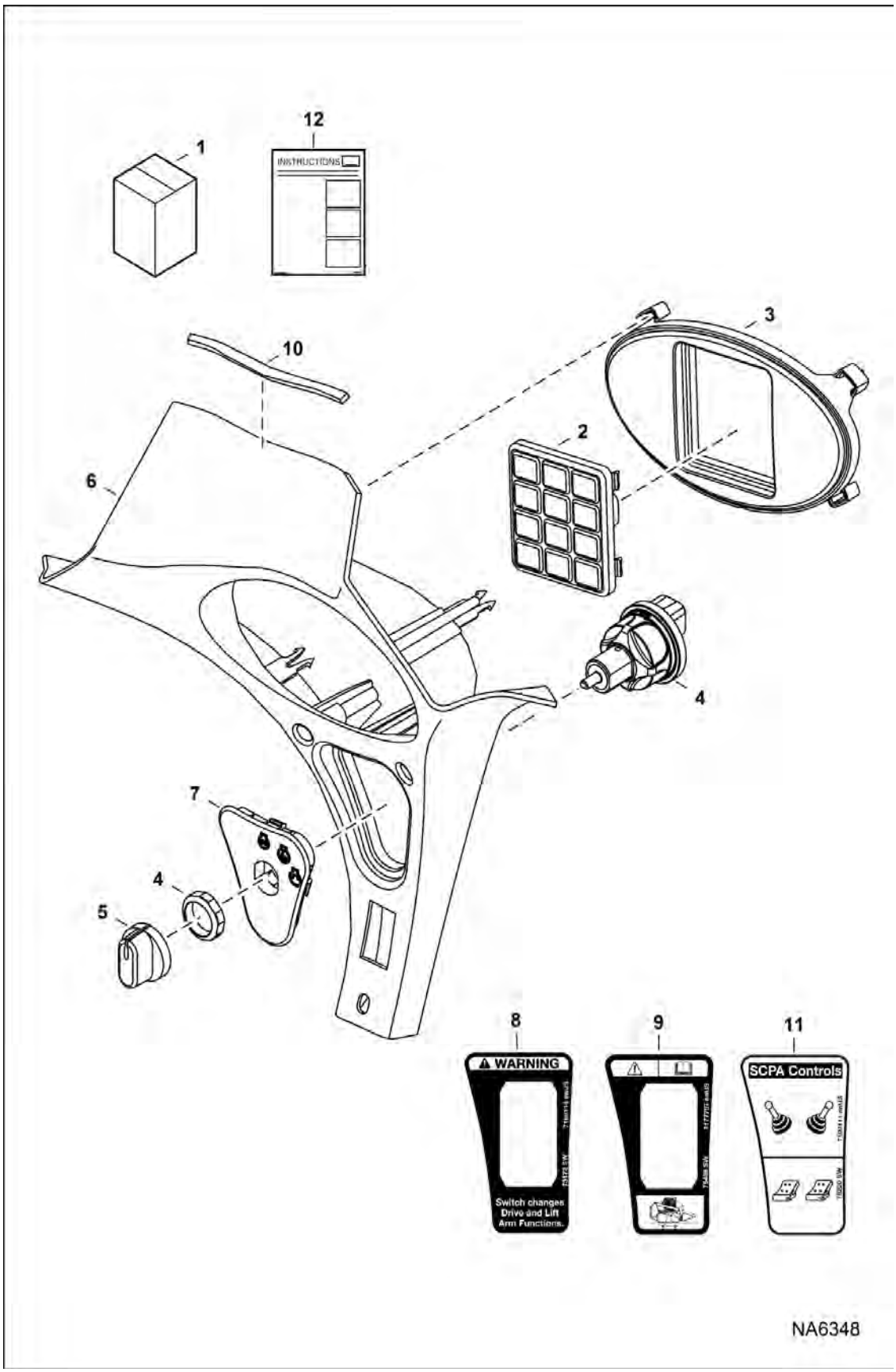

KEYLESS PANEL KIT (Cont'd)
(Rotary Switch)

Ref No	Part Number	Description	Remarks	Serial Number	Qty
1	7213929	KIT, PANEL KEYLESS	Ref. 2-12		1
2	6693712	KEYPAD, PANEL			1
3	7003027	INSERT, KEYPAD			1
4	7023022	SWITCH ROTARY			1
5	7023588	KNOB			1
6	7155791	PANEL, RH			1
7	7163589	INSERT, SWITCH			1
8	7168114	DECAL, SWITCH			1
9	7177707	DECAL			1
10	7187104	SEAL			1
11	7190111	DECAL, CONTROL			1
12	6990344ENUS	INSTRUCTIONS	WAS 6990344 [A]		1

LIFT KIT
(Four Point)

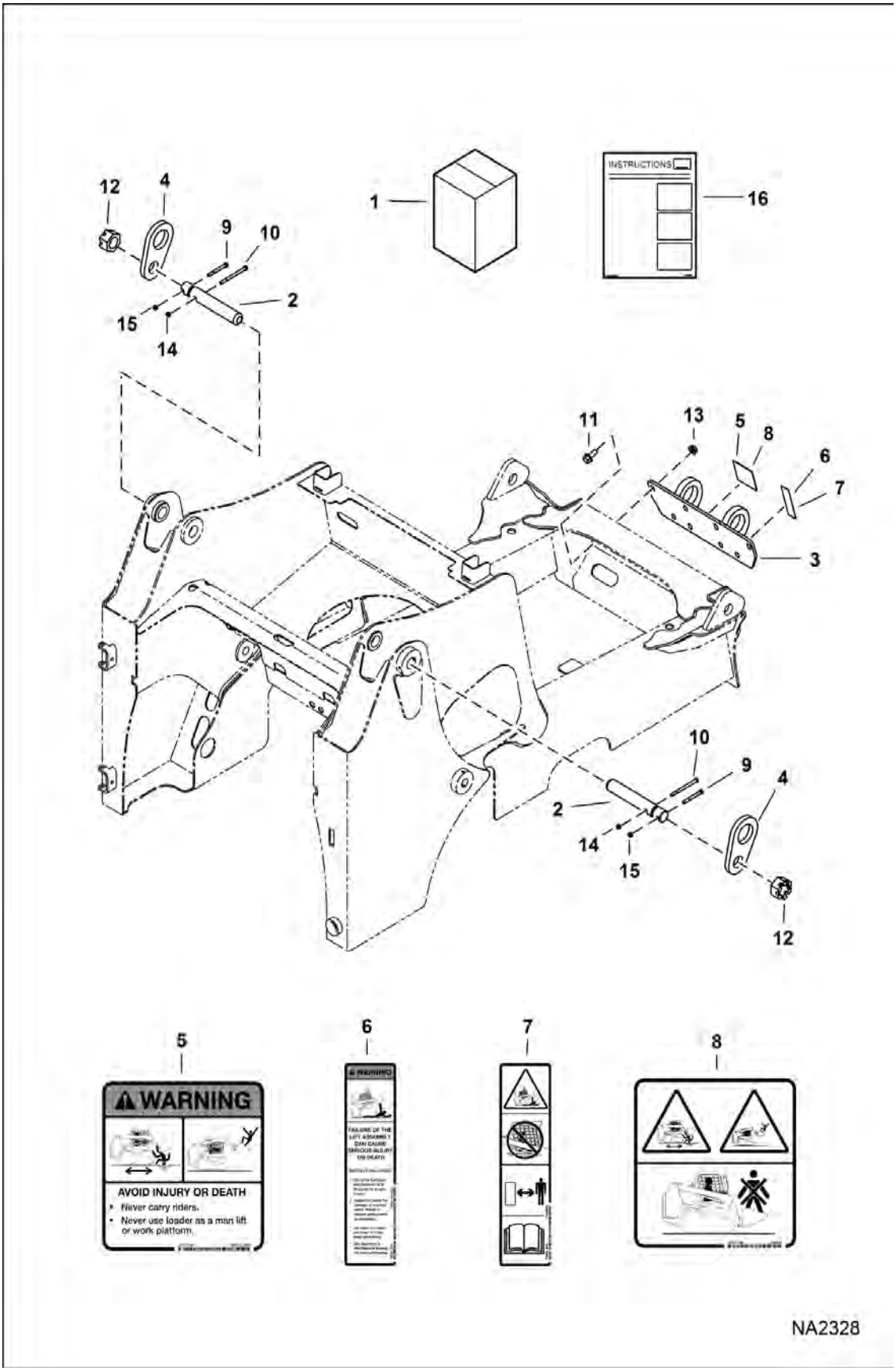

LIFT KIT (Cont'd)
(Four Point)

Ref No	Part Number	Description	Remarks	Serial Number	Qty
1	7241506	KIT, LIFT 4PT	Ref. 2-15		1
1		RESEALING PLUG KIT	See Illustration RESEALING KIT / NA2775		1
2	7227470	PIN, PIVOT			2
3	7156606	BRACKET, ASSY			1
4	6706825	LIFT EYE			2
5	7167996	DECAL, WARNING			1
6	7168019	DECAL, WARNING			1
7	7168020	DECAL, WARNING	no text		1
8	7168040	DECAL, WARNING	no text		1
9	17C540	BOLT			2
10	17C660	BOLT			2
11	31C1024	BOLT			8
12	4D20	NUT			2
13	53D10	NUT			8
14	85D6	NUT, 5			2
15	87D5	NUT			2
16	7241505ENUS	INSTRUCTIONS	Was 7241505		1

LIFT KIT
(Single Point)

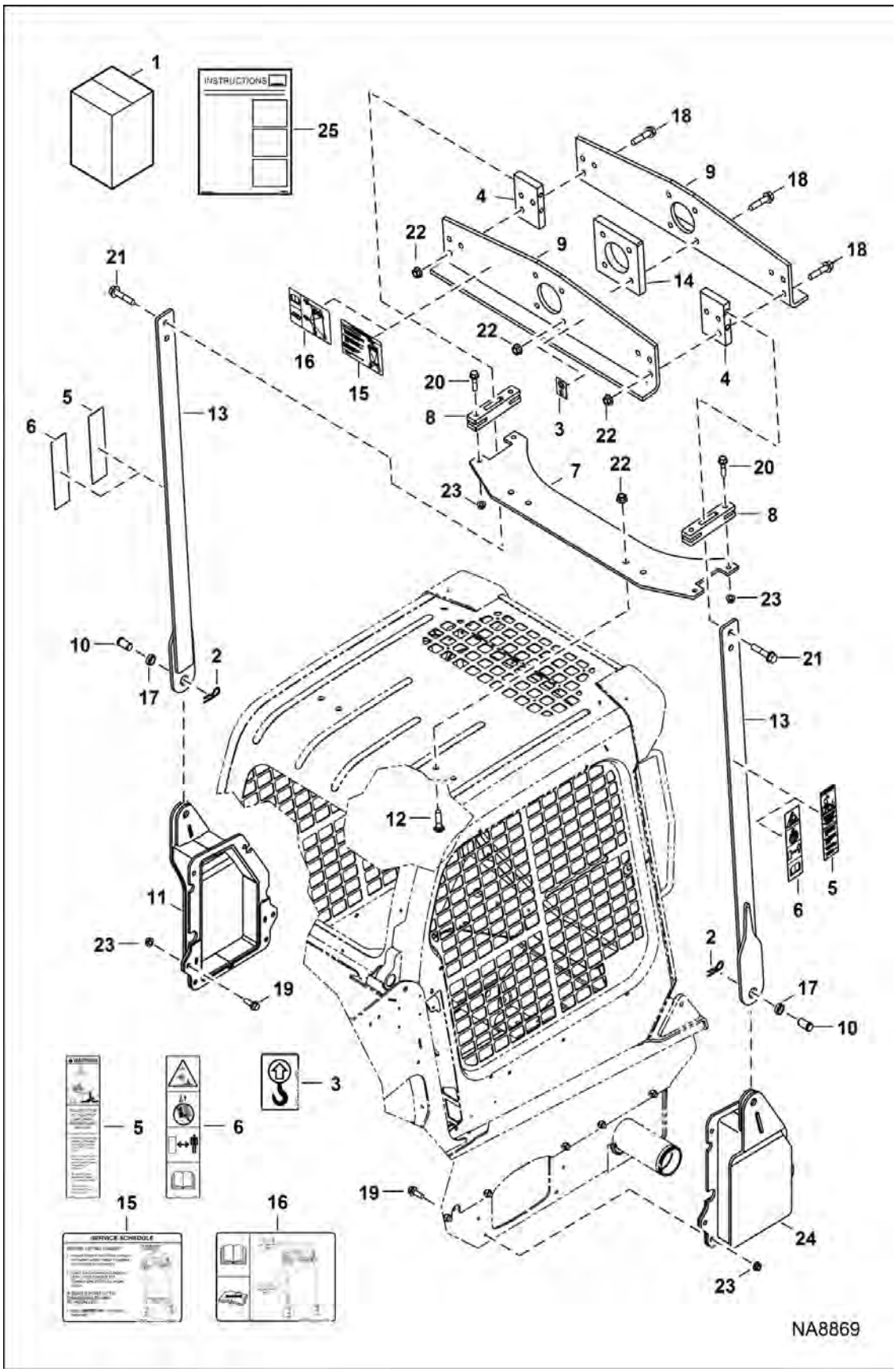

Illustration NA8869

Model S450 MT2KAMEA
6990825

LIFT KIT (Cont'd)
(Single Point)

Ref No	Part Number	Description	Remarks	Serial Number	Qty
1	7241548	KIT, SINGLE PT LIFT	Ref. 2-25		1
1		RESEALING PLUG KIT	See Illustration RESEALING KIT / NA2775		1
2	1320075	PIN, COTTER			2
3	6533898	DECAL			2
4	7126682	BLOCK, SINGLE POINT LIFT			2
5	7142141	DECAL			2
6	7142142	DECAL			2
7	7193584	MOUNT, LIFT KIT			1
8	7160760	MOUNT			2
9	7160779	PLATE			2
10	7161536	PIN, CLEVIS			2
11	7242323	SUPPORT, LH			1
12	7164686	BOLT, CARRIAGE			4
13	7166334	ARM LIFT			2
14	7166831	BLOCK			1
15	7168021	DECAL			2
16	7168022	DECAL			2
17	7168159	BUSHING			2
18	31C1044	BOLT			10
19	31C824	BOLT 10			12
20	31C832	BOLT			4
21	49C1048	BOLT			4
22	53D10	NUT			14
23	53D8	NUT			16
24	7242324	SUPPORT, RH			1
25	7241550ENUS	INSTRUCTIONS	Was 7241550		1

LIGHT GUARD KIT
(Front)

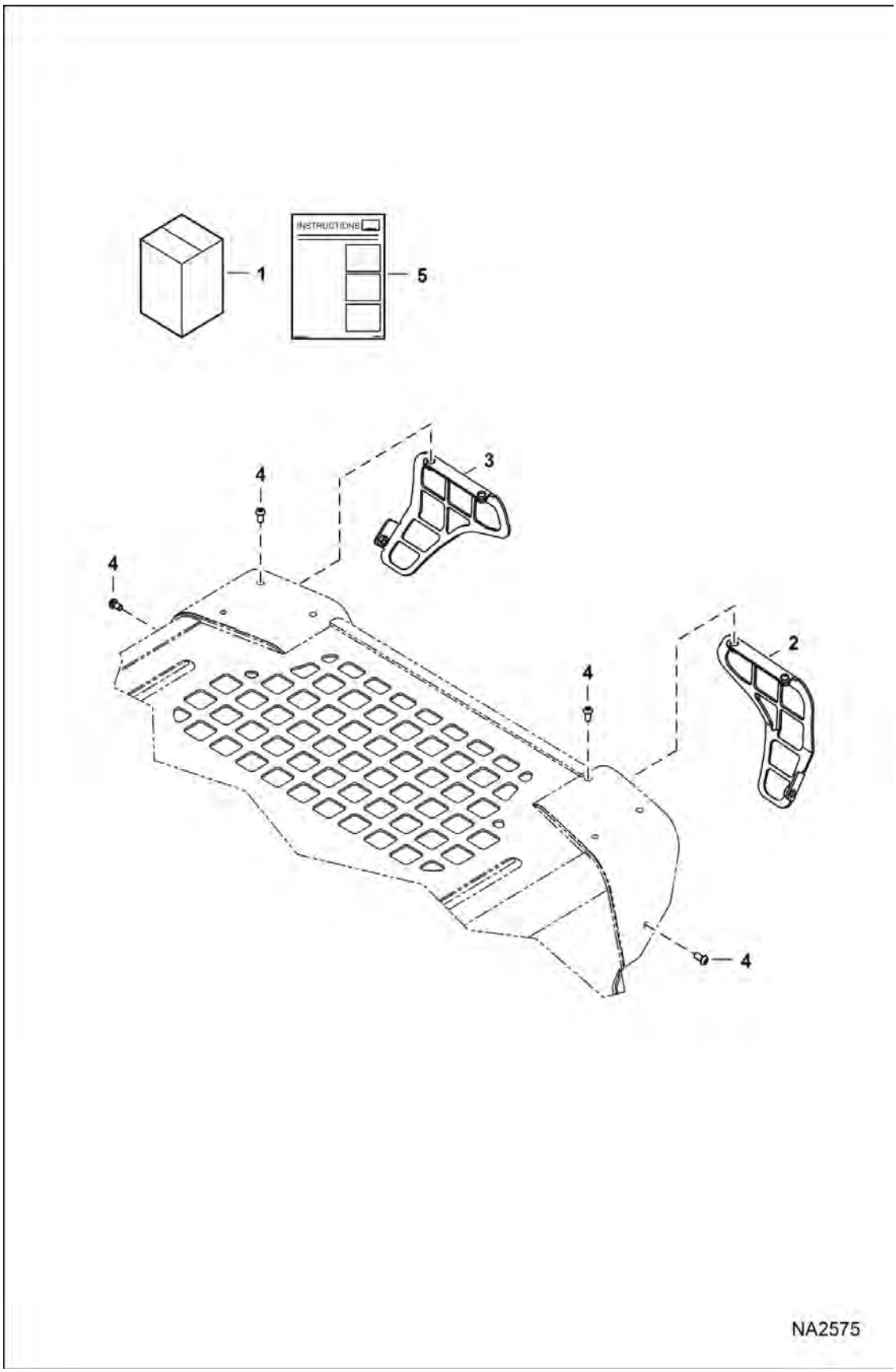

LIGHT GUARD KIT (Cont'd)

(Front)

Ref No	Part Number	Description	Remarks	Serial Number	Qty
1	7174129	KIT, GUARD LIGHT	Ref. 2-5		1
2	7183869	GUARD, LIGHT	RH		1
3	7183870	GUARD, LIGHT	LH		1
4	25G510	BOLT			6
5	6989487ENUS	INSTRUCTIONS	Was 6989487 [A]		1

LIGHT GUARD KIT
(Rear)

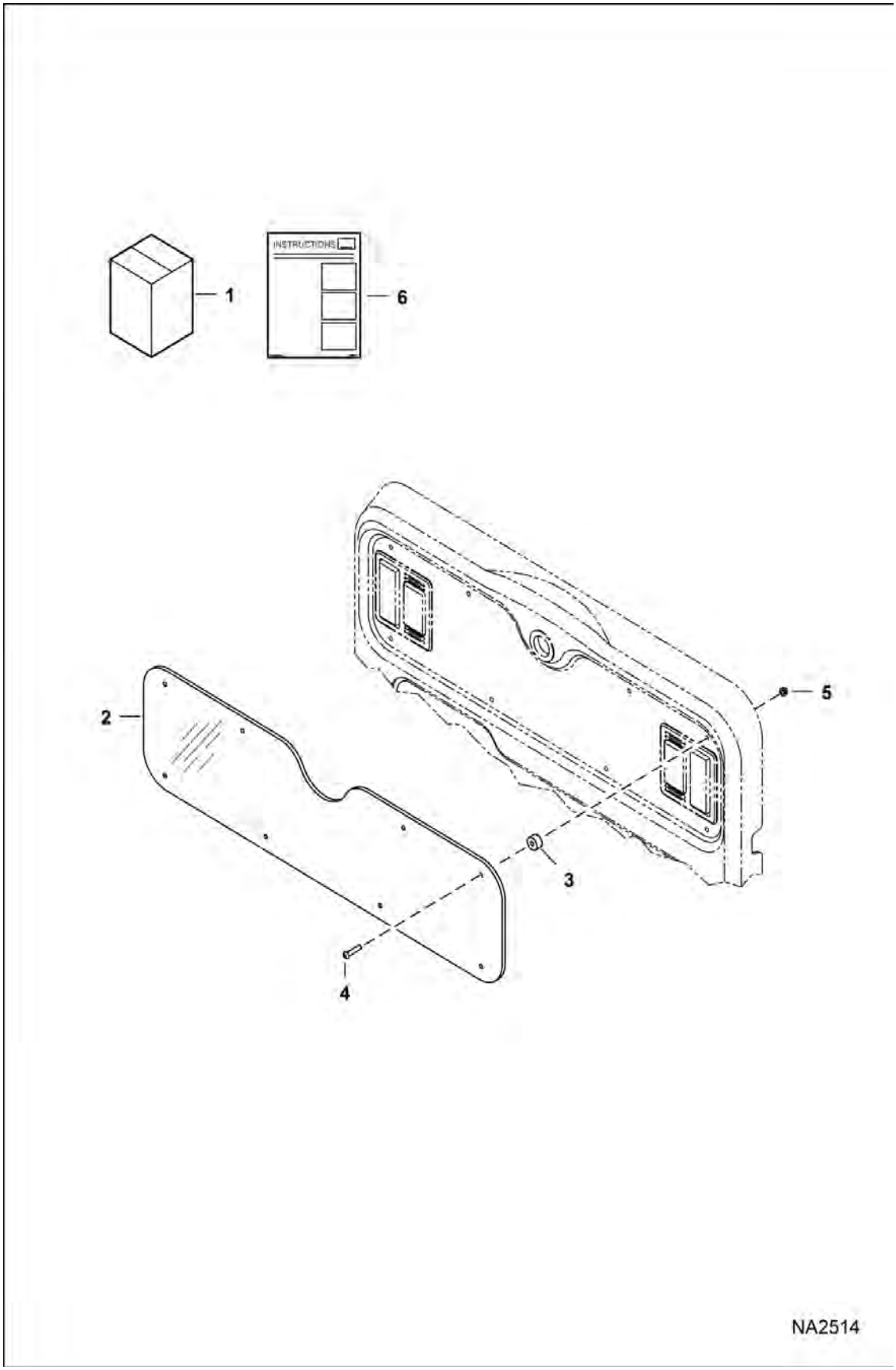

LIGHT GUARD KIT (Cont'd)

(Rear)

Ref No	Part Number	Description	Remarks	Serial Number	Qty
1	7239159	KIT, TAIL LIGHT GUARD	Ref. 2-6		1
2	7239161	GUARD, TAIL LIGHT			2
3	7173310	SPACER			8
4	25G628	SCREW			8
5	97D6	NUT 10			8
6	6987490ENUS	INSTRUCTIONS	Was 6987490 [A]		1

LOADER LED LIGHT KIT

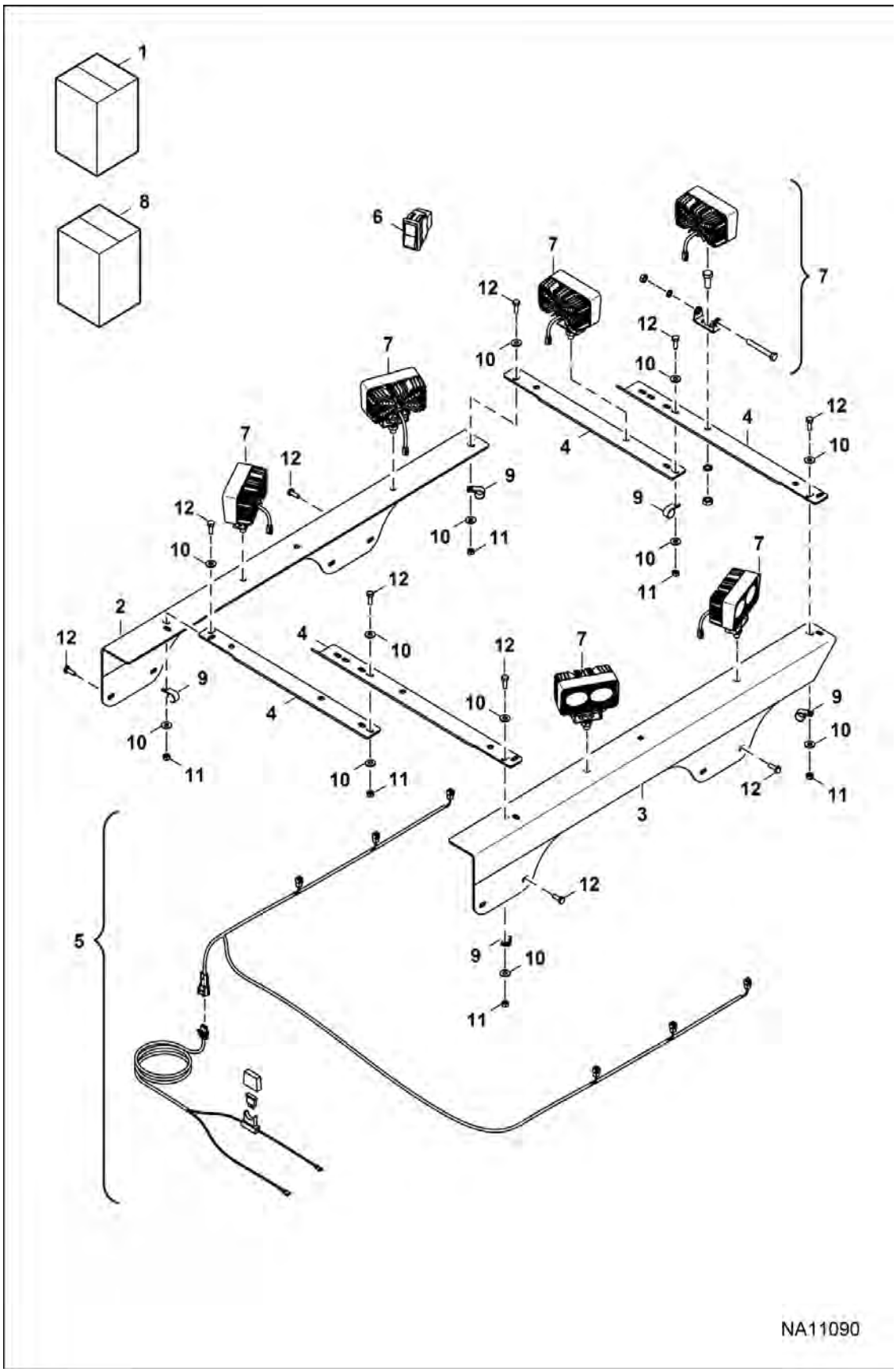

LOADER LED LIGHT KIT (Cont'd)

Ref No	Part Number	Description	Remarks	Serial Number	Qty
1	7275379	KIT, LIGHT LED	Ref. 2-8		1
2	7275528	RAIL, LIGHT MOUNTING LH			1
3	7275529	RAIL, LIGHT MOUNTING RH			1
4	7275530	RAIL, FRONT CROSS MEMBER			2
5	7275531	HARNESS, LED LIGHT			1
6	7265583	SWITCH, ROCKER LIGHT			1
7	7275532	LIGHT, LED FLOOD			6
8	7275533	KIT, HARDWARE	Ref. 8-12		1
9		CLAMP	NSS		X
10		WASHER	NSS		X
11		NUT	NSS		X
12		BOLT	NSS		X

MAINTENANCE PLATFORM KIT

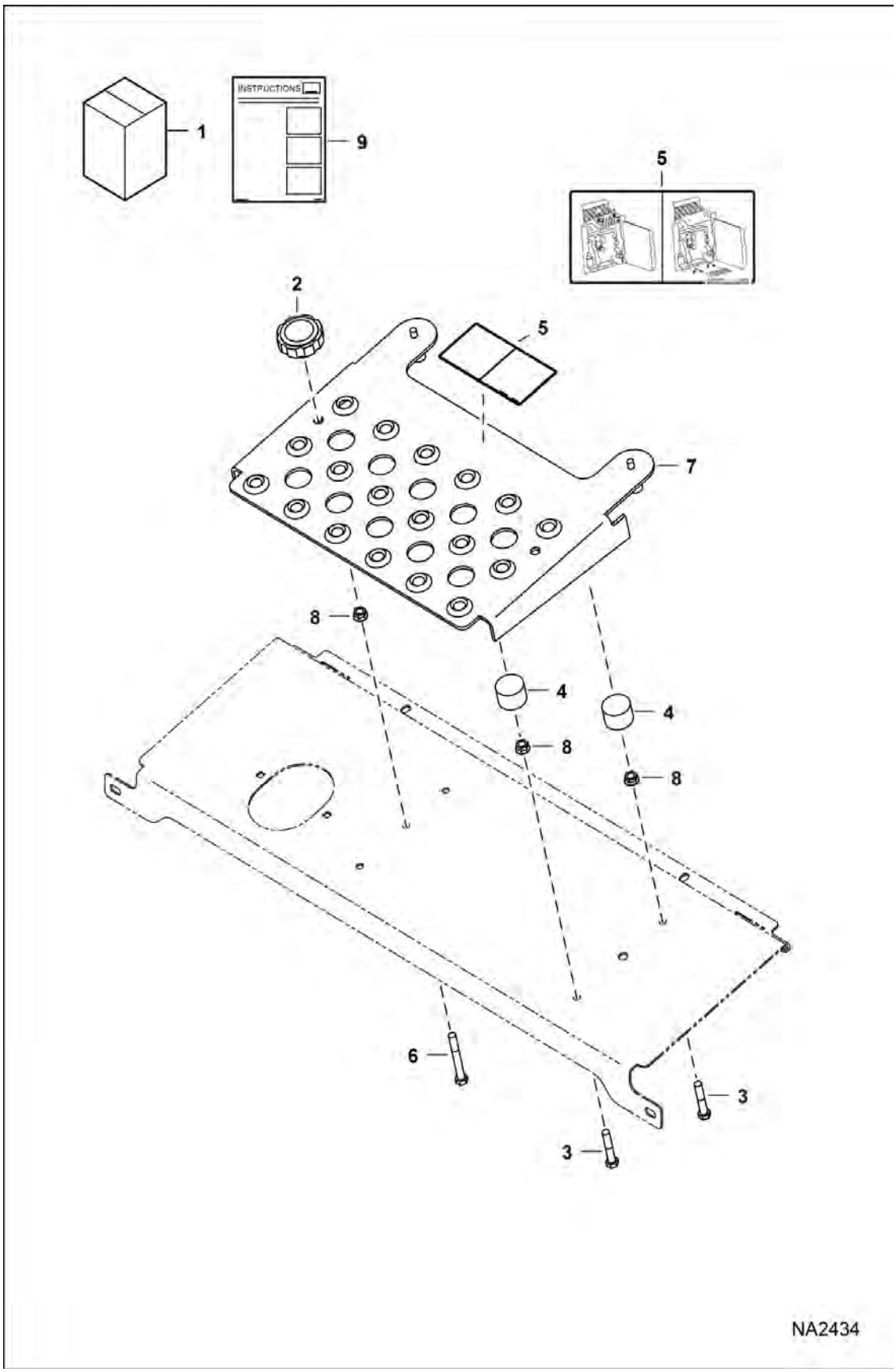

MAINTENANCE PLATFORM KIT (Cont'd)

Ref No	Part Number	Description	Remarks	Serial Number	Qty
1	7178420	KIT, PLATFORM MAINTENANCE	Ref. 2-9		1
2	6684932	KNOB CLAMPING			2
3	7186768	BOLT			4
4	7156809	BUMPER			4
5	7188542	DECAL, INSTRUCTIONS			1
6	7186769	BOLT			2
7	7173943	PLATFORM			1
8	55D6	NUT			6
9	6989484ENUS	INSTRUCTIONS	WAS 6989484 [A]		1

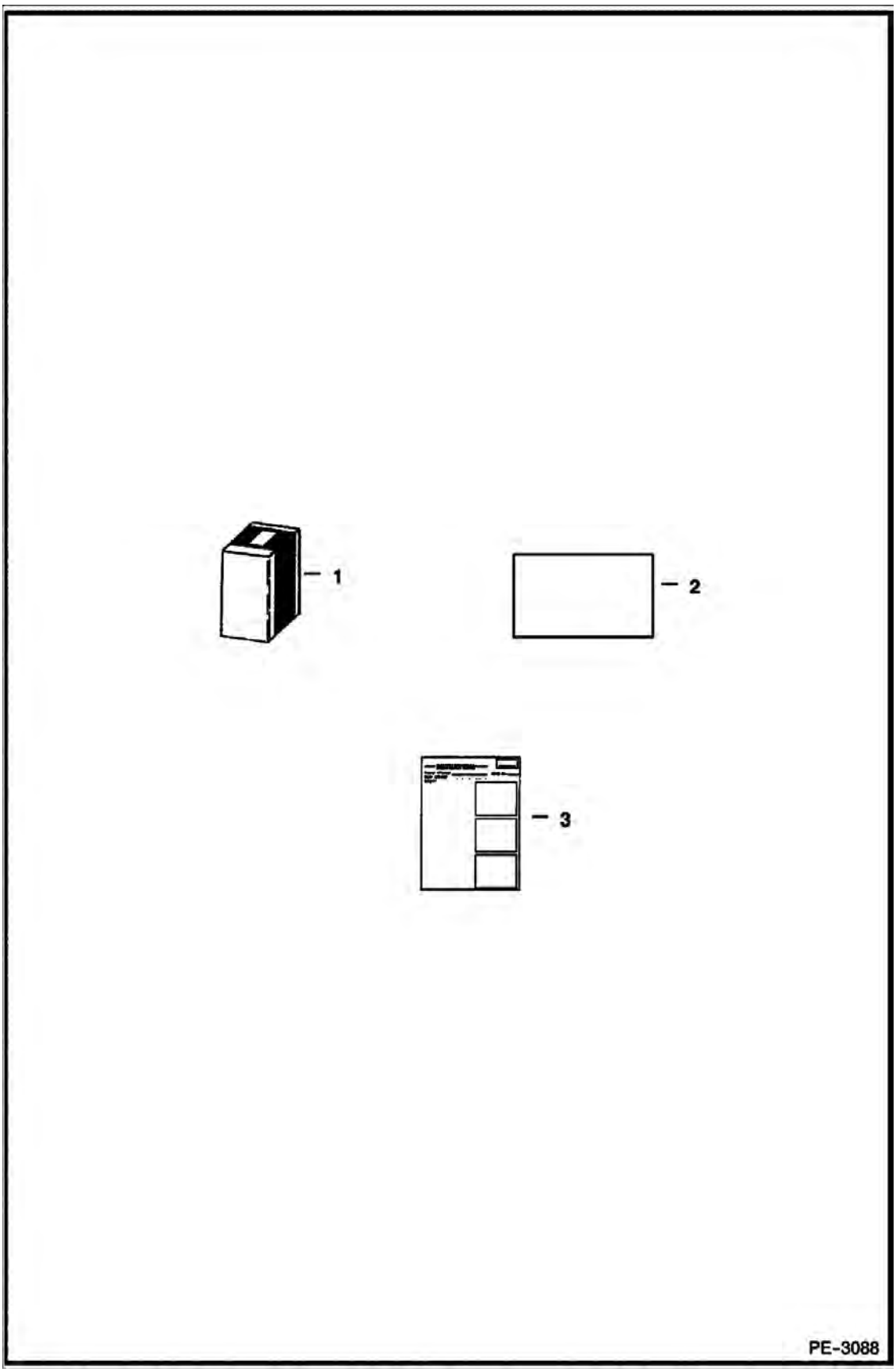
1
2
3
PE-3088

MINE SAFETY & HEALTH ADMINISTRATION (Cont'd)

Ref No	Part Number	Description	Remarks	Serial Number	Qty
1	7113518	DECAL NSS	V2203-MDI Kubota engine		1
2		DECAL	NSS - Order Ref. 1		1
3	6904752ENUS	INSTRUCTIONS	Was 6904752 [A]		1

NEUTRAL LIGHTING OPTION
(SJC Controls)

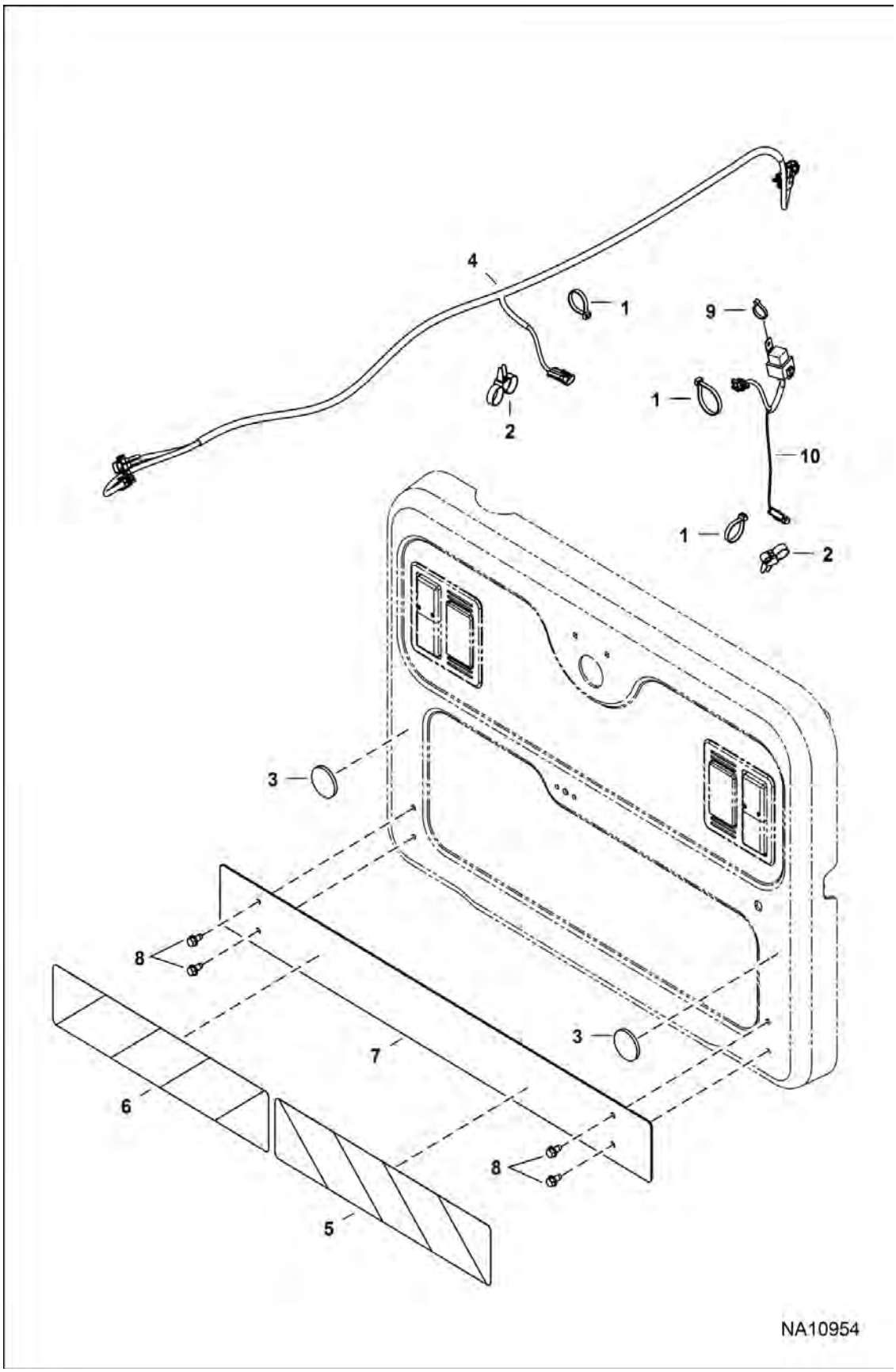

NEUTRAL LIGHTING OPTION (Cont'd)

(SJC Controls)

Ref No	Part Number	Description	Remarks	Serial Number	Qty
1	6624289	STRAP, TIE			12
2	6678668	STRAP			2
3	7191035	LENS, REFLECTIVE			2
4	7219294	HARNESS, SWITCH NEUTRAL			1
5	7220344	DECAL, REFLECTIVE			1
6	7220348	DECAL, REFLECTIVE			1
7	7272066	BRACKET, DECALS			1
8	84G3712	BOLT 5			4
9	6690690	STRAP, TIE			1
10	7175581	HARNESS BRAKE SJC			2

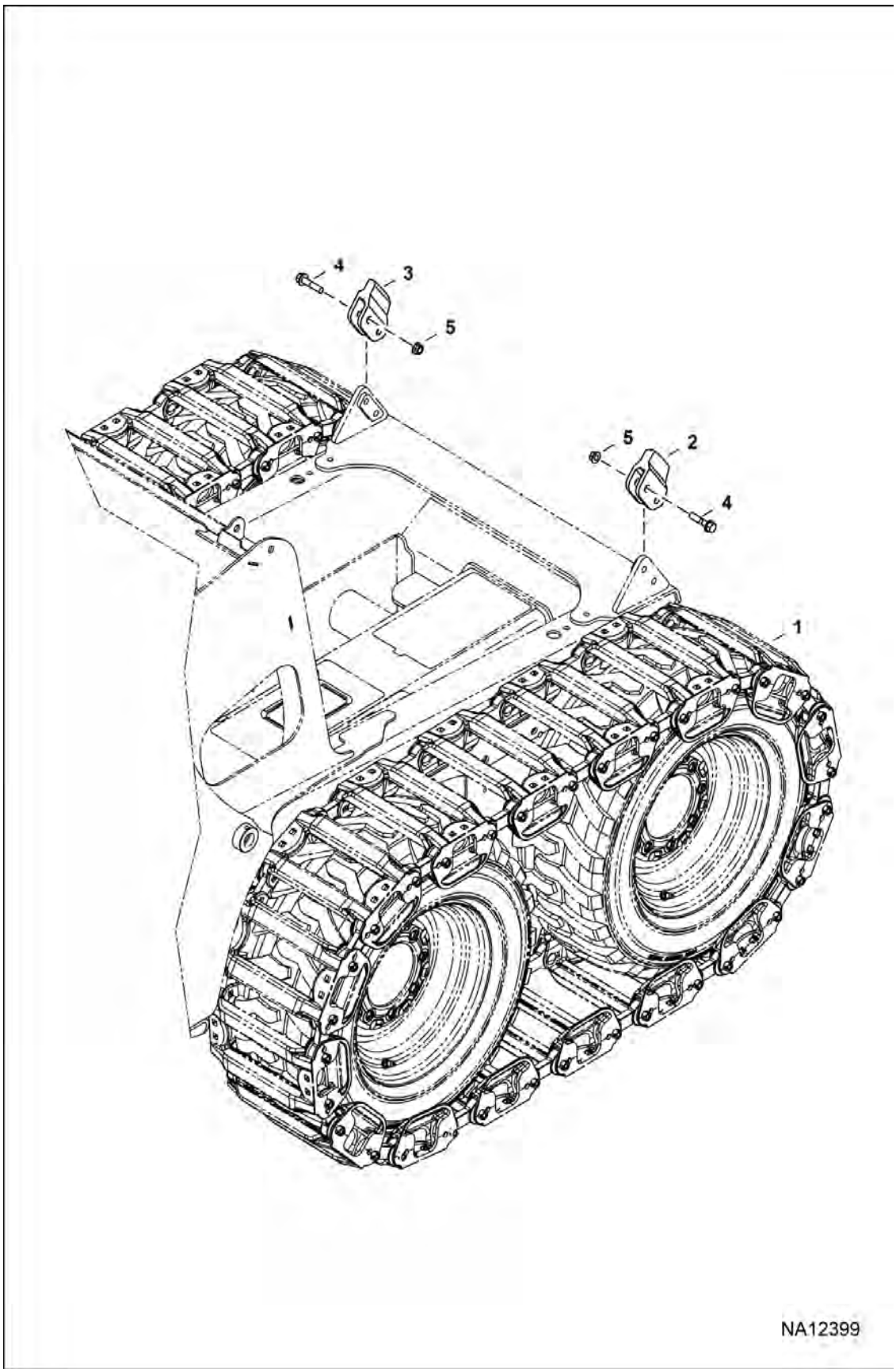
4
3
5
5
2
4
1
NA12399

OTT TRACKS (Cont'd)

Ref No	Part Number	Description	Remarks	Serial Number	Qty
1		TRACK	NLA - W/ Ref. 2, 3, 4, 5 - Was 7199506 [A]		1
2		STOP, RH	NLA - Was 7217717 [A]		1
3		STOP, LH	NLA - Was 7235083 [A]		1
4	31C836	BOLT			4
5	53D8	NUT			4

PEDAL EXTENDERS

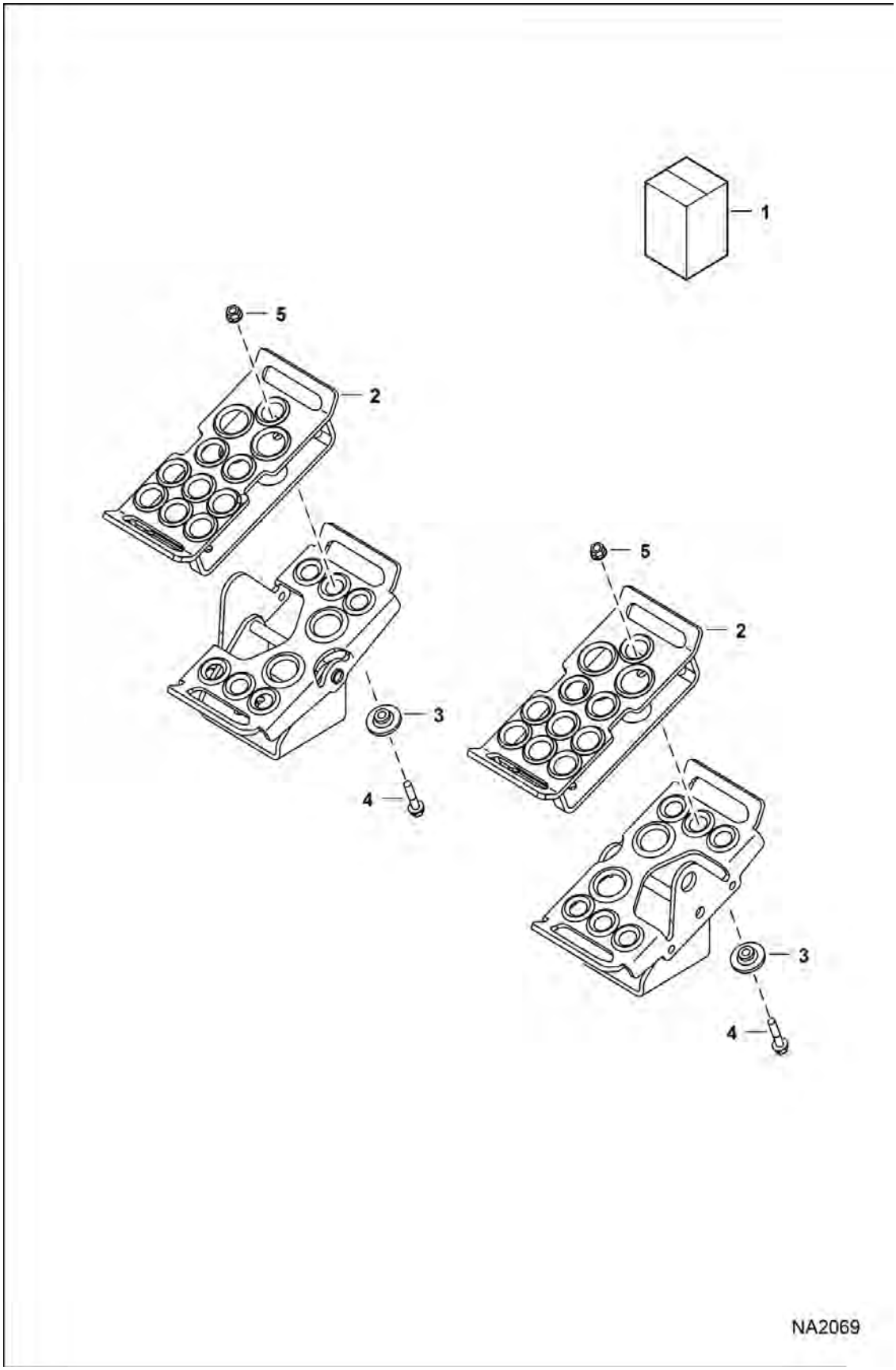

PEDAL EXTENDERS (Cont'd)

Ref No	Part Number	Description	Remarks	Serial Number	Qty
1		KIT, PEDAL EXTENDER	NLA - Order components		1
2	7131233	PEDAL			2
3	7131236	BUSHING			6
4	35C524	BOLT			6
5	89D5	NUT			6

POWER BOB-TACH

(Cylinder) (Bottom & Side Mounted Ports) (54 mm) (2.125") OD Cyl
(44,45 mm) (1.75") Dia Bore

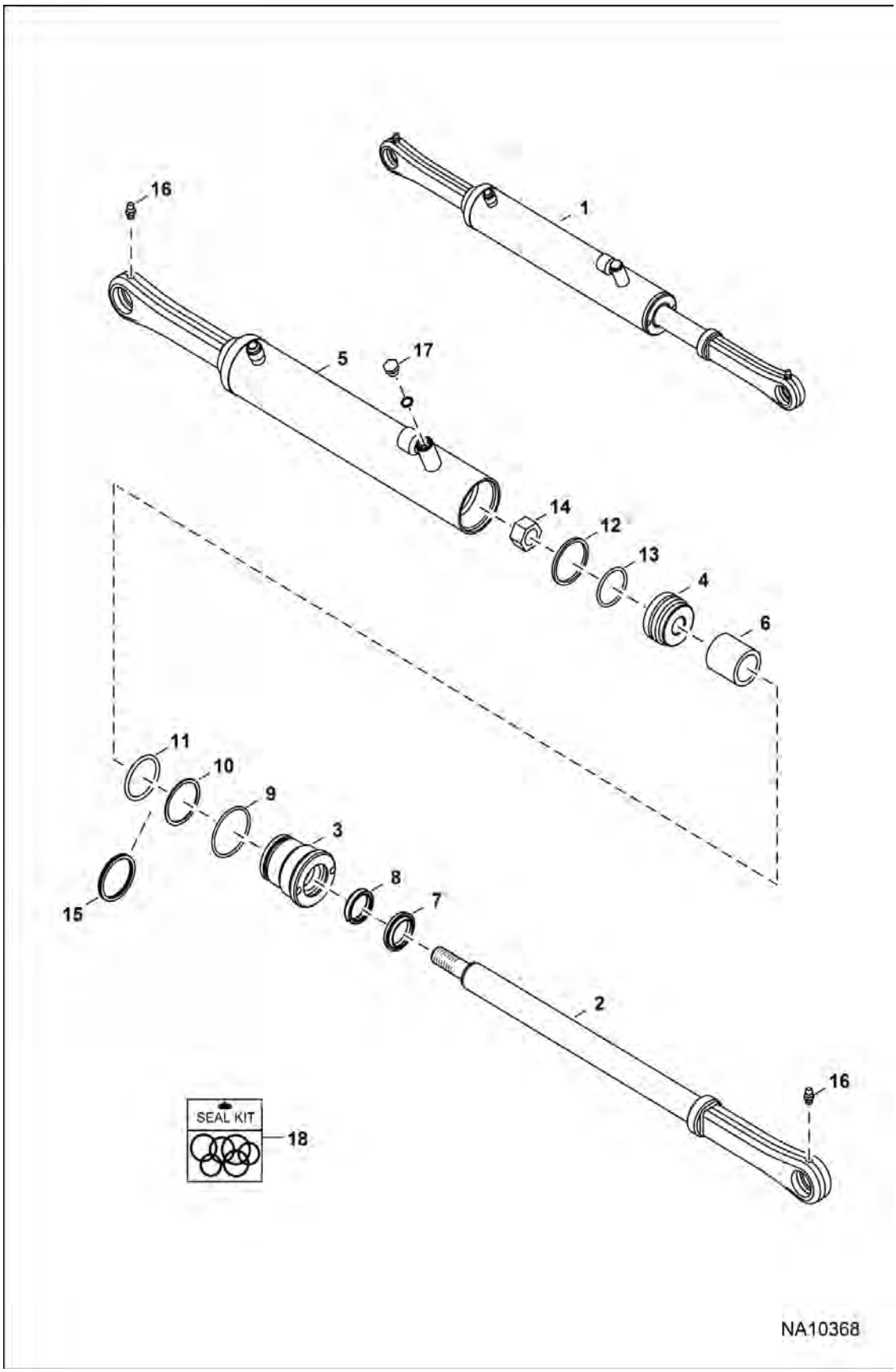

POWER BOB-TACH (Cont'd)

(Cylinder) (Bottom & Side Mounted Ports) (54 mm) (2.125") OD Cyl (44,45 mm) (1.75") Dia Bore

Ref No	Part Number	Description	Remarks	Serial Number	Qty
1	7227463	CYLINDER, POWER BOB-TACH	Ref. 2-14 & 16-18		1
2	7227462	SHAFT, W/A			1
3	6586542	HEAD			1
4	6586543	PISTON			1
5	7227465	TUBE, CASE CYL POWER BOB-TACH			1
6	6810356	SPACER			1
7	6666542	WIPER, ROD CYL			1
8	6667323	SEAL			1
9	82K132	O-RING HYDRAULIC			1
10	73K222	RING			1
11	54K40116	O-RING			1
12	54K30110	O-RING	Was 25K30110 [A]		1
13	6532453	RING SEAL			1
14	92D10	NUT			1
15		SEAL, QUAD	NLA - Order Ref. 10 & 11 - Was 7008782 [A]		1
16	10H35	FITTING, GREASE 10			2
17	6812170	PLUG			2
18	7138014	SEAL KIT	Ref. 7-14		1

POWER BOB-TACH

(Cylinder) (Bottom & Side Mounted Ports) (47,6 mm) (1.875") OD Cyl (38,1 mm) (1.5") Dia Bore

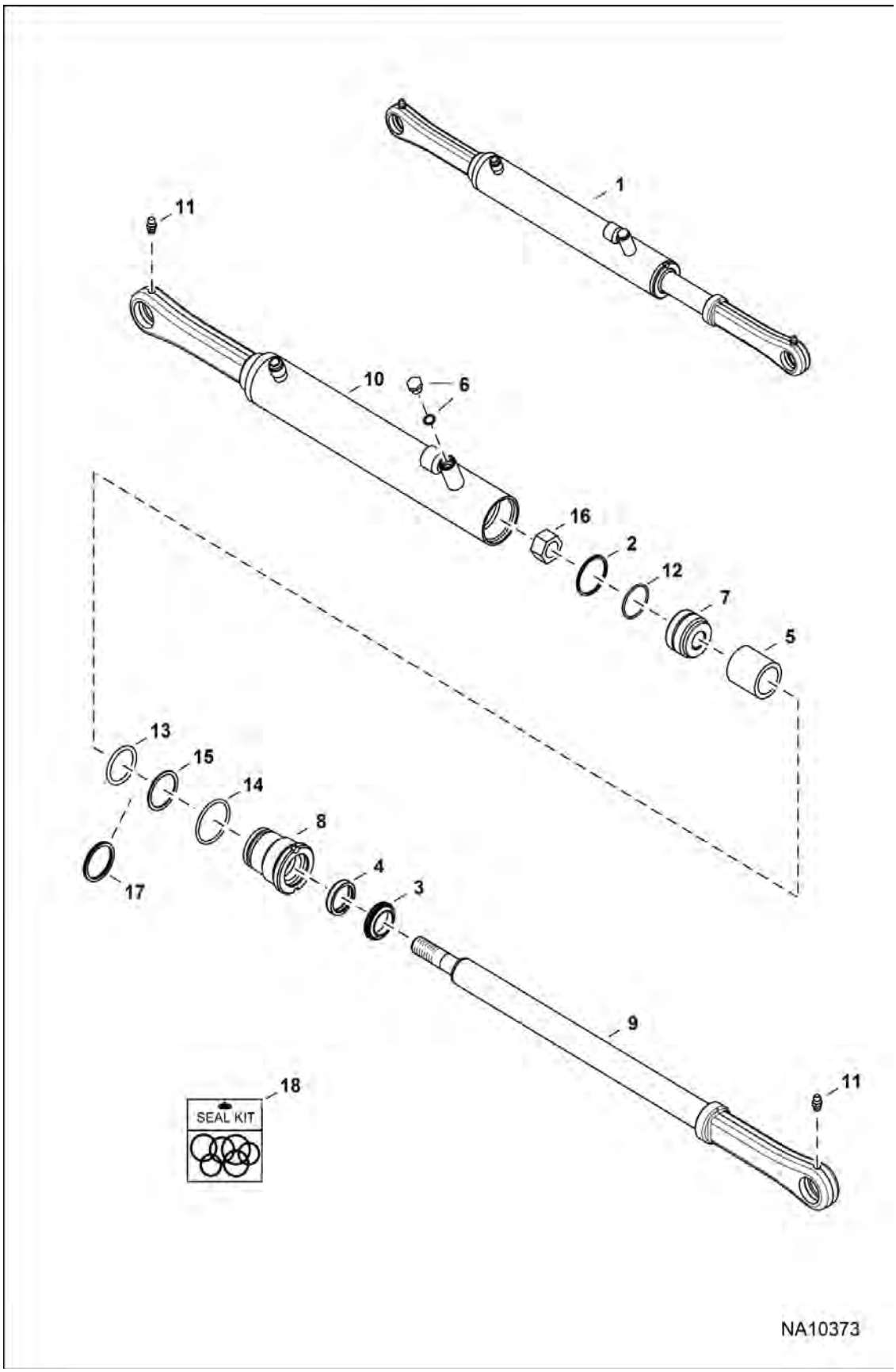

POWER BOB-TACH (Cont'd)

(Cylinder) (Bottom & Side Mounted Ports) (47,6 mm) (1.875") OD Cyl (38,1 mm) (1.5") Dia Bore

Ref No	Part Number	Description	Remarks	Serial Number	Qty
1		CYLINDER HYDRAULIC	See Illustration POWER BOB-TACH / NA12512 NLA - Ref. 2-16 - Was 7227570 [A]		1
2	6649690	SEAL			1
3	6666542	WIPER, ROD CYL			1
4	6667323	SEAL			1
5	6810356	SPACER			1
6	6812170	PLUG			1
7	7153107	PISTON			1
8	7153108	HEAD			1
9	7227462	SHAFT, W/A			1
10	7307555	TUBE CASE CYLINDER	Was 7227571 [A]		1
11	10H35	FITTING, GREASE 10			2
12	54K20106	ORING			1
13	54K40108	ORING			1
14	58K128	ORING			1
15	73K218	RING BKUP			1
16	92D10	NUT			1
17		SEAL, QUAD	NLA - Order Ref. 13 & 15 - Was 7207335 [A]		1
18	7155417	KIT, SEAL	Ref. 2-4 & 12-16		1

POWER BOB-TACH
(Cylinder) (Guard Stud)

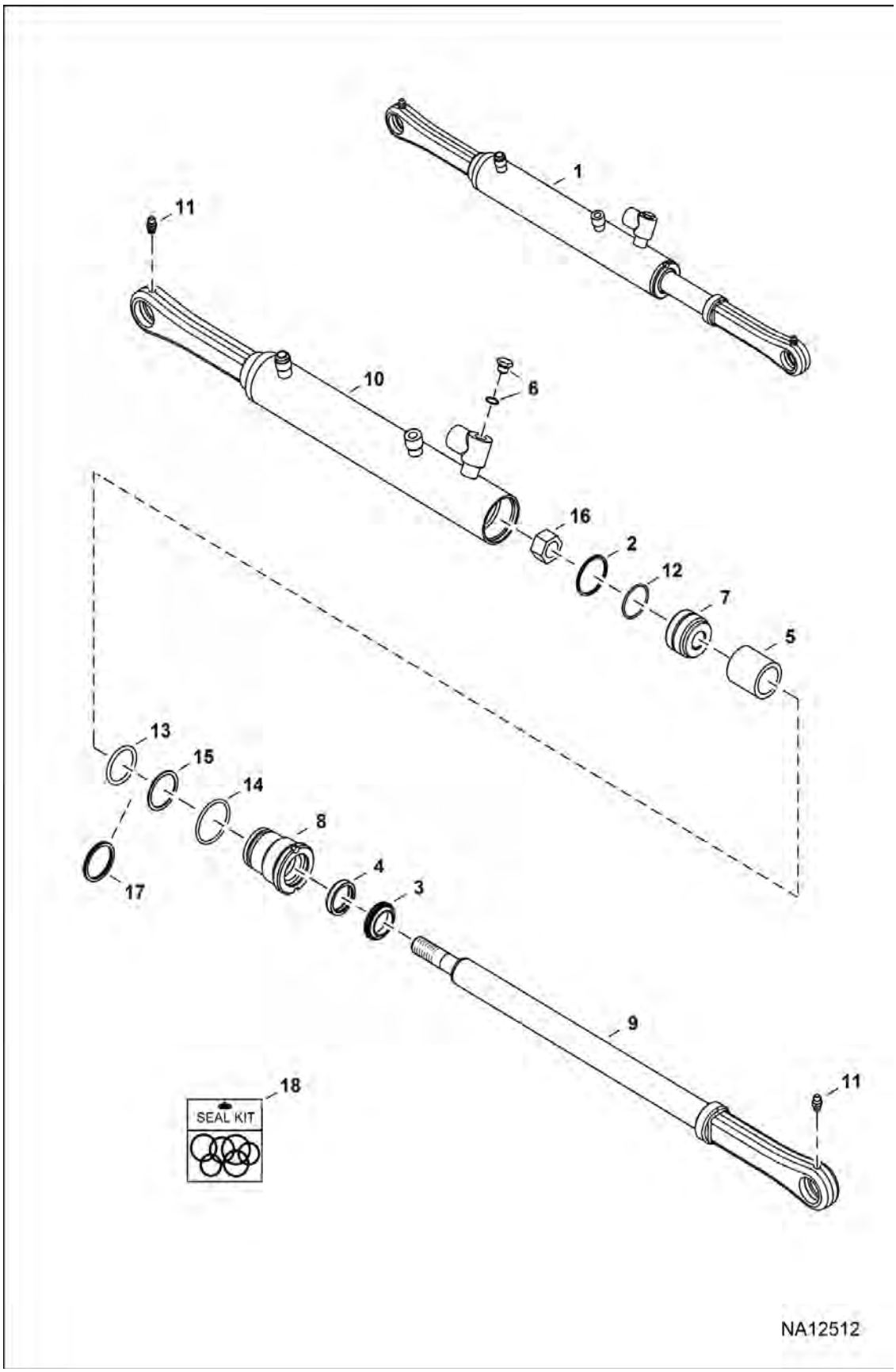

POWER BOB-TACH (Cont'd)

(Cylinder) (Guard Stud)

Ref No	Part Number	Description	Remarks	Serial Number	Qty
1	7307224	CYLINDER HYDRAULIC	Ref. 2-16		1
2	6649690	SEAL			1
3	6666542	WIPER, ROD CYL			1
4	6667323	SEAL			1
5	6810356	SPACER			1
6	6812170	PLUG			1
7	7153107	PISTON			1
8	7153108	HEAD			1
9	7227462	SHAFT, W/A			1
10		TUBE CASE CYLINDER	NLA - Was 7307555		1
11	10H35	FITTING, GREASE 10			2
12	54K20106	ORING			1
13	54K40108	ORING			1
14	58K128	ORING			1
15	73K218	RING BKUP			1
16	92D10	NUT			1
17		SEAL, QUAD	NLA - Order Ref. 13 & 15 - Was 7207335 [A]		1
18	7155417	KIT, SEAL	Ref. 2-4 & 12-16		1

POWER BOB-TACH

(Valve) (Two Female Connector Coils) (JEM)

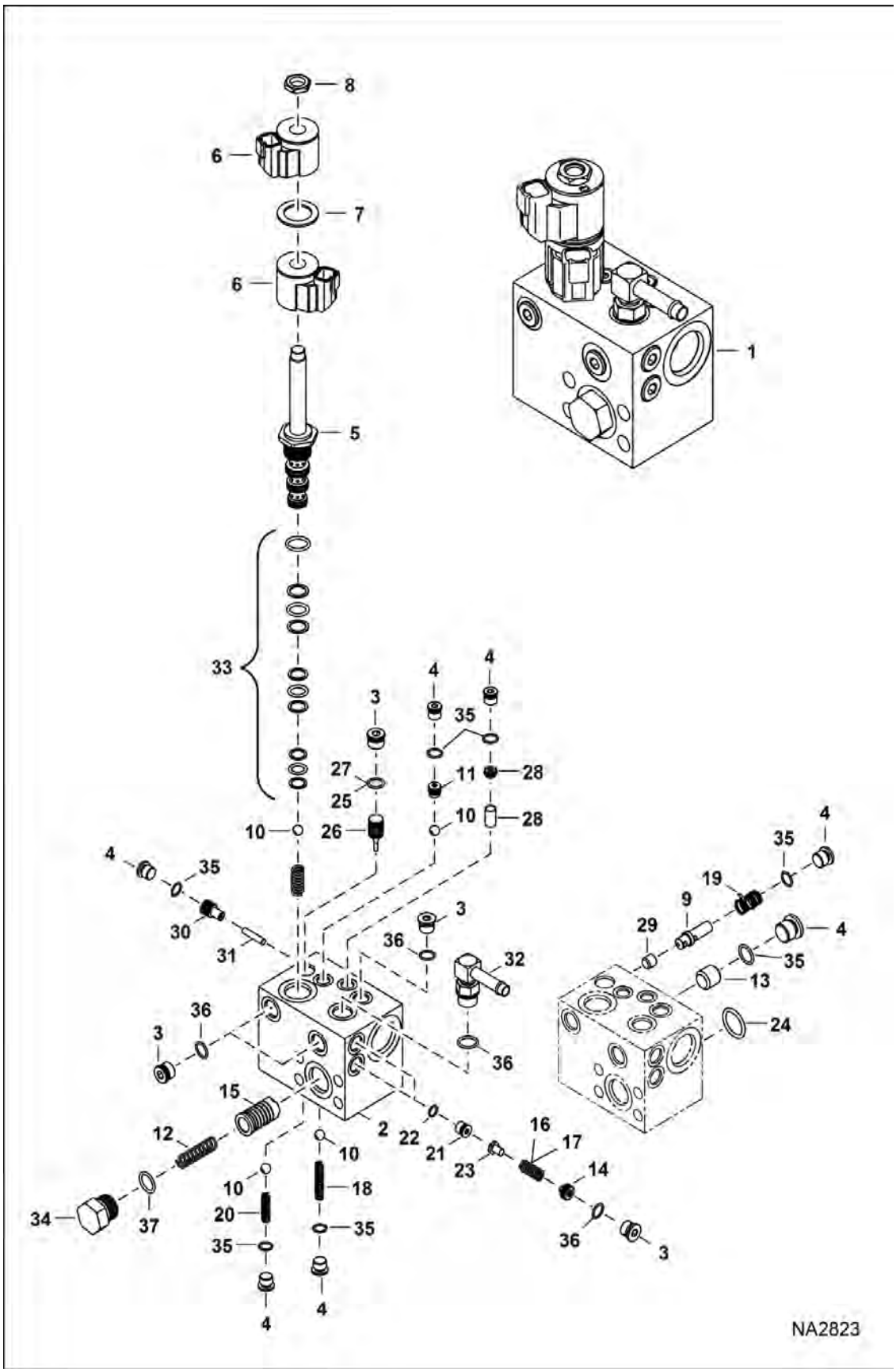

POWER BOB-TACH (Cont'd)

(Valve) (Two Female Connector Coils) (JEM)

Ref No	Part Number	Description	Remarks	Serial Number	Qty
1	7022766	VALVE, POWER BOB-TACH	Ref. 2-37		1
2		BLOCK	NLA - Order Ref. 1		1
3	6669620	PLUG	W/Ref. 36		5
4	6665719	PLUG	W/Ref. 35		7
5	6673986	SPOOL, VALVE			1
6	7010006	COIL			2
7	6689389	SPACER			1
8	7020647	NUT			1
9	7020648	SPOOL			1
10	6678705	BALL			4
11	7008561	SEAT, SHUTTLE			1
12	7020649	SPRING			1
13	6669615	ORIFICE	0.020"		1
14	7020604	PLUG			2
15	7020650	SPOOL			1
16	7020651	SPRING			1
17	7020607	SPRING			1
18	7020652	SPRING			1
19	7020653	SPRING			1
20	7020654	SPRING			1
21	7020606	PLUG			2
22	7020655	O-RING			2
23	7020605	POPPET			2
24	6690299	O-RING			1
25	7020656	RING, BACK-UP			2
26	7020657	PISTON			1
27	6678837	O-RING			1
28	7020658	FILTER CARTRIDGE			1
29	7020659	ORIFICE			1
30	7020660	GUIDE			1
31	7020661	SHAFT			1
32	6727313	FITTING, ELBOW			1
33	6672756	KIT, SEAL	Was 6673835 [A]		1
34	7008556	PLUG			1
35		O RING 10	NSS - Order Ref. 4 - Was 79K3 [B,D]		x
36		O RING 10	NSS - Order Ref. 3 - Was 79K6 [B,D]		x
37	79K10	O RING 10			x

POWER BOB-TACH
(Valve) (Two Female Connector Coils)

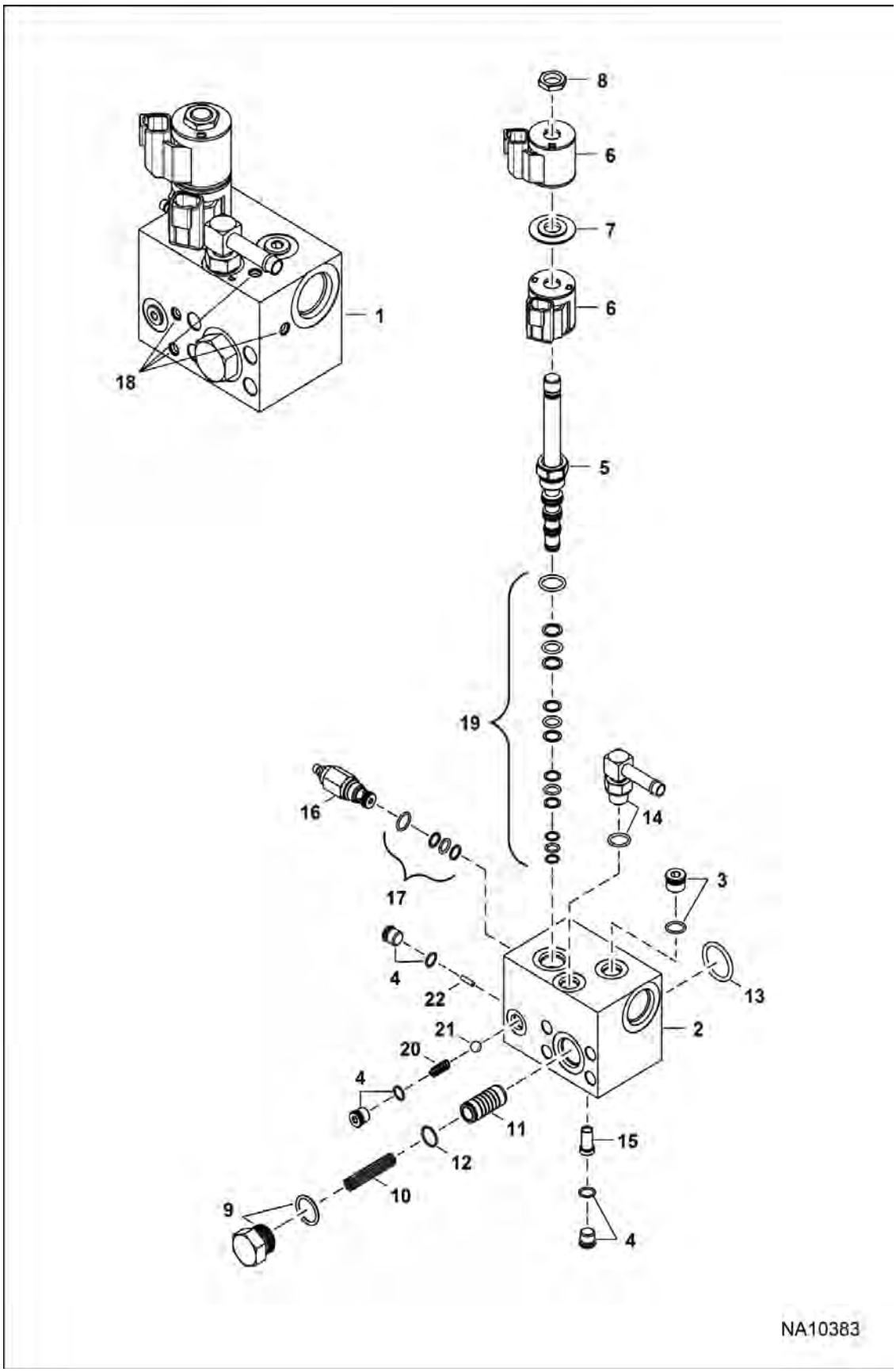

POWER BOB-TACH (Cont'd)
(Valve) (Two Female Connector Coils)

Ref No	Part Number	Description	Remarks	Serial Number	Qty
1	7273570	VALVE, POWER BOB-TACH	Ref. 2- 21 - Was 7231548 [A]		1
2		BLOCK	NSS - Order Ref. 1		1
3	7235665	PLUG, SOCKET			1
3	79K6	O RING 10			1
4	7235664	PLUG			3
4	79K4	O RING 10			3
5	7232742	VALVE, SOLENOID	W/Ref. 7 & 8		1
6	7010006	COIL			2
7	6689389	SPACER			1
8	7020647	NUT			1
9	7267121	PLUG			1
9	79K10	O RING 10			1
10	7224039	SPRING, COMPRESSION			1
11	7225214	SPOOL			1
12	7214312	RING, RETAINING			1
13	25K40100	O RING 10			1
14	6727313	FITTING, ELBOW			1
14	79K6	O RING 10			1
15	7226770	ORIFICE			1
16	7232751	VALVE, RELIEF			1
17	7282204	KIT, SEAL	FS062-N - Was 7031574 [A]		1
18	7232870	PLUG			11
19	6672756	KIT, SEAL			1
20	7247745	SPRING, COMPRESSION			1
21	10J10	BALL			1
22	7240464	ORIFICE			1

POWER BOBTACH
(Kit)

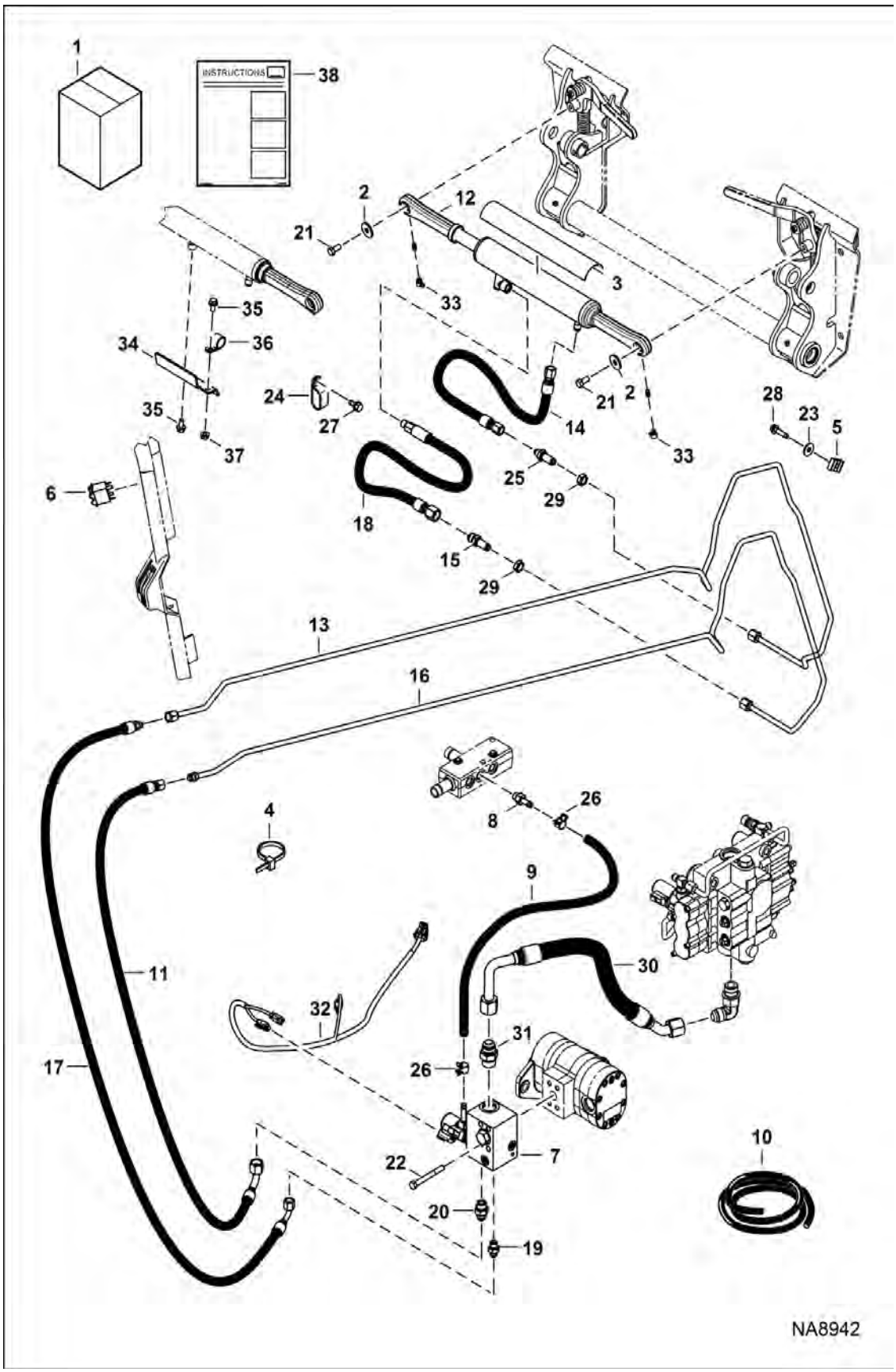

Illustration NA8942

Model S450 MT2KAMEA
6990825

POWER BOBTACH (Cont'd)
(Kit)

Ref No	Part Number	Description	Remarks	Serial Number	Qty
1	7254137	KIT, POWER BOB-TACH	Ref. 2-33		1
2	619021	WASHER, 5			2
3	6555341	TREAD, SAFETY			1
4	6624289	STRAP, TIE			5
5	7115645	CLAMP	Was 6726277 [A]		2
6	7001712	SWITCH			1
7	7022766	VALVE, POWER BOB-TACH	See Illustration POWER BOB-TACH / NA2823 - Use W/Ref. 12 (7227463 cylinder) only		1
7	7273570	VALVE, POWER BOB-TACH	See Illustration POWER BOB-TACH / NA10383 - Use W/Ref. 12 (7227570 cylinder) only		1
8	7158632	CONNECTOR			1
9		HOSE, DRAIN	NLA - 838 mm (33") long - Order Ref. 10		1
10	6586251	HOSE, BULK	sold per foot		x
11	7213589	HOSE, HYD			1
12	7227463	CYLINDER, POWER BOB-TACH	See Illustration POWER BOB-TACH / NA10368 - Use W/Ref. 7 (7273570 valve) only		1
12		CYLINDER, POWER BOB-TACH	See Illustration POWER BOB-TACH / NA10373 - Use W/Ref. 7 (7022766 valve) only - Was 7227570 [A]		1
12	7307224	CYLINDER HYDRAULIC	See Illustration POWER BOB-TACH / NA12512 - Use W/Ref. 7 (7022766 valve) only - Was 7227570		1
13	7234376	TUBELINE HYD			1
14	7234389	HOSE, HYD			1
15	7240057	FITTING, HYD CONNECTOR			1
16	7240312	TUBELINE HYD			1
17	7240313	HOSE, HYD			1
18	7240314	HOSE, HYD			1
19	15KB0606	FITTING, HYD CONNECTOR			1
20	15KB0808	FITTING, HYD CONNECTOR			1
21	17C612	BOLT 5			2
22	17C652	BOLT			4
23	17EM100	WASHER			2
24	31H42	CLIP			1
25	45K5	FITTING			1
26	5HM15	CLAMP			2
27	84G3712	BOLT 5			1
28	84G3724	BOLT			2
29	86F5	NUT			2
30	7233375	HOSE, HYD			1
31	15KB1212	FITTING, HYD CONNECTOR			1
32	7200460	HARNESS, FUEL			1
33	12H25	FITTING			2
34	7303206	GUARD POWER BOB-TACH			1
35	29CM816	SCREW FLGD HEX CAP			2

POWER BOBTACH (Cont'd)
(Kit)

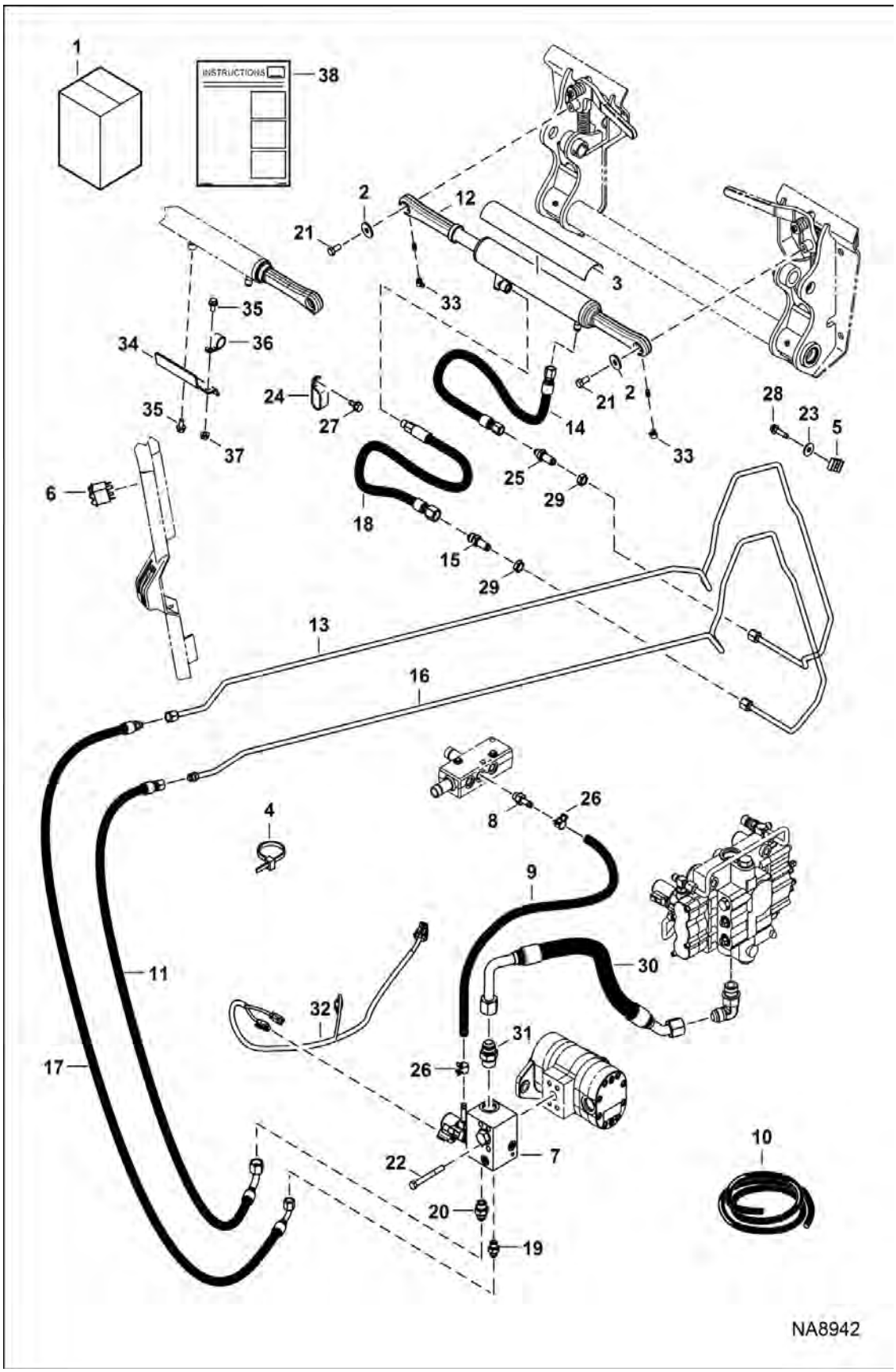

POWER BOBTACH (Cont'd)
(Kit)

Ref No	Part Number	Description	Remarks	Serial Number	Qty
36	30H45	CLIP			1
37	51DM8	NUT HX THDLK PREAPPL			1
38	7255679ENUS	INSTRUCTIONS	Was 7255679 [A]		1

RADIO KIT

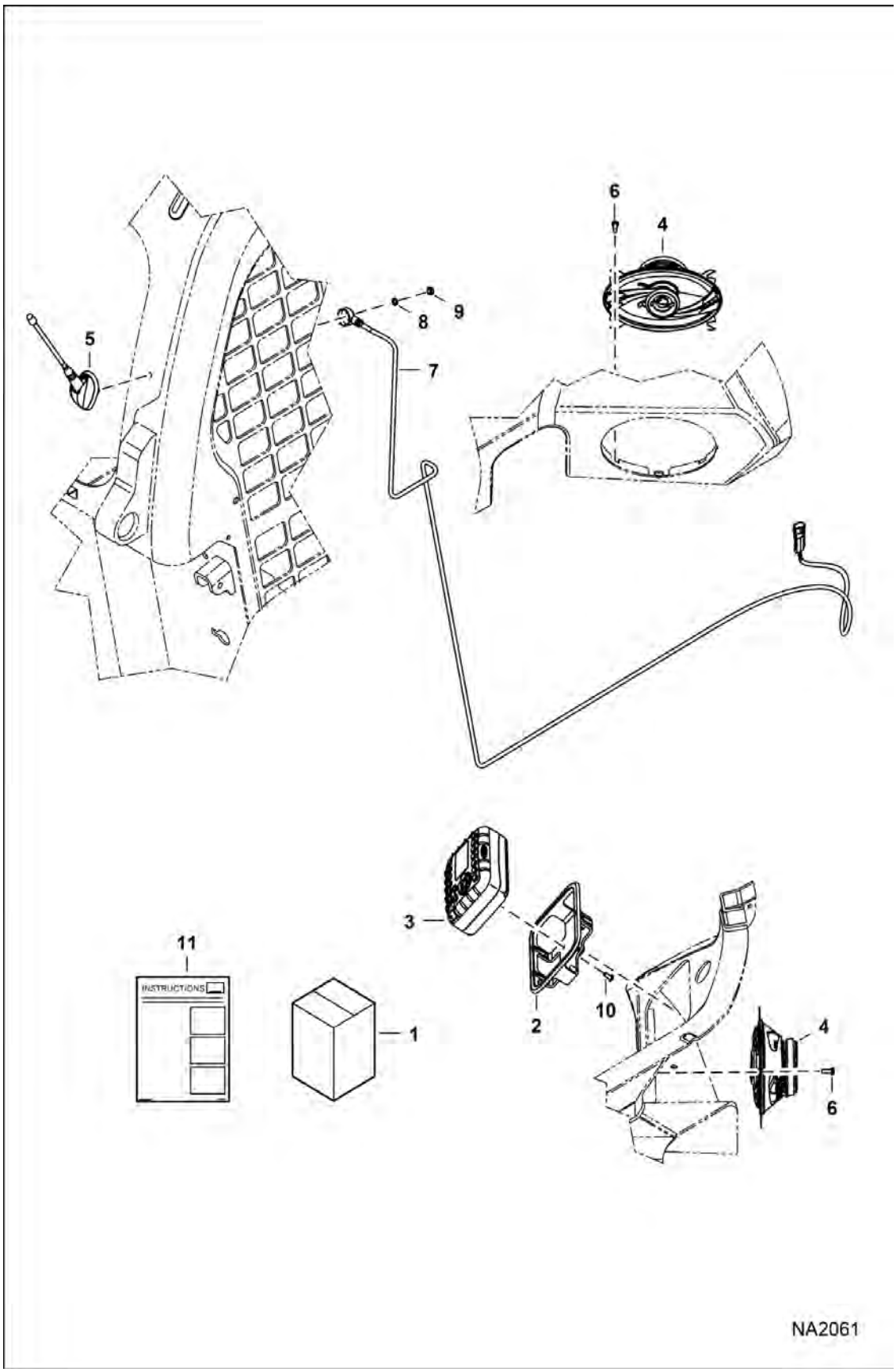

RADIO KIT (Cont'd)

Ref No	Part Number	Description	Remarks	Serial Number	Qty
1	6988435	KIT, RADIO M-SERIES LOADERS	Ref. 2-11 - deluxe cab only		1
2	7145333	BRACKET, RADIO			1
3	6988336	RADIO, BOBCAT HEAVY-DUTY MINI	W/Ref. 10		1
4	6988660	SPEAKER, 4 X 6 RETAIL JXA462			2
5	6988661	ANTENNA, 88 INCH MOTOROLA MALE PLUG	W/Ref. 7-9		1
6	7162770	SCREW			8
7		CABLE	NSS - Order Ref. 5		1
8		WASHER	NSS - Order Ref. 5		1
9		NUT	NSS - Order Ref. 5		1
10		SCREW	NSS - Order Ref. 3		4
11	6987139ENUS	INSTRUCTIONS	Was 6987139 [A]		1

REAR AUXILIARY KIT

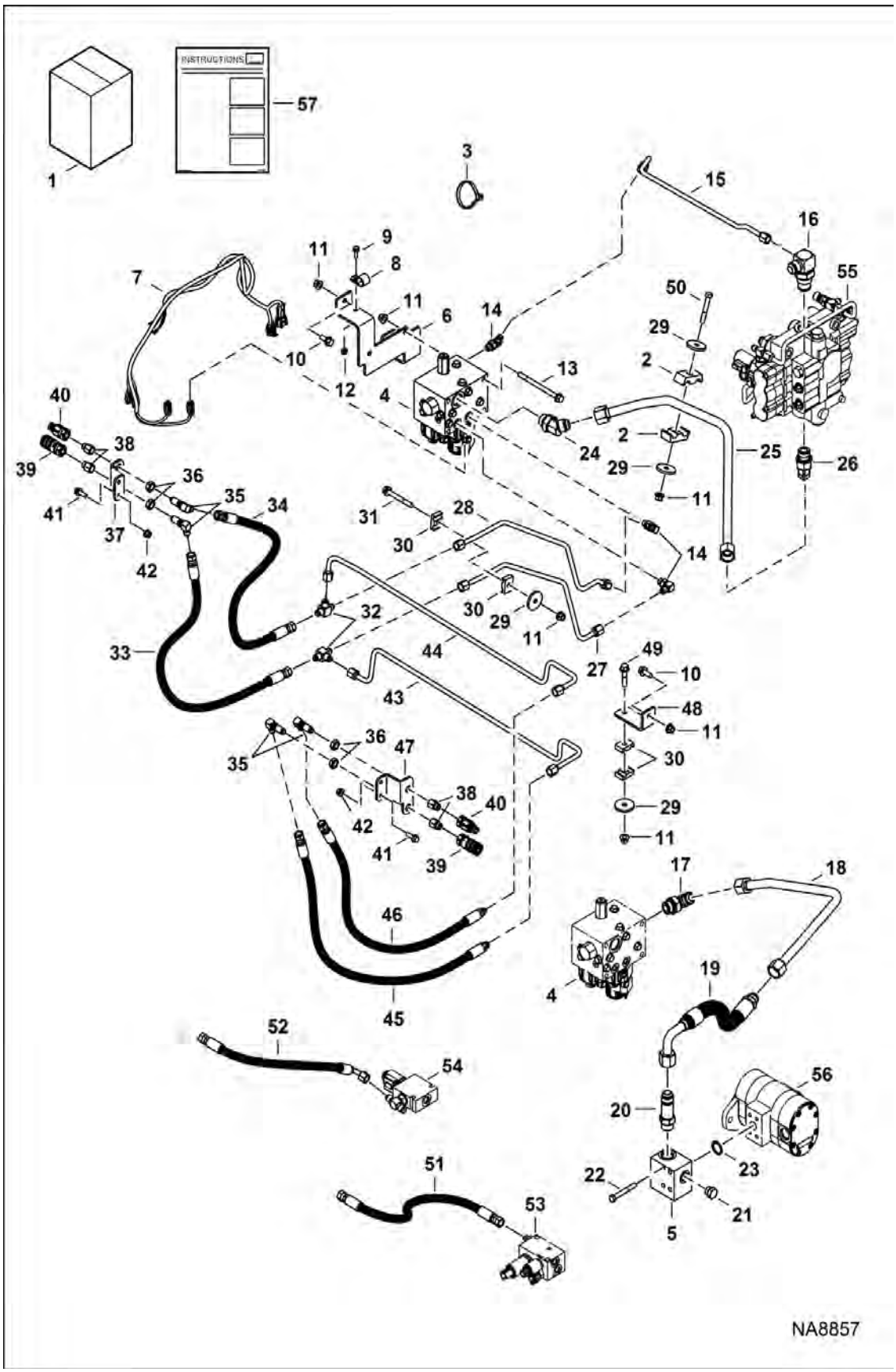

REAR AUXILIARY KIT (Cont'd)

Ref No	Part Number	Description	Remarks	Serial Number	Qty
1	7249869	KIT, REAR AUX	Ref. 2-52 & 59		1
2	6592506	CLAMP			2
3	6624289	STRAP, TIE			8
4	6685624	VALVE, AUX REAR			1
5	7226207	MANIFOLD, OUTLET PUMP			1
6	7238569	BRACKET			1
7	7201414	HARNESS, AUX REAR			1
8	30H65	CLIP			1
9	29CM620	SCREW FLGD HEX CAP			1
10	31C614	BOLT			3
11	83D6	NUT 5			8
12	43DM6	NUT FLANGED HEX			1
13	31C680	BOLT			2
14	17KB0606	FITTING			3
15	7202043	TUBELINE, HYD			1
16	7178841	TEE			1
17	17KB1212	FITTING, HYD ELBOW			1
18	7203431	TUBELINE, HYD			1
19	7236052	HOSE, HYD ASSY			1
20	16KB1212	FITTING, HYD CONNECTOR			1
21	24K6	FITTING			1
22	17C644	BOLT			4
23	55K214	O-RING			1
24	18KB1212	FITTING, HYD ELBOW			1
25	7202051	TUBELINE, HYD			1
26	7101797	ELBOW			1
27	7202056	TUBELINE, HYD			1
28	7202054	TUBELINE, HYD			1
29	872229	WASHER			4
30	7115645	CLAMP	Was 6726277 [B,D]		4
31	31C648	BOLT			1
32	10K5	TEE			2
33	7245140	HOSE, HYD ASSY			1
34	7248550	HOSE, HYD ASSY			1
35	88F5	ELBOW			4
36	86F5	NUT			4
37	7242286	BRACKET			1
38	6706633	CONNECTOR			4
39	7246786	COUPLER, FF FEMALE			2
40	7246787	COUPLER, FF MALE			2
41	31C514	BOLT			4
42	83D5	NUT 5			4

REAR AUXILIARY KIT (Cont'd)

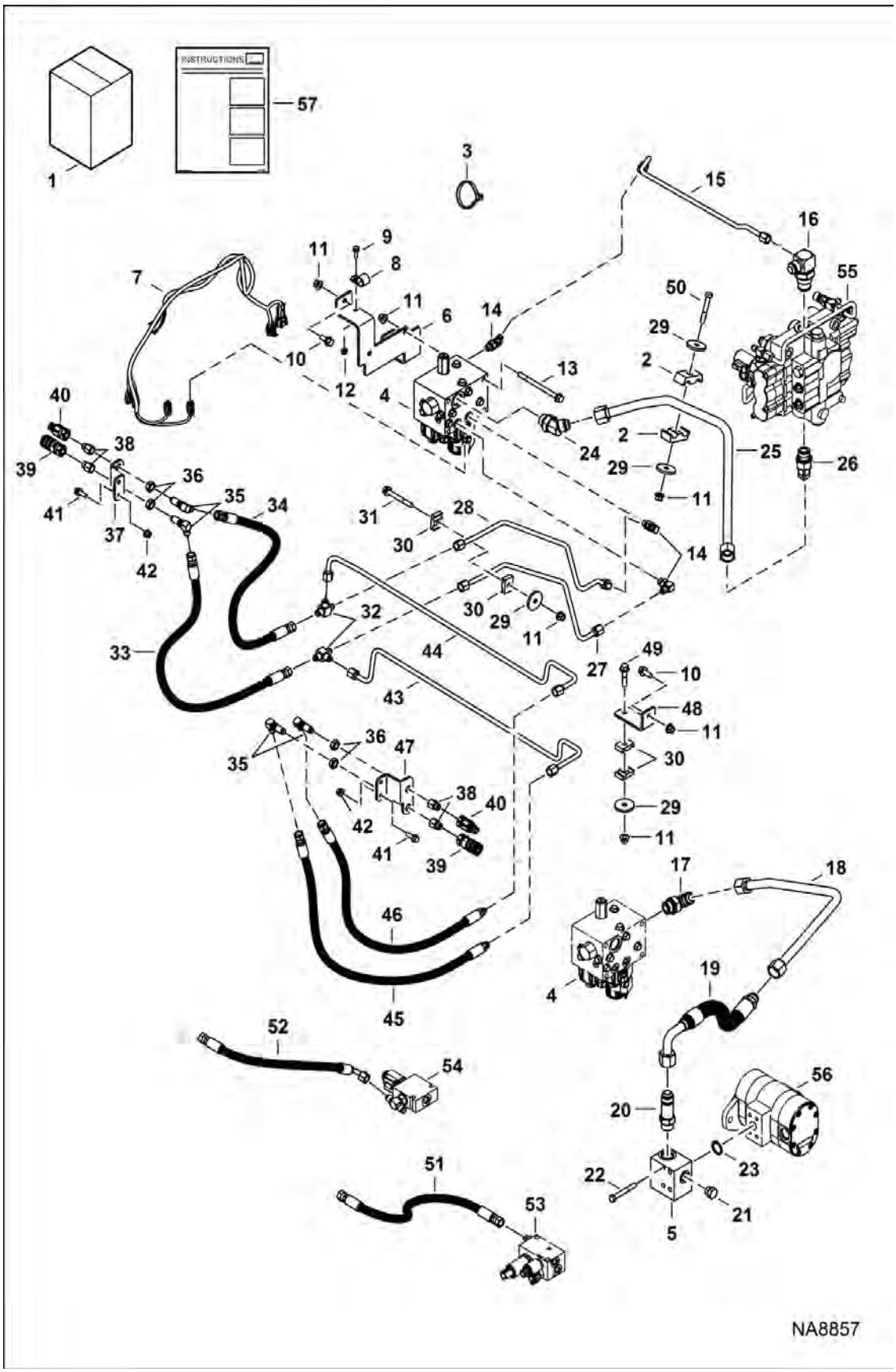

REAR AUXILIARY KIT (Cont'd)

Ref No	Part Number	Description	Remarks	Serial Number	Qty
43	7203566	TUBELINE, HYD			1
44	7203567	TUBELINE, HYD			1
45	7248551	HOSE, HYD ASSY			1
46	7245141	HOSE, HYD ASSY			1
47	7238557	BRACKET			1
48	7238449	BRACKET			1
49	31C628	BOLT			1
50	17C640	BOLT			1
51	7240855	HOSE, HYD ASSY	CTL motors		1
52	7240859	HOSE, HYD ASSY	CTL motors		1
53	7231377	VALVE, 2-SPEED	Not in kit - CTL motors		1
54	6679103	VALVE, BRAKE	Not in kit - CTL motors		1
55		VALVE, HYD MAN	See Illustration HYDRAULIC CONTROL VALVE / NA8520 Not in kit		1
55		VALVE, HYD SJC	See Illustration HYDRAULIC CONTROL VALVE / NA8521 Not in kit		1
56		PUMP, GEAR	See Illustration GEAR PUMP / NA8739 Not in kit		1
57	7247992ENUS	INSTRUCTIONS	Was 7247992 [A]		1

REAR CAMERA KIT

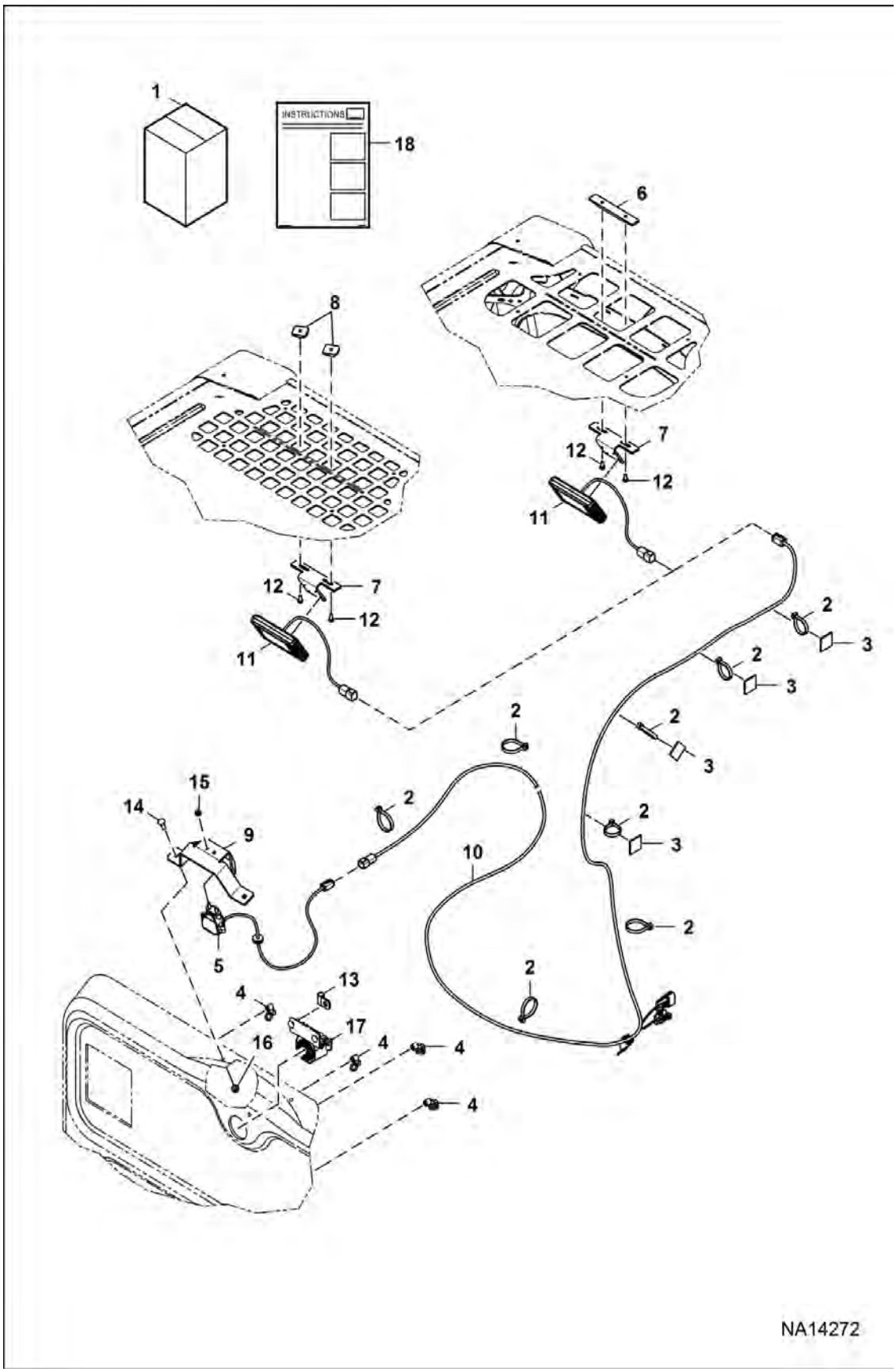

REAR CAMERA KIT (Cont'd)

Ref No	Part Number	Description	Remarks	Serial Number	Qty
1	7329670	KIT CAMERA REAR	Ref. 2-16 & 18		1
2	6624289	STRAP, TIE			17
3	6693924	MOUNT			4
4	7002988	TIE, STUD MOUNT			4
5	7286502	CAMERA REAR VIEW			1
6	7324723	MOUNT CLAMP	use w/large cab top openings		1
7	7324733	MOUNT BRACKET			1
8	7326168	MOUNT CLAMP	use w/small cab top openings		2
9	7327131	BRACKET GUARD			1
10	7329574	HARNESS CAMERA REAR			1
11	7330176	DISPLAY LCD			1
12	1C408	BOLT			2
13	30H23	CLAMP			1
14	37C516	BOLT			2
15	55D4	NUT			2
16	89D5	NUT			2
17		ALARM, BACK-UP	See Illustration ENGINE ELECTRICAL CIRCUITRY / NA12824		1
18	7331167ENUS	INSTRUCTIONS	Was 7331167 [A]		1

REAR DOOR LOCK

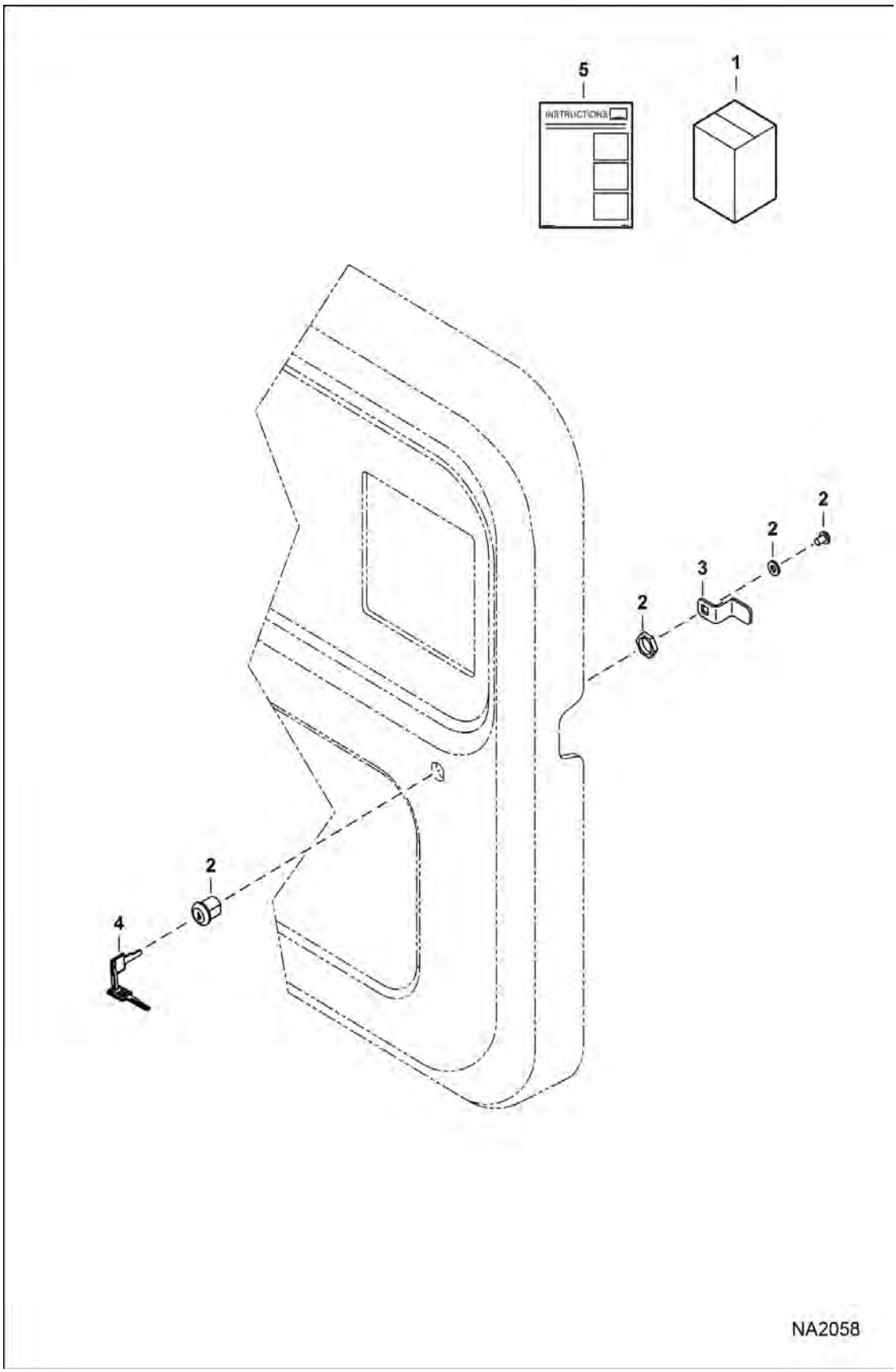

REAR DOOR LOCK (Cont'd)

Ref No	Part Number	Description	Remarks	Serial Number	Qty
1	7128403	KIT, LOCK SECURITY	Ref. 2-5		1
2	6670726	LOCK ONLY			2
3	7149056	LATCH, CAM			2
4	6693241	KEY (2)	ignition - single key W/O ring		1
5	6987239ENUS	INSTRUCTIONS	Was 6987239 [A]		1

REAR WIPER KIT

(666 mm) (26.2") x (379 mm) (14.92") Cab Opening

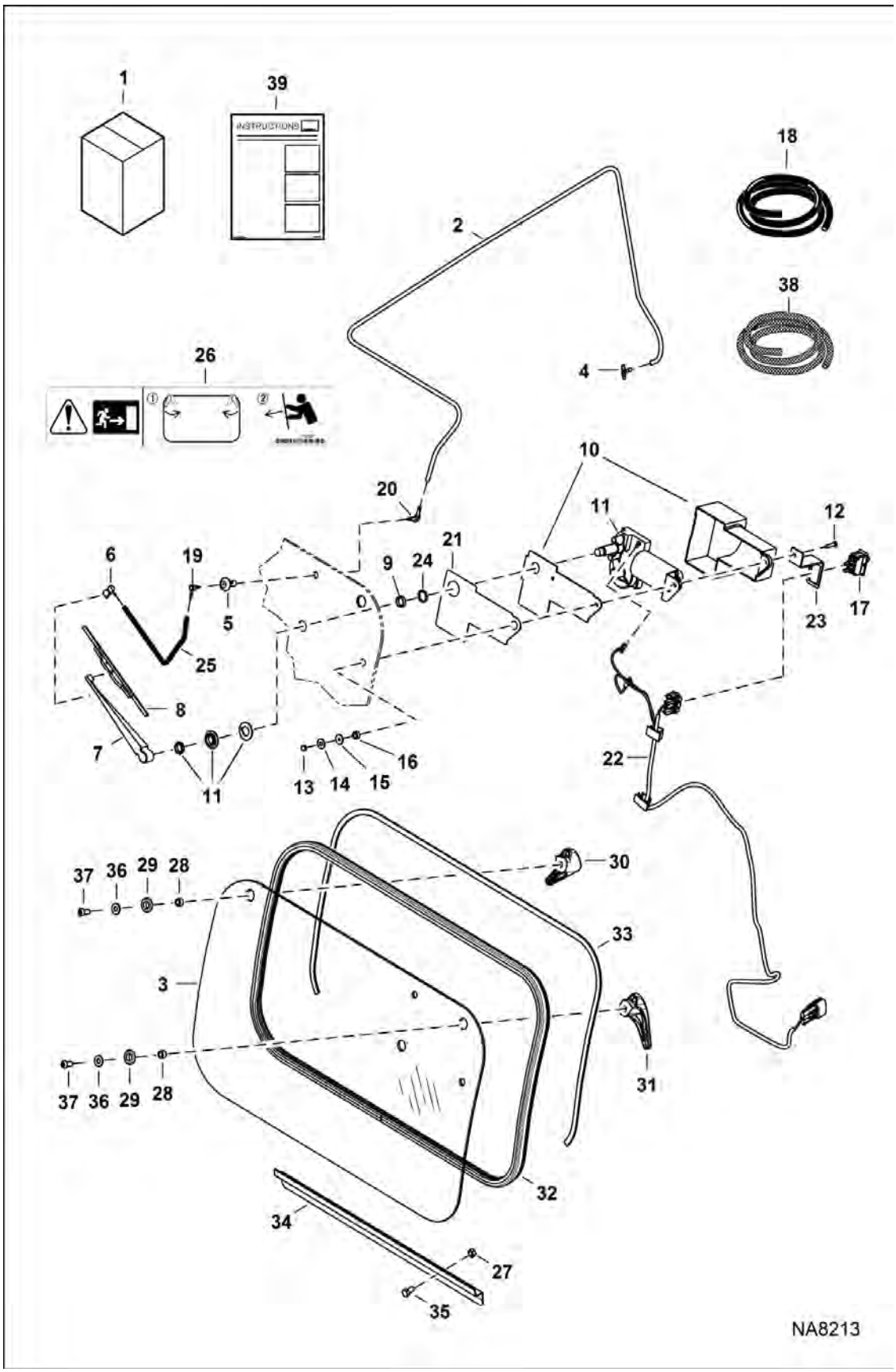

REAR WIPER KIT (Cont'd)

(666 mm) (26.2") x (379 mm) (14.92") Cab Opening

Ref No	Part Number	Description	Remarks	Serial Number	Qty
1	7225133	KIT, WIPER REAR	Ref. 2-39		1
2		HOSE	NLA - 2438 mm (96") long - Order Ref. 18		1
3	7225145	WINDOW, CAB REAR			1
4	6676000	TEE			1
5	7167177	GROMMET WIPER			1
6	6676028	NOZZLE			1
7	6676001	ARM, WIPER			1
8	6676002	BLADE, WIPER			1
9	6667201	SPACER			1
10	6664097	COVER			1
11	6665602	MOTOR			1
12	87G1014	SCREW, MACHINE			1
13	7031685	NUT, ACORN	Was 7031514		1
14	6664065	WASHER	nylon		1
15	6801059	WASHER	neoprene		1
16	6664085	BUSHING	nylon		1
17	6675999	SWITCH			1
18	6676003	HOSE, BULK/FT	black - 0.109" ID - sold per foot		x
19	6676500	ELBOW	exterior		1
20	6676917	ELBOW	interior		1
21	7172119	SEAL, FOAM			1
22	7180207	HARNESS, WIPER			1
23	7172708	BRACKET, SWITCH			1
24	7172121	WASHER			1
25		HOSE	305 mm (12") long - Order Ref. 18		1
26	7167991	DECAL, EXIT REAR			1
27	95D5	NUT			2
28	6802539	SPACER			2
29	7121425	BUSHING			2
30	7150151	LATCH, WINDOW LEFT			1
31	7150152	LATCH, WINDOW RIGHT			1
32	7163988	SEAL, WINDOW REAR			1
33		FOAM SEAL	1372 mm (54") long - Order Ref. 38		1
34	7224369	CHANNEL			1
35	17C510	BOLT			2
36	25E14	WSHR			2
37	53C512	SCREW			2
38	6648416	SEAL BULK /FT	sold per foot		x
39	6990917ENUS	INSTRUCTIONS	Was 6990917 [A]		1

REAR WIPER KIT

(678 mm) (26.7") x (390 mm) (15.37") Cab Opening

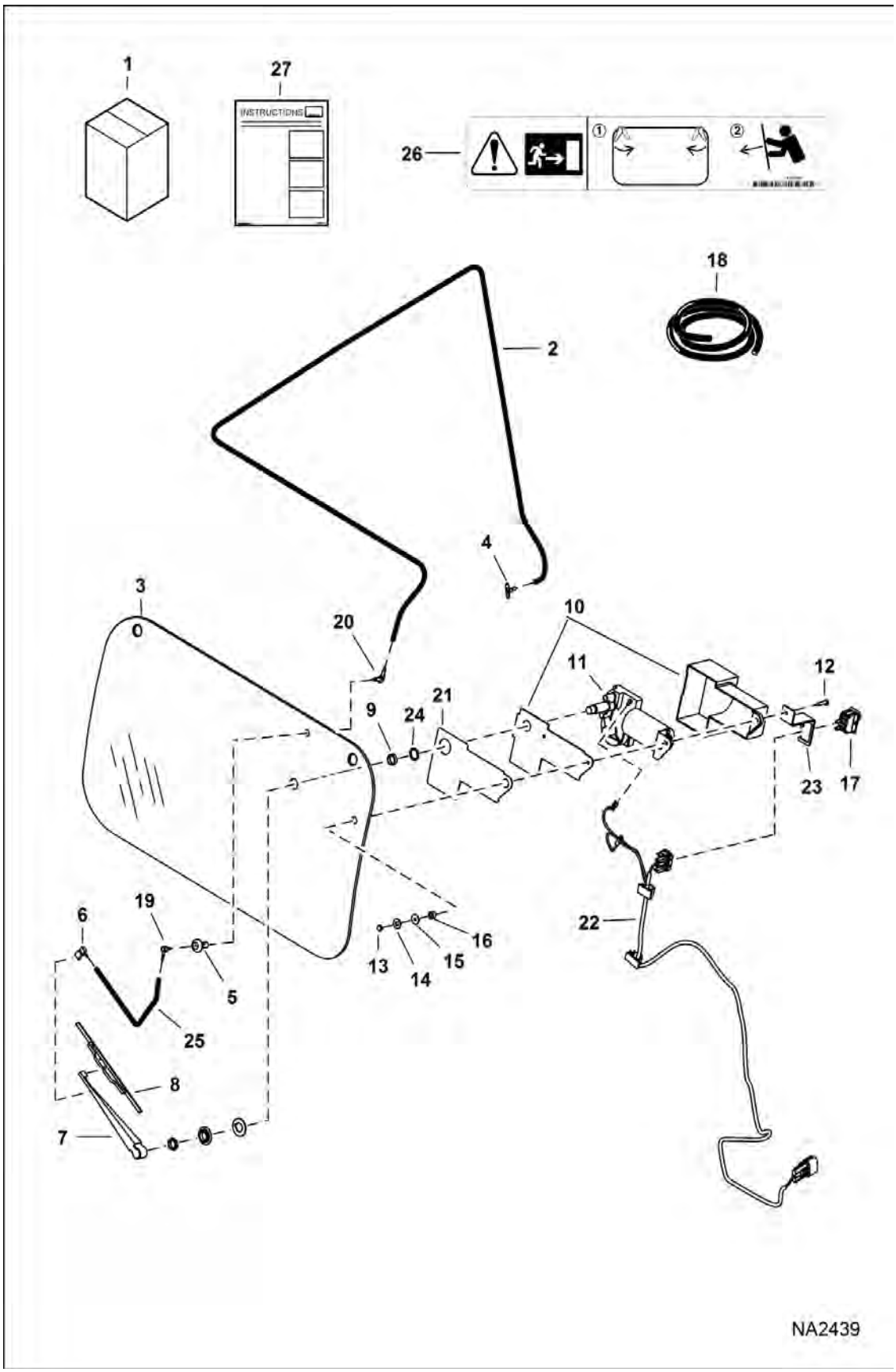

REAR WIPER KIT (Cont'd)

(678 mm) (26.7") x (390 mm) (15.37") Cab Opening

Ref No	Part Number	Description	Remarks	Serial Number	Qty
1		KIT, WIPER REAR	See Illustration REAR WIPER KIT / NA8213 - NLA - Ref. 2-27 - Order 7225133 rear wiper kit - Was 7163571 [C]		1
2		HOSE	NLA - 2133,6 mm (84") long - Order Ref. 18		1
3		WINDOW, CAB REAR	See Illustration REAR WIPER KIT / NA8213 - NLA - Order 7225133 rear wiper kit - Was 7172247 [C]		1
4	6676000	TEE			1
5	7167177	GROMMET WIPER			1
6	6676028	NOZZLE			1
7	6676001	ARM, WIPER			1
8	6676002	BLADE, WIPER			1
9	6667201	SPACER			1
10	6664097	COVER			1
11	6665602	MOTOR			1
12	87G1014	SCREW, MACHINE			1
13	7031685	NUT, ACORN	Was 7031514		1
14	6664065	WASHER	nylon		1
15	6801059	WASHER	neoprene		1
16	6664085	BUSHING	nylon		1
17	6675999	SWITCH			1
18	6676003	HOSE, BULK/FT	black - 0.109" ID - sold per foot		x
19	6676500	ELBOW	exterior		1
20	6676917	ELBOW	interior		1
21	7172119	SEAL, FOAM			1
22	7180207	HARNESS, WIPER			1
23	7172708	BRACKET, SWITCH			1
24	7172121	WASHER			1
25		HOSE	305 mm (12") long - Order Ref. 18		1
26	7167991	DECAL, EXIT REAR			1
27	6987282	INSTRUCTIONS			1

REMOTE CONTROL KIT
(Selectable Joystick Controls)

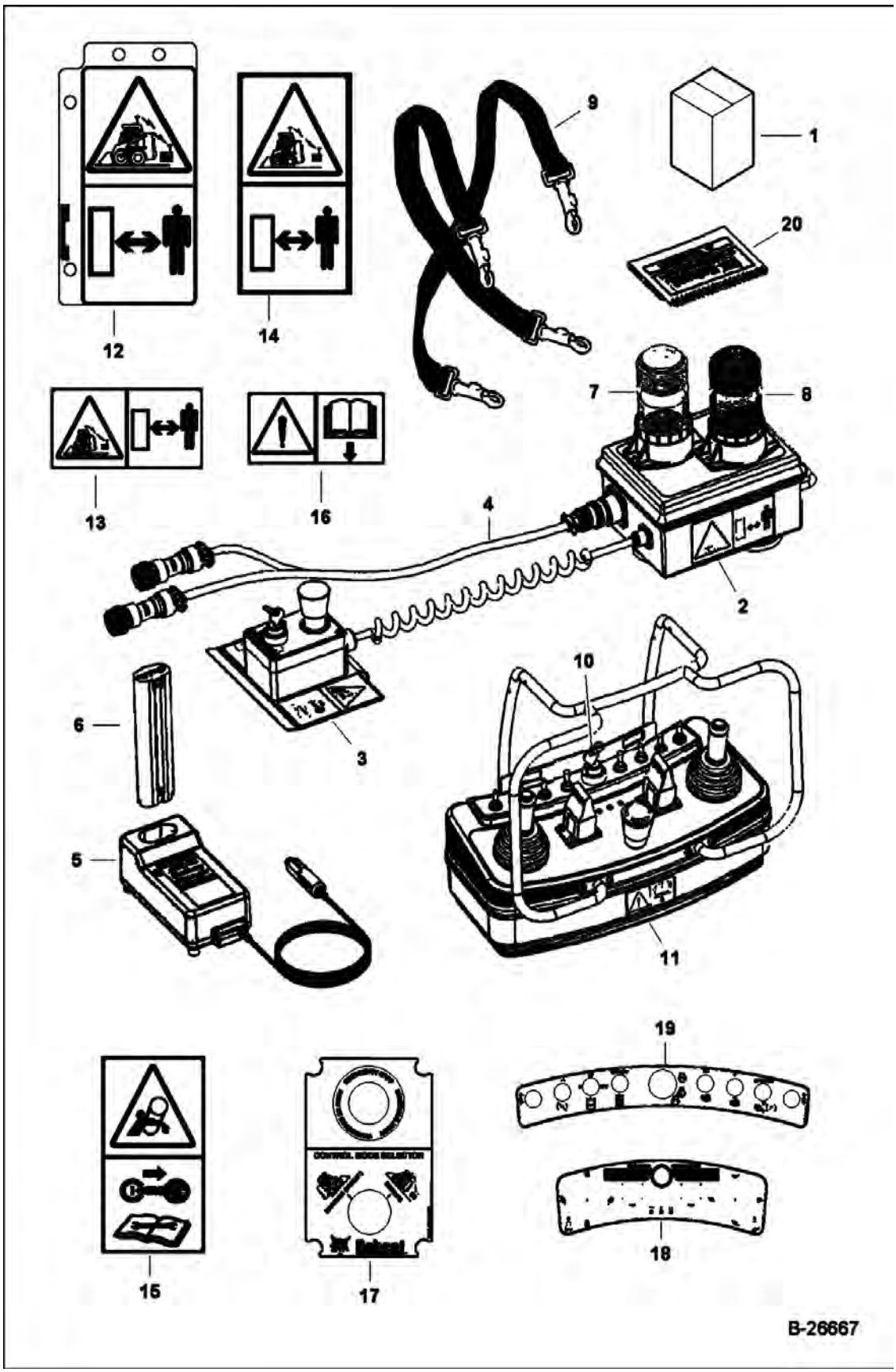

REMOTE CONTROL KIT (Cont'd)

(Selectable Joystick Controls)

Ref No	Part Number	Description	Remarks	Serial Number	Qty
1	7185234	KIT, REMOTE CONTROL	radio remote control		1
2	6692756	RECEIVER, 2.4GHz			1
3	7011071	CONTROL, MODE SELECTOR	mode selector/E-stop box - W/Ref. 17		1
4	7011070	HARNESS, RECEIVER			1
5	6692769	CHARGER, MAKITA DC1422, 12-24VDC			1
6	7022002	BATTERY			1
7	6693411	LENS, STROBE AMBER	green		1
7	6693409	BULB, STROBE			1
8	6693410	LENS, STROBE AMBER	amber		1
8	6693409	BULB, STROBE			1
9	6692771	HARNESS SHOULDER			1
10	6692762	KEYS, SET OF 2	set of (2)		x
11	6692761	TRANSMITTER	transmitter - W/Ref. 18 & 19		1
12	7135569	DECAL	remote ready identification tag		1
13	6692757	DECAL, "REMOTE CONTROL OPERATION", LARGE			1
14	6692768	DECAL, "REMOTE CONTROL OPERATION", SMALL			1
15	6692767	DECAL, "ROTATING PARTS"			1
16	6692763	DECAL WARNING, "READ THE MANUAL"	operating instructions		1
17		DECAL	NLA - Order Ref. 3		1
18		DECAL	NLA - Order Ref. 11		1
19		DECAL	NLA - Order Ref. 11		1
20	6904709	OHB, W/WIRE ROPE	operation, maintenance and parts		1
20	6904709AR	OM RADIO REMOTE CONTROL SPANISH			1
20	6904709PTBR	OHB, W/WIRE ROPE PTBR			1

RESEALING KIT
(Sealing Open Cab Holes)

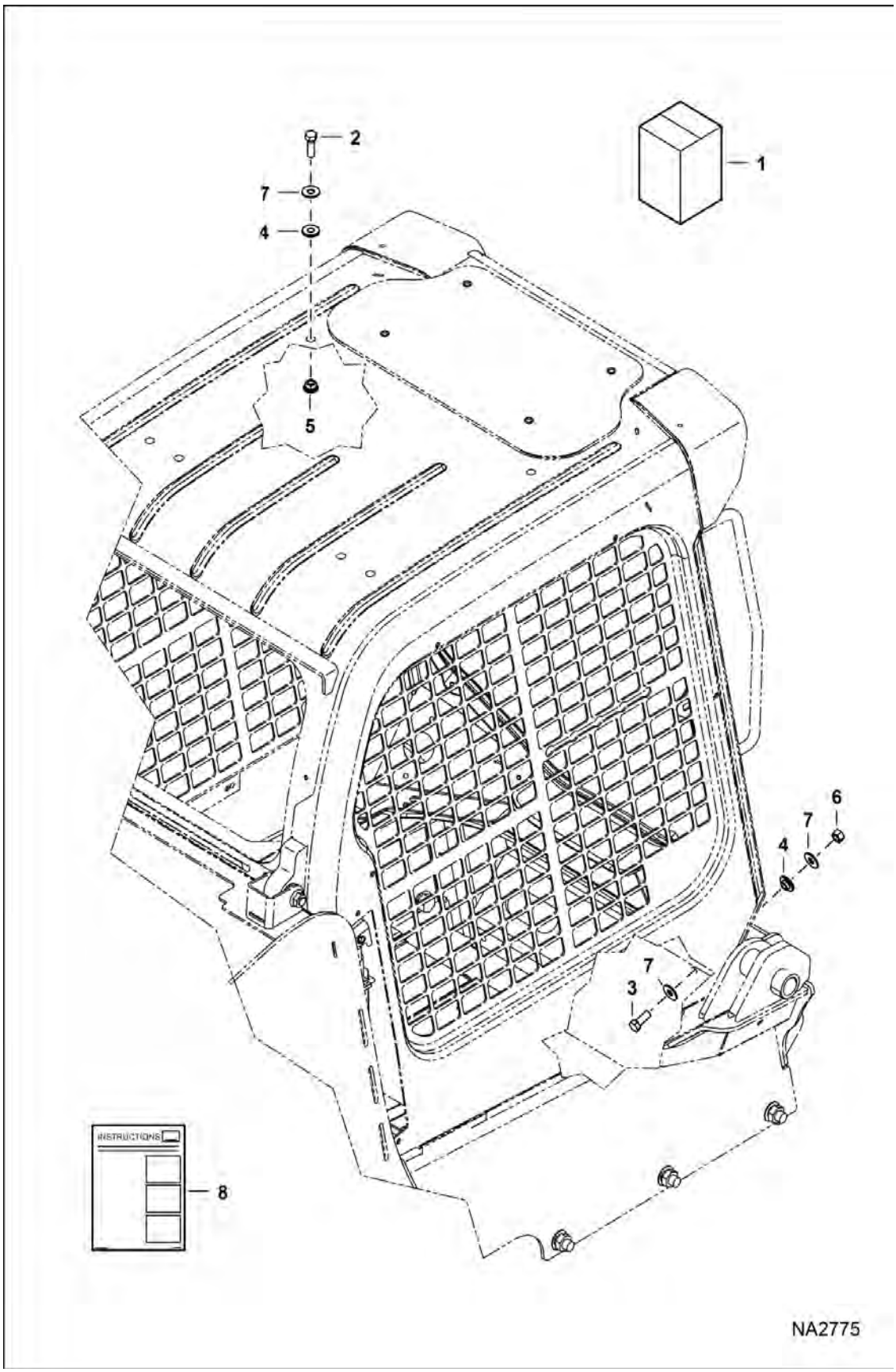

RESEALING KIT (Cont'd)

(Sealing Open Cab Holes)

Ref No	Part Number	Description	Remarks	Serial Number	Qty
1	7172897	KIT, RESEAL PLUGS	Ref. 2-8		1
2	17C824	BOLT 5			6
3	17C820	BOLT 5			8
4	7173453	PLUG			14
5	7192823	NUT			6
6	61D8	NUT 5			8
7	25E20	WASHER			22
8	6987335ENUS	INSTRUCTIONS	WAS 6987335 [A]		1

RIDE CONTROL KIT

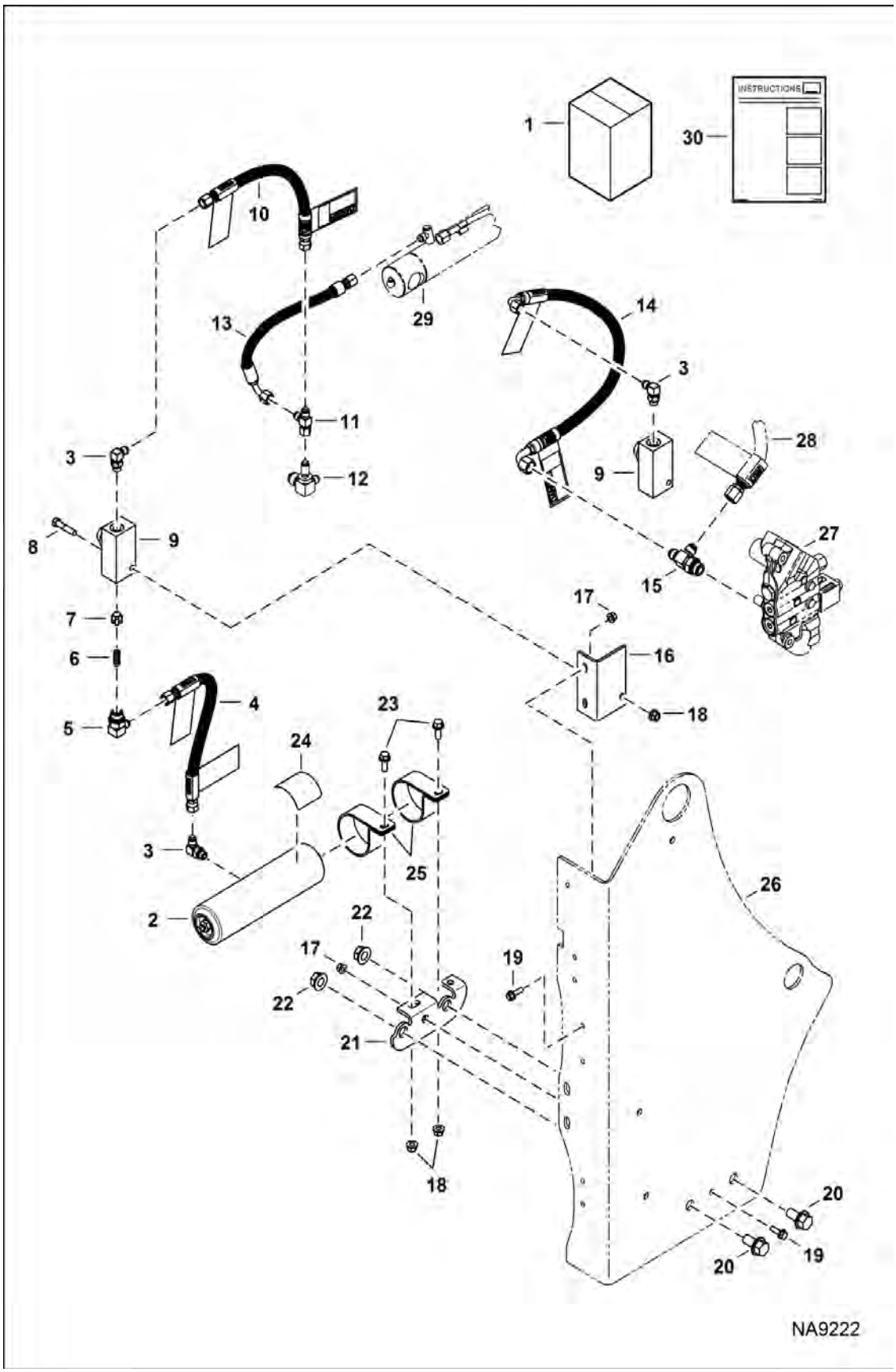

RIDE CONTROL KIT (Cont'd)

Ref No	Part Number	Description	Remarks	Serial Number	Qty
1	7246068	KIT, RIDE CONTROL	Ref. 1-4, 8-25, 30		1
2	6684703	ASSY, ACCUMULATOR			1
3	17KB0606	FITTING			2
4	7249431	HOSE, HYD ASSY			1
5	7183399	ADAPTER	Not in kit		1
6	7186599	VALVE CHECK SPRING	Not in kit		1
7	7186598	VALVE, CHECK	Not in kit		1
8	1C628	BOLT			1
9	7195419	VALVE, RIDE CONTROL	W/Ref. 5-7		1
10	7246079	HOSE, HYD ASSY			1
11	13K5	TEE			1
12	7240056	FITTING, HYD TEE			1
13	7249784	HOSE, HYD ASSY			1
14	7249212	HOSE, HYD ASSY			1
15	21KB0810	FITTING, HYD TEE			1
16	7246081	HOLDER, VALVE			1
17	83D5	NUT 5			3
18	83D6	NUT 5			3
19	35C516	BOLT 10			3
20	31C1020	BOLT			2
21	7245541	HOLDER, ACCUMULATOR			1
22	55D10	NUT			2
23	31C616	SCREW			2
24	6684688	DECAL, WARNING			1
25	7188110	CLAMP			2
26		MAIN FRAME	See Illustration MAIN FRAME / NA8529 Not in kit		1
27		VALVE, BPV	See Illustration BUCKET POSITION VALVE / NA2550 Not in kit		1
28	7240860	HOSE, HYD	Not in kit		1
29		CYLINDER, LIFT	See Illustration LIFT CYLINDER / NA8500 Not in kit		2
30	7249675ENUS	INSTRUCTIONS			1

RIDE CONTROL KIT

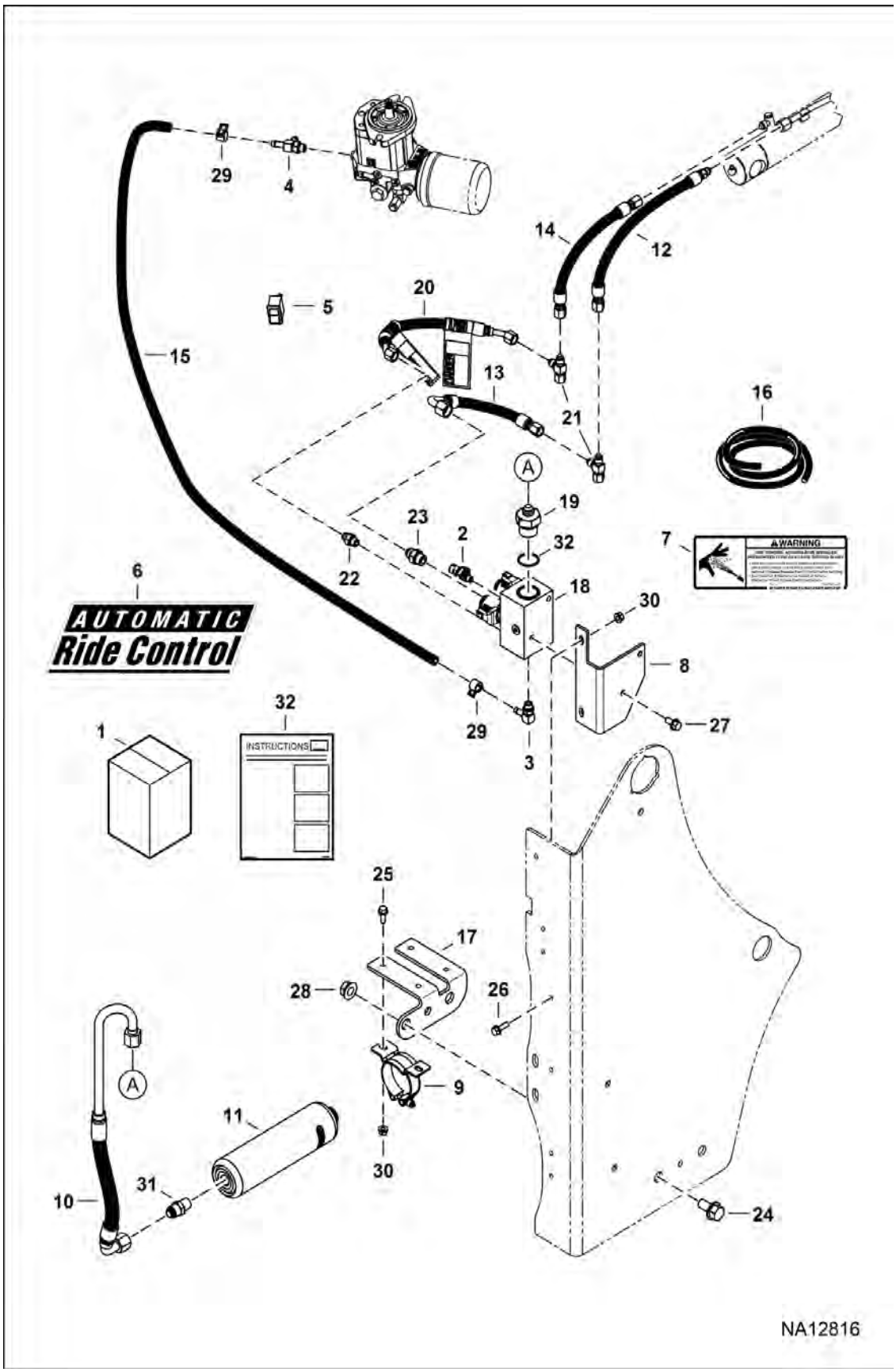

RIDE CONTROL KIT (Cont'd)

Ref No	Part Number	Description	Remarks	Serial Number	Qty
1	7311646	KIT RIDE CONTROL	Ref. 2-32		1
2	7320663	SENSOR PRESS	Was 7025582 [A]		1
3	7174807	ELBOW			1
4	7246193	FITTING, HYD TEE			1
5	7294390	SWITCH, ROCKER			1
6	7308285	DECAL CONTROL			1
7	7308738	DECAL SAFETY			2
8	7311952	HOLDER MANIFOLD			1
9	7311953	CLAMP ACCUMULATOR			2
10	7311954	TUBELINE HYDRAULIC ASSY			1
11	7311955	ACCUMULATOR HYDRAULIC			1
12	7311956	HOSE HYDRAULIC ASSY			1
13	7312089	HOSE HYDRAULIC ASSY			1
14	7312118	HOSE HYDRAULIC ASSY			1
15		HOSE	NLA - 1591 mm (62.65") long - Order Ref. 16		1
16	6586251	HOSE, BULK	sold per foot		X
17	7312135	HOLDER ACCUMULATOR			1
18	7313652	ASSY MANIFOLD			1
19	7314031	ADAPTER HYDRAULIC			1
20	7317768	HOSE HYDRAULIC ASSY			1
21	13K5	TEE			2
22	15KB0606	FITTING, HYD CONNECTOR			1
23	15KB0808	FITTING, HYD CONNECTOR			1
24	31C1020	BOLT			2
25	35C514	BOLT			4
26	35C516	BOLT 10			2
27	35C612	BOLT 5			2
28	55D10	NUT			2
29	5HM16	CLAMP			2
30	83D5	NUT 5			6
31	89F7	ADAPTOR			1
32	79K16	O RING 10			1
33	7311768ENUS	INSTRUCTIONS	Was 7311647 [D]		1

SEAT
(Suspension) (Air)

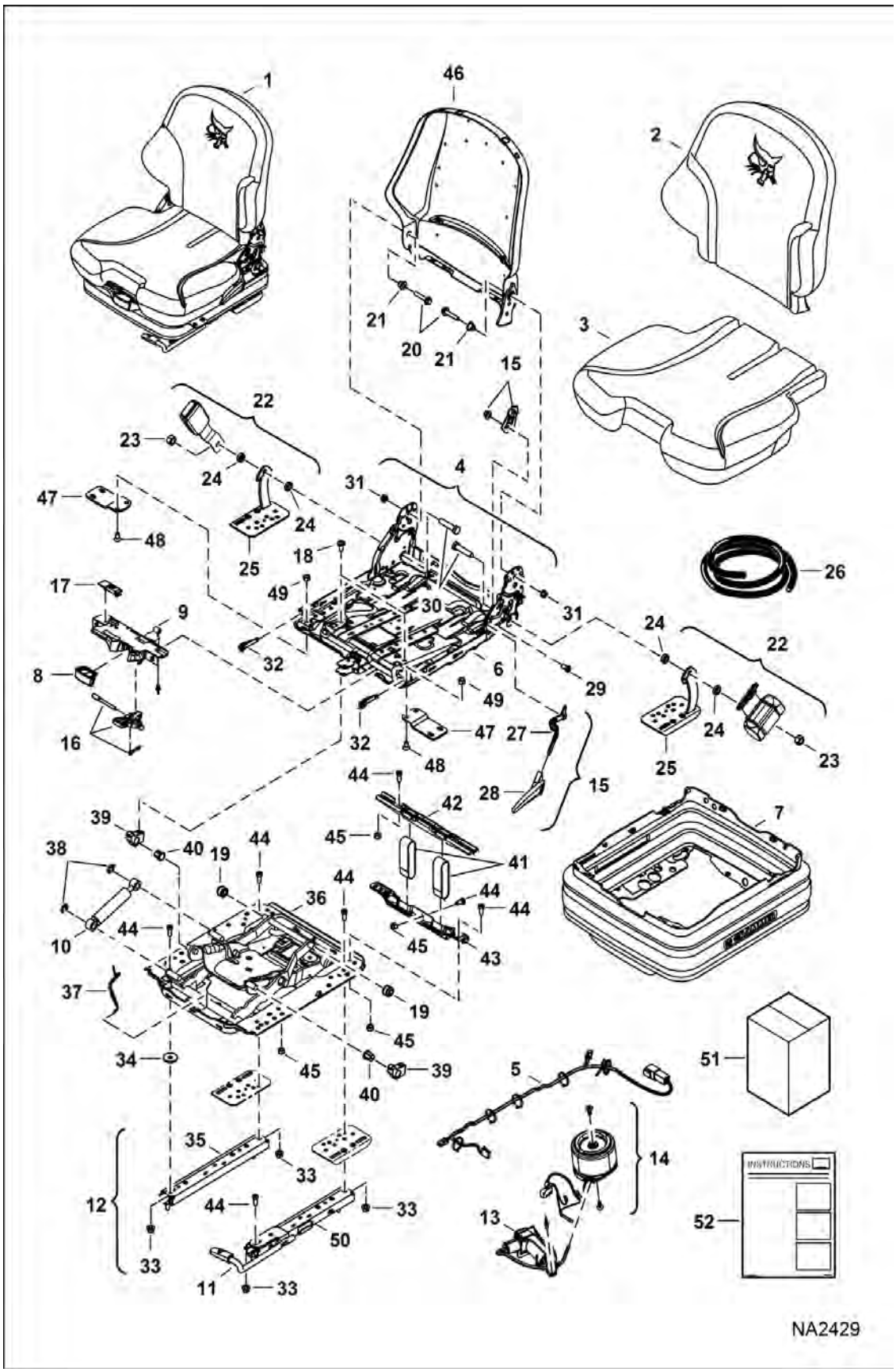

SEAT (Cont'd)
(Suspension) (Air)

Ref No	Part Number	Description	Remarks	Serial Number	Qty
1		SEAT, OPERATOR SUSPENSION AIR	NLA - Ref. 2-49 - Order 7167603 seat - Also Order Ref. 46 or reuse from existing seat - Was 7182356 [A]		1
1	7167603	SEAT, OPERATOR SUSPENSION AIR	See Illustration SEAT COVERS / NA10388 Ref. 2-22 & 26-45		1
2	7010335	KIT, CUSHION SEAT VINYL	backrest		1
3	7010336	KIT, CUSHION SEAT VINYL			1
4	7010338	KIT, BACKREST SEAT	Ref. 20, 21 & 31		1
5	7011175	KIT, SWITCH SEAT			1
6		FRAME	NSS		1
7	7011176	BELLOWS, SEAT CPL			1
8	6921092	HANDLE	Was 7011177 - Was 7011177 [A]		1
9	7011178	HOUSING			1
9		SWITCH, COMPRESSOR	NSS - Order Ref. 9		x
9		VALVE, BLEED OFF	NSS - Order Ref. 9		x
10	7010342	KIT, ABSORBER SHOCK SEAT	W/Ref. 38		1
11	7010343	KIT, LEVER ADJUSTING	assy		1
12	7011179	KIT, RAIL SLIDE SEAT	Ref. 33, 35 & 50 - handle not included		1
13	7011180	COMPRESSOR, AIR SEAT			1
13		HOSE	NSS - Order Ref. 13		x
14	7011181	KIT, SPRING AIR			1
15	7010346	KIT, BACKREST SEAT	Ref. 27, 28 & 29		1
16	7011182	KIT, LEVER			1
17		COVER	NSS - Order Ref. 9		1
18		BOLT	NSS		2
19		BUSHING	NSS - white plastic - Order Ref. 51		2
20		BOLT	NSS		2
21		BUSHING	NSS		2
22	7010345	KIT, TETHER SEAT BELT	Ref. 23-25 - not included		1
23		NUT	NSS - Order Ref. 22		2
24		BUSHING	NSS - Order Ref. 22		4
25		PLATE, TETHER	NSS - Order Ref. 22		2
26		SEAL	NSS		1
27		LEVER	NSS - Order Ref. 15		1
28		HANDLE	NSS - grey - Order Ref. 15		1
29		BOLT	NSS - Order Ref. 15		2
30		BOLT	NSS - Order Ref. 4		2
31		NUT	NSS - Order Ref. 4		2

SEAT (Cont'd)
(Suspension) (Air)

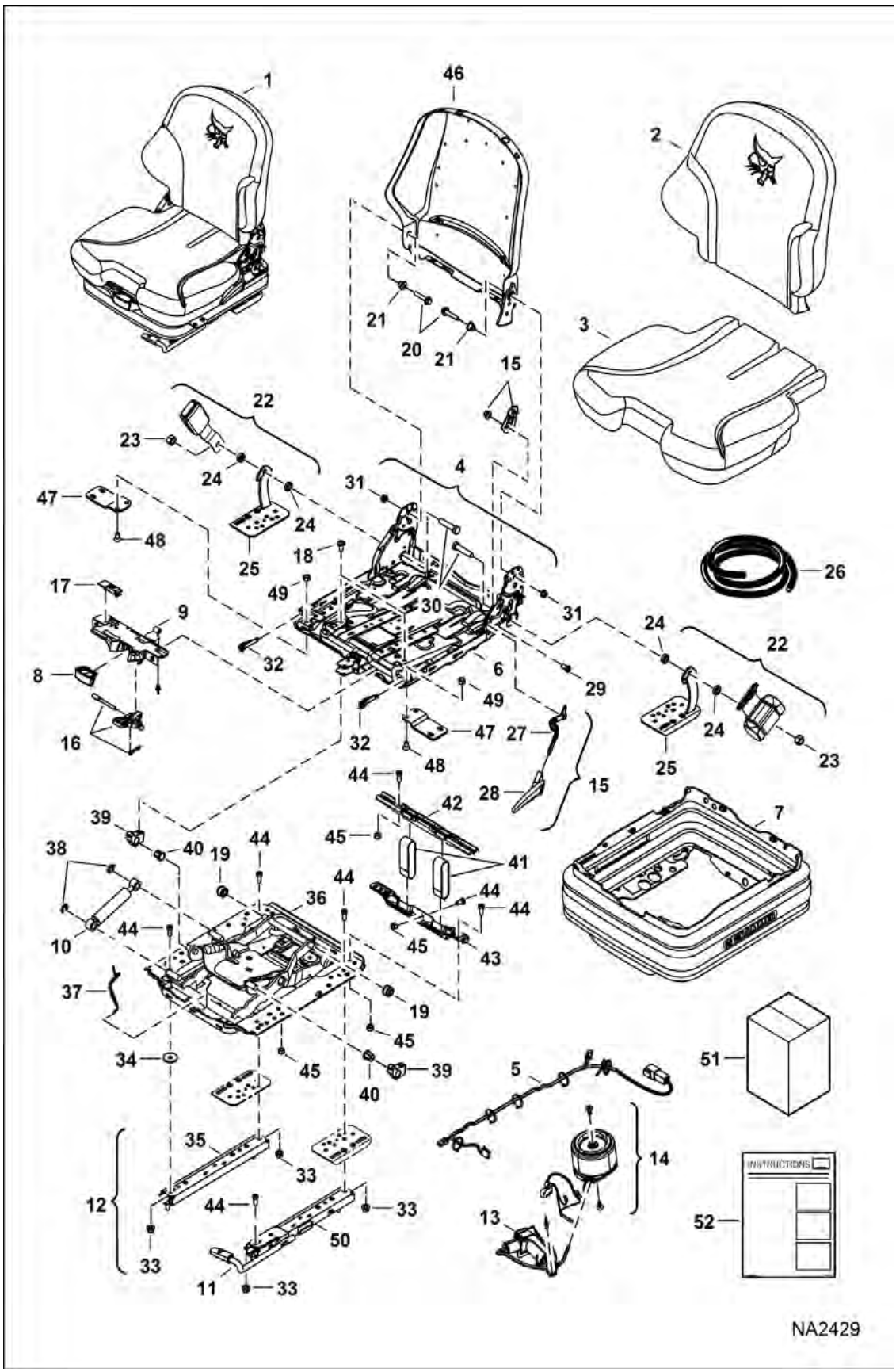

SEAT (Cont'd)
(Suspension) (Air)

Ref No	Part Number	Description	Remarks	Serial Number	Qty
32		CLIP	NSS - plastic		2
33		NUT	NSS		4
34		WASHER	NSS		4
35		RAIL, SLIDE	NSS - Order Ref. 12		1
36		FRAME, SUSPENSION	NSS - Order Ref. 1		1
37		LEVER, GAUGE	NSS - white plastic - Order Ref. 51		1
38		CLIP	NSS - Order Ref. 10		2
39		BLOCK, STOP	NSS - Order Ref. 51		2
40		BUSHING	NSS - Order Ref. 51		2
41		STRAP, TETHER	NSS - white		2
42		MOUNT	NSS		1
43		MOUNT	NSS		1
44		BOLT	NSS		9
45		NUT	NSS		5
46		MOLDING, SEAT	NSS		1
47	7011183	KIT, BRACKET SEAT	W/Ref. 48 & 49		2
48		BOLT	NSS - Order Ref. 47		4
49		NUT	NSS - Order Ref. 47		4
50		RAIL, SLIDE	NSS - Order Ref. 12		1
51	7025560	KIT, REPAIR	Ref. 18 (2), 19, 37, 39 (2) & 40 (2)		x
52	6987249ENUS	INSTRUCTIONS	Was 6987249 [A]		1

SEAT - 80 mm
(Suspension)

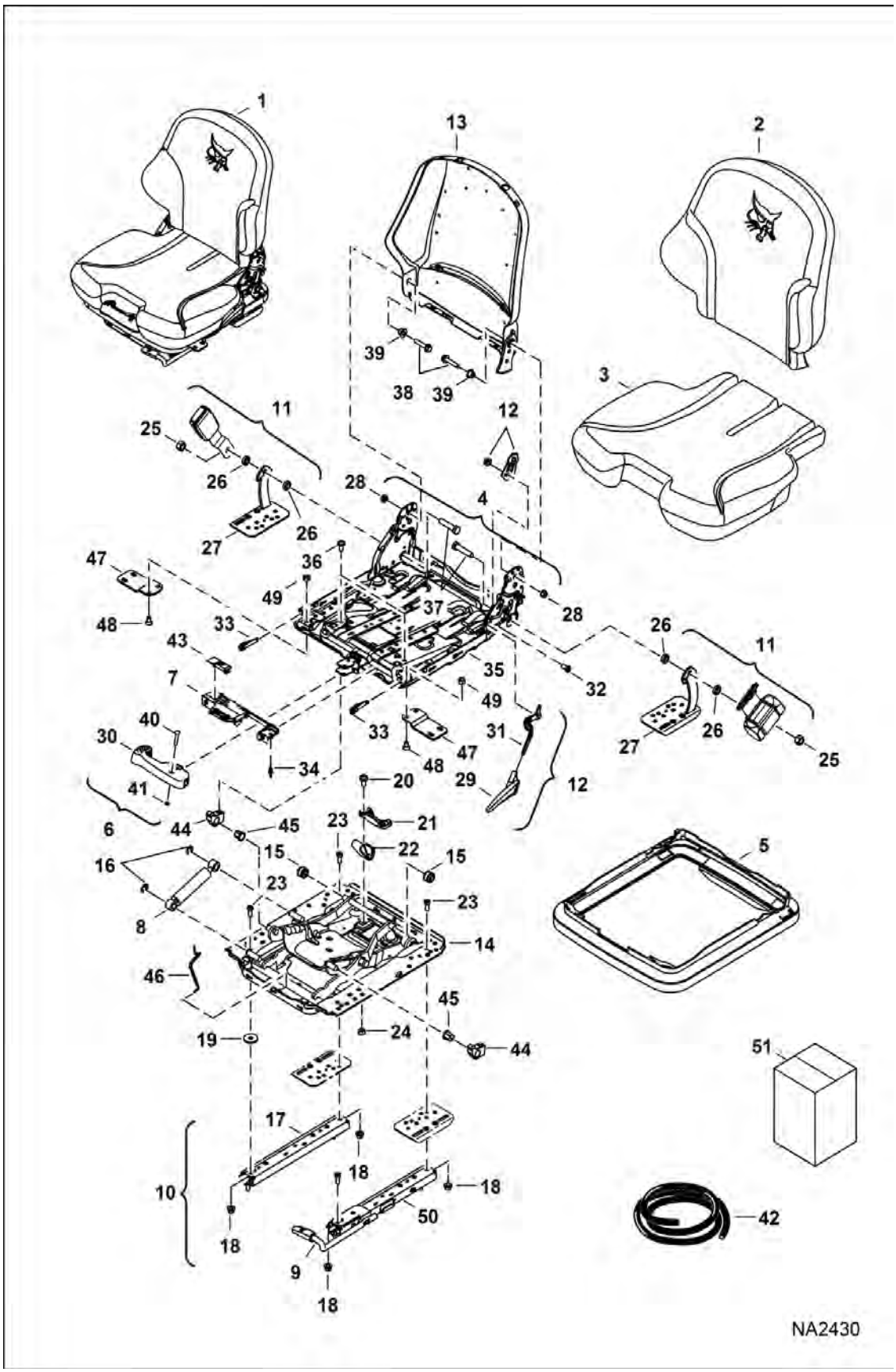

SEAT - 80 mm (Cont'd)
(Suspension)

Ref No	Part Number	Description	Remarks	Serial Number	Qty
1		SEAT, SUSPENSION	NLA - W/SJC - Ref. 2-49 - Order 7149786 seat - Also Order Ref. 47 or reuse from existing seat - Was 7182357		1
1	7149786	SEAT, SUSPENSION	See Illustration SEAT COVERS / NA10388 W/manual controls - Ref. 2-10, 12-24 & 28-46		1
2	7010335	KIT, CUSHION SEAT VINYL	backrest		1
3	7010336	KIT, CUSHION SEAT VINYL			1
4	7010338	KIT, BACKREST SEAT	Ref. 28, 38 & 39 - parts for backrest		1
5	7010339	BELLOW			1
6	7010340	KIT, ADJUSTER SEAT	Ref. 30, 40 & 41		1
7	7010341	KIT, HOUSING SEAT	W/Ref. 34 & 43		1
8	7010342	KIT, ABSORBER SHOCK SEAT			1
9	7010343	KIT, LEVER ADJUSTING	assy.		1
10	7010344	KIT, RAIL SLIDE SEAT	Ref. 17, 18 & 50 - handle assy not included		1
11	7010345	KIT, TETHER SEAT BELT	Ref. 25-27 - not included		1
12	7010346	KIT, BACKREST SEAT	Ref. 29 & 31		1
13		BACKREST, SEAT	NSS		1
14		FRAME, SUSPENSION	NSS		1
15		BUSHING	NSS - white plastic - Order Ref. 51		2
16		CLIP	NSS		2
17		WASHER	NSS - Order Ref. 12		2
17		RAIL, SLIDE	NSS		1
18		NUT	NSS		4
19		WASHER	NSS		4
20		SCREW	NSS - Order Ref. 51		2
21		STOP, TETHER	NSS - Order Ref. 51		1
22		TETHER, BELT	NSS - Order Ref. 51		1
23		BOLT	NSS		4
24		NUT	NSS - Order Ref. 51		4
25	86D7	NUT			2
26		SPACER	NSS - Order Ref. 11		4
27		PLATE, TETHER	NSS - Order Ref. 11		2
28		NUT	NSS - Order Ref. 4		2
29		HANDLE, ADJUSTMENT	NSS - grey - Order Ref. 12		1
30		HANDLE, ADJUSTMENT	NSS - Order Ref. 6		1
31		LEVER	NSS - Order Ref. 12		1
32		SCREW	NSS - Order Ref. 12		1
33		CLIP	NSS - plastic		2

SEAT - 80 mm (Cont'd)
(Suspension)

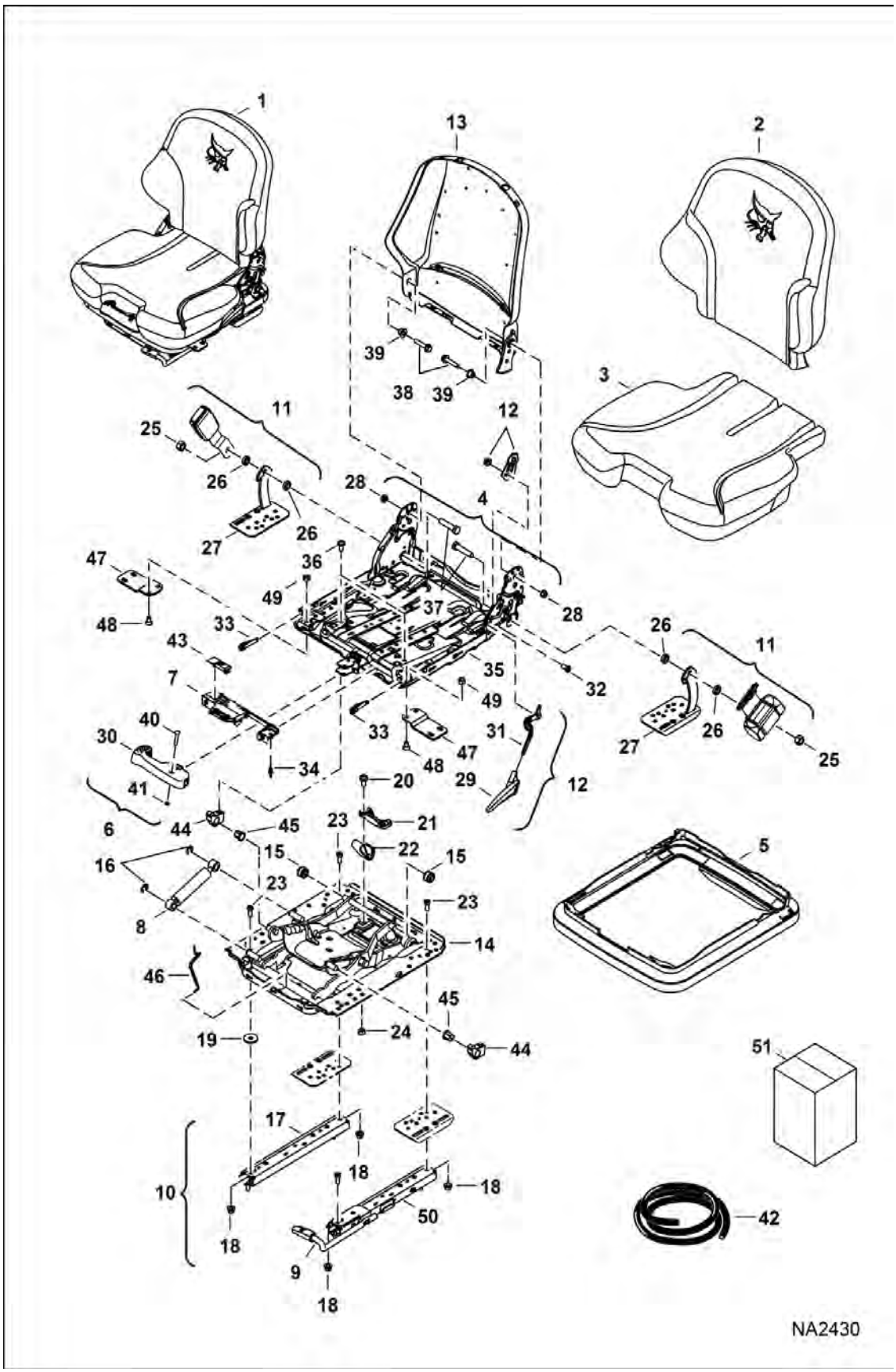

SEAT - 80 mm (Cont'd)
(Suspension)

Ref No	Part Number	Description	Remarks	Serial Number	Qty
34		RIVOT	NSS - Order Ref. 7		2
35		FRAME	NSS - Order Ref. 1		2
36		BOLT	NSS		1
37		BOLT	NSS - Order Ref. 4		2
38		BOLT	NSS		2
39		BUSHINGS	NSS		2
40		BOLT	NSS - Order Ref. 6		1
41		CLIP	NSS - Order Ref. 6		1
42		SEAL	NSS		1
43		COVER	NSS - Order Ref. 7		1
44		BLOCK, STOP	NSS - silver - Order Ref. 51		2
45		BUSHING	NSS - Order Ref. 51		2
46		LEVER, GAUGE	NSS - white plastic - Order Ref. 51		1
47	7011183	KIT, BRACKET SEAT	W/Ref. 48 & 49		2
48		BOLT	NSS - Order Ref. 47		4
49		NUT	NSS - Order Ref. 47		4
50		RAIL, SLIDE	NSS - Order Ref. 10		1
51	7022791	KIT, REPAIR	Ref. 15 (2), 20 (2), 21, 22, 24 (2), 44 (2), 45 (2) & 46		x

SEAT BELT - 2"
(Three Point Retractable)

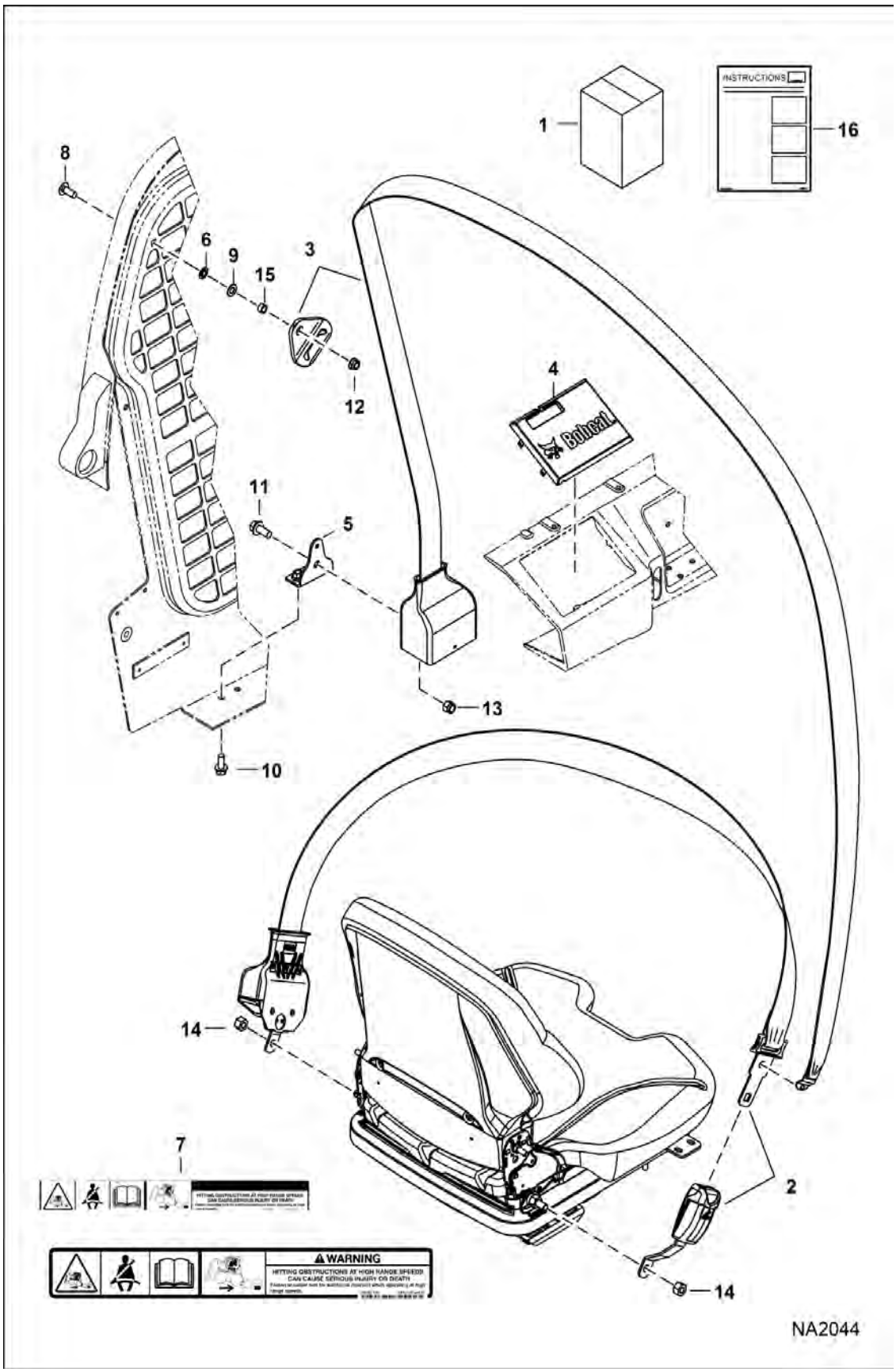

SEAT BELT - 2" (Cont'd)

(Three Point Retractable)

Ref No	Part Number	Description	Remarks	Serial Number	Qty
1	7128405	KIT, BELT SEAT 2"	Ref. 2-13, 15 & 16		1
2	7152319	BELT, RETRACTOR			1
3	7152322	BELT, SEAT 2"			1
4	7152323	COVER, RETRACTOR			1
5	7152324	BRACKET, SEAT BELT			1
6	6674264	RETAINER NUT			1
7	7184346	DECAL WARNING			1
8	10C616	BOLT 10			1
9	29E6	WASHER			1
10	43C612	BOLT			2
11	31C716	SCREW			1
12	53D6	NUT			1
13	95D7	NUT			1
14	86D7	NUT	not in kit		2
15	7184341	BUSHING			1
16	6987248ENUS	INSTRUCTIONS	Was 6987248 [A]		1

SEAT BELT - 3"
(Retractable)

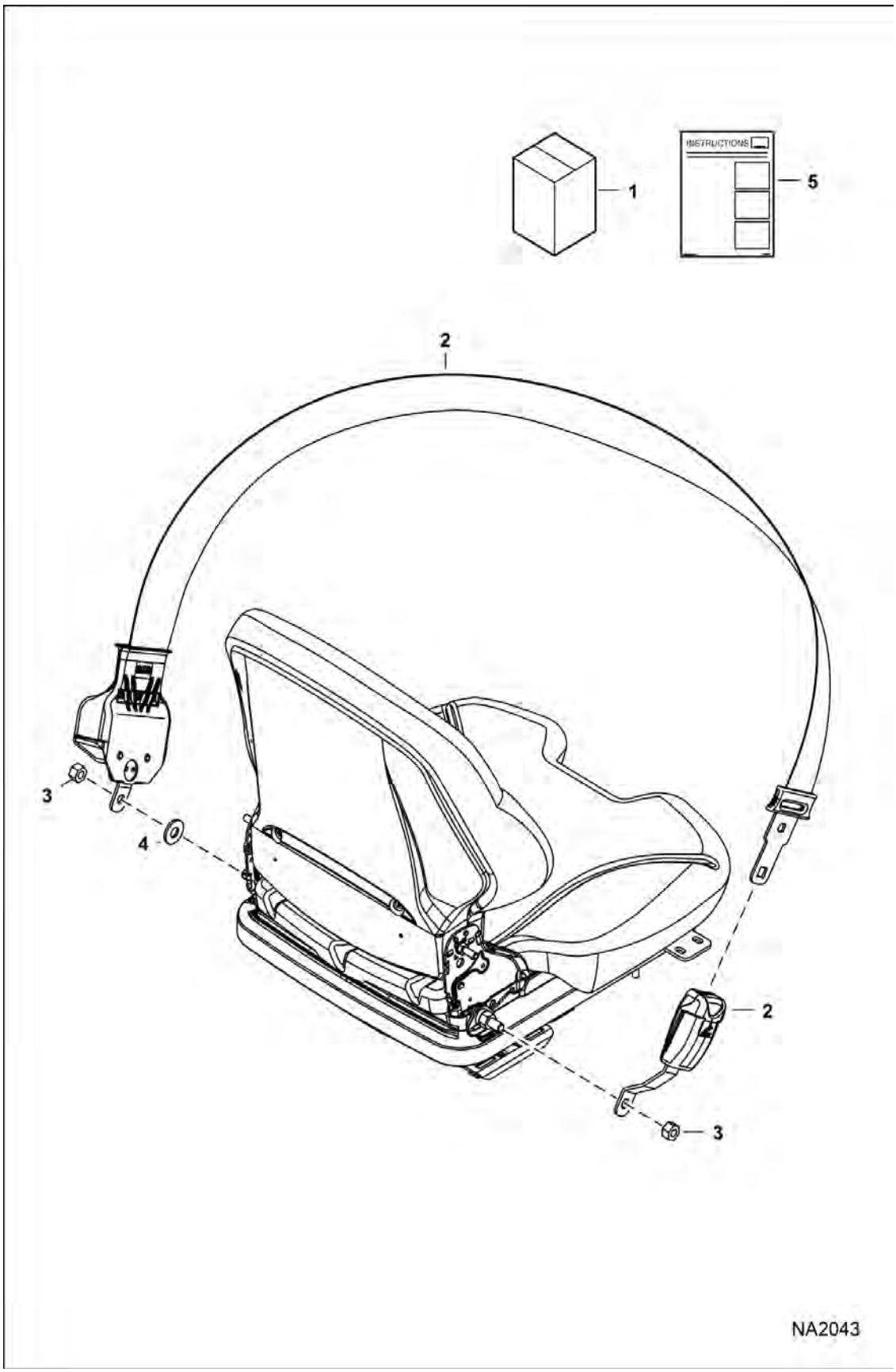

SEAT BELT - 3" (Cont'd)
(Retractable)

Ref No	Part Number	Description	Remarks	Serial Number	Qty
1	7129303	KIT, BELT SEAT 3"	Ref. 2 & 4		1
2	7168171	BELT, SEAT 3"			1
3	86D7	NUT	not in kit		2
4	25E18	WASHER			1
5	6987253ENUS	INSTRUCTIONS	Was 6987253 [A]		1

SEAT BELT - 3"
(Three Point Retractable)

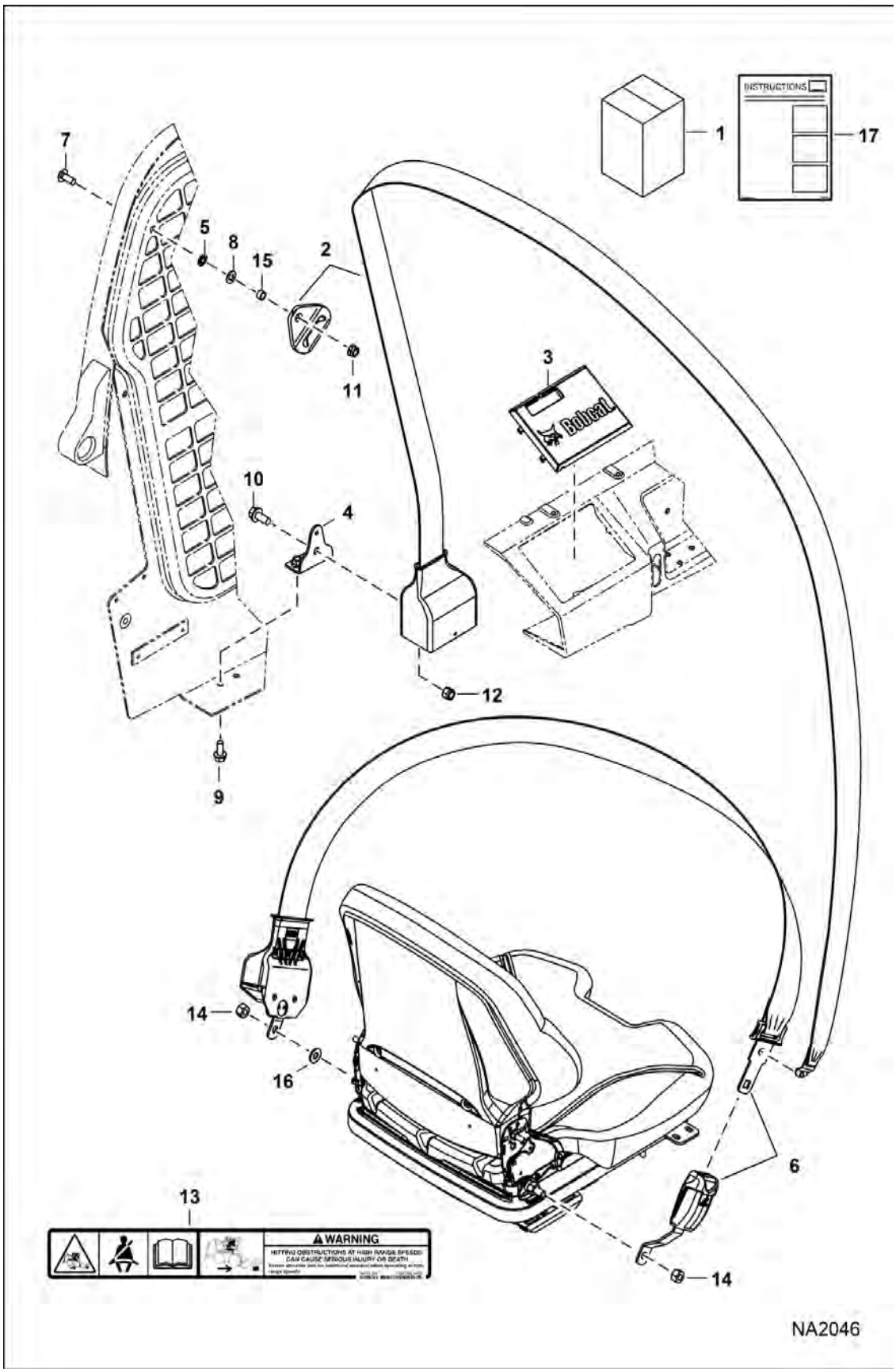

SEAT BELT - 3" (Cont'd)

(Three Point Retractable)

Ref No	Part Number	Description	Remarks	Serial Number	Qty
1	7169480	KIT, BELT SEAT 3"	Ref. 2-13 & 15-17		1
2	7152322	BELT, SEAT 2"			1
3	7152323	COVER, RETRACTOR			1
4	7152324	BRACKET, SEAT BELT			1
5	6674264	RETAINER NUT			1
6	7168172	BELT, SEAT 3"			1
7	10C616	BOLT 10			1
8	29E6	WASHER			1
9	43C612	BOLT			2
10	31C716	SCREW			1
11	53D6	NUT			1
12	95D7	NUT			1
13	7184346	DECAL WARNING			1
14	86D7	NUT	not in kit		2
15	7184341	BUSHING			1
16	25E18	WASHER			1
17	6987248ENUS	INSTRUCTIONS	Was 6987248 [A]		1

SEAT BELT KIT - 3"

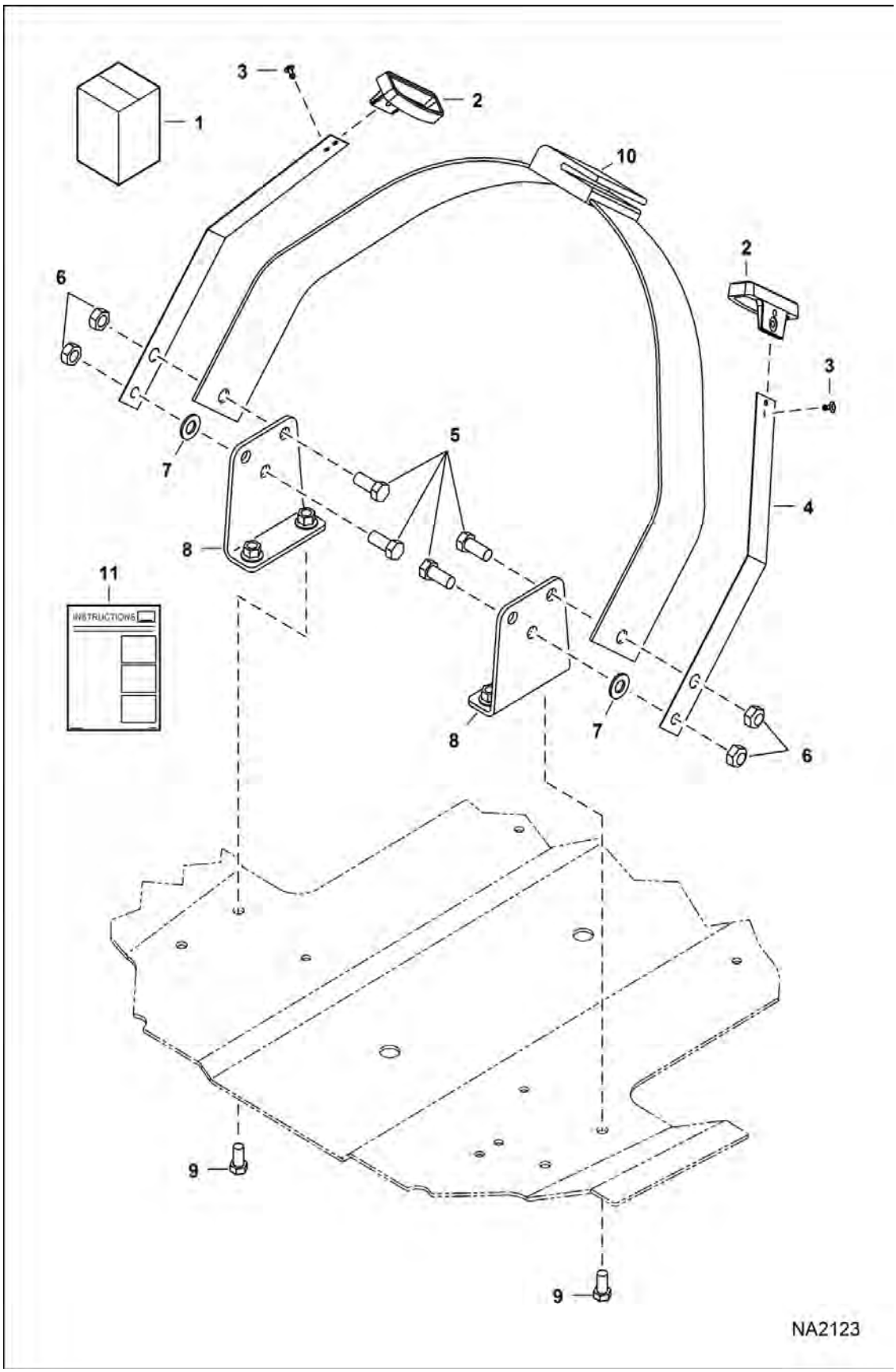

SEAT BELT KIT - 3" (Cont'd)

Ref No	Part Number	Description	Remarks	Serial Number	Qty
1	6703640	KIT, SEAT BELT	Ref. 2-6, 10 & 11		1
2	6703703	GUIDE, SEAT BELT			2
3	6630207	RIVET 5			4
4	6711908	SPNG PLATE			2
5	17C716	BOLT			4
6	95D7	NUT			4
7	25E19	WASHER			2
8	7173159	BRACKET, BELT SEAT			2
9	43C612	BOLT			4
10	6659999	BELT, SEAT			1
11	6989663ENUS	INSTRUCTIONS			1

SEAT COVERS
(Suspension Seat)

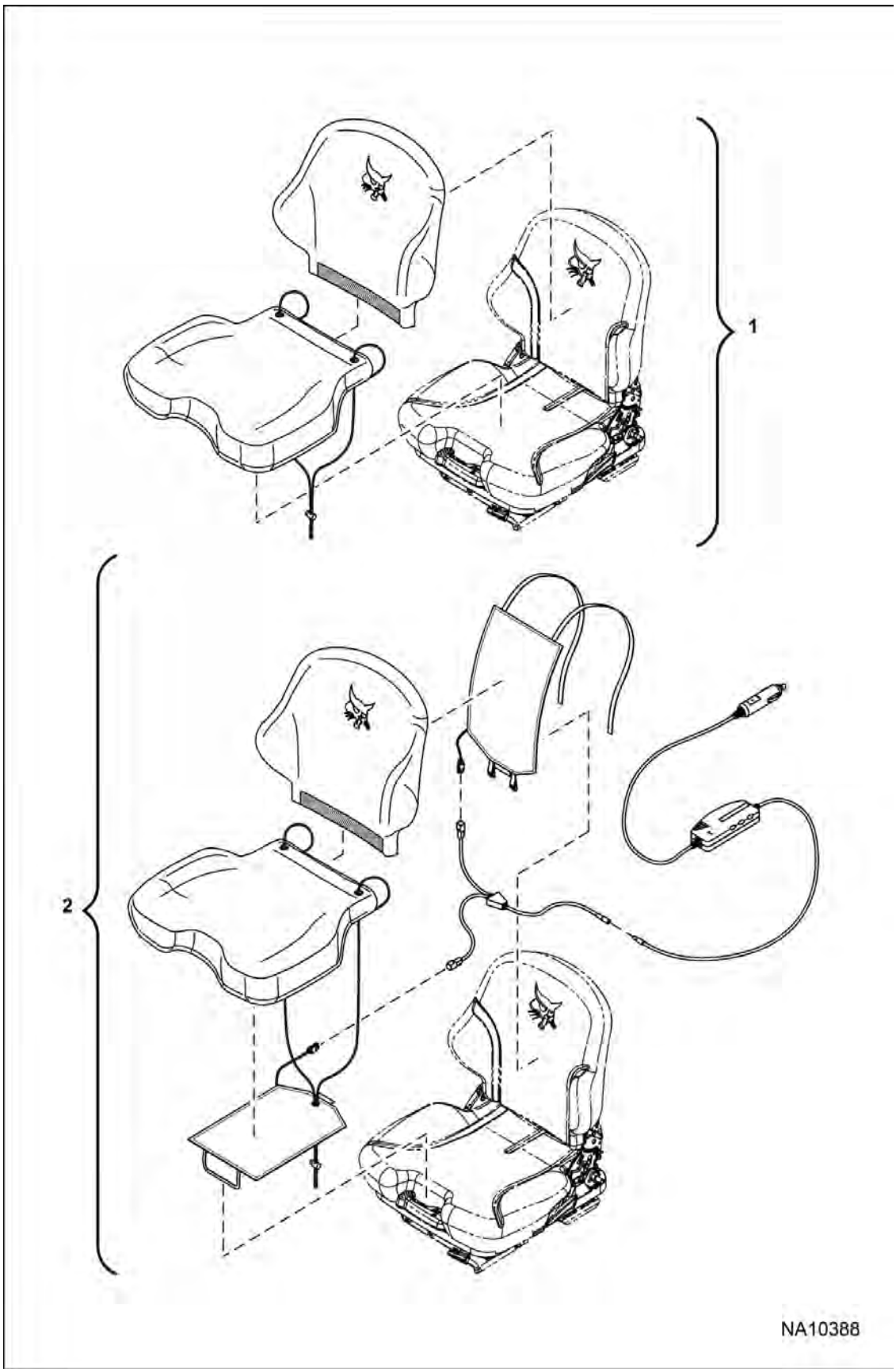

SEAT COVERS (Cont'd)

(Suspension Seat)

Ref No	Part Number	Description	Remarks	Serial Number	Qty
1	7261288	COVER, SEAT	See Illustration SEAT - 80 mm / NA2430 - Use W/ 7149786 seat & 7167603 seat , See Illustration SEAT / NA2429 - Use W/ 7149786 seat & 7167603 seat		1
2	7261289	COVER, SEAT HEATED	See Illustration SEAT - 80 mm / NA2430 - Use W/ 7149786 seat & 7167603 seat , See Illustration SEAT / NA2429 - Use W/ 7149786 seat & 7167603 seat		1

SEAT COVERS
(Vinyl Seat)

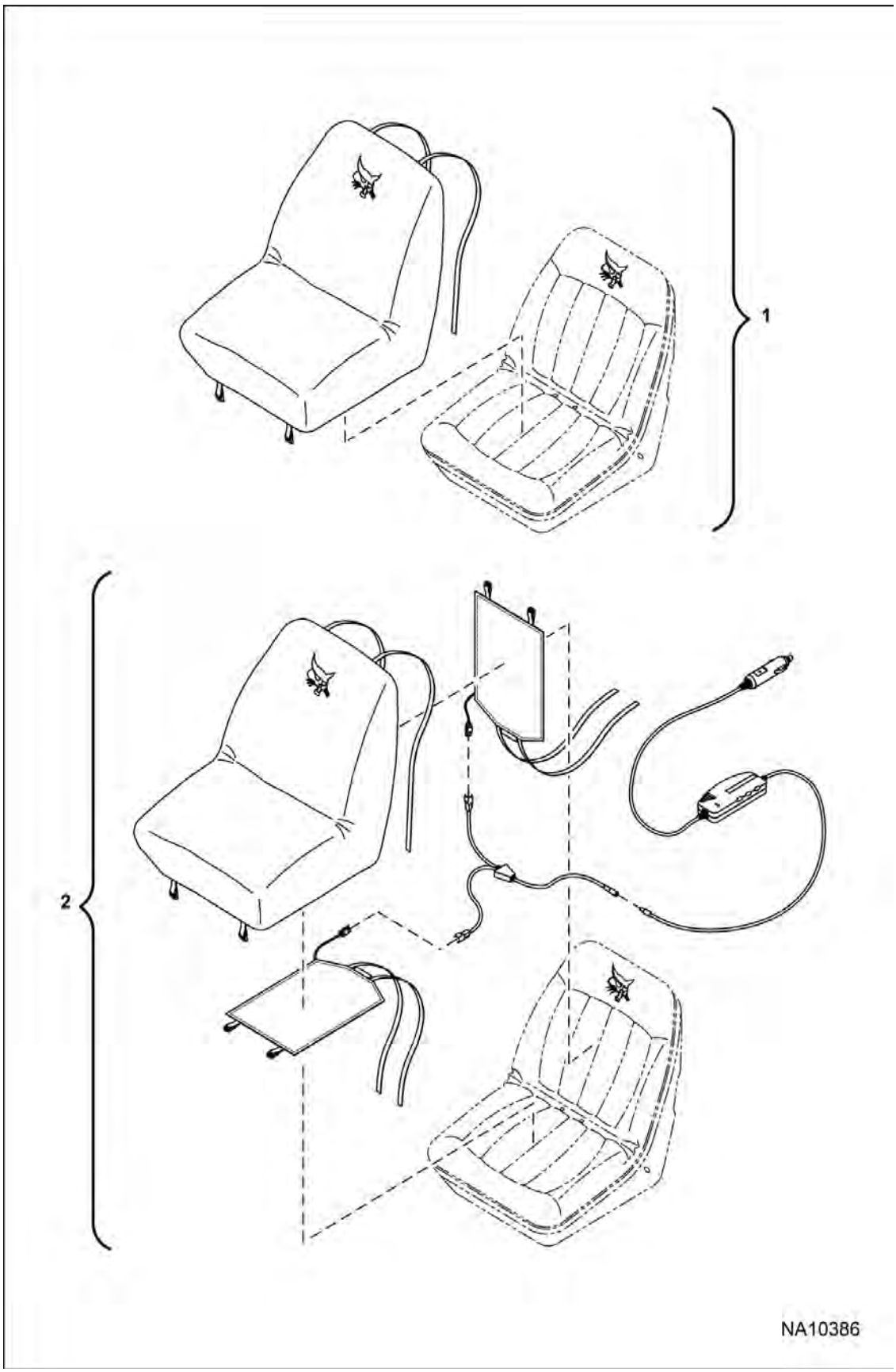

SEAT COVERS (Cont'd)

(Vinyl Seat)

Ref No	Part Number	Description	Remarks	Serial Number	Qty
1	7260106	COVER, SEAT	See Illustration SEAT & SEAT BELT / NA8486 - Use W/ 6669135 seat		1
2	7260107	COVER, SEAT HEATED	See Illustration SEAT & SEAT BELT / NA8486 - Use W/ 6669135 seat		1

SEAT KIT - 80 mm
(Cloth) (Suspension)

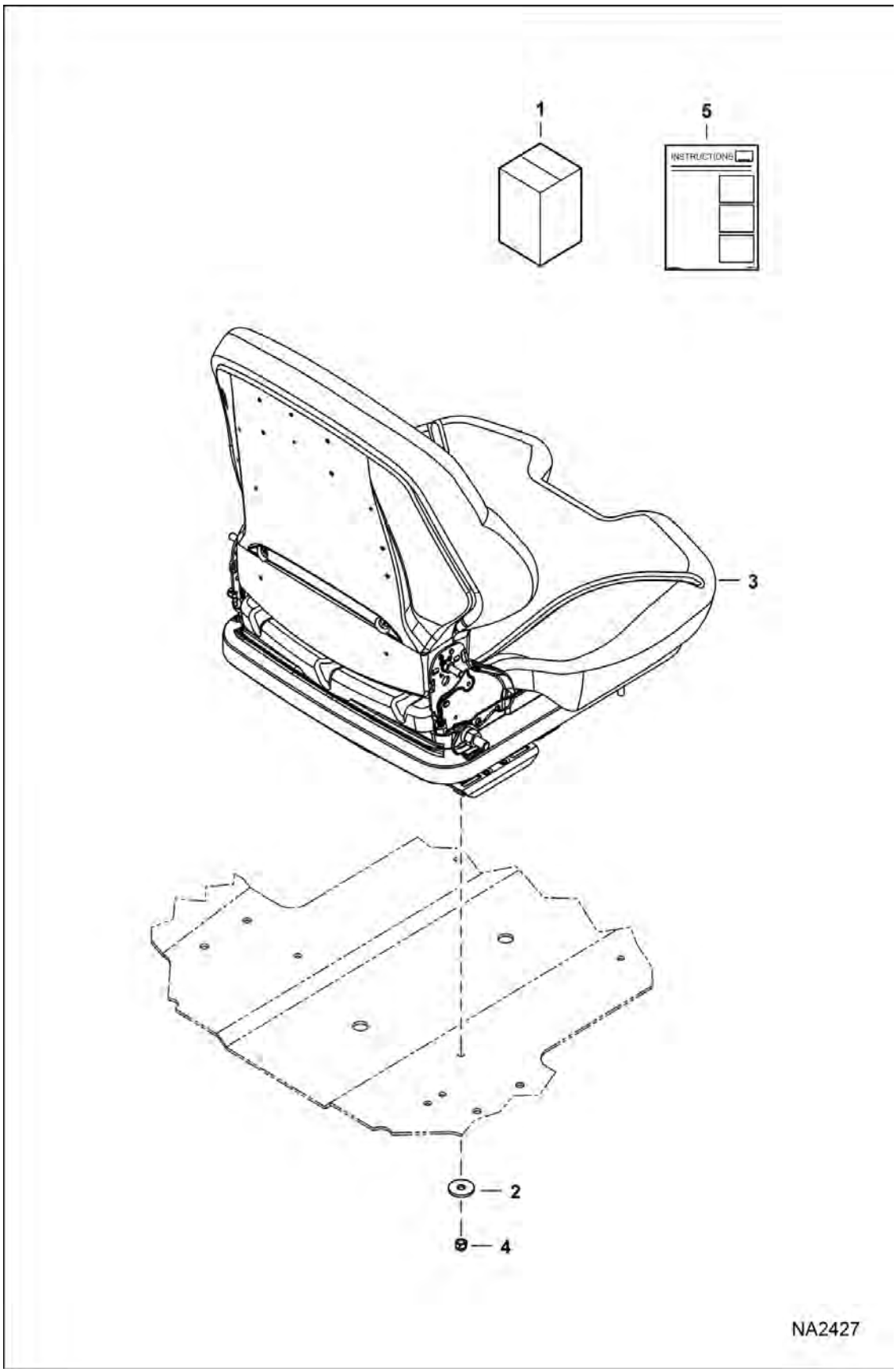

SEAT KIT - 80 mm (Cont'd)

(Cloth) (Suspension)

Ref No	Part Number	Description	Remarks	Serial Number	Qty
1	7331377	KIT, CLOTH SEAT SUSPENSION	Ref. 2-5		1
2	619021	WASHER, 5			4
3	7323942	SEAT, CLOTH SUSPENSION			1
4	59D5	NUT 5			4
5	6987249ENUS	INSTRUCTIONS			1

SEAT KIT - 80 mm
(Suspension)

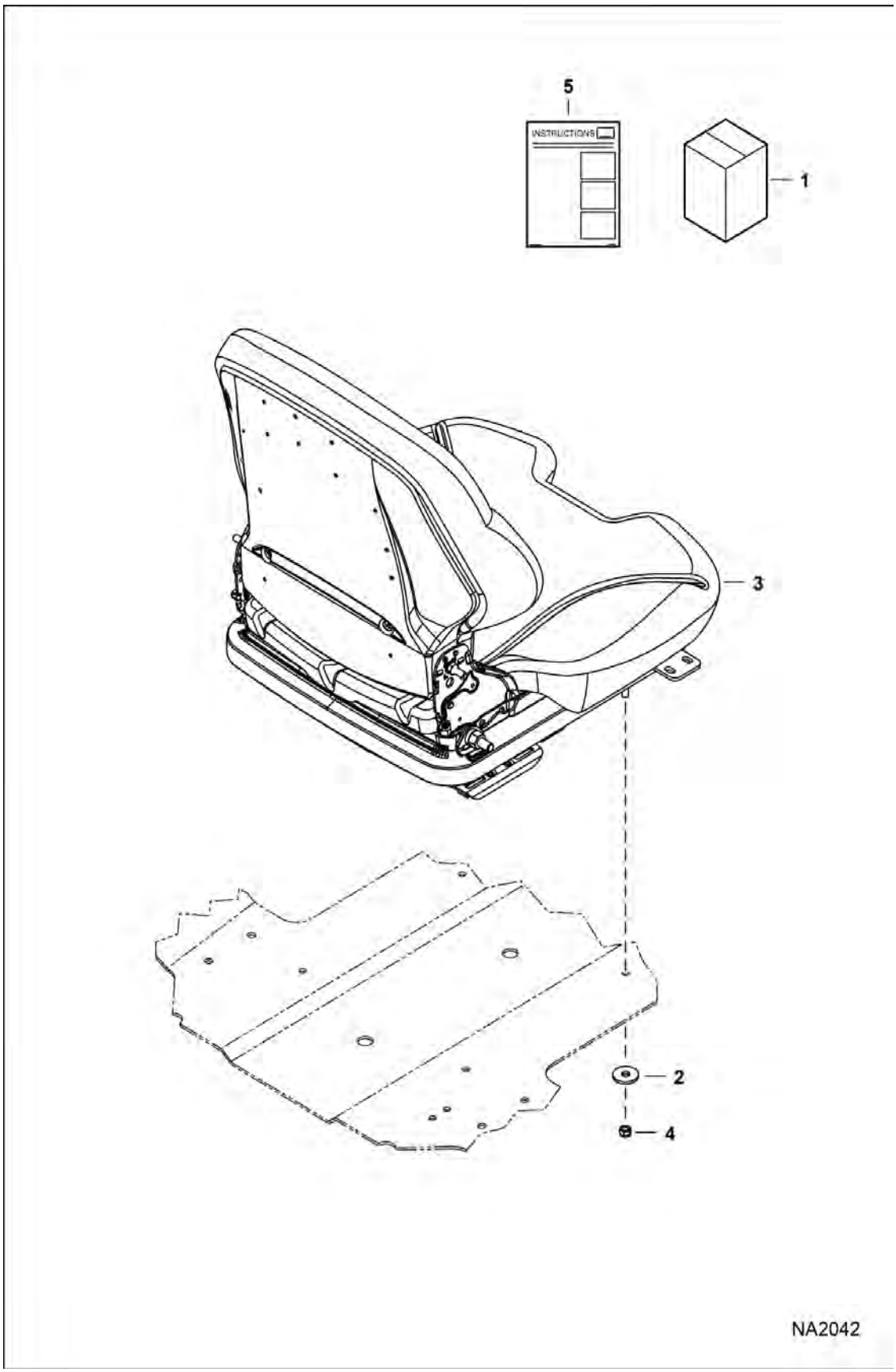

SEAT KIT - 80 mm (Cont'd)
(Suspension)

Ref No	Part Number	Description	Remarks	Serial Number	Qty
1	7128524	KIT, SEAT 80MM SUSPENSION	Ref. 2-5		1
2	619021	WASHER, 5			4
3	7149786	SEAT, SUSPENSION	See Illustration SEAT - 80 mm / NA2430 , See Illustration SEAT COVERS / NA10388		1
4	59D5	NUT 5			4
5	6987249ENUS	INSTRUCTIONS	Was 6987249 [A]		1

SEAT KIT - 80 mm
(Suspension) (Air)

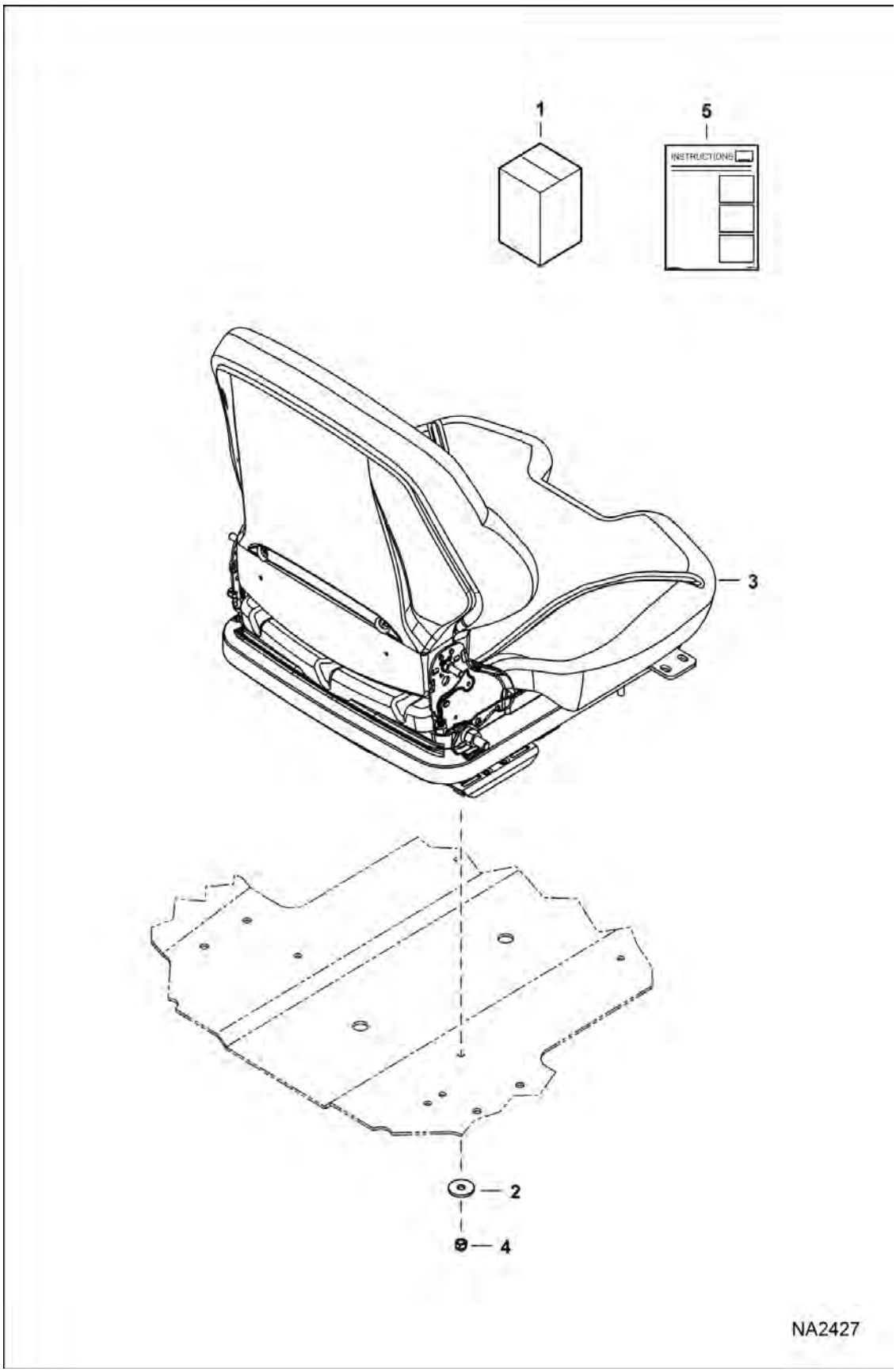

SEAT KIT - 80 mm (Cont'd)
(Suspension) (Air)

Ref No	Part Number	Description	Remarks	Serial Number	Qty
1	7183366	KIT, SEAT OPERATOR SUSPENSION AIR	Ref. 2-5 - loader must be equipped with deluxe cab harness		1
2	619021	WASHER, 5			4
3	7167603	SEAT, OPERATOR SUSPENSION AIR	See Illustration SEAT / NA2429 , See Illustration SEAT COVERS / NA10388		1
4	59D5	NUT 5			4
5	6987249ENUS	INSTRUCTIONS	Was 6987249 [A]		1

SELF LEVEL KIT

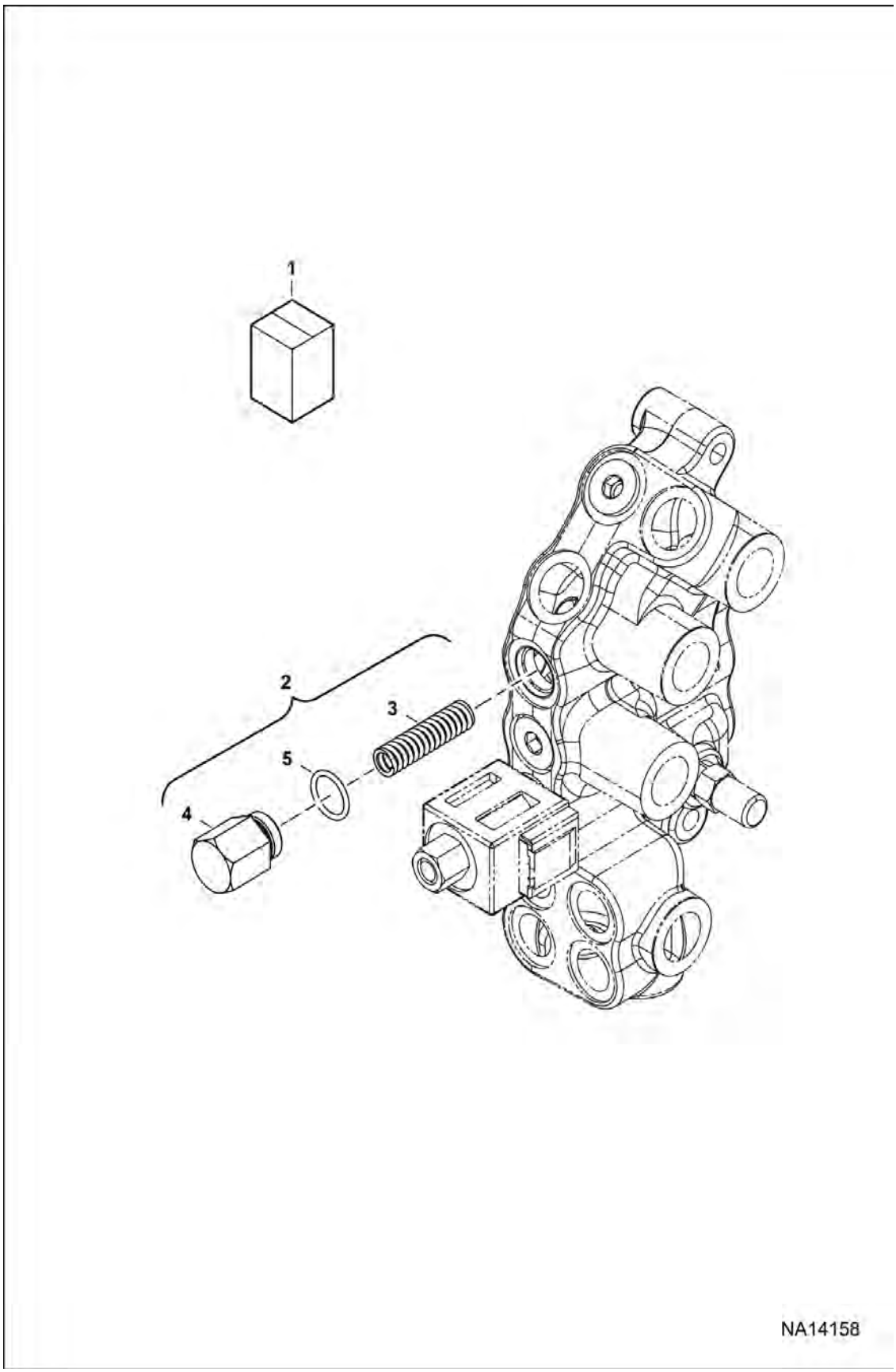

SELF LEVEL KIT (Cont'd)

Ref No	Part Number	Description	Remarks	Serial Number	Qty
1		KIT, SELF LEVEL	NLA - Order components - Ref 1		1
2	7328019	SELF LEVEL, SERVICE	Ref. 3 & 4		1
3	7328017	SPRING, COMPRESSION			1
4	7328018	PLUG	W/Ref. 5		1
5	6634841	O'RING			1

SHIELD KIT
(Tilt Cylinder)

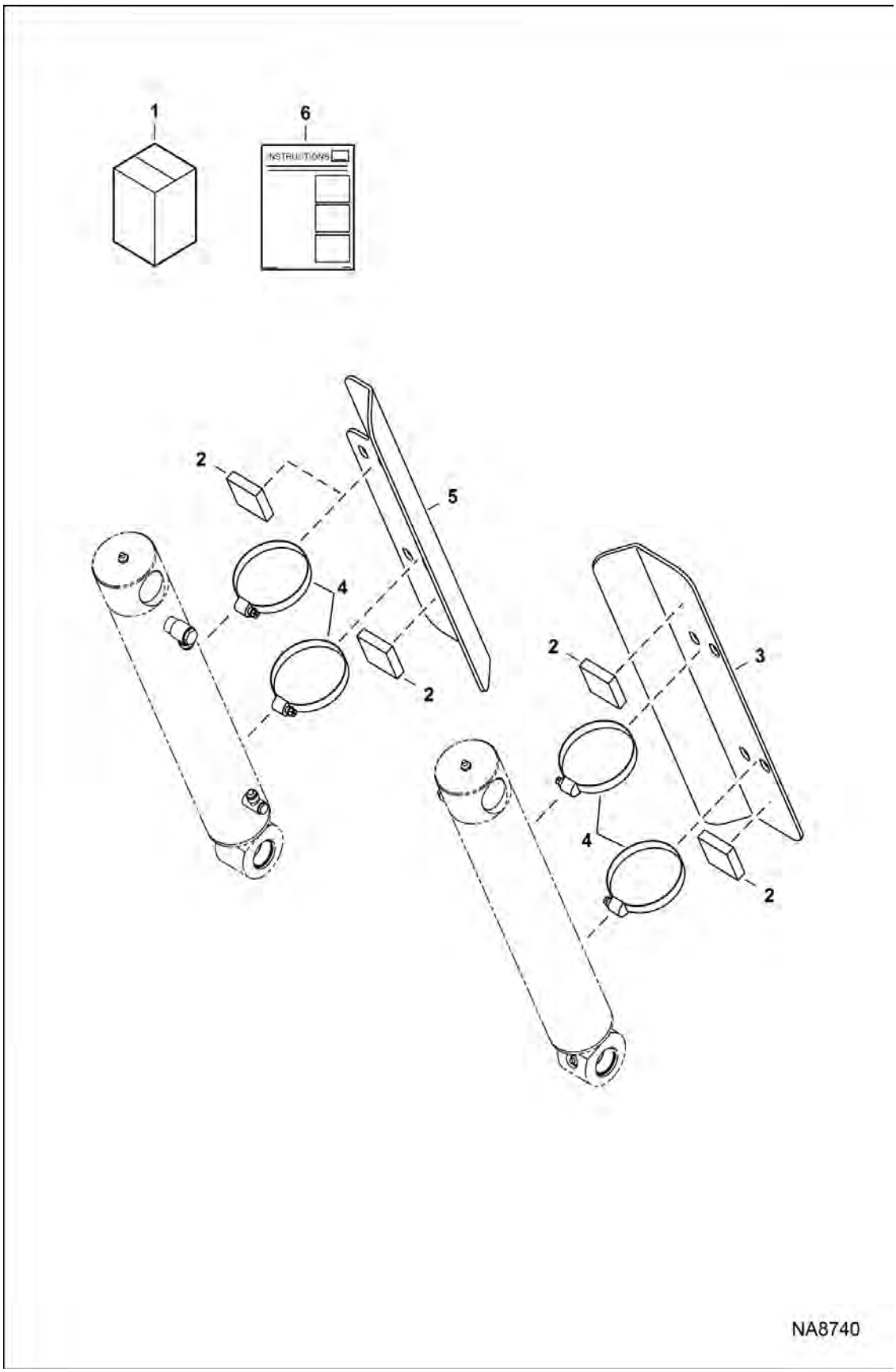

SHIELD KIT (Cont'd)
(Tilt Cylinder)

Ref No	Part Number	Description	Remarks	Serial Number	Qty
1	7248293	KIT, SHIELD CYL	Ref. 2-5		1
2	6704436	RUBBERPAD			4
3	7239466	SHIELD, CYL	RH		1
4	42H52	CLAMP			4
5	7240154	SHIELD, CYL	LH		1
6	6990468ENUS	INSTRUCTIONS	Was 6990468		1

SHIELD KIT
(Tilt Tubelines)

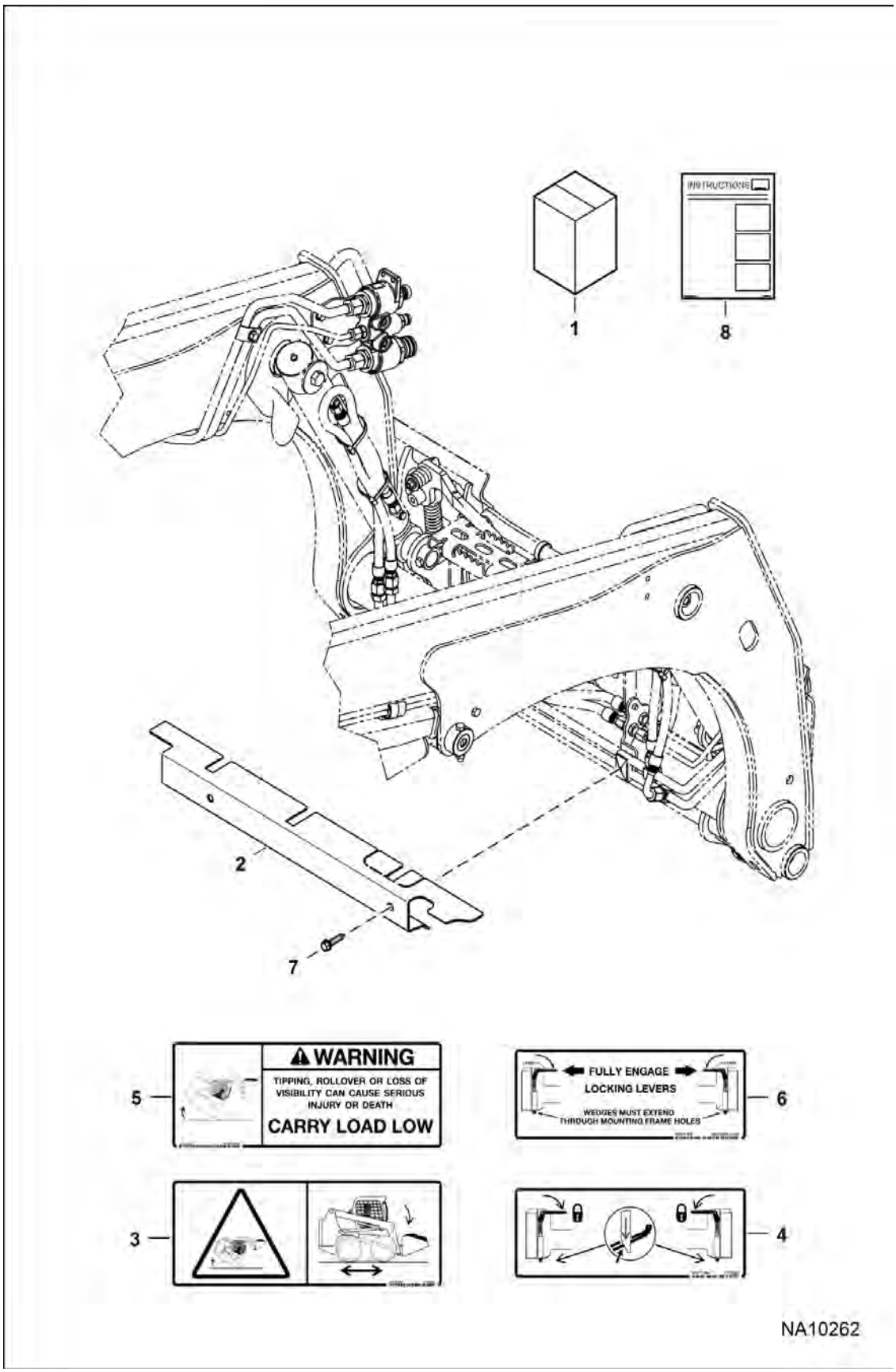

SHIELD KIT (Cont'd)
(Tilt Tubelines)

Ref No	Part Number	Description	Remarks	Serial Number	Qty
1	7251551	KIT, SHIELD	Ref. 2-8		1
2	7251549	SHIELD			1
3	7168037	DECAL, WARNING			1
4	7173403	DECAL, OPERATION			1
5	7167993	DECAL, WARNING			1
6	6561383	DECAL, OPERATION 5			1
7	84G3724	BOLT			2
8	7254142ENUS	INSTRUCTIONS	was 7254142		1

SOUND DELUXE KIT

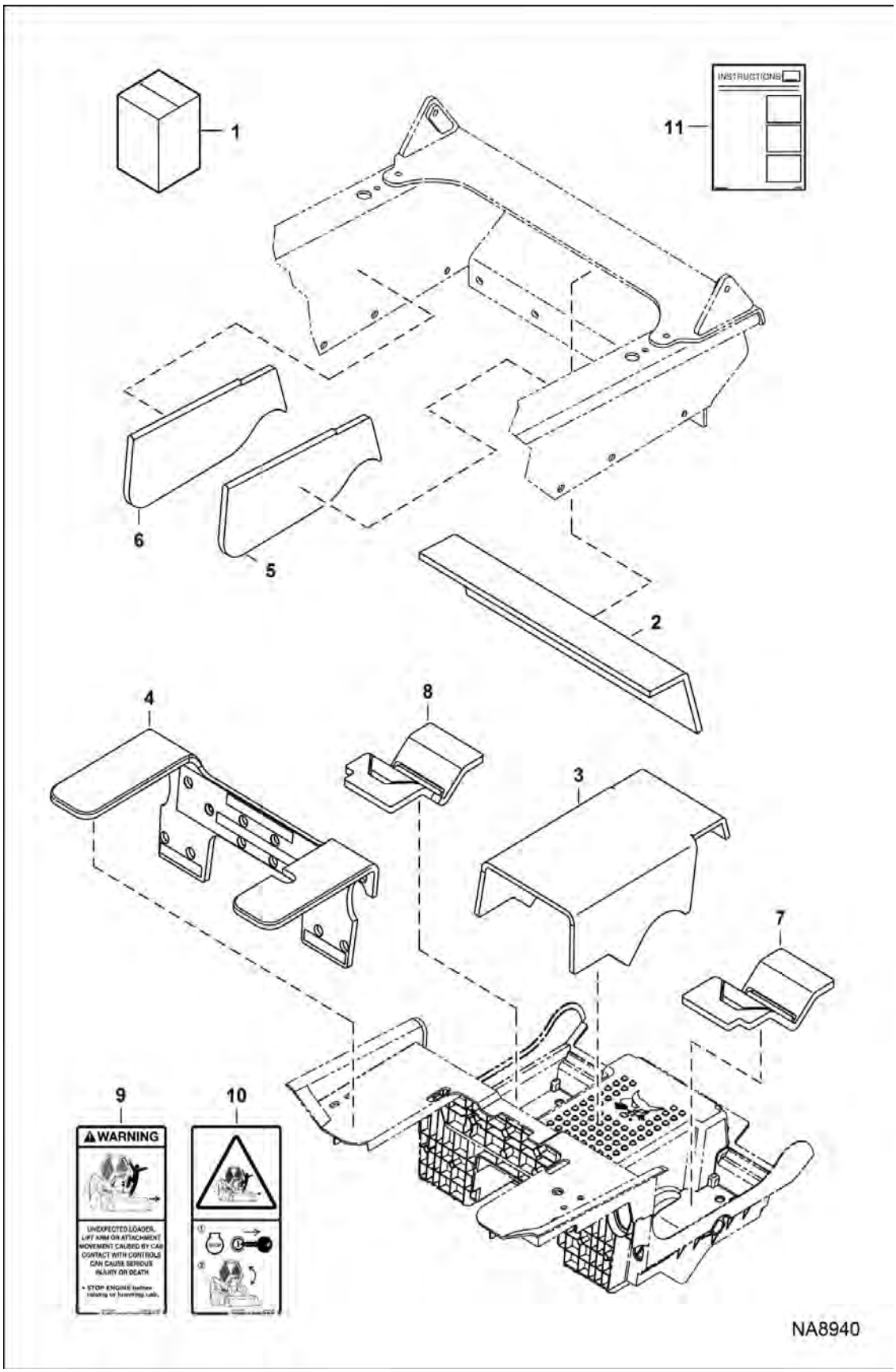

Illustration NA8940

Model S450 MT2KAMEA
6990825

SOUND DELUXE KIT (Cont'd)

Ref No	Part Number	Description	Remarks	Serial Number	Qty
1	7252091	KIT, SOUND/NOISE REDUCTION	W/ Ref. 2-11		1
2	7303241	INSULATION, CROSSMEMBER	Was 7195586 [A]		1
3	7303242	INSULATION	trans ssl - Was 7234196 [A]		1
4	7303243	INSULATION	str panel - Was 7234201 [A]		1
5	7303244	INSULATION	RH panel - Was 7234202 [A]		1
6	7303245	INSULATION	LH panel - Was 7234203 [A]		1
7	7303246	INSULATION	RH pedal - Was 7234927 [A]		1
8	7303247	INSULATION	LH pedal - Was 7234928 [A]		1
9	7168138	DECAL, WARNING			1
10	7168139	DECAL, WARNING			1
11	6989699ENUS	INSTRUCTIONS	Was 6989699		1

SOUND DELUXE SJC KIT
(Selectable Joystick Controls)

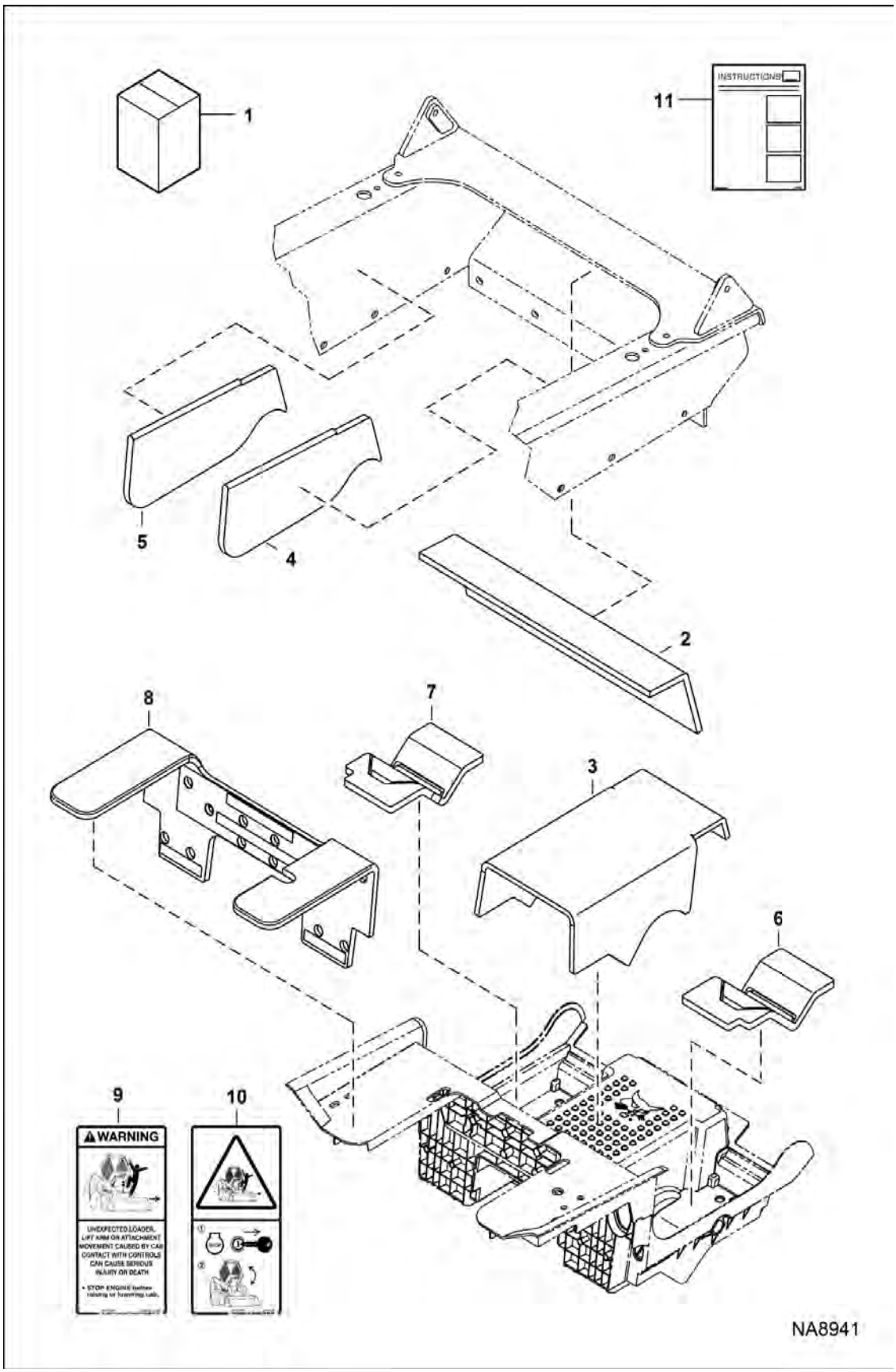

Illustration NA8941

Model S450 MT2KAMEA
6990825

SOUND DELUXE SJC KIT (Cont'd)

(Selectable Joystick Controls)

Ref No	Part Number	Description	Remarks	Serial Number	Qty
1	7252092	KIT, SOUND/NOISE REDUCTION	W/Ref. 2-11		1
2	7303241	INSULATION, CROSSMEMBER	Was 7195586 [A]		1
3	7303242	INSULATION	trans ssl - Was 7234196 [A]		1
4	7303244	INSULATION	RH panel - Was 7234202 [A]		1
5	7303245	INSULATION	LH panel - Was 7234203 [A]		1
6	7303246	INSULATION	RH pedal - Was 7234927 [A]		1
7	7303247	INSULATION	LH pedal - Was 7234928 [A]		1
8	7303248	INSULATION	str panel - Was 7235547 [A]		1
9	7168138	DECAL, WARNING			1
10	7168139	DECAL, WARNING			1
11	6989699ENUS	INSTRUCTIONS	Was 6989699		1

SOUND REDUCTION KIT

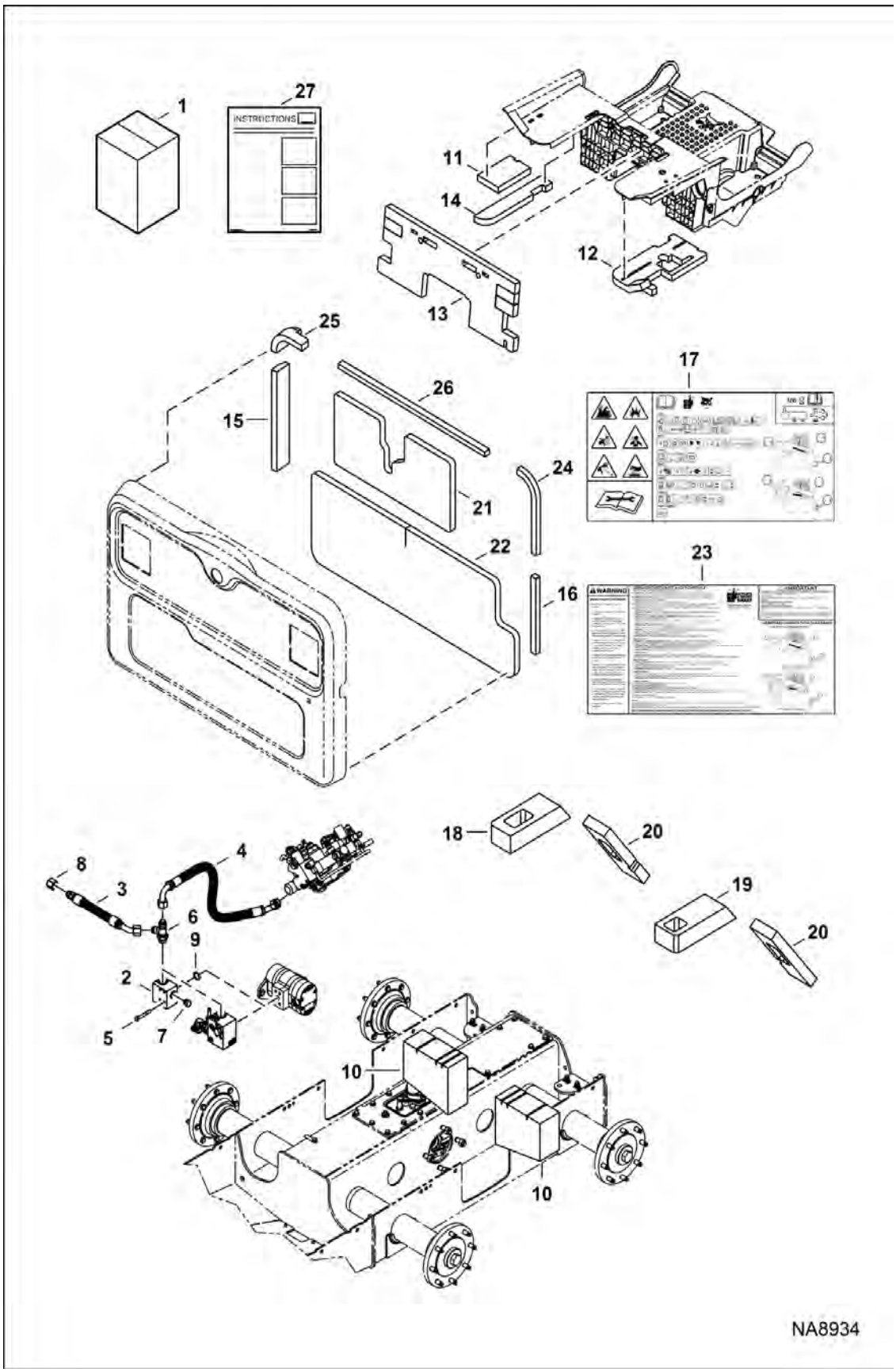

SOUND REDUCTION KIT (Cont'd)

Ref No	Part Number	Description	Remarks	Serial Number	Qty
1	7254140	KIT, SOUND/NOISE REDUCTION	W/ Ref. 2-26		1
2	7226207	MANIFOLD, OUTLET PUMP			1
3	7227584	HOSE, HYD			1
4	7233394	HOSE, HYD			1
5	17C644	BOLT			4
6	21KB1212	FITTING, HYD TEE			1
7	24K6	FITTING			1
8	36K8	CAP			1
9	55K214	O-RING			1
10	7224656	INSULATION TRANS SSL			2
11	7224765	INSULATION			1
12	7224766	INSULATION			1
13	7224767	INSULATION			1
14	7238416	INSULATION			1
15	7198932	INSULATION			1
16	7199010	INSULATION			1
17	7205727	DECAL, SERVICE			1
18	7224653	INSULATION, BLOCK			1
19	7224654	INSULATION, BLOCK			1
20	7224655	INSULATION, BLOCK			2
21	7233339	INSULATION, DOOR REAR			1
22	7233340	INSULATION, DOOR REAR			1
23	7242070	DECAL, SERVICE			1
24	7243894	INSULATION, TAILGATE RH TOP			1
25	7245619	INSULATION, TAILGATE LH TOP			1
26		INSULATION	See Illustration REAR DOOR / NA8485 - not in kit - Was 7233665 [B]		1
27	6987338ENUS	INSTRUCTIONS	Was 6987338 [A]		1

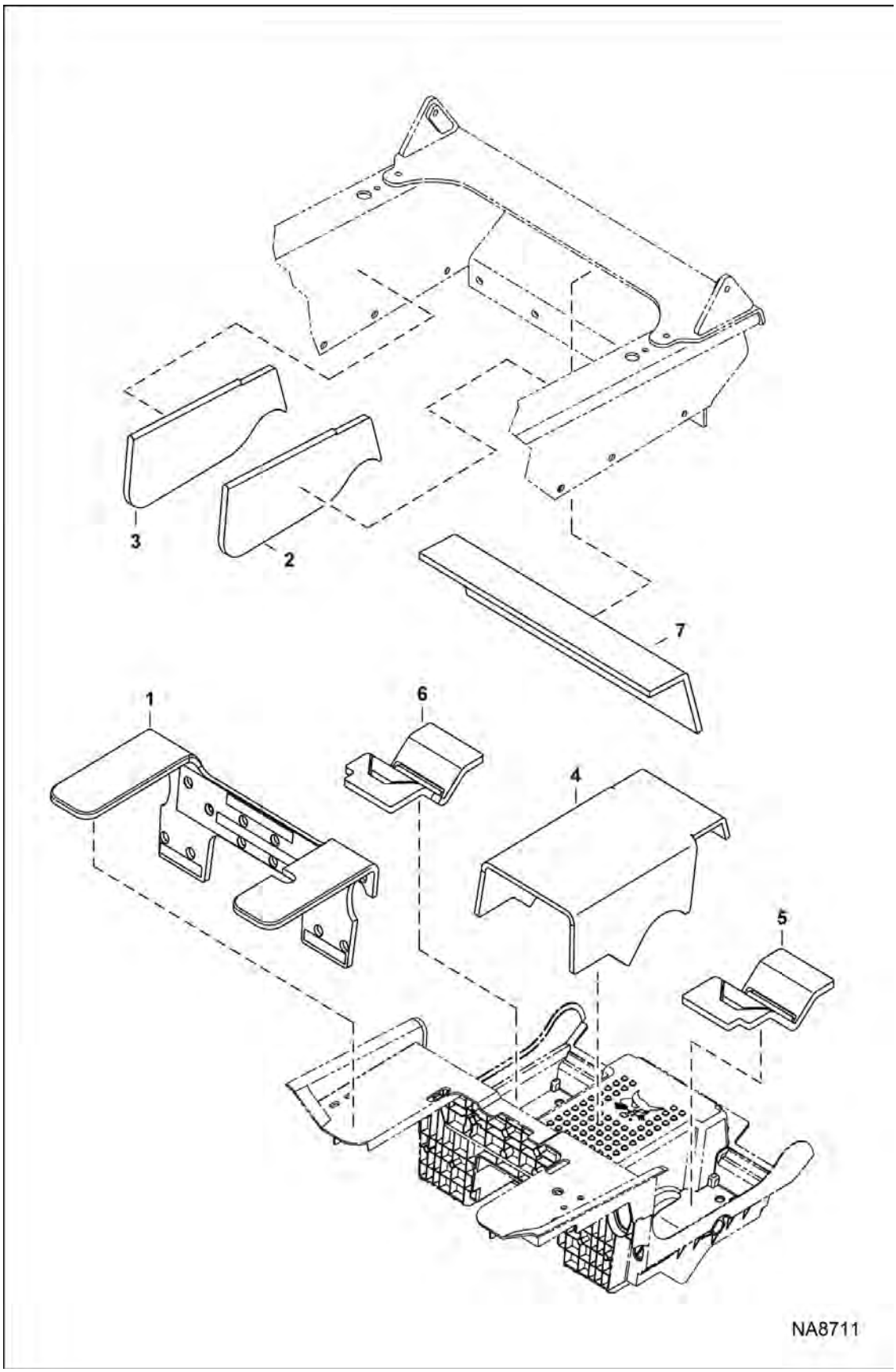

Illustration NA8711

SOUND/NOISE REDUCTION (Cont'd)

(Manual Controls)

Ref No	Part Number	Description	Remarks	Serial Number	Qty
1	7234201	INSULATION	manual controls - NA		1
1	7303243	INSULATION	manual controls - EMEA		1
2	7234202	INSULATION	RH panel - NA		1
2	7303244	INSULATION	RH panel - EMEA		1
3	7234203	INSULATION	LH panel - NA		1
3	7303245	INSULATION	LH panel - EMEA		1
4	7234196	INSULATION	trans ssl - NA		1
4	7303242	INSULATION	trans ssl - EMEA		1
5	7234927	INSULATION	RH pedal - NA		1
5	7303246	INSULATION	RH pedal - EMEA		1
6	7234928	INSULATION	LH pedal - NA		1
6	7303247	INSULATION	LH pedal - EMEA		1
7	7195586	INSULATION, CROSSMEMBER	NA		1
7	7303241	INSULATION, CROSSMEMBER	EMEA		1

SOUND/NOISE REDUCTION
(Selectable Joystick Controls)

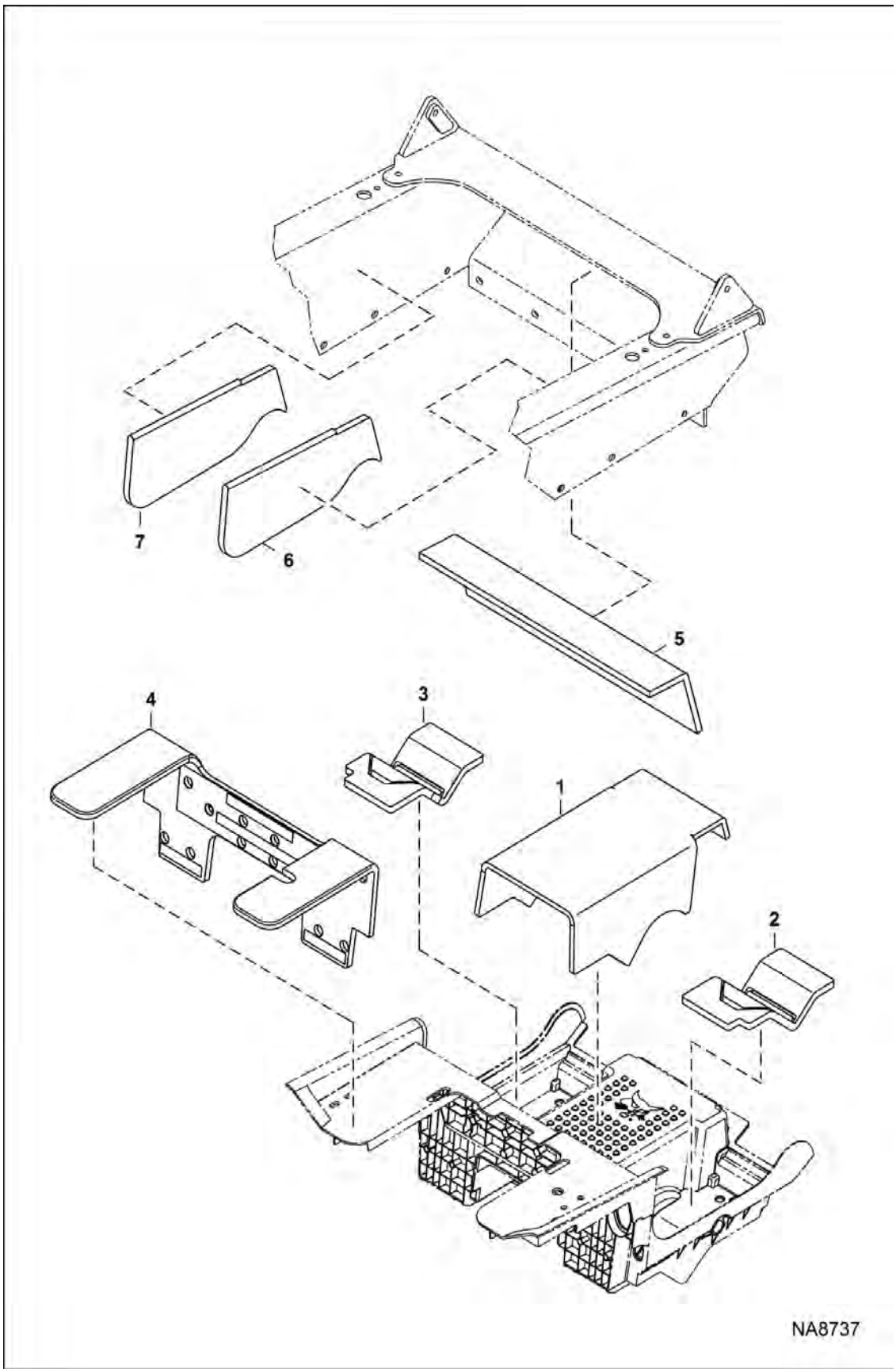

Illustration NA8737

SOUND/NOISE REDUCTION (Cont'd)

(Selectable Joystick Controls)

Ref No	Part Number	Description	Remarks	Serial Number	Qty
1	7234196	INSULATION	trans ssl - NA		1
1	7303242	INSULATION	trans ssl - EMEA		1
2	7234927	INSULATION	RH pedal - NA		1
2	7303246	INSULATION	RH pedal - EMEA		1
3	7234928	INSULATION	LH pedal - NA		1
3	7303247	INSULATION	LH pedal - EMEA		1
4	7235547	INSULATION	str panel - NA		1
4	7303248	INSULATION	str panel - EMEA		1
5	7195586	INSULATION, CROSSMEMBER	NA		1
5	7303241	INSULATION, CROSSMEMBER	EMEA		1
6	7234202	INSULATION	RH panel - NA		1
6	7303244	INSULATION	RH panel - EMEA		1
7	7234203	INSULATION	LH panel - NA		1
7	7303245	INSULATION	LH panel - EMEA		1

SOUND/NOISE REDUCTION OPTION
(Bystander) (Hyd Muffler)

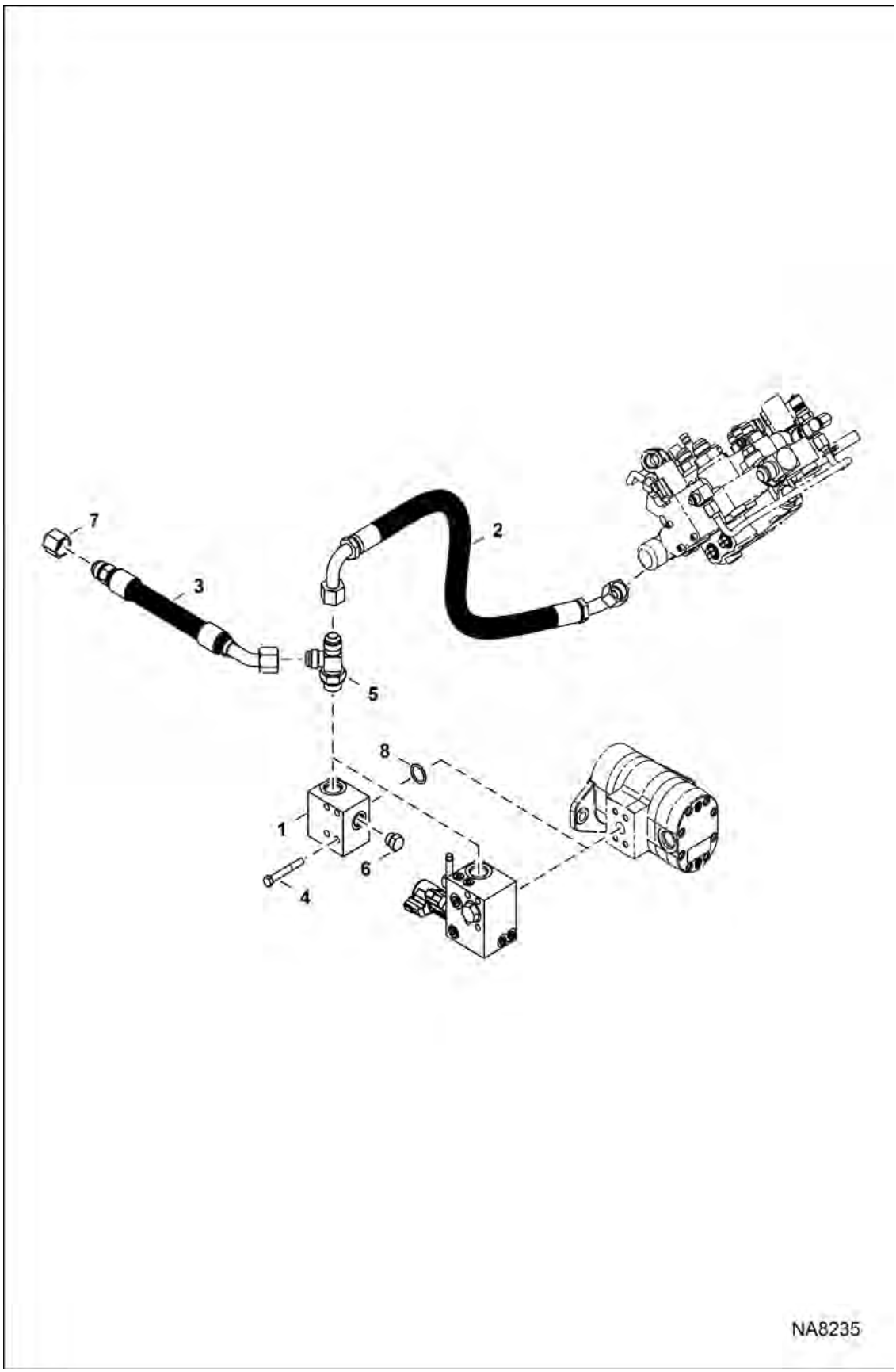

SOUND/NOISE REDUCTION OPTION (Cont'd)

(Bystander) (Hyd Muffler)

Ref No	Part Number	Description	Remarks	Serial Number	Qty
1	7226207	MANIFOLD, OUTLET PUMP			1
2	7233394	HOSE, HYD			1
3	7227584	HOSE, HYD			1
4	17C644	BOLT			4
5	21KB1212	FITTING, HYD TEE			1
6	24K6	FITTING			1
7	36K8	CAP			1
8	55K214	O-RING			1

SOUND/NOISE REDUCTION OPTION
(Bystander) (Insulation)

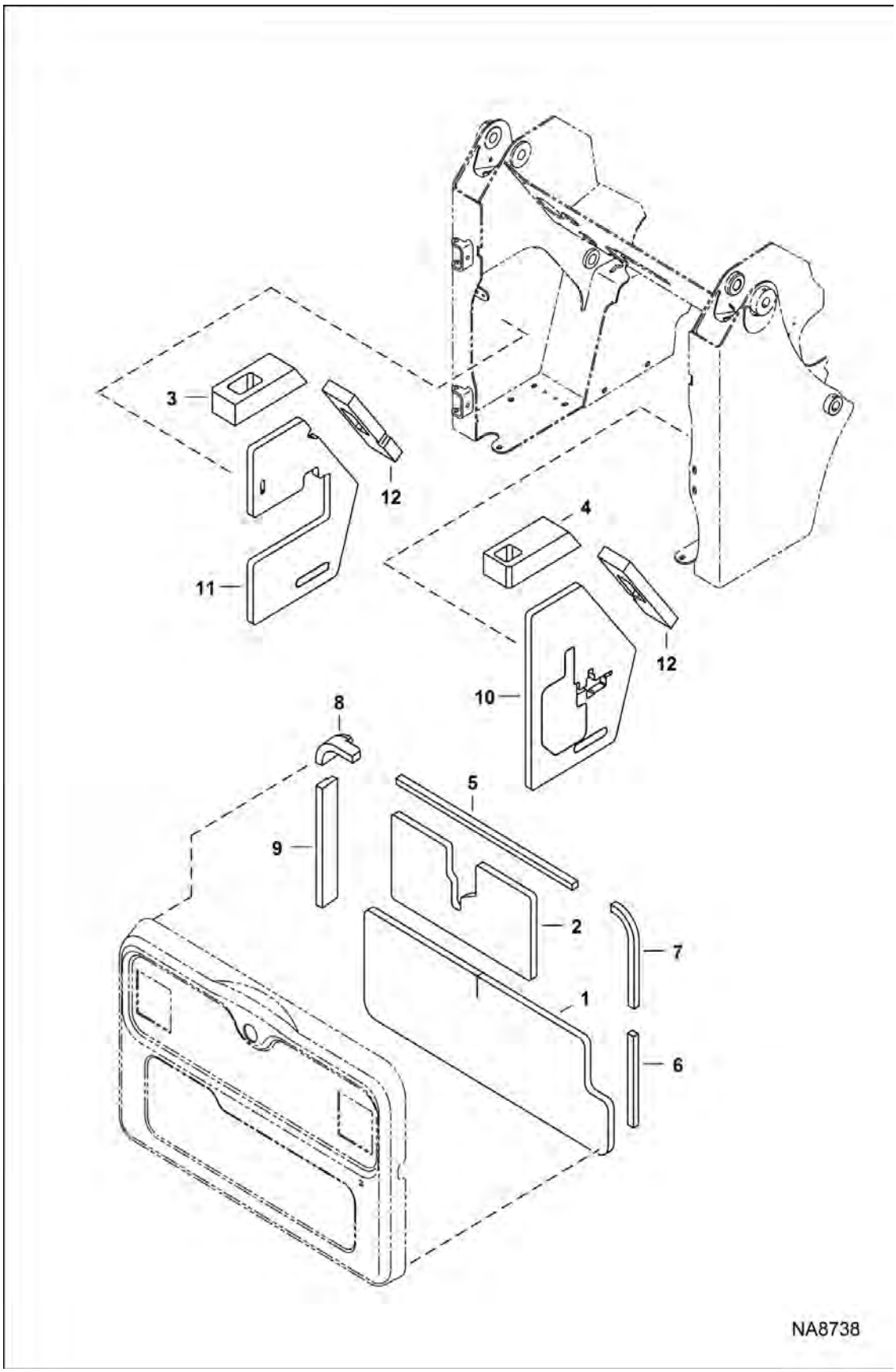

SOUND/NOISE REDUCTION OPTION (Cont'd)

(Bystander) (Insulation)

Ref No	Part Number	Description	Remarks	Serial Number	Qty
1	7233340	INSULATION, DOOR REAR	lower		1
2	7233339	INSULATION, DOOR REAR	upper		1
3	7224653	INSULATION, BLOCK			1
4	7224654	INSULATION, BLOCK			1
5		INSULATION	See Illustration REAR DOOR / NA8485 - Was 7233665 [B]		1
6	7199010	INSULATION			1
7	7243894	INSULATION, TAILGATE RH TOP			1
8	7245619	INSULATION, TAILGATE LH TOP			1
9	7198932	INSULATION			1
10	7217259	INSULATION, UPRIGHT			1
11	7217260	INSULATION, UPRIGHT			1
12	7224655	INSULATION, BLOCK			2

SOUND/NOISE REDUCTION OPTION
(Operator Ear)

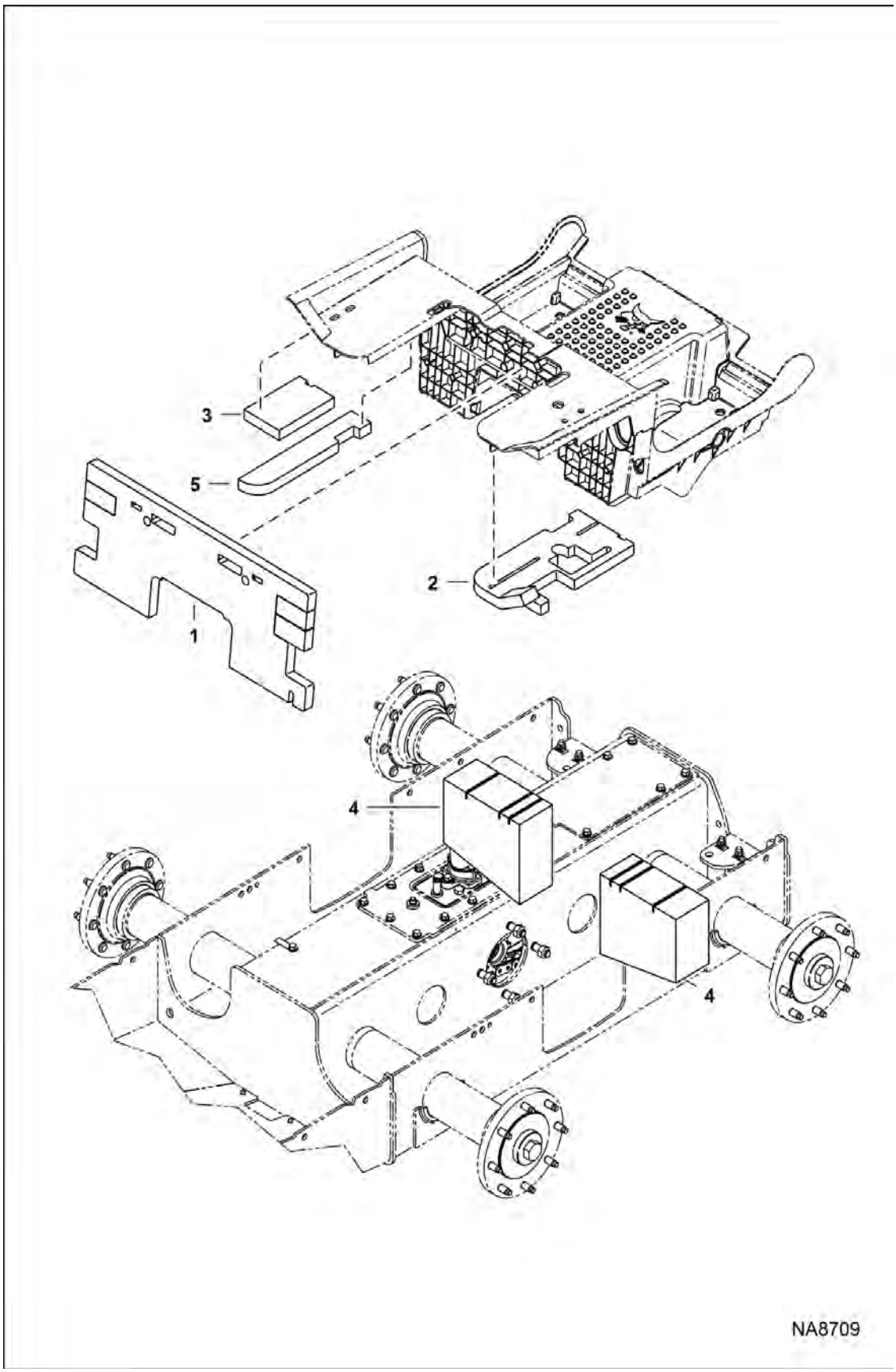

Illustration NA8709

SOUND/NOISE REDUCTION OPTION (Cont'd)

(Operator Ear)

Ref No	Part Number	Description	Remarks	Serial Number	Qty
1	7224767	INSULATION			1
2	7224766	INSULATION			1
3	7224765	INSULATION			1
4	7224656	INSULATION TRANS SSL			2
5	7238416	INSULATION			1

SPRING DAMPER KIT

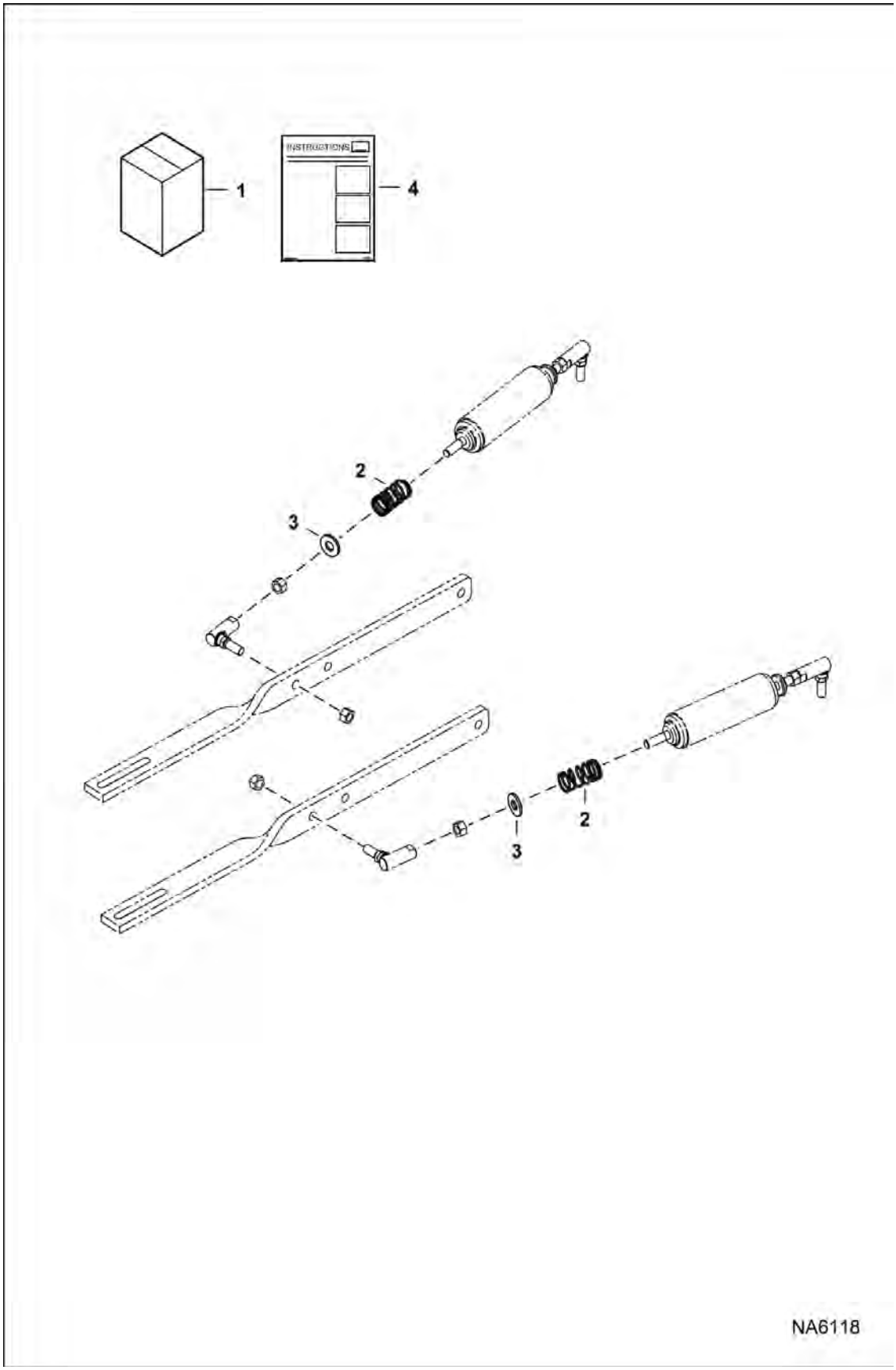

SPRING DAMPER KIT (Cont'd)

Ref No	Part Number	Description	Remarks	Serial Number	Qty
1	7204073	KIT, SPRING DAMPER	Ref. 2-4		1
2	6690564	SPRING COMPRESSION			2
3	25E18	WASHER			2
4	6990138ENUS	INSTRUCTIONS	Was 6990138 [A]		1

STEERING DAMPENER KIT
(Dual)

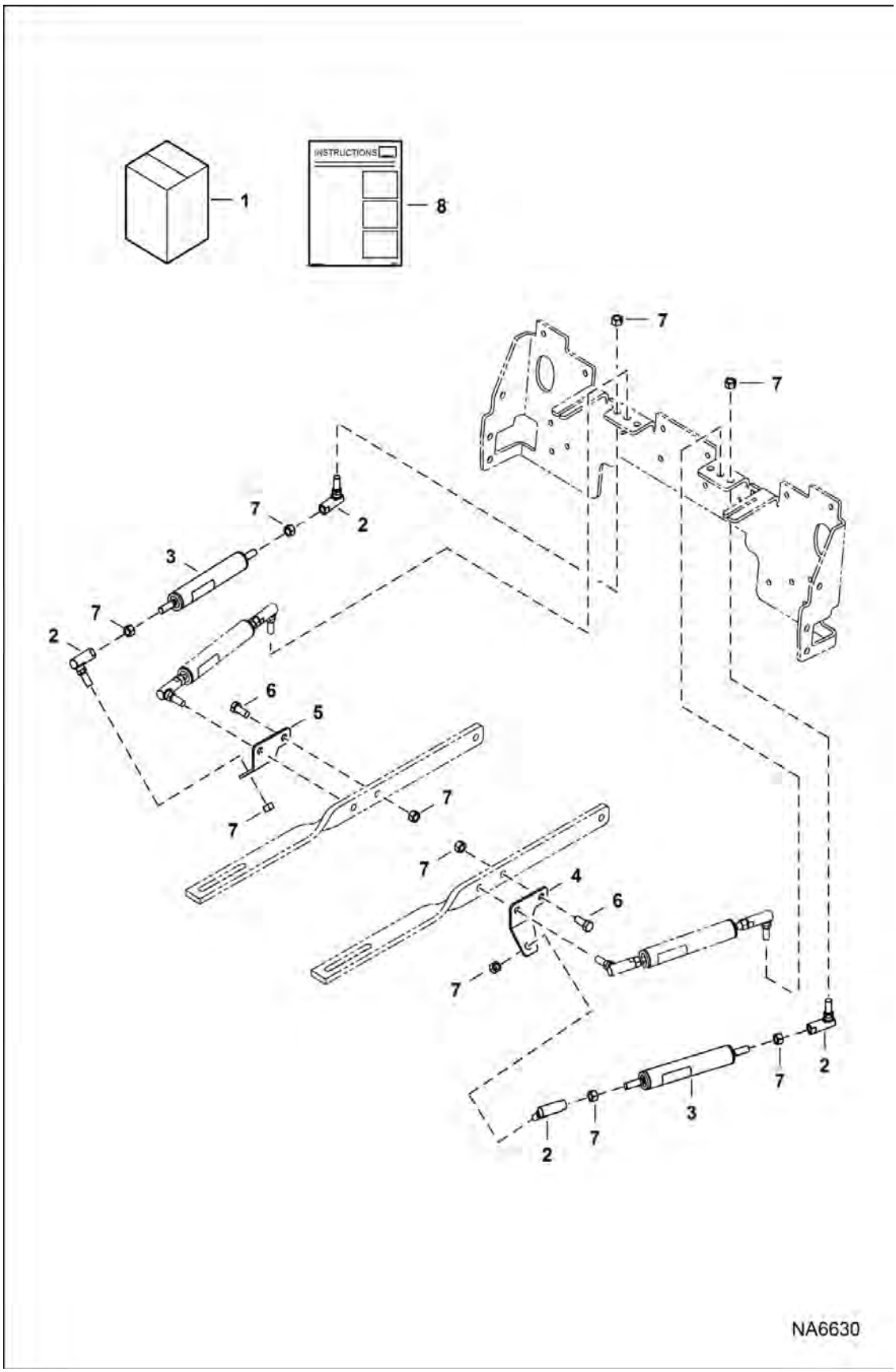

STEERING DAMPENER KIT (Cont'd)

(Dual)

Ref No	Part Number	Description	Remarks	Serial Number	Qty
1	7169070	KIT, DAMPER STEERING	Ref. 2-8		1
2	6599744	BALL, JOINT			4
3	7188108	GAS SPRING			2
4	7153075	BRACKET, DAMPER			1
5	7153076	BRACKET, DAMPER			1
6	2C614	SCREW			2
7	62D6	NUT 5			10
8	6987251ENUS	INSTRUCTIONS	Was 6987251 [A]		1

STEERING LINK ISOLATOR KIT

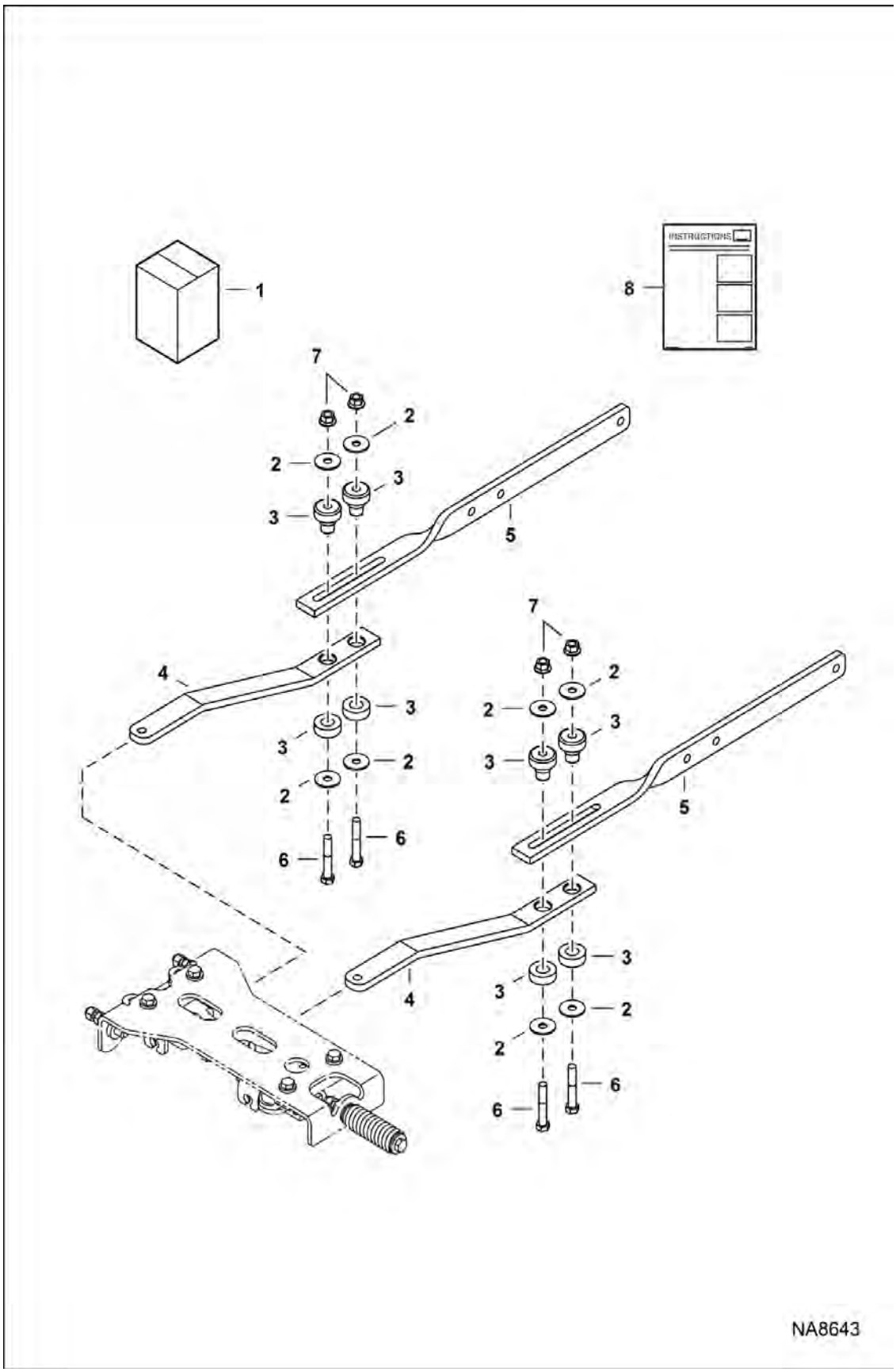

STEERING LINK ISOLATOR KIT (Cont'd)

Ref No	Part Number	Description	Remarks	Serial Number	Qty
1	7242844	KIT, STEERING LINK ISOLATOR	Ref. 2-7		1
2	6737388	WASHER			8
3	7169932	MOUNT			4
4	7243522	LINK, CENTERING			2
5	7243523	LINK, STEERING			2
6	17C640	BOLT	Was 17C636 [B]		4
7	83D6	NUT 5			4
8	7249362ENUS	INSTRUCTIONS	Was 7249362		1

STROBE LIGHT

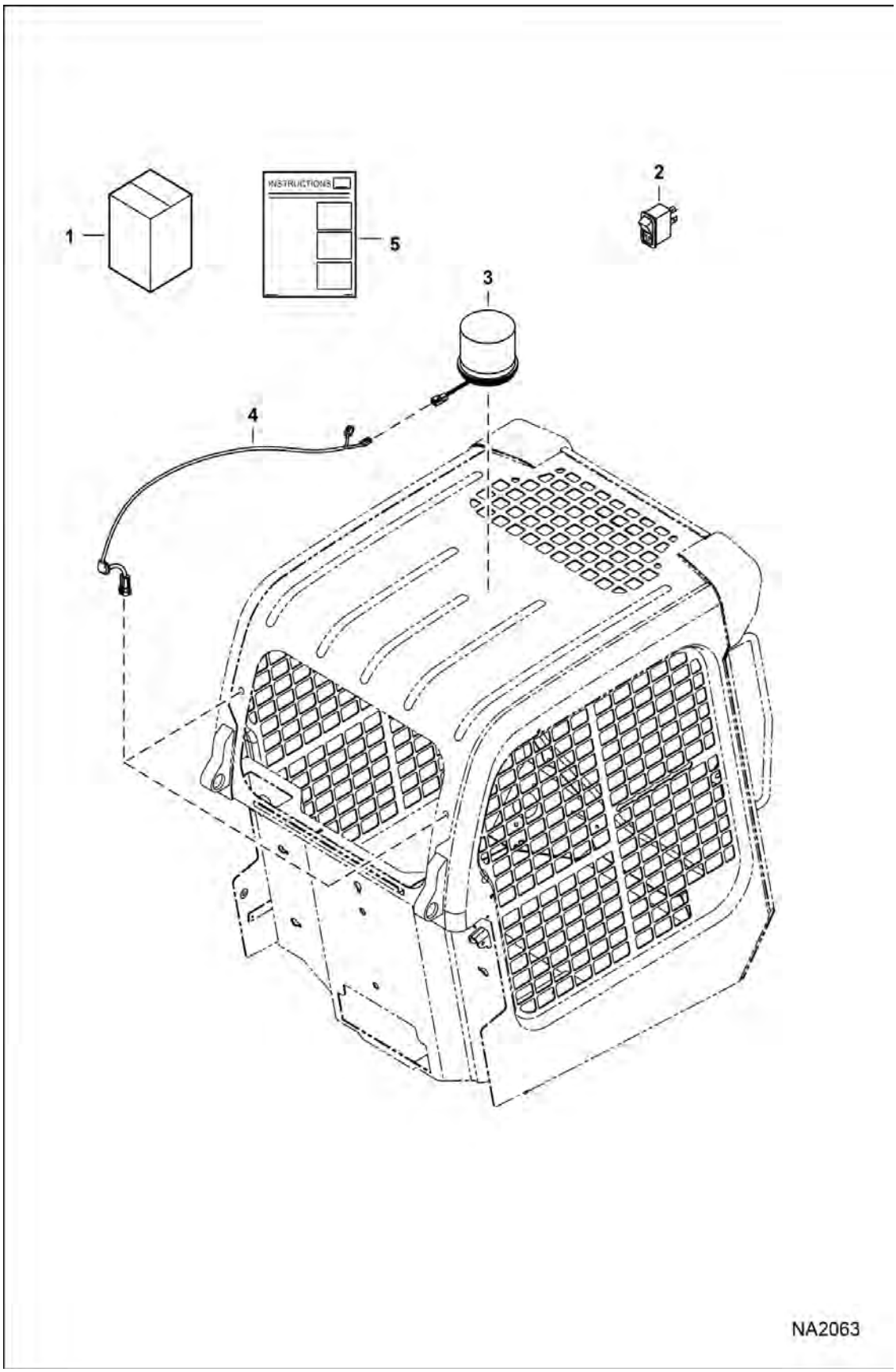

STROBE LIGHT (Cont'd)

Ref No	Part Number	Description	Remarks	Serial Number	Qty
1	7129301	KIT, STROBE LIGHT	Ref. 2-5 - if equipped with standard cab harness Also Order 7169130 harness & 6987252 instructions		1
2	6668816	SWITCH			1
3	7241140	LIGHT, STROBE	Was 7219903 [A]		1
3	7256347	LENS, REFLECTIVE	Was 6697797 [A]		1
4	6718872	HARNESS			1
5	6987225ENUS	INSTRUCTIONS	Was 6987225 [A]		1

TILT CYLINDER TUBELINE SHIELD

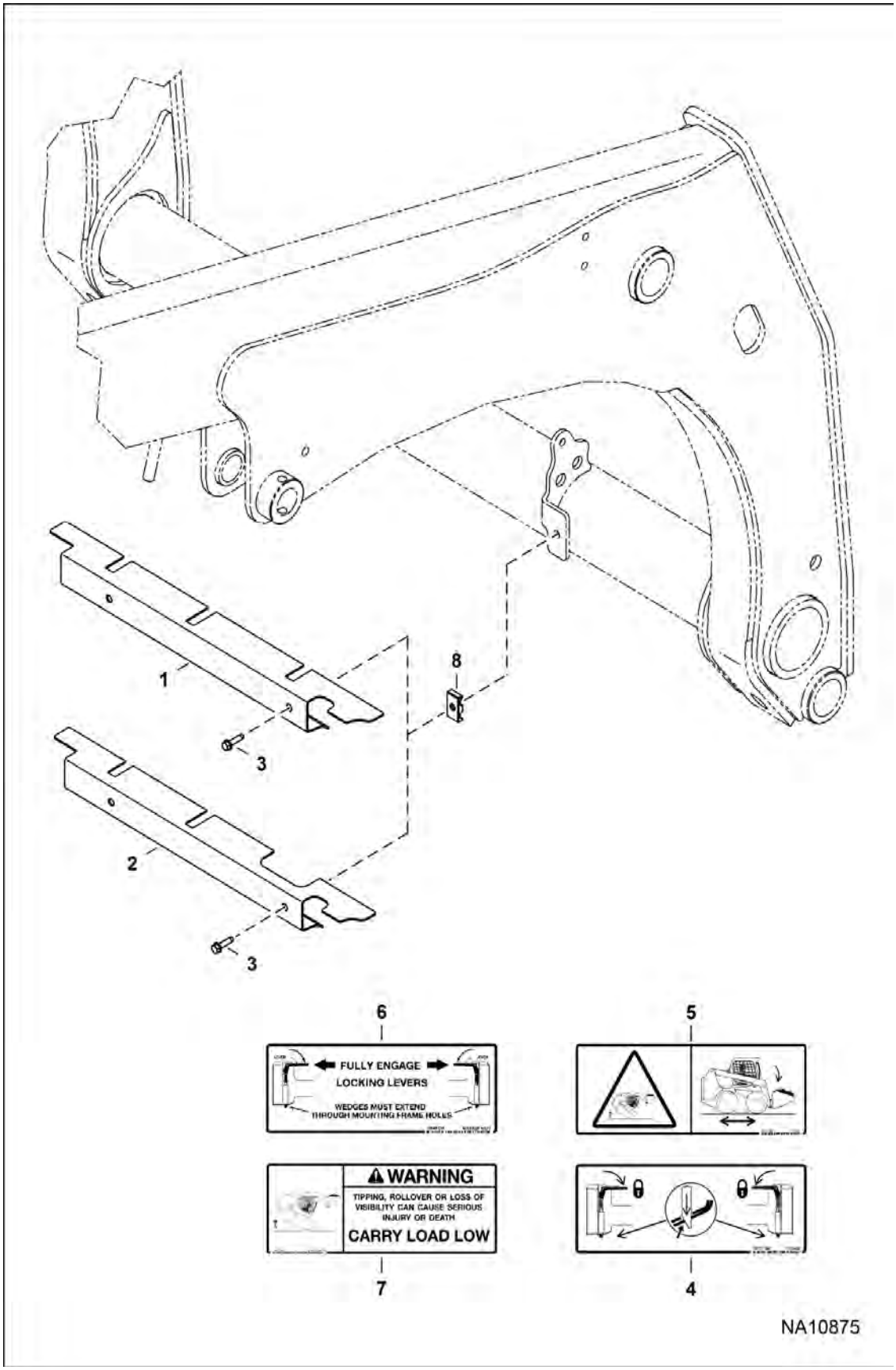

TILT CYLINDER TUBELINE SHIELD (Cont'd)

Ref No	Part Number	Description	Remarks	Serial Number	Qty
1		SHIELD	NLA - Order 7273609 - Also Order (2) of Ref. 8 - Was 7266265 [A]	B1E611001 - B1E613770	1
1	7273609	SHIELD	Use W/Ref. 8	B1E613771 & Above	1
2		SHIELD	NLA - Use W/Power Bob-Tach - Order 7273609 shield - Also Order (2) of Ref. 8 - Was 7266281 [A]	B1E611001 - B1E613770	1
2	7273610	SHIELD	Use W/ Power Bob-Tach - Use W/Ref. 8	B1E613771 & Above	1
3	84G3724	BOLT			2
4	7173403	DECAL, OPERATION			1
5	7168037	DECAL, WARNING			1
6	6561383	DECAL, OPERATION 5			1
7	7167993	DECAL, WARNING			1
8	6701893	CLAMP			2

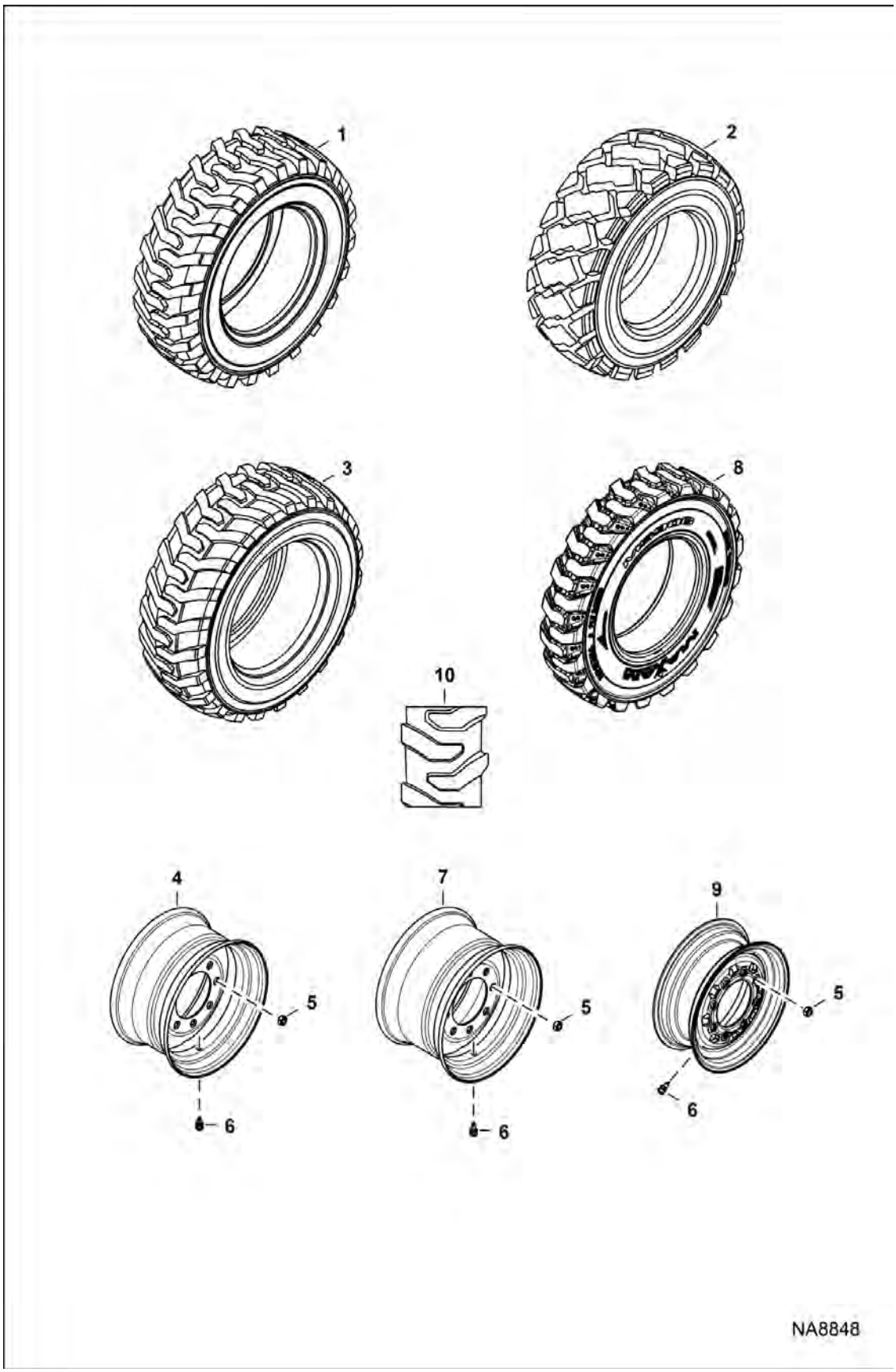
1
2
3
8
10
4
7
9
5
6
5
6
5
6
NA8848

TIRES & RIMS (Cont'd)

(Pneumatic Tire)

Ref No	Part Number	Description	Remarks	Serial Number	Qty
1	7311014	TIRE STANDARD DUTY 10X16.5 10PLY	factory option - Bobcat factory option - Bobcat - Was 6729896 [A]		4
1	7305714EF	TIRE STANDARD DUTY 10X16.5 10PLY			4
1	7311014	TIRE STANDARD DUTY 10X16.5 10PLY	factory option - Bobcat		4
2	6730106	TIRE, SEVERE DUTY 31X10X16.5, 10 PLY	factory option - Bobcat		4
3	7322705	TIRE HEAVY DUTY 10X16.5 10PLY	factory option - Bobcat - Was 6729900 [A]		4
3	7305713EF	TIRE HEAVY DUTY 10X16.5 10PLY			4
3	6987705	TIRE, HEAVY DUTY 10 X 16.5, 10 PLY	factory option - Bobcat		4
3	7305712EF	TIRE ALL TERRAIN 10X16.5 10 PLY			4
3	7322705	TIRE HEAVY DUTY 10X16.5 10PLY			4
4	7247451	WHEEL, RIM 16.5X8.25	Use w/Ref. 1 & 2		4
4	7234460	WHEEL, RIM	Contact your Local Dealer for Bobcat Technical Information BTI197ldr Use W/Ref. 3 (6987705 tire)		4
5	6564669	NUT, 10	wheel		32
6	1614765	VALVE STEM, TIRE	Tubeless tire		4
7	7208252	WHEEL, RIM 16.5X8.25	Use W/Ref. 3 for 276 mm (10.8") wide tire		4
8	7245025	TIRE 7 X 150 HD			4
9	7267717	RIM	offset- Use W/Ref. 8 for 197mm (7.76") wide tire		4
10	6988500	TIRE, EARTHFORCE 10X16.5 - 8 PLY			4
10	7024212	TIRE HEAVY DUTY 10X16.5 12 PLY			4
10	6988143	TIRE NON-DIRECTION AL 10X16.5-12 PLY			4

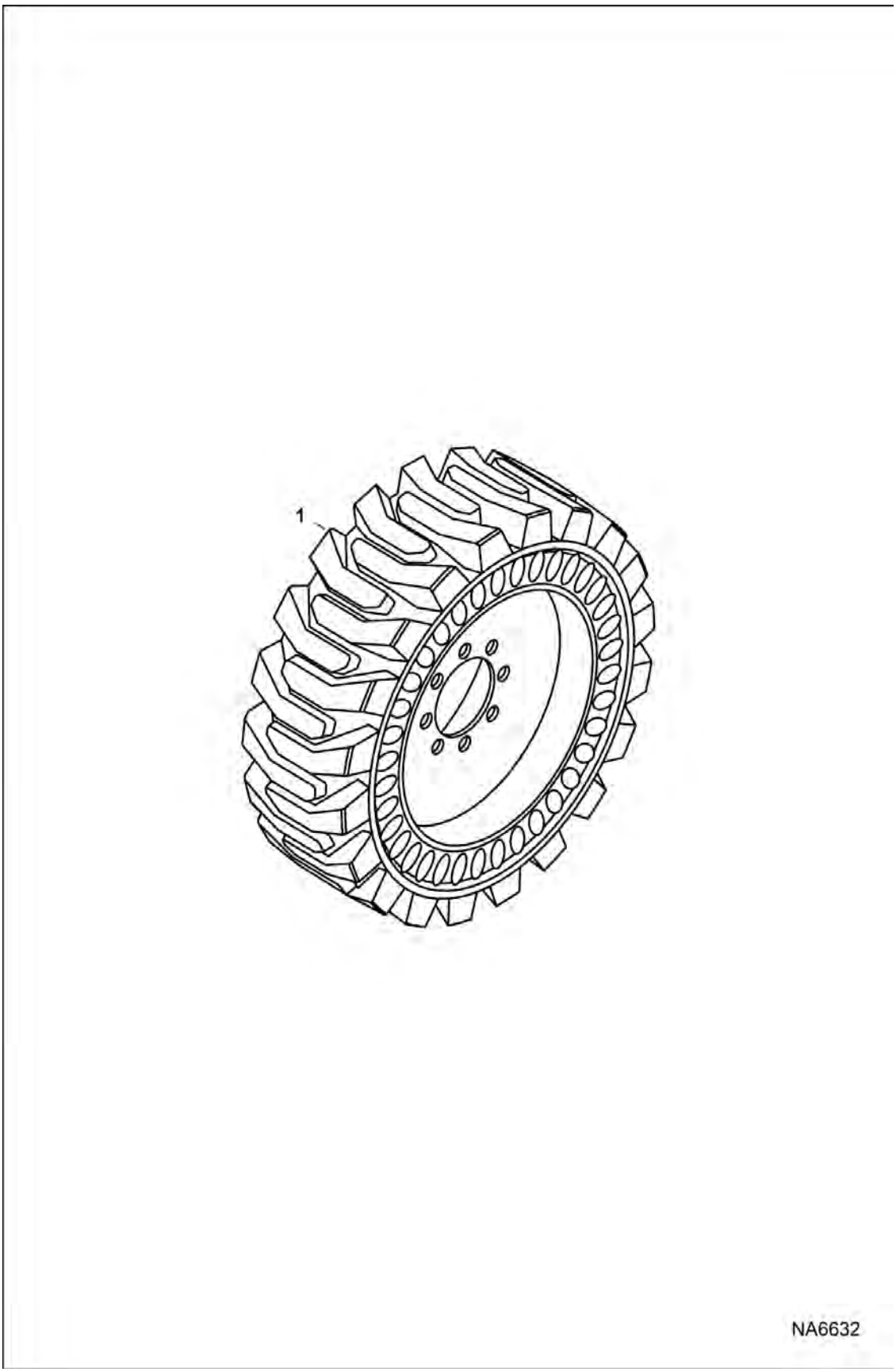

Illustration NA6632

TIRES & RIMS (Cont'd)
(Solid Tire)

Ref No	Part Number	Description	Remarks	Serial Number	Qty
1		TIRE, SOLID FLEX LH	NLA - factory option - LH - 10 x 16.5 - 203 mm (8") circle bolt dia - charcoal rim - Order 7296992 - Was 7228250 [A]		2
1		TIRE, SOLID FLEX RH	NLA - factory option - RH - 10 x 16.5 - 203 mm (8") circle bolt dia - charcoal rim - Order 7296993 - Was 7228251 [A]		2
1	6903766	TIRE, SOLID FLEX 31X6X10 LH	factory option - LH - 10 x 16.5 - 203 mm (8") circle bolt dia - orange rim		2
1	6903767	TIRE, SOLID FLEX 31X6X10 RH	factory option - RH - 10 x 16.5 - 203 mm (8") circle bolt dia - orange rim		2
1	7296992	TIRE SOLID FLEX 10X16.5 LH	LH – 10 x 16.5 - 203mm (8") circle bolt dia - charcoal rim		2
1	7296993	TIRE SOLID FLEX 10X16.5 RH	RH – 10 x 16.5 - 203mm (8") circle bolt dia - charcoal rim		2
1	7295725EF	TIRE OFFSET LH 10X16.5 (30X10-16)			2
1	7295726EF	TIRE OFFSET RH 10X16.5 (30X10-16)			2
1	7295717EF	TIRE, FLEX LH 10X16.5(31X10.5-20) EF			2
1	7295718EF	TIRE, FLEX RH 10X16.5(31X10.5-20) EF			2
1	7295719EF	TIRE, W/O RIM 10X16.5(31X10.5-20) EF			4
1	7246212	TIRE SOLID FLEX 10 X 16.5 LH 8	LH - 10 X 16.5 - 203mm (8") circle bolt dia - orange rim		2
1	7246213	TIRE SOLID FLEX 10 X 16.5 RH 8	RH - 10 X 16.5 - 203mm (8") circle bolt dia - orange rim		2

VINYL CAB KIT

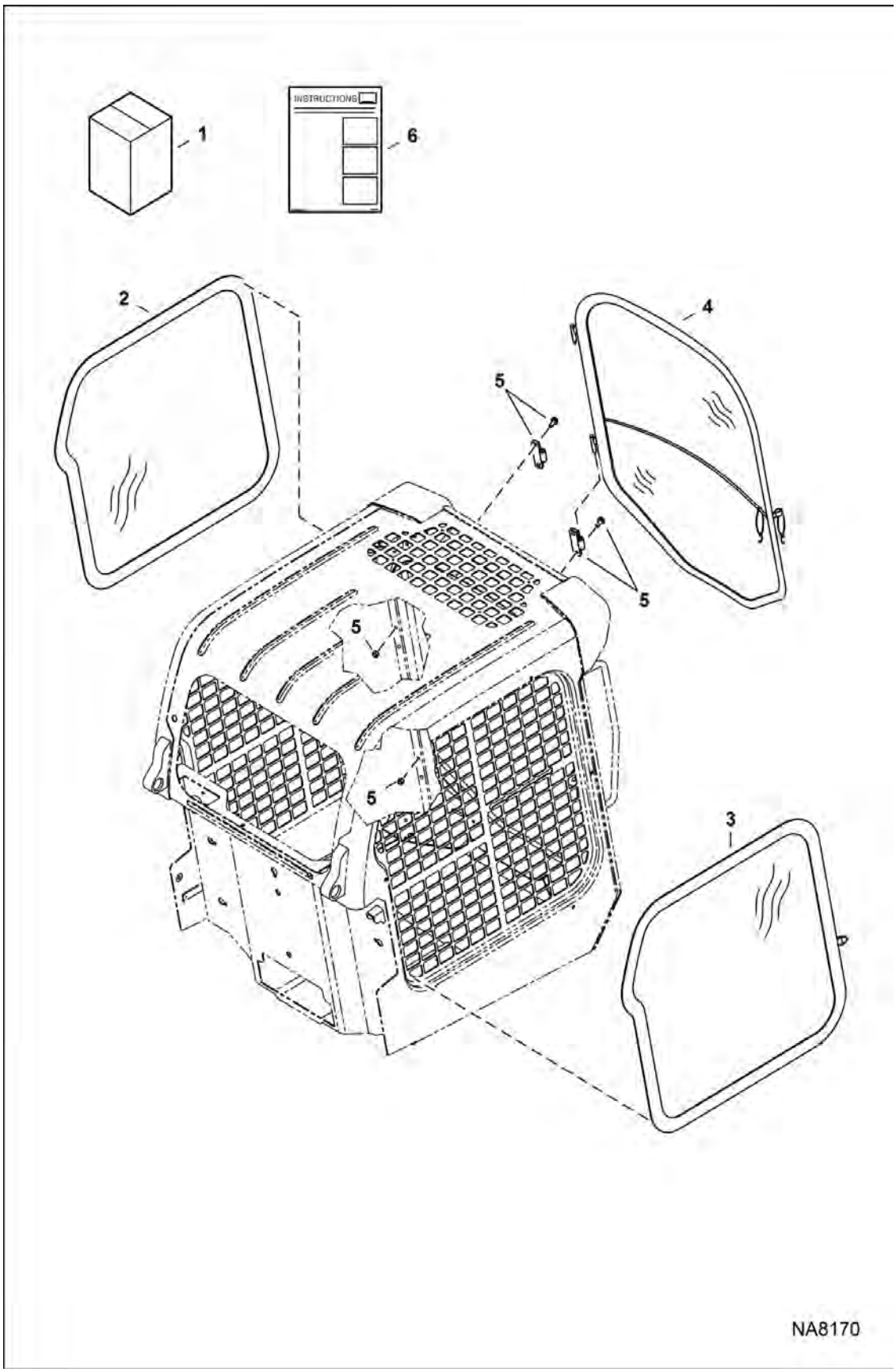

VINYL CAB KIT (Cont'd)

Ref No	Part Number	Description	Remarks	Serial Number	Qty
1	6989239	ENCLOSURE, CAB VINYL			1
2	7030083	WINDOW, CAB VINYL LH			1
3	7030084	WINDOW, CAB VINYL RH			1
4	7030085	DOOR, VINYL			1
5	7030086	KIT, HINGE			1
6	6990376	INSTRUCTIONS			1

WASHER TENSIONER KIT

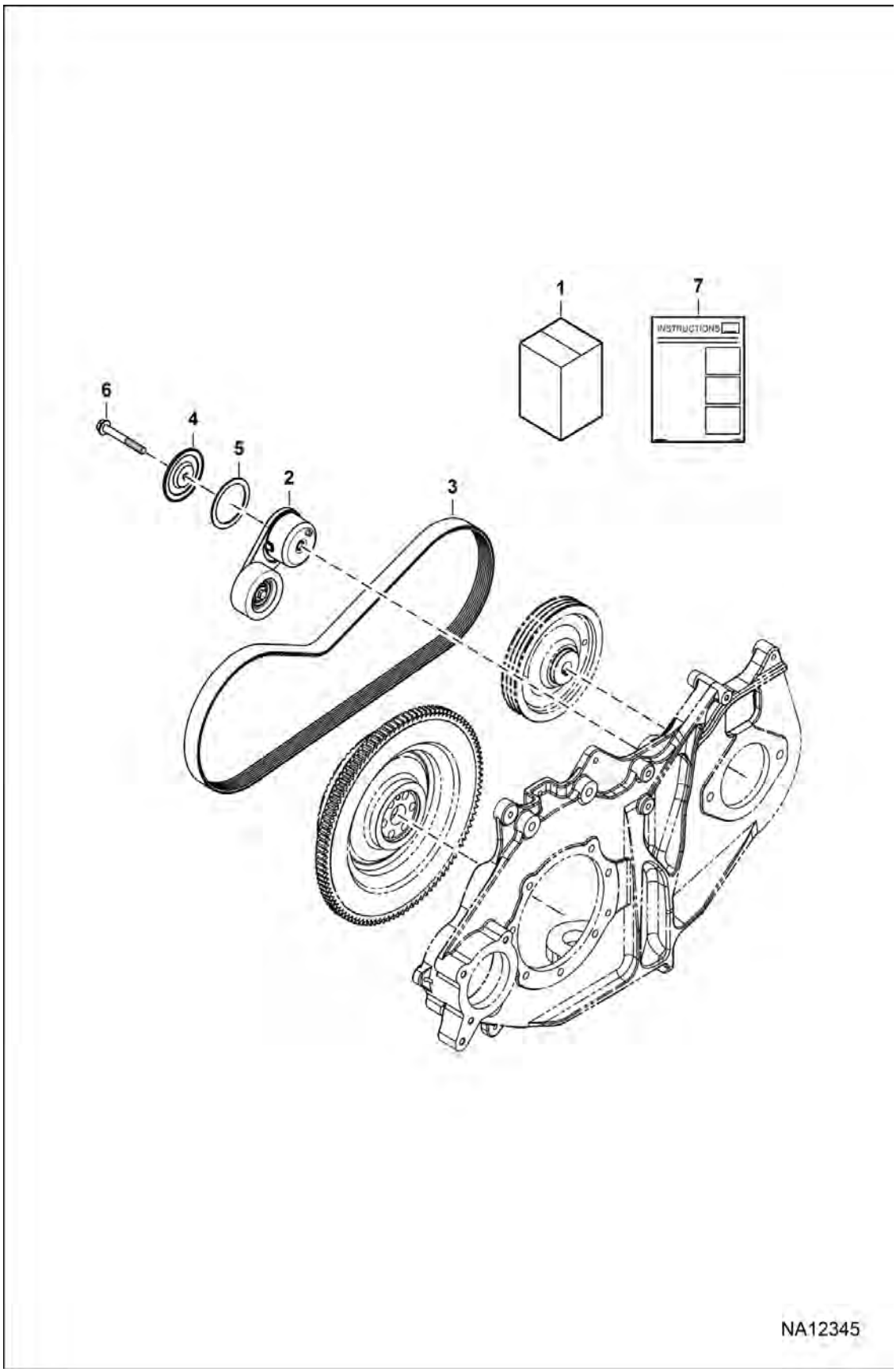

WASHER TENSIONER KIT (Cont'd)

Ref No	Part Number	Description	Remarks	Serial Number	Qty
1	7303126	KIT, TENSIONER			1
2	6689611	IDLER MICRO-V			1
3	7286547	BELT, DRIVE			1
4	7295933	PLATE, TENSIONER			1
5	7295934	WASHER			1
6	59CM1080	SCREW			1
7	7303127ENUS	INSTRUCTIONS	Was 7303127 [A]		1

WHITE DECAL KIT

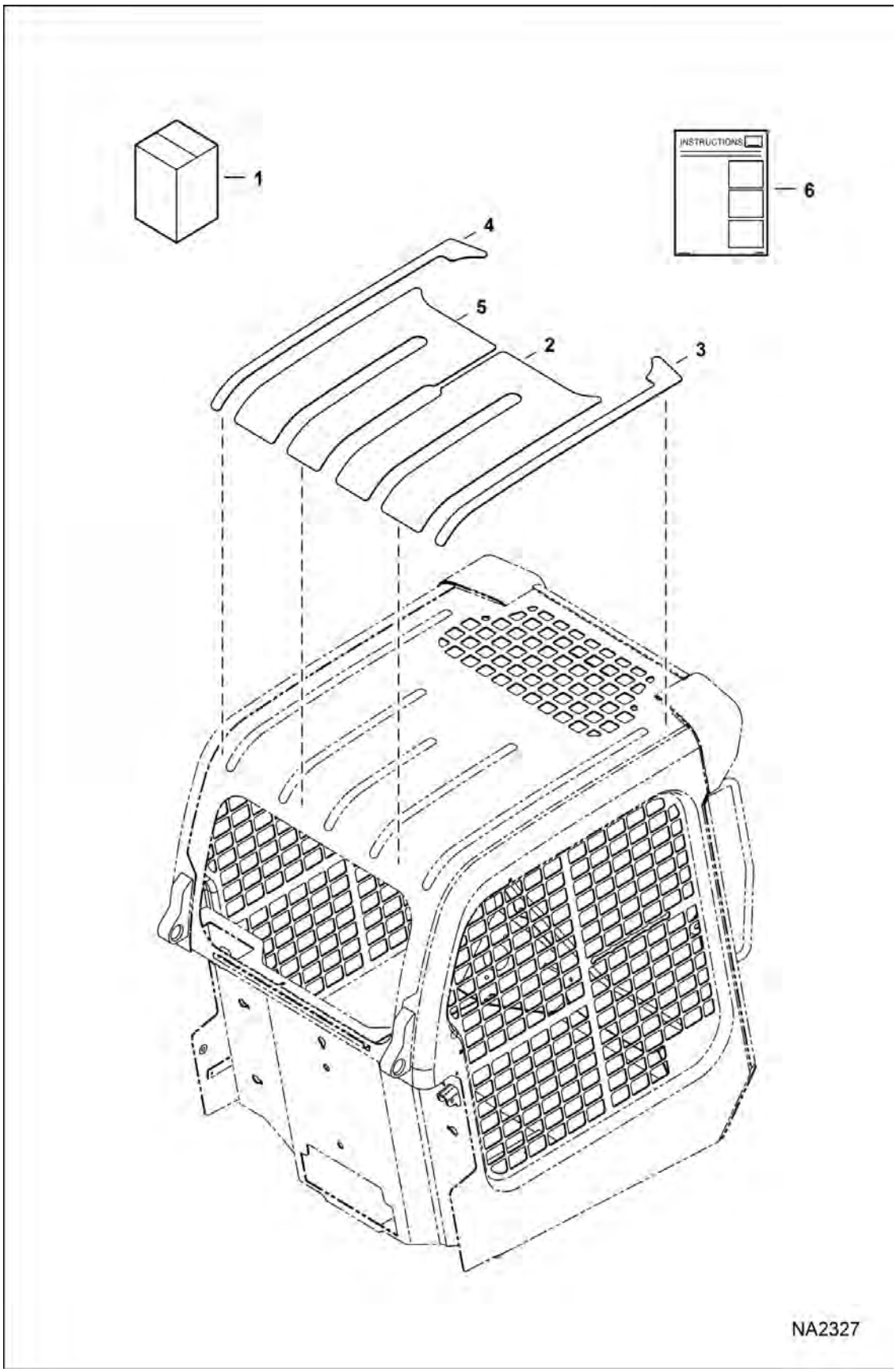

WHITE DECAL KIT (Cont'd)

Ref No	Part Number	Description	Remarks	Serial Number	Qty
1	7172903	KIT, DECAL WHITE	Ref. 2-6		1
2	7140927	DECAL			1
3	7141375	DECAL			1
4	7174328	DECAL			1
5	7174537	DECAL			1
6	6987349ENUS	INSTRUCTIONS	Was 6987349 [A]		1

NUMERICAL INDEX

Part Number	Description	Was	Code	Page
100333SUB	DUCT, AIR			29, 31, 365, 401
100334SUB	DUCT, AIR			29, 31, 365, 401
100644SUB	ASSY DOOR			317, 323
10C410	BOLT			245, 379, 381
10C512	BOLT			219, 223
10C524	BOLT			199, 203
10C612	BOLT	31C612	B	173, 177, 243, 367
10C616	BOLT 10			33, 35, 219, 223, 367, 389, 487, 491
10C620	BOLT			389
10C816	BOLT			311, 317, 323, 329
10H25	FITTING, GREASE 5			45, 69, 71, 73, 75
10H35	FITTING, GREASE 10			47, 443, 445, 447
10J10	BALL			451
10J13	BALL			265
10K5	TEE			459
11H15	FITTING10			45, 47
12D10	NUT			379
12H15	FITTING, GREASE 5			45, 73, 75
12H25	FITTING			453
1306637	CLIP			77
1320075	PIN, COTTER			425
13K5	TEE			475, 477
14D10	NUT HEX MACH SCREW			243, 245
14J0715	PIN			169, 171
15G624	SCREW			127
15KB0606	FITTING, HYD CONNECTOR			63, 65, 115, 453, 477
15KB0808	FITTING, HYD CONNECTOR			237, 453, 477
15KB0810	FITTING, HYD CONNECTOR			115
15KB0812	FITTING, HYD CONNECTOR			117, 165
15KB1008	FITTING, HYD CONNECTOR			55, 309
15KB1010	FITTING, HYD CONNECTOR			55, 59, 309
15KB1016	FITTING, HYD CONNECTOR			65
15KB1212	FITTING, HYD CONNECTOR			109, 123, 453
1614765	VALVE STEM, TIRE			537
16F2	PLUG			255
16F6	PLUG			225
16KB1212	FITTING, HYD CONNECTOR			459
17C10112	BOLT			45
17C1088	BOLT	17C1056	B	17
17C408	BOLT			243, 245
17C412	BOLT 5			53

Code for disposition of old part number
A -- Use up
B -- Use on other application (See PNI)
C -- File PDR Report with Bobcat Parts Sales
D -- Part Number Error

NUMERICAL INDEX (Cont'd)

Part Number	Description	Was	Code	Page
17C428	BOLT			63, 311, 317, 323, 329
17C510	BOLT			243, 245, 337, 467
17C540	BOLT			423
17C612	BOLT 5			127, 207, 453
17C616	BOLT 5			77, 127, 413
17C620	BOLT			77, 109, 127, 245
17C624	BOLT 5			207, 389
17C626	BOLT			77
17C628	BOLT			77, 127
17C636	BOLT			45
17C640	BOLT			33, 35, 65, 349, 459, 531
17C644	BOLT			45, 109, 459, 515, 521
17C652	BOLT			47, 453
17C660	BOLT			45, 423
17C680	BOLT			127
17C716	BOLT			493
17C820	BOLT 5			43, 473
17C824	BOLT 5			473
17C832	BOLT			229, 233
17C844	BOLT			63
17EM100	WASHER			453
17EM120	WASHER			55, 59, 65
17KB0606	FITTING			63, 459, 475
17KB0808	FITTING, HYD ELBOW			115, 117
17KB0810	FITTING, HYD ELBOW			115, 117, 165
17KB0812	FITTING, HYD ELBOW			115
17KB1212	FITTING, HYD ELBOW			109, 459
18C1636	SCREW HEX HD GR8			51
18EM1224	WASHER HARDENED PLN			311, 317, 323, 329
18KB0606	FITTING, HYD ELBOW			63
18KB0810	FITTING, HYD ELBOW			55, 115, 309
18KB1010	FITTING, HYD ELBOW			55, 59, 309
18KB1212	FITTING, HYD ELBOW			459
19J12	CLAMP			109
19KB0606	FITTING, HYD TEE			79, 85, 99, 103
1C1056	SCREW HEX CAP			21
1C408	BOLT			463
1C416	BOLT			17, 21
1C512	BOLT			371
1C616	BOLT			397
1C628	BOLT			475
1C656	BOLT			45
1C716	SCREW HEX CAP			37
1CM616	SCREW HEX CAP	4CM616	A	281, 285
1CM640	SCREW HEX CAP			311, 317, 323, 329
1CM8100	SCREW HEX CAP			237
1CM814	BOLT	4CM814	A	283
1CM818	BOLT			261

Code for disposition of old part number
A -- Use up
B -- Use on other application (See PNI)
C -- File PDR Report with Bobcat Parts Sales
D -- Part Number Error

NUMERICAL INDEX (Cont'd)

Part Number	Description	Was	Code	Page
1CM830	SCREW			199, 203
1CM835	BOLT			269
1CM880	SCREW HEX HD 8.8			237
1DM6	NUT			237, 243, 245, 289
1DM8	NUT			367
1EM80	WASHER PLAIN			271, 273, 367
1F316	PIN			219, 223
1F416	PIN			165
21JM510	PIN			169, 171
21KB0810	FITTING, HYD TEE			475
21KB1212	FITTING, HYD TEE			109, 515, 521
225855	SEAL, OIL 10			55, 59
24K5	PLUG			63
24K6	FITTING			55, 109, 309, 459, 515, 521
24K7	PLUG			79, 85, 91, 95, 99, 103
25E11	WASHER			243, 245
25E13	WASHER 5			17, 21, 53, 209, 381
25E14	WSHR			337, 339, 341, 467
25E15	WASHER 5			185, 189
25E17	WASHER 5			165, 219, 223
25E18	WASHER			39, 41, 63, 199, 203, 389, 489, 491, 527
25E19	WASHER			493
25E20	WASHER			473
25E24	WASHER			127
25E25	WASHER 10			199, 203
25G410	CAPSCREW			179, 381
25G510	BOLT			243, 245, 427
25G612	SCREW			373
25G628	SCREW			429
25GT410	SCREW			209
25K20016	O RING 10			79, 85, 91, 95, 99, 103
25K40100	O RING 10			451
26GM6016	BOLT			25, 407
27E10	WASHER			45
28CM825	BOLT CARRIAGE 8.8	35C516	B	239
28CM830	BOLT			239
29CM10110	BOLT			169, 171
29CM1016	SCREW FLANGE HEX CAP			225
29CM1025	SCREW FLGD HEX CAP	53C516		225, 227, 397
29CM1035	SCREW HEX 10MMX35MM			397
29CM612	BOLT, FLANGED			267
29CM620	SCREW FLGD HEX CAP			459
29CM816	SCREW FLGD HEX CAP			453
29CM820	SCREW FLNGE HEX CAP			185, 189, 227, 237

Code for disposition of old part number
A -- Use up
B -- Use on other application (See PNI)
C -- File PDR Report with Bobcat Parts Sales
D -- Part Number Error

NUMERICAL INDEX (Cont'd)

Part Number	Description	Was	Code	Page
29CM835	BOLT			397
29E6	WASHER			487, 491
29G416	BOLT			99, 103, 197, 199, 203, 207
29G444	BOLT			79, 85, 91, 95, 99, 103
2C614	SCREW			529
2DM10	NUT			311, 317, 323
2DM8	NUT			273
30H12	CLIP			397
30H20	CLIP			173, 243
30H23	CLAMP			463
30H31	CLAMP 10			197
30H32	CLIP			397
30H38	CLIP			397
30H42	CLAMP			197
30H45	CLIP			453
30H50	CLAMP			373
30H65	CLIP			459
30H85	CLAMP			239
31C1020	BOLT			475, 477
31C1024	BOLT			423
31C1044	BOLT			425
31C412	BOLT			347
31C420	BOLT 5			173, 177
31C514	BOLT			459
31C612	BOLT			311, 317, 323
31C614	BOLT			459
31C616	SCREW			197, 207, 475
31C620	BOLT			63
31C628	BOLT			459
31C648	BOLT			459
31C680	BOLT			459
31C716	SCREW			487, 491
31C820	BOLT			13
31C824	BOLT 10			13, 425
31C828	BOLT			13
31C832	BOLT			425
31C836	BOLT			439
31C864	BOLT			237
31H42	CLIP			453
35C410	BOLT 5			173, 177, 191, 193, 297, 299
35C412	BOLT			33, 35, 345
35C512	BOLT			109
35C514	BOLT			477
35C516	BOLT 10			17, 311, 317, 323, 329, 411, 413, 475, 477
35C524	BOLT			411, 413, 441
35C612	BOLT 5			185, 189, 477
35C616	BOLT 5			27, 63, 109, 367, 397
35C632	BOLT			125, 219, 223
35C640	BOLT 10			229, 233

Code for disposition of old part number
A -- Use up
B -- Use on other application (See PNI)
C -- File PDR Report with Bobcat Parts Sales
D -- Part Number Error

NUMERICAL INDEX (Cont'd)

Part Number	Description	Was	Code	Page
35C824	BOLT		B	229, 233
36K5	CAP			79, 85, 91, 95, 99, 103, 169, 171
36K6	CAP			237
36K8	CAP			109, 515, 521
37C1032	BOLT			383
37C412	BOLT			383
37C516	BOLT	10C516	B	179, 185, 191, 193, 297, 299, 463
37C528	BOLT			395
37C620	BOLT			39, 41, 77, 207
37C624	BOLT			243, 245
37C644	BOLT			55, 309
38C608	SCREW			245
38C610	BOLT			311, 317
38C612	BOLT			311, 317, 323
38C616	SCREW			329
38C820	SCREW			43
38C840	BOLT			43
3974037	PIN			255
3974095	GASKET, METAL			255
3974260	SCREW			279
3974267	STUD			267
3974389	PLUG			255
3974390	PLUG			255
3974393	PIN			255
3974394	PIN			255
3974395	PIN			255, 265
3974432	PLUG			271
3974433	PLUG			271
3974514	SPRING 5			273
3974515	RETAINER			273
3974518	CAP			273
3974521	ARM, ROCKER			273
3974524	WASHER			273
3974546	KEY			257, 261
3974547	STOPPER			261
3974577	O-RING			253, 257
3974618	RING, SNAP			283
3974620	CIRCLIP			283
3974626	SHIM			281
3974662	BOLT			287
3974671	NUT			257
3974868	PIN			255
3974871	CONNECTOR			255
3974882	HOOK			271
3974893	SEAT			265
3974894	FLANGE			265
3974971	NUT			289
3974972	GASKET			289
3974996	COVER			283

Code for disposition of old part number
A -- Use up
B -- Use on other application (See PNI)
C -- File PDR Report with Bobcat Parts Sales
D -- Part Number Error

NUMERICAL INDEX (Cont'd)

Part Number	Description	Was	Code	Page
3975337	COLLAR			257
3975441	GEAR, CAMSHAFT			255
3D6	NUT			165, 219, 223
42H52	CLAMP			227, 507
42HC300	CLAMP			227
42HC325	CLAMP			227
42HL91	CLAMP HOSE TYPE MX	5HM20		395
42HS04	CLAMP HOSE TYPE M			239
43C612	BOLT			37, 487, 491, 493
43C616	BOLT			197
43DM6	NUT FLANGED HEX			459
43DM8	NUT FLANGED HEX			185, 189, 227
44H48	CLAMP			397
45C616	BOLT			233
45C620	BOLT			229, 233
45C828	SCREW HEX FLNG W/T			109, 139, 229, 233
45G1006	BOLT			379
45K5	FITTING			453
47C1064	BOLT			45
47C620	BOLT			127
47C820	BOLT			53
47K8	PLUG			141, 145
48C1228	SCREW HEX CAP			51
49C1048	BOLT			425
49C412	BOLT			165, 219, 223
49C624	SCREW			127
4CM1065	BOLT			179
4CM620	BOLT	1CM620	A	265, 289
4CM650	HEX BOLT			255
4CM816	SCREW HEX HD 8.8	1CM816	A	271
4CM820	SCREW HEX HD 8.8	1CM820	A	227
4CM822	BOLT			277
4CM825	BOLT HEX HEAD	1CM825	A	227, 257, 367
4CM828	BOLT			267
4D20	NUT			423
4DM10	NUT HEX			179
4DM8	NUT HEX			215
4F6106	PIN			33, 35
51DM10	NUT HX THDLK PREAPPL	83D8	B	55, 59, 397
51DM6	NUT HX THDLK PREAPPL			311
51DM8	NUT HX THDLK PREAPPL			199, 203, 239, 453
53C512	SCREW			467
53C516	BOLT			337, 339
53D10	NUT			17, 21, 45, 375, 423, 425
53D6	NUT			33, 35, 127, 487, 491

Code for disposition of old part number
A -- Use up
B -- Use on other application (See PNI)
C -- File PDR Report with Bobcat Parts Sales
D -- Part Number Error

NUMERICAL INDEX (Cont'd)

Part Number	Description	Was	Code	Page
53D8	NUT			425, 439
53DM8	NUT HX THDLK PREAPPL			237
54K20028	O RING 10			79, 91, 99
54K20106	ORING			445, 447
54K30110	O-RING	25K30110	A	443
54K30118	O-RING	25K30118	A	73
54K30130	O'RING	25K30130	A	69
54K40108	ORING			445, 447
54K40116	O-RING			443
54K40124	O-RING			73
54K40204	O'RING	25K40204	A	69
55CM16100	BOLT			45
55D10	NUT			383, 475, 477
55D4	NUT			17, 21, 379, 381, 463
55D5	NUT			17, 179, 243, 245, 411, 413
55D6	NUT			433
55K204	O RING 10			79, 85, 91, 95, 99, 103
55K214	O-RING			109, 459, 515, 521
56G412	STUD			43
57D5	NUT			109, 185
57D6	NUT 5			39, 41, 77, 173, 177, 207, 243, 367
58K013	O-RING 10			79, 85, 91, 95, 99, 103
58K016	O-RING 10			79, 85, 91, 95, 99, 103
58K017	O-RING 10			79, 85, 91, 95, 99, 103
58K120	O-RING			197
58K128	ORING			445, 447
59CM10100	SCREW HEX			233
59CM1080	SCREW			229, 543
59CM816	BOLT			229, 233
59D4	NUT 5			179, 311, 317, 323, 329, 383
59D5	NUT 5			37, 185, 189, 311, 317, 323, 329, 499, 501, 503
59D6	NUT			43, 63, 243, 245
59D8	NUT 5			17, 21
5CM1025	SCREW FL THD HEX CAP	6CM1260	B,D	233
5CM812	BOLT			273
5HM13	CLAMP			239
5HM14	CLAMP			225, 239
5HM15	CLAMP			453
5HM16	CLAMP			109, 123, 477
5HM18	CLAMP			391, 403
5HM20	CLAMP	42HL91	B,D	391, 403
5HM24	CLAMP			225, 239
5HM27	CLAMP			113, 119, 121
5HM35	HOSECLAMP			119, 121
5HM42	HOSECLAMP			109, 225
5HM44	CLAMP			225
5HM47	CLAMP			109

Code for disposition of old part number
A -- Use up
B -- Use on other application (See PNI)
C -- File PDR Report with Bobcat Parts Sales
D -- Part Number Error

NUMERICAL INDEX (Cont'd)

Part Number	Description	Was	Code	Page
5JM25	CIR-CLIP			283
619021	WASHER, 5			37, 47, 55, 59, 329, 389, 453, 499, 501, 503
61D4	NUT 5			243, 245
61D5	NUT 10			43, 191, 193, 297, 299
61D6	NUT 5			45, 349
61D8	NUT 5			473
62D4	NUT			243, 245
62D6	NUT 5			127, 529
63D6	NUT			65
63D8	NUT			63
6502426	CLAMP			55, 59, 65
6510470	GEAR, RING STARTER			229, 233
6512026	BUSHING			77
6513524	SEAL,O-RING	6679818	A	131, 133, 135, 137
6513532	POPPET	6692530	A	131, 133, 135, 137
6513533	SPRING	6692528	A	131, 133, 135, 137
6513707	FITTING, BANJO			281
6515817	WASHER			17, 21
6516231	SEAL			73
6517516	LGHT ASY			383
6519178	BUMPER			33, 35, 45
6532453	RING SEAL			443
6533898	DECAL			425
6534668	SNAP RING			245
6536642	RING			69
6539323	HEAD, CYL LIFT			73
654299	BEARING			141, 145
6552871	WASHER			51
6553411	BUSHING, PRESS FIT 5			53, 239
6553709	WASHER			17, 21
6553976	TREAD, SAFETY			45
6554149	CORD, BULK/FT			17, 21
6555341	TREAD, SAFETY			453
6557831	WASHER			77, 219
6557904	FLASHER			383
6558309	CABLE BULK/FT			415
6558310	SLEEVE			415
6560633	DAMPER, VIBRATION			17
6561383	DECAL, OPERATION 5			359, 509, 535
6562602	BUSHING			17, 21
6563914	WASHER			77, 127, 207, 227
6564343	SPACER			245
6564452	LEVERGRIP			43
6564654	PIN, CLEVIS			77, 207
6564669	NUT, 10			51, 537
6565200	DECAL, FILTER			359
6565977	HOSE, BULK			391, 395, 403
6565990	DECAL, OIL HYD 5			359

Code for disposition of old part number
A -- Use up
B -- Use on other application (See PNI)
C -- File PDR Report with Bobcat Parts Sales
D -- Part Number Error

NUMERICAL INDEX (Cont'd)

Part Number	Description	Was	Code	Page
6567743	PIN			17, 21, 387
6569465	SHAFT, AXLE			51
6576033	WASHER 5			229, 233
6577058	PIN, HAND CONTROL			127
6577821	HOSE, BULK			239
6577822	HOSE, BULK			225, 239
6577954	PIN, PIVOT			45
6578169	HOSE, BULK/FT			239
6578172	HOSE, BULK			239
6578253	SPRING, COMPRESSION			47
6586251	HOSE, BULK			109, 123, 165, 453, 477
6586542	HEAD			443
6586543	PISTON			443
6586918	SCREW, DETENT			79, 85, 91, 95
6587230	ELBOW			113
6587580	SPRING			79, 85, 91, 95, 99, 103
6587763	BOOT			79, 85, 91, 95
6587958	HEAD, CYL SWING			69
6592100	COLLAR			79, 85, 91, 95, 99, 103
6592105	BALL 5			79, 85, 91, 95, 169, 171
6592107	SPRING, DETENT 5			79, 85, 91, 95
6592109	ADAPTER			79, 85, 91, 95, 99, 103
6592506	CLAMP			459
6598098	PIN			289
6598099	KEY			283
6598102	VALVE, PUMP INJ			281
6598116	PLUG			271
6598118	COVER			269
6598156	STUD			271
6598275	BOLT			229, 233
6599084	SCREW			281
6599360	SEALANT, ELEC .3 OZ			1
6599744	BALL, JOINT			127, 529
6610510	STRAP, TIE 10			311, 317, 323, 417
6624289	STRAP, TIE			55, 59, 65, 123, 165, 173, 177, 179, 185, 189, 191, 193, 195, 243, 245, 305, 309, 311, 317, 323, 329, 367, 371, 373, 389, 391, 397, 403, 407, 417, 437, 453, 459, 463
6625575	FUSE, 20A			179
6630038	WASHER			243, 245
6630188	POLISH			1
6630189	POLISH			1
6630207	RIVET 5			493
6631046	GASKET			263
6631067	SEAL, OIL			47
6631418	RING, RETAINING			17, 21, 33, 35, 387
6632279	KIT, SEAL	6670634	B,D	79

Code for disposition of old part number
A -- Use up
B -- Use on other application (See PNI)
C -- File PDR Report with Bobcat Parts Sales
D -- Part Number Error

NUMERICAL INDEX (Cont'd)

Part Number	Description	Was	Code	Page
6633583	SEALANT, POLYURETHANE 300 ML			1
6634841	O'RING			505
6640690	PIN			195, 209
6640692	CONNECTOR			195, 209
6640694	LOCK			195, 209
6640699	CONECTR 5			209
6640700	LOCK 5			209
6641176	SEAL			195, 209
6641179	CONECTR 5			195, 209
6641180	LOCK 5			195, 209
6644965	BALL JOINT			243, 245
6645081	O-RING			141
6645086	PLUG			141, 145
6646582	PLUG			209
6646705	MOULDING BULK/FT			219, 223
6646781	SWITCH, ALARM BACK-UP			191, 193, 297
6647783	LOADCHECK			307
6647784	PLUG			307
6647785	SPRING			307
6648294	SPRING			307
6648416	SEAL BULK /FT			337, 339, 467
6649481	LIGHT, WEDGE BASE			191
6649690	SEAL			445, 447
6650083	PAINT, SPRAY BLUE CAN			1
6650627	PLATE THR			141, 145
6650629	PIN			141, 145
6650630	RETAINER			141, 145
6650634	GASKET			141, 145
6650635	BEARING			141, 145
6650636	PIN			141, 145
6650637	BOLT			141, 145
6650646	O-RING			141
6650647	O-RING			141
6650648	PLUG			141
6650652	CH.RELIEF			141
6650668	BOLT			141, 145
6650675	COUPLER			141
6651512	ALARM, BACK-UP			191, 193, 297, 299
6651542	BALL, STEEL			131, 133, 135, 137
6651934	BOLT			283
6652574	PLUG			255
6652575	PLUG			255
6652580	BOLT			255, 267
6652652	SPRING			265
6652670	STUD 5			269, 277, 281
6652688	CLAMP			279

Code for disposition of old part number
A -- Use up
B -- Use on other application (See PNI)
C -- File PDR Report with Bobcat Parts Sales
D -- Part Number Error

NUMERICAL INDEX (Cont'd)

Part Number	Description	Was	Code	Page
6652689	CLAMP			279
6652764	STUD			265, 285, 289
6652792	NUT			267, 269, 271
6653578	BOLT			261
6653809	CON PIPE			265
6653821	BOLT			257
6653830	SEAL, STEM VALVE			251, 273
6653833	SPRING			273
6653859	SLEEVE, WEAR			257
6653861	SLINGER OIL			257
6653888	NUT			255
6653916	HOLDER			287
6654718	CLAMP 5			279
6654806	FUSE, 15A			179
6655154	GUIDE, VALVE			271
6655158	BOLT			271
6655160	PLUG			271
6655161	WASHER			271
6655166	COVER			257
6655176	ROD			261
6655179	PIN, PISTON ENG			257
6655181	ROD, CONNECTING			257
6655210	SHIM			281
6655212	GEAR, PUMP INJ			283
6655213	SLEEVE			283
6655215	BALL			283
6655216	PUMP, FUEL			281
6655223	CAP			289
6655236	BEARING, ROD			257
6655237	BEARING, ROD			257
6655869	PLUG			255
6655870	ROCK ARM			273
6655880	PIPE			275, 277
6657028	O-RING			141, 145
6657067	COVER			141, 145
6657068	COVER			141, 145
6657072	RETAINER			141, 145
6657073	GUIDE, RETAINER			141, 145
6657415	BOLT			269
6657663	PLUG			255
6657719	PLUG			17, 21, 367
6657734	PUMP, PRIMER HAND			239
6658180	PLUG, BLEED			239
6658672	RING, RETAINER			53
6659999	BELT, SEAT			493
6660775	SPRING			307
6660814	RING, QUAD			141, 145
6661150	SWITCH, ROLLER MICRO			305

Code for disposition of old part number
A -- Use up
B -- Use on other application (See PNI)
C -- File PDR Report with Bobcat Parts Sales
D -- Part Number Error

Part Number	Description	Was	Code	Page
6661353	LIGHT, HOUSING ASSY			191, 193
6661481	O-RING			141, 145
6662126	BRACKET	6662426	B,D	145
6662848	CAP			99, 103
6664065	WASHER			467, 469
6664085	BUSHING			467, 469
6664097	COVER			467, 469
6664223	OUTLET			27, 367
6664224	CAP			27, 367
6664554	PUMP, WIPER WASHER			311, 317, 323
6664815	SEAL, OIL	6691564	A	131, 133, 135
6665000	CLIP			209, 311, 317, 323, 329
6665208	WIPER, ROD CYL			69, 73
6665314	PLUG			25, 27, 367
6665321	RIVET			209, 311, 317, 323, 329
6665322	RIVET			209, 311, 317, 323, 329
6665371	SWITCH, VACUUM			179
6665569	RING, BACK-UP			79, 85, 91, 95, 99, 103
6665570	CLYD RING			79, 85, 91, 95, 99, 103
6665602	MOTOR			467, 469
6665701	BUSHING, PRESS FIT			77, 207
6665719	PLUG			449
6665815	FITTING	6691564	A	137
6666338	WASHER			141, 145
6666375	FILTER, AIR OUTER	6666333	B,D	1, 11, 291
6666376	FILTER, AIR INNER	6666334	B,D	1, 11, 291
6666377	COVER	7246029	A	291
6666378	VALVE			291
6666542	WIPER, ROD CYL			443, 445, 447
6666766	GROMMET			311, 317, 323
6666781	GASKET			251, 277
6666782	GASKET			253, 255
6666783	GASKET			253, 255
6666791	GASKET			251, 277
6666802	GASKET			251, 269
6666803	GASKET			253, 265
6666814	GASKET			253, 257
6666881	RING, SEAL			141, 145
6666882	WASHER			141, 145
6667144	CONNECTOR			195, 209
6667145	LOCK			195
6667176	PLUG			307
6667201	SPACER			467, 469
6667323	SEAL			443, 445, 447
6667324	SEAL			69, 73
6667352	FILTER, FUEL W/SEPARATOR 12			1, 11, 239
6667353	FILTER, FUEL ASSY			239

Code for disposition of old part number
A -- Use up
B -- Use on other application (See PNI)
C -- File PDR Report with Bobcat Parts Sales
D -- Part Number Error

NUMERICAL INDEX (Cont'd)

Part Number	Description	Was	Code	Page
6667418	PLUG			255
6667458	DIAPHRAM			281
6667460	IMPELLER			267
6667461	SPRNG PIN			273
6667676	COVER			307
6667680	SNAP RING			307
6667687	VALVE, STEM SOLENOID			79, 91, 99
6667724	WASHER			141, 145
6667725	SPRING			141, 145
6668079	PLUG, MOTOR			131, 133, 135, 137
6668080	SHIM			131, 135
6668082	POPPET	6685064	A	131, 133, 135, 137
6668088	PISTON	6685066	A	131, 133, 135, 137
6668089	PLUG, MOTOR			131, 133, 135, 137
6668742	SWITCH			27
6668815	SWITCH			383
6668816	SWITCH			301, 533
6668820	NUT			79, 91, 99
6668881	CORD			303
6669087	SEAL KIT			107
6669135	SEAT, OPERATOR VINYL			37
6669224	TAP SCREW			25, 27, 367
6669402	HOUSING			141
6669405	CAP, END			145
6669410	KIT, SHIM			141
6669411	BEARING			141, 145
6669445	O'RING			131, 133, 135, 137
6669452	O-RING			131, 133, 135, 137
6669615	ORIFICE			449
6669620	PLUG			449
6669732	KIT, SEAL			79, 85, 91, 95, 99, 103
6670284	LIGHT, REAR ASSY			191
6670472	NUT			279
6670533	NUT			285, 289
6670634	SEAL KIT			85, 307
6670706	CONNECTOR			209
6670707	CONNECTOR			209
6670710	PLUG			209
6670711	LOCK			209
6670715	SOCKET			209
6670726	LOCK ONLY			465
6670769	O-RING			251, 279
6671512	GROUP, ROTARY			141, 145
6671516	KIT, SEAL	7296604	D	141, 145
6671518	BOLT			141, 145
6671520	O-RING			139
6671527	NUT			307

Code for disposition of old part number
A -- Use up
B -- Use on other application (See PNI)
C -- File PDR Report with Bobcat Parts Sales
D -- Part Number Error

NUMERICAL INDEX (Cont'd)

Part Number	Description	Was	Code	Page
6671725	BOLT			159
6671741	SNAP RING	6688042	A	151, 153
6672190	VALVE, DRAIN			255
6672272	WASHER			191
6672273	SCREW			191
6672274	SCREW			191
6672275	GASKET			191
6672276	LENS, LIGHT RED			191
6672277	BRACKET			191
6672279	MOUNT, LIGHT RUBBER			191, 193
6672360	PLUG			265
6672471	VALVE, SOLENOID			79, 91, 99
6672756	KIT, SEAL	6673835	A	449, 451
6672863	VALVE, SOLENOID			307
6673865	BATTERY, WET 600CCA	6674687	B	1, 185
6673986	SPOOL, VALVE			449
6674169	PULLEY			267
6674264	RETAINER NUT			487, 491
6674316	SWITCH, PRESS OIL HYD			165, 167, 179
6674894	NUT, LOCK			33, 35, 173, 243, 389
6674895	RETAINER			25, 29, 31, 351, 365, 367, 401
6674907	NUT	6687925	A	155, 157
6675026	CAP, CONNECTOR			371
6675033	INSERT, THREADED			25, 27, 29, 31, 365, 401
6675154	HOLDER			179
6675155	FUSE, 100A			179
6675176	SWITCH			389
6675177	KNOB			389
6675181	PLUG SWITCH HOLE			389
6675212	RETAINER, BOLT			245, 389
6675281	MOUNT			373
6675298	COUPLER, BODY			311, 317, 323
6675336	LIGHT, BULB 50W			173, 177
6675342	PIN			141, 145
6675380	ADHESIVE, SPRAY 10.5 oz			1
6675517	FILTER, OIL ENG 12			1, 11, 265
6675524	CLIP			25, 29
6675534	BLOCK, VALVE A/C	7193538	A	397, 403
6675545	GROMMET			17, 21
6675559	COIL			79, 91, 99, 179
6675734	TIE STRAP			173, 243
6675780	Cartridge			307
6675781	Coil			307
6675999	SWITCH			467, 469
6676000	TEE			467, 469
6676001	ARM, WIPER			467, 469

Code for disposition of old part number
A -- Use up
B -- Use on other application (See PNI)
C -- File PDR Report with Bobcat Parts Sales
D -- Part Number Error

NUMERICAL INDEX (Cont'd)

Part Number	Description	Was	Code	Page
6676002	BLADE, WIPER			467, 469
6676003	HOSE, BULK/FT			311, 317, 323, 467, 469
6676026	NUT			245
6676028	NOZZLE			467, 469
6676029	SOLENOID, LOCK SPOOL			79, 85, 209
6676500	ELBOW			311, 317, 323, 467, 469
6676538	INSULATION TAPE FT			397, 403
6676539	CLIP PANEL	7193785	A	397, 403
6676543	PLUG			307
6676917	ELBOW			311, 317, 323, 467, 469
6677192	SENSOR, MAGNETIC			311, 317, 323, 329
6677193	RIVET			311, 317, 323, 329
6677195	PISTON			73
6677203	TUBE,DIPSTICK			263
6677485	SPACER			213
6677486	NUT			213
6677487	COVER			213
6677488	RECTIFIRE ASSY			213
6677489	REGULATOR ASSY			213
6677490	BRACKETREAR			213
6677491	BRACKETFRT			213
6677492	ASSY, ROTOR			213
6677493	STATOR			213
6677495	SPACER			213
6677496	PULLEY			213
6677817	SCREW			213
6677818	BEARING			213
6677819	RETAINER			213
6677820	BEARING			213
6678000	SEAL			131, 133, 135, 137
6678004	PLATE BALANCING			131, 133, 135, 137
6678006	RING, BACK-UP			131, 133, 135, 137
6678205	ALTERNATOR, 90 AMP			213
6678205REM	ALTERNATOR, 90 AMP			213
6678226	SEAL, OIL	6673881		141, 145
6678668	STRAP			185, 189, 305, 437
6678675	CONTROLLER, ACD DLX			373
6678705	BALL			449
6678818	MOUNT			179
6678837	O-RING			449
6679034	MOUNT			179, 239, 243
6679103	VALVE, BRAKE			459
6679485	CONTROLLER, DRIVE			197
6679820	SWITCH, RELAY MAGNETIC			179
6680355	CAP			215

Code for disposition of old part number
A -- Use up
B -- Use on other application (See PNI)
C -- File PDR Report with Bobcat Parts Sales
D -- Part Number Error

NUMERICAL INDEX (Cont'd)

Part Number	Description	Was	Code	Page
6680356	BOLT			215
6680357	HOLDER			215
6680358	RING RUBBER			215
6680359	RING STOP			215
6680360	STOP			215
6680361	SPRING			215
6680362	BALL			215
6680363	WASHER			215
6680364	LEVER			215
6680365	SHAFT			215
6680366	GEAR			215
6680367	GEAR			215
6680368	RING STOP			215
6680369	SEAL			215
6680370	PLATE			215
6680371	LEVER			215
6680372	BRACKET			215
6680373	YOKE			215
6680374	ARMATURE			215
6680375	SHAFT ORC ASSY			215
6680376	SWITCH			215
6680377	HOLDER			215
6680378	WASHER			215
6680379	SEAL			215
6680380	SEAL			215
6680381	SPRING			215
6680382	SPRING			215
6680383	BOLT			215
6680384	BOLT			215
6680388	BRACKET			215
6680389	BRACKET			215
6680390	GEAR			215
6680410	CONTROLLER, ACS			197, 207
6680417	HANDLE, AHC			209
6680418	ASSY, HANDLE			195
6680419	HANDLE			195
6680441	BUSHING			33, 35
6680443	BUSHING, MAGNET			33, 35
6680447	DECAL			195
6680462	HANDLE, ACS RH			209
6680468	STRAP			209
6680469	SPACER			209
6680470	SPRING			209
6680471	BOOT			209
6680477	STRAP			209
6680484	GASKET			253
6680657	PLUG			263
6680685	BOLT			273
6680686	BOLT			265

Code for disposition of old part number
A -- Use up
B -- Use on other application (See PNI)
C -- File PDR Report with Bobcat Parts Sales
D -- Part Number Error

Part Number	Description	Was	Code	Page
6680706	BOLT			265, 287
6680788	BOLT			279
6680801	BOLT			281
6680830	BOLT			287
6680970	BREATHER			53
6681905	NUT			311
6682260	FRONT SHAFT			141
6682261	KEY			141, 229, 233
6682262	HOUSING			145
6682264	SHAFT REAR			145
6682500	FILTER			263
6682515	SHIM			281
6682532	NUT			277
6682697	GROMMET			391, 403
6682860	O-RING			131, 133, 135, 137
6682862	SHAFT, DRIVE			131, 137
6682863	BOLT			131, 137
6682897	SEAL			131, 133, 135, 137
6682929	O-RING	6688000	A	161
6682930	RING, BACK-UP	6688041	A	161
6682936	O-RING			149
6682949	O-RING	6688019	A	149
6682968	SCREW	6687995	A	155, 157
6683087	STUD			285
6683101	ASSEMBLY FILTER FUEL			11, 239
6683167	CYLINDER BLOCK			141, 145
6684033	NUT			39, 41, 55, 59, 77, 177, 207, 219, 223, 309, 367
6684125	COUPLER			79, 85, 91, 95, 99, 103
6684125EF	COUPLER ISO MALE B 3/8 BDY 3/8 SAE			79, 85, 91, 95, 99, 103
6684397	BOLT			213
6684641	MOUNT			17, 185, 189, 411, 413
6684646	VALVE, ANTI-CAV			79, 85, 91, 95, 99, 103
6684688	DECAL, WARNING			475
6684703	ASSY, ACCUMULATOR			475
6684754	O-RING			253, 263
6684762	SEAT			271
6684763	SEAT			271
6684780	GASKET			251, 275
6684781	BOLT			275
6684788	GASKET			253, 257
6684789	SEAL, OIL			253, 257
6684791	CAMSHAFT			261
6684792	GEAR			261
6684793	GEAR			261
6684794	BUSHING			261
6684817	NUT			285
6684818	SEAL			253, 285

Code for disposition of old part number
A -- Use up
B -- Use on other application (See PNI)
C -- File PDR Report with Bobcat Parts Sales
D -- Part Number Error

NUMERICAL INDEX (Cont'd)

Part Number	Description	Was	Code	Page
6684819	CAP			285
6684823	SPRING			289
6684825	GUIDE, SOLENOID			285
6684829	SHIM			281
6684832	LEVER			287
6684833	SHAFT			287
6684836	BOLT			289
6684838	GOVERNOR			289
6684839	LEVER			289
6684841	GASKET			253, 285, 289
6684842	PIPE			279
6684844	BOLT			279
6684848	PIPE			279
6684849	PIPE			279
6684850	GLOW PLUG			279
6684854	FLANGE			269
6684857	PLUG			269
6684858	BOLT			269
6684861	BOLT			269
6684862	PIPE			269
6684863	GASKET			251, 269
6684868	SEAL			267
6684869	FLANGE			267
6684870	GASKET			253, 267
6684874	COLLAR			273
6684875	SHAFT			273
6684877	GASKET			251, 277
6684889	CLAMP			269
6684891	SEAL			285
6684910	SENSOR, ELEC AHC			209
6684932	KNOB CLAMPING			433
6685060	BUSHING TORSION			77, 127
6685065	SHUTTLE			131, 133, 135, 137
6685069	DISK, SPRING			131, 133, 135, 137
6685077	GASKET			271
6685078	GASKET			271
6685079	GASKET			271
6685080	GASKET			271
6685081	GASKET			271
6685087	VALVE			275
6685095	RING, PISTON			257
6685096	PISTON RING			257
6685102	PIPE			279
6685103	PIPE			279
6685104	BOLT FLANGE			269
6685105	PUMP WATER			267
6685109	BOLT FLANGE			263
6685190	STARTER			215
6685190REM	STARTER			215

Code for disposition of old part number
A -- Use up
B -- Use on other application (See PNI)
C -- File PDR Report with Bobcat Parts Sales
D -- Part Number Error

Part Number	Description	Was	Code	Page
6685464	BOLT			287
6685465	O-RING			253, 285
6685469	KEY			257
6685471	GASKET			281
6685474	BEARING			267
6685476	SEAL			253, 289
6685478	FLANGE			255
6685479	BEARING			283
6685481	GEAR			257
6685482	BOLT			257
6685483	CASE, MAIN BRG.			257
6685484	CASE, MAIN BRG.			257
6685485	CASE, MAIN BRG.			257
6685490	BEARING, MAIN			257
6685491	BEARING, MAIN			257
6685492	BEARING, MAIN			257
6685493	BEARING, MAIN			257
6685494	WASHER, THRUST			257
6685495	WASHER, THRUST			257
6685496	WASHER, THRUST			257
6685497	WASHER, THRUST			257
6685498	GASKET			251, 279
6685501	WASHER			265
6685503	HEAD, CYL.			271
6685503REM	HEAD CYLINDER ENGINE			271
6685512	INJECTOR, FUEL ASSY			279
6685513	BOLT, ADJ.			285
6685514	SPRING			287
6685516	COLLAR			283
6685517	STOPPER			283
6685518	OIL PAN			263
6685520	THERMOSTAT			269
6685521	PULLEY			257
6685522	CRANKCASE			255
6685526	PLATE, CONTROL			289
6685624	VALVE, AUX REAR			459
6685663	NUT, RETAINING			127
6686037	GASKET			253, 281
6686168	BOLT			275
6686334	IDLE APPARATUS			285
6686985	BOLT			289
6686997	CIR-CLIP			257
6687773	PLATE, PUMP HYD			145
6687774	PLATE, PUMP HYD			141
6687913	SEAL			127
6687921	COLLAR			161
6687922	NUT			161

Code for disposition of old part number
A -- Use up
B -- Use on other application (See PNI)
C -- File PDR Report with Bobcat Parts Sales
D -- Part Number Error

NUMERICAL INDEX (Cont'd)

Part Number	Description	Was	Code	Page
6687938	VALVE	7254834	A	149
6687940	PLATE			151, 153
6687943	SHAFT			153
6687956	2 HALF BEARINGS			151, 153
6687959	SHAFT			151
6687991	KEY			151
6687999	RING, SNAP			151, 153
6688003	SCREW			149
6688008	SCREW			149
6688009	SEAL			149
6688010	PIN			159
6688017	SHIM			149
6688034	SCREW			161
6688040	BEARING			149
6688338	NUT			371
6688521	SPRING			131, 133, 135, 137
6688637	MOUNT			193
6688644	PISTON			257
6689012	KIT, GASKET UPPER T2 ENG			249, 251
6689389	SPACER			449, 451
6689441	PUMP, OIL ENG			255
6689503	CASE MAIN BRG			257
6689599	SPRING			287
6689611	IDLER MICRO-V			229, 543
6689697	HOUSING, MOTOR			131, 133, 135, 137
6689698	PLATE			131, 133, 135, 137
6689700	PLATE			131, 133, 135, 137
6689741	DRIVE			133, 135
6689742	BOLT			133, 135
6689922	HANDLE			199, 203
6689923	HANDLE			199, 203
6689927	BOLT			199, 203
6690299	O-RING			449
6690564	SPRING COMPRESSION			527
6690688	TREE MOUNT			311, 317, 323, 329
6690689	MOUNT, FIR TREE			197, 395
6690690	STRAP, TIE			197, 311, 317, 323, 329, 395, 437
6690709	LINK			49
6690947	SWITCH, BPV			55, 309
6690948	SWITCH PARK BRAKE			173, 177
6691337	RING, RETAINING			131, 133, 135, 137
6691341	SEAL KIT			131, 133, 135, 137
6691343	GEROLER			131, 137
6691498	SOLENOID, SHUTOFF FUEL	7000769	B,D	185, 189, 285
6691532	SCREW			391
6691539	HEX. NUT	6677497	A	213

Code for disposition of old part number
A -- Use up
B -- Use on other application (See PNI)
C -- File PDR Report with Bobcat Parts Sales
D -- Part Number Error

Part Number	Description	Was	Code	Page
6691714	SENSOR, SEATBAR BICS			33, 35
6692337	FILTER, HYD CARTRIDGE			1, 167
6692375	BOLT			265
6692376	BOLT			265
6692377	BOLT			265
6692385	CASE			283
6692386	GASKET			253, 283
6692489	ALARM, BUZZER			173, 177
6692756	RECEIVER, 2.4GHz			471
6692757	DECAL, "REMOTE CONTROL OPERATION", LARGE			359, 471
6692761	TRANSMITTER			471
6692762	KEYS, SET OF 2			471
6692763	DECAL WARNING, "READ THE MANUAL"			359, 471
6692767	DECAL, "ROTATING PARTS"			359, 471
6692768	DECAL, "REMOTE CONTROL OPERATION", SMALL			359, 471
6692769	CHARGER, MAKITA DC1422, 12-24VDC			471
6692771	HARNESS SHOULDER			471
6693241	KEY (2)			173, 239, 311, 317, 323, 329, 465
6693245	SWITCH, IGN			173
6693409	BULB, STROBE			471
6693410	LENS, STROBE AMBER			471
6693411	LENS, STROBE AMBER			471
6693413	DISPLAY, DLX			177, 419
6693712	KEYPAD, PANEL			173, 177, 421
6693876	SEAL, SHAFT			151
6693920	PISTON			257
6693921	SENSOR, RPM			185, 189
6693924	MOUNT			463
6697915	HOSE			397
6697942	PLUG, NYLON			21
6697960	SOLENOID			159
6698062	GASKET, MOTOR			167
6698065	COIL, CPP012H			167, 171
6698066	HOUSING, FILTER CARTRIDGE			167
6698115	CLAMP, HOSE			269
6698116	COVER			285
6698119	SHIM, PUMP INJ			281
6698434	VALVE, PROPORTIONAL			79, 85, 99, 103

Code for disposition of old part number
A -- Use up
B -- Use on other application (See PNI)
C -- File PDR Report with Bobcat Parts Sales
D -- Part Number Error

NUMERICAL INDEX (Cont'd)

Part Number	Description	Was	Code	Page
6698591	KIT, SEAL			167
669863	RING, SNAP			141, 145
6700631	GASKET CAP TANK HYDR			109
6700743	SPRING			45
6701097	WASHER			219
6701174	WASHER			199, 203
6701535	SPRING, CENTERING			33, 35, 127
6701892	CLAMP			395
6701893	CLAMP			59, 65, 535
6702444	FUSE 25A 5			179
6702593	SPACER			191, 193, 297, 305
6702621	GRIP			195
6702642	BOLT 5			179, 389
6702716	BLOCK, WEAR			127
6702903	LEVER, BOB-TACH LH			47
6702904	LEVER, BOB-TACH RH			47
6702958	BUSHING, WELD-ON			47
6702971	BOLT ASSY			17
6702990	BUSHING			209
6703640	KIT, SEAT BELT			493
6703703	GUIDE, SEAT BELT			493
6704248	PIVOT, WEDGE			47
6704436	RUBBERPAD			507
6704453	SPRING 5			311, 317, 323, 329
6704892	RIVET			373
6706098	GUIDE, PRESS FIT			127
6706485	BRACKET			49
6706558	DECAL, OPERATION			359
6706633	CONNECTOR			459
6706718	MOUNT			53
6706737	GASKET SOLENOID			53
6706825	LIFT EYE			423
6707101	SEAL			63, 107
6707621	FUSE, 15A MINI 5			179
6707623	FUSE, 25A MINI 5			179
6708009	LINK			77
6708016	GASKET COVER			53
6708018	SPRING			53
6708043	FLANGE			77
6708267	BOLT			53
6708310	HOSE, BULK/FT 100			311, 317, 323
6708929	DECAL, COOLANT			359
6708987	HINGE, WELD-ON			13
6709170	BOLT, WHEEL			51
6710659	BUSHING			33, 35
6711643	CAM, WEAR			127
6711908	SPNG PLATE			493
6713043	SPACER			209

Code for disposition of old part number
A -- Use up
B -- Use on other application (See PNI)
C -- File PDR Report with Bobcat Parts Sales
D -- Part Number Error

NUMERICAL INDEX (Cont'd)

Part Number	Description	Was	Code	Page
6713589	CLEVIS			33, 35
6713887	BOLT			33, 35
6714278	WEDGE, LOCK TRACTION			53
6714361	COUNTERWEIGHT, AXLE			349
6714810	PIN, RETAINER			45
6715163	BUSHING, PRESS FIT			127
6715164	SLEEVE, SPRING			127
6715183	ELBOW			239
6715864	BUSHING			33, 35
6715865	BUSHING			33, 35
6715866	BUSHING			33, 35
6716843	WASHER			51
6717402	BUSHING			239
6717562	BUSHING, WEAR			45
6717579	GASKET			179
6717933	CLAMP			55, 59, 65
6718034	FUSE, 30A			179
6718260	BATTERY PAN			185, 189
6718414	SENDER, TEMP ENG			185, 189
6718789	PIN, PIVOT			45
6718796	PLUG			377
6718872	HARNESS			301, 383, 533
6719056	BLOCK(LH)			53
6719057	BLOCK(RH)			53
6719448	MAGNET, CONTROL ATTACH			373
6719766	STOP			43
6719834	SPACER			209
6719835	SLEEVE			209
6720038ENUS	INSTRUCTIONS	6720038	A	303
6720736	HEATER, BLOCK ENG PLUG SOFT	6810814		303
6725182	TEE			79, 85, 91, 95, 99, 103
6725301	COVER,OM			25, 29
6725421	HANDLE			343
6725946	KIT, WINDOW REAR			343
6726303	DECAL, OPERATION			343, 359
6727065	SCREW			209
6727313	FITTING, ELBOW			109, 117, 165, 449, 451
6727475	CAP HYDRAULIC			11, 109
6727595	DECAL, TIE-DOWN			359
6727753	GASKET			227
6727869	SENDER,HYD TEMP			179
6728459	SENSOR, DOOR			311, 317, 323, 329
6728473	BOLT, SHOULDER			47
6729078	DECAL			359
6729594	HANDLE			209
6729595	HANDLE			209

Code for disposition of old part number
A -- Use up
B -- Use on other application (See PNI)
C -- File PDR Report with Bobcat Parts Sales
D -- Part Number Error

NUMERICAL INDEX (Cont'd)

Part Number	Description	Was	Code	Page
6730106	TIRE, SEVERE DUTY 31X10X16.5, 10 PLY			537
6730867	MOUNT, ALT			237
6730997	BUSHING, WEAR			47
6731085	ELBOW			395
6731121	PLUG			49
6731160	WASHER			45
6731478	TAG EXIT			17, 21
6732730	HARNESS			373
6733136	KIT, ATTACHMENT 14-PIN			373
6733144	MOUNT			373
6733429	CAP			225
6733575	HINGE, REAR DOOR			43
6733616	BUMPER			43
6734298	BRACKET			127
6735901	DECAL, LOGO BOBCAT HEAD			359
6737189	DECAL, WARNING	7180087	B,D	191, 193, 297, 299, 353
6737191	WEDGE, BOB-TACH			47
6737388	WASHER			77, 125, 127, 219, 223, 229, 233, 531
6737524	HANDLE CONTROL			63, 107
6737626	DECAL SJC	7145528	B	359
6801059	WASHER			467, 469
6802539	SPACER			467
6803202	SCREW			199, 203
6803264	FUSE			179
6805453	Bushing wear	7150182	D	69
6809726	ROLLER			43
6809845	BOLT			43
6810132	SPRING			43
6810356	SPACER			443, 445, 447
6812170	PLUG			69, 73, 169, 171, 443, 445, 447
6813153	PLATE			79, 85, 91, 95
6814531	ELBOW			55, 59
6814694	RETAINER			79, 85, 99, 103
6815152	SPOOL, TILT			79, 85, 91, 95
6816549	PLUG ASSY PORT RLF			79, 85, 99, 103
6816550	PLUG, PORT RELIEF	6816550	A	91, 95
6817529	TEE			119, 121
6817566	BUSHING			237
6901029ENUS	INSTRUCTIONS	6901029	C	343
6901872ENUS	INSTRUCTIONS			373
6903766	TIRE, SOLID FLEX 31X6X10 LH			539
6903767	TIRE, SOLID FLEX 31X6X10 RH			539
6904709	OHB, W/WIRE ROPE			471

Code for disposition of old part number
A -- Use up
B -- Use on other application (See PNI)
C -- File PDR Report with Bobcat Parts Sales
D -- Part Number Error

NUMERICAL INDEX (Cont'd)

Part Number	Description	Was	Code	Page
6904709AR	OM RADIO REMOTE CONTROL SPANISH			471
6904709PTBR	OHB, W/WIRE ROPE PTBR			471
6904752ENUS	INSTRUCTIONS	6904752	A	435
6904845D	TRANSMISSION OIL, 1000L			1
6921092	HANDLE	7011177	A	479
6921585	RING RETAINING			141, 145
6967523	SPINDLE	6687920	A	161
6967525	SPRING	6688043	A	161
6967526	SPRING	6688021	A	161
6967527	PIN	6687923	A	161
6967536	SPRING			149
6967539	SHIM			149
6969803	COVER, BREATHER			275
6969804	PLUG,OIL GAUGE			263
6969805	KEY,FEATHER			255
6969808	BOLT			257
6969817	BALL			283
6969819	NUT, FLANGE			281
6969824	GASKET, NOZZLE INJ			251, 279
6969825	CORD, GLOW PLUG			279
6969990	GUIDE			271
6969996	CLAMP,HOSE			275
6974656	ASSY PIPE,OVER FLOW			279
6987139ENUS	INSTRUCTIONS	6987139	A	457
6987174ENGB	OHB, W/WIRE ROPE			9
6987174ENUS	OHB, W/WIRE ROPE	6987174		9
6987174ESAR	OHB, W/WIRE ROPE			9
6987174FRCA	OHB, W/WIRE ROPE			9
6987174KOKR	OHB, W/WIRE ROPE			9
6987174PTBR	OHB, W/WIRE ROPE			9
6987216ENUS	INSTRUCTIONS	6987216	A	375
6987223ENUS	INSTRUCTIONS	6987223	A	379
6987224ENUS	INSTRUCTIONS	6987224	A	383
6987225ENUS	INSTRUCTIONS	6987225	A	301, 533
6987227ENUS	INSTRUCTIONS	6987227	A	351
6987228ENUS	INSTRUCTIONS	6987228	A	345
6987229	INSTRUCTIONS			339
6987230ENUS	INSTRUCTIONS	7278971ENUS	B,D	311, 317
6987232ENUS	INSTRUCTIONS	6987232	A	329
6987235ENUS	INSTRUCTIONS	6987235	A	297, 299
6987239ENUS	INSTRUCTIONS	6987239	A	465
6987248ENUS	INSTRUCTIONS	6987248	A	487, 491
6987249ENUS	INSTRUCTIONS	6987249	A	479, 499, 501, 503
6987251ENUS	INSTRUCTIONS	6987251	A	529
6987252ENUS	INSTRUCTIONS	6987252	A	295
6987253ENUS	INSTRUCTIONS	6987253	A	489

Code for disposition of old part number
A -- Use up
B -- Use on other application (See PNI)
C -- File PDR Report with Bobcat Parts Sales
D -- Part Number Error

Part Number	Description	Was	Code	Page
6987279ENUS	INSTRUCTIONS	6987279	A	387
6987282	INSTRUCTIONS			469
6987335ENUS	INSTRUCTIONS	6987335	A	473
6987336ENUS	INSTRUCTIONS	6987336	A	385
6987338ENUS	INSTRUCTIONS	6987338	A	515
6987349ENUS	INSTRUCTIONS	6987349	A	545
6987355ENUS	INSTRUCTIONS	6987355	A	365
6987356ENUS	INSTRUCTIONS	6987356	A	401
6987388ENUS	INSTRUCTIONS	6987388	A	335
6987490ENUS	INSTRUCTIONS	6987490	A	429
6987646A	COOLANT, ANTIFREEZE PG			1
6987646B	COOLANT, ANTIFREEZE PG			1
6987646C	COOLANT, ANTIFREEZE PG			1
6987646D	COOLANT, ANTIFREEZE PG			1
6987705	TIRE, HEAVY DUTY 10 X 16.5, 10 PLY			537
6987789A	OIL, 10W30 5L 4	6904840A	A	1
6987789B	OIL, 10W30 20L	6904840B	A	1
6987789C	OIL, 10W30 205L	6904840C	A	1
6987789D	OIL, 10W30 1000L	6904840D	A	1
6987790A	OIL, 15W40 5L 4	6904841A	A	1
6987790B	OIL, 15W40 20L	6904841B	A	1
6987790C	OIL, 15W40 205L	6904841C	A	1
6987790D	OIL, 15W40 1000L	6904841D	A	1
6987791A	FLUID, OIL HYD 5L 4	6904842A	A	1
6987791B	FLUID, OIL HYD 20L	6904842B	A	1
6987791C	FLUID, OIL HYD 205L	6904842C	A	1
6987791D	FLUID, OIL HYD 1000L	6904842D	A	1
6987792A	FLUID, OIL HYD BIO 5L 4	6904843A	A	1
6987792B	FLUID, OIL HYD BIO 20L	6904843B	A	1
6987792C	FLUID, OIL HYD BIO 205L	6904843C	A	1
6987792D	FLUID, OIL HYD BIO 1000L	6904843D	A	1
6987793A	ANTIFREEZE/COOLANT, PG 53/47 PREMIX 5L 4	6904844A	A	1
6987793B	ANTIFREEZE/COOLANT PG 53/47 PREMIX 20L	6904844B	A	1
6987793C	ANTIFREEZE/COOLANT, PG 53/47 PREMIX 205L	6904844C	A	1
6987793D	ANTIFREEZE/COOLANT PG 53/47 PREMIX 1000L	6904844D	A	1
6987794A	OIL, TRANSMISSION 5L 4	6904845A	A	1

Code for disposition of old part number
A -- Use up
B -- Use on other application (See PNI)
C -- File PDR Report with Bobcat Parts Sales
D -- Part Number Error

Part Number	Description	Was	Code	Page
6987794B	OIL, TRANSMISSOIN 20L	6904845B	A	1
6987794C	OIL, TRANSMISSOIN 205L	6904845C	A	1
6987803A	ANTIFREEZE/COOLANT EG CONCENTRATE 5L 4	6987596A	A	1
6987803B	ANTIFREEZE/COOLANT, EG CONCENTRATE 20L	6987596B	A	1
6987803C	ANTIFREEZE/COOLANT EG CONCENTRATE 210L	6987596C	A	1
6987803D	ANTIFREEZE/COOLANT, EG CONCENTRATE 1000L	6987596D	A	1
6987804A	ANTIFREEZE/COOLANT EG 53/47 PREMIX 5L 4	6987597A	A	1
6987804B	ANTIFREEZE/COOLANT, EG 53/47 PREMIX 20L	6987597B	A	1
6987804C	ANTIFREEZE/COOLANT EG 53/47 PREMIX 205L	6987597C	A	1
6987804D	ANTIFREEZE/COOLANT, EG 53/47 PREMIX 1000L	6987597D	A	1
6987805A	OIL, TRANSMISSION AXLE 5L 4	6987602A	A	1
6987805B	OIL, TRANSMISSION AXLE 20L	6987602B	A	1
6987805C	OIL, TRANSMISSION AXLE 205L	6987602C	A	1
6987805D	OIL, TRANSMISSION AXLE 1000L	6987602D	A	1
6987888	GREASE, MULTIPURPOSE #2 - 10	6903122	B	1, 229, 233
6987889	GREASE, HD SUPREME 10	6687884	B	1
6987890	GREASE, HP EXTREME 10	6687885	B	1
6987941	SILICONE, RTV 5920 - COPPER - 80ml	7260849	A	1, 53
6988018	SEALANT, GASKET LIQUID 50ML			1
6988143	TIRE NON-DIRECTIONAL 10X16.5-12 PLY			537
6988336	RADIO, BOBCAT HEAVY-DUTY MINI			457
6988435	KIT, RADIO M-SERIES LOADERS			457
6988500	TIRE, EARTHFORCE 10X16.5 - 8 PLY			537
6988660	SPEAKER, 4 X 6 RETAIL JXA462			457

Code for disposition of old part number
A -- Use up
B -- Use on other application (See PNI)
C -- File PDR Report with Bobcat Parts Sales
D -- Part Number Error

NUMERICAL INDEX (Cont'd)

Part Number	Description	Was	Code	Page
6988661	ANTENNA, 88 INCH MOTOROLA MALE PLUG			457
6989239	ENCLOSURE, CAB VINYL			541
6989418ENUS	INSTRUCTIONS	6989418	A	347
6989484ENUS	INSTRUCTIONS	6989484	A	433
6989487ENUS	INSTRUCTIONS	6989487	A	427
6989520ENUS	INSTRUCTIONS	6989520	C	377
6989526ENUS	INSTRUCTIONS	6989526	A	415
6989663ENUS	INSTRUCTIONS			493
6989699ENUS	INSTRUCTIONS	6989699		511, 513
6990079ENUS	INSTRUCTIONS	6990079	A	407
6990138ENUS	INSTRUCTIONS	6990138	A	527
6990145ENUS	INSTRUCTIONS	6990145	A	349
6990338ENUS	INSTRUCTIONS	6990338	A	411, 413
6990343ENUS	INSTRUCTIONS	6990343	A	419
6990344ENUS	INSTRUCTIONS	6990344	A	421
6990376	INSTRUCTIONS			541
6990468ENUS	INSTRUCTIONS	6990468		507
6990802ENUS	INSTRUCTIONS	6990802	A	341
6990808ENUS	SM, S450 LDR			9
6990810ENGB	OM, S450 LDR			9
6990810ESAR	OM, S450 LDR			9
6990810PTBR	OM S450 LDR			9
6990825	PM, S450 LDR			9
6990847ENUS	INSTRUCTIONS	6990847	A	389
6990856ENUS	INSTRUCTIONS	6990856		371
6990916ENUS	INSTRUCTIONS	6990916	A	337
6990917ENUS	INSTRUCTIONS	6990917	A	467
6990939ENUS	INSTRUCTIONS	6990939	A	417
6990988ENUS	INSTRUCTIONS	6990988	A	367
69G436	BOLT			99, 103, 197, 207
6CM1225	SCREW FL THD HEX CAP			237
6CM1235	BOLT			237
6CM1245	SCREW			229, 233
6CM1260	SCREW			227, 229
6E5	WASHER			383
6EM60	WASHER			287
6EM80	WASHER, SPRING			215, 267, 269, 271, 273
6J1664	KEY WOODRUFF			51
6J807	KEY, WOODRUFF			229, 233
7000489	DAMPER			237
7000974	PLUG, MOTOR			167
7000983	SCREW			389
7000984	CLIP			389
7001463	BEARING, AXLE	6689775	B	51
7001464	CUP, BEARING	6689638	B	51
7001664	PLUG, POWER			367

Code for disposition of old part number
A -- Use up
B -- Use on other application (See PNI)
C -- File PDR Report with Bobcat Parts Sales
D -- Part Number Error

NUMERICAL INDEX (Cont'd)

Part Number	Description	Was	Code	Page
7001709	SWITCH FRONT WIPER			311, 317, 323
7001710	SWITCH, ISO			197
7001712	SWITCH			453
7001713	SWITCH			207
7001922	BOLT			263
7002716	SCREW			79, 85, 99, 103
7002740	GROMMET			115, 117
7002980	SWITCH, PRESSURE			179
7002985	INSERT, BLANK			25, 173
7002988	TIE, STUD MOUNT			191, 193, 297, 299, 463
7003027	INSERT, KEYPAD			173, 177, 421
7003032	SWITCH, OVERRIDE TRACTION			173, 177
7003456	VALVE, MOTORIZED ASSY			391, 403
7003471	SCREW			393
7003487	SCREEN			109
7003494	LEVER, RH			209
7003495	LEVER, LH			209
7003496	SENSOR			207
7008109	MODULE, CONTROL			159
7008111	FLANGE, LH			149
7008112	FLANGE, RH			149
7008114	SCREW			149
7008115	SENSOR			149
7008117	SWASHPLATE	7254828	A	151, 153
7008118	BEARING			151, 153
7008120	HOUSING			159
7008122	COVER			159
7008123	GASKET			159
7008378	MANIFOLD,EXHAUST			277
7008556	PLUG			449
7008561	SEAT, SHUTTLE			449
7008767	SHIM			149
7008771	KIT, SEAL			79, 85, 99, 103
7008802	WIRE			149
7008806	GASKET			159
7008814	BULB, 37.5W	7276034		173, 177
7008823	SPRING			141
7008888	PIN, STRAIGHT			229, 233, 257
7009081	NUT			173, 177
7009357	LEVER, FORK ASSY			287
7009541	CAMSHAFT, FUEL			283
7010006	COIL			449, 451
7010162	HOUSING, BLOWER			393
7010163	MOTOR, FAN			393
7010165	COVER			393
7010166	RING, INNER			393
7010167	BLOWER, WHEEL			393

Code for disposition of old part number

A -- Use up
B -- Use on other application (See PNI)
C -- File PDR Report with Bobcat Parts Sales
D -- Part Number Error

NUMERICAL INDEX (Cont'd)

Part Number	Description	Was	Code	Page
7010168	SCREW			393
7010169	CLAMP, HOSE			393
7010195	BOLT, ADJUSTMENT			289
7010227	COVER			149
7010238	CRANKSHAFT, ENG			257
7010283	VALVE, REGULATOR			307
7010335	KIT, CUSHION SEAT VINYL			479, 483
7010336	KIT, CUSHION SEAT VINYL			479, 483
7010338	KIT, BACKREST SEAT			479, 483
7010339	BELLOW			483
7010340	KIT, ADJUSTER SEAT			483
7010341	KIT, HOUSING SEAT			483
7010342	KIT, ABSORBER SHOCK SEAT			479, 483
7010343	KIT, LEVER ADJUSTING			479, 483
7010344	KIT, RAIL SLIDE SEAT			483
7010345	KIT, TETHER SEAT BELT			479, 483
7010346	KIT, BACKREST SEAT			479, 483
7010356	COVER, HEAD CYL ENG			275
7010357	CAP, END			345
7010358	SPRING			345
7010359	KNOB			345
7010360	SLEEVE			345
7010365	NUT			345
7010397	PLUG, FILL			391
7010599	GASKET, GEARCASE			253, 265
7010600	MOUNT TREE FIR			177
7010691	POP RIVET			391
7010979	VALVE, CHECK	7008810	B,D	167
7011059	VALVE, BPV			55, 307, 309
7011061	DECAL			389
7011062	PANEL, CONTROL			389
7011070	HARNESS, RECEIVER			471
7011071	CONTROL, MODE SELECTOR			471
7011175	KIT, SWITCH SEAT			479
7011176	BELLOWS, SEAT CPL			479
7011178	HOUSING			479
7011179	KIT, RAIL SLIDE SEAT			479
7011180	COMPRESSOR, AIR SEAT			479
7011181	KIT, SPRING AIR			479
7011182	KIT, LEVER			479
7011183	KIT, BRACKET SEAT			479, 483
7012337	HOUSING, GEAR			265

Code for disposition of old part number
A -- Use up
B -- Use on other application (See PNI)
C -- File PDR Report with Bobcat Parts Sales
D -- Part Number Error

Part Number	Description	Was	Code	Page
7013201	PLUG			307
7013203	KIT, SEAL			307
7013263	KIT, GASKET ENG LOWER			249, 253
7015264	BEARING, ENG CRANKSHAFT			257
7015265	BEARING, ENG CRANKSHAFT			257
7015266	WASHER, THRUST		A	257
7015267	WASHER, THRUST			257
7015269	TAPPET			261
7015270	BEARING, ENG ROD CONNECTING			257
7015273	PLUG, FILL			255
7015275	CLAMP, INJECTION			279
7015518	VALVE, CHECK			119, 121
7015668	MOUNT, STRAP TIE			173, 185, 189, 367
7018011	CHANNEL			209
7018012	CHANNEL			209
7019023	BOLT, EYE 12MM			281
7019024	GASKET			281
7019201	DIPSTICK, ENG OIL			263
7020354	NUT	7274762	B,D	311
7020355	BOLT	7274763	B,D	311
7020604	PLUG			449
7020605	POPPET			449
7020606	PLUG			449
7020607	SPRING			449
7020647	NUT			85, 95, 103, 449, 451
7020648	SPOOL			449
7020649	SPRING			449
7020650	SPOOL			449
7020651	SPRING			449
7020652	SPRING			449
7020653	SPRING			449
7020654	SPRING			449
7020655	O-RING			449
7020656	RING, BACK-UP			449
7020657	PISTON			449
7020658	FILTER CARTRIDGE			449
7020659	ORIFICE			449
7020660	GUIDE			449
7020661	SHAFT			449
7020868	PUMP, FUEL INJ			281
7020998	BOLT			257
7021380	RESISTOR			393
7022002	BATTERY			471
7022149	ENG, V2203MDI 48.8 HP EPA T2 / EU STG II			249
7022679	PLUG			255

Code for disposition of old part number
A -- Use up
B -- Use on other application (See PNI)
C -- File PDR Report with Bobcat Parts Sales
D -- Part Number Error

NUMERICAL INDEX (Cont'd)

Part Number	Description	Was	Code	Page
7022766	VALVE, POWER BOB-TACH			449, 453
7022791	KIT, REPAIR			483
7023022	SWITCH ROTARY			173, 177, 419, 421
7023121	BUSHING, PISTON PIN			257
7023149	JOYSTICK, RH ASSY			199
7023150	JOYSTICK, LH ASSY			199
7023151	BASE, JOYSTICK RH			199
7023152	BASE, JOYSTICK LH			199
7023153	BOOT, RUBBER RH			199, 203
7023154	BOOT, RUBBER LH			199, 203
7023162	CAP, END			141
7023548	PISTON, ASSY			141, 145
7023550	CAP, DIESEL LOCKING			239
7023588	KNOB			173, 177, 419, 421
7023794	PUMP, HYD TANDEM W/O GEAR PUMP			149
7023924	COLLAR			261
7023925	SHAFT, GEAR IDLE			261
7024035	FILTER, OIL HYD ASSY			109
7024037	FILTER, OIL HYD ELEMENT			1, 11, 109
7024038	FILTER, OIL HYD CANISTER COVER			109
7024212	TIRE HEAVY DUTY 10X16.5 12 PLY			537
7024267	SCREW, ADJUSTING			273
7024429	BOLT			109
7024735	PUMP, GEAR DOUBLE			163
7024737	NUT	6678765		225
7024826	SEAL, OIL			253, 257
7024884	WASHER	6669409	A	141
7024885	BOLT			145
7024887	BRACKET			141
7024890	BRACKET			145
7025101	RETAINER, BEARING			131, 133, 135, 137
7025111	HOSE, BREATHER			275
7025112	BEARING, BALL			283
7025113	MANIFOLD, INTAKE			277
7025140	NUT			193
7025141	WASHER			193
7025320	DISPLAY, DLX	7022670		173, 177
7025560	KIT, REPAIR			479
7030083	WINDOW, CAB VINYL LH			541
7030084	WINDOW, CAB VINYL RH			541
7030085	DOOR, VINYL			541
7030086	KIT, HINGE			541

Code for disposition of old part number
A -- Use up
B -- Use on other application (See PNI)
C -- File PDR Report with Bobcat Parts Sales
D -- Part Number Error

Part Number	Description	Was	Code	Page
7031367	SEAL, SPOOL			79, 85, 91, 95, 99, 103
7031411	KIT, SEAL			163
7031685	NUT, ACORN	7031514		467, 469
7100024	HOSE			225
7100104	BELT, ALT			11, 237
7100462	CLAMP			109
7101078	PIN, PIVOT TAPERED			45
7101291	ELBOW			239
7101345	BONNET, DETENT HYD VALVE			99, 103
7101371	ELBOW			109
7101672	ACTUATOR			197, 207
7101797	ELBOW			109, 459
7102451	FITTING			185, 189
7102652	SCREW			79, 85, 91, 95, 99, 103
7103217	WASHER			127
7103708	BRACKET			127
7103711	BOLT			127
7104670	LIGHT			193
7104671	LIGHT			193
7105223	SPACER			127
7106218	DECAL QUALITY APPRVL			359
7108236	PIN			197, 207
7108242	SPOOL, TILT			99, 103
7109661	LATCH, DOOR W/SENSOR			311, 317, 323, 329
7109662	HANDLE, LATCH DOOR			311, 317, 323, 329
7110365	ARM, PINTLE			127
7111298	BUSHING, PIVOT			45
7111299	BUSHING, PIVOT			45
7111448	BUSHING, PIVOT			13
7112383	AUX SPOOL			79, 85, 99, 103
7113340	CAP, DIESEL 3 PSI			239
7113425	GROMMET			25
7113518	DECAL NSS			435
7113631	ELBOW			119
7115645	CLAMP			55, 59, 453, 459
7115700	BUSHING, PIVOT			13
7115769	RETAINER, GREASE			47
7116851	CUP			237
7116870	DECAL, LOGO BOBCAT HEAD			359
7120149	O-RING, RETAINING			237
7120401	GLASS, DOOR			311, 317, 323
7120401PK	GLASS DOOR (25)			311, 317, 323
7120402	FRAME, DOOR CAB			311, 317, 323
7120411	WINDOW, CAB TOP			17, 21
7120569	DECAL, FILTER			359, 363

Code for disposition of old part number
A -- Use up
B -- Use on other application (See PNI)
C -- File PDR Report with Bobcat Parts Sales
D -- Part Number Error

Part Number	Description	Was	Code	Page
7120570	DECAL			359, 363
7120573	DECAL			359, 363
7121399	SPRING			79, 85, 99, 103
7121425	BUSHING			337, 339, 467
7122359	BRACKET			197
7123965	KIT, SEAL			79, 85, 91, 95, 99, 103
7124815	PIN, PIVOT			207
7125948	PLATE			219, 223
7126682	BLOCK, SINGLE POINT LIFT			425
7128338	KIT, FLASHER 4-WAY			383
7128342	KIT, WINDOW SIDE			345
7128395	KIT, DOOR CAB SPECIAL APPS			329
7128403	KIT, LOCK SECURITY			465
7128405	KIT, BELT SEAT 2"			487
7128484	KIT, HEATER			389
7128524	KIT, SEAT 80MM SUSPENSION			501
7129293	KIT, FOPS TOP			375
7129299	KIT, BEACON LIGHT			301
7129301	KIT, STROBE LIGHT			533
7129303	KIT, BELT SEAT 3"			489
7129307	KIT, EXTINGUISHER FIRE			379
7131022	FUSE, 30A MINI 5			179
7131233	PEDAL			441
7131236	BUSHING			441
7131273	SCREW			139, 229, 233
7133444	BUMPER SQ			45
7134520	PLUG			79, 85, 91, 95, 99, 103
7134522	PLUG			79, 85, 99, 103
7134523	PLUG			91, 95
7135569	DECAL			359, 471
7135693	MOUNT			45
7136559	SOLENOID ASMBLY	6681512	A	53
7137770	KIT, SEAL CYLINDER			73
7138014	SEAL KIT			443
7138376	BUSHING			79, 85, 91, 95, 99, 103
7140441	HOLDER, CUP			351
7140749	BUSHING, WELD-ON			13
7140927	DECAL			359, 545
7141235	DECAL			359
7141375	DECAL			359, 545
7141405	BUSHING			237
7142141	DECAL			425
7142142	DECAL			425
7142371	SPRING GAS DOOR			311, 317, 323, 329
7142762	CLIP			25, 27, 29, 31, 367
7143971	SEATBAR			33

Code for disposition of old part number
A -- Use up
B -- Use on other application (See PNI)
C -- File PDR Report with Bobcat Parts Sales
D -- Part Number Error

NUMERICAL INDEX (Cont'd)

Part Number	Description	Was	Code	Page
7144076	SPACER			179
7144859	MOUNT, GAS SPRING			17, 21, 387
7145147	LEVER, STEERING	7145146	D	127
7145268	CONTAINER, STORAGE			27, 367
7145333	BRACKET, RADIO			457
7145528	DECAL			359
7145885	VENT, DEFROST			29, 31, 365, 401
7146264	COVER, RH SJC			199, 203
7146265	COVER, LH SJC			199, 203
7146538	PIVOT BOB-TACH			47
7147815	BOOT			39, 207, 209
7147826	BOLT, CROSS DRILLED			219
7148031	PIN, PIVOT TAPERED			45
7148068	WINDOW ASSY			345
7148069	WINDOW ASSY			345
7148287	SEAL DOOR HANDLE			311, 317, 323, 329
7148289	SEAL DOOR HINGE			311, 317, 323, 329
7149056	LATCH, CAM			465
7149091	TUBE			17, 21
7149093	SPRING			17, 21
7149204	NUT			27, 367
7149786	SEAT, SUSPENSION			483, 501
7149827	COVER, WIPER			311, 317, 323
7150151	LATCH, WINDOW LEFT			337, 339, 467
7150152	LATCH, WINDOW RIGHT			337, 339, 467
7150719	SEAL DOOR FRAME			311, 317, 323, 329
7150745	SPACER			329
7150746	SPACER			329
7151889	BELLCRANK			127
7151940	HARNESS, HORN			413
7152037	NUT, RETAINING			237
7152319	BELT, RETRACTOR			487
7152322	BELT, SEAT 2"			487, 491
7152323	COVER, RETRACTOR			487, 491
7152324	BRACKET, SEAT BELT			487, 491
7152658	WASHER			227, 237
7153075	BRACKET, DAMPER			529
7153076	BRACKET, DAMPER			529
7153107	PISTON			445, 447
7153108	HEAD			445, 447
7153379	LEVER, STEERING	7145145	D	127
7153503	BOOT			39, 77, 207, 245
7153832	SEAL, SHELF REAR			29, 31, 365, 401
7154285	BOX,RADIO DELETE			27, 367
7154404	CONTAINER			351

Code for disposition of old part number
A -- Use up
B -- Use on other application (See PNI)
C -- File PDR Report with Bobcat Parts Sales
D -- Part Number Error

Part Number	Description	Was	Code	Page
7154910	INSERT, THREADED			173, 177, 345, 347
7155024	HARNESS DOOR			311, 317, 323
7155044	BRACKET	7214874	B	305
7155238	BOLT			229, 233
7155308	WINDOW			329
7155359	FRAME, DOOR CAB			329
7155417	KIT, SEAL			445, 447
7155642	FENDER, PANEL RH			27, 367
7155643	FENDER, PANEL L.H.			27, 367
7155649	HOLDER, CUP			351
7155785	HEADLINER HVAC ASSY			31, 401
7155786	HEADLINER,STD			25
7155787	HEADLINER HVAC DLX			31
7155791	PANEL, RH			25, 27, 173, 177, 419, 421
7155792	PANEL, LH			25, 27, 173, 177
7155794	LOUVER, ROUND			31, 407
7155796	LOUVER, RECTANGLE			31, 379, 381
7155798	HEADLINER HVAC DLX			29
7155799	SCREW			31, 379, 381
7156087	SEAL			335
7156253	KIT, HEADLINER DLX			365
7156265	COVER			53
7156606	BRACKET, ASSY			423
7156761	PLATE			127
7156809	BUMPER			433
7157286	BODY			79, 85
7157291	TUBELINE			79, 85, 99, 103
7157671	COVER ARMREST, RH			199, 203
7157704	COVER ARMREST LH			199, 203
7157958	WASHER			17, 21
7158632	CONNECTOR			109, 123, 453
7158921	FITTING			119
7159386	WASHER			243, 245
7159624	BUSHING			127, 245
7160320	HOLDER, CUP			351
7160381	RIVET, BIRD CAGE			27, 367, 407
7160382	RIVET, BIRD CAGE			25, 27, 367
7160383	RIVET, BIRD CAGE			27, 351, 367
7160704	STOP			43
7160705	CHANNEL			43
7160760	MOUNT			425
7160765	NUT			389
7160779	PLATE			425
7160841	SEAL HANDLE DOOR			311, 317, 323
7161130	COVER			41
7161131	COVER, LEVER			41
7161429	PLUG			311, 317, 323, 329

Code for disposition of old part number
A -- Use up
B -- Use on other application (See PNI)
C -- File PDR Report with Bobcat Parts Sales
D -- Part Number Error

Part Number	Description	Was	Code	Page
7161536	PIN, CLEVIS			425
7161559	PIN, SNAPPER			415
7161789	SEAL			335
7161939	GRILL			27, 367
7161953	GUIDE, HOSE ASSY			415
7162176	SPACER			199, 203
7162770	SCREW			391, 403, 457
7162967	CABLE, POSITIVE			185
7163263	CAP WASHER BOTTLE			311, 317, 323
7163421	PEDAL ASSY			77, 207
7163589	INSERT, SWITCH			173, 177, 419, 421
7163988	SEAL, WINDOW REAR			337, 339, 467
7164073	GUIDE			177, 367
7164294	PEDAL, FOOT THROTTLE			245
7164345	COVER, PAN FLOOR			39, 41
7164564	BRACKET, A/C			185, 189, 397
7164686	BOLT, CARRIAGE			375, 425
7165037	CAP, INST PANEL RH			25
7165038	CAP, INST PANEL LH			25
7165332	SHELF, REAR			29, 31, 365, 401
7165333	CLIP			29, 31, 365, 401
7165344	STORAGE			27, 367
7165345	DOOR, COVER			27, 367
7165346	DOOR, COVER			27, 367
7165621	SCREW LOW HEAD			245
7165634	WASHER, PLASTIC			199, 203
7165673	SEAL, CAB DUCT			389
7165799	SCREW			25, 27, 29, 31, 365, 401
7165972	COUPLER INSERT			311, 317, 323
7166047	SEAT, CHECK VALVE			79, 85, 91, 95, 99, 103
7166171	BRACKET			243, 245
7166172	HANDLE			243, 245
7166173	HANDLE			243, 245
7166174	BLOCK			243, 245
7166190	SCREW THREAD ROLLING			311, 317, 323, 391, 403
7166196	FOAM, PANEL			335
7166205	SPACER HANDLE			311, 317, 323
7166269	WASHER			243, 245
7166334	ARM LIFT			425
7166339	SPRING, LOAD CHECK	7239824	C	79, 85, 91, 95, 99, 103
7166388	ASSY, ACS			99, 103
7166544	COVER, HVAC			367
7166629	LIGHT, CAB HEADLINER			29, 31
7166831	BLOCK			425
7166832	MOUNT			383

Code for disposition of old part number
A -- Use up
B -- Use on other application (See PNI)
C -- File PDR Report with Bobcat Parts Sales
D -- Part Number Error

NUMERICAL INDEX (Cont'd)

Part Number	Description	Was	Code	Page
7167003	CLIP			351
7167163	BOWL, FUEL			385
7167177	GROMMET WIPER			311, 317, 323, 467, 469
7167395	KIT, CUP HOLDER			351
7167437	SPRING, GAS STD			17, 21, 375
7167438	GAS SPRING			21, 387
7167506	SHIELD, ASSY			375
7167603	SEAT, OPERATOR SUSPENSION AIR			479, 503
7167844	SHAFT			311, 317, 323
7167845	PIN			311, 317, 323, 329
7167846	WASHER CAST			311, 317, 323, 329
7167988	DECAL, DANGER			359
7167989	DECAL, DANGER			359
7167990	DECAL, DANGER			359
7167991	DECAL, EXIT REAR			337, 339, 353, 467, 469
7167993	DECAL, WARNING			359, 509, 535
7167994	DECAL, WARNING			353
7167996	DECAL, WARNING			359, 423
7168019	DECAL, WARNING			423
7168020	DECAL, WARNING			423
7168021	DECAL			425
7168022	DECAL			425
7168023	DECAL			353
7168024	DECAL			353
7168025	DECAL EMERGENCY DOOR			311, 317, 323, 329, 353
7168031	DECAL			359
7168033	DECAL, DANGER			359, 363
7168034	DECAL, DANGER			359, 363
7168036	DECAL			359, 363
7168037	DECAL, WARNING			509, 535
7168038	DECAL, WARNING			353, 357
7168040	DECAL, WARNING			359, 363, 423
7168081	DECAL, OPERATION			353, 357
7168082	DECAL, OPERATION			353, 357
7168114	DECAL, SWITCH			197, 353, 419, 421
7168136	DECAL			353
7168138	DECAL, WARNING			353, 511, 513
7168139	DECAL, WARNING			353, 357, 511, 513
7168140	DECAL, WARNING			353
7168141	DECAL, WARNING			353, 357
7168142	DECAL, WARNING			353
7168143	DECAL, WARNING			353, 357
7168144	DECAL			353
7168159	BUSHING			425
7168171	BELT, SEAT 3"			489
7168172	BELT, SEAT 3"			491
7168272	DECAL			353

Code for disposition of old part number
A -- Use up
B -- Use on other application (See PNI)
C -- File PDR Report with Bobcat Parts Sales
D -- Part Number Error

NUMERICAL INDEX (Cont'd)

Part Number	Description	Was	Code	Page
7168273	DECAL, CONTROL			353, 357
7168429	BOLT, CONTROLLER			179, 197
7168604	RESISTOR			389
7168610	COVER			25, 29, 365
7168836	SHAFT			329
7168837	HINGE, DOOR			329
7168839	SPACER			329
7168841	SEAL			329
7168952	WIPER MOTOR			311
7168953	ARM WIPER ASSY			311
7168954	BLADE WIPER ASSY			311
7168955	GASKET			311
7168956	PLATE ADAPTOR			311
7168957	PLATE STUD ADAPTOR			311
7169070	KIT, DAMPER STEERING			529
7169112	SWITCH, ROCKER A/C			397
7169130	HARNESS ACCESSORY			295
7169291	DECAL			311, 317, 323, 329, 353, 387
7169480	KIT, BELT SEAT 3"			491
7169606	CONNECTOR, SLOTTED			17, 21
7169699	DECAL			359
7169747	TREAD, SAFETY			17, 21
7169753	HARNESS, FLASHER 4-WAY			383
7169849	FITTING BALLSTUD			311, 317, 323, 329
7169877	DECAL			17, 21, 359
7169911	DECAL PLATE			243, 245
7169932	MOUNT			531
7170114	SCREW			29, 31
7170337	STAND, SEAT			37
7170355	DECAL, DANGER			55, 59, 63, 359
7170357	PIN, PIVOT			45
7170360	DECAL, SPRING REMOVAL			311, 317, 323, 329, 353
7170531	HARNESS, CAB			329
7170765	NUT			199, 203
7170782	KIT, GAS SPRING DLX			387
7172119	SEAL, FOAM			467, 469
7172121	WASHER			467, 469
7172708	BRACKET, SWITCH			467, 469
7172897	KIT, RESEAL PLUGS			473
7172903	KIT, DECAL WHITE			545
7173159	BRACKET, BELT SEAT			37, 493
7173310	SPACER			429
7173403	DECAL, OPERATION			509, 535

Code for disposition of old part number
A -- Use up
B -- Use on other application (See PNI)
C -- File PDR Report with Bobcat Parts Sales
D -- Part Number Error

NUMERICAL INDEX (Cont'd)

Part Number	Description	Was	Code	Page
7173453	PLUG			473
7173592	KIT, ALARM BACK-UP			297
7173593	KIT, ALARM BACK-UP			299
7173651	INSULATION, HEATER			397
7173943	PLATFORM			433
7174129	KIT, GUARD LIGHT			427
7174171	KIT, HEADLINER HVAC			401
7174328	DECAL			359, 545
7174537	DECAL			359, 545
7174787	INSULATION, PAN SEAT			17, 21
7174807	ELBOW			477
7174837	GASKET, WIPER			311, 317, 323
7174838	SPACER			311, 317, 323
7174839	SPACER			311, 317, 323
7174841	SPACER, HANDLE			311, 317, 323
7175017	HARNESS, ALARM BACK-UP			191, 193, 297
7175151	STRIKER, DOOR			311, 317, 323, 329
7175581	HARNESS BRAKE SJC			437
7176099	FILTER, AIR FRESH 10			389
7176100	COVER			389
7176101	DUCT, AIR			389
7176133	PANEL, CAB INTERIOR			29
7176134	PANEL, CAB INTERIOR			25
7176579	SEAL, FOAM			389
7176603	INSULATION, PANEL SEAT			17, 21
7176942	SPACER			389
7176943	SEAL, COVER			389
7177196	SHELL, ARMREST RH			199, 203
7177197	SHELL, ARMREST LH			199, 203
7177212	GASKET			385
7177690	MOUNT			411, 413
7177707	DECAL			353, 419, 421
7177742	DECAL			353, 367
7177959	SEAL, BULK BULB			39, 41
7178420	KIT, PLATFORM MAINTENANCE			433
7178841	TEE			459
7178954	COVER, HVAC			25, 367
7179008	SCREW, PLASTIC			173, 177, 419
7179136	PLUG, HARNESS CAB STD			173
7179137	FOAM			173
7180087	DECAL, WARNING			297, 299, 353
7180126	WINDOW, CAB SLIDING			347

Code for disposition of old part number
A -- Use up
B -- Use on other application (See PNI)
C -- File PDR Report with Bobcat Parts Sales
D -- Part Number Error

NUMERICAL INDEX (Cont'd)

Part Number	Description	Was	Code	Page
7180127	WINDOW, CAB SLIDING			347
7180207	HARNESS, WIPER			467, 469
7182335	KIT, WINDOW SIDE			347
7182796	SEAL, FOAM			367
7182942	PLUG			27, 367
7183158	PLATE			329
7183295	HARNESS, HORN			411, 413
7183366	KIT, SEAT OPERATOR SUSPENSION AIR			503
7183399	ADAPTER			475
7183694	HOSE, HYD FORMED			109
7183869	GUARD, LIGHT			427
7183870	GUARD, LIGHT			427
7184341	BUSHING			487, 491
7184346	DECAL WARNING			353, 487, 491
7184677	BUSHING			43
7185137	SPACER			337, 339
7185150	PLUG, HARNESS CAB			173, 177, 367
7185234	KIT, REMOTE CONTROL			471
7185835	DECAL, IMPORTANT			353
7186598	VALVE, CHECK			475
7186599	VALVE CHECK SPRING			475
7186644	WINDOW, FOPS			377
7186723	KIT, WINDOW FOPS			377
7186768	BOLT			433
7186769	BOLT			433
7186972	LEVER			311, 317, 323, 329
7187104	SEAL			25, 419, 421
7187118	KIT, GUIDE HOSE			415
7188097	SEAL			311, 317, 323
7188108	GAS SPRING			127, 529
7188110	CLAMP			475
7188448	HARNESS, PUMP			197
7188542	DECAL, INSTRUCTIONS			359, 433
7188745	PLUG			17, 21, 351, 367, 407
7189077	MOUNT			297, 299
7189893	SHAFT, STEERING			127
7190111	DECAL, CONTROL			353, 421
7191035	LENS, REFLECTIVE			305, 437
7191332	YOKE, FLANGE			77
7191333	PIN, CLEVIS			77
7191334	PIN, CLEVIS			77
7191385	SHIELD, ALARM			297, 299
7191672	ELBOW			179
7192287	BOLT			391, 403, 407
7192371	BOLT			397, 403

Code for disposition of old part number
A -- Use up
B -- Use on other application (See PNI)
C -- File PDR Report with Bobcat Parts Sales
D -- Part Number Error

NUMERICAL INDEX (Cont'd)

Part Number	Description	Was	Code	Page
7192408	SEAL			391, 403
7192569	BRACKET			389
7192823	NUT			473
7193018	SEAL			407
7193019	PANEL, DUCT			407
7193020	DUCT, AIR			407
7193021	BRACKET			27, 367, 407
7193022	INSULATION			407
7193023	DUCT, AIR			407
7193294	DECAL, SERVICE			353
7193354	FILTER, AIR RECIRCULATING			391, 403
7193531	GROMMET			397, 403
7193532	GROMMET			391, 403
7193533	GROMMET			397, 403
7193534	COIL, HEATER			391, 403
7193535	EVAPORATOR			397, 403
7193540	LATCH			391, 403
7193541	DRAIN, WATER SEAT			391, 403
7193542	SEAL			391, 403
7193543	SEAL			391, 403
7193584	MOUNT, LIFT KIT			425
7193687	BRACKET, MOUNTING			229, 233
7193725	HINGE, DOOR CAB			311, 317, 323
7193782	COVER			391
7193783	SEAL, FOAM			391, 403
7193784	BOLT			403
7193786	RIVET, POP			403
7194027	CHAINCASE			49
7194153	SHIELD, BELT			237
7194203	BRACKET, HARNESS			185, 189
7194262	WRAPAROUND			391, 403
7194471	PIN, CLEVIS			375
7195084	MAIN FRAME			13
7195419	VALVE, RIDE CONTROL			475
7195586	INSULATION, CROSSMEMBER			517, 519
7195828	PULLEY, PUMP			229, 233
7195987	LIFT ARM			45
7196000	BUSHING, TAPERED			45
7196010	BUSHING, TAPERED			45
7196015	BUSHING, PLASTIC			311, 317, 323
7196017	DISK, PLASTIC			311, 317, 323
7196740	HOSE, HYD			123
7196741	HOSE, HYD			123
7196775	BOB-TACH	7196777	D	47
7196826	HOSE, DRAIN			119
7196827	HOSE, DRAIN			119
7196889	LATCH			391, 403

Code for disposition of old part number
A -- Use up
B -- Use on other application (See PNI)
C -- File PDR Report with Bobcat Parts Sales
D -- Part Number Error

NUMERICAL INDEX (Cont'd)

Part Number	Description	Was	Code	Page
7197003	LOUVER			13
7197004	LOUVER			13
7197507	COVER			13
7197614	STRAP, HOLD DOWN			397
7197733	FAN			407
7197915	SPRING, COMPRESSION			199, 203
7197916	SPACER			199, 203
7197921	MOUNT, CONTROLS RH			199, 203
7197922	MOUNT, CONTROLS LH			199, 203
7197972	COVER			25, 367
7197973	COVER			367, 389
7198932	INSULATION			515, 523
7199010	INSULATION			515, 523
7199044	BRACKET			367
7199241	TUBE, COOLING			225
7199301	HOSE, HYD			55, 59
7199302	HOSE, HYD			55, 59
7199370	TANK, HYD			109
7199371	TUBELINE HYD			109
7199372	HOSE, HYD FORMED			109
7199373	HOSE, HYD FORMED			109
7199376	BRACKET			109
7199853	SPRING, TORSION			199, 203
7200039	INSULATION	7163132	D	39, 41
7200044	PANEL, STEERING			39, 41
7200045	PAN, FLOOR			39, 41
7200047	INSULATION	7166196	D	39, 41
7200227	CYLINDER, ASSY HYDRAULIC			73
7200229	SHAFT, W/A			73
7200271	TUBELINE, HYD			73
7200449	HARNESS, FUEL			179
7200451	BRACKET			179
7200460	HARNESS, FUEL			179, 453
7200463	HARNESS, SJC			197
7200465	HARNESS, ENG			185, 189
7200657	KIT, DUCT			407
7200765	LINK			77
7200883	HARNESS, JUMPER FAN			407
7201325	TUBELINE HYD			115
7201414	HARNESS, AUX REAR			459
7202043	TUBELINE, HYD			459
7202051	TUBELINE, HYD			459
7202054	TUBELINE, HYD			459
7202056	TUBELINE, HYD			459

Code for disposition of old part number
A -- Use up
B -- Use on other application (See PNI)
C -- File PDR Report with Bobcat Parts Sales
D -- Part Number Error

NUMERICAL INDEX (Cont'd)

Part Number	Description	Was	Code	Page
7202325	TUBELINE, HYD VALVE CONTROL			79, 85, 91, 95, 99, 103
7202329	FITTING, HYD CONNECTOR W/SCREEN			79, 85, 91, 95, 99, 103
7202800	BRACKET, SUPPORT			13
7202956	SEAL, BULK			173, 177
7203000	HOSE, HYD FORMED			119
7203382	PLUG, STEEL	6717401	A	239
7203389	SEAT BAR			35
7203431	TUBELINE, HYD			459
7203566	TUBELINE, HYD			459
7203567	TUBELINE, HYD			459
7203643	SPRING, VALVE			79, 85, 91, 95, 99, 103
7204073	KIT, SPRING DAMPER			527
7204315	KIT, AXLE WEIGHT			349
7204924	LINK			127
7205237	PANEL, MOUNTING			41
7205239	LINK, PEDAL			245
7205245	LEVER			245
7205247	PEDAL, RH			41, 245
7205251	PEDAL, LH			41, 245
7205727	DECAL, SERVICE			353, 357, 515
7205887	LINK, PEDAL			207
7205888	MOUNT, BELLCRANK			39, 127
7205994	HARNESS, ENG			179
7206933	FLYWHEEL, ENG ASSY			229, 233
7207410	SPACER			73
7207541	COVER, FUSE BOX			179
7207542	HOUSING, FUSE CENTER			179
7208227	SEAT, RELIEF PORT			79, 85, 91, 95, 99, 103
7208233	TUBE, FUEL			239
7208252	WHEEL, RIM 16.5X8.25			537
7208338	GUARD, HOSE			239
7208849	MOUNT, ENG			237
7209517	CABLE, THROTTLE			245
7209518	CABLE, THROTTLE HAND			245
7209701	TANK, FUEL			239
7209958	CYLINDER, HYD			69
7209960	PISTON			69
7209962	TUBE, ASSY SERVICE			69
7209963	SHAFT, W/A			69
7210520	MOUNT, ENG/PUMP			237
7210574	SHIELD, BELT			229, 233
7211352	DISC, BRAKE TRACTION LOCK			53
7211353	CHAIN			49

Code for disposition of old part number
A -- Use up
B -- Use on other application (See PNI)
C -- File PDR Report with Bobcat Parts Sales
D -- Part Number Error

NUMERICAL INDEX (Cont'd)

Part Number	Description	Was	Code	Page
7211393	RETAINER, SEAL			79, 85, 91, 95, 99, 103
7211394	ADAPTER, DETENT			79, 85, 91, 95
7211397	WASHER, SPRING			79, 85, 91, 95, 99, 103
7211400	SLEEVE, DETENT			79, 85, 91, 95
7211402	HOSE, HYD			123
7212325	HOSE, AIR FORMED			227
7213028	FITTING, ELBOW			239
7213396	CLAMP, CABLE			245
7213411	SPRING, TORSION			245
7213589	HOSE, HYD			453
7213590	HOSE, HYD			119, 121
7213697	CABLE, NEGATIVE			185
7213928	KIT, PANEL DLX			419
7213929	KIT, PANEL KEYLESS			421
7213950	SUPPORT, LIFT ARM			45
7214062	SPROCKET			49, 53
7214138	WINDOW, CAB REAR			337
7214312	RING, RETAINING			79, 85, 91, 95, 99, 103, 451
7214673	KIT, WINDOW REAR			337
7214804	BUSHING, PIVOT			47
7214841	MOUNT, VALVE			63
7214856	RING, RETAINING			79, 85
7214959	BLOCK, VALVE CONTROL HYD			79, 85
7215368	HOSE, HYD			63
7215374	BUSHING, NYLON			17, 21
7215434	PUMP, HYD TANDEM W/O GEAR PUMP			141, 145
7217075	SPOOL, BICS			79, 85, 91, 95, 99, 103
7217259	INSULATION, UPRIGHT			523
7217260	INSULATION, UPRIGHT			523
7217483	HARNESS, REAR DOOR			193
7217484	HARNESS, REAR DOOR			191
7218276	PLATE, LATCH			43
7218479	SHROUD, FAN			219, 223
7218923	KIT, SEAL COMPLETE			79, 85, 91, 95, 99, 103
7218924	KIT, SEAL			79, 85, 91, 95, 99, 103
7219035	DECAL			359
7219036	DECAL			359
7219038	DECAL			359
7219044	RELAY, ELECTRICAL			179
7219080	O-RING			79, 85, 91, 95, 99, 103
7219294	HARNESS, SWITCH NEUTRAL			305, 437
7219324	VALVE, RELIEF	7219323	D	79, 85, 91, 95, 99, 103
7219703	PLUG, BICS			79, 85, 99, 103

Code for disposition of old part number
A -- Use up
B -- Use on other application (See PNI)
C -- File PDR Report with Bobcat Parts Sales
D -- Part Number Error

Part Number	Description	Was	Code	Page
7219704	PLUG, BICS			91, 95
7219755	PUMP, PRIMER HAND			239
7219892	BUSHING, PIVOT			45
7219972	SEAL, WINDOW REAR			17, 21
7219974	WINDOW, CAB REAR			17, 21
7220028	TANK, WATER COOLANT			225
7220031	MOUNT, TANK COOLANT			225
7220174	BRACKET, COMPRESSOR A/C			397
7220344	DECAL, REFLECTIVE			305, 359, 437
7220348	DECAL, REFLECTIVE			305, 359, 437
7221255	SPRING			47
7221530	HORN, ALARM			411, 413
7221646	O-RING			49
7221861	GROMMET			243, 245
7222384	HARNESS, MFR			179
7222397	LOUVER, ROUND			31
7222498	FILTER, AIR CLEANER ASSY			227, 291
7222517	CABLE, THROTTLE HAND			243
7222562	BLOCK, VALVE CONTROL HYD			99, 103
7222563	BRACKET			179
7222766	HARNESS, ACS			207
7222767	SPACER			411, 413
7223184	MOUNT, LOAD ISOLATOR			229, 233
7223271	KIT, HORN			411
7223272	KIT, HORN W/JOYSTICK			413
7223412	PANEL, DASH			25, 27
7223504	BRACKET, AIR CLEANER			227
7223715	BRACKET, MOUNTING			379, 381
7224039	SPRING, COMPRESSION			451
7224369	CHANNEL			337, 467
7224653	INSULATION, BLOCK			515, 523
7224654	INSULATION, BLOCK			515, 523
7224655	INSULATION, BLOCK			515, 523
7224656	INSULATION TRANS SSL			515, 525
7224664	EXTINGUISHER, FIRE			379
7224665	BRACKET, EXTINGUISHER FIRE			379
7224765	INSULATION			515, 525
7224766	INSULATION			515, 525
7224767	INSULATION			515, 525

Code for disposition of old part number
A -- Use up
B -- Use on other application (See PNI)
C -- File PDR Report with Bobcat Parts Sales
D -- Part Number Error

Part Number	Description	Was	Code	Page
7225133	KIT, WIPER REAR			467
7225145	WINDOW, CAB REAR			467
7225214	SPOOL			451
7225352	HOSE, WATER			225
7225353	HOSE, WATER			225
7225354	EXCHANGER, OIL WATER AIR			125, 225
7225718	HARNESS, HORN			411, 413
7225908	BOLT			49
7226207	MANIFOLD, OUTLET PUMP			109, 459, 515, 521
7226770	ORIFICE			451
7226854	BRACKET			367
7227462	SHAFT, W/A			443, 445, 447
7227463	CYLINDER, POWER BOB-TACH			443, 453
7227465	TUBE, CASE CYL POWER BOB-TACH			443
7227470	PIN, PIVOT			423
7227584	HOSE, HYD			109, 515, 521
7227589	TUBELINE HYD			55, 59
7227642	HOSE, AIR FORMED			227
7227849	KIT, SEAL CAB			335
7227863	DUCT, AIR			219, 223
7228298	BRACKET			397
7228386	CLAMP			185
7228387	CLAMP			185
7228739	MOUNT, BOOM DOWN			63
7228775	HOSE, HYD			65
7228777	HOSE, HYD			55, 59
7228778	HOSE, HYD			55, 59
7228781	HOSE, HYD			55, 59
7228787	TUBELINE HYD			55, 59
7228788	TUBELINE HYD			55, 59
7228791	TUBELINE HYD			63
7229102	KIT, ACD 7-PIN			371
7229104	HARNESS, ACD 7-PIN			371
7229105	MOUNT, ELEC COUPLER			371
7229193	BUSHING, PIVOT			13
7229391	ARMREST RH	7197924	A	199, 203
7229392	ARMREST LH	7197925	A	199, 203
7229539	LIGHT, CAB HEADLINER			29, 31, 365
7230451	HOSE, HYD FORMED			113
7230495	LIFTARM BYPASS			107
7230695	PULLEY, A/C			229, 233, 397
7231090	AXLE SHAFT SEAL			51
7231335	COVER, TRANSMISSION			53

Code for disposition of old part number
A -- Use up
B -- Use on other application (See PNI)
C -- File PDR Report with Bobcat Parts Sales
D -- Part Number Error

NUMERICAL INDEX (Cont'd)

Part Number	Description	Was	Code	Page
7231377	VALVE, 2-SPEED			459
7231496	FILTER, AIR HEATER CAB			409
7231591	LINK, STEERING			127
7231771	HARNESS, WIPER			417
7232149	SEAL, FOAM			219, 223
7232150	BRACKET			219, 223
7232310	DECAL, FUSE			179, 353
7232515	FITTING, HYD TEE			79, 85, 99, 103
7232526	COVER, PLATE			49
7232529	COVER, WIPER			417
7232658	TANK, WASHER	7163259	A	311, 317, 323
7232742	VALVE, SOLENOID			451
7232751	VALVE, RELIEF			451
7232870	PLUG			451
7233218	COVER, ENG			43
7233339	INSULATION, DOOR REAR			515, 523
7233340	INSULATION, DOOR REAR			515, 523
7233368	FITTING, HYD ELBOW			123
7233371	MOUNT, CONDENSER			397
7233375	HOSE, HYD			109, 453
7233394	HOSE, HYD			109, 515, 521
7233439	SEALANT, GASKET LIQUID			17, 21
7233641	TUBELINE, HEATER			395
7233644	HOSE, A/C ASSY			397
7233665	INSULATION			43
7233712	TUBELINE HYD			59
7233713	HOSE, HYD			59
7233715	TUBELINE HYD			55, 309
7233716	TUBELINE HYD			55, 309
7233717	TUBELINE HYD			55, 309
7233891	HUB			165, 219, 223
7233981	COVER, SPRING NO AUX			91, 95
7233982	FITTING, HYD CONNECTOR			91, 95
7233983	COVER, VALVE ASSY			91, 95
7234007	DECAL, REMOVAL WINDOW			341, 359
7234061	HEADLINER DLX			29, 365
7234064	HEADLINER DLX			31
7234124	COVER, ACCESS		A	293
7234174	MOTOR, WIPER			317, 323
7234196	INSULATION			517, 519
7234201	INSULATION			517
7234202	INSULATION			517, 519
7234203	INSULATION			517, 519

Code for disposition of old part number
A -- Use up
B -- Use on other application (See PNI)
C -- File PDR Report with Bobcat Parts Sales
D -- Part Number Error

NUMERICAL INDEX (Cont'd)

Part Number	Description	Was	Code	Page
7234376	TUBELINE HYD			453
7234389	HOSE, HYD			453
7234460	WHEEL, RIM			537
7234463	TUBELINE HYD			65
7234464	TUBELINE HYD			65
7234465	TUBELINE HYD			65
7234468	GAS SPRING			17, 21
7234899	KIT, REMOVAL WINDOW			341
7234926	KNOB			341
7234927	INSULATION			517, 519
7234928	INSULATION			517, 519
7234943	SPACER			341
7235324	SCREEN, FUEL PICKUP			239
7235510	SPRING, CLIP			397
7235547	INSULATION			519
7235664	PLUG			451
7235665	PLUG, SOCKET			451
7235751	FOAM, FRONT	7163132	A	335
7235766	TUBELINE			117
7235925	VALVE, CHECK			169, 171
7236052	HOSE, HYD ASSY			459
7236071	HOSE, HYD FORMED			113
7236073	HOSE, WATER			225
7236074	TUBELINE, HEATER			395
7236275	KIT, SEAL			69
7236735	FITTING, HYD ELBOW	7245503	D	169, 171
7236799	FAN, COOLING			219, 223
7236918	DECAL, TAILGATE BASE			359
7237057	MOUNT			245
7237060	LEVER			245
7237062	LEVER			245
7237096	CONTROL, WIPER			417
7237131	MOUNT, ENG	7223015	C	237
7237345	BELT, COMPRESSOR A/C			397
7237725	MOUNT, ISOLATOR			125, 219, 223
7238416	INSULATION			515, 525
7238449	BRACKET			459
7238557	BRACKET			459
7238569	BRACKET			459
7238712	MOUNT, PUMP	7223017	C	229, 233
7238766	HOSE, HYD			55, 59
7238767	HOSE, HYD			55, 59
7238768	HOSE, HYD			55, 59
7238769	HOSE, HYD			55, 59
7238771	BRACKET, THROTTLE			243, 245
7238772	CONDENSER, A/C			397

Code for disposition of old part number
A -- Use up
B -- Use on other application (See PNI)
C -- File PDR Report with Bobcat Parts Sales
D -- Part Number Error

Part Number	Description	Was	Code	Page
7239159	KIT, TAIL LIGHT GUARD			429
7239161	GUARD, TAIL LIGHT			429
7239168	SPRING			169, 171
7239230	FITTING, HYD TEE			91, 95
7239466	SHIELD, CYL			507
7239841	COVER, MOTOR			13
7239866	TUBELINE, HYD			65
7239867	TUBELINE, HYD			65
7240056	FITTING, HYD TEE			55, 59, 475
7240057	FITTING, HYD CONNECTOR			453
7240148	KIT, WIPER INTERMITTENT			417
7240154	SHIELD, CYL			507
7240246	TUBELINE HYD			55, 309
7240247	TUBELINE HYD			55, 309
7240300	HOSE, HYD			55, 59
7240302	TUBELINE HYD			55, 59
7240312	TUBELINE HYD			453
7240313	HOSE, HYD			453
7240314	HOSE, HYD			453
7240464	ORIFICE			451
7240823	PANEL, CONTROL			389
7240855	HOSE, HYD ASSY			459
7240859	HOSE, HYD ASSY			459
7240860	HOSE, HYD			55, 309, 475
7240968	NUT			165, 219, 223
7241140	LIGHT, STROBE	7219903	A	533
7241386	PLATE, RETAINER			125, 219
7241484	KIT, HEADLINER DLX			367
7241505ENUS	INSTRUCTIONS	7241505		423
7241506	KIT, LIFT 4PT			423
7241548	KIT, SINGLE PT LIFT			425
7241550ENUS	INSTRUCTIONS	7241550		425
7241911	MOUNT			219
7241952	CABLE POSITIVE			185, 189
7241954	CABLE NEGATIVE			185, 189
7242068	GASKET			165, 219, 223
7242070	DECAL, SERVICE			353, 515
7242126	ROD, PROP UP			397
7242286	BRACKET			459
7242323	SUPPORT, LH			425
7242324	SUPPORT, RH			425
7242565	HOSE, HYD			65
7242844	KIT, STEERING LINK ISOLATOR			531
7242905	SLIDE	7200887	A	199, 203
7242906	SLIDE	7200888	A	199, 203
7243522	LINK, CENTERING			531

Code for disposition of old part number
A -- Use up
B -- Use on other application (See PNI)
C -- File PDR Report with Bobcat Parts Sales
D -- Part Number Error

Part Number	Description	Was	Code	Page
7243523	LINK, STEERING			531
7243577	HOSE, HYD			115
7243649	MOUNT, FAN			165, 219, 223
7243659	DUCT, AIR			219
7243662	HOSE, HYD			115
7243663	W/A, SCREEN			219, 223
7243666	SHIELD, DEBRIS			219, 223
7243668	SHIELD, AIR INTAKE			227
7243717	TUBELINE, HYD			109
7243894	INSULATION, TAILGATE RH TOP			515, 523
7243938	SEAL, BULK			219, 223
7243982	RETAINER, HOLDER			397
7244201	GAUGE, SIGHT			109
7244206	POTENTIOMETER, HVAC			389
7244207	KNOB			389
7244288	FTG HYD BEADED 45			123
7244382	INSULATION			179
7244396	MUFFLER			227
7244630	KIT, HEATER PLUMBING			395
7244632	KIT, A/C			397
7244883	COVER, HOSE			219, 223
7244911	SHIELD			219, 223
7244971	BOLT			219
7245025	TIRE 7 X 150 HD			537
7245140	HOSE, HYD ASSY			459
7245141	HOSE, HYD ASSY			459
7245475	SEAL	7142873	A	335
7245476	SEAL	7142875	A	335
7245503	FITTING, HYD ELBOW			117
7245541	HOLDER, ACCUMULATOR			475
7245552	GROMMET			113
7245619	INSULATION, TAILGATE LH TOP			515, 523
7246068	KIT, RIDE CONTROL			475
7246079	HOSE, HYD ASSY			475
7246081	HOLDER, VALVE			475
7246193	FITTING, HYD TEE			477
7246212	TIRE SOLID FLEX 10 X 16.5 LH 8			539
7246213	TIRE SOLID FLEX 10 X 16.5 RH 8			539
7246497	HOSE, HYD ASSY			117, 165
7246498	HOSE, HYD ASSY			117, 165
7246559	INSERT, THREADED			409
7246786	COUPLER, FF FEMALE			459

Code for disposition of old part number
A -- Use up
B -- Use on other application (See PNI)
C -- File PDR Report with Bobcat Parts Sales
D -- Part Number Error

NUMERICAL INDEX (Cont'd)

Part Number	Description	Was	Code	Page
7246787	COUPLER, FF MALE			459
7246876	MOUNT	7167871	A	191, 193
7247020	HUB, FAN COOLING	7199118		219
7247290	RETAINER, BOLT	7121779		127
7247445	NUT BAR ASSY			43
7247451	WHEEL, RIM 16.5X8.25			537
7247745	SPRING, COMPRESSION			451
7247992ENUS	INSTRUCTIONS	7247992	A	459
7248052ENUS	INSTRUCTIONS	7248052		395
7248058ENUS	INSTRUCTIONS	7248058	A	397
7248293	KIT, SHIELD CYL			507
7248550	HOSE, HYD ASSY			459
7248551	HOSE, HYD ASSY			459
7249212	HOSE, HYD ASSY			475
7249362ENUS	INSTRUCTIONS	7249362		531
7249431	HOSE, HYD ASSY			475
7249561	KIT, DECAL			353, 359
7249675ENUS	INSTRUCTIONS			475
7249784	HOSE, HYD ASSY			475
7249869	KIT, REAR AUX			459
7249974	BOLT			165, 219, 223
7250289	KIT, SEAL			169, 171
7250870	GROMMET			323
7250892	HANDLE, LATCH DOOR			43
7251002	MOUNT	7213750	A	65
7251263	ASSY, WIPER ARM			317, 323
7251264	BLADE, WIPER			317, 323
7251265	GASKET			317, 323
7251266	PLATE, ADAPTER			317, 323
7251267	STUD			317, 323
7251278	NUT			317, 323
7251279	NUT			317, 323
7251340	ASSY, LIGHT HEAD RH	7138040	C	173, 177
7251341	ASSY, LIGHT HEAD LH	7138041	A	173, 177
7251385	STEP	7233244	A	45
7251549	SHIELD			509
7251551	KIT, SHIELD			509
7251689	PAINT, ORANGE QT 6			1
7251690	PAINT, ORANGE SPRAY CAN 6			1
7251691	PAINT, ORANGE .5 OZ			1
7251692	PAINT, CHARCOAL QT 6	6902234	A	1
7251693	PAINT, CHARCOAL SPRAY CAN 6	6902229	A	1

Code for disposition of old part number
A -- Use up
B -- Use on other application (See PNI)
C -- File PDR Report with Bobcat Parts Sales
D -- Part Number Error

Part Number	Description	Was	Code	Page
7251694	PAINT, CHARCOAL .5 OZ	6736641	A	1
7251695	PAINT, WHITE QT 6	6902235	A	1
7251701	PAINT, WHITE SPRAY CAN 6	6902230	A	1
7251702	PAINT, WHITE .5 OZ	6736642	A	1
7251704	PAINT, RED .5 OZ	6736645	A	1
7251705	PRIMER, QT 6	6902236	A	1
7251706	PRIMER, SPRAY CAN 6	6902232	A	1
7251745	SWITCH, MAGNETIC			179
7252091	KIT, SOUND/NOISE REDUCTION			511
7252092	KIT, SOUND/NOISE REDUCTION			513
7252095	ASSY, AC TUBELINE HOSE	7233640		397
7252096	ASSY, AC TUBELINE HOSE	7242147		397
7252969	HARNESS, RELAY SWITCH			179
7252989	PIVOT, WEDGE			47
7253043	NOZZLE, SPRAY			323
7253378	HARNESS, JUMPER			317, 323
7253514	TENSIONER, DRIVE BELT			233
7254136	KIT, BUCKET POS			309
7254137	KIT, POWER BOB-TACH			453
7254140	KIT, SOUND/NOISE REDUCTION			515
7254142ENUS	INSTRUCTIONS	7254142		509
7254248	BUSHING			317, 323
7254364	BRACKET, FUEL			239
7254421	BUMPER			345, 347
7254526	MOUNT			219
7254811	GROUP, ROTATING			153
7254812	CONTROL			155
7254813	CONTROL			157
7254817	KIT, SEAL			149
7254818	GROUP, ROTATING			151
7254822	GROUP, ROTATING			151
7254825	GROUP, ROTATING			153
7254827	BEARING			151, 153
7254829	BUSHING			151, 153
7254831	PLATE, CONTROL			151
7254832	PLATE, CONTROL			153
7254835	COUPLER			149
7254836	FILTER			149
7254837	PIN			149
7254838	SHAFT			149

Code for disposition of old part number
A -- Use up
B -- Use on other application (See PNI)
C -- File PDR Report with Bobcat Parts Sales
D -- Part Number Error

NUMERICAL INDEX (Cont'd)

Part Number	Description	Was	Code	Page
7254948	TUBELINE HYDRAULIC			59
7254949	TUBELINE HYDRAULIC			59
7254992	PANEL, CONTROL			389
7254993	DECAL			389
7255136	SCREW, SOCKET HEAD			47
7255536	LINK, PEDAL	7200776	A	77
7255537	LINK	7200775	A	77
7255678ENUS	INSTRUCTIONS	7255678	A	309
7255679ENUS	INSTRUCTIONS	7255679	A	453
7255728ENUS	INSTRUCTIONS			409
7256230	HOUSING			403
7256320	HOSE, HYD ASSY			109
7256347	LENS, REFLECTIVE	6697797	A	533
7257217	HARNESS, MFR SF CONTROL			179
7257218	HARNESS, MFR SF MANUAL			179
7257309	DUCT	7197262	A	389
7257310	SEAL, DUCT CENTER	7167405	A	389
7257350	HOSE, HYD FORMED			119, 121
7257351	FITTING			119, 121
7257756	SPRING			159
7258389	PLUG			323
7259313	HARNESS, CAB	7210557	B	173
7260106	COVER, SEAT			497
7260107	COVER, SEAT HEATED			497
7260936	CONTROLLER, GATEWAY	6693353	A	179
7261288	COVER, SEAT			495
7261289	COVER, SEAT HEATED			495
7261608	GLASS, LOWER			345
7261609	GLASS, REAR FIXED RH			345
7261610	GLASS, FORWARD SLIDING RH			345
7261862	TUBELINE, HYD			117, 165
7261886	HOSE, DRAIN			121
7261903	LOUVER			31
7261916	FITTING			121
7265242ENUS	INSTRUCTIONS			345
7265522	LATCH, WINDOW CAB			345
7265545	COLUMN, FRONT LEFT			27, 367
7265577	MOTOR, FAN DRIVE	7265579		165, 171
7265583	SWITCH, ROCKER LIGHT			431

Code for disposition of old part number
A -- Use up
B -- Use on other application (See PNI)
C -- File PDR Report with Bobcat Parts Sales
D -- Part Number Error

Part Number	Description	Was	Code	Page
7265694	GEROLER			133, 135
7265775	HOUSING, BEARING			135, 137
7265776	HOUSING, BEARING			131, 133
7265777	ASSY, SHAFT			131, 133, 135, 137
7266219	SEAL FOAM			219, 223
7266220	SEAL FOAM			219, 223
7266229	SEAL FOAM			219, 223
7266269	DUCT, REAR AIR			223
7266559	SPOOL, LIFT LOCK	7209497	A	79, 85, 91, 95
7266560	SPOOL, LIFT	7209496	A	99, 103
7266739	GLASS, REAR FIXED LH			345
7266740	GLASS, FORWARD SLIDING LH			345
7266825	JOYSTICK, LH ASSY			203
7266826	JOYSTICK, RH ASSY			203
7266827	BASE, JOYSTICK LH			203
7266828	BASE, JOYSTICK RH			203
7267121	PLUG			451
7267717	RIM			537
7267718	MOTOR, DRIVE HYD			123, 137
7267719	MOTOR, DRIVE HYD			123, 133
7268584	KIT, MOTOR FAN			165
7268640ENUS	INSTRUCTIONS	7268640		165
7268946	HOSE, DRAIN			121
7269229	PLUG THROTTLE CABLE			25
7270107	ASSY, HUB	6578689	B	51
7270546	SPROCKET MACHINED	7211351	A	51
7271318	HOSE, HYD			123
7271320	HOSE, HYD			123
7272066	BRACKET, DECALS			305, 437
7272731	VALVE, SOLENOID			85, 95, 103
7272732	ASSY, COIL SOLENOID			85, 95, 103, 179
7273025	HOSE, DRAIN	7215765	B	237
7273570	VALVE, POWER BOB-TACH	7231548	A	451, 453
7273609	SHIELD			535
7273610	SHIELD			535
7274493	COIL, SOLENOID			171
7274494	VALVE, PROPORTIONAL			171
7274762	NUT, HEX			317, 323
7274763	SCREW			317, 323
7274909	CONTROLLER			197
7275241	COVER, PUMP	7218172		13
7275379	KIT, LIGHT LED			431

Code for disposition of old part number
A -- Use up
B -- Use on other application (See PNI)
C -- File PDR Report with Bobcat Parts Sales
D -- Part Number Error

Part Number	Description	Was	Code	Page
7275528	RAIL, LIGHT MOUNTING LH			431
7275529	RAIL, LIGHT MOUNTING RH			431
7275530	RAIL, FRONT CROSS MEMBER			431
7275531	HARNESS, LED LIGHT			431
7275532	LIGHT, LED FLOOD			431
7275533	KIT, HARDWARE			431
7275994	CYLINDER HYDRAULIC			75
7275995	CYLINDER HYDRAULIC			71
7276579	BRACKET, LIFT	7227550	A	13
7276657	FOAM			179
7277777	PIN	14J5032	B	47
7277821	SEAL, SHAFT	6691339	A	131, 133, 135, 137
7277987	CONTROLLER, AUX CONTROL	7260937	A	179
7278971ENUS	INSTRUCTIONS	7278971	A	323
7279183	PIN, PIVOT TAPERED			45
7279636	KIT, DOOR CAB			323
7280129	EXTINGUISHER, FIRE			381
7280493	COMPRESSOR, A/C	7023584	A	397
7280785	VALVE, POPPET	7214722	A	79, 85, 91, 95, 99, 103
7281063	SEAL, DOOR	7222790	A	311, 317, 323, 329
7281321	COVER, BRAKE			53
7281334	VALVE, RELIEF			141, 145
7282145	FAN, HVAC 3 SPD	7249527	A	393, 403
7282204	KIT, SEAL	7031574	A	451
7282803	BRACKET, MOUNTING	7222080	B	229, 233
7282804	BRACKET, MOUNTING	7222081	B	229, 233
7282966	COLUMN, FRONT RIGHT			27, 367
7283321	STARTER			217
7283468	VALVE, RELIEF	6692332	A	161
7283637	PLATE, DOOR			311, 317, 323, 329
7284703	HARNESS, JOYSTICK			197
7284937	SWASHPLATE	6685344	A	141, 145
7286432	DRIER, A/C ASSY			397
7286433	RECEIVER, DRIER A/C			397
7286434	HARNESS, A/C			397
7286435	HARNESS, A/C			397
7286436	SWITCH, PRESS			397
7286502	CAMERA REAR VIEW			463
7286547	BELT, DRIVE			11, 229, 543
7286548	BELT, DRIVE			233
7286606	ISOLATOR VIBRATION			21
7286607	ISOLATOR VIBRATION			21
7287028	SENSOR, FUEL	7216452	A	179, 239

Code for disposition of old part number
A -- Use up
B -- Use on other application (See PNI)
C -- File PDR Report with Bobcat Parts Sales
D -- Part Number Error

NUMERICAL INDEX (Cont'd)

Part Number	Description	Was	Code	Page
7288358	BRACKET			381
7288645	PANEL MOUNTING			41
7288675	HARNESS SJC			197
7294390	SWITCH, ROCKER			477
7295717EF	TIRE, FLEX LH 10X16.5(31X10.5-20) EF			539
7295718EF	TIRE, FLEX RH 10X16.5(31X10.5-20) EF			539
7295719EF	TIRE, W/O RIM 10X16.5(31X10.5-20) EF			539
7295725EF	TIRE OFFSET LH 10X16.5 (30X10-16)			539
7295726EF	TIRE OFFSET RH 10X16.5 (30X10-16)			539
7295933	PLATE, TENSIONER			229, 543
7295934	WASHER			229, 543
7296507	MANIFOLD DRAIN CASE	7201981	B	63
7296603	SEAL, SHAFT	6687191	A	141
7296992	TIRE SOLID FLEX 10X16.5 LH			539
7296993	TIRE SOLID FLEX 10X16.5 RH			539
7297015	HOSE, HYD ASSY	7271318	A	123
7297078	VALVE, CONTROL			103
7297079	VALVE			85
7299230	MOUNT ENGINE PUMP			237
72F1	FITTING			239
7300621	TANK, FUEL			239
7301022	SCREW KNOB			389
7301530	HARNESS MFR SF MANUAL	7297200	D	179
7301532	HARNESS MFR SF CONTROL	7297202	D	179
7301672	COIL SOLENOID			85, 95, 103, 179
7302293	KIT PIVOT BOB-TACH			47
7302297	KIT BOB-TACH UPPER (M SERIES)			47
7302973	MOTOR, FAN	7231471	A	169, 171
7303126	KIT, TENSIONER			543
7303127ENUS	INSTRUCTIONS	7303127	A	543
7303141	SHIELD BATTERY	7242069	A	185
7303206	GUARD POWER BOB-TACH			453
7303241	INSULATION, CROSSMEMBER	7195586	A	511, 513, 517, 519
7303242	INSULATION	7234196	A	511, 513, 517, 519
7303243	INSULATION	7234201	A	511, 517
7303244	INSULATION	7234202	A	511, 513, 517, 519

Code for disposition of old part number
A -- Use up
B -- Use on other application (See PNI)
C -- File PDR Report with Bobcat Parts Sales
D -- Part Number Error

Part Number	Description	Was	Code	Page
7303245	INSULATION	7234203	A	511, 513, 517, 519
7303246	INSULATION	7234927	A	511, 513, 517, 519
7303247	INSULATION	7234928	A	511, 513, 517, 519
7303248	INSULATION	7235547	A	513, 519
7303649	SPACER TUBE			21
7304852	VALVE, CARTRIDGE			85, 95, 103
7305100	HARNESS CAB DLX	7235340	A	177
7305112	HARNESS MFR SF CONTROL			179
7305580	HINGE	7176593	A	311, 317, 323, 329
7305712EF	TIRE ALL TERRAIN 10X16.5 10 PLY			537
7305713EF	TIRE HEAVY DUTY 10X16.5 10PLY			537
7305714EF	TIRE STANDARD DUTY 10X16.5 10PLY			537
7305843	PAINT ORANGE .5 OZ			1
7305844	PAINT ORANGE SPRAY CAN 6			1
7305845	PAINT ORANGE QT 6			1
7306018	BOLT ADJUSTING			185, 189
7306019	BRACKET BATTERY TIE DOWN			185, 189
7306047	BATTERY, 700A EU			185, 189
7307224	CYLINDER HYDRAULIC			447, 453
7307555	TUBE CASE CYLINDER	7227571	A	445
7307978	CAB ASSY	7215840	B	15
7308285	DECAL CONTROL			477
7308512	DECAL FUSE RELAY			179
7308574	SHIELD BATTERY			185, 189
7308738	DECAL SAFETY			477
7308794	LIGHT ASSEMBLY EURO RH			193
7308795	LIGHT ASSEMBLY EURO LH			193
7308796	LIGHT REAR TURN SIGNAL			193
7308797	LIGHT WORK			193
7308800	MOUNT, LIGHT			193
7309470	KIT SEAL			109
7310097	KIT, MAINTENANCE 50 HR			11
7310098	KIT MAINTENANCE 250 HR			11
7310099	KIT MAINTENANCE 500 HR			11
7310100	KIT MAINTENANCE 1000 HR			11
7310945	WASHER DIVERTER	7305994		191

Code for disposition of old part number
A -- Use up
B -- Use on other application (See PNI)
C -- File PDR Report with Bobcat Parts Sales
D -- Part Number Error

Part Number	Description	Was	Code	Page
7311014	TIRE STANDARD DUTY 10X16.5 10PLY	6729896	A	537
7311065	HARNESS REAR DOOR			193
7311646	KIT RIDE CONTROL			477
7311768ENUS	INSTRUCTIONS	7311647	D	477
7311952	HOLDER MANIFOLD			477
7311953	CLAMP ACCUMULATOR			477
7311954	TUBELINE HYDRAULIC ASSY			477
7311955	ACCUMULATOR HYDRAULIC			477
7311956	HOSE HYDRAULIC ASSY			477
7312089	HOSE HYDRAULIC ASSY			477
7312118	HOSE HYDRAULIC ASSY			477
7312135	HOLDER ACCUMULATOR			477
7313652	ASSY MANIFOLD			477
7314031	ADAPTER HYDRAULIC			477
7314079	VALVE CARTRIDGE			85, 95, 103
7314341	ASSY BOLT W/WASHER			21
7314404	BLOCK FILTER	7231189	A	169, 171
7316249	SPACER STEERING	7189894	A	127
7316520	VALVE PROPORTIONAL	7008810	A	171
7316521	ASSY VALVE	7270873	A	171
7317768	HOSE HYDRAULIC ASSY			477
7318495	SCREW PLASTIC	7162770	B	407
7318895	DECAL HVAC			353, 397
7319444	ELEMENT FILTER	6686926	A	1, 11, 169, 171
7319634	SADDLE WIPER			317, 323
7320663	SENSOR PRESS	7025582	A	477
7321588	SENSOR, PRESSURE	6697920		185, 189
7322705	TIRE HEAVY DUTY 10X16.5 10PLY	6729900	A	537
7323942	SEAT, CLOTH SUSPENSION			499
7324723	MOUNT CLAMP			463
7324733	MOUNT BRACKET			463
7325025	COTTER PIN	6513495	B	77, 207
7325299	ASSY CYLINDER			75
7325300	ROD CYLINDER ASSY			75
7325301	PIPE OIL			75
7325302	KIT SEAL			75
7325303	NUT LOCKING			71, 75

Code for disposition of old part number
A -- Use up
B -- Use on other application (See PNI)
C -- File PDR Report with Bobcat Parts Sales
D -- Part Number Error

Part Number	Description	Was	Code	Page
7325304	PISTON CYLINDER LIFT			75
7325305	BUSHING CYLINDER			75
7325306	ASSY CYLINDER			71
7325307	ROD CYLINDER ASSY			71
7325308	KIT SEAL			71
7325309	NUT LOCKING			71
7325310	BEARING ROD			71
7325312	PISTON CYLINDER TILT			71
7325313	BUSHING CYLINDER			71
7326168	MOUNT CLAMP			463
7327131	BRACKET GUARD			463
7328017	SPRING, COMPRESSION			505
7328018	PLUG			505
7328019	SELF LEVEL, SERVICE			505
7328161	COVER HVAC	7185848	A	391, 403
7328457	SUPPORT LIFT ARM			45
7329574	HARNESS CAMERA REAR			463
7329670	KIT CAMERA REAR			463
7329955	BRACKET	7157719	A	33, 35
7329990	DECAL OPERATION	7168137	A	353, 357
7329991	DECAL OPERATION	7168145	A	353, 357
7330176	DISPLAY LCD			463
7331167ENUS	INSTRUCTIONS	7331167	A	463
7331377	KIT, CLOTH SEAT SUSPENSION			499
7331402	HVAC ASSY			403
7331403	ASSY HEATER			391
7332632	THERMOSTAT ASSY			403
7333169	MOUNT STRAP TIE			397, 403
7334202	STRAP TIE			397, 403
7334237	LENS REFLECTIVE			193
7341779	LIGHT BEACON	6675523	A	301
73G624	BOLT			127
73K013	RING, BACK-UP			79, 85, 91, 95, 99, 103
73K016	RING, BACK-UP			79, 85, 91, 95, 99, 103
73K218	RING BKUP			445, 447
73K222	RING			443
73K224	O-RING			73
73K227	RING			69
75K3	O-RING			169, 171
774220	NUT			185, 191, 193, 219, 223, 239, 243, 245, 297, 299, 395
79K10	O RING 10			55, 59, 79, 85, 91, 95, 99, 103, 113, 115, 117, 141, 307, 449, 451
79K12	O RING 10			65, 109, 117, 119, 121, 123, 141, 145, 169, 171

Code for disposition of old part number
A -- Use up
B -- Use on other application (See PNI)
C -- File PDR Report with Bobcat Parts Sales
D -- Part Number Error

NUMERICAL INDEX (Cont'd)

Part Number	Description	Was	Code	Page
79K14	O RING 10			303
79K16	O RING 10			109, 477
79K4	O RING 10			451
79K5	O RING 10	6669443	A	131, 133, 135, 137, 239
79K6	O RING 10			63, 65, 79, 85, 99, 103, 109, 115, 119, 121, 123, 179, 451
79K8	O RING 10			55, 59, 79, 85, 91, 95, 99, 103, 115, 117, 141, 145
7D4	NUT HEX JAM			63, 107
82K132	O-RING HYDRAULIC			443
82K136	O-RING			73
82K229	ORING			69
83D4	NUT 10			33, 35, 63
83D5	NUT 5			219, 223, 395, 459, 475, 477
83D6	NUT 5			55, 63, 77, 125, 127, 165, 207, 219, 223, 229, 233, 309, 373, 397, 459, 475, 531
83D8	NUT 5			13, 65, 229, 233, 237
84G1320	SCREW THD ROLLING TT			191, 193, 297, 305
84G3112	BOLT 5			179, 373, 377
84G3132	SCREW			63, 109, 119, 121, 123
84G3712	BOLT 5			13, 17, 21, 39, 41, 45, 49, 65, 125, 177, 179, 185, 189, 197, 219, 223, 227, 245, 293, 305, 367, 387, 397, 437, 453
84G3716	SCREW 5			53
84G3720	BOLT			53
84G3724	BOLT			39, 41, 55, 59, 65, 127, 453, 509, 535
84G3728	BOLT			59, 65
85D6	NUT, 5			43, 45, 47, 423
85D8	NUT, 5			17
86D10	NUT			49
86D7	NUT			199, 203, 483, 487, 489, 491
86F5	NUT			55, 59, 453, 459
872229	WASHER			59, 65, 125, 219, 223, 395, 459
87D5	NUT			423
87G1014	SCREW, MACHINE			467, 469
88F5	ELBOW			459
898731	1156 BULB			191, 193
89D5	NUT			441, 463
89F7	ADAPTOR			477
92D10	NUT			443, 445, 447
92D14	NUT			69, 73
95D5	NUT			245, 337, 467
95D6	NUT			77, 389
95D7	NUT			37, 487, 491, 493
96D12	NUT			229, 233
96D8	NUT			219
97D4	NUT			191, 193, 297, 299, 381
97D5	NUT			199, 203, 311, 317, 323, 329
97D6	NUT 10			33, 35, 197, 207, 311, 317, 323, 367, 389, 413, 429

Code for disposition of old part number
A -- Use up
B -- Use on other application (See PNI)
C -- File PDR Report with Bobcat Parts Sales
D -- Part Number Error