RUTHZIL TRATOR COMERCIAL DE PEÇAS LTDA 11 97083-6812 ROLANDO

1976

K KOEHRING **Bantam**

MODEL
S-488, S-588, S-688
TELEKRUISER

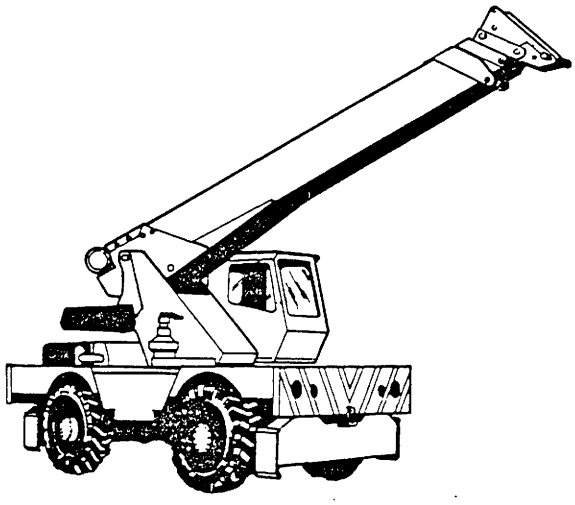

Everything possible has been done in the design and construction of your Bantam equipment to give dependable service and safe operation of the machine. To obtain best reliability, replace all parts with only genuine Bantam duplicates, obtained through your authorized Bantam distributor. When replacing wire rope, use only the types and sizes recommended in this manual. Lubricate the machine only as directed on the "Lubrication Chart" and within the frequencies specified.

SERIAL NO. _____

Printed in U.S.A.

Catalog No. S-88-91

INSTRUCTIONS FOR ORDERING PARTS

WHEN ORDERING PARTS, ALWAYS CONTACT YOUR NEAREST BANTAM DISTRIBUTOR. PROMPT SERVICE WILL BE ASSURED IF CARE IS TAKEN IN GIVING THE FOLLOWING INFORMATION:

1. Always give the serial number and model number of the machine. This number may be found stamped on the brass plate located in the operator's cab.
2. Give the group number, part number and clear description as shown in the parts list, for each part ordered.
3. Give the quantity required. Specify number of pieces required of each part. Do not use words "Pairs" or "Sets".
4. State engine make, drive line components, or any optional equipment that may be helpful in determining the correct parts when not shown in parts manual.
5. If you desire a particular assembly, which is not listed as such, list the individual parts included in the assembly. Then state that they are to be shipped as an assembly. Whenever possible, try to avoid using assemblies that are not listed.
6. Give accurate shipping instructions, including your correct address and state by what means the order should be shipped; whether by freight, express, parcel post, air mail, air express or air freight.
7. Give invoicing address. Unless otherwise specified, invoices will be mailed to the shipping point.

KOEHRING COMPANY STANDARD WARRANTY

CERTIFICATE OF CONSTRUCTION MACHINERY WARRANTY

KOEHRING COMPANY warrants new Products sold by it to be free from defects in material or workmanship for a period of (six months or 1500 hours), whichever period expires first, after date of delivery to the first user and subject to the following conditions:

Koehring Company's obligation and liability under this Warranty is expressly limited to repairing or replacing at Koehring Company's option, any parts which appear to Koehring Company upon inspection to have been defective in material or workmanship. Such parts shall be provided at no cost to the user, F.O.B. Koehring Company's division from which Product was originally shipped, or other source at Koehring Company's option. Koehring Company shall pay, to the extent established by it in its applicable published service policy in effect at the time of delivery, the cost of labor and transportation reasonably necessary to install any repaired or replacement part provided under this Warranty. This Warranty shall not apply to component parts or accessories of Products not manufactured by Koehring Company and which carry the warranty of the manufacturer thereof, or to normal maintenance (such as engine tune-up) or to normal maintenance parts (such as oil filters). KOEHRING COMPANY MAKES NO OTHER WARRANTY, EXPRESS OR IMPLIED, AND MAKES NO WARRANTY OF MERCHANTABILITY OR FITNESS FOR ANY PARTICULAR PURPOSE.

Koehring Company's obligation under this Warranty shall not include duty, taxes or any other charges whatsoever, or any liability for direct, indirect, incidental, or consequential damage or delay. If requested by Koehring Company, Products or parts for which a warranty claim is made are to be returned, transportation prepaid, to the Koehring Company division from which Product was originally shipped. Any improper use, including operation after discovery of defective or worn parts, operation beyond rated capacity, substitution of parts not approved by Koehring Company, or any alteration or repair by others in such manner as in Koehring Company's judgment affects the Product materially and adversely, shall void this warranty. NO EMPLOYEE OR REPRESENTATIVE IS AUTHORIZED TO CHANGE THIS WARRANTY IN ANY WAY OR GRANT ANY OTHER WARRANTY UNLESS SUCH CHANGE IS MADE IN WRITING AND SIGNED BY AN OFFICER OF KOEHRING COMPANY AT ITS HOME OFFICE.

Koehring
Bantam Division
Waverly, Iowa 50677

GROUP INDEX

FRAME, FUEL TANK, AXLE LOCK, ENGINE MOUNTING	1
OUTRIGGERS	2
SUPERSTRUCTURE, COUNTERWEIGHT, ~~ROTEX~~	3
SWING REDUCER	4
HYDRAULIC SYSTEM	5
CABS, SEATS, MARKING	6
CONTROLS	7
ELECTRICAL	8
ACCESSORIES	9
CRANE	10
JIB	11
HOIST BLOCK, HOIST LINE	12
WINCH	13
CRANE OPTIONS	14
ENGINE, COOLING, EXHAUST	15
TRANSMISSION, PUMP DRIVE, PARK BRAKE	16
DRIVE SHAFTS	17
AXLES	18
BRAKES	19
STEERING	20

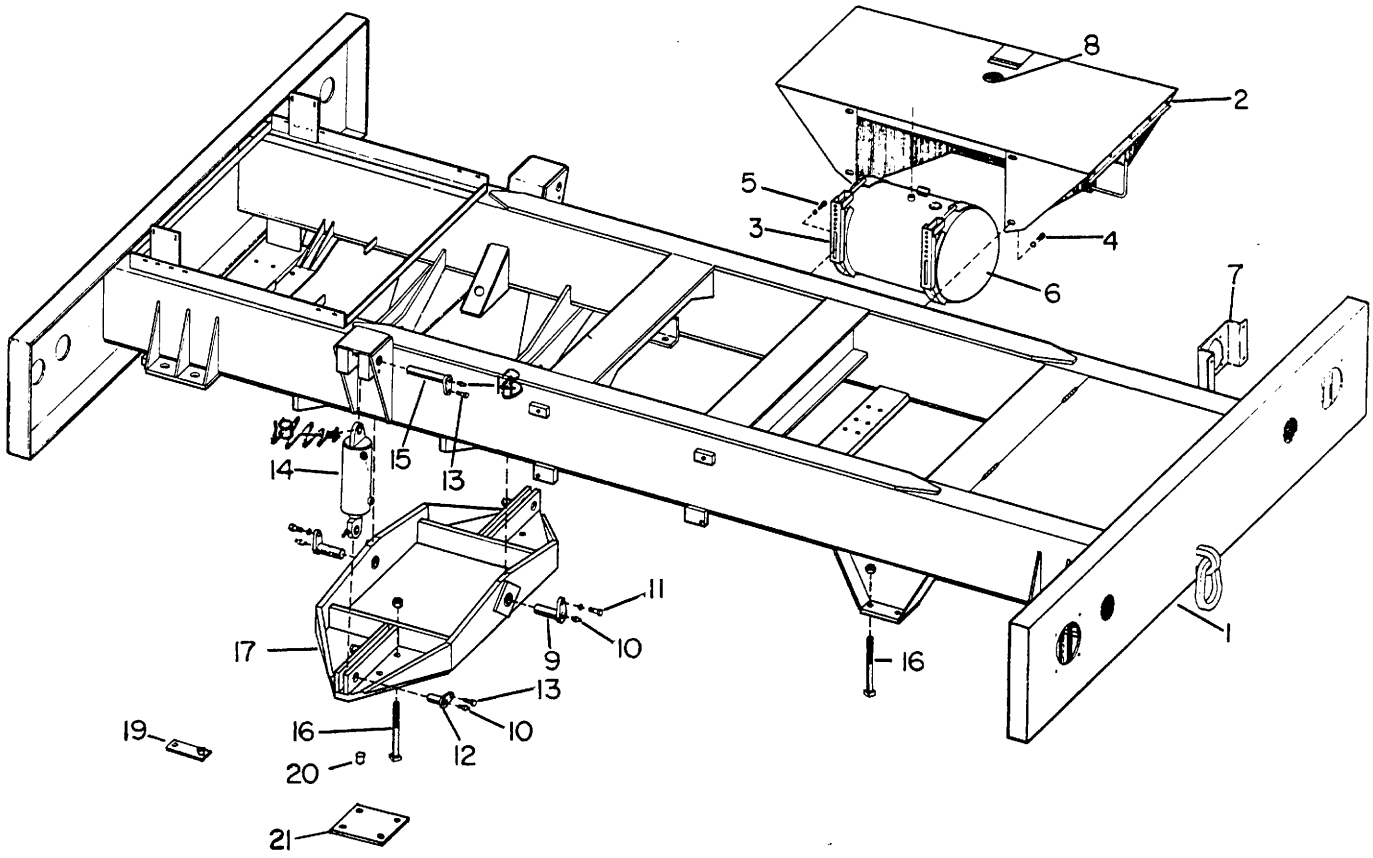

Ref. No.	Part Number	Quan. Req'd.	Name and Description
1	F65000	1	FRAME
	65820		ROTEK BEARING (NOT SHOWN, WELDED TO FRAME)(REPL. 49178)
2	F65416	1	FUEL TANK HOUSING
3	32599	2	BRACKET
4	1200-144	2	CAPSCREW, 5/8 UNC x 1 1/2 LG.
	1210-32	2	LOCKWASHER, 5/8 MED.
5	1200-142	6	CAPSCREW, 5/8 UNC x 1 1/4 LG.
	1210-32	6	LOCKWASHER, 5/8 MED.
6	32797	1	FUEL TANK W/CAP
	22871	1	CAP
		1	SENDING UNIT - SEE ELECTRICAL
7	37642	2	HEADLIGHT BRACKET

Ref. No.	Part Number	Quan. Req'd.	Name and Description
8	11128	1	PLUG
9	F37568	2	PIVOT PIN
10	1213-1	4	GREASE FITTING, 1/8 NPT
11	1242-12	2	CAPSCREW, 1/2 UNC x 1 1/4 LG., HT
	1210-26	2	LOCKWASHER, 1/2 MED.
12	F37564	2	LOWER PIN
13	1200-59	4	CAPSCREW, 3/8 UNC x 1 LG.
	1210-20	4	LOCKWASHER, 3/8 MED.
14		2	AXLE LOCK-OUT CYLINDER - SEE PAGE 1.7
15	F37562	2	UPPER PIN
16	1235-295	16	MACHINE BOLT, 1 UNC x 9 1/2 LG., GRADE 5
	1205-184	16	NUT, 1 UNC
17	F65182	1	AXLE BRACKET
18	1213-3	4	GREASE FITTING
19	F65192	1	BRACKET (REAR AXLE CENTER SWITCH)
20	40586	4	DOWEL
21	65931	2	SHIM, AXLE

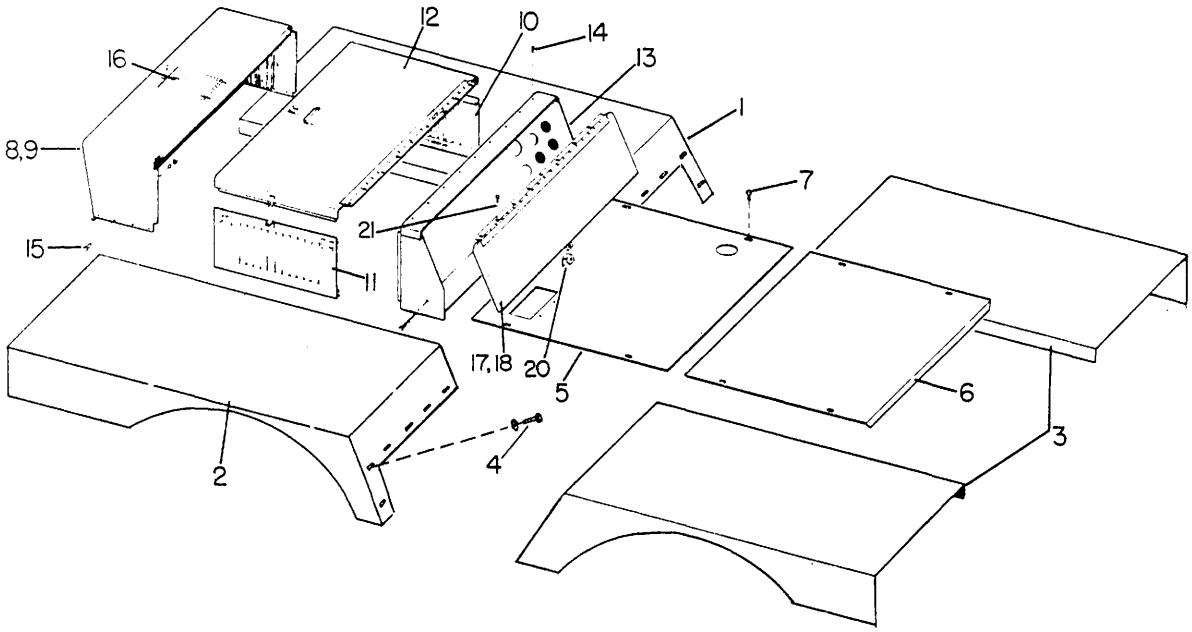

Ref. No.	Part Number	Quan. Req'd.	Name and Description
1	F65132	1	LH REAR FENDER
2	F65134	1	RH REAR FENDER
3	F65418	1	FRONT FENDER, LH
	F65419	1	FRONT FENDER, RH
4	1242-36	16	CAPSCREW, 3/8 UNC x 1 LG. HT
	1242-42	20	CAPSCREW, 3/8 UNC x 1 1/4 LG., HT
	1209-4	36	PLAINWASHER, 3/8 REG.
	1210-20	36	LOCKWASHER, 3/8 MED.
	1205-36	36	NUT, 3/8 UNC
5	65152	1	REAR DECK
6	65153	1	FRONT DECK
7	1211-12	10	THREAD CUTTING SCREW, 5/16 UNC x 3/4 LG.
	1209-3	10	PLAINWASHER
8	65068	1	ENGINE HOOD ASSEMBLY - INCLUDES ITEMS 9 THRU 16
9	29798	1	GRILL (~~REPLACES~~ 23737)
10	29799	1	LEFT PANEL, LOUVERED (~~REPLACES~~ 23738)
11	29800	1	RIGHT PANEL, LOUVERED (~~REPLACES~~ 23739)
12	29801	1	HOOD (~~REPLACES~~ 23740)

Ref. No.	Part Number	Quan. Req'd.	Name and Description
13	29802	1	PANEL (REPLACES 24231)
14	1205-15	9	STOVE BOLT, 1/4 UNC x 3/4 LG.
15	1242-30	12	CAPSCREW, 5/16 UNC x 1 LG.
	1210-17	12	LOCKWASHER, 5/16 MED.
	1205-25	12	NUT, 5/16 UNC
16	23745	AR	SPRING LATCH ONLY - FOR ITEMS 9, 10, 11
17	A38195	1	PANEL COVER ASSEMBLY (OPT.) - INCLUDES ITEMS 18 THRU 21
18	F38187	1	PANEL COVER
19	38186	1	DASH LAMP
20	38197	1	HASP
21	1200-1	7	CAPSCREW, 1/4 UNC x 3/4 LG.
	1210-14	7	LOCKWASHER, 1/4 MED.
	1205-13	7	NUT, 1/4 UNC

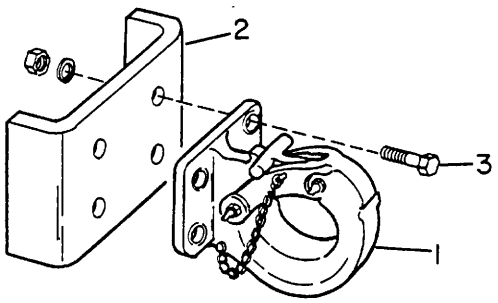

Ref. No.	Part Number	Part Number	Quan. Req'd.	Name and Description
	CURVED BEAM OUTRIGGERS	OUT & DOWN OUTRIGGERS		
	60404	60235		PINTLE HOOK ASSEMBLY, REAR - OPTIONAL
1	41101	41101	1	PINTLE HOOK
2	41110	41110	1	BRACKET
3	~~1229-57~~ 1200-103	~~1229-57~~	4	CAPSCREW, 1/2 UNF x 1 3/4 LG., HT
	1210-26	1210-26	4	LOCKWASHER, 1/2 MED.
	1205-59	1205-59	4	NUT, 1/2 UNF
4	65709		1	PLATE

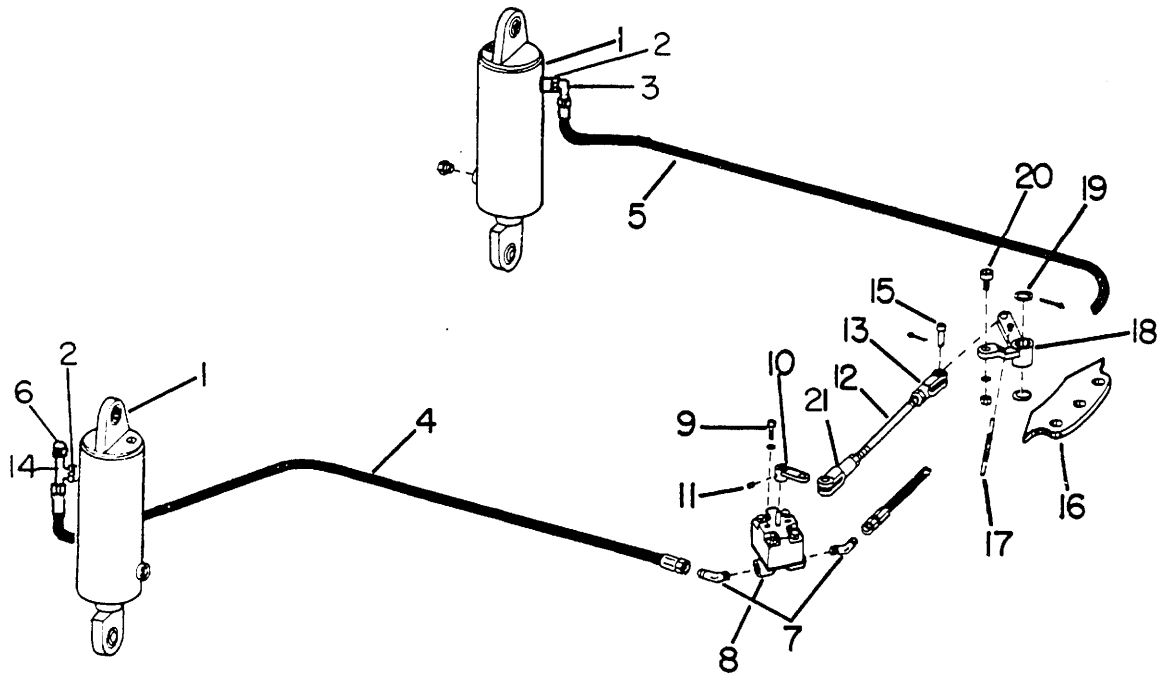

Ref. No.	Part Number	Quan. Req'd.	Name and Description
1		2	HYDRAULIC CYLINDER - SEE PAGE 1.7
2	1219-827	2	ADAPTER
3	1219-470	1	ELBOW
4	A37099	1	HOSE ASSEMBLY
5	A37101	1	HOSE ASSEMBLY
6	1219-736	1	CAP
7	1219-732	2	ADAPTER
8	10711	1	VALVE
9	1200-29 1210-17	2 2	CAPSCREW, 5/16 UNC x 3/4 LG. LOCKWASHER, 5/16 MED.
10	F37270	1	BELLCRANK
11	1206-65	2	SETSCREW, 5/16 UNF x 3/8 LG.
12	37278	1	ROD
13	2597	1	YOKE
14	1219-913	1	TEE

Model S-488, S-588, S-688 — Group No. 1
Date 1 SEPTEMBER 1974 — AXLE LOCK-OUT — Page 1.6

Ref. No.	Part Number	Quan. Req'd.	Name and Description
15	2234	2	PIN
	1207-2	2	COTTER PIN, 1/16 x 3/4 LG.
16	37281	1	CAM PLATE
17	5192	1	SPRING
18	F37273	1	BELLCRANK
	1214-59	2	BUSHING FOR ABOVE
19	1209-6	2	PLAINWASHER, 1/2 REG.
	1207-13	1	COTTER PIN, 1/8 x 1 1/4 LG.
20	1217-50	1	CAM FOLLOWER
	1210-20	1	LOCKWASHER, 3/8 MED.
	1205-40	2	NUT, 3/8 UNF JAM
21	37827	1	YOKE
	[illegible]	1	[illegible]

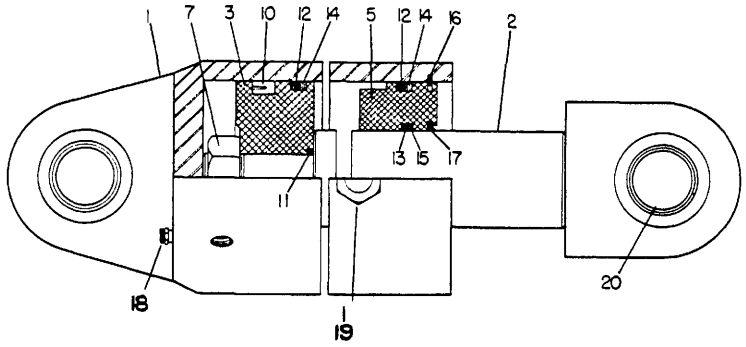

Ref. No.	Part Number	Quan. Req'd.	Name and Description
	49565	2	HYDRAULIC CYLINDER COMPLETE
	29437	1	SEAL KIT - INCLUDES ITEMS 10 THRU 17
1	29438	1	TUBE
2	23716	1	PISTON ROD
3	29439	1	PISTON
5	29440	1	GLAND
7	23721	1	HEX NUT, 1 1/4 - 12
10	29441	1	"U" CUP
11	23725	1	"O" RING
12	23726	2	"O" RING
13	23727	1	"O" RING
14	23728	2	BACK-UP WASHER
15	23729	1	BACK-UP WASHER
16	29442	1	SNAP RING
17	25367	1	WIPER SEAL
18	29443	1	CAPSCREW
	29444	1	NYLTITE SEAL FOR ABOVE
19	25329	1	BREATHER ASSEMBLY
20	1217-241	2	SELF-ALIGNING BUSHING

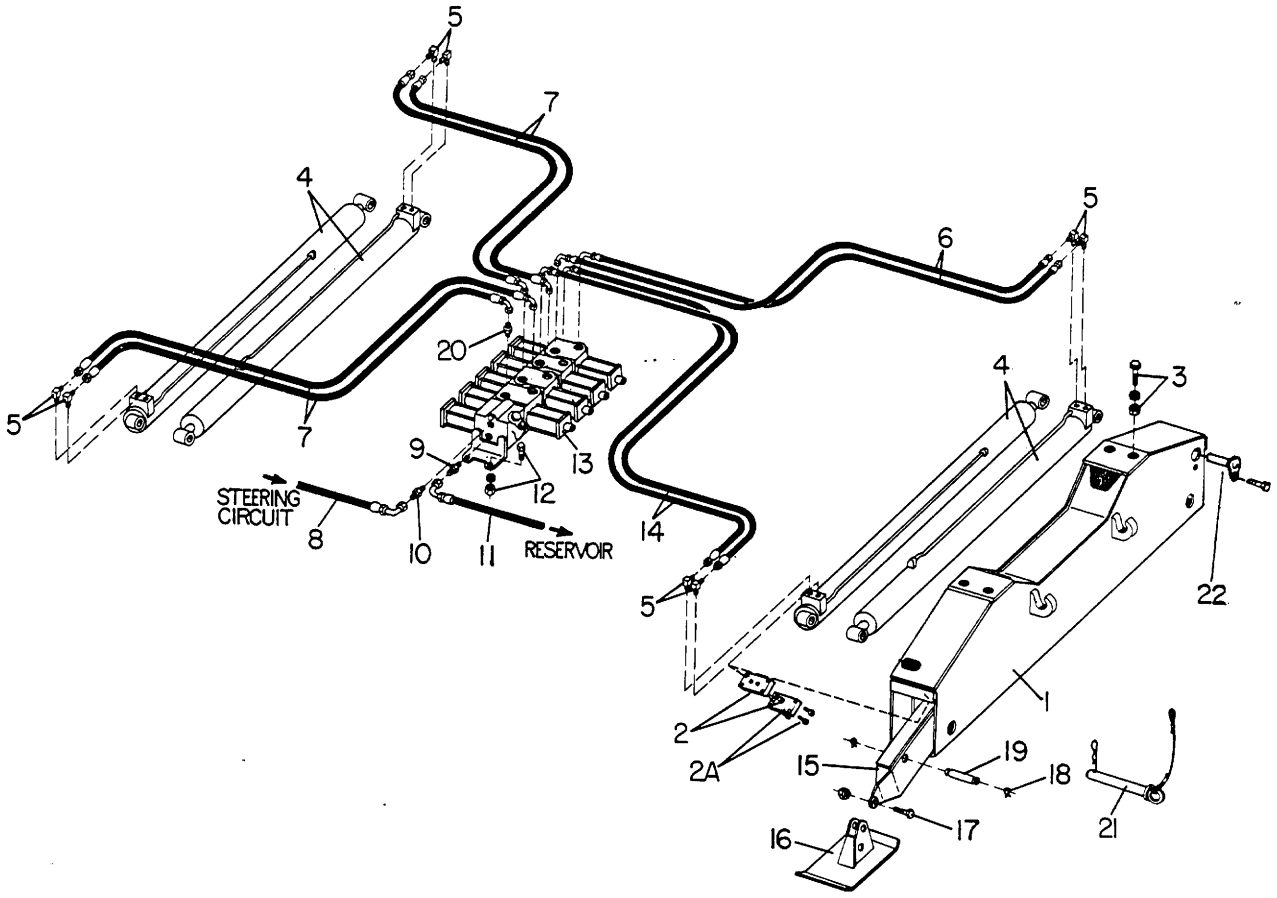

Ref. No.	Part Number	Quan. Req'd.	Name and Description
1	F65371	2	OUTRIGGER BOX - PRIOR TO: S-488 #8206448] F65938 REPLACES F65371 AS PAIR ONLY
	F65938	2	OUTRIGGER BOX - BEGIN. W/: S-588 #8406797]
	65968	4	MOUNT PLATE
2	201296	4	SPACER
	1200-144	8	CAPSCREW, 5/8 UNC x 1 1/2 LG.
2A	707 6247	4	WEAR BLOCK
	1200-33	16	CAPSCREW, 5/16 UNC x 1 1/4 LG.
	1209-3	16	PLAINWASHER
			KIT A201335 INCL. ITEMS 2 & 2A - REPLACES 65385 WEAR BLOCKS & 1200-150 CAPSCREWS - SEE SERVICE BULLETIN #286
			488: S207503 588: S407855
3	1200-341	8	CAPSCREW, 1 1/8 UNC x 4 1/2 LG.
	1210-56	8	LOCKWASHER, 1 1/8 MED.
	1205-160	8	NUT, 1 1/8 UNC ELASTIC
4		4	HYDRAULIC CYLINDER - SEE PAGE 2.3
5	12019-164	8 [	ADAPTER w/"O" RING, 90°
	1219-620		ADAPTER w/"O" RING, STRAIGHT
	1218-34	8	"O" RING FOR ABOVE
6	A65390	2	HOSE ASSEMBLY
7	A65295	4	HOSE ASSEMBLY

Model S-488, S-588, S-688 | Group No. 2
Date REV. 1 FEB. 1978 | CURVED BEAM OUTRIGGERS | Page 2.2

Ref. No.	Part Number	Quan. Req'd.	Name and Description
8	A65696	1	HOSE ASSEMBLY (REPLACES A65101)
9	1219-441	1	ADAPTER w/"O" RING
	1218-34	1	"O" RING
10	1219-598	1	ADAPTER w/"O" RING
	1218-34	1	"O" RING FOR ABOVE
11	A65102	1	HOSE ASSEMBLY
12	1200-95	4	CAPSCREW, 1/2 UNC x 1 LG.
	1210-26	4	LOCKWASHER, 1/2 MED.
	1205-58	4	NUT, 1/2 UNC
13		1	VALVE BANK ASSEMBLY - SEE PAGE 2.4
14	A65391	2	HOSE ASSEMBLY
15	F36552	4	BEAM
16	F36553	4	PEDESTAL BASE
17	49383	4	BOLT
	1205-179	4	NUT, 1 3/8 UNF ESNA LOCKNUT
18	1220-63	8	RETAINING RING
19	37668	4	PIN
20	1219-620	8	ADAPTER w/"O" RING
	1218-34	8	"O" RING FOR ABOVE
21	F65384	4	PIN, BEAM RETAINING
	1222-226	4	HAIR PIN COTTER
	12219-30	4	CABLE
	1222-225	8	SLEEVE
22	F49320	4	PIN
	1200-104	4	CAPSCREW

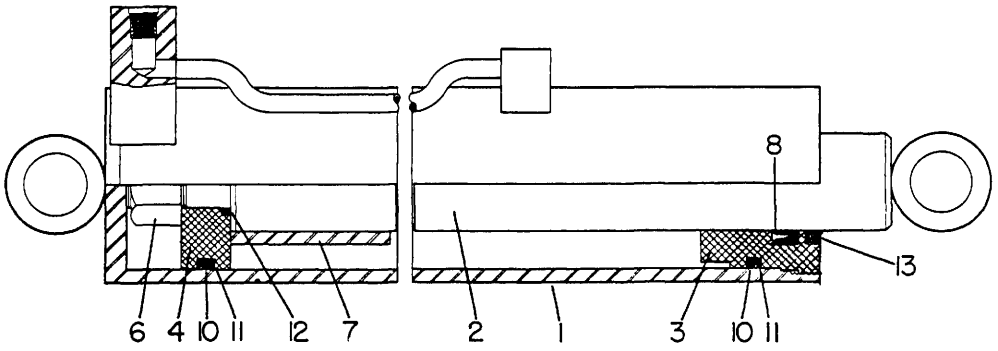

Ref. No.	Part Number	Quan. Req'd.	Name and Description
	49172	1	OUTRIGGER CYLINDER Complete
	A23699	1	SEAL KIT - Includes Items 8 thru 13
1	23700	1	CASE
2	23701	1	PISTON ROD
3	202754	1	GLAND, One-Piece (Replaces 23702 Gland, 23704 Gland Lock & 23713 Nylon Pellet)
4	23703	1	PISTON
6	23705	1	LOCK NUT, 1-14
7	23706	1	SPACER
8	27092	1	"U" CUP SEAL
10	23709	2	"O" RING
11	23710	3	BACK-UP WASHER
12	23711	1	"O" RING
13	23712	1	WIPER

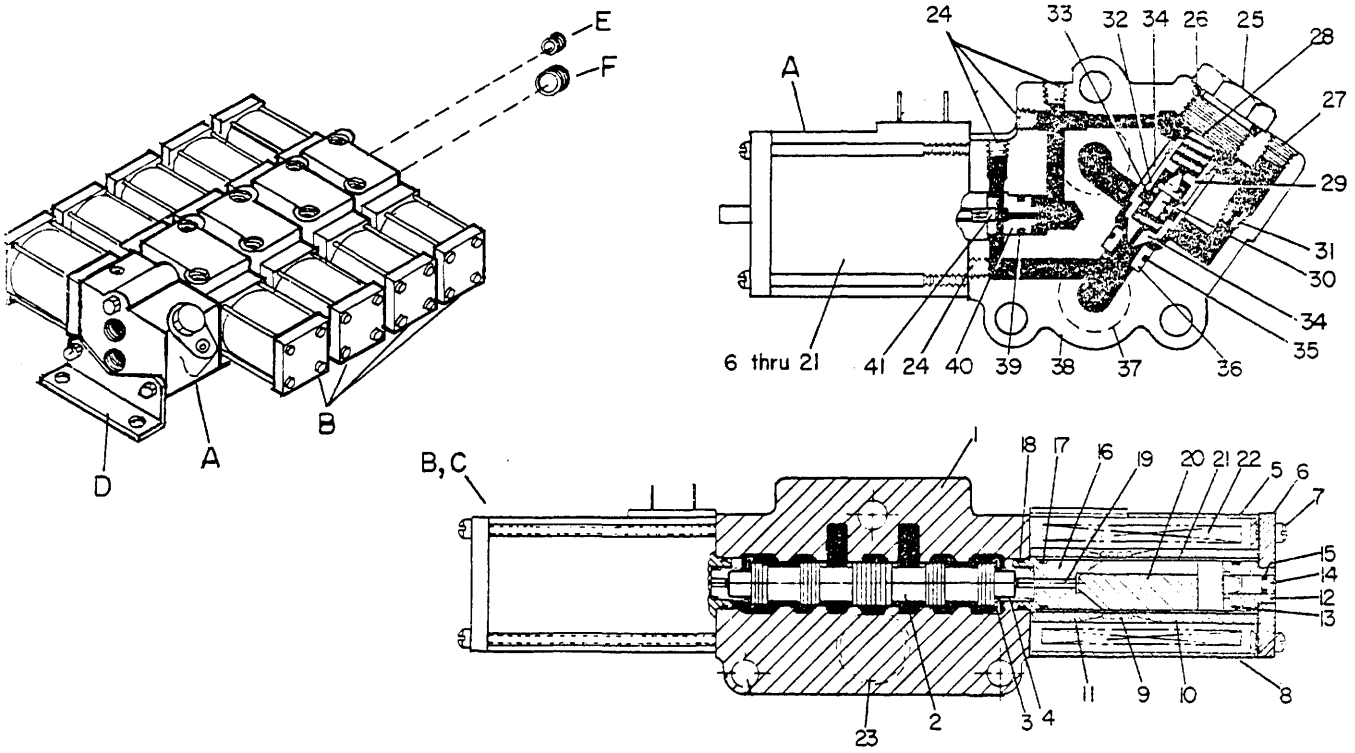

Ref. No.	Part Number	Part Number	Quan. Req'd.	Name and Description
	65298			SOLENOID VALVE BANK COMPLETE
A	29474		1	VALVE SECTION, DIVERSION - 2250 PSI RELIEF
B		29475	4	VALVE SECTION, CYLINDER
D	29477		1	MOUNTING KIT
E	1219-860		1	PLUG w/"O" RING
	1218-144		1	"O" RING FOR ABOVE
F	1219-624		1	PLUG w/"O" RING
	1218-34		1	"O" RING FOR ABOVE
	A	B		QUANTITIES SHOWN FOR ONE SECTION
1			1/1	BODY
2			-/1	SPOOL
3		26841	-/2	WASHER
4		29620	-/2	SPRING
5	201414	26843	1/2	SOLENOID CASE & TUBE ASSEMBLY - INCL. 6 THRU 21
6	26808	26808	1/2	END PLATE
7	26807	29595	4/8	SCREW
8	26803	29596	1/2	CASE
9	26802	26802	1/2	SPRING

Model S-488, S-588, S-688
Date Rev. 1 Aug. 1980

OUTRIGGER SOLENOID VALVE (CURVED BEAM)

Ref. No.	Part Number A	Part Number B	Quan. Req'd.	Name and Description
10	26804	29597	1/2	OUTER FLUX SLEEVE
11	26801	29598	1/2	INNER FLUX SLEEVE
12	29599	29599	1/2	EXTERNAL PUSH PIN GUIDE
13	29311	29311	1/2	"O" RING
14	29600	29624	1/2	PUSH PIN
15	29310	29310	1/2	QUAD RING
16	29601	29602	1/2	FEMALE CONE
17	29311	29311	1/2	"O" RING
18	23289	29312	1/2	"O" RING
19	201413	29603	1/2	PUSH PIN
20	29604	29605	1/2	PLUNGER
21	29606	29607	1/2	GUIDE TUBE
22	26810	24263	1/2	COIL
23		23291	-/1	"O" RING
		29627	-/1	"O" RING
24	26849		4/-	PIPE PLUG, 1/16 NPTF
25	29608		1/-	PLUG
26	29303		1/-	"O" RING
27	28058		1/-	PIPE PLUG, 1/8 NPTF
28	29609		1/-	SPRING
29	29610		1/-	ADJUSTING SCREW
30	29611		1/-	POPPET
31	202829		1/-	ORIFICE PLUG (.040")
32	13555		1/-	"O" RING
33	29612		1/-	SPRING
34	29613		1/-	MAIN POPPET
35	23290		1/-	"O" RING
36	29614		1/-	SEAT
37	23291		1/-	"O" RING
38	29615		1/-	BODY
39	29616		1/-	"O" RING
40	29617		1/-	SEAT
41	29618		1/-	BALL
	A29619			SEAL KIT - FOR DIVERSION SECTION A
		A29309		SEAL KIT - FOR ONE WORK SECTION B

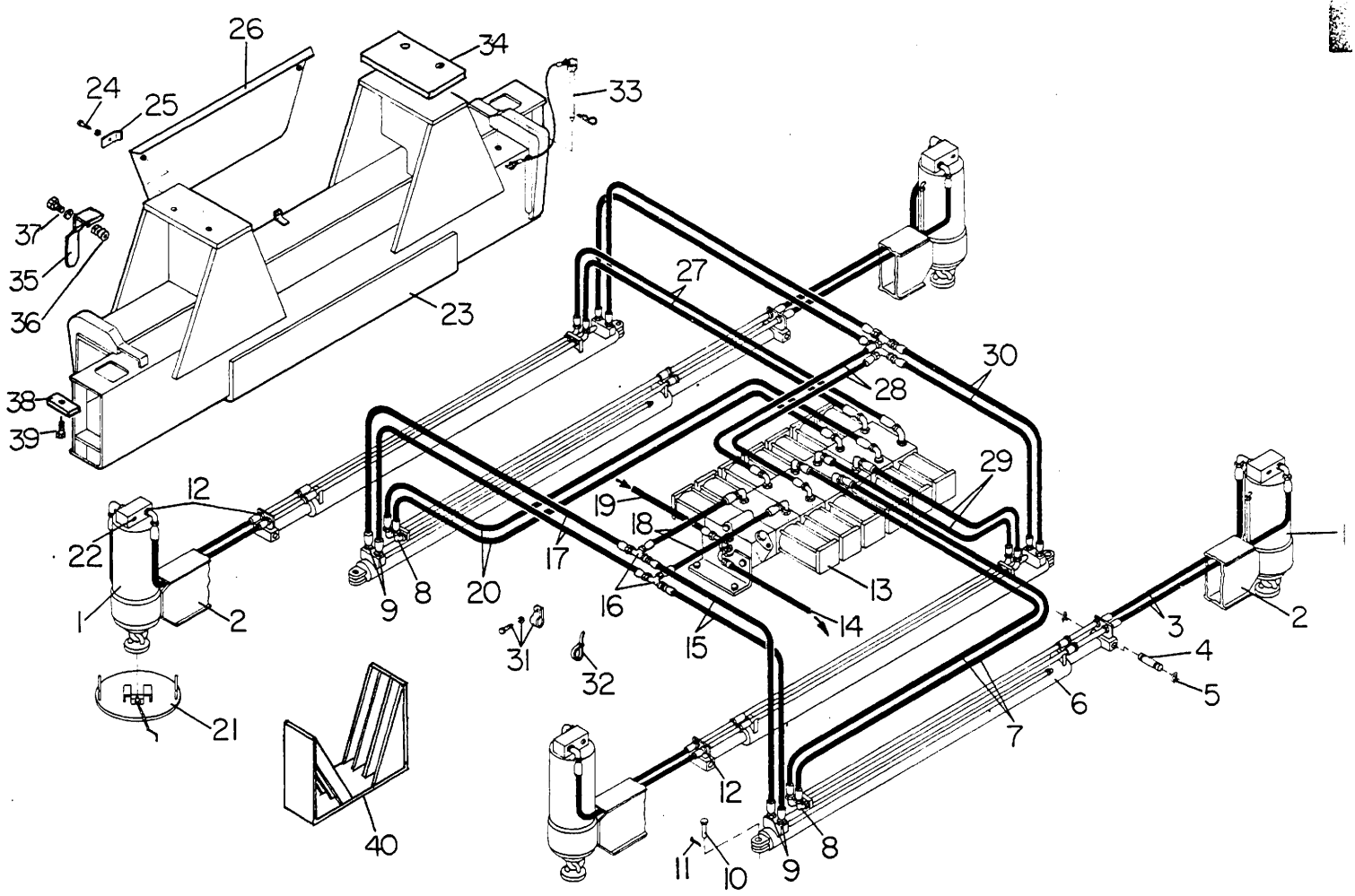

Ref. No.	Part Number	Quan. Req'd.	Name and Description
1		4	VERTICAL CYLINDER - SEE PAGE 2A 2.3
2	F49600	4	BEAM
	F65821	4	BEAM - HIGH CLEARANCE - BEGIN. S-688 SER. #9006288 (EXC. 9006290)
	1203-133	16	CAPSCREW, 3/8 UNC x 1-3/4 LG.
3	A49578	8	HOSE ASSEMBLY
4	49605	4	PIN
5	1220-19	8	SNAP RING
6		4	CYLINDER - SEE PAGE 2A 2.5
7	A65098	2	HOSE ASSEMBLY
8	1219-470	8	ADAPTER
9	1219-605	8	ADAPTER, W/"O" RING
	1218-144	8	"O" RING, FOR ABOVE
10	2335	4	PIN
11	1207-22	4	COTTER PIN, 5/32 x 1-1/4 LG.
12	1219-441	30	ADAPTER, W/"O" RING
	1218-34	30	"O" RING, FOR ABOVE
13		1	VALVE ASSEMBLY - SEE PAGE 2A 2.7
14	A65102	1	HOSE ASSEMBLY

Model S-488, S-588, S-688 — Group No. 2A
Date REV. 1 FEB. 1978 — OUT & DOWN OUTRIGGERS — Page 2.2

Ref. No.	Part Number	Quan. Req'd.	Name and Description
15	A65693	2	HOSE ASSEMBLY
16	1219-625	4	TEE
	1219-853	8	REDUCER
17	A65057	4	HOSE ASSEMBLY
18	A65099	2	HOSE ASSEMBLY
19	A65101	1	HOSE ASSEMBLY (REPL.BY A65696)
20	A65100	2	HOSE ASSEMBLY
21	F65505	4	PAD
22	1219-624	8	PLUG w/"O" RING
	1218-34	8	"O" RING
23	F65103	2	OUTRIGGER BOX
	F65916	2	OUTRIGGER BOX, HIGH CLEARANCE - BEG. S-688 #9006288 (EXC.#9006290)
	1200-340	8	CAPSCREW, 1-1/8 UNC x 3 LG. GR. 5
	1205-160	8	NUT, 1-1/8 UNC ELASTIC
24	1200-35	4	CAPSCREW, 5/16 UNC x 1 1/2 LG.
	1210-17	4	LOCKWASHER, 5/16 MED.
25	65692	4	BRACKET
26	F65694	2	COVER
27	A65056	2	HOSE ASSEMBLY
28	A65058	2	HOSE ASSEMBLY
29	A65097	2	HOSE ASSEMBLY
30	A65059	2	HOSE ASSEMBLY
31	1240-30	10	CLAMP
	1211-12	12	SCREW
	1209-3	12	WASHER
32	1222-202	10	PLASTIC TIE
33	F48542	4	PIN, BEAM RETAINING
	12219-20	4	CABLE
	1222-225	8	SLEEVE
34	65819	4	SPACER
35	65914	4	LEVER
36	38198	4	SPRING
37	1200-47	4	CAPSCREW
	1205-32	4	NUT
38	707 6255	4	WEAR BAR - BEGIN SER. #60084
39	~~1200-275~~	4	CAPSCREW 1223-142
	1205-156	4	NUT
40	F49855	2	BRACKET, PAD

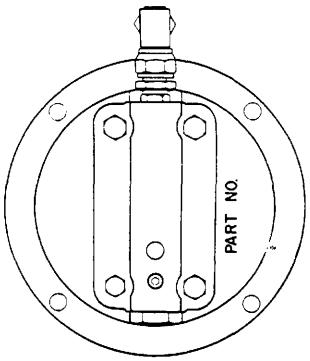

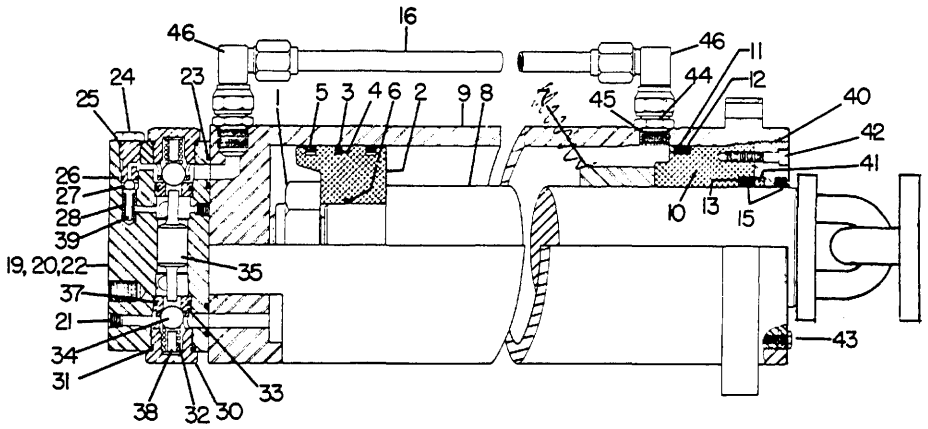

65988 Replaces 40680 - See Page 2A 2.9

Ref. No.	Part Number	Quan. Req'd.	Name and Description
	40680	4	HYDRAULIC CYLINDER, INCLUDES ITEMS 1 THRU 46
	A23682	1	SEAL KIT, INCLUDES "O" RINGS, BACK-UP WASHERS, SEALS, FOR CYLINDER ONLY - SEE REF. 19 FOR VALVE
1	23684	1	BUTTRESS NUT
	1207-27	1	COTTER PIN, 5/32 x 2 1/2 LG., FOR ABOVE
2	23424	1	PISTON
3	23432	1	SEAL & LOADING "O" RING
5	23433	2	PISTON RING
6	23404	1	STATIC "O" RING
	200859	2	BACK-UP WASHER
8	23676	1	SHAFT
9	23677	1	CASE
10	23678	1	HEAD
11	23406	1	STATIC "O" RING
12	23431	1	BACK-UP WASHER
13	22029	1	"O" RING
15	23679	2	WIPER SEAL
16	23683	1	PORTING TUBE
19	A23436	1	HOLD LOCK VALVE, INCLUDES ITEMS 20 THRU 39
	A23437	1	HOLD VALVE SEAL KIT, FOR ABOVE

Model S-488, S-588, S-688 | Group No. 2A
Date 1 SEPTEMBER 1974 | VERTICAL JACK CYLINDER | Page 2.4

Ref. No.	Part Number	Quan. Req'd.	Name and Description
20	23438	1	BODY
21	1219-38	1	PIPE PLUG, 1/8 NPT HEX SOCKET HEAD
22	1229-44	4	CAPSCREW, 3/8 UNF x 2 3/4 LG., H.T.
23	23133	2	"O" RING, BODY TO CYLINDER
24	23448	1	RELIEF CAP & SEAT
25	23131	1	"O" RING, OUTER
26	22845	1	"O" RING, INNER
27	23444	1	BALL
28	23442	1	SPRING
30	23440	2	THREADED RETAINER PLUG
31	1218-64	2	"O" RING, PLUG
32	23441	2	SPRING
33	23447	2	SEAT
34	23443	2	BALL
35	23439	1	SHUTTLE SPOOL STRIKER
37	23142	2	"O" RING
38	23445	2	MAIN SPRING STOP
39	23446	1	RELIEF SPRING STOP
40	23681	1	DRAW RING
41	23680	1	BACK-UP RING
42	23450	2	SOCKET HEAD CAPSCREW, 1/4 UNC x 1 1/4
43	1200-2	1	LOCK SCREW, 1/4 UNF x 3/4 LG.
44	1219-441	2	ADAPTER
45	23403	2	"O" RING
46	1219-570	2	SWIVEL ELBOW

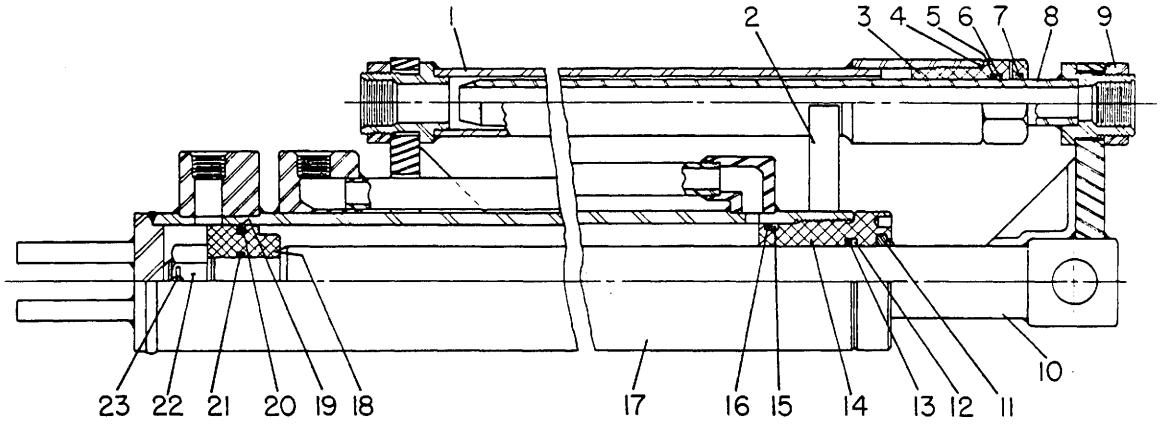

Ref. No.	Part Number	Quan. Req'd.	Name and Description
	45975		HYDRAULIC CYLINDER
	28694		CYLINDER ONLY,- SEAL KIT
	28695		TROMBONE ONLY- SEAL KIT
	28696		COMPLETE CYLINDER & TROMBONE SEAL KIT
1	28682	2	EXTERNAL PORT TUBE ASSEMBLY
2	28683	1	BAND & CLAMP ASSEMBLY
3	23419	2	ALUMINUM TROMBONE GLAND
4	28684	2	GLAND "O" RING
5	23142	2	GLAND "O" RING
6	23420	1	GLAND, LEATHER BACK-UP
7	28685	2	RING WIPER
8	28686	2	INTERNAL CHROME TUBE ASSEMBLY
9	28687	4	ANCHOR NUT
10	28688	1	ROD WELDMENT
11	27328	1	ROD WIPER

Model S-488, S-588, S-688 — Group No. 2A
Date 1 SEPTEMBER 1974 — EXTEND/PORT TUBE CYLINDER — Page 2.6

Ref. No.	Part Number	Quan. Req'd.	Name and Description
12	28689	1	BACK-UP RING
13	27326	1	ROD SEAL "O" RING
14	~~28690~~ 202783	1	HEAD GLAND (Replaces 28690)
15	23414	1	HEAD LEATHER BACK-UP
16	1218-83	1	STATIC HEAD "O" RING
17	28691	1	CASE WELDMENT
18	23410	1	PISTON
19	23415	1	SIRVON PISTON "O" RING
20	23966	1	SIRVON LOADING "O" RING
21	23405	1	STATIC PISTON "O" RING
22	28692	1	SLOTTED HEX NUT
23	28693	1	COTTER KEY

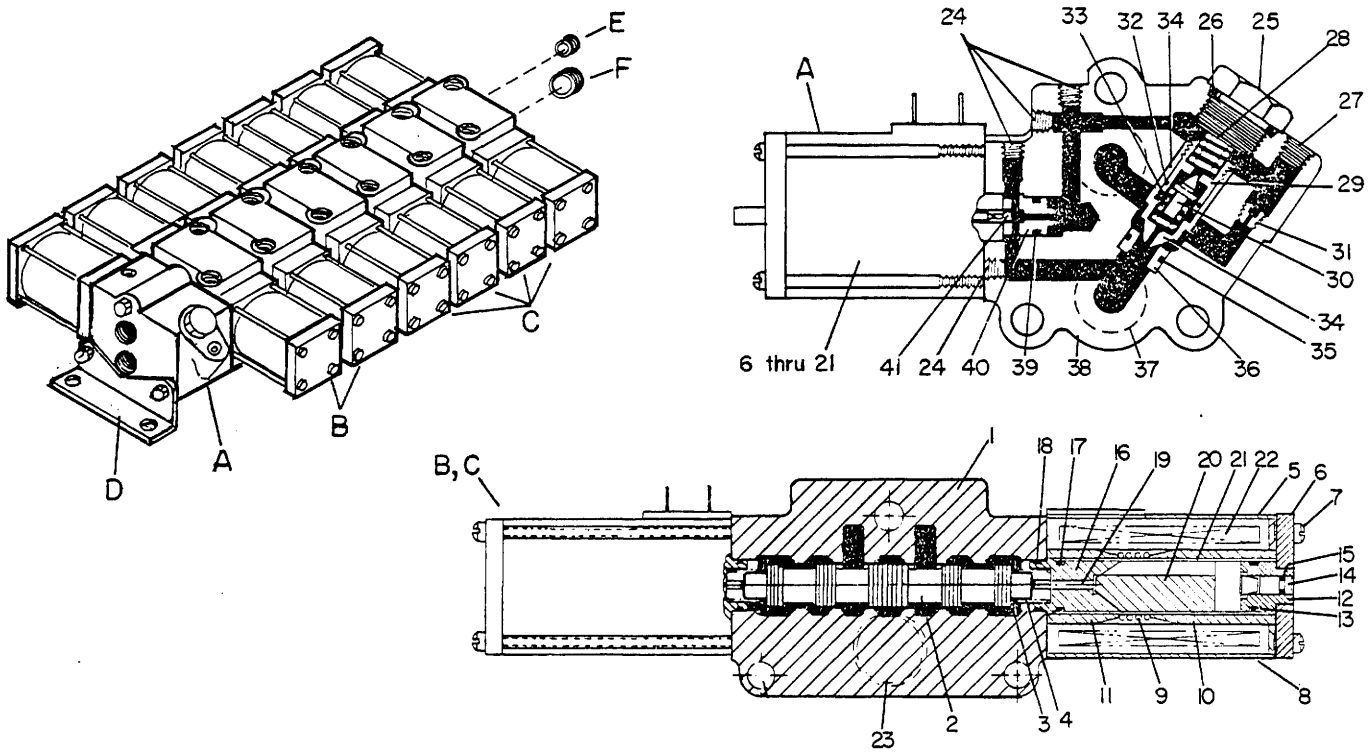

Ref. No.	Part Number	Part Number	Quan. Req'd.	Name and Description
	65135			SOLENOID VALVE BANK COMPLETE
A	29474		1	VALVE SECTION, DIVERSION - 2000 PSI RELIEF
B		29475	2	VALVE SECTION, BEAM EXTEND
C		29476	4	VALVE SECTION, VERTICAL CYLINDER
D	29478		1	MOUNTING KIT
E	1219-860		1	PLUG w/"O" RING
	1218-144		1	"O" RING FOR ABOVE
F	1219-624		1	PLUG w/"O" RING
	1218-34		1	"O" RING FOR ABOVE
	A	B & C		QUANTITIES SHOWN FOR ONE SECTION
1			1/1	BODY
2			-/1	SPOOL
3		26841	-/2	WASHER
4		29620	-/2	SPRING
5	201414	26843	1/2	SOLENOID CASE & TUBE ASSEMBLY-INCL. 6 THRU 21
6	26808	26808	1/2	END PLATE
7	26807	29595	4/8	SCREW
8	26803	29596	1/2	CASE
9	26802	26802	1/2	SPRING

Model S-488, S-588, S-688 | Group No. 2A
Date Rev. 1 Aug. 1980 | OUTRIGGER SOLENOID VALVE (OUT & DOWN) | Page 2.8

Ref. No.	Part Number A	Part Number B & C	Quan. Req'd.	Name and Description
10	26804	29597	1/2	OUTER FLUX SLEEVE
11	26801	29598	1/2	INNER FLUX SLEEVE
12	29599	29599	1/2	EXTERNAL PUSH PIN GUIDE
13	29311	29311	1/2	"O" RING
14	29600	29624	1/2	PUSH PIN
15	29310	29310	1/2	QUAD RING
16	29601	29602	1/2	FEMALE CONE
17	29311	29311	1/2	"O" RING
18	23289	29312	1/2	"O" RING
19	201413	29603	1/2	PUSH PIN
20	29604	29605	1/2	PLUNGER
21	29606	29607	1/2	GUIDE TUBE
22	26810	24263	1/2	COIL
23		23291	-/1	"O" RING
		29627	-/1	"O" RING
24	26849		4/-	PIPE PLUG, 1/16 NPTF
25	29608		1/-	PLUG
26	29303		1/-	"O" RING
27	28058		1/-	PIPE PLUG, 1/8 NPTF
28	29609		1/-	SPRING
29	29610		1/-	ADJUSTING SCREW
30	29611		1/-	POPPET
31	202829		1/-	ORIFICE PLUG (.040")
32	13555		1/-	"O" RING
33	29612		1/-	SPRING
34	29613		1/-	MAIN POPPET
35	23290		1/-	"O" RING
36	29614		1/-	SEAT
37	23291		1/-	"O" RING
38	29615		1/-	BODY
39	29616		1/-	"O" RING
40	29617		1/-	SEAT
41	29618		1/-	BALL
	A29619			SEAL KIT - FOR DIVERSION SECTION A
		A29309		SEAL KIT - FOR ONE WORK SECTION B OR C

200295 12 Thru 21
200291 16,17,18
200289 12,13,14

S-688 BEGIN. #9007355

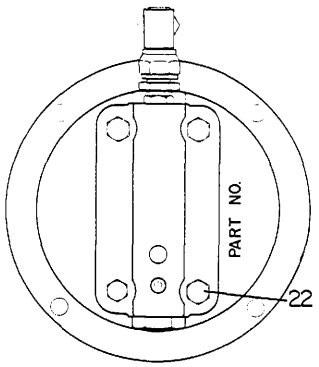

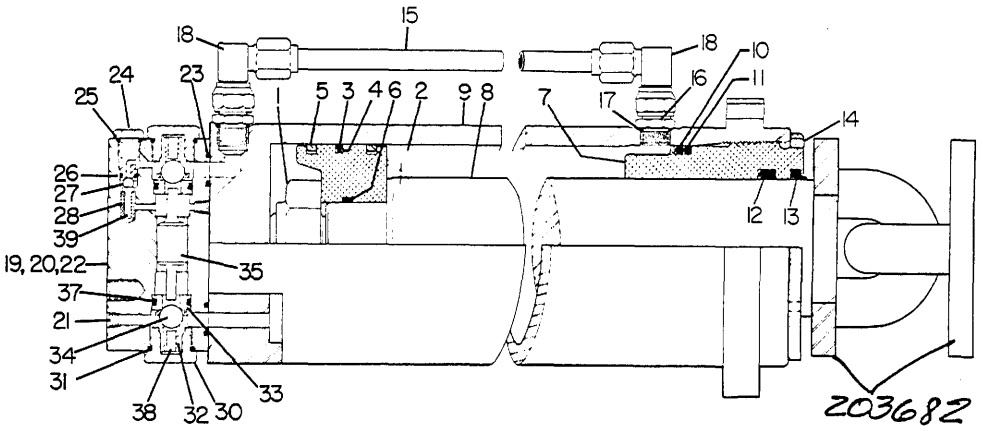

Ref. No.	Part Number	Quan. Req'd.	Name and Description
	65988	4	HYDRAULIC CYLINDER - INCLUDES ITEMS 1 THRU 39
	201346	1	SEAL KIT, CYLINDER ONLY] - INCLUDES "O" RINGS,
	201347	1	SEAL KIT, HOLD VALVE] BACK-UPS, SEALS.
1	23684	1	BUTTRESS NUT, 1 1/2-12
	1207-27	1	COTTER PIN, 5/32 x 2 1/2
2	201348	1	PISTON
3 4	23432	1	SEAL & LOADING "O" RING
5	23433	2	PISTON RING
6	23404	1	STATIC "O" RING
	25084	2	BACK-UP WASHER
7	201349	1	HEAD GLAND
8	201350	1	SHAFT
9	201351	1	CASE
10	23985	1	STATIC "O" RING
11	28698	1	BACK-UP WASHER
12	200767	1	"U" CUP SEAL & "O" RING
13	23679	1	WIPER SEAL
14		1	SETSCREW, 1/4 UNC x 3/8 SOCKET HEAD NYLOK
15	201352	1	PORTING TUBE
16	1219-441	2	ADAPTER
17	23403	2	"O" RING
18	1219-570	2	SWIVEL ELBOW

Ref. No.	Part Number	Quan. Req'd.	Name and Description
19	~~201353~~ 201356	1	HOLD VALVE - INCLUDES ITEMS 20 THRU 39
20	201354	1	BODY
21	1219-38	1	PIPE PLUG, 1/8 NPT HEX SOCKET
22	1229-44 1210-20	4 4	CAPSCREW, 3/8 UNF x 2 3/4 LG. HT GRADE 8 LOCKWASHER, 3/8 MED.
23	23133	2	"O" RING, BODY TO CYLINDER
24	201356	1	RELIEF CAP & SEAT
25	1218-144	1	"O" RING
26	22845 201355	1 2	"O" RING BACK-UP WASHER
27	23444	1	BALL
28	201357	1	SPRING, RELIEF
30	201358	2	MAIN END CAP
31	1218-64	2	"O" RING
32	201359	2	SPRING, MAIN
33	201360	2	SEAT
34	23443	2	BALL
35	201361	1	SHUTTLE SPOOL STRIKER
37	1218-226 201362	2 4	"O" RING BACK-UP WASHER
38	201363	2	MAIN SPRING STOP
39	201364	1	RELIEF SPRING STOP
	1219-624 1218-34	2 2	PLUG W/"O" RING - PORTS "O" RING FOR ABOVE

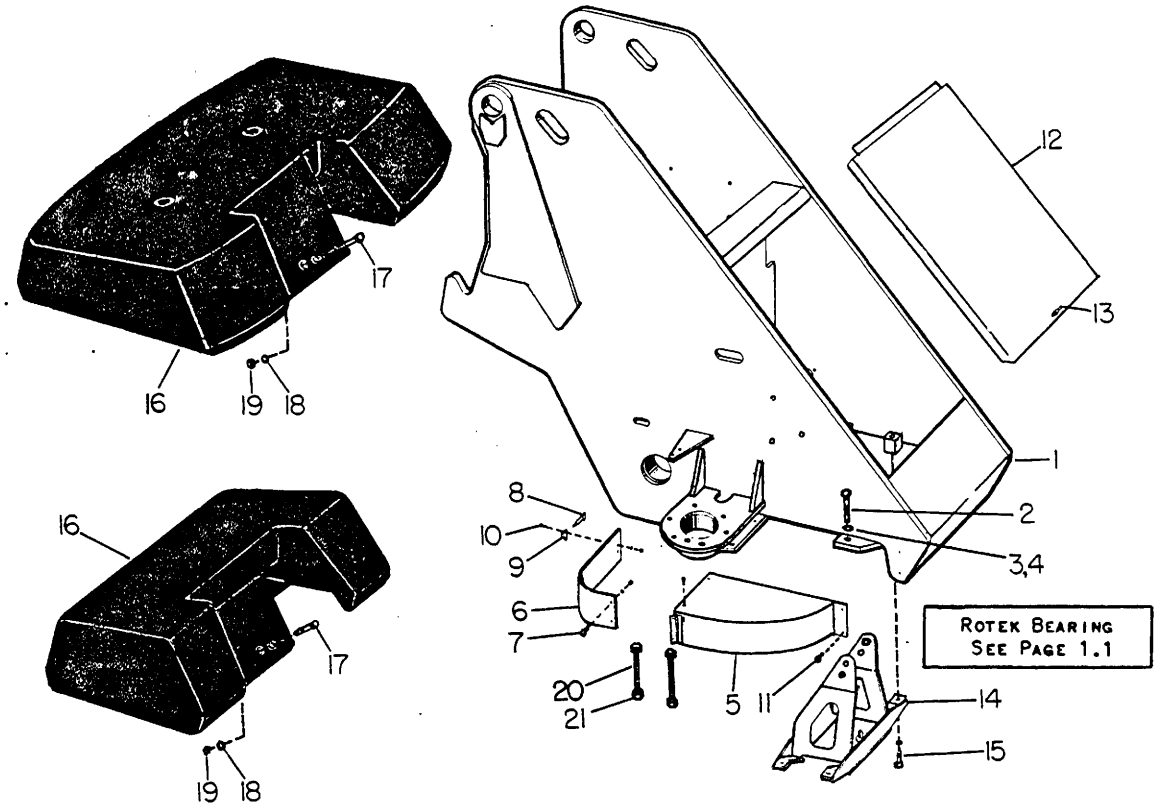

Ref. No.	Part Number	Quan. Req'd.	Name and Description
1	F65142	1	SUPERSTRUCTURE
2	1203-163	22	CAPSCREW, 7/8 UNC x 2 1/4 LG., GRADE 8
3	1209-35	22	WASHER, 1 3/8 x 13/16 x 1/16 SPECIAL
4	1209-37	22	WASHER, 7/8
5	F37060	1	GUARD
6	37064	1	PINION GUARD
7	1200-29	2	CAPSCREW, 5/16 UNC x 3/4 LG.
	1210-17	2	LOCKWASHER, 5/16 MED.
	1205-25	2	NUT, 5/16 UNC
8	1222-80	1	HOOD LATCH
9	1222-81	1	HOOD CATCH
10	1202-4	2	STOVE BOLT, 3/16 UNC x 1/2 LG., RD. HEAD
	1210-8	2	LOCKWASHER, #10
	1205-12	2	NUT, 3/16 UNC

Ref. No.	Part Number	Quan. Req'd.	Name and Description
11	1200-57	4	CAPSCREW, 3/8 UNC x 3/4 LG.
	1210-20	4	LOCKWASHER, 3/8 MED.
	1209-4	2	PLAINWASHER, 3/8 REG.
12	F38623	1	COVER
13	1222-209	1	LOCK
	41535	1	LINK
14	F36599	1	SUPPORT W/BUSHINGS
	1214-63	2	BUSHING FOR ABOVE, 3/4" ID
	1214-59	2	BUSHING FOR ABOVE, 1/2" ID
15	1200-144	4	CAPSCREW, 5/8 UNC x 1 1/2 LG.
	1210-32	4	LOCKWASHER, 5/8 MED.
	4000 LB.		
16	B36692	1	4000 LB. COUNTERWEIGHT
17	1200-292	1	CAPSCREW, 1 UNC x 6 1/2 LG.
18	35549-5	2	WASHER
19	1205-124	1	LOCK NUT, 1 UNC
	6000 LB.		
16	B49000	1	6000 LB. COUNTERWEIGHT
17	1200-329	1	CAPSCREW, 1 1/4 UNC x 5 LG., GRADE 5
18	10049	2	WASHER
19	1205-133	1	LOCK NUT, 1 1/4 UNC ELASTIC
20	1229-168	4	CAPSCREW, 7/8 UNF x 9 LG., GRADE 8
21	1205-186	4	NUT, 7/8 UNF ESNA
22	1213-6	2	GREASE FITTING, ROTEK

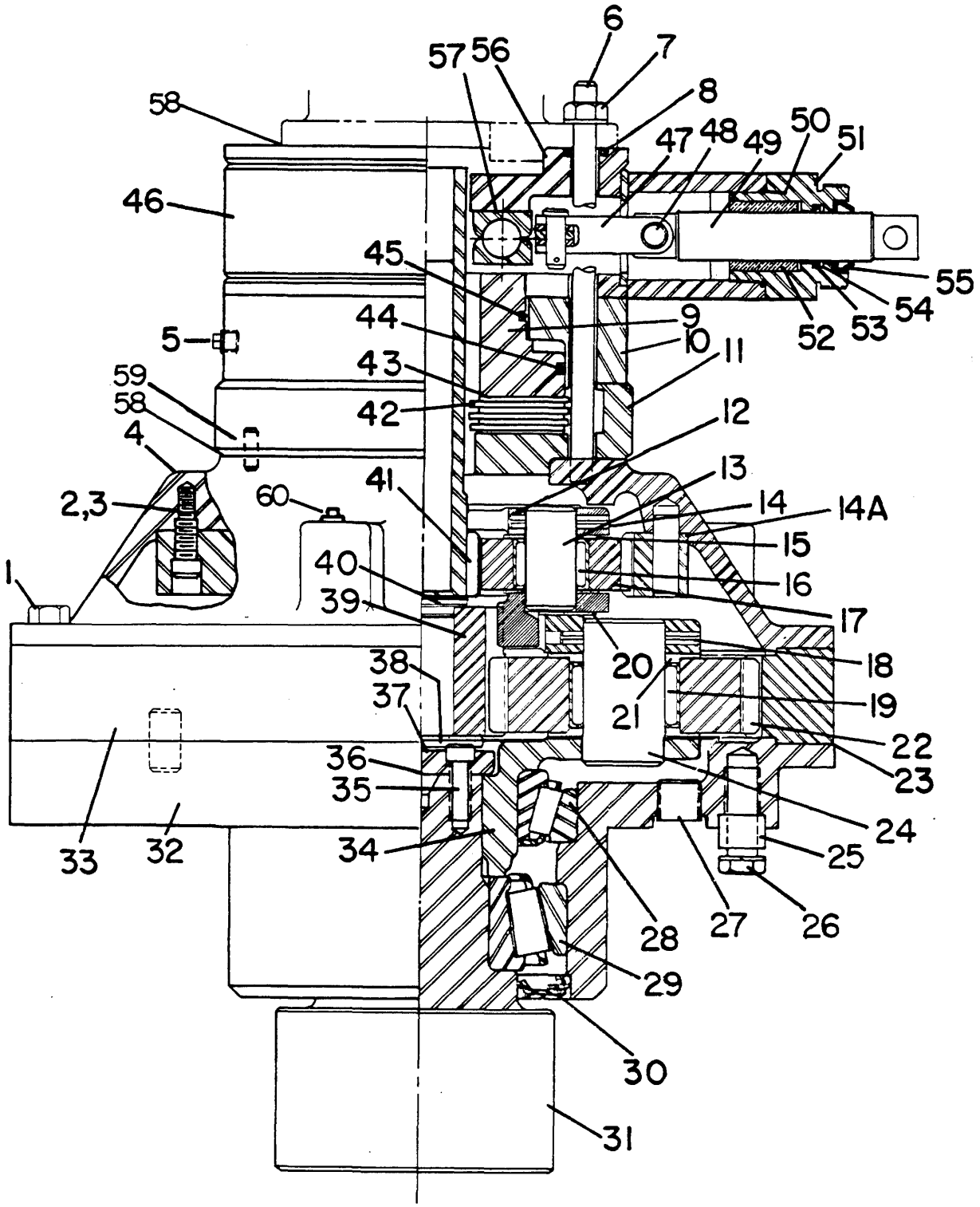
6
7
57
56
8
58
47
48
49
50
51
46
45
55
44
9
54
53
52
5
10
11
43
59
58
42
12
4
13
41
2,3
60
14
14A
15
40
16
1
39
17
20
18
38
37
21
19
22
36
23
35
24
33
32
34
25
28
27
26
29
30
31

Model S-488, S-588, S-688
Date Rev. 1 Oct. 1976

SWING REDUCER

Group No. 4
Page 4.2

Ref. No.	Part Number	Quan. Req'd.	Name and Description
	A65030		SWING SPEED REDUCER - ITEMS 1 THRU 57
1	1200-118	12	CAPSCREW, 1/2 UNC x 3-3/4 LG.
	1210-26	12	LOCKWASHER, 1/2 MED.
	1205-58	12	NUT, 1/2 UNC
2	1203-134	1	SHOULDER SCREW, 3/8
3	1203-14	5	CAPSCREW, 5/16 UNC x 1-1/2 LG,. HEX SOCKET HEAD
4	A46083	1	CASE ASSEMBLY, ITEMS 2,3, & 14A (REPLACES A65033)
5	1219-47	AR	PLUG
	12019-293	AR	AIR VENT
6	65045	4	STUD
7	1205-67	4	NUT, 1/2 UNC - ELASTIC
	1210-26	4	LOCKWASHER, 1/2 MED.
8	1218-179	4	"O" RING
9	65049	1	PISTON
10	65048	1	HOUSING
11	65047	1	END PLATE
12	36544	1	PLANET CARRIER
13	36545	3	SHAFT
14	1227-260	3	ROLL PIN
14A	A25972	1	GEAR ASSEMBLY, INCLUDES 36520 GEAR, 46082 DOWEL PIN - REFER TO SERVICE BULLETIN #243
15	36535	6	BUSHING
16	1217-250	3	ROLLER BEARING
17	36512	3	GEAR
18	1227-264	3	ROLL PIN
19	1217-251	3	ROLLER BEARING
20	36524	1	BUSHING
21	36526	6	BUSHING
22	36519	3	GEAR
23	36527	2	SHIM
24	36525	3	SHAFT

Ref. No.	Part Number	Quan. Req'd.	Name and Description
25	65032	1	BUSHING
26	49657	5	STUD
	1200-148	1	CAPSCREW, 5/8 UNC x 2 LG.
	1210-32	6	LOCKWASHER, 5/8 MED.
	1205-80	5	NUT, 5/8 UNC
27	1219-537	1	PLUG, 1/2 NPT HEX SOCKET HEAD
28	1217-238	1	CUP
	1217-237	1	CONE
29	1217-249	1	CUP
	1217-248	1	CONE
30	1218-96	1	SEAL
31	36517	1	GEAR
32	36529	1	CASE
33	36516	1	GEAR
34	36542	1	PLANET CARRIER
35	1203-135	4	CAPSCREW, 3/8 UNC x 1 LG,. HEX SOCKET HEAD
36	36536	AR	SHIM .002
	36537	AR	SHIM .005
	36538	AR	SHIM .010
37	36534	1	CAP
38	36546	1	BUSHING
39	36511	1	GEAR
40	36533	1	BUSHING
41	65046	1	SHAFT, INPUT
42	46151	3	PLATE
43	46152	3	PLATE
44	1218-33	1	"O" RING) - APPLICABLE FOR HYD. BRAKE ONLY
	1218-219	1	BACK-UP RING)
45	1218-221	1	BACK-UP RING) - APPLICABLE FOR HYD. BRAKE ONLY
	1218-220	1	"O" RING)
46	A65035	1	MECHANICAL BRAKE ASSEMBLY - INCLUDES ITEMS 47 THRU 57
47	F65043	1	LINK

Model S-488, S-588, S-688
Date Rev. 1 March 1976

SWING REDUCER

Group No. 4
Page 4.4

Ref. No.	Part Number	Quan. Req'd.	Name and Description
48	3119	2	PIN
	1207-4	2	COTTER PIN
49	65042	1	ROD - Requires Ref. 56 prior to Ser. No. S-588: 8404128
50	1218-205	1	"O" RING
51	65044	1	RETAINER
52	1214-14	1	BUSHING
53	1218-26	1	"O" RING (no longer req'd.)
54	1218-204	1	BACK-UP RING (no longer req'd.)
55	1218-182	1	WIPER SEAL (install opposite for hydraulic brake)
56	F65036	1	CASE - Requires Ref. 49 prior to Ser.No. S-588: 8404128
57	25568	1	ACTUATING ASSEMBLY
58	46135	2	GASKET
59	65705	2	DOWEL PIN
60	1219-9	2	PLUG

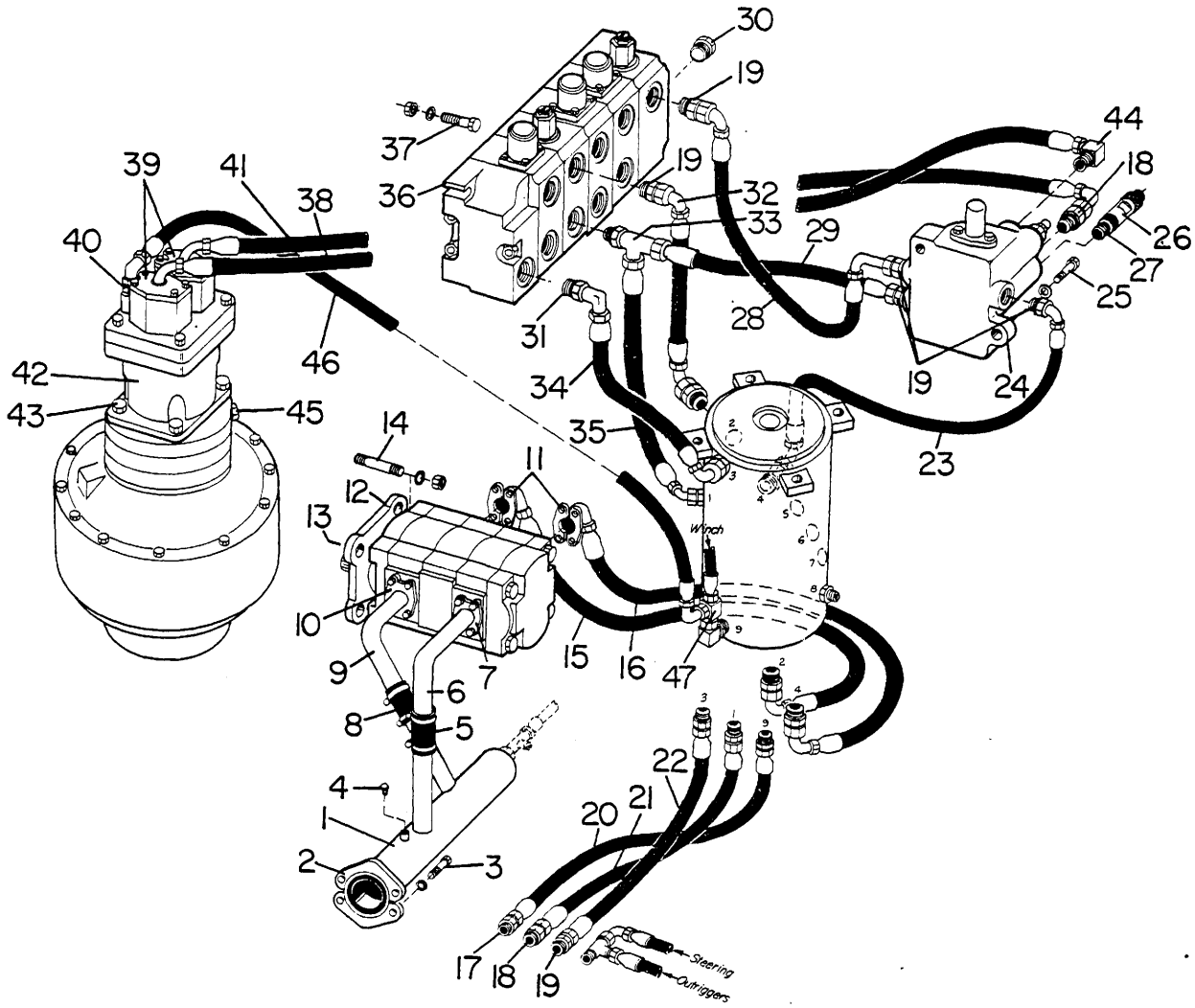

Ref. No.	Part Number	Quan. Req'd.	Name and Description
1	65228	1	MANIFOLD
	1218-61	1	"O" RING FOR ABOVE
2	1219-393	2	SPLIT FLANGE CLAMP
3	1200-146	4	CAPSCREW, 5/8 UNC x 1 3/4 LG., GRADE 5
	1210-32	4	LOCKWASHER, 5/8 MED.
4	1219-38	1	PLUG, 1/8 NPT
5	12367-6	1	HOSE
	1240-97	2	CLAMP
6	65230	1	TUBE

Ref. No.	Part Number	Quan. Req'd.	Name and Description
7	1219-390	2	SPLIT FLANGE CLAMP
	1218-83	1	"O" RING
	1200-98	4	CAPSCREW, 1/2 UNC x 1 1/4 LG., GRADE 5
	1210-26	4	LOCKWASHER, 1/2 MED.
8	12368-6	1	HOSE
	1222-119	2	CLAMP
9	65229	1	TUBE
10	1219-885	2	SPLIT FLANGE CLAMP
	1218-126	1	"O" RING
	1200-98	4	CAPSCREW, 1/2 UNC x 1 1/4 LG., GRADE 5
	1210-26	4	LOCKWASHER, 1/2 MED.
11	1219-392	4	SPLIT FLANGE CLAMP
	1218-63	2	"O" RING
	1200-307	8	CAPSCREW, 7/16 UNC x 1 1/2 LG., GRADE 5
	1210-23	8	LOCKWASHER, 7/16 MED.
12		1	PUMP - SEE PAGE 5.9
13	1239-12	1	GASKET, PUMP
14	~~65227~~	4	STUD ——— 707 6863 replacement Clutch
	1210-26	4	LOCKWASHER, 1/2 MED.
	1205-58	4	NUT, 1/2 UNC
15	A65233	1	HOSE ASSEMBLY
16	A65234	1	HOSE ASSEMBLY
17	1219-347	1	ADAPTER w/"O" RING
	1218-41	1	"O" RING FOR ABOVE
18	1219-389	3	ADAPTER w/"O" RING
	1218-64	3	"O" RING FOR ABOVE
19	1219-282	5	ADAPTER w/"O" RING
	1218-65	5	"O" RING FOR ABOVE
20	A37155	1	HOSE ASSEMBLY
21	A65498	1	HOSE ASSEMBLY
22	A37156	1	HOSE ASSEMBLY
23	A65225	1	HOSE ASSEMBLY
24		1	VALVE - SEE PAGE 5.11
25	1200-67	2	CAPSCREW, 3/8 UNC x 2 LG., GRADE 5
	1210-20	2	LOCKWASHER, 3/8 MED.
26	12019-245	2	QUICK DISCONNECT

Ref. No.	Part Number	Quan. Req'd.	Name and Description
27	1219-954	2	NIPPLE
	1219-327	1	ELBOW
28	A65223	1	HOSE ASSEMBLY
29	A65224	1	HOSE ASSEMBLY
30	1219-783	1	PLUG w/"O" RING
	1218-73	1	"O" RING FOR ABOVE
31	1219-680	1	ADAPTER w/"O" RING
	1218-65	1	"O" RING FOR ABOVE
32	A49368	1	HOSE ASSEMBLY
33	1219-910	1	TEE w/"O" RING
	1218-65	1	"O" RING FOR ABOVE
34	A49369	1	HOSE ASSEMBLY
35	A65226	1	HOSE ASSEMBLY
36		1	VALVE - SEE PAGE 5.13
37	1200-110	3	CAPSCREW, 1/2 UNC x 2 3/4 LG., GRADE 5
	1210-26	3	LOCKWASHER, 1/2 MED.
	1205-58	3	NUT, 1/2 UNC
38	A65222	1	HOSE ASSEMBLY
39	1219-392	4	SPLIT FLANGE CLAMP
	1218-63	2	"O" RING
	1200-307	8	CAPSCREW, 7/16 UNC x 1 1/2 LG., GRADE 5
	1210-23	8	LOCKWASHER, 7/16 MED.
40	1219-446	1	ADAPTER w/"O" RING
	1218-34	1	"O" RING FOR ABOVE
41	A65679	1	HOSE ASSEMBLY - SEE PAGE 5.17 ALSO
42	54739	1	SWING MOTOR - SEE PAGE 5.10
43	1205-67	4	NUT, 1/2 UNC ELASTIC
	1210-26	4	LOCKWASHER, 1/2 MED.
44	1219-802	1	ADAPTER
45	1219-624	1	PLUG w/"O" RING
	1218-34	1	"O" RING FOR ABOVE
46	A65761	1	HOSE ASSEMBLY
47	1219-956	1	TEE

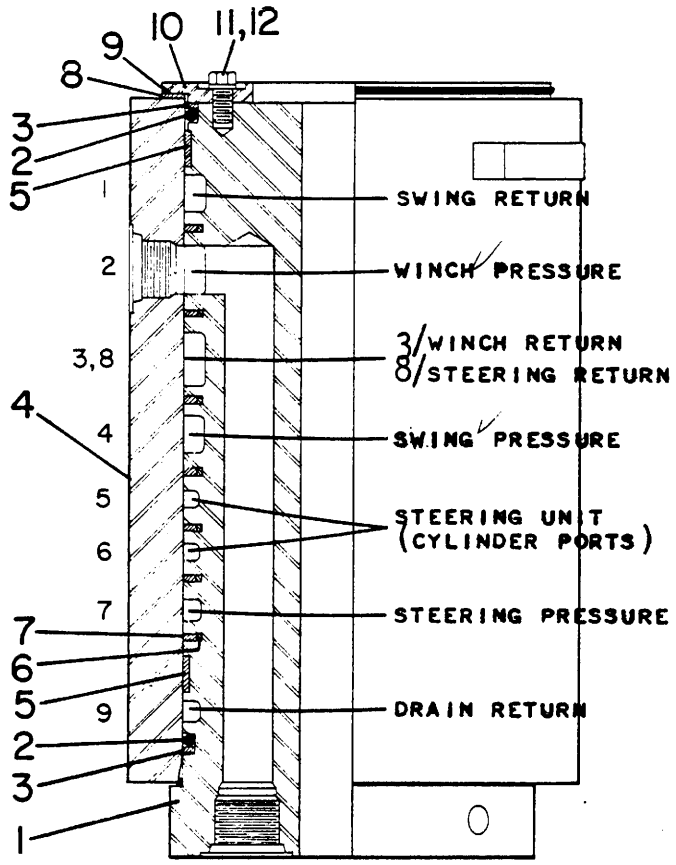

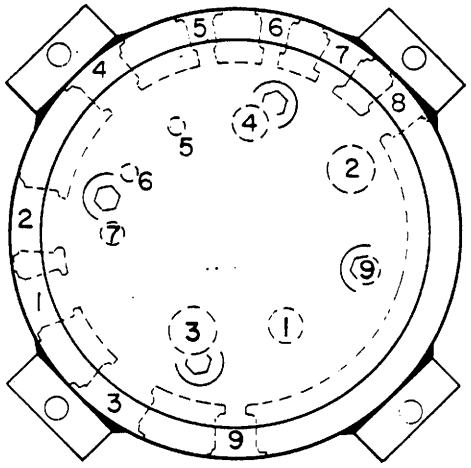

Top View

Ref. No.	Part Number	Quan. Req'd.	Name and Description
	A59160	1	HYDRAULIC ROTARY MANIFOLD-INCLUDES ITEMS 1 THRU 12
	A27119	1	SEAL KIT-INCLUDES ITEMS 2,3,5 THRU 9
1	59161	1	SPOOL
2	1218-187	2	"O" RING
3	1218-188	2	BACK-UP RING
4	F59162	1	CASE
5	49125	2	WEAR RING
6	49126	7	RECTANGULAR RING
7	49127	7	SEAL
8	49128	1	THRUST WASHER
9	1218-52	2	"O" RING
10	49129	1	PLATE
11	1242-100	4	CAPSCREW, 3/8 UNC x 3/4 LG. GRADE 5
12	1210-20	4	LOCKWASHER, 3/8 MED.

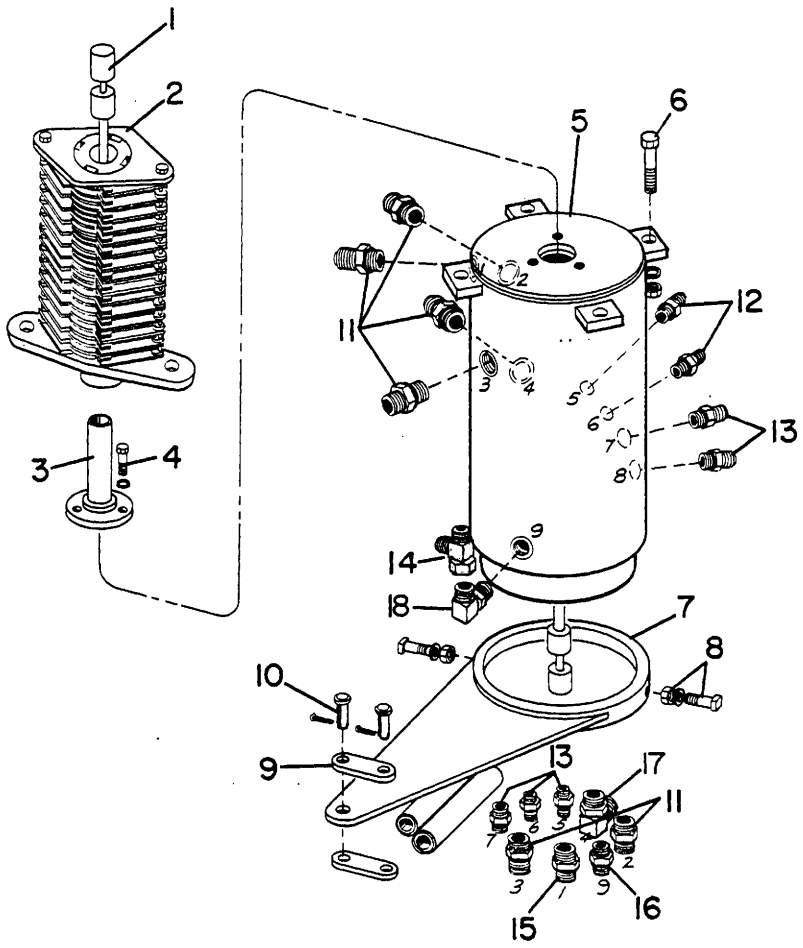

Ref. No.	Part Number	Quan. Req'd.	Name and Description
1	A65496	1	HYDRAULIC SWIVEL w/WIRE HARNESS
	37182	1	HYDRAULIC SWIVEL ONLY
	65255	1	WIRE HARNESS ONLY
2		1	COLLECTOR RING - SEE GROUP 8
3	F37009	1	COLUMN
4	1200-59	3	CAPSCREW, 3/8 UNC x 1 LG., GRADE 5
	1210-20	3	LOCKWASHER, 3/8 MED.
5	A59160	1	ROTARY MANIFOLD - SEE PAGE 5.4
6	1200-102	4	CAPSCREW, 1/2 UNC x 1 3/4 LG., GRADE 5
	1210-26	4	LOCKWASHER, 1/2 MED.
	1205-58	4	NUT, 1/2 UNC
7	F37196	1	TORQUE ARM w/BUSHINGS
	1214-59	2	BUSHING, TOP
	1214-65	2	BUSHING, BOTTOM

Ref. No.	Part Number	Quan. Req'd.	Name and Description
8	1206-64	2	SETSCREW, 5/8 UNC x 1 1/2 LG., SOCKET HD, CUP PT.
	1210-32	2	LOCKWASHER, 5/8 MED.
	1205-84	2	JAM NUT, 5/8 UNC
9	37169	2	LINK
10	1474	2	PIN
	1207-12	2	COTTER PIN, 1/8 x 1 LG.
11	1219-282	7	ADAPTER w/"O" RING
	1218-65	7	"O" RING FOR ABOVE
12	1219-605	2	ADAPTER w/"O" RING
	1218-144	2	"O" RING FOR ABOVE
13	1219-441	5	ADAPTER w/"O" RING
	1218-34	5	"O" RING FOR ABOVE
14	1219-956	1	TEE
15	1219-555	1	ADAPTER w/"O" RING
	1218-65	1	"O" RING FOR ABOVE
16	1219-347	1	ADAPTER w/"O" RING
	1218-41	1	"O" RING FOR ABOVE
17	1219-680	1	ADAPTER w/"O" RING
	1218-65	1	"O" RING FOR ABOVE
18	1219-346	1	ADAPTER w/"O" RING
	1218-41	1	"O" RING FOR ABOVE

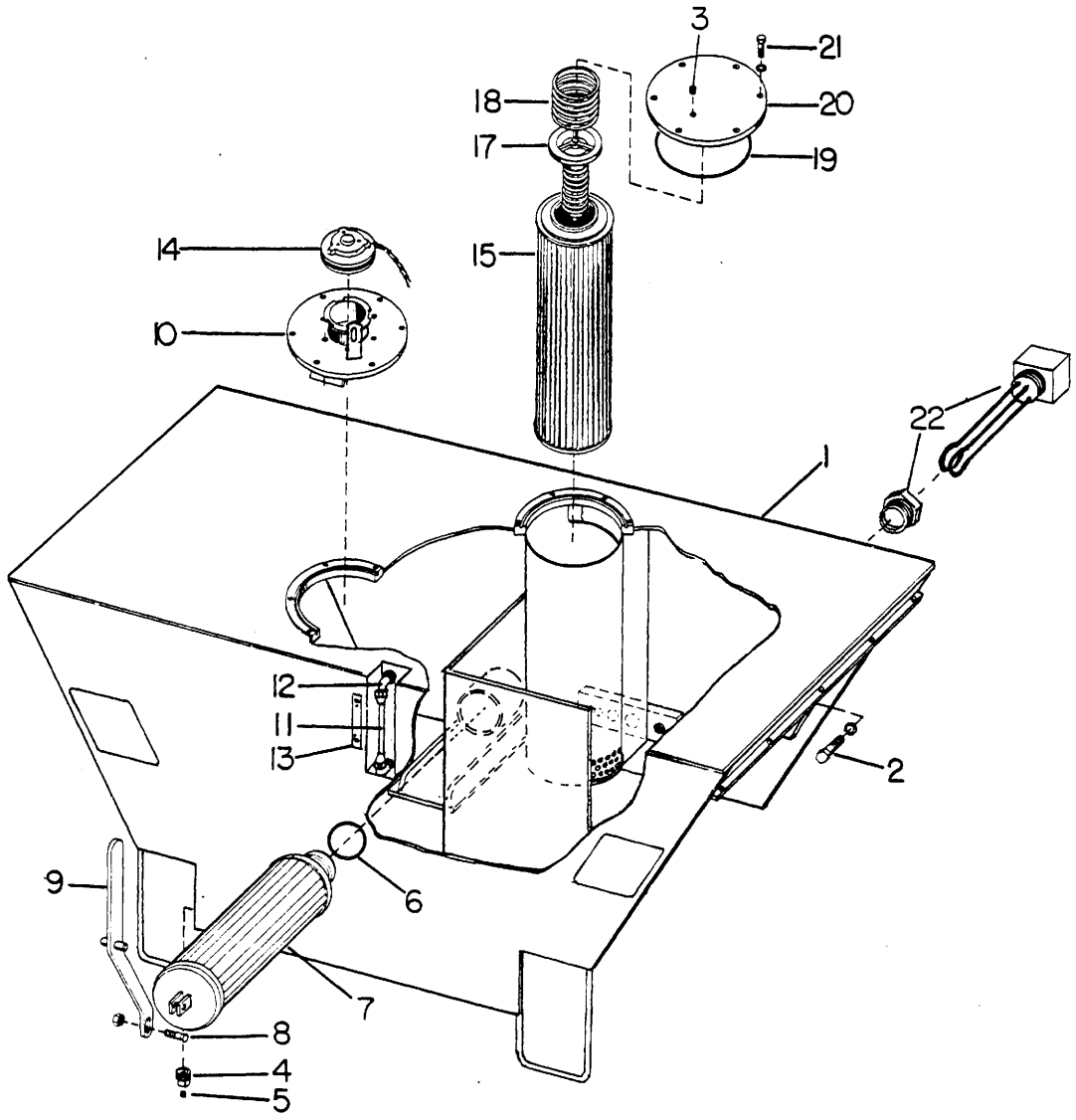

Ref. No.	Part Number	Quan. Req'd.	Name and Description
1	F65393	1	RESERVOIR
2	1200-146	2	CAPSCREW, 5/8 UNC x 1 3/4 LG.
	1200-148	2	CAPSCREW, 5/8 UNC x 2 LG.
	1210-32	4	LOCKWASHER, 5/8 MED.
	41789	AR	SHIM
3	1219-137	1	PLUG, 1/4 NPT
4	37558	1	SPECIAL PLUG
5	1219-38	1	PIPE PLUG, 1/8 NPT
6	1218-66	1	"O" RING

Model S-488, S-588, S-688 | Group No. 5
Date 1 SEPTEMBER 1974 | HYDRAULIC RESERVOIR | Page 5.8

Ref. No.	Part Number	Quan. Req'd.	Name and Description
7	1252-5	1	FILTER
8	1200-102	1	CAPSCREW, 1/2 UNC x 1 3/4 LG.
	1205-65	1	NUT, 1/2 UNC SELF-LOCKING
9	F37556	1	LEVER
10	F65409	1	COVER
11	A65411	1	HOSE ASSEMBLY
12	1219-943	2	ADAPTER, 90°
13	12260-513	1	DECAL
14	F38388	1	FILLER CAP W/CHAIN
15	~~47181~~ 705098	1	FILTER ELEMENT W/"O" RINGS
	1218-85	2	"O" RING FOR ABOVE
17	22919	1	BY-PASS VALVE
18	22920	1	HOLD-DOWN SPRING
19	1218-89	2	"O" RING FOR ITEMS 10 & 20
20	F37554	1	COVER
21	1200-59	12	CAPSCREW, 3/8 UNC x 1 LG.
	1210-20	12	LOCKWASHER, 3/8 MED.
22	1219-869	1	PLUG, 2" NPT - HEATER PORT
22	A38556	1	IMMERSION HEATER ASSEMBLY - INCLUDES THE FOLLOWING
	38552	1	HEATER
	1223-478	1	PLUG
	12239-36	1	CORD, 3 WIRE
	1223-479	1	CONNECTOR, 3/4" SCREW

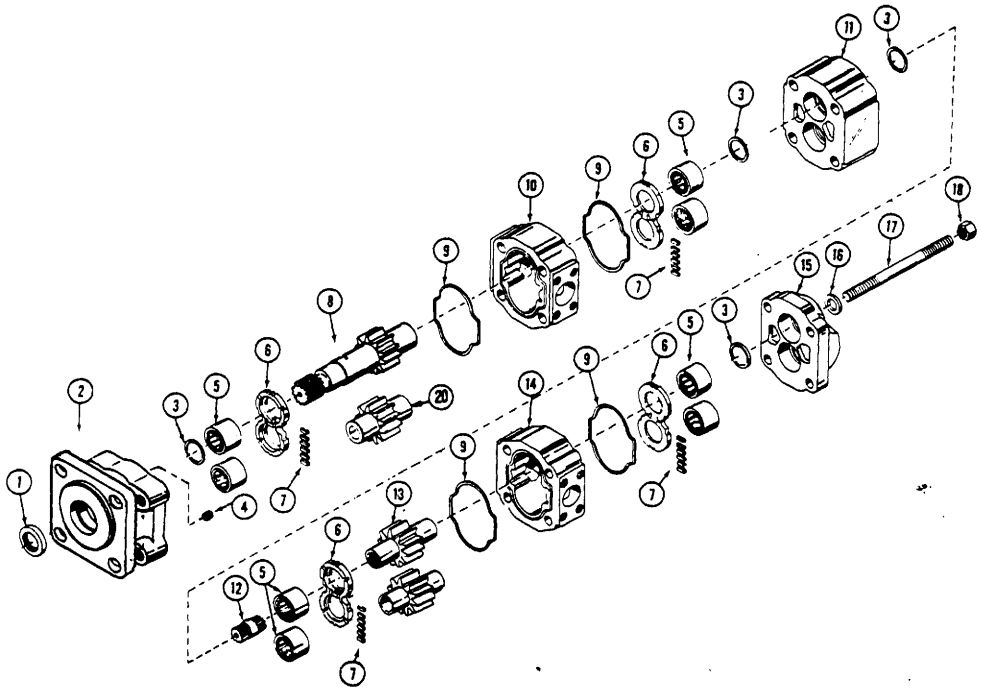

Ref. No.	Part Number	Quan. Req'd.	Name and Description
	45843	1	PUMP COMPLETE - INCLUDES ITEMS 1 THRU 18
	A28013	1	SEAL KIT - INCLUDES ITEMS 1, 3, 7, 9
1	28000	1	DOUBLE LIP SEAL
2	29381	1	SHAFT END COVER (REPLACES 27997)
3	27998	4	RING SEAL
4	24674	1	PLUG
5	23648	8	ROLLER BEARING (REPLACES 27999)
6	28001	4	THRUST PLATE
7	24250	2	POCKET SEAL STRIP, 6" LG.
8	28007	1	SHAFT & GEAR SET, 2"
9	28005	4	GASKET
10	28004	1	GEAR HOUSING
11	28008	1	BEARING CARRIER
12	28010	1	CONNECTING SHAFT
13	28011	1	MATCHED GEAR SET, 1-3/4"
14	28939	1	GEAR HOUSING (REPLACES 28004)
15	28003	1	PORT END COVER
16	24259	4	WASHER
17	28012	4	STUD
18	24247	4	NUT
	28006	4	DOWEL PIN (BETWEEN SECTIONS)
	28009	1	PIPE PLUG (FOR ITEM 11)

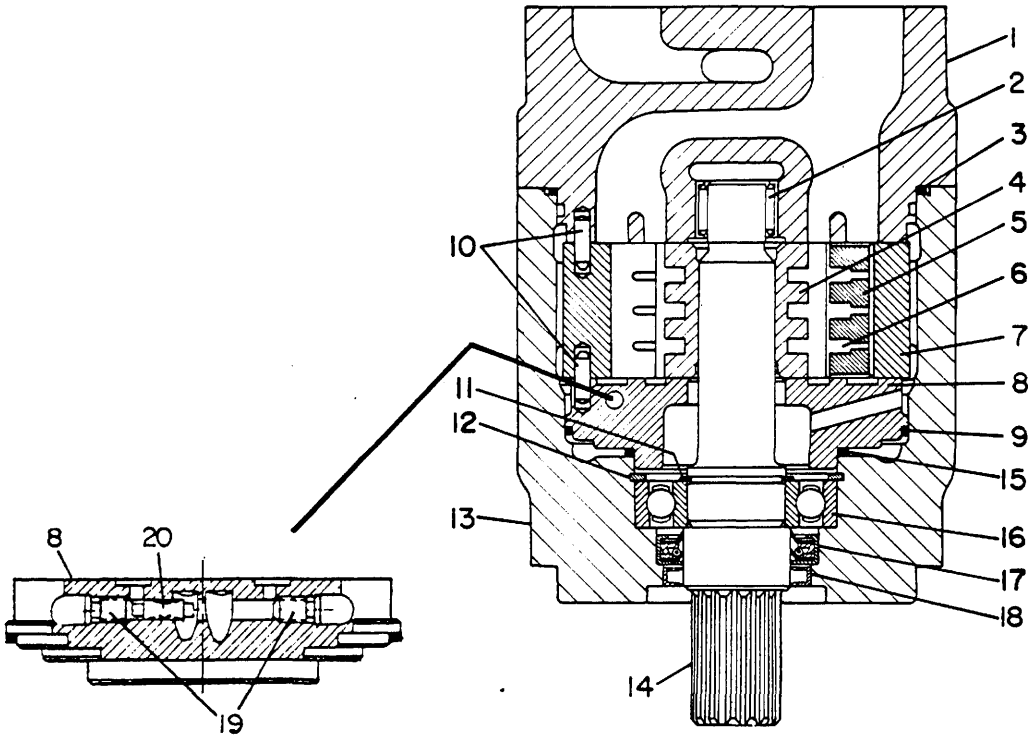

Ref. No.	Part Number	Quan. Req'd.	Name and Description
	54739	1	HYDRAULIC MOTOR COMPLETE - INCLUDES ITEMS 1 THRU 19
	28033	1	SEAL KIT (REPLACES 37220)
1	28018	1	END CAP
	28017	4	CAPSCREW, 5/8 UNC x 2 1/4 LG., SOCKET HEAD
2	28020	1	BEARING
3	28019	1	SEAL
	28022	1	CAM RING ASSEMBLY, INCLUDES ITEMS 4 THRU 7
4	28035	1	ROTOR
5	28036	1	VANE KIT - INCLUDES 10 VANES
6	28037	30	SPRING
7	28034	1	CAM RING
8	28023	1	FRONT PORT PLATE ASSEMBLY
9	28024	1	SEAL
10	28021	28	DOWEL PIN
11	28027	1	SNAP RING
12	28029	1	SNAP RING
13	28032	1	BODY
14	28031	1	SPLINED SHAFT
15	28025	1	SEAL
16	28030	1	BEARING
17	28026	1	SHAFT SEAL
18	28028	1	FELT WIPER
19	28056	2	SCREW. 5/16 UNC x 7/16 LG.
20	200736	1	SHUTTLE SPOOL

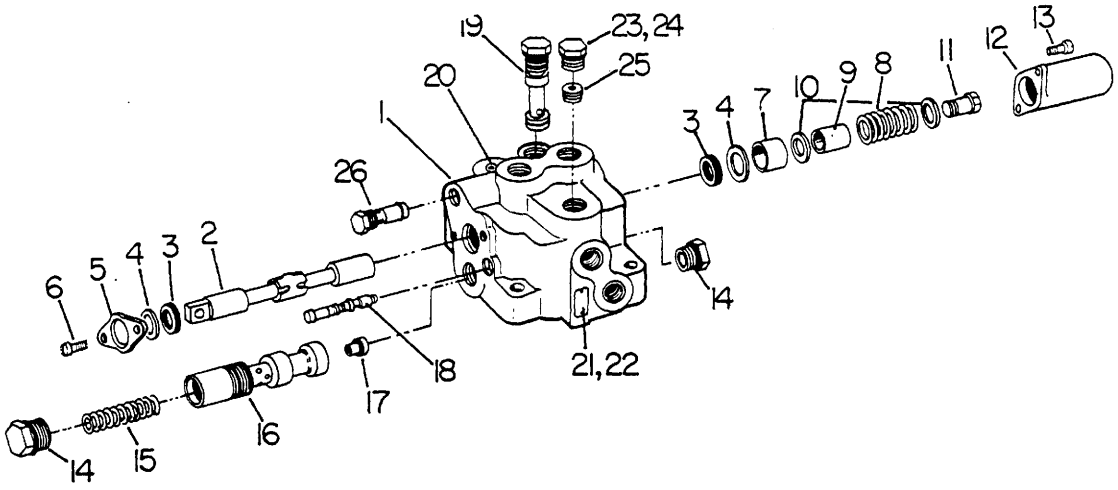

Ref. No.	Part Number	Quan. Req'd.	Name and Description
	65966	1	HYDRAULIC VALVE COMPLETE (REPLACES 65244)
	A29435	1	SEAL KIT FOR ABOVE - INCLUDES ITEMS 3, (14), (17), (24)
1	29409	1	BODY
2	29410	1	SPOOL
3	29411	2	SEAL
4	29412	2	WASHER
5	29413	1	RETAINER PLATE
6	29414	2	MACHINE SCREW
7	29415	1	SPACER
8	29416	1	SPRING
9	29417	1	SPACER
10	29418	2	WASHER
11	29419	1	SHOULDER BOLT
12	29420	1	END CAP
13	29421	2	FILLISTER HEAD SCREW
14	29422	2	PLUG
	29423	2	"O" RING FOR ABOVE

Model S-488, S-588, S-688 Group No. 5
Date 1 SEPTEMBER 1974 SWING VALVE Page 5.12

Ref. No.	Part Number	Quan. Req'd.	Name and Description	
15	29424	1	SPRING	
16	29425	1	COMPENSATING PISTON	
17	29426	1	ORIFICE PLUG	
	29427	1	"O" RING FOR ABOVE	
18	29428	1	SHUTTLE ASSEMBLY — same as [illegible] and items listed by 29 P. 5.26 [illegible]	
19	29429	1	RELIEF VALVE 2500	
20	29430	1	PLUG	
21		1	NAMEPLATE	
22		2	DRIVE SCREW	
23	29431	1	PLUG	
24	29432	1	"O" RING	
25	29433	1	PLUG	
26	29434	2	ANTI-CAVITATION VALVE	

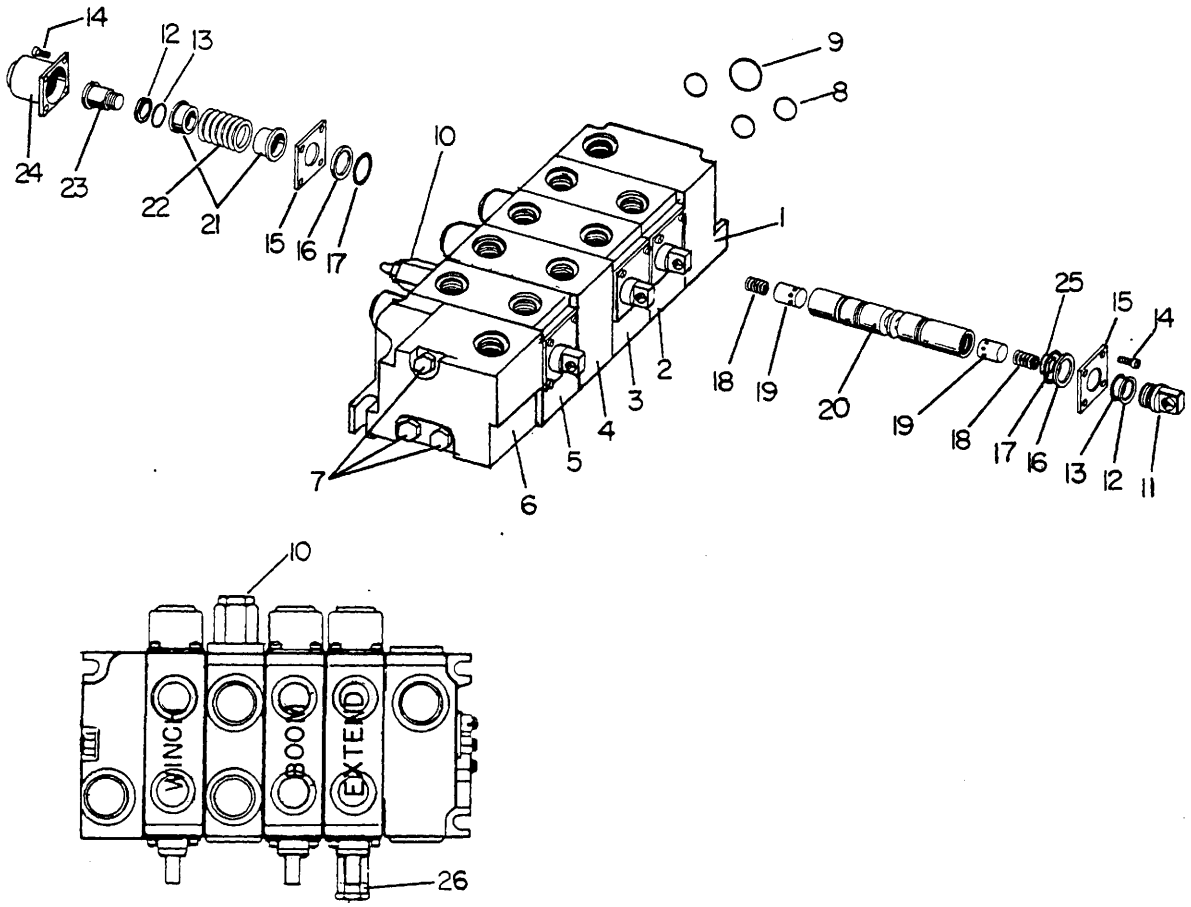

Ref. No.	Part Number	Part Number	Quan. Req'd.	Name and Description
	PRIOR TO S-488: #8206456 S-588: #8406808 S-688: #9006307	BEGIN. W/		
	65241	65972		VALVE BANK COMPLETE
	A24378	A24378		"O" RING KIT FOR COMPLETE VALVE
	A24055	A24055		"O" RING KIT FOR ONE WORK SECTION
1	29445	29445	1	INLET SECTION - INCLUDES ITEMS 8 THRU 10
2	29446	24381	1	WORK SECTION - INCLUDES ITEMS 11 THRU 25/26
3	24496	24496	1	WORK SECTION - INCLUDES ITEMS 11 THRU 25
4	29447	29447	1	MID-INLET SECTION - INCLUDES ITEMS 8 THRU 10
5	29448	29448	1	WORK SECTION - INCLUDES ITEMS 11 THRU 25
6	24388	24388	1	OUTLET SECTION

Model S-488, S-588, S-688 | Group No. 5
Date Rev. 1 Oct. 1976 | VALVE BANK | Page 5.14

Ref. No.	Part Number	Quan. Req'd.	Name and Description
7	29449	3	STUD ASSEMBLY
8	24025	3	SEAL (SQUARE SECTION)
9	24026	1	SEAL (SQUARE SECTION)
10		1	MAIN RELIEF CARTRIDGE - 2750 PSI - SEE PAGE 5.15
11	24015	1	SPOOL CLEVIS
12	27205	2	BACK-UP RING
13	24698	2	"O" RING
14	24697 24695	8 8	CAPSCREW LOCKWASHER
15	24019	3	RETAINER PLATE
16	24003	2	BACK-UP RING
17	24699	2	"O" RING
18	24018	2	SPRING
19	24017	2	POPPET
20		1	SPOOL - NOT AVAILABLE SEPARATELY
21	24696	2	SPRING GUIDE
22	24021	1	SPRING
23	24016	1	STRIPPER BOLT
24	24022	1	END CAP
25	24027	1	SLUG
26		1	LINE RELIEF CARTRIDGE - 2750 PSI - SEE PAGE 5.16

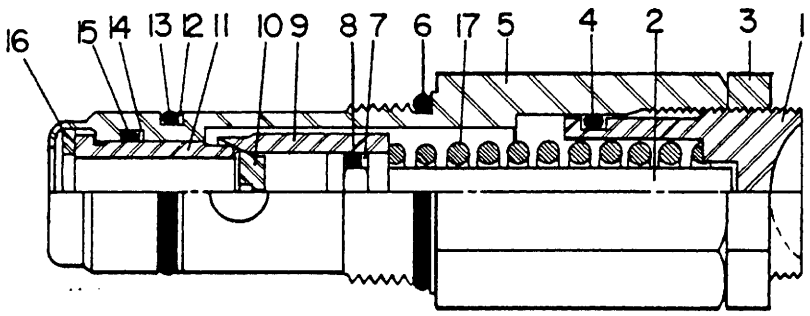

Main Relief

IMPORTANT: REPLACEMENT CARTRIDGES MUST BE ADJUSTED TO THE PROPER PSI SETTING AS SHOWN IN THE MACHINE MAINTENANCE INSTRUCTIONS.

Ref. No.	Part Number	Quan. Req'd.	Name and Description
	27088		MAIN RELIEF COMPLETE, 2000 PSI — REPLACES: 26557 - 2750 PSI ADJUST REPLACEMENT CARTRIDGE TO SPECIFIED SETTING - SEE MAINTENANCE MANUAL.
1	26457	1	SCREW
2	22164	1	PLUNGER
3	22167	1	NUT
4	22159	1	"O" RING
5	26458	1	SHELL
6	1218-65	1	"O" RING
7	22163	1	BACK-UP RING
8	22162	1	"O" RING
9	26459	1	SEAT
10	25545	1	SNUBBER
11	22157	1	POPPET
12	26413	1	BACK-UP RING
13	1218-114	1	"O" RING
14	26460	1	BACK-UP RING
15	22158	1	"O" RING
16	26461	1	RETAINER
17	26462	1	SPRING (2001 TO 2800 PSI)

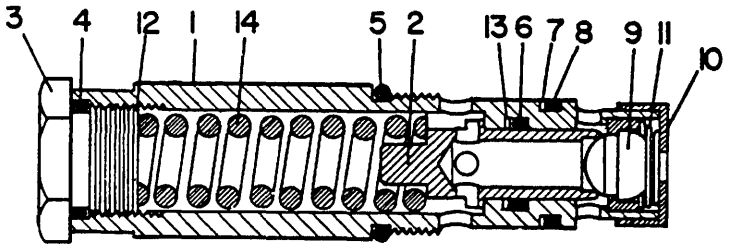

Line Relief

[illegible] TYPE ?

Ref. No.	Part Number	Quan. Req'd.	Name and Description
	24390		LINE RELIEF COMPLETE, INCLUDES ITEMS 1 THRU 14 - 2750 PSI
1	26463	1	CARTRIDGE
2	26464	1	SEAT
3	26465	1	CAP
4	26466	1	"O" RING
5	23 44	1	"O" RING
6	1218-169	1	"O" RING
7	26412	1	BACK-UP RING (PARBACK)
8	23405	1	"O" RING
9	26467	1	BALL & RETAINER ASSEMBLY
10	26468	1	END CAP RETAINER
11	26469	1	SPRING
12	26470	1	SLUG
	26471	1	SLUG
	26472	1	SLUG
13	26473	1	BACK-UP RING
14	26474	1	SPRING - 1001 TO 2200 PSI
	26475	1	SPRING - 2201 TO 3800 PSI
	27674	1	SPRING - 800 TO 1400 PSI

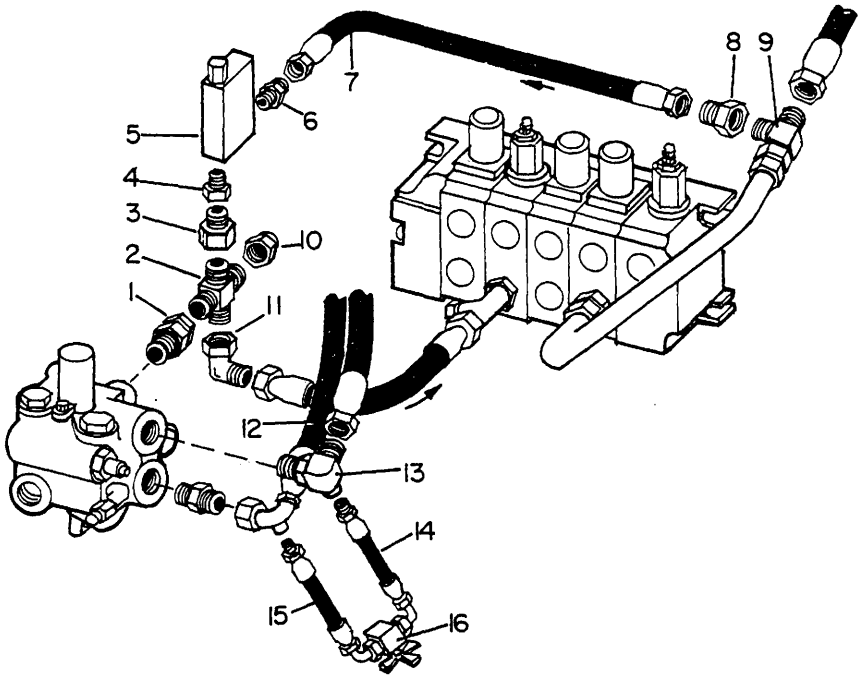

Ref. No.	Part Number	Quan. Req'd.	Name and Description
	A200925		TELESCOPE RELIEF KIT - INCL. 1 THRU 11 - FOR MACHINES PRIOR TO: S-488: 8206456 S-588: 8406808 S-688: 9006307
1	12019-342	1	ADAPTER
2	12019-344	1	CROSS
3	12019-136	1	REDUCER
4	12019-169	1	ADAPTER
5	12019-343	1	RELIEF VALVE, 2650 PSI - TELESCOPE "RETRACT"
6	12019-346	1	ADAPTER
7	A200926	1	HOSE ASSEMBLY
8	1219-564	1	REDUCER
9	1219-843	1	TEE
10	1219-635	2	CAP NUT
11	1219-957	1	ADAPTER
	A200996		SWING SURGE KIT - INCLUDES ITEMS 12 THRU 16 - FOR MACHINES PRIOR TO SER# S-488: 8206448 S-588: 8406797 S-688: 9006307
12	A200993	1	HOSE - REPLACES A65679, REF. 41, PAGE 5.3
13	F200991	1	ADAPTER
14	A200995	1	HOSE ASSEMBLY
15	A200994	1	HOSE ASSEMBLY
16	1219-676	1	VALVE

8-24-76

TELESCOPE "RETRACT" RELIEF VALVE KIT

KIT NO. 200925

MODELS S-488, S-588, S-688, T-588

1. IF THE EXISTING "RETURN" HOSE IS LOCATED AT "A", DISCONNECT. DISCONNECT ANTI-TWO BLOCK HOSE (IF SO EQUIPPED). REMOVE ELBOW (OR TEE) AND DISCARD.

   NOTE: IF "RETURN" HOSE IS LOCATED AT "B", DO NOT DISCONNECT.

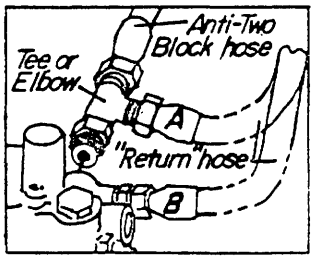

2. CONNECT ADAPTER (1) TO CROSS (2) AND INSTALL BOTH INTO VALVE PORT AS SHOWN BELOW. REMOVE PORT PLUG IF NECESSARY.

3. IF THE "RETURN" HOSE IS CONNECTED AT "B", INSTALL CAP NUT (10) TO BOTTOM OF CROSS.

   IF THE "RETURN" HOSE IS CONNECTED AT "A", INSTALL 90° ADAPTER TO BOTTOM OF CROSS AND CONNECT HOSE AS SHOWN.

4. CONNECT THE ANTI-TWO BLOCK HOSE (IF SO EQUIPPED) TO THE REAR PORT OF THE CROSS.

   INSTALL CAP NUT (10) TO REAR PORT OF CROSS IF THE ANTI-TWO BLOCK IS NOT APPLICABLE.

5. INSTALL REDUCER (3) AND ADAPTER (4) TO THE TOP PORT OF THE CROSS. INSTALL THE RELIEF VALVE (5) AND POSITION AS SHOWN.

6. INSTALL ADAPTER (6) AND HOSE (7) TO THE RELIEF VALVE (5).

7. DISCONNECT THE CYLINDER HOSE FROM THE BOOM "RETRACT" TUBE. INSTALL THE SWIVEL TEE (9) TO THE TUBE AND POSITION AS SHOWN. CONNECT THE RELIEF VALVE HOSE (7) AND THE CYLINDER HOSE TO THE TEE.

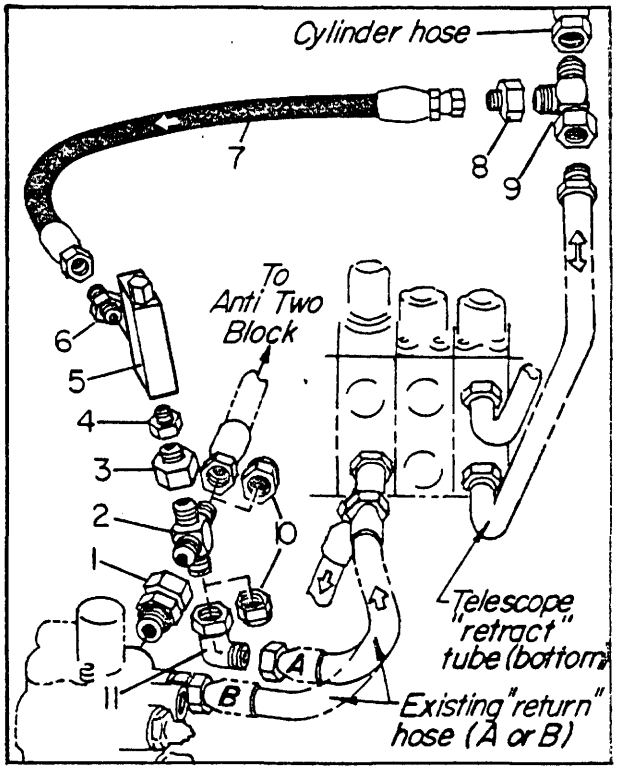

NOTE: RELIEF VALVE IS PRESET @ 2650 PSI.

PARTS REQUIRED

(1)	12019-342	1	ADAPTER
(2)	12019-344	1	CROSS
(3)	12019-136	1	REDUCER
(4)	12019-169	1	ADAPTER
(5)	12019-343	1	RELIEF VALVE
(6)	12019-346	1	ADAPTER
(7)	A200926	1	HOSE ASSEMBLY
(8)	1219-564	1	REDUCER
(9)	1219-843	1	TEE
(10)	1219-635	2	CAP NUT
(11)	1219-957	1	ADAPTER

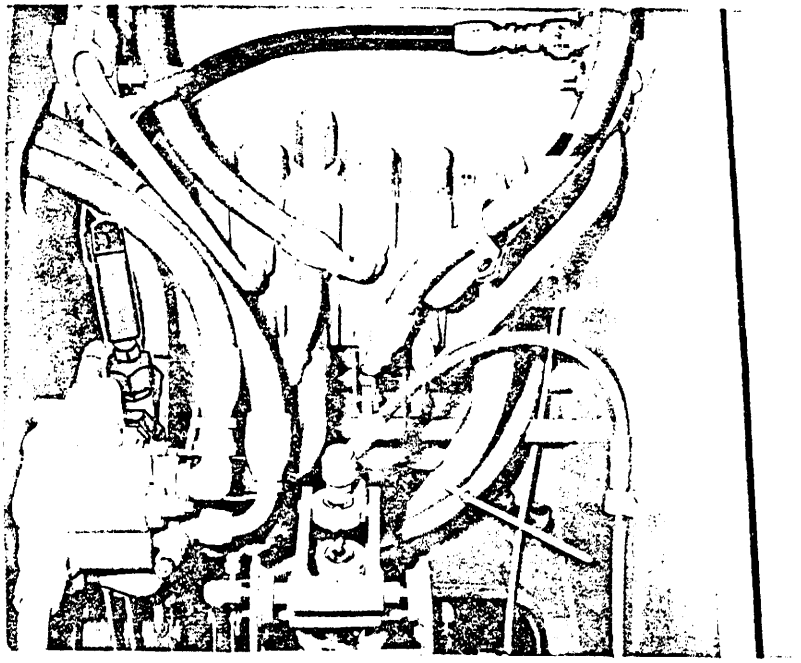

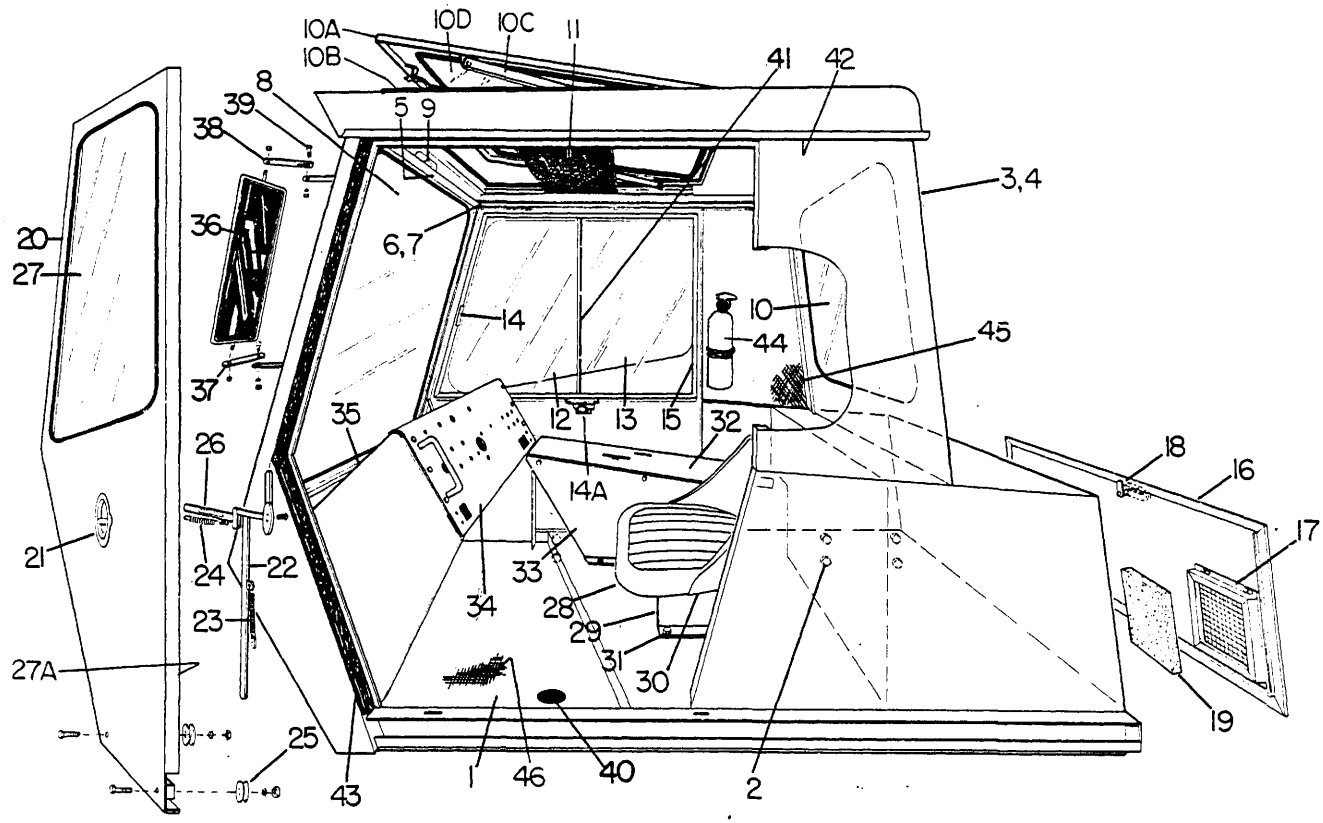

Ref. No.	Part Number	Quan. Req'd.	Name and Description
1	F65053	1	CAB SUBFRAME
2	1200-144	6	CAPSCREW, 5/8 UNC x 1 1/2 LG., HT
	1210-32 (1208-3)	6	LOCKWASHER, 5/8 MED. (WASHER)
3	65780	1	CAB ASSEMBLY - INCLUDES DOOR, FRONT WINDOW FRAME, REAR PANEL, TILT-UP ROOF FRAME - LESS GLASS (REPLACES 49357)
4	23936	1	BASIC CAB ONLY
5	23942	1	FRONT WINDOW FRAME
6	23943	4	ROLLER
7	23944	2	RH SPACER
	23945	2	LH SPACER
8	37208	1	FRONT GLASS
	49767	1	FRONT GLASS, VANDAL RESIST.
	65809	1	FRONT GLASS, VANDAL RESIST. TINTED
	1270-123	1	WEATHER STRIP
9	23554	1	LOCK BOLT W/WASHER

Ref. No.	Part Number	Quan. Req'd.	Name and Description
10	37207	1	REAR WINDOW
	49765	1	REAR WINDOW, VANDAL RESIST.
	65804	1	REAR WINDOW, VANDAL RESIST. TINTED
	1270-91	1	WEATHER STRIP FOR ABOVE
10A	200484	1	COVER W/HINGE & LATCHES
	200485	1	HINGE
	200486	2	LATCH
10B	200487	1	GASKET, COVER
10C	200488	1	RH SLIDE PROP
	200489	1	LH SLIDE PROP
	200490	2	LOCK KNOB FOR ABOVE
10D	65796	1	TOP TINTED WINDOW
	65805	1	TOP TINTED WINDOW, VANDAL RESIST.
	12212-101	1	WEATHER STIP FOR ABOVE
	49358	1	TOP TINTED WINDOW) - FIXED TOP WINDOW
	49764	1	TOP TINTED WINDOW, VANDAL RESIST.) PRIOR TO ABOVE
	1270-107	1	WEATHER STRIP FOR ABOVE SERIAL NO'S.
11	37217	1	SLIDING SHADE - PRIOR TO ABOVE SERIAL NO'S.
	65388	1	SLIDING SHADE - BEGIN. W/ABOVE SERIAL NO'S.
	12242-33	2	32" CHANNEL FOR ABOVE
12	37205	1	SLIDING GLASS
	49762	1	SLIDING GLASS, VANDAL RESIST.
	65807	1	SLIDING GLASS, VANDAL RESIST. TINTED
13	37206	1	SLIDING GLASS
	49763	1	SLIDING GLASS, VANDAL RESIST.
	65808	1	SLIDING GLASS, VANDAL RESIST. TINTED
14	1222-188	2	FINGER PULL
	12245-6	2	STRIPPING FOR ABOVE
14A	27971	1	WINDOW LOCK
15	12244-28	2	GLASS CHANNEL, FRONT & REAR
	12244-32	1	GLASS CHANNEL, TOP
	12244-40	1	GLASS CHANNEL, BOTTOM
16	23946	1	REAR PANEL
17	23947	1	FILTER RETAINER
	1203-75	2	CAPSCREW, 1/4 UNC x 3/8 LG.
	1210-14	2	LOCKWASHER, 1/4 MED.
18	23568	1	LOCK
19	37165	1	FILTER ELEMENT, HEATER INTAKE
20	23937	1	SLIDING DOOR
21	23558	1	HANDLE ASSEMBLY
22	23938	1	LEVER & LATCH ASSEMBLY
23	23939	1	SPRING
24	23940	1	SPRING

ITEMS 10A THRU 10D BEGIN. W/SER. No.
S-488: 8205776
S-588: 8405520
S-688: 9005119

Ref. No.	Part Number	Quan. Req'd.	Name and Description
25	23557	1	ROLLER
	1200-33	2	CAPSCREW, 5/16 UNC x 1 1/4 LG.
	1205-29	2	JAM NUT, 5/16 UNC
26	23941	1	RETRACTABLE LEVER
27	37209	1	DOOR GLASS
	49766	1	DOOR GLASS, VANDAL RESIST.
	65806	1	DOOR GLASS, VANDAL RESIST. TINTED
	1270-112	1	WEATHER STRIP FOR ABOVE
27A	12227-48	1	RUBBER SPONGE, DOOR SEAL
28	36561	1	SEAT
29	37210	2	SUPPORT
30	1200-29	4	CAPSCREW, 5/16 UNC x 3/4 LG.
	1210-17	4	LOCKWASHER, 5/16 MED.
31	1200-315	4	CAPSCREW, 3/8 UNC x 5/8 LG.
	1210-20	4	LOCKWASHER, 3/8 MED.
	1205-36	4	NUT, 3/8 UNC
32	65461	1	CONSOLE COVER (REPLACES 37211)
33	65471	1	CONSOLE SIDE (REPLACES 37212)
34	F65267	1	DASH PANEL
35	37521	1	COVER (REPLACES 65270)
36	32082	1	MIRROR W/NUTS
37	41519	1	ARM
38	41520	1	ARM
39	1200-31	2	CAPSCREW, 5/16 UNC x 1 LG.
	1210-17	2	LOCKWASHER, 5/16 MED.
	1205-25	2	NUT, 5/16 UNC
40	11128	1	COVER
41	12243-27	1	WEATHER STRIP CHANNEL, SLIDING GLASS
42	12240-48	1	WOOL FELT
43	12259-60	1	WEATHER STRIP
44	A49301	1	FIRE EXTINGUISHER
45	A65319	1	CAB INSULATION KIT
46	49295	1	FRONT FLOOR MAT
	49296	1	REAR FLOOR MAT
	12388-240	1	RUBBER STRIP
	1222-193	AR	PLUG BUTTON, 3/4"
	1222-192	AR	PLUG BUTTON, 5/8"
	1221-35	1	GROMMET, ELECTRICAL
47	47825	1	BUBBLE LEVEL
	47826	1	BRACKET

1



2



3



4



8



9

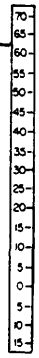

5

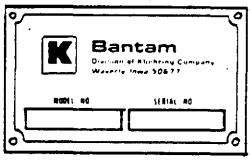

6



7

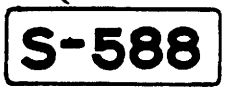

10





11

12

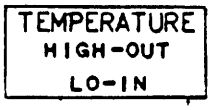

13



14



15



16

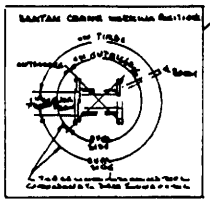

17

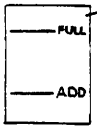

27

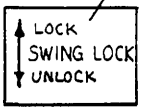

18



28

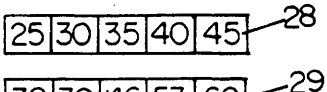

29

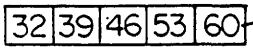

30

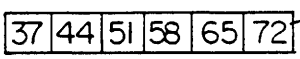

19

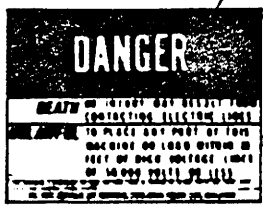

23

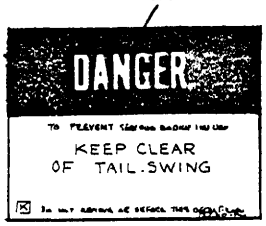

24



25

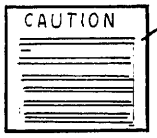

26



31

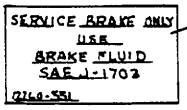

33

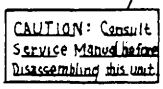

20

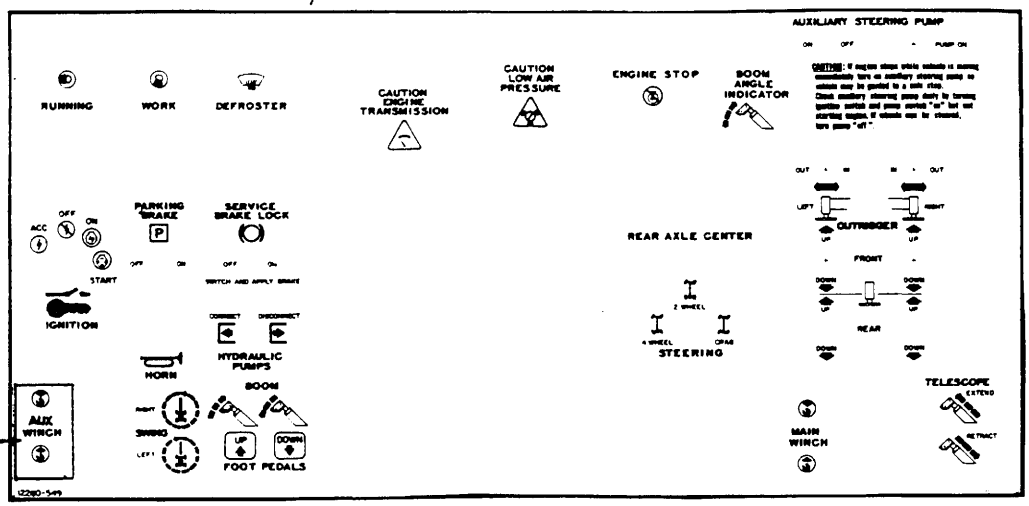

32

34



35



Ref. No.	Part Number	Quan. Req'd.	Name and Description
1	12260-725	2	DECAL, BOOM (REPLACES 12260-299 "TELEKRUISER" DECAL, SEE REF. 24)
2	12260-286	1	DECAL, CAB RH
3	12260-285	1	DECAL, CAB LH
4	12260-287	1	DECAL, CAB LH
5	12260-265	1	SERIAL NO. PLATE
6	12260-96	1	DECAL, PCSA STANDARD #2
7	12260-412	1	DECAL, S-488
	12260-348	1	DECAL, S-588
	12260-634	1	DECAL, S-688
8	12260-52	1	DECAL, SHIFT & THROTTLE
9	12260-97	1	DECAL, BOOM ANGLE INDICATOR
10	12260-75	1	DECAL, HYDRAULIC OIL
11	12260-670	1	DECAL, DIESEL FUEL
12	12260-324	1	DECAL, HEATER
13	12260-36	1	DECAL, REAR AXLE DISCONNECT
14	12260-315	1	DECAL, ENGINE EMERGENCY STOP
15	12260-316	1	DECAL, ENGINE STOP
16	12260-372	1	DECAL, WORK POSITION
17	12260-513	1	DECAL, RESERVOIR
18	12260-568	1	DECAL, FUSE BLOCK
19	12260-554	1	DECAL, "DANGER" (LARGE)
	12260-555	1	DECAL, "DANGER" (SMALL)
20	12260-549	1	DECAL, DASH (OUT & DOWN OUTRIGGERS)
	12260-548	1	DECAL, DASH (CURVED BEAM OUTRIGGERS)
21	12260-524	2	DECAL, HAND SIGNAL (NOT SHOWN)
22	12260-561	1	DECAL, LUBE CHART (NOT SHOWN)
23	12260-625	2	DECAL, "DANGER", TAIL SWING
24	12260-726	2	DECAL, "TELEKRUISER" (REPLACES 12260-276 "BANTAM" DECAL)
25	12260-589	1	DECAL, INTEGRATED ALTERNATOR/REGULATOR
26	12260-362	1	DECAL, BOOM MARKER

Model S-488, S-588, S-688 | Group No. 6
Date REV. 1 MARCH 1976 | MARKING DECALS | Page 6.6

Ref. No.	Part Number	Quan. Req'd.	Name and Description
27	12260-469	1	DECAL, SWING LOCK
28	12260-673	1	DECAL, 45' BOOM
29	12260-674	1	DECAL, 60' BOOM
30	12260-441	1	DECAL, 72' BOOM
31	12260-551	1	DECAL, BRAKE FLUID
32	12260-574	1	DECAL, AUXILIARY WINCH
	12260-311	1	DECAL, TWO-SPEED WINCH (NOT SHOWN)
33	12260-253	1	DECAL, PARKING BRAKE ACTUATOR
34	12260-701	1	DECAL, FAN CAUTION
35	12260-570	1	DECAL, LIFT EYE DATA
			CAPACITY CHART (NOT SHOWN) - SPECIFY PART NUMBER

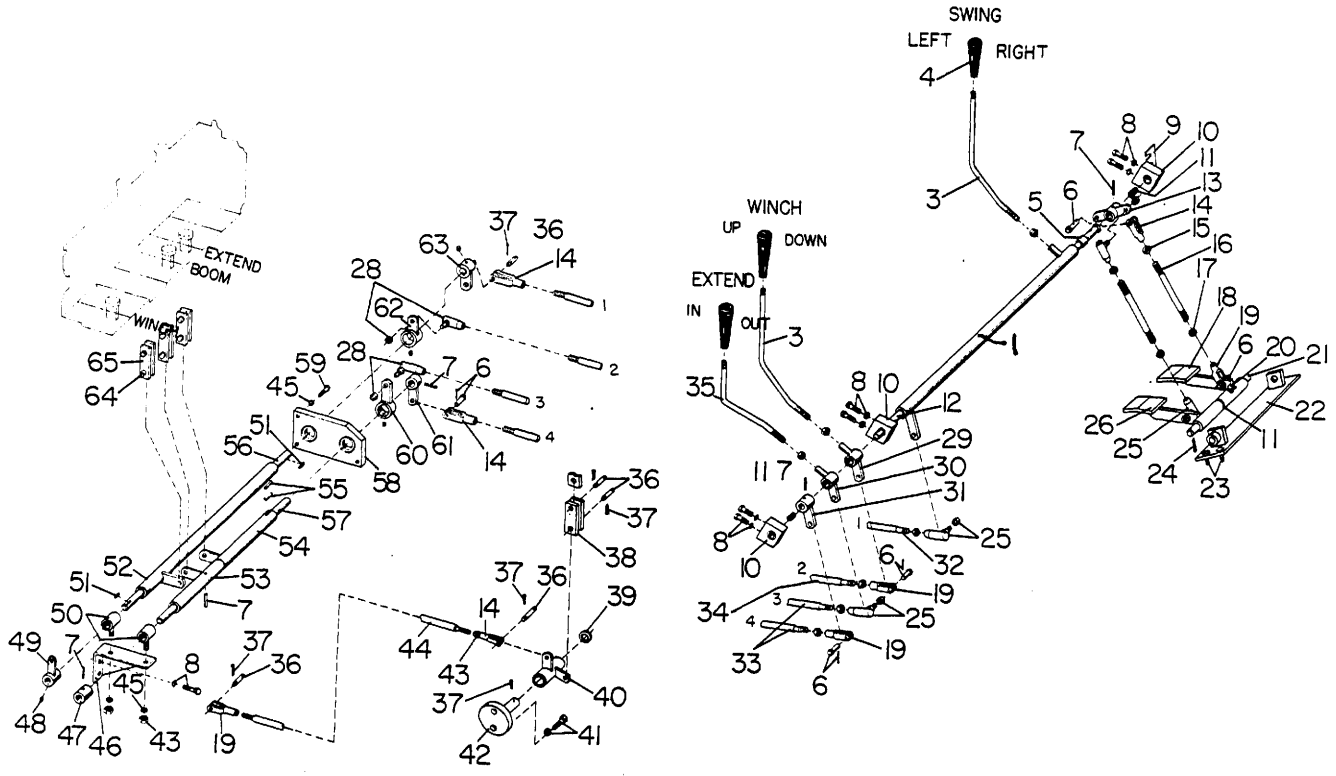

Ref. No.	Part Number	Quan. Req'd.	Name and Description
1	F38326	1	BELLCRANK, W/BUSHING
	1214-96	2	BUSHING, FOR ABOVE
2	1205-58	2	NUT, 1/2 UNC
3	37032	2	ROD
4	1221-32	3	KNOB
5	65362	1	SPACER
6	3119	5	PIN
	1207-13	5	COTTER PIN, 1/8 x 1-1/4 LG.
7	1227-186	5	ROLL PIN
8	1200-57	8	CAPSCREW, 3/8 UNC x 3/4 LG.
	1210-20	8	LOCKWASHER, 3/8 MED.
9	65367	3	SHIM
10	A65455	3	SUPPORT
11	1208-8	14	BUSHING
12	37042	1	SHAFT
13	F37015	1	BELLCRANK

Ref. No.	Part Number	Quan. Req'd.	Name and Description
14	3118	4	YOKE
15	1205-37	2	NUT, 3/8 UNF
16	41472	1	ROD
17	1205-162	6	NUT, 3/8 UNF
18	F65791	1	PEDAL, L.H.
	1216-2	2	BUSHING
19	35559	4	YOKE
20	1213-6	2	GREASE FITTING
21	41474	1	PIN
22	F41468	1	BRACKET
23	1200-3	4	CAPSCREW, 1/4 UNC x 1 LG.
	1210-14	4	LOCKWASHER, 1/4 MED.
	1205-13	4	NUT, 1/4 UNC
24	1207-31	1	COTTER PIN 3/16 x 1-1/2 LG.
25	1222-182	3	BALL JOINT
	1210-20	3	LOCKWASHER, 3/8 MED.
	1205-37	3	NUT, 3/8 UNF
26	F65790	1	PEDAL, R.H.
	1216-2	2	BUSHING
27	41473	1	ROD
28	1222-139	3	BALL JOINT
	1210-20	3	LOCKWASHER, 3/8 MED.
	1205-37	3	NUT, 3/8 UNF
29	F38330	1	BELLCRANK, W/BUSHING
	1214-96	1	BUSHING, FOR ABOVE
30	F38329	1	BELLCRANK, W/BUSHNG
	1214-96	1	BUSHING, FOR ABOVE
31	F38331	1	ARM
32	38337	1	ROD
33	36892	2	ROD
34	38339	1	ROD
35	37031	1	ROD
36	3119	5	PIN
37	1207-13	6	COTTER PIN, 1/8 x 1-1/4 LG.

Ref. No.	Part Number	Quan. Req'd.	Name and Description
38	65080	2	LINK
39	1209-9	1	WASHER, 3/4 REG.
40	F65078	1	BELLCRANK, W/BUSHING
	1214-96	2	BUSHING, FOR ABOVE
41	1200-63	2	CAPSCREW, 3/8 UNC x 1-1/2 LG.
	1209-4	2	WASHER, 3/8 REG.
42	F65075	2	SUPPORT
43	1205-36	3	NUT, 3/8 UNC
44	F65089	1	ROD
45	1210-20	3	LOCKWASHER, 3/8 MED.
46	F37028	1	BRACKET
47	37049	1	SPACER
48	1206-2	4	SETSCREW, 1/4 UNC x 1/4 LG.
49	F65314	1	ARM
50	F37044	2	SUPPORT
51	65321	2	KEY
52	F65086	1	BELLCRANK, W/BUSHING
	1214-96	2	BUSHING, FOR ABOVE
53	F65453	1	BELLCRANK, W/BUSHING
	1214-96	2	BUSHING, FOR ABOVE
54	F65451	1	BELLCRANK, W/BUSHING
	1214-96	2	BUSHING, FOR ABOVE
55	37893	2	KEY
56	65085	1	SHAFT
57	65088	1	SHAFT
58	F37053	1	SUPPORT
59	1200-59	3	CAPSCREW, 3/8 UNC x 1 LG.
60	F37018	1	ARM
61	F38334	1	LEVER
62	F65083	1	ARM

4789/ SPACER. (3)
DROP 1208-8 BUSH'S

Model S-488, S-588, S-688 Group No. 7
Date 1 SEPTEMBER 1974 HYDRAULIC CONTROLS ASSEMBLY Page 7.4

Ref. No.	Part Number	Quan. Req'd.	Name and Description
63	F65081	1	ARM
64	1689	2	PIN
	1207-13	2	COTTER PIN, 1/8 x 1-1/4 LG.
65	37055	6	LINK

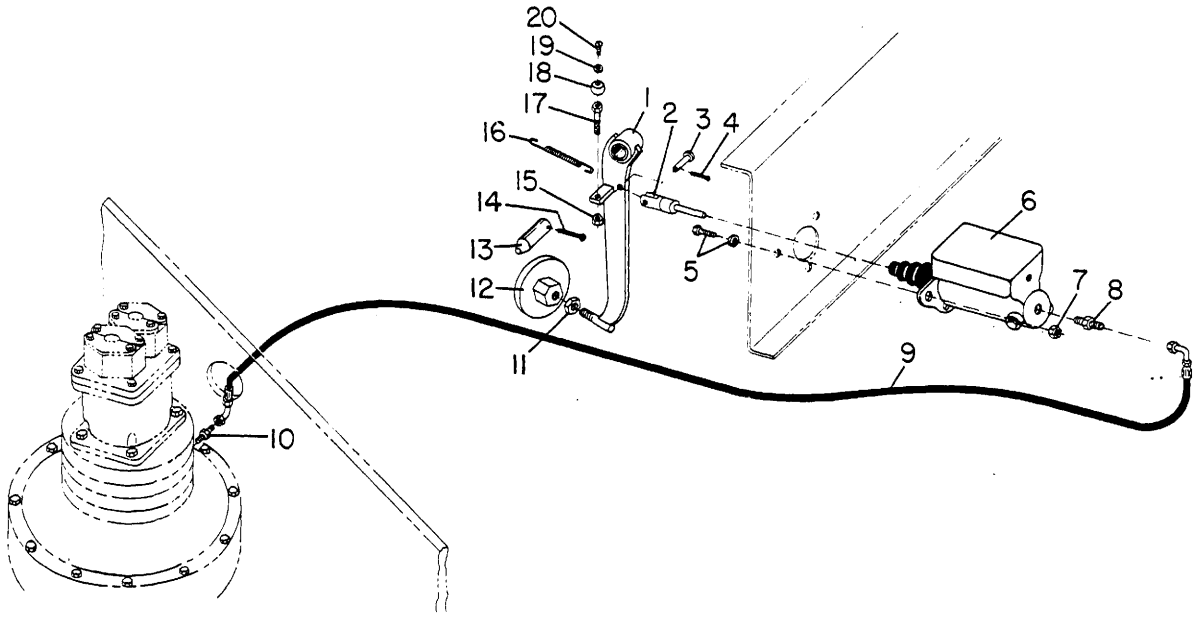

Ref. No.	Part Number	Quan. Req'd.	Name and Description
1	F65235	1	ARM
2	F65237	1	PUSHROD
3	3063	1	PIN
4	1207-11	1	COTTER PIN, 1/8 x 3/4 LG.
5	1200-61	3	CAPSCREW, 3/8 UNC x 1-1/4 LG.
	1210-20	3	LOCKWASHER, 3/8 MED.
6	58344	1	MASTER CYLINDER ASSEMBLY
7	1205-36	3	NUT, 3/8 UNC
8	1219-605	1	ADAPTER
9	A65236	1	HOSE ASSEMBLY
10	12019-188	1	ADAPTER
11	1205-84	1	NUT, 5/8 UNC
12	46581	1	PEDAL
13	16079	1	PIN
14	1207-31	1	COTTER PIN, 3/16 x 1-1/2 LG.
15	1205-25	1	NUT, 5/16 UNC
16	37141	1	SPRING
17	40903	1	CAPSCREW
18	6977	1	BUMPER
19	1209-1	1	PLAIN WASHER, 3/16 REG.
20	1233-1	1	MACHINE SCREW #10 x 1/2 LG.

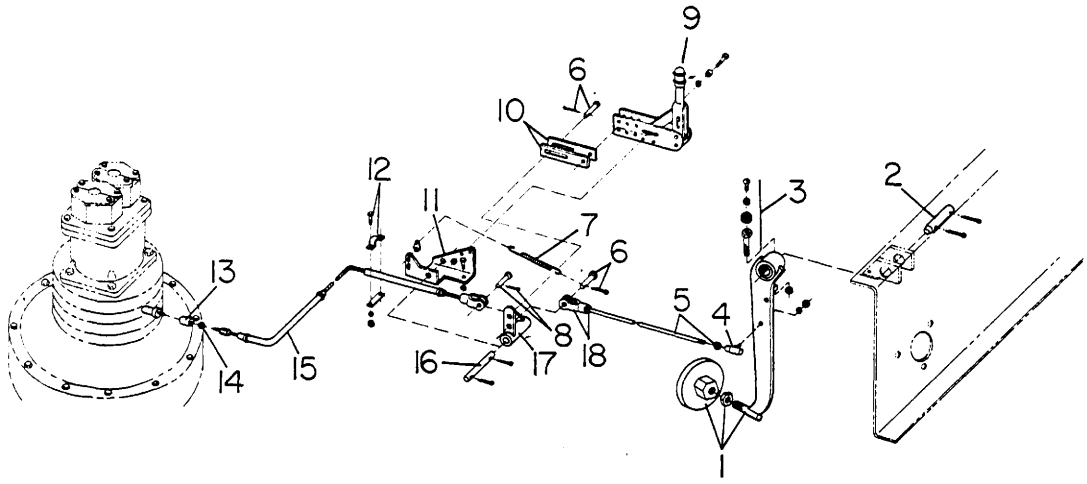

Ref. No.	Part Number	Quan. Req'd.	Name and Description
1	F65235	1	ARM
	46581	1	PEDAL
	1205-84	1	NUT, 5/8 UNC
2	16079	1	PIN
	1207-31	2	COTTER PIN, 3/16 x 1-1/2 LG.
3	1233-1	1	SCREW, MACHINE, #10 x 1/2 LG.
	1209-1	1	WASHER, 3/16 REG.
	6977	1	BUMPER
	40903	1	CAPSCREW
	1205-25	1	NUT, 5/16 UNC
4	1222-182	1	BALL JOINT
	1205-37	1	NUT, 3/8 UNF
5	65716	1	ROD
	1205-162	1	NUT, 3/8 UNF
6	3119	2	PIN
	1207-13	2	COTTER PIN, 1/8 x 1-1/4 LG.
7	37141	1	SPRING
8	3063	1	PIN
	1207-5	1	COTTER PIN, 3/32 x 1 LG.
9	37218	1	BRAKE LEVER
	1200-65	2	CAPSCREW, 3/8 UNC x 1-3/4 LG.
	65720	2	SPACER
	1210-20	2	LOCKWASHER, 3/8 MED.
	1205-36	2	NUT, 3/8 UNC
10	65717	2	LINKS
11	65718	1	BRACKET

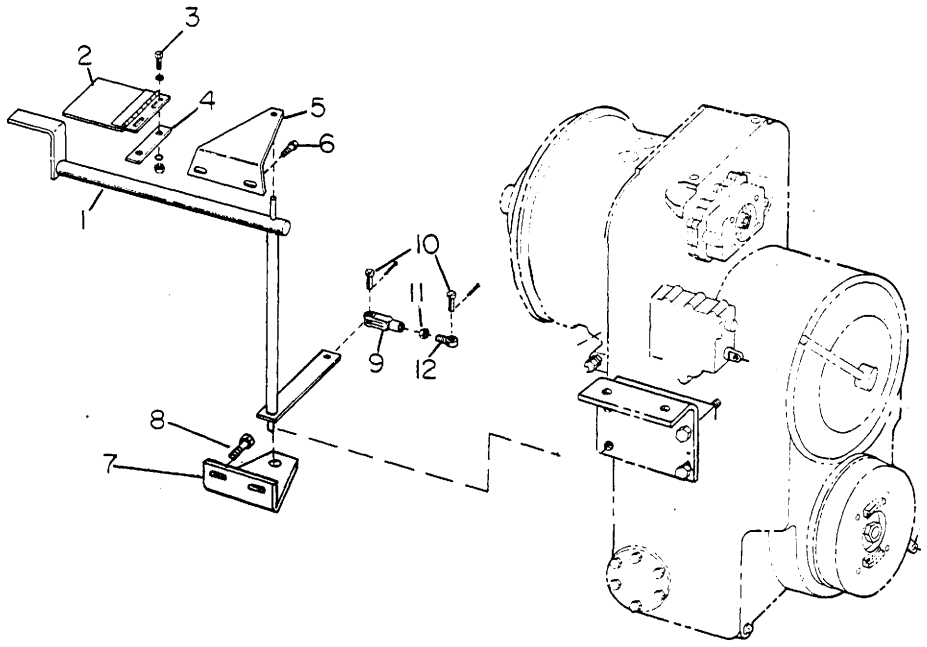

Ref. No.	Part Number	Quan. Req'd.	Name and Description
1	F65112	1	LEVER
2	F65115	1	LOCK
3	1242-7	2	CAPSCREW, 3/8 UNC x 1 LG.
	1209-4	2	PLAINWASHER, 3/8 REG.
	1210-20	2	LOCKWASHER, 3/8 MED.
	1205-36	2	NUT, 3/8 UNC
4	65118	1	STRIP
5	F65120 ~~F65148~~	1	BRACKET
	1214-59	1	BUSHING FOR ABOVE
6	1242-6	2	CAPSCREW, 3/8 UNC x 1 1/4 LG.
	1210-20	2	LOCKWASHER, 3/8 MED.
7	65119	1	BRACKET (REPLACES F65148)
8	1242-30	2	CAPSCREW, 5/16 UNC x 1 LG.
	1209-3	2	PLAINWASHER, 5/16 REG.
	1210-17	2	LOCKWASHER, 5/16 MED.
	1205-25	2	NUT, 5/16 UNC
9	2464	1	CLEVIS
10	2463	2	PIN
	1207-12	2	COTTER PIN
11	1205-62	1	JAM NUT, 1/2 UNF
12	37650	1	ROD END

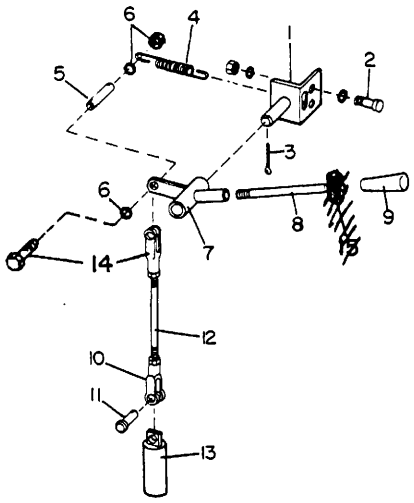

Ref. No.	Part Number	Quan. Req'd.	Name and Description
1	F65286	1	BRACKET
2	1200-57	2	CAPSCREW, 3/8 UNC x 3/4 LG.
	1209-4	2	PLAINWASHER, 3/8 REG.
	1210-20	2	LOCKWASHER, 3/8 MED.
	1205-36	2	NUT, 3/8 UNC
3	1207-6	1	COTTER PIN, 3/32 x 1-1/4 LG.
4	65291	1	SPRING
5	1291-19	1	SPACER
6	1205-43	1	NUT, 3/8 UNC SELF LOCKING
	1209-4	2	PLAINWASHER, 3/8 REG.
7	F65275	1	BELLCRANK, W/BUSHING
	1214-96	1	BUSHING, FOR ABOVE
8	65274	1	ROD
9	1221-32	1	KNOB
10	35559	1	YOKE
	1205-162	1	NUT, 3/8 UNF
11	3119	1	PIN
	1207-13	1	COTTER PIN, 1/8 x 1-1/4 LG.
12	65277	1	ROD
13	F65278	1	PIN
14	3118	1	YOKE
	1205-37	1	NUT, 3/8 UNF
	1200-67	1	CAPSCREW, 3/8 UNC x 2 LG.
~~15~~	~~12283-125~~	~~1~~	~~GROMMET, HOSE~~ NEVER USED

Ref. No.	Part Number	Quan. Req'd.	Name and Description
12	32475	1	CABLE CLAMP
	32476	2	LINK SPACER
	1200-32	2	CAPSCREW, 5/16 UNF x 1 LG.
	1210-17	2	LOCKWASHER, 5/16 MED.
	1205-26	2	NUT, 5/16 UNF
13	F65155	1	CABLE ANCHOR
14	1205-40	1	NUT, 3/8 UNF
15	1291-43	1	BRAKE CABLE (REPLACES 1291-7)
16	65715	1	SHAFT
	1207-13	2	COTTER PIN, 1/8 x 1 1/4 LG.
17	F65711	1	BELLCRANK
18	3118	1	YOKE
	1205-37	1	NUT, 3/8 UNF

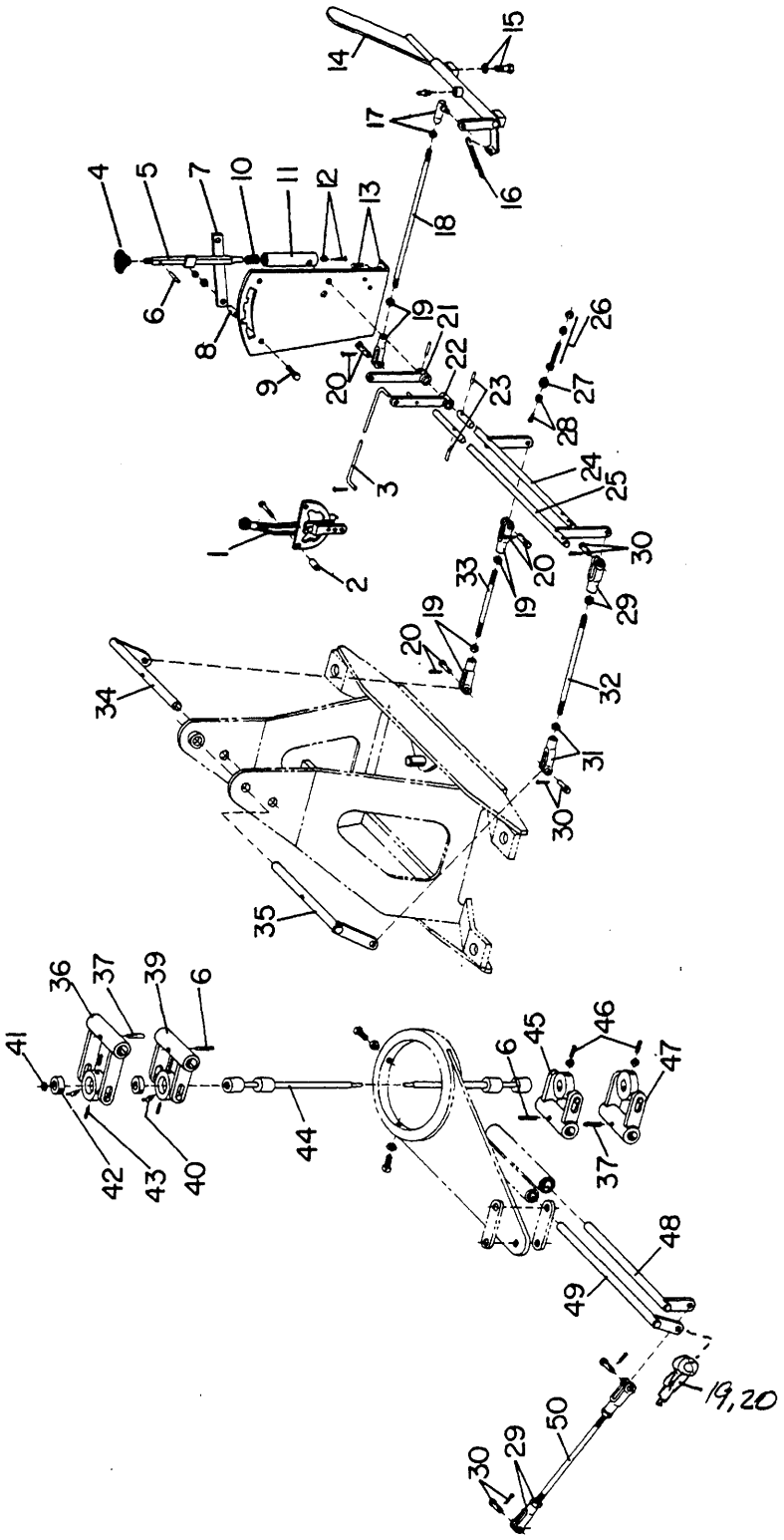
19,20

Ref. No.	Part Number	Quan. Req'd.	Name and Description
1	1222-187	1	THROTTLE QUADROSTAT
	1211-14	2	SELF-TAPPING SCREW
2	37142	2	SPACER
3	38322	1	ROD
	1207-5	1	COTTER PIN
4	1222-94	1	KNOB
5	F38316	1	LEVER
6	1227-252	4	ROLL PIN
7	38320	1	STRIP
8	38321	2	SPACER
9	1200-~~307~~ 310	2	CAPSCREW, 7/16 UNC x 1 1/2 LG.
	1210-23	2	LOCKWASHER, 7/16 MED.
	1205-47	2	NUT, 7/16 UNC
10	38198	1	SPRING
11	38319	1	ROD
12	1202-24	1	STOVE BOLT, 1/4 UNC x 1 3/4 LG.
	1205-13	1	NUT, 1/4 UNC
13	38315	1	BRACKET
	1211-12	2	THREAD CUTTING SCREW, 5/16 UNC x 3/4 LG.
14	F65106	1	PEDAL
	1213-1	1	GREASE FITTING, FOR ABOVE
15	1200-57	2	CAPSCREW, 3/8 UNC x 3/4 LG.
	1210-20	2	LOCKWASHER, 3/8 MED.
16	37141	2	SPRING
17	1222-122	1	BALL JOINT
	1205-18	1	NUT, 1/4 UNF JAM
18	37140	1	ROD
19	2597	84	YOKE
	1205-18	84	NUT, 1/4 UNF JAM
20	2234	3	PIN
	1207-1	3	COTTER PIN
21	F37118	1	BELLCRANK
	1227-186	1	ROLL PIN, FOR ABOVE
22	F38312	1	STOP ASSEMBLY

Model S-488, S-588, S-688 Group No. 7
Date 1 SEPTEMBER 1974 SHIFT & THROTTLE ASSEMBLY Page 7.11

Ref. No.	Part Number	Quan. Req'd.	Name and Description
23	1227-116	5	ROLL PIN, 1/4 x 1 LG.
24	F37103	1	BELLCRANK
25	F37121	1	BELLCRANK
26	40903	2	CAPSCREW
	1210-17	2	LOCKWASHER, 5/16 MED.
	1205-25	2	NUT, 5/16 UNC
27	6977	2	BUMPER
28	1233-1	2	SCREW, #10 x 1/2
	1209-1	2	PLAINWASHER, 3/16
29	3118	3	YOKE
	1205-37	3	NUT, 3/8 UNF
30	3119	6	PIN
	1207-11	6	COTTER PIN
31	35559	2	YOKE
	1205-162	2	NUT, 3/8 UNF LH
32	~~37138~~	1	ROD
33	37139	1	ROD
34	F37173	1	BELLCRANK
35	F37179	1	BELLCRANK
36	F37183	1	BELLCRANK
37	1227-288	2	ROLL PIN, 5/16 x 1 1/4 LG.
39	F37187	1	BELLCRANK
40	1213-8	2	GREASE FITTING
41	1220-67	4	RETAINING RING
42	1214-48	2	BUSHING
43	1206-62	4	SETSCREW, 1/4 UNC x 3/4 LG., SOCKET HD, OVAL POINT
	1205-14	4	NUT, 1/4 UNF
44		1	SWIVEL - SEE GROUP 5
45	F37191	1	BELLCRANK
46	1206-63	2	SETSCREW, 1/4 UNC x 1 LG., SOCKET HD, OVAL POINT
	1205-14	4	NUT, 1/4 UNF
47	F37194	1	BELLCRANK

Model S-488, S-588, S-688 Group No. 7
Date 1 SEPTEMBER 1974 SHIFT & THROTTLE ASSEMBLY Page 7.12

Ref. No.	Part Number	Quan. Req'd.	Name and Description	
48	F37176	1	BELLCRANK	
49	F37170	1	BELLCRANK	
50	65110	1	ROD	

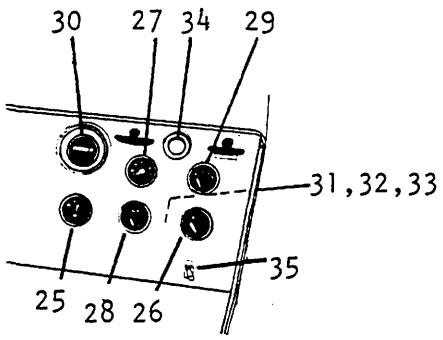
30
27
34
29
31,32,33
35
25
28
26


20

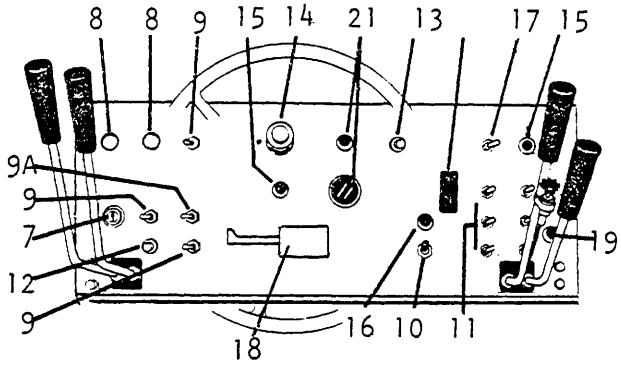
8
8
9
15
14
21
13
17
15
9A
9
7
12
9
19
18
16
10
11

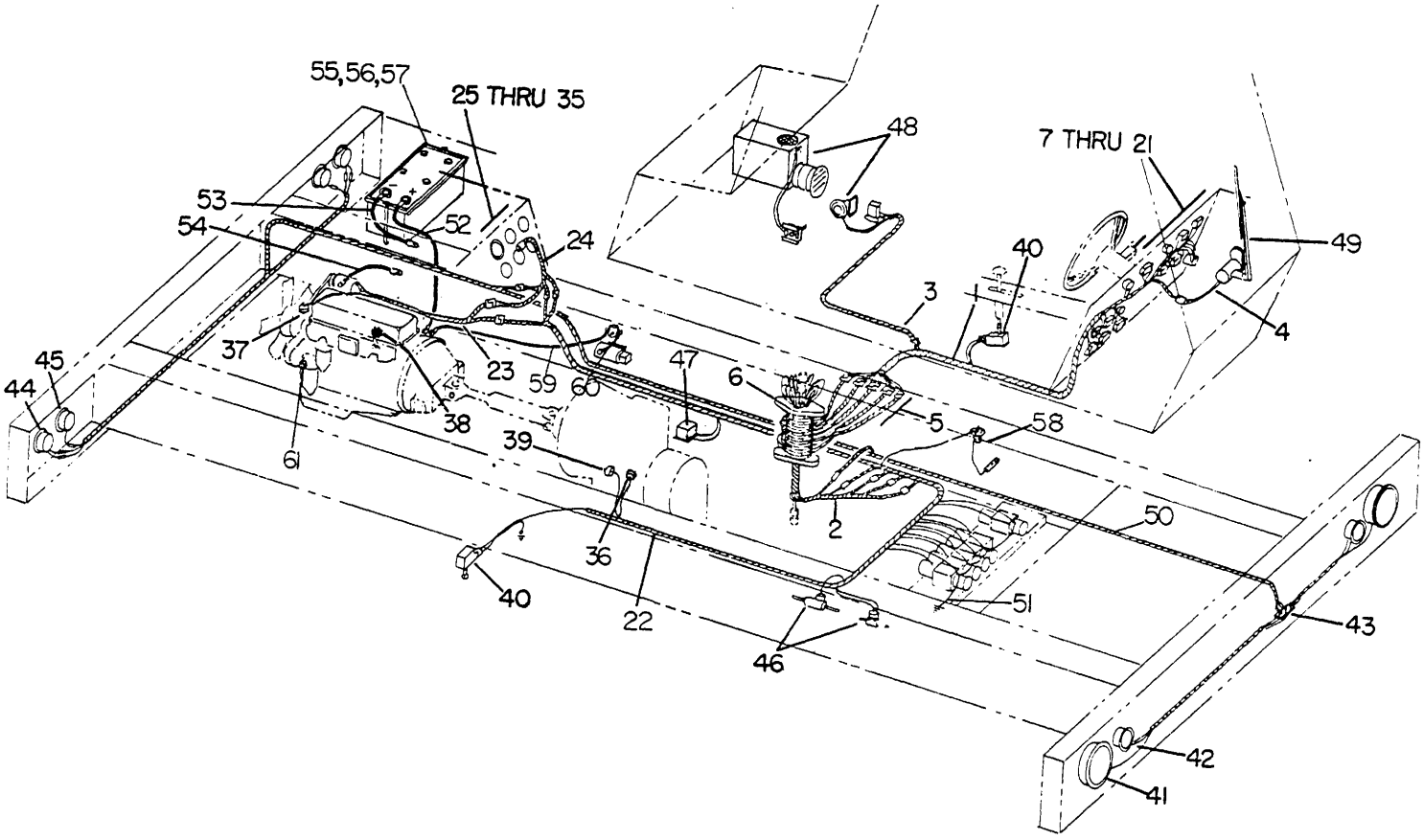
55,56,57
25 THRU 35
48
7 THRU 21
53
54
52
24
40
49
3
4
37
23
59
60
47
6
5
58
45
44
38
39
61
2
50
36
40
22
51
43
46
42
41

Ref. No.	Part Number	Quan. Req'd.	Name and Description	
1	65249	1	WIRE HARNESS, Main Instrument	
2	A65496	1	WIRE HARNESS & HYDRAULIC SWIVEL	
	65255	1	WIRE HARNESS only	
3	38777	1	WIRE HARNESS, Horn	
4	A37865	1	CONNECTOR w/Wires - Wiper	
5	65250	1	WIRE HARNESS, Main Harness to Collector Ring	
6		1	COLLECTOR RING - See Page 8.5	
7	1223-53	1	IGNITION SWITCH	
8	7103	2	LIGHT SWITCH	
9	1223-2	AR	TOGGLE SWITCH - Parking Brake, Pump Disconnect, Defroster	
9A	1223-531	1	TOGGLE SWITCH, Mico Brake	
10	1223-449	1	TOGGLE SWITCH, Steering Mode	
11	1223-448	4/6	TOGGLE SWITCH, Outrigger	
12	1223-64	1	HORN BUTTON	
13	1223-338	1	PUSH BUTTON SWITCH, Diesel Stop	
14	1223-526	1	DASH LAMP (Replaces F37863, Larger Hole Req'd.)	
15	F37851	2	INDICATOR LIGHT (Red) - Instrument Warning,Aux. Steering	
16	F37852	1	INDICATOR LIGHT (Green) - Axle Center	
17	1223-2	1	TOGGLE SWITCH, Auxiliary Steering	
18	F37862	1	TURNSIGNAL ASSEMBLY	
	1223-536	1	FLASHER	
	1223-376	1	FLASHER UNIT	
19	1223-495	Opt.	INDICATOR LIGHT (Amber) - Anti-Two Block	
20	1223-484	3	FUSE BLOCK	
	1223-282	2	FUSE, 20 Amp	
	1223-299	10	FUSE, 10 Amp	
	1223-295	2	FUSE, 14 Amp	
21	* 1245-125	1	AIR PRESSURE GAUGE (Replaces 1245-112)	
	1223-380	1	AIR PRESSURE BUZZER	
	A40628	1	LOW AIR LIGHT	
22	65252	1	MAIN WIRING HARNESS, Lower	
23	65810	1	ENGINE WIRING HARNESS - GM 4-53 w/Integrated Alt./Reg.	
	200481	1	ALTERNATOR HARNESS - Use with above for separate regulator.	See Ref 61

Ref. No.	Part Number	Quan. Req'd.	Name and Description
24	65253	1	LOWER DASH HARNESS
25	*1245-128	1	AMMETER (Replaces 1245-68)
26	*1245-126	1	FUEL GAUGE (Replaces 1245-63)
27	1245-65	1	ENGINE TEMPERATURE GAUGE w/Bulb & Connector
	*1245-120	1	ENGINE TEMPERATURE GAUGE, Electrical
28	1245-66	1	TRANS. TEMPERATURE GAUGE w/Bulb & Connector
	*1245-118	1	TRANS. TEMPERATURE GAUGE, Electrical
29	1245-71	1	OIL PRESSURE GAUGE
	*1245-123	1	OIL PRESSURE GAUGE
30	1245-138	1	HOUR METER (Replaces 1245-59)
	1221-27	1	MOUNTING RUBBER for above
31	1223-443	1	CIRCUIT BREAKER, 30 Amp.
32	1223-444	1	CIRCUIT BREAKER, 40 Amp.
33	1246-4	1	RELAY, Headlight
	1246-2	2	RELAY, Starter, Auxiliary Steering
34	F37863	AR	DASH LAMP] - Early Models Prior to Lighted International Symbol Gauges.
	38186	AR	DASH LAMP (For Panel Cover)]
35	1223-2	1	SWITCH, Dash Lamp
36	1223-558	1	SWITCH, Neutral Start
37	1223-452	1	ENGINE HIGH-TEMPERATURE SWITCH
	1245-122	1	ENGINE TEMPERATURE SENDER - For Electrical Gauge *
38	1223-450	1	PRESSURE SWITCH
	1245-124	1	OIL PRESSURE SENDER (Replaces 1245-38)
39	1223-464	1	TRANSMISSION HIGH-TEMP SWITCH
	1245-119	1	TRANSMISSION TEMPERATURE SENDER - For Electrical Gauge *
40	1223-477	2	CAM ROLLER SWITCH
	1221-36	2	RUBBER STOPPER for above
41	1223-269	2	HEADLIGHT
42	1223-454	2	TURNSIGNAL LAMP w/Case, Lens, Bulb
	25486	2	LENS
	1223-273	2	BULB
43	7099	2	TERMINAL BLOCK

*International Symbol Gauges used Begin. W/Serial No.:
S-488: 8206408
S-588: 8406715
S-688: 9006263

Ref. No.	Part Number	Quan. Req'd.	Name and Description
44	1223-465	2	TURNSIGNAL LAMP w/Case, Lens, Bulb
	25485	2	LENS
	1223-273	2	BULB
45	1223-455	2	TAIL LAMP w/Case Lens, Bulb
	25485	2	LENS
	1223-275	2	BULB
46			MICO LOCK & STOP LIGHT SWITCH - See Group 19
47			PUMP DISCONNECT VALVE - See Group 5
48			HEATER & HORN - See Group 9
49			WIPER - See Group 9
50	37870	1	LIGHTING HARNESS
51	41337	1	GROUND WIRE, Outrigger Valve
52	1223-437	1	BATTERY CABLE (+)
53	1223-339	1	BATTERY CABLE (-)
54	1223-147	1	BATTERY CABLE (Engine Ground)
55	A18288-1	1	BATTERY TIE DOWN BRACKET
56	32089	2	HOLD DOWN BOLT
	1205-25	2	NUT
57	1223-44	4	GROMMET
58	1245-42	1	FUEL SENDER (Replaces 1245-73)
	1245-106	1	MOUNTING KIT for above
59	1223-142	1	BATTERY CABLE, Auxiliary Steering Motor
60	1223-410	1	BATTERY CABLE, Auxiliary Steering Motor
61	1223-547	1	FUEL PRESSURE SWITCH(Primary Filter)(Prior to Integrated Alternator)

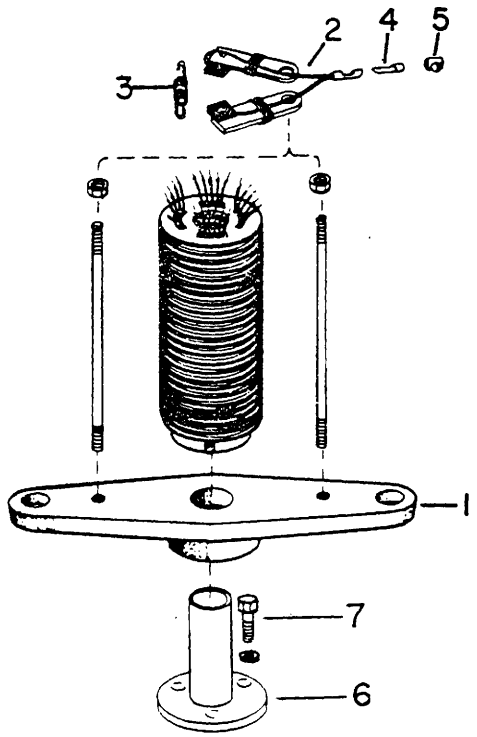

Ref. No.	Part Number	Quan. Req'd.	Name and Description
	65311	1	COLLECTOR RING COMPLETE - CURVED BEAM OUTRIGGERS - 28 CIRCUIT
	65248	1	COLLECTOR RING COMPLETE - OUT & DOWN OUTRIGGERS - 32 CIRCUIT
1	25434	1	BRACKET
2	25435	AR	BRUSH HOLDER & BRUSHES
3	25436	AR	SPRING
4	25437	AR	CLIP
5	25438	AR	SOLDERLESS CONNECTOR
6	F37009	1	COLUMN
7	1200-59	3	CAPSCREW, 3/8 UNC x 1 LG.
	1210-20	3	LOCKWASHER, 3/8 MED.

ECN 15935

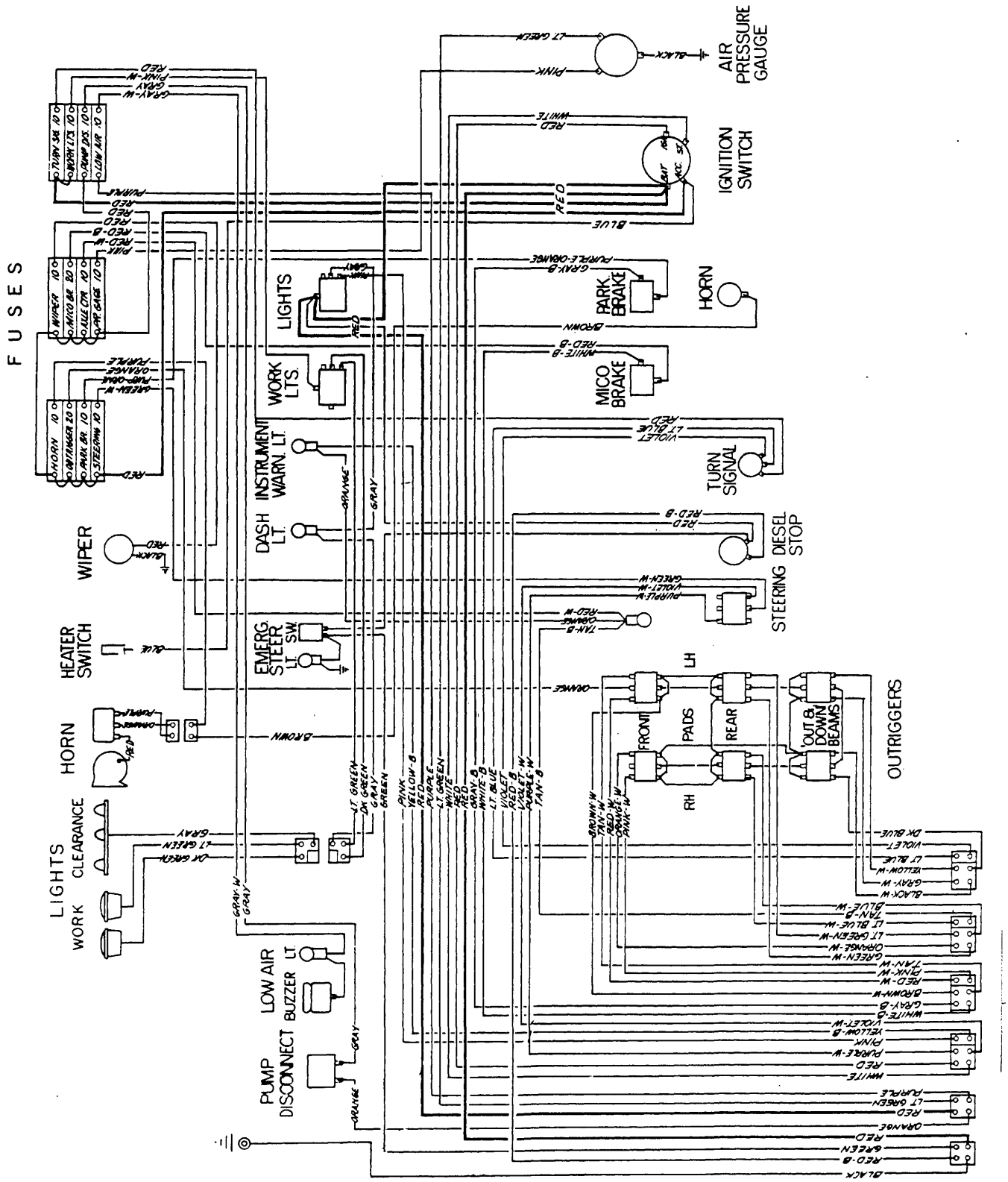
AIR PRESSURE GAUGE
IGNITION SWITCH
PARK. BRAKE
HORN
MICO BRAKE
TURN SIGNAL
DIESEL STOP
STEERING
OUTRIGGERS
LH
RH
FRONT
REAR
PADS
OUT & DOWN BEAMS
FUSES
LIGHTS
WORK LTS.
INSTRUMENT WARN. LT.
DASH LT.
WIPER
HEATER SWITCH
EMERG STEER LT. SW.
HORN
LIGHTS CLEARANCE
WORK
LOW AIR BUZZER LT.
PUMP DISCONNECT

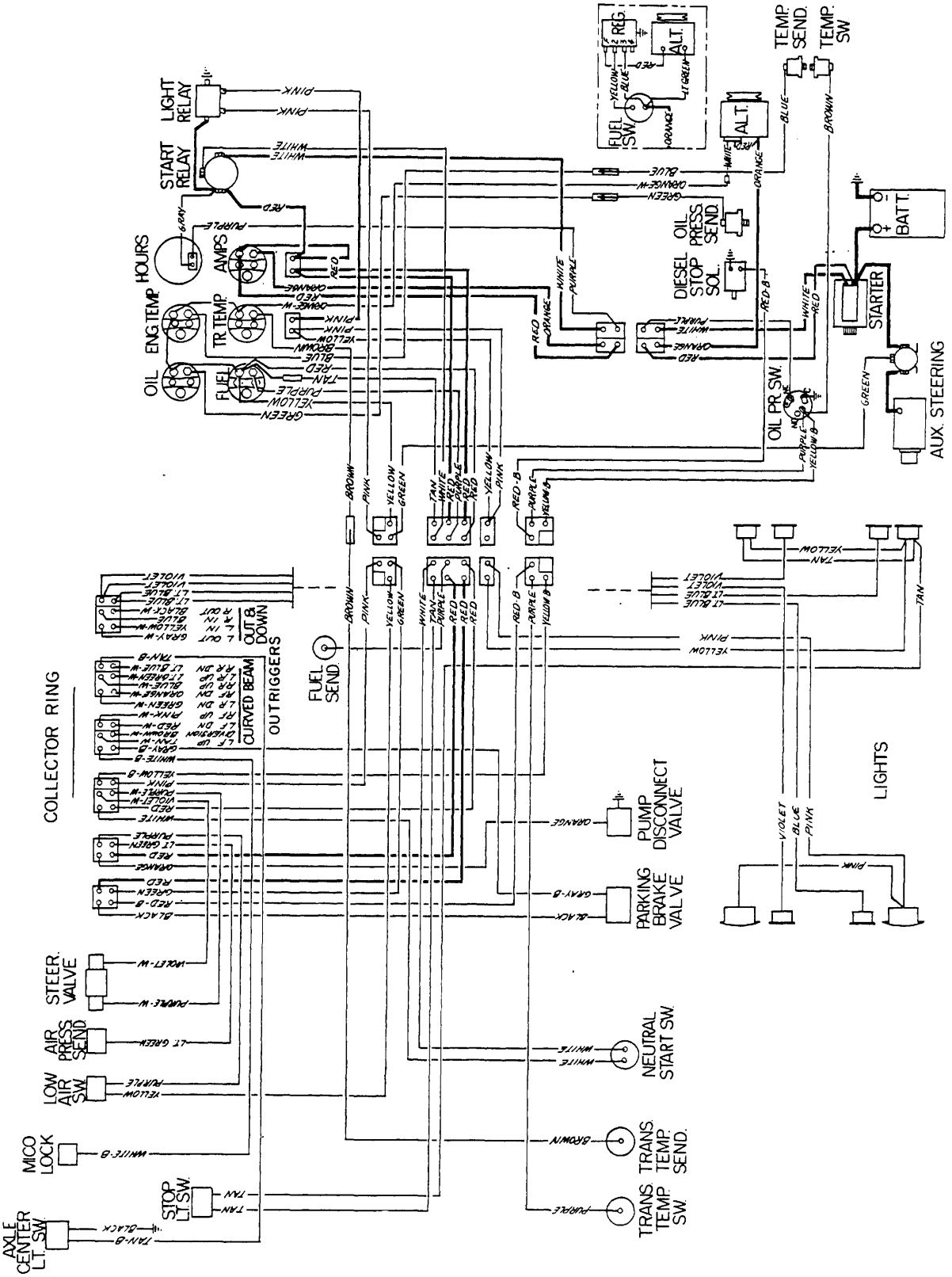
LIGHT RELAY
START RELAY
HOURS
AMPS
ENG TEMP
TR TEMP
OIL
FUEL
REG.
ALT.
FUEL SW.
TEMP. SEND.
TEMP. SW.
OIL PRESS SEND.
DIESEL STOP SOL.
BATT.
STARTER
OIL PR. SW.
AUX. STEERING
COLLECTOR RING
OUTRIGGERS
CURVED BEAM
OUT & DOWN
FUEL SEND
PUMP DISCONNECT VALVE
PARKING BRAKE VALVE
LIGHTS
STEER. VALVE
AIR PRESS SEND
LOW AIR SW.
MICO LOCK
STOP LT SW.
AXLE CENTER LT. SW.
NEUTRAL START SW.
TRANS. TEMP. SEND.
TRANS. TEMP SW.

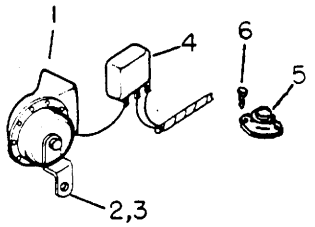

Ref. No.	Part Number	Quan. Req'd.	Name and Description
	A37290		HORN ASSEMBLY
1	1223-387	1	HORN
2	1223-380	1	BRACKET
3	1223-389	1	NUT,
4	1223-270	1	RELAY
5	1223-64	1	SWITCH
6	1211-12	2	THREAD CUTTING SCREW

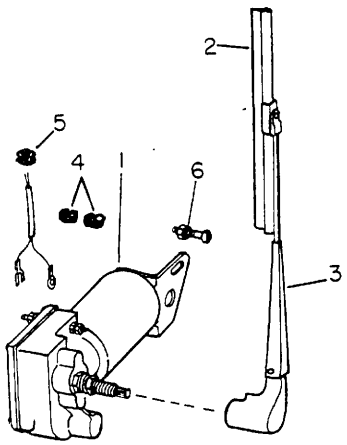

Ref. No.	Part Number	Quan. Req'd.	Name and Description
	A37291		WIPER ASSEMBLY
1	1251-4	1	WIPER MOTOR
2	1222-152	1	WIPER BLADE 16"
3	1222-151	1	WIPER ARM
4	1223-50	1	GROMMET
5	1221-35	1	GROMMET (MAKES 2)
6	1233-37	1	MACHINE SCREW, #8 x 1/2 LG., RD HEAD SLOTTED
	1210-5	1	LOCKWASHER, #8 MED.
	1205-3	1	NUT, #8

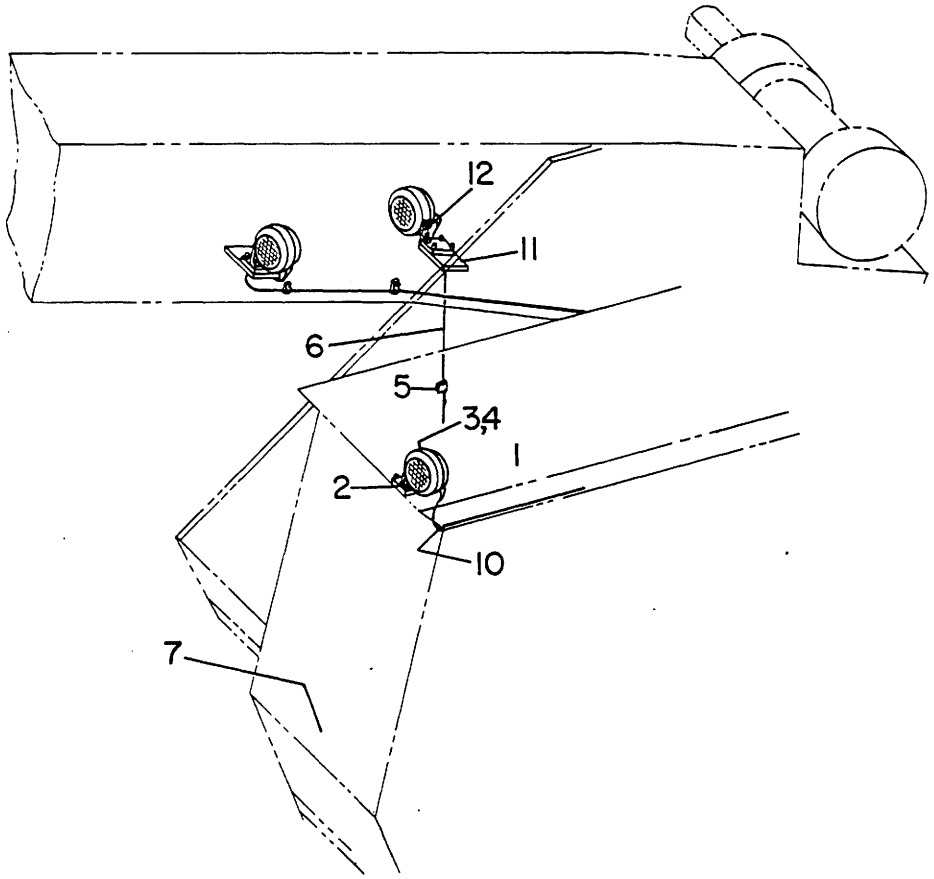

Ref. No.	Part Number	Quan. Req'd.	Name and Description
	A37292		WORK LIGHT KIT, INCLUDES ITEMS 1 THRU 12
1	1223-447	3	WORK LIGHT W/BULB
	24467	3	SEALED BEAM LAMP, FOR ABOVE
2	1223-476	3	MOUNTING BASE
3	1209-6	6	FLATWASHER, 1/2 STD.
4	1205-68	3	NUT, 1/2 UNF ELASTIC
5	1240-27	4	JIFFY CLIP
	1211-3	4	SHEET METAL SCREW, #8 x 1/2 LG.
6	1223-217	AR	WIRE, 14 GA.
7	7103	1	LIGHT SWITCH
8	6653	1	TERMINAL BLOCK (LOCATED IN HEATER COMPARTMENT)
	1233-7	2	MACHINE SCREW, #10 UNF x 3/4 LG.
	1205-6	2	NUT, #10 UNF
9	1223-519	1	TWO WAY MALE CONNECTOR
10	1221-35	2	GROMMET
11	38392	2	BRACKET
12	38570	3	BRACKET

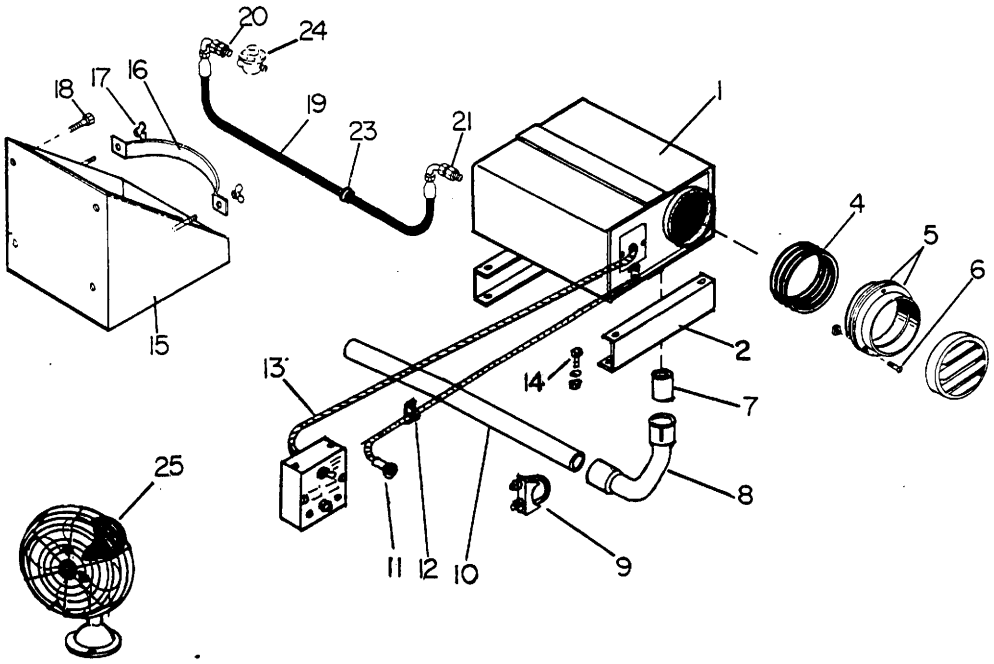

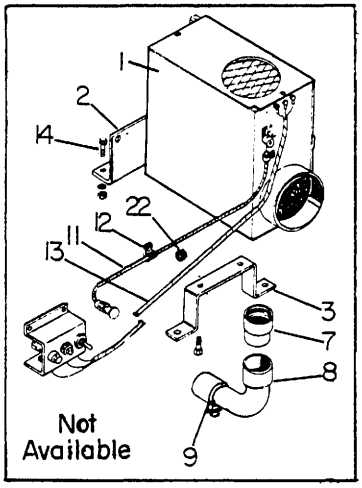

Ref. No.	Part Number	Part Number	Quan. Req'd.	Name and Description
	INSET			
1	→	707 6486		PROPANE HEATER - SEE PAGES 9.5 & 9.10 KIT A201587 REPLACES 49404 HEATER SHOWN IN INSET. INCLUDES ITEMS 1,2,7,8,9,11,13,14
2	49413	707 6519	2	BRACKET
3	49414		1	BRACKET
4		12385-2	1	HOSE
5		49409	2	FLANGE
6		1202-4 1205-12	3 3	STOVE BOLT, 3/16 UNC x 1/2 LG. NUT, 3/16 UNC
7	F49417	1219-19	1	COUPLING
8	49416	707 6518	1	ELBOW
9	1240-20	1240-78	2	CLAMP
10		38776	1	EXHAUST TUBE
11	49412	*	1	CONTROL CABLE
12	1240-43	1240-43	1	CLAMP
13	49779	*	1	WIRE HARNESS (REPLACES 49415)

*PART OF HEATER

Ref. No.	Part Number	Quan. Req'd.	Name and Description
14	1200-1	9	CAPSCREW, 1/4 UNC x 3/4 LG.
	1210-14	9	LOCKWASHER, 1/4 MED.
	1205-13	4	NUT, 1/4 UNC
15	F38769	1	MOUNTING BRACKET
16	38774	1	CLAMP
17	1231-2	2	WING NUT, 5/16 UNC
18	1200-311	4	CAPSCREW, 7/16 UNC x 1 LG.
	1210-23	4	LOCKWASHER, 7/16 MED.
19	A38775	1	HOSE ASSEMBLY
20	1219-799	1	ADAPTER
21	12019-188	1	ADAPTER
22	1221-35	1	GROMMET
23	1223-44	2	GROMMET
24	200360	1	PRESSURE REGULATOR
25	1223-330	1	DEFROSTER FAN
	1211-1	2	SELF-TAPPING SCREW
	12260-324	1	DECAL, HEATER

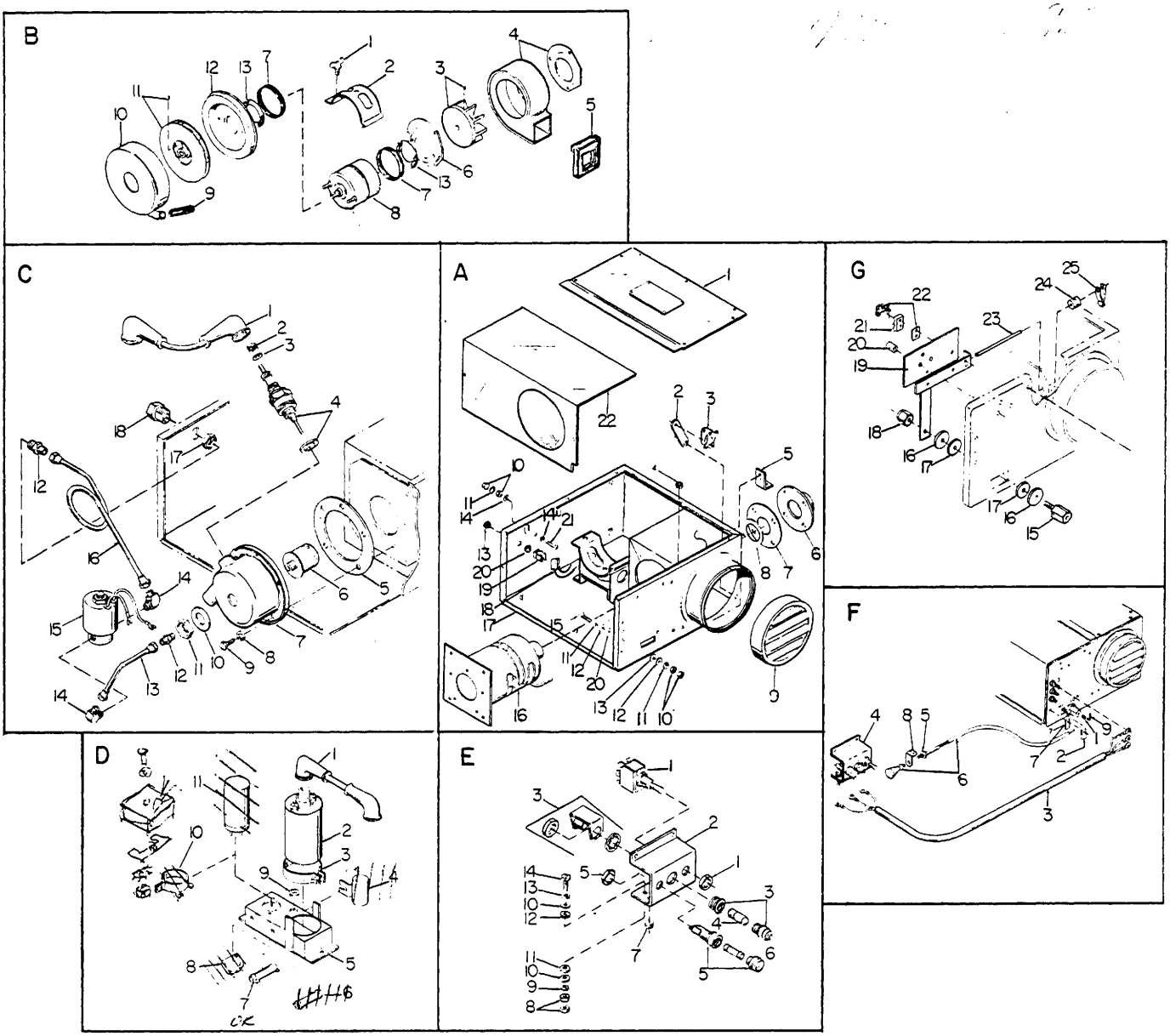

Ref. No.	Part Number	Quan. Req'd.	Name and Description
	49404		PROPANE HEATER COMPLETE
(A)			CASE & HEAT EXCHANGER
1	28217	1	TOP COVER
2	28218	1	THERMOSTAT BRACKET
3	28219	1	THERMOSTAT
4	28220	1	RUBBER GROMMET
5	28221	1	MOUNTING BRACKET
6	28222	1	EXHAUST CONNECTOR
7	28223	1	EXHAUST GASKET
8	28224	1	EXHAUST WASHER
9	28225	1	IAR DEFLECTOR
10	28226	1	HEX NUT
11	28227	1	LOCKWASHER
12	28228	1	FLAT WASHER

Ref. No.	Part Number	Quan. Req'd.	Name and Description
13	28229		FIBER WASHER
14	28230		LOCKWASHER
15	28231		MACHINE SCREW
16	28232		HEAT EXCHANGER
17	28233		CASE
18	28234		MERCURY SWITCH
19	28235		CLIP
20	28236		SHOULDERED WASHER
21	28237		MACHINE SCREW
22	28238		FRONT AND TOP COVER
(B)	28315		MOTOR & BLOWER ASSEMBLY LESS CLAMP
1	28239		THUMBSCREW
2	28240		CLAMP, MOTOR MOUNTING
3	28241		NYLON FAN
4	28242		BLOWER HOUSING, CIRCULATING AIR
5	28243		GASKET
6	28244		BLOWER MOUNTING PLATE, CIRCULATING AIR (INCLUDES GASKET, ITEM 13)
7	28245		BAND, RUBBER
8	28246		MOTOR, 12 VDC
9	28247		HOSE, COMBUSTION AIR OUTLET 2"
10	28248		BLOWER HOUSING, COMBUSTION AIR
11	28249		BLOWER WHEEL
12	28250		BLOWER MOUNTING PLATE, COMBUSTION AIR (INCLUDES GASKET, ITEM 13)
13	28251		GASKET
(C)			BURNER HEAD ASSEMBLY
1	28252		IGNITER WIRE
2	28253		KNURLED NUT
3	28254		FLAT WASHER
4	28255		IGNITER
5	28256		BURNER HEAD GASKET
	28257		BURNER HEAD ASSEMBLY (INCLUDES 6 THRU 11)
6	28258		BURNER TUBE
7	28259		BURNER HEAD
8	28260		LOCKWASHER
9	28261		MACHINE SCREW
10	28262		WASHER
11	28263		LOCK NUT
12	28264		CONNECTOR
13	28265		FUEL LINE
14	28266		MALE ELBOW
15	28267		SOLENOID VALVE
16	28268		FUEL LINE
17	28269		LOCK NUT
18	28270		CONNECTOR

Model S-488, S-588, S-688 — PROPANE HEATER — Group No. 9
Date 1 SEPTEMBER 1974 — Page 9.7

Ref. No.	Part Number	Quan. Req'd.	Name and Description
(D)	28316		POWER PACK ASSEMBLY
1	28271	1	IGNITER WIRE
2	28272	1	COIL
3	28273	1	COIL CLAMP
4	28274	1	CONDENSER
5	28275	1	IGNITION PACK WRAPAROUND
6	28276	1	RESISTOR, 15 OHM, 12 WATT
7	28277	1	RESISTOR, 2 OHM, 12 WATT
8	28278	1	SOCKET
9	28279	1	RUBBER GROMMET
10	28280	1	VIBRATOR CLAMP
11	28281	1	VIBRATOR — REPLACED W/SOLID STATE COIL DRIVER KIT W/INSTRUCTIONS 3-82
(E)	28317		CONTROL ASSEMBLY
1	28282	1	TOGGLE SWITCH
2	28283	1	CONTROL BOX
3	28284	1	GREEN PILOT LIGHT
4	28285	1	PILOT LAMP
5	28286	1	FUSE HOLDER
6	28287	1	10 AMP FUSE
7	28288	1	GROMMET
8	28289	6	HEX NUT
9	28290	3	LOCKWASHER
10	28291	6	FLAT WASHER
11	28292	3	SHOULDERED WASHER
12	28293	1	FIBER WASHER
13	28294	1	LOCKWASHER
14	28295	3	MACHINE SCREW
(F)	28318		REMOTE CONTROL KIT LESS PANEL
1	28296	1	SETSCREW
2	28297	1	ROD CLIP
3	28298	1	HARNESS
5	28299	1	LOCK NUT
6	28300	1	PUSH-PULL CONTROL
7	28301	1	SPACER
8	28302	1	BRACKET
9	28303	1	HEX KEY
(G)			CONTROL ASSEMBLY
15	28304	1	PIVOT CONTROL
16	28305	1	STEEL WASHER
17	28306	1	NYLON WASHER
18	28307	1	LOCK NUT
19	28308	1	TEMPERATURE CONTROL
20	28309	1	SPACER
21	28310	1	MICROSWITCH

Ref. No.	Part Number	Quan. Req'd.	Name and Description
22	28311	1	MICROSWITCH ACTUATING KIT
23	28312	1	ACTUATING ROD
24	28313	1	STOP
25	28314	1	BIMETAL BLADE

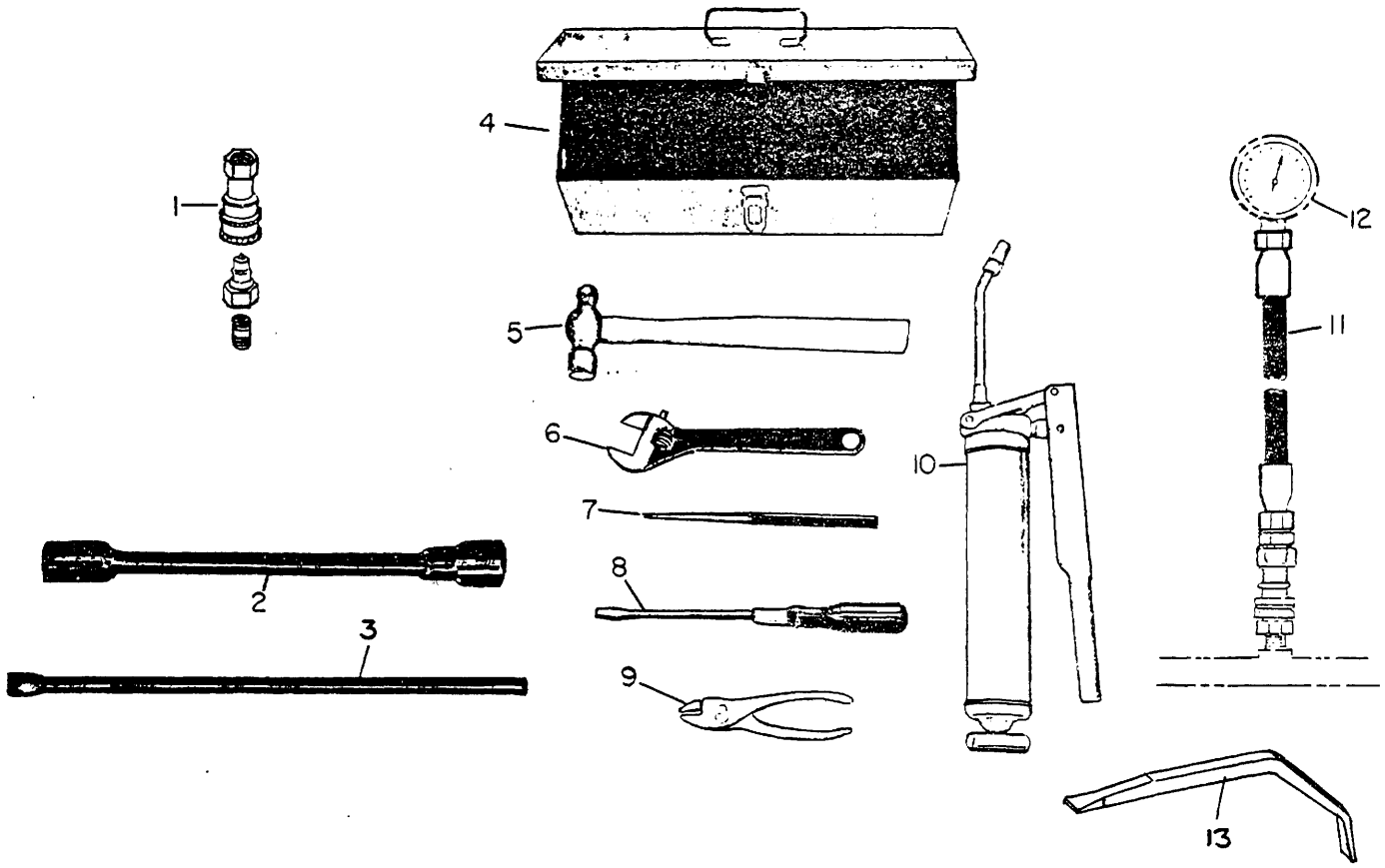

Ref. No.	Part Number	Quan. Req'd.	Name and Description
	A65316	1	TOOL LIST - INCLUDES ITEMS 1 THRU 3
1	12019-251	1	QUICK DISCONNECT ADAPTER - PRESSURE GAUGE
2	1226-11	1	TRUCK WHEEL WRENCH
3	32179	1	HANDLE
	A29815	1	TOOL BOX KIT - AVAILABLE UPON REQUEST
4	17207	1	TOOL BOX
5	1226-1	1	BALL PEIN HAMMER
6	1226-6	1	CRESCENT WRENCH
7	1226-5	1	LONG TAPER PUNCH
8	1226-4	1	SCREW DRIVER
9	1226-3	1	PLIERS
10	1226-2	1	LEVER TYPE GREASE GUN
11	A29372	1	PRESSURE TEST HOSE KIT - LESS GAUGE - AVAILABLE UPON REQUEST - USE APPROPRIATE GAUGE AND ADAPTER AS REQUIRED.
12	201724	1	PRESSURE GAUGE (0-3000)
13	200927	1	BRAKE ADJUSTING TOOL - AVAILABLE UPON REQUEST

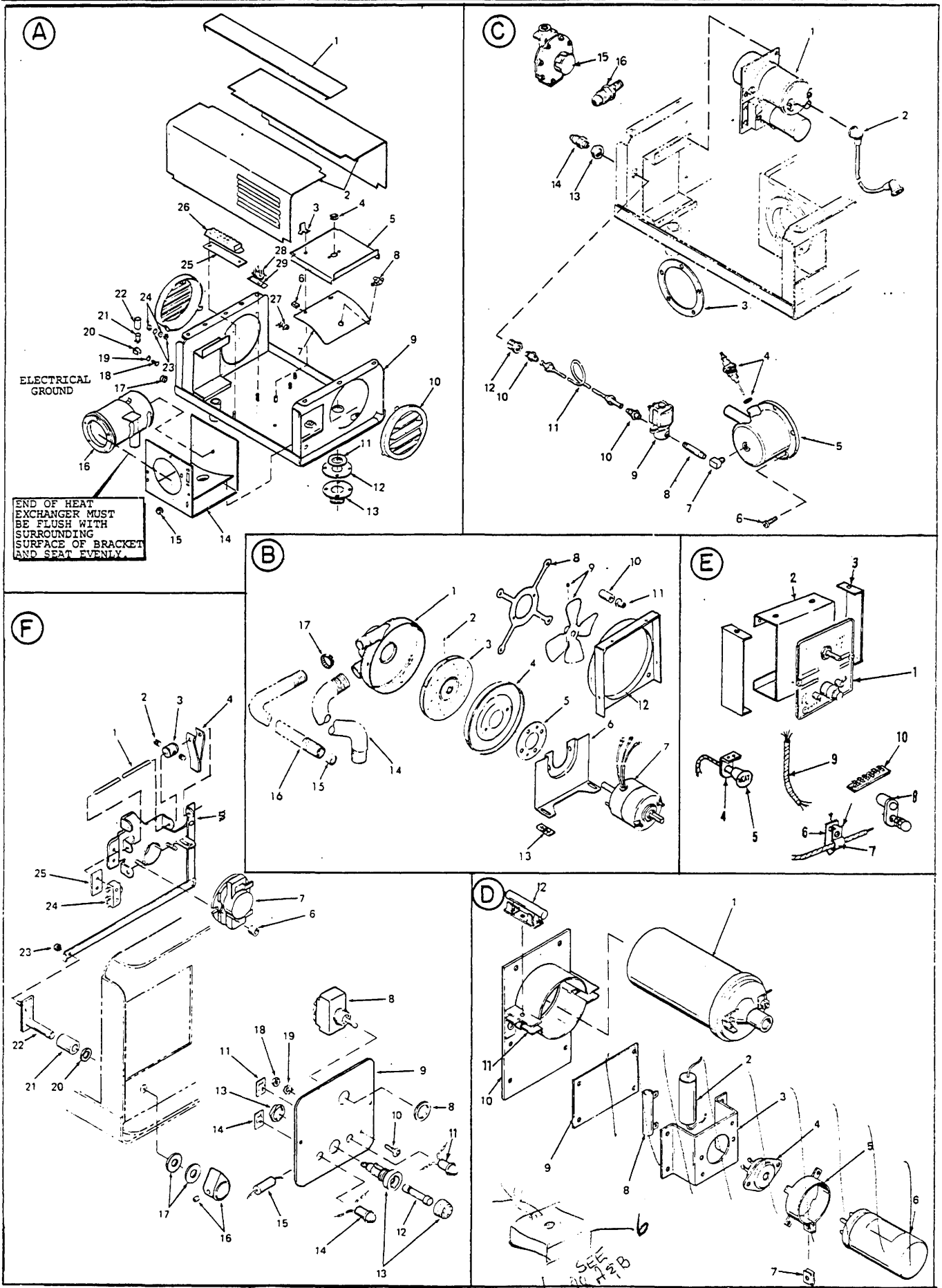
A
ELECTRICAL GROUND
END OF HEAT EXCHANGER MUST BE FLUSH WITH SURROUNDING SURFACE OF BRACKET AND SEAT EVENLY.
C
B
E
F
D
SEE PAGE 9.8

Ref. No.	Part Number	Quan. Req'd.	Name and Description
	707 6486		HEATER Complete
(A)			CASE & HEAT EXHANGER
	202568		TILT SWITCH KIT - Incl. Items 20, 21, 22
	202569		EXHAUST SEAL KIT - Incl. Items 11, 12, 13
	202570		MARKER STRIP KIT - Incl. Items 25, 26
	202571		HEAT EXCHANGER ASS'Y - Incl. Items 4,5,6,7,8,14,15,16
1		1	CROSS BAR
2		1	COVER
3	202572	1	CLAMP
4		1	GROMMET
5		1	TOP COVER
6		2	SPEED NUT
7		1	UPPER BAFFLE
8	202573	1	THERMOSTAT
9		1	CASE ASSEMBLY
10	202574	1	AIR DEFLECTOR
11		1	WASHER
12		1	EXHAUST GASKET
13		1	EXHAUST CONNECTOR
14		1	BRACKET
15		1	GROMMET
16	202575	1	HEAT EXCHANGER
17		1	GROMMET
18		1	GROUND SCREW, #10 x 1/2
19		1	LOCKWASHER, #10
20		1	CLIP
21		1	MERCURY SWITCH
22		1	INSULATOR
23		2	LOCKWASHER, #10
24		2	NUT, #10
25		1	MARKER STRIP
26		1	TERMINAL BLOCK
27			Not Applicable
28	202576	1	TERMINAL BOARD
29	202577	1	INSULATOR
(B)			MOTOR & BLOWER ASSEMBLY
	202597		BLOWER ASSEMBLY - Incl. Items 1 thru 13
1	202598	1	BLOWER HOUSING
2	28296	1	SETSCREW
3	202599	1	BLOWER WHEEL
4	202600	1	BACK PLATE
5	202601	1	GASKET
6	202602	1	MOUNTING PLATE
7	202603	1	MOTOR, 12 volt
8	202604	1	SPIDER ARM
9	202605	1	PROPELLER
10	202606	1	SPACER
11	202607	1	WELL NUT
12	202608	1	MOUNTING PLATE
13	202609	1	PAD

Ref. No.	Part Number	Quan. Req'd.	Name and Description
14	202610	1	AIR HOSE (Incoming)
15	202611	1	AIR RESTRICTOR
16	202612	1	AIR HOSE (Outgoing)
17	202613	1	HOSE CLAMP
(C)			BURNER HEAD ASSEMBLY
1	202578	1	IGNITION PACK ASSEMBLY - See (D)
2	202579	1	IGNITER WIRE
3	28256	1	GASKET
4	28255	1	IGNITER
5	202580	1	BURNER HEAD
6	202581	5	SCREW
7	202582	1	RESTRICTOR ELBOW
8		1	NIPPLE
9	202583	1	SOLENOID VALVE (12v)
10	202584	2	CONNECTOR
11	202585	1	FUEL LINE ASSEMBLY
12	28270	1	CONNECTOR
13	28269	1	LOCK NUT
14	202586	1	MALE CONNECTOR
15	202567	1	REGULATOR
16	202614	1	POL CONNECTOR - Incl. Excess Flow Valve
(D)			IGNITION PACK ASSEMBLY
	202578	1	IGNITION PACK ASSEMBLY - Incl. Items 1 thru 11
1	202594	1	COIL, 12volt
2	202595	1	MYLAR CAPACITOR, 0.33μF
3		1	VIBRATOR BRACKET
4	28278	1	VIBRATOR SOCKET
5		1	CLAMP
6	28281	1	VIBRATOR — REPLACED WITH SOLID STATE COIL DRIVER W/ INSTRUCTIONS
7	8	1	TINNERMAN NUT
8	28276	1	RESISTOR, 15 ohm, 12 watt
9	202596	1	INSULATOR
10		1	MOUNTING PLATE
11		1	CLAMP
(E)			CONTROL ASSEMBLY
1	202622	1	PANEL
2	202623	1	BRACKET
3	202624	2	END PLATE
4	28302	1	CABLE BRACKET
5	202619	1	CABLE
	28303	1	HEX KEY
	28299	1	LOCK NUT
	28260	1	LOCKWASHER
	202618	1	NUT
6	202617	1	CLAMP BASE
7	202616	1	CLAMP
8	202615	1	ARM
9	202620	1	WIRE HARNESS
10	202621	1	TERMINAL BLOCK

Ref. No.	Part Number	Quan. Req'd.	Name and Description
(F)			CONTROL ASSEMBLY
	202587	1	THERMO CONTROL KIT - Incl. Items 1,2,3,4,5,6,7,24,25
	202588	1	PIVOT & KNOB KIT - Incl. Items 16,17,20,21,22,23
	202589	1	MICROSWITCH KIT - Incl. Items 24,25
1		1	ACTUATING ROD
2		2	SETSCREW
3		1	ACTUATOR STOP
4	28314	1	BI-METAL BLADE
5		1	BRACKET
6		2	SPACER
7	202590	1	FLAME SWITCH
8	202591	1	TOGGLE SWITCH w/jumpers
9	202622	1	PLATE
10		1	GROUND SCREW, #6 x 3/8
11	202592	1	PILOT LIGHT (Green)
12		1	FUSE (20 amp)
13	28286	1	FUSEHOLDER
14	202593	1	PILOT LIGHT (Amber)
15			Not Applicable
16			Not Applicable
17			Not Applicable
18		1	NUT
19		1	LOCK WASHER
20		1	SPRING WASHER
21		1	SPACER
22		1	PIVOT ARM
23		1	STOP NUT
24		1	MICROSWITCH
25		1	INSULATOR

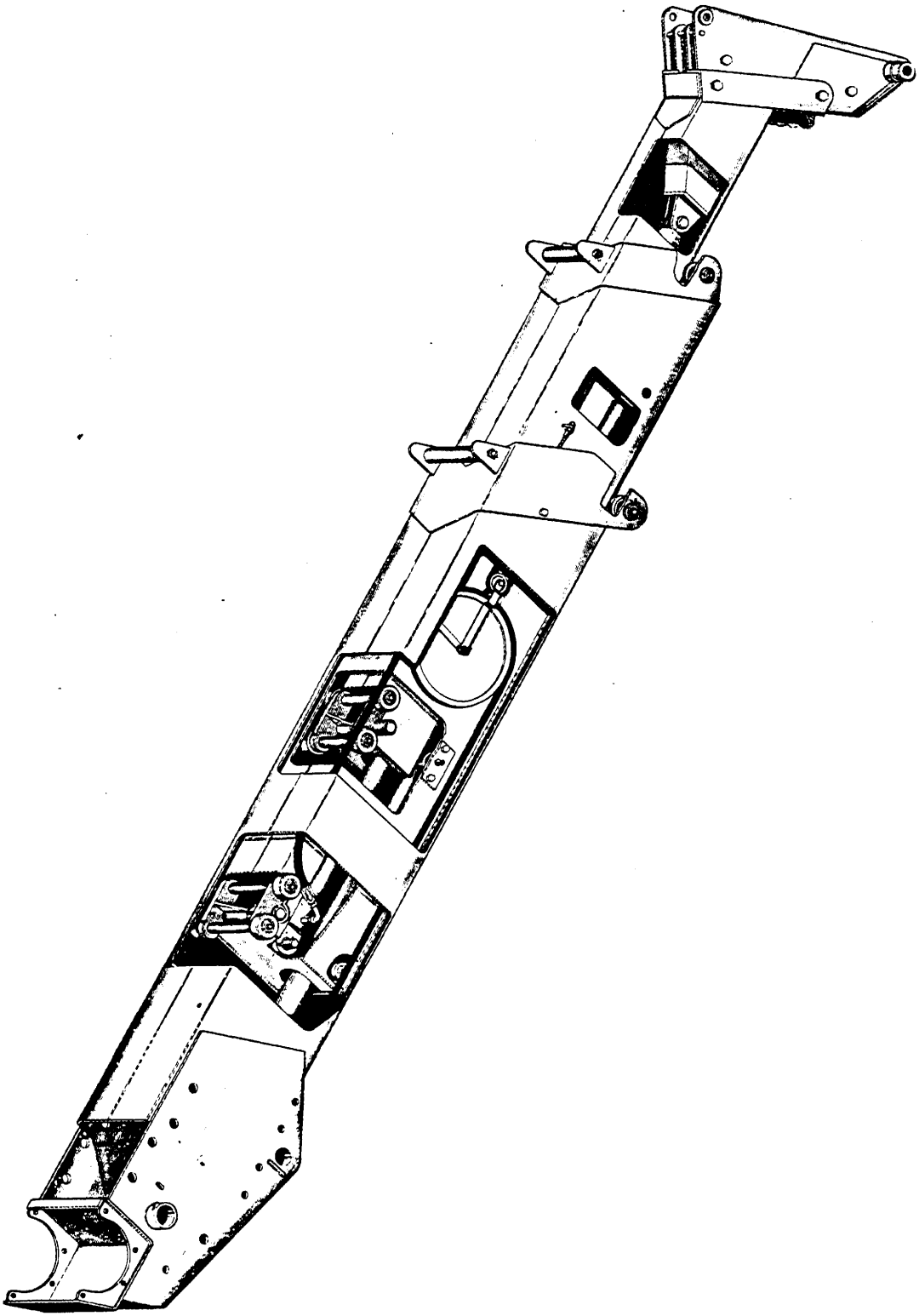

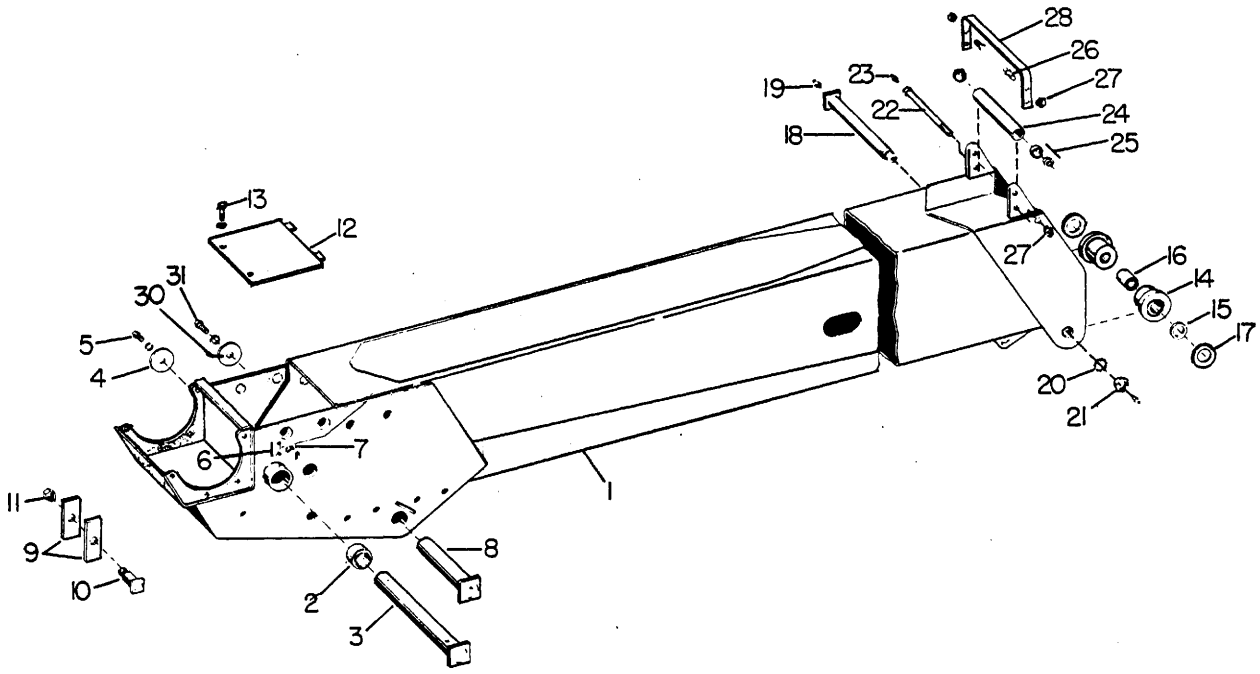

Ref. No.	Part Number	Quan. Req'd.	Name and Description
1	F49269	1	LOWER BOOM
2	12014-10	2	BUSHING
3	F38637	1	PIN
	35817	2	SHIM, FOR ABOVE PIN
4	38663	1	CAP
5	1200-184	1	CAPSCREW, 3/4 UNC x 1 1/2 LG.
	1210-38	1	LOCKWASHER, 3/4 MED.
6	1206-34	2	SETSCREW, 1/2 UNC x 1 1/4 LG.
	1205-61	2	JAM NUT, 1/2 UNC
7	1213-6	2	GREASE FITTING
8	F36612	1	PIN
9	36609	2	BLOCK
10	A35717-1	1	PIN
11	1204-25	1	ELASTIC NUT

Model S-488
Date 1 SEPTEMBER 1974

45' BOOM

Group No. 10
Page 10.2

Ref. No.	Part Number	Quan. Req'd.	Name and Description
12	F49260	1	COVER
14	A35479-1	2	ROLLER w/BUSHINGS, ITEMS 15 & 16
15	10723	1	THRUST BUSHING
16	1214-91	1	BUSHING
17	1208-73	AR	MACHINERY BUSHING, 2 1/2 x 3 7/8 x 14 GA.
18	F36614	1	PIN
19	1213-1	2	GREASE FITTING, 1/8 NPT
20	1228-8	1	LOCKWASHER, SAE W-12
21	1228-9	1	LOCKNUT, SAE N-12
22	10957	1	SHAFT
23	1213-10	1	GREASE FITTING, 1/4 UNF
24	A15025-2	1	ROLLER w/BEARING
	10956	1	ROLLER ONLY
25	1217-66	2	ROLLER BEARING COMPLETE
26	1200-145	2	CAPSCREW, 5/8 UNF x 1 1/2 LG.
27	1205-91	3	NUT, 5/8 UNF ELASTIC
28	35647	1	STRAP
30	36613	1	CAP
31	1200-141	1	CAPSCREW, 5/8 UNC x 1 LG.
	1210-32	1	LOCKWASHER, 5/8 MED.

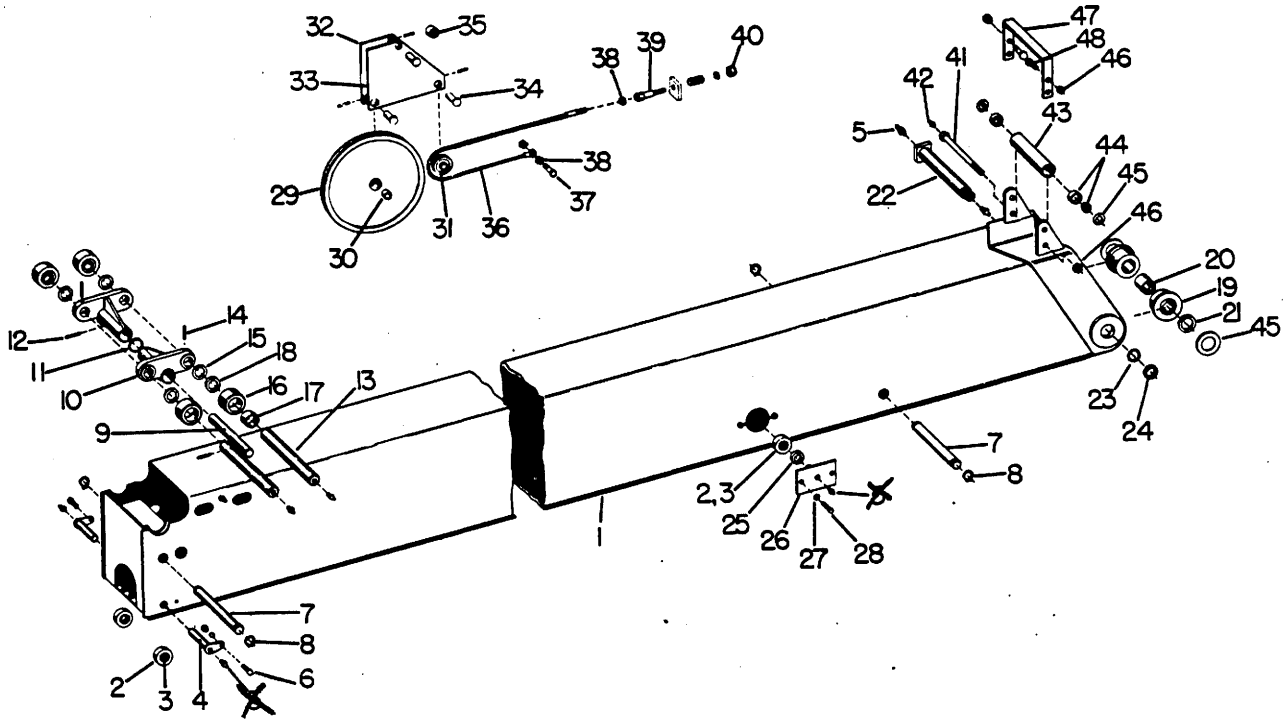

Ref. No.	Part Number	Quan. Req'd.	Name and Description	
1	F36616	1	CENTER BOOM SECTION	
2	A47310	4	ROLLER W/BUSHING, ITEM 3	
3	1214-104	1	BUSHING	
4	F47307	2	PIN	
5	1213-1	6	GREASE FITTING, 1/8 NPT	
6	1200-59 1210-20	2 2	CAPSCREW, 3/8 UNC x 1 LG. LOCKWASHER, 3/8 MED.	
7	36621	2	PIN	
8	1220-45	4	SNAP RING	
9	36622	1	PIN	
10	F36623	2	BRACKET	
11	1208-57	AR	MACHINERY BUSHING, 2 x 3 x 14 GA.	
12	1227-297	1	ROLL PIN, 5/16 x 2 3/4 LG.	

Ref. No.	Part Number	Quan. Req'd.	Name and Description
13	36626	2	PIN
14	1227-302	2	ROLL PIN, 5/16 x 4 LG.
15	1208-72	AR	MACHINERY BUSHING, 2 1/2 x 3 1/2 x 14 GA.
16	A35493-1	4	ROLLER W/BUSHINGS, ITEMS 17 & 18
17	1214-94	1	BUSHING
18	10726	1	THRUST BUSHING
19	A35495-1	2	ROLLER W/BUSHINGS, ITEMS 20 & 21
20	1214-92	1	BUSHING
21	10723	1	THRUST BUSHING
22	F36627	1	PIN
23	1228-8	1	LOCKWASHER
24	1228-9	1	LOCKNUT
25	36629	2	COLLAR
26	F36630	2	SUPPORT
27	1210-86	4	LOCKWASHER, 3/4 STAR
28	41792	4	CAPSCREW
	A49250	2	CABLE BRACKET ASSEMBLY - INCLUDES ITEMS 29 THRU 35
29	F36631	2	SHEAVE W/BUSHING, ITEM 30
30	1214-63	1	BUSHING
31	A35503-1	2	SHEAVE W/BUSHING
	1214-63	1	BUSHING FOR ABOVE
	1208-8	1	MACHINERY BUSHING, 3/4 x 1 1/4 x 18 GA.
32	F49252	2	LEFT PLATE
33	F49253	1	RIGHT PLATE
34	~~38768~~ 51051	3	PIN
	~~1227-188~~ 1220-19	3	ROLL PIN
35	38761	1	ROLLER
36	36636	2	CABLE
37	1200-106	2	CAPSCREW, 1/2 UNC x 2 1/4 LG.
	1210-26	2	LOCKWASHER, 1/2 MED.

Model S-488
Date 1 SEPTEMBER 1974

45' BOOM

Ref. No.	Part Number	Quan. Req'd.	Name and Description
38	1205-61	4	NUT, 1/2 UNC, JAM
	1205-65	2	NUT, 1/2 UNC SELF-LOCKING
39	35556	2	SPINDLE
	16351	2	SPRING
	35557	2	EAR (WELDED TO BOOM)
	1208-3	2	MACHINERY BUSHING, 5/8 x 1 1/8 x 14 GA.
40	1205-90	2	NUT, 5/8 UNC ELASTIC
41	36637	1	SHAFT
42	1213-10	1	GREASE FITTING, 1/4 UNF
43	F37734	1	ROLLER W/BEARING
44	1217-66	2	ROLLER BEARING W/CUP & CONE
45	1208-73	AR	MACHINERY BUSHING, 2 1/2 x 3 7/8 x 14 GA.
46	1205-91	3	NUT, 5/8 UNF ELASTIC
47	36638	1	STRAP
48	1200-145	2	CAPSCREW, 5/8 UNF x 1 1/2 LG.

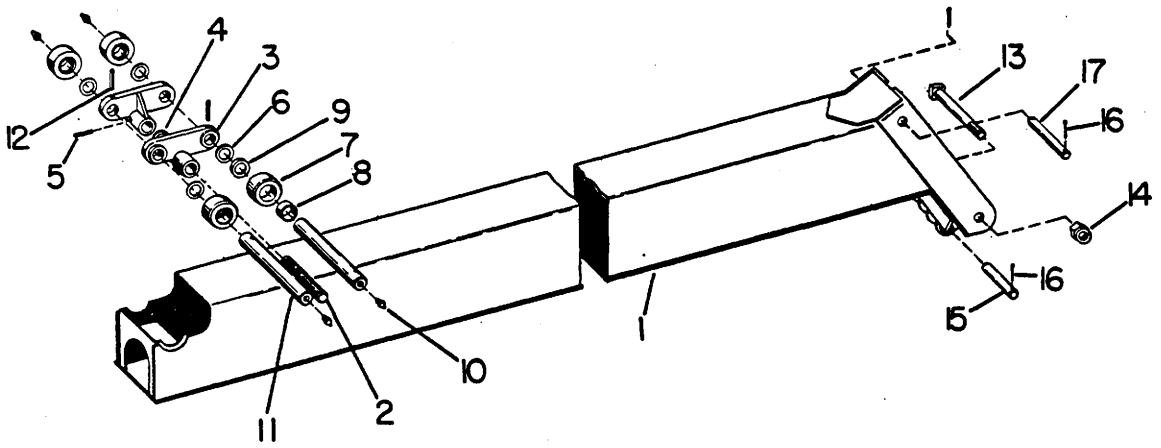

Ref. No.	Part Number	Quan. Req'd.	Name and Description	
1	F38698	1	UPPER BOOM	
2	36642	1	PIN	
3	F36643	2	BRACKET	
4	1208-57	AR	MACHINERY BUSHING, 2 x 3 x 14 GA.	
5	1227-297	1	ROLL PIN, 5/16 x 2 3/4 LG.	
6	1208-72	AR	MACHINERY BUSHING, 2 1/2 x 3 1/2 x 14 GA.	
7	A35493-1	4	ROLLER W/BUSHINGS, ITEMS 8 & 9	
8	1214-94	1	BUSHING	
9	10726	1	THRUST BUSHING	
10	1213-1	4	GREASE FITTING, 1/8 NPT STRAIGHT	
11	36646	2	PIN	
12	1227-302	2	ROLL PIN, 3/8 x 4 LG.	
13	1235-370	1	MACHINE BOLT, 1 1/4 UNC x 9 LG., HT	
14	1205-133	1	NUT, 1 1/4 UNC ELASTIC	
15	38998	1	PIN	
16	1207-42	3	COTTER PIN, 1/4 x 2 LG.	
17	38732	1	PIN	

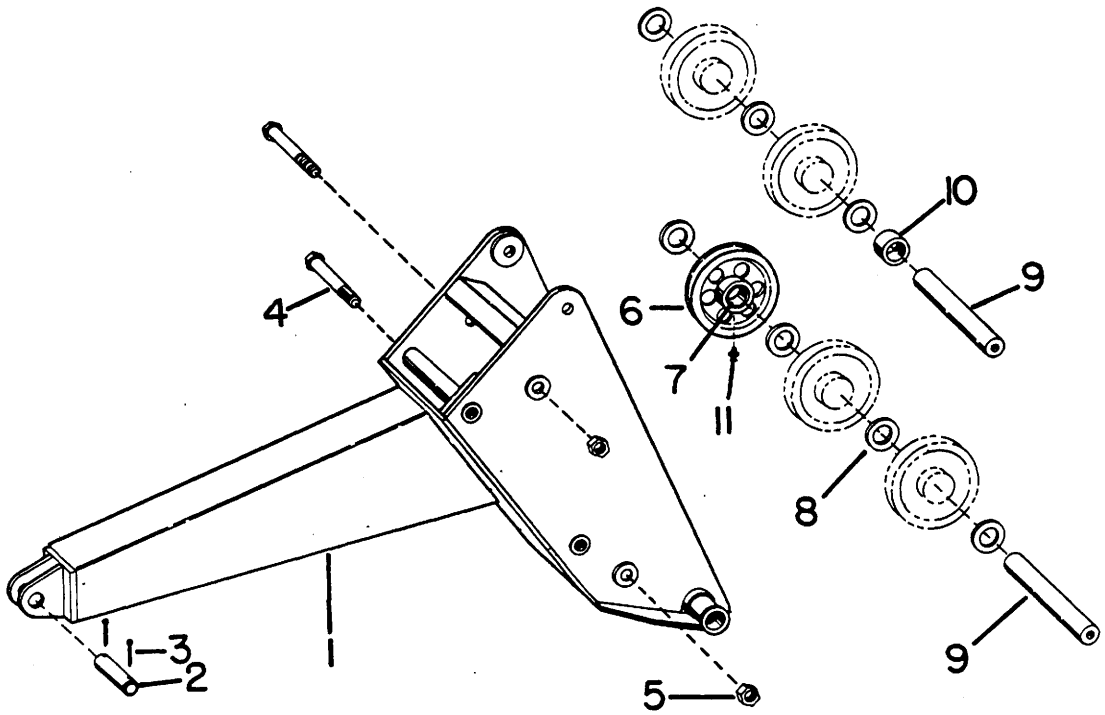

Ref. No.	Part Number	Quan. Req'd.	Name and Description	
	A38855		BOOM TIP ASSEMBLY - INCLUDES ITEMS 1 THRU 11	
1	F38856	1	BOOM TIP	
2	35477	1	PIN	
3	1207-58	2	COTTER PIN, 5/16 x 2 3/4 LG.	
4	1235-298	2	CAPSCREW	
5	1205-185	2	ELASTIC NUT	
6	A38933	5	13-1/2" SHEAVE W/BEARING	
7	1217-236	5	BEARING FOR ABOVE	
8	1209-53	7	NYLON SPACER	
9	38867	2	INNER RACE	
10	38705	1	SPACER	
11	1213-16	5	GREASE FITTING	

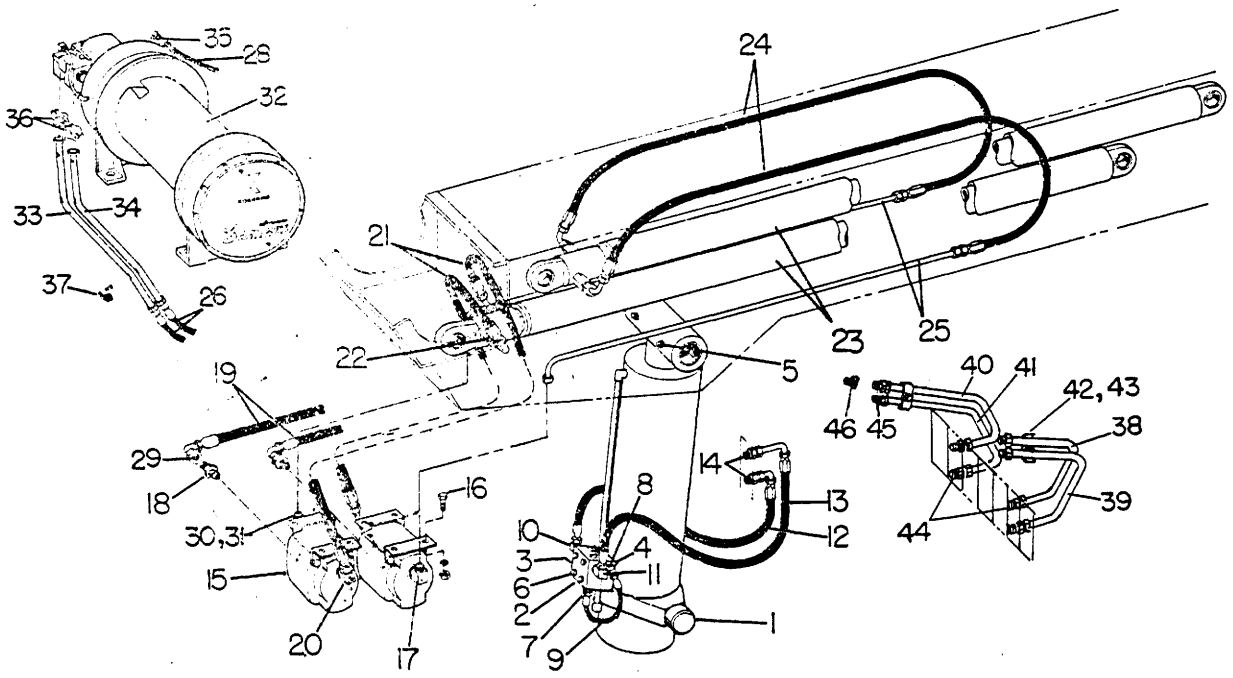

Ref. No.	Part Number	Quan. Req'd.	Name and Description
1		1	BOOM LIFT CYLINDER - See Page 10.13
2		1	HOLD VALVE - See Ref. 23, Page 10A 10.9
	A23955	1	SEAL KIT FOR ABOVE
	1218-126	1	"O" RING, VALVE TO CYL.
3	1219-38	1	PIPE PLUG
4	1219-588	1	ADAPTER, 90°
5	1213-3	2	GREASE FITTING
6	~~1229-62~~	4	CAPSCREW, 1/2 UNF x 3 LG.
	1209-29	4	PLAIN WASHER, 1/2
7	1219-801	1	ADAPTER
8	35249	1	PLUG
9	A35448	1	HOSE ASSEMBLY
10	1219-802	1	ADAPTER w/"O" RING
	1218-64	1	"O" RING
11	1219-287	1	ADAPTER
12	A38679	1	HOSE ASSEMBLY
13	A38678	1	HOSE ASSEMBLY
14	1219-555	2	ADAPTER w/"O" RING
	1218-65	2	"O" RING
15	35873	2	PROPORTIONATOR - See Page 10A 10.14

Ref. No.	Part Number	Quan. Req'd.	Name and Description
16	1200-59	8	CAPSCREW, 3/8 UNC x 1 LG.
	1210-26	8	LOCKWASHER, 3/8 MED.
	1205-36	8	NUT, 3/8 UNC
17	1219-285	1	ADAPTER, 90°
18	1219-480	2	ADAPTER
19	A39779	2	HOSE ASSEMBLY
20	1219-651	2	ADAPTER
21	A41841	2	HOSE ASSEMBLY
22	1219-441	4	ADAPTER w/"O" RING
	1218-34	4	"O" RING
23		2	EXTEND CYLINDER - SEE PAGE 10.11
24	A38752	2	HOSE ASSEMBLY —— 1240-53 (2) Clamps -69?
25	36671	1	RH TUBE
	41977	1	LH TUBE
26	A41842	1	HOSE ASSEMBLY
27	A41843	1	HOSE ASSEMBLY
28	A41840	1	HOSE ASSEMBLY
29	1219-583	2	SWIVEL ADAPTER
30	1219-281	1	ADAPTER
31	1219-571	1	ADAPTER
32		1	BANTAM WINCH - SEE GROUP 13
33	41711	1	TUBE
34	41712	1	TUBE
35	1219-446	1	ADAPTER w/"O" RING
	1218-34	1	"O" RING
36	1219-665	4	SPLIT FLANGE CLAMP
	1218-103	2	"O" RING
1200-61	~~1203-137~~	8	CAPSCREW, 3/8 UNC x 1 1/4 LG. HT
	1210-20	8	LOCKWASHER, 3/8 MED.
37	1240-53	2	CLAMP
	1200-57	2	CAPSCREW, 3/8 UNC x 3/4 LG.
	1210-20	2	LOCKWASHER, 3/8 MED.

Model S-488
Date Rev. 1 Oct. 1976

BOOM HYDRAULICS - 45' BOOM

Ref. No.	Part Number	Quan. Req'd.	Name and Description
38	65527	1	TUBE
39	38851	1	TUBE
40	65450	1	TUBE - Prior to Ser. #8205784
	65768	1	TUBE - Begin. w/Ser. #8205784
41	65449	1	TUBE - Prior to Ser. #8205784
	65767	1	TUBE - Begin. w/Ser. #8205784
42	35639	2	CLAMP
43	1200-98	2	CAPSCREW, 1/2 UNC x 1 1/4 lg.
	1210-26	2	LOCKWASHER, 1/2 med.
44	1219-282	4	ADAPTER w/"O" RING
	1218-65	4	"O" RING for above
45	12019-9	2	ADAPTER
46	1219-585	1	ADAPTER

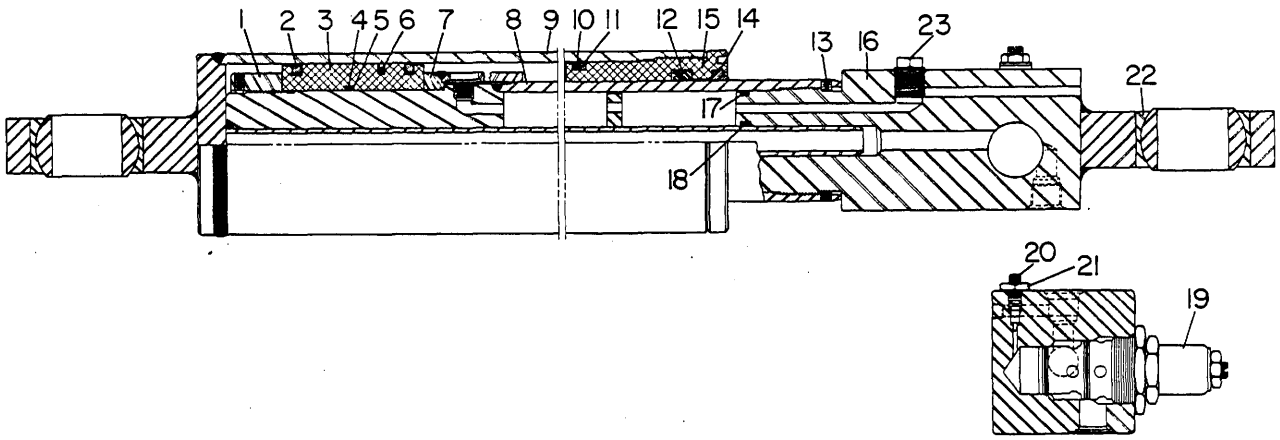

7076496 BH. (SEE HYBRID) SEE # 840 ?

Ref. No.	Part Number	Quan. Req'd.	Name and Description
	49768	2	HYDRAULIC CYLINDER, INCLUDES ITEMS 1 THRU 25
	29495	1	SEAL REPAIR KIT, INCLUDES SEALS, "O" RINGS, BACK-UP WASHERS - LESS PISTON RINGS
1	29501	1	BUTTRESS RING NUT
	200545	2	SETSCREW, 1/4 UNC x 3/8 LG. NYLOK
2	26302	2	PISTON RING
3	29498	1	PISTON
4	23747	1	STATIC "O" RING
5	25053	2	BACK-UP WASHER
6	29504	1	SIRVON SEAL RING (OUTER)
	29505	1	LOADING "O" RING (INNER)
7	29502	1	SPACER
8	29497	1	SHAFT
9	29496	1	CASE
10	22029	1	STATIC "O" RING
11	29503	1	BACK-UP WASHER
12	25479	1	U CUP SEAL
13	201589	1	SETSCREW, 1/4 UNC x 1/4 LG. NYLOK

Model S-488 Group No. 10

Date Rev. 1 Oct. 1977 EXTENSION CYLINDER - 45' BOOM Page 10.12

Ref. No.	Part Number	Quan. Req'd.	Name and Description
14	23429	1	WIPER SEAL
15	29499	1	HEAD GLAND
16	29500	1	ROD EYE UNIT ONLY (REQUIRES ITEMS 24, 25, 26)
17	27323	1	"O" RING
	29506	1	BACK-UP WASHER, FOR ABOVE
18	1218-226	1	"O" RING
	23420	2	BACK-UP WASHER, FOR ABOVE
19	24458	1	HOLD VALVE
	A25038	1	"O" RING KIT, FOR ABOVE
20	25956	1	NEEDLE VALVE
21	1205-39	1	JAM NUT, 3/8 UNF
	22845	1	"O" RING (REPL. 25943 TH'D. SEAL)
	28700	1	WASHER, SPECIAL
22	1217-182	2	RBC BEARING, SELF-ALIGNING
23	29489	2	PIPE PLUG, 1/8 NPT
24	201467	1	NEEDLE VALVE w/WASHER
25	201468	1	HIGH JAM NUT, 7/16 UNF
26	201469	1	"O" RING

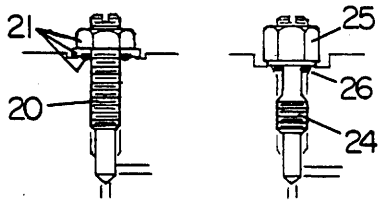

Begin. W/Ser. #60078

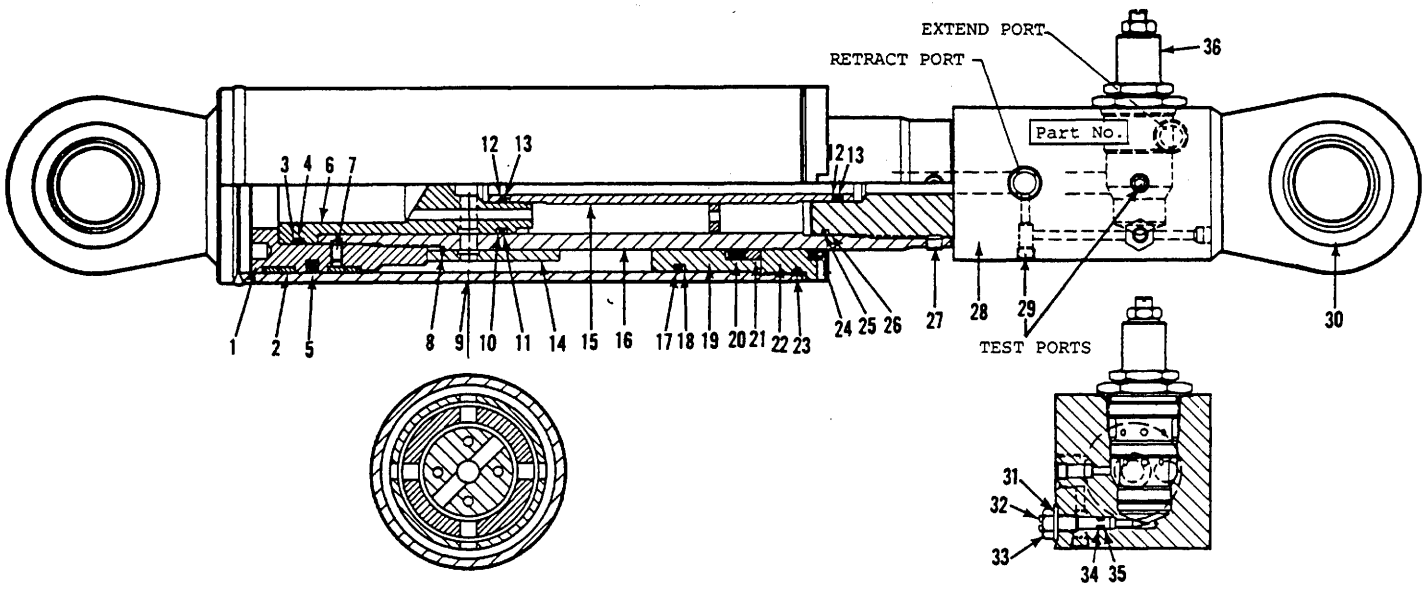

Ref. No.	Part Number	Quan. Req'd.	Name and Description
	707 6496	2	HYDRAULIC CYLINDER - INCLUDES ITEMS 1 THRU 35
	201755		SEAL KIT FOR ABOVE - INCLUDES SEALS, "O" RINGS, BACK-UPS.
1	201734	1	PISTON
2	201482	4	WEAR RING
3	202627	2	BACK-UP RING
4	201736	1	"O" RING
5	201483	1	SEAL ASSEMBLY
6	201737	1	PORT BLOCK
7	201738	2	SETSCREW
8	202849	1	SNAP RING
9	201740	1	CASE w/BUSHING REF. 34
10	201741	2	BACK-UP RING
11	201742	1	"O" RING
12	201743	4	BACK-UP RING
13	201744	2	"O" RING
14	201745	1	SPACER
15	201746	1	INNER TUBE

Ref. No.	Part Number	Quan. Req'd.	Name and Description
16	201747	1	ROD
17	201488	1	"O" RING
18	201489	1	BACK-UP RING
19	201748	1	HEAD
20	201204	1	SEAL
21	201749	1	SPACER
22	201750	1	RETAINING RING
23	28053	1	"O" RING
24	201205	1	WIPER
25	201751	1	"O" RING
26	201752	1	BACK-UP RING
27	201753	2	SETSCREW
28	201754	1	ROD END ASSEMBLY w/Bushing Ref. 34
29	200046	2	PIPE PLUG
30	1217-182	2	BUSHING, Self-Aligning
31	202242	1	WASHER
32	202626	1	ADJUSTING SCREW
33	202243	1	JAM NUT
34	202241	1	BACK-UP RING
35	202240	1	"O" RING
36	24458	1	HOLD VALVE
	A25038	1	SEAL KIT for above

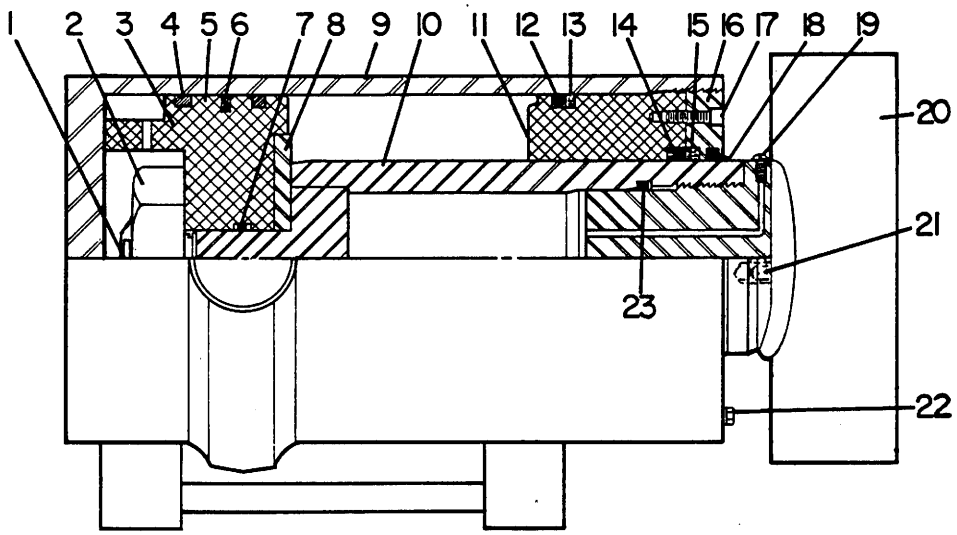

Ref. No.	Part Number	Quan. Req'd.	Name and Description	
	41605		HYDRAULIC CYLINDER COMPLETE	
	26419	1	SEAL KIT, INCLUDES SEALS, "O" RINGS, BACK-UP WASHERS	
1		1	COTTER PIN, 3/16 x 2¼ LG.	
2	200541	1	SLOTTED BUTTRESS NUT (REPLACES 26425)	ITEMS 2 & 3 MUST BE USED CONCURRENTLY
3	200542	1	PISTON (REPLACES 26422)	
4	26434	2	PISTON RING	
5	1218-152	1	"O" RING	
6	26431	1	SIRVON SEAL	
7	22015	1	STATIC "O" RING	
	26432	2	BACK-UP WASHER, FOR ABOVE	
8	26426	1	SHOULDER RING	
9	26420	1	CYLINDER CASE	
10	26421	1	ROD ASSEMBLY	
11	26423	1	HEAD GLAND	
12	23767	1	STATIC HEAD "O" RING	
13	26430	1	LEATHER BACK-UP RING	

Ref. No.	Part Number	Quan. Req'd.	Name and Description
14	26428	1	"U" CUP SEAL
15	26429	1	PHENOLIC BACK-UP RING
16	26424	1	THREAD RING
17	29494	4	LOCKSCREW, 1/2 UNC x 2 LG.
18	26427	1	WIPER SEAL
19	200543	1	BLEED SCREW, 1/4 UNF x 1/2 LG. PAN HEAD
	26433	1	THREAD SEAL WASHER
20	26435	1	ROD EYE
	200544	1	BRONZE BUSHING FOR ABOVE
21	200545	2	NYLOK SETSCREW, 1/4 UNC
22	1203-73	1	CAPSCREW, 1/4 UNF x 3/4 LG.
	1210-14	1	LOCKWASHER, 1/4 MED.
23	23985	1	"O" RING
	28698	1	BACK-UP WASHER (REPLACES 25357)

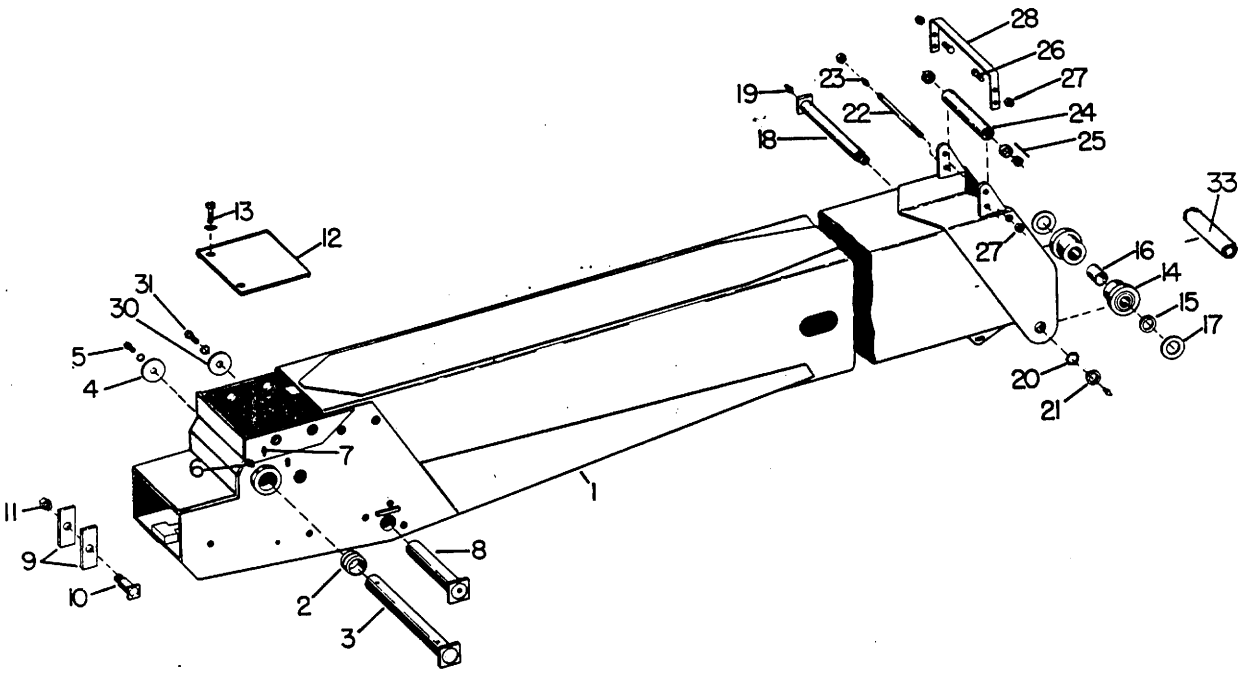

Ref. No.	Part Number	Quan. Req'd.	Name and Description
1	F49526	1	LOWER BOOM
2	12014-10	2	BUSHING
3	F38637	1	PIN
4	38663 35817	1	CAP SHIM
5	1200-184 1210-38	1 1	CAPSCREW, 3/4 UNC x 1 1/2 LG. LOCKWASHER, 3/4 MED.
6	1206-34 1205-61	2 2	SETSCREW, 1/2 UNC x 1 1/4 LG. JAM NUT, 1/2 UNC
7	1213-6	2	GREASE FITTING
8	F49520	1	PIN
9	41564	2	BLOCK
10	A35717-1	1	PIN
11	1204-25	1	ELASTIC NUT

Model S-488, S-588, S-688 — Group No. 10A
Date 1 SEPTEMBER 1974 — 60' BOOM — Page 10.2

Ref. No.	Part Number	Quan. Req'd.	Name and Description
12	F49258	1	COVER
13	1200-144	2	CAPSCREW
	1210-32	2	LOCKWASHER
14	A35479-1	2	ROLLER W/BUSHINGS, ITEMS 15 & 16
15	10723	1	THRUST BUSHING
16	1214-91	1	BUSHING
17	1208-73	AR	MACHINERY BUSHING, 2 1/2 x 3 7/8 x 14 GA.
18	A35481-1	1	PIN
19	1213-1	2	GREASE FITTING, 1/8 NPT
20	1228-8	1	LOCKWASHER, SAE W-12
21	1228-9	1	LOCKNUT, SAE N-12
22	38404	1	SHAFT
23	1213-10	1	GREASE FITTING, 1/4 UNF
24	35443	1	ROLLER LESS BEARINGS
25	1217-66	2	ROLLER BEARING COMPLETE
26	1200-145	2	CAPSCREW, 5/8 UNF x 1 1/2 LG.
27	1205-91	4	NUT, 5/8 UNF x 1 1/2 LG.
28	35646	1	STRAP
30	49525	1	CAP
31	1200-141	1	CAPSCREW, 5/8 UNC x 1 LG.
	1210-32	1	LOCKWASHER, 5/8 MED.
32	35817	2	SHIM
33	F49322	1	SPACER

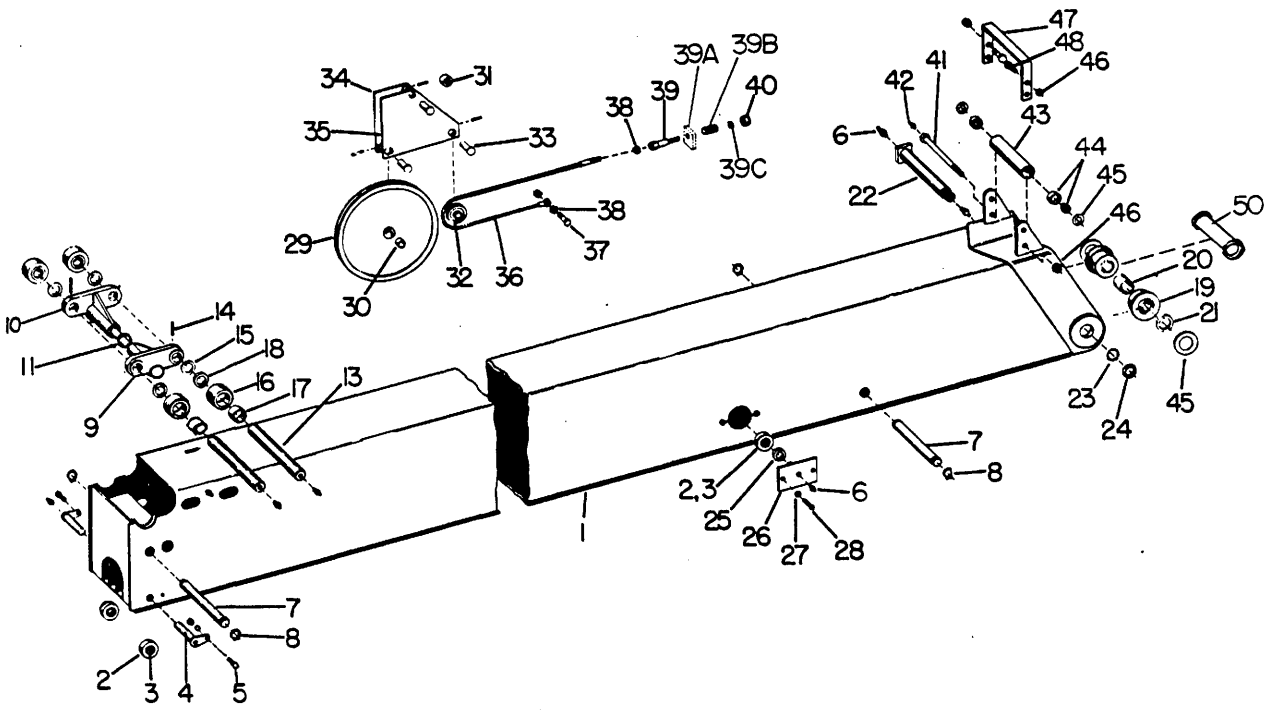

Ref. No.	Part Number	Part Number	Quan. Req'd.	Name and Description
1	A35486-1		1	CENTER BOOM SECTION
2	A47345		4	ROLLER w/BUSHING, ITEM 3
3	1214-105		1	BUSHING
4	F47360		2	PIN
5	1203-154		2	CAPSCREW, 3/8 UNC x 1 LG., FLAT SOCK. HD.
6	1213-1		6	GREASE FITTING
7	35488		2	PIN
8	1220-45		4	SNAP RING
9	F65327	F65875	1	BRACKET w/PIN
10	F65329	F65874	2	BRACKET
11	1208-57	1208-57	4	MACHINERY BUSHING, 2 x 3 x 14 GA.
13	35489	65833	2	PIN
14	1227-302 ROLL PIN	1206-11 SETSCREW	2	FASTENER

488: 8206415
588: 8406734
688: 9006274

Ref. No.	Part Number	Quan. Req'd.	Name and Description
15	1208-72	4	MACHINERY BUSHING, 2 1/2 x 3 1/2 x 14 GA.
16	A35493-1	4	ROLLER W/BUSHINGS, ITEMS 17 & 18
17	1214-94	1	BUSHING
18	10726	1	THRUST BUSHING
19	A35495-1	2	ROLLER W/BUSHINGS, ITEMS 20 & 21
20	1214-92	1	BUSHING
21	10723	1	THRUST BUSHING
22	A35494-1	1	PIN
23	1228-8	1	LOCKWASHER
24	1228-9	1	LOCK NUT
25	35496	2	COLLAR
26	A35497-1	2	SUPPORT
27	1210-38	4	LOCKWASHER, 3/4 MED.
28	1200-182	4	CAPSCREW, 3/4 UNC x 7/8 LG.
	A38760	2	WHEEL BRACKET ASSEMBLY - INCLUDES ITEMS 29 THRU 35
29	108F0618 ~~A35498-1~~ 12	2	SHEAVE W/BUSHING, ITEM 30
30	1214-63	1	BUSHING
31	38761	1	SPACER
32	A35503-1	2	SHEAVE W/BUSHING
	1214-63	1	BUSHING FOR ABOVE
	1208-8	1	MACHINERY BUSHING, 3/4 x 1 1/4 x 18 GA.
33	~~F38768~~ 51051	3	PIN
	~~1227-188~~ 1220-19 SR.	3	ROLL PIN, FOR ABOVE
34	F38762	1	LH SUPPORT
35	F38765	1	RH SUPPORT
36	35504	2	CABLE
37	1200-106	2	CAPSCREW, 1/2 UNC x 2 1/4 LG.
	1210-26	2	LOCKWASHER, 1/2 MED.

1-83

Ref. No.	Part Number	Quan. Req'd.	Name and Description
38	1205-61	4	NUT, 1/2 UNC JAM
	1205-65	4	NUT, 1/2 UNC SELF-LOCKING
39	35556	2	SPINDLE
39A	16351	2	SPRING
39B	35557	2	EAR (WELDED TO BOOM)
39C	1208-3	2	MACHINERY BUSHING, 5/8 x 1 1/8 x 14 GA.
40	1205-90	2	NUT, 5/8 UNC ELASTIC
41	10957	1	SHAFT
42	1213-10	1	GREASE FITTING, 1/4 UNF STRAIGHT
43	10956	1	ROLLER LESS BEARING
44	1217-66	2	ROLLER BEARING COMPLETE
45	1208-73	4	MACHINERY BUSHING, 2 1/2 x 3 7/8 x 14 GA.
46	1205-91	1	NUT, 5/8 UNF ELASTIC
47	35647	1	STRAP
48	1200-145	2	CAPSCREW, 5/8 UNF x 1 1/2 LG.
49	1205-91	2	NUT, 5/8 UNF ELASTIC
50	F49322	1	SPACER

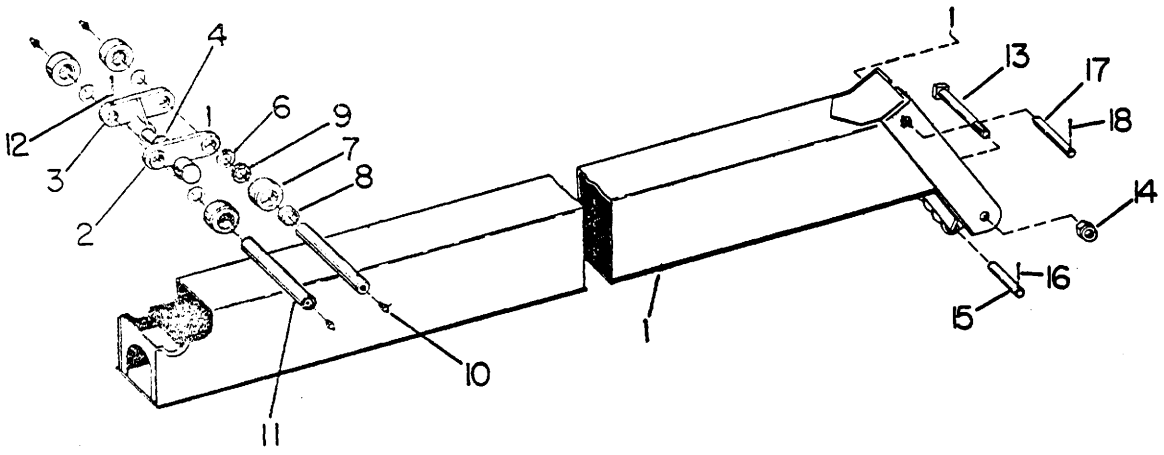

Ref. No.	Part Number	Part Number	Quan. Req'd.	Name and Description	
1	A35505-1		1	UPPER BOOM SECTION	
2	F65323	F65877	1	BRACKET W/PIN	
3	F65325	F65876	1	BRACKET	
4	1208-57		AR	MACHINERY BUSHING, 2 x 3 x 14 GA.	
6	1208-72		AR	MACHINERY BUSHING, 2 1/2 x 3 1/2 x 14 GA.	
7	A35493-1		4	ROLLER W/BUSHINGS, ITEMS 8 & 9	
8	1214-94		1	BUSHING	
9	10726		1	THRUST BUSHING	
10	1213-1		4	GREASE FITTING, 1/8 NPT	
11	35508	65832	2	PIN	
12	1227-302 ROLL PIN	1206-11 SETSCREW	2	FASTENER	
13	1235-354		1	MACHINE BOLT, 1 1/4 UNC x 13 LG.	
14	1205-133		1	NUT, 1 1/4 UNC ELASTIC	
15	38998		1	PIN	
16	1207-42		1	COTTER PIN, 1/4 x 2 LG.	
17	38199		1	PIN	
18	1207-55		2	COTTER PIN, 5/16 x 2 LG.	

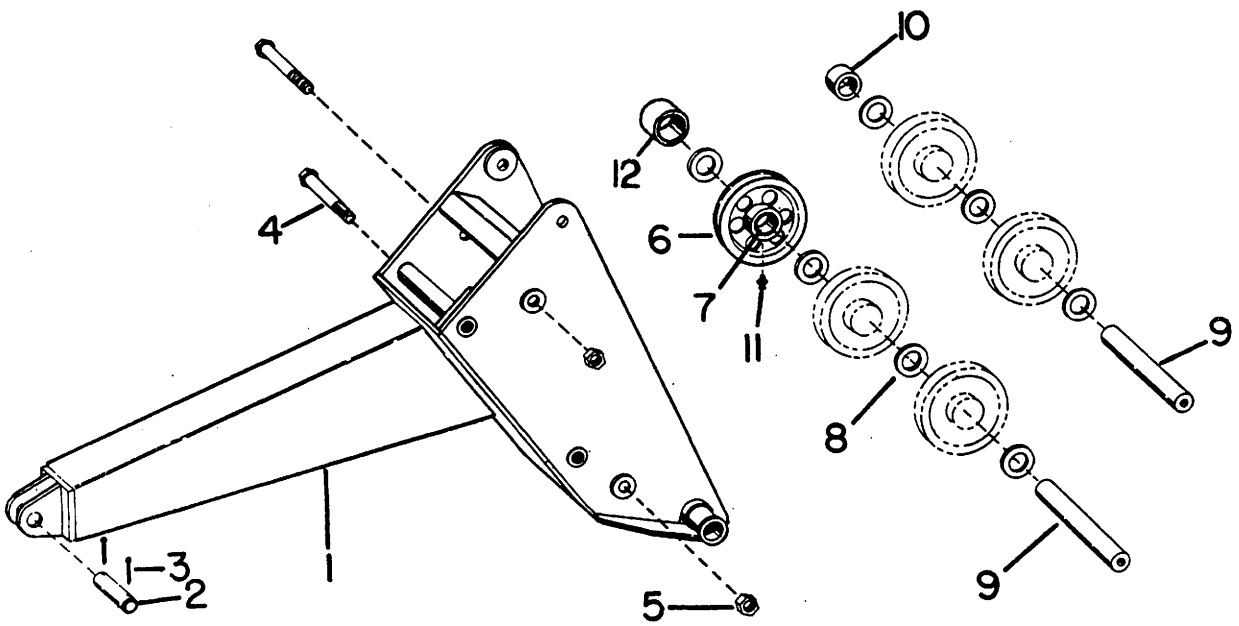

Ref. No.	Part Number	Part Number	Quan. Req'd.	Name and Description
	A38872 3-SHEAVE 13-1/2"	A41260 4-SHEAVE 13-1/2"		BOOM TIP ASSEMBLY - INCLUDES ITEMS 1 THRU 12 SHEAVE SIZE
1	F38873	F38873	1	BOOM TIP
2	35477	35477	1	PIN
3	1207-58	1207-58	2	COTTER PIN, 5/16 x 2 3/4 LG.
4	F38876	F38876	2	CAPSCREW
5	1205-179 1209-28	1205-179 1209-28	2 2	ELASTIC NUT, 1 3/8 UNF WASHER, 1 3/8 SAE
6	A38933	A38933	5/6	SHEAVE W/BEARING
7	1217-236	1217-236	5/6	BEARING FOR ABOVE
8	1209-52	1209-52	7/8	NYLON SPACER
9	38874	38874	1	UPPER RACE - 4 3/16" LG.
	38875	38875	1	LOWER RACE - 8 1/8" LG.
10	38879	38879	1	SPACER
11	1213-16 1213-1	1213-16 1213-1	2/3 3	GREASE FITTING, 30° GREASE FITTING, STRAIGHT
12	38705		1	SPACER

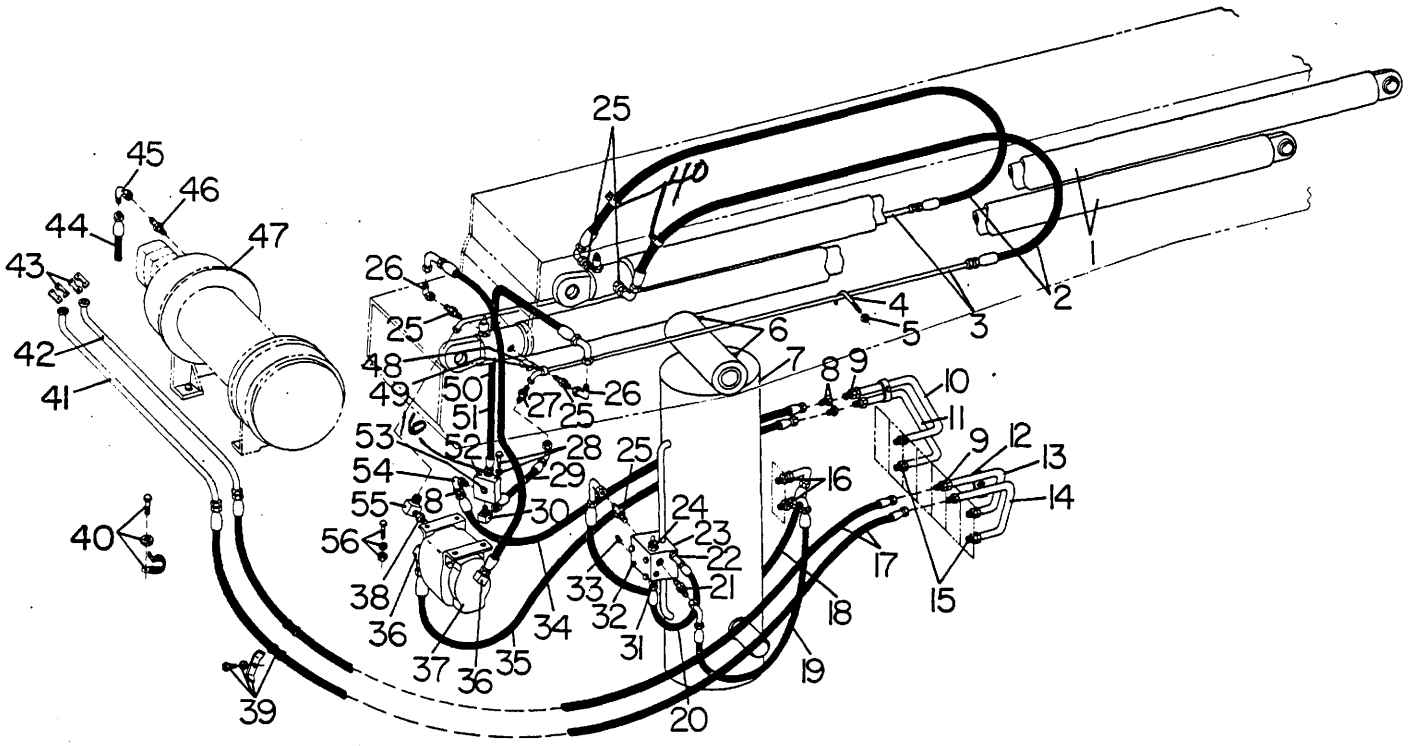

Ref. No.	Part Number	Quan. Req'd.	Name and Description	
1		2	CYLINDER-EXTEND - SEE PAGE 10A 10.11	
2	A49036	2	HOSE ASSEMBLY	
3	38670	2	TUBE	
4	38937	2	J-BOLT	
5	1205-22	2	NUT, 1/4 UNF-SELF LOCKING	
6	1213-3	2	GREASE FITTING	
7		1	CYLINDER-HOIST - SEE PAGE 10A 10.13	
8	1219-585	2X	ADAPTER	
9	12019-9	2	ADAPTER	
10	65450 65768	1 1	TUBE - PRIOR TO SER. No. TUBE - BEGIN. W/SER. No.	S-488: 8205784 S-588: 8405529 S-688: 9005125
11	65449 65767	1 1	TUBE - PRIOR TO SER. No. TUBE - BEGIN. W/SER. No.	
12	35639 1200-~~88~~122 1210-26	2 2 2	CLAMP CAPSCREW, 1/2 UNC x ~~1-1/4~~ LG. LOCKWASHER, 1/2 MED.	
13	65527 1219-409	1 2	TUBE PLUG	

Model S-488, S-588, S-688 | Group No. 10A
Date REV. 1 FEB. 1978 | HYDRAULIC ASSEMBLY - 60' BOOM | Page 10.9

Ref. No.	Part Number	Quan. Req'd.	Name and Description
14	38851	1	TUBE
	1219-954	1	NIPPLE
	12019-245	1	MALE QUICK DISCONNECT
15	1219-282	4	ADAPTER w/"O" RING
	1218-65	4	"O" RING
16	1219-555	3	ADAPTER, w/"O" RING
	1218-65	3	"O" RING, FOR ABOVE
17	A39781	2	HOSE ASSEMBLY
18	A38678	1	HOSE ASSEMBLY (REPLACES A65474)
19	A38679	1	HOSE ASSEMBLY (REPLACES A65473)
20	A35448	1	HOSE ASSEMBLY
21	1219-802	1	ADAPTER w/"O" RING
	1218-64	1	"O" RING, FOR ABOVE
22	1219-588	1	ADAPTER w/"O" RING
	1218-155	1	"O" RING, FOR ABOVE
23	1219-657		HOLD VALVE, RACINE — SEAL KITS A23955
	12019-281	1	HOLD VALVE, FLUID CONTROL A200517
	~~12019-345~~ NOT AVAIL A208652 INCL. 7095065		HOLD VALVE, RACINE - REPLACES ABOVE VALVES....A200915 (SEE SERVICE BULLETIN #276)
24	35249	1	PLUG — 25# SPRING #360543 PER BECKS LETTER
25	1219-389	4	ADAPTER W/"O" RING
	1218-64	4	"O" RING, FOR ABOVE
26	1219-583	2	ADAPTER
27	12019-213	1	ADAPTER
28	1200-59	2	CAPSCREW, 3/8 UNC x 1 LG.
	1210-20	2	LOCKWASHER, 3/8 MED.
29	A49495	1	HOSE ASSEMBLY
30	12019-218	2	ADAPTER w/"O" RING
	1218-65	2	"O" RING
31	1219-801	1	ADAPTER w/"O" RING
	1218-155	1	"O" RING, FOR ABOVE
32	1200-113	4	CAPSCREW, 1/2 UNF x 3 LG.
	1209-29	4	PLAINWASHER, 1/2
33	1219-38	1	PLUG
34	A39779	1	HOSE ASSEMBLY
35	A39780	1	HOSE ASSEMBLY
36	1219-287	3	ADAPTER w/"O" RING

Ref. No.	Part Number	Quan. Req'd.	Name and Description
37		1	DUAL PROPORTIONATOR - SEE PAGE 10A 10.14
38	1219-780	1	ADAPTER
39	1200-69	1	CAPSCREW, 3/8 UNC x 2-1/4 LG.
	1210-20	1	LOCKWASHER, 3/8 MED.
	35324	1	CLAMP
	1221-31	2	GROMMET
	1240-29	2	CLAMP
40	1200-94	2	CAPSCREW, 1/2 UNF x 3/4 LG.
	1210-26	2	LOCKWASHER, 1/2 MED.
	1240-29	4 2	CLAMP
41	41586	1	TUBE
42	41587	1	TUBE
43	1219-665	4	SPLIT FLANGE CLAMP
	1218-103	2	"O" RING, FOR ABOVE
1200-61	1203-137	8	CAPSCREW, 3/8 UNC x 1-1/4 LG.,H.T., GRADE 5
	1210-20	8	LOCKWASHER, 3/8 MED.
44	A65477	1	HOSE ASSEMBLY
45	1219-571	1	ADAPTER
46	1219-446	1	ADAPTER w/"O" RING
	1218-41	1	"O" RING, FOR ABOVE
47		1	BANTAM WINCH- SEE GROUP 13
48	43340	1	CLAMP
	1200-61	2	CAPSCREW, 3/8 UNC x 1-1/4 LG.
	1210-20	2	LOCKWASHER, 3/8 MED.
49	1221-41	1	GROMMET
50	A65475	1	HOSE ASSEMBLY
51	A65476	1	HOSE ASSEMBLY
52	43407	1	BLOCK
53	1219-409	1 2	PLUG
54	1219-680	1	ADAPTER
	1219-65		
55	1219-864	1	ADAPTER
56	1200-59	4	CAPSCREW, 3/8 UNC x 1 LG,
	1210-20	4	LOCKWASHER, 3/8 MED.
	1205-36	4	NUT, 3/8 UNC

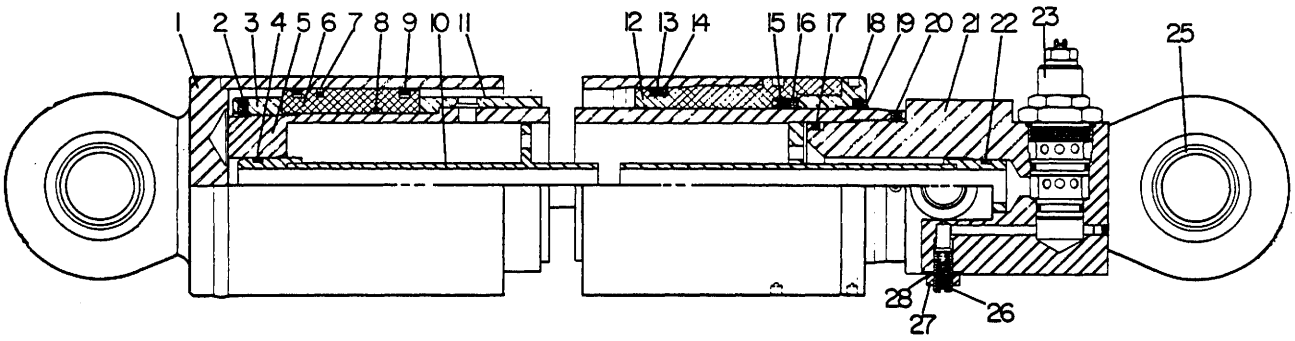

Ref. No.	Part Number	Part Number	Quan. Req'd.	Name and Description
	39991 - Prior To: S-588: #8407855 S-688: #9007378	65986 Begin. W/:	2	HYDRAULIC CYLINDER complete
	25955	201771	2	SEAL KIT - Includes Seals, "O" Rings, Back-Up Washers- See Ref. 23 for Hold Valve Kit
1	25954	201757	1	CASE
2	200545		1	SETSCREW, 1/4 UNC x 3/8 Lg. Sock. Hd. Cup Pt. Nylok
3	25949	201765	1	BUTTRESS PISTON NUT
4	1218-156 25942		1 1	"O" RING BACK-UP RING
5	25953	201758	1	SHAFT
6	25952	201766	1	PISTON
7	23432 1218-146		1 1	SEAL "O" RING
8	24481 25945		1 2	STATIC "O" RING BACK-UP WASHER
9	23433		2	PISTON RING
10	25947	201759	1	PORT TUBE

Ref. No.	Part Number	Part Number	Quan. Req'd.	Name and Description	
	39991	65986			
	Prior To: S-588: #8407855 S-688: #9007378	Begin. W/:			
11	25948	201760	1	SPACER	
12	25951	201767	1	HEAD GLAND	
13	1218-223	1218-223	1	"O" RING	
14	25357		1	BACK-UP WASHER	
15	25478		1	"U" CUP SEAL	
16	25050		1	BACK-UP RING	
17	28699		1	BACK-UP RING (Replaces 25944)	
	1218-157		1	"O" RING	
18	25950	201768	1	THREAD RING	
19	25049		1	WIPER SEAL	
20	200545	201589	1	SETSCREW, 1/4 UNC x 3/8/1/41g., Sock. Hd, Cup Pt.,	Nylok
21	25946	201769	1	ROD EYE UNIT only (Requires Items 29, 30, 31)	
22	1218-156		1	"O" RING	
	25942		1	BACK-UP WASHER	
23	24458		1	HOLD VALVE	
	A25038		1	SEAL KIT for above	
25	1217-182		2	SELF-ALIGNING BEARING	
26	25956		1	NEEDLE VALVE	
27	1205-39		1	LOCK NUT, 3/8 UNC Jam	
28	28700		1	WASHER, Special	
	22845		1	"O" RING	
29	201467	201770	1	NEEDLE VALVE w/Washer	
30	201468		1	HIGH JAM NUT, 7/16 UNF	
31	201469	1218-155	1	"O" RING	

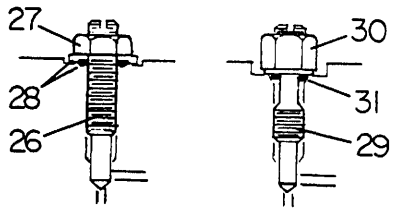

FIRST RECEIVED 6-21-74

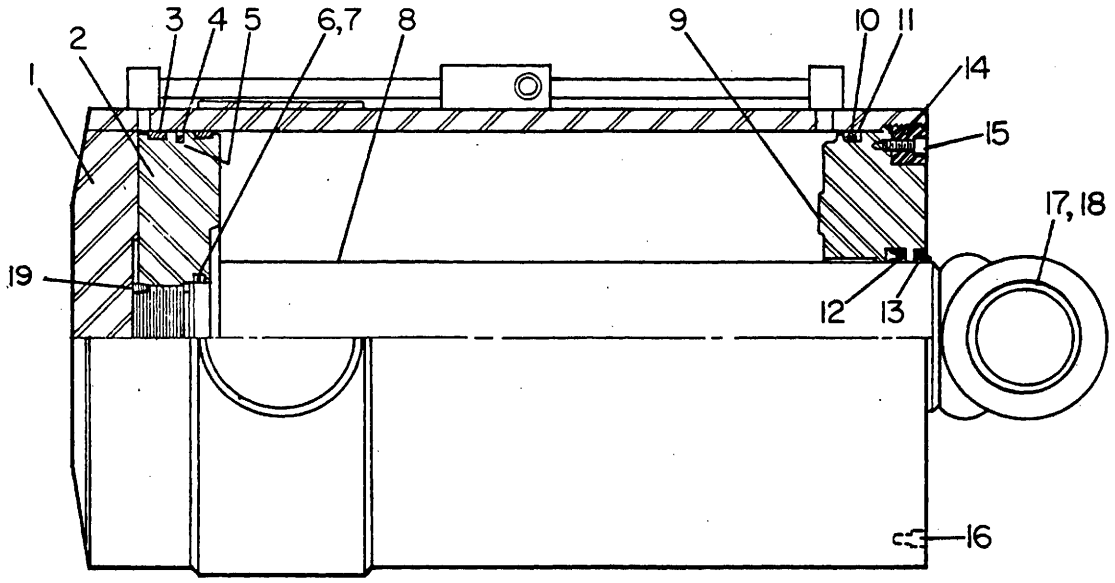

Ref. No.	Part Number	Quan. Req'd.	Name and Description
	49817	1	BOOM LIFT CYLINDER
	29480 OK	1	SEAL KIT - INCLUDES ITEMS ~~4~~ 3 THRU 7, 10 THRU 13
1	29481	1	CASE
2	29483	1	PISTON
3	29492	2	WEAR RING
4	29490	1	SIRVON SEAL
5	29491	1	"O" RING
6	29010	1	"O" RING
7	29006	2	BACK-UP WASHER
8	29482	1	SHAFT NEED NO.?
9	29484	1	HEAD GLAND
10	25012	1	"O" RING
11	29488	1	BACK-UP WASHER
12	29013	1	"U" CUP SEAL
13	29011	1	WIPER SEAL
14	29485	1	THREAD RING
15	29494	2	SOCKET HEAD CAPSCREW, 1/2 UNC x 2 LG.
16	29493	1	SOCKET HEAD CAPSCREW, 1/4 UNF x 3/4 LG.
17	29487	2	BRONZE BUSHING
18	29486	1	SPACER
19	29012	1	SETSCREW, 3/8 UNC x 3/8 LG.

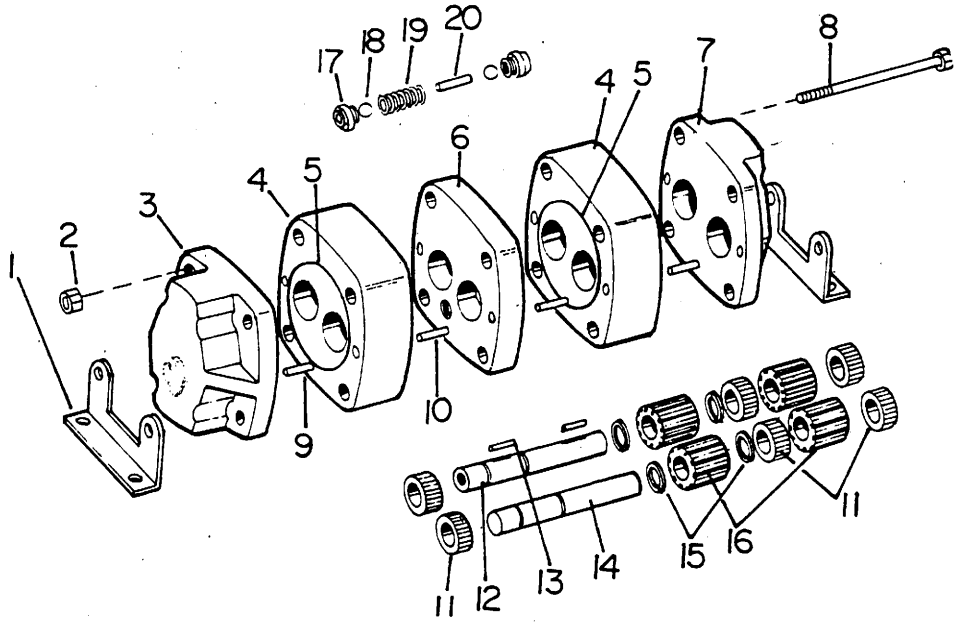

Ref. No.	Part Number	Quan. Req'd.	Name and Description
	35873		DUAL PROPORTIONATOR
1	27817	2	MOUNTING BRACKET
2	27820	4	NUT
3	200529	1	END PLATE (1 port)
4	27810	2	CASE
5	23250	4	"O" RING
6	27812	1	SPACER PLATE
7	27811	1	END PLATE (2 port)
8	27818	2	CAPSCREW
	200527	2	CAPSCREW, MOUNTING BRACKET
9	200520	6	DOWEL PIN
10	23251	2	DOWEL PIN
11	23253	6	BEARING
12	27813	1	IDLER SHAFT
13	23252	2	DOWEL PIN
14	23249	1	IDLER SHAFT
15	23254	4	RETAINING RING
16	23248	4	GEAR
17	27814	2	VALVE HEAD
18	27815	2	BALL
19	27816	1	SPRING
20	200530	1	DOWEL PIN

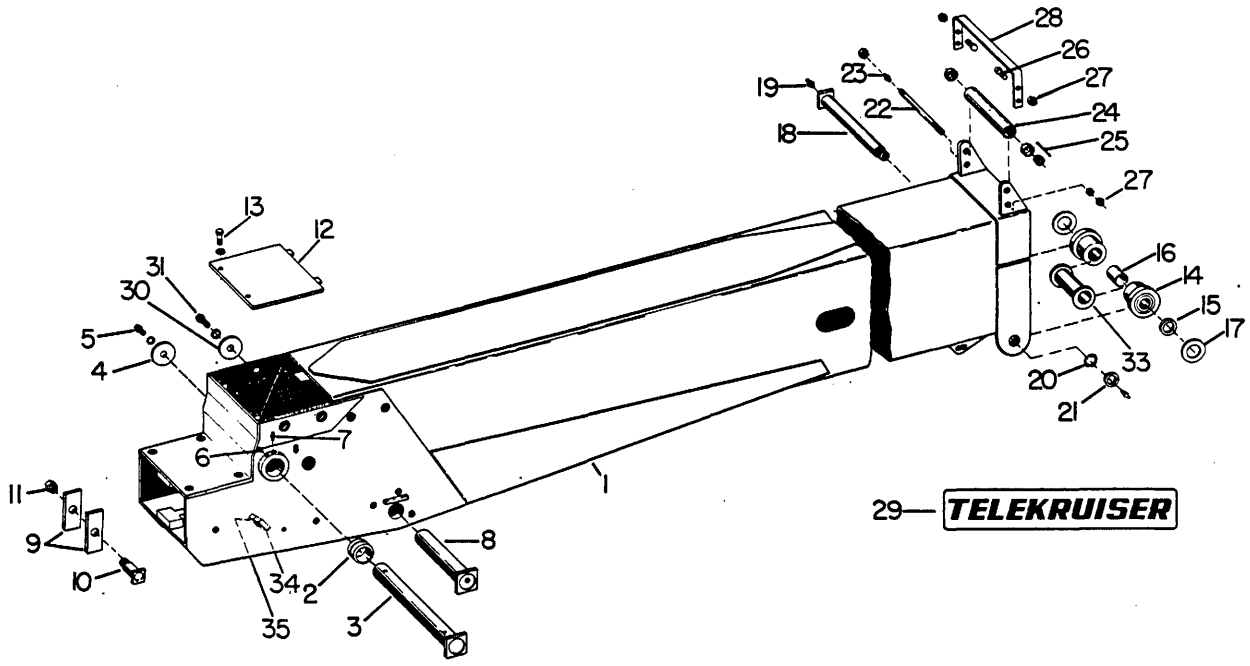

Ref. No.	Part Number	Quan. Req'd.	Name and Description
1	F49503	1	LOWER BOOM
2	12014-10	2	BUSHING
3	F38637	1	PIN
4	38663	1	CAP
5	1200-184	1	CAPSCREW, 3/4 UNC x 1 1/2 LG.
	1210-38	1	LOCKWASHER, 3/4 MED.
6	1206-34	2	SETSCREW, 1/2 UNC x 1 1/4 LG.
	1205-61	2	JAM NUT, 1/2 UNC
7	1213-6	2	GREASE FITTING
8	F49520	1	PIN
9	41564	2	BLOCK
10	A35717-1	1	PIN
11	1204-25	1	ELASTIC NUT

Ref. No.	Part Number	Quan. Req'd.	Name and Description
12	F49258	1	COVER
13	1200-144	2	CAPSCREW, 5/8 UNC X 1-1/2 LG.
	1210-32	2	LOCKWASHER, 5/8 MED.
14	A35479-1	2	ROLLER W/BUSHING, ITEMS 15 & 16
15	10723	1	THRUST BUSHING
16	1214-91	1	BUSHING
17	1208-73	AR	MACHINERY BUSHING, 2-1/2 x 3-7/8 x 14 GA.
18	A35481-1	1	PIN
19	1213-1	2	GREASE FITTING, 1/8 NPT
20	1228-8	1	LOCKWASHER, SAE W-12
21	1228-9	1	LOCKNUT, SAE N-12
22	38404	1	SHAFT
23	1213-10	1	GREASE FITTING, 1/4 UNF
24	A35401-2	1	ROLLER, W/BEARING
25	1217-66	1	ROLLER BEARING, FOR ABOVE
26	1200-145	2	CAPSCREW, 5/8 UNF x 1-1/2 LG.
27	1205-91	4	NUT, 5/8 UNF
28	35646	1	STRAP
29	12260-299	2	"TELEKRUISER" EMBLEM
30	49525	1	CAP
31	1200-141	1	CAPSCREW, 5/8 UNC x 1 LG.
	1210-32	1	LOCKWASHER, 5/8 MED.
32	35817	2	SHIM
33	F49322	1	SPACER, TIP ROLLER
34	43340	1	CLAMP
	1221-41	1	GROMMET
35	1200-61	2	CAPSCREW, 3/8 UNC x 1-1/4 LG.
	1210-20	2	LOCKWASHER, 3/8

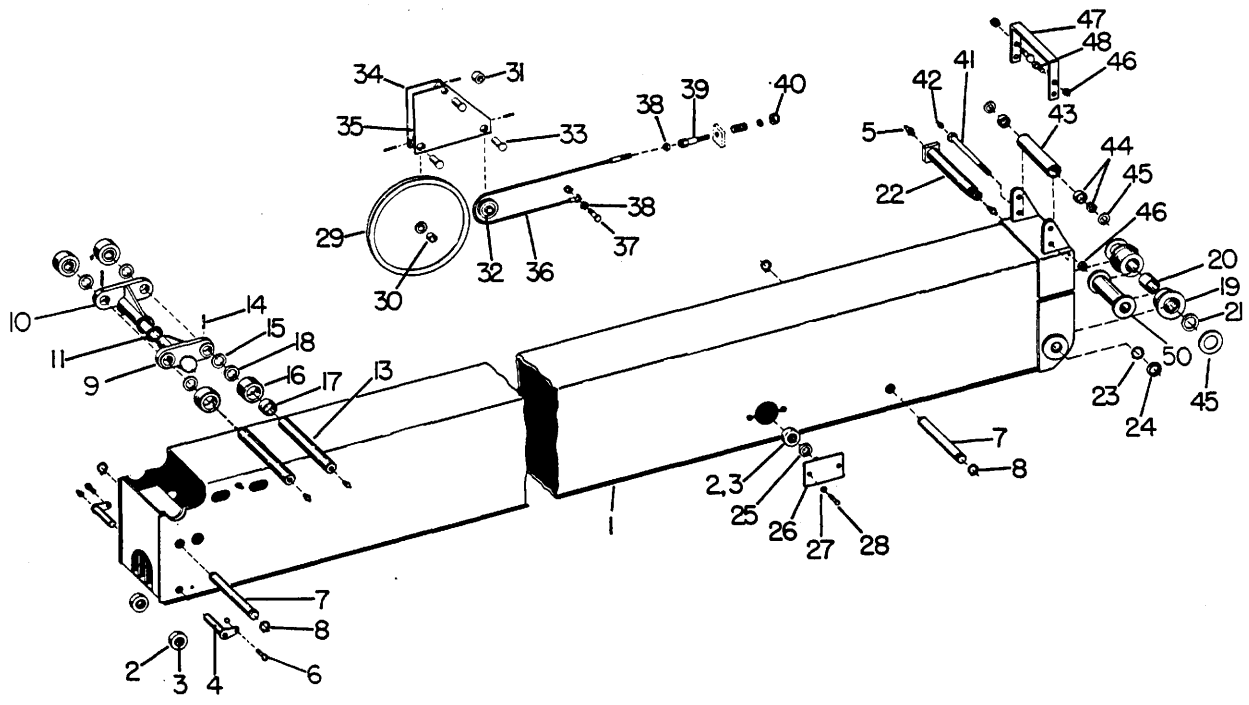

Ref. No.	Part Number	Part Number	Quan. Req'd.	Name and Description
1	F49474		1	CENTER BOOM SECTION
2	A47345		4	ROLLER w/BUSHING, ITEM 3
3	1214-105		1	BUSHING
4	F47360		2	PIN
5	1213-1		6	GREASE FITTING, 1/8 NPT
6	1203-154		2	CAPSCREW, 3/8 UNC x 1 LG., FLAT SOCK. HD.
7	35488		2	PIN
8	1220-45		4	SNAP RING
9	F65327	F65875	1	BRACKET w/PIN 688: 9006277
10	F65329	F65874	1	BRACKET
11	1208-57	1208-57	AR	MACHINERY BUSHING, 2 x 3 x 14 GA.
13	35489	65833	2	PIN
14	1227-302 ROLL PIN	1206-11 SETSCREW	2	FASTENER

Ref. No.	Part Number	Quan. Req'd.	Name and Description
15	1208-72	AR	MACHINERY BUSHING, 2 1/2 x 3 1/2 x 14 GA.
16	A35493-1	4	ROLLER w/BUSHING, ITEMS 17 & 18
17	1214-94	1	BUSHING
18	10726	1	THRUST BUSHING
19	A35495-1	2	ROLLER w/BUSHINGS, ITEMS 20 & 21
20	1214-92	1	BUSHING
21	10723	1	THRUST BUSHING
22	A35494-1	1	PIN
23	1228-8	1	LOCKWASHER
24	1228-9	1	LOCK NUT
25	35496	2	COLLAR
26	35497-1	2	SUPPORT
27	1210-38	4	LOCKWASHER, 3/4 MED.
28	1200-182	4	CAPSCREW, 3/4 UNC x 7/8 LG.
	A38760	2	WHEEL BRACKET ASSEMBLY - INCLUDES ITEMS 29 THRU 35
11-83	706F0618		
29	~~A35498-1~~	2	SHEAVE w/BUSHING, ITEM 30
30	1214-63	1	BUSHING
31	38761	1	SPACER
32	A35503-1	2	SHEAVE w/BUSHING
	1214-63	1	BUSHING FOR ABOVE
	1208-8	1	MACHINERY BUSHING, 3/4 x 1 1/4 x 18 GA.
33	~~F38768~~	3	PIN 51051
	~~1227-188~~	3	ROLL PIN FOR ABOVE 1220-19 S.RING.
34	F38762	1	LH SUPPORT
35	F38765	1	RH SUPPORT
36	49492	2	CABLE
37	1200-106	2	CAPSCREW, 1/2 UNC x 2 1/4 LG.
	1210-26	2	LOCKWASHER, 1/2 MED.
38	1205-61	4	NUT, 1/2 UNC JAM
	1205-65	4	NUT, 1/2 UNC SELF-LOCKING

Ref. No.	Part Number	Quan. Req'd.	Name and Description
39	35556	2	SPINDLE
	16351	2	SPRING, FOR ABOVE
	35557	2	EAR(WELDED TO BOOM)
	1208-3	2	MACHINERY BUSHING, 5/8 x 1 1/8 x 14 GA.
40	1205-90	2	NUT, 5/8 UNC ELASTIC
41	10957	1	SHAFT
42	1213-10	1	GREASE FITTING, 1/4 UNF STRAIGHT
43	A15025-2	1	ROLLER w/BEARING, REF. 44
44	1217-66	2	ROLLER BEARING, w/CUP & CONE
45	1208-73	2	MACHINERY BUSHING, 2 1/2 x 3 7/8 x 14 GA.
46	1205-91	1	NUT, 5/8 UNF ~~x 1 1/2 LG~~.
47	35647	1	STRAP
48	1200-145	2	CAPSCREW, 5/8 UNF x 1 1/2 LG.
49	1205-91	2	NUT, 5/8 UNF ELASTIC
50	F49322	1	SPACER

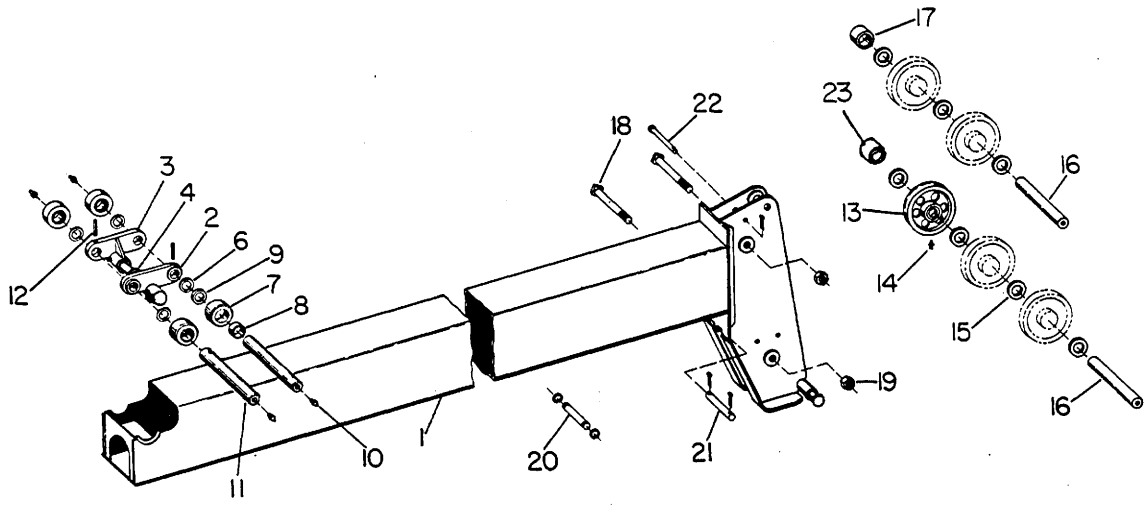

Ref. No.	Part Number	Part Number	Quan. Req'd.	Name and Description
1	F49527		1	UPPER BOOM SECTION
2	F65323	F65877	1	BRACKET W/PIN
3	F65325	F65876	1	BRACKET
4	1208-57		AR	MACHINERY BUSHING, 2 x 3 x 14 GA.
6	1208-72		AR	MACHINERY BUSHING, 2 1/2 x 3 1/2 x 14 GA.
7	A35493-1		4	ROLLER W/BUSHINGS, ITEMS 8 & 9
8	1214-94		1	BUSHING
9	10726		1	THRUST BUSHING
10	1213-1		4	GREASE FITTING, 1/8 NPT
11	35508	65832	2	PIN
12	1227-302 ROLL PIN	1206-11 SETSCREW	2	FASTENER

Ref. No.	Part Number	Quan. Req'd.	Name and Description
		3/4	SHEAVES
13	A38933	5/6	SHEAVE ASSEMBLY W/BEARING
	1217-236	5/6	BEARING FOR ABOVE
14	1213-16	3	GREASE FITTING, 30°
	1213-1	3	GREASE FITTING, STRAIGHT
15	1209-52	7/8	SPACER
16	38874	1	UPPER RACE
	38875	1	LOWER RACE
17	38879	1	SPACER
18	F38876	2	CAPSCREW
19	1205-179	2	NUT
	1209-28	2	PLAINWASHER
	1209-14	2	PLAINWASHER
20	49468	1	CYLINDER PIN
	1220-45	2	SNAP RING
21	41219	1	PIN
	1207-42	2	COTTER PIN
22	49561	3	PIN
	1207-12	6	COTTER PIN
23	38705	1/-	SPACER

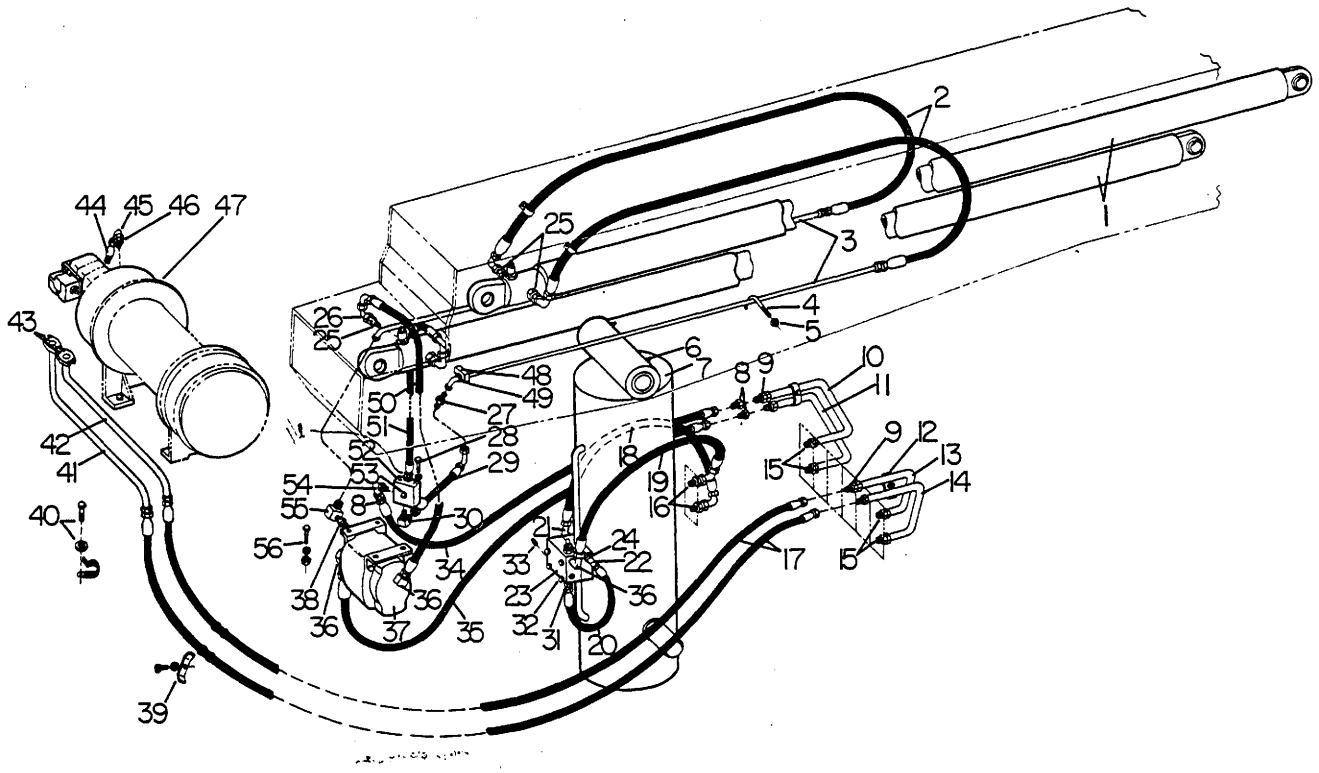

Ref. No.	Part Number	Quan. Req'd.	Name and Description
1		2	CYLINDER-EXTEND - SEE PAGE 10B 10.11
2	A49493	2	HOSE ASSEMBLY
3	38670	2	TUBE
4	38937	2	J-BOLT
5	1205-22	2	NUT, 1/4 UNF - SELF LOCKING
6	1213-3	2	GREASE FITTING
7		1	CYLINDER-HOIST - SEE PAGE 10A 10.13
8	1219-585	28	ADAPTER
9	12019-9	2	ADAPTER
10	65450	1	TUBE - PRIOR TO SER. NO. .....) ~~S-688: 8405529~~ S-688: 9005125
	65768	1	TUBE - BEGIN. W/SER. NO. .....
11	65449	1	TUBE - PRIOR TO SER. NO. .....
	65767	1	TUBE - BEGIN. W/SER. NO.
12	35639	2	CLAMP
	1200-~~98~~122	2	CAPSCREW, 1/2 UNC x 1-~~1/4~~ LG.
	1210-26	2	LOCKWASHER, 1/2 MED.
13	65527	1	TUBE
	1219-409	2	PLUG

Ref. No.	Part Number	Quan. Req'd.	Name and Description
14	38851	1	TUBE
	1219-954	1	NIPPLE
	12019-245	1	MALE QUICK DISCONNECT
15	1219-~~285~~ 282	4	ADAPTER w/"O" RING
	1218-65	4	"O" RING
16	1219-555	3	ADAPTER, w/"O" RING
	1218-64	3	"O" RING, FOR ABOVE
17	A39781	2	HOSE ASSEMBLY
18	A38678	1	HOSE ASSEMBLY (REPLACES A65474)
19	A38679	1	HOSE ASSEMBLY (REPLACES A65473)
20	A35448	1	HOSE ASSEMBLY
21	1219-802	1	ADAPTER w/"O" RING
	1218-64	1	"O" RING, FOR ABOVE
22	1219-588	1	ADAPTER w/"O" RING
	1218-155	1	"O" RING, FOR ABOVE
23	1219-657		HOLD VALVE, RACINE ....A23955 (SEAL KITS)
	12019-281	1	HOLD VALVE, FLUID CONTROL A200517
KIT A208652 REPLACES ECN 21425	12019-345		HOLD VALVE, RACINE - REPLACES ABOVE VALVES....A200915 (SEE SERVICE BULLETIN #276)
24	35249	1	PLUG
25	1219-389	4	ADAPTER W/"O" RING
	1218-64	4	"O" RING, FOR ABOVE
26	1219-583	2	ADAPTER
27	12019-213	1	ADAPTER
28	1200-59	2	CAPSCREW, 3/8 UNC x 1 LG.
	1210-20	2	LOCKWASHER, 3/8 MED.
29	A49495	1	HOSE ASSEMBLY
30	12019-218	2	ADAPTER
31	1219-801	1	ADAPTER w/"O" RING
	1218-155	1	"O" RING, FOR ABOVE
32	1200-113 ~~1229-63~~	4	CAPSCREW, 1/2 UNF x 3 LG.
	1209-29	4	PLAINWASHER, 1/2
33	1219-38	1	PLUG
34	A39779	1	HOSE ASSEMBLY
35	A39780	1	HOSE ASSEMBLY
36	1219-287	3	ADAPTER w/"O" RING

Ref. No.	Part Number	Quan. Req'd.	Name and Description
37	35873	1	DUAL PROPORTIONATOR - SEE PAGE 10A 10.14
38	1219-780	1	ADAPTER
39	1200-69	1	CAPSCREW, 3/8 UNC x 2-1/4 LG.
	1210-20	1	LOCKWASHER, 3/8 MED.
	35324	1	CLAMP
	1221-31	6 2	GROMMET
40	1200-94	2	CAPSCREW, 1/2 UNF x 3/4 LG.
	1210-26	2	LOCKWASHER, 1/2 MED.
	1240-29	4 2	CLAMP
41	41586	1	TUBE
42	41587	1	TUBE
43	1219-665	4	SPLIT FLANGE CLAMP
	1218-103	2	"O" RING, FOR ABOVE
1200-61	~~1203-137~~	8	CAPSCREW, 3/8 UNC x 1-1/4 LG.,H.T., GRADE 5
	1210-20	8	LOCKWASHER, 3/8 MED.
44	A65477	1	HOSE ASSEMBLY
45	1219-571	1	ADAPTER
46	1219-446	1	ADAPTER w/"O" RING
	1218-41	1	"O" RING, FOR ABOVE
47		1	BANTAM WINCH- SEE GROUP 13
48	43340	1	CLAMP
	1200-61	2	CAPSCREW, 3/8 UNC x 1-1/4 LG.
	1210-20	2	LOCKWASHER, 3/8 MED.
49	1221-41	1	GROMMET
50	A65475	1	HOSE ASSEMBLY
51	A65476	1	HOSE ASSEMBLY
52	43407	1	BLOCK
53	1219-409	2	PLUG
X 54	1219-680	1	ADAPTER 36574 2 / 1205-58 4) ADD.
55	1219-864	1	ADAPTER
56	1200-59	4	CAPSCREW, 3/8 UNC x 1 LG.
	1210-20	4	LOCKWASHER, 3/8 MED.
	1205-36	4	NUT, 3/8 UNC

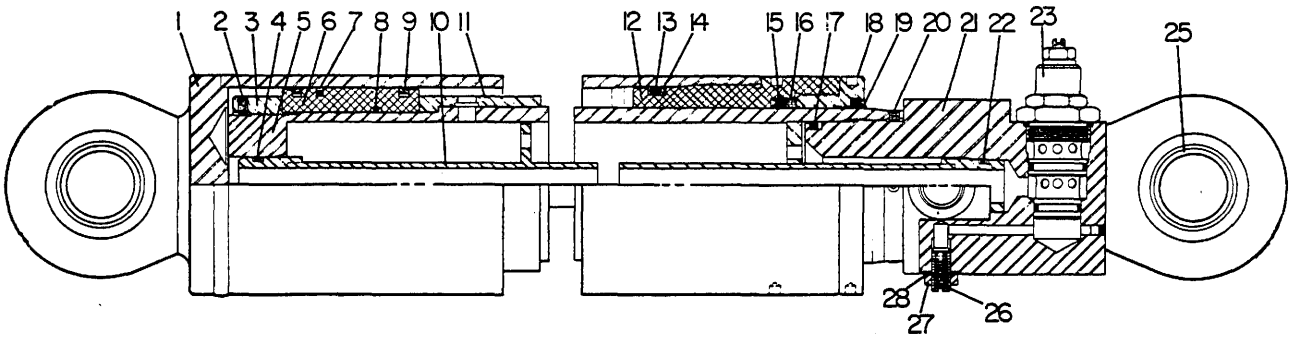

Ref. No.	Part Number	Part Number	Quan. Req'd.	Name and Description	
	49501 Prior To #60085	65987 Begin. W/ #60085	2	HYDRAULIC CYLINDER complete	
	28697	201771	2	SEAL KIT - Includes Seals, "O" Rings, Back-Up Washers - See Ref. 23 for Hold Valve Kit	
1	28131	201761	1	CASE	
2	200545		1	SETSCREW, 1/4 UNC x 3/8 Lg., Sock. Hd. Cup Pt.	Nylok
3	25949	201765	1	BUTTRESS PISTON NUT	
4	1218-156 25942		1 1	"O" RING BACK-UP RING	
5	28132	201762	1	SHAFT	
6	25952	201766	1	PISTON	
7	23432 1218-146		1 1	SEAL "O" RING	
8	24481 25945		1 2	STATIC "O" RING BACK-UP WASHER	
9	23433		2	PISTON RING	
10	28133	201763	1	PORT TUBE	

Model S-688 | Group No. 10B
Date Rev. 1 Aug. 1980 | BOOM EXTEND CYLINDER - 72' Boom | Page 10.12

Ref. No.	Part Number	Part Number	Quan. Req'd.	Name and Description	
	49501 Prior To: #60085	65987 Begin. W/: #60085			
11	28134	201764	1	SPACER	
12	25951	201767	1	HEAD GLAND	
13	1218-223	1218-223	1	"O" RING	
14	25357		1	BACK-UP WASHER	
15	25478		1	"U" CUP SEAL	
16	25050		1	BACK-UP RING	
17	28699		1	BACK-UP RING	
	1218-157		1	"O" RING	
18	25950	201768	1	THREAD RING	
19	25049		1	WIPER SEAL	
20	201589	201589	1	SETSCREW, 1/4 UNC x 1/4 lg., Sock. Hd, Cup Pt.,	Nylok
21	25946	201769	1	ROD EYE UNIT only (Requires Items 29, 30, 31)	
22	1218-156		1	"O" RING	
	25942		1	BACK-UP WASHER	
23	24458		1	HOLD VALVE	
	A25038		1	SEAL KIT for above	
25	1217-182		2	SELF-ALIGNING BEARING	
26	25956		1	NEEDLE VALVE	
27	1205-39		1	LOCK NUT, 3/8 UNC Jam	
28	28700		1	WASHER, Special	
	22845		1	"O" RING (Replaces 25943 Th'd Seal)	
29	201467	201770	1	NEEDLE VALVE w/Washer	
30	201468		1	HIGH JAM NUT, 7/16 UNF	
31	201469	1218-155	1	"O" RING	

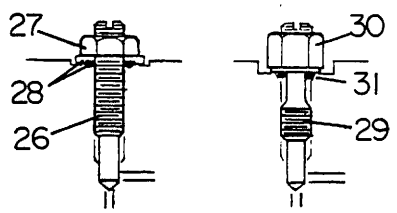

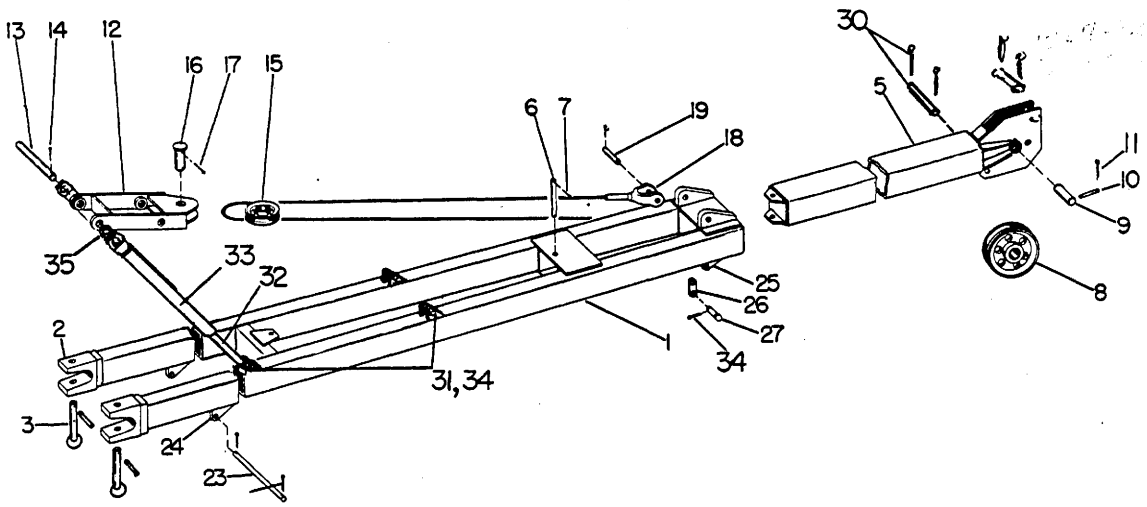

Ref. No.	Part Number	Quan. Req'd.	Name and Description
	A65331		JIB ATTACHMENT COMPLETE - INCLUDES ITEMS 1 THRU 33
1	F38891	1	JIB BOOM ONLY
2	~~35886~~ 706 8157	~~2~~ 1	BEARING BLOCK
	35553	AR	SHIM, FOR ABOVE
3	35887	2	PIN
	1227-335	2	ROLL PIN, FOR ABOVE
5	F65334	1	EXTENSION
6	17143	1	PIN
7	1207-40	2	COTTER PIN, 1/4 x 1 1/2 LG.
8	A38933	1	SHEAVE W/BEARING
	1217-236	1	BEARING FOR ABOVE
9	65344	1	PIN
10	65345	1	PIN
11	1207-5	1	COTTER PIN

Ref. No.	Part Number	Quan. Req'd.	Name and Description
12	F65346	1	PENDANT BRACKET
13	65343	1	PIN
14	1207-55	2	COTTER PIN
15	A18386-1	1	SHEAVE W/BUSHING
	1214-8	1	BUSHING FOR ABOVE
16	A35568-1	1	PIN
17	1207-57	1	COTTER PIN, 5/16 x 2 1/2 LG.
18	49786	1	PENDANT W/PIN ITEM 19
19	~~10784~~	2	PIN
	~~1207-42~~	4	COTTER PIN
23	41272	1	PIN
24	38908	2	EAR
25	35565	2	EAR
	35566	2	EAR (CRANE BOOM)
26	35567	1	LINK
27	1398	2	PIN
30	38909	1	PIN
	1207-40	2	COTTER PIN
31	38768	4	PIN
32	F49310	2	TUBE
33	F65341	2	TUBE
34	122 2/8-55	8	HAIR PIN COTTER
35	1208-66	AR	MACHINERY BUSHING

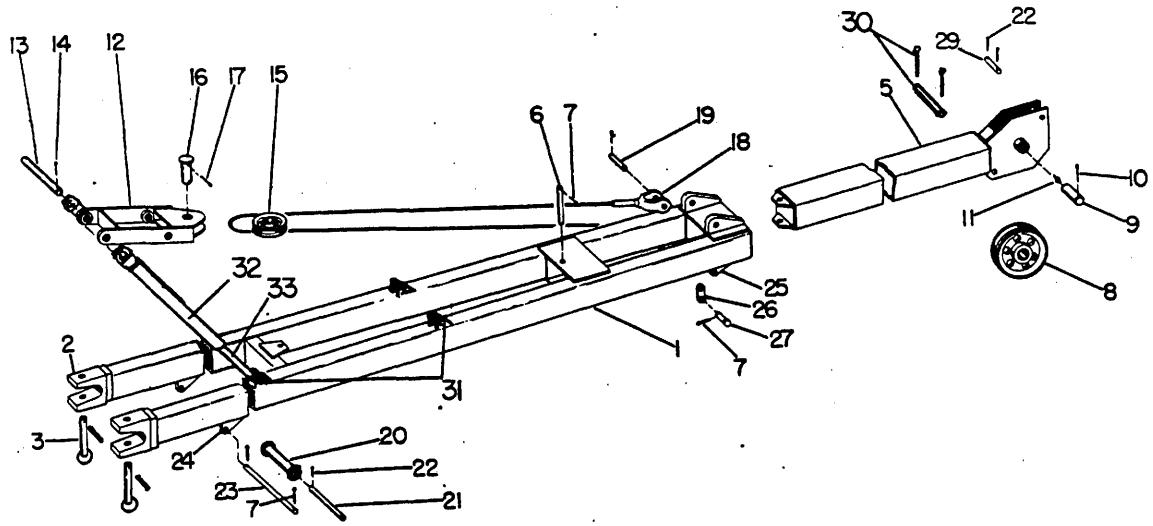

Ref. No.	Part Number	Quan. Req'd.	Name and Description
	A49306		JIB ATTACHMENT - INCLUDES ITEMS 1 THRU 33
	13-1/2"		SHEAVE SIZE
1	F38891	1	JIB BOOM ONLY
2	35886	2	BEARING BLOCK
	35553	AR	SHIM, FOR ABOVE
3	35887	2	PIN
	1227-335	2	ROLL PIN, FOR ABOVE
5	F38910	1	EXTENSION
6	17143	1	PIN
7	1207-40	6	COTTER PIN, 1/4 x 1 1/2 LG.
8	A38934	1	SHEAVE W/BUSHING
	1214-39	1	BUSHING FOR ABOVE
9	38895	1	PIN
10	1207-71	1	COTTER PIN
11	1213-1	1	GREASE FITTING
12	A35551-1	1	PENDANT BRACKET

Model S-488, S-588, S-688 — Group No. 11A
Date 1 SEPTEMBER 1974 — 15'-20' JIB - 60' BOOM — Page 11.2

Ref. No.	Part Number	Quan. Req'd.	Name and Description
13	49313	1	PIN
14	1207-55	2	COTTER PIN
15	A18386-1	1	SHEAVE W/BUSHING
	1214-8	1	BUSHING FOR ABOVE
16	A35568-1	1	PIN
17	1207-57	2	COTTER PIN, 5/16 x 2 1/2 LG.
18	35554	1	PENDANT W/PIN ITEM 19
19	10784	2	PIN
	1207-42	4	COTTER PIN, FOR ABOVE
20	F38906	1	ROLLER
21	9855	1	PIN
22	1207-30	4	COTTER PIN
23	41272	1	PIN
24	38908	2	EAR
25	35565	2	EAR, JIB
	35566	2	EAR, CRANE BOOM
26	35567	1	LINK
27	1398	2	PIN
29	38490	1	PIN
30	38909	1	PIN
	1207-40	2	COTTER PIN
31	38768	4	PIN
	1207-30	4	COTTER PIN
32	F49307	2	TUBE, JIB STOP
33	F49310	2	TUBE, JIB STOP

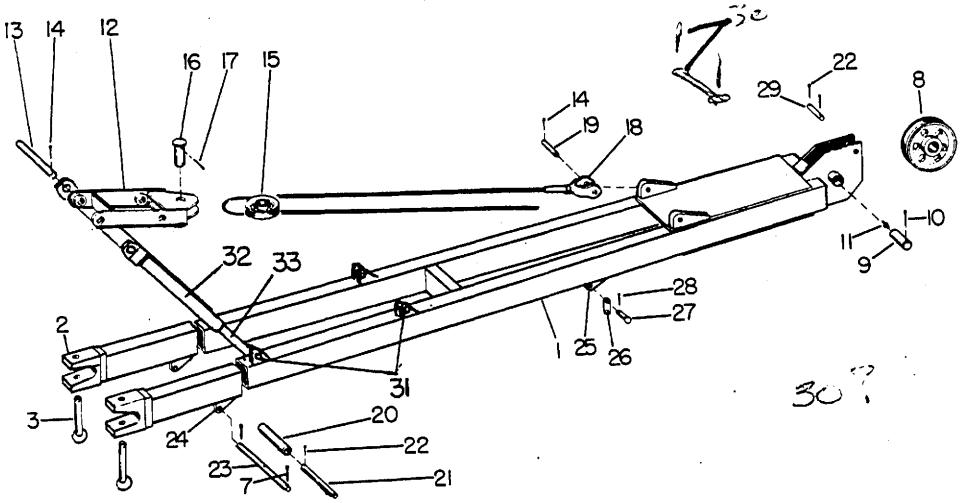

Ref. No.	Part Number	Quan. Req'd.	Name and Description
	A49304	1	JIB ATTACHMENT COMPLETE - INCLUDES ITEMS 1 THRU 29
1	F38994	1	JIB BOOM ONLY
2	36659	2	BEARING BLOCK
	36668	AR	SHIM (FOR WELDING ABOVE BLOCK TO JIB)
3	36667	2	PIN
7	1207-41	9	COTTER PIN
8	A38934	1	SHEAVE, 13-1/2" W/BUSHING
	1214-39	1	BUSHING FOR ABOVE
9	38895	1	PIN
10	1207-71	1	COTTER PIN, 5/16 x 3 1/4 LG.
11	1213-1	1	GREASE FITTING
12	F38723	1	PENDANT BRACKET
13	49317	1	PIN
14	1207-42	6	COTTER PIN, 1/4 x 2 LG.
15	A18386-1	1	SHEAVE W/BUSHING
	1214-8	1	BUSHING FOR ABOVE

Ref. No.	Part Number	Quan. Req'd.	Name and Description
16	A35568-1	1	PIN
17	1207-57	2	COTTER PIN, 5/16 x 2 1/2 LG.
18	36665	1	PENDANT w/pin
19	~~10784~~	2	PIN
20	F38871	1	ROLLER
21	38995	1	PIN
22	1207-30	4	COTTER PIN
23	38727	1	PIN
24	35644	2	EAR
25	35565	2	EAR
	35566	2	EAR (WELD TO CRANE BOOM)
26	38030	1	LINK
27	1398	2	PIN
28	1207-~~404~~41	2	COTTER PIN
29	38490	1	PIN
30	38909	1	PIN
	1207-~~404~~41	2	COTTER PIN
31	38768	4	PIN
	1207-30 ✓	4	COTTER PIN
32	F49315	2	TUBE
33	F49310	2	TUBE

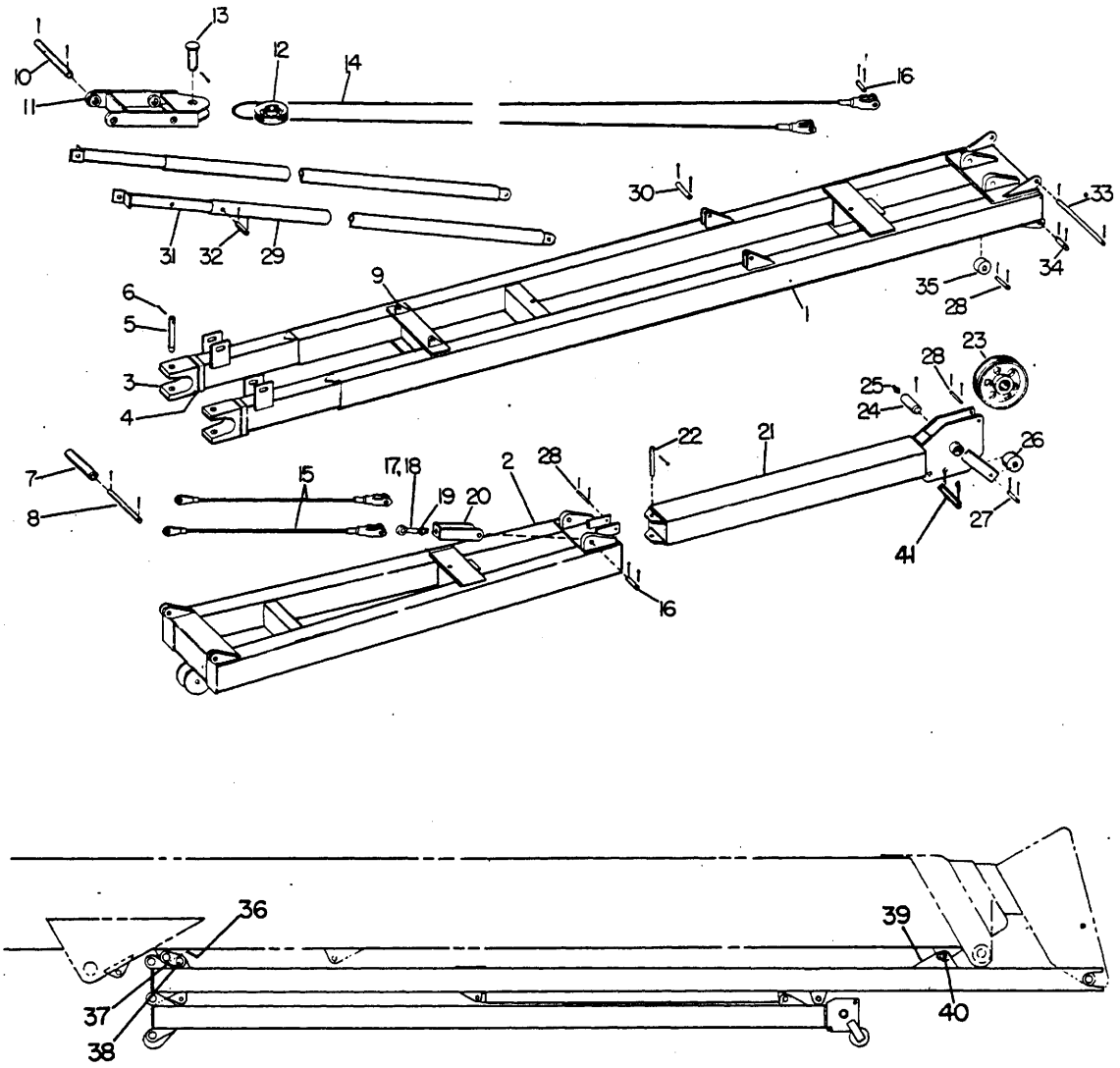

Ref. No.	Part Number	Quan. Req'd.	Name and Description
	A41258		32' JIB ASSEMBLY - INCLUDES ITEMS 1 THRU 40
	13-1/2"		SHEAVE SIZE
1	F41271	1	BOTTOM SECTION
2	F38461	1	TOP SECTION
3	35886	2	BEARING BLOCK - ASSEMBLE TO BOOM HEAD. USE SHIMS TO CENTER JIB WITH BOOM. WELD JIB & SHIMS TO BLOCKS.
4	35553	AR	SHIM, FOR ABOVE BLOCKS

Ref. No.	Part Number	Quan. Req'd.	Name and Description
5	35887	2	PIN
6	1227-335	2	ROLL PIN
7	F38906	1	ROLLER
8	9855	1	PIN
	1207-22	2	COTTER PIN
9	38473	2	EAR
10	38474	1	PIN
	1207-66	2	COTTER PIN
11	A35551-1	1	BRACKET
	1209-13	2	WASHER, FOR ABOVE
12	A18386-1	1	SHEAVE
	1214-8	1	BUSHING, FOR ABOVE
13	A35568-1	1	PIN
	1207-57	1	COTTER PIN
14	35554	1	PENDANT
15	10790	2	PENDANT - 10'
16	10784	5	PIN
	1207-42	10	COTTER PIN
17	F38475	1	BOLT, SHORT - FOR FULL JIB
18	F38476	1	BOLT, LONG - FOR SHORT JIB
19	1205-124	2	NUT, 1" UNC ELASTIC
20	F38480	1	LINK
21	F38921	1	EXTENSION
22	38491	1	PIN
	1207-41	2	COTTER PIN
23	A38934	1	SHEAVE - 13 1/2"
	1214-39	1	BUSHING, FOR ABOVE
24	38895	1	PIN
	1207-71	1	COTTER PIN
25	1213-1	1	GREASE FITTING

Model S-488, S-588, S-688 — Group No. 11B
Date 1 SEPTEMBER 1974 — 32' JIB — Page 11.3

Ref. No.	Part Number	Quan. Req'd.	Name and Description
26	38493	1	ROLLER
27	38494	1	PIN
	1207-22	2	COTTER PIN
28	38490	3	PIN
	1207-30	6	COTTER PIN
29	F41233	2	OUTER TUBE
30	2335	2	PIN
	1207-22	2	COTTER PIN
31	F41234	2	INNER TUBE
32	5882	2	PIN
	1207-41	2	COTTER PIN
33	38487	1	PIN
	1207-41	2	COTTER PIN
34	38488	2	PIN
	1207-41	2	COTTER PIN
35	38489	1	ROLLER
36	35565	2	EAR - PIN TO LINK & JIB TO DETERMINE LOCATION ON BOOM BEFORE WELDING.
37	35567	1	LINK
38	1398	2	PIN
	1207-41	2	COTTER PIN
39	38495	2	EAR - MOUNT WITH PIN OVER OUTSIDE OF BOOM EARS, THE PIN BEARING ON FRONT EDGE OF SLOT. WELD EARS TO JIB.
40	41272	1	PIN
	1207-41	2	COTTER PIN
41	38909	1	PIN
	1207-40	2	COTTER PIN

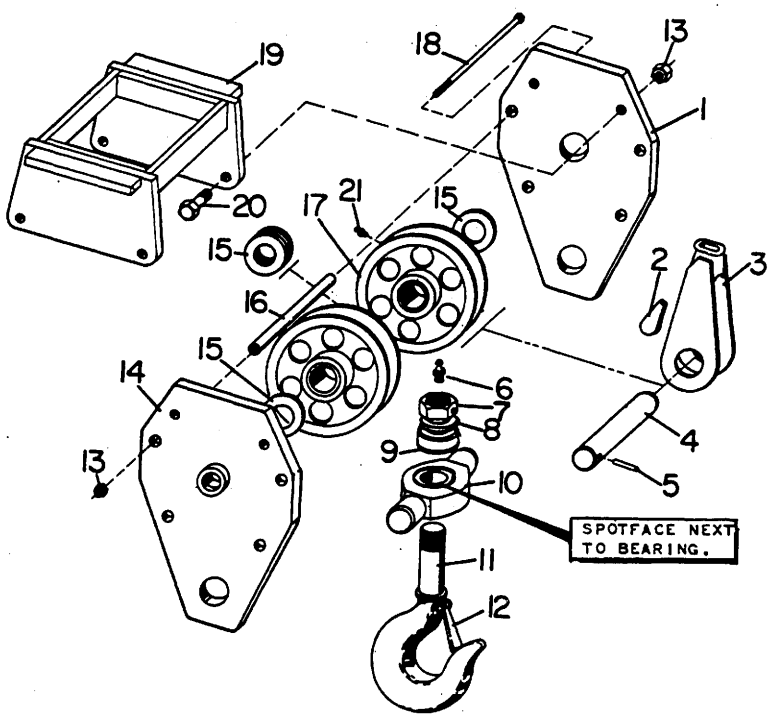

Ref. No.	Part Number	Quan. Req'd.	Name and Description
	A65565		15-TON HOIST BLOCK - INCLUDES ITEMS 1 THRU 21
1	65513	1	PLATE
2	B17006	1	WEDGE
3	F65558	1	CABLE SOCKET
4	65563	1	PIN
5	1227-402	1	ROLL PIN
6	1213-6	1	GREASE FITTING
7	1205-187	1	NUT
8	1209-84	1	WASHER
9	1217-340	1	BEARING (REPLACES 1217-282)
10	A201548	1	TRUNNION KIT - INCLUDES ITEMS 8, 9
	1214-124	1	BUSHING, TRUNNION
11	41287	1	HOOK

Model S-488 | Group No. 12
Date Rev. 1 April 1977 | 15-TON HOIST BLOCK - 45' BOOM | Page 12.2

Ref. No.	Part Number	Quan. Req'd.	Name and Description
12	1234-13	1	SAFETY LATCH
13	1205-100	8	NUT, 3/4 UNC
14	F65514	1	PLATE
15	1209-71	4	WASHER
16	65564	4	TUBE
17	A38933	2	SHEAVE, 13-1/2" W/BEARING
	1217-236	2	BEARING, FOR ABOVE
18	1200-220	4	CAPSCREW, 3/4 UNC x 8 LG., GRADE 5
19	F65567	1	BRACKET
20	1200-198	4	CAPSCREW, 3/4 UNC x 3-1/4 LG.
21	1213-16	2	GREASE FITTING
22	B4070	1	CABLE SOCKET
23	B17006	1	WEDGE
	1269-200	1	HOIST CABLE (200') - 1/2" DIA. WIRE ROPE, 6 x 19 IWRC IPS PREFORMED, 23,000 LBS. BREAKING STRENGTH, (SINGLE PART).

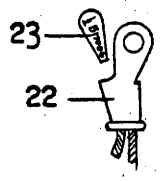

1/2 B17006 — HOIST BLOCK

1/2 B52661 — WINCH (REPLACES 38753)

REFER TO SPOOLING INSTRUCTIONS IN OPERATION MANUAL

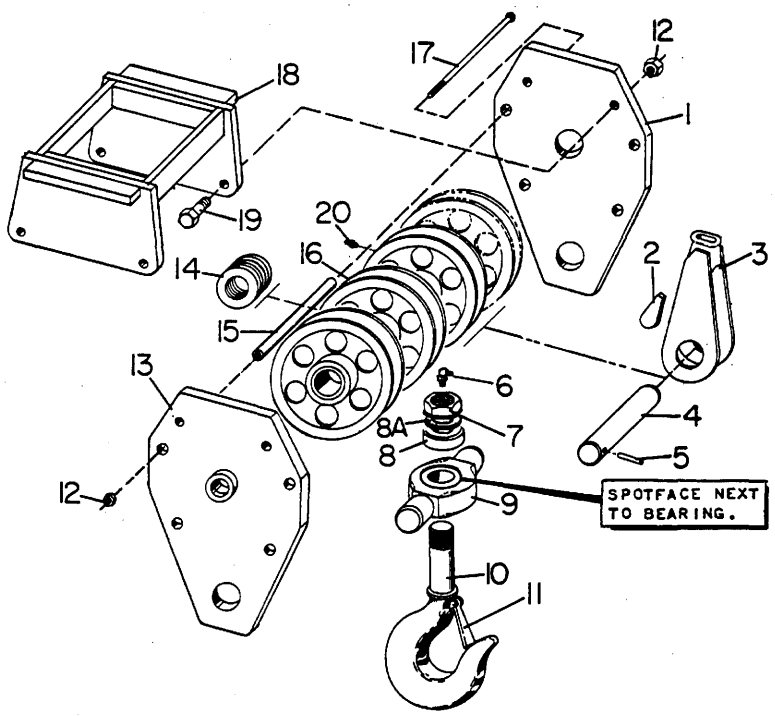

Ref. No.	Part Number	Part Number	Quan. Req'd.	Name and Description
	3-SHEAVE	4-SHEAVE		
	A65702	A65703		20-TON HOIST BLOCK - INCLUDES ITEMS 1 THRU 20
1	65513	65513	1	PLATE
2	B17006	B17006	1	WEDGE
3	F65558	F65558	1	CABLE SOCKET
4	65541	65533	1	PIN
5	1227-402	1227-402	1	ROLL PIN
6	1213-6	1213-6	1	GREASE FITTING
7	1205-187	1205-187	1	NUT
8	1217-340	1217-340	1	BEARING (REPLACES 1217-282)
8A	1209-84	1209-84	1	WASHER
9	A201550	A201552	1	TRUNNION KIT - INCLUDES ITEMS 8, 8A
	1214-124	1214-124	1	BUSHING, TRUNNION
10	41287	41287	1	HOOK
11	1234-13	1234-13	1	SAFETY LATCH
12	1205-100	1205-100	8/4	NUT, 3/4 UNC
13	F65514	F65514	1	PLATE
14	1209-71	1209-71	5/6	WASHER
15	65570	65577	4	TUBE

Model S-488, S-588, S-688 | Group No. 12A
Date REV. 1 APRIL 1977 | 20-TON HOIST BLOCK - 60' & 72' BOOM | Page 12.2

Ref. No.	Part Number	Part Number	Quan. Req'd.	Name and Description
	3-SHEAVE	4-SHEAVE		
16	A38933	A38933	3/4	SHEAVE, 13-1/2" W/BEARING
	1217-236	1217-236	3/4	BEARING FOR ABOVE
17	1235-289		4	CAPSCREW, 3/4 UNC x 9-1/2 LG., GRADE 5
		1235-372	4	CAPSCREW, 3/4 UNC x 11-1/2 LG., GRADE 5
18	F65515	F65581	1	BRACKET
19	1200-188	1200-188	4	CAPSCREW, 3/4 UNC x 2 LG.
20	1213-16	1213-16	3/4	GREASE FITTING
21	B4070	B4070	1	CABLE SOCKET
22	B17006	B17006	1	WEDGE
	1269-300	1269-300	1	HOIST CABLE (300') - 60' BOOM
	1269-400	1269-400	1	HOIST CABLE (400') - 72' BOOM



1/2" DIA. WIRE ROPE, 6 x 19 IWRC IPS PREFORMED, 23,000 LBS. BREAKING STRENGTH, (SINGLE PART).

1/2 B17006 — HOIST BLOCK

1/2 B52661 — WINCH (REPLACES 38753)

REFER TO SPOOLING INSTRUCTIONS IN OPERATION MANUAL.

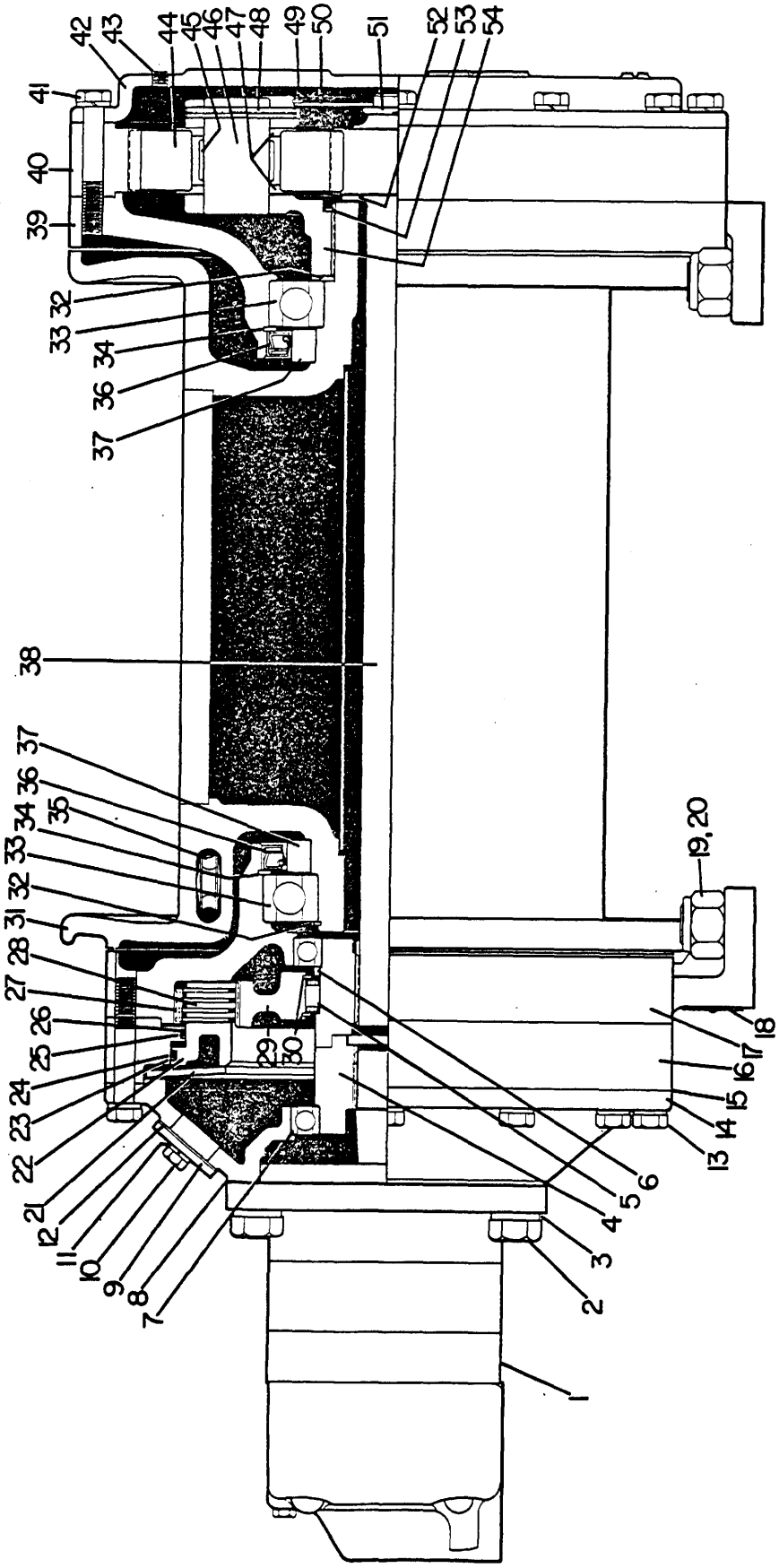
42
43
44
45
46
47
48
49
50
51
52
53
54
41
40
39
32
33
34
36
37
38
37
36
34
35
33
32
31
28
27
26
25
24
23
22
21
12
11
10
9
8
7
19, 20
18
17
16
15
14
13
6
5
4
3
2
1
29
30

Ref. No.	Part Number	Quan. Req'd.	Name and Description
	A38750		MAIN WINCH COMPLETE - INCLUDES ITEMS 1 THRU 54 AND ITEMS 1 THRU 6, PAGE 13.5
	A43820		AUX. WINCH AS ABOVE (EXCEPT MOTOR POSITION)
	A26320	1	SEAL KIT - INCLUDES SHIMS, GASKETS, "O" RINGS, BACK-UP WASHERS, LIP SEALS.
1		1	MOTOR - SEE PAGE 13.6
2	1200-186	4	CAPSCREW, 5/8 UNC x 1 3/4 LG.
3	1208-8	4	MACHINERY BUSHING
4	49355	1	HUB ASSEMBLY
	49356	1	SPACER FOR ABOVE
5	41333	1	SPRAG CLUTCH
6	49136	1	SPACER
7	1217-312	2	BALL BEARING
8	41324	3	SHIM
9	41331	1	COVER
10	1203-146	2	CAPSCREW
11	1209-4	2	LOCKWASHER
12	41575	1	GASKET
13	1200-114	12	CAPSCREW
	6924	12	COPPER GASKET
14	49133	1	END COVER
15	41321	3	SHIM
16	41317	1	PISTON HOUSING
	1219-38	1	PLUG, 1/8 NPT, FOR ABOVE
17	49132	1	MAIN DRIVE MOUNT
18	12260-160	1	IDENTIFICATION PLATE
	1211-22	2	DRIVE SCREW, FOR ABOVE
19	~~1229-129~~ 1200-213	4	CAPSCREW, 1 UNF x 3 LG.
	49137	AR	SHIM, FOR ABOVE
20	1205-123	4	LOCKNUT
21	38755	1	BELLEVILLE SPRING

Ref. No.	Part Number	Quan. Req'd.	Name and Description
22	41315	1	ANNULAR PISTON
23	1218-151	1	BACK-UP RING
24	1218-150	1	"O" RING
25	1218-152	1	"O" RING
26	1218-153	1	BACK-UP RING
27	38757	4	SEPARATOR DISC
28	38758	4	CLUTCH DISC
29	38744	1	OUTER RACE
30	1220-69	2	RETAINING RING
31	F49019	1	DRUM - Prior to Ser. No.] S-488: #8304302
	F49690	1	DRUM - Begin. w/Ser. No., All S-688] S-588: #8504903
32	1220-70	1	RETAINING RING
33	1217-267	2	BALL BEARING
34	1220-71	2	RETAINING RING
35	B52661	1	WEDGE (replaces 38753)
36	1218-154	2	LIP SEAL
37	41325	2	SEAL RACE
38	38747	1	CENTER SHAFT
39	41327	1	FINAL DRIVE MOUNT
40	36516	1	RING GEAR
41	1200-114	12	CAPSCREW, 1/2 UNC x 3 1/4 lg.
	6924	12	COPPER GASKET
42	41329	1	COVER
43	1219-21	2	PLUG, 3/8 NPT
44	36519	3	PLANET GEAR
45	1217-251	3	ROLLER BEARING

Ref. No.	Part Number	Quan. Req'd.	Name and Description
46	36525	3	SHAFT
47	36526	6	BUSHING
48	1227-264	3	ROLL PIN
49	1220-73	1	RETAINING RING
50	38756	1	BUSHING HOLDER BOSS
51	36533	1	BUSHING
52	38754	1	BUSHING
53	1220-79	1	RETAINING RING
54	38759	1	PLANET CARRIER
	49688	2	CABLE GUARD (NOT SHOWN)

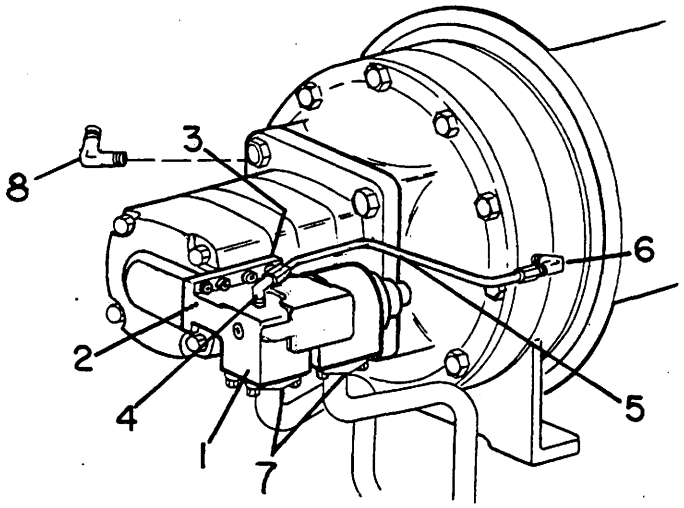

Ref. No.	Part Number	Quan. Req'd.	Name and Description
1	41980	1	HOLD VALVE
2	1218-115	2	"O" RING
3	1203-135	8	CAPSCREW, 3/8 UNC x 1 LG.
4	1219-351	2	ADAPTER
5	41577	1	TUBE
6	1219-776	1	ADAPTER
	1218-144	1	"O" RING, FOR ABOVE
7	1219-665	4	SPLIT FLANGE CLAMP
	1218-103	2	"O" RING
	1203-137	8	CAPSCREW, 3/8 UNC x 1 1/4 LG., H.T.
	1210-20	8	LOCKWASHER, 3/8 MED.
8	12019-124	1	ADAPTER

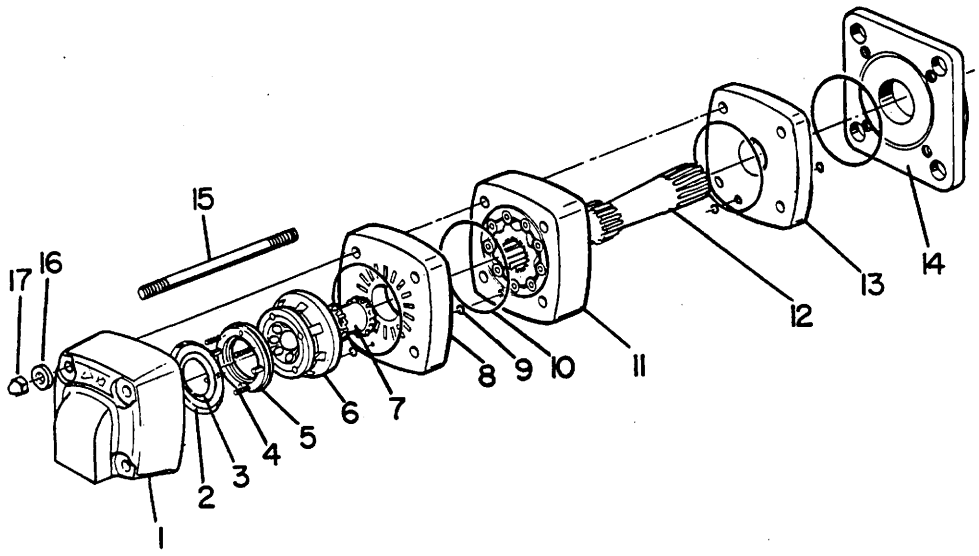

Ref. No.	Part Number	Quan. Req'd.	Name and Description
	49405	1	MOTOR COMPLETE
	26319	1	SEAL KIT - INCLUDES ITEMS 2, 3, 9, 10
1	27945	1	HOUSING
2	26322	1	OUTER FACE SEAL
3	26323	1	INNER FACE SEAL
4	26324	4	SPRING
5	26325	1	BALANCING PLATE ASSEMBLY
6	27946	1	VALVE
7	26327	1	VALVE DRIVE
8	27947	1	VALVE PLATE
9	26329	4	"O" RING
10	26330	4	SEAL
11	27974	1	GEROLER ASSEMBLY
12	27973	1	OUTPUT SHAFT
13	27949	1	WEAR PLATE
14	27950	1	MOUNTING PLATE
15	27951	4	STUD
	27954	4	"O" RING, FOR ABOVE
16	27952	4	WASHER
17	27953	4	NUT

Ref. No.	Part Number	Part Number	Quan. Req'd.	Name and Description
7	F39919	F41194	1	HOSE REEL - SEE PAGE 14.11
	1219-480	1219-480	4	ADAPTER
8	A41189	A41189	2	HOSE ASSEMBLY
9	49249	49249	AR	TAPE
10	F38306	F38306	2	BRACKET
11	1222-191	1222-191	1	SHACKLE
12	F49362	F49362	1	CLEVIS
	2234	2234	1	PIN
	1207-13	1207-13	1	COTTER PIN
13	1221-32	1221-32	1	KNOB
14	37032	37032	1	ROD
15	1205-58	1205-58	1	NUT, 1/2 UNC
16	F49338	F49338	1	BELLCRANK
17	1222-202	1222-202	3	PLASTIC TIE
18	1291-71	1291-71	1	CABLE
19	49381	49381	1	VALVE SECTION
20	1219-555	1219-555	2	ADAPTER
21	24391	24391	3	STUD ASSEMBLY
22	1689	1689	2	PIN
	1207-13	1207-13	2	COTTER PIN
23	65468	65468	2	LINK
24	1291-56	1291-56	1	CLEVIS
25	F65749	F65749	1	BELLCRANK (REPLACES F65467)
26	F65748	F65748	1	BRACKET (REPLACES F65463)
27	1200-59	1200-59	4	CAPSCREW, 3/8 UNC x 1 LG.
	1209-63	1209-63	4	WASHER, 3/8 REG.
28	1291-27	1291-27	1	CLAMP
	1202-6	1202-6	2	BOLT
	1230-7	1230-7	2	KEPS
29	38142		1	STRAP

DOES NOT INCLUDE WINCH.

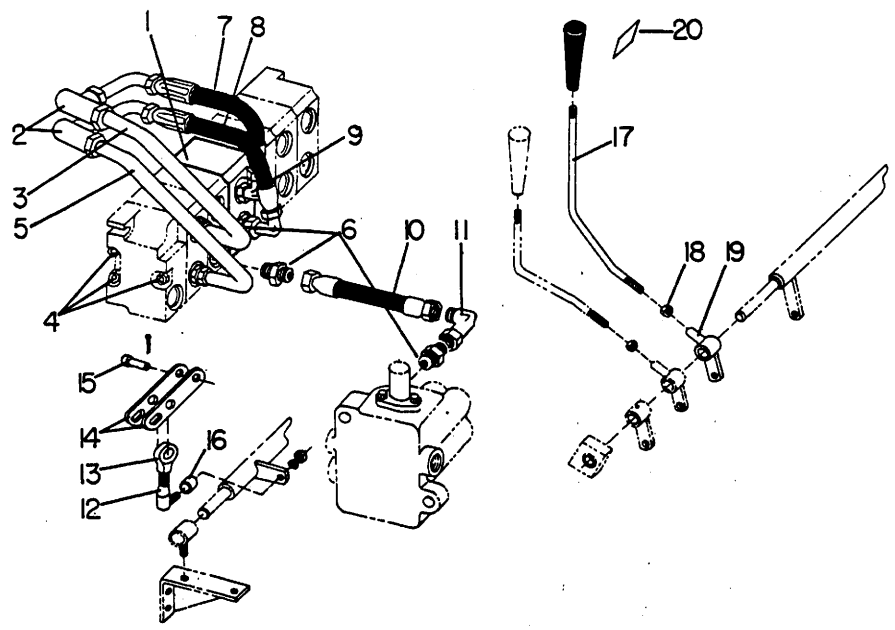

Ref. No.	Part Number	Quan. Req'd.	~~WINCH~~ CONTROL Name and Description
	A65313		TWO SPEED ~~WINCH~~ ASSEMBLY (OPTIONAL)
1	49381	1	VALVE SECTION
2	1219-843	2	TEE
3	49370	1	TUBE [USE 65527 FOR TWO-SPEED WINCH/ANTI-TWO BLOCK]
4	24391	3	STUD
5	49371	1	TUBE [USE 38851 FOR TWO-SPEED WINCH/ANTI-TWO BLOCK]
6	1219-282	3	ADAPTER
7	A65757	2	HOSE ASSEMBLY
8	A65758	1	HOSE ASSEMBLY
9	1219-680	1	ADAPTER
10	A65759	1	HOSE ASSEMBLY
11	1219-957	1	ADAPTER
12	1222-139	1	BALL JOINT
	1210-20	1	LOCKWASHER, 3/8 MED.
	1205-37	1	NUT, 3/8 UNF
13	F49377	1	ROD END
14	49375	2	LINK
15	1689	1	PIN
	1207-13	1	COTTER PIN, 1/8 x 1 1/4 LG.
16	65695	1	BUSHING
17	49380	1	ROD
18	1205-70	1	NUT, 9/16 UNF
19	F49379	1	BELLCRANK
20	12260-311	1	DECAL

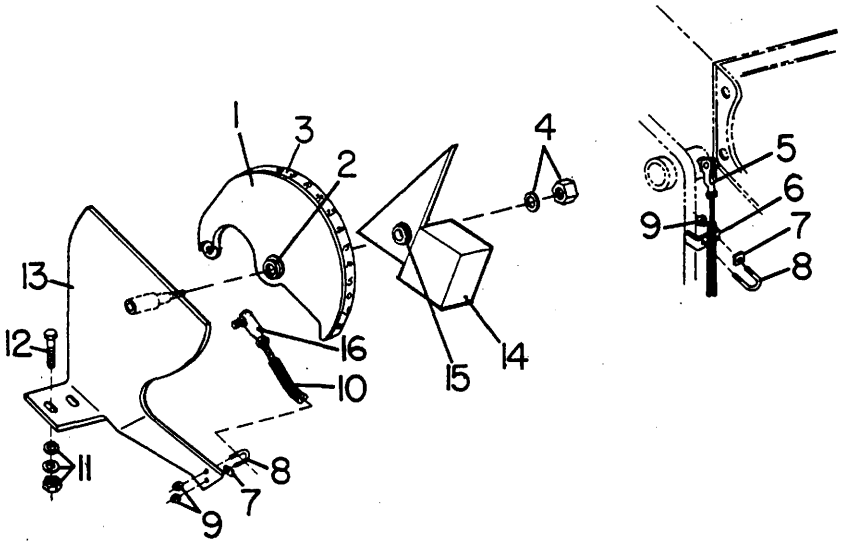

Ref. No.	Part Number	Quan. Req'd.	Name and Description
	A65526		BOOM ANGLE INDICATOR ASSEMBLY - INCLUDES ITEMS 1 THRU 16
1	A65730	1	INDICATOR W/BEARING
2	1217-24	1	BEARING FOR ABOVE
3	12260-97	1	DECAL
4	1209-2	1	WASHER
	1205-22	1	LOCKNUT, 1/4 UNF SELF-LOCKING
5	2930	1	YOKE
	2931	1	PIN
	1207-1	1	COTTER PIN, 1/16 x 1/2 LG.
6	41590	1	BRACKET
7	2938	2	PLATE
8	2929	2	"U" BOLT
9	1205-5	4	NUT, #10 UNC
	1210-7	4	LOCKWASHER, #10 LIGHT
10	1291-94	1	CABLE (REPLACES 1291-30)
11	1209-3	2	PLAINWASHER, 5/16 REG.
	1210-17	2	LOCKWASHER, 5/16 MED.
	1205-25	2	NUT, 5/16 UNC
12	1200-31	2	CAPSCREW, 5/16 UNC x 1 LG.
13	F65525	1	BRACKET
14	F65678	1	PENDULUM W/BEARING
15	1217-24	1	BEARING FOR ABOVE
16	1291-44	1	BALL JOINT
	12227-5	1	RUBBER SPONGE
	65707	1	STOP

Model S-488, S-588, S-688 — Group No. 14
Date REV. 1 APRIL 1977 — AUXILIARY WINCH — Page 14.4

Ref. No.	Part Number	Part Number	Quan. Req'd.	Name and Description
7	1269-200	1269-300	1	CABLE
	B4070	B4070	1	CABLE SOCKET
	B17006	B17006	1	WEDGE
8	1200-274	1200-274	6	CAPSCREW, 1 UNC x 3 LG.
	1205-122	1205-122	6	NUT, 1 UNC
9	F65900	F65830	1	BRACKET (REPLACES F41950/F49331)
10	1219-446	1219-446	1	ADAPTER
	1219-956	1219-956	1	TEE
11	1219-665	1219-665	4	SPLIT FLANGE CLAMP
	1218-103	1218-103	2	"O" RING, FOR ABOVE
	1200-61	1200-61	8	CAPSCREW, 3/8 UNC x 1-1/4 LG.
	1210-20	1210-20	8	LOCKWASHER, 3/8 MED.
12	1240-91	1240-91	2	CLAMP
	1200-37	1200-37	2	CAPSCREW, 5/16 UNC x 1-3/4 LG.
	1210-17	1210-17	2	LOCKWASHER, 5/16 MED.
	1205-25	1205-25	2	NUT, 5/16 UNC
13	A65750	A65470	1	HOSE ASSEMBLY
14	A65751	A65469	1	HOSE ASSEMBLY
15	29448	29448	1	VALVE SECTION (REPLACES 27125)
16	1689	1689	2	PIN
17	65468	65468	2	LINK
18	1207-13	1207-13	3	COTTER PIN
19	F65749	F65749	1	BELLCRANK (REPLACES F65467)
20	F65748	F65748	1	BRACKET (REPLACES F65463)
21	1200-59	1200-59	2	CAPSCREW, 3/8 UNC x 1 LG.
	1209-63	1209-63	2	WASHER, 3/8 REG.
22	1291-27	1291-27	1	CLAMP
	1202-6	1202-6	2	BOLT
	1230-7	1230-7	2	KEPS
23	24391	24391	3	STUD
24	1219-555	1219-555	1	ADAPTER
25	1219-555	1219-555	1	ADAPTER
26	1291-56	1291-56	1	CLEVIS
27	1222-202	1222-202	3	PLASTIC TIE

Model S-488, S-588, S-688 — Group No. 14
Date REV. 1 APRIL 1977 — AUXILIARY WINCH — Page 14.4

Ref. No.	Part Number	Part Number	Quan. Req'd.	Name and Description
7	1269-200	1269-300	1	CABLE
	B4070	B4070	1	CABLE SOCKET
	B17006	B17006	1	WEDGE
8	1200-274	1200-274	6	CAPSCREW, 1 UNC x 3 LG.
	1205-122	1205-122	6	NUT, 1 UNC
9	F65900	F65830	1	BRACKET (REPLACES F41950/F49331)
10	1219-446	1219-446	1	ADAPTER
	1219-956	1219-956	1	TEE
11	1219-665	1219-665	4	SPLIT FLANGE CLAMP
	1218-103	1218-103	2	"O" RING, FOR ABOVE
	1200-61	1200-61	8	CAPSCREW, 3/8 UNC x 1-1/4 LG.
	1210-20	1210-20	8	LOCKWASHER, 3/8 MED.
12	1240-91	1240-91	2	CLAMP
	1200-37	1200-37	2	CAPSCREW, 5/16 UNC x 1-3/4 LG.
	1210-17	1210-17	2	LOCKWASHER, 5/16 MED.
	1205-25	1205-25	2	NUT, 5/16 UNC
13	A65750	A65470	1	HOSE ASSEMBLY
14	A65751	A65469	1	HOSE ASSEMBLY
15	29448	29448	1	VALVE SECTION (REPLACES 27125)
16	1689	1689	2	PIN
17	65468	65468	2	LINK
18	1207-13	1207-13	3	COTTER PIN
19	F65749	F65749	1	BELLCRANK (REPLACES F65467)
20	F65748	F65748	1	BRACKET (REPLACES F65463)
21	1200-59	1200-59	2	CAPSCREW, 3/8 UNC x 1 LG.
	1209-63	1209-63	2	WASHER, 3/8 REG.
22	1291-27	1291-27	1	CLAMP
	1202-6	1202-6	2	BOLT
	1230-7	1230-7	2	KEPS
23	24391	24391	3	STUD
24	1219-555	1219-555	1	ADAPTER
25	1219-555	1219-555	1	ADAPTER
26	1291-56	1291-56	1	CLEVIS
27	1222-202	1222-202	3	PLASTIC TIE

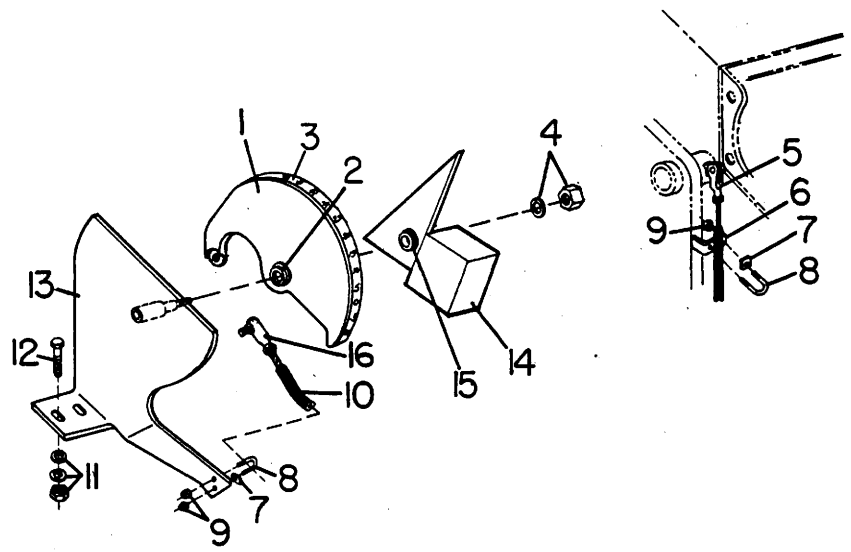

Ref. No.	Part Number	Quan. Req'd.	Name and Description
	A65526		BOOM ANGLE INDICATOR ASSEMBLY - INCLUDES ITEMS 1 THRU 16
1	A65730	1	INDICATOR W/BEARING
2	1217-24	1	BEARING FOR ABOVE
3	12260-97	1	DECAL
4	1209-2	1	WASHER
	1205-22	1	LOCKNUT, 1/4 UNF SELF-LOCKING
5	2930	1	YOKE
	2931	1	PIN
	1207-1	1	COTTER PIN, 1/16 x 1/2 LG.
6	41590	1	BRACKET
7	2938	2	PLATE
8	2929	2	"U" BOLT
9	1205-5	4	NUT, #10 UNC
	1210-7	4	LOCKWASHER, #10 LIGHT
10	1291-94	1	CABLE (REPLACES 1291-30)
11	1209-3	2	PLAINWASHER, 5/16 REG.
	1210-17	2	LOCKWASHER, 5/16 MED.
	1205-25	2	NUT, 5/16 UNC
12	1200-31	2	CAPSCREW, 5/16 UNC x 1 LG.
13	F65525	1	BRACKET
14	F65678	1	PENDULUM W/BEARING
15	1217-24	1	BEARING FOR ABOVE
16	1291-44	1	BALL JOINT
	12227-5	1	RUBBER SPONGE
	65707	1	STOP

DOES NOT INCLUDE WINCH.

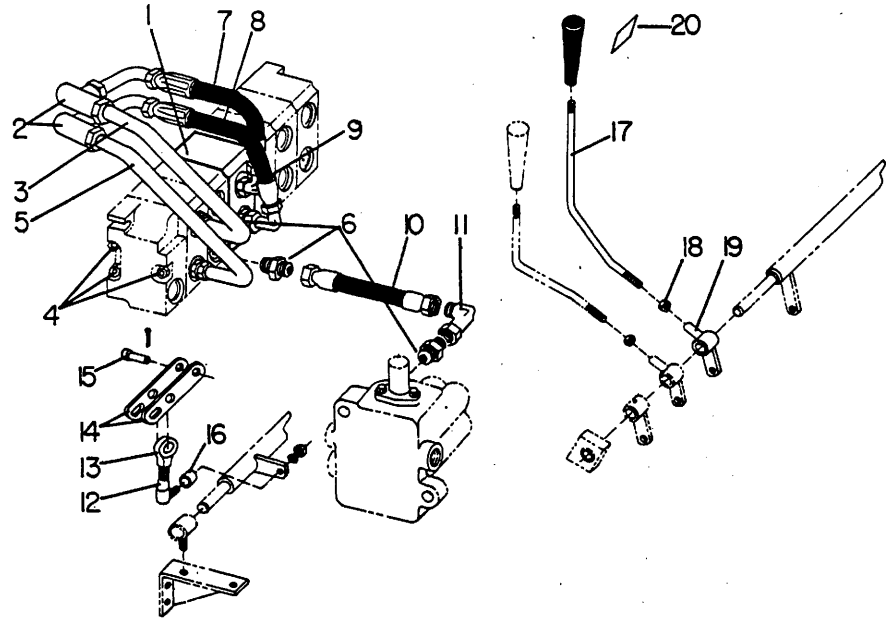

Ref. No.	Part Number	Quan. Req'd.	~~WINCH~~ CONTROL Name and Description
	A65313		TWO SPEED ~~WINCH~~ ASSEMBLY (OPTIONAL)
1	49381	1	VALVE SECTION
2	1219-843	2	TEE
3	49370	1	TUBE [USE 65527 FOR TWO-SPEED WINCH/ANTI-TWO BLOCK]
4	24391	3	STUD
5	49371	1	TUBE [USE 38851 FOR TWO-SPEED WINCH/ANTI-TWO BLOCK]
6	1219-282	3	ADAPTER
7	A65757	2	HOSE ASSEMBLY
8	A65758	1	HOSE ASSEMBLY
9	1219-680	1	ADAPTER
10	A65759	1	HOSE ASSEMBLY
11	1219-957	1	ADAPTER
12	1222-139	1	BALL JOINT
	1210-20	1	LOCKWASHER, 3/8 MED.
	1205-37	1	NUT, 3/8 UNF
13	F49377	1	ROD END
14	49375	2	LINK
15	1689	1	PIN
	1207-13	1	COTTER PIN, 1/8 x 1 1/4 LG.
16	65695	1	BUSHING
17	49380	1	ROD
18	1205-70	1	NUT, 9/16 UNF
19	F49379	1	BELLCRANK
20	12260-311	1	DECAL

Model S-488, S-588, S-688
Date REV. 1 MARCH 1976

HYDRAULIC CLAM ASSEMBLY

Ref. No.	Part Number	Part Number	Quan. Req'd.	Name and Description
7	F39919	F41194	1	HOSE REEL - SEE PAGE 14.11
	1219-480	1219-480	4	ADAPTER
8	A41189	A41189	2	HOSE ASSEMBLY
9	49249	49249	AR	TAPE
10	F38306	F38306	2	BRACKET
11	1222-191	1222-191	1	SHACKLE
12	F49362	F49362	1	CLEVIS
	2234	2234	1	PIN
	1207-13	1207-13	1	COTTER PIN
13	1221-32	1221-32	1	KNOB
14	37032	37032	1	ROD
15	1205-58	1205-58	1	NUT, 1/2 UNC
16	F49338	F49338	1	BELLCRANK
17	1222-202	1222-202	3	PLASTIC TIE
18	1291-71	1291-71	1	CABLE
19	49381	49381	1	VALVE SECTION
20	1219-555	1219-555	2	ADAPTER
21	24391	24391	3	STUD ASSEMBLY
22	1689	1689	2	PIN
	1207-13	1207-13	2	COTTER PIN
23	65468	65468	2	LINK
24	1291-56	1291-56	1	CLEVIS
25	F65749	F65749	1	BELLCRANK (REPLACES F65467)
26	F65748	F65748	1	BRACKET (REPLACES F65463)
27	1200-59	1200-59	4	CAPSCREW, 3/8 UNC x 1 LG.
	1209-63	1209-63	4	WASHER, 3/8 REG.
28	1291-27	1291-27	1	CLAMP
	1202-6	1202-6	2	BOLT
	1230-7	1230-7	2	KEPS
29	38142		1	STRAP

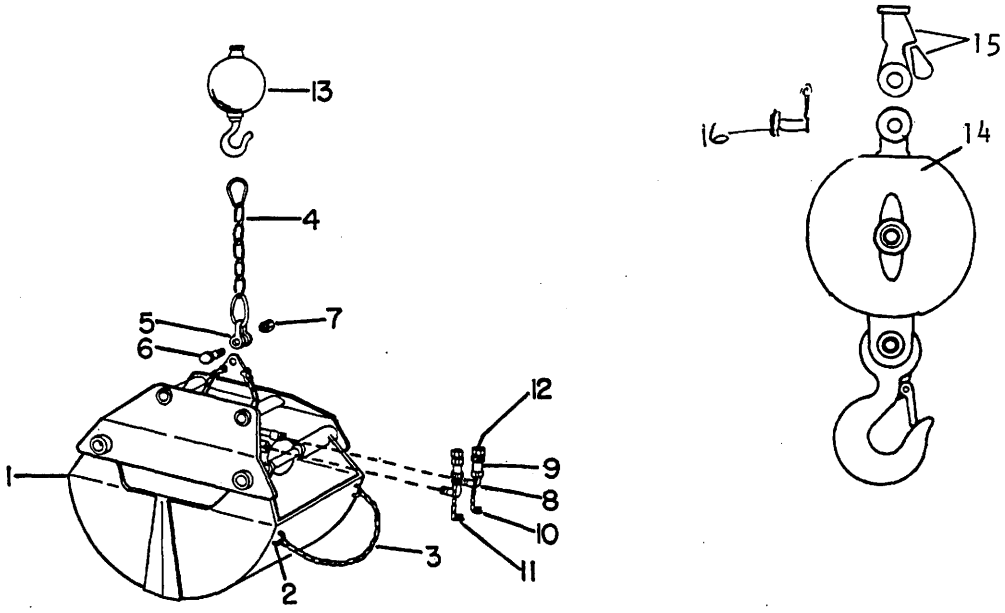

Ref. No.	Part Number	Part Number	Quan. Req'd.	Name and Description
	3/8 Yd.	1/2 Yd.		
1	39925	37904	1	HYDRAULIC CLAM
2	1222-29		2	COLD SHUT
3	9513		2	CHAIN
4	18534		1	DRAG CHAIN
5	B10883		1	CLEVIS
6	18535		1	PIN
7	18536		1	NUT
8	1219-837	1219-772	2	ADAPTER
9	1219-622	1219-773	2	QUICK DISCONNECT
10	1219-743	1219-807	1	DUST CAP
11	1219-741	1219-808	1	DUST PLUG
12	1219-838		2	ADAPTER
13	35685		1	BALL & HOOK ASS'Y - 3 Ton — Not Available - Order A202673 Kit - Includes Items 14 & 15., 16
	24241		1	WEDGE
	24242		1	SOCKET
	24243		1	SWIVEL HOOK
	201170 26554		1 /	PIN & NUT ASS'Y LATCH
14	707 6816		1	BALL & HOOK ASS'Y - 6-1/4 Ton
	202894		1	LATCH
	202895		1	PIN & NUT ASS'Y
	202896		1	SWIVEL
15	B4070		1	SOCKET (1/2" Cable)
	B17006		1	WEDGE, For Above

16 17680 PIN 1207-42 COTTER PIN

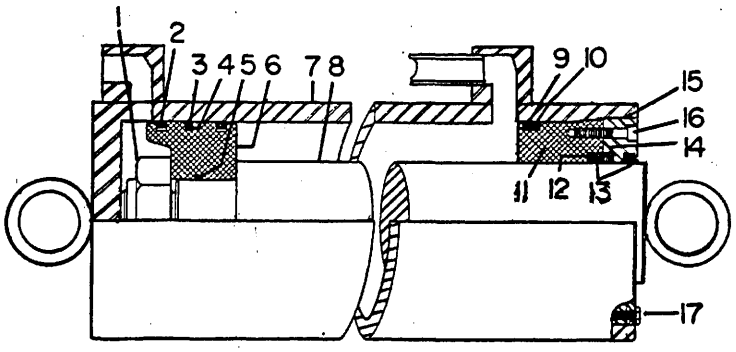

Ref. No.	Part Number	Quan. Req'd.	Name and Description
	29564		HYDRAULIC CYLINDER
	29565		SEAL KIT - INCLUDES SEALS, BACK-UPS, "O" RINGS, LESS PISTON RINGS
1	23684	1	BUTTRESS NUT
	27335	1	COTTER PIN
2	22828	2	PISTON RING
3	22829	1	SIRVON SEAL
4	29571	1	"O" RING
5	23404	1	STATIC "O" RING
6	29568	1	PISTON
7	29566	1	CASE
8	29567	1	SHAFT
9	22834	1	"O" RING
10	22835	1	BACK-UP RING
11	29569	1	HEAD GLAND
12	22029	1	"O" RING
13	23679	2	WIPER SEAL
14	23680	1	BACK-UP RING
15	29570	1	THREAD RING
16	27343	2	CAPSCREW, 1/4 UNC x 1 1/4 LG.
17	1203-73	1	LOCKING CAPSCREW, 1/4 UNF x 3/4 LG.
	1210-14	1	LOCKWASHER, 1/4 MED.

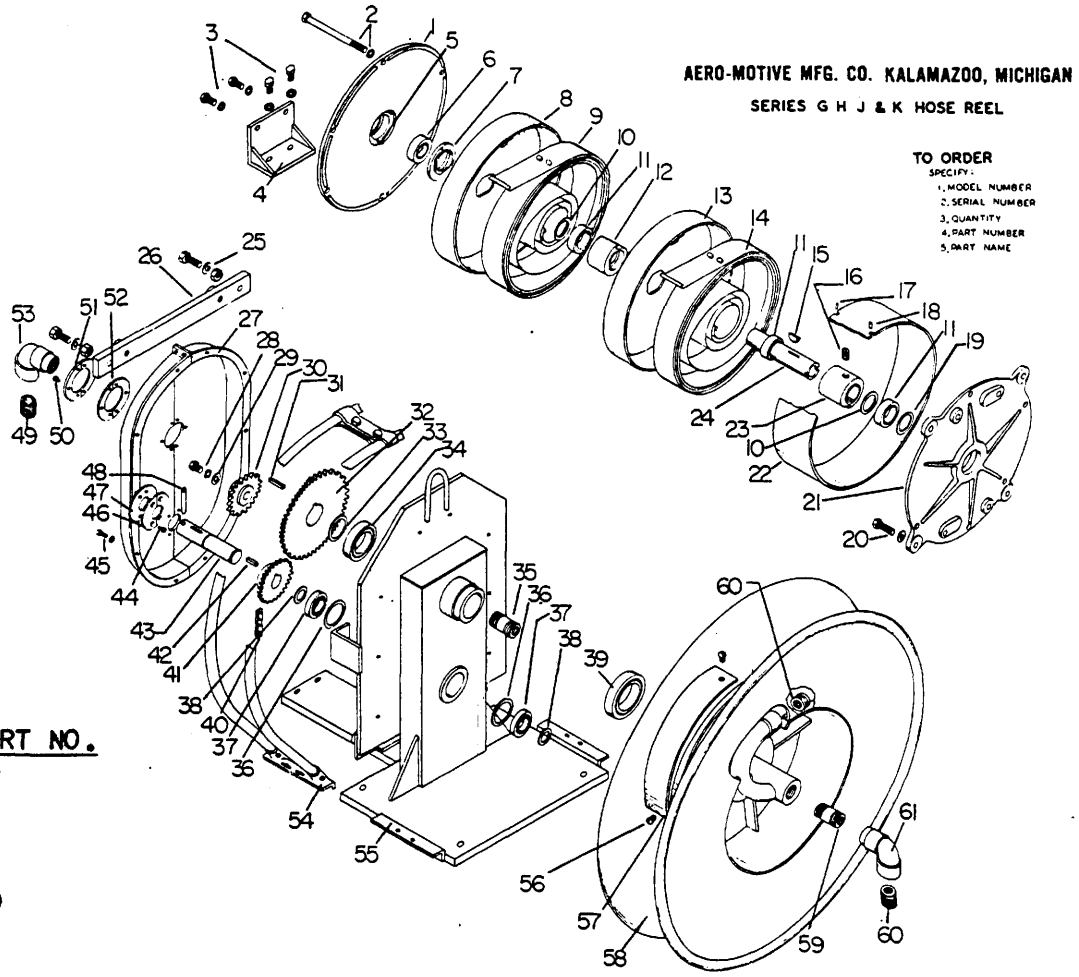

REF.	BANTAM PART NO.
8	201158
9	25328
10	201159
13	201158
19	201160
53	27591
61	27591

REF	AERO-MOTIVE PART NO.	NAME	QTY
1	40809	REAR PLATE	1
2	40143	BOLT	6
	103-P-30	WASHER	6
3	32-P-101	SCREW	AR
	101-P-2	WASHER	AR
4	44345	SUPPORT	AR
5	230-P-122	PIN	2
6	40005	BEARING	1
7	40176	DRIVE RING	1
8	*40696	SPRING CUP ASS'Y	1
	* REPLACES 41835		
9	40145	MAIN SPRING	1
10	40119	SPACER	2
11	40005	BEARING	3
12	41837	ROTATING COLLAR	1
13	*40696	SPRING CUP ASS'Y	1
14	40145	MAIN SPRING	1
15	751-P-11	KEY	1
16	53-P-500	SETSCREW	2
17	230-P-116	PIN	1
18	230-P-138	PIN	1
19	40829	SEAL	1
20	32-P-100	SCREW	4
	101-P-2	WASHER	4

REF	AERO-MOTIVE PART NO.	NAME	QTY
21	44344	FRONT PLATE ASS'Y	1
22	40120	BAND	1
23	41834	FIXED COLLAR	1
24	44322	SHAFT	1
25	32-P-112	SCREW	4
	101-P-2	WASHER	4
	151-P-45	NUT	4
26	44349	BRACKET	1
27	44350	HOUSING ASS'Y	1
28	31-P-50	SCREW	1
	101-P-12	WASHER	1
29	126-P-40	WASHER	1
30	40824	IDLER SPROCKET	1
31	752-P-6	KEY	1
32	44347	SPROCKET	1
33	582-P-3	RETAINING RING	1
34	376-P-100	BEARING	1
35	628-P	NIPPLE, DUAL HOSE	1
36	581-P-75	RETAINING RING	2
37	376-P-120	BEARING	2
38	582-P-8	RETAINING RING	2
39	376-P-60	BEARING	1
40	40833	CHAIN	1

REF	AERO-MOTIVE PART NO.	NAME	QTY
41	44348	SPROCKET	1
42	752-P-2	KEY	1
43	44328	SHAFT	1
44	1-P-135	SCREW	AR
45	4-P-101	SCREW	10
	103-P-30	WASHER	10
46	44331	RETAINER	1
47	44332	SEAL	1
48	230-P-133	PIN	1
49	669-P	BUSHING	1
50	1-P-135	SCREW	6
51	44329	RETAINER	1
52	44330	SEAL,	1
53	43841	SWIVEL,	1
54	43866	GUIDE RAIL ASS'Y	1
55	44346	FRAME ASS'Y	1
56	5-P-100	SCREW	2
57	43855	FILLER STRIP	AR
58	44351	DRUM ASS'Y	1
59	828-P	NIPPLE	1
60	669-P	BUSHING	1
61	**666-P-39	SWIVEL	1
	** REPLACES 43841		

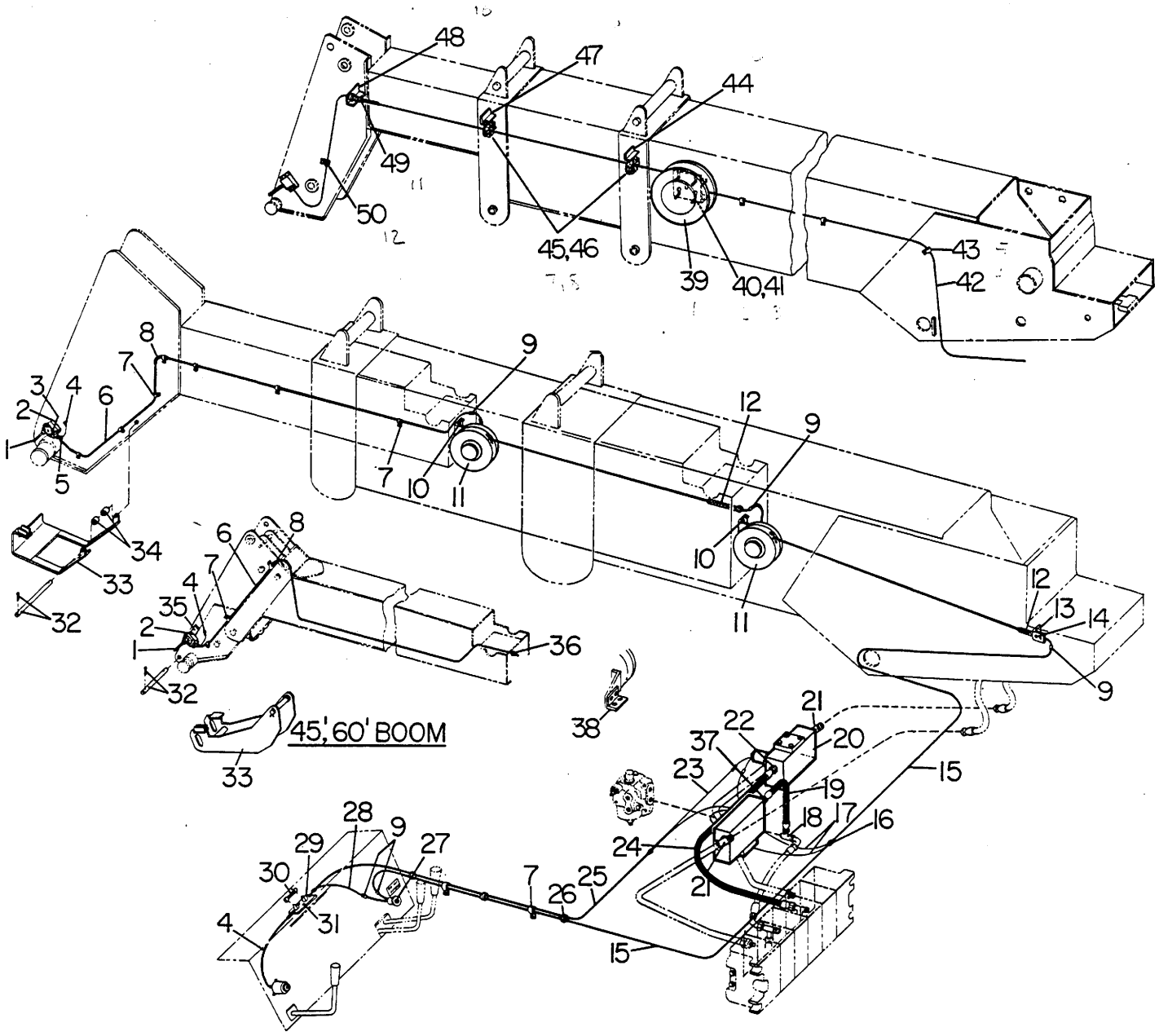

Ref. No.	Part Number	Quan. Req'd.	Name and Description	
	A65951		ANTI-TWO BLOCK ASSEMBLY - 45' BOOM	(REPLACES A65811)
	A65950		ANTI-TWO BLOCK ASSEMBLY - 60' BOOM	(REPLACES A65618)
	A65949		ANTI-TWO BLOCK ASSEMBLY - 72' BOOM	(REPLACES A65543)
1	1223-560	1	SWITCH (COMMON GROUND, NORMALLY OPEN)	
2	47737	1	BLOCK	
3	1202-16	3	CAPSCREW, 1/4 UNC x 1 LG.	
	1210-14	3	LOCKWASHER, 1/4 MED.	
4	A41207	2	WIRE	
5	1223-535	1	CONNECTOR	

Ref. No.	Part Number	Quan. Req'd.	Name and Description
6	A41206	1	WIRE - 45' BOOM
	A41216	1	WIRE - 60' BOOM
	A65551	1	WIRE - 72' BOOM
7	1240-27	AR	CLIP
	1211-8	AR	DRIVE SCREW
8	1267-36	1	LOOM
9	1223-494	10	TERMINAL
	1223-496	9	SLEEVE
10	1211-12	4	SCREW
11	41209	2	REEL - 45' BOOM
	41210	2	REEL - 60' BOOM
	65333	2	REEL - 72' BOOM
12	1222-201	2	WIRE
13	41914	1	BRACKET, 60' & 72' BOOMS
	38938	1	BRACKET, 45' BOOM
14	1200-3	2	CAPSCREW, 1/4 UNC x 1 LG.
	1210-14	2	LOCKWASHER, 1/4 MED.
	1205-13	2	NUT, 1/4 UNC
15	65555	2	WIRE
16	1223-287	2	CONNECTOR
17	65552	1	WIRE
18	1219-910	2	TEE
19	A49801	1	HOSE ASSEMBLY - 45' BOOM
	A65688	1	HOSE ASSEMBLY - 60' & 72' BOOMS
20	12019-263	2	VALVE
	202736	2	SOLENOID ASS'Y, For Above
21	1219-936	3	TEE
22	1219-282	1	ADAPTER
23	65553	1	WIRE
24	A65557	1	HOSE ASSEMBLY
25	65556	1	WIRE
26	1267-90	1	LOOM
27	1223-495	1	LIGHT
28	65554	1	WIRE

- FOR CONVERSION TO EXTERNAL REEL - KIT #A201252 INCL. ITEMS 39 THRU 50 SEE SERVICE BULLETIN #287

Ref. No.	Part Number	Quan. Req'd.	Name and Description
29	1223-298	1	FUSE BLOCK
30	1223-295	1	FUSE
31	1233-35	2	MACHINE SCREW
	1210-2	2	LOCKWASHER
	1205-1	2	NUT
32	38870	1	PIN - 45' & 60' BOOM
	1207-30	2	COTTER PIN, 3/16 x 1 1/4 LG.
	65549	1	PIN - 72' BOOM
	1207-40	2	COTTER PIN, 1/4 x 1 1/2 LG.
33	F65680	1	BRACKET - 45' BOOM
	F65580	1	BRACKET - 60' BOOM
	F65545	1	BRACKET - 72' BOOM
	41208	1	PIN - 45' BOOM
	41219	1	PIN - 60' BOOM
	1207-40	2	COTTER PIN, 1/4 x 1 1/2 LG.
34	65550	2	SPACER, 60' & 72' BOOMS
35	65544	1	PLATE, 45' & 60' BOOMS
36	1223-41	1	GROMMET, 45' & 60' BOOMS
37	1219-680	1	ADAPTER
38	38939	1	BRACKET - 45' BOOM
39	65948	1	REEL COMPLETE
40	F65991	1	BRACKET
41	1200-59	4	CAPSCREW
	1209-4	4	PLAINWASHER
42	65992	1	WIRE - 45' BOOM
	65993	1	WIRE - 60' BOOM
	65994	1	WIRE - 72' BOOM
	1223-90	2	CONNECTOR (WIRE TO REEL)
43	1240-27	12	CLIP
	1211-8	12	DRIVE SCREW
44	65940	1	ANGLE
45	65954	2	ROLLER GUIDE
46	1200-57	2	CAPSCREW
47	65941	1	ANGLE
48	65952	1	ANGLE
49	1222-242	1	WIRE GRIP
50	1240-38	2	CLAMP
	1211-12	2	SCREW

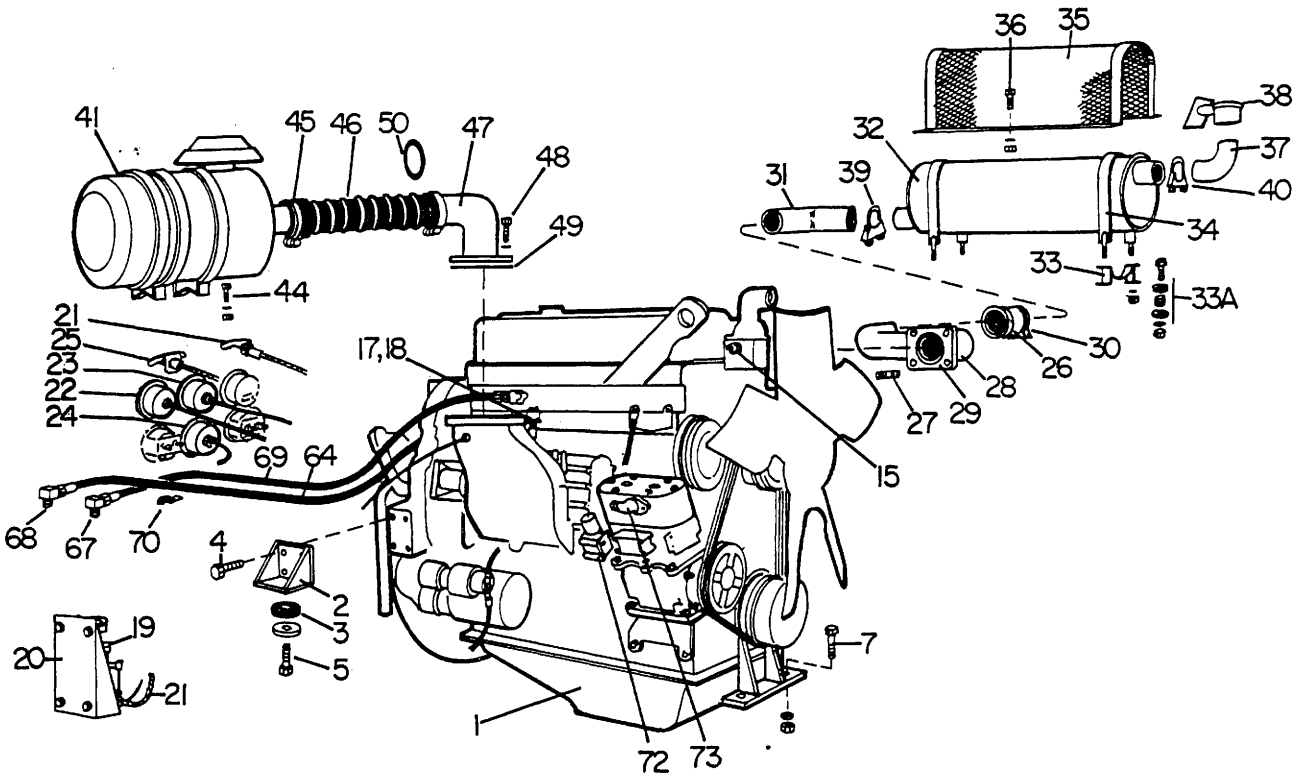
36
35
38
41
45
46
50
47
48
32
37
31
39
40
49
34
33
33A
44
21
25
23
22
24
17,18
30
26
28
27
29
69
64
15
68
67
70
4
2
3
5
19
20
21
7
1
72
73

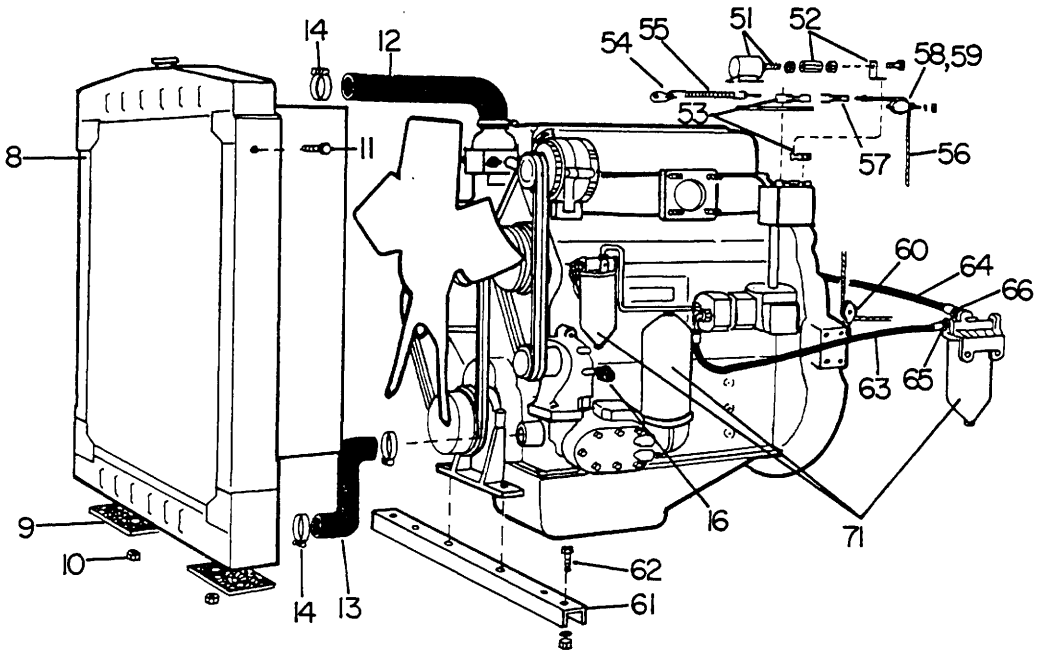
14
12
54
55
51
52
58,59
53
57
56
8
11
60
64
66
63
65
16
71
9
10
62
61
14
13

Ref. No.	Part Number	Quan. Req'd.	Name and Description
1	65159 3043-7000	1	ENGINE - GM 4-53 Diesel less items below - See GM Dealer for parts & service - Not available from Bantam.
2	F65441	2	BRACKET FLEX PLATE DRIVE ASSY D.D. 5136910 (NO CLUTCH) GROUP 6C-3-627
3	1221-29 37886	2 2	BUSHING SUPPORT, FLYWH. HSG DRIVE BRG w/6C FLANGE 6R-1-304 GP. RETAINER for above
4	1200-100 1210-26	8 8	CAPSCREW, 1/2 UNC x 1 1/2 lg., Grade 5 LOCKWASHER, 1/2 med.
5	1200-162 1205-90	2 2	CAPSCREW, 5/8 UNC x 3 3/4 lg., Grade 5 NUT, 5/8 UNC elastic
7	1200-327 1205-78	2 2	CAPSCREW, 9/16 UNC x 1 1/2 lg., Grade 5 NUT, 9/16 UNC elastic
8	65196 200501 65370 1200-309	1 1 1 10	RADIATOR CAP for above, 7# SHROUD CAPSCREW, 1/4 UNC x 1/2 lg.
9	4059	2	PAD
10	1205-67	2	NUT, 1/2 UNC elastic
11	1200-57 1210-20	2 2	CAPSCREW, 3/8 UNC x 3/4 lg., Grade 5 LOCKWASHER, 3/8 med.
12	1244-170	1	UPPER HOSE
13	1244-175	1	LOWER HOSE
14	1240-77	4	CLAMP
15	|	1	HI-TEMPERATURE SWITCH
16	See Electrical	1	PRESSURE SWITCH
17	|	1	OIL PRESSURE SENDER
18	1219-420 1219-93 1219-97 12019-181	1 1 1 1	NIPPLE COUPLING BUSHING BUSHING
19	18715	1	STARTING AID KIT
20	A32783-1 1200-314 1210-17	1 2 2	BRACKET CAPSCREW, 5/16 UNC x 5/8 lg., Grade 5 LOCKWASHER, 5/16 med.
21	1222-5	1	CONTROL CABLE
22	See Elect.	1	OIL PRESSURE GAUGE w/connector

GENERAL MOTORS CORPORATION, DETROIT 28, MICHIGAN

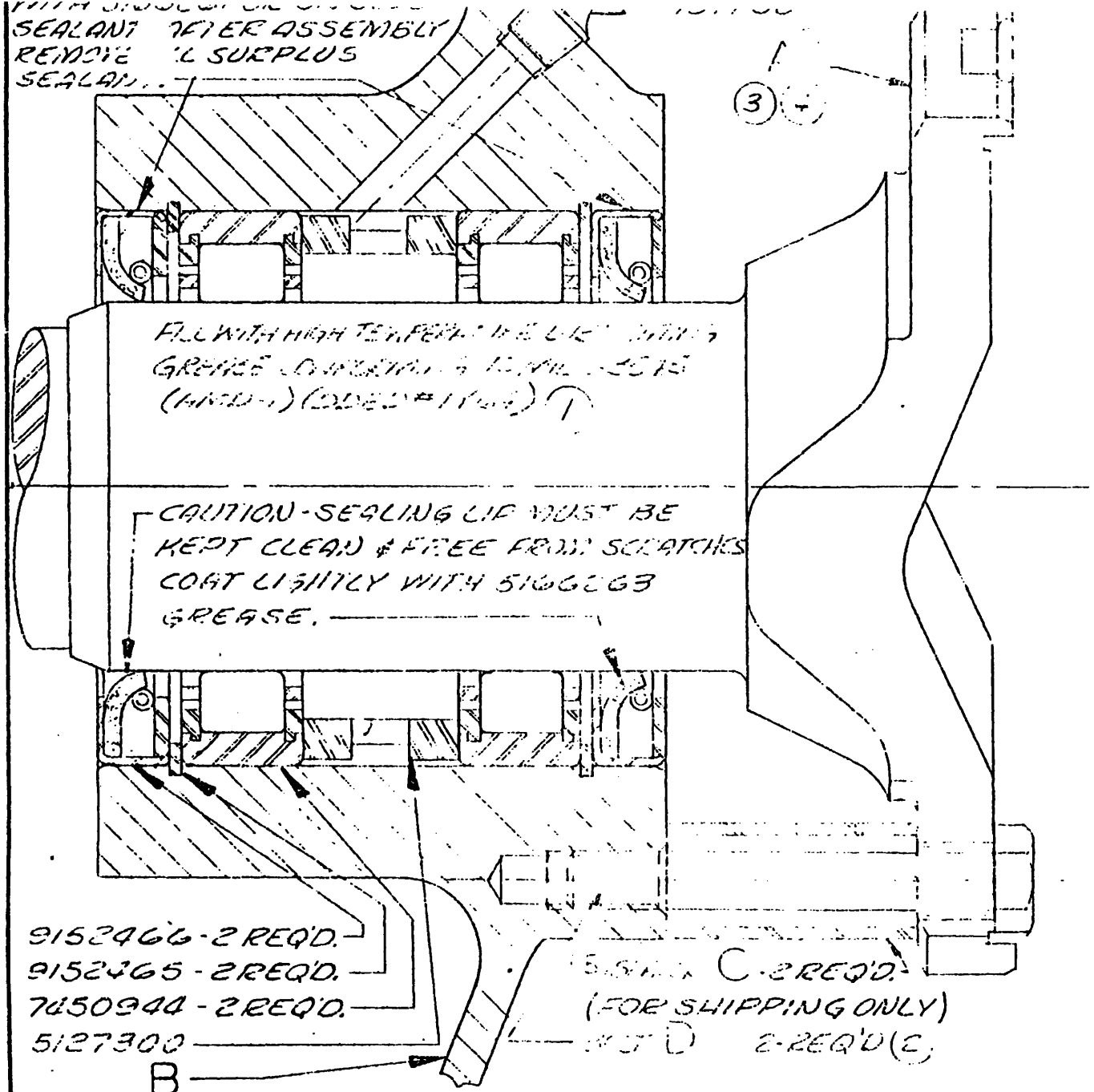

PART NO.	A	B	C	D
5137481-N.D.	5122429 N.D.	5136406 N.D.	[illegible]	
5136521-ND	5136411 ND	5136406 ND	[illegible]	108396
5127144	5122429	5127130	[illegible]	[illegible]

— 6R1-304

P.D. Group number

DATE	SYM.	REVISION RECORD	DR.
9-14-59	1	[illegible]	[illegible]
12-3-59	2	WAS 10011	
—	3	WAS 9171151	[illegible]
5-30-60	4	WAS 9152959	[illegible]
1-3-61	5	WAS 5127190	[illegible]
9-4-61	6	5136521 ADDED	[illegible]
1-14-65	7	5137481 N.D. ADDED	[illegible]
[illegible]	8	[illegible] "C" & "D" ADDED	
	9	FOR 5136521 "C" WAS 5127177	
		& "D" WAS 10361.3	[illegible]

DO NOT SCALE PRINT — REPORT ERRORS

COUNTERSINK ALL TAPPED SCREW THREADS 90° TO 1/32 LARGER THAN DIA OF THREAD. SURFACE FINISH SPECIFICATIONS (√) ARE IN ARITHMETICAL AGE UNITS (MICROINCHES). FOR REFERENCE SEE G. M. ENGINEERING STAN

UNLESS OTHERWISE SPECIFIED THE FOLLOWING APPLY:

PART MUST BE COMMERCIALLY FREE FROM BURRS.

TOLERANCE ON ALL DECIMAL AND FRACTIONAL DIMENSIONS LOCATING FI SURFACES ± .010. f1 DENOTES 1/32 MACH. ALLOWANCE, f2-1/16, f3-3/32, f4-1, TOLERANCE ON SAND CASTING DIMENSIONS ± 1/32, ON FORGING DIME. + 1/16—0. DRAFT ANGLES ON CASTINGS 2°, ON FORGINGS 7°. LOCATING POINTS (⊗) MUST BE SMOOTH AND CLEAN.

DWG. DATE	SCALE	DR.
8-24-59	FULL	J. E. HENKE
FIRST USED		CK.
3914		APPR.
REFERENCE		APPR.
[illegible] SHE		APPR.

MATERIAL SPEC.

NAME

SUPPORT ASSEMBLY-FLYWH HOUSING DRIVE BEARIN

PART NO.

5127144

Ref. No.	Part Number	Quan. Req'd.	Name and Description
23	SEE ELECTRICAL	1	TEMPERATURE GAUGE, ENGINE
24		1	TEMPERATURE GAUGE, TRANSMISSION
25		1	EMERGENCY STOP CABLE - GM #5146241
26	F65990	1	FLEX JOINT & TUBE - Replaces 65814, 65815, 65072
	28766		GASKET FOR ABOVE
	28767		CLAMP FOR ABOVE
27	53768	4	STUD
	1209-4	4	WASHER
	1205-169	4	NUT, 3/8 UNF BRASS
28	F65070	1	EXHAUST PIPE
29	35225	1	GASKET
30	1240-67	1	CLAMP (REPLACES 1240-89)
31	65073	1	EXHAUST PIPE
32	1256-22	1	MUFFLER
33	F36782	1	CRADLE
33A	A27231	1	MOUNTING KIT
34	F37518	2	STRAP
	1210-17	4	LOCKWASHER, 5/16 MED.
	1205-25	1	NUT, 5/16 UNC
35	F37810	1	GUARD
36	1200-1	4	CAPSCREW, 1/4 UNC x 3/4 LG.
	1205-21	4	NUT, 1/4 UNC
37	1256-23	1	PIPE
38	1222-185	1	RAINCAP
39	1240-67	1	CLAMP
40	1240-8	1	CLAMP
41		1	AIR CLEANER - See Page 15.6
44	1200-59	4	CAPSCREW, 3/8 UNC x 1 LG.
	1210-20	4	LOCKWASHER, 3/8 MED.
	1205-36	4	NUT, 3/8 UNC
45	1240-48	2	CLAMP
46	12282-~~35~~ 44	1	HOSE

Ref. No.	Part Number	Quan. Req'd.	Name and Description
47	F37786	1	INLET TUBE
48	1200-29	4	CAPSCREW, 5/16 UNC x 3/4 LG.
	1210-17	4	LOCKWASHER, 5/16 MED.
49	35254	1	GASKET
50	12283-16	1	HOSE GROMMET
51	1246-6	1	SHUT-DOWN SOLENOID
	1246-8	1	LINK
	65774	1	MOUNTING PLATE
52	37922	1	CONNECTOR
	65706	1	ANGLE
53	1246-10	1	SHUT-DOWN LEVER
	1246-7	1	GOVERNOR LEVER
54	8904	1	SPRING HOOK
55	6422	1	SPRING
56	F37931	1	THROTTLE CABLE
57	37959	1	ADJUSTABLE YOKE
	3063	1	PIN
	1207-4	1	COTTER PIN
	1206-27	1	SETSCREW
58	1261-102	3	PULLEY, 3/8" (REPLACES 1261-65, 1/4")
59	2929	1	"U" BOLT
	1210-7	AR	LOCKWASHER
	1205-5		NUT
	65965	1	PULLEY BRACKET (REPLACES 37960)
60	65161	1	PULLEY PLATE
61	65007	1	CHANNEL
62	1200-148	2	CAPSCREW, 5/8 UNC x 2 LG.
	1210-32	2	LOCKWASHER, 5/8 MED.
	1205-80	2	NUT, 5/8 UNC
63	A65139	1	SUPPLY HOSE
	1240-38	2	CLAMP FOR ABOVE
64	A65140	1	SUPPLY HOSE
65	1219-795	1	ADAPTER
66	1219-559	1	ADAPTER
67	1219-799	1	ADAPTER
68	12019-47	1	ADAPTER
69	A41836	1	RETURN HOSE

Ref. No.	Part Number	Quan. Req'd.	Name and Description
23	SEE ELECTRICAL	1	TEMPERATURE GAUGE, ENGINE
24		1	TEMPERATURE GAUGE, TRANSMISSION
26	F65990	1	FLEX JOINT & TUBE - REPLACES 65814, 65815, 65072
	28766		GASKET FOR ABOVE
	28767		CLAMP FOR ABOVE
27	53768	4	STUD
	1209-4	4	WASHER
	1205-169	4	NUT, 3/8 UNF BRASS
28	F65070	1	EXHAUST PIPE
29	35225	1	GASKET
30	1240-67	1	CLAMP (REPLACES 1240-89)
31	65073	1	EXHAUST PIPE
32	1256-22	1	MUFFLER
33	F36782	1	CRADLE
33A	A27231	1	MOUNTING KIT
34	F37518	2	STRAP
	1210-17	4	LOCKWASHER, 5/16 MED.
	1205-25	1	NUT, 5/16 UNC
35	F37810	1	GUARD
36	1200-1	4	CAPSCREW, 1/4 UNC x 3/4 LG.
	1205-21	4	NUT, 1/4 UNC
37	1256-23	1	PIPE
38	1222-185	1	RAINCAP
39	1240-67	1	CLAMP
40	1240-8	1	CLAMP
41		1	AIR CLEANER - SEE PAGE 15.6
44	1200-59	4	CAPSCREW, 3/8 UNC x 1 LG.
	1210-20	4	LOCKWASHER, 3/8 MED.
	1205-36	4	NUT, 3/8 UNC
45	1240-48	2	CLAMP
46	12282-36	1	HOSE

Ref. No.	Part Number	Quan. Req'd.	Name and Description
47	F37786	1	INLET TUBE
48	1200-29	4	CAPSCREW, 5/16 UNC x 3/4 LG.
	1210-17	4	LOCKWASHER, 5/16 MED.
49	35254	1	GASKET
50	12283-16	1	HOSE GROMMET
51	1246-6	1	SHUT-DOWN SOLENOID
	1246-8	1	LINK
	65774	1	MOUNTING PLATE
52	37922	1	CONNECTOR
	65706	1	ANGLE
53	1246-10	1	SHUT-DOWN LEVER
	1246-7	1	GOVERNOR LEVER
54	8904	1	SPRING HOOK
55	6422	1	SPRING
56	F37931	1	THROTTLE CABLE
57	37959	1	ADJUSTABLE YOKE
	3063	1	PIN
	1207-4	1	COTTER PIN
	1206-27	1	SETSCREW
58	1261-102	3	PULLEY, 3/8" (REPLACES 1261-65, 1/4")
59	2929	1	"U" BOLT
	1210-7	AR	LOCKWASHER
	1205-5	1	NUT
	65965	1	PULLEY BRACKET (REPLACES 37960)
60	65161	1	PULLEY PLATE
61	65007	1	CHANNEL
62	1200-148	2	CAPSCREW, 5/8 UNC x 2 LG.
	1210-32	2	LOCKWASHER, 5/8 MED.
	1205-80	2	NUT, 5/8 UNC
63	A65139	1	SUPPLY HOSE
	1240-38	2	CLAMP FOR ABOVE
64	A65140	1	SUPPLY HOSE
65	1219-795	1	ADAPTER
66	1219-559	1	ADAPTER
67	1219-799	1	ADAPTER
68	12019-47	1	ADAPTER
69	A41836	1	RETURN HOSE

Ref. No.	Part Number	Quan. Req'd.	Name and Description
70	1240-21	4	JIFFY CLIP
71	13414	1	OIL FILTER ELEMENT
	26790	1	PRIMARY FUEL FILTER ELEMENT
	26789	1	SECONDARY FUEL FILTER ELEMENT
72	1219-574	1	AIR GOVERNOR
	1200-45	2	CAPSCREW, 5/16 UNC x 2 3/4 LG.
	1219-575	1	GOVERNOR ADAPTER
	1200-31	2	CAPSCREW, 5/16 UNC x 1 LG.
73	1219-415	1	DISCHARGE ELBOW, COMPRESSOR
	~~1203-39~~ 1200-39	2	CAPSCREW, 5/16 UNC x 2 LG.

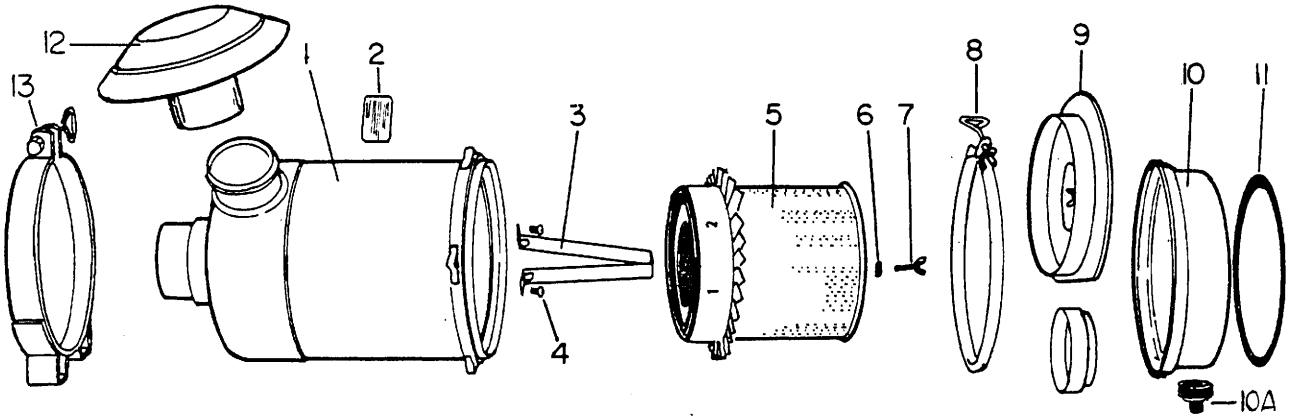

Ref. No.	Part Number	Quan. Req'd.	Name and Description
	1243-42	1	AIR CLEANER COMPLETE - INCLUDES ITEMS 1 THRU 11 - 12"
1	*	1	BODY
2	27417	1	DECAL
3	*	1	YOKE
4	*	2	SCREW & LOCKWASHER
5	1243-48	1	ELEMENT
6	27412	1	GASKET WASHER
7	27413	1	THUMB SCREW
8	27414	1	CLAMP ASSEMBLY
9	27415	1	BAFFLE ASSEMBLY
10	27416	1	CUP ASSEMBLY
	29360	1	VACUATOR CUP ASSEMBLY
10A	29361	1	VACUATOR VALVE ONLY
11	1243-52	1	CUP GASKET
12	1243-43	1	STACK CAP
13	1243-44	2	MOUNTING BAND

* NOT SERVICEABLE

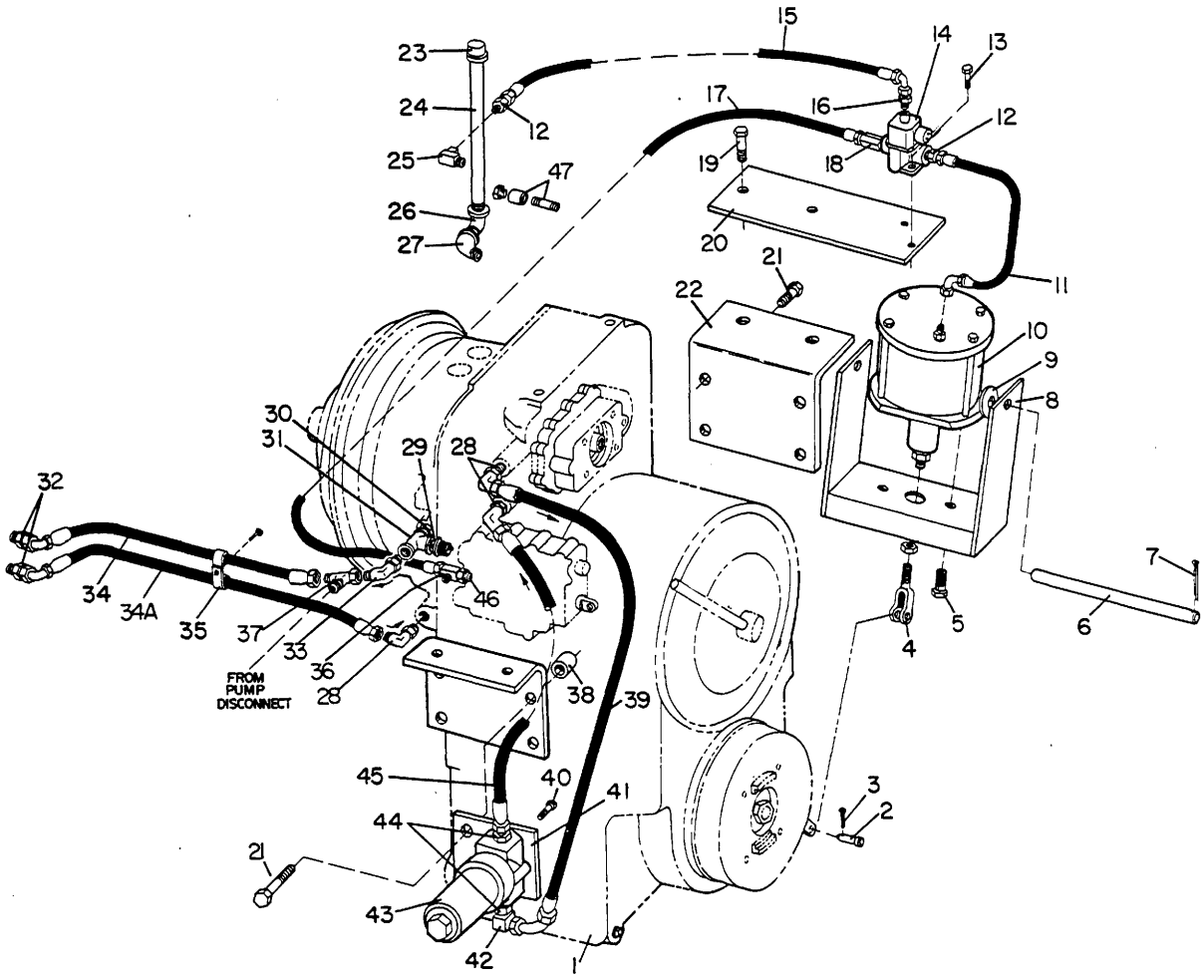
15
14
13
23
24
12
17
16
12
25
47
19
18
26
20
21
27
22
11
10
9
8
30
31
29
28
32
7
34
34A
35
37
33
36
28
FROM PUMP DISCONNECT
46
38
39
6
5
4
45
40
41
3
2
44
21
43
42
1

Ref. No.	Part Number	Quan. Req'd.	Name and Description
1	65055	1	TRANSMISSION - ALLISON HYDRO-POWERSHIFT - SEE MFR'S MANUAL FOR PARTS BREAKDOWN - A/N 6880785
2	3119	1	PIN
3	1207-5	1	COTTER PIN, 3/32 x 1 LG.
4	37694	1	YOKE
	1205-39	1	NUT
5	1229-72	2	CAPSCREW, 5/8 UNF x 1 1/4 LG. HT
6	39997	1	PIN
7	1207-31	2	COTTER PIN, 3/16 x 1 1/2 LG.
8	F39993	1	YOKE
9	1209-9	6	WASHER, 3/4 REG.
10		1	BRAKE ACTUATOR - SEE PAGE 16.4
11	A37227	1	HOSE ASSEMBLY
12	1219-559	2	ADAPTER w/"O" RING
	1218-144	2	"O" RING FOR ABOVE
13	1200-1	2	CAPSCREW, 1/4 UNC x 3/4 LG.
	1210-14	2	LOCKWASHER, 1/4 MED.
14	37204	1	SOLENOID VALVE
15	A37228	1	HOSE ASSEMBLY
16	12019-188	1	ADAPTER
17	A37226	1	HOSE ASSEMBLY
18	37203	1	CHECK VALVE
19	1200-154	4	CAPSCREW, 5/8 UNC x 2 1/4 LG.
	1209-57	4	WASHER, 5/8 REG.
	1205-88	4	NUT, 5/8 UNC
20	37695	1	PLATE
21	1200-164	8	CAPSCREW, 5/8 UNC x 4 LG.
	1209-57	8	WASHER, 5/8 REG.
22	37594	2	ANGLE BRACKET
23	1219-87	1	CAP (REPLACES F65062, F58832)
24	65060	1	PIPE

Ref. No.	Part Number	Quan. Req'd.	Name and Description
25	1219-313	1	TEE
26	1219-533	1	ELBOW
27	1219-154	1	ELBOW
28	1219-583	3	ADAPTER w/"O" RING
	1218-64	3	"O" RING FOR ABOVE
29	1219-71	1	BUSHING
30	1219-607	1	ADAPTER
31	1219-475	1	TEE
32	1219-480	1	ADAPTER w/"O" RING
	1218-64	1	"O" RING FOR ABOVE
33	1219-287	1	ELBOW
34	A65061	1	HOSE ASSEMBLY
34A	A65813	1	HOSE ASSEMBLY
35	1240-69	5	CLAMP
	1211-12	5	SCREW, 5/16 UNC x 3/4 LG.
	1209-3	5	WASHER, 5/16 REG.
36	12019-8	1	TEE
37	1219-876	1	TEE
38	65066	4	SPACER
39	A65065	1	HOSE ASSEMBLY
40	1200-95	2	CAPSCREW, 1/2 UNC x 1 1/8 LG.
	1210-26	2	LOCKWASHER, 1/2 MED.
41	37262	1	BRACKET
42	1219-583	1	ADAPTER
43	1252-6	1	OIL FILTER
	24229	1	CARTRIDGE FOR ABOVE
	24230	1	"O" RING FOR ABOVE
44	1219-555	2	ADAPTER w/"O" RING
	1218-65	2	"O" RING FOR ABOVE
45	A65064	1	HOSE ASSEMBLY
46	1219-52	1	ADAPTER
47	1219-114	1	NIPPLE
	1219-130	1	COUPLING

- ITEMS 29 THRU 37 - REFER TO SERVICE BULLETIN #285

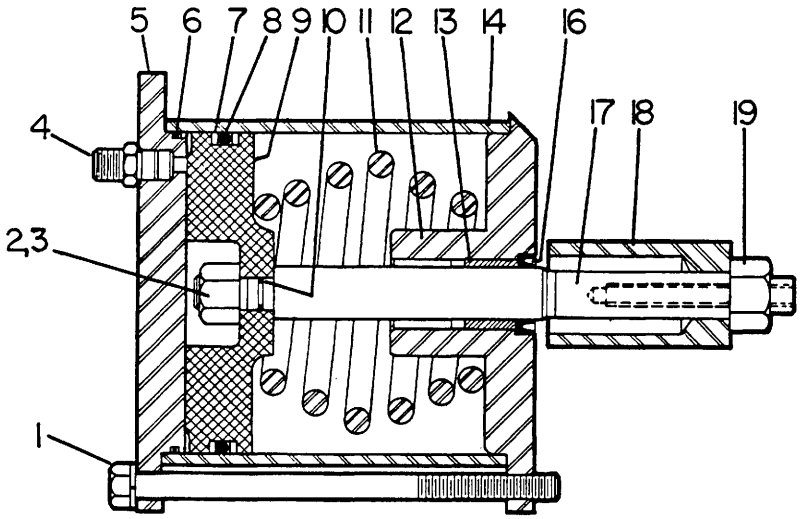

Ref. No.	Part Number	Quan. Req'd.	Name and Description
	A41940	1	ACTUATOR COMPLETE - INCLUDES ITEMS 1 THRU 19
1	1200-337	4	CAPSCREW, 7/16 UNC x 8 Lg.
	1209-59	4	WASHER, 7/16
2	1205-79	1	NUT, 9/16 UNF ELASTIC
3	1204-6	1	NUT, 5/8 UNC
	1207-22	1	COTTER PIN
4	1219-605	1	ADAPTER w/"O" RING
	1218-144	1	"O" RING FOR ABOVE
5	41942	1	FLANGE
6	1218-178	1	"O" RING
7	1218-181	1	BACK-UP RING
8	1218-180	1	"O" RING
9	41943	1	PISTON
10	1218-179	1	"O" RING
11	41945	1	SPRING
12	F41944	1	COVER
13	1214-95	1	BUSHING
14	41939	1	TUBE
16	1218-182	1	WIPER SEAL
17	41938	1	SHAFT - REPLACEMENT REQUIRES 9/16 NUT, REF. 2
18	41941	1	BLOCK
19	1205-108	1	NUT

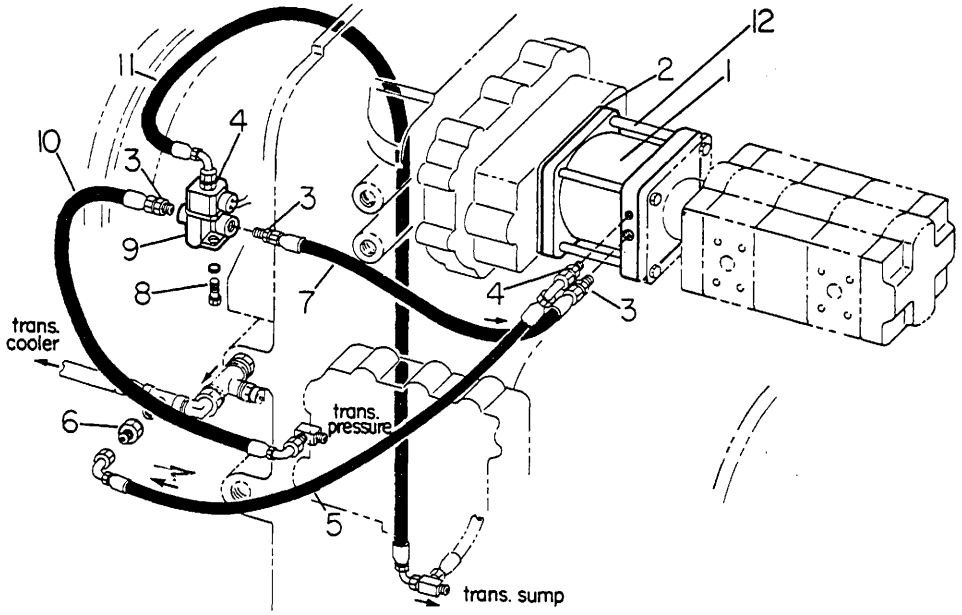

Ref. No.	Part Number	Quan. Req'd.	Name and Description
	A65310		PUMP DISCONNECT ASSEMBLY - Includes Items 1 thru 11
1		1	CLUTCH - See Page 16.6
2	1239-12	1	GASKET
3	1219-559	3	ADAPTER
4	12019-188	2	ADAPTER
5	A65306	1	HOSE ASSEMBLY
6	F65734	1	ORIFICE, .0625 (Replaces F65297)
7	A65307	1	HOSE ASSEMBLY
8	1200-1 1210-14	2 2	CAPSCREW, 1/4 UNC x 3/4 LOCKWASHER, 1/4 med.
9	37204	1	VALVE, Solenoid
10	A65308	1	HOSE ASSEMBLY
11	A65309	1	HOSE ASSEMBLY
12	65227 707 6863 1210-26 1205-58	4 4 4 4	STUD - For 65296 Clutch STUD - For 707 5178 Clutch LOCKWASHER, 1/2 med. NUT, 1/2 UNC

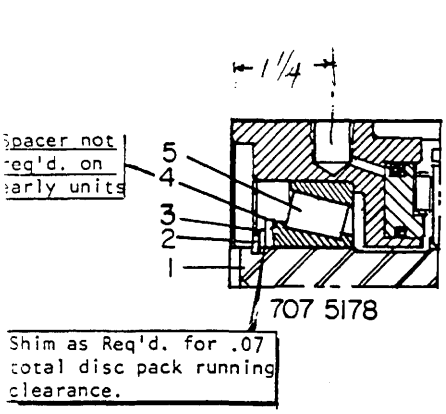

707 5178 Replaces 65296, ORDER KIT A202755 which Includes Clutch & Studs.

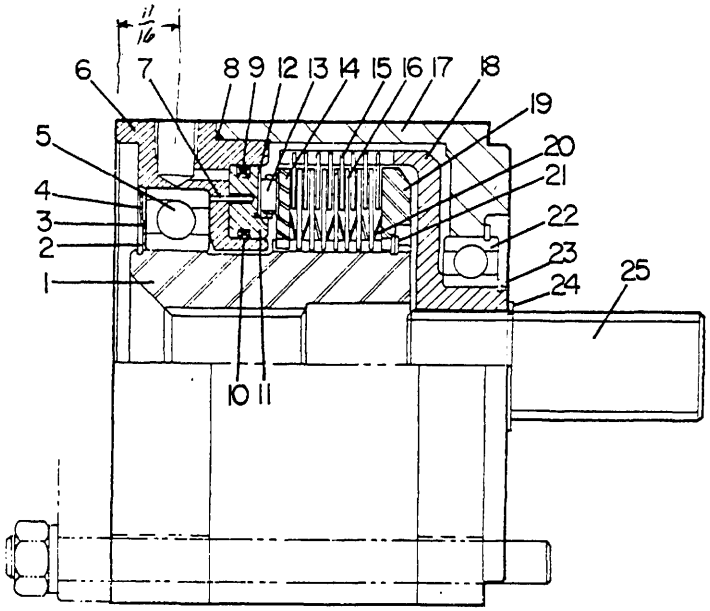

Ref. No.	Part Number	Part Number	Quan. Req'd.	Name and Description
	65296	707 5178	1	CLUTCH Complete
1			1	HUB
2			1	SNAP RING
3			2	SHIM
4			1/1	SHIELD /SPACER
5			1	BEARING
6			1	CYLINDER
7			1/-	DOWEL PIN
8			1	"O" RING
9			1	QUAD RING, Outer Piston
10			1	QUAD RING, Inner Piston
11			1	PISTON
12			2	THRUST RACE
13			1	THRUST BEARING
14			1	PRESSURE PLATE
15			8	FRICTION DISC
16			7	SEPARATOR
17			1	HOUSING
18			1	DRIVE CUP
19			1	BACKPLATE
20			8	BELLEVUE SPRING
21			1	SNAP RING
22			1	BEARING
23			1	SNAP RING
24			1	SNAP RING
25			1	SHAFT
	29550	29550		REBUILD KIT - Includes Items 8,9,10
	29551	29551		REBUILD KIT - Includes Items 8,15,16,20,21
	29552	202788		REBUILD KIT - Includes Items 2,3,4,5,8,12,13,22,23

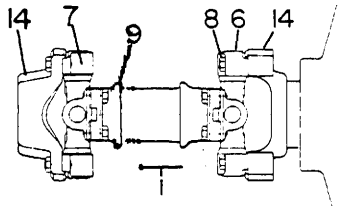

ENGINE TO TRANSMISSION

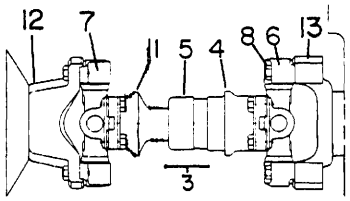

TRANSMISSION TO REAR

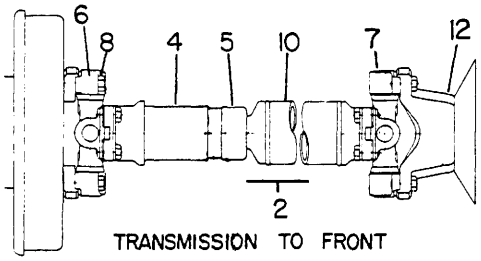

TRANSMISSION TO FRONT

Ref. No.	Part Number	Part Number	Part Number	Quan. Req'd.	Name and Description
	ENGINE TO TRANS.	TRANS. TO FRONT	TRANS. TO REAR		
1	34853			1	DRIVE SHAFT COMPLETE
2		34855		1	DRIVE SHAFT COMPLETE
3			34851	1	DRIVE SHAFT COMPLETE
4		28802	29514	1	SLIP YOKE
5		23911	23912	1	FELT WASHER
5		23914	23915	2	RETAINING WASHER
5		23917	23917	1	THREADED RETAINER
6	28803	28803	28803	1	SPIDER & BEARING KIT W/FASTENERS (2 THREADED WING, 2 BLOCK BEARINGS)
7	29511	28804	28804	1	SPIDER & BEARING KIT W/FASTENERS (4 THREADED WING BEARINGS)
8	23922			16	CAPSCREW
8		23922	23922	12	CAPSCREW, FOR THREADED WING BEARING
8		26317	26317	4	CAPSCREW, FOR BLOCK BEARING
9	29515			1	TUBE ASSEMBLY
10		29516		1	TUBE ASSEMBLY
11			29517	1	STUB YOKE
12				2	AXLE YOKE - SEE AXLES
13				3	TRANSMISSION YOKE - SEE ALLISON DEALER FOR REPLACEMENT.
14				1	ENGINE YOKE - SEE ENGINE MFR'S MANUAL.

Begin. W/Ser. No.: S-488: 8206415
S-588: 8406722
S-688: 9006274

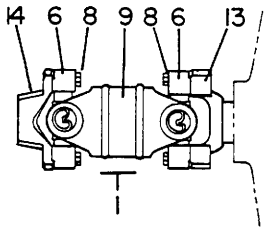

ENGINE TO TRANSMISSION

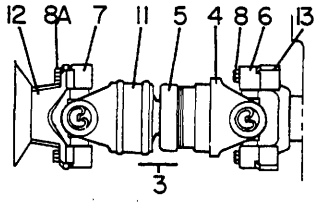

TRANSMISSION TO REAR

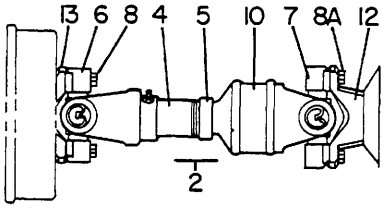

TRANSMISSION TO FRONT

Ref. No.	Part Number	Part Number	Part Number	Quan. Req'd.	Name and Description
	Engine To Trans.	Trans. To Front	Trans. To Rear		
1	34815			1	DRIVE SHAFT
2		34805		1	DRIVE SHAFT
3			34810	1	DRIVE SHAFT
4		12403-7	12403-2	1	SLIP YOKE
5		26990	200730	1	WASHER KIT
6	200731	200731	200731	2|1|1	SPIDER & BEARING KIT - Includes 2 Drilled Wing & 2 Snap Ring Bearings
7		200263	200263	1	SPIDER & BEARING KIT - Includes 2 Threaded Wing & 2 Snap Ring Bearings
8	12405-12	12405-12	12405-12	8|4|4	CAPSCREW, 3/8 UNF x 1 1/4 LG, HT
8A		12405-13	12405-13	-|4|4	CAPSCREW, 3/8 UNF x 1 ~~11/16~~ LG., HT
9	200732			1	TUBE ASSEMBLY
10		200733		1	TUBE ASSEMBLY
11			200734	1	STUB YOKE
12				2	AXLE YOKE - See Axles, Group 18.
13				3	TRANSMISSION YOKE - See Allison Dealer for replacement.
14				1	ENGINE YOKE - See Engine Mfr's Manual.

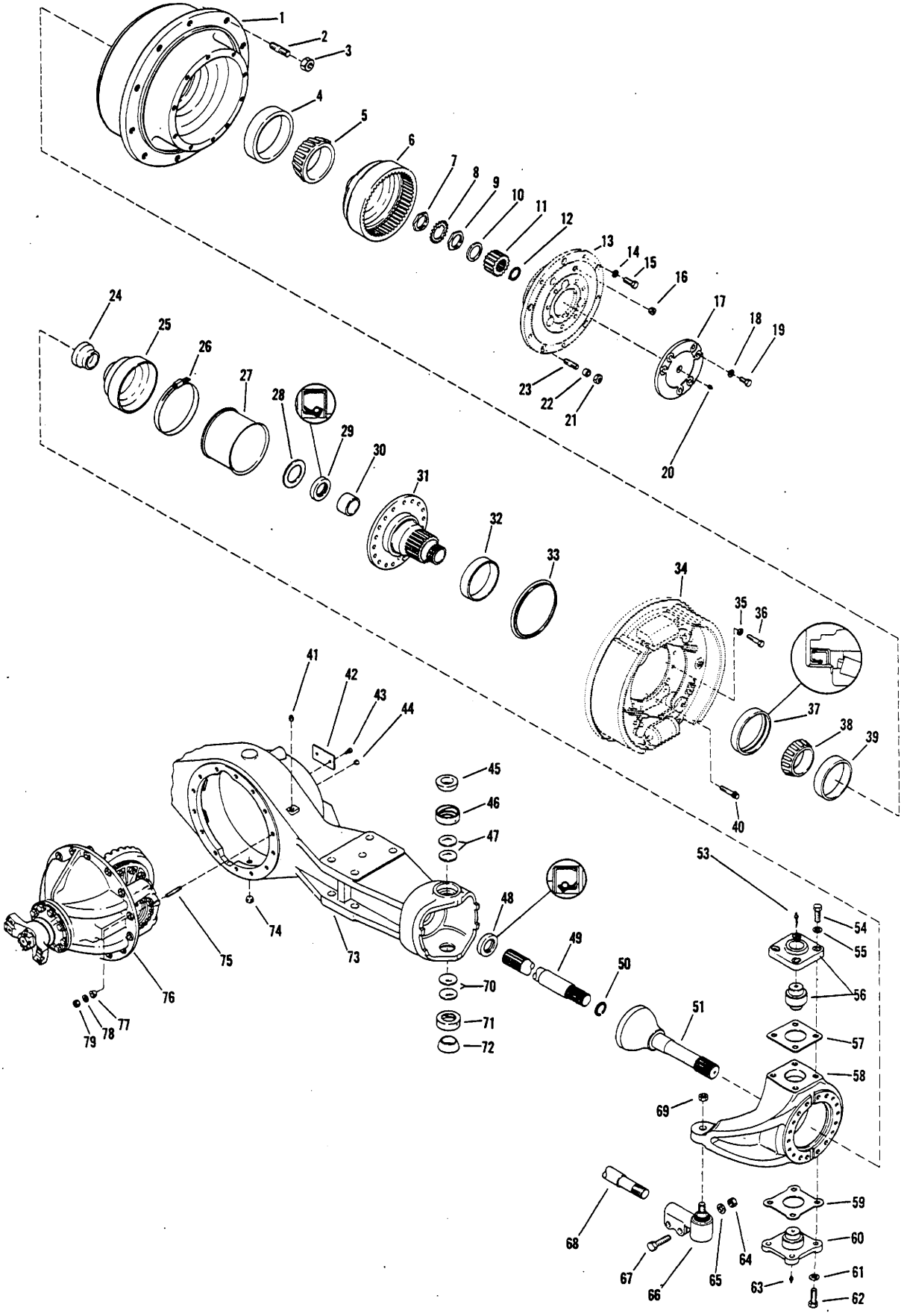
1
2
3
4
5
6
7
8
9
10
11
12
13
14
15
16
17
18
19
20
21
22
23
24
25
26
27
28
29
30
31
32
33
34
35
36
37
38
39
40
41
42
43
44
45
46
47
48
49
50
51
53
54
55
56
57
58
59
60
61
62
63
64
65
66
67
68
69
70
71
72
73
74
75
76
77
78
79

Ref. No.	Part Number	Quan. Req'd.	Name and Description	
	65726	1	FRONT AXLE-22.349:1 ST'D. DIFFERENTIAL (REPLACES 65166)	
	65727	1	REAR AXLE - 22.349:1 ST'D. DIFFERENTIAL (REPLACES 65190)	
	65728	1	REAR AXLE - 22.349:1 NO-SPIN DIFFERENT. (REPLACES 65191)	
1	29317	2	HUB & CUP ASSEMBLY, REAR AXLE) INCL.	PRIOR TO SER. NO. S-488: 8205758 S-588: 8405458
1 →	29327	2	HUB & CUP ASSEMBLY, FRONT AXLE) 4 & 39	
2	28493	20	WHEEL HUB STUD	
3	28494	20	WHEEL MOUNTING NUT	
4	28495	2	OUTER CUP	
5	28496	2	OUTER CONE	
6	28497	2	INTERNAL GEAR HUB	
7	28498	2	ADJUSTING NUT, BEARING	
8	28499	2	LOCK, ADJUSTING NUT	
9	28498	2	ADJUSTING NUT, BEARING	
10	28500	2	THRUST WASHER	
11	28501	2	SUN GEAR	
12	28502	2	SNAP RING	
13	28503	2	PLANET CARRIER ASSEMBLY - SEE PAGE 10.5	
14	28504	20	WASHER	
15	29653	10	SCREW	
16	28506	2	FILL PLUG, HUB	
17	28507	2	PLANET COVER	
18	28508	12	LOCKWASHER	
19	28509	12	BOLT	
20	28510	2	RELIEF VALVE	
21	28511	10	NUT	
22	28512	10	DOWEL, PLANET	
23	29654	10	PLANET STUD	
24	28514	2	RETAINER BOOT	
25	28515	2	GREASE RETAINING BOOT	

Ref. No.	Part Number (Prior To S-488: 8205758, S-588: 8405458)	Part Number (Begin. W/)	Quan. Req'd.	Name and Description
26	28516		2	CLAMP
27	28517		2	SUPPORT BOOT
28	28518		2	THRUST WASHER
29	28519	200371	2	INNER OIL SEAL
30	28520		2	SPINDLE BUSHING
31	28521		2	SPINDLE ASSEMBLY - INCLUDES ITEMS 30
32	28522		2	WEAR SLEEVE
33	28523		2	HUB OIL CATCHER
34	29339		1	RH FRONT BRAKE ASSEMBLY
	29340		1	LH FRONT BRAKE ASSEMBLY
	28612		1	RH REAR BRAKE ASSEMBLY
	28613		1	LH REAR BRAKE ASSEMBLY
35	28526		20	WASHER
36	28527		20	SCREW
37	28528		2	HUB OIL SEAL
38	28529		2	INNER CONE
39	28530		2	INNER CUP
40	28531		16	SPINDLE SCREW
41	28532		1	BREATHER
42	28533		1	NAME PLATE
43	28534		2	SCREW
44	28535		1	HOUSING FILL PLUG
45				NOT APPLICABLE
46	29655	200372	2	UPPER TRUNNION BUSHING
		~~200373~~	~~2~~	~~RETAINER FOR ABOVE MOVE TO 56~~
47	28538	200374	4	GREASE RETAINER
		200375	10	TRUNNION SCREW
		~~200376~~ 28548	10	WASHER
48	28519	200371	2	INNER SEAL, AXLE SHAFT
49	29322		2	AXLE SHAFT
50	28540		2	SNAP RING
51	28541		2	UNIVERSAL JOINT

Ref. No.	Part Number	Part Number	Quan. Req'd.	Name and Description
	PRIOR TO / BEGIN. W/ S-488: 8205758 S-588: 8405458			
53	28544		2	GREASE FITTING
54	28545		8	TRUNNION CAPSCREW
55	28547		8	TRUNNION WASHER
56	29656	200373	2	~~RETAINER, GREASE~~ (UPPER CAP)
		200377	2	UPPER TRUNNION
		200378	2	"O" RING FOR ABOVE
57	28552	200379	AR	SHIM, THICK
	28553	200380	AR	SHIM, MED.
	28554	200381	AR	SHIM, THIN
58	28555	200382	1	RH SPINDLE SUPPORT, FRONT
	28556	200383	1	RH SPINDLE SUPPORT, REAR
	28556	200383		LH SPINDLE SUPPORT, FRONT
	28555	200382		LH SPINDLE SUPPORT, REAR
59	SEE REF. 57		AR	SHIMS
60	29656		2	LOWER TRUNNION
61	28547	28548	8	LOCKWASHER
62	28545	200375	8	CAPSCREW
63	28544		2	GREASE FITTING
66	28559		2	TIE ROD END ASSEMBLY - INCL. 64, 65, 67, 69
68	29324		1	TIE ROD ASSEMBLY
70	28538	-	4	GREASE RETAINER
71	29655	200384	2	LOWER TRUNNION BUSHING
	-	200385	2	RETAINER FOR ABOVE
72				NOT APPLICABLE
73	29657	200386	1	AXLE HOUSING
		200387	2	LOWER TRUNNION PIN
		200388	2	LOWER TRUNNION SEAL
74	28506		1	DRAIN PLUG
75	28562		14	STUD, CARRIER MOUNTING
76			1	DIFFERENTIAL CARRIER ASSEMBLY - SEE PAGE 18.6 PERMATEX #2 - (GASKET)
77	28563		3	DOWEL
78	28564		14	WASHER
79	28565		14	NUT

Ref. No.	Part Number	Quan. Req'd.	Name and Description
80	28544	2	GREASE FITTING, TIE ROD (NOT SHOWN)
81	28566	2	COTTER PIN, TIE ROD (NOT SHOWN)
82	29327	2	HUB, CUP, & STUD ASSEMBLY - INCLUDES ITEMS 1, 2, 4, 39

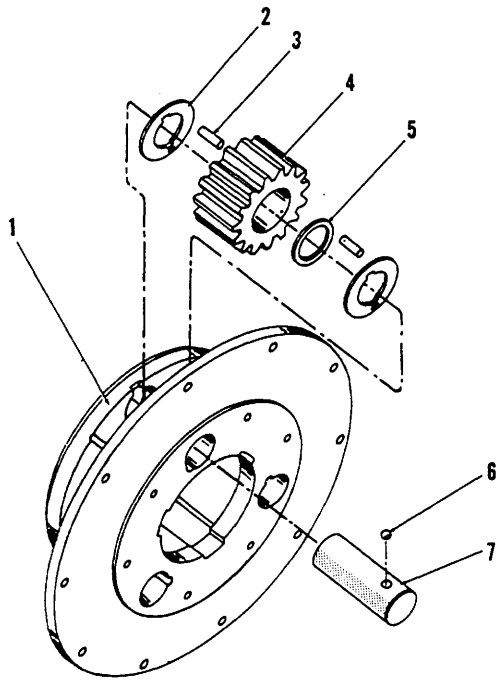

Ref. No.	Part Number	Quan. Req'd.	Name and Description
	28503	2	PLANET CARRIER ASSEMBLY - INCLUDES ITEMS 1 THRU 7
1	28635	2	PLANET SPIDER
2	28636	12	THRUST WASHER
3	28637	348	PINION NEEDLE ROLLER
4	28638	6	PLANET PINION
5	28639	6	PINION ROLL SPACER
6	28640	6	PINION SHAFT LOCK BALL
7	28641	6	PINION SHAFT

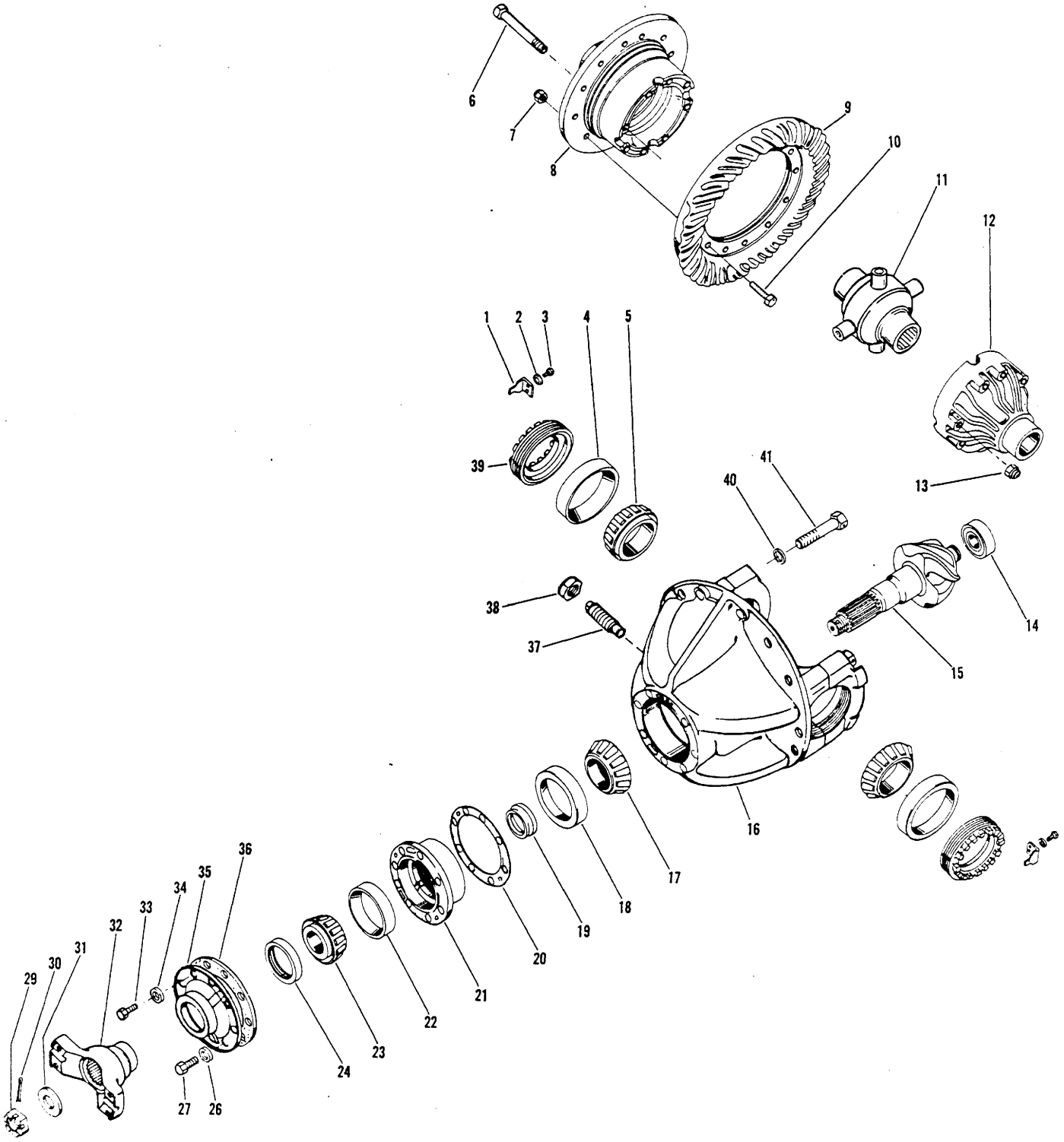
1
2
3
4
5
6
7
8
9
10
11
12
13
14
15
16
17
18
19
20
21
22
23
24
26
27
29
30
31
32
33
34
35
36
37
38
39
40
41

Ref. No.	Part Number	Quan. Req'd.	Name and Description
	29328		FRONT DIFFERENTIAL CARRIER ASS'Y - 22.349:1, ST'D DIFF.
	29329		REAR DIFFERENTIAL CARRIER ASS'Y - 22.349:1, ST'D DIFF.
	29330		REAR DIFFERENTIAL CARRIER ASS'Y - 22.349:1, NO-SPIN DIFF.
1	28572	2	ADJUSTING NUT LOCK
2	28573	2	LOCKWASHER
3	28574	2	BOLT
4	28575	2	CUP
5	28576	2	CONE
6	28577	12	CASE BOLT
7	28578	12	NUT
8	NSS	1	CASE HALF, FLANGED - See Ref. 44
9	28610	1	RING GEAR & PINION, FRONT - 22.349:1
	28611	1	RING GEAR & PINION, REAR
10	28579	12	BOLT, RING GEAR
11	28580	1	NO-SPIN DIFFERENTIAL
	A29332	1	STANDARD DIFFERENTIAL
12	NSS	1	CASE HALF, PLAIN - See Ref. 44
13	28581	12	WASHER
14	28582	1	INNER PINION BEARING
15	NSS	1	PINION - See Ref. 9
16	28583	1	DIFFERENTIAL CARRIER & CAPS - Includes items 40, 41
17	28584	1	CENTER CONE
18	28585	1	CENTER CUP
19	28586	1	PINION BEARING SPACER KIT
20	28587	AR	SHIM, THIN
	28588	AR	SHIM, MED.
	28589	AR	SHIM, THICK
21	28590	1	PINION BEARING CAGE

Ref. No.	Part Number	Quan. Req'd.	Name and Description
22	28591	1	OUTER CUP
23	28592	1	OUTER CONE
24	28593	1	PINION OIL SEAL .375 WIDE - REPLACES EXISTING SEALS .375 TO .730" WIDE
26	28594	5	LOCKWASHER
27	28595	5	CAPSCREW
29	28596	1	NUT
30	28597	1	COTTER PIN
31	28598	1	WASHER
32	29331	1	COMPANION FLANGE (REPLACES 28599)
33	28600	1	RETAINER CAPSCREW
34	28601	1	WASHER
35	28602	1	OIL SEAL RETAINER
36	28603	1	GASKET
37	28604	1	PLUG
38	28605	1	WASHER
39	28606	2	ADJUSTING NUT
40	28547	4	LOCKWASHER
41	28607	4	CAPSCREW
44	29338	1	DIFFERENTIAL CASE ASSEMBLY - INCLUDES ITEMS 6, 8, 12, 13

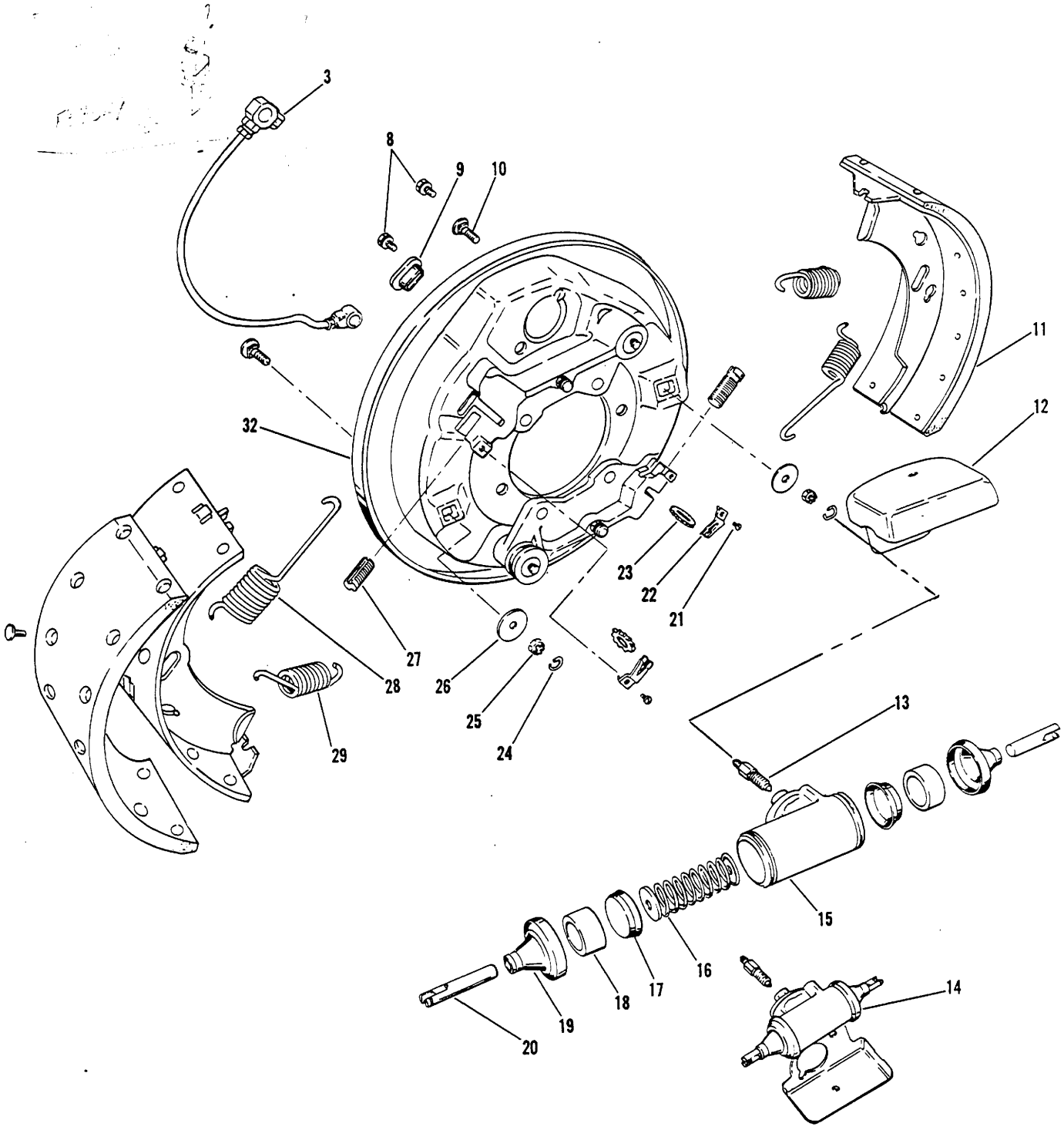
3
8
9
10
11
12
32
23
22
21
27
28
26
25
24
29
13
15
16
17
18
19
20
14

Ref. No.	Part Number	Quan. Req'd.	Name and Description
	29339	1	RH FRONT BRAKE ASSEMBLY) - INCLUDES ITEMS 3 THRU 32
	29340	1	LH FRONT BRAKE ASSEMBLY)
	28612	1	RH REAR BRAKE ASSEMBLY) - INCLUDES ITEMS 3 THRU 32
	28613	1	LH REAR BRAKE ASSEMBLY)
3	28614	1	CONNECTOR TUBE ASSEMBLY
8	28615	4	BOLT
	28616	4	LOCKWASHER
9	28617	2	ADJUSTING SLOT COVER
10	28618	2	SHOE GUIDE BOLT KIT - INCLUDES ITEMS 24, 25, 26
11	29341	1	BRAKE SHOE & LINING KIT, ONE WHEEL - BONDED TYPE
	28619	1	BRAKE SHOE & LINING KIT, ONE AXLE - BONDED TYPE
12	28620	2	RH WHEEL CYLINDER COVER
	28621	2	LH WHEEL CYLINDER COVER
13	28622	1	BLEEDER SCREW
14	28623	2	WHEEL CYLINDER ASSEMBLY
	29342		REPAIR KIT FOR ABOVE (1.75 DIA.)
15	NSS		BODY
16	29343	2	PISTON RETURN SPRING
17	NSS		CUP
18	NSS		PISTON
19	NSS		WHEEL CYLINDER BOOT
20	28624	2	PUSH ROD
21	28625	2	SPRING SCREW
22	28626	2	SPRING
23	28627	2	ADJUSTING STAR WHEEL
24 THRU 26			SEE REF. 10
27	28628	2	RH ADJUSTING SCREW
	28629	2	LH ADJUSTING SCREW
28	28630	2	FORWARD BRAKE RETURN SPRING
29	28631	2	REVERSE BRAKE RETURN SPRING
32	28632	1	RH BACKING PLATE ASSEMBLY
	28633	1	LH BACKING PLATE ASSEMBLY
	29344	1	CLIP FITTING
	29345	1	CAPSCREW
	29346	1	LOCKWASHER

200927
BRAKE ADJUST TOOL

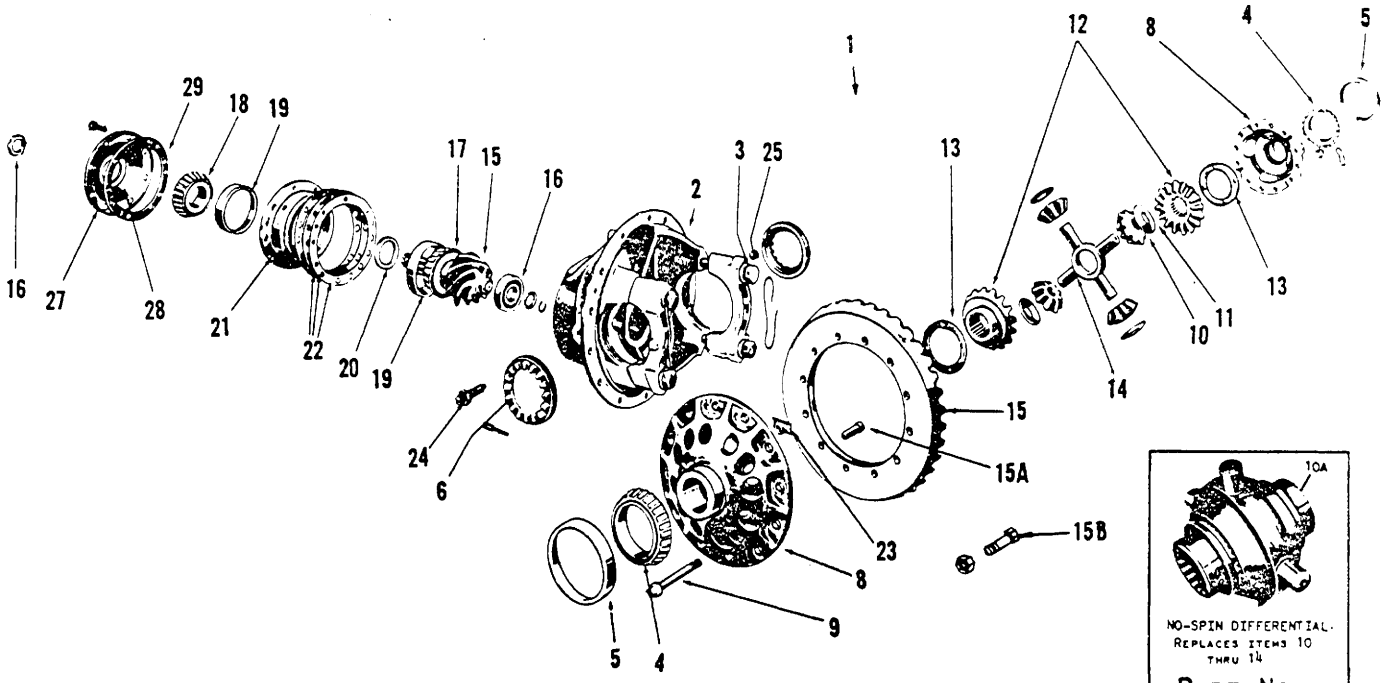

NO-SPIN DIFFERENTIAL. REPLACES ITEMS 10 THRU 14

PART NO. 41115

Ref. No.	Part Number 16.65:1	Part Number 25.92:1	Quan. Req'd.	Name and Description
	4-5/8:1 RATIO	7-1/5:1 RATIO		
	49560	49781	2	AXLE ASSEMBLY, COMPLETE W/DIFFERENTIAL CARRIER
	A23790	A23790	2	AXLE ASSEMBLY, LESS DIFFERENTIAL CARRIER, SEE PAGE 14.3
1	A23860	A24492	1	DIFFERENTIAL CARRIER ASSEMBLY, INCLUDES ITEMS 2 THRU 29
2	23861	23861	1	DIFFERENTIAL CARRIER & CAPS
3	23859	23859	4	CAPSCREW, FOR ABOVE
4	9612	9612	2	CONE
5	9588	9588	2	CUP
6	23862	23862	2	ADJUSTING RING
8	23863	23863	1	DIFFERENTIAL CASE
9	23864	23864	4	CAPSCREW, SHORT
	23865	23865	8	CAPSCREW, LONG
	23866	23866	12	NUT, FOR ABOVE CAPSCREWS
10	A23867	A23867	1	DIFFERENTIAL, INCLUDES ITEMS 10 THRU 14, SERVICED AS AN ASSEMBLY ONLY.
15	23868	24461	1	DRIVE GEAR AND PINION
15A	24462	24462	12	RIVET
15B	24578	24578	12	BOLT, REPLACES RIVET FOR FIELD REPAIR
	24579	24579	12	NUT, FOR ABOVE BOLT

WHEN ORDERING, SPECIFY BANTAM SERIAL NUMBER, PART NUMBER AND NAME OF PART REQUIRED

Ref. No.	Part Number	Quan. Req'd.	Name and Description
16	23869	1	REAR BEARING
16	23870	1	LOCKRING
16	22257	1	NUT
16	20259	1	WASHER
17	23871	1	INNER CONE
18	23872	1	OUTER CONE
19	23873	2	CUP
20	23874	1	SPACER, .445
20	23875	1	SPACER, .477
21	23876	1	DRIVE PINION CAGE ASSEMBLY
22	A23877	1	SHIM KIT
23	22263	1	DRIVE GEAR THRUST BLOCK
24	22264	1	SCREW, FOR ABOVE
25	20283	1	INSPECTION FILLER & OIL LEVEL PLUG
27	23878	1	DRIVE PINION BEARING CAGE COVER W/OIL SEAL
	23879	8	CAPSCREW, FOR ABOVE
28	23880	1	OIL SEAL
29	23881	1	COVER GASKET
	23902	1	MECHANICS YOKE & SLINGER (NOT SHOWN)

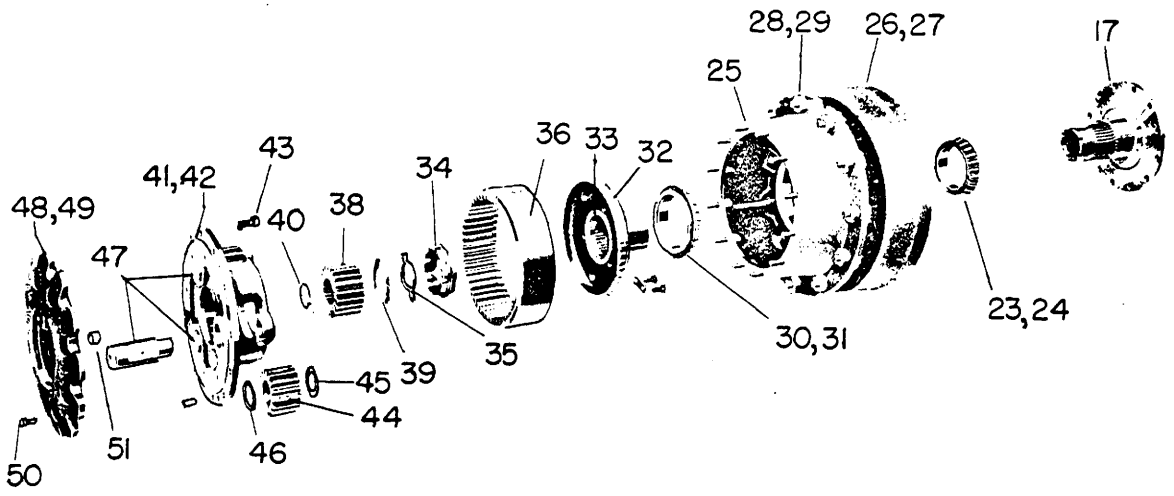
28,29
26,27
17
25
43
41,42
36
33
32
34
48,49
40
38
47
23,24
30,31
35
39
45
44
51
46
50

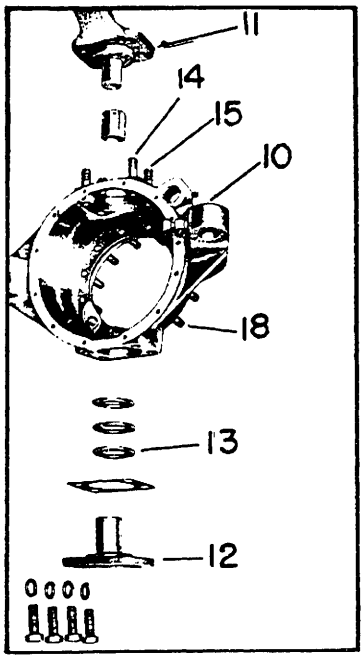
11
14
15
10
18
13
12

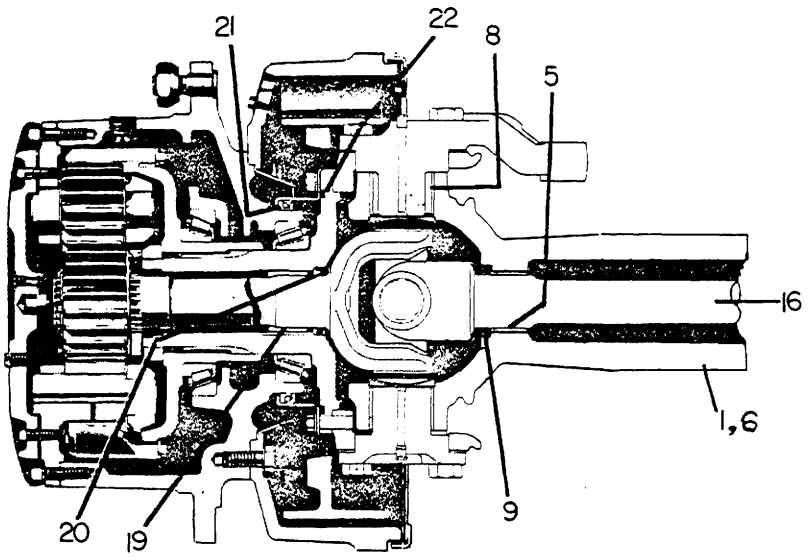
21
22
8
5
16
1,6
20
19
9

Ref. No.	Part Number	Quan. Req'd.	Name and Description
1	29573	1	AXLE HOUSING, ONE-PIECE
	23791	1	CARRIER GASKET
	23792	10	SHORT STUD
	23793	4	LONG STUD
	23794	14	WASHER & NUT
	23857	1	FILL PLUG
	23858	1	DRAIN PLUG
	23795	1	OIL BREATHER
5	24530	2	HOUSING BUSHING
6	29574	2	HOUSING TRUNNION ARM
8	23800	4	KING PIN BUSHING
9	23801	2	AXLE HOUSING OIL SEAL
	29575	2	OIL SEAL RETAINER
10	28898	2	STEERING KNUCKLE FLANGE ASSEMBLY
11	23803	2	UPPER CAP
	29576	2	INNER WASHER
	29577	2	OUTER WASHER
12	23804	2	LOWER CAP
	23805	AR	SHIM FOR ABOVE
13	23806	2	THRUST WASHER
14	23807	8	INNER CAPSCREW
15	~~23808~~ 29578	8	OUTER CAPSCREW
16	23809	2	UNIVERSAL JOINT & DRIVE SHAFT ASSEMBLY
	26688	2	CENTER PARTS KIT FOR ABOVE
17	29579	2	HUB SPINDLE
18	23811	24	STUD
	23812	24	WASHER & NUT
19	23813	2	BUSHING
20	23814	2	OIL SEAL
21	23815	2	RETAINER & SEAL
22	23816	2	"O" RING, RETAINER
23	23817	2	INNER BEARING CUP

Ref. No.	Part Number	Quan. Req'd.	Name and Description
24	23818	2	INNER BEARING CONE
25	23819	2	HUB
26	23820	2	BRAKE DRUM - 17-1/4" x 4"
27	29580	38	CAPSCREW
	24649	38	WASHER
	23856	2	OIL DRAIN PLUG
	23855	2	FILL PLUG
28	23822	24	WHEEL STUD
	23823	24	NUT
29	23824	2	OIL SLINGER
30	23825	2	OUTER BEARING CUP
31	23826	2	OUTER BEARING CONE
32	29581	2	RING GEAR HUB
33		2	SLEEVE - NOT REPLACEABLE
34	29582	2	ADJUSTING NUT
35	29583	4	LOCK now 1220-H-26 } MFS 2792 KIT
	29584	4	SCREW now 10X-1304
36	29585	2	FLOATING RING GEAR, 52 TOOTH
37	23832	16	CAPSCREW, PLANETARY RING GEAR
	26410	16	LOCKWASHER
	26411	1	LOCKWIRE
38	23833	2	SUN GEAR, 20 TOOTH
	29586	2	WASHER FOR ABOVE
39	23834	2	THRUST WASHER
40	23835	2	SNAP RING
41	29587	2	PLANETARY SPIDER
42	29363	2	SILASTIC GASKET, 2 OZ.
43	23879	32	CAPSCREW, SPIDER TO HUB
	24925 3	32	WASHER
44	23839	6	PLANET PINION GEAR, 16 TOOTH
45	23840	6	INNER THRUST WASHER
46	23841	6	OUTER THRUST WASHER
47	23842	6	SHAFT, PINION GEAR
48	29588	2	SPIDER COVER

Ref. No.	Part Number	Quan. Req'd.	Name and Description
49	23844	2	GASKET
50	29589	16	CAPSCREW
51	23846	2	THRUST BUTTON
	23847	AR	SHIM, THRUST BUTTON
	28906	1	TIE ROD YOKE, 12 THREAD
	28907	1	TIE ROD YOKE, 16 THREAD
	29590	1	TIE ROD, 2"
	23851	4	CLAMP BOLT & NUT
	23852	2	LOCK PIN
	23853	2	BUSHING, YOKE BOLT
	20971	2	NUT
	20970	1	NUT, LOCK
	23854	2	BOLT, YOKE
	29591	1	STEERING STOP SCREW
	F65509	1	STEERING CYLINDER BRACKET
	65507	2	SPACER, STEERING CYLINDER END TO AXLE

Ref. No.	Part Number	Quan. Req'd.	Name and Description
			QUANTITIES SHOWN FOR ONE AXLE
1	26454	2	BRAKE SHOE & LINING ASSEMBLY (COUNTERCLOCKWISE FROM CYLINDER)
2	26455	2	BRAKE SHOE & LINING ASSEMBLY (CLOCKWISE FROM CYLINDER) -
3	26456	2	LINING KIT FOR ONE AXLE, INCLUDES LINING AND RIVETS -
4	23897	4	BRAKE SHOE PIN & NUT
5	23892	2	BRAKE SHOE RETURN SPRING
6	23899	2	LINK, BRAKE SHOE
7	23898	4	SNAP RING, LINK
8	23900	4	CONNECTING LINK
9	23884	1	LOWER DUST SHIELD, R REAR, L FRONT
	23885	1	UPPER DUST SHIELD, R REAR, L FRONT
	23886	1	LOWER DUST SHIELD, L REAR, R FRONT
	23887	1	UPPER DUST SHIELD, L REAR, R FRONT
10	23889	2	WHEEL CYLINDER, 1 3/4 DIA.
11	23890		REPAIR KIT, FOR ABOVE
12	23888	2	ADAPTER, CYLINDER
13	23895	4	ADJUSTING CAM
14	23894	4	CAM BOLT & WASHER
15	23893	4	CAM SPRING
16	23896	4	INLET GASKETS
17	23901	2	BLEEDER SCREW

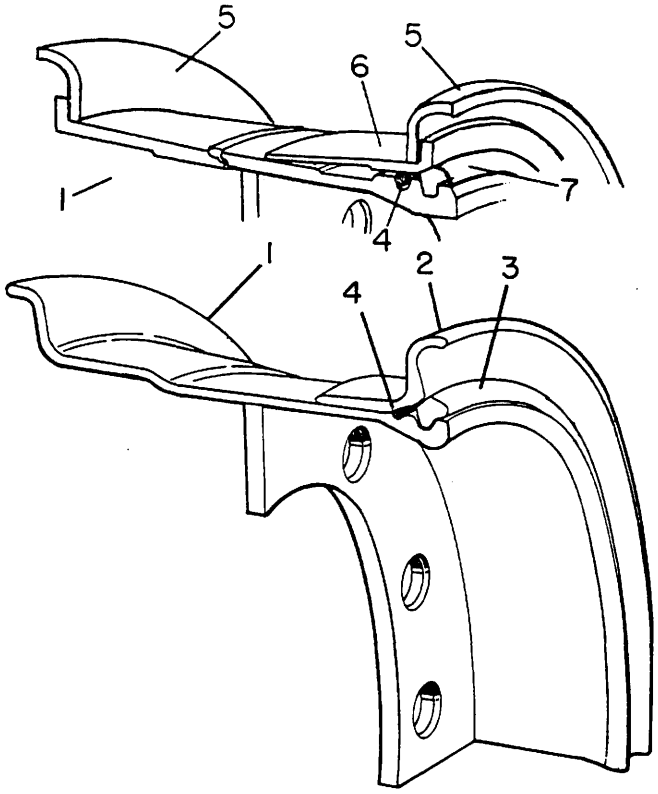

Ref. No.	Part Number	Part Number	Part Number	Quan. Req'd.	Name and Description
	16.00 x 24	17.50 x 25	20.50 x 25		
1	F65293	F65303	F65300	1	WHEEL - Clark Axle
	F65572	F38026	F65573	1	WHEEL - Rockwell Standard Axle
2	38827	37614		1	SIDE RING
3	38828	37615		1	LOCK RING
4	1218-104	1218-105	1218-145	1	"O" RING
5			27296	2	FLANGE
6			27297	1	BEAD SEAT BAND
7			27298	1	LOCK RING
	38829		30223	1	16 PLY TIRE
		30297		1	20 PLY TIRE
	65654	38031	38031	1	TIRE VALVE
	65819	38043	38043 65819	1	VALVE ADAPTOR SPACER (OUTRIGGER)

200123 MICO RELOCAT. KIT

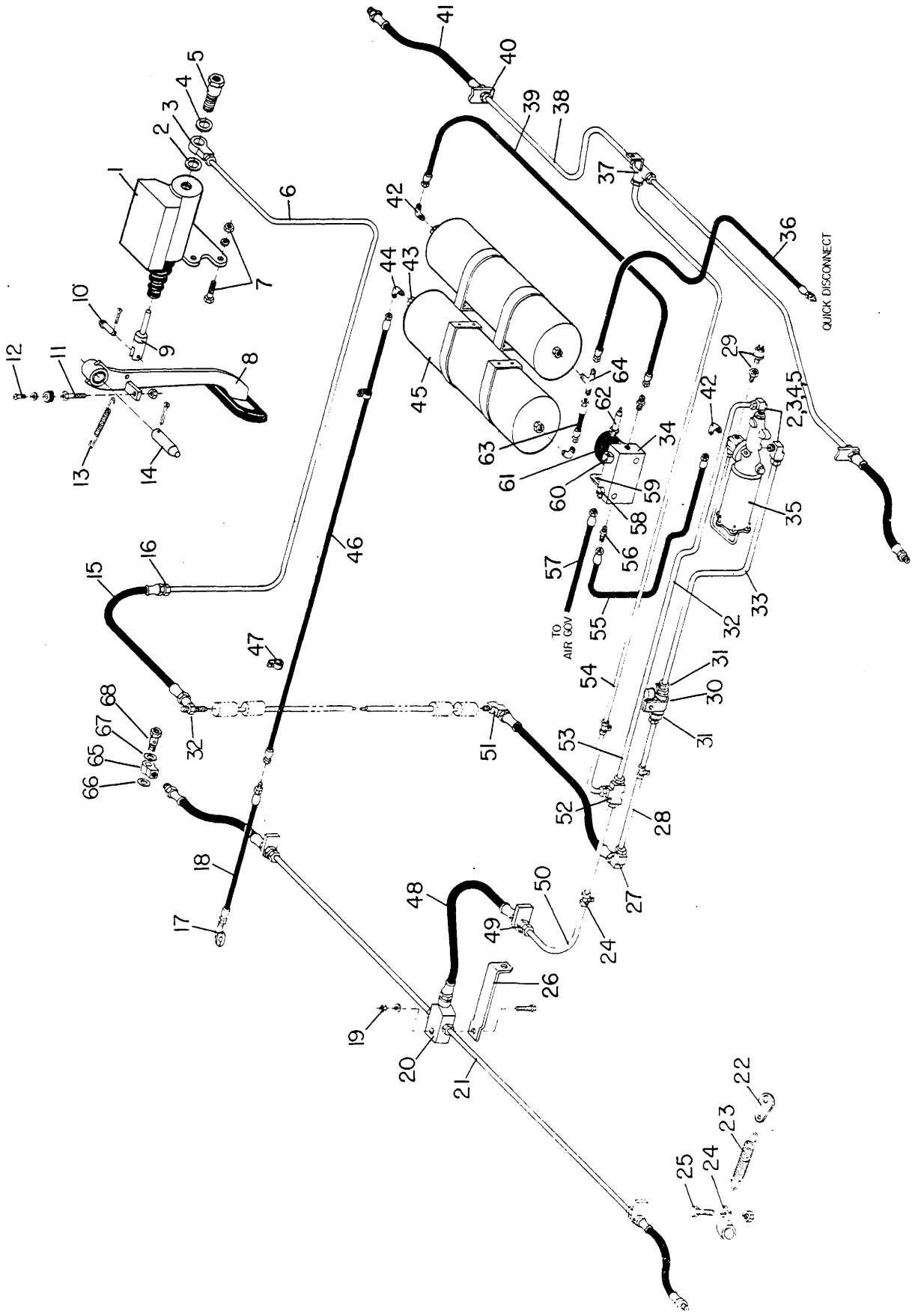

Model S-488, S-588, S-688 Group No. 19
Date REV. 1 APRIL 1975 HYDRAULIC BRAKE ASSEMBLY Page 19.2

Ref. No.	Part Number	Quan. Req'd.	Name and Description
1	40915	1	MASTER CYLINDER
	22872	1	REPAIR KIT
2	1239-33	3	GASKET
3	6972	3	BLOCK CONNECTOR
4	6924	3	GASKET
5	6970	3	CONNECTOR BOLT
6	37671	1	TUBE ASSEMBLY
7	1200-34	4	CAPSCREW, 5/16 UNF x 1-1/4 LG.
	1210-17	4	LOCKWASHER, 5/16 MED.
	1205-26	4	NUT, 5/16 UNF
8	F65199	1	PEDAL ASSEMBLY
	1221-19	1	PEDAL PAD
9	F65201	1	PUSH ROD
10	16238	1	PIN
	1207-1	1	COTTER PIN, 1/16 x 1/2 LG.
11	40903	1	CAPSCREW, 5/16 UNC x 2-1/2 LG.
	1210-17	1	LOCKWASHER, 5/16 MED.
	1205-25	1	NUT, 5/16 UNC
12	1233-1	1	MACHINE SCREW, # 10 x 1/2 LG.
	1209-1	1	PLAIN WASHER, 3/16 REG.
	6977	1	BUMPER
13	37141	1	SPRING
14	16079	1	PIN
	1207-31	1	COTTER PIN, 3/16 x 1-1/2 LG.
15	1244-11	2	HOSE ASSEMBLY
16	1219-81	1	CONNECTOR
17	1219-415	1	FLANGED ELBOW
18	A65207	1	HOSE ASSEMBLY
19	1200-307	1	CAPSCREW, 7/16 UNC x 1-1/2 LG.
	1210-23	1	LOCKWASHER, 7/16 MED.
	1205-47	1	NUT, 7/16 UNC
20	6984	1	TEE
21	43481	2	TUBE UNIT - CLARK AXLE
	37676	2	TUBE UNIT - ROCKWELL STANDARD AXLE
22	38124	4	SPRING HOOK

Model S-488, S-588, S-688 Group No. 19
Date REV. 1 APRIL 1975 HYDRAULIC BRAKE ASSEMBLY Page 19.3

Ref. No.	Part Number	Quan. Req'd.	Name and Description
23	2235	4	SPRING
24	1240-38	20	CLAMP
25	1200-2	4	CAPSCREW, 1/4 UNF x 3/4 LG.
	1205-22	4	NUT, 1/4 UNF, SELF LOCKING
26	65620	1	SUPPORT
27	1219-163	1	ELBOW
28	37681	1	TUBE UNIT
29	1219-425	1	ADAPTER
	1223-307	1	BRAKE SWITCH
30	6969	1	MICO BRAKE LOCK
31	1219-83	2	CONNECTOR
32	12019-221	1	TEE
33	38122	1	TUBE UNIT
34	65204	1	MANIFOLD
	1242-50	2	CAPSCREW, 3/8 UNC x 1-3/4 LG., H.T. GRADE8
	1210-20	2	LOCKWASHER, 3/8 MED.
	1219-21	1	PLUG
35	49540	1	AIR BOOSTER ASSEMBLY, SEE PAGE 19.5 1243-6 AIR CLEAN.
	1203-48	3	CAPSCREW, 7/16 UNF x 1 LG.
	1210-23	2	LOCKWASHER, 7/16 MED.
	1242-29	1	CAPSCREW, 1/2 UNC x 1 LG., H.T.
	1210-26	2	LOCKWASHER, 1/2 MED.
36	A65211	1	HOSE ASSEMBLY
	12019-244	1	QUICK DISCONNECT
37	1219-726	1	TEE
38	37678	2	TUBE UNIT
39	A65208	1	HOSE ASSEMBLY
40	1205-85	4	NUT, 5/8 UNF JAM
41	6921	4	HOSE ASSEMBLY
42	12019-55	4	ELBOW
43	1219-131	2	CHECK VALVE
44	1219-985	1	ELBOW

Model S-488, S-588, S-688 Group No. 19
Date REV. 1 APRIL 1975 HYDRAULIC BRAKE ASSEMBLY Page 19.4

Ref. No.	Part Number	Quan. Req'd.	Name and Description
45	1219-457	2	AIR TANK
	1200-61	4	CAPSCREW, 3/8 UNC x 1-1/4 LG.
	1210-20	4	LOCKWASHER, 3/8 MED.
	1205-36	4	NUT, 3/8 UNC
	1219-~~883~~ 217	2	DRAIN COCK
46	A65210	1	HOSE ASSEMBLY
47	1240-21		JIFFY CLIP
48	1244-143	1	HOSE ASSEMBLY
49	1205-182	1	NUT, 11/16 UNF JAM
50	65213	1	TUBE UNIT
51	1219-848	2	ELBOW
52	1219-725	1	TEE
53	65619	1	TUBE
54	65212	1	TUBE UNIT
55	A65205	1	HOSE ASSEMBLY
56	12019-62	2	ADAPTER
57	A65206	1	HOSE ASSEMBLY
58	1219-943	1	ADAPTER, 90°
59	1223-379	1	LOW AIR PRESSURE SWITCH
60	1219-157	1	ELBOW
61	1245-111	1	PRESSURE SENDER
62	1219-213	1	AIR RELIEF
63	A65209	1	HOSE ASSEMBLY
64	12019-104	1	TEE FITTING
65	24237	4	BANJO FITTING
66	1239-33	4	GASKET
67	6924	4	GASKET
68	65760	4	CONNECTOR BOLT
add	12019-297		

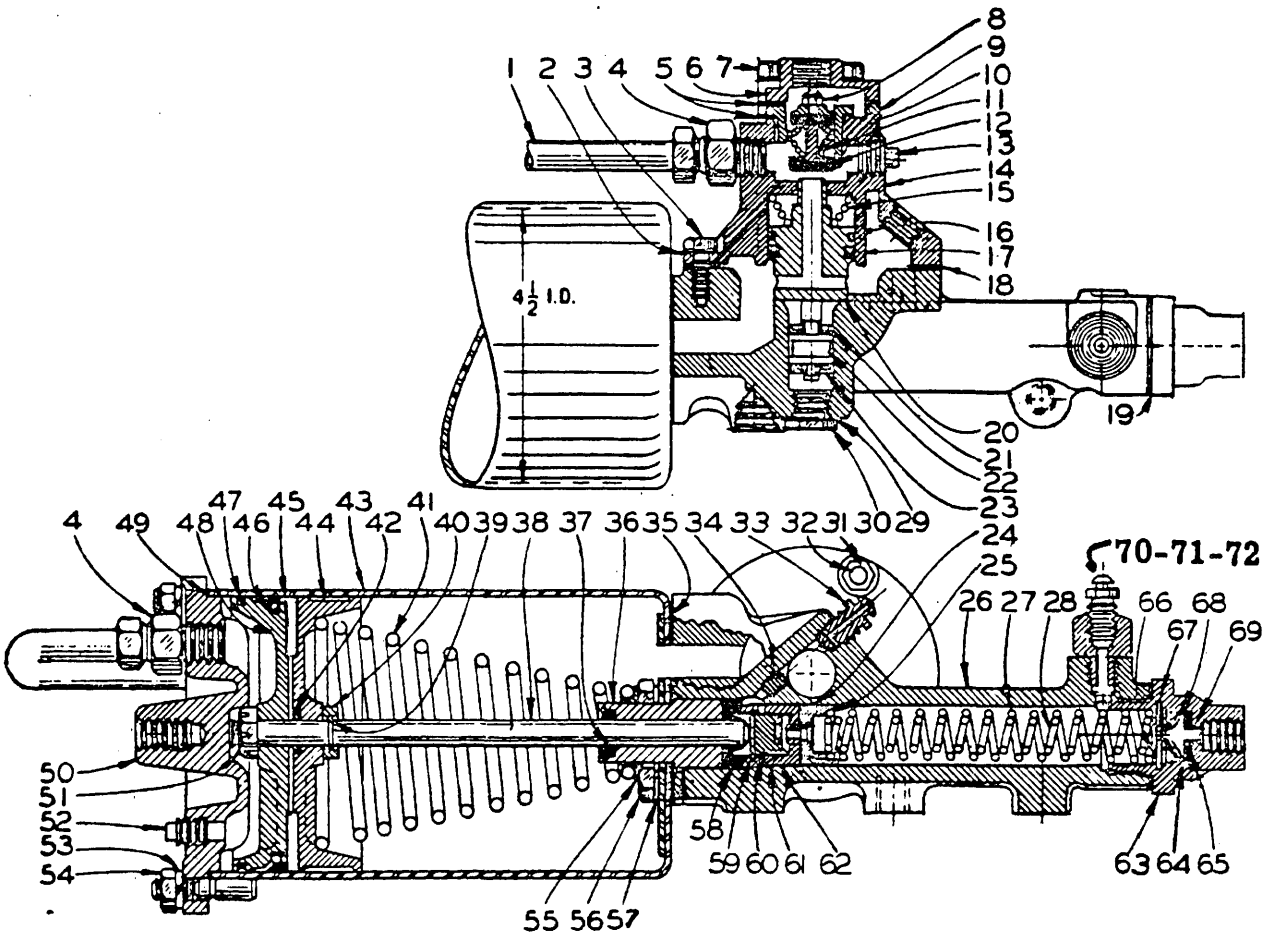

Ref. No.	Part Number	Quan. Req'd.	Name and Description
	49540		AIR BOOSTER W/RESIDUAL CHECK VALVE - COMPLETE
	28998		MINOR OVERHAUL KIT - INCLUDES PARTS (*)
	200986		MAJOR OVERHAUL KIT - INCLUDES PARTS (▲)
1	200775	1	TUBE ASSEMBLY
2	1210-14		LOCKWASHER, 1/4
3	200839		CAPSCREW, 1/4 UNC
4	200776	1	TUBE CONNECTOR
5*▲	200777	1	VALVE CAP GASKET
6	200778	1	COMPENSATOR BODY END CAP
7	200840		CAPSCREW, 1/4 UNC
A	200779	1	VALVE CAGE ASSEMBLY - INCL. ITEMS 8, 9, 10, 11, 12
8	200780	1	ELASTIC STOP NUT
9	200781	1	VALVE CAGE
10*▲	200782	1	INLET VALVE
11 ▲	200783	1	INLET VALVE SPRING
12*▲	200784	1	EXHAUST VALVE
13	1219-279	1	PIPE PLUG, 3/8 NPT
14	200785	1	COMPENSATOR BODY
15 ▲	200786	1	COMPENSATOR PISTON SPRING
16*▲	200787	1	PISTON FELT
17*▲	200788	1	COMPENSATOR PISTON CUP
18*▲	200789	1	COMPENSATOR BODY GASKET
19*▲	200790	1	COPPER GASKET
20	200791	1	COMPENSATOR PISTON
21*▲	200792	1	CONTROL VALVE INNER CUP

Ref. No.	Part Number	Quan. Req'd.	Name and Description
22	200793	1	CONTROL VALVE PISTON
23*▲	200794	1	CONTROL VALVE OUTER CUP
24*▲	200795	1	SLAVE CYLINDER CUP
25	200796	1	PISTON SPRING RETAINER
26	200797	1	SLAVE CYLINDER BODY
27 ▲	200798	1	SLAVE CYLINDER OUTER SPRING
28 ▲	200799	1	SLAVE CYLINDER INNER SPRING
29*▲	200800	1	COPPER GASKET
30	200801	1	CONTROL VALVE END PLUG
31	1205-14		NUT, 1/4 UNF
32	200841		CAPSCREW, 1/4 UNF
33	200802	1	BLEEDER SCREW
34	200803	1	METERING JET
35*▲	200804	1	GASKET
B	200805		BUSHING & SEAL ASSEMBLY - INCL. 36, 37
36	200806	1	PUSH ROD BUSHING ASSEMBLY
37	200807	1	PUSH ROD SEAL
38	200808	1	PUSH ROD
39	200809	1	SNAP RING
40	200810	1	COLLAR
41	200811	1	PISTON RETURN SPRING
42	200812	1	"O" RING SEAL
43	200813	1	4-1/2 SHELL ASSEMBLY
44	200814	1	PISTON PRESSURE PLATE
45*▲	200815	1	PISTON CUP
46	200816	1	PISTON CUP EXPANDER
47*▲	200817	1	PISTON FELT
48	200818	1	PISTON FOLLOWER
49*▲	200819	1	COVER GASKET
50	200820	1	CYLINDER END COVER
51	200821	1	NUT, 7/16 UNF
52	1219-47	1	PIPE PLUG, 1/8 NPT
53	1210-20		LOCKWASHER, 3/8
54	1205-37		NUT, 3/8 UNF
55	200822	1	SPRING RETAINER
56	200842		CAPSCREW, 3/8 UNC
57	1210-20		LOCKWASHER, 3/8
58*▲	200823	1	PUSH ROD SEAL
C ▲	200824	1	PISTON ASSEMBLY - INCL. ITEMS 59, 60, 61, 62
59	200825	1	SNAP RING
60*	200826	1	VALVE
61	200827	1	PISTON BODY
62	200828	1	SPRING
D	200829	1	RESIDUAL CHECK VALVE - INCL. ITEMS 63 THRU 69
63	200830	1	VALVE BODY
64	200831	1	SPRING
65 ▲	200832	1	RUBBER SEAT
66	200833	1	RETAINING WASHER
67	200834	1	SNAP RING
68 ▲	200835	1	CHECK VALVE ASSEMBLY
69	200836	1	RETAINER RIVET
70	200802	1	BLEEDER SCREW
71	200837	1	ADAPTER
72*▲	200838	1	COPPER GASKET

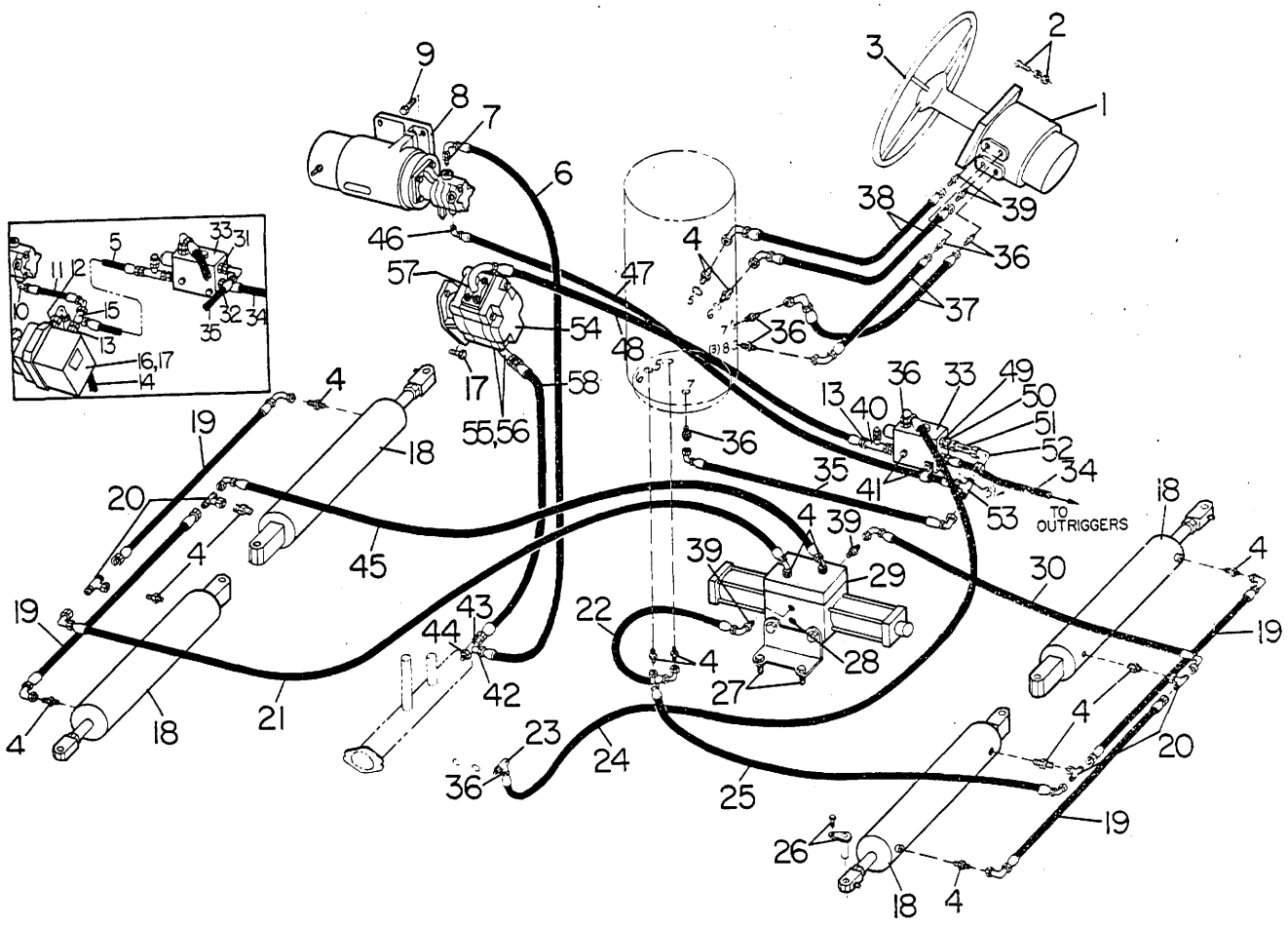

Ref. No.	Part Number	Part Number	Quan. Req'd.	Name and Description
	Prior To S-488: #8205722 S-588: #8405454	Begin. W/		
1			1	ORBITROL STEERING UNIT W/COLUMN, LESS WHEEL See Page 20.6 for parts breakdown.
2	1200-61		2	CAPSCREW, 3/8 UNC x 1 1/4 LG.
	1210-20		2	LOCKWASHER, 3/8 MED.
3	36560		1	STEERING WHEEL
	37593		1	STEERING WHEEL CAP
	1204-31		1	NUT
4	1219-605	1219-598	10/14	ADAPTER w/"O" RING
	1218-144	1218-144	10/14	"O" RING FOR ABOVE
5	A65216		1	HOSE ASSEMBLY
6	A65722		1	HOSE ASSEMBLY
7	1219-283		1	ADAPTER w/"O" RING
	1218-34		1	"O" RING FOR ABOVE
8	41979		1	PUMP & MOTOR ASSEMBLY
	27607			MOTOR ONLY
	27608			PUMP ONLY

Model S-488, S-588, S-688 | Group No. 20
Date REV. 1 OCT. 1976 | STEERING | Page 20.2

Ref. No.	Part Number (Prior To S-488: #8205722, S-588: #8405454)	Part Number (Begin. W/)	Quan. Req'd.	Name and Description	
9	1200-59		2	CAPSCREW, 3/8 UNC x 1 LG.	
	1210-20		2	LOCKWASHER, 3/8 MED.	
10	1219-451		1	ELBOW	
11	A65762		1	HOSE ASSEMBLY	
12	1219-659		1	ADAPTER	
13	1219-810		2	ADAPTER	
14	A65721		1	HOSE ASSEMBLY	
15	1219-956		1	TEE	ORDER KIT A20112 3 TO CONVERT TO GEAR TYPE PUMP - INCL. ITEMS 46 THRU 58
16	65242		1	STEERING PUMP - SEE PAGE 20.5	
	1239-13		1	GASKET, PUMP TO TRANSMISSION	
17	1200-61		2	CAPSCREW, 3/8 UNC x 1 1/4 LG.	
	1210-20		2	LOCKWASHER, 3/8 MED.	
18			4	CYLINDER - SEE PAGE 20.9	
19	A65094	A65740	4	HOSE ASSEMBLY	
20	1219-774	12019-199	4	TEE	
21	A38201	A65787	1	HOSE ASSEMBLY	
22	A37089	A65744	1	HOSE ASSEMBLY	
23	1219-694		1	TEE	
24	A65763		1	HOSE ASSEMBLY	
25	A65096	A65743	1	HOSE ASSEMBLY	
26	A65167		8	CYLINDER PIN	
	1200-59		8	CAPSCREW, 1/2 UNC x 1 LG.	
	1210-26		8	LOCKWASHER, 1/2 MED.	
27	1200-59 95		4	CAPSCREW, 1/2 UNC x 1 LG.	
	1210-26		4	LOCKWASHER, 1/2 MED.	
	1205-36		4	NUT, 1/2 UNC	
	1209-4		4	WASHER, 1/2 REG.	
28	1219-624		2	PLUG	
29			1	VALVE - SEE PAGE 20.7	
30	A65093	A65742	1	HOSE ASSEMBLY	
31	1219-442		1	ADAPTER w/"O" RING	
	1218-34		1	"O" RING	
32	1219-691		1	ADAPTER w/"O" RING	
	1218-64		1	"O" RING	
33			1	FLOW DIVIDER - SEE PAGE 20.4	

Model S-488, S-588, S-688 | Group No. 20
Date Rev. 1 Oct. 1976 | STEERING | Page 20.3

Ref. No.	Part Number	Part Number	Quan. Req'd.	Name and Description
	Prior To S-488: S-588:	Begin. W/ #8205722 #8405454		AUX STEER PUMP PRESSURE & CHECK VALVE MOVED TO FLOW DIVIDER. CHG TO [illegible] & CYL. HOSES CHANGED. -6 TO -8
34	A65101	A65696	1	HOSE ASSEMBLY - To Outriggers
35	A65999		1	HOSE ASSEMBLY (replaces A65215)
36	1219-441 1218-34		5 5	ADAPTER w/"O" ring "O" RING
37	A37084	A65655	2	HOSE ASSEMBLY
38	A37085		2	HOSE ASSEMBLY
39	1219-620 1218-144		4 4	ADAPTER w/"O" ring "O" RING
40	65245 12019-245 1219-954		1 1 1	TUBE QUICK DISCONNECT NIPPLE
41	1200-13 1210-14 1240-29		2 2 1	CAPSCREW, 1/2 UNC x 2 1/4 lg. LOCKWASHER, 1/4 med. CLAMP
42	12019-147		1	REDUCER
43	12019-146		1	TEE
44	1219-388		1	ADAPTER
45	A38201	A65745	1	HOSE ASSEMBLY
46		1219-827	1	ADAPTER
47		A65975	1	HOSE ASSEMBLY
48		A65974 A65996	1 1	HOSE ASSEMBLY - Vickers Pump HOSE ASSEMBLY - Commercial Pump
49		12019-171	1	ADAPTER
50		1219-856	1	ADAPTER
51		12019-255	1	CHECK VALVE
52		1219-651	1	ELBOW
53		1219-800	1	TEE
54		65985	1	STEERING PUMP - See Page 20.4B
55		65998	1	TUBE
56		1219-665 1218-103 1200-61 1210-20	2 1 4 4	SPLIT FLANGE CLAMP "O" RING CAPSCREW, 3/8 UNC x 1 1/4 lg. LOCKWASHER, 3/8 med.
57		12019-279 1218-26 1200-61 1210-20	2 1 4 4	SPLIT FLANGE CLAMP "O" RING CAPSCREW, 3/8 UNC x 1 1/4 lg. LOCKWASHER, 3/8 med.
58		A65997	1	HOSE ASSEMBLY

A201301 CHECK VALVE KIT
SERV. BULLETIN #283

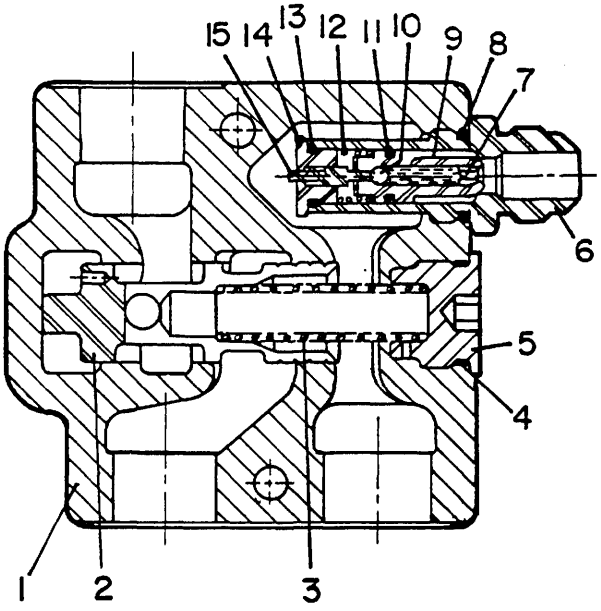

Ref. No.	Part Number	Quan. Req'd.	Name and Description	
	65243	1	FLOW DIVIDER COMPLETE	
	A29468	1	SEAL KIT - INCLUDES ITEMS 3, 4, 8, 11 THRU 13	
1	29463	1	BODY	
2	29464	1	PISTON	
3	29465	1	SPRING	
4	29467	1	"O" RING	
5	29466	1	END CAP	
6	29450	1	RELIEF VALVE, 1500 PSI - INCLUDES ITEMS 7 THRU 15	
	29451	1	RELIEF VALVE BODY	
7	29454	1	SETSCREW	
8	29460	1	"O" RING	
9	29452	1	PISTON	
10	29453	1	BALL	
11	29458	1	"O" RING	
12	29455	1	SPRING	
13	29459	1	"O" RING	
14	29457	1	ORIFICE PLUG	
15	29456	1	METERING PIN	

BEGIN. W/SER. NO. S-488: #8205785
S-588: #8405536
S-688: #9005130

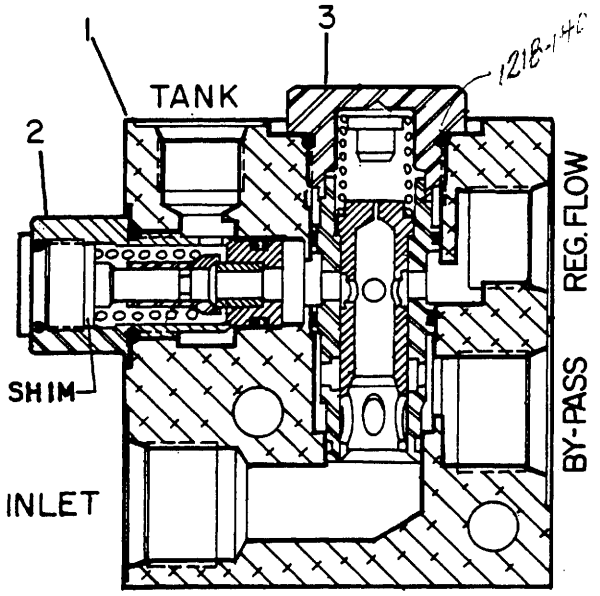

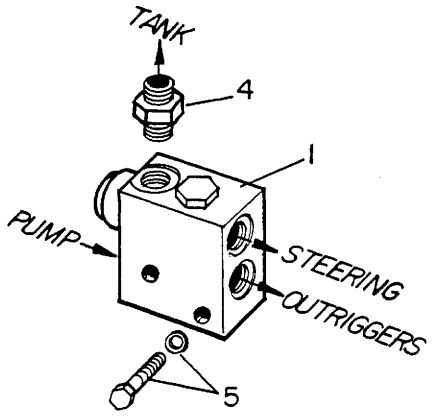

Ref. No.	Part Number	Quan. Req'd.	Name and Description	
1	65802 A203130	1	FLOW DIVIDER COMPLETE Seal Kit	REPLACES 65243, PAGE 20.4, PRIOR TO ABOVE SERIAL NO'S. REQUIRES ITEMS 4 & 5 AND NEW MOUNTING HOLE.
2	200740 201150	1 1	RELIEF VALVE SHIM, ADJUST	
3	200741	1	FLOW CONTROL	
4	1219-441	1	ADAPTER w/"O" RING	
5	1200-13 1210-14	2 2	CAPSCREW, 1/4 UNC x 2 1/4 LG. LOCKWASHER, 1/4 MED.	

BEGIN. W/SER. NO.: S-488: 8207502
S-588: 8407853
S-688: 9007354



Ref. No.	Part Number	Quan. Req'd.	Name and Description
	65985	1	PUMP COMPLETE
	A24987	1	SEAL KIT - INCLUDES ITEMS 1, 3, 7, 9
1	24244	1	LIP SEAL
2	201120	1	SHAFT END COVER
3	24982	2	RING SEAL
4	24674	1	PLUG
5	24248	4	ROLLER BEARING
6	24249	2	THRUST PLATE
7	24250	2	POCKET SEAL STRIP
8	201121	1	SHAFT & GEAR SET
9	24252	2	GASKET SEAL
10	201122	1	GEAR HOUSING
11	24258	1	PORT END COVER
12	28179	4	CAPSCREW
13	23666	4	WASHER

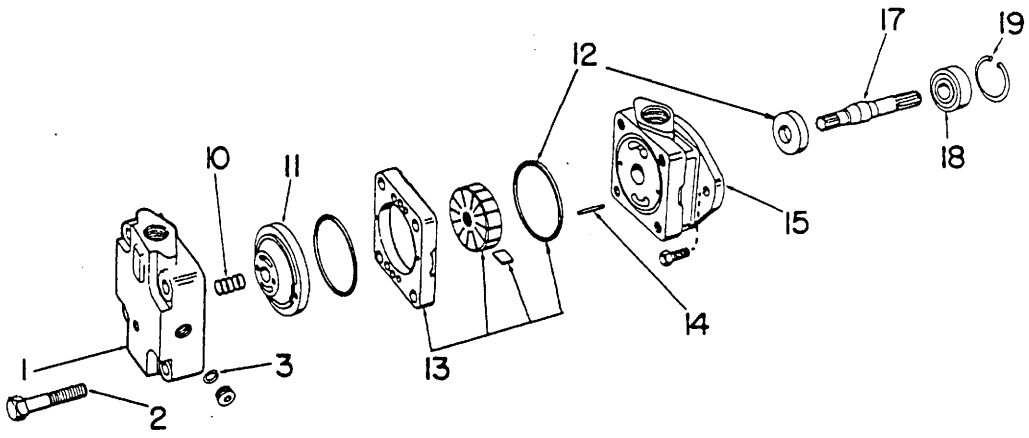

Ref. No.	Part Number	Quan. Req'd.	Name and Description
	65242	1	HYDRAULIC PUMP COMPLETE
1	29553	1	COVER
2	29554	4	SCREW
10	24370	1	SPRING
11	24371	1	PRESSURE PLATE W/BUSHING
	24372	1	BUSHING FOR ABOVE
12	24373	1	SEAL KIT
13	29556	1	CARTRIDGE KIT
14	29557	2	PIN
15	28801	1	BODY
17	29555	1	SHAFT
18	24365	1	BEARING
	24377	1	BEARING SNAP RING
19	24366	1	SNAP RING

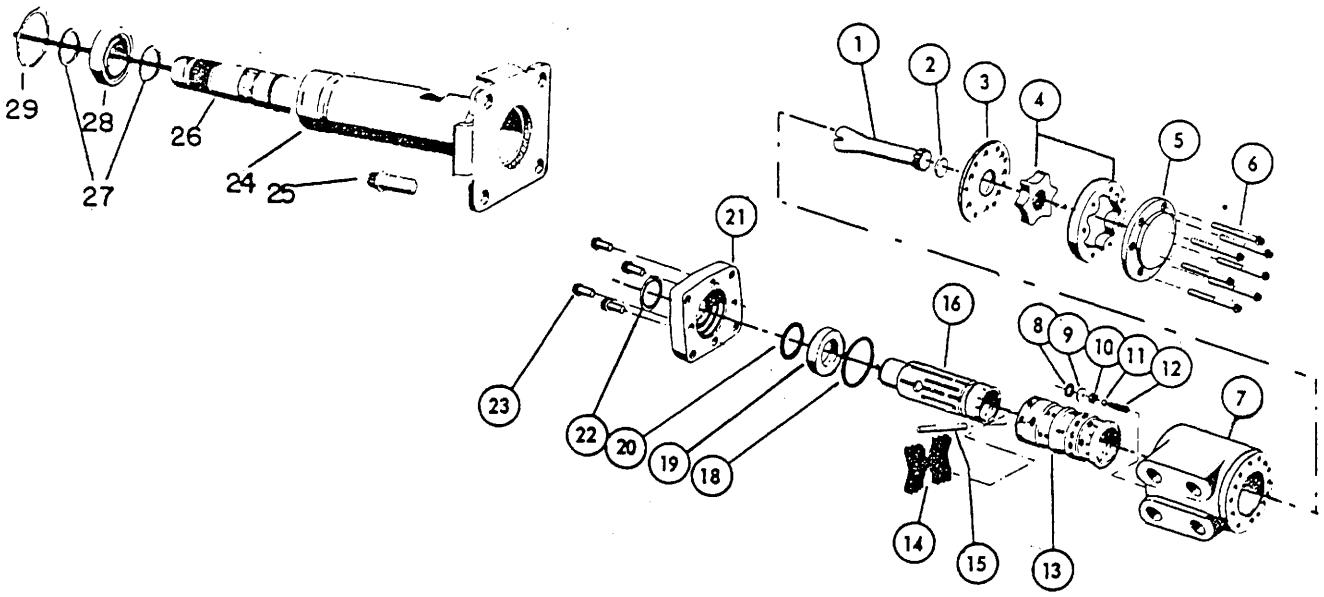

Ref. No.	Part Number	Quan. Req'd.	Name and Description
	41937	1	ORBITROL STEERING CONTROL UNIT W/COLUMN
	23689	1	SEAL KIT, INCLUDES 1 EACH ITEMS 8, 18, 20, 22
	26733	1	CONTROL UNIT ONLY, LESS COLUMN & WHEEL
1	26726	1	DRIVE
2	26727	1	SPACER
3	26693	1	PLATE
4	26728	1	GEROTOR
5	26729	1	END CAP
6	26730	7	CAPSCREW
7	26718	1	CONTROL PARTS ASSEMBLY, INCLUDES ITEMS 7 THRU 16 *
8	22845	1	"O" RING
9	26719	1	SEAL PLUG
10	26720	1	CHECK SEAT
11	26721	1	STEEL BALL
12	26722	1	SPRING
13	*	1	CONTROL SLEEVE
14	26723	6	CENTERING SPRING
15	26725	1	CENTERING PIN
	26724	2	NYLON DISC, FOR ABOVE
16	*	1	SPOOL
18	26700	1	"O" RING
19	26717	1	CAP LOCATOR
	26716	1	RACE, FOR ABOVE
	26715	1	NEEDLE BEARING, FOR ABOVE
20	26712	1	QUAD RING SEAL
21	26714	1	MOUNTING PLATE
22	26703	1	OIL SEAL
23	26713	4	CAPSCREW
24	26731	1	COLUMN & FLANGE 203281 ASSY
25		4	CAPSCREW, 3/8 UNC x 3/4 LG.
26	26732	1	SHAFT
27	24544	2	SNAP RING
28	24543	1	BEARING
29	24545	1	SNAP RING

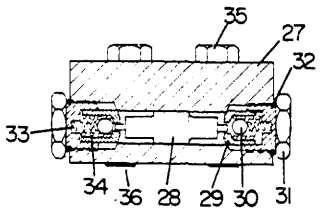

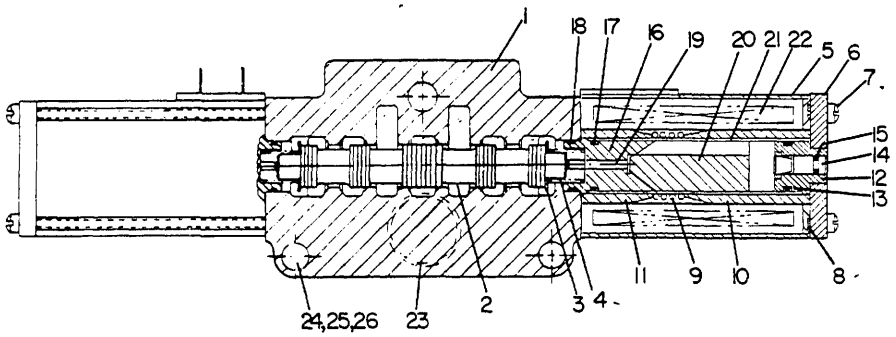

Ref. No.	Part Number	Quan. Req'd.	Name and Description
	49018	1	STEERING VALVE ASSEMBLY
	A29309	1	SEAL KIT FOR ABOVE
1	26860	1	BODY
2	26840	1	SPOOL
3	26841	2	WASHER
4	26842	2	SPRING
5	26843	2	SOLENOID, CASE & TUBE ASS'Y, INCL. ITEMS 6 THRU 21
6		2	END PLATE
7		4	SCREW
8		2	HUBBARD WASHER
9		2	SPRING
10		2	OUTER FLUX SLEEVE
11		2	INNER FLUX SLEEVE
12		2	EXTERNAL PUSH PIN GUIDE
13	29311	2	"O" RING
14		2	ACTUATOR PUSH PIN
15	29310	2	QUAD RING
16		2	FEMALE CONE
17	29311	2	"O" RING
18	29312	2	"O" RING

Ref. No.	Part Number	Quan. Req'd.	Name and Description
19		2	PUSH PIN
20		2	PLUNGER
21		2	GUIDE TUBE
22	24263	2	SOLENOID COIL
23	26845	1	"O" RING
24	26844	2	MOUNTING BRACKET
25		3	BOLT, 3/8 UNF x 3 1/4 LG.
26		3	NUT, 3/8 UNF
	26859	1	DOUBLE LOCK VALVE - INCLUDES ITEMS 27 THRU 36
27		1	BODY
28		1	PISTON
29		2	POPPET
30		2	BALL
31		2	PLUG
32	26857	2	"O" RING
33		2	SPRING, SMALL
34		2	SPRING, LARGE
35		2	CAPSCREW
36	23290	2	"O" RING

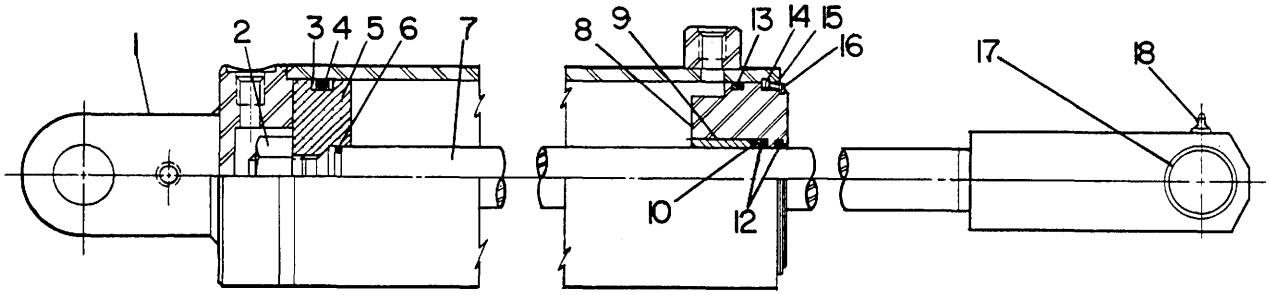

Ref. No.	Part Number	Quan. Req'd.	Name and Description
	65095	4	HYDRAULIC CYLINDER COMPLETE
	200366	1	SEAL KIT - INCLUDES ITEMS 3, 4, 6, 10 THRU 13
1	28704	1	TUBE ASSEMBLY
2		1	JAM NUT
3		2	BACK-UP WASHER
4		1	"O" RING
5	23690	1	PISTON
6		1	STATIC SEAL
7	28703	1	ROD
8	28702	1	HEAD GLAND
9	28705	1	HEAD GLAND SLEEVE
10		1	"O" RING
12		2	WIPER SEAL
13		1	SEAL
14	23694	1	LOCK RING
15	23692	1	SPACER
16	23695	1	LOCK RING
17	28706	1	ROD MOUNT BUSHING
18	1213-8	1	LUBE FITTING

THE FOLLOWING HOSE REFERENCE LISTS THE HOSE AND REUSABLE FITTINGS. SOME HOSE ASSEMBLIES REQUIRE INDEXING OF ONE FITTING WITH RESPECT TO THE OPPOSITE FITTING SO THAT ALIGNMENT WILL BE CORRECT UPON INSTALLATION WITHOUT TWISTING THE HOSE. NOTE THE POSTION OF THE FITTINGS BEFORE REMOVAL AND MAINTAIN THIS POSITION UPON REASSEMBLY.

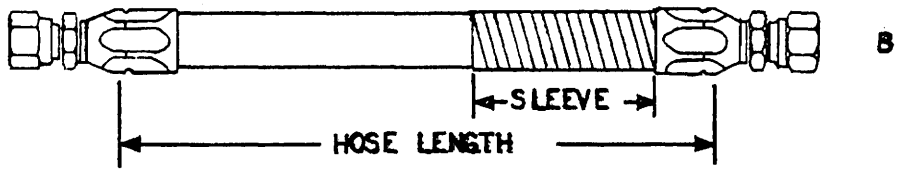

BANTAM NUMBER	HOSE LENGTH	AEROQUIP HOSE #	END A AEROQUIP #	END B AEROQUIP #	SLEEVE #	SLEEVE LENGTH
A35448	14"	2781-4	4721-4-4S	4721-4-4S		
A37084	83"	1503-8	PARKER 13/32-8-20620-1	PARKER 13/32-8-23920-1		
A37085	80"	1503-6	PARKER 5/16-6-20620-1	190261-6		
A37089	40"	1503-6	190261-6	190261-6		
A37099	86"	PARKER 1/2-343	PARKER 1/2-8-20634-1	PARKER 1/2-8-20634-1		
A37101	114"	PARKER 1/2-343	PARKER 1/2-8-20634-1	PARKER 1/2-8-20634-1		
A37155	28"	PARKER 5/8-821	PARKER 5/8-10-30682-4	PARKER 5/8-10-30682-4		
A37156	24"	1503-16	411-16	411-16		
A37226	41"	FC184-06	411-6	411-6		
A37227	12"	FC184-06	411-6	190261-6		
A37228	26"	FC184-06	411-6	190261-6		
A38201	115"	1503-6	PARKER 5/16-6-20620-1	190261-6		
A38678	54"	1508-12	4730-12S	190468-12S		
A38679	48"	1508-12	4730-12S	190469-12S		
A38752	132"	2781-8	4725-10-85	FC9789-08085 SPEC.		
A38775	75"	FC152-6	411-6S	190261-6S		
A39779	50"	1508-12	4730-12S	4730-12S		
A39780	52"	1508-12	4730-12S	4730-12S		

Bantam Number	Hose Length	Aeroquip Hose #	End A Aeroquip #	End B Aeroquip #	Sleeve #	Sleeve Length
A39781	53"	1508-16	4730-16S	190470-16S		
A41189	540"	2781-12	4722-12-12S	4721-12S	Kellems Slack Grip 033-08-004	
A41836	115"	FC107-04	FC9215-04-04S	FC9402-05-04S		
A41840	118"	2556-10	4797-10B	4797-10B		
A41841	21"	2781-8	190263-8	190263-8		
A41842	58"	1508-16	4730-16	4730-16		
A41843	62"	1508-16	4730-16	4730-16		
A49036	172"	1508-12	4730-12	190468-12		
A49351	19"	2556-10	4797-10B	4797-10B		
A49367	24"	1508-16	4730-16S	190470-16S		
A49368	19"	1508-16	190468-16S	190469-16		
A49369	19"	1503-16	411-16S	190261-16S		
A49493	224"	1508-12	190468-12	4730-12S		
A49495	6"	1508-12	190469-12S	4730-12S		
A49578	41"	1503-8	411-8S	190296-8	900952-12	40"
A49801	17"	1503-16	190261-16S	190261-16S		
A65056	114"	1503-8	411-8S	190296-8	90052-12	36"
A65057	114"	1503-6	411-6S	411-6S	900952-10	36"
A65058	14"	1503-8	411-8S	190296-8		
A65059	191"	1503-6	411-6S	411-6S	900952-10	36"
A65061	41"	FC184-12	411-12S	190265-12		
A65064	14"	1503-12	411-12S	190291-12S		
A65065	23"	1503-12	190261-12S	190261-12S		
A65093	69"	1503-6	190261-6S	190261-6S		
A65094	30"	1503-6	411-6S	190261-6S		
A65096	114"	1503-6	190261-6	190261-6		
A65097	191"	1503-8	411-8S	190296-8	900952-12	36"
A65098	185"	1503-8	411-8S	190296-8	900952-12	36"
A65099	10"	1503-8	411-8S	190296-8		

BANTAM NUMBER	HOSE LENGTH	AEROQUIP HOSE #	END A AEROQUIP #	END B AEROQUIP #	SLEEVE #	SLEEVE LENGTH
A65100	134"	1503-8	411-8S	190296-8	900952-12	36"
A65101	23"	1503-8	190296-8S	190296-8S		
A65102	~~40~~ 44"	1503-8	190296-8S	190296-8S		
A65139	23"	FC184-06	411-6S	190261-6S		
A65140	110"	FC184-06	411-6S	411-6S		
A65205	14"	FC184-06	401-6S	401-6S		
A65206	168"	2556-4	4797-4B	4797-4B		
A65207	36"	2807	190742-10S	38-190627-8-10		
A65208	50"	FC184-06	401-6S	401-6S		
A65209	65"	FC184-06	401-6S	401-6S		
A65210	123"	FC184-10	411-10	411-10		
A65211	77"	FC184-06	412-4-6	401-6	900952-8	12"
A65214	60"	1503-6S	190261-6S	190261-6S		
A65215	59"	1503-8	190296-8S	190296-8S		
A65216	58"	2781-10	4725-10S	4721-10S		
A65217	17"	1503-8	411-8S	190296-8		
A65218	17"	2781-10	4721-10S	4725-10S		
A65219	32"	1503-16	412-16-16S	190261-16S		
A65220	100"	1503-10	411-10S	190296-10S		
A65222	19.5"	1508-12	479003-20-12	4730-12S		
A65223	31"	1508-16	190469-16S	190468-16S		
A65224	9"	1508-16	411-16S	411-16S		
A65225	40"	1508-16	190469-16S	190469-16S		
A65226	20"	1503-16	411-16S	411-16S		
A65233	26"	1508-16	474403-20-16SX	190469-16S X CH6.		
A65234	18"	1508-16	476703-20-16S	190470-16S		
A65236	120"	2781-4	190287-4S	190287-4S		
A65295	113"	1503-6	190261-6S	190261-6S	700952-10	36"
A65306	19"	1503-6	411-6S	190261-6S		

Bantam Number	Hose Length	Aeroquip Hose #	End A Aeroquip #	End B Aeroquip #	Sleeve #	Sleeve Length
A65307	13"	1503-6	411-6S	411-6S		
A65308	17"	1503-6	411-6S	190261-6S		
A65309	46"	1503-6	190261-6S	190261-6S		
A65390	166"	1503-6	190261-6S	190261-6S	900952-10	36"
A65391	180"	1503-6	190261-6S	190261-6S	900952-10	36"
A65411	3.5"	McMaster Carr S238N	4797-4B	4797-4B		
A65443	196"	1508-12	4730-12S	4730-12S		
A65444	186"	1508-12	190469-12S	190470-12S		
A65445	162"	1508-12	4730-12S	4730-12S		
A65446	166"	1508-12	4730-12S	4730-12S		
A65469	105"	1508-12	190469-16S	479003-16-12S	900705-6S	40"
A65470	100"	1508-12	190468-16S	479003-16-12S	900705-6S	40"
A65473	54"	1508-12	190468-12S	190469-12S		
A65474	48"	1508-12	190469-12S	190469-12S		
A65475	10"	1508-12	4730-12S	190469-12S		
A65476	13"	1508-12	4730-12S	190469-12S		
A65477	143"	2556-10	4797-10B	4797-10B	900952-12	40"
A65498	24"	1503-12	411-12S	411-12S		
A65557	13"	1503-16	411-16	411-16		
A65655	83"	1503-8	190296-8S	190297-8S		
A65679	23"	1508-12	190469-12S	479003-20-12S		
A65688	19"	1503-16	411-16S	190265-16S		
A65693	181"	1503-6	411-6S	411-6S	900952-10	36"
A65696	24"	1503-8	190296-8	190296-8		
A65721	25"	1503-20	411-20S	190261-20S		
A65722	47"	1503-10	411-12-10S	190296-10S		
A65740	30"	2781-8	4721-8-8S	190264-8S		
A65742	69"	2781-8	190264-8S	190264-8S		
A65743	114"	2781-8	190264-8S	190264-8S		

Bantam Number	Hose Length	Aeroquip Hose #	End A Aeroquip #	End B Aeroquip #	Sleeve #	Sleeve Length
A65744	40"	2781-8	190264-8S	190264-8S		
A65745	115"	2781-8	190264-8S	4721-8-8S		
A65757	8.5"	1508-16	4730-16S	190468-16S		
A65758	10"	1508-16	190469-16S	190469-16S		
A65759	7"	1503-16	411-16S	411-16S		
A65761	53"	1503-10	190296-10S	190296-10S		
A65762	22.5"	2781-10	190264-10S	190264-10S		
A65763	66"	1503-8	411-8S	190296-8S		
A65787	125"	2781-8	190264-8S	190264-8S		
A65813	50"	FC184-12	190260-12S	190265-12S		
A65974	58"	2781-10	190264-10S	4725-10S		
A65996	60"	2781-10	SPECIAL	4725-10S		
A65997	16"	1503-20	411-20S	411-20S		
A65999	65"	1503-8	190296-8S	190296-8S		
A200926	24"	2781-10	4721-10S	4721-10S		
A200993	23"	1508-12	479003-20-12S	SPECIAL		
A200994	3"	1503-4	411-4-4S	190296-4S		
A200995	4"	1503-4	411-4-4S	190296-4S		

1398	11.2	22845	2A.4	23695	20.9
1474	5.6	22871	1.1	A23698	20.9
1689	7.4	22872	19.2	A23699	2.3
2228	14.1	22919	5.8	23700	2.3
2234	1.6	22920	5.8	THRU	
2235	19.3	23131	2A.4	23706	2.3
2335	2A.1	23133	2A.4	23709	2.3
2463	7.7	23142	2A.4	THRU	
2464	7.7	23248	10A.14	23713	2.3
2597	1.5	23249	10A.14	23716	1.7
2929	15.4	23250	10A.14	23721	1.7
3063	15.4	23251	10A.14	23725	1.7
3118	7.2	23252	10A.14	23726	1.7
3119	4.4	23253	10A.14	23727	1.7
5192	1.6	23254	10A.14	23728	1.7
6422	15.4	23290	20.8	23729	1.7
6653	9.2	23403	2A.4	23737	1.3
6924	19.2	23404	2A.3	23738	1.3
6969	19.3	23405	2A.6	23739	1.3
6970	19.2	23406	2A.3	23740	1.3
6972	19.2	23410	2A.6	23745	1.4
6975	19.3	23414	2A.6	23767	10.13
6977	19.2	23415	2A.6	A23790	18A.1
6984	19.2	23419	2A.5	23791	18A.4
7099	8.3	23420	2A.5	23792	18A.4
7103	9.2	23424	2A.3	23793	18A.4
8904	15.4	23429	10.12	23794	18A.4
9588	18A.1	23431	2A.3	23795	18A.4
9612	18A.1	23432	10A.11	23800	18A.4
9855	11A.2	A23436	2A.3	23801	18A.4
10711	1.5	A23437	2A.3	23803	18A.4
10723	10A.4	23438	2A.4	23804	18A.4
10726	10A.4	23439	2A.4	THRU	
10956	14.3	23440	2A.4	23809	18A.4
10957	14.3	23441	2A.4	23811	18A.4
11128	1.2	23442	2A.4	THRU	
11274	19.3	23443	2A.4	23817	18A.4
12385-2	9.3	23444	2A.4	23818	18A.5
A15025-2	10.2	23445	2A.4	23819	18A.5
16079	19.2	23446	2A.4	23820	18A.5
16238	19.2	23447	2A.4	23822	18A.5
16351	10A.5	23448	2A.4	23823	18A.5
17143	11.1	23450	2A.4	23824	18A.5
A18288-1	8.4	23554	6.1	23825	18A.5
A18386-1	11.1	23557	6.2	23826	18A.5
20283	18A.1	23558	6.2	23832	18A.5
20289	18A.1	23568	6.2	23833	18A.5
20970	18A.6	23676	2A.3	23834	18A.5
20971	18A.6	23677	2A.3	23835	18A.5
22015	10.13	23678	2A.3	23839	18A.5
22029	2A.3	23679	2A.3	23840	18A.5
22157	5.15	23680	2A.4	23841	18A.5
22158	5.15	23681	2A.4	23842	18A.5
22159	5.15	A23682	2A.3	23844	18A.6
22162	5.15	23683	2A.3	23846	18A.6
22163	5.15	23684	2A.3	23847	18A.6
22167	5.15	23689	20.6	23851	18A.6
22257	18A.1	23690	20.9	THRU	
22263	18A.1	23692	20.9	23854	18A.6
22264	18A.1	23694	20.9	23855	18A.5

SEE SUPPLEMENT

23856	18A.5	24371	20.5	26329	13.6
23857	18A.4	24372	20.5	26330	13.6
23858	18A.4	24373	20.5	26391	13.7
23859	18A.1	24377	20.5	26393	13.7
23861	18A.1	A24378	5.13	26410	18A.5
THRU		24388	5.13	26411	18A.5
23866	18A.1	24391	14.4	26413	5.15
A23867	18A.1	24458	10.12	26419	10.13
23868	18A.1	24461	18A.1	THRU	
23869	18A.2	24462	18A.1	26423	10.13
THRU		24467	9.2	26424	10.14
23876	18A.2	24481	10A.1	26425	10.13
A23877	18A.2	A24492	18A.1	26426	10.13
23878	18A.2	24496	5.13	26427	10.14
THRU		24530	18A.4	26428	10.14
23881	18A.2	24543	20.6	26429	10.14
23884	18A.7	24544	20.6	26430	10.13
THRU		24545	20.6	26431	10.13
23890	18A.7	24578	18A.1	26432	10.13
23892	18A.7	24579	18A.1	26433	10.14
23902	18A.7	24649	18A.5	26434	10.14
23911	17.1	24695	5.14	26435	10.14
23912	17.1	24696	5.14	26454	18A.7
23914	17.1	THRU		26455	18A.7
23915	17.1	24699	5.14	26456	18A.7
23917	17.1	24925	18A.5	26457	5.15
23922	17.1	25012	10A.13	THRU	
23936	6.1	A25038	10.12	26462	5.15
23937	6.2	25049	10A.12	26557	5.14
23938	6.2	25050	10A.12	26560	13.7
23939	6.2	25329	1.7	THRU	
23940	6.2	25357	10A.11	26578	13.7
23941	6.2	25367	1.7	26688	18A.4
23942	6.1	25434	8.5	26693	20.6
THRU		THRU		26700	20.6
23945	6.1	25438	8.5	26703	20.6
23946	6.2	25478	10A.12	26712	20.6
23947	6.2	25485	8.3	THRU	
A23955	10.8	25486	8.3	26733	20.6
23966	2A.6	25545	5.15	26789	15.5
23985	10.14	25568	4.4	26790	15.5
24003	5.14	25942	10A.11	26810	2.4
24015	5.14	25943	10.12	26840	20.7
THRU		25944	10A.12	THRU	
24019	5.14	25945	10A.11	26843	20.7
24021	5.14	25947	10A.11	26844	20.8
24022	5.14	25948	10A.11	26845	20.8
24025	5.14	25949	10A.11	26857	20.8
24026	5.14	25950	10A.12	26859	20.8
24027	5.14	25951	10A.11	26860	20.7
A24055	5.13	THRU		27092	2.3
24229	16.3	25955	10A.11	A27119	5.4
24230	16.3	25956	10.12	27125	14.4
24231	1.4	A25972	4.2	27205	5.14
24247	5.9	26317	17.1	27296	18.11
24250	5.9	26319	13.6	27297	18.11
24259	5.9	A26320	13.2	27298	18.11
24263	2.4	26322	13.6	27323	10.12
24365	20.5	THRU		27326	2A.6
24366	20.5	26325	13.6	27328	2A.5
24370	20.5	26327	13.6		

SEE SUPPLEMENT

27412	15.6	28544	18.4	29339	18.10
THRU		28545	18.4	29340	18.10
27417	15.6	28547	18.4	29342	18.10
27810	10A.14	28551	18.4	THRU	
27811	10A.14	THRU		29346	18.10
27812	10A.14	28556	18.4	29360	15.6
27814	10A.14	28559	18.4	29361	15.6
THRU		28562	18.4	29363	18A.5
27818	10A.14	28563	18.4	29409	5.11
27820	20A.14	28564	18.4	THRU	
27945	13.6	28565	18.4	29423	5.11
27946	13.6	28566	18.5	29424	5.12
27947	13.6	28571	18.7	THRU	
27949	13.6	THRU		29434	5.12
THRU		28590	18.7	A29435	5.11
27954	13.6	28610	18.7	29437	1.7
27971	6.2	28611	18.7	THRU	
27973	13.6	28617	18.10	29444	1.7
27974	13.6	28618	18.10	29445	5.13
27997	5.9	28620	18.10	29446	5.13
27998	5.9	THRU		29447	5.13
27999	5.9	28633	18.10	29448	5.13
28000	5.9	28635	18.5	29449	5.14
28001	5.9	THRU		29450	20.4
28003	5.9	28641	18.5	THRU	
THRU		28682	2A.5	29460	20.4
28012	5.9	THRU		A29463	20.4
28017	5.10	28696	2A.5	29464	20.4
THRU		28697	2A.5	THRU	
28037	5.10	28698	10B.11	29467	20.4
28056	5.9	28699	10B.11	A29468	20.4
28131	10B.11	28700	10B.11	29474	2.4
28132	10B.11	28702	20.9	29475	2.4
28217	9.5	THRU		29476	2A.7
THRU		28706	20.9	29477	2.4
28228	9.5	28801	20.5	29478	2A.7
28229	9.6	28898	18A.4	29480	10A.13
THRU		28906	18A.6	THRU	
28269	9;6	28907	18A.6	29488	10A.13
28270	9.6	29006	10A.13	29489	10.12
28271	9.7	29010	10A.13	29490	10A.13
THRU		29011	10A.133	THRU	
28310	9.7	29012	10A.13	29494	10A.13
28311	9.8	29013	10A.13	29495	10A.11
THRU		A29309	20.7	29499	10.12
28314	9.8	29310	20.7	29500	10.12
28315	9.5	29311	20.7	29501	10.11
28316	9.7	29312	20.7	29506	10.12
28317	9.7	29317	18.2	29508	10.11
28318	9.7	29318	18.3	29510	17.1
28493	18.2	29319	18.3	THRU	
THRU		29322	18.3	29517	17.1
28515	18.2	29324	18.4	29550	16.6
28516	18.3	29325	18.4	29551	16.6
THRU		29326	18.4	29552	20.5
28523	18.3	29327	18.5	29553	20.5
28526	18.3	29328	18.7	THRU	
THRU		29329	18.7	29555	20.5
28538	18.3	29330	18.7	29573	18A.4
28540	18.3	A29332	18.7	THRU	
28541	18.3	29338	18.8	29577	28A.4

SEE SUPPLEMENT

29579	18A.4	35996	14.1	A37085	20.3
29580	18A.5	35997	14.1	A37089	20.3
THRU		36511	4.3	A37099	1.5
29588	18A.5	36512	4.2	A37101	1.5
29589	18A.6	36516	4.3	F37103	7.11
29590	18A.6	36517	4.3	F37118	7.10
29591	18A.6	36519	4.2	F37121	7.11
30223	18.11	36524	4.2	37138	7.111
32082	6.3	THRU		37139	7.11
32089	8.4	36527	4.2	37140	7.10
32179	9.9	36529	4.3	37141	7.6
32599	1.1	36533	4.3	37142	7.10
32783-1	15.2	36534	4.3	A37155	5.2
32797	1.1	THRU		A37156	5.2
34851	17.1	36538	4.3	37165	6.2
34853	17.1	36542	4.3	37169	5.6
34855	17.1	36544	4.2	F37170	7.12
35224	15.2	36545	4.2	F37173	7.11
35225	15.3	36546	4.3	F37176	7.12
35249	10.8	F36552	2.2	F37179	7.11
35324	10B.10	F36553	2.2	37182	5.5
A35401-2	10B.2	36560	20.1	F37183	7.11
35443	14.3	36561	6.3	F37187	7.11
A35448	10.8	F36599	3.2	F37191	7.11
35477	10.7	36609	10.1	F37196	5.5
A35479-1	10.2	F36612	10.1	F37194	7.11
A35481-1	10B.2	36613	10.2	37203	16.2
A35486-1	10A.3	F36614	10.2	THRU	
35488	10A.3	F36616	10.3	37209	16.2
35489	10A.3	36621	10.3	37210	6.3
A35493-1	10.4	36622	10.3	37211	6.3
A35494-1	10A.4	F36623	10.3	37212	6.3
A35495-1	10.4	36629	10.4	37217	6.2
35496	10A.4	F36630	10.4	A37226	16.2
A35497-1	10A.4	F36631	10.4	A37227	16.2
A35498-1	10A.4	36636	10.4	A37228	16.2
A35503-1	10.4	36637	10.5	F37270	1.5
35504	10A.4	36638	10.5	F37273	1.6
35508	10.2	36642	10.6	37278	1.5
35549-5	3.2	36643	10.6	37281	1.6
A35551-1	11A.1	36646	10.6	A37290	9.1
35553	11.1	36659	11.1	A37291	9.1
35554	11A.2	36665	11.2	A37292	9.2
35559	7.2	36667	11.1	37298	7.8
35565	11.2	36668	11.1	F37554	5.8
35566	11.2	36671	10.9	F37556	5.8
35567	11.2	B36692	3.2	F37562	1.2
A35568-1	11.2	F36782	15.3	F37564	1.2
35639	10.10	F36892	7.2	F37568	1.2
35644	10.2	F37009	5.5	37558	5.7
35646	10.2	F37018	7.3	37589	18.11
35647	10.2	F37028	7.3	37591	18.11
35648	14.3	37031	7.2	37593	20.2
35649	14.3	37032	14.5	37594	16.2
A35717-1	10.1	F37044	7.3	37614	18.11
35817	10.1	37049	7.3	37615	18.11
35873	10.8	F37053	7.3	37642	1.1
35886	11.1	37055	7.4	37650	7.7
35887	11.1	F37060	3.1	37668	2.2
35994	14.1	37064	3.1	37671	19.2
35995	14.1	A37084	20.3	37678	19.3

SEE SUPPLEMENT

37680	19.4	38570	9.2	A39779	10.9
37694	16.2	F38623	3.2	A39780	10A.9
37695	16.2	F38637	10.1	A39781	10A.9
F37734	10.5	38663	10.1	F39993	16.2
F37763	19.3	38670	10A.8	39997	16.2
F37786	15.4	A38678	10.8	40586	1.2
37820	8.4	A38679	10.8	A40628	8.2
37827	1.6	F38698	10.6	40680	2A.3
F37851	8.2	38705	10.7		
F37852	8.2	F38723	11.1		
F37862	8.2	38727	11.2	40903	7.6
F37863	8.2	38732	10.6	40915	19.2
A37865	8.2	38744	13.3	41101	1.4
37886	15.2	38747	13.3	41110	1.4
37893	7.3	A38750	13.2	41181	5.8
F37931	15.4	A38752	10.9	41219	10B.7
37959	15.4	38753	13.3	A41258	11B.1
37960	15.4	38754	13.4	A41260	10A.7
38030	18.11	38755	13.2	F41264	12.1
38031	18.11	38756	13.4	F41271	11B.1
38043	18.11	38757	13.3	41272	11.2
38122	19.3	38758	13.3	A41275	12.1
38124	19.2	38759	13.4	41277	12.2
38186	1.4	A38760	10B.4	41278	12.2
F38187	1.4	38761	10.4	F41279	12.2
A38195	1.4	F38762	10A.4	41281	12.1
38197	1.4	F38765	10A.4	F41282	12.1
38198	7.10	38768	10.4	41285	12.2
38199	10A.6	F38769	9.4	41287	12.1
A38201	20.2	38774	9.4	A41297	12.1
F38312	7.10	A38775	9.4	41315	13.3
38315	7.10	38776	9.3	41317	13.2
F38316	7.10	38777	8.2	41321	13.2
38319	7.10	38827	18.11	41324	13.2
38320	7.10	38828	18.11	41325	13.3
38321	7.10	38829	18.11	41327	13.3
38322	7.10	38850	14.6	41329	13.3
F38329	7.2	38851	14.6	41331	13.2
F38330	7.2	A38855	10.7	41333	13.2
F38331	7.2	F38856	10.7	41337	8.4
F38334	7.3	38867	10.7	F41468	7.2
F38337	7.2	F38871	11.2	41472	7.2
F38339	7.3	A38872	10A.7	41473	7.2
F38388	5.8	F38873	10A.7	41474	7.2
38392	9.2	38874	10A.7	F41476	7.2
38404	10A.2	38875	10A.7	F41477	7.2
F38461	11B.1	F38876	10A.7	41519	6.3
38473	11B.2	38879	10A.7	41520	6.3
F38474	11B.2	F38891	11A.1	41535	3.2
F38475	11B.2	38895	11.1	41564	10A.1
F38476	11B.2	F38906	11A.2	41575	13.2
F38480	11B.2	38908	11.2	41586	10A.10
38487	11B.3	38909	11.2	41587	10A.10
38488	11B.3	F38910	11A.1	41605	10.13
38489	11B.3	F38921	11B.2	41711	10.9
38490	11.2	A38933	10.7	41712	10.9
38491	11B.2	A38934	11.7	41789	5.7
38493	11B.3	38937	10A.8	41792	10.4
38494	11B.3	F38994	11.1	A41823	14.1
38495	11B.3	38995	11.2	A41836	15.4
38552	5.8	38998	10.6	A41840	10.9
A38556	5.8				

SEE SUPPLEMENT

A41841	10.9	F49258	10A.2	49688	13.4
A41842	10.9	F49260	10.2	F49690	13.3
A41843	10.9	F49269	10.1	49698	14.3
F41933	14.1	49295	6.3	49762	6.2
F41934	14.1	49296	6.3	49763	6.2
41938	16.4	A49300	12.1	49764	6.2
41939	16.4	A49301	6.3	49765	6.2
A41940	16.4	A49304	11.1	49766	6.2
41941	16.4	A49306	11A.1	49767	6.1
41942	16.4	F49307	11A.2	49768	10.11
41943	16.4	F49310	11.2	A49769	14.1
F41944	16.4	49313	11A.2	49781	18A.1
41945	16.4	F49315	11.2	49786	11.2
F41950	14.4	49317	11.1	49817	10A.13
41977	10.9	F49322	10B.2	53768	15.3
41979	20.1	F49331	14.4	58344	7.5
41980	13.5	F49338	14.5	A59160	5.5
43340	10A.10	A49351	14.3	59161	5.4
43407	10A.10	49355	13.2	F59162	5.4
43481	19.2	49356	13.2	60235	1.4
A43820	14.3	49357	6.1	F65000	1.1
44220	15.3	49358	6.2	F65007	15.4
45843	5.9	F49362	14.5	A65032	4.2
45973	2A.5	A49367	14.6	A65033	4.2
46151	4.3	A49369	5.3	A65035	4.3
46152	4.3	49375	14.6	A65036	4.4
46581	7.5	F49377	14.6	65042	4.4
A47307	10.3	B49379	14.6	F65043	4.3
A47310	10.3	49380	14.6	65045	4.2
A47345	10A.3	49381	14.6	65047	4.2
A47360	10A.3	49382	14.6	65048	4.2
47445	12.1	49383	2.2	65049	4.2
A47450	12.2	49404	9.3	A65053	6.1
47451	12.1	49405	13.6	65055	16.2
47452	12.2	49409	9.3	A65056	2A.2
47454	12.1	49412	9.3	A65057	2A.2
47455	12.1	49413	9.3	A65058	2A.2
47457	12.2	49414	9.3	A65059	2A.2
F47461	12.2	49415	9.3	65060	7.3
47462	12.2	49416	9.3	A65061	16.3
47463	12.1	F49417	9.3	F65062	7.3
A47463	12.1	49468	10B.7	A65064	16.3
47568	12.1	A49471	12.2	A65065	16.3
47569	12.1	F49474	10B.3	65066	16.3
F48542	2A.2	49492	10.4	65068	1.3
B49000	3.2	B49493	10B.8	F65070	15.3
A49036	10A.8	A49495	10A.9	65072	15.3
49125	5.4	F49503	10B.1	65073	15.3
THRU		F49520	10A.1	65074	15.3
49129	5.4	49525	10A.2	65075	7.3
49132	13.2	F49526	10A.1	F65078	7.3
49133	13.2	F49527	10B.6	65080	7.3
49136	13.2	49540	19.3	F65081	7.4
49137	13.2	49560	18A.1	F65083	7.3
49172	2.3	49561	10B.7	65085	7.3
49178	1.1	F49563	12.1	F65086	7.3
49214	19.3	49565	1.7	65088	7.3
A49250	10.4	A49578	2A.1	F65089	7.3
F49252	10.4	F49600	2A.1	A65093	20.2
F49253	10.4	49605	2A.1	A65094	20.2

SEE SUPPLEMENT

65095	20.9	A65234	5.2	F65409	5.8
A65096	20.2	F65235	7.5	A65411	5.8
A65098	2A.1	A65236	7.5	F65416	1.1
A65099	2A.2	F65237	7.5	F65418	1.3
A65100	2A.2	65241	5.13	F65419	1.3
A65101	2.1	65243	20.4	F65441	15.2
A65102	2.2	65244	5.11	F65449	5.3
A65103	2A.2	65248	8.5	65450	10.10
F65106	7.10	65249	8.2	F65451	7.3
65110	7.12	65250	8.2	F65453	7.3
F65112	7.7	65252	8.2	65458	2A.2
F65115	7.7	65253	8.3	F65463	14.4
65118	7.7	65254	8.2	F65467	14.4
F65132	1.3	65255	8.2	65468	14.4
F65134	1.3	F65267	6.3	A65469	14.4
65135	2A.7	65270	6.3	A65470	14.4
A65139	15.4	65274	7.8	A65473	10A.9
A65140	15.4	F65275	7.8	A65474	10A.9
F65142	3.1	65277	7.8	A65475	10A.10
F65148	7.7	F65278	7.8	A65476	10A.10
65152	1.3	F65286	7.8	A65477	10A.10
65153	1.3	65291	7.8	A65496	5.5
65159	15.2	F65293	18.11	A65498	5.2
65161	15.4	A65295	2.1	F65505	2A.2
65165	18.2	A65296	16.5	A65512	12.3
65166	18.2	F65297	16.5	65513	12.1
F65167	20.2	65298	2.4	F65514	12.2
F65182	1.2	F65300	18.11	F65515	12.4
65190	18.2	F65303	18.11	F65525	14.2
65191	18.2	F65305	18.11	A65526	14.2
F65192	1.2	A65306	16.5	65527	10.10
65196	15.2	A65307	16.5	A65532	12.3
F65199	19.2	A65308	16.5	65533	12.3
F65201	19.2	A65309	16.5	A65538	14.7
65204	19.3	A65310	16.5	A65539	14.7
A65205	19.4	65311	8.5	65541	12.3
A65206	19.4	A65313	14.6	F65558	12.1
A65207	19.2	F65314	7.3	65563	12.1
A65208	19.3	65315	7.2	65564	12.2
A65209	19.4	A65316	9.9	A65565	12.1
A65210	19.4	A65319	6.3	A65566	12.1
A65211	19.3	65321	7.3	F65567	12.2
65212	19.4	F65323	10A.6	F65568	12.3
65213	19.4	F65325	10B.6	65570	12.3
A65214	20.2	F65327	10A.3	F65572	18B.1
A65215	20.3	F65329	10A.3	F65573	18B.1
A65216	20.1	A65331	11.1	65577	12.3
A65218	20.2	F65334	11.1	F65581	12.3
A65219	20.2	F65339	11.2		
A65220	20.1	F65341	11.2		
A65222	5.3	65343	11.2		
A65223	5.2	65344	11.1		
A65224	5.3	65345	11.1		
A65225	5.3	F65346	11.2		
A65226	5.3	65370	15.2		
65227	5.2	F65371	2.1		
65228	5.1	65385	2.1		
65229	5.2	A65390	2.1		
65230	5.1	A65391	2.2		
A65233	5.2	F65393	5.6		

SEE SUPPLEMENT

SUPPLEMENT

PART NUMBER PAGE REFERENCE S-488, S-588, S-688

2930	14.2
2931	14.2
2938	14.2
2939	14.2
9513	14.9
B10883	14.9
B17006	12.3
18534	14.9
18535	14.9
18536	14.9
22828	14.10
22829	14.10
22834	14.10
22835	14.10
24241	14.9
24242	14.9
24243	14.9
26801	2.5
26802	2.4
26803	2.4
26804	2.5
26807	2.4
26808	2.4
26849	2.5
26858	2.4
27335	14.10
27343	14.10
29564	14.10
THRU	
29571	14.10
29594	2.4
29595	2.4
29596	2.4
29599	2.5
THRU	
29618	2.5
A29619	2.5
29620	2.4
A35685	14.9
37904	14.9
F38026	18B.1
38142	14.8
F38306	14.8
38936	14.7
F39918	14.8
39919	14.7
39920	14.7
39925	14.9
A41189	14.8
F41194	14.8
F41195	14.7
41590	14.2
49249	14.8
A65443	14.7
A65444	14.7
A65445	14.7
A65446	14.7