RUTHZIL TRATOR COMERCIAL DE PEÇAS LTDA 11 97083-6812 ROLANDO CITRANGULO

DOOSAN

SOLAR 500LC-V

PARTS LIST
LISTE DE PIECES DETACHEES

N°DE REFERENCE : 021- 00046JEF
HELY1 - 2807

DOOSAN Excavator S500LC-V



Filter		Interval(hr)
E/g oil filter	65.05510-5020A	250
E/g fuel filter	65.12503-5016B	500
Element-inner(air cleaner)	2474-9057	500
Element-outer(air cleaner)	2474-9051	500
Suction filter-oil tank	2471-9401A	2000
Filter-oil tank	2471-9051B	500
Filter-fuel tank	2471-9046	
Element-pilot filter	2471-1154	500
Aircon filter	2471-6050A	1000
Element-Air Breather	K1029257	1000

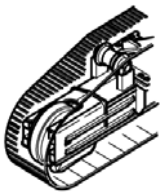

Under carriage		
Idler	2270-9405G	
Upper roller	2270-9402A	
Lower roller	2270-9404B	
Sprocket	108-00019	
Track link-without shoe	2272-6143B	
Track shoe-link+shoe	2272-6162D5	600G
Shoe (only) 16t	2273-6058D1	600G
Shoe (only) 20t	2273-6073D1	750G
Shoe (only) 20t	2273-6073D2	800G
Shoe (only) 20t	2273-6073D3	900G

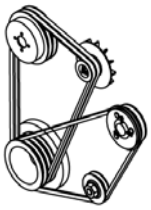

Belt	
Aircon Belt	2106-1019D2
Fan Belt	65.96801-0126A



Seal kit	
Seal kit-boom	2440-9295KT
Seal kit-arm	440-000135KT
Seal kit-bucket	440-00013AKT
Seal kit-track spring	2274-6014AKT
Seal kit-center joint	2480-9405BKT
Main pump	401-00255KT
Swing motor	2401-9242KT

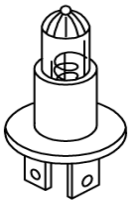

Bulb	
Bulb 24V 3W	S862203H
Bulb-halogen 24V 75/70W	2515-1022D1
Bulb 24V 70W	2515-1016D4

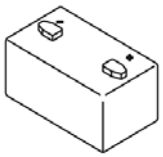



Battery / fuse / relay		
Battery	2506-6008	150AH
Fuse 10A	2527-1016	
Fuse 15A	2527-1017	
Fuse 20A	2527-1018	
Fuse 30A	2527-1025	
Fusible link 27A	2527-1023A	
Relay	2544-9033	
Battery relay	2544-9024	

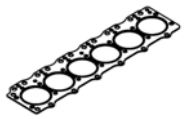

Engine Gasket kit	
Top overhaul gasket kit	65.99605-8028
All overhaul gasket kit	65.99601-8042



Teeth / adapter / side cutter	
Teeth	2713-1236
Adpater	2713-1273
Side cutter(RH)	2713-1240
Side cutter(LH)	2713-1241

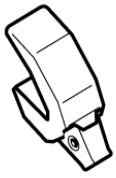

FOREWORD

● This parts list is shown the equipment components parts of「DOOSAN EXCAVATOR S500LC-V」.

1. HOW TO ORDER PARTS.

When ordering parts, please specify the follwing items as shown in the following example.

Ex.	1) Model of Machine	:	S500LC-V	(Shown on name plate on the side cover)
	2) Machine Serial No	:	HELY1-○○○○	(Shown on nameplate on the bed frame)
	3) Engine Serial No	:	DE12TIS	(Shown on Engine cylinder block)
	4) Part No.	:	401-00233	
	5) Description	:	MAIN PUMP	
	6) Q'ty	:	1	

2. HOW TO USE THIS PARTS LIST.

Key No. : It shows the reference no. on the illustration.

Part No. : It shows the part number of the parts which are included in an illustration.

Description : It shows the name of part. Components of an assembly part are shown with [•] marks and are shown on the line, or lines, below the assembly part. Also if the components with [•] mark is consists of further components part. These further components are shown with the marks [••].

Q'ty : It shows the quantity use for one machine. quantity of components show the quantity for one assembly part.

Service code : Abbreviations in this column have their own meaning as show below.

- **B** : The parts with this abbreviation shows that the part requires some work on it before installing in the machine.
- **D** : These parts are not serviceable, In case of the part with this abbreviation is a component of an assembly and is not available independently. The assembly part containing this part should be ordered.
- **K** : This means that the part is contained in the service part kit.
- **M** : This means that the part is available only with its mating parts altogether.
- **R** : The part with this abbreviation shows that the quantity of the part is changed depending on the machine, such as an adjusting shim etc.
- **S** : This part is specially provided as a service part, which was not provided in the machine before shipping from the factory.

G : This part need grade control and should be requested as the same grade of counter part.

OP : Optional parts.

EX : Specific design parts.

OS : Over-sized parts.

US : Under-sized parts.
(Part with abbreviation "OS" or "US" is described on the line below the standard sized part.)

: The part with this mark is newly added on that page of the equipment.

Serial no. : Serial No. shows the machine serial number which the parts were applied.
As to the engine Serial No. shows only engine serial number which the parts were applied.
Parts without any applicable serial number are used in every machine.

ICA : ICA shows the interchangeability between the original and the improved parts.
Abbreviations used in this column are as follows;

I : Part No. in the column of "Replaceable part" can be used instead of this part but not vice versa.

P : This must not be used for machine. The part No. in the column "Replaceable part" should be used instead.

T : Parts No. those in the column of "Replaceable part" can be used as an assembly instead of this part.

Y : This part and the part in the column of "Replaceable part" are interchangeable with each other.

Blank : This part has no "Repleaceable part"

Replaceable part : Interchangeable parts nos. and their required quantity are shown in this column.
If interchangeable improved parts are provided for the parts which you may order, the improved parts classified as "I", "P" "T" or "Y" may be supplied.

● When repairing, it is recommended to use our standard part.

● Researching the assembling parts from Part No., see the 「Parts Index」 of this parts list.

Sep. 2002

AVANT-PROPOS

● Cette liste de pieces apparait dans le 「DOOSAN EXCAVATEUR S500LC-V」.

1. COMMENT COMMANDER LES PICES.

Lorsque vous commanderez les pieces, veuillez specifier les articles suivants comme indiques dans l'exemple ci-dessous:

Ex.	1) Modele de machine	:	S500LC-V
	2) Serie de la machine	:	HELY1-○○○○
	3) Numero de serie du moteur	:	DE12TIS
	4) Numero de la piece	:	401-00233
	5) Description	:	POMPE
	6) Quantite	:	1

2. COMMENT UTILISER CE RECUEIL DE PIECES DETACHEES.

Numero de la cle : Indique le numero de reference de l'illustration.

Numero de la piece : Indique le numero de piece sur l'illustration.

Description : Nom de la piece. Les pieces composantes des pieces d'assemblage sont indiquees avec une marque [•] en dessous des pieces d'assemblage. Aussi, si les pieces composantes sont marques d'un [•]. Cela indique qu'ily a plusieurs pieces composantes, ces autres pieces composantes sont indiquees par un [••].

Quantite : Quantite, montre la quantite utilisee pour une machine, cependant Q'te des composants de pieces montre la quantite utilisee pour un assemblage de pieces.

Code de Service : L'Abveration est un composant d'un code de service qui a sa propre signification comme indique ci-dessous.

- B : La piece avec cette abreviation indique que la piece exige d'etre travaillee avant d'etre installee dans la machine.
- D : La piece avec cette abreviation est uun composant d'un assemblage et n'est pas diponible toute seule, la d'assemblage contenant cette peece dcvrait ctrc commandee
- K : Cette veut dire que la piece est inclue dans la trousse de pieces de service. "ensemble kit"
- M : Cela signifie que la piece est disponible uniquement avec as peice piece d'accouplement.
- R : La piece avec cette abreviation montre que la quantite de la piece est changee en fonction de la machine.

S : Cette piece est specialement approvisionnee en tant que piece de service, qui n'a pas ete livree dans la machine lors du depart de l'usine.

G : Cette piece a besoin d'on degerde controle et doit etre commande avec un niveau de degre equivalent.

OP : Prieces facultatives

EX : Pieces specifiquement dessinees

OS : Pieces demesurees

US : Pieces uop petites
La piece avec abreviation OS-US est decrite sur la ligne en dessous de la piece standard

: La piece avec cette marque vient d'ent d'etre rajoutee sur la page de l'equipement.

Numero de serie : Numero de serie indique le numero de serie de la machine avcc lesquels les pieces etaient appliquees.
En ce qui conceme le numero de serie du moteur. Celui-ci indique seulement le numero de serie du moteur sur lesquels les pieces etaient appliquess.
Les pieces qui n'ont aucun numero de serie applicable sont utilisees dans toutes les machines.

ICA : Indique l'interchangeabilite entre la piece originale et les piece ameliorees.
Les abreviations utilisees dans cette colonne sont les suivantes:

I : Piece numero dans la colonne de piece de piece de remplacement peut etre utilisee au lieu de cette piece mais pas l'inverse.

P : Ceci ne peut etrc utilise pour la machine. Le numero de piece dans colonne pieces remplacable devrait etre utilise a la place.

T : Numcros de pieces, ceux dans la colonne piece de remplacement' peuvent etre utilisees en tant qu'assemblage au lieu de cette piece.

Y : Cette piece et la piece dans la colonne piece de remplacement'sont.

Piece de rechange : Numeros de pieces interchangeables et leurs quantites requises sont indiques sur cette colonne. Si les pieces ameliorees interchangeables sont fournies, les pieces que vous pouvez commander sont classees de la facon suivante "I", "P", "T" ou "Y" peuvent etre fournies.

- Lors de reparation. il est recommande d'utiliser notre piece standard.
- Recherche de pieces d'assemblage a partir des numeros de pieces
  Regarder l'index des pieces qui se trouvent a la fin du livre.

Sep. 2002

CONTENTS
TABLES DES MATIERES

● ENGINE PARTS

● TIER-II ENGINE (DE12TIS)

Fig.	001	CYLINDER BLOCK	BLOC CYLINDRES	2
	002	TIMING GEAR CASE	CARTER DE DISTRIBUTION	4
	003	FLYWHEEL HOUSING	CARTER DE VOLANT MOTEUR	6
	004	DRIVING SYSTEM	SYSTEME D'CENTRAINEMENT	8
	005	CYLINDER HEAD	CULASSE	12
	006	CYLINDER HEAD COVER	COUVERTURE DE CULASSE	16
	007	TIMING SYSTEM	SYSTEME DE SYNCHRONISATION	18
	008	OIL PUMP	POMPE D'CHUILE	22
	009	OIL FILTER	FILTRE D'CHUILE	24
	010	OIL COOLER	RADIATEUR D'HUILE	26
	011	OIL PAN	CARTER D'HUILE	28
	012	COOLING WATER PIPE	CONDUITE D'EAU DE REFROIDISSEMENT	30
	013	WATER PUMP	POMPE D'CEAU	32
	014	COOLING FAN	VENTILATEUR	34
	015	EXHAUST MANIFOLD	TUBULURE D'CECHAPPEMENT	36
	016	INTAKE MANIFOLD	TUBULURE D'CENTREE	38
	017	TURBO CHARGER	CHARGEUR DE TURBO	40
	018	NOZZLE & HOLDER	INJECTEUR ET PORTE-INJECTEUR	42
	019	INJECTION PIPE	PIPE D'INJECTION	44
	020	INJECTION PUMP	POMPE D'INJECTION	46
	021	INJECTION PUMP DRIVE	LECTEUR DE POMPE D'CLNJECTION	48
	022	INJECTION PUMP MOUNTING	SUPPORT DE POMPE D'CLNJECTION	50
	023	FUEL PIPE	PIPE DE CARBURANT	52
	024	FUEL FILTER	FILTRE A GAZOLE	54
	025	ALTERNATOR MOUNTING	SUPPORT D'CALTERNATEUR	56
	026	STARTER	METTEZ EN MARCHE LE MOTEUR	58
	027	PRESSURE GAUGE	INDICATEUR DE PRESSION	60
	028	AIR CONDITIONER	CLIMATISATION	62
	029	ENGINE MOUNTING	MOTAGE POUR MOTEUR	64
	030	OVER HAUL GASKET KIT-TOP	PIECES DE RECHANGE	66
	031	OVER HAUL GASKET KIT-ALL	PIECES DE RECHANGE	68

● TIER-I ENGINE (DE12TIA)

110	CYLINDER BLOCK	BLOC CYLINDRES	69-3
120	TIMING GEAR CASE	CARTER DE DISTRIBUTION	69-7
130	FLYWHEEL HOUSING	CARTER DE VOLANT MOTEUR	69-9
140	DRIVING SYSTEM	SYSTEME D'ENTRAINEMENT	69-11
150	CYLINDER HEAD	CULLASSE	69-15
160	CYLINDER HEAD COVER	COUVERTURE DE CULASSE	69-19
170	TIMING SYSTEM	SYSTEME DE SYNCHRONISATION	69-21

180	OIL PUMP	POMPE D'HUILE	69-25
190	OIL FILTER	FILTRE D'HUILE	69-27
200	OIL COOLER	REFROIDISSEMENT DE HUILE	69-29
210	OIL PAN	CARTER D'HUILE	69-31
220	COOLING WATER PIPE	CONDUITE D'EAU DE REFROIDISSEMENT	69-33
230	COOLING WATER PUMP	POMPE D'CEAU	69-35
240	COOLING FAN	VENTILATEUR	69-37
250	EXHAUST MANIFOLD	TUBULURE D'ECHAPPEMENT	69-39
260	INTAKE MANIFOLD	TUBULURE DE PRISE	69-41
270	TURBO CHARGER	CHARGEUR DE TURBO	69-43
280	INJECTION NOZZLE	BEC D'INJECTION	69-45
290	INJECTION PIPE	PIPE D'INJECTION	69-47
300	INJECTION PUMP	POMPE D'INJECTION	69-49
310	INJECTION PUMP DRIVE	LECTEUR DE POMPE D'CLNJECTION	69-51
320	INJECTION PUMP MOUNTING	SUPPORT DE POMPE D'INJECTION	69-53
330	FUEL PIPE	PIPE DE CARBURANT	69-55
340	FUEL FILTER	FILTRE A GAZOLE	69-57
350	ALTERNATOR MOUNTING	SUPPORT D'ALTERNATEUR	69-59
360	STARTER	DEMARREUR	69-61
370	PRESSURE GAUGE	INDICATEUR DE PRESSION	69-63
380	AIR CONDITIONER	MONSIEUR CONDITIONER	69-65
390	ENGINE MOUNTING	MOTAGE POUR MOTEUR	69-67
400	OVER HAUL GASKET KIT-TOP	PIECES DE RECHANGE	69-69
410	OVER HAUL GASKET KIT-ALL	PIECES DE RECHANGE	69-71

● BODY PARTS

Fig.	1100	MAIN FRAME	BATI PRINCIPAL	70
	1110	COUNTER WEIGHT-ADDITIONAL	CONTRE-POIDS	72
	1120	ENGINE MOUNTING	MOTEUR	74
	1130	RADIATOR	RADIATEUR	76
	1140	RESERVE TANK	RESERVOIR	78
	1150	MUFFLER	SILENCIEUX	80
	1160	CAC PIPING	CHARGEE DE REFROIDISSEUR D'CAIR	82
	1170	AIR CLEANER ASS'Y	ENSEMBLE FILTRE A AIR	84
	1175	AIR CLEANER	FILTRE A AIR	86
	1180	PUMP MOUNTING	POMPE	88
	1190	FUEL PIPING	CONDUITES DE GAZOLE	90
	1200	FUEL TANK	RESERVOIR DE GAZOLE	92
	1210	SWING DEVICE ASS'Y	SYSTEME D'ORIENTATION	94
	1220	OIL TANK	RESERVOIR DE HUILE	96
	1230	OIL COOLER PIPING(1)	CONDUITES DE HUILE	98
	1240	OIL COOLER PIPING(2)	CONDUITES DE HUILE	100
	1250	OIL COOLER PIPING(3)	CONDUITES DE HUILE	102
	1260	MAIN PIPING(1)	CONDUITES DE BATI PRINCIPAL	104
	1270	MAIN PIPING(2)	CONDUITES DE BATI PRINCIPAL	106
	1280	MAIN PIPING(3)	CONDUITES DE BATI PRINCIPAL	108

1290	MAIN PIPING(4)	CONDUITES DE BATI PRINCIPAL	110
1300	MAIN PIPING(5)	CONDUITES DE BATI PRINCIPAL	112
1310	MAIN PIPING-ONE & TWO WAY	CONDUITES DE BATI PRINCIPAL	114
1320	ENGINE CONTROL ASS'Y	COMMANDE REGIME MOTEUR	116
1330	PILOT PIPING(1)	CONDUITES DE PILOTE	118
1340	PILOT PIPING(2)	CONDUITES DE PILOTE	122
1350	PILOT PIPING(3)	CONDUITES DE PILOTE	124
1360	PILOT PIPING(4)	CONDUITES DE PILOTE	126
1370	PILOT PIPING(5)	CONDUITES DE PILOTE	128
1380	PILOT PIPING(6)	CONDUITES DE PILOTE	130
1390	PILOT PIPING(7)	CONDUITES DE PILOTE	132
1400	PILOT PIPING(8)	CONDUITES DE PILOTE	134
1410	PILOT PIPING-BREAKER	CONDUITES DE PILOTE	136
1420	CONTROL STAND-L.H	CONSOLE DE COMMANDE	138
1430	CONTROL STAND-R.H	CONSOLE DE COMMANDE	142
1440	SEAT & ELECTRIC BOX	SIEGE ET ELECTRIQUE BOITIES	144
1450	SEAT MOUNTING	SIEGE LE SUPPORT	146
1460	SEAT	SIEGE	148
1470	DUCT COVER ASS'Y	CONDUITES COUVERCLE	150
1480	HEATER COVER ASS'Y	BOITIES DE CHAUFFAGE	152
1490	CABIN MOUNT ASS'Y	SUPPORT DE CABINE	154
1500	CABIN ASS'Y	CABINE	156
1510	CABIN(1)	CABINE	160
1520	CABIN(2)	CABINE	164
1530	CABIN(3)	CABINE	168
1540	CABIN(4)	CABINE	170
1550	CABIN(5)	CABINE	172
1560	SUPPORT	SUPPORT	176
1570	COVER(1)	COUVERCLE	178
1580	COVER(2)	COUVERCLE	180
1590	COVER(3)	COUVERCLE	182
1600	COVER(4)	COUVERCLE	184
1610	COVER(5)	COUVERCLE	186
1620	UNDER COVER	TOLES IMFERIEVRES	188
1630	BAFFLE	COUVERCLE	190
1640	ACOUSTIC FOAM	ENSEMBLE DE EPONGE	192
1650	COVER-NOISE KIT	COUVERTURE	194
1660	ACOUSTIC FOAM-NOISE KIT	ENSEMBLE DE EPONGE	196
1670	LUBRICATION PIPING	LUBRIFICATION	198
1680	ELECTRIC BOX ASS'Y(1)-BOX	EQUIPMENT ELECTRIQUE	200
1690	ELECTRIC BOX ASS'Y(2)-ELECTRIC PARTS	EQUIPMENT ELECTRIQUE	202
1700	ELECTRIC PARTS(1)-GAUGE & SWITCH PANEL	EQUIPMENT ELECTRIQUE	206
1710	ELECTRIC PARTS(2)-STAND R.H	EQUIPMENT ELECTRIQUE	208
1720	ELECTRIC PARTS(3)-STAND L.H	EQUIPMENT ELECTRIQUE	210
1730	ELECTRIC PARTS(4)-CABIN	EQUIPMENT ELECTRIQUE	212
1740	ELECTRIC PARTS(5)-CABIN LAMP	EQUIPMENT ELECTRIQUE	214

1750	ELECTRIC PARTS(6)-BATTERY	EQUIPMENT ELECTRIQUE	216
1760	ELECTRIC PARTS(7)-ENGINE	EQUIPMENT ELECTRIQUE	218
1770	ALTERNATOR	ALTERNATEUR	220
1780	ELECTRIC PARTS(8)-RELATED PARTS	EQUIPMENT ELECTRIQUE	222
1790	ELECTRIC WIRING(1)-BATTERY	POSE DE FILES ELECTRIQUES	224
1800	ELECTRIC WIRING(2)-ENGINE	POSE DE FILES ELECTRIQUES	226
1810	ELECTRIC WIRING(3)-RELATED PARTS	POSE DE FILES ELECTRIQUES	228
1820	AIRCONDITIONER(1)	REFRIGERATION	230
1830	AIRCONDITIONER(2)-AIRCON UNIT	REFRIGERATION	234
1840	HEATER PIPING	CONDUITES DE CHAUFFAGE	236
1850	NOISE FILTER ASS'Y	SILENCIEUX FILTRE	238

● TRACK PARTS

Fig. 2100	TRACK FRAME	TRAIN DE ROULEMENT	240
2110	IDLER	BARBOTIN	244
2120	TRACK SPRING	TENDEUR DE CHENILLE	246
2130	UPPER ROLLER	GALET SUPERIEUR	248
2140	LOWER ROLLER	GALET INFERIEUR	250
2150	TRACK SHOE ASS'Y-600G	MAILLON DE CHAINE	252
2160	TRAVEL PIPING	CONDUITES DE TRANSLATION	254
2170	CENTER JOINT	JOINT CENTRAL	256

● FRONT PARTS

Fig. 3100	BOOM-6.3m	FLECHE	258
3110	ARM-2.9m	BALANCIER	260
3120	BUCKET-2.55㎥(72")-SIDE PIN	GODET	262
3130	BUCKET-2.55㎥(72")-VERTICAL PIN	GODET	264
3140	BUCKET-2.87㎥(80")-SIDE PIN	GODET	266
3150	BUCKET-2.87㎥(80")-VERTICAL PIN	GODET	268
3160	BUCKET-3.2㎥(88")-SIDE PIN	GODET	270
3170	BUCKET-3.2㎥(88")-VERTICAL PIN	GODET	272
3180	BOOM PIPING-6.3m	CONDUITES DE FLECHE	274
3190	ARM PIPING-2.9m	CONDUITES DE BALANCIER	276
3200	LUBRICATION PIPING-6.3m BOOM	TUYAUTERIE AVANT DE LUBRIFICATION	278
3210	LOCK VALVE PIPING-6.3m	CONDUITES DE VERROU VANNE	280
3220	BOOM PIPING-6.3m ONE & TWO WAY	CONDUITES DE FLECHE	284
3230	ARM PIPING-2.9m ONE & TWO WAY	CONDUITES DE BALANCIER	286

● HYDRAULIC COMPONENTS

Fig. 4100	MAIN PUMP	POMPE	288
4110	MAIN PUMP-PUMP	POMPE	290
4120	MAIN PUMP-CONTROL	POMPE	294
4130	MAIN PUMP-EPPR VALVE	POMPE	298
4140	SWING MOTOR	MOTEUR D'ORIENTATION	300
4150	SWING REDUCTION GEAR	REDEUTEUR D'ORIENTATION	304
4151	SWING REDUCTION GEAR	REDEUTEUR D'ORIENTATION	305-1

4160	TRAVEL MOTOR	MOTEUR DE TRANSLATION	306
4170	TRAVEL MOTOR-ROTARY GROUP	MOTEUR DE TRANSLATION	308
4180	TRAVEL MOTOR-CONTROL	MOTEUR DE TRANSLATION	310
4190	BRAKE VALVE	VANNE DE FREIN	312
4200	PRESSURE CONTROL VALVE	VANNE DE COMMANDE	314
4210	VALVE	VANNE	316
4220	TRAVEL REDUCTION GEAR	BOITE REDUCTEUR	318
4230	CONTROL VALVE(1)	DISTRIBUTEUR	320
4240	CONTROL VALVE(2)	DISTRIBUTEUR	322
4250	CONTROL VALVE(3)	DISTRIBUTEUR	326
4260	REMOTE CONTROL VALVE	VANNE DE COMMAND A DISTANCE	330
4261	REMOTE CONTROL VALVE	VANNE DE COMMAND A DISTANCE	331-1
4265	REMOTE CONTROL VALVE-3 SWITCH	VANNE DE COMMAND A DISTANCE	332
4270	PEDAL VALVE	VANNE DE PEDALE	334
4280	SOLENOID VALVE	VANNE DE SOLENOIDE	336
4290	BREAKER VALVE	VANNE DE BRISEUR	338
4295	PILOT VALVE	VANNE	339-1
4300	BOOM CYLINDER-R.H	VERIN DE FLECHE	340
4310	BOOM CYLINDER-L.H	VERIN DE FLECHE	344
4320	ARM CYLINDER	VERIN DE BALANCIER	348
4330	BUCKET CYLINDER	VERIN DE GODET	352
4340	ARM CYLINDER-BOOM 6.3m	VERIN DE BALANCIER	356
4350	BOOM CYLINDER(R.H)-LOCK VALVE	VERIN DE FLECHE	360
4360	BOOM CYLINDER(L.H)-LOCK VALVE	VERIN DE FLECHE	364
4370	ARM CYLINDER-LOCK VALVE	VERIN DE BALANCIER	368
4380	ARM CYLINDER-LOCK VALVE	VERIN DE BALANCIER	372
4390	BUCKET CYLINDER-ARM 6.0m	VERIN DE GODET	376
4391	BUCKET CYLINDER-ARM 6.0m	VERIN DE GODET	379-1
4400	BUCKET CYLINDER-ARM 8.0m	VERIN DE GODET	380
4410	ARM CYLINDER-HEAVY DUTY	VERIN DE BALANCIER	383-1
4420	BUCKET CYLINDER-HEAVY DUTY	VERIN DE GODET	383-5

● OTHER PARTS

Fig. 5100	TOOLS	OUTILLAGE	384
5110	SPARE PARTS	PIECES DE RECHANGE	388
5120	NAME PLATE-EUROPE	PLAQUE D'IDENTIFICATION	390
5130	NAME PLATE-ENGLISH	PLAQUE D'IDENTIFICATION	394

● OPTION PARTS

Fig. 6100	FUEL FILLER PUMP ASS'Y	POMPE	398
6110	6-LAMP & BEACON(TELESCOPIC)	LAMPE & FEU DE CIRCULATION	400
6120	ROTATING BEACON	FEU DE CIRCULATION	402
6130	TRAVEL ALARM ASS'Y	ALARME DE VOYAGE	404
6140	TRAVEL/SWING ALARM ASS'Y	SIGNALISATEUR	406
6150	RETURN FILTER PRESS SWITCH	COMMUTATEUR DE FILTRE DE RETURUN	408
6160	ALTERNATOR	ALTERNATEUR	410

6170	F.O.G.S GUARD	GARDE	412
6180	CABIN LOW GUARD	GARDE	414
6190	SUN VISOR ASS'Y	PARE-SOLEIL	416
6200	SUN ROOF ASS'Y	COUVERTURE DE TOIT	418
6210	FLOOR PLATE-TILTING	TOLE DE PLANCHER	420
6220	OVERLOAD WARNING ASS'Y	AVERTISSEMENT DE SURCHARGE	422
6230	JOYSTICK VALVE ASS'Y-3 SWITCH	VANNE DE COMMAND A DISTANCE	424
6240	TRACK SHOE-750G	ENSEMBLE MAILLON DE CHAINES	426
6241	TRACK SHOE-750G	ENSEMBLE MAILLON DE CHAINES	427-1
6250	TRACK SHOE-800G	ENSEMBLE MAILLON DE CHAINES	428
6251	TRACK SHOE-800G	ENSEMBLE MAILLON DE CHAINES	429-1
6260	TRACK SHOE-900G	ENSEMBLE MAILLON DE CHAINES	430
6261	TRACK SHOE-900G	ENSEMBLE MAILLON DE CHAINES	431-1
6270	BOOM-7.1m	FLECHE	432
6280	BOOM-9.0m	FLECHE	434
6290	BOOM-11.0m	FLECHE	436
6300	ARM-2.4m	BALANCIER	438
6310	ARM-3.35m	BALANCIER	440
6320	ARM-4.0m	BALANCIER	442
6330	ARM-6.0m	BALANCIER	444
6340	ARM-8.0m	BALANCIER	448
6350	BUCKET-1.58㎥(48")-SIDE PIN	GODET	452
6360	BUCKET-1.58㎥(48")-VERTICAL PIN	GODET	454
6370	BUCKET-1.82㎥(54")-SIDE PIN	GODET	456
6380	BUCKET-1.82㎥(54")-VERTICAL PIN	GODET	458
6390	BUCKET-2.07㎥(60")-SIDE PIN	GODET	460
6400	BUCKET-2.07㎥(60")-VERTICAL PIN	GODET	462
6410	BUCKET-0.8m³	GODET	464
6420	BUCKET-1.1m³	GODET	466
6430	BUCKET-1.2m³	GODET	468
6440	BUCKET-1.6m³	GODET	470
6450	BUCKET-1.9m³	GODET	472
6460	BUCKET-2.1m³	GODET	474
6470	BUCKET-2.5m³	GODET	476
6480	BUCKET-1.75㎥-ROCK	GODET	478
6490	BUCKET-0.96m³-DITCH CLEANING	GODET	480
6500	BUCKET-1.17m³-DITCH CLEANING	GODET	482
6510	BOOM PIPING-7.1m	CONDUITES DE FLECHE	484
6511	BOOM PIPING-7.1m	CONDUITES DE FLECHE	485-1
6520	BOOM PIPING-9.0m	CONDUITES DE FLECHE	486
6530	BOOM PIPING-11.0m	CONDUITES DE FLECHE	488
6540	ARM PIPING-2.4m	CONDUITES DE BALANCIER	490
6550	ARM PIPING-3.35m	CONDUITES DE BALANCIER	492
6560	ARM PIPING-4.0m	CONDUITES DE BALANCIER	494
6570	ARM PIPING-6.0m	CONDUITES DE BALANCIER	496
6580	ARM PIPING-8.0m	CONDUITES DE BALANCIER	498

6590	LUBRICATION PIPING-7.1m BOOM	TUYAUTERIE AVANT DE LUBRIFICATION	500
6591	LUBRICATION PIPING-7.1m BOOM	TUYAUTERIE AVANT DE LUBRIFICATION	501-1
6600	LUBRICATION PIPING-9.0m BOOM	TUYAUTERIE AVANT DE LUBRIFICATION	502
6610	LUBRICATION PIPING-11.0m BOOM	TUYAUTERIE AVANT DE LUBRIFICATION	504
6620	LOCK VALVE PIPING-7.1m BOOM	CONDUITES DE VERROU VANNE	506
6630	LOCK VALVE PIPING-9.0m BOOM	CONDUITES DE VERROU VANNE	510
6640	LOCK VALVE PIPING-11.0m BOOM	CONDUITES DE VERROU VANNE	514
6650	BOOM PIPING-7.1m ONE & TWO WAY	CONDUITES DE FLECHE	518
6651	BOOM PIPING-7.1m ONE & TWO WAY	CONDUITES DE FLECHE	519-1
6660	BOOM PIPING-9.0m ONE & TWO WAY	CONDUITES DE FLECHE	520
6670	ARM PIPING-2.4m ONE & TWO WAY	CONDUITES DE BALANCIER	522
6680	ARM PIPING-3.35m ONE & TWO WAY	CONDUITES DE BALANCIER	524
6690	ARM PIPING-6.0m ONE & TWO WAY	CONDUITES DE BALANCIER	526
6700	NAME PLATE-ONE & TWO WAY	PLAQUE D'IDENTIFICATION	528
6710	CABIN ASS'Y-WINDOW GUARD	CABINE	530
6720	ROCK BUCKET-1.75m³	GODET	534
6730	BUCKET-2.5m³-WITHOUT TOOTH	GODET	536
6740	DOUBLE FUEL FILTER ASS'Y	FILTRE A GAZOLE	538
6750	BOOM - 7.1m - HEAVY DUTY	FLECHE	540
6755	BOOM PIPING-HEAVY DUTY	CONDUITES DE FLECHE	541-1
6760	ARM - 3.35m - HEAVY DUTY	BALANCIER	542
6765	ARM PIPING - HEAVY DUTY	CONDUITES DE BALANCIER	545-1
6770	ROCK BUCKET ASS'Y 1.48㎥ - HEAVY DUTY	GODET	546
6771	ROCK BUCKET ASS'Y 1.48㎥ - HEAVY DUTY	GODET	547-1
6780	LUBRICATION PIPING - H.D ARM 3.35m	LUBRIFICATION	548
6781	LUBRICATION PIPING - H.D ARM 3.35m	LUBRIFICATION	549-1
6790	UNDER COVER-HEAVY DUTY	TOLES IMFERIEVRES	550
6800	TRACK FRAME-HEAVY DUTY	TRAIN DE ROULEMENT	552
6810	TRACK SHOE ASS'Y-600G-HEAVY DUTY	MAILLON DE CHAINE	556
6811	TRACK SHOE ASS'Y-600G-HEAVY DUTY	MAILLON DE CHAINE	558
6812	TRACK SHOE ASS'Y-600G-HEAVY DUTY	MAILLON DE CHAINE	559-1
6820	CABIN GUARD - HEAVY DUTY	CABINE DE GARDE	560

● WORLDWIDE NETWORK

DE12TIS
(Tier-Ⅱ TYPE)

DATE	JUN. 30, 2007
REV. NO.	EXB07-06

Fig. 001 CYLINDER BLOCK
BLOC CYLINDRES

Serial No. ;

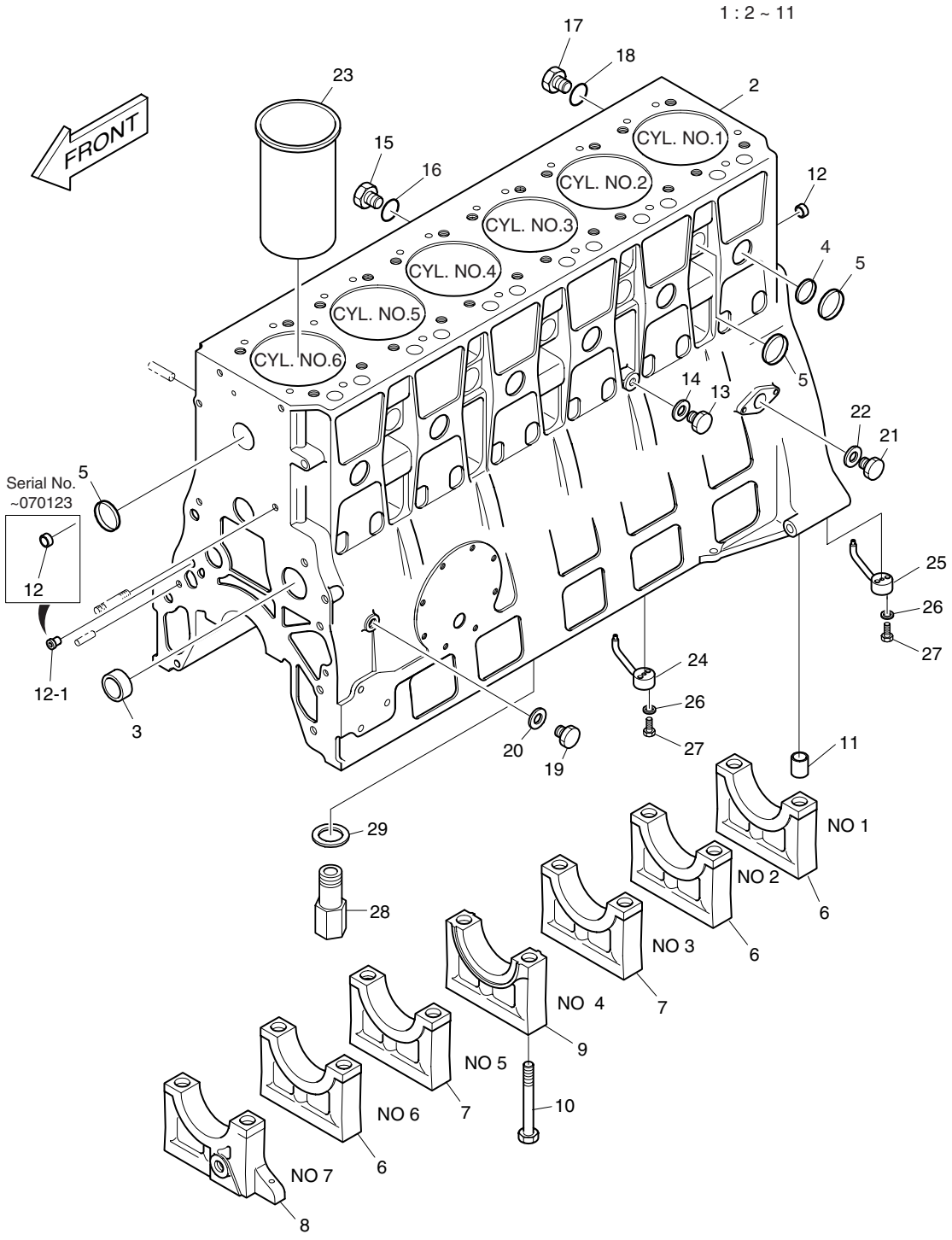

DATE	JUN. 30, 2007
REV. NO.	EXB07-06

Fig. 001 CYLINDER BLOCK BLOC CYLINDRES

Serial No. ;

Key No.	Part No.	Description	Description	Q'ty	S.C	Serial No.	ICA	Replaceable part	
								Part No.	Q'ty
001-1	65.01101-6213B	CYLINDER BLOCK ASS'Y	BLOC DE CYLINDRE	1		~030730	Y	65.01101-6213C	1
	65.01101-6213C	CYLINDER BLOCK ASS'Y	BLOC DE CYLINDRE	1		~040213	Y	65.01101-6213D	1
	65.01101-6213D	CYLINDER BLOCK ASS'Y	BLOC DE CYLINDRE	1		~051201	Y	65.01101-6213E	1
	65.01101-6213E	CYLINDER BLOCK ASS'Y	BLOC DE CYLINDRE	1		~060617			
	65.01101-6213F	CYLINDER BLOCK ASS'Y	BLOC DE CYLINDRE	1		060618~			
2	65.01101-0212A	. BLOCK;CYLINDER	. DOUILLE	1	D	~051201			
	65.01101-0212B	. BLOCK;CYLINDER	. DOUILLE	1	D	~060617			
	65.01101-0212C	. BLOCK;CYLINDER	. DOUILLE	1	D	060618~			
3	65.04410-0016	. BUSH;CAM SHAFT	. DOUILLE	4	B				
4	65.90302-0048	. PLUG;CORE	. BOUCHON DE	6					
5	06.15091-0326	. PLUG;CORE	. BOUCHON DE CHEMISE	15		~040213	I	65.91606-0037	15
	65.91606-0037	. PLUG;CORE	. BOUCHON DE CHEMISE	15		040214~			
6	65.01105-1177A	. BEARING;CAP NO.2.6	. PALIER	3	D	~030730			
	65.01105-1177B	. BEARING;CAP NO.2.6	. PALIER	3	D	030731~			
7	65.01105-1180A	. BEARING;CAP	. PALIER	2	D	~030730			
	65.01105-1180B	. BEARING;CAP	. PALIER	2	D	030731~			
8	65.01105-1179B	. BEARING;CAP NO.1	. PALIER	1	D	~030730			
	65.01105-1179C	. BEARING;CAP NO.1	. PALIER	1	D	030731~			
9	65.01105-1178A	. CAP BEARING;THRUST	. CHAPEAU	1	D	~030730			
	65.01105-1178B	. CAP BEARING;THRUST	. CHAPEAU	1	D	030731~			
10	65.90020-0036B	. BOLT;BEARING CAP	. BOULON A 6PANS	14					
11	65.91710-0035	. RING;LOCATING	. BAGUE DE CENTRAGE	14		~030428	Y	65.91710-0035B	14
	65.91710-0035B	. RING;LOCATING	. BAGUE DE CENTRAGE	14		030429~			
12	65.91606-0041	PLUG;CORE HOLE	BOUCHON	2		~070123			
	65.91606-0041	**PLUG;CORE HOLE**	BOUCHON	1		070124~			
12-1	**65.01605-0008**	**NOZZLE;SPRAY**	JET DE BEC	1		070124~			
13	65.90310-0137	SCREW;PLUG M16X1.5X20	BAGUE D'ETANCHEITE	1					
14	06.56190-0709	RING;SEAL	BAGUE D'ETANCHEITE	1					
15	65.90310-0136	SCREW;PLUG	VIS	1		~040421	Y	65.90310-0136A	1
	65.90310-0136A	SCREW;PLUG	VIS	1		040422~			
16	06.56190-0718	RING;SEAL	BAGUE	1					
17	06.08092-2403	SCREW;PLUG M12X1.5	BAGUE D'ETANCHEITE	1					
18	06.56190-0703	RING;SEAL	VIS	1					
19	65.90310-0131	SCREW;PLUG	VIS	1					
20	06.56190-0712	RING;SEAL	BAGUE D'ETANCHEITE	1					
21	65.90310-0149A	SCREW;PLUG M26X1.5	VIS	1					
22	06.56190-0726	RING;SEAL	BAGUE D'ETANCHEITE	1					
23	65.01201-0072	LINER;CYLINDER	RONDELLE DE BUTEE	6		~040706	Y	65.01201-0072A	6

DATE	JUN. 30, 2007
REV. NO.	EXB07-06

Fig. 001 CYLINDER BLOCK
BLOC CYLINDRES

Serial No. ;

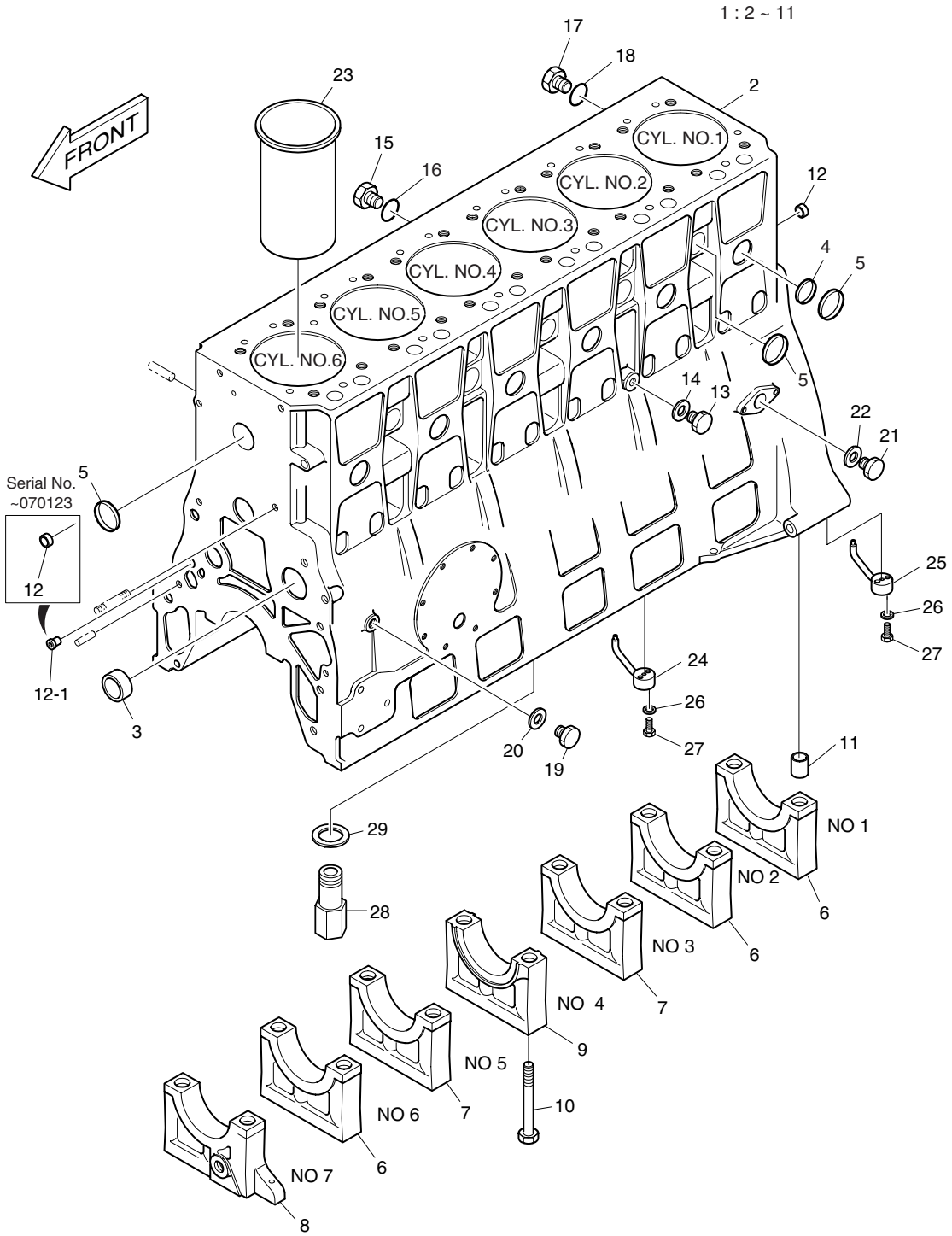

DATE	JUN. 30, 2007
REV. NO.	EXB07-06

Fig. 001 CYLINDER BLOCK
BLOC CYLINDRES

Serial No. ;

Key No.	Part No.	Description	Description	Q'ty	S.C	Serial No.	ICA	Replaceable part	
								Part No.	Q'ty
001-23	65.01201-0072A	LINER;CYLINDER	RONDELLE DE BUTEE	6		040707~			
24	65.01601-6006	OIL SPRAY NOZZLE(NO.1. 4. 5)	BEC	3					
25	65.01601-6007	OIL SPRAY NOZZLE(NO.2. 3. 6)	BEC	3					
26	65.90001-0126	BOLT;HEX	BOULON A 6PANS	12					
27	06.16044-0208	WASHER;SPRING	RONDELLE PLATE	12					
28	65.05405-7021	RELIEF VALVE ASS'Y	VANNE	1					
29	06.56190-0704	RING;SEAL	BAGUE D'ETANCHEITE	1					

DATE	DEC. 15, 2006
REV. NO.	EXB06-13

Fig. 002 TIMING GEAR CASE
CARTER DE DISTRIBUTION

Serial No. ;

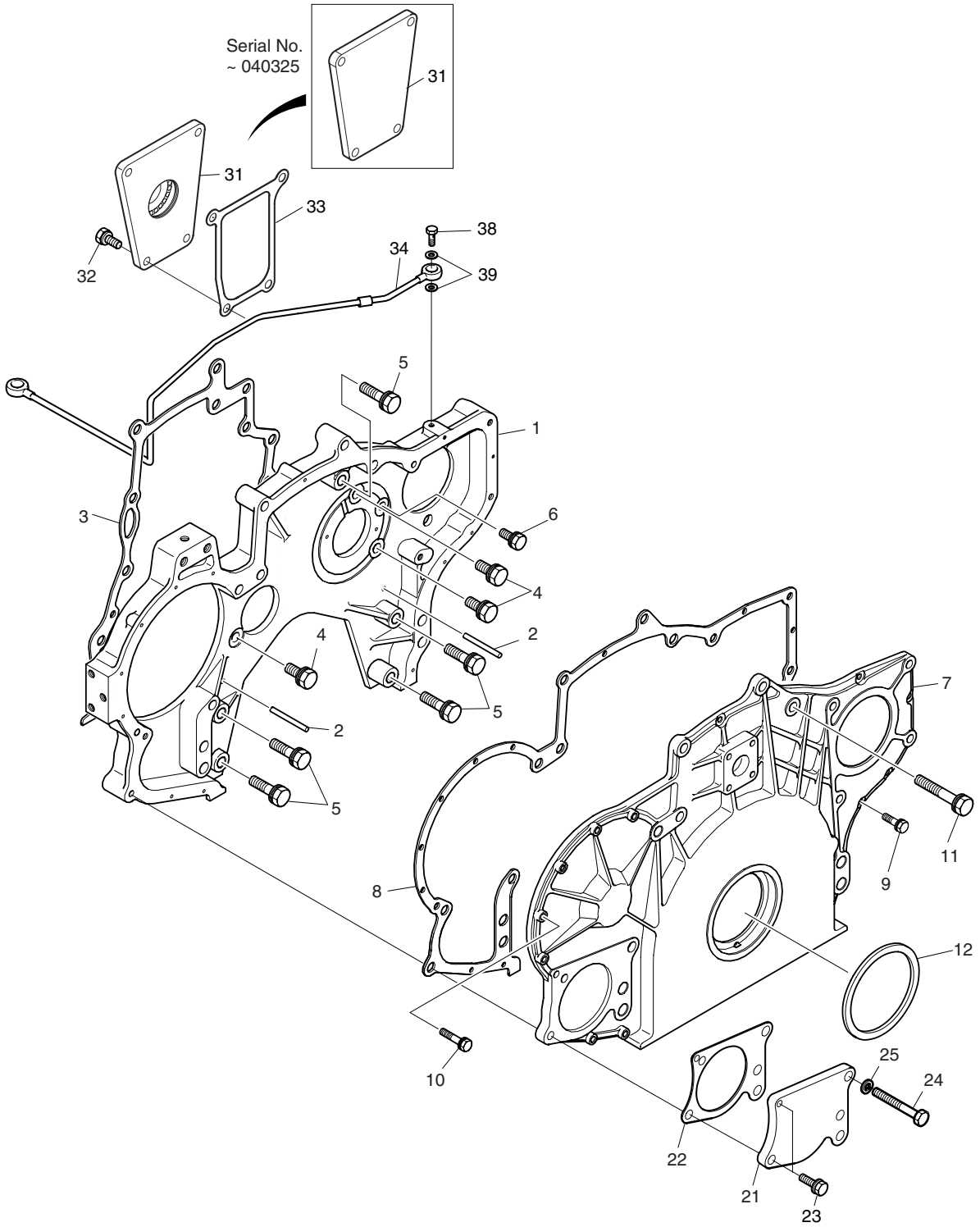

DATE	DEC. 15, 2006
REV. NO.	EXB06-13

Fig. 002 TIMING GEAR CASE
CARTER DE DISTRIBUTION

Serial No. ;

Key No.	Part No.	Description	Description	Q'ty	S.C	Serial No.	ICA	Replaceable part	
								Part No.	Q'ty
002-1	65.01304-0023C	CASE;TIMING GEAR	CAS DE VITESSE DE	1					
2	65.91010-0017	PIN;DOWEL M6X60	GOUPILLE D'AJUSTAGE	2					
3	65.01903-0048B	GASKET	JOINT	1					
4	06.01943-3317	BOLT ASS'Y M12X1.5X30	BOULON A 6PANS	3					
5	06.01943-3320	BOLT ASS'Y M12X1.5X45	BOULON A 6PANS	5					
6	06.01913-3215	BOLT ASS'Y M10X25	BOULON A 6PANS	1					
7	65.01305-5049G	T.G.C. COVER ASS'Y	COUVERCLE	1					
8	65.01903-0050	GASKET;T.G.C. COVER	COUSSINET COTE STD	1					
9	06.01923-2914	BOLT ASS'Y M6X22	BOULON A 6PANS	6					
10	06.01923-2917	BOLT ASS'Y M6X30	BOULON A 6PANS	7					
11	06.01953-3326	BOLT ASS'Y M12X1.5X75	BOULON A 6PANS	3					
12	65.01510-0157	SEAL;OIL	JOINT	1					
21	65.91601-0010	COVER	COUVERCLE	1					
22	65.47901-0010	GASKET;P/S PUMP	PALIER	1					
23	06.01913-3219	BOLT ASS'Y M10X40	BOULON A 6PANS	2					
24	06.01013-9221	BOLT;HEX M10X80	BOULON A 6PANS	1					
25	06.16731-2108	WASHER;SPRING	RONDELLE	1					
31	65.91601-0003	COVER;BLIND	COUVERCLE	1		~040325			
	65.91601-6003	COVER;BLIND	COUVERCLE	1		~040715	Y	65.91601-6003A	1
	65.91601-6003A	COVER;BLIND	COUVERCLE	1		~051021	I	65.91601-6005	1
	65.91601-6005	COVER;BLIND	COUVERCLE	1		051022~			
32	06.01924-3217	BOLT ASS'Y	BOULON A 6PANS	4					
33	65.54901-0025A	GASKET;AIR COMPRESSOR	PALIER	1					
34	65.05701-5361	OIL PIPE ASS'Y	CONDUITE	1					
38	65.98150-0056	SCREW;HOLLOW	VIS CREUSE	1					
39	06.56180-0712	RING;SEAL	BAGUE D'ETANCHEITE	2					

DATE	DEC. 29, 2005
REV. NO.	EXB05-20

Fig. 003 FLYWHEEL HOUSING
CARTER DE VOLANT MOTEUR

Serial No. ;

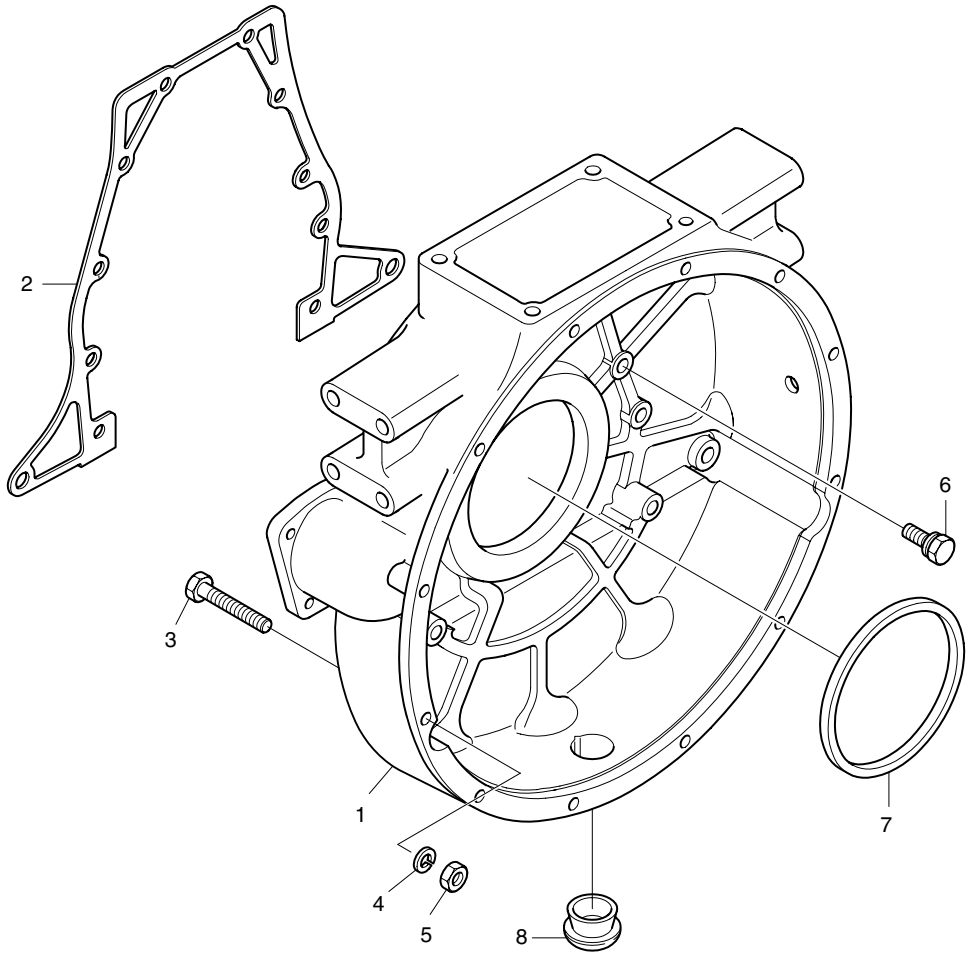

DATE	DEC. 29, 2005
REV. NO.	EXB05-20

Fig. 003 FLYWHEEL HOUSING
CARTER DE VOLANT MOTEUR

Serial No ;

Key No.	Part No.	Description	Description	Q'ty	S.C	Serial No.	ICA	Replaceable part	
								Part No.	Q'ty
003-1	65.01401-0099	HOUSING;FLY WHEEL	CARTER	1		~051012	Y	65.01401-0099A	1
	65.01401-0099A	**HOUSING;FLY WHEEL**	CARTER	1		051013~			
2	65.01904-0022A	GASKET;FLY WHEEL	COUSSINET COTE	1					
3	06.02074-0317	BOLT;REAMER M14X2X90	BOULON A 6PANS	2					
4	06.16731-2110	WASHER;SPRING	RONDELLE ELASTIQUE	2					
5	06.11063-8217	NUT;HEX M14	ECROU	2					
6	65.90001-6002	BOLT ASS'Y M12X1.5X45	BOULON A 6PANS	10					
7	65.01510-0158	SEAL;OIL	JOINT	1					
8	65.96002-0003	PLUG;RUBBER	BOUCHON CAOUTCHOUC	1					

DATE	JUN. 30, 2007
REV. NO.	EXB07-06

Fig. 004 DRIVING SYSTEM
SYSTEME D'CENTRAINEMENT

Serial No. ;

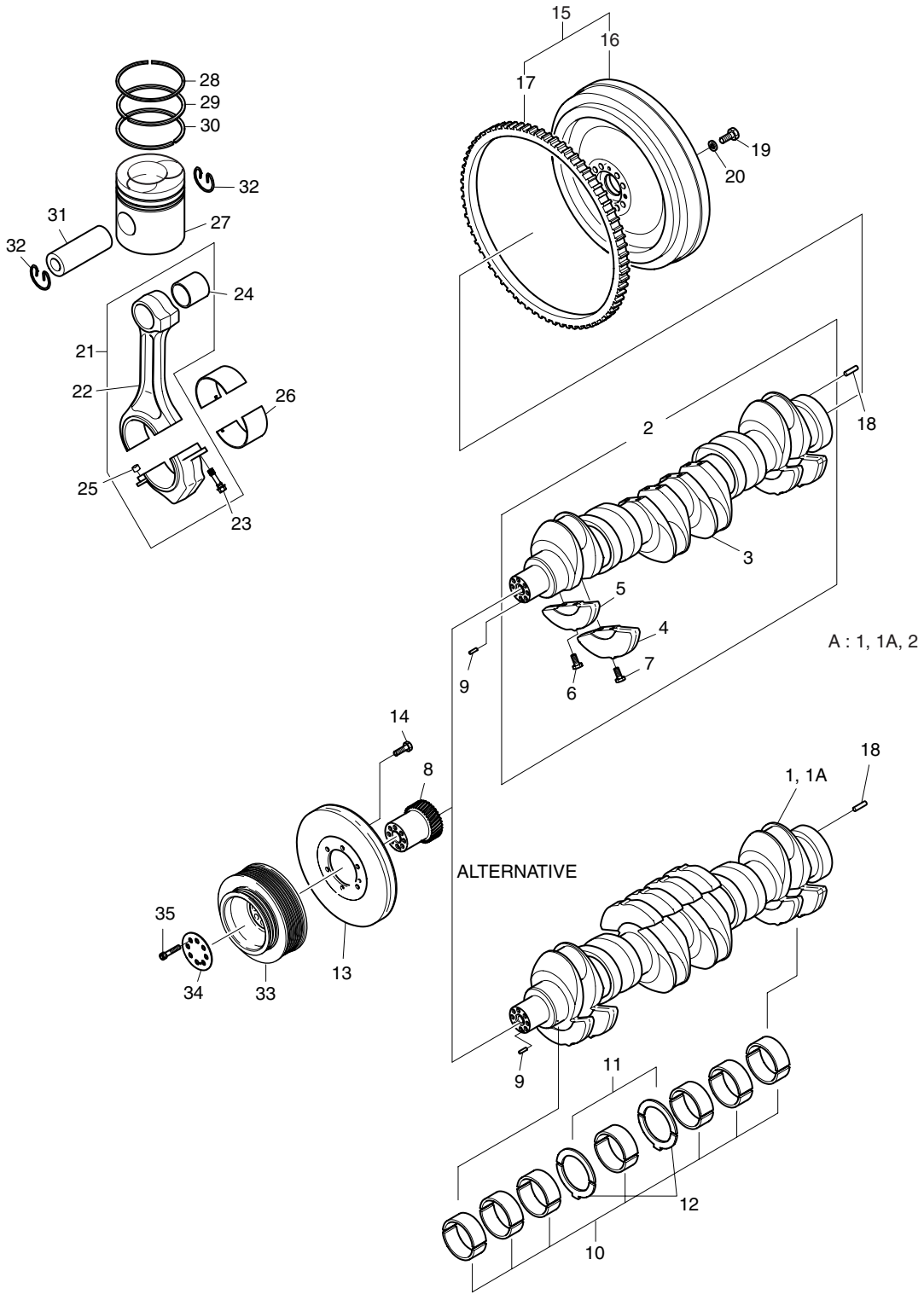

DATE	JUN. 30, 2007
REV. NO.	EXB07-06

Fig. 004 DRIVING SYSTEM SYSTEME D'CENTRAINEMENT

Serial No. ;

Key No.	Part No.	Description	Description	Q'ty	S.C	Serial No.	ICA	Replaceable part	
								Part No.	Q'ty
004-A	65.02101-7541B	CRANKSHAFT ASS'Y	ENSEMBLE VILEBREQUIN	1	D	~071001	Y	65.02101-7541C	1
	65.02101-7541C	**CRANKSHAFT ASS'Y**	ENSEMBLE VILEBREQUIN	1	D	071002~			
1	65.02101-0057A	. SHAFT;CRANK	. ENSEMBLE VILEBREQUIN	1		~071001			
	65.02101-0057B	**. SHAFT;CRANK**	. ENSEMBLE VILEBREQUIN	1		071002~			
1A	65.02101-0060A	. SHAFT;CRANK	. ENSEMBLE VILEBREQUIN	1		~071001			
	65.02101-0060B	**. SHAFT;CRANK**	. ENSEMBLE VILEBREQUIN	1		071002~			
2	65.02101-7054A	. CRANK SHAFT ASS'Y	. ENSEMBLE VILEBREQUIN	1					
3	65.02101-0054	.. SHAFT;CRANK	.. VILEBREQUIN	1	D				
4	65.02110-0013E	.. WEIGHT;COUNTER	.. CONTRE- POIDS	4	D				
5	65.02110-0014E	.. WEIGHT;COUNTER	.. CONTRE- POIDS	4	D				
6	65.90430-0012B	.. BOLT;CRANK SHAFT	.. BOULON A 6 PANS	8					
7	65.90430-0013B	.. BOLT;CRANK SHAFT	.. BOULON A 6 PANS	8					
8	65.02115-0008B	GEAR;CRANK SHAFT	PIGNON	1					
9	06.22022-0912	PIN;DOWEL M6X20	GOUPILLE D'AJUSTAGE	1					
10	65.01110-6115	BEARING;MAIN	PALIER	7					
	65.01110-6116	BEARING;MAIN 0.25	PALIER	7	US				
	65.01110-6117	BEARING;MAIN 0.50	PALIER	7	US				
11	65.01150-0017A	WASHER;THRUST	RONDELLE DE BUTEE	2					
	65.01150-0048A	WASHER;THRUST 0.25	RONDELLE DE BUTEE	2	OS				
	65.01150-0049A	WASHER;THRUST 0.50	RONDELLE DE BUTEE	2	OS				
12	65.01150-0018B	WASHER;THRUST	RONDELLE DE BUTEE	2					
	65.01150-0052B	WASHER;THRUST 0.25	RONDELLE DE BUTEE	2	OS				
	65.01150-0053B	WASHER;THRUST 0.50	RONDELLE DE BUTEE	2	OS				
13	65.02201-7032	VISCOUS;DAMPER	AMORTISSEUR DE	1					
14	06.01914-3215	BOLT ASS'Y M10X25	BOULON A 6PANS	6		~040701	I	65.90020-0062B	6
	65.90020-0062B	BOLT ASS'Y M10X20	BOULON A 6PANS	6		040702~			
15	65.02301-5121	FLYWHEEL	VOLANT	1					
16	65.02301-0266	. FLYWHEEL	. VOLANT	1					
17	65.02310-0011A	. GEAR;STARTER RING	. COURONNE DENTEE	1					
18	06.22022-1010	PIN;DOWEL	GOUPILLE D'AJUSTAGE	1					
19	65.90001-0084	BOLT;HEX M14X1.5X40	BOULON A 6PANS	8					
20	06.16731-2110	WASHER;SPRING	RONDELLE ELASTIQUE	8					
21	65.02401-6017	CONNECTING ROD ASS'Y	BIELLE	6		~030206	Y	65.02401-6017A	6
	65.02401-6017A	CONNECTING ROD ASS'Y	BIELLE	6		~041216	Y	65.02401-6017B	6
	65.02401-6017B	CONNECTING ROD ASS'Y	BIELLE	6		~060628	Y	65.02401-6017C	6
	65.02401-6017C	CONNECTING ROD ASS'Y	BIELLE	6		060629~			
22	65.02401-0045E	. ROD;CONNECTING	. BIELLE;ENSEMBLE DE	1	D	~030206	Y	65.02401-0045F	1
	65.02401-0045F	. ROD;CONNECTING	. BIELLE;ENSEMBLE DE	1	D	~041216	Y	65.02401-0045G	1

DATE	JUN. 30, 2007
REV. NO.	EXB07-06

Fig. 004 DRIVING SYSTEM
SYSTEME D'CENTRAINEMENT

Serial No. ;

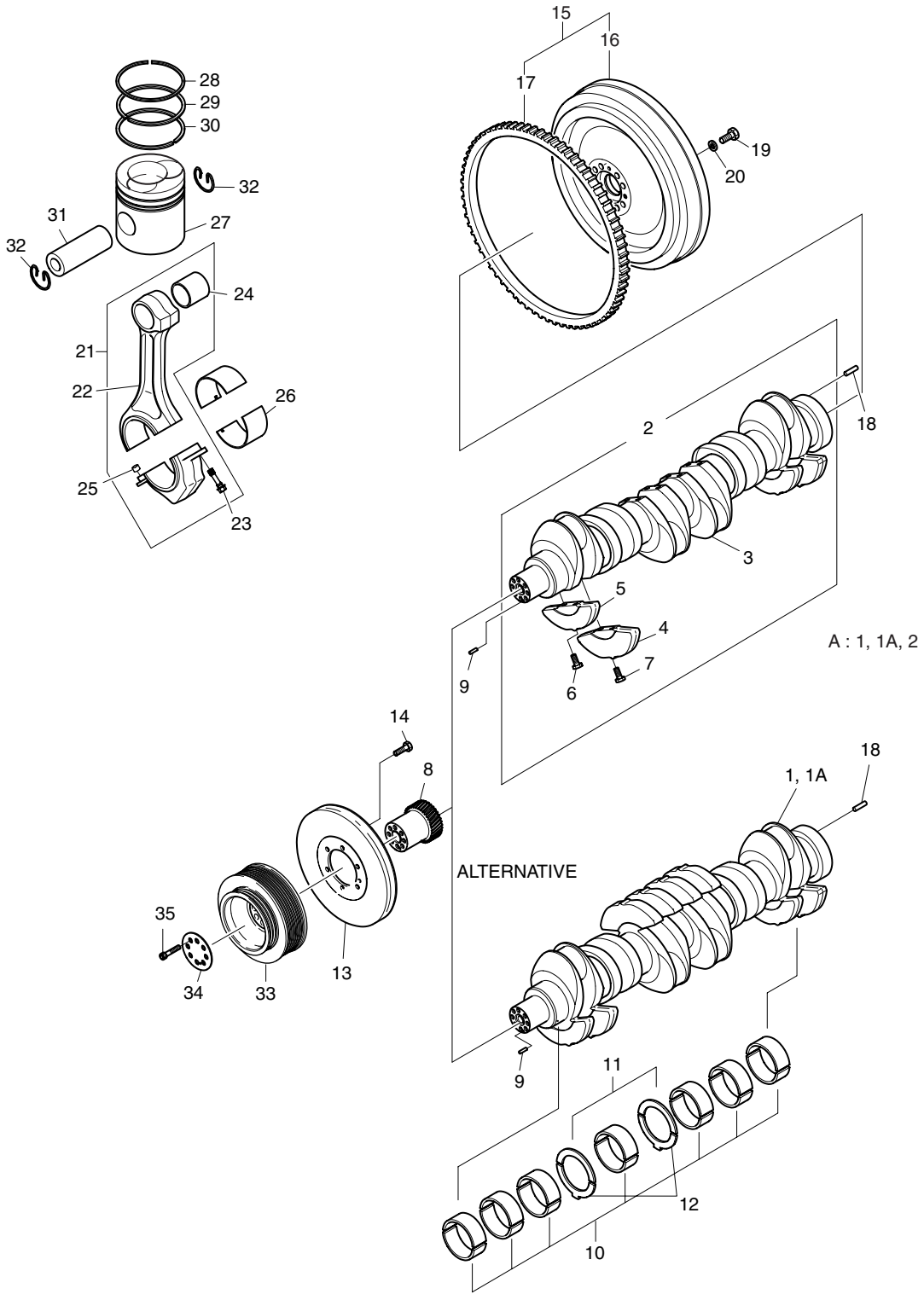

DATE	JUN. 30, 2007
REV. NO.	EXB07-06

Fig. 004 DRIVING SYSTEM SYSTEME D'CENTRAINEMENT

Serial No. ;

Key No.	Part No.	Description	Description	Q'ty	S.C	Serial No.	ICA	Replaceable part	
								Part No.	Q'ty
004-22	65.02401-0045G	. ROD;CONNECTING	. BIELLE;ENSEMBLE DE	1	D	041217~			
23	65.90020-0010E	. BOLT;CON-ROD	. BOULON A 6PANS	2					
24	65.02405-1010	. BUSH;CON-ROD	. DOUILLE	1	B	~060628	Y	65.02405-0011	1
	65.02405-0011	. BUSH;CON-ROD	. DOUILLE	1	B	060629~			
25	65.91301-0010	. PIN;DOWEL	. GOUPILLE D'AJUSTAGE	2					
26	65.02410-6106	BEARING;CON-ROD	PALIER	6					
	65.02410-6107	BEARING;CON-ROD 0.25	PALIER	6	US				
	65.02410-6108	BEARING;CON-ROD 0.50	PALIER	6	US				
	65.02410-6109	BEARING;CON-ROD 0.75	PALIER	6	US				
27	65.02501-0601	PISTON	PISTON	6			Y	65.02501-0601A	1
	65.02501-0601A	PISTON	PISTON	6		~061011	Y	65.02501-0601B	6
	65.02501-0601B	PISTON	PISTON	6		061012~			
28	65.02503-0674	RING;TOP	BAGUE	6					
29	65.02503-0097	RING;2ND	SEGMENT DE	6					
30	65.02503-0675B	RING;PISTON	BAGUE	6					
31	65.02502-0013	PIN;PISTON	AXE DE PISTON	6					
32	06.29020-0127	RING;SNAP 45X1.75	CIRCLIP	12					
33	65.02601-0192	PULLEY;V-BELT	POULIE	1					
34	65.90701-0088	WASHER	RONDELLE	1					
35	06.02106-0622	BOLT;SOCKET HEAD	BOULON A 6PANS	8					

DATE	DEC. 15, 2006
REV. NO.	EXB06-13

Fig. 005 CYLINDER HEAD
CULASSE

Serial No. ;

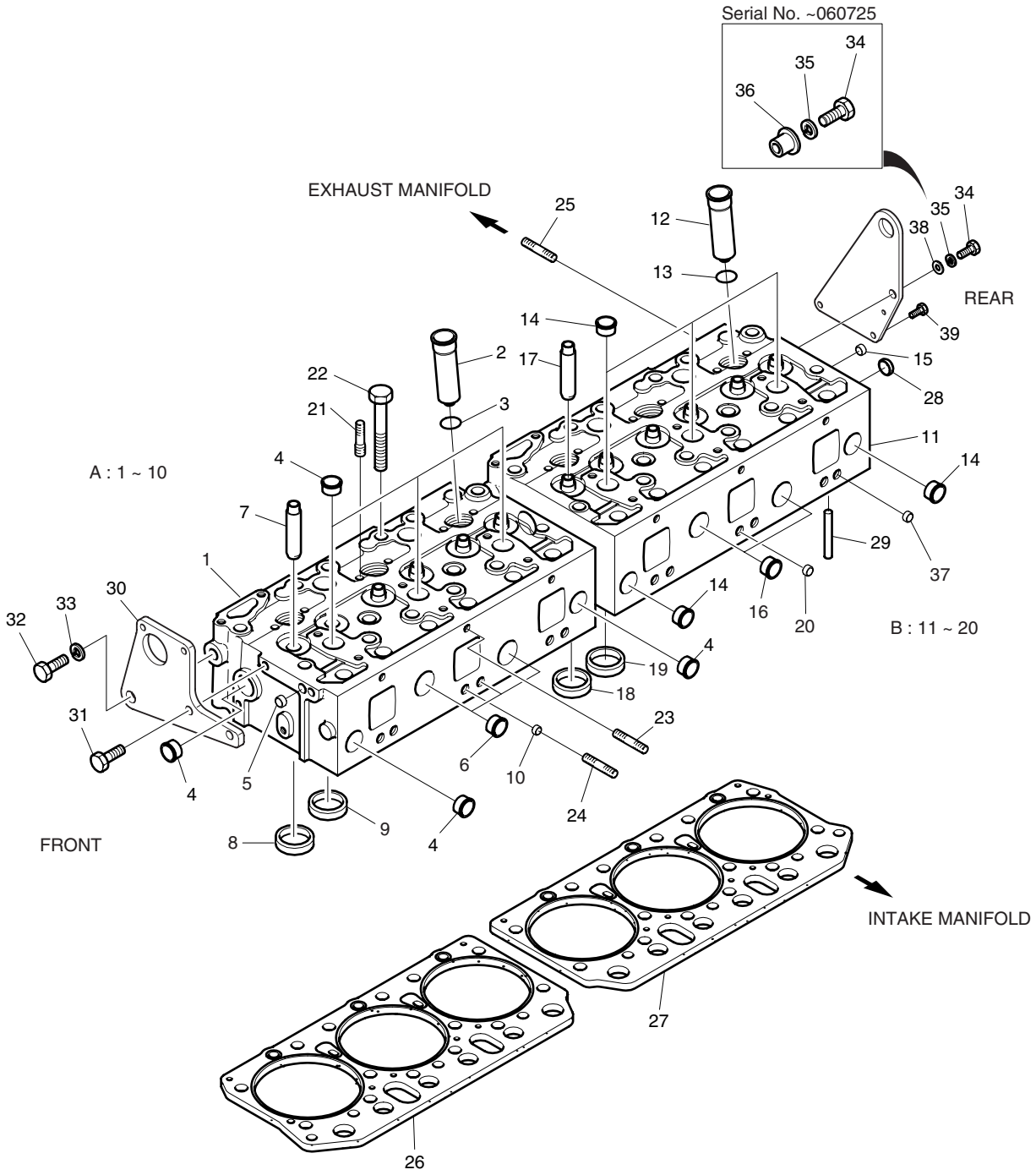

DATE	DEC. 15, 2006
REV. NO.	EXB06-13

Fig. 005 CYLINDER HEAD CULASSE

Serial No. ;

Key No.	Part No.	Description	Description	Q'ty	S.C	Serial No.	ICA	Replaceable part	
								Part No.	Q'ty
005-A	65.03101-6604D	CYLINDER HEAD ASS'Y	CULASSE	1		~030409	Y	65.03101-6604E	1
	65.03101-6604E	CYLINDER HEAD ASS'Y(FR)	CULASSE	1		~040827			
	65.03101-6084	CYLINDER HEAD ASS'Y	CULASSE	1		~040924	Y	65.03101-6084A	1
	65.03101-6084A	CYLINDER HEAD ASS'Y	CULASSE	1		~051130	Y	65.03101-6084B	1
	65.03101-6084B	CYLINDER HEAD ASS'Y	CULASSE	1		051131~			
1	65.03101-0003F	. HEAD;CYLINDER	. CULASSE	1	D	~030409			
	65.03101-0003G	. HEAD;CYLINDER	. CULASSE	1	D	~040827			
	65.03101-1064	. HEAD;CYLINDER	. CULASSE	1	D	~051130			
	65.03101-1064A	. HEAD;CYLINDER	. CULASSE	1	D	051131~			
2	65.03205-0002	. NOZZLE;TUBE	. CONTUITES	3					
3	65.96501-0069	. O-RING	. JONT TORIQUE	3					
4	**65.90302-0041**	**. PLUG;CORE**	. BOUCHON DE	9					
5	**65.91001-0002**	**. PLUG;CORE**	. BOUCHON DE	1					
6	65.90302-0042	. PLUG;CORE	. BOUCHON DE	2					
7	65.03201-1008E	. GUIDE;VALVE	. GUIDE DE VALVE	6	B	~040924	Y	65.03201-1008F	6
	65.03201-1008F	. GUIDE;VALVE	. GUIDE DE VALVE	6	B	040925~			
8	65.03203-1044	. RING;VALVE SEAT(EXHAUST)	. BAGUE	3	B				
9	65.03203-1043	. RING;VALVE SEAT(INTAKE)	. BAGUE	3	B				
10	65.90302-0049	. PLUG;CORE	. BOUCHON	3					
B	65.03101-6605D	CYLINDER HEAD ASS'Y	CULASSE	1		~030409	Y	65.03101-6605E	1
	65.03101-6605E	CYLINDER HEAD ASS'Y(RR)	CULASSE	1		~040827			
	65.03101-6085	CYLINDER HEAD ASS'Y	CULASSE	1		~040924	Y	65.03101-6085A	1
	65.03101-6085A	CYLINDER HEAD ASS'Y	CULASSE	1		~051130	Y	65.03101-6085B	1
	65.03101-6085B	CYLINDER HEAD ASS'Y	CULASSE	1		051131~			
11	65.03101-0004F	. HEAD;CYLINDER	. CULASSE	1	D	~030409			
	65.03101-0004G	. HEAD;CYLINDER	. CULASSE	1	D	~040825			
	65.03101-1065	. HEAD;CYLINDER	. CULASSE	1	D	~051130			
	65.03101-1065A	. HEAD;CYLINDER	. CULASSE	1	D	051131~			
12	65.03205-0002	. NOZZLE;TUBE	. CONTUITES	3					
13	65.96501-0069	. O-RING	. JONT TORIQUE	3					
14	**65.90302-0041**	**. PLUG;CORE**	. BOUCHON DE	9					
15	**65.91001-0002**	**. PLUG;CORE**	. BOUCHON DE	1					
16	65.90302-0042	. PLUG;CORE	. BOUCHON DE	2					
17	65.03201-1008E	. GUIDE;VALVE	. GUIDE DE VALVE	6	B	~040924	Y	65.03201-1008F	1
	65.03201-1008F	. GUIDE;VALVE	. GUIDE DE VALVE	6	B	040925~			
18	65.03203-1044	. RING;VALVE SEAT(EXHAUST)	. BAGUE	3	B				
19	65.03203-1043	. RING;VALVE SEAT(INTAKE)	. BAGUE	3	B				
20	65.90302-0049	. PLUG;CORE	. BOUCHON	3					

DATE	DEC. 15, 2006
REV. NO.	EXB06-13

Fig. 005 CYLINDER HEAD CULASSE

Serial No. ;

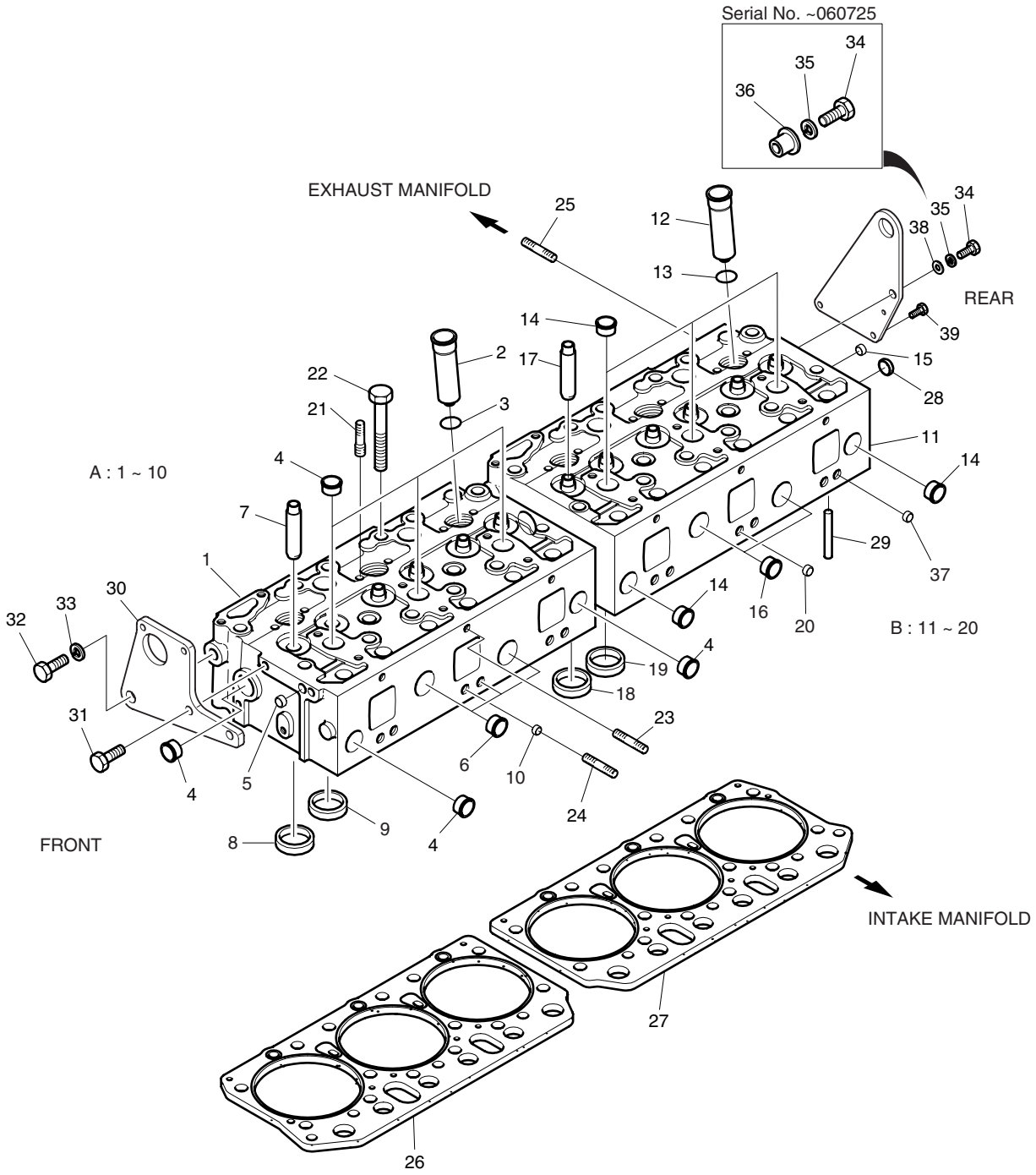

DATE	DEC. 15, 2006
REV. NO.	EXB06-13

Fig. 005 CYLINDER HEAD CULASSE

Serial No. ;

Key No.	Part No.	Description	Description	Q'ty	S.C	Serial No.	ICA	Replaceable part	
								Part No.	Q'ty
005-21	65.90201-0106	BOLT;STUD M6XM8	BOULON DE PLOT	12					
22	65.90021-0001A	BOLT;COLLARED HEX.	BOULON A 6PANS	28		~031020	I	65.90021-0005	28
	65.90021-0005	BOLT;COLLARED HEX.	BOULON A 6PANS	28		031021~			
23	65.90201-0094	BOLT;STUD	BOULON DE PLOT	6					
24	65.90201-0154	BOLT;STUD M12X1.5X10	BOULON DE PLOT	6					
25	65.90201-0080	BOLT;STUD	BOULON DE PLOT	2					
26	65.03901-0063A	GASKET;CYLINDER	COUSSINET COTE	1		~031020	T	65.03901-0063B	1
								65.90021-0005	14
	65.03901-0063B	GASKET;CYLINDER	COUSSINET COTE	1		~051017	Y	65.03901-0072	1
	65.03901-0072	GASKET;CYLINDER	COUSSINET COTE	1		051018~			
27	65.03901-0064A	GASKET;CYLINDER HEAD(REAR)	COUSSINET COTE	1		~031020	T	65.03901-0064B	1
								65.90021-0005	14
	65.03901-0064B	GASKET;CYLINDER HEAD(REAR)	COUSSINET COTE	1		~051017	Y	65.03901-0073	1
	65.03901-0073	GASKET;CYLINDER HEAD(REAR)	COUSSINET COTE	1		051018~			
28	65.91001-0013	SEAL	BOUCHON	2		~051130	Y	65.91001-0013A	2
	65.91001-0013A	**SEAL**	BOUCHON	2		051131~			
29	06.22022-0907	PIN;DOWEL M6X10	GOUPILLE D'AJUSTAGE	4		~060725			
	06.22022-0909	**PIN;DOWEL M6X14**	GOUPILLE D'AJUSTAGE	4		060726~			
30	65.19202-0035	HOOK;LIFTING	CROCHET	1					
31	06.01913-3217	BOLT ASS'Y M10X30	BOULON A 6PANS	1					
32	06.01734-4411	BOLT;HEX M14X1.5X30	BOULON A 6PANS	1					
33	06.16731-2110	WASHER;SPRING	RONDELLE ELASTIQUE	1					
34	06.01494-4408	BOLT;HEX M14X1.5X45	BOULON A 6PANS	1		~060725			
	06.01494-4406	**BOLT;HEX M14X1.5X35**	BOULON A 6PANS	1		060726~			
35	06.16731-2110	WASHER;SPRING	RONDELLE ELASTIQUE	1					
36	65.91701-0275	SPACER	BAGUE D'ECARTEMENT	1		~060725			
	65.19202-0064	**HOOK;LIFTING**	CROCHET	1		060726~			
37	**65.91001-0004**	**PIN;CORE**	GOUPILLE DE NOYAU	6		051131~			
38	**65.91701-0246**	**SPACER**	BAGUE D'ECARTEMENT	1		060726~			
39	**06.01914-3215**	**BOLT ASS'Y M10X25**	BOULON A 6PANS	2		060726~			

DATE	JUN. 30, 2006
REV. NO.	EXB06-08

Fig. 006 CYLINDER HEAD COVER
COUVERTURE DE CULASSE

Serial No. ;

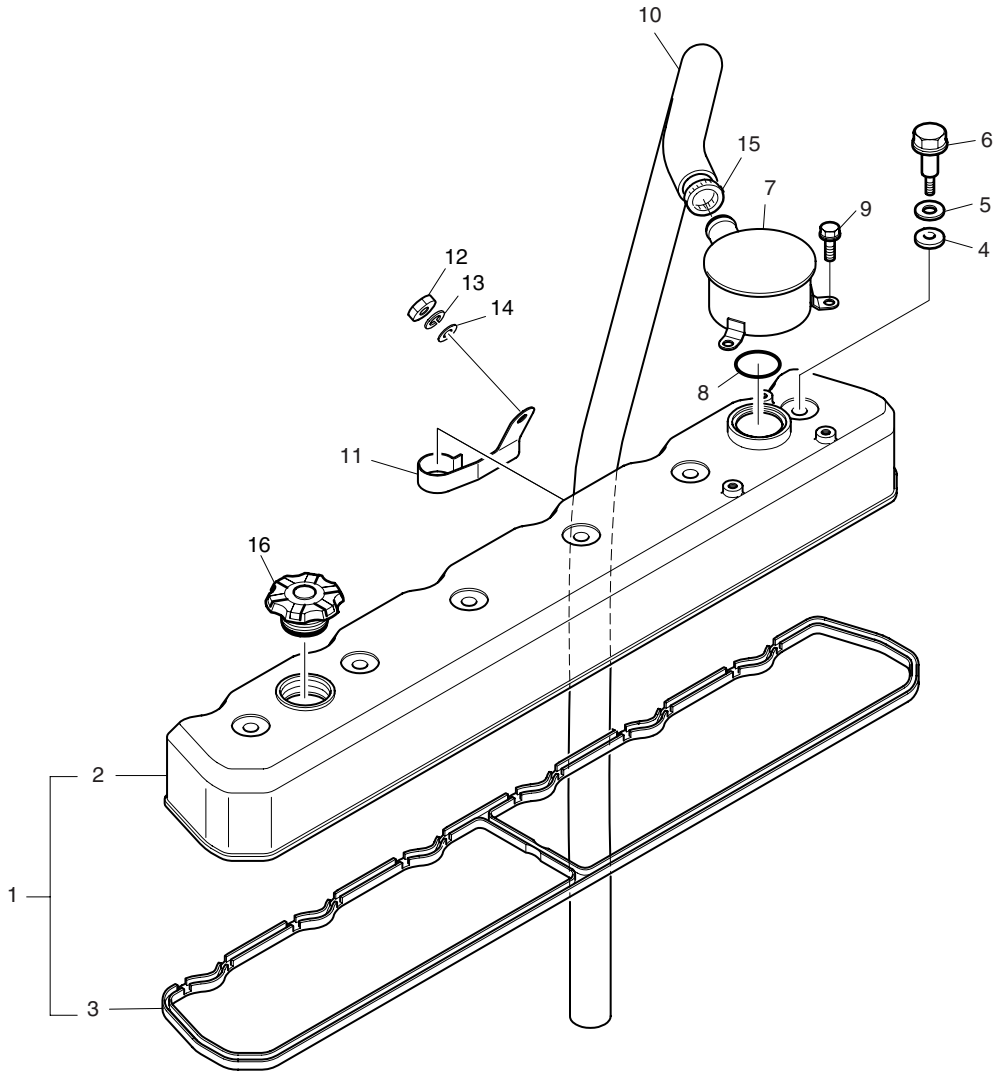

DATE	JUN. 30, 2006
REV. NO.	EXB06-08

Fig. 006 CYLINDER HEAD COVER COUVERTURE DE CULASSE

Serial No. ;

Key No.	Part No.	Description	Description	Q'ty	S.C	Serial No.	ICA	Replaceable part	
								Part No.	Q'ty
006-1	65.03401-6046B	CYLINDER HEAD COVER ASS'Y	CULLASSE	1		~050624	Y	65.03401-6046C	1
	65.03401-6046C	CYLINDER HEAD COVER ASS'Y	CULLASSE	1		050625~			
2	65.03401-0048B	. COVER;CYINDER HEAD	. COUVERCLE	1		~050609	Y	65.03401-0048C	1
	65.03401-0048C	. COVER;CYINDER HEAD	. COUVERCLE	1		050610~			
3	65.03905-0020	. PACKING;CYLINDER HEAD	. COUSSINET, PIED DE	1					
4	65.03905-0023A	GASKET;CYLINDER HEAD	BOULON A 6 PANS	6					
5	65.90701-0202	WASHER	RONDELLE	6					
6	65.90020-0074	BOLT;COLLARED HEX.	BOULON A 6PANS	6					
7	65.01801-5099B	HOUSING;BREATHER	CARTER	1		~050704	Y	65.01801-5099C	1
	65.01801-5099C	HOUSING;BREATHER	CARTER	1		050705~			
8	65.96501-0033B	O-RING	JONT TORIQUE	1					
9	06.01923-3113	BOLT ASS'Y M8X20	BOULON A 6PANS	3					
10	65.96301-0344	HOSE;RUBBER	TUYAU FLEXIBLE	1					
11	65.97401-0164	CLIP;BREATHER HOSE	COLLIER	1					
12	06.11063-8214	NUT;HEX M8	ECROU	1					
13	06.15010-2311	WASHER	RONDELLE	1					
14	06.16731-2107	WASHER;SPRING	RONDELLE ELASTIQUE	1					
15	06.67020-0105	CLAMP	COLLIER	1					
16	65.01810-5007	OIL FILLER CAP ASS'Y	VIBREUR	1		~051230	I	65.01810-5011	1
	65.01810-5011	**OIL FILLER CAP ASS'Y**	VIBREUR	1		051231~			

DATE	DEC. 15, 2006
REV. NO.	EXB06-13

Fig. 007 TIMING SYSTEM
SYSTEME DE SYNCHRONISATION

Serial No. ;

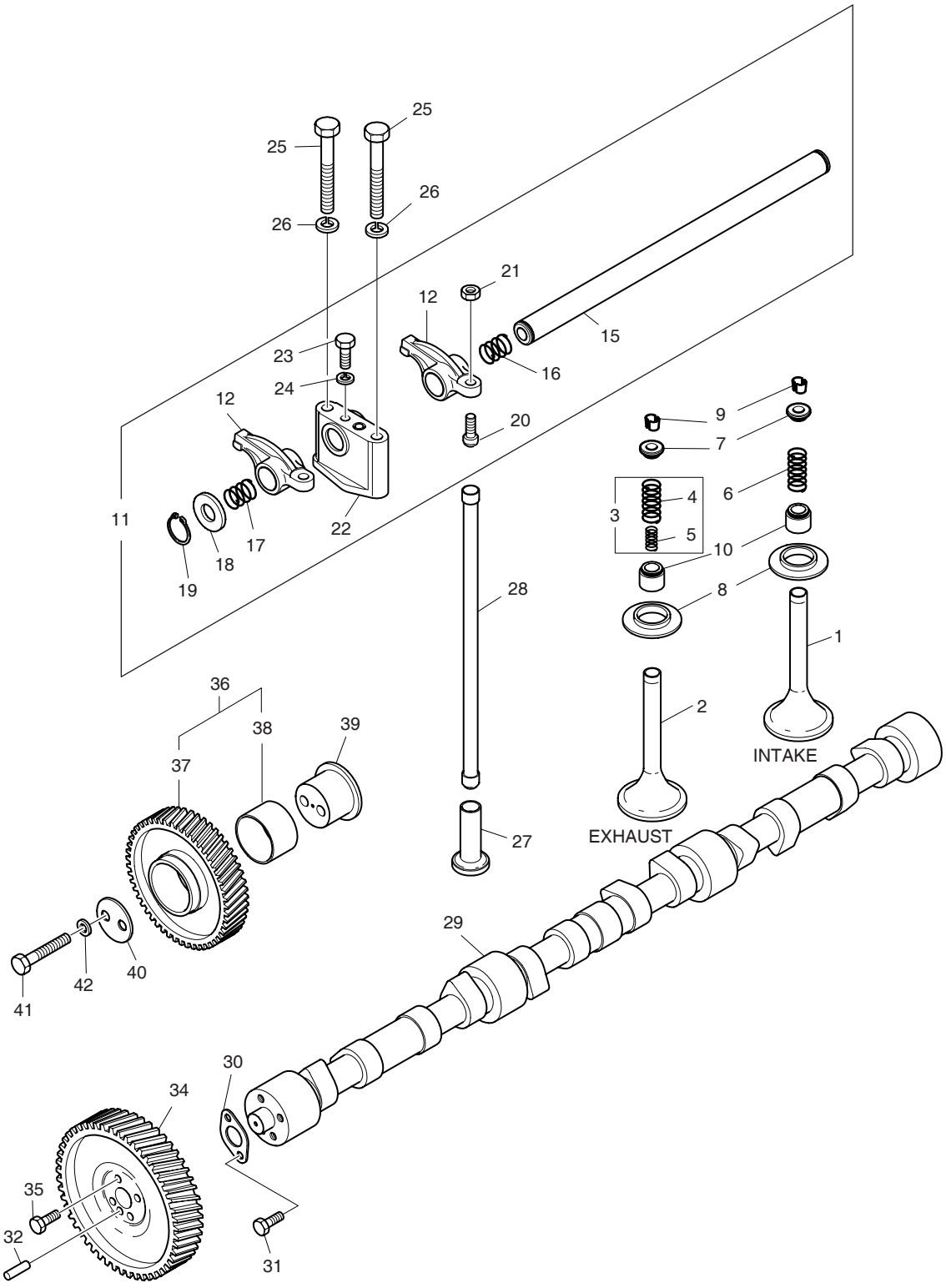

DATE	DEC. 15, 2006
REV. NO.	EXB06-13

Fig. 007 TIMING SYSTEM SYSTEME DE SYNCHRONISATION

Serial No. ;

Key No.	Part No.	Description	Description	Q'ty	S.C	Serial No.	ICA	Replaceable part	
								Part No.	Q'ty
007-1	65.04101-0050A	VALVE;INTAKE	VANNE	6					
2	65.04101-0044	VALVE;EXHAUST	VANNE	6					
3	65.04102-6004	SPRING VALVE ASS'Y	JOINT TORIQUE	6		~030122	Y	65.04102-6004A	6
	65.04102-6004A	SPRING VALVE ASS'Y	JOINT TORIQUE	6		030123~			
4	65.04102-0066	. SPRING;VALVE(OUTER)	. RESSORT DE EXTERIEUR	1					
5	65.04102-0002	. SPRING;VALVE(INNER)	. RESSORT DE INTERIEUR	1		~030122	Y	65.04102-0002A	1
	65.04102-0002A	. SPRING;VALVE(INNER)	. RESSORT DE INTERIEUR	1		030123~			
6	65.04102-0066	SPRING;VALVE(OUTER)	RESSORT DE EXTERIEUR	6					
7	65.04103-0014	RETAINER;VALVE SPRING	COUPELLE DE RESSORT	12					
8	65.04103-0078	SEAT;VALVE SPRING	SIEGE	12					
9	65.04104-0007	COTTER;VALVE	CLAVETTE DE SOUPAPE	24					
10	65.04902-0010	SEAL;VALVE STEM	JOINT	12					
11	65.04200-6027C	R/ARM & SHAFT ASS'Y	AXE DE CULBUTEUR	2		~060621	Y	65.04200-6027D	2
	65.04200-6027D	**R/ARM & SHAFT ASS'Y**	AXE DE CULBUTEUR	2		060622~			
12	65.04201-5014E	. ROCKER ARM ASS'Y	. AXE DE CULBUTEUR	6					
15	65.04203-5010	. SHAFT;ROCKER ARM	. AXE DE CULBUTEUR	1					
16	65.97601-0104	. SPRING;COMP	. RESSORT	2					
17	65.97601-0053	. SPRING;COMP(OUTER)	. RESSORT	2					
18	65.90710-0039	. WASHER;ROCKER ARM	. RONDELLE D'AXE DE	2					
19	06.29010-0120	. RING;SNAP	. CIRCLIP	2					
20	65.04205-0003	. BOLT;ADJUSTING	. BOULON A 6PANS	6		~060621	Y	65.04205-0003A	6
	65.04205-0003A	**. BOLT;ADJUSTING**	. BOULON A 6PANS	6		060622~			
21	65.90501-0003	. NUT;HEX M10X1.0	. ECROU	6					
22	65.04202-0014A	. BRACKET;ROCKER ARM	. SUPPORT	3					
23	06.01283-7112	. BOLT;HEX M8X18	. BOULON A 6PANS	3					
24	06.15010-2311	. WASHER	. RONDELLE	3					
25	06.01013-9221	BOLT;HEX M10X80	BOULON A 6PANS	6					
26	06.16731-2108	WASHER;SPRING	RONDELLE	6					
27	65.04301-0006	TAPPET	POUSSOIR DE TIGE DE	12					
28	65.04302-5011	ROD;PUSH	TIGE DE POUSSOIR	12					
29	65.04401-0489A	CAM;SHAFT	ARBRE	1		~021220	Y	65.04401-0489B	1
	65.04401-0489B	CAM;SHAFT	ARBRE	1		~030801	Y	65.04401-0489C	1
	65.04401-0489C	CAM;SHAFT	ARBRE	1		~040827	Y	65.04401-0489D	1
	65.04401-0489D	CAM;SHAFT	ARBRE	1		040828~			
30	65.98112-0038	FLANGE	BRIDE	1					
31	65.90001-6003	BOLT ASS'Y M6X14	BOULON A 6PANS	2					
32	06.22022-1014	PIN;DOWEL	GOUPILLE D'AJUSTAGE	1					
34	65.04501-0007A	GEAR;CAMSHAFT	PIGNON	1					

DATE	DEC. 15, 2006
REV. NO.	EXB06-13

Fig. 007 TIMING SYSTEM
SYSTEME DE SYNCHRONISATION

Serial No. ;

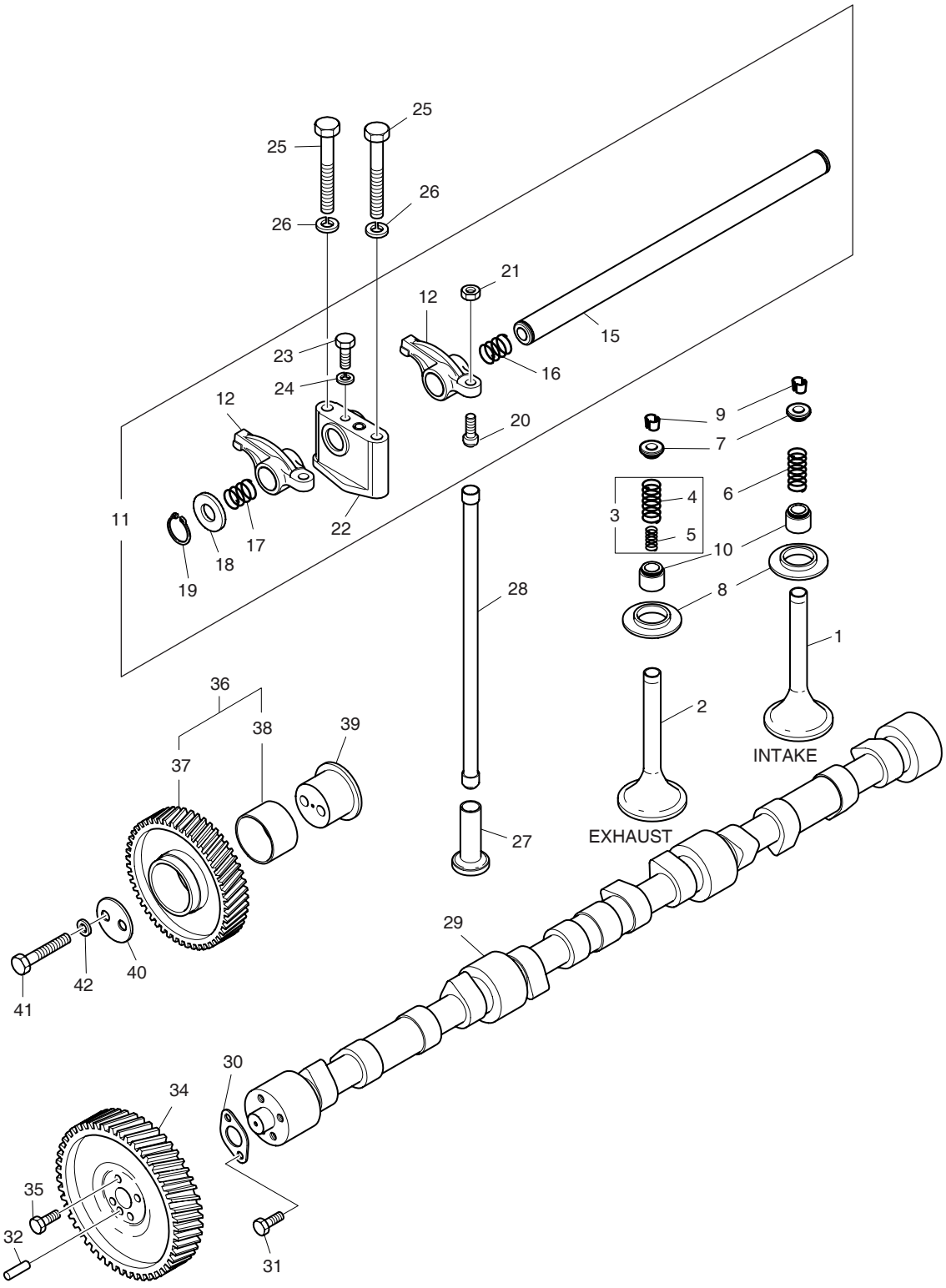

DATE	DEC. 15, 2006
REV. NO.	EXB06-13

Fig. 007 TIMING SYSTEM
SYSTEME DE SYNCHRONISATION

Serial No. ;

Key No.	Part No.	Description	Description	Q'ty	S.C	Serial No.	ICA	Replaceable part	
								Part No.	Q'ty
007-35	06.01914-3119	BOLT ASS'Y	BOULON A 6PANS	4					
36	65.04505-5016	IDLE GEAR ASS'Y	PIGNON	1					
37	65.04505-0033	. GEAR;IDLE	. PIGNON	1	D				
38	65.04507-0004	. BUSH;IDLE GEAR	. ROULEMENT DE PIGNON	1	D				
39	65.04506-0033	PIN;IDLE GEAR	GOUPILLE DE PIGNON FOU	1					
40	65.90720-0018	WASHER;THRUST	RONDELLE DE BUTEE	1					
41	06.01015-9220	BOLT;HEX	BOULON A 6PANS	2					
42	06.16731-2108	WASHER;SPRING	RONDELLE	2					

DATE	JUN. 30, 2006
REV. NO.	EXB06-08

Fig. 008 OIL PUMP
POMPE D'CHUILE

Serial No. ;

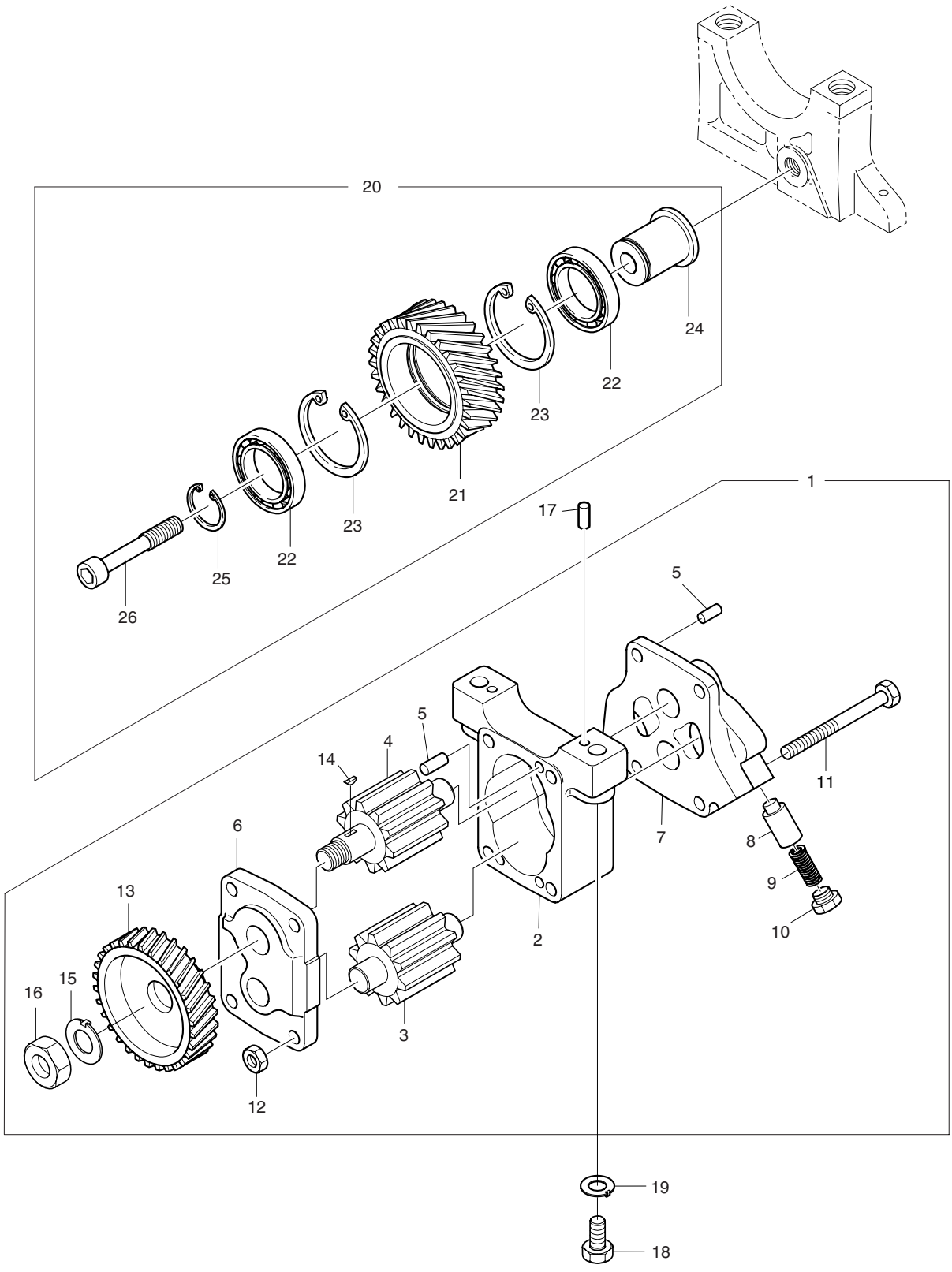

DATE	JUN. 30, 2006
REV. NO.	EXB06-08

Fig. 008 OIL PUMP POMPE D'CHUILE

Serial No. ;

Key No.	Part No.	Description	Description	Q'ty	S.C	Serial No.	ICA	Replaceable part	
								Part No.	Q'ty
008-1	65.05100-6044	OIL PUMP ASS'Y	POMPE D'CHUILE	1		~060605	Y	65.05100-6044A	1
	65.05100-6044A	**OIL PUMP ASS'Y**	POMPE D'CHUILE	1		060606~			
2	65.05102-0021	. HOUSING	. CARTER	1	D	~060605			
	65.05102-0021A	**. HOUSING**	. CARTER	1	D	060606~			
3	65.05104-5006	. GEAR;OIL PUMP	. PIGNON	1					
4	65.05104-5007	. GEAR;OIL PUMP	. PIGNON	1					
5	06.22022-0909	. PIN;DOWEL 6M6X14	. GOUJON D'ASSEMBLAGE	4					
6	65.05103-5009	. COVER;OIL PUMP	. COUVERTURE	1	D				
7	65.05103-5003	. COVER;OIL PUMP	. COUVERTURE	1	D				
8	65.05410-0007	. PLUNGER;VALVE	. PLUNGEUR	1					
9	65.97601-0105	. SPRING;COMP.	. RESSORT	1					
10	65.90310-0104	. SCREW;PLUG	. VIS	1					
11	06.01013-9120	. BOLT;HEX M8X75	. BOULON A 6PANS	4					
12	65.90510-0012	. NUT	. ECROU	4					
13	65.05201-0008A	. GEAR;DRIVE	. PIGNON	1					
14	06.29141-0207	. KEY	. KEY	1					
15	06.16050-0311	. WASHER;LOCK	. RONDELLE	1					
16	06.11053-9217	. NUT;HEX	. ECROU	1					
17	06.22022-0907	PIN;DOWEL 6M6X10	GOUPILLE D'AJUSTAGE	2					
18	06.01013-9215	BOLT;HEX M10X1.5X50	BOULON A 6PANS	2					
19	65.90801-0018	WASHER;LOCK	RONDELLE	2					
20	65.05200-6004A	IDLE GEAR MOUNTING	PIGNON	1	D				
21	65.05204-0003A	. GEAR;OIL PUMP IDLE	. PIGNON	1					
22	06.31420-0314	. BEARING;BALL	. ROULEMENT A BILLES	2					
23	06.29020-0132	. RING;SNAP	. BAGUE ELASTIQUE	2					
24	65.05205-0018	. PIN;IDLE GEAR	. GOUPILLE DE PIGNON	1					
25	06.29010-0125	. RING;SNAP	. CIRCLIP	1					
26	65.90030-0009	. BOLT;SOCKET HEAD M10X60	. BOULON A 6PANS	1					

DATE	DEC. 29, 2005
REV. NO.	EXB05-20

Fig. 009 OIL FILTER
FILTRE D'CHUILE

Serial No. ;

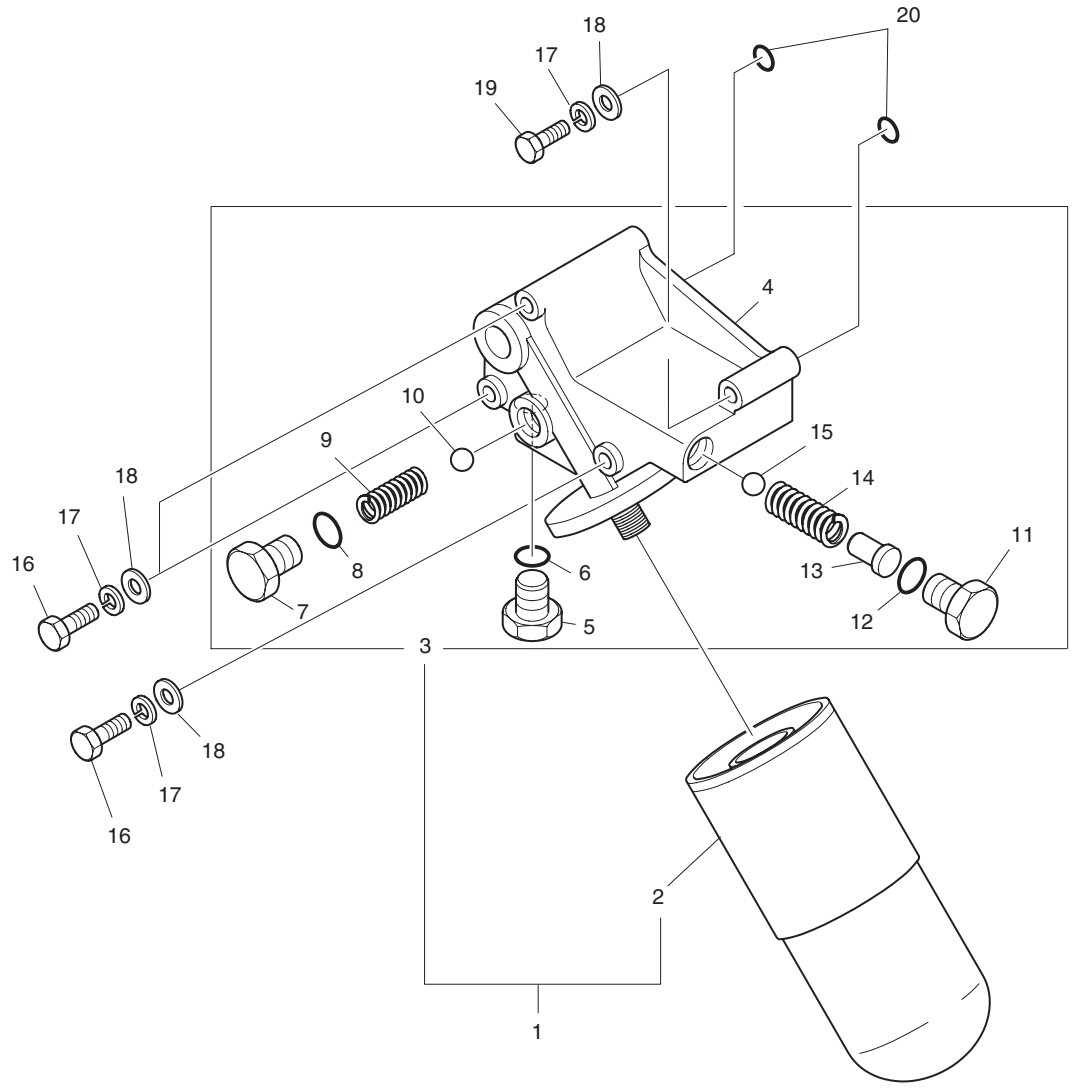

DATE	DEC. 29, 2005
REV. NO.	EXB05-20

Fig. 009 OIL FILTER FILTRE D'CHUILE

Serial No ;

Key No.	Part No.	Description	Description	Q'ty	S.C	Serial No.	ICA	Replaceable part	
								Part No.	Q'ty
009-1	65.05501-7072	OIL FILTER ASS'Y	FILTRE D'CHUILE	1		~040305	Y	65.05501-7081	1
	65.05501-7081	OIL FILTER ASS'Y	FILTRE D'CHUILE	1		~050714	Y	65.05501-7081A	1
	65.05501-7081A	**OIL FILTER ASS'Y**	FILTRE D'CHUILE	1		050715~			
2	65.05510-5027	. CARTRIDGE;OIL FILTER	. INDICATEUR	1		~040305			
	65.05510-5020A	. CARTRIDGE;OIL FILTER	. INDICATEUR	1		040306~			
3	65.05503-5050	. OIL FILTER HEAD ASS'Y	. CULASSE	1					
4	65.05503-0040A	.. HEAD;OIL FILTER	.. CULASSE	1					
5	65.90310-0121	.. SCREW;PLUG	.. VIS	1					
6	06.56190-0722	.. RING;SEAL	.. BAGUE	1					
7	65.90310-0115	.. PLUG	.. BOUCHON	1					
8	06.56190-0726	.. RING;SEAL	.. BAGUE D'ETANCHEITE	1					
9	65.97601-0075	.. SPRING	.. RESSORT	1					
10	06.31641-0433	.. BALL;STEEL	.. BALLIER	1					
11	65.90310-0034	.. SCREW;PLUG M26X1.5	.. VIS	1					
12	06.56190-0728	.. RING;SEAL A26X32	.. BAGUE D'ETANCHEITE	1					
13	06.22230-1214	.. PIN;SPRING	.. GOUPILLE	1					
14	65.97601-0004	.. SPRING	.. RESSORT	1					
15	06.31641-0433	.. BALL;STEEL	.. BALLIER	1					
16	06.01493-4323	BOLT M12X140	BOULON A 6PANS	3					
17	06.16731-2109	WASHER;SPRING	RONDELLE ELASTIQUE	4					
18	06.15010-2313	WASHER;PLAIN	RONDELLE 13	4					
19	06.01493-4315	BOLT;HEX M12X1.5X80	BOULON A 6PANS	1					
20	65.96501-0061	O-RING	JONT TORIQUE	2					

DATE	JUL. 30, 2003
REV. NO.	EXB03-13

Fig. 010 OIL COOLER
RADIATEUR D'HUILE

Serial No. ;

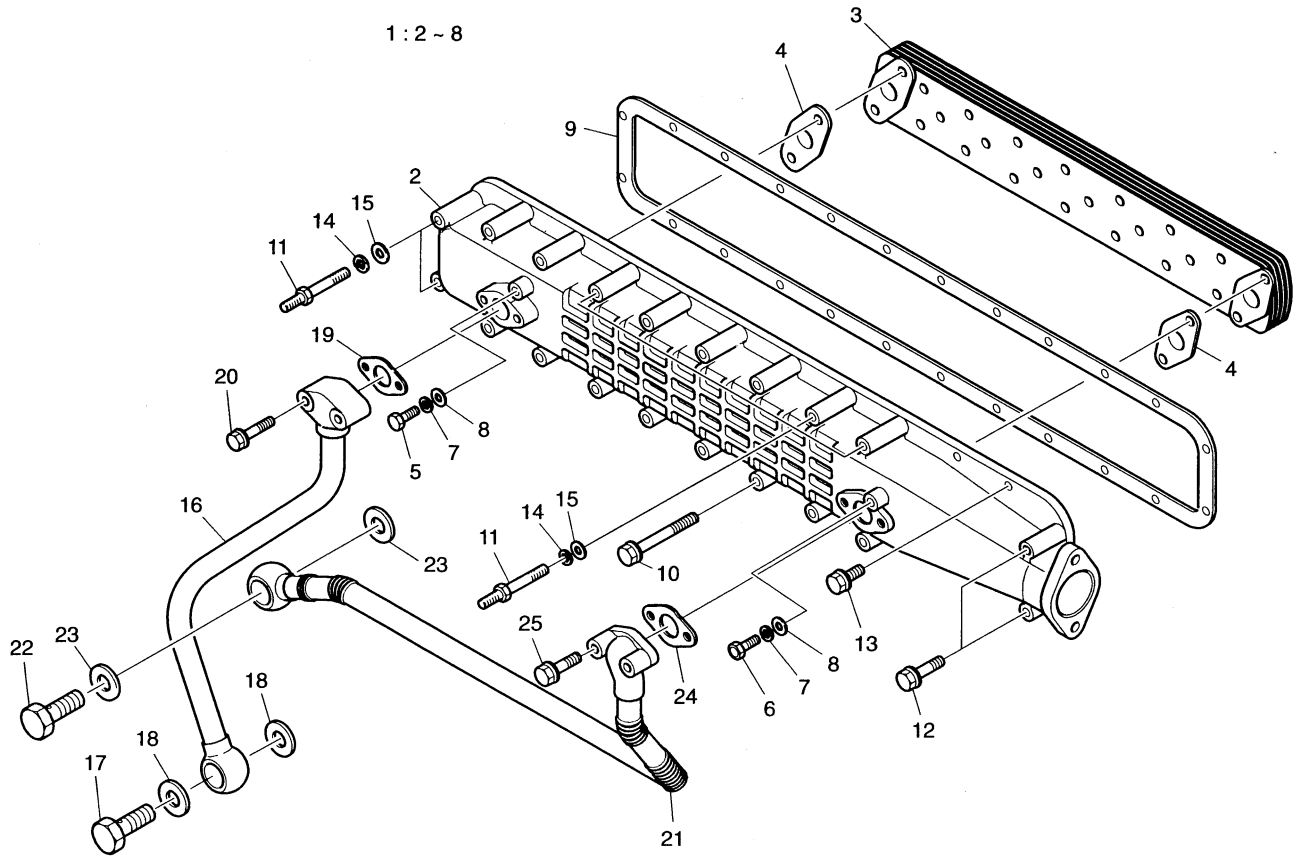

DATE	JUL. 30, 2003
REV. NO.	EXB03-13

Fig. 010 OIL COOLER RADIATEUR D'HUILE

Serial No ;

Key No.	Part No.	Description	Description	Q'ty	S.C	Serial No.	ICA	Replaceable part	
								Part No.	Q'ty
010-1	65.05601-7072C	OIL COOLER ASS'Y	REFROIDISSEUR D'HUILE	1					
2	65.05604-0019B	. HOUSING;OIL COOLER	. COUVERCLE	1					
3	65.05606-5027B	. ELEMENT;OIL COOLER	. ELEMENTRE	1					
4	65.05903-0028	. GASKET;OIL COOLER	. RONDELLE DE BUTEE	2					
5	06.02090-0512	. BOLT;SOCKET HEAD M10X25	. BOULON A 6PANS	2					
6	06.02090-0513	. BOLT;SOCKET HEAD M10X30	. BOULON A 6PANS	2					
7	06.16731-2108	. WASHER;SPRING	. RONDELLE	4					
8	06.15010-2312	. WASHER;PLAIN	. RONDELLE	4					
9	65.01907-0008A	GASKET	RONDELLE DE BUTEE	1					
10	06.01923-3124	BOLT ASS'Y M8X65	BOULON A 6PANS	13					
11	65.90201-0066	BOLT;STUD	BOULON DE PLOT	5					
12	06.01923-3122	BOLT ASS'Y M8X55	BOULON A 6PANS	2					
13	06.01923-3115	BOLT ASS'Y M8X25	BOULON A 6PANS	4					
14	06.16731-2107	WASHER;SPRING	RONDELLE ELASTIQUE	5					
15	06.15010-2311	WASHER	RONDELLE	5					
16	65.05701-5660	PIPE;OIL	CONDUITE	1					
17	06.78140-2408	SCREW;HOLLOW	VIS	1					
18	06.56190-0727	RING;SEAL	BAGUE D'ETANCHEITE	2					
19	65.05903-0030A	GASKET;OIL RETURN PIPE	JOINT	1					
20	06.01913-3120	BOLT ASS'Y M8X45	BOULON A 6PANS	2					
21	65.05701-5964A	OIL PIPE ASS'Y	TUYAU D'HUILE	1					
22	06.78140-2408	SCREW;HOLLOW	VIS	1					
23	06.56190-0728	RING;SEAL	BAGUE D'ETANCHEITE	2					
24	65.05903-0030A	GASKET;OIL RETURN PIPE	JOINT	1					
25	06.01913-3120	BOLT ASS'Y M8X45	BOULON A 6PANS	2					

DATE	JUN. 30, 2007
REV. NO.	EXB07-06

Fig. 011 OIL PAN
CARTER D'HUILE

Serial No. ;

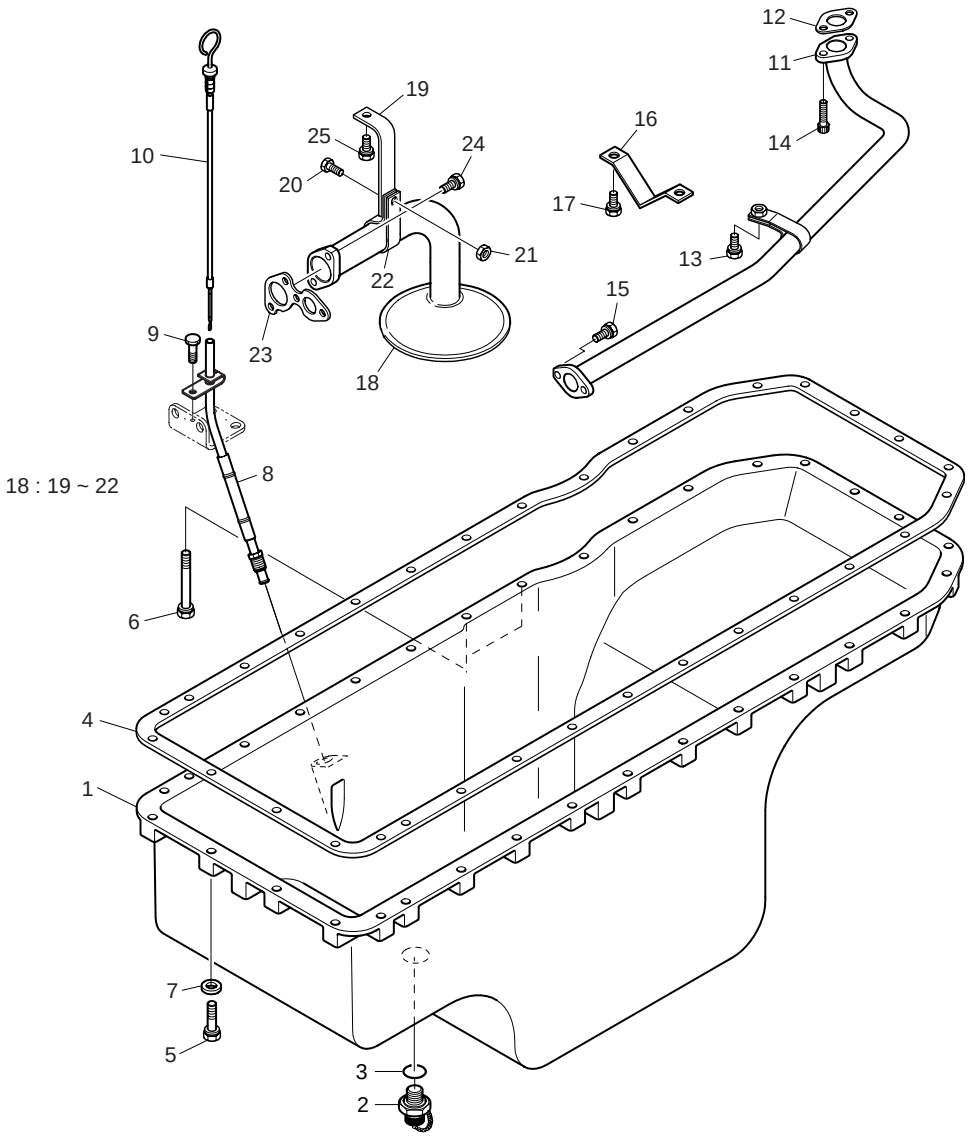

DATE	JUN. 30, 2007
REV. NO.	EXB07-06

Fig. 011 OIL PAN
CARTER D'HUILE

Serial No. ;

Key No.	Part No.	Description	Description	Q'ty	S.C	Serial No.	ICA	Replaceable part	
								Part No.	Q'ty
011-1	65.05801-5380A	PAN;OIL	CARTER DE HUILE	1					
2	65.98125-5019	JOINT;DRAIN	JOINT	1		~030629	Y	65.98125-5022	1
	65.98125-5022	JOINT;DRAIN	JOINT	1		~060707	Y	65.98125-5022A	1
	65.98125-5022A	JOINT;DRAIN	JOINT	1		060708~			
3	06.56190-0732	RING;SEAL	CONTACT DE NIVEAU	1					
4	65.05904-0096A	GASKET;OIL PAN	RONDELLE DE BUTEE	1					
5	65.90001-6010	BOLT ASS'Y M8X38	BOULON A 6PANS	30					
6	06.01923-3124	BOLT ASS'Y M8X65	BOULON A 6PANS	2					
7	06.15010-2311	WASHER	RONDELLE	30					
8	65.05806-5096A	TUBE;GUIDE	TUBE DE GUIDAGE	1		~070911	Y	65.05806-5096B	1
	65.05806-5096B	**TUBE;GUIDE**	TUBE DE GUIDAGE	1		070912~			
9	06.01923-3113	BOLT ASS'Y M8X20	BOULON A 6PANS	1					
10	65.05805-5193A	OIL LEVEL GAUGE ASS'Y	TUBE DE GUIDAGE	1		~050630	Y	65.05805-5193B	1
	65.05805-5193B	OIL LEVEL GAUGE ASS'Y	TUBE DE GUIDAGE	1		~070911	Y	65.05805-5193C	1
	65.05805-5193C	**OIL LEVEL GAUGE ASS'Y**	TUBE DE GUIDAGE	1		070912~			
11	65.05701-5349	OIL PIPE ASS'Y	CONDUITE	1					
12	65.96601-0043	GASKET	RONDELLE DE BUTEE	1					
13	06.01913-3115	BOLT ASS'Y M8X25	BOULON A 6PANS	1					
14	65.90001-6005	BOLT;SOCKET	BOULON A 6PANS	2					
15	06.01913-3113	BOLT ASS'Y M8X20	BOULON A 6PANS	2					
16	65.05740-2042	BRACKET	SUPPORT	1					
17	06.01923-3112	BOLT ASS'Y M8X18	BOULON A 6PANS	2					
18	65.05701-6041A	OIL SUCT. PIPE ASSS'Y	TUYAU D'HUILE	1					
19	65.05740-0017	. BRACKET;OIL SUCTION	. SUPPORT	1					
20	06.01283-7113	. BOLT;HEX M8X20	. BOULON A 6PANS	1					
21	65.90510-0012	. NUTCLEVELOC NUT	. ECROU	1					
22	65.97401-0130	. CLAMP;SUCTION PIPE	. COLLIER	1					
23	65.05903-0027A	GASKET	JOINT	1					
24	06.01913-3114	BOLT ASS'Y M8X22	BOULON A 6PANS	2					
25	06.01923-3111	BOLT ASS'Y M8X16	BOULON A 6PANS	1		~060630	Y	65.90020-0068	1
	65.90020-0068	BOLT ASS'Y M8X12	BOULON A 6PANS	1		060631~			

DATE	DEC. 15, 2006
REV. NO.	EXB06-13

Fig. 012 COOLING WATER PIPE
CONDUITE D'EAU DE REFROIDISSEMENT

Serial No. ;

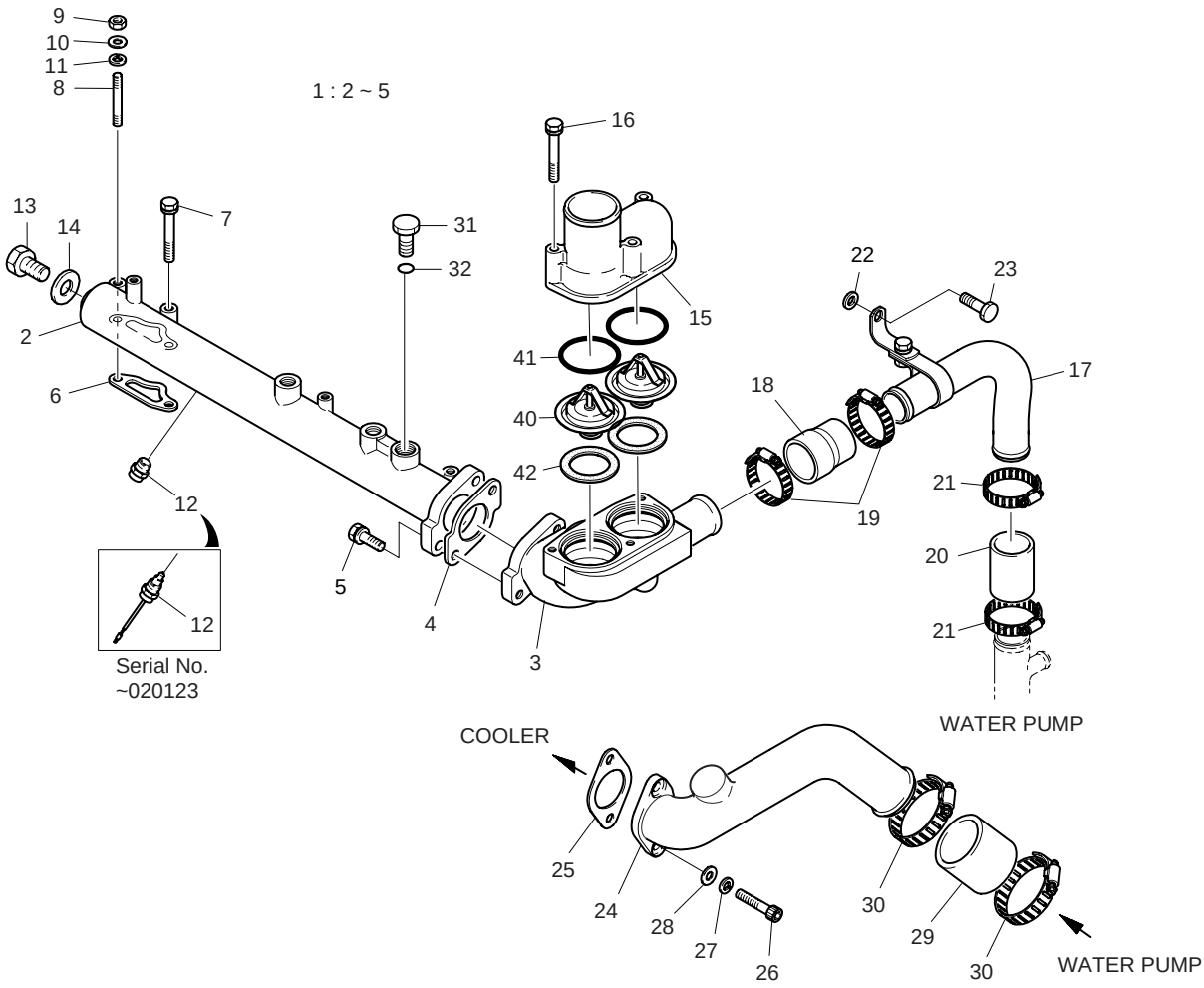

DATE	DEC. 15, 2006
REV. NO.	EXB06-13

Fig. 012 COOLING WATER PIPE
CONDUITE D'EAU DE REFROIDISSEMENT

Serial No. ;

Key No.	Part No.	Description	Description	Q'ty	S.C	Serial No.	ICA	Replaceable part	
								Part No.	Q'ty
012-1	65.06301-6054A	COOLING WATER PIPE ASS'Y	CONDUITES DE EAU	1		~040827			
	65.06301-6084	COOLING WATER PIPE ASS'Y	CONDUITES DE EAU	1		040828~			
2	65.06301-0671A	. PIPE;COOLING WATER	. CONDUITE	1		~040827			
	65.06301-0240	. PIPE;COOLING WATER	. CONDUITE	1		040828~			
3	65.06404-0021B	. HOUSING;THERMOSTAT	. CARTER	1					
4	65.06903-0021	. GASKET(C/W PIPE-W/P)	. RONDELLE DE	1					
5	06.01923-3218	. BOLT ASS'Y M10X35	. BOULON A 6PANS	2					
6	65.06903-0018	GASKET(COOLING WTR PIP	RONDELLE DE BUTEE	2		~040827			
	65.06903-0028	GASKET(COOLING WTR PIP	RONDELLE DE BUTEE	2		040828~			
7	06.01923-3124	BOLT ASS'Y M8X65	BOULON A 6PANS	2					
8	65.90201-0064	BOLT;STUD M8X60	BOULON DE PLOT	2					
9	06.11063-8214	NUT;HEX M8	ECROU	2					
10	06.16731-2107	WASHER;SPRING	RONDELLE ELASTIQUE	2					
11	06.15010-2311	WASHER	RONDELLE	2					
12	65.27435-6003	SWITCH;WATER TEMP.	INTERRUPTEUR	1		~020123			
	65.90320-0019	**PLUG;SCREW**	BOUCHON A VIS	1		020124~			
13	06.08092-2405	PLUG;SCREW M16X1.5	BOUCHON A VIS	1					
14	06.56190-0709	RING;SEAL RING A16X22	BAGUE D'ETANCHEITE	1					
15	65.06405-0018A	PIPE;WATER OUTLET	COUVERCLE	1					
16	06.01923-3124	BOLT ASS'Y M8X65	BOULON A 6PANS	3					
17	65.06301-6037B	PIPE;BY-PASS	CONDUITE	1					
18	65.96301-0204B	HOSE;RUBBER	TUYAU	1					
19	06.67020-0108	CLAMP;HOSE	COLLIER	2					
20	04.27405-1506	HOSE;RUBBER	TUYAU	1					
21	06.67020-0108	CLAMP;HOSE	COLLIER	2					
22	65.90710-0019	WASHER	RONDELLE	1					
23	06.01923-3218	BOLT ASS'Y M10X35	BOULON A 6PANS	1					
24	65.06301-0675	PIPE	CONDUITE	1					
25	65.06903-0020	GASKET	RONDELLE DE BUTEE	1		~061023	Y	65.06903-0020A	1
	65.06903-0020A	**GASKET**	RONDELLE DE BUTEE	1		061024~			
26	06.02090-0513	BOLT;SOCKET HEAD	BOULON A 6PANS	2					
27	06.16731-2108	WASHER;SPRING	RONDELLE	2					
28	06.15010-2312	WASHER;PLAIN	RONDELLE	2					
29	65.96301-0205A	HOSE;RUBBER	TUYAU	1					
30	**06.67020-0109**	**CLAMP;HOSE**	COLLIER	2					
31	65.90310-0149A	SCREW;PLUG M26X1.5	VIS	1					
32	06.56190-0728	RING;SEAL	BAGUE D'ETANCHEITE	1					
40	51.06402-0062	THERMOSTAT	THERMOSTAT	2					

DATE	DEC. 15, 2006
REV. NO.	EXB06-13

Fig. 012 COOLING WATER PIPE
CONDUITE D'EAU DE REFROIDISSEMENT

Serial No. ;

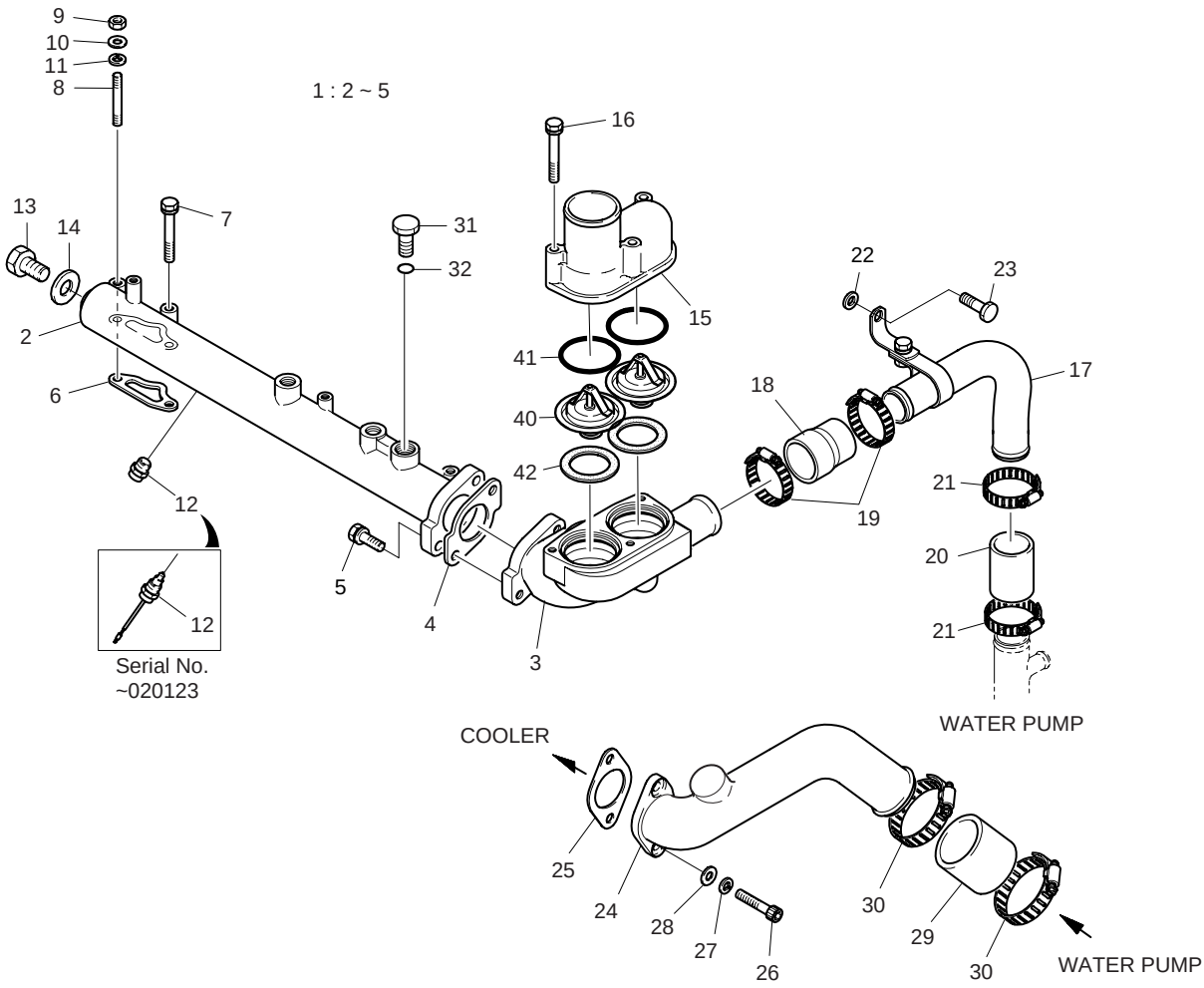

DATE	DEC. 15, 2006
REV. NO.	EXB06-13

Fig. 012 COOLING WATER PIPE
CONDUITE D'EAU DE REFROIDISSEMENT

Serial No. ;

Key No.	Part No.	Description	Description	Q'ty	S.C	Serial No.	ICA	Replaceable part	
								Part No.	Q'ty
012-41	06.56342-1208	O-RING	JONT TORIQUE	2					
42	65.06901A0069	GASKET	JOINT	2					

DATE	JUN. 30, 2007
REV. NO.	EXB07-06

Fig. 013 WATER PUMP
POMPE D'CEAU

Serial No. ;

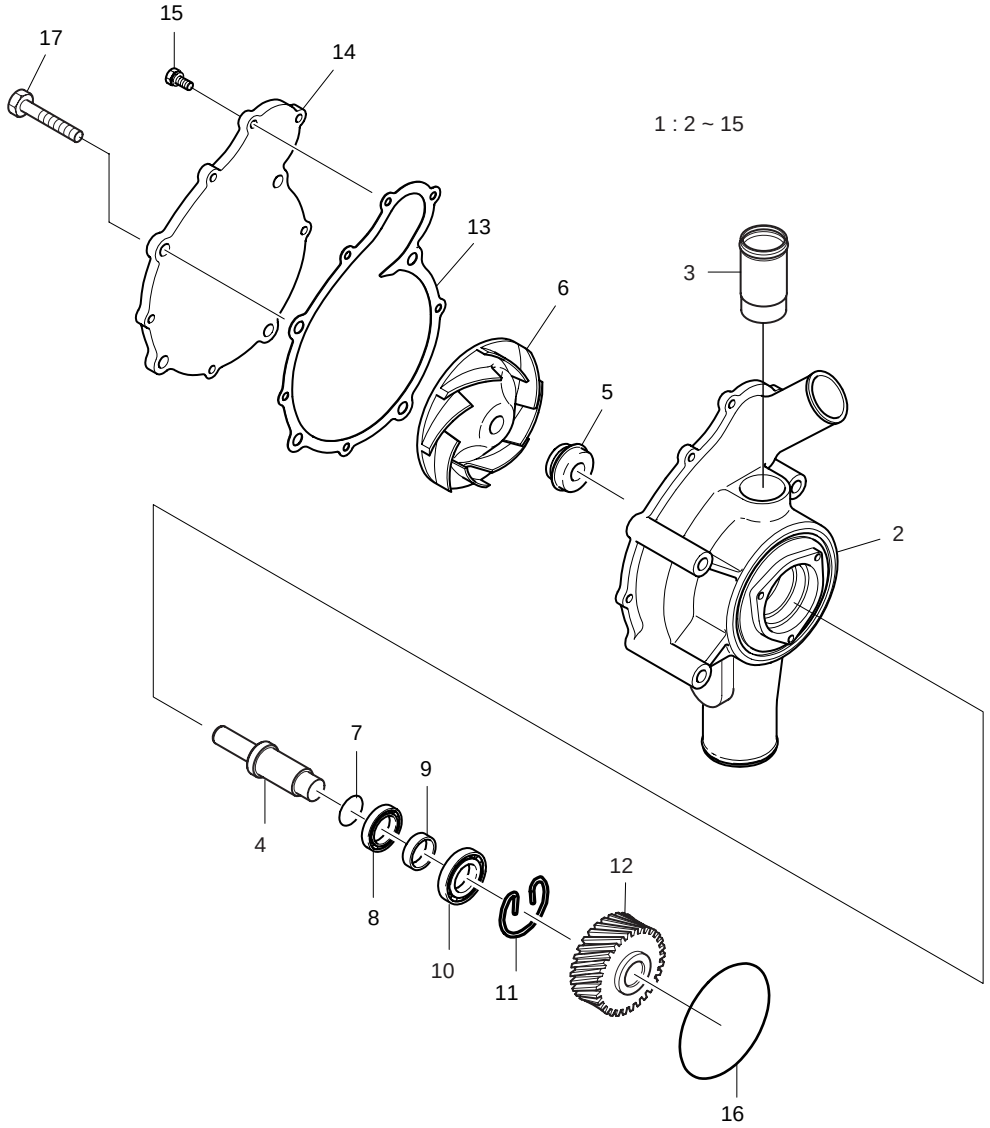

DATE	JUN. 30, 2007
REV. NO.	EXB07-06

Fig. 013 WATER PUMP POMPE D'CEAU

Serial No. ;

Key No.	Part No.	Description	Description	Q'ty	S.C	Serial No.	ICA	Replaceable part	
								Part No.	Q'ty
013-1	65.06500-6157C	WATER PUMP ASS'Y	POMPE DE EAU	1		~021118	Y	65.06500-6157D	1
	65.06500-6157D	WATER PUMP ASS'Y	POMPE DE EAU	1		~040325	T	65.06500-6357	1
								65.91601-6003	1
	65.06500-6357	WATER PUMP ASS'Y	POMPE DE EAU	1		~040715	Y	65.06500-6357A	1
	65.06500-6357A	WATER PUMP ASS'Y	POMPE DE EAU	1		~070823	Y	65.06500-6357B	1
	65.06500-6357B	**WATER PUMP ASS'Y**	POMPE DE EAU	1		070824~			
2	65.06501-0077B	. HOUSING;WATER PUMP	. CARTER	1	D	~021118			
	65.06501-0077C	. HOUSING;WATER PUMP	. CARTER	1	D	~040325			
	65.06501-0092	. HOUSING;WATER PUMP	. CARTER	1	D	040326~			
3	65.06301-0673	. PIPE;COOLING WATER	. CONDUITE	1	D				
4	65.06505-0041	. SHAFT	. ARBRE	1		~040325			
	65.06505-0026	. SHAFT	. ARBRE	1		~040715	I	65.06505-0027	1
	65.06505-0027	. SHAFT	. ARBRE	1		040716~			
5	65.06520-6007	. SEAL;MECHANICAL	. JOINT	1					
6	65.06506-0024A	. IMPELLER	. PROPULSEUR	1		~040325			
	65.06506-0027	. IMPELLER	. PROPULSEUR	1		040326~			
7	65.01510-0103	. SEAL;OIL	. JOINT D'HUILE	1					
8	06.31420-4513	. BEARING;BALL	. PALIER	1					
9	65.06508-0012	. SPACER	. PALIER	1					
10	65.93410-0038	. BEARING	. PALIER	1					
11	06.29020-0131	. RING;SNAP;RING 52X2	. CIRCLIP	1					
12	65.06507-0005A	. GEAR;WATER PUMP DRIVE	. PIGNON	1					
13	65.06901-0076	. GASKET	. RONDELLE DE BUTEE	1					
14	65.06512-0014	. COVER	. COUVERCLE	1		~070823			
	65.06512-0014A	**. COVER**	. COUVERCLE	1		070824~			
15	06.01913-2914	. BOLT ASS'Y M6X22	. BOULON A 6PANS	5					
16	65.96501-0068	O-RING	JONT TORIQUE	1					
17	06.01913-3234	BOLT ASS'Y M10X130	BOULON A 6PANS	4					

DATE	JUN. 30, 2007
REV. NO.	EXB07-06

Fig. 014 COOLING FAN VENTILATEUR

Serial No. ;

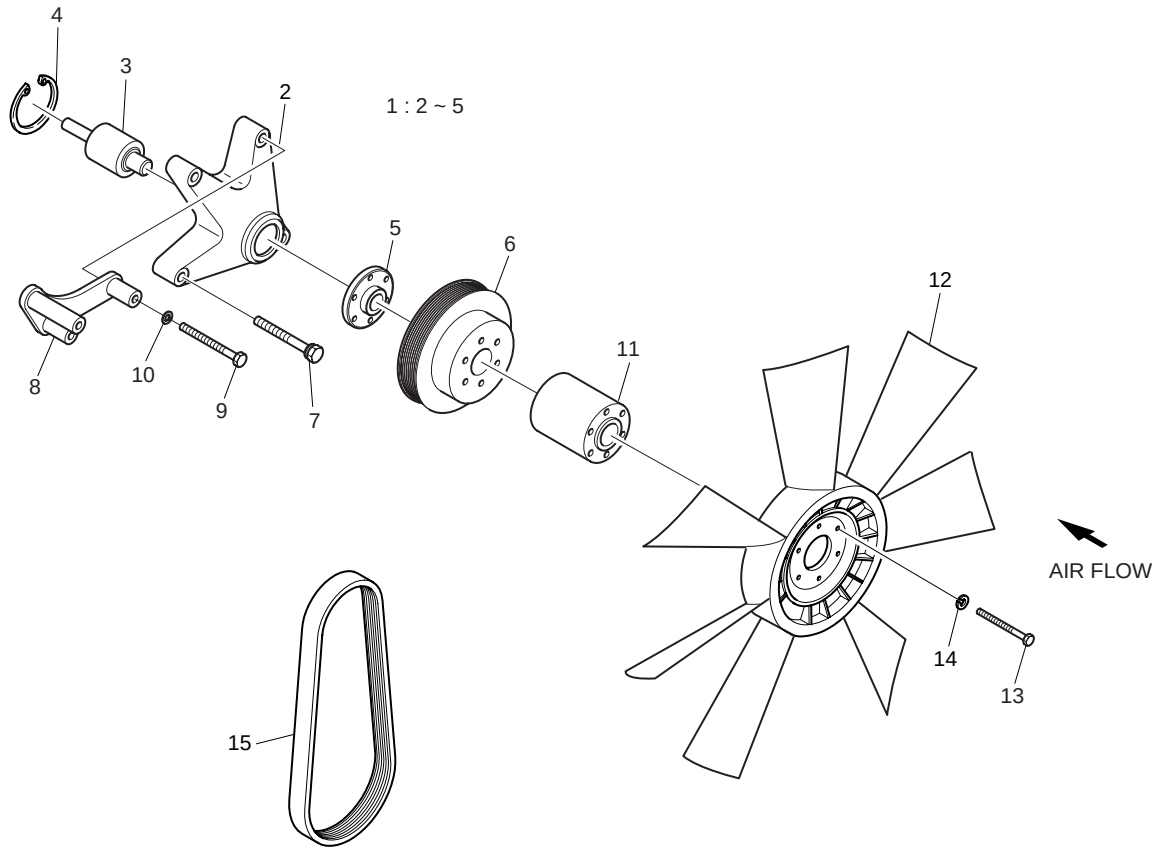

DATE	JUN. 30, 2007
REV. NO.	EXB07-06

Fig. 014 COOLING FAN VENTILATEUR

Serial No. ;

Key No.	Part No.	Description	Description	Q'ty	S.C	Serial No.	ICA	Replaceable part	
								Part No.	Q'ty
014-1	65.06650-6016	FAN DRIVE ASS'Y	SUPPORT	1					
2	65.06651-0005	. HOUSING;FAN DRIVE	. CARTER	1	D				
3	65.93410-0024	. BEARING;UNIT	. PALIER	1					
4	06.29020-0132	. RING;SNAP	. BAGUE ELASTIQUE	1					
5	65.06504-0013	. HUB;FAN DRIVE	. MOYEU DE FIXATION	1					
6	65.06606-0059	PULLEY;FAN	POULIE	1					
7	06.01943-3332	BOLT ASS'Y M12X1.5X110	BOULON A 6PANS	2					
8	65.19103-5035	BRACKET	SUPPORT	1					
9	06.01013-9226	BOLT;HEX M10X1.5X110	BOULON A 6PANS	2					
10	06.16731-2108	WASHER;SPRING	RONDELLE	2					
11	65.06611-0125	FLANGE;FAN	BRIDE	1		~030217	Y	65.06611-0125A	1
	65.06611-0125A	FLANGE;FAN	BRIDE	1		030218~			
12	65.06601-5067	FAN;COOLING	VENTILATEUR	1					
13	06.01013-9142	BOLT;HEX M8X135	BOULON A 6 PANS	6					
14	06.16731-2107	WASHER;SPRING	RONDELLE ELASTIQUE	6					
15	65.96801-0126	V-BELT	COURROIE	1		~040205	Y	65.96801-0126A	1
	65.96801-0126A	V-BELT	COURROIE	1		040206~			

DATE	JUN. 30, 2006
REV. NO.	EXB06-08

Fig. 015 EXHAUST MANIFOLD
TUBULURE D'CECHAPPEMENT

Serial No. ;

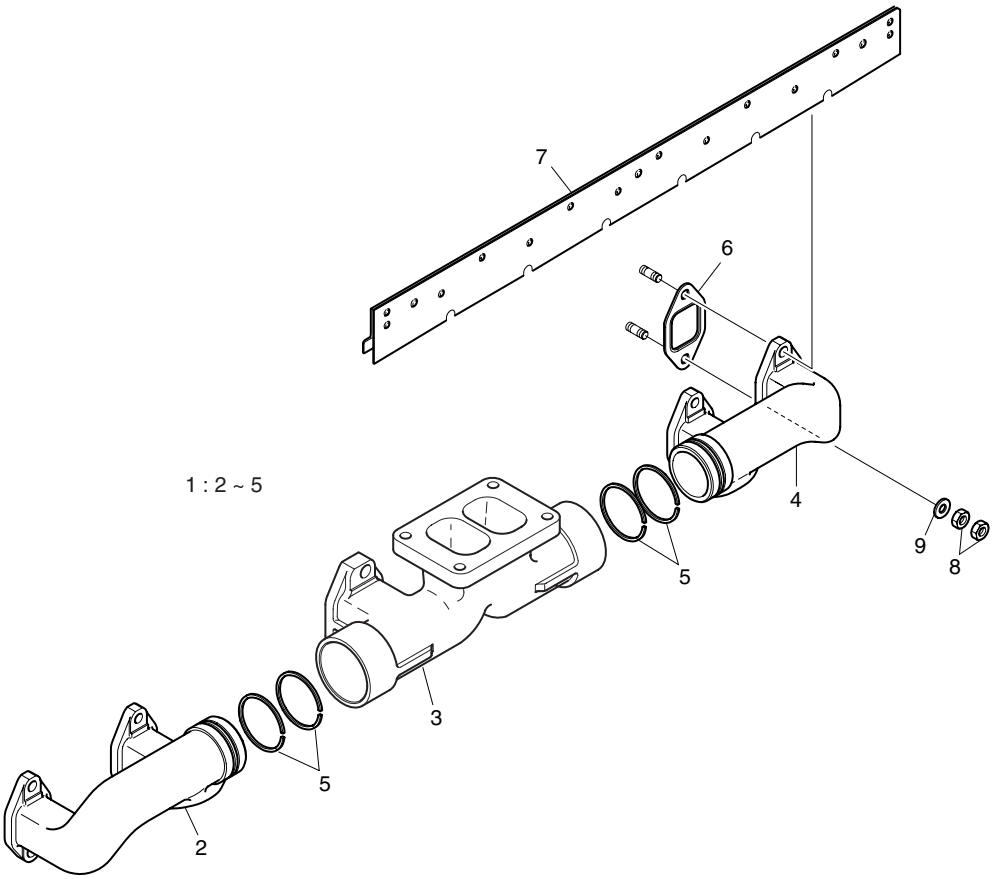

DATE	JUN. 30, 2006
REV. NO.	EXB06-08

Fig. 015 EXHAUST MANIFOLD TUBULURE D'CECHAPPEMENT

Serial No. ;

Key No.	Part No.	Description	Description	Q'ty	S.C	Serial No.	ICA	Replaceable part	
								Part No.	Q'ty
015-1	65.08100-6061	EXHAUST MANIFOLD ASS'Y	COLLECTEUR	1					
2	65.08101-0181A	. MANIFOLD;EXHAUST(FRONT)	. COLLECTEUR	1					
3	65.08101-0530	. MANIFOLD;EXHAUST(CENTER)	. COLLECTEUR	1					
4	65.08101-0183A	. MANIFOLD;EXHAUST(REAR)	. COLLECTEUR	1					
5	65.08105-0001	. RING	. BAGUE D'ETANCHEITE	4					
6	65.08901A0012	GASKET;EXHAUST MANIFOLD	INJECTEUR D'HUILE	6		~051130	I	65.08901-0044	6
	65.08901-0044	**GASKET;EXHAUST**	INJECTEUR D'HUILE	6		051131~			
7	65.08120-5008F	SCREEN;HEAT&CYL HEAD	SCREEN	1		~030507	Y	65.08120-5008G	1
	65.08120-5008G	SCREEN;HEAT&CYL HEAD	SCREEN	1		030508~			
8	06.11063-8215	NUT;HEX M10	ECROU	22					
9	06.15010-2312	WASHER;PLAIN	RONDELLE	12					

DATE	DEC. 30, 2004
REV. NO.	EXB04-09

Fig. 016 INTAKE MANIFOLD
TUBULURE D'CENTREE

Serial No. ;

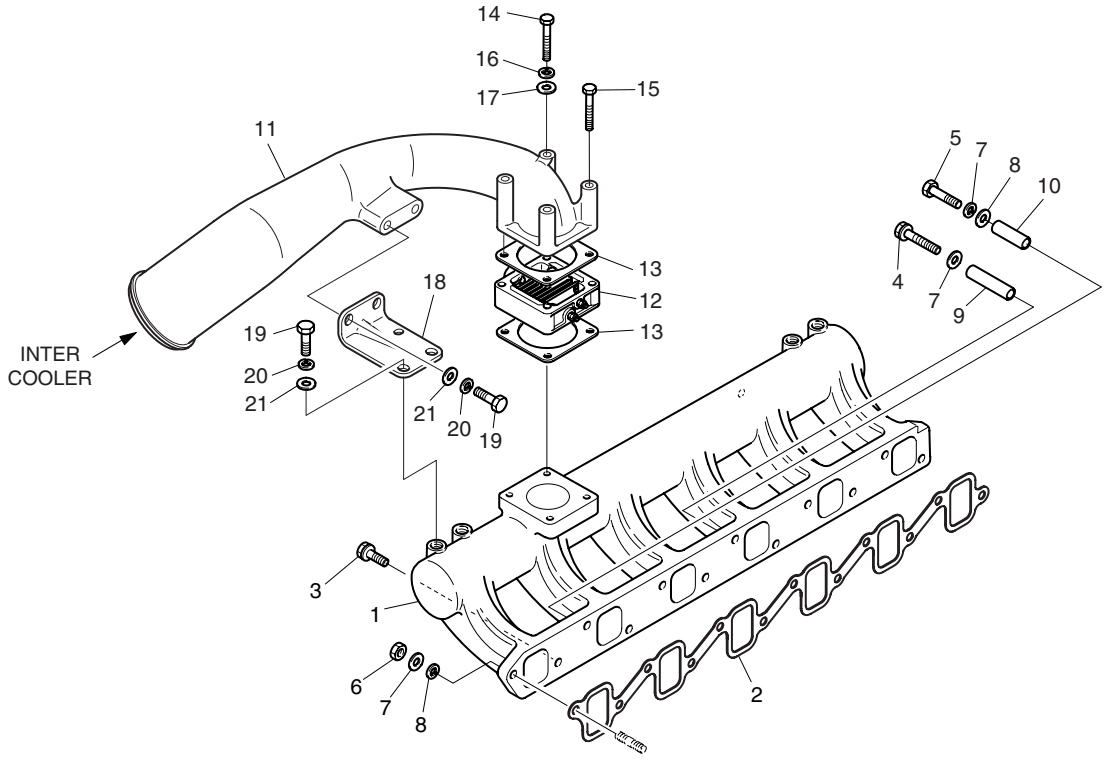

DATE	DEC. 30, 2004
REV. NO.	EXB04-09

Fig. 016 INTAKE MANIFOLD TUBULURE D'CENTREE

Serial No ;

Key No.	Part No.	Description	Description	Q'ty	S.C	Serial No.	ICA	Replaceable part	
								Part No.	Q'ty
016-1	65.08201-5057	MANIFOLD;INTAKE	TUBULURE ET	1					
2	65.08902-0025	GASKET;INTAKE MANIFOLD	BOULON A 6 PANS	1					
3	06.01923-3218	BOLT ASS'Y M10X35	BOULON A 6PANS	8					
4	06.01913-3234	BOLT ASS'Y M10X130	BOULON A 6PANS	1					
5	06.01013-9221	BOLT;HEX M10X80	BOULON A 6PANS	1					
6	06.11063-8215	NUT;HEX M10	ECROU	2					
7	06.16731-2108	WASHER;SPRING	RONDELLE	3					
8	06.15010-2312	WASHER;PLAIN	RONDELLE	4					
9	65.91701-0470	SPACER(92mm)	BAGUE D'ECARTEMENT	1					
10	65.91701-0533	SPACER(44mm)	BAGUE D'ECARTEMENT	1					
11	65.08202-5059A	STAKE;INTAKE	PIEU	1					
12	65.26803-7028	HEATER;AIR	RECHAUFFEUR D'AIR	1		~040128	Y	65.26803-7028A	1
	65.26803-7028A	HEATER;AIR	RECHAUFFEUR D'AIR	1		~041213	Y	65.26803-7028B	1
	65.26803-7028B	**HEATER;AIR**	RECHAUFFEUR D'AIR	1		041214~			
13	65.09904-0008	GASKET;AIR PIPE	ELEMENT FILTRE	2					
14	06.01013-9128	BOLT;HEX. M8X130	BOULON A 6PANS	2					
15	06.01013-9127	BOLT;HEX. M8X120	BOULON A 6PANS	2					
16	06.16731-2107	WASHER;SPRING	RONDELLE ELASTIQUE	4					
17	06.15010-2311	WASHER	RONDELLE	4					
18	65.08240-0026	BRACKET;INTAKE STAKE	SUPPORT	1					
19	06.01733-4309	BOLT;HEX. M12X1.5X25	BOULON A 6PANS	4					
20	06.16731-2109	WASHER;SPRING	RONDELLE ELASTIQUE	4					
21	06.15010-2313	WASHER;PLAIN	RONDELLE	4					

DATE	DEC. 15, 2006
REV. NO.	EXB06-13

Fig. 017 TURBO CHARGER
CHARGEUR DE TURBO

Serial No. ;

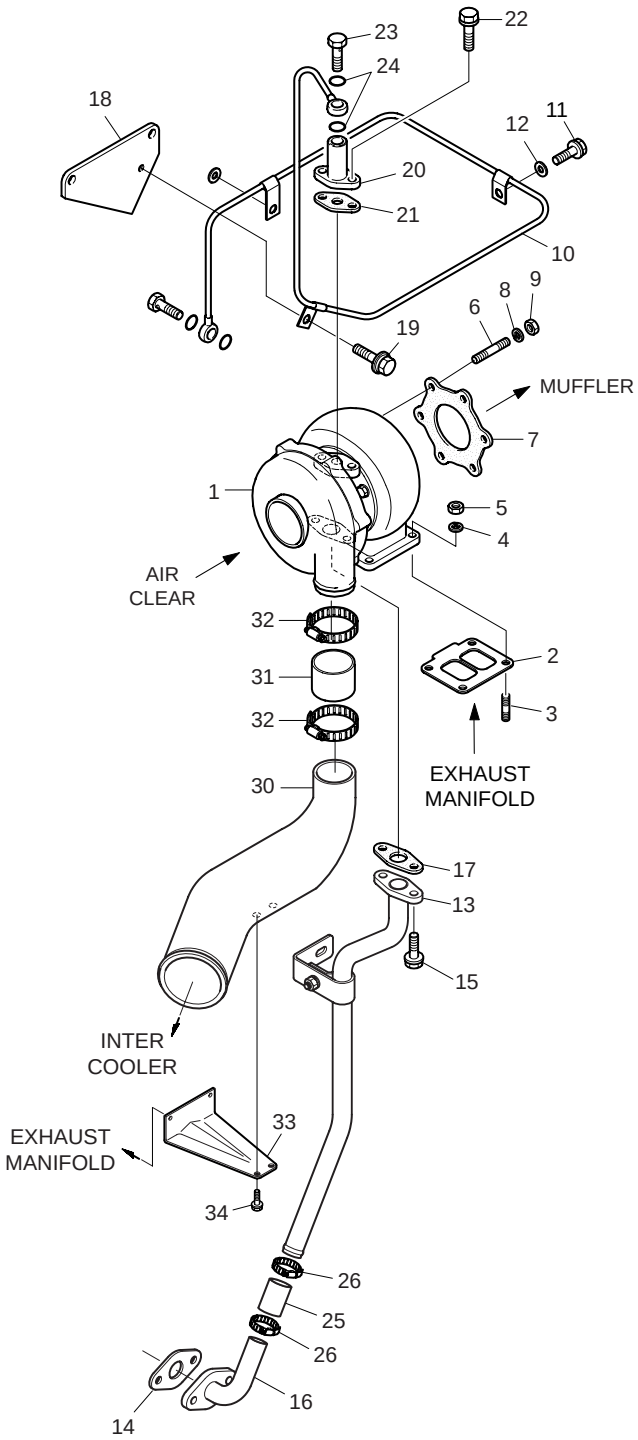

DATE	DEC. 15, 2006
REV. NO.	EXB06-13

Fig. 017 TURBO CHARGER
CHARGEUR DE TURBO

Serial No. ;

Key No.	Part No.	Description	Description	Q'ty	S.C	Serial No.	ICA	Replaceable part	
								Part No.	Q'ty
017-1	65.09100-7073	TURBOCHARGER ASS'Y	CHARGEUR DE TURBO	1					
2	65.09901-0025	GASKET;TURBO CHARGER	BAGUE D'ETANCHEITE	1		~040305	Y	65.09901-0033	1
	65.09901-0033	GASKET;TURBO CHARGER	BAGUE D'ETANCHEITE	1		040306~			
3	06.06226-0808	BOLT;STUD M10X30	BOULON DE PLOT	4		~030115	I	65.90201-0076	4
	65.90201-0076	BOLT;STUD M10X30	BOULON DE PLOT	4		030116~			
4	06.16731-2108	WASHER;SPRING	RONDELLE	4					
5	06.11063-8215	NUT;HEX M10	ECROU	4		~030115	I	65.90535-0001	4
	65.90535-0001	NUT;HEX M10	ECROU	4		030116~			
6	65.90201-0181	BOLT;STUD	BOULON DE PLOT	6					
7	65.08901-0063	GASKET	BAGUE D'ETANCHEITE DE	1					
8	06.16731-2108	WASHER;SPRING	RONDELLE	6					
9	06.11063-8215	NUT;HEX M10	ECROU	6					
10	65.05701-5661	PIPE;OIL	TUYAU D'HUILE	1					
11	06.01943-3317	BOLT ASS'Y M12X1.5X30	BOULON A 6PANS	2					
12	06.15010-2313	WASHER;PLAIN	RONDELLE 13	2					
13	65.05701-5442	PIPE;OIL	CONDUITE	1					
14	65.96601-0045A	GASKET;T/C OIL RETURN	BOULON A 6 PANS	1		~060530	I	65.96601-0067	1
	65.96601-0067	**GASKET;T/C OIL RETURN**	BOULON A 6 PANS	1		060531~			
15	06.01913-3114	BOLT ASS'Y M8X22	BOULON A 6PANS	2					
16	65.05701-5443	PIPE;OIL	CONDUITE	1					
17	65.96601-0012	GASKET;T/C OIL RETURN	JOINT	1					
18	65.05740-5002	BRACKET;OIL PIPE	SUPPORT	1					
19	06.01923-3114	BOLT ASS'Y M8X22	BOULON A 6PANS	1					
20	65.98131-5008	FLANGE;ADPTER	BRIDE	1					
21	65.96601-0046A	GASKET;OIL PIPE ADPTR	JOINT	1		~060530	Y	65.96601-0046B	1
	65.96601-0046B	**GASKET;OIL PIPE ADPTR**	JOINT	1		060531~			
22	06.01913-3113	BOLT ASS'Y M8X20	BOULON A 6PANS	2					
23	06.78144-2403	SCREW;HOLLOW M12X1.5	VIS CREUSE	1					
24	06.56180-0714	RING;SEAL	BAGUE D'ETANCHEITE	2					
25	65.96301-0327	HOSE;RUBBER	TUYAU CAOUTCHOUC	1		~040226	Y	65.96301-0327A	1
	65.96301-0327A	HOSE;RUBBER	TUYAU CAOUTCHOUC	1		040227~			
26	06.67020-0106	CLAMP;HOSE	COLLIER	2					
30	65.09411-5051	INLET	PRISE	1					
31	65.96301-0268	HOSE	TUYAU	1					
32	06.67020-0112	CLAMP;HOSE	COLLIER A DURITE	2					
33	65.09440-0007	BRACKET	SUPPORT	1					
34	06.01923-3215	BOLT ASS'Y M10X25	BOULON A 6PANS	2					

DATE	DEC. 15, 2006
REV. NO.	EXB06-13

Fig. 018 NOZZLE & HOLDER
INJECTEUR ET PORTE-INJECTEUR

Serial No. ;

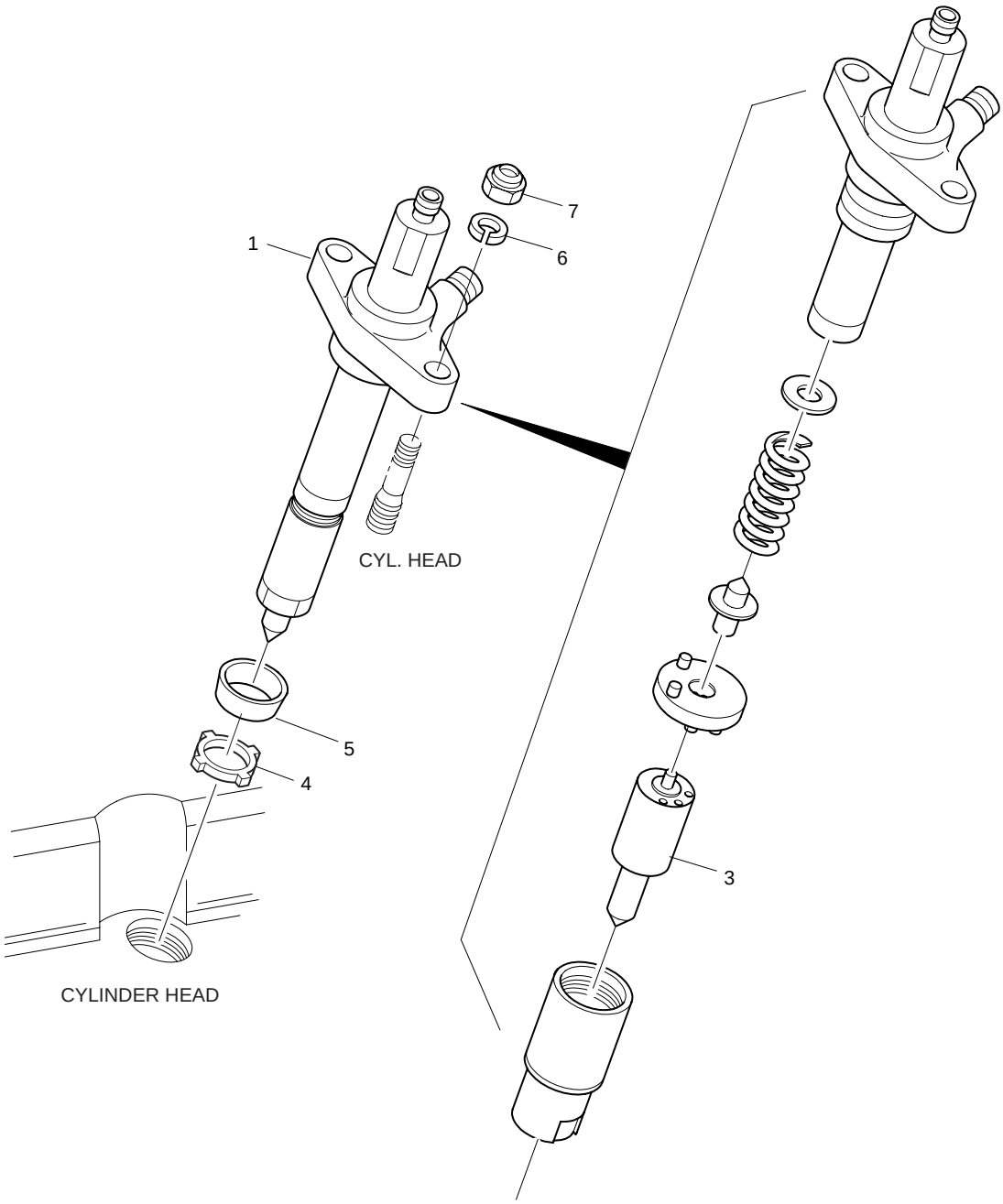

DATE	DEC. 15, 2006
REV. NO.	EXB06-13

Fig. 018 NOZZLE & HOLDER INJECTEUR ET PORTE-INJECTEUR

Serial No. ;

Key No.	Part No.	Description	Description	Q'ty	S.C	Serial No.	ICA	Replaceable part	
								Part No.	Q'ty
018-1	65.10101-7298	NOZZLE & HOLDER ASS'Y	INJECTEUR ET	6		~061229	Y	65.10101-7103	6
	65.10101-7103	**NOZZLE & HOLDER ASS'Y**	INJECTEUR ET	6		061230~			
3	65.10102-6053	. NOZZLE	. INJECTEUR	1		~061229			
	65.10102-6103	**. NOZZLE**	. INJECTEUR	1		061230~			
4	65.98701-0012	GASKET;METAL	JOINT	6					
5	65.96401-0012	SEAL;DUST	BAGUE	6					
6	06.16731-2105	WASHER;SPRING	RONDELLE ELASTIQUE	12					
7	65.90510-0011	NUT	ECROU	12		~021015			
	06.11063-8212	NUT	ECROU	24		021016~			

DATE	JUN. 30, 2006
REV. NO.	EXB06-08

Fig. 019 INJECTION PIPE
PIPE D'INJECTION

Serial No. ;

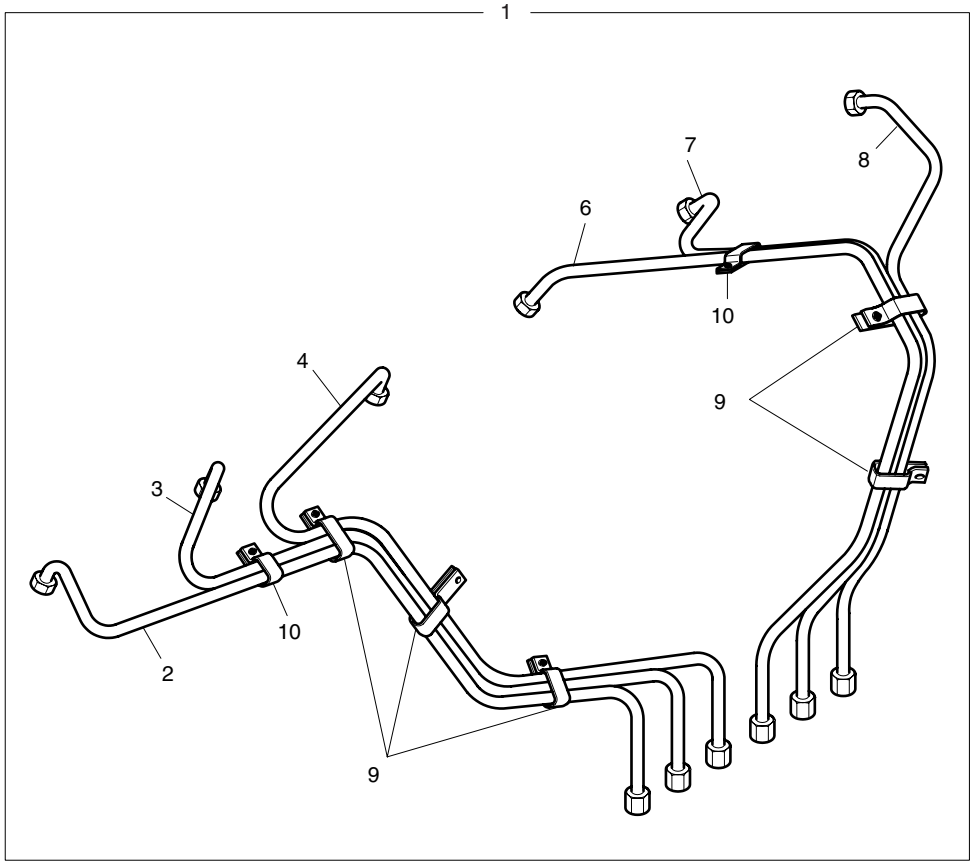

DATE	JUN. 30, 2006
REV. NO.	EXB06-08

Fig. 019 INJECTION PIPE
PIPE D'INJECTION

Serial No. ;

Key No.	Part No.	Description	Description	Q'ty	S.C	Serial No.	ICA	Replaceable part	
								Part No.	Q'ty
019-1	65.10301-7006	INJECTION PIPE ASS'Y(2~8)	ENSEMBLE DE CONDUITE	1					
2	65.10301-5247	. INJECTION PIPE NO.1	. CONDUITE	1	D				
3	65.10301-5248	. INJECTION PIPE NO.2	. CONDUITE	1	D				
4	65.10301-5249	. INJECTION PIPE NO.3	. CONDUITE	1	D				
6	65.10301-5295	. INJECTION PIPE NO.4	. CONDUITE	1	D				
7	65.10301-5296	. INJECTION PIPE NO.5	. CONDUITE	1	D				
8	65.10301-5297	. INJECTION PIPE NO.6	. CONDUITE	1	D				
9	65.97401-6002A	. 3 PIPE CLIP ASS'Y	. ATTACHE	5	D				
10	65.97401-6001A	. 2 PIPE CLIP ASS'Y	. ATTACHE	2	D				

DATE	JUN. 30, 2007
REV. NO.	EXB07-06

Fig. 020 INJECTION PUMP
POMPE D'INJECTION

Serial No. ;

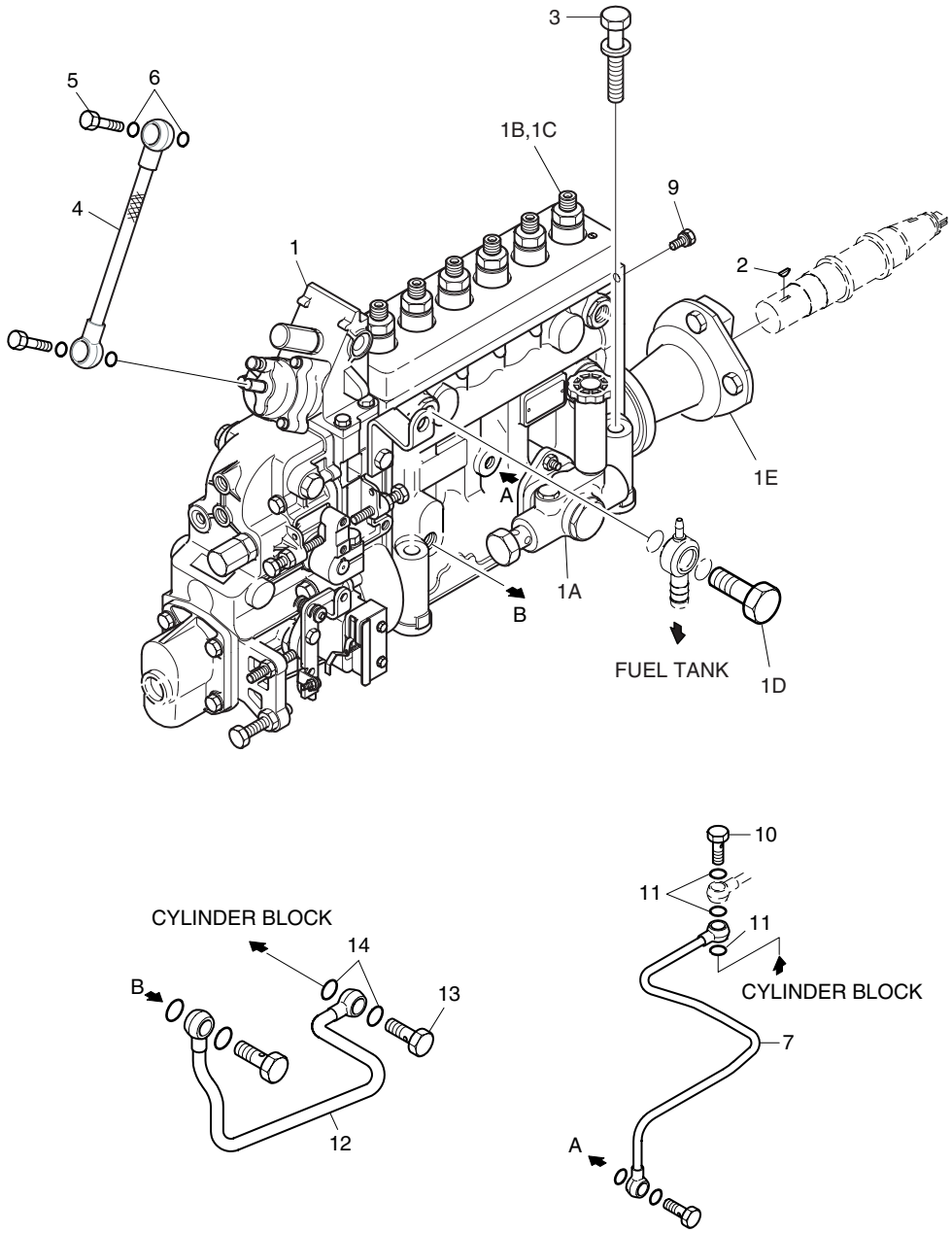

DATE	JUN. 30, 2007
REV. NO.	EXB07-06

Fig. 020 INJECTION PUMP POMPE D'INJECTION

Serial No. ;

Key No.	Part No.	Description	Description	Q'ty	S.C	Serial No.	ICA	Replaceable part	
								Part No.	Q'ty
020-1	65.11101-7358A	INJECTION PUMP	POMPE D'INJECTION	1		~070928	Y	65.11101-7358B	1
	65.11101-7358B	**INJECTION PUMP**	POMPE D'INJECTION	1		070929~			
1A	105207-1520	. FEED PUMP	. POMPE	1					
1B	134110-9420	. DELIVERY VALVE	. VANNE	6					
1C	134151-8820	. PLUNGER	. PLUNGEUR	6					
1D	131424-4420	. VALVE;OVER FLOW	. VANNE DE GAZOLE	1					
1E	65.11305-6004	. COUPLING	. ACCOUPLEMENT	1					
2	06.29141-0215	KEY;WOODRUFF	CLAVETTE WOODRUFF	1					
3	06.01923-3228	BOLT ASS'Y M10X85	BOULON A 6PANS	4					
4	65.08301-6012	AIR HOSE ASS'Y	TUYAU	1					
5	65.98150-0053B	SCREW;HOLLOW	VIS CREUSE	1					
6	06.56180-0714	RING;SEAL	BAGUE D'ETANCHEITE	2					
7	65.05701-5313	PIPE;OIL	TUYAU D'HUILE	1					
9	06.01923-2910	BOLT ASS'Y M6X12	BOULON A 6PANS	1					
10	65.98150-0050	SCREW;HOLLOW	VIS CREUSE	1					
11	06.56180-0714	RING;SEAL	BAGUE D'ETANCHEITE	3					
12	65.05701-5624	PIPE;OIL	TUYAU D'HUILE	1					
13	06.78144-2204	SCREW;HOLLOW	VIS CREUSE	1					
14	06.56190-0706	RING;SEAL	BAGUE D'ETANCHEITE	2					

DATE	JUN. 30, 2007
REV. NO.	EXB07-06

Fig. 021 INJECTION PUMP DRIVE
LECTEUR DE POMPE D'CLNJECTION

Serial No. ;

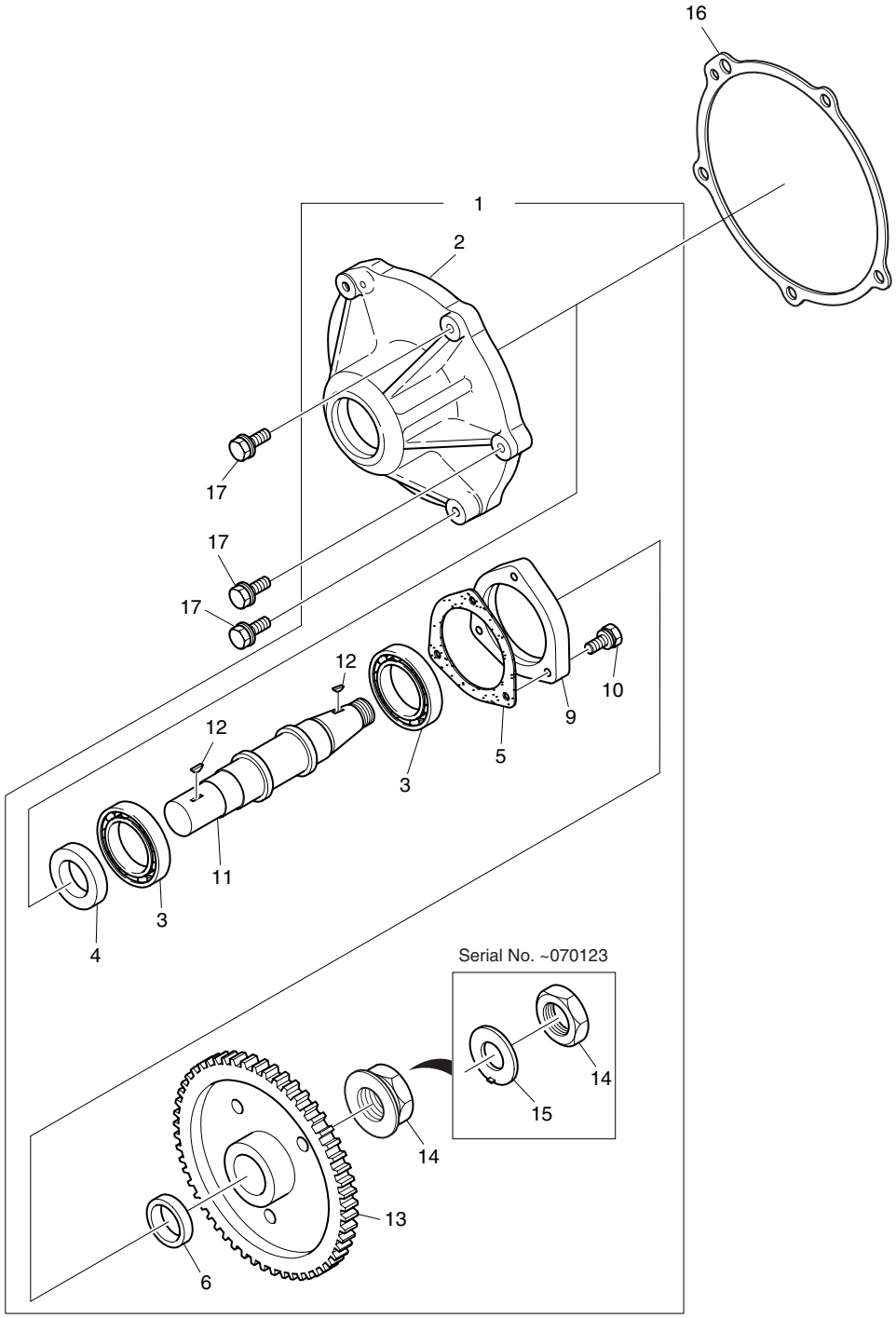

DATE	JUN. 30, 2007
REV. NO.	EXB07-06

Fig. 021 INJECTION PUMP DRIVE
LECTEUR DE POMPE D'CLNJECTION

Serial No. ;

Key No.	Part No.	Description	Description	Q'ty	S.C	Serial No.	ICA	Replaceable part	
								Part No.	Q'ty
021-1	65.11301-7010F	INJECTION DRIVE ASS'Y	CARTER DE PALIER	1		~051102	Y	65.11301-7010G	1
	65.11301-7010G	INJECTION DRIVE ASS'Y	CARTER DE PALIER	1		~070123			
	65.11301-7019A	**INJECTION DRIVE ASS'Y**	CARTER DE PALIER	1		070124~			
2	65.11309-0007A	. HOUSING;INJECTION DRIVE	. CARTER	1	D	~070123			
	65.11309-0011C	**. HOUSING;INJECTION DRIVE**	. CARTER	1	D	070124~			
3	06.32092-0307	. BEARING;TAPER ROLLER	. ROULEMENT A ROULEAUX	2		~070123			
	06.32092-0308	**. BEARING;TAPER ROLLER**	. ROULEMENT A ROULEAUX	2		070124~			
4	65.01510-0039	. SEAL;OIL	. RONDELLE D'ETANCHEITE	1		~070123			
	65.01510-0038	**. SEAL;OIL**	. RONDELLE D'ETANCHEITE	1		070124~			
5	65.11308-0001	. SHIM 0.50mm	. CALE	1	R				
	65.11308-0002	. SHIM 0.20mm	. CALE	1	R				
	65.11308-0003	. SHIM 0.15mm	. CALE	1	R				
	65.11308-0004	. SHIM 0.10mm	. CALE	1	R				
6	**65.91701-0219**	**. SPACER**	BAGUE D'ECARTEMENT	1		070124~			
9	65.11312-0007	. COVER	. COUVERCLE	1		~070123			
	65.11312-0008	**. COVER**	. COUVERCLE	1		070124~			
10	06.01913-3115	. BOLT ASS'Y M8X25	. BOULON A 6PANS	3					
11	65.11302-0009A	. SHAFT	. ARBRE D'ENTRAINEMENT	1		~051102	Y	65.11302-0009B	1
	65.11302-0009B	. SHAFT	. ARBRE D'ENTRAINEMENT	1		~070123			
	65.11302-0019A	**. SHAFT**	. ARBRE D'ENTRAINEMENT	1		070124~			
12	06.29141-0215	. KEY;WOODRUFF	. CLAVETTE WOODRUFF	1					
13	65.11301-0013C	. GEAR;INJECTION PUMP DRIVE	. PIGNON	1		~051102	Y	65.11301-0013D	1
	65.11301-0013D	. GEAR;INJECTION PUMP DRIVE	. PIGNON	1		~070123			
	65.11301-0026A	**. GEAR;INJECTION PUMP**	. PIGNON	1		070124~			
14	06.11250-4329	. NUT;HEX M24X1.5	. ECROU	1		~070123			
	65.90640-0021	**. NUT;HEX M24X1.5**	. ECROU	1		070124~			
15	**06.16050-0316**	**. WASHER;LOCK**	. RONDELLE FREIN	1		070124~			
16	65.11902-0017	GASKET	PALIER	1					
17	65.90020-0079	BOLT;HEX ASS'Y M10X35	BOULON A 6PANS	3					

DATE	JUN. 30, 2006
REV. NO.	EXB06-08

Fig. 022 INJECTION PUMP MOUNTING
SUPPORT DE POMPE D'CLNJECTION

Serial No. ;

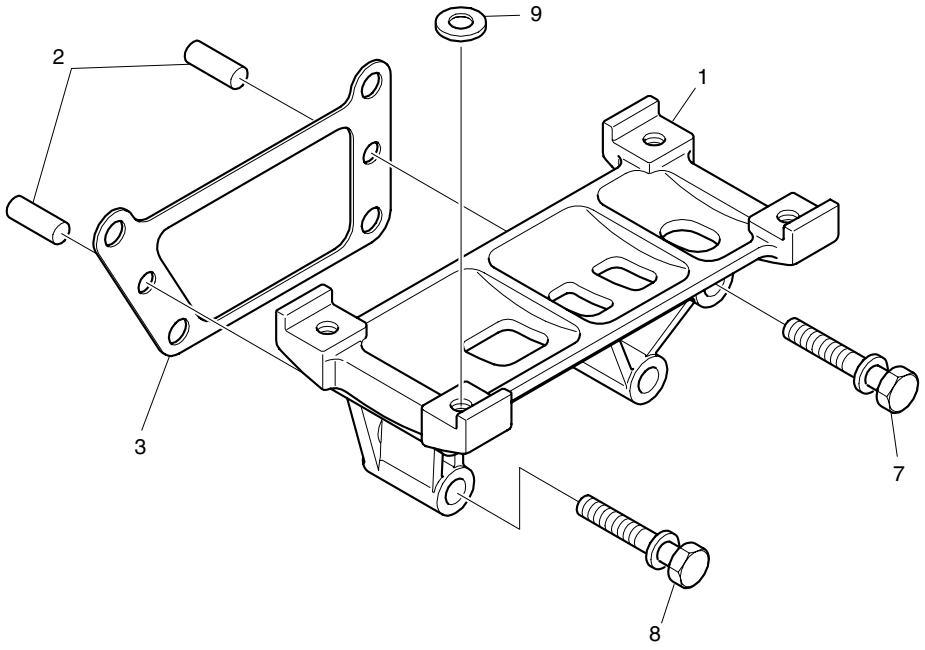

DATE	JUN. 30, 2006
REV. NO.	EXB06-08

Fig. 022 INJECTION PUMP MOUNTING SUPPORT DE POMPE D'CLNJECTION

Serial No. ;

Key No.	Part No.	Description	Description	Q'ty	S.C	Serial No.	ICA	Replaceable part	
								Part No.	Q'ty
022-1	65.11401-0033	BRACKET;INJECTION PUMP	SUPPORT	1					
2	06.22022-1112	PIN;DOWEL	GOUPILLE D'AJUSTAGE	2					
3	65.11405-0005	SHIM 0.10mm	CALE	1	R				
	65.11405-0006	SHIM 0.15mm	CALE	1	R				
	65.11405-0007	SHIM 0.20mm	CALE	1	R				
	65.11405-0008	SHIM 0.50mm	CALE	1	R				
7	06.01943-3332	BOLT ASS'Y M12X1.5X110	BOULON A 6PANS	2					
8	06.01943-7324	BOLT ASS'Y M12X65	BOULON A 6PANS	2					
9	65.11405-0009	SHIM 0.10mm	CALE 0.1mm	4	R				
	65.11405-0013	SHIM 0.20mm	CALE 0.2mm	1	R				
	65.11405-0010	SHIM 0.30mm	CALE 0.3mm	4	R				

DATE	DEC. 29, 2005
REV. NO.	EXB05-20

Fig. 023 FUEL PIPE
PIPE DE CARBURANT

Serial No. ;

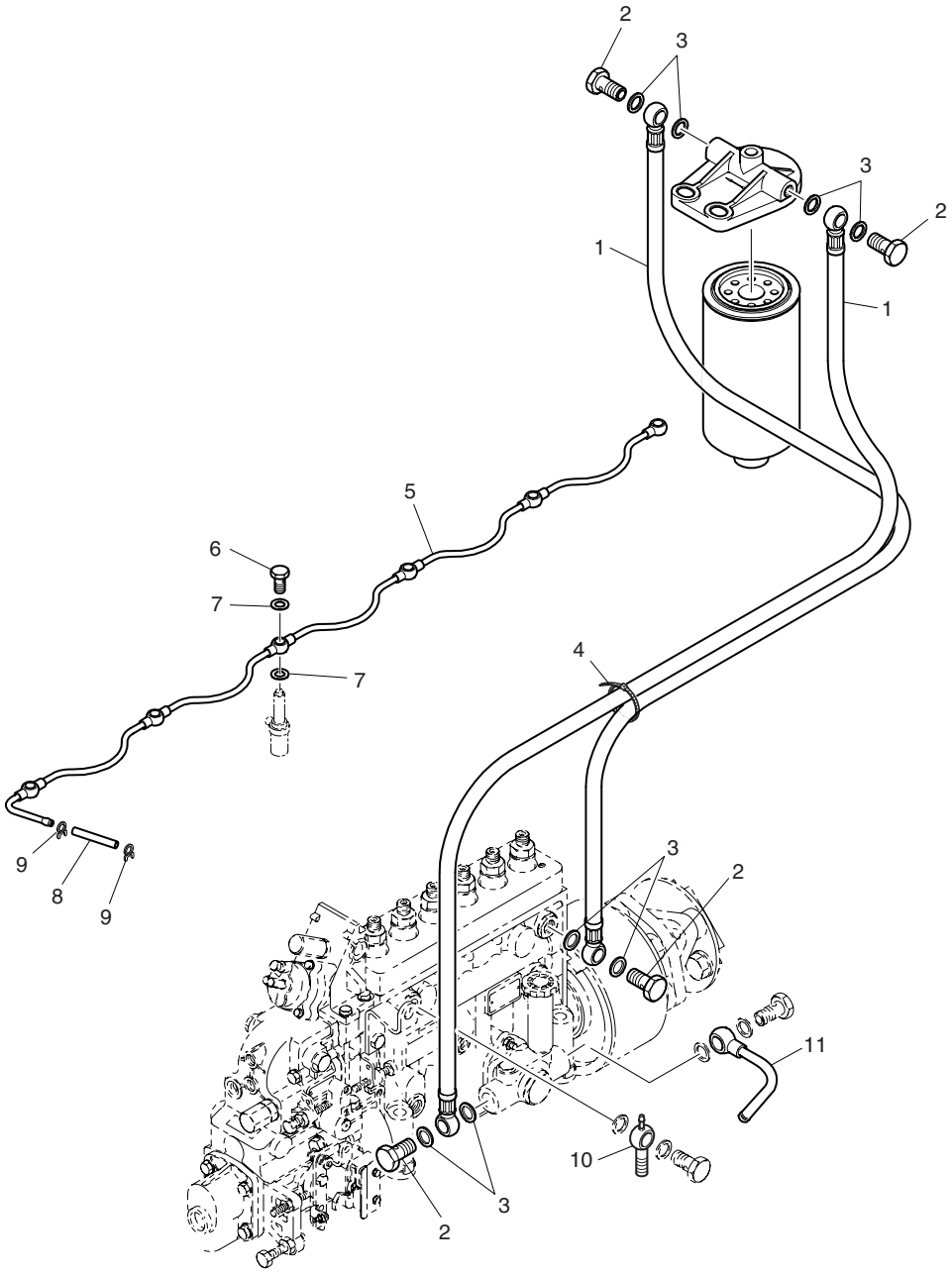

INJECTION PUMP

DATE	DEC. 29, 2005
REV. NO.	EXB05-20

Fig. 023 FUEL PIPE
PIPE DE CARBURANT

Serial No ;

Key No.	Part No.	Description	Description	Q'ty	S.C	Serial No.	ICA	Replaceable part	
								Part No.	Q'ty
023-1	65.96341-0100	HOSE;FUEL	TUYAU A GAZOLE	2					
2	06.78144-2204	SCREW;HOLLOW	VIS CREUSE	4					
3	06.56190-0706	RING;SEAL	BAGUE D'ETANCHEITE	8					
4	65.97460-0001	BAND;TENSION	COLLIER	1					
5	65.12301-5165A	FUEL PIPE ASS'Y	CONDUITE	1					
6	65.98150-0042A	SCREW;HOLLOW	VIS CREUSE	6					
7	06.56180-0712	RING;SEAL	BAGUE D'ETANCHEITE	12					
8	65.96330-0132	HOSE;FUEL	TUYAU	1					
9	65.97445-0001	CLAMP	COLLIER A RESSSORT	2					
10	65.98101-0008	UNION;DOUBLE BANJO	ENSEMBLE RACCORD	1					
11	65.12301-5022	PIPE;FUEL RETURN	CANALISATION DE GAZOLE	1					

DATE	JUN. 30, 2007
REV. NO.	EXB07-06

Fig. 024 FUEL FILTER
FILTRE A GAZOLE

Serial No. ;

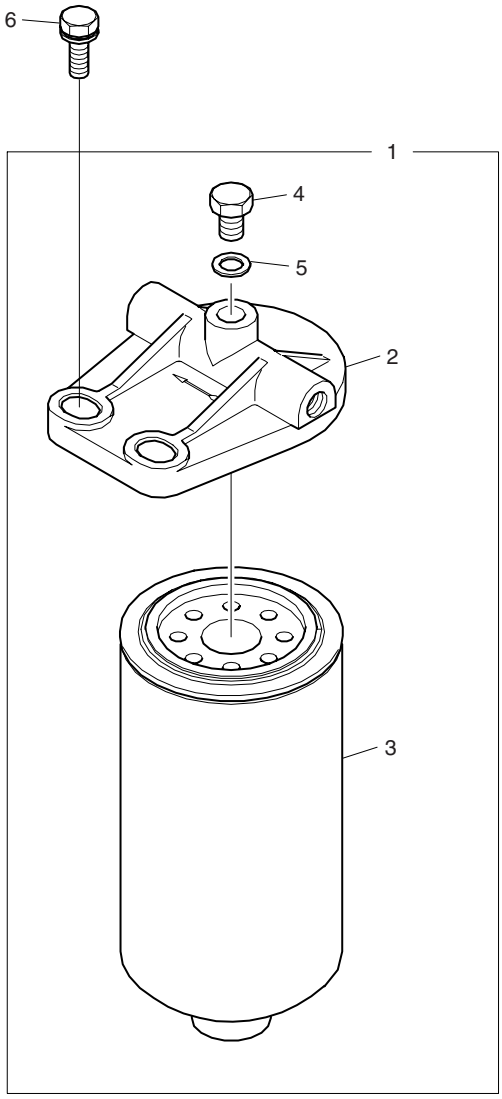

DATE	JUN. 30, 2007
REV. NO.	EXB07-06

Fig. 024 FUEL FILTER
FILTRE A GAZOLE

Serial No. ;

Key No.	Part No.	Description	Description	Q'ty	S.C	Serial No.	ICA	Replaceable part	
								Part No.	Q'ty
024-1	65.12501-7023	FUEL FILTER ASS'Y	ENSEMBLE FILTRE A	1		~050522	Y	65.12501-7023A	1
	65.12501-7023A	FUEL FILTER ASS'Y	ENSEMBLE FILTRE A	1		~070911	Y	65.12501-7023B	1
	65.12501-7023B	**FUEL FILTER ASS'Y**	ENSEMBLE FILTRE A	1		070912~			
2	65.12504-5013A	. HEAD;FUEL FILTER	. COUVERCLE	1		~050522	Y	65.12504-5013B	1
	65.12504-5013B	. HEAD;FUEL FILTER	. COUVERCLE	1		050523~			
3	65.12503-5016	. ELEMENT;FUEL FILTER	. ELEMENT FILTRE	1		~050522	Y	65.12503-5016A	1
	65.12503-5016A	. ELEMENT;FUEL FILTER	. ELEMENT FILTRE	1		~070911	Y	65.12503-5016B	1
	65.12503-5016B	**. ELEMENT;FUEL FILTER**	. ELEMENT FILTRE	1		070912~			
4	65.90310-0143	. SCREW;PLUG M10X1.5	. VIS	1					
5	06.56180-0716	. RING;SEAL	. BAGUE D'ETANCHEITE	1					
6	06.01953-3318	BOLT ASS'Y M12X1.5X35	BOULON A 6PANS	2					

DATE	DEC. 15, 2006
REV. NO.	EXB06-13

Fig. 025 ALTERNATOR MOUNTING SUPPORT D'CALTERNATEUR

Serial No. ;

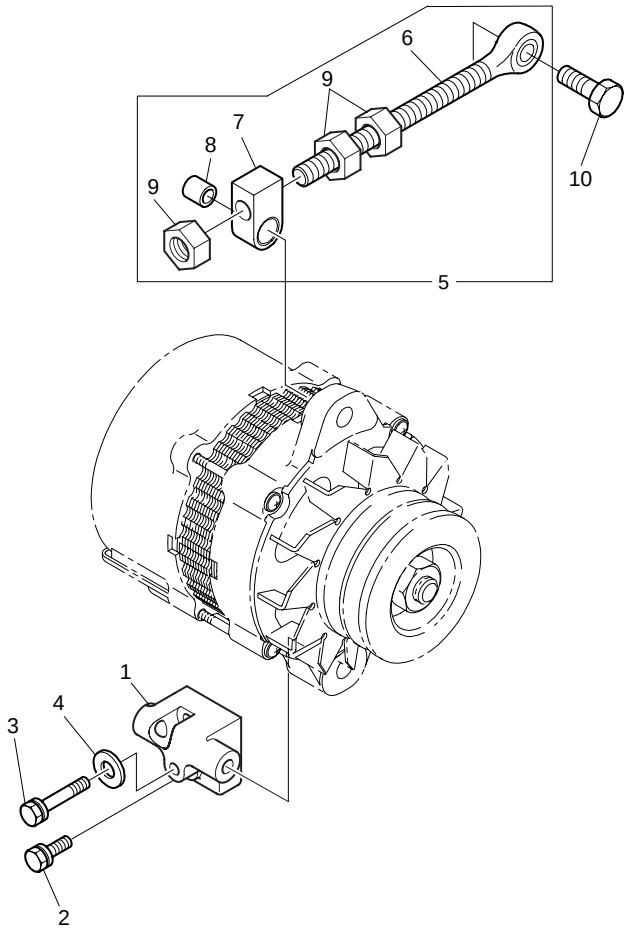

DATE	DEC. 15, 2006
REV. NO.	EXB06-13

Fig. 025 ALTERNATOR MOUNTING SUPPORT D'CALTERNATEUR

Serial No. ;

Key No.	Part No.	Description	Description	Q'ty	S.C	Serial No.	ICA	Replaceable part	
								Part No.	Q'ty
025-1	65.19102-0075	BRACKET;ALTERNATOR	SUPPORT	1					
2	06.01913-3219	BOLT ASS'Y M10X40	BOULON A 6PANS	2					
3	06.01013-9220	BOLT;HEX M10X1.5X75	BOULON A 6PANS	1					
4	06.16731-2108	WASHER;SPRING	RONDELLE	1					
5	65.19103-6012	EYE BOLT ASS'Y	BOULON A 6PANS	1		~060927	Y	65.19103-6012A	1
	65.19103-6012A	**EYE BOLT ASS'Y**	BOULON A 6PANS	1		060928~			
6	65.90435-0011	. BOLT;EYE	. BOULON 6 PANS	1	D				
7	65.19107-0001	. PIECE;GUIDE	. GUIDE	1	D	~060927			
	65.19107-0001A	**. PIECE;GUIDE**	. GUIDE	1	D	060928~			
8	65.93020-0055	. BUSH	. AMPOULE	1	D				
9	06.11063-9217	. NUT;HEX	. ECROU	3	D				
10	06.01943-3319	BOLT ASS'Y M12X1.5X40	BOULON A 6PANS	1					

DATE	JUN. 30, 2007
REV. NO.	EXB07-06

Fig. 026 STARTER
METTEZ EN MARCHE LE MOTEUR

Serial No. ;

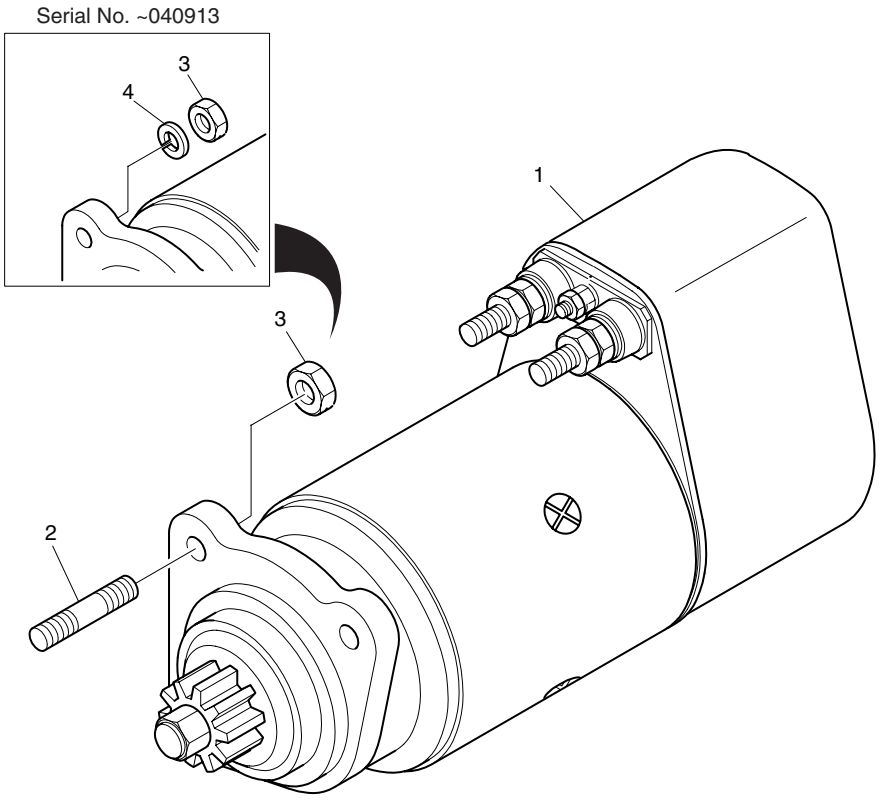

DATE	JUN. 30, 2007
REV. NO.	EXB07-06

Fig. 026 STARTER
METTEZ EN MARCHE LE MOTEUR

Serial No. ;

Key No.	Part No.	Description	Description	Q'ty	S.C	Serial No.	ICA	Replaceable part	
								Part No.	Q'ty
026-1	65.26201-7058A	STARTER(DAC)	DEMARREUR	1		~040913	I	65.26201-7074	1
	65.26201-7074	STARTER(DAC)	DEMARREUR	1		~070820	Y	65.26201-7074C	1
	65.26201-7074C	STARTER(DAC)	DEMARREUR	1		070821~			
2	06.06175-8308	BOLT;STUD M12X1.5X30	BOULON DE PLOT	3		~040913	I	06.06175-8309	3
	06.06175-8309	BOLT;STUD M12X1.5X35	BOULON DE PLOT	3		040914~			
3	06.11063-9216	NUT;HEX M12X1.5	ECROU	3		~040913	I	65.90535-0005	3
	65.90535-0005	NUT;HEX M12X1.5	ECROU	3		040914~			
4	06.16731-2109	WASHER;SPRING	RONDELLE ELASTIQUE	3		~040913			

DATE	JUL. 30, 2003
REV. NO.	EXB03-13

Fig. 027 PRESSURE GAUGE
INDICATEUR DE PRESSION

Serial No. ;

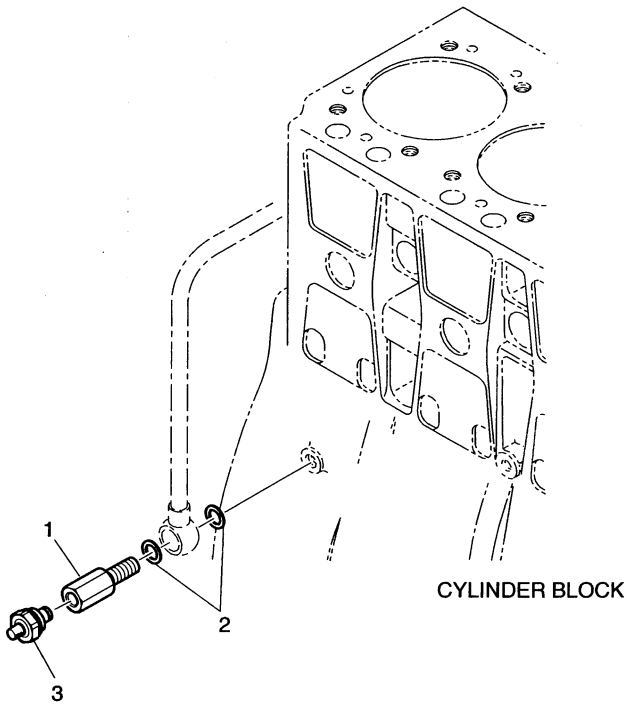

DATE	JUL. 30, 2003
REV. NO.	EXB03-13

Fig. 027 PRESSURE GAUGE INDICATEUR DE PRESSION

Serial No ;

Key No.	Part No.	Description	Description	Q'ty	S.C	Serial No.	ICA	Replaceable part	
								Part No.	Q'ty
027-1	65.98150-0002	ADAPTER;OIL PRESS	ADAPTEUR	1					
2	06.56190-0704	RING;SEAL A12X18	BAGUE D'ETANCHEITE	2					
3	65.27441-7007	SWITCH;OIL PRESS.	MANOCONTACT DE	1					

DATE	JUN. 30, 2006
REV. NO.	EXB06-08

Fig. 028 AIR CONDITIONER CLIMATISATION

Serial No. ;

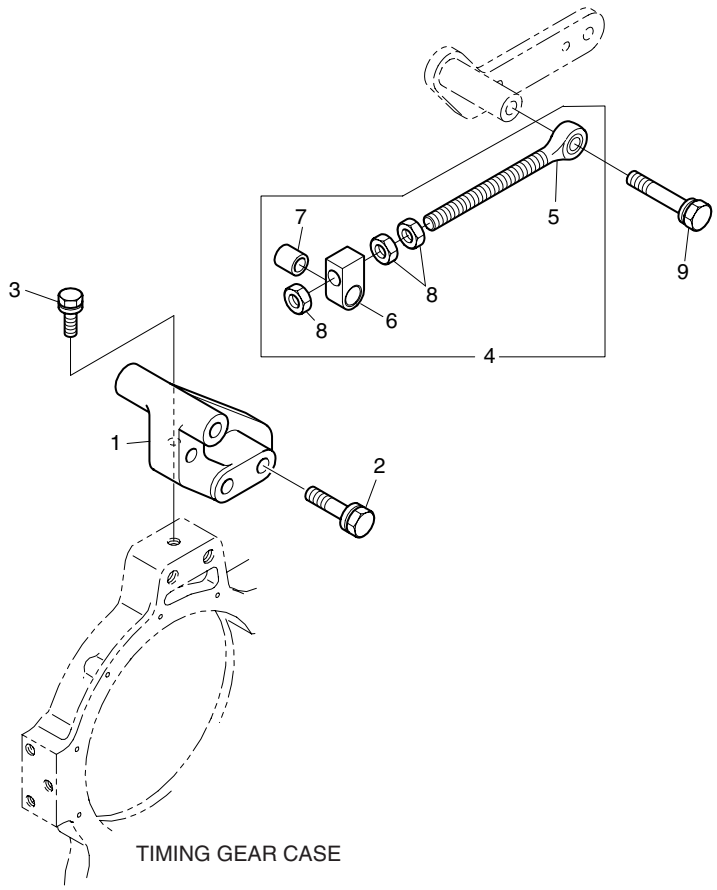

DATE	JUN. 30, 2006
REV. NO.	EXB06-08

Fig. 028 AIR CONDITIONER CLIMATISATION

Serial No. ;

Key No.	Part No.	Description	Description	Q'ty	S.C	Serial No.	ICA	Replaceable part	
								Part No.	Q'ty
028-1	65.28652-0013	BRACKET;AIR CON.COMP.	SUPPORT	1					
2	06.01943-3323	BOLT ASS'Y M12X1.5X60	BOULON A 6PANS	2					
3	06.01913-3217	BOLT ASS'Y M10X30	BOULON A 6PANS	1					
4	65.19103-6010	EYE BOLT ASS'Y	BOULON A 6PANS	1		~060526	Y	65.19103-6010A	1
	65.19103-6010A	**EYE BOLT ASS'Y**	BOULON A 6PANS	1		060527~			
5	65.90441-0009A	. BOLT;EYE	. BOULON A 6PANS	1	D				
6	65.19107-0001	. PIECE;GUIDE	. GUIDE	1	D	~060526			
	65.19107-0001A	**. PIECE;GUIDE**	. GUIDE	1	D	060527~			
7	65.93020-0055	. BUSH	. AMPOULE	1	D				
8	06.11063-9217	. NUT;HEX	. ECROU	3	D				
9	06.01943-3319	BOLT ASS'Y M12X1.5X40	BOULON A 6PANS	1					

DATE	JUN. 30, 2006
REV. NO.	EXB06-08

Fig. 029 ENGINE MOUNTING
MOTAGE POUR MOTEUR

Serial No. ;

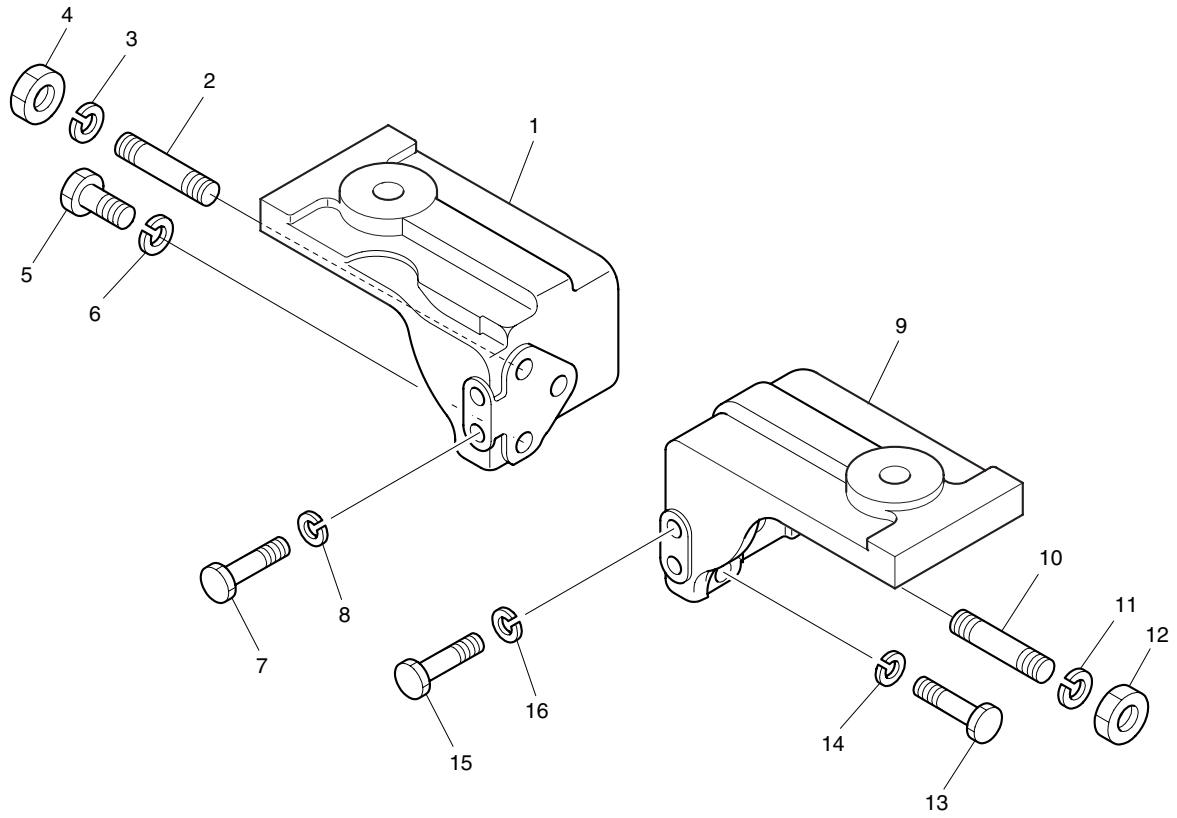

DATE	JUN. 30, 2006
REV. NO.	EXB06-08

Fig. 029 ENGINE MOUNTING
MOTAGE POUR MOTEUR

Serial No. ;

Key No.	Part No.	Description	Description	Q'ty	S.C	Serial No.	ICA	Replaceable part	
								Part No.	Q'ty
029-1	65.41530-0161	BRACKET;FRONT MOUNTING	SUPPORT	1		~060110	Y	65.41530-0161A	1
	65.41530-0161A	**BRACKET;FRONT MOUNTING**	SUPPORT	1		060111~			
2	65.90201-0063	BOLT;STUD M14X1.5X35	BOULON DE PLOT	1					
3	06.16731-2110	WASHER;SPRING	RONDELLE ELASTIQUE	1					
4	06.11063-9217	NUT;HEX	ECROU	1					
5	06.01494-4414	BOLT;HEX M14X1.5X75	BOULON A 6PANS	2					
6	06.16731-2110	WASHER;SPRING	RONDELLE ELASTIQUE	2					
7	06.01494-4414	BOLT;HEX M14X1.5X75	BOULON A 6PANS	2					
8	06.16731-2110	WASHER;SPRING A14	RONDELLE ELASTIQUE	2					
9	65.41530-0162	BRACKET;FRONT MOUNTING	SUPPORT	1		~060110	Y	65.41530-0162A	1
	65.41530-0162A	**BRACKET;FRONT MOUNTING**	SUPPORT	1		060111~			
10	65.90201-0063	BOLT;STUD M14X1.5X35	BOULON DE PLOT	1					
11	06.16731-2110	WASHER;SPRING	RONDELLE ELASTIQUE	1					
12	06.11063-9217	NUT;HEX	ECROU	1					
13	06.01494-4410	BOLT;HEX M14X1.5X55	BOULON A 6PANS	2					
14	06.16731-2110	WASHER;SPRING	RONDELLE ELASTIQUE	2					
15	06.01494-4416	BOLT;HEX M14X1.5X85	BOULON A 6PANS	2					
16	06.16731-2110	WASHER;SPRING	RONDELLE ELASTIQUE	2					

DATE	DEC. 15, 2006
REV. NO.	EXB06-13

Fig. 030 OVER HAUL GASKET KIT-TOP PIECES DE RECHANGE

Serial No. ;

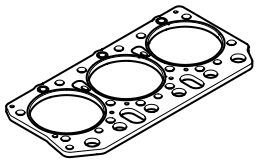

1

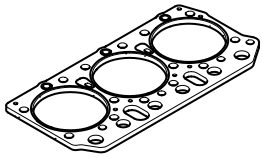

2



3

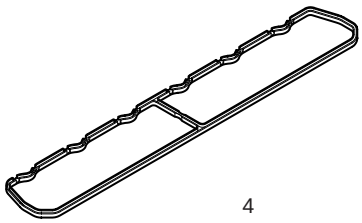

4



5



6



7



8



9



10

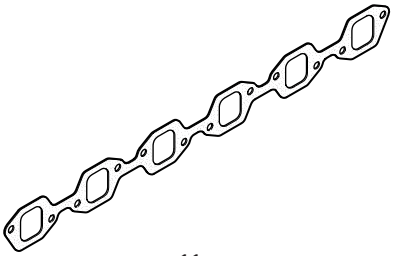

11

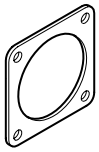

12



13



14



15



16



TIER-I TIER-II

17



18



19

DATE	DEC. 15, 2006
REV. NO.	EXB06-13

Fig. 030 OVER HAUL GASKET KIT-TOP PIECES DE RECHANGE

Serial No. ;

Key No.	Part No.	Description	Description	Q'ty	S.C	Serial No.	ICA	Replaceable part	
								Part No.	Q'ty
030--	65.99605-8028	OVER HAUL GASKET KIT-TOP	PIECES DE RECHANGE	1					
1	65.03901-0063B	GASKET;CYLINDER HEAD	JOINT	1		~051017	Y	65.03901-0072	1
	65.03901-0072	**GASKET;CYLINDER HEAD**	JOINT	1		051018~			
2	65.03901-0064B	GASKET;CYLINDER HEAD	JOINT	1		~051017	Y	65.03901-0073	1
	65.03901-0073	**GASKET;CYLINDER HEAD**	JOINT	1		051018~			
3	65.03905-0023A	GASKET;CYLINDER HEAD COVER	JOINT	6					
4	65.03905-0020	PACKING	RONDELLE ETANCHE	1					
5	65.96501-0033B	O-RING	JONT TORIQUE	1					
6	65.04902-0010	SEAL;VALVE STEM	JOINT	12					
7	65.06903-0018	GASKET;COOLING WATER PIPE	JOINT	2		~040827			
	65.06903-0028	**GASKET;COOLING WATER**	JOINT	2		040828~			
8	65.96501-0069	O-RING	JONT TORIQUE	6					
9	06.56342-1208	O-RING	JONT TORIQUE	2					
10	65.08901A0012	GASKET;EXHAUST MANIFOLD	JOINT	6		~051130	I	65.08901-0044	6
	65.08901-0044	**GASKET;EXHAUST**	JOINT	6		051131~			
11	65.08902-0025	GASKET;INTAKE MANIFOLD	JOINT	1					
12	65.09904-0008	GASKET;AIR PIPE	JOINT	2					
13	65.09901-0033	GASKET;TURBO CHARGER	JOINT	1					
14	65.08901-0063	GASKET;EXHAUST ELBOW	JOINT	1					
15	65.96601-0045A	GASKET;T/C OIL RETURN(UP)	JOINT	1		~060530	I	65.96601-0067	1
	65.96601-0067	**GASKET;T/C OIL RETURN(UP)**	JOINT	1		060531~			
16	65.96601-0046A	GASKET;OIL PIPE ADAPTER	JOINT	1		~060530	Y	65.96601-0046B	1
	65.96601-0046B	**GASKET;OIL PIPE ADAPTER**	JOINT	1		060531~			
17	65.98701-0010	SEAL;RING (TIER-I)	JOINT	6					
	65.98701-0012	SEAL;RING(TIER-II)	JOINT	6					
18	65.96401-0011	SEAL;DUST NOZZLE (TIER-I)	JOINT	6					
	65.96401-0012	SEAL;DUST NOZZLE (TIER-II)	JOINT	6					
19	06.56180-0712	SEAL;RING	BAGUE D'ETANCHEITE	12					

DATE	DEC. 15, 2006
REV. NO.	EXB06-13

Fig. 031 OVER HAUL GASKET KIT-ALL PIECES DE RECHANGE

Serial No. ;

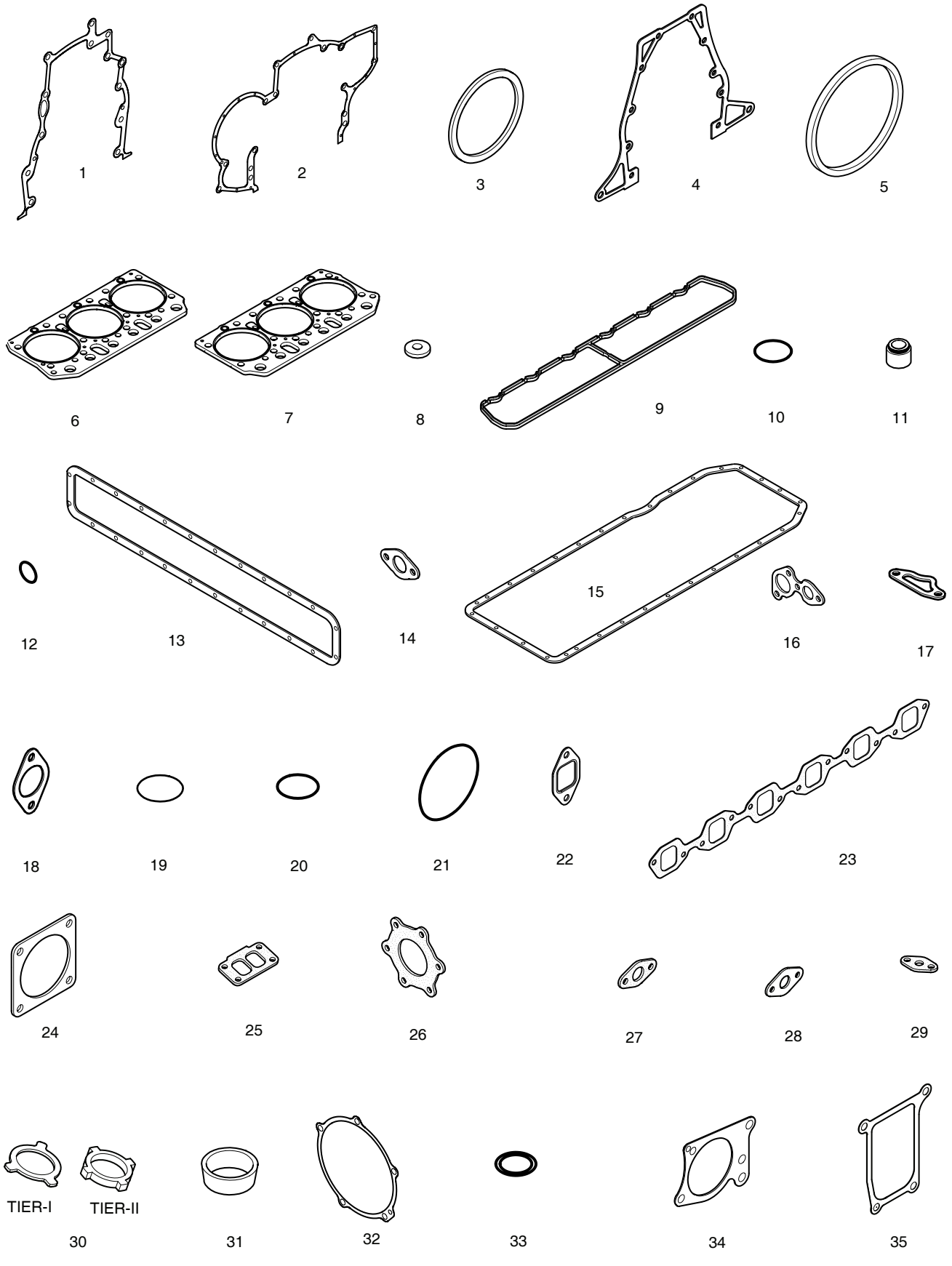

DATE	DEC. 15, 2006
REV. NO.	EXB06-13

Fig. 031 OVER HAUL GASKET KIT-ALL PIECES DE RECHANGE

Serial No. ;

Key No.	Part No.	Description	Description	Q'ty	S.C	Serial No.	ICA	Replaceable part	
								Part No.	Q'ty
031--	65.99601-8042	OVER HAUL GASKET KIT-ALL	PIECES DE RECHANGE	1					
1	65.01903-0048B	GASKET	JOINT	1					
2	65.01903-0050	GASKET;TIMING GEAR CASE	JOINT	1					
3	65.01510-0157	SEAL;OIL	JOINT	1					
4	65.01904-0022A	GASKET;FLYWHEEL HOUSING	JOINT	1					
5	65.01510-0158	SEAL;OIL	JOINT	1					
6	65.03901-0063B	GASKET;CYLINDER HEAD	JOINT	1		~051017	Y	65.03901-0072	1
	65.03901-0072	**GASKET;CYLINDER HEAD**	JOINT	1		051018~			
7	65.03901-0064B	GASKET;CYLINDER HEAD	JOINT	1		~051017	Y	65.03901-0073	1
	65.03901-0073	**GASKET;CYLINDER HEAD**	JOINT	1		051018~			
8	65.03905-0023A	GASKET;CYLINDER HEAD COVER	JOINT	6					
9	65.03905-0020	PACKING	RONDELLE ETANCHE	1					
10	65.96501-0033B	O-RING	JONT TORIQUE	1					
11	65.04902-0010	SEAL;VALVE STEM	JOINT	12					
12	65.96501-0061	O-RING	JONT TORIQUE	2					
13	65.01907-0008A	GASKET	JOINT	1					
14	65.05903-0030A	GASKET	JOINT	2					
15	65.05904-0096A	GASKET;OIL PAN	JOINT	1					
16	65.05903-0027A	GASKET	JOINT	1					
17	65.06903-0018	GASKET;COOLING WATER PIPE	JOINT	2		~040827			
	65.06903-0028	**GASKET;COOLING WATER**	JOINT	2		040828~			
18	65.06903-0020	GASKET(WATER & C/W PIPE)	JOINT	1		~061023	Y	65.06903-0020A	1
	65.06903-0020A	**GASKET(WATER & C/W PIPE)**	JOINT	1		061024~			
19	65.06901A0069	GASKET	JOINT	2					
20	06.56342-1208	O-RING	JONT TORIQUE	2					
21	65.96501-0068	O-RING;WATER PUMP	JONT TORIQUE	1					
22	65.08901A0012	GASKET;EXHAUST MANIFOLD	JOINT	6		~051130	I	65.08901-0044	6
	65.08901-0044	**GASKET;EXHAUST**	JOINT	6		051131~			
23	65.08902-0025	GASKET;INTAKE MANIFOLD	JOINT	1					
24	65.09904-0008	GASKET;AIR PIPE	JOINT	2					
25	65.09901-0033	GASKET;TURBO CHARGER	JOINT	1					
26	65.08901-0063	GASKET;EXHAUST ELBOW	JOINT	1					
27	65.96601-0045A	GASKET;T/C OIL RETURN(UP)	JOINT	1		~060530	I	65.96601-0067	1
	65.96601-0067	**GASKET;T/C OIL RETURN(UP)**	JOINT	1		060531~			
28	65.96601-0012	GASKET;T/C OIL RETURN	JOINT	1					
29	65.96601-0046A	GASKET;OIL PIPE ADAPTER	JOINT	1		~060530	Y	65.96601-0046B	1
	65.96601-0046B	**GASKET;OIL PIPE ADAPTER**	JOINT	1		060531~			
30	65.98701-0010	SEAL;RING (TIER-I)	JOINT	6					

DATE	DEC. 15, 2006
REV. NO.	EXB06-13

Fig. 031 OVER HAUL GASKET KIT-ALL PIECES DE RECHANGE

Serial No. ;

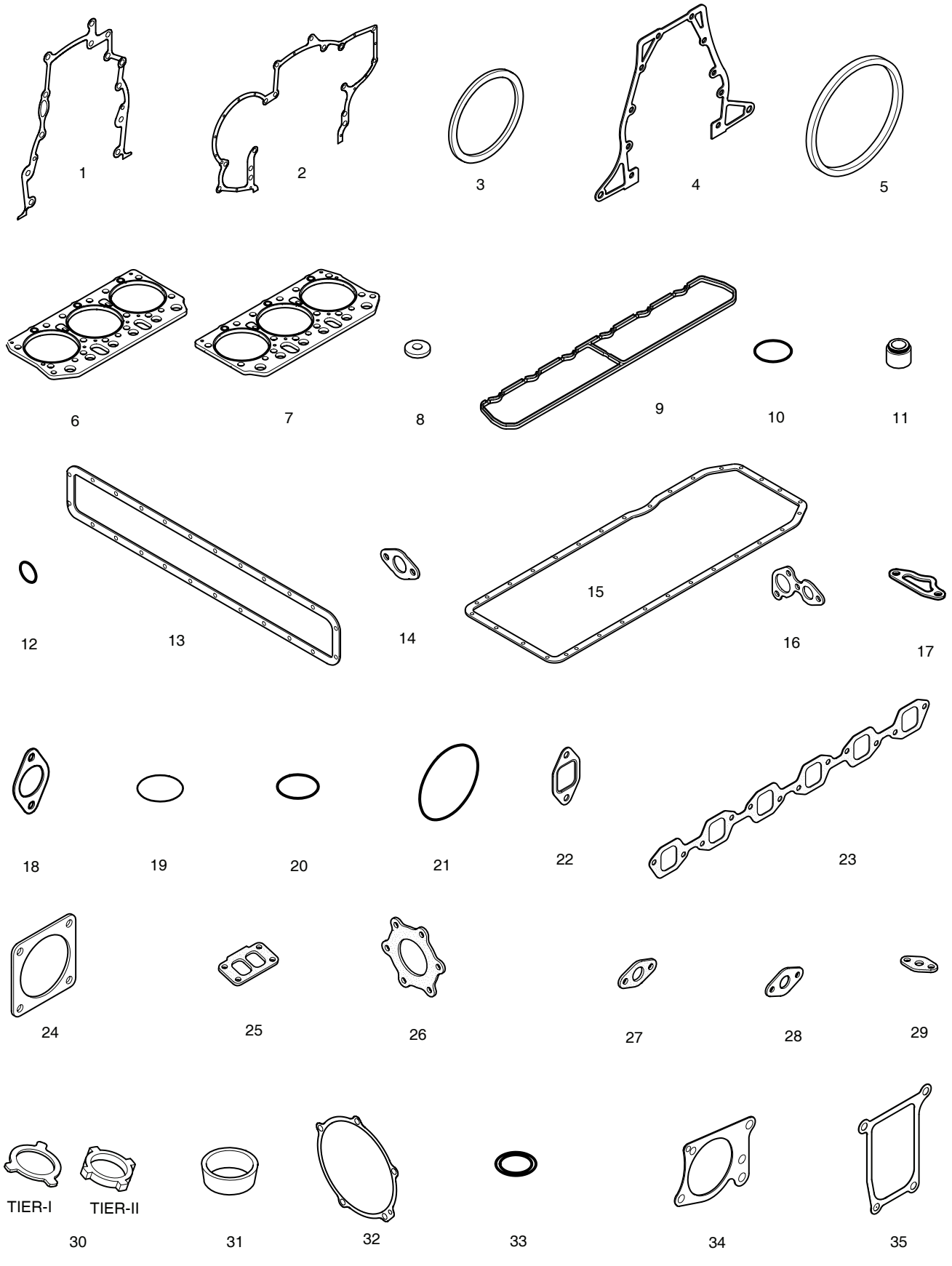

DATE	DEC. 15, 2006
REV. NO.	EXB06-13

Fig. 031 OVER HAUL GASKET KIT-ALL PIECES DE RECHANGE

Serial No. ;

Key No.	Part No.	Description	Description	Q'ty	S.C	Serial No.	ICA	Replaceable part	
								Part No.	Q'ty
031-30	65.98701-0012	SEAL;RING (TIER-II)	JOINT	6					
	65.96401-0011	SEAL;DUST NOZZLE (TIER-I)	JOINT	6					
31	65.96401-0012	SEAL;DUST NOZZLE (TIER-II)	JOINT	6					
32	65.11902-0017	GASKET;MOUNTING FLANGE	JOINT	1					
33	06.56180-0712	SEAL;DUST NOZZLE	JOINT	12					
34	65.47901-0010	GASKET;P/S PUMP	JOINT	1					
35	65.54901-0025A	GASKET;AIR COMPRESSOR	JOINT	1					

DE12TIA
(Tier-I TYPE)

DATE	JUN. 30, 2007
REV. NO.	EXB07-06

Fig. 110 CYLINDER BLOCK
BLOC CYLINDRES

Serial No. ;

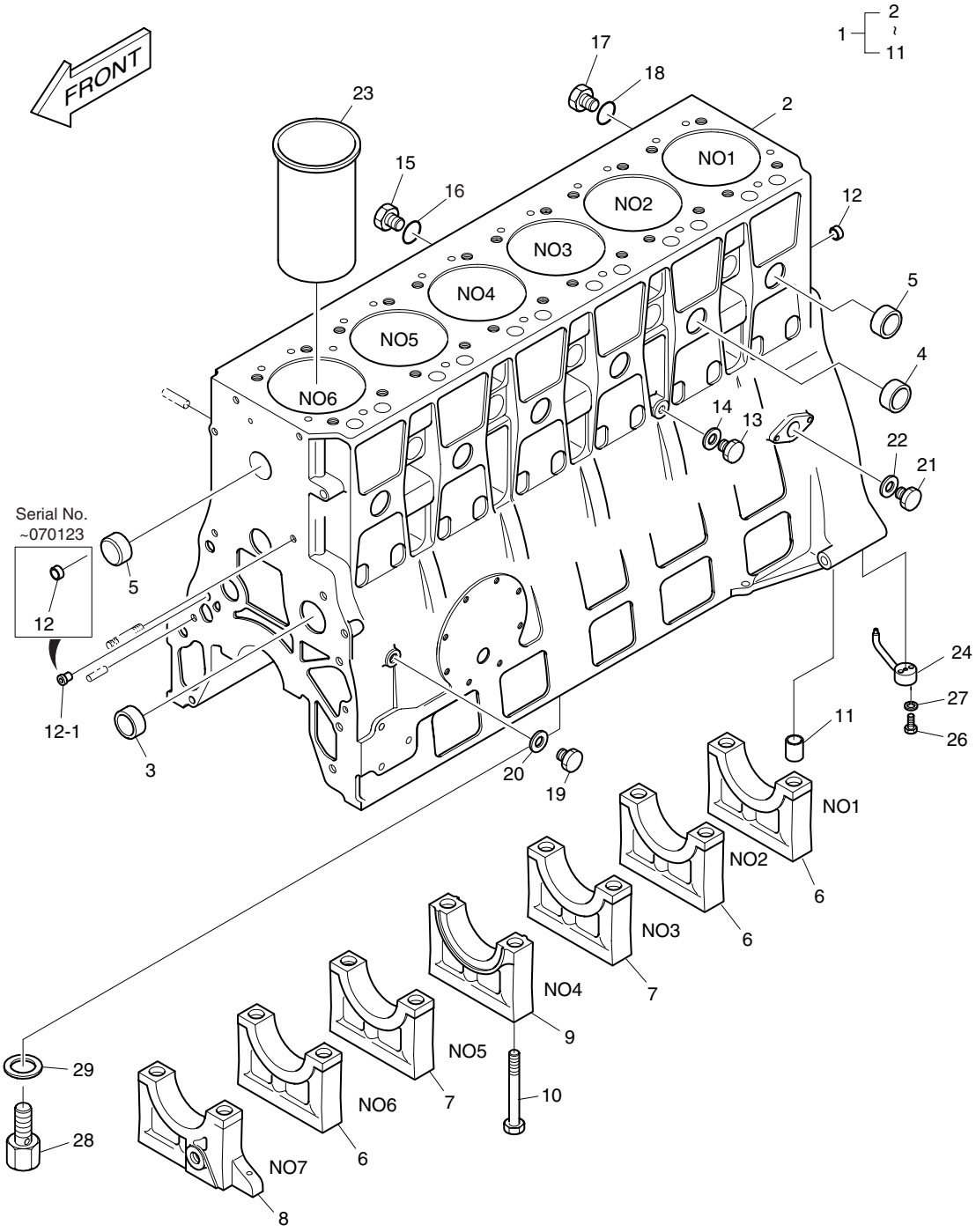

DATE	JUN. 30, 2007
REV. NO.	EXB07-06

Fig. 110 CYLINDER BLOCK BLOC CYLINDRES

Serial No. ;

Key No.	Part No.	Description	Description	Q'ty	S.C	Serial No.	ICA	Replaceable part	
								Part No.	Q'ty
110-1	65.01101-6212A	CYLINDER BLOCK ASS'Y	ENSEMBLE DE BLOC	1		~030730	Y	65.01101-6212B	1
	65.01101-6212B	CYLINDER BLOCK ASS'Y	ENSEMBLE DE BLOC	1		~040213	Y	65.01101-6212C	1
	65.01101-6212C	CYLINDER BLOCK ASS'Y	ENSEMBLE DE BLOC	1		~051201	Y	65.01101-6212D	1
	65.01101-6212D	CYLINDER BLOCK ASS'Y	ENSEMBLE DE BLOC	1		~060617	Y	65.01101-6212E	1
	65.01101-6212E	CYLINDER BLOCK ASS'Y	ENSEMBLE DE BLOC	1		060618~			
2	65.01101-0212A	. BLOCK;CYLINDER	. DOUILLE	1	D	~051201			
	65.01101-0212B	. BLOCK;CYLINDER	. DOUILLE	1	D	051202~			
3	65.04410-0016	. BUSH;CAM SHAFT	. DOUILLE	4	B				
4	65.90302-0048	. PLUG;CORE	. BOUCHON DE	6					
5	06.15091-0326	. PLUG;CORE	. BOUCHON DE CHEMISE	15		~040213	I	65.91606-0037	15
	65.91606-0037	. PLUG;CORE	. BOUCHON DE CHEMISE	15		040214~			
6	65.01105-1161A	. CAP;BEARING NO.1 2 6	. BRIDE DE ROULEMENT	3	D	~030730			
	65.01105-1161B	. CAP;BEARING NO.1 2 6	. BRIDE DE ROULEMENT	3	D	030731~			
7	65.01105-1158F	. CAP;BEARING NO.3 5	. BRIDE DE ROULEMENT	2	D	~030730			
	65.01105-1158G	. CAP;BEARING NO.3 5	. BRIDE DE ROULEMENT	2	D	030731~			
8	65.01105-1157G	. CAP;BEARING NO.7	. BRIDE DE ROULEMENT	1	D	~030730			
	65.01105-1157H	. CAP;BEARING NO.7	. BRIDE DE ROULEMENT	1	D	030731~			
9	65.01105-1159F	. CAP BEARING;THRUST	. BRIDE DE ROULEMENT	1	D	~030730			
	65.01105-1159G	. CAP BEARING;THRUST	. BRIDE DE ROULEMENT	1	D	030731~			
10	65.90020-0036B	. BOLT;BEARING CAP	. BOULON A 6PANS	14					
11	65.91710-0035	. RING;LOCATING	. BAGUE DE CENTRAGE	14		~030428	Y	65.91710-0035B	14
	65.91710-0035B	. RING;LOCATING	. BAGUE DE CENTRAGE	14		030429~			
12	65.91606-0041	PLUG;CORE HOLE	BOUCHON	2		~070123			
	65.91606-0041	**PLUG;CORE HOLE**	BOUCHON	1		070124~			
12-1	**65.01605-0008**	**NOZZLE;SPRAY**	JET DE BEC	1		070124~			
13	65.90310-0137	SCREW;PLUG M16X1.5X20	VIS	1					
14	06.56190-0709	RING;SEAL	BAGUE D'ETANCHEITE	1					
15	65.90310-0136	SCREW;PLUG	VIS	1		~040421	Y	65.90310-0136A	1
	65.90310-0136A	SCREW;PLUG	VIS	1		040422~			
16	06.56190-0718	RING;SEAL	BAGUE D'ETANCHEITE	1					
17	06.08092-2403	SCREW;PLUG M12X1.5	VIS	1					
18	06.56190-0703	RING;SEAL	BAGUE D'ETANCHEITE	1					
19	65.90310-0131	SCREW;PLUG	VIS	1					
20	06.56190-0712	RING;SEAL	BAGUE D'ETANCHEITE	1					
21	65.90310-0149A	SCREW;PLUG M26X1.5	VIS	1					
22	06.56190-0726	RING;SEAL	BAGUE D'ETANCHEITE	1					
23	65.01201-0072	LINER;CYLINDER	RONDELLE DE BUTEE	6		~040706	Y	65.01201-0072A	6
	65.01201-0072A	LINER;CYLINDER	RONDELLE DE BUTEE	6		040707~			

DATE	JUN. 30, 2007
REV. NO.	EXB07-06

Fig. 110 CYLINDER BLOCK
BLOC CYLINDRES

Serial No. ;

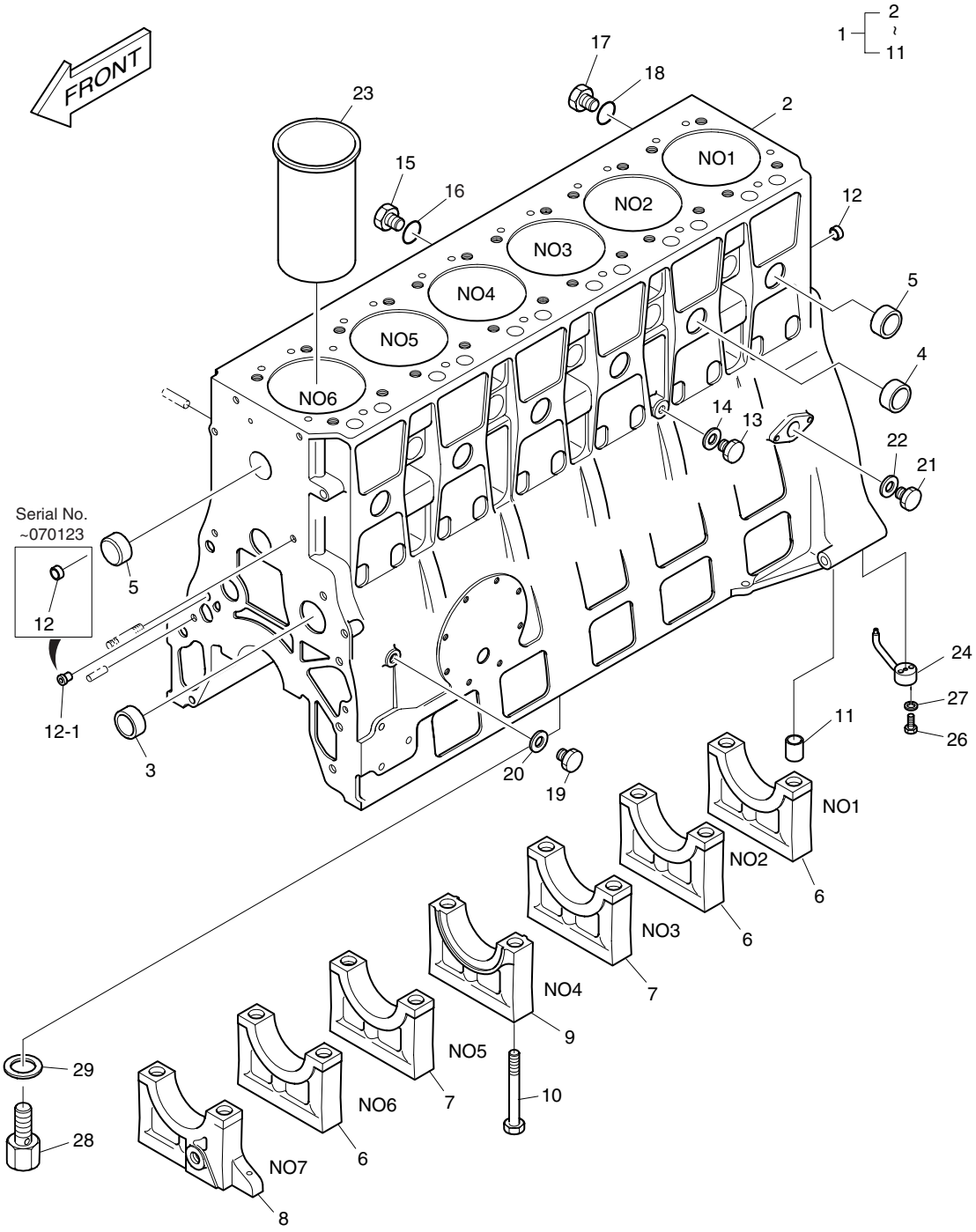

DATE	JUN. 30, 2007
REV. NO.	EXB07-06

Fig. 110 CYLINDER BLOCK BLOC CYLINDRES

Serial No. ;

Key No.	Part No.	Description	Description	Q'ty	S.C	Serial No.	ICA	Replaceable part	
								Part No.	Q'ty
110-24	65.01601-6002	NOZZLE;OIL SPRAY	INJECTEUR D'HUILE	3					
26	65.90001-0126	BOLT;HEX.	BOULON A 6PANS	12					
27	06.16044-0208	WASHER;SPRING	RONDELLE PLATE	12					
28	65.05405-7021	RELIEF VALVE ASS'Y	SOUPAPE DE SECURITE	1					
29	06.56190-0704	RING;SEAL A12X18	BAGUE D'ETANCHEITE	1					

DATE	DEC. 15, 2006
REV. NO.	EXB06-13

Fig. 120 TIMING GEAR CASE
CARTER DE DISTRIBUTION

Serial No. ;

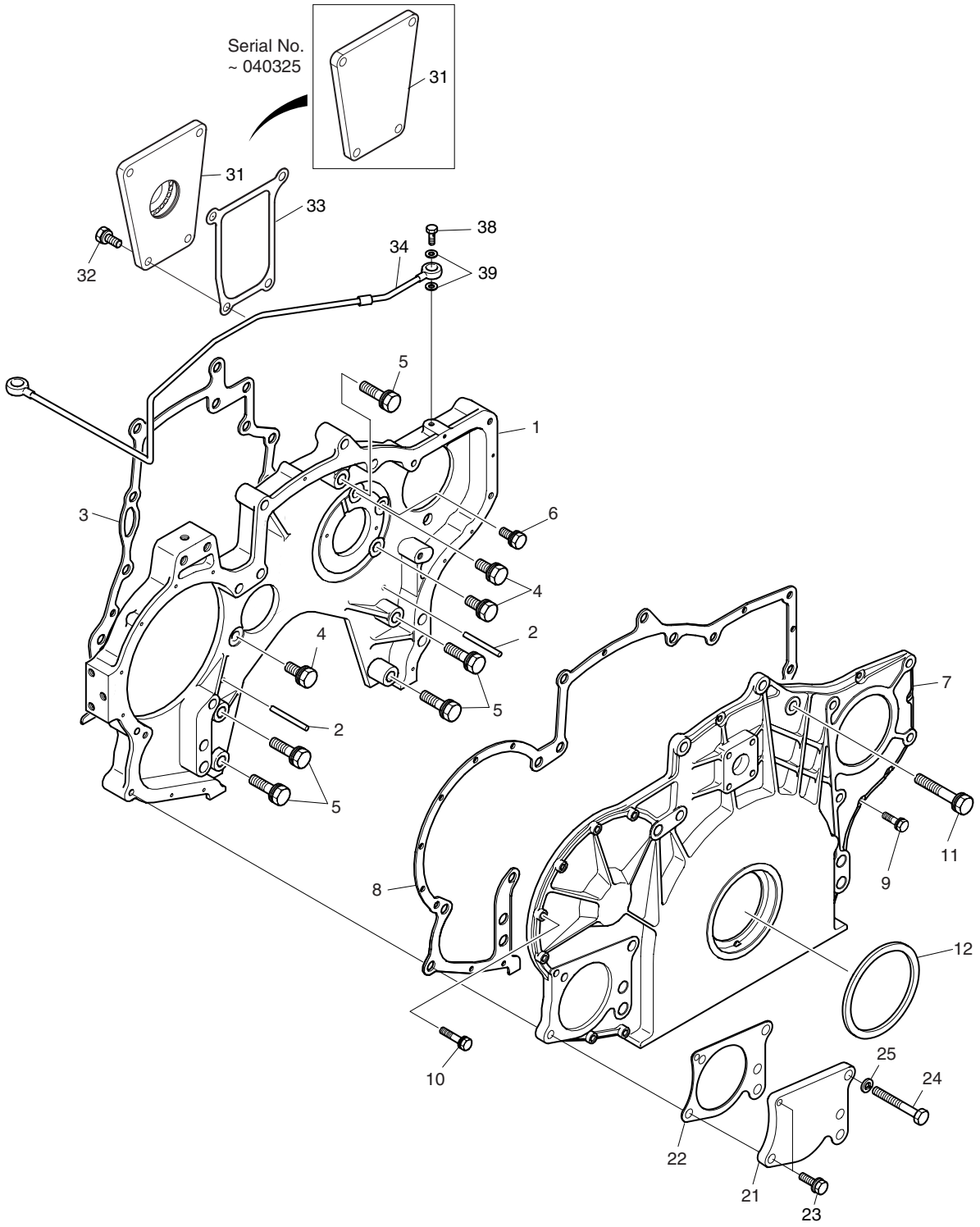

DATE	DEC. 15, 2006
REV. NO.	EXB06-13

Fig. 120 TIMING GEAR CASE
CARTER DE DISTRIBUTION

Serial No. ;

Key No.	Part No.	Description	Description	Q'ty	S.C	Serial No.	ICA	Replaceable part	
								Part No.	Q'ty
120-1	65.01304-0023C	CASE;TIMING GEAR	CARTER	1					
2	65.91010-0017	PIN;DOWEL M6X60	GOUPILLE D'AJUSTAGE	2					
3	65.01903-0048B	GASKET	GARNITURE	1					
4	06.01943-3317	BOLT ASS'Y M12X1.5X30	BOULON A 6PANS	3					
5	06.01943-3320	BOLT ASS'Y M12X1.5X45	BOULON A 6PANS	5					
6	06.01913-3215	BOLT ASS'Y M10X25	BOULON A 6PANS	1					
7	65.01305-5049G	TIMING GEAR CASE COVER	CARTER DE DISTRIBUTION	1					
8	65.01903-0050	GASKET;TIMING GEAR CASE	GARNITURE	1					
9	06.01923-2914	BOLT ASS'Y M6X22	BOULON A 6PANS	6					
10	06.01923-2917	BOLT ASS'Y M6X30	BOULON A 6PANS	7					
11	06.01953-3326	BOLT ASS'Y M12X1.5X75	BOULON A 6PANS	3					
12	65.01510-0157	SEAL;OIL	JOINT	1					
21	65.91601-0010	COVER	COUVERCLE	1					
22	65.47901-0010	GASKET	GARNITURE	1					
23	06.01913-3219	BOLT ASS'Y M10X40	BOULON A 6PANS	2					
24	06.01013-9221	BOLT;HEX. M10X80	BOULON A 6PANS	1					
25	06.16731-2108	WASHER;SPRING	RONDELLE	1					
31	65.91601-0003	COVER;BLIND	COUVERCLE	1		~040325			
	65.91601-6003	COVER;BLIND	COUVERCLE	1		~040715	Y	65.91601-6003A	1
	65.91601-6003A	COVER;BLIND	COUVERCLE	1		~051021	I	65.91601-6005	1
	65.91601-6005	COVER;BLIND	COUVERCLE	1		051022~			
32	06.01924-3217	BOLT ASS'Y	BOULON A 6PANS	4					
33	65.54901-0025A	GASKET;AIR COMPRESSOR	GARNITURE	1					
34	65.05701-5361	OIL PIPE ASS'Y	TUYAU D'HUILE	1					
38	65.98150-0056	SCREW;HOLLOW	VIS CREUSE	1					
39	06.56180-0712	RING;SEAL	BAGUE D'ETANCHEITE	2					

DATE	DEC. 15, 2006
REV. NO.	EXB06-13

Fig. 130 FLYWHEEL HOUSING
CARTER DE VOLANT MOTEUR

Serial No. ;

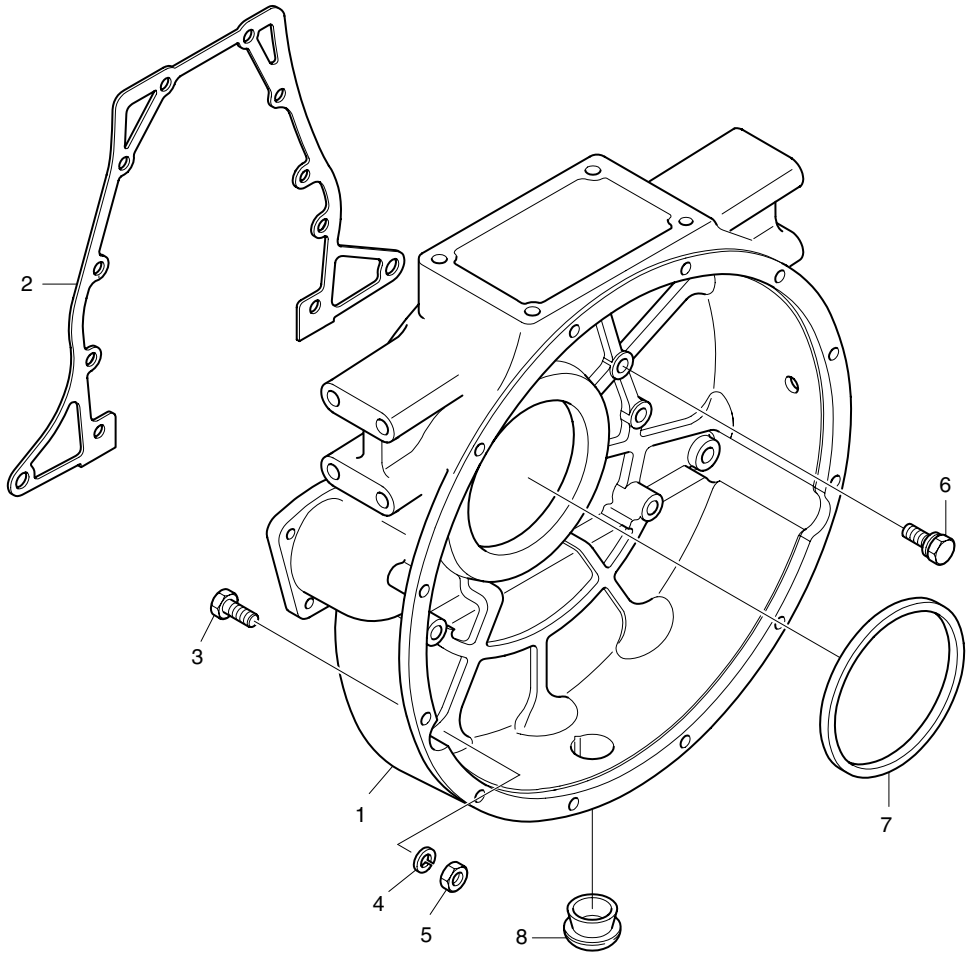

DATE	DEC. 15, 2006
REV. NO.	EXB06-13

Fig. 130 FLYWHEEL HOUSING
CARTER DE VOLANT MOTEUR

Serial No. ;

Key No.	Part No.	Description	Description	Q'ty	S.C	Serial No.	ICA	Replaceable part	
								Part No.	Q'ty
130-1	65.01401-0099	HOUSING;FLY WHEEL	CARTER	1		~051012	Y	65.01401-0099A	1
	65.01401-0099A	HOUSING;FLY WHEEL	CARTER	1		051013~			
2	65.01904-0022A	GASKET;FLY WHEEL	GARNITURE	1					
3	06.02074-0317	BOLT;REAMER M14X2X90	BOULON A 6PANS	2					
4	06.16731-2110	WASHER;SPRING	RONDELLE ELASTIQUE	2					
5	06.11063-8217	NUT;HEX. M14	ECROU	2					
6	65.90001-6002	BOLT ASS'Y M12X1.5X45	BOULON A 6PANS	10					
7	65.01510-0158	SEAL;OIL	JOINT	1					
8	65.96002-0003	PLUG;RUBBER	BOUCHON CAOUTCHOUC	1					

DATE	JUN. 30, 2007
REV. NO.	EXB07-06

Fig. 140 DRIVING SYSTEM
SYSTEME D'ENTRAINEMENT

Serial No. ;

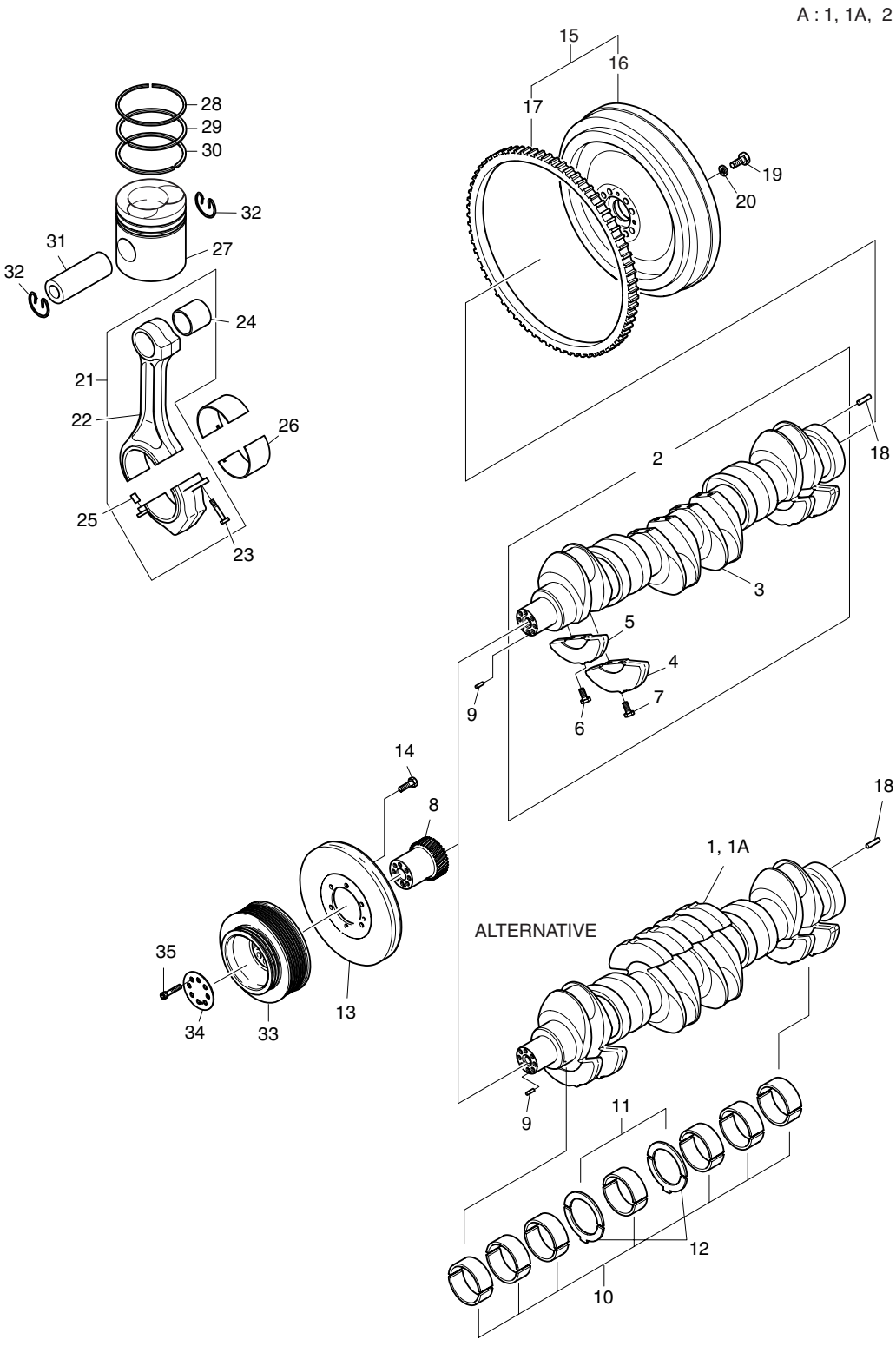

DATE	JUN. 30, 2007
REV. NO.	EXB07-06

Fig. 140 DRIVING SYSTEM SYSTEME D'ENTRAINEMENT

Serial No. ;

Key No.	Part No.	Description	Description	Q'ty	S.C	Serial No.	ICA	Replaceable part	
								Part No.	Q'ty
140-A	65.02101-7541B	CRANKSHAFT ASS'Y	ENSEMBLE VILEBREQUIN	1	D	~071001	Y	65.02101-7541C	1
	65.02101-7541C	**CRANKSHAFT ASS'Y**	ENSEMBLE VILEBREQUIN	1	D	071002~			
1	65.02101-0057A	. SHAFT;CRANK	. ENSEMBLE VILEBREQUIN	1		~071001			
	65.02101-0057B	**. SHAFT;CRANK**	. ENSEMBLE VILEBREQUIN	1		071002~			
1A	65.02101-0060A	. SHAFT;CRANK	. ENSEMBLE VILEBREQUIN	1		~071001			
	65.02101-0060B	**. SHAFT;CRANK**	. ENSEMBLE VILEBREQUIN	1		071002~			
2	65.02101-7054A	. CRANK SHAFT ASS'Y	. ENSEMBLE VILEBREQUIN	1					
3	65.02101-0054	.. SHAFT;CRANK	.. VILEBREQUIN	1	D				
4	65.02110-0013E	.. WEIGHT;COUNTER	.. CONTRE- POIDS	4	D				
5	65.02110-0014E	.. WEIGHT;COUNTER	.. CONTRE- POIDS	4	D				
6	65.90430-0012B	.. BOLT;CRANK SHAFT	.. BOULON A 6 PANS	8					
7	65.90430-0013B	.. BOLT;CRANK SHAFT	.. BOULON A 6 PANS	8					
8	65.02115-0008B	GEAR;CRANK SHAFT	PIGNON	1					
9	06.22022-0912	PIN;DOWEL M6X20	GOUPILLE D'AJUSTAGE	1					
10	65.01110-6055A	BEARING;MAIN	COUSSINET COTE STD	7					
	65.01110-6068A	BEARING;MAIN 0.25	COUSSINET COTE	7	US				
	65.01110-6069A	BEARING;MAIN 0.50	COUSSINET COTE	7	US				
	65.01110-6070A	**BEARING;MAIN 0.75**	COUSSINET COTE	7	US				
11	65.01150-0017A	WASHER;THRUST	RONDELLE DE	2					
	65.01150-0048A	WASHER;THRUST 0.25	RONDELLE DE BUTEE	2	OS				
	65.01150-0049A	WASHER;THRUST 0.50	RONDELLE DE BUTEE	2	OS				
12	65.01150-0018B	WASHER;THRUST	RONDELLE DE BUTEE(BAS)	2					
	65.01150-0052B	WASHER;THRUST 0.25	RONDELLE DE BUTEE	2	OS				
	65.01150-0053B	WASHER;THRUST 0.50	RONDELLE DE BUTEE	2	OS				
13	65.02201-7032	DAMPER;VISCOUS	AMORTISSEUR DE	1					
14	06.01914-3215	BOLT ASS'Y M10X25	BOULON A 6PANS	6		~040701	I	65.90020-0062B	6
	65.90020-0062B	BOLT ASS'Y M10X20	BOULON A 6PANS	6		040702~			
15	65.02301-5121	FLY WHEEL	VOLANT	1					
16	65.02301-0266	. FLY WHEEL	. VOLANT	1					
17	65.02310-0011A	. GEAR;STARTER RING	. COURONNE DENTEE	1					
18	06.22022-1010	PIN;DOWEL	GOUPILLE D'AJUSTAGE	1					
19	65.90001-0084	BOLT;HEX. M14X1.5X40	BOULON A 6PANS	8					
20	06.16731-2110	WASHER;SPRING	RONDELLE ELASTIQUE	8					
21	65.02401-6012E	CONNECTING ROD ASS'Y	ENSEMBLE DE BIELLE	6		~030206	Y	65.02401-6012F	6
	65.02401-6012F	CONNECTING ROD ASS'Y	ENSEMBLE DE BIELLE	6		~041216	Y	65.02401-6012G	6
	65.02401-6012G	CONNECTING ROD ASS'Y	ENSEMBLE DE BIELLE	6		041217~			
22	65.02401-0045E	. ROD;CONNECTING	. BIELLE;ENSEMBLE DE	1	D	~030206			
	65.02401-0045F	. ROD;CONNECTING	. BIELLE;ENSEMBLE DE	1	D	~041216	Y	65.02401-0045G	1

DATE	JUN. 30, 2007
REV. NO.	EXB07-06

Fig. 140 DRIVING SYSTEM
SYSTEME D'ENTRAINEMENT

Serial No. ;

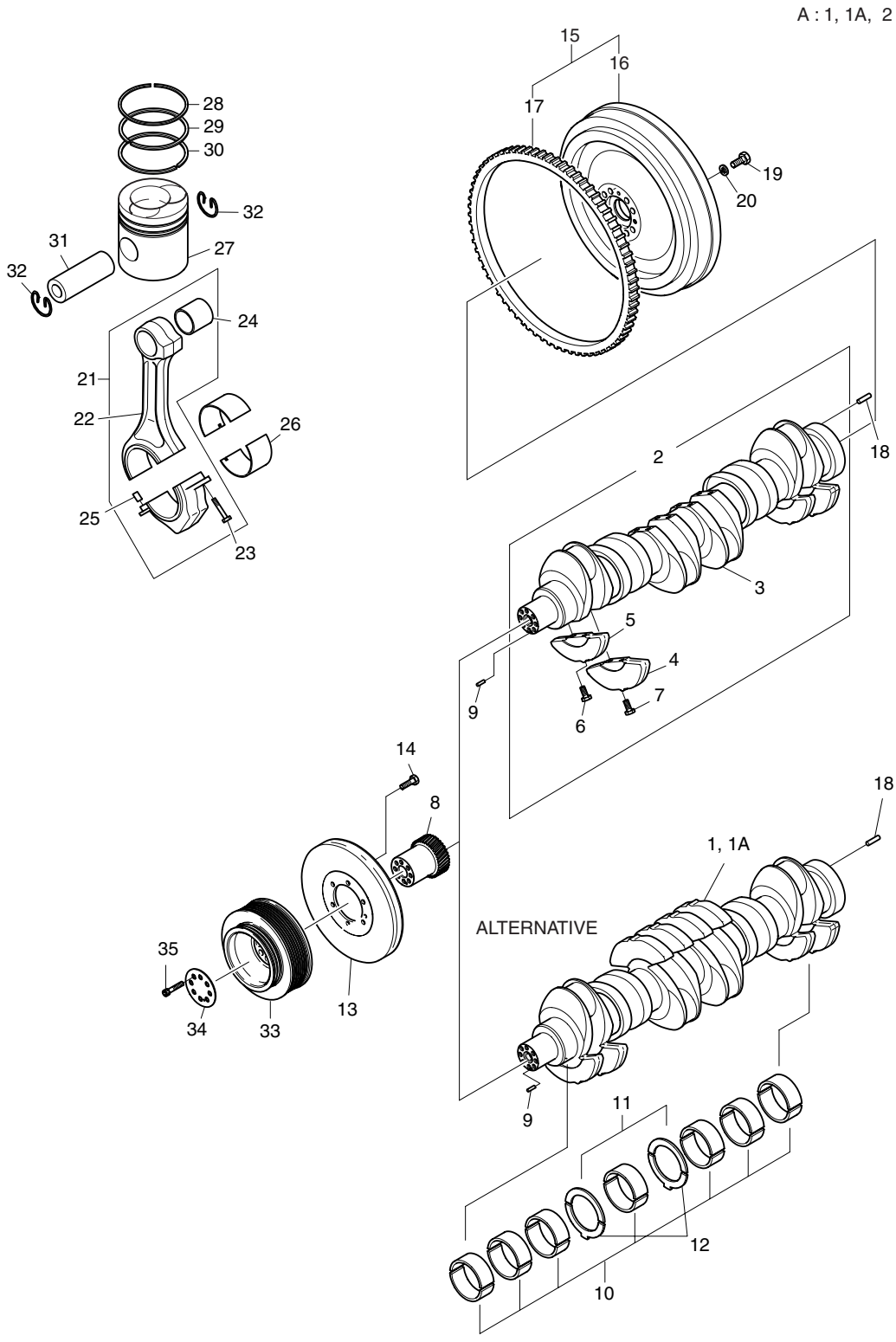

DATE	JUN. 30, 2007
REV. NO.	EXB07-06

Fig. 140 DRIVING SYSTEM SYSTEME D'ENTRAINEMENT

Serial No. ;

Key No.	Part No.	Description	Description	Q'ty	S.C	Serial No.	ICA	Replaceable part	
								Part No.	Q'ty
140-22	65.02401-0045G	. ROD;CONNECTING	. BIELLE;ENSEMBLE DE	1	D	041217~			
23	65.90020-0010E	. BOLT;CON-ROD	. BOULON A 6PANS	2					
24	65.02405-1006	. BUSH;CON-ROD	. COUSSINET PIED DE	1	B				
25	65.91301-0010	. PIN;DOWEL	. GOUPILLE D'AJUSTAGE	2					
26	65.02410-6106	BEARING;CON-ROD	PALIER	6					
	65.02410-6107	BEARING;CON-ROD 0.25	PALIER	6	US				
	65.02410-6108	BEARING;CON-ROD 0.50	PALIER	6	US				
27	65.02501-0222	PISTON	PISTON	6		~050708	Y	65.02501-0222A	6
	65.02501-0222A	PISTON	PISTON	6		~061011	Y	65.02501-0222B	6
	65.02501-0222B	PISTON	PISTON	6		061012~			
28	65.02503-0057	RING;TOP	SEGMENT COUP DE FEU	6		~020519	I	65.02503-0674	6
	65.02503-0674	RING;TOP	SEGMENT COUP DE FEU	6		020520~			
29	65.02503-0097	RING;2ND	SEGMENT DE	6					
30	65.02503-0105	RING;OIL	SEGMENT RACLEUR	6		~020519	I	65.02503-0675B	6
	65.02503-0675B	RING;OIL	SEGMENT RACLEUR	6		020520~			
31	65.02502-0013	PIN;PISTON	GOUPILLE	6					
32	06.29020-0127	RING;SNAP 45X1.75	ANNEAU RESSORT	12					
33	65.02601-0192	PULLEY;V-BELT	POULIE	1					
34	65.90701-0088	WASHER	RONDELLE	1					
35	06.02106-0622	BOLT;SOCKET HEAD	BOULON A 6PANS	8					

DATE	DEC. 15, 2006
REV. NO.	EXB06-13

Fig. 150 CYLINDER HEAD
CULLASSE

Serial No. ;

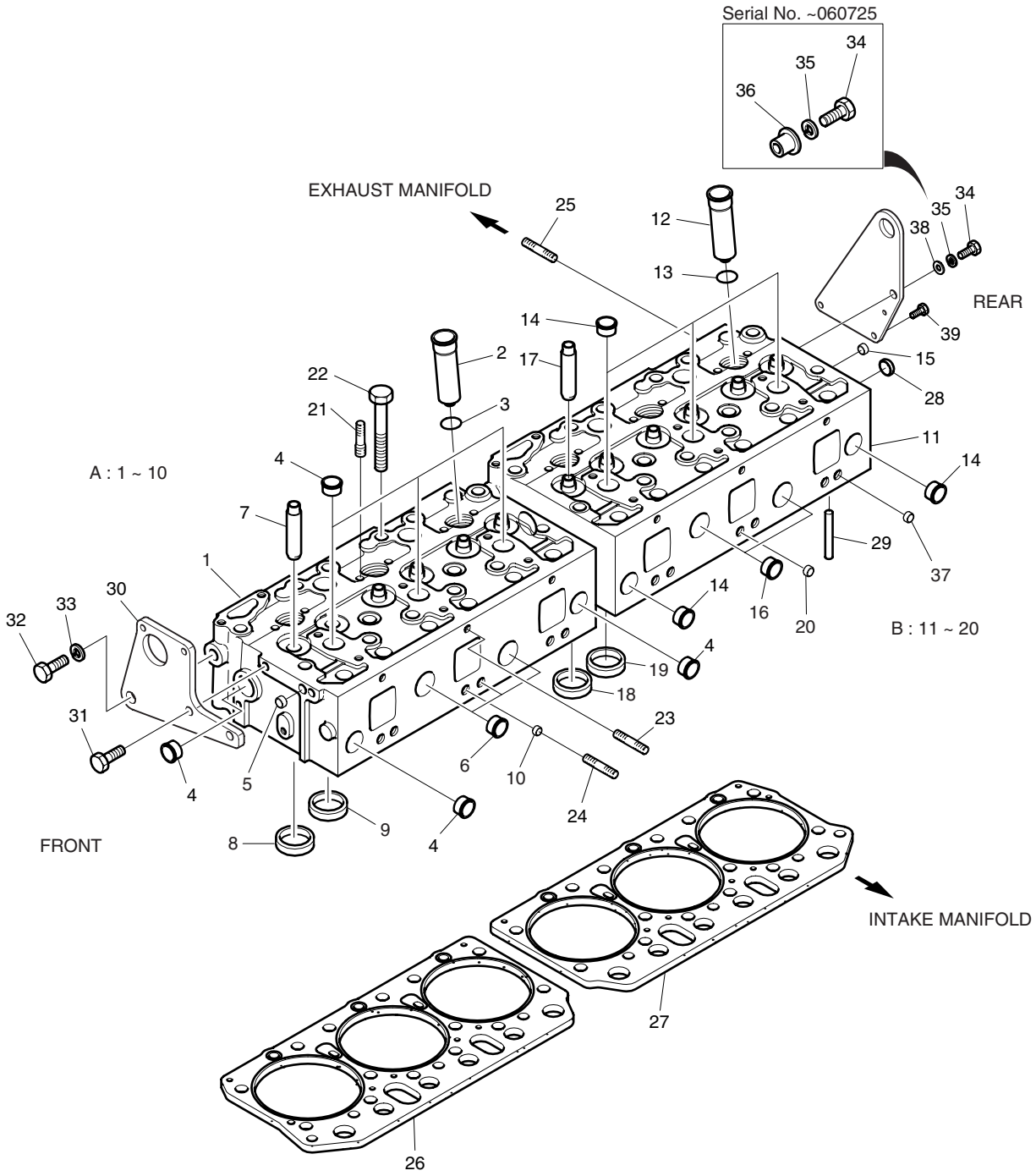

DATE	DEC. 15, 2006
REV. NO.	EXB06-13

Fig. 150 CYLINDER HEAD CULLASSE

Serial No. ;

Key No.	Part No.	Description	Description	Q'ty	S.C	Serial No.	ICA	Replaceable part	
								Part No.	Q'ty
150-A	65.03101-6053G	CYLINDER HEAD ASS'Y	ENSEMBLE DE CULASSE	1		~030409	Y	65.03101-6053H	1
	65.03101-6053H	CYLINDER HEAD ASS'Y	ENSEMBLE DE CULASSE	1		~040827			
	65.03101-6082	CYLINDER HEAD ASS'Y	ENSEMBLE DE CULASSE	1		~040924	Y	65.03101-6082A	1
	65.03101-6082A	CYLINDER HEAD ASS'Y	ENSEMBLE DE CULASSE	1		~051130	Y	65.03101-6082B	1
	65.03101-6082B	CYLINDER HEAD ASS'Y	ENSEMBLE DE CULASSE	1		051131~			
1	65.03101-0003F	. HEAD;CYLINDER	. CULASSE	1	D	~030409			
	65.03101-0003G	. HEAD;CYLINDER	. CULASSE	1	D	~040827			
	65.03101-1064	. HEAD;CYLINDER	. CULASSE	1	D	~051130			
	65.03101-1064A	. HEAD;CYLINDER	. CULASSE	1	D	051131~			
2	65.03205-0002	. NOZZLE;TUBE	. CONTUITES	3					
3	65.96501-0069	. O-RING	. JONT TORIQUE	3					
4	**65.90302-0041**	**. PLUG;CORE**	. BOUCHON DE	9					
5	**65.91001-0002**	**. PLUG;CORE**	. BOUCHON DE	1					
6	65.90302-0042	. PLUG;CORE	. BOUCHON DE	2					
7	65.03201-1008E	. VALVE;GUIDE	. GUIDE DE VALVE	6	B	~040924	Y	65.03201-1008F	6
	65.03201-1008F	. VALVE;GUIDE	. GUIDE DE VALVE	6	B	040925~			
8	65.03203-1042	. RING;VALVE SEAT(EXHAUST)	. BAGUE	3	B				
9	65.03203-1041	. RING;VALVE SEAT(INTAKE)	. BAGUE	3	B				
10	65.90302-0049	. PLUG;CORE	. BOUCHON	3					
B	65.03101-6054F	CYLINDER HEAD ASS'Y	ENSEMBLE DE CULASSE	1		~030409	Y	65.03101-6054H	1
	65.03101-6054H	CYLINDER HEAD ASS'Y	ENSEMBLE DE CULASSE	1		~040827			
	65.03101-6083	CYLINDER HEAD ASS'Y	ENSEMBLE DE CULASSE	1		~040924	Y	65.03101-6083A	1
	65.03101-6083A	CYLINDER HEAD ASS'Y	ENSEMBLE DE CULASSE	1		~051130	Y	65.03101-6083B	1
	65.03101-6083B	CYLINDER HEAD ASS'Y	ENSEMBLE DE CULASSE	1		051131~			
11	65.03101-0004E	. HEAD;CYLINDER	. CULASSE	1	D	~030409			
	65.03101-0004G	. HEAD;CYLINDER	. CULASSE	1	D	~040827			
	65.03101-1065	. HEAD;CYLINDER	. CULASSE	1	D	~051130			
	65.03101-1065A	. HEAD;CYLINDER	. CULASSE	1	D	051131~			
12	65.03205-0002	. NOZZLE;TUBE	. CONTUITES	3					
13	65.96501-0069	. O-RING	. JONT TORIQUE	3					
14	**65.90302-0041**	**. PLUG;CORE**	. BOUCHON DE	9					
15	**65.91001-0002**	**. PLUG;CORE**	. BOUCHON DE	1					
16	65.90302-0042	. PLUG;CORE	. BOUCHON DE	2					
17	65.03201-1008E	. VALVE;GUIDE	. GUIDE DE VALVE	6	B	~040924	Y	65.03201-1008F	6
	65.03201-1008F	. VALVE;GUIDE	. GUIDE DE VALVE	6	B	040925~			
18	65.03203-1042	. RING;VALVE SEAT(EXHAUST)	. BAGUE	3	B				
19	65.03203-1041	. RING;VALVE SEAT(INTAKE)	. BAGUE	3	B				
20	65.90302-0049	. PLUG;CORE	. BOUCHON	3					

DATE	DEC. 15, 2006
REV. NO.	EXB06-13

Fig. 150 CYLINDER HEAD
CULLASSE

Serial No. ;

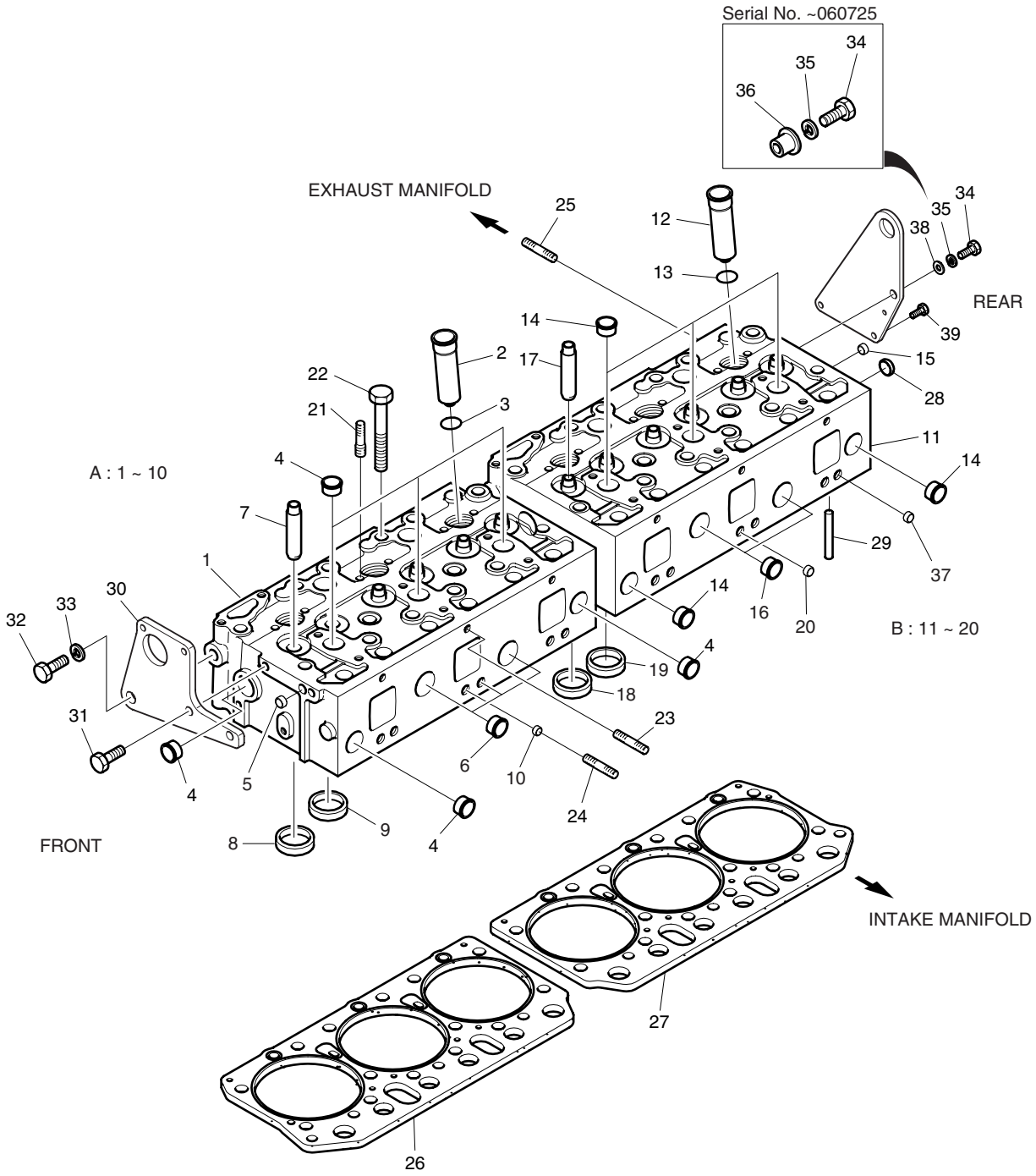

DATE	DEC. 15, 2006
REV. NO.	EXB06-13

Fig. 150 CYLINDER HEAD CULLASSE

Serial No. ;

Key No.	Part No.	Description	Description	Q'ty	S.C	Serial No.	ICA	Replaceable part	
								Part No.	Q'ty
150-21	65.90201-0186A	BOLT;STUD M6XM8	BOULON DE PLOT	12		~021015	T	65.90201-0106	12
								06.11063-8212	24
	65.90201-0106	BOLT;STUD M6XM8	BOULON DE PLOT	12		021016~			
22	65.90021-0001A	BOLT;COLLARED HEX.	BOULON A 6PANS	28		~031020	I	65.90021-0005	28
	65.90021-0005	BOLT;COLLARED HEX.	BOULON A 6PANS	28		031021~			
23	65.90201-0094	BOLT;STUD	BOULON DE PLOT	6					
24	65.90201-0154	BOLT;STUD M12X1.5X10	BOULON DE PLOT	6					
25	65.90201-0080	BOLT;STUD	BOULON DE PLOT	2					
26	65.03901-0063A	GASKET;CYLINDER	GARNITURE	1		~031020	T	65.03901-0063B	1
								65.90021-0005	14
	65.03901-0063B	GASKET;CYLINDER	GARNITURE	1		~051017	Y	65.03901-0072	1
	65.03901-0072	GASKET;CYLINDER	GARNITURE	1		051018~			
27	65.03901-0064A	GASKET;CYLINDER HEAD(REAR)	GARNITURE	1		~031020	T	65.03901-0064B	1
								65.90021-0005	14
	65.03901-0064B	GASKET;CYLINDER HEAD(REAR)	GARNITURE	1		~051017	Y	65.03901-0073	1
	65.03901-0073	GASKET;CYLINDER HEAD(REAR)	GARNITURE	1		051018~			
28	65.91001-0013	SEAL	BOUCHON	2		~051130	Y	65.91001-0013A	2
	65.91001-0013A	**SEAL**	BOUCHON	2		051131~			
29	06.22022-0907	PIN;DOWEL M6X10	GOUPILLE D'AJUSTAGE	4		~060725			
	06.22022-0909	**PIN;DOWEL M6X14**	GOUPILLE D'AJUSTAGE	4		060726~			
30	65.19202-0035	HOOK;LIFTING	CROCHET	1					
31	06.01913-3217	BOLT ASS'Y M10X30	BOULON A 6PANS	1					
32	06.01734-4411	BOLT;HEX. M14X1.5X30	BOULON A 6PANS	1					
33	06.16731-2110	WASHER;SPRING	RONDELLE ELASTIQUE	1					
34	06.01494-4408	BOLT;HEX. M14X1.5X45	BOULON A 6PANS	1		~060725			
	06.01494-4406	**BOLT;HEX. M14X1.5X35**	BOULON A 6PANS	1		060726~			
35	06.16731-2110	WASHER;SPRING	RONDELLE ELASTIQUE	1					
36	65.91701-0275	SPACER	BAGUE D'ECARTEMENT	1		~060725			
	65.19202-0064	**HOOK;LIFTING**	CROCHET	1		060726~			
37	**65.91001-0004**	**PIN;CORE**	GOUPILLE DE NOYAU	6		051131~			
38	**65.91701-0246**	**SPACER**	BAGUE D'ECARTEMENT	1		060726~			
39	**06.01914-3215**	**BOLT ASS'Y M10X25**	BOULON A 6PANS	2		060726~			

DATE	DEC. 15, 2006
REV. NO.	EXB06-13

Fig. 160 CYLINDER HEAD COVER
COUVERTURE DE CULASSE

Serial No. ;

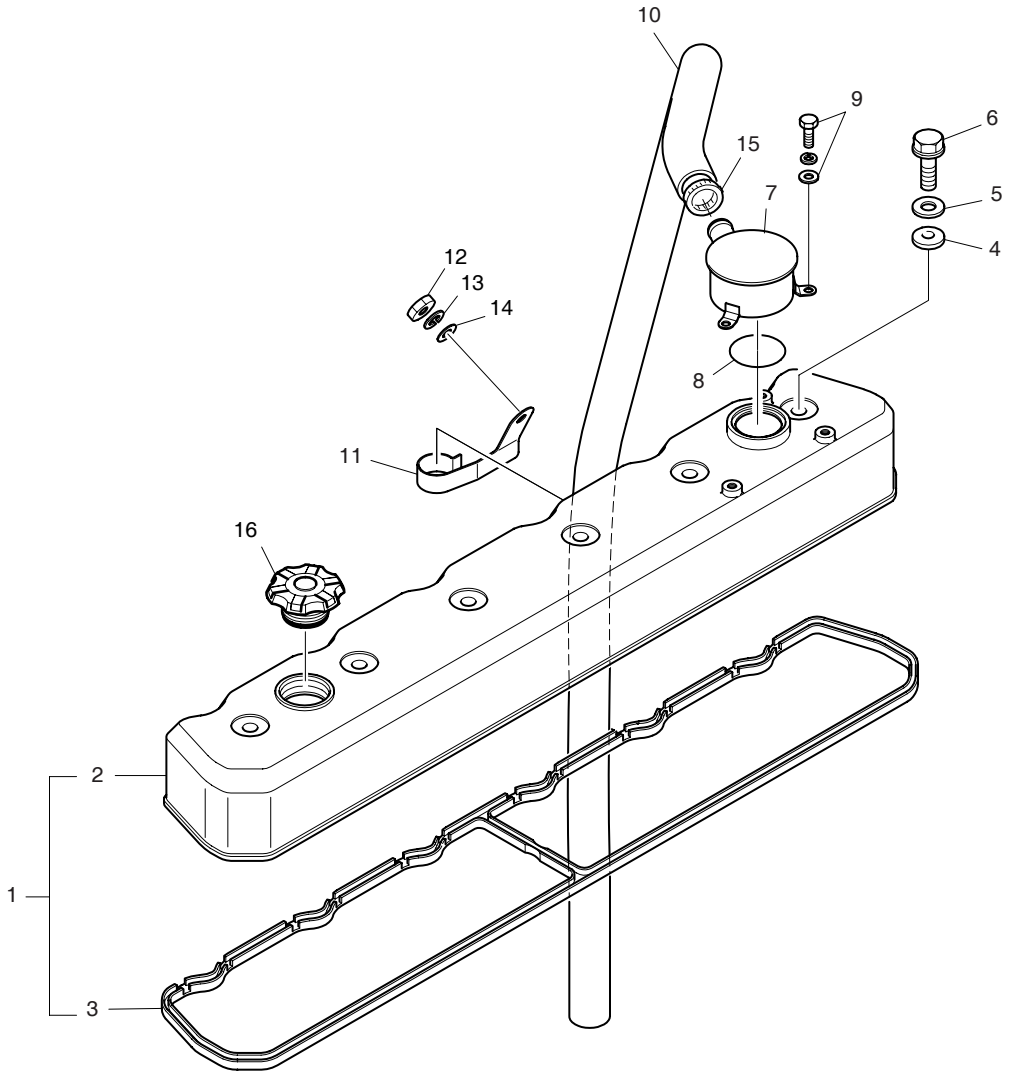

DATE	DEC. 15, 2006
REV. NO.	EXB06-13

Fig. 160 CYLINDER HEAD COVER COUVERTURE DE CULASSE

Serial No. ;

Key No.	Part No.	Description	Description	Q'ty	S.C	Serial No.	ICA	Replaceable part	
								Part No.	Q'ty
160-1	65.03401-6046B	CYLINDER HEAD COVER ASS'Y	CULLASSE	1		~050624	Y	65.03401-6046C	1
	65.03401-6046C	CYLINDER HEAD COVER ASS'Y	CULLASSE	1		050625~			
2	65.03401-0048B	. COVER;CYINDER HEAD	. COUVERCLE	1		~050609	Y	65.03401-0048C	1
	65.03401-0048C	. COVER;CYINDER HEAD	. COUVERCLE	1		050610~			
3	65.03905-0020	. PACKING;CYLINDER HEAD	. COUSSINET PIED DE	1					
4	65.03905-0023A	GASKET;CYLINDER HEAD	GARNITURE	6					
5	65.90701-0202	WASHER	RONDELLE	6					
6	65.90020-0074	BOLT;COLLARED HEX.	BOULON A 6PANS	6					
7	65.01801-5099B	HOUSING;BREATHER	CARTER	1		~050704	Y	65.01801-5099C	1
	65.01801-5099C	HOUSING;BREATHER	CARTER	1		050705~			
8	65.96501-0033B	O-RING	JONT TORIQUE	1					
9	06.01923-3113	BOLT ASS'Y M8X20	BOULON A 6PANS	3					
10	65.96301-0344	HOSE;RUBBER	TUYAU FLEXIBLE	1					
11	65.97401-0164	CLIP;BREATHER HOSE	ATTACHE	1					
12	06.11063-8214	NUT;HEX. M8	ECROU	1					
13	06.15010-2311	WASHER	RONDELLE	1					
14	06.16731-2107	WASHER;SPRING	RONDELLE ELASTIQUE	1					
15	06.67020-0105	CLAMP	BRIDE	1					
16	65.01810-5007	OIL FILLER CAP ASS'Y	VIBREUR	1		~051130	I	65.01810-5011	1
	65.01810-5011	**OIL FILLER CAP ASS'Y**	VIBREUR	1		051231~			

DATE	DEC. 15, 2006
REV. NO.	EXB06-13

Fig. 170 TIMING SYSTEM
SYSTEME DE SYNCHRONISATION

Serial No. ;

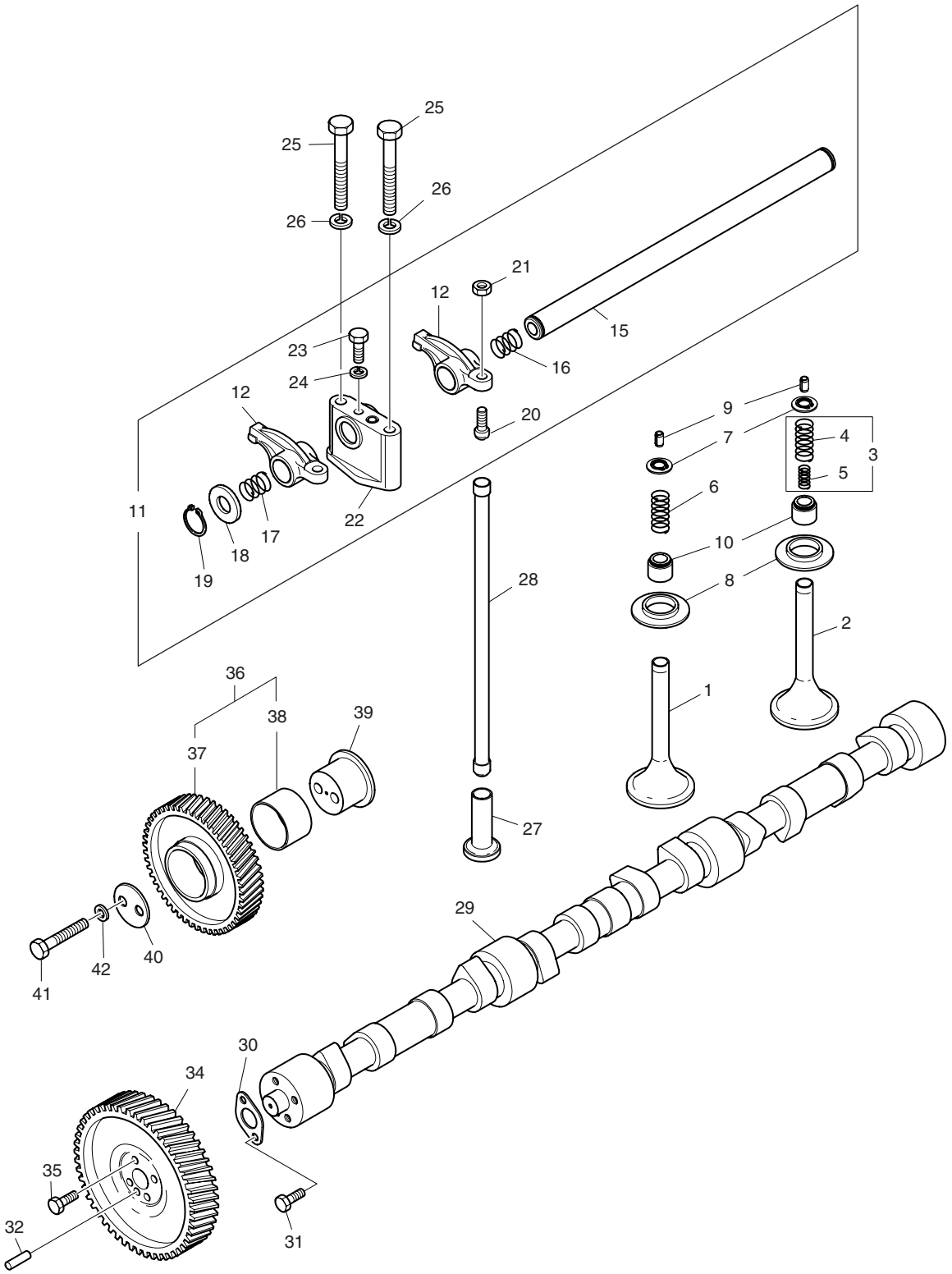

DATE	DEC. 15, 2006
REV. NO.	EXB06-13

Fig. 170 TIMING SYSTEM SYSTEME DE SYNCHRONISATION

Serial No. ;

Key No.	Part No.	Description	Description	Q'ty	S.C	Serial No.	ICA	Replaceable part	
								Part No.	Q'ty
170-1	65.04101-0043	VALVE;INTAKE	SOUPAPE D'ADMISSION	6					
2	65.04101-0044	VALVE;EXHAUST	VANNE	6					
3	65.04102-6004	SPRING VALVE ASS'Y	JOINT TORIQUE	6		~030122	Y	65.04102-6004A	6
	65.04102-6004A	SPRING VALVE ASS'Y	JOINT TORIQUE	6		030123~			
4	65.04102-0066	. SPRING;VALVE(OUTER)	. RESSORT DE EXTERIEUR	1					
5	65.04102-0002	. SPRING;VALVE(INNER)	. RESSORT DE INTERIEUR	1		~030122	Y	65.04102-0002A	1
	65.04102-0002A	. SPRING;VALVE(INNER)	. RESSORT DE INTERIEUR	1		030123~			
6	65.04102-0066	SPRING;VALVE(OUTER)	RESSORT DE EXTERIEUR	6					
7	65.04103-0014	RETAINER;VALVE SPRING	COUPELLE DE RESSORT	12					
8	65.04103-0078	SEAT;VALVE SPRING	PLAQUE DE VANNE	12					
9	65.04104-0007	COTTER;VALVE	CLAVETTE DE SOUPAPE	24					
10	65.04902-0010	SEAL;VALVE STEM	JOINT	12					
11	65.04200-6027C	ROCKER ARM & SHAFT ASS'Y	AXE DE CULBUTEUR	2		~060621	Y	65.04200-6027D	2
	65.04200-6027D	**ROCKER ARM & SHAFT**	AXE DE CULBUTEUR	2		060622~			
12	65.04201-5014E	. ROCKER ARM ASS'Y	. AXE DE CULBUTEUR	6					
15	65.04203-5010	. SHAFT;ROCKER ARM	. AXE DE CULBUTEUR	1					
16	65.97601-0104	. SPRING;COMPRESSION	. RESSORT	2					
17	65.97601-0053	. SPRING;COMPRESSION(OUTER)	. RESSORT	2					
18	65.90710-0039	. WASHER;ROCKER ARM	. RONDELLE D'AXE DE	2					
19	06.29010-0120	. RING;SNAP	. CIRCLIP	2					
20	65.04205-0003	. BOLT;ADJUSTING	. BOULON A 6PANS	6		~060621	Y	65.04205-0003A	6
	65.04205-0003A	**. BOLT;ADJUSTING**	. BOULON A 6PANS	6		060622~			
21	65.90501-0003	. NUT;HEX. M10X1.0	. ECROU	6					
22	65.04202-0014A	. BRACKET;ROCKER ARM	. SUPPORT	3					
23	06.01283-7112	. BOLT;HEX. M8X18	. BOULON A 6PANS	3					
24	06.15010-2311	. WASHER	. RONDELLE	3					
25	06.01013-9221	BOLT;HEX. M10X80	BOULON A 6PANS	6					
26	06.16731-2108	WASHER;SPRING	RONDELLE	6					
27	65.04301-0006	TAPPET	POUSSOIR DE TIGE DE	12					
28	65.04302-5011	ROD;PUSH	TIGE DE POUSSOIR	12					
29	65.04401-0010K	CAM;SHAFT	ARBRE A CAMES	1		~040827	Y	65.04401-0010L	1
	65.04401-0010L	CAM;SHAFT	ARBRE A CAMES	1		040828~			
30	65.98112-0038	FLANGE	BRIDE	1					
31	65.90001-6003	BOLT ASS'Y M6X14	BOULON A 6PANS	2					
32	06.22022-1014	PIN;DOWEL	GOUPILLE D'AJUSTAGE	1					
34	65.04501-0007A	GEAR;CAMSHAFT	PIGNON	1					
35	06.01914-3119	BOLT ASS'Y	BOULON A 6PANS	4					
36	65.04505-5016	IDLE GEAR ASS'Y	PIGNON	1					

DATE	DEC. 15, 2006
REV. NO.	EXB06-13

Fig. 170 TIMING SYSTEM
SYSTEME DE SYNCHRONISATION

Serial No. ;

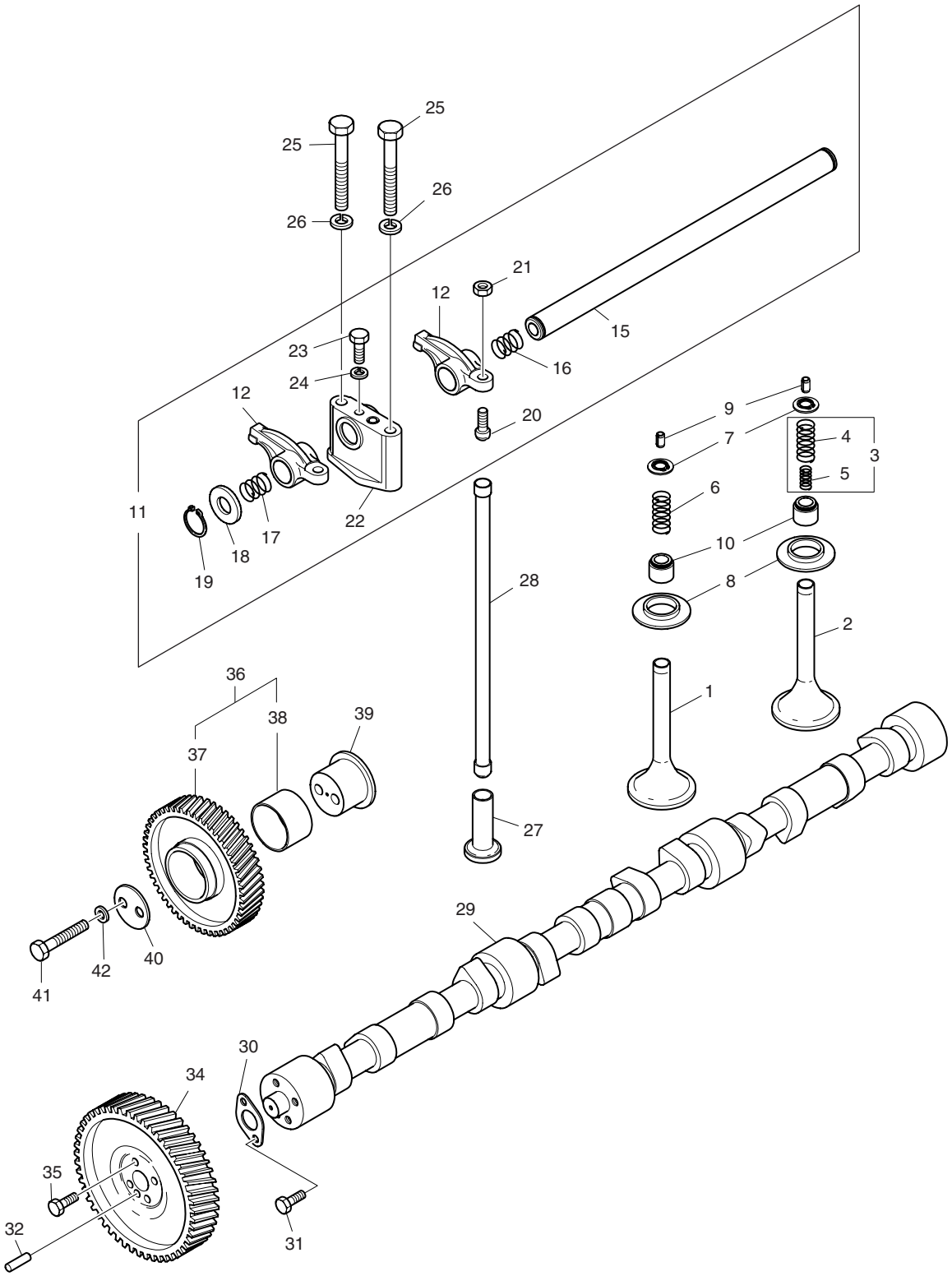

DATE	DEC. 15, 2006
REV. NO.	EXB06-13

Fig. 170 TIMING SYSTEM SYSTEME DE SYNCHRONISATION

Serial No. ;

Key No.	Part No.	Description	Description	Q'ty	S.C	Serial No.	ICA	Replaceable part	
								Part No.	Q'ty
170-37	65.04505-0033	. GEAR;IDLE	. PIGNON	1	D				
38	65.04507-0004	. BUSH;IDLE GEAR	. ROULEMENT DE PIGNON	1	D				
39	65.04506-0033	PIN;IDLE GEAR	GOUPILLE DE PIGNON FOU	1					
40	65.90720-0018	WASHER;THRUST	RONDELLE DE BUTEE	1					
41	06.01015-9220	BOLT;HEX. (12.9T M10X1.5X75)	BOULON A 6PANS	2					
42	06.16731-2108	WASHER;SPRING	RONDELLE	2					

DATE	DEC. 15, 2006
REV. NO.	EXB06-13

Fig. 180 OIL PUMP
POMPE D'HUILE

Serial No. ;

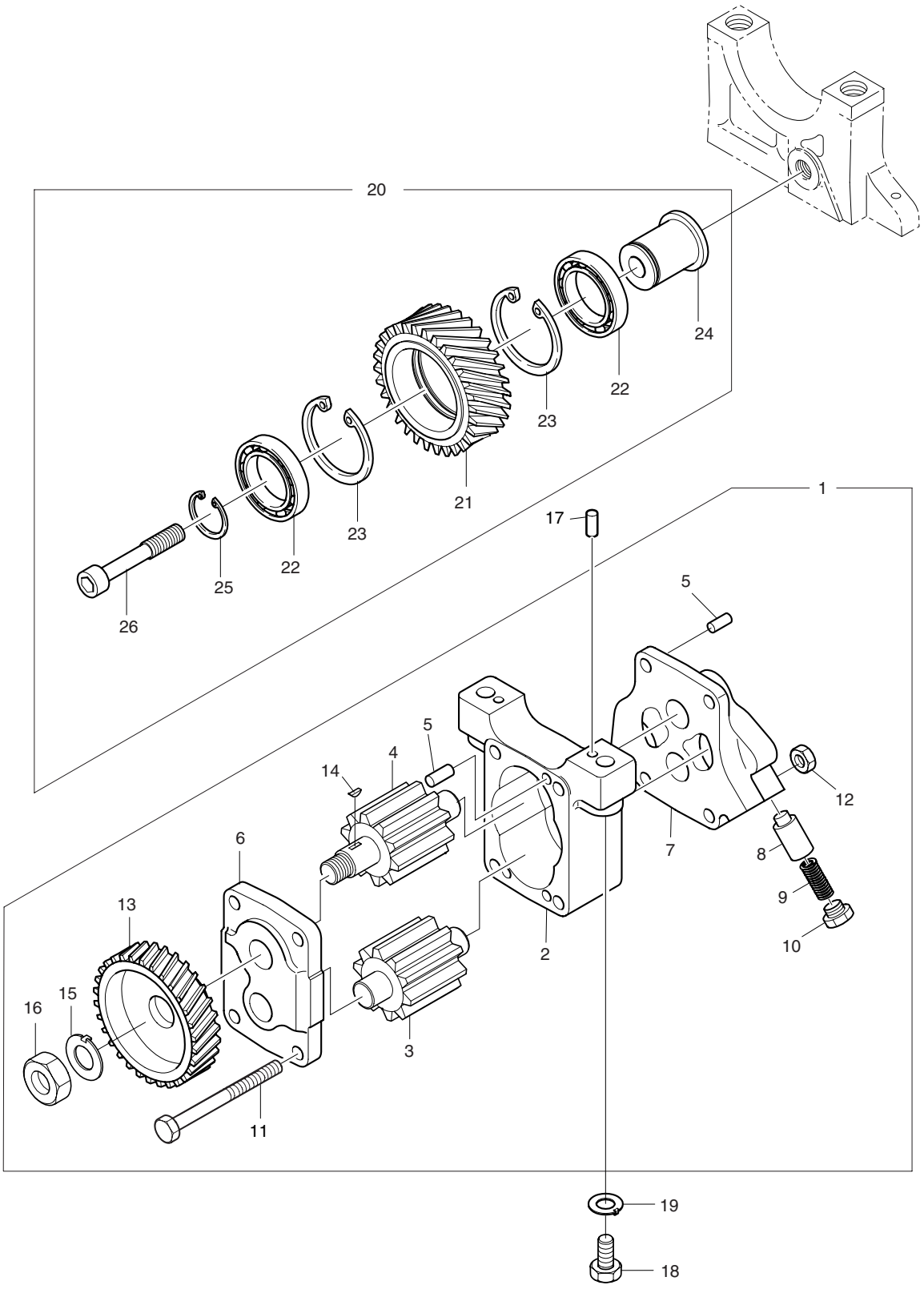

DATE	DEC. 15, 2006
REV. NO.	EXB06-13

Fig. 180 OIL PUMP POMPE D'HUILE

Serial No. ;

Key No.	Part No.	Description	Description	Q'ty	S.C	Serial No.	ICA	Replaceable part	
								Part No.	Q'ty
180-1	65.05100-6042A	OIL PUMP ASS'Y	POMPE D'CHUILE	1					
2	65.05102-0015	. HOUSING	. CARTER	1	D				
3	65.05104-5005	. GEAR;OIL PUMP	. PIGNON	1					
4	65.05104-5004	. GEAR;OIL PUMP	. PIGNON	1					
5	06.22022-0909	. PIN;DOWEL 6M6X14	. GOUJON D'ASSEMBLAGE	4					
6	65.05103-5006A	. COVER;OIL PUMP	. COUVERTURE	1	D				
7	65.05103-5008	. COVER;OIL PUMP	. COUVERTURE	1	D				
8	65.05410-0007	. PLUNGER;VALVE	. PLUNGEUR	1					
9	65.97601-0105	. SPRING;COMP.	. RESSORT	1					
10	65.90310-0104	. SCREW;PLUG	. VIS	1					
11	**06.01013-9118**	**. BOLT;HEX M8X65**	. BOULON A 6PANS	4					
12	65.90510-0012	. NUT	. ECROU	4					
13	65.05201-0008A	. GEAR;DRIVE	. PIGNON	1					
14	06.29141-0207	. KEY	. KEY	1					
15	06.16050-0311	. WASHER;LOCK	. RONDELLE	1					
16	06.11053-9217	. NUT;HEX	. ECROU	1					
17	06.22022-0907	PIN;DOWEL 6M6X10	GOUPILLE D'AJUSTAGE	2					
18	06.01013-9215	BOLT;HEX M10X1.5X50	BOULON A 6PANS	2					
19	65.90801-0018	WASHER;LOCK	RONDELLE	2					
20	65.05200-6004A	IDLE GEAR MOUNTING	PIGNON	1	D				
21	65.05204-0003A	. GEAR;OIL PUMP IDLE	. PIGNON	1					
22	06.31420-0314	. BEARING;BALL	. ROULEMENT A BILLES	2					
23	06.29020-0132	. RING;SNAP	. BAGUE ELASTIQUE	2					
24	65.05205-0018	. PIN;IDLE GEAR	. GOUPILLE DE PIGNON	1					
25	06.29010-0125	. RING;SNAP	. CIRCLIP	1					
26	65.90030-0009	. BOLT;SOCKET HEAD M10X60	. BOULON A 6PANS	1					

DATE	DEC. 15, 2006
REV. NO.	EXB06-13

Fig. 190 OIL FILTER
FILTRE D'HUILE

Serial No. ;

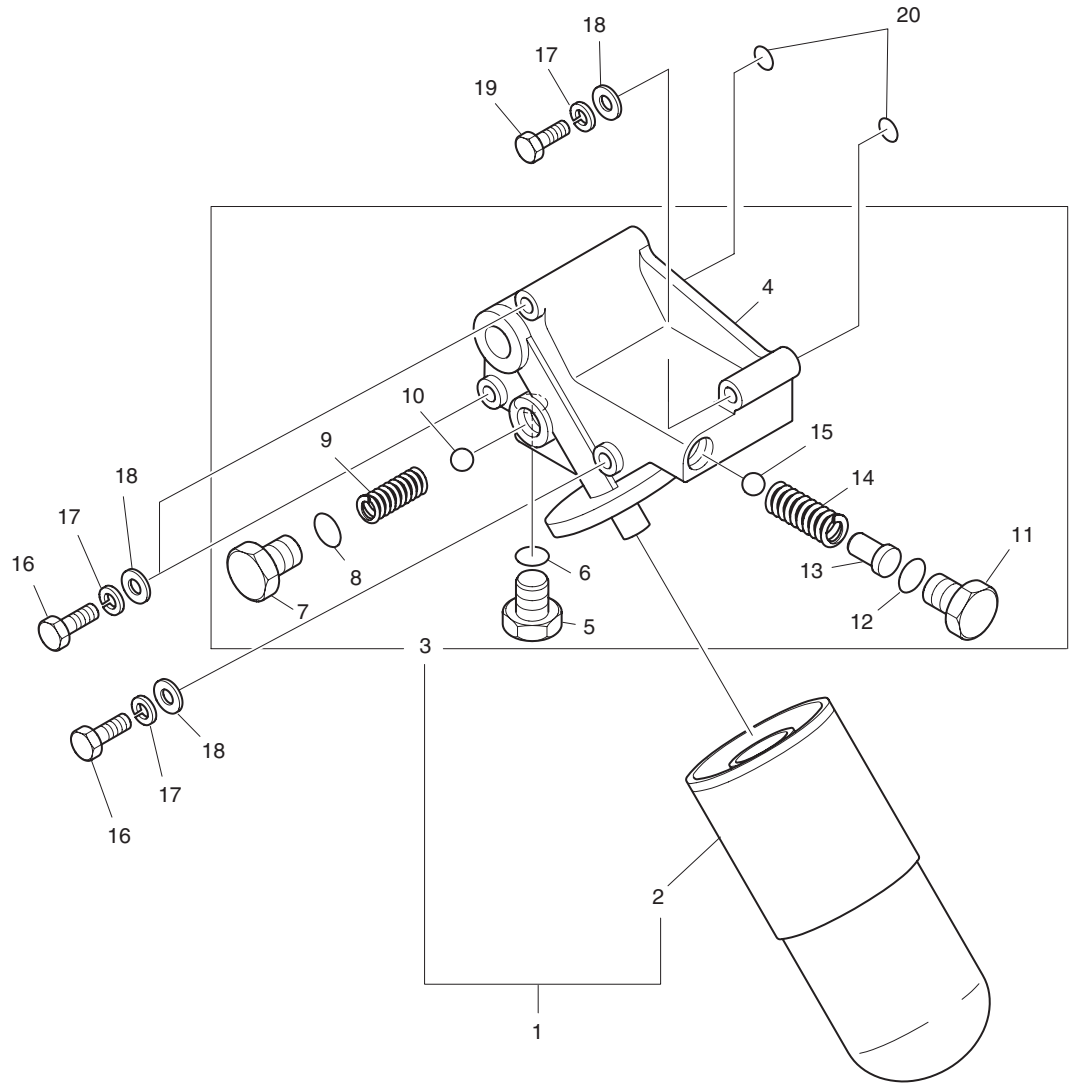

DATE	DEC. 15, 2006
REV. NO.	EXB06-13

Fig. 190 OIL FILTER FILTRE D'HUILE

Serial No. ;

Key No.	Part No.	Description	Description	Q'ty	S.C	Serial No.	ICA	Replaceable part	
								Part No.	Q'ty
190-1	65.05501-7072	OIL FILTER ASS'Y	FILTRE D'HUILE	1		~040305	Y	65.05501-7081	1
	65.05501-7081	OIL FILTER ASS'Y	FILTRE D'HUILE	1		~050714	Y	65.05501-7081A	1
	65.05501-7081A	OIL FILTER ASS'Y	FILTRE D'HUILE	1		050715~			
2	65.05510-5027	CARTRIDGE;OIL FILTER	CARTOUCHE	1		~040305			
	65.05510-5020A	CARTRIDGE;OIL FILTER	CARTOUCHE	1		040306~			
3	65.05503-5050	OIL FILTER HEAD ASS'Y	TETE DE FILTRE D'HUILE	1					
4	65.05503-0040A	HEAD;OIL FILTER	CULASSE	1					
5	65.90310-0121	SCREW;PLUG	VIS	1					
6	06.56190-0722	RING;SEAL	BAGUE D'ETANCHEITE	1					
7	65.90310-0115	PLUG	BOUCHON	1					
8	06.56190-0726	RING;SEAL	BAGUE D'ETANCHEITE	1					
9	65.97601-0075	SPRING	RESSORT	1					
10	06.31641-0433	BALL;STEEL	BALLIER	1					
11	65.90310-0034	SCREW;PLUG M26X1.5	VIS	1					
12	06.56190-0728	RING;SEAL A26X32	BAGUE D'ETANCHEITE	1					
13	06.22230-1214	PIN;SPRING	GOUPILLE	1					
14	65.97601-0004	SPRING	RESSORT	1					
15	06.31641-0433	BALL;STEEL	BALLIER	1					
16	06.01493-4323	BOLT M12X140	BOULON A 6PANS	3					
17	06.16731-2109	WASHER;SPRING	RONDELLE ELASTIQUE	4					
18	06.15010-2313	WASHER;PLAIN	RONDELLE	4					
19	06.01493-4315	BOLT;HEX. M12X1.5X80	BOULON A 6PANS	1					
20	65.96501-0061	O-RING	JONT TORIQUE	2					

DATE	DEC. 15, 2006
REV. NO.	EXB06-13

Fig. 200 OIL COOLER
REFROIDISSEMENT DE HUILE

Serial No. ;

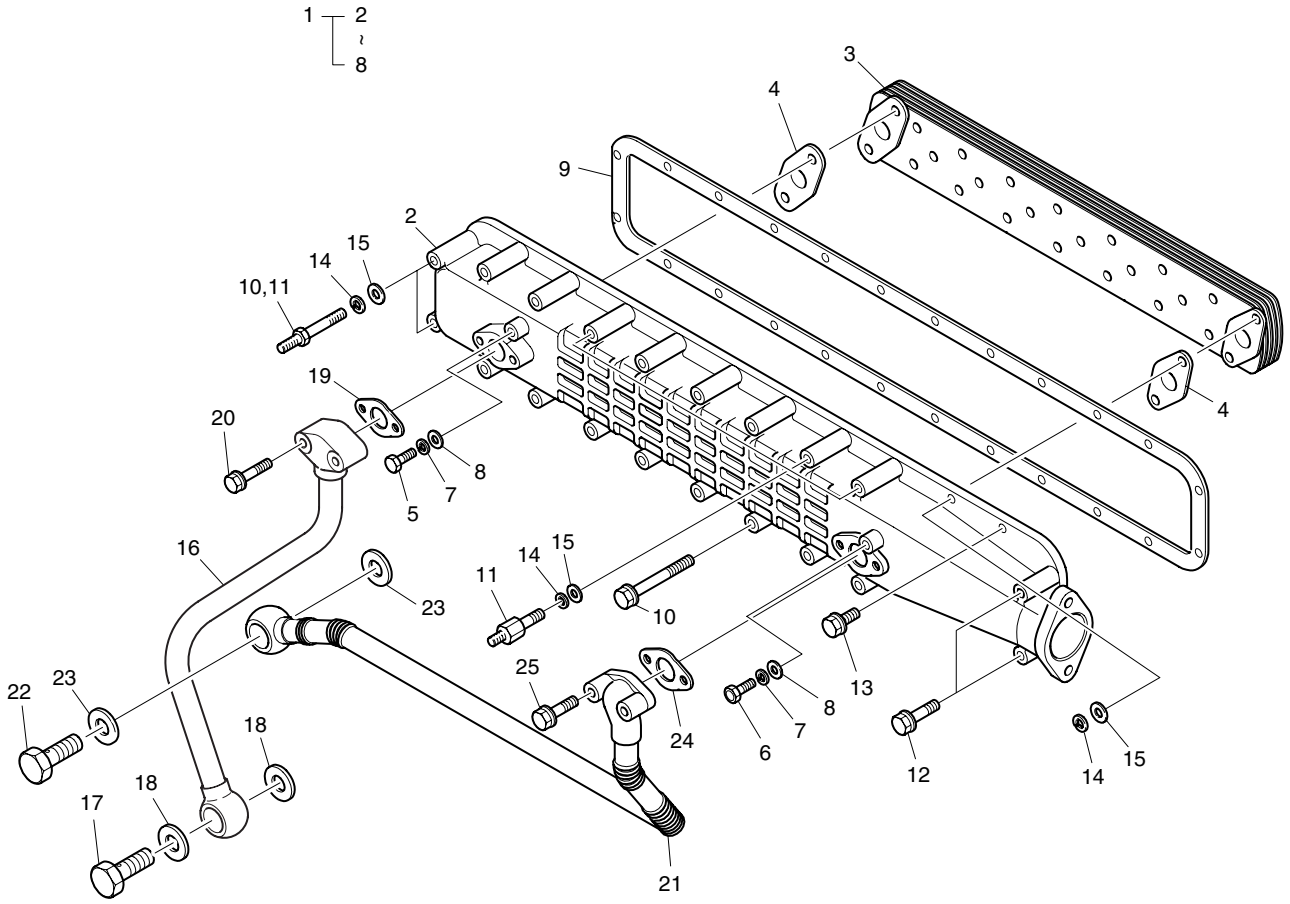

DATE	DEC. 15, 2006
REV. NO.	EXB06-13

Fig. 200 OIL COOLER
REFROIDISSEMENT DE HUILE

Serial No. ;

Key No.	Part No.	Description	Description	Q'ty	S.C	Serial No.	ICA	Replaceable part	
								Part No.	Q'ty
200-1	65.05601-7072C	OIL COOLER ASS'Y	REFROIDISSEUR D'HUILE	1					
2	65.05604-0019B	. HOUSING;OIL COOLER	. COUVERCLE	1					
3	65.05606-5027B	. ELEMENT;OIL COOLER	. ELEMENTRE	1					
4	65.05903-0028	. GASKET;OIL COOLER	. RONDELLE DE BUTEE	2					
5	06.02090-0512	. BOLT;SOCKET HEAD M10X25	. BOULON A 6PANS	2					
6	06.02090-0513	. BOLT;SOCKET HEAD M10X30	. BOULON A 6PANS	2					
7	06.16731-2108	. WASHER;SPRING	. RONDELLE	4					
8	06.15010-2312	. WASHER;PLAIN	. RONDELLE	4					
9	65.01907-0008A	GASKET	GARNITURE	1					
10	06.01923-3124	BOLT ASS'Y M8X65	BOULON A 6PANS	13					
11	65.90201-0066	BOLT;STUD	BOULON DE PLOT	5					
12	06.01923-3122	BOLT ASS'Y M8X55	BOULON A 6PANS	2					
13	06.01923-3115	BOLT ASS'Y M8X25	BOULON A 6PANS	4					
14	06.16731-2107	WASHER;SPRING	RONDELLE ELASTIQUE	5					
15	06.15010-2311	WASHER	RONDELLE	5					
16	65.05701-5660	PIPE;OIL	CONDUITE	1					
17	06.78140-2408	SCREW;HOLLOW	VIS	1					
18	06.56190-0727	RING;SEAL	BAGUE D'ETANCHEITE	2					
19	65.05903-0030A	GASKET;OIL RETURN PIPE	GARNITURE	1					
20	06.01913-3120	BOLT ASS'Y M8X45	BOULON A 6PANS	2					
21	65.05701-5964A	OIL PIPE ASS'Y	TUYAU D'HUILE	1					
22	06.78140-2408	SCREW;HOLLOW	VIS	1					
23	06.56190-0728	RING;SEAL	BAGUE D'ETANCHEITE	2					
24	65.05903-0030A	GASKET;OIL RETURN PIPE	GARNITURE	1					
25	06.01913-3120	BOLT ASS'Y M8X45	BOULON A 6PANS	2					

DATE	JUN. 30, 2007
REV. NO.	EXB07-06

Fig. 210 OIL PAN
CARTER D'HUILE

Serial No. ;

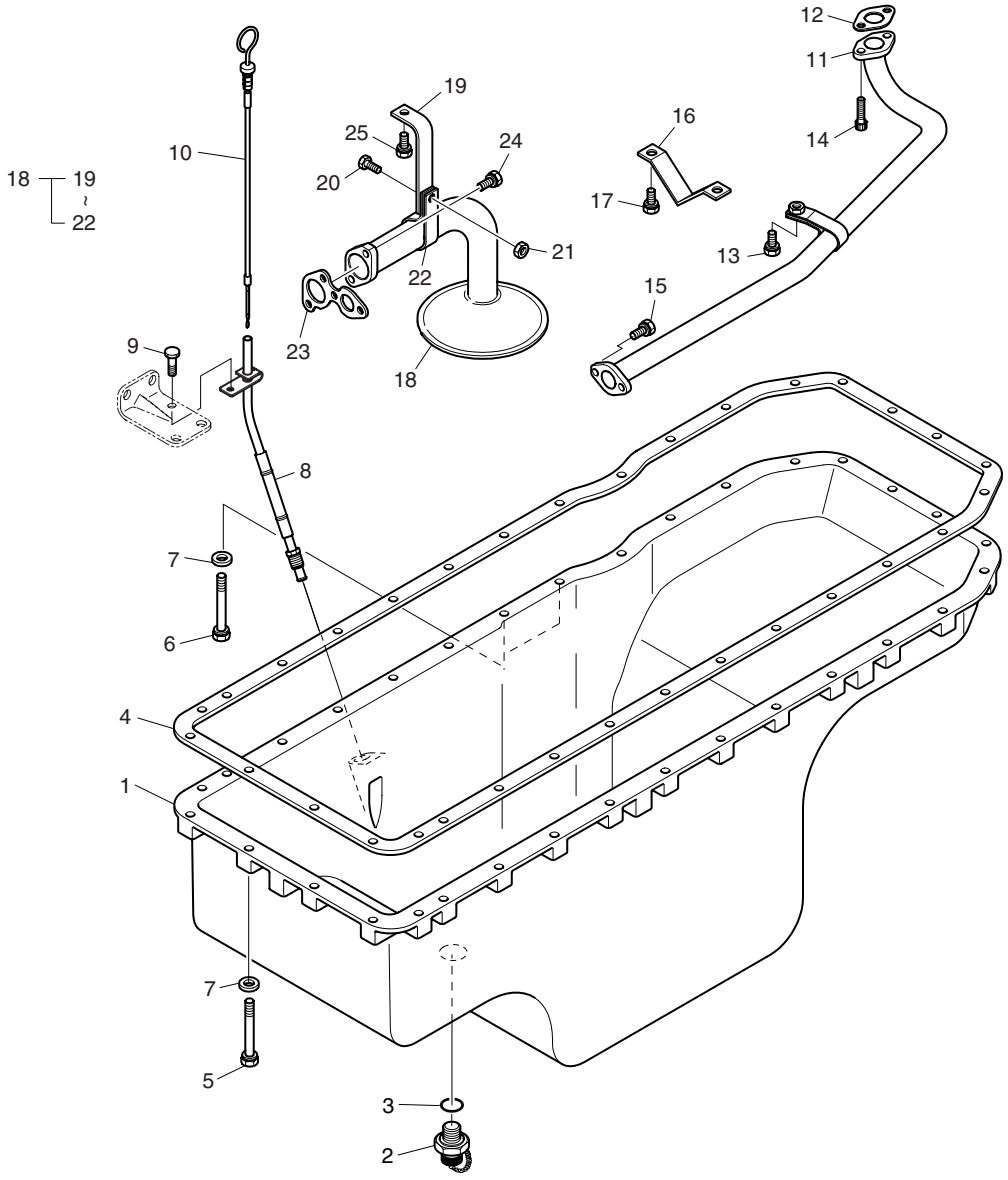

DATE	JUN. 30, 2007
REV. NO.	EXB07-06

Fig. 210 OIL PAN
CARTER D'HUILE

Serial No. ;

Key No.	Part No.	Description	Description	Q'ty	S.C	Serial No.	ICA	Replaceable part	
								Part No.	Q'ty
210-1	65.05801-5380A	PAN;OIL	CASSEROLE	1					
2	65.98125-5019	JOINT;DRAIN	JOINT TOURNANT	1		~030629	Y	65.98125-5022	1
	65.98125-5022	JOINT;DRAIN	JOINT TOURNANT	1		~060707	Y	65.98125-5022A	1
	65.98125-5022A	JOINT;DRAIN	JOINT TOURNANT	1		060708~			
3	06.56190-0732	RING;SEAL	BAGUE D'ETANCHEITE	1					
4	65.05904-0096A	GASKET;OIL PAN	GARNITURE	1					
5	65.90001-6010	BOLT ASS'Y M8X38	BOULON A 6PANS	30					
6	06.01923-3124	BOLT ASS'Y M8X65	BOULON A 6PANS	2					
7	06.15010-2311	WASHER	RONDELLE	30					
8	65.05806-5096A	TUBE;GUIDE	TUBE	1		~070911	Y	65.05806-5096B	1
	65.05806-5096B	**TUBE;GUIDE**	TUBE	1		070912~			
9	06.01923-3113	BOLT ASS'Y M8X20	BOULON A 6PANS	1					
10	65.05805-5193A	OIL LEVEL GAUGE ASS'Y	TUBE DE GUIDAGE	1		~050630	Y	65.05805-5193B	1
	65.05805-5193B	OIL LEVEL GAUGE ASS'Y	TUBE DE GUIDAGE	1		~070911	Y	65.05805-5193C	1
	65.05805-5193C	**OIL LEVEL GAUGE ASS'Y**	TUBE DE GUIDAGE	1		070912~			
11	65.05701-5349	OIL PIPE ASS'Y	TUYAU D'HUILE	1					
12	65.96601-0043	GASKET	GARNITURE	1					
13	06.01913-3115	BOLT ASS'Y M8X25	BOULON A 6PANS	1					
14	65.90001-6005	BOLT;SOCKET	BOULON A 6PANS	2					
15	06.01913-3113	BOLT ASS'Y M8X20	BOULON A 6PANS	2					
16	65.05740-2042	BRACKET	SUPPORT	1					
17	06.01923-3112	BOLT ASS'Y M8X18	BOULON A 6PANS	2					
18	65.05701-6041A	OIL SUCTION PIPE ASS'Y	TUYAU D'HUILE	1					
19	65.05740-0017	. BRACKET;OIL SUCTION	. SUPPORT	1					
20	06.01283-7113	. BOLT;HEX. M8X20	. BOULON A 6PANS	1					
21	65.90510-0012	. NUT;CLEVELOC	. ECROU	1					
22	65.97401-0130	. CLAMP;SUCTION PIPE	. COLLIER	1					
23	65.05903-0027A	GASKET	GARNITURE	1					
24	06.01913-3114	BOLT ASS'Y M8X22	BOULON A 6PANS	2					
25	65.90020-0068	BOLT;HEX.	BOULON A 6PANS	1					

DATE	DEC. 15, 2006
REV. NO.	EXB06-13

Fig. 220 COOLING WATER PIPE
CONDUITES D'EAU DE REFROIDISSEMENT

Serial No. ;

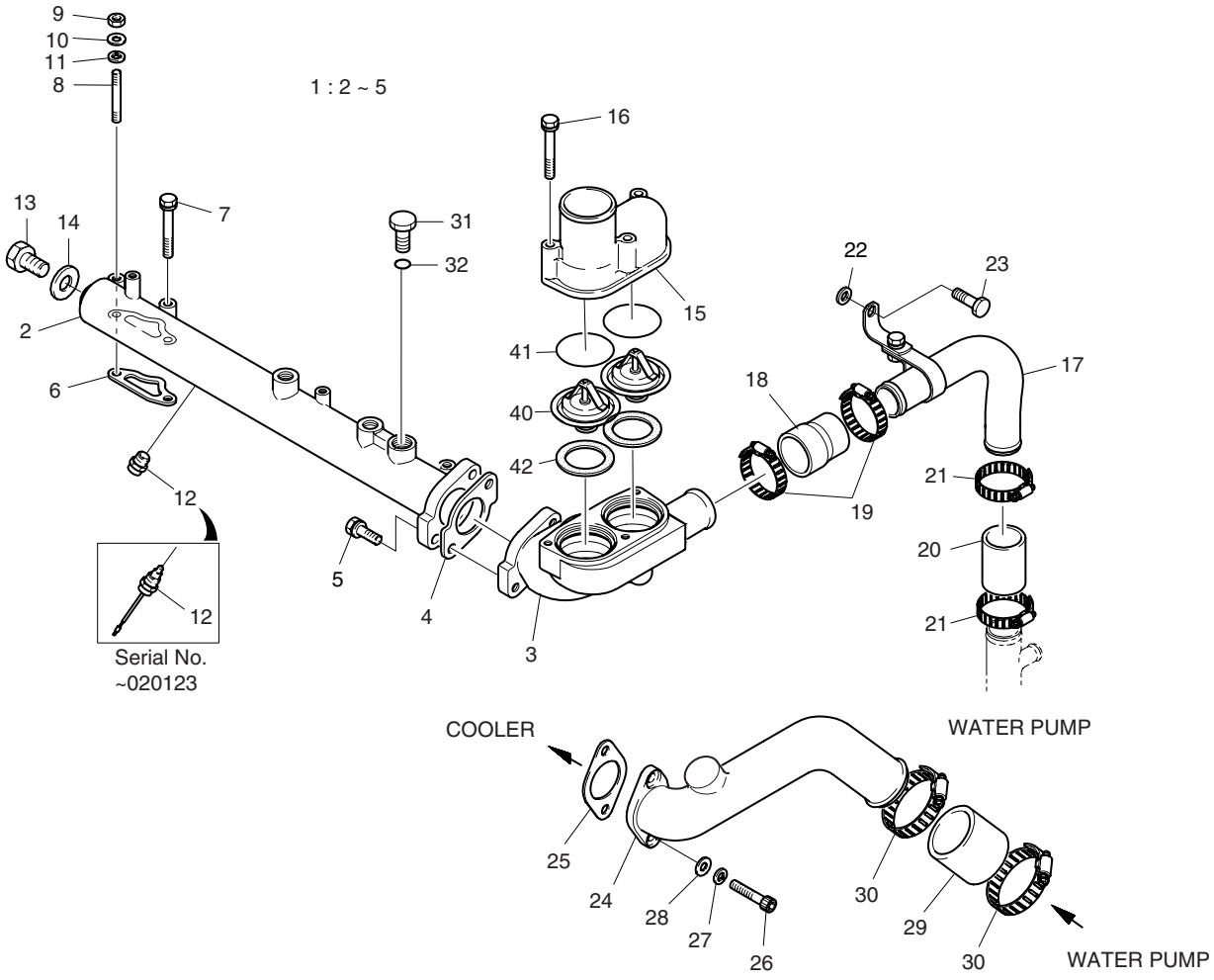

DATE	DEC. 15, 2006
REV. NO.	EXB06-13

Fig. 220 COOLING WATER PIPE
CONDUITE D'EAU DE REFROIDISSEMENT

Serial No. ;

Key No.	Part No.	Description	Description	Q'ty	S.C	Serial No.	ICA	Replaceable part	
								Part No.	Q'ty
220-1	65.06301-6054A	COOLING WATER PIPE ASS'Y	CONDUITES DE EAU	1		~040827			
	65.06301-6084	COOLING WATER PIPE ASS'Y	CONDUITES DE EAU	1		040828~			
2	65.06301-0671A	. PIPE;COOLING WATER	. CONDUITE	1		~040827			
	65.06301-0240	. PIPE;COOLING WATER	. CONDUITE	1		040828~			
3	65.06404-0021B	. HOUSING;THERMOSTAT	. CARTER	1					
4	65.06903-0021	. GASKET(C/W PIPE-W/P)	. RONDELLE DE BUTEE	1					
5	06.01923-3218	. BOLT ASS'Y M10X35	. BOULON A 6PANS	2					
6	65.06903-0018	GASKET(COOLING WATER PIPE)	GARNITURE	2		~040827			
	65.06903-0028	GASKET(COOLING WATER PIPE)	GARNITURE	2		040828~			
7	06.01923-3124	BOLT ASS'Y M8X65	BOULON A 6PANS	2					
8	65.90201-0064	BOLT;STUD M8X60	BOULON DE PLOT	2					
9	06.11063-8214	NUT;HEX. M8	ECROU	2					
10	06.16731-2107	WASHER;SPRING	RONDELLE ELASTIQUE	2					
11	06.15010-2311	WASHER	RONDELLE	2					
12	65.27435-6003	SWITCH;WATER TEMP.	INTERRUPTEUR	1		~020123			
	65.90320-0019	**PLUG;SCREW**	BOUCHON A VIS	1		020124~			
13	06.08092-2405	PLUG;SCREW M16X1.5	BOUCHON A VIS	1					
14	06.56190-0709	RING;SEAL A16X22	BAGUE D'ETANCHEITE	1					
15	65.06405-0018A	PIPE;WATER OUTLET	COUVERCLE	1					
16	06.01923-3124	BOLT ASS'Y M8X65	BOULON A 6PANS	3					
17	65.06301-6037B	PIPE;BY-PASS	CONDUITE	1					
18	65.96301-0204B	HOSE;RUBBER	TUYAU FLEXIBLE	1					
19	06.67020-0108	CLAMP;HOSE	COLLIER DE LA CONDUITE	2					
20	04.27405-1506	HOSE;RUBBER	TUYAU	1					
21	06.67020-0108	CLAMP;HOSE	COLLIER DE LA CONDUITE	2					
22	65.90710-0019	WASHER	RONDELLE	1					
23	06.01923-3218	BOLT ASS'Y M10X35	BOULON A 6PANS	1					
24	65.06301-0675	PIPE	CONDUITE	1					
25	65.06903-0020	GASKET	GARNITURE	1		~061023	Y	65.06903-0020A	1
	65.06903-0020A	**GASKET**	GARNITURE	1		061024~			
26	06.02090-0513	BOLT;SOCKET HEAD	BOULON A 6PANS	2					
27	06.16731-2108	WASHER;SPRING	RONDELLE	2					
28	06.15010-2312	WASHER;PLAIN	RONDELLE	2					
29	65.96301-0205A	HOSE;RUBBER	TUYAU	1					
30	**06.67020-0109**	**CLAMP;HOSE**	COLLIER DE LA CONDUITE	2					
31	65.90310-0149A	SCREW;PLUG M26X1.5	VIS	1					
32	06.56190-0728	RING;SEAL	BAGUE D'ETANCHEITE	1					
40	51.06402-0062	THERMOSTAT	THERMOSTAT	2					

DATE	DEC. 15, 2006
REV. NO.	EXB06-13

Fig. 220 COOLING WATER PIPE
CONDUITES D'EAU DE REFROIDISSEMENT

Serial No. ;

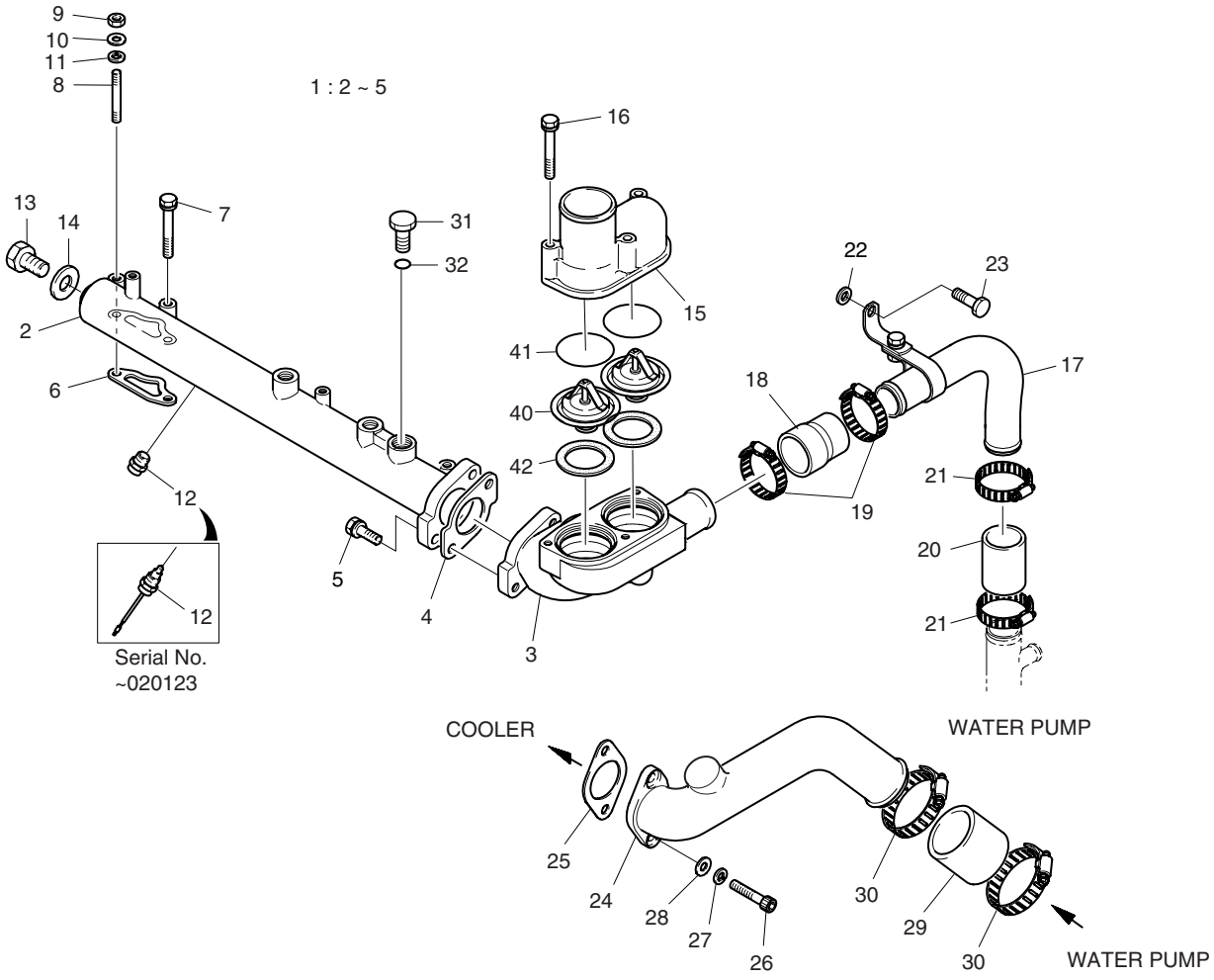

DATE	DEC. 15, 2006
REV. NO.	EXB06-13

Fig. 220 COOLING WATER PIPE
CONDUITE D'EAU DE REFROIDISSEMENT

Serial No. ;

Key No.	Part No.	Description	Description	Q'ty	S.C	Serial No.	ICA	Replaceable part	
								Part No.	Q'ty
220-41	06.56342-1208	O-RING	JONT TORIQUE	2					
42	65.06901A0069	GASKET	GARNITURE	2					

DATE	JUN. 30, 2007
REV. NO.	EXB07-06

Fig. 230 COOLING WATER PUMP
POMPE D'CEAU

Serial No. ;

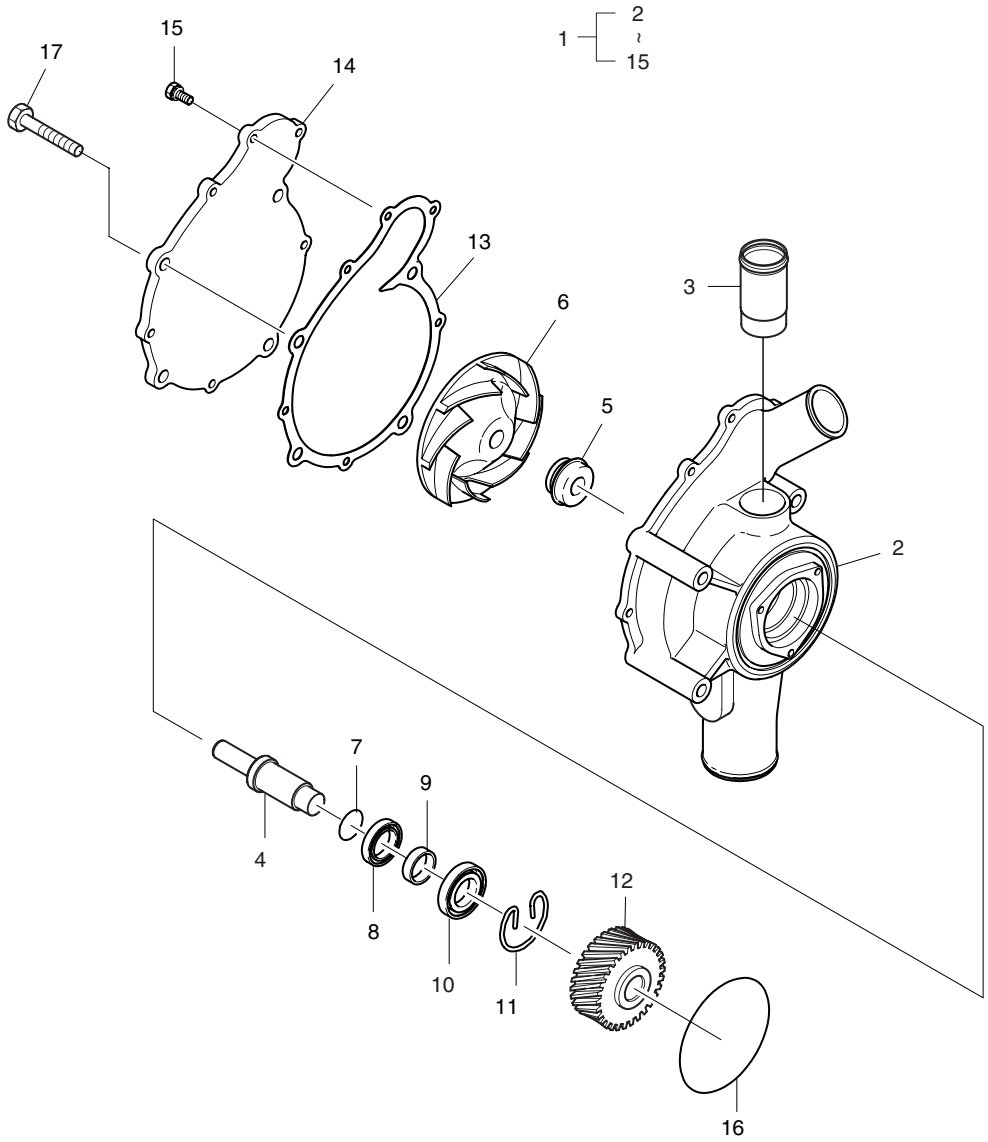

DATE	JUN. 30, 2007
REV. NO.	EXB07-06

Fig. 230 COOLING WATER PUMP POMPE D'CEAU

Serial No. ;

Key No.	Part No.	Description	Description	Q'ty	S.C	Serial No.	ICA	Replaceable part	
								Part No.	Q'ty
230-1	65.06500-6157C	WATER PUMP ASS'Y	POMPE	1		~021118	I	65.06500-6157D	1
	65.06500-6157D	WATER PUMP ASS'Y	POMPE	1		~040325	T	65.06500-6357	1
								65.91601-6003	1
	65.06500-6357	WATER PUMP ASS'Y	POMPE	1		~040715	Y	65.06500-6357A	1
	65.06500-6357A	WATER PUMP ASS'Y	POMPE	1		~070823	Y	65.06500-6357B	1
	65.06500-6357B	**WATER PUMP ASS'Y**	POMPE	1		070824~			
2	65.06501-0077B	. HOUSING;WATER PUMP	. CARTER	1	D	~021118			
	65.06501-0077C	. HOUSING;WATER PUMP	. CARTER	1	D	~040325			
	65.06501-0092	. HOUSING;WATER PUMP	. CARTER	1	D	040326~			
3	65.06301-0673	. PIPE;COOLING WATER	. CONDUITE	1					
4	65.06505-0041	. SHAFT	. ARBRE	1		~040325			
	65.06505-0026	. SHAFT	. ARBRE	1		~040715	I	65.06505-0027	1
	65.06505-0027	. SHAFT	. ARBRE	1		040716~			
5	65.06520-6007	. SEAL;MECHANICAL	. JOINT	1					
6	65.06506-0024A	. IMPELLER	. PROPULSEUR	1		~040325			
	65.06506-0027	. IMPELLER	. PROPULSEUR	1		040326~			
7	65.01510-0103	. SEAL;OIL	. JOINT D'HUILE	1					
8	06.31420-4513	. BEARING;BALL	. PALIER	1					
9	65.06508-0012	. SPACER	. PALIER	1					
10	65.93410-0038	. BEARING	. PALIER	1					
11	06.29020-0131	. RING;SNAP 52X2	. CIRCLIP	1					
12	65.06507-0005A	. GEAR;WATER PUMP DRIVE	. PIGNON	1					
13	65.06901-0076	. GASKET	. RONDELLE DE BUTEE	1					
14	65.06512-0014	. COVER	. COUVERCLE	1		~070823			
	65.06512-0014A	**. COVER**	. COUVERCLE	1		070824~			
15	06.01913-2914	. BOLT ASS'Y M6X22	. BOULON A 6PANS	5					
16	65.96501-0068	O-RING	JONT TORIQUE	1					
17	06.01913-3234	BOLT ASS'Y M10X130	BOULON A 6PANS	4					

DATE	DEC. 15, 2006
REV. NO.	EXB06-13

Fig. 240 COOLING FAN VENTILATEUR

Serial No. ;

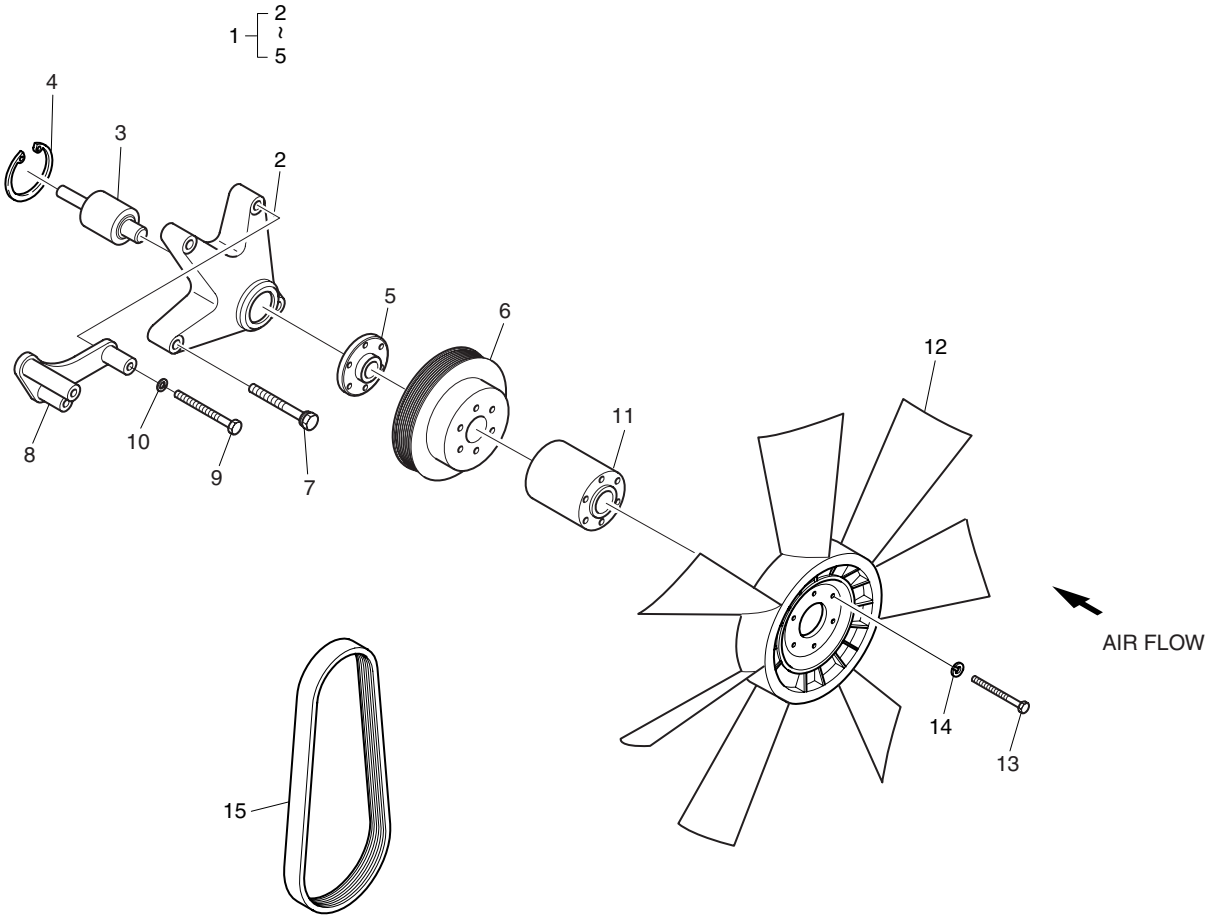

DATE	DEC. 15, 2006
REV. NO.	EXB06-13

Fig. 240 COOLING FAN VENTILATEUR

Serial No. ;

Key No.	Part No.	Description	Description	Q'ty	S.C	Serial No.	ICA	Replaceable part	
								Part No.	Q'ty
240-1	65.06650-6016	FAN DRIVE ASS'Y	SUPPORT	1					
2	65.06651-0005	. HOUSING;FAN DRIVE	. CARTER	1	D				
3	65.93410-0024	. BEARING;UNIT	. PALIER	1					
4	06.29020-0132	. RING;SNAP	. BAGUE ELASTIQUE	1					
5	65.06504-0013	. HUB;FAN DRIVE	. MOYEU DE FIXATION	1					
6	65.06606-0059	PULLEY;FAN	POULIE	1					
7	06.01943-3332	BOLT ASS'Y M12X1.5X110	BOULON A 6PANS	2					
8	65.19103-5035	BRACKET	SUPPORT	1					
9	06.01013-9226	BOLT;HEX. M10X1.5X110	BOULON A 6PANS	2					
10	06.16731-2108	WASHER;SPRING	RONDELLE	2					
11	65.06611-0125	FLANGE;FAN	BRIDE	1		~030227	Y	65.06611-0125A	1
	65.06611-0125A	FLANGE;FAN	BRIDE	1		030228~			
12	65.06601-5067	FAN;COOLING	FAN	1					
13	06.01013-9142	BOLT;HEX. M8X135	BOULON A 6PANS	6					
14	06.16731-2107	WASHER;SPRING	RONDELLE ELASTIQUE	6					
15	65.96801-0126	V-BELT	COURROIE	1		~040205	Y	65.96801-0126A	1
	65.96801-0126A	V-BELT	COURROIE	1		040206~			

DATE	DEC. 15, 2006
REV. NO.	EXB06-13

Fig. 250 EXHAUST MANIFOLD TUBULURE D'ECHAPPEMENT

Serial No. ;

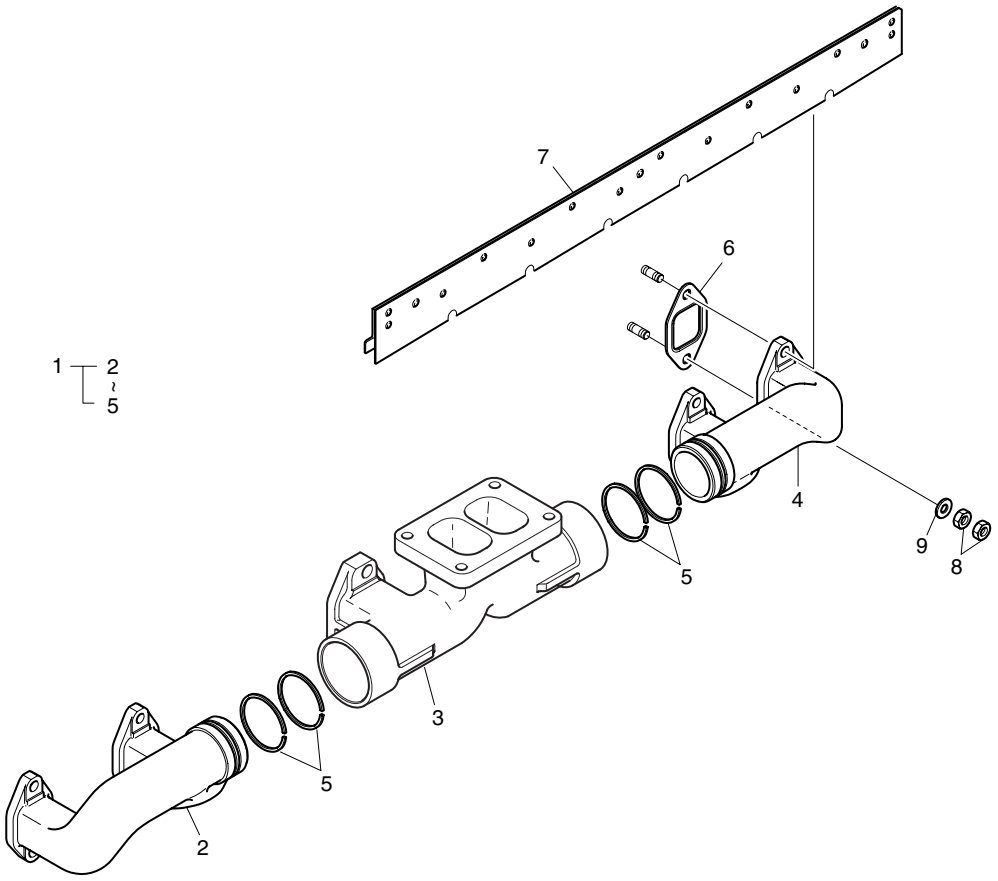

DATE	DEC. 15, 2006
REV. NO.	EXB06-13

Fig. 250 EXHAUST MANIFOLD TUBULURE D'ECHAPPEMENT

Serial No. ;

Key No.	Part No.	Description	Description	Q'ty	S.C	Serial No.	ICA	Replaceable part	
								Part No.	Q'ty
250-1	65.08100-6061	EXHAUST MANIFOLD ASS'Y	COLLECTEUR	1					
2	65.08101-0181A	. MANIFOLD;EXHAUST(FRONT)	. COLLECTEUR	1					
3	65.08101-0530	. MANIFOLD;EXHAUST(CENTER)	. COLLECTEUR	1					
4	65.08101-0183A	. MANIFOLD;EXHAUST(REAR)	. COLLECTEUR	1					
5	65.08105-0001	. RING	. BAGUE D'ETANCHEITE	4					
6	65.08901A0012	GASKET;EXHAUST MANIFOLD	GARNITURE	6		~051130	I	65.08901-0044	6
	65.08901-0044	**GASKET;EXHAUST**	GARNITURE	6		051131~			
7	65.08120-5008F	SCREEN;HEAT & CYLINDER HEAD	SCREEN	1		~030507	Y	65.08120-5008G	1
	65.08120-5008G	SCREEN;HEAT & CYLINDER HEAD	SCREEN	1		030508~			
8	06.11063-8215	NUT;HEX. M10	ECROU	22					
9	06.15010-2312	WASHER;PLAIN	RONDELLE	12					

DATE	DEC. 15, 2006
REV. NO.	EXB06-13

Fig. 260 INTAKE MANIFOLD
TUBULURE DE PRISE

Serial No. ;

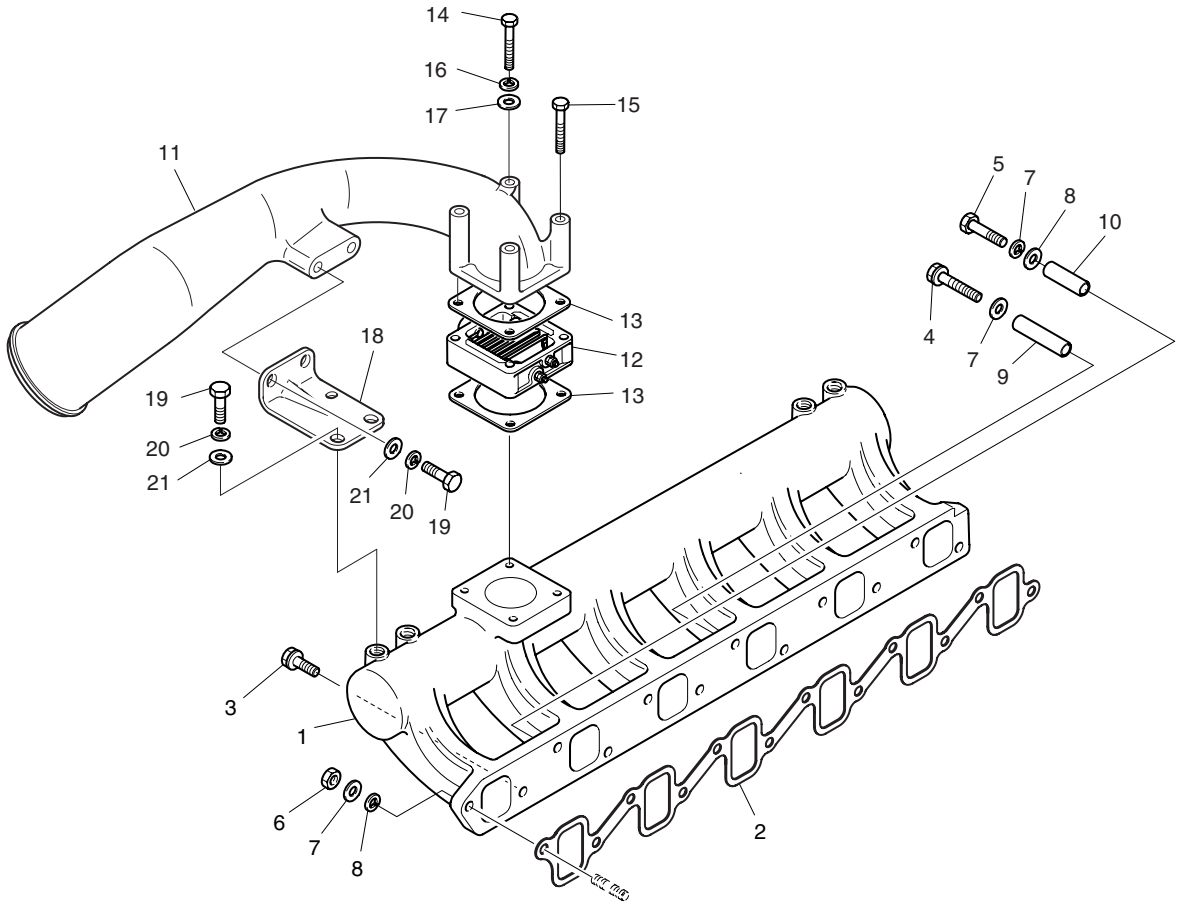

DATE	DEC. 15, 2006
REV. NO.	EXB06-13

Fig. 260 INTAKE MANIFOLD TUBULURE DE PRISE

Serial No. ;

Key No.	Part No.	Description	Description	Q'ty	S.C	Serial No.	ICA	Replaceable part	
								Part No.	Q'ty
260-1	65.08201-5057	MANIFOLD;INTAKE	TUBULURE ET	1					
2	65.08902-0025	GASKET;INTAKE MANIFOLD	GARNITURE	1					
3	06.01923-3218	BOLT ASS'Y M10X35	BOULON A 6PANS	8					
4	06.01913-3234	BOLT ASS'Y M10X130	BOULON A 6PANS	1					
5	06.01013-9221	BOLT;HEX. M10X80	BOULON A 6PANS	1					
6	06.11063-8215	NUT;HEX. M10	ECROU	2					
7	06.16731-2108	WASHER;SPRING	RONDELLE	3					
8	06.15010-2312	WASHER;PLAIN	RONDELLE	4					
9	65.91701-0470	SPACER(92mm)	BAGUE D'ECARTEMENT	1					
10	65.91701-0533	SPACER(44mm)	BAGUE D'ECARTEMENT	1					
11	65.08202-5059A	STAKE;INTAKE	PIEU	1					
12	65.26803-7028	HEATER;AIR	RECHAUFFEUR D'AIR	1		~040228	Y	65.26803-7028A	1
	65.26803-7028A	HEATER;AIR	RECHAUFFEUR D'AIR	1		~041213	Y	65.26803-7028B	1
	65.26803-7028B	HEATER;AIR	RECHAUFFEUR D'AIR	1		041214~			
13	65.09904-0008	GASKET;AIR PIPE	GARNITURE	2					
14	06.01013-9128	BOLT;HEX. M8X130	BOULON A 6PANS	2					
15	06.01013-9127	BOLT;HEX. M8X120	BOULON A 6PANS	2					
16	06.16731-2107	WASHER;SPRING	RONDELLE ELASTIQUE	4					
17	06.15010-2311	WASHER	RONDELLE	4					
18	65.08240-0026	BRACKET;INTAKE STAKE	SUPPORT	1					
19	06.01733-4309	BOLT;HEX. M12X1.5X25	BOULON A 6PANS	4					
20	06.16731-2109	WASHER;SPRING	RONDELLE ELASTIQUE	4					
21	06.15010-2313	WASHER;PLAIN	RONDELLE	4					

DATE	DEC. 15, 2006
REV. NO.	EXB06-13

Fig. 270 TURBO CHARGER
CHARGEUR DE TURBO

Serial No. ;

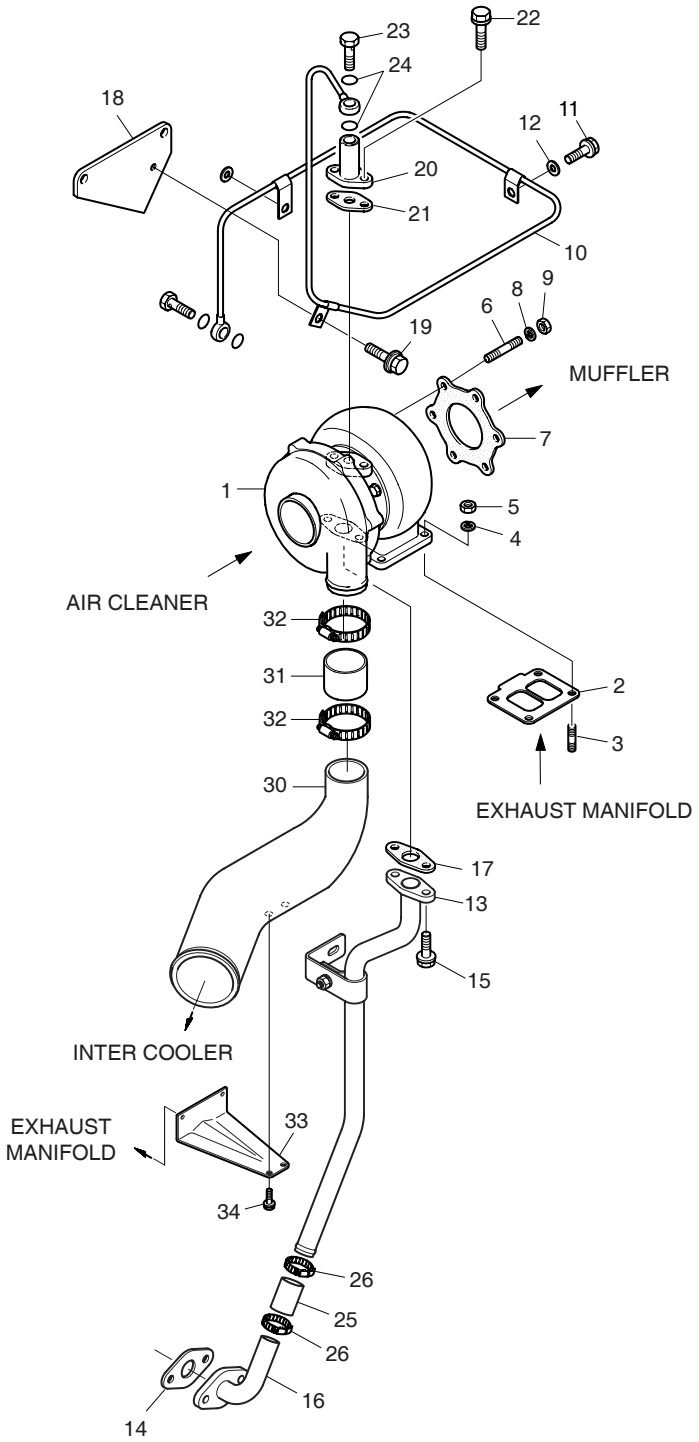

DATE	DEC. 15, 2006
REV. NO.	EXB06-13

Fig. 270 TURBO CHARGER
CHARGEUR DE TURBO

Serial No. ;

Key No.	Part No.	Description	Description	Q'ty	S.C	Serial No.	ICA	Replaceable part	
								Part No.	Q'ty
270-1	65.09100-7073	TURBO CHARGER ASS'Y	CHARGEUR DE TURBO	1					
2	65.09901-0025	GASKET;TURBO CHARGER	GARNITURE	1		~040305	Y	65.09901-0033	1
	65.09901-0033	GASKET;TURBO CHARGER	GARNITURE	1		040306~			
3	06.06226-0808	BOLT;STUD M10X30	BOULON DE PLOT	4		~030115	I	65.90201-0076	4
	65.90201-0076	BOLT;STUD M10X30	BOULON DE PLOT	4		030116~			
4	06.16731-2108	WASHER;SPRING	RONDELLE	4					
5	06.11063-8215	NUT;HEX. M10	ECROU	4		~030115	I	65.90535-0001	4
	65.90535-0001	NUT;HEX. M10	ECROU	4		030116~			
6	65.90201-0181	BOLT;STUD	BOULON DE PLOT	6					
7	65.08901-0063	GASKET	GARNITURE	1					
8	06.16731-2108	WASHER;SPRING	RONDELLE	6					
9	06.11063-8215	NUT;HEX. M10	ECROU	6					
10	65.05701-5661	PIPE;OIL	TUYAU D'HUILE	1					
11	06.01943-3317	BOLT ASS'Y M12X1.5X30	BOULON A 6PANS	2					
12	06.15010-2313	WASHER;PLAIN	RONDELLE	2					
13	65.05701-5442	PIPE;OIL	TUYAU D'HUILE	1					
14	65.96601-0045A	GASKET;TURBO CHARGER OIL	GARNITURE	1		~060530	I	65.96601-0067	1
	65.96601-0067	**GASKET;TURBO CHARGER**	GARNITURE	1		060531~			
15	06.01913-3114	BOLT ASS'Y M8X22	BOULON A 6PANS	2					
16	65.05701-5443	PIPE;OIL	TUYAU D'HUILE	1					
17	65.96601-0012	GASKET;TURBO CHARGER OIL	GARNITURE	1					
18	65.05740-5002	BRACKET;OIL PIPE	SUPPORT	1					
19	06.01923-3114	BOLT ASS'Y M8X22	BOULON A 6PANS	1					
20	65.98131-5008	FLANGE;ADAPTER	BRIDE	1					
21	65.96601-0046A	GASKET;OIL PIPE ADAPTR	GARNITURE	1		~060530	Y	65.96601-0046B	1
	65.96601-0046B	**GASKET;OIL PIPE ADAPTR**	GARNITURE	1		060531~			
22	06.01913-3113	BOLT ASS'Y M8X20	BOULON A 6PANS	2					
23	06.78144-2403	SCREW;HOLLOW M12X1.5	VIS CREUSE	1					
24	06.56180-0714	RING;SEAL	BAGUE D'ETANCHEITE	2					
25	65.96301-0327	HOSE;RUBBER	TUYAU CAOUTCHOUC	1		~040226	Y	65.96301-0327A	1
	65.96301-0327A	HOSE;RUBBER	TUYAU CAOUTCHOUC	1		040227~			
26	06.67020-0106	CLAMP;HOSE	COLLIER DE LA CONDUITE	2					
30	65.09411-5051	INLET	ADMISSION	1					
31	65.96301-0268	HOSE	TUYAU FLEXIBLE	1					
32	06.67020-0112	CLAMP;HOSE	COLLIER DE LA CONDUITE	2					
33	65.09440-0007	BRACKET	SUPPORT	1					
34	06.01923-3215	BOLT ASS'Y M10X25	BOULON A 6PANS	2					

DATE	DEC. 15, 2006
REV. NO.	EXB06-13

Fig. 280 INJECTION NOZZLE BEC D'INJECTION

Serial No. ;

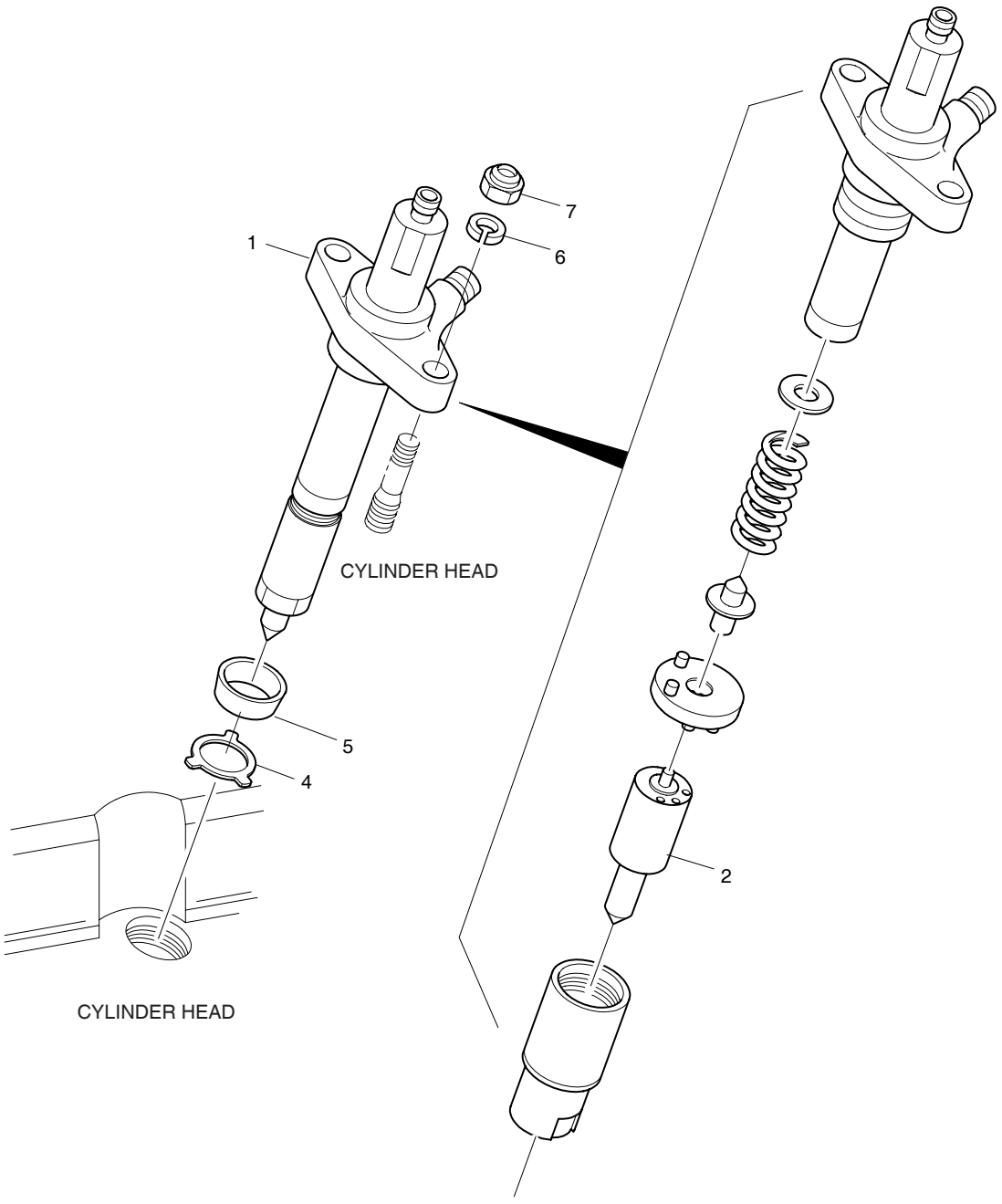

DATE	DEC. 15, 2006
REV. NO.	EXB06-13

Fig. 280 INJECTION NOZZLE BEC D'INJECTION

Serial No. ;

Key No.	Part No.	Description	Description	Q'ty	S.C	Serial No.	ICA	Replaceable part	
								Part No.	Q'ty
280-1	65.10101-7300	NOZZLE & HOLDER ASS'Y	INJECTEUR ET	6					
2	**65.10102-6046**	**. NOZZLE**	. INJECTEUR	1					
4	65.98701-0010	GASKET;METAL	GARNITURE	6					
5	65.96401-0011	SEAL;DUST	RONDELLE D'ETANCHEITE	6					
6	06.16731-2105	WASHER;SPRING	RONDELLE ELASTIQUE	12					
7	65.90510-0011	NUT	ECROU	24		~021015			
	06.11063-8212	NUT	ECROU	24		021016~			

DATE	DEC. 15, 2006
REV. NO.	EXB06-13

Fig. 290 INJECTION PIPE
PIPE D'INJECTION

Serial No. ;

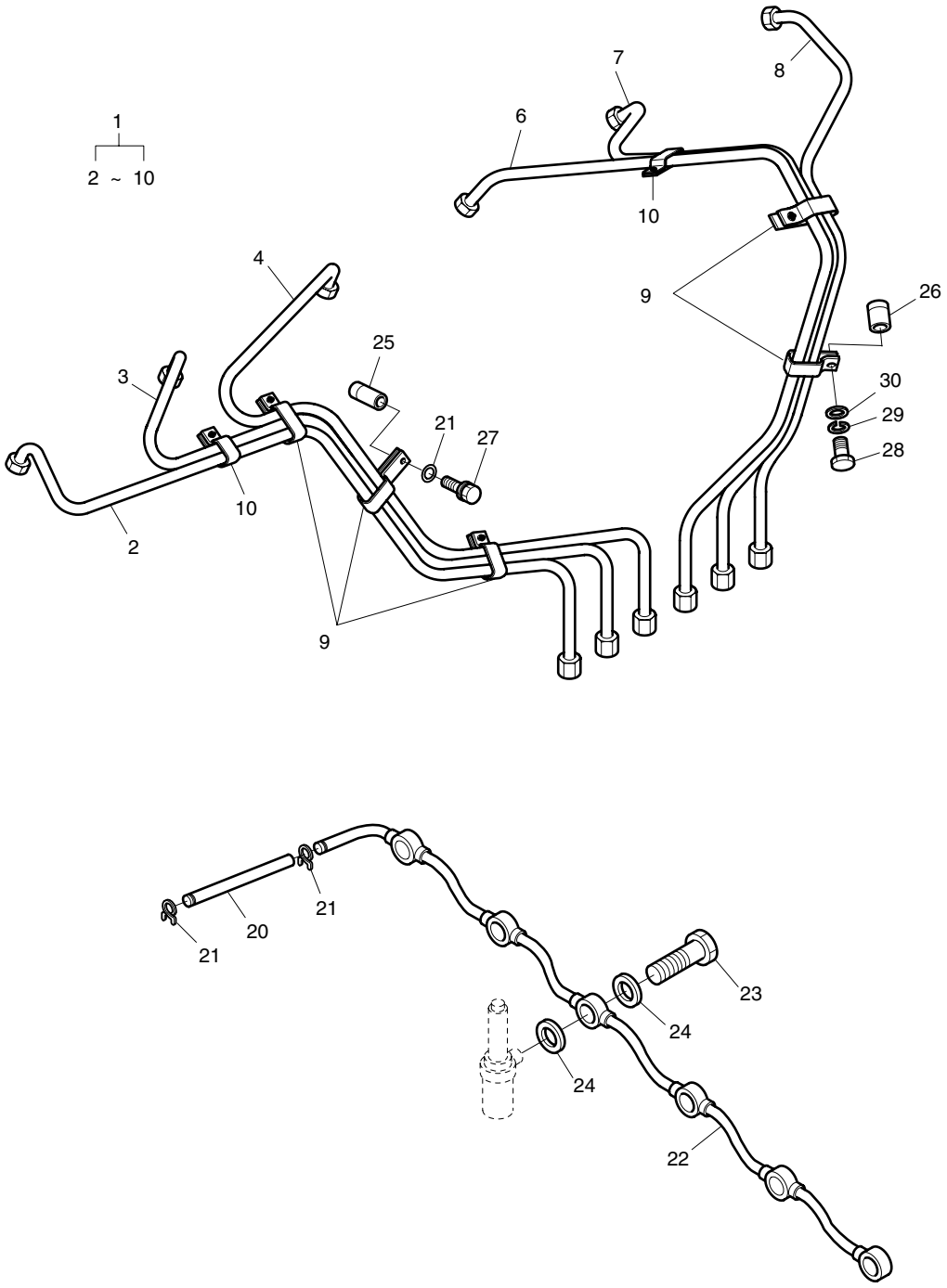

DATE	DEC. 15, 2006
REV. NO.	EXB06-13

Fig. 290 INJECTION PIPE
PIPE D'INJECTION

Serial No. ;

Key No.	Part No.	Description	Description	Q'ty	S.C	Serial No.	ICA	Replaceable part	
								Part No.	Q'ty
290-1	65.10301-7006	INJECTION PIPE ASS'Y(2~8)	ENSEMBLE DE CONDUITE	1					
2	65.10301-5247	. INJECTION PIPE NO.1	. CONDUITE	1	D				
3	65.10301-5248	. INJECTION PIPE NO.2	. CONDUITE	1	D				
4	65.10301-5249	. INJECTION PIPE NO.3	. CONDUITE	1	D				
6	65.10301-5295	. INJECTION PIPE NO.4	. CONDUITE	1	D				
7	65.10301-5296	. INJECTION PIPE NO.5	. CONDUITE	1	D				
8	65.10301-5297	. INJECTION PIPE NO.6	. CONDUITE	1	D				
9	65.97401-6002A	. 3 PIPE CLIP ASS'Y	. ATTACHE	5	D				
10	65.97401-6001A	. 2 PIPE CLIP ASS'Y	. ATTACHE	2	D				
20	65.96330-0132	TUBE;FUEL OVER FLOW	TUYAU	1					
21	65.97445-0001	CLAMP;SPRING	COLLIER A RESSSORT	2					
22	65.12301-5165A	FUEL OVER FLOW PIPE ASS'Y	CONDUITE	1					
23	65.98150-0042A	SCREW;HOLLOW M8X14	VIS CREUSE	6					
24	06.56180-0712	RING;SEA	BAGUE D'ETANCHEITE	12					
25	65.91701-0470	SPACER	BAGUE D'ECARTEMENT	1					
26	65.91701-0533	SPACER	BAGUE D'ECARTEMENT	1					
27	06.01913-3234	BOLT ASS'Y	BOULON A 6 PANS	1					
28	06.01013-9221	BOLT;HEX.	BOULON 6 PANS CREUX	1					
29	06.16731-2108	WASHER;SPRING	RONDELLE	1					
30	06.15010-2312	WASHER;PLAIN	RONDELLE	2					

DATE	DEC. 15, 2006
REV. NO.	EXB06-13

Fig. 300 INJECTION PUMP
POMPE D'INJECTION

Serial No. ;

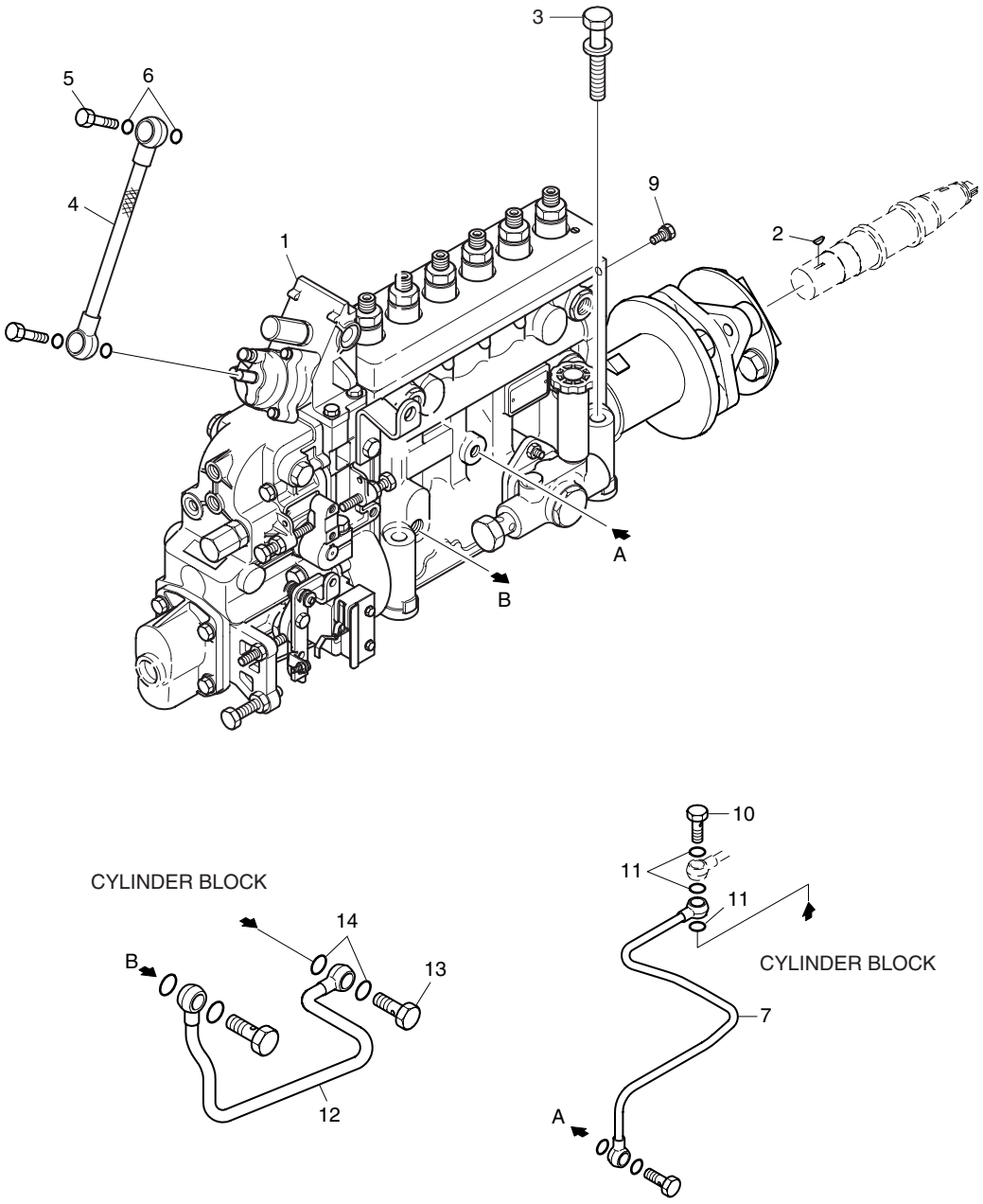

DATE	DEC. 15, 2006
REV. NO.	EXB06-13

Fig. 300 INJECTION PUMP POMPE D'INJECTION

Serial No. ;

Key No.	Part No.	Description	Description	Q'ty	S.C	Serial No.	ICA	Replaceable part	
								Part No.	Q'ty
300-1	65.11101-7368A	INJECTION PUMP	POMPE D'INJECTION	1					
2	06.29141-0215	KEY;WOODRUFF	CLAVETTE WOODRUFF	1					
3	06.01923-3228	BOLT ASS'Y M10X85	BOULON A 6PANS	4					
4	65.08301-6012	AIR HOSE ASS'Y	TUYAU	1					
5	65.98150-0053B	SCREW;HOLLOW	VIS CREUSE	1					
6	06.56180-0714	RING;SEAL	BAGUE D'ETANCHEITE	2					
7	65.05701-5313	PIPE;OIL	TUYAU D'HUILE	1					
9	06.01923-2910	BOLT ASS'Y M6X12	BOULON A 6PANS	1					
10	65.98150-0050	SCREW;HOLLOW	VIS CREUSE	1					
11	06.56180-0714	RING;SEAL	BAGUE D'ETANCHEITE	3					
12	65.05701-5624	PIPE;OIL	TUYAU D'HUILE	1					
13	06.78144-2204	SCREW;HOLLOW	VIS CREUSE	1					
14	06.56190-0706	RING;SEAL	BAGUE D'ETANCHEITE	2					

DATE	JUN. 30, 2007
REV. NO.	EXB07-06

Fig. 310 INJECTION PUMP DRIVE
LECTEUR DE POMPE D'CLNJECTION

Serial No. ;

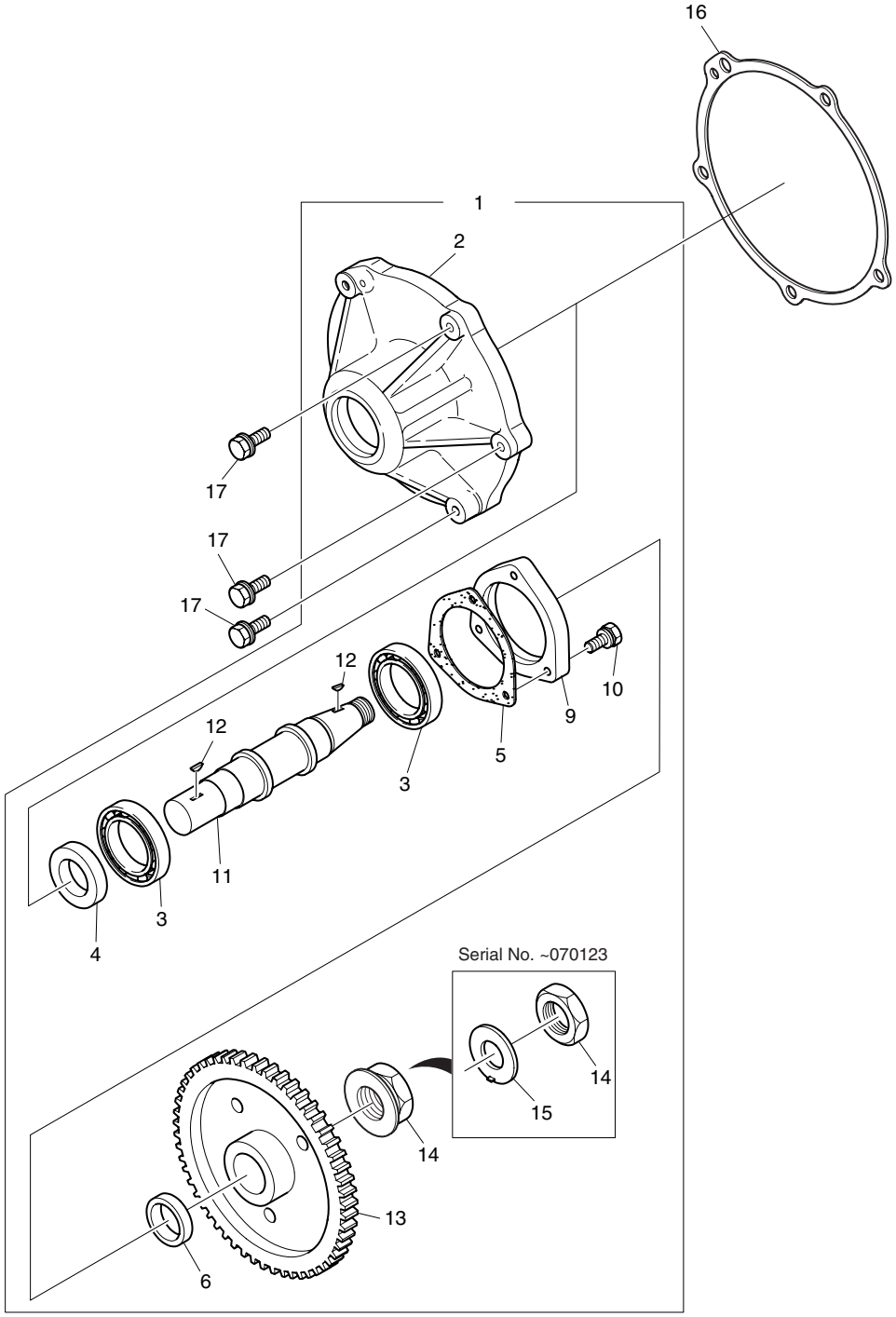

DATE	JUN. 30, 2007
REV. NO.	EXB07-06

Fig. 310 INJECTION PUMP DRIVE
LECTEUR DE POMPE D'CLNJECTION

Serial No. ;

Key No.	Part No.	Description	Description	Q'ty	S.C	Serial No.	ICA	Replaceable part	
								Part No.	Q'ty
310-1	65.11301-7010F	INJECTION DRIVE ASS'Y	CARTER DE PALIER	1		~051102	Y	65.11301-7010G	1
	65.11301-7010G	INJECTION DRIVE ASS'Y	CARTER DE PALIER	1		~070123			
	65.11301-7019A	**INJECTION DRIVE ASS'Y**	CARTER DE PALIER	1		070124~			
2	65.11309-0007A	. HOUSING;INJECTION DRIVE	. CARTER	1	D	~070123			
	65.11309-0011C	**. HOUSING;INJECTION DRIVE**	. CARTER	1	D	070124~			
3	06.32092-0307	. BEARING;TAPER ROLLER	. ROULEMENT A ROULEAUX	2		~070123			
	06.32092-0308	**. BEARING;TAPER ROLLER**	. ROULEMENT A ROULEAUX	2		070124~			
4	65.01510-0039	. SEAL;OIL	. RONDELLE D'ETANCHEITE	1		~070123			
	65.01510-0038	**. SEAL;OIL**	. RONDELLE D'ETANCHEITE	1		070124~			
5	65.11308-0001	. SHIM 0.50mm	. CALE	1	R				
	65.11308-0002	. SHIM 0.20mm	. CALE	1	R				
	65.11308-0003	. SHIM 0.15mm	. CALE	1	R				
	65.11308-0004	. SHIM 0.10mm	. CALE	1	R				
6	**65.91701-0219**	**. SPACER**	BAGUE D'ECARTEMENT	1		070124~			
9	65.11312-0007	. COVER	. COUVERCLE	1		~070123			
	65.11312-0008	**. COVER**	. COUVERCLE	1		070124~			
10	06.01913-3115	. BOLT ASS'Y M8X25	. BOULON A 6PANS	3					
11	65.11302-0009A	. SHAFT	. ARBRE D'ENTRAINEMENT	1		~051102	Y	65.11302-0009B	1
	65.11302-0009B	. SHAFT	. ARBRE D'ENTRAINEMENT	1		~070123			
	65.11302-0019A	**. SHAFT**	. ARBRE D'ENTRAINEMENT	1		070124~			
12	06.29141-0215	. KEY;WOODRUFF	. CLAVETTE WOODRUFF	1					
13	65.11301-0013C	. GEAR;INJECTION PUMP DRIVE	. PIGNON	1		~051102	Y	65.11301-0013D	1
	65.11301-0013D	. GEAR;INJECTION PUMP DRIVE	. PIGNON	1		~070123			
	65.11301-0026A	**. GEAR;INJECTION PUMP**	. PIGNON	1		070124~			
14	06.11250-4329	. NUT;HEX. M24X1.5	. ECROU	1		~070123			
	65.90640-0021	**. NUT;HEX. M24X1.5**	. ECROU	1		070124~			
15	**06.16050-0316**	**. WASHER;LOCK**	. RONDELLE FREIN	1		070124~			
16	65.11902-0017	GASKET	GARNITURE	1					
17	65.90020-0079	HEX. BOLT ASS'Y M10X35	BOULON A 6PANS	3					

DATE	DEC. 15, 2006
REV. NO.	EXB06-13

Fig. 320 INJECTION PUMP MOUNTING
SUPPORT DE POMPE D'INJECTION

Serial No. ;

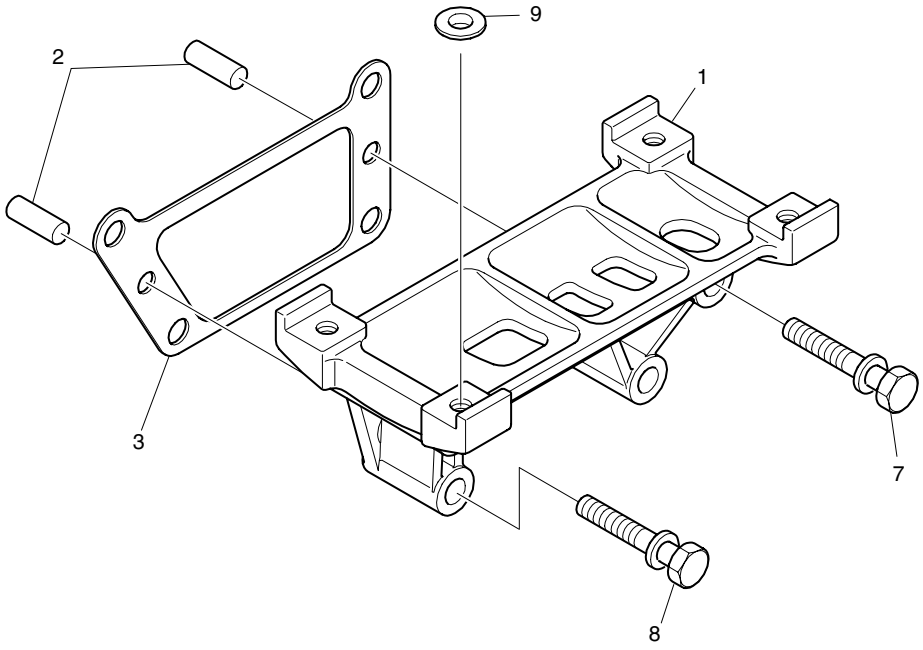

DATE	DEC. 15, 2006
REV. NO.	EXB06-13

Fig. 320 INJECTION PUMP MOUNTING SUPPORT DE POMPE D'INJECTION

Serial No. ;

Key No.	Part No.	Description	Description	Q'ty	S.C	Serial No.	ICA	Replaceable part	
								Part No.	Q'ty
320-1	65.11401-0033	BRACKET;INJECTION PUMP	SUPPORT	1					
2	06.22022-1112	PIN;DOWEL	GOUPILLE D'AJUSTAGE	2					
3	**65.11405-0005**	**SHIM 0.10mm**	CALE	1	R				
	65.11405-0006	**SHIM 0.15mm**	CALE	1	R				
	65.11405-0007	**SHIM 0.20mm**	CALE	1	R				
	65.11405-0008	**SHIM 0.50mm**	CALE	1	R				
7	06.01943-3332	BOLT ASS'Y M12X1.5X110	BOULON A 6PANS	2					
8	06.01943-7324	BOLT ASS'Y M12X65	BOULON A 6PANS	2					
9	**65.11405-0009**	**SHIM 0.10mm**	CALE	4	R				
	65.11405-0013	**SHIM 0.20mm**	CALE	4	R				
	65.11405-0010	**SHIM 0.30mm**	CALE	4	R				

DATE	DEC. 15, 2006
REV. NO.	EXB06-13

Fig. 330 FUEL PIPE
PIPE DE CARBURANT

Serial No. ;

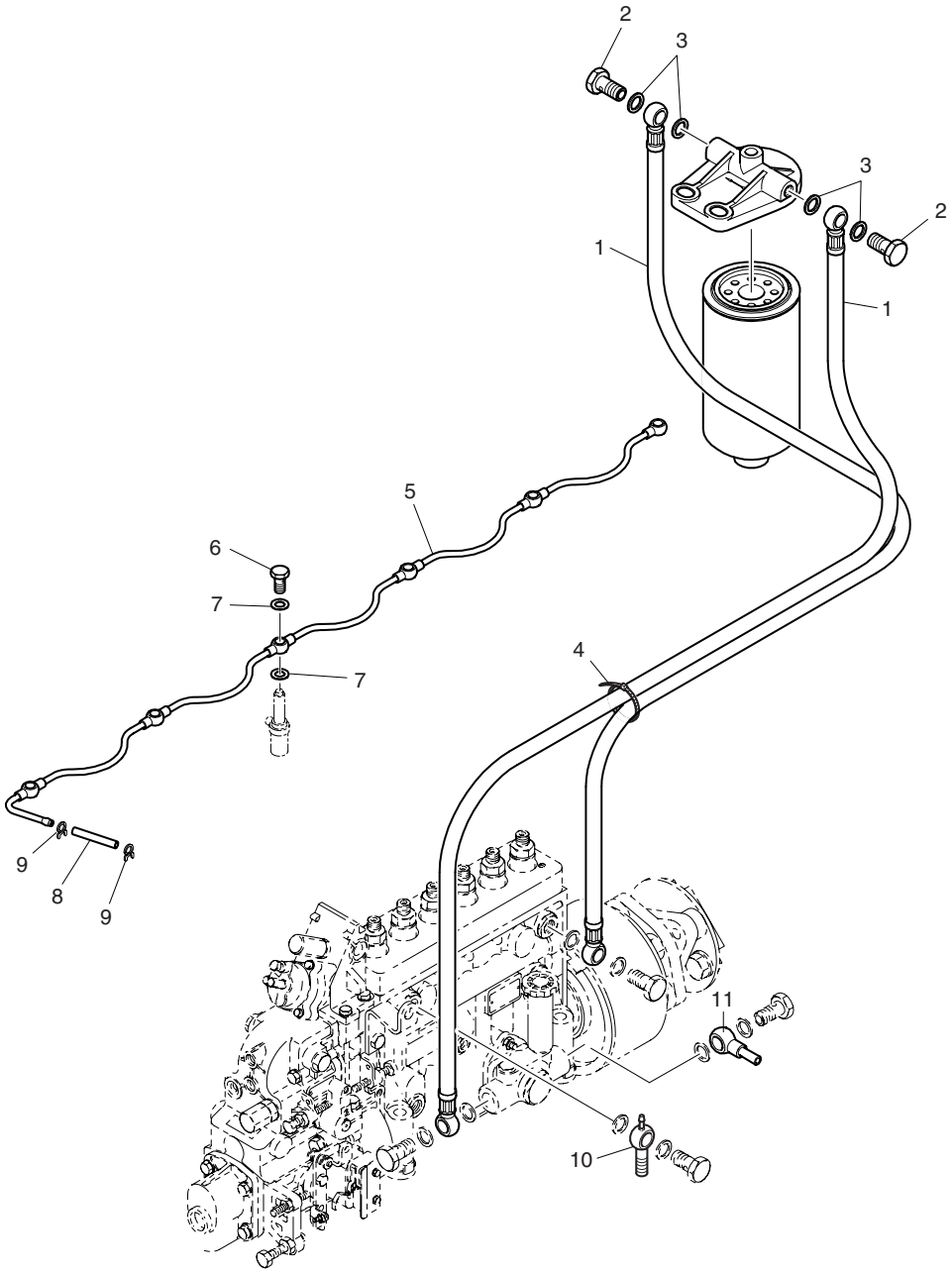

INJECTION PUMP

DATE	DEC. 15, 2006
REV. NO.	EXB06-13

Fig. 330 FUEL PIPE
PIPE DE CARBURANT

Serial No. ;

Key No.	Part No.	Description	Description	Q'ty	S.C	Serial No.	ICA	Replaceable part	
								Part No.	Q'ty
330-1	65.96341-0100	HOSE;FUEL	TUYAU A GAZOLE	2					
2	06.78144-2204	SCREW;HOLLOW	VIS CREUSE	4					
3	06.56190-0706	RING;SEAL	BAGUE D'ETANCHEITE	8					
4	65.97460-0001	BAND;TENSION	COLLIER	1					
5	65.12301-5165A	FUEL PIPE ASS'Y	CONDUITE	1					
6	65.98150-0042A	SCREW;HOLLOW	VIS CREUSE	6					
7	06.56180-0712	RING;SEAL	BAGUE D'ETANCHEITE	12					
8	65.96330-0132	HOSE;FUEL	TUYAU FLEXIBLE	1					
9	65.97445-0001	CLAMP	BRIDE	2					
10	65.98101-0008	UNION;DOUBLE BANJO	ENSEMBLE RACCORD	1					
11	65.12301-5022	PIPE;FUEL RETURN	CANALISATION DE GAZOLE	1					

DATE	JUN. 30, 2007
REV. NO.	EXB07-06

Fig. 340 FUEL FILTER
FILTRE A GAZOLE

Serial No. ;

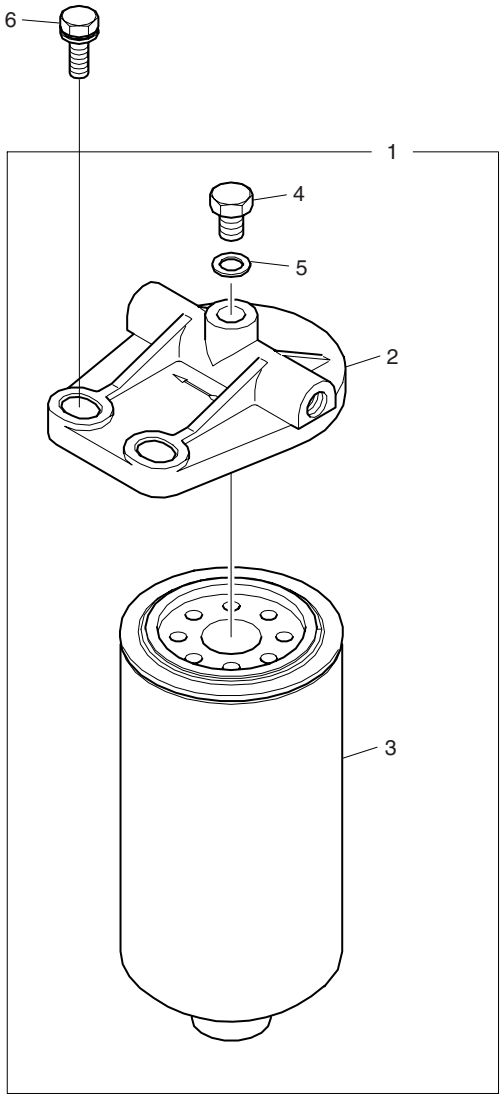

DATE	JUN. 30, 2007
REV. NO.	EXB07-06

Fig. 340 FUEL FILTER
FILTRE A GAZOLE

Serial No. ;

Key No.	Part No.	Description	Description	Q'ty	S.C	Serial No.	ICA	Replaceable part	
								Part No.	Q'ty
340-1	65.12501-7023	FUEL FILTER ASS'Y	FILTRE D'ESSENCE	1		~050522	Y	65.12501-7023A	1
	65.12501-7023A	FUEL FILTER ASS'Y	FILTRE D'ESSENCE	1		~070911	Y	65.12501-7023B	1
	65.12501-7023B	**FUEL FILTER ASS'Y**	FILTRE D'ESSENCE	1		070912~			
2	65.12504-5013A	. HEAD;FUEL FILTER	. COUVERCLE	1		~050522	Y	65.12504-5013B	1
	65.12504-5013B	. HEAD;FUEL FILTER	. COUVERCLE	1		050523~			
3	65.12503-5016	. ELEMENT;FUEL FILTER	. ELEMENT FILTRANT	1		~050522	Y	65.12503-5016A	1
	65.12503-5016A	. ELEMENT;FUEL FILTER	. ELEMENT FILTRANT	1		~070911	Y	65.12503-5016B	1
	65.12503-5016B	**. ELEMENT;FUEL FILTER**	. ELEMENT FILTRANT	1		070912~			
4	65.90310-0143	. SCREW;PLUG M10X1.5	. VIS	1					
5	06.56180-0716	. RING;SEAL	. BAGUE D'ETANCHEITE	1					
6	06.01953-3318	BOLT ASS'Y M12X1.5X35	BOULON A 6PANS	2					

DATE	DEC. 15, 2006
REV. NO.	EXB06-13

Fig. 350 ALTERNATOR MOUNTING SUPPORT D'ALTERNATEUR

Serial No. ;

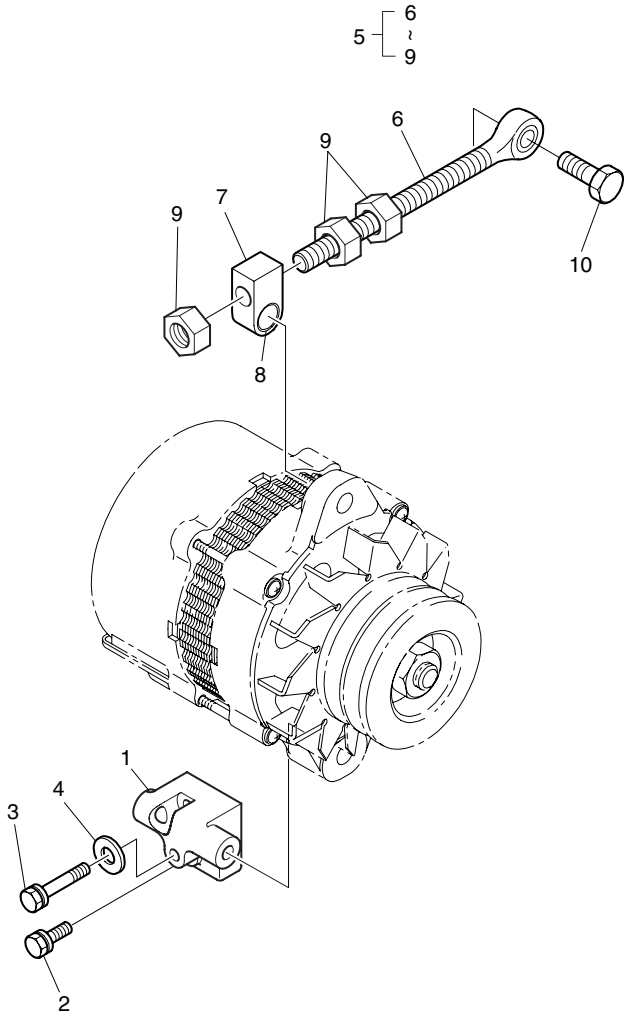

DATE	DEC. 15, 2006
REV. NO.	EXB06-13

Fig. 350 ALTERNATOR MOUNTING SUPPORT D'ALTERNATEUR

Serial No. ;

Key No.	Part No.	Description	Description	Q'ty	S.C	Serial No.	ICA	Replaceable part	
								Part No.	Q'ty
350-1	65.19102-0075	BRACKET;ALTERNATOR	SUPPORT	1					
2	06.01913-3219	BOLT ASS'Y M10X40	BOULON A 6PANS	2					
3	06.01013-9220	BOLT;HEX. M10X1.5X75	BOULON A 6PANS	1					
4	06.16731-2108	WASHER;SPRING	RONDELLE	1					
5	65.19103-6012	EYE BOLT ASS'Y	BOULON A 6PANS	1		~060927	Y	65.19103-6012A	1
	65.19103-6012A	**EYE BOLT ASS'Y**	BOULON A 6PANS	1		060928~			
6	65.90435-0011	. BOLT;EYE	. BOULON 6 PANS	1	D				
7	65.19107-0001	. PIECE;GUIDE	. GUIDE	1	D	~060927			
	65.19107-0001A	**. PIECE;GUIDE**	. GUIDE	1	D	060928~			
8	65.93020-0055	. BUSH	. AMPOULE	1	D				
9	06.11063-9217	. NUT;HEX.	. ECROU	3	D				
10	06.01943-3319	BOLT ASS'Y M12X1.5X40	BOULON A 6PANS	1					

DATE	JUN. 30, 2007
REV. NO.	EXB07-06

Fig. 360 STARTER DEMARREUR

Serial No. ;

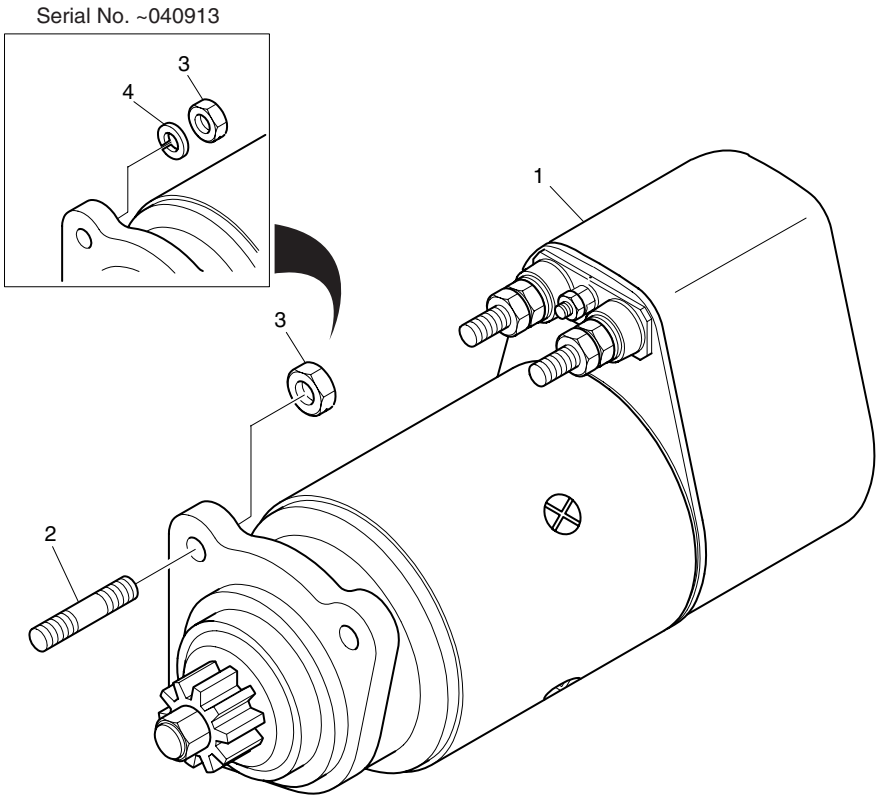

DATE	JUN. 30, 2007
REV. NO.	EXB07-06

Fig. 360 STARTER DEMARREUR

Serial No. ;

Key No.	Part No.	Description	Description	Q'ty	S.C	Serial No.	ICA	Replaceable part	
								Part No.	Q'ty
360-1	65.26201-7058A	STARTER(DAC)	DEMARREUR	1		~04913	I	65.26201-7074	1
	65.26201-7074	STARTER(DAC)	DEMARREUR	1		~070820	Y	65.26201-7074C	1
	65.26201-7074C	**STARTER(DAC)**	DEMARREUR	1		070821~			
2	06.06175-8308	BOLT;STUD M12X1.5X30	BOULON DE PLOT	3		~04913	I	06.06175-8309	3
	06.06175-8309	BOLT;STUD M12X1.5X35	BOULON DE PLOT	3		040914~			
3	06.11063-9216	NUT;HEX. M12X1.5	ECROU	3		~04913	I	65.90535-0005	3
	65.90535-0005	NUT;HEX. M12X1.5	ECROU	3		040914~			
4	06.16731-2109	WASHER;SPRING	RONDELLE ELASTIQUE	3		~040913			

DATE	DEC. 15, 2006
REV. NO.	EXB06-13

Fig. 370 PRESSURE GAUGE
INDICATEUR DE PRESSION

Serial No. ;

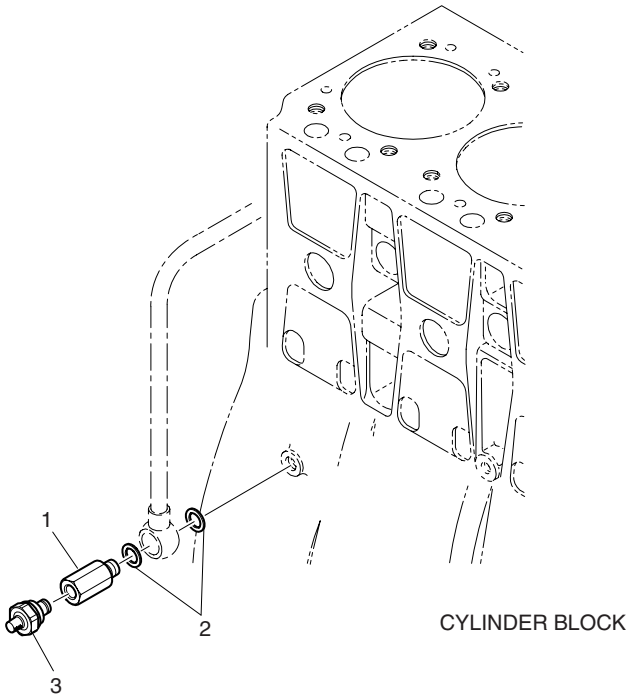

DATE	DEC. 15, 2006
REV. NO.	EXB06-13

Fig. 370 PRESSURE GAUGE INDICATEUR DE PRESSION

Serial No. ;

Key No.	Part No.	Description	Description	Q'ty	S.C	Serial No.	ICA	Replaceable part	
								Part No.	Q'ty
370-1	65.98150-0002	ADAPTER;OIL PRESSURE	ADAPTEUR	1					
2	06.56190-0704	RING;SEAL A12X18	BAGUE D'ETANCHEITE	2					
3	65.27441-7007	SWITCH;OIL PRESSURE	MANOCONTACT DE	1					

DATE	DEC. 15, 2006
REV. NO.	EXB06-13

Fig. 380 AIR CONDITIONER MONSIEUR CONDITIONER

Serial No. ;

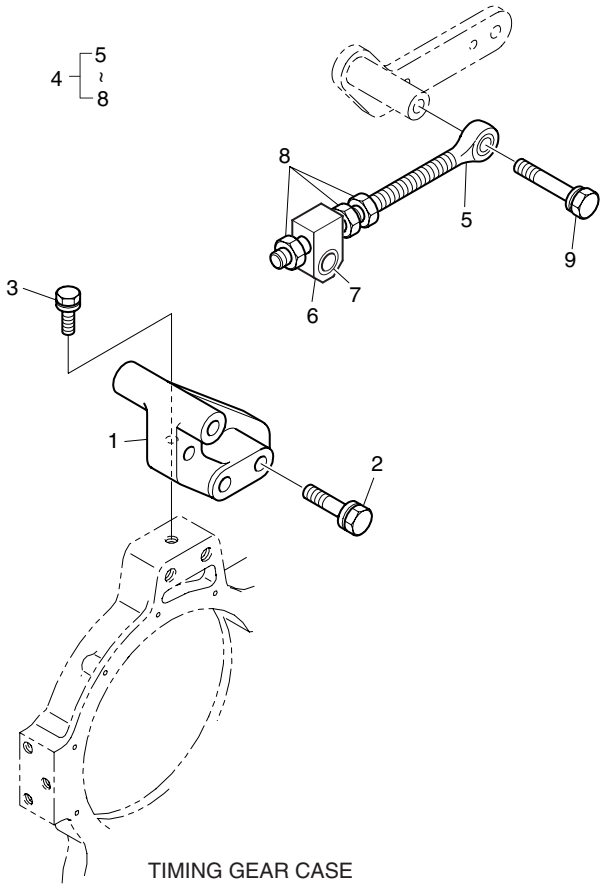

DATE	DEC. 15, 2006
REV. NO.	EXB06-13

Fig. 380 AIR CONDITIONER MONSIEUR CONDITIONER

Serial No. ;

Key No.	Part No.	Description	Description	Q'ty	S.C	Serial No.	ICA	Replaceable part	
								Part No.	Q'ty
380-1	65.28652-0013	BRACKET;AIR CON.COMP.	SUPPORT	1					
2	06.01943-3323	BOLT ASS'Y M12X1.5X60	BOULON A 6PANS	2					
3	06.01913-3217	BOLT ASS'Y M10X30	BOULON A 6PANS	1					
4	65.19103-6010	EYE BOLT ASS'Y	BOULON A 6PANS	1		~060526	Y	65.19103-6010A	1
	65.19103-6010A	**EYE BOLT ASS'Y**	BOULON A 6PANS	1		060527~			
5	65.90441-0009A	. BOLT;EYE	. BOULON A 6PANS	1	D				
6	65.19107-0001	. PIECE;GUIDE	. GUIDE	1	D	~060526			
	65.19107-0001A	**. PIECE;GUIDE**	. GUIDE	1	D	060527~			
7	65.93020-0055	. BUSH	. AMPOULE	1	D				
8	06.11063-9217	. NUT;HEX.	. ECROU	3	D				
9	06.01943-3319	BOLT ASS'Y M12X1.5X40	BOULON A 6PANS	1					

DATE	DEC. 15, 2006
REV. NO.	EXB06-13

Fig. 390 ENGINE MOUNTING
MOTAGE POUR MOTEUR

Serial No. ;

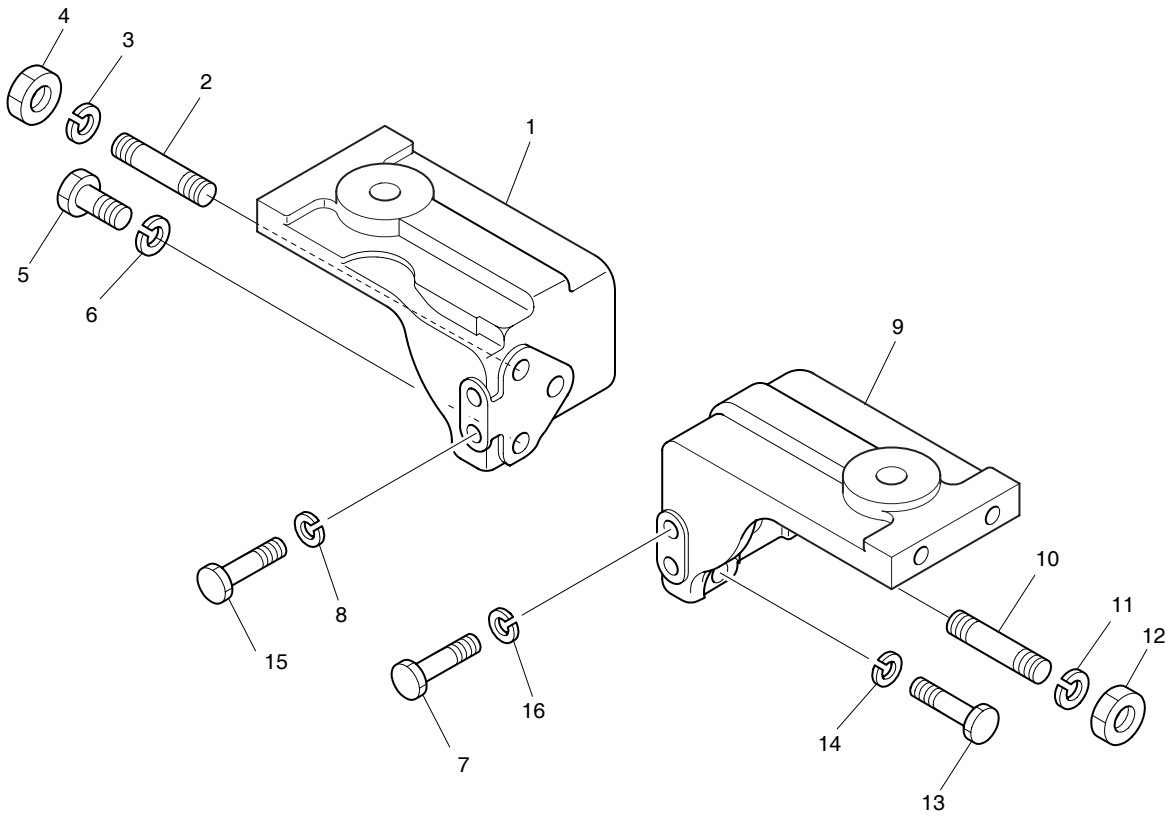

DATE	DEC. 15, 2006
REV. NO.	EXB06-13

Fig. 390 ENGINE MOUNTING
MOTAGE POUR MOTEUR

Serial No. ;

Key No.	Part No.	Description	Description	Q'ty	S.C	Serial No.	ICA	Replaceable part	
								Part No.	Q'ty
390-1	65.41530-0161	BRACKET;FRONT MOUNTING	SUPPORT	1		~060110	Y	65.41530-0161A	1
	65.41530-0161A	**BRACKET;FRONT MOUNTING**	SUPPORT	1		060111~			
2	65.90201-0063	BOLT;STUD M14X1.5X35	BOULON DE PLOT	1					
3	06.16731-2110	WASHER;SPRING	RONDELLE ELASTIQUE	1					
4	06.11063-9217	NUT;HEX.	ECROU	1					
5	06.01494-4414	BOLT;HEX. M14X1.5X75	BOULON A 6PANS	2					
6	06.16731-2110	WASHER;SPRING	RONDELLE ELASTIQUE	2					
7	06.01494-4414	BOLT;HEX. M14X1.5X75	BOULON A 6PANS	2					
8	06.16731-2110	WASHER;SPRING A14	RONDELLE ELASTIQUE	2					
9	65.41530-0162	BRACKET;FRONT MOUNTING	SUPPORT	1		~060110	Y	65.41530-0162A	1
	65.41530-0162A	**BRACKET;FRONT MOUNTING**	SUPPORT	1		060111~			
10	65.90201-0063	BOLT;STUD M14X1.5X35	BOULON DE PLOT	1					
11	06.16731-2110	WASHER;SPRING	RONDELLE ELASTIQUE	1					
12	06.11063-9217	NUT;HEX.	ECROU	1					
13	06.01494-4410	BOLT;HEX. M14X1.5X55	BOULON A 6PANS	2					
14	06.16731-2110	WASHER;SPRING	RONDELLE ELASTIQUE	2					
15	06.01494-4416	BOLT;HEX. M14X1.5X85	BOULON A 6PANS	2					
16	06.16731-2110	WASHER;SPRING	RONDELLE ELASTIQUE	2					

DATE	DEC. 15, 2006
REV. NO.	EXB06-13

Fig. 400 OVER HAUL GASKET KIT-TOP PIECES DE RECHANGE

Serial No. ;

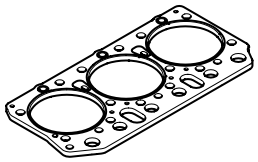

1

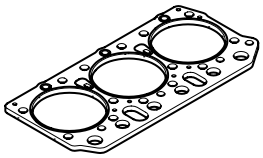

2



3

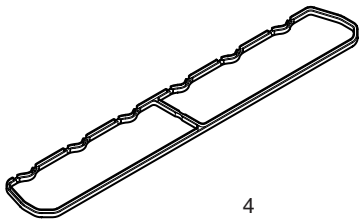

4



5



6



7



8



9



10

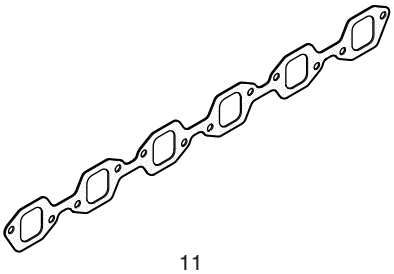

11

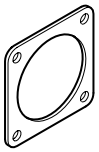

12



13



14



15



16



TIER-I TIER-II

17



18



19

DATE	DEC. 15, 2006
REV. NO.	EXB06-13

Fig. 400 OVER HAUL GASKET KIT-TOP PIECES DE RECHANGE

Serial No. ;

Key No.	Part No.	Description	Description	Q'ty	S.C	Serial No.	ICA	Replaceable part	
								Part No.	Q'ty
400--	65.99605-8028	OVER HAUL GASKET KIT-TOP	PIECES DE RECHANGE	1					
1	65.03901-0063B	GASKET;CYLINDER HEAD	JOINT	1		~051017	Y	65.03901-0072	1
	65.03901-0072	**GASKET;CYLINDER HEAD**	JOINT	1		051018~			
2	65.03901-0064B	GASKET;CYLINDER HEAD	JOINT	1		~051017	Y	65.03901-0073	1
	65.03901-0073	**GASKET;CYLINDER HEAD**	JOINT	1		051018~			
3	65.03905-0023A	GASKET;CYLINDER HEAD COVER	JOINT	6					
4	65.03905-0020	PACKING	RONDELLE ETANCHE	1					
5	65.96501-0033B	O-RING	JONT TORIQUE	1					
6	65.04902-0010	SEAL;VALVE STEM	JOINT	12					
7	65.06903-0018	GASKET;COOLING WATER PIPE	JOINT	2		~040827			
	65.06903-0028	**GASKET;COOLING WATER**	JOINT	2		040828~			
8	65.96501-0069	O-RING	JONT TORIQUE	6					
9	06.56342-1208	O-RING	JONT TORIQUE	2					
10	65.08901A0012	GASKET;EXHAUST MANIFOLD	JOINT	6		~051130	I	65.08901-0044	6
	65.08901-0044	**GASKET;EXHAUST**	JOINT	6		051131~			
11	65.08902-0025	GASKET;INTAKE MANIFOLD	JOINT	1					
12	65.09904-0008	GASKET;AIR PIPE	JOINT	2					
13	65.09901-0033	GASKET;TURBO CHARGER	JOINT	1					
14	65.08901-0063	GASKET;EXHAUST ELBOW	JOINT	1					
15	65.96601-0045A	GASKET;T/C OIL RETURN(UP)	JOINT	1		~060530	I	65.96601-0067	1
	65.96601-0067	**GASKET;T/C OIL RETURN(UP)**	JOINT	1		060531~			
16	65.96601-0046A	GASKET;OIL PIPE ADAPTER	JOINT	1		~060530	Y	65.96601-0046B	1
	65.96601-0046B	**GASKET;OIL PIPE ADAPTER**	JOINT	1		060531~			
17	65.98701-0010	SEAL;RING (TIER-I)	JOINT	6					
	65.98701-0012	SEAL;RING (TIER-II)	JOINT	6					
18	65.96401-0011	SEAL;DUST NOZZLE (TIER-I)	JOINT	6					
	65.96401-0012	SEAL;DUST NOZZLE (TIER-II)	JOINT	6					
19	06.56180-0712	SEAL;RING	BAGUE D'ETANCHEITE	12					

DATE	DEC. 15, 2006
REV. NO.	EXB06-13

Fig. 410 OVER HAUL GASKET KIT-ALL PIECES DE RECHANGE

Serial No. ;

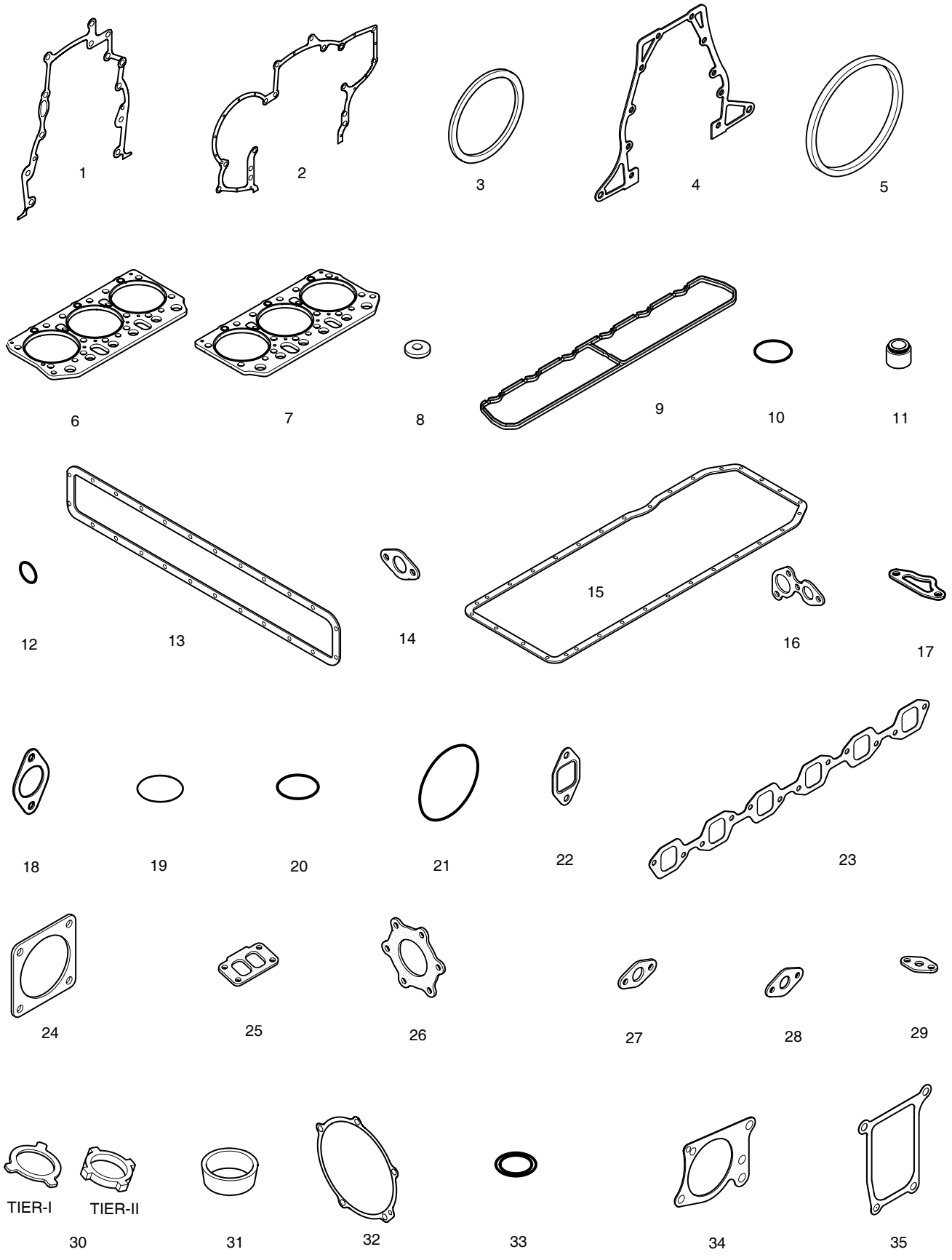

DATE	DEC. 15, 2006
REV. NO.	EXB06-13

Fig. 410 OVER HAUL GASKET KIT-ALL PIECES DE RECHANGE

Serial No. ;

Key No.	Part No.	Description	Description	Q'ty	S.C	Serial No.	ICA	Replaceable part	
								Part No.	Q'ty
410--	65.99601-8042	OVER HAUL GASKET KIT-ALL	PIECES DE RECHANGE	1					
1	65.01903-0048B	GASKET	JOINT	1					
2	65.01903-0050	GASKET;TIMING GEAR CASE	JOINT	1					
3	65.01510-0157	SEAL;OIL	JOINT	1					
4	65.01904-0022A	GASKET;FLYWHEEL HOUSING	JOINT	1					
5	65.01510-0158	SEAL;OIL	JOINT	1					
6	65.03901-0063B	GASKET;CYLINDER HEAD	JOINT	1		~051017	Y	65.03901-0072	1
	65.03901-0072	**GASKET;CYLINDER HEAD**	JOINT	1		051018~			
7	65.03901-0064B	GASKET;CYLINDER HEAD	JOINT	1		~051017	Y	65.03901-0073	1
	65.03901-0073	**GASKET;CYLINDER HEAD**	JOINT	1		051018~			
8	65.03905-0023A	GASKET;CYLINDER HEAD COVER	JOINT	6					
9	65.03905-0020	PACKING	RONDELLE ETANCHE	1					
10	65.96501-0033B	O-RING	JONT TORIQUE	1					
11	65.04902-0010	SEAL;VALVE STEM	JOINT	12					
12	65.96501-0061	O-RING	JONT TORIQUE	2					
13	65.01907-0008A	GASKET	JOINT	1					
14	65.05903-0030A	GASKET	JOINT	2					
15	65.05904-0096A	GASKET;OIL PAN	JOINT	1					
16	65.05903-0027A	GASKET	JOINT	1					
17	65.06903-0018	GASKET;COOLING WATER PIPE	JOINT	2		~040827			
	65.06903-0028	**GASKET;COOLING WATER**	JOINT	2		040828~			
18	65.06903-0020	GASKET(WATER & C/W PIPE)	JOINT	1		~061023	Y	65.06903-0020A	1
	65.06903-0020A	**GASKET(WATER & C/W PIPE)**	JOINT	1		061024~			
19	65.06901A0069	GASKET	JOINT	2					
20	06.56342-1208	O-RING	JONT TORIQUE	2					
21	65.96501-0068	O-RING;WATER PUMP	JONT TORIQUE	1					
22	65.08901A0012	GASKET;EXHAUST MANIFOLD	JOINT	6		~051130	I	65.08901-0044	6
	65.08901-0044	**GASKET;EXHAUST**	JOINT	6		051131~			
23	65.08902-0025	GASKET;INTAKE MANIFOLD	JOINT	1					
24	65.09904-0008	GASKET;AIR PIPE	JOINT	2					
25	65.09901-0033	GASKET;TURBO CHARGER	JOINT	1					
26	65.08901-0063	GASKET;EXHAUST ELBOW	JOINT	1					
27	65.96601-0045A	GASKET;T/C OIL RETURN(UP)	JOINT	1		~060530	I	65.96601-0067	1
	65.96601-0067	**GASKET;T/C OIL RETURN(UP)**	JOINT	1		060531~			
28	65.96601-0012	GASKET;T/C OIL RETURN	JOINT	1					
29	65.96601-0046A	GASKET;OIL PIPE ADAPTER	JOINT	1		~060530	Y	65.96601-0046B	1
	65.96601-0046B	**GASKET;OIL PIPE ADAPTER**	JOINT	1		060531~			
30	65.98701-0010	SEAL;RING (TIER-I)	JOINT	6					

DATE	DEC. 15, 2006
REV. NO.	EXB06-13

Fig. 410 OVER HAUL GASKET KIT-ALL PIECES DE RECHANGE

Serial No. ;

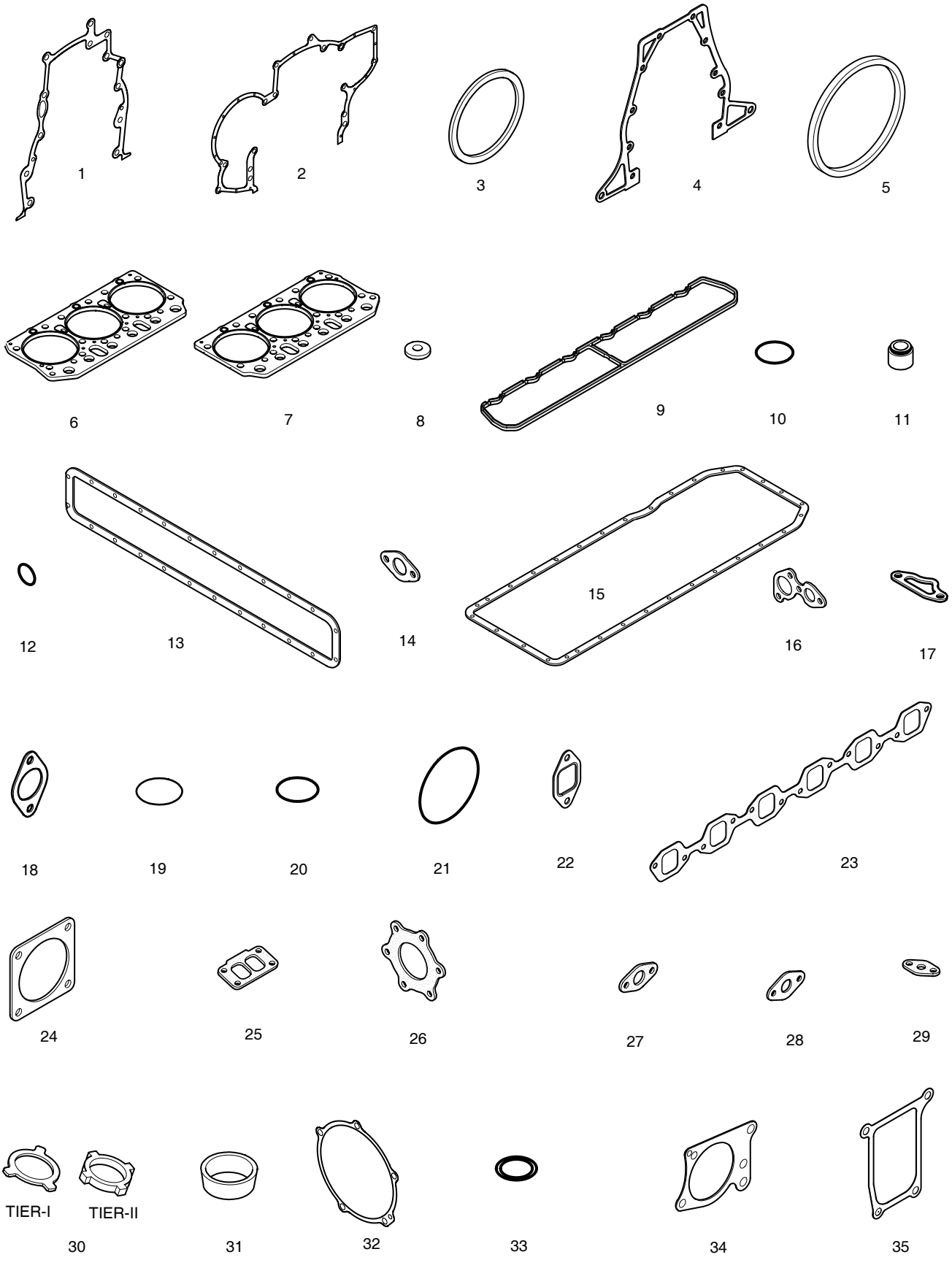

DATE	DEC. 15, 2006
REV. NO.	EXB06-13

Fig. 410 OVER HAUL GASKET KIT-ALL PIECES DE RECHANGE

Serial No. ;

Key No.	Part No.	Description	Description	Q'ty	S.C	Serial No.	ICA	Replaceable part	
								Part No.	Q'ty
410-30	65.98701-0012	SEAL;RING (TIER-II)	JOINT	6					
31	65.96401-0011	SEAL;DUST NOZZLE (TIER-I)	JOINT	6					
	65.96401-0012	SEAL;DUST NOZZLE (TIER-II)	JOINT	6					
32	65.11902-0017	GASKET;MOUNTING FLANGE	JOINT	1					
33	06.56180-0712	SEAL;RING	JOINT	12					
34	65.47901-0010	GASKET;P/S PUMP	JOINT	1					
35	65.54901-0025A	GASKET;AIR COMPRESSOR	JOINT	1					

DATE	JUN. 30, 2007
REV. NO.	EXB07-06

Fig. 1100 MAIN FRAME
BATI PRINCIPAL

Serial No. ;

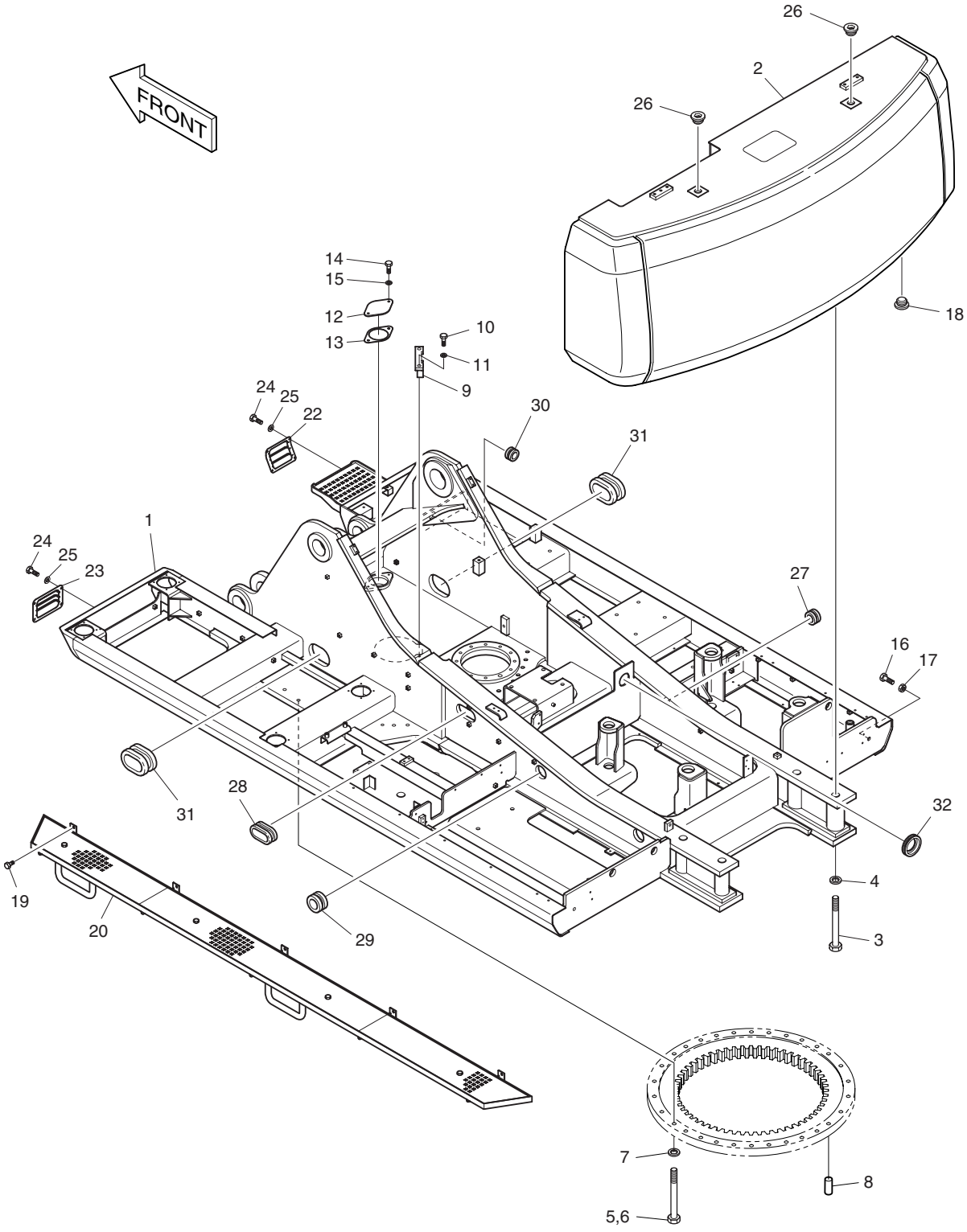

DATE	JUN. 30, 2007
REV. NO.	EXB07-06

Fig. 1100 MAIN FRAME BATI PRINCIPAL

Serial No. ;

Key No.	Part No.	Description	Description	Q'ty	S.C	Serial No.	ICA	Replaceable part	
								Part No.	Q'ty
1100--	**600-00078A**	**FRAME ASS'Y**	BATI PRINCIPAL	-	D				
1	603-00102	FRAME;MAIN	BATI PRINCIPAL	1		1001–1832	I	603-00102A	1
	603-00102A	**FRAME;MAIN**	BATI PRINCIPAL	1		**1833–**			
2	624-00033H	WEIGHT;COUNTER	MASSE D'EQUILIBRAGE	1		1001–1363	I	624-00033J	1
	624-00033J	WEIGHT;COUNTER	MASSE D'EQUILIBRAGE	1		1364–			
3	120-00271	BOLT M39X3.0X350	BOULON A 6 PANS	4		1001–1267	I	120-00271A	4
	120-00271A	BOLT M39X3.0X350	BOULON A 6 PANS	4		1268–			
4	114-00055	WASHER;HARDEN	RODELLE	4					
5	120-00046	BOLT M24X2.0X165	BOULON A 6PANS	30		1001–1267	I	120-00046A	30
	120-00046A	BOLT M24X2.0X165	BOULON A 6PANS	30		1268–			
6	S0776261	BOLT M24X2.0X160	BOULON A 6PANS	14					
7	2114-1831A	WASHER;HARD	RONDELLE	44					
8	2123-1107D4	PIN;KNOCK(SWING BEARING)	BROCHE	2					
9	195-01648	BRACKET	SUPPORT	1					
10	S0521456	BOLT M16X2.0X40	BOULON A 6PANS	2					
11	S5102903	WASHER;SPRING	RONDELLE ELASTIQUE	2					
12	2403-1002	PLATE	COUVERCLE	1					
13	2180-1017A	PACKING	RONDELLE ETANCHE	1					
14	S0511853	BOLT M10X1.5X20	BOULON A 6PANS	2					
15	S5102603	WASHER;SPRING M10	RONDELLE ELASTIQUE	2					
16	S0534261	BOLT M24X3.0X80	BOULON A 6PANS	2		1001–1267	I	S0534266	2
	S0534266	BOLT M24X3.0X80	BOULON A 6PANS	2		1268–			
17	S4013333	NUT	ECROU	2					
18	2160-9033	CAP	CHAPEAU	4					
19	2120-2196D8	BOLT;SET M12X1.75X30	BOULON A 6PANS	10					
20	625-00078B	STEP	MARCHER	1					
22	621-01527A	COVER;LAMP	COUVERTURE	1					
23	621-01579A	COVER;LAMP	COUVERTURE	1					
24	S0508853	BOLT M8X1.25X20	BOULON A 6PANS	8					
25	S5010513	WASHER;PLAIN M8	RONDELLE M8	8					
26	2160-9034	CAP	CHAPEAU	2					
27	2160-1004D41	BUSHING;RUBBER	MANCHON CAOUTCHOUC	1					
28	2160-1201D25	BUSHING;RUBBER	MANCHON CAOUTCHOUC	1					
29	2160-1004D42	BUSHING;RUBBER	MANCHON CAOUTCHOUC	1					
30	2160-1004D34	BUSHING;RUBBER	MANCHON CAOUTCHOUC	1					
31	2160-1201D9	BUSHING;RUBBER	MANCHON CAOUTCHOUC	2					
32	160-00039	BUSHING;RUBBER	MANCHON CAOUTCHOUC	1					

DATE	JUN. 30, 2004
REV. NO.	EXB04-04

Fig. 1110 COUNTER WEIGHT-ADDITIONAL CONTRE-POIDS

Serial No. ;

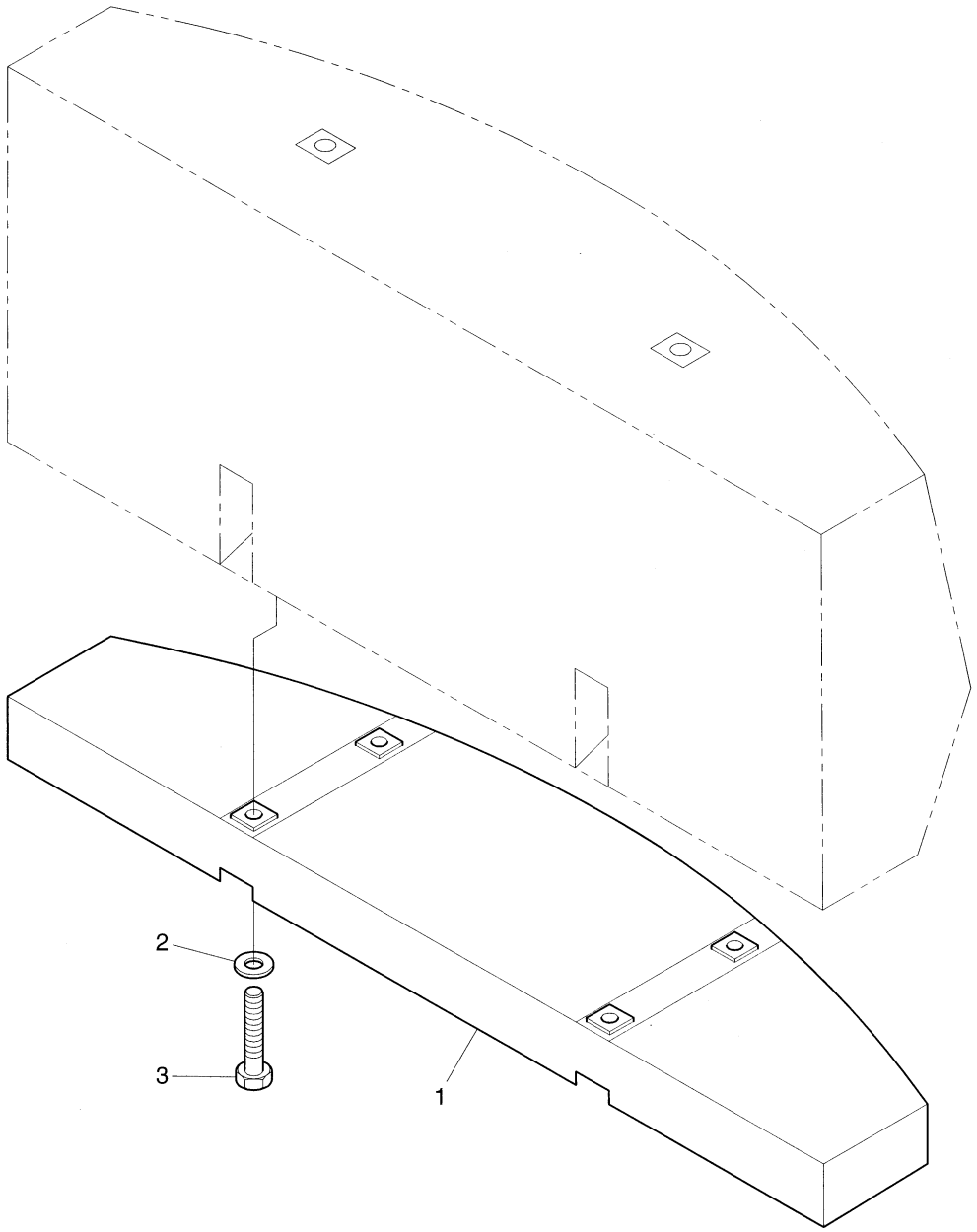

DATE	JUN. 30, 2004
REV. NO.	EXB04-04

Fig. 1110 COUNTER WEIGHT-ADDITIONAL CONTRE-POIDS

Serial No ;

Key No.	Part No.	Description	Description	Q'ty	S.C	Serial No.	ICA	Replaceable part	
								Part No.	Q'ty
1110--	624-00052	COUNTER;WEIGHT	MASSE D'EQUILIBRAGE	-	D				
1	624-00053A	COUNTER;WEIGHT	MASSE D'EQUILIBRAGE	1					
2	114-00055	WASHER;HARDEN	RONDELLE ELASTIQUE	4					
3	120-00284	BOLT M39X3.0X280	BOULON A 6 PANS	4		1001–1364	I	120-00284A	4
	120-00284A	**BOLT M39X3.0X280**	BOULON A 6 PANS	4		**1365–**			

DATE	DEC. 29, 2005
REV. NO.	EXB05-20

Fig. 1120 ENGINE MOUNTING MOTEUR

Serial No. ;

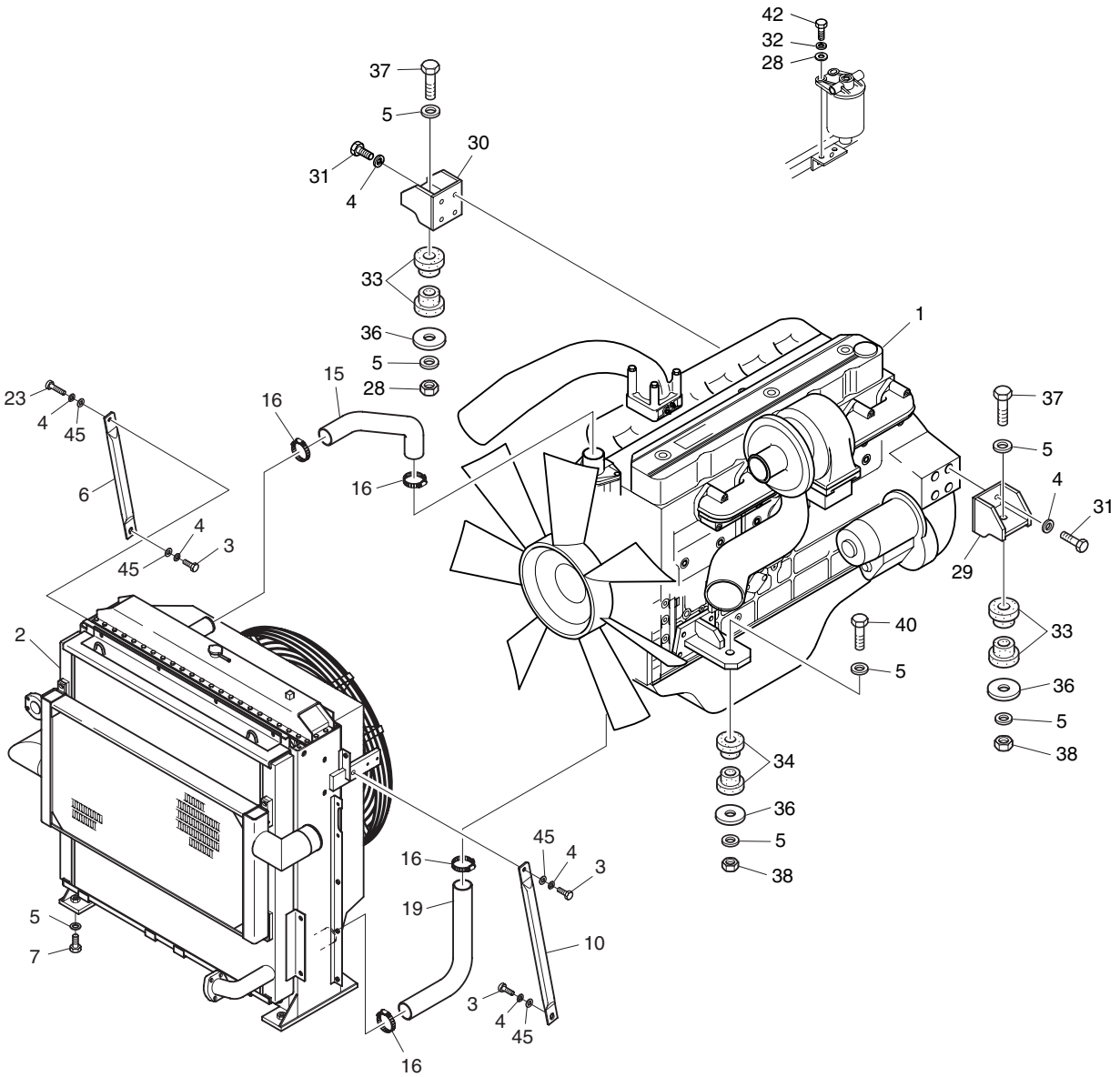

DATE	DEC. 29, 2005
REV. NO.	EXB05-20

Fig. 1120 ENGINE MOUNTING MOTEUR

Serial No ;

Key No.	Part No.	Description	Description	Q'ty	S.C	Serial No.	ICA	Replaceable part	
								Part No.	Q'ty
1120--	201-00084	ENGINE ASS'Y	MOTEUR	-	D				
1	201-00083	ENGINE(DE12TIS)	MOTEUR	1					
2	202-00075B	RADIATOR ASS'Y	RADIATEUR	1		1001–1227	I	202-00075C	1
	202-00075C	RADIATOR ASS'Y	RADIATEUR	1		1228–1418	I	202-00075E	1
	202-00075E	RADIATOR ASS'Y	RADIATEUR	1		1419–			
3	S0521466	BOLT M16X2.0X40	BOULON A 6PANS	3					
4	S5102903	WASHER;SPRING	RONDELLE ELASTIQUE	12					
5	2114-9012A	WASHER;HARDEN	RONDELLE	12					
6	145-00048A	STAY	ENTRETOISE	1					
7	S0569866	BOLT M20X2.5X50	BOULON A 6PANS	4					
10	145-00049A	STAY	ENTRETOISE	1					
15	2185-1740	HOSE;WATER	TUYAU FLEXIBLE	1					
16	S8470065	CLAMP;HOSE	COLLIER	4					
19	185-00254	HOSE;WATER	TUYAU FLEXIBLE	1					
23	S0565666	BOLT M16X2.0X70	BOULON A 6PANS	1					
28	S5010713	WASHER;PLAIN M12	RONDELLE	6					
29	195-01584A	BRACKET	SUPPORT	1					
30	195-01585B	BRACKET	SUPPORT	1					
31	S0765066	BOLT M16X2.0X70	BOULON A 6PANS	8					
32	S5102703	WASHER;SPRING M12	RONDELLE ELASTIQUE	2					
33	2161-9065	RUBBER;REAR	CAOUTCHOUC	4		1001–1591	I	161-00551	4
	161-00551	**RUBBER;REAR**	CAOUTCHOUC	4		**1592–**			
34	2161-9066	RUBBER;FRONT	CAOUTCHOUC	4		1001–1603	I	161-00548	4
	161-00548	**RUBBER;FRONT**	CAOUTCHOUC	4		**1604–**			
36	2114-1929	WASHER	RONDELLE PLATE	4					
37	S0771566	BOLT M20X1.5X140	BOULON A 6PANS	2		1001–1394			
	S0771466	BOLT M20X1.5X130	BOULON A 6PANS	2		1395–			
38	121-00066	NUT;LOCK	ECROU	4					
40	S0771766	BOLT M20X1.5X160	BOULON A 6PANS	2		1001–1394			
	S0771666	BOLT M20X1.5X150	BOULON A 6PANS	2		1395–			
42	S0560553	BOLT M12X1.75X40	BOULON A 6PANS	2					
45	S5010913	WASHER;PLAIN M16X18X30X3.2	RONDELLE PLATE	4					

DATE	JUN. 30, 2005
REV. NO.	EXB05-05

Fig. 1130 RADIATOR RADIATEUR

Serial No. ;

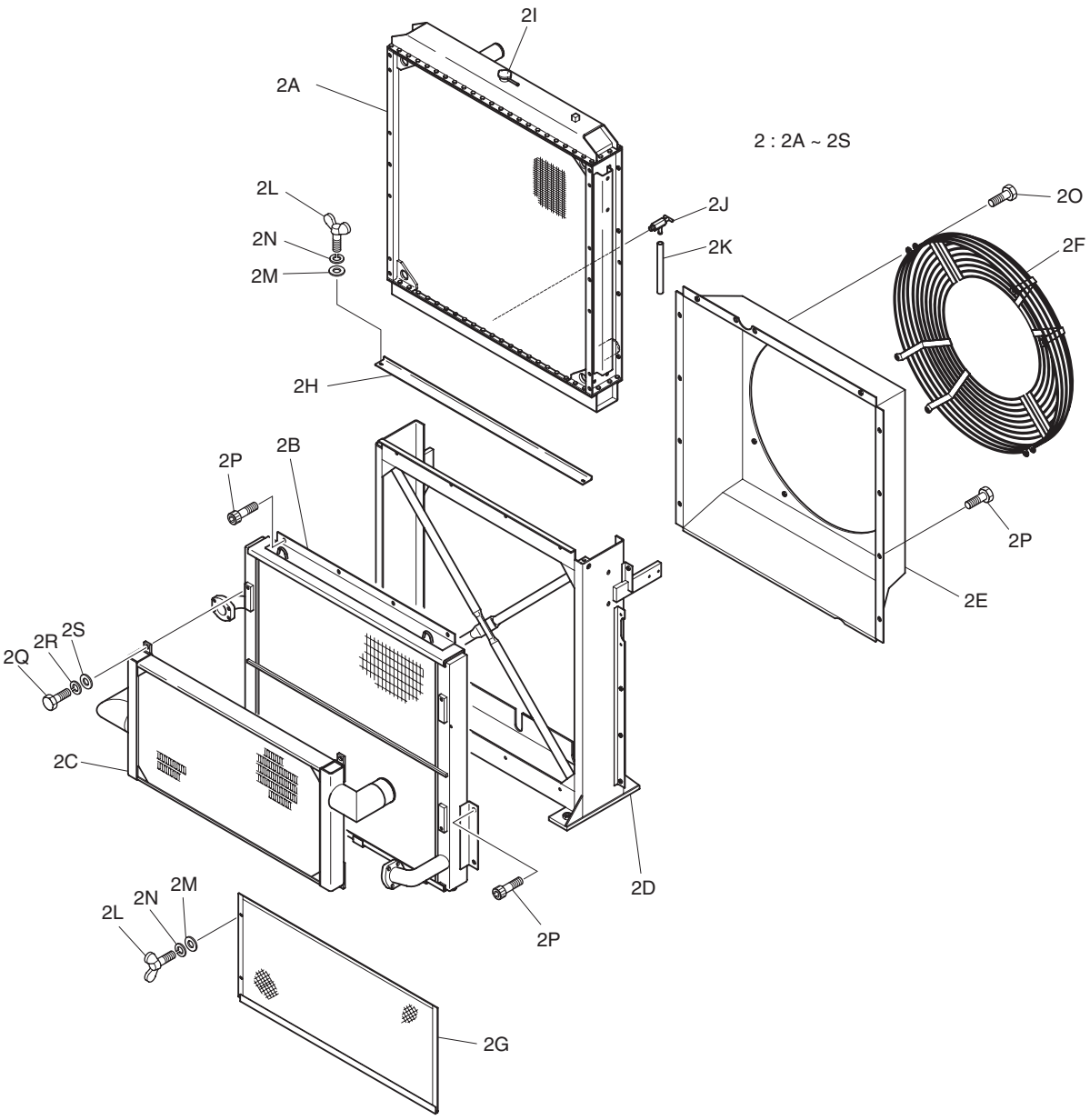

DATE	JUN. 30, 2005
REV. NO.	EXB05-05

Fig. 1130 RADIATOR RADIATEUR

Serial No ;

Key No.	Part No.	Description	Description	Q'ty	S.C	Serial No.	ICA	Replaceable part	
								Part No.	Q'ty
1130--	201-00084	ENGINE ASS'Y	MOTEUR	-	D				
2	202-00075B	RADIATOR ASS'Y	RADIATEUR	1		1001–1227	I	202-00075C	1
	202-00075C	**RADIATOR ASS'Y**	RADIATEUR	1		**1228–1418**	I	202-00075E	1
	202-00075E	**RADIATOR ASS'Y**	RADIATEUR	1		**1419–**			
2A	13F51000	. RADIATOR ASS'Y	. RADIATEUR	1					
2B	13F52000	. OIL COOLER ASS'Y	. REFROIDISSEUR D'HUILE	1		1001–1418	I	13F52000A	1
	13F52000A	**. OIL COOLER ASS'Y**	. REFROIDISSEUR D'HUILE	1		**1419–**			
2C	13F53000	. CAC ASS'Y	. REFRIGERATION	1					
2D	13F54000	. FRAME ASS'Y	. BATI	1					
2E	13F55000	. SHROUD ASS'Y	. ARITER	1					
2F	13F56000	. FAN GUARD ASS'Y	. ABRITER	2					
2G	13F57000	. WIRE NET ASS'Y	. CABLE	2					
2H	13F58000	. TOP PLATE	. PLAQUE	1					
2I	P06A	. CAP ASS'Y	. BOUCHON	1					
2J	P04	. DRAIN COCK ASS'Y	. ROBINET	1					
2K	P03	. DRAIN HOSE	. TUYAU FLEXIBLE	1					
2L	P1106	. BOLT;WING M6X1.0X15	. BOULON A 6PANS	6					
2M	P1306	. WASHER;PLAIN	. RONDELLE	6					
2N	P1406	. WASHER;SPRING	. RONDELLE ELASTIQUE	6					
2O	P1108	. BOLT M81.25X20	. BOULON A 6PANS	8					
2P	P1110	. BOLT M10X1.25X25	. BOULON A 6PANS	24					
2Q	P1110	. BOLT M12X1.75X30	. BOULON A 6PANS	4					
2R	P1210	. WASHER;PLAIN	. RONDELLE PLATE	4					
2S	P1210	. WASHER;SPRING	. RONDELLE ELASTIQUE	4					

DATE	JUN. 30, 2006
REV. NO.	EXB06-08

Fig. 1140 RESERVE TANK RESERVOIR

Serial No. ;

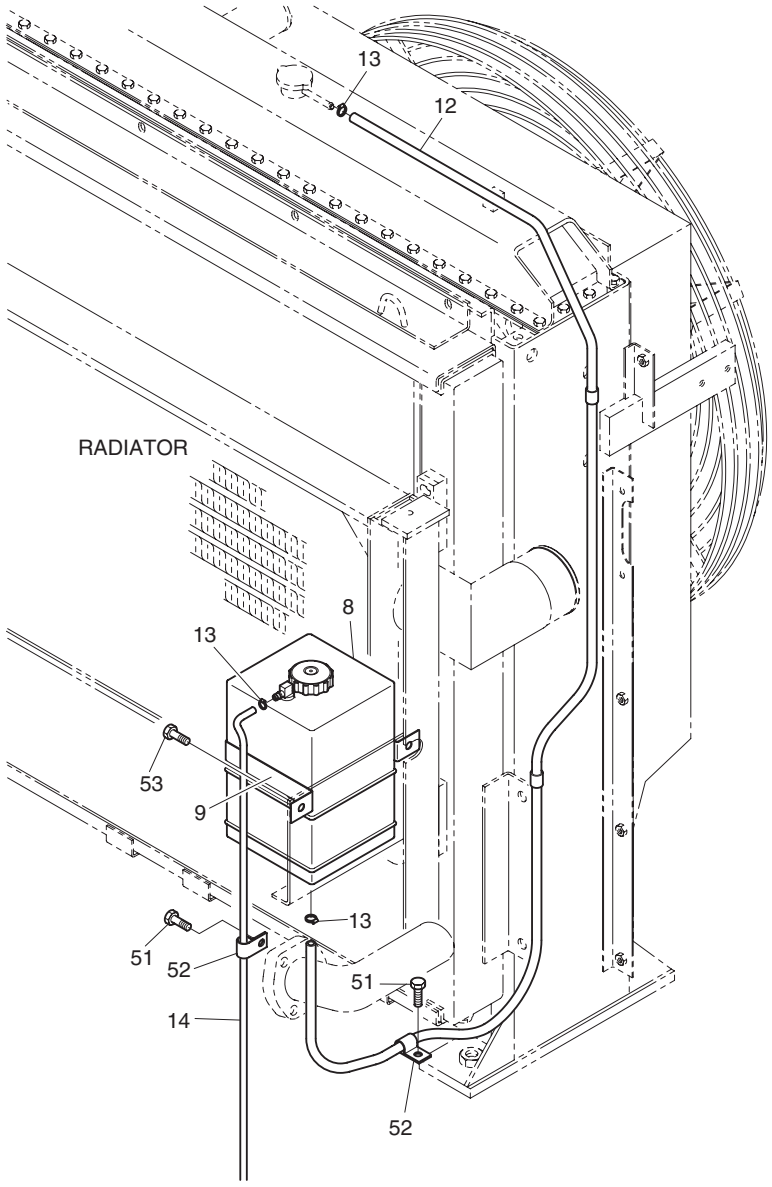

DATE	JUN. 30, 2006
REV. NO.	EXB06-08

Fig. 1140 RESERVE TANK RESERVOIR

Serial No. ;

Key No.	Part No.	Description	Description	Q'ty	S.C	Serial No.	ICA	Replaceable part	
								Part No.	Q'ty
1140--	201-00084	ENGINE ASS'Y	MOTEUR	-	D				
8	2470-9017	TANK;RESERVE	RESERVOIR DE SECOURS	1		1001–1494	I	K1003354	1
	K1003354	TANK;RESERVE	RESERVOIR DE SECOURS	1		1495–1544	I	K1003354A	1
	K1003354A	TANK;RESERVE	RESERVOIR DE SECOURS	1		1545–			
9	2124-1690	CLAMP	COLLIER	1					
12	185-00298	HOSE 2200L	TUYAU FLEXIBLE	1					
13	S8450006	CLAMP;HOSE	COLLIER	3					
14	185-00320	HOSE 920L	TUYAU FLEXIBLE	1					
51	120-00276	BOLT M8X1.25X12	BOULON A 6PANS	2					
52	124-00208D2	CLIP	ATTACHE	2					
53	2120-2196D1	BOLT;SET M10X1.5X20	BOULON A 6PANS	2					

DATE	JUN. 30, 2007
REV. NO.	EXB07-06

Fig. 1150 MUFFLER SILENCIEUX

Serial No. ;

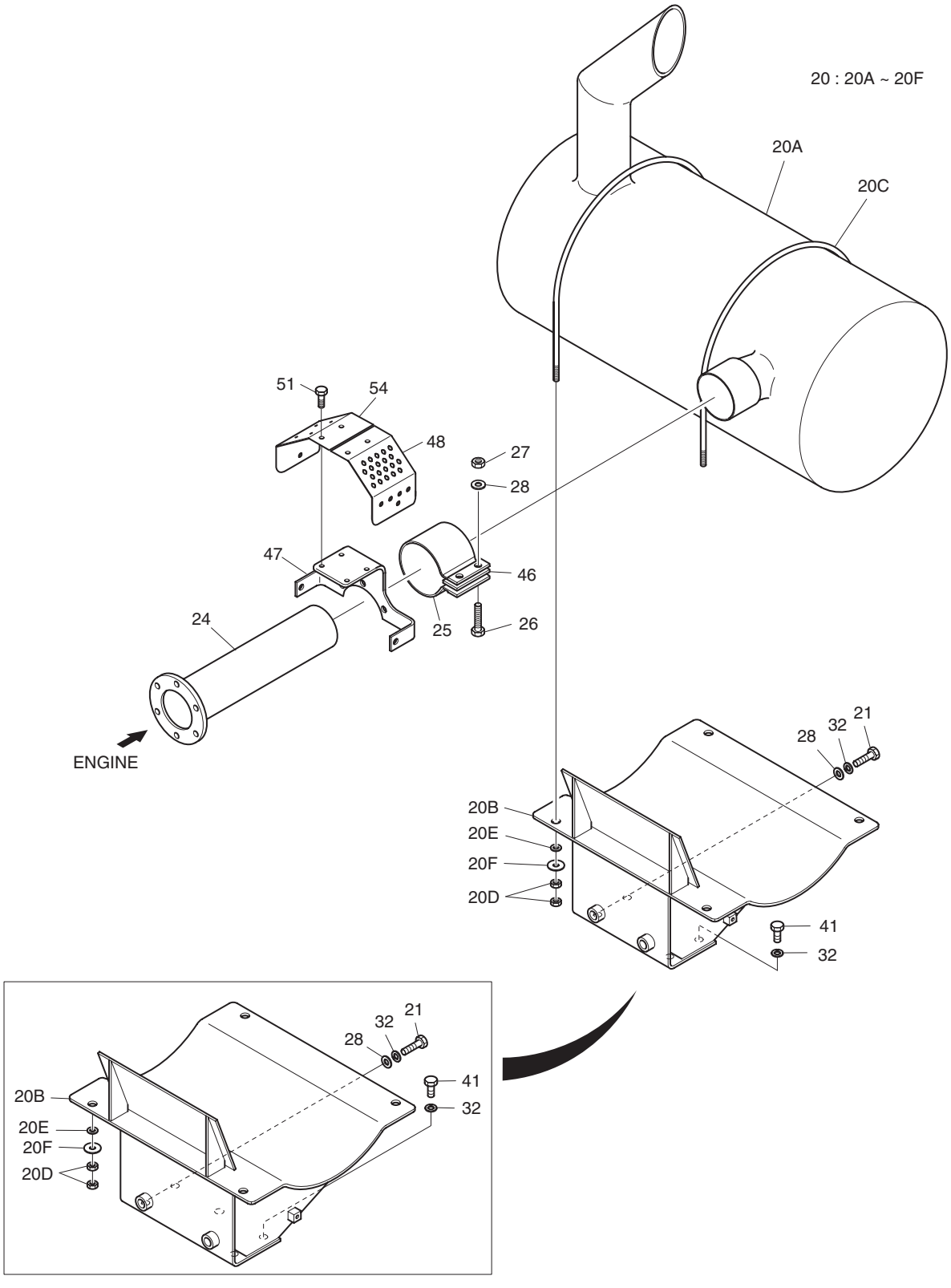

DATE	JUN. 30, 2007
REV. NO.	EXB07-06

Fig. 1150 MUFFLER SILENCIEUX

Serial No. ;

Key No.	Part No.	Description	Description	Q'ty	S.C	Serial No.	ICA	Replaceable part	
								Part No.	Q'ty
1150--	**201-00084B**	**ENGINE ASS'Y**	MOTEUR	-	D				
20	203-00051B	MUFFLER SUB ASS'Y	SILENCIEUX	1		1001–1096	I	203-00087	1
	203-00087	MUFFLER SUB ASS'Y	SILENCIEUX	1		1097–1166	I	203-00087A	1
	203-00087A	MUFFLER SUB ASS'Y	SILENCIEUX	1		1167–1806	I	203-00087B	1
	203-00087B	**MUFFLER SUB ASS'Y**	SILENCIEUX	1		**1807–1843**	I	203-00087C	1
	203-00087C	**MUFFLER SUB ASS'Y**	SILENCIEUX	1		**1844–**			
20A	203-00050B	. MUFFLER	. SILENCIEUX	1		1001–1806	I	203-00050C	1
	203-00050C	**. MUFFLER**	. SILENCIEUX	1		**1807–1843**	I	203-00050E	1
	203-00050E	**. MUFFLER**	. SILENCIEUX	1		**1844–**			
20B	195-01574B	. BRACKET;MUFFLER	. SUPPORT	1		1001–1096			
	195-02409	. BRACKET;MUFFLER	. SUPPORT	1		1097–1806	I	195-02409A	1
	195-02409A	**. BRACKET;MUFFLER**	. SUPPORT	1		**1807–**			
20C	120-00251	. BOLT;U	. BOULON	2		1001–1096			
	120-00302	. BOLT;U	. BOULON	2		1097–1166	I	120-00302A	2
	120-00302A	. BOLT;U	. BOULON	2		1167–			
20D	S4012633	. NUT	. ECROU	8					
20E	S5010613	. WASHER;PLAIN	. RONDELLE PLATE	4					
20F	2114-1058D1	. WASHER	. RONDELLE	4					
21	S0786453	BOLT M12X1.5X45	BOULON A 6PANS	2					
24	2182-1697	PIPE;EXHAUST	CONDUITE	1		1001–1544	I	2182-1697A	1
	2182-1697A	PIPE;EXHAUST	CONDUITE	1		1545–			
25	2124-1591A	CLAMP	ATTACHE DE TUBE	1					
26	S0515553	BOLT M12X1.75X45	BOULON A 6PANS	2					
27	S4012733	NUT	ECROU	2					
28	S5010713	WASHER;PLAIN M12	RONDELLE	4					
32	S5102703	WASHER;SPRING M12	RONDELLE ELASTIQUE	7		1001–1096			
	S5102703	WASHER;SPRING M12	RONDELLE ELASTIQUE	6		1097–			
41	S0515253	BOLT M12X1.75X30	BOULON A 6PANS	5		1001–1096			
	S0515253	BOLT M12X1.75X30	BOULON A 6PANS	4		1097–			
46	2114-1925	SPACER	BAGUE D'ECARTEMENT	1					
47	195-02192A	BRACKET	SUPPORT	1					
48	621-02363	COVER;TURBO CHARGER(REAR)	COUVERTURE	1					
51	120-00276	BOLT M8X1.25X12	BOULON A 6PANS	6					
54	621-02364	COVER;TURBO CHARGER	COUVERTURE	1					

DATE	JUL. 30, 2003
REV. NO.	EXB03-13

Fig. 1160 CAC PIPING
CHARGEE DE REFROIDISSEUR D'CAIR

Serial No. ;

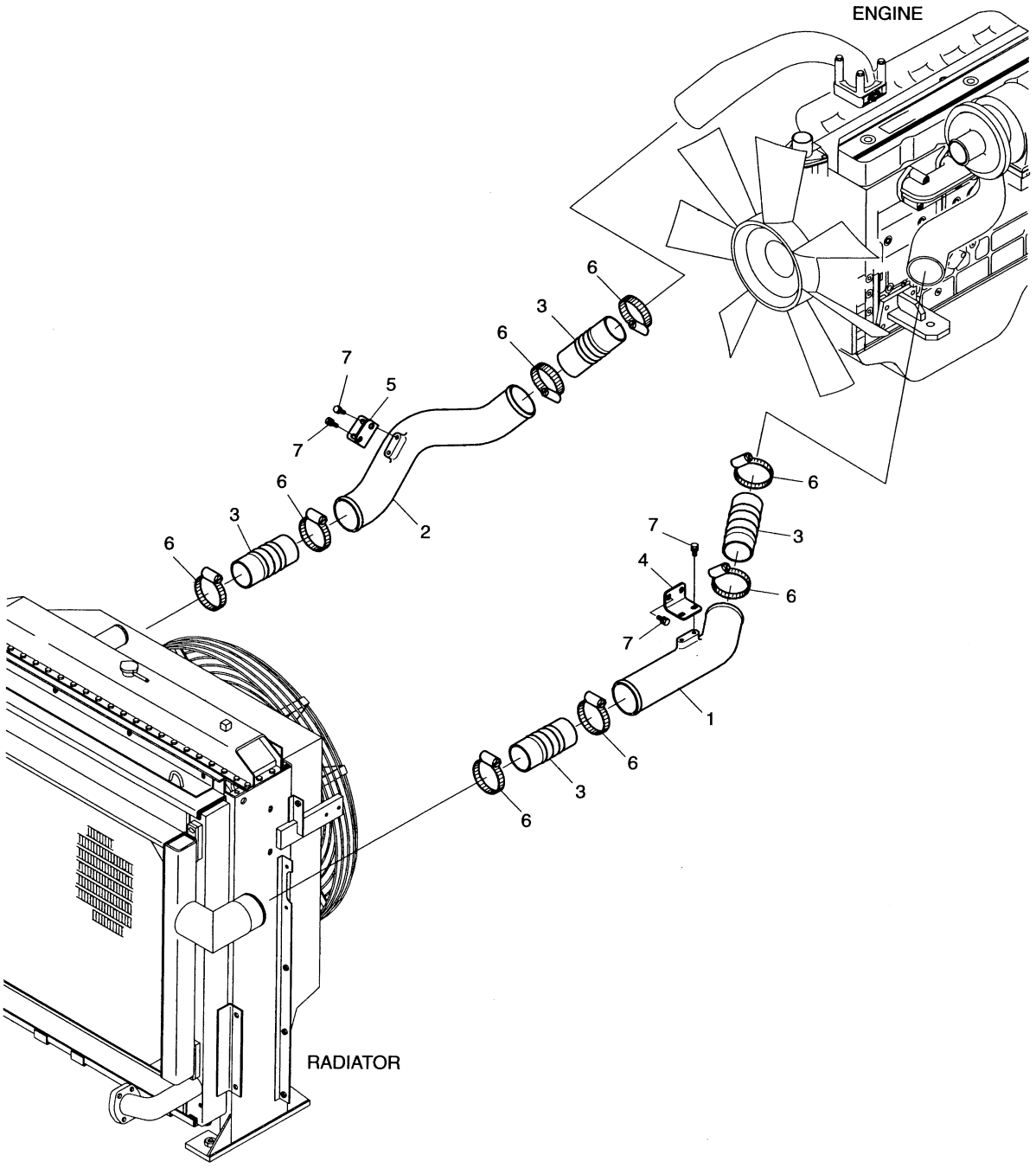

DATE	JUL. 30, 2003
REV. NO.	EXB03-13

Fig. 1160 CAC PIPING
CHARGEE DE REFROIDISSEUR D'CAIR

Serial No ;

Key No.	Part No.	Description	Description	Q'ty	S.C	Serial No.	ICA	Replaceable part	
								Part No.	Q'ty
1160--	201-00087	CAC PIPING ASS'Y	CHARGEE DE	-	D				
1	140-00892	PIPE;AIR	CONDUITE	1					
2	140-00893A	PIPE	CONDUITE	1					
3	185-00263	HOSE;CAC	TUYAU FLEXIBLE	4					
4	195-01620	BRACKET	SUPPORT	1					
5	195-01621B	BRACKET	SUPPORT	1					
6	124-00137	CLAMP	COLLIER	8					
7	2120-2196D2	BOLT M10X1.5X25	BOULON A 6PANS	8					

DATE	JUN. 30, 2004
REV. NO.	EXB04-04

Fig. 1170 AIR CLEANER ASS'Y
ENSEMBLE FILTRE A AIR

Serial No. ;

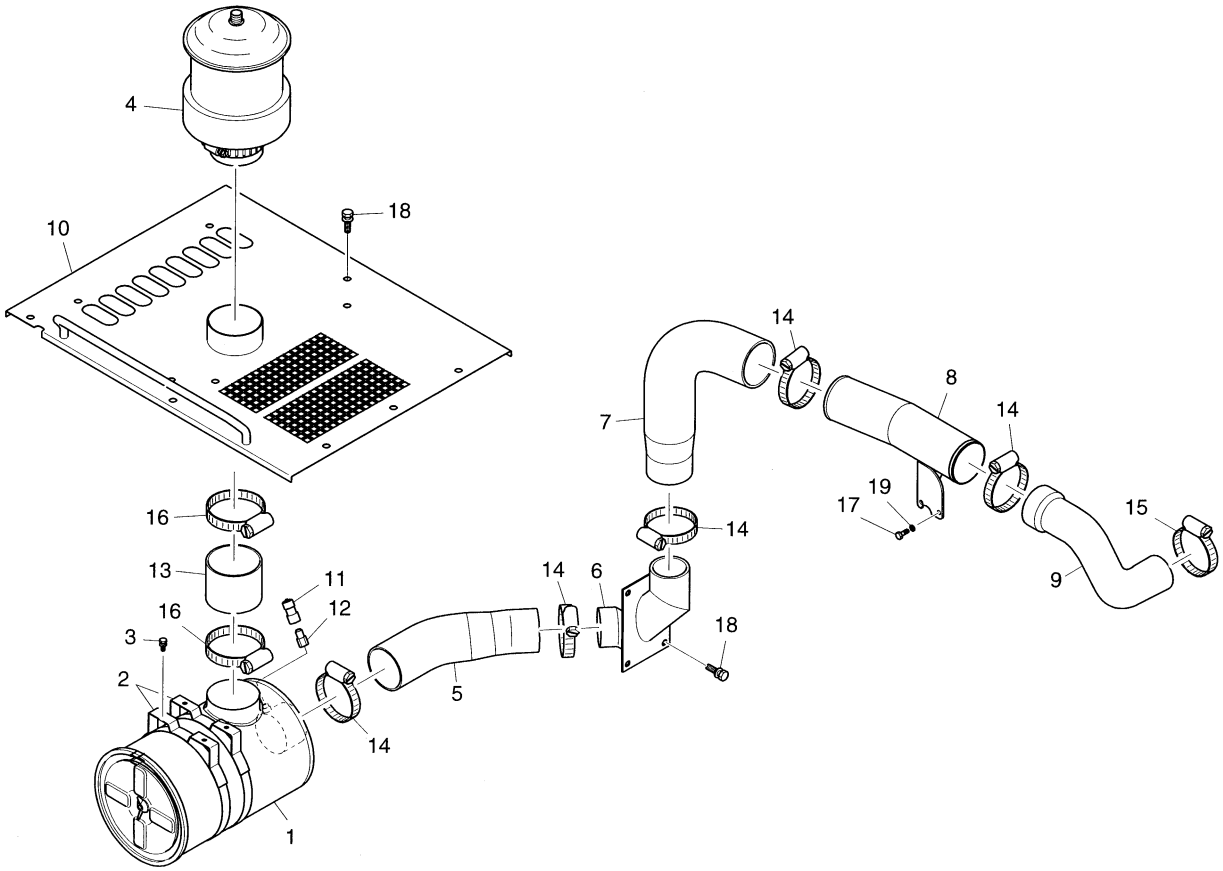

DATE	JUN. 30, 2004
REV. NO.	EXB04-04

Fig. 1170 AIR CLEANER ASS'Y ENSEMBLE FILTRE A AIR

Serial No ;

Key No.	Part No.	Description	Description	Q'ty	S.C	Serial No.	ICA	Replaceable part	
								Part No.	Q'ty
1170--	204-00036	AIR CLEANER ASS'Y	FILTRE A AIR	-	D				
1	2204-2012A	CLEANER;AIR	FILTRE A AIR	1					
2	2124-1552A	BAND;AIR CLEANER	ATTACHE DE TUYAU	2					
3	2120-2196D2	BOLT	BOULON A 6PANS	4					
4	204-00026	PRECLEANER	PR DCAPANT	1					
5	185-00251A	HOSE;AIR	PRE-FILTRE A AIR TURBO	1					
6	193-00642A	PIPE;AIR	CONDUITE	1					
7	185-00250A	HOSE;AIR	TUYAU FLEXIBLE	1					
8	193-00643A	PIPE;AIR	CONDUITE	1					
9	185-00249	HOSE;AIR	TUYAU FLEXIBLE	1					
10	621-01650G	COVER	COUVERTURE	1		1001–1315	I	621-01650H	1
	621-01650H	**COVER**	COUVERTURE	1		**1316–**			
11	170-00004	INDICATOR;DUST	INDICATEUR	1					
12	2181-2690	ADAPTER;FILTER	ADAPTEUR	1					
13	2185-1792A	HOSE;AIR	TUYAU FLEXIBLE	1					
14	S8510143	CLAMP;HOSE	COLLIER	5					
15	S8510118	CLAMP;HOSE	COLLIER	1					
16	S8510168	CLAMP;HOSE	COLLIER	2					
17	S0511853	BOLT	BOULON A 6PANS	2					
18	2120-2196D9	BOLT;SET M12X1.75X25	BOULON A 6PANS	15					
19	S5102603	WASHER;SPRING M10	RONDELLE ELASTIQUE	2					

DATE	JUL. 30, 2003
REV. NO.	EXB03-13

Fig. 1175 AIR CLEANER FILTRE A AIR

Serial No. ;

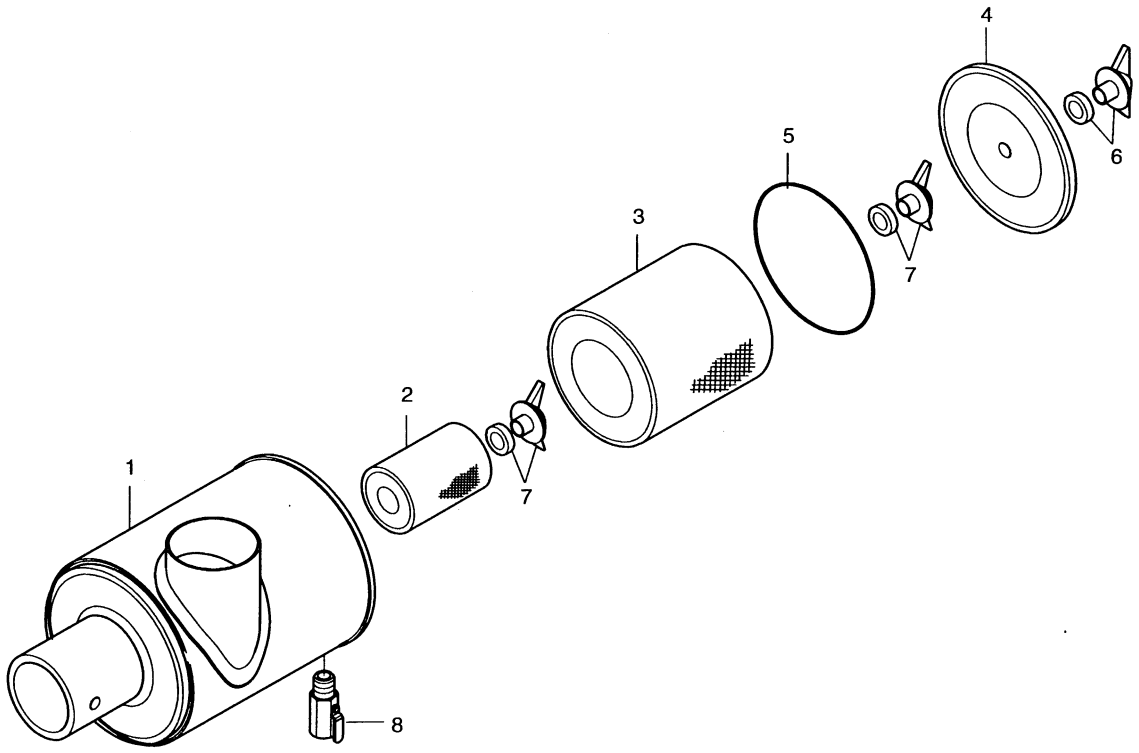

DATE	JUL. 30, 2003
REV. NO.	EXB03-13

Fig. 1175 AIR CLEANER FILTRE A AIR

Serial No ;

Key No.	Part No.	Description	Description	Q'ty	S.C	Serial No.	ICA	Replaceable part	
								Part No.	Q'ty
1175--	2204-2012A	AIR CLEANER	FILTRE A AIR	1					
1	-	BODY	CARTER	1	D				
2	2474-9057	ELEMENT;INNER	ELEMENT	1					
3	2474-9051	ELEMENT;OUTER	ELEMENT	1					
4	2621-6012	COVER;FRONT	COUVERCLE	1					
5	2180-6085	PACKING	EMBALLAGE	1					
6	121-00041	NUT;WING(OUTER)	ECROU	1					
7	121-00078	NUT;WING(INNER)	ECROU	2					
8	198-00007	VALVE;VACUATOR	VANNE	1					

DATE	DEC. 29, 2005
REV. NO.	EXB05-20

Fig. 1180 PUMP MOUNTING
POMPE

Serial No. ;

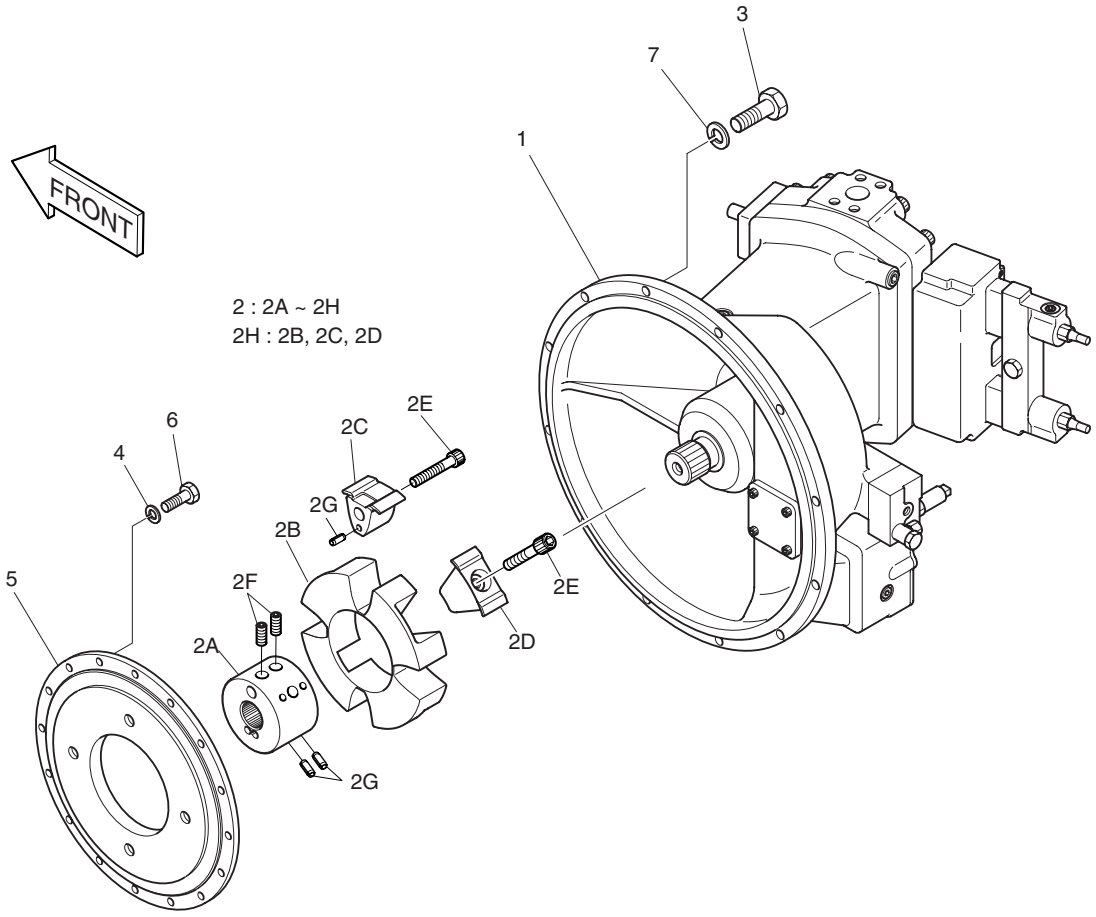

DATE	DEC. 29, 2005
REV. NO.	EXB05-20

Fig. 1180 PUMP MOUNTING POMPE

Serial No ;

Key No.	Part No.	Description	Description	Q'ty	S.C	Serial No.	ICA	Replaceable part	
								Part No.	Q'ty
1180--	401-00236A	PUMP INSTALL ASS'Y	POMPE	-	D				
1	401-00233	PUMP	POMPE	1		1001–1598	I	401-00233B	1
	401-00233B	**PUMP**	POMPE	1		**1599–**			
2	414-00041	COUPLING	FIXATION	1		1001–1379	I	414-00041A	1
	414-00041A	COUPLING	FIXATION	1		1380–			
2A	-	. HUB	. MOYEU	1	D				
2B	K9000426	. ELEMENT	. ELEMENT	1		1001–1379			
	K9000994	. ELEMENT	. ELEMENT	1		1380–			
2C	-	. INSERT(A)	. INSERTION	4	D				
2D	-	. INSERT(R)	. INSERTION	4	D				
2E	K9000428	. SOCKET BOLT SET(8EA)	. BOULON DE PLOT	1					
2F	-	. BOLT;CLAMPING M20X2.5X25	. BOULON	2	D				
2G	-	. PIN;SPRING D8X16	. GOUPILLE	12	D				
2H	K9000427	. ELEMENT KIT	. KIT DE ELEMENT	1		1001–1379	I	K9000995	1
	K9000995	. ELEMENT KIT	. KIT DE ELEMENT	1		1380–			
3	S0560553	BOLT M12X1.75X40	BOULON A 6PANS	12					
4	S5102603	WASHER;SPRING	RONDELLE ELASTIQUE	16					
5	403-00007B	COVER;COUPLING	COUVERTURE	1					
6	S0558153	BOLT M10X1.5X30	BOULON A 6PANS	16					
7	S5102703	WASHER;SPRING	RONDELLE ELASTIQUE	12					

DATE	JUN. 30, 2005
REV. NO.	EXB05-05

Fig. 1190 FUEL PIPING
CONDUITES DE GAZOLE

Serial No. ;

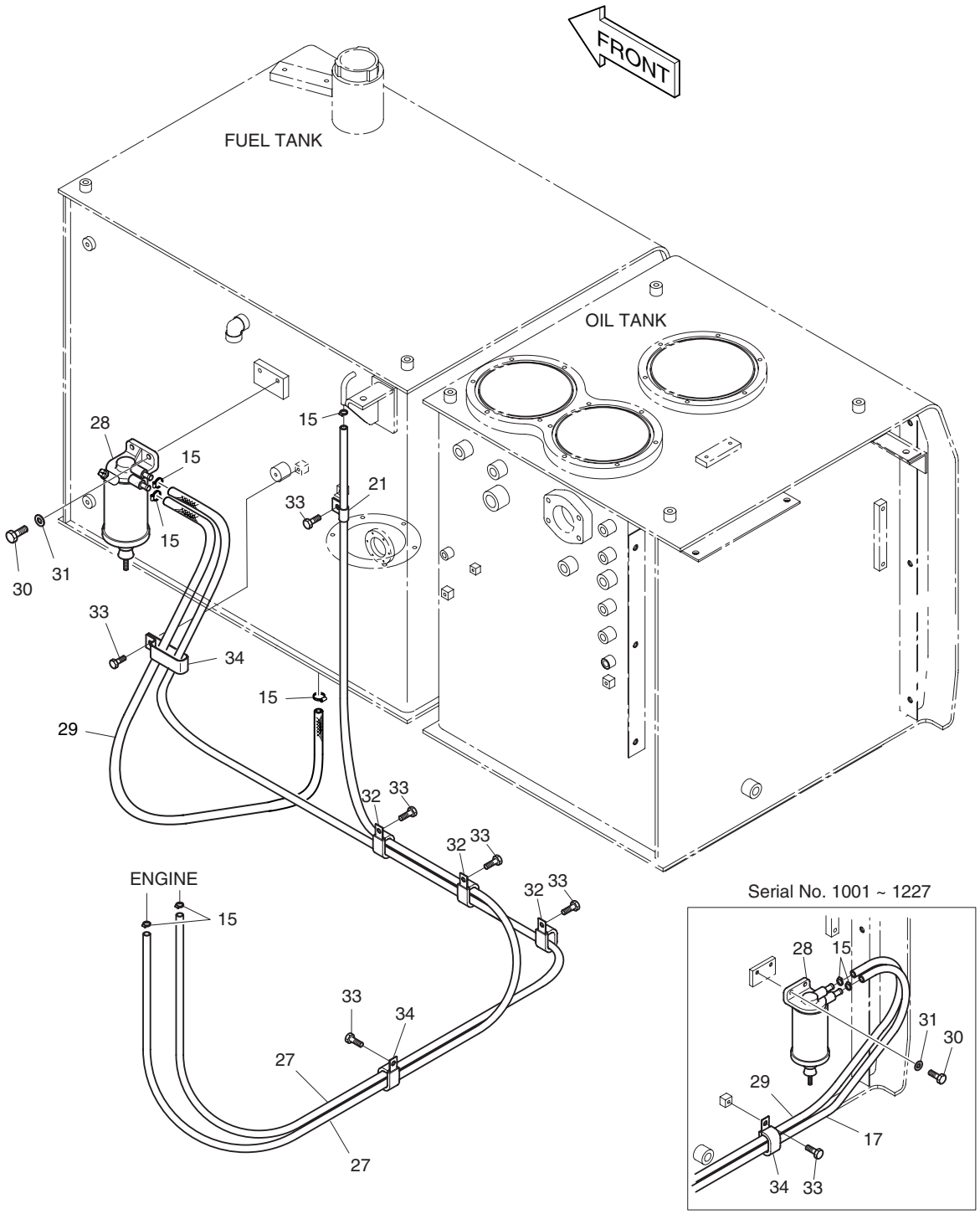

DATE	JUN. 30, 2005
REV. NO.	EXB05-05

Fig. 1190 FUEL PIPING
CONDUITES DE GAZOLE

Serial No ;

Key No.	Part No.	Description	Description	Q'ty	S.C	Serial No.	ICA	Replaceable part	
								Part No.	Q'ty
1190--	470-00073	FUEL TANK ASS'Y	RESERVOIR DE GAZOLE	-	D				
15	S8450012	CLAMP;HOSE	COLLIER	6					
17	2185-1247D147	HOSE	TUYAU FLEXIBLE	1		1001–1227			
21	2124-1509D2	CLIP	ATTACHE	1					
27	2185-1247D132	HOSE 2700L	TUYAU FLEXIBLE	1		1001–1227			
	2185-1247D132	HOSE 2700L	TUYAU FLEXIBLE	2		1228–1448	I	2185-1247D138	2
	2185-1247D138	**HOSE 2900L**	TUYAU FLEXIBLE	2		**1449**–			
28	471-00082	SEPARATOR;WATER	SEPARATEUR	1		1001–1409	I	471-00082A	1
	471-00082A	SEPARATOR;WATER	SEPARATEUR	1		1410–			
29	2185-1247D25	HOSE;FUEL	TUYAU FLEXIBLE	1		1001–1227			
	2185-1247D31	HOSE;FUEL 1200L	TUYAU FLEXIBLE	1		1228–1404			
	2185-1247D2	HOSE;FUEL 1800L	TUYAU FLEXIBLE	1		1405–			
30	S0508753	BOLT M8X1.28X18	BOULON A 6PANS	2					
31	S5010513	WASHER;PLAIN	RONDELLE	2					
32	124-00208D7	CLIP	ATTACHE	3					
33	120-00276	BOLT M8X1.25X12	BOULON A 6PANS	6					
34	124-00209D1	CLIP	ATTACHE	2					

DATE	JUN. 30, 2005
REV. NO.	EXB05-05

Fig. 1200 FUEL TANK
RESERVOIR DE GAZOLE

Serial No. ;

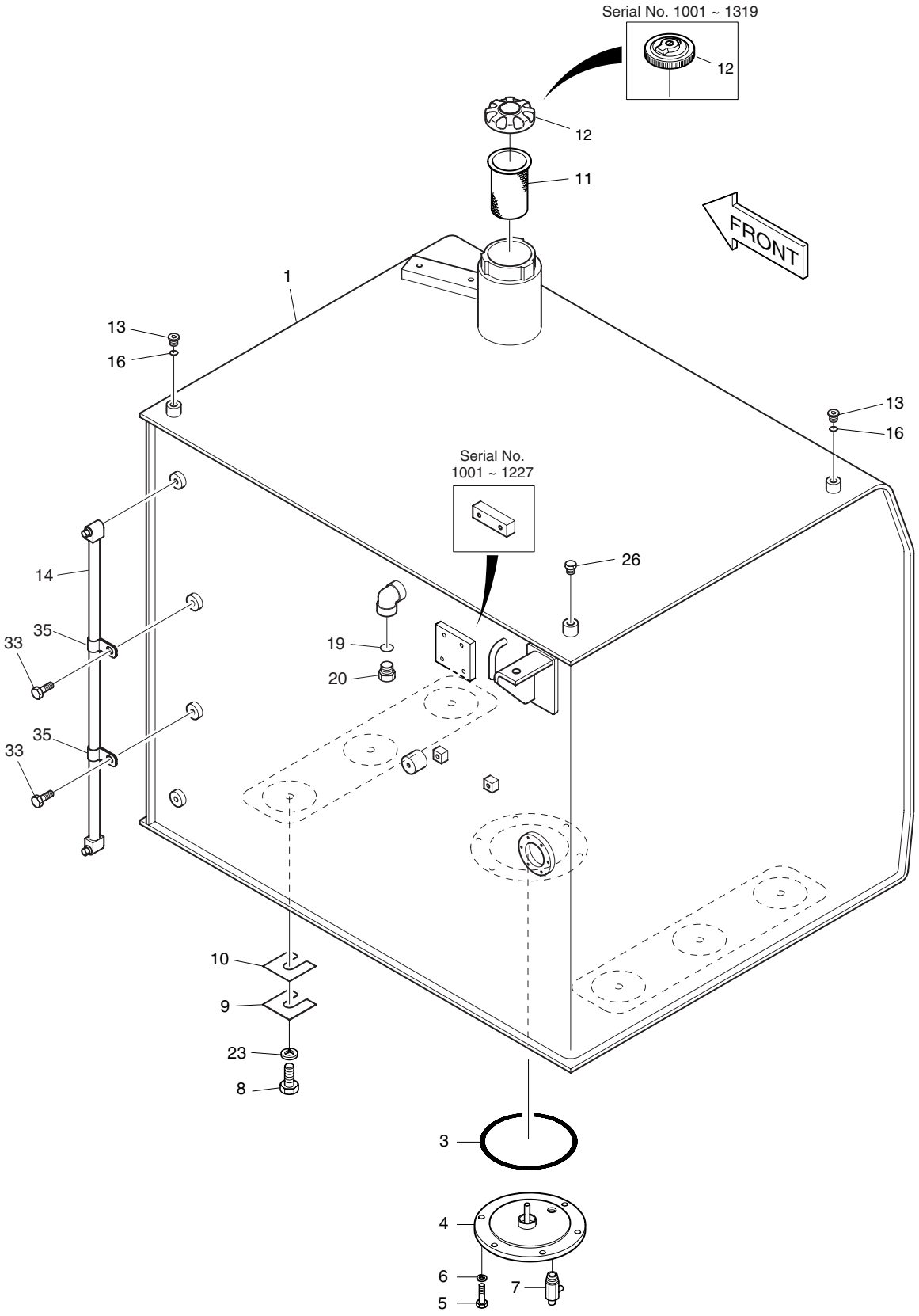

DATE	JUN. 30, 2005
REV. NO.	EXB05-05

Fig. 1200 FUEL TANK
RESERVOIR DE GAZOLE

Serial No ;

Key No.	Part No.	Description	Description	Q'ty	S.C	Serial No.	ICA	Replaceable part	
								Part No.	Q'ty
1200--	470-00073	FUEL TANK ASS'Y	RESERVOIR DE GAZOLE	-	D				
1	470-00074E	TANK;FUEL	RESERVOIR A GAZOLE	1		1001–1227			
	470-00074G	TANK;FUEL	RESERVOIR A GAZOLE	1		1228–1234	I	470-00074H	1
	470-00074H	TANK;FUEL	RESERVOIR A GAZOLE	1		1235–1349			
	470-00074I	TANK;FUEL	RESERVOIR A GAZOLE	1		1350–1469	I	470-00074J	1
	470-00074J	**TANK;FUEL**	RESERVOIR A GAZOLE	1		**1470–**			
3	S8011450	O-RING	JONT TORIQUE	1					
4	473-00033	COVER	COUVERTURE	1					
5	S0512053	BOLT M10X1.5X25	BOULON A 6PANS	6					
6	S5102603	WASHER;SPRING	RONDELLE ELASTIQUE	6					
7	186-00017	COCK;DRAIN	ROBINET	1		1001–1234	I	186-00017A	1
	186-00017A	COCK;DRAIN	ROBINET	1		1235–			
8	S0565461	BOLT M16X2.0X60	BOULON A 6PANS	6					
9	114-00522	SHIM	CALE	3					
10	114-00523	SHIM	CALE	3					
11	2471-9046	FILTER;FUEL	FILTRE	1		1001–1227	I	471-00105	1
	471-00105	FILTER;FUEL	FILTRE	1		1228–			
12	2188-9008	CAP	BOUCHON	1		1001–1234	I	188-00018	1
	188-00018	CAP	BOUCHON	1		1235–1319	I	188-00014A	1
	188-00014A	CAP	BOUCHON	1		1320–1470			
	K1004166	**CAP**	BOUCHON	1		**1471–**			
13	2181-1890D2	PLUG	BOUCHON	2					
14	119-00014D1	GAUGE;LEVEL	JAUGE D'HUILE	1					
16	S8000111	O-RING	JONT TORIQUE	2					
19	S8000181	O-RING	JONT TORIQUE	1					
20	2181-1950D7	PLUG	BOUCHON	1					
23	114-00425	SPACER	BAGUE D'ECARTEMENT	6					
26	S0514653	BOLT M12X1.75X16	BOULON A 6PANS	1					
33	120-00276	BOLT M8X1.25X12	BOULON A 6PANS	2					
35	DS2802021	CLIP	ATTACHE	2					

DATE	JUN. 30, 2006
REV. NO.	EXB06-08

Fig. 1210 SWING DEVICE ASS'Y
SYSTEME D'ORIENTATION

Serial No. ;

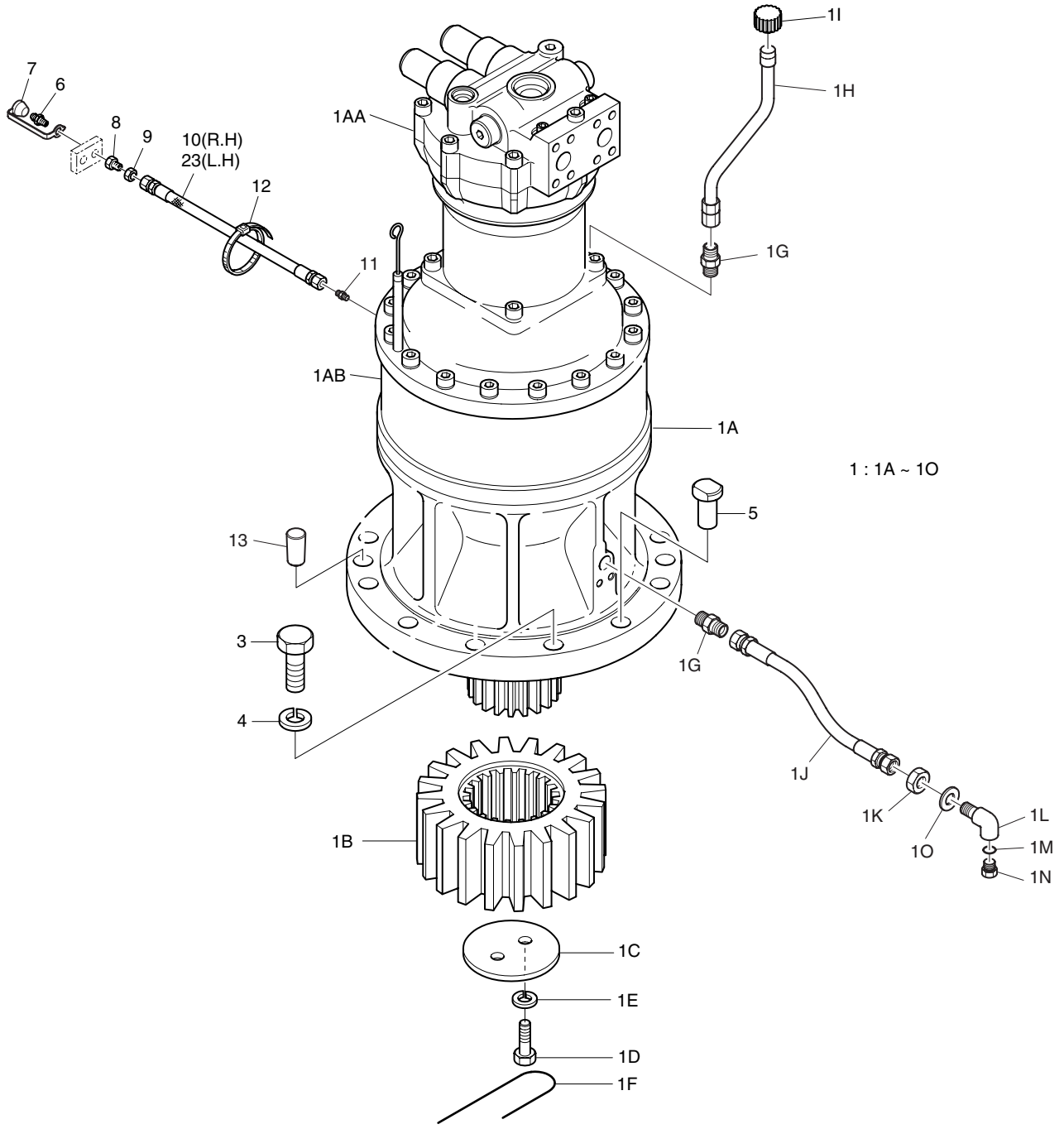

DATE	JUN. 30, 2006
REV. NO.	EXB06-08

Fig. 1210 SWING DEVICE ASS'Y SYSTEME D'ORIENTATION

Serial No. ;

Key No.	Part No.	Description	Description	Q'ty	S.C	Serial No.	ICA	Replaceable part	
								Part No.	Q'ty
1210--	401-00246	SWING DEVICE INSTALL	MOTEUR D'ORIENTATION	-	D	1001–1601			
	401-00246A	SWING DEVICE INSTALL	MOTEUR D'ORIENTATION	-	D	1602–			
1	401-00247B	SWING DEVICE SUB ASS'Y	MOTEUR D'ORIENTATION	2		1001–1263	I	401-00247C	2
	401-00247C	SWING DEVICE SUB ASS'Y	MOTEUR D'ORIENTATION	2		1264–1448	I	401-00247E	2
	401-00247E	SWING DEVICE SUB ASS'Y	MOTEUR D'ORIENTATION	2		1449–1601	I	401-00247G	2
	401-00247G	SWING DEVICE SUB ASS'Y	MOTEUR D'ORIENTATION	2		1602–			
1A	401-00249A	. SWING DEVICE SUB ASS'Y	. MOTEUR D'ORIENTATION	1		1001–1263	I	401-00249B	1
	401-00249B	. SWING DEVICE SUB ASS'Y	. MOTEUR D'ORIENTATION	1		1264–1448	I	401-00249C	1
	401-00249C	. SWING DEVICE SUB ASS'Y	. MOTEUR D'ORIENTATION	1		1449–			
1AA	2401-9304B	.. SWING MOTOR	.. MOTEUR	1		1001–1601	I	2401-9304C	1
	2401-9304C	.. SWING MOTOR	.. MOTEUR	1		1602–			
1AB	2404-6010I	.. REDUCTION GEAR ASS'Y	.. BOITE REDUCTEUR	1		1001–1263	I	2404-6010J	1
	2404-6010J	.. REDUCTION GEAR ASS'Y	.. BOITE REDUCTEUR	1		1264–1448	I	K1000350	1
	K1000350	.. REDUCTION GEAR ASS'Y	.. BOITE REDUCTEUR	1		1449–			
1B	404-00091	. GEAR;PINION	. PIGNON	1					
1C	2403-4001A	. COVER	. COUVERCLE	1					
1D	2120-4006	. BOLT M16X2.0X40	. BOULON A 6PANS	2					
1E	S5102903	. S/W	. RONDELLE ELASTIQUE	2					
1F	2126-9001	. WIRE 250L	. CABLE	1					
1G	2181-1110D3	. ADAPTER PT1/2-PF1/2	. ADAPTEUR	2					
1H	2182-1706A	. PIPE	. CONDUITE	1					
1I	2119-1063A	. CAP	. CHAPEAU	1					
1J	2184-1026D145	. HOSE PF1/2-420L	. TUYAU FLEXIBLE	1					
1K	121-00010D3	. NUT	. ECROU	1					
1L	181-00717	. ELBOW	. COUDE	1					
1M	2181-1950D3	. PLUG	. BOUCHON	1					
1N	S8000181	. O-RING	. JONT TORIQUE	1					
1O	S5011113	. WASHER;PLAIN	. RONDELLE	1					
3	S0570166	BOLT M20X2.5X65	BOULON A 6PANS	22					
4	2114-9012A	WASHER;HARDEN	RONDELLE	22					
5	2123-1916A	PIN;BLOCK	BROCHE	2					
6	S6710041	FITTING	GRAISSEUR	2					
7	160-00020	CAP;GREASE NIPPLE	CHAPEAU	2					
8	181-00103	REDUCER	REDUCTEUR	2					
9	121-00006	NUT	ECROU	2					
10	2184-1045D128	HOSE PF1/4-1080L	TUYAU FLEXIBLE	1					
11	2181-1110D1	ADAPTER	ADAPTEUR	2					
12	2124-1084D3	CLIP;BAND	ATTACHE	4					

DATE	JUN. 30, 2006
REV. NO.	EXB06-08

Fig. 1210 SWING DEVICE ASS'Y
SYSTEME D'ORIENTATION

Serial No. ;

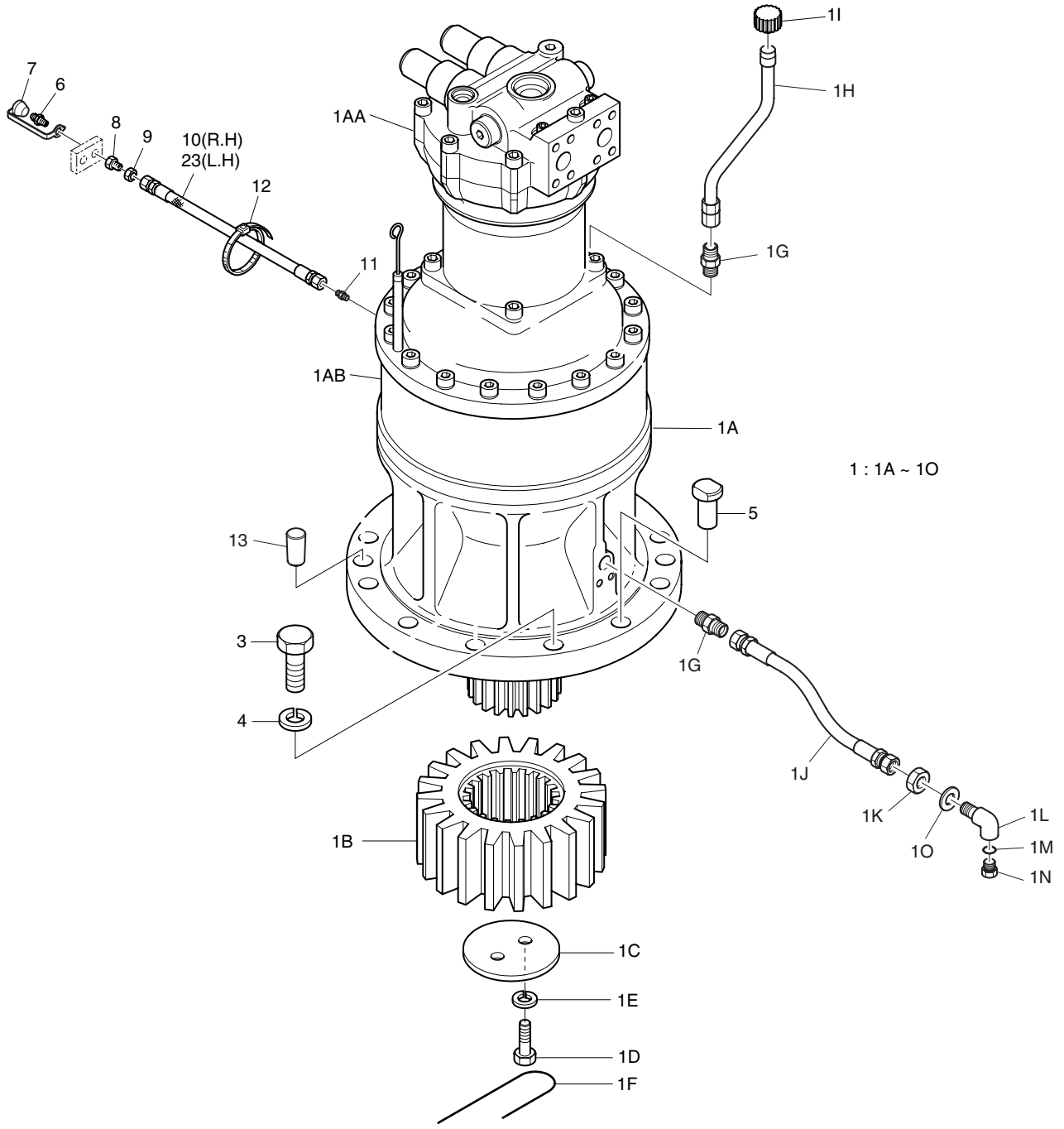

DATE	JUN. 30, 2006
REV. NO.	EXB06-08

Fig. 1210 SWING DEVICE ASS'Y SYSTEME D'ORIENTATION

Serial No. ;

Key No.	Part No.	Description	Description	Q'ty	S.C	Serial No.	ICA	Replaceable part	
								Part No.	Q'ty
1210-13	160-00027	CAP;RUBBER	CHAPEAU	4					
23	2184-1045D207	HOSE PF1/4-1150L	TUYAU FLEXIBLE	1					

DATE	JUN. 30, 2007
REV. NO.	EXB07-06

Fig. 1220 OIL TANK
RESERVOIR DE HUILE

Serial No. ;

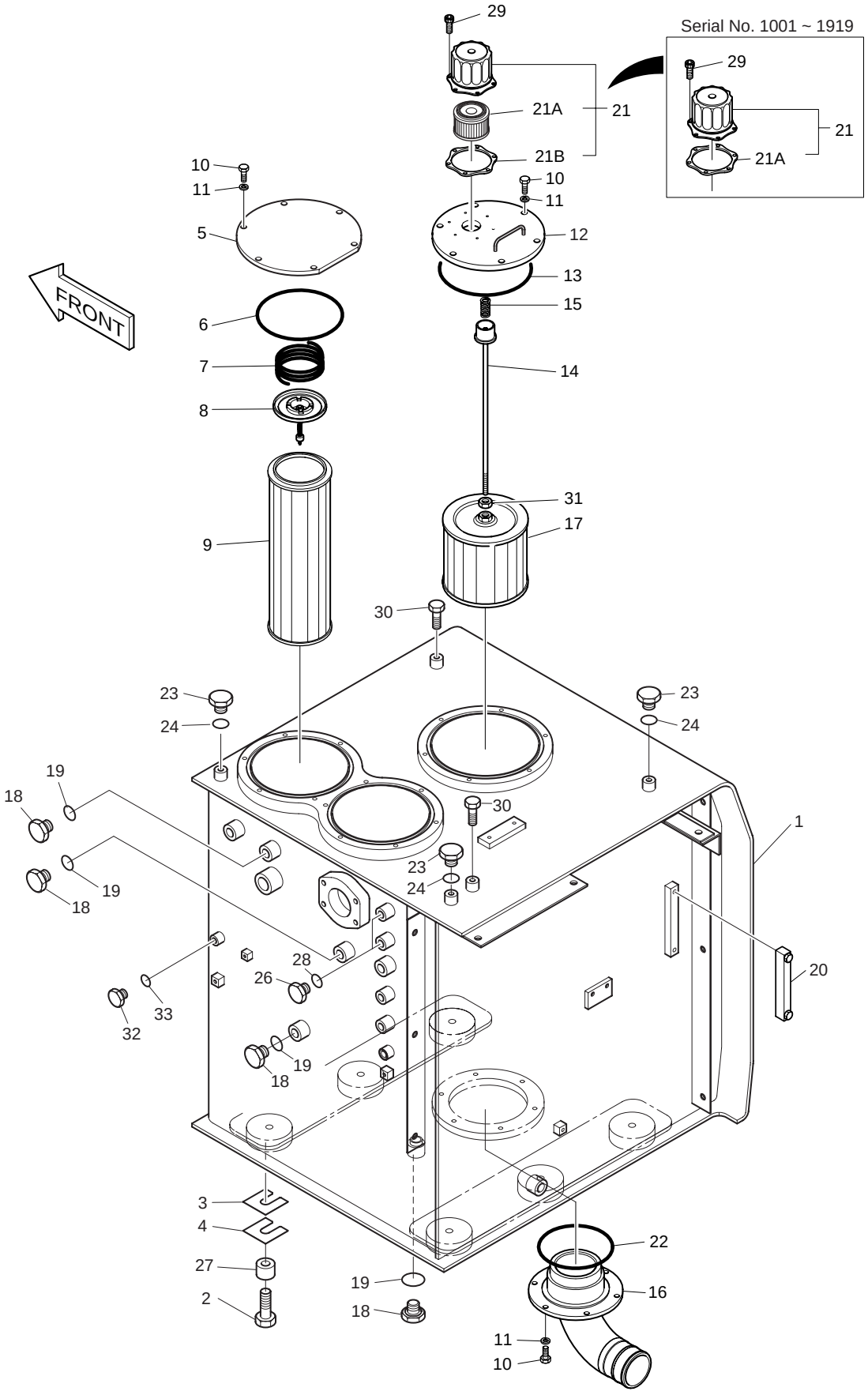

DATE	JUN. 30, 2007
REV. NO.	EXB07-06

Fig. 1220 OIL TANK RESERVOIR DE HUILE

Serial No. ;

Key No.	Part No.	Description	Description	Q'ty	S.C	Serial No.	ICA	Replaceable part	
								Part No.	Q'ty
1220--	470-00075	OIL TANK ASS'Y	RESERVOIR DE HUILE	-	D	1001–1520			
	470-00075A	OIL TANK ASS'Y	RESERVOIR DE HUILE	-	D	1521–1598			
	470-00075C	OIL TANK ASS'Y	RESERVOIR DE HUILE	-	D	1599–			
1	470-00076G	TANK;OIL	RESERVOIR DE HUILE	1		1001–1520	I	470-00076H	1
	470-00076H	TANK;OIL	RESERVOIR DE HUILE	1		1521–1630	I	470-00076J	1
	470-00076J	TANK;OIL	RESERVOIR DE HUILE	1		1631–			
2	S0565461	BOLT M16X2.0X60	BOULON A 6PANS	6					
3	114-00522	SHIM 0.8T	SCALE	3					
4	114-00523	SHIM 1.6T	SCALE	3					
5	2473-1085A	COVER	COUVERCLE	2					
6	S8012000	O-RING	JONT TORIQUE	2					
7	2129-1393	SPRING	RESSORT	2					
8	2426-1175	VALVE;BY-PASS	VANNE	2					
9	2471-9051B	ELEMENT;FILTER	ELEMENT	2		1001–1598	I	474-00056	2
	474-00056	ELEMENT;FILTER	ELEMENT	2		1599–			
10	S0512053	BOLT M10X1.5X20	BOULON A 6PANS	24					
11	S5102603	WASHER;SPRING	RONDELLE ELASTIQUE	24					
12	2473-1087B	COVER;FLANGE	COUVERCLE	1					
13	S8012200	O-RING	JONT TORIQUE	1					
14	2136-1433	ROD	TIGE	1					
15	2129-1008	SPRING;COMPRESS	RESSORT	1					
16	140-00865	PIPE	CONDUITE	1					
17	2471-9401A	FILTER;SUCTION	FILTRE A ASPIRATION	1					
18	2181-1950D7	PLUG	BOUCHON	4					
19	S8000181	O-RING	JONT TORIQUE	4					
20	2119-1007	GAUGE;LEVEL	JAUGE D'HUILE	1					
21	422-00027A	BREATHER;AIR	RENIFLARD	1		1001–1919	I	K1012685A	1
21A	**180-00200**	**. PACKING**	. EMBALLAGE	1		**1001–1919**			
21	**K1012685A**	**BREATHER;AIR**	RENIFLARD	1		**1920–**			
21A	**K1029257**	**. ELEMENT;AIR BREATHER**	. ELEMENT	1		**1920–**			
21B	**K9005662**	**. GASKET**	. JOINT	1		**1920–**			
22	S8011651	O-RING	JONT TORIQUE	1					
23	2181-1890D2	PLUG	BOUCHON	3					
24	S8000111	O-RING	JONT TORIQUE	3					
26	2181-1950D2	PLUG	BOUCHON	2					
27	114-00425	SPACER	BAGUE D'ECARTEMENT	6					
28	S8000141	O-RING	JONT TORIQUE	2					
29	2120-2166D41	BOLT M8X0.8X8	BOULON A 6PANS	6					

DATE	JUN. 30, 2007
REV. NO.	EXB07-06

Fig. 1220 OIL TANK
RESERVOIR DE HUILE

Serial No. ;

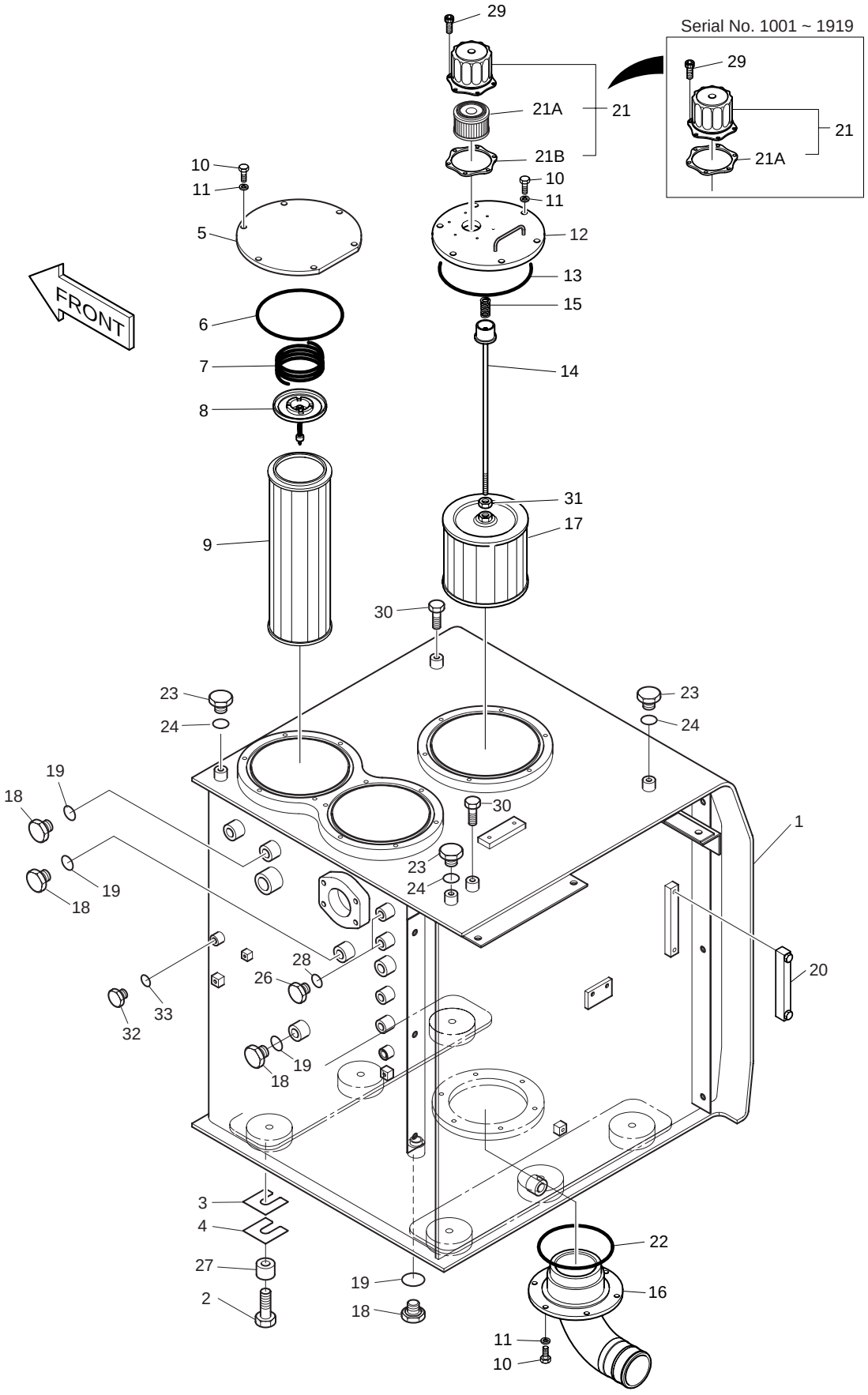

DATE	JUN. 30, 2007
REV. NO.	EXB07-06

Fig. 1220 OIL TANK
RESERVOIR DE HUILE

Serial No. ;

Key No.	Part No.	Description	Description	Q'ty	S.C	Serial No.	ICA	Replaceable part	
								Part No.	Q'ty
1220-30	S0514653	BOLT M12X1.75X16	BOULON A 6PANS	2					
31	S4012633	NUT	ECROU	1					
32	2181-2667	PLUG	BOUCHON	1					
33	S8180221	PACKING	RONDELLE D'ETANCHEITE	1					

DATE	JUN. 30, 2005
REV. NO.	EXB05-05

Fig. 1230 OIL COOLER PIPING(1)
CONDUITES DE HUILE

Serial No. ;

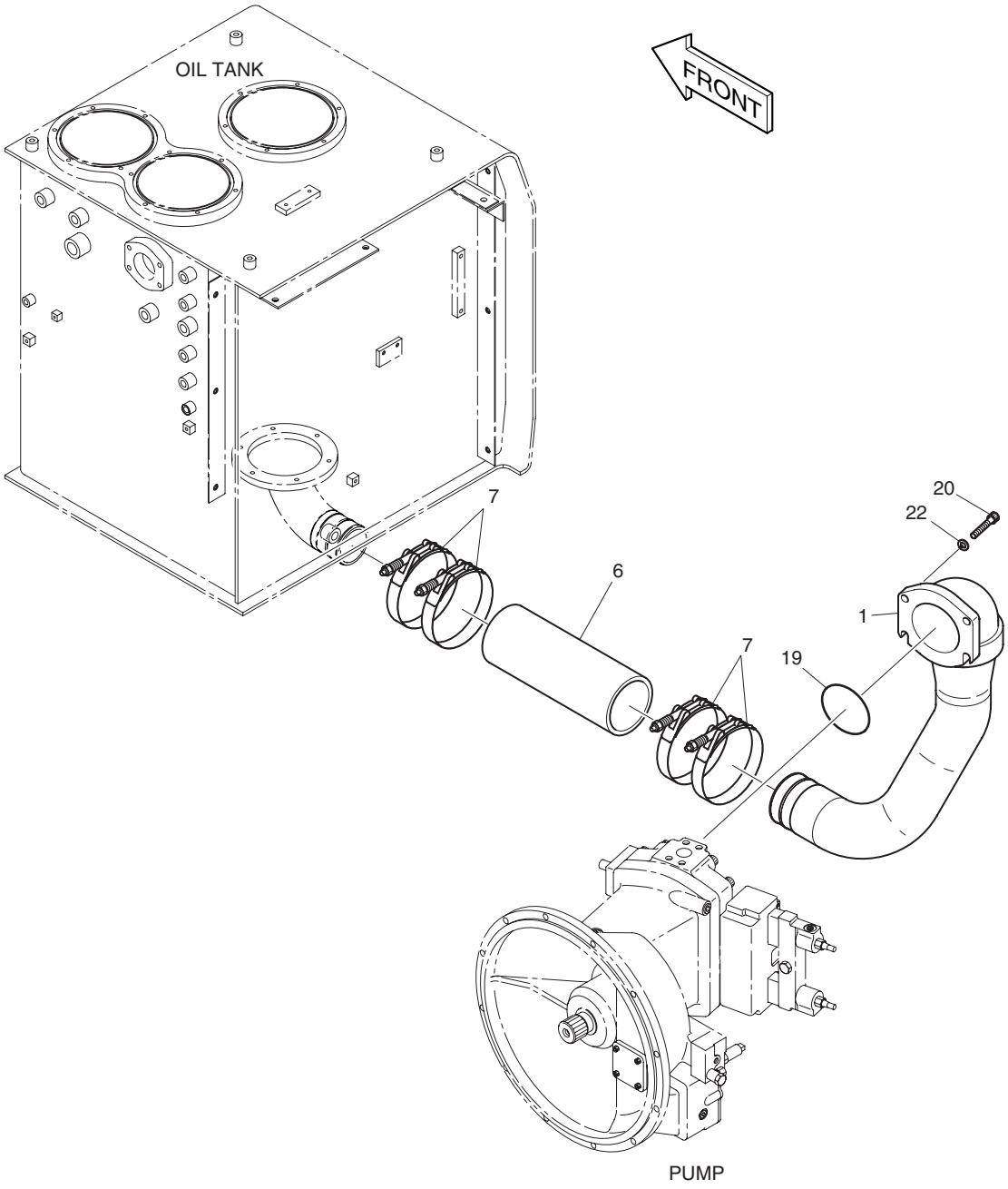

DATE	JUN. 30, 2005
REV. NO.	EXB05-05

Fig. 1230 OIL COOLER PIPING(1) CONDUITES DE HUILE

Serial No ;

Key No.	Part No.	Description	Description	Q'ty	S.C	Serial No.	ICA	Replaceable part	
								Part No.	Q'ty
1230--	**400-00706A**	**OIL COOLER PIPING**	CONDUITES DE HUILE	-	D				
1	140-00866A	PIPE	CONDUITE	1					
6	2185-1737D3	HOSE	TUYAU FLEXIBLE	1					
7	S8470138	CLAMP;HOSE	COLLIER	4					
19	2180-1026D35	O-RING	JONT TORIQUE	1					
20	S2221566	BOLT;SOCKET M16X2.0X45	BOULON A 6 PANS CREUX	4					
22	S5110903	WASHER	RONDELLE ELASTIQUE	4					

DATE	JUN. 30, 2005
REV. NO.	EXB05-05

Fig. 1240 OIL COOLER PIPING(2) CONDUITES DE HUILE

Serial No. ;

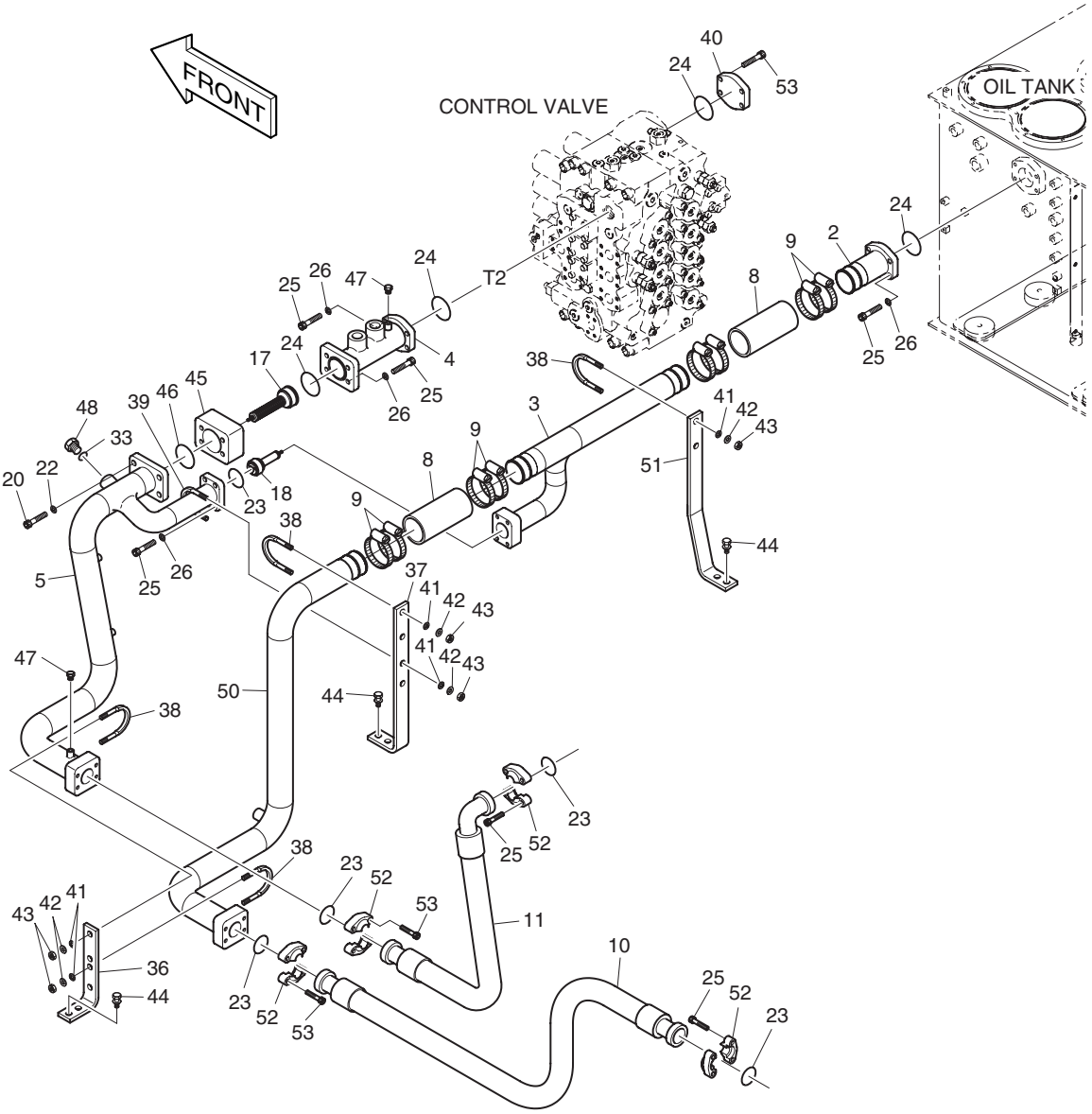

DATE	JUN. 30, 2005
REV. NO.	EXB05-05

Fig. 1240 OIL COOLER PIPING(2) CONDUITES DE HUILE

Serial No ;

Key No.	Part No.	Description	Description	Q'ty	S.C	Serial No.	ICA	Replaceable part	
								Part No.	Q'ty
1240--	**400-00706A**	**OIL COOLER PIPING**	CONDUITES DE HUILE	-	D				
2	140-00867	PIPE	CONDUITE	1					
3	140-00868	PIPE	CONDUITE	1					
4	140-00869A	PIPE	CONDUITE	1					
5	140-00870A	PIPE	CONDUITE	1		1001–1544	I	140-00870B	1
	140-00870B	**PIPE**	CONDUITE	1		**1545–**			
8	2185-1776D11	HOSE;RUBBER	TUYAU FLEXIBLE	2					
9	S8470095	CLAMP;HOSE	COLLIER	8					
10	DS2038112	HOSE 2"-1030L	TUYAU FLEXIBLE	1					
11	DS2045292	HOSE 2"-740L	TUYAU FLEXIBLE	1					
17	422-00041	VALVE;BYPASS(2.5K)	VANNE	1		1001–1245	I	420-00261B	1
	420-00261B	VALVE;BYPASS(2.5K)	VANNE	1		1246–			
18	420-00304	VALVE;BY-PASS(1.0K)	VANNE	1					
20	S2221566	BOLT;SOCKET M16X2.0X45	BOULON A 6 PANS CREUX	4					
22	S5110903	WASHER	RONDELLE ELASTIQUE	4					
23	2180-1026D27	O-RING	JONT TORIQUE	5					
24	2180-1026D31	O-RING	JONT TORIQUE	4					
25	S2215466	BOLT;SOCKET M12X1.75X40	BOULON A 6 PANS CREUX	24					
26	S5110703	WASHER;SPRING	RONDELLE ELASTIQUE	16					
33	S8000291	O-RING	JONT TORIQUE	1					
36	195-01615A	BRACKET	SUPPORT	1					
37	195-01576A	BRACKET	SUPPORT	1					
38	120-00269A	BOLT;U	BOULON	4					
39	120-00258A	BOLT;U	BOULON	1					
40	2181-2157D10	FLANGE;COVER	BRIDE	1					
41	2114-1058D46	WASHER	RONDELLE	10					
42	S5102703	WASHER;SPRING M12	RONDELLE ELASTIQUE	10					
43	S4012733	NUT	ECROU	10					
44	2120-2196D10	BOLT;SET M12X1.75X25	BOULON A 6PANS	6					
45	423-00114A	BLOCK	BLOC	1					
46	2180-1026D32	O-RING	JONT TORIQUE	1					
47	2181-2047A	PLUG	BOUCHON	2					
48	2181-1950D9	PLUG	BOUCHON	1					
50	140-00889A	PIPE	CONDUITE	1					
51	195-01639	BRACKET	SUPPORT	1					
52	4215-1003D6	FLANGE	FLASQUE	8					
53	S2215266	BOLT;SOCKET M12X1.75X30	BOULON A 6 PANS CREUX	12					

DATE	JUN. 30, 2005
REV. NO.	EXB05-05

Fig. 1250 OIL COOLER PIPING(3) CONDUITES DE HUILE

Serial No. ;

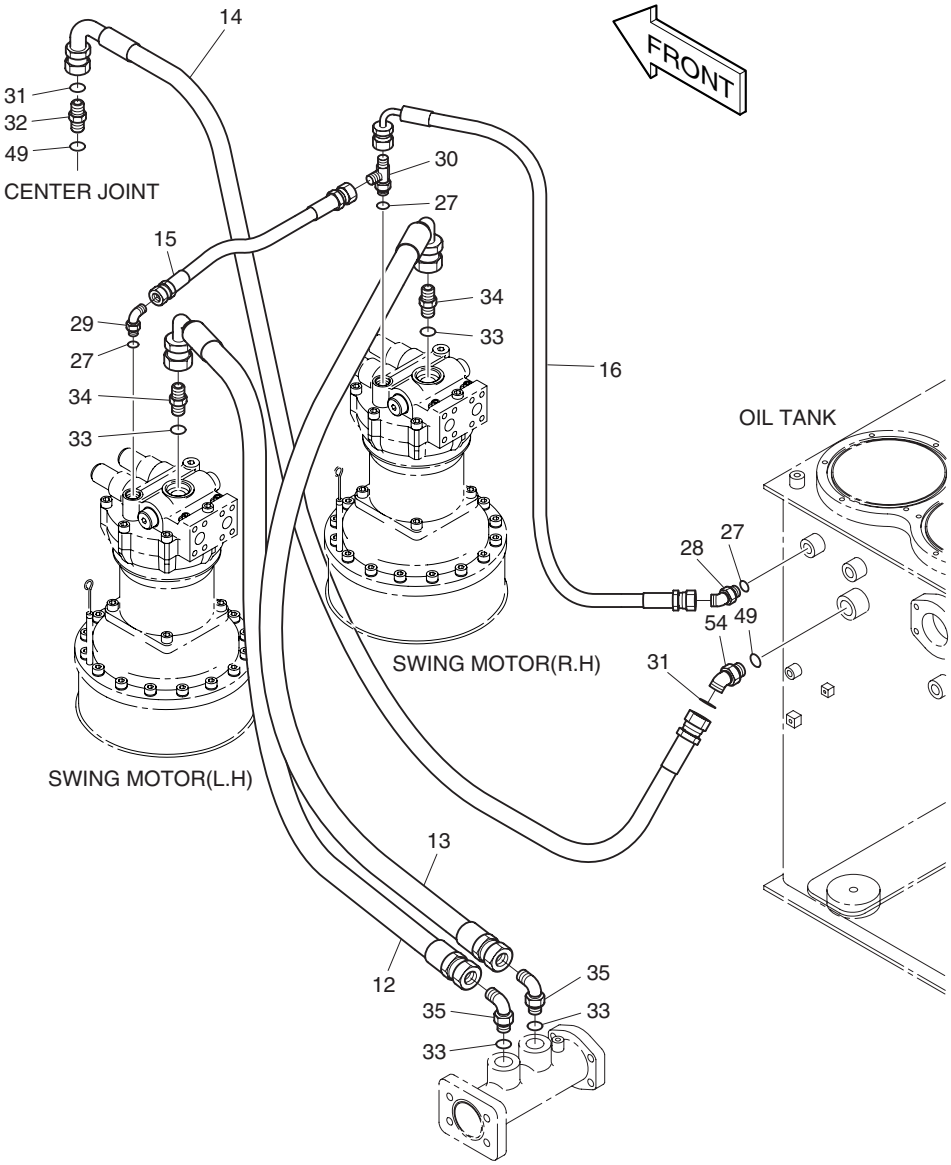

DATE	JUN. 30, 2005
REV. NO.	EXB05-05

Fig. 1250 OIL COOLER PIPING(3) CONDUITES DE HUILE

Serial No ;

Key No.	Part No.	Description	Description	Q'ty	S.C	Serial No.	ICA	Replaceable part	
								Part No.	Q'ty
1250--	**400-00706A**	**OIL COOLER PIPING**	CONDUITES DE HUILE	-	D				
12	2184-1036D344	HOSE PF1-770L	TUYAU FLEXIBLE	1					
13	2184-1036D186	HOSE PF1-1020L	TUYAU FLEXIBLE	1					
14	2184-1197D44	HOSE	TUYAU FLEXIBLE	1					
15	2184-1026D95	HOSE PF1/2-450L	TUYAU FLEXIBLE	1					
16	2184-1036D219	HOSE PF1/2-850L	TUYAU FLEXIBLE	1					
27	S8000181	O-RING	JONT TORIQUE	3					
28	2181-2419D3	ELBOW	COUDE	1					
29	2181-1702D2	ELBOW	COUDE	1					
30	2181-1951D42	TEE	TE	1					
31	S8000231	O-RING	JONT TORIQUE	2					
32	2181-2627D1	ADAPTER	ADAPTEUR	1					
33	S8000291	O-RING	JONT TORIQUE	4					
34	2181-1126D25	ADAPTER	ADAPTEUR	2					
35	2181-1702D73	ELBOW	COUDE	2					
49	S8030121	O-RING	JONT TORIQUE	2					
54	2181-2816D1	ELBOW	COUDE	1					

DATE	JUL. 30, 2003
REV. NO.	EXB03-13

Fig. 1260 MAIN PIPING(1)
CONDUITES DE BATI PRINCIPAL

Serial No. ;

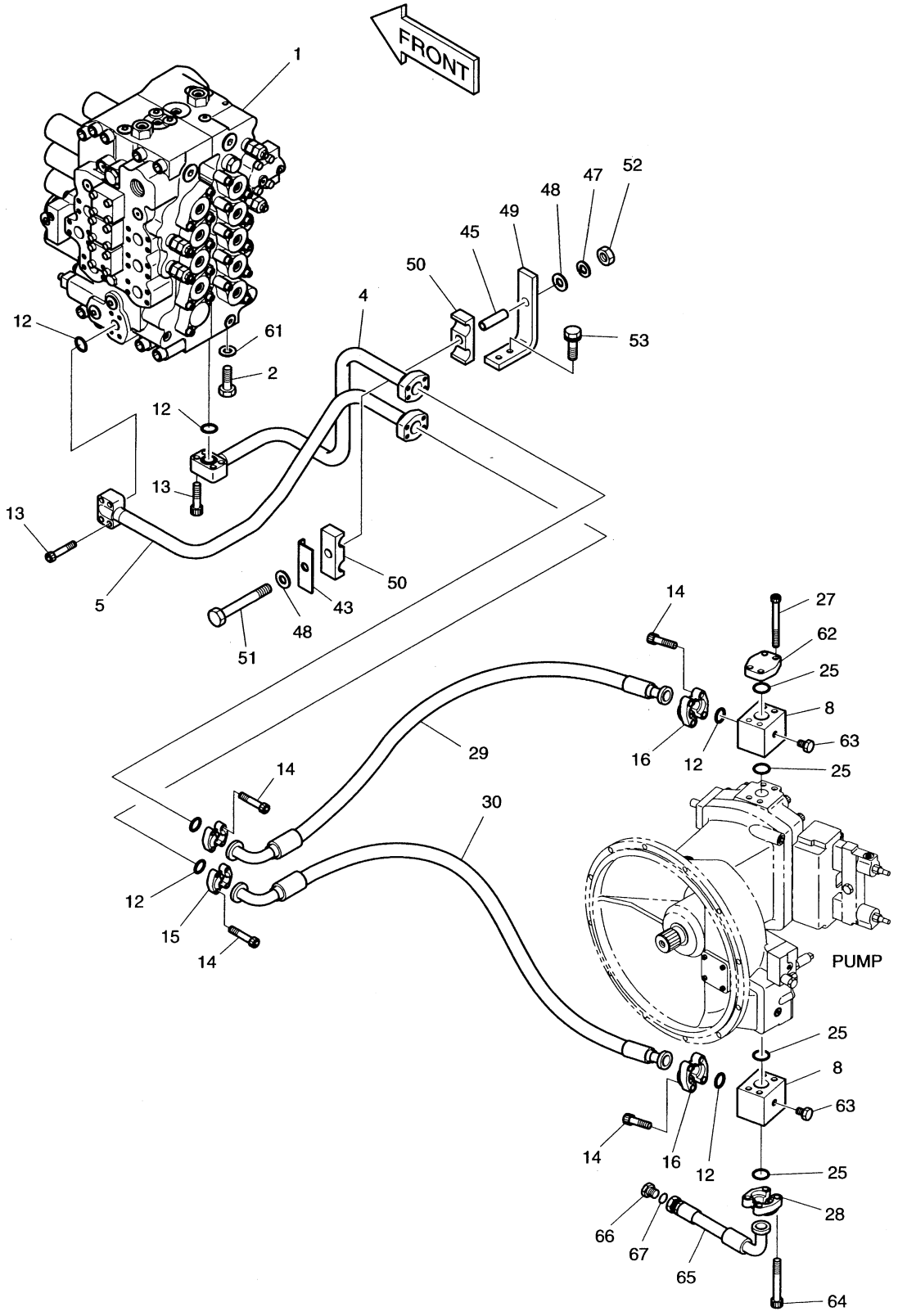

DATE	JUL. 30, 2003
REV. NO.	EXB03-13

Fig. 1260 MAIN PIPING(1) CONDUITES DE BATI PRINCIPAL

Serial No ;

Key No.	Part No.	Description	Description	Q'ty	S.C	Serial No.	ICA	Replaceable part	
								Part No.	Q'ty
1260--	400-00705	MAIN PIPING	CONDUITES DE BATI	-	D				
1	420-00280A	VALVE;CONTROL	VANNE	1					
2	S0527566	BOLT M20X2.5X45	BOULON A 6PANS	4					
4	140-00878	PIPE	CONDUITE	1					
5	140-00879A	PIPE	CONDUITE	1					
8	423-00127A	BLOCK	BLOC	2					
12	2180-1026D19	O-RING	JONT TORIQUE	6					
13	S2215766	BOLT;SOCKET M12X1.75X55	BOULON A 6 PANS CREUX	8					
14	S2215466	BOLT;SOCKET M12X1.75X40	BOULON A 6 PANS CREUX	16					
15	2181-9081	FLANGE;SPLIT	BRIDE	4					
16	2181-9084A	FLANGE;SPLIT	FLASQUE EN DEUX	4					
25	2180-1026D23	O-RING	JONT TORIQUE	4					
27	S2216666	BOLT;SOCKET M12X1.75X100	BOULON A 6 PANS CREUX	4					
28	2181-9086	FLANGE;SPLIT	FLASQUE EN DEUX	2					
29	DS2040321	HOSE	TUYAU FLEXIBLE	1					
30	DS2040321	HOSE	TUYAU FLEXIBLE	1					
43	2191-3705C	PLATE;CLAMP	PLAQUE	1					
45	114-00456	SPACER	BAGUE D'ECARTEMENT	1					
47	S5102903	WASHER;SPRING	RONDELLE ELASTIQUE	1					
48	S5010913	WASHER;PLAIN	RONDELLE PLATE	2					
49	195-01599	BRACKET	SUPPORT	1					
50	124-00210A	CLAMP	COLLIER	2					
51	S0566453	BOLT M16X2.0X110	BOULON A 6PANS	1					
52	S4012933	NUT	ECROU	1					
53	2120-2196D11	BOLT;SET M12X1.75X35	BOULON A 6PANS	2					
61	2114-9012	WASHER;HARDEN	RONDELLE ELASTIQUE	4					
62	2181-2157D8	FLANGE;COVER	BRIDE	1					
63	2181-2047A	PLUG	BOUCHON	2					
64	S2216766	BOLT;SOCKET M12X1.75X105	BOULON A 6 PANS CREUX	4					
65	DS2018067	HOSE	TUYAU FLEXIBLE	1					
66	2181-2218D6	PLUG	BOUCHON	1					
67	S8030161	O-RING	JONT TORIQUE	1					

DATE	JUL. 30, 2003
REV. NO.	EXB03-13

Fig. 1270 MAIN PIPING(2)
CONDUITES DE BATI PRINCIPAL

Serial No. ;

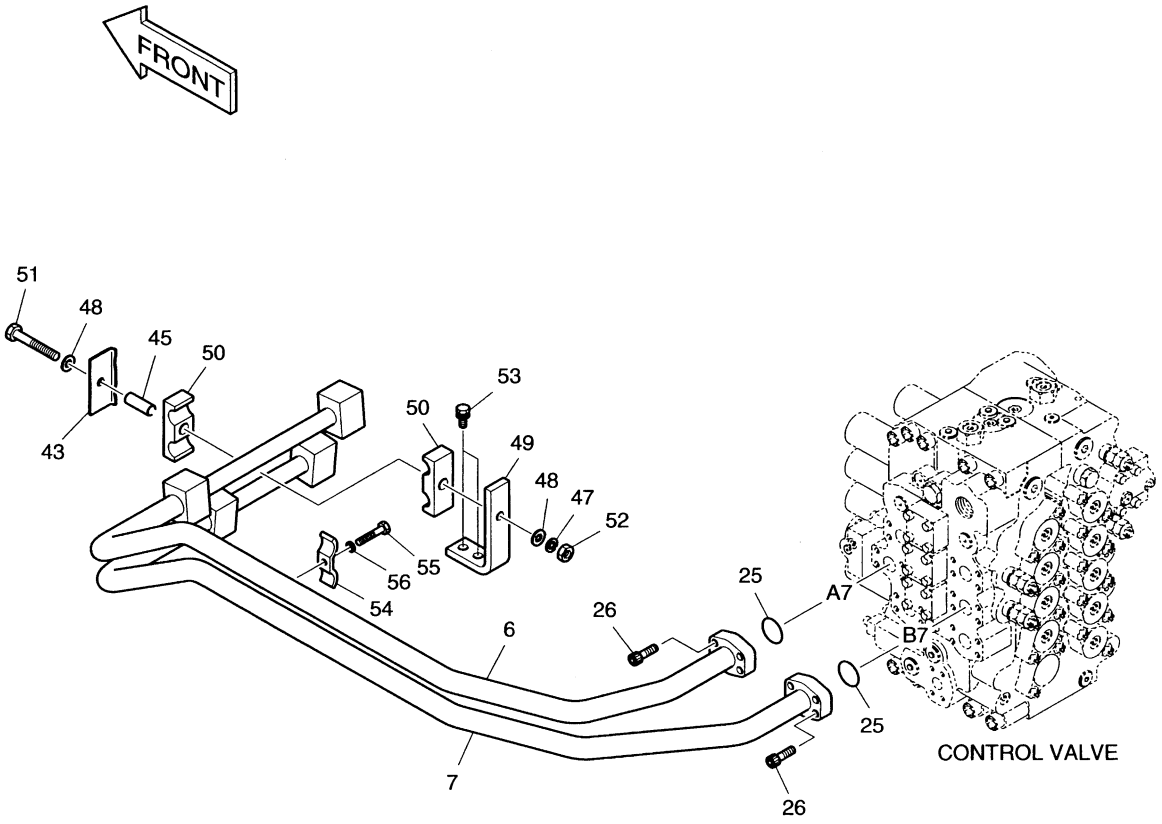

DATE	JUL. 30, 2003
REV. NO.	EXB03-13

Fig. 1270 MAIN PIPING(2) CONDUITES DE BATI PRINCIPAL

Serial No ;

Key No.	Part No.	Description	Description	Q'ty	S.C	Serial No.	ICA	Replaceable part	
								Part No.	Q'ty
1270--	400-00705	MAIN PIPING	CONDUITES DE BATI	-	D				
6	140-00880	PIPE	CONDUITE	1					
7	140-00881	PIPE	CONDUITE	1					
25	2180-1026D23	O-RING	JONT TORIQUE	2					
26	S2218566	BOLT;SOCKET M14X2.0X45	BOULON A 6 PANS CREUX	8					
43	2191-3705C	PLATE;CLAMP	PLAQUE	1					
45	114-00456	SPACER	BAGUE D'ECARTEMENT	1					
47	S5102903	WASHER;SPRING	RONDELLE ELASTIQUE	1					
48	S5010913	WASHER;PLAIN	RONDELLE PLATE	2					
49	195-01599	BRACKET	SUPPORT	1					
50	124-00210A	CLAMP	ATTACHE	2					
51	S0566453	BOLT M16X2.0X110	BOULON A 6PANS	1					
52	S4012933	NUT	ECROU	1					
53	2120-2196D11	BOLT;SET M12X1.75X35	BOULON A 6PANS	2					
54	2124-1340D19	CLAMP;PIPE	ATTACHE DE TUYAU	1					
55	S0561053	BOLT M12X1.75X65	BOULON A 6PANS	1					
56	S5102703	WASHER;SPRING M12	RONDELLE ELASTIQUE	1					

DATE	JUL. 30, 2003
REV. NO.	EXB03-13

Fig. 1280 MAIN PIPING(3) CONDUITES DE BATI PRINCIPAL

Serial No. ;

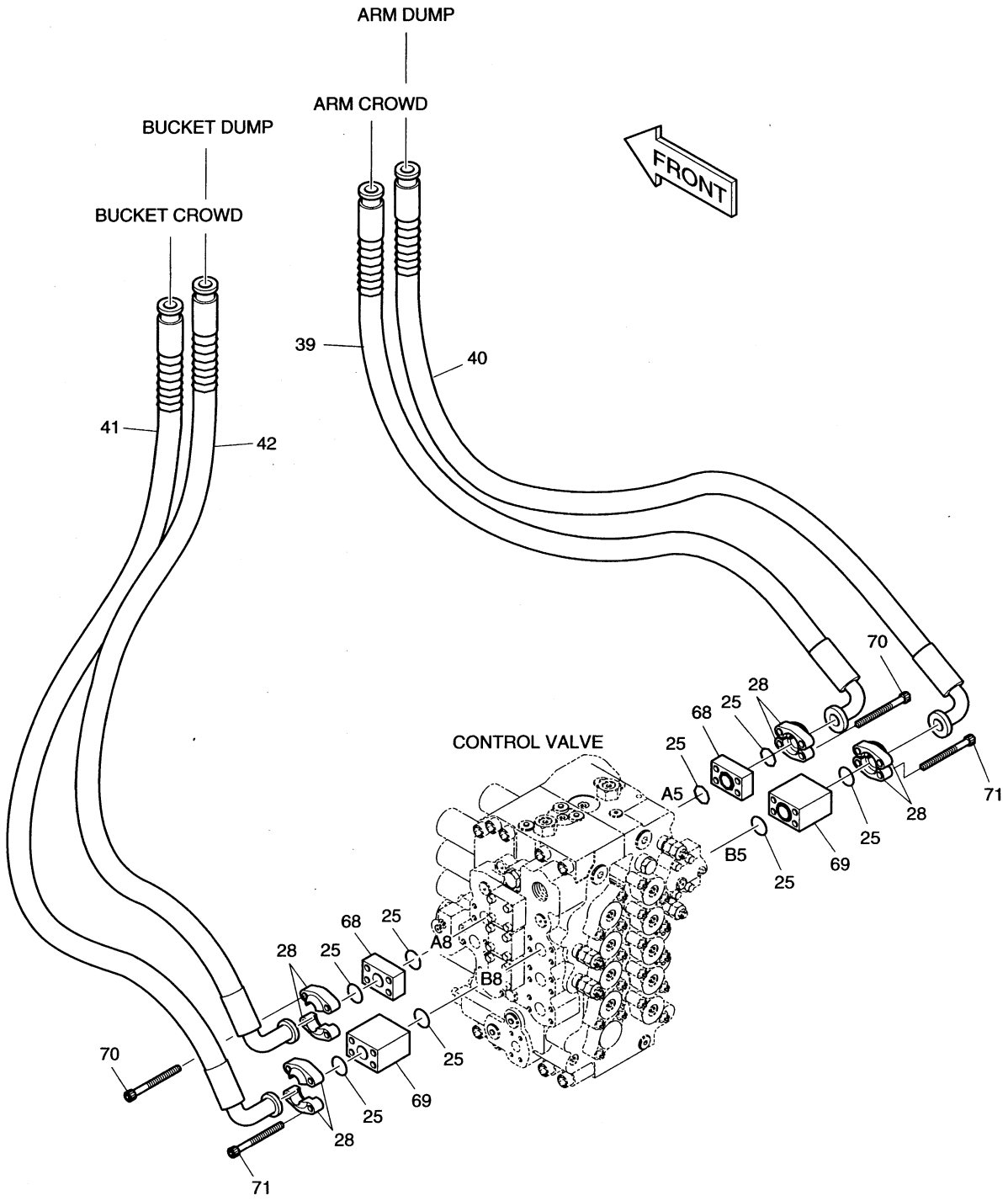

DATE	JUL. 30, 2003
REV. NO.	EXB03-13

Fig. 1280 MAIN PIPING(3) CONDUITES DE BATI PRINCIPAL

Serial No ;

Key No.	Part No.	Description	Description	Q'ty	S.C	Serial No.	ICA	Replaceable part	
								Part No.	Q'ty
1280--	400-00705	MAIN PIPING	CONDUITES DE BATI	-	D				
25	2180-1026D23	O-RING	JONT TORIQUE	8					
28	2181-9086	FLANGE;SPLIT	FLASQUE EN DEUX	8					
39	DS2040330	HOSE	TUYAU FLEXIBLE	1					
40	DS2040331	HOSE	TUYAU FLEXIBLE	1					
41	DS2040331	HOSE	TUYAU FLEXIBLE	1					
42	DS2040330	HOSE	TUYAU FLEXIBLE	1					
68	423-00162	BLOCK;SPACER	BLOC	2					
69	423-00163	BLOCK;SPACER	BLOC	2					
70	S2219366	BOLT;SOCKET M14X2.0X85	BOULON A 6 PANS CREUX	8					
71	S2220466	BOLT;SOCKET M14X2.0X150	BOULON A 6 PANS CREUX	8					

DATE	JUL. 30, 2003
REV. NO.	EXB03-13

Fig. 1290 MAIN PIPING(4)
CONDUITES DE BATI PRINCIPAL

Serial No. ;

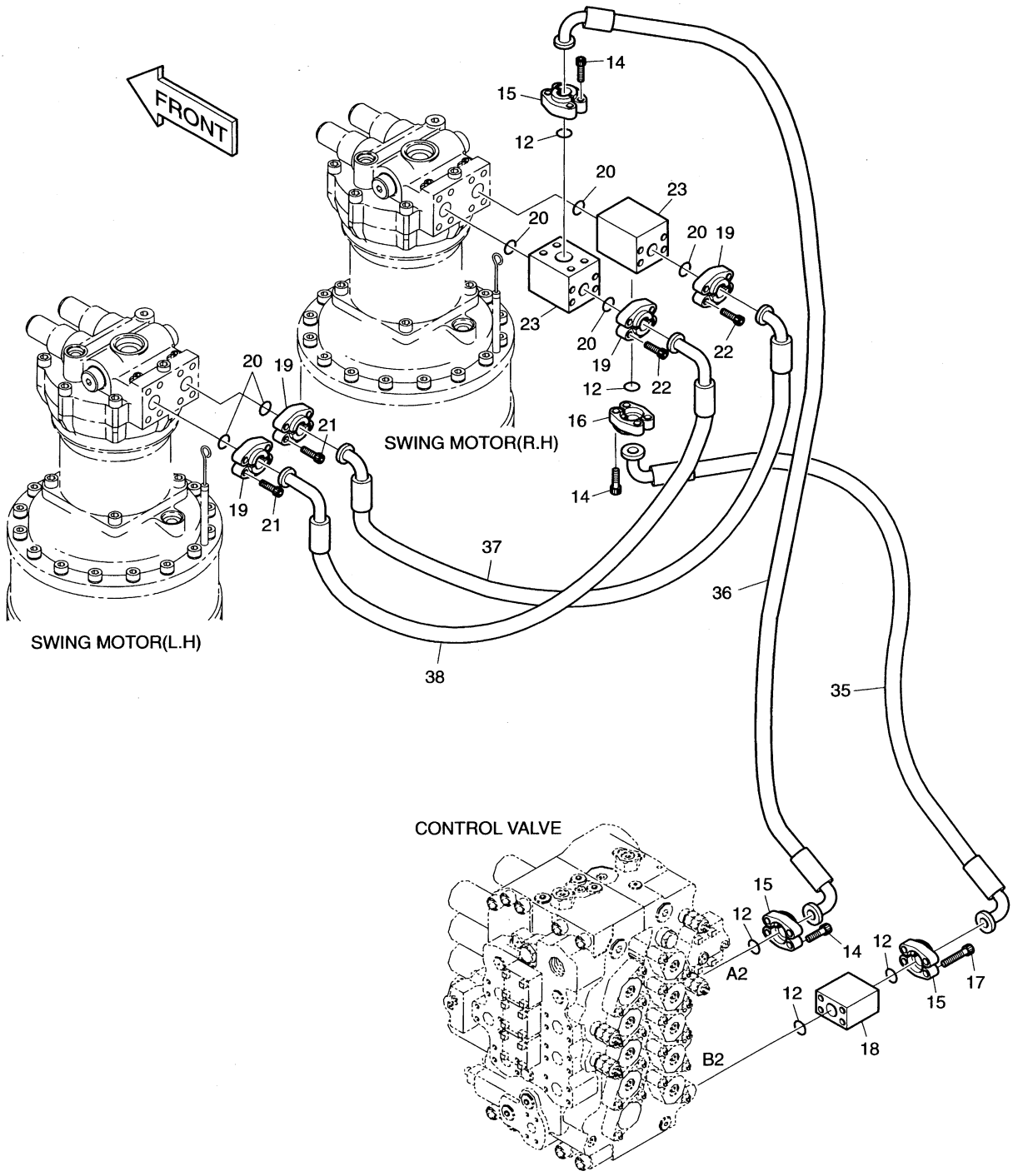

DATE	JUL. 30, 2003
REV. NO.	EXB03-13

Fig. 1290 MAIN PIPING(4) CONDUITES DE BATI PRINCIPAL

Serial No ;

Key No.	Part No.	Description	Description	Q'ty	S.C	Serial No.	ICA	Replaceable part	
								Part No.	Q'ty
1290--	400-00705	MAIN PIPING	CONDUITES DE BATI	-	D				
12	2180-1026D19	O-RING	JONT TORIQUE	5					
14	S2215466	BOLT;SOCKET M12X1.75X40	BOULON A 6 PANS CREUX	12					
15	2181-9081	FLANGE;SPLIT	BRIDE	6					
16	2181-9084A	FLANGE;SPLIT	FLASQUE EN DEUX	2					
17	S2217066	BOLT;SOCKET M12X1.75X120	BOULON A 6 PANS CREUX	4					
18	423-00015	BLOCK;VALVE	BLOC	1					
19	2181-9079	FLANGE	FLASQUE EN DEUX	8					
20	2180-1026D2	O-RING	JONT TORIQUE	6					
21	S2212266	BOLT;SOCKET M10X1.5X30	BOULON A 6 PANS CREUX	8					
22	S2213866	BOLT;SOCKET M10X1.5X110	BOULON A 6 PANS CREUX	8					
23	2423-1570	BLOCK	BLOC	2					
35	DS2045271	HOSE	TUYAU FLEXIBLE	1					
36	2184-1124D191	HOSE	TUYAU FLEXIBLE	1					
37	2184-1124D60	HOSE	TUYAU FLEXIBLE	1					
38	2184-1124D197	HOSE	TUYAU FLEXIBLE	1					

DATE	JUL. 30, 2003
REV. NO.	EXB03-13

Fig. 1300 MAIN PIPING(5)
CONDUITES DE BATI PRINCIPAL

Serial No. ;

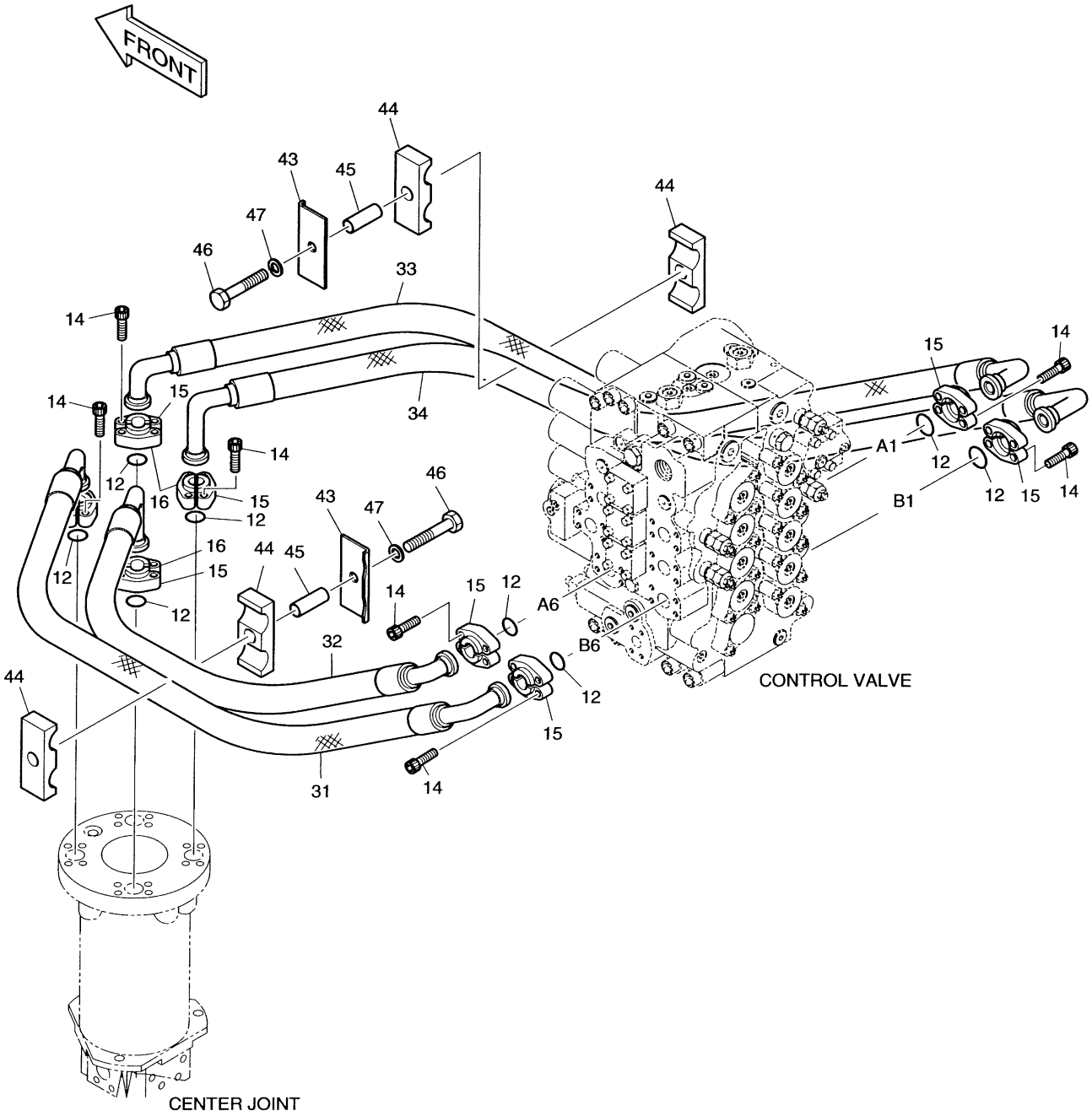

DATE	JUL. 30, 2003
REV. NO.	EXB03-13

Fig. 1300 MAIN PIPING(5) CONDUITES DE BATI PRINCIPAL

Serial No ;

Key No.	Part No.	Description	Description	Q'ty	S.C	Serial No.	ICA	Replaceable part	
								Part No.	Q'ty
1300--	400-00705	MAIN PIPING	CONDUITES DE BATI	-	D				
12	2180-1026D19	O-RING	JONT TORIQUE	8					
14	S2215466	BOLT;SOCKET M12X1.75X40	BOULON A 6 PANS CREUX	32					
15	2181-9081	FLANGE;SPLIT	BRIDE	12					
16	2181-9084A	FLANGE;SPLIT	FLASQUE EN DEUX	4					
31	DS2045239	HOSE	TUYAU FLEXIBLE	1					
32	DS2045269	HOSE	TUYAU FLEXIBLE	1					
33	DS2045234	HOSE	TUYAU FLEXIBLE	1					
34	DS2045270	HOSE	TUYAU FLEXIBLE	1					
43	2191-3705C	PLATE;CLAMP	PLAQUE	2					
44	124-00247	CLAMP;HOSE	COLLIER	4					
45	114-00456	SPACER	BAGUE D'ECARTEMENT	2					
46	S0566053	BOLT M16X2.0X90	BOULON A 6PANS	2					
47	S5102903	WASHER;SPRING	RONDELLE ELASTIQUE	2					

DATE	JUL. 30, 2003
REV. NO.	EXB03-13

Fig. 1310 MAIN PIPING-ONE & TWO WAY
CONDUITES DE BATI PRINCIPAL

Serial No. ;

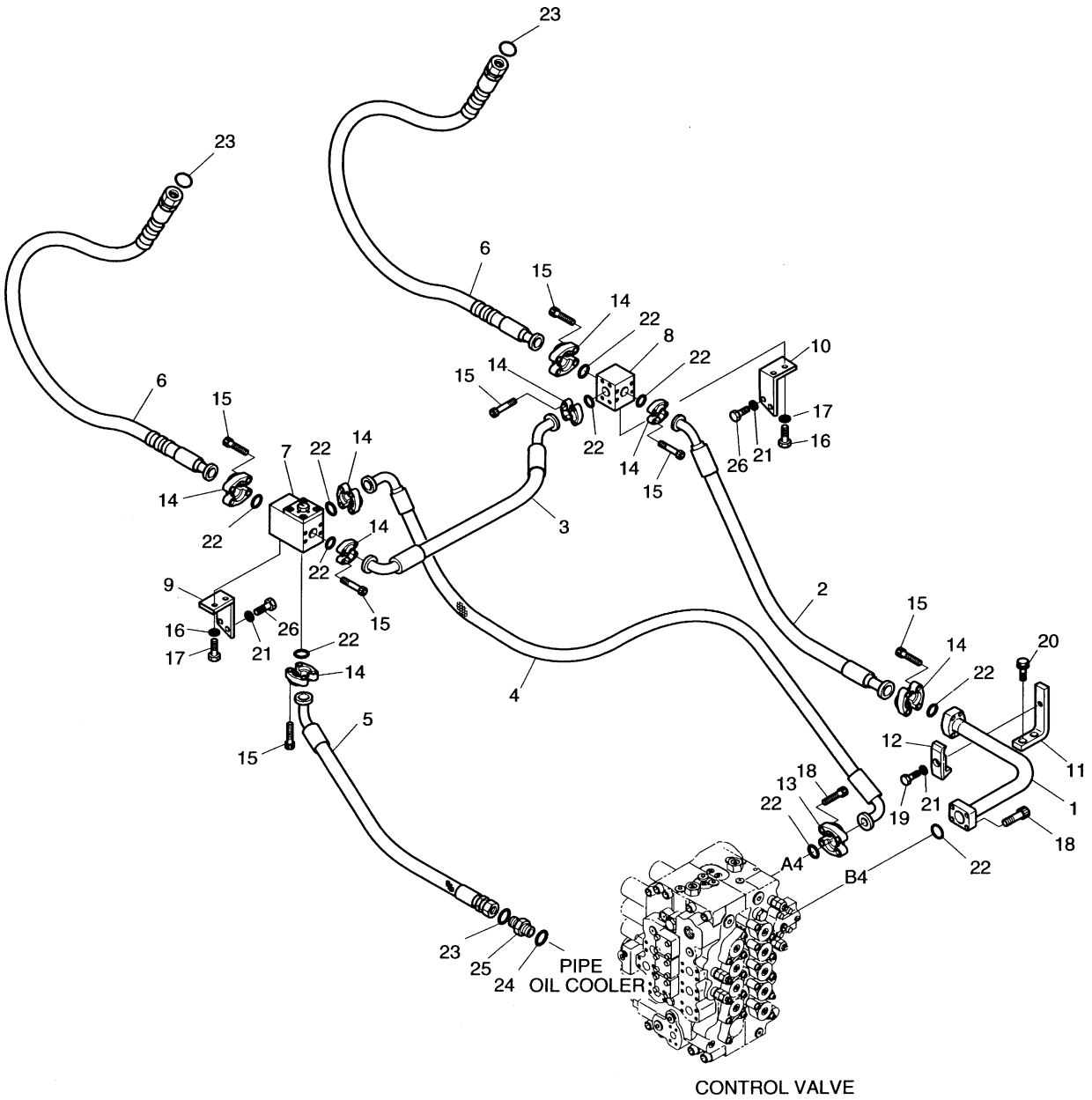

DATE	JUL. 30, 2003
REV. NO.	EXB03-13

Fig. 1310 MAIN PIPING-ONE & TWO WAY CONDUITES DE BATI PRINCIPAL

Serial No ;

Key No.	Part No.	Description	Description	Q'ty	S.C	Serial No.	ICA	Replaceable part	
								Part No.	Q'ty
1310--	400-00924A	MAIN PIPING-ONE & TWO WAY	CONDUITES DE	-	D				
1	140-01169	PIPE	TUYAU	1					
2	2184-1098D55	HOSE	TUYAU FLEXIBLE	1					
3	DS2043065	HOSE	TUYAU FLEXIBLE	1					
4	2184-1124D96	HOSE	TUYAU FLEXIBLE	1					
5	DS2017034	HOSE	TUYAU FLEXIBLE	1					
6	DS2016011	HOSE	TUYAU FLEXIBLE	2					
7	421-00019	VALVE;SWITCH	VANNE	1					
7A	S8000321	. O-RING(P32)	. JOINT TORIQUE	2					
7B	S8000381	. O-RING(P38)	. JOINT TORIQUE	2					
8	423-00150	BLOCK	BLOC	1					
9	195-01917A	BRACKET	SUPPORT	1					
10	195-01918A	BRACKET	SUPPORT	1					
11	195-01919	BRACKET	SUPPORT	1					
12	2124-1026D3	CLAMP;PIPE	ATTACHE DE TUBE	1					
13	2181-9081	FLANGE;SPLIT	BRIDE	2					
14	2181-9078	FLANGE	BRIDE	16					
15	S2212266	BOLT;SOCKET M10X1.5X30	BOULON A 6 PANS CREUX	32					
16	S0512253	BOLT M10X1.5X30	BOULON A 6PANS	4					
17	S5102603	WASHER;SPRING M10	RONDELLE ELASTIQUE	4					
18	S2215466	BOLT;SOCKET M12X1.75X40	BOULON A 6 PANS CREUX	8					
19	S0561053	BOLT M12X1.75X65	BOULON A 6PANS	1					
20	2120-2196D11	BOLT;SET M12X1.75X35	BOULON A 6PANS	2					
21	S5102703	WASHER;SPRING M12	RONDELLE ELASTIQUE	5					
22	2180-1026D19	O-RING	JONT TORIQUE	10					
23	S8030161	O-RING	JONT TORIQUE	3					
24	S8000291	O-RING	JONT TORIQUE	1					
25	2181-4133D6	ADAPTER	RACCORD ADAPTATEUR	1					
26	S0515353	BOLT;M10X1.75X35	RACCORD ADAPTATEUR	4					

DATE	JUL. 30, 2003
REV. NO.	EXB03-13

Fig. 1320 ENGINE CONTROL ASS'Y
COMMANDE REGIME MOTEUR

Serial No. ;

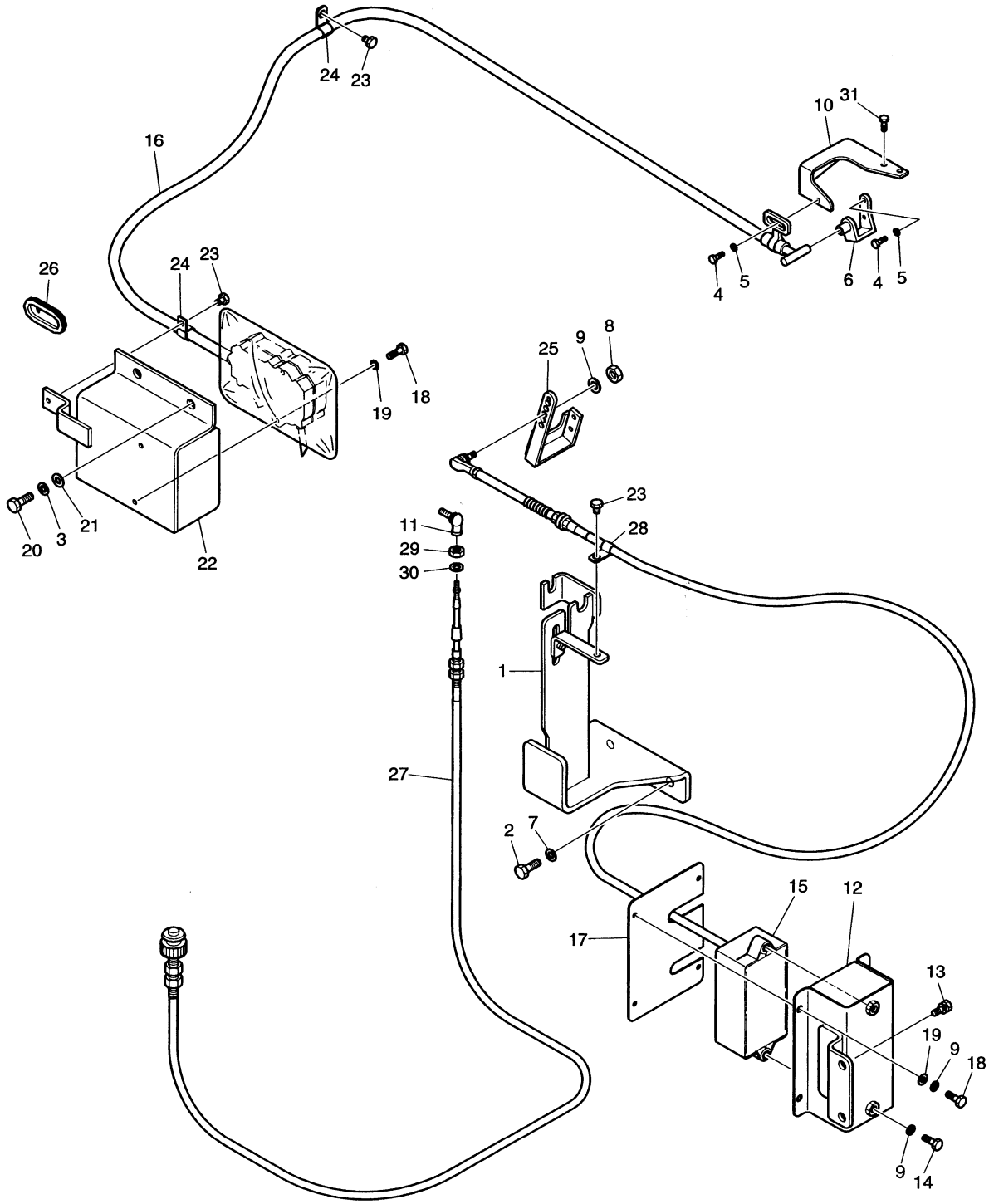

DATE	JUL. 30, 2003
REV. NO.	EXB03-13

Fig. 1320 ENGINE CONTROL ASS'Y COMMANDE REGIME MOTEUR

Serial No ;

Key No.	Part No.	Description	Description	Q'ty	S.C	Serial No.	ICA	Replaceable part	
								Part No.	Q'ty
1320--	201-00099	ENGINE CONTROL ASS'Y	COMMANDE REGIME	-	D				
1	195-01922	BRACKET	SUPPORT	1					
2	2120-2231	BOLT M12X1.5X75	BOULON A 6PANS	2					
3	S5102603	WASHER;SPRING M10	RONDELLE ELASTIQUE	2					
4	S0504553	BOLT M6X1.0X14	BOULON A 6PANS	5					
5	S5102303	WASHER;SPRING	RONDELLE ELASTIQUE M6	5					
6	150-00011	HOOK;CABLE	CROCHET	1					
7	S5102703	WASHER;SPRING M12	RONDELLE ELASTIQUE	2					
8	S4012533	NUT	ECROU	1					
9	S5102503	WASHER M8	RONDELLE ELASTIQUE	7					
10	195-01923A	BRACKET	SUPPORT	1					
11	2138-9006B	JOINT;BALL	ENSEMBLE DE JOINT	1					
12	195-01503B	BRACKET	SUPPORT	1					
13	2120-2196D8	BOLT;SET M12X1.75X30	BOULON A 6PANS	2					
14	S0556053	BOLT M8X1.25X35	BOULON A 6PANS	2					
15	523-00008	MOTOR;E/G CONTROL	MOTEUR	1					
16	2523-9016	MOTOR;E/G STOP	MOTEUR	1					
17	621-01909	COVER	COUVERTURE	1					
18	S0508853	BOLT M8X1.25X20	BOULON A 6PANS	6					
19	S5010513	WASHER;PLAIN	RONDELLE M8	6					
20	S0511853	BOLT M10X1.5X20	BOULON A 6PANS	2					
21	S5010613	WASHER;PLAIN	RONDELLE PLATE	2					
22	2197-1802A	BRACKET	SUPPORT	1					
23	120-00276	BOLT M8X1.25X12	BOULON A 6PANS	3					
24	2124-1509D10	CLIP	ATTACHE	2					
25	133-00166	LEVER;E/G CONTROL	LEVIER	1					
26	160-00040	BUSHING;RUBBER	TUYAU FLEXIBLE	1					
27	2139-6055D15	CABLE;CONTROL	CABLE	1					
28	2124-1509D1	CLIP	ATTACHE	1					
29	S4012233	NUT	ECROU	1					
30	S5102203	WASHER;SPRING	RONDELLE ELASTIQUE	1					
31	S0504853	BOLT M6X1.0X20	BOULON A 6PANS	2					

DATE	JUN. 30, 2005
REV. NO.	EXB05-05

Fig. 1330 PILOT PIPING(1)
CONDUITES DE PILOTE

Serial No. ;

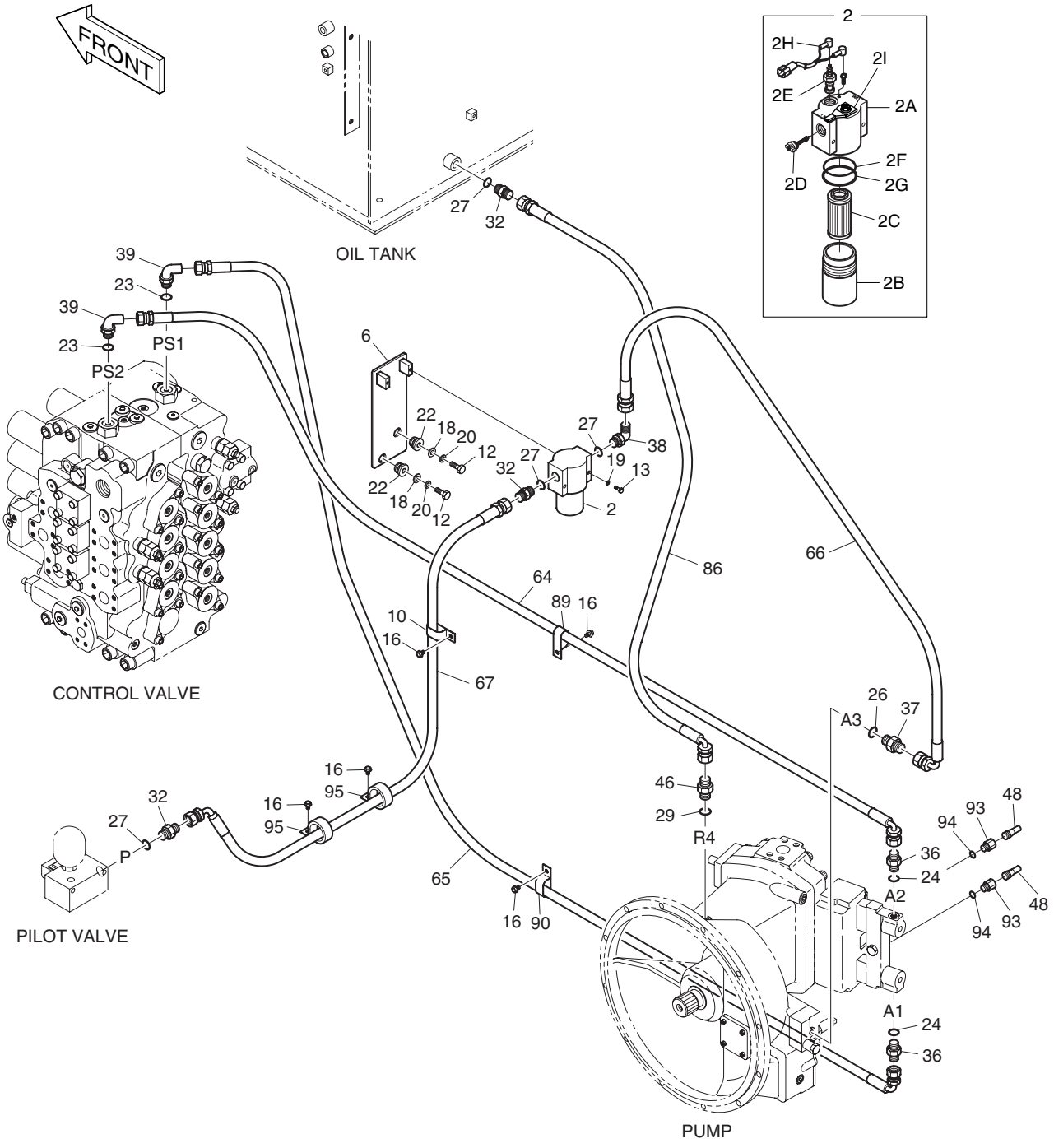

DATE	JUN. 30, 2005
REV. NO.	EXB05-05

Fig. 1330 PILOT PIPING(1) CONDUITES DE PILOTE

Serial No ;

Key No.	Part No.	Description	Description	Q'ty	S.C	Serial No.	ICA	Replaceable part	
								Part No.	Q'ty
1330--	400-00697	PILOT PIPING	CONDUITES DE PILOTE	-	D	1001–1498			
	400-00697A	**PILOT PIPING**	CONDUITES DE PILOTE	-	D	**1499–**			
2	471-00075A	FILTER;PILOT	FILTRE	1					
2A	-	. HEAD	. COUVERCLE	1	D				
2B	2472-7003	. CASE	. CARTER	1					
2C	2471-1154	. ELEMENT;PILOT FILTER	. ELEMENT FILTRANT	1					
2D	2426-1237	. VALVE;BY-PASS	. CLAPET DE DERIVATION	1					
2E	2471-1155A	. INDICATOR	. FILTRE DE GAZOLE	1					
2F	Y-3738-04	. O-RING	. JOINT TORIQUE	1					
2G	Y-3738-05	. RING;BACK UP	. BAGUE D'ETANCHEITE	1					
2H	530-00236	. HARNESS;PILOT FILTER	. FAISCEAU	1					
2I	2197-1661	. BRACKET	. SUPPORT	1					
6	195-01601	BRACKET	SUPPORT	1					
10	124-00209D4	CLIP	ATTACHE	1					
12	S0512353	BOLT M10X1.5X35	BOULON A 6PANS	2					
13	S0553753	BOLT M6X1.0X55	BOULON A 6PANS	2					
16	120-00276	BOLT M8X1.25X12	BOULON A 6PANS	5					
18	2114-1058D10	WASHER	RONDELLE PLATE	2					
19	S5102303	WASHER;SPRING	RONDELLE ELASTIQUE M6	2					
20	S5102603	WASHER;SPRING	RONDELLE ELASTIQUE	2					
22	198-00016	RUBBER	CAOUTCHOUC	2					
23	S8000111	O-RING	JONT TORIQUE	2					
24	S8180211	RING;SEAL	RONDELLE	2					
26	S8180281	RING;SEAL	RONDELLE D'ETANCHEITE	1					
27	S8000181	O-RING	JONT TORIQUE	4					
29	S8040081	O-RING	JONT TORIQUE	1					
32	2181-1126D6	ADAPTER PFO1/2-PF1/2	ADAPTEUR	3					
36	2181-1917D5	ADAPTER	ADAPTEUR	2					
37	2181-1917D13	ADAPTER	ADAPTEUR	1					
38	2181-1702D2	ELBOW PFO1/2-PF1/2	COUDE	1					
39	2181-1702D4	ELBOW PFO1/4-PF1/4	COUDE	2					
46	2181-1126D92	ADAPTER	ADAPTEUR	1		1001–1498			
	DS2380004	**ADAPTER**	ADAPTEUR	1		**1499–**			
48	2547-9045	SENSOR;PRESSURE	CAPTEUR	2					
64	2184-1046D194	HOSE PF1/4-2800L	TUYAU FLEXIBLE	1					
65	2184-1046D180	HOSE PF1/4-2700L	TUYAU FLEXIBLE	1					
66	2184-1036D14	HOSE PF1/2-1420L	TUYAU FLEXIBLE	1					
67	DS2054237	HOSE PF1/2-2650L	TUYAU FLEXIBLE	1					

DATE	JUN. 30, 2005
REV. NO.	EXB05-05

Fig. 1330 PILOT PIPING(1)
CONDUITES DE PILOTE

Serial No. ;

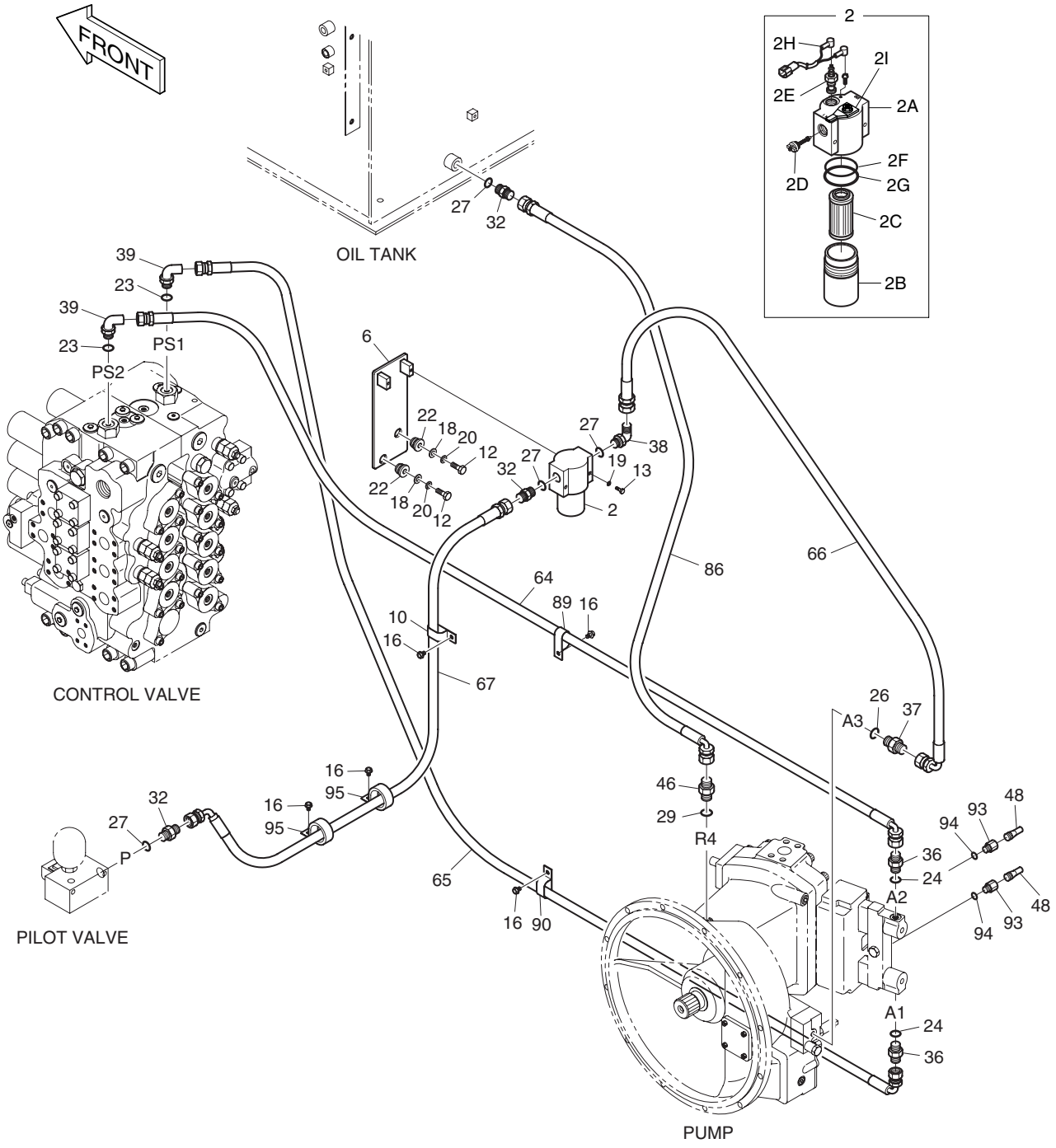

DATE	JUN. 30, 2005
REV. NO.	EXB05-05

Fig. 1330 PILOT PIPING(1)
CONDUITES DE PILOTE

Serial No ;

Key No.	Part No.	Description	Description	Q'ty	S.C	Serial No.	ICA	Replaceable part	
								Part No.	Q'ty
1330-86	2184-1036D147	HOSE PF1/2-1000L	TUYAU FLEXIBLE	1					
89	124-00209D2	CLIP	ATTACHE	1					
90	124-00208D4	CLIP	ATTACHE	1					
93	181-00716	ADAPTER	ADAPTEUR	2					
94	S8040061	O-RING	JONT TORIQUE	2					
95	124-00208D7	CLIP	ATTACHE	2					

DATE	JUL. 30, 2003
REV. NO.	EXB03-13

Fig. 1340 PILOT PIPING(2) CONDUITES DE PILOTE

Serial No. ;

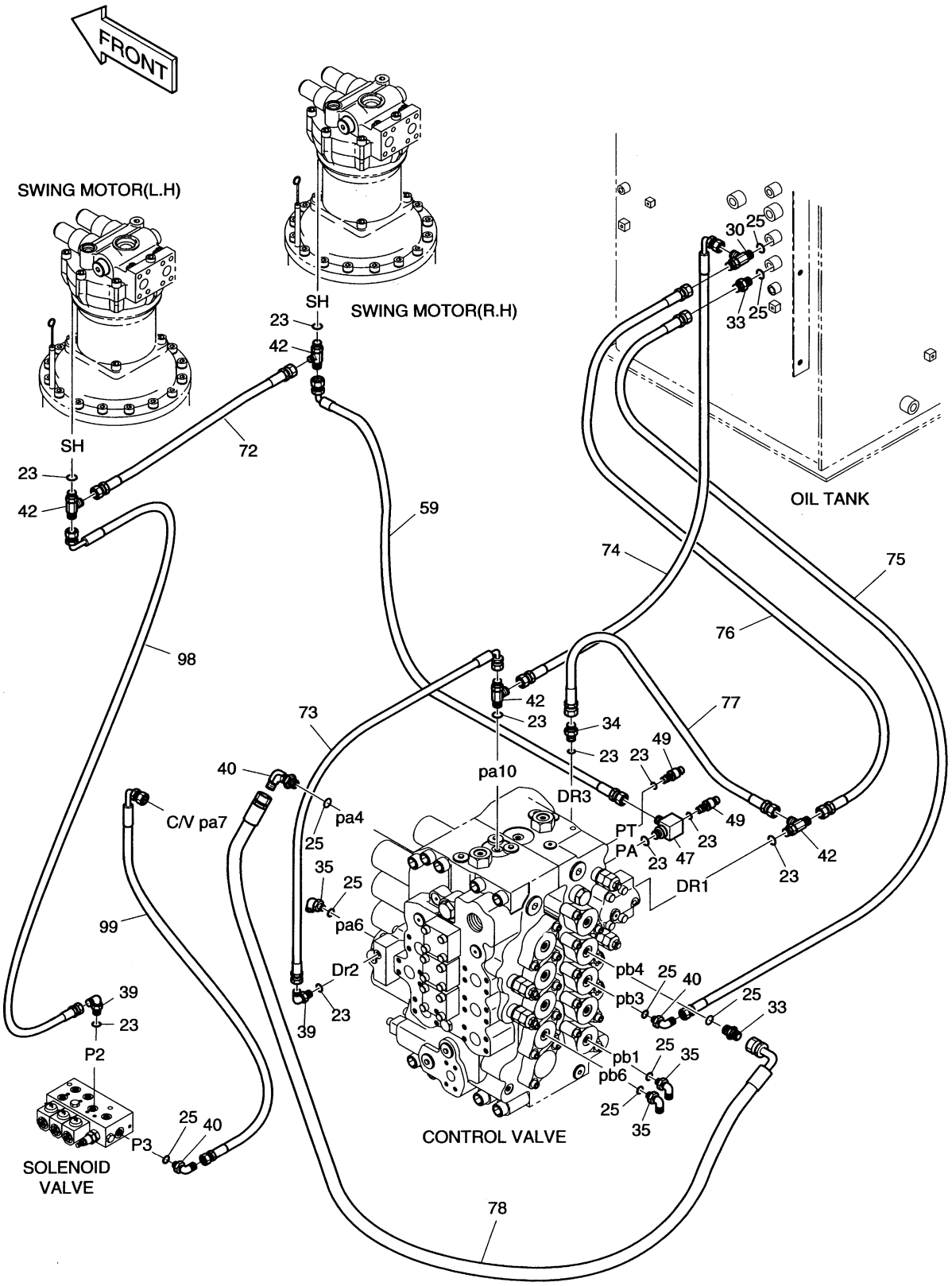

DATE	JUL. 30, 2003
REV. NO.	EXB03-13

Fig. 1340 PILOT PIPING(2) CONDUITES DE PILOTE

Serial No ;

Key No.	Part No.	Description	Description	Q'ty	S.C	Serial No.	ICA	Replaceable part	
								Part No.	Q'ty
1340--	400-00697	PILOT PIPING	CONDUITES DE PILOTE	-	D				
23	S8000111	O-RING	JONT TORIQUE	10					
25	S8000141	O-RING	JONT TORIQUE	9					
30	2181-1951D7	TEE PFO3/8-2PF1/4	TE	1					
33	2181-1126D7	ADAPTER PFO3/8-PF3/8	ADAPTEUR	2					
34	2181-1126D14	ADAPTER PFO1/4-PF1/4	ADAPTEUR	1					
35	2181-1702D10	ELBOW PFO3/8-PF1/4	COUDE	3					
39	2181-1702D4	ELBOW PFO1/4-PF1/4	COUDE	2					
40	2181-1702D5	ELBOW PFO3/8-PF/8	COUDE EN S	3					
42	2181-1951D1	TEE PFO1/4-2PF1/4	TE	4					
47	2181-2760	TEE 2PFO1/4-PF1/4	RACCORD ADAPTATEUR	1					
49	2549-9112	SWITCH;PRESSURE	INTERRUPTEUR	2					
59	2184-1060D52	HOSE PF1/4-1100L	TUYAU FLEXIBLE	1					
72	2184-1045D42	HOSE PF1/4-420L	TUYAU FLEXIBLE	1					
73	2184-1046D206	HOSE PF1/4-550L	TUYAU FLEXIBLE	1					
74	2184-1046D133	HOSE PF1/4-625L	TUYAU FLEXIBLE	1					
75	2184-1045D226	HOSE PF3/8-570L	TUYAU FLEXIBLE	1					
76	2184-1060D69	HOSE PF1/4-400L	TUYAU FLEXIBLE	1					
77	2184-1046D197	HOSE PF1/4-300L	TUYAU FLEXIBLE	1					
78	2184-1046D237	HOSE PF3/8-1100L	TUYAU FLEXIBLE	1					
98	2184-1060D32	HOSE PF3/8-1300L	TUYAU FLEXIBLE	1					
99	2184-1046D294	HOSE PF1/4-1665L	TUYAU FLEXIBLE	1					

DATE	DEC. 29, 2005
REV. NO.	EXB05-20

Fig. 1350 PILOT PIPING(3)
CONDUITES DE PILOTE

Serial No. ;

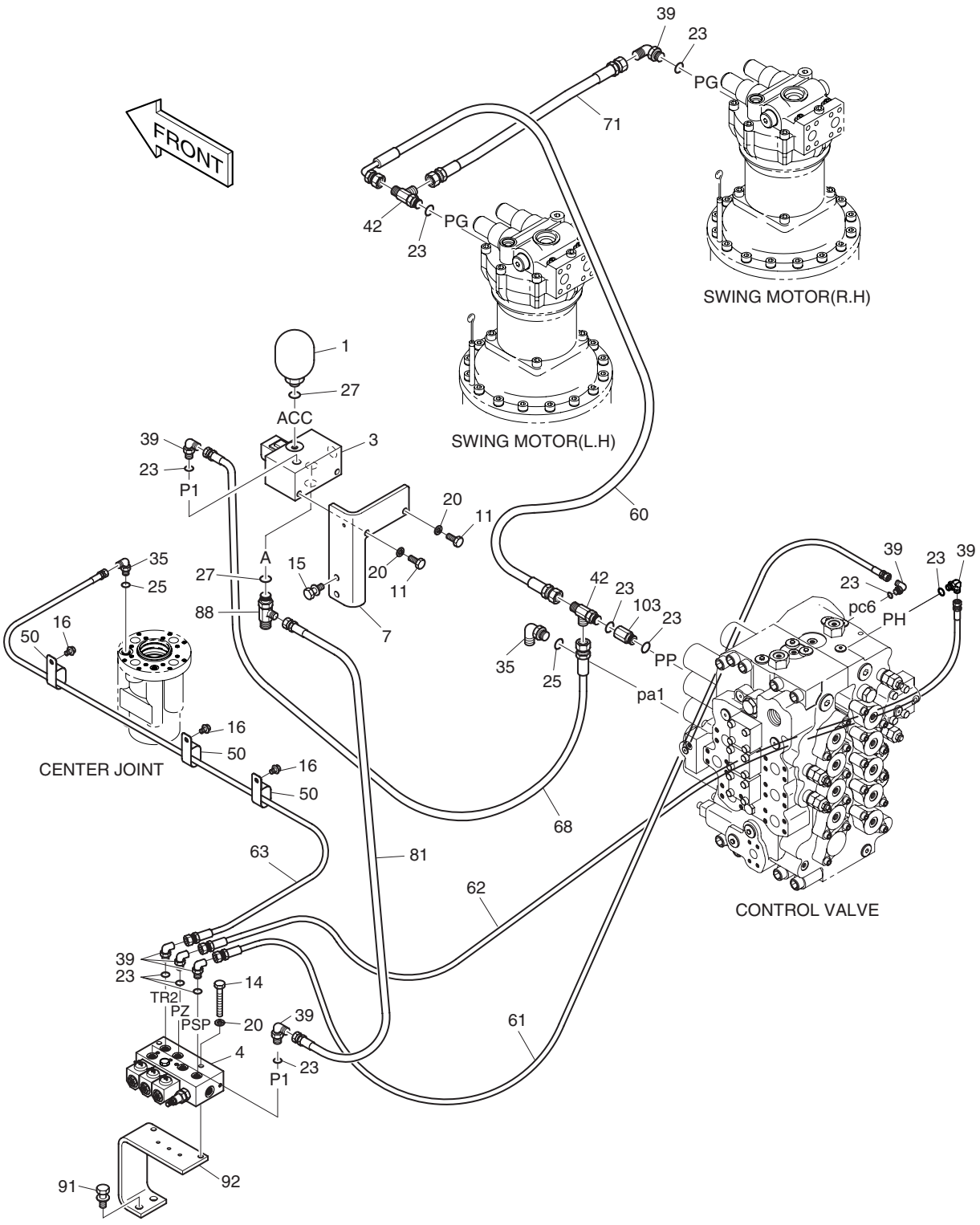

DATE	DEC. 29, 2005
REV. NO.	EXB05-20

Fig. 1350 PILOT PIPING(3) CONDUITES DE PILOTE

Serial No ;

Key No.	Part No.	Description	Description	Q'ty	S.C	Serial No.	ICA	Replaceable part	
								Part No.	Q'ty
1350--	**400-00697B**	**PILOT PIPING**	CONDUITES DE PILOTE	-	D				
1	2460-9060	ACCUMULATOR;PILOT	RESERVOIR	1					
3	2426-9039B	VALVE;PILOT	VANNE	1		1001–1319	I	2426-9039C	1
	2426-9039C	VALVE;PILOT	VANNE	1		1320–			
4	420-00369C	VALVE;SOLENOID	VANNE	1		1001–1319	I	420-00369E	1
	420-00369E	VALVE;SOLENOID	VANNE	1		1320–			
7	195-01583B	BRACKET;PILOT VALVE	SUPPORT	1					
11	S0512053	BOLT M10X1.5X25	BOULON A 6PANS	2					
14	S0558953	BOLT M10X1.5X70	BOULON A 6PANS	2					
15	2120-2196D4	BOLT;SET M10X1.5X30	BOULON A 6PANS	2					
16	120-00276	BOLT M8X1.25X12	BOULON A 6PANS	3					
20	S5102603	WASHER;SPRING M10	RONDELLE ELASTIQUE	4					
23	S8000111	O-RING	JONT TORIQUE	10		1001–1592			
	S8000111	**O-RING**	JONT TORIQUE	11		**1593–**			
25	S8000141	O-RING	JONT TORIQUE	2					
27	S8000181	O-RING	JONT TORIQUE	2					
35	2181-1702D10	ELBOW PF3/8-PF1/4	COUDE	2					
39	2181-1702D4	ELBOW PF1/4-PF1/4	COUDE	8					
42	2181-1951D1	TEE PFO1/4-PF1/4	TE	2					
50	124-00209D1	CLIP	ATTACHE	3					
60	2184-1046D84	HOSE PF1/4-1050L	TUYAU FLEXIBLE	1					
61	2184-1045D208	HOSE PF1/4-1540L	TUYAU FLEXIBLE	1					
62	2184-1045D201	HOSE PF1/4-1100L	TUYAU FLEXIBLE	1					
63	2184-1045D202	HOSE PF1/4-1650L	TUYAU FLEXIBLE	1					
68	2184-1045D190	HOSE PF1/4-1200L	TUYAU FLEXIBLE	1					
71	2184-1045D42	HOSE PF1/4-420L	TUYAU FLEXIBLE	1					
81	2184-1045D158	HOSE PF1/4-650L	TUYAU FLEXIBLE	1					
88	2181-1951D19	TEE PFO1/2-PF1/4-PF1/2	TE	1					
91	2120-2196D8	BOLT;SET M12X1.75X30	BOULON A 6PANS	2					
92	195-01999	BRACKET	SUPPORT	1					
103	**471-00118**	**FILTER;REDUCER**	FILTRE DE REDUCTEUR	1		**1593–**			

DATE	DEC. 15, 2006
REV. NO.	EXB06-13

Fig. 1360 PILOT PIPING(4)
CONDUITES DE PILOTE

Serial No. ;

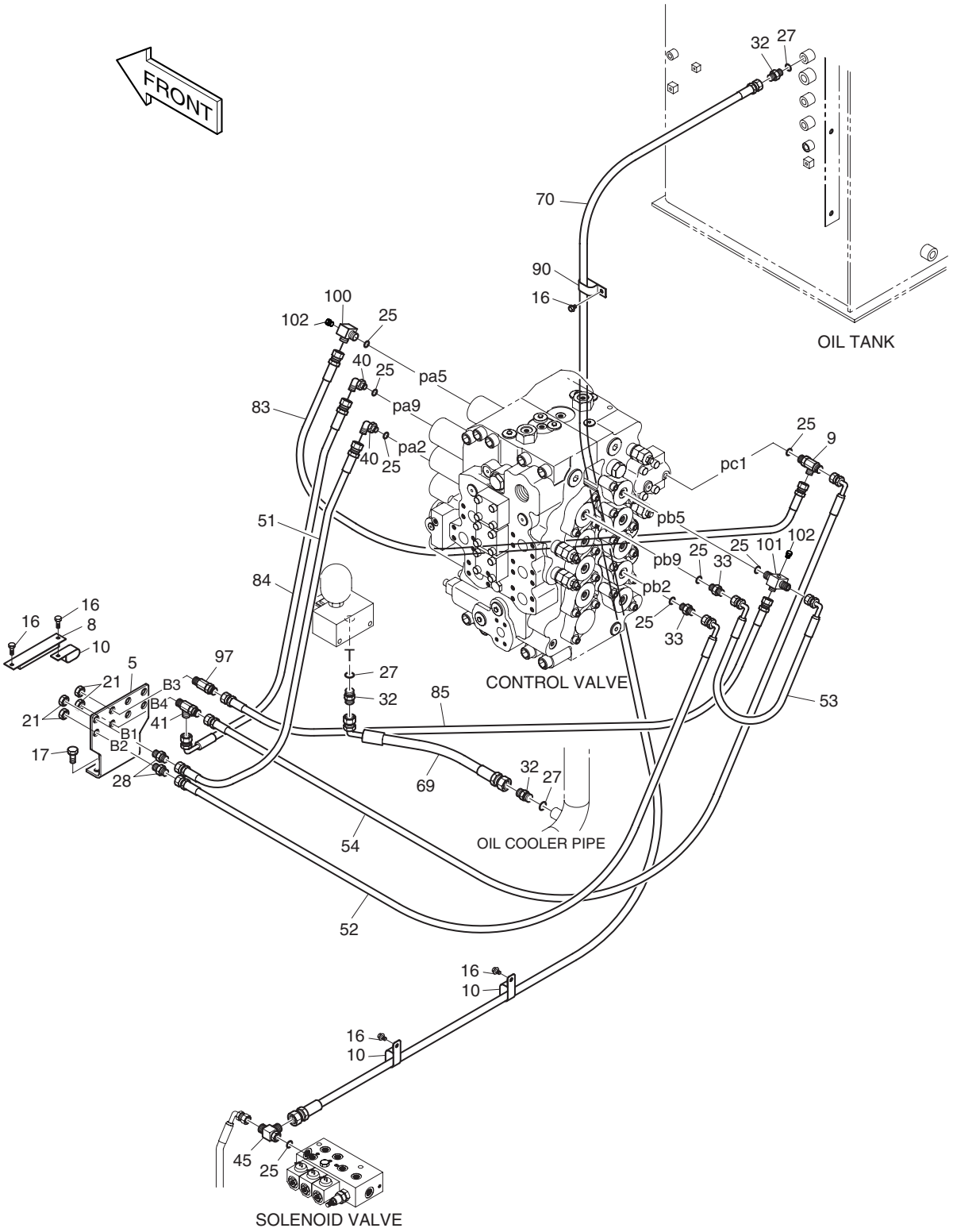

DATE	DEC. 15, 2006
REV. NO.	EXB06-13

Fig. 1360 PILOT PIPING(4)
CONDUITES DE PILOTE

Serial No. ;

Key No.	Part No.	Description	Description	Q'ty	S.C	Serial No.	ICA	Replaceable part	
								Part No.	Q'ty
1360--	400-00697	PILOT PIPING	CONDUITES DE PILOTE	-	D				
5	195-01469A	BRACKET	SUPPORT	1					
8	124-00187A	CLAMP	COLLIER	1					
9	2181-2375D7	TEE	TE	1					
10	124-00209D4	CLIP	ATTACHE	3					
16	120-00276	BOLT M8X1.25X12	BOULON A 6PANS	5					
17	2120-2196D10	BOLT;SET M12X1.75X25	BOULON A 6PANS	2					
21	121-00010D1	NUT	ECROU	4					
25	S8000141	O-RING	JONT TORIQUE	8					
27	S8000181	O-RING	JONT TORIQUE	3					
28	181-00078D1	ADAPTER	ADAPTEUR	2					
32	2181-1126D6	ADAPTER PFO1/2-PF1/2	ADAPTEUR	3					
33	2181-1126D7	ADAPTER PFO3/8-PF3/8	ADAPTEUR	2					
40	2181-1702D5	ELBOW PFO3/8-PF3/8	COUDE EN S	2					
41	181-00086D2	TEE;CONECTOR	TE	1					
45	DS2349012	TEE PFO3/8-2PF1/2	TE	1					
51	2184-1045D243	HOSE PF3/8-1700L	TUYAU FLEXIBLE	1					
52	DS2055734	HOSE PF3/8-1700L	TUYAU FLEXIBLE	1					
53	2184-1061D95	HOSE PF3/8-1300L	TUYAU FLEXIBLE	1					
54	DS2055732	HOSE PF3/8-1900L	TUYAU FLEXIBLE	1					
69	2184-1036D118	HOSE PF1/2-580L	TUYAU FLEXIBLE	1					
70	2184-1070D48	HOSE PF1/2-2300L	TUYAU FLEXIBLE	1					
83	2184-1045D248	HOSE PF3/8-1200L	TUYAU FLEXIBLE	1					
84	DS2055732	HOSE PF3/8-1900L	TUYAU FLEXIBLE	1					
85	2184-1045D206	HOSE PF3/8-2000L	TUYAU FLEXIBLE	1					
90	124-00208D4	CLIP	ATTACHE	1					
97	420-00352D3	VALVE;SHOCKLESS	VANNE	1					
100	2181-2590D2	ADAPTER	TUYAU FLEXIBLE	1					
101	DS2462001	TEE	ATTACHE	1					
102	2181-2047A	PLUG	VANNE	2					

DATE	DEC. 15, 2006
REV. NO.	EXB06-13

Fig. 1370 PILOT PIPING(5)
CONDUITES DE PILOTE

Serial No. ;

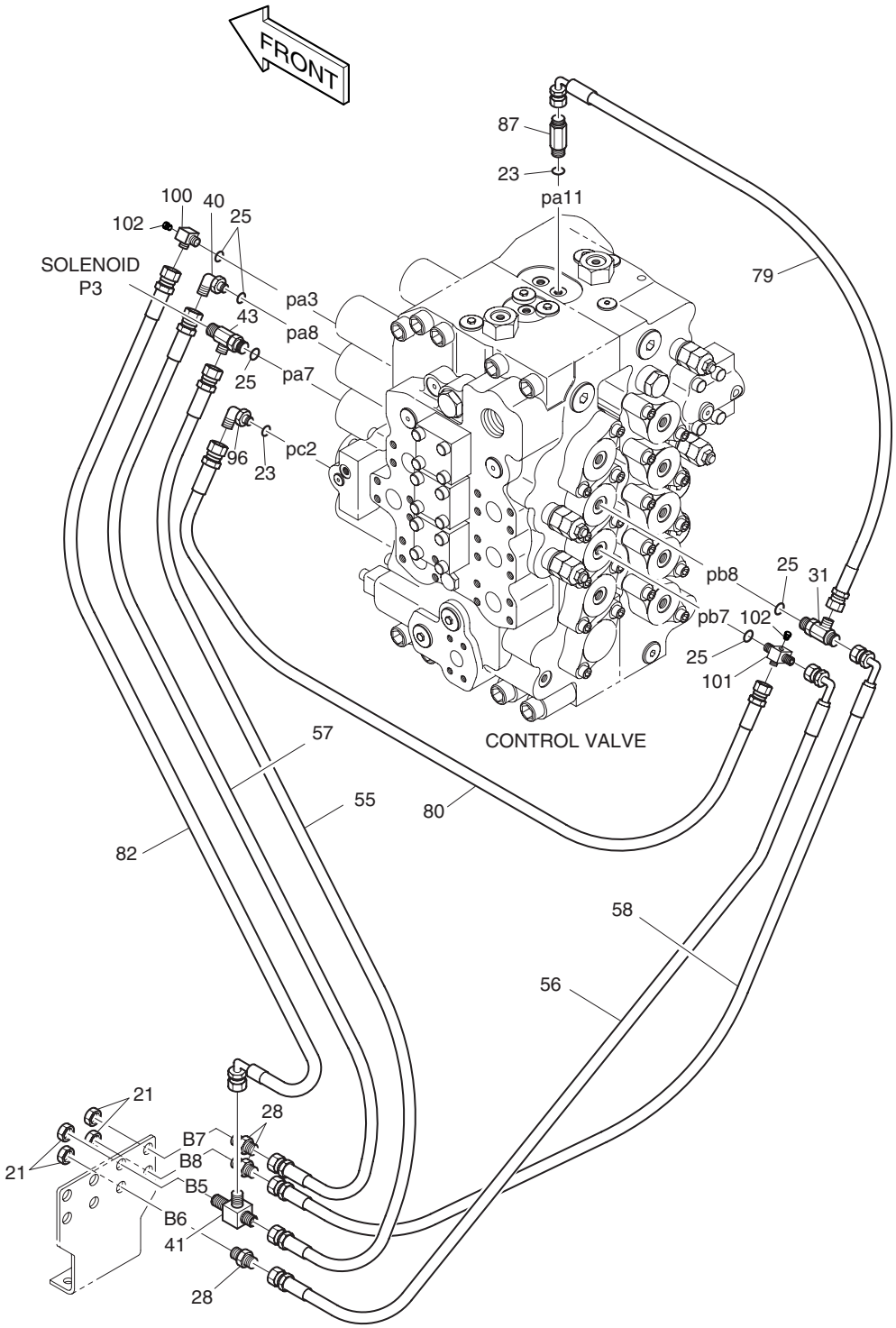

DATE	DEC. 15, 2006
REV. NO.	EXB06-13

Fig. 1370 PILOT PIPING(5) CONDUITES DE PILOTE

Serial No. ;

Key No.	Part No.	Description	Description	Q'ty	S.C	Serial No.	ICA	Replaceable part	
								Part No.	Q'ty
1370--	400-00697	PILOT PIPING	CONDUITES DE PILOTE	-	D				
21	121-00010D1	NUT	ECROU	4					
23	S8000111	O-RING	JONT TORIQUE	2					
25	S8000141	O-RING	JONT TORIQUE	5					
28	181-00078D1	ADAPTER	ADAPTEUR	3					
31	2181-1951D6	TEE PFO3/8-PF1/4-PF3/8	TE	1					
40	2181-1702D5	ELBOW PFO3/8-PF3/8	COUDE EN S	1					
41	181-00086D2	TEE;CONECTOR	TE	1					
43	2181-1951D16	TEE PFO3/8-PF3/8	TE	1					
55	DS2053737	HOSE PF3/8-1550L	TUYAU FLEXIBLE	1					
56	2184-1046D291	HOSE PF3/8-1550L	TUYAU FLEXIBLE	1					
57	2184-1045D139	HOSE PF3/8-1600L	TUYAU FLEXIBLE	1					
58	2184-1046D291	HOSE PF3/8-1550L	TUYAU FLEXIBLE	1					
79	2184-1046D126	HOSE PF1/4-450L	TUYAU FLEXIBLE	1					
80	2184-1045D219	HOSE PF3/8-870L	TUYAU FLEXIBLE	1					
82	DS2055733	HOSE PF3/8-1750L	TUYAU FLEXIBLE	1					
87	2181-1126D38	ADAPTER PFO1/4-PF1/4	ADAPTEUR	1					
96	2181-1702D3	ELBOW PFO1/4-PF3/8	COUDE	1					
100	2181-2590D2	ADAPTER	TUYAU FLEXIBLE	1					
101	DS2462001	TEE	ATTACHE	1					
102	2181-2047A	PLUG	VANNE	2					

DATE	DEC. 15, 2006
REV. NO.	EXB06-13

Fig. 1380 PILOT PIPING(6)
CONDUITES DE PILOTE

Serial No. ;

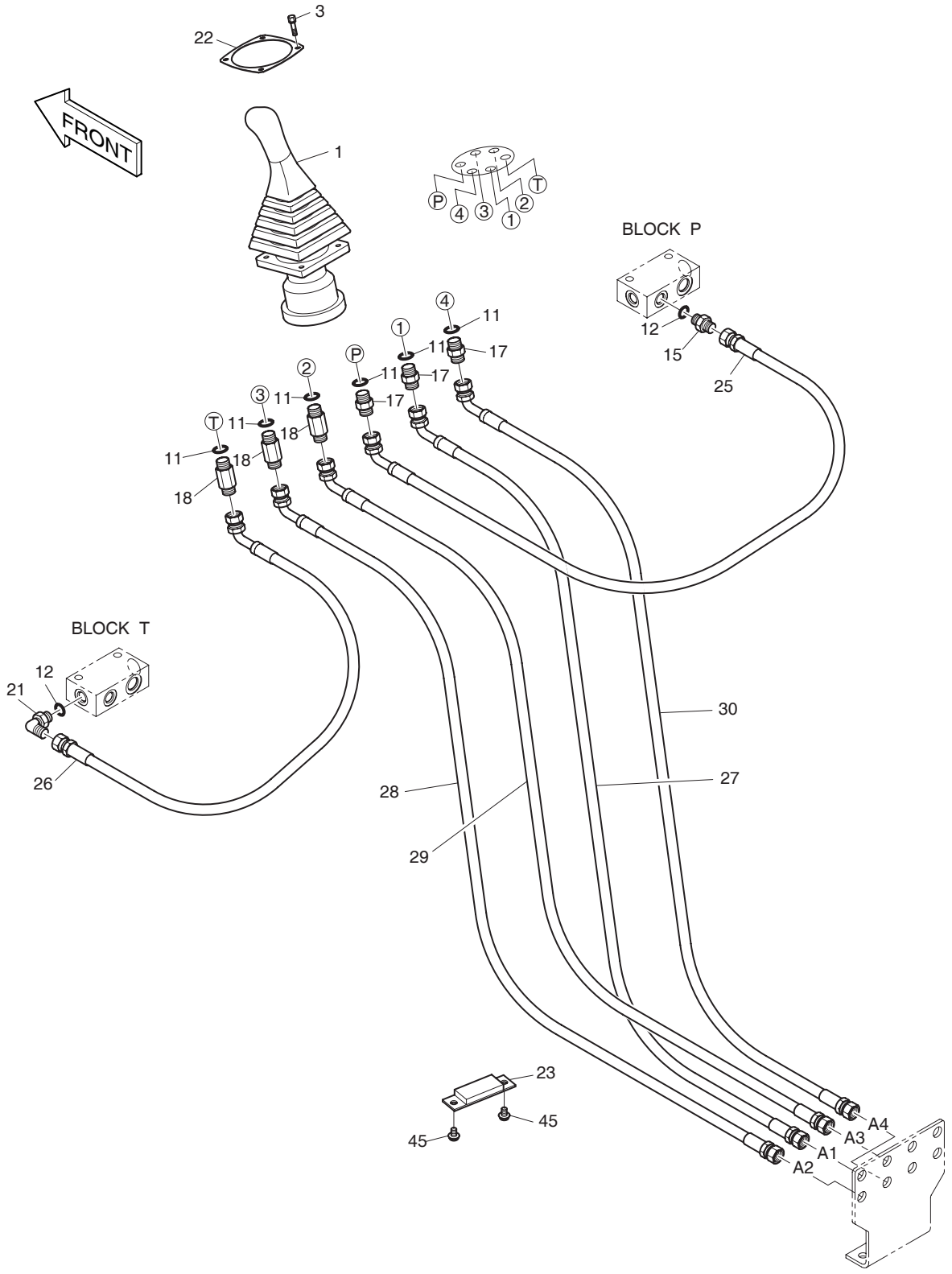

DATE	DEC. 15, 2006
REV. NO.	EXB06-13

Fig. 1380 PILOT PIPING(6) CONDUITES DE PILOTE

Serial No. ;

Key No.	Part No.	Description	Description	Q'ty	S.C	Serial No.	ICA	Replaceable part	
								Part No.	Q'ty
1380--	**400-00695C**	**PILOT PIPING;CABIN SUB.**	CONDUITES DE PILOTE	-	D				
1	420-00355	VALVE;REMOCON(L.H)	VANNE	1		1001–1613	I	420-00355A	1
	420-00355A	**VALVE;REMOCON(L.H)**	VANNE	1		**1614–**			
3	S2205066	BOLT;SOCKET M16X1.0X25	BOULON A 6 PANS CREUX	4					
11	S8000111	O-RING	JONT TORIQUE	6					
12	S8000141	O-RING	JONT TORIQUE	2					
15	2181-1126D7	ADAPTER PFO3/8-PF3/8	ADAPTEUR	1					
17	2181-1126D89	ADAPTER PFO1/4-PF1/4	ADAPTEUR	3					
18	2181-1126D120	ADAPTER PFO1/4-PF1/4	ADAPTEUR	3					
21	2181-1702D5	ELBOW PFO3/8-PF3/8	COUDE EN S	1					
22	2621-2752	PLATE	PLAQUE CAOUTCHOUC	1					
23	124-00226A	CLAMP;HOSE	COLLIER	1					
25	2184-1267D9	HOSE PF3/8-1950L	TUYAU FLEXIBLE	1					
26	2184-1267D10	HOSE PF3/8-2050L	TUYAU FLEXIBLE	1					
27	DS2062020	HOSE PF3/8-2350L	TUYAU FLEXIBLE	1					
28	DS2062020	HOSE PF3/8-2350L	TUYAU FLEXIBLE	1					
29	DS2062020	HOSE PF3/8-2350L	TUYAU FLEXIBLE	1					
30	DS2062020	HOSE PF3/8-2350L	TUYAU FLEXIBLE	1					
45	120-00276	BOLT M8X1.25X12	BOULON A 6PANS	2					

DATE	DEC. 15, 2006
REV. NO.	EXB06-13

Fig. 1390 PILOT PIPING(7)
CONDUITES DE PILOTE

Serial No. ;

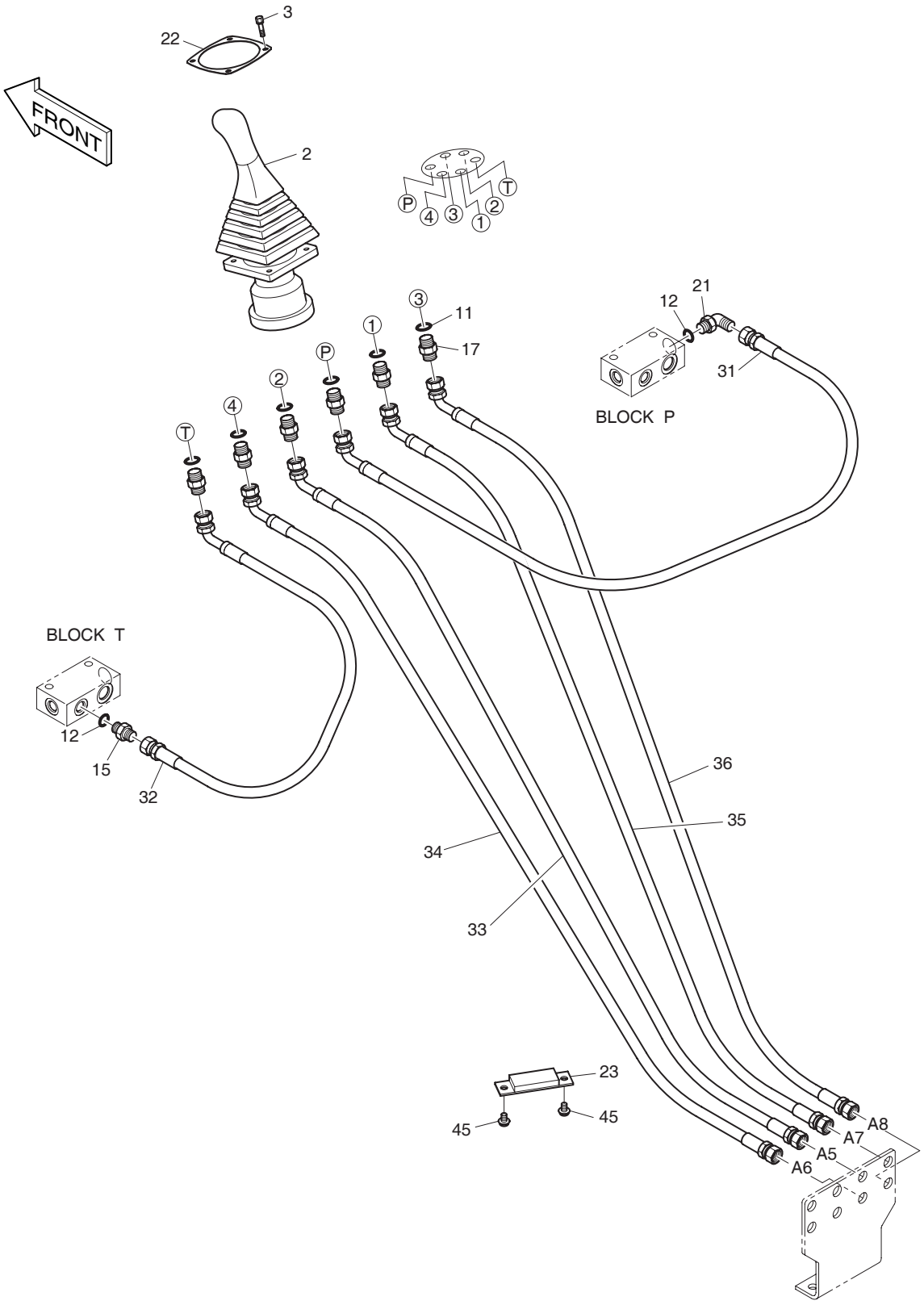

DATE	DEC. 15, 2006
REV. NO.	EXB06-13

Fig. 1390 PILOT PIPING(7) CONDUITES DE PILOTE

Serial No. ;

Key No.	Part No.	Description	Description	Q'ty	S.C	Serial No.	ICA	Replaceable part	
								Part No.	Q'ty
1390--	**400-00695C**	**PILOT PIPING;CABIN SUB.**	CONDUITES DE PILOTE	-	D				
2	420-00356	VALVE;REMOCON(R.H)	VANNE	1		1001–1613	I	420-00356A	1
	420-00356A	**VALVE;REMOCON(R.H)**	VANNE	1		**1614–**			
3	S2205066	BOLT;SOCKET M16X1.0X25	BOULON A 6 PANS CREUX	4					
11	S8000111	O-RING	JONT TORIQUE	6					
12	S8000141	O-RING	JONT TORIQUE	2					
15	2181-1126D7	ADAPTER PFO3/8-PF3/8	ADAPTEUR	1					
17	2181-1126D89	ADAPTER PFO1/4-PF3/8	ADAPTEUR	6					
21	2181-1702D5	ELBOW PFO3/8-PF3/8	COUDE EN S	1					
22	2621-2752	PLATE	PLAQUE CAOUTCHOUC	1					
23	124-00226A	CLAMP;HOSE	COLLIER	1					
31	2184-1060D151	HOSE PFO3/8-1950L	TUYAU FLEXIBLE	1					
32	2184-1060D151	HOSE PFO3/8-1950L	TUYAU FLEXIBLE	1					
33	2184-1060D147	HOSE PFO3/8-2200L	TUYAU FLEXIBLE	1					
34	2184-1060D147	HOSE PFO3/8-2200L	TUYAU FLEXIBLE	1					
35	2184-1060D147	HOSE PFO3/8-2200L	TUYAU FLEXIBLE	1					
36	2184-1060D147	HOSE PFO3/8-2200L	TUYAU FLEXIBLE	1					
45	120-00276	BOLT M8X1.25X12	BOULON A 6PANS	2					

DATE	JUL. 30, 2003
REV. NO.	EXB03-13

Fig. 1400 PILOT PIPING(8) CONDUITES DE PILOTE

Serial No. ;

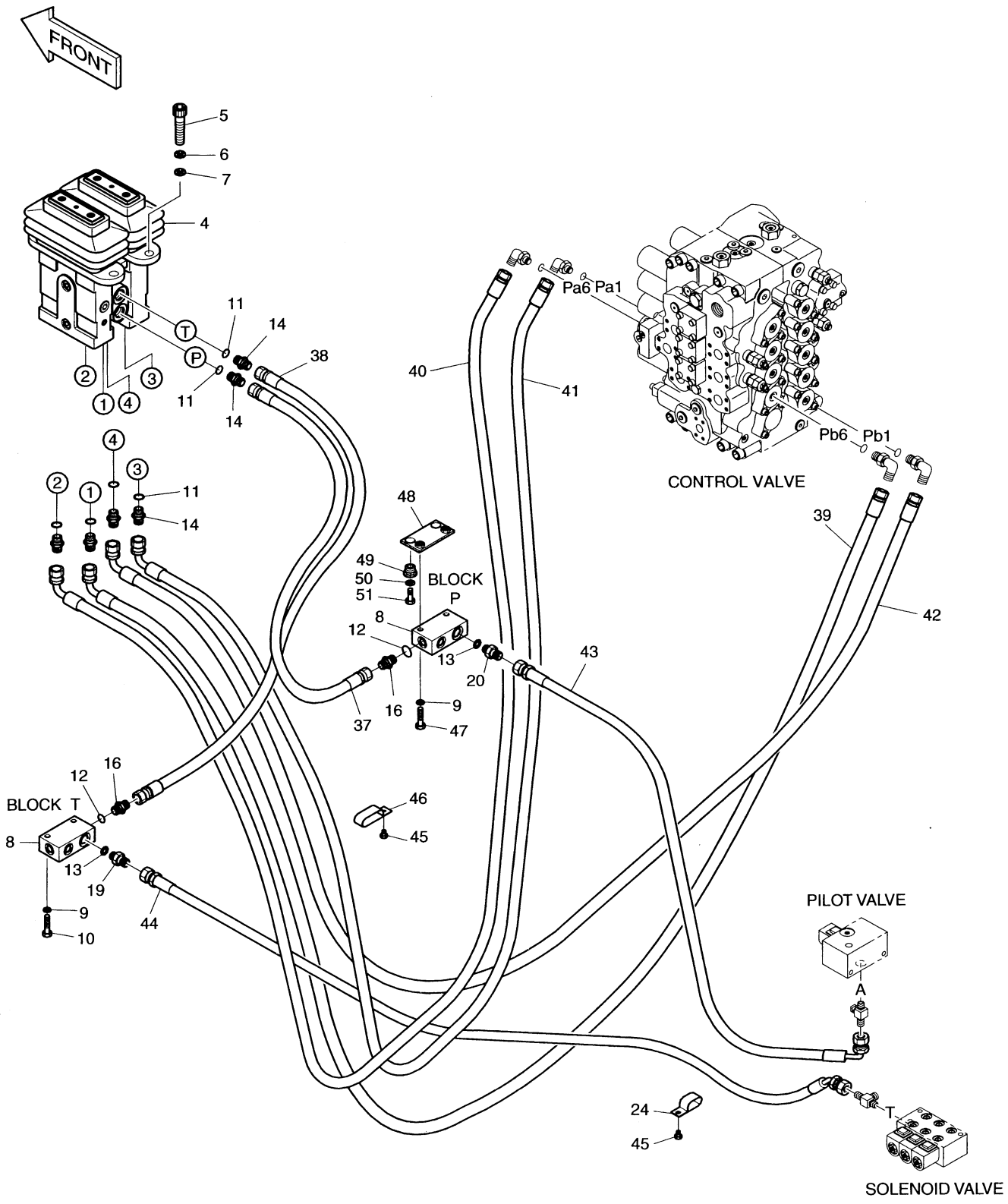

DATE	JUL. 30, 2003
REV. NO.	EXB03-13

Fig. 1400 PILOT PIPING(8) CONDUITES DE PILOTE

Serial No ;

Key No.	Part No.	Description	Description	Q'ty	S.C	Serial No.	ICA	Replaceable part	
								Part No.	Q'ty
1400--	400-00695B	PILOT PIPING;CABIN SUB.	CONDUITES DE PILOTE	-	D				
4	420-00030	VALVE;PEDAL	VANNE	1					
5	S2212266	BOLT;SOCKET M10X1.5X30	BOULON A 6 PANS CREUX	4					
6	S5110603	WASHER	RONDELLE ELASTIQUE	4					
7	S5010613	WASHER;PLAIN	RONDELLE PLATE	4					
8	2423-1470	BLOCK	BLOC	2					
9	S5102603	WASHER;SPRING M10	RONDELLE ELASTIQUE	4					
10	S0558653	BOLT M10X1.5X55	BOULON A 6PANS	2					
11	S8000111	O-RING	JONT TORIQUE	6					
12	S8000141	O-RING	JONT TORIQUE	2					
13	S8000181	O-RING	JONT TORIQUE	2					
14	2181-1126D14	ADAPTER PFO1/4-PF1/4	ADAPTEUR	6					
16	2181-1126D36	ADAPTER PFO3/8-PF1/4	ADAPTEUR	2					
19	2181-1126D6	ADAPTER PFO1/2-PF1/2	ADAPTEUR	1					
20	2471-1135	ADAPTER;FILTER PFO1/2-PF1/2	ADAPTEUR	1					
24	124-00209D4	CLIP	ATTACHE	1					
37	2184-1045D42	HOSE PF1/4-420L	TUYAU FLEXIBLE	1					
38	2184-1045D42	HOSE PF1/4-420L	TUYAU FLEXIBLE	1					
39	DS2055615	HOSE PF1/4-3250L	TUYAU FLEXIBLE	1					
40	2184-1046D218	HOSE PF1/4-3300L	TUYAU FLEXIBLE	1					
41	DS2055615	HOSE PF1/4-3250L	TUYAU FLEXIBLE	1					
42	2184-1046D218	HOSE PF1/4-3300L	TUYAU FLEXIBLE	1					
43	2184-1036D187	HOSE PF1/2-1800L	TUYAU FLEXIBLE	1					
44	DS2054238	HOSE PF1/2-2000L	TUYAU FLEXIBLE	1					
45	120-00276	BOLT M8X1.25X12	BOULON A 6PANS	2					
46	124-00209D3	CLIP	ATTACHE	1					
47	S0558753	BOLT M10X1.5X60	BOULON A 6PANS	2					
48	621-02151	PLATE	PLAQUE	1					
49	198-00016	RUBBER	CAOUTCHOUC	2					
50	2114-1058D10	WASHER	RONDELLE PLATE	2					
51	S0512253	BOLT M10X1.5X30	BOULON A 6PANS	2					

DATE	JUN. 30, 2006
REV. NO.	EXB06-08

Fig. 1410 PILOT PIPING-BREAKER CONDUITES DE PILOTE

Serial No. ;

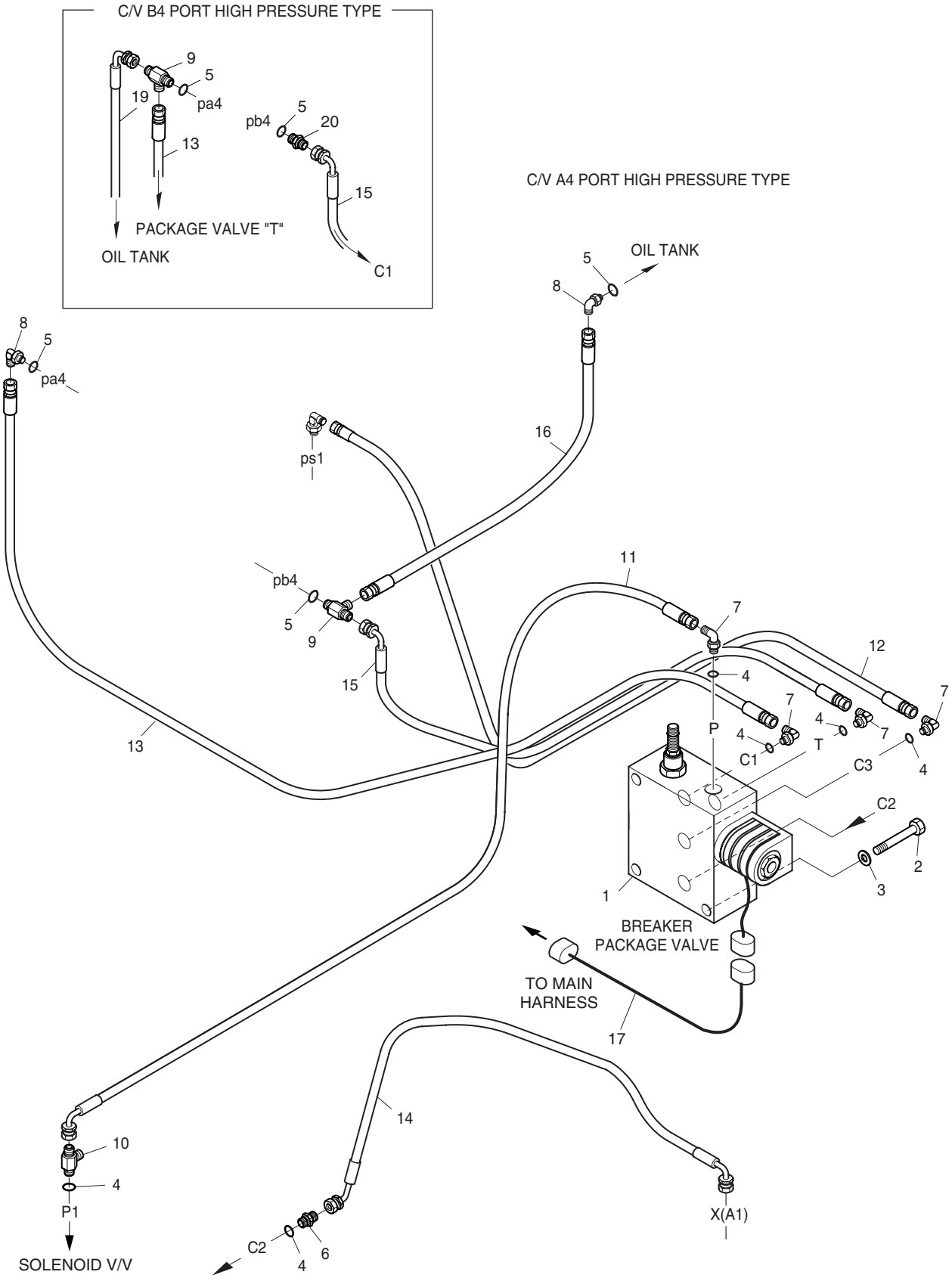

DATE	JUN. 30, 2006
REV. NO.	EXB06-08

Fig. 1410 PILOT PIPING-BREAKER CONDUITES DE PILOTE

Serial No. ;

Key No.	Part No.	Description	Description	Q'ty	S.C	Serial No.	ICA	Replaceable part	
								Part No.	Q'ty
1410--	400-00920	PILOT PIPING;BREAKER	CIRCUIT DE PILOTE	1					
1	420-00340	VALVE;BREAKER PACKAGE	VANNE	1		1001–1322	I	420-00340A	1
	420-00340A	VALVE;BREAKER PACKAGE	VANNE	1		1323–1324	I	420-00340B	1
	420-00340B	VALVE;BREAKER PACKAGE	VANNE	1		1325–			
2	S0558953	BOLT M10X1.5X70	BOULON A 6PANS	3					
3	S5102603	WASHER;SPRING M10	RONDELLE ELASTIQUE	3					
4	S8000111	O-RING	JONT TORIQUE	6					
5	S8000141	O-RING	JONT TORIQUE	3					
6	2181-1126D14	ADAPTER;S	ADAPTEUR	1					
7	2181-1702D4	ELBOW	COUDE	4					
8	2181-1702D10	ELBOW;S	COUDE	2					
9	2181-1951D7	ADAPTER	TE	1					
10	2181-1951D1	TEE	TE	1					
11	2184-1046D89	HOSE PF1/4-2065L	TUYAU FLEXIBLE	1					
12	2184-1045D125	HOSE PF1/4-1700L	TUYAU FLEXIBLE	1					
13	2184-1045D105	HOSE PF1/4-1900L	TUYAU FLEXIBLE	1					
14	2184-1061D83	HOSE PF1/4-1150	TUYAU FLEXIBLE	1					
15	2184-1046D76	HOSE PF1/4-1200L	TUYAU FLEXIBLE	1					
16	2184-1045D143	HOSE PF1/4-700L	TUYAU FLEXIBLE	1					
17	530-00232	HARNESS;BREAKER	FAISCEAU	1					
19	2184-1046D110	HOSE PF1/4-1530L	TUYAU FLEXIBLE	1					
20	2181-1126D36	ADAPTER	ADAPTEUR	1					

DATE	DEC. 15, 2006
REV. NO.	EXB06-13

Fig. 1420 CONTROL STAND-L.H
CONSOLE DE COMMANDE

Serial No. ;

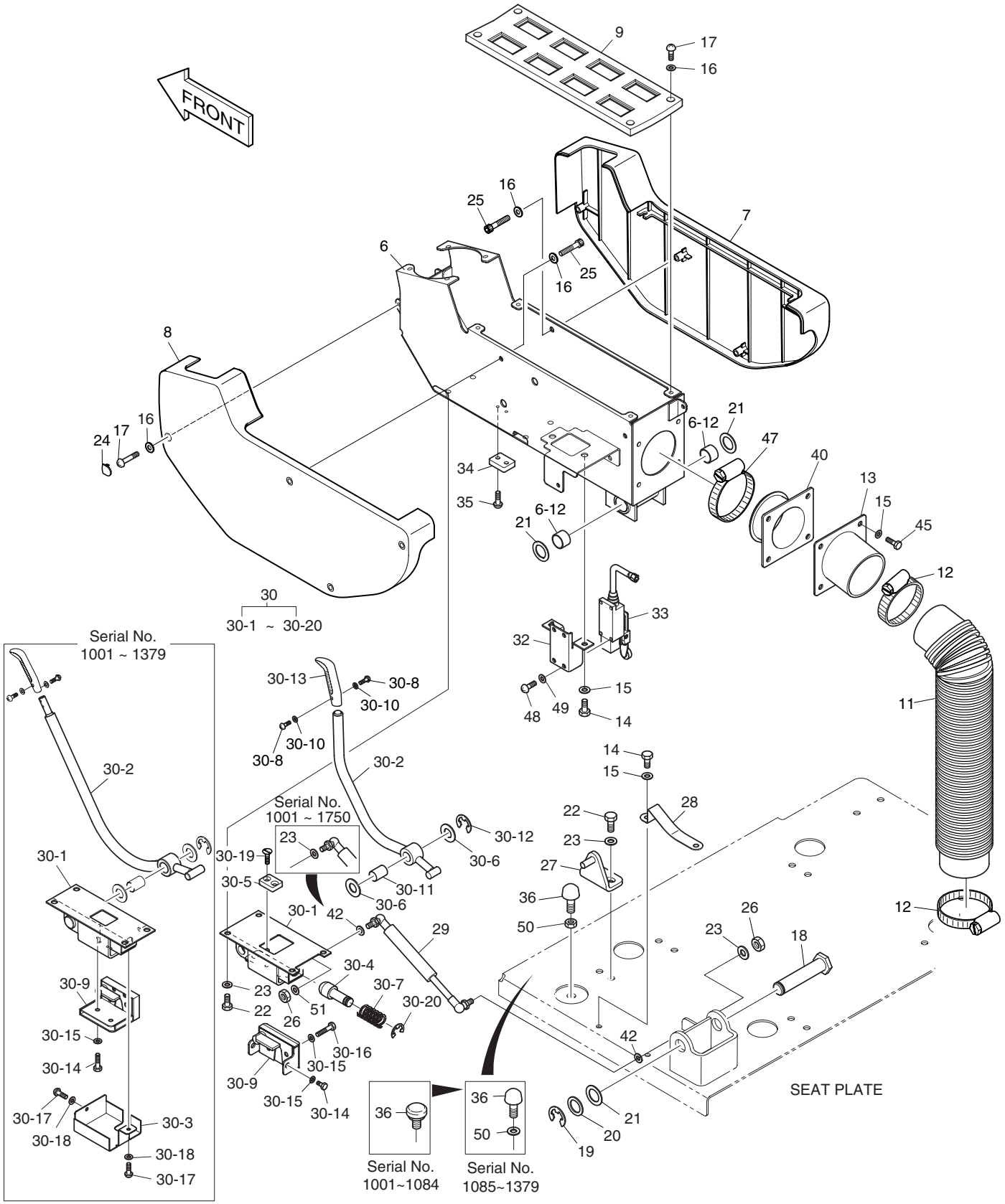

DATE	DEC. 15, 2006
REV. NO.	EXB06-13

Fig. 1420 CONTROL STAND-L.H
CONSOLE DE COMMANDE

Serial No. ;

Key No.	Part No.	Description	Description	Q'ty	S.C	Serial No.	ICA	Replaceable part	
								Part No.	Q'ty
1420--	195-01710E	STAND ASS'Y	CONSOLE DE COMMANDE	-	D	1001–1084			
	195-01710G	STAND ASS'Y	CONSOLE DE COMMANDE	-	D	1085–1379			
	195-01710H	STAND ASS'Y	CONSOLE DE COMMANDE	-	D	1380–1470			
	195-01710K	**STAND ASS'Y**	CONSOLE DE COMMANDE	-	D	**1471–**			
6	195-01617B	BRACKET;STAND(L.H)	SUPPORT	1					
6-12	2110-1184D37	. BUSH;DU	. DOUILLE	2					
7	621-01822	CASE;STAND	CARTER	1					
8	621-01823	CASE;STAND	CARTER	1					
9	621-01827	PLATE;SWITCH	PLAQUE	1					
11	2158-1021	PROTECTOR	PROTECTEUR	1					
12	S8450066	CLAMP;HOSE	COLLIER	2					
13	195-01730A	BRACKET	SUPPORT	1					
14	2120-2166D6	BOLT M6X1.0X16	BOULON A 6 PANS	4					
15	2114-1898D3	WASHER	RONDELLE	8					
16	2114-1898D4	WASHER;PLAIN	RONDELLE PLATE	12					
17	2120-2166D8	SCREW M5X0.8X14	VIS	9					
18	2123-2240	PIN	GOUJON	1					
19	S6541900	RING;RETAINER	BAGUE	1					
20	2114-4129	WASHER	RONDELLE	1					
21	2114-1059D31	SHIM	CALE	3					
22	2120-2166D5	BOLT M8X1.25X20	BOULON A 6 PANS	6					
23	2114-1898D2	WASHER	RONDELLE	8		1001–1750			
	2114-1898D2	**WASHER**	RONDELLE	7		**1751–**			
24	621-01850	COVER;HOLE	COUVERCLE	1					
25	S2202866	BOLT;SOCKET M5X0.8X10	BOULON A 6 PANS CREUX	3					
26	2121-1311D2	NUT M8X1.25	ECROU	1		1001–1750			
	2121-1311D2	**NUT M8X1.25**	ECROU	2		**1751–**			
27	142-00052	STRIKER	FRAPPER	1					
28	159-00114	PLATE	PLAQUE	1					
29	DS1001045	SPRING;GAS	RESSORT	1					
30	133-00163C	LEVER;SAFETY	LEVIER	1		1001–1379	I	133-00163E	1
	133-00163E	LEVER;SAFETY	LEVIER	1		1380–1470	I	133-00163G	1
	133-00163G	LEVER;SAFETY	LEVIER	1		1471–1750			
	133-00163H	**LEVER;SAFETY**	LEVIER	1		**1751–**			
30-1	159-00223A	. PLATE	. PLAQUE	1		1001–1379			
	159-00223B	. PLATE	. PLAQUE	1		1380–1750			
	159-00223C	**. PLATE**	. PLAQUE	1		**1751–**			
30-2	133-00130A	. LEVER	. LEVIER	1		1001–1379	I	133-00130B	1

DATE	DEC. 15, 2006
REV. NO.	EXB06-13

Fig. 1420 CONTROL STAND-L.H
CONSOLE DE COMMANDE

Serial No. ;

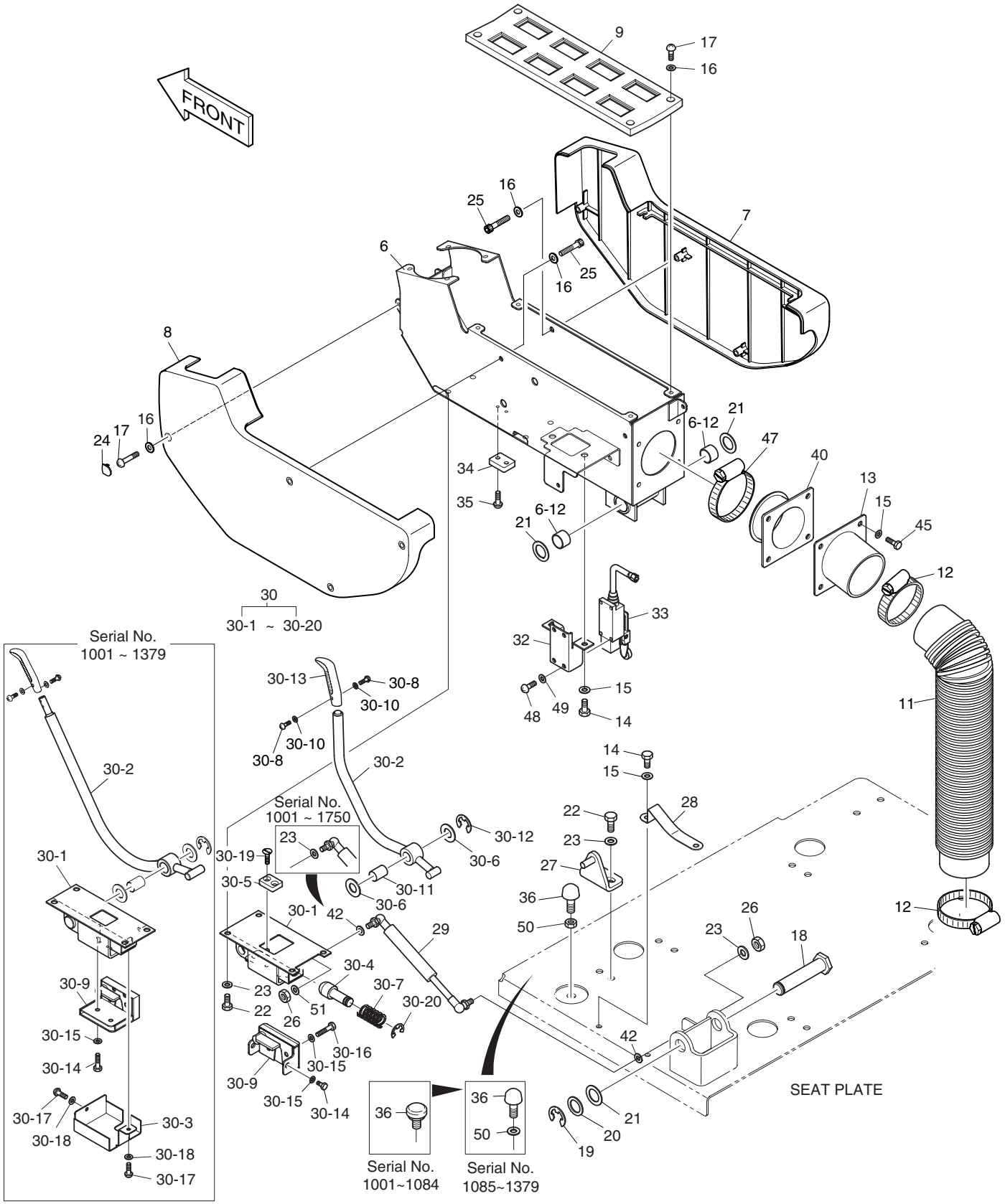

DATE	DEC. 15, 2006
REV. NO.	EXB06-13

Fig. 1420 CONTROL STAND-L.H
CONSOLE DE COMMANDE

Serial No. ;

Key No.	Part No.	Description	Description	Q'ty	S.C	Serial No.	ICA	Replaceable part	
								Part No.	Q'ty
1420-30-2	133-00130B	. LEVER	. LEVIER	1		1380–1470	I	K1008200	1
	K1008200	. LEVER	. LEVIER	1		1471–			
30-3	213-00022	. COVER	. COUVERCLE	1		1001–1379			
30-4	123-00456A	. PIN	. GOUJON	1					
30-5	161-00297	. STOPPER;RUBBER	. TAQUET D'ARRET	1					
30-6	2114-1059D37	. SHIM	. CALE	2					
30-7	2129-1432	. SPRING	. RESSORT	1					
30-8	S3450583	. SCREW M4X0.7X12	. VIS	2					
30-9	125-00021	. CATCH	. LOQUET	1		1001–1379			
	K1003998	. CATCH	. LOQUET	1		1380–			
30-10	S5000113	. WASHER;PLAIN M4	. RONDELLE PLATE	2					
30-11	2110-1184D29	. BUSH;DU	. DOUILLE	1					
30-12	S6541200	. RING;RETAINER	. BAGUE	1					
30-13	2132-1132A	. GRIP	. POIGNEE	1					
30-14	S0503353	. BOLT M5X0.8X20	. BOULON A 6 PANS	2		1001–1379			
	2120-2166D19	. BOLT M6X1.0X12	. BOULON A 6 PANS	2		1380–			
30-15	S5000213	. WASHER	. RONDELLE	3		1001–1379			
	2114-1898D3	. WASHER	. RONDELLE	4		1380–			
30-16	S0503553	. BOLT M5X0.8X25	. BOULON A 6 PANS	1		1001–1379			
	S0505063	. BOLT M6X1.0X25	. BOULON A 6 PANS	2		1380–			
30-17	2120-2166D18	. SCREW M5X0.8X10	. VIS	2		1001–1379			
30-18	2114-1898D4	. WASHER M5	. RONDELLE	2		1001–1379			
30-19	S3452833	. SCREW M5X0.8X12	. VIS	2					
30-20	S6541500	. RING;RETAINER	. BAGUE	1					
32	621-01951	COVER;MICRO SWITCH	COUVERCLE	1					
33	549-00046	SWITCH;MICRO	INTERRUPTEUR	1					
34	161-00524	RUBBER;STOPPER	CAOUTCHOUC	1					
35	S3452853	SCREW M5X0.8X16	VIS	2					
36	2161-2367	STOPPER	TAQUET D'ARRET	1		1001–1084			
	161-00195	STOPPER	TAQUET D'ARRET	1		1085–			
40	160-00030	BOOT	BOOT	1					
42	**2114-2031D4**	**WASHER**	RONDELLE	2		**1751**–			
45	2120-2166D36	BOLT M6X1.0X20	BOULON A 6 PANS	4					
47	S8450053	CLAMP;HOSE	COLLIER	1					
48	S3450823	SCREW M5X0.8X10	VIS	4					
49	S5000203	WASHER M5	RONDELLE	4					
50	2114-1898D16	WASHER	RONDELLE	1		1085–1379			
	2121-1311D4	NUT	ECROU	1		1380–			

DATE	DEC. 15, 2006
REV. NO.	EXB06-13

Fig. 1420 CONTROL STAND-L.H
CONSOLE DE COMMANDE

Serial No. ;

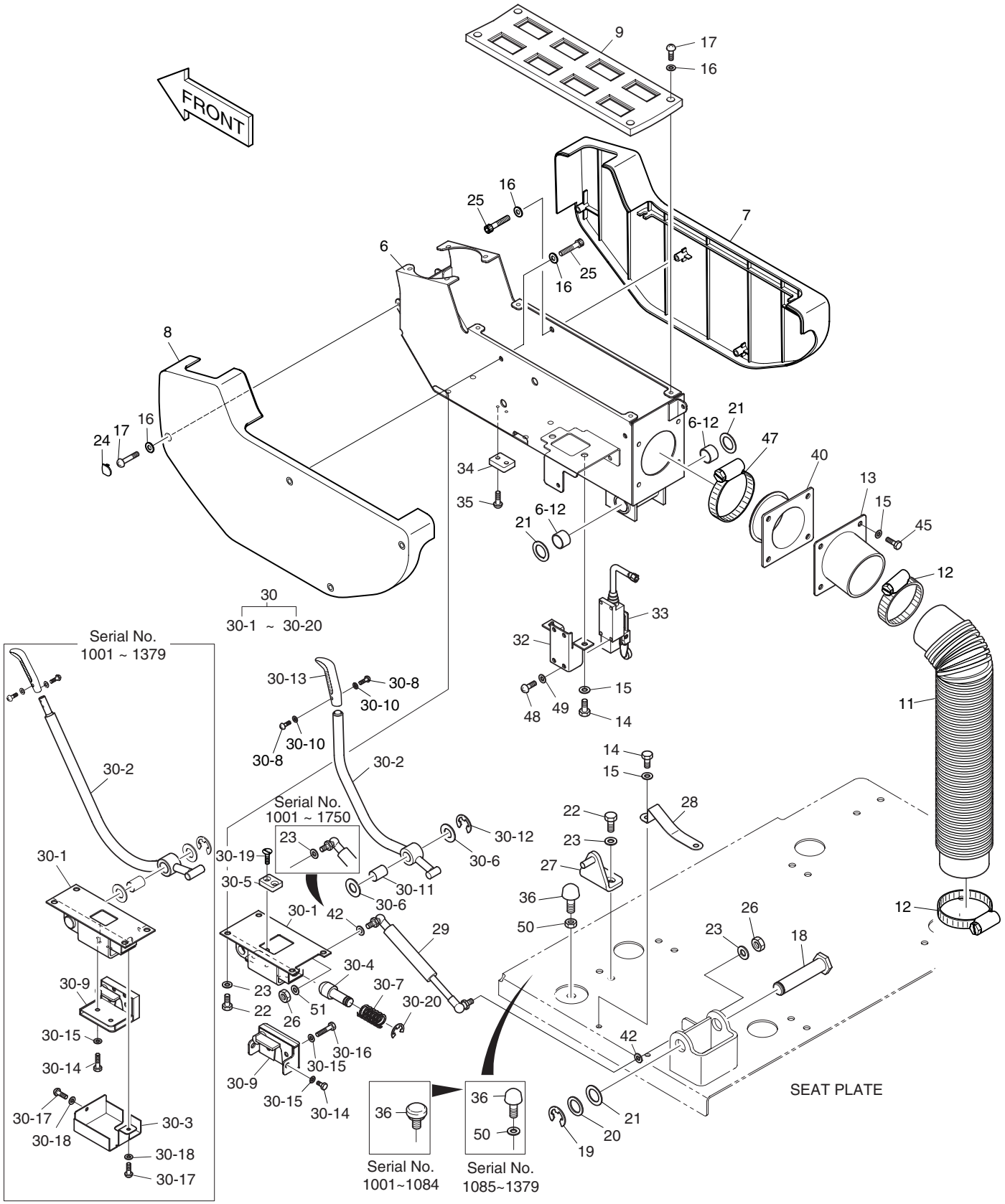

DATE	DEC. 15, 2006
REV. NO.	EXB06-13

Fig. 1420 CONTROL STAND-L.H
CONSOLE DE COMMANDE

Serial No. ;

Key No.	Part No.	Description	Description	Q'ty	S.C	Serial No.	ICA	Replaceable part	
								Part No.	Q'ty
1420-51	**2114-1898D8**	**WASHER**	RONDELLE	1		**1751–**			

DATE	JUN. 30, 2005
REV. NO.	EXB05-05

Fig. 1430 CONTROL STAND-R.H
CONSOLE DE COMMANDE

Serial No. ;

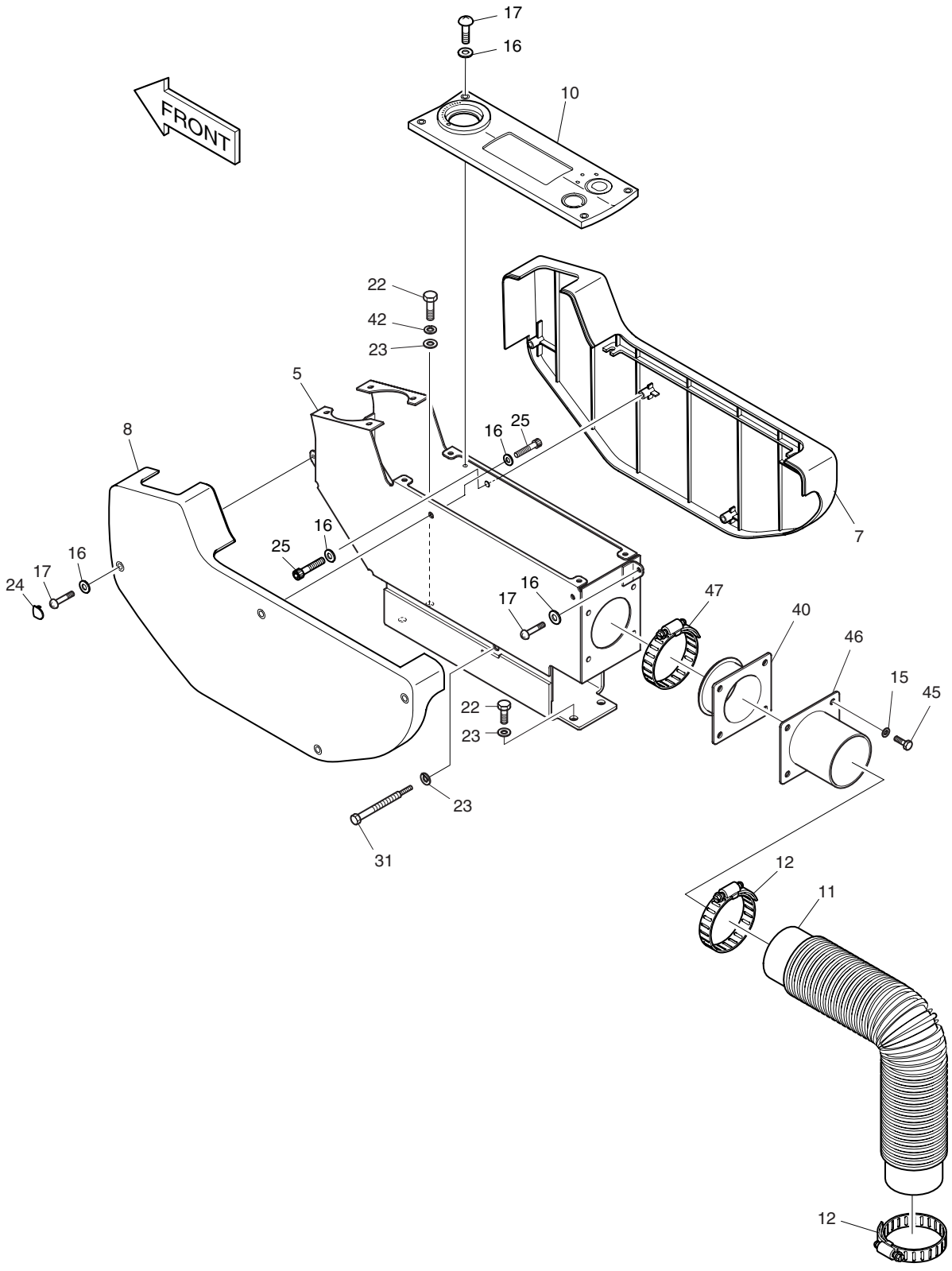

DATE	JUN. 30, 2005
REV. NO.	EXB05-05

Fig. 1430 CONTROL STAND-R.H
CONSOLE DE COMMANDE

Serial No ;

Key No.	Part No.	Description	Description	Q'ty	S.C	Serial No.	ICA	Replaceable part	
								Part No.	Q'ty
1430--	195-01710E	STAND ASS'Y	CONSOLE DE COMMANDE	-	D	1001–1084			
	195-01710G	STAND ASS'Y	CONSOLE DE COMMANDE	-	D	1085–1379			
	195-01710H	STAND ASS'Y	CONSOLE DE COMMANDE	-	D	1380–1470			
	195-01710J	**STAND ASS'Y**	CONSOLE DE COMMANDE	-	D	**1471**–			
5	195-01616A	BRACKET;STAND	SUPPORT	1					
7	621-01822	CASE;STAND	CARTER	1					
8	621-01823	CASE;STAND	CARTER	1					
10	621-01826	PLATE;SWITCH	PLAQUE	1					
11	2158-1021	PROTECTOR	PROTECTEUR	1					
12	S8450066	CLAMP;HOSE	COLLIER	2					
15	2114-1898D3	WASHER M6	RONDELLE	4					
16	2114-1898D4	WASHER;PLAIN M5	RONDELLE PLATE	11					
17	2120-2166D8	SCREW M5X0.8X14	VIS	10					
22	2120-2166D5	BOLT M8X1.25X20	BOULON A 6 PANS	4					
23	2114-1898D2	WASHER M8	RONDELLE	5					
24	621-01850	COVER;HOLE	COUVERCLE	1					
25	S2202866	BOLT;SOCKET M5X0.8X10	BOULON A 6 PANS CREUX	4					
31	120-00274	BOLT	BOULON A 6 PANS	1					
40	160-00030	BOOT	BOOT	1					
42	2114-2031D4	WASHER;SPRING M8	RONDELLE ELASTIQUE	1					
45	2120-2166D36	BOLT M6X1.0X20	BOULON A 6 PANS	4					
46	195-01765B	BRACKET	SUPPORT	1					
47	S8450053	CLAMP;HOSE	COLLIER	1					

DATE	JUN. 30, 2005
REV. NO.	EXB05-05

Fig. 1440 SEAT & ELECTRIC BOX
SIEGE ET ELECTRIQUE BOITIES

Serial No. ;

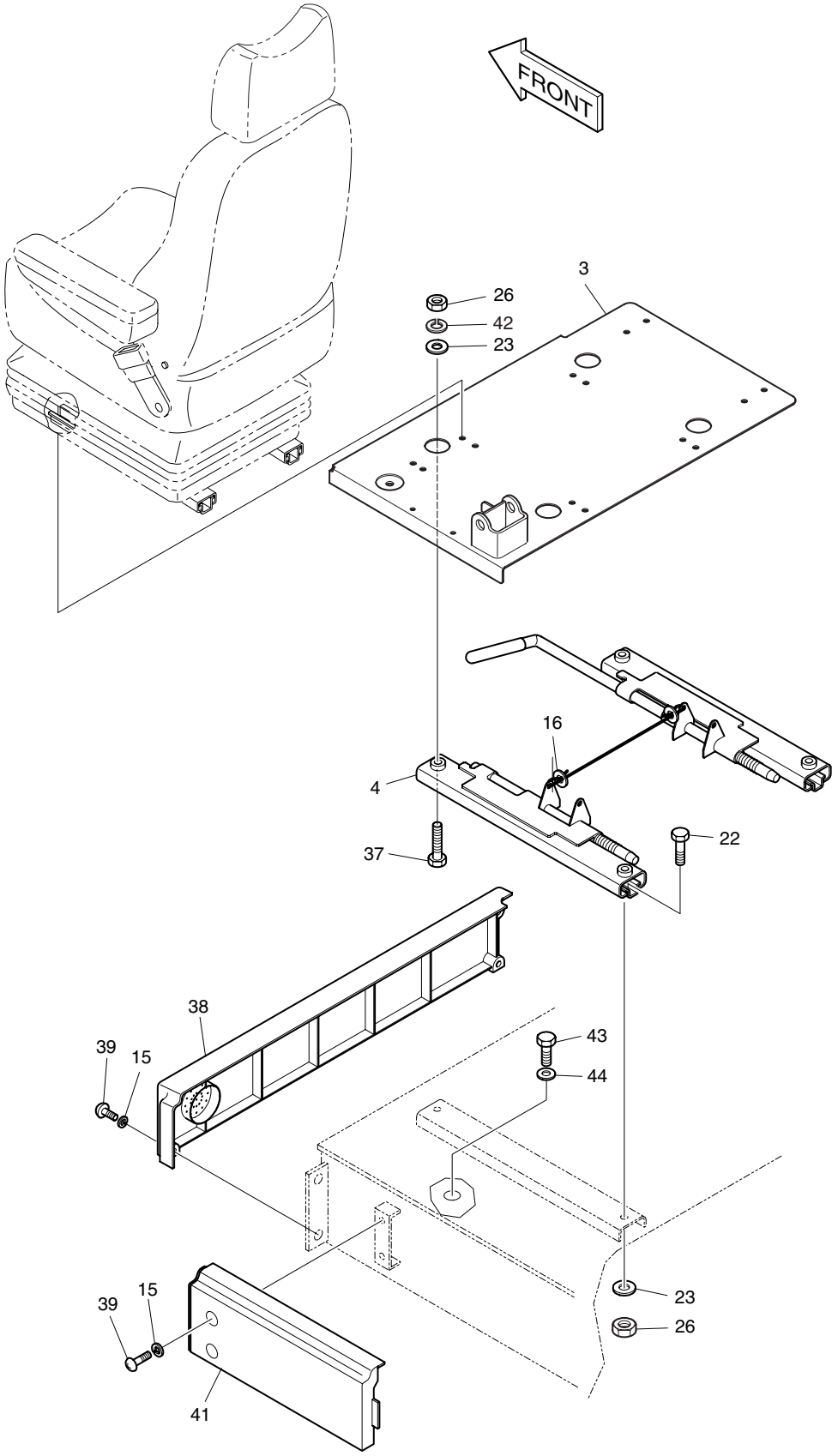

DATE	JUN. 30, 2005
REV. NO.	EXB05-05

Fig. 1440 SEAT & ELECTRIC BOX
SIEGE ET ELECTRIQUE BOITIES

Serial No ;

Key No.	Part No.	Description	Description	Q'ty	S.C	Serial No.	ICA	Replaceable part	
								Part No.	Q'ty
1440--	195-01710E	STAND ASS'Y	CONSOLE DE COMMANDE	-	D	1001–1084			
	195-01710G	STAND ASS'Y	CONSOLE DE COMMANDE	-	D	1085–1379			
	195-01710H	STAND ASS'Y	CONSOLE DE COMMANDE	-	D	1380–1470			
	195-01710J	**STAND ASS'Y**	CONSOLE DE COMMANDE	-	D	**1471**–			
3	901-00024C	PLATE;SEAT	PLAQUE	1		1001–1084	I	901-00024E	1
	901-00024E	PLATE;SEAT	PLAQUE	1		1085–			
4	194-00024	RAIL;SEAT	CHEMIN DE FER	1					
15	2114-1898D3	WASHER M6	RONDELLE	6					
16	2114-1898D4	WASHER;PLAIN M5	RONDELLE PLATE	2					
22	2120-2166D5	BOLT M8X1.25X20	BOULON A 6 PANS	4					
23	2114-1898D2	WASHER M8	RONDELLE	8					
26	2121-1311D2	NUT M8X1.25	ECROU	8					
37	2120-2166D46	BOLT M8X1.25X25	BOULON A 6 PANS	4					
38	621-01824	COVER;ELEC. BOX(FRONT)	COUVERCLE	1					
39	2120-2166D7	SCREW M6X1.0X14	VIS	6					
41	621-01825	COVER;ELEC. BOX(L.H)	COUVERCLE	1					
42	2114-2031D4	WASHER;SPRING M8	RONDELLE ELASTIQUE	4					
43	S0514853	BOLT M10X1.75X20	BOULON A 6 PANS	4					
44	2114-1058D46	WASHER	RONDELLE	4					

DATE	DEC. 30, 2004
REV. NO.	EXB04-09

Fig. 1450 SEAT MOUNTING
SIEGE LE SUPPORT

Serial No. ;

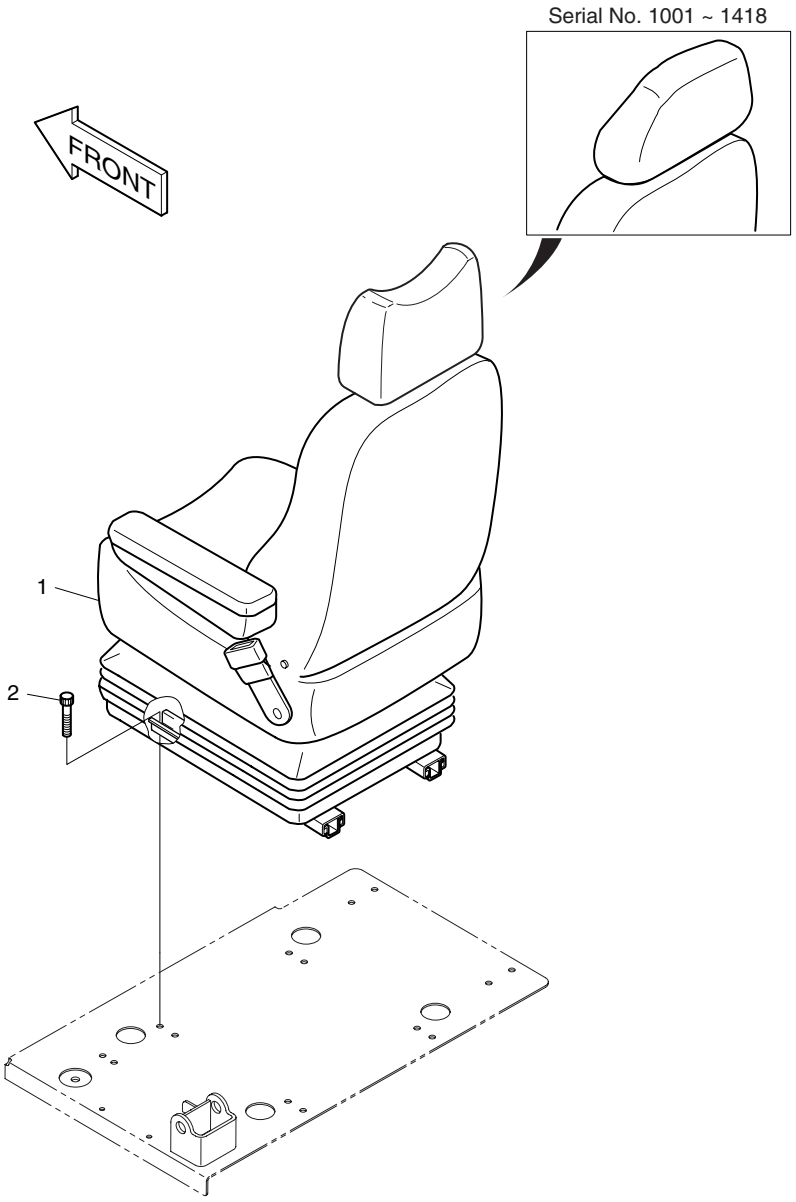

DATE	DEC. 30, 2004
REV. NO.	EXB04-09

Fig. 1450 SEAT MOUNTING SIEGE LE SUPPORT

Serial No ;

Key No.	Part No.	Description	Description	Q'ty	S.C	Serial No.	ICA	Replaceable part	
								Part No.	Q'ty
1450--	901-00031	SEAT MOUNTING	SIEGE LE SUPPORT	-	D	1001–1418			
	901-00031A	**SEAT MOUNTING**	SIEGE LE SUPPORT	-	D	**1419–**			
1	901-00029	SEAT	SIEGE	1		1001–1418	I	901-00029A	1
	901-00029A	**SEAT**	SIEGE	1		**1419–**			
2	S2208761	BOLT;SOCKET M8X1.25X18	BOULON A 6 PANS CREUX	4					

DATE	DEC. 29, 2005
REV. NO.	EXB05-20

Fig. 1460 SEAT
SIEGE

Serial No. ;

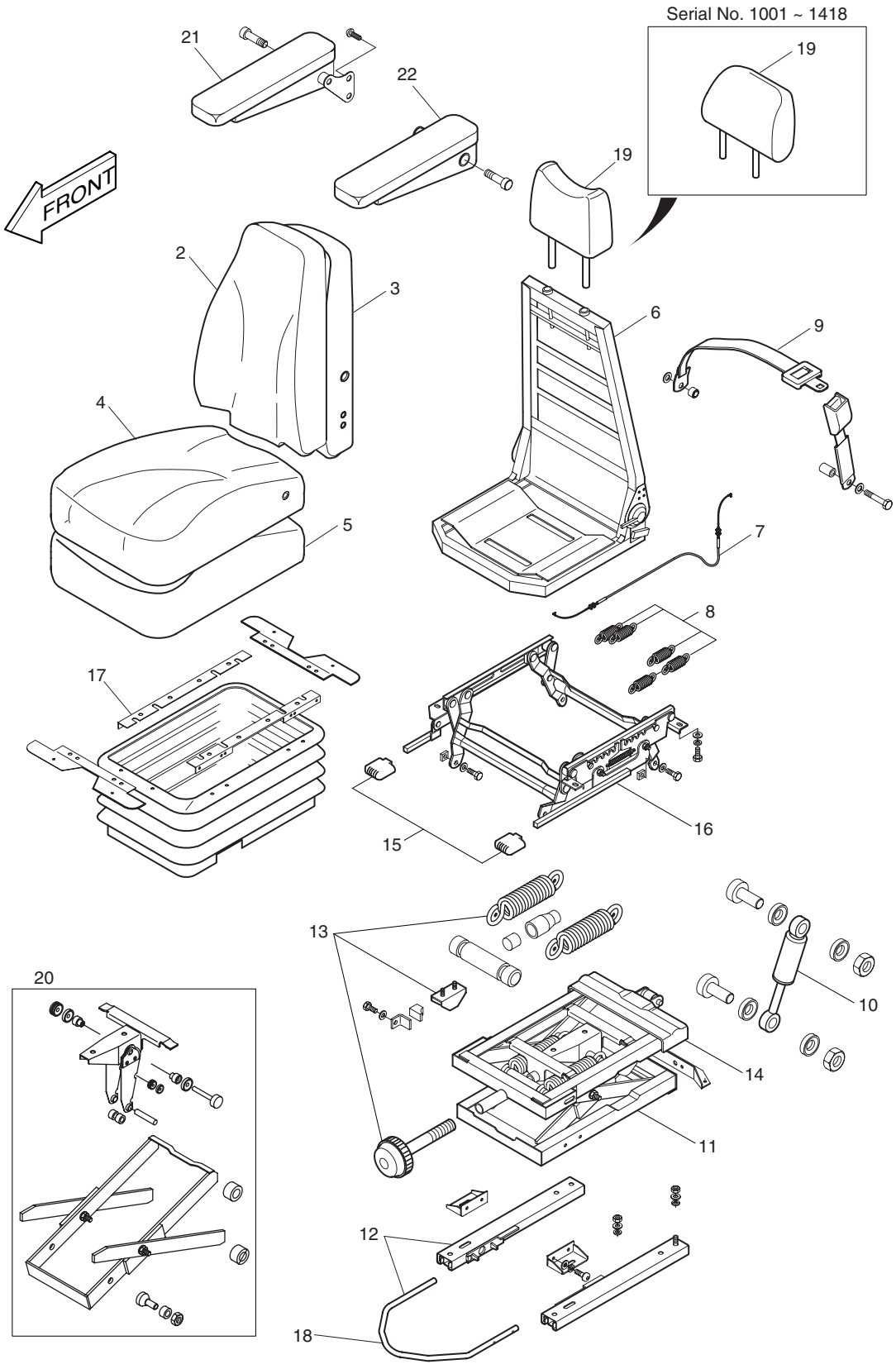

DATE	DEC. 29, 2005
REV. NO.	EXB05-20

Fig. 1460 SEAT SIEGE

Serial No ;

Key No.	Part No.	Description	Description	Q'ty	S.C	Serial No.	ICA	Replaceable part	
								Part No.	Q'ty
1460--	901-00029	SEAT	SIEGE	1		1001–1418	I	901-00029A	1
	901-00029A	SEAT	SIEGE	1		1419–			
1	185184	UPPER ASS'Y	SUPERIEUR	1					
2	185183	COVER;BACK	COUVERCLE	1					
3	183708	FOAM;BACK	EPONGE	1					
4	161395	COVER;SEAT	COUVERCLE	1					
5	183709	FOAM;SEAT	EPONGE	1					
6	-	FRAME ASS'Y	BATI PRINCIPAL	1	D				
7	179981	CABLE;ADJUSTMENT	CABLE	1					
8	162056	SPRING;HEIGHT RISER	RESSORT	1					
9	172561	BELT;SEAT	COURROIE	1					
10	158116	DAMPER ASS'Y	RESSORT	1					
11	157230	SUSPENSION ASS'Y	SUSPENSION	1					
12	162035	FORE & AFT ADJUSTER	ADJUSTER	1					
13	156737	WEIGHT ADJUSTER KIT	KIT	1					
14	156717	UPSTOP/BUMPSTOP KIT	KIT	1					
15	185193	KNOB KIT	LIT DE MOLETTE	1					
16	163369	HEIGHT RISER KIT	CANALISATION VERTICALE	1					
17	162047	COVER;SUSPENSION	COUVERCLE	1					
18	161796	SLIDERAIL HANDLE	TRAITEMENT	1					
19	172526	HEADREST KIT	KIT DE SIEGE	1		1001–1418	I	161392	1
	161392	HEADREST KIT	KIT DE SIEGE	1		1419–			
20	156738	BEARING KIT	PALIER	1					
21	162666	ARM REST-R.H	REPOSER	1		1001–1418			
	191723	ARM REST-R.H	REPOSER	1		1419–			
22	162665	ARM REST-L.H	REPOSER	1		1001–1418			
	191722	ARM REST-L.H	REPOSER	1		1419–			

DATE	JUL. 30, 2003
REV. NO.	EXB03-13

Fig. 1470 DUCT COVER ASS'Y
CONDUITES COUVERCLE

Serial No. ;

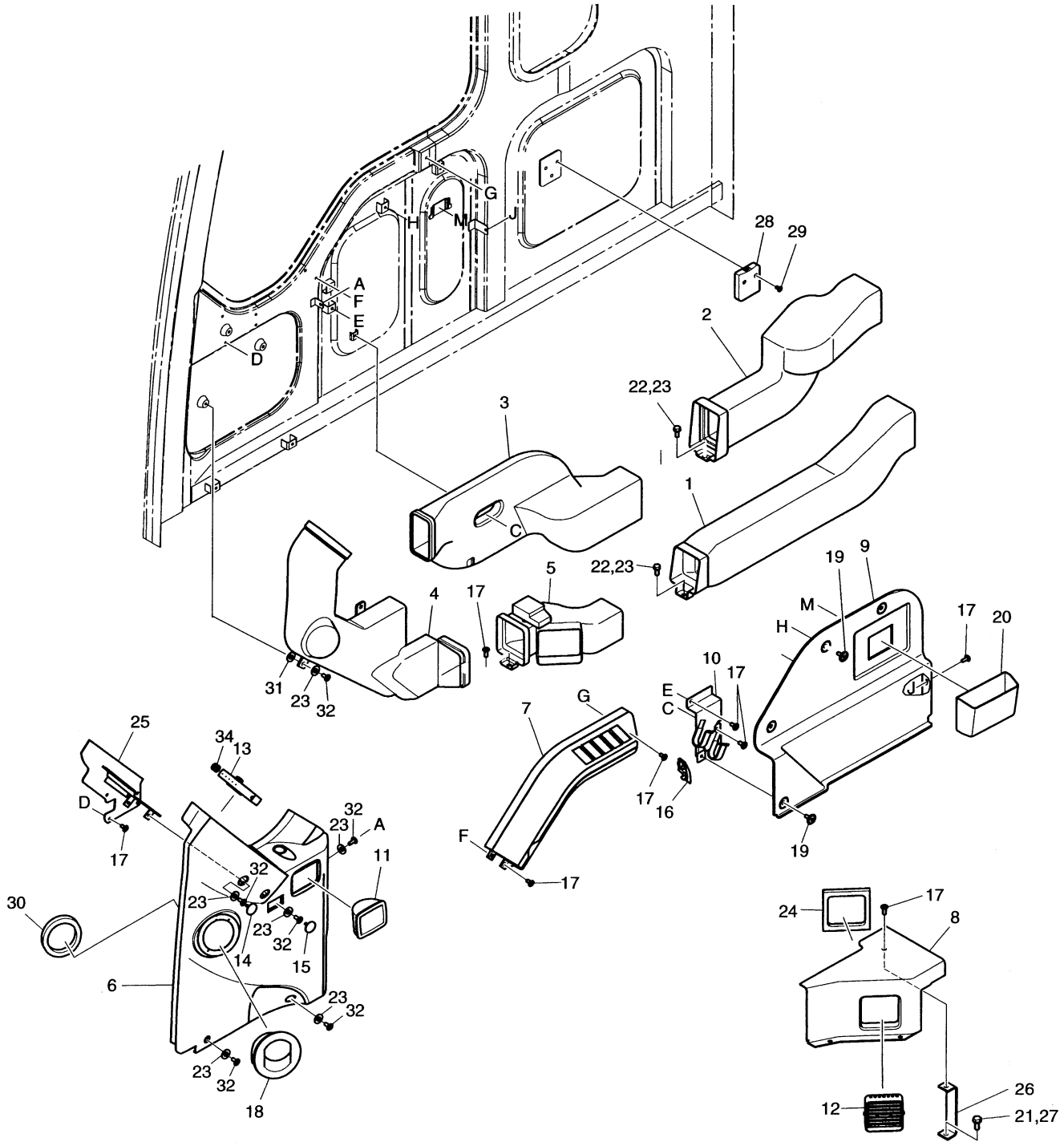

DATE	JUL. 30, 2003
REV. NO.	EXB03-13

Fig. 1470 DUCT COVER ASS'Y CONDUITES COUVERCLE

Serial No ;

Key No.	Part No.	Description	Description	Q'ty	S.C	Serial No.	ICA	Replaceable part	
								Part No.	Q'ty
1470--	621-01885C	DUCT &DUCT COVER ASS'Y	INSERTION	-	D				
1	2213-1097	DUCT;FOOT REAR	COUVERCLE	1					
2	2213-1095	DUCT;FACE REAR	COUVERCLE	1					
3	213-00025	DUCT;FACE REAR	COUVERCLE	1					
4	213-00026	DUCT;FACE FRONT	COUVERCLE	1					
5	2213-9002	DUCT;FOOT	COUVERCLE	1					
6	621-01859A	COVER;SIDE INNER(FRONT)	COUVERCLE	1					
7	621-01860	COVER;SIDE INNER(REAR)	COUVERCLE	1					
8	621-01849	COVER;FOOT DUCT	COUVERCLE	1					
9	621-00340	PANEL	PANNEAU	1					
10	195-01847	BRACKET	SUPPORT	1					
11	2906-9005	ASHTRAY	CENDRIER	1					
12	2415-1014	LOUVER;DEF& FOOT	COUVERCLE	1					
13	415-00039	LOUVER;FACE	COUVERCLE	1					
14	621-01873	COVER;HOLE	COUVERCLE	1					
15	621-01874	COVER;HOLE	COUVERCLE	1					
16	621-01875	COVER;HOLE	COUVERCLE	1					
17	2120-2166D10	SCREW M6X1.0X14	VIS	14					
18	2415-9007	NOZZLE;ROUND	INJECTEUR	1					
19	2120-2174	SCRIVET	RIVET	4					
20	621-01908	BOX	BOITE	1					
21	2114-1898D2	WASHER M8	RONDELLE	1					
22	2120-2166D6	BOLT M6X1.0X16	BOULON A 6 PANS	2					
23	2114-1898D5	WASHER M6	RONDELLE	10					
24	2161-2397	RUBBER;CUSHION 15T	CAOUTCHOUC	1					
25	195-01640C	BRACKET	SUPPORT	1					
26	195-01746	BRACKET PL4.5	SUPPORT	1					
27	2120-2166D5	BOLT M8X1.25X20	BOULON A 6 PANS	1					
28	621-01984	HOLDER;CUP	POSSESSEUR	1					
29	S3452853	SCREW M5X0.8X16	VIS	2					
30	161-00427A	RUBBER;CUSHION	CAOUTCHOUC	1					
31	2114-1058D54	WASHER	RONDELLE	3					
32	2120-2166D24	SCREW M6X1.0X20	VIS	8					
34	161-00495	RUBBER;CUSHION	CAOUTCHOUC	1					

DATE	JUN. 30, 2005
REV. NO.	EXB05-05

Fig. 1480 HEATER COVER ASS'Y
BOITIES DE CHAUFFAGE

Serial No. ;

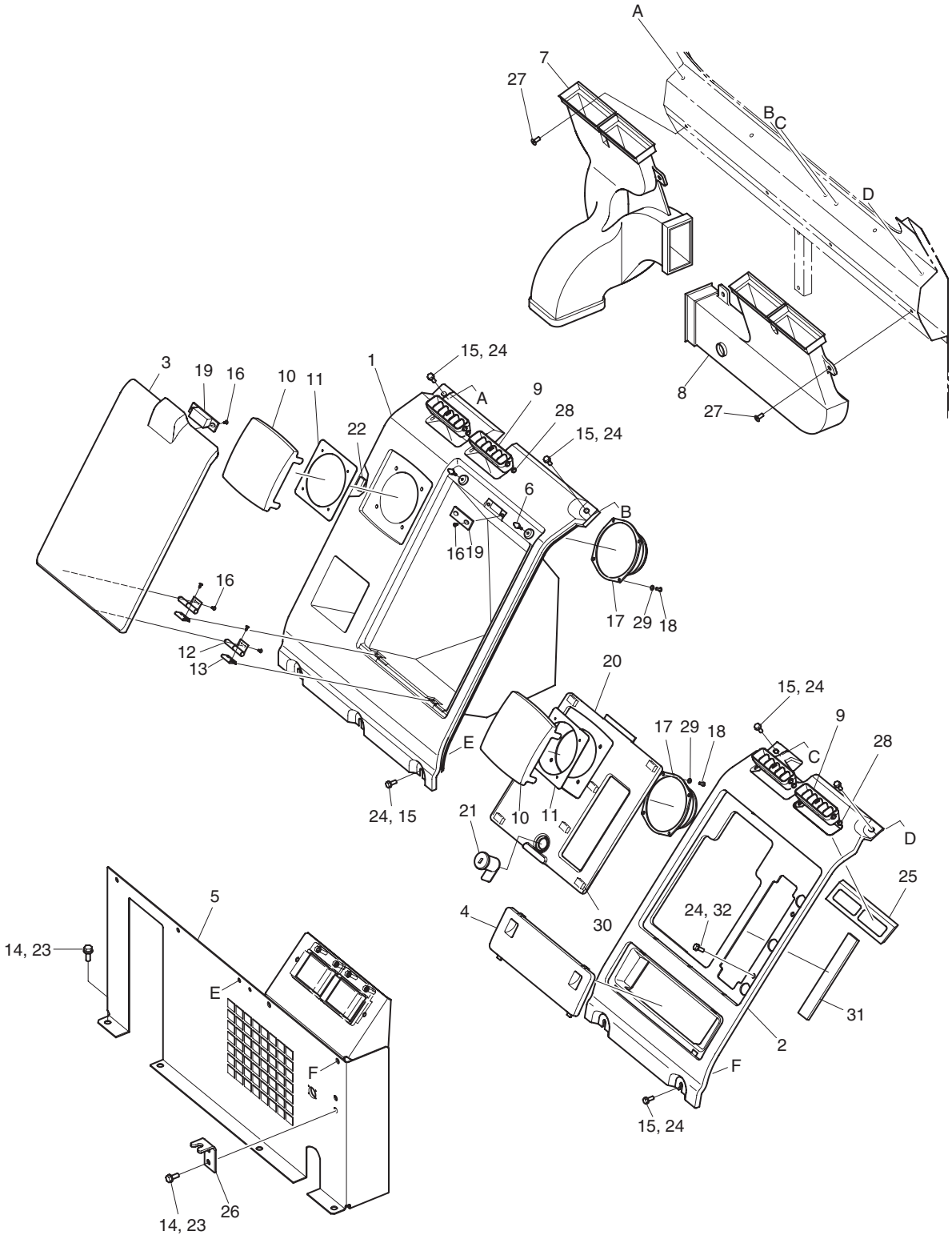

DATE	JUN. 30, 2005
REV. NO.	EXB05-05

Fig. 1480 HEATER COVER ASS'Y BOITIES DE CHAUFFAGE

Serial No ;

Key No.	Part No.	Description	Description	Q'ty	S.C	Serial No.	ICA	Replaceable part	
								Part No.	Q'ty
1480--	621-01917C	HEATER COVER ASS'Y	COUVERCLE	-	D	1001–1234			
	621-01917E	HEATER COVER ASS'Y	COUVERCLE	-	D	1235–1470			
	621-01917G	**HEATER COVER ASS'Y**	COUVERCLE	-	D	**1471–**			
1	621-01839	COVER;HEATER(R.H)	COUVERCLE	1					
2	621-01924	COVER;LOWER HEATER(L.H)	COUVERCLE	1					
3	621-01840	LID;CENTER	LID	1					
4	621-01841	LID;FUSE BOX	LID	1					
5	621-01755A	LOW HEATER COVER ASS'Y	COUVERCLE	1					
6	2116-1520	STOPPER;H/C LID	TAQUET D'ARRET	2					
7	2213-1098A	DUCT;VENT(R.H)	COUVERCLE	1					
8	2213-1099B	DUCT;VENT(L.H)	COUVERCLE	1					
9	2415-1015A	LOUVER;FACE & VENT	COUVERCLE	4					
10	2623-1252A	SPEAKER;GRILL	HAUT-PARLEUR	2					
11	2197-1741A	BRACKET;SPEAKER	SUPPORT	2					
12	2171-1084A	HINGE	CHARNIERE	2					
13	2121-1304	NUT;SPIRE	ECROU	2					
14	2120-2166D5	BOLT M8X1.25X20	BOULON A 6 PANS	8					
15	2120-2166D6	BOLT M6X1.0X16	BOULON A 6 PANS	9					
16	S3644183	SCREW;TAPPING	VIS	12					
17	2541-9020	SPEAKER	HAUT-PARLEUR	2					
18	S3450373	SCREW	VIS	8					
19	2125-1095A	CATCH;MAGNETIC	LOQUET	1					
20	621-01923	COVER;HEATER(L.H)	COUVERCLE	1					
21	2172-9035	CYLINDER;KEY	CLE	1		1001–1234	I	172-00215	1
	172-00215	CYLINDER;KEY	CLE	1		1235–1470			
	K1006160	**CYLINDER;KEY**	CLE	1		**1471–**			
22	2161-2289	RUBBER;CUSHION	CAOUTCHOUC	1					
23	2114-1898D2	WASHER M8	RONDELLE	8					
24	2114-1898D5	WASHER;PLAIN M6	RONDELLE PLATE	11					
25	2161-2397	RUBBER;CUSHION 15T	CAOUTCHOUC	2					
26	195-01782A	BRACKET	SUPPORT	1					
27	2120-2166D10	SCREW M6X1.0X14	VIS	6					
28	2160-1329	BUSHING	MANCHON	1					
29	S5000003	WASHER;PLAIN M3	RONDELLE PLATE	8					
30	161-00468	RUBBER	CAOUTCHOUC	6					
31	161-00469	SPONGE	EPONGE	1					
32	2120-2166D36	BOLT M6X1.0X20	BOULON A 6 PANS	2					

DATE	DEC. 30, 2004
REV. NO.	EXB04-09

Fig. 1490 CABIN MOUNT ASS'Y
SUPPORT DE CABINE

Serial No. ;

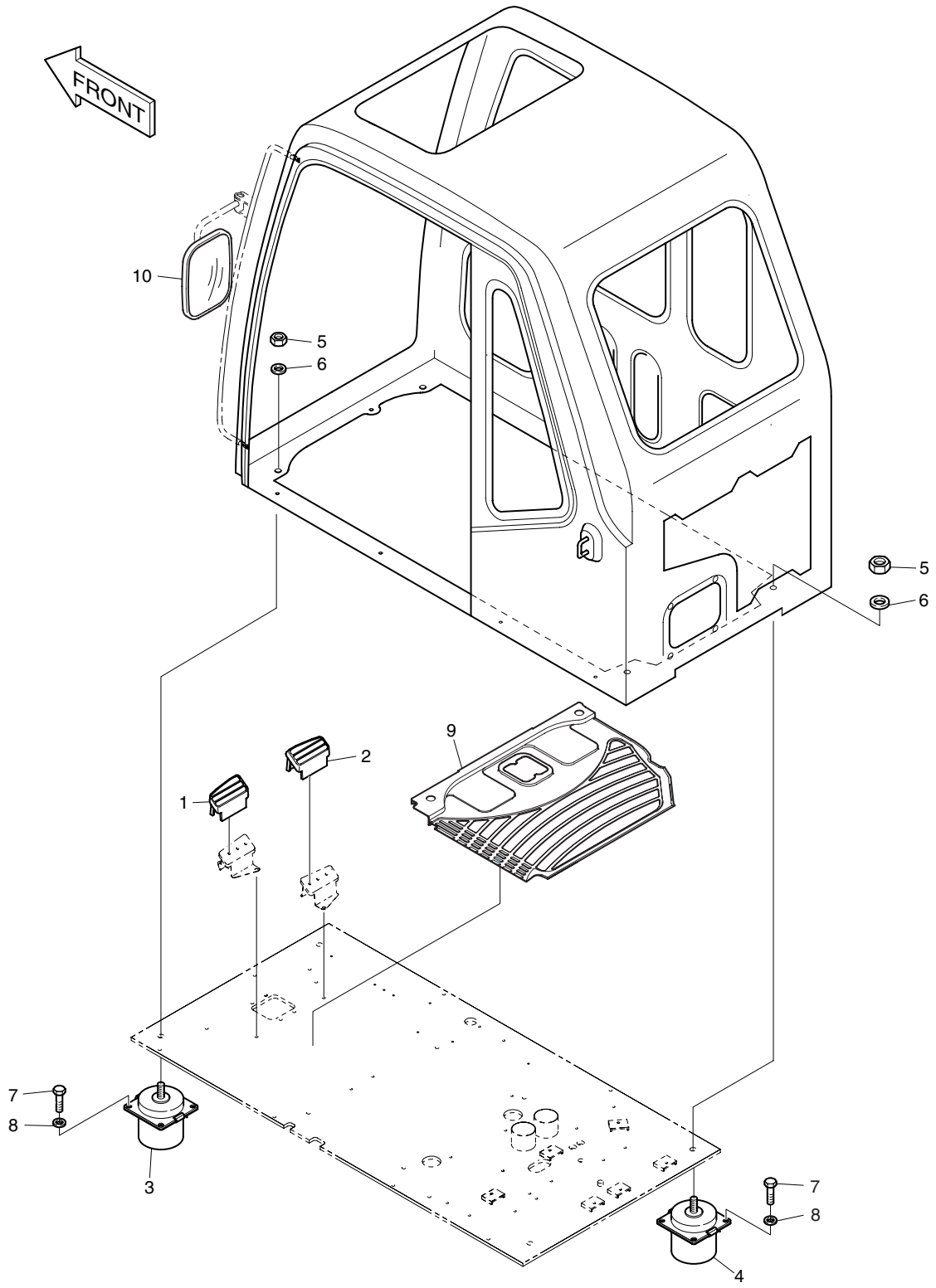

DATE	DEC. 30, 2004
REV. NO.	EXB04-09

Fig. 1490 CABIN MOUNT ASS'Y SUPPORT DE CABINE

Serial No ;

Key No.	Part No.	Description	Description	Q'ty	S.C	Serial No.	ICA	Replaceable part	
								Part No.	Q'ty
1490--	622-00225	CABIN MOUNT ASS'Y	SUPPORT DE CABINE	-	D				
1	2161-2216	COVER;FOOT REST(L.H)	COUVERCLE	1					
2	2161-2235	COVER;FOOT REST(R.H)	COUVERCLE	1					
3	2161-9057	CABIN MOUNT;FRONT	SUPPORT	2					
4	2161-9058	CABIN MOUNT;REAR	SUPPORT	2					
5	2121-9007	NUT	ECROU	4					
6	2114-1058D2	WASHER	RONDELLE	4					
7	2120-2166D2	BOLT M10X1.5X25	BOULON A 6 PANS	16					
8	2114-1898D1	WASHER;PLAIN	RONDELLE PLATE	16					
9	161-00383	MAT;FLOOR	PLAQUE	1					
10	903-00052	MIRROR	RETROVISEUR	1		1001–1082	Y	2903-9012A	1
	2903-9012A	MIRROR	RETROVISEUR	1		1083–1324	I	903-00068	1
	903-00068	**MIRROR**	RETROVISEUR	1		**1325–**			

DATE	JUN. 30, 2005
REV. NO.	EXB05-05

Fig. 1500 CABIN ASS'Y
CABINE

Serial No. ;

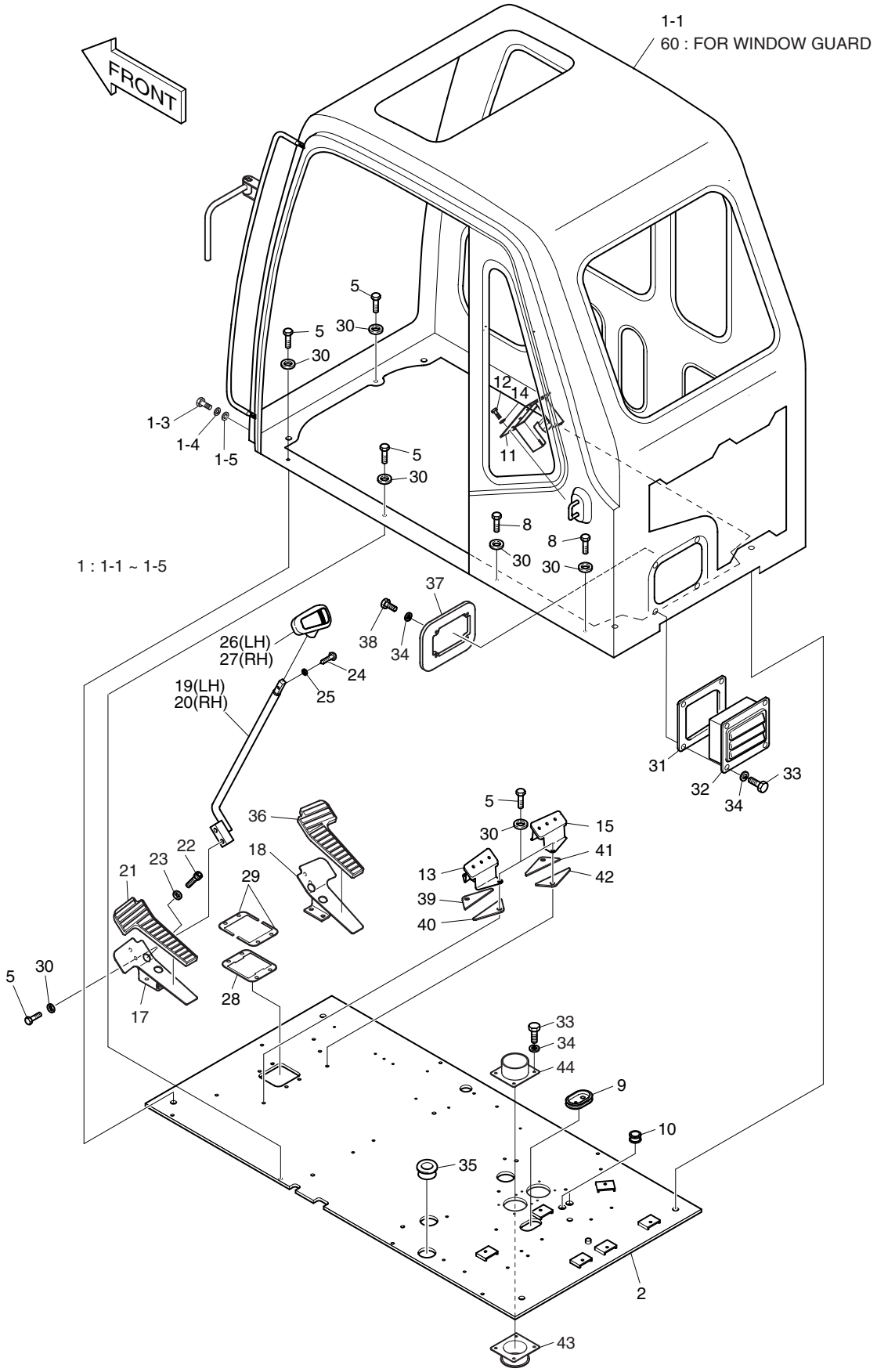

DATE	JUN. 30, 2005
REV. NO.	EXB05-05

Fig. 1500 CABIN ASS'Y CABINE

Serial No ;

Key No.	Part No.	Description	Description	Q'ty	S.C	Serial No.	ICA	Replaceable part	
								Part No.	Q'ty
1500--	622-00215J	CABIN ASS'Y	CABINE	-	D	1001–1211			
	622-00215L	CABIN ASS'Y	CABINE	-	D	1212–1234			
	622-00215M	CABIN ASS'Y	CABINE	-	D	1235–1369			
	622-00215N	CABIN ASS'Y	CABINE	-	D	1370–1421			
	622-00215P	CABIN ASS'Y	CABINE	-	D	1422–1466			
	622-00215Q	**CABIN ASS'Y**	CABINE	-	D	**1467–1470**			
	622-00215R	**CABIN ASS'Y**	CABINE	-	D	**1471–**			
1	622-00298	CABIN ASS'Y	CABINE	1		1001–1211	I	622-00298A	1
	622-00298A	CABIN ASS'Y	CABINE	1		1212–1234	I	622-00298B	1
	622-00298B	CABIN ASS'Y	CABINE	1		1235–1369	I	622-00298C	1
	622-00298C	CABIN ASS'Y	CABINE	1		1370–1421	I	622-00298E	1
	622-00298E	CABIN ASS'Y	CABINE	1		1422–1466	I	622-00298G	1
	622-00298G	**CABIN ASS'Y**	CABINE	1		**1467–1470**			
	622-00298H	**CABIN ASS'Y**	CABINE	1		**1471–**			
1-1	622-00224H	. CABIN ASS'Y	. CABINE	1		1001–1211			
	622-00224I	. CABIN ASS'Y	. CABINE	1	D	1212–1234			
	622-00224J	. CABIN ASS'Y	. CABINE	1	D	1235–1369			
	622-00224K	. CABIN ASS'Y	. CABINE	1	D	1370–1421			
	622-00224L	. CABIN ASS'Y	. CABINE	1	D	1422–1466			
	622-00224M	**. CABIN ASS'Y**	. CABINE	1	D	**1467–1470**			
	622-00224N	**. CABIN ASS'Y**	. CABINE	1	D	**1471–**			
1-3	2120-2166D4	. BOLT M10X1.5X20	. BOULON A 6PANS	4					
1-4	2114-2031D5	. WASHER;SPRING M10	. RONDELLE	4					
1-5	2114-1898D1	. WASHER;PLAIN M10	. RONDELLE	4					
2	621-01920B	PLATE;FLOOR	PLAQUE	1					
5	2120-2166D2	BOLT M10X1.5X25	BOULON A 6 PANS	11					
8	2120-2166D3	BOLT M10X1.5X65	BOULON A 6 PANS	4					
9	2160-1308	BUSHING;RUBBER	GARNISSAGE	1					
10	2160-1004D48	BUSHING;RUBBER	GARNISSAGE	2					
11	195-01784A	BRACKET;AUDIO CASSETTE	SUPPORT	1		1001–1211	I	195-01784C	1
	195-01784C	BRACKET;AUDIO CASSETTE	SUPPORT	1		1212–			
12	S0508853	BOLT M8X1.25X20	BOULON A 6 PANS	3					
13	2197-1704A	BRACKET;FOOT REST(L.H)	SUPPORT	1					
14	S5010513	WASHER;PLAIN	RONDELLE PLATE	3					
15	2197-1744A	BRACKET;FOOT REST(R.H)	SUPPORT	1					
17	195-01684A	BRACKET;PEDAL(L.H)	SUPPORT	1					
18	195-01683A	BRACKET;PEDAL(R.H)	SUPPORT	1					
19	133-00155A	LEVER(L.H)	LEVIER	1					

DATE	JUN. 30, 2005
REV. NO.	EXB05-05

Fig. 1500 CABIN ASS'Y
CABINE

Serial No. ;

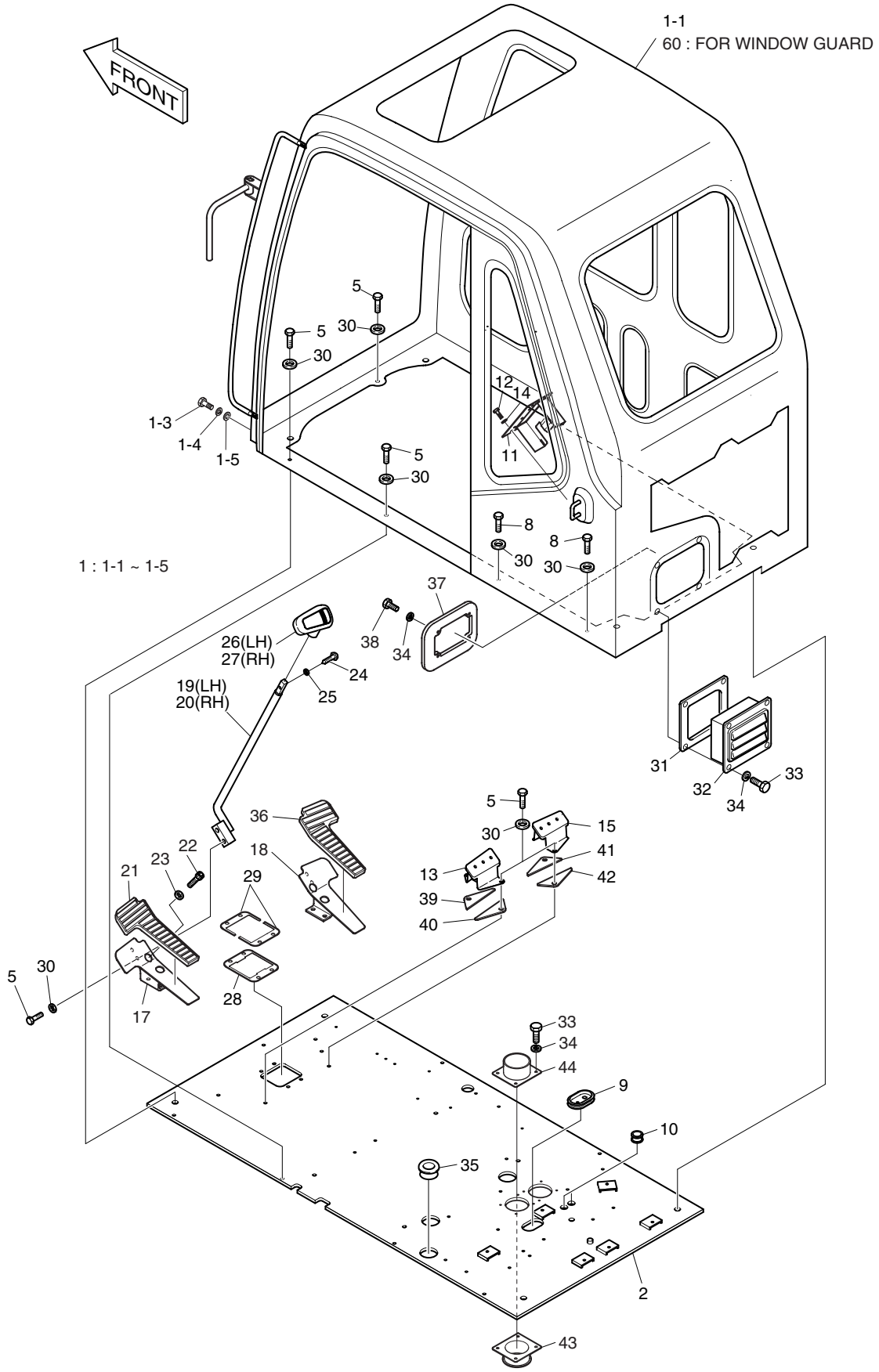

DATE	JUN. 30, 2005
REV. NO.	EXB05-05

Fig. 1500 CABIN ASS'Y CABINE

Serial No ;

Key No.	Part No.	Description	Description	Q'ty	S.C	Serial No.	ICA	Replaceable part	
								Part No.	Q'ty
1500-20	133-00156A	LEVER(R.H)	LEVIER	1					
21	161-00382	RUBBER;PEDAL(L.H)	CAOUTCHOUC	1					
22	S2211866	BOLT;SOCKET M10X1.5X20	BOULON A 6 PANS CREUX	4					
23	S5110601	WASHER;SPRING M10	RONDELLE ELASTIQUE	4					
24	S2201766	BOLT;SOCKET M4X0.7X14	BOULON A 6 PANS CREUX	2					
25	S5000113	WASHER;PLAIN M4	RONDELLE PLATE	2					
26	2132-1133B	GRIP;LEVER(L.H)	POIGNEE	1					
27	2132-1134B	GRIP;LEVER(R.H)	POIGNEE	1					
28	161-00077	PLATE;RUBBER	PLAQUE	1					
29	621-00564	SHIM	CALE	2					
30	2114-1898D1	WASHER	RONDELLE	15					
31	2161-2317	RUBBER;PLATE	CAOUTCHOUC	1					
32	621-01159	PLATE;COVER	PLAQUE	1					
33	2120-2166D6	BOLT M6X1.0X16	BOULON A 6 PANS	12					
34	2114-1898D3	WASHER M6	RONDELLE	16					
35	160-00035	BUSHING;RUBBER	GARNISSAGE	1					
36	161-00381	RUBBER;PEDAL(R.H)	CAOUTCHOUC	1					
37	621-01160	COVER;FRESH AIR DUCT	COUVERCLE	1					
38	2120-2166D19	BOLT M6X1.0X12	BOULON A 6 PANS	4					
39	161-00329	RUBBER;DAMPER(L.H)	CAOUTCHOUC	1					
40	161-00330	RUBBER;DAMPER(L.H)	CAOUTCHOUC	1					
41	161-00331	RUBBER;DAMPER(R.H)	CAOUTCHOUC	1					
42	161-00335	RUBBER;DAMPER(R.H)	CAOUTCHOUC	1					
43	160-00030	BOOT	GAINE DE PROTECTION	2					
44	195-01765B	BRACKET	SUPPORT	2					
60	622-00218H	CABIN;WINDOW GUARD	CABINE	1		1001–1369	I	622-00218J	1
	622-00218J	CABIN;WINDOW GUARD	CABINE	1		1370–1421	I	622-00218K	1
	622-00218K	CABIN;WINDOW GUARD	CABINE	1		1422–1466	I	622-00218L	1
	622-00218L	**CABIN;WINDOW GUARD**	CABINE	1		**1467–**			

DATE	JUN. 30, 2005
REV. NO.	EXB05-05

Fig. 1510 CABIN(1) CABINE

Serial No. ;

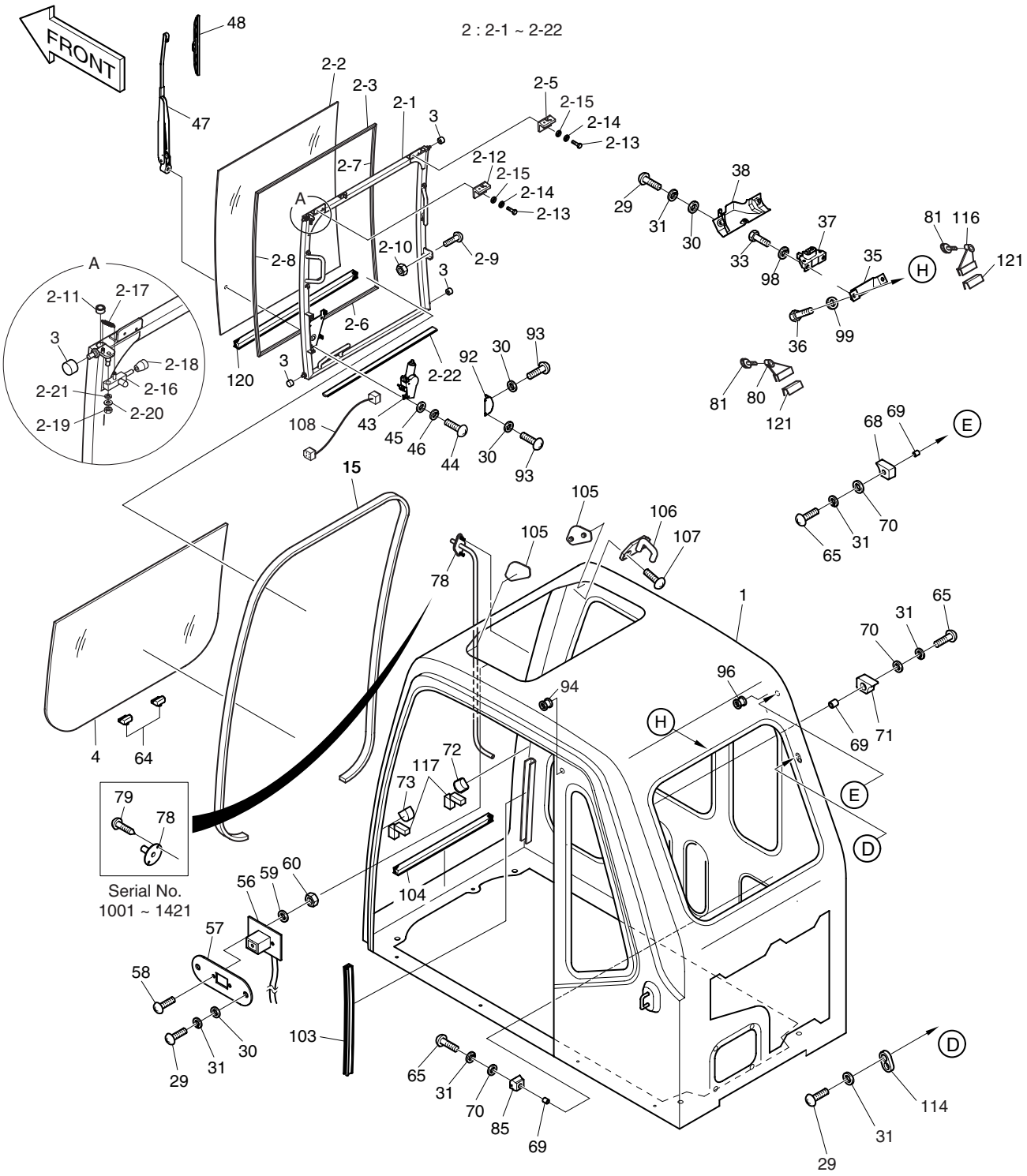

DATE	JUN. 30, 2005
REV. NO.	EXB05-05

Fig. 1510 CABIN(1) CABINE

Serial No ;

Key No.	Part No.	Description	Description	Q'ty	S.C	Serial No.	ICA	Replaceable part	
								Part No.	Q'ty
1510--	622-00224H	CABIN ASS'Y	CABINE	1	D	1001–1211	I	622-00224I	1
	622-00224I	CABIN ASS'Y	CABINE	1	D	1212–1234			
	622-00224J	CABIN ASS'Y	CABINE	1	D	1235–1369			
	622-00224K	CABIN ASS'Y	CABINE	1	D	1370–1421			
	622-00224L	CABIN ASS'Y	CABINE	1	D	1422–1466			
	622-00224M	**CABIN ASS'Y**	CABINE	1	D	**1467–1470**			
	622-00224N	**CABIN ASS'Y**	CABINE	1	D	**1471–**			
1	-	CAB ASS'Y	CABINE	1	D				
2	622-00191B	DOOR ASS'Y;FRONT	VERROU	1		1001–1369	I	622-00191C	1
	622-00191C	DOOR ASS'Y;FRONT	VERROU	1		1370–			
2-1	622-00194B	. DOOR;FRONT	. VERROU	1	D	1001–1369			
	622-00194C	. DOOR;FRONT	. VERROU	1	D	1370–			
2-2	903-00055A	. GLASS 6.76t	. VITRE	1					
2-3	161-00395	. DAMPER	. REGISTRE	1					
2-5	125-00031A	. CATCH	. LOQUET	1					
2-6	161-00395	. DAMPER	. REGISTRE	1					
2-7	161-00395	. DAMPER	. REGISTRE	1					
2-8	161-00395	. DAMPER	. REGISTRE	1					
2-9	2161-2069	. STOPPER	. FRAPPER	1					
2-10	S4032633	. SCREW;FLAT M8X1.25X16	. VIS	1					
2-11	2110-1347	. BUSH	. MANCHON	2					
2-12	125-00043	. CATCH	. LOQUET	1					
2-13	2120-2166D36	. BOLT M6X1.0X20	. BOULON A 6 PANS	4					
2-14	2114-2031D3	. WASHER;SPRING M6	. RONDELLE ELASTIQUE	4					
2-15	2114-1898D3	. WASHER;PLAIN M6	. RONDELLE PLATE	4					
2-16	133-00168	. BAR	. CAOUTCHOUC	1					
2-17	129-00146A	. SPRING	. RESSORT	1					
2-18	2160-1307	. CAP;RUBBER	. CHAPEAU	1					
2-19	S4012533	. NUT	. ECROU	1					
2-20	2114-1898D2	. WASHER	. RONDELLE	1					
2-21	S5102503	. WASHER;SPRING	. RONDELLE ELASTIQUE	1					
2-22	K1000868	. RUBBER 920L	. CAOUTCHOUC	1		1370–			
3	2154-1033	ROLLER	GALET	4					
4	903-00049	GLASS;FRONT LOWER	VITRE	1					
15	162-00025A	STRIP;WEATHER 3800L	TAMPON	1					
29	S3450973	SCREW M6X1.0X16	VIS	7					
30	S5010313	WASHER;PLAIN M6	RONDELLE PLATE	11					
31	S5102303	WASHER;SPRING M6	RONDELLE ELASTIQUE	9					

DATE	JUN. 30, 2005
REV. NO.	EXB05-05

Fig. 1510 CABIN(1) CABINE

Serial No. ;

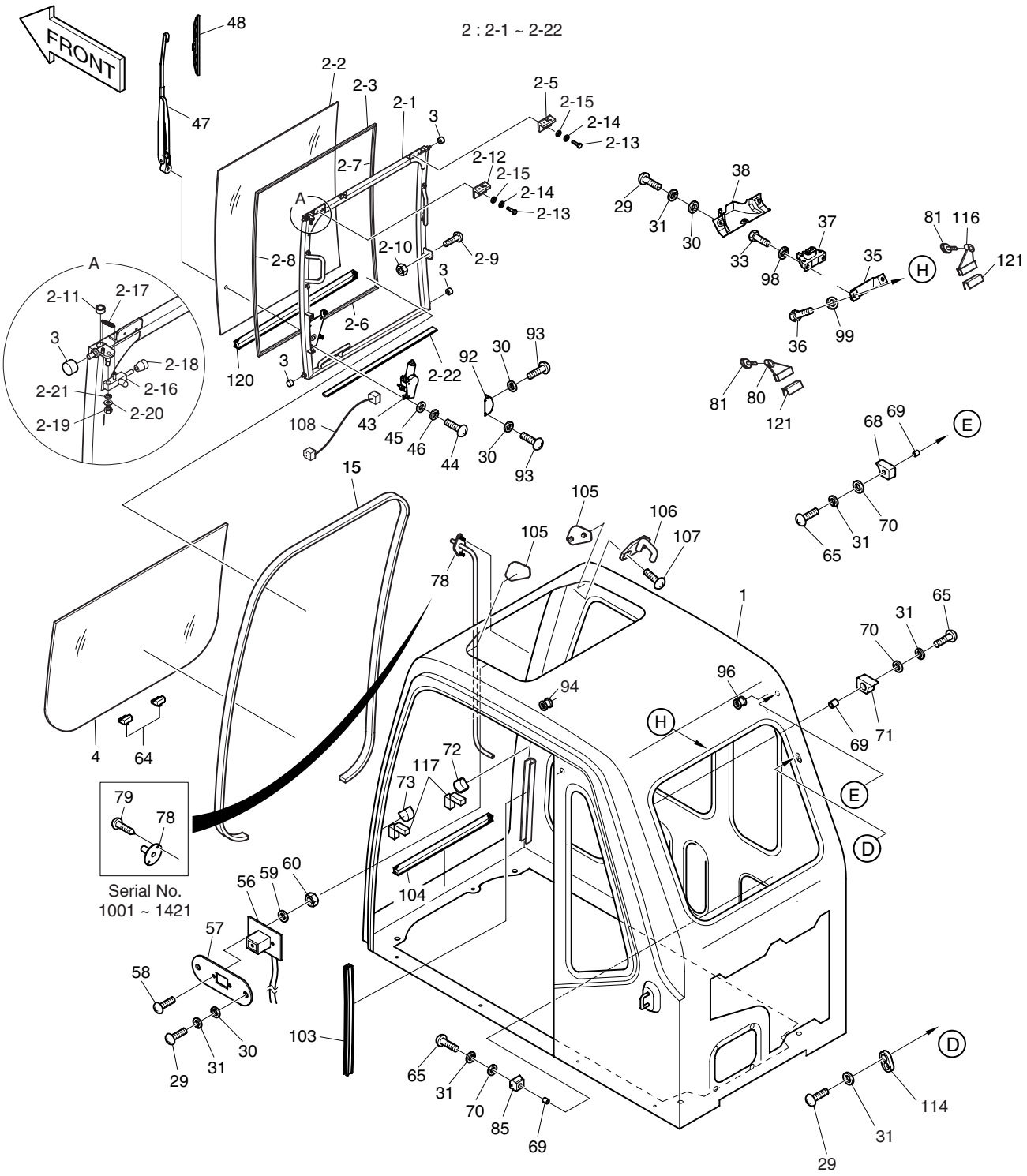

DATE	JUN. 30, 2005
REV. NO.	EXB05-05

Fig. 1510 CABIN(1) CABINE

Serial No ;

Key No.	Part No.	Description	Description	Q'ty	S.C	Serial No.	ICA	Replaceable part	
								Part No.	Q'ty
1510-33	2120-2166D5	BOLT M8X1.25X20	BOULON A 6 PANS	2					
35	2197-1711	BRACKET;AUTO LOCK	SUPPORT	1					
36	2120-2166D4	BOLT M10X1.5X20	BOULON A 6 PANS	2					
37	2125-9056	CATCH;AUTO LOCK	VERROU	1					
38	621-01990	COVER;AUTO LOCK	COUVERCLE	1					
43	538-00009	MOTOR;WIPER	MOTEUR	1					
44	S3450833	SCREW M5X0.8X12	VIS	3					
45	S5010213	WASHER;PLAIN M5	RONDELLE PLATE	3					
46	S5102203	WASHER;SPRING M5	RONDELLE ELASTIQUE	3					
47	2541-6020	WIPER ARM ASS'Y	BRAS D'ESSUIE-GLACE	1					
48	507-00005	BLADE;WIPER	BALAI D'ESSUIE-GLACE	1					
56	530-00212	HARNESS;CABIN LAMP	FAISCEAU	1					
57	2891-1323	PLATE	PLAQUE	1					
58	S3450343	SCREW M3X0.5X10	VIS	2					
59	S5020013	WASHER;PLAIN M3	RONDELLE PLATE	2					
60	S4010003	NUT M3X0.5	ECROU	2					
64	2161-2211	STOPPER;RUBBER	TAQUET D'ARRET	2					
65	S3450993	SCREW M6X1.0X25	VIS	4					
68	2161-2208	STOPPER;RUBBER RH	TAQUET D'ARRET	1					
69	2140-1338	PIPE;SPACER	CONDUITE	4					
70	2114-1058D52	WASHER M6	RONDELLE	4					
71	2161-2207	STOPPER;RUBBER LH	TAQUET D'ARRET	1					
72	2161-2210	STOPPER;RUBBER RH	TAQUET D'ARRET	1					
73	2161-2209	STOPPER;RUBBER LH	TAQUET D'ARRET	1					
78	2114-1855	WASHER ASS'Y	RONDELLE	1		1001–1421	I	K1002429	1
	K1002429	NOZZLE ASS'Y	INJECTEUR	1		1422–			
79	S3643359	SCREW;TAPPING	VIS	2		1001–1421			
80	195-01549A	BRACKET	SUPPORT	1					
81	120-00226	BOLT;KNOB M8X1.25X30	BOULON	2					
85	2161-2212	STOPPER;RUBBER	TAQUET D'ARRET	2					
92	621-01991	COVER;WIPER MOTOR	COUVERCLE	1					
93	S3450953	SCREW M6X1.0X12	VIS	4					
94	110-00230	BUSHING;RUBBER	GARNISSAGE	1					
96	2160-1310	BUSHING;RUBBER	GARNISSAGE	1					
98	2114-1898D2	WASHER M8	RONDELLE	2					
99	2114-1058D45	WASHER	RONDELLE	2					
103	2160-1026	TRIM	CANAL	2					
104	162-00027	STRIP;WEATHER L=920	TAMPON	1		1001–1369	I	2160-1023	1

DATE	JUN. 30, 2005
REV. NO.	EXB05-05

Fig. 1510 CABIN(1) CABINE

Serial No. ;

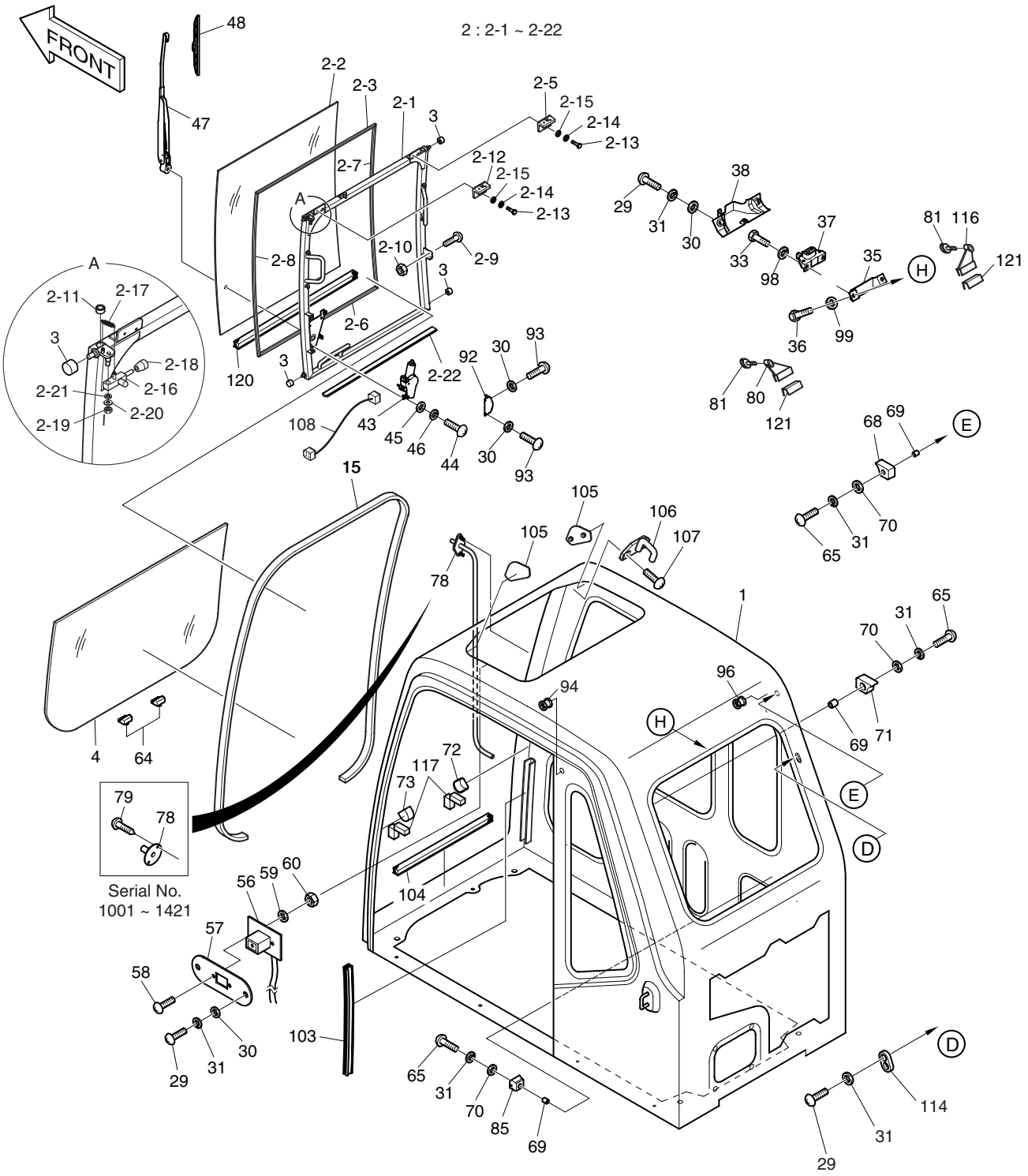

DATE	JUN. 30, 2005
REV. NO.	EXB05-05

Fig. 1510 CABIN(1) CABINE

Serial No ;

Key No.	Part No.	Description	Description	Q'ty	S.C	Serial No.	ICA	Replaceable part	
								Part No.	Q'ty
1510-104	2160-1023	RUBBER;CUSHION	CAOUTCHOUC	1		1370–1421	I	162-00027	1
	162-00027	STRIP;WEATHER L=920	TAMPON	1		1422–			
105	160-00038	RUBBER	CAOUTCHOUC	2					
106	142-00067	STRIKER	FRAPPER	2					
107	S3453118	SCREW M8X1.25X20	VIS	4					
108	530-00251	HARNESS;W/MOTOR JOINT	FAISCEAU	1					
114	2514-1013	HOLDER	POSSESSEUR	2					
116	195-02099	BRACKET	SUPPORT	1					
117	2161-2289	RUBBER;CUSHION	CAOUTCHOUC	2		1001–1369	I	2161-2289A	2
	2161-2289A	RUBBER;CUSHION	CAOUTCHOUC	2		1370–			
120	162-00030	STRIP;WEATHER	CAOUTCHOUC	1		1001–1234	I	198-00036A	1
	198-00036A	STRIP;WEATHER	CAOUTCHOUC	1		1235–			
121	162-00031	RUBBER;H	CAOUTCHOUC	1					

DATE	JUN. 30, 2005
REV. NO.	EXB05-05

Fig. 1520 CABIN(2) CABINE

Serial No. ;

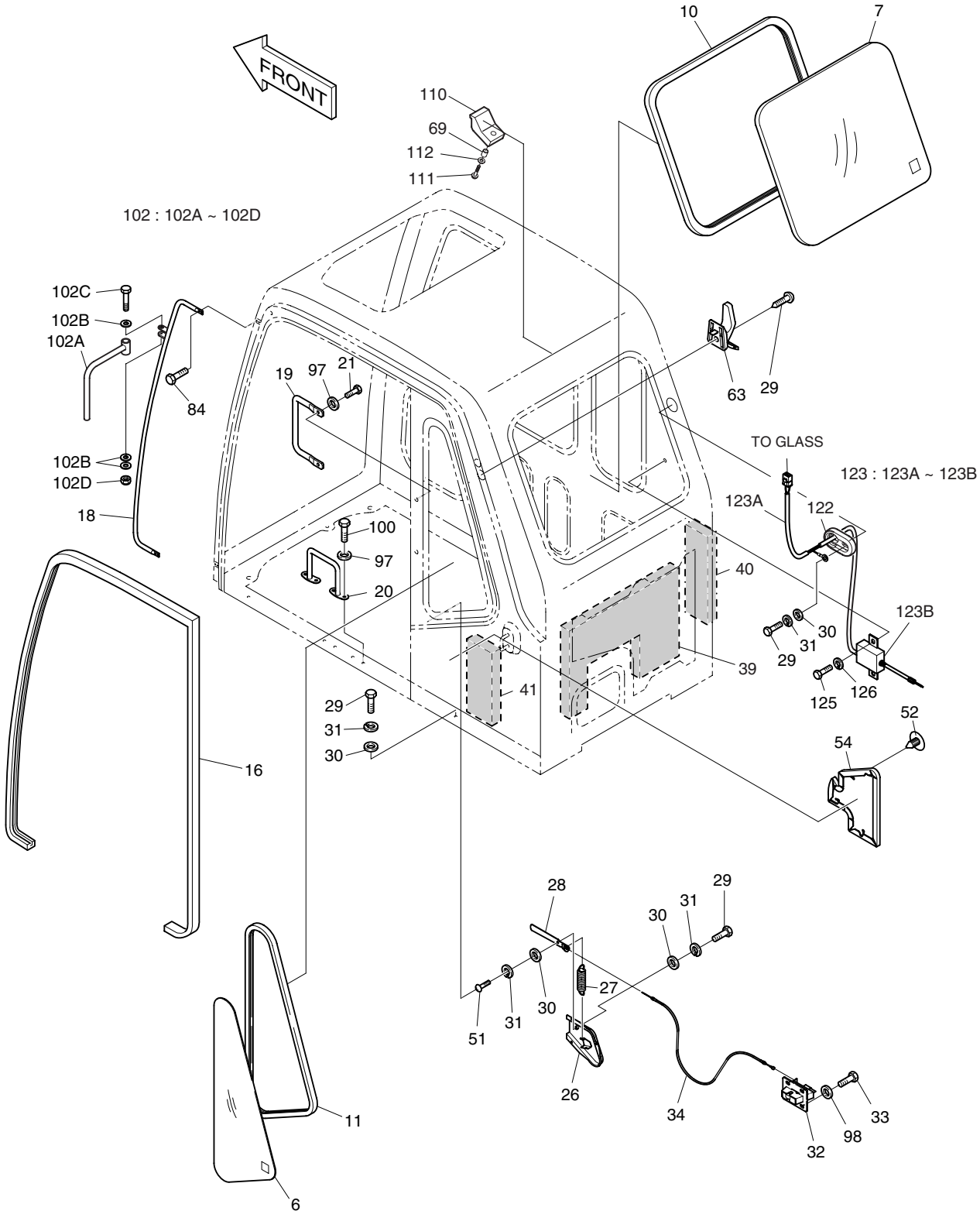

DATE	JUN. 30, 2005
REV. NO.	EXB05-05

Fig. 1520 CABIN(2) CABINE

Serial No ;

Key No.	Part No.	Description	Description	Q'ty	S.C	Serial No.	ICA	Replaceable part	
								Part No.	Q'ty
1520--	622-00224H	CABIN ASS'Y	CABINE	1	D	1001–1211	I	622-00224I	1
	622-00224I	CABIN ASS'Y	CABINE	1	D	1212–1234			
	622-00224J	CABIN ASS'Y	CABINE	1	D	1235–1369			
	622-00224K	CABIN ASS'Y	CABINE	1	D	1370–1421			
	622-00224L	CABIN ASS'Y	CABINE	1	D	1422–1466			
	622-00224M	**CABIN ASS'Y**	CABINE	1	D	**1467–1470**			
	622-00224N	**CABIN ASS'Y**	CABINE	1	D	**1471–**			
6	2903-1212	GLASS(L.H)	VITRE	1					
7	2903-1213	GLASS;REAR	VITRE	1		1001–1211			
	903-00067	GLASS;REAR	VITRE	1		1212–			
10	2198-1058	H-RUBBER 2590L	CAOUTCHOUC	1					
11	2198-1055	S-RUBBER;REAR(L.H)	CAOUTCHOUC	1					
16	2162-1064A	STRIP;WEATHER 3500L	TAMPON	1					
18	172-00027A	HANDLE;FRONT(L.H)	POIGNER	1					
19	172-00043	HANDLE;CENTER(L.H)	POIGNER	1					
20	2172-1109	HANDLE;LOWER(L.H)	POIGNER	1					
21	2120-2166D1	BOLT M10X1.5X30	BOULON A 6 PANS	2					
26	2197-1639A	BRACKET;LEVER CASE	SUPPORT	1					
27	2129-1446	SPRING	RESSORT	1					
28	2133-2014	LEVER;CATCH DOOR	LEVIER	1					
29	S3450973	SCREW M6X1.0X16	VIS	5		1001–1211			
	S3450973	SCREW M6X1.0X16	VIS	6		1212–			
30	S5010313	WASHER;PLAIN M6	RONDELLE PLATE	5		1001–1211			
	S5010313	WASHER;PLAIN M6	RONDELLE PLATE	6		1212–			
31	S5102303	WASHER;SPRING M6	RONDELLE ELASTIQUE	5		1001–1211			
	S5102303	WASHER;SPRING M6	RONDELLE ELASTIQUE	6		1212–			
32	2125-9055	CATCH;DOOR ASM	LOQUET	1					
33	2120-2166D5	BOLT M8X1.25X20	BOULON A 6 PANS	4					
34	2127-1002A	WIRE ASM;RELEASE	CABLE	1					
39	161-00317	FOAM;POLYURETHANE	EPONGE	1					
40	161-00318	FOAM;POLYURETHANE	EPONGE	1					
41	161-00319	FOAM;POLYURETHANE	EPONGE	1					
51	S3450953	SCREW M6X1.0X12	VIS	1					
52	2124-1607	CLIP;TRIM	ATTACHE	4					
54	161-00430A	PAD(L.H)	CAOUTCHOUC	1					
63	2150-1133	HOOK;COAT	CROCHET	1					
69	2140-1338	PIPE;SPACER	CONDUITE	2					
84	2120-2150D1	BOLT M10X1.5X25	BOULON A 6 PANS	4					

DATE	JUN. 30, 2005
REV. NO.	EXB05-05

Fig. 1520 CABIN(2) CABINE

Serial No. ;

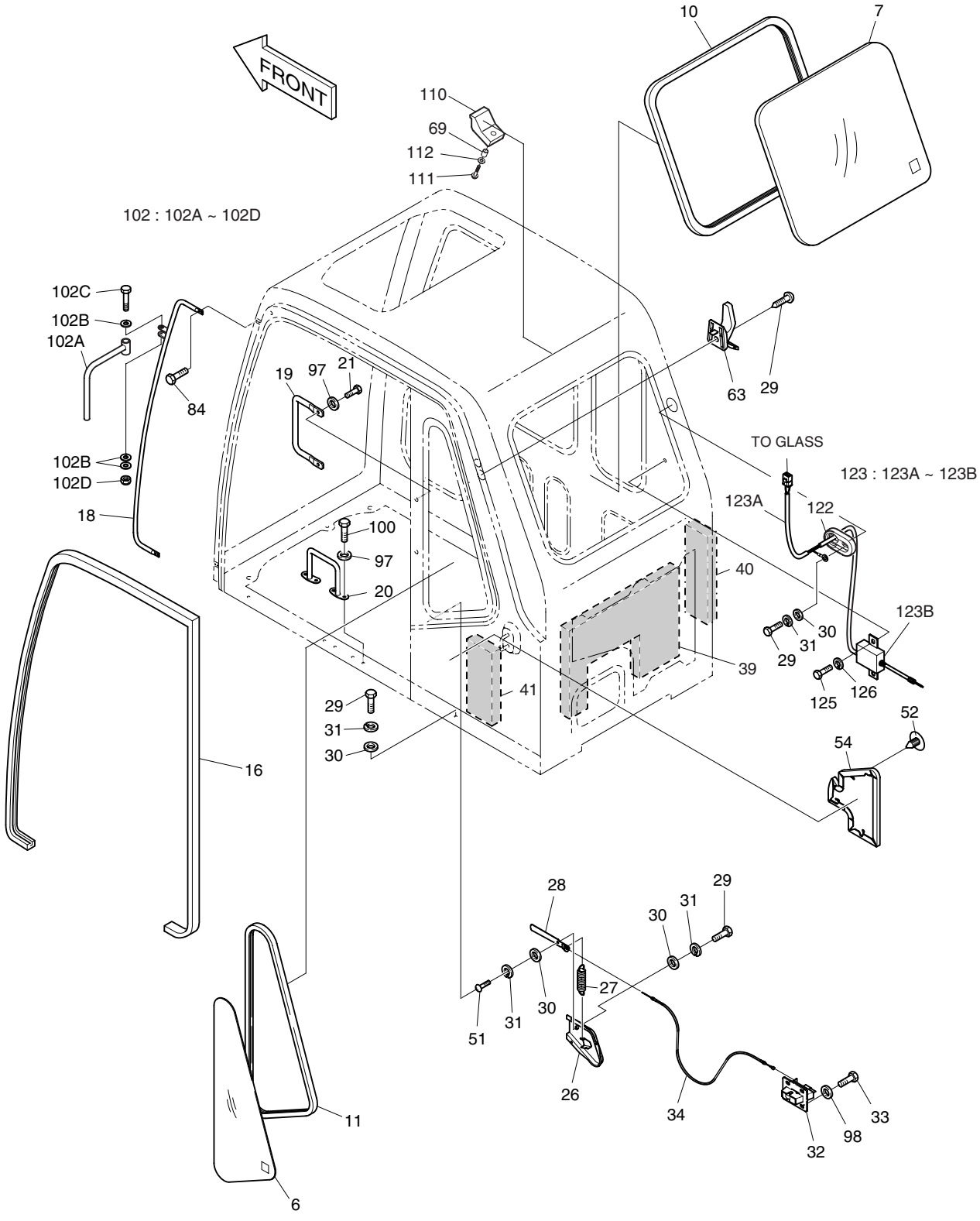

DATE	JUN. 30, 2005
REV. NO.	EXB05-05

Fig. 1520 CABIN(2) CABINE

Serial No ;

Key No.	Part No.	Description	Description	Q'ty	S.C	Serial No.	ICA	Replaceable part	
								Part No.	Q'ty
1520-97	2114-1898D1	WASHER M10	RONDELLE	5					
98	2114-1898D2	WASHER M8	RONDELLE	4					
100	2120-2166D2	BOLT M10X1.5X25	BOULON A 6 PANS	3					
102	623-00023	STAY;SIDE MIRROR	ENTRETOISE	1					
102A	623-00024	. STAY	. ENTRETOISE	1	D				
102B	2114-1898D16	. WASHER M10	. RONDELLE	3	D				
102C	2120-2166D40	. BOLT M10X1.5X70	. BOULON A 6 PANS	1	D				
102D	2121-1311D5	. NUT;CAP M10X1.5	. ECROU	1	D				
110	161-00461A	STOPPER	TAQUET D'ARRET	2					
111	2120-2166D14	SCREW M5X0.8X25	VIS	2					
112	2114-1058D64	WASHER	RONDELLE	2					
122	160-00084	BUSHING;RUBBER	GARNISSAGE	1					
123	537-00074	MODULE ASS'Y	MODULE	1					
123A	563-00016	. MAIN FEEDER	. CONDUCTEUR PRINCIPAL	1					
123B	537-00078	. SUB MODULE ASS'Y	. MODULE	1					
125	S0508853	BOLT	BOULON A 6 PANS	1					
126	S5102503	WASHER;SPRING	RONDELLE	1					

DATE	JUN. 30, 2005
REV. NO.	EXB05-05

Fig. 1530 CABIN(3) CABINE

Serial No. ;

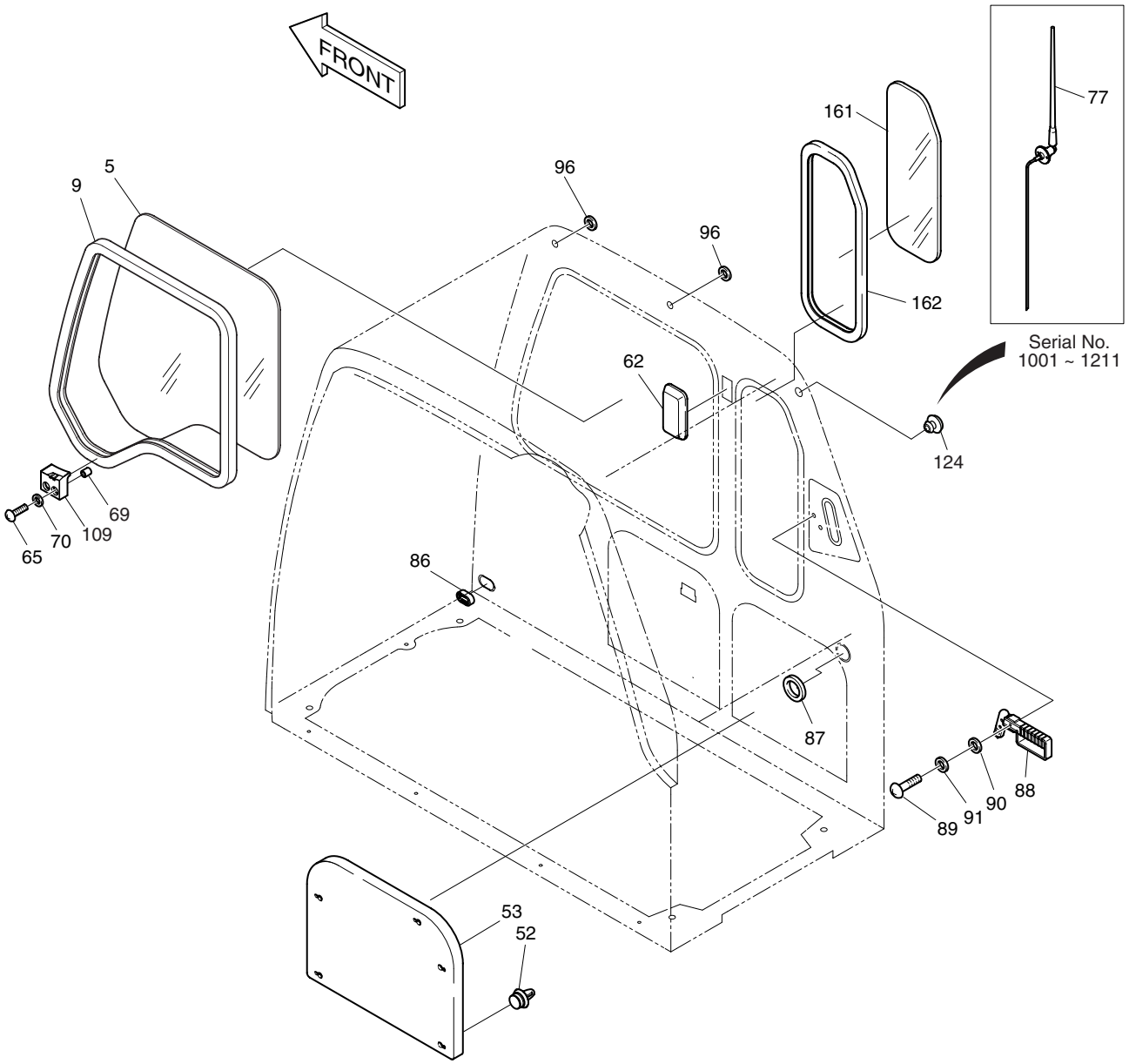

DATE	JUN. 30, 2005
REV. NO.	EXB05-05

Fig. 1530 CABIN(3) CABINE

Serial No ;

Key No.	Part No.	Description	Description	Q'ty	S.C	Serial No.	ICA	Replaceable part	
								Part No.	Q'ty
1530--	622-00224H	CABIN ASS'Y	CABINE	1	D	1001–1211	I	622-00224I	1
	622-00224I	CABIN ASS'Y	CABINE	1	D	1212–1234			
	622-00224J	CABIN ASS'Y	CABINE	1	D	1235–1369			
	622-00224K	CABIN ASS'Y	CABINE	1	D	1370–1421			
	622-00224L	CABIN ASS'Y	CABINE	1	D	1422–1466			
	622-00224M	**CABIN ASS'Y**	CABINE	1	D	**1467–1470**			
	622-00224N	**CABIN ASS'Y**	CABINE	1	D	**1471–**			
5	903-00051	GLASS;FRONT(R.H)	VITRE	1					
9	198-00034	H-RUBBER 3800L	CAOUTCHOUC	1					
52	2124-1607	CLIP;TRIM	ATTACHE	6					
53	161-00429A	PAD;REAR(R.H)	CAOUTCHOUC	1					
62	2534-9063	LAMP;ROOM	LAMPE	1					
65	S3450993	SCREW M6X1.0X25	VIS	2					
69	2140-1338	PIPE;SPACER	CONDUITE	2					
70	2114-1058D52	WASHER	RONDELLE	2					
77	541-00005	ANTENNA	ANTENNE	1		1001–1211			
86	2110-1347	BUSH 135L	MANCHON	1					
87	2110-1349	BUSH 188L	MANCHON	1					
88	2199-9058	HAMMER	MARTEAU	1					
89	S3458582	SCREW M4X0.7X12	VIS	2					
90	S5000111	WASHER;PLAIN M4	RONDELLE PLATE	2					
91	S5102101	WASHER;SPRING M4	RONDELLE ELASTIQUE	2					
96	2160-1310	BUSHING;RUBBER	GARNISSAGE	2					
109	161-00449	STOPPER	TAQUET D'ARRET	1					
124	160-00083	BUSHING;RUBBER	DOUILLE	1		1212–			
161	903-00060	GLASS;R.H	VITRE	1					
162	198-00044	RUBBER;H	CAOUTCHOUC	1					

DATE	JUN. 30, 2005
REV. NO.	EXB05-05

Fig. 1540 CABIN(4) CABINE

Serial No. ;

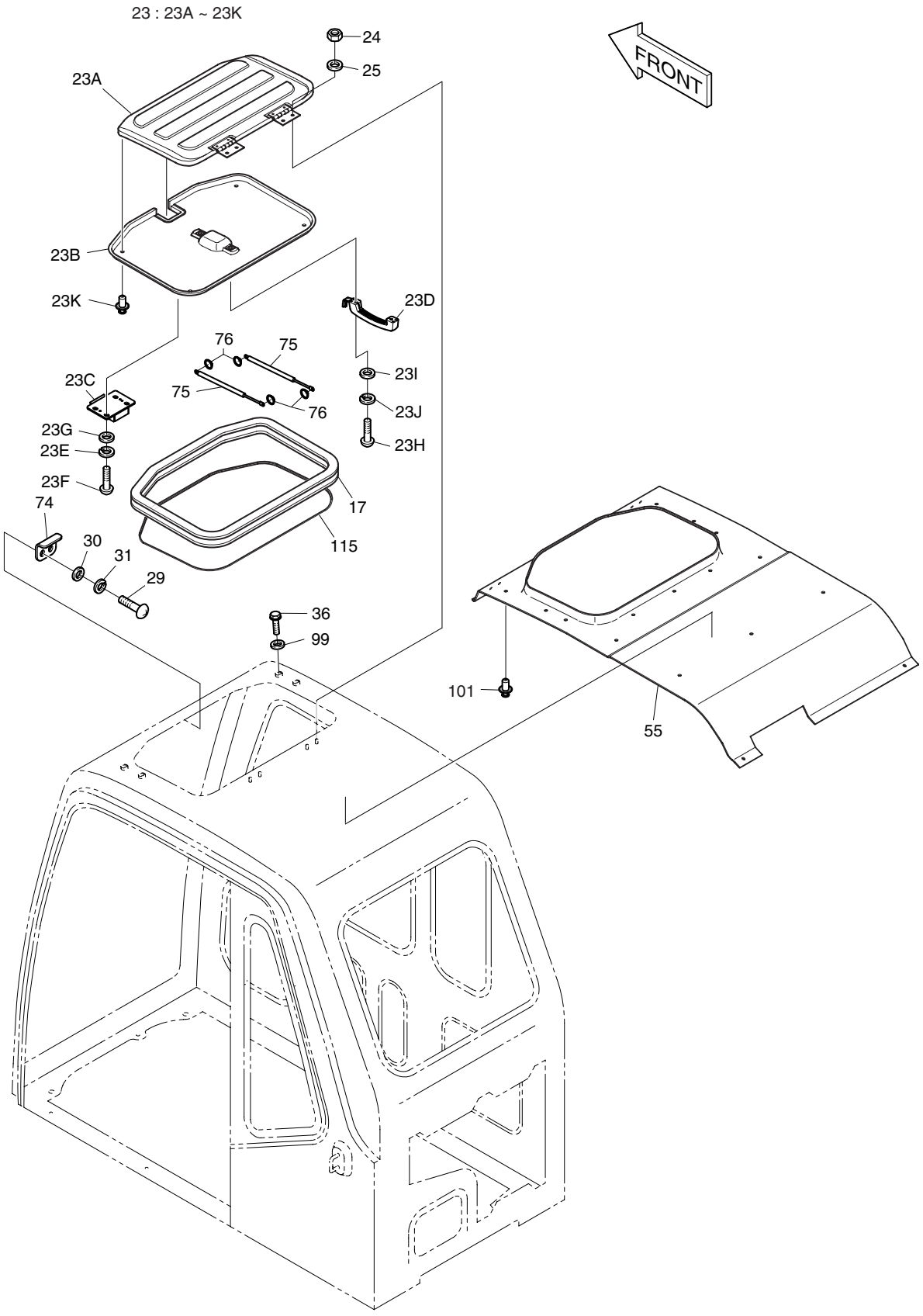

DATE	JUN. 30, 2005
REV. NO.	EXB05-05

Fig. 1540 CABIN(4) CABINE

Serial No ;

Key No.	Part No.	Description	Description	Q'ty	S.C	Serial No.	ICA	Replaceable part	
								Part No.	Q'ty
1540--	622-00224H	CABIN ASS'Y	CABINE	1	D	1001–1211	I	622-00224I	1
	622-00224I	CABIN ASS'Y	CABINE	1	D	1212–1234			
	622-00224J	CABIN ASS'Y	CABINE	1	D	1235–1369			
	622-00224K	CABIN ASS'Y	CABINE	1	D	1370–1421			
	622-00224L	CABIN ASS'Y	CABINE	1	D	1422–1466			
	622-00224M	**CABIN ASS'Y**	CABINE	1	D	**1467–1470**			
	622-00224N	**CABIN ASS'Y**	CABINE	1	D	**1471–**			
17	162-00026	STRIP;WEATHER 2000L	TAMPON	1					
23	621-01667	ROOF COVER ASS'Y	COUVERCLE	1					
23A	621-01668	. COVER;ROOF	. COUVERCLE	1					
23B	161-00326	. PAD;ROOF COVER	. CAOUTCHOUC	1					
23C	2125-9057	. CATCH;ROOF COVER	. LOQUET	1					
23D	2172-1112	. HANDLE;PULL	. POIGNER	1					
23E	S5100203	. WASHER;SPRING M5	. RONDELLE ELASTIQUE	4					
23F	S3450833	. SCREW M5X0.8X12	. VIS	4					
23G	S5000213	. WASHER;PLAIN M5	. RONDELLE PLATE	4					
23H	S3450993	. SCREW M6X1.0X25	. VIS	2					
23I	S5010313	. WASHER;PLAIN M6	. RONDELLE PLATE	2					
23J	S5102303	. WASHER;SPRING M6	. RONDELLE ELASTIQUE	2					
23K	2120-2174	. SCRIVET	. RIVET	4					
24	S4012533	NUT M8	ECROU	4					
25	S5010513	WASHER M8	RONDELLE	4					
29	S3450973	SCREW M6X1.0X16	VIS	2					
30	S5010313	WASHER;PLAIN M6	RONDELLE PLATE	2					
31	S5102303	WASHER;SPRING M6	RONDELLE ELASTIQUE	2					
36	2120-2166D4	BOLT M10X1.5X20	BOULON A 6 PANS	4					
55	161-00323	PAD;ROOF	CAOUTCHOUC	1					
74	2142-1122A	STRIKER	FRAPPER	1					
75	2440-9251	SPRING;GAS	RESSORT	2					
76	S6540600	RING;RETAINING	BAGUE	4					
99	2114-1058D45	WASHER M10	RONDELLE	4					
101	2120-2174	SCRIVET	RIVET	14					
115	161-00486	FINISHER	FINISHER	1					

DATE	DEC. 29, 2005
REV. NO.	EXB05-20

Fig. 1550 CABIN(5)
CABINE

Serial No. ;

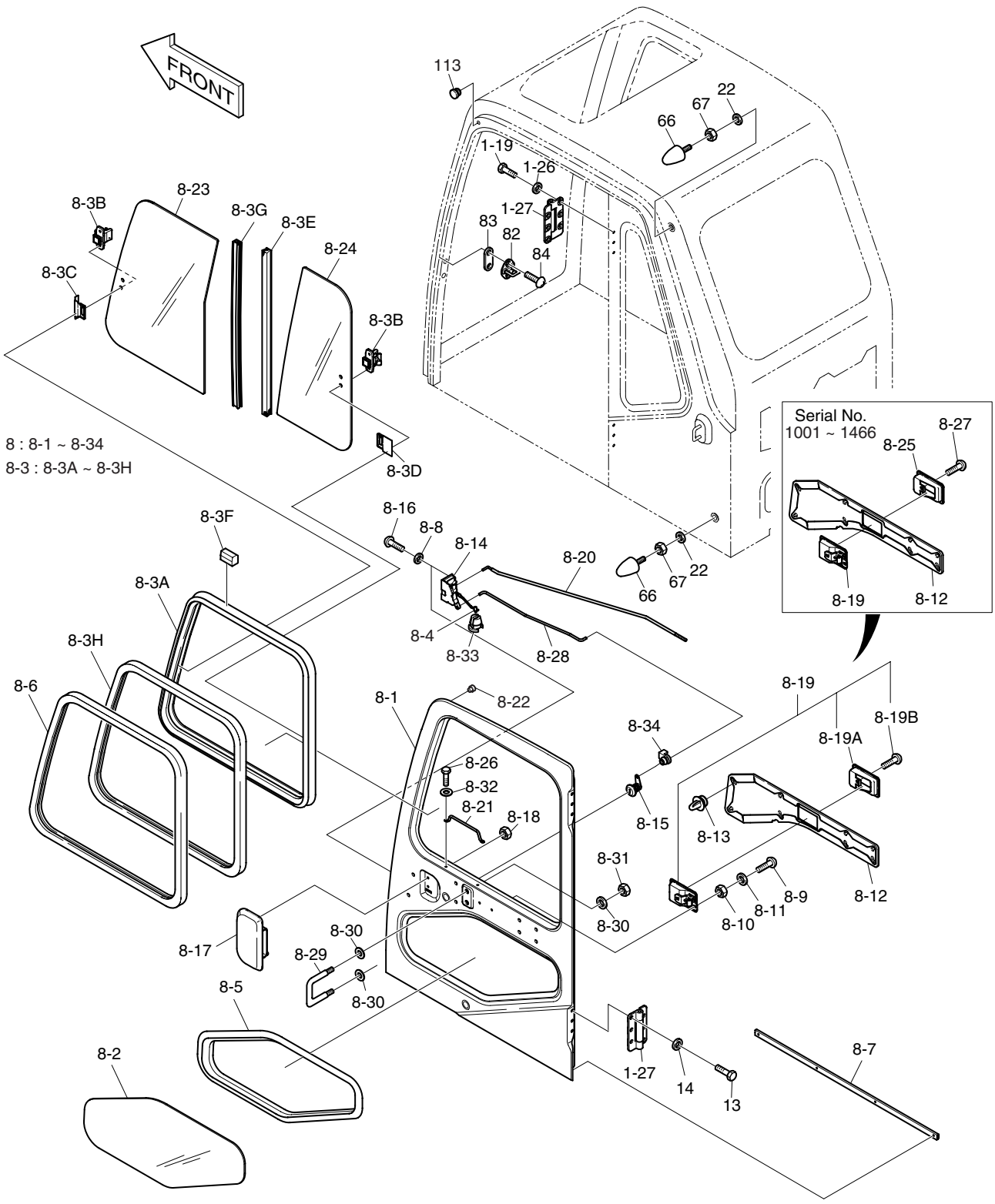

DATE	DEC. 29, 2005
REV. NO.	EXB05-20

Fig. 1550 CABIN(5) CABINE

Serial No ;

Key No.	Part No.	Description	Description	Q'ty	S.C	Serial No.	ICA	Replaceable part	
								Part No.	Q'ty
1550--	622-00224H	CABIN ASS'Y	CABINE	1	D	1001–1211	I	622-00224I	1
	622-00224I	CABIN ASS'Y	CABINE	1	D	1212–1234			
	622-00224J	CABIN ASS'Y	CABINE	1	D	1235–1369			
	622-00224K	CABIN ASS'Y	CABINE	1	D	1370–1421			
	622-00224L	CABIN ASS'Y	CABINE	1	D	1422–1466			
	622-00224M	CABIN ASS'Y	CABINE	1	D	1467–1470			
	622-00224N	CABIN ASS'Y	CABINE	1	D	1471–			
1-19	S0512263	. BOLT M10X1.5X30	. BOULON A 6 PANS	6					
1-26	2114-1058D45	. WASHER M10	. RONDELLE	6					
1-27	2171-1078	. HINGE	. PAUMELLE	2					
8	622-00219A	PANEL;DOOR ASS'Y	PANNEAU	1		1001–1234	I	622-00219B	1
	622-00219B	PANEL;DOOR ASS'Y	PANNEAU	1		1235–1369	I	622-00219C	1
	622-00219C	PANEL;DOOR ASS'Y	PANNEAU	1		1370–1466	I	622-00219E	1
	622-00219E	PANEL;DOOR ASS'Y	PANNEAU	1		1467–1470			
	622-00219G	PANEL;DOOR ASS'Y	PANNEAU	1		1471–			
8-1	622-00242	. PANEL ASM;DOOR	. PANNEAU	1					
8-2	2903-1214	. GLASS;DOOR t=5	. VITRE	1					
8-3	-	. SASH ASSY;DOOR	. CHASSIS	1	D				
8-3A	2622-6014	.. SASH	.. CHASSIS	1					
8-3B	2123-6119	.. DOOR LOCK	.. VERROU	2					
8-3C	2116-6006	.. STOPPER;LOCK	.. PLAQUE	1					
8-3D	2116-6007	.. STOPPER;LOCK	.. PLAQUE	1					
8-3E	2731-6002	.. BAR;SEAL	.. CAOUTCHOUC	1					
8-3F	2161-6063	.. STOPPER;CLASS	.. ARRET	2					
8-3G	2731-6003	.. BAR;CENTER	.. CAOUTCHOUC	1					
8-3H	2161-6060	.. RUN CHANNEL	.. PROFILE	1					
8-4	2123-2247	. PIN	. GOUJON	1					
8-5	2198-1054	. S-RUBBER;DOOR	. CAOUTCHOUC	1					
8-6	2161-2229	. FINISHER;SASH DOOR	. SASH	1					
8-7	2180-1267	. SEAL;DOOR	. JOINT	1					
8-8	S5210303	. WASHER;TOOTHED LOCK	. RONDELLEELASTIQUE	3					
8-9	S3450833	. SCREW M5X0.8X12	. VIS	2					
8-10	S5010213	. WASHER PLAIN M5	. RONDELLE PLATE	2					
8-11	S5102203	. WASHER SPRING M5	. RONDELLE ELASTIQUE	2					
8-12	161-00428A	. PAD;DOOR	. CAOUTCHOUC	1					
8-13	2124-1607	. TRIM CLIP	. ATTACHE	8					
8-14	2125-9036	. CATCH;DOOR LOCK	. LOQUET	1					
8-15	2172-9036	. CYLINDER;KEY	. CLEF DE CYLINDRE	1		1001–1234	I	172-00212	1

DATE	DEC. 29, 2005
REV. NO.	EXB05-20

Fig. 1550 CABIN(5)
CABINE

Serial No. ;

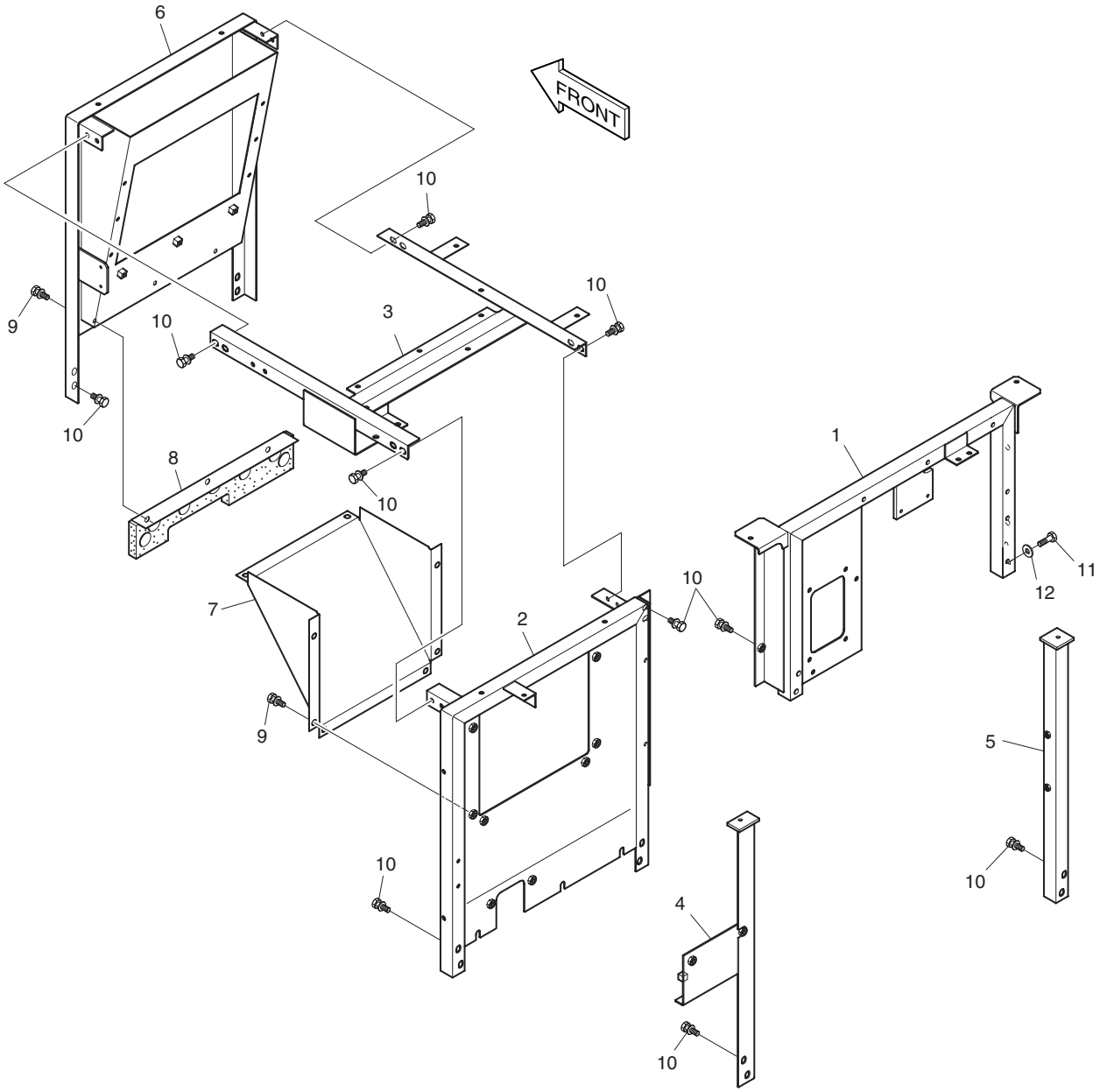

DATE	DEC. 29, 2005
REV. NO.	EXB05-20

Fig. 1550 CABIN(5) CABINE

Serial No ;

Key No.	Part No.	Description	Description	Q'ty	S.C	Serial No.	ICA	Replaceable part	
								Part No.	Q'ty
1550-8-15	172-00212	. CYLINDER;KEY	. CLEF DE CYLINDRE	1		1235–1470			
	K1003900	. CYLINDER;KEY	. CLEF DE CYLINDRE	1		1471–			
8-16	2120-2150D3	. BOLT M6X1.0X16	. BOULONA6PANS	3					
8-17	2172-9021	. HANDLE;OUTER	. POIGNEE	1					
8-18	S4012303	. NUT M6X1.0	. ECROU	2					
8-19	2172-9022	. HANDLE;INNER	. POIGNEE	1		1001–1466	I	K1004085	1
	K1004085	. HANDLE;INNER	. POIGNEE	1		1467–			
8-19A	2621-9005	.. COVER;HANDLE	.. COUVERCLE	1		1467–			
8-19B	S3452823	.. SCREW M5X0.8X10	.. VIS	1		1467–			
8-20	2136-1431	. ROD;HANDLE INNER DOOR	. TIGE	1					
8-21	2172-1110B	. HANDLE;DOOR	. POIGNER	1					
8-22	2161-2227	. STOPPER;RUBBER	. TAQUET D'ARRET	1					
8-23	2903-1219A	. GLASS 5T	. VITRE	1					
8-24	2903-1220	. GLASS 5T	. VITRE	1					
8-25	2621-9005	. COVER;HANDLE	. COUVERCLE	1		1001–1466			
8-26	2120-2166D5	. BOLT M8X1.25X20	. BOULON A 6 PANS	2					
8-27	S3452823	. SCREW M5X0.8X10	. VIS	1		1001–1466			
8-28	2123-2239A	. ROD;DOOR LOCK	. TIGE	1					
8-29	2150-1132A	. HOOK;CATCH DOOR	. CROCHET	1					
8-30	2891-1311	. PLATE;PLAIN	. PLAQUE	4					
8-31	S4012533	. NUT M8X1.25	. ECROU	2					
8-32	2114-1898D2	. WASHER	. RONDELLE	2					
8-33	2124-1689A	. ROD;SNAP	. TIGE	1					
8-34	124-00010	. CLIP;ROD	. ATTACHE	1					
13	S0512263	BOLT M10X1.5X30	BOULON A 6 PANS	6					
14	2114-1058D45	WASHER	RONDELLE	6					
22	S5010613	WASHER;PLAIN M10	RONDELLE PLATE	2					
66	2161-2226	STOPPER;RUBBER	TAQUET D'ARRET	2					
67	S4014633	NUT M10X1.5	ECROU	2					
82	2142-9005	STRIKER;DOOR LOCK	FRAPPER	1					
83	2114-1856	SHIM;STRIKER 1.0T	CALE	1					
84	2120-2150D1	BOLT M10X1.5X25	BOULON A 6 PANS	2					
113	2161-2227	STOPPER	TAQUET D'ARRET	1					

DATE	JUL. 30, 2003
REV. NO.	EXB03-13

Fig. 1560 SUPPORT
SUPPORT

Serial No. ;

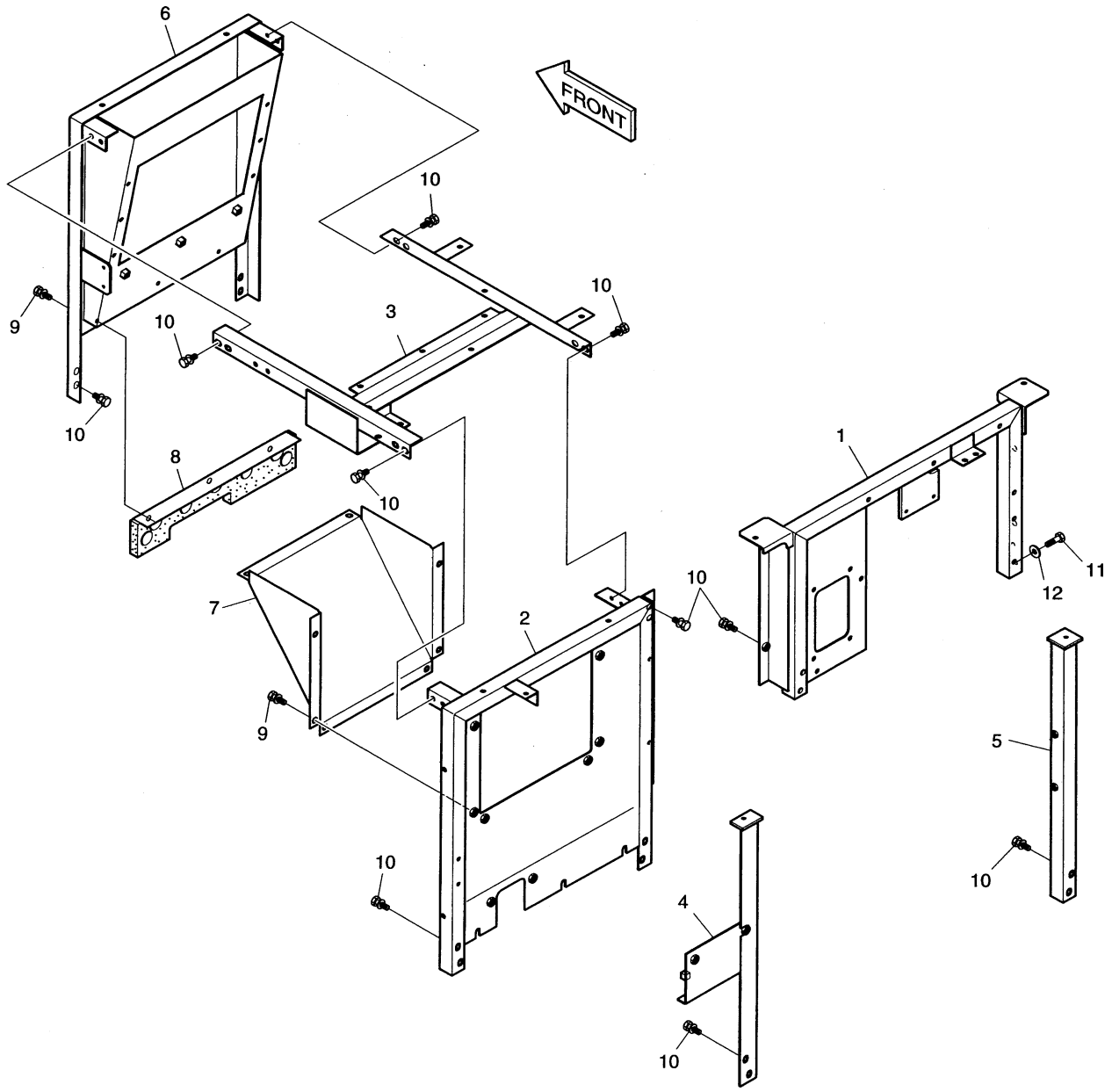

DATE	JUL. 30, 2003
REV. NO.	EXB03-13

Fig. 1560 SUPPORT
SUPPORT

Serial No ;

Key No.	Part No.	Description	Description	Q'ty	S.C	Serial No.	ICA	Replaceable part	
								Part No.	Q'ty
1560--	195-01568	SUPPORT ASS'Y	SUPPORT	-	D				
1	195-01578C	SUPPORT	SUPPORT	1					
2	195-01579E	SUPPORT	SUPPORT	1					
3	195-01580C	SUPPORT	SUPPORT	1					
4	195-01461B	SUPPORT	SUPPORT	1					
5	195-01643A	SUPPORT	SUPPORT	1					
6	195-01457B	SUPPORT	SUPPORT	1					
7	621-01690A	COVER	COUVERCLE	1					
8	621-01587B	COVER	COUVERCLE	1					
9	2120-2196D6	BOLT;SET M12X1.75X20	BOULON A 6 PANS	11					
10	2120-2196D9	BOLT;SET M12X1.75X25	BOULON A 6 PANS	24					
11	S0560553	BOLT M12X1.75X40	BOULON A 6 PANS	2					
12	2114-1154	WASHER;PLAIN	RONDELLE PLATE	2					

DATE	JUN. 30, 2005
REV. NO.	EXB05-05

Fig. 1570 COVER(1) COUVERCLE

Serial No. ;

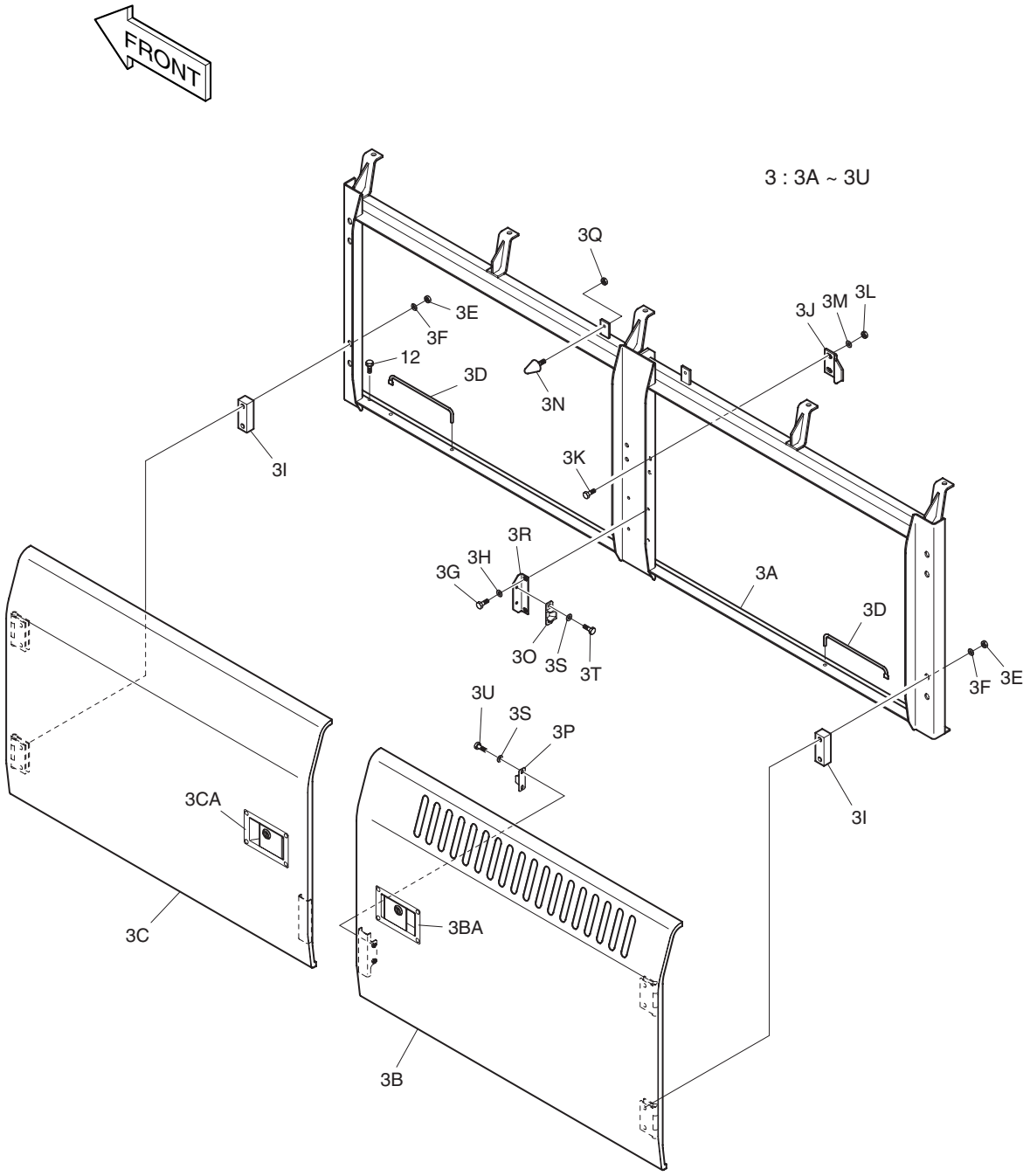

DATE	JUN. 30, 2005
REV. NO.	EXB05-05

Fig. 1570 COVER(1) COUVERCLE

Serial No ;

Key No.	Part No.	Description	Description	Q'ty	S.C	Serial No.	ICA	Replaceable part	
								Part No.	Q'ty
1570--	621-01613	COVER ASS'Y	COUVERCLE	-	D				
3	621-01642E	SIDE DOOR ASS'Y	PORTE	1		1001–1234	I	621-01642G	1
	621-01642G	SIDE DOOR ASS'Y	PORTE	1		1235–1324	I	621-01642H	1
	621-01642H	SIDE DOOR ASS'Y	PORTE	1		1325–1470			
	621-01642I	**SIDE DOOR ASS'Y**	PORTE	1		**1471–**			
3A	195-01553E	. SUPPORT	. SUPPORT	1					
3B	621-01641A	. DOOR;SIDE	. PORTE	1		1001–1234	I	621-01641B	1
	621-01641B	. DOOR;SIDE	. PORTE	1		1235–1324	I	621-01641C	1
	621-01641C	. DOOR;SIDE	. PORTE	1		1325–1470			
	621-01641E	**. DOOR;SIDE**	. PORTE	1		**1471–**			
3BA	125-00034	.. LOCK	.. VERROU	1		1001–1234	I	125-00082	1
	125-00082	.. LOCK	.. VERROU	1		1235–1324	I	125-00082A	1
	125-00082A	.. LOCK	.. VERROU	1		1325–1470			
	K1006422	**.. LOCK**	.. VERROU	1		**1471–**			
3C	621-01645A	. SIDE DOOR	. PORTE	1		1001–1234	I	621-01645B	1
	621-01645B	. SIDE DOOR	. PORTE	1		1235–1324	I	621-01645C	1
	621-01645C	. SIDE DOOR	. PORTE	1		1325–1470			
	621-01645E	**. SIDE DOOR**	. PORTE	1		**1471–**			
3CA	125-00035	.. LOCK	.. VERROU	1		1001–1234	I	125-00083	1
	125-00083	.. LOCK	.. VERROU	1		1235–1324	I	125-00083A	1
	125-00083A	.. LOCK	.. VERROU	1		1325–1470			
	K1006423	**.. LOCK**	.. VERROU	1		**1471–**			
3D	2145-1237	. STAY	. ENTRETOISE	2					
3E	S4012733	. NUT M12X1.75	. ECROU	8					
3F	2114-1058D30	. WASHER;PLAIN	. RONDELLE PLATE	8					
3G	S0508753	. BOLT M8X1.25X18	. BOULON A 6 PANS	4					
3H	S5010513	. WASHER;PLAIN M8	. RONDELLE PLATE	4					
3I	2891-1912	. SEAT;SCREW	. VIS DE SIEGE	4					
3J	161-00320	. PLATE;STOPPER	. PLAQUE	2					
3K	S0512053	. BOLT M10X1.5X25	. BOULON A 6 PANS	4					
3L	S4012633	. NUT M10X1.5	. ECROU	4					
3M	2114-1058D10	. WASHER;PLAIN	. RONDELLE PLATE	4					
3N	2161-2226	. STOPPER;RUBBER	. TAQUET D'ARRET	2					
3O	2161-9052	. STOPPER;PLATE	. TAQUET D'ARRET	2					
3P	2161-9053	. STOPPER;RUBBER	. TAQUET D'ARRET	2					
3Q	S4012633	. NUT M10X1.5	. ECROU	2					
3R	2116-1522	. PLATE	. PLAQUE	2					
3S	S5010313	. WASHER;PLAIN M6	. RONDELLE PLATE	8					

DATE	JUN. 30, 2005
REV. NO.	EXB05-05

Fig. 1570 COVER(1) COUVERCLE

Serial No. ;

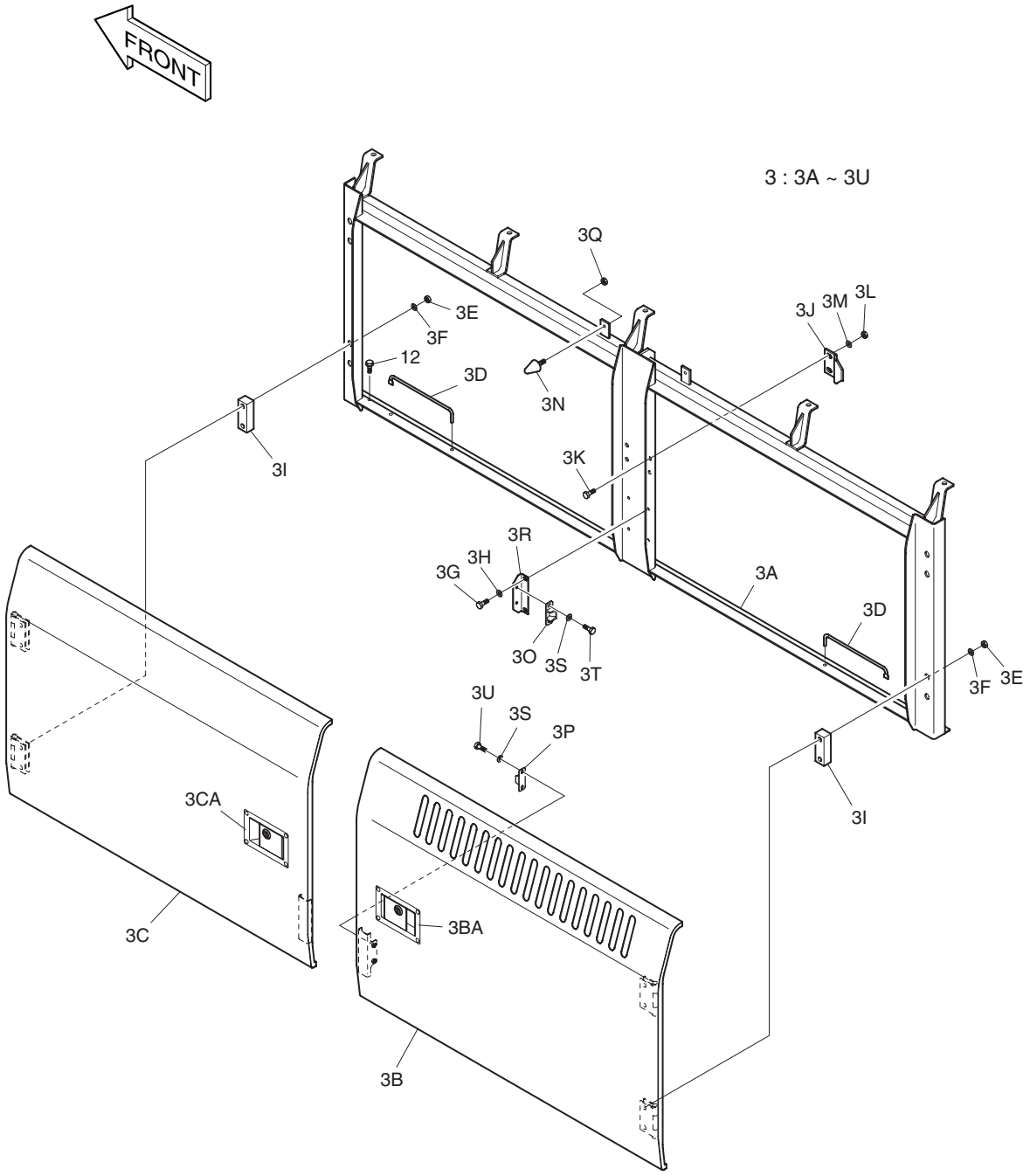

DATE	JUN. 30, 2005
REV. NO.	EXB05-05

Fig. 1570 COVER(1) COUVERCLE

Serial No ;

Key No.	Part No.	Description	Description	Q'ty	S.C	Serial No.	ICA	Replaceable part	
								Part No.	Q'ty
1570-3T	S0501553	. BOLT	. BOULON A 6 PANS	4					
3U	S0504453	. BOLT	. BOULON A 6 PANS	4					
12	2120-2196D9	BOLT;SET M12X1.75X25	BOULON A 6 PANS	10					

DATE	JUN. 30, 2005
REV. NO.	EXB05-05

Fig. 1580 COVER(2) COUVERCLE

Serial No. ;

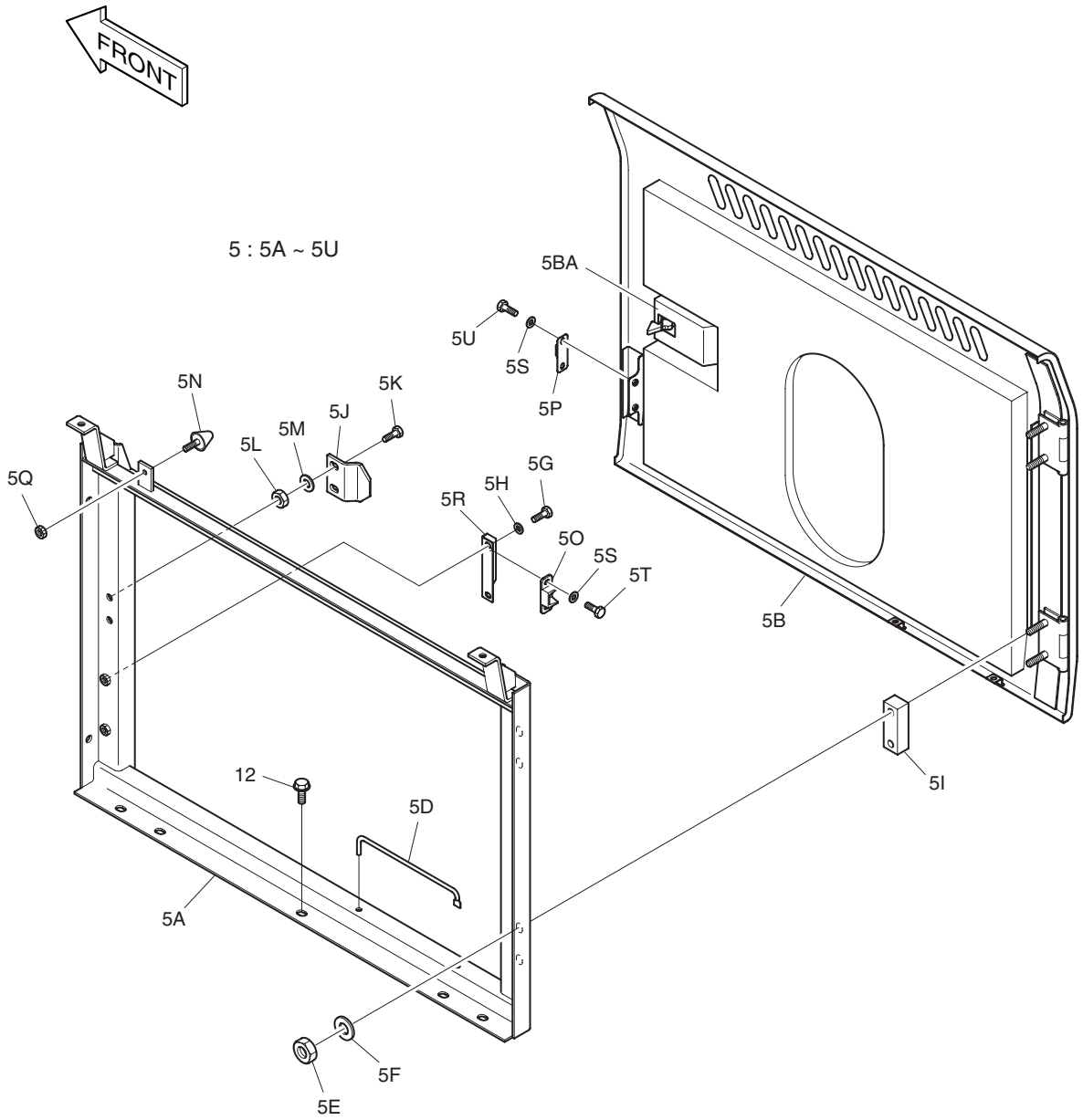

DATE	JUN. 30, 2005
REV. NO.	EXB05-05

Fig. 1580 COVER(2) COUVERCLE

Serial No ;

Key No.	Part No.	Description	Description	Q'ty	S.C	Serial No.	ICA	Replaceable part	
								Part No.	Q'ty
1580--	621-01613	COVER ASS'Y	COUVERCLE	-	D				
5	621-02198A	SIDE DOOR ASS'Y	PORTE	1		1001–1234	I	621-02198B	1
	621-02198B	SIDE DOOR ASS'Y	PORTE	1		1235–1324	I	621-02198C	1
	621-02198C	SIDE DOOR ASS'Y	PORTE	1		1325–1470			
	621-02198E	**SIDE DOOR ASS'Y**	PORTE	1		**1471–**			
5A	195-01564B	. SUPPORT	. SUPPORT	1					
5B	621-02199	. DOOR;SIDE	. PORTE	1		1001–1234	I	621-02199A	1
	621-02199A	. DOOR;SIDE	. PORTE	1		1235–1324	I	621-02199B	1
	621-02199B	. DOOR;SIDE	. PORTE	1		1325–1470			
	621-02199C	**. DOOR;SIDE**	. PORTE	1		**1471–**			
5BA	125-00035	.. LOCK	.. VERROU	1		1001–1234	I	125-00083	1
	125-00083	.. LOCK	.. VERROU	1		1235–1324	I	125-00083A	1
	125-00083A	.. LOCK	.. VERROU	1		1325–1470			
	K1006423	**.. LOCK**	.. VERROU	1		**1471–**			
5D	2145-1237	. STAY	. ENTRETOISE	1					
5E	S4012733	. NUT M12X1.75	. ECROU	4					
5F	2114-1058D30	. WASHER;PLAIN	. RONDELLE PLATE	4					
5G	S0508753	. BOLT M8X1.25X18	. BOULON A 6 PANS	2					
5H	S5010513	. WASHER;PLAIN M8	. RONDELLE PLATE	2					
5I	2891-1912	. SEAT;SCREW	. VIS DE SIEGE	2					
5J	161-00320	. PLATE;STOPPER	. PLAQUE	1					
5K	S0512053	. BOLT M10X1.5X25	. BOULON A 6 PANS	2					
5L	S4012633	. NUT M10X1.5	. ECROU	2					
5M	2114-1058D10	. WASHER;PLAIN	. RONDELLE PLATE	2					
5N	2161-2226	. STOPPER;RUBBER	. TAQUET D'ARRET	1					
5O	2161-9052	. STOPPER;PLATE	. TAQUET D'ARRET	1					
5P	2161-9053	. STOPPER;RUBBER	. TAQUET D'ARRET	1					
5Q	S4012633	. NUT M10X1.5	. ECROU	1					
5R	2116-1522	. PLATE	. PLAQUE	1					
5S	S5010313	. WASHER;PLAIN M6	. RONDELLE PLATE	4					
5T	S0504553	. BOLT	. BOULON A 6 PANS	2					
5U	S0504453	. BOLT	. BOULON A 6 PANS	2					
12	2120-2196D9	BOLT;SET M12X1.75X25	BOULON A 6 PANS	5					

DATE	JUN. 30, 2005
REV. NO.	EXB05-05

Fig. 1590 COVER(3) COUVERCLE

Serial No. ;

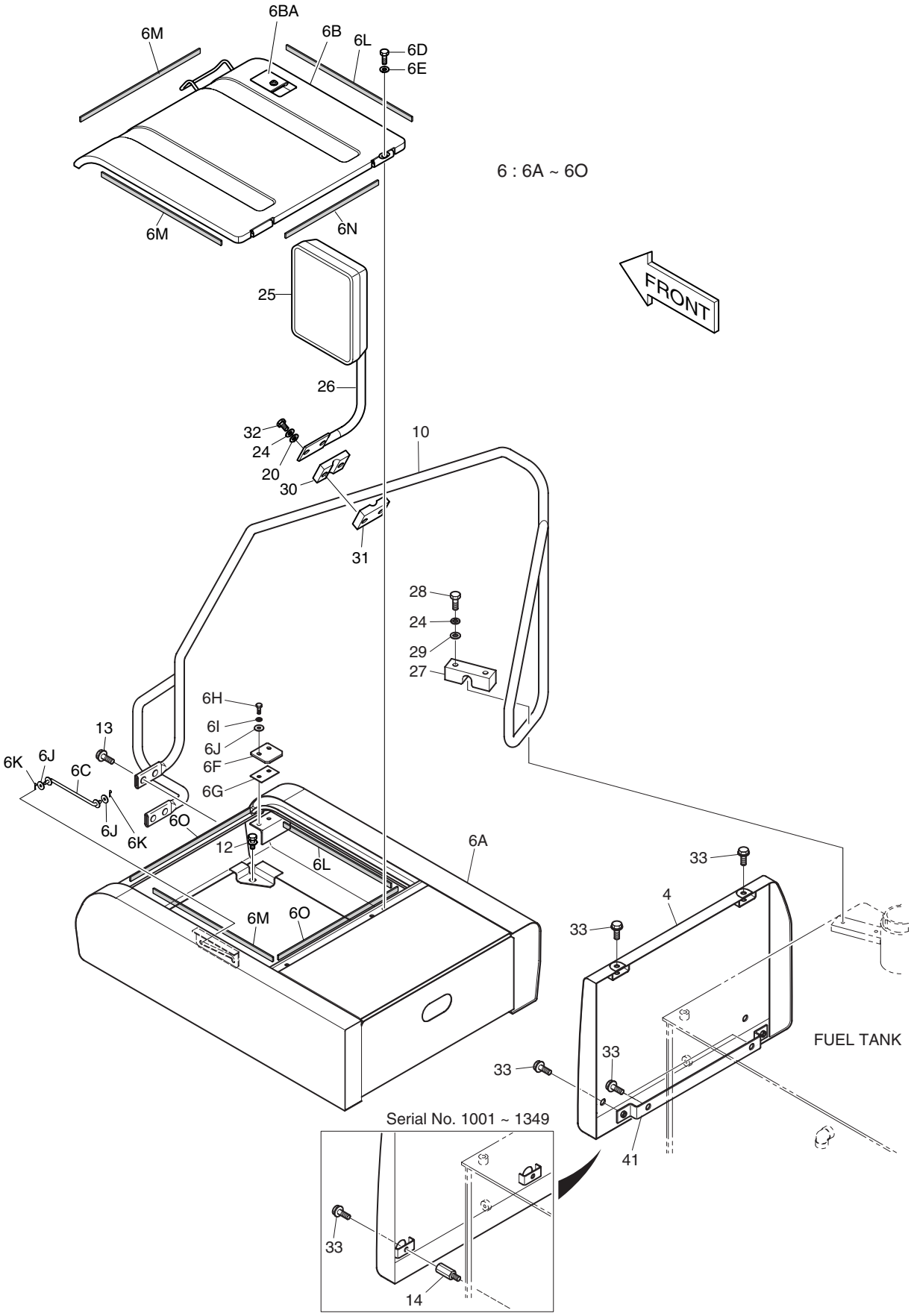

DATE	JUN. 30, 2005
REV. NO.	EXB05-05

Fig. 1590 COVER(3) COUVERCLE

Serial No ;

Key No.	Part No.	Description	Description	Q'ty	S.C	Serial No.	ICA	Replaceable part	
								Part No.	Q'ty
1590--	621-01613	COVER ASS'Y	COUVERCLE	-	D				
4	621-01927A	COVER;FUEL TANK	COUVERCLE	1					
6	621-01975A	BATTERY COVER ASS'Y	COUVERCLE	1		1001–1234	I	621-01975B	1
	621-01975B	BATTERY COVER ASS'Y	COUVERCLE	1		1235–1324	I	621-01975C	1
	621-01975C	BATTERY COVER ASS'Y	COUVERCLE	1		1325–1324	I	621-01975E	1
	621-01975E	BATTERY COVER ASS'Y	COUVERCLE	1		1325–1470			
	621-01975G	**BATTERY COVER ASS'Y**	COUVERCLE	1		**1471–**			
6A	621-01979A	. BATTERY COVER	. COUVERCLE	1					
6B	621-01693A	. COVER	. COUVERCLE	1		1001–1234	I	621-01693B	1
	621-01693B	. COVER	. COUVERCLE	1		1235–1324	I	621-01693C	1
	621-01693C	. COVER	. COUVERCLE	1		1325–1324	I	621-01693E	1
	621-01693E	. COVER	. COUVERCLE	1		1325–1470			
	621-01693G	**. COVER**	. COUVERCLE	1		**1471–**			
6BA	125-00034	.. LOCK	.. VERROU	1		1001–1234	I	125-00082	1
	125-00082	.. LOCK	.. VERROU	1		1235–1324	I	125-00082A	1
	125-00082A	.. LOCK	.. VERROU	1		1325–1470			
	K1006422	**.. LOCK**	.. VERROU	1		**1471–**			
6C	2145-1243	. STAY	. ENTRETOISE	1					
6D	S0512053	. BOLT M10X1.5X25	. BOULON A 6PANS	4					
6E	S5010613	. WASHER;PLAIN M10	. RONDELLE PLATE	4					
6F	2621-3003B	. PLATE	. PLAQUE	1					
6G	2114-1727B	. SHIM	. CALE	1					
6H	S0555753	. BOLT	. BOULON A 6PANS	2					
6I	S5010513	. WASHER;PLAIN M8	. RONDELLE M8	2					
6J	2114-1058D29	. WASHER	. RONDELLE	2					
6K	2705-9002	. PIN;LOCK	. GOUPILLE DE BLOCAGE	2					
6L	-	. BUSHING;RUBBER	. DOUILLE	2					
6M	-	. BUSHING;RUBBER	. DOUILLE	3					
6N	-	. BUSHING;RUBBER	. DOUILLE	1					
6O	-	. BUSHING;RUBBER	. DOUILLE	2					
10	145-00067	STAY	ENTRETOISE	1		1001–1260	I	145-00067A	1
	145-00067A	STAY	ENTRETOISE	1		1261–			
12	2120-2196D9	BOLT;SET M12X1.75X25	BOULON A 6PANS	4					
13	2120-2196D11	BOLT;SET M12X1.75X35	BOULON A 6PANS	4					
14	120-00280	BOLT;STUD M10X1.5	BOULON A 6PANS	2		1001–1349			
20	S5010713	WASHER;PLAIN M12	RONDELLE	2					
24	S5102703	WASHER;SPRING M12	RONDELLE ELASTIQUE	4					
25	903-00052	MIRROR	RETROVISEUR	1		1001–1082	Y	2903-9012A	1

DATE	JUN. 30, 2005
REV. NO.	EXB05-05

Fig. 1590 COVER(3) COUVERCLE

Serial No. ;

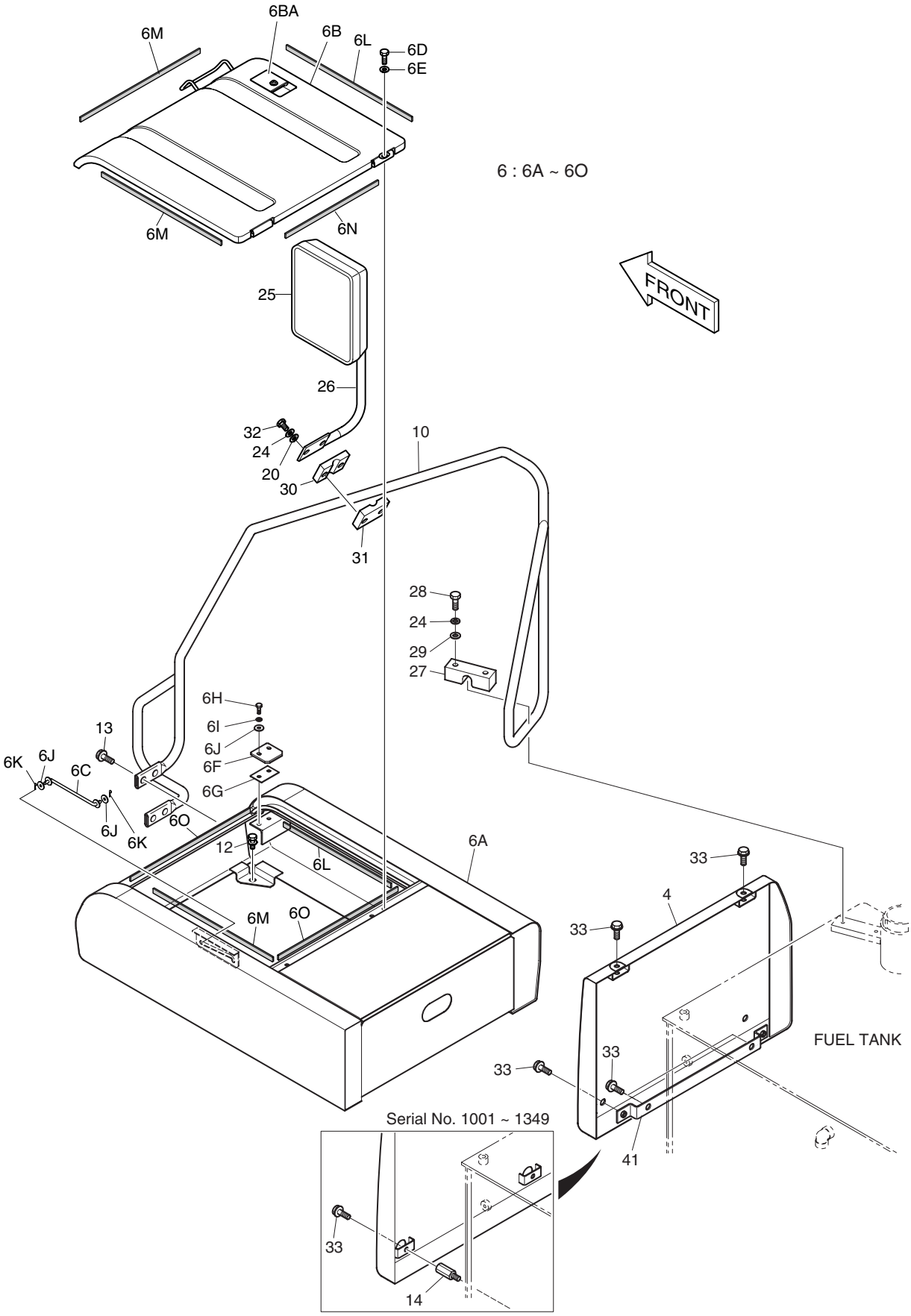

DATE	JUN. 30, 2005
REV. NO.	EXB05-05

Fig. 1590 COVER(3) COUVERCLE

Serial No ;

Key No.	Part No.	Description	Description	Q'ty	S.C	Serial No.	ICA	Replaceable part	
								Part No.	Q'ty
1590-25	2903-9012A	MIRROR	RETROVISEUR	1		1083–1324	I	903-00068	1
	903-00068	MIRROR	RETROVISEUR	1		1325–			
26	145-00052	STAY	ENTRETOISE	1					
27	124-00246	CLAMP	COLLIER	1					
28	S0561153	BOLT M12X1.75X35	BOULON A 6PANS	2					
29	2114-1154	WASHER	RONDELLE M12	2					
30	124-00216	CLAMP	COLLIER	1					
31	124-00217	CLAMP	COLLIER	1					
32	S0561253	BOLT M12X1.75X75	BOULON A 6PANS	2					
33	2120-2196D5	BOLT;SET M10X1.5X20	BOULON A 6PANS	4		1001–1349			
	2120-2196D5	BOLT;SET M10X1.5X20	BOULON A 6PANS	6		1350–			
41	K1003227	BRACKET	SUPPORT	1		1350–			

DATE	JUN. 30, 2005
REV. NO.	EXB05-05

Fig. 1600 COVER(4) COUVERCLE

Serial No. ;

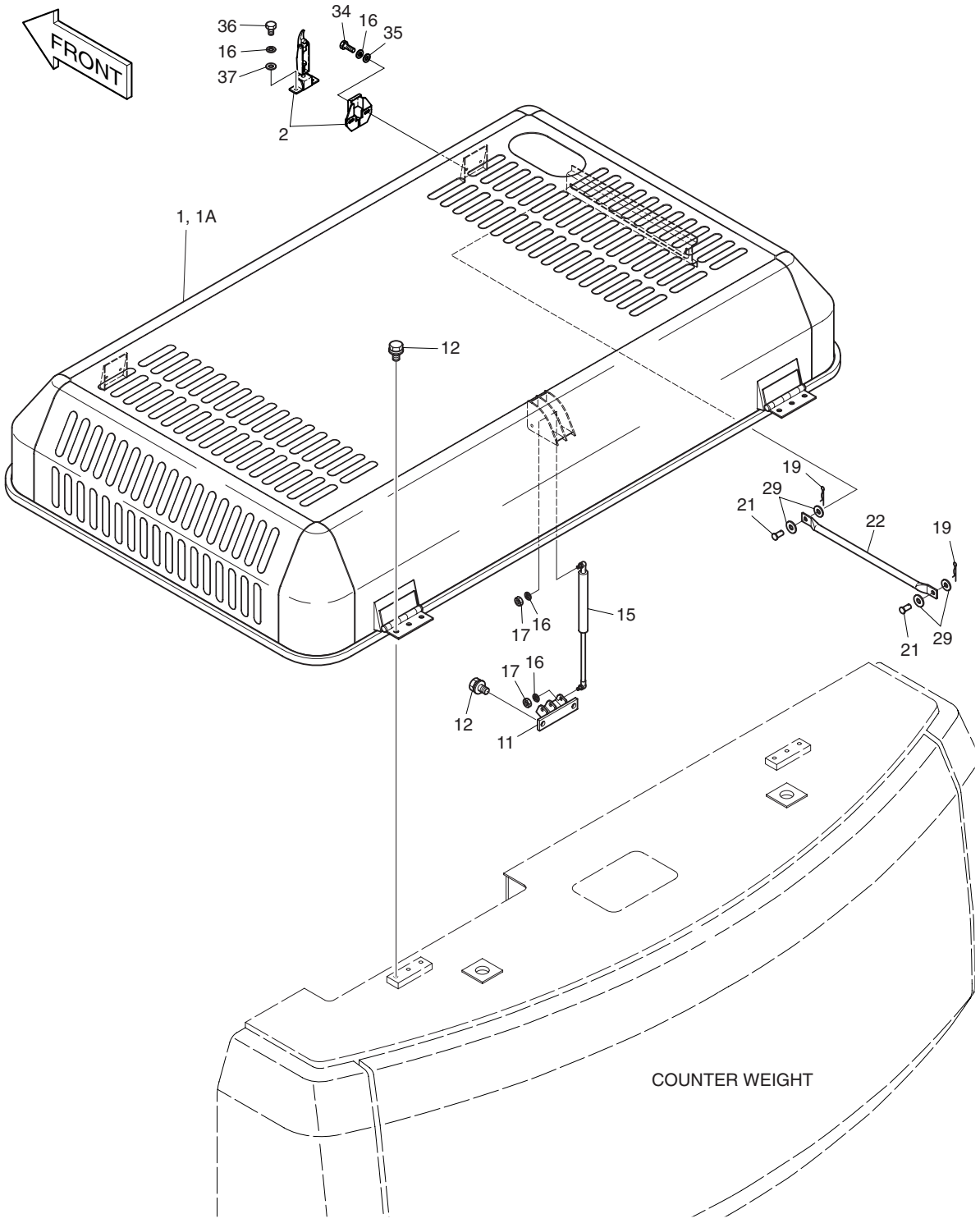

DATE	JUN. 30, 2005
REV. NO.	EXB05-05

Fig. 1600 COVER(4) COUVERCLE

Serial No ;

Key No.	Part No.	Description	Description	Q'ty	S.C	Serial No.	ICA	Replaceable part	
								Part No.	Q'ty
1600--	621-01613	COVER ASS'Y	COUVERCLE	-	D				
1	621-01978E	COVER;ENGINE	COUVERCLE	1					
1A	1.162-00001	. RUBBER;CUSHION	. CAOUTCHOUC	1					
2	125-00045	CATCH;BONNET	LOQUET	2		1001–1234	I	125-00084	2
	125-00084	CATCH;BONNET	LOQUET	2		1235–1470			
	K1006424	**CATCH;BONNET**	LOQUET	2		**1471–**			
11	195-01876	BRACKET	SUPPORT	1					
12	2120-2196D9	BOLT;SET M12X1.75X25	BOULON A 6PANS	8					
15	2440-9141	SPRING;GAS	VERIN PNEUMATIQUE	3					
16	S5102503	WASHER;SPRING M8	RONDELLE ELASTIQUE	14					
17	S4012533	NUT M8X1.25	ECROU	6					
19	2705-9002	PIN;LOCK	GOUPILLE DE BLOCAGE	2					
21	2123-1057D47	PIN	GOUPILLE	2					
22	145-00069	STAY	ENTRETOISE	1					
29	2114-1154	WASHER	RONDELLE M12	4					
34	S0508853	BOLT M8X1.25X20	BOULON A 6PANS	4					
35	S5010513	WASHER;PLAIN M8	RONDELLE M8	4					
36	S0508553	BOLT M8X1.25X14	BOULON A 6PANS	4					
37	2114-1058D56	WASHER	RONDELLE	4					

DATE	JUL. 30, 2003
REV. NO.	EXB03-13

Fig. 1610 COVER(5) COUVERCLE

Serial No. ;

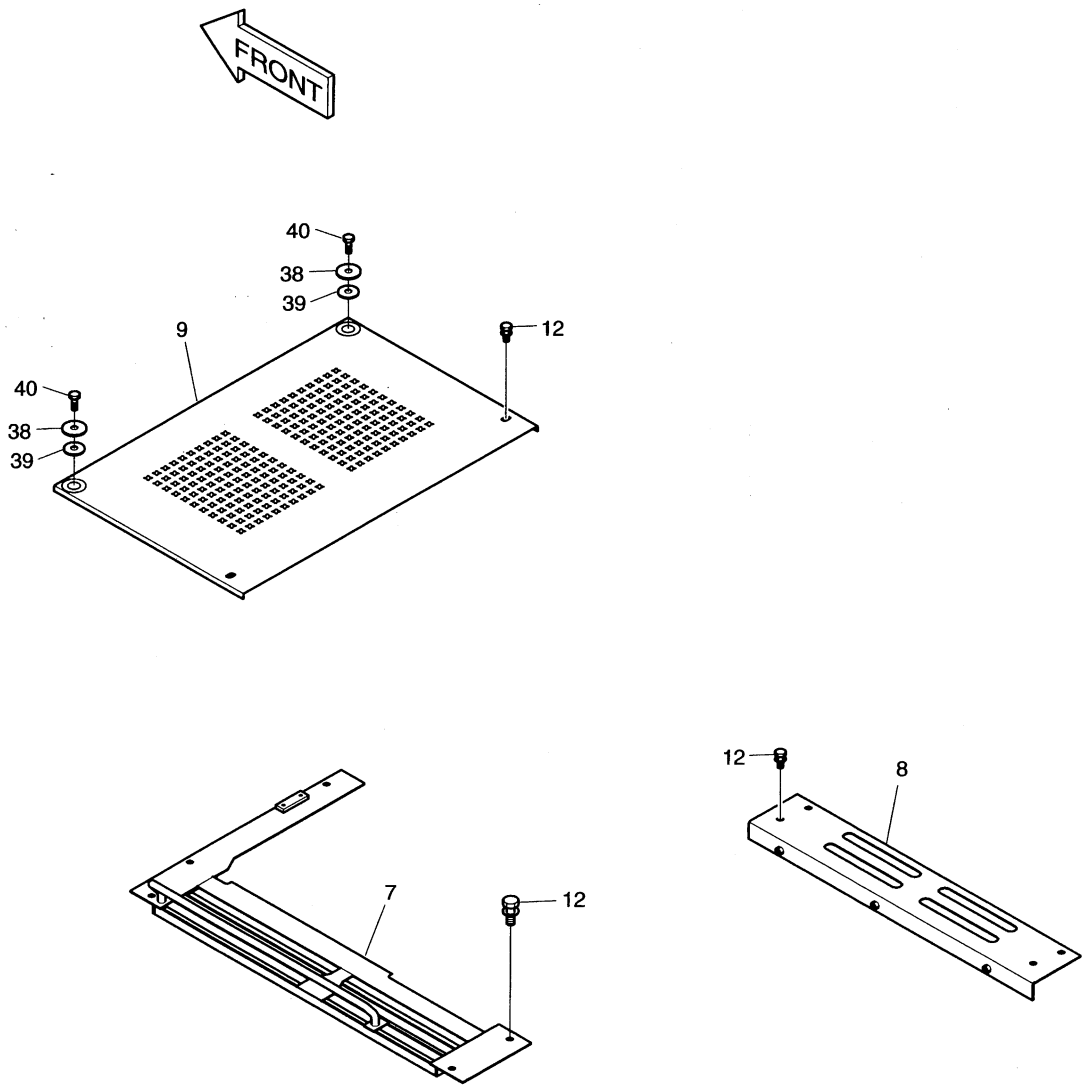

DATE	JUL. 30, 2003
REV. NO.	EXB03-13

Fig. 1610 COVER(5) COUVERCLE

Serial No ;

Key No.	Part No.	Description	Description	Q'ty	S.C	Serial No.	ICA	Replaceable part	
								Part No.	Q'ty
1610--	621-01613	COVER ASS'Y	COUVERCLE	-	D				
7	621-01680E	COVER	COUVERCLE	1					
8	621-01681B	COVER	COUVERCLE	1					
9	621-01695G	COVER	COUVERCLE	1					
12	2120-2196D9	BOLT;SET M12X1.75X25	BOULON A 6 PANS	12					
38	114-00529	SPACER	BAGUE D'ECARTEMENT	1					
39	160-00050	RUBBER	CAOUTCHOUC	1					
40	S0515253	BOLT M12X1.75X30	BOULON A 6PANS	1					

DATE	JUN. 30, 2005
REV. NO.	EXB05-05

Fig. 1620 UNDER COVER TOLES IMFERIEVRES

Serial No. ;

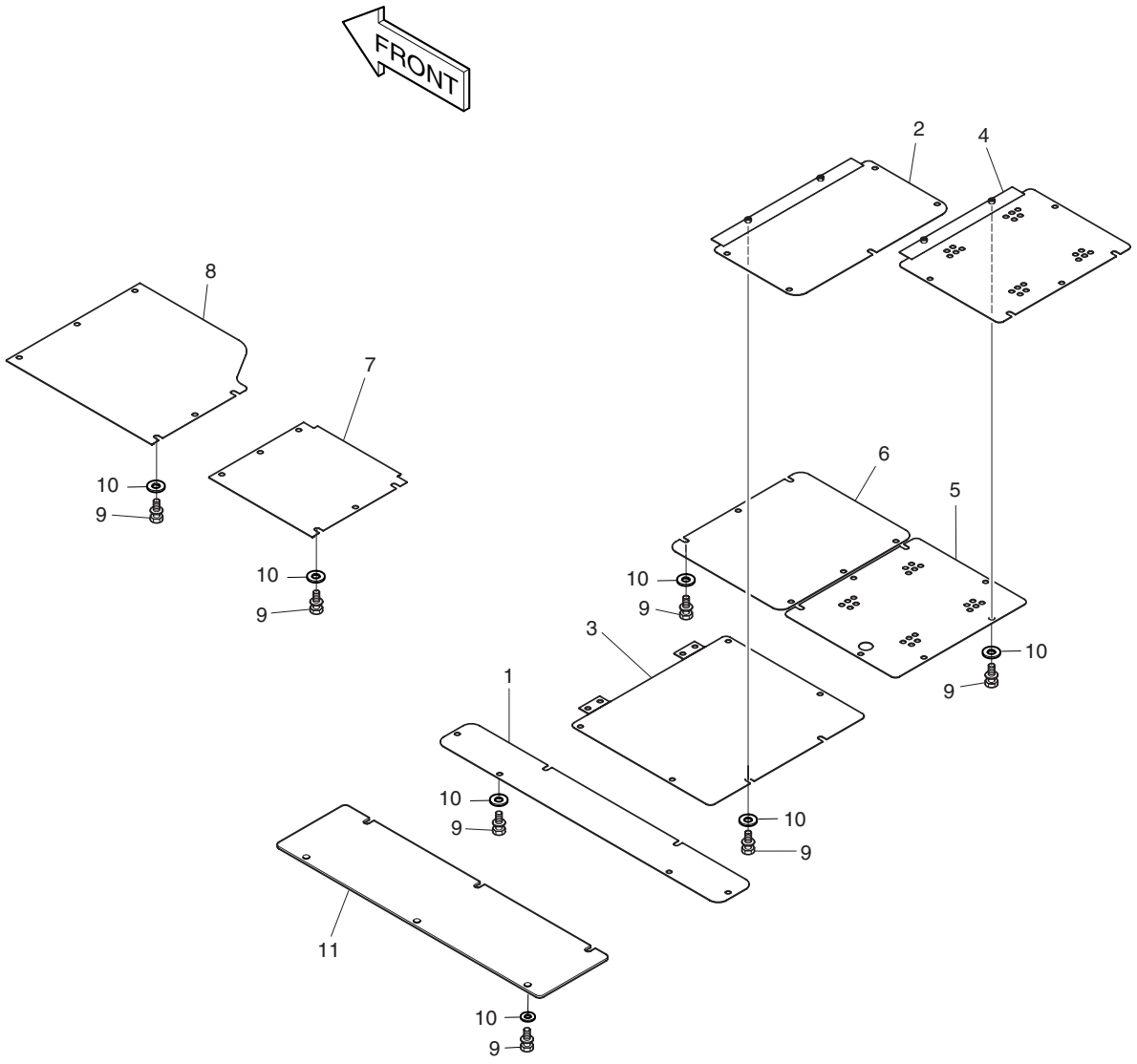

DATE	JUN. 30, 2005
REV. NO.	EXB05-05

Fig. 1620 UNDER COVER TOLES IMFERIEVRES

Serial No ;

Key No.	Part No.	Description	Description	Q'ty	S.C	Serial No.	ICA	Replaceable part	
								Part No.	Q'ty
1620--	621-01671	UNDER COVER ASS'Y	COUVERCLE	-	D				
1	621-01672B	COVER;UNDER	COUVERCLE	1					
2	621-01673B	COVER;UNDER	COUVERCLE	1					
3	621-01674B	COVER;UNDER	COUVERCLE	1					
4	621-02200	COVER;UNDER	COUVERCLE	1					
5	621-02201	COVER;UNDER	COUVERCLE	1					
6	621-01677A	COVER;UNDER	COUVERCLE	1					
7	621-01678B	COVER;UNDER	COUVERCLE	1					
8	621-01679B	COVER;UNDER	COUVERCLE	1					
9	2120-2196D10	BOLT;SET M12X1.75X25	BOULON A 6 PANS	51		1001–1104			
	2120-2196D14	BOLT;SET M12X1.75X25	BOULON A 6 PANS	51		1105–1450			
	2120-2196D14	**BOLT;SET M12X1.75X25**	BOULON A 6 PANS	57		**1451–**			
10	2114-1154	WASHER;PLAIN	RONDELLE	51		1105–1450			
	2114-1154	**WASHER;PLAIN**	RONDELLE	57		**1451–**			
11	**K1006066**	**COVER;UNDER**	COUVERCLE	1		**1451–**			

DATE	JUL. 30, 2003
REV. NO.	EXB03-13

Fig. 1630 BAFFLE COUVERCLE

Serial No. ;

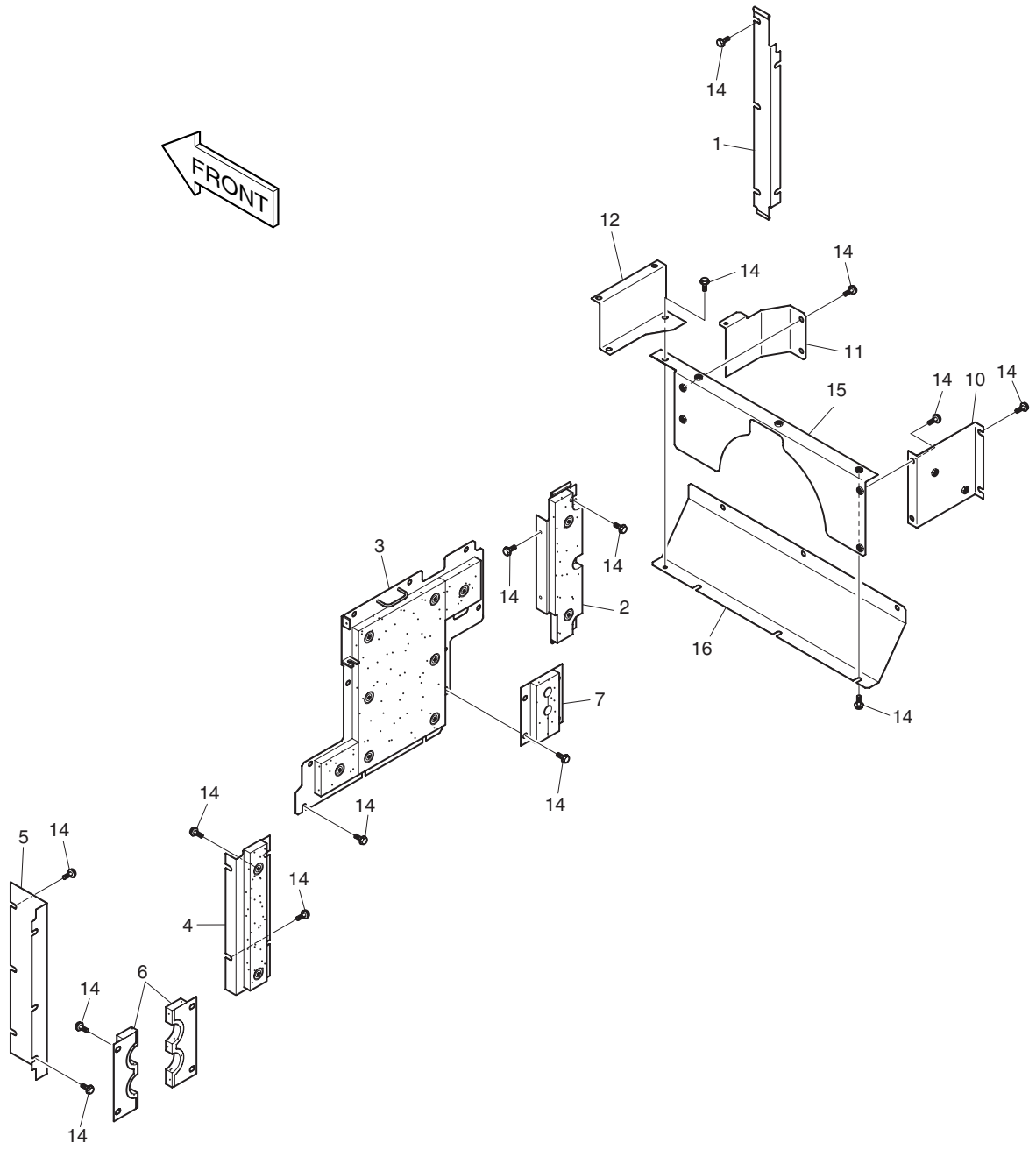

DATE	JUL. 30, 2003
REV. NO.	EXB03-13

Fig. 1630 BAFFLE COUVERCLE

Serial No ;

Key No.	Part No.	Description	Description	Q'ty	S.C	Serial No.	ICA	Replaceable part	
								Part No.	Q'ty
1630--	621-01696	BAFFLE ASS'Y	COUVERCLE	-	D				
1	621-01698	COVER	COUVERCLE	1					
2	621-01699A	COVER	COUVERCLE	1					
3	621-01700A	COVER	COUVERCLE	1					
4	621-01701C	COVER	COUVERCLE	1					
5	621-01702C	COVER	COUVERCLE	1					
6	621-01703B	COVER	COUVERCLE	2					
7	621-01704B	COVER	COUVERCLE	1					
10	621-01714A	COVER	COUVERCLE	1					
11	621-01715	COVER	COUVERCLE	1					
12	621-01716	COVER	COUVERCLE	1					
14	2120-2196D6	BOLT;SET M12X1.75X20	BOULON A 6 PANS	53					
15	621-01976	COVER	COUVERCLE	1					
16	621-01977	COVER	COUVERCLE	1					

DATE	JUL. 30, 2003
REV. NO.	EXB03-13

Fig. 1640 ACOUSTIC FOAM
ENSEMBLE DE EPONGE

Serial No. ;

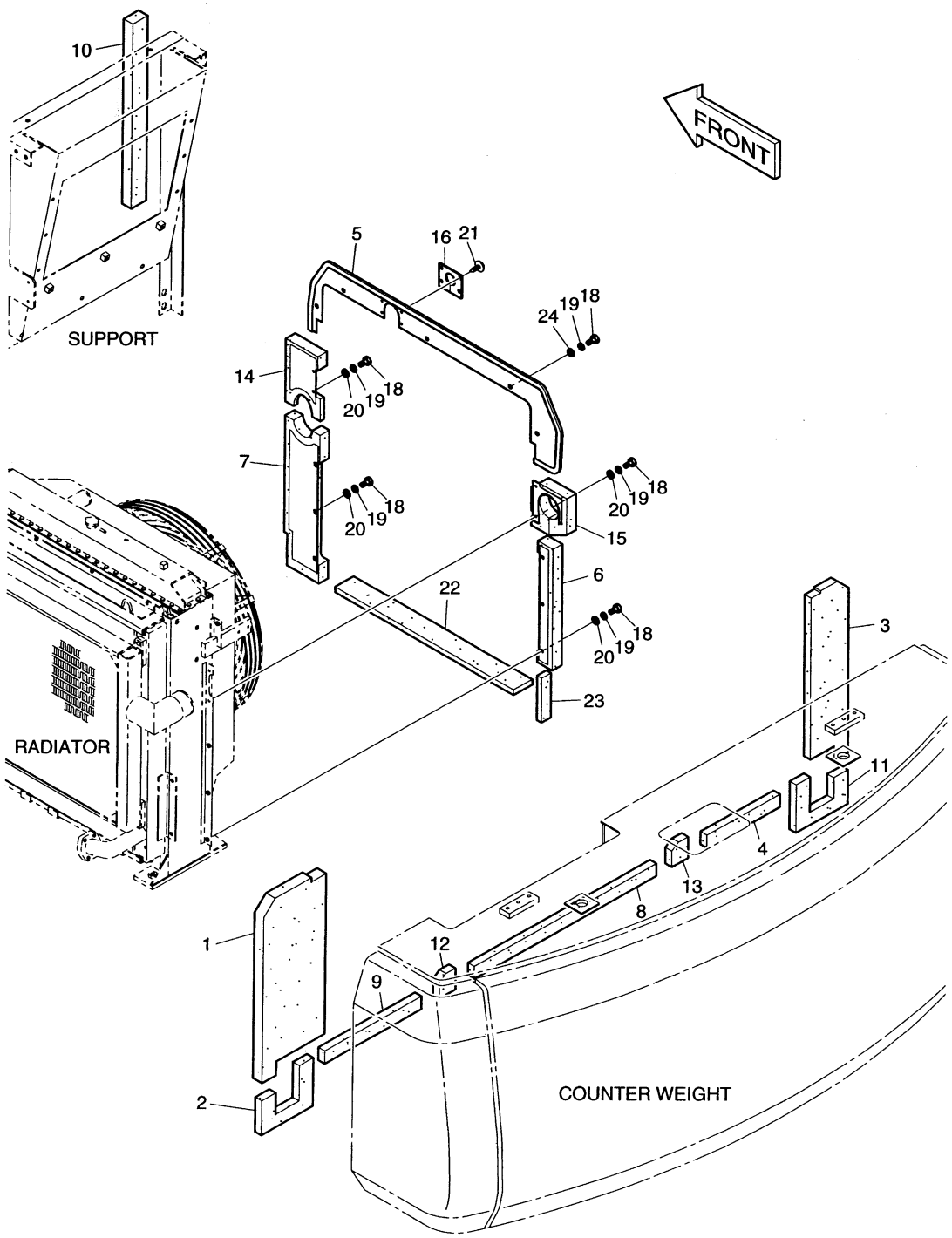

DATE	JUL. 30, 2003
REV. NO.	EXB03-13

Fig. 1640 ACOUSTIC FOAM ENSEMBLE DE EPONGE

Serial No ;

Key No.	Part No.	Description	Description	Q'ty	S.C	Serial No.	ICA	Replaceable part	
								Part No.	Q'ty
1640--	161-00338	ACOUSTIC FOAM ASS'Y	EPONGE	-	D				
1	161-00339A	FOAM;POLYURETHANE	EPONGE	1					
2	161-00340	FOAM;POLYURETHANE	EPONGE	1					
3	161-00341A	FOAM;POLYURETHANE	EPONGE	1					
4	161-00344	FOAM;POLYURETHANE	EPONGE	1					
5	621-01733C	COVER	COUVERCLE	1					
6	621-01734A	COVER	COUVERCLE	1					
7	621-01735B	COVER	COUVERCLE	1					
8	161-00342	FOAM;POLYURETHANE	EPONGE	1					
9	161-00343	FOAM;POLYURETHANE	EPONGE	1					
10	161-00308A	FOAM;POLYURETHANE	EPONGE	1					
11	161-00345	FOAM;POLYURETHANE	EPONGE	1					
12	161-00356	FOAM;POLYURETHANE	EPONGE	1					
13	161-00357	FOAM;POLYURETHANE	EPONGE	1					
14	621-01736B	COVER	COUVERCLE	1					
15	621-01737C	COVER	COUVERCLE	1					
16	161-00349A	RUBBER	CAOUTCHOUC	1					
18	S0508853	BOLT M8X1.25X20	BOULON A 6 PANS	15					
19	S5102503	WASHER;SPRING M8	RONDELLE ELASTIQUE	15					
20	S5010513	WASHER;PLAIN M8	RONDELLE PLATE	10					
21	124-00070	CLIP;TREE	ATTACHE	4					
22	161-00350A	FOAM;POLYURETHANE	EPONGE	1					
23	161-00351	FOAM;POLYURETHANE	EPONGE	1					
24	2114-1058D29	WASHER	RONDELLE	5					

DATE	JUN. 30, 2005
REV. NO.	EXB05-05

Fig. 1650 COVER-NOISE KIT
COUVERTURE

Serial No. ;

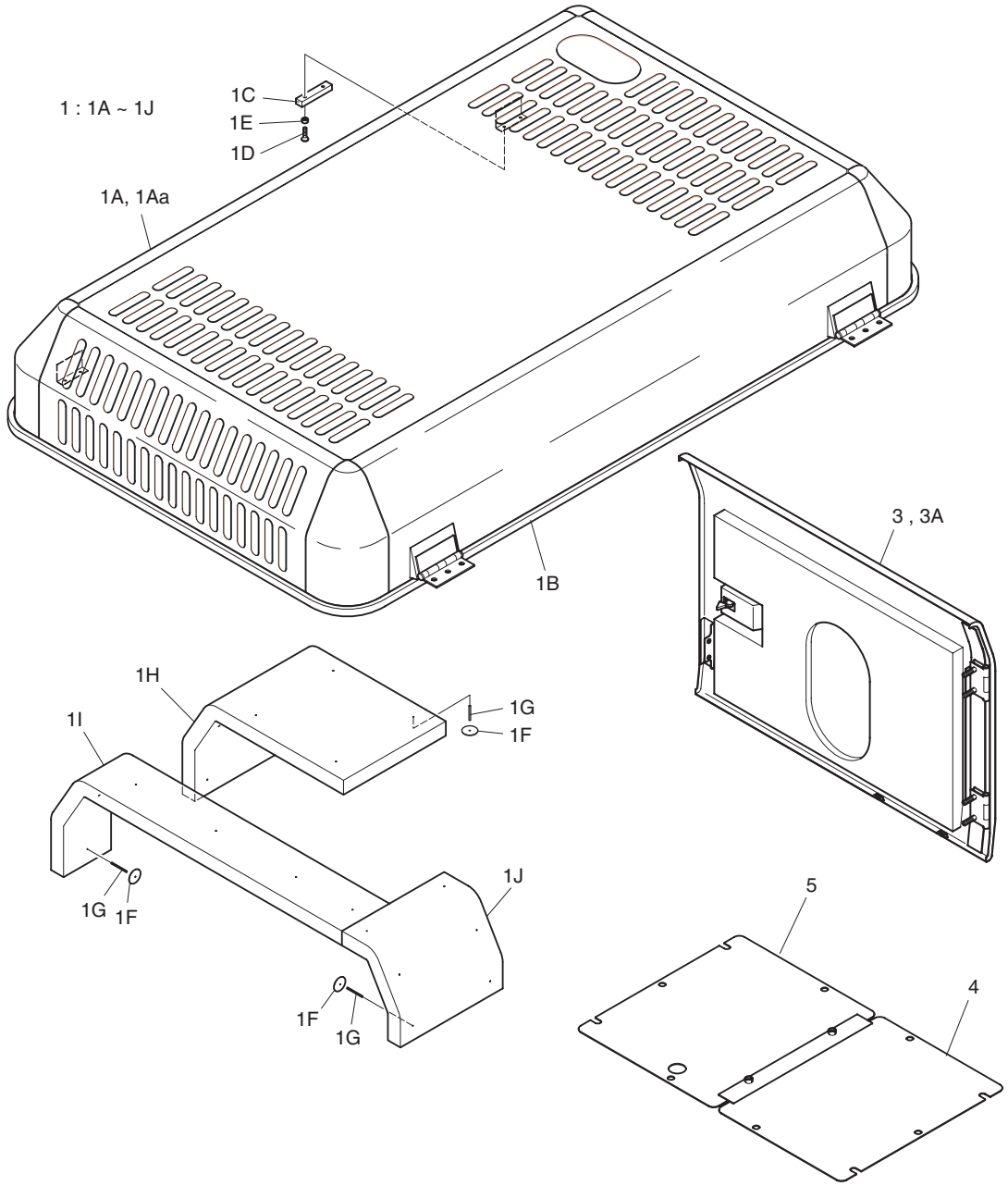

DATE	JUN. 30, 2005
REV. NO.	EXB05-05

Fig. 1650 COVER-NOISE KIT COUVERTURE

Serial No ;

Key No.	Part No.	Description	Description	Q'ty	S.C	Serial No.	ICA	Replaceable part	
								Part No.	Q'ty
1650--	537-00022	NOISE KIT	KIT DE BRUIT	-	D				
1	621-02039C	COVER;ENGINE (EUROPE OPT.)	COUVERCLE	1					
1A	621-01986E	. COVER;ENGINE	. COUVERCLE	1					
1Aa	1.162-00001	.. RUBBER;CUSHION	.. CAOUTCHOUC	1					
1B	-	. TRIM	. CANAL	1					
1C	2512-1054	. RUBBER	. CAOUTCHOUC	2					
1D	S3452983	. SCREW M6X1.0X20	. VIS	4					
1E	S4012333	. NUT M6X10	. ECROU	4					
1F	2432-9001	. HOLDER	. POSSESSEUR	20					
1G	2123-1690D5	. PIN	. BROUCHE	20					
1H	-	. FOAM	. EPONGE	1					
1I	-	. FOAM	. EPONGE	1					
1J	-	. FOAM	. EPONGE	1					
3	621-01648E	DOOR;SIDE	VERROU	1		1001–1234	I	621-01648G	1
	621-01648G	DOOR;SIDE	VERROU	1		1235–1470			
	621-01648I	**DOOR;SIDE**	VERROU	1		**1471–**			
3A	621-01647C	. DOOR	. VERROU	1		1001–1470			
	621-01647G	**. DOOR**	. VERROU	1		**1471–**			
4	621-01675B	COVER;UNDER	COUVERCLE	1					
5	621-01676C	COVER;UNDER	COUVERCLE	1					

DATE	JUL. 30, 2003
REV. NO.	EXB03-13

Fig. 1660 ACOUSTIC FOAM-NOISE KIT ENSEMBLE DE EPONGE

Serial No. ;

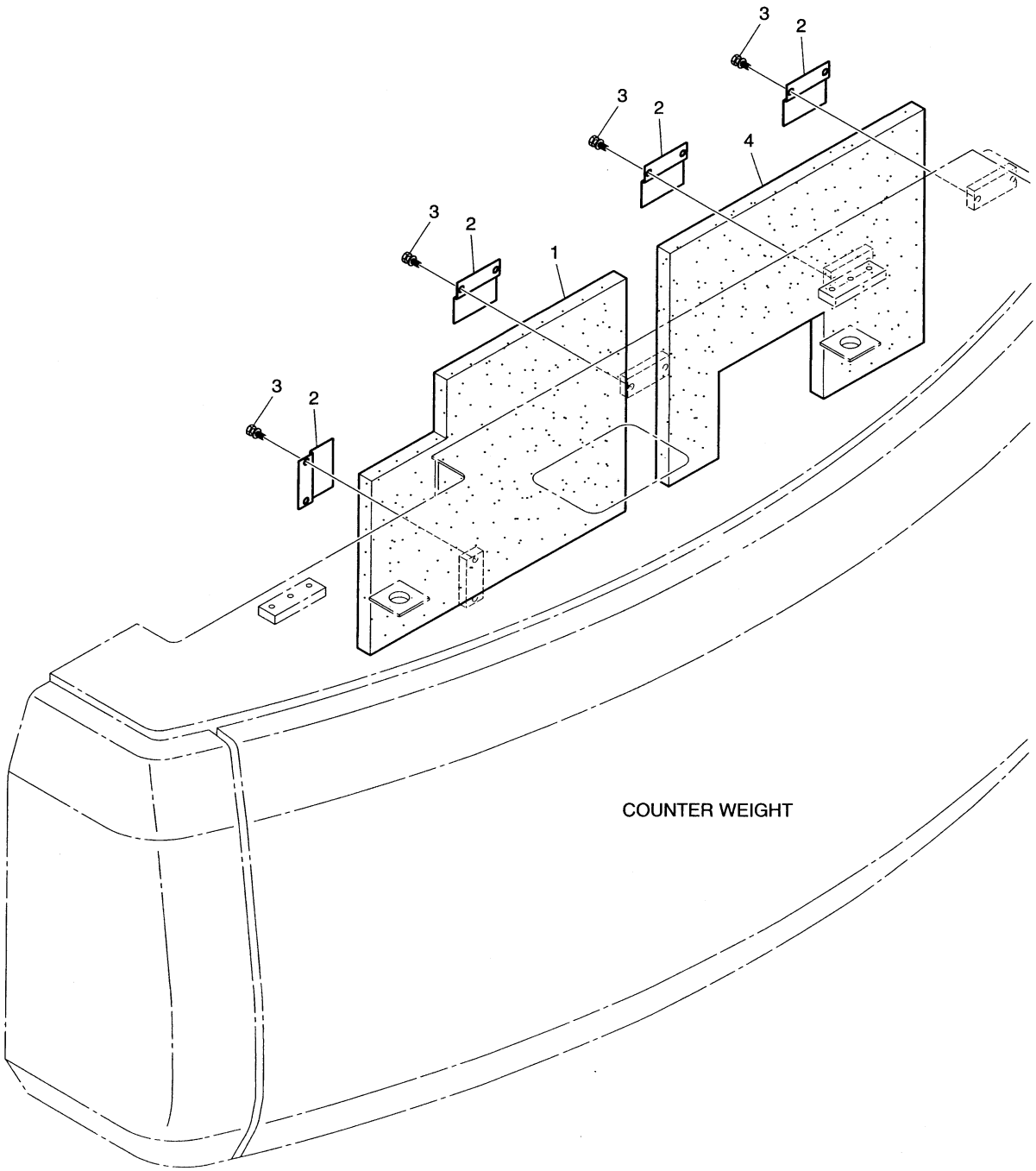

DATE	JUL. 30, 2003
REV. NO.	EXB03-13

Fig. 1660 ACOUSTIC FOAM-NOISE KIT ENSEMBLE DE EPONGE

Serial No ;

Key No.	Part No.	Description	Description	Q'ty	S.C	Serial No.	ICA	Replaceable part	
								Part No.	Q'ty
1660--	161-00435	ACOUSTIC FOAM ASS'Y	EPONGE	-	D				
1	161-00437A	POLYURETHANE FOAM	EPONGE	1					
2	195-00692	BRACKET	SUPPORT	4					
3	2120-2196D1	BOLT;SET M10X1.5X20	BOULON A 6PANS	8					
4	161-00441B	POLYURETHANE FOAM	EPONGE	1					

DATE	JUL. 30, 2003
REV. NO.	EXB03-13

Fig. 1670 LUBRICATION PIPING
LUBRIFICATION

Serial No. ;

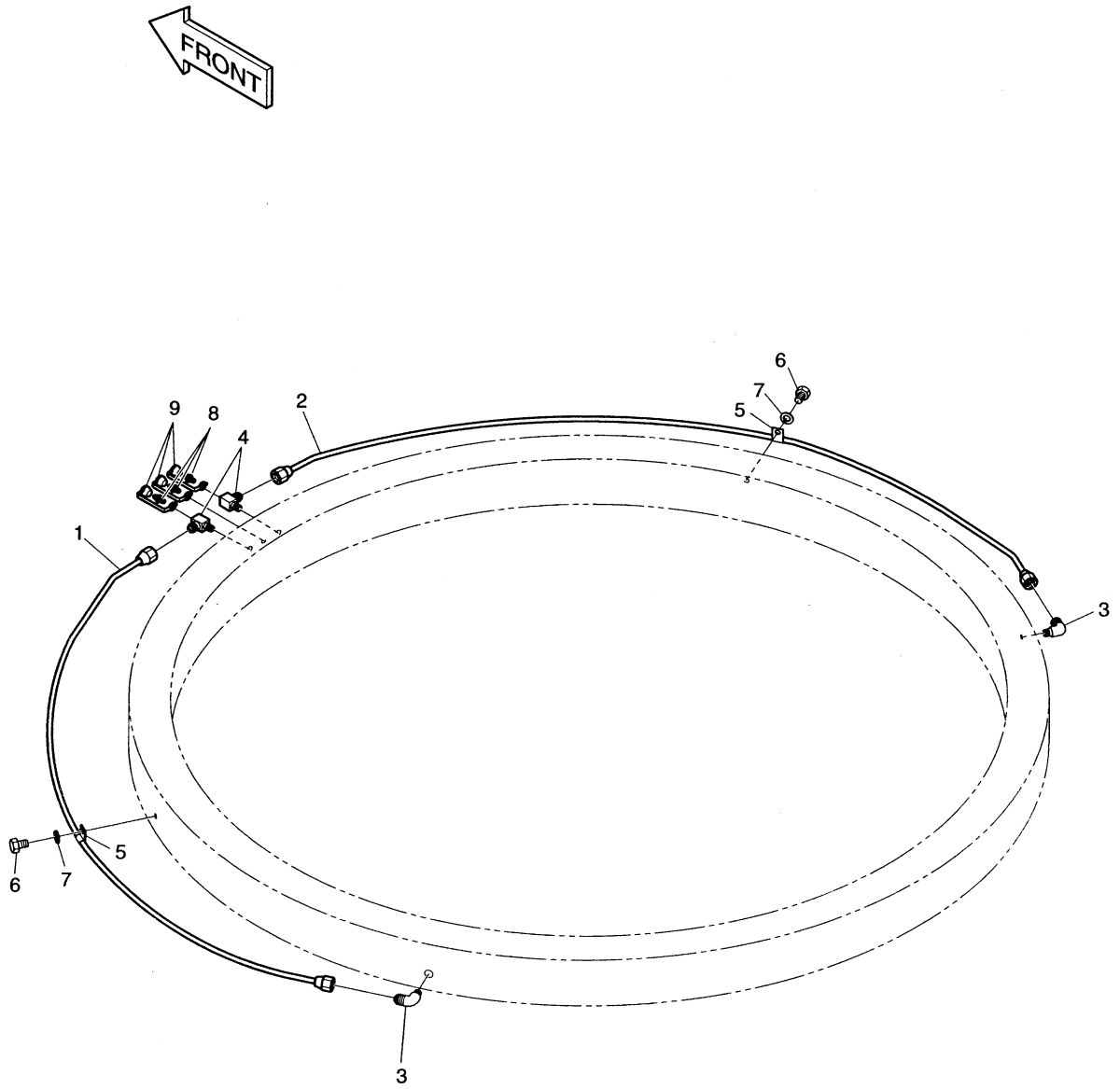

DATE	JUL. 30, 2003
REV. NO.	EXB03-13

Fig. 1670 LUBRICATION PIPING
LUBRIFICATION

Serial No ;

Key No.	Part No.	Description	Description	Q'ty	S.C	Serial No.	ICA	Replaceable part	
								Part No.	Q'ty
1670--	400-00715	LUBRICATION PIPING	CONDUITES DE	-	D				
1	140-00875	PIPE	TUYAU	1					
2	140-00876	PIPE	TUYAU	1					
3	2181-1925	ELBOW	RACCORD ADAPTATEUR	2					
4	2181-2527	TEE	TE	2					
5	2124-1027D19	CLIP;PIPE	CLIP	2					
6	S0508453	BOLT M8X1.25X12	BOULON A 6 PANS	2					
7	S5102503	WASHER;SPRING M8	RONDELLE ELASTIQUE	2					
8	S6710041	NIPPLE;GREASE	GRAISSEUR	3					
9	160-00020	CAP;GREASE NIPPLE	CHAPEAU	3					

DATE	JUL. 30, 2003
REV. NO.	EXB03-13

Fig. 1680 ELECTRIC BOX ASS'Y(1)-BOX EQUIPMENT ELECTRIQUE

Serial No. ;

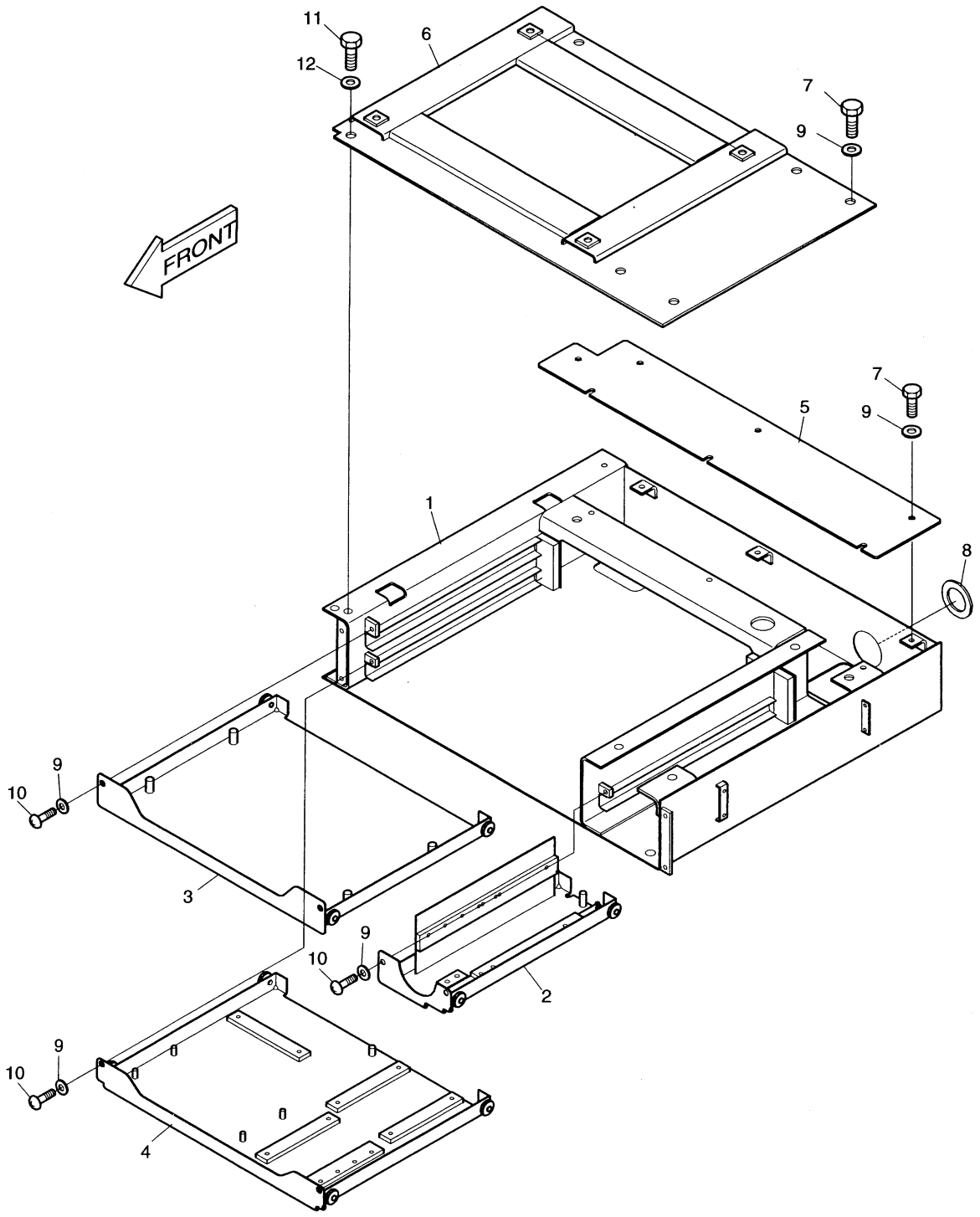

DATE	JUL. 30, 2003
REV. NO.	EXB03-13

Fig. 1680 ELECTRIC BOX ASS'Y(1)-BOX EQUIPMENT ELECTRIQUE

Serial No ;

Key No.	Part No.	Description	Description	Q'ty	S.C	Serial No.	ICA	Replaceable part	
								Part No.	Q'ty
1680--	512-00031	ELECTRIC BOX ASS'Y	EQUIPMENT ELECTRIQUE	-	D				
1	2512-1118B	ELECTRIC BOX	EQUIPMENT ELECTRIQUE	1					
2	2891-1266A	PLATE	PLAQUE	1					
3	2891-1267	PLATE	PLAQUE	1					
4	2891-1265	PLATE	PLAQUE	1					
5	2891-1268	PLATE	PLAQUE	1					
6	621-01952	PLATE	PLAQUE	1					
7	2120-2166D6	BOLT M6X1.0X16	BOULON A 6 PANS	9					
8	2110-1349	BUSH;RUBBER	MANCHON	1					
9	2114-1898D3	WASHER	RONDELLE	15					
10	S3458953	SCREW M6X1.0X12	VIS	6					
11	2120-2166D4	BOLT M10X1.5X20	BOULON A 6 PANS	4					
12	2114-1898D1	WASHER	RONDELLE	4					

DATE	JUN. 30, 2004
REV. NO.	EXB04-04

Fig. 1690 ELECTRIC BOX ASS'Y(2)-ELECTRIC PARTS EQUIPMENT ELECTRIQUE

Serial No. ;

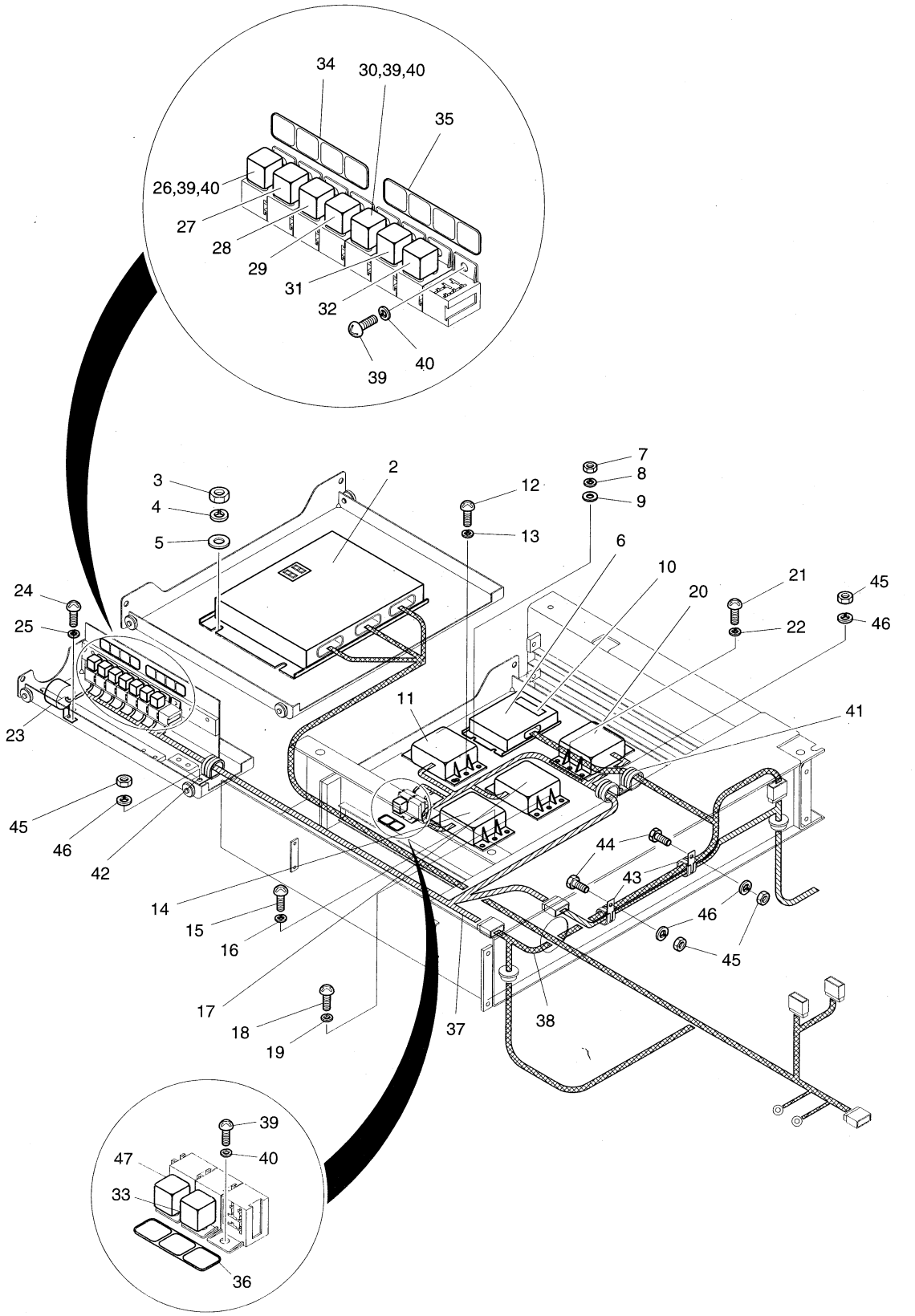

DATE	JUN. 30, 2004
REV. NO.	EXB04-04

Fig. 1690 ELECTRIC BOX ASS'Y(2)-ELECTRIC PARTS EQUIPMENT ELECTRIQUE

Serial No ;

Key No.	Part No.	Description	Description	Q'ty	S.C	Serial No.	ICA	Replaceable part	
								Part No.	Q'ty
1690--	500-00123C	ELECTRIC BOX ASS'Y	EQUIPMENT ELECTRIQUE	1		1001–1121			
	500-00123E	ELECTRIC BOX ASS'Y	EQUIPMENT ELECTRIQUE	1		1122–1304	I	500-00123G	1
	500-00123G	**ELECTRIC BOX ASS'Y**	EQUIPMENT ELECTRIQUE	1		**1305–**			
2	543-00052B	CONTROLLER;E-EPOS	COMMANDE EPOS	1		1001–1121			
	543-00052C	CONTROLLER;E-EPOS	COMMANDE EPOS	1		1122–			
3	S4012633	NUT M10X1.5	ECROU	4					
4	S5102603	WASHER;SPRING M10	RONDELLE ELASTIQUE	4					
5	S5010613	WASHER;PLAIN M10	RONDELLE PLATE	4					
6	543-00074	CONTROLLER;THROTTLE	COMMANDE EPOS	1					
7	S4012333	NUT M6X1.0	ECROU	4					
8	S5102303	WASHER;SPRING M6	RONDELLE ELASTIQUE	4					
9	S5010313	WASHER;PLAIN M6	RONDELLE PLATE	4					
10	2190-3231D23	PLATE;NAME	PLAQUE D'IDENTIFICATION	1					
11	2543-9015	STARTER;CONTROLLER	COMMANDE DEMARREUR	1					
12	S3450943	SCREW M6X1.0X10	VIS	2					
13	S5102303	WASHER;SPRING M6	RONDELLE ELASTIQUE	2					
14	2537-9008	TIMER;WIPER	INTERRUPTEUR	1					
15	S3450943	SCREW M6X1.0X12	VIS	2					
16	S5102303	WASHER;SPRING M6	RONDELLE ELASTIQUE	2					
17	2531-1003	CONVERTER;DC-DC (1)	CONVERTEUR	1					
18	S3450953	SCREW M6X1.0X12	VIS	2					
19	S5102303	WASHER;SPRING M6	RONDELLE ELASTIQUE	2					
20	2531-1003	CONVERTER;DC-DC (2)	CONVERTEUR	1					
21	S3450953	SCREW	VIS	2					
22	S5102303	WASHER;SPRING	RONDELLE ELASTIQUE	2					
23	2516-1116	BUZZER;PILOT	VIBREUR ARRIERE	1					
24	S3450943	SCREW M6X1.0X10	VIS	2					
25	S5102303	WASHER;SPRING M6	RONDELLE ELASTIQUE	2					
26	2544-9033	RELAY;HAED LAMP	RELAIS AVERTISSEUR	1					
27	2544-9033	RELAY;WORKING LAMP	RELAIS AVERTISSEUR	1					
28	2544-9033	RELAY;ENGINE STOP	RELAIS AVERTISSEUR	1					
29	2544-9033	RELAY;HORN	RELAIS AVERTISSEUR	1					
30	2544-9033	RELAY;COMPRESSOR	RELAIS AVERTISSEUR	1					
31	2544-9033	RELAY;CONDENSER FAN	RELAIS AVERTISSEUR	1					
32	2544-9033	RELAY;STEREO	RELAIS AVERTISSEUR	1					
33	2544-9033	RELAY;CABIN LAMP(1)	RELAIS AVERTISSEUR	1					
34	2190-2037D19	PLATE;NAME	PLAQUE D'IDENTIFICATION	1					
35	2190-2037D20	PLATE;NAME	PLAQUE D'IDENTIFICATION	1					

DATE	JUN. 30, 2004
REV. NO.	EXB04-04

Fig. 1690 ELECTRIC BOX ASS'Y(2)-ELECTRIC PARTS EQUIPMENT ELECTRIQUE

Serial No. ;

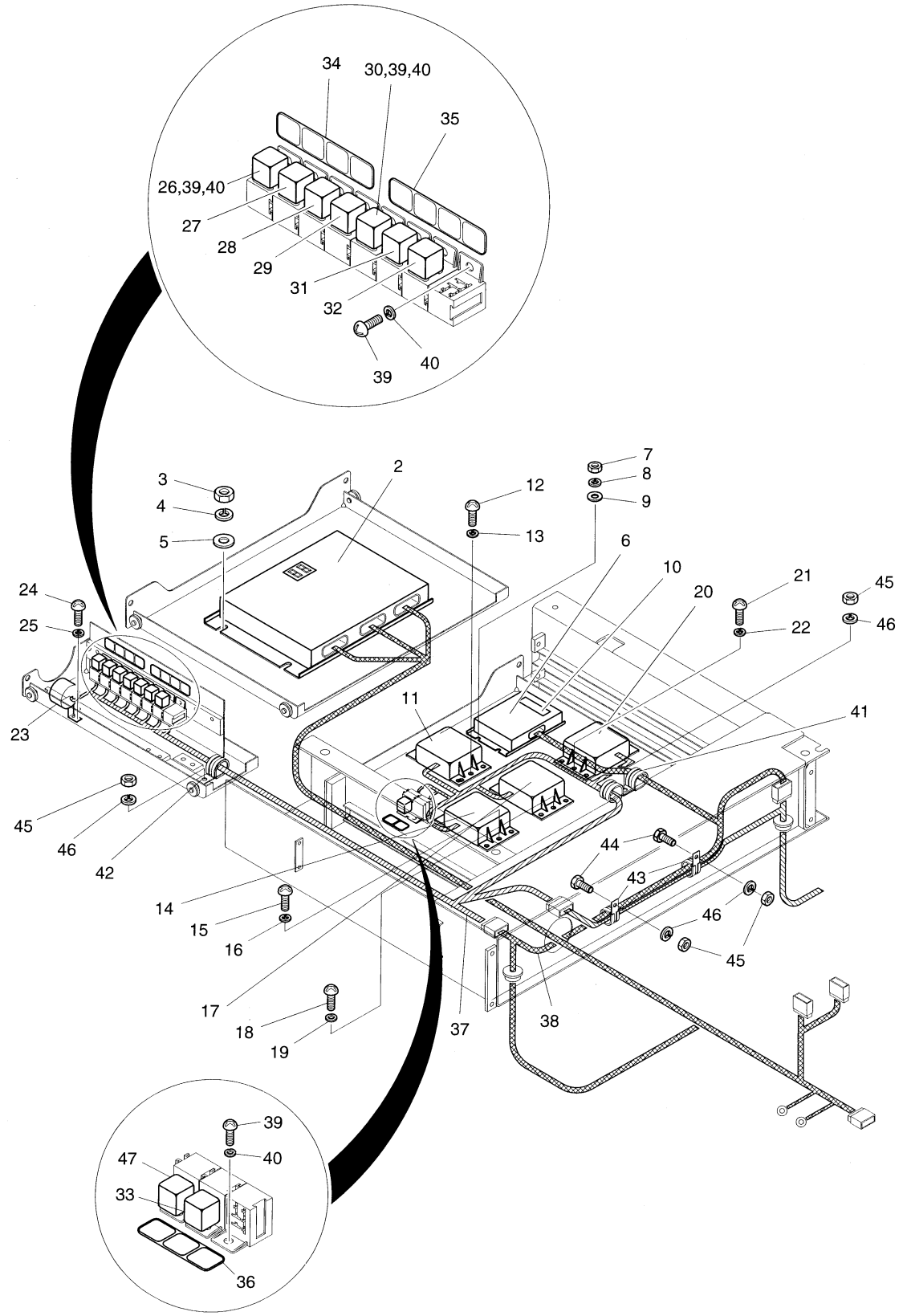

DATE	JUN. 30, 2004
REV. NO.	EXB04-04

Fig. 1690 ELECTRIC BOX ASS'Y(2)-ELECTRIC PARTS EQUIPMENT ELECTRIQUE

Serial No ;

Key No.	Part No.	Description	Description	Q'ty	S.C	Serial No.	ICA	Replaceable part	
								Part No.	Q'ty
1690-36	2190-2037D56	PLATE;NAME	PLAQUE D'IDENTIFICATION	1					
37	530-00207A	HARNESS;ELECTRIC BOX	FAISCEAU	1					
38	530-00208A	HARNESS;CABIN	FAISCEAU	1		1001–1304	I	530-00208B	1
	530-00208B	**HARNESS;CABIN**	FAISCEAU	1		**1305–**			
39	S3450823	SCREW M5X0.8X10	VIS	5					
40	S5100203	WASHER;SPRING M5	RONDELLE ELASTIQUE	5					
41	124-00208D3	CLIP D18/M8	ATTACHE	2					
42	124-00208D5	CLIP D30/M8	ATTACHE	1					
43	124-00208D6	CLIP D36/M8	ATTACHE	2					
44	S0508853	BOLT M8X1.25X20	BOULON A 6 PANS	2					
45	S4012533	NUT M8X1.25	ECROU	4					
46	S5102503	WASHER;SPRING M8	RONDELLE ELASTIQUE	4					
47	2544-9033	RELAY	RELAIS AVERTISSEUR	1					

DATE	JUN. 30, 2006
REV. NO.	EXB06-08

Fig. 1700 ELECTRIC PARTS(1)-GAUGE & SWITCH PANEL EQUIPMENT ELECTRIQUE

Serial No. ;

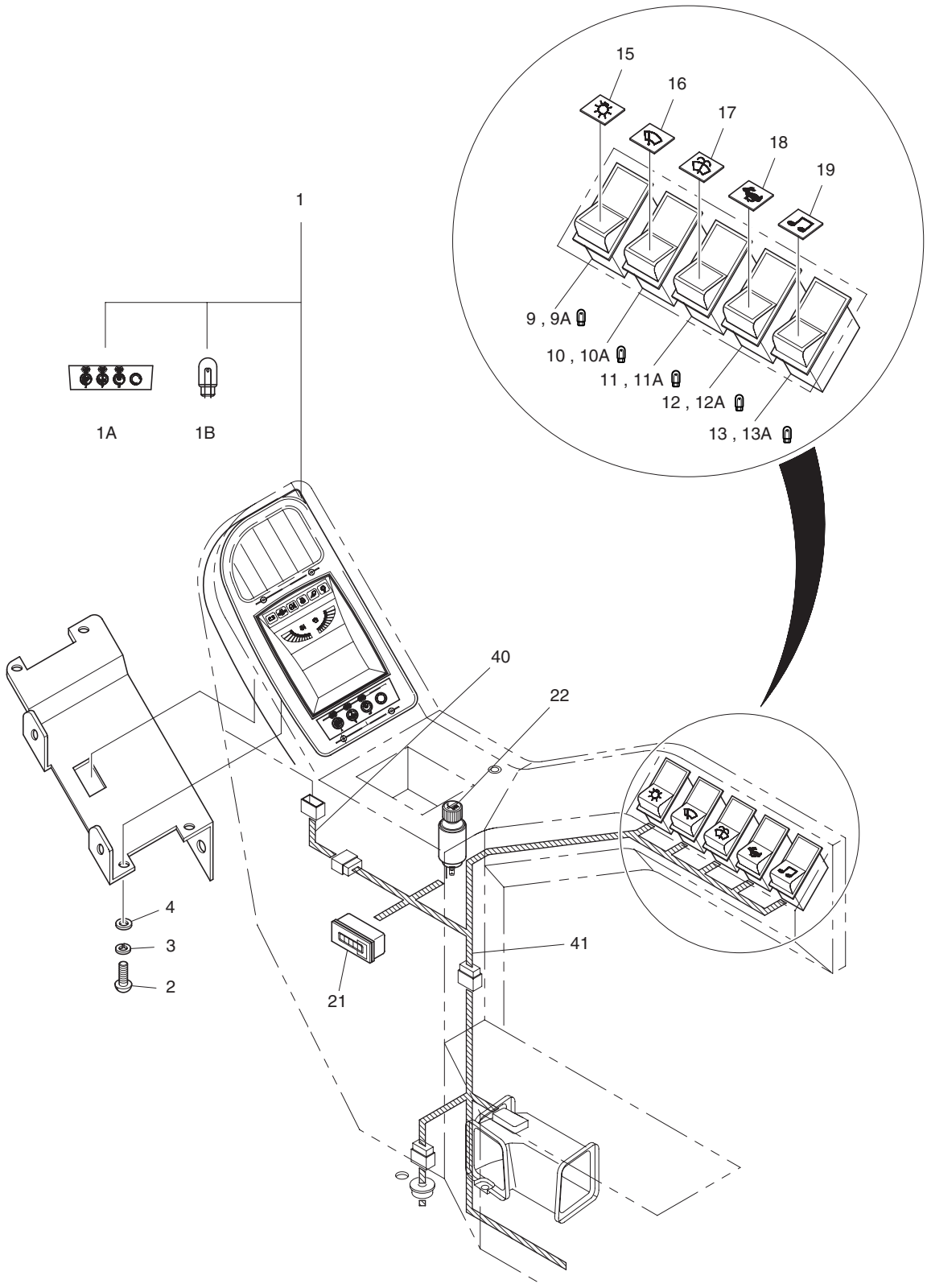

DATE	JUN. 30, 2006
REV. NO.	EXB06-08

Fig. 1700 ELECTRIC PARTS(1)-GAUGE & SWITCH PANEL EQUIPMENT ELECTRIQUE

Serial No. ;

Key No.	Part No.	Description	Description	Q'ty	S.C	Serial No.	ICA	Replaceable part	
								Part No.	Q'ty
1700--	500-00124G	ELECTRIC PARTS(1)	EQUIPMENT ELECTRIQUE	-	D	1001–1211			
	500-00124H	ELECTRIC PARTS(1)	EQUIPMENT ELECTRIQUE	-	D	1212–1234			
	500-00124I	ELECTRIC PARTS(1)	EQUIPMENT ELECTRIQUE	-	D	1235–1319			
	500-00124J	ELECTRIC PARTS(1)	EQUIPMENT ELECTRIQUE	-	D	1320–1339			
	500-00124K	ELECTRIC PARTS(1)	EQUIPMENT ELECTRIQUE	-	D	1340–1409			
	500-00124L	ELECTRIC PARTS(1)	EQUIPMENT ELECTRIQUE	-	D	1410–1470			
	500-00124M	ELECTRIC PARTS(1)	EQUIPMENT ELECTRIQUE	-	D	1471–			
1	539-00048C	PANEL;LCD GAUGE	PANNEAU	1		1001–1319	I	539-00048E	1
	539-00048E	PANEL;LCD GAUGE	PANNEAU	1		1320–1406	I	539-00048G	1
	539-00048G	**PANEL;LCD GAUGE**	PANNEAU	1		**1407–**			
1A	159-00195	. SHEET;SWITCH PC	. SHEET	1					
1B	515-00012A	. BULB 24V 2W	. LAMPE	6					
2	S3450853	SCREW M5X0.8X16	VIS	4					
3	S5100203	WASHER;SPRING M5	RONDELLE ELASTIQUE	4					
4	S5000213	WASHER;PLAIN M5	RONDELLE PLATE	4					
9	2549-9109	SWITCH;LAMP	INTERRUPTEUR	1					
9A	K9000353	. LAMP;PILOT	. LAMPE	1					
10	2549-9109	SWITCH;WIPER	INTERRUPTEUR	1					
10A	K9000353	. LAMP;PILOT	. LAMPE	1					
11	2549-9110	SWITCH;WASHER	INTERRUPTEUR	1					
11A	K9000353	. LAMP;PILOT	. LAMPE	1					
12	2549-9109	SWITCH;HIGH SPEED	INTERRUPTEUR	1					
12A	K9000353	. LAMP;PILOT	. LAMPE	1					
13	2549-9098	SWITCH;CAR STEREO	INTERRUPTEUR	1					
13A	K9000353	. LAMP;PILOT	. LAMPE	1					
15	2190-2036D24	INSERT;LAMP	INSERTION	1					
16	2190-2036D11	INSERT;WIPER	INSERTION	1					
17	2190-2036D12	INSERT;WASHER	INSERTION	1					
18	2190-2036D13	INSERT;HIGH SPEED	INSERTION	1					
19	2190-2036D23	INSERT;CAR STEREO	INSERTION	1					
21	2528-9040	METER;HOUR	TOTALISATEUR HORAIRE	1					
22	545-00001	LIGHTER;CIGAR	ALLUME-CIGARE	1					
40	530-00231A	HARNESS;GAUGE PANEL JOINT	FAISCEAU	1					
41	530-00209	HARNESS;SWITCH BOX	FAISCEAU	1					

DATE	DEC. 15, 2006
REV. NO.	EXB06-13

Fig. 1710 ELECTRIC PARTS(2)-STAND R.H EQUIPMENT ELECTRIQUE

Serial No. ;

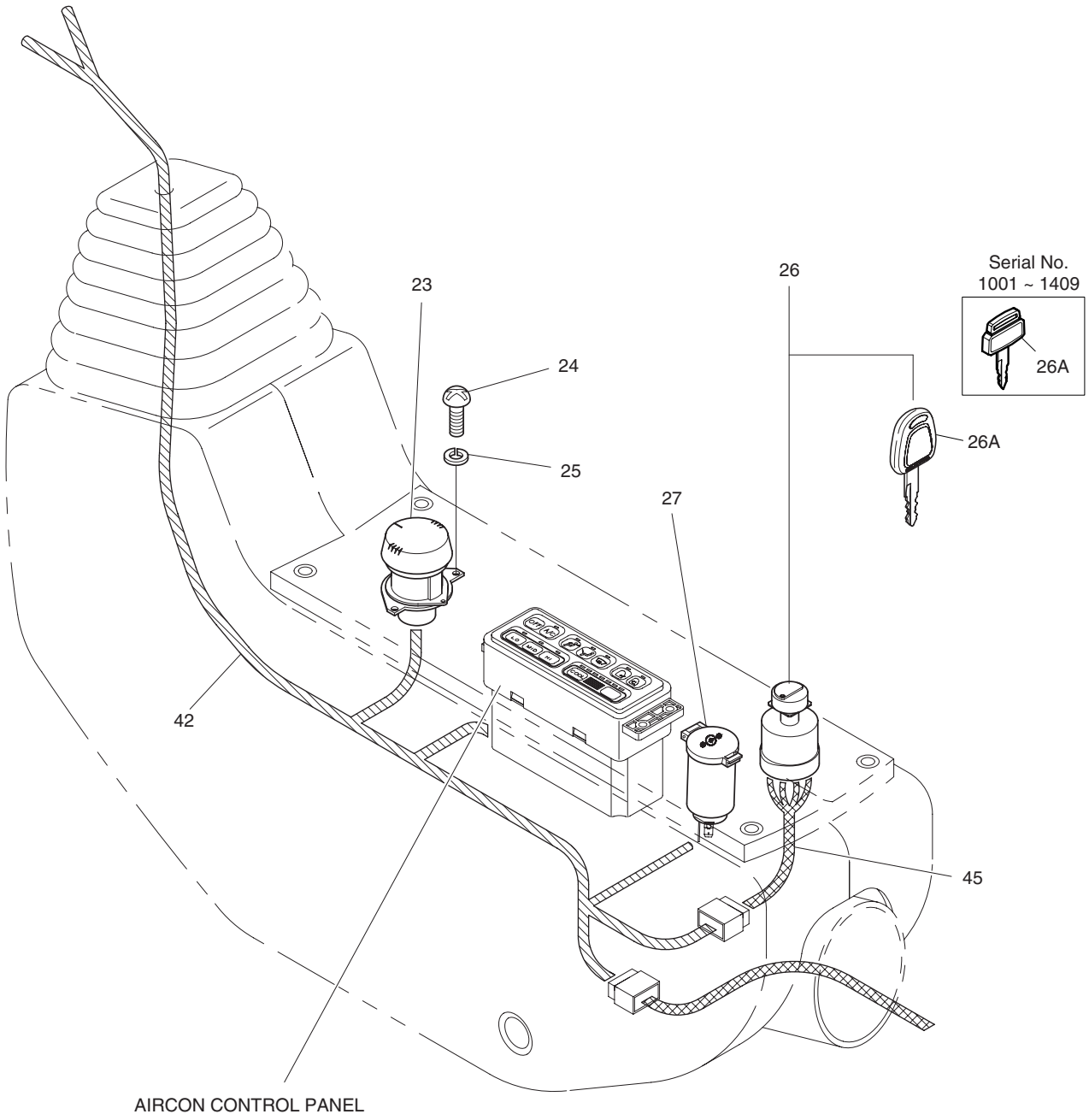

DATE	DEC. 15, 2006
REV. NO.	EXB06-13

Fig. 1710 ELECTRIC PARTS(2)-STAND R.H EQUIPMENT ELECTRIQUE

Serial No. ;

Key No.	Part No.	Description	Description	Q'ty	S.C	Serial No.	ICA	Replaceable part	
								Part No.	Q'ty
1710--	500-00124G	ELECTRIC PARTS(2)	EQUIPMENT ELECTRIQUE	-	D	1001–1211			
	500-00124H	ELECTRIC PARTS(2)	EQUIPMENT ELECTRIQUE	-	D	1212–1234			
	500-00124I	ELECTRIC PARTS(2)	EQUIPMENT ELECTRIQUE	-	D	1235–1319			
	500-00124J	ELECTRIC PARTS(2)	EQUIPMENT ELECTRIQUE	-	D	1320–1339			
	500-00124K	ELECTRIC PARTS(2)	EQUIPMENT ELECTRIQUE	-	D	1340–1409			
	500-00124L	ELECTRIC PARTS(2)	EQUIPMENT ELECTRIQUE	-	D	1410–1470			
	500-00124M	ELECTRIC PARTS(2)	EQUIPMENT ELECTRIQUE	-	D	1471–			
23	2552-1004	DIAL;E/G CONTROL	CADRAN	1		1001–1750	I	K1013846	1
	K1013846	**DIAL;E/G CONTROL**	CADRAN	1		**1751**–			
24	S3450583	SCREW M4X0.7X12	VIS	2					
25	S5100103	WASHER;SPRING M4	RONDELLE ELASTIQUE	2					
26	2549-1152	SWITCH;STARTER	INTERRUPTEUR	1		1001–1234			
	549-00210	SWITCH;STARTER	INTERRUPTEUR	1		1235–1409	I	549-00210A	1
	549-00210A	SWITCH;STARTER	INTERRUPTEUR	1		1410–1470			
	K1001858	SWITCH;STARTER	INTERRUPTEUR	1		1471–1597	I	K1001858A	1
	K1001858A	SWITCH;STARTER	INTERRUPTEUR	1		1598–			
26A	2172-1134	. KEY;STARTER SWITCH	. CLAVETTE	2		1001–1234			
	172-00320	. KEY;STARTER SWITCH	. CLAVETTE	2		1235–1409	I	172-00320A	2
	172-00320A	. KEY;STARTER SWITCH	. CLAVETTE	2		1410–1470			
	K1009605	. KEY;STARTER SWITCH	. CLAVETTE	2		1471–1597	I	K1009605B	2
	K1009605B	. KEY;STARTER SWITCH	. CLAVETTE	2		1598–			
27	527-00006	SOCKET;12V POWER	CLE A DOUILLE	1					
42	530-00205	HARNESS;STAND(R.H)	FAISCEAU	1					
45	530-00150	HARNESS;STARTER SWITCH	FAISCEAU	1					

DATE	JUN. 30, 2005
REV. NO.	EXB05-05

Fig. 1720 ELECTRIC PARTS(3)-STAND L.H
EQUIPMENT ELECTRIQUE

Serial No. ;

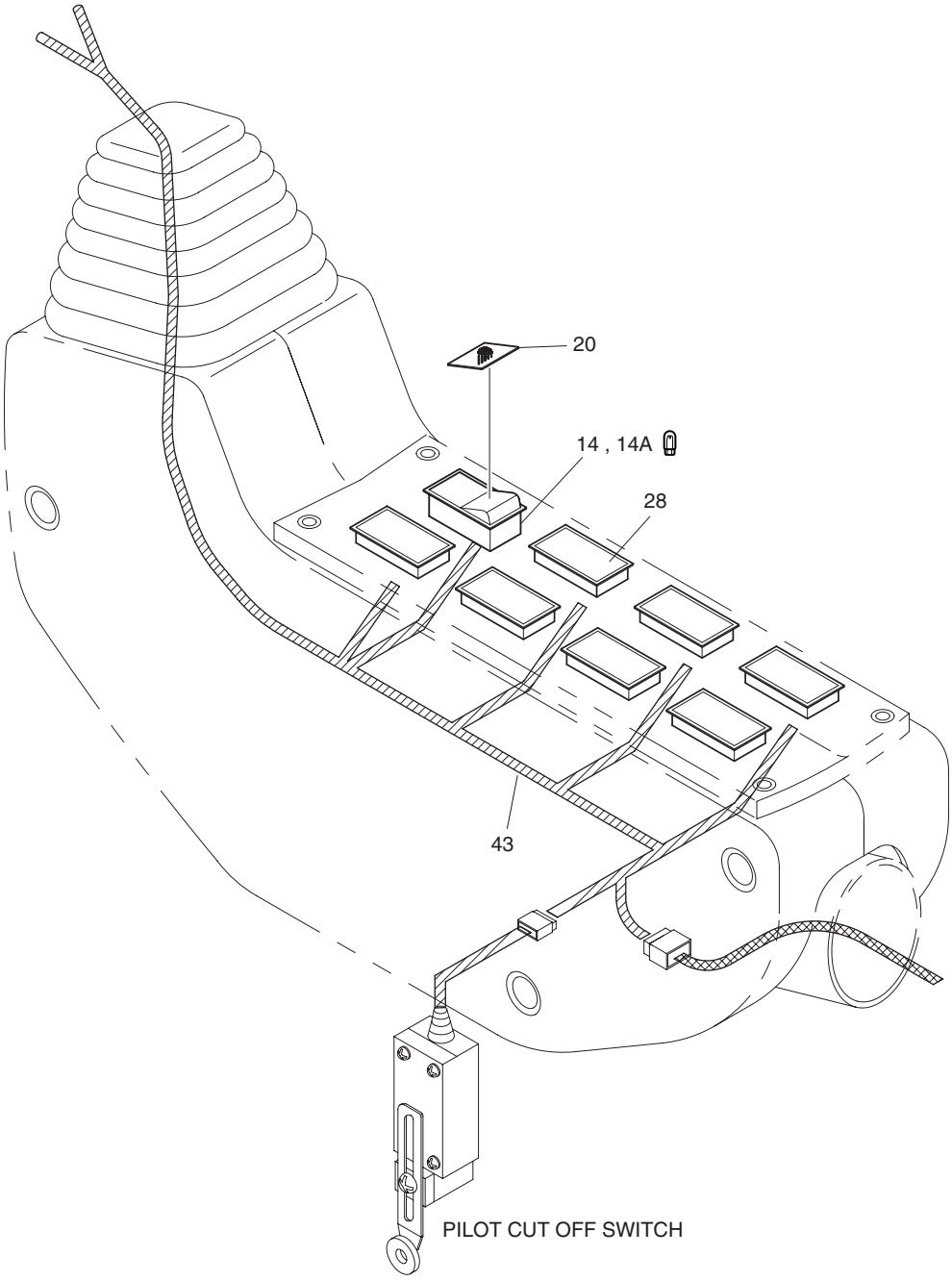

DATE	JUN. 30, 2005
REV. NO.	EXB05-05

Fig. 1720 ELECTRIC PARTS(3)-STAND L.H EQUIPMENT ELECTRIQUE

Serial No ;

Key No.	Part No.	Description	Description	Q'ty	S.C	Serial No.	ICA	Replaceable part	
								Part No.	Q'ty
1720--	500-00124G	ELECTRIC PARTS(3)	EQUIPMENT ELECTRIQUE	-	D	1001–1211			
	500-00124H	ELECTRIC PARTS(3)	EQUIPMENT ELECTRIQUE	-	D	1212–1234			
	500-00124I	ELECTRIC PARTS(3)	EQUIPMENT ELECTRIQUE	-	D	1235–1319			
	500-00124J	ELECTRIC PARTS(3)	EQUIPMENT ELECTRIQUE	-	D	1320–1339			
	500-00124K	ELECTRIC PARTS(3)	EQUIPMENT ELECTRIQUE	-	D	1340–1409			
	500-00124L	ELECTRIC PARTS(3)	EQUIPMENT ELECTRIQUE	-	D	1410–1470			
	500-00124M	**ELECTRIC PARTS(3)**	EQUIPMENT ELECTRIQUE	-	D	**1471**–			
14	2549-9109	SWITCH;CABIN LAMP	INTERRUPTEUR	1					
14A	K9000353	. LAMP;PILOT	. LAMPE	1					
20	2190-2584D14	INSERT;CABIN LAMP	INSERTION	1					
28	2621-9002	COVER	COUVERCLE	7					
43	530-00206	HARNESS;STAND(L.H)	FAISCEAU	1					

DATE	DEC. 15, 2006
REV. NO.	EXB06-13

Fig. 1730 ELECTRIC PARTS(4)-CABIN EQUIPMENT ELECTRIQUE

Serial No. ;

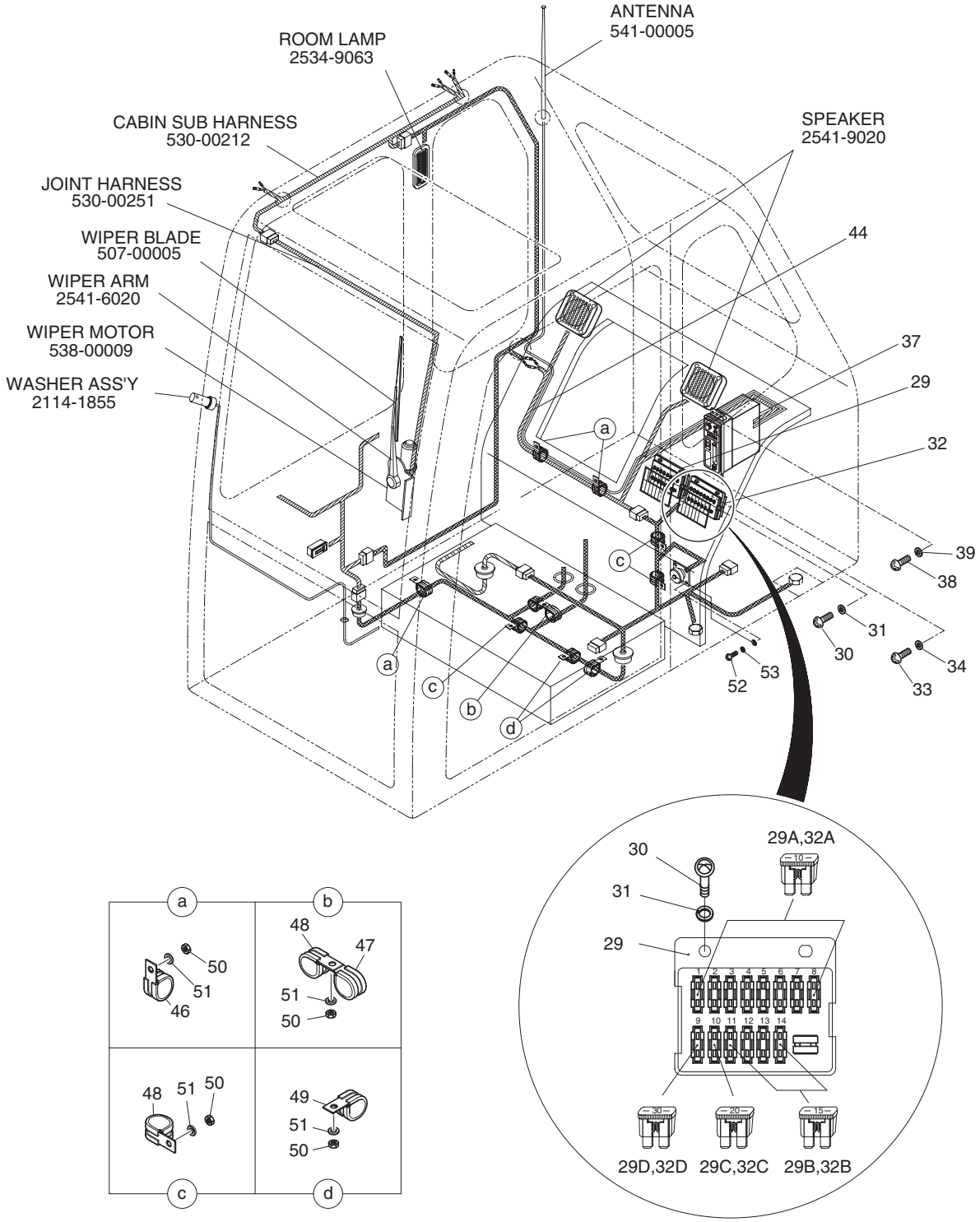

DATE	DEC. 15, 2006
REV. NO.	EXB06-13

Fig. 1730 ELECTRIC PARTS(4)-CABIN EQUIPMENT ELECTRIQUE

Serial No. ;

Key No.	Part No.	Description	Description	Q'ty	S.C	Serial No.	ICA	Replaceable part	
								Part No.	Q'ty
1730--	500-00124G	ELECTRIC PARTS(4)	EQUIPMENT ELECTRIQUE	-	D	1001–1125			
	500-00124H	ELECTRIC PARTS(4)	EQUIPMENT ELECTRIQUE	-	D	1126–1234			
	500-00124I	ELECTRIC PARTS(4)	EQUIPMENT ELECTRIQUE	-	D	1235–1319			
	500-00124J	ELECTRIC PARTS(4)	EQUIPMENT ELECTRIQUE	-	D	1320–1339			
	500-00124K	ELECTRIC PARTS(4)	EQUIPMENT ELECTRIQUE	-	D	1340–1409			
	500-00124L	ELECTRIC PARTS(4)	EQUIPMENT ELECTRIQUE	-	D	1410–1470			
	500-00124M	ELECTRIC PARTS(4)	EQUIPMENT ELECTRIQUE	-	D	1471–			
29	2510-1010	BOX ASS'Y;FUSE (1)	BOITE ELECTRIQUE	1					
29A	2527-1016	. FUSE;BLADE 10A	. LAME DE FUSIBLE	8					
29B	2527-1017	. FUSE;BLADE 15A	. LAME DE FUSIBLE	4					
29C	2527-1018	. FUSE;BLADE 20A	. FUSIBLE	1					
29D	2527-1025	. FUSE;BLADE 30A	. FUSIBLE	1					
30	S3450983	SCREW M6X1.0X20	VIS	2					
31	S5102303	WASHER;SPRING M6	RONDELLE ELASTIQUE	2					
32	2510-1010	BOX ASS'Y;FUSE (2)	BOITE ELECTRIQUE	1					
32A	2527-1016	. FUSE;BLADE 10A	. LAME DE FUSIBLE	8					
32B	2527-1017	. FUSE;BLADE 15A	. LAME DE FUSIBLE	4					
32C	2527-1018	. FUSE;BLADE 20A	. FUSIBLE	1					
32D	2527-1025	. FUSE;BLADE 30A	. FUSIBLE	1					
33	S3450983	SCREW M6X1.0X20	VIS	2					
34	S5102303	WASHER;SPRING M6	RONDELLE ELASTIQUE	2					
37	541-00014	CAR STEREO 12V	CHAPEAU	1		1001–1211	I	541-00014A	1
	541-00014A	CAR STEREO 12V	CHAPEAU	1		1212–1750	I	K1013232	1
	K1013232	**CAR STEREO 12V**	CHAPEAU	1		**1751**–			
38	S3450823	SCREW M5X0.8X10	VIS	4					
39	S5100203	WASHER;SPRING M5	RONDELLE ELASTIQUE	4					
44	530-00213	HARNESS;STEREO	FAISCEAU	1		1001–1339	I	530-00213A	1
	530-00213A	HARNESS;STEREO	FAISCEAU	1		1340–			
46	124-00208D3	CLIP D20/M8	ATTACHE	3					
47	124-00208D4	CLIP D26/M8	ATTACHE	1					
48	124-00208D5	CLIP D32/M8	ATTACHE	4					
49	124-00208D6	CLIP D38/M8	ATTACHE	2					
50	S4012533	NUT M8X1.25	ECROU	9					
51	S5102503	WASHER;SPRING M8	RONDELLE ELASTIQUE	9					
52	S3450343	SCREW M3X0.5X10	VIS	4					
53	S5100003	WASHER;SPRING M3	RONDELLE ELASTIQUE	4					

DATE	JUN. 30, 2005
REV. NO.	EXB05-05

Fig. 1740 ELECTRIC PARTS(5)-CABIN LAMP EQUIPMENT ELECTRIQUE

Serial No. ;

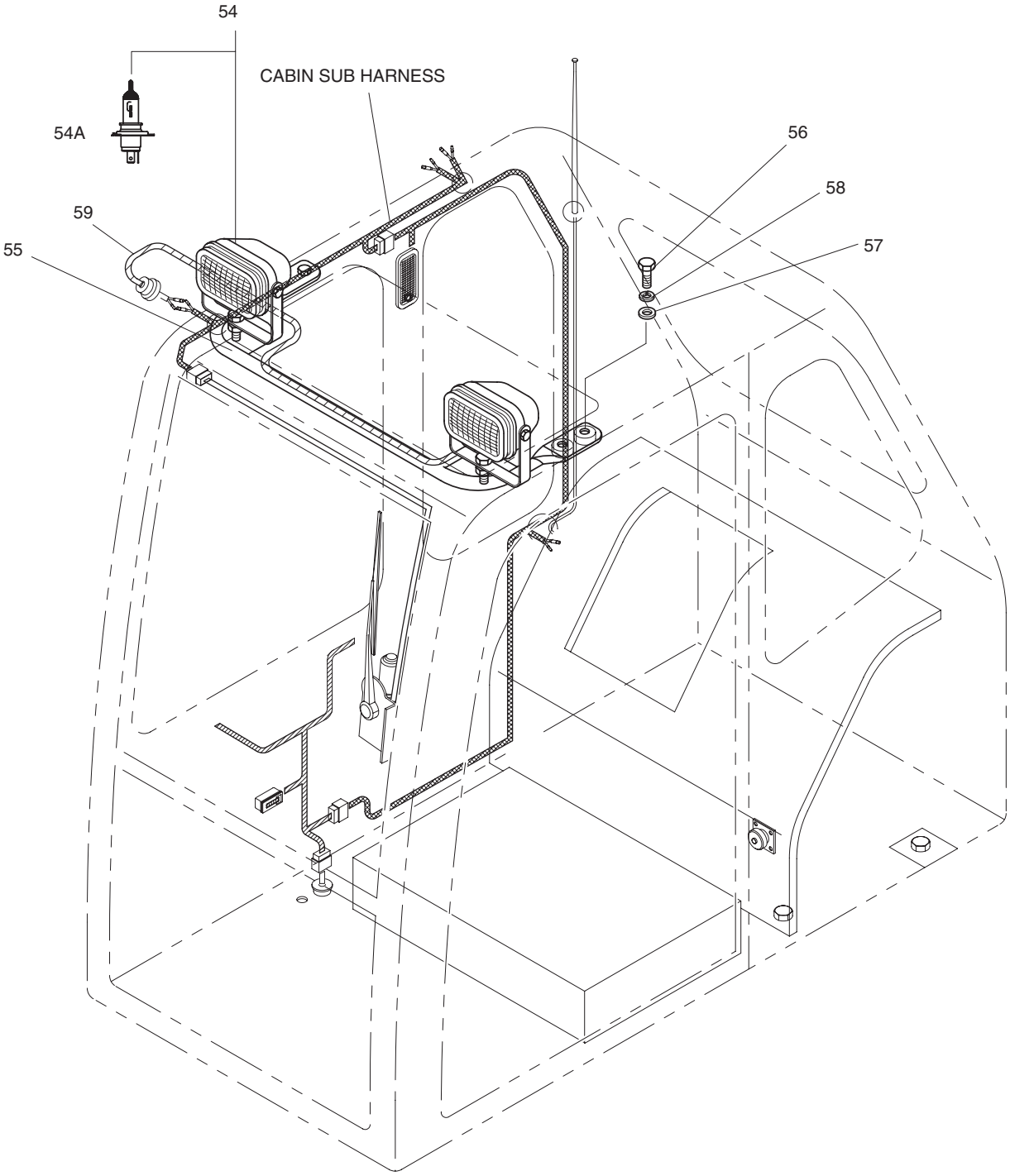

DATE	JUN. 30, 2005
REV. NO.	EXB05-05

Fig. 1740 ELECTRIC PARTS(5)-CABIN LAMP
EQUIPMENT ELECTRIQUE

Serial No ;

Key No.	Part No.	Description	Description	Q'ty	S.C	Serial No.	ICA	Replaceable part	
								Part No.	Q'ty
1740--	500-00124G	ELECTRIC PARTS(5)	EQUIPMENT ELECTRIQUE	-	D	1001–1125			
	500-00124H	ELECTRIC PARTS(5)	EQUIPMENT ELECTRIQUE	-	D	1126–1234			
	500-00124I	ELECTRIC PARTS(4)	EQUIPMENT ELECTRIQUE	-	D	1235–1319			
	500-00124J	ELECTRIC PARTS(4)	EQUIPMENT ELECTRIQUE	-	D	1320–1339			
	500-00124K	ELECTRIC PARTS(4)	EQUIPMENT ELECTRIQUE	-	D	1340–1409			
	500-00124L	ELECTRIC PARTS(4)	EQUIPMENT ELECTRIQUE	-	D	1410–1470			
	500-00124M	**ELECTRIC PARTS(4)**	EQUIPMENT ELECTRIQUE	-	D	**1471**–			
54	2534-1127	LAMP;CABIN 24VX70W	PROJECTEUR DE FLENCHE	2					
54A	2515-1022D1	. BULB;HALOGEN 24VX75W	. AMPOULE	1					
55	2197-1740B	BRACKET;CABIN LAMP	SUPPORT	1					
56	2120-2166D2	BOLT M10X1.5X25	BOULON A 6 PANS	4					
57	2114-1898D1	WASHER;PLAIN M10	RONDELLE	4					
58	2114-2031D5	WASHER;SPRING M10	RONDELLE ELASTIQUE	4					
59	2530-1611	HARNESS;CABIN LAMP	FAISCEAU	1					

DATE	JUL. 30, 2003
REV. NO.	EXB03-13

Fig. 1750 ELECTRIC PARTS(6)-BATTERY EQUIPMENT ELECTRIQUE

Serial No. ;

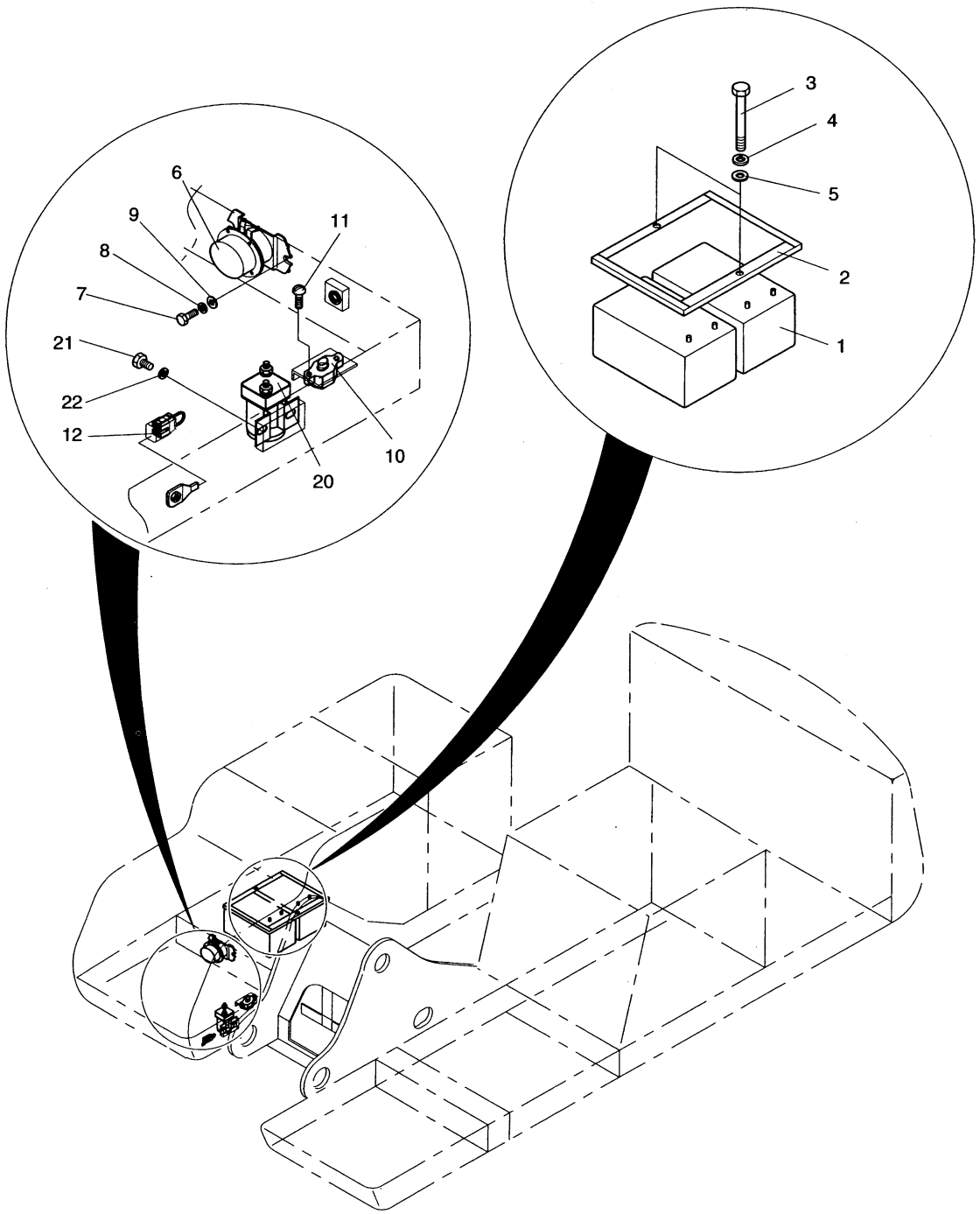

DATE	JUL. 30, 2003
REV. NO.	EXB03-13

Fig. 1750 ELECTRIC PARTS(6)-BATTERY EQUIPMENT ELECTRIQUE

Serial No ;

Key No.	Part No.	Description	Description	Q'ty	S.C	Serial No.	ICA	Replaceable part	
								Part No.	Q'ty
1750--	500-00125	ELECTRIC PARTS(6)	EQUIPMENT ELECTRIQUE	-	D				
1	2506-6008	BATTERY 150A	BATTERIE	2					
2	2197-1119	BRACKET;BATTERY	SUPPORT	1					
3	2120-1036D12	BOLT M10X1.5X240	BOULON A 6 PANS	2					
4	S5102603	WASHER;SPRING M10	RONDELLE ELASTIQUE	2					
5	S5010613	WASHER;PLAIN M10	RONDELLE PLATE	2					
6	2544-9024	RELAY;BATTERY 24V 100A	RELAIS BATTERIE	1					
7	S0509053	BOLT M8X1.25X25	BOULON A 6 PANS	2					
8	S5102503	WASHER;SPRING M8	RONDELLE ELASTIQUE	2					
9	S5010513	WASHER;PLAIN M8	RONDELLE PLATE	2					
10	2527-9004	BREAKER;CIRCUIT	COUPE-CIRCUIT	1					
11	2120-1354	SCREW	VIS	2					
12	2527-1023A	FUSIBLE LINK 27A	FUSIBLE	1					
20	2544-1022	RELAY;STARTER	RELAIS DEMARREUR	1					
21	S0504453	BOLT M6X1.0X12	BOULON A 6 PANS	2					
22	S5102303	WASHER;SPRING M6	RONDELLE ELASTIQUE	2					

DATE	JUL. 30, 2003
REV. NO.	EXB03-13

Fig. 1760 ELECTRIC PARTS(7)-ENGINE EQUIPMENT ELECTRIQUE

Serial No. ;

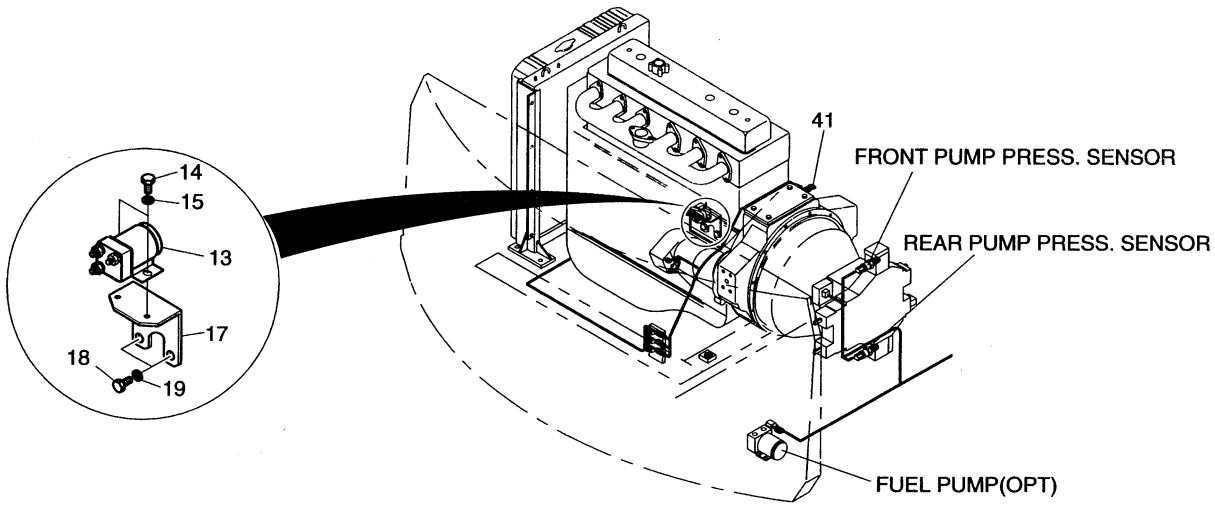

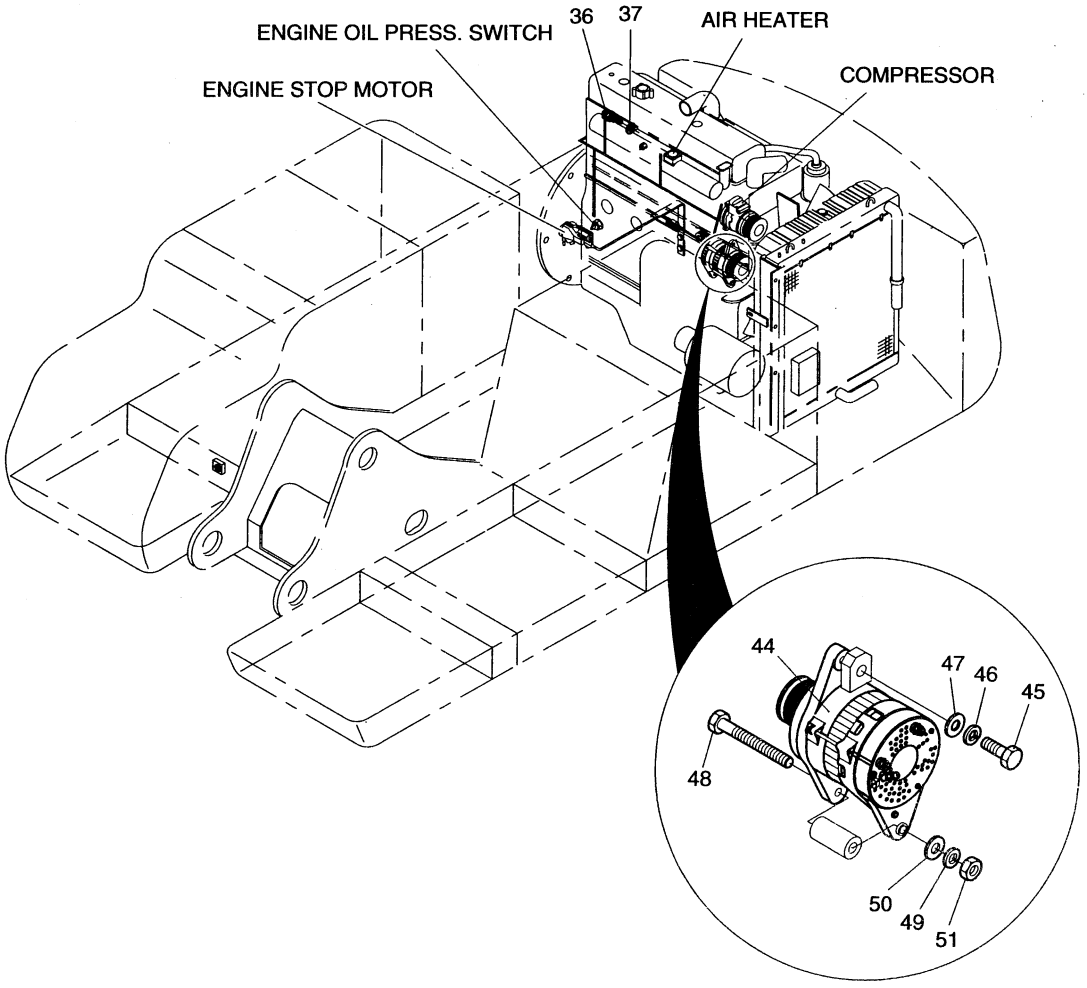

DATE	JUL. 30, 2003
REV. NO.	EXB03-13

Fig. 1760 ELECTRIC PARTS(7)-ENGINE EQUIPMENT ELECTRIQUE

Serial No ;

Key No.	Part No.	Description	Description	Q'ty	S.C	Serial No.	ICA	Replaceable part	
								Part No.	Q'ty
1760--	500-00125	ELECTRIC PARTS(7)	EQUIPMENT ELECTRIQUE	-	D				
13	544-00007	RELAY;PREHEAT	RELAIS DE	1					
14	S0504453	BOLT M6X1.0X12	BOULON A 6 PANS	2					
15	S5102303	WASHER;SPRING M6	RONDELLE ELASTIQUE	2					
17	4197-1954	BRACKET;RELAY	SUPPORT	1					
18	S0686151	BOLT M12X1.5X25	BOULON A 6 PANS	2					
19	S5102703	WASHER;SPRING M12	RONDELLE ELASTIQUE	2					
36	2547-9038B	SENSOR;WATER TEMP	CAPTEUR	1					
37	S8180251	PACKING	RONDELLE D'ETANCHEITE	1					
41	2547-1015	SENSOR;ENG SPEED	CAPTEUR	1					
44	2502-9009	ALTERNATOR 25V 50A	ALTERNATEUR	1					
45	S0786653	BOLT M12X1.5X55	BOULON A 6 PANS	1					
46	S5102703	WASHER;SPRING M12	RONDELLE ELASTIQUE	1					
47	2114-1058D54	WASHER M12	RONDELLE	1					
48	S0562653	BOLT M12X1.75X160	BOULON A 6 PANS	1					
49	S5102703	WASHER;SPRING M12	RONDELLE ELASTIQUE	1					
50	S5010713	WASHER;PLAIN M12	RONDELLE PLATE	1					
51	S4012733	NUTM12X1.75	ECROU	1					

DATE	JUL. 30, 2003
REV. NO.	EXB03-13

Fig. 1770 ALTERNATOR
ALTERNATEUR

Serial No. ;

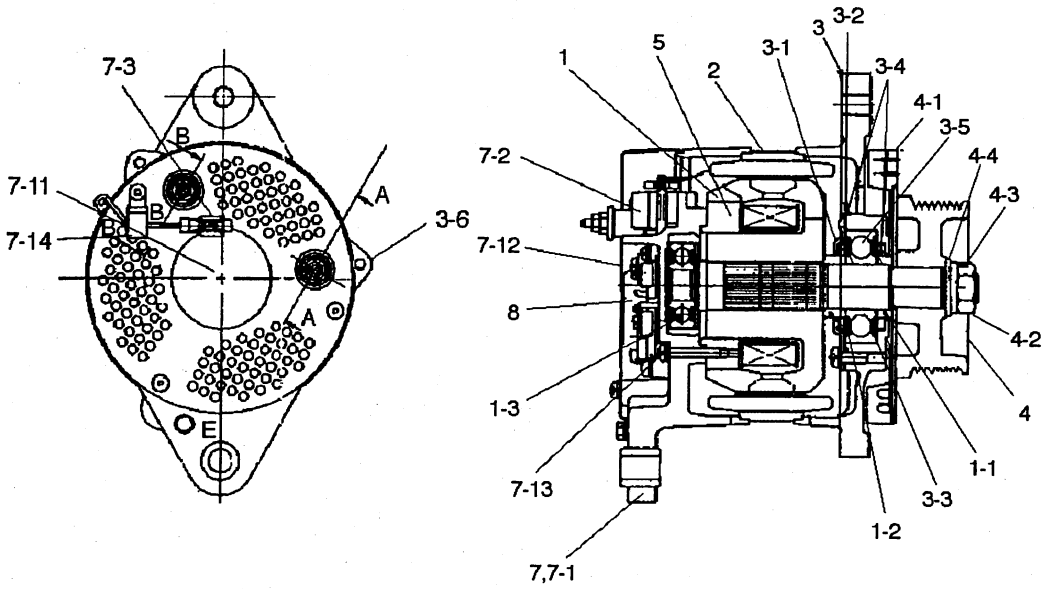

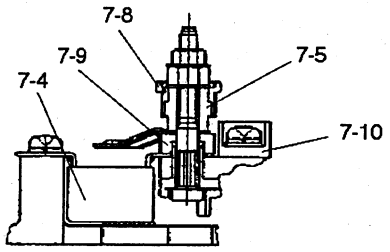

SECTION A–A

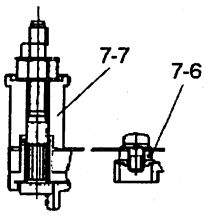

SECTION B–B

DATE	JUL. 30, 2003
REV. NO.	EXB03-13

Fig. 1770 ALTERNATOR ALTERNATEUR

Serial No ;

Key No.	Part No.	Description	Description	Q'ty	S.C	Serial No.	ICA	Replaceable part	
								Part No.	Q'ty
1770--	2502-9009	ALTERNATOR	ALTERNATEUR	1					
1	0-35100-0300	ROTOR ASS'Y	ROTOR	1					
1-1	1-33923-0790	. COLLAR	. BRIDE	1					
1-2	0-35923-0160	. COLLAR	. BAGUE	1					
1-3	0-09201-0980	. BEARING;BALL	. PALIER	1					
2	0-35200-0440	STATOR ASS'Y	STATOR	1					
3	0-35300-0310	F. BRACKET ASS'Y	SUPPORT	1					
3-1	0-35926-0070	. RETAINER	. BAGUE DE SOUTIEN	1					
3-2	0-35926-0090	. RETAINER	. BAGUE DE SOUTIEN	1					
3-3	1-33926-0730	. RETAINER	. BAGUE	1					
3-4	0-35951-0060	. PACKING	. JOINT	2					
3-5	0-09201-1140	. BEARING;BALL	. PALIER	1					
3-6	0-0275-06802	. BOLT	. BOULON A 6 PANS	3					
4	0-35411-0870	PULLEY	POULIE	1					
4-1	0-35421-0170	. FAN	. VENTILATEUR	1					
4-2	0-0280-16022	. NUT	. ECROU	1					
4-3	1-0335-16002	. WASHER;SPRING	. RONDELLE	1					
4-4	1-0330-16012	. WASHER;PLAIN	. RONDELLE	1					
5	0-35120-0230	COIL;FIELD	COIL	1					
7	0-35700-0890	R. BRACKET ASS'Y	SUPPORT	1					
7-1	0-35710-1090	. BRACKET;REAR	. SUPPORT	1					
7-2	0-35730-0510	. RECTIFIER ASS'Y	. RECTIFIER	1					
7-3	0-35780-0750	. TERMINAL ASS'Y	. COSSE	1					
7-4	0-09170-2501	. CONDENSER	. CONDENSEUR	1					
7-5	0-35923-0130	. COLLAR	. BAGUE	1					
7-6	0-35923-0200	. COLLAR	. BAGUE	1					
7-7	0-35943-0140	. BUSH;INSULATE	. DOUILLE	1					
7-8	0-35943-0150	. BUSH;INSULATE	. DOUILLE	1					
7-9	0-35943-0160	. BUSH;INSULATE	. DOUILLE	1					
7-10	0-35943-0170	. BUSH;INSULATE	. DOUILLE	1					
7-11	1-33953-0150	. BUSH;GUM	. DOUILLE	1					
7-12	0-35761-0250	. COVER	. COUVERCLE	1					
7-13	0-0056-05302	. SCREW	. VIS	3					
7-14	1-33931-0021	. CLIP	. ATTACHE	1					
8	0-35719-0200	REGULATOR ASS'Y	REGULATEUR	1					

DATE	DEC. 22, 2003
REV. NO.	EXB03-15

Fig. 1780 ELECTRIC PARTS(8)-RELATED PARTS EQUIPMENT ELECTRIQUE

Serial No. ;

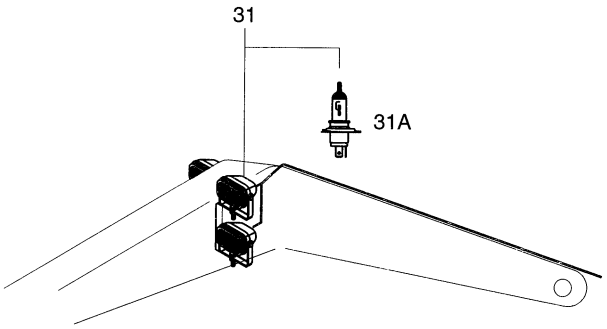

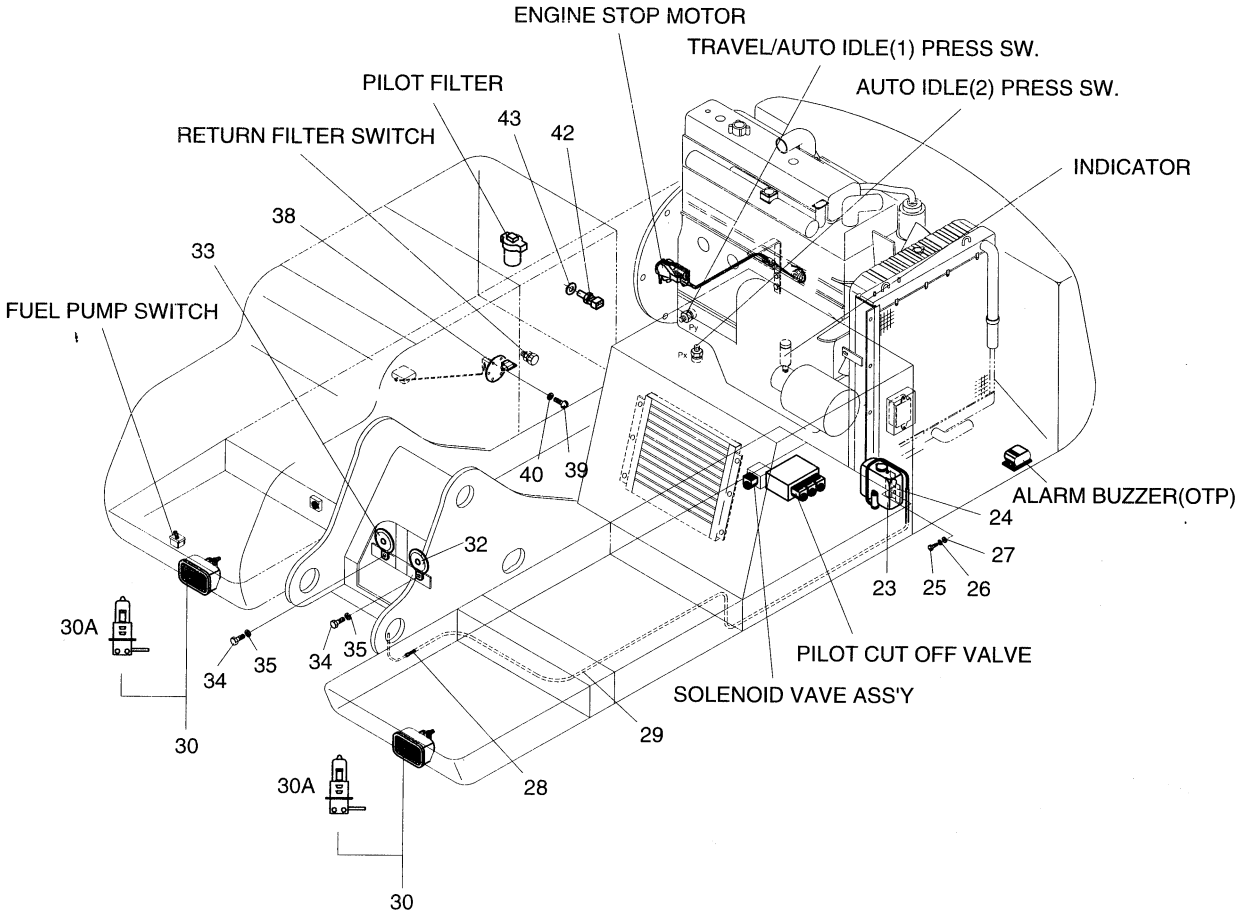

DATE	DEC. 22, 2003
REV. NO.	EXB03-15

Fig. 1780 ELECTRIC PARTS(8)-RELATED PARTS EQUIPMENT ELECTRIQUE

Serial No ;

Key No.	Part No.	Description	Description	Q'ty	S.C	Serial No.	ICA	Replaceable part	
								Part No.	Q'ty
1780--	500-00125	ELECTRIC PARTS(8)	EQUIPMENT ELECTRIQUE	-	D				
23	2554-9005A	WINDOW-WASHER	RONDELLE	1					
24	2195-1534	BRACKET	SUPPORT	1					
25	S0504453	BOLT M6X1.0X12	BOULON A 6 PANS	2					
26	S5102303	WASHER;SPRING M6	RONDELLE ELASTIQUE	2					
27	S5010313	WASHER;PLAIN M6	RONDELLE	2					
28	2415-1018	ADAPTER;HOSE	RACCORD ADAPTEUR	1					
29	2185-1681D4	TUBE;CORRUGATE	TUYAU FLEXIBLE	1					
30	534-00063	LAMP;HEAD	PROJECTEUR DE FLENCHE	2					
30A	2515-1016D4	. BULB;HALOGEN	. AMPOULE	1					
31	534-00064	LAMP;WORKING	PROJECTEUR DE FLENCHE	4					
31A	2515-1022D1	. BULB;HALOGEN	. AMPOULE	1					
32	516-00014	HORN;HIGH	AVERTISSEUR	1					
33	516-00015	HORN;LOW	AVERTISSEUR	1					
34	S0508653	BOLT M8X1.25X16	BOULON A 6 PANS	2					
35	S5102503	WASHER;SPRING M8	RONDELLE ELASTIQUE	2					
38	2547-9035	SENSOR;FUEL	CAPTEUR	1		1001-1190	I	2547-9035A	1
	2547-9035A	**SENSOR;FUEL**	CAPTEUR	1		**1191-**			
39	S3450833	BOLT M5X0.8X12	BOULON A 6 PANS	6					
40	S5100203	WASHER;SPRING M5	RONDELLE ELASTIQUE	6					
42	2547-9038B	SENSOR;OIL TEMP	CAPTEUR	1					
43	S8180251	PACKING	RONDELLE D'ETANCHEITE	1					

DATE	JUL. 30, 2003
REV. NO.	EXB03-13

Fig. 1790 ELECTRIC WIRING(1)-BATTERY
POSE DE FILES ELECTRIQUES

Serial No. ;

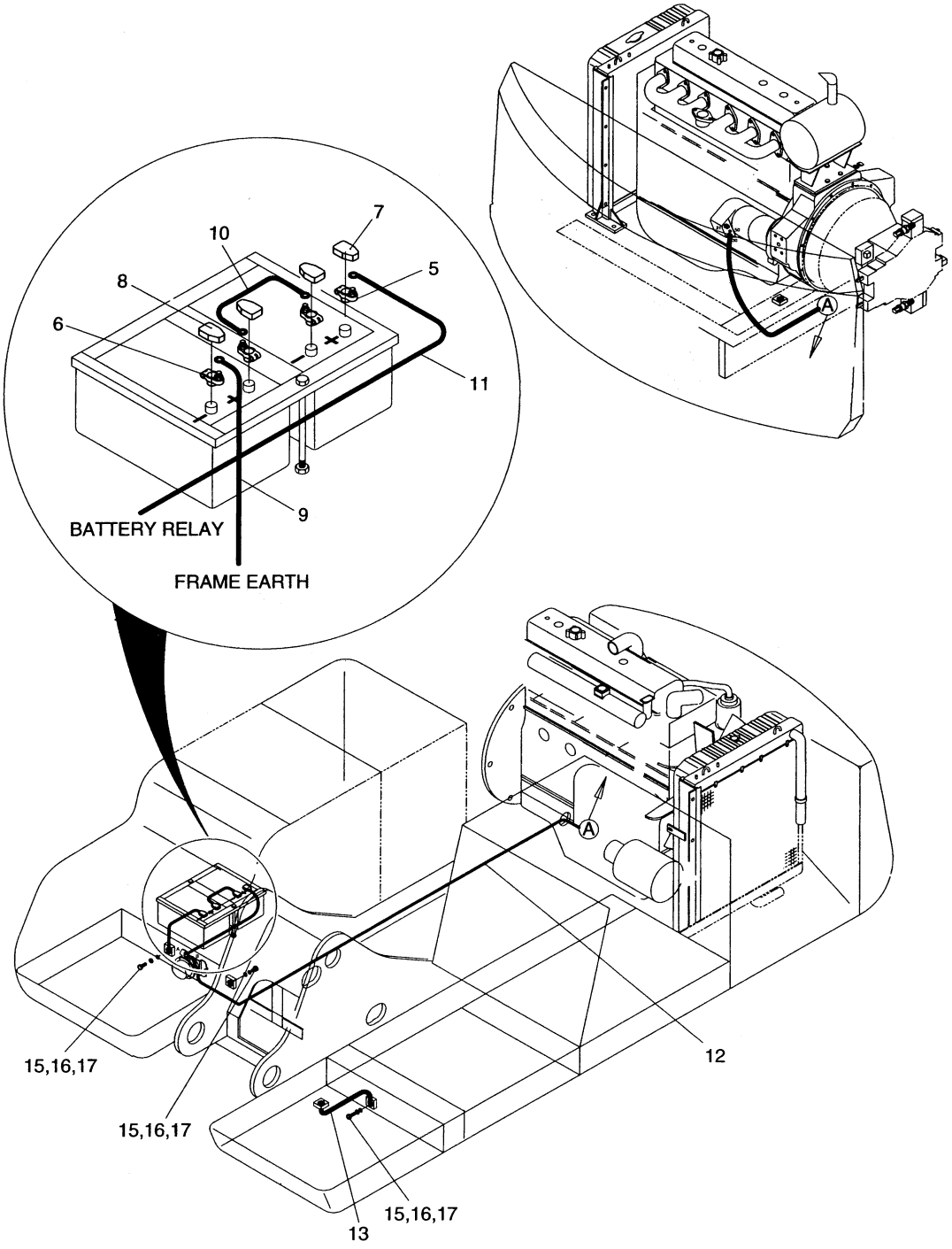

DATE	JUL. 30, 2003
REV. NO.	EXB03-13

Fig. 1790 ELECTRIC WIRING(1)-BATTERY
POSE DE FILES ELECTRIQUES

Serial No ;

Key No.	Part No.	Description	Description	Q'ty	S.C	Serial No.	ICA	Replaceable part	
								Part No.	Q'ty
1790--	500-00126	ELECTRIC WIRING(1)	EQUIPMENT ELECTRIQUE	-	D				
5	2550-1014D1	TERMINAL;BATTERY(+)	COSSE DE BATTERIE(+)	2					
6	2550-1014D2	TERMINAL;BATTERY(-)	COSSE DE BATTERIE(-)	2					
7	2160-1212	CAP;BATT. TML (+) RED	CHAPEAU DO COSSE DE	2					
8	2160-1213	CAP;BATT. TML (-) BLACK	CHAPEAU DO COSSE DE	2					
9	2553-1275D1	CABLE;BATT-EARTH	CABLE	1					
10	2553-1275D2	CABLE;BATT-BATT	CABLE	1					
11	2553-1275D50	CABLE;BATT-BATT RELAY	CABLE	1					
12	2553-1275D47	CABLE;BATT RY-STARTER	CABLE	1					
13	2553-1275D5	CABLE;FL PLATE-EARTH	CABLE	1					
15	S0511653	BOLT M10X1.5X16	BOULON A 6 PANS	4					
16	S5102603	WASHER;SPRING M10	RONDELLE ELASTIQUE	4					
17	S5010613	WASHER;PLAIN M10	RONDELLE	4					

DATE	JUN. 30, 2007
REV. NO.	EXB07-06

Fig. 1800 ELECTRIC WIRING(2)-ENGINE
POSE DE FILES ELECTRIQUES

Serial No. ;

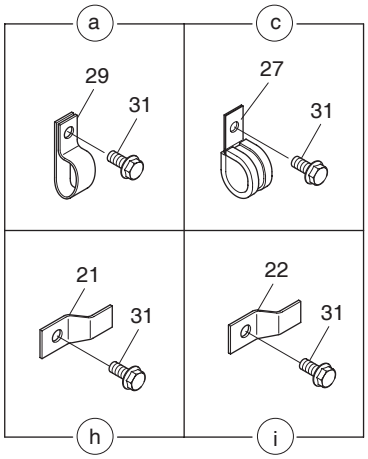

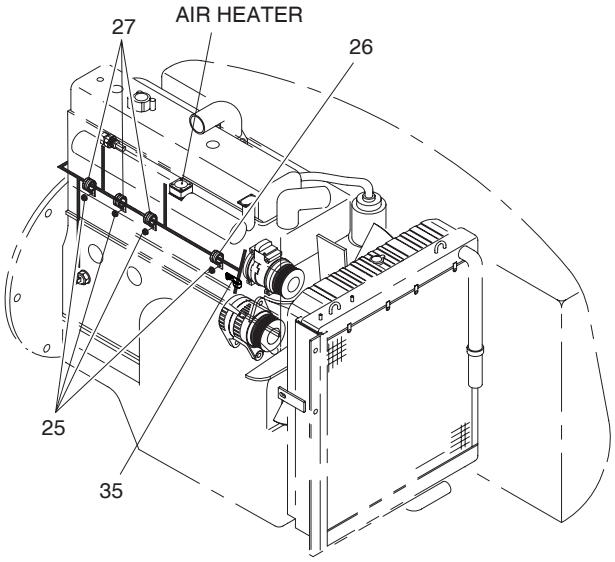

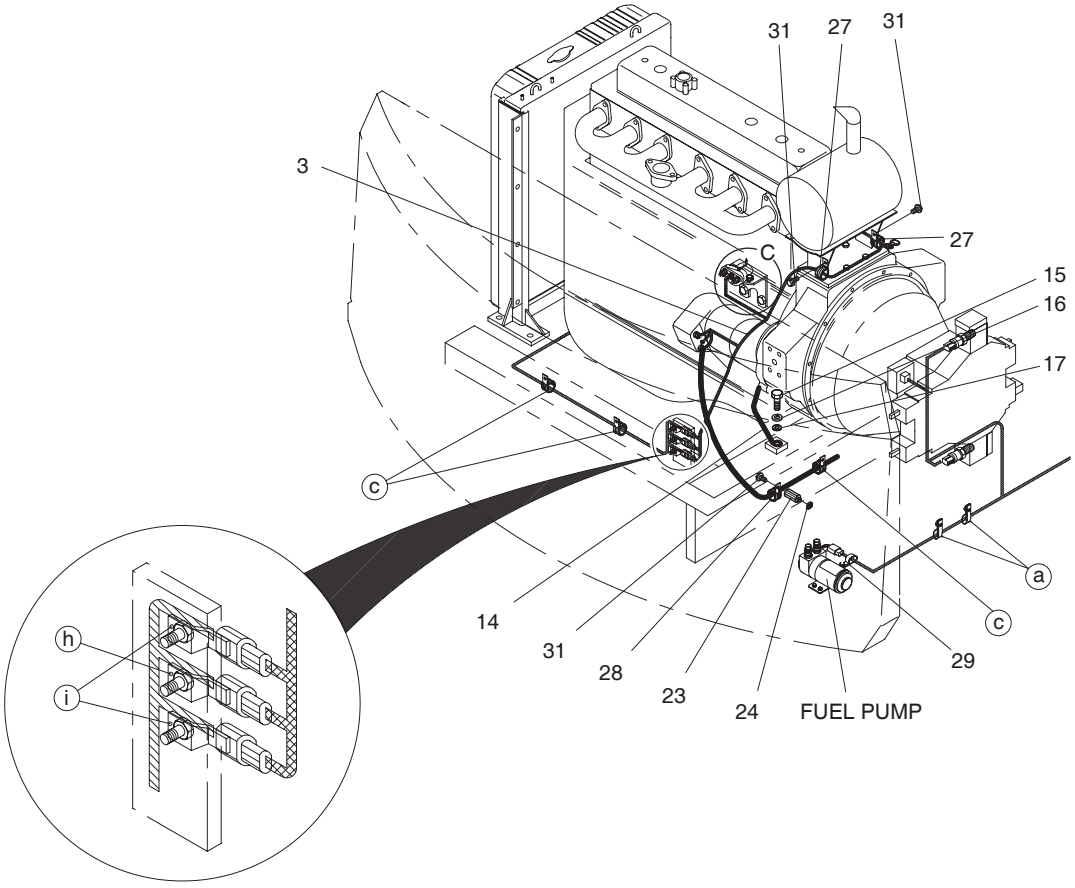

DATE	JUN. 30, 2007
REV. NO.	EXB07-06

Fig. 1800 ELECTRIC WIRING(2)-ENGINE
POSE DE FILES ELECTRIQUES

Serial No. ;

Key No.	Part No.	Description	Description	Q'ty	S.C	Serial No.	ICA	Replaceable part	
								Part No.	Q'ty
1800--	500-00126	ELECTRIC WIRING(2)	EQUIPMENT ELECTRIQUE	-	D				
3	530-00229B	HARNESS;ENGINE	FAISCEAU	1		1001–1792	I	530-00229C	1
	530-00229C	**HARNESS;ENGINE**	FAISCEAU	1		**1793–**			
3A	2548-1027	. DIODE ASS'Y	. DIODE	2					
14	2553-1261D53	CABLE;ENGINE-EARTH	CABLE	1					
15	S0511653	BOLT M10X1.5X16	BOULON A 6 PANS	1					
16	S5102603	WASHER;SPRING M10	RONDELLE ELASTIQUE	1					
17	S5010613	WASHER;PLAIN M10	RONDELLE	1					
21	2197-1660	BRACKET;HOUSING	SUPPORT	1					
22	2197-1661	BRACKET;HOUSING	SUPPORT	2					
23	2120-2187	BOLT;STUD M8X1.25X12	BOULON DE PLOT	1					
24	S5102503	WASHER;SPRING M8	RONDELLE ELASTIQUE	1					
25	2121-1305	NUT M8X1.25	ECROU	3					
26	124-00208D2	CLIP	ATTACHE	1					
27	124-00208D3	CLIP	ATTACHE	9					
28	124-00208D4	CLIP	ATTACHE	4					
29	2124-1509D1	CLIP	ATTACHE	3					
31	120-00276	BOLT M8X1.25X10	BOULON A 6PANS	9					
35	2124-1353D3	CLIP	ATTACHE	1					

DATE	JUN. 30, 2004
REV. NO.	EXB04-04

Fig. 1810 ELECTRIC WIRING(3)-RELATED PARTS
POSE DE FILES ELECTRIQUES

Serial No. ;

1 WIRING DIAGRAM

32

33

34

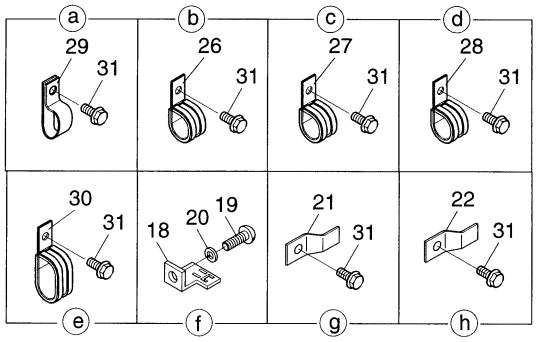

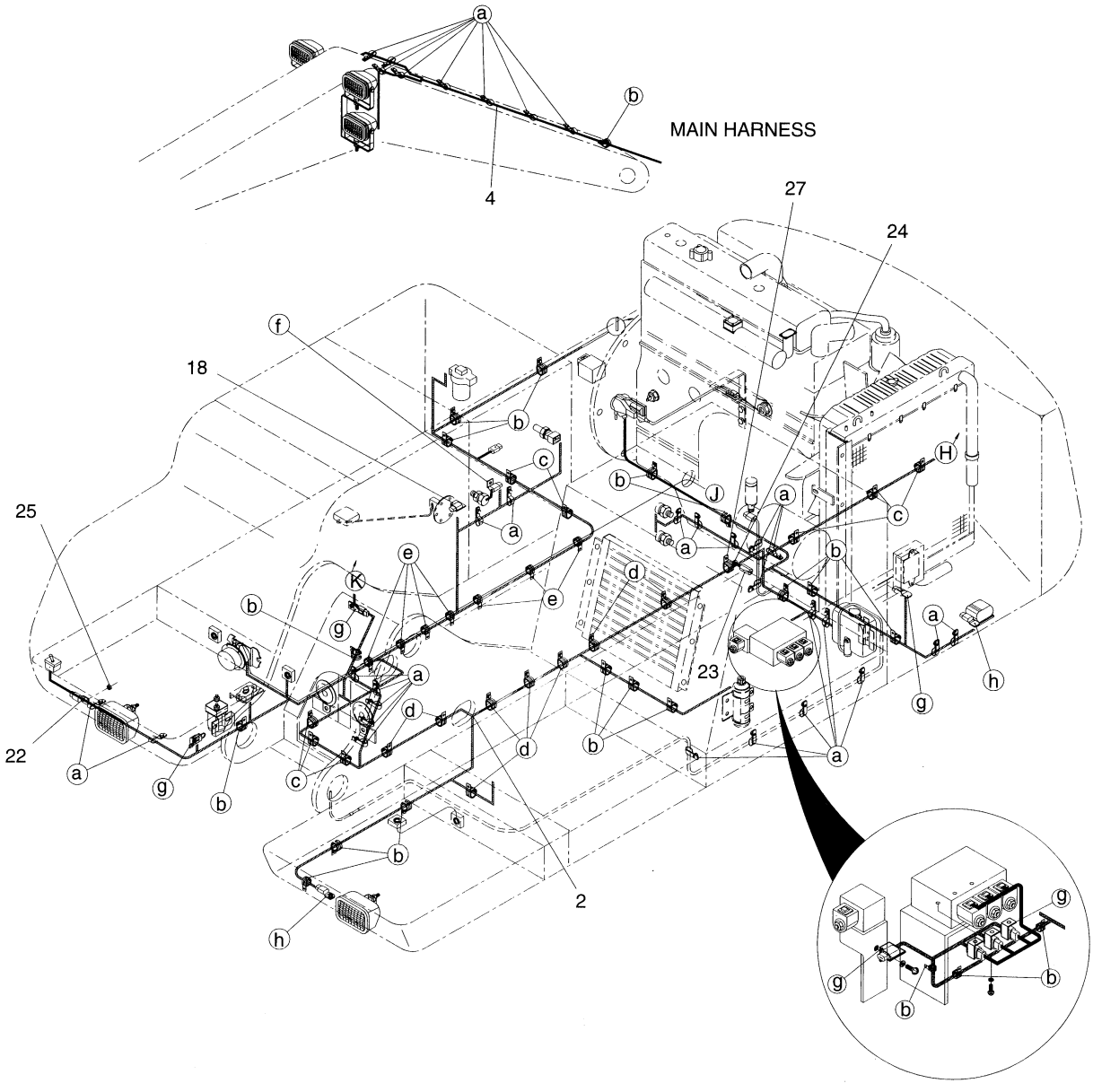

DATE	JUN. 30, 2004
REV. NO.	EXB04-04

Fig. 1810 ELECTRIC WIRING(3)-RELATED PARTS
POSE DE FILES ELECTRIQUES

Serial No ;

Key No.	Part No.	Description	Description	Q'ty	S.C	Serial No.	ICA	Replaceable part	
								Part No.	Q'ty
1810--	500-00126	ELECTRIC WIRING(3)	EQUIPMENT ELECTRIQUE	-	D				
1	599-00039	WIRING DIAGRAM	DIAGRAM DE CIRCUIT	1	D	1001–1304			
	599-00039A	**WIRING DIAGRAM**	DIAGRAM DE CIRCUIT	1	D	**1305–**			
2	530-00228A	HARNESS;MAIN	FAISCEAU	1					
2A	2548-1027	. DIODE ASS'Y	. DIODE	7					
2B	548-00003	. DIODE ASS'Y	. DIODE	1					
4	530-00247B	HARNESS;WORKING LAMP	FAISCEAU	1					
18	2195-3500	BRACKET;HOUSING	SUPPORT	6					
19	S3450953	SCREW	VIS	5					
20	S5102303	WASHER;SPRING M6	RONDELLE ELASTIQUE M6	5					
21	2197-1660	BRACKET;HOUSING	SUPPORT	3					
22	2197-1661	BRACKET;HOUSING	SUPPORT	3					
23	2120-2187	BOLT;STUD M8X1.25X12	BOULON DE PLOT	1					
24	S5102503	WASHER;SPRING M8	RONDELLE ELASTIQUE	1					
25	2121-1305	NUT M8X1.25	ECROU	1					
26	124-00208D2	CLIP	ATTACHE	20					
27	124-00208D3	CLIP	ATTACHE	9					
28	124-00208D4	CLIP	ATTACHE	8					
29	2124-1509D1	CLIP	ATTACHE	31					
30	124-00209D1	CLIP	ATTACHE	7					
31	120-00276	BOLT M8X1.25X10	BOULON A 6PANS	80					
32	2124-1622D1	CLIP;BAND	ATTACHE	10					
33	2124-1622D2	CLIP;BAND	ATTACHE	15					
34	2124-1622D3	CLIP;BAND	ATTACHE	10					

DATE	JUN. 30, 2004
REV. NO.	EXB04-04

Fig. 1820 AIRCONDITIONER(1) REFRIGERATION

Serial No. ;

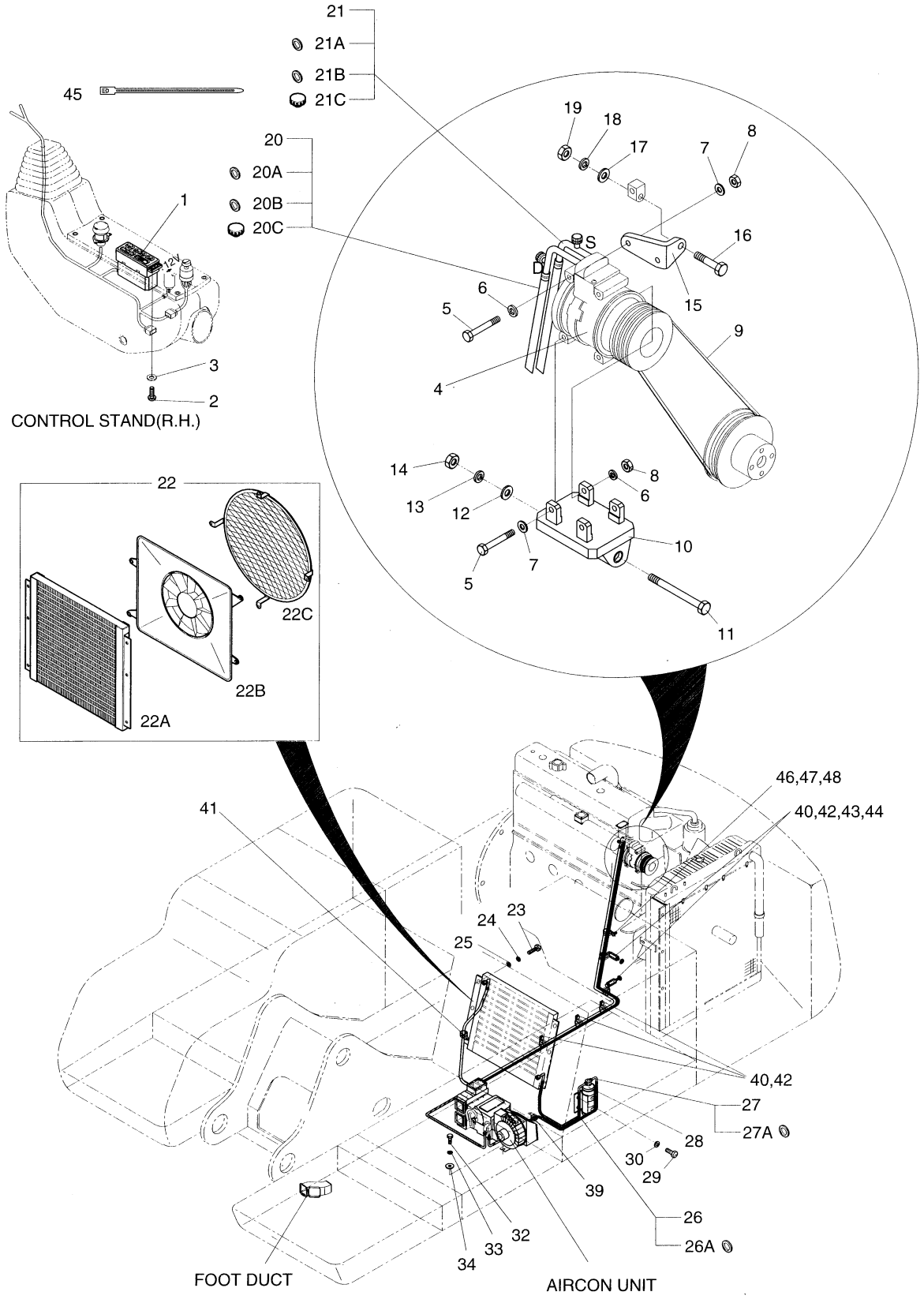

DATE	JUN. 30, 2004
REV. NO.	EXB04-04

Fig. 1820 AIRCONDITIONER(1) REFRIGERATION

Serial No ;

Key No.	Part No.	Description	Description	Q'ty	S.C	Serial No.	ICA	Replaceable part	
								Part No.	Q'ty
1820--	920-00069	COOLER & HEATER	REFRIGERATION	-	D				
1	543-00049	PANEL;AIRCON CONTROL	PANNEAU	1					
2	S3450583	SCREW M4X0.7X12	VIS	4					
3	S5000113	WASHER;PLAIN M4	RONDELLE PLATE	4					
4	2208-6013B	COMPRESSOR 4PK	COMPRESSEUR	1					
5	S0557453	BOLT M8X1.25X105	BOULON A 6PANS	4					
6	S5102503	WASHER;SPRING M8	RONDELLE ELASTIQUE	4					
7	S5010513	WASHER;PLAIN M8	RONDELLE M8	4					
8	S4012533	NUT M8	ECROU	4					
9	2106-1019D2	V-BELT 4PK 1470L	COURROIE	1					
10	195-01543	BRACKET;COMPRESSOR(LOW)	SUPPORT	1					
11	S0560361	BOLT M10X1.5X150	BOULON A 6PANS	1					
12	S5010613	WASHER;PLAIN M10	RONDELLE PLATE	1					
13	S5102603	WASHER;SPRING M10	RONDELLE ELASTIQUE	1					
14	S4012633	NUT M10X1.5	ECROU	1					
15	2197-2079	BRACKET;CONDENSER(UP)	SUPPORT	1					
16	S0560853	BOLT M12X1.75X55	BOULON A 6PANS	1					
17	S5010713	WASHER;PLAIN M12	RONDELLE	1					
18	S5102703	WASHER;SPRING M12	RONDELLE ELASTIQUE	1					
19	S4012733	NUT M12X1.75	ECROU	1					
20	185-00294	HOSE;DISCHARGE-3150L	TUYAU FLEXIBLE	1					
20A	2180-6089	. O-RING(COND)	. JONT TORIQUE	1					
20B	2180-6088	. O-RING(COMP)	. JONT TORIQUE	1					
20C	1.161-00018	. CAP;CHECK PORT(H)	. CHAPEAU	1					
21	185-00276A	HOSE;SUCTION-3750L	TUYAU FLEXIBLE	1					
21A	2180-6086	. O-RING(COMP)	. JONT TORIQUE	1					
21B	2180-6087	. O-RING(EVA)	. JONT TORIQUE	1					
21C	1.161-00019	. CAP;CHECK PORT(L)	. CHAPEAU	1					
22	2520-6004	CONDENSER ASS'Y	ENSEMBLE COMPRESSEUR	1					
22A	2520-6005	. CORE ASS'Y;CONDENSER	. ENSEMBLE	1					
22B	2538-6018	. FAN MOTOR ASS'Y	. MOTEUR	1					
22C	2520-6006	. NET;CONDENSER	. ENSEMBLE	1					
23	S0512053	BOLT M10X1.5X25	BOULON A 6PANS	6					
24	S5102603	WASHER;SPRING M10	RONDELLE ELASTIQUE	6					
25	S5010613	WASHER;PLAIN M10	RONDELLE PLATE	6					
26	2185-1697D1	HOSE;LIQUID (1)	TUYAU FLEXIBLE	1					
26A	2180-6090	. O-RING	. JONT TORIQUE	2					
27	2185-1698D1	HOSE;LIQUID (2)	TUYAU FLEXIBLE	1					

DATE	JUN. 30, 2004
REV. NO.	EXB04-04

Fig. 1820 AIRCONDITIONER(1) REFRIGERATION

Serial No. ;

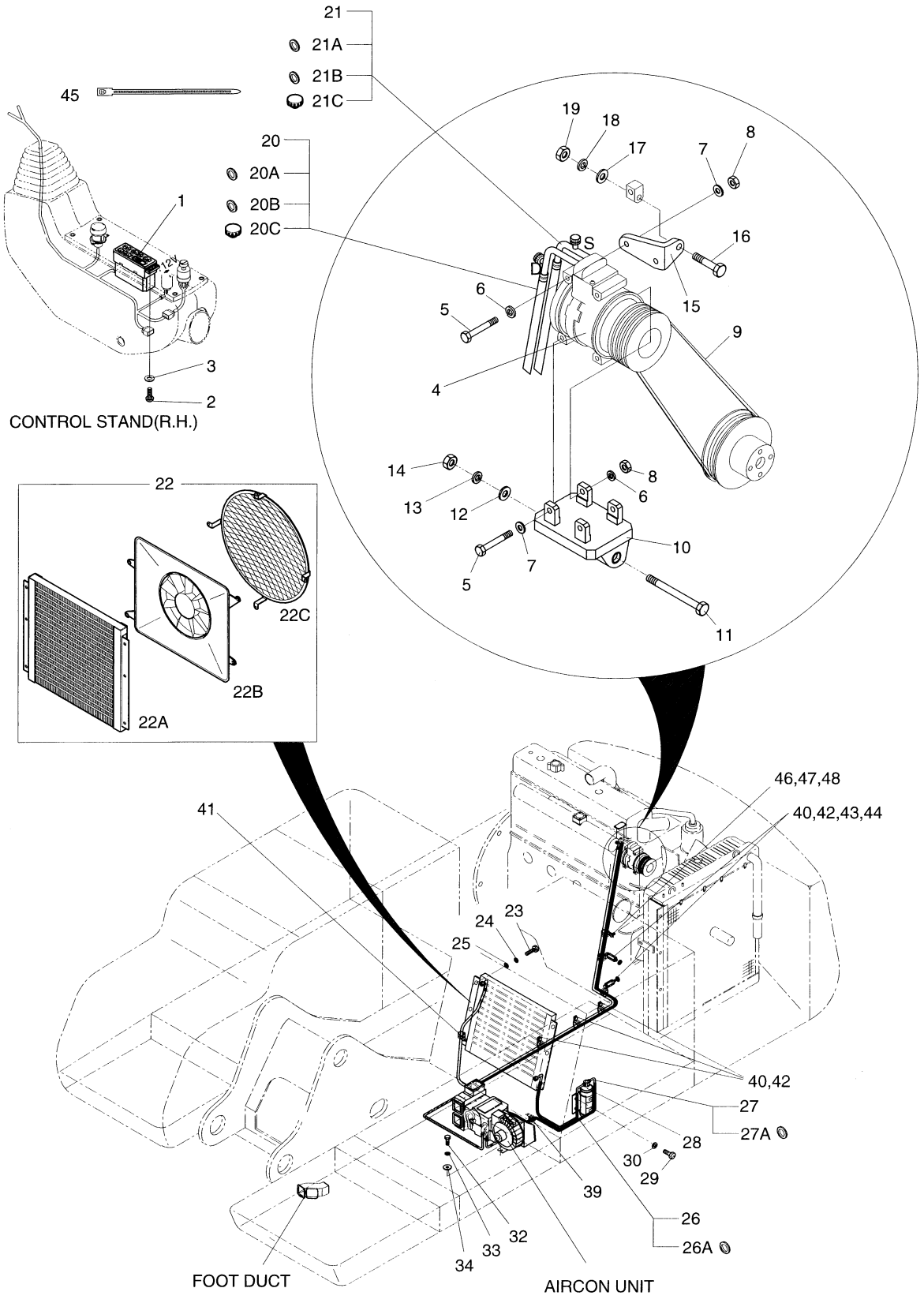

DATE	JUN. 30, 2004
REV. NO.	EXB04-04

Fig. 1820 AIRCONDITIONER(1) REFRIGERATION

Serial No ;

Key No.	Part No.	Description	Description	Q'ty	S.C	Serial No.	ICA	Replaceable part	
								Part No.	Q'ty
1820-27A	2180-6090	. O-RING	. JONT TORIQUE	2					
28	2204-6039A	RECEIVER DRIER	RESERVOIR DESSICATEUR	1					
29	S0508653	BOLT M8X1.25X16	BOULON A 6PANS	2					
30	S5102503	WASHER;SPRING M8	RONDELLE ELASTIQUE	2					
32	S0509053	BOLT M8X1.25X25	BOULON A 6PANS	6					
33	S5102503	WASHER;SPRING M8	RONDELLE ELASTIQUE	6					
34	2114-1058D29	WASHER	RONDELLE	6					
39	124-00208D3	CLIP	ATTACHE	1					
40	124-00208D7	CLIP	ATTACHE	5					
41	2124-1353D4	CLIP	ATTACHE	1					
42	120-00276	BOLT M8X1.25X12	BOULON A 6PANS	5					
43	2120-2187	BOLT;STUD M8X1.25X50	BOULON DE PLOT	2					
44	S5102503	WASHER;SPRING M8	RONDELLE ELASTIQUE	2					
45	2124-1622D3	CLIP;BAND	ATTACHE	10					
46	2124-1353D18	CLIP	ATTACHE	1					
47	S0512053	BOLT M10X1.5X25	BOULON A 6PANS	1					
48	S5102603	WASHER;SPRING M10	RONDELLE ELASTIQUE	1					

DATE	JUN. 30, 2007
REV. NO.	EXB07-06

Fig. 1830 AIRCONDITIONER(2)-AIRCON UNIT REFRIGERATION

Serial No. ;

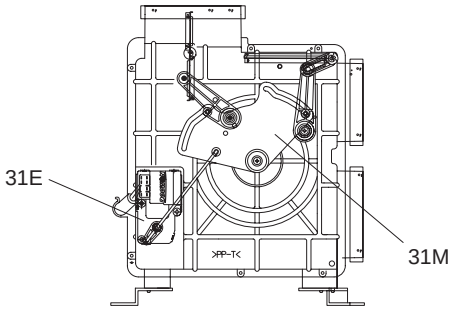

VIEW A

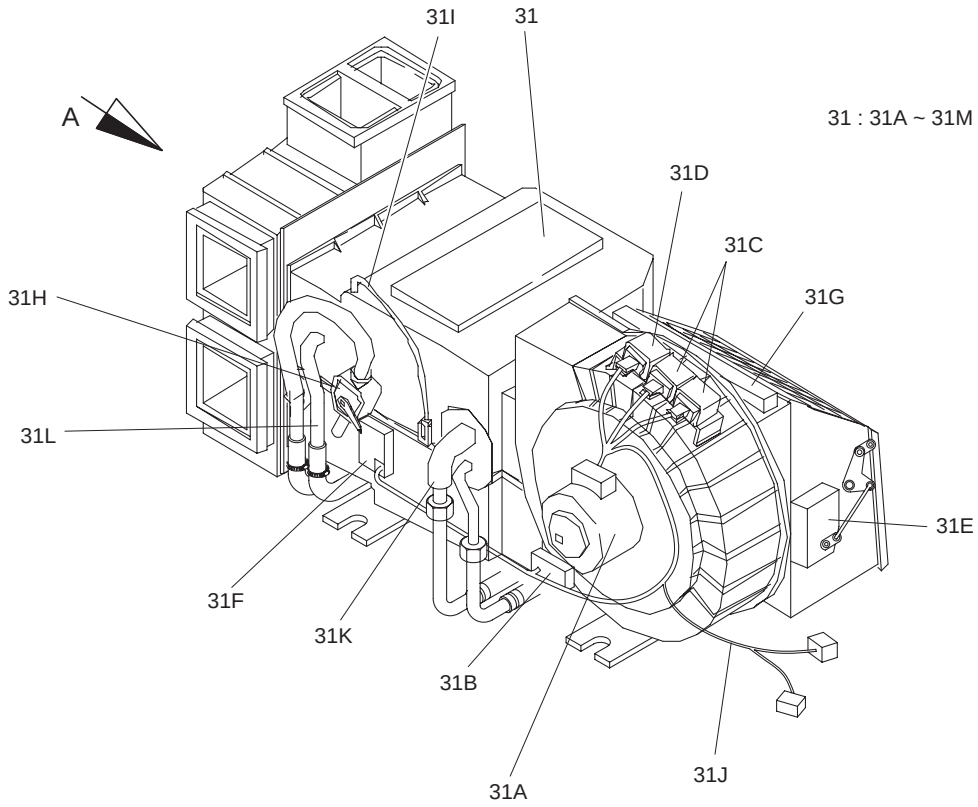

DATE	JUN. 30, 2007
REV. NO.	EXB07-06

Fig. 1830 AIRCONDITIONER(2)-AIRCON UNIT REFRIGERATION

Serial No. ;

Key No.	Part No.	Description	Description	Q'ty	S.C	Serial No.	ICA	Replaceable part	
								Part No.	Q'ty
1830--	920-00069	COOLER & HEATER	REFRIGERATION	-	D				
31	920-00020B	UNIT;AIRCON	CLE A MOLETTE	1		1001–1929	I	920-00020C	1
	920-00020C	**UNIT;AIRCON**	CLE A MOLETTE	1		**1930–**			
31A	2538-6015	. MOTOR;BLOWER 24V	. MOTEUR	1		1001–1929	I	K1040112	1
	K1040112	**. MOTOR;BLOWER 24V**	. MOTEUR	1		**1930–**			
31B	545-00003	. RESISTOR;BLOWER	. RESISTOR	1					
31C	2544-6023	. RELAY 10A	. RELAIS DEMARREUR	2					
31D	2544-6024	. RELAY 20A	. RELAIS DEMARREUR	1					
31E	2538-6016	. MOTOR;INTAKE 24V	. MOTEUR	2					
31F	2538-6017	. MOTOR;MIX 12V	. MOTEUR	1					
31G	2471-6050A	. FILTER;AIRCON	. FILTRE	1					
31H	2426-6048	. VALVE;STEM	. VANNE	1					
31I	2547-6033	. SENSOR;TEMPERATURE	. CAPTEUR REGIME	1					
31J	2530-6005A	. HARNESS;AIRCON UNIT	. FAISCEAU	1					
31K	2920-6111	. EVAPORATOR	. CHAUFFAGE	1					
31L	2920-6112	. HEATER CORE	. CHAUFFAGE	1					
31M	133-00161	. MAIN LEVER	. LEVIER	1					

DATE	JUL. 30, 2003
REV. NO.	EXB03-13

Fig. 1840 HEATER PIPING
CONDUITES DE CHAUFFAGE

Serial No. ;

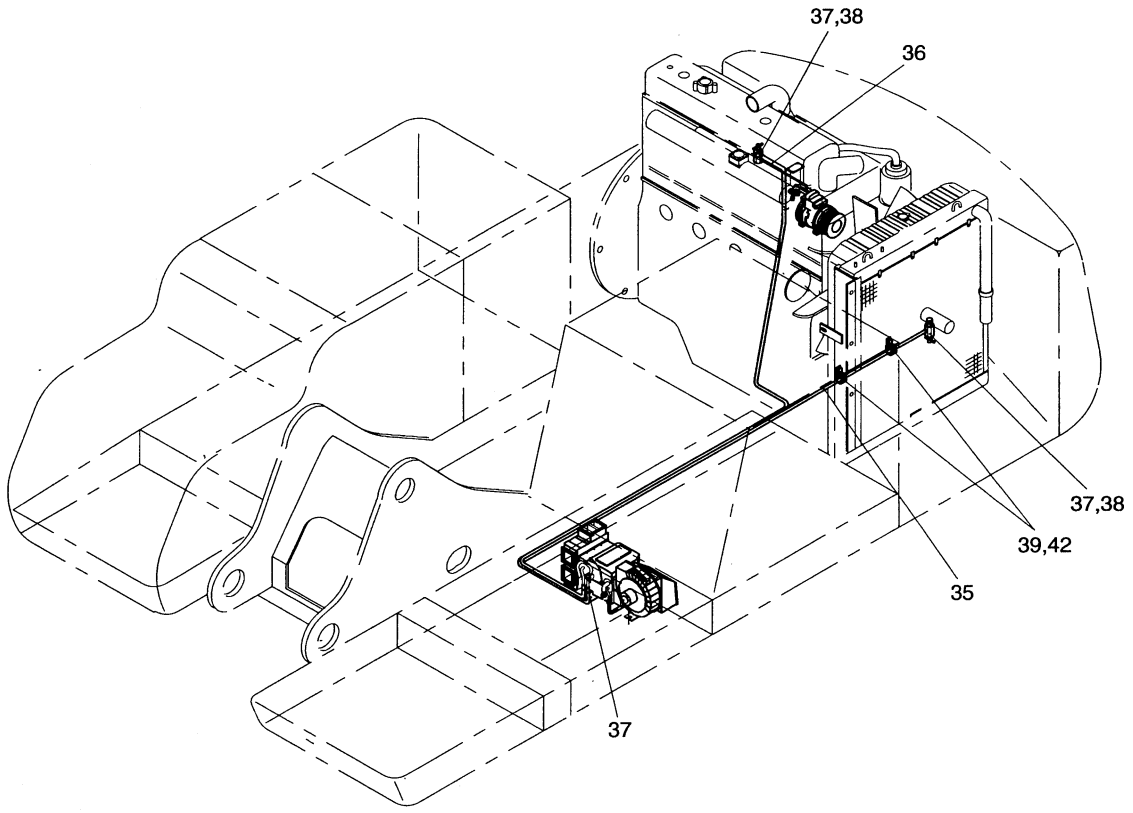

DATE	JUL. 30, 2003
REV. NO.	EXB03-13

Fig. 1840 HEATER PIPING
CONDUITES DE CHAUFFAGE

Serial No ;

Key No.	Part No.	Description	Description	Q'ty	S.C	Serial No.	ICA	Replaceable part	
								Part No.	Q'ty
1840--	920-00069	COOLER & HEATER	REFRIGERATION	-	D				
35	2185-1308D8	HOSE;RUBBER	TUYAU FLEXIBLE	1					
36	2185-1308D9	HOSE;RUBBER	TUYAU FLEXIBLE	1					
37	S8450016	CLAMP;HOSE	COLLIER	4					
38	2186-9005	COCK	ROBINET	2					
39	124-00208D3	CLIP	ATTACHE	2					
42	120-00276	BOLT M8X1.25X12	BOULON A 6PANS	2					

DATE	JUL. 30, 2003
REV. NO.	EXB03-13

Fig. 1850 NOISE FILTER ASS'Y
SILEN CIEUX FILTRE

Serial No. ;

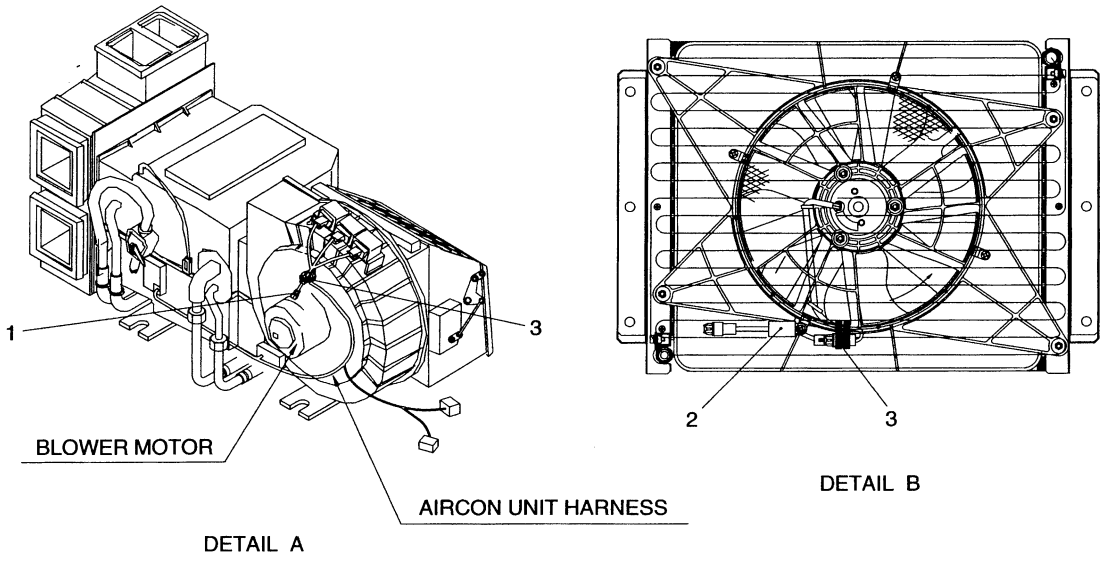

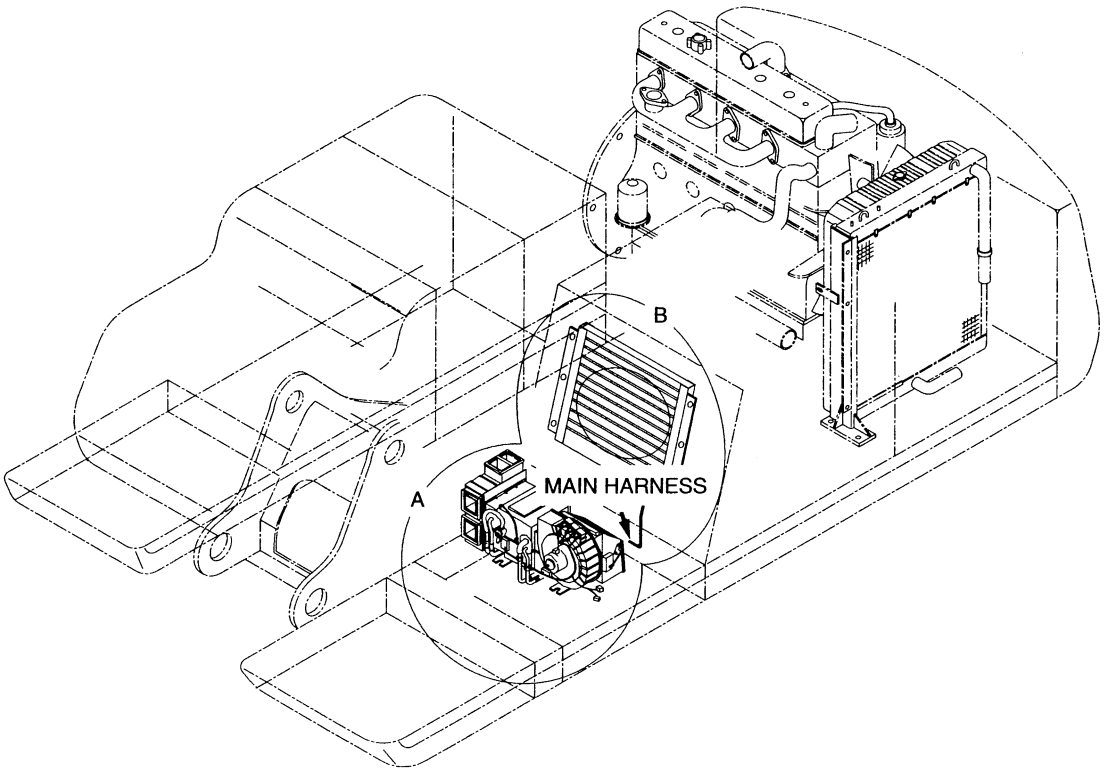

DATE	JUL. 30, 2003
REV. NO.	EXB03-13

Fig. 1850 NOISE FILTER ASS'Y SILENCIEUX FILTRE

Serial No ;

Key No.	Part No.	Description	Description	Q'ty	S.C	Serial No.	ICA	Replaceable part	
								Part No.	Q'ty
1850--	2471-1158	FILTER ASS'Y	FILTRE	-	D				
1	2471-6062	FILTER;NOISE(BLOWER)	FILTRE	1					
2	2471-6063	FILTER;NOISE(CONDENSER)	FILTRE	1					
3	2124-1622D2	BAND;CLIP 200L	ATTACHE	3					

DATE	DEC. 29, 2005
REV. NO.	EXB05-20

Fig. 2100 TRACK FRAME
TRAIN DE ROULEMENT

Serial No. ;

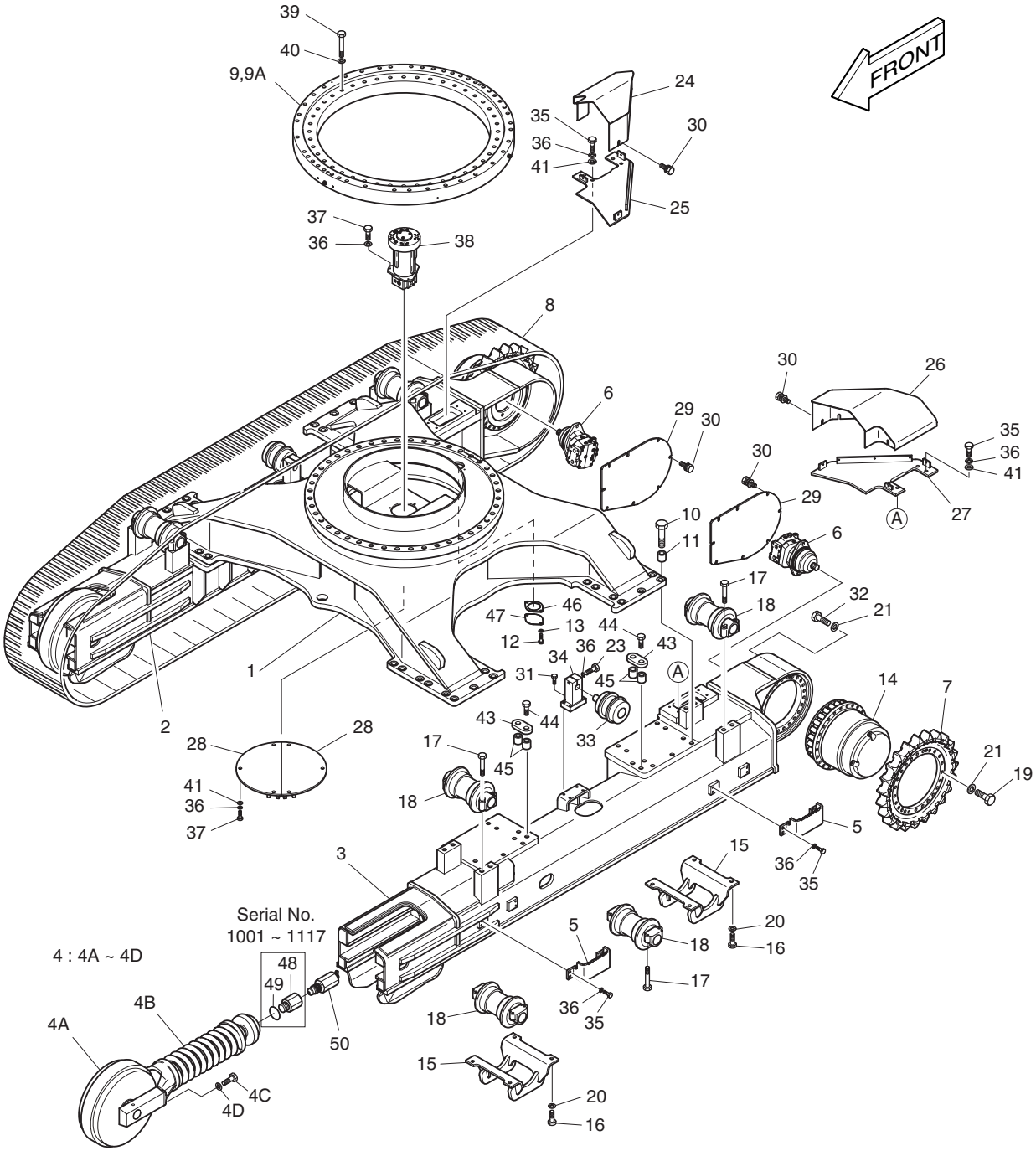

DATE	DEC. 29, 2005
REV. NO.	EXB05-20

Fig. 2100 TRACK FRAME TRAIN DE ROULEMENT

Serial No ;

Key No.	Part No.	Description	Description	Q'ty	S.C	Serial No.	ICA	Replaceable part	
								Part No.	Q'ty
2100--	604-00126	TRACK ASS'Y	TRAIN DE ROULEMENT	-	D	1001–1589			
	604-00126A	**TRACK ASS'Y**	TRAIN DE ROULEMENT	-	D	**1590–**			
1	604-00127A	FRAME;CENTER	TRAIN DE ROULEMENT	1					
2	2604-1437E	FRAME;SIDE(R.H)	TRAIN DE ROULEMENT	1		1001–1255			
	2604-1437G	FRAME;SIDE(R.H)	TRAIN DE ROULEMENT	1		1256–1404	I	2604-1437H	1
	2604-1437H	FRAME;SIDE(R.H)	TRAIN DE ROULEMENT	1		1405–1589	I	2604-1437I	1
	2604-1437I	**FRAME;SIDE(R.H)**	TRAIN DE ROULEMENT	1		**1590–**			
3	2604-1436E	FRAME;SIDE(L.H)	TRAIN DE ROULEMENT	1		1001–1255			
	2604-1436G	FRAME;SIDE(L.H)	TRAIN DE ROULEMENT	1		1256–1404	I	2604-1436H	1
	2604-1436H	FRAME;SIDE(L.H)	TRAIN DE ROULEMENT	1		1405–1589	I	2604-1436I	1
	2604-1436I	**FRAME;SIDE(L.H)**	TRAIN DE ROULEMENT	1		**1590–**			
4	-	IDLER SUB ASS'Y	ENSEMBLE BARBOTIN	2	D				
4A	2270-9405G	. IDLER ASS'Y	. ENSEMBLE BARBOTIN	1					
4B	274-00003C	. TRACK SPRING ASS'Y	. TENDEUR DE CHENILLE	1					
4C	S0570061	. BOLT M20X2.5X60	. BOULON A 6 PANS	4		1001–1180	I	S0570066	4
	S0570066	. BOLT M20X2.5X60	. BOULON A 6 PANS	4		1181–			
4D	S5103101	. WASHER;SPRING	. RONDELLE ELASTIQUE	4					
5	2625-1155AD1	STEP	MARCHER	4					
6	2401-6292A	MOTOR;TRAVEL	MOTEUR DE TRANSLATION	2					
7	108-00019	SPROCKET	COURONNE DENTEE	2		1001–1180	I	108-00019A	2
	108-00019A	SPROCKET	COURONNE DENTEE	2		1181–			
8	2272-6162D5	TRACK SHOE ASS'Y(600mm)	ENSEMBLE CHAINE	2					
9	109-00159	BEARING;SWING	PLAIER	1					
9A	180-00297D2	. SEAL	. JOINT	1					
10	120-00040	BOLT M33X3.0X140	BOULON A 6 PANS	36		1001–1297	I	120-00040A	36
	120-00040A	BOLT M33X3.0X140	BOULON A 6 PANS	36		1298–			
11	114-00049	SPACER	BAGUE D'ECARTEMENT	36					
12	S0511853	BOLT M10X1.5X20	BOULON A 6 PANS	2					
13	S5102603	WASHER;SPRING M10	REDEUTEUR	2					
14	2401-9229A	REDUCTION GEAR;TRAVEL	GUIDE	2					
15	623-00034	GUARD;LINK	GARDE	4					
16	S0530761	BOLT M22X2.5X55	BOULON A 6 PANS	16		1001–1180	I	S0530766	16
	S0530766	BOLT M22X2.5X55	BOULON A 6 PANS	16		1181–			
17	S0573361	BOLT M22X2.5X110	BOULON A 6 PANS	88		1001–1180	I	S0573366	88
	S0573366	BOLT M22X2.5X110	BOULON A 6 PANS	88		1181–			
18	2270-9404B	ROLLER;LOWER	GALET INFERIEUR	22					
19	S0570166	BOLT M22X2.5X65	BOULON A 6 PANS	48					
20	S5103203	WASHER;SPRING M22	RONDELLE ELASTIQUE	16					

DATE	DEC. 29, 2005
REV. NO.	EXB05-20

Fig. 2100 TRACK FRAME
TRAIN DE ROULEMENT

Serial No. ;

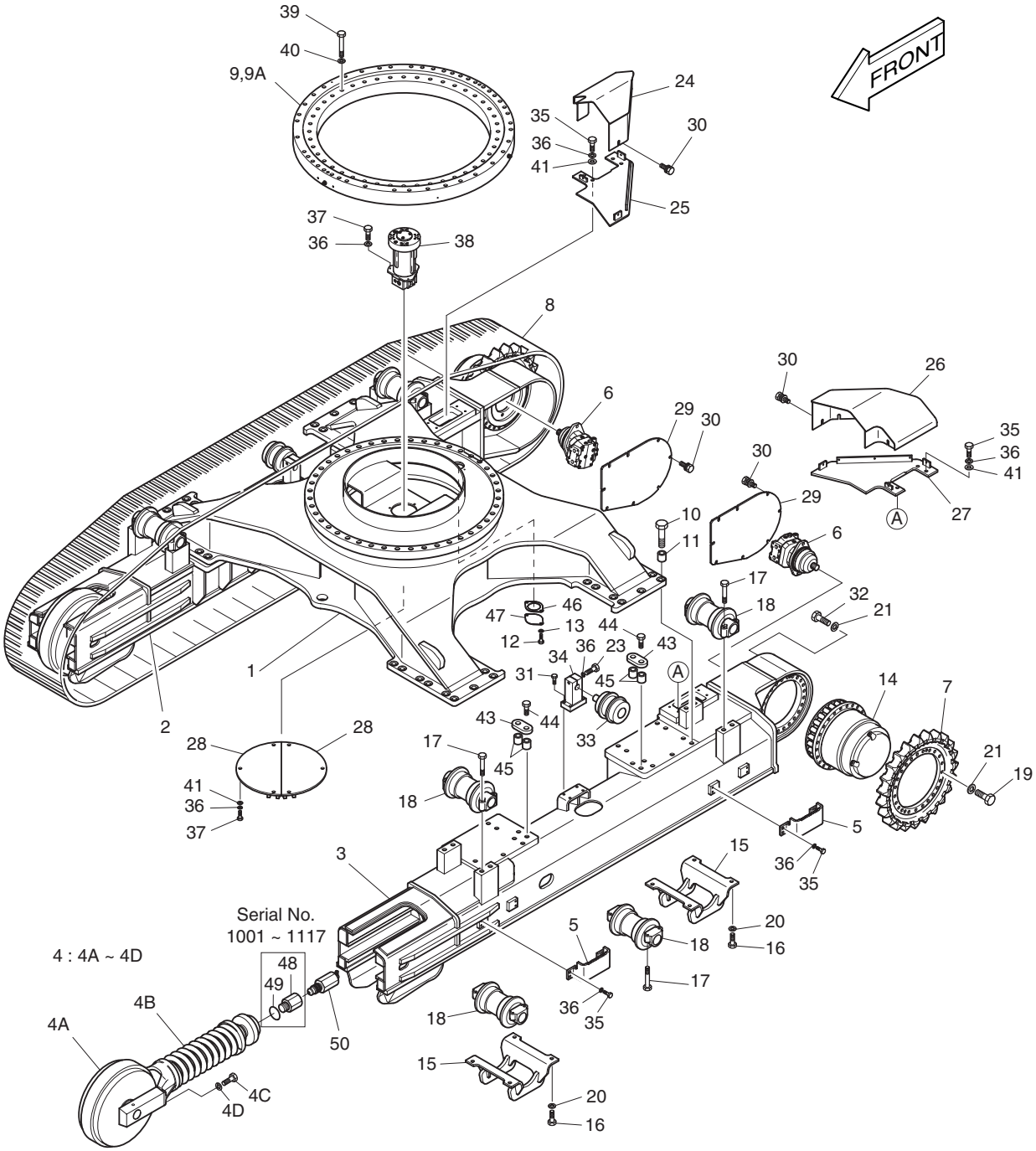

DATE	DEC. 29, 2005
REV. NO.	EXB05-20

Fig. 2100 TRACK FRAME TRAIN DE ROULEMENT

Serial No ;

Key No.	Part No.	Description	Description	Q'ty	S.C	Serial No.	ICA	Replaceable part	
								Part No.	Q'ty
2100-21	2114-9012A	WASHER;HARDEN M20	RONDELLE ELASTIQUE	96					
23	S0566066	BOLT M16X2.0X90	BOULON A 6 PANS	4					
24	2627-1892A	COVER(R.H)	COUVERCLE	1		1001–1266	I	2627-1892B	1
	2627-1892B	COVER(R.H)	COUVERCLE	1		1267–			
25	2197-2658B	BRACKET(R.H)	SUPPORT	1		1001–1266	I	2197-2658C	1
	2197-2658C	BRACKET(R.H)	SUPPORT	1		1267–			
26	2627-1891A	COVER;TR(L.H)	COUVERCLE	1		1001–1266	I	2627-1891B	1
	2627-1891B	COVER;TR(L.H)	COUVERCLE	1		1267–			
27	2197-2657B	BRACKET(L.H)	SUPPORT	1		1001–1266	I	2197-2657C	1
	2197-2657C	BRACKET(L.H)	SUPPORT	1		1267–			
28	621-01528A	COVER;CENTER FRAME	COUVERCLE	2					
29	2627-1877A	COVER	COUVERCLE	2					
30	2120-2196D10	BOLT;SET M13X1.75X25	BOULON A 6PANS	28					
31	S0565466	BOLT M16X2.0X70	BOULON A 6PANS	8					
32	S0570461	BOLT M20X2.5X80	BOULON A 6PANS	48		1001–1180	I	S0570466	48
	S0570466	BOLT M20X2.5X80	BOULON A 6PANS	48		1181–			
33	2270-9402A	ROLLER;UPPER	GALET SUPERIEUR	2					
34	2195-4619	BRACKET	SUPPORT	2					
35	S0565056	BOLT M16X2.0X40	BOULON A 6PANS	24					
36	S5102903	WASHER;SPRING M16	RONDELLE ELASTIQUE	37					
37	S0521261	BOLT M16X2.0X30	BOULON A 6PANS	9		1001–1315	I	S0521266	9
	S0521266	BOLT M16X2.0X30	BOULON A 6PANS	9		1316–			
38	2480-9405B	JOINT;CENTER	JOINT TOURNANT	1					
39	S0776261	BOLT M24X2.0X160	BOULON A 6PANS	44		1001–1315	I	S0776266	44
	S0776266	BOLT M24X2.0X160	BOULON A 6PANS	44		1316–			
40	2114-1831A	WASHER;HARD	RONDELLE	44					
41	S5010913	WASHER;PLAIN M16	RONDELLE PLATE	14					
43	621-00050	PLATE	PLAQUE	4					
44	120-00041	BOLT M33X3.0X120	BOULON A 6PANS	8		1001–1334	I	120-00041A	8
	120-00041A	BOLT M33X3.0X120	BOULON A 6PANS	8		1335–			
45	114-00048A	SPACER	BAGUE D'ECARTEMENT	8					
46	2180-1017A	PACKING	RONDELLE ETANCHE	1					
47	2403-1002	PLATE	COUVERCLE	1					
48	2181-4247	ADAPTOR	ADAPTEUR	2		1001–1117			
49	S8180251	PACKING	RONDELLE D'ETANCHEITE	2		1001–1117			
50	2420-1242A	VALVE;GREASE	ENSEMBLE CLAPET	2		1001–1117	I	420-00429A	2
	420-00429A	VALVE;GREASE	ENSEMBLE CLAPET	2		1118–			

DATE	JUL. 30, 2003
REV. NO.	EXB03-13

Fig. 2110 IDLER BARBOTIN

Serial No. ;

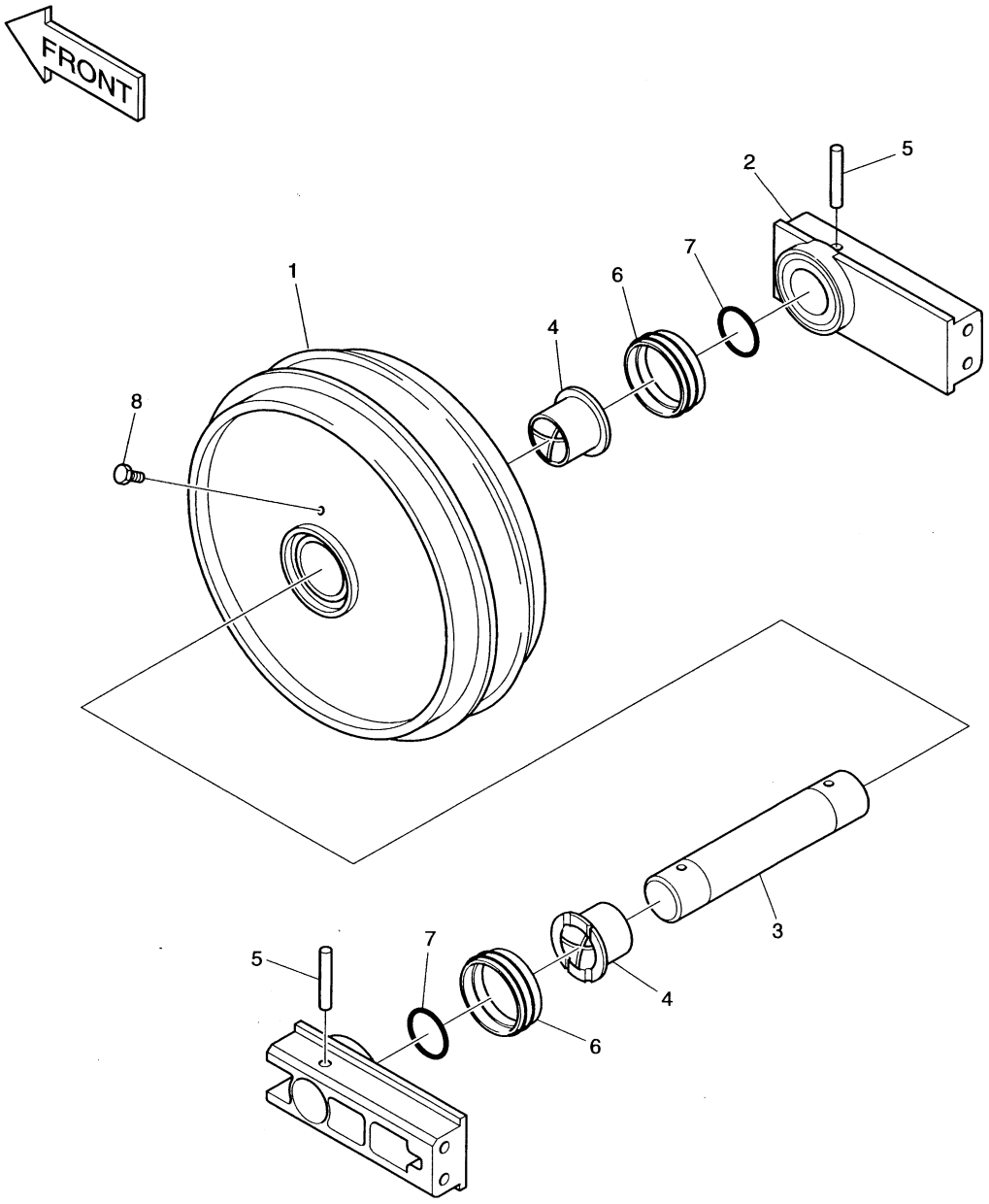

DATE	JUL. 30, 2003
REV. NO.	EXB03-13

Fig. 2110 IDLER BARBOTIN

Serial No ;

Key No.	Part No.	Description	Description	Q'ty	S.C	Serial No.	ICA	Replaceable part	
								Part No.	Q'ty
2110--	2270-9405G	IDLER ASS'Y	ENSEMBLE BARBOTIN	2					
1	2270-6105A	. IDLER BODY	. BARBOTIN	1	D				
2	2271-6017A	. SUPPORT	. PALIER	2					
3	2112-6010A	. SHAFT	. ARBRE	1					
4	2110-6058A	. BUSH	. DOUILLE	2					
5	2123-6070	. PIN	. GOUPILLE	2					
6	2180-6073	. SEAL;FLOATING	. JOINT	2					
7	S8010901	. O-RING	. JOINT TORIQUE	2					
8	-	. PLUG PT1/4	. BOUCHON	1	D				

DATE	JUN. 30, 2007
REV. NO.	EXB07-06

Fig. 2120 TRACK SPRING
TENDEUR DE CHENILLE

Serial No. ;

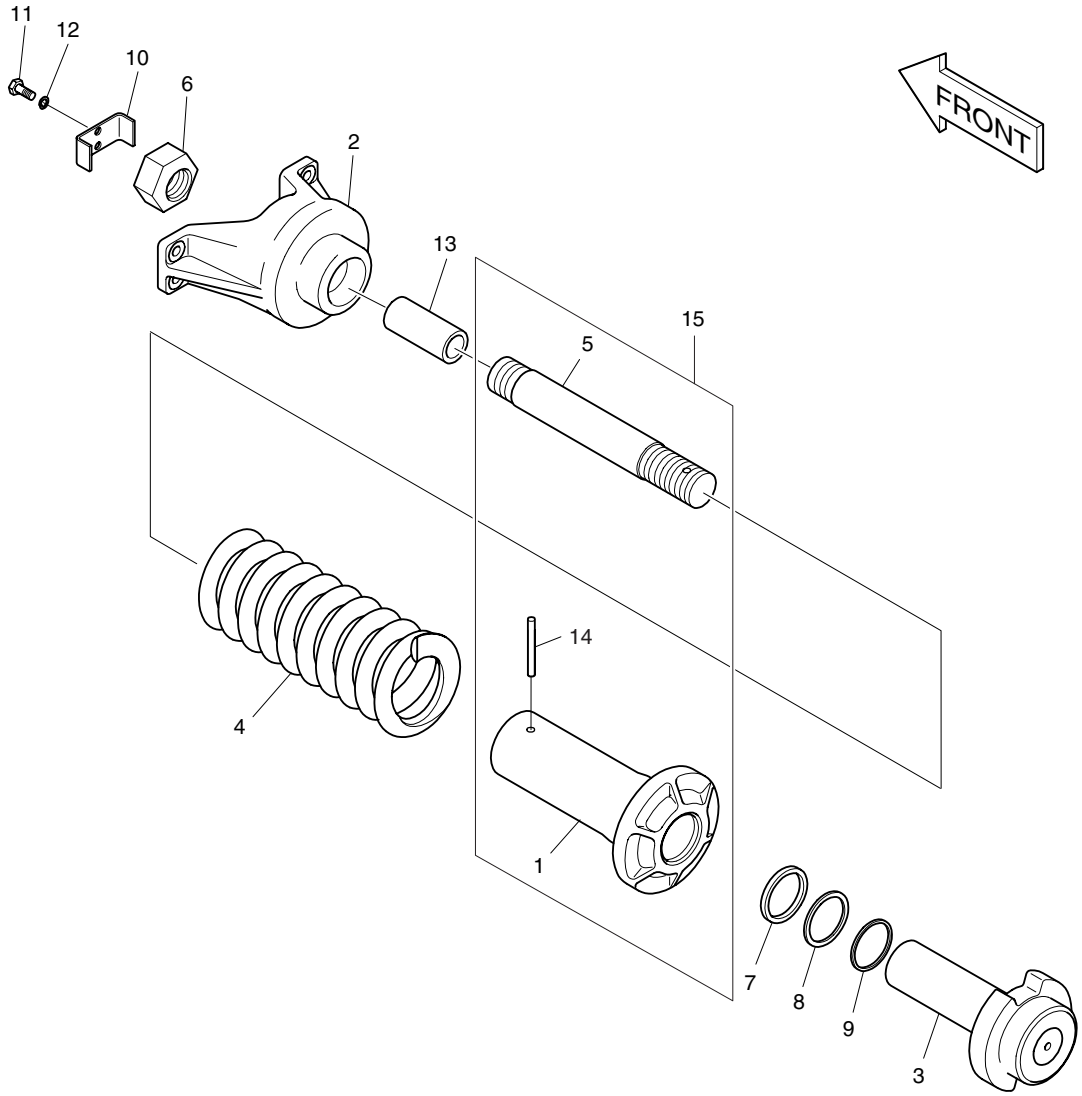

DATE	JUN. 30, 2007
REV. NO.	EXB07-06

Fig. 2120 TRACK SPRING
TENDEUR DE CHENILLE

Serial No. ;

Key No.	Part No.	Description	Description	Q'ty	S.C	Serial No.	ICA	Replaceable part	
								Part No.	Q'ty
2120--	274-00003C	TRACK SPRING ASS'Y	TENDEUR DE CHENILLE	2					
1	**308-00030**	**. BODY**	. CORPS	1					
2	195-02111	. BRACKET	. SUPPORT	1					
3	2444-6003B	.. ROD	.. TIGE	1					
4	129-00147	. SPRING	. RESSORT	1					
5	2444-6004B	. BAR;TIE	. CAOUTCHOUC	1					
6	2121-6035A	. NUT M76X2.0	. ECROU	1					
7	-	. PACKING;ROD D100XD120X12	. JOINT	1	K				
8	-	. RING;BACK UP 100X120X3	. BAGUE D'ETANCHEITE	1	K				
9	-	. SEAL;DUST 100X114X8	. PARE-POUSSIERES	1	K				
10	2621-6019	. PLATE	. PLAQUE	1					
11	S0718361	. BOLT M14X1.5X35	. BOULON A 6 PANS	2					
12	S5102803	. WASHER;SPRING M14	. RONDELLE ELASTIQUE	2					
13	416-00017A	. STOPPER	. ARRET	1					
14	S5741420	. PIN;SPRING D10X63	. GOUPILLE	1					
15	308-00033A	. BODY ASS'Y	. ENSEMBLE DE CORPS	1					
*	2274-6014AKT	SEAL KIT	KIT D'ETANCHEITE	1					

DATE	JUL. 30, 2003
REV. NO.	EXB03-13

Fig. 2130 UPPER ROLLER
GALET SUPERIEUR

Serial No. ;

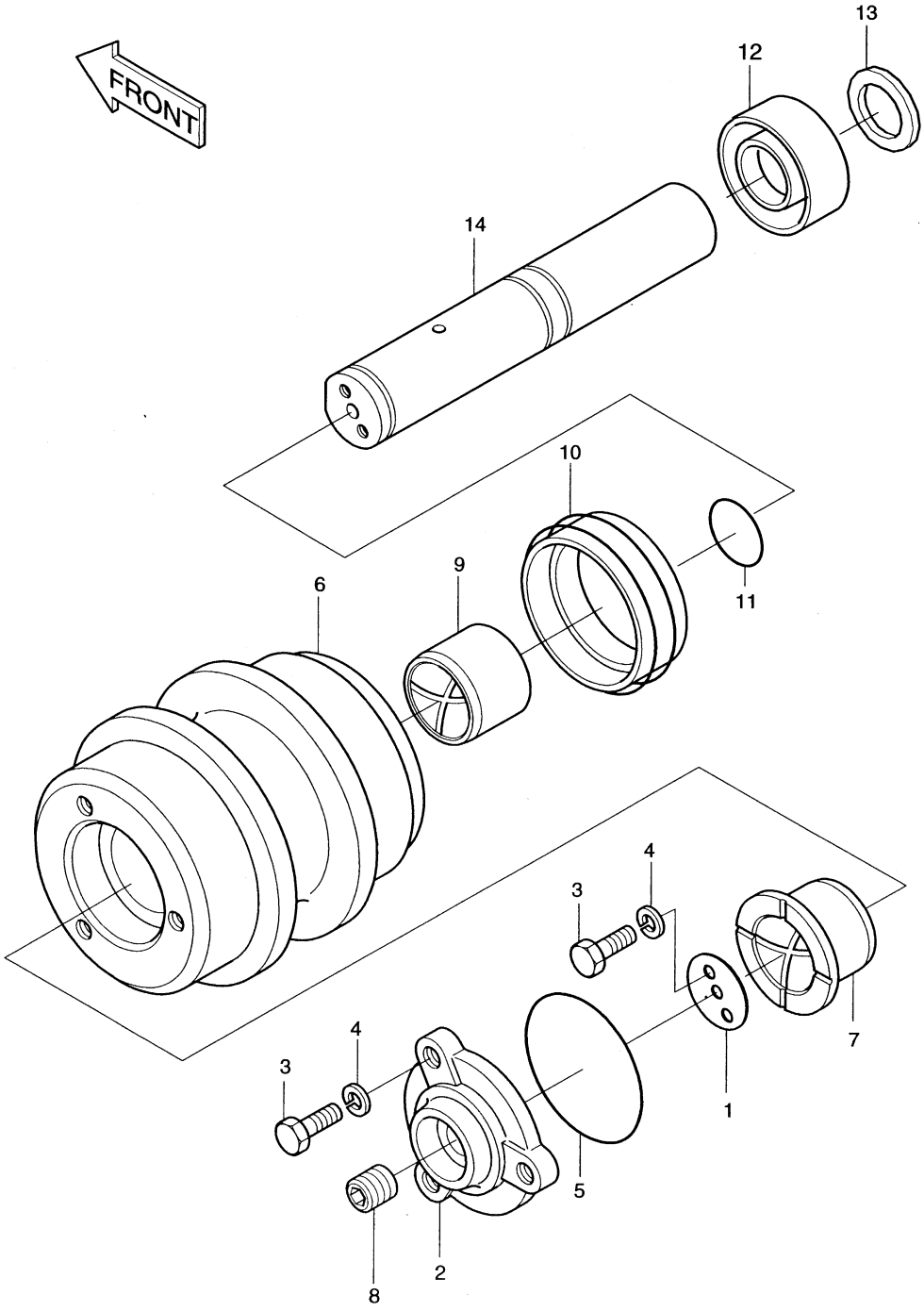

DATE	JUL. 30, 2003
REV. NO.	EXB03-13

Fig. 2130 UPPER ROLLER / GALET SUPERIEUR

Serial No ;

Key No.	Part No.	Description	Description	Q'ty	S.C	Serial No.	ICA	Replaceable part	
								Part No.	Q'ty
2130--	2270-9402A	ROLLER;UPPER	GALET SUPERIEUR	2					
1	2114-6024	. WASHER;THRUST	. RONDELLE	1					
2	2229-6003	. COVER	. COUVERCLE	1					
3	S0715251	. BOLT M12X1.25X30	. BOULON A 6 PANS	6					
4	S5102702	. WASHER;SPRING M12	. RONDELLE ELASTIQUE	6					
5	S8010900	. O-RING	. JOINT TORIQUE	1					
6	2481-6002	. BODY	. CORPS	1					
7	2110-6044	. BUSHING	. DOUILLE	1					
8	2181-1116D2	. PLUG	. BOUCHON	1					
9	2110-6045	. BUSHING	. DOUILLE	1					
10	2180-9098	. SEAL;FLOATING	. ETANCHEITE	1					
11	S8010550	. O-RING	. JOINT TORIQUE	1					
12	2115-6003	. RING;THRUST	. BAGUE	1					
13	2114-6025	. SPACER	. BAGUE D'ECARTEMENT	1					
14	2112-6006	. SHAFT	. ARBRE	1					

DATE	JUL. 30, 2003
REV. NO.	EXB03-13

Fig. 2140 LOWER ROLLER
GALET INFERIEUR

Serial No. ;

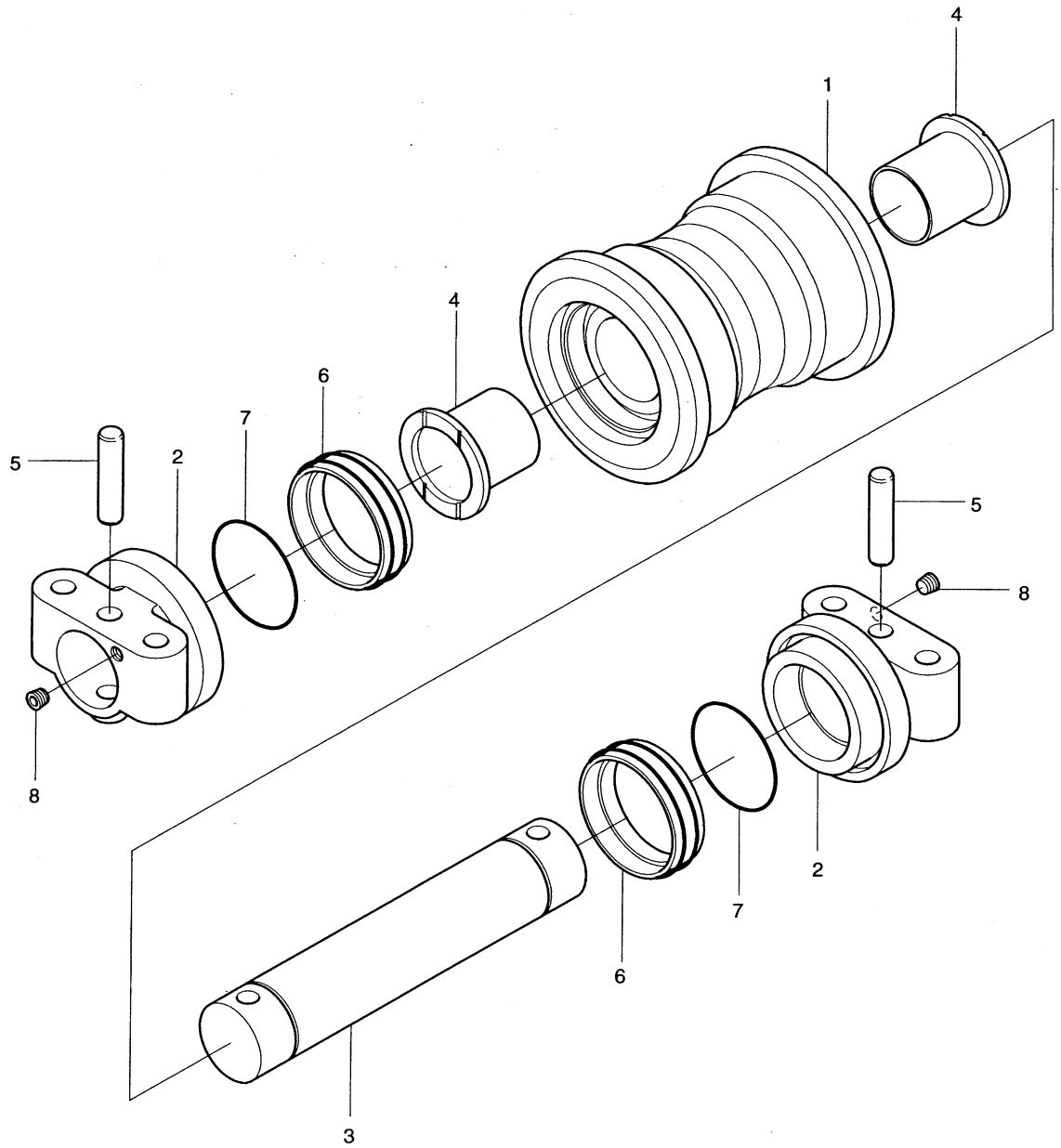

DATE	JUL. 30, 2003
REV. NO.	EXB03-13

Fig. 2140 LOWER ROLLER GALET INFERIEUR

Serial No ;

Key No.	Part No.	Description	Description	Q'ty	S.C	Serial No.	ICA	Replaceable part	
								Part No.	Q'ty
2140--	2270-9404B	LOWER ROLLER ASS'Y	GALET INFERIEUR	22					
1	2270-6083A	. ROLLER	. GALET	1					
2	2271-6020A	. COLLER	. RONDELLE	2					
3	2112-6013	. SHAFT	. ARBRE	1					
4	2110-6070	. BUSHING	. DOUILLE	2					
5	2123-6085	. PIN	. GOUPILLE	2					
6	2180-6080A	. SEAL;GROUP	. ETANCHEITE	2					
7	2180-6081	. O-RING	. JOINT TORIQUE	2					
8	-	. PLUG	. BOUCHON	2					

DATE	JUL. 30, 2003
REV. NO.	EXB03-13

Fig. 2150 TRACK SHOE ASS'Y-600G
MAILLON DE CHAINE

Serial No. ;

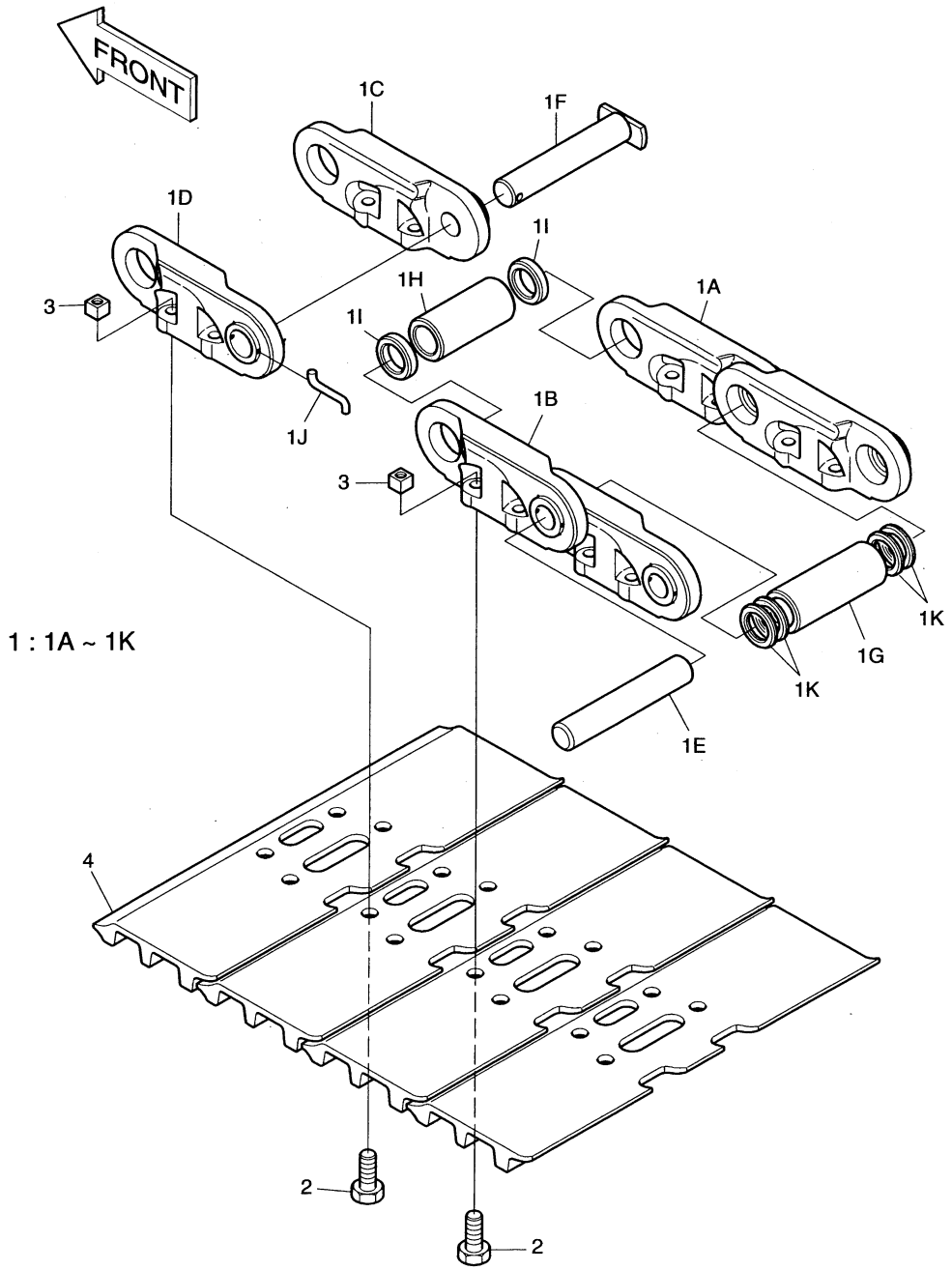

DATE	JUL. 30, 2003
REV. NO.	EXB03-13

Fig. 2150 TRACK SHOE ASS'Y-600G MAILLON DE CHAINE

Serial No ;

Key No.	Part No.	Description	Description	Q'ty	S.C	Serial No.	ICA	Replaceable part	
								Part No.	Q'ty
2150--	2272-6162D5	TRACK SHOE ASS'Y	ENSEMBLE CHAINE	2					
1	2272-6143B	TRACK LINK ASS'Y	ENSEMBLE MAILLON DE	1					
1A	2272-6144	. LINK(R.H)	. ARTICULATION	52					
1B	2272-6145	. LINK(L.H)	. ARTICULATION	52					
1C	2272-6135	. LINK;MASTER(R.H)	. MAILLON PRINCIPAL	1					
1D	2272-6136	. LINK;MASTER(L.H)	. MAILLON PRINCIPAL	1					
1E	2123-6079A	. PIN	. GOUPILLE	52					
1F	2123-6080	. PIN;MASTER	. GOUPILLE	1					
1G	2110-6065B	. BUSHING	. DOUILLE	52					
1H	2110-6066A	. BUSHING;MASTER	. DOUILLE	1					
1I	2271-6018	. COLLAR	. RONDELLE	2					
1J	2123-6081	. PIN	. BROCHE	1					
1K	2180-6077A	. SEAL;DUST	. PARE-POUSSIERES	104					
2	2120-6025	BOLT;TRACK M22X1.5X72	BOULON A 6 PANS	212					
3	2121-6027	NUT;TRACK M22X1.5	ECROU	212					
4	2273-6058D1	SHOE;TRACK(600mm)16T	PATIN	53					

DATE	JUL. 30, 2003
REV.NO.	EXB03-13

Fig. 2160 TRAVEL PIPING
CONDUITES DE TRANSLATION

Serial No. ;

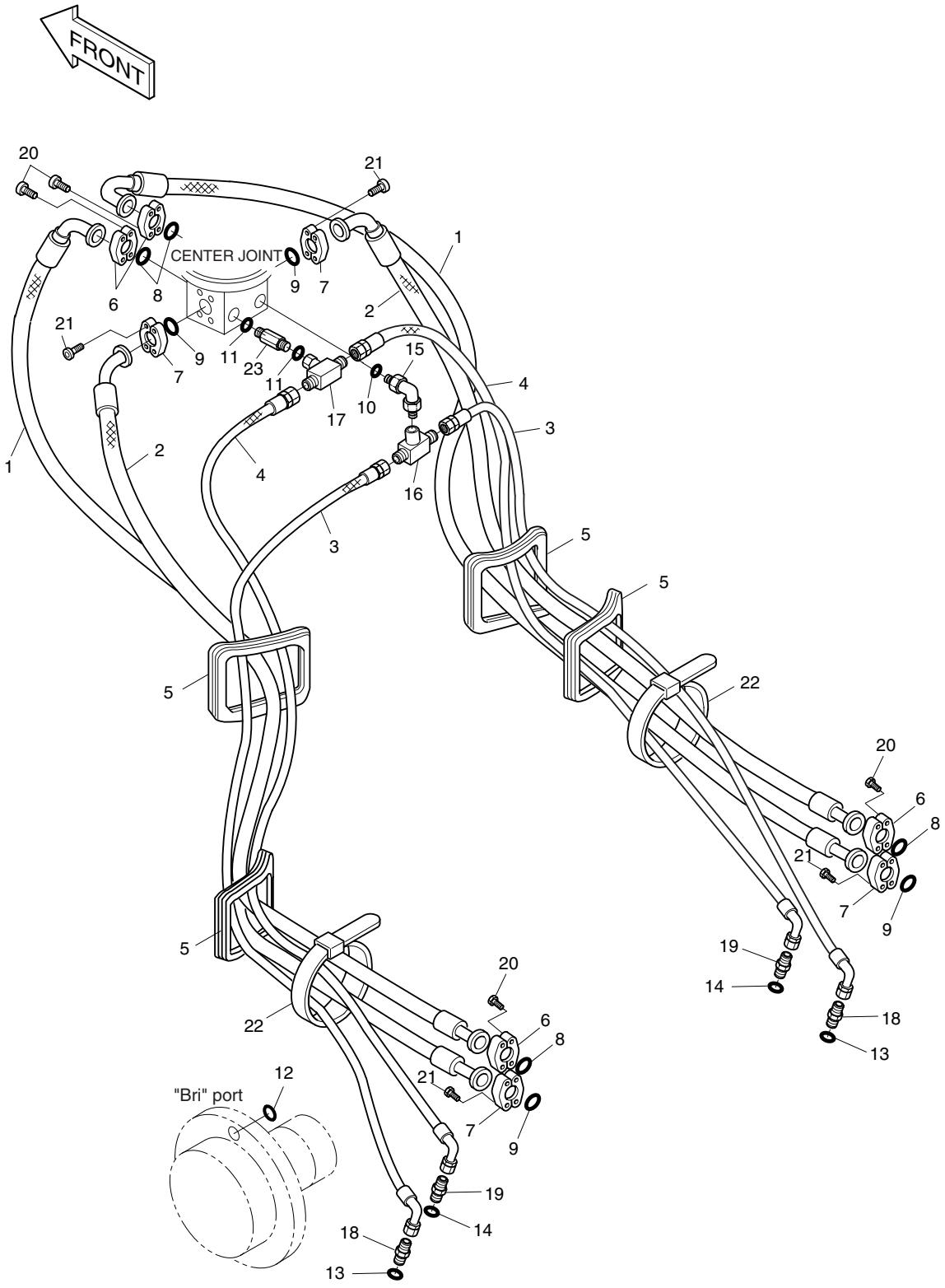

DATE	JUL. 30, 2003
REV. NO.	EXB03-13

Fig. 2160 TRAVEL PIPING
CONDUITES DE TRANSLATION

Serial No ;

Key No.	Part No.	Description	Description	Q'ty	S.C	Serial No.	ICA	Replaceable part	
								Part No.	Q'ty
2160--	2400-2180A	PROPELLING PIPING	CONDUITES DE	-	D				
1	2184-1100D203	HOSE	TUYAU FLEXIBLE	2					
2	2184-1098D77	HOSE	TUYAU FLEXIBLE	2					
3	2184-1036D292	HOSE PF1/2-2800L	TUYAU FLEXIBLE	2					
4	2184-1036D23	HOSE PF3/8-2800L	TUYAU FLEXIBLE	2					
5	2160-4023	BUSHING;RUBBER	MANCHON	4					
6	2181-9081	FLANGE;SPLIT	BRIDE	8					
7	2181-9086	FLANGE;SPLIT	FLASQUE EN DEUX	8					
8	2180-1026D19	O-RING	JOINT TORIQUE	4					
9	2180-1026D23	O-RING	JOINT TORIQUE	4					
10	S8000231	O-RING	JOINT TORIQUE	1					
11	S8000141	O-RING	JOINT TORIQUE	2					
12	S8030041	O-RING	JOINT TORIQUE	2					
13	S8180441	SEAL;RING	RONDELLE	2					
14	S8180211	SEAL;RING	RONDELLE	2					
15	2181-1702D70	ELBOW PFO3/4XPF1/2	COUDE	1					
16	2181-4124	TEE PF1/2	TE	1					
17	2181-2281D13	TEE PFO3/8X2PF3/8	TE	1					
18	2181-1917D49	ADAPTER M26X1.5-PF1/2	RACCORD	2					
19	2181-4245	ADAPTER M14X1.5-PF3/8	RACCORD ADAPTATEUR	2					
20	S2215466	BOLT;SOCKET M12X1.75X40	BOULON A 6 PANS CREUX	16					
21	S2218466	BOLT;SOCKET M14X2.0X40	BOULON A 6 PANS CREUX	16					
22	2124-1084D1	BAND;CLIP	CLIP	10					
23	2181-2337D12	REDUCER PFO3/8XPF3/8	REDUCTEUR	1					

DATE	JUL. 30, 2003
REV. NO.	EXB03-13

Fig. 2170 CENTER JOINT
JOINT CENTRAL

Serial No. ;

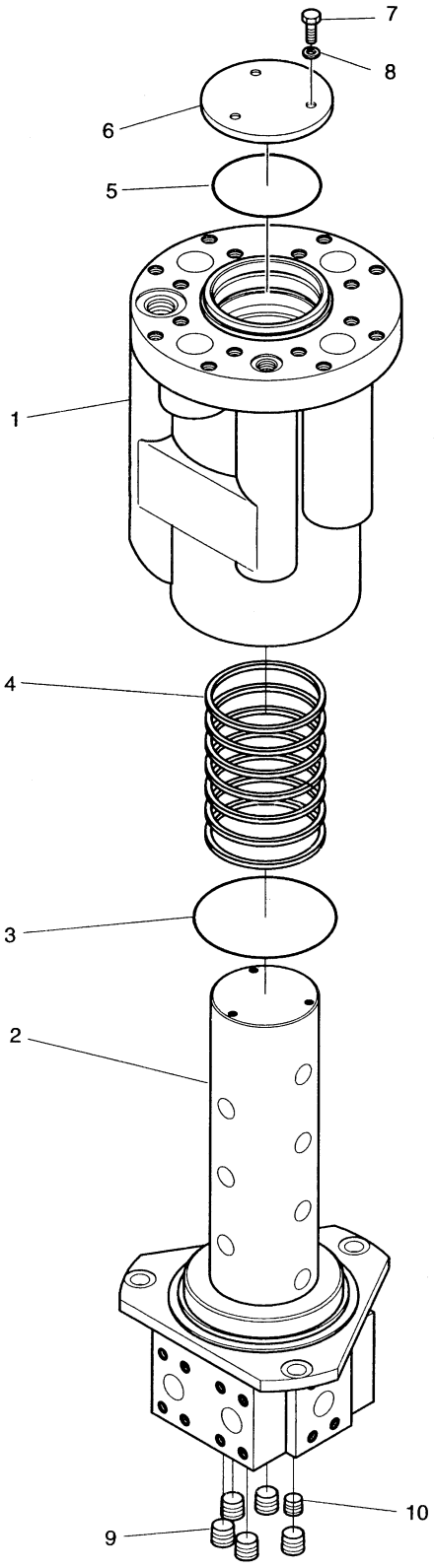

DATE	JUL. 30, 2003
REV. NO.	EXB03-13

Fig. 2170 CENTER JOINT
JOINT CENTRAL

Serial No ;

Key No.	Part No.	Description	Description	Q'ty	S.C	Serial No.	ICA	Replaceable part	
								Part No.	Q'ty
2170--	2480-9405B	JOINT;CENTER	JOINT TOURNANT	1					
1	03C271-2	BODY	CARROSSERIE	1					
2	03C272-4	SPINDLE	AXE	1					
3	E6301581	O-RING	JOINT TORIQUE	1	K				
4	E5430420	SEAL;SLIPPER	ETANCHEITE A GRADINS	6	K				
5	E6490049	O-RING	JOINT TORIQUE	1	K				
6	03C273-1	COVER	COUVERCLE	1					
7	E0020335	BOLT;HEX. M8X1.25X16	BOULON A 6 PANS	3					
8	E3110092	WASHER;SPRING	RONDELLE ELASTIQUE	3					
9	E1500050	PLUG PT3/4	BOUCHON	5					
10	E1500030	PLUG PT3/8	BOUCHON	1					
*	2480-9405BKT	SEAL KIT	KIT D'ETANCHEITE	1					

DATE	DEC. 15, 2006
REV. NO.	EXB06-13

Fig. 3100 BOOM-6.3m FLECHE

Serial No. ;

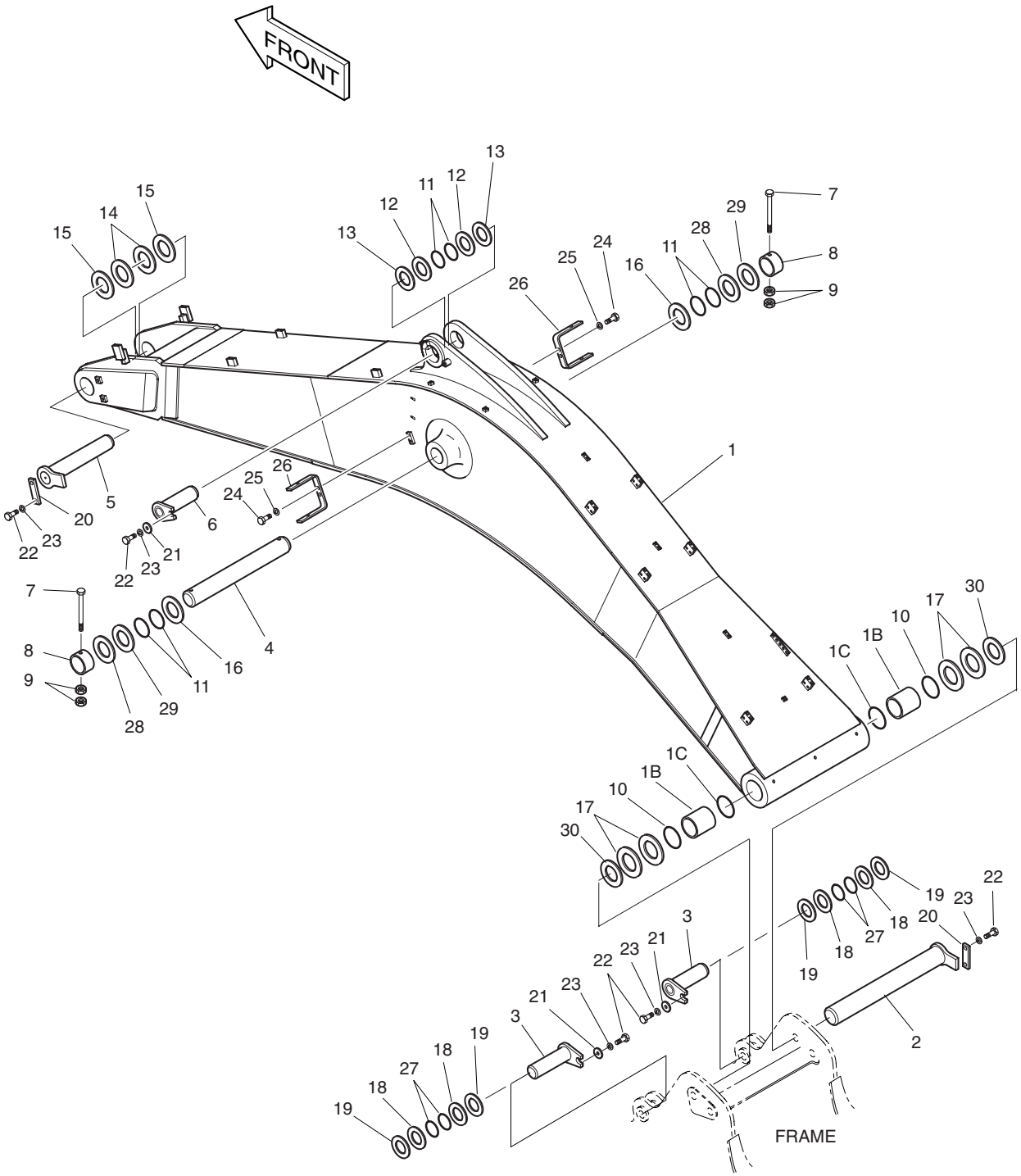

DATE	DEC. 15, 2006
REV. NO.	EXB06-13

Fig. 3100 BOOM-6.3m FLECHE

Serial No. ;

Key No.	Part No.	Description	Description	Q'ty	S.C	Serial No.	ICA	Replaceable part	
								Part No.	Q'ty
3100--	**701-00409A**	**BOOM ASS'Y-6.3m**	FLECHE	-	D				
1	701-00410	BOOM SUB ASS'Y	FLECHE	1		1001–1700	I	701-00410A	1
	701-00410A	**BOOM SUB ASS'Y**	FLECHE	1		**1701–**			
1B	110-00192	. BUSHING	. DOUILLE	2					
1C	2180-1106BD19	. SEAL;DUST	. PARE-POUSSIERES	2					
2	123-00020A	PIN	BROCHE	1					
3	2123-2048A	PIN	BROCHE	2		1001–1428	I	2123-2048C	2
	2123-2048C	PIN	BROCHE	2		1429–			
4	123-00022	PIN	BROCHE	1					
5	2123-2046G	PIN	BROCHE	1					
6	2123-2049A	PIN	BROCHE	1					
7	S0572166	BOLT M20X2.0X200	BOULON A 6PANS	2					
8	2116-1548	STOPPER	TAQUET D'ARRET	2					
9	S4013133	NUT M20X2.5	ECROU	4					
10	2180-1106BD19	SEAL;DUST	PARE-POUSSIERES	2					
11	2180-1106BD18	SEAL;DUST	PARE-POUSSIERES	6					
12	2114-1059D43	SHIM	CALE	1					
13	2114-1059D42	SHIM	CALE	1					
14	2114-1059D193	SHIM	CALE	2					
15	2114-1059D192	SHIM	CALE	2					
16	2114-1059D50	SHIM	CALE	2					
17	2114-1059D223	SHIM	CALE	2					
18	2114-1059D203	SHIM	CALE	4					
19	2114-1059D202	SHIM	CALE	4					
20	2191-2205D6	PLATE;STOPPER	ARRET	2					
21	2116-1060D5	STOPPER	TAQUET D'ARRET	3					
22	S0521456	BOLT M16X2.0X40	BOULON A 6PANS	7					
23	S5102903	WASHER;SPRING M16	RONDELLE ELASTIQUE	7					
24	S0515053	BOLT M12X1.75X25	BOULON A 6PANS	4					
25	S5102703	WASHER;SPRING M12	RONDELLE ELASTIQUE	4					
26	2195-3793	BRACKET	SUPPORT	2					
27	2180-1106BD15	SEAL;DUST	PARE-POUSSIERES	4					
28	2114-1059D261	SHIM	CALE	2					
29	2114-1059D262	SHIM	CALE	2					
30	DS7701358	SHIM	CALE	2		1208–			

DATE	JUN. 30, 2007
REV. NO.	EXB07-06

Fig. 3110 ARM-2.9m BALANCIER

Serial No. ;

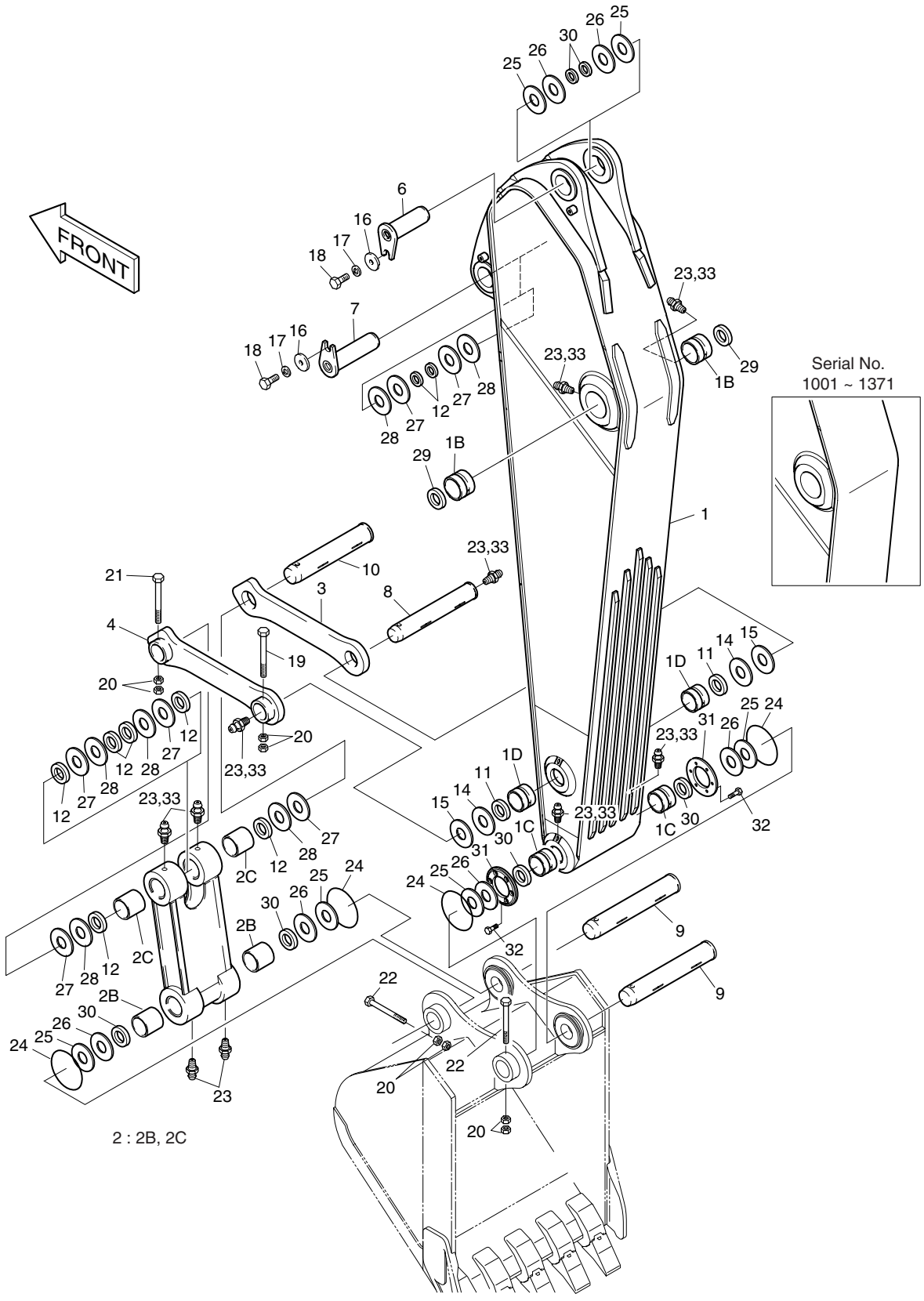

DATE	JUN. 30, 2007
REV. NO.	EXB07-06

Fig. 3110 ARM-2.9m BALANCIER

Serial No. ;

Key No.	Part No.	Description	Description	Q'ty	S.C	Serial No.	ICA	Replaceable part	
								Part No.	Q'ty
3110--	701-00050	ARM ASS'Y-2.9m	BALANCIER	-	D				
1	701-00051C	ARM SUB ASS'Y	BALANCIER	1		1001–1117	I	701-00051E	1
	701-00051E	ARM SUB ASS'Y	BALANCIER	1		1118–1181	I	701-00051G	1
	701-00051G	ARM SUB ASS'Y	BALANCIER	1		1182–1371	I	701-00051H	1
	701-00051H	ARM SUB ASS'Y	BALANCIER	1		1372–			
1B	110-00186	. BUSHING	. DOUILLE	2					
1C	110-00205	. BUSHING;FLANGE	. DOUILLE	2					
1D	110-00187	. BUSHING	. DOUILLE	2		1001–1181	I	2110-1252A	2
	2110-1252A	. BUSHING	. DOUILLE	2		1182–			
2	2155-1373E	PUSH LINK ASS'Y	ARTICULATION	1		1001–1181	I	2155-1373G	1
	2155-1373G	PUSH LINK ASS'Y	ARTICULATION	1		1182–1532	I	2155-1373H	1
	2155-1373H	**PUSH LINK ASS'Y**	ARTICULATION	1		**1533–**			
2B	110-00189	. BUSHING	. DOUILLE	2		1001–1181	I	2110-1243B	2
	2110-1243B	. BUSHING	. DOUILLE	2		1182–			
2C	2110-1442	. BUSHING	. DOUILLE	2					
3	2155-4023B	LINK;GUIDE(R.H)	ARTICULATION	1					
4	2155-4024B	LINK;GUIDE(L.H)	ARTICULATION	1					
6	123-00018	PIN	BROCHE	1					
7	2123-2482	PIN	BROCHE	1					
8	2123-2051A	PIN	BROCHE	1					
9	2123-2477A	PIN	BROCHE	2					
10	2123-2478	PIN	BROCHE	1					
11	2180-1106BD14	SEAL;DUST	PARE-POUSSIERES	2					
12	2180-1106BD15	SEAL;DUST	PARE-POUSSIERES	8					
14	2114-1059D73	SHIM	CALE	2					
15	2114-1059D72	SHIM	CALE	2					
16	2116-1060D5	STOPPER	TAQUET D'ARRET	2					
17	S5102903	WASHER;SPRING	RONDELLE ELASTIQUE M16	2					
18	S0521366	BOLT M16X2.0X40	BOULON A 6 PANS	2					
19	S0571966	BOLT M20X2.5X180	BOULON A 6 PANS	1					
20	S4013133	NUT M20X2.5	ECROU	8					
21	S0572066	BOLT M20X2.5X190	BOULON A 6 PANS	1					
22	S0572166	BOLT M20X2.5X200	BOULON A 6 PANS	2					
23	S6710042	FITTING;GREASE	GRAISSEUR	10					
24	180-00077D9	O-RING	JOINT TORIQUE	4					
25	2114-1059D43	SHIM	CALE	6					
26	2114-1059D42	SHIM	CALE	6					
27	2114-1059D202	SHIM	CALE	6					

DATE	JUN. 30, 2007
REV. NO.	EXB07-06

Fig. 3110 ARM-2.9m BALANCIER

Serial No. ;

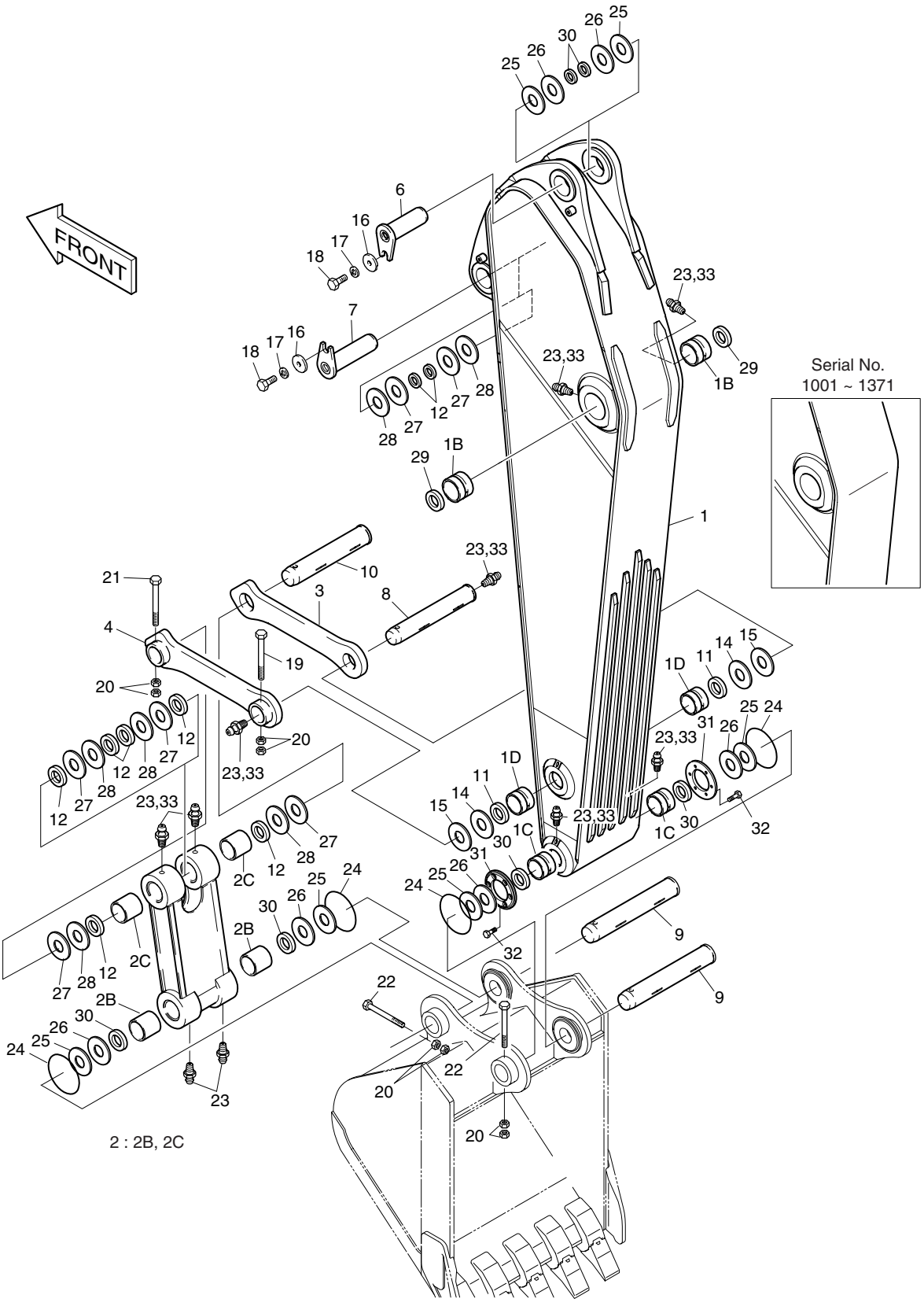

DATE	JUN. 30, 2007
REV. NO.	EXB07-06

Fig. 3110 ARM-2.9m BALANCIER

Serial No. ;

Key No.	Part No.	Description	Description	Q'ty	S.C	Serial No.	ICA	Replaceable part	
								Part No.	Q'ty
3110-28	2114-1059D203	SHIM	CALE	6					
29	2180-1106BD19	SEAL;DUST	PARE-POUSSIERES	2					
30	2180-1106BD18	SEAL;DUST	PARE-POUSSIERES	4					
31	114-00443	SPACER	BAGUE	2		1001–1225	I	114-00443A	2
	114-00443A	SPACER	BAGUE	2		1226–			
32	120-00223	BOLT M12X1.25X25	BOULON A 6 PANS	12					
33	160-00020	CAP;GREASE NIPPLE	CHAPEAU	10					

DATE	JUL. 30, 2003
REV. NO.	EXB03-13

Fig. 3120 BUCKET-2.55m³(72")-SIDE PIN GODET

Serial No. ;

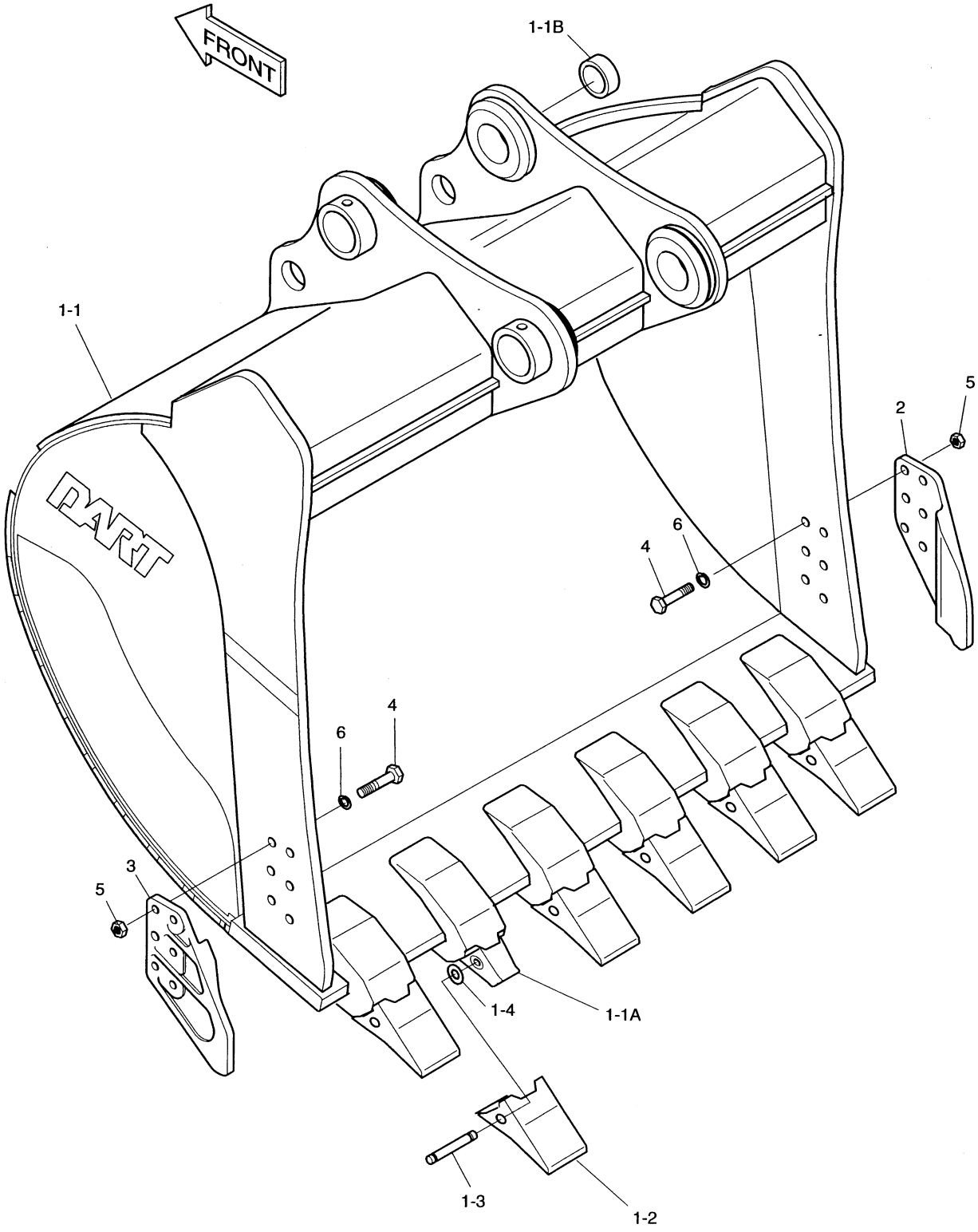

DATE	JUL. 30, 2003
REV. NO.	EXB03-13

Fig.3120 BUCKET-2.55㎥(72")-SIDE PIN GODET

Serial No ;

Key No.	Part No.	Description	Description	Q'ty	S.C	Serial No.	ICA	Replaceable part	
								Part No.	Q'ty
3120--	704-00151	BUCKET ASS'Y-2.55㎥	GODET	1					
1	704-00152	BUCKET SUB ASS'Y	GODET	1					
1-1	-	. BUCKET;WELD	. GODET	1	D				
1-1A	2713-1273	.. ADAPTER;TOOTH	.. DENT DE ADAPTEUR	6					
1-1B	2110-1413	.. BUSH	.. DOUILLE	4					
1-2	713-00028	. POINT;TOOTH	. DENT	6					
1-3	2705-1034	. PIN;LOCKING	. BROUCHE	6					
1-4	2114-1931	. WASHER;LOCKING	. RONDELLE PLATE	6					
2	2713-1240	CUTTER;SIDE(R.H)	COUTEAU LATERAL	1					
3	2713-1241	CUTTER;SIDE(L.H)	COUTEAU LATERAL	1					
4	S0575061	BOLT M24X3.0X85	BOULON A 6 PANS	12					
5	S4013333	NUT M24X3.0	ECROU	12					
6	2114-1831	WASHER;HARDEN M24	RONDELLE ELASTIQUE	12					

DATE	JUL. 30, 2003
REV. NO.	EXB03-13

Fig. 3130 BUCKET-2.55m³(72")-VERTICAL PIN GODET

Serial No. ;

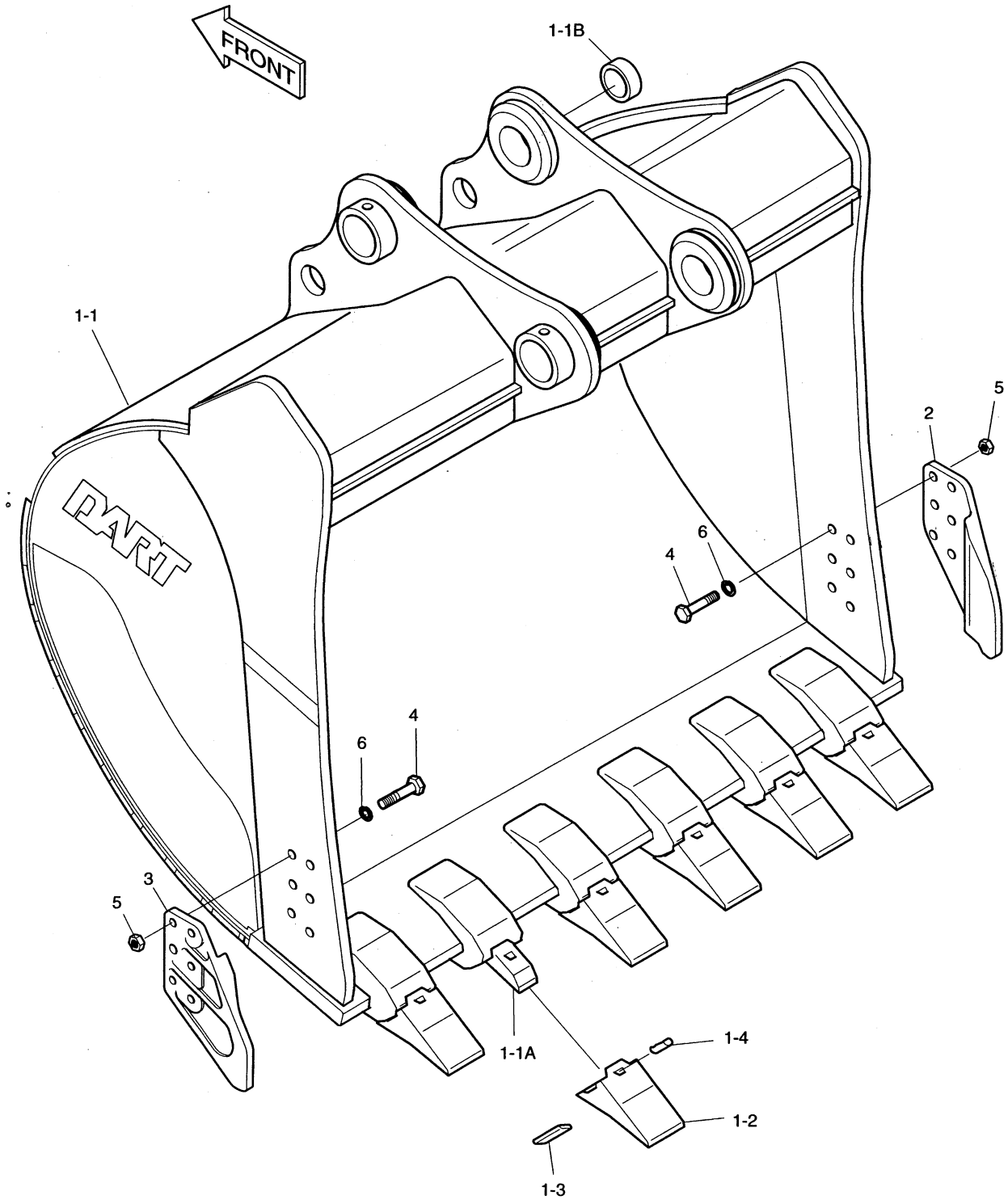

DATE	JUL. 30, 2003
REV. NO.	EXB03-13

Fig.3130 BUCKET-2.55㎥(72")-VERTICAL PIN GODET

Serial No ;

Key No.	Part No.	Description	Description	Q'ty	S.C	Serial No.	ICA	Replaceable part	
								Part No.	Q'ty
3130--	704-00155	BUCKET ASS'Y-2.55㎥	GODET	1					
1	704-00156	BUCKET SUB ASS'Y	GODET	1					
1-1	-	. BUCKET;WELD	. GODET	1	D				
1-1A	2713-6082	.. ADAPTER;TOOTH	.. DENT DE ADAPTEUR	6					
1-1B	2110-1413	.. BUSH	.. DOUILLE	4					
1-2	2713-9063	. POINT;TOOTH	. DENT	6					
1-3	2705-6037	. PIN;LOCKING	. GOUPILLE DE BLOCAGE	6					
1-4	2705-6038	. RUBBER;LOCKING	. GOUPILLE	6					
2	2713-1240	CUTTER;SIDE(R.H)	COUTEAU LATERAL	1					
3	2713-1241	CUTTER;SIDE(L.H)	COUTEAU LATERAL	1					
4	S0575061	BOLT M24X3.0X85	BOULON A 6 PANS	12					
5	S4013333	NUT M24X3.0	ECROU	12					
6	2114-1831	WASHER;HARDEN M24	RONDELLE ELASTIQUE	12					

DATE	JUL. 30, 2003
REV. NO.	EXB03-13

Fig. 3140 BUCKET-2.87m³(80")-SIDE PIN GODET

Serial No. ;

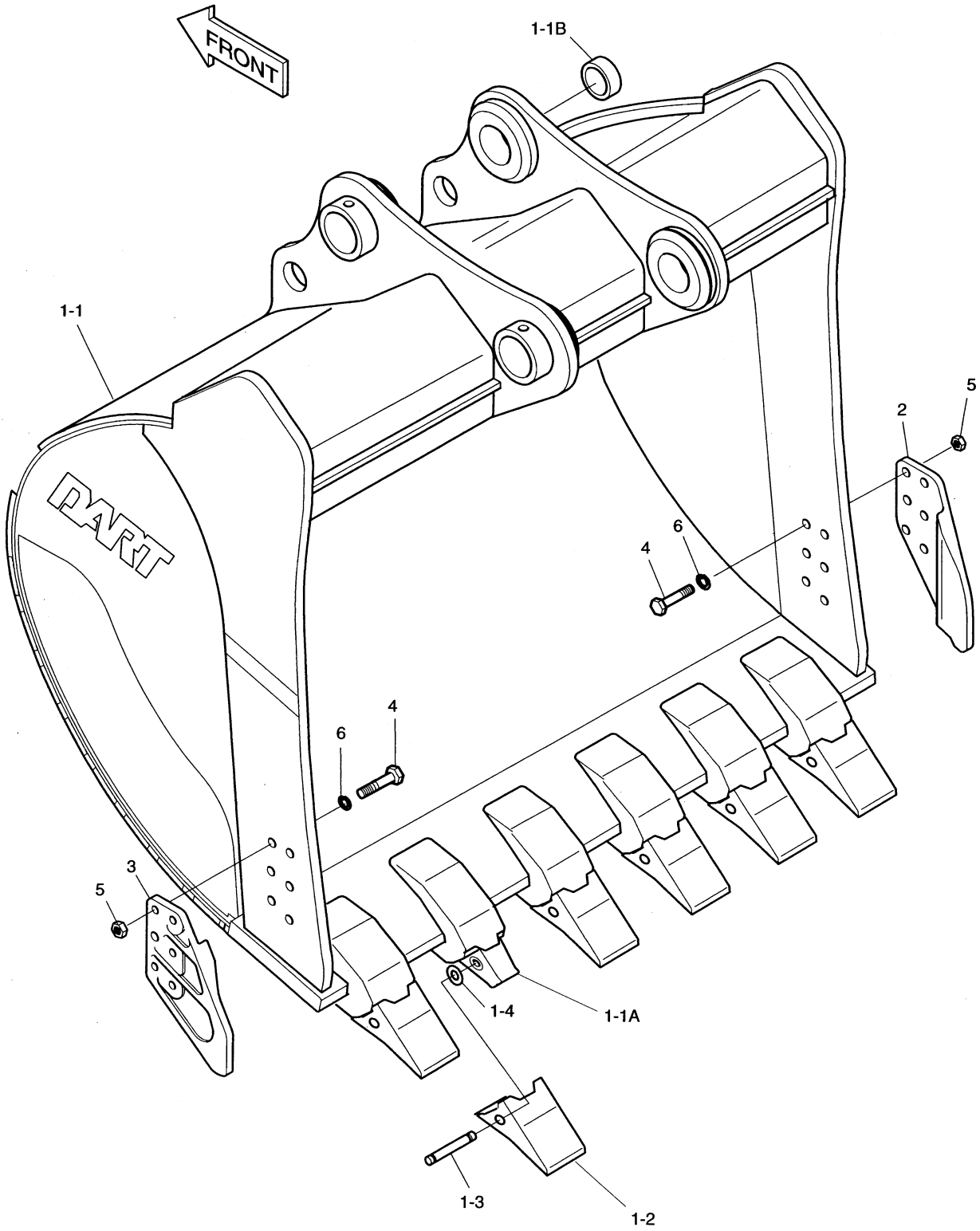

DATE	JUL. 30, 2003
REV. NO.	EXB03-13

Fig. 3140 BUCKET-2.87㎥(80")-SIDE PIN GODET

Serial No ;

Key No.	Part No.	Description	Description	Q'ty	S.C	Serial No.	ICA	Replaceable part	
								Part No.	Q'ty
3140--	704-00110A	BUCKET ASS'Y-2.87㎥	GODET	1					
1	704-00111A	BUCKET SUB ASS'Y	GODET	1					
1-1	-	. BUCKET;WELD	. GODET	1	D				
1-1A	2713-1273	.. ADAPTER;TOOTH	.. DENT DE ADAPTEUR	6					
1-1B	2110-1413	.. BUSH	.. DOUILLE	4					
1-2	713-00028	. POINT;TOOTH	. DENT	6					
1-3	2705-1034	. PIN;LOCKING	. BROUCHE	6					
1-4	2114-1931	. WASHER;LOCKING	. RONDELLE PLATE	6					
2	2713-1240	CUTTER;SIDE(R.H)	COUTEAU LATERAL	1					
3	2713-1241	CUTTER;SIDE(L.H)	COUTEAU LATERAL	1					
4	S0575061	BOLT M24X3.0X85	BOULON A 6 PANS	12					
5	S4013333	NUT M24X3.0	ECROU	12					
6	2114-1831	WASHER;HARDEN M24	RONDELLE ELASTIQUE	12					

DATE	JUL. 30, 2003
REV. NO.	EXB03-13

Fig. 3150 BUCKET-2.87m³(80")-VERTICAL PIN GODET

Serial No. ;

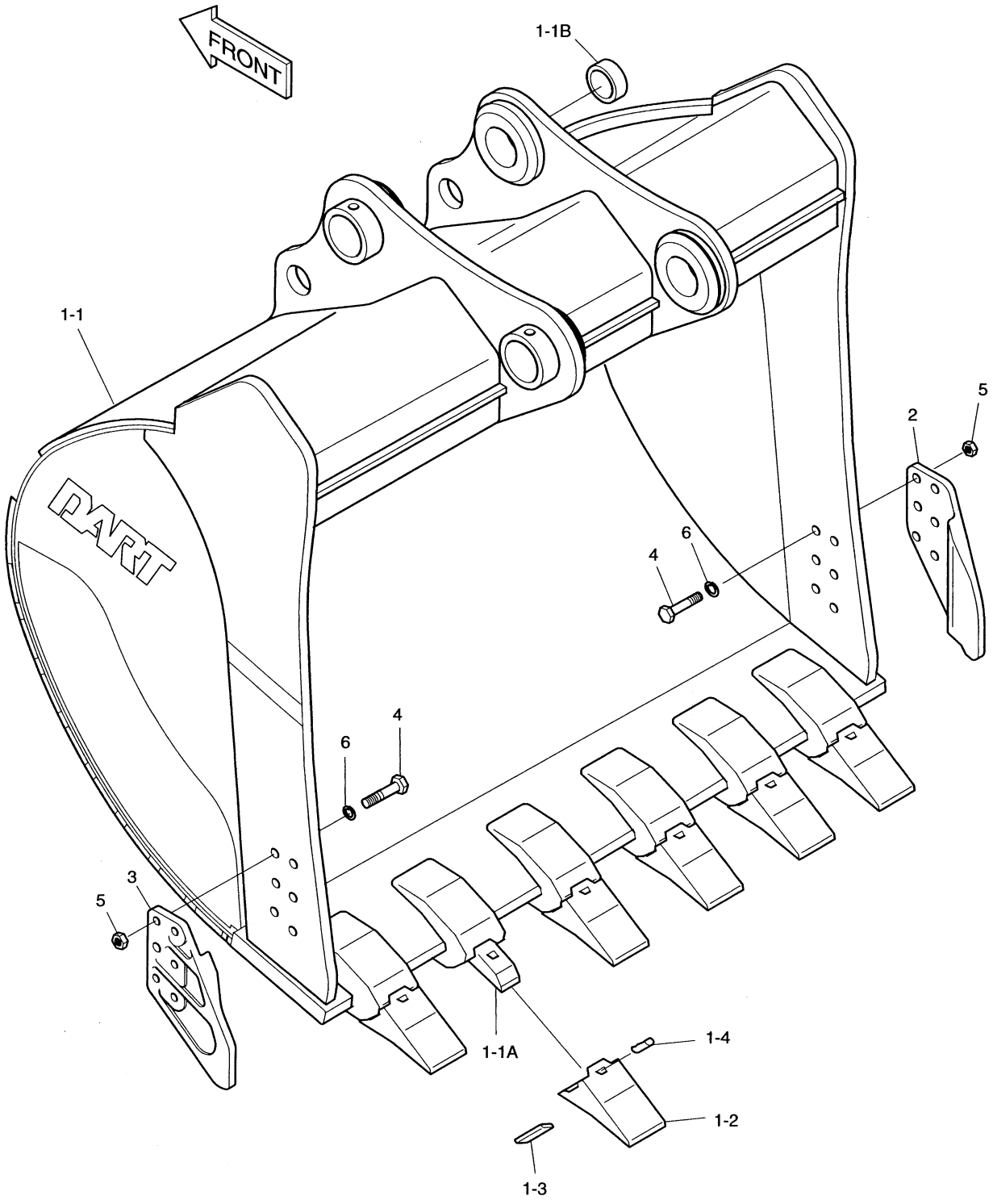

DATE	JUL. 30, 2003
REV. NO.	EXB03-13

Fig.3150 BUCKET-2.87㎥(80")-VERTICAL PIN GODET

Serial No ;

Key No.	Part No.	Description	Description	Q'ty	S.C	Serial No.	ICA	Replaceable part	
								Part No.	Q'ty
3150--	704-00114A	BUCKET ASS'Y-2.87㎥	GODET	1					
1	704-00115A	BUCKET SUB ASS'Y	GODET	1					
1-1	-	. BUCKET;WELD	. GODET	1	D				
1-1A	2713-6082	.. ADAPTER;TOOTH	.. DENT DE ADAPTEUR	6					
1-1B	2110-1413	.. BUSH	.. DOUILLE	4					
1-2	2713-9063	. POINT;TOOTH	. DENT	6					
1-3	2705-6037	. PIN;LOCKING	. GOUPILLE DE BLOCAGE	6					
1-4	2705-6038	. RUBBER;LOCKING	. GOUPILLE	6					
2	2713-1240	CUTTER;SIDE(R.H)	COUTEAU LATERAL	1					
3	2713-1241	CUTTER;SIDE(L.H)	COUTEAU LATERAL	1					
4	S0575061	BOLT M24X3.0X85	BOULON A 6 PANS	12					
5	S4013333	NUT M24X3.0	ECROU	12					
6	2114-1831	WASHER;HARDEN M24	RONDELLE ELASTIQUE	12					

DATE	JUL. 30, 2003
REV. NO.	EXB03-13

Fig. 3160 BUCKET-3.2m³(88")-SIDE PIN GODET

Serial No. ;

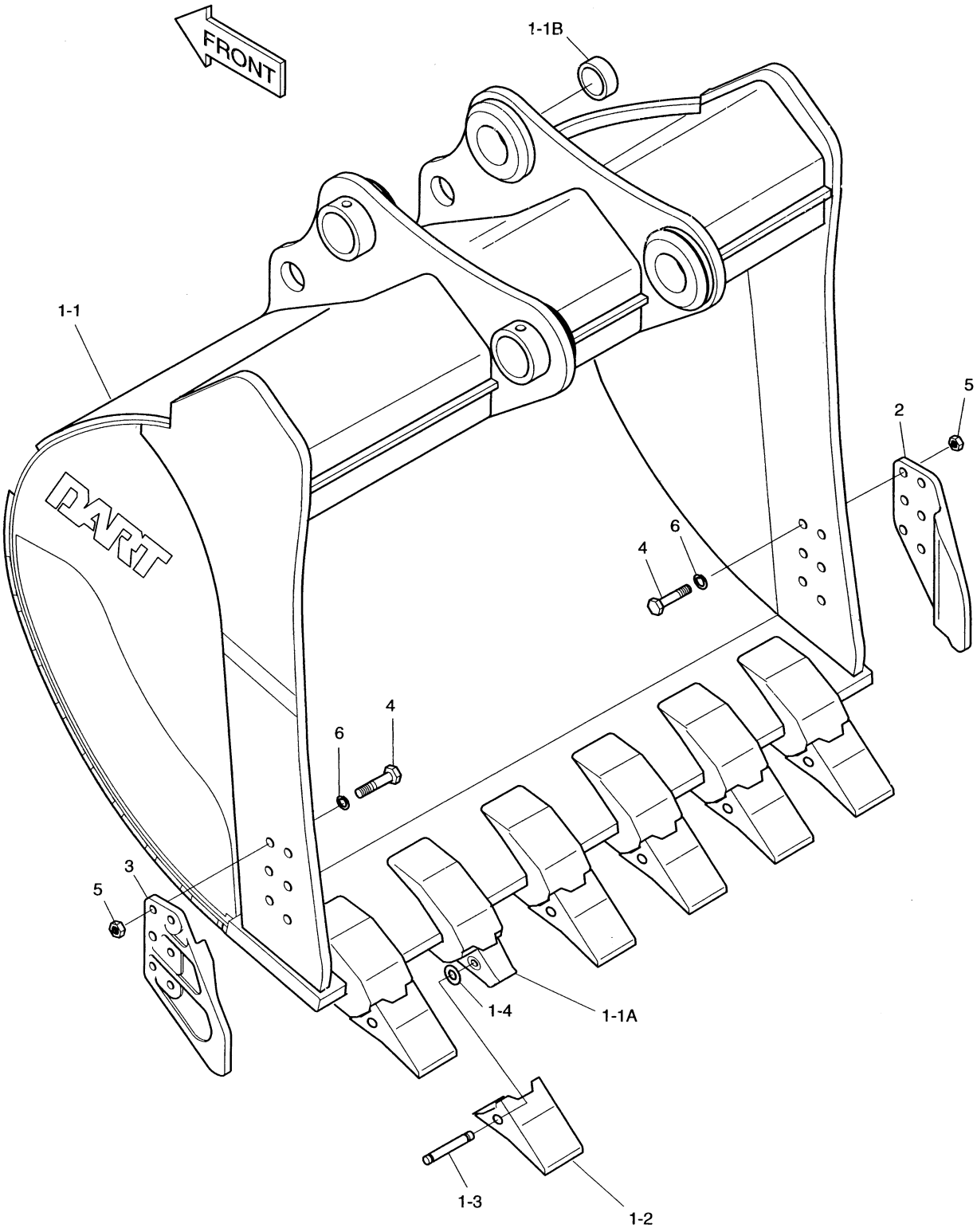

DATE	JUL. 30, 2003
REV. NO.	EXB03-13

Fig. 3160 BUCKET-3.2㎥(88")-SIDE PIN GODET

Serial No ;

Key No.	Part No.	Description	Description	Q'ty	S.C	Serial No.	ICA	Replaceable part	
								Part No.	Q'ty
3160--	704-00042A	BUCKET ASS'Y-3.2㎥	GODET	1					
1	704-00036A	BUCKET SUB ASS'Y	GODET	1					
1-1	-	. BUCKET;WELD	. GODET	1	D				
1-1A	2713-1273	.. ADAPTER;TOOTH	.. ADAPTEUR	6					
1-1B	2110-1413	.. BUSH	.. DOUILLE	4					
1-2	713-00028	. POINT;TOOTH	. DENT	6					
1-3	2705-1034	. PIN;LOCKING	. BROUCHE	6					
1-4	2114-1931	. WASHER;LOCKING	. RONDELLE PLATE	6					
2	2713-1240	CUTTER;SIDE(R.H)	COUTEAU LATERAL	1					
3	2713-1241	CUTTER;SIDE(L.H)	COUTEAU LATERAL	1					
4	S0575061	BOLT M24X3.0X85	BOULON A 6 PANS	12					
5	S4013333	NUT M24X3.0	ECROU	12					
6	2114-1831	WASHER;HARDEN M24	RONDELLE ELASTIQUE	12					

DATE	JUL. 30, 2003
REV. NO.	EXB03-13

Fig. 3170 BUCKET-3.2m³(88")-VERTICAL PIN GODET

Serial No. ;

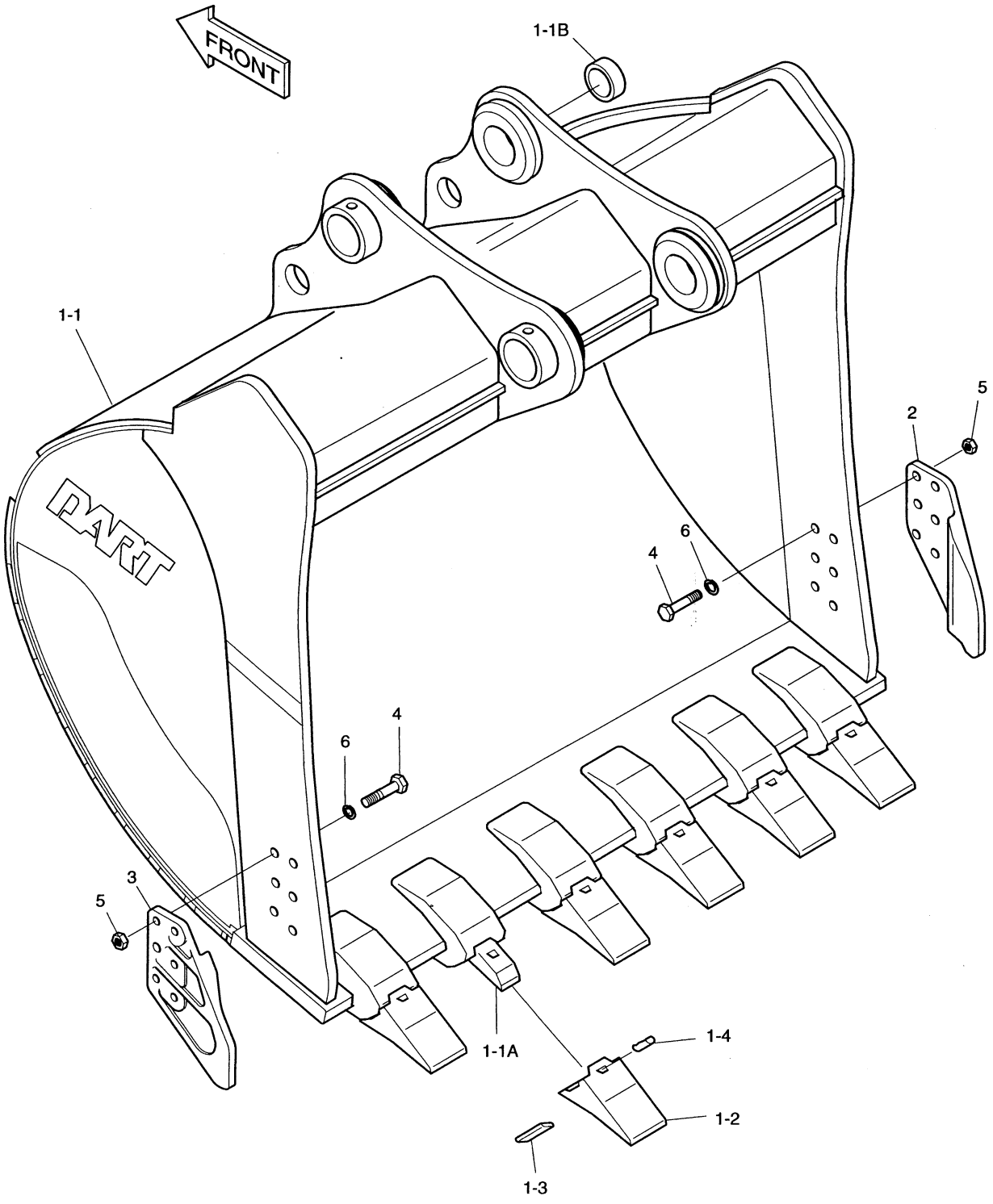

DATE	JUL. 30, 2003
REV. NO.	EXB03-13

Fig. 3170 BUCKET-3.2m³(88")-VERTICAL PIN GODET

Serial No ;

Key No.	Part No.	Description	Description	Q'ty	S.C	Serial No.	ICA	Replaceable part	
								Part No.	Q'ty
3170--	704-00043A	BUCKET ASS'Y-3.2㎥	GODET	1					
1	704-00039A	BUCKET SUB ASS'Y	GODET	1					
1-1	704-00040	. BUCKET;WELD	. GODET	1					
1-1A	2713-6082	.. ADAPTER;TOOTH	.. DENT DE ADAPTEUR	6					
1-1B	2110-1413	.. BUSH	.. DOUILLE	4					
1-2	2713-9063	. POINT;TOOTH	. DENT	6					
1-3	2705-6037	. PIN;LOCKING	. GOUPILLE DE BLOCAGE	6					
1-4	2705-6038	. RUBBER;LOCKING	. GOUPILLE	6					
2	2713-1240	CUTTER;SIDE(R.H)	COUTEAU LATERAL	1					
3	2713-1241	CUTTER;SIDE(L.H)	COUTEAU LATERAL	1					
4	S0575061	BOLT M24X3.0X85	BOULON A 6 PANS	12					
5	S4013333	NUT M24X3.0	ECROU	12					
6	2114-1831	WASHER;HARDEN M24	RONDELLE ELASTIQUE	12					

DATE	DEC. 15, 2006
REV. NO.	EXB06-13

Fig. 3180 BOOM PIPING-6.3m
CONDUITES DE FLECHE

Serial No. ;

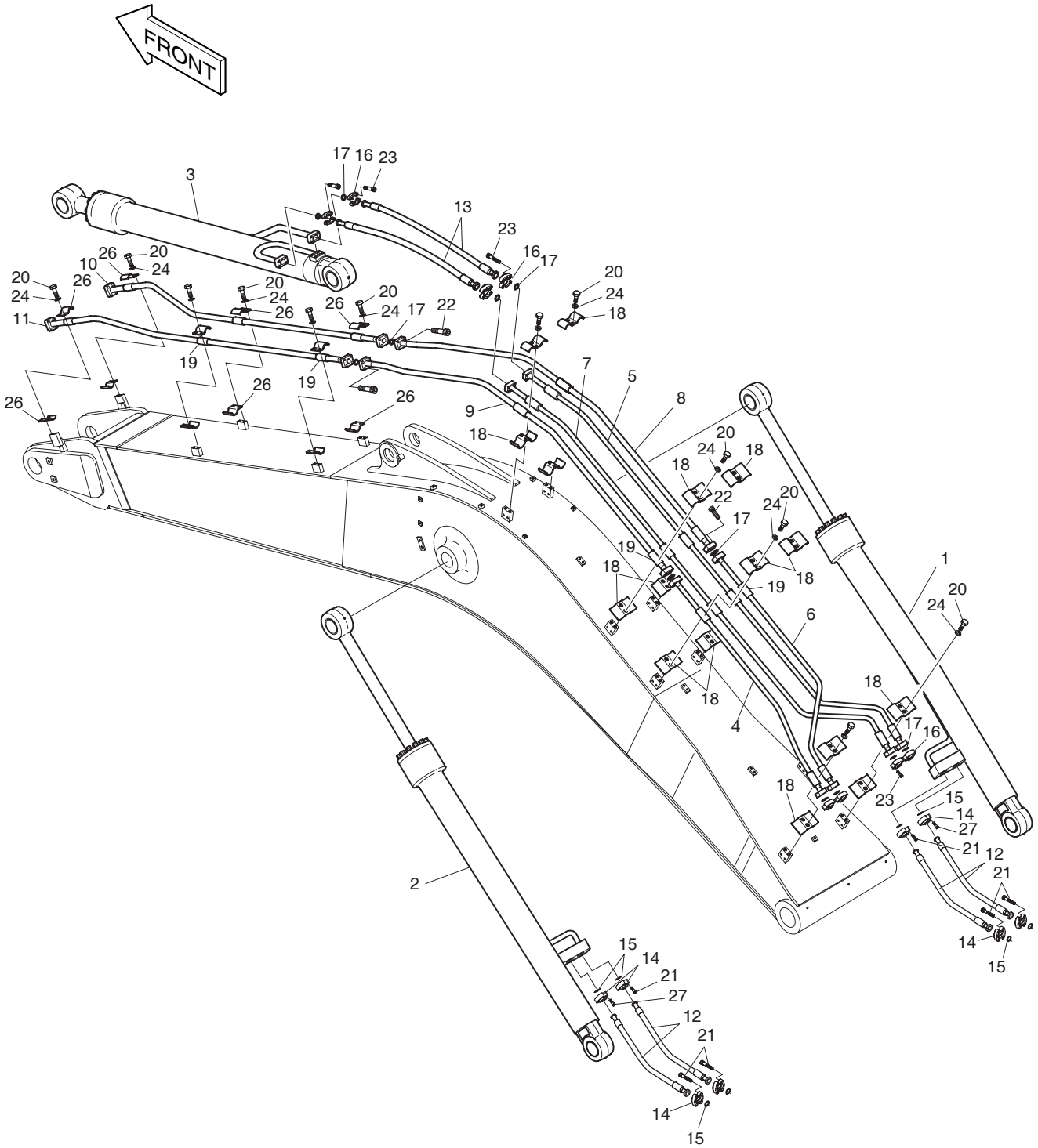

DATE	DEC. 15, 2006
REV. NO.	EXB06-13

Fig. 3180 BOOM PIPING-6.3m CONDUITES DE FLECHE

Serial No. ;

Key No.	Part No.	Description	Description	Q'ty	S.C	Serial No.	ICA	Replaceable part	
								Part No.	Q'ty
3180--	**400-00983A**	**BOOM PIPING-6.3m**	CONDUITES DE FLECHE	-	D				
1	440-00286	CYLINDER;BOOM(R.H)	VERIN DE FLECHE	1		1001–1711	I	440-00286A	1
	440-00286A	**CYLINDER;BOOM(R.H)**	VERIN DE FLECHE	1		**1712–**			
2	440-00287	CYLINDER;BOOM(L.H)	VERIN DE FLECHE	1		1001–1711	I	440-00287A	1
	440-00287A	**CYLINDER;BOOM(L.H)**	VERIN DE FLECHE	1		**1712–**			
3	440-00085	CYLINDER;ARM	VERIN DE BALANCIER	1		1001–1711	I	440-00085A	1
	440-00085A	**CYLINDER;ARM**	VERIN DE BALANCIER	1		**1712–**			
4	140-01298	PIPE	CONDUITE	1					
5	140-01225	PIPE	CONDUITE	1					
6	140-01297	PIPE	CONDUITE	1					
7	140-01226	PIPE	CONDUITE	1					
8	140-01227A	PIPE	CONDUITE	1					
9	140-01228A	PIPE	CONDUITE	1					
10	140-00859	PIPE	CONDUITE	1					
11	140-00860	PIPE	CONDUITE	1					
12	DS2038132	HOSE-1070L	TUYAU FLEXIBLE	4					
13	2184-1081D136	HOSE-1950L	TUYAU FLEXIBLE	2					
14	2181-9081	FLANGE;SPLIT	BRIDE	16					
15	2180-1026D19	O-RING	JONT TORIQUE	8					
16	2181-9086	FLANGE;SPLIT	FLASQUE EN DEUX	16					
17	2180-1026D23	O-RING	JONT TORIQUE	12					
18	124-00205A	CLAMP;PIPE	ATTACHE DE TUYAU	12					
19	161-00280	RUBBER	CAOUTCHOUC	18					
20	S0562766	BOLT M14X2.0X40	BOULON A 6PANS	24					
21	S2215366	BOLT;SOCKET M12X1.75X35	BOULON A 6 PANS CREUX	24					
22	S2218766	BOLT;SOCKET M14X2.0X55	BOULON A 6 PANS CREUX	16					
23	S2218666	BOLT;SOCKET M14X2.0X50	BOULON A 6 PANS CREUX	32					
24	S5102803	WASHER;SPRING M14	RONDELLE ELASTIQUE M14	24					
26	124-00219	CLAMP;PIPE	ATTACHE DE TUYAU	12					
27	S2215666	BOLT;SOCKET M12X1.75X50	BOULON A 6 PANS CREUX	8					

DATE	DEC. 15, 2006
REV. NO.	EXB06-13

Fig. 3190 ARM PIPING-2.9m
CONDUITES DE BALANCIER

Serial No. ;

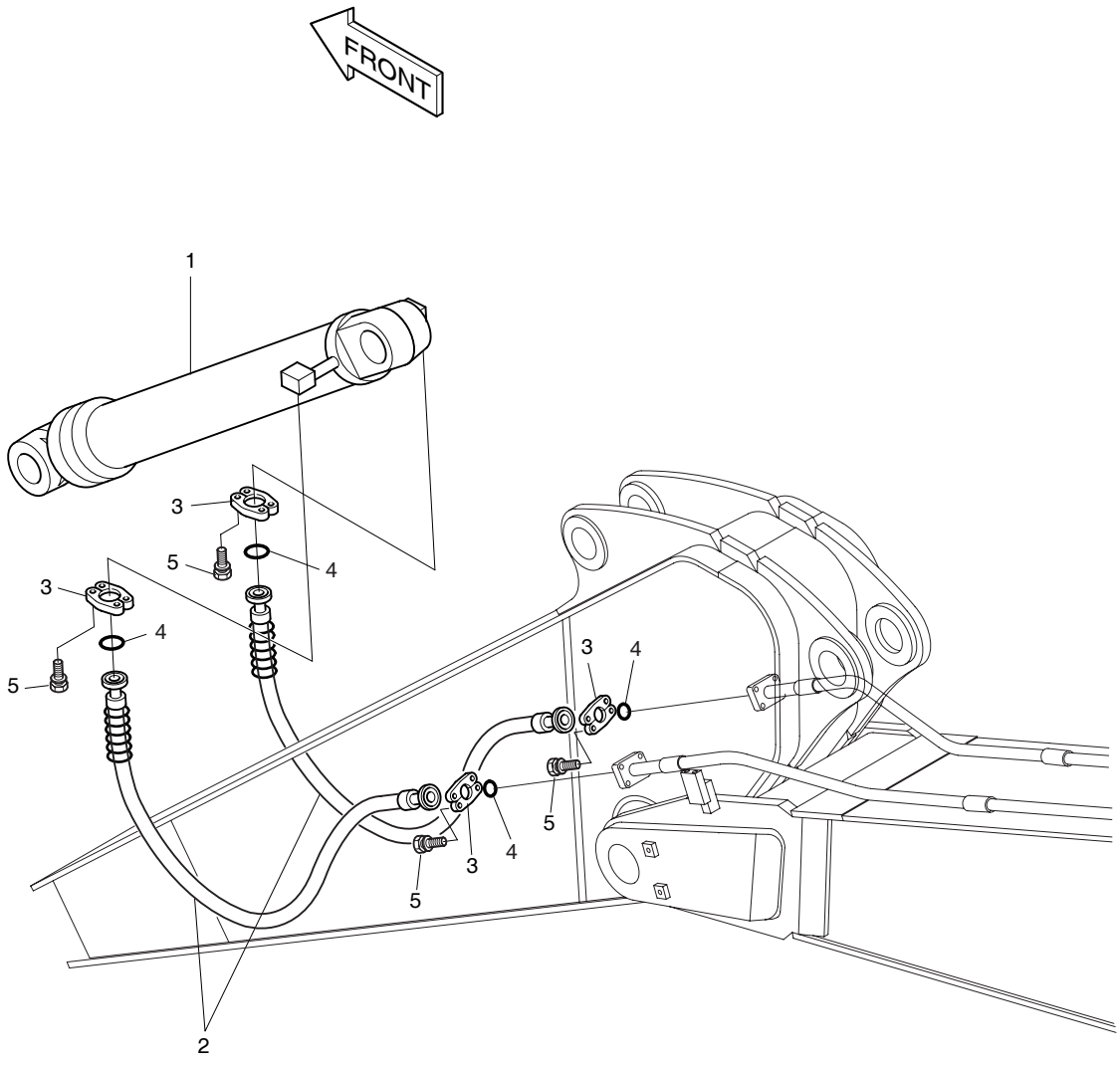

DATE	DEC. 15, 2006
REV. NO.	EXB06-13

Fig. 3190 ARM PIPING-2.9m CONDUITES DE BALANCIER

Serial No. ;

Key No.	Part No.	Description	Description	Q'ty	S.C	Serial No.	ICA	Replaceable part	
								Part No.	Q'ty
3190--	400-00990	ARM PIPING-2.9m	CONDUITES DE BALANCIER	-	D				
1	440-00016A	CYLINDER;BUCKET	VERIN DE GODET	1		1001–1104	I	440-00016B	1
	440-00016B	CYLINDER;BUCKET	VERIN DE GODET	1		1105–1181	I	440-00016C	1
	440-00016C	CYLINDER;BUCKET	VERIN DE GODET	1		1182–1711	I	440-00016E	1
	440-00016E	**CYLINDER;BUCKET**	VERIN DE GODET	1		**1712–**			
2	2184-1098D53	HOSE-2350L	TUYAU FLEXIBLE	2					
3	2181-9086	FLANGE;SPLIT	BRIDE	8					
4	2180-1026D23	O-RING	JOINT TORIQUE	4					
5	S2218666	BOLT;SOCKET M14X2.0X50	BOULON A 6 PANS CREUX	16					

DATE	JUL. 30, 2003
REV. NO.	EXB03-13

Fig. 3200 LUBRICATION PIPING-6.3m BOOM
TUYAUTERIE AVANT DE LUBRIFICATION

Serial No. ;

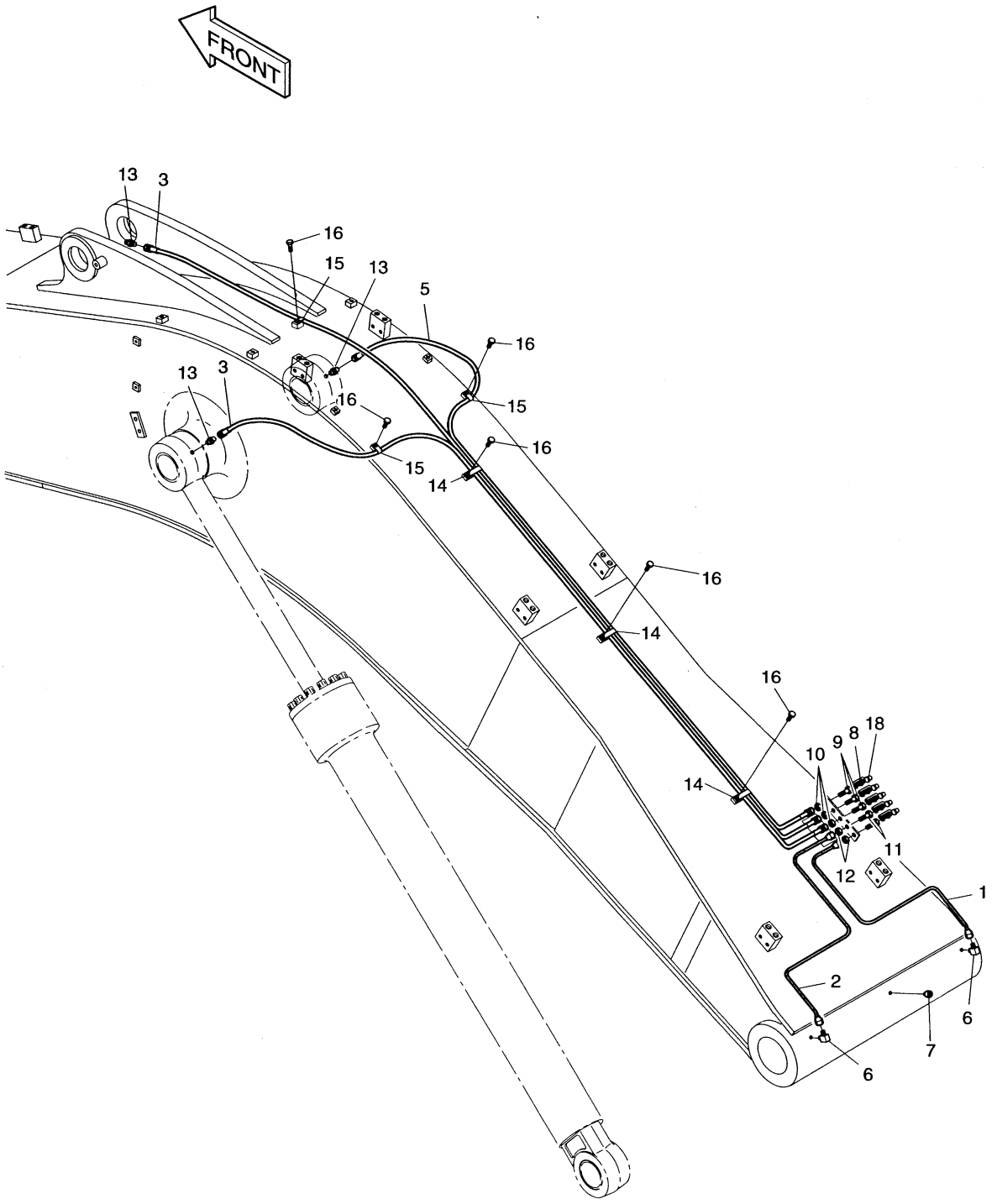

DATE	JUL. 30, 2003
REV. NO.	EXB03-13

Fig. 3200 LUBRICATION PIPING-6.3m BOOM
TUYAUTERIE AVANT DE LUBRIFICATION

Serial No ;

Key No.	Part No.	Description	Description	Q'ty	S.C	Serial No.	ICA	Replaceable part	
								Part No.	Q'ty
3200--	400-00984	LUBRICATION PIPING	LUBRIFICATION	-	D				
1	182-00111	PIPE	CONDUITE	1					
2	182-00112	PIPE	CONDUITE	1					
3	2184-1045D97	HOSE PF1/4-3300L	TUYAU FLEXIBLE	2					
5	DS2053736	HOSE PF1/4-3250L	TUYAU FLEXIBLE	1					
6	2181-1925	ELBOW	COUDE	2					
7	S3524403	PLUG;DRAIN M10X1.5X12	BOUCHON	1					
8	S6710041	NIPPLE;GREASE PT1/8	GRAISSEUR	5					
9	181-00103	REDUCER	REDUCTEUR	3					
10	121-00006	NUT	ECROU	3					
11	181-00525	REDUCER	REDUCTEUR	2					
12	S4032833	NUT M14X1.5	ECROU	2					
13	2181-1186D12	ELBOW PF1/4-PT1/8	COUDE	3					
14	124-00199D4	CLIP	ATTACHE	3					
15	2124-1353D2	CLIP	ATTACHE	3					
16	120-00276	BOLT M8X1.25X12	BOULON A 6 PANS	6					
18	160-00020	CAP;GREASE NIPPLE	CHAPEAU	5					

DATE	DEC. 15, 2006
REV. NO.	EXB06-13

Fig. 3210 LOCK VALVE PIPING-6.3m
CONDUITES DE VERROU VANNE

Serial No. ;

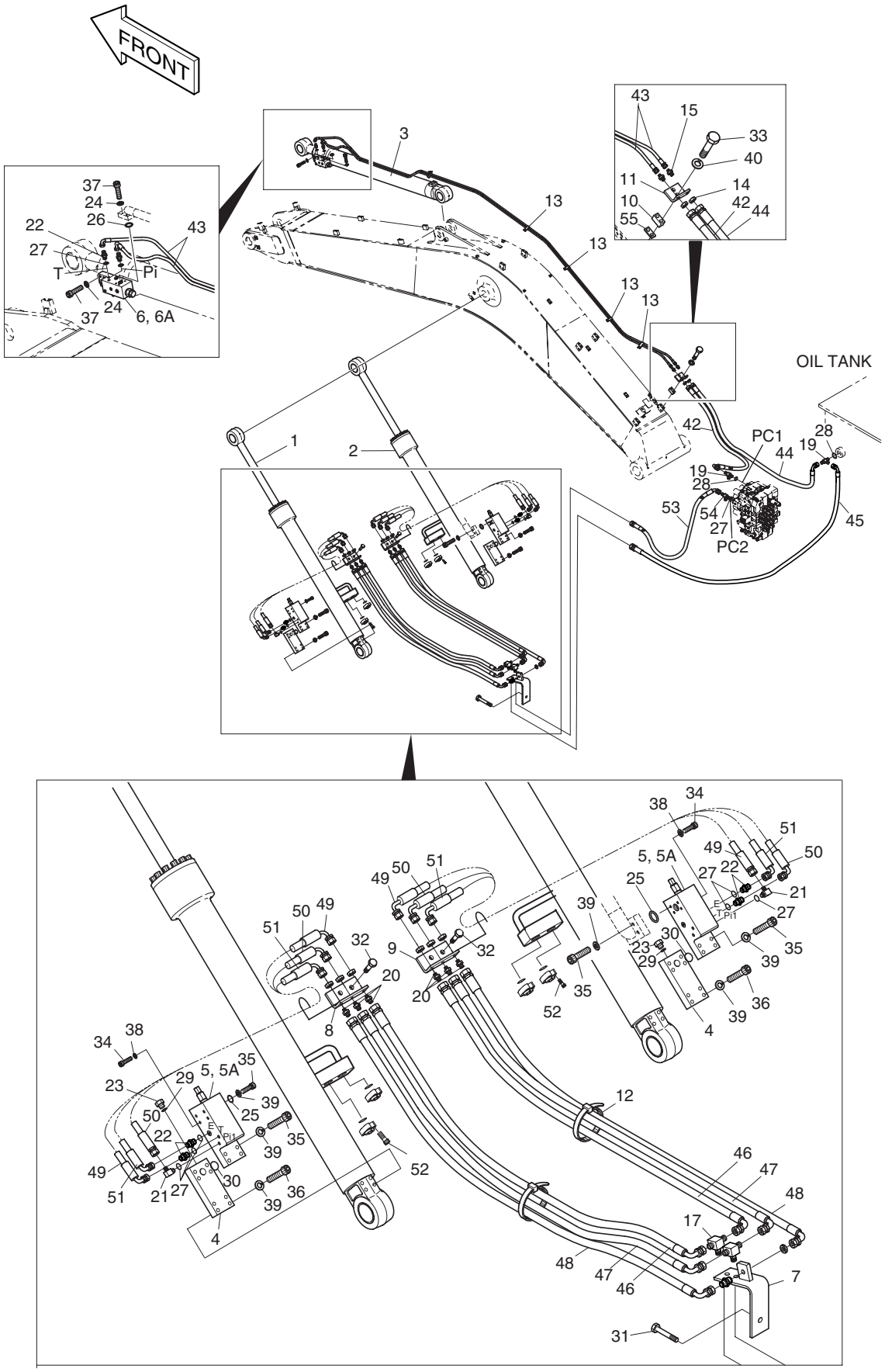

DATE	DEC. 15, 2006
REV. NO.	EXB06-13

Fig. 3210 LOCK VALVE PIPING-6.3m CONDUITES DE VERROU VANNE

Serial No. ;

Key No.	Part No.	Description	Description	Q'ty	S.C	Serial No.	ICA	Replaceable part	
								Part No.	Q'ty
3210--	**400-00996A**	**LOCK VALVE PIPING-6.3m**	CONDUITES DE VERROU	-	D				
1	440-00318	CYLINDER;BOOM(L.H)	VERIN DE FLECHE	1		1001–1702	I	440-00318A	1
	440-00318A	**CYLINDER;BOOM(L.H)**	VERIN DE FLECHE	1		**1703–**			
2	440-00319	CYLINDER;BOOM(R.H)	VERIN DE FLECHE	1		1001–1702	I	440-00319A	1
	440-00319A	**CYLINDER;BOOM(R.H)**	VERIN DE FLECHE	1		**1703–**			
3	440-00089	CYLINDER;ARM	VERIN DE BALANCIER	1		1001–1715	I	440-00089A	1
	440-00089A	**CYLINDER;ARM**	VERIN DE BALANCIER	1		**1716–**			
4	423-00030	VALVE;BLOCK	BLOC	2					
5	420-00004A	VALVE;LOCK	VANNE	2					
5A	K9000999	. SEAL KIT	. JOINT DE KIT	1					
6	420-00021A	VALVE;LOCK	CONDUITES DE VERROU	1					
6A	K9001000	. SEAL KIT	. JOINT DE KIT	1					
7	195-01964	BRACKET;LOCK VALVE	SUPPORT	1					
8	195-00335	BRACKET	SUPPORT	1					
9	195-00329	BRACKET	SUPPORT	1					
10	2114-1180D20	SHIM	CALE	1					
11	195-00163	BRACKET	SUPPORT	1					
12	2124-1084D2	BAND;CLIP	ATTACHE	30					
13	124-00199D5	CLIP	ATTACHE	4					
14	121-00010D1	NUT	ECROU	2					
15	181-00078D5	ADAPTER PF1/4-PF3/8	ADAPTEUR	2					
17	181-00008	TEE PF1/4-PF1/4-PF3/8	TE	2					
19	2181-1951D16	TEE PFO3/8-PF3/8-PF3/8	TE	2					
20	181-00020	ADAPTER;S PF1/4-PF1/4	ADAPTEUR	7					
21	2181-1702D4	ELBOW PFO1/4-PF1/4	COUDE	2					
22	2181-1126D14	ADAPTER;S PFO1/4-PF1/4	ADAPTEUR	6					
23	2181-1890D9	PLUG	BOUCHON	2					
24	S5110803	WASHER;SPRING M14	RONDELLE ELASTIQUE	8					
25	S8000341	O-RING	JONT TORIQUE	2					
26	S8000401	O-RING	JONT TORIQUE	1					
27	S8000111	O-RING	JONT TORIQUE	9					
28	S8000141	O-RING	JONT TORIQUE	2					
29	S8000291	O-RING	JONT TORIQUE	2					
30	2180-1026D19	O-RING	JONT TORIQUE	2					
31	S0566666	BOLT M16X2.0X120	BOULON A 6PANS	1					
32	S0515353	BOLT M12X1.75X35	BOULON A 6PANS	4					
33	S0563366	BOLT M14X2.0X70	BOULON A 6PANS	2					
34	S0515053	BOLT M12X1.75X25	BOULON A 6PANS	2					

DATE	DEC. 15, 2006
REV. NO.	EXB06-13

Fig. 3210 LOCK VALVE PIPING-6.3m
CONDUITES DE VERROU VANNE

Serial No. ;

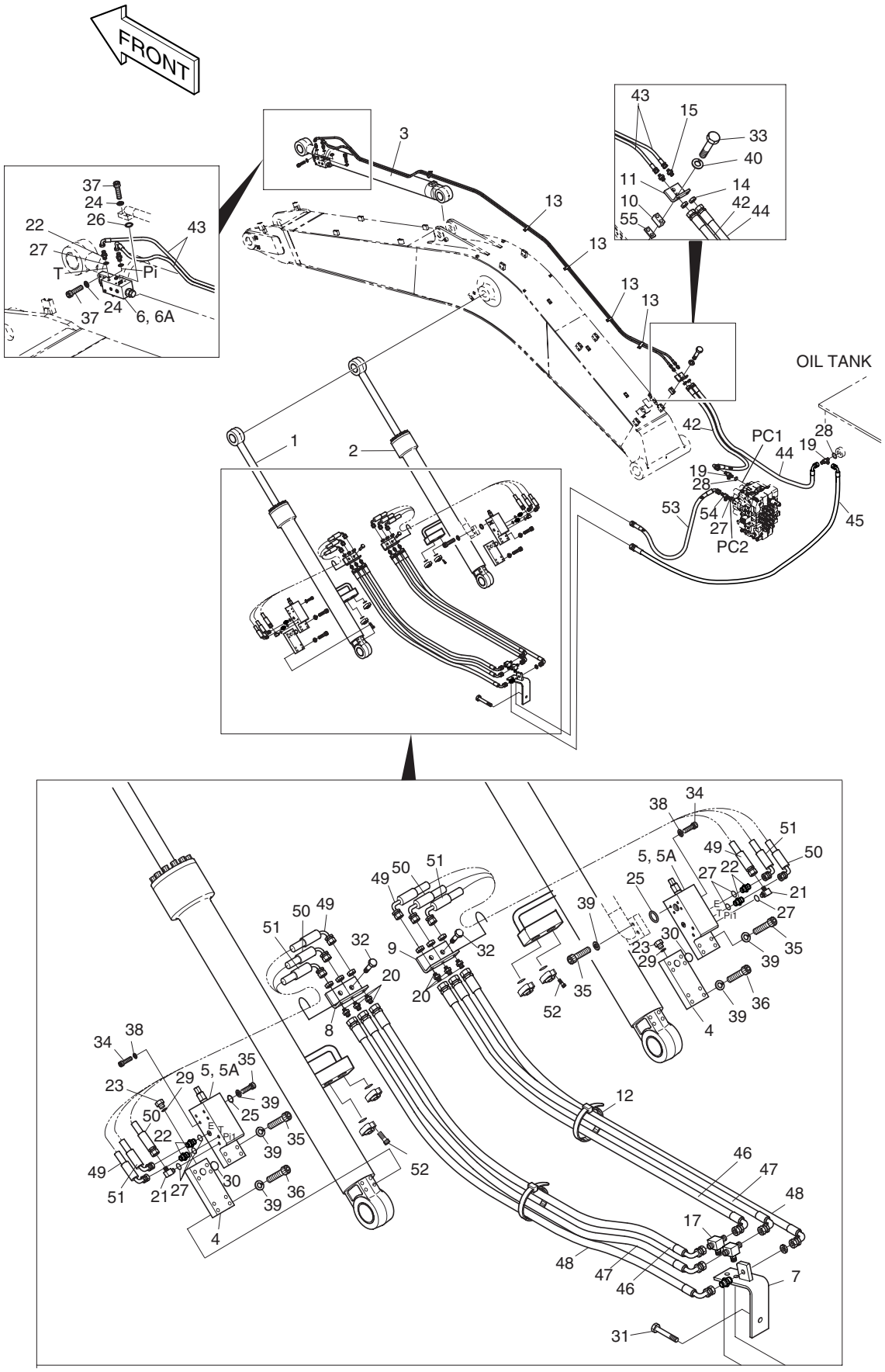

DATE	DEC. 15, 2006
REV. NO.	EXB06-13

Fig. 3210 LOCK VALVE PIPING-6.3m
CONDUITES DE VERROU VANNE

Serial No. ;

Key No.	Part No.	Description	Description	Q'ty	S.C	Serial No.	ICA	Replaceable part	
								Part No.	Q'ty
3210-35	S2215766	BOLT;SOCKET M12X1.75X55	BOULON A 6 PANS CREUX	16					
36	S2215966	BOLT;SOCKET M12X1.75X65	BOULON A 6 PANS CREUX	8					
37	S2218966	BOLT;SOCKET M14X2.0X65	BOULON A 6 PANS CREUX	8					
38	S5102703	WASHER;SPRING M12	RONDELLE ELASTIQUE	2					
39	S5110703	WASHER;SPRING M12	RONDELLE ELASTIQUE	24					
40	S5102803	WASHER;SPRING M14	RONDELLE ELASTIQUE M14	2					
42	DS2055733	HOSE PF3/8-1700L	TUYAU FLEXIBLE	1					
43	2184-1046D259	HOSE PF1/4-6000L	TUYAU FLEXIBLE	2					
44	2184-1046D238	HOSE PF3/8-2300L	TUYAU FLEXIBLE	1					
45	2184-1046D226	HOSE PF3/8-2900L	TUYAU FLEXIBLE	1					
46	2184-1060D45	HOSE PF1/4-1000L	TUYAU FLEXIBLE	2					
47	2184-1060D48	HOSE PF1/4-1050L	TUYAU FLEXIBLE	2					
48	2184-1060D221	HOSE PF1/4-1100L	TUYAU FLEXIBLE	2					
49	2184-1061D335	HOSE PF1/4-680L	TUYAU FLEXIBLE	2					
50	2184-1046D35	HOSE PF1/4-680L	TUYAU FLEXIBLE	2					
51	2184-1061D336	HOSE PF1/4-580L	TUYAU FLEXIBLE	2					
52	S2215666	BOLT;SOCKET M12X1.75X50	BOULON A 6 PANS CREUX	8					
53	2184-1046D227	HOSE PF3/8-2600L	TUYAU FLEXIBLE	1					
54	2181-1951D20	TEE	TE	1					
55	2114-1180D15	SHIM T=3.2	CALE	1					

DATE	JUN. 30, 2004
REV. NO.	EXB04-04

Fig. 3220 BOOM PIPING-6.3m ONE & TWO WAY
CONDUITES DE FLECHE

Serial No. ;

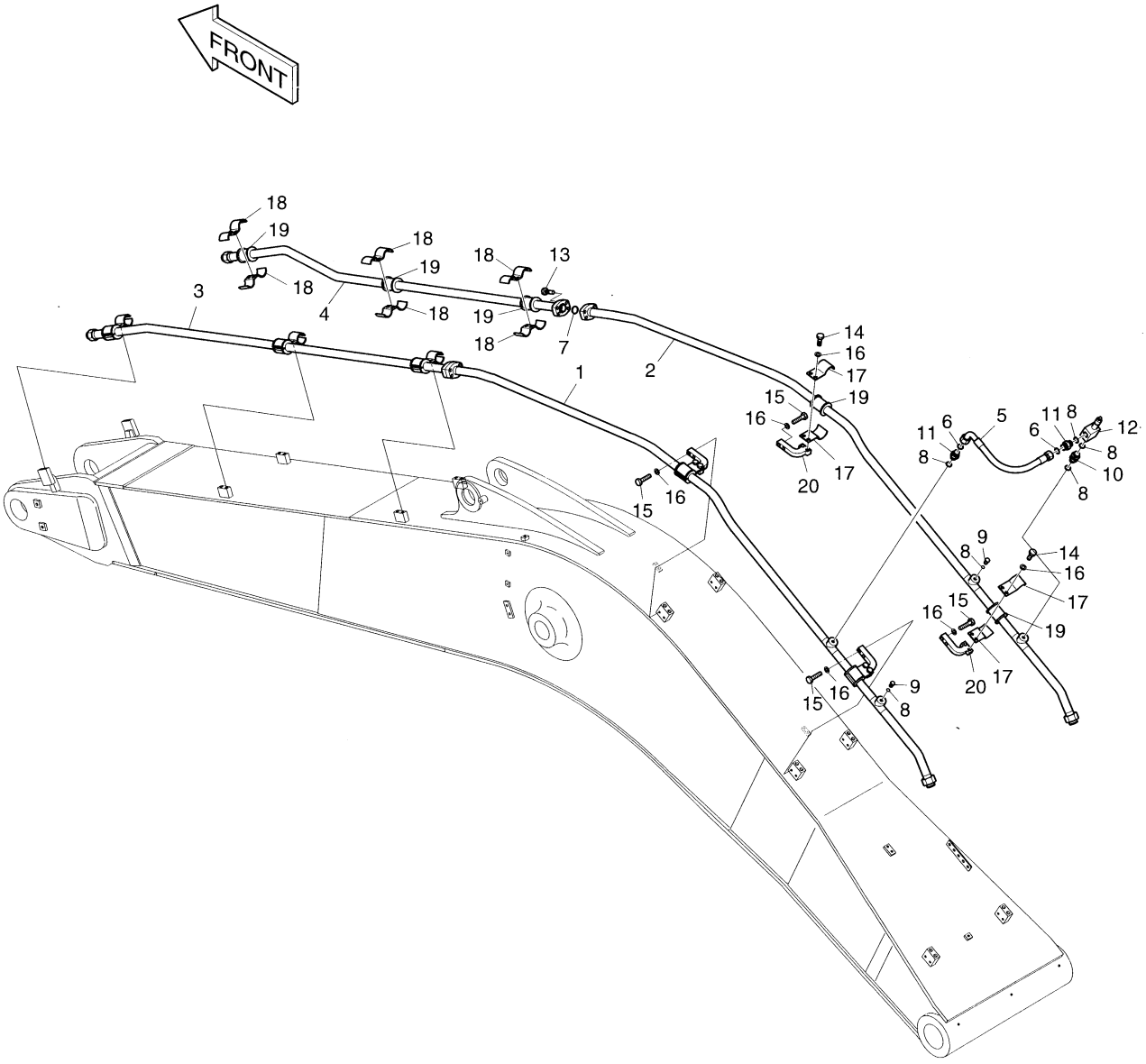

DATE	JUN. 30, 2004
REV. NO.	EXB04-04

Fig. 3220 BOOM PIPING-6.3m ONE & TWO WAY CONDUITES DE FLECHE

Serial No ;

Key No.	Part No.	Description	Description	Q'ty	S.C	Serial No.	ICA	Replaceable part	
								Part No.	Q'ty
3220--	400-00998A	BOOM PIPING-ONE & TWO WAY	CONDUITES DE FLECHE	-	D				
1	140-01229	PIPE	CONDUITE	1					
2	140-01230	PIPE	CONDUITE	1					
3	140-01173	PIPE	CONDUITE	1					
4	140-01174	PIPE	CONDUITE	1					
5	2184-1197D180	HOSE-900L	TUYAU FLEXIBLE	1					
6	S8030161	O-RING	JONT TORIQUE	2					
7	2180-1026D23	O-RING	JONT TORIQUE	2					
8	S8000291	O-RING	JONT TORIQUE	6					
9	2181-1950D9	PLUG	BOUCHON	2					
10	2181-2818	ADAPTER;SP	ADAPTEUR	1					
11	2181-4133D6	ADAPTER	RACCORD ADAPTATEUR	2					
12	2420-9627A	VALVE;RELIEF	VANNE	1		1001–1356	I	2420-9627B	1
	2420-9627B	**VALVE;RELIEF**	VANNE	1		**1357–**			
13	S2218766	BOLT;SOCKET M14X2.0X55	BOULON A 6 PANS CREUX	8					
14	S0562766	BOLT M14X2.0X40	BOULON A 6PANS	8					
15	S0563166	BOLT M14X2.0X60	BOULON A 6PANS	8					
16	S5102803	WASHER;SPRING M14	RONDELLE ELASTIQUE M14	16					
17	124-00219	CLAMP;PIPE	ATTACHE DE TUYAU	8					
18	124-00205A	CLAMP;PIPE	ATTACHE DE TUYAU	12					
19	161-00280	RUBBER	CAOUTCHOUC	10					
20	195-01920	BRACKET	SUPPORT	4					

DATE	JUL. 30, 2003
REV. NO.	EXB03-13

Fig. 3230 ARM PIPING-2.9m ONE & TWO WAY
CONDUITES DE BALANCIER

Serial No. ;

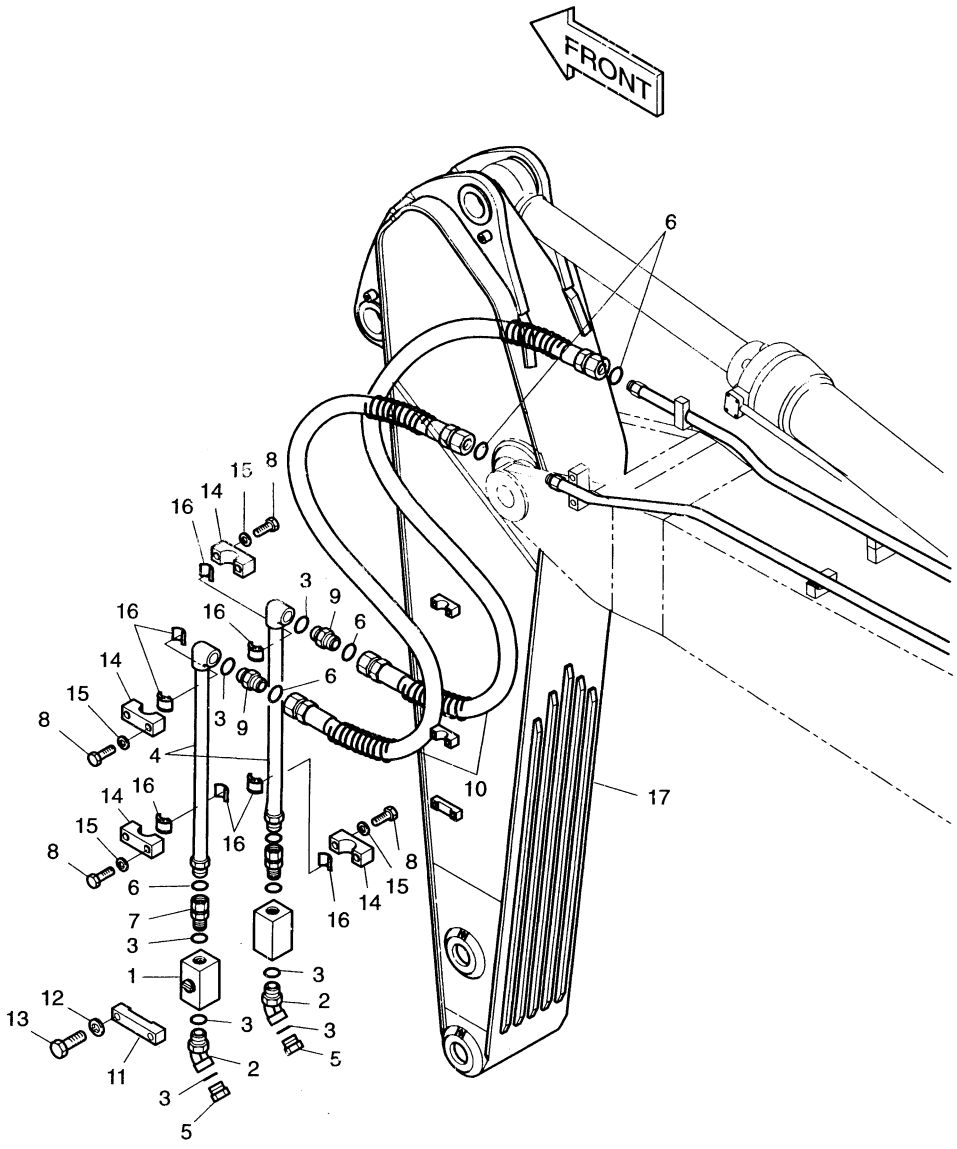

DATE	JUL. 30, 2003
REV. NO.	EXB03-13

Fig. 3230 ARM PIPING-2.9m ONE & TWO WAY CONDUITES DE BALANCIER

Serial No ;

Key No.	Part No.	Description	Description	Q'ty	S.C	Serial No.	ICA	Replaceable part	
								Part No.	Q'ty
3230--	400-00999	ARM PIPING-2.9m	CONDUITES DE BALANCIER	-	D				
1	2420-9631A	VALVE;STOP	VANNE	2					
2	2181-2816D3	ELBOW	COUDE	2					
3	S8000381	O-RING	JONT TORIQUE	6					
4	140-00040	PIPE	TUYAU	2					
5	2181-2817D3	PLUG	BOUCHON	2					
6	2180-1026D37	O-RING	JONT TORIQUE	6					
7	2181-2566D9	ADAPTER	ADAPTEUR	2					
8	S0560953	BOLT M12X1.75X60	BOULON A 6PANS	8					
9	2181-4133D35	ADAPTER	ADAPTEUR	2					
10	2184-1196D83	HOSE	TUYAU FLEXIBLE	2					
11	124-00170	CLAMP	ATTACHE DE TUYAU	2					
12	S5102903	WASHER;SPRING M16	RONDELLE ELASTIQUE	4					
13	S0566053	BOLT M16X2.0X90	BOULON A 6PANS	4					
14	2124-1693	CLAMP;PIPE	ATTACHE DE TUYAU	4					
15	S5102703	WASHER;SPRING M12	RONDELLE ELASTIQUE	8					
16	2161-2505	RUBBER	CAOUTCHOUC	8					
17	**701-00436**	**ARM;WELDMENT**	BALANCIER	1		**1001-1117**			

DATE	JUN. 30, 2006
REV.NO.	EXB06-08

Fig. 4100 MAIN PUMP POMPE

Serial No. ;

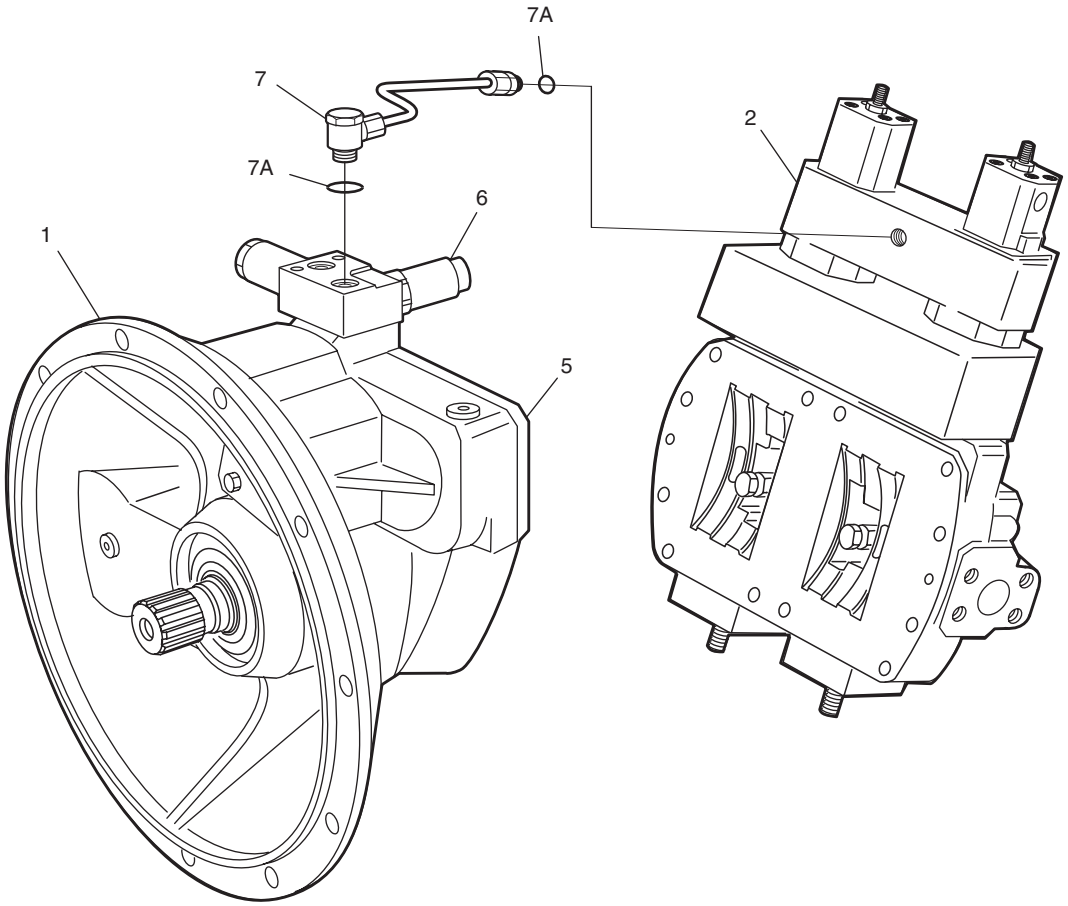

DATE	JUN. 30, 2006
REV. NO.	EXB06-08

Fig. 4100 MAIN PUMP POMPE

Serial No. ;

Key No.	Part No.	Description	Description	Q'ty	S.C	Serial No.	ICA	Replaceable part	
								Part No.	Q'ty
4100--	401-00233	PUMP;MAIN	POMPE	1		1001–1598	I	401-00233B	1
	401-00233B	PUMP;MAIN	POMPE	1		1599–			
1	-	**PUMP**	POMPE	1	D				
2	02057262	CONTROL	CONTROL	1					
5	02031868	COVER	COUVERCLE	1					
6	02057118	PORT PLATE WITH VALVES	PLAQUE	1					
7	02057200	PIPE ASS'Y	ENSEMBLE CONDUITES	1					
7A	09156348	. O-RING	. JONT TORIQUE	2					
*	401-00255KT	SEAL KIT;PUMP	KIT DE JOINT	1					

DATE	JUN. 30, 2007
REV. NO.	EXB07-06

Fig. 4110 MAIN PUMP-PUMP POMPE

Serial No. ;

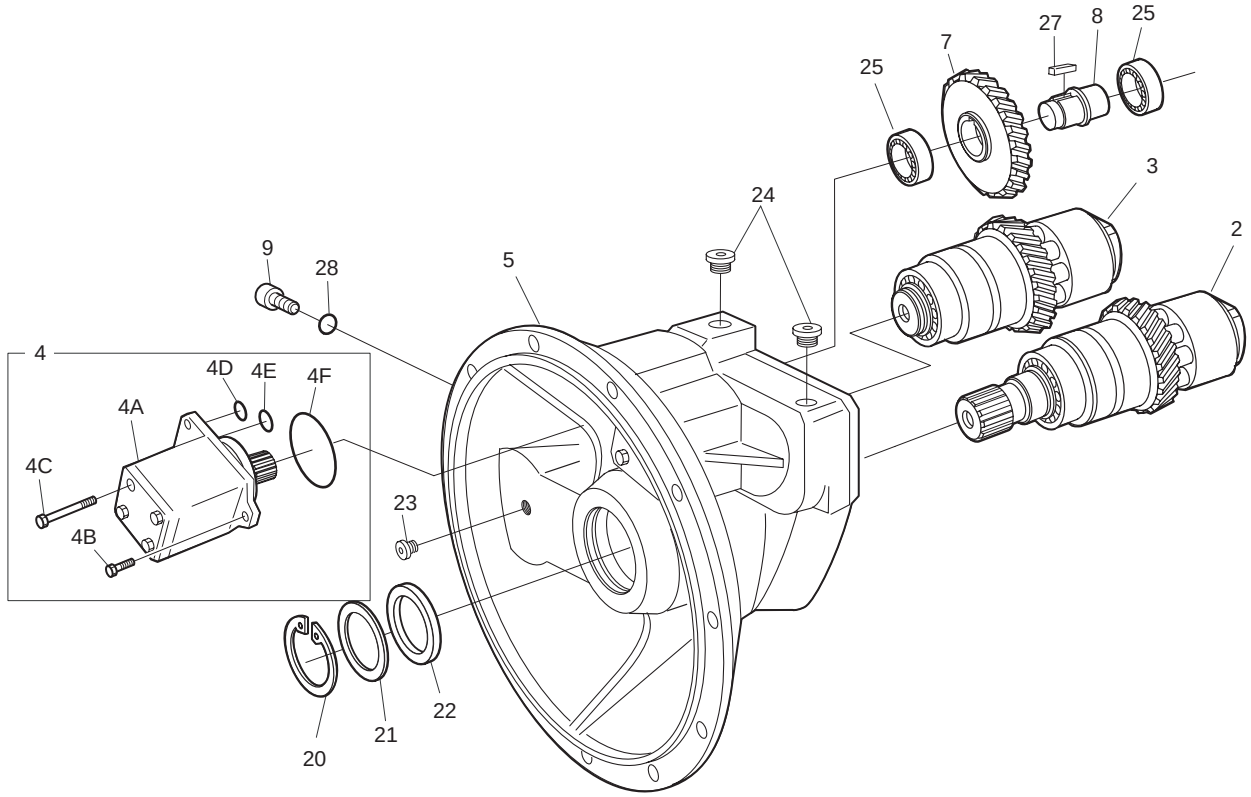

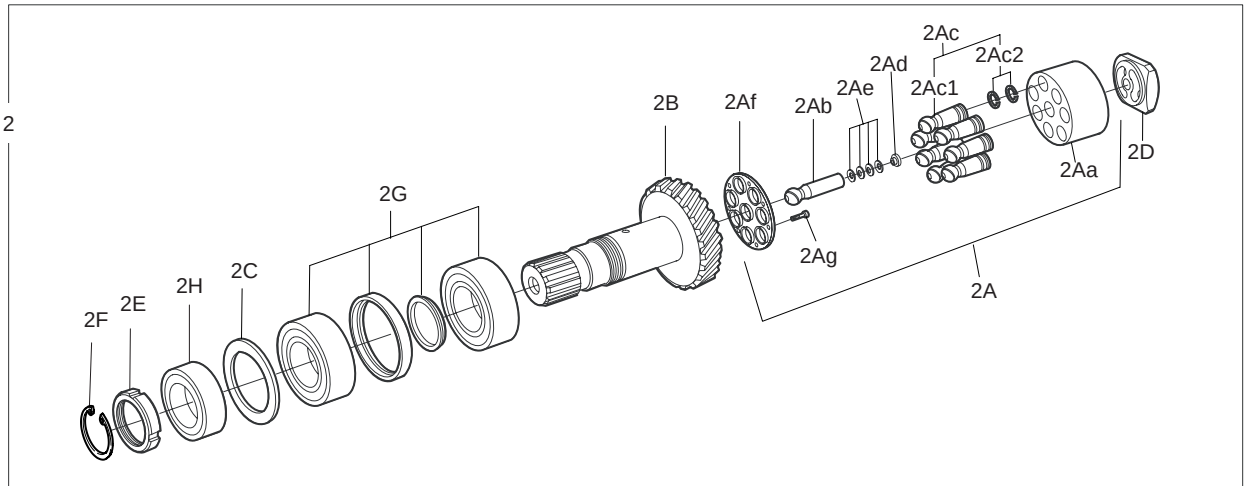

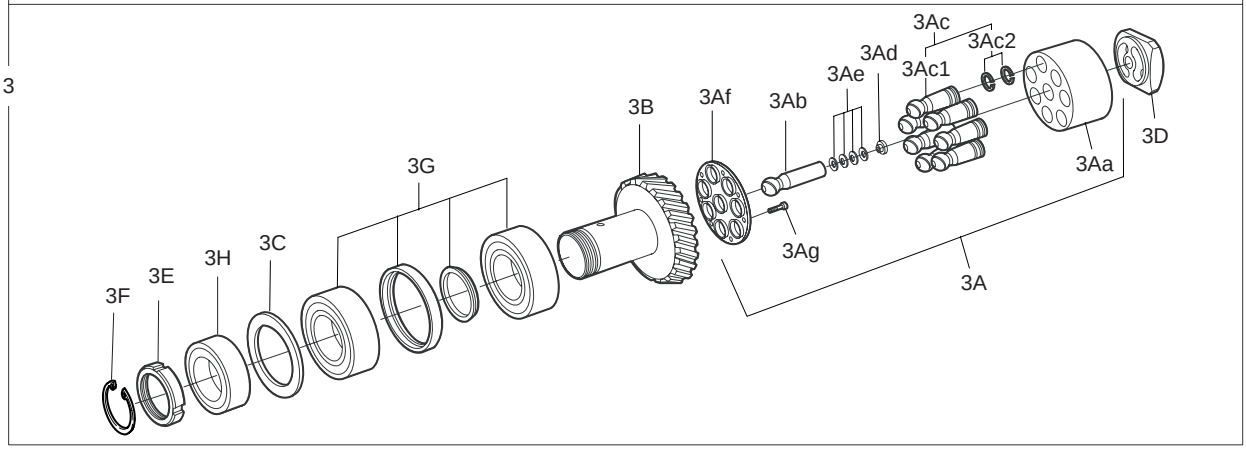

DATE	JUN. 30, 2007
REV. NO.	EXB07-06

Fig. 4110 MAIN PUMP-PUMP POMPE

Serial No. ;

Key No.	Part No.	Description	Description	Q'ty	S.C	Serial No.	ICA	Replaceable part	
								Part No.	Q'ty
4110-2	02043832	ROTARY GROUP	ROTATOIRE GROUPE	1					
2A	02043825	. ROTARY GROUP, HYDR.	. ROTATOIRE GROUPE	1					
2Aa	02042247	.. CYLINDER	.. CYLINDRE	1					
2Ab	02031617	.. PIN;CENTER	.. BROUCHE	1					
2Ac	02031949	.. PISTON & PISTON RINGS	.. PISTON	7					
2Ac1	02036858	... PISTON	... PISTON	1	D				
2Ac2	09831898	... RING;STEEL SEALING	... BAGUE	2	D				
2Ad	02045069	.. COLLAR;SPRING	.. BAGUE	1					
	02045070	.. COLLAR;SPRING	.. BAGUE	1	R				
	02045071	.. COLLAR;SPRING	.. BAGUE	1	R				
2Ae	09418513	.. CUP SPRING	.. RESSORT	4					
2Af	02033027	.. PLATE;RETAINING	.. PLAQUE	1					
2Ag	09831108	.. SCREW;PAN HEAD	.. VIS	14					
2B	02036865	. SHAFT;DRIVE	. ARBRE	1					
2C	02031913	. SHIM	. CALE	1					
	02031914	. SHIM	. CALE	1					
	02031915	. SHIM	. CALE	1					
2D	02050516	. CONTROL LENS;RIGHT-HAND	. ROTATOIRE	1					
2E	02031630	. PLATE;BACK-UP	. PLAQUE	1	R				
	02031632	. PLATE;BACK-UP	. PLAQUE	1	R				
	02031633	. PLATE;BACK-UP	. PLAQUE	1	R				
	02031634	. PLATE;BACK-UP	. PLAQUE	1	R				
	02031635	. PLATE;BACK-UP	. PLAQUE	1	R				
	02031636	. PLATE;BACK-UP	. PLAQUE	1	R				
	02031637	. PLATE;BACK-UP	. PLAQUE	1	R				
2F	09083367	. RING;RETAINING	. BAGUE D'ARRET	1					
2G	09157648	. BEARING;UNIT	. PALIER	1					
2H	09151103	. BEARING;TAPERED-ROLLER	. PALIER	1					
3	02054462	ROTARY GROUP	ROTATOIRE GROUPE	1		1001–1598			
	02077073	ROTARY GROUP	ROTATOIRE GROUPE	1		1599–			
3A	02043825	. ROTARY GROUP, HYDR.	. ROTATOIRE GROUPE	1		1001–1598			
	02075457	. ROTARY GROUP, HYDR.	. ROTATOIRE GROUPE	1		1599–			
3Aa	02042247	.. CYLINDER	.. CYLINDRE	1					
3Ab	02031617	.. PIN;CENTER	.. BROUCHE	1		1001–1598			
	02080908	.. PIN;CENTER	.. BROUCHE	1		1599–			
3Ac	02031949	.. PISTON & PISTON RINGS	.. PISTON	7					
3Ac1	02036858	... PISTON	... PISTON	1	D				
3Ac2	09831898	... RING;STEEL SEALING	... BAGUE	2	D				

DATE	JUN. 30, 2007
REV. NO.	EXB07-06

Fig. 4110 MAIN PUMP-PUMP POMPE

Serial No. ;

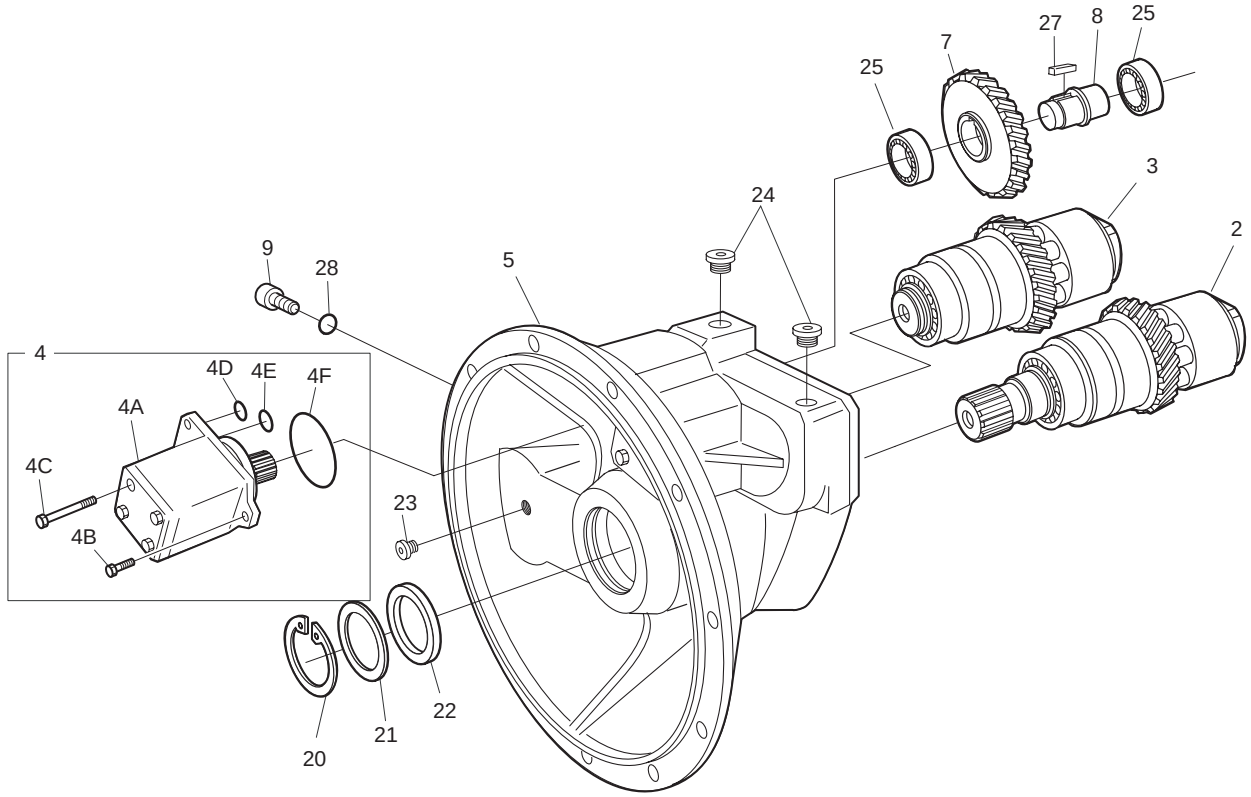

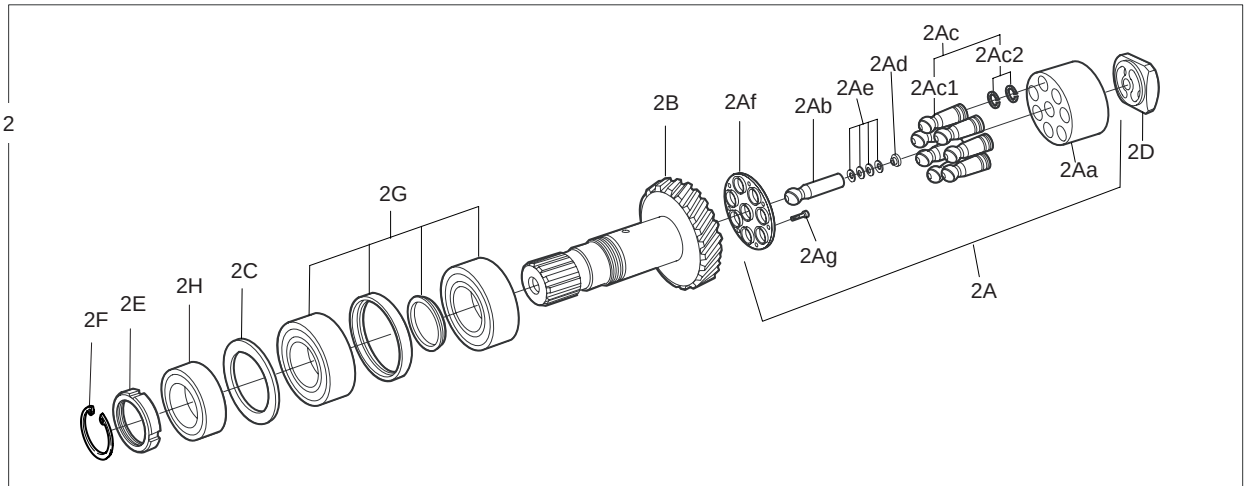

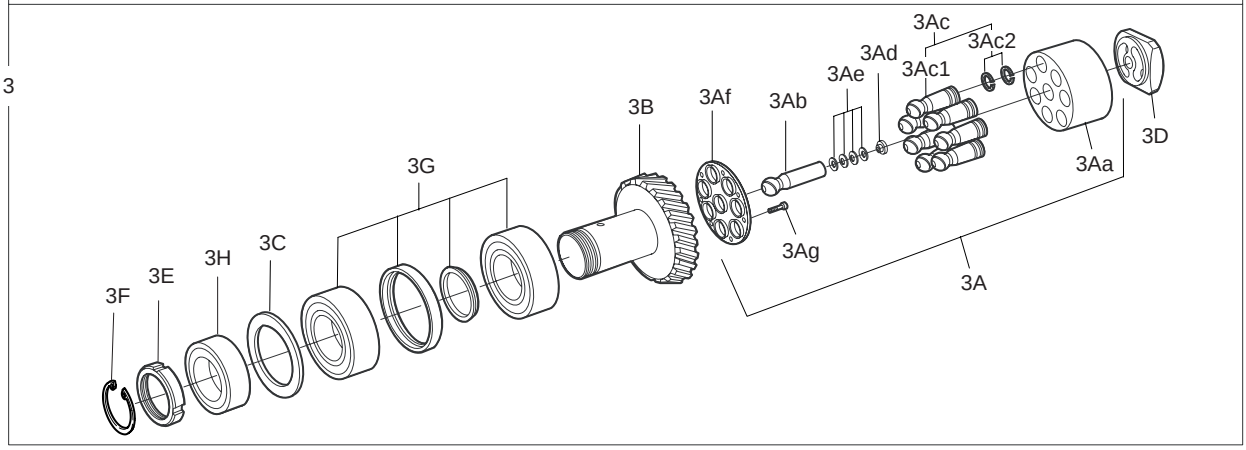

DATE	JUN. 30, 2007
REV. NO.	EXB07-06

Fig. 4110 MAIN PUMP-PUMP POMPE

Serial No. ;

Key No.	Part No.	Description	Description	Q'ty	S.C	Serial No.	ICA	Replaceable part	
								Part No.	Q'ty
4110-3Ad	02045069	.. COLLAR;SPRING	.. BAGUE	1					
	02045070	.. COLLAR;SPRING	.. BAGUE	1	R				
	02045071	.. COLLAR;SPRING	.. BAGUE	1	R				
3Ae	09418513	.. CUP SPRING	.. RESSORT	4					
3Af	02033027	.. PLATE;RETAINING	.. PLAQUE	1					
3Ag	09831108	.. SCREW;PAN HEAD	.. VIS	14		1001–1598			
	02602395	.. SCREW;PAN HEAD	.. VIS	14		1599–			
3B	02047356	. SHAFT;DRIVE	. ARBRE	1					
3C	09651590	. SHIM	. CALE	1	R				
	09651589	. SHIM	. CALE	1	R				
	09651588	. SHIM	. CALE	1	R				
	09651587	. SHIM	. CALE	1	R				
	09651586	. SHIM	. CALE	1	R				
3D	02050517	. CONTROL LENS;LEFT-HAND	. ROTATOIRE	1					
3E	02031630	. PLATE;BACK-UP	. PLAQUE	1	R				
	02031631	. PLATE;BACK-UP	. PLAQUE	1	R				
	02031632	. PLATE;BACK-UP	. PLAQUE	1	R				
	02031633	. PLATE;BACK-UP	. PLAQUE	1	R				
	02031634	. PLATE;BACK-UP	. PLAQUE	1	R				
	02031635	. PLATE;BACK-UP	. PLAQUE	1	R				
	02031636	. PLATE;BACK-UP	. PLAQUE	1	R				
	02031637	. PLATE;BACK-UP	. PLAQUE	1	R				
3F	09083367	. RING;RETAINING	. BAGUE D'ARRET	1					
3G	02601626	. BEARING;UNIT	. PALIER	1					
3H	09151103	. BEARING;TAPERED-ROLLER	. PALIER	1					
4	02047182	GEAR PUMP;COMPLETE	PIGNON	1					
4A	02601660	. PUMP;GEAR	. POMPE	1					
4B	09083058	. BOLT;SOCKET M10X20	. BOULON A 6 PANS CREUX	4					
4C	09083067	. BOLT;SOCKET M10X50	. BOULON A 6 PANS CREUX	4					
4D	**2180-1217D54**	**. O-RING**	. JONT TORIQUE	1					
4E	**2180-1217D57**	**. O-RING**	. JONT TORIQUE	1					
4F	**2180-1216D125**	**. O-RING**	. JONT TORIQUE	1					
5	02047183	HOUSING;PUMP	CARTER	1	D				
7	02036543	GEAR	PISTON	1					
8	02036540	SHAFT;STUB	ARBRE	1		~6699463	I	02086580	1
	02086580	SHAFT;STUB	ARBRE	1		6699464~			
9	09440107	STUD;CONNECT	GOUJON	1					
20	09083415	RING;RETAINING	BAGUE D'ARRET	1					

DATE	JUN. 30, 2007
REV. NO.	EXB07-06

Fig. 4110 MAIN PUMP-PUMP POMPE

Serial No. ;

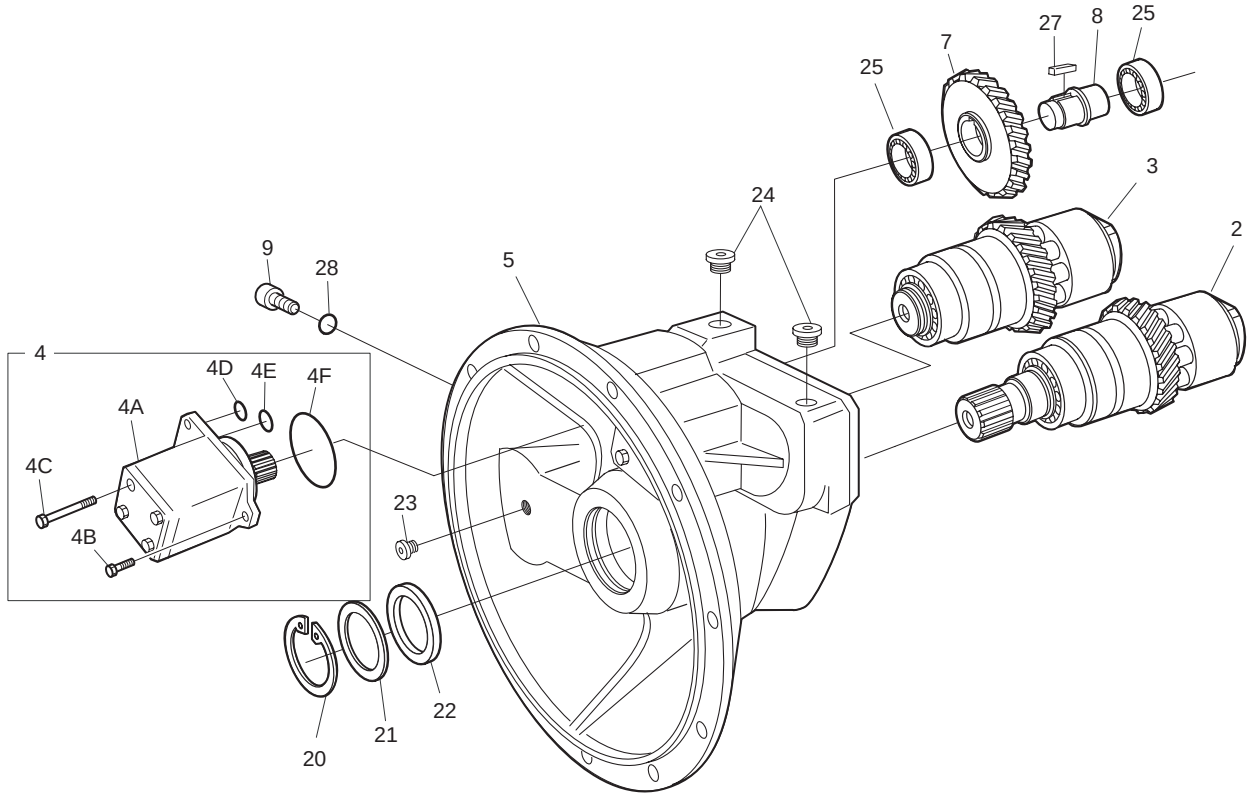

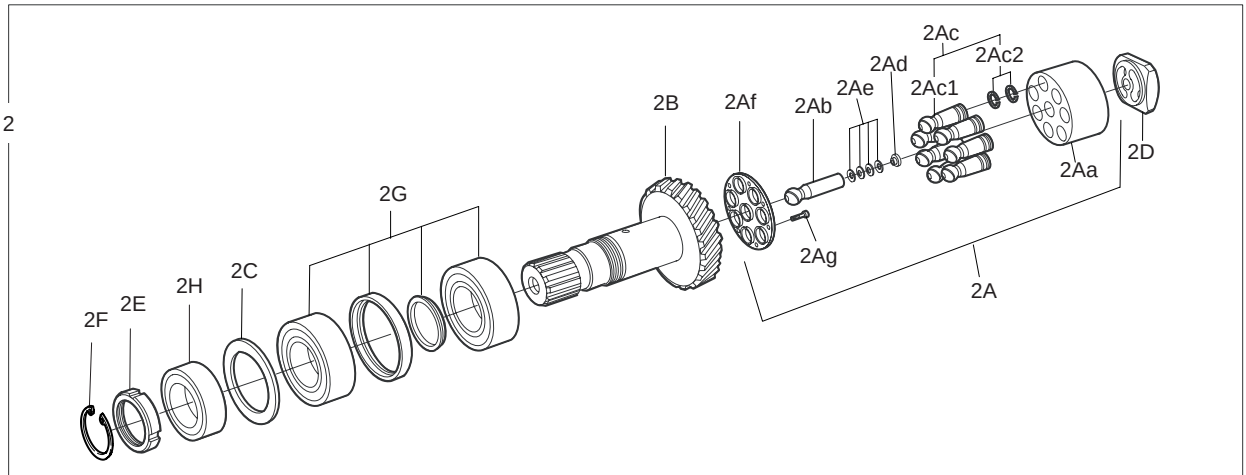

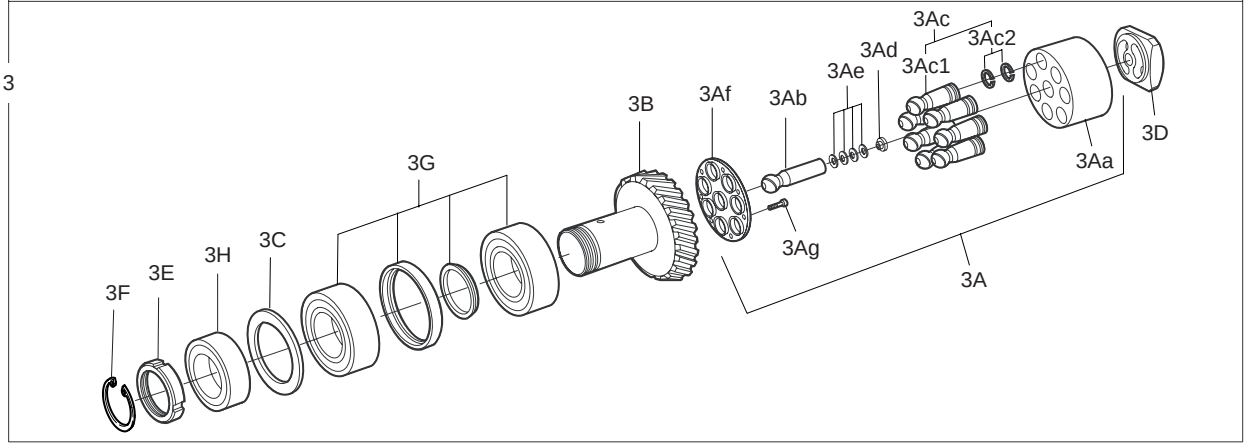

DATE	JUN. 30, 2007
REV. NO.	EXB07-06

Fig. 4110 MAIN PUMP-PUMP POMPE

Serial No. ;

Key No.	Part No.	Description	Description	Q'ty	S.C	Serial No.	ICA	Replaceable part	
								Part No.	Q'ty
4110-21	09831662	RING;SHAFT SEAL	BAGUE	1	K				
22	09083430	SHIM	CALE	1					
23	09153364	SCREW;LOCKING	VIS	1					
24	09151694	SCREW;LOCKING	VIS	3					
25	02601069	BEARING;PLAIN ROLLER	PALIER	2					
27	02601143	SHAFT;KEY	ARBRE	1					
28	09157403	O-RING	JONT TORIQUE	1	K				

DATE	JUN. 30, 2005
REV. NO.	EXB05-05

Fig. 4120 MAIN PUMP-CONTROL POMPE

Serial No. ;

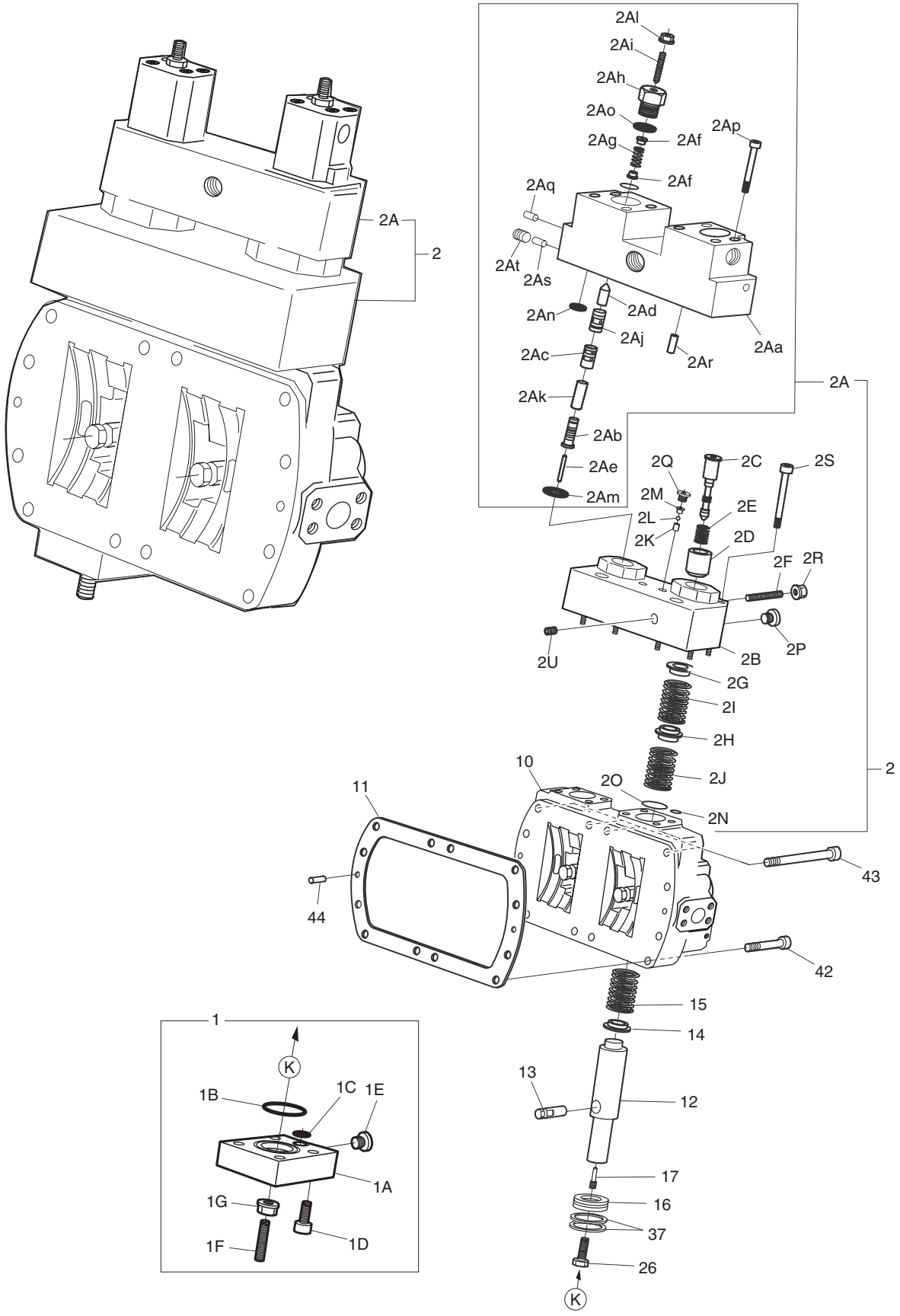

DATE	JUN. 30, 2005
REV. NO.	EXB05-05

Fig. 4120 MAIN PUMP-CONTROL POMPE

Serial No ;

Key No.	Part No.	Description	Description	Q'ty	S.C	Serial No.	ICA	Replaceable part	
								Part No.	Q'ty
4120-1	09610429	COVER	COUVERCLE	2					
1A	09651448	. COVER	. COUVERCLE	1					
1B	09150108	. O-RING	. JONT TORIQUE	1	K				
1C	09085709	. O-RING	. JONT TORIQUE	1	K				
1D	09083116	. SCREW;SOCKET-HEAD	. VIS	4					
1E	09151692	. SCREW;LOCKING	. VIS	1					
1F	09086120	. PIN;THREADED	. BROUCHE	1					
1G	09152459	. NUT;SEAL LOCK	. ECROU	1					
2	02057202	CONTROL MODULE	MODULE DE COMMANDE	1					
2A	02057201	. CONTROL MODULE	. MODULE DE COMMANDE	1					
2Aa	02057192	.. HOUSING;CONTROL	.. CARTER	1	D				
2Ab	02054797	.. PISTON;CONTROL	.. PISTON	2					
2Ac	02054798	.. BUSH;CONTROL	.. DOUILLE	2					
2Ad	09436378	.. PISTON;POSITIONING	.. PISTON	2					
2Ae	02057199	.. PIN	.. BROUCHE	2					
2Af	09430649	.. COLLAR;SPRING	.. BAGUE	4					
2Ag	09650259	.. SPRING;PRESSURE	.. RESSORT	2					
2Ah	09436380	.. SCREW;LOCKING	.. VIS	2					
2Ai	09420991	.. PIN;THREADED	.. BROUCHE	2					
2Aj	02054799	.. PISTON;CONTROL	.. PISTON	2					
2Ak	02054800	.. BUSH;CONTROL	.. DOUILLE	2					
2Al	09152425	.. NUT;SEAL LOCK	.. ECROU	2					
2Am	09086730	.. O-RING	.. JONT TORIQUE	2	K				
2An	02600655	.. O-RING	.. JONT TORIQUE	2	K				
2Ao	09083757	.. O-RING	.. JONT TORIQUE	2	K				
2Ap	09083027	.. SCREW;SOCKET-HEAD	.. VIS	6					
2Aq	09831318	.. PIN;DOUBLE BREAK-OFF	.. BROUCHE	5					
2Ar	09084149	.. PIN;CYLINDER	.. BROUCHE	2					
2As	09831319	.. PIN;DOUBLE BREAK-OFF	.. BROUCHE	1					
2At	02600705	.. PLUG	.. BOUCHON	1					
2B	02030917	. HOUSING;CONTROL	. CARTER	1	D				
2C	09449944	. PISTON;CONTROL	. PISTON	2					
2D	09449344	. BUSH;SPRING	. DOUILLE	2					
2E	09651102	. SPRING;PRESSURE	. RESSORT	2					
2F	09420992	. PIN;THREADED	. BROUCHE	2					
2G	09432513	. COLLAR;SPRING	. BAGUE	2					
2H	09432511	. COLLAR;SPRING	. BAGUE	2					
2I	02031945	. SPRING;PRESSURE	. RESSORT	2					

DATE	JUN. 30, 2005
REV. NO.	EXB05-05

Fig. 4120 MAIN PUMP-CONTROL POMPE

Serial No. ;

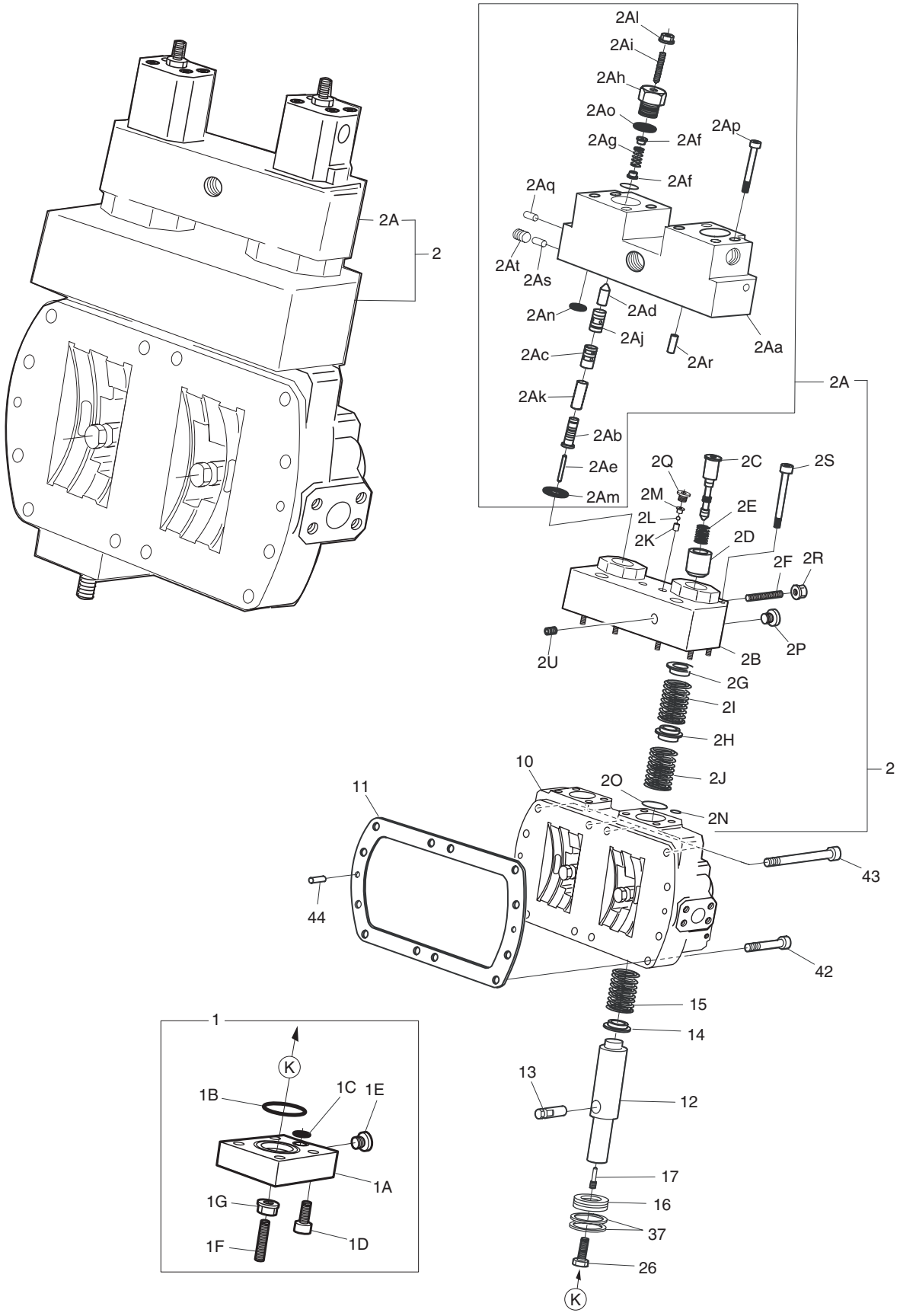

DATE	JUN. 30, 2005
REV. NO.	EXB05-05

Fig. 4120 MAIN PUMP-CONTROL POMPE

Serial No ;

Key No.	Part No.	Description	Description	Q'ty	S.C	Serial No.	ICA	Replaceable part	
								Part No.	Q'ty
4120-2J	02031946	. SPRING;PRESSURE	. RESSORT	2					
2K	09650250	. BUSH	. DOUILLE	1					
2L	09083258	. BALL	. BILLE	1					
2M	09650251	. SCREW;VALVE	. VIS	1					
2N	02600655	. O-RING	. JONT TORIQUE	4	K				
2O	09151810	. O-RING	. JONT TORIQUE	2	K				
2P	09153364	. SCREW;LOCKING	. VIS	2					
2Q	09153816	. SCREW;LOCKING	. VIS	1					
2R	09152425	. NUT;SEAL LOCK	. ECROU	2					
2S	09083051	. SCREW;SOCKET-HEAD	. VIS	6					
2U	09153338	. SCREW;LOCKING	. VIS	1					
10	02030556	HOUSING;CONTROL	CARTER	1	D				
11	02031863	GASKET	JOINT	1					
12	09921021	PISTON;POSITIONING	PISTON	2					
13	09425458	TRUNNION;POSITIONING	BOULON A 6 PANS	2					
14	02057263	COLLAR;SPRING	BAGUE	2					
15	09432558	SPRING;PRESSURE	RESSORT	2					
16	09651472	PISTON	PISTON	2					
17	09445016	PIN;THREADED	BROUCHE	2					
26	09083716	SCREW;HEX	VIS	2					
37	09156647	RING;SQUARE	BAGUE	4					
42	09083136	SCREW;SOCKET M16X60	VIS	8					
43	09083142	SCREW;SOCKET M16X90	BOULON A 6PANS	4					
44	09084186	PIN;CYLINDER	BROUCHE	2					

DATE	JUN. 30, 2005
REV. NO.	EXB05-05

Fig. 4130 MAIN PUMP-EPPR VALVE POMPE

Serial No. ;

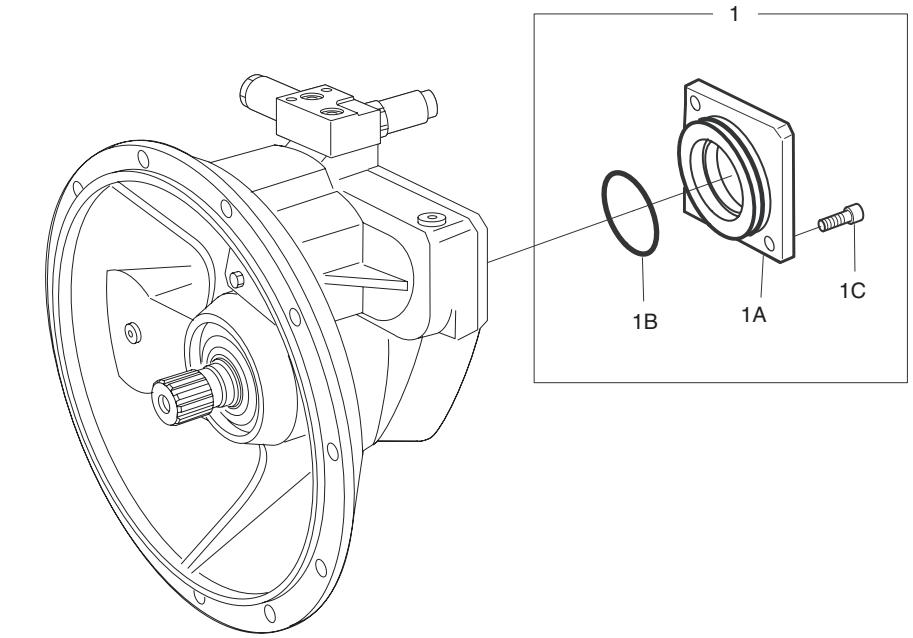

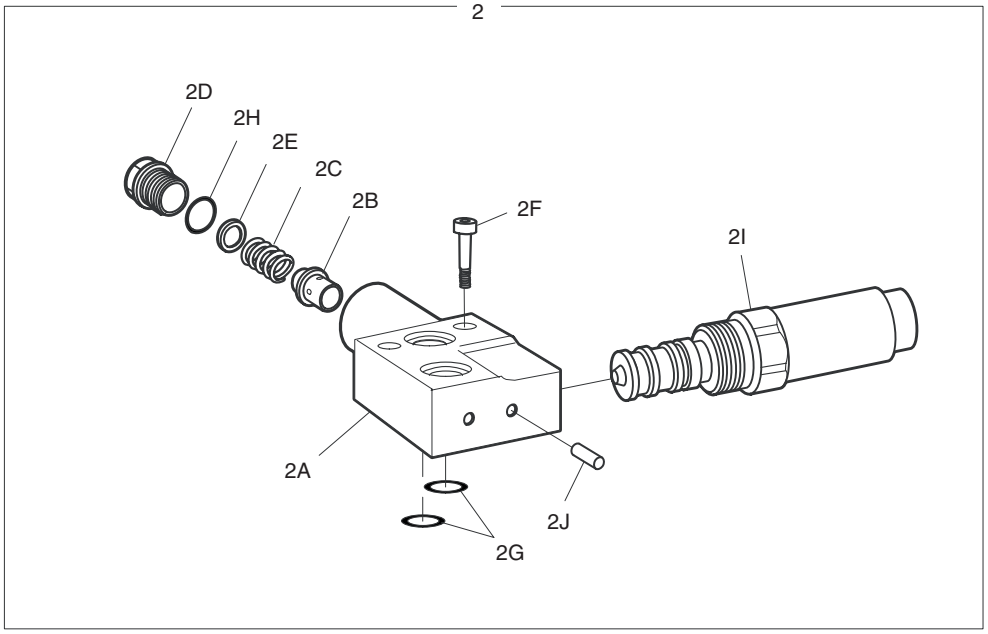

DATE	JUN. 30, 2005
REV. NO.	EXB05-05

Fig. 4130 MAIN PUMP-EPPR VALVE POMPE

Serial No ;

Key No.	Part No.	Description	Description	Q'ty	S.C	Serial No.	ICA	Replaceable part	
								Part No.	Q'ty
4130-1	02031868	COVER	COUVERCLE	1					
1A	02036531	. COVER	. COUVERCLE	1					
1B	09086950	. O-RING	. JONT TORIQUE	1	K				
1C	09083085	. SCREW;SOCKET-HEAD	. VIS	2					
2	02057118	PORT PLATE WITH VALVES	PLAQUE	1					
2A	02054820	. PLATE;PORT	. PLAQUE	1	D				
2B	09426804	. PISTON;VALVE	. PISTON	1					
2C	02030583	. SPRING;PRESSURE	. RESSORT	1					
2D	09409509	. SCREW;LOCKING	. VIS	1					
2E	09080511	. WASHER	. RONDELLE	1					
2F	09083043	. SCREW;SOCKET-HEAD	. VIS	2					
2G	09083753	. O-RING	. JONT TORIQUE	2	K				
2H	09083760	. O-RING	. JONT TORIQUE	1	K				
2I	02601882	. VALVE	. VANNE	1					
2J	09831317	. PIN;DOUBLE BREAK-OFF	. BROUCHE	1					

DATE	DEC. 29, 2005
REV.NO.	EXB05-20

Fig. 4140 SWING MOTOR MOTEUR D'ORIENTATION

Serial No. ;

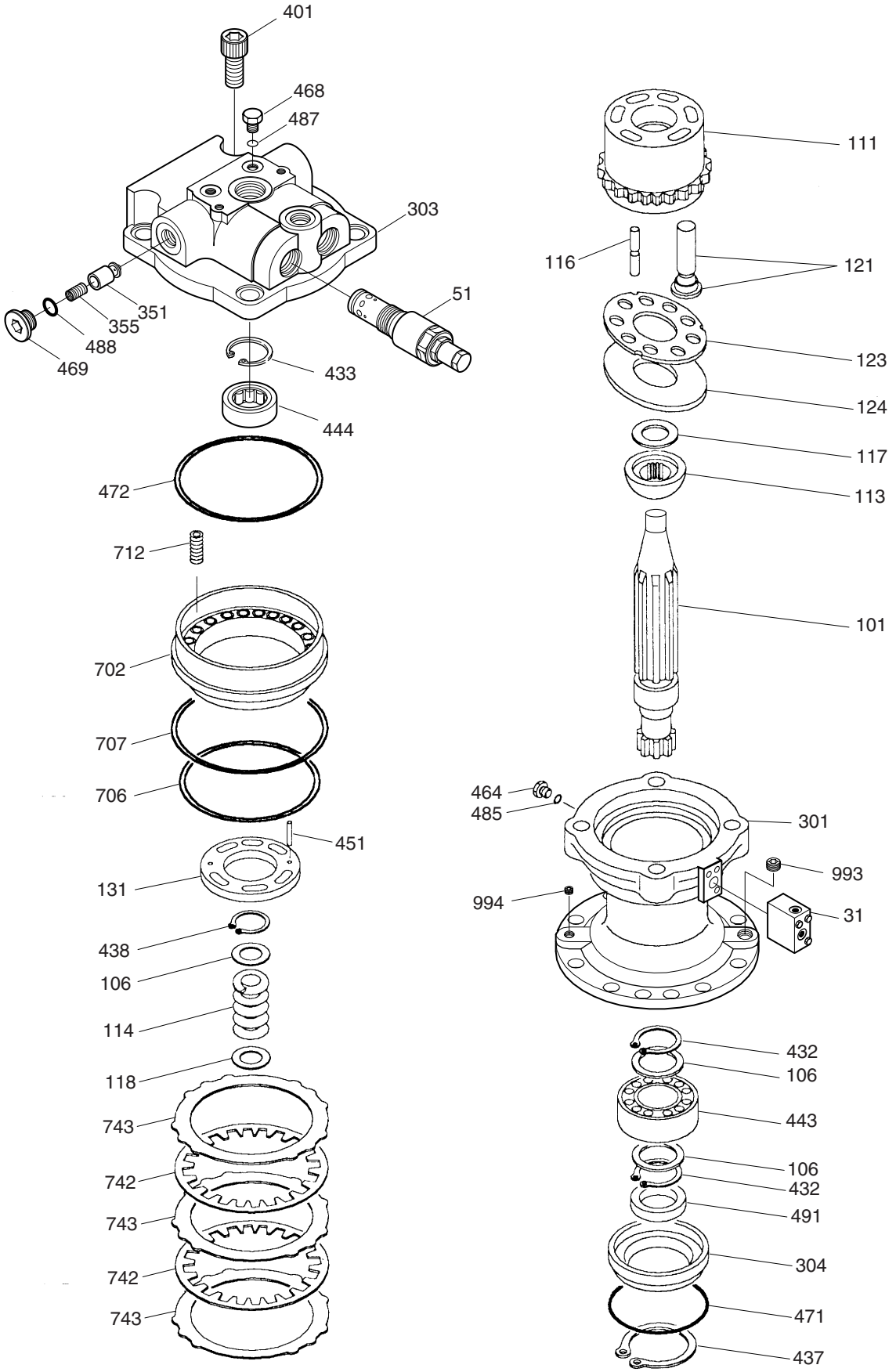

DATE	DEC. 29, 2005
REV. NO.	EXB05-20

Fig. 4140 SWING MOTOR MOTEUR D'ORIENTATION

Serial No ;

Key No.	Part No.	Description	Description	Q'ty	S.C	Serial No.	ICA	Replaceable part	
								Part No.	Q'ty
4140--	2401-9304B	MOTOR;SWING	SYSTEME D'ORIENTATION	2		1001–1601	I	2401-9304C	2
	2401-9304C	**MOTOR;SWING**	SYSTEME D'ORIENTATION	2		**1602–**			
31	717022	VALVE;BRAKE	VANNE DE FREIN	1					
51	235886	VALVE;RELIEF	CLAPET DE DECHARGE	2					
101	132528A	SHAFT;DRIVE	ARBRE	1					
106	113372	SPACER	BAGUE D'ECARTEMENT	3					
111	116635A	CYLINDER;BLOCK	BLOC	1					
113	113374B	BUSH;SPHERICAL	COUSSINET	1					
114	211949A	SPRING;CYLINDER	RESSORT	1					
116	113375A	ROD;PUSH	TIGE DE POUSSOIR	12					
117	113376	SPACER(F)	BAGUE D'ECARTEMENT	1					
118	113350	SPACER(R)	BAGUE D'ECARTEMENT	1					
121	704502	PISTON ASS'Y	PISTON	9					
123	113353	RETAINER	ARRETOIR	1					
124	113354C	PLATE;SHOE	PLAQUE	1					
131	135306	PLATE;VALVE	PLAQUE DE VANNE	1					
301	134635	CASING F4	BOITIER	1		1001–1601	I	134635B	1
	134635B	**CASING F4**	BOITIER	1		**1602–**			
303	135308	CASING;VALVE H1	CARTER DE VANNE	1					
304	113360	COVER;FRONT	COUVERCLE	1		1001–1601			
	113360A	**COVER;FRONT**	COUVERCLE	1		**1602–**			
351	135309	PLUNGER H	PLONGEUR	2					
355	214337A	SPRING	RESSORT	2					
401	200741	BOLT;SOCKET M20X2.5X45	BOULON A 6 PANS CREUX	4					
432	202608	RING;SNAP	BAGUE D'ARRET	2					
433	202599	RING;SNAP	BAGUE D'ARRET	1					
437	202558	RING;SNAP	BAGUE	1					
438	212014	RING;SNAP	BAGUE	1					
443	225681	BEARING;ROLLER	PALIER	1					
444	225680	BEARING;ROLLER	PALIER	1					
451	212881	SPRING;PIN	GOUPILLE	2					
464	108844	PLUG;VP	BOUCHON	1					
468	108844	PLUG;VP	BOUCHON	2					
469	108892	PLUG;RO	BOUCHON	2					
471	201630	O-RING	JOINT TORIQUE	1	K				
472	212009	O-RING	JOINT TORIQUE	1	K				
485	201689	O-RING	JOINT TORIQUE	1	K				
487	201689	O-RING	JOINT TORIQUE	2	K				

DATE	DEC. 29, 2005
REV.NO.	EXB05-20

Fig. 4140 SWING MOTOR MOTEUR D'ORIENTATION

Serial No. ;

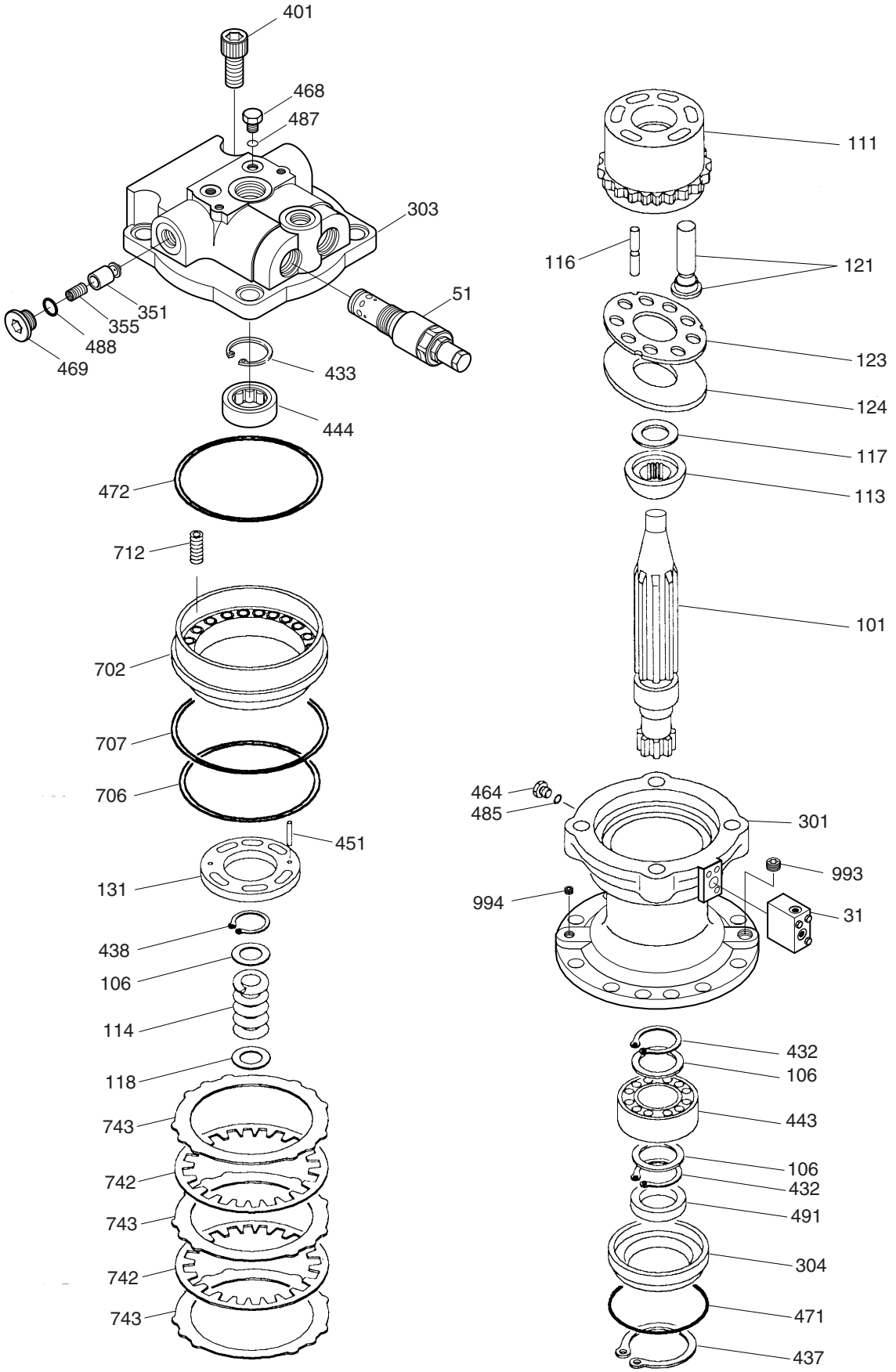

DATE	DEC. 29, 2005
REV. NO.	EXB05-20

Fig. 4140 SWING MOTOR MOTEUR D'ORIENTATION

Serial No ;

Key No.	Part No.	Description	Description	Q'ty	S.C	Serial No.	ICA	Replaceable part	
								Part No.	Q'ty
4140-488	201727	O-RING	JOINT TORIQUE	2	K				
491	211952	SEAL;OIL	JOINT D'HUILE	1	K	1001–1601			
	238795	**SEAL;OIL**	JOINT D'HUILE	1	K	**1602–**			
702	113363	PISTON;BRAKE	PISTON	1					
706	212008	O-RING	JOINT TORIQUE	1	K				
707	212010	O-RING	JOINT TORIQUE	1	K				
712	211953A	SPRING;BRAKE	RESSORT DE FREIN	18					
742	125812	PLATE;FRICTION	RESSORT EXTERIEUR	2					
743	113365	PLATE;SEPARATION	PLAQUE	3					
993	206699	PLUG;PT	BOUCHON	1					
994	208276	SCREW;RIVER	VIS	1					
*	2401-9242KT	SEAL KIT;SWING MOTOR	KIT DE JOINT	1		1001–1601	I	K9002875	1
	K9002875	**SEAL KIT;SWING MOTOR**	KIT DE JOINT	1		**1602–**			

DATE	JUN. 30, 2005
REV. NO.	EXB05-05

Fig. 4150 SWING REDUCTION GEAR
REDEUTEUR D'ORIENTATION

Serial No. ; 1001 ~ 1448

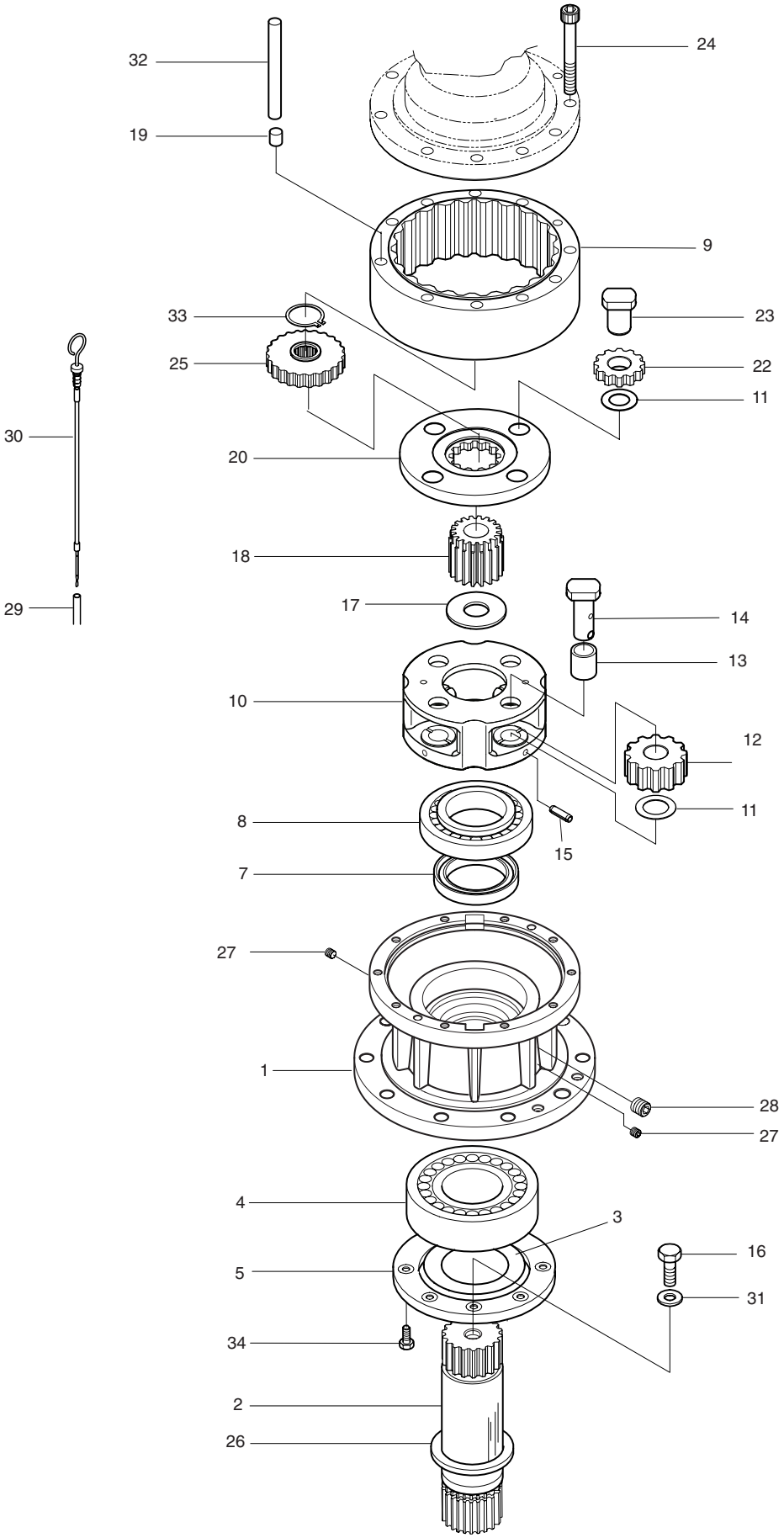

DATE	JUN. 30, 2005
REV. NO.	EXB05-05

Fig. 4150 SWING REDUCTION GEAR REDEUTEUR D'ORIENTATION

Serial No ; 1001 ~ 1448

Key No.	Part No.	Description	Description	Q'ty	S.C	Serial No.	ICA	Replaceable part	
								Part No.	Q'ty
4150--	2404-6010I	REDUCTION GEAR;SWING	REDEUTEUR	2		1001–1263	I	2404-6010J	2
	2404-6010J	**REDUCTION GEAR;SWING**	REDEUTEUR	2		**1264–1448**			
1	2402-6003C	CASING	CARTER	1					
2	2405-1018B	SHAFT;DRIVE	AXE	1		1001–1263	I	2405-1018C	1
	2405-1018C	SHAFT;DRIVE	AXE	1		1264–			
3	2412-1040	PLATE	PLAQUE	1					
4	2109-9033	BEARING;ROLLER	ROULEMENT A BILLES	1					
5	2891-1421B	PLATE;COVER	PLAQUE	1					
7	2180-1254	SEAL ;OIL	JOINT D'HUILE	1					
8	2109-1050	BEARING;ROLLER	ROULEMENT A BILLES	1					
9	2104-1013A	GEAR;RING	PIGNON	1					
10	2230-1037A	CARRIER NO.2	SUPPORT	1					
11	2114-1901A	WASHER;THRUST NO.2	RONDELLE	8					
12	2104-1022B	GEAR;PLANET NO,2	PIGNON	4					
13	2110-1371A	BUSH NO.2	DOUILLE	4					
14	2123-2322B	PIN NO.2	GOUJON	4					
15	S5741341	PIN;SPRING	GOUPILLE FENDUE	4					
16	S0121061	BOLT;HEX.HD	BOULONE A 6 PANS	1					
17	2114-1902	WASHER;THRUST NO.3	RONDELLE	1					
18	2104-1021B	GEAR;SUN NO.2	PIGNON	1					
19	2705-1030	PIN;KNOCK	BROCHE DE BLOCAGE	4					
20	2230-1036B	CARRIER NO.1	SUPPORT	1					
22	2104-1020C	GEAR;PLANET NO,1	PIGNON	4					
23	2123-2327A	PIN ASS'Y NO.1	GOUJON	4					
24	S2217471	BOLT;SOCKET	BOULON A 6 PANS CREUX	16					
25	2104-1019B	GEAR;SUN NO.1	PIGNON	1					
26	2114-1914A	SPACER	BAGUE D'ECARTEMENT	1					
27	2181-1116D2	PLUG	BOUCHON	2					
28	2181-1116D4	PLUG	BOUCHON	1					
29	2140-1406	PIPE;LEVEL GAUGE	CONDUITE	1					
30	2119-1065	GAUGE;LEVEL	JAUGE DE NIVEAU	1					
31	S5231090	WASHER;DOUBLE TAP	RONDELLE	1					
32	2182-1756A	PIPE	CONDUITES	4					
33	S6500450	RING;SNAP	BAGUE D'ARRET	1					
34	120-00144	BOLT;HEX.HD	BOULON A 6 PANS	8					

DATE	JUN. 30, 2007
REV. NO.	EXB07-06

Fig. 4151 SWING REDUCTION GEAR
REDEUTEUR D'ORIENTATION

Serial No. ; 1449 ~

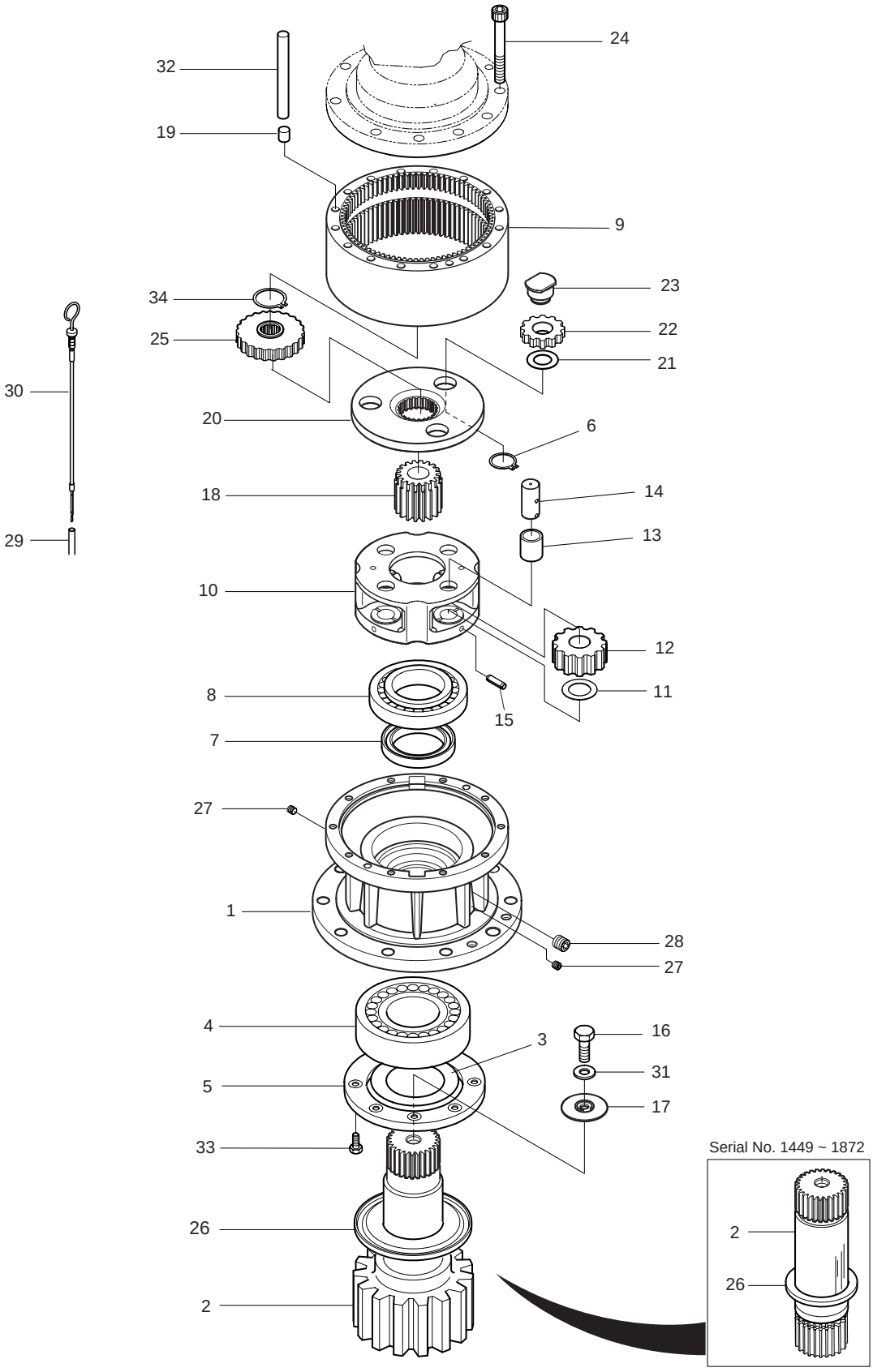

DATE	JUN. 30, 2007
REV. NO.	EXB07-06

Fig. 4151 SWING REDUCTION GEAR REDEUTEUR D'ORIENTATION

Serial No. ; 1449 ~

Key No.	Part No.	Description	Description	Q'ty	S.C	Serial No.	ICA	Replaceable part	
								Part No.	Q'ty
4151--	K1000350	REDUCTION GEAR;SWING	REDEUTEUR	2		1449–1872	I	K1033589	2
	K1033589	**REDUCTION GEAR;SWING**	REDEUTEUR	2		**1873–**			
1	2402-6003C	CASING	CARTER	1					
2	2405-1018C	SHAFT;DRIVE	AXE	1		1449–1872	I	K1033590	1
	K1033590	**SHAFT;DRIVE**	AXE	1		**1873–**			
3	2412-1040	PLATE	PLAQUE	1					
4	2109-9033	BEARING;ROLLER	ROULEMENT A BILLES	1					
5	2891-1421B	PLATE;COVER	PLAQUE	1					
6	S6500380	RING;SNAP	BAGUE D'ARRET	3					
7	2180-1254	SEAL;OIL	JOINT D'HUILE	1					
8	2109-1050	BEARING;ROLLER	ROULEMENT A BILLES	1		1449–1872	I	109-00174	1
	109-00174	**BEARING;ROLLER**	ROULEMENT A BILLES	1		**1873–**			
9	104-00051A	GEAR;RING	PIGNON	1					
10	230-00061	CARRIER NO.2	SUPPORT	1					
11	2114-1901A	WASHER;THRUST NO.2	RONDELLE	4					
12	104-00050	GEAR;PLANET NO.2	PIGNON	4					
13	110-00219	BUSH NO.2	DOUILLE	4					
14	123-00437A	PIN NO.2	GOUJON	4					
15	S5741341	PIN;SPRING	GOUPILLE FENDUE	4					
16	S0121061	BOLT;HEX.HD	BOULONE A 6 PANS	1					
17	114-00548	WASHER;THRUST NO.3	RONDELLE	1					
18	104-00048	GEAR;SUN NO.2	PIGNON	1					
19	2705-1030	PIN;KNOCK	BROCHE DE BLOCAGE	4					
20	230-00060A	CARRIER NO.1	SUPPORT	1					
21	114-00527	WASHER;SHRUST NO.1	RONDELLE	3					
22	104-00049A	GEAR;PLANET NO.1	PIGNON	3					
23	123-00435A	PIN ASS'Y NO.1	GOUJON	3					
24	S2217471	BOLT;SOCKET	BOULON A 6 PANS CREUX	16					
25	104-00047A	GEAR;SUN NO.1	PIGNON	1					
26	2114-1914A	SPACER	BAGUE D'ECARTEMENT	1		1449–1872			
	K1033591	**SPACER**	BAGUE D'ECARTEMENT	1		**1873–**			
27	2181-1116D2	PLUG	BOUCHON	2					
28	2181-1116D4	PLUG	BOUCHON	1					
29	2140-1406	PIPE;LEVEL GAUGE	CONDUITE	1					
30	2119-1065	GAUGE;LEVEL	JAUGE DE NIVEAU	1					
31	S5231090	WASHER;DOUBLE TAP	RONDELLE	1					
32	140-01374A	PIPE	BAGUE D'ARRET	4					
33	120-00144	BOLT;HEX.HD	BOULON A 6 PANS	8					

DATE	JUN. 30, 2007
REV. NO.	EXB07-06

Fig. 4151 SWING REDUCTION GEAR
REDEUTEUR D'ORIENTATION

Serial No. ; 1449 ~

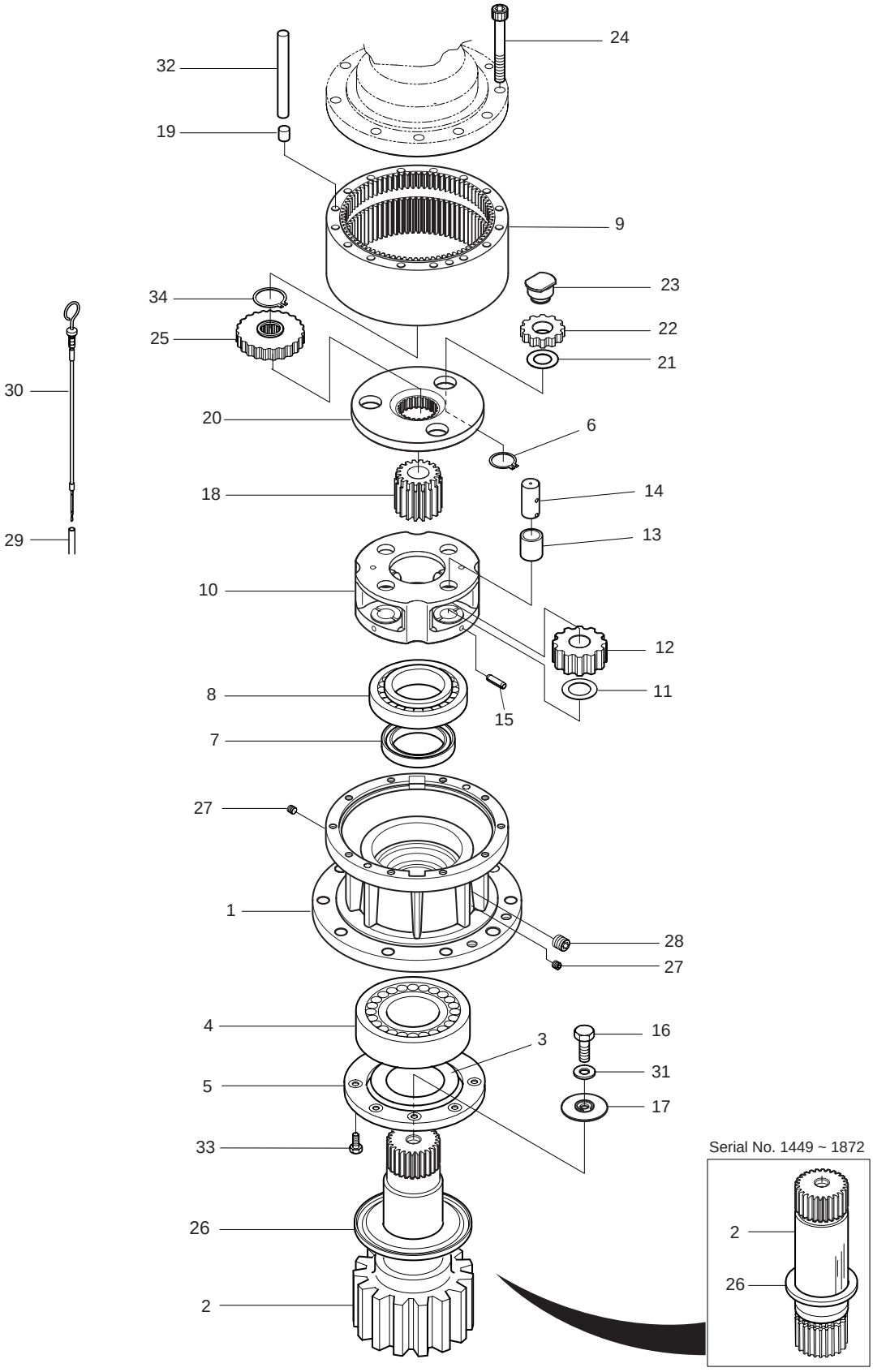

DATE	JUN. 30, 2007
REV. NO.	EXB07-06

Fig. 4151 SWING REDUCTION GEAR REDEUTEUR D'ORIENTATION

Serial No. ; 1449 ~

Key No.	Part No.	Description	Description	Q'ty	S.C	Serial No.	ICA	Replaceable part	
								Part No.	Q'ty
4151-34	S6500450	RING;SNAP	BAGUE D'ARRET	1					

DATE	JUL. 30, 2003
REV. NO.	EXB03-13

Fig. 4160 TRAVEL MOTOR MOTEUR DE TRANSLATION

Serial No. ;

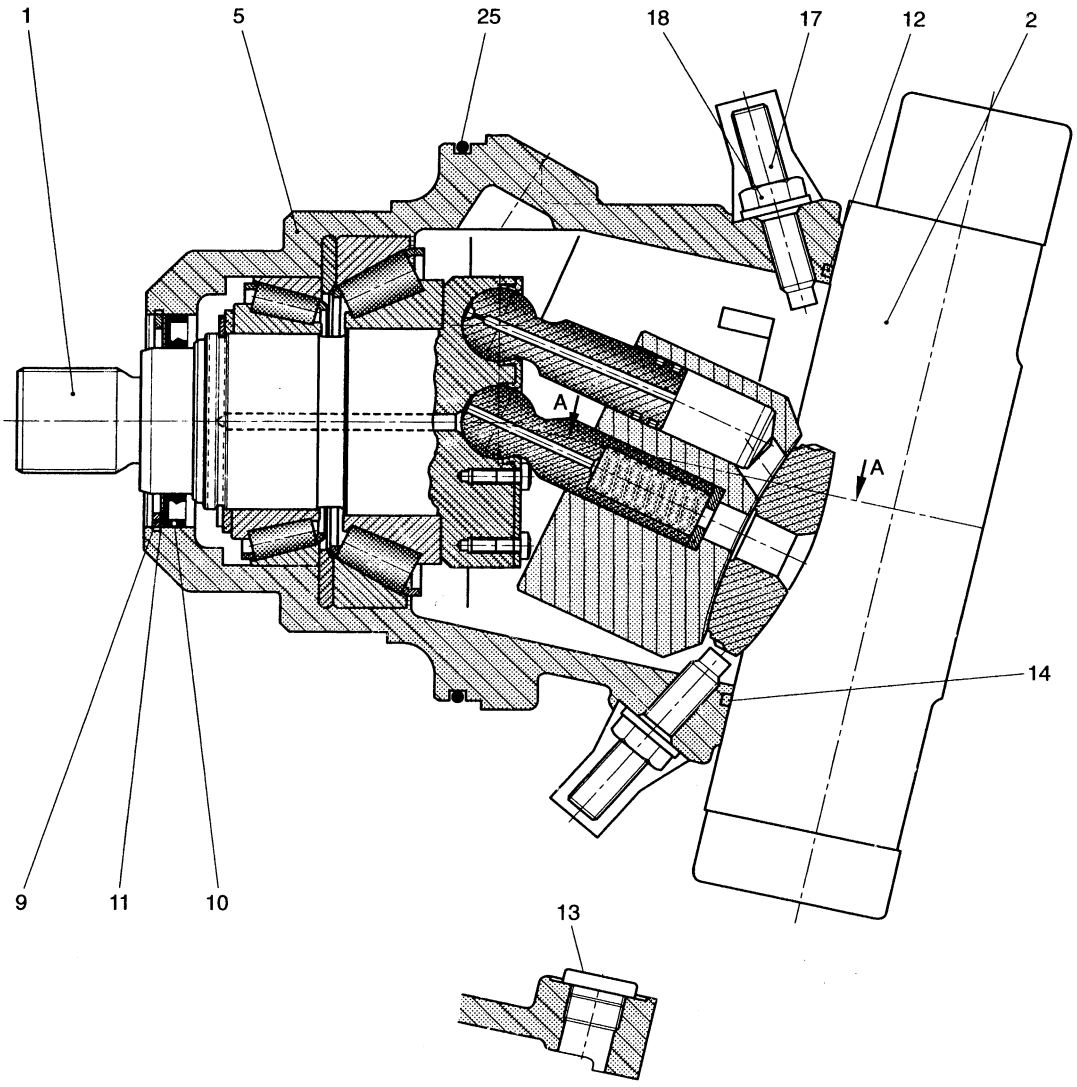

SECTION A–A

DATE	JUL. 30, 2003
REV. NO.	EXB03-13

Fig. 4160 TRAVEL MOTOR MOTEUR DE TRANSLATION

Serial No ;

Key No.	Part No.	Description	Description	Q'ty	S.C	Serial No.	ICA	Replaceable part	
								Part No.	Q'ty
4160--	2401-6292A	MOTOR;TRAVEL	MOTEUR DE TRANSLATION	2					
1	09603784	GROUP;ROTARY	SYSTEME DE	1					
2	02030906	CONTROL	COMMAND	1					
5	09651108	HOUSING	CARTER	1					
9	09083416	RING;RETAINING	ANNEAU DE SOUTIEN	1					
10	09831663	RING;SHAFT SEAL	BAGUE	1					
11	09832084	PLATE;BACK UP	PLAQUE	1					
12	09087781	O-RING	JOINT TORIQUE	1					
13	09156989	SCREW;ROCKING	VIS	1					
14	09085577	O-RING	JOINT TORIQUE	1					
17	09446862	PIN	BROUCHE	2					
18	09152459	NUT;SEAL LOCK	ECROU	2					
25	02016775	O-RING	JOINT TORIQUE	1					

DATE	JUL. 30, 2003
REV. NO.	EXB03-13

Fig. 4170 TRAVEL MOTOR-ROTARY GROUP MOTEUR DE TRANSLATION

Serial No. ;

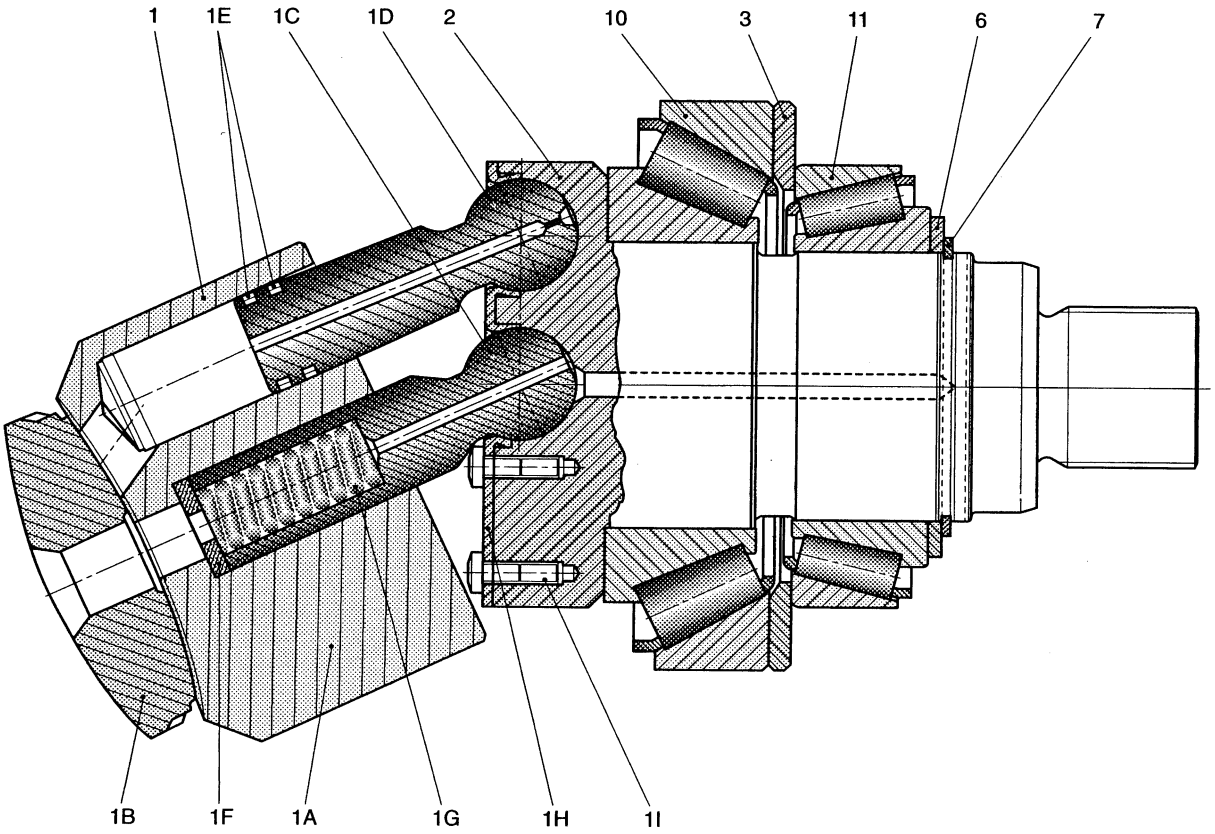

DATE	JUL. 30, 2003
REV. NO.	EXB03-13

Fig. 4170 TRAVEL MOTOR-ROTARY GROUP MOTEUR DE TRANSLATION

Serial No ;

Key No.	Part No.	Description	Description	Q'ty	S.C	Serial No.	ICA	Replaceable part	
								Part No.	Q'ty
4170--	09603784	GROUP;ROTARY	SYSTEME DE	1					
1	09603785	ROTARY	SYSTEME DE	1					
1A	09430794	. CYLINDER	. CYLINDRE	1					
1B	09921790	. LENS;CONTROL	. CONTROL LENS	1					
1C	09921576	. PIN;CENTER	. BROCHE	1					
1D	09430790	. PISTON	. PISTON	7					
1E	09831897	. RING;STEEL SEALING	. BAGUE	14					
1F	09921577	. SHIM;ADJUSTMENT	. CALE	1					
1G	09921583	. SPRING;PRESSURE	. RESSORT	1					
1H	09062969	. PLATE;RETAINING	. PLAQUE	1					
1I	09831108	. SCREW	. VIS	14					
2	09921597	SHAFT;DRIVE	ARBRE	1					
3	09651499	SHIM	CALE	1					
6	09650815	PLATE;BACK UP	PLAQUE	1					
7	09083369	RING;RETAINING	ANNEAU DE SOUTIEN	1					
10	09154687	BEARING;TAPER ROLLER	PALIER	1					
11	09154688	BEARING;TAPER ROLLER	PALIER	1					

DATE	JUL. 30, 2003
REV. NO.	EXB03-13

Fig. 4180 TRAVEL MOTOR-CONTROL MOTEUR DE TRANSLATION

Serial No. ;

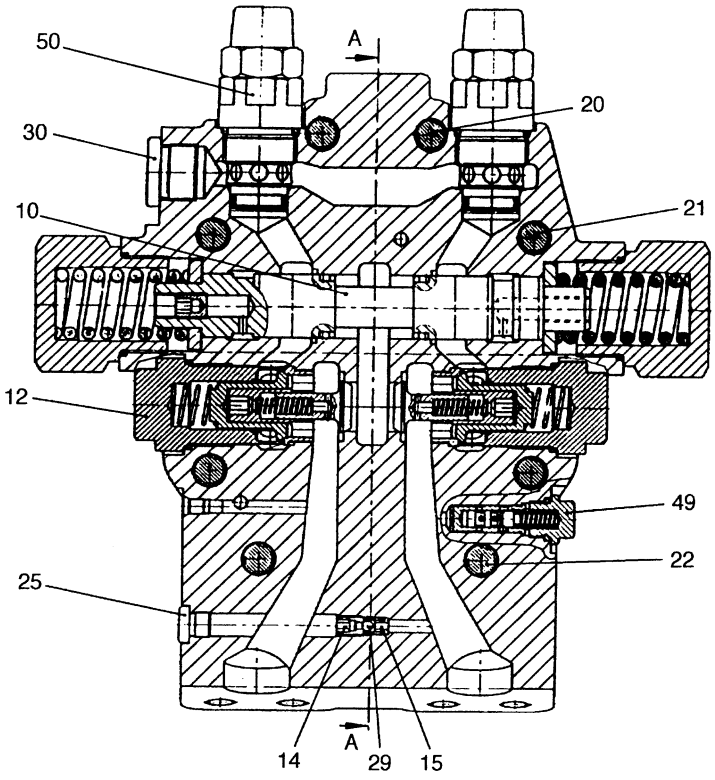

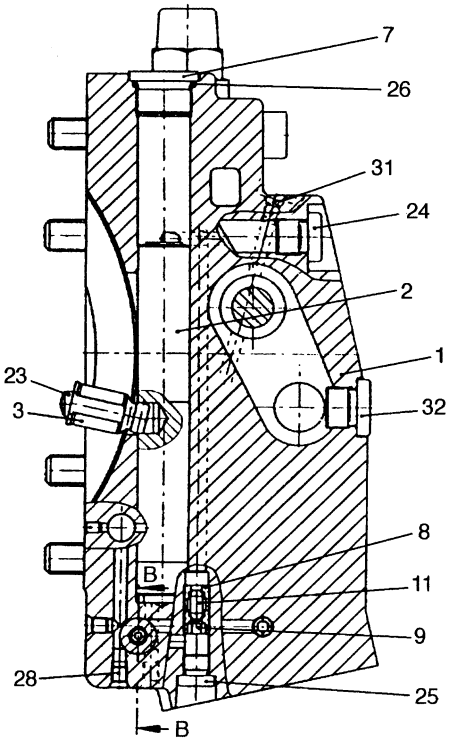

SECTION A–A

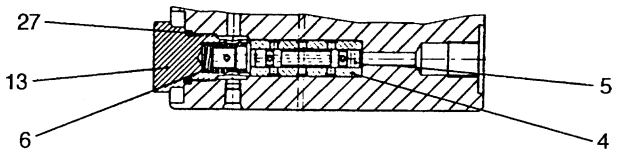

SECTION B–B

DATE	JUL. 30, 2003
REV. NO.	EXB03-13

Fig. 4180 TRAVEL MOTOR-CONTROL MOTEUR DE TRANSLATION

Serial No ;

Key No.	Part No.	Description	Description	Q'ty	S.C	Serial No.	ICA	Replaceable part	
								Part No.	Q'ty
4180--	02030906	CONTROL	COMMAND	1					
1	02024669	PLATE;PORT	PLAQUE	1					
2	09650699	PISTON;POSITIONING	PISTON	1					
3	09651060	TRUNNION;POSITIONING	ANNEAU DE SOUTIEN	1					
4	09921975	BUSH;CONTROL	DOUILLE	1					
5	09921999	PISTON;CONTROL	PISTON	1					
6	09445946	SPRING;PRESSURE	RESSORT	1					
7	09443868	SCREW;LOCKING	VIS	1					
8	09400263	VALVE;THROTTLE	VANNE	1					
9	09400264	VALVE;THROTTLE	VANNE	1					
10	02030907	VALVE;BRAKE	VANNE DE FREIN	1					
11	09446625	PIN;THROTTLE	BROUCHE	1					
12	02024743	VALVE	VANNE	2					
13	02009712	SCREW;LOCKING	VIS	1					
14	09921171	SCREW;VALVE	VIS	1					
15	09921170	BUSH	COUSSINET	1					
20	09083142	BOLT;SOCKET M16X90	BOULON A 6 PANS CREUX	2					
21	09083142	BOLT;SOCKET M16X90	BOULON A 6 PANS CREUX	2					
22	09083148	BOLT;SOCKET M16X120	BOULON A 6 PANS CREUX	4					
23	09084542	PIN;CYLINDER	BROUCHE	2					
24	09153930	SCREW;LOCKING	VIS	3					
25	09156649	SCREW;LOCKING	VIS	2					
26	09152694	O-RING	JOINT TORIQUE	1					
27	09087891	O-RING	JOINT TORIQUE	1					
28	09831318	PIN;DOUBLE BREAK-OFF	BROUCHE	5					
29	09083256	BALL	BILLE	1					
30	09156984	SCREW;LOCKING	VIS	1					
31	09831319	PIN;DOUBLE BREAK-OFF	BROUCHE	2					
32	09156864	SCREW;LOCKING	VIS	1					
49	09610948	VALVE;PRESSURE CONTROL	DISTRIBUTE DE COMMAND	1					
50	02600502	VALVE;PRESSURE RELIEF	CLAPET DE DECHARGE	2					

DATE	JUL. 30, 2003
REV. NO.	EXB03-13

Fig. 4190 BRAKE VALVE VANNE DE FREIN

Serial No. ;

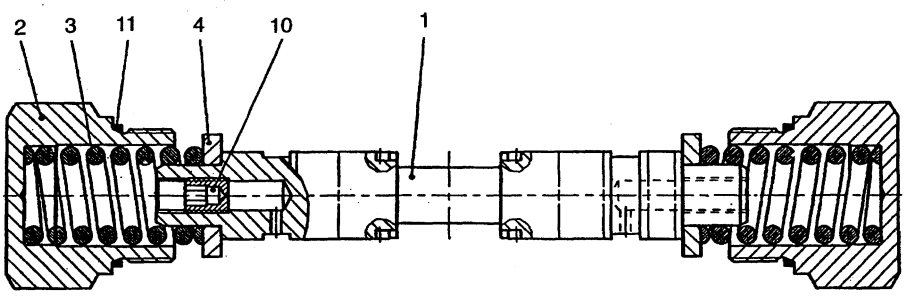

DATE	JUL. 30, 2003
REV. NO.	EXB03-13

Fig. 4190 BRAKE VALVE VANNE DE FREIN

Serial No ;

Key No.	Part No.	Description	Description	Q'ty	S.C	Serial No.	ICA	Replaceable part	
								Part No.	Q'ty
4190--	02030907	VALVE;BRAKE	VANNE DE FREIN	1					
1	02011788	PISTON;BRAKE	PISTON	1					
2	09651745	SCREW;LOCKING	VIS	2					
3	09921002	SPRING;PRESSURE	RESSORT	2					
4	09921004	WASHER	RONNDELLE	2					
10	09432302	SCREW;THROTTLE	BROUCHE	2					
11	09831230	O-RING 34.59X2.62	JOINT TORIQUE	2					

DATE	JUL. 30, 2003
REV. NO.	EXB03-13

Fig. 4200 PRESSURE CONTROL VALVE VANNE DE COMMANDE

Serial No. ;

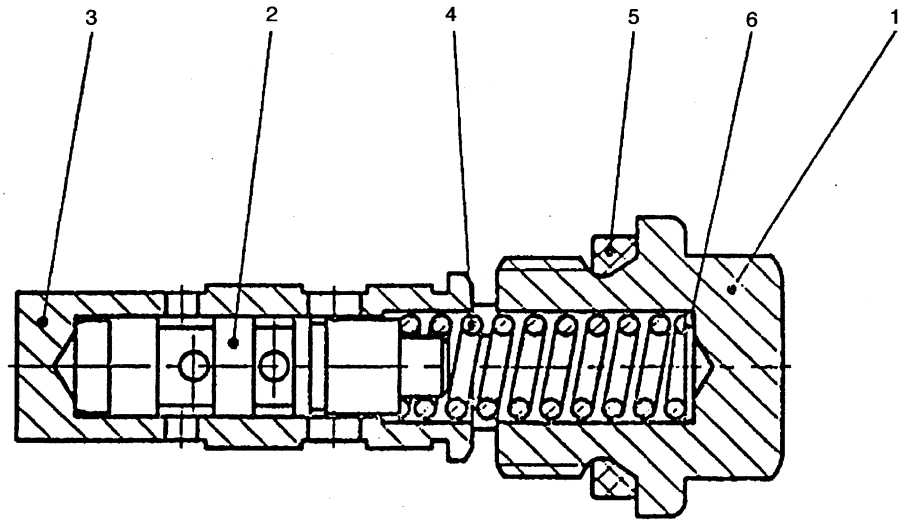

DATE	JUL. 30, 2003
REV. NO.	EXB03-13

Fig. 4200 PRESSURE CONTROL VALVE VANNE DE COMMANDE

Serial No ;

Key No.	Part No.	Description	Description	Q'ty	S.C	Serial No.	ICA	Replaceable part	
								Part No.	Q'ty
4200--	09610948	CONTROL VALVE;PRESSURE	DISTRIBUTE DE COMMAND	1					
1	09651756	SCREW;LOCKING	VIS	1					
2	09651562	PISTON;CONTROL	PISTON	1					
3	09651619	BUSH;CONTROL	DOUILLE	1					
4	09650339	SPRING;PRESSURE	RESSORT	1					
5	09086765	O-RING 10.77X2.62	JOINT TORIQUE	1					
6	09087596	SHIM 3.2T	CALE	1					

DATE	JUL. 30, 2003
REV. NO.	EXB03-13

Fig. 4210 VALVE VANNE

Serial No. ;

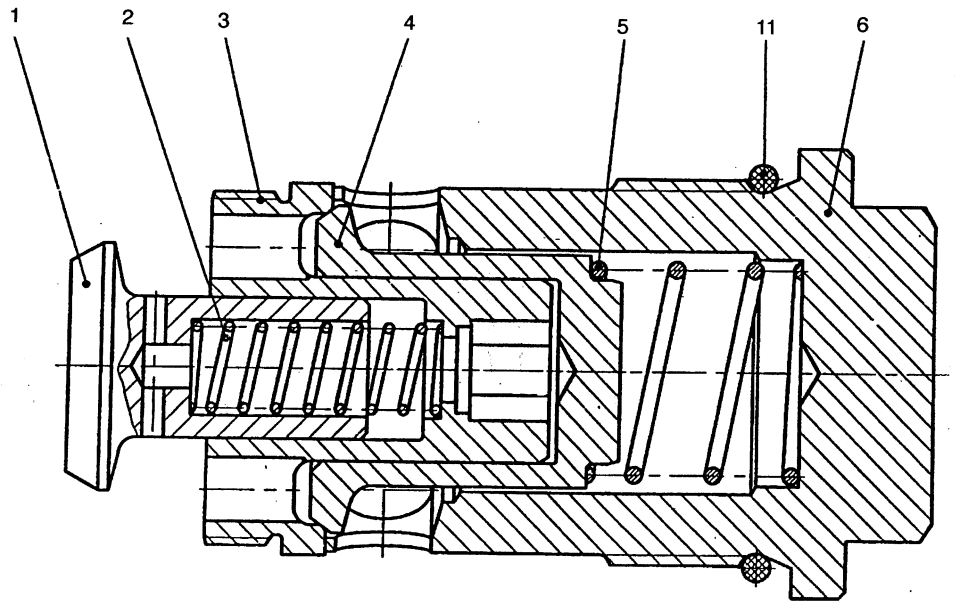

DATE	JUL. 30, 2003
REV. NO.	EXB03-13

Fig. 4210 VALVE VANNE

Serial No ;

Key No.	Part No.	Description	Description	Q'ty	S.C	Serial No.	ICA	Replaceable part	
								Part No.	Q'ty
4210--	02024743	VALVE	VANNE	2					
1	09651771	POPPET;VALVE	POPPET	1					
2	09444279	SPRING;PRESSURE	RESSORT	1					
3	09651772	SEAT;POPPET	SIEGE	1					
4	09651774	POPPET;VALVE	POPPET	1					
5	09651770	SPRING;PRESSURE	RESSORT	1					
6	02018449	SCREW;LOCKING	VIS	1					
11	09832103	O-RING 32.99X2.62	JOINT TORIQUE	1					

DATE	JUL. 30, 2003
REV.NO.	EXB03-13

Fig. 4220 TRAVEL REDUCTION GEAR BOITE REDUCTEUR

Serial No. ;

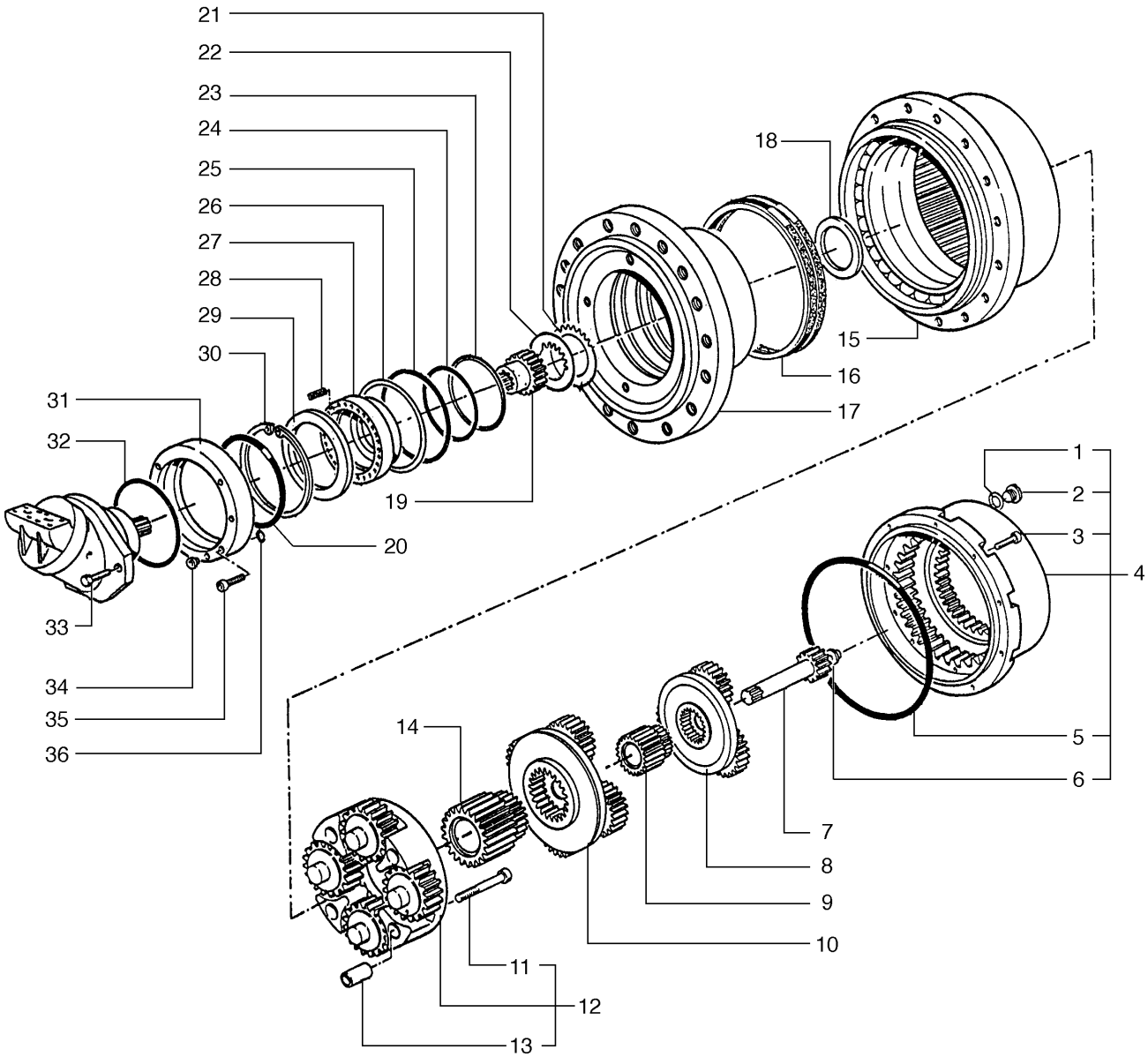

DATE	JUL. 30, 2003
REV. NO.	EXB03-13

Fig. 4220 TRAVEL REDUCTION GEAR BOITE REDUCTEUR

Serial No ;

Key No.	Part No.	Description	Description	Q'ty	S.C	Serial No.	ICA	Replaceable part	
								Part No.	Q'ty
4220--	2401-9229A	GEAR;REDUCTION	REDEUTEUR	2					
1	718006008	WASHER	RONDELLE	2					
2	682500640	PLUG;BREATHER M22X1.5	BOUCHON	2					
3	720968010	SCREW	VIS	16					
4	237179021	COVER;SET	COUVERCLE DE REGLAGE	1					
5	715303276	O-RING 3.5X380.59	JOINT TORIQUE	1					
6	663350310	PAD	TAMPON	1					
7	643010430	GEAR;SUN	PIGNON PRINCIPAL	1					
8	235379050	1ST. RED. ASS'Y	1ST D'TRANSSMISION	1					
9	643020590	GEAR;SUN Z=20 1;4.4	PIGNON PRINCIPAL	1					
10	235379030	2ND. RED. ASS'Y	2ND D'TRANSSMISION	1					
11	720965815	SCREW M30X2X150L	VIS	4					
12	235379012	3RD. RED. ASS'Y	3RD D'TRANSSMISION	1					
13	661000441	BUSH	COUSSINET	4					
14	643040150	GEAR;SUN	PIGNON PRINCIPAL	1					
15	280004860	BEARING ASS'Y	PALIER	1					
16	710317016	GASKET;LIFETIME	JOINT	1					
17	632590950	HUB	MOYEU DE FIXATION	1					
18	660300410	SPACER	BAGUE D'ECARTEMENT	1					
19	633030830	BRAKE;SHAFT	ENSEMBLE DE FREIN	1					
20	715303257	O-RING 3.53X266.29	JOINT TORIQUE	1					
21	680900050	DISC;SINTERIZ	DISQUE	7					
22	680700060	RING;STEEL	BAGUE	6					
23	722369044	RING;BACK-UP 4.65X191.21	ANNEAU DE SOUTIEN	1					
24	715307367	O-RING 5.33X189.87	JOINT TORIQUE	1					
25	715307371	O-RING 5.33X215.27	JOINT TORIQUE	1					
26	722369045	RING;SPIRAL	BAGUE	1					
27	635060151	PISTON	PISTON	1					
28	680000100	SPRING	RESSORT	21					
29	660300420	SPACER	BAGUE D'ECARTEMENT	1					
30	718299136	CIRCLIP	CIRCLIP	1					
31	654506540	FLANGE	BRIDE	1					
32	715303263	O-RING 3.53X190.99	JOINT TORIQUE	1					
33	711360005	SCREW M20X50-8.8	VIS	2					
34	715303293	O-RING 1.78X8.74	JOINT TORIQUE	1					
35	720956002	SCREW M16X35-8.8	VIS	8					
36	715303026	O-RING 2.62X12.37	JOINT TORIQUE	1					

DATE	JUN. 30, 2004
REV. NO.	EXB04-04

Fig. 4230 CONTROL VALVE(1) DISTRIBUTEUR

Serial No. ;

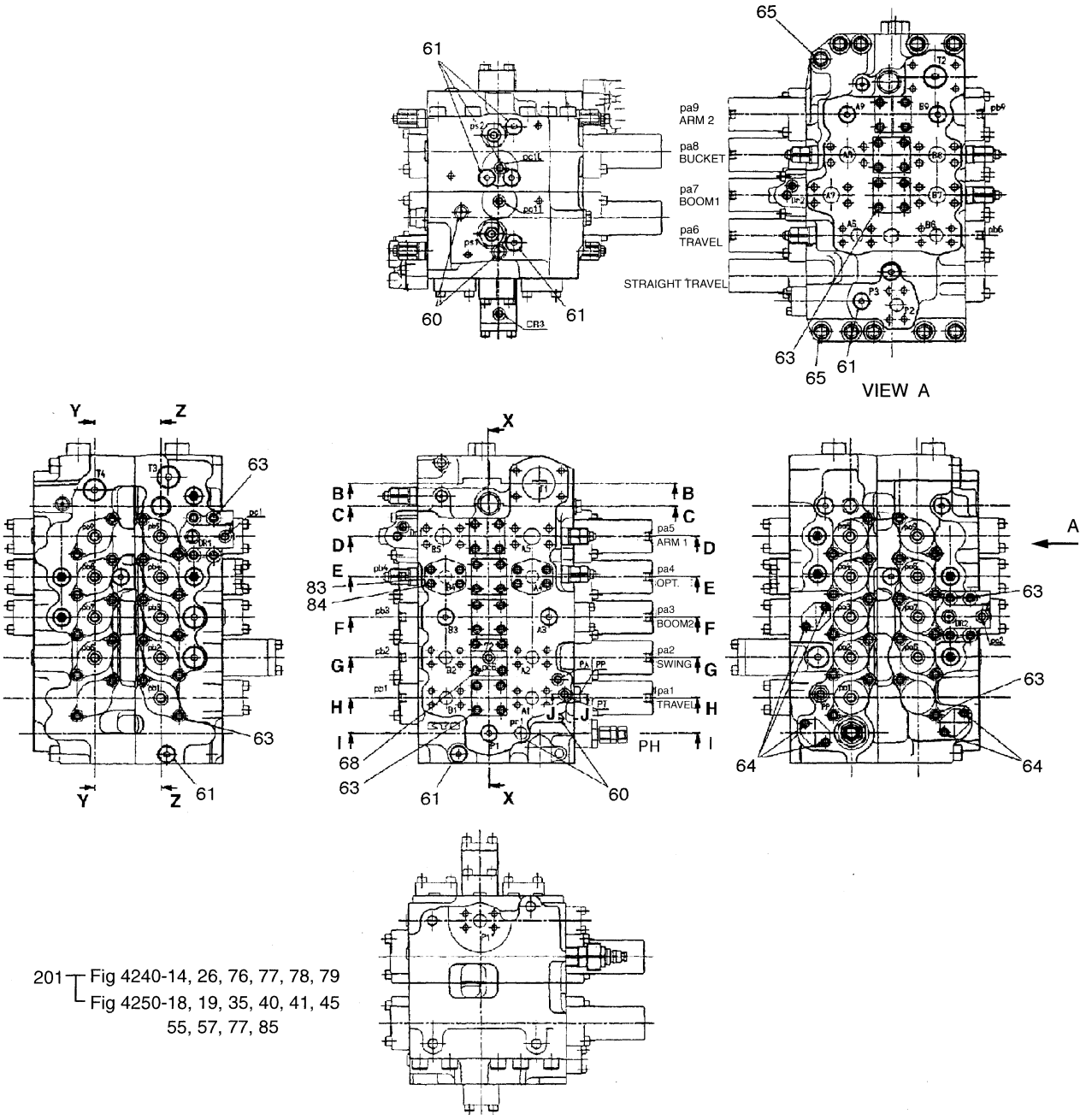

201 ┬ Fig 4240-14, 26, 76, 77, 78, 79
└ Fig 4250-18, 19, 35, 40, 41, 45
55, 57, 77, 85

DATE	JUN. 30, 2004
REV. NO.	EXB04-04

Fig. 4230 CONTROL VALVE(1) DISTRIBUTEUR

Serial No ;

Key No.	Part No.	Description	Description	Q'ty	S.C	Serial No.	ICA	Replaceable part	
								Part No.	Q'ty
4230--	420-00280A	CONTROL VALVE	DISTRIBUTEUR	1					
60	21003-00382	PLUG ASS'Y	BOUCHON	4					
61	21003-00384	PLUG ASS'Y	BOUCHON	7					
63	92703-12551	BOLT;SOCKET HEAD	BOULON A 6 PANS CREUX	48					
64	92703-10401	BOLT;SOCKET HEAD	BOULON A 6 PANS CREUX	6					
65	92703-20181	BOLT;SOCKET HEAD	BOULON A 6 PANS CREUX	10					
68	92703-12121	BOLT;SOCKET HEAD	BOULON A 6 PANS CREUX	4					
83	21001-00977	CAP;FLANGE	CHAPEAU	2					
84	92703-12451	BOLT;SOCKET HEAD	BOULON A 6 PANS CREUX	36					
201	420-00280KT	SEAL KIT	KIT DE JOINT	1					

DATE	JUN. 30, 2005
REV. NO.	EXB05-05

Fig. 4240 CONTROL VALVE(2) DISTRIBUTEUR

Serial No. ;

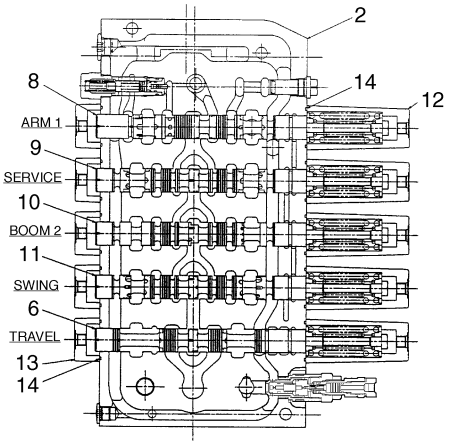

SECTION Z-Z

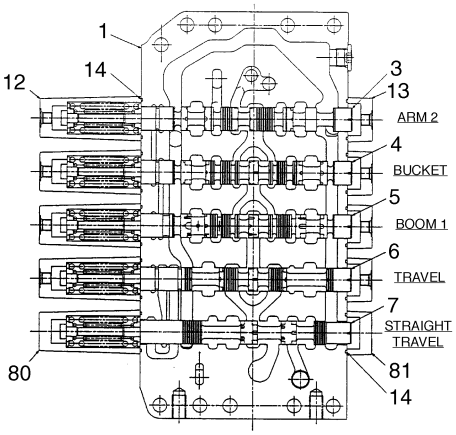

SECTION Y-Y

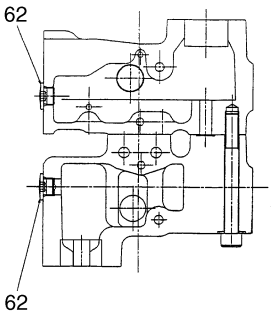

SECTION B-B

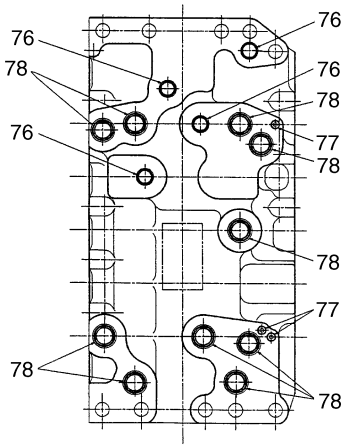

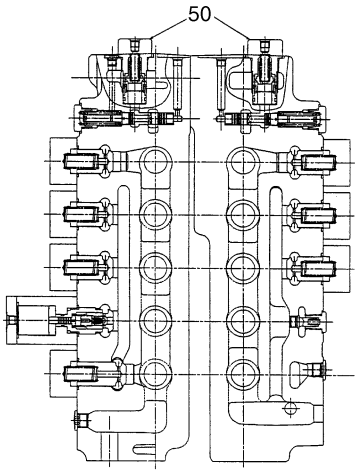

SECTION X-X

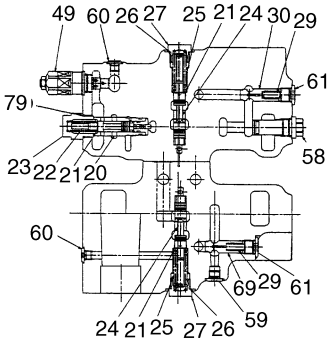

SECTION C-C

DATE	JUN. 30, 2005
REV. NO.	EXB05-05

Fig. 4240 CONTROL VALVE(2) DISTRIBUTEUR

Serial No ;

Key No.	Part No.	Description	Description	Q'ty	S.C	Serial No.	ICA	Replaceable part	
								Part No.	Q'ty
4240--	420-00280A	CONTROL VALVE	DISTRIBUTEUR	1					
1	C0151-61003	HOUSING;VALVE	CARTER	1	D				
2	C0151-61004	HOUSING;VALVE	CARTER	1	D				
3	**C017B-71501**	**SPOOL KIT (ARM-2)**	BOBINE	1					
4	**C017B-71502**	**SPOOL KIT (BUCKET)**	BOBINE	1					
5	**C017B-71503**	**SPOOL KIT (BOOM-1)**	BOBINE	1					
6	**C017B-71504**	**SPOOL KIT (TRAVEL)**	BOBINE	2					
7	**C017B-71505**	**SPOOL KIT (TRAVEL**	BOBINE	1					
8	**C017B-71506**	**SPOOL KIT (ARM-1)**	BOBINE	1					
9	C017B-71513	SPOOL KIT (OPTION)	BOBINE	1					
10	C017B-71507	SPOOL KIT (BOOM-2)	BOBINE	1					
11	C017B-71508	SPOOL KIT (SWING)	BOBINE	1					
12	C0001-63001	CAP	CHAPEAU	9					
13	C0001-63002	CAP	CHAPEAU	9					
14	95121-05500	O-RING	JONT TORIQUE	20	K				
20	C017B-71517	SPOOL KIT	BOBINE	1					
21	21111-30702	SEAT;SPRING	PLAQUE DE VANNE	3					
22	T1461-16002	SPRING	RESSORT	1					
23	T1152-33301	PLUG	BOUCHON	1					
24	C017B-71518	SPOOL KIT	BOBINE	2					
25	T1461-20005	SPRING	RESSORT	2					
26	21001-00213	O-RING	JONT TORIQUE	2	K				
27	21111-55956	PLUG	BOUCHON	2					
29	21111-56512	SPRING	RESSORT	2					
30	T1411-18004	POPPET	POPPET	1					
49	C011B-40377	OVERLOAD RELIEF VALVE ASS'Y	CLAPET DE DECHARGE	1					
50	C0003-60001	RELIEF VALVE ASS'Y	CLAPET DE DECHARGE	2					
58	C0003-01209	PLUG ASS'Y	BOUCHON	1					
59	21003-00383	PLUG ASS'Y	BOUCHON	1					
60	21003-00382	PLUG ASS'Y	BOUCHON	2					
61	21003-00384	PLUG ASS'Y	BOUCHON	2					
62	21003-00385	PLUG ASS'Y	BOUCHON	2					
69	T1411-18006	POPPET	POPPET	1					
76	T1515-22001	O-RING	JONT TORIQUE	4					
77	T1515-10001	O-RING	JONT TORIQUE	3	K				
78	T1515-30001	O-RING	JONT TORIQUE	10	K				
79	21001-00182	O-RING	JONT TORIQUE	1	K				
80	C0001-63003	CAP	CHAPEAU	1					

DATE	JUN. 30, 2005
REV. NO.	EXB05-05

Fig. 4240 CONTROL VALVE(2) DISTRIBUTEUR

Serial No. ;

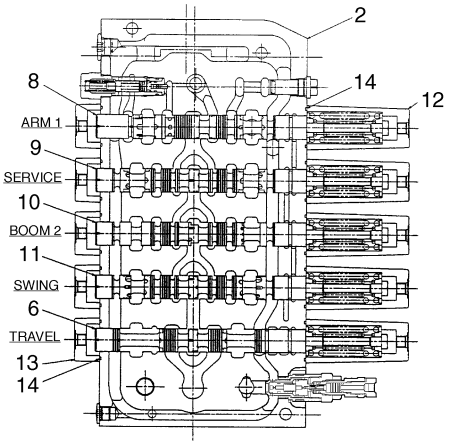

SECTION Z-Z

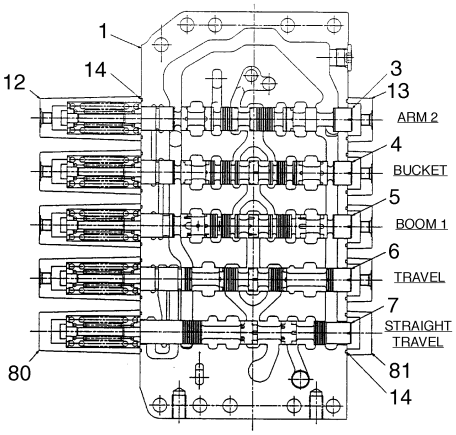

SECTION Y-Y

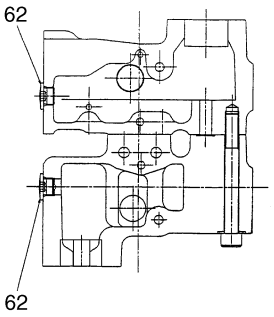

SECTION B-B

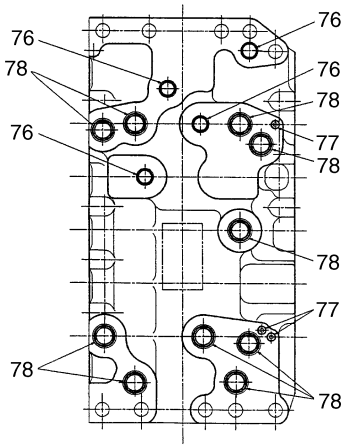

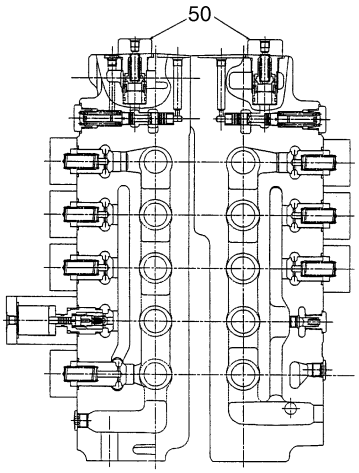

SECTION X-X

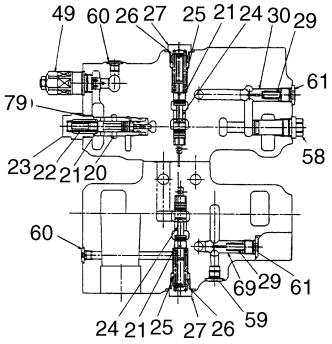

SECTION C-C

DATE	JUN. 30, 2005
REV. NO.	EXB05-05

Fig. 4240 CONTROL VALVE(2) DISTRIBUTEUR

Serial No ;

Key No.	Part No.	Description	Description	Q'ty	S.C	Serial No.	ICA	Replaceable part	
								Part No.	Q'ty
4240-81	C0001-63005	CAP	CHAPEAU	1					

DATE	JUN. 30, 2005
REV. NO.	EXB05-05

Fig. 4250 CONTROL VALVE(3) DISTRIBUTEUR

Serial No. ;

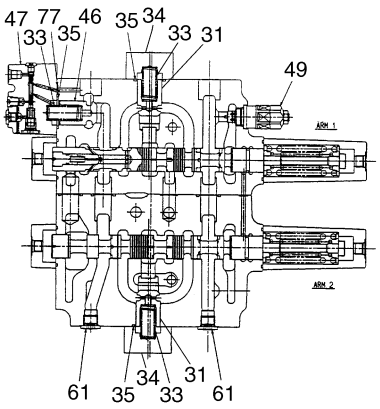

SECTION D-D

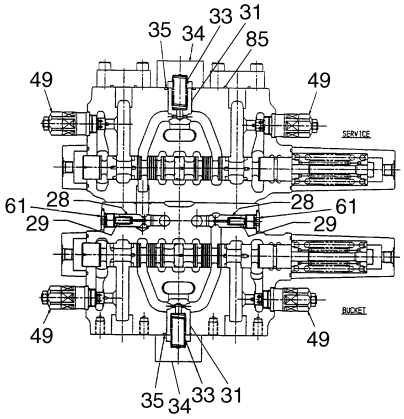

SECTION E-E

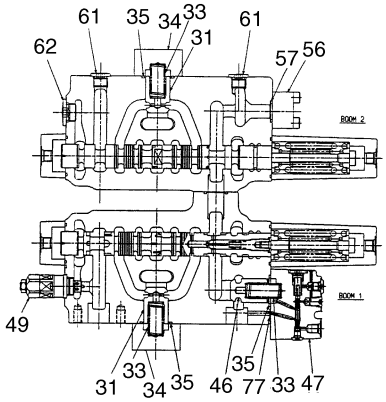

SECTION F-F



SECTION J-J

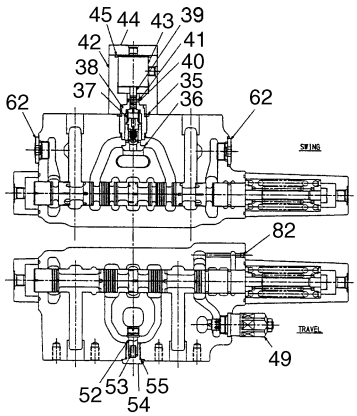

SECTION G-G

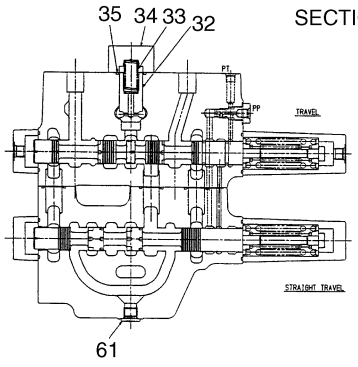

SECTION H-H

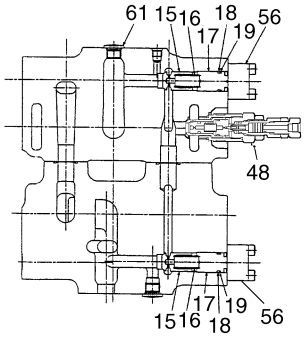

SECTION I-I

DATE	JUN. 30, 2005
REV. NO.	EXB05-05

Fig. 4250 CONTROL VALVE(3) DISTRIBUTEUR

Serial No ;

Key No.	Part No.	Description	Description	Q'ty	S.C	Serial No.	ICA	Replaceable part	
								Part No.	Q'ty
4250--	420-00280A	CONTROL VALVE	DISTRIBUTEUR	1					
15	T1411-28001	POPPET	POPPET	2					
16	T1461-19007	SPRING	RESSORT	2					
17	T1311-46001	SPACER	BAGUE D'ECARTEMENT	2					
18	95121-02500	O-RING	JONT TORIQUE	2	K				
19	95722-02500	RING;BACK-UP	BAGUE DE SOUTIEN	2	K				
28	T1411-18003	POPPET	POPPET	2					
29	21111-56512	SPRING	RESSORT	2					
31	T1411-36001	POPPET	POPPET	6					
32	T1411-36002	POPPET	POPPET	1					
33	21191-19403	SPRING	RESSORT	9					
34	T1631-00011	FLANGE	BRIDE	7					
35	95113-04100	O-RING	JONT TORIQUE	10	K				
36	C0003-04106	POPPET ASS'Y	POPPET	1					
37	21111-70328	SPRING	RESSORT	1					
38	21111-71543	SLEEVE	BARBOTINE	1					
39	21111-72222	PISTON	PISTON	1					
40	95113-01400	O-RING	JONT TORIQUE	1	K				
41	95712-01400	RING;BACK-UP	BAGUE DE SOUTIEN	1					
42	C0111-61002	BODY	BOITIER	1					
43	T1431-44001	PISTON	PISTON	1					
44	T1631-00003	FLANGE	BRIDE	1					
45	95113-04800	O-RING	JONT TORIQUE	1	K				
46	T1411-36003	POPPET	POPPET	2					
47	C0003-60702	BODY ASS'Y	BOITIER	2					
48	C011B-50145	MAIN RELIEF VALVE ASS'Y	CLAPET DE DECHARGE	1					
49	C011B-40377	OVERLOAD RELIEF VALVE ASS'Y	CLAPET DE DECHARGE	7					
51	C0003-01208	PLUG ASS'Y	BOUCHON	1					
52	T1415-19001	POPPET	POPPET	1					
53	21011-30644	SPRING	RESSORT	1					
54	21001-90227	PLUG ASS'Y	BOUCHON	1					
55	21001-00036	O-RING	JONT TORIQUE	1	K				
56	T1631-00004	FLANGE	BRIDE	3					
57	21001-01267	O-RING	JONT TORIQUE	1	K				
61	21003-00384	PLUG ASS'Y	BOUCHON	17					
62	21003-00385	PLUG ASS'Y	BOUCHON	3					
77	T1515-10001	O-RING	JONT TORIQUE	5	K				
82	96321-06350	BALL;STEEL	BILLE	1					

DATE	JUN. 30, 2005
REV. NO.	EXB05-05

Fig. 4250 CONTROL VALVE(3) DISTRIBUTEUR

Serial No. ;

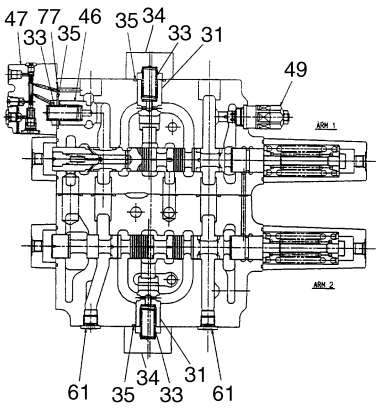

SECTION D-D

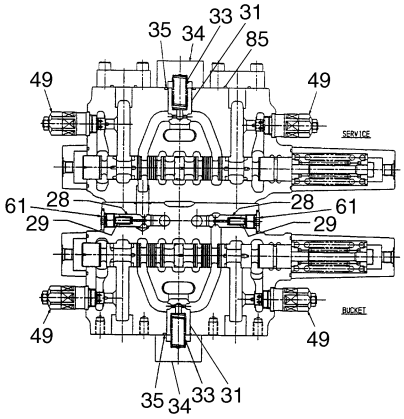

SECTION E-E

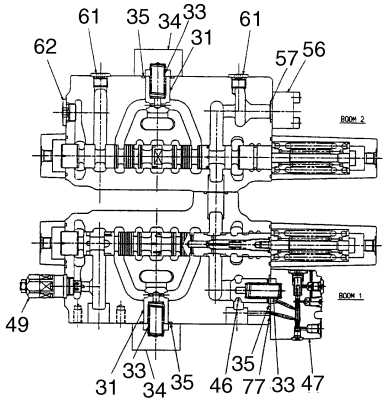

SECTION F-F



SECTION J-J

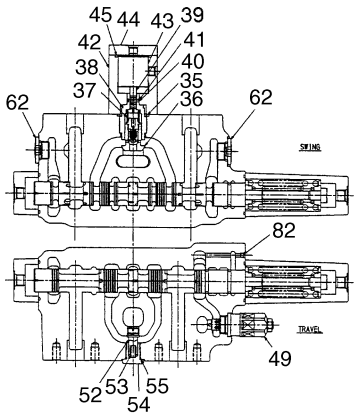

SECTION G-G

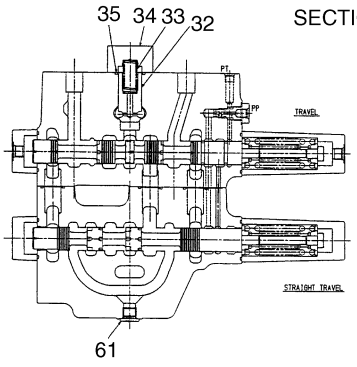

SECTION H-H

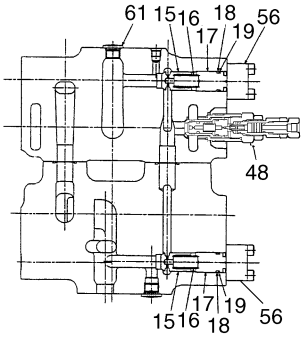

SECTION I-I

DATE	JUN. 30, 2005
REV. NO.	EXB05-05

Fig. 4250 CONTROL VALVE(3) DISTRIBUTEUR

Serial No ;

Key No.	Part No.	Description	Description	Q'ty	S.C	Serial No.	ICA	Replaceable part	
								Part No.	Q'ty
4250-85	95131-02400	O-RING	JONT TORIQUE	2	K				

DATE	DEC. 15, 2006
REV. NO.	EXB06-13

Fig. 4260 REMOTE CONTROL VALVE
VANNE DE COMMAND A DISTANCE

Serial No. ; 1001 ~ 1613

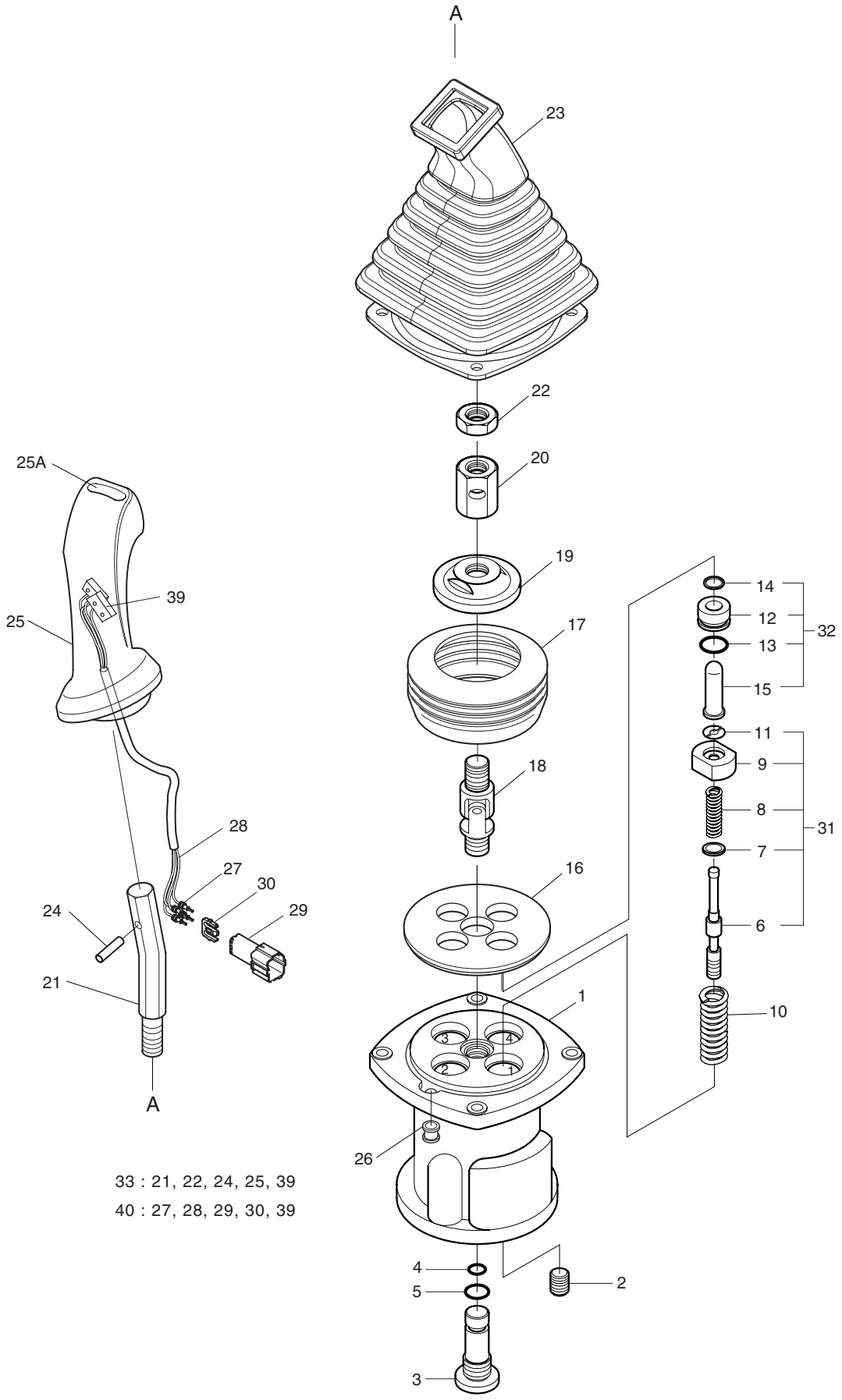

DATE	DEC. 15, 2006
REV. NO.	EXB06-13

Fig. 4260 REMOTE CONTROL VALVE VANNE DE COMMAND A DISTANCE

Serial No. ; 1001 ~ 1613

Key No.	Part No.	Description	Description	Q'ty	S.C	Serial No.	ICA	Replaceable part	
								Part No.	Q'ty
4260--	**420-00355**	**REMOTE CONTROL**	MANETTE DE CONTROLE	1		**1001–1613**	I	420-00355A	1
	420-00356	**REMOTE CONTROL**	MANETTE DE CONTROLE	1		**1001–1613**	I	420-00356A	1
1	JA1G1001	CASE	CARTER	1					
2	WPT18	PLUG	BOUCHON	1					
3	J95C1002	PLUG	BOUCHON	1					
4	P0010A	O-RING	JOINT TORIQUE	1					
5	P0014	O-RING	JOINT TORIQUE	1					
6	J95C1003	SPOOL	PLUNGEUR	4	D				
7	J95C1004	SHIM	CALE	4	D				
8	J96E2002	SPRING	RESSORT	4	D				
9	J95C1006	SEAT;SPRING	SIEGE	4	D				
10	J95C1007	SPRING	RESSORT	4					
11	J24D2011	STOPPER	ARRET	4	D				
12	J95C1008	PLUG	BOUCHON	4	D				
13	P0020	O-RING	JOINT TORIQUE	4	D				
14	RSY10	SEAL;ROD	TIGE D'ETANCHEITE	4	D				
15	J95C1009	ROD;PUSH	TIGE DE POUSSOIR	4	D				
16	JA1G1002	PLATE	PLAQUE	1					
17	J97A5018	BOOT	GAINE DE PROTECTION	1					
18	J95C1012	JOINT ASS'Y	ENSEMBLE DE JOINT	1					
19	JA1G1004	PLATE;SWASH	PLAQUE	1					
20	J95C1014	NUT;HEX.	ECROU 6 PANS	1					
21	JA1D2001	BAR;HANDLE	JAGUE DE NIVEAU	1	D				
22	HNM14	NUT;HEX.	ECROU 6 PANS	1	D				
23	JA1D2002	BOOT	GAINE DE PROTECTION	1					
24	SP0528	PIN;SPRING	GOUPILLE ELASTIQUE	1	D				
25	JA0E3026	HANDLE ASS'Y	HANDLE ASS'Y	1	D				
25A	1.161-00021	. CAP;PEANUT	. CHAPEAU	1	D				
26	JA1G1003	BUSHING	DOUILLE	1					
27	-	TERMINAL	TERMINAL	4	D				
28	-	WIRE;SEAL	FIL	4	D				
29	SWP4PT	HOUSING	CARTER	1	D				
30	SWP4P	HOLDER;REAR	POSSESSEUR	1	D				
31	JA1G3001	SPOOL KIT	KIT DE TRAITEMENT	4					
32	JA1G3002	PLUG KIT	KIT DE PRISE	4					
33	JA1G1005	HANDLE KIT	KIT ASS'Y	1					
39	-	SWITCH	INTERRUPTEUR	2	D				
40	K9001001	SWITCH ASS'Y	INTERRUPTEUR	1					

DATE	DEC. 15, 2006
REV. NO.	EXB06-13

Fig. 4261 REMOTE CONTROL VALVE VANNE DE COMMAND A DISTANCE

Serial No. ; 1614 ~

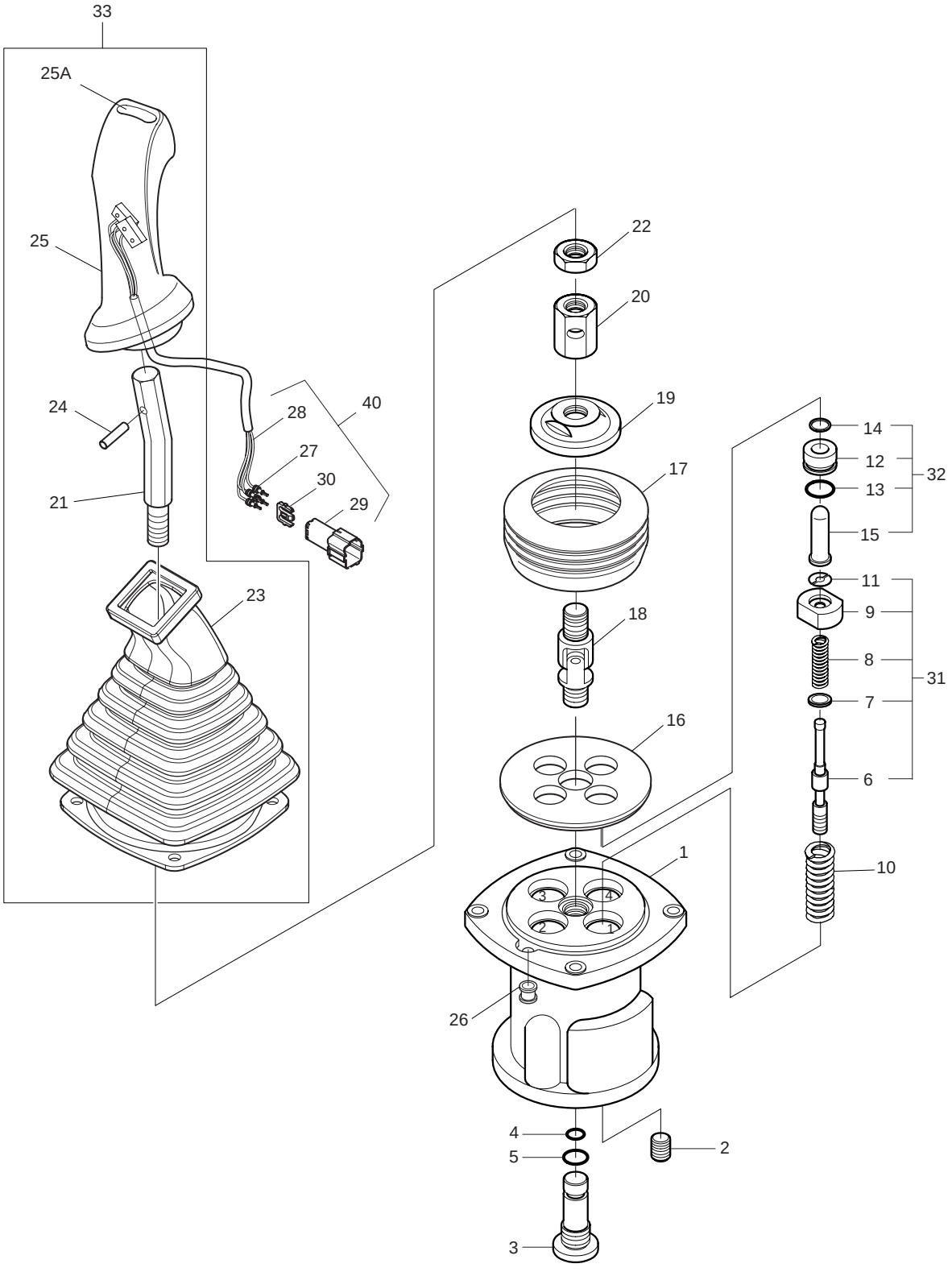

DATE	DEC. 15, 2006
REV. NO.	EXB06-13

Fig. 4261 REMOTE CONTROL VALVE VANNE DE COMMAND A DISTANCE

Serial No. ; 1614 ~

Key No.	Part No.	Description	Description	Q'ty	S.C	Serial No.	ICA	Replaceable part	
								Part No.	Q'ty
4261--	**420-00355A**	**REMOTE CONTROL**	MANETTE DE CONTROLE	1		**1614–**			
	420-00356A	**REMOTE CONTROL**	MANETTE DE CONTROLE	1		**1614–**			
1	1.402-00001	CASE	CARTER	1					
2	2181-1116D1	PLUG	BOUCHON	1					
3	K9002911	PLUG	BOUCHON	1					
4	S8002701	O-RING	JOINT TORIQUE	1					
5	S8000141	O-RING	JOINT TORIQUE	1					
6	1.424-00015	SPOOL	PLUNGEUR	4	D				
7	1.114-00012	SHIM	CALE	4	D				
8	1.131-00027	SPRING	RESSORT	4	D				
9	1.427-00014	SEAT;SPRING	SIEGE	4	D				
10	1.131-00023	SPRING	RESSORT	4					
11	161-00171	STOPPER	ARRET	4					
12	K9001126	PLUG	BOUCHON	4	D				
13	S8000201	O-RING	JOINT TORIQUE	4					
14	K9001127	SEAL;ROD	TIGE D'ETANCHEITE	4					
15	1.428-00235	ROD;PUSH	TIGE DE POUSSOIR	4					
16	1.412-00017	PLATE	PLAQUE	1					
17	1.160-00004	BOOT	GAINE DE PROTECTION	1					
18	1.138-00004	JOINT ASS'Y	ENSEMBLE DE JOINT	1					
19	1.412-00131	PLATE;SWASH	PLAQUE	1					
20	1.121-00028	NUT;HEX.	ECROU 6 PANS	1					
21	1.178-00004	BAR;HANDLE	JAGUE DE NIVEAU	1					
22	S4012833	NUT;HEX.	ECROU 6 PANS	1					
23	1.160-00007	BOOT	GAINE DE PROTECTION	1					
24	S5740800	PIN;SPRING	GOUPILLE ELASTIQUE	1					
25	K9001224	HANDLE ASS'Y(L.H)	HANDLE ASS'Y	1					
	K9001225	HANDLE ASS'Y(R.H)	HANDLE ASS'Y	1					
25A	1.161-00016	. CAP;PEANUT	. CHAPEAU	1					
26	1.110-00169	BUSHING	DOUILLE	1					
27	-	TERMINAL	TERMINAL	4	D				
28	-	WIRE;SEAL	FIL	4	D				
29	-	HOUSING	CARTER	1	D				
30	-	HOLDER;REAR	POSSESSEUR	1	D				
31	1.424-00035	SPOOL KIT	KIT DE TRAITEMENT	4					
32	1.181-00085A	PLUG KIT	KIT DE PRISE	4					
33	K9001228	HANDLE KIT(L.H)	KIT ASS'Y	1					
	K9001229	HANDLE KIT(R.H)	KIT ASS'Y	1					

DATE	DEC. 15, 2006
REV. NO.	EXB06-13

Fig. 4261 REMOTE CONTROL VALVE VANNE DE COMMAND A DISTANCE

Serial No. ; 1614 ~

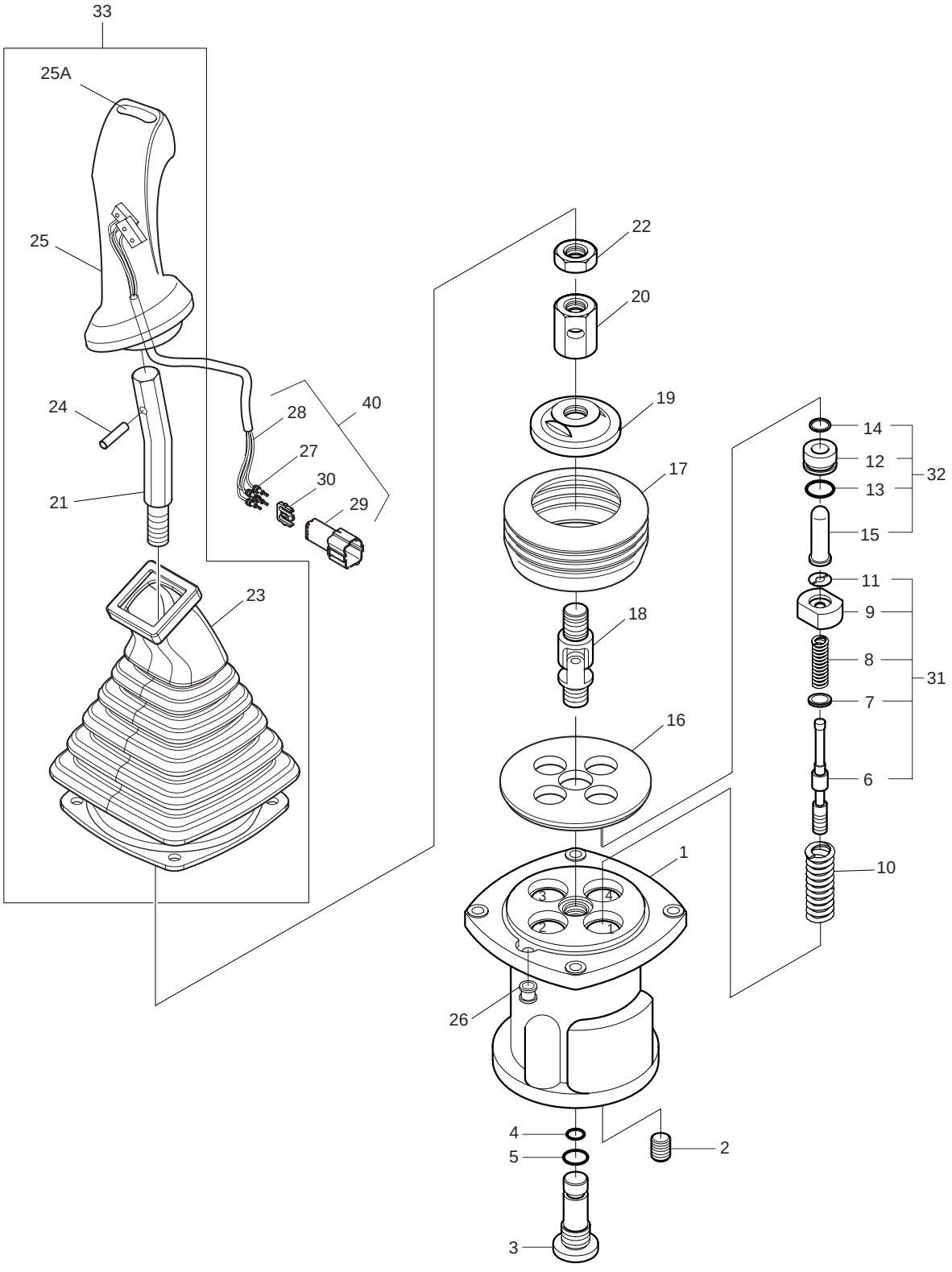

DATE	DEC. 15, 2006
REV. NO.	EXB06-13

Fig. 4261 REMOTE CONTROL VALVE VANNE DE COMMAND A DISTANCE

Serial No. ; 1614 ~

Key No.	Part No.	Description	Description	Q'ty	S.C	Serial No.	ICA	Replaceable part	
								Part No.	Q'ty
4261-40	K9001001	SWITCH ASS'Y	INTERRUPTEUR	1					

DATE	DEC. 29, 2005
REV. NO.	EXB05-20

Fig. 4265 REMOTE CONTROL VALVE-3 SWITCH
VANNE DE COMMAND A DISTANCE

Serial No. ;

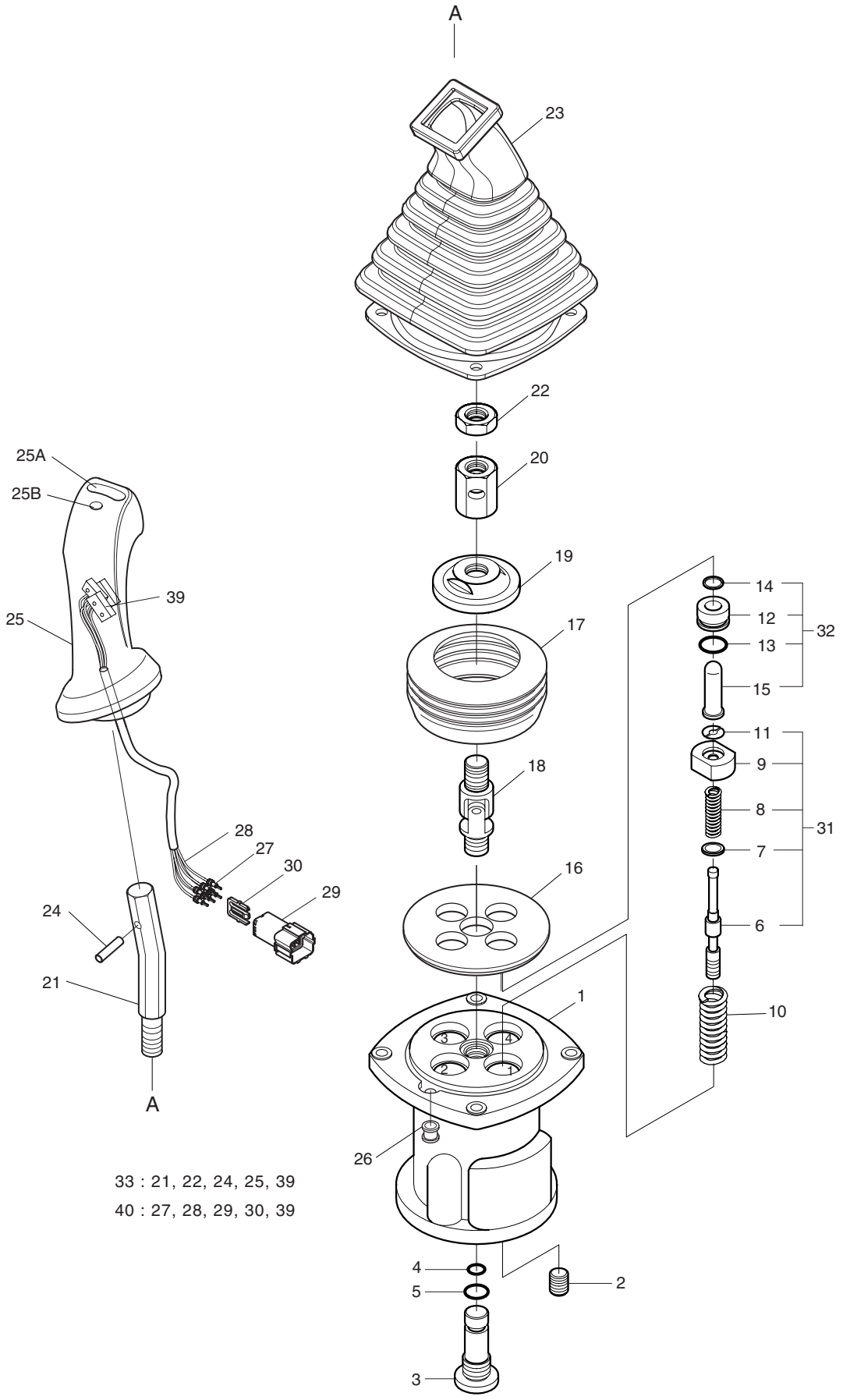

33 : 21, 22, 24, 25, 39

40 : 27, 28, 29, 30, 39

DATE	DEC. 29, 2005
REV. NO.	EXB05-20

Fig. 4265 REMOTE CONTROL VALVE-3 SWITCH VANNE DE COMMAND A DISTANCE

Serial No ;

Key No.	Part No.	Description	Description	Q'ty	S.C	Serial No.	ICA	Replaceable part	
								Part No.	Q'ty
4265--	420-00358	REMOTE CONTROL VALVE(L.H)	MANETTE DE CONTROLE	1					
	420-00359	REMOTE CONTROL VALVE(R.H)	MANETTE DE CONTROLE	1					
1	JA1G1001	CASE	CARTER	1					
2	WPT18	PLUG	BOUCHON	1					
3	J95C1002	PLUG	BOUCHON	1					
4	P0010A	O-RING	JOINT TORIQUE	1					
5	P0014	O-RING	JOINT TORIQUE	1					
6	J95C1003	SPOOL	PLUNGEUR	4	D				
7	J95C1004	SHIM	CALE	4	D				
8	J96E2002	SPRING	RESSORT	4	D				
9	J95C1006	SEAT;SPRING	SIEGE	4	D				
10	**J95C1007**	**SPRING**	RESSORT	4					
11	J24D2011	STOPPER	ARRET	4	D				
12	J95C1008	PLUG	BOUCHON	4	D				
13	P0020	O-RING	JOINT TORIQUE	4	D				
14	RSY10	SEAL;ROD	TIGE D'ETANCHEITE	4	D				
15	J95C1009	ROD;PUSH	TIGE DE POUSSOIR	4	D				
16	JA1G1002	PLATE	PLAQUE	1					
17	J97A5018	BOOT	GAINE DE PROTECTION	1					
18	J95C1012	JOINT ASS'Y	ENSEMBLE DE JOINT	1					
19	JA1G1004	PLATE;SWASH	PLAQUE	1					
20	J95C1014	NUT;HEX.	ECROU 6 PANS	1					
21	JA1D2001	BAR;HANDLE	JAGUE DE NIVEAU	1	D				
22	HNM14	NUT;HEX.	ECROU 6 PANS	1	D				
23	JA1D2002	BOOT	GAINE DE PROTECTION	1					
24	SP0528	PIN;SPRING	GOUPILLE ELASTIQUE	1	D				
25	J99K1011	HANDLE ASS'Y	HANDLE ASS'Y	1	D				
25A	1.161-00021	. CAP;PEANUT	. CHAPEAU	1					
25B	1.161-00017	. CAP;ROUND	. CHAPEAU	1					
26	JA1G1003	BUSHING	DOUILLE	1					
27	-	TERMINAL	TERMINAL	4	D				
28	-	WIRE;SEAL	FIL	4	D				
29	SWP6PT	HOUSING	CARTER	1	D				
30	SWP6P	HOLDER;REAR	POSSESSEUR	1	D				
31	JA1G3001	SPOOL KIT	KIT DE TRAITEMENT	4					
32	JA1G3002	PLUG KIT	KIT DE PRISE	4					
33	JA1G2001	HANDLE KIT	KIT ASS'Y	1					
39	-	SWITCH	INTERRUPTEUR	3	D				

DATE	DEC. 29, 2005
REV. NO.	EXB05-20

Fig. 4265 REMOTE CONTROL VALVE-3 SWITCH
VANNE DE COMMAND A DISTANCE

Serial No. ;

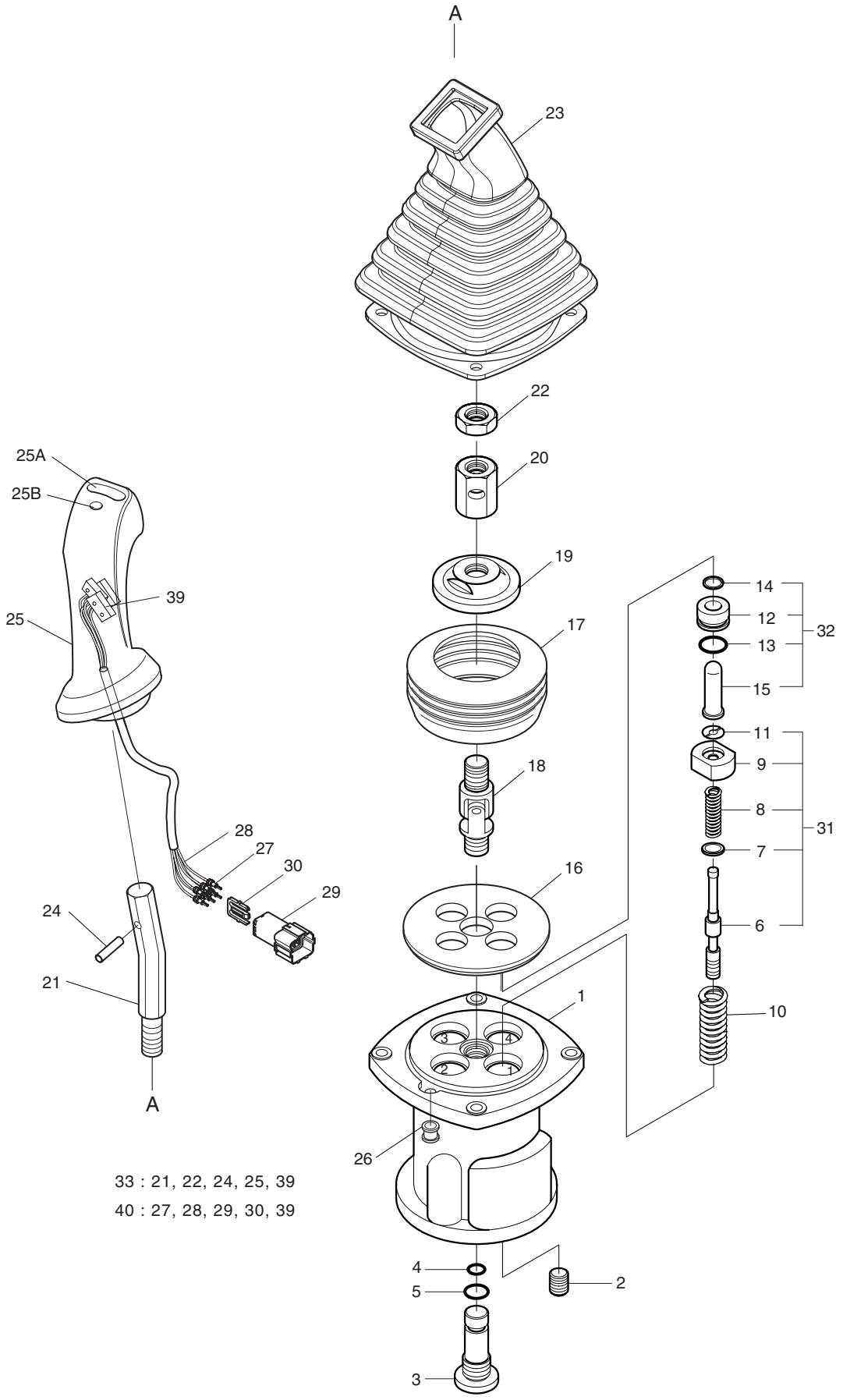

DATE	DEC. 29, 2005
REV. NO.	EXB05-20

Fig. 4265 REMOTE CONTROL VALVE-3 SWITCH VANNE DE COMMAND A DISTANCE

Serial No ;

Key No.	Part No.	Description	Description	Q'ty	S.C	Serial No.	ICA	Replaceable part	
								Part No.	Q'ty
4265-40	K9001002	SWITCH ASS'Y	INTERRUPTEUR	1					

DATE	JUL. 30, 2003
REV. NO.	EXB03-13

Fig. 4270 PEDAL VALVE VANNE DE PEDALE

Serial No. ;

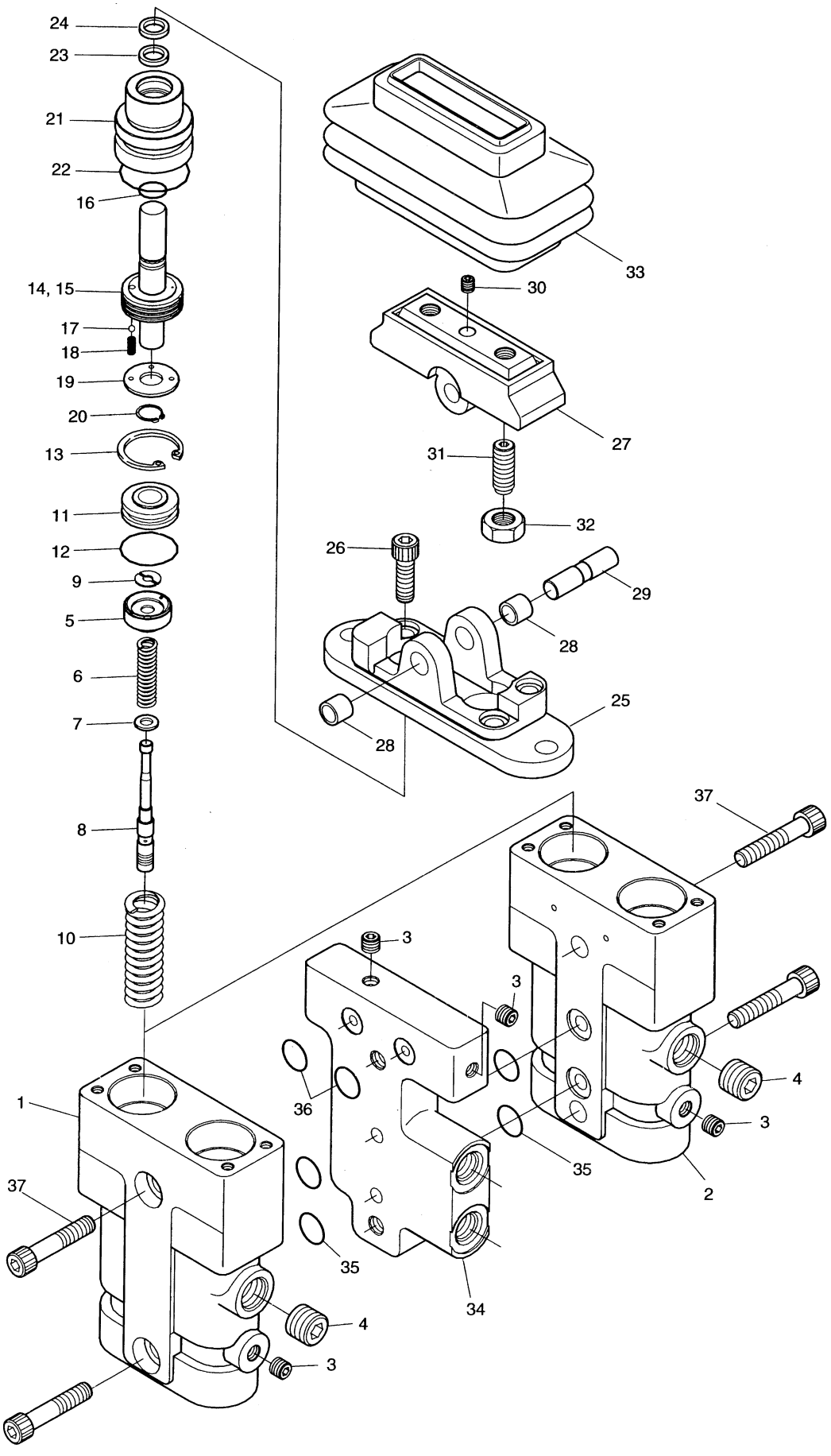

DATE	JUL. 30, 2003
REV. NO.	EXB03-13

Fig. 4270 PEDAL VALVE VANNE DE PEDALE

Serial No ;

Key No.	Part No.	Description	Description	Q'ty	S.C	Serial No.	ICA	Replaceable part	
								Part No.	Q'ty
4270--	420-00030	PEDAL VALVE	VANNE	1					
1	J98J1001	BODY(1)	BOITIER	1					
2	J98J1002	BODY(2)	BOITIER	1					
3	NWP116	PLUG NPT1/16	BOUCHON	4					
4	WPT38	PLUG PT3/8	BOUCHON	2					
5	J98J1003	SEAT;SPRING	RESSORT DE SIEGE	4					
6	J98J1004	SPRING	RESSORT	4					
7	J24D2008	SEAT;SPRING	RESSORT DE SIEGE	4					
8	J98J1005	SPOOL	PLUNGEUR	4					
9	J98J1006	STOPPER	ARRET	4					
10	J98J1007	SPRING	RESSORT	4					
11	J98J1008	GUIDE;ROD	GUIDE	4					
12	P022	O-RING	JOINT TORIQUE	4					
13	SR28CH	RING;SNAP	ARRET	4					
14	J98J1009	ROD;PUSH	TIGE DE POUSSOIR	4					
15	SP0306	PIN;SPRING	GOUPILLE FENDUE	4					
16	J98J1010	SEAL	JOINT D'HUILE	4					
17	SB18	BALL;STEEL	BILLE	4					
18	J98J1011	SPRING	RESSORT	4					
19	J98J1012	PLATE	PLAQUE	4					
20	SR11CS	RING;SNAP	ARRET	4					
21	J98J1013	PLUG	BOUCHON	4					
22	G025	O-RING	JOINT TORIQUE	4					
23	RSY12	SEAL;ROD	TIGE D'ETANCHEITE	4					
24	DSP12	SEAL;DUST	JOINT D'HUILE	4					
25	J98J1014	COVER	COUVERCLE	2					
26	WBM0630	BOLT;WRENCH M6X1.0X30	BOULON A 6 PANS CREUX	4					
27	J24D2005	CAM	CAME	2					
28	DU1010	BUSHING	DOUILLE	4					
29	J24D2016	SHAFT;CAM	ARBRE A CAMES	2					
30	SBM0605	SCREW;SET	VIS	2					
31	J24D2015	SCREW;SET	VIS	4					
32	HNM10	NUT M10	ECROU	4					
33	J24D2006	BELLOWS	SOUFFLET	2					
34	J98J1015	SPACER	BAGUE D'ECARTEMENT	1					
35	P012	O-RING	JOINT TORIQUE	4					
36	P010	O-RING	JOINT TORIQUE	2					
37	WBM1042	BOLT;WRENCH M10X1.5X42	BOULON A 6 PANS CREUX	4					

DATE	DEC. 30, 2004
REV. NO.	EXB04-09

Fig. 4280 SOLENOID VALVE
VANNE DE SOLENOIDE

Serial No. ;

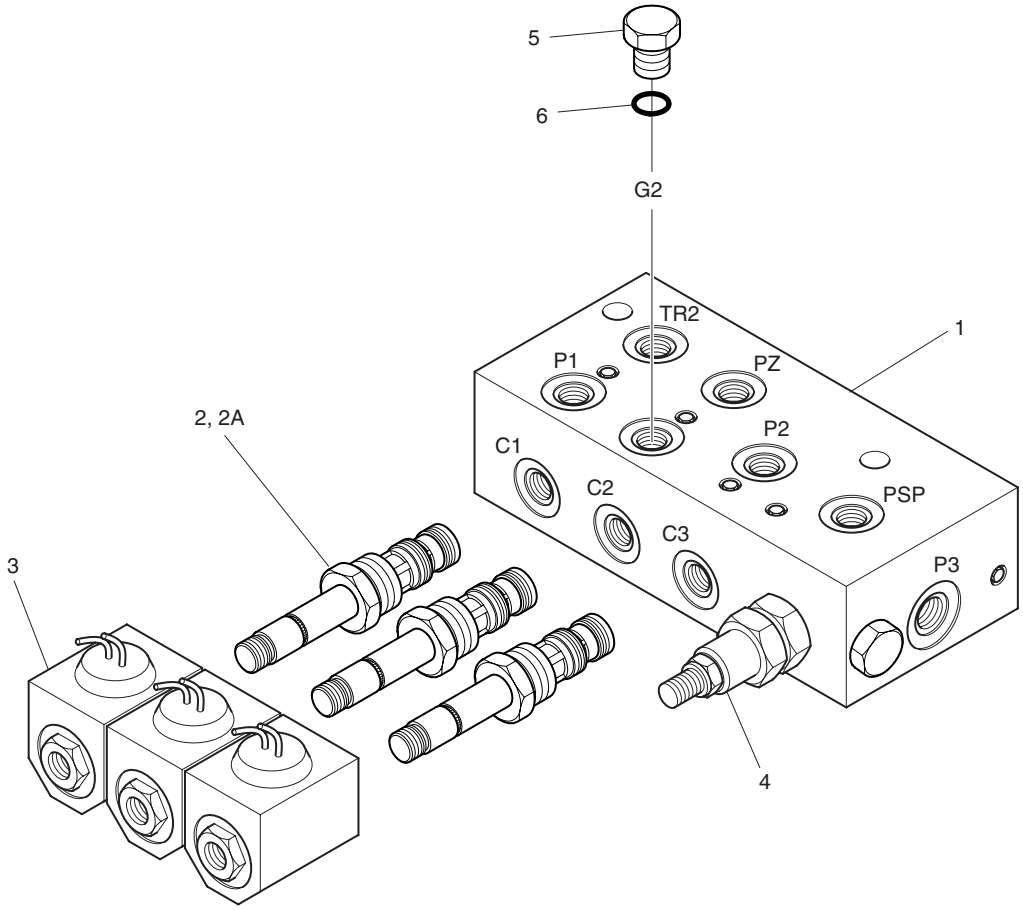

DATE	DEC. 30, 2004
REV. NO.	EXB04-09

Fig. 4280 SOLENOID VALVE VANNE DE SOLENOIDE

Serial No ;

Key No.	Part No.	Description	Description	Q'ty	S.C	Serial No.	ICA	Replaceable part	
								Part No.	Q'ty
4280--	420-00369C	SOLENOID VALVE	SOUPAPE A SOLENOIDE	1		1001–1319	I	420-00369E	1
	420-00369E	**SOLENOID VALVE**	SOUPAPE A SOLENOIDE	1		**1320–**			
1	-	BLOCK	BLOC	1	D				
2	DF-S3A-00	SOLENOID VALVE	VANNE SOLENOIDE	3		1001–1319	I	TF-S3A-00	3
	TF-S3A-00	**SOLENOID VALVE**	VANNE SOLENOIDE	3		**1320–**			
2A	DF-S3A-S-01	. SEAL KIT	. KIT D'ETANCHEITE	1		1001–1319			
	TF-S3A-S-01	**. SEAL KIT**	. KIT D'ETANCHEITE	1		**1320–**			
3	VDL24	COIL	COIL	3					
4	FD-PSS1-0005	PILOT SHIFT	BOUCHON	1					
5	2181-1950D1	PLUG PF1/4	BOUCHON	1					
6	S8000111	O-RING P11	JOINT TORIQUE	1					

DATE	DEC. 30, 2004
REV. NO.	EXB04-09

Fig. 4290 BREAKER VALVE VANNE DE BRISEUR

Serial No. ;

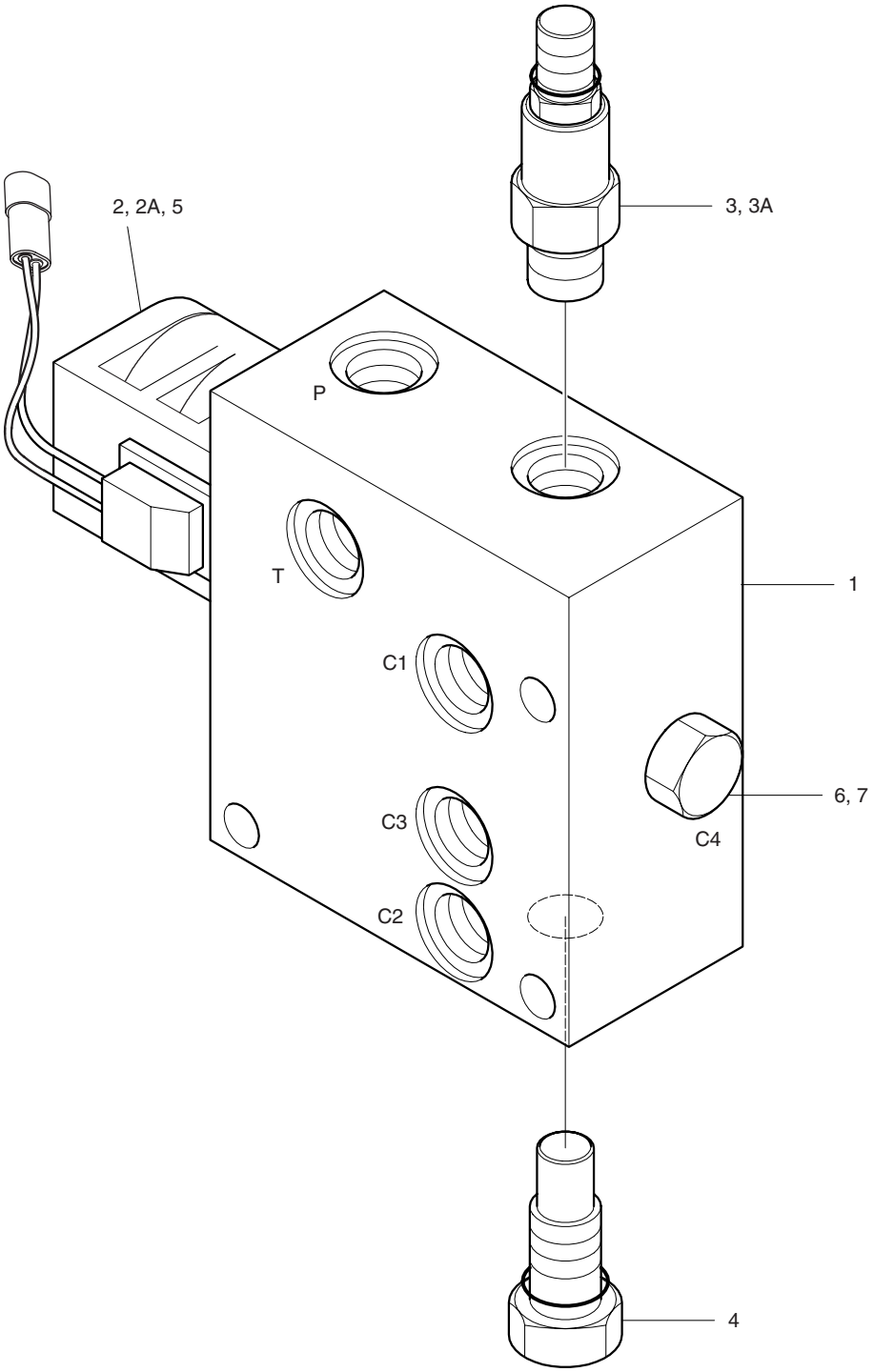

DATE	DEC. 30, 2004
REV. NO.	EXB04-09

Fig. 4290 BREAKER VALVE VANNE DE BRISEUR

Serial No ;

Key No.	Part No.	Description	Description	Q'ty	S.C	Serial No.	ICA	Replaceable part	
								Part No.	Q'ty
4290--	420-00340	VALVE;BREAKER	SOUPAPE A SOLENOIDE	1		1001–1322	I	420-00340A	1
	420-00340A	VALVE;BREAKER	SOUPAPE A SOLENOIDE	1		1323–1324	I	420-00340B	1
	420-00340B	**VALVE;BREAKER**	SOUPAPE A SOLENOIDE	1		**1325–**			
1	-	BODY	BOITIER	1	D				
2	DF-S3A-00	VALVE;SOLENOID	VANNE SOLENOIDE	1		1001–1324	I	TF-S3A-00	1
	TF-S3A-00	**VALVE;SOLENOID**	VANNE SOLENOIDE	1		**1325–**			
2A	DF-S3A-S-01	. SEAL KIT	. KIT D'ETANCHEITE	1		1001–1324			
	TF-S3A-S-01	**. SEAL KIT**	. KIT D'ETANCHEITE	1		**1325–**			
3	PBDB-LNN	VALVE;REDUCING	CLAPET DE TROP-PLEIN	1					
3A	990-011-007	. SEAL KIT	. KIT D'ETANCHEITE	1					
4	CSAB-XXN	VALVE;SHUTTLE	CLAPET BALADEUR	1					
5	VDL24	COIL	COIL	1					
6	2181-1950D1	PLUG PF1/4	BOUCHON	1					
7	S8000111	O-RING P11	JOINT TORIQUE	1					

DATE	DEC. 30, 2004
REV. NO.	EXB04-09

Fig. 4295 PILOT VALVE
VANNE

Serial No. ;

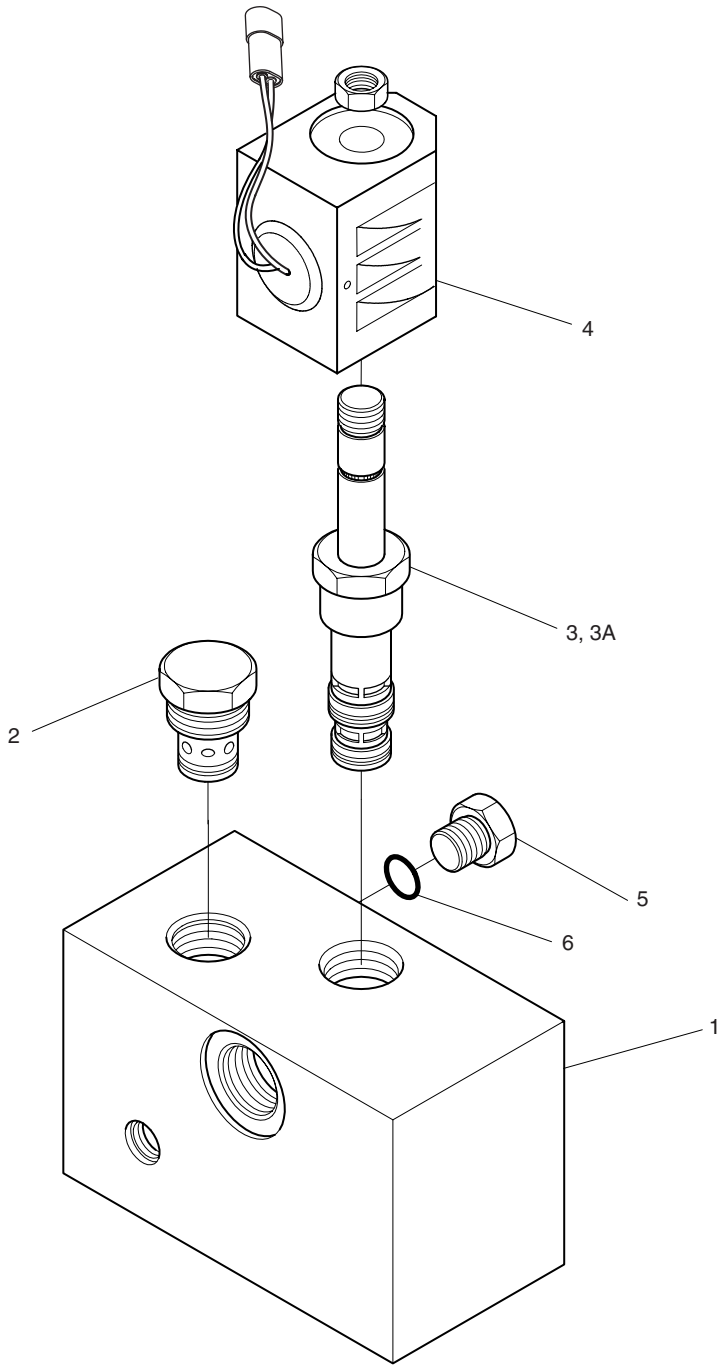

DATE	DEC. 30, 2004
REV. NO.	EXB04-09

Fig. 4295 PILOT VALVE VANNE

Serial No ;

Key No.	Part No.	Description	Description	Q'ty	S.C	Serial No.	ICA	Replaceable part	
								Part No.	Q'ty
4295--	2426-9039B	PILOT VALVE	VANNE	1		1001–1319	I	2426-9039C	1
	2426-9039C	**PILOT VALVE**	VANNE	1		**1320–**			
1	-	BODY	CARTER	1	D				
2	FD-DC-0-B	VALVE;CHECK	CLAPET DE RETENUE	1					
3	DF-S3A-00	SOLENOID SPOOL	VANNE SOLENOIDE	1		1001–1319	I	TF-S3A-00	1
	TF-S3A-00	**SOLENOID SPOOL**	VANNE SOLENOIDE	1		**1320–**			
3A	DF-S3A-S-01	. SEAL KIT	. KIT D'ETANCHEITE	1		1001–1319			
	TF-S3A-S-01	**. SEAL KIT**	. KIT D'ETANCHEITE	1		**1320–**			
4	VDL24	COIL	COIL	1					
5	2181-1950D1	PLUG PF1/4	BOUCHON	1					
6	S8000111	O-RING P11	JOINT TORIQUE	1					

DATE	DEC. 15, 2006
REV. NO.	EXB06-13

Fig. 4300 BOOM CYLINDER-R.H
VERIN DE FLECHE

Serial No. ;

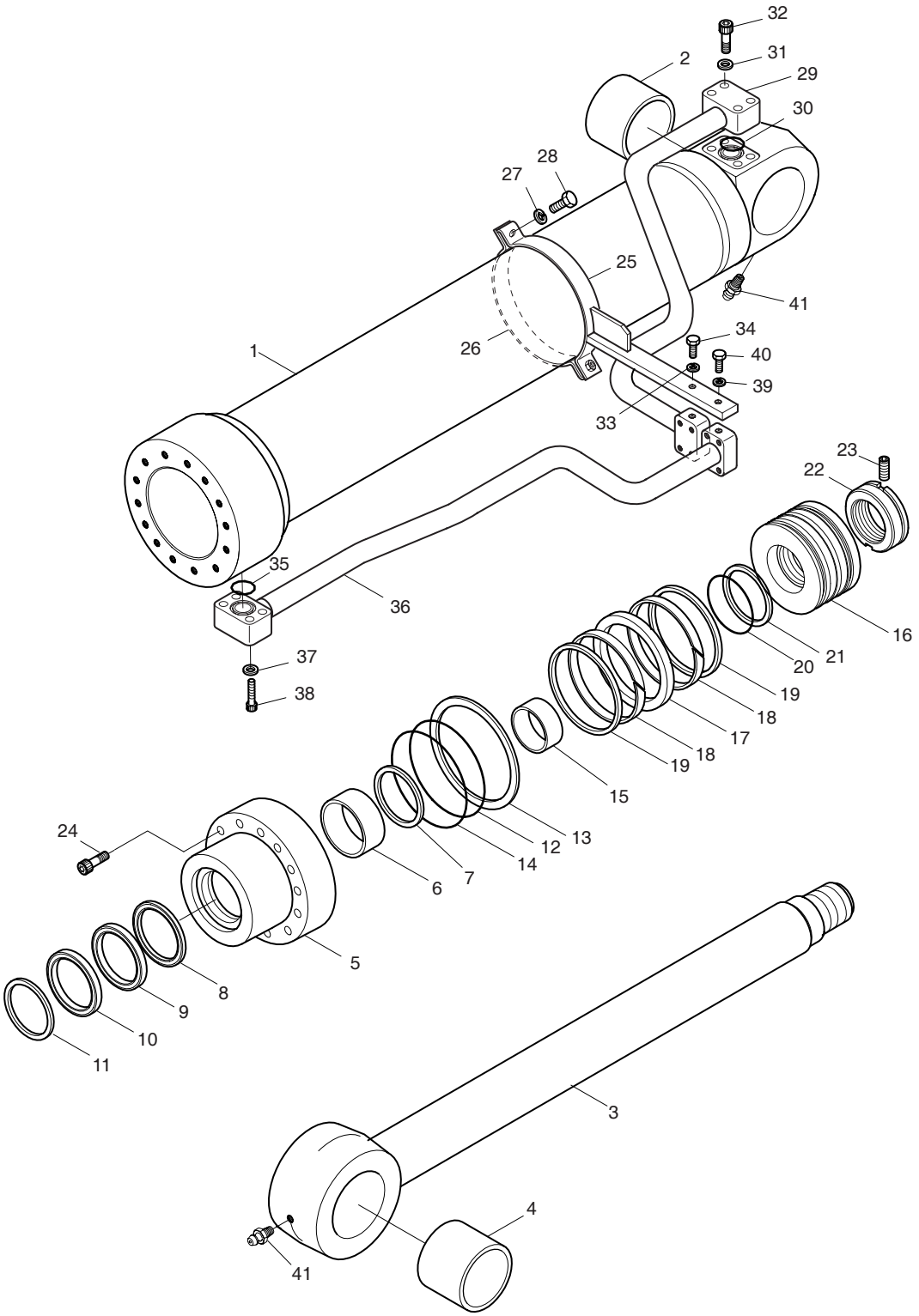

DATE	DEC. 15, 2006
REV. NO.	EXB06-13

Fig. 4300 BOOM CYLINDER-R.H VERIN DE FLECHE

Serial No. ;

Key No.	Part No.	Description	Description	Q'ty	S.C	Serial No.	ICA	Replaceable part	
								Part No.	Q'ty
4300--	440-00286	CYLINDER;BOOM(R.H)	VERIN DE FLECHE	1		1001–1711	I	440-00286A	1
	440-00286A	**CYLINDER;BOOM(R.H)**	VERIN DE FLECHE	1		**1712–**			
1	53B738-0	TUBE ASS'Y	CONDUITE	1					
2	00B102-1	BUSH	DOUILLE	1					
3	53B739-0	ROD ASS'Y	TIGE	1		1001–1711			
	53B739-2	**ROD ASS'Y**	TIGE	1		**1712–**			
4	00B104-1	BUSH	DOUILLE	1					
5	53B538-0	COVER;ROD	COUVERCLE DE TIGE	1					
6	E8412227	BUSH;DU	DOUILLE DU	1					
7	00M574-0	RING;RETAINING	BAGUE CIRCLIPS	1					
8	E5500350	SEAL;BUFFER	ETANCHEITE A GRADINS	1	K				
9	E5303590	PACKING;U	JOINT EN U	1	K				
10	E6020350	WIPER;DUST	PARE-POUSSIERE	1	K				
11	00M799-0	RING;RETAINING	BAGUE CIRCLIPS	1					
12	E6311841	O-RING	JOINT TORIQUE	1	K				
13	04B438-0	RING;BACK-UP	BAGUE DE SOUTIEN	1	K				
14	E6490091	O-RING	JOINT TORIQUE	1	K				
15	00C316-0	RING;CUSHION	BAGUE DE SOUTIEN	1					
16	53A518-0	PISTON	PISTON	1					
17	E5130380	SEAL;SLIPPER	PATIN D'ETANCHEITE	1	K				
18	00Z113-0	RING;WEAR	SEGMENT D'USURE	2	K				
19	00R105-0	RING;SLYD	BAGUE DE SOUTIEN	2	K				
20	E6311481	O-RING	JOINT TORIQUE	1	K				
21	53A429-0	RING;BACK-UP	BAGUE DE SOUTIEN	2	K				
22	53U423-0	NUT;PISTON	ECROU	1		1001–1711			
	55A371-0	**NUT;PISTON**	ECROU	1		**1712–**			
23	E1330544	SCREW;SET	VIS	1					
24	E0502709	BOLT;SOCKET	BOULON A 6 PANS CREUX	14					
25	03B702-4	PIPE BAND ASS'Y	ENSEMBLE DE ATTACHE	1					
26	53B268-0	BAND;PIPE	ATTACHE	1					
27	E3110102	WASHER;SPRING	RONDELLE ELASTIQUE	2					
28	E0020683	BOLT;HEX.	BOULON A 6 PANS	2					
29	03B696-5	PIPE ASS'Y-H(R.H)	ENSEMBLE CONDUITES	1					
30	E6300761	O-RING	JOINT TORIQUE	1					
31	E3110112	WASHER;SPRING	RONDELLE ELASTIQUE	4					
32	E0501546	BOLT;SOCKET	BOULON A 6 PANS CREUX	4					
33	E3110112	WASHER;SPRING	RONDELLE ELASTIQU	1					
34	E0020953	BOLT;HEX.	BOULON A 6 PANS	1					

DATE	DEC. 15, 2006
REV. NO.	EXB06-13

Fig. 4300 BOOM CYLINDER-R.H VERIN DE FLECHE

Serial No. ;

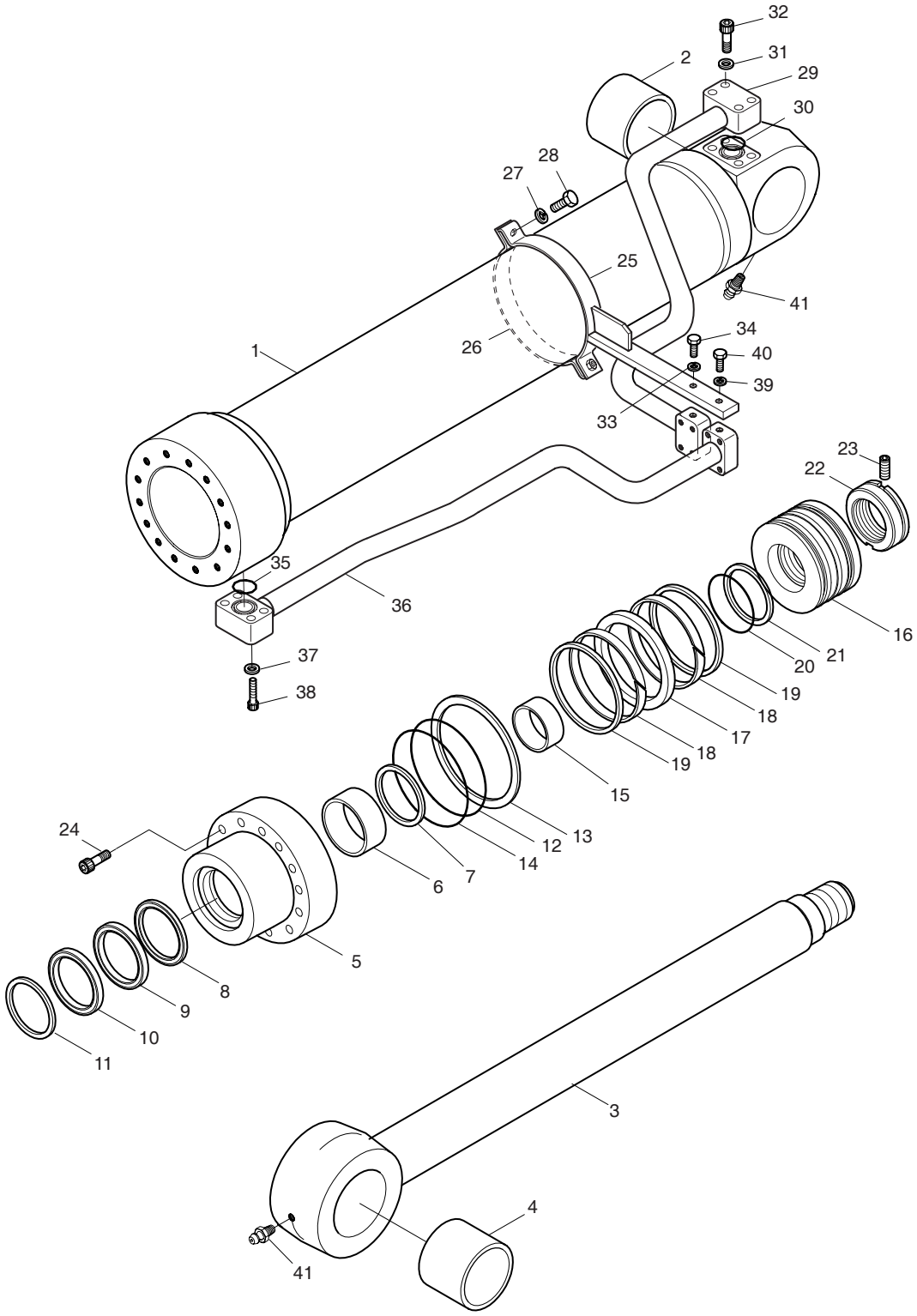

DATE	DEC. 15, 2006
REV. NO.	EXB06-13

Fig. 4300 BOOM CYLINDER-R.H VERIN DE FLECHE

Serial No. ;

Key No.	Part No.	Description	Description	Q'ty	S.C	Serial No.	ICA	Replaceable part	
								Part No.	Q'ty
4300-35	53B740-0	PIPE ASS'Y(R.H)	CONDUITE	1					
36	E6300761	O-RING	JOINT TORIQUE	1					
37	E3110112	WASHER;SPRING	RONDELLE ELASTIQU	4					
38	E0501546	BOLT;SOCKET	BOULON A 6 PANS CREUX	4					
39	E3110112	WASHER;SPRING	RONDELLE ELASTIQU	1					
40	E0020953	BOLT;HEX.	BOULON A 6 PANS	1					
41	E8841022	NIPPLE;GREASE	GRAISSEUR	2					
*	440-00013AKT	SEAL KIT	KIT D'ETANCHEITE	1					

DATE	DEC. 15, 2006
REV. NO.	EXB06-13

Fig. 4310 BOOM CYLINDER-L.H
VERIN DE FLECHE

Serial No. ;

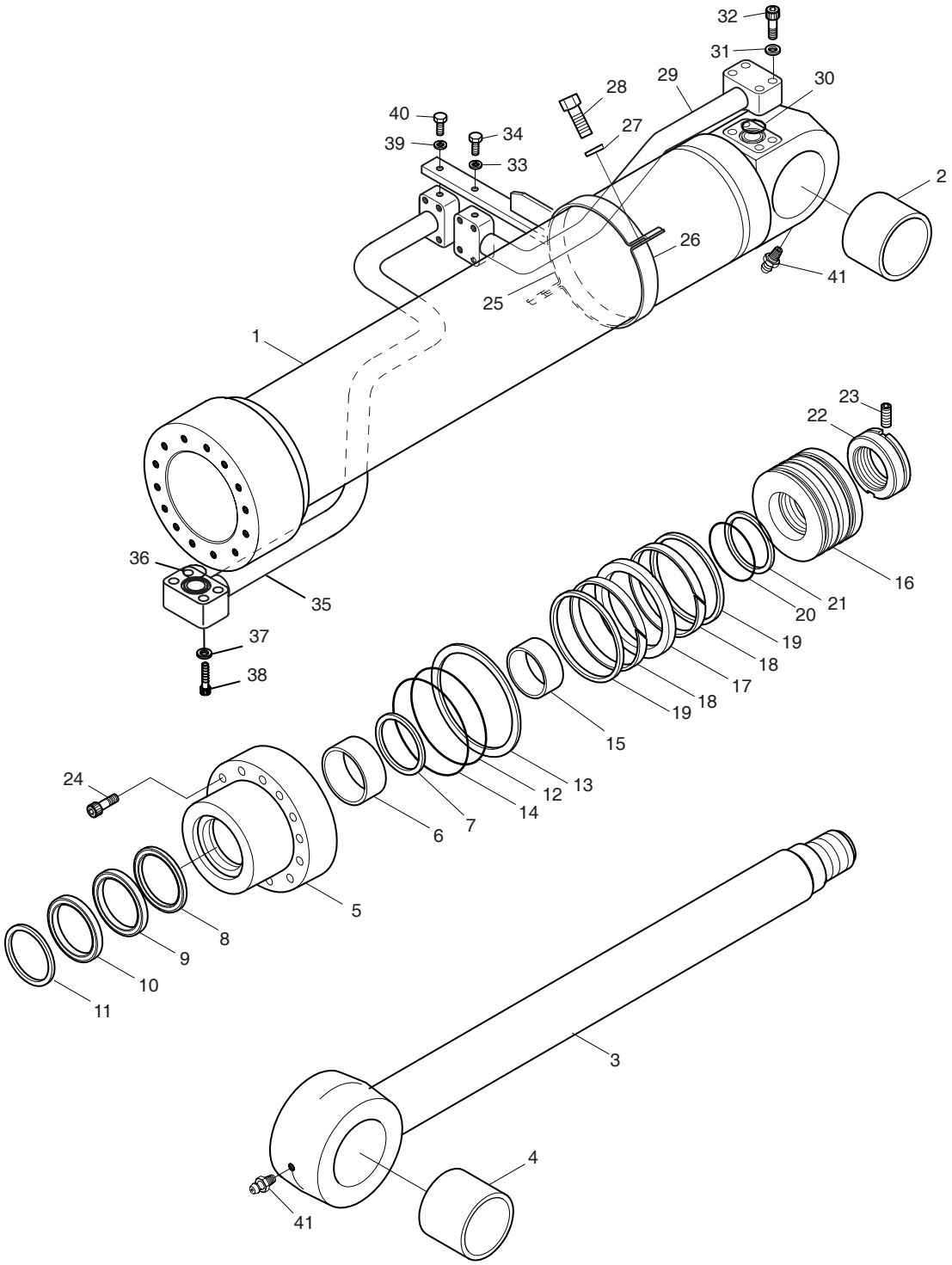

DATE	DEC. 15, 2006
REV. NO.	EXB06-13

Fig. 4310 BOOM CYLINDER-L.H VERIN DE FLECHE

Serial No. ;

Key No.	Part No.	Description	Description	Q'ty	S.C	Serial No.	ICA	Replaceable part	
								Part No.	Q'ty
4310--	440-00287	CYLINDER;BOOM(L.H)	VERIN DE FLECHE	1		1001–1711	I	440-00287A	1
	440-00287A	**CYLINDER;BOOM(L.H)**	VERIN DE FLECHE	1		**1712–**			
1	53B738-0	TUBE ASS'Y	CONDUITE	1					
2	00B102-1	BUSH	DOUILLE	1					
3	53B739-0	ROD ASS'Y	TIGE	1		1001–1711			
	53B739-2	**ROD ASS'Y**	TIGE	1		**1712–**			
4	00B104-1	BUSH	DOUILLE	1					
5	53B538-0	COVER;ROD	COUVERCLE DE TIGE	1					
6	E8412227	BUSH;DU	DOUILLE DU	1					
7	00M574-0	RING;RETAINING	BAGUE CIRCLIPS	1					
8	E5500350	SEAL;BUFFER	ETANCHEITE A GRADINS	1	K				
9	E5303590	PACKING;U	JOINT EN U	1	K				
10	E6020350	WIPER;DUST	PARE-POUSSIERE	1	K				
11	00M799-0	RING;RETAINING	BAGUE CIRCLIPS	1					
12	E6311841	O-RING	JOINT TORIQUE	1	K				
13	04B438-0	RING;BACK-UP	BAGUE DE SOUTIEN	1	K				
14	E6490091	O-RING	JOINT TORIQUE	1	K				
15	00C316-0	RING;CUSHION	BAGUE DE SOUTIEN	1					
16	53A518-0	PISTON	PISTON	1					
17	E5130380	SEAL;SLIPPER	PATIN D'ETANCHEITE	1	K				
18	00Z113-0	RING;WEAR	SEGMENT D'USURE	2	K				
19	00R105-0	RING;SLYD	BAGUE DE SOUTIEN	2	K				
20	E6311481	O-RING	JOINT TORIQUE	1	K				
21	53A429-0	RING;BACK-UP	BAGUE DE SOUTIEN	2	K				
22	53U423-0	NUT;PISTON	ECROU	1		1001–1711			
	55A371-0	**NUT;PISTON**	ECROU	1		**1712–**			
23	E1330544	SCREW;SET	VIS	1					
24	E0502709	BOLT;SOCKET	BOULON A 6 PANS CREUX	14					
25	53B420-1	PIPE BAND ASS'Y(L.H)	ENSEMBLE DE ATTACHE	1					
26	53B268-0	BAND;PIPE	ATTACHE	1					
27	E3110102	WASHER;SPRING	RONDELLE ELASTIQUE	2					
28	E0020683	BOLT;HEX.	BOULON A 6 PANS	2					
29	03B700-5	PIPE ASS'Y-H(L.H)	ENSEMBLE CONDUITES	1					
30	E6300761	O-RING	JOINT TORIQUE	1					
31	E3110112	WASHER;SPRING	RONDELLE ELASTIQUE	4					
32	E0501546	BOLT;SOCKET	BOULON A 6 PANS CREUX	4					
33	E3110112	WASHER;SPRING	RONDELLE ELASTIQUE	1					
34	E0020953	BOLT;HEX.	BOULON A 6 PANS	1					

DATE	DEC. 15, 2006
REV. NO.	EXB06-13

Fig. 4310 BOOM CYLINDER-L.H VERIN DE FLECHE

Serial No. ;

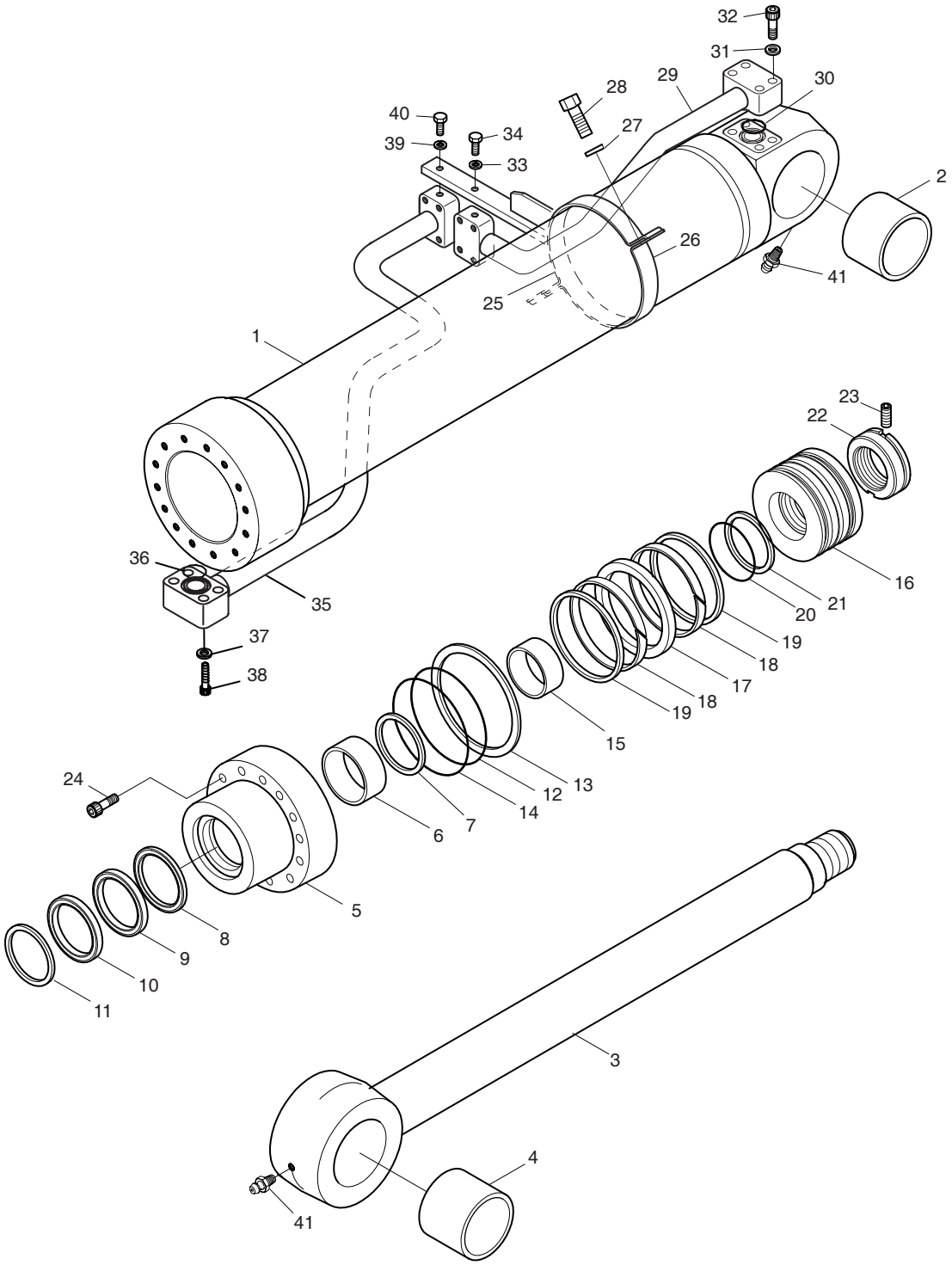

DATE	DEC. 15, 2006
REV. NO.	EXB06-13

Fig. 4310 BOOM CYLINDER-L.H VERIN DE FLECHE

Serial No. ;

Key No.	Part No.	Description	Description	Q'ty	S.C	Serial No.	ICA	Replaceable part	
								Part No.	Q'ty
4310-35	53B741-0	PIPE ASS'Y(L.H)	CONDUITE	1					
36	E6300761	O-RING	JOINT TORIQUE	1					
37	E3110112	WASHER;SPRING	RONDELLE ELASTIQUE	4					
38	E0501546	BOLT;SOCKET	BOULON A 6 PANS CREUX	4					
39	E3110112	WASHER;SPRING	RONDELLE ELASTIQUE	1					
40	E0020953	BOLT;HEX.	BOULON A 6 PANS	1					
41	E8841022	NIPPLE;GREASE	GRAISSEUR	2					
*	440-00013AKT	SEAL KIT	KIT D'ETANCHEITE	1					

DATE	DEC. 15, 2006
REV. NO.	EXB06-13

Fig. 4320 ARM CYLINDER VERIN DE BALANCIER

Serial No. ;

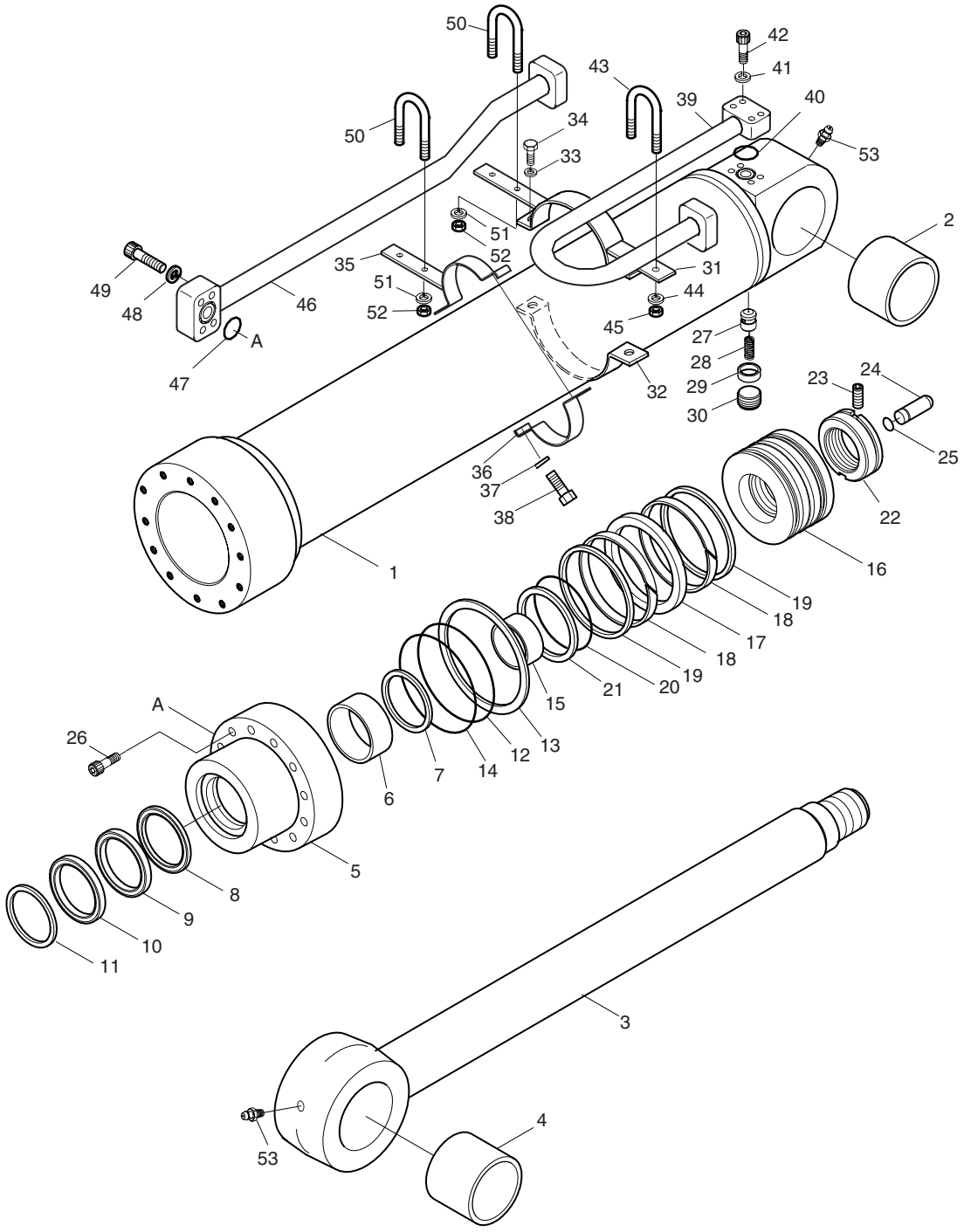

DATE	DEC. 15, 2006
REV. NO.	EXB06-13

Fig. 4320 ARM CYLINDER VERIN DE BALANCIER

Serial No. ;

Key No.	Part No.	Description	Description	Q'ty	S.C	Serial No.	ICA	Replaceable part	
								Part No.	Q'ty
4320--	440-00015A	CYLINDER;ARM	VERIN DE BALANCIER	1		1001–1702	I	440-00015B	1
	440-00015B	**CYLINDER;ARM**	VERIN DE BALANCIER	1		**1703–**			
1	53A554-0	TUBE ASS'Y	CONDUITE	1					
2	00B109-0	BUSH	DOUILLE	1					
3	53A555-0	ROD ASS'Y	TIGE	1		1001–1702			
	53A555-3	**ROD ASS'Y**	TIGE	1		**1703–**			
4	00B109-0	BUSH	DOUILLE	1					
5	53A556-0	COVER;ROD	COUVERCLE DE TIGE	1					
6	E8412904	DD-BUSH	DOUILLE DU	1					
7	00M419-0	RING;RETAINING	BAGUE DE SOUTIEN	1					
8	E5500380	SEAL;BUFFER	JOINT	1	K				
9	E5303880	U-PACKING	JOINT EN U	1	K				
10	E6020370	WIPER;DUST	JOINT	1	K				
11	00M465-0	RING;RETAINING	BAGUE DE SOUTIEN	1					
12	E6311921	O-RING	JOINT TORIQUE	1	K				
13	04A358-0	RING;BACK-UP	BAGUE DE SOUTIEN	1	K				
14	E6490093	O-RING	JOINT TORIQUE	1	K				
15	53A558-0	RING;CUSHION	BAGUE DE SOUTIEN	1					
16	53A561-0	PISTON	PISTON	1					
17	E5130440	SEAL;SLIPPER	JOINT	1	K				
18	00Z115-0	RING;WEAR	SEGMENT D'USURE	2	K				
19	00R107-0	RING;SLYD	BAGUE DE SOUTIEN	2	K				
20	E6311561	O-RING	JOINT TORIQUE	1	K				
21	04A359-0	RING;BACK-UP	BAGUE DE SOUTIEN	2	K				
22	04A340-0	NUT;PISTON	ECROU	1		1001–1702			
	55A279-0	**NUT;PISTON**	ECROU	1		**1703–**			
23	E1330544	SCREW;SET	VIS	1		1001–1702			
	E1330564	**SCREW;SET**	VIS	1		**1703–**			
24	03A626-1	PLUNGER;CUSHION	PLONGEUR	1					
25	03A627-0	RING;STOP	BAGUE DE SOUTIEN	1					
26	E0503289	BOLT;SOCKET	BOULON A 6 PANS CREUX	12					
27	03A727-0	VALVE;CHECK	VANNE DE CONTROLE	1					
28	03A729-0	SPRING	RESSORT	1					
29	03A728-0	SUPPORT;SPRING	SUPPORT	1					
30	E1500030	PLUG;HEX.	BOUCHON	1					
31	53A557-0	PIPE BAND ASS'Y-A	ENSEMBLE DE ATTACHE	1					
32	00P383-1	BAND;PIPE	ATTACHE	1					
33	E3110112	WASHER;SPRING	RONDELLE ELASTIQUE	2					

DATE	DEC. 15, 2006
REV. NO.	EXB06-13

Fig. 4320 ARM CYLINDER VERIN DE BALANCIER

Serial No. ;

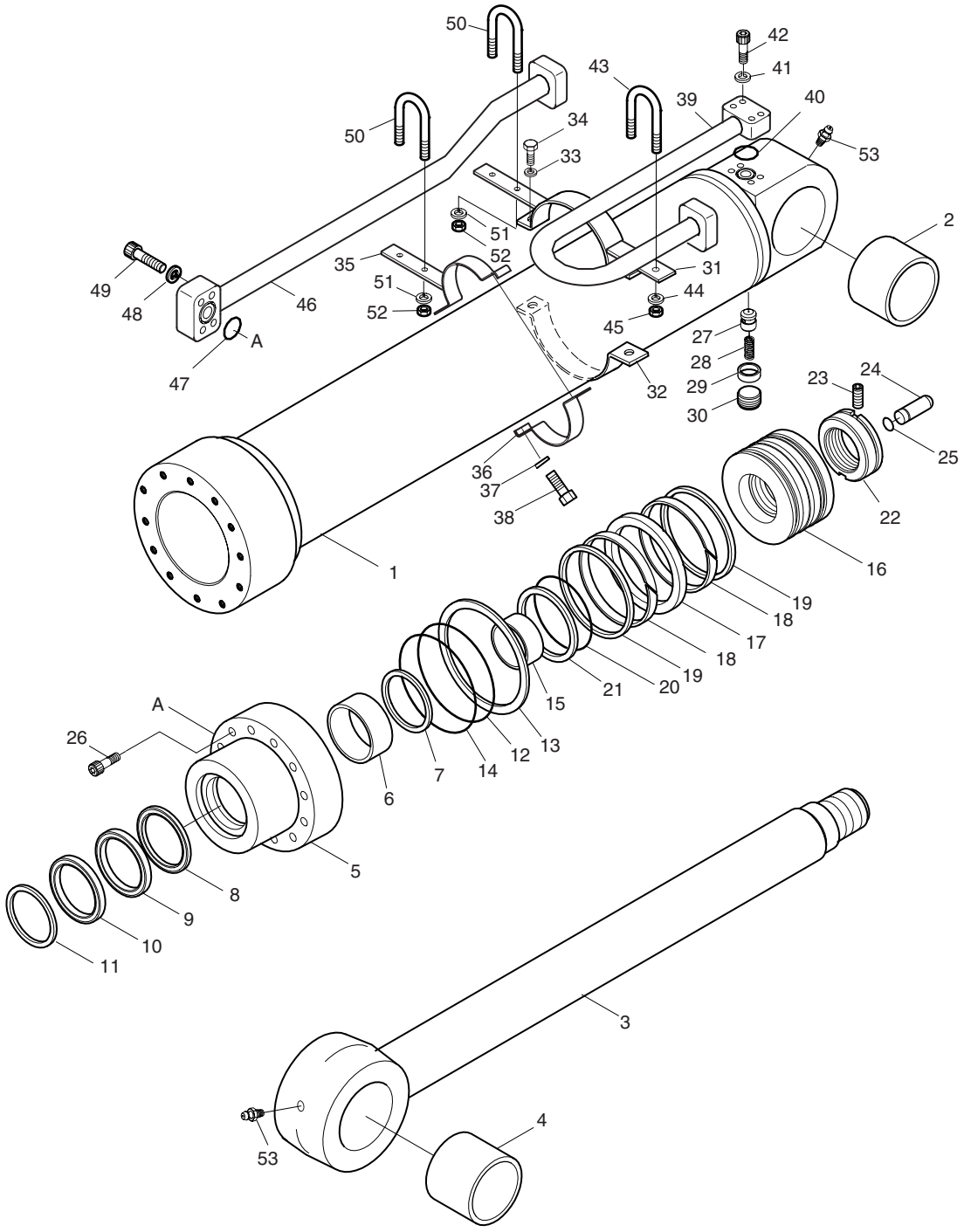

DATE	DEC. 15, 2006
REV. NO.	EXB06-13

Fig. 4320 ARM CYLINDER VERIN DE BALANCIER

Serial No. ;

Key No.	Part No.	Description	Description	Q'ty	S.C	Serial No.	ICA	Replaceable part	
								Part No.	Q'ty
4320-34	E0020963	BOLT;HEX.	BOULON A 6 PANS	2					
35	53A562-0	PIPE BAND ASS'Y-B	ENSEMBLE DE ATTACHE	1					
36	00P383-1	BAND;PIPE	ATTACHE	1					
37	E3110112	WASHER;SPRING	RONDELLE ELASTIQUE	2					
38	E0020963	BOLT;HEX.	BOULON A 6 PANS	2					
39	53A559-0	PIPE ASS'Y-H	CONDUITE	1					
40	E6300881	O-RING	JOINT TORIQUE	1					
41	E3110122	WASHER;SPRING	RONDELLE ELASTIQUE	4					
42	E0501846	BOLT;SOCKET	BOULON A 6 PANS CREUX	4					
43	00U211-0	U-BOLT	BOULON U	1					
44	E3110112	WASHER;SPRING	RONDELLE ELASTIQUE	2					
45	E2021042	NUT;HEX.	ECROU 6 PANS	2					
46	53A560-0	PIPE ASS'Y-R	CONDUITE	1					
47	E6300881	O-RING	JOINT TORIQUE	1					
48	E3110122	WASHER;SPRING	RONDELLE ELASTIQUE	4					
49	E0501846	BOLT;SOCKET	BOULON A 6 PANS CREUX	4					
50	00U211-0	U-BOLT	BOULON U	2					
51	E3110112	WASHER;SPRING	RONDELLE ELASTIQUE	4					
52	E2021042	NUT;HEX.	ECROU 6 PANS	4					
53	E8841022	NIPPLE;GREASE	GRAISSEUR	2					
*	440-00015AKT	SEAL KIT	KIT D'ETANCHEITE	1					

DATE	DEC. 15, 2006
REV. NO.	EXB06-13

Fig. 4330 BUCKET CYLINDER VERIN DE GODET

Serial No. ;

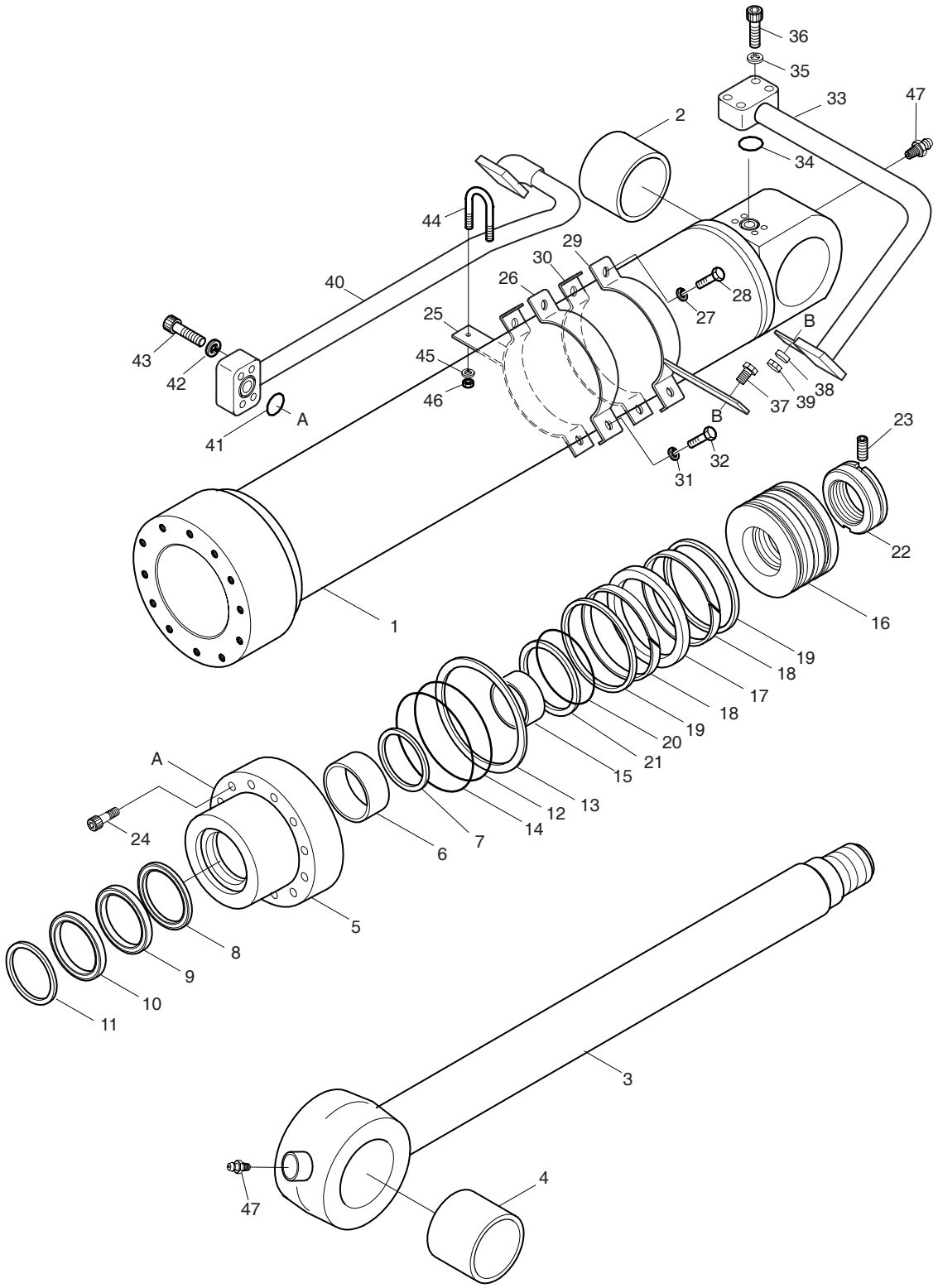

DATE	DEC. 15, 2006
REV. NO.	EXB06-13

Fig. 4330 BUCKET CYLINDER VERIN DE GODET

Serial No. ;

Key No.	Part No.	Description	Description	Q'ty	S.C	Serial No.	ICA	Replaceable part	
								Part No.	Q'ty
4330--	440-00016A	CYLINDER;BUCKET	VERIN DE GODET	1		1001–1104	I	440-00016B	1
	440-00016B	CYLINDER;BUCKET	VERIN DE GODET	1		1105–1181	I	440-00016C	1
	440-00016C	CYLINDER;BUCKET	VERIN DE GODET	1		1182–1711	I	440-00016E	1
	440-00016E	**CYLINDER;BUCKET**	VERIN DE GODET	1		**1712–**			
1	53U515-0	TUBE ASS'Y	CONDUITE	1		1001–1104			
	53U515-1	TUBE ASS'Y	CONDUITE	1		1105–			
2	00B102-0	BUSH	DOUILLE	1		1001–1104			
	00B102-1	BUSH	DOUILLE	1		1105–1181	I	03B685-2	1
	03B685-2	BUSH	DOUILLE	1		1182–			
3	53U516-0	ROD ASS'Y	TIGE	1		1001–1104	I	53U516-4	1
	53U516-4	ROD ASS'Y	TIGE	1		1105–1711			
	53U516-6	**ROD ASS'Y**	TIGE	1		**1712–**			
4	00B102-0	BUSH	DOUILLE	1		1001–1104			
	00B102-1	BUSH	DOUILLE	1		1105–1181	I	03B685-2	1
	03B685-2	BUSH	DOUILLE	1		1182–			
5	53U541-0	COVER;ROD	COUVERCLE DE TIGE	1		1001–1104			
	53U541-1	COVER;ROD	COUVERCLE DE TIGE	1		1105–			
6	E8412227	BUSH;DU	DOUILLE DU	1					
7	00M574-0	RING;RETAINING	BAGUE CIRCLIPS	1					
8	E5500350	SEAL;BUFFER	ETANCHEITE A GRADINS	1	K				
9	E5303590	PACKING;U	JOINT EN U	1	K				
10	E6020350	WIPER;DUST	PARE-POUSSIERE	1	K				
11	00M799-0	RING;RETAINING	BAGUE CIRCLIPS	1					
12	E6311841	O-RING	JOINT TORIQUE	1	K				
13	04B438-0	RING;BACK-UP	BAGUE DE SOUTIEN	1	K				
14	E6490091	O-RING	JOINT TORIQUE	1	K				
15	00C316-0	RING;CUSHION	BAGUE DE SOUTIEN	1					
16	53A518-0	PISTON	PISTON	1					
17	E5130380	SEAL;SLIPPER	PATIN D'ETANCHEITE	1	K				
18	00Z113-0	RING;WEAR	SEGMENT D'USURE	2	K				
19	00R105-0	RING;SLYD	BAGUE DE SOUTIEN	2	K				
20	E6311481	O-RING	JOINT TORIQUE	1	K				
21	53A429-0	RING;BACK-UP	BAGUE DE SOUTIEN	2	K				
22	53U423-0	NUT;PISTON	ECROU	1		1001–1711			
	55A371-0	**NUT;PISTON**	ECROU	1		**1712–**			
23	E1330544	SCREW;SET	VIS	1					
24	E0502709	BOLT;SOCKET	BOULON A 6 PANS CREUX	14					
25	53U517-0	PIPE BAND ASS'Y-R	ENSEMBLE DE ATTACHE	1					

DATE	DEC. 15, 2006
REV. NO.	EXB06-13

Fig. 4330 BUCKET CYLINDER VERIN DE GODET

Serial No. ;

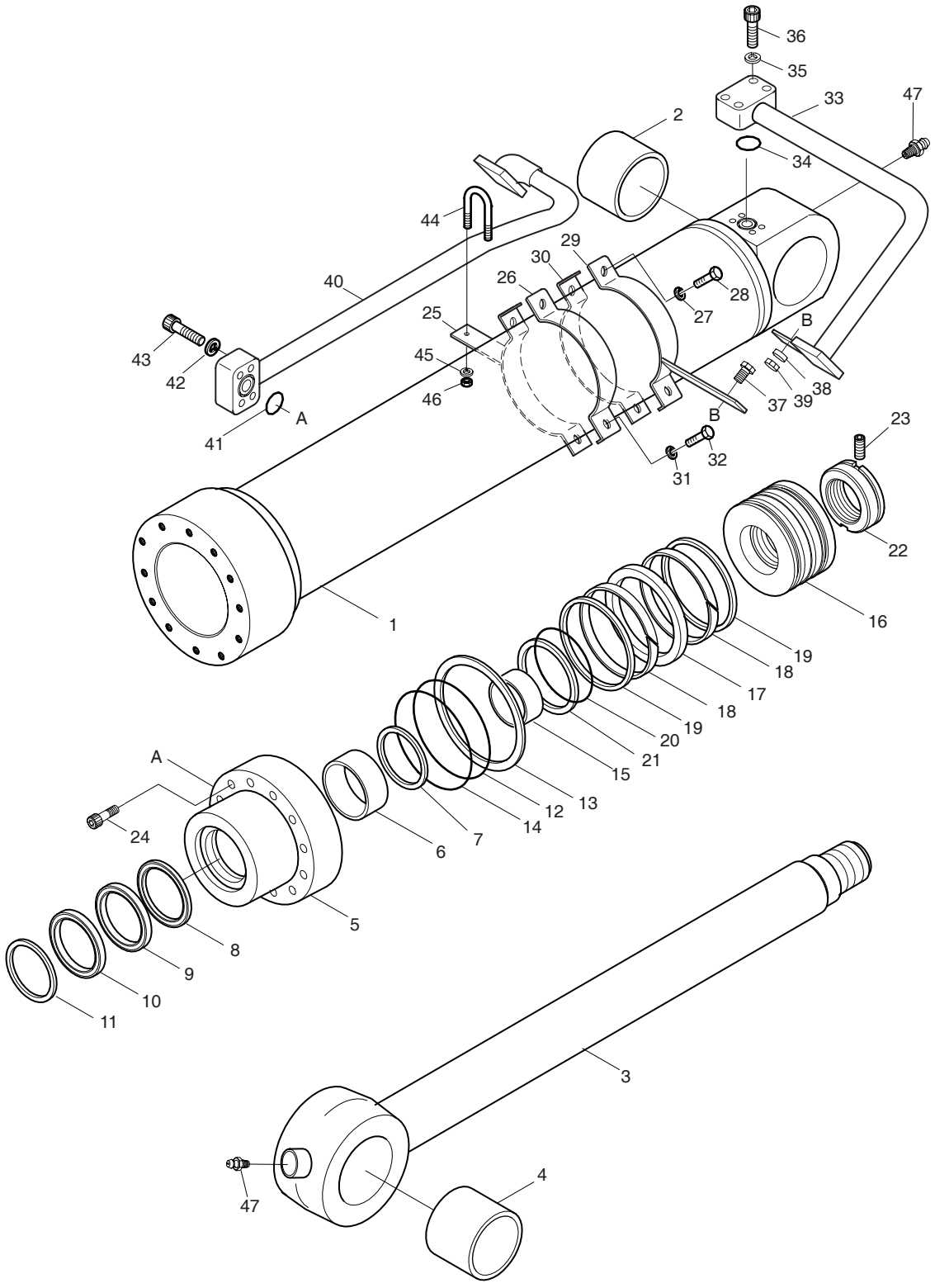

DATE	DEC. 15, 2006
REV. NO.	EXB06-13

Fig. 4330 BUCKET CYLINDER VERIN DE GODET

Serial No. ;

Key No.	Part No.	Description	Description	Q'ty	S.C	Serial No.	ICA	Replaceable part	
								Part No.	Q'ty
4330-26	00P381-1	BAND;PIPE	ATTACHE	1					
27	E3110112	WASHER;SPRING	RONDELLE ELASTIQUE	2					
28	E0020963	BOLT;HEX.	BOULON A 6 PANS	2					
29	53U520-0	PIPE BAND ASS'Y-H	ENSEMBLE DE ATTACHE	1					
30	00P381-1	BAND;PIPE	ATTACHE	1					
31	E3110112	WASHER;SPRING	RONDELLE ELASTIQUE	2					
32	E0020963	BOLT;HEX.	BOULON A 6 PANS	2					
33	53U518-0	PIPE ASS'Y-H	CONDUITE	1					
34	E6300881	O-RING	JOINT TORIQUE	1					
35	E3110122	WASHER;SPRING	RONDELLE ELASTIQUE	4					
36	E0501846	BOLT;SOCKET	BOULON A 6 PANS CREUX	4					
37	E0020973	BOLT;HEX.	BOULON A 6 PANS	2					
38	E3110112	WASHER;SPRING	RONDELLE ELASTIQUE	2					
39	E2022043	NUT;HEX.	ECROU	2					
40	53U519-0	PIPE ASS'Y-R	CONDUITE	1					
41	E6300881	O-RING	JOINT TORIQUE	1					
42	E3110122	WASHER;SPRING	RONDELLE ELASTIQUE	4					
43	E0501846	BOLT;SOCKET	BOULON A 6 PANS CREUX	4					
44	00U211-0	BOLT;U	BOULON	1					
45	E3110112	WASHER;SPRING	RONDELLE ELASTIQUE	1					
46	E2021042	NUT;HEX.	ECROU 6 PANS	1					
47	E8841022	NIPPLE;GREASE	GRAISSEUR	2					
*	440-00013AKT	SEAL KIT	KIT D'ETANCHEITE	1					

DATE	DEC. 15, 2006
REV. NO.	EXB06-13

Fig. 4340 ARM CYLINDER-BOOM 6.3m VERIN DE BALANCIER

Serial No. ;

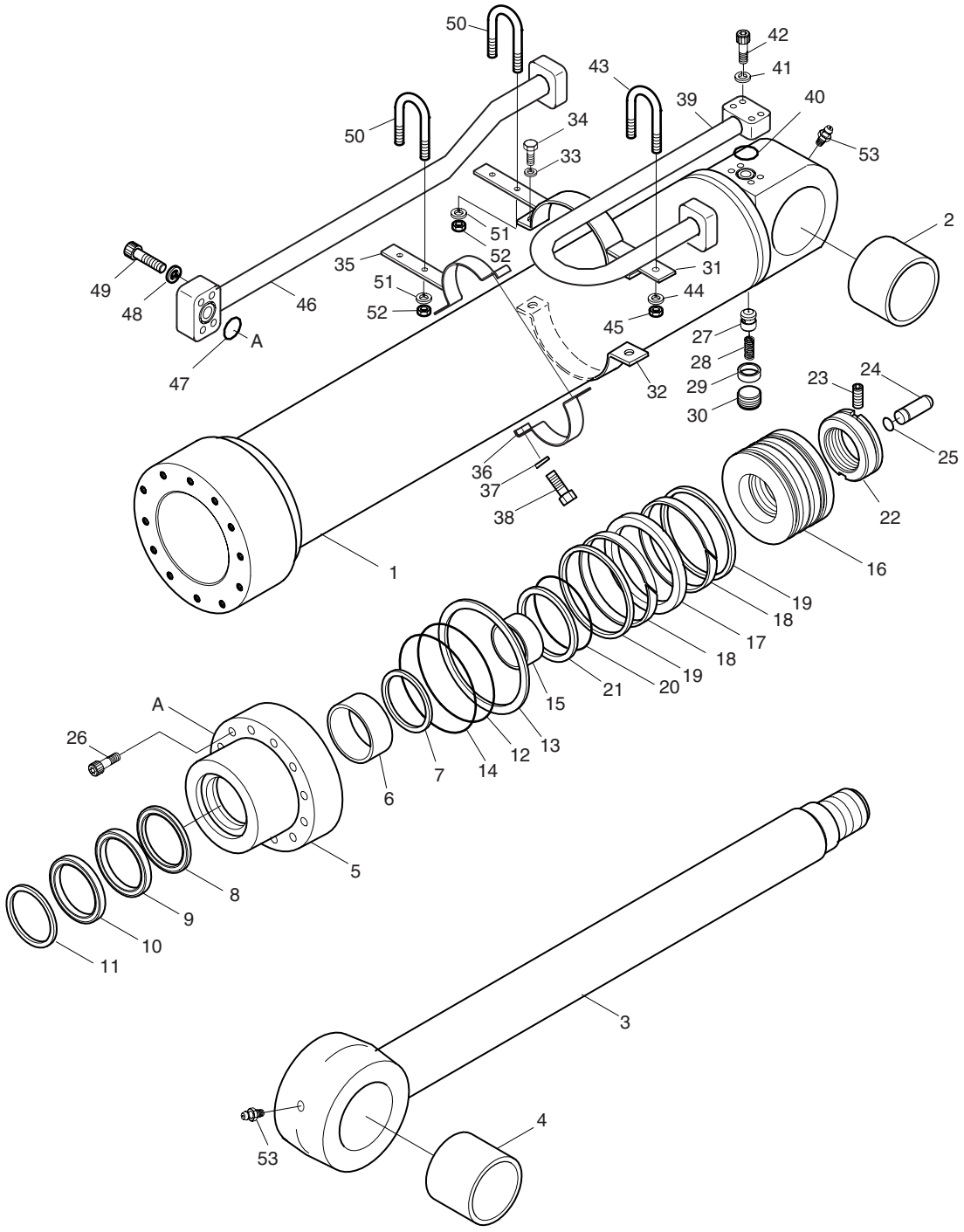

DATE	DEC. 15, 2006
REV. NO.	EXB06-13

Fig. 4340 ARM CYLINDER-BOOM 6.3m VERIN DE BALANCIER

Serial No. ;

Key No.	Part No.	Description	Description	Q'ty	S.C	Serial No.	ICA	Replaceable part	
								Part No.	Q'ty
4340--	440-00085	CYLINDER;ARM	VERIN DE BALANCIER	1		1001–1711	I	440-00085A	1
	440-00085A	**CYLINDER;ARM**	VERIN DE BALANCIER	1		**1712–**			
1	53A632-0	TUBE ASS'Y	CONDUITE	1					
2	00B109-0	BUSH;STEEL	DOUILLE	1					
3	53A635-0	ROD ASS'Y	TIGE	1		1001–1711			
	53A635-3	**ROD ASS'Y**	TIGE	1		**1712–**			
4	00B109-0	BUSH;STEEL	DOUILLE	1					
5	53A556-0	COVER;ROD	COUVERCLE DE TIGE	1					
6	E8412904	BUSH;DU	DOUILLE DU	1					
7	00M419-0	RING;RETAINING	BAGUE DE SOUTIEN	1					
8	E5500380	SEAL;BUFFER	JOINT	1	K				
9	E5303880	PACKING;U	JOINT EN U	1	K				
10	E6020370	WIPER;DUST	JOINT	1	K				
11	00M465-0	RING;RETAINING	BAGUE DE SOUTIEN	1					
12	E6311921	O-RING	JOINT TORIQUE	1	K				
13	04A358-0	RING;BACK-UP	BAGUE DE SOUTIEN	1	K				
14	E6490093	O-RING	JOINT TORIQUE	1	K				
15	53A558-0	RING;CUSHION	BAGUE DE SOUTIEN	1					
16	53A561-0	PISTON	PISTON	1					
17	E5130440	SEAL;SLIPPER	JOINT	1	K				
18	00Z115-0	RING;WEAR	SEGMENT D'USURE	2	K				
19	00R107-0	RING;SLYD	BAGUE DE SOUTIEN	2	K				
20	E6311561	O-RING	JOINT TORIQUE	1	K				
21	04A359-0	RING;BACK-UP	BAGUE DE SOUTIEN	2	K				
22	04A340-0	NUT;PISTON	ECROU	1		1001–1711			
	55A279-0	**NUT;PISTON**	ECROU	1		**1712–**			
23	E1330544	SCREW;SET	VIS	1		1001–1711			
	E1330564	**SCREW;SET**	VIS	1		**1712–**			
24	03A626-1	PLUNGER;CUSHION	PLONGEUR	1					
25	03A627-0	RING;STOP	BAGUE DE SOUTIEN	1					
26	E0503289	BOLT;SOCKET	BOULON A 6 PANS CREUX	12					
27	03A727-0	VALVE;CHECK	VANNE DE CONTROLE	1					
28	03A729-0	SPRING	RESSORT	1					
29	03A728-0	SUPPORT;SPRING	SUPPORT	1					
30	E1500030	PLUG;SOCKET	BOUCHON	1					
31	53A557-0	PIPE BAND ASS'Y-A	ENSEMBLE DE ATTACHE	1					
32	00P383-1	BAND;PIPE	ATTACHE	1					
33	E3110112	WASHER;SPRING	RONDELLE ELASTIQUE	2					

DATE	DEC. 15, 2006
REV. NO.	EXB06-13

Fig. 4340 ARM CYLINDER-BOOM 6.3m VERIN DE BALANCIER

Serial No. ;

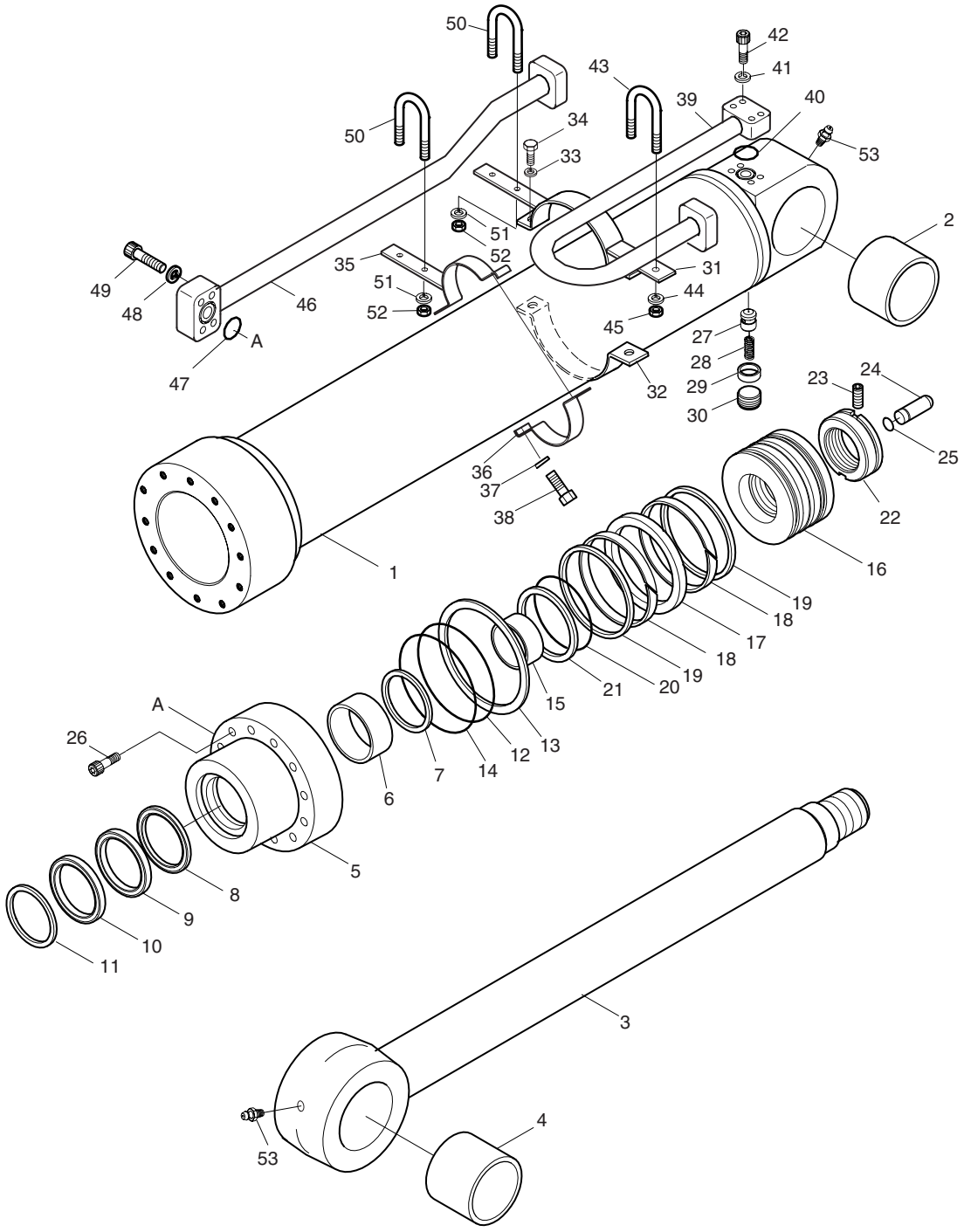

DATE	DEC. 15, 2006
REV. NO.	EXB06-13

Fig. 4340 ARM CYLINDER-BOOM 6.3m VERIN DE BALANCIER

Serial No. ;

Key No.	Part No.	Description	Description	Q'ty	S.C	Serial No.	ICA	Replaceable part	
								Part No.	Q'ty
4340-34	E0020963	BOLT;HEX.	BOULON A 6 PANS	2					
35	53A562-0	PIPE BAND ASS'Y-B	ENSEMBLE DE ATTACHE	1					
36	00P383-1	BAND;PIPE	ATTACHE	1					
37	E3110112	WASHER;SPRING	RONDELLE ELASTIQUE	2					
38	E0020963	BOLT;HEX.	BOULON A 6 PANS	2					
39	53A559-0	PIPE ASS'Y-H	CONDUITE	1					
40	E6300881	O-RING	JOINT TORIQUE	1					
41	E3110122	WASHER;SPRING	RONDELLE ELASTIQUE	4					
42	E0501846	BOLT;SOCKET	BOULON A 6 PANS CREUX	4					
43	00U211-0	BOLT;U	BOULON	1					
44	E3110112	WASHER;SPRING	RONDELLE ELASTIQUE	2					
45	E2021042	NUT;HEX.	ECROU 6 PANS	2					
46	53A637-0	PIPE ASS'Y-R	CONDUITE	1					
47	E6300881	O-RING	JOINT TORIQUE	1					
48	E3110122	WASHER;SPRING	RONDELLE ELASTIQUE	4					
49	E0501846	BOLT;SOCKET	BOULON A 6 PANS CREUX	4					
50	00U211-0	BOLT;U	BOULON	2					
51	E3110112	WASHER;SPRING	RONDELLE ELASTIQUE	4					
52	E2021042	NUT;HEX.	ECROU 6 PANS	4					
53	E8841022	NIPPLE;GREASE	GRAISSEUR	2					
*	440-00015AKT	SEAL KIT	KIT D'ETANCHEITE	1					

DATE	DEC. 15, 2006
REV. NO.	EXB06-13

Fig. 4350 BOOM CYLINDER(R.H)-LOCK VALVE VERIN DE FLECHE

Serial No. ;

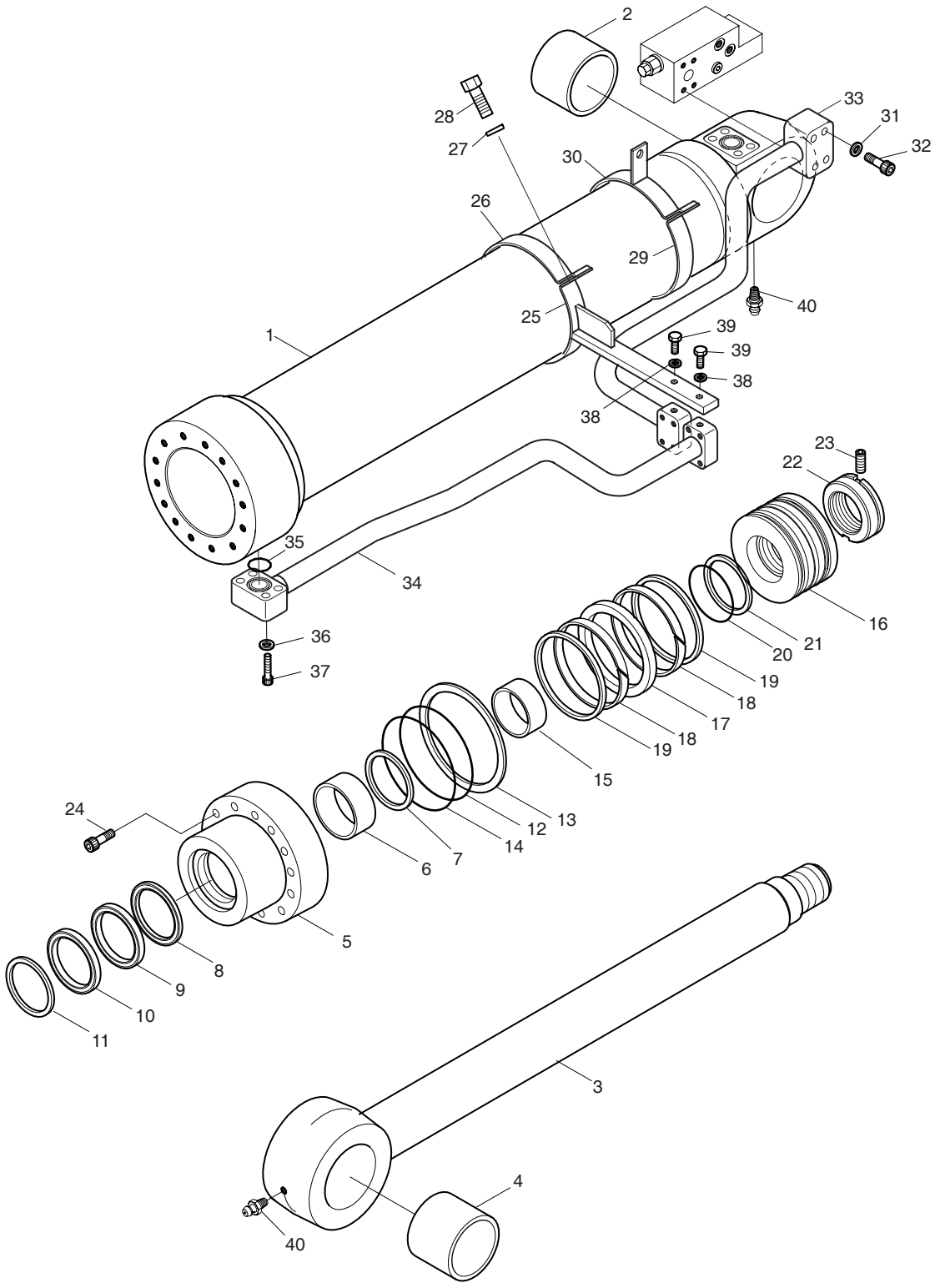

DATE	DEC. 15, 2006
REV. NO.	EXB06-13

Fig. 4350 BOOM CYLINDER(R.H)-LOCK VALVE VERIN DE FLECHE

Serial No. ;

Key No.	Part No.	Description	Description	Q'ty	S.C	Serial No.	ICA	Replaceable part	
								Part No.	Q'ty
4350--	440-00318	CYLINDER;BOOM(R.H)-LOCK	VERIN DE FLECHE	1		1001–1702	I	440-00318A	1
	440-00318A	**CYLINDER;BOOM(R.H)-LOCK**	VERIN DE FLECHE	1		**1703–**			
1	53B738-0	TUBE ASS'Y	CONDUITE	1					
2	00B102-1	BUSH	DOUILLE	1					
3	53B739-0	ROD ASS'Y	TIGE	1		1001–1702			
	53B739-2	**ROD ASS'Y**	TIGE	1		**1703–**			
4	00B104-1	BUSH	DOUILLE	1					
5	53B538-1	COVER;ROD	COUVERCLE DE TIGE	1					
6	E8412227	BUSH;DU	DOUILLE DU	1					
7	00M574-0	RING;RETAINING	BAGUE CIRCLIPS	1					
8	E5500350	SEAL;BUFFER	ETANCHEITE A GRADINS	1	K				
9	E5303590	PACKING;U	JOINT EN U	1	K				
10	E6020350	WIPER;DUST	PARE-POUSSIERE	1	K				
11	00M799-0	RING;RETAINING	BAGUE CIRCLIPS	1					
12	E6311841	O-RING	JOINT TORIQUE	1	K				
13	04B438-0	RING;BACK-UP	BAGUE DE SOUTIEN	1	K				
14	E6490091	O-RING	JOINT TORIQUE	1	K				
15	00C316-0	RING;CUSHION	BAGUE DE SOUTIEN	1					
16	53A518-0	PISTON	PISTON	1					
17	E5130380	SEAL;SLIPPER	PATIN D'ETANCHEITE	1	K				
18	00Z113-0	RING;WEAR	SEGMENT D'USURE	2	K				
19	00R105-0	RING;SLYD	BAGUE DE SOUTIEN	2	K				
20	E6311481	O-RING	JOINT TORIQUE	1	K				
21	53A429-0	RING;BACK-UP	BAGUE DE SOUTIEN	2	K				
22	53U423-0	NUT;PISTON	ECROU	1		1001–1702			
	55A371-0	**NUT;PISTON**	ECROU	1		**1703–**			
23	E1330544	SCREW;SET	VIS	1					
24	E0502709	BOLT;SOCKET	BOULON A 6 PANS CREUX	14					
25	03B702-4	PIPE BAND ASS'Y(R.H)	ENSEMBLE DE ATTACHE	1					
26	53B268-0	BAND;PIPE	ATTACHE	1					
27	E3110102	WASHER;SPRING	RONDELLE ELASTIQUE	2					
28	E0020683	BOLT;HEX.	BOULON A 6 PANS	2					
29	03B696-5	PIPE ASS'Y-H(R.H)	ENSEMBLE CONDUITES	1					
30	53B268-0	BAND;PIPE	ATTACHE	1					
31	E3110102	WASHER;SPRING	RONDELLE ELASTIQUE	2					
32	E0020683	BOLT;HEX.	BOULON A 6 PANS	2					
33	140-00165	PIPE ASS'Y(R.H)	CONDUITE	1					
34	53B740-0	PIPE ASS'Y(R.H)	CONDUITE	1					

DATE	DEC. 15, 2006
REV. NO.	EXB06-13

Fig. 4350 BOOM CYLINDER(R.H)-LOCK VALVE VERIN DE FLECHE

Serial No. ;

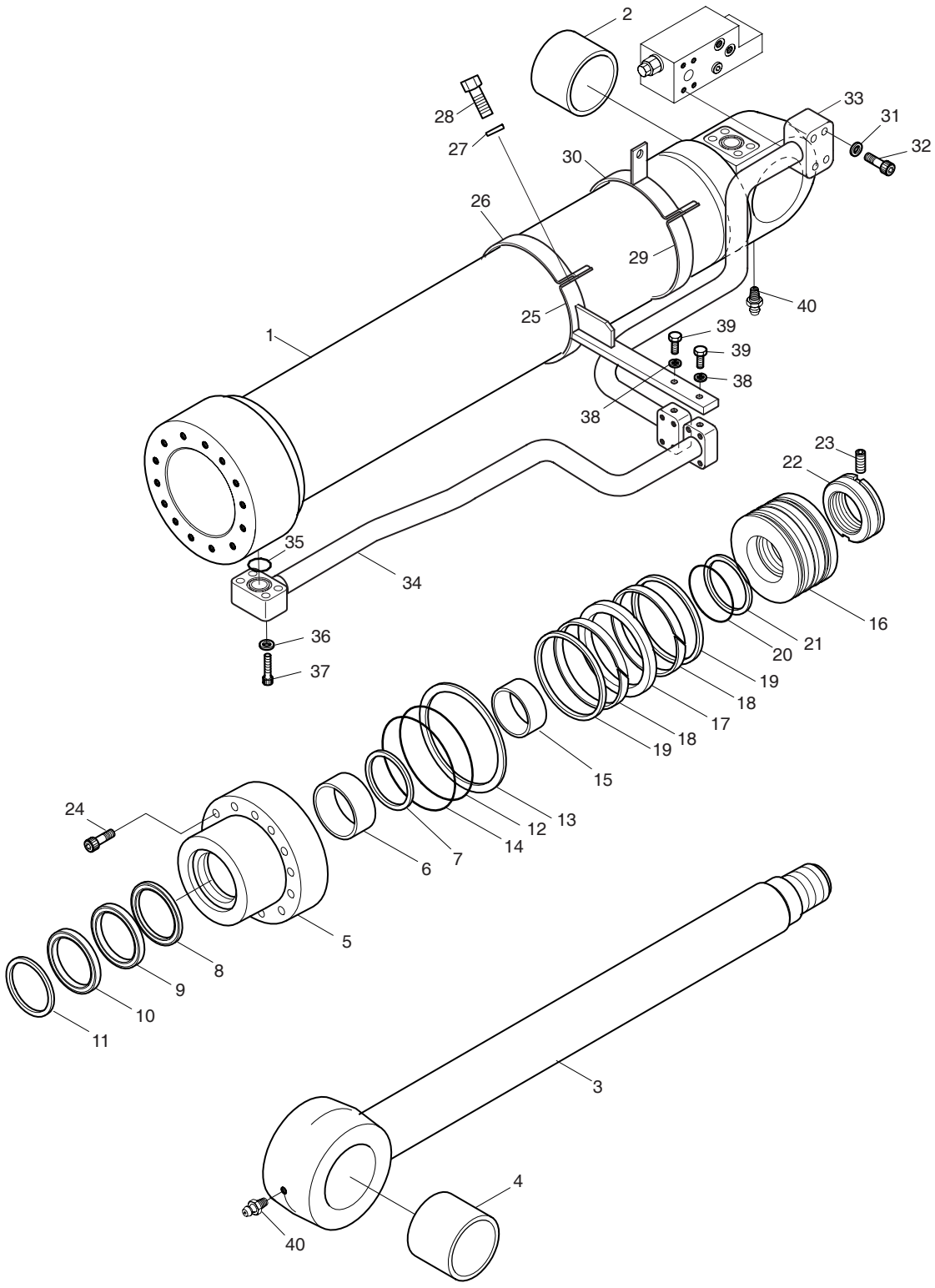

DATE	DEC. 15, 2006
REV. NO.	EXB06-13

Fig. 4350 BOOM CYLINDER(R.H)-LOCK VALVE VERIN DE FLECHE

Serial No. ;

Key No.	Part No.	Description	Description	Q'ty	S.C	Serial No.	ICA	Replaceable part	
								Part No.	Q'ty
4350-35	E6300761	O-RING	JOINT TORIQUE	1					
36	E3110112	WASHER;SPRING	RONDELLE ELASTIQUE	4					
37	E0501546	BOLT;SOCKET	BOULON A 6 PANS CREUX	4					
38	E3110112	WASHER;SPRING	RONDELLE ELASTIQUE	1					
39	E0020953	BOLT;HEX.	BOULON A 6 PANS	1					
40	E8841022	NIPPLE;GREASE	GRAISSEUR	2					
*	440-00013AKT	SEAL KIT	KIT D'ETANCHEITE	1					

DATE	DEC. 15, 2006
REV. NO.	EXB06-13

Fig. 4360 BOOM CYLINDER(L.H)-LOCK VALVE VERIN DE FLECHE

Serial No. ;

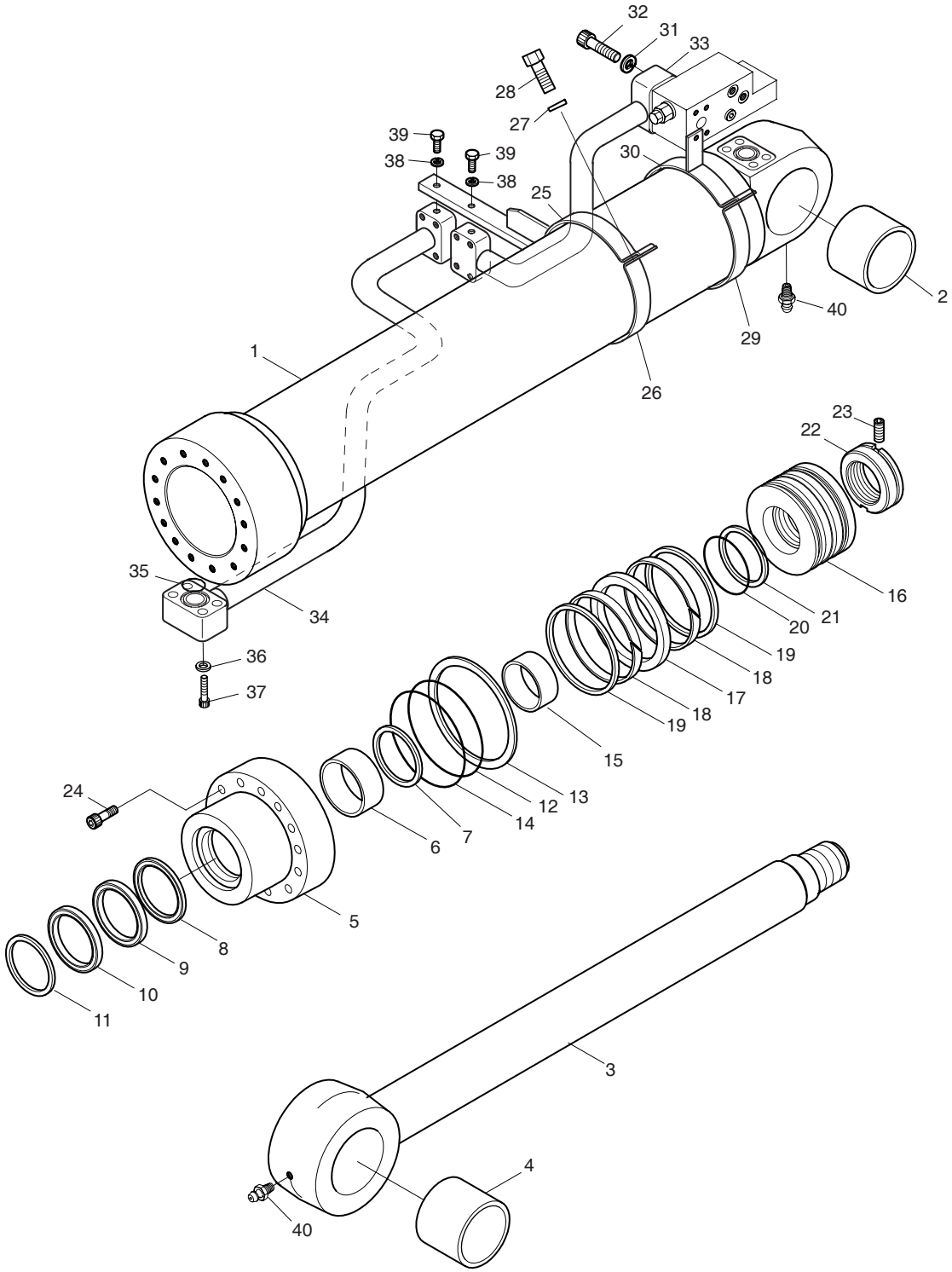

DATE	DEC. 15, 2006
REV. NO.	EXB06-13

Fig. 4360 BOOM CYLINDER(L.H)-LOCK VALVE VERIN DE FLECHE

Serial No. ;

Key No.	Part No.	Description	Description	Q'ty	S.C	Serial No.	ICA	Replaceable part	
								Part No.	Q'ty
4360--	440-00319	CYLINDER;BOOM(L.H)-LOCK	VERIN DE FLECHE	1		1001–1702	I	440-00319A	1
	440-00319A	**CYLINDER;BOOM(L.H)-LOCK**	VERIN DE FLECHE	1		**1703–**			
1	53B738-0	TUBE ASS'Y	CONDUITE	1					
2	00B102-1	BUSH	DOUILLE	1					
3	53B739-0	ROD ASS'Y	TIGE	1		1001–1702			
	53B739-2	**ROD ASS'Y**	TIGE	1		**1703–**			
4	00B104-1	BUSH	DOUILLE	1					
5	53B538-1	COVER;ROD	COUVERCLE DE TIGE	1					
6	E8412227	BUSH;DU	DOUILLE DU	1					
7	00M574-0	RING;RETAINING	BAGUE CIRCLIPS	1					
8	E5500350	SEAL;BUFFER	ETANCHEITE A GRADINS	1	K				
9	E5303590	PACKING;U	JOINT EN U	1	K				
10	E6020350	WIPER;DUST	PARE-POUSSIERE	1	K				
11	00M799-0	RING;RETAINING	BAGUE CIRCLIPS	1					
12	E6311841	O-RING	JOINT TORIQUE	1	K				
13	04B438-0	RING;BACK-UP	BAGUE DE SOUTIEN	1	K				
14	E6490091	O-RING	JOINT TORIQUE	1	K				
15	00C316-0	RING;CUSHION	BAGUE DE SOUTIEN	1					
16	53A518-0	PISTON	PISTON	1					
17	E5130380	SEAL;SLIPPER	PATIN D'ETANCHEITE	1	K				
18	00Z113-0	RING;WEAR	SEGMENT D'USURE	2	K				
19	00R105-0	RING;SLYD	BAGUE DE SOUTIEN	2	K				
20	E6311481	O-RING	JOINT TORIQUE	1	K				
21	53A429-0	RING;BACK-UP	BAGUE DE SOUTIEN	2	K				
22	53U423-0	NUT;PISTON	ECROU	1		1001–1702			
	55A371-0	**NUT;PISTON**	ECROU	1		**1703–**			
23	E1330544	SCREW;SET	VIS	1					
24	E0502709	BOLT;SOCKET	BOULON A 6 PANS CREUX	14					
25	53B420-1	PIPE BAND ASS'Y(L.H)	ENSEMBLE DE ATTACHE	1					
26	53B268-0	BAND;PIPE	ATTACHE	1					
27	E3110102	WASHER;SPRING	RONDELLE ELASTIQUE	2					
28	E0020683	BOLT;HEX.	BOULON A 6 PANS	2					
29	53B610-0	PIPE BAND ASS'Y-B	ENSEMBLE CONDUITES	1					
30	53B268-0	BAND;PIPE	ATTACHE	1					
31	E3110102	WASHER;SPRING	RONDELLE ELASTIQUE	2					
32	E0020673	BOLT;HEX.	BOULON A 6 PANS	2					
33	140-00166	PIPE ASS'Y(L.H)	CONDUITE	1					
34	53B741-0	PIPE ASS'Y(L.H)	CONDUITE	1					

DATE	DEC. 15, 2006
REV. NO.	EXB06-13

Fig. 4360 BOOM CYLINDER(L.H)-LOCK VALVE VERIN DE FLECHE

Serial No. ;

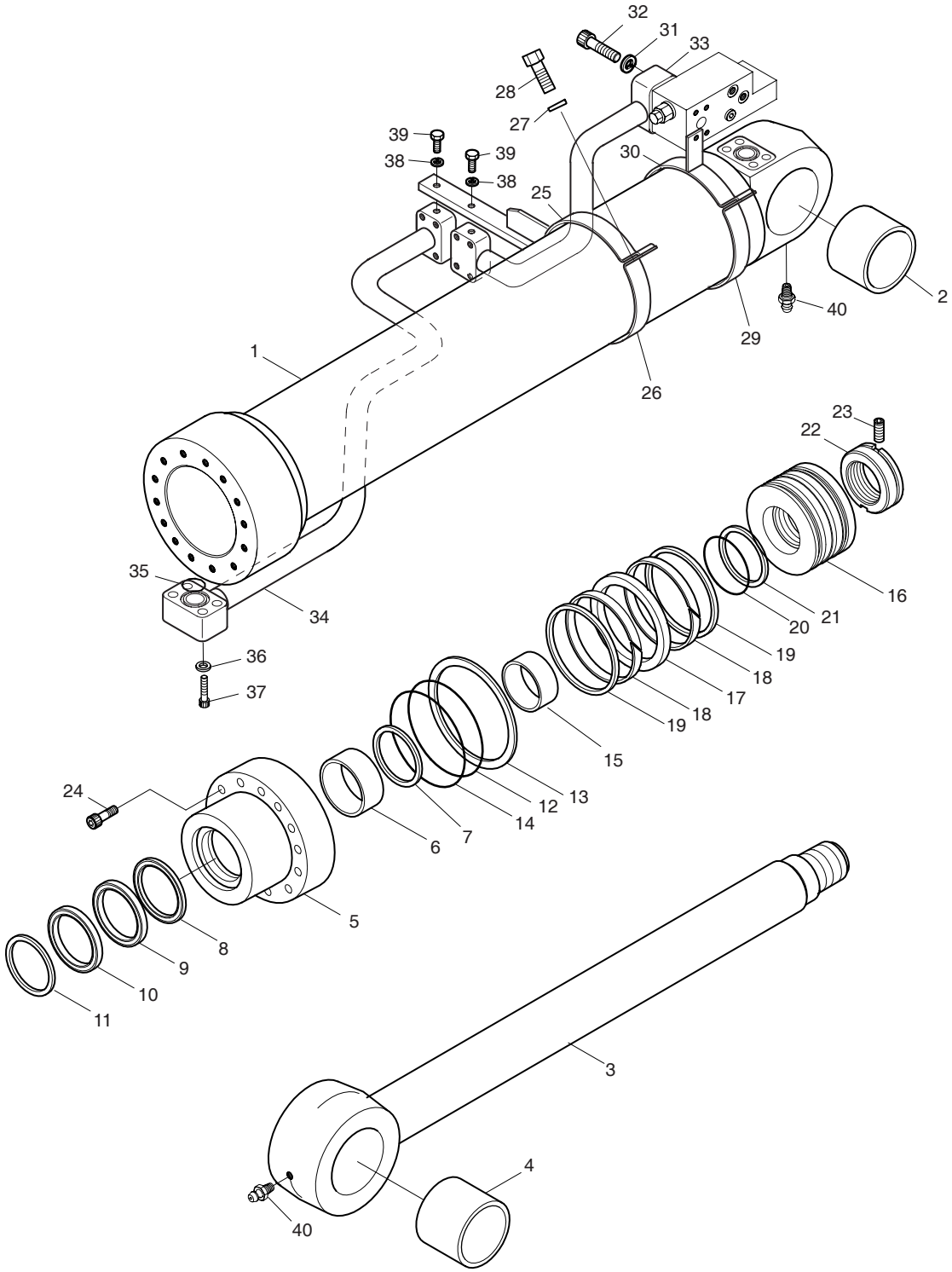

DATE	DEC. 15, 2006
REV. NO.	EXB06-13

Fig. 4360 BOOM CYLINDER(L.H)-LOCK VALVE VERIN DE FLECHE

Serial No. ;

Key No.	Part No.	Description	Description	Q'ty	S.C	Serial No.	ICA	Replaceable part	
								Part No.	Q'ty
4360-35	E6300761	O-RING	JOINT TORIQUE	1					
36	E3110112	WASHER;SPRING	RONDELLE ELASTIQUE	4					
37	E0501546	BOLT;SOCKET	BOULON A 6 PANS CREUX	4					
38	E3110112	WASHER;SPRING	RONDELLE ELASTIQUE	1					
39	E0020953	BOLT;HEX.	BOULON A 6 PANS	1					
40	E8841022	NIPPLE;GREASE	GRAISSEUR	2					
*	440-00013AKT	SEAL KIT	KIT D'ETANCHEITE	1					

DATE	DEC. 15, 2006
REV. NO.	EXB06-13

Fig. 4370 ARM CYLINDER-LOCK VALVE
VERIN DE BALANCIER

Serial No. ;

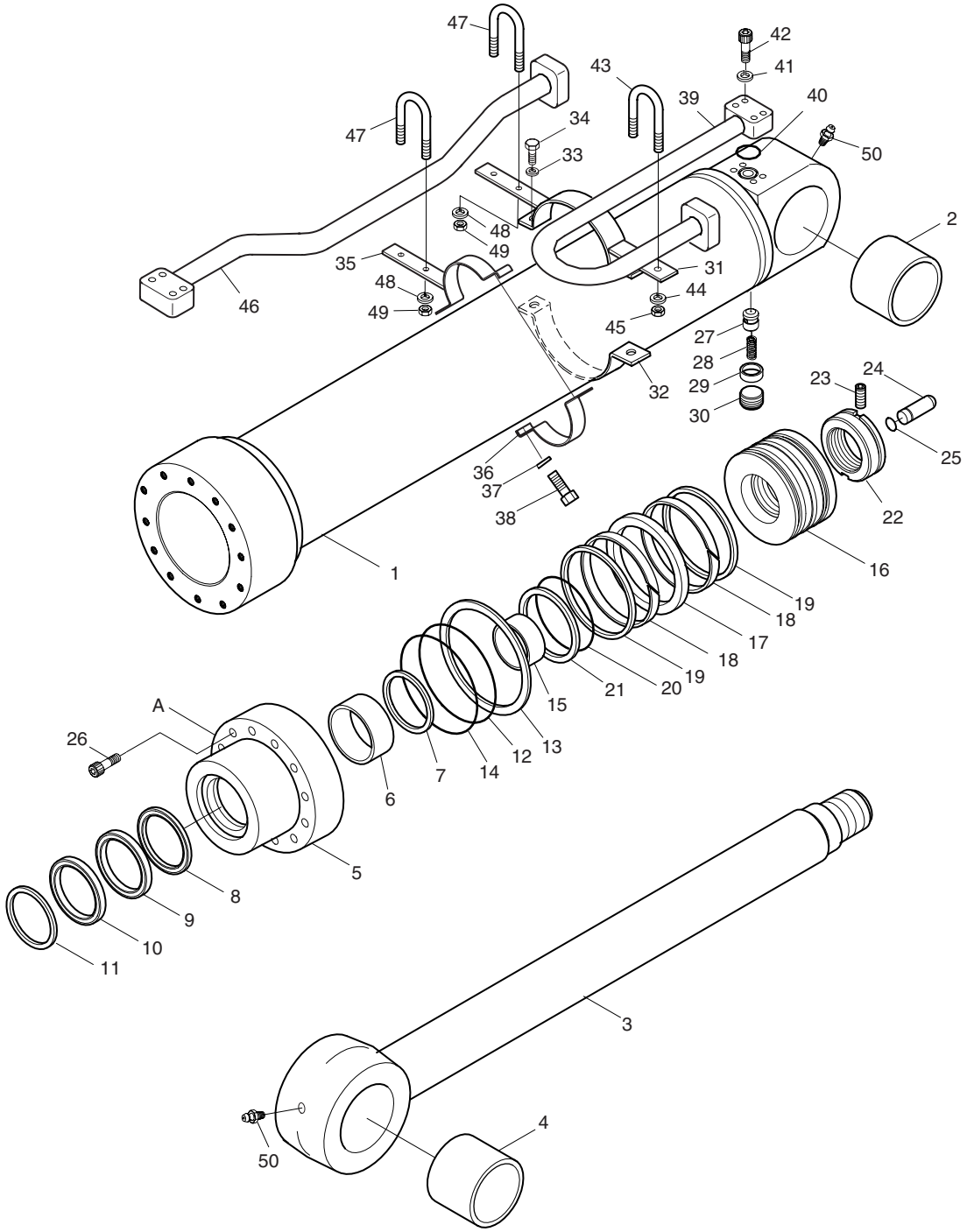

DATE	DEC. 15, 2006
REV. NO.	EXB06-13

Fig. 4370 ARM CYLINDER-LOCK VALVE VERIN DE BALANCIER

Serial No. ;

Key No.	Part No.	Description	Description	Q'ty	S.C	Serial No.	ICA	Replaceable part	
								Part No.	Q'ty
4370--	440-00088	CYLINDER;ARM-LOCK VALVE	VERIN DE BALANCIER	1		1001–1702	I	440-00088A	1
	440-00088A	**CYLINDER;ARM-LOCK VALVE**	VERIN DE BALANCIER	1		**1703–**			
1	53A554-0	TUBE ASS'Y	CONDUITE	1					
2	00B109-0	BUSH	DOUILLE	1					
3	53A555-0	ROD ASS'Y	TIGE	1		1001–1702			
	53A555-3	**ROD ASS'Y**	TIGE	1		**1703–**			
4	00B109-0	BUSH	DOUILLE	1					
5	53A556-0	ROD COVER	COUVERCLE DE TIGE	1					
6	E8412904	DD-BUSH	DOUILLE DU	1					
7	00M419-0	RING;RETAINING	BAGUE DE SOUTIEN	1					
8	E5500380	SEAL;BUFFER	JOINT	1	K				
9	E5303880	U-PACKING	JOINT EN U	1	K				
10	E6020370	WIPER;DUST	JOINT	1	K				
11	00M465-0	RING;RETAINING	BAGUE DE SOUTIEN	1					
12	E6311921	O-RING	JOINT TORIQUE	1	K				
13	04A358-0	RING;BACK-UP	BAGUE DE SOUTIEN	1	K				
14	E6490093	O-RING	JOINT TORIQUE	1	K				
15	00C318-0	RING;CUSHION	BAGUE DE SOUTIEN	1					
16	53A561-0	PISTON	PISTON	1					
17	E5130440	SEAL;SLIPPER	JOINT	1	K				
18	00Z115-0	RING;WEAR	SEGMENT D'USURE	2	K				
19	00R107-0	RING;SLYD	BAGUE DE SOUTIEN	2	K				
20	E6311561	O-RING	JOINT TORIQUE	1	K				
21	04A359-0	RING;BACK-UP	BAGUE DE SOUTIEN	2	K				
22	04A340-0	NUT;PISTON	ECROU	1		1001–1702			
	55A279-0	**NUT;PISTON**	ECROU	1		**1703–**			
23	E1330544	SCREW;SET	VIS	1		1001–1702			
	E1330564	**SCREW;SET**	VIS	1		**1703–**			
24	03A626-1	PLUNGER;CUSHION	PLONGEUR	1					
25	03A627-0	RING;STOP	BAGUE DE SOUTIEN	1					
26	E0503289	BOLT;SOCKET	BOULON A 6 PANS CREUX	12					
27	03A727-0	VALVE;CHECK	VANNE DE CONTROLE	1					
28	03A729-0	SPRING	RESSORT	1					
29	03A728-0	SUPPORT;SPRING	SUPPORT	1					
30	E1500030	PLUG;HEX.	BOUCHON	1					
31	53A557-0	PIPE BAND ASS'Y-A	ENSEMBLE DE ATTACHE	1					
32	00P383-1	BAND;PIPE	ATTACHE	1					
33	E3110112	WASHER;SPRING	RONDELLE ELASTIQUE	2					

DATE	DEC. 15, 2006
REV. NO.	EXB06-13

Fig. 4370 ARM CYLINDER-LOCK VALVE VERIN DE BALANCIER

Serial No. ;

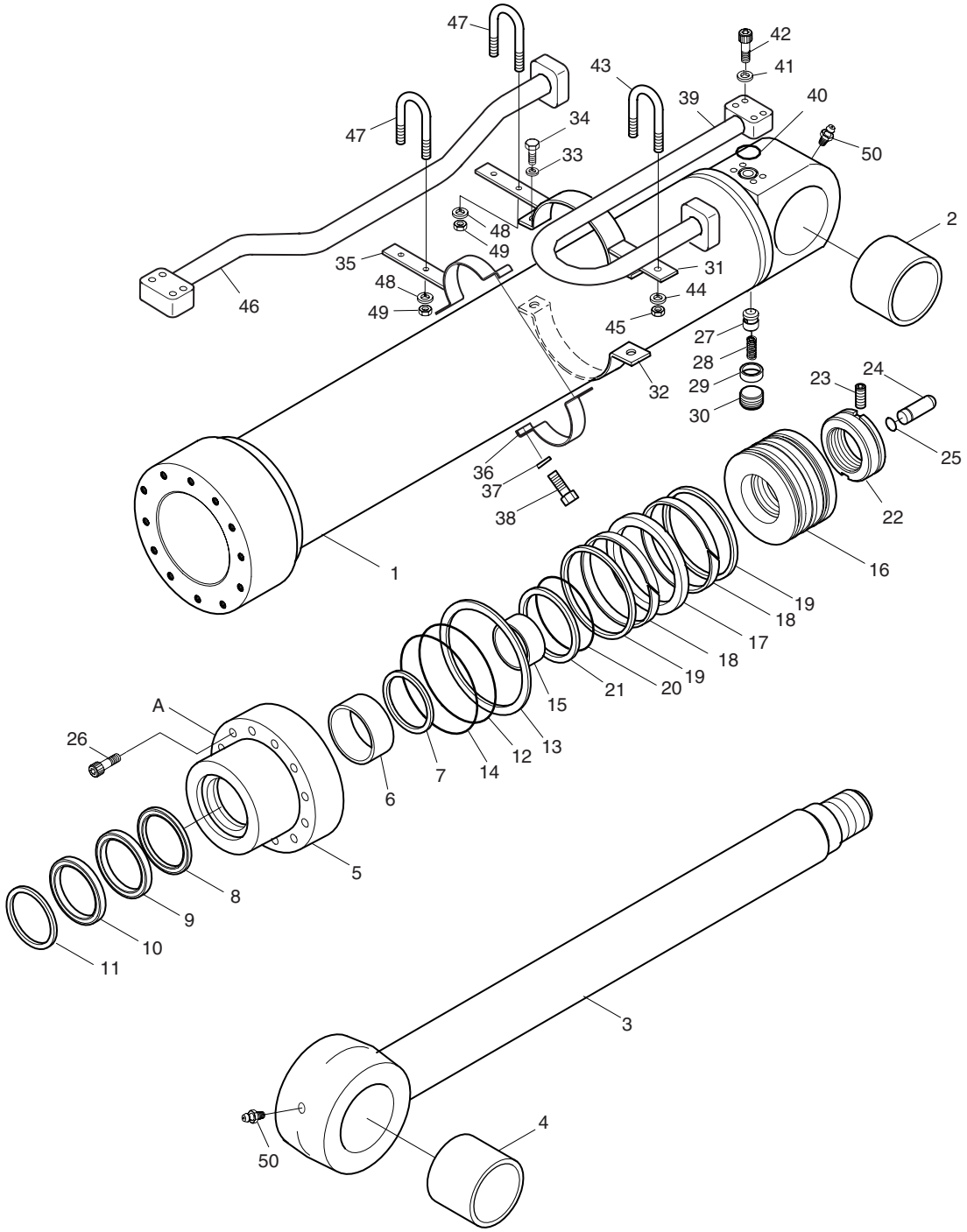

DATE	DEC. 15, 2006
REV. NO.	EXB06-13

Fig. 4370 ARM CYLINDER-LOCK VALVE VERIN DE BALANCIER

Serial No. ;

Key No.	Part No.	Description	Description	Q'ty	S.C	Serial No.	ICA	Replaceable part	
								Part No.	Q'ty
4370-34	E0020963	BOLT;HEX.	BOULON A 6 PANS	2					
35	53A562-0	PIPE BAND ASS'Y-B	ENSEMBLE DE ATTACHE	1					
36	00P383-1	BAND;PIPE	ATTACHE	1					
37	E3110112	WASHER;SPRING	RONDELLE ELASTIQUE	2					
38	E0020963	BOLT;HEX.	BOULON A 6 PANS	2					
39	53A559-0	PIPE ASS'Y-H	CONDUITE	1					
40	E6300881	O-RING	JOINT TORIQUE	1					
41	E3110122	WASHER;SPRING	RONDELLE ELASTIQUE	4					
42	E0501846	BOLT;SOCKET	BOULON A 6 PANS CREUX	4					
43	00U211-0	U-BOLT	BOULON U	1					
44	E3110112	WASHER;SPRING	RONDELLE ELASTIQUE	2					
45	E2021042	NUT;HEX.	ECROU 6 PANS	2					
46	53A638-0	PIPE ASS'Y-R	CONDUITE	1					
47	00U211-0	U-BOLT	BOULON U	2					
48	E3110112	WASHER;SPRING	RONDELLE ELASTIQUE	4					
49	E2021042	NUT;HEX.	ECROU 6 PANS	4					
50	E8841022	NIPPLE;GREASE	GRAISSEUR	2					
*	440-00015AKT	SEAL KIT	KIT D'ETANCHEITE	1					

DATE	DEC. 15, 2006
REV. NO.	EXB06-13

Fig. 4380 ARM CYLINDER-LOCK VALVE
VERIN DE BALANCIER

Serial No. ;

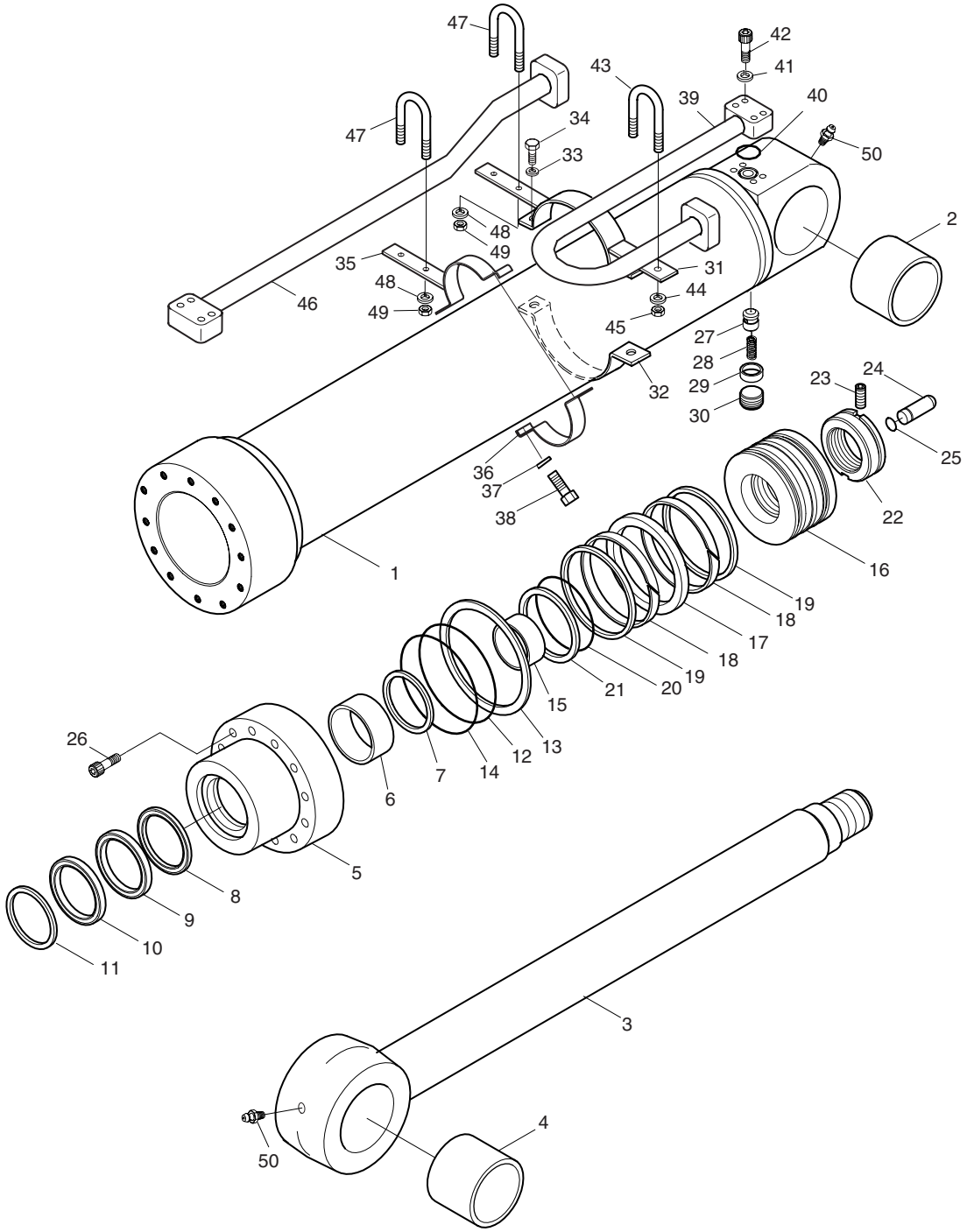

DATE	DEC. 15, 2006
REV. NO.	EXB06-13

Fig. 4380 ARM CYLINDER-LOCK VALVE VERIN DE BALANCIER

Serial No. ;

Key No.	Part No.	Description	Description	Q'ty	S.C	Serial No.	ICA	Replaceable part	
								Part No.	Q'ty
4380--	440-00089	CYLINDER;SHORT ARM-LOCK	VERIN DE BALANCIER	1		1001–1715	I	440-00089A	1
	440-00089A	**CYLINDER;SHORT**	VERIN DE BALANCIER	1		**1716–**			
1	53A632-0	TUBE ASS'Y	CONDUITE	1					
2	00B109-0	BUSH	DOUILLE	1					
3	53A635-0	ROD ASS'Y	TIGE	1		1001–1715			
	53A635-3	**ROD ASS'Y**	TIGE	1		**1716–**			
4	00B109-0	BUSH	DOUILLE	1					
5	53A556-0	COVER;ROD	COUVERCLE DE TIGE	1					
6	E8412904	DD-BUSH	DOUILLE DU	1					
7	00M419-0	RING;RETAINING	BAGUE DE SOUTIEN	1					
8	E5500380	SEAL;BUFFER	JOINT	1	K				
9	E5303880	U-PACKING	JOINT EN U	1	K				
10	E6020370	WIPER;DUST	JOINT	1	K				
11	00M465-0	RING;RETAINING	BAGUE DE SOUTIEN	1					
12	E6311921	O-RING	JOINT TORIQUE	1	K				
13	04A358-0	RING;BACK-UP	BAGUE DE SOUTIEN	1	K				
14	E6490093	O-RING	JOINT TORIQUE	1	K				
15	00C318-0	RING;CUSHION	BAGUE DE SOUTIEN	1					
16	53A561-0	PISTON	PISTON	1					
17	E5130440	SEAL;SLIPPER	JOINT	1	K				
18	00Z115-0	RING;WEAR	SEGMENT D'USURE	2	K				
19	00R107-0	RING;SLYD	BAGUE DE SOUTIEN	2	K				
20	E6311561	O-RING	JOINT TORIQUE	1	K				
21	04A359-0	RING;BACK-UP	BAGUE DE SOUTIEN	2	K				
22	04A340-0	NUT;PISTON	ECROU	1		1001–1715			
	55A279-0	**NUT;PISTON**	ECROU	1		**1716–**			
23	E1330544	SCREW;SET	VIS	1		1001–1715			
	E1330564	**SCREW;SET**	VIS	1		**1716–**			
24	03A626-1	PLUNGER;CUSHION	PLONGEUR	1					
25	03A627-0	RING;STOP	BAGUE DE SOUTIEN	1					
26	E0503289	BOLT;SOCKET	BOULON A 6 PANS CREUX	12					
27	03A727-0	VALVE;CHECK	VANNE DE CONTROLE	1					
28	03A729-0	SPRING	RESSORT	1					
29	03A728-0	SUPPORT;SPRING	SUPPORT	1					
30	E1500030	PLUG;HEX.	BOUCHON	1					
31	53A557-0	PIPE BAND ASS'Y-A	ENSEMBLE DE ATTACHE	1					
32	00P383-1	BAND;PIPE	ATTACHE	1					
33	E3110112	WASHER;SPRING	RONDELLE ELASTIQUE	2					

DATE	DEC. 15, 2006
REV. NO.	EXB06-13

Fig. 4380 ARM CYLINDER-LOCK VALVE
VERIN DE BALANCIER

Serial No. ;

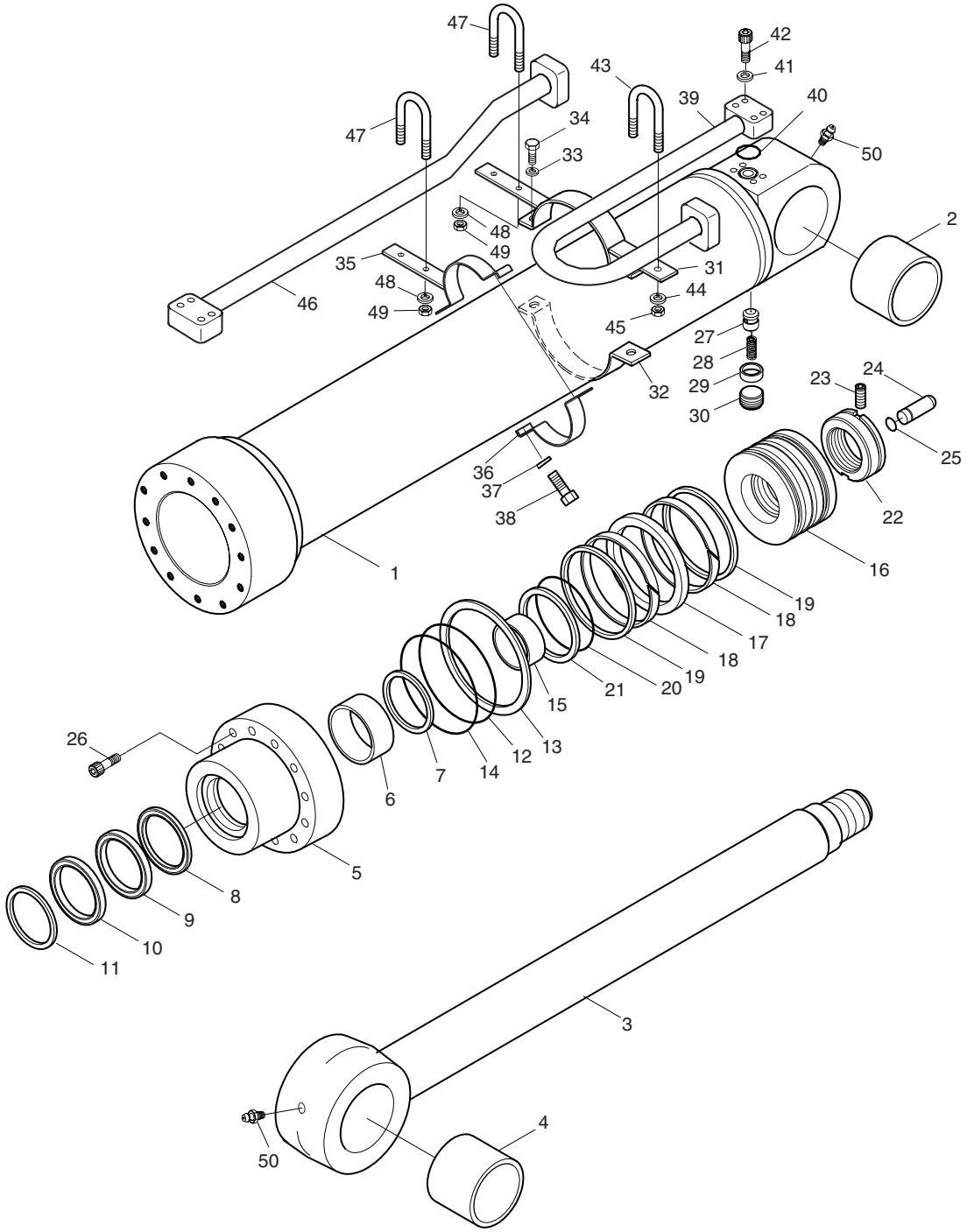

DATE	DEC. 15, 2006
REV. NO.	EXB06-13

Fig. 4380 ARM CYLINDER-LOCK VALVE VERIN DE BALANCIER

Serial No. ;

Key No.	Part No.	Description	Description	Q'ty	S.C	Serial No.	ICA	Replaceable part	
								Part No.	Q'ty
4380-34	E0020963	BOLT;HEX.	BOULON A 6 PANS	2					
35	53A562-0	PIPE BAND ASS'Y-B	ENSEMBLE DE ATTACHE	1					
36	00P383-1	BAND;PIPE	ATTACHE	1					
37	E3110112	WASHER;SPRING	RONDELLE ELASTIQUE	2					
38	E0020963	BOLT;HEX.	BOULON A 6 PANS	2					
39	53A559-0	PIPE ASS'Y-H	CONDUITE	1					
40	E6300881	O-RING	JOINT TORIQUE	1					
41	E3110122	WASHER;SPRING	RONDELLE ELASTIQUE	4					
42	E0501846	BOLT;SOCKET	BOULON A 6 PANS CREUX	4					
43	00U211-0	U-BOLT	BOULON U	1					
44	E3110112	WASHER;SPRING	RONDELLE ELASTIQUE	2					
45	E2021042	NUT;HEX.	ECROU 6 PANS	2					
46	53A698-0	PIPE ASS'Y-R	CONDUITE	1					
47	00U211-0	U-BOLT	BOULON U	2					
48	E3110112	WASHER;SPRING	RONDELLE ELASTIQUE	4					
49	E2021042	NUT;HEX.	ECROU 6 PANS	4					
50	E8841022	NIPPLE;GREASE	GRAISSEUR	2					
*	440-00015AKT	SEAL KIT	KIT D'ETANCHEITE	1					

DATE	JUN. 30, 2004
REV. NO.	EXB04-04

Fig. 4390 BUCKET CYLINDER-ARM 6.0m VERIN DE GODET

Serial No. ; 1001 ~ 1253

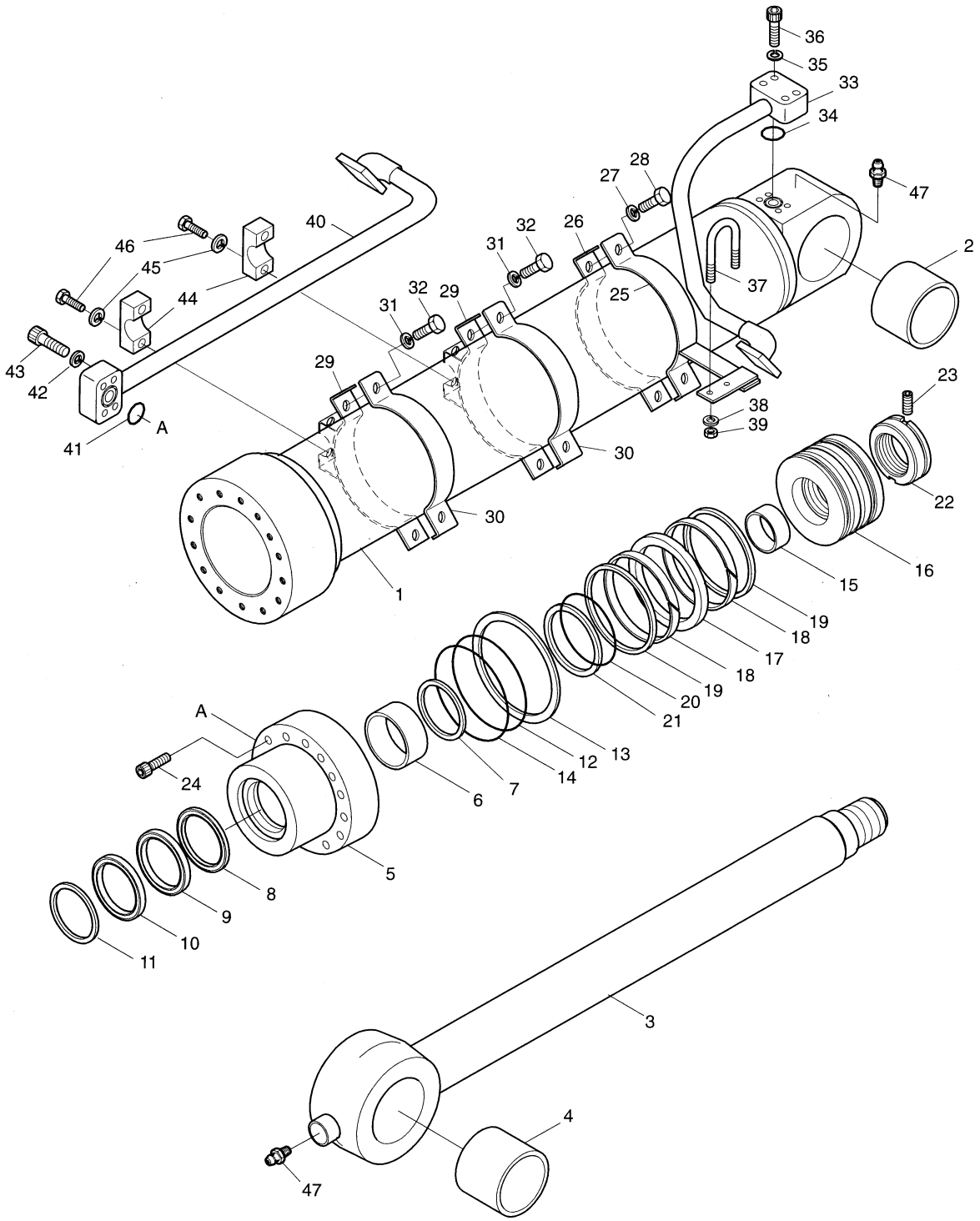

DATE	JUN. 30, 2004
REV. NO.	EXB04-04

Fig. 4390 BUCKET CYLINDER-ARM 6.0m VERIN DE GODET

Serial No ; 1001 ~ 1253

Key No.	Part No.	Description	Description	Q'ty	S.C	Serial No.	ICA	Replaceable part	
								Part No.	Q'ty
4390--	2440-9241G	BUCKET CYLINDER	VERIN DE GODET	1		1001–1253	I	2440-9241H	1
1	53U313-3	TUBE ASS'Y	ENSEMBLE TUBE	1					
2	00B123-0	BUSH	BAGUE	1					
3	53U367-4	ROD ASS'Y	ENSEMBLE PISTON	1					
4	00B123-0	BUSH	BAGUE	1					
5	53U372-1	ROD COVER	COUVERCLE DE TIGE	1					
6	E8412281	DD-BUSH	DOUILLE DU	1					
7	00M313-0	RING;RETAINING	BAGUE D'ARRET	1					
8	E5500300	SEAL;BUFFER	JOINT EN U	1	K				
9	E5303200	U-PACKING	JOINT EN U	1	K				
10	E6020300	WIPER;DUST	JOINT TORIQUE	1	K				
11	00M315-0	RING;RETAINING	BAGUE D'ARRET	1					
12	E6311741	O-RING	JOINT TORIQUE	1	K				
13	53B316-0	RING;BACK UP	BAGUE DE SOUTIEN	1	K				
14	E6490059	O-RING	JOINT TORIQUE	1	K				
15	00C306-0	RING;CUSHION	BAGUE D'AMORTISSEMENT	1					
16	53U370-1	PISTON	PISTON	1					
17	E5130320	SEAL;SLIPPER	PATIN D'ETANCHEITE	1	K				
18	00Z109-0	RING;WEAR	SEGMENT D'USURE	2	K				
19	00R730-0	RING;SLYD	BAGUE DE SOUTIEN	2	K				
20	E6311341	O-RING	JOINT TORIQUE	1	K				
21	53U252-0	RING;BACK UP	BAGUE DE SOUTIEN	1	K				
22	53U374-1	NUT;PISTON	ECROU	1					
23	E1330544	SCREW;SET	VIS	1					
24	E0502149	BOLT;SOCKET	BOULON A 6 PANS CREUX	14					
25	53U509-1	PIPE BAND ASS'Y-H	ENSEMBLE CONDUITES	1					
26	00P374-1	BAND;PIPE	ATTACHE	1					
27	E3110112	WASHER;SPRING	RONDELLE ELASTIQUE	2					
28	E0020963	BOLT HEX	BOULON A 6 PANS	2					
29	53U510-1	PIPE BAND ASS'Y-R	BRIDE DE FIXATION	2					
30	00P374-1	BAND;PIPE	ATTACHE	2					
31	E3110112	WASHER;SPRING	RONDELLE ELASTIQUE	4					
32	E0020963	BOLT HEX	BOULON A 6 PANS	4					
33	53U319-1	PIPE ASS'Y-H	ENSEMBLE CONDUITES	1					
34	E6300761	O-RING	JOINT TORIQUE	1					
35	E3110112	WASHER;SPRING	RONDELLE ELASTIQUE	4					
36	E0501546	BOLT;SOCKET	BOULON A 6 PANS CREUX	4					
37	03A534-0	U-BOLT	BOULON U	1					

DATE	JUN. 30, 2004
REV. NO.	EXB04-04

Fig. 4390 BUCKET CYLINDER-ARM 6.0m VERIN DE GODET

Serial No. ; 1001 ~ 1253

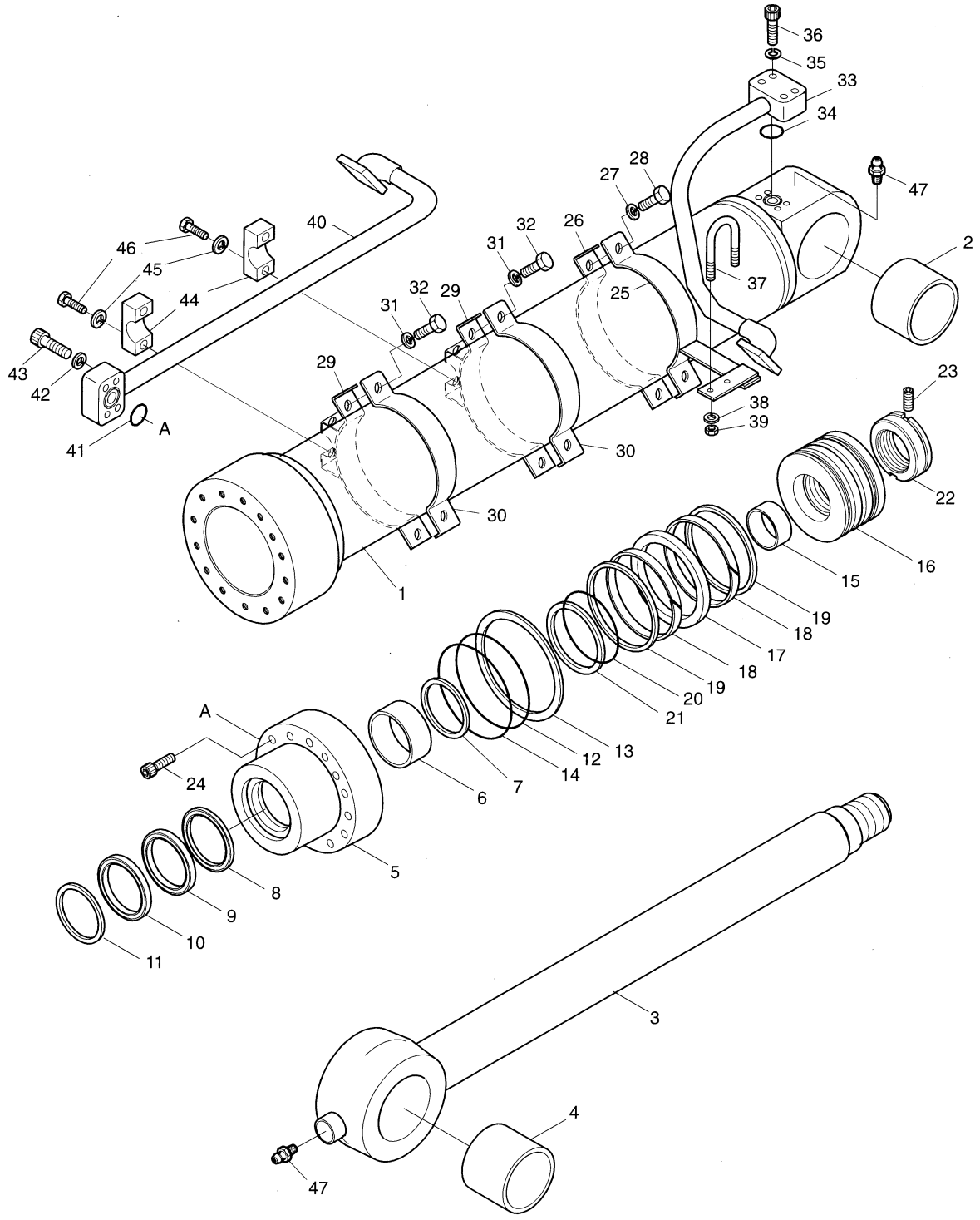

DATE	JUN. 30, 2004
REV. NO.	EXB04-04

Fig. 4390 BUCKET CYLINDER-ARM 6.0m VERIN DE GODET

Serial No ; 1001 ~ 1253

Key No.	Part No.	Description	Description	Q'ty	S.C	Serial No.	ICA	Replaceable part	
								Part No.	Q'ty
4390-38	E3110102	WASHER;SPRING	RONDELLE ELASTIQUE	2					
39	E2022033	NUT;HEX	ECROU 6 PANS	2					
40	53U373-1	PIPE ASS'Y-R	ENSEMBLE CONDUITES	1					
41	E6300761	O-RING	JOINT TORIQUE	1					
42	E3110112	WASHER;SPRING	RONDELLE ELASTIQUE	4					
43	E0501546	BOLT;SOCKET	BOULON A 6 PANS CREUX	4					
44	00C270-0	CLAMP;PIPE	COLLIER	2					
45	E3110102	WASHER;SPRING	RONDELLE ELASTIQUE	4					
46	E0020733	BOLT	BOULON A 6 PANS	4					
47	E8841022	NIPPLE;GREASE PT1/8	GRAISSEUR	2					
*	2440-9241KT	SEAL KIT;BUCKET CYL.	KIT D'ETANCHEITE	1	S				

DATE	JUN. 30, 2004
REV. NO.	EXB04-04

Fig. 4391 BUCKET CYLINDER-ARM 6.0m VERIN DE GODET

Serial No. ; 1254 ~

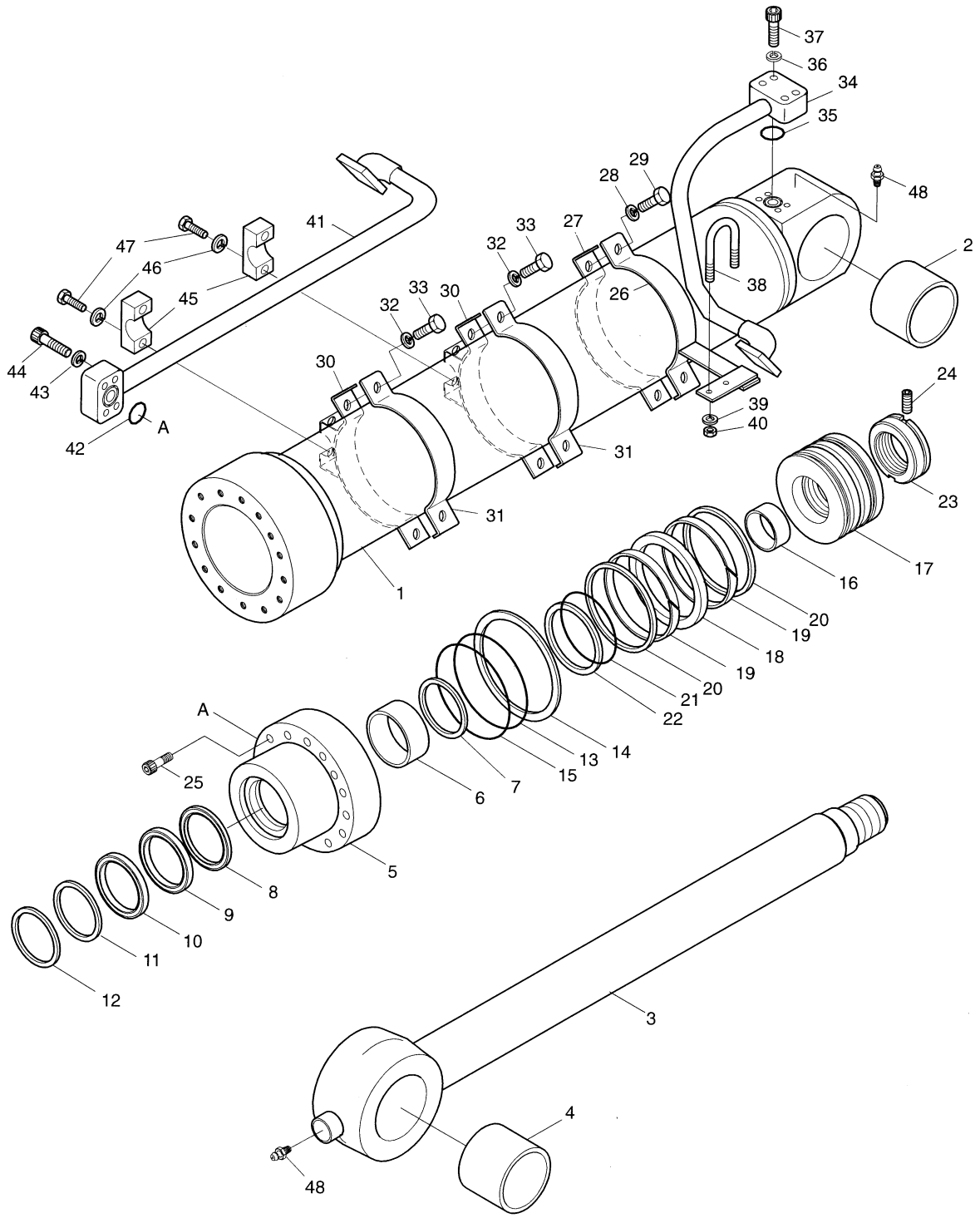

DATE	JUN. 30, 2004
REV. NO.	EXB04-04

Fig. 4391 BUCKET CYLINDER-ARM 6.0m VERIN DE GODET

Serial No ; 1254 ~

Key No.	Part No.	Description	Description	Q'ty	S.C	Serial No.	ICA	Replaceable part	
								Part No.	Q'ty
4391--	2440-9241H	BUCKET CYLINDER	VERIN DE GODET	1		1254–			
1	1.441-00171	TUBE ASS'Y	ENSEMBLE TUBE	1					
2	110-00168	BUSH	BAGUE	1					
3	1.428-00153	ROD ASS'Y	ENSEMBLE PISTON	1					
4	110-00168	BUSH	BAGUE	1					
5	1.442-00005	COVER;ROD	COUVERCLE DE TIGE	1					
6	110-00080	DD-BUSH	DOUILLE DU	1					
7	115-00063	RING;RETAINING	BAGUE D'ARRET	1					
8	1.180-00657	SEAL;BUFFER	JOINT EN U	1	K				
9	115-00071	U-PACKING	JOINT EN U	1	K				
10	1.180-00658	RING;BACK UP	BAGUE DE SOUTIEN	1	K				
11	115-00072	WIPER;DUST	JOINT TORIQUE	1	K				
12	115-00073	RING;RETAINING	BAGUE D'ARRET	1					
13	S8011351	O-RING	JOINT TORIQUE	1	K				
14	180-00270	RING;BACK UP	BAGUE DE SOUTIEN	1	K				
15	2180-1217D96	O-RING	JOINT TORIQUE	1	K				
16	1.411-00003	RING;CUSHION	BAGUE D'AMORTISSEMENT	1					
17	1.409-00132	PISTON	PISTON	1					
18	180-00271	SEAL;SLIPPER	PATIN D'ETANCHEITE	1	K				
19	115-00079	RING;WEAR	SEGMENT D'USURE	2	K				
20	115-00080	RING;SLYD	BAGUE DE SOUTIEN	2	K				
21	S8010701	O-RING	JOINT TORIQUE	1	K				
22	180-00268	RING;BACK UP	BAGUE DE SOUTIEN	1	K				
23	121-00045	NUT;PISTON	ECROU	1					
24	1.120-00219	SCREW;SET	VIS	1					
25	S2222272	BOLT;SOCKET	BOULON A 6 PANS CREUX	14					
26	1.124-00060	PIPE BAND ASS'Y-H	ENSEMBLE CONDUITES	1					
27	124-00052	BAND;PIPE	ATTACHE	1					
28	S5100703	WASHER;SPRING	RONDELLE ELASTIQUE	2					
29	S0560453	BOLT HEX	BOULON A 6 PANS	2					
30	124-00066	PIPE BAND ASS'Y-R	BRIDE DE FIXATION	2					
31	124-00052	BAND;PIPE	ATTACHE	2					
32	S5100703	WASHER;SPRING	RONDELLE ELASTIQUE	4					
33	S0560453	BOLT HEX	BOULON A 6 PANS	4					
34	1.140-00165	PIPE ASS'Y-H	ENSEMBLE CONDUITES	1					
35	S8000341	O-RING	JOINT TORIQUE	1					
36	S5100703	WASHER;SPRING	RONDELLE ELASTIQUE	4					
37	S2215961	BOLT;SOCKET	BOULON A 6 PANS CREUX	4					

DATE	JUN. 30, 2004
REV. NO.	EXB04-04

Fig. 4391 BUCKET CYLINDER-ARM 6.0m VERIN DE GODET

Serial No. ; 1254 ~

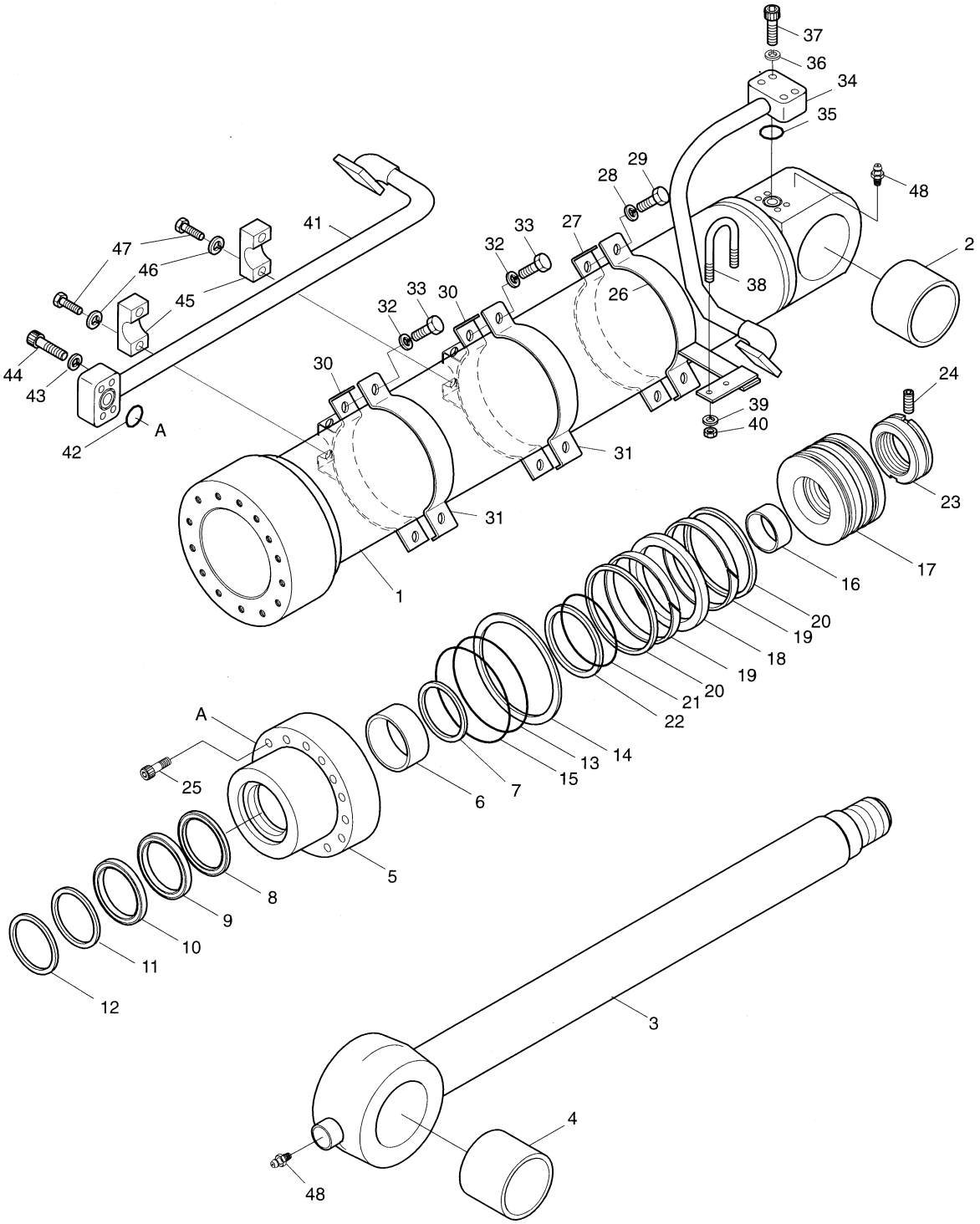

DATE	JUN. 30, 2004
REV. NO.	EXB04-04

Fig. 4391 BUCKET CYLINDER-ARM 6.0m VERIN DE GODET

Serial No ; 1254 ~

Key No.	Part No.	Description	Description	Q'ty	S.C	Serial No.	ICA	Replaceable part	
								Part No.	Q'ty
4391-38	120-00159	U-BOLT	BOULON U	1					
39	S5100603	WASHER;SPRING	RONDELLE ELASTIQUE	2					
40	S4012633	NUT;HEX	ECROU 6 PANS	2					
41	1.140-00238	PIPE ASS'Y-R	ENSEMBLE CONDUITES	1					
42	S8000341	O-RING	JOINT TORIQUE	1					
43	S5100703	WASHER;SPRING	RONDELLE ELASTIQUE	4					
44	S2215961	BOLT;SOCKET	BOULON A 6 PANS CREUX	4					
45	124-00060	CLAMP;PIPE	ATTACHE DE TUYAU	2					
46	S5100603	WASHER;SPRING	RONDELLE ELASTIQUE	4					
47	S0558761	BOLT	BOULON A 6 PANS	4					
48	S6710032	NIPPLE;GREASE PT1/8	GRAISSEUR	2					
*	2440-9241HKT	SEAL KIT;BUCKET CYL.	KIT D'ETANCHEITE	1					

DATE	JUN. 30, 2006
REV.NO.	EXB06-08

Fig. 4400 BUCKET CYLINDER-ARM 8.0m VERIN DE GODET

Serial No. ;

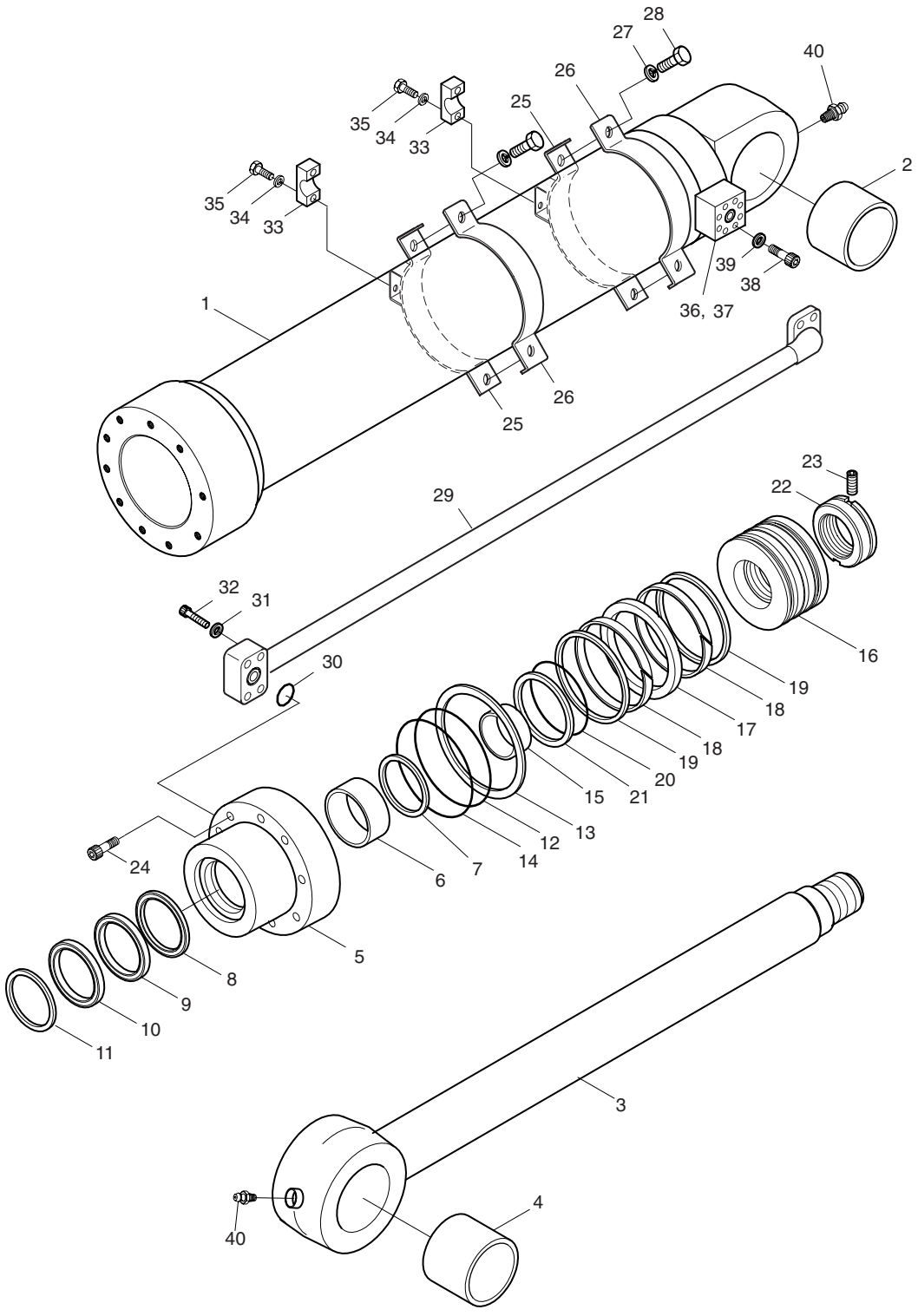

DATE	JUN. 30, 2006
REV. NO.	EXB06-08

Fig. 4400 BUCKET CYLINDER-ARM 8.0m VERIN DE GODET

Serial No. ;

Key No.	Part No.	Description	Description	Q'ty	S.C	Serial No.	ICA	Replaceable part	
								Part No.	Q'ty
4400--	440-00059	CYLINDER;BUCKET	VERIN DE GODET	1		1001–1634			
	440-00059A	**CYLINDER;BUCKET**	VERIN DE GODET	1		**1635–**			
1	53U470-1	TUBE ASS'Y	ENSEMBLE TUBE	1					
2	00T193-0	BUSH;STEEL	DOUILLE	1					
3	53U474-0	ROD ASS'Y	ENSEMBLE TIGE	1		1001–1634	I	53U474-3	1
	53U474-3	**ROD ASS'Y**	ENSEMBLE TIGE	1		**1635–**			
4	00T193-0	BUSH;STEEL	DOUILLE	1					
5	53U477-1	COVER;ROD	COUVERCLE DE TIGE	1					
6	E8412908	BUSH;DU	COUSSINET	1					
7	00M312-0	RING;RETAINING	ARRET	1					
8	E5500260	SEAL;BUFFER	JOINT	1	K				
9	E5303040	PACKING;U	JOINT EN U	1	K				
10	E6020260	WIPER;DUST	JOINT PARE-POUSSIERE	1	K				
11	00M313-0	RING;RETAINING	TAQUET D'ARRET	1					
12	E6311621	O-RING	JOINT TORIQUE	1	K				
13	53B423-0	RING;BACK UP	BAGUE DE SOUTIEN	1	K				
14	E6311641	O-RING	JOINT TORIQUE	1	K				
15	00C304-0	RING;CUSHION	BAGUE	1					
16	53U478-0	PISTON	PISTON	1					
17	E5130260	SEAL;SLIPPER	JOINT EN U	1	K				
18	00Z105-0	RING;WEAR	BAGUE DE SOUTIEN	2	K				
19	00R097-0	RING;SLYD	BAGUE	2	K				
20	E6490086	O-RING	JOINT TORIQUE	1	K				
21	53A387-0	RING;BACK UP	ANNEAU DE SOUTIEN	2	K				
22	80B485-2	NUT;PISTON	ECROU	1					
23	E1330544	SCREW;SET	VIS	1					
24	E0502139	BOLT;SOCKET	BOULON A 6 PANS	10					
25	53U508-0	PIPE BAND ASS'Y	FIXATION DES CONDUITES	2					
26	00P371-0	BAND;PIPE	BRIDE DE FIXATION	2					
27	E3110102	WASHER;SPRING	RONDELLE ELASTIQUE	4					
28	E0020683	BOLT;HEX	BOULON A 6 PANS	4					
29	53U334-2	PIPE ASS'Y	CONDUITES	1					
30	E6300621	O-RING	JOINT TORIQUE	1					
31	E3110102	WASHER;SPRING	RONDELLE ELASTIQUE	4					
32	E0501246	BOLT;SOCKET	BOULON A 6 PANS	4					
33	00C267-0	CLAMP;PIPE	FIXATION DE TUYAU	2					
34	E3110102	WASHER;SPRING	RONDELLE ELASTIQUE	4					
35	E0020723	BOLT;HEX.	BOULON A 6 PANS	4					

DATE	JUN. 30, 2006
REV.NO.	EXB06-08

Fig. 4400 BUCKET CYLINDER-ARM 8.0m VERIN DE GODET

Serial No. ;

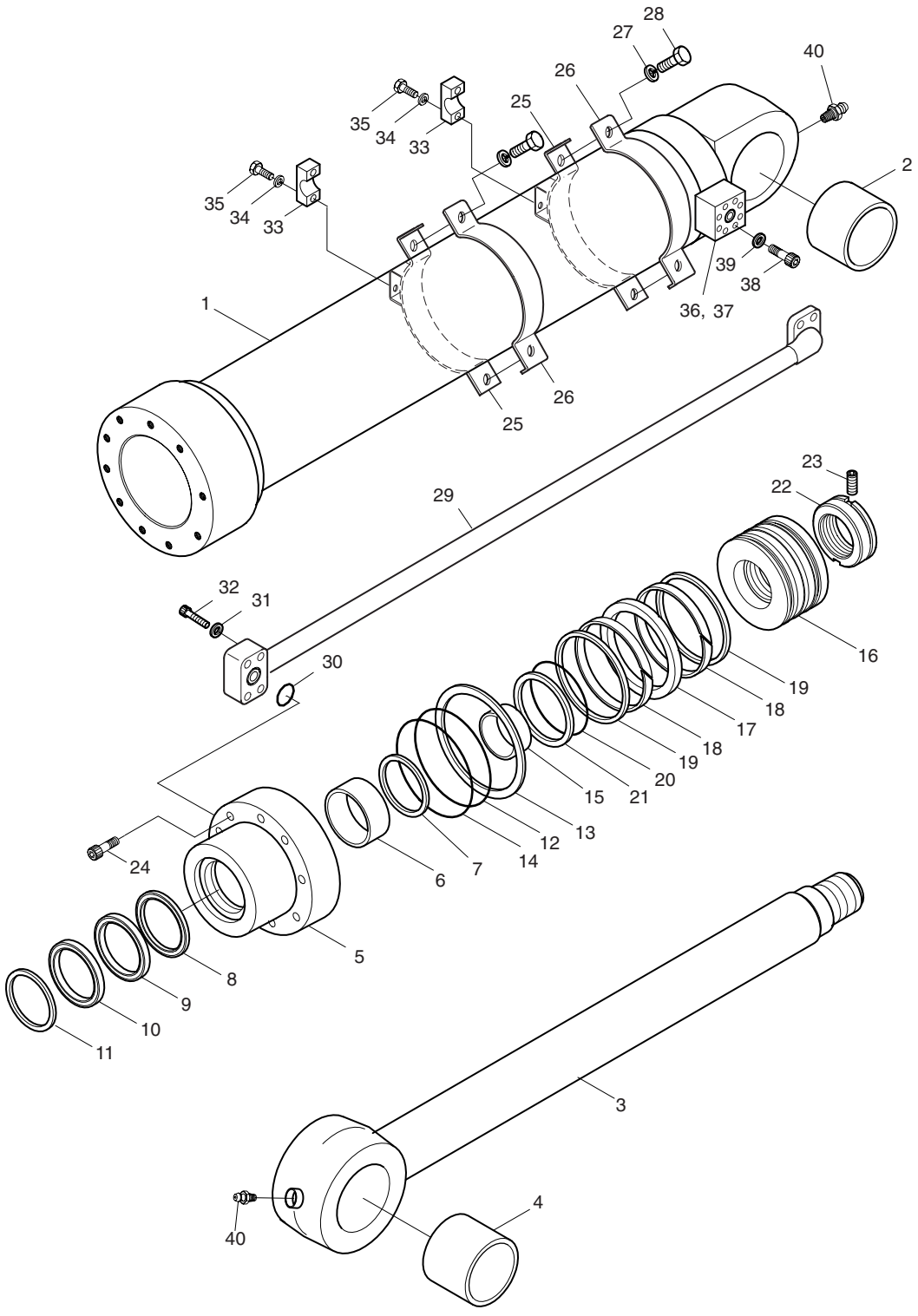

DATE	JUN. 30, 2006
REV. NO.	EXB06-08

Fig. 4400 BUCKET CYLINDER-ARM 8.0m VERIN DE GODET

Serial No. ;

Key No.	Part No.	Description	Description	Q'ty	S.C	Serial No.	ICA	Replaceable part	
								Part No.	Q'ty
4400-36	53U481-0	FLANGE;PORT	BRIDE	1					
37	E6300621	O-RING	JOINT TORIQUE	1					
38	E3110102	WASHER;SPRING	RONDELLE ELASTIQUE	4					
39	E0501236	BOLT;SOCKET	BOULON A 6 PANS	4					
40	E8841022	NIPPLE;GREASE	GRAISSEUR	2					
*	2440-9339BKT	SEAL KIT;BUCKET	KIT D'ETANCHEITE	1	S				

DATE	DEC. 15, 2006
REV. NO.	EXB06-13

Fig. 4410 ARM CYLINDER-HEAVY DUTY
VERIN DE BALANCIER

Serial No. ;

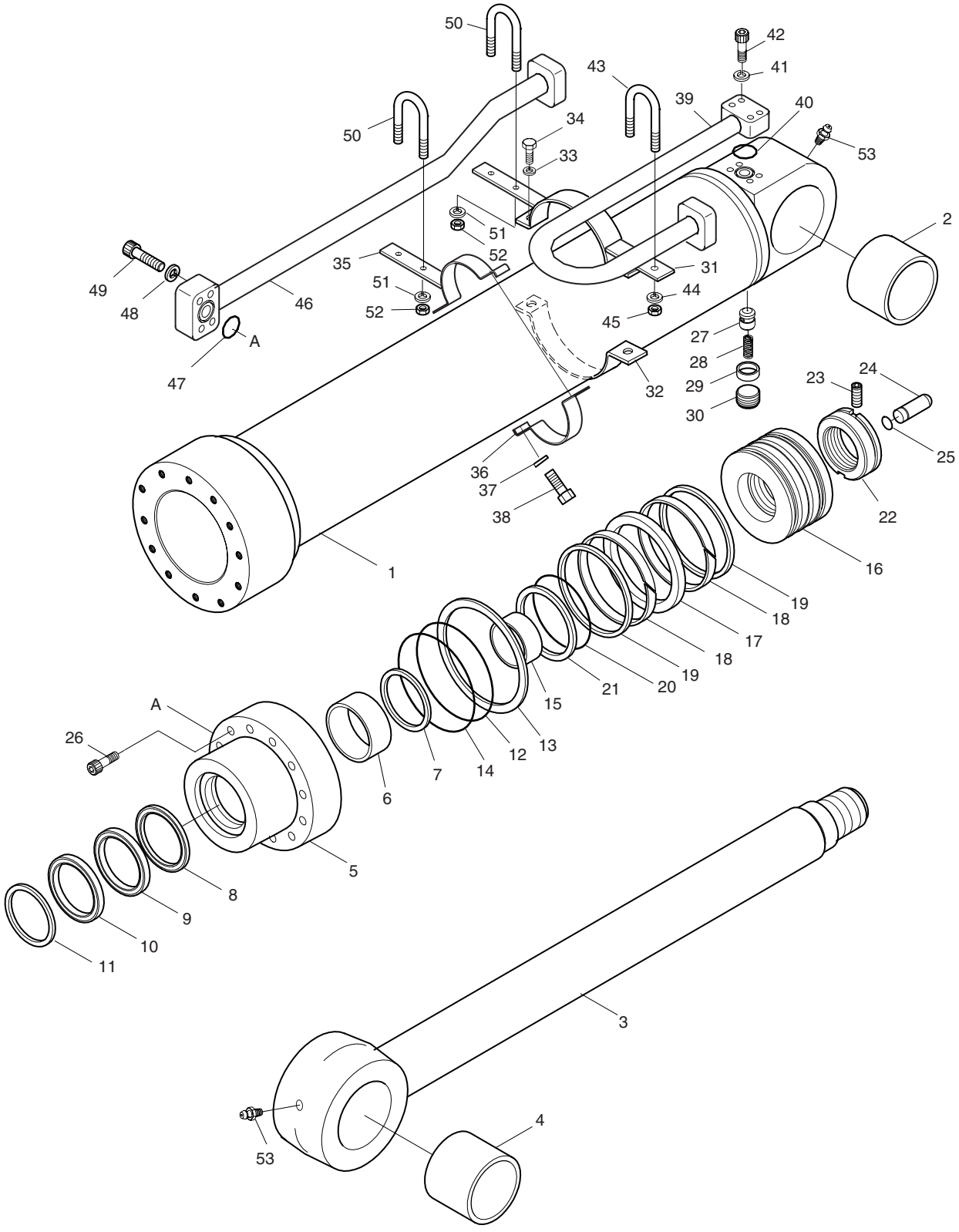

DATE	DEC. 15, 2006
REV. NO.	EXB06-13

Fig. 4410 ARM CYLINDER-HEAVY DUTY VERIN DE BALANCIER

Serial No. ;

Key No.	Part No.	Description	Description	Q'ty	S.C	Serial No.	ICA	Replaceable part	
								Part No.	Q'ty
4410--	K1008810	CYLINDER;ARM	VERIN DE BALANCIER	1		1001–1711	I	K1008810A	1
	K1008810A	**CYLINDER;ARM**	VERIN DE BALANCIER	1		**1712–**			
1	55A243-0	TUBE ASS'Y	ENSEMBLE TUBE	1					
2	00B109-1	BUSH	DOUILLE	1					
3	53A555-3	ROD ASS'Y	ENSEMBLE TIGE	1					
4	00B109-1	BUSH	DOUILLE	1					
5	53A556-2	COVER;ROD	COUVERCLE DE TIGE	1					
6	E8412904	BUSH;DU	DOUILLE DU	1					
7	00M419-0	RING;RETAINING	BAGUE	1					
8	E5500380	SEAL;BUFFER	JOINT	1	K				
9	E5303880	PACKING;U	JOINT EN U	1	K				
10	E6020370	WIPER;DUST	JOINT	1	K				
11	00M465-0	RING;RETAINING	BAGUE DE SOUTIEN	1					
12	E6311921	O-RING	JONT TORIQUE	1	K				
13	04A358-1	RING;BACK-UP	BAGUE DE SOUTIEN	1	K				
14	E6490093	O-RING	JONT TORIQUE	1	K				
15	00C379-0	RING;CUSHION	BAGUE DE SOUTIEN	1					
16	53A561-0	PISTON	PISTON	1					
17	E5130440	SEAL;SLIPPER	JOINT	1	K				
18	00Z115-0	RING;WEAR	SEGMENT D'USURE	2	K				
19	00R107-0	RING;SLYD	BAGUE DE SOUTIEN	2	K				
20	E6341561	O-RING	JONT TORIQUE	1	K				
21	04A359-0	RING;BACK-UP	BAGUE DE SOUTIEN	2	K				
22	04A340-1	NUT;PISTON	ECROU	1		1001–1711			
	55A279-0	**NUT;PISTON**	ECROU	1		**1712–**			
23	E1330544	SCREW;SET	VIS	1		1001–1711			
	E1330564	**SCREW;SET**	VIS	1		**1712–**			
24	03A626-3	PLUNGER;CUSHION	PLUNGEUR	1					
25	03A627-0	RING;STOP	BAGUE DE SOUTIEN	1					
26	E0503289	BOLT;SOCKET	BOULON A 6PANS	12					
27	03A727-0	VALVE;CHECK	VANNE DE CONTROLE	1					
28	03A729-0	SPRING	RESSORT	1					
29	03A728-0	SUPPORT;SPRING	SUPPORT	1					
30	E1500030	PLUG;SOCKET	BOUCHON	1					
31	53A877-0	PIPE BAND ASS'Y-A	ENSEMBLE DE ATTACHE	1					
32	00P383-1	BAND;PIPE	ATTACHE	1					
33	E3110112	WASHER;SPRING	RONDELLE ELASTIQUE M12	2					
34	E0020973	BOLT;HEX.	BOULON A 6PANS	2					

DATE	DEC. 15, 2006
REV. NO.	EXB06-13

Fig. 4410 ARM CYLINDER-HEAVY DUTY
VERIN DE BALANCIER

Serial No. ;

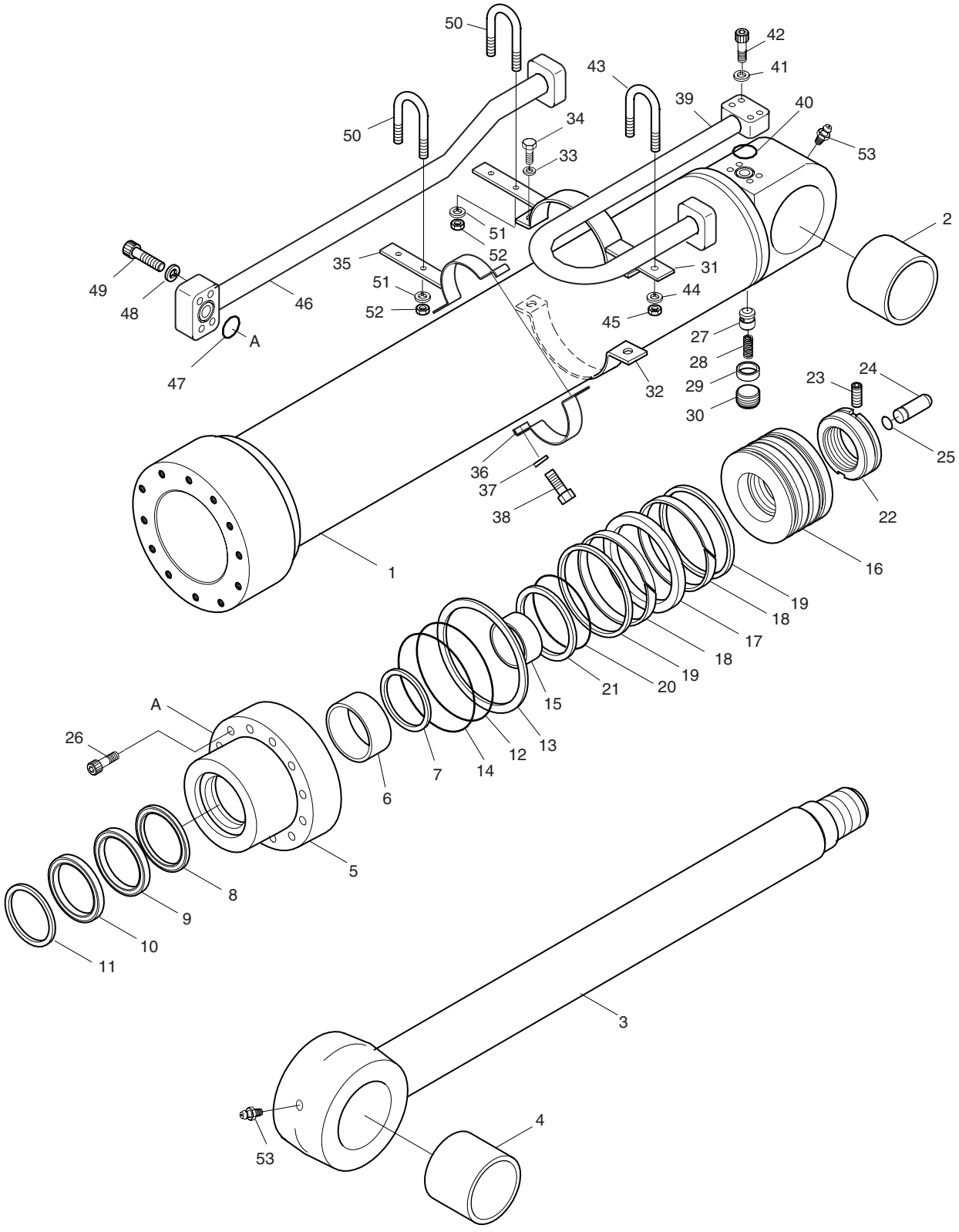

DATE	DEC. 15, 2006
REV. NO.	EXB06-13

Fig. 4410 ARM CYLINDER-HEAVY DUTY VERIN DE BALANCIER

Serial No. ;

Key No.	Part No.	Description	Description	Q'ty	S.C	Serial No.	ICA	Replaceable part	
								Part No.	Q'ty
4410-35	53A880-0	PIPE BAND ASS'Y-B	ENSEMBLE DE ATTACHE	1					
36	00P383-1	BAND;PIPE	ATTACHE	1					
37	E3110112	WASHER;SPRING	RONDELLE ELASTIQUE M12	2					
38	E0020973	BOLT;HEX.	BOULON A 6PANS	2					
39	53A880-0	PIPE ASS'Y-H	ENSEMBLE DE ATTACHE	1					
40	E6300881	O-RING	JONT TORIQUE	1					
41	E3110122	WASHER;SPRING	RONDELLE ELASTIQUE	4					
42	E0501846	BOLT;SOCKET	BOULON A 6PANS	4					
43	00U211-0	BOLT;U	BOULON DE U	1					
44	E3110112	WASHER;SPRING	RONDELLE ELASTIQUE M12	2					
45	E2021042	NUT;HEX.	ECROU	2					
46	53A881-0	PIPE ASS'Y-R	ENSEMBLE DE ATTACHE	1					
47	E6300881	O-RING	JONT TORIQUE	1					
48	E3110122	WASHER;SPRING	RONDELLE ELASTIQUE	4					
49	E0501846	BOLT;SOCKET	BOULON A 6PANS	4					
50	00U211-0	BOLT;U	BOULON DE U	2					
51	E3110112	WASHER;SPRING	RONDELLE ELASTIQUE M12	4					
52	E2021042	NUT;HEX.	ECROU	4					
53	E8841022	NIPPLE;GREASE	GRAISSEUR	2					
*	440-00015AKT	SEAL KIT;ARM CYL.	KIT D'ETANCHEITE	1					

DATE	DEC. 15, 2006
REV. NO.	EXB06-13

Fig. 4420 BUCKET CYLINDER-HEAVY DUTY VERIN DE GODET

Serial No. ;

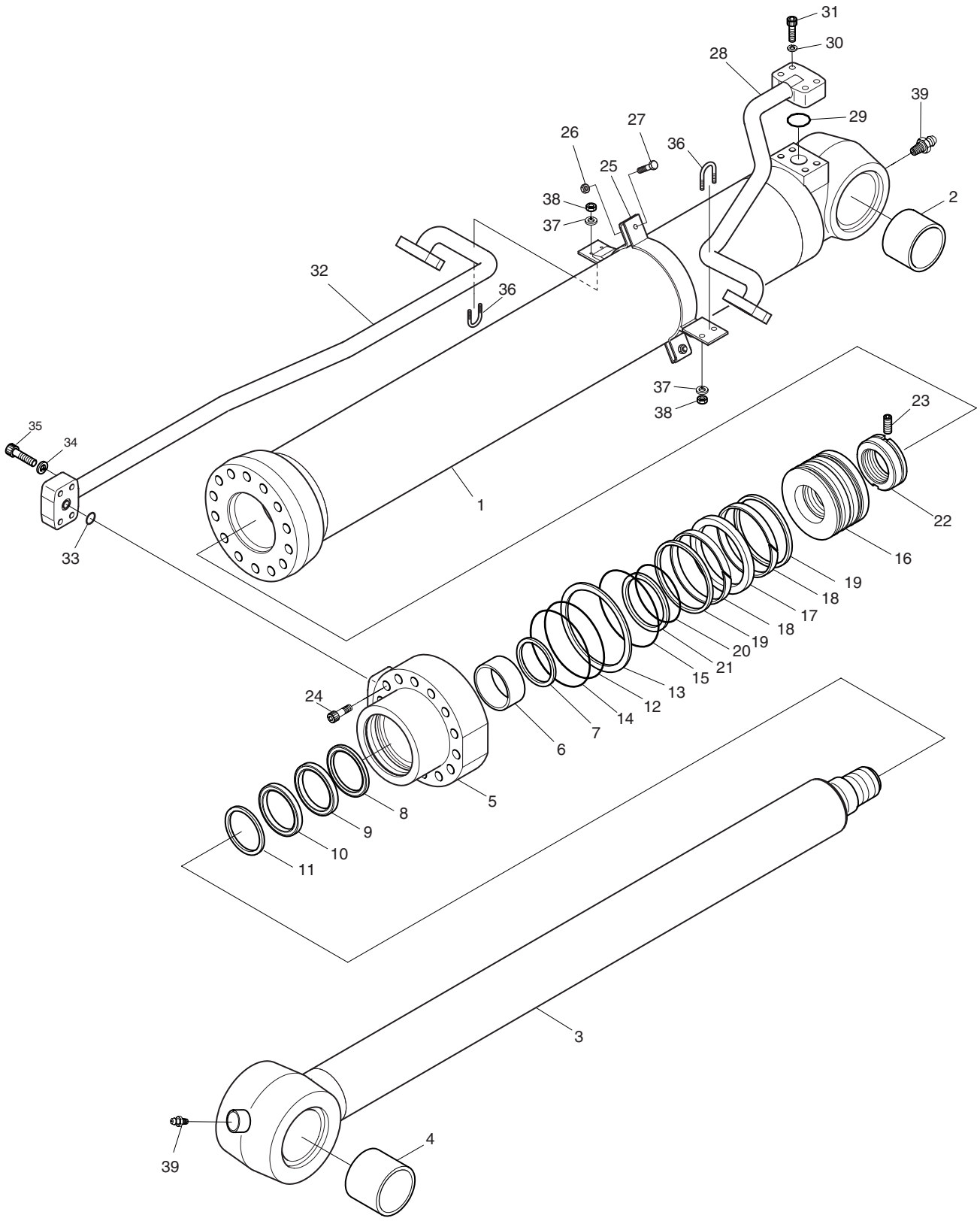

DATE	DEC. 15, 2006
REV. NO.	EXB06-13

Fig. 4420 BUCKET CYLINDER-HEAVY DUTY VERIN DE GODET

Serial No. ;

Key No.	Part No.	Description	Description	Q'ty	S.C	Serial No.	ICA	Replaceable part	
								Part No.	Q'ty
4420--	K1008815	BUCKET CYLINDER-HEAVY DUTY	VERIN DE GODET	1		1001–1702	I	K1008815A	1
	K1008815A	**BUCKET CYLINDER-HEAVY**	VERIN DE GODET	1		**1703–**			
1	53U740-0	TUBE ASS'Y	CONDUITE	1					
2	03B685-2	BUSH	DOUILLE	1					
3	53U516-5	ROD ASS'Y	TIGE	1		1001–1702			
	53U516-6	**ROD ASS'Y**	TIGE	1		**1703–**			
4	03B685-2	BUSH	DOUILLE	1					
5	53U541-2	COVER;ROD	COUVERCLE DE TIGE	1					
6	E8412227	BUSH;DU	DOUILLE DU	1					
7	00M574-0	RING;RETAINING	BAGUE CIRCLIPS	1					
8	E5500350	SEAL;BUFFER	ETANCHEITE A GRADINS	1	K				
9	E5303590	PACKING;U	JOINT EN U	1	K				
10	E6020350	WIPER;DUST	PARE-POUSSIERE	1	K				
11	00M799-0	RING;RETAINING	BAGUE CIRCLIPS	1					
12	E6311841	O-RING	JOINT TORIQUE	1	K				
13	04B438-1	RING;BACK-UP	BAGUE DE SOUTIEN	1	K				
14	E6490091	O-RING	JOINT TORIQUE	1	K				
15	00C376-0	RING;CUSHION	BAGUE DE SOUTIEN	1					
16	53A518-0	PISTON	PISTON	1					
17	E5130380	SEAL;SLIPPER	PATIN D'ETANCHEITE	1	K				
18	00Z113-0	RING;WEAR	SEGMENT D'USURE	2	K				
19	00R105-0	RING;SLYD	BAGUE DE SOUTIEN	2	K				
20	E6311481	O-RING	JOINT TORIQUE	1	K				
21	53A429-1	RING;BACK-UP	BAGUE DE SOUTIEN	2	K				
22	81A537-0	NUT;PISTON	ECROU	1		1001–1702			
	55A371-0	**NUT;PISTON**	ECROU	1		**1703–**			
23	E1330544	SCREW;SET	VIS	1					
24	E0502709	BOLT;SOCKET	BOULON A 6 PANS CREUX	14					
25	53U700-0	PIPE BAND ASS'Y-R	ENSEMBLE DE ATTACHE	1					
26	E3110112	WASHER;SPRING	RONDELLE ELASTIQUE	2					
27	E0020973	BOLT;HEX.	BOULON A 6 PANS	2					
28	53U703-0	PIPE ASS'Y-H	CONDUITE	1					
29	E6300881	O-RING	JOINT TORIQUE	1					
30	E3110122	WASHER;SPRING	RONDELLE ELASTIQUE	4					
31	E0501846	BOLT;SOCKET	BOULON A 6 PANS CREUX	4					
32	53U704-0	PIPE ASS'Y-R	CONDUITE	1					
33	E6300881	O-RING	JOINT TORIQUE	1					
34	E3110122	WASHER;SPRING	RONDELLE ELASTIQUE	4					

DATE	DEC. 15, 2006
REV. NO.	EXB06-13

Fig. 4420 BUCKET CYLINDER-HEAVY DUTY VERIN DE GODET

Serial No. ;

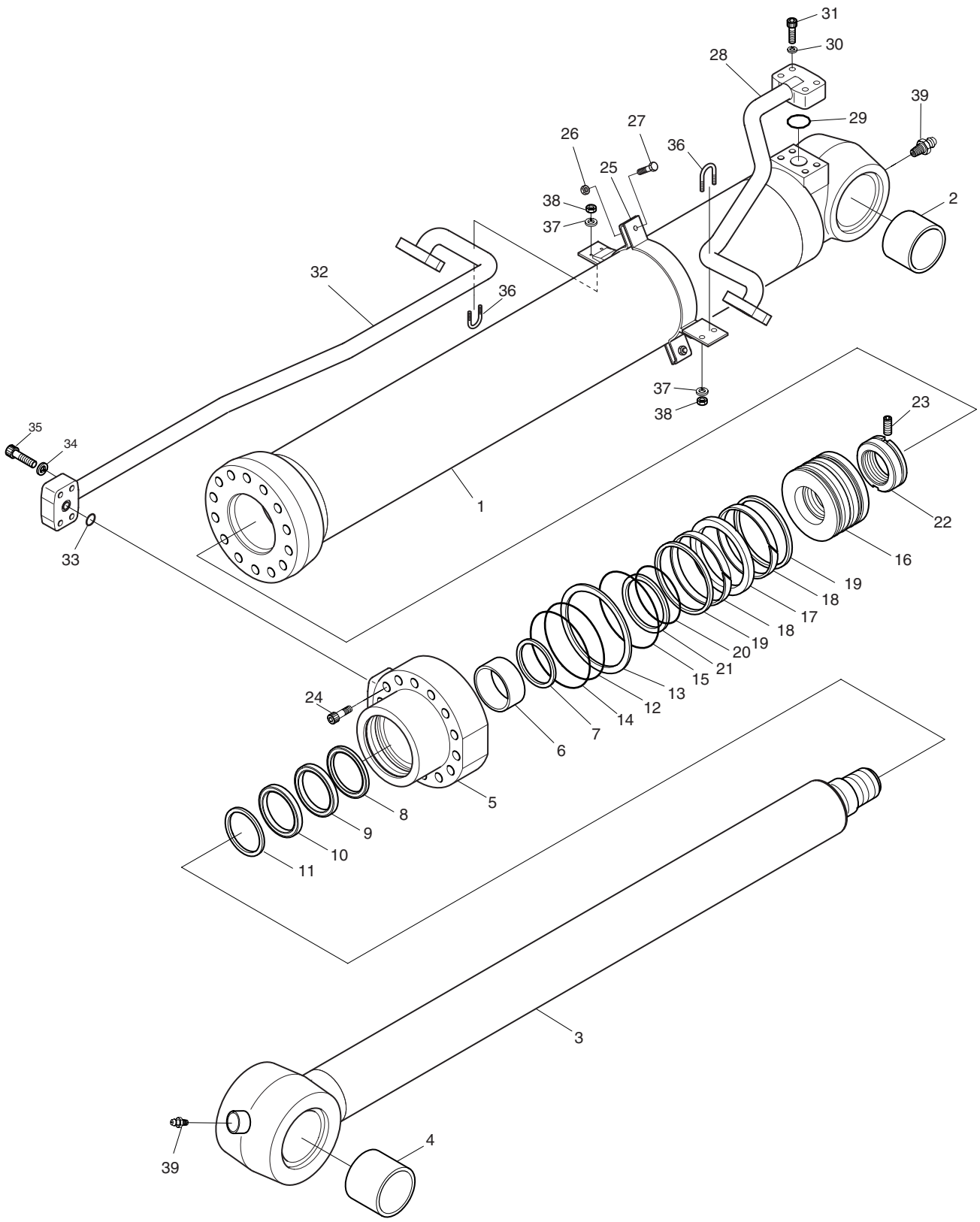

DATE	DEC. 15, 2006
REV. NO.	EXB06-13

Fig. 4420 BUCKET CYLINDER-HEAVY DUTY VERIN DE GODET

Serial No. ;

Key No.	Part No.	Description	Description	Q'ty	S.C	Serial No.	ICA	Replaceable part	
								Part No.	Q'ty
4420-35	E0501846	BOLT;SOCKET	BOULON A 6 PANS CREUX	4					
36	00U211-0	BOLT;U	BOULON	2					
37	E3110112	WASHER;SPRING	RONDELLE ELASTIQUE	4					
38	E2021042	NUT;HEX.	ECROU 6 PANS	4					
39	E8841022	NIPPLE;GREASE	GRAISSEUR	2					
*	440-00013AKT	SEAL KIT	KIT D'ETANCHEITE	1					

DATE	JUN. 30, 2005
REV. NO.	EXB05-05

Fig. 5100 TOOLS OUTILLAGE

Serial No. ;

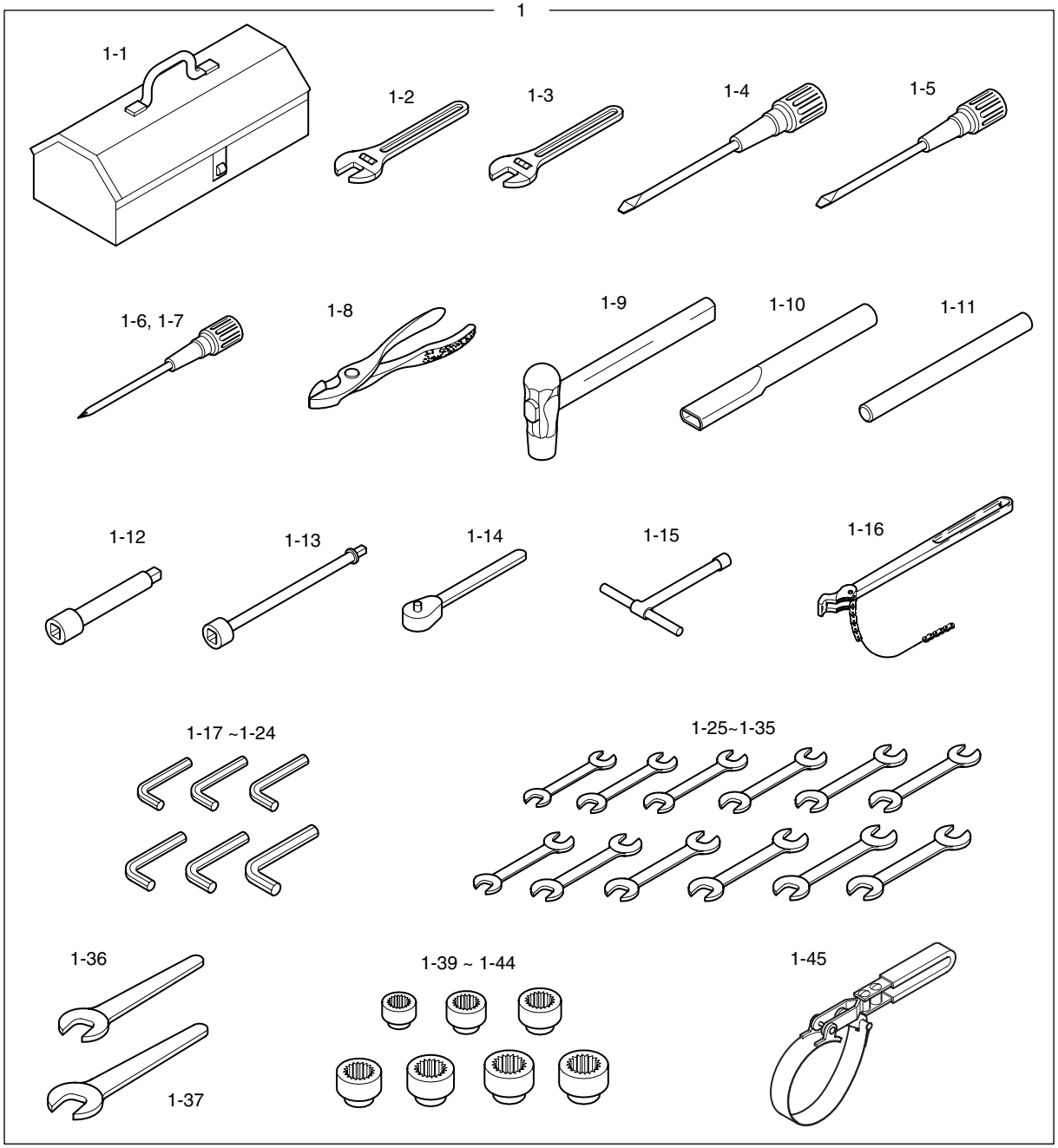

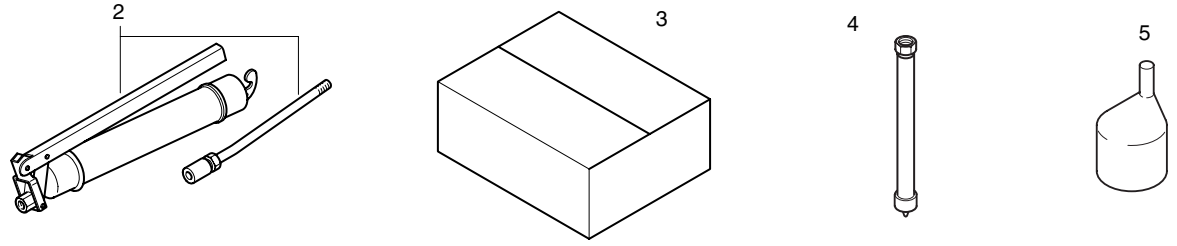

DATE	JUN. 30, 2005
REV. NO.	EXB05-05

Fig. 5100 TOOLS OUTILLAGE

Serial No ;

Key No.	Part No.	Description	Description	Q'ty	S.C	Serial No.	ICA	Replaceable part	
								Part No.	Q'ty
5100--	199-00102	TOOL	OUTILLAGE	-	D				
1	2199-1063F31	TOOL ASS'Y	OUTILLAGE	1					
1-1	2199-9043	. BOX;TOOL	. BOITE	1					
1-2	T6580008	. WRENCH;ADJUST	. CLE A MOLETTE	1					
1-3	T6580020	. WRENCH;ADJUST	. CLE A MOLETTE	1					
1-4	T7050003	. DRIVER(-) 6X100	. TOURNEVIS(-)	1					
1-5	T7050013	. DRIVER(-) 8X150	. TOURNEVIS(-)	1					
1-6	T7050021	. DRIVER(+) 6X100	. TOURNEVIS(-)	1					
1-7	T7050022	. DRIVER(+) 8X150	. TOURNEVIS(+)	1					
1-8	T7500004	. PLIER;COMBI 8'	. PINCE	1					
1-9	T7260057	. HAMMER 2 L/B	. MARTEAU	1					
1-10	2199-1004	. BAR	. BARRE	1					
1-11	2199-1005	. PIPE	. CONDUITE	1					
1-12	T6690012	. BAR;EXTENSION 5"	. RALLONGE	1					
1-13	T6690013	. BAR;EXTENSION 10"	. RALLONGE	1					
1-14	T6750003	. HANDLE;RATCHET	. POIGNEE A CLIQUET	1					
1-15	2199-9009	. CLIP;DRIVER 13	. TOURNEVIS	1					
1-16	2199-9057	. WRENCH;FILTER	. CLE A MOLETTE	1					
1-17	T6550005	. L-WRENCH 4	. CLE MALE	1					
1-18	T6550006	. L-WRENCH 5	. CLE MALE	1					
1-19	T6550007	. L-WRENCH 6	. CLE MALE	1					
1-20	T6550009	. L-WRENCH 8	. CLE MALE	1					
1-21	T6550011	. L-WRENCH 10	. CLE 6 PANS MALE	1					
1-22	T6550013	. L-WRENCH 12	. CEL 6 PANS MALE	1					
1-23	T6550015	. L-WRENCH 14	. CLE MALE	1					
1-24	T6550018	. L-WRENCH 17	. CLE MALE	1					
1-25	T6510062	. SPANNER 8X10	. CLE PLATE	1					
1-26	T6510066	. SPANNER 10X13	. CLE PLATE	1					
1-27	T6510070	. SPANNER 13X17	. CLE PLATE	1					
1-28	T6510072	. SPANNER 17X19	. CLE PLATE	1					
1-29	T6510075	. SPANNER 19X22	. CLE PLATE	1					
1-30	T6510081	. SPANNER 24X27	. CLE PLATE	1					
1-31	T6510085	. SPANNER 27X30	. CLE PLATE	1					
1-32	T6510087	. SPANNER 30X32	. CLE PLATE	1					
1-33	T6510089	. SPANNER 32X36	. CLE PLATE	1					
1-34	T6510091	. SPANNER 36X41	. CLE PLATE	1					
1-35	T6510092	. SPANNER 41X46	. CLE PLATE	1					
1-36	T6510018	. SPANNER 24	. CLE PLATE	1					

DATE	JUN. 30, 2005
REV. NO.	EXB05-05

Fig. 5100 TOOLS OUTILLAGE

Serial No. ;

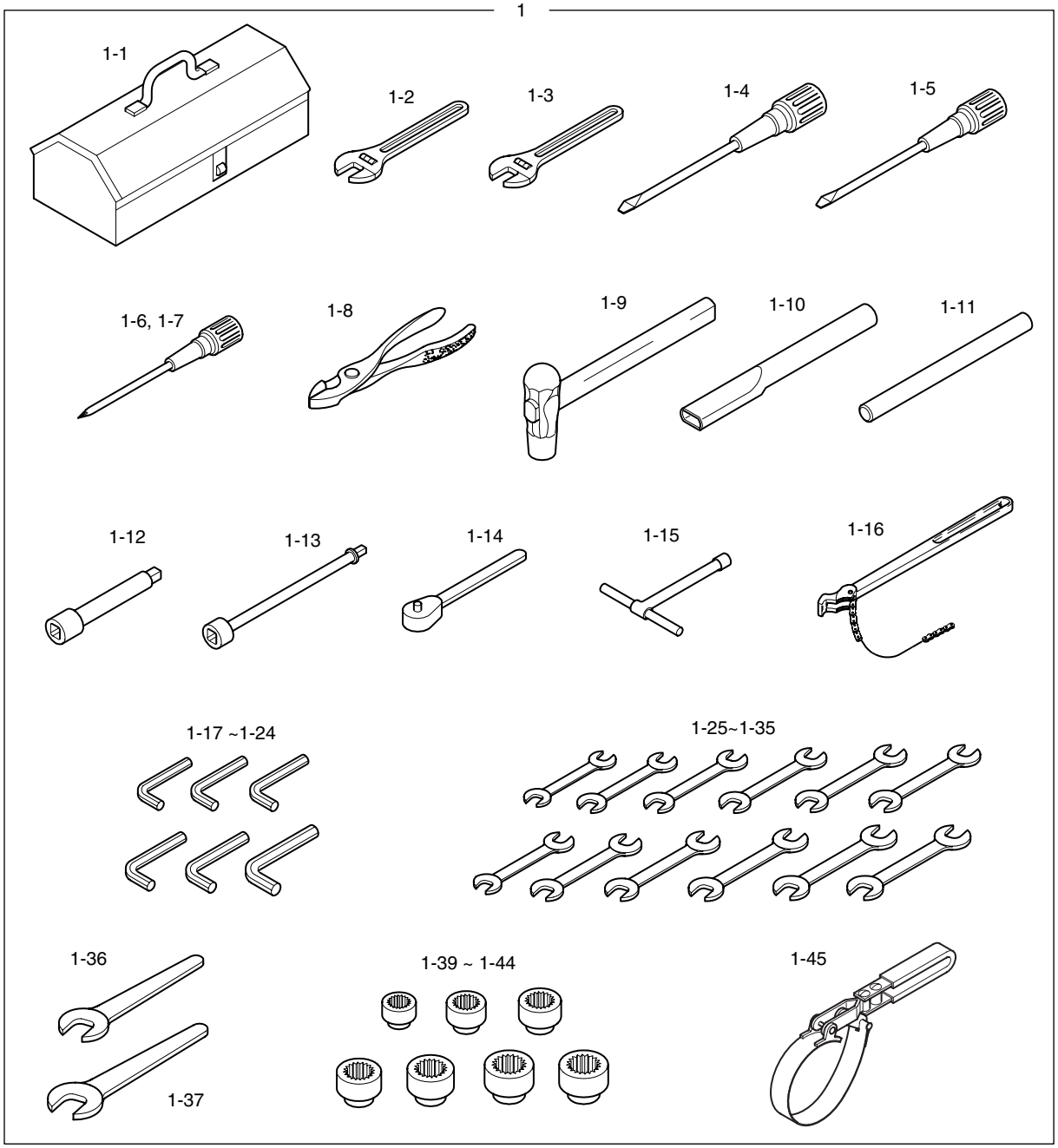

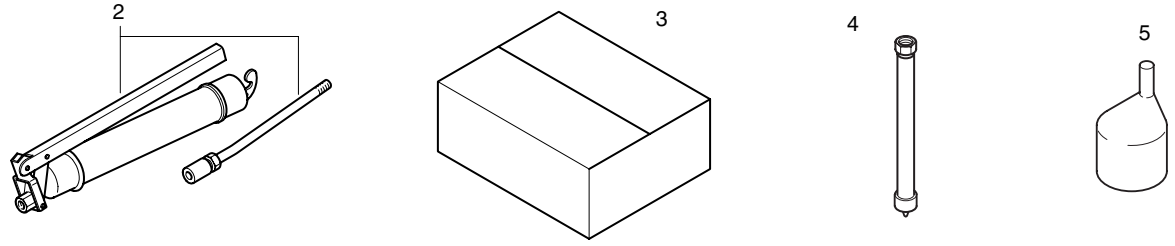

DATE	JUN. 30, 2005
REV. NO.	EXB05-05

Fig. 5100 TOOLS OUTILLAGE

Serial No ;

Key No.	Part No.	Description	Description	Q'ty	S.C	Serial No.	ICA	Replaceable part	
								Part No.	Q'ty
5100-1-37	T6510027	. SPANNER 41	. CLE PLATE	1					
1-38	T6600183	. SOCKET 10	. CLE A DOUILLE	1					
1-39	T6600189	. SOCKET 13	. CLE A DOUILLE	1					
1-40	T6600197	. SOCKET 17	. CLE A DOUILLE	1					
1-41	T6600201	. SOCKET 19	. CLE A DOUILLE	1					
1-42	T6600211	. SOCKET 24	. CLE A DOUILLE	1					
1-43	T6600223	. SOCKET 30	. CLE A DOUILLE	1					
1-44	T6600227	. SOCKET 32	. CLE A DOUILLE	1					
1-45	199-00126	. WRENCH;FILTER	. CLE A MOLETTE	1					
2	2199-9008	GUN;GREASE	PISTOLET DE GRAISSAGE	1					
3	2199-9007	BOX	BOITE	1					
4	184-00085	HOSE;OIL CHANGE	TUYAU	1		1001–1549	I	184-00120	1
	184-00120	**HOSE;OIL CHANGE**	TUYAU	1		**1550–**			
5	2199-9056	FUNNEL	ENTONNOIR	1					

DATE	JUN. 30, 2007
REV. NO.	EXB07-06

Fig. 5110 SPARE PARTS PIECES DE RECHANGE

Serial No. ;

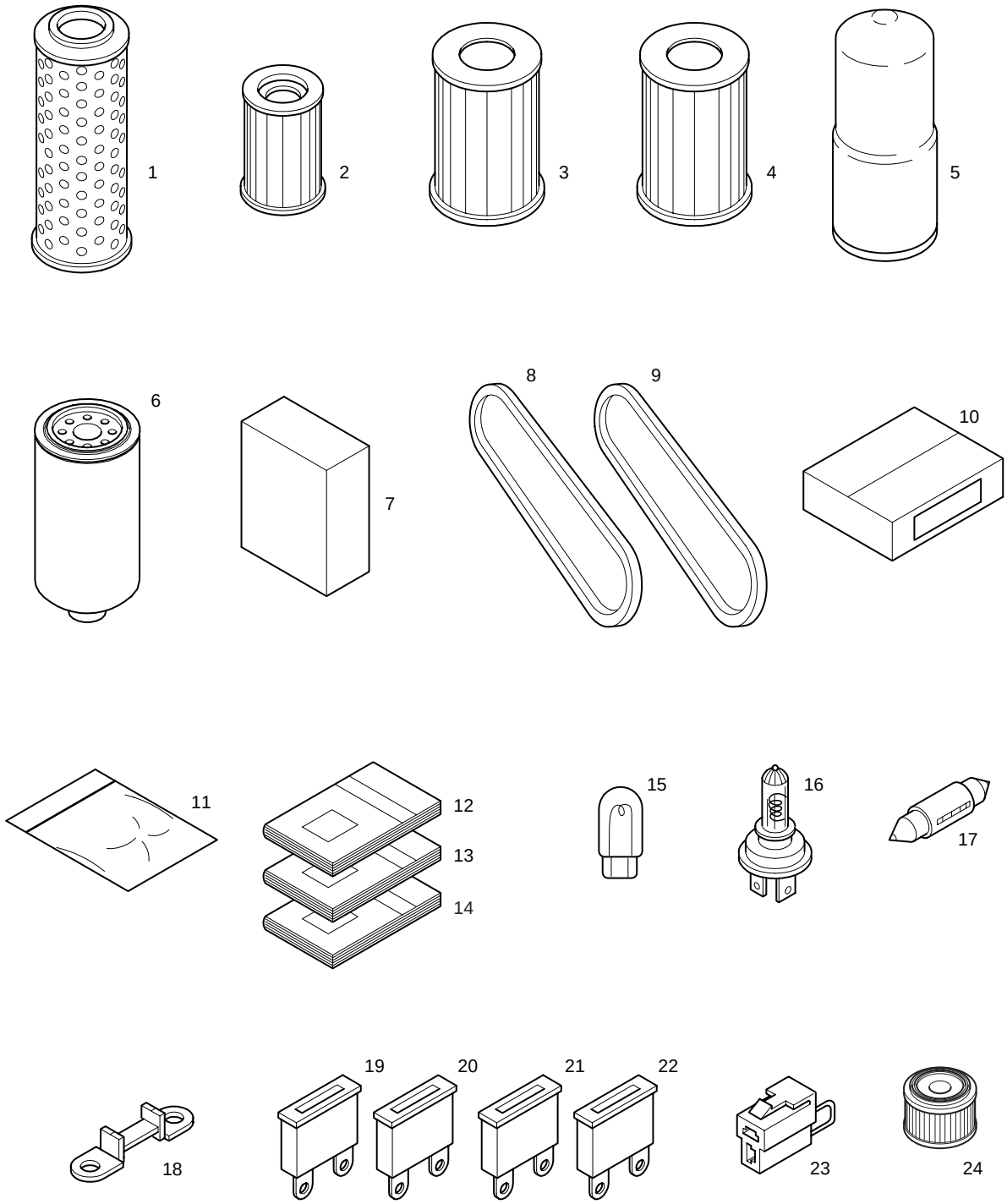

DATE	JUN. 30, 2007
REV. NO.	EXB07-06

Fig. 5110 SPARE PARTS PIECES DE RECHANGE

Serial No. ;

Key No.	Part No.	Description	Description	Q'ty	S.C	Serial No.	ICA	Replaceable part	
								Part No.	Q'ty
5110--	918-00126	SPARE PARTS	PIECES DE RECHANGE	-	D				
1	2471-9051B	ELEMENT;FILTER	FILTRE	2					
2	2471-1154	FILTER;PILOT	ELEMENT FILTRANT	1					
3	2474-9051	ELEMENT(OUTER);AIR CLEANER	ELEMENT FILTRANT	1					
4	2474-9057	ELEMENT(INNER);AIR CLEANER	FILTRE	1					
5	471-00086	CARTRIDGE;E/G OIL FILTER	CARTRIDGE	1					
6	2474-9060A	FILTER;ENGINE FUEL	ELEMENT FILTRANT	1					
7	910-00019	OIL;ENGINE	HUILE MOTEUR	6					
8	2106-1019D12	VELT;ALTERNATOR	COURROIE	1					
9	2106-1019D2	V-BELT 4PK 1470L	JOINT	1					
10	2512-1095D1	BOX;SPARE PARTS	BOITE DE PIECES DE	1					
11	2180-9153	O-RING KIT	KIT DE REPARATION	1					
12	021-00046EF	PARTS BOOK	MANUEL DE PIECES DE	1					
13	022-00022E	MANUAL;OPERATION	MANUEL D'UTILISATION	1					
14	023-00047E	MANUAL;SERVICE	MANUEL D'ENTRETIEN	1					
15	S862203H	BULB	LAMPE	2					
16	2515-1022D1	BULB;HALOGEN	AMPOULE	1					
17	2515-1016D4	BULB	LAMPE	1					
18	527-00005	FUSE;LINK	FUSIBLE(127A)	2					
19	2527-1016	FUSE;BLADE	FUSIBLE	2					
20	2527-1017	FUSE;BLADE	FUSIBLE	2					
21	2527-1018	FUSE;BLADE	FUSIBLE	1					
22	2527-1025	FUSE;BLADE	FUSIBLE	1					
23	2527-1023A	FUSIBLE LINK	FUSIBLE	1					
24	**K1029257**	**ELEMENT;AIR BREATHER**	ELEMENT	1		**1920–**			

DATE	JUN. 30, 2007
REV. NO.	EXB07-06

Fig. 5120 NAME PLATE-EUROPE
PLAQUE D'IDENTIFICATION

Serial No. ;

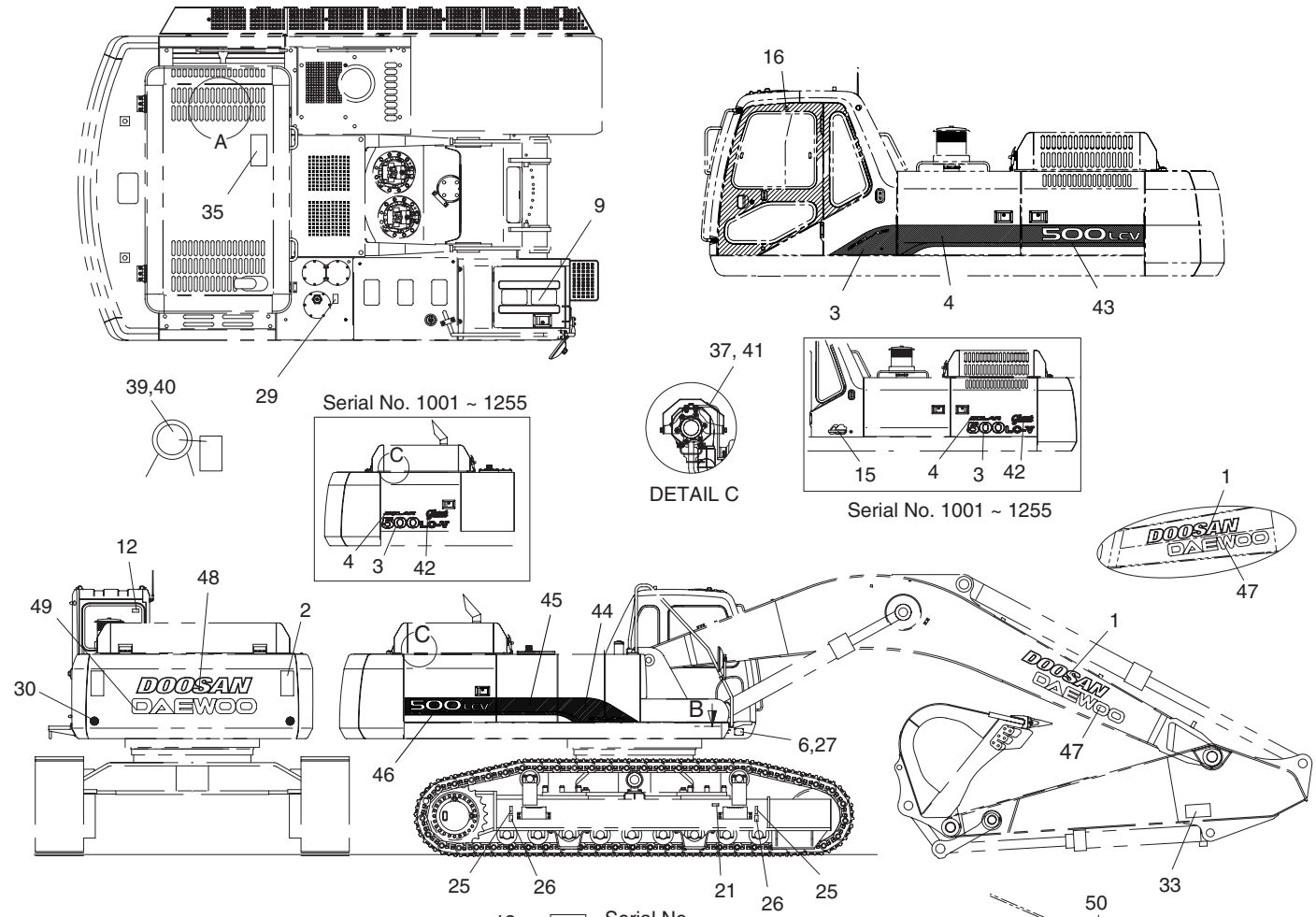

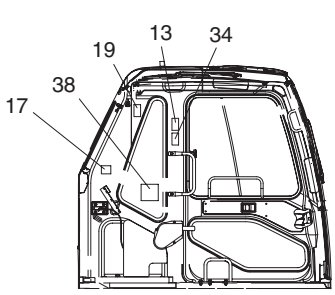

LEFT SIDE VIEW OF CABIN INSIDE

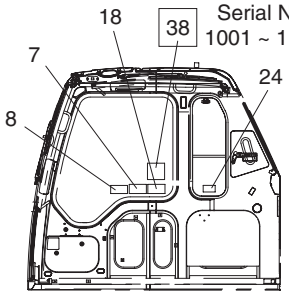

RIGHT SIDE VIEW OF CABIN INSIDE

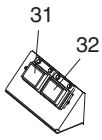

FUSE BOX COVER

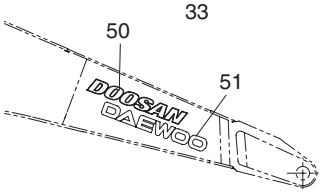

6.3m SHORT BOOM

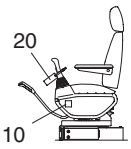

LEFT CONTROL STAND

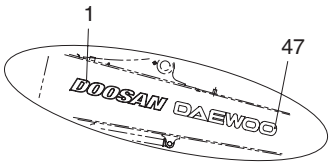

9.0m LONG BOOM

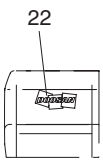

FRONT VIEW OF BATTERY COVER

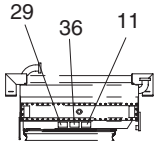

DETAIL A

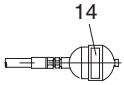

ACCUMULATOR

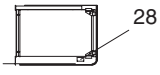

SECTION B



DETAIL OF INSIDE FOR BATTERY DOOR

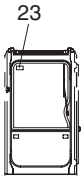

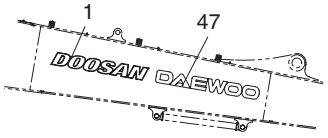

11.0m SUPER LONG BOOM

DATE	JUN. 30, 2007
REV. NO.	EXB07-06

Fig. 5120 NAME PLATE-EUROPE PLAQUE D'IDENTIFICATION

Serial No. ;

Key No.	Part No.	Description	Description	Q'ty	S.C	Serial No.	ICA	Replaceable part	
								Part No.	Q'ty
5120--	190-00831A	NAME PLATE ASS'Y	PLAQUE D'IDENTIFICATION	-	D				
1	K1011645D12	PLATE;NAME(DOOSAN)	PLAQUE D'IDENTIFICATION	2					
2	190-00090	PLATE;NAME	PLAQUE D'IDENTIFICATION	2					
3	190-00829	PLATE;NAME(500LC-V)	PLAQUE D'IDENTIFICATION	2		1001–1255			
	190-00851	PLATE;NAME	PLAQUE D'IDENTIFICATION	1		1256–			
4	2190-3332	PLATE;NAME(SOLAR)	PLAQUE D'IDENTIFICATION	2		1001–1255			
	190-00856	PLATE;NAME	PLAQUE D'IDENTIFICATION	1		1256–			
5	190-00671	PLATE;NAME	PLAQUE D'IDENTIFICATION	1					
6	2122-1002D2	RIVET	RIVET	4					
7	190-00092	PLATE;NAME	PLAQUE D'IDENTIFICATION	1					
8	2190-3297	PLATE;NAME(JOYSTICK)	PLAQUE D'IDENTIFICATION	1					
9	2190-2314D3	TAPE;ANTI-SKID	PLAQUE D'IDENTIFICATION	6					
10	2190-3309	PLATE;NAME(LEVER LOCK)	PLAQUE D'IDENTIFICATION	1					
11	190-00095	PLATE;NAME(FAN)	PLAQUE D'IDENTIFICATION	1					
12	190-00101	PLATE;NAME(HAMMER)	PLAQUE D'IDENTIFICATION	1					
13	190-00521	PLATE;NAME(TRACK ADJUSTER)	PLAQUE D'IDENTIFICATION	1					
14	190-00099	PLATE;NAME(ACCUMULATOR)	PLAQUE D'IDENTIFICATION	1					
15	2190-3239	PLATE;NAME(WORLD 21)	PLAQUE D'IDENTIFICATION	1		1001–1255			
16	2116-9003	PLATE	PLAQUE	1					
17	2190-2524	PLATE;NAME	PLAQUE D'IDENTIFICATION	1					
18	190-00096	PLATE;NAME(ELEC. LINE)	PLAQUE D'IDENTIFICATION	1					
19	190-00093	PLATE;NAME(SLIDE WINDOW)	PLAQUE D'IDENTIFICATION	1					
20	190-00098	PLATE;NAME	PLAQUE D'IDENTIFICATION	1					
21	190-00122	PLATE;NAME(TRACK ADJUSTER)	PLAQUE D'IDENTIFICATION	2					
22	K1011648	PLATE;NAME	PLAQUE D'IDENTIFICATION	1					
23	190-00315	PLATE;NAME(WIPER MOTOR)	PLAQUE D'IDENTIFICATION	1					
24	190-00102	PLATE;NAME	PLAQUE D'IDENTIFICATION	1					
25	2190-2476	PLATE;NAME(TIE DOWN)	PLAQUE D'IDENTIFICATION	4					
26	2190-2477	PLATE;NAME(LIFTING)	PLAQUE D'IDENTIFICATION	4					
27	K1012204	PLATE;NAME	PLAQUE D'IDENTIFICATION	1					
28	190-00100	PLATE;NAME(BATTERY)	PLAQUE D'IDENTIFICATION	1					
29	190-00097	PLATE;NAME(HOT WATER)	PLAQUE D'IDENTIFICATION	2					
30	190-00647	PLATE;NAME	PLAQUE D'IDENTIFICATION	2					
31	2190-3244D11	PLATE;NAME	PLAQUE D'IDENTIFICATION	1					
32	2190-3244D12	PLATE;NAME	PLAQUE D'IDENTIFICATION	1					
33	190-00652	PLATE;NAME	PLAQUE D'IDENTIFICATION	2					
34	190-00094	PLATE;NAME(CAUTION)	PLAQUE D'IDENTIFICATION	1					
35	190-00522	PLATE;NAME	PLAQUE D'IDENTIFICATION	1		1001–1872	I	190-00522A	1

DATE	JUN. 30, 2007
REV. NO.	EXB07-06

Fig. 5120 NAME PLATE-EUROPE
PLAQUE D'IDENTIFICATION

Serial No. ;

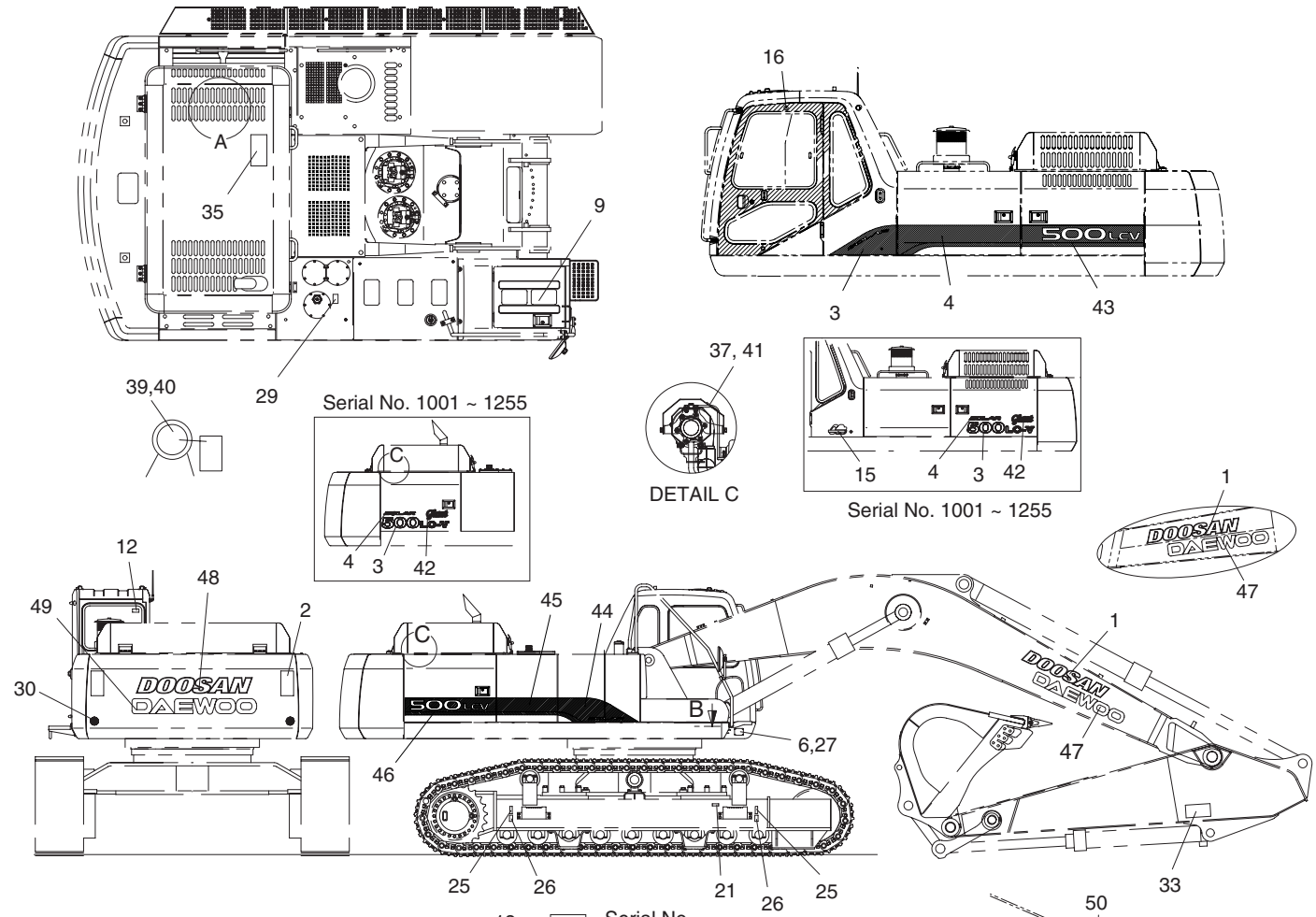

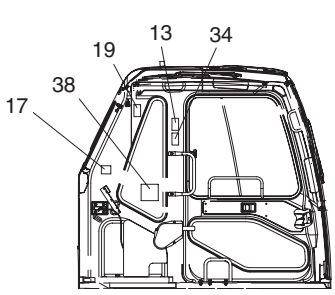

LEFT SIDE VIEW OF CABIN INSIDE

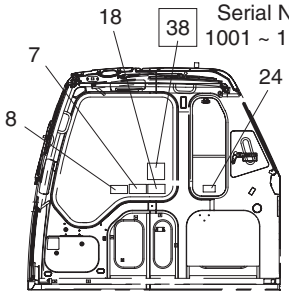

RIGHT SIDE VIEW OF CABIN INSIDE

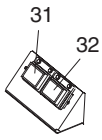

FUSE BOX COVER

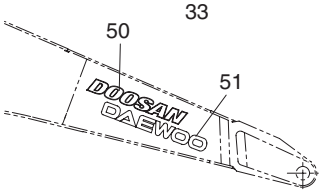

6.3m SHORT BOOM

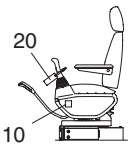

LEFT CONTROL STAND

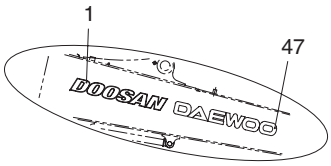

9.0m LONG BOOM

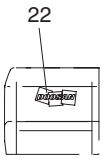

FRONT VIEW OF BATTERY COVER

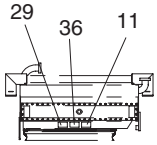

DETAIL A

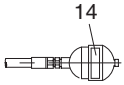

ACCUMULATOR

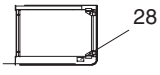

SECTION B



DETAIL OF INSIDE FOR BATTERY DOOR

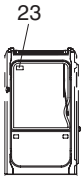

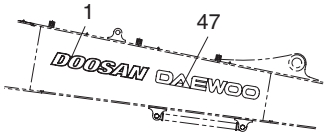

11.0m SUPER LONG BOOM

DATE	JUN. 30, 2007
REV. NO.	EXB07-06

Fig. 5120 NAME PLATE-EUROPE PLAQUE D'IDENTIFICATION

Serial No. ;

Key No.	Part No.	Description	Description	Q'ty	S.C	Serial No.	ICA	Replaceable part	
								Part No.	Q'ty
5120-35	**190-00522A**	**PLATE;NAME**	PLAQUE D'IDENTIFICATION	1		**1873–**			
36	190-00557	PLATE;NAME	PLAQUE D'IDENTIFICATION	1					
37	190-00648A	PLATE;NAME	PLAQUE D'IDENTIFICATION	1					
38	190-00730D19	PLATE;NAME	PLAQUE D'IDENTIFICATION	1		1001–1082			
	190-00730D20	PLATE;NAME	PLAQUE D'IDENTIFICATION	1		1083–1113			
	190-01059D20	PLATE;NAME	PLAQUE D'IDENTIFICATION	1		1114–			
39	190-00509AD20	PLATE;NAME	PLAQUE D'IDENTIFICATION	1					
40	2124-1622D1	CLIP;BAND	ATTACHE	1					
41	2122-1002D4	RIVET	RIVET	4					
42	190-00909	PLATE;NAME(GIANT)	PLAQUE D'IDENTIFICATION	2		1001–1255			
43	190-01268	PLATE;NAME	PLAQUE D'IDENTIFICATION	1		1256–			
44	190-00872	PLATE;NAME	PLAQUE D'IDENTIFICATION	1		1256–			
45	190-00873	PLATE;NAME	PLAQUE D'IDENTIFICATION	1		1256–			
46	190-01269	PLATE;NAME	PLAQUE D'IDENTIFICATION	1		1256–			
47	K1012470D1	PLATE;NAME(DAEWOO)	PLAQUE D'IDENTIFICATION	2					
48	K1011645D2	PLATE;NAME(DOOSAN)	PLAQUE D'IDENTIFICATION	1					
49	K1012470D3	PLATE;NAME(DAEWOO)	PLAQUE D'IDENTIFICATION	1					
50	K1011645D5	PLATE;NAME(DOOSAN)	PLAQUE D'IDENTIFICATION	2					
51	K1012470D11	PLATE;NAME(DAEWOO)	PLAQUE D'IDENTIFICATION	2					

DATE	JUN. 30, 2007
REV. NO.	EXB07-06

Fig. 5130 NAME PLATE-ENGLISH PLAQUE D'IDENTIFICATION

Serial No. ;

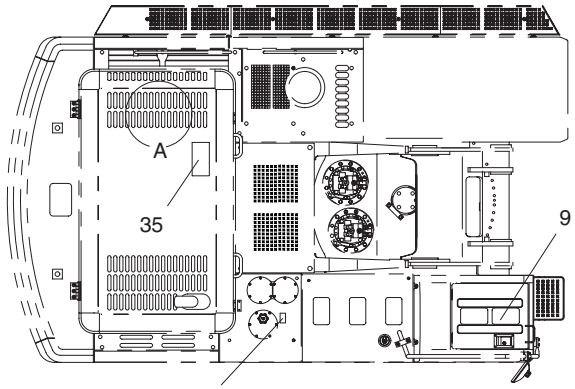

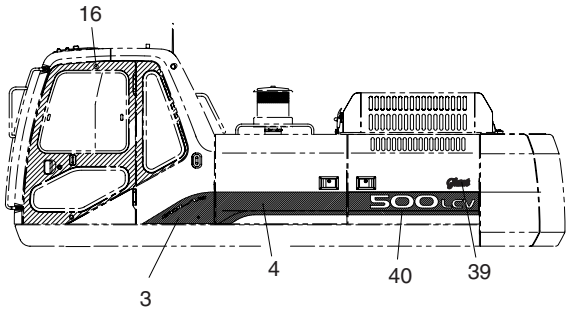

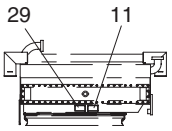

DETAIL A

Serial No. 1001 ~ 1255

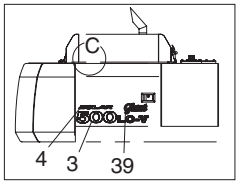

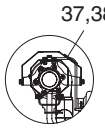

DETAIL C

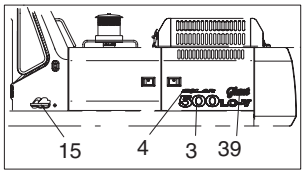

Serial No. 1001 ~ 1255

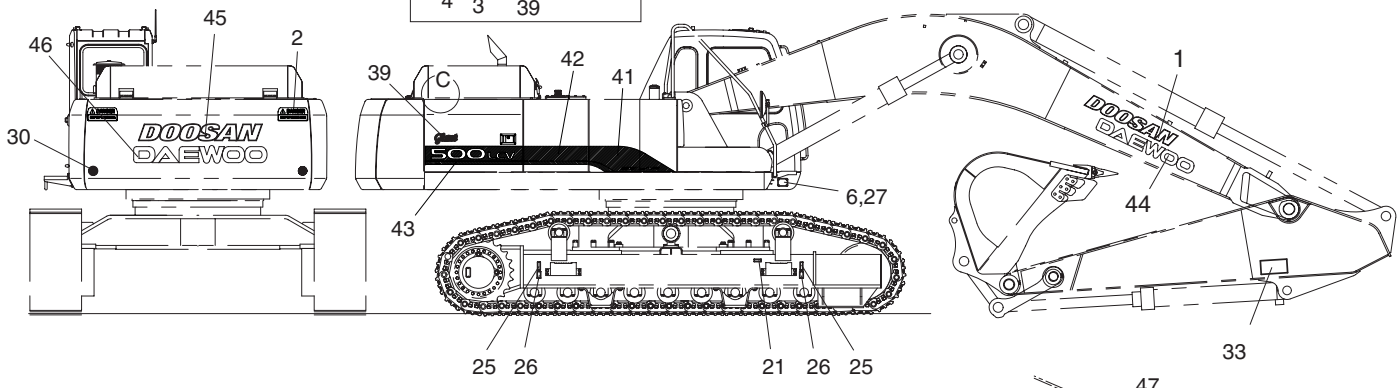

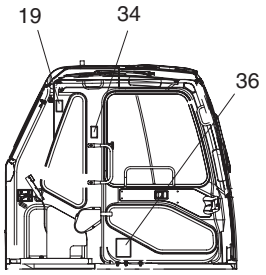

LEFT SIDE VIEW OF CABIN INSIDE

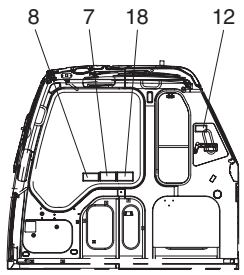

RIGHT SIDE VIEW OF CABIN INSIDE

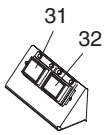

FUSE BOX COVER

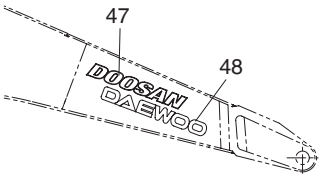

6.3m SHORT BOOM

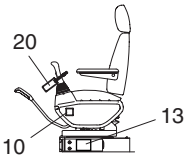

LEFT CONTROL STAND

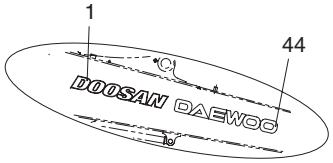

9.0m LONG BOOM

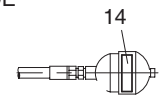

ACCUMULATOR



FRONT VIEW OF BATTERY COVER

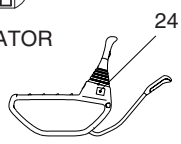

RIGHT SIDE VIEW OF LEFT CONTROL STNAD

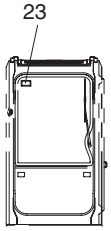

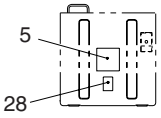

DETAIL OF INSIDE FOR BATTERY DOOR

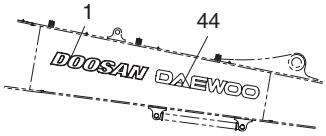

11.0m SUPER LONG BOOM

DATE	JUN. 30, 2007
REV. NO.	EXB07-06

Fig. 5130 NAME PLATE-ENGLISH PLAQUE D'IDENTIFICATION

Serial No. ;

Key No.	Part No.	Description	Description	Q'ty	S.C	Serial No.	ICA	Replaceable part	
								Part No.	Q'ty
5130--	190-00913A	NAME PLATE-EXPORT	PLAQUE D'IDENTIFICATION	-	D				
1	K1011645D12	PLATE;NAME(DOOSAN)	PLAQUE D'IDENTIFICATION	2					
2	2190-3379	PLATE;NAME	PLAQUE D'IDENTIFICATION	2		1001–1350	I	2190-3379A	2
	2190-3379A	PLATE;NAME	PLAQUE D'IDENTIFICATION	2		1351–			
3	190-00829	PLATE;NAME(500LC-V)	PLAQUE D'IDENTIFICATION	2		1001–1255			
	190-00851	PLATE;NAME	PLAQUE D'IDENTIFICATION	1		1256–			
4	2190-3332	PLATE;NAME(SOLAR)	PLAQUE D'IDENTIFICATION	2		1001–1255			
	190-00856	PLATE;NAME	PLAQUE D'IDENTIFICATION	1		1256–			
5	190-00799	PLATE;NAME	PLAQUE D'IDENTIFICATION	1		1001–1919	I	190-00799A	1
	190-00799A	**PLATE;NAME**	PLAQUE D'IDENTIFICATION	1		**1920–**			
6	2122-1002D2	RIVET	RIVET	8					
7	190-00688	PLATE;NAME	PLAQUE D'IDENTIFICATION	1					
8	2190-3297	PLATE;NAME	PLAQUE D'IDENTIFICATION	1					
9	2190-2314D3	TAPE;ANTI-SKID	PLAQUE D'IDENTIFICATION	5					
10	2190-3309	PLATE;NAME(LEVER LOCK)	PLAQUE D'IDENTIFICATION	1					
11	190-00694	PLATE;NAME(FAN)	PLAQUE D'IDENTIFICATION	1					
12	2190-2480	PLATE;NAME(HAMMER)	PLAQUE D'IDENTIFICATION	1					
13	2190-3386A	PLATE;NAME(TRACK ADJUSTER)	PLAQUE D'IDENTIFICATION	1					
14	190-00703	PLATE;NAME(ACCMULATOR)	PLAQUE D'IDENTIFICATION	1					
15	2190-3239	PLATE;NAME(WORLD 21)	PLAQUE D'IDENTIFICATION	1		1001–1255			
16	2116-9003	PLATE	PLAQUE	1					
17	190-00691	PLATE;NAME(HOT OIL)	PLAQUE D'IDENTIFICATION	1		1001–1919			
	190-00691A	**PLATE;NAME(HOT OIL)**	PLAQUE D'IDENTIFICATION	1		**1920–**			
18	190-00689	PLATE;NAME(ELEC. LINE)	PLAQUE D'IDENTIFICATION	1					
19	190-00690	PLATE;NAME(SLIDE WINDOW)	PLAQUE D'IDENTIFICATION	1					
20	190-00695	PLATE;NAME	PLAQUE D'IDENTIFICATION	1					
21	190-00122	PLATE;NAME(TRACK SPRING)	PLAQUE D'IDENTIFICATION	2					
22	K1011648	PLATE;NAME	PLAQUE D'IDENTIFICATION	1					
23	2190-3384	PLATE;NAME(WIPER MOTOR)	PLAQUE D'IDENTIFICATION	1					
24	2190-3383	PLATE;NAME(CONTROL STAND)	PLAQUE D'IDENTIFICATION	1					
25	**2190-2476**	**PLATE;NAME(TIE DOWN)**	PLAQUE D'IDENTIFICATION	4		**1001–1919**			
26	2190-2477	PLATE;NAME(LIFTING)	PLAQUE D'IDENTIFICATION	4		1001–1919	I	K1042074	4
	K1042074	**PLATE;NAME(LIFTING)**	PLAQUE D'IDENTIFICATION	4		**1920–**			
27	K1011647A	PLATE;NAME	PLAQUE D'IDENTIFICATION	1					
28	2190-2533A	PLATE;NAME(BATTERY)	PLAQUE D'IDENTIFICATION	1					
29	190-00692	PLATE;NAME(HOT WATER)	PLAQUE D'IDENTIFICATION	1					
30	190-00647	PLATE;NAME(SWING AREA)	PLAQUE D'IDENTIFICATION	2					
31	2190-3244D11	PLATE;NAME(FUSE BOX 1)	PLAQUE D'IDENTIFICATION	1					

DATE	JUN. 30, 2007
REV. NO.	EXB07-06

Fig. 5130 NAME PLATE-ENGLISH PLAQUE D'IDENTIFICATION

Serial No. ;

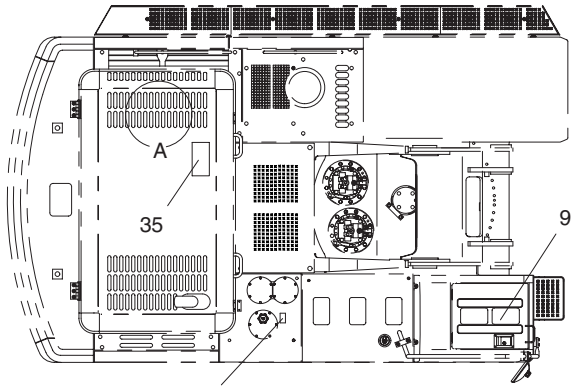

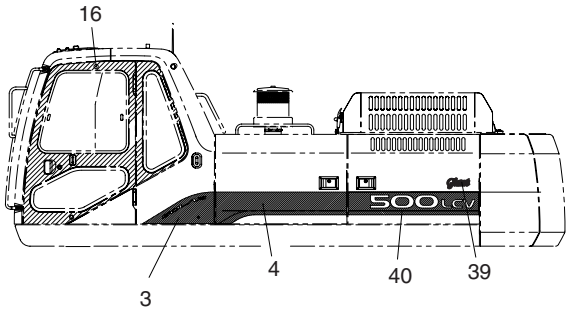

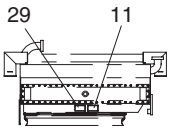

DETAIL A

Serial No. 1001 ~ 1255

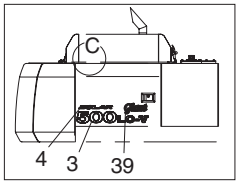

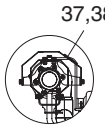

DETAIL C

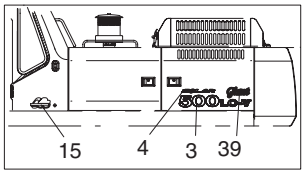

Serial No. 1001 ~ 1255

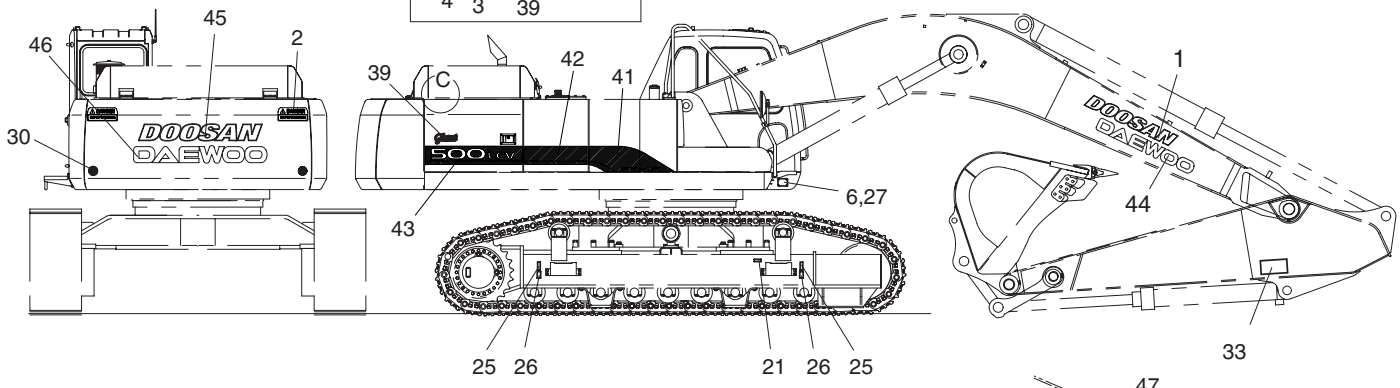

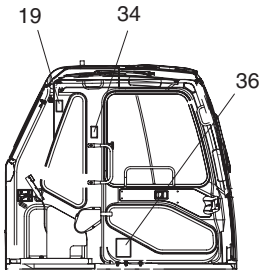

LEFT SIDE VIEW OF CABIN INSIDE

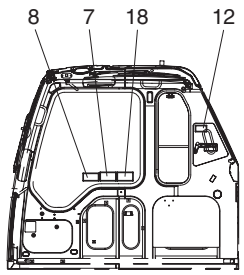

RIGHT SIDE VIEW OF CABIN INSIDE

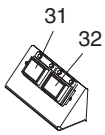

FUSE BOX COVER

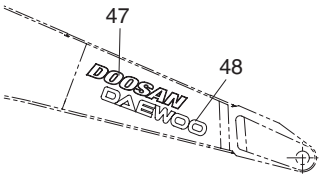

6.3m SHORT BOOM

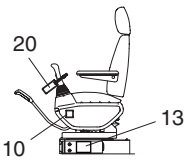

LEFT CONTROL STAND

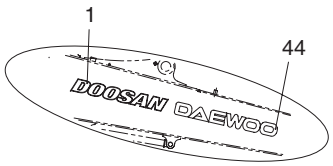

9.0m LONG BOOM

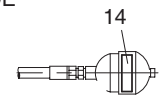

ACCUMULATOR



FRONT VIEW OF BATTERY COVER

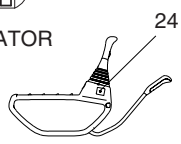

RIGHT SIDE VIEW OF LEFT CONTROL STNAD

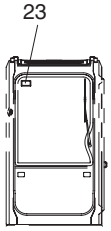

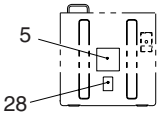

DETAIL OF INSIDE FOR BATTERY DOOR

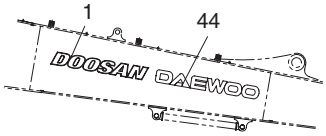

11.0m SUPER LONG BOOM

DATE	JUN. 30, 2007
REV. NO.	EXB07-06

Fig. 5130 NAME PLATE-ENGLISH PLAQUE D'IDENTIFICATION

Serial No. ;

Key No.	Part No.	Description	Description	Q'ty	S.C	Serial No.	ICA	Replaceable part	
								Part No.	Q'ty
5130-32	2190-3244D12	PLATE;NAME(FUSE BOX 2)	PLAQUE D'IDENTIFICATION	1					
33	190-00652	PLATE;NAME	PLAQUE D'IDENTIFICATION	2					
34	190-00693	PLATE;NAME(WARNING)	PLAQUE D'IDENTIFICATION	1					
35	190-00522	PLATE;NAME	PLAQUE D'IDENTIFICATION	1		1001–1872	I	190-00522A	1
	190-00522A	**PLATE;NAME**	PLAQUE D'IDENTIFICATION	1		**1873**–			
36	2190-2556D102	PLATE;NAME(SPEC.)	PLAQUE D'IDENTIFICATION	1					
37	190-00648A	PLATE;NAME	PLAQUE D'IDENTIFICATION	1					
38	2122-1002D4	RIVET	RIVET	4					
39	190-00909	PLATE;NAME(GIANT)	PLAQUE D'IDENTIFICATION	2		1001–1255			
	190-00909A	PLATE;NAME(GIANT)	PLAQUE D'IDENTIFICATION	2		1256–			
40	190-01268	PLATE;NAME	PLAQUE D'IDENTIFICATION	1		1256–			
41	190-00872	PLATE;NAME	PLAQUE D'IDENTIFICATION	1		1256–			
42	190-00873	PLATE;NAME	PLAQUE D'IDENTIFICATION	1		1256–			
43	190-01269	PLATE;NAME	PLAQUE D'IDENTIFICATION	1		1256–			
44	K1012470D1	PLATE;NAME(DAEWOO)	PLAQUE D'IDENTIFICATION	2					
45	K1011645D2	PLATE;NAME(DOOSAN)	PLAQUE D'IDENTIFICATION	1					
46	K1012470D3	PLATE;NAME(DAEWOO)	PLAQUE D'IDENTIFICATION	1					
47	K1011645D5	PLATE;NAME(DOOSAN)	PLAQUE D'IDENTIFICATION	2					
48	K1012470D11	PLATE;NAME(DAEWOO)	PLAQUE D'IDENTIFICATION	2					

DATE	JUL. 30, 2003
REV. NO.	EXB03-13

Fig. 6100 FUEL FILLER PUMP ASS'Y POMPE

Serial No. ;

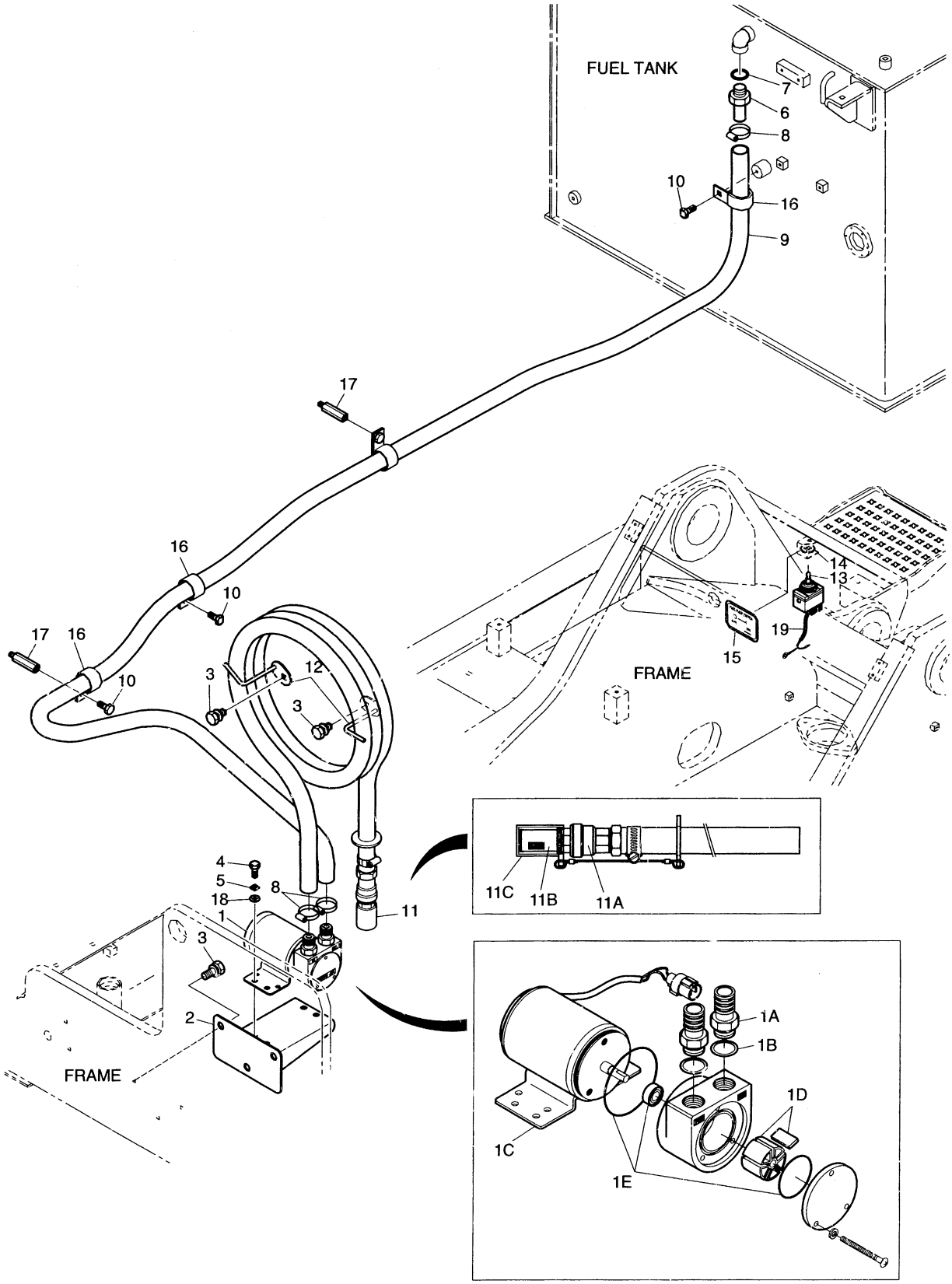

DATE	JUL. 30, 2003
REV. NO.	EXB03-13

Fig. 6100 FUEL FILLER PUMP ASS'Y POMPE

Serial No ;

Key No.	Part No.	Description	Description	Q'ty	S.C	Serial No.	ICA	Replaceable part	
								Part No.	Q'ty
6100--	401-00295	FUEL FILLER PUMP ASS'Y-OPT	POMPE	-	D				
1	401-00238	PUMP;FUEL TRANSFER	POMPE	1					
1A	2181-2755B	. ADAPTER	. RACCORD ADAPTATEUR	2					
1B	S8180321	. SEAL;WASHER	. BAGUE D'ETANCHEITE	2					
1C	523-00012	. MOTOR;FUEL TRANSFER PUMP	. MOTEUR	1					
1D	407-00001	. VANE KIT	. KIT DE VANE	1					
1E	2401-1276KT	. SEAL KIT	. KIT D'ETANCHEITE	1					
2	195-01628	BRACKET;FUEL PUMP	SUPPORT	1					
3	2120-2196D10	BOLT;SET M12X1.75X30	BOULON A 6 PANS	3					
4	S0508853	BOLT M8X1.25X20	BOULON A 6 PANS	4					
5	S5102503	WASHER;SPRING M8	RONDELLE ELASTIQUE	4					
6	2181-2104D6	ADAPTER	RACCORD ADAPTEUR	1					
7	S8000181	O-RING	JOINT TORIQUE	1					
8	S8450023	CLAMP;HOSE	COLLIER	3					
9	2185-1247D148	HOSE 3000L	TUYAU FLEXIBLE	1					
10	120-00276	BOLT;SET M12X1.25X12	BOULON A 6 PANS	2					
11	185-00167D3	HOSE ASS'Y	TUYAU FLEXIBLE	1					
11A	2420-1258	. VALVE;CHECK	. CARTOUCHE DE VANNE	1					
11B	2471-1152	. STRAINER	. FILTRE	1					
11C	2160-1336	. CAP;STRAINER	. CHAPEAU	1					
12	195-01630	BRACKET	SUPPORT	2					
13	2549-9096	SWITCH;TOGGLE	INTERRUPTEUR	1					
14	2114-1683	WASHER;TOGGLE SWITCH	RONDELLE ELASTIQUE	1					
15	190-00519	PLATE;NAME	PLAQUE D'IDENTIFICATION	1					
16	124-00208D5	CLIP	ATTACHE	2					
17	2120-2187	BOLT;STUD M8X1.25	BOULON A 6 PANS	3					
18	S5010513	WASHER;PLAIN M8	RONDELLE PLATE	4					
19	530-00214	HARNESS;TOGGLE SWITCH	FAISCEAU	1					

DATE	JUN. 30, 2004
REV. NO.	EXB04-04

Fig. 6110 6-LAMP & BEACON(TELESCOPIC) LAMPE & FEU DE CIRCULATION

Serial No. ;

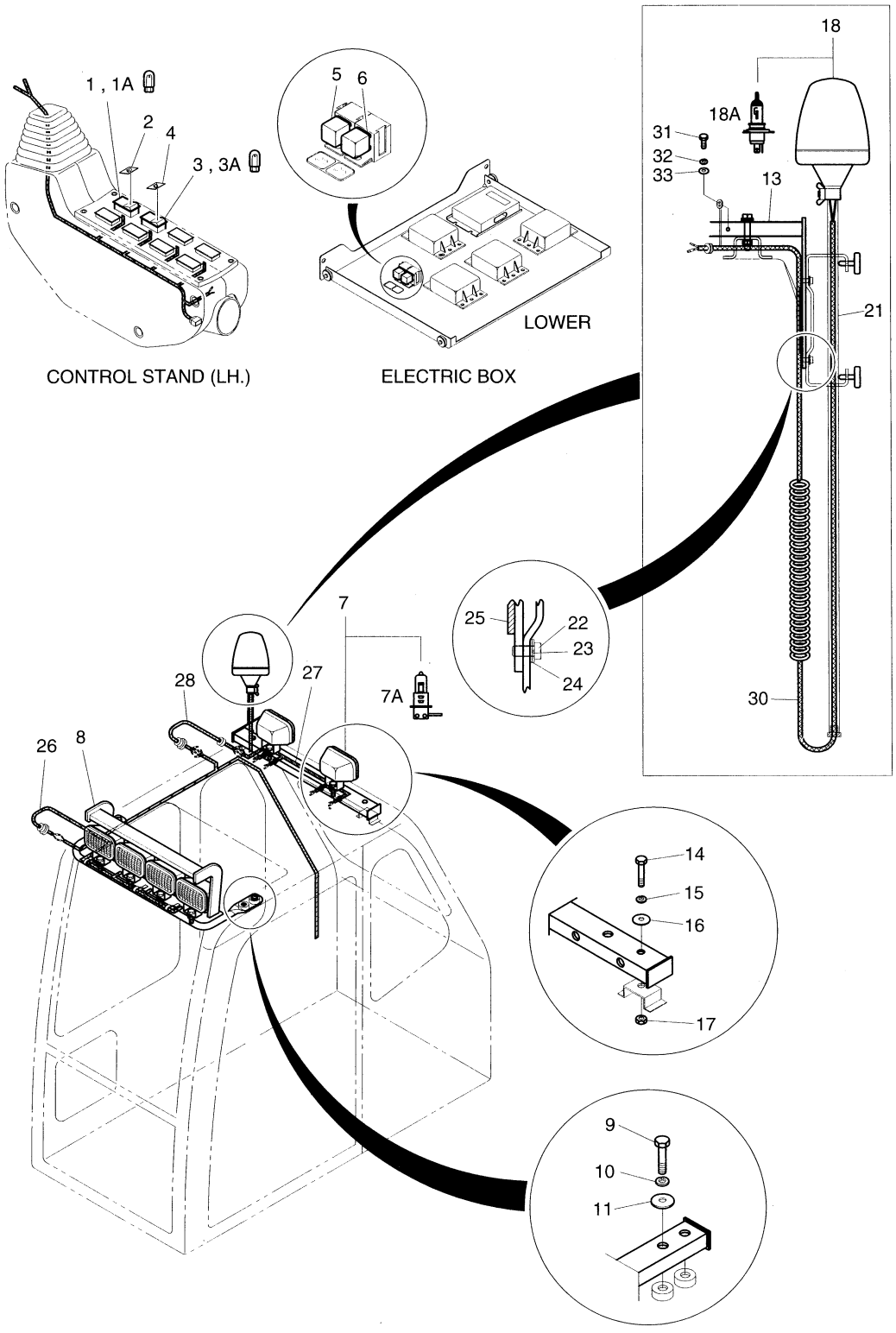

DATE	JUN. 30, 2004
REV. NO.	EXB04-04

Fig. 6110 6-LAMP & BEACON(TELESCOPIC) LAMPE & FEU DE CIRCULATION

Serial No ;

Key No.	Part No.	Description	Description	Q'ty	S.C	Serial No.	ICA	Replaceable part	
								Part No.	Q'ty
6110--	534-00066F2	6-LAMP &	LAMPE	-	D				
1	2549-9109	SWITCH;CABIN LAMP	INTERRUPTEUR	1					
1A	**K9000353**	**. LAMP;PILOT**	. LAMPE	1					
2	2190-2584D14	INSERT;CABIN LAMP	INSERTION	1					
3	2549-9098	SWITCH;ROTATING BEACON	INTERRUPTEUR	1					
3A	**K9000353**	**. LAMP;PILOT**	. LAMPE	1					
4	2190-2036D10	INSERT;ROTATING BEACON	INSERTION	1					
5	2544-9033	RELAY;CABIN LAMP 24V 20/30A	RELAIS AVERTISSEUR	1					
6	2544-9033	RELAY;CABIN LAMP 24V 20/30A	RELAIS AVERTISSEUR	1					
7	534-00077	LAMP;CABIN 24V 70W	LAMPE	6					
7A	2515-1016D4	. BULB;HALOGEN 24V 70W	. AMPOULE	1					
8	195-01693	SUPPORT;FRONT CABIN LAMP	SUPPORT	1					
9	2120-2166D2	BOLT M10X1.5X25	BOULON A 6 PANS	4					
10	S5102603	WASHER;SPRING M10	RONDELLE ELASTIQUE	4					
11	2114-1898D1	WASHER	RONDELLE	4					
13	195-01804	SUPPORT;REAR LAMP & BEACON	SUPPORT	1					
14	S0556453	BOLT M8X1.25X55	BOULON A 6 PANS	2					
15	S5102503	WASHER;SPRING M8	RONDELLE ELASTIQUE	2					
16	2114-1898D8	WASHER;PLAIN	RONDELLE PLATE	2					
17	S4012533	NUT M8X1.25	ECROU	2					
18	534-00062	LAMP;ROTATING BEACON	LAMPE	1					
18A	515-00013	. BULB;HALOGEN 24V 70W	. AMPOULE	1					
21	195-01805	SUPPORT;BEACON	SUPPORT	1					
22	S0508653	BOLT M8X1.25X16	BOULON A 6 PANS	2					
23	S5102503	WASHER;SPRING M8	RONDELLE ELASTIQUE	2					
24	S5010513	WASHER;PLAIN M8	RONDELLE PLATE	2					
25	161-00404	RUBBER;PLATE	CAOUTCHOUC	1					
26	530-00235	HARNESS;FRONT CABIN LAMP	FAISCEAU	1					
27	530-00237	HARNESS;REAR CABIN LAMP	FAISCEAU	1					
28	530-00248	HARNESS;REAR LAMP JOINT	FAISCEAU	1					
30	530-00249	HARNESS;BEACON TELESCOPIC	FAISCEAU	1					
31	S0504453	BOLT M6X1.0X12	BOULON A 6 PANS	1					
32	S5102303	WASHER;SPRING M6	RONDELLE ELASTIQUE	1					
33	S5010313	WASHER;PLAIN M6	RONDELLE PLATE	1					

DATE	JUN. 30, 2004
REV. NO.	EXB04-04

Fig. 6120 ROTATING BEACON FEU DE CIRCULATION

Serial No. ;

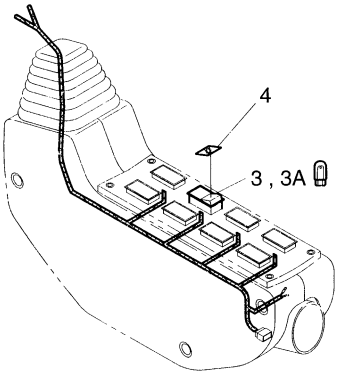

CONTROL STAND (LH)

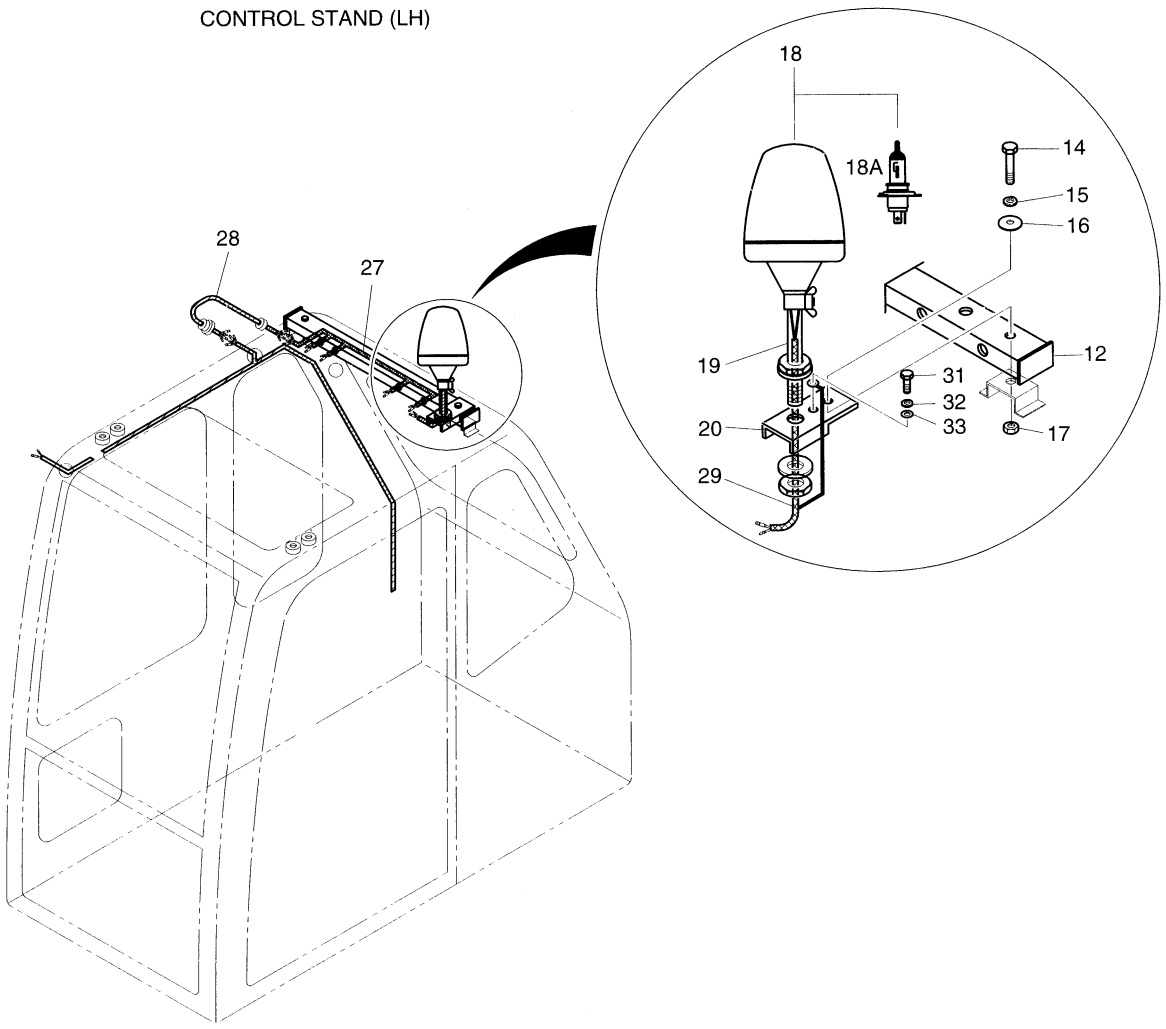

DATE	JUN. 30, 2004
REV. NO.	EXB04-04

Fig. 6120 ROTATING BEACON FEU DE CIRCULATION

Serial No ;

Key No.	Part No.	Description	Description	Q'ty	S.C	Serial No.	ICA	Replaceable part	
								Part No.	Q'ty
6120--	534-00066F4	BEACON ASS'Y-OPT.	FEU DE CIRCULATION	-	D				
3	2549-9098	SWITCH;ROTATING BEACON	INTERRUPTEUR	1					
3A	**K9000353**	**. LAMP;PILOT**	. LAMPE	1					
4	2190-2036D10	INSERT;ROTATING BEACON	INSERTION	1					
12	195-01694	SUPPORT;REAR CABIN LAMP	SUPPORT	1					
14	S0556453	BOLT M8X1.25X55	BOULON A 6 PANS	2					
15	S5102503	WASHER;SPRING M8	RONDELLE ELASTIQUE	2					
16	2114-1898D8	WASHER;PLAIN	RONDELLE PLATE	2					
17	S4012533	NUT M8X1.25	ECROU	2					
18	534-00062	LAMP;ROTATING BEACON	LAMPE	1					
18A	515-00013	. BULB;HALOGEN 24V 70W	. AMPOULE	1					
19	160-00032	BUSH;MOUNTING	MANCHON	1					
20	195-01692	BRACKET	SUPPORT	1					
27	530-00237	HARNESS;REAR CABIN LAMP	FAISCEAU	1					
28	530-00248	HARNESS;REAR LAMP JOINT	FAISCEAU	1					
29	530-00238	HARNESS;BEACON	FAISCEAU	1					
31	S0504453	BOLT M6X1.0X12	BOULON A 6 PANS	1					
32	S5102303	WASHER;SPRING M6	RONDELLE ELASTIQUE	1					
33	S5010313	WASHER;PLAIN M6	RONDELLE PLATE	1					

DATE	JUN. 30, 2004
REV. NO.	EXB04-04

Fig. 6130 TRAVEL ALARM ASS'Y
ALARME DE VOYAGE

Serial No. ;

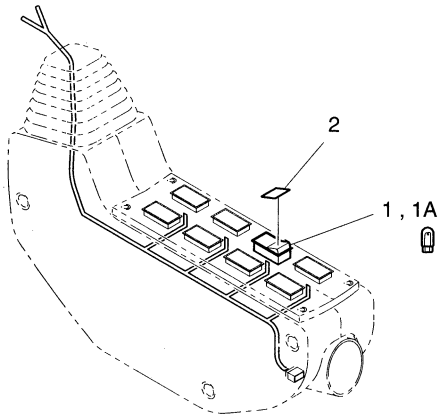

CONTROL STAND (LH)

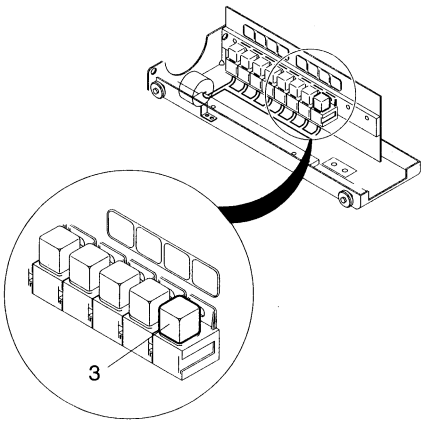

ELECTRIC BOX

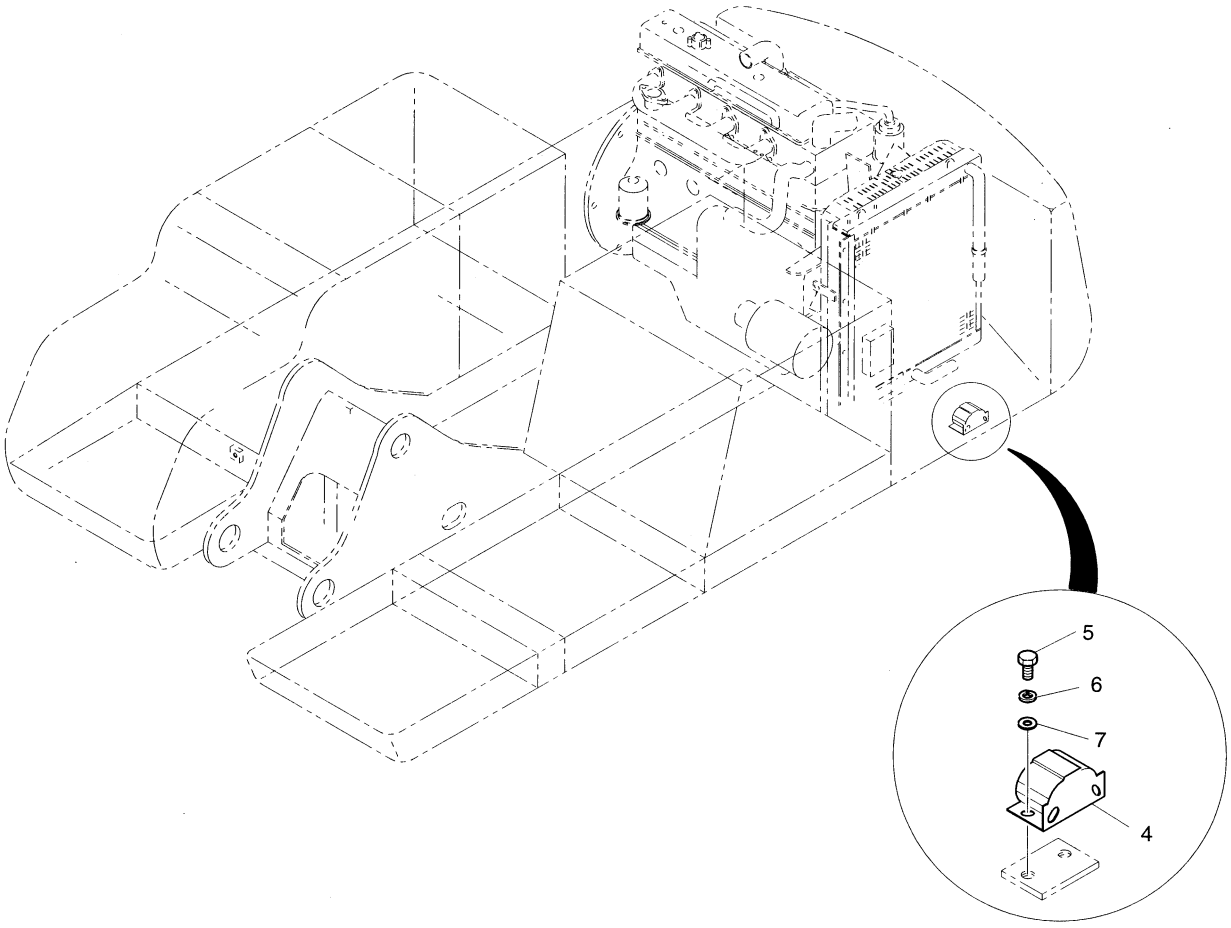

DATE	JUN. 30, 2004
REV. NO.	EXB04-04

Fig. 6130 TRAVEL ALARM ASS'Y ALARME DE VOYAGE

Serial No ;

Key No.	Part No.	Description	Description	Q'ty	S.C	Serial No.	ICA	Replaceable part	
								Part No.	Q'ty
6130--	516-00017	TRAVEL ALARM ASSY	AVERTISSEUR	-	D				
1	2549-9109	SWITCH;ALARM	INTERRUPTEUR	1					
1A	**K9000353**	**. LAMP;PILOT**	. LAMPE	1					
2	190-00674D1	INSERT;TRAVEL ALARM	INSERTION	1					
3	2544-9033	RELAY;ALARM 24V 20/30A	RELAIS AVERTISSEUR	1					
4	516-00011	BUZZER;ALARM	VIBREUR ARRIERE	1					
5	S0508653	BOLT M8X1.25X16	BOULON A 6 PANS	2					
6	S5102503	WASHER;SPRING M8	RONDELLE ELASTIQUE	2					
7	S5010513	WASHER;PLAIN M8	RONDELLE PLATE	2					

DATE	JUN. 30, 2004
REV. NO.	EXB04-04

Fig. 6140 TRAVEL/SWING ALARM ASS'Y SIGNALISATEUR

Serial No. ;

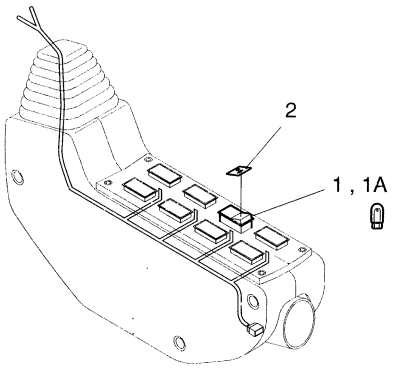

CONTROL STAND (LH)

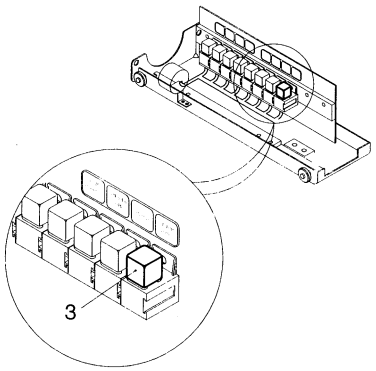

ELECTRIC BOX

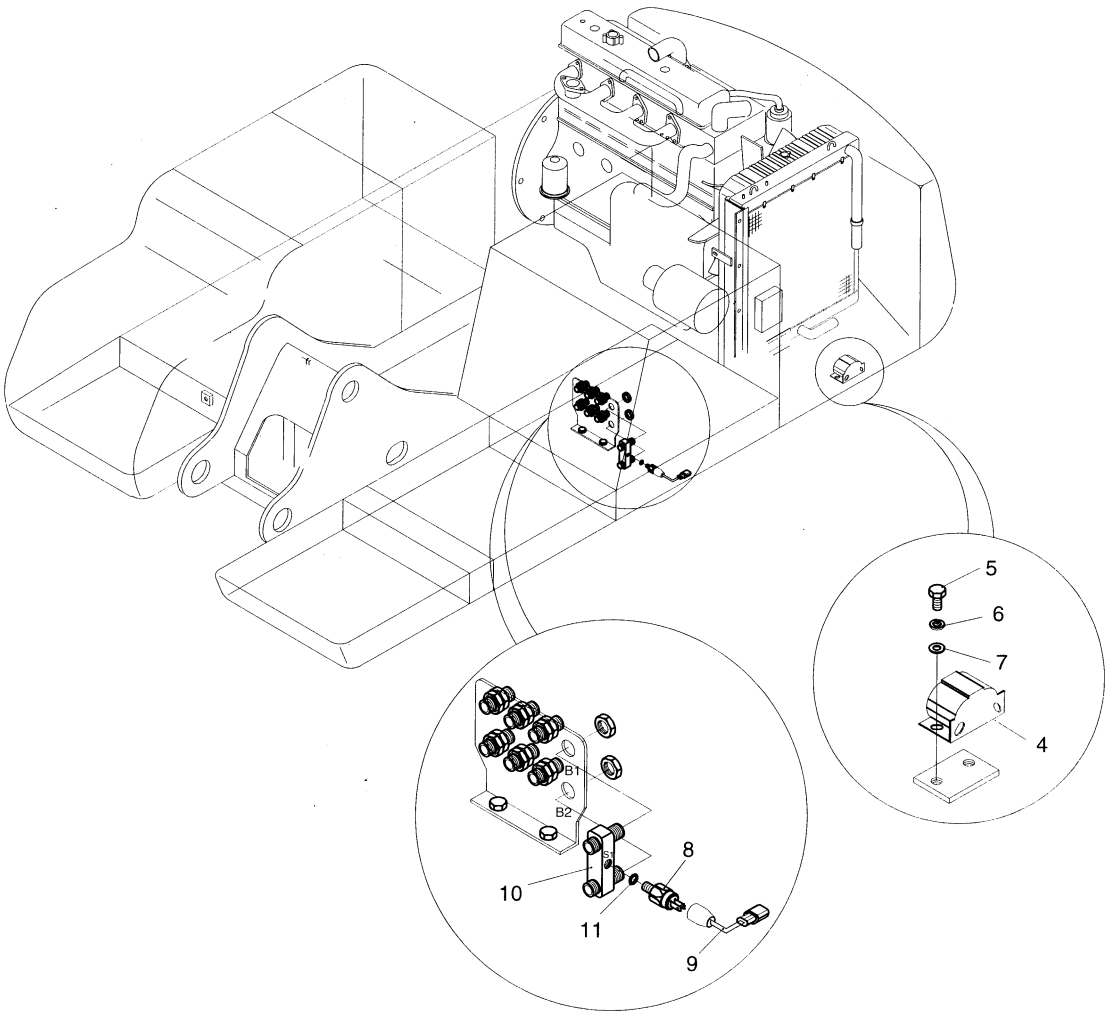

DATE	JUN. 30, 2004
REV. NO.	EXB04-04

Fig. 6140 TRAVEL/SWING ALARM ASS'Y SIGNALISATEUR

Serial No ;

Key No.	Part No.	Description	Description	Q'ty	S.C	Serial No.	ICA	Replaceable part	
								Part No.	Q'ty
6140--	516-00018	TRAVEL/SWING ALARM ASS'Y	AVERTISSEUR	-	D				
1	2549-9109	SWITCH;ALARM	INTERRUPTEUR	1					
1A	**K9000353**	**. LAMP;PILOT**	. LAMPE	1					
2	2190-2584D13	INSERT;ALARM	INSERTION	1					
3	2544-9033	RELAY;ALARM	RELAIS AVERTISSEUR	1					
4	516-00011	BUZZER;ALARM	VIBREUR ARRIERE	1					
5	S0508653	BOLT M8X1.25X16	BOULON A 6 PANS	2					
6	S5102503	WASHER;SPRING M8	RONDELLE ELASTIQUE	2					
7	S5010513	WASHER;PLAIN M8	RONDELLE PLATE	2					
8	2549-9407	SWITCH;SWING PRESS 4BAR	INTERRUPTEUR	1					
9	2530-1423A	HARNESS;PRESS SWITCH	FAISCEAU	1					
10	420-00282	VALVE;SHUTTLE	VANNE	1					
11	S8180221	RING;SEAL	RONDELLE D'ETANCHEITE	1					

DATE	JUL. 30, 2003
REV. NO.	EXB03-13

Fig. 6150 RETURN FILTER PRESS SWITCH
COMMUTATEUR DE FILTRE DE RETURUN

Serial No. ;

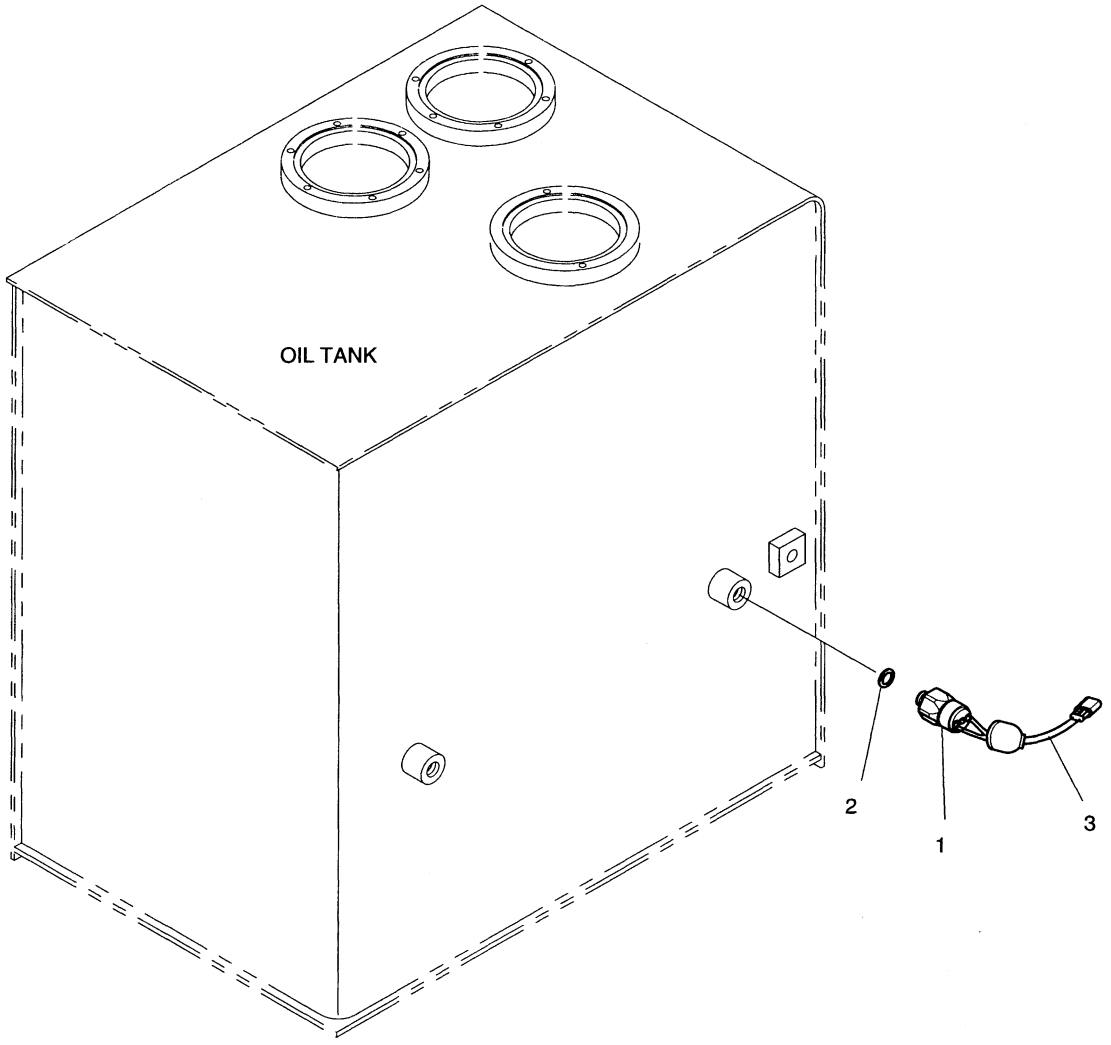

DATE	JUL. 30, 2003
REV. NO.	EXB03-13

Fig. 6150 RETURN FILTER PRESS SWITCH
COMMUTATEUR DE FILTRE DE RETURUN

Serial No ;

Key No.	Part No.	Description	Description	Q'ty	S.C	Serial No.	ICA	Replaceable part	
								Part No.	Q'ty
6150--	549-00075	RETURN FILTER SWITCH ASS'Y	INTERRUPTEUR	-	D				
1	2549-1135D10	SWITCH;PRESS	INTERRUPTEUR	1					
2	S8180221	RING;SEAL	RONDELLE D'ETANCHEITE	1					
3	2530-1400	HARNESS;PRESSURE SWITCH	FAISCEAU	1					

DATE	JUL. 30, 2003
REV. NO.	EXB03-13

Fig. 6160 ALTERNATOR ALTERNATEUR

Serial No. ;

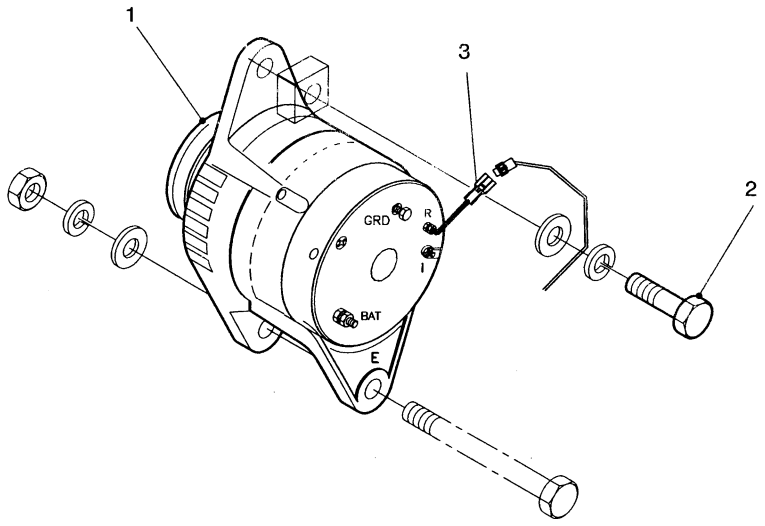

DATE	JUL. 30, 2003
REV. NO.	EXB03-13

Fig. 6160 ALTERNATOR ALTERNATEUR

Serial No ;

Key No.	Part No.	Description	Description	Q'ty	S.C	Serial No.	ICA	Replaceable part	
								Part No.	Q'ty
6160--	500-00081	ALTERNATOR ASS'Y	ALTERNATEUR	-	D				
1	502-00003A	ALTERNATOR 24V 80A	ALTERNATEUR	1					
2	S0760853	BOLT M12X1.25X55	BOULON A 6 PANS	1					
3	530-00123	HARNESS;ALTERNATOR	FAISCEAU	1					

DATE	JUN. 30, 2007
REV. NO.	EXB07-06

Fig. 6170 F.O.G.S GUARD GARDE

Serial No. ;

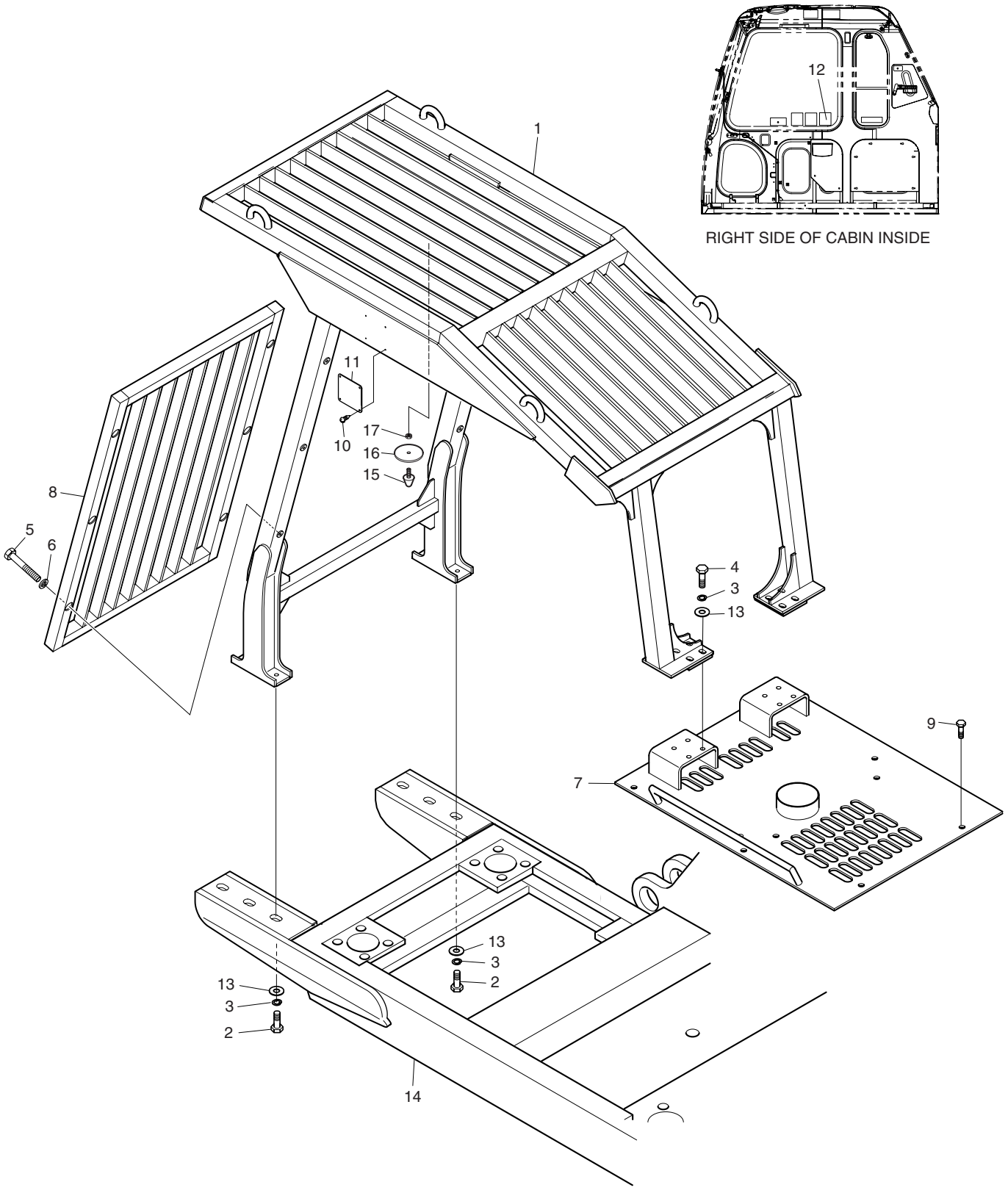

DATE	JUN. 30, 2007
REV. NO.	EXB07-06

Fig. 6170 F.O.G.S GUARD GARDE

Serial No. ;

Key No.	Part No.	Description	Description	Q'ty	S.C	Serial No.	ICA	Replaceable part	
								Part No.	Q'ty
6170--	733-00021A	F.O.G.S ASS'Y	GARDE	-	D				
1	2623-1253C	FOPS;GUARD	GARDE	1		1001–1876			
	2623-1253E	**FOPS;GUARD**	GARDE	1		**1877–**			
2	S0521466	BOLT M16X20X40	BOULON A 6 PANS	6					
3	S5102903	WASHER;SPRING	RONDELLE ELASTIQUE	14					
4	S0521666	BOLT M16X20X50	BOULON A 6 PANS	8					
5	S0558853	BOLT M10X1.5X65	BOULON A 6PANS	6					
6	S5102603	WASHER;SPRING M10	RONDELLE ELASTIQUE	6					
7	621-02318	COVER	COUVERCLE	1					
8	2142-1123	GUARD;FRONT	GARDE	1		1001–1876			
	2142-1123A	**GUARD;FRONT**	GARDE	1		**1877–**			
9	2120-2196D7	BOLT;SET M12X1.75X30	BOULON A 6 PANS	5					
10	2122-1002D2	RIVET	RIVET	4					
11	K1013180	PLATE;NAME	PLAQUE D'IDENTIFICATION	1					
12	190-00003	PLATE;NAME	PLAQUE D'IDENTIFICATION	1					
13	2114-1058D39	WASHER	RONDELLE M16	14					
14	603-00281	FRAME;BED	BATI PRINCIPAL	1		1001–1409	I	603-00281A	1
	603-00281A	FRAME;BED	BATI PRINCIPAL	1		1410–			
15	2161-2226	STOPPER RUBBER	ARRET	1					
16	S5010613	WASHER;PLAIN	RONDELLE PLATE	1					
17	S4012633	NUT	ECROU	1					

DATE	JUL. 30, 2003
REV. NO.	EXB03-13

Fig. 6180 CABIN LOW GUARD GARDE

Serial No. ;

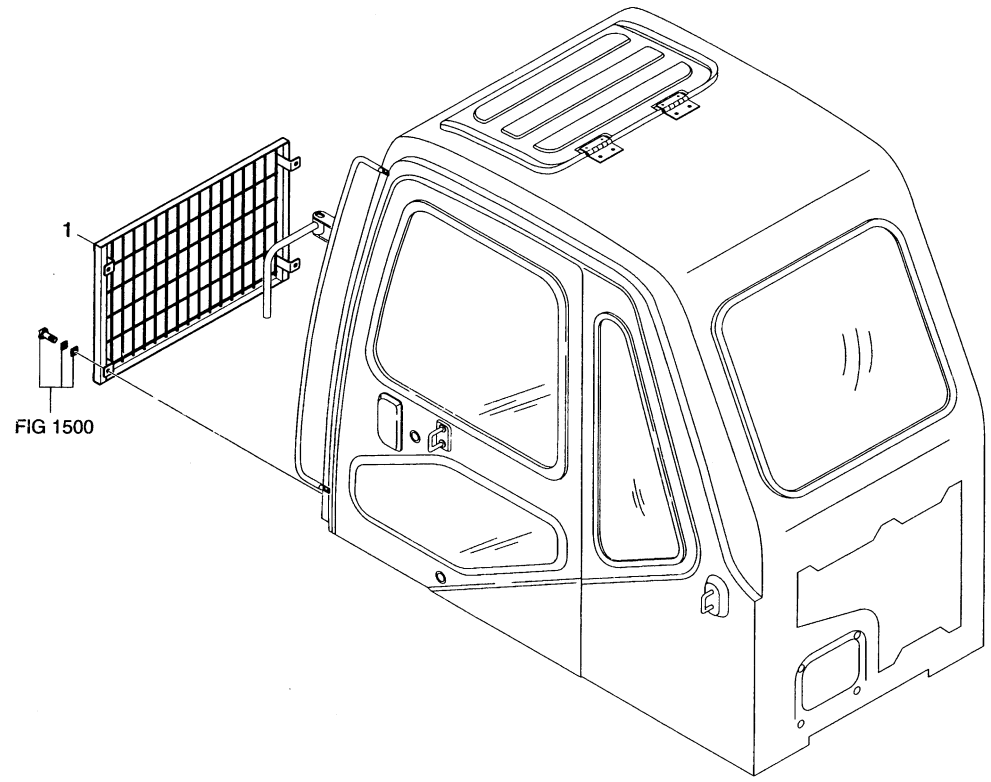

DATE	JUL. 30, 2003
REV. NO.	EXB03-13

Fig. 6180 CABIN LOW GUARD GARDE

Serial No ;

Key No.	Part No.	Description	Description	Q'ty	S.C	Serial No.	ICA	Replaceable part	
								Part No.	Q'ty
6180--	142-00093	CABIN LOW GUARD ASS'Y	GARDE	-	D				
1	142-00094	GUARD;FRONT-LOW	GARDE	1					

DATE	JUL. 30, 2003
REV. NO.	EXB03-13

Fig. 6190 SUN VISOR ASS'Y PARE-SOLEIL

Serial No. ;

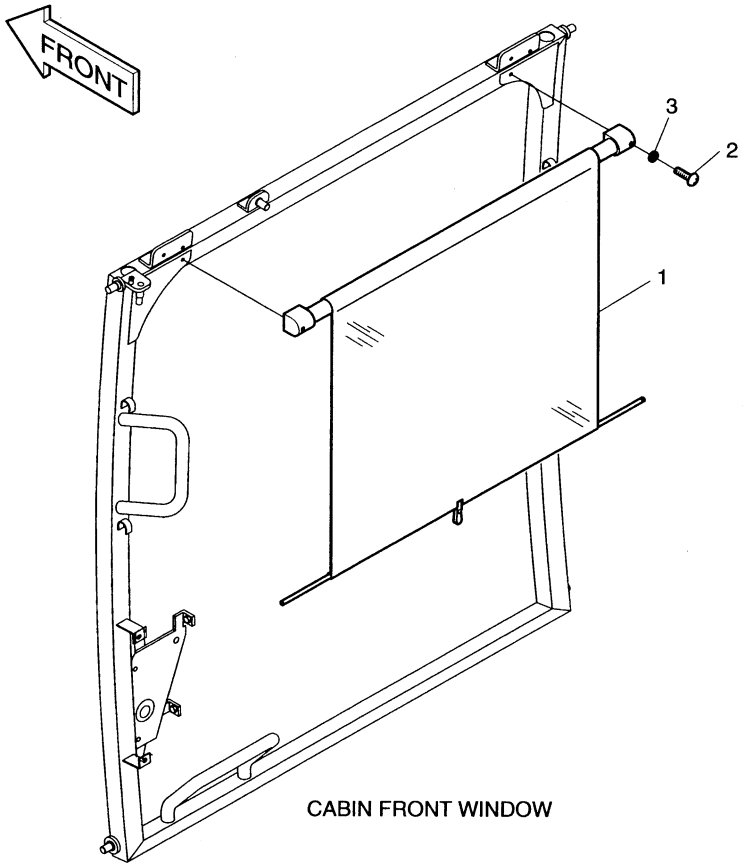

CABIN FRONT WINDOW

DATE	JUL. 30, 2003
REV. NO.	EXB03-13

Fig. 6190 SUN VISOR ASS'Y PARE-SOLEIL

Serial No ;

Key No.	Part No.	Description	Description	Q'ty	S.C	Serial No.	ICA	Replaceable part	
								Part No.	Q'ty
6190--	623-00043	SUN VISOR ASS'Y	PARE-SOLEIL	-	D				
1	621-01495	SUN VISOR	VISIERE	1					
2	2120-2166D10	SCREW M6X1.0X14	VIS	2					
3	2114-1898D3	WASHER	RONDELLE	2					

DATE	JUL. 30, 2003
REV. NO.	EXB03-13

Fig. 6200 SUN ROOF ASS'Y
COUVERTURE DE TOIT

Serial No. ;

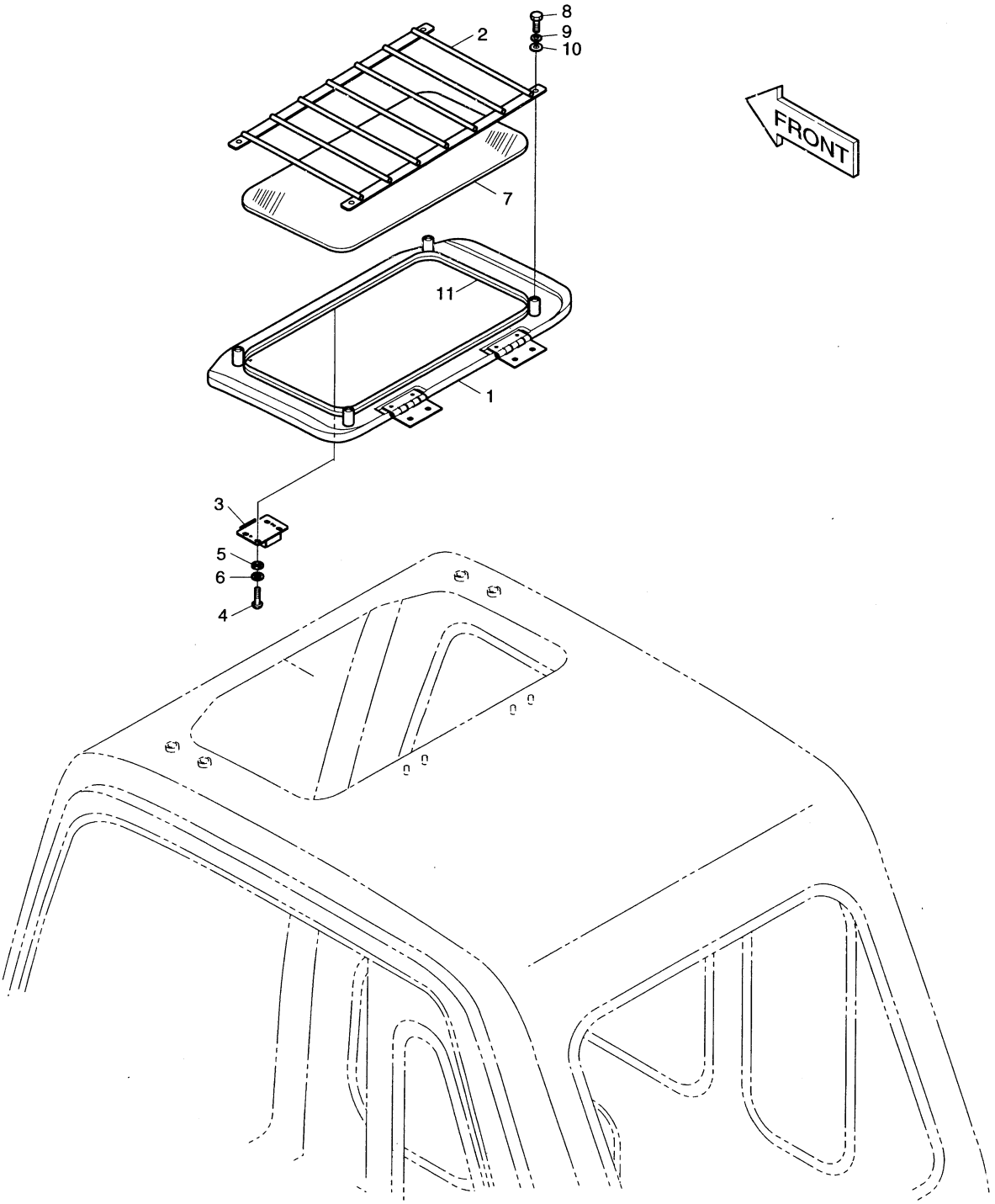

DATE	JUL. 30, 2003
REV. NO.	EXB03-13

Fig. 6200 SUN ROOF ASS'Y COUVERTURE DE TOIT

Serial No ;

Key No.	Part No.	Description	Description	Q'ty	S.C	Serial No.	ICA	Replaceable part	
								Part No.	Q'ty
6200--	621-01957	SUN ROOF ASS'Y	COUVERTURE DE TOIT	-	D				
1	621-01956	COVER ASS'Y;ROOF	COUVERCLE	1					
2	195-01843	GUARD;ROOF	GARDE	1					
3	2125-9057	CATCH;FOOF COVER	LOQUET	1					
4	2120-2166D8	SCREW M5X0.8X14	VIS	4					
5	S5000213	WASHER;PLAIN	RONDELLE PLATE	4					
6	S5100203	WASHER;SPRING	RONDELLE ELASTIQUE	4					
7	903-00056	GLASS	VITRE	1					
8	2120-2166D5	BOLT M8X1.25X20	BOULON A 6 PANS	4					
9	2114-2031D4	WASHER;SPRING	RONDELLE ELASTIQUE	4					
10	2114-1898D2	WASHER;PLAIN	RONDELLE PLATE	4					
11	2161-2254	DAMPER	RESSORT	1					

DATE	JUN. 30, 2004
REV. NO.	EXB04-04

Fig. 6210 FLOOR PLATE-TILTING
TOLE DE PLANCHER

Serial No. ;

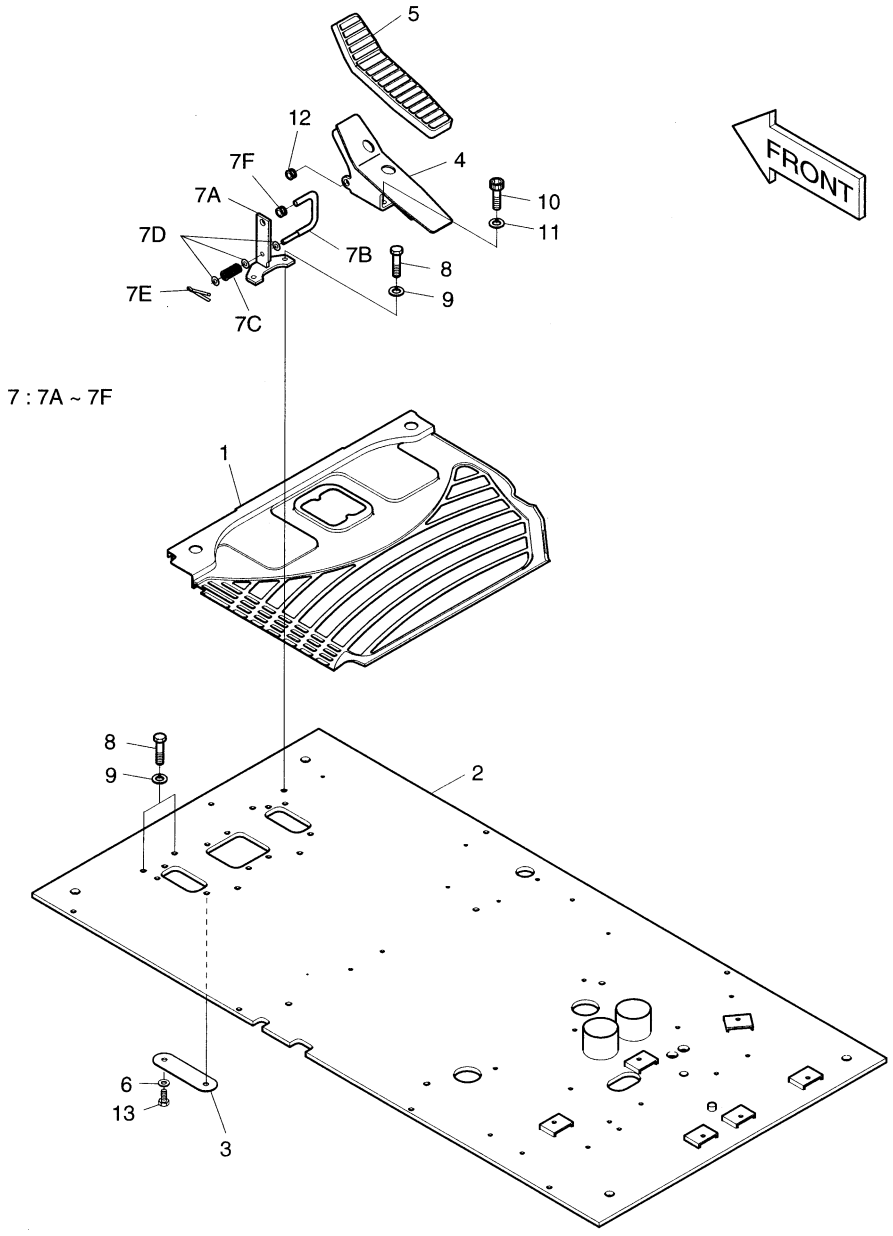

DATE	JUN. 30, 2004
REV. NO.	EXB04-04

Fig. 6210 FLOOR PLATE-TILTING TOLE DE PLANCHER

Serial No ;

Key No.	Part No.	Description	Description	Q'ty	S.C	Serial No.	ICA	Replaceable part	
								Part No.	Q'ty
6210--	621-02077	FLOOR ASS'Y	PLAQUE	-	D				
1	161-00448	MAT;FLOOR	PLAQUE	1					
2	621-02072A	PLATE;FLOOR	PLAQUE	1		1001–1210	I	621-02072B	1
	621-02072B	**PLATE;FLOOR**	PLAQUE	1		**1211–**			
3	621-01507	PLATE;FLOOR	PLAQUE	1					
4	195-01736	BRACKET;PEDAL(R.H)	SUPPORT	1					
5	161-00386	RUBBER;PEDAL	CAOUTCHOUC	1					
6	2114-1898D1	WASHER	RONDELLE	2					
7	195-01940	BRACKET	SUPPORT	1					
7A	195-01937	. BRACKET	. SUPPORT	1	D				
7B	133-00167	. BAR	. CONDUITE	1	D				
7C	129-00144	. SPRING	. RESSORT	1	D				
7D	2114-1898D14	. WASHER	. RONDELLE	1	D				
7E	S5735351	. PIN;SPLIT	. GOUJON	1	D				
7F	160-00045	. BUSHING;RUBBER	. DOUILLE	1	D				
8	2120-2166D5	BOLT M8X1.25X20	BOULON A 6 PANS	4					
9	2114-1898D14	WASHER	RONDELLE	4					
10	S2211866	BOLT;SOCKET M10X1.5X20	BOULON A 6 PANS CREUX	2					
11	S5110601	WASHER;SPRING	RONDELLE ELASTIQUE	2					
12	160-00045	BUSHING;RUBBER	GARNISSAGE	1					
13	S0511653	BOLT M10X1.5X16	BOULON A 6 PANS	2					

DATE	JUN. 30, 2004
REV. NO.	EXB04-04

Fig. 6220 OVERLOAD WARING ASS'Y AVERTISSEMENT DE SURCHARGE

Serial No. ;

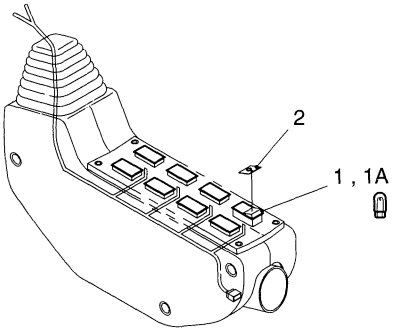

CONTROL STAND(L.H)

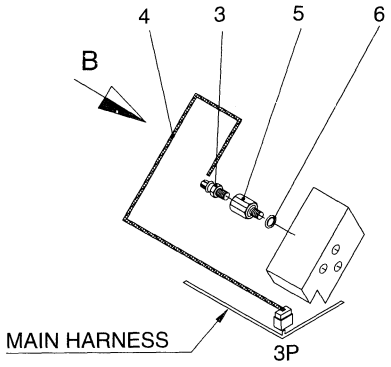

DETAIL A

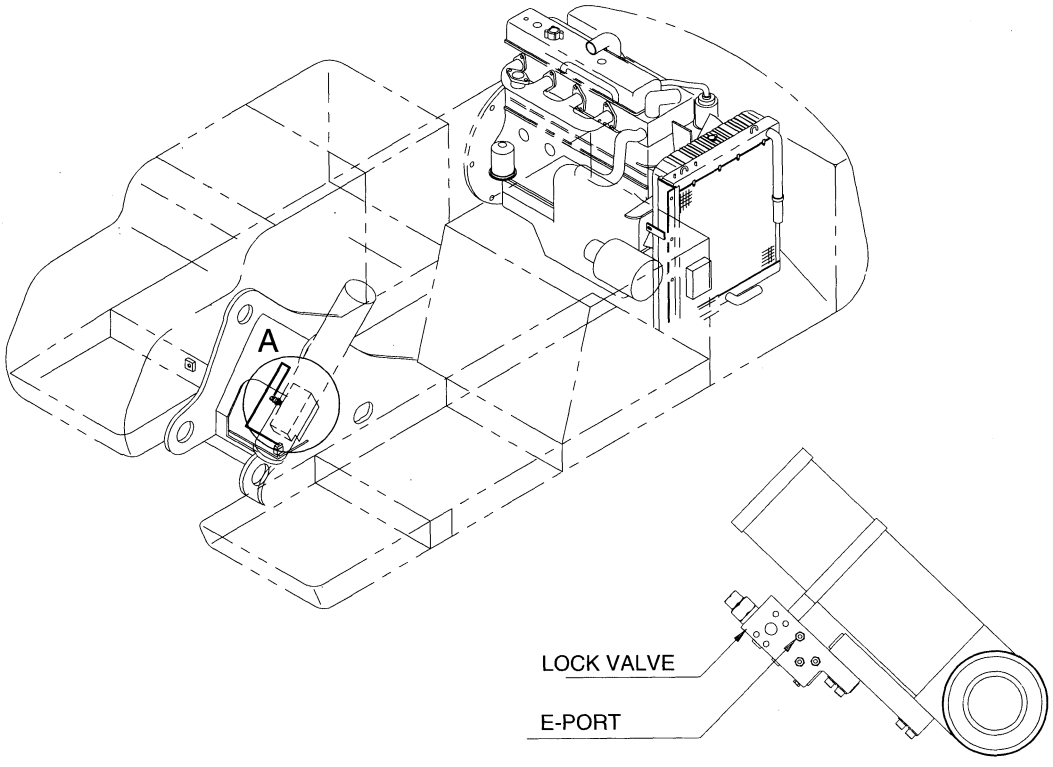

VIEW B

DATE	JUN. 30, 2004
REV. NO.	EXB04-04

Fig. 6220 OVERLOAD WARNING ASS'Y AVERTISSEMENT DE SURCHARGE

Serial No ;

Key No.	Part No.	Description	Description	Q'ty	S.C	Serial No.	ICA	Replaceable part	
								Part No.	Q'ty
6220--	500-00156	OVERLOAD WARNING DEVICE	AVERTISSEMENT DE	-	D				
1	2549-9098	SWITCH;OVERLOAD WARNING	INTERRUPTEUR	1					
1A	**K9000353**	**. LAMP;PILOT**	. LAMPE	1					
2	2190-2036D25	INSERT;OVERLOAD WARNING	INSERTION	1					
3	2547-9045	SENSOR;PRESSURE	CAPTEUR	1					
4	530-00269	HARNESS;OVERLOAD WARNING	FAISCEAU	1					
5	2181-2439A	REDUCER	REDUCTEUR	1					
6	S8000111	O-RING	JOINT TORIQUE	1					

DATE	JUL. 30, 2003
REV. NO.	EXB03-13

Fig. 6230 JOYSTICK VALVE ASS'Y-3 SWITCH VANNE DE COMMAND A DISTANCE

Serial No. ;

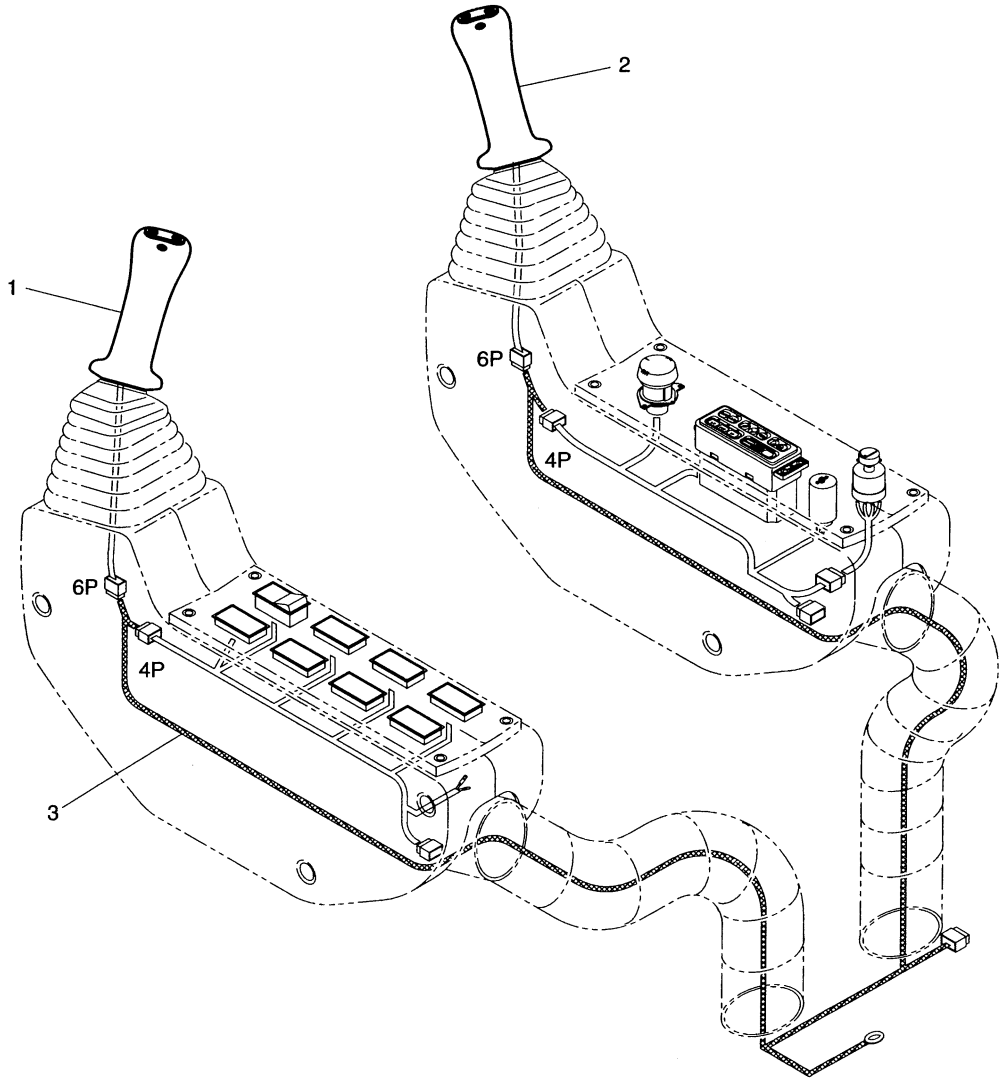

DATE	JUL. 30, 2003
REV. NO.	EXB03-13

Fig. 6230 JOYSTICK VALVE ASS'Y-3 SWITCH VANNE DE COMMAND A DISTANCE

Serial No ;

Key No.	Part No.	Description	Description	Q'ty	S.C	Serial No.	ICA	Replaceable part	
								Part No.	Q'ty
6230--	420-00360	JOYSTICK VALVE ASS'Y	VANNE DE COMMAND A	-	D				
1	420-00358	VALVE;JOYSTICK(L.H)	VANNE	1					
2	420-00359	VALVE;JOYSTICK(R.H)	VANNE	1					
3	530-00105A	HARNESS	FAISCEAU	1					

DATE	DEC. 29, 2005
REV. NO.	EXB05-20

Fig. 6240 TRACK SHOE-750G
ENSEMBLE MAILLON DE CHAINES

Serial No. ; 1001 ~ 1799

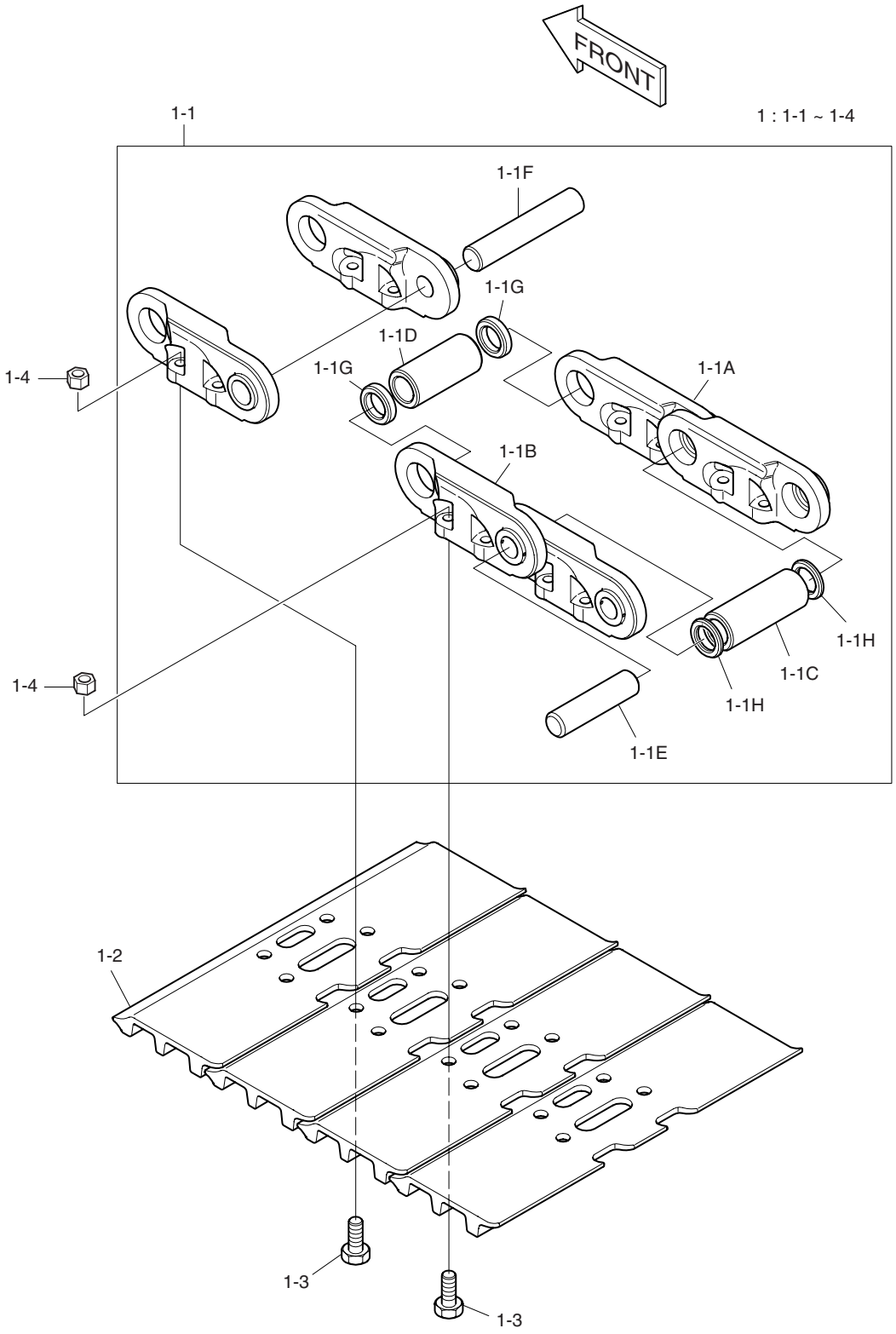

DATE	DEC. 29, 2005
REV. NO.	EXB05-20

Fig. 6240 TRACK SHOE-750G
ENSEMBLE MAILLON DE CHAINES

Serial No ; 1001 ~ 1799

Key No.	Part No.	Description	Description	Q'ty	S.C	Serial No.	ICA	Replaceable part	
								Part No.	Q'ty
6240--	**273-00071**	**TRACK SHOE ASS'Y-750mm**	ENSEMBLE MAILLON DE	-	D	**1001–1799**			
1	2273-6072D1	TRACK SHOE ASS'Y-750mm	ENSEMBLE MAILLON DE	2			I	K1011430	2
1-1	2272-6186	. LINK ASS'Y	. ENSEMBLE MAILLON DE	1					
1-1A	2272-6188	.. LINK(R.H)	.. PIECE DE JONCTION	53					
1-1B	2272-6187	.. LINK(L.H)	.. PIECE DE JONCTION	53					
1-1C	2110-6079	.. BUSHING	.. DOUILLE	52					
1-1D	2110-6080	.. BUSHING;MASTER	.. DOUILLE PRINCIPALE	1					
1-1E	2123-6105	.. PIN	.. BROCHE	52					
1-1F	2123-6106	.. PIN;MASTER	.. BROCHE PRINCIPALE	1					
1-1G	2114-6048	.. SPACER	.. ENTERTOISE	2					
1-1H	2180-6091	.. SEAL	.. BAGUE	104					
1-2	2273-6073D1	. SHOE	. SABOT	53					
1-3	2120-6030	. BOLT	. BOULON A 6 PANS	212					
1-4	2121-6037	. NUT	. ECROU	212					

DATE	DEC. 29, 2005
REV. NO.	EXB05-20

Fig. 6241 TRACK SHOE-750G
ENSEMBLE MAILLON DE CHAINES

Serial No. ; 1800 ~

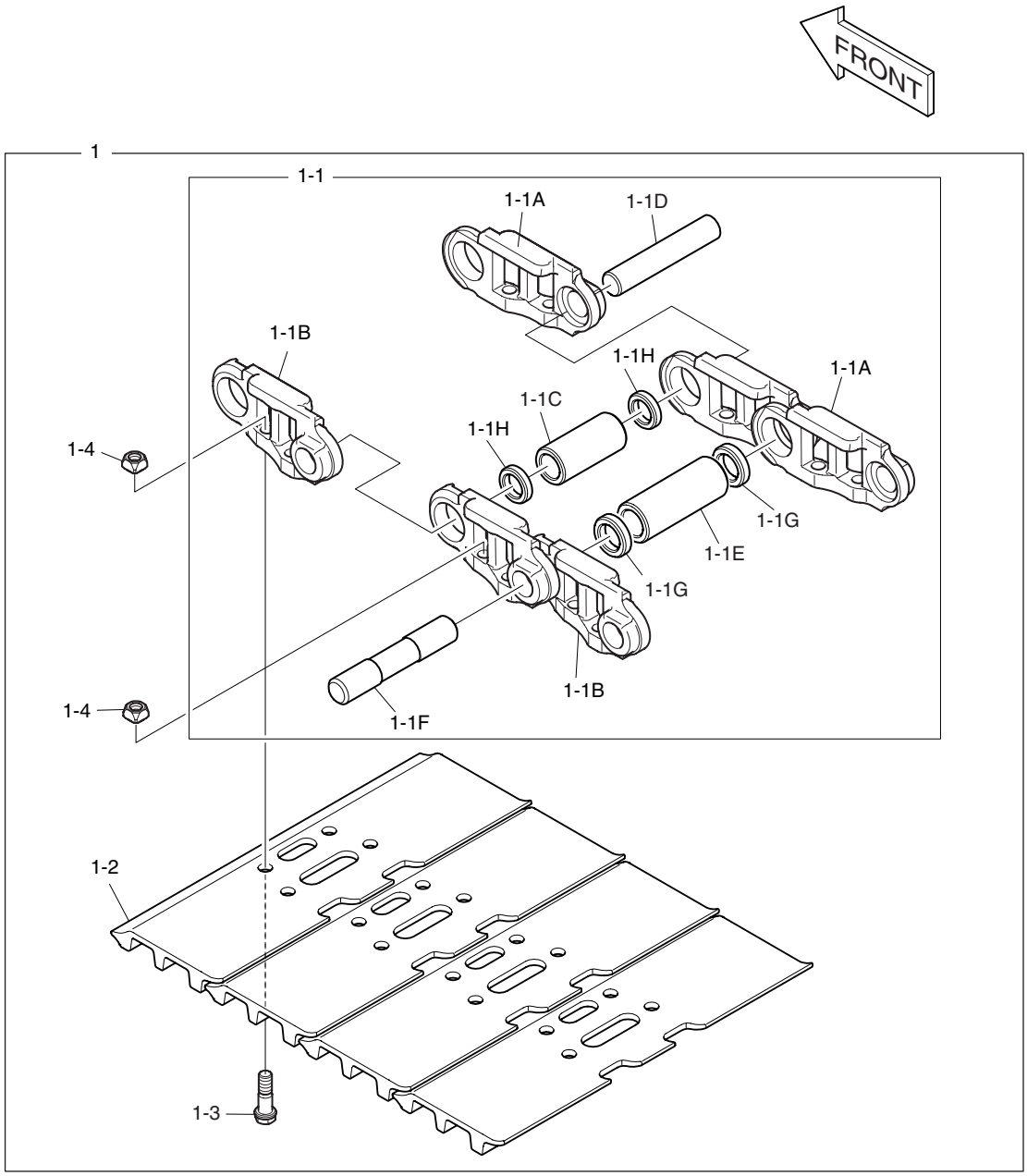

DATE	DEC. 29, 2005
REV. NO.	EXB05-20

Fig. 6241 TRACK SHOE-750G ENSEMBLE MAILLON DE CHAINES

Serial No ; 1800 ~

Key No.	Part No.	Description	Description	Q'ty	S.C	Serial No.	ICA	Replaceable part	
								Part No.	Q'ty
6241--	273-00071A	TRACK SHOE ASS'Y-750mm	ENSEMBLE MAILLON DE	-	D	1800–			
1	K1011430	TRACK SHOE ASS'Y-750mm	ENSEMBLE MAILLON DE	2					
1-1	K1007954	. LINK ASS'Y	. ENSEMBLE MAILLON DE	1					
1-1A	K1012128	.. LINK(R.H)	.. PIECE DE JONCTION	53					
1-1B	K1012129	.. LINK(L.H)	.. PIECE DE JONCTION	53					
1-1C	K1012131	.. BUSHING	.. DOUILLE	52					
1-1D	K1012130	.. PIN	.. BROCHE	52					
1-1E	K1012132	.. BUSHING;MASTER	.. DOUILLE PRINCIPALE	1					
1-1F	K1012136	.. PIN;MASTER	.. BROCHE PRINCIPALE	1					
1-1G	K1012135	.. SPACER	.. ENTERTOISE	2					
1-1H	K1012133	.. SEAL	.. BAGUE	104					
1-2	K1011426	. SHOE 750mm	. SABOT	53					
1-3	K1012134	. BOLT	. BOULON A 6 PANS	212					
1-4	K1007956	. NUT	. ECROU	212					

DATE	DEC. 29, 2005
REV. NO.	EXB05-20

Fig. 6250 TRACK SHOE-800G
ENSEMBLE MAILLON DE CHAINES

Serial No. ; 1001 ~ 1799

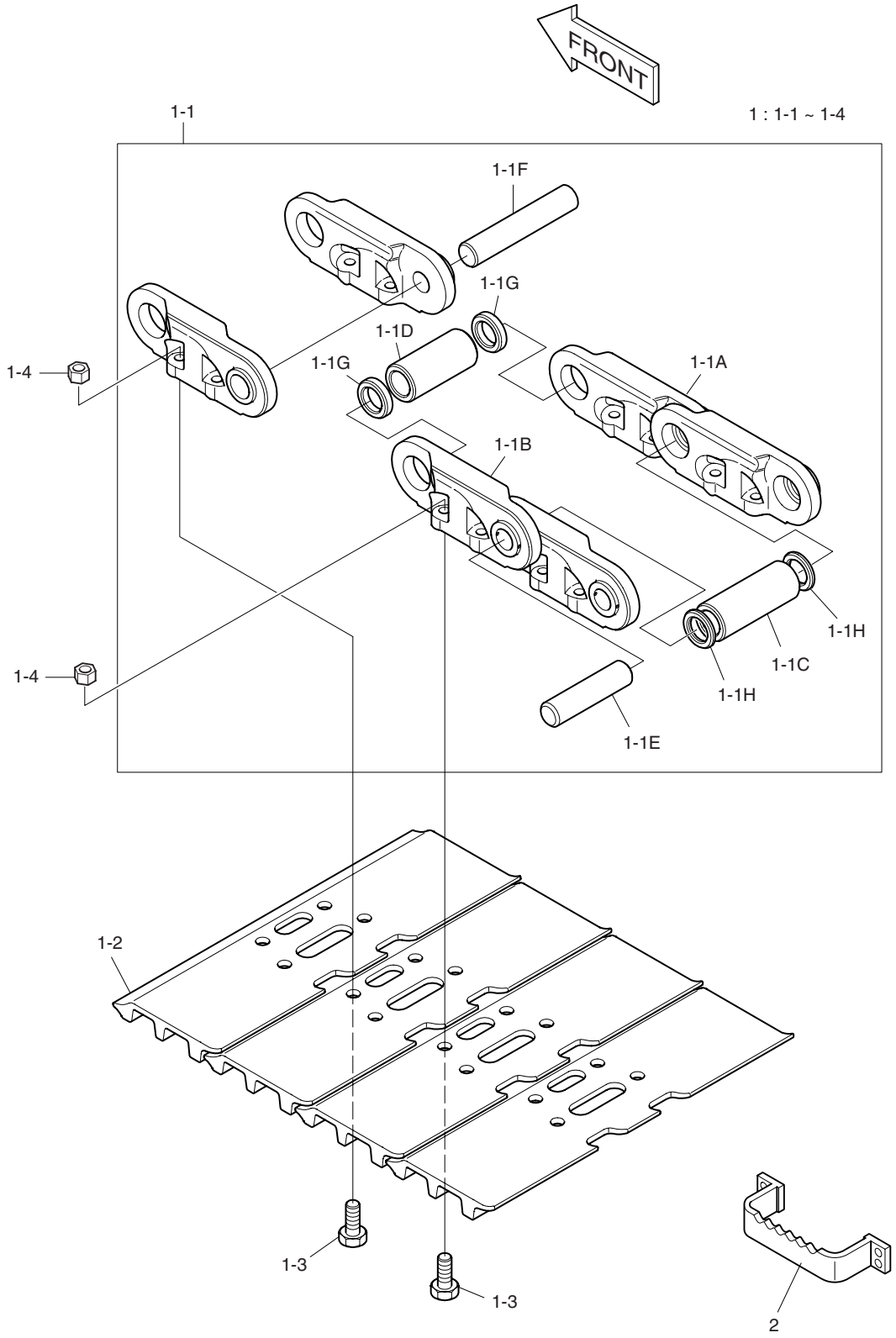

DATE	DEC. 29, 2005
REV. NO.	EXB05-20

Fig. 6250 TRACK SHOE-800G
ENSEMBLE MAILLON DE CHAINES

Serial No ; 1001 ~ 1799

Key No.	Part No.	Description	Description	Q'ty	S.C	Serial No.	ICA	Replaceable part	
								Part No.	Q'ty
6250--	273-00072	TRACK SHOE ASS'Y-800mm	ENSEMBLE MAILLON DE	-	D	1001–1799			
1	2273-6072D2	TRACK SHOE ASS'Y-800mm	ENSEMBLE MAILLON DE	2			I	K1011431	2
1-1	2272-6186	. LINK ASS'Y	. ENSEMBLE MAILLON DE	1					
1-1A	2272-6188	.. LINK(R.H)	.. PIECE DE JONCTION	53					
1-1B	2272-6187	.. LINK(L.H)	.. PIECE DE JONCTION	53					
1-1C	2110-6079	.. BUSHING	.. DOUILLE	52					
1-1D	2110-6080	.. BUSHING;MASTER	.. DOUILLE PRINCIPALE	1					
1-1E	2123-6105	.. PIN	.. BROCHE	52					
1-1F	2123-6106	.. PIN;MASTER	.. BROCHE PRINCIPALE	1					
1-1G	2114-6048	.. SPACER	.. ENTERTOISE	2					
1-1H	2180-6091	.. SEAL	.. BAGUE	104					
1-2	2273-6073D2	. SHOE	. SABOT	53					
1-3	2120-6030	. BOLT	. BOULON A 6 PANS	212					
1-4	2121-6037	. NUT	. ECROU	212					
2	2625-1155AD5	STEP	MARCHER	4					

DATE	DEC. 29, 2005
REV. NO.	EXB05-20

Fig. 6251 TRACK SHOE-800G
ENSEMBLE MAILLON DE CHAINES

Serial No. ; 1800 ~

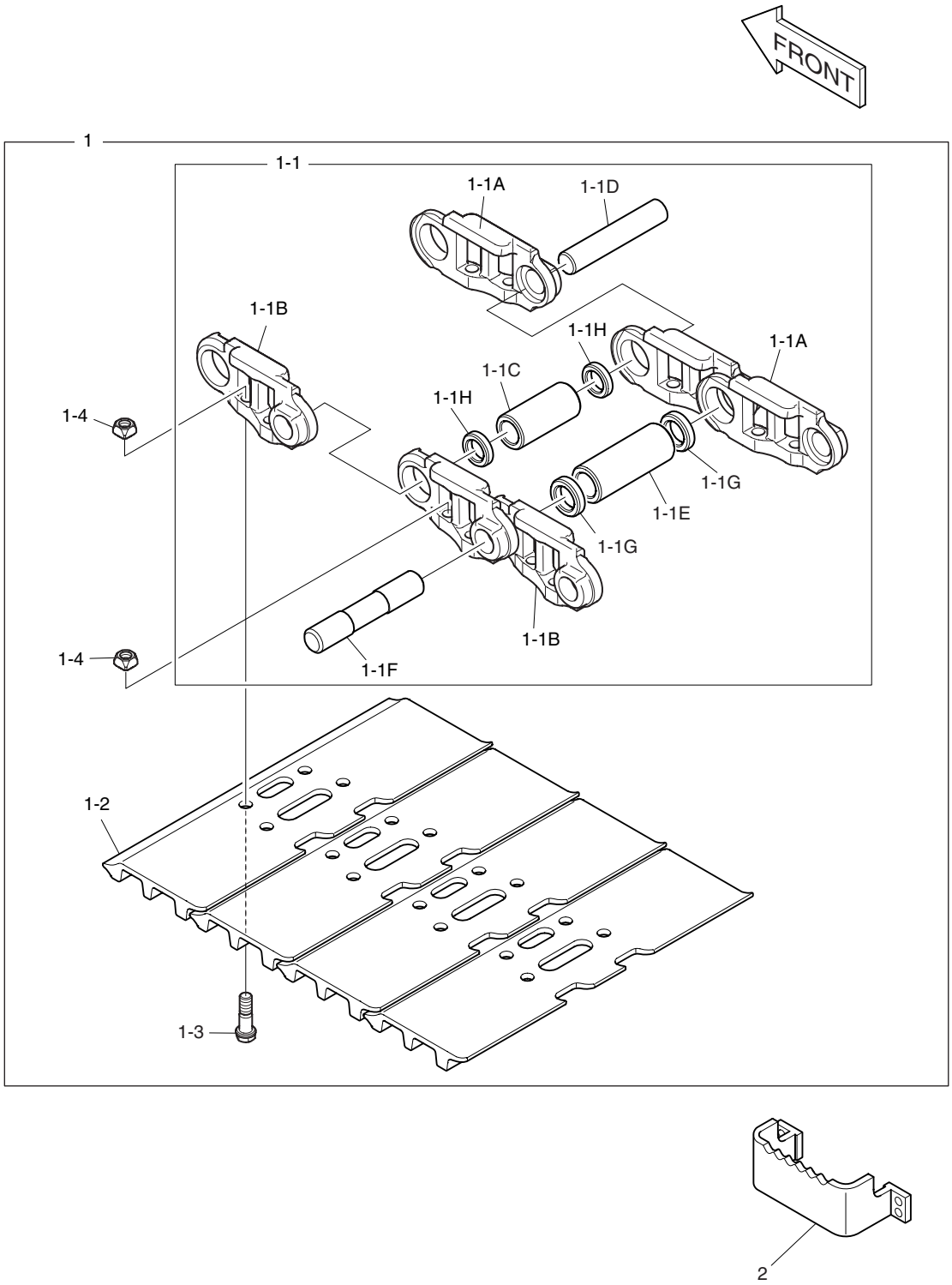

DATE	DEC. 29, 2005
REV. NO.	EXB05-20

Fig. 6251 TRACK SHOE-800G
ENSEMBLE MAILLON DE CHAINES

Serial No ; 1800 ~

Key No.	Part No.	Description	Description	Q'ty	S.C	Serial No.	ICA	Replaceable part	
								Part No.	Q'ty
6251--	273-00072A	TRACK SHOE ASS'Y-800mm	ENSEMBLE MAILLON DE	-	D	1800–			
1	K1011431	TRACK SHOE ASS'Y-800mm	ENSEMBLE MAILLON DE	2					
1-1	K1007954	. LINK ASS'Y	. ENSEMBLE MAILLON DE	1					
1-1A	K1012128	.. LINK(R.H)	.. PIECE DE JONCTION	53					
1-1B	K1012129	.. LINK(L.H)	.. PIECE DE JONCTION	53					
1-1C	K1012131	.. BUSHING	.. DOUILLE	52					
1-1D	K1012130	.. PIN	.. BROCHE	52					
1-1E	K1012132	.. BUSHING;MASTER	.. DOUILLE PRINCIPALE	1					
1-1F	K1012136	.. PIN;MASTER	.. BROCHE PRINCIPALE	1					
1-1G	K1012135	.. SPACER	.. ENTERTOISE	2					
1-1H	K1012133	.. SEAL	.. BAGUE	104					
1-2	K1011427	. SHOE 800mm	. SABOT	53					
1-3	K1012134	. BOLT	. BOULON A 6 PANS	212					
1-4	K1007956	. NUT	. ECROU	212					
2	2625-1155AD5	STEP	MARCHER	4					

DATE	DEC. 29, 2005
REV. NO.	EXB05-20

Fig. 6260 TRACK SHOE-900G
ENSEMBLE MAILLON DE CHAINES

Serial No. ; 1001 ~ 1799

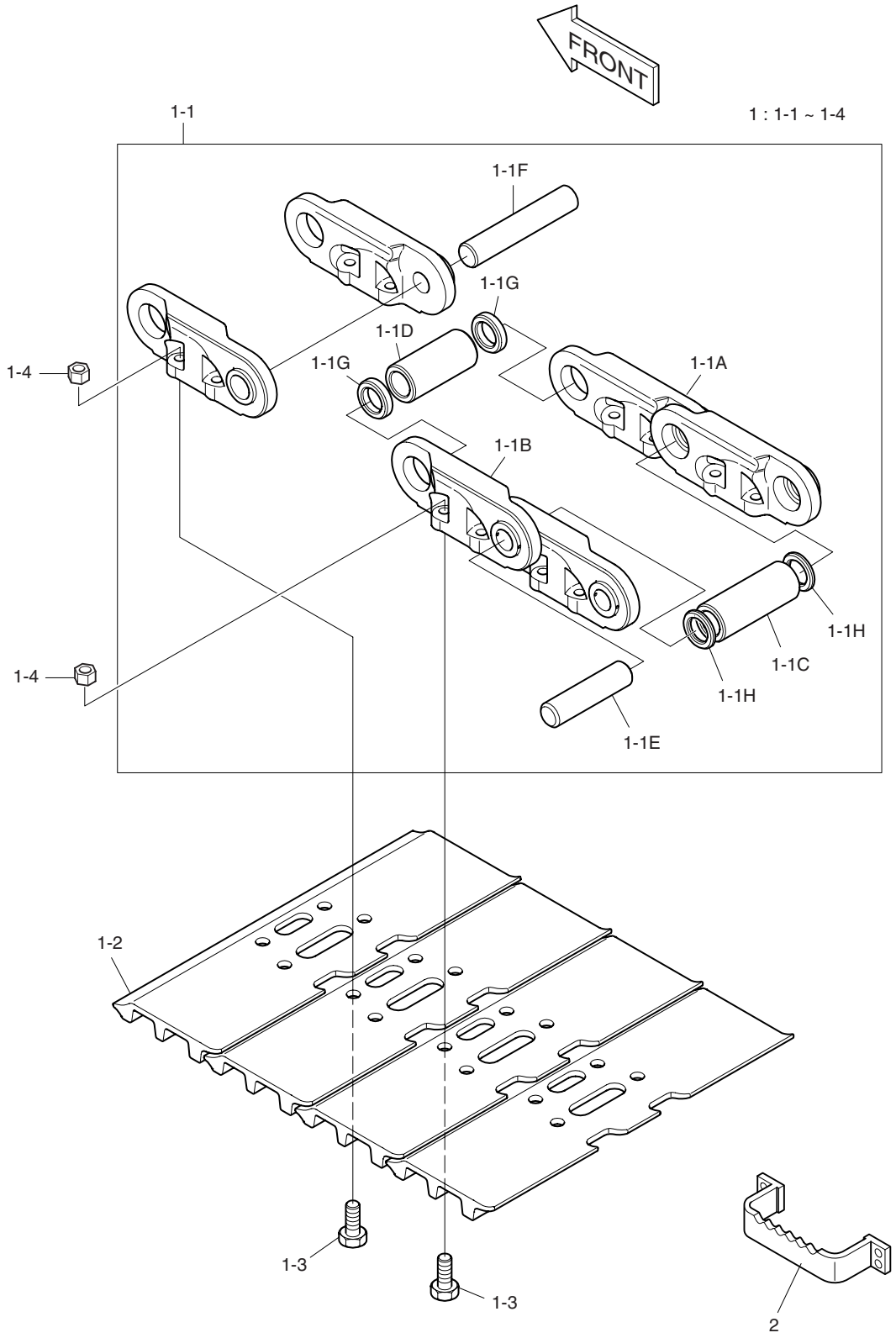

DATE	DEC. 29, 2005
REV. NO.	EXB05-20

Fig. 6260 TRACK SHOE-900G
ENSEMBLE MAILLON DE CHAINES

Serial No ; 1001 ~ 1799

Key No.	Part No.	Description	Description	Q'ty	S.C	Serial No.	ICA	Replaceable part	
								Part No.	Q'ty
6260--	**273-00073**	**TRACK SHOE ASS'Y-900mm**	ENSEMBLE CHAINE	-	D	**1001–1799**			
1	2273-6072D3	TRACK SHOE ASS'Y-900mm	ENSEMBLE CHAINE	2			I	K1011432	2
1-1	2272-6186	. LINK ASS'Y	. ENSEMBLE MAILLON DE	1					
1-1A	2272-6188	.. LINK(R.H)	.. PIECE DE JONCTION	53					
1-1B	2272-6187	.. LINK(L.H)	.. PIECE DE JONCTION	53					
1-1C	2110-6079	.. BUSHING	.. DOUILLE	52					
1-1D	2110-6080	.. BUSHING;MASTER	.. DOUILLE PRINCIPALE	1					
1-1E	2123-6105	.. PIN	.. BROCHE	52					
1-1F	2123-6106	.. PIN;MASTER	.. BROCHE PRINCIPALE	1					
1-1G	2114-6048	.. SPACER	.. ENTERTOISE	2					
1-1H	2180-6091	.. SEAL	.. BAGUE	104					
1-2	2273-6073D3	. SHOE	. SABOT	53					
1-3	2120-6030	. BOLT	. BOULON A 6 PANS	212					
1-4	2121-6037	. NUT	. ECROU	212					
2	2625-1155AD6	STEP	MARCHER	4					

DATE	DEC. 29, 2005
REV. NO.	EXB05-20

Fig. 6261 TRACK SHOE-900G
ENSEMBLE MAILLON DE CHAINES

Serial No. ; 1800 ~

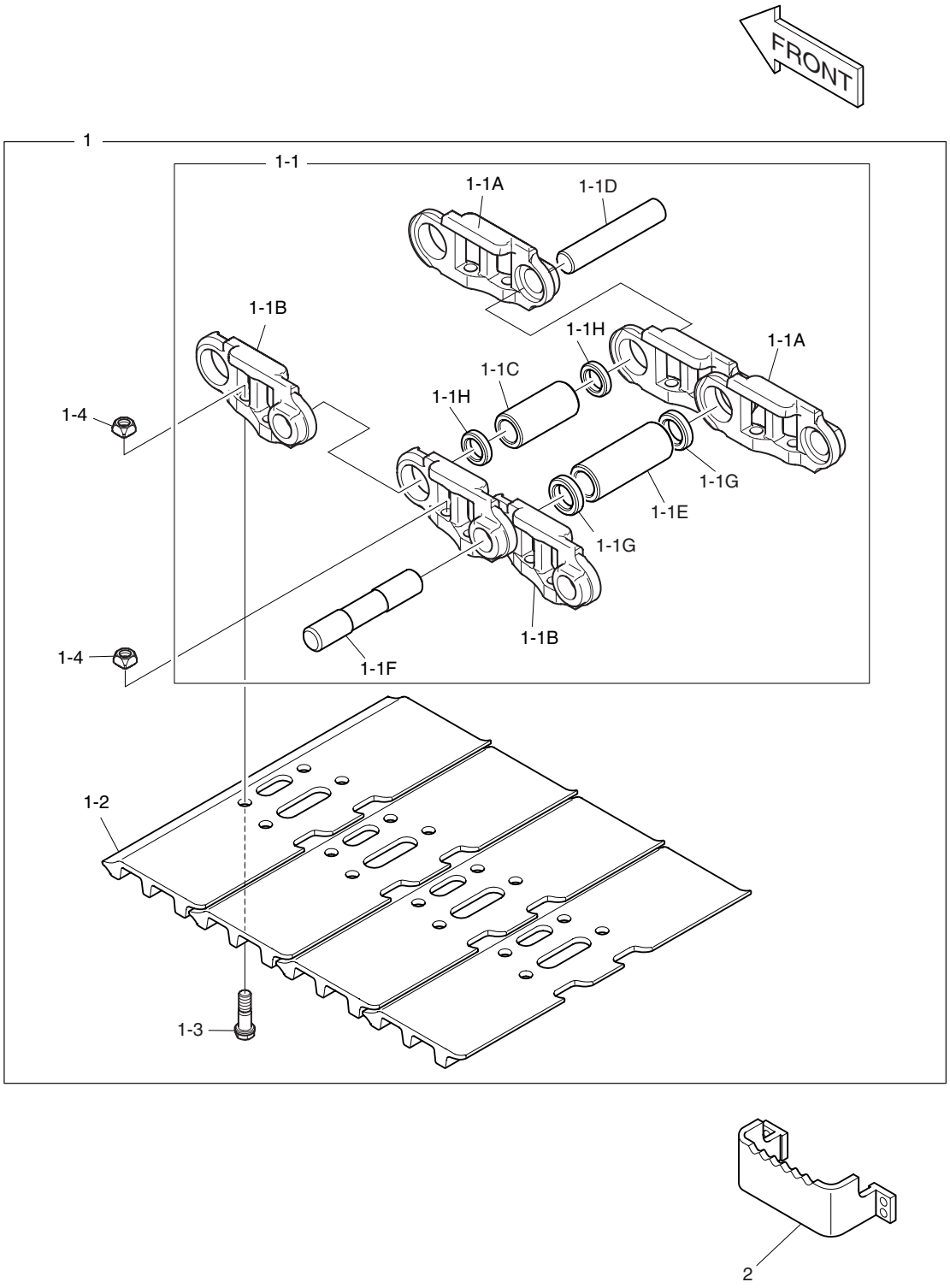

DATE	DEC. 29, 2005
REV. NO.	EXB05-20

Fig. 6261 TRACK SHOE-900G
ENSEMBLE MAILLON DE CHAINES

Serial No ; 1800 ~

Key No.	Part No.	Description	Description	Q'ty	S.C	Serial No.	ICA	Replaceable part	
								Part No.	Q'ty
6261--	273-00073A	TRACK SHOE ASS'Y-900mm	ENSEMBLE CHAINE	-	D	1800–			
1	K1011432	TRACK SHOE ASS'Y-900mm	ENSEMBLE CHAINE	2					
1-1	K1007954	. LINK ASS'Y	. ENSEMBLE MAILLON DE	1					
1-1A	K1012128	.. LINK(R.H)	.. PIECE DE JONCTION	53					
1-1B	K1012129	.. LINK(L.H)	.. PIECE DE JONCTION	53					
1-1C	K1012131	.. BUSHING	.. DOUILLE	52					
1-1D	K1012130	.. PIN	.. BROCHE	52					
1-1E	K1012132	.. BUSHING;MASTER	.. DOUILLE PRINCIPALE	1					
1-1F	K1012136	.. PIN;MASTER	.. BROCHE PRINCIPALE	1					
1-1G	K1012135	.. SPACER	.. ENTERTOISE	2					
1-1H	K1012133	.. SEAL	.. BAGUE	104					
1-2	K1011331	. SHOE 900mm	. SABOT	53					
1-3	K1012134	. BOLT	. BOULON A 6 PANS	212					
1-4	K1007956	. NUT	. ECROU	212					
2	2625-1155AD6	STEP	MARCHER	4					

DATE	JUN. 30, 2005
REV. NO.	EXB05-05

Fig. 6270 BOOM-7.1m FLECHE

Serial No. ;

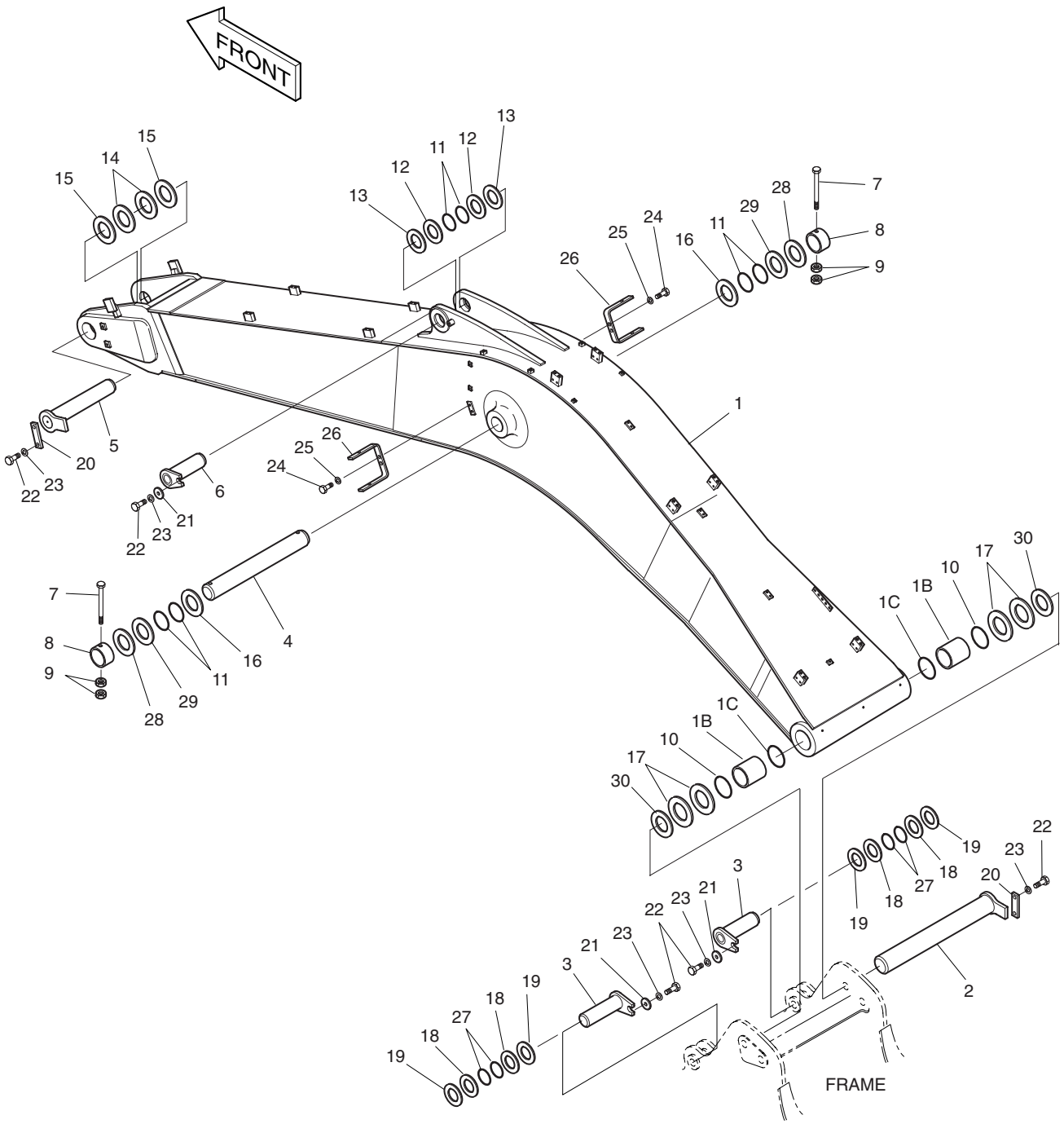

DATE	JUN. 30, 2005
REV. NO.	EXB05-05

Fig. 6270 BOOM-7.1m FLECHE

Serial No ;

Key No.	Part No.	Description	Description	Q'ty	S.C	Serial No.	ICA	Replaceable part	
								Part No.	Q'ty
6270--	701-00349	BOOM ASS'Y	ENSEMBLE FLECHE	-	D	1001–1200			
	701-00502	BOOM ASS'Y	ENSEMBLE FLECHE	-	D	1201–1513			
	701-00502A	**BOOM ASS'Y**	ENSEMBLE FLECHE	-	D	**1514–**			
1	701-00350A	BOOM SUB ASS'Y	ENSEMBLE FLECHE	1		1001–1200			
	701-00503	BOOM SUB ASS'Y	ENSEMBLE FLECHE	1		1201–1513			
	701-00503A	**BOOM SUB ASS'Y**	ENSEMBLE FLECHE	1		**1514–**			
1B	110-00192	. BUSHING	. DOUILLE	2					
1C	2180-1106BD19	. SEAL;DUST	. PARE-POUSSIERES	2					
2	123-00020A	PIN	BROCHE	1					
3	2123-2048A	PIN	BROCHE	2		1001–1428	I	2123-2048C	2
	2123-2048C	**PIN**	BROCHE	2		**1429–**			
4	123-00022	PIN	BROCHE	1					
5	2123-2046G	PIN	BROCHE	1					
6	2123-2049A	PIN	BROCHE	1					
7	S0572166	BOLT M20X2.0X200	BOULON A 6 PANS	2					
8	2116-1548	STOPPER	TAQUET D'ARRET	2					
9	S4013133	NUT M20X2.5	ECROU	4					
10	2180-1106BD19	SEAL;DUST	PARE-POUSSIERES	2					
11	2180-1106BD18	SEAL;DUST	PARE-POUSSIERES	6					
12	2114-1059D43	SHIM 0.5T	CALE	1					
13	2114-1059D42	SHIM 1.0T	CALE	1					
14	2114-1059D193	SHIM 1.6T	CALE	2					
15	2114-1059D192	SHIM 1.0T	CALE	2					
16	2114-1059D50	SHIM 1.6T	CALE	2					
17	2114-1059D223	SHIM 1.0T	CALE	2					
18	2114-1059D203	SHIM 1.0T	CALE	4					
19	2114-1059D202	SHIM 1.6T	CALE	4					
20	2191-2205D6	PLATE;STOPPER	ARRET	2					
21	2116-1060D5	STOPPER	TAQUET D'ARRET	3					
22	S0521456	BOLT M16X2.0X40	BOULON A 6 PANS	7					
23	S5102903	WASHER;SPRING M16	RONDELLE ELASTIQUE	7					
24	S0515053	BOLT M12X1.75X25	BOULON A 6 PANS	4					
25	S5102703	WASHER;SPRING M12	RONDELLE ELASTIQUE	4					
26	2195-3793	BRACKET	SUPPORT	2					
27	2180-1106BD15	SEAL;DUST	PARE-POUSSIERES	4					
28	2114-1059D261	SHIM 1.0T	CALE	2					
29	2114-1059D262	SHIM 1.6T	CALE	2					
30	DS7701358	SHIM	CALE	2		1208–			

DATE	JUN. 30, 2005
REV. NO.	EXB05-05

Fig. 6280 BOOM-9.0m FLECHE

Serial No. ;

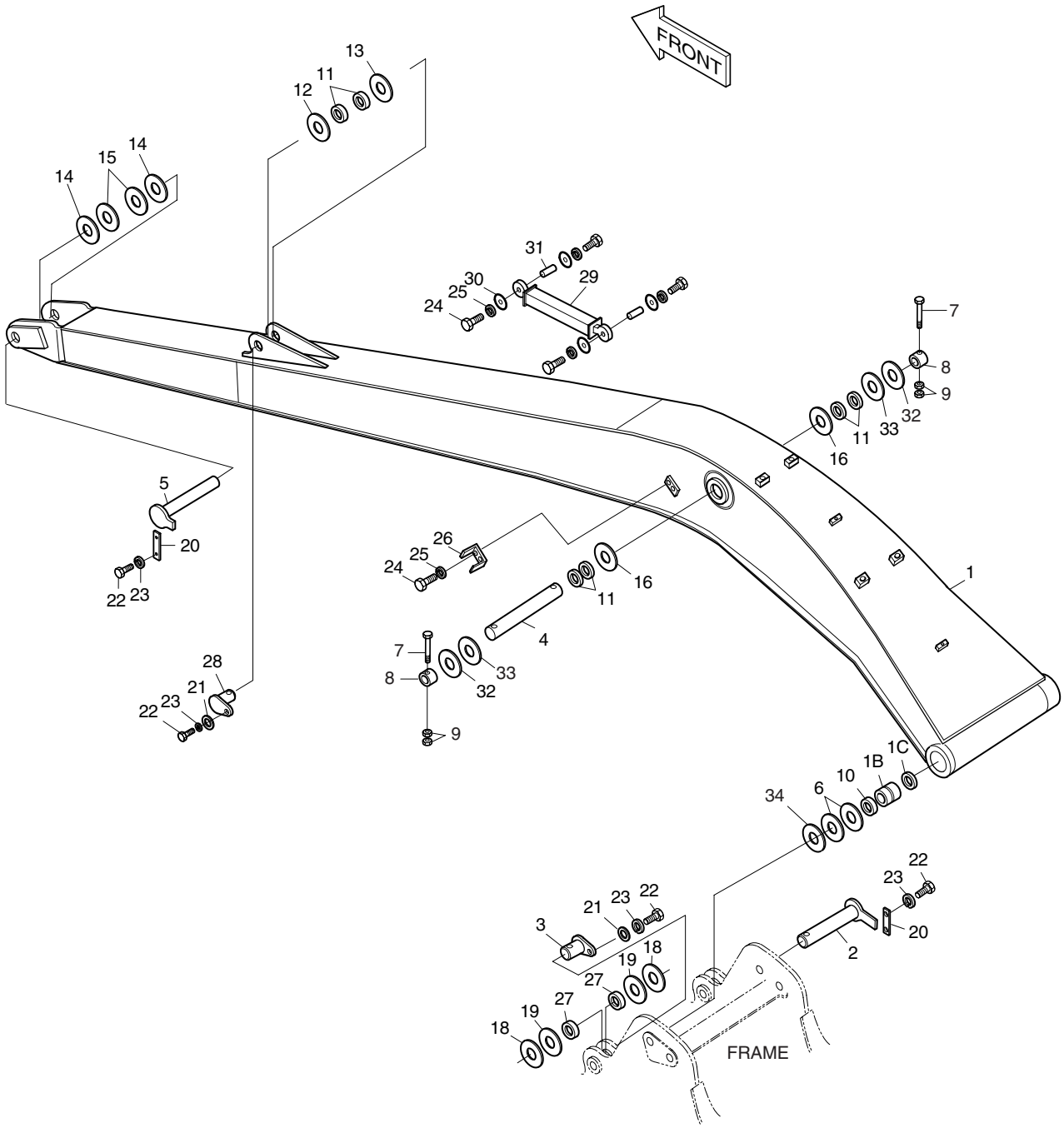

DATE	JUN. 30, 2005
REV. NO.	EXB05-05

Fig. 6280 BOOM-9.0m FLECHE

Serial No ;

Key No.	Part No.	Description	Description	Q'ty	S.C	Serial No.	ICA	Replaceable part	
								Part No.	Q'ty
6280--	701-00438	BOOM ASS'Y	FLECHE	-	D				
1	701-00439	BOOM SUB ASS'Y	FLECHE	1					
1B	110-00192	. BUSHING	. DOUILLE	2					
1C	2180-1106BD19	. SEAL;DUST	. PARE-POUSSIERES	2					
2	123-00020A	PIN	BROCHE	1					
3	2123-2048A	PIN	BROCHE	2		1001–1428	I	2123-2048C	2
	2123-2048C	**PIN**	BROCHE	2		**1429–**			
4	123-00022	PIN	BROCHE	1					
5	2123-2046G	PIN	BROCHE	1					
6	2114-1059D223	SHIM	CALE	2					
7	S0572166	BOLT M20X2.0X200	BOULON A 6 PANS	2					
8	2116-1548	STOPPER	TAQUET D'ARRET	2					
9	S4013133	NUT	ECROU	4					
10	2180-1106BD19	SEAL;DUST	PARE-POUSSIERES	2					
11	2180-1106BD18	SEAL;DUST	PARE-POUSSIERES	6					
12	2114-1059D43	SHIM	CALE	1					
13	2114-1059D42	SHIM	CALE	1					
14	2114-1059D193	SHIM	CALE	2					
15	2114-1059D192	SHIM	CALE	2					
16	2114-1059D50	SHIM	CALE	2					
18	2114-1059D203	SHIM	CALE	4					
19	2114-1059D202	SHIM	CALE	4					
20	2191-2205D6	PLATE;STOPPER	ARRET	2					
21	2116-1060D5	STOPPER	TAQUET D'ARRET	3					
22	S0521456	BOLT M16X2.0X40	BOULON A 6 PANS	7					
23	S5102903	WASHER;SPRING	RONDELLE ELASTIQUE M16	7					
24	S0515053	BOLT M12X1.75X25	BOULON A 6 PANS	8					
25	S5102703	WASHER;SPRING	RONDELLE ELASTIQUE M12	8					
26	2195-3793	BRACKET	SUPPORT	2					
27	2180-1106BD15	SEAL;DUST	PARE-POUSSIERES	4					
28	2123-2049A	PIN	BROCHE	1					
29	2312-1005A	ROD;TIE	TIGE	1					
30	2116-1472A	PLATE;STOPPER	PLAQUE	4					
31	2123-1915A	PIN	GOUJON	2					
32	2114-1059D261	SHIM	CALE	2					
33	2114-1059D262	SHIM	CALE	2					
34	DS7701358	SHIM	CALE	2		1208–			

DATE	JUN. 30, 2005
REV. NO.	EXB05-05

Fig. 6290 BOOM-11.0m FLECHE

Serial No. ;

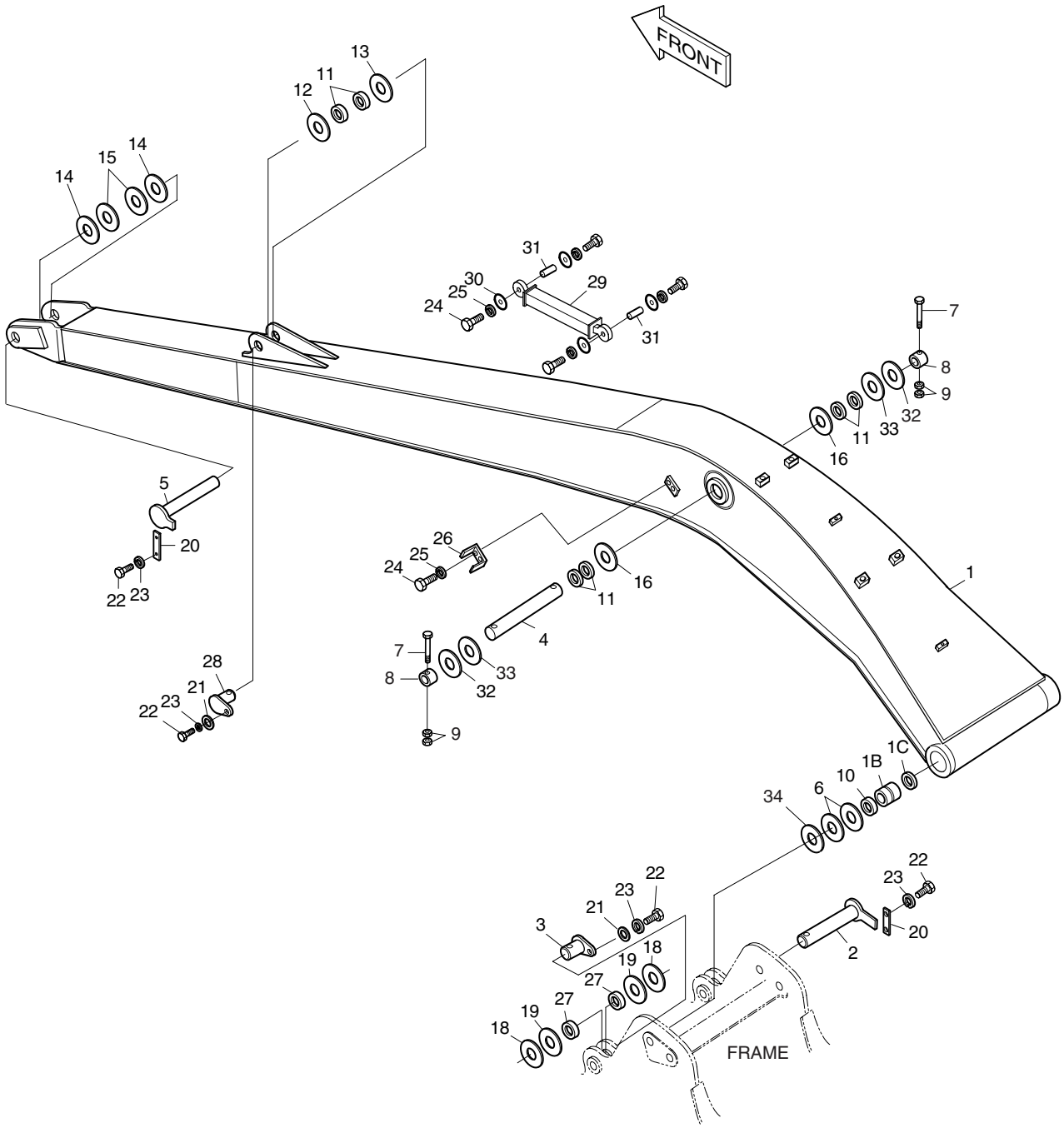

DATE	JUN. 30, 2005
REV. NO.	EXB05-05

Fig. 6290 BOOM-11.0m FLECHE

Serial No ;

Key No.	Part No.	Description	Description	Q'ty	S.C	Serial No.	ICA	Replaceable part	
								Part No.	Q'ty
6290--	701-00453	BOOM ASS'Y	FLECHE	-	D				
1	701-00454	BOOM SUB ASS'Y-11m	FLECHE	1					
1B	110-00192	. BUSHING	. DOUILLE	2					
1C	2180-1106BD19	. SEAL;DUST	. PARE-POUSSIERES	2					
2	123-00020A	PIN	BROCHE	1					
3	2123-2048A	PIN	BROCHE	2		1001–1428	I	2123-2048C	2
	2123-2048C	**PIN**	BROCHE	2		**1429–**			
4	123-00022	PIN	BROCHE	1					
5	2123-2046G	PIN	BROCHE	1					
6	2114-1059D223	SHIM	CALE	2					
7	S0572161	BOLT M20X2.0X200	BOULON A 6 PANS	2					
	S0572166	BOLT M20X2.0X200	BOULON A 6 PANS	2					
8	2116-1548	STOPPER	TAQUET D'ARRET	2					
9	S4013133	NUT	ECROU	4					
10	2180-1106BD19	SEAL;DUST	PARE-POUSSIERES	2					
11	2180-1106BD18	SEAL;DUST	PARE-POUSSIERES	6					
12	2114-1059D43	SHIM	CALE	1					
13	2114-1059D42	SHIM	CALE	1					
14	2114-1059D193	SHIM	CALE	2					
15	2114-1059D192	SHIM	CALE	2					
16	2114-1059D50	SHIM	CALE	2					
18	2114-1059D203	SHIM	CALE	4					
19	2114-1059D202	SHIM	CALE	4					
20	2191-2205D6	PLATE;STOPPER	ARRET	2					
21	2116-1060D5	STOPPER	TAQUET D'ARRET	3					
22	S0521456	BOLT M16X2.0X40	BOULON A 6 PANS	7					
23	S5102903	WASHER;SPRING	RONDELLE ELASTIQUE	7					
24	S0515053	BOLT M12X1.75X25	BOULON A 6 PANS	8					
25	S5102703	WASHER;SPRING	RONDELLE ELASTIQUE	8					
26	2195-3793	BRACKET	SUPPORT	2					
27	2180-1106BD15	SEAL;DUST	PARE-POUSSIERES	4					
28	2123-2049A	PIN	BROCHE	1					
29	2312-1005A	ROD;TIE	TIGE	1					
30	2116-1472A	PLATE;STOPPER	PLAQUE	4					
31	2123-1915A	PIN	GOUJON	2					
32	2114-1059D261	SHIM	CALE	2					
33	2114-1059D262	SHIM	CALE	2					
34	DS7701358	SHIM	CALE	2		1208–			

DATE	JUN. 30, 2007
REV. NO.	EXB07-06

Fig. 6300 ARM-2.4m BALANCIER

Serial No. ;

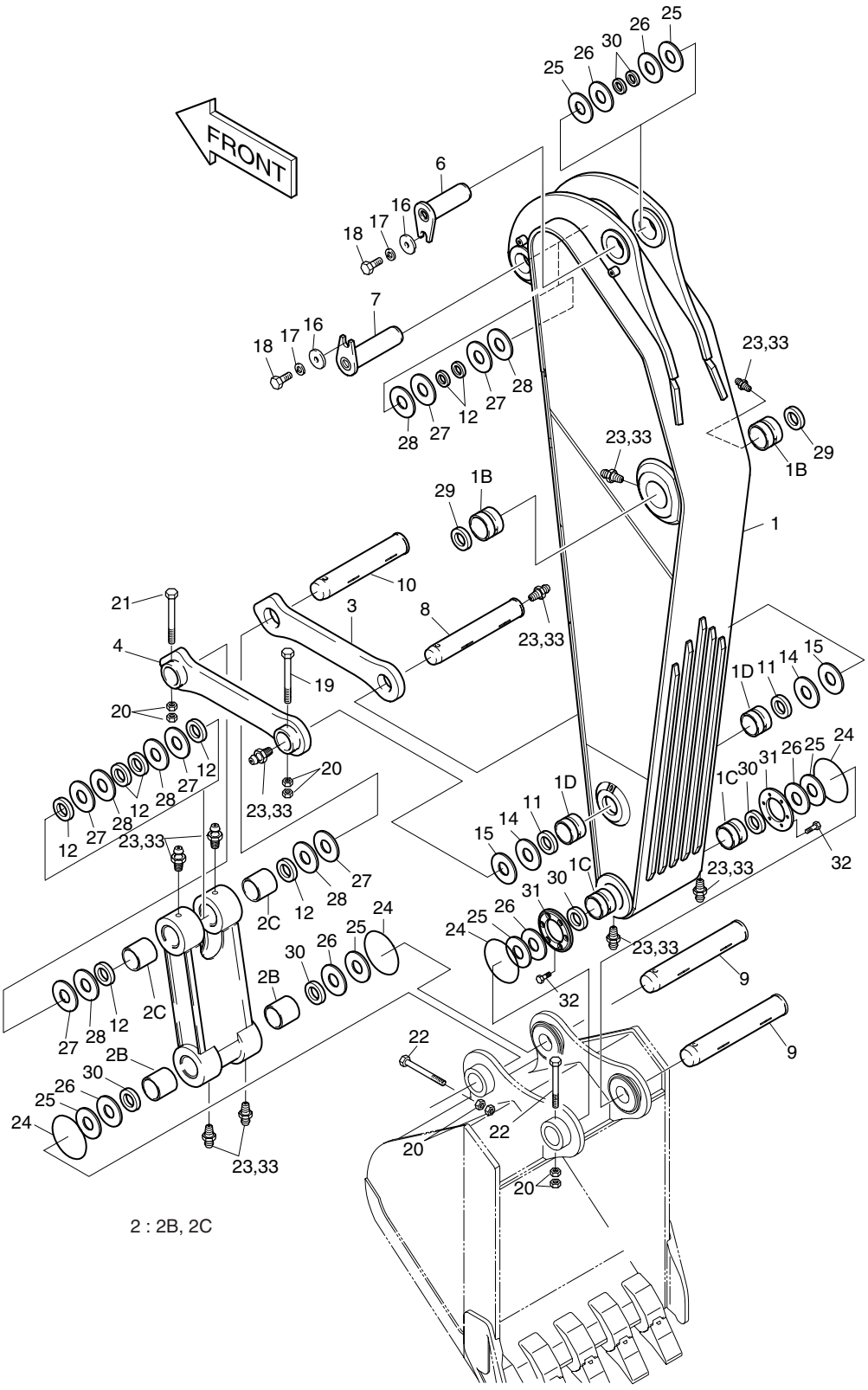

DATE	JUN. 30, 2007
REV. NO.	EXB07-06

Fig. 6300 ARM-2.4m BALANCIER

Serial No. ;

Key No.	Part No.	Description	Description	Q'ty	S.C	Serial No.	ICA	Replaceable part	
								Part No.	Q'ty
6300--	701-00053	ARM ASS'Y-2.4m	BALANCIER	-	D				
1	701-00054C	ARM SUB ASS'Y	BALANCIER	1		1001–1117	I	701-00054E	1
	701-00054E	ARM SUB ASS'Y	BALANCIER	1		1118–1181	I	701-00054G	1
	701-00054G	ARM SUB ASS'Y	BALANCIER	1		1182–			
1B	110-00186	. BUSHING	. DOUILLE	2					
1C	110-00205	. BUSHING;FLANGE	. DOUILLE	2					
1D	110-00187	. BUSHING	. DOUILLE	2		1001–1181	I	2110-1252A	2
	2110-1252A	. BUSHING	. DOUILLE	2		1182–			
2	2155-1373E	PUSH LINK ASS'Y	ARTICULATION	1		1001–1181	I	2155-1373G	1
	2155-1373G	PUSH LINK ASS'Y	ARTICULATION	1		1182–1532	I	2155-1373H	1
	2155-1373H	**PUSH LINK ASS'Y**	ARTICULATION	1		**1533**–			
2B	110-00189	. BUSHING	. DOUILLE	2		1001–1181	I	2110-1243B	2
	2110-1243B	. BUSHING	. DOUILLE	2		1182–			
2C	2110-1442	. BUSHING	. DOUILLE	2					
3	2155-4023B	LINK;GUIDE(R.H)	ARTICULATION	1					
4	2155-4024B	LINK;GUIDE(L.H)	ARTICULATION	1					
6	123-00018	PIN	BROCHE	1					
7	2123-2482	PIN	BROCHE	1					
8	2123-2051A	PIN	BROCHE	1					
9	2123-2477A	PIN	BROCHE	2					
10	2123-2478	PIN	BROCHE	1					
11	2180-1106BD14	SEAL;DUST	PARE-POUSSIERES	2					
12	2180-1106BD15	SEAL;DUST	PARE-POUSSIERES	8					
14	2114-1059D73	SHIM	CALE	2					
15	2114-1059D72	SHIM	CALE	2					
16	2116-1060D5	STOPPER	TAQUET D'ARRET	2					
17	S5102903	WASHER;SPRING M16	RONDELLE ELASTIQUE M16	2					
18	S0521366	BOLT M16X2.0X40	BOULON A 6 PANS	2					
19	S0571966	BOLT M20X2.5X180	BOULON A 6 PANS	1					
20	S4013133	NUT M20X2.5	ECROU	8					
21	S0572066	BOLT M20X2.5X190	BOULON A 6 PANS	1					
22	S0572166	BOLT M20X2.5X200	BOULON A 6 PANS	2					
23	S6710042	FITTING;GREASE	GRAISSEUR	10					
24	180-00077D9	O-RING	JOINT TORIQUE	4					
25	2114-1059D43	SHIM	CALE	6					
26	2114-1059D42	SHIM	CALE	6					
27	2114-1059D202	SHIM	CALE	6					
28	2114-1059D203	SHIM	CALE	6					

DATE	JUN. 30, 2007
REV. NO.	EXB07-06

Fig. 6300 ARM-2.4m BALANCIER

Serial No. ;

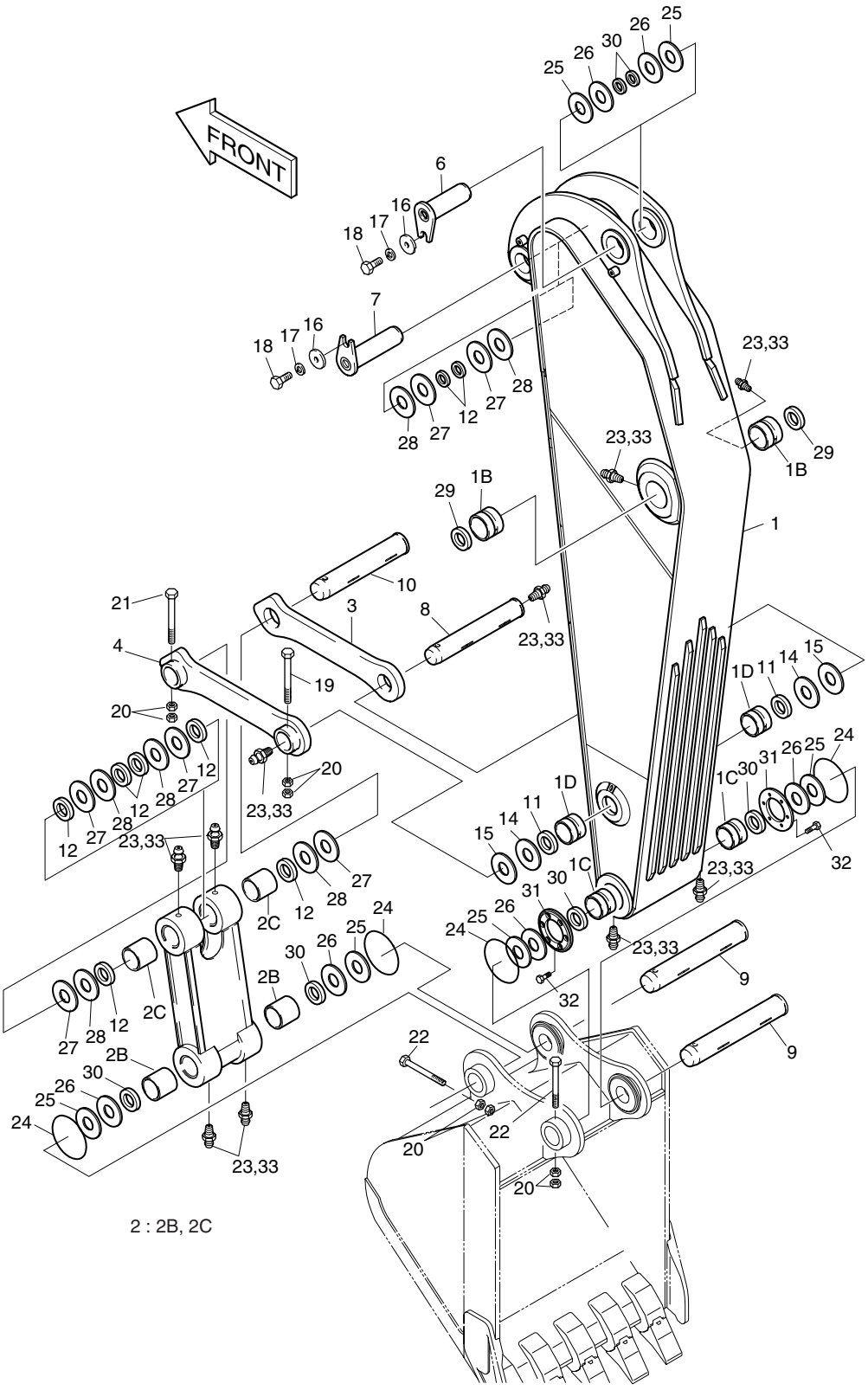

DATE	JUN. 30, 2007
REV. NO.	EXB07-06

Fig. 6300 ARM-2.4m BALANCIER

Serial No. ;

Key No.	Part No.	Description	Description	Q'ty	S.C	Serial No.	ICA	Replaceable part	
								Part No.	Q'ty
6300-29	2180-1106BD19	SEAL;DUST	PARE-POUSSIERES	2					
30	2180-1106BD18	SEAL;DUST	PARE-POUSSIERES	4					
31	114-00443	SPACER	BAGUE	2		1001–1225	I	114-00443A	2
	114-00443A	SPACER	BAGUE	2		1226–			
32	120-00223	BOLT M12X1.25X25	BOULON A 6 PANS	12					
33	160-00020	CAP;GREASE NIPPLE	CHAPEAU	10					

DATE	JUN. 30, 2007
REV. NO.	EXB07-06

Fig. 6310 ARM-3.35m BALANCIER

Serial No. ;

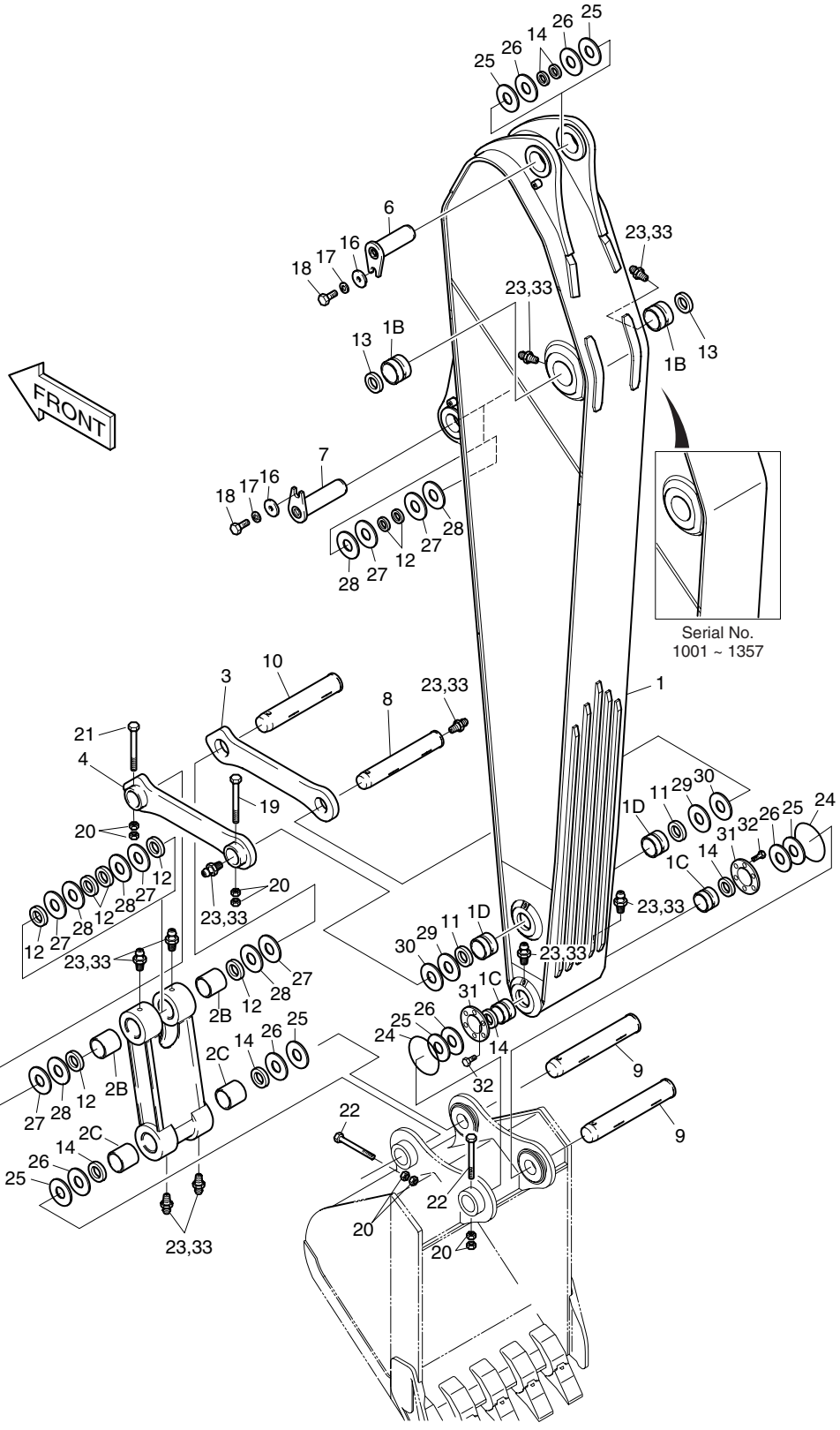

DATE	JUN. 30, 2007
REV. NO.	EXB07-06

Fig. 6310 ARM-3.35m BALANCIER

Serial No. ;

Key No.	Part No.	Description	Description	Q'ty	S.C	Serial No.	ICA	Replaceable part	
								Part No.	Q'ty
6310--	701-00353	ARM ASS'Y	BALANCIER	-	D				
1	701-00354	ARM SUB ASS'Y	BALANCIER	1		1001–1077	I	701-00354A	1
	701-00354A	ARM SUB ASS'Y	BALANCIER	1		1078–1117	I	701-00354B	1
	701-00354B	ARM SUB ASS'Y	BALANCIER	1		1118–1181	I	701-00354C	1
	701-00354C	ARM SUB ASS'Y	BALANCIER	1		1182–1200	I	701-00354E	1
	701-00354E	ARM SUB ASS'Y	BALANCIER	1		1201–1357	I	701-00354F	1
	701-00354F	ARM SUB ASS'Y	BALANCIER	1		1358–			
1B	110-00186	. BUSHING	. DOUILLE	2					
1C	110-00205	. BUSHING	. DOUILLE	2					
1D	110-00187	. BUSHING	. DOUILLE	2		1001–1181	I	2110-1252A	2
	2110-1252A	. BUSHING	. DOUILLE	2		1182–			
2	2155-1373E	PUSH LINK ASS'Y	ARTICULATION	1		1001–1181	I	2155-1373G	1
	2155-1373G	PUSH LINK ASS'Y	ARTICULATION	1		1182–1532	I	2155-1373H	1
	2155-1373H	**PUSH LINK ASS'Y**	ARTICULATION	1		**1533–**			
2B	110-00189	. BUSHING	. DOUILLE	2		1001–1181	I	2110-1243B	2
	2110-1243B	. BUSHING	. DOUILLE	2		1182–			
2C	2110-1442	. BUSHING	. DOUILLE	2					
3	2155-4023B	LINK;GUIDE(R.H)	ARTICULATION	1					
4	2155-4024B	LINK;GUIDE(L.H)	ARTICULATION	1					
6	123-00018	PIN	BROCHE	1					
7	2123-2482	PIN	BROCHE	1					
8	2123-2051A	PIN	BROCHE	1					
9	2123-2477A	PIN	BROCHE	2					
10	2123-2478	PIN	BROCHE	1					
11	2180-1106BD14	SEAL;DUST	PARE-POUSSIERES	2					
12	2180-1106BD15	SEAL;DUST	PARE-POUSSIERES	8					
13	2180-1106BD19	SEAL;DUST	PARE-POUSSIERES	2					
14	2180-1106BD18	SEAL;DUST	PARE-POUSSIERES	6					
16	2116-1060D5	STOPPER	TAQUET D'ARRET	2					
17	S5102903	WASHER;SPRING M16	RONDELLE ELASTIQUE	2					
18	S0521366	BOLT M16X2.0X40	BOULON A 6 PANS	2					
19	S0571966	BOLT M20X2.5X180	BOULON A 6 PANS	1					
20	S4013133	NUT M20X2.5	ECROU	8					
21	S0572066	BOLT M20X2.5X190	BOULON A 6 PANS	1					
22	S0572166	BOLT M20X2.5X200	BOULON A 6 PANS	2					
23	S6710041	FITTING;GREASE	GRAISSEUR	10					
24	180-00077D9	O-RING	JOINT TORIQUE	4					
25	2114-1059D43	SHIM 0.5T	CALE	6					

DATE	JUN. 30, 2007
REV. NO.	EXB07-06

Fig. 6310 ARM-3.35m BALANCIER

Serial No. ;

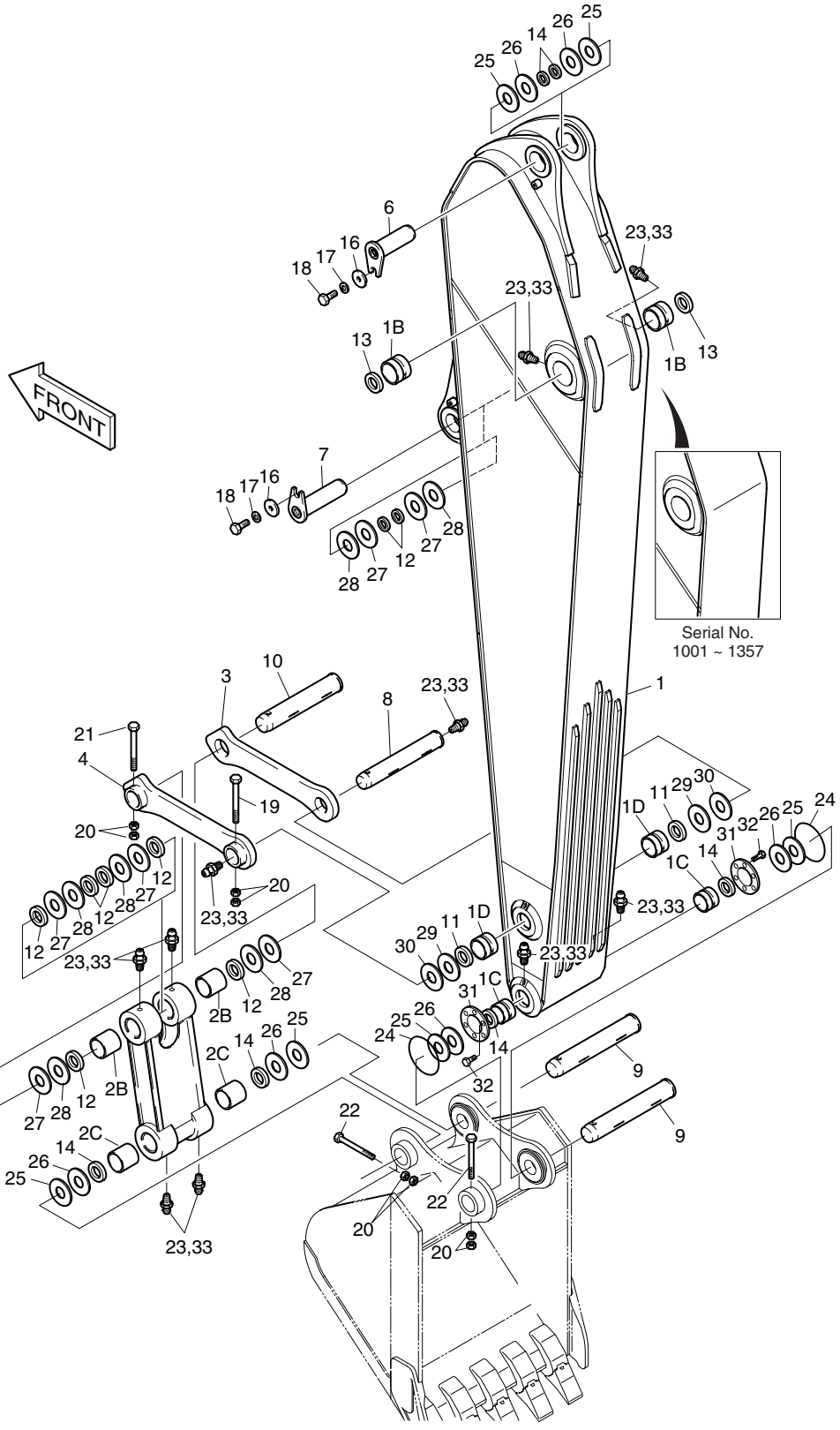

DATE	JUN. 30, 2007
REV. NO.	EXB07-06

Fig. 6310 ARM-3.35m BALANCIER

Serial No. ;

Key No.	Part No.	Description	Description	Q'ty	S.C	Serial No.	ICA	Replaceable part	
								Part No.	Q'ty
6310-26	2114-1059D42	SHIM 1.0T	CALE	6					
27	2114-1059D202	SHIM 1.5T	CALE	6					
28	2114-1059D203	SHIM 1.0T	CALE	6					
29	2114-1059D73	SHIM 1.6T	CALE	2					
30	2114-1059D72	SHIM 1.0T	CALE	2					
31	114-00443	SPACER	BAGUE D'ECARTEMENT	2		1001–1225	I	114-00443A	2
	114-00443A	SPACER	BAGUE D'ECARTEMENT	2		1226–			
32	120-00223	BOLT M12X1.25X25	BOULON A 6 PANS	12					
33	160-00020	CAP;GREASE NIPPLE	CHAPEAU	10					

DATE	JUN. 30, 2007
REV. NO.	EXB07-06

Fig. 6320 ARM-4.0m BALANCIER

Serial No. ;

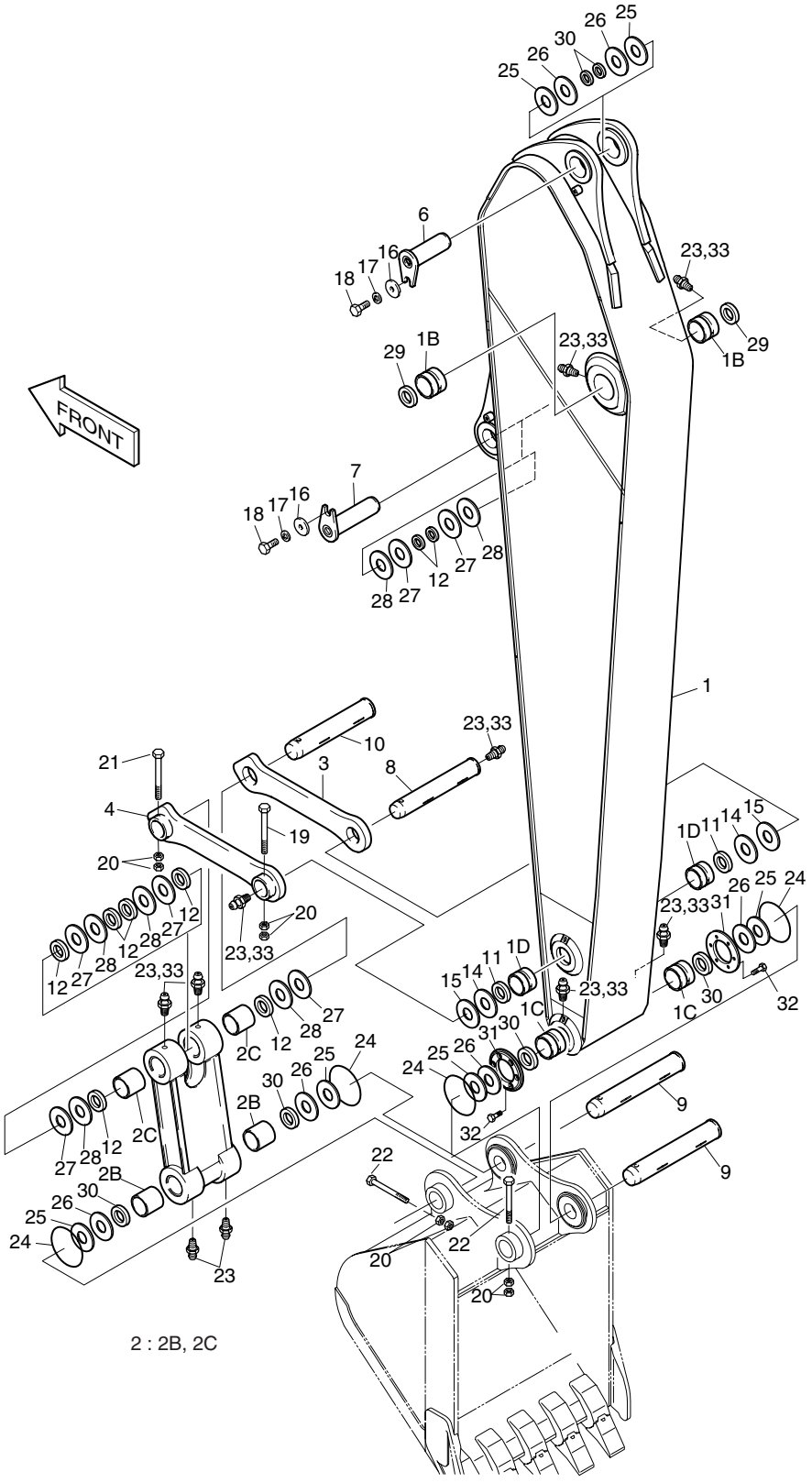

DATE	JUN. 30, 2007
REV. NO.	EXB07-06

Fig. 6320 ARM-4.0m BALANCIER

Serial No. ;

Key No.	Part No.	Description	Description	Q'ty	S.C	Serial No.	ICA	Replaceable part	
								Part No.	Q'ty
6320--	701-00059	ARM ASS'Y-4m	BALANCIER	-	D				
1	701-00060C	ARM SUB ASS'Y	BALANCIER	1		1001–1181	I	701-00060E	1
	701-00060E	ARM SUB ASS'Y	BALANCIER	1		1182–			
1B	110-00186	. BUSHING	. DOUILLE	2					
1C	110-00205	. BUSHING;FLANGE	. DOUILLE	2					
1D	110-00187	. BUSHING	. DOUILLE	2		1001–1181	I	2110-1252A	2
	2110-1252A	. BUSHING	. DOUILLE	2		1182–			
2	2155-1373E	PUSH LINK ASS'Y	ARTICULATION	1		1001–1181	I	2155-1373G	1
	2155-1373G	PUSH LINK ASS'Y	ARTICULATION	1		1182–1532	I	2155-1373H	1
	2155-1373H	**PUSH LINK ASS'Y**	ARTICULATION	1		**1533**–			
2B	110-00189	. BUSHING	. DOUILLE	2		1001–1181	I	2110-1243B	2
	2110-1243B	. BUSHING	. DOUILLE	2		1182–			
2C	2110-1442	. BUSHING	. DOUILLE	2					
3	2155-4023B	LINK;GUIDE(R.H)	ARTICULATION	1					
4	2155-4024B	LINK;GUIDE(L.H)	ARTICULATION	1					
6	123-00018	PIN	BROCHE	1					
7	2123-2482	PIN	BROCHE	1					
8	2123-2051A	PIN	BROCHE	1					
9	2123-2477A	PIN	BROCHE	2					
10	2123-2478	PIN	BROCHE	1					
11	2180-1106BD14	SEAL;DUST	PARE-POUSSIERES	2					
12	2180-1106BD15	SEAL;DUST	PARE-POUSSIERES	8					
14	2114-1059D73	SHIM	CALE	2					
15	2114-1059D72	SHIM	CALE	2					
16	2116-1060D5	STOPPER	TAQUET D'ARRET	2					
17	S5102903	WASHER;SPRING M16	RONDELLE ELASTIQUE	2					
18	S0521366	BOLT M16X2.0X40	BOULON A 6 PANS	2					
19	S0571966	BOLT M20X2.5X180	BOULON A 6 PANS	1					
20	S4013133	NUT M20X2.5	ECROU	8					
21	S0572066	BOLT M20X2.5X190	BOULON A 6 PANS	1					
22	S0572166	BOLT M20X2.5X200	BOULON A 6 PANS	2					
23	S6710042	FITTING;GREASE	GRAISSEUR	10					
24	180-00077D9	O-RING	JOINT TORIQUE	4					
25	2114-1059D43	SHIM	CALE	6					
26	2114-1059D42	SHIM	CALE	6					
27	2114-1059D202	SHIM	CALE	6					
28	2114-1059D203	SHIM	CALE	6					
29	2180-1106BD19	SEAL;DUST	PARE-POUSSIERES	2					

DATE	JUN. 30, 2007
REV. NO.	EXB07-06

Fig. 6320 ARM-4.0m BALANCIER

Serial No. ;

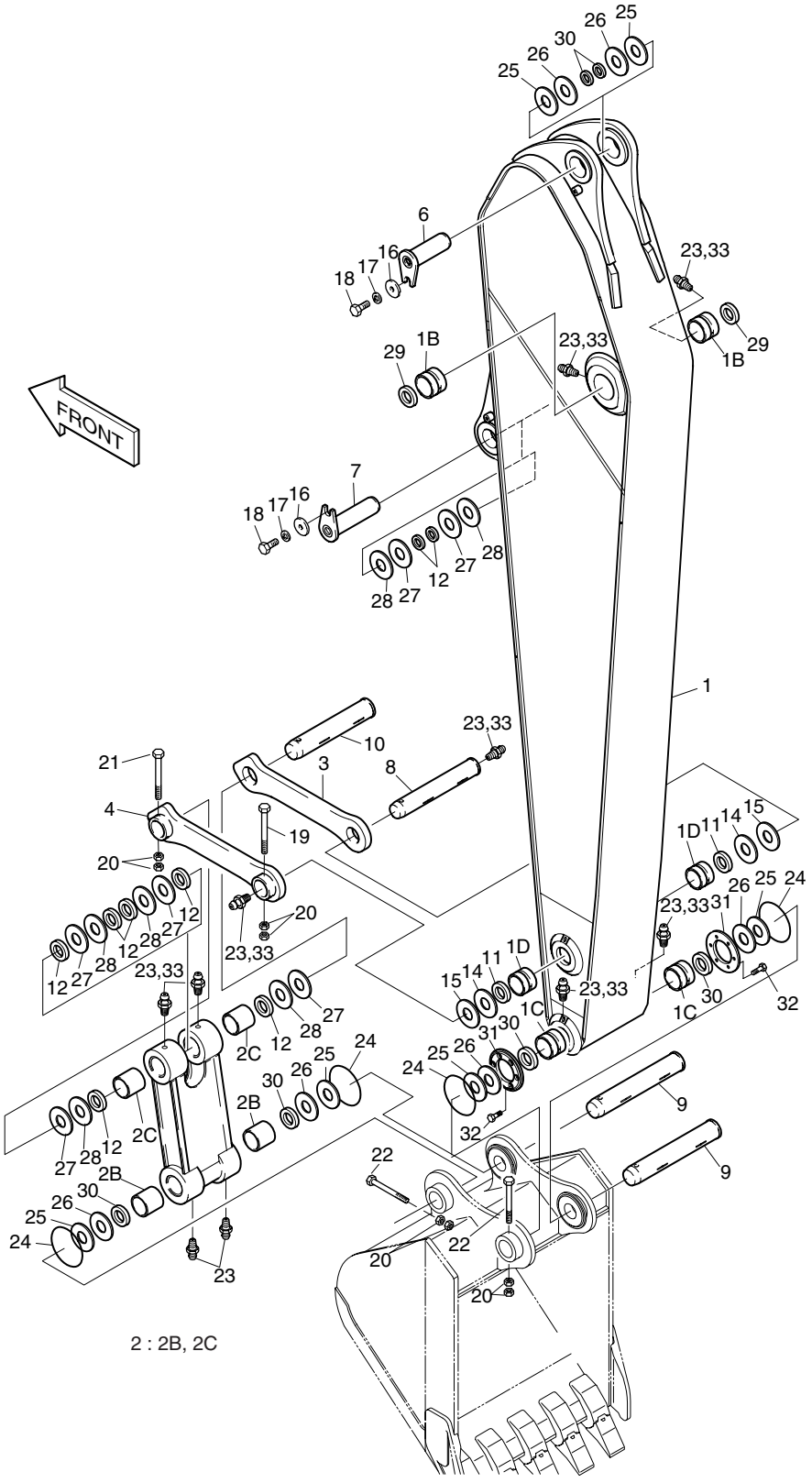

DATE	JUN. 30, 2007
REV. NO.	EXB07-06

Fig. 6320 ARM-4.0m BALANCIER

Serial No. ;

Key No.	Part No.	Description	Description	Q'ty	S.C	Serial No.	ICA	Replaceable part	
								Part No.	Q'ty
6320-30	2180-1106BD18	SEAL;DUST	PARE-POUSSIERES	4					
31	114-00443	SPACER	ENTERTOISE	2		1001–1225	I	114-00443A	2
	114-00443A	SPACER	ENTERTOISE	2		1226–			
32	120-00223	BOLT M12X1.25X25	BOULON A 6 PANS	12					
33	160-00020	CAP;GREASE NIPPLE	CHAPEAU	10					

DATE	JUN. 30, 2005
REV. NO.	EXB05-05

Fig. 6330 ARM-6.0m BALANCIER

Serial No. ;

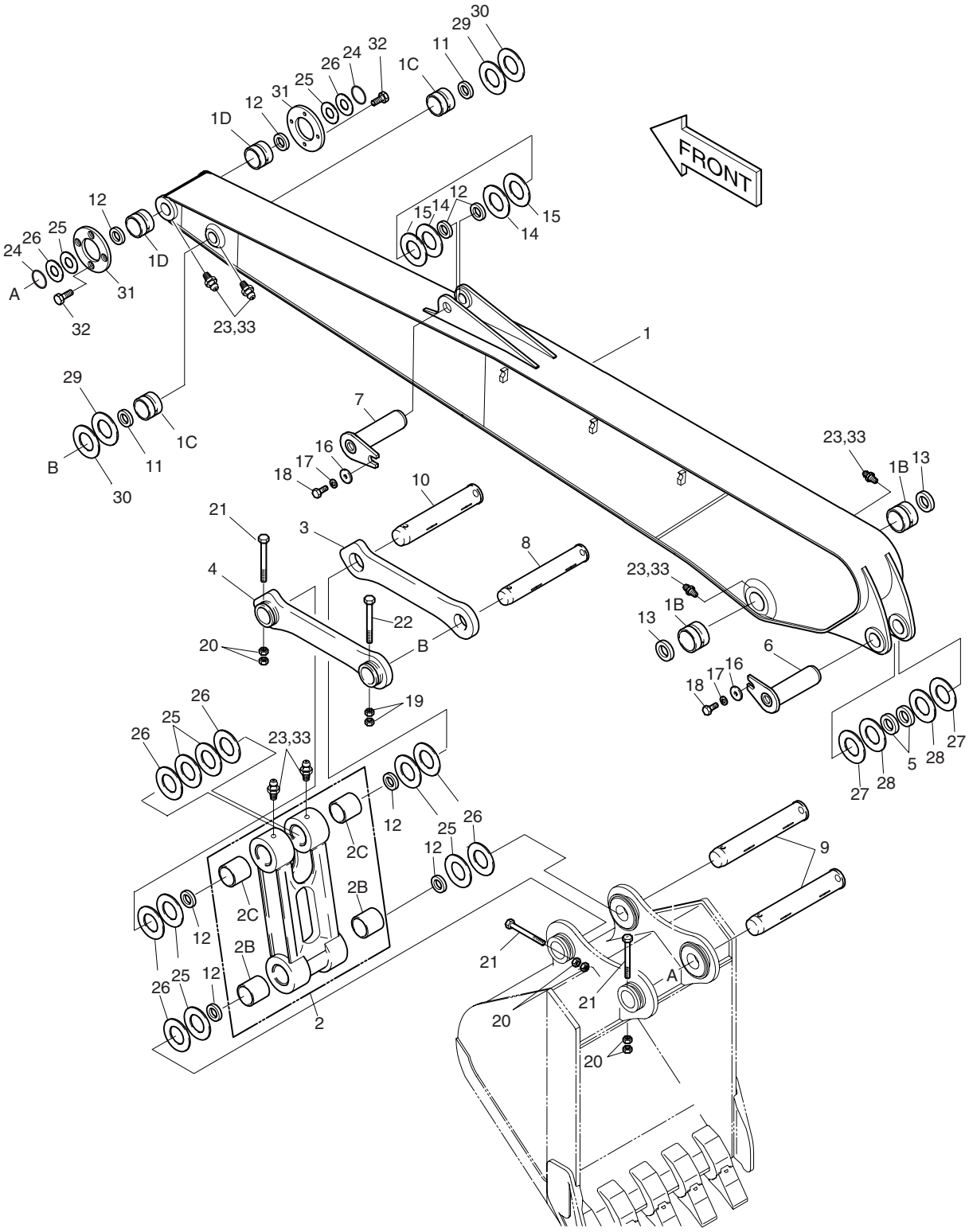

DATE	JUN. 30, 2005
REV. NO.	EXB05-05

Fig. 6330 ARM-6.0m BALANCIER

Serial No ;

Key No.	Part No.	Description	Description	Q'ty	S.C	Serial No.	ICA	Replaceable part	
								Part No.	Q'ty
6330--	701-00214	ARM ASS'Y	BALANCIER	-	D				
1	701-00215B	ARM SUB ASS'Y-6.0m	BALANCIER	1		1001–1117	I	701-00215C	1
	701-00215C	ARM SUB ASS'Y-6.0m	BALANCIER	1		1118–1442	I	701-00215E	1
	701-00215E	**ARM SUB ASS'Y-6.0m**	BALANCIER	1		**1443–**			
1B	110-00186	. BUSHING	. DOUILLE	2					
1C	110-00152	. BUSHING	. MANCHON	2					
1D	110-00206	. BUSHING	. DOUILLE	2					
2	2155-1327H	PUSH LINK ASS'Y	ARTICULATION	1					
2B	2110-1376A	. BUSHING	. MANCHON	2					
2C	110-00158	. BUSHING	. MANCHON	2					
3	2155-1310B	LINK;GUIDE(R.H)	ARTICULATION	1					
4	2155-1311B	LINK;GUIDE(L.H)	ARTICULATION	1					
5	2180-1106BD18	SEAL;DUST	PARE-POUSSIERES	2					
6	123-00018	PIN	BROCHE	1					
7	2123-2215C	PIN	GOUJON	1					
8	2123-2222B	PIN	GOUJON	1					
9	2123-2223C	PIN	GOUJON	2					
10	2123-2224B	PIN	GOUJON	1					
11	2180-1106BD24	SEAL;DUST	PARE-POUSSIERES	2					
12	2180-1106BD6	SEAL;DUST	PARE-POUSSIERES	12					
13	2180-1106BD19	SEAL;DUST	PARE-POUSSIERES	2					
14	2114-1059D113	SHIM 1.0T	CALE	2					
15	2114-1059D114	SHIM 1.6T	CALE	2					
16	2116-1060D5	STOPPER	TAQUET D'ARRET	2					
17	S5102903	WASHER;SPRING	RONDELLE ELASTIQUE M16	2					
18	S0521366	BOLT M16X2.0X35	BOULON A 6 PANS	2					
19	S4012933	NUT M16X2.0	ECROU	2					
20	S4013133	NUT M20X2.5	ECROU	8					
21	S0571866	BOLT M20X2.5X170	BOULON A 6 PANS	3					
22	S0566966	BOLT M16X2.0X140	BOULON A 6 PANS	1					
23	S6710041	NIPPLE;GREASE	GRAISSEUR	9					
24	180-00077D6	O-RING	JOINT TORIQUE	2					
25	2114-1059D219	SHIM 1.0T	CALE	8					
26	2114-1059D234	SHIM 1.6T	CALE	8					
27	2114-1059D43	SHIM 0.5T	CALE	2					
28	2114-1059D42	SHIM 1.0T	CALE	2					
29	2114-1059D63	SHIM 1.0T	CALE	2					
30	2114-1059D118	SHIM 1.6T	CALE	2					

DATE	JUN. 30, 2005
REV. NO.	EXB05-05

Fig. 6330 ARM-6.0m BALANCIER

Serial No. ;

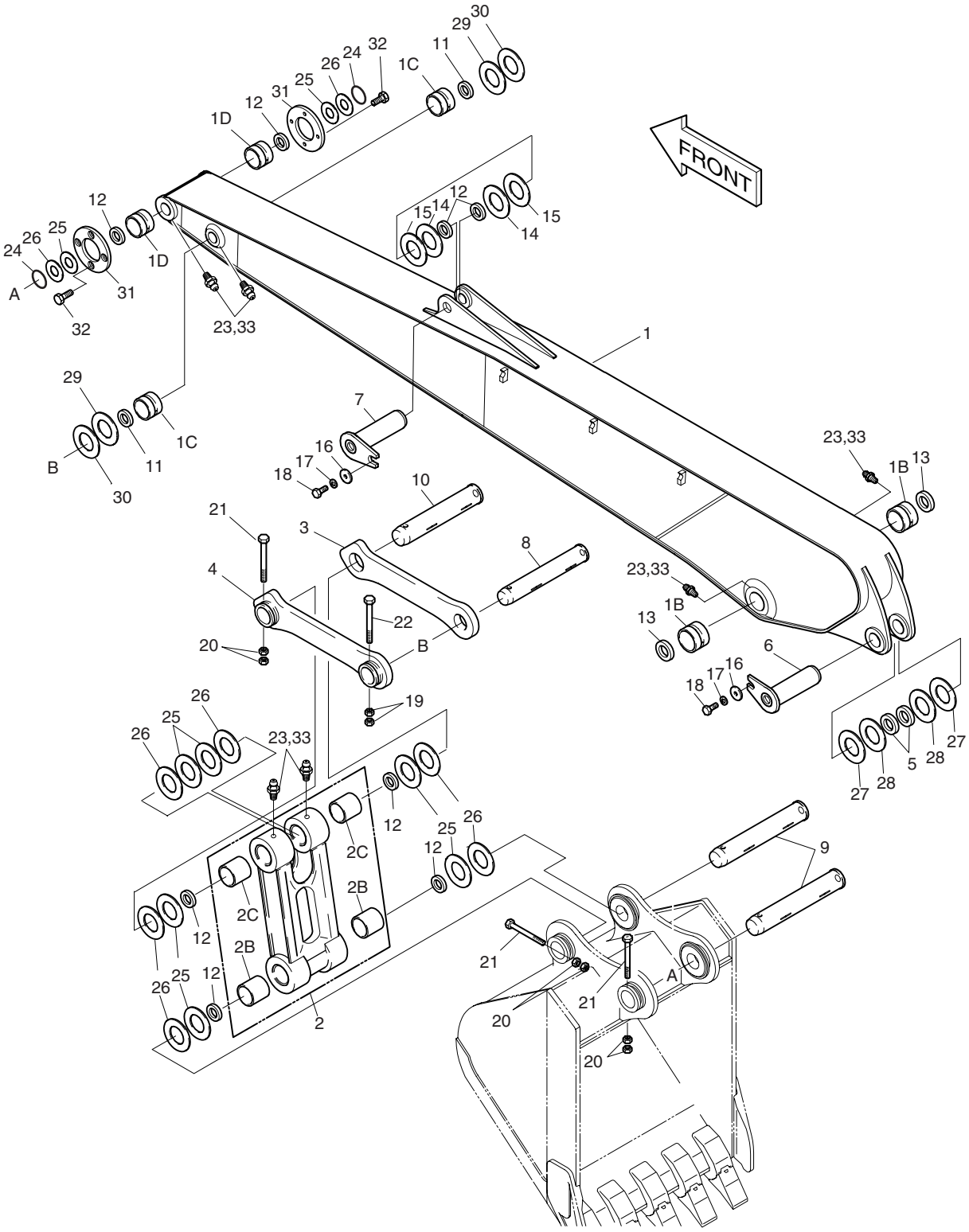

DATE	JUN. 30, 2005
REV. NO.	EXB05-05

Fig. 6330 ARM-6.0m BALANCIER

Serial No ;

Key No.	Part No.	Description	Description	Q'ty	S.C	Serial No.	ICA	Replaceable part	
								Part No.	Q'ty
6330-31	114-00379	SPACER	BAGUE	2		1001–1225	I	114-00379A	1
	114-00379A	SPACER	BAGUE	2		1226–			
32	120-00223	BOLT M12X1.25X25	BOULON A 6 PANS	8					
33	160-00020	CAP;GREASE NIPPLE	CHAPEAU	9					

DATE	JUN. 30, 2005
REV. NO.	EXB05-05

Fig. 6340 ARM-8.0m BALANCIER

Serial No. ;

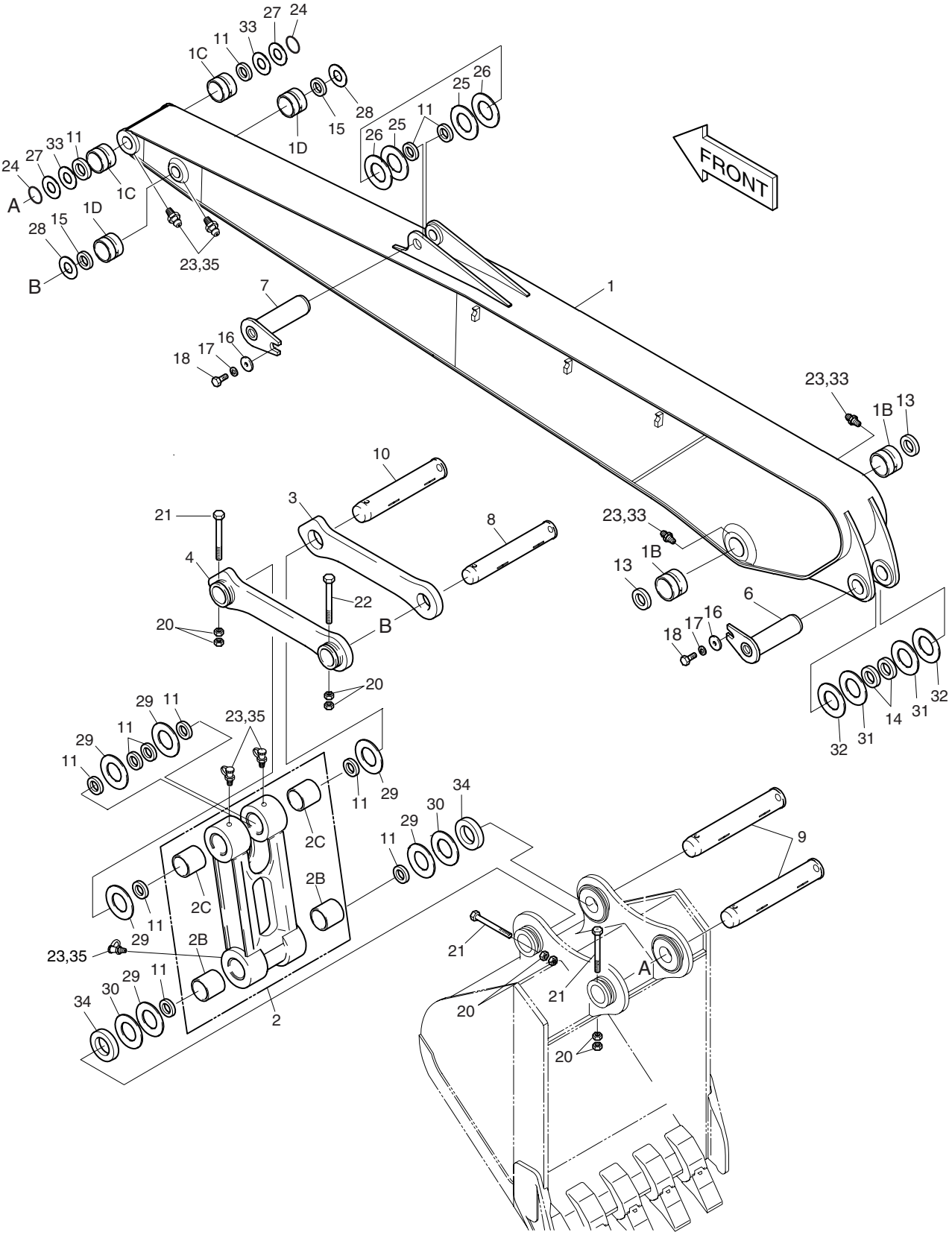

DATE	JUN. 30, 2005
REV. NO.	EXB05-05

Fig. 6340 ARM-8.0m BALANCIER

Serial No ;

Key No.	Part No.	Description	Description	Q'ty	S.C	Serial No.	ICA	Replaceable part	
								Part No.	Q'ty
6340--	701-00221	ARM ASS'Y	BALANCIER	-	D				
1	701-00222B	ARM SUB ASS'Y-8.0m	BALANCIER	1		1001–1117	I	701-00222C	1
	701-00222C	ARM SUB ASS'Y-8.0m	BALANCIER	1		1118–1442	I	701-00222E	1
	701-00222E	**ARM SUB ASS'Y-8.0m**	BALANCIER	1		**1443–**			
1B	110-00186	. BUSHING	. DOUILLE	2					
1C	110-00064	. BUSHING	. DOUILLE	2					
1D	110-00179	. BUSHING	. DOUILLE	2					
2	2155-1335G	PUSH LINK ASS'Y	ARTICULATION	1					
2B	2110-1228B	. BUSHING	. MANCHON	2					
2C	2110-1360A	. BUSHING	. MANCHON	2					
3	2155-1299B	LINK;GUIDE(R.H)	ARTICULATION	1					
4	2155-1300B	LINK;GUIDE(L.H)	ARTICULATION	1					
6	123-00018	PIN	BROCHE	1					
7	2123-2182C	PIN	GOUJON	1					
8	2123-2191B	PIN	GOUJON	1					
9	2123-2192C	PIN	GOUJON	2					
10	2123-2193B	PIN	GOUJON	1					
11	2180-1106BD24	SEAL;DUST	PARE-POUSSIERES	12					
13	2180-1106BD19	SEAL;DUST	PARE-POUSSIERES	2					
14	2180-1106BD18	SEAL;DUST	PARE-POUSSIERES	2					
15	2180-1106BD4	SEAL;DUST	PARE-POUSSIERES	2					
16	2116-1060D6	STOPPER	TAQUET D'ARRET	2					
17	S5102903	WASHER;SPRING	RONDELLE ELASTIQUE	2					
18	S0521366	BOLT M16X2.0X35	BOULON A 6 PANS	2					
20	S4012933	NUT	ECROU	8					
21	S0566966	BOLT M16X2.0X140	BOULON A 6 PANS	3					
22	S0566866	BOLT M16X2.0X130	BOULON A 6 PANS	1					
23	S6710041	NIPPLE;GREASE	GRAISSEUR	9					
24	180-00077D5	O-RING	JOINT TORIQUE	2					
25	2114-1059D98	SHIM	CALE	2					
26	2114-1059D100	SHIM	CALE	2					
27	2114-1059D175	SHIM	CALE	2					
28	2114-1059D122	SHIM	CALE	2					
29	2114-1059D63	SHIM	CALE	6					
30	2114-1059D118	SHIM	CALE	2					
31	2114-1059D43	SHIM	CALE	2					
32	2114-1059D42	SHIM	CALE	2					
33	2114-1997A	SPACER	BAGUE D'ECARTEMENT	2		1001–1225	I	2114-1997B	2

DATE	JUN. 30, 2005
REV. NO.	EXB05-05

Fig. 6340 ARM-8.0m BALANCIER

Serial No. ;

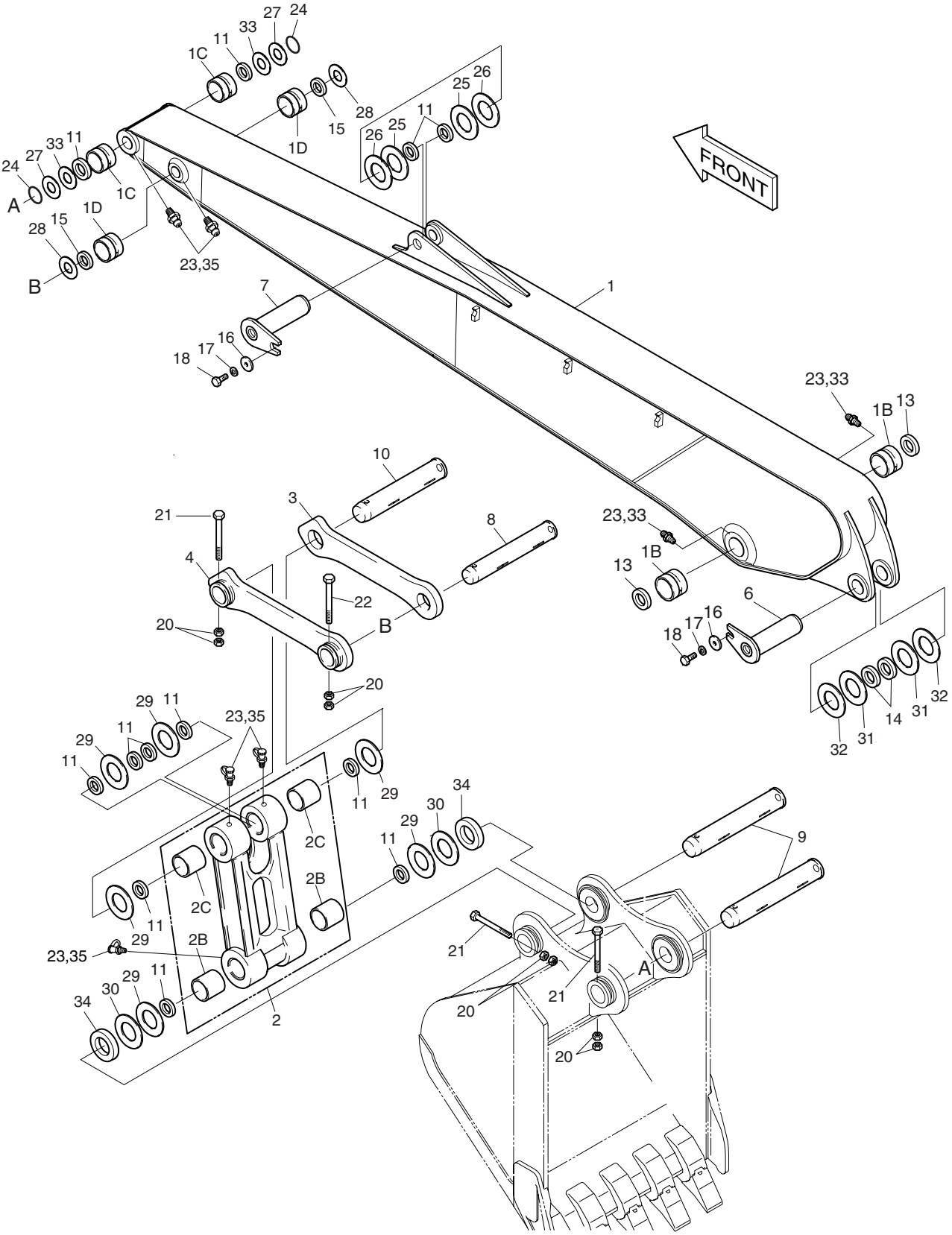

DATE	JUN. 30, 2005
REV. NO.	EXB05-05

Fig. 6340 ARM-8.0m BALANCIER

Serial No ;

Key No.	Part No.	Description	Description	Q'ty	S.C	Serial No.	ICA	Replaceable part	
								Part No.	Q'ty
6340-33	2114-1997B	SPACER	BAGUE D'ECARTEMENT	2		1226–			
34	2114-1998A	SPACER	BAGUE D'ECARTEMENT	2		1001–1225	I	2114-1998B	2
	2114-1998B	SPACER	BAGUE D'ECARTEMENT	2		1226–			
35	160-00020	CAP;GREASE NIPPLE	CHAPEAU	9					

DATE	JUL. 30, 2003
REV. NO.	EXB03-13

Fig. 6350 BUCKET-1.58m³(48")-SIDE PIN GODET

Serial No. ;

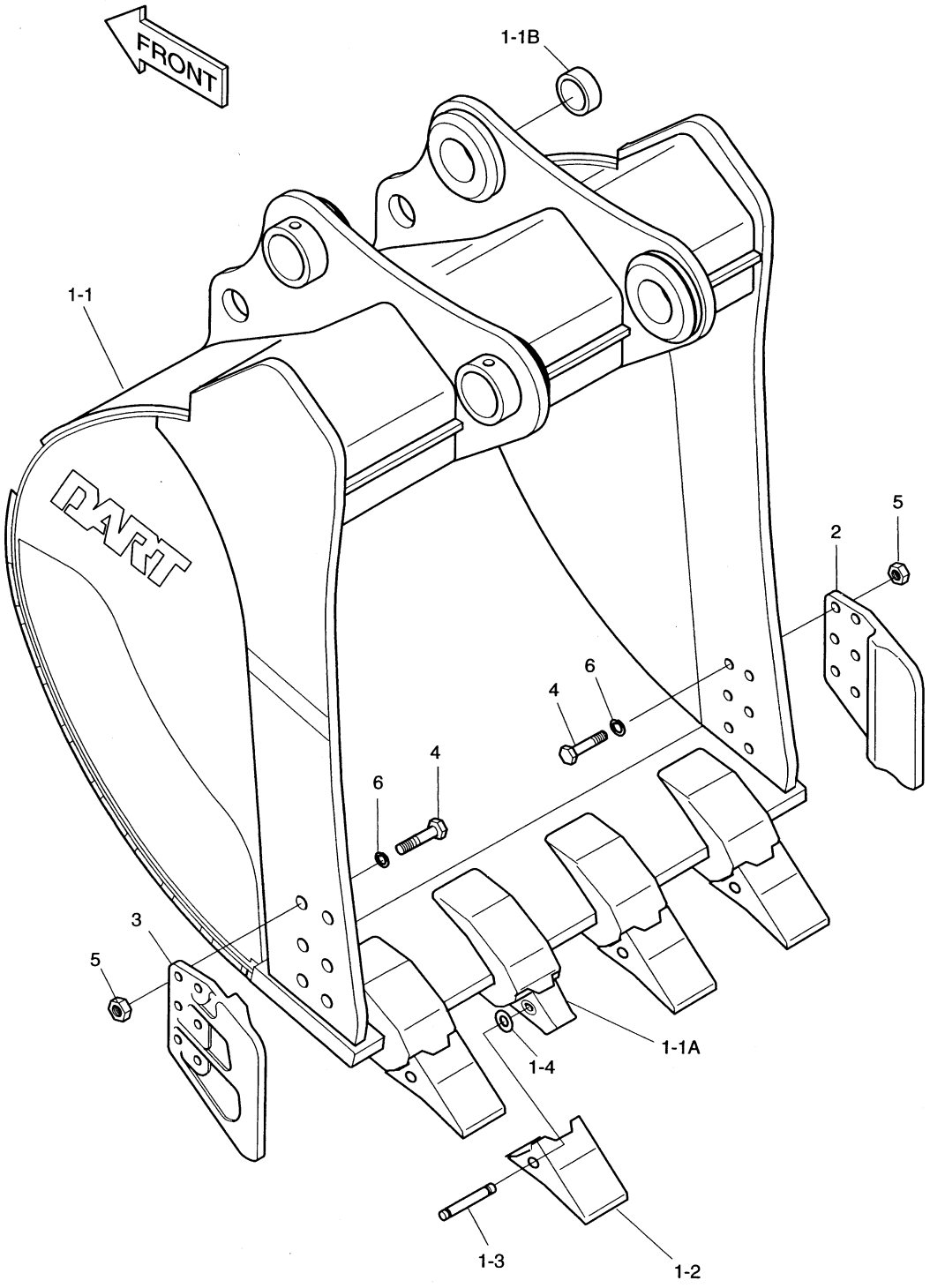

DATE	JUL. 30, 2003
REV. NO.	EXB03-13

Fig. 6350 BUCKET-1.58㎥(48")-SIDE PIN GODET

Serial No ;

Key No.	Part No.	Description	Description	Q'ty	S.C	Serial No.	ICA	Replaceable part	
								Part No.	Q'ty
6350--	2704-1717	BUCKET ASS'Y-1.58㎥	GODET	1					
1	2704-1718	BUCKET SUB ASS'Y	GODET	1					
1-1	-	. BUCKET;WELD	. GODET	1	D				
1-1A	2713-1273	.. ADAPTER;TOOTH	.. DENT DE ADAPTEUR	4					
1-1B	2110-1413	.. BUSH	.. DOUILLE	4					
1-2	713-00028	. POINT;TOOTH	. DENT	4					
1-3	2705-1034	. PIN;LOCKING	. BROUCHE	4					
1-4	2114-1931	. WASHER;LOCKING	. RONDELLE PLATE	4					
2	2713-1240	CUTTER;SIDE(R.H)	COUTEAU LATERAL	1					
3	2713-1241	CUTTER;SIDE(L.H)	COUTEAU LATERAL	1					
4	S0575061	BOLT M24X3.0X85	BOULON A 6 PANS	12					
5	S4013333	NUT M24X3.0	ECROU	12					
6	2114-1831	WASHER;HARDEN M24	RONDELLE ELASTIQUE	12					

DATE	JUL. 30, 2003
REV. NO.	EXB03-13

Fig. 6360 BUCKET-1.58m³(48")-VERTICAL PIN GODET

Serial No. ;

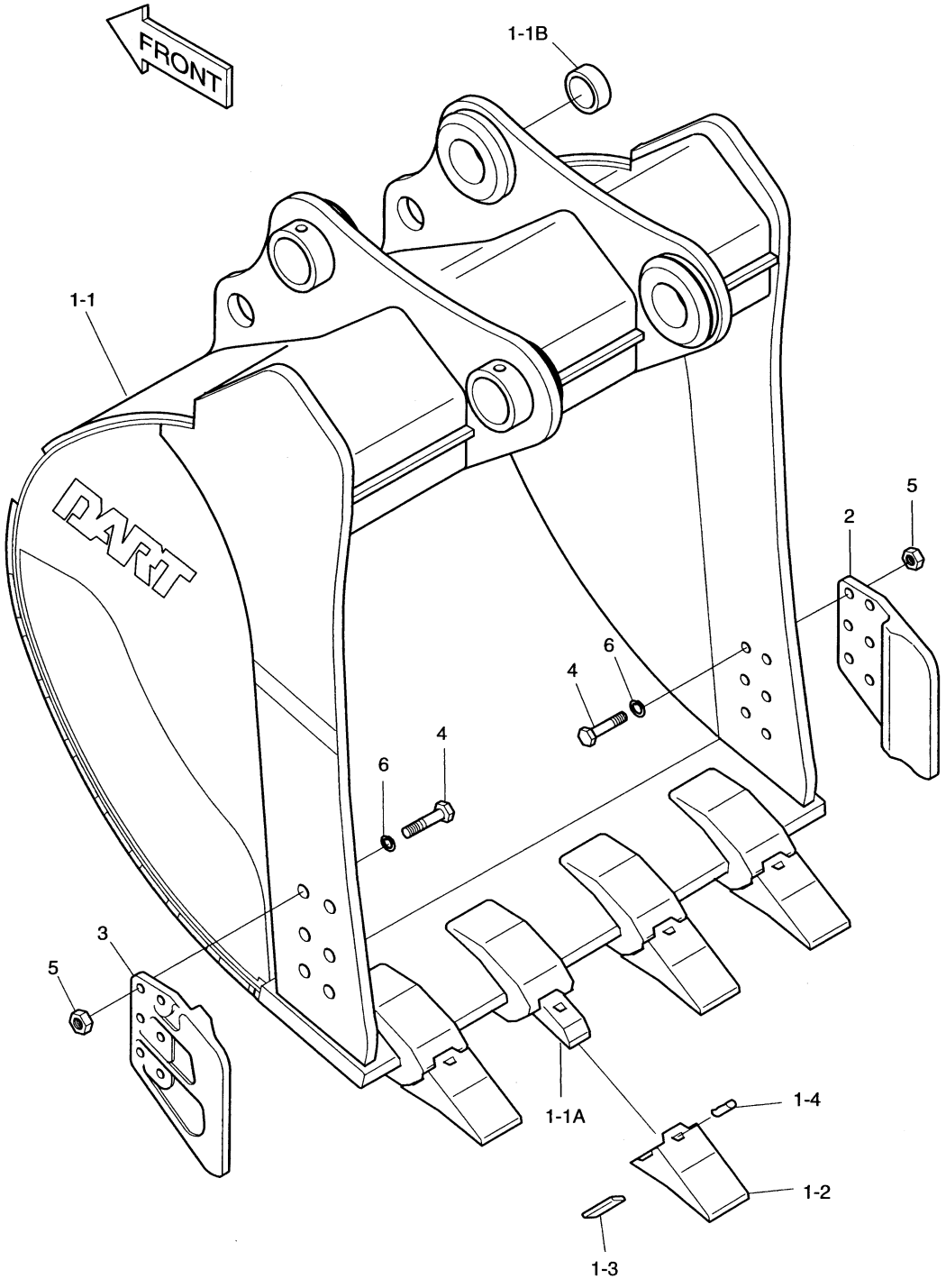

DATE	JUL. 30, 2003
REV. NO.	EXB03-13

Fig. 6360 BUCKET-1.58m³(48")-VERTICAL PIN GODET

Serial No ;

Key No.	Part No.	Description	Description	Q'ty	S.C	Serial No.	ICA	Replaceable part	
								Part No.	Q'ty
6360--	2704-1734	BUCKET ASS'Y-1.58m³	GODET	1					
1	2704-1735	BUCKET SUB ASS'Y	GODET	1					
1-1	-	. BUCKET;WELD	. GODET	1	D				
1-1A	2713-6082	.. ADAPTER;TOOTH	.. DENT DE ADAPTEUR	4					
1-1B	2110-1413	.. BUSH	.. DOUILLE	4					
1-2	2713-9063	. POINT;TOOTH	. DENT	4					
1-3	2705-6037	. PIN;LOCKING	. GOUPILLE DE BLOCAGE	4					
1-4	2705-6038	. PIN;RUBBER	. GOUPILLE	4					
2	2713-1240	CUTTER;SIDE(R.H)	COUTEAU LATERAL	1					
3	2713-1241	CUTTER;SIDE(L.H)	COUTEAU LATERAL	1					
4	S0575061	BOLT M24X3.0X85	BOULON A 6 PANS	12					
5	S4013333	NUT M24X3.0	ECROU	12					
6	2114-1831	WASHER;HARDEN M24	RONDELLE ELASTIQUE	12					

DATE	JUL. 30, 2003
REV. NO.	EXB03-13

Fig. 6370 BUCKET-1.82m³(54")-SIDE PIN GODET

Serial No. ;

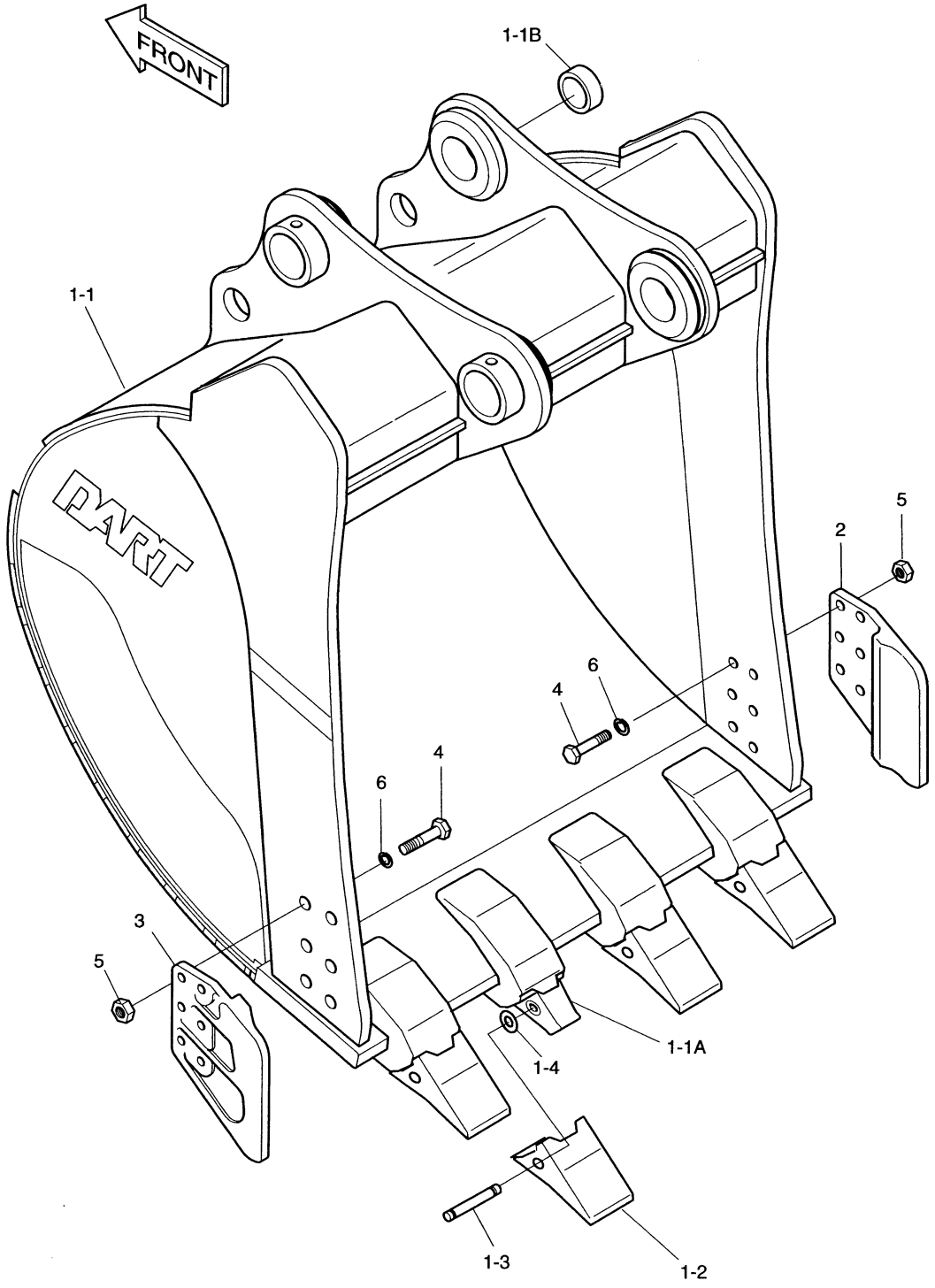

DATE	JUL. 30, 2003
REV. NO.	EXB03-13

Fig. 6370 BUCKET-1.82m³(54")-SIDE PIN GODET

Serial No ;

Key No.	Part No.	Description	Description	Q'ty	S.C	Serial No.	ICA	Replaceable part	
								Part No.	Q'ty
6370--	2704-1639A	BUCKET ASS'Y-1.82m³	GODET	1					
1	2704-1594A	BUCKET SUB ASS'Y	GODET	1					
1-1	-	. BUCKET;WELD	. GODET	1	D				
1-1A	2713-1273	.. ADAPTER;TOOTH	.. DENT DE ADAPTEUR	4					
1-1B	2110-1413	.. BUSH	.. DOUILLE	4					
1-2	713-00028	. POINT;TOOTH	. DENT	4					
1-3	2705-1034	. PIN;LOCKING	. BROUCHE	4					
1-4	2114-1931	. WASHER;LOCKING	. RONDELLE PLATE	4					
2	2713-1240	CUTTER;SIDE(R.H)	COUTEAU LATERAL	1					
3	2713-1241	CUTTER;SIDE(L.H)	COUTEAU LATERAL	1					
4	S0575061	BOLT M24X3.0X85	BOULON A 6 PANS	12					
5	S4013333	NUT M24X3.0	ECROU	12					
6	2114-1831	WASHER;HARDEN M24	RONDELLE ELASTIQUE	12					

DATE	JUL. 30, 2003
REV. NO.	EXB03-13

Fig. 6380 BUCKET-1.82m³(54")-VERTICAL PIN GODET

Serial No. ;

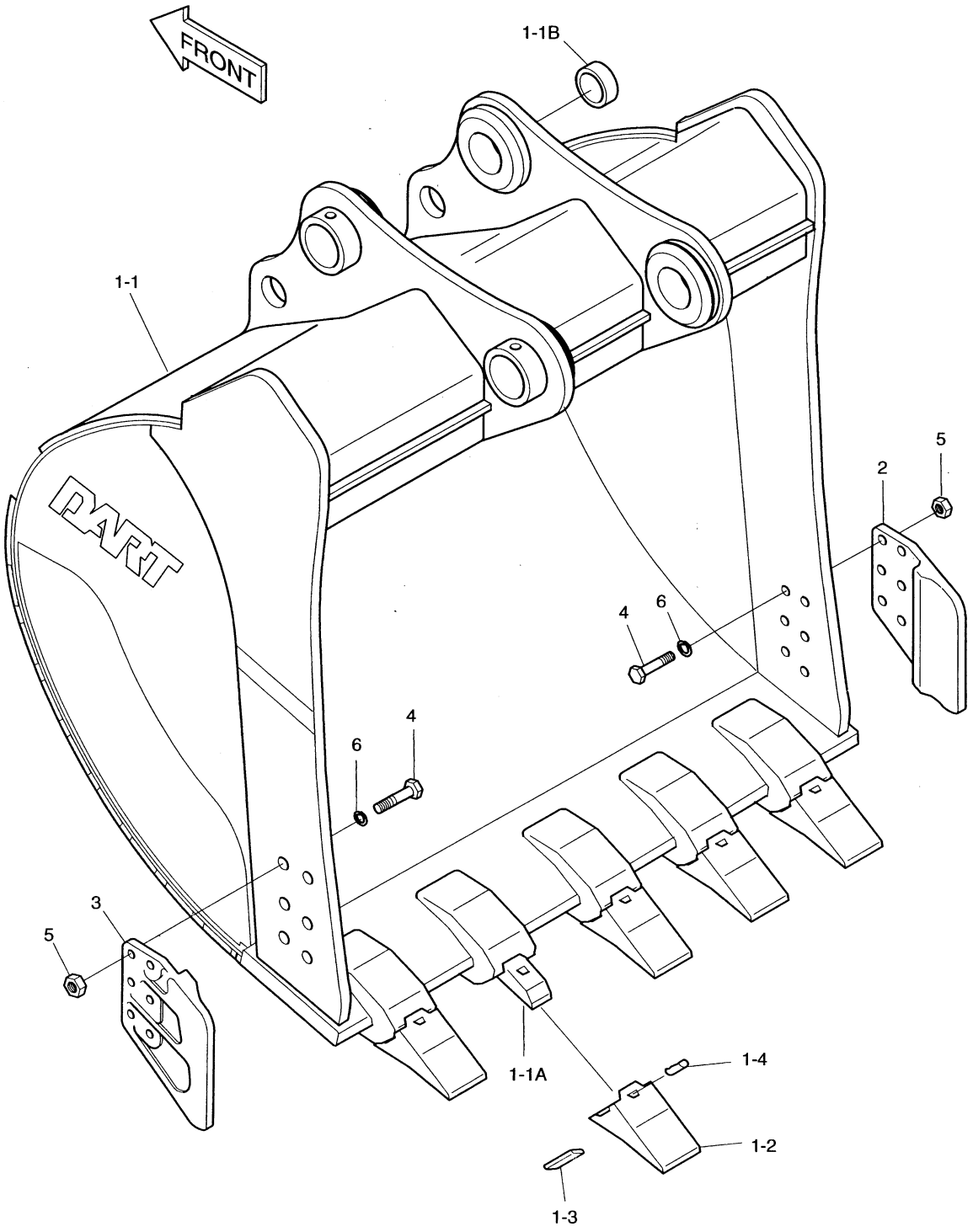

DATE	JUL. 30, 2003
REV. NO.	EXB03-13

Fig. 6380 BUCKET-1.82㎥(54")-VERTICAL PIN GODET

Serial No ;

Key No.	Part No.	Description	Description	Q'ty	S.C	Serial No.	ICA	Replaceable part	
								Part No.	Q'ty
6380--	2704-1737	BUCKET ASS'Y-1.82㎥	GODET	1					
1	2704-1738	BUCKET SUB ASS'Y	GODET	1					
1-1	-	. BUCKET;WELD	. GODET	1	D				
1-1A	2713-6082	.. ADAPTER;TOOTH	.. DENT DE ADAPTEUR	5					
1-1B	2110-1413	.. BUSH	.. DOUILLE	4					
1-2	2713-9063	. POINT;TOOTH	. DENT	5					
1-3	2705-6037	. PIN;LOCKING	. GOUPILLE DE BLOCAGE	5					
1-4	2705-6038	. PIN;RUBBER	. GOUPILLE	5					
2	2713-1240	CUTTER;SIDE(R.H)	COUTEAU LATERAL	1					
3	2713-1241	CUTTER;SIDE(L.H)	COUTEAU LATERAL	1					
4	S0575061	BOLT M24X3.0X85	BOULON A 6 PANS	12					
5	S4013333	NUT M24X3.0	ECROU	12					
6	2114-1831	WASHER;HARDEN M24	RONDELLE ELASTIQUE	12					

DATE	JUL. 30, 2003
REV. NO.	EXB03-13

Fig. 6390 BUCKET-2.07m³(60")-SIDE PIN GODET

Serial No. ;

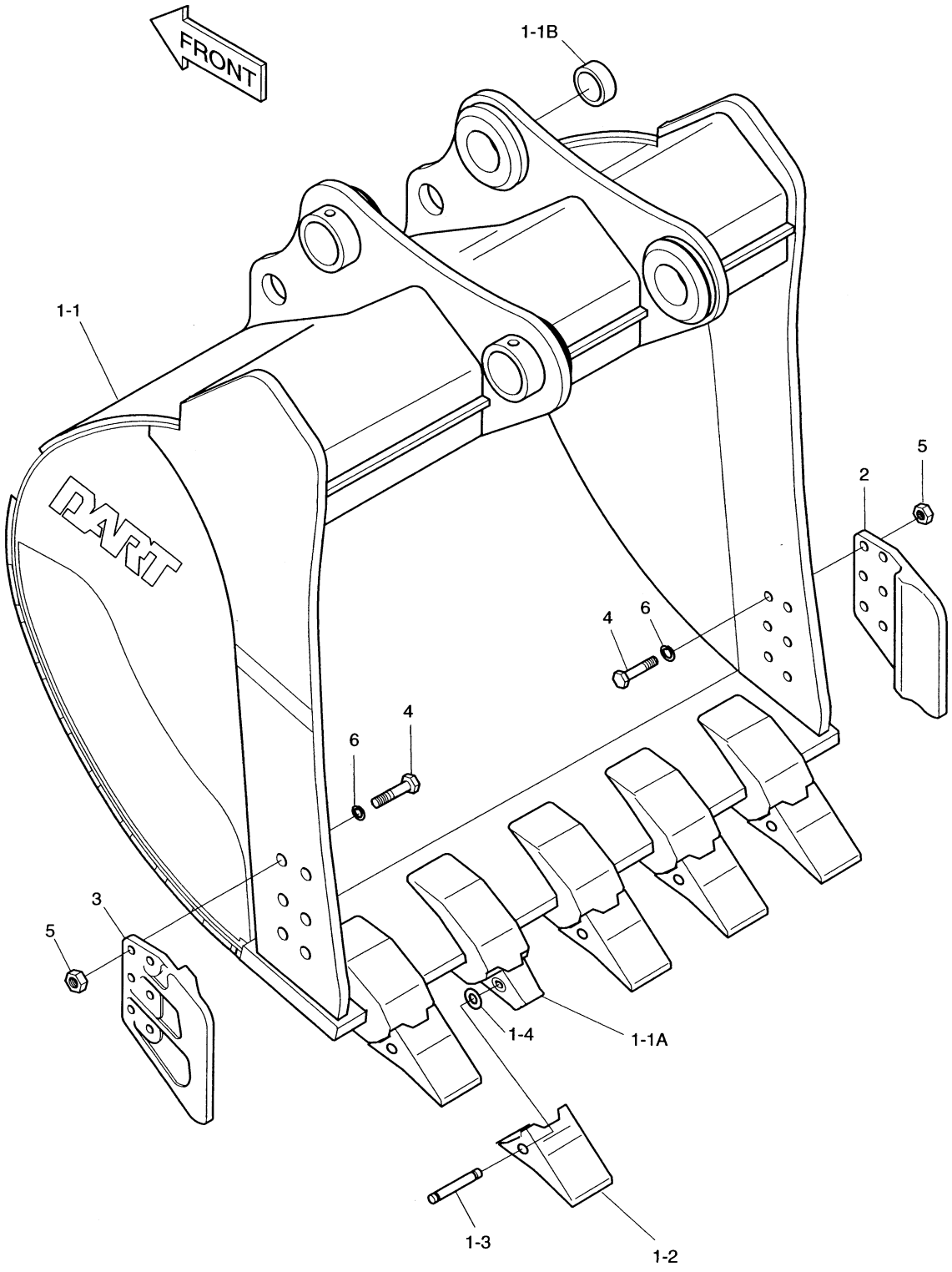

DATE	JUL. 30, 2003
REV. NO.	EXB03-13

Fig. 6390 BUCKET-2.07㎥(60")-SIDE PIN GODET

Serial No ;

Key No.	Part No.	Description	Description	Q'ty	S.C	Serial No.	ICA	Replaceable part	
								Part No.	Q'ty
6390--	2704-1721	BUCKET ASS'Y-2.07㎥	GODET	1					
1	2704-1722	BUCKET SUB ASS'Y	GODET	1					
1-1	-	. BUCKET;WELD	. GODET	1	D				
1-1A	2713-1273	.. ADAPTER;TOOTH	.. DENT DE ADAPTEUR	5					
1-1B	2110-1413	.. BUSH	.. DOUILLE	4					
1-2	713-00028	. POINT;TOOTH	. DENT	5					
1-3	2705-1034	. PIN;LOCKING	. BROUCHE	5					
1-4	2114-1931	. WASHER;LOCKING	. RONDELLE PLATE	5					
2	2713-1240	CUTTER;SIDE(R.H)	COUTEAU LATERAL	1					
3	2713-1241	CUTTER;SIDE(L.H)	COUTEAU LATERAL	1					
4	S0575061	BOLT M24X3.0X85	BOULON A 6 PANS	12					
5	S4013333	NUT M24X3.0	ECROU	12					
6	2114-1831	WASHER;HARDEN M24	RONDELLE ELASTIQUE	12					

DATE	JUL. 30, 2003
REV. NO.	EXB03-13

Fig. 6400 BUCKET-2.07m³(60")-VERTICAL PIN GODET

Serial No. ;

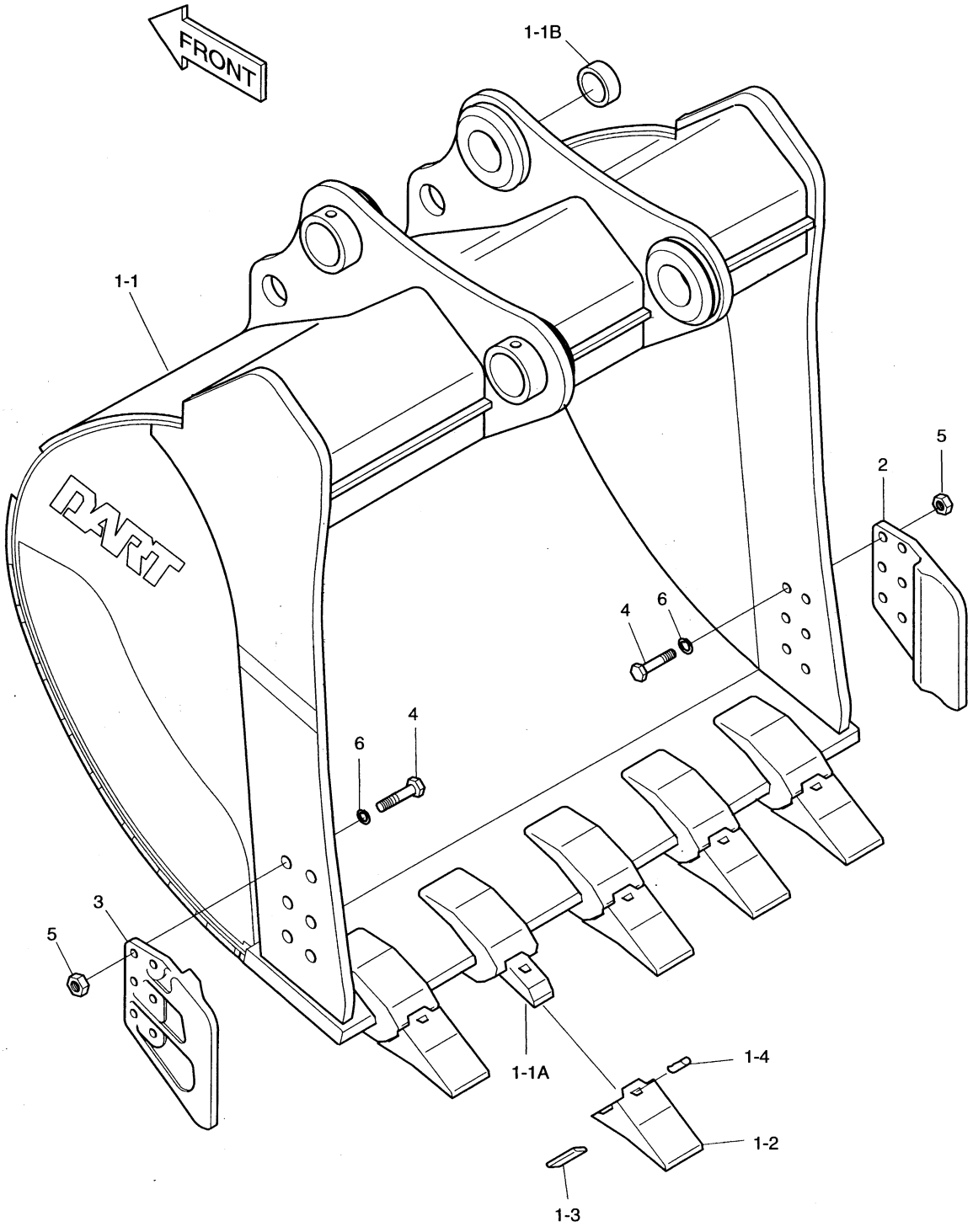

DATE	JUL. 30, 2003
REV. NO.	EXB03-13

Fig. 6400 BUCKET-2.07㎥(60")-VERTICAL PIN GODET

Serial No ;

Key No.	Part No.	Description	Description	Q'ty	S.C	Serial No.	ICA	Replaceable part	
								Part No.	Q'ty
6400--	2704-1740	BUCKET ASS'Y-2.07㎥	GODET	1					
1	2704-1741	BUCKET SUB ASS'Y	GODET	1					
1-1	-	. BUCKET;WELD	. GODET	1	D				
1-1A	2713-6082	.. ADAPTER;TOOTH	.. DENT DE ADAPTEUR	5					
1-1B	2110-1413	.. BUSH	.. DOUILLE	4					
1-2	2713-9063	. POINT;TOOTH	. DENT	5					
1-3	2705-6037	. PIN;LOCKING	. GOUPILLE DE BLOCAGE	5					
1-4	2705-6038	. PIN;RUBBER	. GOUPILLE	5					
2	2713-1240	CUTTER;SIDE(R.H)	COUTEAU LATERAL	1					
3	2713-1241	CUTTER;SIDE(L.H)	COUTEAU LATERAL	1					
4	S0575061	BOLT M24X3.0X85	BOULON A 6 PANS	12					
5	S4013333	NUT M24X3.0	ECROU	12					
6	2114-1831	WASHER;HARDEN M24	RONDELLE ELASTIQUE	12					

DATE	DEC. 30, 2004
REV. NO.	EXB04-09

Fig. 6410 BUCKET-0.8m³ GODET

Serial No. ;

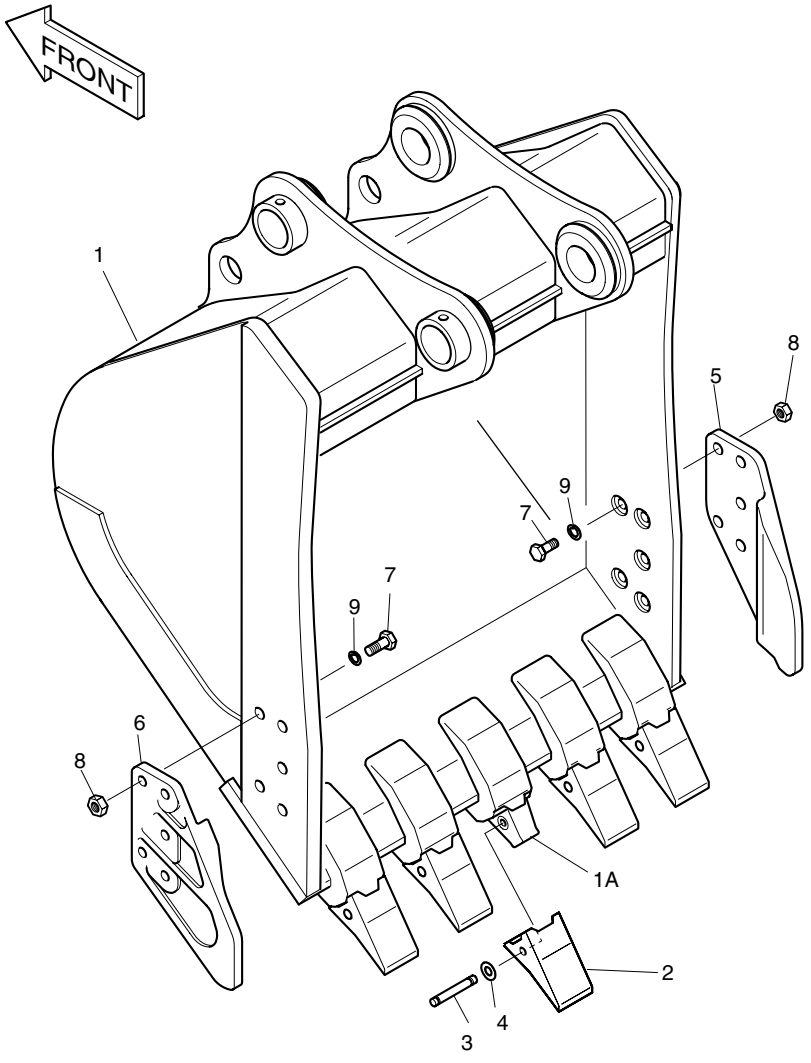

DATE	DEC. 30, 2004
REV. NO.	EXB04-09

Fig. 6410 BUCKET-0.8m³ GODET

Serial No ;

Key No.	Part No.	Description	Description	Q'ty	S.C	Serial No.	ICA	Replaceable part	
								Part No.	Q'ty
6410--	2704-1365G	BUCKET ASS'Y-0.8㎥	ENSEMBLE GODET	1		1001–1347	I	2704-1365H	1
	2704-1365H	**BUCKET ASS'Y-0.8㎥**	ENSEMBLE GODET	1		**1348–**			
1	2704-1366E	BUCKET-0.8㎥	ENSEMBLE GODET	1					
1A	2713-1218	. ADAPTER;TOOTH	. RACCORD	5					
2	2713-1217	POINT;TOOTH	DENT	5		1001–1347	Y	K1000344	5
	K1000344	**POINT;TOOTH**	DENT	5		**1348–**			
3	2705-1020	PIN;LOCKING	BROCHE DE BLOCAGE	5					
4	2114-1848A	WASHER;LOCKING	RONDELLE D'ARRET	5					
5	2713-1059A	CUTTER;SIDE(RH)	COUTEAU LATERAL	1					
6	2713-1060A	CUTTER;SIDE(LH)	COUTEAU LATERAL	1					
7	S0574761	BOLT M24X3.0X70	BOULON A 6 PANS	10					
8	S4013333	NUT M24X3.0	ECROU	10					
9	2114-1831	WASHER;HARDEN	RONDELLE ELASTIQUE	10					

DATE	JUN. 30, 2005
REV. NO.	EXB05-05

Fig. 6420 BUCKET-1.1m³ GODET

Serial No. ;

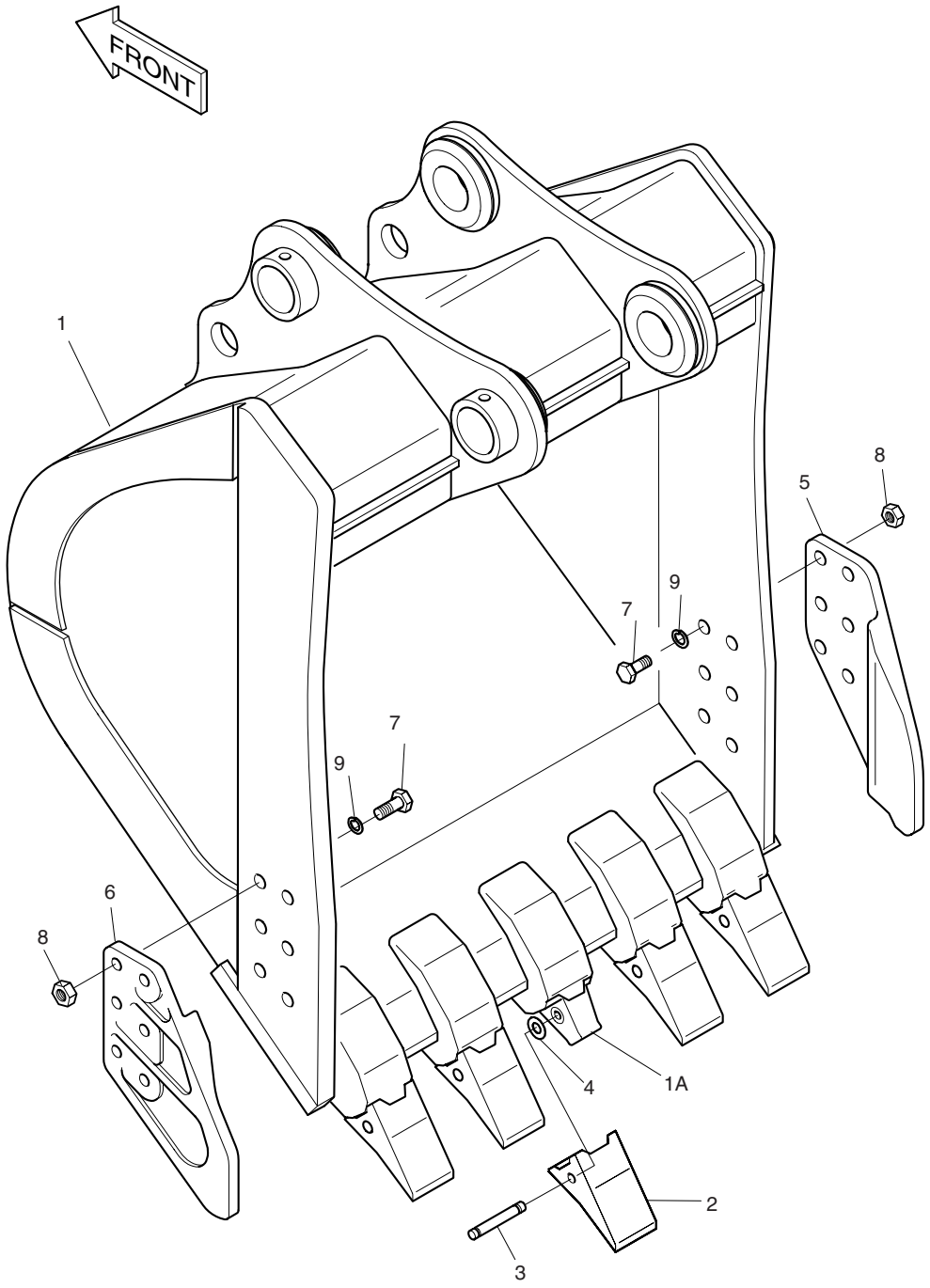

DATE	JUN. 30, 2005
REV. NO.	EXB05-05

Fig. 6420 BUCKET-1.1m³ GODET

Serial No ;

Key No.	Part No.	Description	Description	Q'ty	S.C	Serial No.	ICA	Replaceable part	
								Part No.	Q'ty
6420--	2704-1371I	BUCKET ASS'Y-1.1㎥	ENSEMBLE GODET	1		1001–1140	I	2704-1371J	1
	2704-1371J	BUCKET ASS'Y-1.1㎥	ENSEMBLE GODET	1		1141–1479	I	2704-1371K	1
	2704-1371K	**BUCKET ASS'Y-1.1㎥**	ENSEMBLE GODET	1		**1180–**			
1	2704-1372H	BUCKET ASS'Y-1.1㎥	ENSEMBLE GODET	1					
1A	2713-1220	. ADAPTER;TOOTH	. DENT DE ADAPTEUR	5					
2	2713-1219	POINT;TOOTH	DENT	5		1001–1140			
	713-00054	POINT;TOOTH	DENT	5		1141–1479	I	713-00054A	5
	713-00054A	**POINT;TOOTH**	DENT	5		**1480–**			
3	2705-1021	PIN;LOCKING	GOUPILLE DE BLOCAGE	5					
4	2114-1849A	WASHER;LOCKING	RONDELLE	5					
5	2713-6034A	CUTTER;SIDE(R.H)	COUTEAU LATERAL	1					
6	2713-6035A	CUTTER;SIDE(L.H)	COUTEAU LATERAL	1					
7	S0574761	BOLT M24X3.0X70	BOULON A 6 PANS	12					
8	S4013333	NUT M24X3.0	ECROU	12					
9	2114-1831	WASHER;HARDEN	RONDELLE ELASTIQUE	12		1001–1140	I	2114-1831A	12
	2114-1831A	WASHER;HARDEN	RONDELLE ELASTIQUE	12		1141–			

DATE	JUL. 30, 2003
REV. NO.	EXB03-13

Fig. 6430 BUCKET-1.2m³ GODET

Serial No. ;

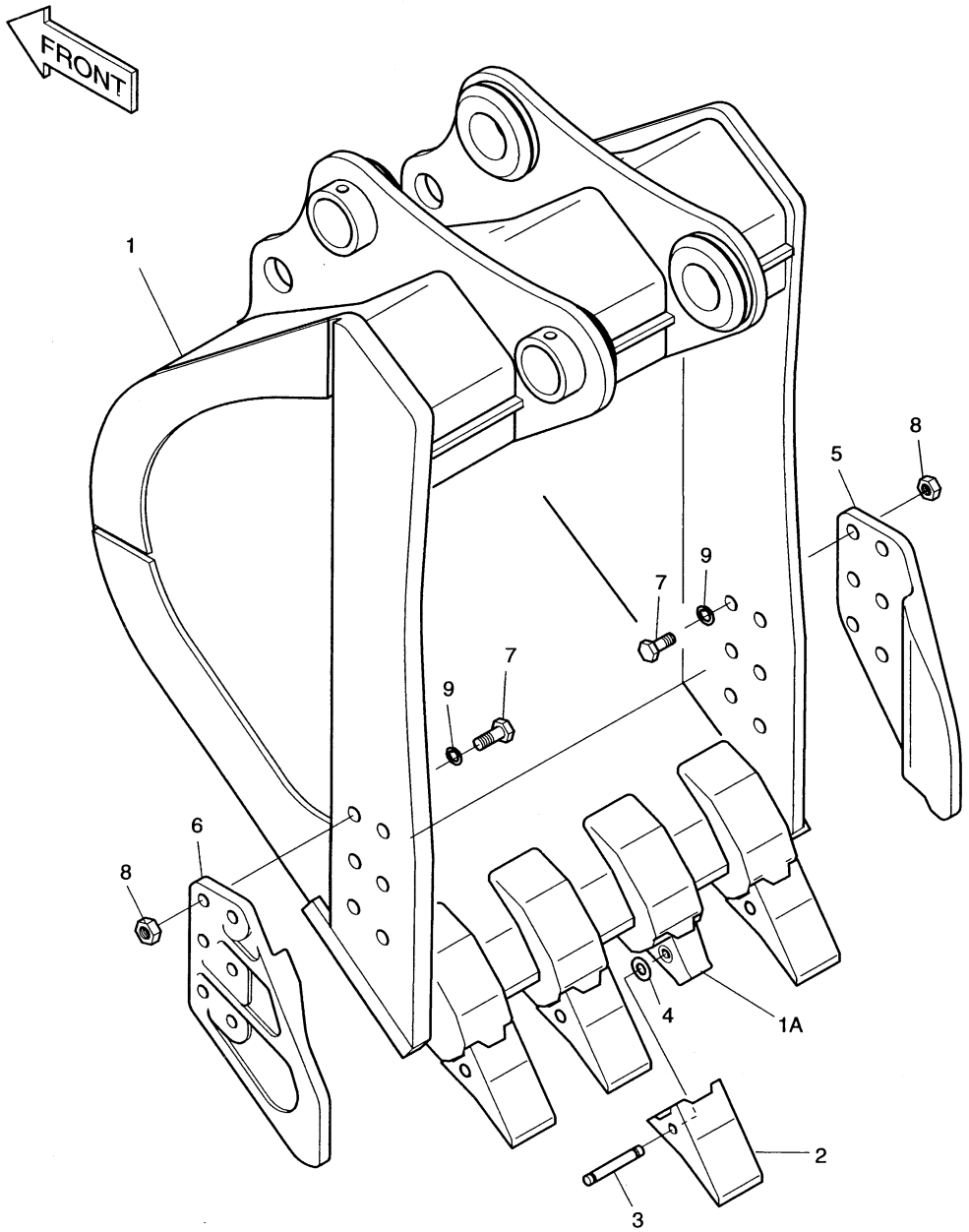

DATE	JUL. 30, 2003
REV. NO.	EXB03-13

Fig. 6430 BUCKET-1.2m³ GODET

Serial No ;

Key No.	Part No.	Description	Description	Q'ty	S.C	Serial No.	ICA	Replaceable part	
								Part No.	Q'ty
6430--	704-00063	BUCKET ASS'Y-1.2m³	GODET	1					
1	704-00064	BUCKET	GODET	1					
1A	2713-1273	. ADAPTER;TOOTH	. DENT DE ADAPTEUR	4					
2	2713-1271	POINT;TOOTH	DENT	4					
3	2705-1034	PIN;LOCKING	BROUCHE	4					
4	2114-1931	WASHER;LOCKING	RONDELLE PLATE	4					
5	2713-1240	CUTTER;SIDE(R.H)	COUTEAU LATERAL	1					
6	2713-1241	CUTTER;SIDE(L.H)	COUTEAU LATERAL	1					
7	S0574961	BOLT M24X3.0X80	BOULON A 6 PANS	12					
8	S4013333	NUT M24X3.0	ECROU	12					
9	2114-1831	WASHER;HARDEN M24	RONDELLE ELASTIQUE	12					

DATE	DEC. 30, 2004
REV. NO.	EXB04-09

Fig. 6440 BUCKET-1.6m³ GODET

Serial No. ;

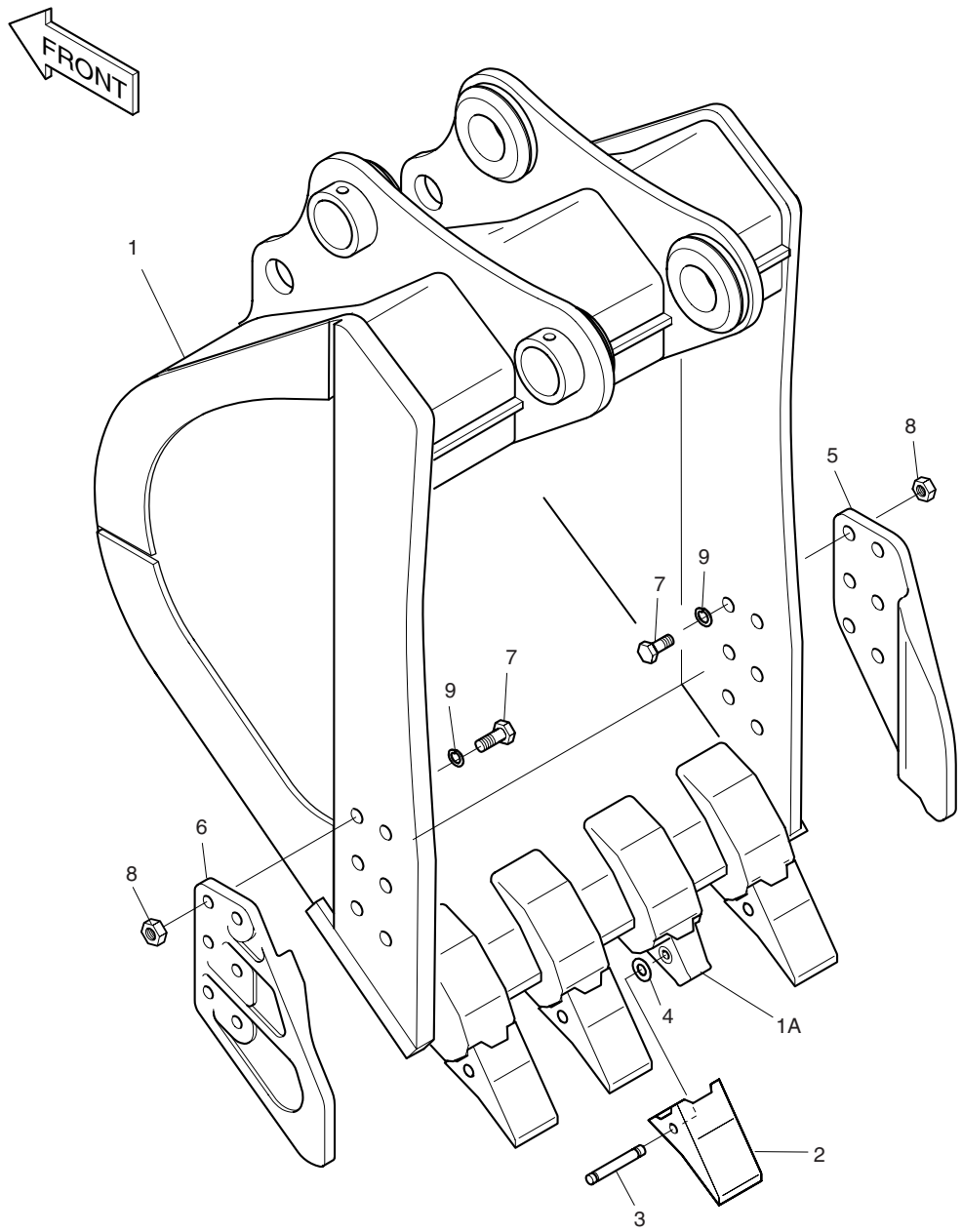

DATE	DEC. 30, 2004
REV. NO.	EXB04-09

Fig. 6440 BUCKET-1.6m³ GODET

Serial No ;

Key No.	Part No.	Description	Description	Q'ty	S.C	Serial No.	ICA	Replaceable part	
								Part No.	Q'ty
6440--	704-00065B	BUCKET ASS'Y-1.6㎥	GODET	1		1001–1340	I	704-00065C	1
	704-00065C	**BUCKET ASS'Y-1.6㎥**	GODET	1		**1341–**			
1	704-00066A	BUCKET	GODET	1					
1A	2713-1273	. ADAPTER;TOOTH	. DENT DE ADAPTEUR	4					
2	2713-1236	POINT;TOOTH	DENT	4		1001–1340	I	713-00052	4
	713-00052	**POINT;TOOTH**	DENT	4		**1341–**			
3	2705-1034	PIN;LOCKING	BROUCHE	4					
4	2114-1931	WASHER;LOCKING	RONDELLE PLATE	4					
5	2713-1240	CUTTER;SIDE(R.H)	COUTEAU LATERAL	1					
6	2713-1241	CUTTER;SIDE(L.H)	COUTEAU LATERAL	1					
7	S0574961	BOLT M24X3.0X80	BOULON A 6 PANS	12					
8	S4013333	NUT M24X3.0	ECROU	12					
9	2114-1831	WASHER;HARDEN M24	RONDELLE ELASTIQUE	12					

DATE	DEC. 30, 2004
REV. NO.	EXB04-09

Fig. 6450 BUCKET-1.9m³ GODET

Serial No. ;

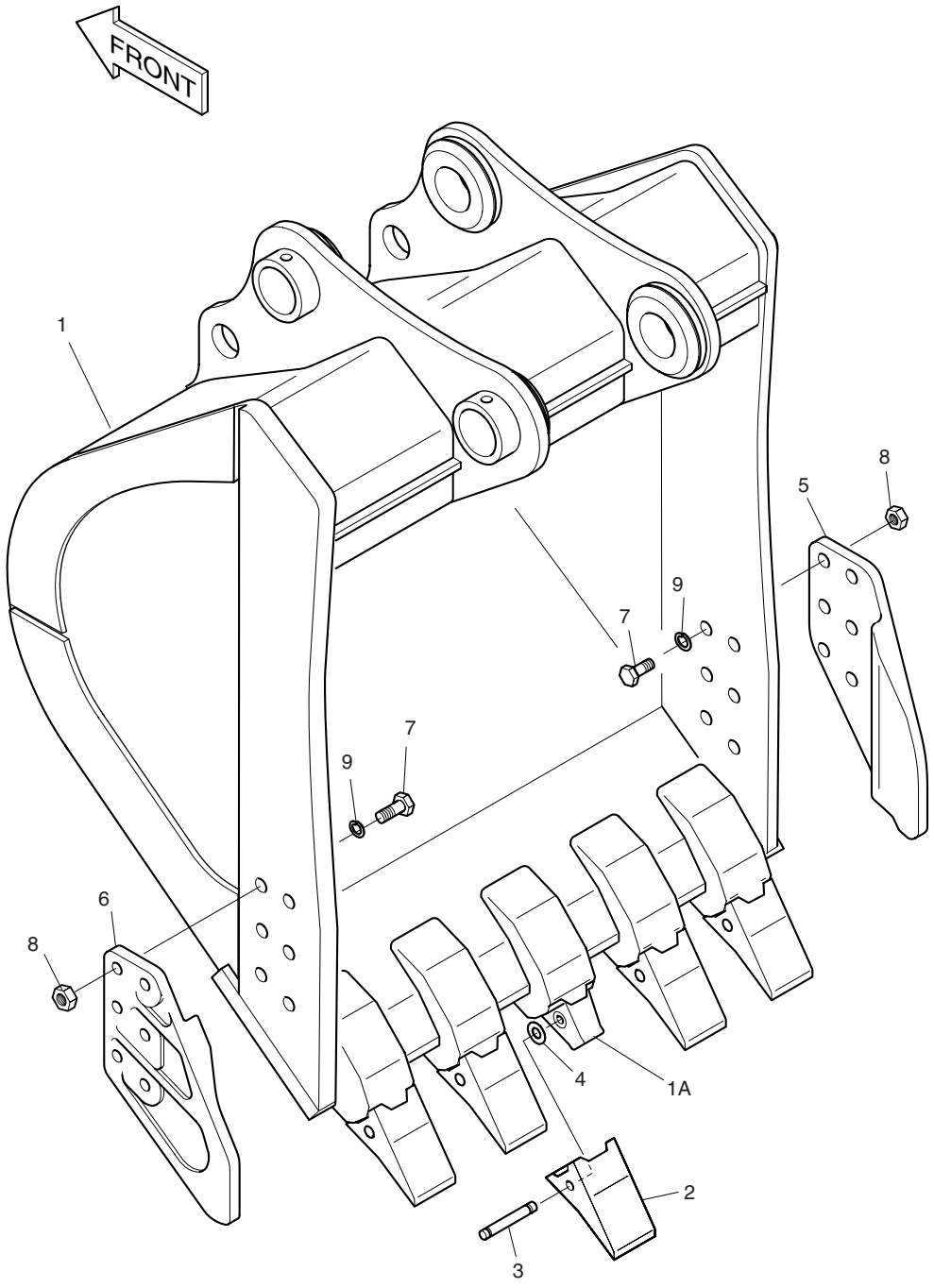

DATE	DEC. 30, 2004
REV. NO.	EXB04-09

Fig. 6450 BUCKET-1.9m³ GODET

Serial No ;

Key No.	Part No.	Description	Description	Q'ty	S.C	Serial No.	ICA	Replaceable part	
								Part No.	Q'ty
6450--	2704-1582C	BUCKET ASS'Y	ENSEMBLE GODET	1		1001–1340	I	2704-1582E	1
	2704-1582E	**BUCKET ASS'Y**	ENSEMBLE GODET	1		**1341–**			
1	2704-1583B	BUCKET-1.9㎥	ENSEMBLE GODET	1					
1A	2713-1273	. ADAPTER;TOOTH	. DENT DE ADAPTEUR	5					
2	2713-1236	POINT;TOOTH	DENT	5		1001–1340	I	713-00052	5
	713-00052	**POINT;TOOTH**	DENT	5		**1341–**			
3	2705-1034	PIN;LOCKING	BROUCHE	5					
4	2114-1931	WASHER;LOCKING	RONDELLE PLATE	5					
5	2713-1240	CUTTER;SIDE(R.H)	COUTEAU LATERAL	1					
6	2713-1241	CUTTER;SIDE(L.H)	COUTEAU LATERAL	1					
7	S0574961	BOLT M24X3.0X80	BOULON A 6 PANS	12					
8	S4013333	NUT M24X3.0	ECROU	12					
9	2114-1831	WASHER;HARDEN M24	RONDELLE ELASTIQUE	12					

DATE	DEC. 30, 2004
REV. NO.	EXB04-09

Fig. 6460 BUCKET-2.1m³ GODET

Serial No. ;

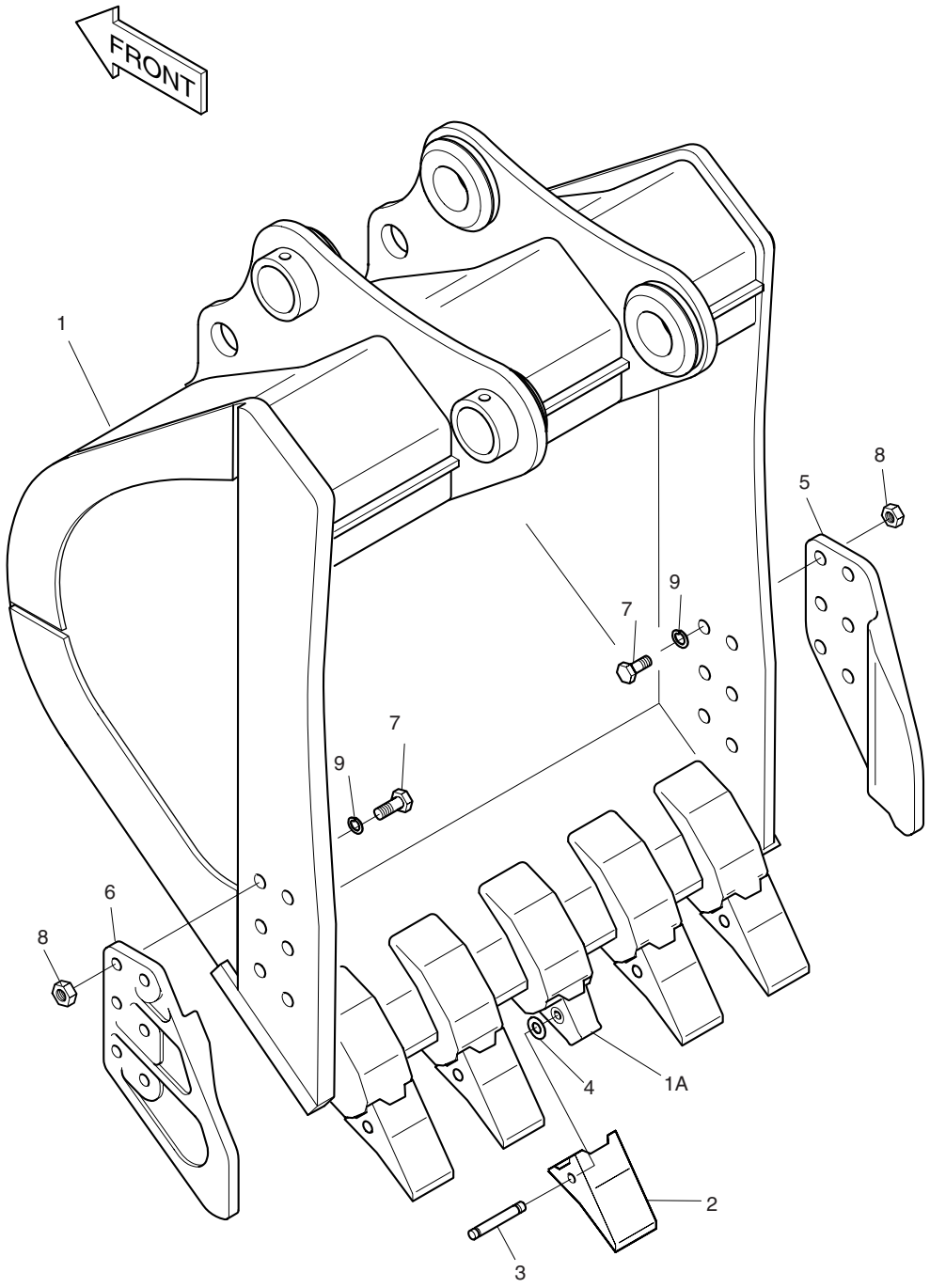

DATE	DEC. 30, 2004
REV. NO.	EXB04-09

Fig. 6460 BUCKET-2.1m³ GODET

Serial No ;

Key No.	Part No.	Description	Description	Q'ty	S.C	Serial No.	ICA	Replaceable part	
								Part No.	Q'ty
6460--	704-00067B	BUCKET ASS'Y-2.1㎥	GODET	1		1001–1340	I	704-00067C	1
	704-00067C	**BUCKET ASS'Y-2.1㎥**	GODET	1		**1341–**			
1	704-00068A	BUCKET	GODET	1					
1A	2713-1273	. ADAPTER;TOOTH	. DENT DE ADAPTEUR	5					
2	2713-1236	POINT;TOOTH	DENT	5		1001–1340	I	713-00052	5
	713-00052	**POINT;TOOTH**	DENT	5		**1341–**			
3	2705-1034	PIN;LOCKING	BROUCHE	5					
4	2114-1931	WASHER;LOCKING	RONDELLE PLATE	5					
5	2713-1240	CUTTER;SIDE(R.H)	COUTEAU LATERAL	1					
6	2713-1241	CUTTER;SIDE(L.H)	COUTEAU LATERAL	1					
7	S0574961	BOLT M24X3.0X80	BOULON A 6 PANS	12					
8	S4013333	NUT M24X3.0	ECROU	12					
9	2114-1831	WASHER;HARDEN M24	RONDELLE ELASTIQUE	12					

DATE	DEC. 30, 2004
REV. NO.	EXB04-09

Fig. 6470 BUCKET-2.5m³ GODET

Serial No. ;

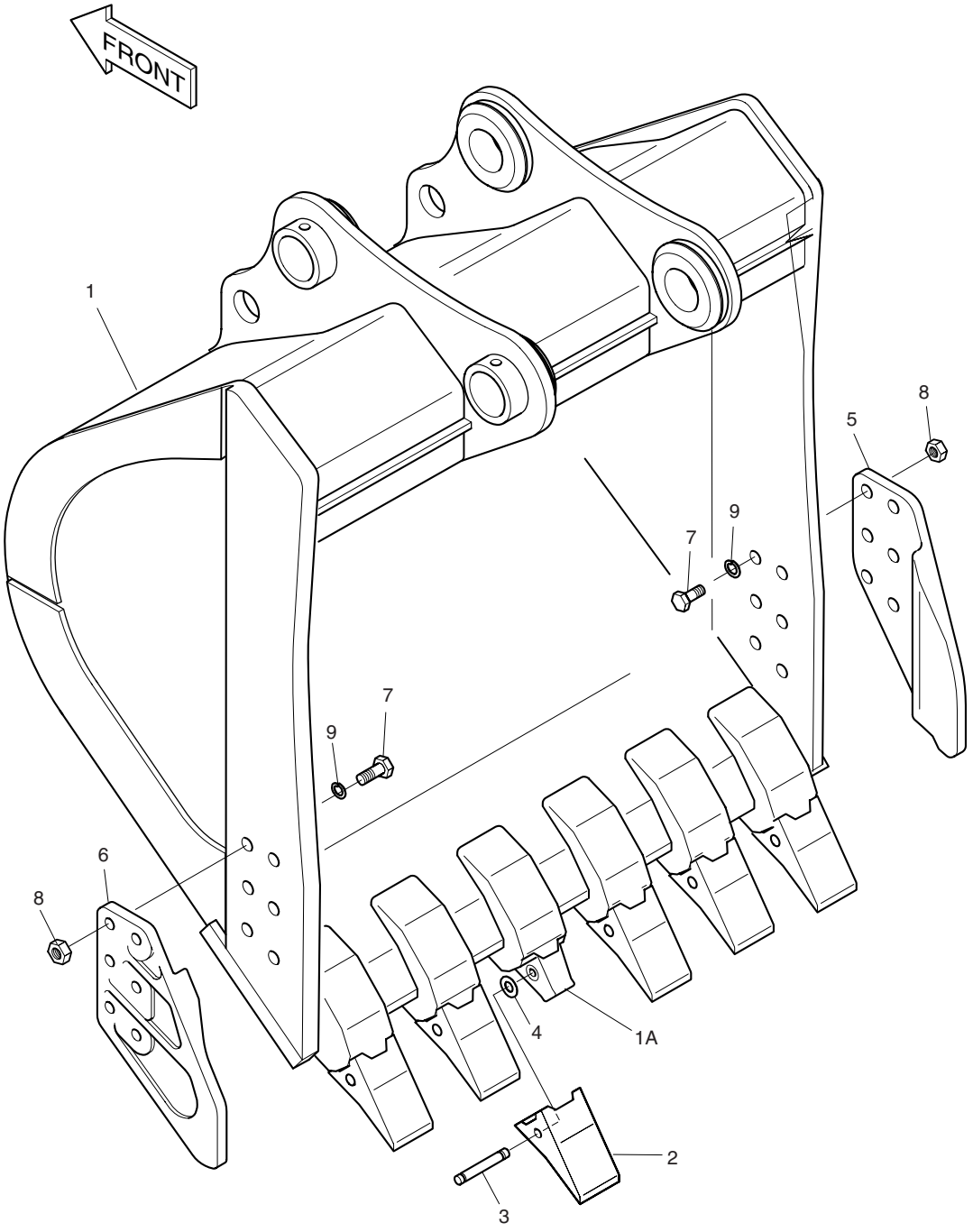

DATE	DEC. 30, 2004
REV. NO.	EXB04-09

Fig. 6470 BUCKET-2.5m³ GODET

Serial No ;

Key No.	Part No.	Description	Description	Q'ty	S.C	Serial No.	ICA	Replaceable part	
								Part No.	Q'ty
6470--	704-00069B	BUCKET ASS'Y-2.5㎥	GODET	1		1001–1340	I	704-00069C	1
	704-00069C	**BUCKET ASS'Y-2.5㎥**	GODET	1		**1341–**			
1	704-00070A	BUCKET	GODET	1					
1A	2713-1273	. ADAPTER;TOOTH	. DENT DE ADAPTEUR	6					
2	2713-1236	POINT;TOOTH	DENT	6		1001–1340	I	713-00052	6
	713-00052	**POINT;TOOTH**	DENT	6		**1341–**			
3	2705-1034	PIN;LOCKING	BROUCHE	6					
4	2114-1931	WASHER;LOCKING	RONDELLE PLATE	6					
5	2713-1240	CUTTER;SIDE(R.H)	COUTEAU LATERAL	1					
6	2713-1241	CUTTER;SIDE(L.H)	COUTEAU LATERAL	1					
7	S0574961	BOLT M24X3.0X80	BOULON A 6 PANS	12					
8	S4013333	NUT M24X3.0	ECROU	12					
9	2114-1831	WASHER;HARDEN M24	RONDELLE ELASTIQUE	12					

DATE	DEC. 30, 2004
REV. NO.	EXB04-09

Fig. 6480 BUCKET-1.75m³-ROCK GODET

Serial No. ;

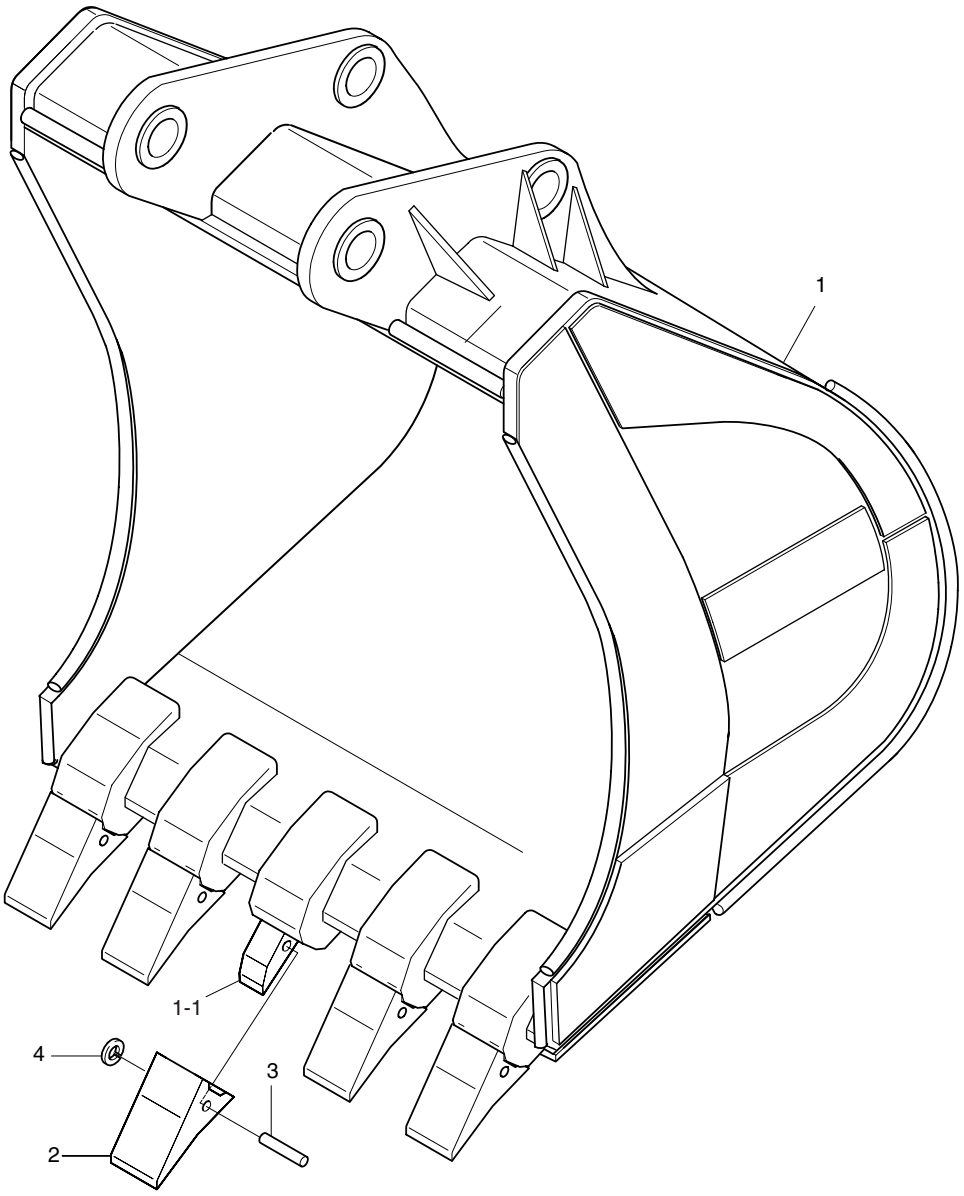

DATE	DEC. 30, 2004
REV. NO.	EXB04-09

Fig. 6480 BUCKET-1.75㎥-ROCK GODET

Serial No ;

Key No.	Part No.	Description	Description	Q'ty	S.C	Serial No.	ICA	Replaceable part	
								Part No.	Q'ty
6480--	704-00242	BUCKET ASS'Y	ENSEMBLE GODET	1		1001–1340	I	704-00242A	1
	704-00242A	**BUCKET ASS'Y**	ENSEMBLE GODET	1		**1341–**			
1	704-00243	BUCKET-1.75㎥	ENSEMBLE GODET	1	D				
1-1	2713-1273	. ADAPTER;TOOTH	. DENT DE ADAPTEUR	5					
2	2713-1236	POINT;TOOTH	DENT	5		1001–1340	I	713-00052	5
	713-00052	**POINT;TOOTH**	DENT	5		**1341–**			
3	2705-1034	PIN;LOCKING	BROUCHE	5					
4	2114-1931	WASHER;LOCKING	RONDELLE PLATE	5					

DATE	JUL. 30, 2003
REV. NO.	EXB03-13

Fig. 6490 BUCKET-0.96m³-DITCH CLEANING GODET

Serial No. ;

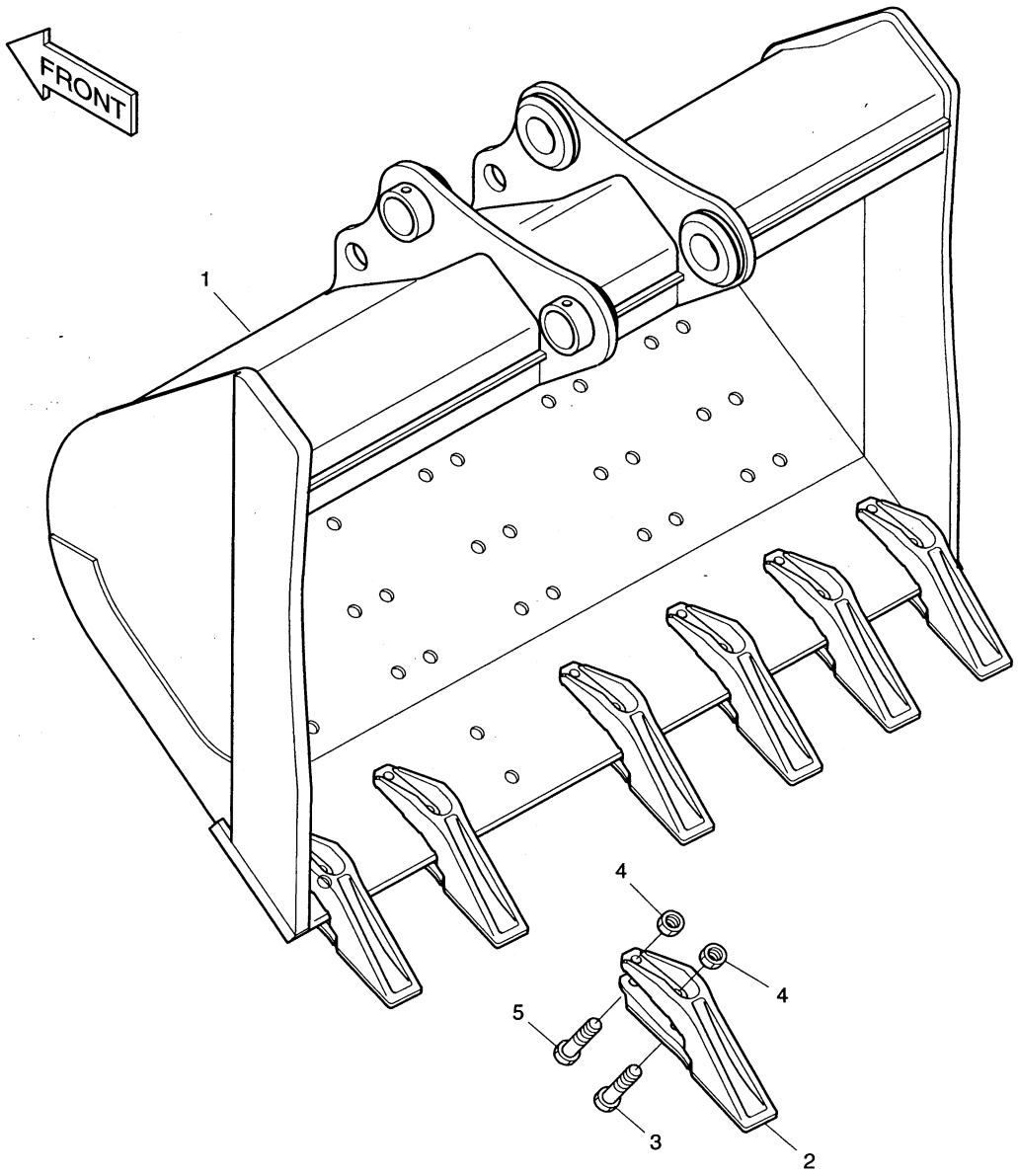

DATE	JUL. 30, 2003
REV. NO.	EXB03-13

Fig. 6490 BUCKET-0.96m³ -DITCH CLEANING GODET

Serial No ;

Key No.	Part No.	Description	Description	Q'ty	S.C	Serial No.	ICA	Replaceable part	
								Part No.	Q'ty
6490--	704-00089	BUCKET ASS'Y-0.96㎥	GODET	1					
1	-	BUCKET;WELD	GODET	1					
2	4713-1130C	TOOTH	DENT	7					
3	S0534661	BOLT M24X100	BOULON A 6 PANS	7					
4	S4013343	NUT	ECROU	14					
5	S0534461	BOLT M24X90	BOULON A 6 PANS	7					

DATE	JUL. 30, 2003
REV. NO.	EXB03-13

Fig. 6500 BUCKET-1.17m³-DITCH CLEANING GODET

Serial No. ;

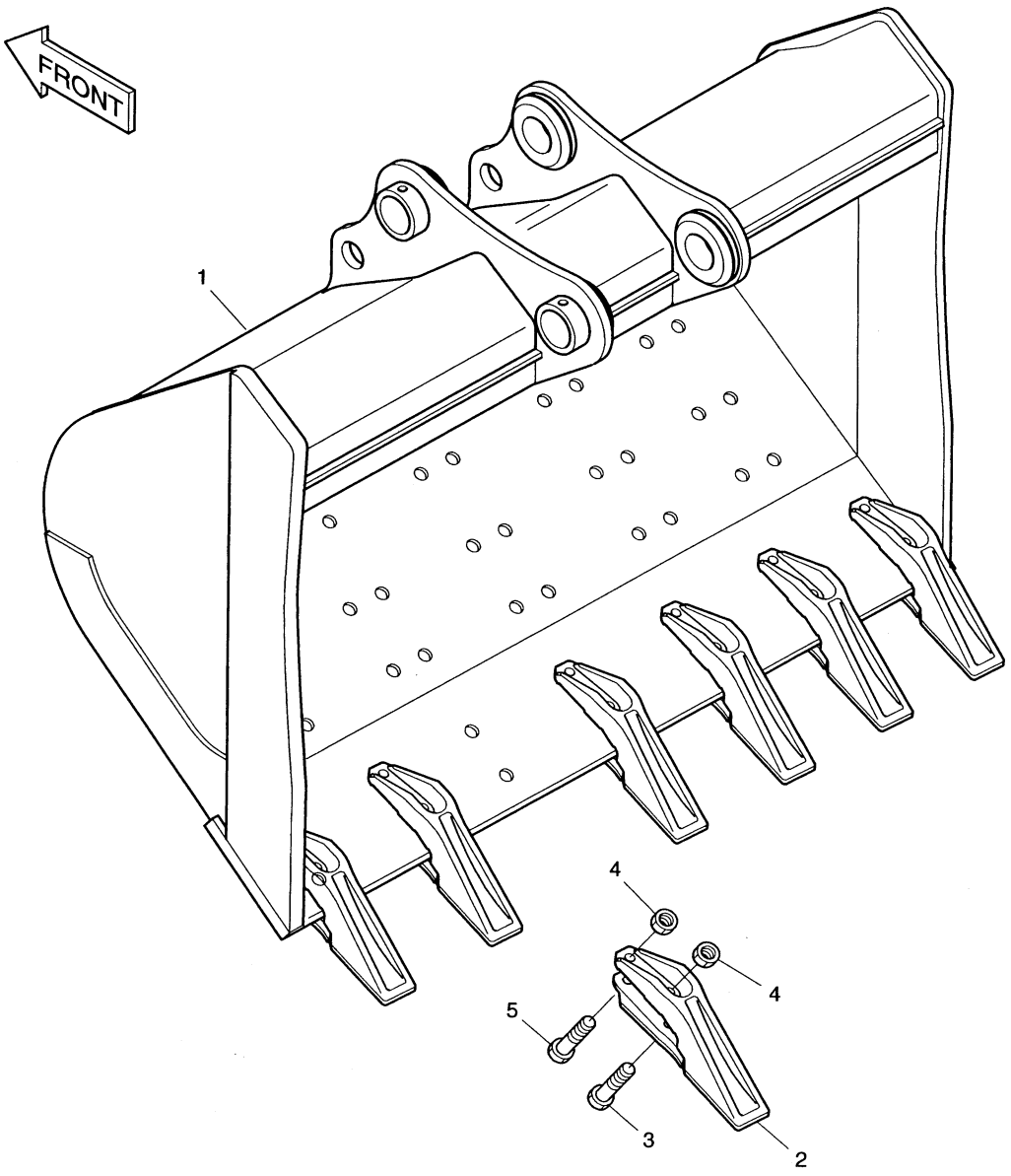

DATE	JUL. 30, 2003
REV. NO.	EXB03-13

Fig. 6500 BUCKET-1.17m³ -DITCH CLEANING GODET

Serial No ;

Key No.	Part No.	Description	Description	Q'ty	S.C	Serial No.	ICA	Replaceable part	
								Part No.	Q'ty
6500--	704-00091	BUCKET ASS'Y-1.17㎥	GODET	1					
1	-	BUCKET;WELD	GODET	1					
2	4713-1130C	TOOTH	DENT	7					
3	S0534661	BOLT M24X100	BOULON A 6 PANS	7					
4	S4013343	NUT	ECROU	14					
5	S0534461	BOLT M24X90	BOULON A 6 PANS	7					

DATE	DEC. 22, 2003
REV. NO.	EXB03-15

Fig. 6510 BOOM PIPING-7.1m
CONDUITES DE FLECHE

Serial No. ; 1001 ~ 1200

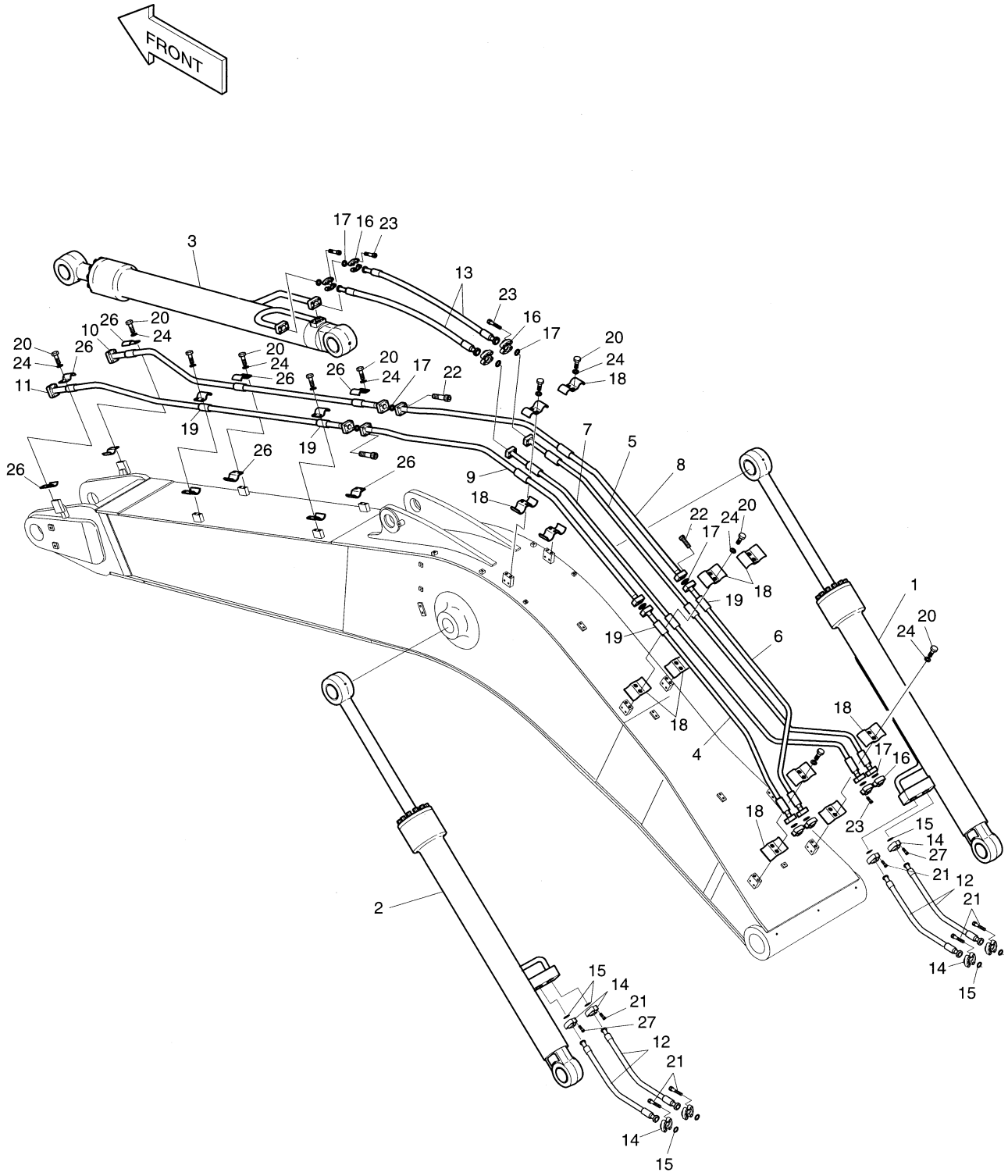

DATE	DEC. 22, 2003
REV. NO.	EXB03-15

Fig. 6510 BOOM PIPING-7.1m CONDUITES DE FLECHE

Serial No ; 1001 ~ 1200

Key No.	Part No.	Description	Description	Q'ty	S.C	Serial No.	ICA	Replaceable part	
								Part No.	Q'ty
6510--	400-00692	BOOM PIPING-7.1m	CONDUITES DE FLECHE	-	D	1001-1200			
1	440-00286	CYLINDER;BOOM(R.H)	CONDUITES DE FLECHE	1					
2	440-00287	CYLINDER;BOOM(L.H)	CONDUITES DE FLECHE	1					
3	440-00015A	CYLINDER;ARM	VERIN DE BALANCIER	1					
4	140-00885B	PIPE	CONDUITE	1					
5	140-00864B	PIPE	CONDUITE	1					
6	140-00855B	PIPE	CONDUITE	1					
7	140-00856B	PIPE	CONDUITE	1					
8	140-00857A	PIPE	CONDUITE	1					
9	140-00858A	PIPE	CONDUITE	1					
10	140-00859	PIPE	CONDUITE	1					
11	140-00860	PIPE	CONDUITE	1					
12	DS2038132	HOSE-1070L	TUYAU FLEXIBLE	4					
13	2184-1081D139	HOSE-1450L	TUYAU FLEXIBLE	2					
14	2181-9081	FLANGE;SPLIT	BRIDE	16					
15	2180-1026D19	O-RING	JONT TORIQUE	8					
16	2181-9086	FLANGE;SPLIT	FLASQUE EN DEUX	16					
17	2180-1026D23	O-RING	JONT TORIQUE	12					
18	124-00205A	CLAMP;PIPE	ATTACHE DE TUYAU	12					
19	161-00280	RUBBER	CAOUTCHOUC	18					
20	S0562766	BOLT M14X2.0X40	BOULON A 6PANS	24					
21	S2215366	BOLT;SOCKET M12X1.75X35	BOULON A 6 PANS CREUX	24					
22	S2218766	BOLT;SOCKET M14X2.0X55	BOULON A 6 PANS CREUX	16					
23	S2218666	BOLT;SOCKET M14X2.0X50	BOULON A 6 PANS CREUX	32					
24	S5102803	WASHER;SPRING M14	RONDELLE ELASTIQUE M14	24					
26	124-00219	CLAMP;PIPE	ATTACHE DE TUYAU	12					
27	S2215666	BOLT;SOCKET M12X1.75X50	BOULON A 6 PANS CREUX	8					

DATE	DEC. 15, 2006
REV. NO.	EXB06-13

Fig. 6511 BOOM PIPING-7.1m
CONDUITES DE FLECHE

Serial No. ; 1201 ~

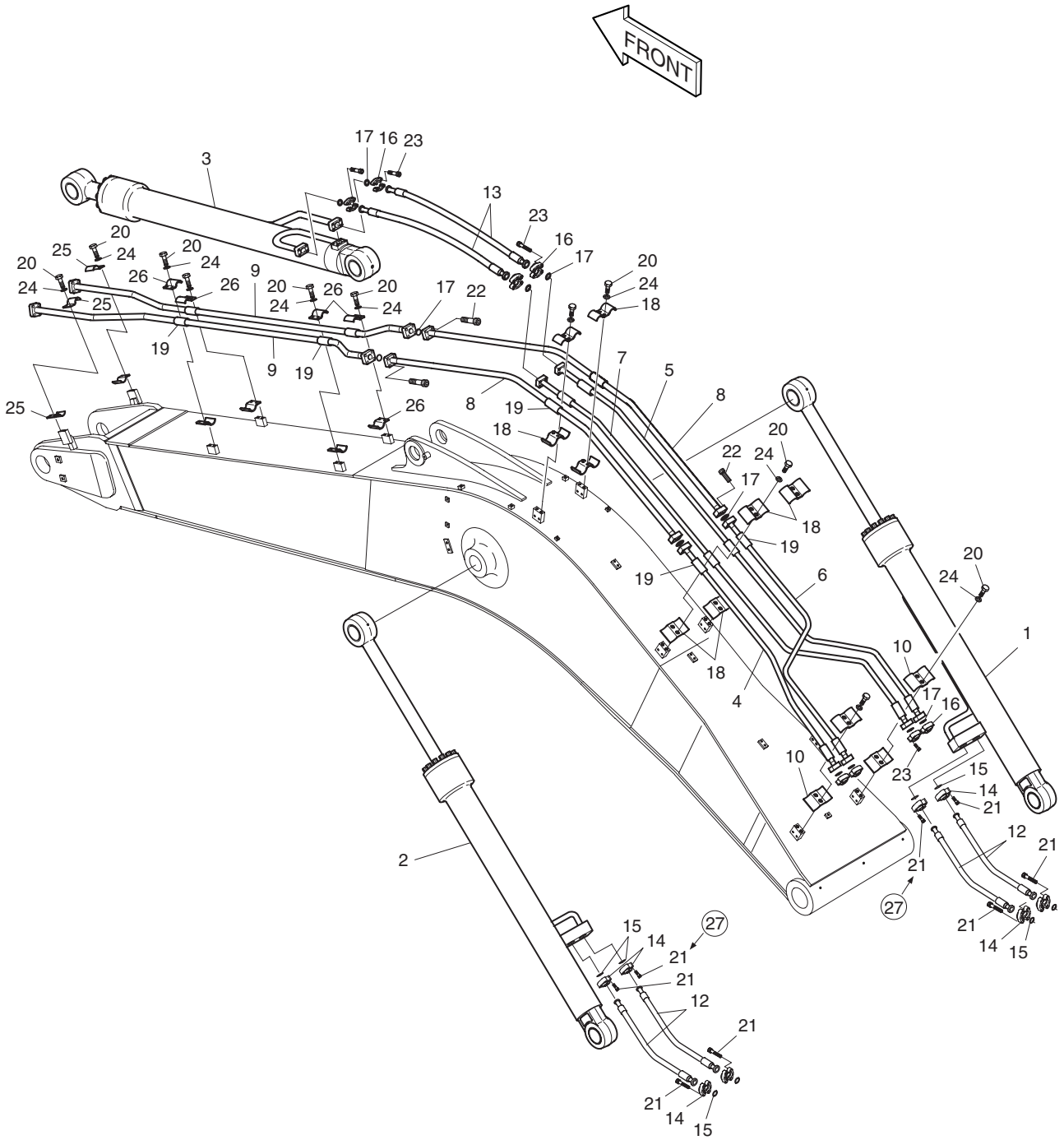

DATE	DEC. 15, 2006
REV. NO.	EXB06-13

Fig. 6511 BOOM PIPING-7.1m CONDUITES DE FLECHE

Serial No. ; 1201 ~

Key No.	Part No.	Description	Description	Q'ty	S.C	Serial No.	ICA	Replaceable part	
								Part No.	Q'ty
6511--	**400-01400B**	**BOOM PIPING-7.1m**	CONDUITES DE FLECHE	-	D	**1201–**			
1	440-00286	CYLINDER;BOOM(R.H)	CONDUITES DE FLECHE	1		1201–1711	I	440-00286A	1
	440-00286A	**CYLINDER;BOOM(R.H)**	CONDUITES DE FLECHE	1		**1712–**			
2	440-00287	CYLINDER;BOOM(L.H)	CONDUITES DE FLECHE	1		1201–1711	I	440-00287A	1
	440-00287A	**CYLINDER;BOOM(L.H)**	CONDUITES DE FLECHE	1		**1712–**			
3	440-00015A	CYLINDER;ARM	VERIN DE BALANCIER	1		1201–1702	I	440-00015B	1
	440-00015B	**CYLINDER;ARM**	VERIN DE BALANCIER	1		**1703–**			
4	140-01574	PIPE	CONDUITE	1		1201–1324			
	140-01574A	PIPE	CONDUITE	1		1325–			
5	140-01575	PIPE	CONDUITE	1		1201–1324			
	140-01575A	PIPE	CONDUITE	1		1325–			
6	140-01576	PIPE	CONDUITE	1		1201–1324			
	140-01576A	PIPE	CONDUITE	1		1325–			
7	140-01577	PIPE	CONDUITE	1		1201–1324			
	140-01577A	PIPE	CONDUITE	1		1325–			
8	140-01578	PIPE	CONDUITE	2		1201–1324			
	140-01578A	PIPE	CONDUITE	2		1325–			
9	140-01579	PIPE	CONDUITE	2		1201–1324			
	140-01579A	PIPE	CONDUITE	2		1325–1402			
	140-01579B	PIPE	CONDUITE	2		1403–			
10	124-00315	CLAMP	ATTACHE DE TUYAU	4					
12	DS2038132	HOSE-1070L	TUYAU FLEXIBLE	4					
13	2184-1081D139	HOSE-1450L	TUYAU FLEXIBLE	2					
14	2181-9081	FLANGE;SPLIT	BRIDE	16					
15	2180-1026D19	O-RING	JONT TORIQUE	8					
16	2181-9086	FLANGE;SPLIT	FLASQUE EN DEUX	16					
17	2180-1026D23	O-RING	JONT TORIQUE	12					
18	124-00205A	CLAMP;PIPE	ATTACHE DE TUYAU	8		1201–1324			
	K1000540	CLAMP;PIPE	ATTACHE DE TUYAU	8		1325–			
19	161-00280	RUBBER	CAOUTCHOUC	12					
20	S0562766	BOLT M14X2.0X40	BOULON A 6PANS	24					
21	S2215366	BOLT;SOCKET M12X1.75X35	BOULON A 6 PANS CREUX	24		1201–1513			
	S2215466	BOLT;SOCKET M12X1.75X40	BOULON A 6 PANS CREUX	32		1514–			
22	S2218766	BOLT;SOCKET M14X2.0X55	BOULON A 6 PANS CREUX	16					
23	S2218666	BOLT;SOCKET M14X2.0X50	BOULON A 6 PANS CREUX	32					
24	S5102803	WASHER;SPRING M14	RONDELLE ELASTIQUE M14	24					
25	124-00291	CLAMP;PIPE	ATTACHE DE TUYAU	4					
26	124-00219	CLAMP;PIPE	ATTACHE DE TUYAU	8		1201–1324			

DATE	DEC. 15, 2006
REV. NO.	EXB06-13

Fig. 6511 BOOM PIPING-7.1m
CONDUITES DE FLECHE

Serial No. ; 1201 ~

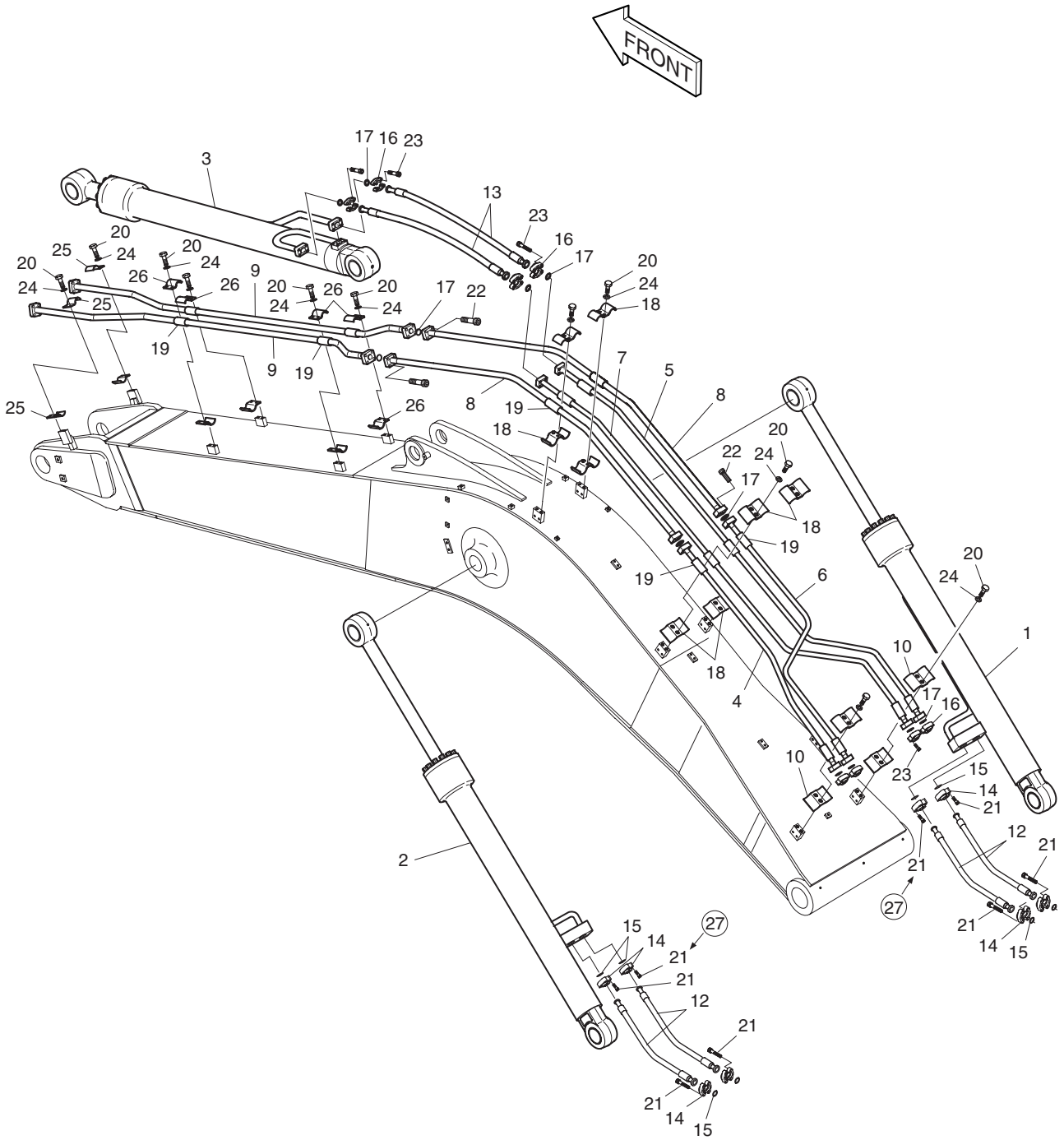

DATE	DEC. 15, 2006
REV. NO.	EXB06-13

Fig. 6511 BOOM PIPING-7.1m CONDUITES DE FLECHE

Serial No. ; 1201 ~

Key No.	Part No.	Description	Description	Q'ty	S.C	Serial No.	ICA	Replaceable part	
								Part No.	Q'ty
6511-26	124-00295	CLAMP;PIPE	ATTACHE DE TUYAU	8		1325–			
27	S2215666	BOLT;SOCKET M12X1.75X50	BOULON A 6 PANS CREUX	8		1201–1513			

DATE	DEC. 15, 2006
REV. NO.	EXB06-13

Fig. 6520 BOOM PIPING-9.0m
CONDUITES DE FLECHE

Serial No. ;

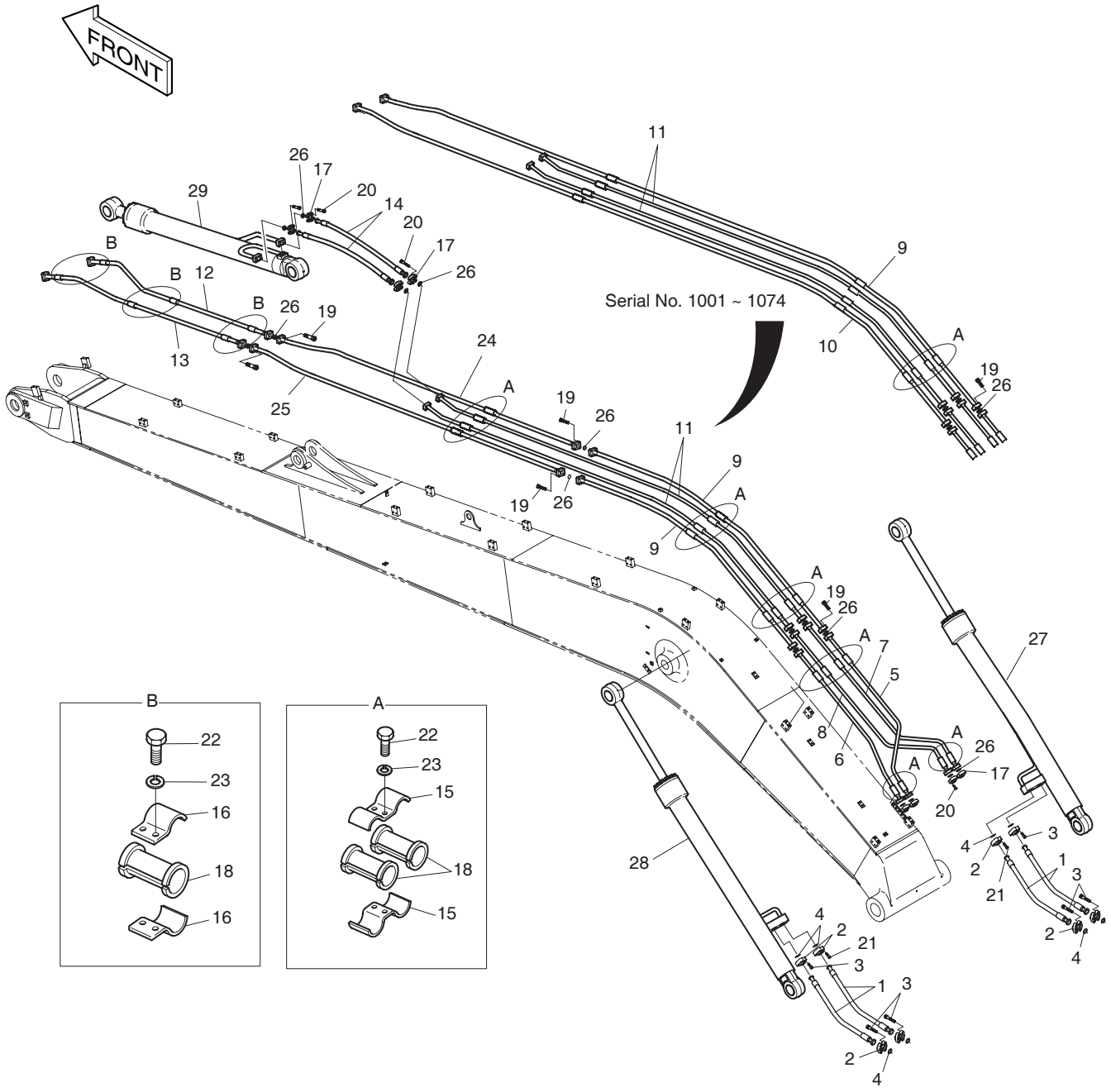

DATE	DEC. 15, 2006
REV. NO.	EXB06-13

Fig. 6520 BOOM PIPING-9.0m CONDUITES DE FLECHE

Serial No. ;

Key No.	Part No.	Description	Description	Q'ty	S.C	Serial No.	ICA	Replaceable part	
								Part No.	Q'ty
6520--	400-00971	BOOM PIPING-9.0m	CONDUITES DE FLECHE	-	D				
1	DS2038132	HOSE	TUYAU FLEXIBLE	4					
2	2181-9081	FLANGE;SPLIT	BRIDE	16					
3	S2215366	BOLT;SOCKET M12X1.75X35	BOULON A 6 PANS CREUX	24					
4	2180-1026D19	O-RING	JOINT TORIQUE	8					
5	140-00855B	PIPE	TUYAU	1					
6	140-00885B	PIPE	TUYAU	1					
7	140-01247	PIPE	TUYAU	1					
8	140-01248	PIPE	TUYAU	1					
9	140-01249	PIPE	TUYAU	1		1001–1074			
	140-01249A	PIPE	TUYAU	2		1075–			
10	140-01250	PIPE	TUYAU	1		1001–1074			
11	140-01251	PIPE	TUYAU	2					
12	140-00859	PIPE	TUYAU	1					
13	140-00860	PIPE	TUYAU	1					
14	DS2038126	HOSE	TUYAU FLEXIBLE	2					
15	124-00205A	CLAMP;PIPE	COILLER	20					
16	124-00219	CLAMP;PIPE	COLLIER	12					
17	2181-9086	FLANGE;SPLIT	FLASQUE EN DEUX	16					
18	161-00280	RUBBER	CAOUTCHOUC	26					
19	S2218766	BOLT;SOCKET M14X2.0X55	BOULON A 6 PANS CREUX	24		1001–1074			
	S2218766	BOLT;SOCKET M14X2.0X55	BOULON A 6 PANS CREUX	32		1075–			
20	S2218666	BOLT;SOCKET M14X2.0X50	BOULON A 6 PANS CREUX	32					
21	S2215666	BOLT;SOCKET M14X2.0X45	BOULON A 6 PANS CREUX	8					
22	S0562766	BOLT M14X2.0X40	BOULON A 6 PANS	32					
23	S5102803	WASHER;SPRING	RONDELLE ELASTIQUE	32					
24	140-01378	PIPE	TUYAU	1		1075–			
25	140-01379	PIPE	TUYAU	1		1075–			
26	2180-1026D23	O-RING	JOINT TORIQUE	14		1001–1074			
	2180-1026D23	O-RING	JOINT TORIQUE	16		1075–			
27	440-00286	CYLINDER;BOOM(R.H)	VERIN DE FLECHE	1		1001–1711	I	440-00286A	1
	440-00286A	**CYLINDER;BOOM(R.H)**	VERIN DE FLECHE	1		**1712–**			
28	440-00287	CYLINDER;BOOM(L.H)	VERIN DE FLECHE	1		1001–1711	I	440-00287A	1
	440-00287A	**CYLINDER;BOOM(L.H)**	VERIN DE FLECHE	1		**1712–**			
29	440-00015A	CYLINDER;ARM	VERIN DE BALANCIER	1		1001–1702	I	440-00015B	1
	440-00015B	**CYLINDER;ARM**	VERIN DE BALANCIER	1		**1703–**			

DATE	JUL. 30, 2003
REV. NO.	EXB03-13

Fig. 6530 BOOM PIPING-11.0m
CONDUITES DE FLECHE

Serial No. ;

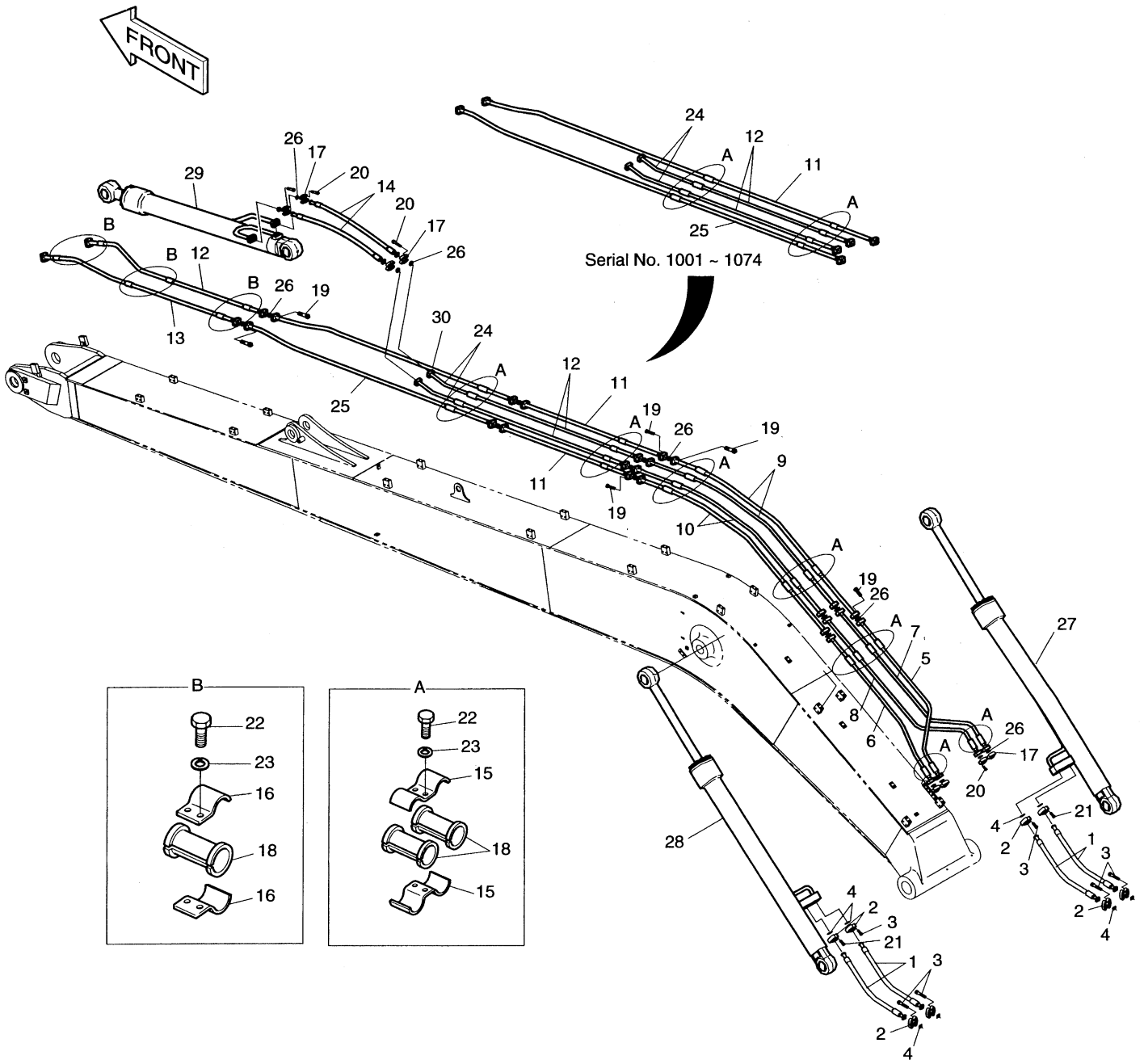

DATE	JUL. 30, 2003
REV. NO.	EXB03-13

Fig. 6530 BOOM PIPING-11.0m CONDUITES DE FLECHE

Serial No ;

Key No.	Part No.	Description	Description	Q'ty	S.C	Serial No.	ICA	Replaceable part	
								Part No.	Q'ty
6530--	400-01031	BOOM PIPING-11.0m	CONDUITES DE FLECHE	-	D				
1	DS2038132	HOSE	TUYAU FLEXIBLE	4					
2	2181-9081	FLANGE;SPLIT	BRIDE	16					
3	S2215366	BOLT;SOCKET M12X1.75X35	BOULON A 6 PANS CREUX	24					
4	2180-1026D19	O-RING	JOINT TORIQUE	8					
5	140-00855B	PIPE	TUYAU	1					
6	140-00885B	PIPE	TUYAU	1					
7	140-01247	PIPE	TUYAU	1					
8	140-01248	PIPE	TUYAU	1					
9	140-01265	PIPE	TUYAU	2					
10	140-01266	PIPE	TUYAU	2					
11	140-01267	PIPE	TUYAU	1		1001-1074			
	140-01267A	**PIPE**	TUYAU	2		**1075-**			
12	2140-1217A	PIPE	TUYAU	2					
13	140-00859	PIPE	TUYAU	1					
14	140-00860	PIPE	TUYAU	1					
15	124-00205A	CLAMP;PIPE	COILLER	28					
16	124-00219	CLAMP;PIPE	COLLIER	12					
17	2181-9086	FLANGE;SPLIT	FLASQUE EN DEUX	16					
18	161-00280	RUBBER	CAOUTCHOUC	34					
19	S2218766	BOLT;SOCKET M14X2.0X55	BOULON A 6 PANS CREUX	40		1001-1074			
	S2218766	**BOLT;SOCKET M14X2.0X55**	BOULON A 6 PANS CREUX	48		**1075-**			
20	S2218666	BOLT;SOCKET M14X2.0X50	BOULON A 6 PANS CREUX	32					
21	S2215666	BOLT;SOCKET M14X2.0X45	BOULON A 6 PANS CREUX	8					
22	S0562766	BOLT M14X2.0X40	BOULON A 6 PANS	40					
23	S5102803	WASHER;SPRING	RONDELLE ELASTIQUE	40					
24	DS2038116	HOSE	TUYAU FLEXIBLE	2					
25	140-01271	PIPE	TUYAU	1		1001-1074			
	140-01381	**PIPE**	TUYAU	1		**1075-**			
26	2180-1026D23	O-RING	JOINT TORIQUE	18		1001-1074			
	2180-1026D23	**O-RING**	JOINT TORIQUE	20		**1075-**			
27	440-00286	CYLINDER;BOOM(R.H)	VERIN DE FLECHE	1					
28	440-00287	CYLINDER;BOOM(L.H)	VERIN DE FLECHE	1					
29	440-00015A	CYLINDER;ARM	VERIN DE BALANCIER	1					
30	**140-01380**	**PIPE**	TUYAU	1		**1075-**			

DATE	DEC. 15, 2006
REV. NO.	EXB06-13

Fig. 6540 ARM PIPING-2.4m
CONDUITES DE BALANCIER

Serial No. ;

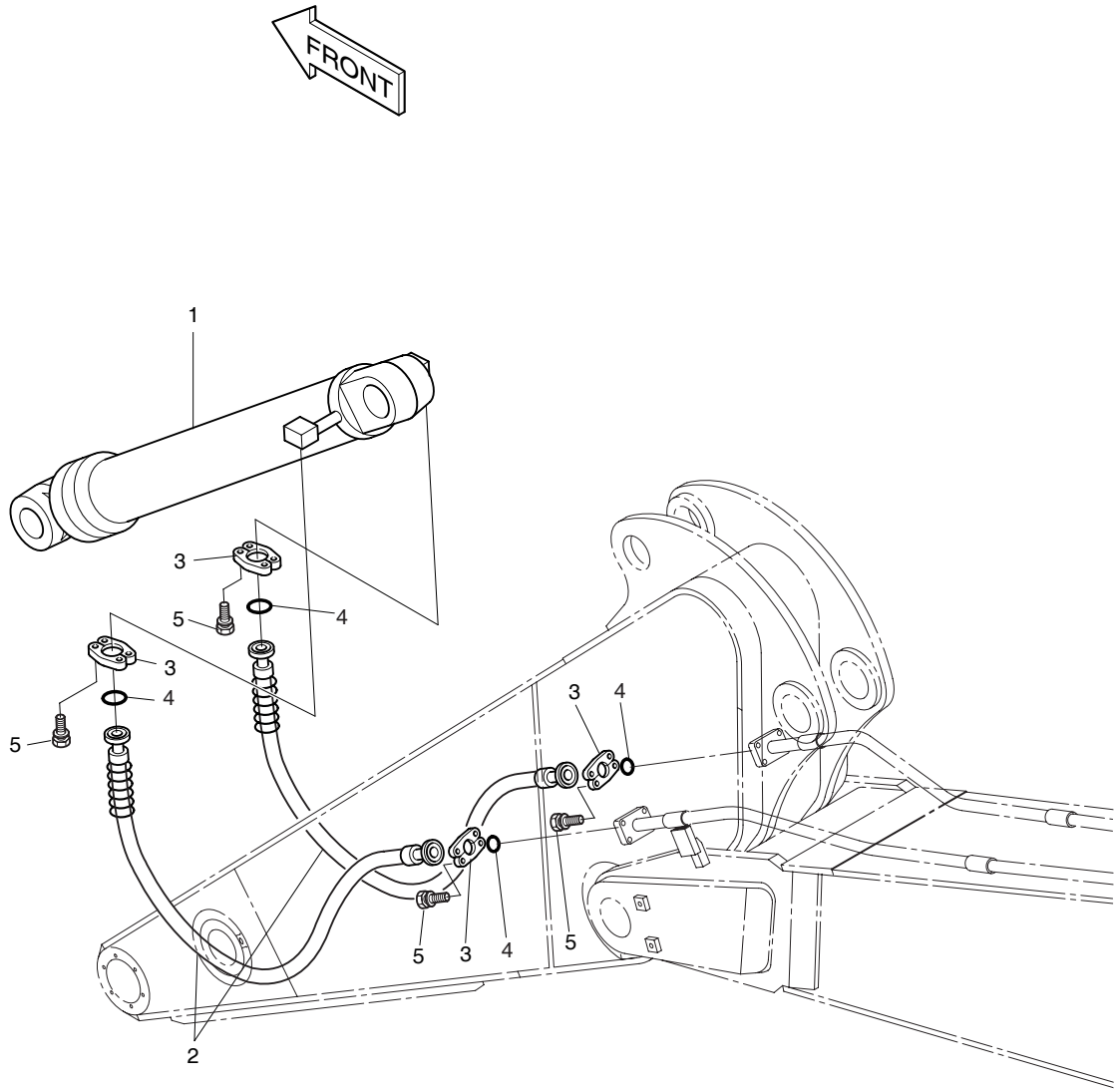

DATE	DEC. 15, 2006
REV. NO.	EXB06-13

Fig. 6540 ARM PIPING-2.4m CONDUITES DE BALANCIER

Serial No. ;

Key No.	Part No.	Description	Description	Q'ty	S.C	Serial No.	ICA	Replaceable part	
								Part No.	Q'ty
6540--	400-00989	ARM PIPING-2.4m	CONDUITES DE BALANCIER	-	D				
1	440-00016A	CYLINDER;BUCKET	VERIN DE GODET	1		1001–1104	I	440-00016B	1
	440-00016B	CYLINDER;BUCKET	VERIN DE GODET	1		1105–1181	I	440-00016C	1
	440-00016C	CYLINDER;BUCKET	VERIN DE GODET	1		1182–1711	I	440-00016E	1
	440-00016E	**CYLINDER;BUCKET**	VERIN DE GODET	1		**1712–**			
2	2184-1098D74	HOSE-1850L	TUYAU FLEXIBLE	2					
3	2181-9086	FLANGE;SPLIT	BRIDE	8					
4	2180-1026D23	O-RING	JOINT TORIQUE	4					
5	S2218666	BOLT;SOCKET M14X2.0X50	BOULON A 6 PANS CREUX	16					

DATE	DEC. 15, 2006
REV. NO.	EXB06-13

Fig. 6550 ARM PIPING-3.35m
CONDUITES DE BALANCIER

Serial No. ;

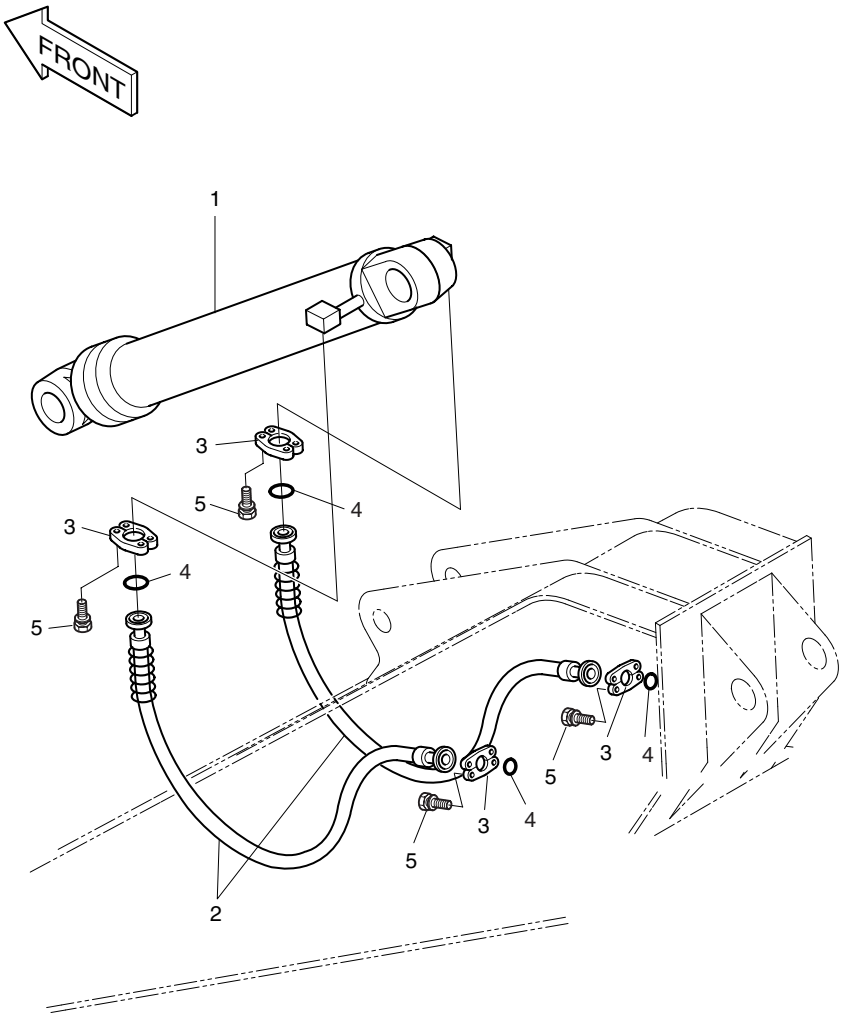

DATE	DEC. 15, 2006
REV. NO.	EXB06-13

Fig. 6550 ARM PIPING-3.35m CONDUITES DE BALANCIER

Serial No. ;

Key No.	Part No.	Description	Description	Q'ty	S.C	Serial No.	ICA	Replaceable part	
								Part No.	Q'ty
6550--	400-00708	ARM PIPING-3.35m	CONDUITES DE BALANCIER	-	D				
1	440-00016A	CYLINDER;BUCKET	VERIN DE GODET	1		1001–1104	I	440-00016B	1
	440-00016B	CYLINDER;BUCKET	VERIN DE GODET	1		1105–1181	I	440-00016C	1
	440-00016C	CYLINDER;BUCKET	VERIN DE GODET	1		1182–1711	I	440-00016E	1
	440-00016E	**CYLINDER;BUCKET**	VERIN DE GODET	1		**1712–**			
2	DS2038136	HOSE 1800L	TUYAU FLEXIBLE	2					
3	2181-9086	FLANGE;SPLIT	FLASQUE EN DEUX	8					
4	2180-1026D23	O-RING	JONT TORIQUE	4					
5	S2218666	BOLT M14X2.0X50	BOULON A 6PANS	16					

DATE	DEC. 15, 2006
REV. NO.	EXB06-13

Fig. 6560 ARM PIPING-4.0m
CONDUITES DE BALANCIER

Serial No. ;

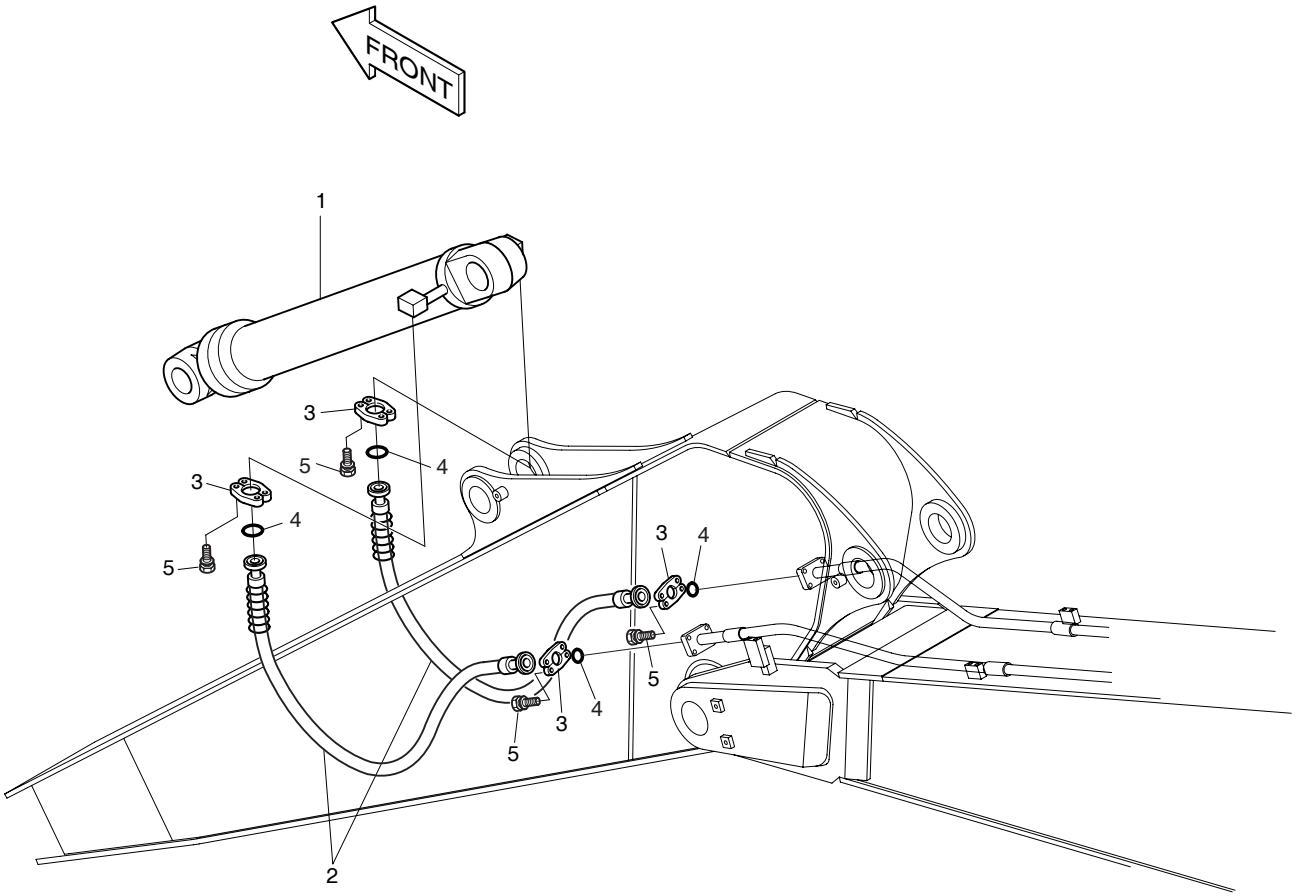

DATE	DEC. 15, 2006
REV. NO.	EXB06-13

Fig. 6560 ARM PIPING-4.0m CONDUITES DE BALANCIER

Serial No. ;

Key No.	Part No.	Description	Description	Q'ty	S.C	Serial No.	ICA	Replaceable part	
								Part No.	Q'ty
6560--	400-00991	ARM PIPING-4.0m	CONDUITES DE BALANCIER	-	D				
1	440-00016A	CYLINDER;BUCKET	VERIN DE GODET	1		1001–1104	I	440-00016B	1
	440-00016B	CYLINDER;BUCKET	VERIN DE GODET	1		1105–1181	I	440-00016C	1
	440-00016C	CYLINDER;BUCKET	VERIN DE GODET	1		1182–1711	I	440-00016E	1
	440-00016E	**CYLINDER;BUCKET**	VERIN DE GODET	1		**1712–**			
2	2184-1081D58	HOSE-2800L	TUYAU FLEXIBLE	2					
3	2181-9086	FLANGE;SPLIT	BRIDE	8					
4	2180-1026D23	O-RING	JOINT TORIQUE	4					
5	S2218666	BOLT;SOCKET M14X2.0X50	BOULON A 6 PANS CREUX	16					

DATE	DEC. 15, 2006
REV. NO.	EXB06-13

Fig. 6570 ARM PIPING-6.0m
CONDUITES DE BALANCIER

Serial No. ;

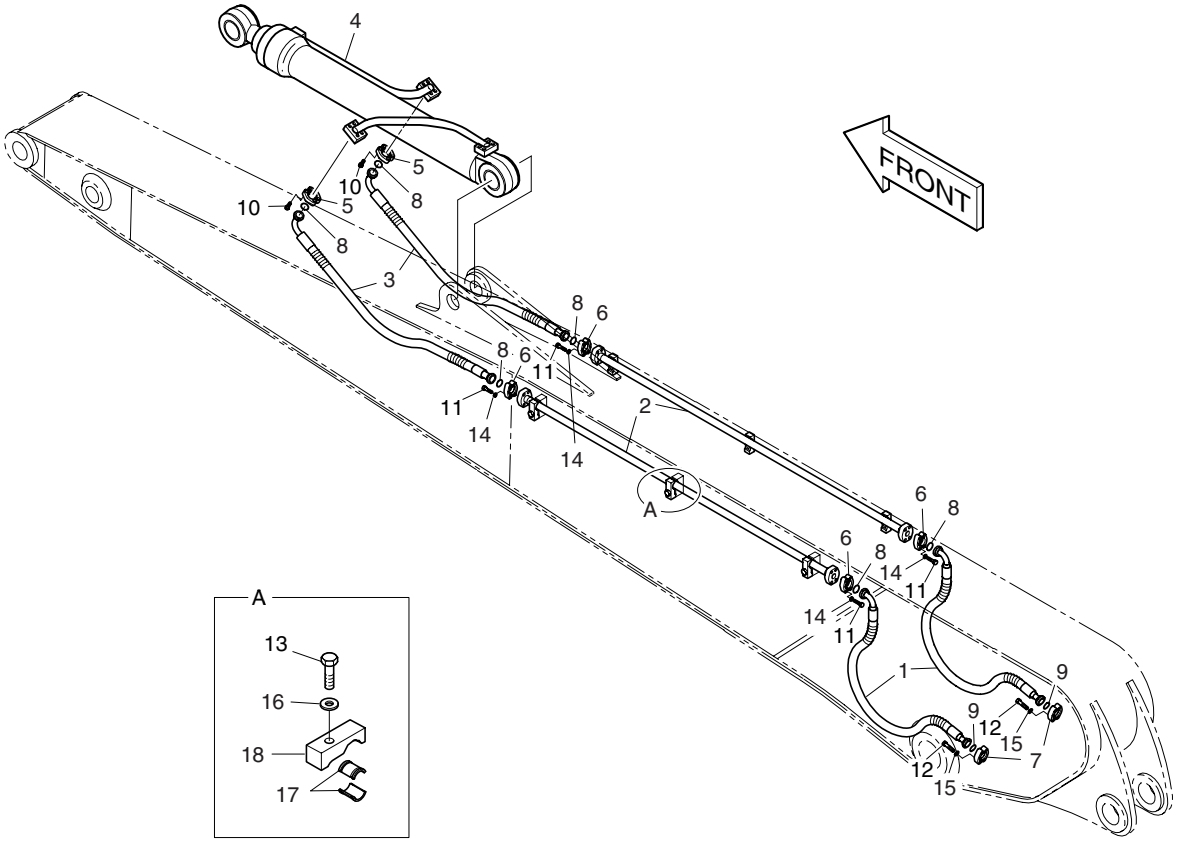

DATE	DEC. 15, 2006
REV. NO.	EXB06-13

Fig. 6570 ARM PIPING-6.0m CONDUITES DE BALANCIER

Serial No. ;

Key No.	Part No.	Description	Description	Q'ty	S.C	Serial No.	ICA	Replaceable part	
								Part No.	Q'ty
6570--	**400-00120B**	**ARM PIPING**	CONDUITES DE BALANCIER	-	D				
1	DS2040271	HOSE PF1 1/4-1600L	TUYAU FLEXIBLE	2		1001–1442			
	DS2040441	HOSE PF1 1/4-1950L	TUYAU FLEXIBLE	2		1443–			
2	140-00106	PIPE	TUYAU	2		1001–1442			
	140-00106A	PIPE	TUYAU	2		1443–			
3	DS2040272	HOSE	TUYAU FLEXIBLE	2					
4	2440-9241G	CYLINDER;BUCKET	VERIN DE GODET	1		1001–1253	I	2440-9241H	1
	2440-9241H	CYLINDER;BUCKET	VERIN DE GODET	1		1254–1702	I	2440-9241I	1
	2440-9241I	**CYLINDER;BUCKET**	VERIN DE GODET	1		**1703–**			
5	2181-9078	FLANGE	FLASQUE EN DEUX	4					
6	2181-9081	FLANGE;SPLIT	BRIDE	8					
7	2181-9086	FLANGE;SPLIT	FLASQUE EN DEUX	4					
8	2180-1026D19	O-RING	JOINT TORIQUE	6					
9	2180-1026D23	O-RING	JOINT TORIQUE	2					
10	S2212266	BOLT;SOCKET M10X1.5X30	BOULON A 6 PANS CREUX	8					
11	S2215566	BOLT;SOCKET M12X1.75X45	BOULON A 6 PANS CREUX	16		1001–1442			
	S2215666	BOLT;SOCKET M12X1.75X50	BOULON A 6 PANS CREUX	16		1443–			
12	S2218766	BOLT;SOCKET M14X2.0X55	BOULON A 6 PANS CREUX	8					
13	S0565666	BOLT M16X2.0X70	BOULON A 6 PANS	6					
14	S5110703	WASHER;SPRING M12	RONDELLE ELASTIQUE	16					
15	S5110803	WASHER;SPRING M14	RONDELLE ELASTIQUE	8					
16	S5102903	WASHER;SPRING M16	RONDELLE ELASTIQUE	6					
17	161-00102	RUBBER	CAOUTCHOUC	12					
18	2124-1586A	CLAMP;PIPE	ATTACHE DE TUBE	6					

DATE	JUN. 30, 2006
REV. NO.	EXB06-08

Fig. 6580 ARM PIPING-8.0m
CONDUITES DE BALANCIER

Serial No. ;

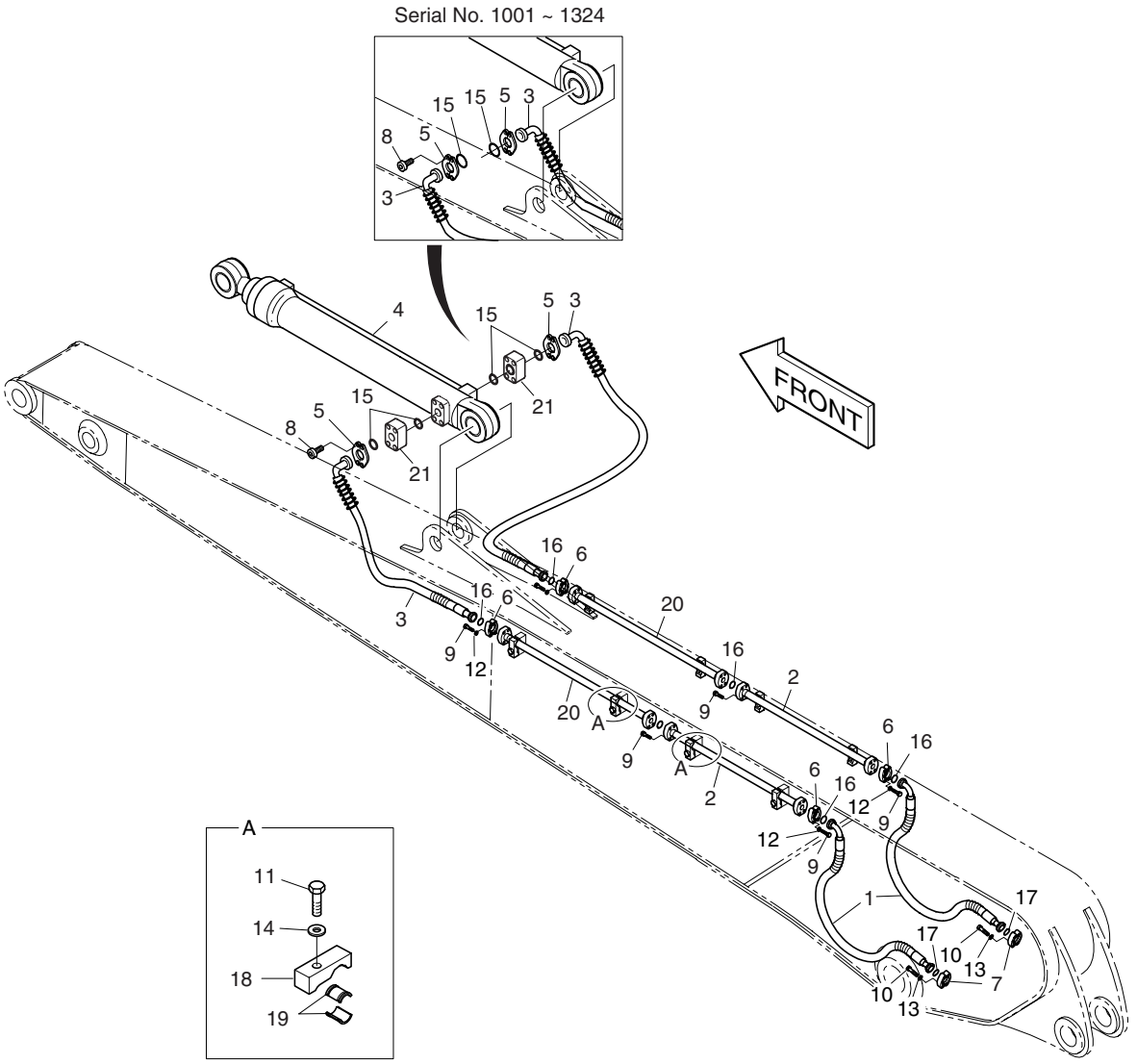

DATE	JUN. 30, 2006
REV. NO.	EXB06-08

Fig. 6580 ARM PIPING-8.0m CONDUITES DE BALANCIER

Serial No. ;

Key No.	Part No.	Description	Description	Q'ty	S.C	Serial No.	ICA	Replaceable part	
								Part No.	Q'ty
6580--	400-00187A	ARM PIPING-8.0m	CONDUITES DE BALANCIER	-	D				
1	DS2040271	HOSE	TUYAU FLEXIBLE	2		1001–1442			
	DS2040441	HOSE PF1 1/4-1950L	TUYAU FLEXIBLE	2		1443–			
2	140-00106	PIPE	TUYAU	2		1001–1442			
	140-00106A	PIPE	TUYAU	2		1443–			
3	DS2040273	HOSE	TUYAU FLEXIBLE	2		1001–1324			
	DS2040379	HOSE	TUYAU FLEXIBLE	2		1325–			
4	440-00059	CYLINDER;BUCKET	VERIN DE GODET	1		1001–1634	I	440-00059A	1
	440-00059A	**CYLINDER;BUCKET**	VERIN DE GODET	1		**1635**–			
5	2181-9079	FLANGE	FLASQUE EN DEUX	4					
6	2181-9081	FLANGE;SPLIT	BRIDE	8					
7	2181-9086	FLANGE;SPLIT	FLASQUE EN DEUX	4					
8	S2212366	BOLT;SOCKET M10X1.5X35	BOULON A 6 PANS CREUX	8		1001–1324			
	S2213066	BOLT;SOCKET M10X1.5X70	BOULON A 6 PANS CREUX	8		1325–			
9	S2215366	BOLT;SOCKET M12X1.75X35	BOULON A 6 PANS	24		1001–1442			
	S2215666	BOLT;SOCKET M12X1.75X50	BOULON A 6 PANS	24		1443–			
10	S2218766	BOLT;SOCKET M14X2.0X55	BOULON A 6 PANS CREUX	8					
11	S0565666	BOLT M16X2.0X70	BOULON A 6 PANS	8					
12	S5110703	WASHER;SPRING	RONDELLE ELASTIQUE	16					
13	S5110803	WASHER;SPRING	RONDELLE ELASTIQUE	8					
14	S5102903	WASHER;SPRING	RONDELLE ELASTIQUE	8					
15	2180-1026D2	O-RING	JOINT TORIQUE	2		1001–1324			
	2180-1026D2	O-RING	JOINT TORIQUE	4		1325–			
16	2180-1026D19	O-RING	JOINT TORIQUE	6					
17	2180-1026D23	O-RING	JOINT TORIQUE	2					
18	2124-1586A	CLAMP;PIPE	ATTACHE DE TUBE	8					
19	161-00102	RUBBER	CAOUTCHOUC	16					
20	140-00790	PIPE	TUYAU	2					
21	423-00032	BLOCK;SPACER	BLOC	2		1325–			

DATE	DEC. 22, 2003
REV. NO.	EXB03-15

Fig. 6590 LUBRICATION PIPING-7.1m BOOM
TUYAUTERIE AVANT DE LUBRIFICATION

Serial No. ; 1001 ~ 1200

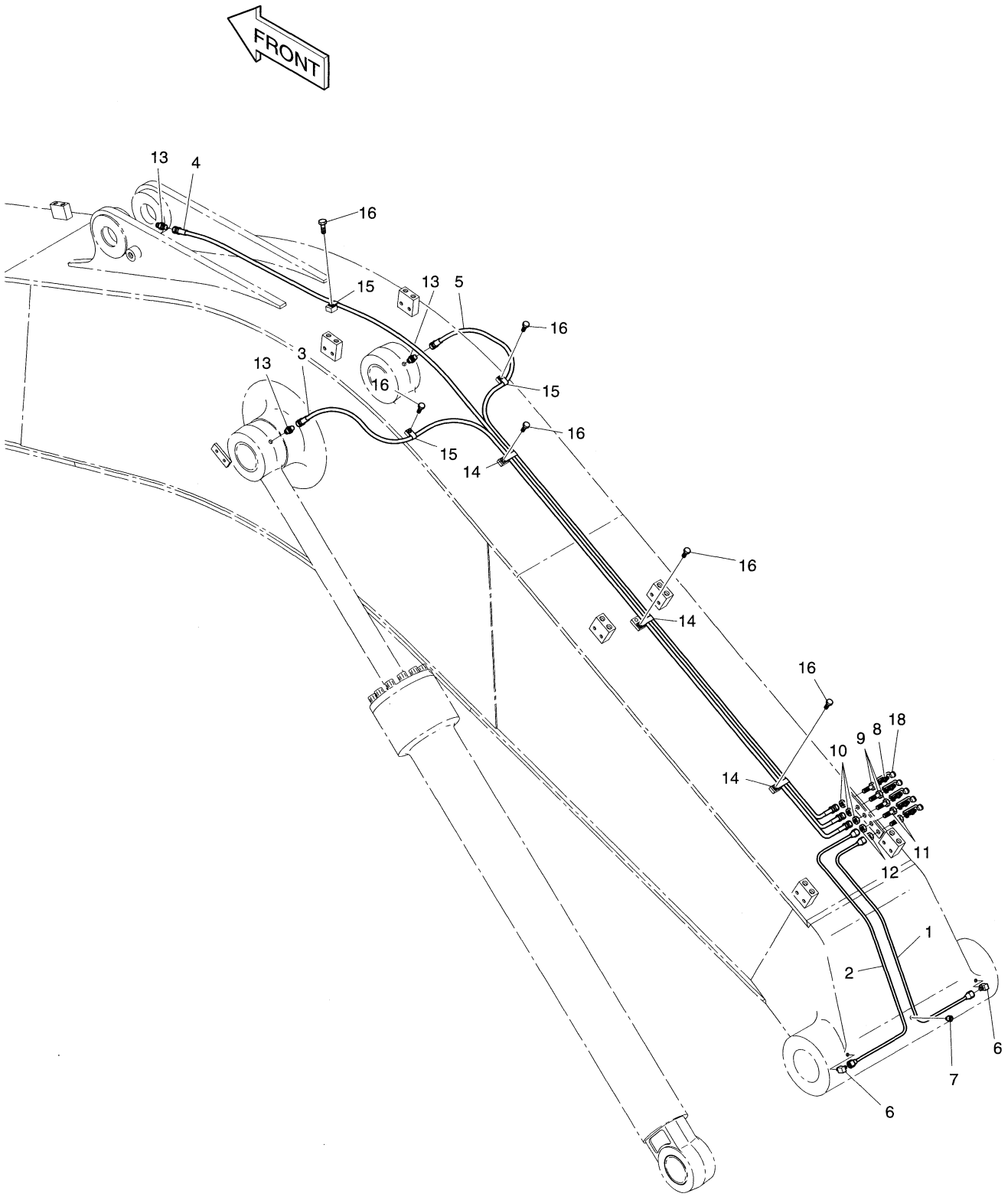

DATE	DEC. 22, 2003
REV. NO.	EXB03-15

Fig. 6590 LUBRICATION PIPING-7.1m BOOM
TUYAUTERIE AVANT DE LUBRIFICATION

Serial No ; 1001 ~ 1200

Key No.	Part No.	Description	Description	Q'ty	S.C	Serial No.	ICA	Replaceable part	
								Part No.	Q'ty
6590--	400-00691	FRONT LUBRICATION PIPING	TUYAUTERIE AVANT DE	1		1001-1200			
1	182-00111	PIPE	CONDUITE	1					
2	182-00112	PIPE	CONDUITE	1					
3	2184-1045D97	HOSE PF1/4-3300L	TUYAU FLEXIBLE	1					
4	2184-1045D95	HOSE PF1/4-3600L	TUYAU FLEXIBLE	1					
5	DS2053736	HOSE PF1/4-3250L	TUYAU FLEXIBLE	1					
6	2181-1925	ELBOW PT1/8-M14X1.5	COUDE	2					
7	S3524403	PLUG;DRAIN M10X1.5X12	BOUCHON	1					
8	S6710041	NIPPLE;GREASE PT1/8	GRAISSEUR	5					
9	181-00103	REDUCER	REDUCTEUR	3					
10	121-00006	NUT	ECROU	3					
11	181-00525	REDUCER	REDUCTEUR	2					
12	S4032833	NUT M14X1.5	ECROU	2					
13	2181-1186D12	ELBOW PF1/4-PT1/8	COUDE	3					
14	124-00199D4	CLIP	ATTACHE	3					
15	2124-1353D2	CLIP	ATTACHE	3					
16	120-00276	BOLT M8X1.25X12	BOULON A 6PANS	6					
18	160-00020	CAP;GREASE NIPPLE	CHAPEAU	5					

DATE	DEC. 30, 2004
REV. NO.	EXB04-09

Fig. 6591 LUBRICATION PIPING-7.1m BOOM
TUYAUTERIE AVANT DE LUBRIFICATION

Serial No. ; 1201 ~

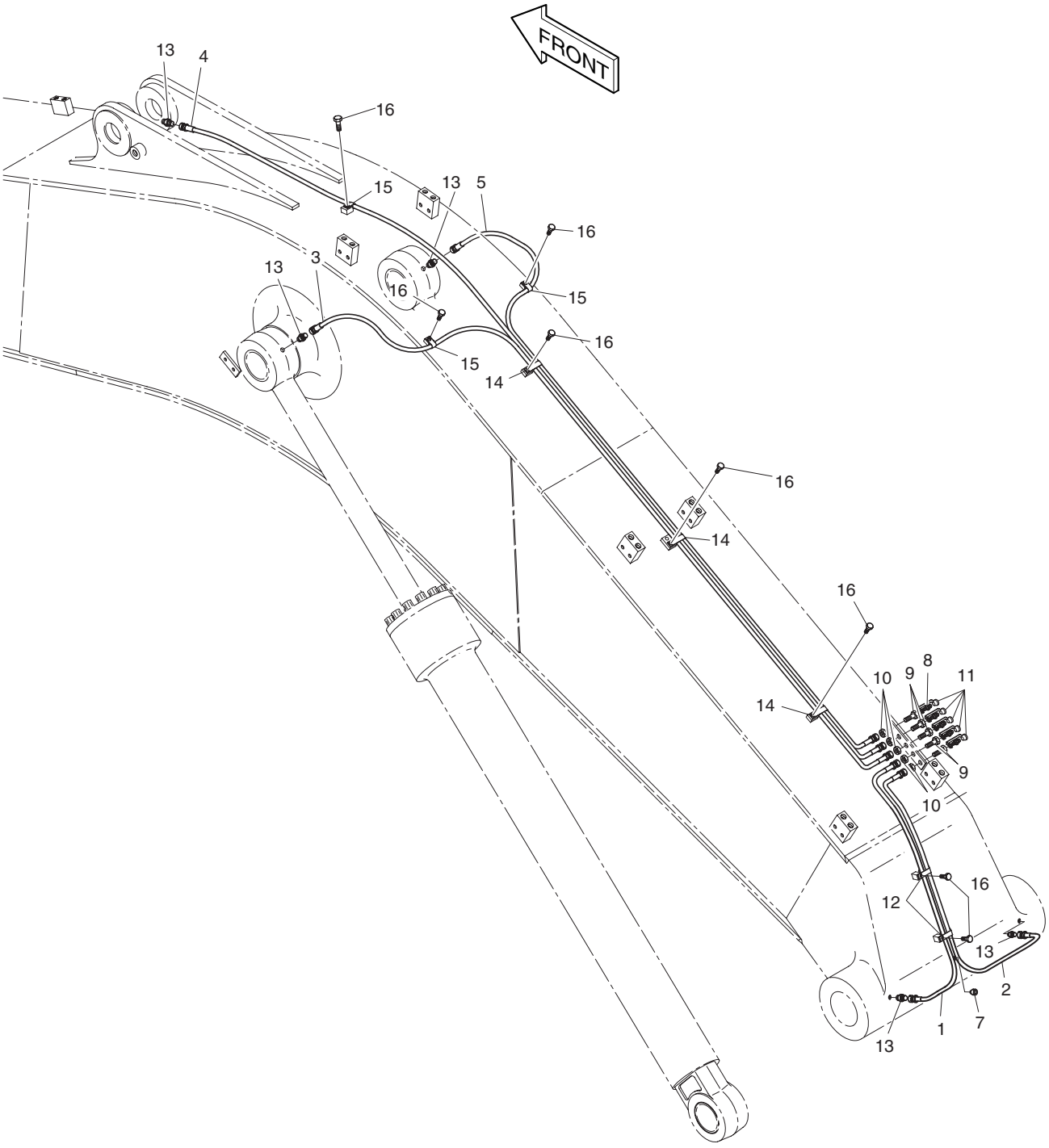

DATE	DEC. 30, 2004
REV. NO.	EXB04-09

Fig. 6591 LUBRICATION PIPING-7.1m BOOM TUYAUTERIE AVANT DE LUBRIFICATION

Serial No ; 1201 ~

Key No.	Part No.	Description	Description	Q'ty	S.C	Serial No.	ICA	Replaceable part	
								Part No.	Q'ty
6591--	400-01405	FRONT LUBRICATION PIPING	TUYAUTERIE AVANT DE	-	D	1201–			
1	2184-1045D157	HOSE PF1/4 1500L	TUYAU FLEXIBLE	1		1201–1324			
	2184-1045D209	**HOSE PF1/4 1350L**	TUYAU FLEXIBLE	1		**1325–**			
2	2184-1045D102	HOSE PF1/4 1450L	TUYAU FLEXIBLE	1		1201–1324			
	2184-1045D209	**HOSE PF1/4 1350L**	TUYAU FLEXIBLE	1		**1325–**			
3	2184-1045D97	HOSE PF1/4-3300L	TUYAU FLEXIBLE	1					
4	2184-1045D95	HOSE PF1/4-3600L	TUYAU FLEXIBLE	1		1201–1324			
	DS2053803	**HOSE PF1/4-3650L**	TUYAU FLEXIBLE	1		**1325–**			
5	DS2053736	HOSE PF1/4-3250L	TUYAU FLEXIBLE	1					
7	S3524403	PLUG;DRAIN M10X1.5X12	BOUCHON	1					
8	S6710041	NIPPLE;GREASE PT1/8	GRAISSEUR	5					
9	181-00103	REDUCER	REDUCTEUR	5					
10	121-00006	NUT	ECROU	5					
11	160-00020	CAP;NIPPLE	CHAPEAU	5					
12	124-00199D5	CLAMP;PIPE	COLLIER	2					
13	2181-1186D12	ELBOW PF1/4-PT1/8	COUDE	3					
14	124-00199D4	CLAMP;PIPE	COLLIER	3					
15	2124-1353D2	CLAMP;PIPE	COLLIER	3					
16	120-00276	BOLT M8X1.25X12	BOULON A 6PANS	8					

DATE	JUL. 30, 2003
REV. NO.	EXB03-13

Fig. 6600 LUBRICATION PIPING-9.0m BOOM
TUYAUTERIE AVANT DE LUBRIFICATION

Serial No. ;

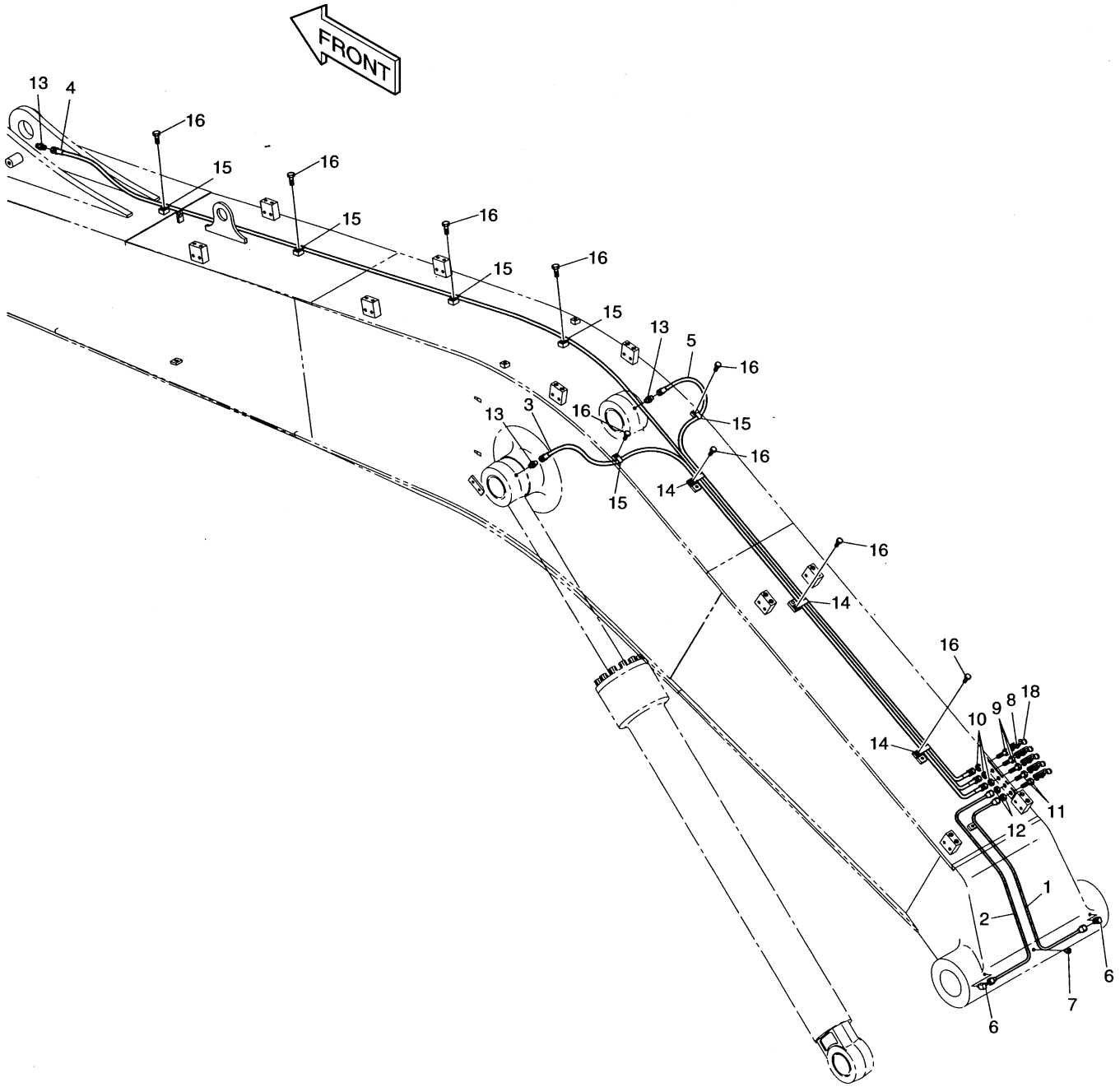

DATE	JUL. 30, 2003
REV. NO.	EXB03-13

Fig. 6600 LUBRICATION PIPING-9.0m BOOM
TUYAUTERIE AVANT DE LUBRIFICATION

Serial No ;

Key No.	Part No.	Description	Description	Q'ty	S.C	Serial No.	ICA	Replaceable part	
								Part No.	Q'ty
6600--	400-01019	LUBRICATION PIPING	LUBRIFICATION	-	D				
1	182-00111	PIPE	CONDUITE	1					
2	182-00112	PIPE	CONDUITE	1					
3	2184-1045D97	HOSE PF1/4-3300L	TUYAU FLEXIBLE	1					
4	DS2053747	HOSE	TUYAU FLEXIBLE	1					
5	DS2053736	HOSE	TUYAU FLEXIBLE	1					
6	2181-1925	ELBOW	COUDE	2					
7	S3524403	PLUG;DRAIN	BOUCHON	1					
8	S6710041	FITTING	GRAISSEUR	5					
9	181-00103	REDUCER	REDUCTEUR	3					
10	121-00006	NUT	ECROU	3					
11	181-00525	REDUCER	REDUCTEUR	2					
12	S4032833	NUT	ECROU	2					
13	2181-1186D12	ELBOW	COUDE	3					
14	124-00199D4	CLIP	ATTACHE	3					
15	2124-1353D2	CLIP	ATTACHE	6					
16	120-00276	BOLT	BOULON A 6PANS	9					
18	160-00020	CAP;GREASE NIPPLE	CHAPEAU	5					

DATE	JUL. 30, 2003
REV. NO.	EXB03-13

Fig. 6610 LUBRICATION PIPING-11.0m BOOM
TUYAUTERIE AVANT DE LUBRIFICATION

Serial No. ;

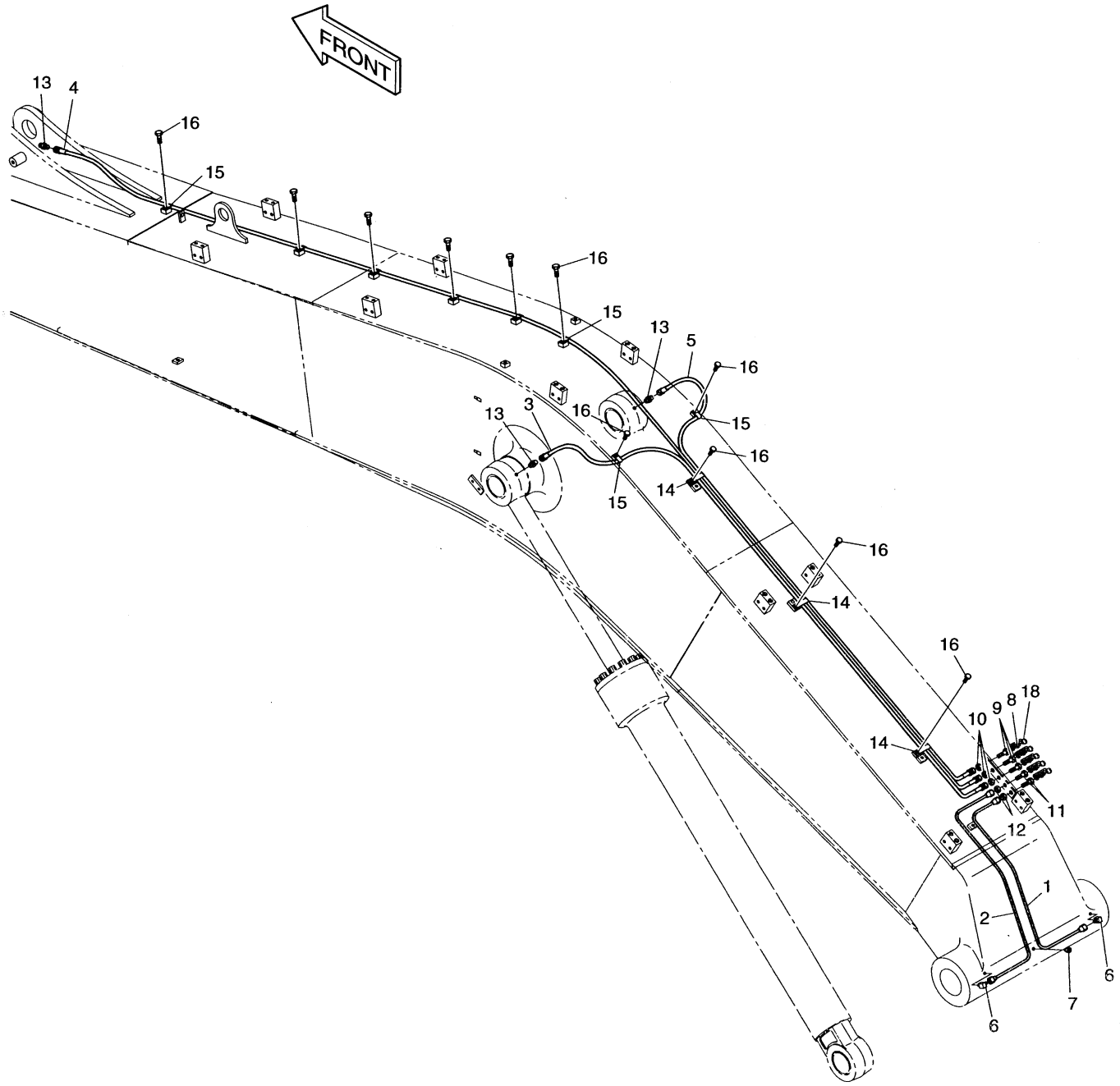

DATE	JUL. 30, 2003
REV. NO.	EXB03-13

Fig. 6610 LUBRICATION PIPING-11.0m BOOM
TUYAUTERIE AVANT DE LUBRIFICATION

Serial No ;

Key No.	Part No.	Description	Description	Q'ty	S.C	Serial No.	ICA	Replaceable part	
								Part No.	Q'ty
6610--	400-01033	LUBRICATION PIPING	LUBRIFICATION	-	D				
1	182-00111	PIPE	CONDUITE	1					
2	182-00112	PIPE	CONDUITE	1					
3	2184-1045D97	HOSE PF1/4-3300L	TUYAU FLEXIBLE	1					
4	DS2053752	HOSE PF1/4-7500L	TUYAU FLEXIBLE	1					
5	DS2053736	HOSE PF1/4-3250L	TUYAU FLEXIBLE	1					
6	2181-1925	ELBOW	COUDE	2					
7	S3524403	PLUG;DRAIN	BOUCHON	1					
8	S6710041	FITTING	GRAISSEUR	5					
9	181-00103	REDUCER	REDUCTEUR	3					
10	121-00006	NUT	ECROU	3					
11	181-00525	REDUCER	REDUCTEUR	2					
12	S4032833	NUT	ECROU	2					
13	2181-1186D12	ELBOW	COUDE	3					
14	124-00199D4	CLIP	ATTACHE	3					
15	2124-1353D2	CLIP	ATTACHE	8					
16	120-00276	BOLT	BOULON A 6PANS	11					
18	160-00020	CAP;GREASE NIPPLE	CHAPEAU	5					

DATE	DEC. 15, 2006
REV. NO.	EXB06-13

Fig. 6620 LOCK VALVE PIPING-7.1m BOOM
CONDUITES DE VERROU VANNE

Serial No. ;

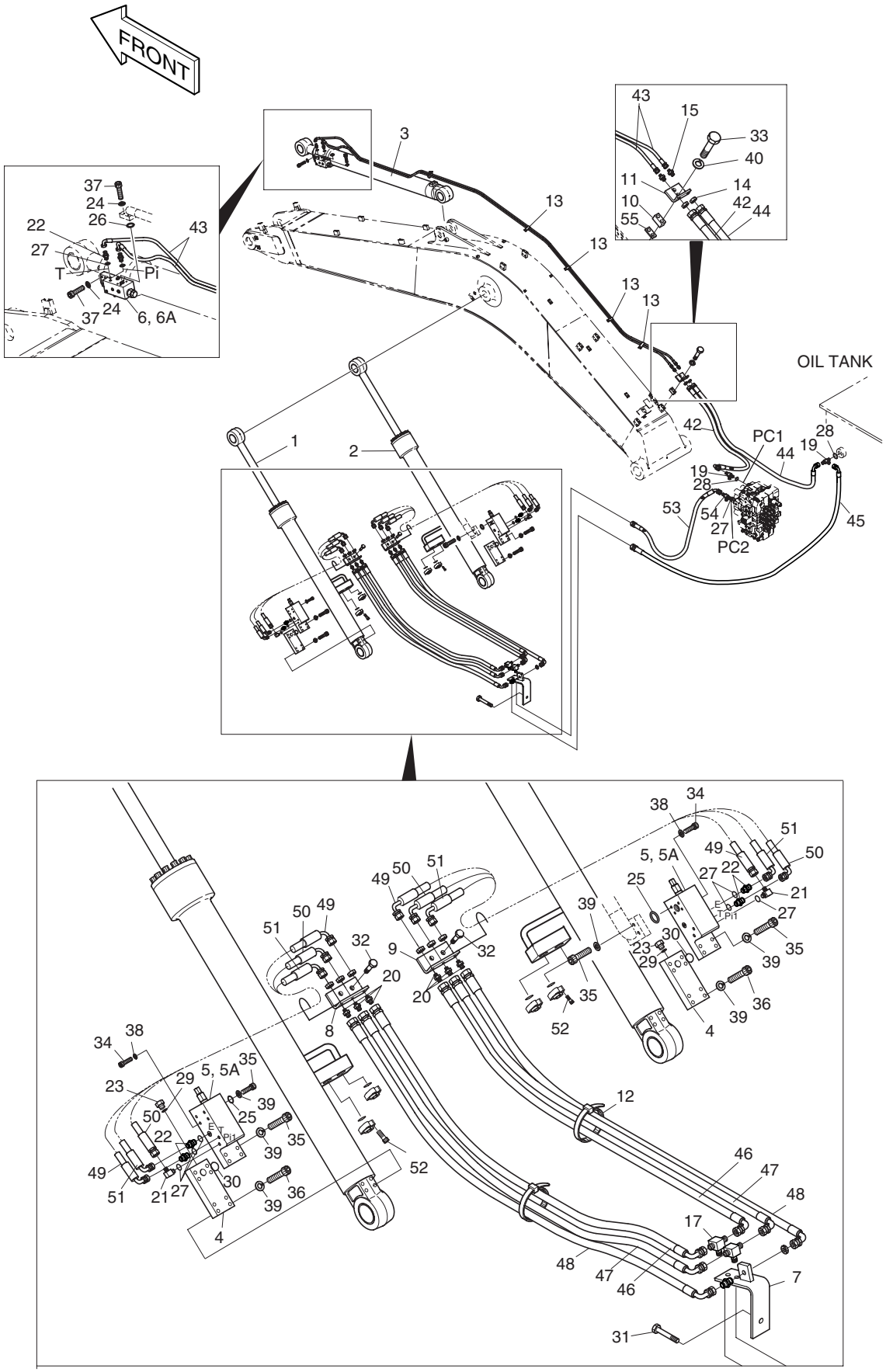

DATE	DEC. 15, 2006
REV. NO.	EXB06-13

Fig. 6620 LOCK VALVE PIPING-7.1m BOOM CONDUITES DE VERROU VANNE

Serial No. ;

Key No.	Part No.	Description	Description	Q'ty	S.C	Serial No.	ICA	Replaceable part	
								Part No.	Q'ty
6620--	**400-00830A**	**LOCK VALVE PIPING**	CONDUITES DE VERROU	-	D				
1	440-00318	CYLINDER;BOOM(L.H)	VERIN DE FLECHE	1		1001–1702	I	440-00318A	1
	440-00318A	**CYLINDER;BOOM(L.H)**	VERIN DE FLECHE	1		**1703–**			
2	440-00319	CYLINDER;BOOM(R.H)	VERIN DE FLECHE	1		1001–1702	I	440-00319A	1
	440-00319A	**CYLINDER;BOOM(R.H)**	VERIN DE FLECHE	1		**1703–**			
3	440-00088	CYLINDER;ARM	VERIN DE BALANCIER	1		1001–1702	I	440-00088A	1
	440-00088A	**CYLINDER;ARM**	VERIN DE BALANCIER	1		**1703–**			
4	423-00030	VALVE;BLOCK	BLOC	2					
5	420-00004A	VALVE;LOCK	VANNE	2					
5A	K9000999	. SEAL KIT	. JOINT DE KIT	1					
6	420-00021A	VALVE;LOCK	CONDUITES DE VERROU	1					
6A	K9001000	. SEAL KIT	. JOINT DE KIT	1					
7	195-01964	BRACKET;LOCK VALVE	SUPPORT	1					
8	195-00335	BRACKET(L.H)	SUPPORT	1					
9	195-00329	BRACKET(R.H)	SUPPORT	1					
10	2114-1180D20	SHIM	CALE	1					
11	195-00163	BRACKET	SUPPORT	1					
12	2124-1084D2	BAND;CLIP	ATTACHE	30					
13	124-00199D5	CLIP	ATTACHE	4					
14	121-00010D1	NUT	ECROU	2					
15	181-00078D5	ADAPTER PF1/4-PF3/8	ADAPTEUR	2					
17	181-00008	TEE PF1/4-PF1/4-PF3/8	TE	2					
19	2181-1951D16	TEE PFO3/8-PF3/8-PF3/8	TE	2					
20	181-00020	ADAPTER;S PF1/4-PF1/4	ADAPTEUR	7					
21	2181-1702D4	ELBOW PFO1/4-PF1/4	COUDE	2					
22	2181-1126D14	ADAPTER;S PFO1/4-PF1/4	ADAPTEUR	6					
23	2181-1890D9	PLUG	BOUCHON	2					
24	S5110803	WASHER;SPRING M14	RONDELLE ELASTIQUE	8					
25	S8000341	O-RING	JONT TORIQUE	2					
26	S8000401	O-RING	JONT TORIQUE	1					
27	S8000111	O-RING	JONT TORIQUE	9					
28	S8000141	O-RING	JONT TORIQUE	2					
29	S8000291	O-RING	JONT TORIQUE	2					
30	2180-1026D19	O-RING	JONT TORIQUE	2					
31	S0566666	BOLT M16X2.0X120	BOULON A 6PANS	1					
32	S0515353	BOLT M12X1.75X35	BOULON A 6PANS	4					
33	S0563366	BOLT M14X2.0X70	BOULON A 6PANS	2					
34	S0515053	BOLT M12X1.75X25	BOULON A 6PANS	2					

DATE	DEC. 15, 2006
REV. NO.	EXB06-13

Fig. 6620 LOCK VALVE PIPING-7.1m BOOM
CONDUITES DE VERROU VANNE

Serial No. ;

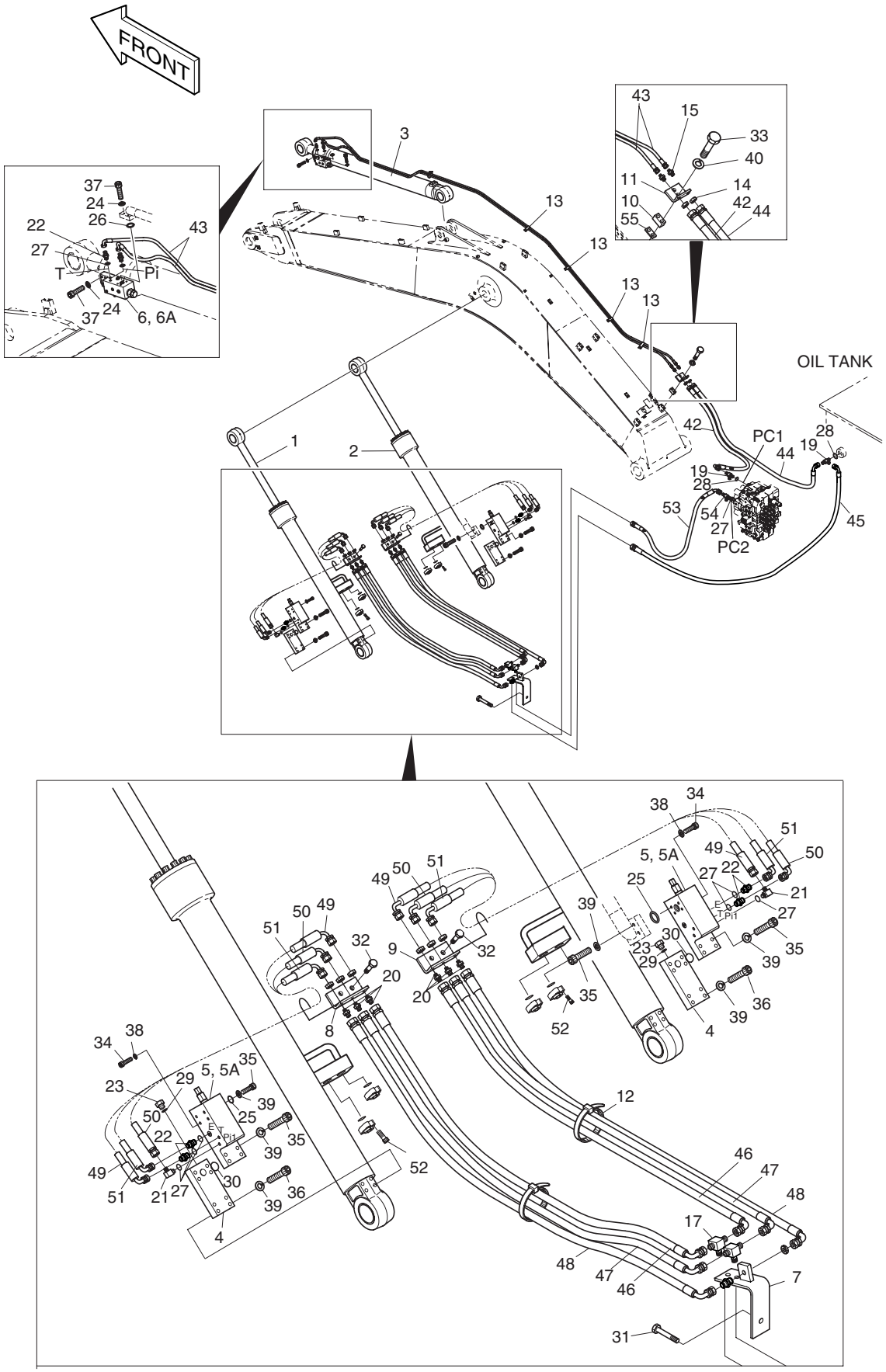

DATE	DEC. 15, 2006
REV. NO.	EXB06-13

Fig. 6620 LOCK VALVE PIPING-7.1m BOOM
CONDUITES DE VERROU VANNE

Serial No. ;

Key No.	Part No.	Description	Description	Q'ty	S.C	Serial No.	ICA	Replaceable part	
								Part No.	Q'ty
6620-35	S2215766	BOLT;SOCKET M12X1.75X55	BOULON A 6 PANS CREUX	16					
36	S2215966	BOLT;SOCKET M12X1.75X65	BOULON A 6 PANS CREUX	8					
37	S2218966	BOLT;SOCKET M14X2.0X65	BOULON A 6 PANS CREUX	8					
38	S5102703	WASHER;SPRING M12	RONDELLE ELASTIQUE	2					
39	S5110703	WASHER;SPRING M12	RONDELLE ELASTIQUE	24					
40	S5102803	WASHER;SPRING M14	RONDELLE ELASTIQUE M14	2					
42	DS2055733	HOSE PF3/8-1700L	TUYAU FLEXIBLE	1					
43	DS2055744	HOSE PF1/4-6400L	TUYAU FLEXIBLE	2					
44	2184-1046D238	HOSE PF3/8-2300L	TUYAU FLEXIBLE	1					
45	2184-1046D226	HOSE PF3/8-2900L	TUYAU FLEXIBLE	1					
46	2184-1060D45	HOSE PF1/4-1000L	TUYAU FLEXIBLE	2					
47	2184-1060D48	HOSE PF1/4-1050L	TUYAU FLEXIBLE	2					
48	2184-1060D221	HOSE PF1/4-1100L	TUYAU FLEXIBLE	2					
49	2184-1061D335	HOSE PF1/4-680L	TUYAU FLEXIBLE	2					
50	2184-1046D35	HOSE PF1/4-680L	TUYAU FLEXIBLE	2					
51	2184-1061D336	HOSE PF1/4-580L	TUYAU FLEXIBLE	2					
52	S2215666	BOLT;SOCKET M12X1.75X50	BOULON A 6 PANS CREUX	8					
53	2184-1046D227	HOSE PF3/8-2600L	TUYAU FLEXIBLE	1					
54	2181-1951D20	TEE	TE	1					
55	2114-1180D15	SHIM T=3.2	CALE	1					

DATE	DEC. 15, 2006
REV. NO.	EXB06-13

Fig. 6630 LOCK VALVE PIPING-9.0m BOOM
CONDUITES DE VERROU VANNE

Serial No. ;

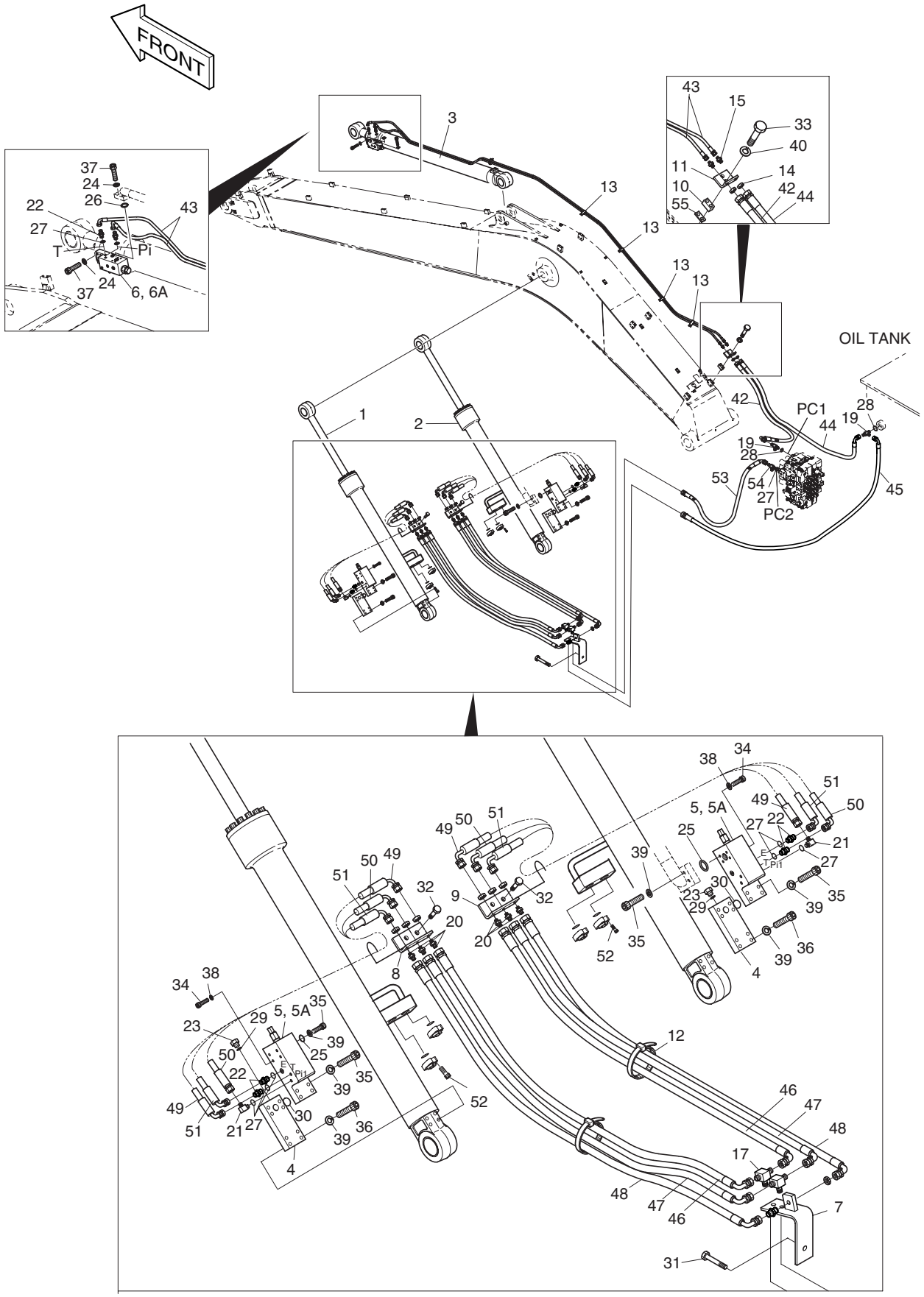

DATE	DEC. 15, 2006
REV. NO.	EXB06-13

Fig. 6630 LOCK VALVE PIPING-9.0m BOOM CONDUITES DE VERROU VANNE

Serial No. ;

Key No.	Part No.	Description	Description	Q'ty	S.C	Serial No.	ICA	Replaceable part	
								Part No.	Q'ty
6630--	**400-01027A**	**LOCK VALVE PIPING**	CONDUITES DE VERROU	-	D				
1	440-00318	CYLINDER;BOOM(L.H)	VERIN DE FLECHE	1		1001–1702	I	440-00318A	1
	440-00318A	**CYLINDER;BOOM(L.H)**	VERIN DE FLECHE	1		**1703–**			
2	440-00319	CYLINDER;BOOM(R.H)	VERIN DE FLECHE	1		1001–1702	I	440-00319A	1
	440-00319A	**CYLINDER;BOOM(R.H)**	VERIN DE FLECHE	1		**1703–**			
3	440-00088	CYLINDER;ARM	VERIN DE BALANCIER	1		1001–1702	I	440-00088A	1
	440-00088A	**CYLINDER;ARM**	VERIN DE BALANCIER	1		**1703–**			
4	423-00030	VALVE;BLOCK	BLOC	2					
5	420-00004A	VALVE;LOCK	VANNE	2					
5A	K9000999	. SEAL KIT	. JOINT DE KIT	1					
6	420-00021A	VALVE;LOCK	CONDUITES DE VERROU	1					
6A	K9001000	. SEAL KIT	. JOINT DE KIT	1					
7	195-01964	BRACKET;LOCK VALVE	SUPPORT	1					
8	195-00335	BRACKET(L.H)	SUPPORT	1					
9	195-00329	BRACKET(R.H)	SUPPORT	1					
10	2114-1180D20	SHIM	CALE	1					
11	195-00163	BRACKET	SUPPORT	1					
12	2124-1084D2	BAND;CLIP	ATTACHE	30					
13	124-00199D5	CLIP	ATTACHE	6					
14	121-00010D1	NUT	ECROU	2					
15	181-00078D5	ADAPTER PF1/4-PF3/8	ADAPTEUR	2					
17	181-00008	TEE PF1/4-PF1/4-PF3/8	TE	2					
19	2181-1951D16	TEE PFO3/8-PF3/8-PF3/8	TE	2					
20	181-00020	ADAPTER;S PF1/4-PF1/4	ADAPTEUR	7					
21	2181-1702D4	ELBOW PFO1/4-PF1/4	COUDE	2					
22	2181-1126D14	ADAPTER;S PFO1/4-PF1/4	ADAPTEUR	6					
23	2181-1890D9	PLUG	BOUCHON	2					
24	S5110803	WASHER;SPRING M14	RONDELLE ELASTIQUE	8					
25	S8000341	O-RING	JONT TORIQUE	2					
26	S8000401	O-RING	JONT TORIQUE	1					
27	S8000111	O-RING	JONT TORIQUE	9					
28	S8000141	O-RING	JONT TORIQUE	2					
29	S8000291	O-RING	JONT TORIQUE	2					
30	2180-1026D19	O-RING	JONT TORIQUE	2					
31	S0566666	BOLT M16X2.0X120	BOULON A 6PANS	1					
32	S0515353	BOLT M12X1.75X35	BOULON A 6PANS	4					
33	S0563366	BOLT M14X2.0X70	BOULON A 6PANS	2					
34	S0515053	BOLT M12X1.75X25	BOULON A 6PANS	2					

DATE	DEC. 15, 2006
REV. NO.	EXB06-13

Fig. 6630 LOCK VALVE PIPING-9.0m BOOM
CONDUITES DE VERROU VANNE

Serial No. ;

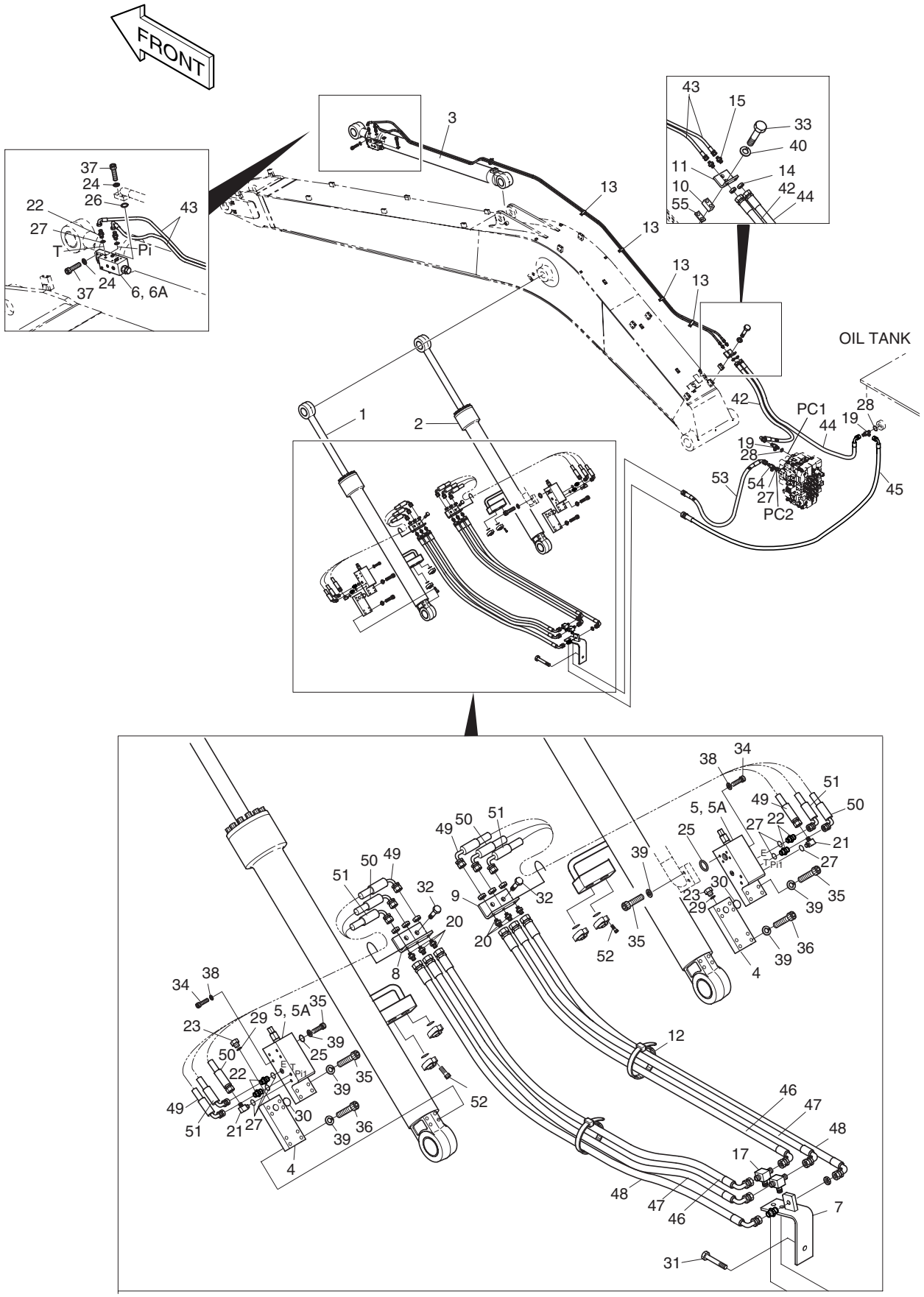

DATE	DEC. 15, 2006
REV. NO.	EXB06-13

Fig. 6630 LOCK VALVE PIPING-9.0m BOOM
CONDUITES DE VERROU VANNE

Serial No. ;

Key No.	Part No.	Description	Description	Q'ty	S.C	Serial No.	ICA	Replaceable part	
								Part No.	Q'ty
6630-35	S2215766	BOLT;SOCKET M12X1.75X55	BOULON A 6 PANS CREUX	16					
36	S2215966	BOLT;SOCKET M12X1.75X65	BOULON A 6 PANS CREUX	8					
37	S2218966	BOLT;SOCKET M14X2.0X65	BOULON A 6 PANS CREUX	8					
38	S5102703	WASHER;SPRING M12	RONDELLE ELASTIQUE	2					
39	S5110703	WASHER;SPRING M12	RONDELLE ELASTIQUE	24					
40	S5102803	WASHER;SPRING M14	RONDELLE ELASTIQUE M14	2					
42	DS2055733	HOSE PF3/8-1700L	TUYAU FLEXIBLE	1					
43	DS2055745	HOSE PF1/4-8250L	TUYAU FLEXIBLE	2					
44	2184-1046D238	HOSE PF3/8-2300L	TUYAU FLEXIBLE	1					
45	2184-1046D226	HOSE PF3/8-2900L	TUYAU FLEXIBLE	1					
46	2184-1060D45	HOSE PF1/4-1000L	TUYAU FLEXIBLE	2					
47	2184-1060D48	HOSE PF1/4-1050L	TUYAU FLEXIBLE	2					
48	2184-1060D221	HOSE PF1/4-1100L	TUYAU FLEXIBLE	2					
49	2184-1061D335	HOSE PF1/4-680L	TUYAU FLEXIBLE	2					
50	2184-1046D35	HOSE PF1/4-680L	TUYAU FLEXIBLE	2					
51	2184-1061D336	HOSE PF1/4-580L	TUYAU FLEXIBLE	2					
52	S2215666	BOLT;SOCKET M12X1.75X50	BOULON A 6 PANS CREUX	8					
53	2184-1046D227	HOSE PF3/8-2600L	TUYAU FLEXIBLE	1					
54	2181-1951D20	TEE	TE	1					
55	2114-1180D15	SHIM T=3.2	CALE	1					

DATE	DEC. 15, 2006
REV. NO.	EXB06-13

Fig. 6640 LOCK VALVE PIPING-11.0m BOOM
CONDUITES DE VERROU VANNE

Serial No. ;

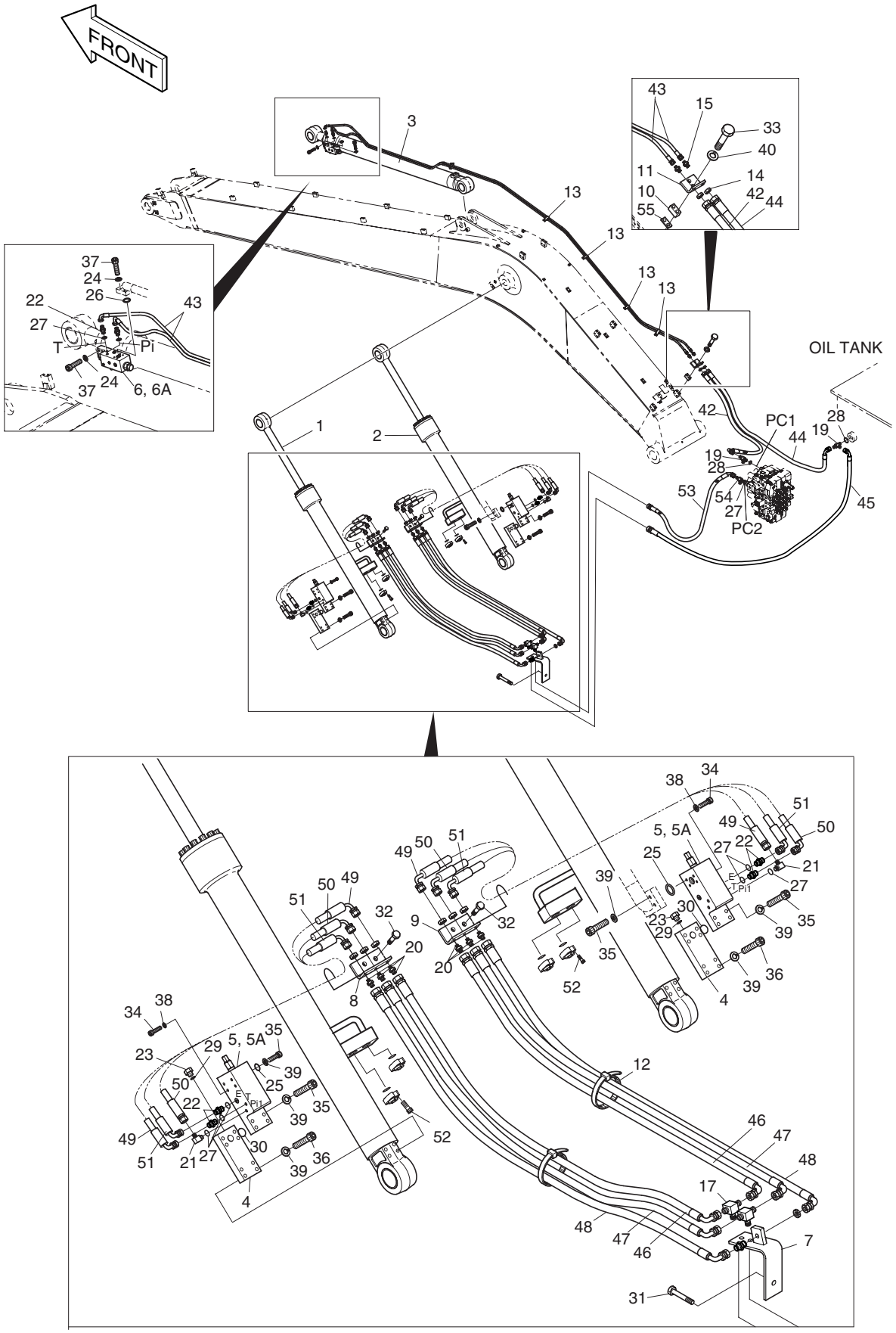

DATE	DEC. 15, 2006
REV. NO.	EXB06-13

Fig. 6640 LOCK VALVE PIPING-11.0m BOOM
CONDUITES DE VERROU VANNE

Serial No. ;

Key No.	Part No.	Description	Description	Q'ty	S.C	Serial No.	ICA	Replaceable part	
								Part No.	Q'ty
6640--	400-01079	LOCK VALVE PIPING	CONDUITES DE VERROU	-	D				
1	440-00318	CYLINDER;BOOM(L.H)	VERIN DE FLECHE	1		1001–1702	I	440-00318A	1
	440-00318A	**CYLINDER;BOOM(L.H)**	VERIN DE FLECHE	1		**1703–**			
2	440-00319	CYLINDER;BOOM(R.H)	VERIN DE FLECHE	1		1001–1702	I	440-00319A	1
	440-00319A	**CYLINDER;BOOM(R.H)**	VERIN DE FLECHE	1		**1703–**			
3	440-00088	CYLINDER;ARM	VERIN DE BALANCIER	1		1001–1702	I	440-00088A	1
	440-00088A	**CYLINDER;ARM**	VERIN DE BALANCIER	1		**1703–**			
4	423-00030	VALVE;BLOCK	BLOC	2					
5	420-00004A	VALVE;LOCK	VANNE	2					
5A	K9000999	. SEAL KIT	. JOINT DE KIT	1					
6	420-00021A	VALVE;LOCK	CONDUITES DE VERROU	1					
6A	K9001000	. SEAL KIT	. JOINT DE KIT	1					
7	195-01964	BRACKET;LOCK VALVE	SUPPORT	1					
8	195-00335	BRACKET(L.H)	SUPPORT	1					
9	195-00329	BRACKET(R.H)	SUPPORT	1					
10	2114-1180D20	SHIM	CALE	1					
11	195-00163	BRACKET	SUPPORT	1					
12	2124-1084D2	BAND;CLIP	ATTACHE	30					
13	124-00199D5	CLIP	ATTACHE	9					
14	121-00010D1	NUT	ECROU	2					
15	181-00078D5	ADAPTER PF1/4-PF3/8	ADAPTEUR	2					
17	181-00008	TEE PF1/4-PF1/4-PF3/8	TE	2					
19	2181-1951D16	TEE PFO3/8-PF3/8-PF3/8	TE	2					
20	181-00020	ADAPTER;S PF1/4-PF1/4	ADAPTEUR	7					
21	2181-1702D4	ELBOW PFO1/4-PF1/4	COUDE	2					
22	2181-1126D14	ADAPTER;S PFO1/4-PF1/4	ADAPTEUR	6					
23	2181-1890D9	PLUG	BOUCHON	2					
24	S5110803	WASHER;SPRING M14	RONDELLE ELASTIQUE	8					
25	S8000341	O-RING	JONT TORIQUE	2					
26	S8000401	O-RING	JONT TORIQUE	1					
27	S8000111	O-RING	JONT TORIQUE	9					
28	S8000141	O-RING	JONT TORIQUE	2					
29	S8000291	O-RING	JONT TORIQUE	2					
30	2180-1026D19	O-RING	JONT TORIQUE	2					
31	S0566666	BOLT M16X2.0X120	BOULON A 6PANS	1					
32	S0515353	BOLT M12X1.75X35	BOULON A 6PANS	4					
33	S0563366	BOLT M14X2.0X70	BOULON A 6PANS	2					
34	S0515053	BOLT M12X1.75X25	BOULON A 6PANS	2					

DATE	DEC. 15, 2006
REV. NO.	EXB06-13

Fig. 6640 LOCK VALVE PIPING-11.0m BOOM
CONDUITES DE VERROU VANNE

Serial No. ;

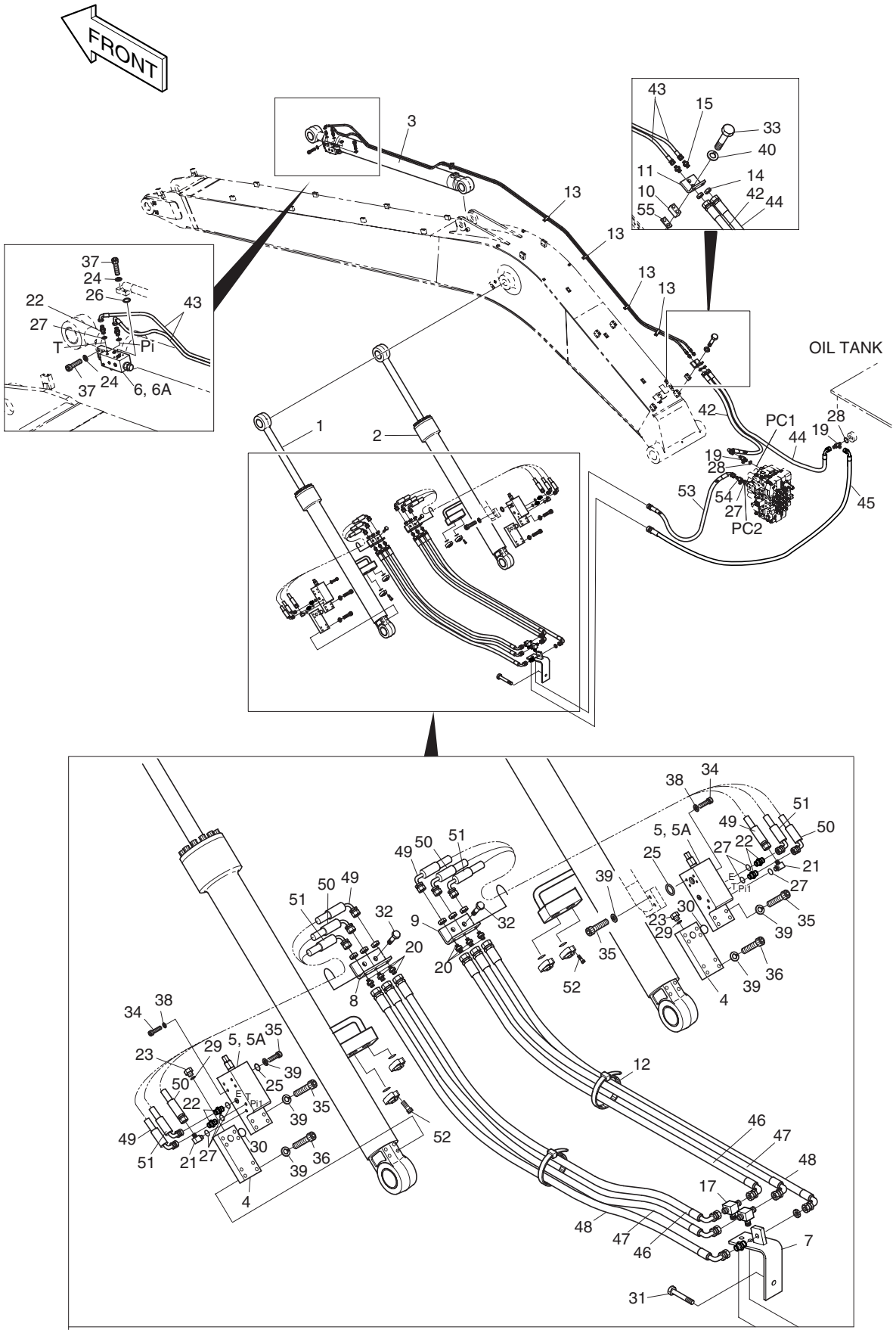

DATE	DEC. 15, 2006
REV. NO.	EXB06-13

Fig. 6640 LOCK VALVE PIPING-11.0m BOOM
CONDUITES DE VERROU VANNE

Serial No. ;

Key No.	Part No.	Description	Description	Q'ty	S.C	Serial No.	ICA	Replaceable part	
								Part No.	Q'ty
6640-35	S2215766	BOLT;SOCKET M12X1.75X55	BOULON A 6 PANS CREUX	16					
36	S2215966	BOLT;SOCKET M12X1.75X65	BOULON A 6 PANS CREUX	8					
37	S2218966	BOLT;SOCKET M14X2.0X65	BOULON A 6 PANS CREUX	8					
38	S5102703	WASHER;SPRING M12	RONDELLE ELASTIQUE	2					
39	S5110703	WASHER;SPRING M12	RONDELLE ELASTIQUE	24					
40	S5102803	WASHER;SPRING M14	RONDELLE ELASTIQUE M14	2					
42	DS2055733	HOSE PF3/8-1700L	TUYAU FLEXIBLE	1					
43	2184-1046D271	HOSE PF1/4-10600L	TUYAU FLEXIBLE	2					
44	2184-1046D238	HOSE PF3/8-2300L	TUYAU FLEXIBLE	1					
45	2184-1046D226	HOSE PF3/8-2900L	TUYAU FLEXIBLE	1					
46	2184-1060D45	HOSE PF1/4-1000L	TUYAU FLEXIBLE	2					
47	2184-1060D48	HOSE PF1/4-1050L	TUYAU FLEXIBLE	2					
48	2184-1060D221	HOSE PF1/4-1100L	TUYAU FLEXIBLE	2					
49	2184-1061D335	HOSE PF1/4-680L	TUYAU FLEXIBLE	2					
50	2184-1046D35	HOSE PF1/4-680L	TUYAU FLEXIBLE	2					
51	2184-1061D336	HOSE PF1/4-580L	TUYAU FLEXIBLE	2					
52	S2215666	BOLT;SOCKET M12X1.75X50	BOULON A 6 PANS CREUX	8					
53	2184-1046D227	HOSE PF3/8-2600L	TUYAU FLEXIBLE	1					
54	2181-1951D20	TEE	TE	1					
55	2114-1180D15	SHIM T=3.2	CALE	1					

DATE	DEC. 22, 2003
REV. NO.	EXB03-15

Fig. 6650 BOOM PIPING-7.1m ONE & TWO WAY
CONDUITES DE FLECHE

Serial No. ; 1001 ~ 1200

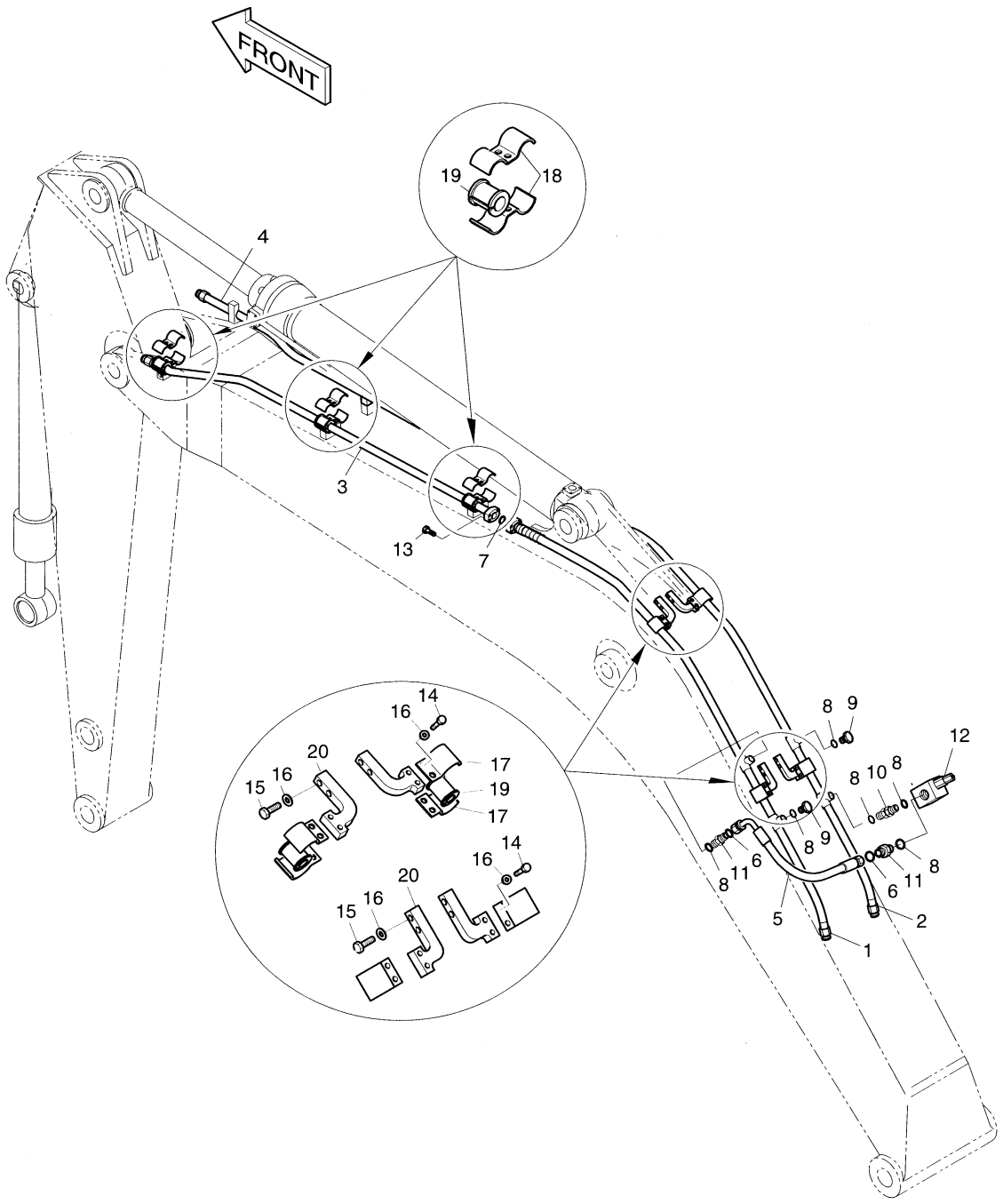

DATE	DEC. 22, 2003
REV. NO.	EXB03-15

Fig. 6650 BOOM PIPING-7.1m ONE & TWO WAY CONDUITES DE FLECHE

Serial No ; 1001 ~ 1200

Key No.	Part No.	Description	Description	Q'ty	S.C	Serial No.	ICA	Replaceable part	
								Part No.	Q'ty
6650--	400-00928A	BOOM PIPING-ONE & TWO WAY	CONDUITES DE FLECHE	-	D	1001-1200			
1	140-01171	PIPE	CONDUITE	1					
2	140-01172	PIPE	CONDUITE	1					
3	140-01173	PIPE	CONDUITE	1					
4	140-01174	PIPE	CONDUITE	1					
5	2184-1197D180	HOSE-900L	TUYAU FLEXIBLE	1					
6	S8030161	O-RING	JONT TORIQUE	2					
7	2180-1026D23	O-RING	JONT TORIQUE	2					
8	S8000291	O-RING	JONT TORIQUE	6					
9	2181-1950D9	PLUG	BOUCHON	2					
10	2181-2818	ADAPTER;SP	ADAPTEUR	1					
11	2181-4133D6	ADAPTER	RACCORD ADAPTATEUR	2					
12	2420-9627A	VALVE;RELIEF	VANNE	1					
13	S2218766	BOLT;SOCKET M14X2.0X55	BOULON A 6 PANS CREUX	8					
14	S0562766	BOLT M14X2.0X40	BOULON A 6PANS	8					
15	S0563166	BOLT M14X2.0X60	BOULON A 6PANS	8					
16	S5102803	WASHER;SPRING M14	RONDELLE ELASTIQUE M14	16					
17	124-00219	CLAMP;PIPE	ATTACHE DE TUYAU	8					
18	124-00205A	CLAMP;PIPE	ATTACHE DE TUYAU	12					
19	161-00280	RUBBER	CAOUTCHOUC	10					
20	195-01920	BRACKET	SUPPORT	4					

DATE	DEC. 30, 2004
REV. NO.	EXB04-09

Fig. 6651 BOOM PIPING-7.1m ONE & TWO WAY CONDUITES DE FLECHE

Serial No. ; 1201 ~

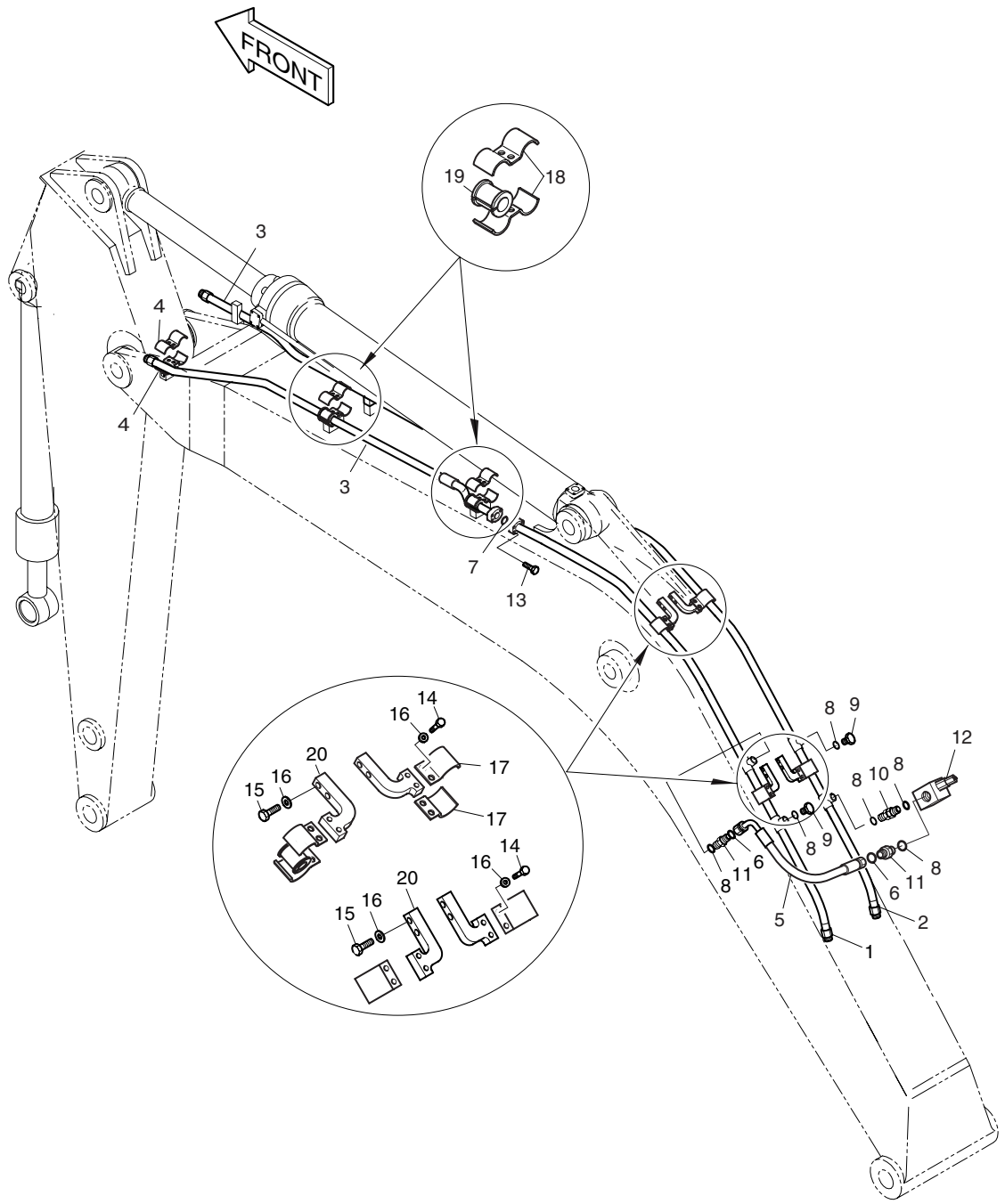

DATE	DEC. 30, 2004
REV. NO.	EXB04-09

Fig. 6651 BOOM PIPING-7.1m ONE & TWO WAY CONDUITES DE FLECHE

Serial No ; 1201 ~

Key No.	Part No.	Description	Description	Q'ty	S.C	Serial No.	ICA	Replaceable part	
								Part No.	Q'ty
6651--	400-01404	BOOM PIPING-ONE & TWO WAY	CONDUITES DE FLECHE	-	D	1201–			
1	140-01580	PIPE	CONDUITE	1		1201–1324			
	140-01580A	**PIPE**	CONDUITE	1		**1325–**			
2	140-01581	PIPE	CONDUITE	1		1201–1324			
	140-01581A	**PIPE**	CONDUITE	1		**1325–**			
3	140-01582	PIPE	CONDUITE	2		1201–1324			
	140-01582A	**PIPE**	CONDUITE	2		**1325–**			
4	124-00315	CLAMP;PIPE	ATTACHE DE TUYAU	4					
5	2184-1197D180	HOSE-900L	TUYAU FLEXIBLE	1					
6	S8030161	O-RING	JONT TORIQUE	2					
7	2180-1026D23	O-RING	JONT TORIQUE	2					
8	S8000291	O-RING	JONT TORIQUE	6					
9	2181-1950D9	PLUG	BOUCHON	2					
10	2181-2818	ADAPTER;SP	ADAPTEUR	1					
11	2181-4133D6	ADAPTER	RACCORD ADAPTATEUR	2					
12	2420-9627A	VALVE;RELIEF	VANNE	1		1201–1356	I	2420-9627B	1
	2420-9627B	VALVE;RELIEF	VANNE	1		1357–			
13	S2218766	BOLT;SOCKET M14X2.0X55	BOULON A 6 PANS CREUX	8					
14	S0562766	BOLT M14X2.0X40	BOULON A 6PANS	8					
15	S0563166	BOLT M14X2.0X60	BOULON A 6PANS	8					
16	S5102803	WASHER;SPRING M14	RONDELLE ELASTIQUE M14	16					
17	124-00291	CLAMP;PIPE	ATTACHE DE TUYAU	8					
18	124-00205A	CLAMP;PIPE	ATTACHE DE TUYAU	8		1201–1324			
	K1000540	**CLAMP;PIPE**	ATTACHE DE TUYAU	8		**1325–**			
19	161-00280	RUBBER	CAOUTCHOUC	4					
20	195-01920	BRACKET	SUPPORT	4					

DATE	JUN. 30, 2004
REV. NO.	EXB04-04

Fig. 6660 BOOM PIPING-9.0m ONE & TWO WAY CONDUITES DE FLECHE

Serial No. ;

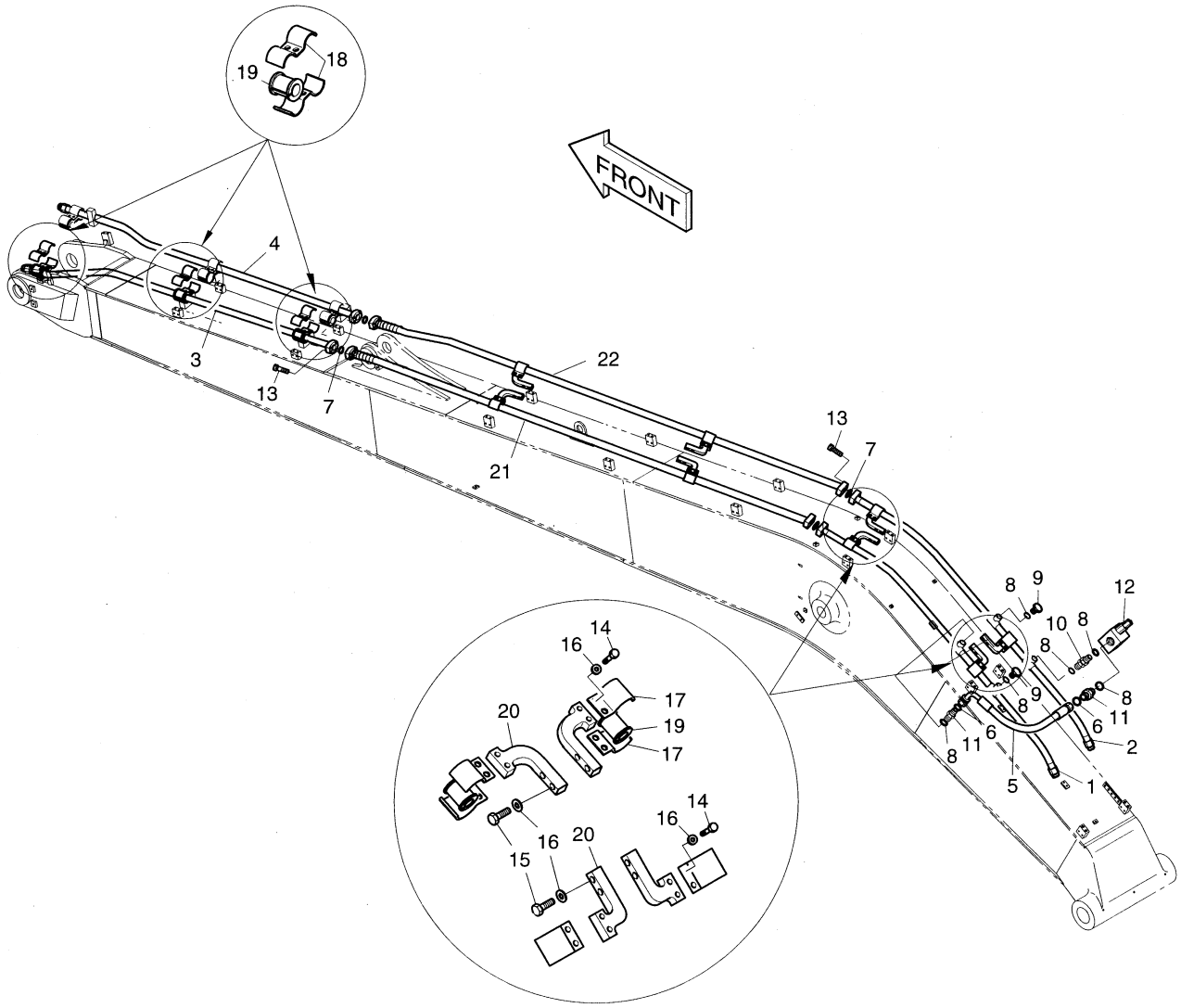

DATE	JUN. 30, 2004
REV. NO.	EXB04-04

Fig. 6660 BOOM PIPING-9.0m ONE & TWO WAY CONDUITES DE FLECHE

Serial No ;

Key No.	Part No.	Description	Description	Q'ty	S.C	Serial No.	ICA	Replaceable part	
								Part No.	Q'ty
6660--	400-01016	BOOM PIPING-ONE & TWO WAY	CONDUITES DE FLECHE	-	D				
1	140-01253	PIPE	CONDUITE	1					
2	140-01254	PIPE	CONDUITE	1					
3	140-01173	PIPE	CONDUITE	1					
4	140-01174	PIPE	CONDUITE	1					
5	2184-1197D180	HOSE	TUYAU FLEXIBLE	1					
6	S8030161	O-RING	JONT TORIQUE	1					
7	2180-1026D23	O-RING	JONT TORIQUE	4					
8	S8000291	O-RING	JONT TORIQUE	5					
9	2181-1950D9	PLUG	BOUCHON	2					
10	2181-2818	ADAPTER	ADAPTEUR	1					
11	2181-4133D6	ADAPTER	RACCORD ADAPTATEUR	1					
12	2420-9627A	VALVE;RELIEF	VANNE	1		1001–1356	I	2420-9627B	1
	2420-9627B	**VALVE;RELIEF**	VANNE	1		**1357–**			
13	S2218766	BOLT;SOCKET M14X2.0X55	BOULON A 6 PANS CREUX	16					
14	S0562766	BOLT M14X2.0X40	BOULON A 6PANS	16					
15	S0563166	BOLT M14X2.0X60	BOULON A 6PANS	16					
16	S5102803	WASHER;SPRING	RONDELLE ELASTIQUE M14	32					
17	124-00219	CLAMP	COLLIER	16					
18	124-00205A	CLAMP	COLLIER	12					
19	161-00280	RUBBER	CAOUTCHOUC	14					
20	195-01920	BRACKET	SUPPORT	8					
21	140-01255	PIPE	CONDUITE	1					
22	140-01256	PIPE	CONDUITE	1					

DATE	JUL. 30, 2003
REV. NO.	EXB03-13

Fig. 6670 ARM PIPING-2.4m ONE & TWO WAY
CONDUITES DE BALANCIER

Serial No. ;

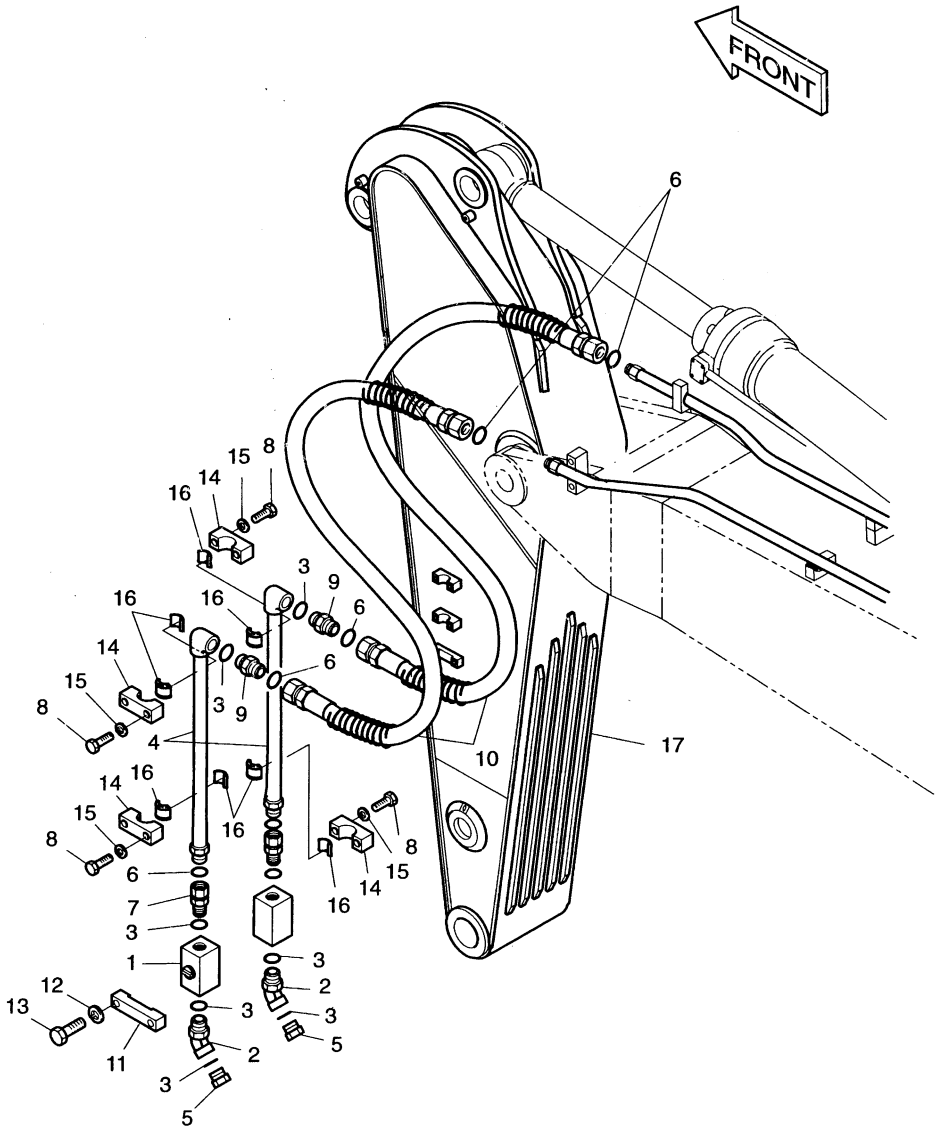

DATE	JUL. 30, 2003
REV. NO.	EXB03-13

Fig. 6670 ARM PIPING-2.4m ONE & TWO WAY CONDUITES DE BALANCIER

Serial No ;

Key No.	Part No.	Description	Description	Q'ty	S.C	Serial No.	ICA	Replaceable part	
								Part No.	Q'ty
6670--	400-01000	ARM PIPING-2.4m	CONDUITES DE BALANCIER	-	D				
1	2420-9631A	VALVE;STOP	VANNE	2					
2	2181-2816D3	ELBOW	COUDE	2					
3	S8000381	O-RING	JONT TORIQUE	6					
4	140-00445	PIPE	CONDUITE	2					
5	2181-2817D3	PLUG	BOUCHON	2					
6	2180-1026D37	O-RING	JONT TORIQUE	6					
7	2181-2566D9	ADAPTER	ADAPTEUR	2					
8	S0560953	BOLT M12X1.75X60	BOULON A 6PANS	8					
9	2181-4133D35	ADAPTER	ADAPTEUR	2					
10	2184-1196D99	HOSE	TUYAU FLEXIBLE	2					
11	124-00170	CLAMP	ATTACHE DE TUYAU	2					
12	S5102903	WASHER;SPRING M16	RONDELLE ELASTIQUE	4					
13	S0566053	BOLT M16X2.0X90	BOULON A 6PANS	4					
14	2124-1693	CLAMP;PIPE	ATTACHE DE TUYAU	4					
15	S5102703	WASHER;SPRING M12	RONDELLE ELASTIQUE	8					
16	2161-2505	RUBBER	CAOUTCHOUC	8					
17	**701-00437**	**ARM;WELDMENT**	BALANCIER	1		**1001- 1117**			

DATE	JUL. 30, 2003
REV. NO.	EXB03-13

Fig. 6680 ARM PIPING-3.35m ONE & TWO WAY
CONDUITES DE BALANCIER

Serial No. ;

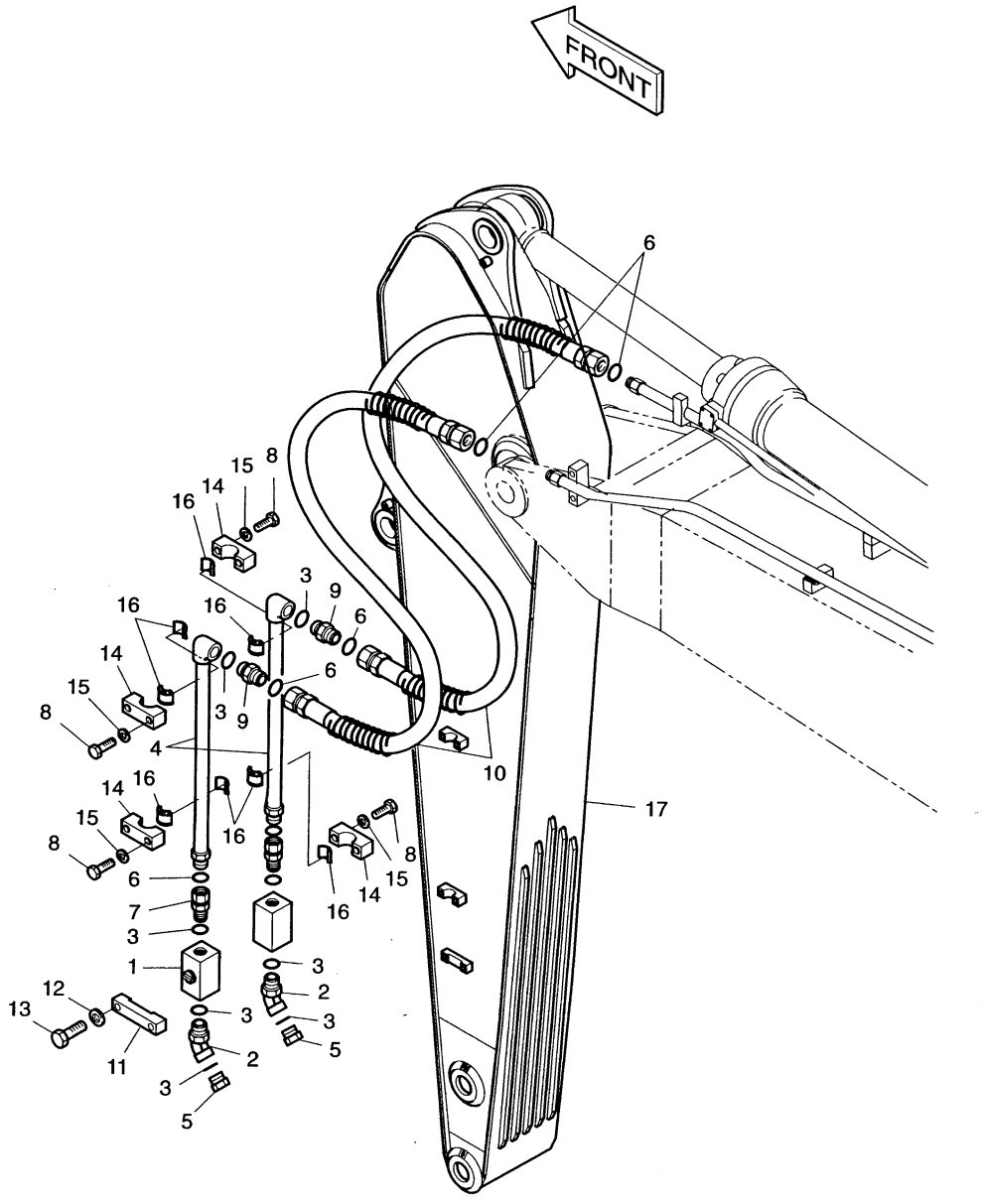

DATE	JUL. 30, 2003
REV. NO.	EXB03-13

Fig. 6680 ARM PIPING-3.35m ONE & TWO WAY CONDUITES DE BALANCIER

Serial No ;

Key No.	Part No.	Description	Description	Q'ty	S.C	Serial No.	ICA	Replaceable part	
								Part No.	Q'ty
6680--	400-00909	ARM PIPING-3.35m	CONDUITES DE BALANCIER	-	D				
1	2420-9631A	VALVE;STOP	VANNE	2					
2	2181-2816D3	ELBOW	COUDE	2					
3	S8000381	O-RING	JONT TORIQUE	6					
4	140-00010	PIPE	TUYAU	2					
5	2181-2817D3	PLUG	BOUCHON	2					
6	2180-1026D37	O-RING	JONT TORIQUE	6					
7	2181-2566D9	ADAPTER	ADAPTEUR	2					
8	S0560953	BOLT M12X1.75X60	BOULON A 6PANS	8					
9	2181-4133D35	ADAPTER	ADAPTEUR	2					
10	2184-1196D97	HOSE	TUYAU FLEXIBLE	2					
11	124-00170	CLAMP	ATTACHE DE TUYAU	2					
12	S5102903	WASHER;SPRING M16	RONDELLE ELASTIQUE	4					
13	S0566053	BOLT M16X2.0X90	BOULON A 6PANS	4					
14	2124-1693	CLAMP;PIPE	ATTACHE DE TUYAU	4					
15	S5102703	WASHER;SPRING M12	RONDELLE ELASTIQUE	8					
16	2161-2505	RUBBER	CAOUTCHOUC	8					
17	**701-00125**	**ARM;WELDMENT**	BALANCIER	1		**1001-1117**			

DATE	JUN. 30, 2005
REV. NO.	EXB05-05

Fig. 6690 ARM PIPING-6.0m ONE & TWO WAY
CONDUITES DE BALANCIER

Serial No. ;

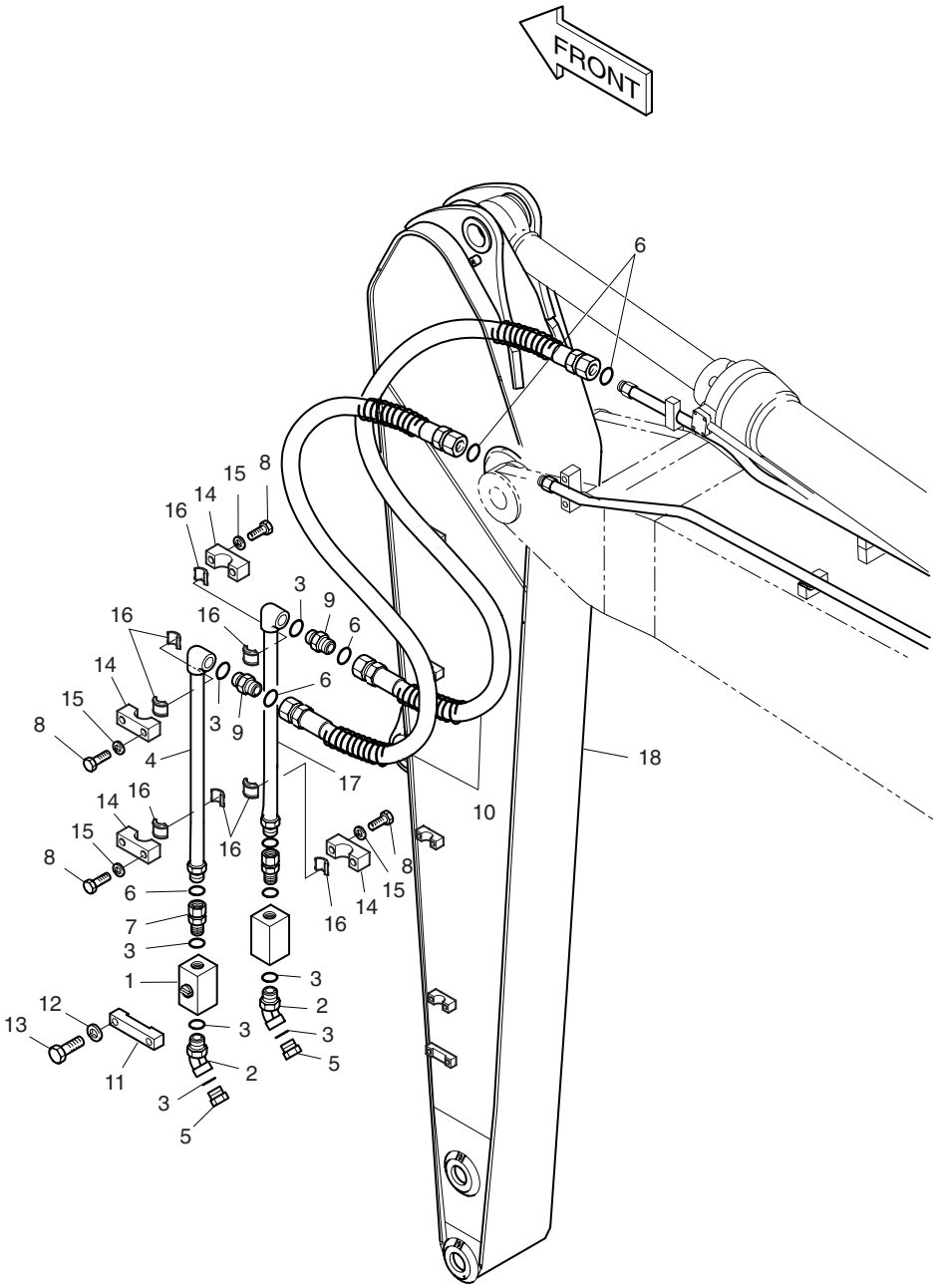

DATE	JUN. 30, 2005
REV. NO.	EXB05-05

Fig. 6690 ARM PIPING-6.0m ONE & TWO WAY CONDUITES DE BALANCIER

Serial No ;

Key No.	Part No.	Description	Description	Q'ty	S.C	Serial No.	ICA	Replaceable part	
								Part No.	Q'ty
6690--	400-01021	ARM PIPING-6.0m	CONDUITES DE BALANCIER	-	D				
1	2420-9631A	VALVE;STOP	VANNE	2					
2	2181-2816D3	ELBOW	COUDE	2					
3	S8000381	O-RING	JONT TORIQUE	6					
4	140-00446	PIPE	TUYAU	1		1001–1442			
	140-00446A	**PIPE**	TUYAU	1		**1443–**			
5	2181-2817D3	PLUG	BOUCHON	2					
6	2180-1026D37	O-RING	JONT TORIQUE	6					
7	2181-2566D9	ADAPTER	ADAPTEUR	2					
8	S0560953	BOLT M12X1.75X60	BOULON A 6PANS	16					
9	2181-4133D35	ADAPTER	ADAPTEUR	2					
10	2184-1196D90	HOSE	TUYAU FLEXIBLE	2		1001–1442			
	2184-1196D100	**HOSE PF1 1/4-2400L**	TUYAU FLEXIBLE	2		**1443–**			
11	124-00170	CLAMP	ATTACHE DE TUYAU	2					
12	S5102903	WASHER;SPRING M16	RONDELLE ELASTIQUE	4					
13	S0566053	BOLT M16X2.0X90	BOULON A 6PANS	4					
14	2124-1693	CLAMP;PIPE	ATTACHE DE TUYAU	8					
15	S5102703	WASHER;SPRING M12	RONDELLE ELASTIQUE	16					
16	2161-2505	RUBBER	CAOUTCHOUC	16					
17	140-00447	PIPE	TUYAU	1		1001–1442			
	140-00447A	**PIPE**	TUYAU	1		**1443–**			
18	701-00197	ARM;WELDMENT	BALANCIER	1		1001–1117			

DATE	JUL. 30, 2003
REV. NO.	EXB03-13

Fig. 6700 NAME PLATE-ONE & TWO WAY PLAQUE D'IDENTIFICATION

Serial No. ;

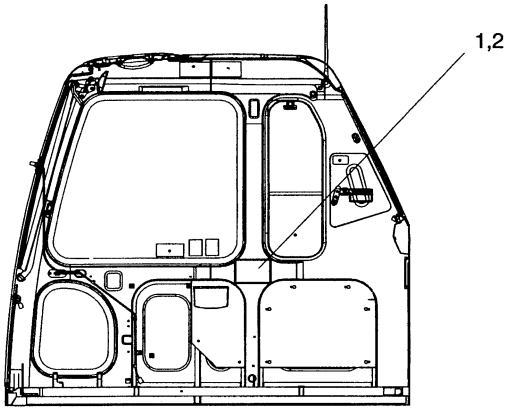

DATE	JUL. 30, 2003
REV. NO.	EXB03-13

Fig. 6700 NAME PLATE-ONE & TWO WAY PLAQUE D'IDENTIFICATION

Serial No ;

Key No.	Part No.	Description	Description	Q'ty	S.C	Serial No.	ICA	Replaceable part	
								Part No.	Q'ty
6700-1	2190-3602	PLATE;NAME(KOREAN)	PLAQUE D'IDENTIFICATION	1					
2	2190-3603	PLATE;NAME(ENGLISH)	PLAQUE D'IDENTIFICATION	1					

DATE	JUL. 30, 2003
REV. NO.	EXB03-13

Fig. 6710 CABIN ASS'Y-WINDOW GUARD CABINE

Serial No. ;

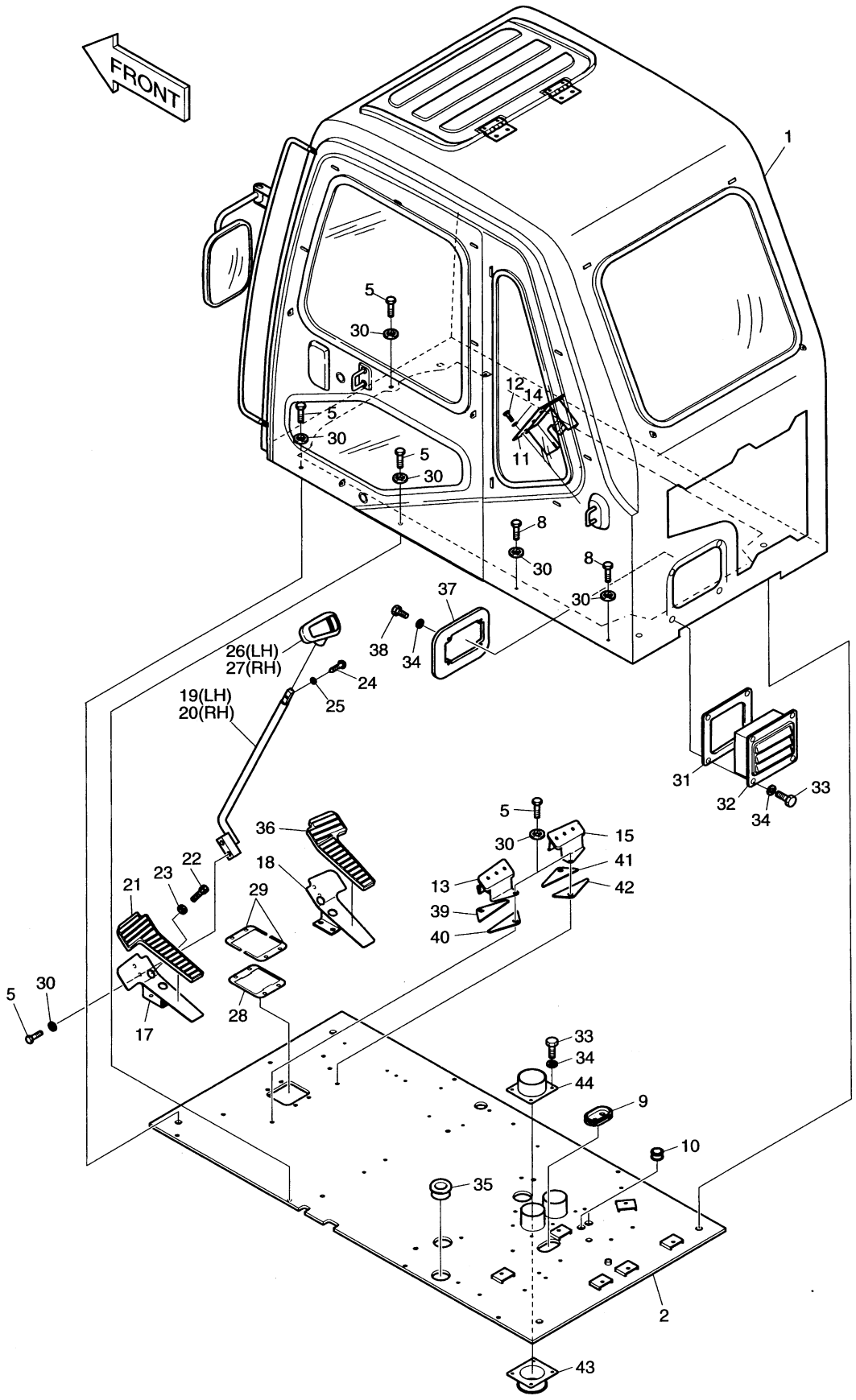

DATE	JUL. 30, 2003
REV. NO.	EXB03-13

Fig. 6710 CABIN ASS'Y-WINDOW GUARD CABINE

Serial No ;

Key No.	Part No.	Description	Description	Q'ty	S.C	Serial No.	ICA	Replaceable part	
								Part No.	Q'ty
6710--	622-00217E	CABIN ASS'Y	CABINE	-	D				
1	622-00218E	CABIN ASS'Y	CABINE	1					
2	621-01920B	PLATE;FLOOR	PLAQUE	1					
5	2120-2166D2	BOLT M10X1.5X25	BOULON A 6 PANS	11					
8	2120-2166D3	BOLT M10X1.5X65	BOULON A 6 PANS	4					
9	2160-1308	BUSHING;RUBBER	GARNISSAGE	1					
10	2160-1004D48	BUSHING;RUBBER	GARNISSAGE	2					
11	195-01784B	BRACKET;AUDIO CASSETTE	SUPPORT	1					
12	S0508853	BOLT M8X1.25X20	BOULON A 6 PANS	3					
13	2197-1704A	BRACKET;FOOT REST(L.H)	SUPPORT	1					
14	S5010513	WASHER;PLAIN	RONDELLE PLATE	3					
15	2197-1744A	BRACKET;FOOT REST(R.H)	SUPPORT	1					
17	195-01684A	BRACKET;PEDAL(L.H)	SUPPORT	1					
18	195-01683A	BRACKET;PEDAL(R.H)	SUPPORT	1					
19	133-00155A	LEVER(L.H)	LEVIER	1					
20	133-00156A	LEVER(R.H)	LEVIER	1					
21	161-00382	RUBBER;PEDAL(L.H)	CAOUTCHOUC	1					
22	S2211866	BOLT;SOCKET M10X1.5X20	BOULON A 6 PANS CREUX	4					
23	S5110601	WASHER;SPRING M10	RONDELLE ELASTIQUE	4					
24	S2201766	BOLT;SOCKET M4X0.7X14	BOULON A 6 PANS CREUX	2					
25	S5000113	WASHER;PLAIN M4	RONDELLE PLATE	2					
26	2132-1133B	GRIP;LEVER(L.H)	POIGNEE	1					
27	2132-1134B	GRIP;LEVER(R.H)	POIGNEE	1					
28	161-00077	PLATE;RUBBER	PLAQUE	1					
29	621-00564	SHIM	CALE	2					
30	2114-1898D1	WASHER	RONDELLE	15					
31	2161-2317	RUBBER;PLATE	CAOUTCHOUC	1					
32	621-01159	PLATE;COVER	PLAQUE	1					
33	2120-2166D6	BOLT M6X1.0X16	BOULON A 6 PANS	12					
34	2114-1898D3	WASHER M6	RONDELLE	16					
35	160-00035	BUSHING;RUBBER	GARNISSAGE	1					
36	161-00381	RUBBER;PEDAL(R.H)	CAOUTCHOUC	1					
37	621-01160	COVER;FRESH AIR DUCT	COUVERCLE	1					
38	2120-2166D19	BOLT M6X1.0X12	BOULON A 6 PANS	4					
39	161-00329	RUBBER;DAMPER(L.H)	CAOUTCHOUC	1					
40	161-00330	RUBBER;DAMPER(L.H)	CAOUTCHOUC	1					
41	161-00331	RUBBER;DAMPER(R.H)	CAOUTCHOUC	1					
42	161-00335	RUBBER;DAMPER(R.H)	CAOUTCHOUC	1					

DATE	JUL. 30, 2003
REV. NO.	EXB03-13

Fig. 6710 CABIN ASS'Y-WINDOW GUARD CABINE

Serial No. ;

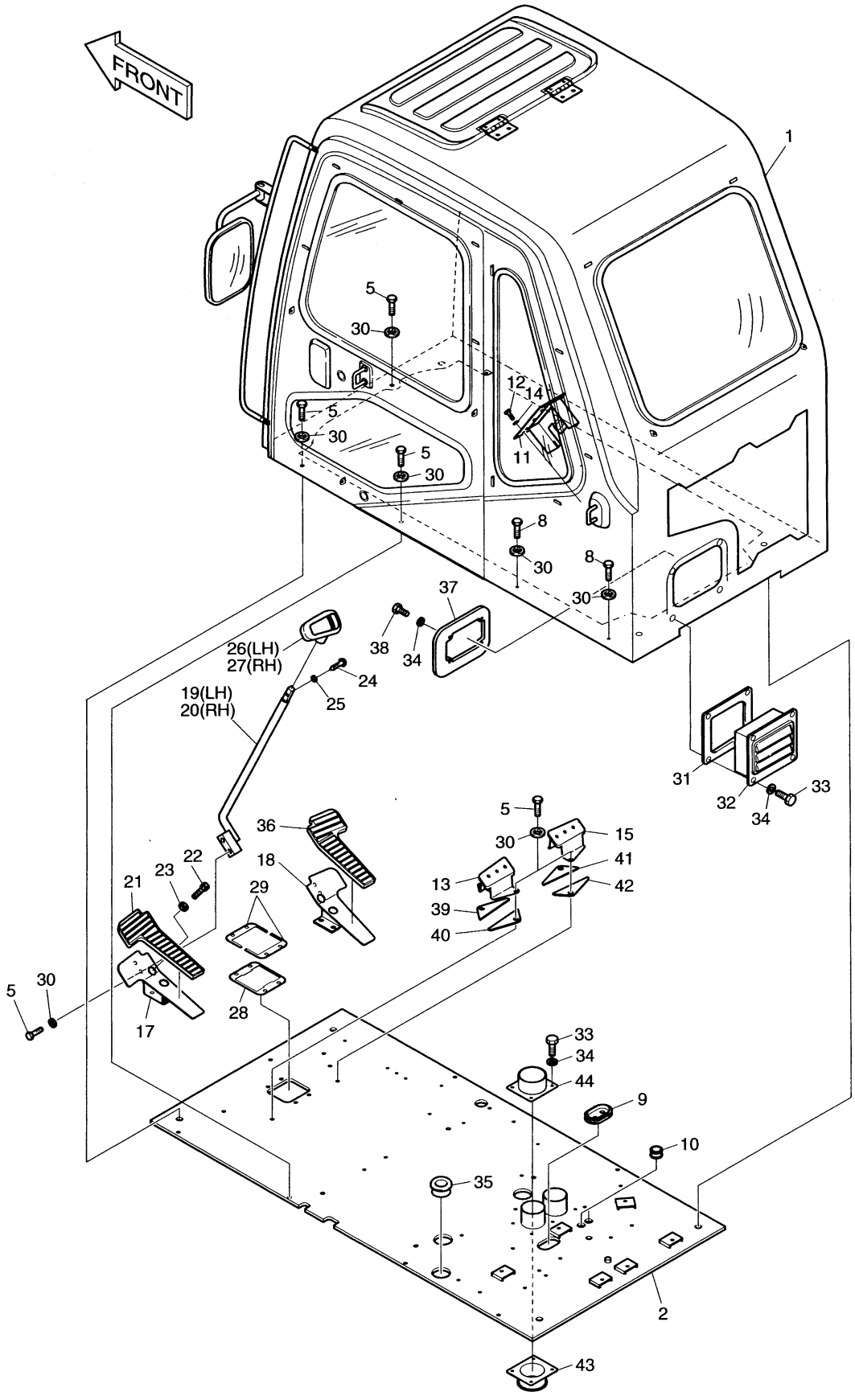

DATE	JUL. 30, 2003
REV. NO.	EXB03-13

Fig. 6710 CABIN ASS'Y-WINDOW GUARD CABINE

Serial No ;

Key No.	Part No.	Description	Description	Q'ty	S.C	Serial No.	ICA	Replaceable part	
								Part No.	Q'ty
6710-43	160-00030	BOOT	GAINE DE PROTECTION	2					
44	195-01765B	BRACKET	SUPPORT	2					

DATE	JUL. 30, 2003
REV. NO.	EXB03-13

Fig. 6720 ROCK BUCKET-1.75m³ GODET

Serial No. ;

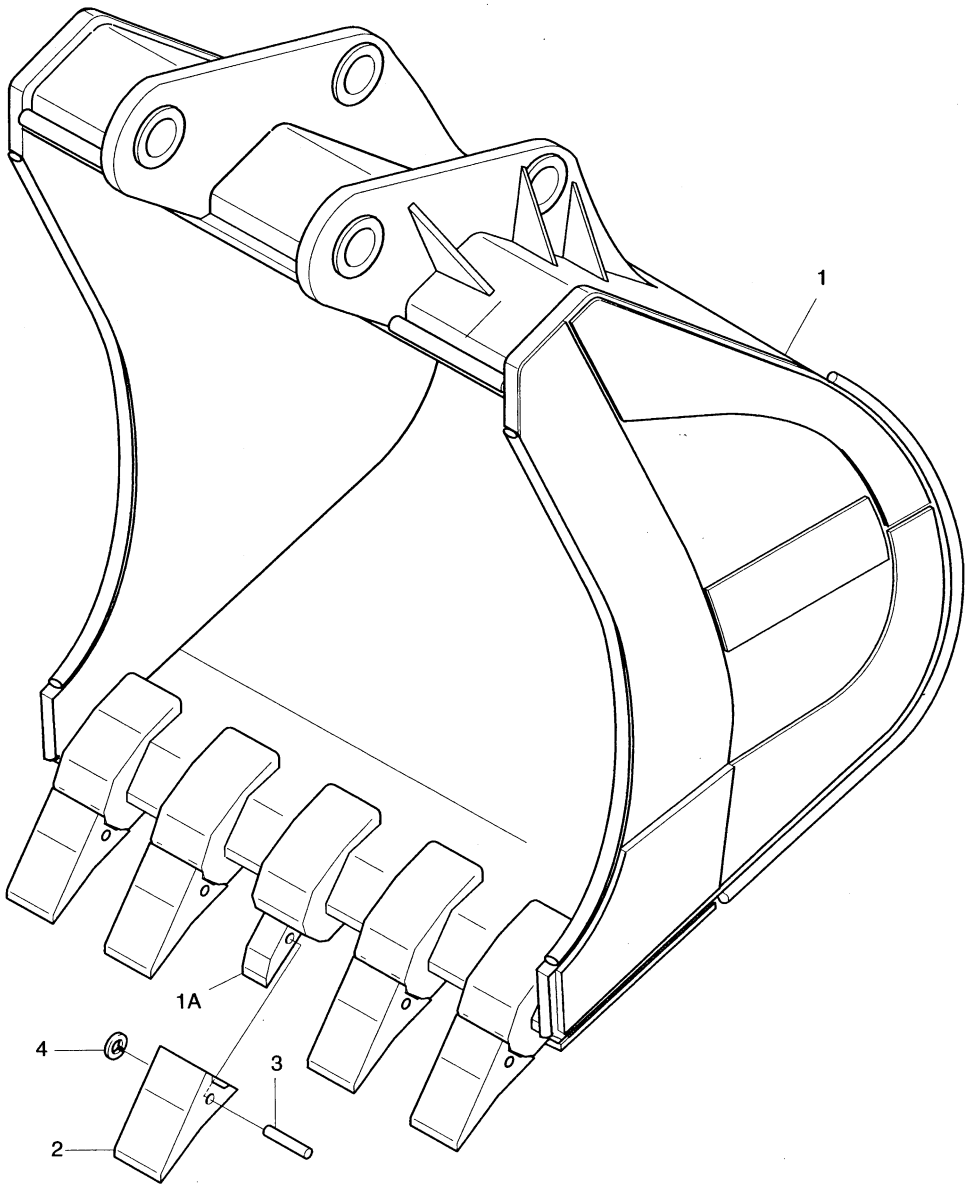

DATE	JUL. 30, 2003
REV. NO.	EXB03-13

Fig. 6720 ROCK BUCKET-1.75m³ GODET

Serial No ;

Key No.	Part No.	Description	Description	Q'ty	S.C	Serial No.	ICA	Replaceable part	
								Part No.	Q'ty
6720--	704-00261	BUCKET ASS'Y;ROCK 1.75m³	ENSEMBLE GODET	1					
1	704-00262	BUCKET;WELD	ENSEMBLE GODET	1					
1A	2713-1273	. ADAPTER	. DENT DE ADAPTEUR	5					
2	713-00052	POINT;TOOTH	DENT	5					
3	2705-1034	PIN;LOCKING	BROUCHE	5					
4	2114-1931	WASHER;LOCKING	RONDELLE PLATE	5					

DATE	DEC. 22, 2003
REV. NO.	EXB03-15

Fig. 6730 BUCKET-2.5m^3 -WITHOUT TOOTH GODET

Serial No. ;

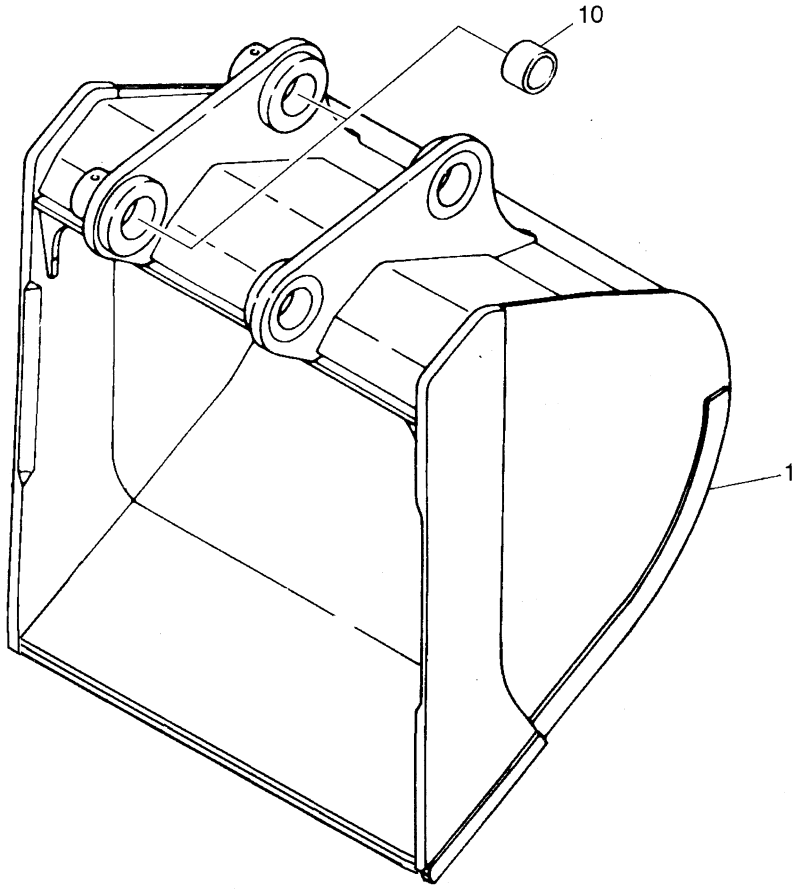

DATE	DEC. 22, 2003
REV. NO.	EXB03-15

Fig. 6730 BUCKET-2.5m^3 -WITHOUT TOOTH GODET

Serial No ;

Key No.	Part No.	Description	Description	Q'ty	S.C	Serial No.	ICA	Replaceable part	
								Part No.	Q'ty
6730--	2704-1298D1	BUCKET ASS'Y 2.5㎥	ENSEMBLE GODET	1					
1	2704-1287D1	BUCKET-WITHOUT TOOTH	GODET	1					
10	2110-4037	BUSHING	COUSSINET	4					

DATE	DEC. 29, 2005
REV. NO.	EXB05-20

Fig. 6740 DOUBLE FUEL FILTER ASS'Y
FILTRE A GAZOLE

Serial No. ;

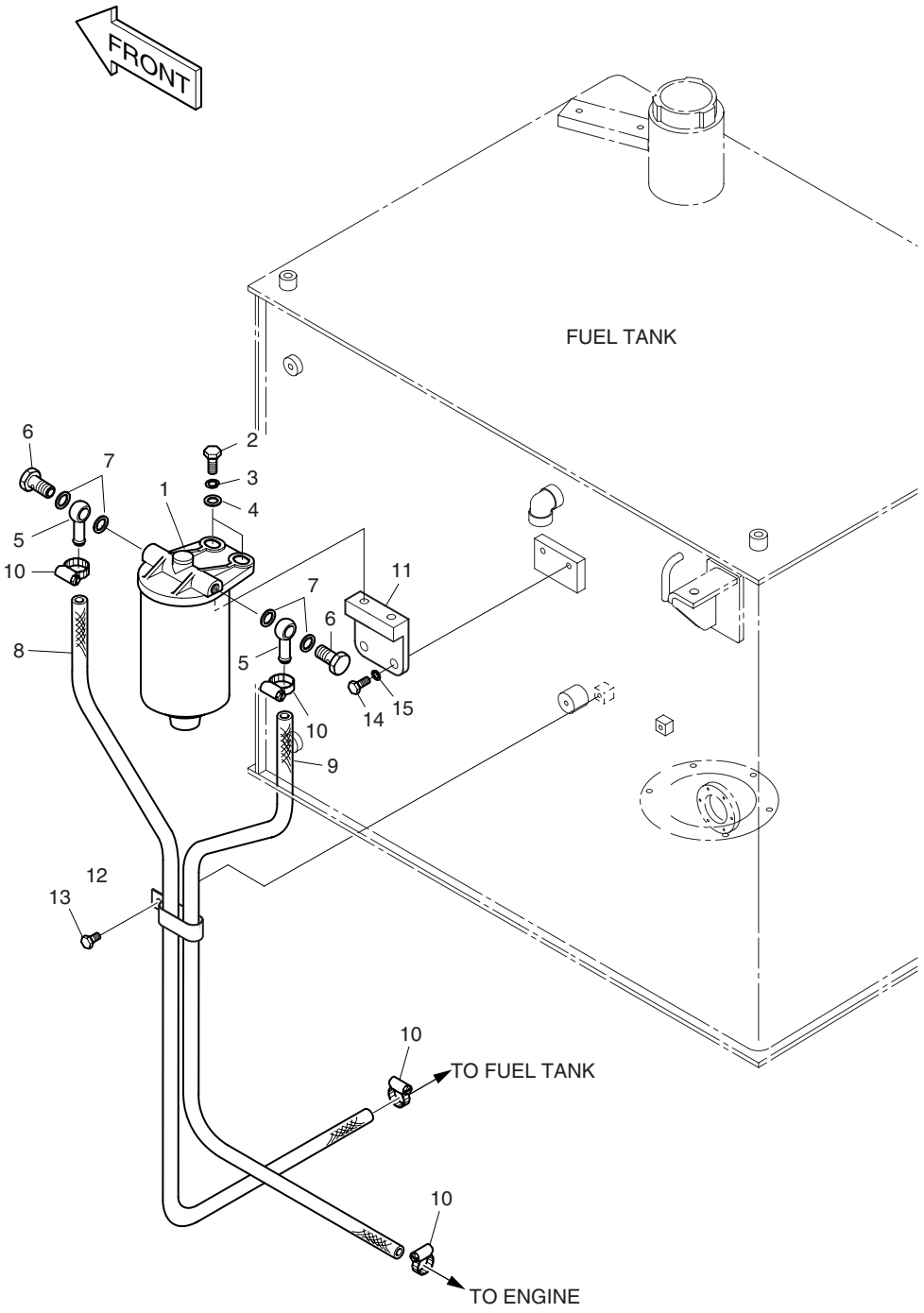

DATE	DEC. 29, 2005
REV. NO.	EXB05-20

Fig. 6740 DOUBLE FUEL FILTER ASS'Y FILTRE A GAZOLE

Serial No ;

Key No.	Part No.	Description	Description	Q'ty	S.C	Serial No.	ICA	Replaceable part	
								Part No.	Q'ty
6740--	471-00128	DOUBLE FUEL FILTER ASS'Y	VERROU	-	D				
1	2471-9053	FUEL FILTER ASS'Y	FILTRE A GAZOLE	1					
2	S0512353	BOLT M10X1.5X35	BOULON A 6 PANS	2		1001–1428			
	S0515353	BOLT M12X1.75X35	BOULON A 6 PANS	2		1429–			
3	S5102603	WASHER;SPRING M10	RONDELLE ELASTIQUE	2		1001–1428			
	S5102703	WASHER;SPRING M12	RONDELLE ELASTIQUE	2		1429–			
4	S5010613	WASHER;PLAIN M10	RONDELLE PLATE	2		1001–1428			
	S5010713	WASHER;PLAIN M12	RONDELLE PLATE	2		1429–			
5	2181-9015	PIPE;FUEL	CONDUITE	2					
6	2120-9013	SCREW;HOLLOW	VIS	2					
7	S8180221	PACKING	EMBALLAGE	4					
8	2185-1247D31	HOSE 1200L	TUYAU FLEXIBLE	1		1001–1404	I	2185-1247D2	1
	2185-1247D2	HOSE 1800L	TUYAU FLEXIBLE	1		1405–			
9	2185-1247D132	HOSE 2700L	TUYAU FLEXIBLE	1		1001–1448	I	2185-1247D138	1
	2185-1247D138	HOSE 2900L	TUYAU FLEXIBLE	1		1449–			
10	S8450012	CLAMP;HOSE	COLLIER	4					
11	195-03421	BRACKET	SUPPORT	1		1001–1428			
	195-03421A	BRACKET	SUPPORT	1		1429–			
12	124-00209D1	CLIP	ATTACHE	1					
13	120-00276	BOLT M8X1.25X12	BOULON A 6 PANS	1					
14	S0509053	BOLT M8X1.25X25	BOULON A 6 PANS	2					
15	S5102503	WASHER;SPRING M8	RONDELLE ELASTIQUE	2					

DATE	JUN. 30, 2005
REV. NO.	EXB05-05

Fig. 6750 BOOM - 7.1m - HEAVY DUTY FLECHE

Serial No. ;

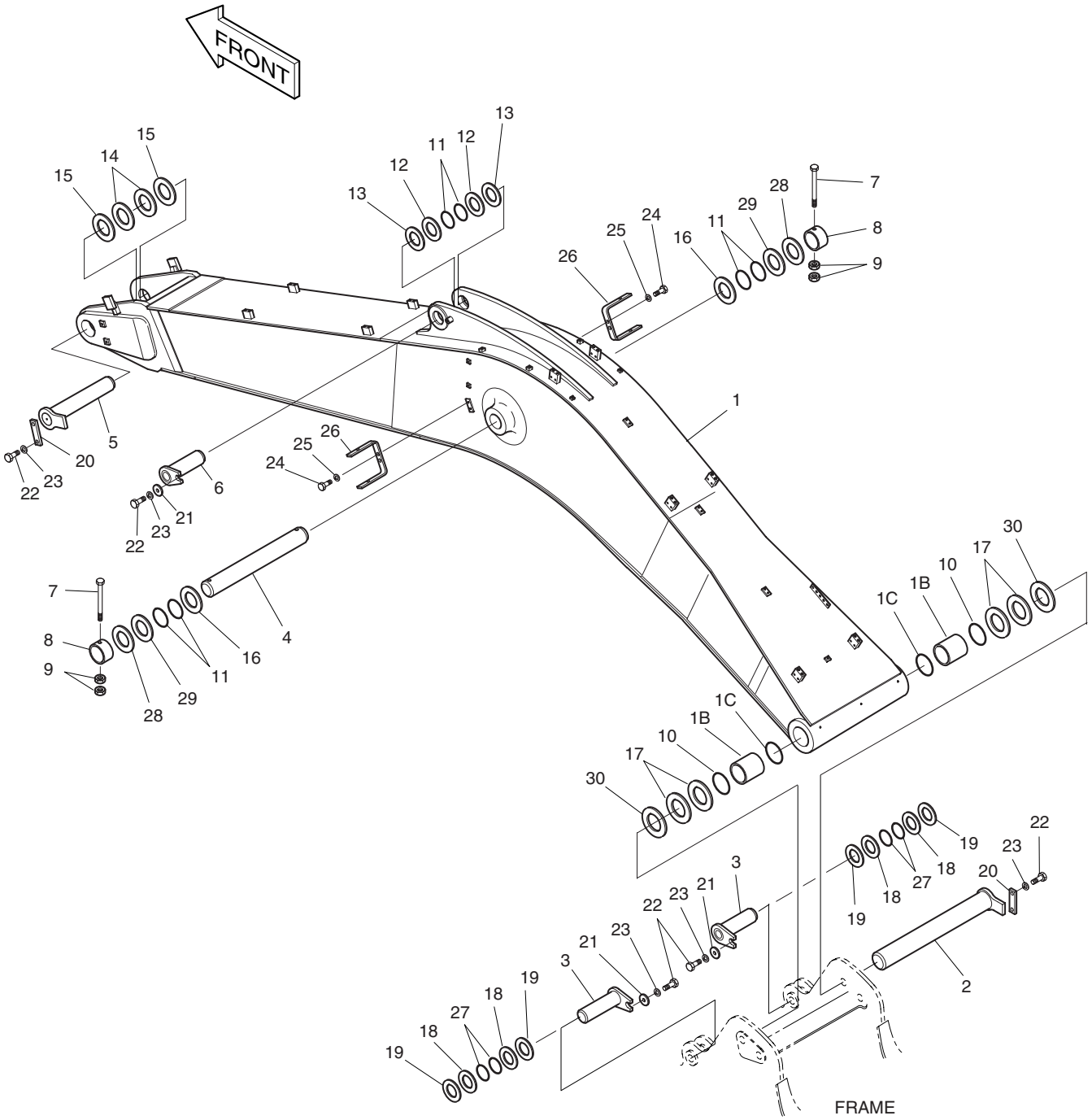

DATE	JUN. 30, 2005
REV. NO.	EXB05-05

Fig. 6750 BOOM - 7.1m - HEAVY DUTY FLECHE

Serial No ;

Key No.	Part No.	Description	Description	Q'ty	S.C	Serial No.	ICA	Replaceable part	
								Part No.	Q'ty
6750--	K1000148	BOOM ASS'Y	ENSEMBLE FLECHE	-	D				
1	K1000149	BOOM SUB ASS'Y	ENSEMBLE FLECHE	1		1001–1462			
	K1000149A	**BOOM SUB ASS'Y**	ENSEMBLE FLECHE	1		**1463–**			
1B	110-00192	. BUSHING	. DOUILLE	2					
1C	2180-1106BD19	. SEAL;DUST	. PARE-POUSSIERES	2					
2	123-00020A	PIN	BROCHE	1					
3	2123-2048A	PIN	BROCHE	2		1001–1428	I	2123-2048C	2
	2123-2048C	**PIN**	BROCHE	2		**1429–**			
4	123-00022	PIN	BROCHE	1					
5	K1000157	PIN	BROCHE	1					
6	K1000180	PIN	BROCHE	1					
7	S0572166	BOLT M20X2.0X200	BOULON A 6 PANS	2					
8	2116-1548	STOPPER	TAQUET D'ARRET	2					
9	S4013133	NUT M20X2.5	ECROU	4					
10	2180-1106BD19	SEAL;DUST	PARE-POUSSIERES	2					
11	2180-1106BD18	SEAL;DUST	PARE-POUSSIERES	6					
12	2114-1059D43	SHIM 0.5T	CALE	1					
13	2114-1059D42	SHIM 1.0T	CALE	1					
14	2114-1059D193	SHIM 1.6T	CALE	2					
15	2114-1059D192	SHIM 1.0T	CALE	2					
16	2114-1059D50	SHIM 1.6T	CALE	2					
17	2114-1059D223	SHIM 1.0T	CALE	2					
18	2114-1059D203	SHIM 1.0T	CALE	4					
19	2114-1059D202	SHIM 1.6T	CALE	4					
20	2191-2205D6	PLATE;STOPPER	ARRET	2					
21	2116-1060D5	STOPPER	TAQUET D'ARRET	3					
22	S0521456	BOLT M16X2.0X40	BOULON A 6 PANS	7					
23	S5102903	WASHER;SPRING M16	RONDELLE ELASTIQUE	7					
24	S0515053	BOLT M12X1.75X25	BOULON A 6 PANS	4					
25	S5102703	WASHER;SPRING M12	RONDELLE ELASTIQUE	4					
26	2195-3793	BRACKET	SUPPORT	2					
27	2180-1106BD15	SEAL;DUST	PARE-POUSSIERES	4					
28	2114-1059D261	SHIM 1.0T	CALE	2					
29	2114-1059D262	SHIM 1.6T	CALE	2					
30	DS7701358	SHIM	CALE	2					

DATE	JUN. 30, 2005
REV. NO.	EXB05-05

Fig. 6755 BOOM PIPING-HEAVY DUTY
CONDUITES DE FLECHE

Serial No. ;

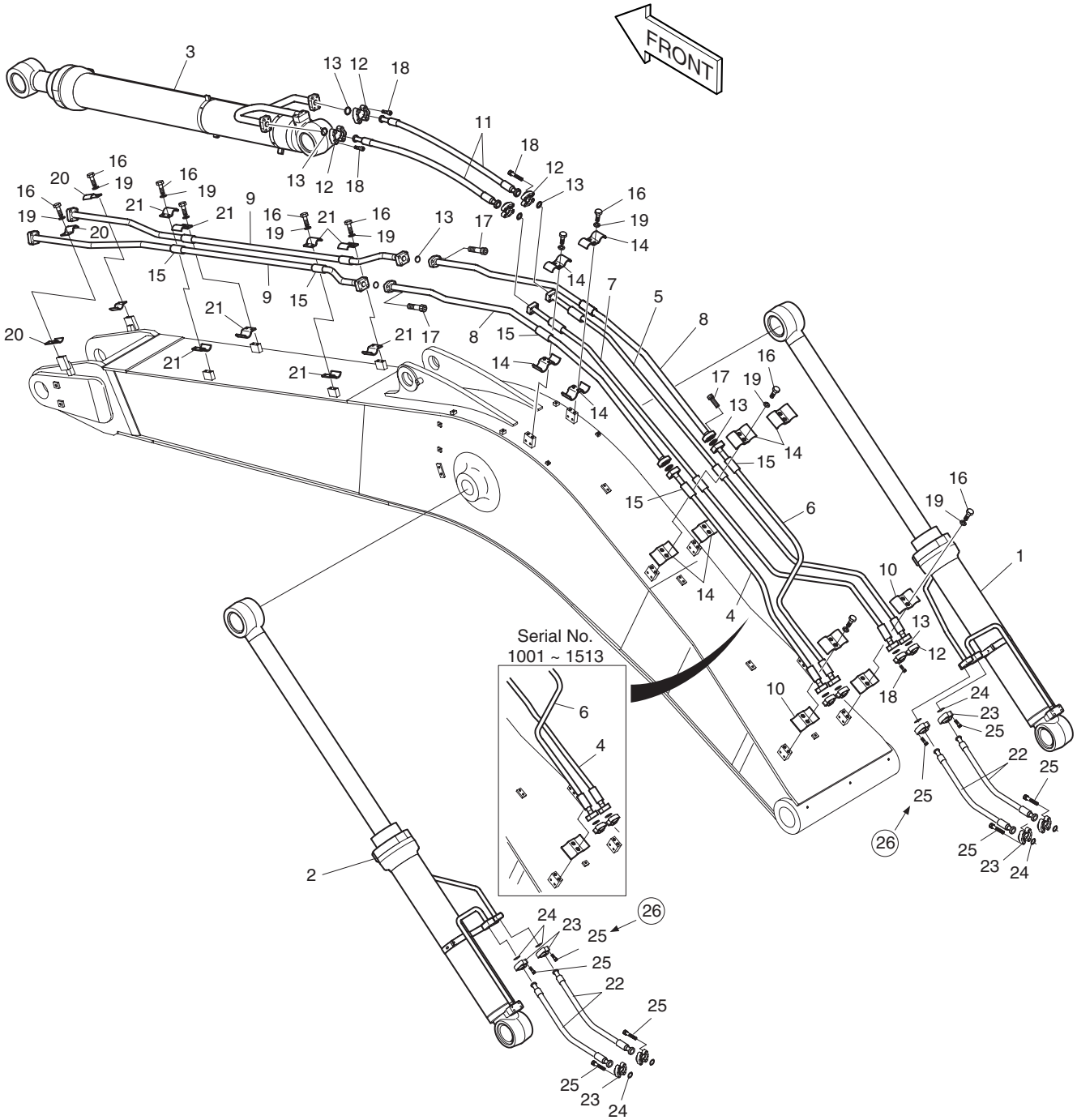

DATE	JUN. 30, 2005
REV. NO.	EXB05-05

Fig. 6755 BOOM PIPING-HEAVY DUTY CONDUITES DE FLECHE

Serial No ;

Key No.	Part No.	Description	Description	Q'ty	S.C	Serial No.	ICA	Replaceable part	
								Part No.	Q'ty
6755--	**K1008809**	**BOOM PIPING-HEAVY DUTY**	CONDUITES DE FLECHE	-	D	**1001–1513**			
	K1008809A	**BOOM PIPING-HEAVY DUTY**	CONDUITES DE FLECHE	-	D	**1514–**			
1	440-00286	CYLINDER;BOOM(R.H)	CONDUITES DE FLECHE	1					
2	440-00287	CYLINDER;BOOM(L.H)	CONDUITES DE FLECHE	1					
3	K1008810	CYLINDER;ARM	VERIN DE BALANCIER	1					
4	K1004647	PIPE;BUCKET	CONDUITES	1		1001–1513			
	140-01574A	**PIPE;BUCKET**	CONDUITES	1		**1514–**			
5	K1001347	PIPE;ARM	CONDUITES	1					
6	K1004648	PIPE;BUCKET	CONDUITES	1		1001–1513			
	140-01576A	**PIPE;BUCKET**	CONDUITES	1		**1514–**			
7	K1001348	PIPE;ARM	CONDUITES	1					
8	K1001349	PIPE;BUCKET	CONDUITES	2					
9	K1006262	PIPE;BUCKET	CONDUITES	2					
10	K1004002	CLAMP	ATTACHE	4					
11	2184-1081D104	HOSE	TUYAU FLEXIBLE	2					
12	2181-9086	FLANGE;SPLIT	FLASQUE EN DEUX	16					
13	2180-1026D23	O-RING	JONT TORIQUE	12					
14	K1003999	CLAMP;PIPE	ATTACHE DE TUYAU	8					
15	161-00280	RUBBER	CAOUTCHOUC	12					
16	S0562766	BOLT M14x2.0x40	BOULON A 6PANS	24					
17	S2218766	BOLT;SOCKET M14x2.0x55	BOULON A 6PANS CREUX	16					
18	S2218666	BOLT;SOCKET M14x2.0x50	BOULON A 6PANS CREUX	32					
19	S5102803	WASHER;SPRING M14	RONDELLE ELASTIQUE M14	24					
20	K1004000	CLAMP	ATTACHE	4					
21	K1004001	CLAMP	ATTACHE	8					
22	DS2038132	HOSE	TUYAU FLEXIBLE	4					
23	2181-9081	FLANGE;SPLIT	BRIDE	16					
24	2180-1026D19	O-RING	JONT TORIQUE	8					
25	S2215366	BOLT;SOCKET M12x1.75x35	BOULON A 6PANS	22		1001–1513			
	S2215466	**BOLT;SOCKET M12x1.75x40**	BOULON A 6PANS	32		**1514–**			
26	**S2215666**	**BOLT;SOCKET M12x1.75x50**	BOULON A 6PANS	8		**1001–1513**			

DATE	DEC. 29, 2005
REV. NO.	EXB05-20

Fig. 6760 ARM - 3.35m - HEAVY DUTY BALANCIER

Serial No. ;

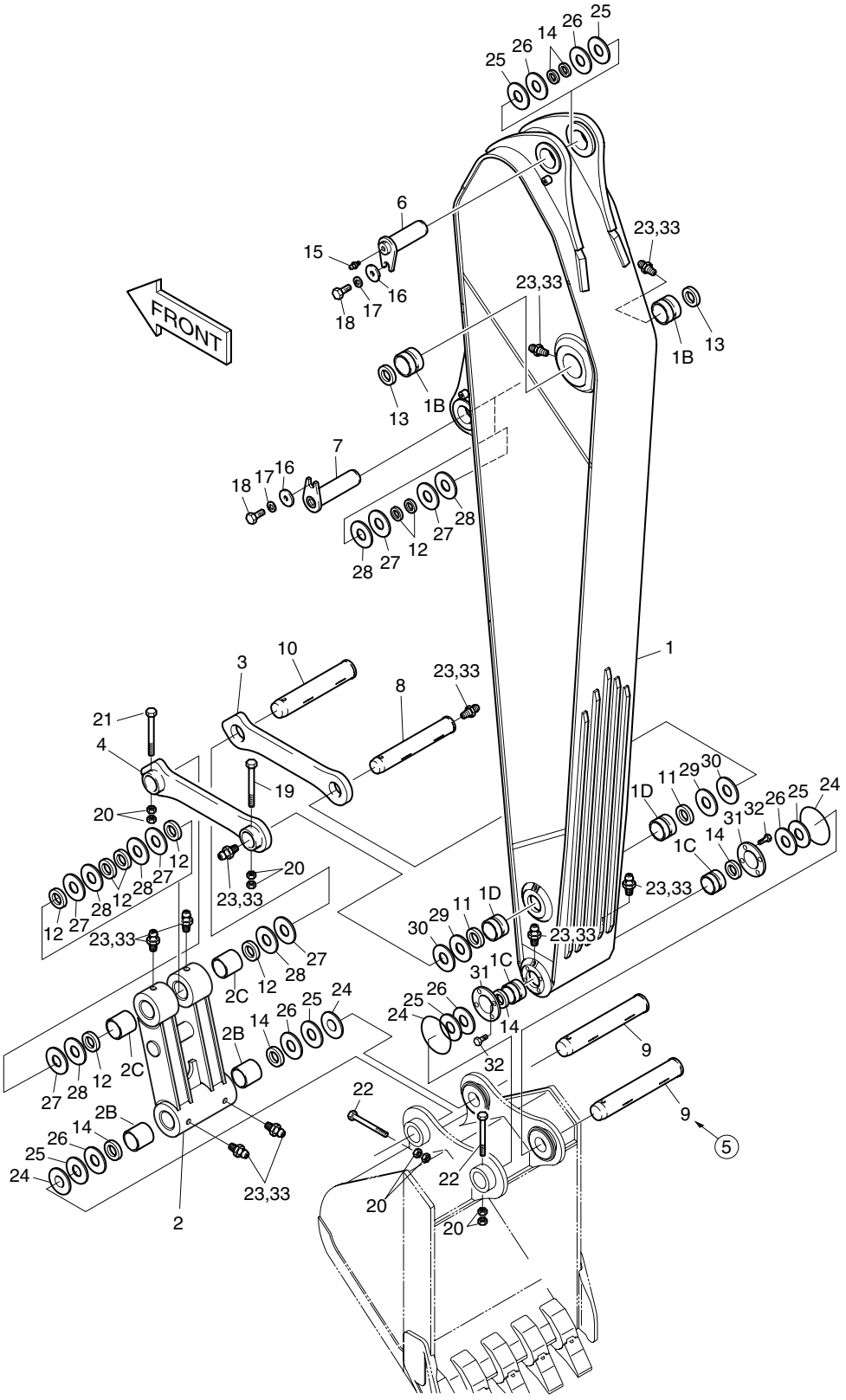

DATE	DEC. 29, 2005
REV. NO.	EXB05-20

Fig. 6760 ARM - 3.35m - HEAVY DUTY BALANCIER

Serial No ;

Key No.	Part No.	Description	Description	Q'ty	S.C	Serial No.	ICA	Replaceable part	
								Part No.	Q'ty
6760--	K1000159	ARM ASS'Y	BALANCIER	-	D				
1	K1000160	ARM SUB ASS'Y	BALANCIER	1		1001–1462			
	K1000160A	ARM SUB ASS'Y	BALANCIER	1		1463–			
1B	110-00186	. BUSHING	. DOUILLE	2					
1C	110-00205	. BUSHING	. DOUILLE	2					
1D	2110-1252A	. BUSHING	. DOUILLE	2					
2	K1000178	PUSH LINK ASS'Y	ARTICULATION	1					
2B	2110-1442	. BUSHING	. DOUILLE	2					
2C	2110-1243B	. BUSHING	. DOUILLE	2					
3	2155-4023B	LINK;GUIDE(R.H)	ARTICULATION	1					
4	2155-4024B	LINK;GUIDE(L.H)	ARTICULATION	1					
5	**K1000163**	**PIN**	BROCHE	1		**1001–1530**			
6	K1000164	PIN	BROCHE	1					
7	K1000547	PIN	BROCHE	1					
8	2123-2051A	PIN	BROCHE	1					
9	2123-2477A	PIN	BROCHE	1		1001–1530			
	2123-2477A	**PIN**	BROCHE	1		**1531**–			
10	2123-2478	PIN	BROCHE	1					
11	2180-1106BD14	SEAL;DUST	PARE-POUSSIERES	2					
12	2180-1106BD15	SEAL;DUST	PARE-POUSSIERES	8					
13	2180-1106BD19	SEAL;DUST	PARE-POUSSIERES	2					
14	2180-1106BD18	SEAL;DUST	PARE-POUSSIERES	6					
15	2181-1116D1	PLUG	BOUCHON	1					
16	2116-1060D5	STOPPER	TAQUET D'ARRET	2					
17	S5102903	WASHER;SPRING M16	RONDELLE ELASTIQUE	2					
18	S0521366	BOLT M16X2.0X35	BOULON A 6 PANS	2					
19	S0571966	BOLT M20X2.5X180	BOULON A 6 PANS	1					
20	S4013133	NUT M20X2.5	ECROU	8					
21	S0572066	BOLT M20X2.5X190	BOULON A 6 PANS	1					
22	S0572166	BOLT M20X2.5X200	BOULON A 6 PANS	2					
23	S6710041	FITTING;GREASE	GRAISSEUR	10					
24	180-00077D9	O-RING	JOINT TORIQUE	4					
25	2114-1059D43	SHIM 0.5T	CALE	6					
26	2114-1059D42	SHIM 1.0T	CALE	6					
27	2114-1059D202	SHIM 1.5T	CALE	6					
28	2114-1059D203	SHIM 1.0T	CALE	6					
29	2114-1059D73	SHIM 1.6T	CALE	2					
30	2114-1059D72	SHIM 1.0T	CALE	2					

DATE	DEC. 29, 2005
REV. NO.	EXB05-20

Fig. 6760 ARM - 3.35m - HEAVY DUTY BALANCIER

Serial No. ;

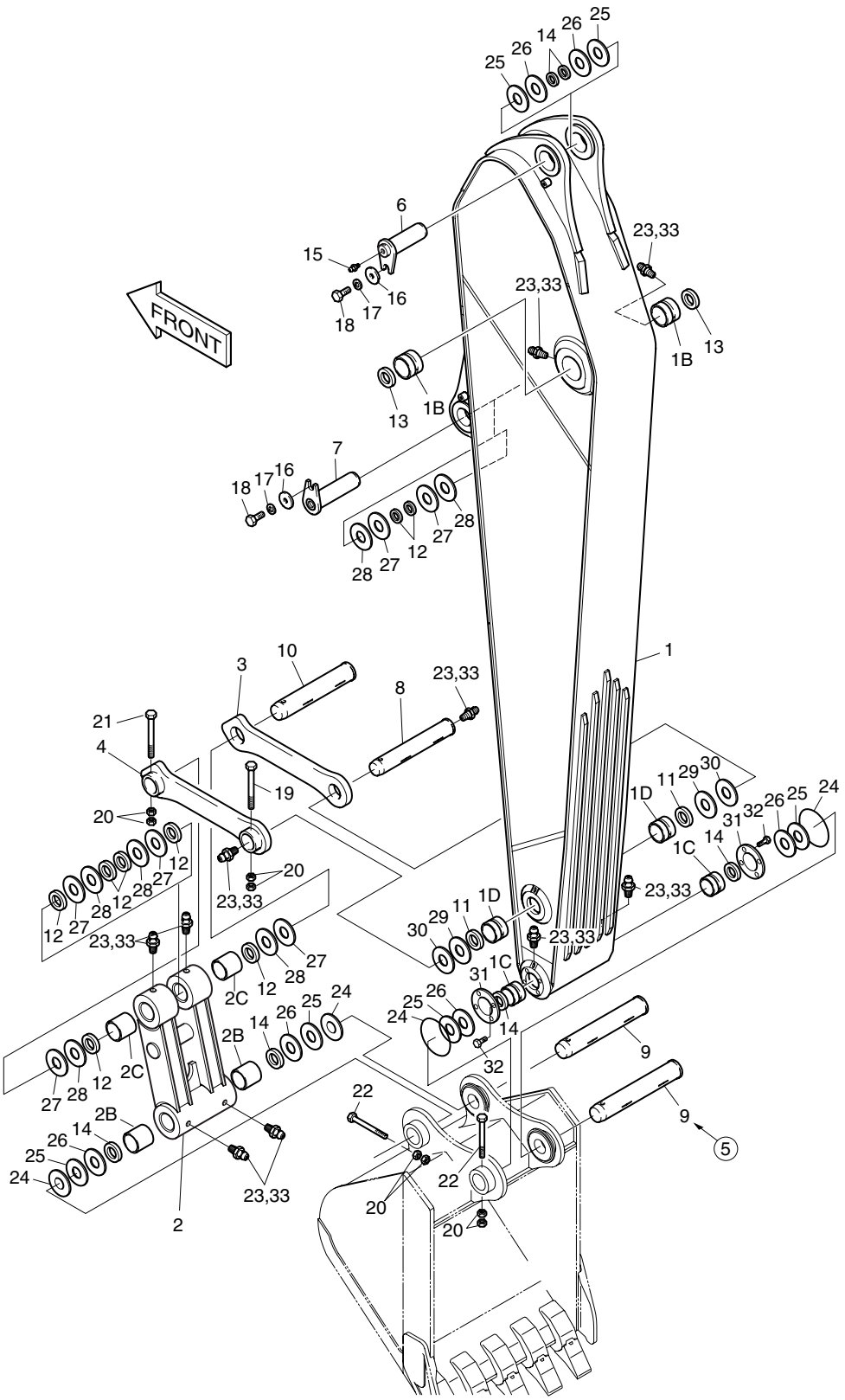

DATE	DEC. 29, 2005
REV. NO.	EXB05-20

Fig. 6760 ARM - 3.35m - HEAVY DUTY BALANCIER

Serial No ;

Key No.	Part No.	Description	Description	Q'ty	S.C	Serial No.	ICA	Replaceable part	
								Part No.	Q'ty
6760-31	114-00443A	SPACER	BAGUE D'ECARTEMENT	2					
32	120-00223	BOLT M12X1.25X25	BOULON A 6 PANS	12					
33	160-00020	CAP;GREASE NIPPLE	CHAPEAU	10					

DATE	JUN. 30, 2005
REV. NO.	EXB05-05

Fig. 6765 ARM PIPING-HEAVY DUTY
CONDUITES DE BALANCIER

Serial No. ;

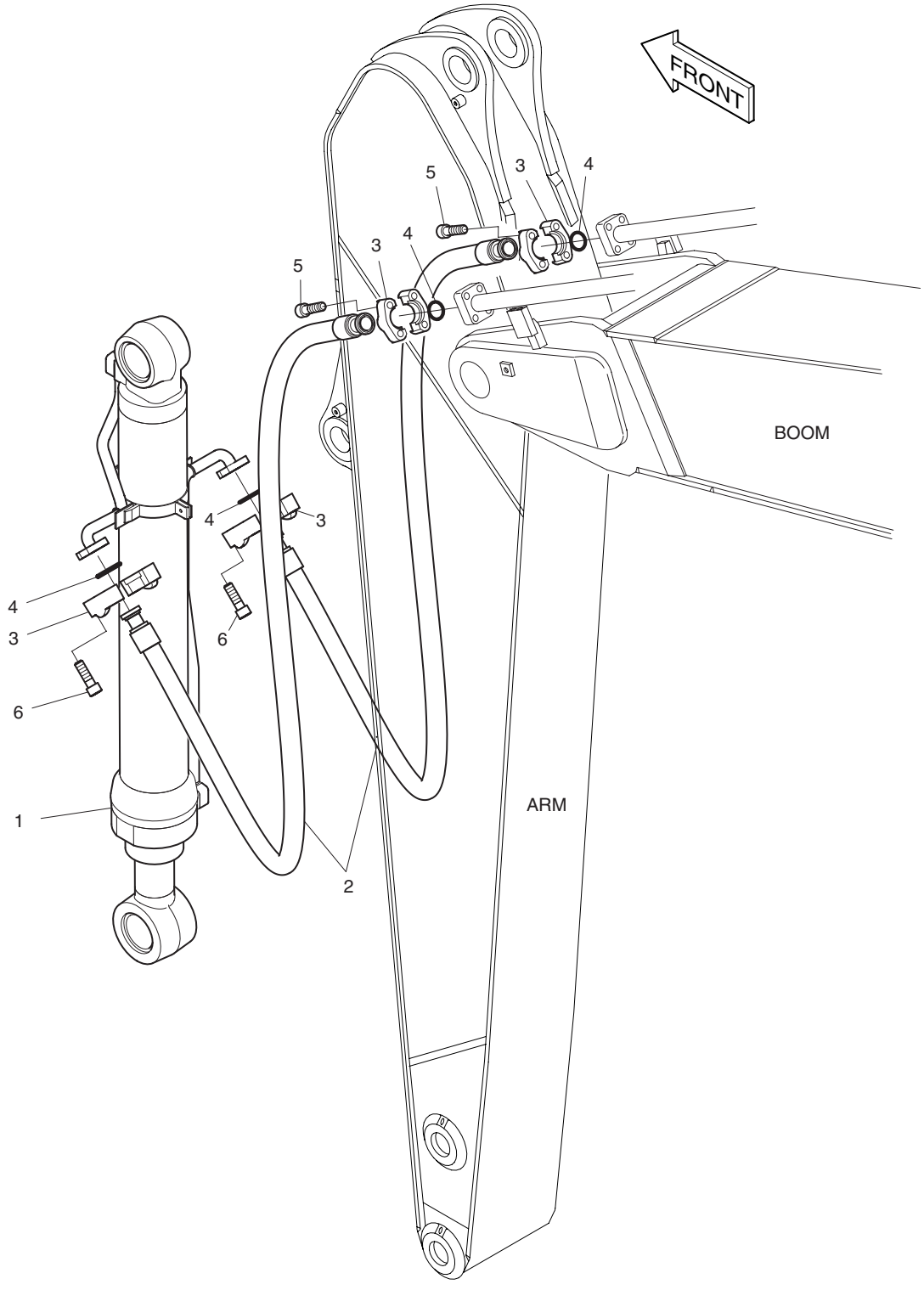

DATE	JUN. 30, 2005
REV. NO.	EXB05-05

Fig. 6765 ARM PIPING - HEAVY DUTY CONDUITES DE BALANCIER

Serial No ;

Key No.	Part No.	Description	Description	Q'ty	S.C	Serial No.	ICA	Replaceable part	
								Part No.	Q'ty
6765--	**K1008814**	**ARM PIPING - 3.35m**	CONDUITES DE BALANCIER	-	D				
1	K1008815	CYLINDER;BUCKET	CONDUITES DE FLECHE	1					
2	DS2038156	HOSE	TUYAU FLEXIBLE	2					
3	2181-9086	FLANGE;SPLIT	FLASQUE EN DEUX	8					
4	2180-1026D23	O-RING	JONT TORIQUE	4					
5	S2218666	BOLT	BOULON A 6PANS	8					
6	S2218566	BOLT;SOCKET M14X2.0X45	BOULON A 6PANS CREUX	8					

DATE	DEC. 29, 2005
REV. NO.	EXB05-20

Fig. 6770 ROCK BUCKET ASS'Y 1.48m³ - HEAVY DUTY GODET

Serial No. ; 1001 ~ 1530

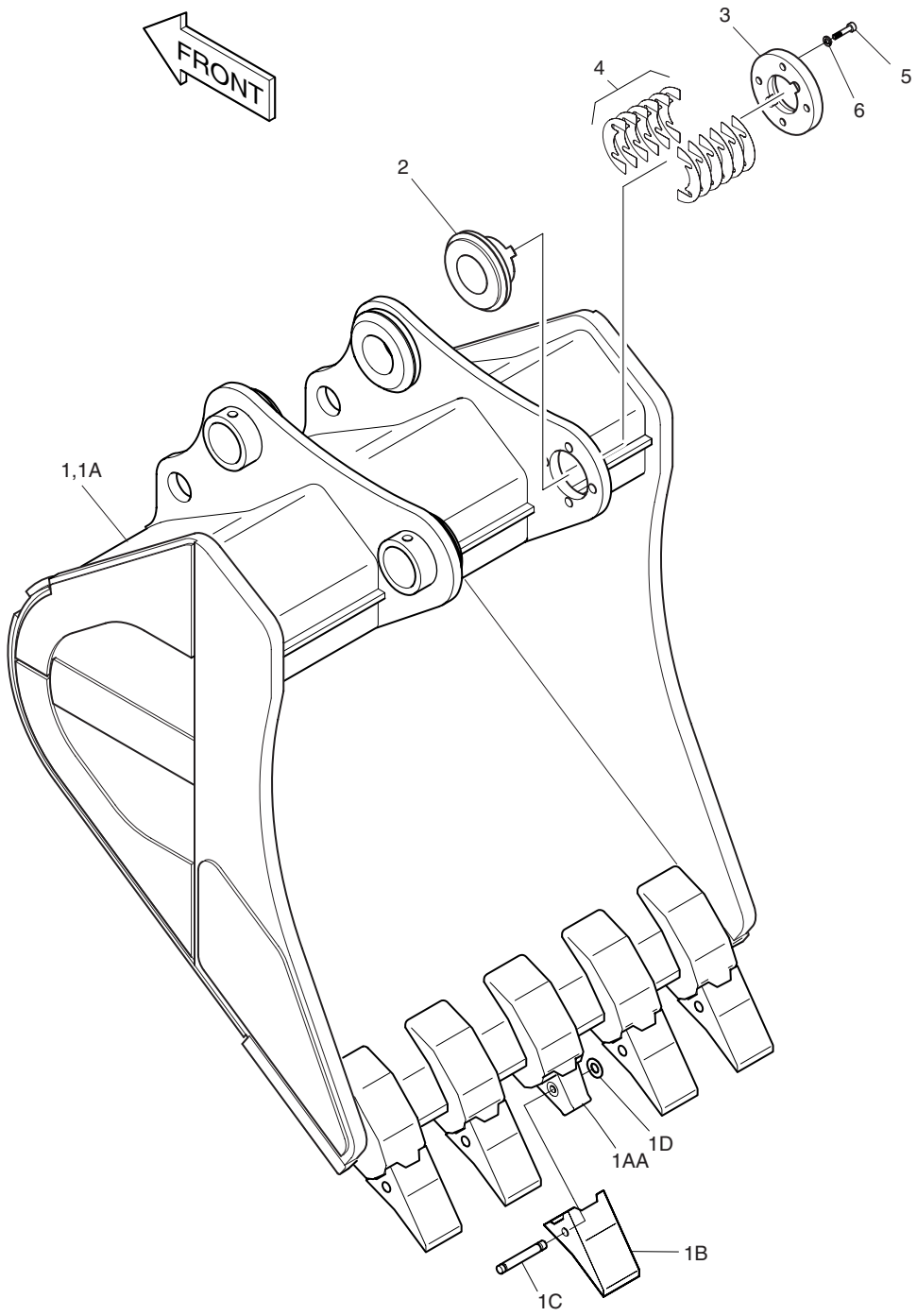

DATE	DEC. 29, 2005
REV. NO.	EXB05-20

Fig. 6770 ROCK BUCKET ASS'Y 1.48㎥ - HEAVY DUTY GODET

Serial No ; 1001 ~ 1530

Key No.	Part No.	Description	Description	Q'ty	S.C	Serial No.	ICA	Replaceable part	
								Part No.	Q'ty
6770--	**K1000167**	**ROCK BUCKET ASS'Y**	ENSEMBLE GODET	1		**1001–1530**			
1	K1000168	BUCKET SUB ASS'Y 1.48㎥	ENSEMBLE GODET	1					
1A	-	. ROCK BUCKET;WELD	. ENSEMBLE GODET	1	D				
1AA	2713-1273	.. ADAPTER	.. ADAPTEUR	5					
1B	713-00052	. POINT;TOOTH	. DENT	5					
1C	2705-1034	. PIN;LOCKING	. BROUCHE	5					
1D	2114-1931	. WASHER;LOCKING	. RONDELLE PLATE	5					
2	K1000175	BUSH;FLANGE	DOUILLE	1		1001–1381	I	K1000175A	1
	K1000175A	BUSH;FLANGE	DOUILLE	1		1382–			
3	K1000176	STOPPER	TAQUET D'ARRET	1					
4	K1000177	SHIM	CALE	12					
5	S2227861	BOLT;SOCKET M20X2.5X60	BOULON A 6 PANS	4					
6	S5111101	WASHER;SPRING M20	RONDELLE	4					

DATE	DEC. 29, 2005
REV. NO.	EXB05-20

Fig. 6771 ROCK BUCKET ASS'Y 1.48m³ - HEAVY DUTY GODET

Serial No. ; 1531 ~

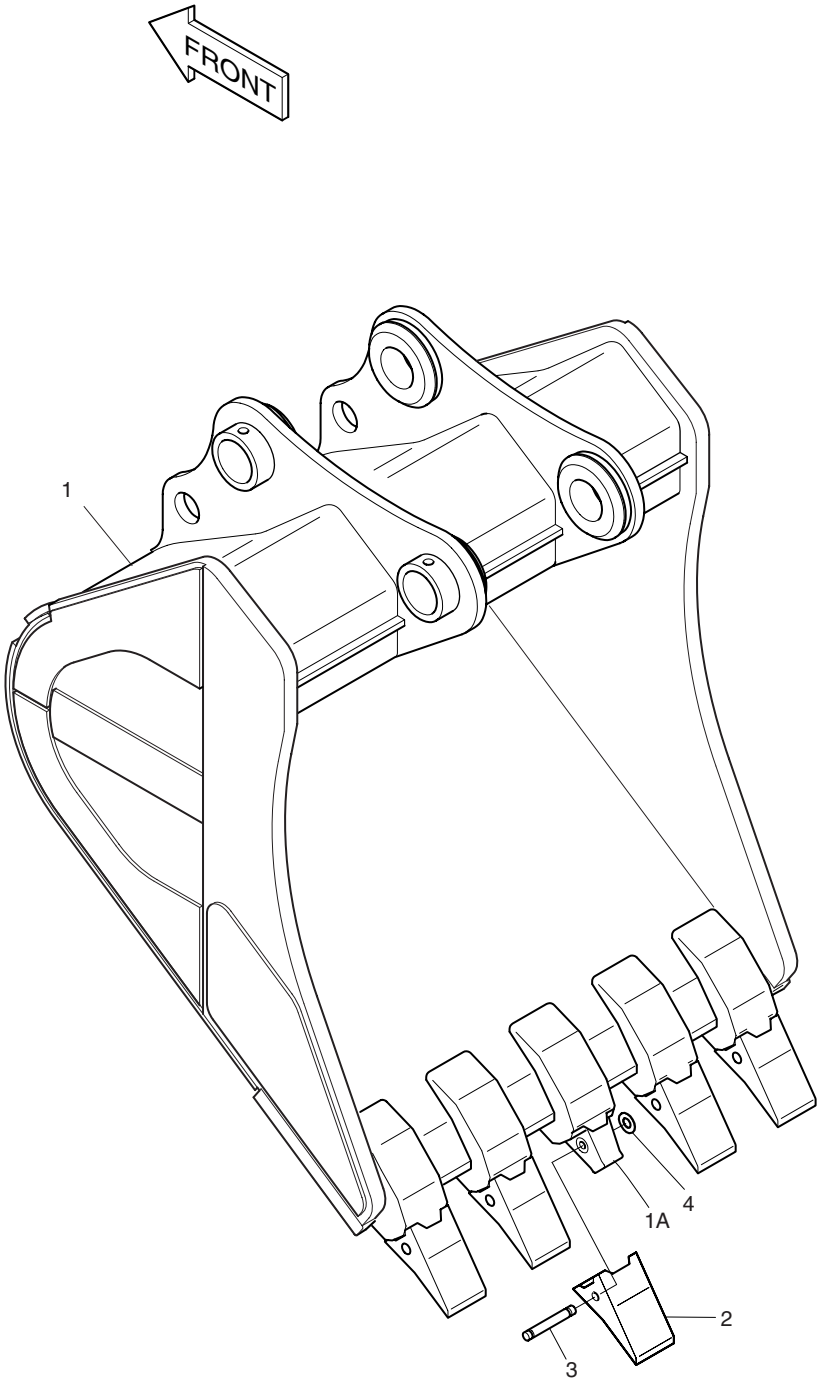

DATE	DEC. 29, 2005
REV. NO.	EXB05-20

Fig. 6771 ROCK BUCKET ASS'Y 1.48㎥ - HEAVY DUTY GODET

Serial No ; 1531 ~

Key No.	Part No.	Description	Description	Q'ty	S.C	Serial No.	ICA	Replaceable part	
								Part No.	Q'ty
6771--	**K1000168A**	**BUCKET ASS'Y 1.48㎥**	ENSEMBLE GODET	1		**1531–**			
1	K1000196A	ROCK BUCKET;WELD	ENSEMBLE GODET	1					
1A	2713-1273	. ADAPTER	. ADAPTEUR	5					
2	713-00052	POINT;TOOTH	DENT	5					
3	2705-1034	PIN;LOCKING	BROUCHE	5					
4	2114-1931	WASHER;LOCKING	RONDELLE PLATE	5					

DATE	JUN. 30, 2005
REV. NO.	EXB05-05

Fig. 6780 LUBRICATION PIPING - H.D ARM 3.35m
LUBRIFICATION

Serial No. ; 1001 ~ 1462

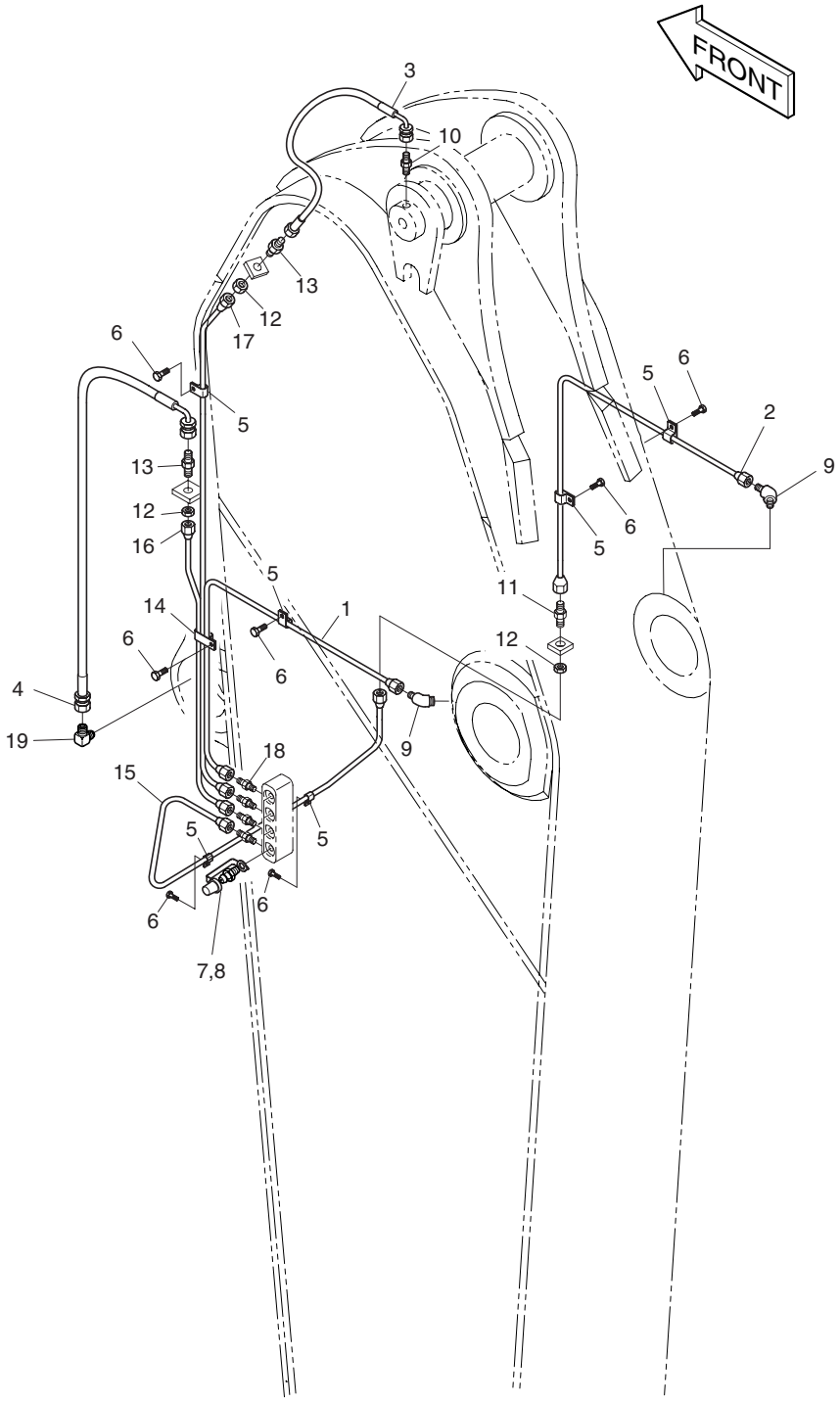

DATE	JUN. 30, 2005
REV. NO.	EXB05-05

Fig. 6780 LUBRICATION PIPING - H.D ARM 3.35m
LUBRIFICATION

Serial No ; 1001 ~ 1462

Key No.	Part No.	Description	Description	Q'ty	S.C	Serial No.	ICA	Replaceable part	
								Part No.	Q'ty
6780--	K1000171	REMOTE LUBRICATION PIPING	CONDUITES DE	-	D	1001–1462			
1	K1000371	PIPE	TUYAU	1					
2	K1000372	PIPE	TUYAU	1					
3	2184-1036D64	HOSE	TUYAU FLEXIBLE	1					
4	DS2055699	HOSE	TUYAU FLEXIBLE	1					
5	2124-1353D1	CLIP	ATTACHE	6					
6	120-00276	BOLT	BOULON A 6 PANS	7					
7	S6710041	NIPPLE;GREASE	CHAPEAU	4					
8	160-00020	CAP;GREASE NIPPLE	BRIDE DE ROULEMENT	4					
9	K1000057	ELBOW	COUDE	2					
10	2181-4112	ADAPTER	RACCORD ADAPTATEUR	1					
11	DS2225009	ADAPTER	RACCORD ADAPTATEUR	1					
12	S4032833	NUT	ECROU	3					
13	2181-1923D12	ADAPTER	RACCORD ADAPTATEUR	2					
14	124-00199D4	CLIP	ATTACHE	1					
15	K1000172	PIPE	TUYAU	1					
16	K1000173	PIPE	TUYAU	1					
17	K1000174	PIPE	TUYAU	1					
18	2181-1184	ADAPTER	ADAPTATEUR	4					
19	2181-1111D11	ELBOW	COUDE	1					

DATE	JUN. 30, 2005
REV. NO.	EXB05-05

Fig. 6781 LUBRICATION PIPING - H.D ARM 3.35m
LUBRIFICATION

Serial No. ; 1463 ~

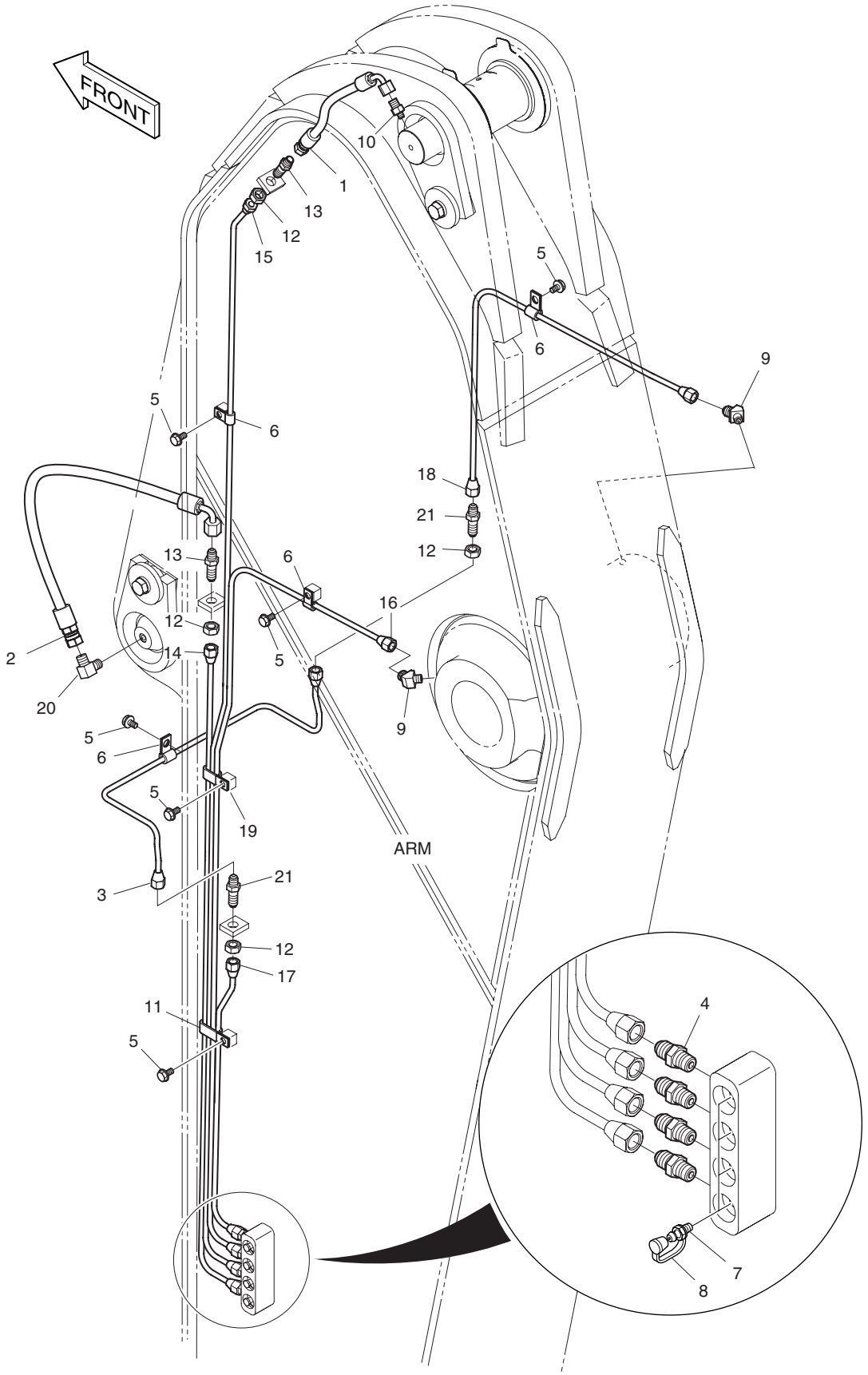

DATE	JUN. 30, 2005
REV. NO.	EXB05-05

Fig. 6781 LUBRICATION PIPING - H.D ARM 3.35m
LUBRIFICATION

Serial No ; 1463 ~

Key No.	Part No.	Description	Description	Q'ty	S.C	Serial No.	ICA	Replaceable part	
								Part No.	Q'ty
6781--	**K1002053**	**REMOTE LUBRICATION**	CONDUITES DE	-	D	**1463–**			
1	DS2055817	HOSE	TUYAU FLEXIBLE	1					
2	DS2055822	HOSE	TUYAU FLEXIBLE	1					
3	K1006536	PIPE	TUYAU	1					
4	2181-1184	ADAPTER	ADAPTEUR	4					
5	K1001029	BOLT;DACRO	BOULON A 6PANS	6					
6	DS2802023	CLIP	ATTACHE	4					
7	S6710041	NIPPLE;GREASE	GRAISSEUR	4					
8	160-00020	CAP;GREASE NIPPLE	CHAPEAU	4					
9	K1000057	ELBOW	ECROU	2					
10	2181-4112	ADAPTER	ADAPTEUR	1					
11	DS2805010	CLIP	ATTACHE	1					
12	S4032833	NUT	ECROU	4					
13	2181-1923D12	ADAPTER	ADAPTEUR	2					
14	K1002054	PIPE	TUYAU	1					
15	K1002055	PIPE	TUYAU	1					
16	K1002057	PIPE	TUYAU	1					
17	K1002058A	PIPE	TUYAU	1					
18	K1002059A	PIPE	TUYAU	1					
19	DS2805008	CLIP	ATTACHE	1					
20	2181-1111D11	ELBOW	COUDE	1					
21	DS2225009	ADAPTER	ADAPTEUR	2					

DATE	JUN. 30, 2005
REV. NO.	EXB05-05

Fig. 6790 UNDER COVER-HEAVY DUTY TOLES IMFERIEVRES

Serial No. ;

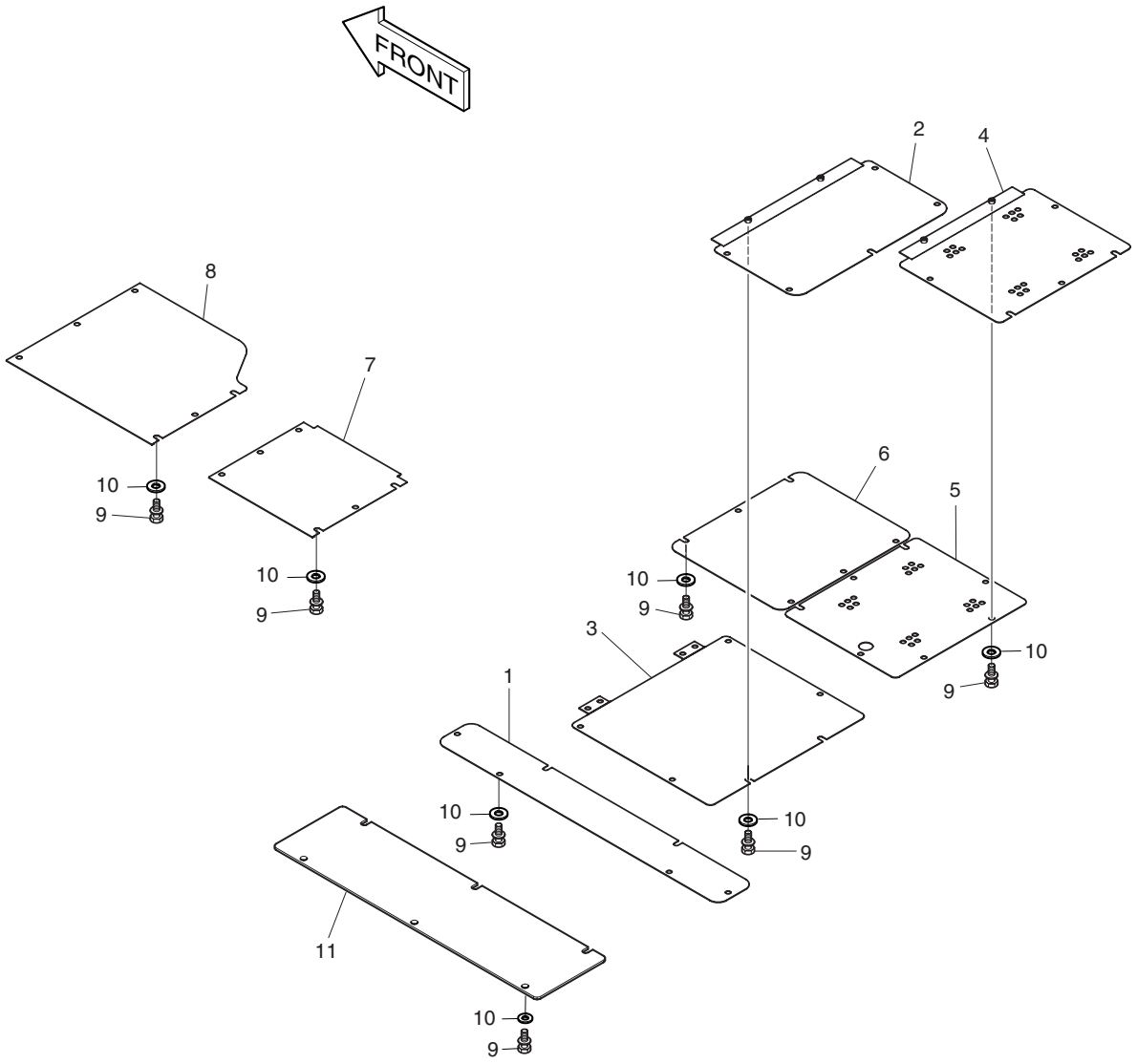

DATE	JUN. 30, 2005
REV. NO.	EXB05-05

Fig. 6790 UNDER COVER-HEAVY DUTY TOLES IMFERIEVRES

Serial No ;

Key No.	Part No.	Description	Description	Q'ty	S.C	Serial No.	ICA	Replaceable part	
								Part No.	Q'ty
6790--	K1002148	UNDER COVER ASS'Y	TOLES IMFERIEVRES	-	D				
1	621-01672B	COVER;UNDER	COUVERCLE	1					
2	K1002141	COVER;UNDER	COUVERCLE	1					
3	K1002142	COVER;UNDER	COUVERCLE	1					
4	K1002143	COVER;UNDER	COUVERCLE	1					
5	K1002144	COVER;UNDER	COUVERCLE	1					
6	621-01677A	COVER;UNDER	COUVERCLE	1					
7	621-01678B	COVER;UNDER	COUVERCLE	1					
8	621-01679B	COVER;UNDER	COUVERCLE	1					
9	2120-2196D14	BOLT;SET M12X1.75X25	BOULON	51		1001–1450			
	2120-2196D14	**BOLT;SET M12X1.75X25**	BOULON	57		**1451–**			
10	2114-1154	WASHER;PLAIN	RONDELLE PLATE	51		1001–1450			
	2114-1154	**WASHER;PLAIN**	RONDELLE PLATE	57		**1451–**			
11	**K1006066**	**COVER;UNDER**	COUVERCLE	1		**1450–**			

DATE	JUN. 30, 2005
REV. NO.	EXB05-05

Fig. 6800 TRACK FRAME-HEAVY DUTY
TRAIN DE ROULEMENT

Serial No. ;

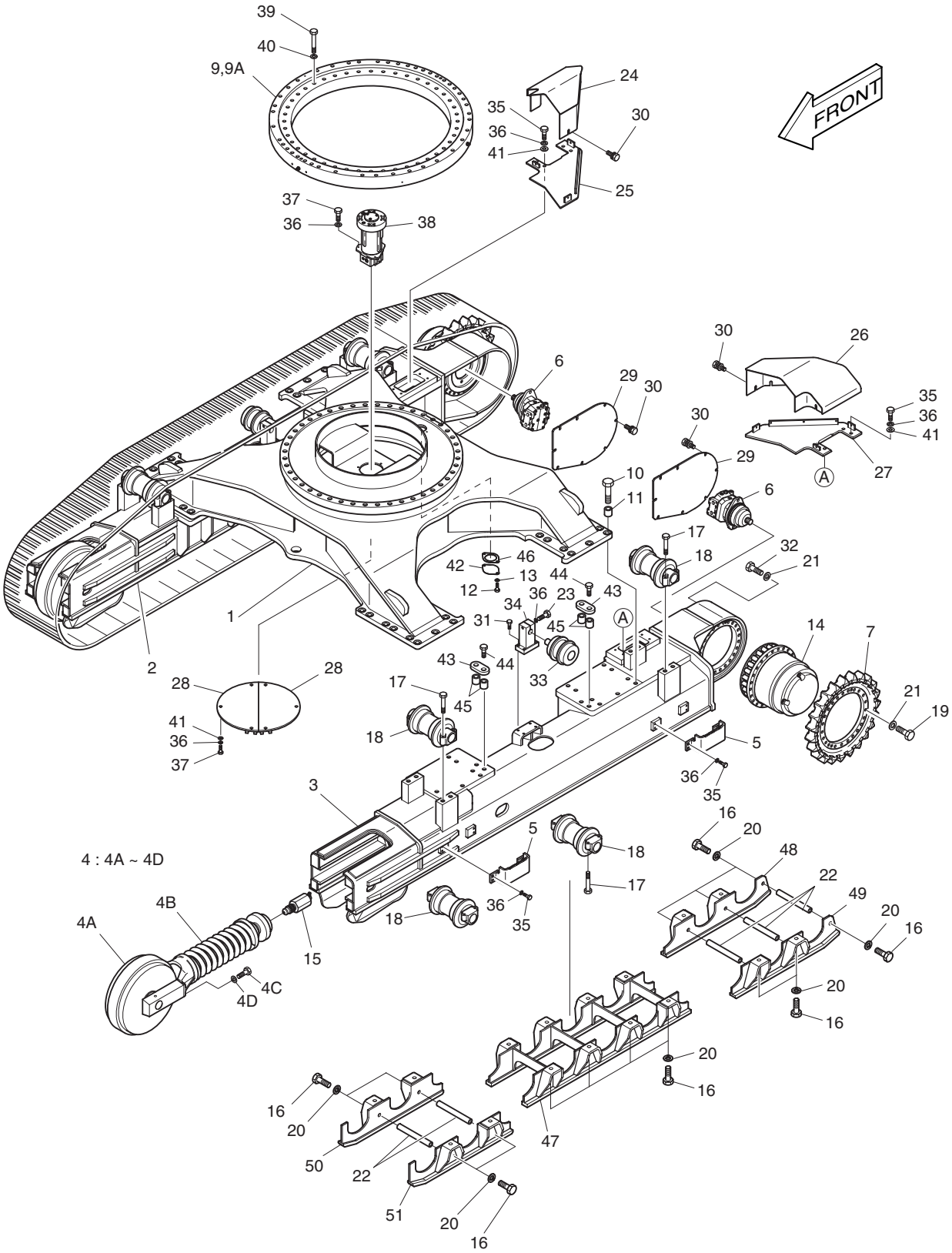

DATE	JUN. 30, 2005
REV. NO.	EXB05-05

Fig. 6800 TRACK FRAME-HEAVY DUTY TRAIN DE ROULEMENT

Serial No ;

Key No.	Part No.	Description	Description	Q'ty	S.C	Serial No.	ICA	Replaceable part	
								Part No.	Q'ty
6800--	K1001949	TRACK ASS'Y	TRAIN DE ROULEMENT	-	D				
1	604-00127A	FRAME;CENTER	TRAIN DE ROULEMENT	1					
2	K1001951	FRAME;SIDE(R.H)	TRAIN DE ROULEMENT	1		1001–1409	I	K1001951A	1
	K1001951A	**FRAME;SIDE(R.H)**	TRAIN DE ROULEMENT	1		**1410–**			
3	K1001950	FRAME;SIDE(L.H)	TRAIN DE ROULEMENT	1		1001–1409	I	K1001950A	1
	K1001950A	**FRAME;SIDE(L.H)**	TRAIN DE ROULEMENT	1		**1410–**			
4	270-00009	IDLER SUB ASS'Y	ENSEMBLE BARBOTIN	2					
4A	2270-9405G	. IDLER ASS'Y	. ENSEMBLE BARBOTIN	1					
4B	274-00003C	. TRACK SPRING ASS'Y	. TENDEUR DE CHENILLE	1					
4C	S0570066	. BOLT M20X2.5X60	. BOULON A 6 PANS	4					
4D	S5103101	. WASHER;SPRING	. RONDELLE ELASTIQUE	4					
5	2625-1155AD1	STEP	MARCHER	4					
6	2401-6292A	MOTOR;TRAVEL	MOTEUR DE TRANSLATION	2					
7	108-00019A	SPROCKET	COURONNE DENTEE	2					
9	109-00159	BEARING;SWING	PLAIER	1					
9A	180-00297D2	. SEAL	. JOINT	1					
10	120-00040A	BOLT M33X3.0X140	BOULON A 6 PANS	36					
11	114-00049	SPACER	BAGUE D'ECARTEMENT	36					
12	S0511853	BOLT M10X1.5X20	BOULON A 6 PANS	2					
13	S5102603	WASHER;SPRING M10	REDEUTEUR	2					
14	2401-9229A	REDUCTION GEAR;TRAVEL	GUIDE	2					
15	420-00429A	VALVE;GREASE	ENSEMBLE CLAPET	2					
16	S0530766	BOLT M22X2.5X55	BOULON A 6 PANS	52					
17	S0573366	BOLT M22X2.5X110	BOULON A 6 PANS	88					
18	2270-9404B	ROLLER;LOWER	GALET INFERIEUR	22					
19	S0570166	BOLT M22X2.5X65	BOULON A 6 PANS	48					
20	S5103203	WASHER;SPRING M22	RONDELLE ELASTIQUE	52					
21	2114-9012A	WASHER;HARDEN M20	RONDELLE ELASTIQUE	96					
22	K1001698	SPACER	ENTRETOISE	10					
23	S0566066	BOLT M16X2.0X90	BOULON A 6 PANS	4					
24	2627-1892B	COVER(R.H)	COUVERCLE	1					
25	2197-2658C	BRACKET(R.H)	SUPPORT	1					
26	2627-1891B	COVER;TR(L.H)	COUVERCLE	1					
27	2197-2657C	BRACKET(L.H)	SUPPORT	1					
28	621-01528A	COVER;CENTER FRAME	COUVERCLE	2					
29	2627-1877A	COVER	COUVERCLE	2					
30	2120-2196D10	BOLT;SET M13X1.75X25	BOULON A 6PANS	28					
31	S0565466	BOLT M16X2.0X60	BOULON A 6PANS	8					

DATE	JUN. 30, 2005
REV. NO.	EXB05-05

Fig. 6800 TRACK FRAME-HEAVY DUTY
TRAIN DE ROULEMENT

Serial No. ;

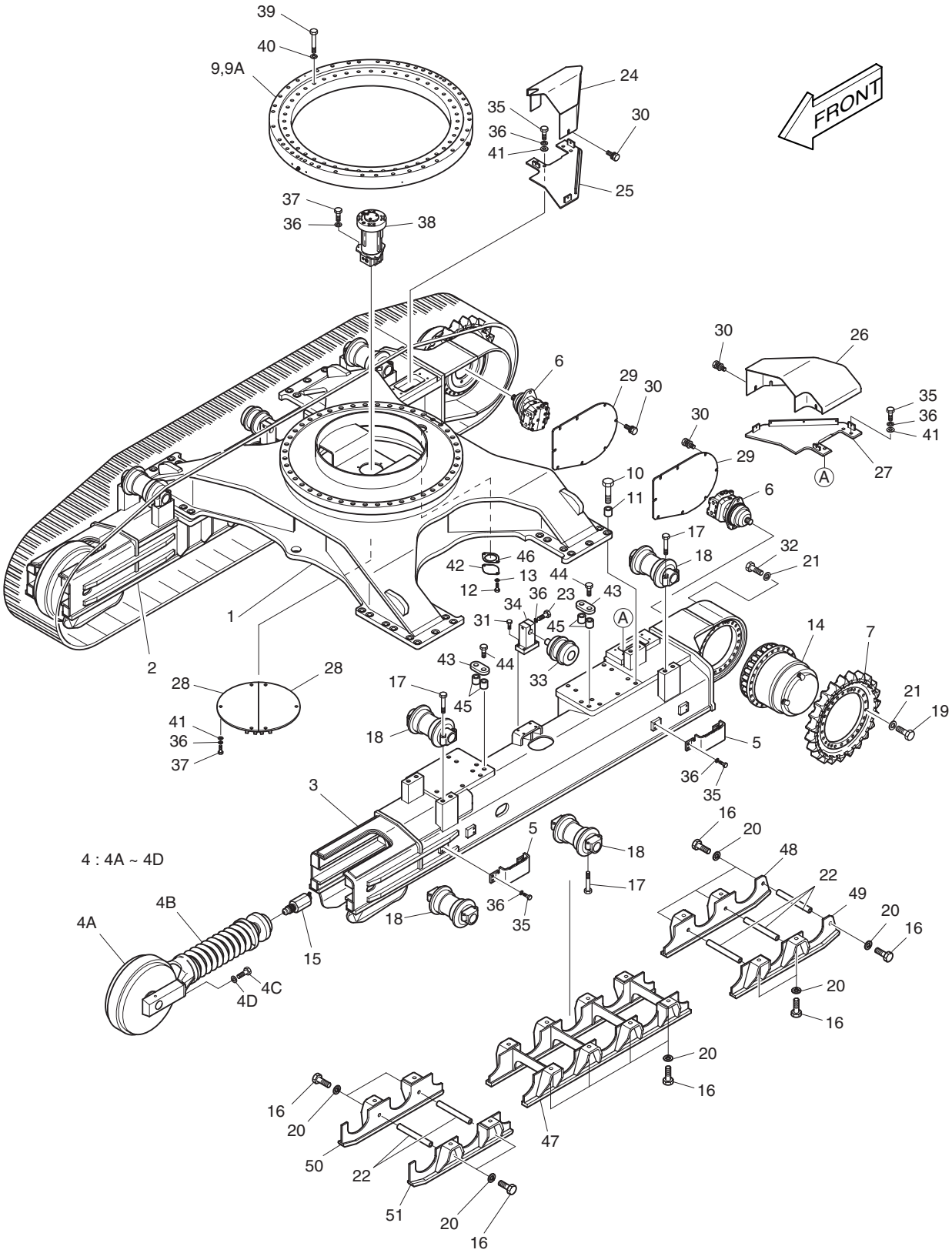

DATE	JUN. 30, 2005
REV. NO.	EXB05-05

Fig. 6800 TRACK FRAME-HEAVY DUTY TRAIN DE ROULEMENT

Serial No ;

Key No.	Part No.	Description	Description	Q'ty	S.C	Serial No.	ICA	Replaceable part	
								Part No.	Q'ty
6800-32	S0570466	BOLT M20X2.5X80	BOULON A 6PANS	48					
33	2270-9402A	ROLLER;UPPER	GALET SUPERIEUR	2					
34	2195-4619	BRACKET	SUPPORT	2					
35	S0565056	BOLT M16X2.0X40	BOULON A 6PANS	24					
36	S5102903	WASHER;SPRING M16	RONDELLE ELASTIQUE	37					
37	S0521266	BOLT M16X2.0X30	BOULON A 6PANS	9					
38	2480-9405B	JOINT;CENTER	JOINT TOURNANT	1					
39	S0776266	BOLT M24X2.0X160	BOULON A 6PANS	44					
40	2114-1831A	WASHER;HARD	RONDELLE	44					
41	S5010913	WASHER;PLAIN M16	RONDELLE PLATE	14					
42	2403-1002	PLATE	COUVERCLE	1					
43	621-00050	PLATE	PLAQUE	4					
44	120-00041A	BOLT M33X3.0X120	BOULON A 6PANS	8					
45	114-00048A	SPACER	BAGUE D'ECARTEMENT	8					
46	2180-1017A	PACKING	RONDELLE ETANCHE	1					
47	K1001953	GUARD;LINK	GARDE	2					
48	K1001954	GUARD;LINK	GARDE	2					
49	K1001955	GUARD;LINK	GARDE	2					
50	K1001956	GUARD;LINK	GARDE	2					
51	K1001957	GUARD;LINK	GARDE	2					

DATE	DEC. 30, 2004
REV. NO.	EXB04-09

Fig. 6810 TRACK SHOE ASS'Y-600G-HEAVY DUTY MAILLON DE CHAINE

Serial No. ; 1001 ~ 1394

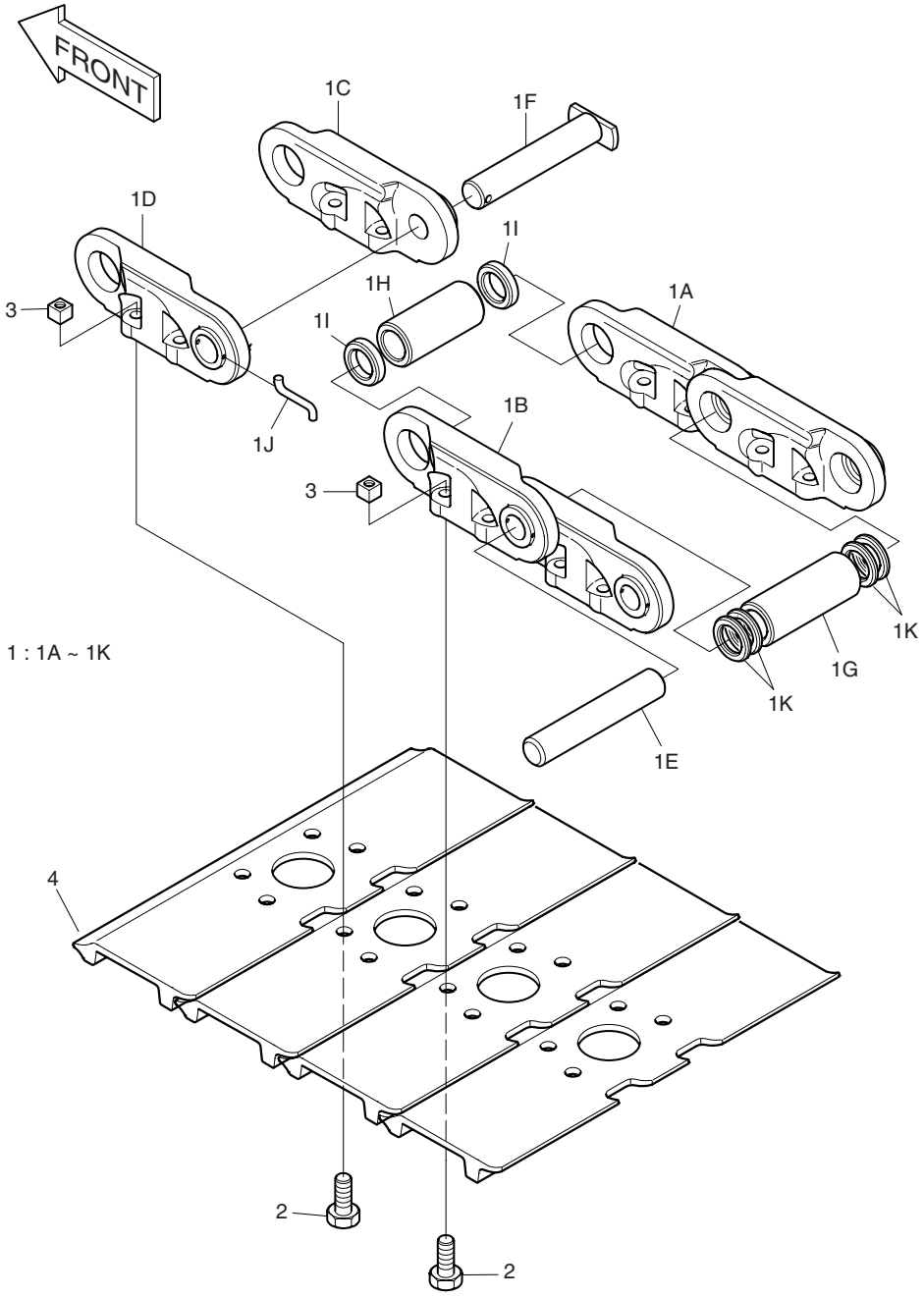

DATE	DEC. 30, 2004
REV. NO.	EXB04-09

Fig. 6810 TRACK SHOE ASS'Y-600G-HEAVY DUTY MAILLON DE CHAINE

Serial No ; 1001 ~ 1394

Key No.	Part No.	Description	Description	Q'ty	S.C	Serial No.	ICA	Replaceable part	
								Part No.	Q'ty
6810--	K1001112	TRACK SHOE ASS'Y	ENSEMBLE CHAINE	2		1001–1394	I	K1002594	2
1	2272-6143B	TRACK LINK ASS'Y	ENSEMBLE MAILLON DE	1					
1A	2272-6144	. LINK(R.H)	. ARTICULATION	52					
1B	2272-6145	. LINK(L.H)	. ARTICULATION	52					
1C	2272-6135	. LINK;MASTER(R.H)	. MAILLON PRINCIPAL	1					
1D	2272-6136	. LINK;MASTER(L.H)	. MAILLON PRINCIPAL	1					
1E	2123-6079A	. PIN	. GOUPILLE	52					
1F	2123-6080	. PIN;MASTER	. GOUPILLE	1					
1G	2110-6065B	. BUSHING	. DOUILLE	52					
1H	2110-6066A	. BUSHING;MASTER	. DOUILLE	1					
1I	2271-6018	. COLLAR	. RONDELLE	2					
1J	2123-6081	. PIN	. BROCHE	1					
1K	2180-6077A	. SEAL;DUST	. PARE-POUSSIERES	104					
2	2120-6025	BOLT;TRACK M22X1.5X72	BOULON A 6 PANS	212					
3	2121-6027	NUT;TRACK M22X1.5	ECROU	212					
4	**K1001214A**	**SHOE;TRACK(600mm)15T**	PATIN	53					

DATE	DEC. 29, 2005
REV. NO.	EXB05-20

Fig. 6811 TRACK SHOE ASS'Y-600G-HEAVY DUTY MAILLON DE CHAINE

Serial No. ; 1395 ~ 1799

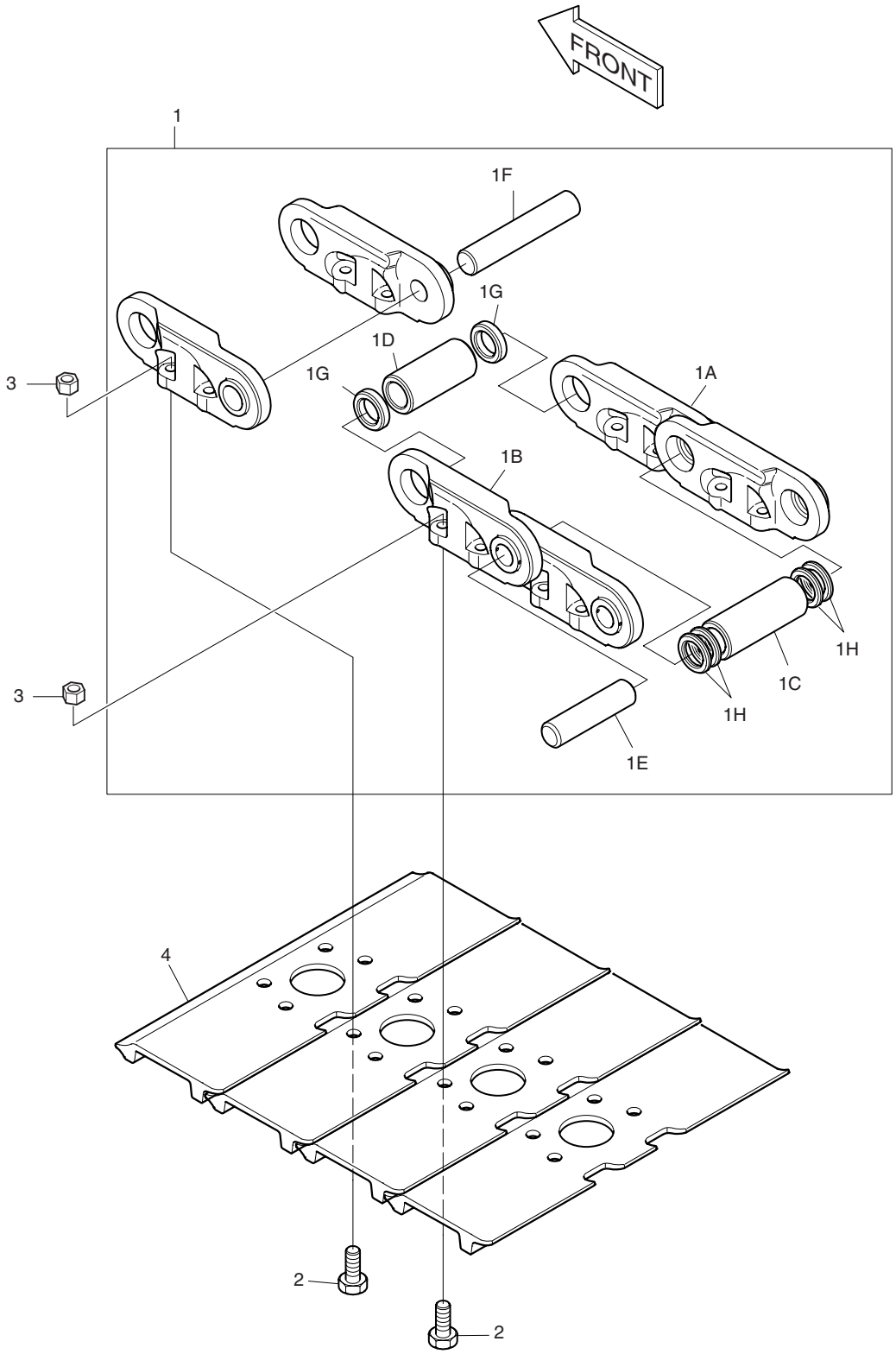

DATE	DEC. 29, 2005
REV. NO.	EXB05-20

Fig. 6811 TRACK SHOE ASS'Y-600G-HEAVY DUTY MAILLON DE CHAINE

Serial No ; 1395 ~ 1799

Key No.	Part No.	Description	Description	Q'ty	S.C	Serial No.	ICA	Replaceable part	
								Part No.	Q'ty
6811--	**K1002594**	**TRACK SHOE ASS'Y**	ENSEMBLE CHAINE	2		**1395–1799**	I	K1002594A	2
1	2272-6186	LINK ASS'Y	ENSEMBLE MAILLON DE	1					
1A	2272-6188	. LINK(R.H)	. ARTICULATION	53					
1B	2272-6187	. LINK(L.H)	. ARTICULATION	53					
1C	2110-6079	. BUSHING	. DOUILLE	52					
1D	2110-6080	. BUSHING;MASTER	. DOUILLE	1					
1E	2123-6105	. PIN	. GOUPILLE	52					
1F	2123-6106	. PIN;MASTER	. GOUPILLE	1					
1G	2114-6048	. SPACER	. BAGUE D'ECARTEMENT	2					
1H	2180-6091	. SEAL	. PARE-POUSSIERES	104					
2	2120-6030	BOLT	BOULON A 6 PANS	212					
3	2121-6037	NUT	ECROU	212					
4	K1001214A	SHOE	PATIN	53					

DATE	DEC. 29, 2005
REV. NO.	EXB05-20

Fig. 6812 TRACK SHOE ASS'Y-600G-HEAVY DUTY MAILLON DE CHAINE

Serial No. ; 1800 ~

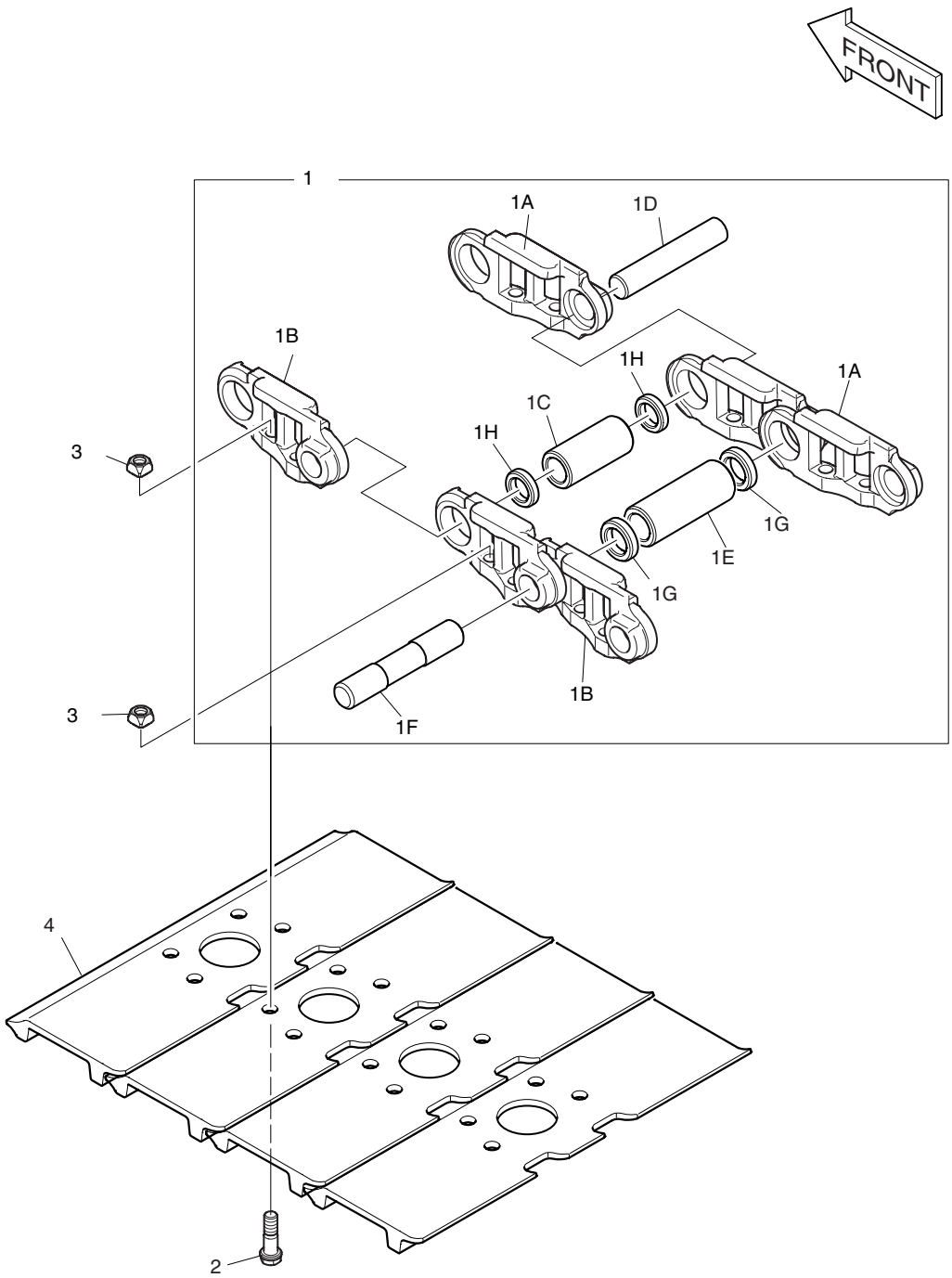

DATE	DEC. 29, 2005
REV. NO.	EXB05-20

Fig. 6812 TRACK SHOE ASS'Y-600G-HEAVY DUTY MAILLON DE CHAINE

Serial No ; 1800 ~

Key No.	Part No.	Description	Description	Q'ty	S.C	Serial No.	ICA	Replaceable part	
								Part No.	Q'ty
6812--	**K1002594A**	**TRACK SHOE ASS'Y**	ENSEMBLE CHAINE	2		**1800–**			
1	K1007954	LINK ASS'Y	ENSEMBLE MAILLON DE	1					
1A	K1012128	. LINK(R.H)	. ARTICULATION	53					
1B	K1012129	. LINK(L.H)	. ARTICULATION	53					
1C	K1012131	. BUSHING	. DOUILLE	52					
1D	K1012130	. PIN	. GOUPILLE	52					
1E	K1012132	. BUSHING;MASTER	. DOUILLE	1					
1F	K1012136	. PIN;MASTER	. GOUPILLE	1					
1G	K1012135	. SPACER	. BAGUE D'ECARTEMENT	2					
1H	K1012133	. SEAL	. PARE-POUSSIERES	104					
2	K1007955	BOLT	BOULON A 6 PANS	212					
3	K1007956	NUT	ECROU	212					
4	K1001214A	SHOE	PATIN	53					

DATE	JUN. 30, 2005
REV. NO.	EXB05-05

Fig. 6820 CABIN GUARD - HEAVY DUTY
CABINE DE GARDE

Serial No. ;

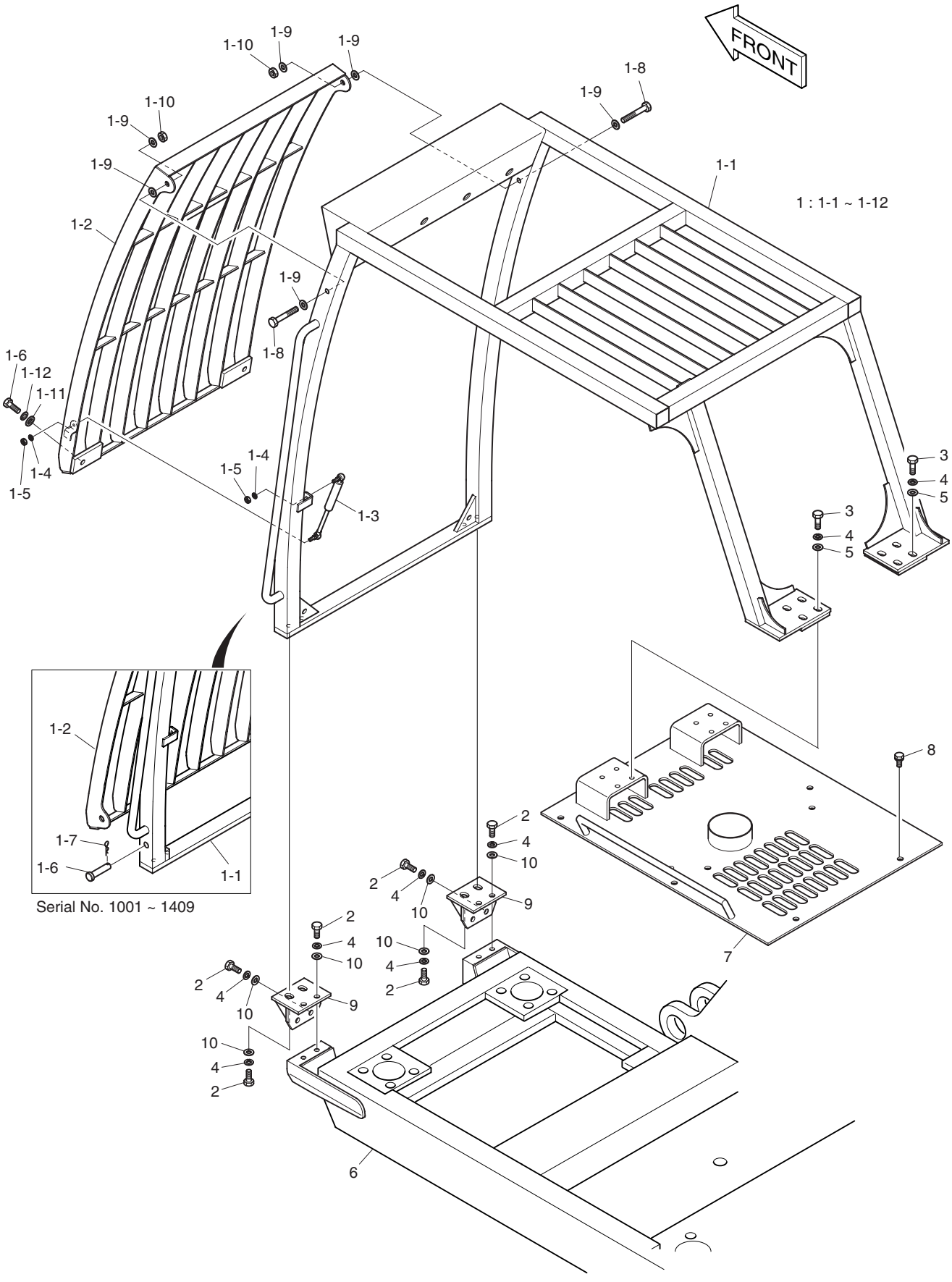

DATE	JUN. 30, 2005
REV. NO.	EXB05-05

Fig. 6820 CABIN GUARD - HEAVY DUTY
CABINE DE GARDE

Serial No ;

Key No.	Part No.	Description	Description	Q'ty	S.C	Serial No.	ICA	Replaceable part	
								Part No.	Q'ty
6820--	K1003457	CABIN GUARD ASS'Y	CABINE DE GARDE	-	D				
1	K1003456	GUARD ASS`Y	GARDE	1		1001–1409	I	K1003456A	1
	K1003456A	**GUARD ASS`Y**	GARDE	1		**1410–**			
1-1	K1003455	. GUARD;CABIN	. GARDE	1		1001–1409			
	K1003455A	**. GUARD;CABIN**	. GARDE	1		**1410–**			
1-2	K1003454	. GUARD;WINDOW	. GARDE	1		1001–1409			
	K1003454A	**. GUARD;WINDOW**	. GARDE	1		**1410–**			
1-3	K1003334	. CYLINDER;GAS	. CYLINDRE	1					
1-4	S5102503	. WASHER;SPRING M8	. RONDELLE PLATE	2					
1-5	S4012533	. NUT M8X1.25	. ECROU	2					
1-6	K1003453	. PIN	. BROUCHE	2		1001–1409			
	S0515353	**. BOLT**	. BOULON A 6 PANS	2		**1410–**			
1-7	**2123-1441D7**	**. PIN;SET**	. BROUCHE	2		**1001–1409**			
1-8	S3102271	. BOLT;REAMER	. BOULON A 6 PANS	2		1001–1409			
	S3102281	**. BOLT;REAMER**	. BOULON A 6 PANS	2		**1410–**			
1-9	S5010913	. WASHER M16	. RONDELLE	6					
1-10	S4012933	. NUT M16	. ECROU	2					
1-11	**2114-1058D72**	**. WASHER;PLAIN**	. RONDELLE PLATE	2		**1410–**			
1-12	**S5100703**	**. WASHER;SPRING**	. RONDELLE ELASTIQUE	2		**1410–**			
2	S0521466	BOLT M16X2.0X40	BOULON A 6 PANS	12					
3	S0521666	BOLT M16X2.0X50	BOULON A 6 PANS	8					
4	S5102903	WASHER;SPRING M16	RONDELLE PLATE	20					
5	2114-1058D39	WASHER	RONDELLE	8					
6	K1001007	FRAME;BED	BATI PRINCIPAL	1		1001–1409	I	K1001007A	1
	K1001007A	**FRAME;BED**	BATI PRINCIPAL	1		**1410–**			
7	621-02318	COVER	COUVERCLE	1					
8	2120-2196D7	BOLT;SET M12X1.75X30	BOULON A 6 PANS	10					
9	K1001058	BRACKET	SUPPORT	2					
10	S5010913	WASHER M16	RONDELLE	12					

INDEX

PART NO.	FIG NO.	KEY NO.
0-0056-05302	1770	7-13
0-0275-06802	1770	3-6
0-0280-16022	1770	4-2
0-09170-2501	1770	7-4
0-09201-0980	1770	1-3
0-09201-1140	1770	3-5
00B102-0	4330	2
	4330	4
00B102-1	4300	2
	4310	2
	4330	2
	4330	4
	4350	2
	4360	2
00B104-1	4300	4
	4310	4
	4350	4
	4360	4
00B109-0	4320	2
	4320	4
	4340	2
	4340	4
	4370	2
	4370	4
	4380	2
	4380	4
00B109-1	4410	2
	4410	4
00B123-0	4390	2
	4390	4
00C267-0	4400	33
00C270-0	4390	44
00C304-0	4400	15
00C306-0	4390	15
00C316-0	4300	15
	4310	15
	4330	15
	4350	15
	4360	15
00C318-0	4370	15
	4380	15
00C376-0	4420	15
00C379-0	4410	15
00M312-0	4400	7
00M313-0	4390	7
	4400	11
00M315-0	4390	11
00M419-0	4320	7
	4340	7
	4370	7
00M419-0	4380	7
	4410	7
00M465-0	4320	11
	4340	11
	4370	11
	4380	11
	4410	11
00M574-0	4300	7
	4310	7
	4330	7
	4350	7
	4360	7
	4420	7
00M799-0	4300	11
	4310	11
	4330	11
	4350	11
	4360	11
	4420	11
00P371-0	4400	26
00P374-1	4390	26
	4390	30
00P381-1	4330	26
	4330	30
00P383-1	4320	32
	4320	36
	4340	32
	4340	36
	4370	32
	4370	36
	4380	32
	4380	36
	4410	32
	4410	36
00R097-0	4400	19
00R105-0	4300	19
	4310	19
	4330	19
	4350	19
	4360	19
	4420	19
00R107-0	4320	19
	4340	19
	4370	19
	4380	19
	4410	19
00R730-0	4390	19
00T193-0	4400	2
	4400	4
00U211-0	4320	43
00U211-0	4320	50
	4330	44
	4340	43
	4340	50
	4370	43
	4370	47
	4380	43
	4380	47
	4410	43
	4410	50
	4420	36
00Z105-0	4400	18
00Z109-0	4390	18
00Z113-0	4300	18
	4310	18
	4330	18
	4350	18
	4360	18
	4420	18
00Z115-0	4320	18
	4340	18
	4370	18
	4380	18
	4410	18
02009712	4180	13
02011788	4190	1
02016775	4160	25
02018449	4210	6
02024669	4180	1
02024743	4180	12
	4210	-
02030556	4120	10
02030583	4130	2C
02030906	4160	2
	4180	-
02030907	4180	10
	4190	-
02030917	4120	2B
02031617	4110	2Ab
	4110	3Ab
02031630	4110	2E
	4110	3E
02031631	4110	3E
02031632	4110	2E
	4110	3E
02031633	4110	2E
	4110	3E
02031634	4110	2E
	4110	3E
02031635	4110	2E

PART NO.	FIG NO.	KEY NO.	PART NO.	FIG NO.	KEY NO.	PART NO.	FIG NO.	KEY NO.
02031635	4110	3E	02057201	4120	2A	03A627-0	4340	25
02031636	4110	2E	02057202	4120	2		4370	25
	4110	3E	02057262	4100	2		4380	25
02031637	4110	2E	02057263	4120	14		4410	25
	4110	3E	02075457	4110	3A	03A727-0	4320	27
02031863	4120	11	02077073	4110	3		4340	27
02031868	4100	5	02080908	4110	3Ab		4370	27
	4130	1	02086580	4110	8		4380	27
02031913	4110	2C	021-00046EF	5110	12		4410	27
02031914	4110	2C	022-00022E	5110	13	03A728-0	4320	29
02031915	4110	2C	023-00047E	5110	14		4340	29
02031945	4120	2I	02600502	4180	50		4370	29
02031946	4120	2J	02600655	4120	2An		4380	29
02031949	4110	2Ac		4120	2N		4410	29
	4110	3Ac	02600705	4120	2At	03A729-0	4320	28
02033027	4110	2Af	02601069	4110	25		4340	28
	4110	3Af	02601143	4110	27		4370	28
02036531	4130	1A	02601626	4110	3G		4380	28
02036540	4110	8	02601660	4110	4A		4410	28
02036543	4110	7	02601882	4130	2I	03B685-2	4330	2
02036858	4110	2Ac1	02602395	4110	3Ag		4330	4
	4110	3Ac1	0-35100-0300	1770	1		4420	2
02036865	4110	2B	0-35120-0230	1770	5		4420	4
02042247	4110	2Aa	0-35200-0440	1770	2	03B696-5	4300	29
	4110	3Aa	0-35300-0310	1770	3		4350	29
02043825	4110	2A	0-35411-0870	1770	4	03B700-5	4310	29
	4110	3A	0-35421-0170	1770	4-1	03B702-4	4300	25
02043832	4110	2	0-35700-0890	1770	7		4350	25
02045069	4110	2Ad	0-35710-1090	1770	7-1	03C271-2	2170	1
	4110	3Ad	0-35719-0200	1770	8	03C272-4	2170	2
02045070	4110	2Ad	0-35730-0510	1770	7-2	03C273-1	2170	6
	4110	3Ad	0-35761-0250	1770	7-12	04.27405-1506	012	20
02045071	4110	2Ad	0-35780-0750	1770	7-3		220	20
	4110	3Ad	0-35923-0130	1770	7-5	04A340-0	4320	22
02047182	4110	4	0-35923-0160	1770	1-2		4340	22
02047183	4110	5	0-35923-0200	1770	7-6		4370	22
02047356	4110	3B	0-35926-0070	1770	3-1		4380	22
02050516	4110	2D	0-35926-0090	1770	3-2	04A340-1	4410	22
02050517	4110	3D	0-35943-0140	1770	7-7	04A358-0	4320	13
02054462	4110	3	0-35943-0150	1770	7-8		4340	13
02054797	4120	2Ab	0-35943-0160	1770	7-9		4370	13
02054798	4120	2Ac	0-35943-0170	1770	7-10		4380	13
02054799	4120	2Aj	0-35951-0060	1770	3-4	04A358-1	4410	13
02054800	4120	2Ak	03A534-0	4390	37	04A359-0	4320	21
02054820	4130	2A	03A626-1	4320	24		4340	21
02057118	4100	6		4340	24		4370	21
	4130	2		4370	24		4380	21
02057192	4120	2Aa		4380	24		4410	21
02057199	4120	2Ae	03A626-3	4410	24	04B438-0	4300	13
02057200	4100	7	03A627-0	4320	25		4310	13

PART NO.	FIG NO.	KEY NO.
04B438-0	4330	13
	4350	13
	4360	13
04B438-1	4420	13
06.01013-9118	180	11
06.01013-9120	008	11
06.01013-9127	016	15
	260	15
06.01013-9128	016	14
	260	14
06.01013-9142	014	13
	240	13
06.01013-9215	008	18
	180	18
06.01013-9220	025	3
	350	3
06.01013-9221	002	24
	007	25
	016	5
	120	24
	170	25
	260	5
	290	28
06.01013-9226	014	9
	240	9
06.01015-9220	007	41
	170	41
06.01283-7112	007	23
	170	23
06.01283-7113	011	20
	210	20
06.01493-4315	009	19
	190	19
06.01493-4323	009	16
	190	16
06.01494-4406	005	34
	150	34
06.01494-4408	005	34
	150	34
06.01494-4410	029	13
	390	13
06.01494-4414	029	5
	029	7
	390	5
	390	7
06.01494-4416	029	15
	390	15
06.01733-4309	016	19
	260	19
06.01734-4411	005	32
06.01734-4411	150	32
06.01913-2914	013	15
	230	15
06.01913-3113	011	15
	017	22
	210	15
	270	22
06.01913-3114	011	24
	017	15
	210	24
	270	15
06.01913-3115	011	13
	021	10
	210	13
	310	10
06.01913-3120	010	20
	010	25
	200	20
	200	25
06.01913-3215	002	6
	120	6
06.01913-3217	005	31
	028	3
	150	31
	380	3
06.01913-3219	002	23
	025	2
	120	23
	350	2
06.01913-3234	013	17
	016	4
	230	17
	260	4
	290	27
06.01914-3119	007	35
	170	35
06.01914-3215	004	14
	005	39
	140	14
	150	39
06.01923-2910	020	9
	300	9
06.01923-2914	002	9
	120	9
06.01923-2917	002	10
	120	10
06.01923-3111	011	25
06.01923-3112	011	17
	210	17
06.01923-3113	006	9
06.01923-3113	011	9
	160	9
	210	9
06.01923-3114	017	19
	270	19
06.01923-3115	010	13
	200	13
06.01923-3122	010	12
	200	12
06.01923-3124	010	10
	011	6
	012	7
	012	16
	200	10
	210	6
	220	7
	220	16
06.01923-3215	017	34
	270	34
06.01923-3218	012	5
	012	23
	016	3
	220	5
	220	23
	260	3
06.01923-3228	020	3
	300	3
06.01924-3217	002	32
	120	32
06.01943-3317	002	4
	017	11
	120	4
	270	11
06.01943-3319	025	10
	028	9
	350	10
	380	9
06.01943-3320	002	5
	120	5
06.01943-3323	028	2
	380	2
06.01943-3332	014	7
	022	7
	240	7
	320	7
06.01943-7324	022	8
	320	8
06.01953-3318	024	6
	340	6
06.01953-3326	002	11

PART NO.	FIG NO.	KEY NO.
06.01953-3326	120	11
06.02074-0317	003	3
	130	3
06.02090-0512	010	5
	200	5
06.02090-0513	010	6
	012	26
	200	6
	220	26
06.02106-0622	004	35
	140	35
06.06175-8308	026	2
	360	2
06.06175-8309	026	2
	360	2
06.06226-0808	017	3
	270	3
06.08092-2403	001	17
	110	17
06.08092-2405	012	13
	220	13
06.11053-9217	008	16
	180	16
06.11063-8212	018	7
	280	7
06.11063-8214	006	12
	012	9
	160	12
	220	9
06.11063-8215	015	8
	016	6
	017	5
	017	9
	250	8
	260	6
	270	5
	270	9
06.11063-8217	003	5
	130	5
06.11063-9216	026	3
	360	3
06.11063-9217	025	9
	028	8
	029	4
	029	12
	350	9
	380	8
	390	4
	390	12
06.11250-4329	021	14
06.11250-4329	310	14
06.15010-2311	006	13
	007	24
	010	15
	011	7
	012	11
	016	17
	160	13
	170	24
	200	15
	210	7
	220	11
	260	17
06.15010-2312	010	8
	012	28
	015	9
	016	8
	200	8
	220	28
	250	9
	260	8
	290	30
06.15010-2313	009	18
	016	21
	017	12
	190	18
	260	21
	270	12
06.15091-0326	001	5
	110	5
06.16044-0208	001	27
	110	27
06.16050-0311	008	15
	180	15
06.16050-0316	021	15
	310	15
06.16731-2105	018	6
	280	6
06.16731-2107	006	14
	010	14
	012	10
	014	14
	016	16
	160	14
	200	14
	220	10
	240	14
	260	16
06.16731-2108	002	25
	007	26
06.16731-2108	007	42
	010	7
	012	27
	014	10
	016	7
	017	4
	017	8
	025	4
	120	25
	170	26
	170	42
	200	7
	220	27
	240	10
	260	7
	270	4
	270	8
	290	29
	350	4
06.16731-2109	009	17
	016	20
	026	4
	190	17
	260	20
	360	4
06.16731-2110	003	4
	004	20
	005	33
	005	35
	029	3
	029	6
	029	8
	029	11
	029	14
	029	16
	130	4
	140	20
	150	33
	150	35
	390	3
	390	6
	390	8
	390	11
	390	14
	390	16
06.22022-0907	005	29
	008	17
	150	29
	180	17
06.22022-0909	005	29

PART NO.	FIG NO.	KEY NO.
06.22022-0909	008	5
	150	29
	180	5
06.22022-0912	004	9
	140	9
06.22022-1010	004	18
	140	18
06.22022-1014	007	32
	170	32
06.22022-1112	022	2
	320	2
06.22230-1214	009	13
	190	13
06.29010-0120	007	19
	170	19
06.29010-0125	008	25
	180	25
06.29020-0127	004	32
	140	32
06.29020-0131	013	11
	230	11
06.29020-0132	008	23
	014	4
	180	23
	240	4
06.29141-0207	008	14
	180	14
06.29141-0215	020	2
	021	12
	300	2
	310	12
06.31420-0314	008	22
	180	22
06.31420-4513	013	8
	230	8
06.31641-0433	009	10
	009	15
	190	10
	190	15
06.32092-0307	021	3
	310	3
06.32092-0308	021	3
	310	3
06.56180-0712	002	39
	023	7
	030	19
	031	33
	120	39
	290	24
	330	7
06.56180-0712	400	19
	410	33
06.56180-0714	017	24
	020	6
	020	11
	270	24
	300	6
	300	11
06.56180-0716	024	5
	340	5
06.56190-0703	001	18
	110	18
06.56190-0704	001	29
	027	2
	110	29
	370	2
06.56190-0706	020	14
	023	3
	300	14
	330	3
06.56190-0709	001	14
	012	14
	110	14
	220	14
06.56190-0712	001	20
	110	20
06.56190-0718	001	16
	110	16
06.56190-0722	009	6
	190	6
06.56190-0726	001	22
	009	8
	110	22
	190	8
06.56190-0727	010	18
	200	18
06.56190-0728	009	12
	010	23
	012	32
	190	12
	200	23
	220	32
06.56190-0732	011	3
	210	3
06.56342-1208	012	41
	030	9
	031	20
	220	41
	400	9
	410	20
06.67020-0105	006	15
	160	15
06.67020-0106	017	26
	270	26
06.67020-0108	012	19
	012	21
	220	19
	220	21
06.67020-0109	012	30
	220	30
06.67020-0112	017	32
	270	32
06.78140-2408	010	17
	010	22
	200	17
	200	22
06.78144-2204	020	13
	023	2
	300	13
	330	2
06.78144-2403	017	23
	270	23
09062969	4170	1H
09080511	4130	2E
09083027	4120	2Ap
09083043	4130	2F
09083051	4120	2S
09083058	4110	4B
09083067	4110	4C
09083085	4130	1C
09083116	4120	1D
09083136	4120	42
09083142	4120	43
	4180	20
	4180	21
09083148	4180	22
09083256	4180	29
09083258	4120	2L
09083367	4110	2F
	4110	3F
09083369	4170	7
09083415	4110	20
09083416	4160	9
09083430	4110	22
09083716	4120	26
09083753	4130	2G
09083757	4120	2Ao
09083760	4130	2H
09084149	4120	2Ar
09084186	4120	44

PART NO.	FIG NO.	KEY NO.	PART NO.	FIG NO.	KEY NO.	PART NO.	FIG NO.	KEY NO.
09084542	4180	23	09432513	4120	2G	09831318	4180	28
09085577	4160	14	09432558	4120	15	09831319	4120	2As
09085709	4120	1C	09436378	4120	2Ad		4180	31
09086120	4120	1F	09436380	4120	2Ah	09831662	4110	21
09086730	4120	2Am	09440107	4110	9	09831663	4160	10
09086765	4200	5	09443868	4180	7	09831897	4170	1E
09086950	4130	1B	09444279	4210	2	09831898	4110	2Ac2
09087596	4200	6	09445016	4120	17		4110	3Ac2
09087781	4160	12	09445946	4180	6	09832084	4160	11
09087891	4180	27	09446625	4180	11	09832103	4210	11
09150108	4120	1B	09446862	4160	17	09921002	4190	3
09151103	4110	2H	09449344	4120	2D	09921004	4190	4
	4110	3H	09449944	4120	2C	09921021	4120	12
09151692	4120	1E	09603784	4160	1	09921170	4180	15
09151694	4110	24		4170	-	09921171	4180	14
09151810	4120	2O	09603785	4170	1	09921576	4170	1C
09152425	4120	2Al	09610429	4120	1	09921577	4170	1F
	4120	2R	09610948	4180	49	09921583	4170	1G
09152459	4120	1G		4200	-	09921597	4170	2
	4160	18	09650250	4120	2K	09921790	4170	1B
09152694	4180	26	09650251	4120	2M	09921975	4180	4
09153338	4120	2U	09650259	4120	2Ag	09921999	4180	5
09153364	4110	23	09650339	4200	4	1.110-00169	4261	26
	4120	2P	09650699	4180	2	1.114-00012	4261	7
09153816	4120	2Q	09650815	4170	6	1.120-00219	4391	24
09153930	4180	24	09651060	4180	3	1.121-00028	4261	20
09154687	4170	10	09651102	4120	2E	1.124-00060	4391	26
09154688	4170	11	09651108	4160	5	1.131-00023	4261	10
09156348	4100	7A	09651448	4120	1A	1.131-00027	4261	8
09156647	4120	37	09651472	4120	16	1.138-00004	4261	18
09156649	4180	25	09651499	4170	3	1.140-00165	4391	34
09156864	4180	32	09651562	4200	2	1.140-00238	4391	41
09156984	4180	30	09651586	4110	3C	1.160-00004	4261	17
09156989	4160	13	09651587	4110	3C	1.160-00007	4261	23
09157403	4110	28	09651588	4110	3C	1.161-00016	4261	25A
09157648	4110	2G	09651589	4110	3C	1.161-00017	4265	25B
09400263	4180	8	09651590	4110	3C	1.161-00018	1820	20C
09400264	4180	9	09651619	4200	3	1.161-00019	1820	21C
09409509	4130	2D	09651745	4190	2	1.161-00021	4260	25A
09418513	4110	2Ae	09651756	4200	1		4265	25A
	4110	3Ae	09651770	4210	5	1.162-00001	1600	1A
09420991	4120	2Ai	09651771	4210	1		1650	1Aa
09420992	4120	2F	09651772	4210	3	1.178-00004	4261	21
09425458	4120	13	09651774	4210	4	1.180-00657	4391	8
09426804	4130	2B	09831108	4110	2Ag	1.180-00658	4391	10
09430649	4120	2Af		4110	3Ag	1.181-00085A	4261	32
09430790	4170	1D		4170	1I	1.402-00001	4261	1
09430794	4170	1A	09831230	4190	11	1.409-00132	4391	17
09432302	4190	10	09831317	4130	2J	1.411-00003	4391	16
09432511	4120	2H	09831318	4120	2Aq	1.412-00017	4261	16

PART NO.	FIG NO.	KEY NO.
1.412-00131	4261	19
1.424-00015	4261	6
1.424-00035	4261	31
1.427-00014	4261	9
1.428-00153	4391	3
1.428-00235	4261	15
1.441-00171	4391	1
1.442-00005	4391	5
1-0330-16012	1770	4-4
1-0335-16002	1770	4-3
104-00047A	4151	25
104-00048	4151	18
104-00049A	4151	22
104-00050	4151	12
104-00051A	4151	9
105207-1520	020	1A
108-00019	2100	7
108-00019A	2100	7
	6800	7
108844	4140	464
	4140	468
108892	4140	469
109-00159	2100	9
	6800	9
109-00174	4151	8
110-00064	6340	1C
110-00080	4391	6
110-00152	6330	1C
110-00158	6330	2C
110-00168	4391	2
	4391	4
110-00179	6340	1D
110-00186	3110	1B
	6300	1B
	6310	1B
	6320	1B
	6330	1B
	6340	1B
	6760	1B
110-00187	3110	1D
	6300	1D
	6310	1D
	6320	1D
110-00189	3110	2B
	6300	2B
	6310	2B
	6320	2B
110-00192	3100	1B
	6270	1B
	6280	1B
110-00192	6290	1B
	6750	1B
110-00205	3110	1C
	6300	1C
	6310	1C
	6320	1C
	6760	1C
110-00206	6330	1D
110-00219	4151	13
110-00230	1510	94
113350	4140	118
113353	4140	123
113354C	4140	124
113360	4140	304
113360A	4140	304
113363	4140	702
113365	4140	743
113372	4140	106
113374B	4140	113
113375A	4140	116
113376	4140	117
114-00048A	2100	45
	6800	45
114-00049	2100	11
	6800	11
114-00055	1100	4
	1110	2
114-00379	6330	31
114-00379A	6330	31
114-00425	1200	23
	1220	27
114-00443	3110	31
	6300	31
	6310	31
	6320	31
114-00443A	3110	31
	6300	31
	6310	31
	6320	31
	6760	31
114-00456	1260	45
	1270	45
	1300	45
114-00522	1200	9
	1220	3
114-00523	1200	10
	1220	4
114-00527	4151	21
114-00529	1610	38
114-00548	4151	17
115-00063	4391	7
115-00071	4391	9
115-00072	4391	11
115-00073	4391	12
115-00079	4391	19
115-00080	4391	20
116635A	4140	111
119-00014D1	1200	14
120-00040	2100	10
120-00040A	2100	10
	6800	10
120-00041	2100	44
120-00041A	2100	44
	6800	44
120-00046	1100	5
120-00046A	1100	5
120-00144	4150	34
	4151	33
120-00159	4391	38
120-00223	3110	32
	6300	32
	6310	32
	6320	32
	6330	32
	6760	32
120-00226	1510	81
120-00251	1150	20C
120-00258A	1240	39
120-00269A	1240	38
120-00271	1100	3
120-00271A	1100	3
120-00274	1430	31
120-00276	1140	51
	1150	51
	1190	33
	1200	33
	1320	23
	1330	16
	1350	16
	1360	16
	1380	45
	1390	45
	1400	45
	1800	31
	1810	31
	1820	42
	1840	42
	3200	16
	6100	10
	6590	16

PART NO.	FIG NO.	KEY NO.
120-00276	6591	16
	6600	16
	6610	16
	6740	13
	6780	6
120-00280	1590	14
120-00284	1110	3
120-00284A	1110	3
120-00302	1150	20C
120-00302A	1150	20C
121-00006	1210	9
	3200	10
	6590	10
	6591	10
	6600	10
	6610	10
121-00010D1	1360	21
	1370	21
	3210	14
	6620	14
	6630	14
	6640	14
121-00010D3	1210	1K
121-00041	1175	6
121-00045	4391	23
121-00066	1120	38
121-00078	1175	7
123-00018	3110	6
	6300	6
	6310	6
	6320	6
	6330	6
	6340	6
123-00020A	3100	2
	6270	2
	6280	2
	6290	2
	6750	2
123-00022	3100	4
	6270	4
	6280	4
	6290	4
	6750	4
123-00435A	4151	23
123-00437A	4151	14
123-00456A	1420	30-4
124-00010	1550	8-34
124-00052	4391	27
	4391	31
124-00060	4391	45
124-00066	4391	30
124-00070	1640	21
124-00137	1160	6
124-00170	3230	11
	6670	11
	6680	11
	6690	11
124-00187A	1360	8
124-00199D4	3200	14
	6590	14
	6591	14
	6600	14
	6610	14
	6780	14
124-00199D5	3210	13
	6591	12
	6620	13
	6630	13
	6640	13
124-00205A	3180	18
	3220	18
	6510	18
	6511	18
	6520	15
	6530	15
	6650	18
	6651	18
	6660	18
124-00208D2	1140	52
	1800	26
	1810	26
124-00208D3	1690	41
	1730	46
	1800	27
	1810	27
	1820	39
	1840	39
124-00208D4	1330	90
	1360	90
	1730	47
	1800	28
	1810	28
124-00208D5	1690	42
	1730	48
	6100	16
124-00208D6	1690	43
	1730	49
124-00208D7	1190	32
	1330	95
	1820	40
124-00209D1	1190	34
	1350	50
	1810	30
	6740	12
124-00209D2	1330	89
124-00209D3	1400	46
124-00209D4	1330	10
	1360	10
	1400	24
124-00210A	1260	50
	1270	50
124-00216	1590	30
124-00217	1590	31
124-00219	3180	26
	3220	17
	6510	26
	6511	26
	6520	16
	6530	16
	6650	17
	6660	17
124-00226A	1380	23
	1390	23
124-00246	1590	27
124-00247	1300	44
124-00291	6511	25
	6651	17
124-00295	6511	26
124-00315	6511	10
	6651	4
125-00021	1420	30-9
125-00031A	1510	2-5
125-00034	1570	3BA
	1590	6BA
125-00035	1570	3CA
	1580	5BA
125-00043	1510	2-12
125-00045	1600	2
125-00082	1570	3BA
	1590	6BA
125-00082A	1570	3BA
	1590	6BA
125-00083	1570	3CA
	1580	5BA
125-00083A	1570	3CA
	1580	5BA
125-00084	1600	2
125812	4140	742
129-00144	6210	7C
129-00146A	1510	2-17

PART NO.	FIG NO.	KEY NO.	PART NO.	FIG NO.	KEY NO.	PART NO.	FIG NO.	KEY NO.
129-00147	2120	4	140-00790	6580	20	140-01247	6520	7
131424-4420	020	1D	140-00855B	6510	6		6530	7
132528A	4140	101		6520	5	140-01248	6520	8
133-00130A	1420	30-2		6530	5		6530	8
133-00130B	1420	30-2	140-00856B	6510	7	140-01249	6520	9
133-00155A	1500	19	140-00857A	6510	8	140-01249A	6520	9
	6710	19	140-00858A	6510	9	140-01250	6520	10
133-00156A	1500	20	140-00859	3180	10	140-01251	6520	11
	6710	20		6510	10	140-01253	6660	1
133-00161	1830	31M		6520	12	140-01254	6660	2
133-00163C	1420	30		6530	13	140-01255	6660	21
133-00163E	1420	30	140-00860	3180	11	140-01256	6660	22
133-00163G	1420	30		6510	11	140-01265	6530	9
133-00163H	1420	30		6520	13	140-01266	6530	10
133-00166	1320	25		6530	14	140-01267	6530	11
133-00167	6210	7B	140-00864B	6510	5	140-01267A	6530	11
133-00168	1510	2-16	140-00865	1220	16	140-01271	6530	25
1-33923-0790	1770	1-1	140-00866A	1230	1	140-01297	3180	6
1-33926-0730	1770	3-3	140-00867	1240	2	140-01298	3180	4
1-33931-0021	1770	7-14	140-00868	1240	3	140-01374A	4151	32
1-33953-0150	1770	7-11	140-00869A	1240	4	140-01378	6520	24
134110-9420	020	1B	140-00870A	1240	5	140-01379	6520	25
134151-8820	020	1C	140-00870B	1240	5	140-01380	6530	30
134635	4140	301	140-00875	1670	1	140-01381	6530	25
134635B	4140	301	140-00876	1670	2	140-01574	6511	4
135306	4140	131	140-00878	1260	4	140-01574A	6511	4
135308	4140	303	140-00879A	1260	5		6755	4
135309	4140	351	140-00880	1270	6	140-01575	6511	5
13F51000	1130	2A	140-00881	1270	7	140-01575A	6511	5
13F52000	1130	2B	140-00885B	6510	4	140-01576	6511	6
13F52000A	1130	2B		6520	6	140-01576A	6511	6
13F53000	1130	2C		6530	6		6755	6
13F54000	1130	2D	140-00889A	1240	50	140-01577	6511	7
13F55000	1130	2E	140-00892	1160	1	140-01577A	6511	7
13F56000	1130	2F	140-00893A	1160	2	140-01578	6511	8
13F57000	1130	2G	140-01169	1310	1	140-01578A	6511	8
13F58000	1130	2H	140-01171	6650	1	140-01579	6511	9
140-00010	6680	4	140-01172	6650	2	140-01579A	6511	9
140-00040	3230	4	140-01173	3220	3	140-01579B	6511	9
140-00106	6570	2		6650	3	140-01580	6651	1
	6580	2		6660	3	140-01580A	6651	1
140-00106A	6570	2	140-01174	3220	4	140-01581	6651	2
	6580	2		6650	4	140-01581A	6651	2
140-00165	4350	33		6660	4	140-01582	6651	3
140-00166	4360	33	140-01225	3180	5	140-01582A	6651	3
140-00445	6670	4	140-01226	3180	7	142-00052	1420	27
140-00446	6690	4	140-01227A	3180	8	142-00067	1510	106
140-00446A	6690	4	140-01228A	3180	9	142-00093	6180	-
140-00447	6690	17	140-01229	3220	1	142-00094	6180	1
140-00447A	6690	17	140-01230	3220	2	145-00048A	1120	6

PART NO.	FIG NO.	KEY NO.
145-00049A	1120	10
145-00052	1590	26
145-00067	1590	10
145-00067A	1590	10
145-00069	1600	22
150-00011	1320	6
156717	1460	14
156737	1460	13
156738	1460	20
157230	1460	11
158116	1460	10
159-00114	1420	28
159-00195	1700	1A
159-00223A	1420	30-1
159-00223B	1420	30-1
159-00223C	1420	30-1
160-00020	1210	7
	1670	9
	3110	33
	3200	18
	6300	33
	6310	33
	6320	33
	6330	33
	6340	35
	6590	18
	6591	11
	6600	18
	6610	18
	6760	33
	6780	8
	6781	8
160-00027	1210	13
160-00030	1420	40
	1430	40
	1500	43
	6710	43
160-00032	6120	19
160-00035	1500	35
	6710	35
160-00038	1510	105
160-00039	1100	32
160-00040	1320	26
160-00045	6210	7F
	6210	12
160-00050	1610	39
160-00083	1530	124
160-00084	1520	122
161-00077	1500	28
	6710	28
161-00102	6570	17
	6580	19
161-00171	4261	11
161-00195	1420	36
161-00280	3180	19
	3220	19
	6510	19
	6511	19
	6520	18
	6530	18
	6650	19
	6651	19
	6660	19
	6755	15
161-00297	1420	30-5
161-00308A	1640	10
161-00317	1520	39
161-00318	1520	40
161-00319	1520	41
161-00320	1570	3J
	1580	5J
161-00323	1540	55
161-00326	1540	23B
161-00329	1500	39
	6710	39
161-00330	1500	40
	6710	40
161-00331	1500	41
	6710	41
161-00335	1500	42
	6710	42
161-00338	1640	-
161-00339A	1640	1
161-00340	1640	2
161-00341A	1640	3
161-00342	1640	8
161-00343	1640	9
161-00344	1640	4
161-00345	1640	11
161-00349A	1640	16
161-00350A	1640	22
161-00351	1640	23
161-00356	1640	12
161-00357	1640	13
161-00381	1500	36
	6710	36
161-00382	1500	21
	6710	21
161-00383	1490	9
161-00386	6210	5
161-00395	1510	2-3
	1510	2-6
	1510	2-7
	1510	2-8
161-00404	6110	25
161-00427A	1470	30
161-00428A	1550	8-12
161-00429A	1530	53
161-00430A	1520	54
161-00435	1660	-
161-00437A	1660	1
161-00441B	1660	4
161-00448	6210	1
161-00449	1530	109
161-00461A	1520	110
161-00468	1480	30
161-00469	1480	31
161-00486	1540	115
161-00495	1470	34
161-00524	1420	34
161-00548	1120	34
161-00551	1120	33
161392	1460	19
161395	1460	4
161796	1460	18
162-00025A	1510	15
162-00026	1540	17
162-00027	1510	104
	1510	104
162-00030	1510	120
162-00031	1510	121
162035	1460	12
162047	1460	17
162056	1460	8
162665	1460	22
162666	1460	21
163369	1460	16
170-00004	1170	11
172-00027A	1520	18
172-00043	1520	19
172-00212	1550	8-15
172-00215	1480	21
172-00320	1710	26A
172-00320A	1710	26A
172526	1460	19
172561	1460	9
179981	1460	7
180-00077D5	6340	24
180-00077D6	6330	24
180-00077D9	3110	24

PART NO.	FIG NO.	KEY NO.
180-00077D9	6300	24
	6310	24
	6320	24
	6760	24
180-00200	1220	21A
180-00268	4391	22
180-00270	4391	14
180-00271	4391	18
180-00297D2	2100	9A
	6800	9A
181-00008	3210	17
	6620	17
	6630	17
	6640	17
181-00020	3210	20
	6620	20
	6630	20
	6640	20
181-00078D1	1360	28
	1370	28
181-00078D5	3210	15
	6620	15
	6630	15
	6640	15
181-00086D2	1360	41
	1370	41
181-00103	1210	8
	3200	9
	6590	9
	6591	9
	6600	9
	6610	9
181-00525	3200	11
	6590	11
	6600	11
	6610	11
181-00716	1330	93
181-00717	1210	1L
182-00111	3200	1
	6590	1
	6600	1
	6610	1
182-00112	3200	2
	6590	2
	6600	2
	6610	2
183708	1460	3
183709	1460	5
184-00085	5100	4
184-00120	5100	4
185-00167D3	6100	11
185-00249	1170	9
185-00250A	1170	7
185-00251A	1170	5
185-00254	1120	19
185-00263	1160	3
185-00276A	1820	21
185-00294	1820	20
185-00298	1140	12
185-00320	1140	14
185183	1460	2
185184	1460	1
185193	1460	15
186-00017	1200	7
186-00017A	1200	7
188-00014A	1200	12
188-00018	1200	12
190-00003	6170	12
190-00090	5120	2
190-00092	5120	7
190-00093	5120	19
190-00094	5120	34
190-00095	5120	11
190-00096	5120	18
190-00097	5120	29
190-00098	5120	20
190-00099	5120	14
190-00100	5120	28
190-00101	5120	12
190-00102	5120	24
190-00122	5120	21
	5130	21
190-00315	5120	23
190-00509AD20	5120	39
190-00519	6100	15
190-00521	5120	13
190-00522	5120	35
	5130	35
190-00522A	5120	35
	5130	35
190-00557	5120	36
190-00647	5120	30
	5130	30
190-00648A	5120	37
	5130	37
190-00652	5120	33
	5130	33
190-00671	5120	5
190-00674D1	6130	2
190-00688	5130	7
190-00689	5130	18
190-00690	5130	19
190-00691	5130	17
190-00691A	5130	17
190-00692	5130	29
190-00693	5130	34
190-00694	5130	11
190-00695	5130	20
190-00703	5130	14
190-00730D19	5120	38
190-00730D20	5120	38
190-00799	5130	5
190-00799A	5130	5
190-00829	5120	3
	5130	3
190-00831A	5120	-
190-00851	5120	3
	5130	3
190-00856	5120	4
	5130	4
190-00872	5120	44
	5130	41
190-00873	5120	45
	5130	42
190-00909	5120	42
	5130	39
190-00909A	5130	39
190-00913A	5130	-
190-01059D20	5120	38
190-01268	5120	43
	5130	40
190-01269	5120	46
	5130	43
191722	1460	22
191723	1460	21
193-00642A	1170	6
193-00643A	1170	8
194-00024	1440	4
195-00163	3210	11
	6620	11
	6630	11
	6640	11
195-00329	3210	9
	6620	9
	6630	9
	6640	9
195-00335	3210	8
	6620	8
	6630	8
	6640	8

PART NO.	FIG NO.	KEY NO.	PART NO.	FIG NO.	KEY NO.	PART NO.	FIG NO.	KEY NO.
195-00692	1660	2	195-01710K	1420	-	201-00084	1130	-
195-01457B	1560	6	195-01730A	1420	13	201-00084B	1140	-
195-01461B	1560	4	195-01736	6210	4		1150	-
195-01469A	1360	5	195-01746	1470	26	201-00087	1160	-
195-01503B	1320	12	195-01765B	1430	46	201-00099	1320	-
195-01543	1820	10		1500	44	201630	4140	471
195-01549A	1510	80		6710	44	201689	4140	485
195-01553E	1570	3A	195-01782A	1480	26		4140	487
195-01564B	1580	5A	195-01784A	1500	11	201727	4140	488
195-01568	1560	-	195-01784B	6710	11	202-00075B	1120	2
195-01574B	1150	20B	195-01784C	1500	11		1130	2
195-01576A	1240	37	195-01804	6110	13	202-00075C	1120	2
195-01578C	1560	1	195-01805	6110	21		1130	2
195-01579E	1560	2	195-01843	6200	2	202-00075E	1120	2
195-01580C	1560	3	195-01847	1470	10		1130	2
195-01583B	1350	7	195-01876	1600	11	202558	4140	437
195-01584A	1120	29	195-01917A	1310	9	202599	4140	433
195-01585B	1120	30	195-01918A	1310	10	202608	4140	432
195-01599	1260	49	195-01919	1310	11	203-00050B	1150	20A
	1270	49	195-01920	3220	20	203-00050C	1150	20A
195-01601	1330	6		6650	20	203-00050E	1150	20A
195-01615A	1240	36		6651	20	203-00051B	1150	20
195-01616A	1430	5		6660	20	203-00087	1150	20
195-01617B	1420	6	195-01922	1320	1	203-00087A	1150	20
195-01620	1160	4	195-01923A	1320	10	203-00087B	1150	20
195-01621B	1160	5	195-01937	6210	7A	203-00087C	1150	20
195-01628	6100	2	195-01940	6210	7	204-00026	1170	4
195-01630	6100	12	195-01964	3210	7	204-00036	1170	-
195-01639	1240	51		6620	7	206699	4140	993
195-01640C	1470	25		6630	7	208276	4140	994
195-01643A	1560	5		6640	7	21001-00036	4250	55
195-01648	1100	9	195-01999	1350	92	21001-00182	4240	79
195-01683A	1500	18	195-02099	1510	116	21001-00213	4240	26
	6710	18	195-02111	2120	2	21001-00977	4230	83
195-01684A	1500	17	195-02192A	1150	47	21001-01267	4250	57
	6710	17	195-02409	1150	20B	21001-90227	4250	54
195-01692	6120	20	195-02409A	1150	20B	21003-00382	4230	60
195-01693	6110	8	195-03421	6740	11		4240	60
195-01694	6120	12	195-03421A	6740	11	21003-00383	4240	59
195-01710E	1420	-	198-00007	1175	8	21003-00384	4230	61
	1430	-	198-00016	1330	22		4240	61
	1440	-		1400	49		4250	61
195-01710G	1420	-	198-00034	1530	9	21003-00385	4240	62
	1430	-	198-00036A	1510	120		4250	62
	1440	-	198-00044	1530	162	21011-30644	4250	53
195-01710H	1420	-	199-00102	5100	-	2104-1013A	4150	9
	1430	-	199-00126	5100	1-45	2104-1019B	4150	25
	1440	-	200741	4140	401	2104-1020C	4150	22
195-01710J	1430	-	201-00083	1120	1	2104-1021B	4150	18
	1440	-	201-00084	1120	-	2104-1022B	4150	12

PART NO.	FIG NO.	KEY NO.
2106-1019D12	5110	8
2106-1019D2	1820	9
	5110	9
2109-1050	4150	8
	4151	8
2109-9033	4150	4
	4151	4
2110-1184D29	1420	30-11
2110-1184D37	1420	6-12
2110-1228B	6340	2B
2110-1243B	3110	2B
	6300	2B
	6310	2B
	6320	2B
	6760	2C
2110-1252A	3110	1D
	6300	1D
	6310	1D
	6320	1D
	6760	1D
2110-1347	1510	2-11
	1530	86
2110-1349	1530	87
	1680	8
2110-1360A	6340	2C
2110-1371A	4150	13
2110-1376A	6330	2B
2110-1413	3120	1-1B
	3130	1-1B
	3140	1-1B
	3150	1-1B
	3160	1-1B
	3170	1-1B
	6350	1-1B
	6360	1-1B
	6370	1-1B
	6380	1-1B
	6390	1-1B
	6400	1-1B
2110-1442	3110	2C
	6300	2C
	6310	2C
	6320	2C
	6760	2B
2110-4037	6730	10
2110-6044	2130	7
2110-6045	2130	9
2110-6058A	2110	4
2110-6065B	2150	1G
	6810	1G
2110-6066A	2150	1H
	6810	1H
2110-6070	2140	4
2110-6079	6240	1-1C
	6250	1-1C
	6260	1-1C
	6811	1C
2110-6080	6240	1-1D
	6250	1-1D
	6260	1-1D
	6811	1D
21111-30702	4240	21
21111-55956	4240	27
21111-56512	4240	29
	4250	29
21111-70328	4250	37
21111-71543	4250	38
21111-72222	4250	39
2112-6006	2130	14
2112-6010A	2110	3
2112-6013	2140	3
2114-1058D1	1150	20F
2114-1058D10	1330	18
	1400	50
	1570	3M
	1580	5M
2114-1058D2	1490	6
2114-1058D29	1590	6J
	1640	24
	1820	34
2114-1058D30	1570	3F
	1580	5F
2114-1058D39	6170	13
	6820	5
2114-1058D45	1510	99
	1540	99
	1550	1-26
	1550	14
2114-1058D46	1240	41
	1440	44
2114-1058D52	1510	70
	1530	70
2114-1058D54	1470	31
	1760	47
2114-1058D56	1600	37
2114-1058D64	1520	112
2114-1058D72	6820	1-11
2114-1059D100	6340	26
2114-1059D113	6330	14
2114-1059D114	6330	15
2114-1059D118	6330	30
	6340	30
2114-1059D122	6340	28
2114-1059D175	6340	27
2114-1059D192	3100	15
	6270	15
	6280	15
	6290	15
	6750	15
2114-1059D193	3100	14
	6270	14
	6280	14
	6290	14
	6750	14
2114-1059D202	3100	19
	3110	27
	6270	19
	6280	19
	6290	19
	6300	27
	6310	27
	6320	27
	6750	19
	6760	27
2114-1059D203	3100	18
	3110	28
	6270	18
	6280	18
	6290	18
	6300	28
	6310	28
	6320	28
	6750	18
	6760	28
2114-1059D219	6330	25
2114-1059D223	3100	17
	6270	17
	6280	6
	6290	6
	6750	17
2114-1059D234	6330	26
2114-1059D261	3100	28
	6270	28
	6280	32
	6290	32
	6750	28
2114-1059D262	3100	29
	6270	29
	6280	33
	6290	33

PART NO.	FIG NO.	KEY NO.
2114-1059D262	6750	29
2114-1059D31	1420	21
2114-1059D37	1420	30-6
2114-1059D42	3100	13
	3110	26
	6270	13
	6280	13
	6290	13
	6300	26
	6310	26
	6320	26
	6330	28
	6340	32
	6750	13
	6760	26
2114-1059D43	3100	12
	3110	25
	6270	12
	6280	12
	6290	12
	6300	25
	6310	25
	6320	25
	6330	27
	6340	31
	6750	12
	6760	25
2114-1059D50	3100	16
	6270	16
	6280	16
	6290	16
	6750	16
2114-1059D63	6330	29
	6340	29
2114-1059D72	3110	15
	6300	15
	6310	30
	6320	15
	6760	30
2114-1059D73	3110	14
	6300	14
	6310	29
	6320	14
	6760	29
2114-1059D98	6340	25
2114-1154	1560	12
	1590	29
	1600	29
	1620	10
	1620	10
2114-1154	6790	10
	6790	10
2114-1180D15	3210	55
	6620	55
	6630	55
	6640	55
2114-1180D20	3210	10
	6620	10
	6630	10
	6640	10
2114-1683	6100	14
2114-1727B	1590	6G
2114-1831	3120	6
	3130	6
	3140	6
	3150	6
	3160	6
	3170	6
	6350	6
	6360	6
	6370	6
	6380	6
	6390	6
	6400	6
	6410	9
	6420	9
	6430	9
	6440	9
	6450	9
	6460	9
	6470	9
2114-1831A	1100	7
	2100	40
	6420	9
	6800	40
2114-1848A	6410	4
2114-1849A	6420	4
2114-1855	1510	78
2114-1856	1550	83
2114-1898D1	1490	8
	1500	1-5
	1500	30
	1520	97
	1680	12
	1740	57
	6110	11
	6210	6
	6710	30
2114-1898D14	6210	7D
	6210	9
2114-1898D16	1420	50
	1520	102B
2114-1898D2	1420	23
	1420	23
	1430	23
	1440	23
	1470	21
	1480	23
	1510	2-20
	1510	98
	1520	98
	1550	8-32
	6200	10
2114-1898D3	1420	15
	1420	30-15
	1430	15
	1440	15
	1500	34
	1510	2-15
	1680	9
	6190	3
	6710	34
2114-1898D4	1420	16
	1420	30-18
	1430	16
	1440	16
2114-1898D5	1470	23
	1480	24
2114-1898D8	1420	51
	6110	16
	6120	16
2114-1901A	4150	11
	4151	11
2114-1902	4150	17
2114-1914A	4150	26
	4151	26
2114-1925	1150	46
2114-1929	1120	36
2114-1931	3120	1-4
	3140	1-4
	3160	1-4
	6350	1-4
	6370	1-4
	6390	1-4
	6430	4
	6440	4
	6450	4
	6460	4
	6470	4
	6480	4

PART NO.	FIG NO.	KEY NO.
2114-1931	6720	4
	6770	1D
	6771	4
2114-1997A	6340	33
2114-1997B	6340	33
2114-1998A	6340	34
2114-1998B	6340	34
2114-2031D3	1510	2-14
2114-2031D4	1420	42
	1430	42
	1440	42
	6200	9
2114-2031D5	1500	1-4
	1740	58
2114-4129	1420	20
2114-6024	2130	1
2114-6025	2130	13
2114-6048	6240	1-1G
	6250	1-1G
	6260	1-1G
	6811	1G
2114-9012	1260	61
2114-9012A	1120	5
	1210	4
	2100	21
	6800	21
2115-6003	2130	12
2116-1060D5	3100	21
	3110	16
	6270	21
	6280	21
	6290	21
	6300	16
	6310	16
	6320	16
	6330	16
	6750	21
	6760	16
2116-1060D6	6340	16
2116-1472A	6280	30
	6290	30
2116-1520	1480	6
2116-1522	1570	3R
	1580	5R
2116-1548	3100	8
	6270	8
	6280	8
	6290	8
	6750	8
2116-6006	1550	8-3C
2116-6007	1550	8-3D
2116-9003	5120	16
	5130	16
2119-1007	1220	20
2119-1063A	1210	1I
2119-1065	4150	30
	4151	30
21191-19403	4250	33
211949A	4140	114
211952	4140	491
211953A	4140	712
212008	4140	706
212009	4140	472
212010	4140	707
2120-1036D12	1750	3
2120-1354	1750	11
212014	4140	438
2120-2150D1	1520	84
	1550	84
2120-2150D3	1550	8-16
2120-2166D1	1520	21
2120-2166D10	1470	17
	1480	27
	6190	2
2120-2166D14	1520	111
2120-2166D18	1420	30-17
2120-2166D19	1420	30-14
	1500	38
	6710	38
2120-2166D2	1490	7
	1500	5
	1520	100
	1740	56
	6110	9
	6710	5
2120-2166D24	1470	32
2120-2166D3	1500	8
	6710	8
2120-2166D36	1420	45
	1430	45
	1480	32
	1510	2-13
2120-2166D4	1500	1-3
	1510	36
	1540	36
	1680	11
2120-2166D40	1520	102C
2120-2166D41	1220	29
2120-2166D46	1440	37
2120-2166D5	1420	22
	1440	22
	1470	27
	1480	14
	1510	33
	1520	33
	1550	8-26
	6200	8
	6210	8
2120-2166D6	1420	14
	1470	22
	1480	15
	1500	33
	1680	7
	6710	33
2120-2166D7	1440	39
2120-2166D8	1420	17
	1430	17
	6200	4
2120-2174	1470	19
	1540	23K
	1540	101
2120-2187	1800	23
	1810	23
	1820	43
	6100	17
2120-2196D1	1140	53
	1660	3
2120-2196D10	1240	44
	1360	17
	1620	9
	2100	30
	6100	3
	6800	30
2120-2196D11	1260	53
	1270	53
	1310	20
	1590	13
2120-2196D14	1620	9
	1620	9
	6790	9
	6790	9
2120-2196D2	1160	7
	1170	3
2120-2196D4	1350	15
2120-2196D5	1590	33
	1590	33
2120-2196D6	1560	9
	1630	14
2120-2196D7	6170	9

PART NO.	FIG NO.	KEY NO.
2120-2196D7	6820	8
2120-2196D8	1100	19
	1320	13
	1350	91
2120-2196D9	1170	18
	1560	10
	1570	12
	1580	12
	1590	12
	1600	12
	1610	12
2120-2231	1320	2
2120-4006	1210	1D
2120-6025	2150	2
	6810	2
2120-6030	6240	1-3
	6250	1-3
	6260	1-3
	6811	2
2120-9013	6740	6
2121-1304	1480	13
2121-1305	1800	25
	1810	25
2121-1311D2	1420	26
	1420	26
	1440	26
2121-1311D4	1420	50
2121-1311D5	1520	102D
2121-6027	2150	3
	6810	3
2121-6035A	2120	6
2121-6037	6240	1-4
	6250	1-4
	6260	1-4
	6811	3
2121-9007	1490	5
2122-1002D2	5120	6
	5130	6
	6170	10
2122-1002D4	5120	41
	5130	38
2123-1057D47	1600	21
2123-1107D4	1100	8
2123-1441D7	6820	1-7
2123-1690D5	1650	1G
2123-1915A	6280	31
	6290	31
2123-1916A	1210	5
2123-2046G	3100	5
	6270	5
2123-2046G	6280	5
	6290	5
2123-2048A	3100	3
	6270	3
	6280	3
	6290	3
	6750	3
2123-2048C	3100	3
	6270	3
	6280	3
	6290	3
	6750	3
2123-2049A	3100	6
	6270	6
	6280	28
	6290	28
2123-2051A	3110	8
	6300	8
	6310	8
	6320	8
	6760	8
2123-2182C	6340	7
2123-2191B	6340	8
2123-2192C	6340	9
2123-2193B	6340	10
2123-2215C	6330	7
2123-2222B	6330	8
2123-2223C	6330	9
2123-2224B	6330	10
2123-2239A	1550	8-28
2123-2240	1420	18
2123-2247	1550	8-4
2123-2322B	4150	14
2123-2327A	4150	23
2123-2477A	3110	9
	6300	9
	6310	9
	6320	9
	6760	9
2123-2478	3110	10
	6300	10
	6310	10
	6320	10
	6760	10
2123-2482	3110	7
	6300	7
	6310	7
	6320	7
2123-6070	2110	5
2123-6079A	2150	1E
	6810	1E
2123-6080	2150	1F
	6810	1F
2123-6081	2150	1J
	6810	1J
2123-6085	2140	5
2123-6105	6240	1-1E
	6250	1-1E
	6260	1-1E
	6811	1E
2123-6106	6240	1-1F
	6250	1-1F
	6260	1-1F
	6811	1F
2123-6119	1550	8-3B
2124-1026D3	1310	12
2124-1027D19	1670	5
2124-1084D1	2160	22
2124-1084D2	3210	12
	6620	12
	6630	12
	6640	12
2124-1084D3	1210	12
2124-1340D19	1270	54
2124-1353D1	6780	5
2124-1353D18	1820	46
2124-1353D2	3200	15
	6590	15
	6591	15
	6600	15
	6610	15
2124-1353D3	1800	35
2124-1353D4	1820	41
2124-1509D1	1320	28
	1800	29
	1810	29
2124-1509D10	1320	24
2124-1509D2	1190	21
2124-1552A	1170	2
2124-1586A	6570	18
	6580	18
2124-1591A	1150	25
2124-1607	1520	52
	1530	52
	1550	8-13
2124-1622D1	1810	32
	5120	40
2124-1622D2	1810	33
	1850	3

PART NO.	FIG NO.	KEY NO.
2124-1622D3	1810	34
	1820	45
2124-1689A	1550	8-33
2124-1690	1140	9
2124-1693	3230	14
	6670	14
	6680	14
	6690	14
2125-1095A	1480	19
2125-9036	1550	8-14
2125-9055	1520	32
2125-9056	1510	37
2125-9057	1540	23C
	6200	3
2126-9001	1210	1F
2127-1002A	1520	34
212881	4140	451
2129-1008	1220	15
2129-1393	1220	7
2129-1432	1420	30-7
2129-1446	1520	27
213-00022	1420	30-3
213-00025	1470	3
213-00026	1470	4
2132-1132A	1420	30-13
2132-1133B	1500	26
	6710	26
2132-1134B	1500	27
	6710	27
2133-2014	1520	28
2136-1431	1550	8-20
2136-1433	1220	14
2138-9006B	1320	11
2139-6055D15	1320	27
2140-1217A	6530	12
2140-1338	1510	69
	1520	69
	1530	69
2140-1406	4150	29
	4151	29
2142-1122A	1540	74
2142-1123	6170	8
2142-1123A	6170	8
2142-9005	1550	82
214337A	4140	355
2145-1237	1570	3D
	1580	5D
2145-1243	1590	6C
2150-1132A	1550	8-29
2150-1133	1520	63
2154-1033	1510	3
2155-1299B	6340	3
2155-1300B	6340	4
2155-1310B	6330	3
2155-1311B	6330	4
2155-1327H	6330	2
2155-1335G	6340	2
2155-1373E	3110	2
	6300	2
	6310	2
	6320	2
2155-1373G	3110	2
	6300	2
	6310	2
	6320	2
2155-1373H	3110	2
	6300	2
	6310	2
	6320	2
2155-4023B	3110	3
	6300	3
	6310	3
	6320	3
	6760	3
2155-4024B	3110	4
	6300	4
	6310	4
	6320	4
	6760	4
2158-1021	1420	11
	1430	11
2160-1004D34	1100	30
2160-1004D41	1100	27
2160-1004D42	1100	29
2160-1004D48	1500	10
	6710	10
2160-1023	1510	104
2160-1026	1510	103
2160-1201D25	1100	28
2160-1201D9	1100	31
2160-1212	1790	7
2160-1213	1790	8
2160-1307	1510	2-18
2160-1308	1500	9
	6710	9
2160-1310	1510	96
	1530	96
2160-1329	1480	28
2160-1336	6100	11C
2160-4023	2160	5
2160-9033	1100	18
2160-9034	1100	26
2161-2069	1510	2-9
2161-2207	1510	71
2161-2208	1510	68
2161-2209	1510	73
2161-2210	1510	72
2161-2211	1510	64
2161-2212	1510	85
2161-2216	1490	1
2161-2226	1550	66
	1570	3N
	1580	5N
	6170	15
2161-2227	1550	8-22
	1550	113
2161-2229	1550	8-6
2161-2235	1490	2
2161-2254	6200	11
2161-2289	1480	22
	1510	117
2161-2289A	1510	117
2161-2317	1500	31
	6710	31
2161-2367	1420	36
2161-2397	1470	24
	1480	25
2161-2505	3230	16
	6670	16
	6680	16
	6690	16
2161-6060	1550	8-3H
2161-6063	1550	8-3F
2161-9052	1570	3O
	1580	5O
2161-9053	1570	3P
	1580	5P
2161-9057	1490	3
2161-9058	1490	4
2161-9065	1120	33
2161-9066	1120	34
2162-1064A	1520	16
2171-1078	1550	1-27
2171-1084A	1480	12
2172-1109	1520	20
2172-1110B	1550	8-21
2172-1112	1540	23D
2172-1134	1710	26A
2172-9021	1550	8-17
2172-9022	1550	8-19

PART NO.	FIG NO.	KEY NO.	PART NO.	FIG NO.	KEY NO.	PART NO.	FIG NO.	KEY NO.
2172-9035	1480	21	2180-1026D32	1240	46	2180-1106BD24	6330	11
2172-9036	1550	8-15	2180-1026D35	1230	19		6340	11
2180-1017A	1100	13	2180-1026D37	3230	6	2180-1106BD4	6340	15
	2100	46		6670	6	2180-1106BD6	6330	12
	6800	46		6680	6	2180-1216D125	4110	4F
2180-1026D19	1260	12		6690	6	2180-1217D54	4110	4D
	1290	12	2180-1106BD14	3110	11	2180-1217D57	4110	4E
	1300	12		6300	11	2180-1217D96	4391	15
	1310	22		6310	11	2180-1254	4150	7
	2160	8		6320	11		4151	7
	3180	15		6760	11	2180-1267	1550	8-7
	3210	30	2180-1106BD15	3100	27	2180-6073	2110	6
	6510	15		3110	12	2180-6077A	2150	1K
	6511	15		6270	27		6810	1K
	6520	4		6280	27	2180-6080A	2140	6
	6530	4		6290	27	2180-6081	2140	7
	6570	8		6300	12	2180-6085	1175	5
	6580	16		6310	12	2180-6086	1820	21A
	6620	30		6320	12	2180-6087	1820	21B
	6630	30		6750	27	2180-6088	1820	20B
	6640	30		6760	12	2180-6089	1820	20A
	6755	24	2180-1106BD18	3100	11	2180-6090	1820	26A
2180-1026D2	1290	20		3110	30		1820	27A
	6580	15		6270	11	2180-6091	6240	1-1H
	6580	15		6280	11		6250	1-1H
2180-1026D23	1260	25		6290	11		6260	1-1H
	1270	25		6300	30		6811	1H
	1280	25		6310	14	2180-9098	2130	10
	2160	9		6320	30	2180-9153	5110	11
	3180	17		6330	5	2181-1110D1	1210	11
	3190	4		6340	14	2181-1110D3	1210	1G
	3220	7		6750	11	2181-1111D11	6780	19
	6510	17		6760	14		6781	20
	6511	17	2180-1106BD19	3100	1C	2181-1116D1	4261	2
	6520	26		3100	10		6760	15
	6520	26		3110	29	2181-1116D2	2130	8
	6530	26		6270	1C		4150	27
	6530	26		6270	10		4151	27
	6540	4		6280	1C	2181-1116D4	4150	28
	6550	4		6280	10		4151	28
	6560	4		6290	1C	2181-1126D120	1380	18
	6570	9		6290	10	2181-1126D14	1340	34
	6580	17		6300	29		1400	14
	6650	7		6310	13		1410	6
	6651	7		6320	29		3210	22
	6660	7		6330	13		6620	22
	6755	13		6340	13		6630	22
	6765	4		6750	1C		6640	22
2180-1026D27	1240	23		6750	10	2181-1126D25	1250	34
2180-1026D31	1240	24		6760	13	2181-1126D36	1400	16

PART NO.	FIG NO.	KEY NO.	PART NO.	FIG NO.	KEY NO.	PART NO.	FIG NO.	KEY NO.
2181-1126D36	1410	20	2181-1923D12	6781	13	2181-2566D9	6670	7
2181-1126D38	1370	87	2181-1925	1670	3		6680	7
2181-1126D6	1330	32		3200	6		6690	7
	1360	32		6590	6	2181-2590D2	1360	100
	1400	19		6600	6		1370	100
2181-1126D7	1340	33		6610	6	2181-2627D1	1250	32
	1360	33	2181-1950D1	4280	5	2181-2667	1220	32
	1380	15		4290	6	2181-2690	1170	12
	1390	15		4295	5	2181-2755B	6100	1A
2181-1126D89	1380	17	2181-1950D2	1220	26	2181-2760	1340	47
	1390	17	2181-1950D3	1210	1M	2181-2816D1	1250	54
2181-1126D92	1330	46	2181-1950D7	1200	20	2181-2816D3	3230	2
2181-1184	6780	18		1220	18		6670	2
	6781	4	2181-1950D9	1240	48		6680	2
2181-1186D12	3200	13		3220	9		6690	2
	6590	13		6650	9	2181-2817D3	3230	5
	6591	13		6651	9		6670	5
	6600	13		6660	9		6680	5
	6610	13	2181-1951D1	1340	42		6690	5
2181-1702D10	1340	35		1350	42	2181-2818	3220	10
	1350	35		1410	10		6650	10
	1410	8	2181-1951D16	1370	43		6651	10
2181-1702D2	1250	29		3210	19		6660	10
	1330	38		6620	19	2181-4112	6780	10
2181-1702D3	1370	96		6630	19		6781	10
2181-1702D4	1330	39		6640	19	2181-4124	2160	16
	1340	39	2181-1951D19	1350	88	2181-4133D35	3230	9
	1350	39	2181-1951D20	3210	54		6670	9
	1410	7		6620	54		6680	9
	3210	21		6630	54		6690	9
	6620	21		6640	54	2181-4133D6	1310	25
	6630	21	2181-1951D42	1250	30		3220	11
	6640	21	2181-1951D6	1370	31		6650	11
2181-1702D5	1340	40	2181-1951D7	1340	30		6651	11
	1360	40		1410	9		6660	11
	1370	40	2181-2047A	1240	47	2181-4245	2160	19
	1380	21		1260	63	2181-4247	2100	48
	1390	21		1360	102	2181-9015	6740	5
2181-1702D70	2160	15		1370	102	2181-9078	1310	14
2181-1702D73	1250	35	2181-2104D6	6100	6		6570	5
2181-1890D2	1200	13	2181-2157D10	1240	40	2181-9079	1290	19
	1220	23	2181-2157D8	1260	62		6580	5
2181-1890D9	3210	23	2181-2218D6	1260	66	2181-9081	1260	15
	6620	23	2181-2281D13	2160	17		1290	15
	6630	23	2181-2337D12	2160	23		1300	15
	6640	23	2181-2375D7	1360	9		1310	13
2181-1917D13	1330	37	2181-2419D3	1250	28		2160	6
2181-1917D49	2160	18	2181-2439A	6220	5		3180	14
2181-1917D5	1330	36	2181-2527	1670	4		6510	14
2181-1923D12	6780	13	2181-2566D9	3230	7		6511	14

PART NO.	FIG NO.	KEY NO.	PART NO.	FIG NO.	KEY NO.	PART NO.	FIG NO.	KEY NO.
2181-9081	6520	2	2184-1045D202	1350	63	2184-1046D35	6630	50
	6530	2	2184-1045D206	1360	85		6640	50
	6570	6	2184-1045D207	1210	23	2184-1046D76	1410	15
	6580	6	2184-1045D208	1350	61	2184-1046D84	1350	60
	6755	23	2184-1045D209	6591	1	2184-1046D89	1410	11
2181-9084A	1260	16		6591	2	2184-1060D147	1390	33
	1290	16	2184-1045D219	1370	80		1390	34
	1300	16	2184-1045D226	1340	75		1390	35
2181-9086	1260	28	2184-1045D243	1360	51		1390	36
	1280	28	2184-1045D248	1360	83	2184-1060D151	1390	31
	2160	7	2184-1045D42	1340	72		1390	32
	3180	16		1350	71	2184-1060D221	3210	48
	3190	3		1400	37		6620	48
	6510	16		1400	38		6630	48
	6511	16	2184-1045D95	6590	4		6640	48
	6520	17		6591	4	2184-1060D32	1340	98
	6530	17	2184-1045D97	3200	3	2184-1060D45	3210	46
	6540	3		6590	3		6620	46
	6550	3		6591	3		6630	46
	6560	3		6600	3		6640	46
	6570	7		6610	3	2184-1060D48	3210	47
	6580	7	2184-1046D110	1410	19		6620	47
	6755	12	2184-1046D126	1370	79		6630	47
	6765	3	2184-1046D133	1340	74		6640	47
2182-1697	1150	24	2184-1046D180	1330	65	2184-1060D52	1340	59
2182-1697A	1150	24	2184-1046D194	1330	64	2184-1060D69	1340	76
2182-1706A	1210	1H	2184-1046D197	1340	77	2184-1061D335	3210	49
2182-1756A	4150	32	2184-1046D206	1340	73		6620	49
2184-1026D145	1210	1J	2184-1046D218	1400	40		6630	49
2184-1026D95	1250	15		1400	42		6640	49
2184-1036D118	1360	69	2184-1046D226	3210	45	2184-1061D336	3210	51
2184-1036D14	1330	66		6620	45		6620	51
2184-1036D147	1330	86		6630	45		6630	51
2184-1036D186	1250	13		6640	45		6640	51
2184-1036D187	1400	43	2184-1046D227	3210	53	2184-1061D83	1410	14
2184-1036D219	1250	16		6620	53	2184-1061D95	1360	53
2184-1036D23	2160	4		6630	53	2184-1070D48	1360	70
2184-1036D292	2160	3		6640	53	2184-1081D104	6755	11
2184-1036D344	1250	12	2184-1046D237	1340	78	2184-1081D136	3180	13
2184-1036D64	6780	3	2184-1046D238	3210	44	2184-1081D139	6510	13
2184-1045D102	6591	2		6620	44		6511	13
2184-1045D105	1410	13		6630	44	2184-1081D58	6560	2
2184-1045D125	1410	12		6640	44	2184-1098D53	3190	2
2184-1045D128	1210	10	2184-1046D259	3210	43	2184-1098D55	1310	2
2184-1045D139	1370	57	2184-1046D271	6640	43	2184-1098D74	6540	2
2184-1045D143	1410	16	2184-1046D291	1370	56	2184-1098D77	2160	2
2184-1045D157	6591	1		1370	58	2184-1100D203	2160	1
2184-1045D158	1350	81	2184-1046D294	1340	99	2184-1124D191	1290	36
2184-1045D190	1350	68	2184-1046D35	3210	50	2184-1124D197	1290	38
2184-1045D201	1350	62		6620	50	2184-1124D60	1290	37

PART NO.	FIG NO.	KEY NO.
2184-1124D96	1310	4
2184-1196D100	6690	10
2184-1196D83	3230	10
2184-1196D90	6690	10
2184-1196D97	6680	10
2184-1196D99	6670	10
2184-1197D180	3220	5
	6650	5
	6651	5
	6660	5
2184-1197D44	1250	14
2184-1267D10	1380	26
2184-1267D9	1380	25
2185-1247D132	1190	27
	1190	27
	6740	9
2185-1247D138	1190	27
	6740	9
2185-1247D147	1190	17
2185-1247D148	6100	9
2185-1247D2	1190	29
	6740	8
2185-1247D25	1190	29
2185-1247D31	1190	29
	6740	8
2185-1308D8	1840	35
2185-1308D9	1840	36
2185-1681D4	1780	29
2185-1697D1	1820	26
2185-1698D1	1820	27
2185-1737D3	1230	6
2185-1740	1120	15
2185-1776D11	1240	8
2185-1792A	1170	13
2186-9005	1840	38
2188-9008	1200	12
2190-2036D10	6110	4
	6120	4
2190-2036D11	1700	16
2190-2036D12	1700	17
2190-2036D13	1700	18
2190-2036D23	1700	19
2190-2036D24	1700	15
2190-2036D25	6220	2
2190-2037D19	1690	34
2190-2037D20	1690	35
2190-2037D56	1690	36
2190-2314D3	5120	9
	5130	9
2190-2476	5120	25
2190-2476	5130	25
2190-2477	5120	26
	5130	26
2190-2480	5130	12
2190-2524	5120	17
2190-2533A	5130	28
2190-2556D102	5130	36
2190-2584D13	6140	2
2190-2584D14	1720	20
	6110	2
2190-3231D23	1690	10
2190-3239	5120	15
	5130	15
2190-3244D11	5120	31
	5130	31
2190-3244D12	5120	32
	5130	32
2190-3297	5120	8
	5130	8
2190-3309	5120	10
	5130	10
2190-3332	5120	4
	5130	4
2190-3379	5130	2
2190-3379A	5130	2
2190-3383	5130	24
2190-3384	5130	23
2190-3386A	5130	13
2190-3602	6700	1
2190-3603	6700	2
2191-2205D6	3100	20
	6270	20
	6280	20
	6290	20
	6750	20
2191-3705C	1260	43
	1270	43
	1300	43
2195-1534	1780	24
2195-3500	1810	18
2195-3793	3100	26
	6270	26
	6280	26
	6290	26
	6750	26
2195-4619	2100	34
	6800	34
2197-1119	1750	2
2197-1639A	1520	26
2197-1660	1800	21
2197-1660	1810	21
2197-1661	1330	2I
	1800	22
	1810	22
2197-1704A	1500	13
	6710	13
2197-1711	1510	35
2197-1740B	1740	55
2197-1741A	1480	11
2197-1744A	1500	15
	6710	15
2197-1802A	1320	22
2197-2079	1820	15
2197-2657B	2100	27
2197-2657C	2100	27
	6800	27
2197-2658B	2100	25
2197-2658C	2100	25
	6800	25
2198-1054	1550	8-5
2198-1055	1520	11
2198-1058	1520	10
2199-1004	5100	1-10
2199-1005	5100	1-11
2199-1063F31	5100	1
2199-9007	5100	3
2199-9008	5100	2
2199-9009	5100	1-15
2199-9043	5100	1-1
2199-9056	5100	5
2199-9057	5100	1-16
2199-9058	1530	88
2204-2012A	1170	1
	1175	-
2204-6039A	1820	28
2208-6013B	1820	4
2213-1095	1470	2
2213-1097	1470	1
2213-1098A	1480	7
2213-1099B	1480	8
2213-9002	1470	5
2229-6003	2130	2
2230-1036B	4150	20
2230-1037A	4150	10
225680	4140	444
225681	4140	443
2270-6083A	2140	1
2270-6105A	2110	1
2270-9402A	2100	33
	2130	-

PART NO.	FIG NO.	KEY NO.
2270-9402A	6800	33
2270-9404B	2100	18
	2140	-
	6800	18
2270-9405G	2100	4A
	2110	-
	6800	4A
2271-6017A	2110	2
2271-6018	2150	1I
	6810	1I
2271-6020A	2140	2
2272-6135	2150	1C
	6810	1C
2272-6136	2150	1D
	6810	1D
2272-6143B	2150	1
	6810	1
2272-6144	2150	1A
	6810	1A
2272-6145	2150	1B
	6810	1B
2272-6162D5	2100	8
	2150	-
2272-6186	6240	1-1
	6250	1-1
	6260	1-1
	6811	1
2272-6187	6240	1-1B
	6250	1-1B
	6260	1-1B
	6811	1B
2272-6188	6240	1-1A
	6250	1-1A
	6260	1-1A
	6811	1A
2273-6058D1	2150	4
2273-6072D1	6240	1
2273-6072D2	6250	1
2273-6072D3	6260	1
2273-6073D1	6240	1-2
2273-6073D2	6250	1-2
2273-6073D3	6260	1-2
2274-6014AKT	2120	*
230-00060A	4151	20
230-00061	4151	10
2312-1005A	6280	29
	6290	29
235379012	4220	12
235379030	4220	10
235379050	4220	8
235886	4140	51
237179021	4220	4
238795	4140	491
2400-2180A	2160	-
2401-1276KT	6100	1E
2401-6292A	2100	6
	4160	-
	6800	6
2401-9229A	2100	14
	4220	-
	6800	14
2401-9242KT	4140	*
2401-9304B	1210	1AA
	4140	-
2401-9304C	1210	1AA
	4140	-
2402-6003C	4150	1
	4151	1
2403-1002	1100	12
	2100	47
	6800	42
2403-4001A	1210	1C
2404-6010I	1210	1AB
	4150	-
2404-6010J	1210	1AB
	4150	-
2405-1018B	4150	2
2405-1018C	4150	2
	4151	2
2412-1040	4150	3
	4151	3
2415-1014	1470	12
2415-1015A	1480	9
2415-1018	1780	28
2415-9007	1470	18
2420-1242A	2100	50
2420-1258	6100	11A
2420-9627A	3220	12
	6650	12
	6651	12
	6660	12
2420-9627B	3220	12
	6651	12
	6660	12
2420-9631A	3230	1
	6670	1
	6680	1
	6690	1
2423-1470	1400	8
2423-1570	1290	23
2426-1175	1220	8
2426-1237	1330	2D
2426-6048	1830	31H
2426-9039B	1350	3
	4295	-
2426-9039C	1350	3
	4295	-
2432-9001	1650	1F
2440-9141	1600	15
2440-9241G	4390	-
	6570	4
2440-9241H	4391	-
	6570	4
2440-9241HKT	4391	*
2440-9241I	6570	4
2440-9241KT	4390	*
2440-9251	1540	75
2440-9339BKT	4400	*
2444-6003B	2120	3
2444-6004B	2120	5
2460-9060	1350	1
2470-9017	1140	8
2471-1135	1400	20
2471-1152	6100	11B
2471-1154	1330	2C
	5110	2
2471-1155A	1330	2E
2471-1158	1850	-
2471-6050A	1830	31G
2471-6062	1850	1
2471-6063	1850	2
2471-9046	1200	11
2471-9051B	1220	9
	5110	1
2471-9053	6740	1
2471-9401A	1220	17
2472-7003	1330	2B
2473-1085A	1220	5
2473-1087B	1220	12
2474-9051	1175	3
	5110	3
2474-9057	1175	2
	5110	4
2474-9060A	5110	6
2480-9405B	2100	38
	2170	-
	6800	38
2480-9405BKT	2170	*
2481-6002	2130	6
2502-9009	1760	44

PART NO.	FIG NO.	KEY NO.	PART NO.	FIG NO.	KEY NO.	PART NO.	FIG NO.	KEY NO.
2502-9009	1770	-	2543-9015	1690	11	2553-1275D2	1790	10
2506-6008	1750	1	2544-1022	1750	20	2553-1275D47	1790	12
2510-1010	1730	29	2544-6023	1830	31C	2553-1275D5	1790	13
	1730	32	2544-6024	1830	31D	2553-1275D50	1790	11
2512-1054	1650	1C	2544-9024	1750	6	2554-9005A	1780	23
2512-1095D1	5110	10	2544-9033	1690	26	2604-1436E	2100	3
2512-1118B	1680	1		1690	27	2604-1436G	2100	3
2514-1013	1510	114		1690	28	2604-1436H	2100	3
2515-1016D4	1780	30A		1690	29	2604-1436I	2100	3
	5110	17		1690	30	2604-1437E	2100	2
	6110	7A		1690	31	2604-1437G	2100	2
2515-1022D1	1740	54A		1690	32	2604-1437H	2100	2
	1780	31A		1690	33	2604-1437I	2100	2
	5110	16		1690	47	2621-2752	1380	22
2516-1116	1690	23		6110	5		1390	22
2520-6004	1820	22		6110	6	2621-3003B	1590	6F
2520-6005	1820	22A		6130	3	2621-6012	1175	4
2520-6006	1820	22C		6140	3	2621-6019	2120	10
2523-9016	1320	16	2547-1015	1760	41	2621-9002	1720	28
2527-1016	1730	29A	2547-6033	1830	31I	2621-9005	1550	8-19A
	1730	32A	2547-9035	1780	38		1550	8-25
	5110	19	2547-9035A	1780	38	2622-6014	1550	8-3A
2527-1017	1730	29B	2547-9038B	1760	36	2623-1252A	1480	10
	1730	32B		1780	42	2623-1253C	6170	1
	5110	20	2547-9045	1330	48	2623-1253E	6170	1
2527-1018	1730	29C		6220	3	2625-1155AD1	2100	5
	1730	32C	2548-1027	1800	3A		6800	5
	5110	21		1810	2A	2625-1155AD5	6250	2
2527-1023A	1750	12	2549-1135D10	6150	1		6251	2
	5110	23	2549-1152	1710	26	2625-1155AD6	6260	2
2527-1025	1730	29D	2549-9096	6100	13		6261	2
	1730	32D	2549-9098	1700	13	2627-1877A	2100	29
	5110	22		6110	3		6800	29
2527-9004	1750	10		6120	3	2627-1891A	2100	26
2528-9040	1700	21		6220	1	2627-1891B	2100	26
2530-1400	6150	3	2549-9109	1700	9		6800	26
2530-1423A	6140	9		1700	10	2627-1892A	2100	24
2530-1611	1740	59		1700	12	2627-1892B	2100	24
2530-6005A	1830	31J		1720	14		6800	24
2531-1003	1690	17		6110	1	270-00009	6800	4
	1690	20		6130	1	2704-1287D1	6730	1
2534-1127	1740	54		6140	1	2704-1298D1	6730	-
2534-9063	1530	62	2549-9110	1700	11	2704-1365G	6410	-
2537-9008	1690	14	2549-9112	1340	49	2704-1365H	6410	-
2538-6015	1830	31A	2549-9407	6140	8	2704-1366E	6410	1
2538-6016	1830	31E	2550-1014D1	1790	5	2704-1371I	6420	-
2538-6017	1830	31F	2550-1014D2	1790	6	2704-1371J	6420	-
2538-6018	1820	22B	2552-1004	1710	23	2704-1371K	6420	-
2541-6020	1510	47	2553-1261D53	1800	14	2704-1372H	6420	1
2541-9020	1480	17	2553-1275D1	1790	9	2704-1582C	6450	-

PART NO.	FIG NO.	KEY NO.	PART NO.	FIG NO.	KEY NO.	PART NO.	FIG NO.	KEY NO.
2704-1582E	6450	-	2713-1218	6410	1A	2713-1273	6440	1A
2704-1583B	6450	1	2713-1219	6420	2		6450	1A
2704-1594A	6370	1	2713-1220	6420	1A		6460	1A
2704-1639A	6370	-	2713-1236	6440	2		6470	1A
2704-1717	6350	-		6450	2		6480	1-1
2704-1718	6350	1		6460	2		6720	1A
2704-1721	6390	-		6470	2		6770	1AA
2704-1722	6390	1		6480	2		6771	1A
2704-1734	6360	-	2713-1240	3120	2	2713-6034A	6420	5
2704-1735	6360	1		3130	2	2713-6035A	6420	6
2704-1737	6380	-		3140	2	2713-6082	3130	1-1A
2704-1738	6380	1		3150	2		3150	1-1A
2704-1740	6400	-		3160	2		3170	1-1A
2704-1741	6400	1		3170	2		6360	1-1A
2705-1020	6410	3		6350	2		6380	1-1A
2705-1021	6420	3		6360	2		6400	1-1A
2705-1030	4150	19		6370	2	2713-9063	3130	1-2
	4151	19		6380	2		3150	1-2
2705-1034	3120	1-3		6390	2		3170	1-2
	3140	1-3		6400	2		6360	1-2
	3160	1-3		6430	5		6380	1-2
	6350	1-3		6440	5		6400	1-2
	6370	1-3		6450	5	273-00071	6240	-
	6390	1-3		6460	5	273-00071A	6241	-
	6430	3		6470	5	273-00072	6250	-
	6440	3	2713-1241	3120	3	273-00072A	6251	-
	6450	3		3130	3	273-00073	6260	-
	6460	3		3140	3	273-00073A	6261	-
	6470	3		3150	3	2731-6002	1550	8-3E
	6480	3		3160	3	2731-6003	1550	8-3G
	6720	3		3170	3	274-00003C	2100	4B
	6770	1C		6350	3		2120	-
	6771	3		6360	3		6800	4B
2705-6037	3130	1-3		6370	3	280004860	4220	15
	3150	1-3		6380	3	2891-1265	1680	4
	3170	1-3		6390	3	2891-1266A	1680	2
	6360	1-3		6400	3	2891-1267	1680	3
	6380	1-3		6430	6	2891-1268	1680	5
	6400	1-3		6440	6	2891-1311	1550	8-30
2705-6038	3130	1-4		6450	6	2891-1323	1510	57
	3150	1-4		6460	6	2891-1421B	4150	5
	3170	1-4		6470	6		4151	5
	6360	1-4	2713-1271	6430	2	2891-1912	1570	3I
	6380	1-4	2713-1273	3120	1-1A		1580	5I
	6400	1-4		3140	1-1A	2903-1212	1520	6
2705-9002	1590	6K		3160	1-1A	2903-1213	1520	7
	1600	19		6350	1-1A	2903-1214	1550	8-2
2713-1059A	6410	5		6370	1-1A	2903-1219A	1550	8-23
2713-1060A	6410	6		6390	1-1A	2903-1220	1550	8-24
2713-1217	6410	2		6430	1A	2903-9012A	1490	10

PART NO.	FIG NO.	KEY NO.	PART NO.	FIG NO.	KEY NO.	PART NO.	FIG NO.	KEY NO.
2903-9012A	1590	25	400-01079	6640	-	420-00340	1410	1
2906-9005	1470	11	400-01400B	6511	-		4290	-
2920-6111	1830	31K	400-01404	6651	-	420-00340A	1410	1
2920-6112	1830	31L	400-01405	6591	-		4290	-
308-00030	2120	1	401-00233	1180	1	420-00340B	1410	1
308-00033A	2120	15		4100	-		4290	-
400-00120B	6570	-	401-00233B	1180	1	420-00352D3	1360	97
400-00187A	6580	-		4100	-	420-00355	1380	1
400-00691	6590	-	401-00236A	1180	-		4260	-
400-00692	6510	-	401-00238	6100	1	420-00355A	1380	1
400-00695B	1400	-	401-00246	1210	-		4261	-
400-00695C	1380	-	401-00246B	1210	-	420-00356	1390	2
	1390	-	401-00247B	1210	1		4260	-
400-00697	1330	-	401-00247C	1210	1	420-00356A	1390	2
	1340	-	401-00247E	1210	1		4261	-
	1360	-	401-00247G	1210	1	420-00358	4265	-
	1370	-	401-00247H	1210	1		6230	1
400-00697A	1330	-	401-00249A	1210	1A	420-00359	4265	-
400-00697B	1350	-	401-00249B	1210	1A		6230	2
400-00705	1260	-	401-00249C	1210	1A	420-00360	6230	-
	1270	-	401-00249E	1210	1A	420-00369C	1350	4
	1280	-	401-00249G	1210	1A		4280	-
	1290	-	401-00255KT	4100	*	420-00369E	1350	4
	1300	-	401-00295	6100	-		4280	-
400-00706A	1230	-	403-00007B	1180	5	420-00429A	2100	50
	1240	-	404-00091	1210	1B		6800	15
	1250	-	407-00001	6100	1D	421-00019	1310	7
400-00708	6550	-	414-00041	1180	2	4215-1003D6	1240	52
400-00715	1670	-	414-00041A	1180	2	422-00027A	1220	21
400-00830A	6620	-	415-00039	1470	13	422-00041	1240	17
400-00909	6680	-	416-00017A	2120	13	423-00015	1290	18
400-00920	1410	-	4197-1954	1760	17	423-00030	3210	4
400-00924A	1310	-	420-00004A	3210	5		6620	4
400-00928A	6650	-		6620	5		6630	4
400-00971	6520	-		6630	5		6640	4
400-00983A	3180	-		6640	5	423-00032	6580	21
400-00984	3200	-	420-00021A	3210	6	423-00114A	1240	45
400-00989	6540	-		6620	6	423-00127A	1260	8
400-00990	3190	-		6630	6	423-00150	1310	8
400-00991	6560	-		6640	6	423-00162	1280	68
400-00996A	3210	-	420-00030	1400	4	423-00163	1280	69
400-00998A	3220	-		4270	-	440-00013AKT	4300	*
400-00999	3230	-	420-00261B	1240	17		4310	*
400-01000	6670	-	420-00280A	1260	1		4330	*
400-01016	6660	-		4230	-		4350	*
400-01019	6600	-		4240	-		4360	*
400-01021	6690	-		4250	-		4420	*
400-01027A	6630	-	420-00280KT	4230	201	440-00015A	4320	-
400-01031	6530	-	420-00282	6140	10		6510	3
400-01033	6610	-	420-00304	1240	18		6511	3

PART NO.	FIG NO.	KEY NO.
440-00015A	6520	29
	6530	29
440-00015AKT	4320	*
	4340	*
	4370	*
	4380	*
	4410	*
440-00015B	4320	-
	6511	3
	6520	29
440-00016A	3190	1
	4330	-
	6540	1
	6550	1
	6560	1
440-00016B	3190	1
	4330	-
	6540	1
	6550	1
	6560	1
440-00016C	3190	1
	4330	-
	6540	1
	6550	1
	6560	1
440-00016E	3190	1
	4330	-
	6540	1
	6550	1
	6560	1
440-00059	4400	-
	6580	4
440-00059A	4400	-
	6580	4
440-00085	3180	3
	4340	-
440-00085A	3180	3
	4340	-
440-00088	4370	-
	6620	3
	6630	3
	6640	3
440-00088A	4370	-
	6620	3
	6630	3
	6640	3
440-00089	3210	3
	4380	-
440-00089A	3210	3
	4380	-
440-00286	3180	1
	4300	-
	6510	1
	6511	1
	6520	27
	6530	27
	6755	1
440-00286A	3180	1
	4300	-
	6511	1
	6520	27
	6755	1
440-00287	3180	2
	4310	-
	6510	2
	6511	2
	6520	28
	6530	28
	6755	2
440-00287A	3180	2
	4310	-
	6511	2
	6520	28
	6755	2
440-00318	3210	1
	4350	-
	6620	1
	6630	1
	6640	1
440-00318A	3210	1
	4350	-
	6620	1
	6630	1
	6640	1
440-00319	3210	2
	4360	-
	6620	2
	6630	2
	6640	2
440-00319A	3210	2
	4360	-
	6620	2
	6630	2
	6640	2
470-00073	1190	-
	1200	-
470-00074E	1200	1
470-00074G	1200	1
470-00074H	1200	1
470-00074I	1200	1
470-00074J	1200	1
470-00075	1220	-
470-00075A	1220	-
470-00075C	1220	-
470-00076G	1220	1
470-00076H	1220	1
470-00076J	1220	1
471-00075A	1330	2
471-00082	1190	28
471-00082A	1190	28
471-00086	5110	5
471-00105	1200	11
471-00118	1350	103
471-00128	6740	-
4713-1130C	6490	2
	6500	2
473-00033	1200	4
474-00056	1220	9
500-00081	6160	-
500-00123C	1690	-
500-00123E	1690	-
500-00123G	1690	-
500-00124G	1700	-
	1710	-
	1720	-
	1730	-
	1740	-
500-00124H	1700	-
	1710	-
	1720	-
	1730	-
	1740	-
500-00124I	1700	-
	1710	-
	1720	-
	1730	-
	1740	-
500-00124J	1700	-
	1710	-
	1720	-
	1730	-
	1740	-
500-00124K	1700	-
	1710	-
	1720	-
	1730	-
	1740	-
500-00124L	1700	-
	1710	-
	1720	-

PART NO.	FIG NO.	KEY NO.
500-00124L	1730	-
	1740	-
500-00124M	1700	-
	1710	-
	1720	-
	1730	-
	1740	-
500-00125	1750	-
	1760	-
	1780	-
500-00126	1790	-
	1800	-
	1810	-
500-00156	6220	-
502-00003A	6160	1
507-00005	1510	48
51.06402-0062	012	40
	220	40
512-00031	1680	-
515-00012A	1700	1B
515-00013	6110	18A
	6120	18A
516-00011	6130	4
	6140	4
516-00014	1780	32
516-00015	1780	33
516-00017	6130	-
516-00018	6140	-
523-00008	1320	15
523-00012	6100	1C
527-00005	5110	18
527-00006	1710	27
530-00105A	6230	3
530-00123	6160	3
530-00150	1710	45
530-00205	1710	42
530-00206	1720	43
530-00207A	1690	37
530-00208A	1690	38
530-00208B	1690	38
530-00209	1700	41
530-00212	1510	56
530-00213	1730	44
530-00213A	1730	44
530-00214	6100	19
530-00228A	1810	2
530-00229B	1800	3
530-00229C	1800	3
530-00231A	1700	40
530-00232	1410	17
530-00235	6110	26
530-00236	1330	2H
530-00237	6110	27
	6120	27
530-00238	6120	29
530-00247B	1810	4
530-00248	6110	28
	6120	28
530-00249	6110	30
530-00251	1510	108
530-00269	6220	4
534-00062	6110	18
	6120	18
534-00063	1780	30
534-00064	1780	31
534-00066F2	6110	-
534-00066F4	6120	-
534-00077	6110	7
537-00022	1650	-
537-00074	1520	123
537-00078	1520	123B
538-00009	1510	43
539-00048C	1700	1
539-00048E	1700	1
539-00048G	1700	1
53A387-0	4400	21
53A429-0	4300	21
	4310	21
	4330	21
	4350	21
	4360	21
53A429-1	4420	21
53A518-0	4300	16
	4310	16
	4330	16
	4350	16
	4360	16
	4420	16
53A554-0	4320	1
	4370	1
53A555-0	4320	3
	4370	3
53A555-3	4320	3
	4370	3
	4410	3
53A556-0	4320	5
	4340	5
	4370	5
	4380	5
53A556-2	4410	5
53A557-0	4320	31
	4340	31
	4370	31
	4380	31
53A558-0	4320	15
	4340	15
53A559-0	4320	39
	4340	39
	4370	39
	4380	39
53A560-0	4320	46
53A561-0	4320	16
	4340	16
	4370	16
	4380	16
	4410	16
53A562-0	4320	35
	4340	35
	4370	35
	4380	35
53A632-0	4340	1
	4380	1
53A635-0	4340	3
	4380	3
53A635-3	4340	3
	4380	3
53A637-0	4340	46
53A638-0	4370	46
53A698-0	4380	46
53A877-0	4410	31
53A880-0	4410	35
	4410	39
53A881-0	4410	46
53B268-0	4300	26
	4310	26
	4350	26
	4350	30
	4360	26
	4360	30
53B316-0	4390	13
53B420-1	4310	25
	4360	25
53B423-0	4400	13
53B538-0	4300	5
	4310	5
53B538-1	4350	5
	4360	5
53B610-0	4360	29
53B738-0	4300	1
	4310	1

PART NO.	FIG NO.	KEY NO.	PART NO.	FIG NO.	KEY NO.	PART NO.	FIG NO.	KEY NO.
53B738-0	4350	1	53U541-2	4420	5	621-01159	6710	32
	4360	1	53U700-0	4420	25	621-01160	1500	37
53B739-0	4300	3	53U703-0	4420	28		6710	37
	4310	3	53U704-0	4420	32	621-01495	6190	1
	4350	3	53U740-0	4420	1	621-01507	6210	3
	4360	3	541-00005	1530	77	621-01527A	1100	22
53B739-2	4300	3	541-00014	1730	37	621-01528A	2100	28
	4310	3	541-00014A	1730	37		6800	28
	4350	3	543-00049	1820	1	621-01579A	1100	23
	4360	3	543-00052B	1690	2	621-01587B	1560	8
53B740-0	4300	35	543-00052C	1690	2	621-01613	1570	-
	4350	34	543-00074	1690	6		1580	-
53B741-0	4310	35	544-00007	1760	13		1590	-
	4360	34	545-00001	1700	22		1600	-
53U252-0	4390	21	545-00003	1830	31B		1610	-
53U313-3	4390	1	548-00003	1810	2B	621-01641A	1570	3B
53U319-1	4390	33	549-00046	1420	33	621-01641B	1570	3B
53U334-2	4400	29	549-00075	6150	-	621-01641C	1570	3B
53U367-4	4390	3	549-00210	1710	26	621-01641E	1570	3B
53U370-1	4390	16	549-00210A	1710	26	621-01642E	1570	3
53U372-1	4390	5	55A243-0	4410	1	621-01642G	1570	3
53U373-1	4390	40	55A279-0	4320	22	621-01642H	1570	3
53U374-1	4390	22		4340	22	621-01642I	1570	3
53U423-0	4300	22		4370	22	621-01645A	1570	3C
	4310	22		4380	22	621-01645B	1570	3C
	4330	22		4410	22	621-01645C	1570	3C
	4350	22	55A371-0	4300	22	621-01645E	1570	3C
	4360	22		4310	22	621-01647C	1650	3A
53U470-1	4400	1		4330	22	621-01647G	1650	3A
53U474-0	4400	3		4350	22	621-01648E	1650	3
53U474-3	4400	3		4360	22	621-01648G	1650	3
53U477-1	4400	5		4420	22	621-01648I	1650	3
53U478-0	4400	16	563-00016	1520	123A	621-01650G	1170	10
53U481-0	4400	36	599-00039	1810	1	621-01650H	1170	10
53U508-0	4400	25	599-00039A	1810	1	621-01667	1540	23
53U509-1	4390	25	600-00078A	1100	-	621-01668	1540	23A
53U510-1	4390	29	603-00102	1100	1	621-01671	1620	-
53U515-0	4330	1	603-00102A	1100	1	621-01672B	1620	1
53U515-1	4330	1	603-00281	6170	14		6790	1
53U516-0	4330	3	603-00281A	6170	14	621-01673B	1620	2
53U516-4	4330	3	604-00126	2100	-	621-01674B	1620	3
53U516-5	4420	3	604-00126A	2100	-	621-01675B	1650	4
53U516-6	4330	3	604-00127A	2100	1	621-01676C	1650	5
	4420	3		6800	1	621-01677A	1620	6
53U517-0	4330	25	621-00050	2100	43		6790	6
53U518-0	4330	33		6800	43	621-01678B	1620	7
53U519-0	4330	40	621-00340	1470	9		6790	7
53U520-0	4330	29	621-00564	1500	29	621-01679B	1620	8
53U541-0	4330	5		6710	29		6790	8
53U541-1	4330	5	621-01159	1500	32	621-01680E	1610	7

PART NO.	FIG NO.	KEY NO.	PART NO.	FIG NO.	KEY NO.	PART NO.	FIG NO.	KEY NO.
621-01681B	1610	8	621-01920B	1500	2	622-00215Q	1500	-
621-01690A	1560	7		6710	2	622-00215R	1500	-
621-01693A	1590	6B	621-01923	1480	20	622-00217E	6710	-
621-01693B	1590	6B	621-01924	1480	2	622-00218E	6710	1
621-01693C	1590	6B	621-01927A	1590	4	622-00218H	1500	60
621-01693E	1590	6B	621-01951	1420	32	622-00218J	1500	60
621-01693G	1590	6B	621-01952	1680	6	622-00218K	1500	60
621-01695G	1610	9	621-01956	6200	1	622-00218L	1500	60
621-01696	1630	-	621-01957	6200	-	622-00219A	1550	8
621-01698	1630	1	621-01975A	1590	6	622-00219B	1550	8
621-01699A	1630	2	621-01975B	1590	6	622-00219C	1550	8
621-01700A	1630	3	621-01975C	1590	6	622-00219E	1550	8
621-01701C	1630	4	621-01975E	1590	6	622-00219G	1550	8
621-01702C	1630	5	621-01975G	1590	6	622-00224H	1500	1-1
621-01703B	1630	6	621-01976	1630	15		1510	-
621-01704B	1630	7	621-01977	1630	16		1520	-
621-01714A	1630	10	621-01978E	1600	1		1530	-
621-01715	1630	11	621-01979A	1590	6A		1540	-
621-01716	1630	12	621-01984	1470	28		1550	-
621-01733C	1640	5	621-01986E	1650	1A	622-00224I	1500	1-1
621-01734A	1640	6	621-01990	1510	38		1510	-
621-01735B	1640	7	621-01991	1510	92		1520	-
621-01736B	1640	14	621-02039C	1650	1		1530	-
621-01737C	1640	15	621-02072A	6210	2		1540	-
621-01755A	1480	5	621-02072B	6210	2		1550	-
621-01822	1420	7	621-02077	6210	-	622-00224J	1500	1-1
	1430	7	621-02151	1400	48		1510	-
621-01823	1420	8	621-02198A	1580	5		1520	-
	1430	8	621-02198B	1580	5		1530	-
621-01824	1440	38	621-02198C	1580	5		1540	-
621-01825	1440	41	621-02198E	1580	5		1550	-
621-01826	1430	10	621-02199	1580	5B	622-00224K	1500	1-1
621-01827	1420	9	621-02199A	1580	5B		1510	-
621-01839	1480	1	621-02199B	1580	5B		1520	-
621-01840	1480	3	621-02199C	1580	5B		1530	-
621-01841	1480	4	621-02200	1620	4		1540	-
621-01849	1470	8	621-02201	1620	5		1550	-
621-01850	1420	24	621-02318	6170	7	622-00224L	1500	1-1
	1430	24		6820	7		1510	-
621-01859A	1470	6	621-02363	1150	48		1520	-
621-01860	1470	7	621-02364	1150	54		1530	-
621-01873	1470	14	622-00191B	1510	2		1540	-
621-01874	1470	15	622-00191C	1510	2		1550	-
621-01875	1470	16	622-00194B	1510	2-1	622-00224M	1500	1-1
621-01885C	1470	-	622-00194C	1510	2-1		1510	-
621-01908	1470	20	622-00215J	1500	-		1520	-
621-01909	1320	17	622-00215L	1500	-		1530	-
621-01917C	1480	-	622-00215M	1500	-		1540	-
621-01917E	1480	-	622-00215N	1500	-		1550	-
621-01917G	1480	-	622-00215P	1500	-	622-00224N	1500	1-1

PART NO.	FIG NO.	KEY NO.
622-00224N	1510	-
	1520	-
	1530	-
	1540	-
	1550	-
622-00225	1490	-
622-00242	1550	8-1
622-00298	1500	1
622-00298A	1500	1
622-00298B	1500	1
622-00298C	1500	1
622-00298E	1500	1
622-00298G	1500	1
622-00298H	1500	1
623-00023	1520	102
623-00024	1520	102A
623-00034	2100	15
623-00043	6190	-
624-00033H	1100	2
624-00033J	1100	2
624-00052	1110	-
624-00053A	1110	1
625-00078B	1100	20
632590950	4220	17
633030830	4220	19
635060151	4220	27
643010430	4220	7
643020590	4220	9
643040150	4220	14
65.01101-0212A	001	2
	110	2
65.01101-0212B	001	2
	110	2
65.01101-0212C	001	2
65.01101-6212A	110	1
65.01101-6212B	110	1
65.01101-6212C	110	1
65.01101-6212D	110	1
65.01101-6212E	110	1
65.01101-6213B	001	1
65.01101-6213C	001	1
65.01101-6213D	001	1
65.01101-6213E	001	1
65.01101-6213F	001	1
65.01105-1157G	110	8
65.01105-1157H	110	8
65.01105-1158F	110	7
65.01105-1158G	110	7
65.01105-1159F	110	9
65.01105-1159G	110	9
65.01105-1161A	110	6
65.01105-1161B	110	6
65.01105-1177A	001	6
65.01105-1177B	001	6
65.01105-1178A	001	9
65.01105-1178B	001	9
65.01105-1179B	001	8
65.01105-1179C	001	8
65.01105-1180A	001	7
65.01105-1180B	001	7
65.01110-6055A	140	10
65.01110-6068A	140	10
65.01110-6069A	140	10
65.01110-6070A	140	10
65.01110-6115	004	10
65.01110-6116	004	10
65.01110-6117	004	10
65.01150-0017A	004	11
	140	11
65.01150-0018B	004	12
	140	12
65.01150-0048A	004	11
	140	11
65.01150-0049A	004	11
	140	11
65.01150-0052B	004	12
	140	12
65.01150-0053B	004	12
	140	12
65.01201-0072	001	23
	110	23
65.01201-0072A	001	23
	110	23
65.01304-0023C	002	1
	120	1
65.01305-5049G	002	7
	120	7
65.01401-0099	003	1
	130	1
65.01401-0099A	003	1
	130	1
65.01510-0038	021	4
	310	4
65.01510-0039	021	4
	310	4
65.01510-0103	013	7
	230	7
65.01510-0157	002	12
	031	3
	120	12
65.01510-0157	410	3
65.01510-0158	003	7
	031	5
	130	7
	410	5
65.01601-6002	110	24
65.01601-6006	001	24
65.01601-6007	001	25
65.01605-0008	001	12-1
	110	12-1
65.01801-5099B	006	7
	160	7
65.01801-5099C	006	7
	160	7
65.01810-5007	006	16
	160	16
65.01810-5011	006	16
	160	16
65.01903-0048B	002	3
	031	1
	120	3
	410	1
65.01903-0050	002	8
	031	2
	120	8
	410	2
65.01904-0022A	003	2
	031	4
	130	2
	410	4
65.01907-0008A	010	9
	031	13
	200	9
	410	13
65.02101-0054	004	3
	140	3
65.02101-0057A	004	1
	140	1
65.02101-0057B	004	1
	140	1
65.02101-0060A	004	1A
	140	1A
65.02101-0060B	004	1A
	140	1A
65.02101-7054A	004	2
	140	2
65.02101-7541B	004	A
	140	A
65.02101-7541C	004	A
	140	A

PART NO.	FIG NO.	KEY NO.
65.02110-0013E	004	4
	140	4
65.02110-0014E	004	5
	140	5
65.02115-0008B	004	8
	140	8
65.02201-7032	004	13
	140	13
65.02301-0266	004	16
	140	16
65.02301-5121	004	15
	140	15
65.02310-0011A	004	17
	140	17
65.02401-0045E	004	22
	140	22
65.02401-0045F	004	22
	140	22
65.02401-0045G	004	22
	140	22
65.02401-6012E	140	21
65.02401-6012F	140	21
65.02401-6012G	140	21
65.02401-6017	004	21
65.02401-6017A	004	21
65.02401-6017B	004	21
65.02401-6017C	004	21
65.02405-0011	004	24
65.02405-1006	140	24
65.02405-1010	004	24
65.02410-6106	004	26
	140	26
65.02410-6107	004	26
	140	26
65.02410-6108	004	26
	140	26
65.02410-6109	004	26
65.02501-0222	140	27
65.02501-0222A	140	27
65.02501-0222B	140	27
65.02501-0601	004	27
65.02501-0601A	004	27
65.02501-0601B	004	27
65.02502-0013	004	31
	140	31
65.02503-0057	140	28
65.02503-0097	004	29
	140	29
65.02503-0105	140	30
65.02503-0674	004	28
65.02503-0674	140	28
65.02503-0675B	004	30
	140	30
65.02601-0192	004	33
	140	33
65.03101-0003F	005	1
	150	1
65.03101-0003G	005	1
	150	1
65.03101-0004E	150	11
65.03101-0004F	005	11
65.03101-0004G	005	11
	150	11
65.03101-1064	005	1
	150	1
65.03101-1064A	005	1
	150	1
65.03101-1065	005	11
	150	11
65.03101-1065A	005	11
	150	11
65.03101-6053G	150	A
65.03101-6053H	150	A
65.03101-6054F	150	B
65.03101-6054H	150	B
65.03101-6082	150	A
65.03101-6082A	150	A
65.03101-6082B	150	A
65.03101-6083	150	B
65.03101-6083A	150	B
65.03101-6083B	150	B
65.03101-6084	005	A
65.03101-6084A	005	A
65.03101-6084B	005	A
65.03101-6085	005	B
65.03101-6085A	005	B
65.03101-6085B	005	B
65.03101-6604D	005	A
65.03101-6604E	005	A
65.03101-6605D	005	B
65.03101-6605E	005	B
65.03201-1008E	005	7
	005	17
	150	7
	150	17
65.03201-1008F	005	7
	005	17
	150	7
	150	17
65.03203-1041	150	9
65.03203-1041	150	19
65.03203-1042	150	8
	150	18
65.03203-1043	005	9
	005	19
65.03203-1044	005	8
	005	18
65.03205-0002	005	2
	005	12
	150	2
	150	12
65.03401-0048B	006	2
	160	2
65.03401-0048C	006	2
	160	2
65.03401-6046B	006	1
	160	1
65.03401-6046C	006	1
	160	1
65.03901-0063A	005	26
	150	26
65.03901-0063B	005	26
	030	1
	031	6
	150	26
	400	1
	410	6
65.03901-0064A	005	27
	150	27
65.03901-0064B	005	27
	030	2
	031	7
	150	27
	400	2
	410	7
65.03901-0072	005	26
	030	1
	031	6
	150	26
	400	1
	410	6
65.03901-0073	005	27
	030	2
	031	7
	150	27
	400	2
	410	7
65.03905-0020	006	3
	030	4
	031	9

PART NO.	FIG NO.	KEY NO.	PART NO.	FIG NO.	KEY NO.	PART NO.	FIG NO.	KEY NO.
65.03905-0020	160	3	65.04401-0010L	170	29	65.05501-7072	190	1
	400	4	65.04401-0489A	007	29	65.05501-7081	009	1
	410	9	65.04401-0489B	007	29		190	1
65.03905-0023A	006	4	65.04401-0489C	007	29	65.05501-7081A	009	1
	030	3	65.04401-0489D	007	29		190	1
	031	8	65.04410-0016	001	3	65.05503-0040A	009	4
	160	4		110	3		190	4
	400	3	65.04501-0007A	007	34	65.05503-5050	009	3
	410	8		170	34		190	3
65.04101-0043	170	1	65.04505-0033	007	37	65.05510-5020A	009	2
65.04101-0044	007	2		170	37		190	2
	170	2	65.04505-5016	007	36	65.05510-5027	009	2
65.04101-0050A	007	1		170	36		190	2
65.04102-0002	007	5	65.04506-0033	007	39	65.05601-7072C	010	1
	170	5		170	39		200	1
65.04102-0002A	007	5	65.04507-0004	007	38	65.05604-0019B	010	2
	170	5		170	38		200	2
65.04102-0066	007	4	65.04902-0010	007	10	65.05606-5027B	010	3
	007	6		030	6		200	3
	170	4		031	11	65.05701-5313	020	7
	170	6		170	10		300	7
65.04102-6004	007	3		400	6	65.05701-5349	011	11
	170	3		410	11		210	11
65.04102-6004A	007	3	65.05100-6042A	180	1	65.05701-5361	002	34
	170	3	65.05100-6044	008	1		120	34
65.04103-0014	007	7	65.05100-6044A	008	1	65.05701-5442	017	13
	170	7	65.05102-0015	180	2		270	13
65.04103-0078	007	8	65.05102-0021	008	2	65.05701-5443	017	16
	170	8	65.05102-0021A	008	2		270	16
65.04104-0007	007	9	65.05103-5003	008	7	65.05701-5624	020	12
	170	9	65.05103-5006A	180	6		300	12
65.04200-6027C	007	11	65.05103-5008	180	7	65.05701-5660	010	16
	170	11	65.05103-5009	008	6		200	16
65.04200-6027D	007	11	65.05104-5004	180	4	65.05701-5661	017	10
	170	11	65.05104-5005	180	3		270	10
65.04201-5014E	007	12	65.05104-5006	008	3	65.05701-5964A	010	21
	170	12	65.05104-5007	008	4		200	21
65.04202-0014A	007	22	65.05200-6004A	008	20	65.05701-6041A	011	18
	170	22		180	20		210	18
65.04203-5010	007	15	65.05201-0008A	008	13	65.05740-0017	011	19
	170	15		180	13		210	19
65.04205-0003	007	20	65.05204-0003A	008	21	65.05740-2042	011	16
	170	20		180	21		210	16
65.04205-0003A	007	20	65.05205-0018	008	24	65.05740-5002	017	18
	170	20		180	24		270	18
65.04301-0006	007	27	65.05405-7021	001	28	65.05801-5380A	011	1
	170	27		110	28		210	1
65.04302-5011	007	28	65.05410-0007	008	8	65.05805-5193A	011	10
	170	28		180	8		210	10
65.04401-0010K	170	29	65.05501-7072	009	1	65.05805-5193B	011	10

PART NO.	FIG NO.	KEY NO.
65.05805-5193B	210	10
65.05805-5193C	011	10
	210	10
65.05806-5096A	011	8
	210	8
65.05806-5096B	011	8
	210	8
65.05903-0027A	011	23
	031	16
	210	23
	410	16
65.05903-0028	010	4
	200	4
65.05903-0030A	010	19
	010	24
	031	14
	200	19
	200	24
	410	14
65.05904-0096A	011	4
	031	15
	210	4
	410	15
65.06301-0240	012	2
	220	2
65.06301-0671A	012	2
	220	2
65.06301-0673	013	3
	230	3
65.06301-0675	012	24
	220	24
65.06301-6037B	012	17
	220	17
65.06301-6054A	012	1
	220	1
65.06301-6084	012	1
	220	1
65.06404-0021B	012	3
	220	3
65.06405-0018A	012	15
	220	15
65.06500-6157C	013	1
	230	1
65.06500-6157D	013	1
	230	1
65.06500-6357	013	1
	230	1
65.06500-6357A	013	1
	230	1
65.06500-6357B	013	1
65.06500-6357B	230	1
65.06501-0077B	013	2
	230	2
65.06501-0077C	013	2
	230	2
65.06501-0092	013	2
	230	2
65.06504-0013	014	5
	240	5
65.06505-0026	013	4
	230	4
65.06505-0027	013	4
	230	4
65.06505-0041	013	4
	230	4
65.06506-0024A	013	6
	230	6
65.06506-0027	013	6
	230	6
65.06507-0005A	013	12
	230	12
65.06508-0012	013	9
	230	9
65.06512-0014	013	14
	230	14
65.06512-0014A	013	14
	230	14
65.06520-6007	013	5
	230	5
65.06601-5067	014	12
	240	12
65.06606-0059	014	6
	240	6
65.06611-0125	014	11
	240	11
65.06611-0125A	014	11
	240	11
65.06650-6016	014	1
	240	1
65.06651-0005	014	2
	240	2
65.06901-0076	013	13
	230	13
65.06901A0069	012	42
	031	19
	220	42
	410	19
65.06903-0018	012	6
	030	7
	031	17
65.06903-0018	220	6
	400	7
	410	17
65.06903-0020	012	25
	031	18
	220	25
	410	18
65.06903-0020A	012	25
	031	18
	220	25
	410	18
65.06903-0021	012	4
	220	4
65.06903-0028	012	6
	030	7
	031	17
	220	6
	400	7
	410	17
65.08100-6061	015	1
	250	1
65.08101-0181A	015	2
	250	2
65.08101-0183A	015	4
	250	4
65.08101-0530	015	3
	250	3
65.08105-0001	015	5
	250	5
65.08120-5008F	015	7
	250	7
65.08120-5008G	015	7
	250	7
65.08201-5057	016	1
	260	1
65.08202-5059A	016	11
	260	11
65.08240-0026	016	18
	260	18
65.08301-6012	020	4
	300	4
65.08901-0044	015	6
	030	10
	031	22
	250	6
	400	10
	410	22
65.08901-0063	017	7
	030	14
	031	26

PART NO.	FIG NO.	KEY NO.
65.08901-0063	270	7
	400	14
	410	26
65.08901A0012	015	6
	030	10
	031	22
	250	6
	400	10
	410	22
65.08902-0025	016	2
	030	11
	031	23
	260	2
	400	11
	410	23
65.09100-7073	017	1
	270	1
65.09411-5051	017	30
	270	30
65.09440-0007	017	33
	270	33
65.09901-0025	017	2
	270	2
65.09901-0033	017	2
	030	13
	031	25
	270	2
	400	13
	410	25
65.09904-0008	016	13
	030	12
	031	24
	260	13
	400	12
	410	24
65.10101-7103	018	1
65.10101-7298	018	1
65.10101-7300	280	1
65.10102-6046	280	2
65.10102-6053	018	3
65.10102-6103	018	3
65.10301-5247	019	2
	290	2
65.10301-5248	019	3
	290	3
65.10301-5249	019	4
	290	4
65.10301-5295	019	6
	290	6
65.10301-5296	019	7
65.10301-5296	290	7
65.10301-5297	019	8
	290	8
65.10301-7006	019	1
	290	1
65.11101-7358A	020	1
65.11101-7358B	020	1
65.11101-7368A	300	1
65.11301-0013C	021	13
	310	13
65.11301-0013D	021	13
	310	13
65.11301-0026A	021	13
	310	13
65.11301-7010F	021	1
	310	1
65.11301-7010G	021	1
	310	1
65.11301-7019A	021	1
	310	1
65.11302-0009A	021	11
	310	11
65.11302-0009B	021	11
	310	11
65.11302-0019A	021	11
	310	11
65.11305-6004	020	1E
65.11308-0001	021	5
	310	5
65.11308-0002	021	5
	310	5
65.11308-0003	021	5
	310	5
65.11308-0004	021	5
	310	5
65.11309-0007A	021	2
	310	2
65.11309-0011C	021	2
	310	2
65.11312-0007	021	9
	310	9
65.11312-0008	021	9
	310	9
65.11401-0033	022	1
	320	1
65.11405-0005	022	3
	320	3
65.11405-0006	022	3
	320	3
65.11405-0007	022	3
65.11405-0007	320	3
65.11405-0008	022	3
	320	3
65.11405-0009	022	9
	320	9
65.11405-0010	022	9
	320	9
65.11405-0013	022	9
	320	9
65.11902-0017	021	16
	031	32
	310	16
	410	32
65.12301-5022	023	11
	330	11
65.12301-5165A	023	5
	290	22
	330	5
65.12501-7023	024	1
	340	1
65.12501-7023A	024	1
	340	1
65.12501-7023B	024	1
	340	1
65.12503-5016	024	3
	340	3
65.12503-5016A	024	3
	340	3
65.12503-5016B	024	3
	340	3
65.12504-5013A	024	2
	340	2
65.12504-5013B	024	2
	340	2
65.19102-0075	025	1
	350	1
65.19103-5035	014	8
	240	8
65.19103-6010	028	4
	380	4
65.19103-6010A	028	4
	380	4
65.19103-6012	025	5
	350	5
65.19103-6012A	025	5
	350	5
65.19107-0001	025	7
	028	6
	350	7
	380	6

PART NO.	FIG NO.	KEY NO.
65.19107-0001A	025	7
	028	6
	350	7
	380	6
65.19202-0035	005	30
	150	30
65.19202-0064	005	36
	150	36
65.26201-7058A	026	1
	360	1
65.26201-7074	026	1
	360	1
65.26201-7074C	026	1
	360	1
65.26803-7028	016	12
	260	12
65.26803-7028A	016	12
	260	12
65.26803-7028B	016	12
	260	12
65.27435-6003	012	12
	220	12
65.27441-7007	027	3
	370	3
65.28652-0013	028	1
	380	1
65.41530-0161	029	1
	390	1
65.41530-0161A	029	1
	390	1
65.41530-0162	029	9
	390	9
65.41530-0162A	029	9
	390	9
65.47901-0010	002	22
	031	34
	120	22
	410	34
65.54901-0025A	002	33
	031	35
	120	33
	410	35
65.90001-0084	004	19
	140	19
65.90001-0126	001	26
	110	26
65.90001-6002	003	6
	130	6
65.90001-6003	007	31
	170	31
65.90001-6005	011	14
	210	14
65.90001-6010	011	5
	210	5
65.90020-0010E	004	23
	140	23
65.90020-0036B	001	10
	110	10
65.90020-0062B	004	14
	140	14
65.90020-0068	011	25
	210	25
65.90020-0074	006	6
	160	6
65.90020-0079	021	17
	310	17
65.90021-0001A	005	22
	150	22
65.90021-0005	005	22
	150	22
65.90030-0009	008	26
	180	26
65.90201-0063	029	2
	029	10
	390	2
	390	10
65.90201-0064	012	8
	220	8
65.90201-0066	010	11
	200	11
65.90201-0076	017	3
	270	3
65.90201-0080	005	25
	150	25
65.90201-0094	005	23
	150	23
65.90201-0106	005	21
	150	21
65.90201-0154	005	24
	150	24
65.90201-0181	017	6
	270	6
65.90201-0186A	150	21
65.90302-0041	005	4
	005	14
	150	4
	150	14
65.90302-0042	005	6
	005	16
	150	6
65.90302-0042	150	16
65.90302-0048	001	4
	110	4
65.90302-0049	005	10
	005	20
	150	10
	150	20
65.90310-0034	009	11
	190	11
65.90310-0104	008	10
	180	10
65.90310-0115	009	7
	190	7
65.90310-0121	009	5
	190	5
65.90310-0131	001	19
	110	19
65.90310-0136	001	15
	110	15
65.90310-0136A	001	15
	110	15
65.90310-0137	001	13
	110	13
65.90310-0143	024	4
	340	4
65.90310-0149A	001	21
	012	31
	110	21
	220	31
65.90320-0019	012	12
	220	12
65.90430-0012B	004	6
	140	6
65.90430-0013B	004	7
	140	7
65.90435-0011	025	6
	350	6
65.90441-0009A	028	5
	380	5
65.90501-0003	007	21
	170	21
65.90510-0011	018	7
	280	7
65.90510-0012	008	12
	011	21
	180	12
	210	21
65.90535-0001	017	5
	270	5
65.90535-0005	026	3

PART NO.	FIG NO.	KEY NO.
65.90535-0005	360	3
65.90640-0021	021	14
	310	14
65.90701-0088	004	34
	140	34
65.90701-0202	006	5
	160	5
65.90710-0019	012	22
	220	22
65.90710-0039	007	18
	170	18
65.90720-0018	007	40
	170	40
65.90801-0018	008	19
	180	19
65.91001-0002	005	5
	005	15
	150	5
	150	15
65.91001-0004	005	37
	150	37
65.91001-0013	005	28
	150	28
65.91001-0013A	005	28
	150	28
65.91010-0017	002	2
	120	2
65.91301-0010	004	25
	140	25
65.91601-0003	002	31
	120	31
65.91601-0010	002	21
	120	21
65.91601-6003	002	31
	120	31
65.91601-6003A	002	31
	120	31
65.91601-6005	002	31
	120	31
65.91606-0037	001	5
	110	5
65.91606-0041	001	12
	001	12
	110	12
	110	12
65.91701-0219	021	6
	310	6
65.91701-0246	005	38
	150	38
65.91701-0275	005	36
65.91701-0275	150	36
65.91701-0470	016	9
	260	9
	290	25
65.91701-0533	016	10
	260	10
	290	26
65.91710-0035	001	11
	110	11
65.91710-0035B	001	11
	110	11
65.93020-0055	025	8
	028	7
	350	8
	380	7
65.93410-0024	014	3
	240	3
65.93410-0038	013	10
	230	10
65.96002-0003	003	8
	130	8
65.96301-0204B	012	18
	220	18
65.96301-0205A	012	29
	220	29
65.96301-0268	017	31
	270	31
65.96301-0327	017	25
	270	25
65.96301-0327A	017	25
	270	25
65.96301-0344	006	10
	160	10
65.96330-0132	023	8
	290	20
	330	8
65.96341-0100	023	1
	330	1
65.96401-0011	030	18
	031	30
	280	5
	400	18
	410	31
65.96401-0012	018	5
	030	18
	031	31
	400	18
	410	31
65.96501-0033B	006	8
	030	5
65.96501-0033B	031	10
	160	8
	400	5
	410	10
65.96501-0061	009	20
	031	12
	190	20
	410	12
65.96501-0068	013	16
	031	21
	230	16
	410	21
65.96501-0069	005	3
	005	13
	030	8
	150	3
	150	13
	400	8
65.96601-0012	017	17
	031	28
	270	17
	410	28
65.96601-0043	011	12
	210	12
65.96601-0045A	017	14
	030	15
	031	27
	270	14
	400	15
	410	27
65.96601-0046A	017	21
	030	16
	031	29
	270	21
	400	16
	410	29
65.96601-0046B	017	21
	030	16
	031	29
	270	21
	400	16
	410	29
65.96601-0067	017	14
	030	15
	031	27
	270	14
	400	15
	410	27
65.96801-0126	014	15
	240	15

PART NO.	FIG NO.	KEY NO.
65.96801-0126A	014	15
	240	15
65.97401-0130	011	22
	210	22
65.97401-0164	006	11
	160	11
65.97401-6001A	019	10
	290	10
65.97401-6002A	019	9
	290	9
65.97445-0001	023	9
	290	21
	330	9
65.97460-0001	023	4
	330	4
65.97601-0004	009	14
	190	14
65.97601-0053	007	17
	170	17
65.97601-0075	009	9
	190	9
65.97601-0104	007	16
	170	16
65.97601-0105	008	9
	180	9
65.98101-0008	023	10
	330	10
65.98112-0038	007	30
	170	30
65.98125-5019	011	2
	210	2
65.98125-5022	011	2
	210	2
65.98125-5022A	011	2
	210	2
65.98131-5008	017	20
	270	20
65.98150-0002	027	1
	370	1
65.98150-0042A	023	6
	290	23
	330	6
65.98150-0050	020	10
	300	10
65.98150-0053B	020	5
	300	5
65.98150-0056	002	38
	120	38
65.98701-0010	030	17
	031	30
65.98701-0010	280	4
	400	17
	410	30
65.98701-0012	018	4
	030	17
	031	30
	400	17
	410	30
65.99601-8042	031	-
	410	-
65.99605-8028	030	-
	400	-
654506540	4220	31
660300410	4220	18
660300420	4220	29
661000441	4220	13
663350310	4220	6
680000100	4220	28
680700060	4220	22
680900050	4220	21
682500640	4220	2
701-00050	3110	-
701-00051C	3110	1
701-00051E	3110	1
701-00051G	3110	1
701-00051H	3110	1
701-00053	6300	-
701-00054C	6300	1
701-00054E	6300	1
701-00054G	6300	1
701-00059	6320	-
701-00060C	6320	1
701-00060E	6320	1
701-00125	6680	17
701-00197	6690	18
701-00214	6330	-
701-00215B	6330	1
701-00215C	6330	1
701-00215E	6330	1
701-00221	6340	-
701-00222B	6340	1
701-00222C	6340	1
701-00222E	6340	1
701-00349	6270	-
701-00350A	6270	1
701-00353	6310	-
701-00354	6310	1
701-00354A	6310	1
701-00354B	6310	1
701-00354C	6310	1
701-00354E	6310	1
701-00354F	6310	1
701-00409A	3100	-
701-00410	3100	1
701-00410A	3100	1
701-00436	3230	17
701-00437	6670	17
701-00438	6280	-
701-00439	6280	1
701-00453	6290	-
701-00454	6290	1
701-00502	6270	-
701-00502A	6270	-
701-00503	6270	1
701-00503A	6270	1
704-00036A	3160	1
704-00039A	3170	1
704-00040	3170	1-1
704-00042A	3160	-
704-00043A	3170	-
704-00063	6430	-
704-00064	6430	1
704-00065B	6440	-
704-00065C	6440	-
704-00066A	6440	1
704-00067B	6460	-
704-00067C	6460	-
704-00068A	6460	1
704-00069B	6470	-
704-00069C	6470	-
704-00070A	6470	1
704-00089	6490	-
704-00091	6500	-
704-00110A	3140	-
704-00111A	3140	1
704-00114A	3150	-
704-00115A	3150	1
704-00151	3120	-
704-00152	3120	1
704-00155	3130	-
704-00156	3130	1
704-00242	6480	-
704-00242A	6480	-
704-00243	6480	1
704-00261	6720	-
704-00262	6720	1
704502	4140	121
710317016	4220	16
711360005	4220	33
713-00028	3120	1-2

PART NO.	FIG NO.	KEY NO.	PART NO.	FIG NO.	KEY NO.	PART NO.	FIG NO.	KEY NO.
713-00028	3140	1-2	903-00068	1590	25	DF-S3A-00	4280	2
	3160	1-2	910-00019	5110	7		4290	2
	6350	1-2	918-00126	5110	-		4295	3
	6370	1-2	920-00020B	1830	31	DF-S3A-S-01	4280	2A
	6390	1-2	920-00020C	1830	31		4290	2A
713-00052	6440	2	920-00069	1820	-		4295	3A
	6450	2		1830	-	DS1001045	1420	29
	6460	2		1840	-	DS2016011	1310	6
	6470	2	92703-10401	4230	64	DS2017034	1310	5
	6480	2	92703-12121	4230	68	DS2018067	1260	65
	6720	2	92703-12451	4230	84	DS2038112	1240	10
	6770	1B	92703-12551	4230	63	DS2038116	6530	24
	6771	2	92703-20181	4230	65	DS2038126	6520	14
713-00054	6420	2	95113-01400	4250	40	DS2038132	3180	12
713-00054A	6420	2	95113-04100	4250	35		6510	12
715303026	4220	36	95113-04800	4250	45		6511	12
715303257	4220	20	95121-02500	4250	18		6520	1
715303263	4220	32	95121-05500	4240	14		6530	1
715303276	4220	5	95131-02400	4250	85		6755	22
715303293	4220	34	95712-01400	4250	41	DS2038136	6550	2
715307367	4220	24	95722-02500	4250	19	DS2038156	6765	2
715307371	4220	25	96321-06350	4250	82	DS2040271	6570	1
717022	4140	31	990-011-007	4290	3A		6580	1
718006008	4220	1	C0001-63001	4240	12	DS2040272	6570	3
718299136	4220	30	C0001-63002	4240	13	DS2040273	6580	3
720956002	4220	35	C0001-63003	4240	80	DS2040321	1260	29
720965815	4220	11	C0001-63005	4240	81		1260	30
720968010	4220	3	C0003-01208	4250	51	DS2040330	1280	39
722369044	4220	23	C0003-01209	4240	58		1280	42
722369045	4220	26	C0003-04106	4250	36	DS2040331	1280	40
733-00021A	6170	-	C0003-60001	4240	50		1280	41
80B485-2	4400	22	C0003-60702	4250	47	DS2040379	6580	3
81A537-0	4420	22	C0111-61002	4250	42	DS2040441	6570	1
901-00024C	1440	3	C011B-40377	4240	49		6580	1
901-00024E	1440	3		4250	49	DS2043065	1310	3
901-00029	1450	1	C011B-50145	4250	48	DS2045234	1300	33
	1460	-	C0151-61003	4240	1	DS2045239	1300	31
901-00029A	1450	1	C0151-61004	4240	2	DS2045269	1300	32
	1460	-	C017B-71501	4240	3	DS2045270	1300	34
901-00031	1450	-	C017B-71502	4240	4	DS2045271	1290	35
901-00031A	1450	-	C017B-71503	4240	5	DS2045292	1240	11
903-00049	1510	4	C017B-71504	4240	6	DS2053736	3200	5
903-00051	1530	5	C017B-71505	4240	7		6590	5
903-00052	1490	10	C017B-71506	4240	8		6591	5
	1590	25	C017B-71507	4240	10		6600	5
903-00055A	1510	2-2	C017B-71508	4240	11		6610	5
903-00056	6200	7	C017B-71513	4240	9	DS2053737	1370	55
903-00060	1530	161	C017B-71517	4240	20	DS2053747	6600	4
903-00067	1520	7	C017B-71518	4240	24	DS2053752	6610	4
903-00068	1490	10	CSAB-XXN	4290	4	DS2053803	6591	4

PART NO.	FIG NO.	KEY NO.
DS2054237	1330	67
DS2054238	1400	44
DS2055615	1400	39
	1400	41
DS2055699	6780	4
DS2055732	1360	54
	1360	84
DS2055733	1370	82
	3210	42
	6620	42
	6630	42
	6640	42
DS2055734	1360	52
DS2055744	6620	43
DS2055745	6630	43
DS2055817	6781	1
DS2055822	6781	2
DS2062020	1380	27
	1380	28
	1380	29
	1380	30
DS2225009	6780	11
	6781	21
DS2349012	1360	45
DS2380004	1330	46
DS2462001	1360	101
	1370	101
DS2802021	1200	35
DS2802023	6781	6
DS2805008	6781	19
DS2805010	6781	11
DS7701358	3100	30
	6270	30
	6280	34
	6290	34
	6750	30
DSP12	4270	24
DU1010	4270	28
E0020335	2170	7
E0020673	4360	32
E0020683	4300	28
	4310	28
	4350	28
	4350	32
	4360	28
	4400	28
E0020723	4400	35
E0020733	4390	46
E0020953	4300	34
	4300	40
E0020953	4310	34
	4310	40
	4350	39
	4360	39
E0020963	4320	34
	4320	38
	4330	28
	4330	32
	4340	34
	4340	38
	4370	34
	4370	38
	4380	34
	4380	38
	4390	28
	4390	32
E0020973	4330	37
	4410	34
	4410	38
	4420	27
E0501236	4400	39
E0501246	4400	32
E0501546	4300	32
	4300	38
	4310	32
	4310	38
	4350	37
	4360	37
	4390	36
	4390	43
E0501846	4320	42
	4320	49
	4330	36
	4330	43
	4340	42
	4340	49
	4370	42
	4380	42
	4410	42
	4410	49
	4420	31
	4420	35
E0502139	4400	24
E0502149	4390	24
E0502709	4300	24
	4310	24
	4330	24
	4350	24
	4360	24
	4420	24
E0503289	4320	26
	4340	26
	4370	26
	4380	26
	4410	26
E1330544	4300	23
	4310	23
	4320	23
	4330	23
	4340	23
	4350	23
	4360	23
	4370	23
	4380	23
	4390	23
	4400	23
	4410	23
	4420	23
E1330564	4320	23
	4340	23
	4370	23
	4380	23
	4410	23
E1500030	2170	10
	4320	30
	4340	30
	4370	30
	4380	30
	4410	30
E1500050	2170	9
E2021042	4320	45
	4320	52
	4330	46
	4340	45
	4340	52
	4370	45
	4370	49
	4380	45
	4380	49
	4410	45
	4410	52
	4420	38
E2022033	4390	39
E2022043	4330	39
E3110092	2170	8
E3110102	4300	27
	4310	27
	4350	27
	4350	31
	4360	27

PART NO.	FIG NO.	KEY NO.	PART NO.	FIG NO.	KEY NO.	PART NO.	FIG NO.	KEY NO.
E3110102	4360	31	E3110122	4320	48	E5500380	4410	8
	4390	38		4330	35	E6020260	4400	10
	4390	45		4330	42	E6020300	4390	10
	4400	27		4340	41	E6020350	4300	10
	4400	31		4340	48		4310	10
	4400	34		4370	41		4330	10
	4400	38		4380	41		4350	10
E3110112	4300	31		4410	41		4360	10
	4300	33		4410	48		4420	10
	4300	37		4420	30	E6020370	4320	10
	4300	39		4420	34		4340	10
	4310	31	E5130260	4400	17		4370	10
	4310	33	E5130320	4390	17		4380	10
	4310	37	E5130380	4300	17		4410	10
	4310	39		4310	17	E6300621	4400	30
	4320	33		4330	17		4400	37
	4320	37		4350	17	E6300761	4300	30
	4320	44		4360	17		4300	36
	4320	51		4420	17		4310	30
	4330	27	E5130440	4320	17		4310	36
	4330	31		4340	17		4350	35
	4330	38		4370	17		4360	35
	4330	45		4380	17		4390	34
	4340	33		4410	17		4390	41
	4340	37	E5303040	4400	9	E6300881	4320	40
	4340	44	E5303200	4390	9		4320	47
	4340	51	E5303590	4300	9		4330	34
	4350	36		4310	9		4330	41
	4350	38		4330	9		4340	40
	4360	36		4350	9		4340	47
	4360	38		4360	9		4370	40
	4370	33		4420	9		4380	40
	4370	37	E5303880	4320	9		4410	40
	4370	44		4340	9		4410	47
	4370	48		4370	9		4420	29
	4380	33		4380	9		4420	33
	4380	37		4410	9	E6301581	2170	3
	4380	44	E5430420	2170	4	E6311341	4390	20
	4380	48	E5500260	4400	8	E6311481	4300	20
	4390	27	E5500300	4390	8		4310	20
	4390	31	E5500350	4300	8		4330	20
	4390	35		4310	8		4350	20
	4390	42		4330	8		4360	20
	4410	33		4350	8		4420	20
	4410	37		4360	8	E6311561	4320	20
	4410	44		4420	8		4340	20
	4410	51	E5500380	4320	8		4370	20
	4420	26		4340	8		4380	20
	4420	37		4370	8	E6311621	4400	12
E3110122	4320	41		4380	8	E6311641	4400	14

PART NO.	FIG NO.	KEY NO.	PART NO.	FIG NO.	KEY NO.	PART NO.	FIG NO.	KEY NO.
E6311741	4390	12	E8841022	4400	40	J98J1013	4270	21
E6311841	4300	12		4410	53	J98J1014	4270	25
	4310	12		4420	39	J98J1015	4270	34
	4330	12	FD-DC-0-B	4295	2	J99K1011	4265	25
	4350	12	FD-PSS1-0005	4280	4	JA0E3026	4260	25
	4360	12	G025	4270	22	JA1D2001	4260	21
	4420	12	HNM10	4270	32		4265	21
E6311921	4320	12	HNM14	4260	22	JA1D2002	4260	23
	4340	12		4265	22		4265	23
	4370	12	J24D2005	4270	27	JA1G1001	4260	1
	4380	12	J24D2006	4270	33		4265	1
	4410	12	J24D2008	4270	7	JA1G1002	4260	16
E6341561	4410	20	J24D2011	4260	11		4265	16
E6490049	2170	5		4265	11	JA1G1003	4260	26
E6490059	4390	14	J24D2015	4270	31		4265	26
E6490086	4400	20	J24D2016	4270	29	JA1G1004	4260	19
E6490091	4300	14	J95C1002	4260	3		4265	19
	4310	14		4265	3	JA1G1005	4260	33
	4330	14	J95C1003	4260	6	JA1G2001	4265	33
	4350	14		4265	6	JA1G3001	4260	31
	4360	14	J95C1004	4260	7		4265	31
	4420	14		4265	7	JA1G3002	4260	32
E6490093	4320	14	J95C1006	4260	9		4265	32
	4340	14		4265	9	K1000057	6780	9
	4370	14	J95C1007	4260	10		6781	9
	4380	14		4265	10	K1000148	6750	-
	4410	14	J95C1008	4260	12	K1000149	6750	1
E8412227	4300	6		4265	12	K1000149A	6750	1
	4310	6	J95C1009	4260	15	K1000157	6750	5
	4330	6		4265	15	K1000159	6760	-
	4350	6	J95C1012	4260	18	K1000160	6760	1
	4360	6		4265	18	K1000160A	6760	1
	4420	6	J95C1014	4260	20	K1000163	6760	5
E8412281	4390	6		4265	20	K1000164	6760	6
E8412904	4320	6	J96E2002	4260	8	K1000167	6770	-
	4340	6		4265	8	K1000168	6770	1
	4370	6	J97A5018	4260	17	K1000168A	6771	-
	4380	6		4265	17	K1000171	6780	-
	4410	6	J98J1001	4270	1	K1000172	6780	15
E8412908	4400	6	J98J1002	4270	2	K1000173	6780	16
E8841022	4300	41	J98J1003	4270	5	K1000174	6780	17
	4310	41	J98J1004	4270	6	K1000175	6770	2
	4320	53	J98J1005	4270	8	K1000175A	6770	2
	4330	47	J98J1006	4270	9	K1000176	6770	3
	4340	53	J98J1007	4270	10	K1000177	6770	4
	4350	40	J98J1008	4270	11	K1000178	6760	2
	4360	40	J98J1009	4270	14	K1000180	6750	6
	4370	50	J98J1010	4270	16	K1000196A	6771	1
	4380	50	J98J1011	4270	18	K1000344	6410	2
	4390	47	J98J1012	4270	19	K1000350	1210	1AB

PART NO.	FIG NO.	KEY NO.
K1000350	4151	-
K1000371	6780	1
K1000372	6780	2
K1000540	6511	18
	6651	18
K1000547	6760	7
K1000868	1510	2-22
K1001007	6820	6
K1001007A	6820	6
K1001029	6781	5
K1001058	6820	9
K1001112	6810	-
K1001214A	6810	4
	6811	4
	6812	4
K1001347	6755	5
K1001348	6755	7
K1001349	6755	8
K1001698	6800	22
K1001858	1710	26
K1001858A	1710	26
K1001949	6800	-
K1001950	6800	3
K1001950A	6800	3
K1001951	6800	2
K1001951A	6800	2
K1001953	6800	47
K1001954	6800	48
K1001955	6800	49
K1001956	6800	50
K1001957	6800	51
K1002053	6781	-
K1002054	6781	14
K1002055	6781	15
K1002057	6781	16
K1002058A	6781	17
K1002059A	6781	18
K1002141	6790	2
K1002142	6790	3
K1002143	6790	4
K1002144	6790	5
K1002148	6790	-
K1002429	1510	78
K1002594	6811	-
K1002594A	6812	-
K1003227	1590	41
K1003334	6820	1-3
K1003354	1140	8
K1003354A	1140	8
K1003453	6820	1-6
K1003454	6820	1-2
K1003454A	6820	1-2
K1003455	6820	1-1
K1003455A	6820	1-1
K1003456	6820	1
K1003456A	6820	1
K1003457	6820	-
K1003900	1550	8-15
K1003998	1420	30-9
K1003999	6755	14
K1004000	6755	20
K1004001	6755	21
K1004002	6755	10
K1004085	1550	8-19
K1004166	1200	12
K1004647	6755	4
K1004648	6755	6
K1006066	1620	11
	6790	11
K1006160	1480	21
K1006262	6755	9
K1006422	1570	3BA
	1590	6BA
K1006423	1570	3CA
	1580	5BA
K1006424	1600	2
K1006536	6781	3
K1007954	6241	1-1
	6251	1-1
	6261	1-1
	6812	1
K1007955	6812	2
K1007956	6241	1-4
	6251	1-4
	6261	1-4
	6812	3
K1008200	1420	30-2
K1008809	6755	-
K1008809A	6755	-
K1008810	4410	-
	6755	3
K1008810A	4410	-
	6755	3
K1008814A	6765	-
K1008815	4420	-
	6765	1
K1008815A	4420	-
	6765	1
K1009605	1710	26A
K1009605B	1710	26A
K1011331	6261	1-2
K1011426	6241	1-2
K1011427	6251	1-2
K1011430	6241	1
K1011431	6251	1
K1011432	6261	1
K1011645D12	5120	1
	5130	1
K1011645D2	5120	48
	5130	45
K1011645D5	5120	50
	5130	47
K1011647A	5130	27
K1011648	5120	22
	5130	22
K1012128	6241	1-1A
	6251	1-1A
	6261	1-1A
	6812	1A
K1012129	6241	1-1B
	6251	1-1B
	6261	1-1B
	6812	1B
K1012130	6241	1-1D
	6251	1-1D
	6261	1-1D
	6812	1D
K1012131	6241	1-1C
	6251	1-1C
	6261	1-1C
	6812	1C
K1012132	6241	1-1E
	6251	1-1E
	6261	1-1E
	6812	1E
K1012133	6241	1-1H
	6251	1-1H
	6261	1-1H
	6812	1H
K1012134	6241	1-3
	6251	1-3
	6261	1-3
K1012135	6241	1-1G
	6251	1-1G
	6261	1-1G
	6812	1G
K1012136	6241	1-1F
	6251	1-1F
	6261	1-1F
	6812	1F

PART NO.	FIG NO.	KEY NO.
K1012204	5120	27
K1012470D1	5120	47
	5130	44
K1012470D11	5120	51
	5130	48
K1012470D3	5120	49
	5130	46
K1012685A	1220	21
K1013180	6170	11
K1013232	1730	37
K1013846	1710	23
K1029257	1220	21A
	5110	24
K1033589	1210	1AB
	4151	-
K1033590	4151	2
K1033591	4151	26
K1040112	1830	31A
K1042074	5130	26
K9000353	1700	9A
	1700	10A
	1700	11A
	1700	12A
	1700	13A
	1720	14A
	6110	1A
	6110	3A
	6120	3A
	6130	1A
	6140	1A
	6220	1A
K9000426	1180	2B
K9000427	1180	2H
K9000428	1180	2E
K9000994	1180	2B
K9000995	1180	2H
K9000999	3210	5A
	6620	5A
	6630	5A
	6640	5A
K9001000	3210	6A
	6620	6A
	6630	6A
	6640	6A
K9001001	4260	40
	4261	40
K9001002	4265	40
K9001126	4261	12
K9001127	4261	14
K9001224	4261	25
K9001225	4261	25
K9001228	4261	33
K9001229	4261	33
K9002875	4140	*
K9002911	4261	3
K9005662	1220	21B
NWP116	4270	3
P0010A	4260	4
	4265	4
P0014	4260	5
	4265	5
P0020	4260	13
	4265	13
P010	4270	36
P012	4270	35
P022	4270	12
P03	1130	2K
P04	1130	2J
P06A	1130	2I
P1106	1130	2L
P1108	1130	2O
P1110	1130	2P
	1130	2Q
P1210	1130	2R
	1130	2S
P1306	1130	2M
P1406	1130	2N
PBDB-LNN	4290	3
RSY10	4260	14
	4265	14
RSY12	4270	23
S0121061	4150	16
	4151	16
S0501553	1570	3T
S0503353	1420	30-14
S0503553	1420	30-16
S0504453	1570	3U
	1580	5U
	1750	21
	1760	14
	1780	25
	6110	31
	6120	31
S0504553	1320	4
	1580	5T
S0504853	1320	31
S0505063	1420	30-16
S0508453	1670	6
S0508553	1600	36
S0508653	1780	34
S0508653	1820	29
	6110	22
	6130	5
	6140	5
S0508753	1190	30
	1570	3G
	1580	5G
S0508853	1100	24
	1320	18
	1500	12
	1520	125
	1600	34
	1640	18
	1690	44
	6100	4
	6710	12
S0509053	1750	7
	1820	32
	6740	14
S0511653	1790	15
	1800	15
	6210	13
S0511853	1100	14
	1170	17
	1320	20
	2100	12
	6800	12
S0512053	1200	5
	1220	10
	1350	11
	1570	3K
	1580	5K
	1590	6D
	1820	23
	1820	47
S0512253	1310	16
	1400	51
S0512263	1550	1-19
	1550	13
S0512353	1330	12
	6740	2
S0514653	1200	26
	1220	30
S0514853	1440	43
S0515053	3100	24
	3210	34
	6270	24
	6280	24
	6290	24
	6620	34

PART NO.	FIG NO.	KEY NO.
S0515053	6630	34
	6640	34
	6750	24
S0515253	1150	41
	1150	41
	1610	40
S0515353	1310	26
	3210	32
	6620	32
	6630	32
	6640	32
	6740	2
	6820	1-6
S0515553	1150	26
S0521261	2100	37
S0521266	2100	37
	6800	37
S0521366	3110	18
	6300	18
	6310	18
	6320	18
	6330	18
	6340	18
	6760	18
S0521456	1100	10
	3100	22
	6270	22
	6280	22
	6290	22
	6750	22
S0521466	1120	3
	6170	2
	6820	2
S0521666	6170	4
	6820	3
S0527566	1260	2
S0530761	2100	16
S0530766	2100	16
	6800	16
S0534261	1100	16
S0534266	1100	16
S0534461	6490	5
	6500	5
S0534661	6490	3
	6500	3
S0553753	1330	13
S0555753	1590	6H
S0556053	1320	14
S0556453	6110	14
	6120	14
S0557453	1820	5
S0558153	1180	6
S0558653	1400	10
S0558753	1400	47
S0558761	4391	47
S0558853	6170	5
S0558953	1350	14
	1410	2
S0560361	1820	11
S0560453	4391	29
	4391	33
S0560553	1120	42
	1180	3
	1560	11
S0560853	1820	16
S0560953	3230	8
	6670	8
	6680	8
	6690	8
S0561053	1270	55
	1310	19
S0561153	1590	28
S0561253	1590	32
S0562653	1760	48
S0562766	3180	20
	3220	14
	6510	20
	6511	20
	6520	22
	6530	22
	6650	14
	6651	14
	6660	14
	6755	16
S0563166	3220	15
	6650	15
	6651	15
	6660	15
S0563366	3210	33
	6620	33
	6630	33
	6640	33
S0565056	2100	35
	6800	35
S0565461	1200	8
	1220	2
S0565466	2100	31
	6800	31
S0565666	1120	23
	6570	13
S0565666	6580	11
S0566053	1300	46
	3230	13
	6670	13
	6680	13
	6690	13
S0566066	2100	23
	6800	23
S0566453	1260	51
	1270	51
S0566666	3210	31
	6620	31
	6630	31
	6640	31
S0566866	6340	22
S0566966	6330	22
	6340	21
S0569866	1120	7
S0570061	2100	4C
S0570066	2100	4C
	6800	4C
S0570166	1210	3
	2100	19
	6800	19
S0570461	2100	32
S0570466	2100	32
	6800	32
S0571866	6330	21
S0571966	3110	19
	6300	19
	6310	19
	6320	19
	6760	19
S0572066	3110	21
	6300	21
	6310	21
	6320	21
	6760	21
S0572161	6290	7
S0572166	3100	7
	3110	22
	6270	7
	6280	7
	6290	7
	6300	22
	6310	22
	6320	22
	6750	7
	6760	22
S0573361	2100	17

PART NO.	FIG NO.	KEY NO.
S0573366	2100	17
	6800	17
S0574761	6410	7
	6420	7
S0574961	6430	7
	6440	7
	6450	7
	6460	7
	6470	7
S0575061	3120	4
	3130	4
	3140	4
	3150	4
	3160	4
	3170	4
	6350	4
	6360	4
	6370	4
	6380	4
	6390	4
	6400	4
S0686151	1760	18
S0715251	2130	3
S0718361	2120	11
S0760853	6160	2
S0765066	1120	31
S0771466	1120	37
S0771566	1120	37
S0771666	1120	40
S0771766	1120	40
S0776261	1100	6
	2100	39
S0776266	2100	39
	6800	39
S0786453	1150	21
S0786653	1760	45
S2201766	1500	24
	6710	24
S2202866	1420	25
	1430	25
S2205066	1380	3
	1390	3
S2208761	1450	2
S2211866	1500	22
	6210	10
	6710	22
S2212266	1290	21
	1310	15
	1400	5
	6570	10
S2212366	6580	8
S2213066	6580	8
S2213866	1290	22
S2215266	1240	53
S2215366	3180	21
	6510	21
	6511	21
	6520	3
	6530	3
	6580	9
	6755	25
S2215466	1240	25
	1260	14
	1290	14
	1300	14
	1310	18
	2160	20
	6511	21
	6755	25
S2215566	6570	11
S2215666	3180	27
	3210	52
	6510	27
	6511	27
	6520	21
	6530	21
	6570	11
	6580	9
	6620	52
	6630	52
	6640	52
	6755	26
S2215766	1260	13
	3210	35
	6620	35
	6630	35
	6640	35
S2215961	4391	37
	4391	44
S2215966	3210	36
	6620	36
	6630	36
	6640	36
S2216666	1260	27
S2216766	1260	64
S2217066	1290	17
S2217471	4150	24
	4151	24
S2218466	2160	21
S2218566	1270	26
S2218566	6765	6
S2218666	3180	23
	3190	5
	6510	23
	6511	23
	6520	20
	6530	20
	6540	5
	6550	5
	6560	5
	6755	18
	6765	5
S2218766	3180	22
	3220	13
	6510	22
	6511	22
	6520	19
	6520	19
	6530	19
	6530	19
	6570	12
	6580	10
	6650	13
	6651	13
	6660	13
	6755	17
S2218966	3210	37
	6620	37
	6630	37
	6640	37
S2219366	1280	70
S2220466	1280	71
S2221566	1230	20
	1240	20
S2222272	4391	25
S2227861	6770	5
S3102271	6820	1-8
S3102281	6820	1-8
S3450343	1510	58
	1730	52
S3450373	1480	18
S3450583	1420	30-8
	1710	24
	1820	2
S3450823	1420	48
	1690	39
	1730	38
S3450833	1510	44
	1540	23F
	1550	8-9

PART NO.	FIG NO.	KEY NO.
S3450833	1780	39
S3450853	1700	2
S3450943	1690	12
	1690	15
	1690	24
S3450953	1510	93
	1520	51
	1690	18
	1690	21
	1810	19
S3450973	1510	29
	1520	29
	1520	29
	1540	29
S3450983	1730	30
	1730	33
S3450993	1510	65
	1530	65
	1540	23H
S3452823	1550	8-19B
	1550	8-27
S3452833	1420	30-19
S3452853	1420	35
	1470	29
S3452983	1650	1D
S3453118	1510	107
S3458582	1530	89
S3458953	1680	10
S3524403	3200	7
	6590	7
	6591	7
	6600	7
	6610	7
S3643359	1510	79
S3644183	1480	16
S4010003	1510	60
S4012233	1320	29
S4012303	1550	8-18
S4012333	1650	1E
	1690	7
S4012533	1320	8
	1510	2-19
	1540	24
	1550	8-31
	1600	17
	1690	45
	1730	50
	1820	8
	6110	17
	6120	17

PART NO.	FIG NO.	KEY NO.
S4012533	6820	1-5
S4012633	1150	20D
	1220	31
	1570	3L
	1570	3Q
	1580	5L
	1580	5Q
	1690	3
	1820	14
	4391	40
	6170	17
S4012733	1150	27
	1240	43
	1570	3E
	1580	5E
	1760	51
	1820	19
S4012833	4261	22
S4012933	1260	52
	1270	52
	6330	19
	6340	20
	6820	1-10
S4013133	3100	9
	3110	20
	6270	9
	6280	9
	6290	9
	6300	20
	6310	20
	6320	20
	6330	20
	6750	9
	6760	20
S4013333	1100	17
	3120	5
	3130	5
	3140	5
	3150	5
	3160	5
	3170	5
	6350	5
	6360	5
	6370	5
	6380	5
	6390	5
	6400	5
	6410	8
	6420	8
	6430	8

PART NO.	FIG NO.	KEY NO.
S4013333	6440	8
	6450	8
	6460	8
	6470	8
S4013343	6490	4
	6500	4
S4014633	1550	67
S4032633	1510	2-10
S4032833	3200	12
	6590	12
	6600	12
	6610	12
	6780	12
	6781	12
S5000003	1480	29
S5000111	1530	90
S5000113	1420	30-10
	1500	25
	1820	3
	6710	25
S5000203	1420	49
S5000213	1420	30-15
	1540	23G
	1700	4
	6200	5
S5010213	1510	45
	1550	8-10
S5010313	1510	30
	1520	30
	1520	30
	1540	23I
	1540	30
	1570	3S
	1580	5S
	1690	9
	1780	27
	6110	33
	6120	33
S5010513	1100	25
	1190	31
	1320	19
	1500	14
	1540	25
	1570	3H
	1580	5H
	1590	6I
	1600	35
	1640	20
	1750	9
	1820	7

PART NO.	FIG NO.	KEY NO.
S5010513	6100	18
	6110	24
	6130	7
	6140	7
	6710	14
S5010613	1150	20E
	1320	21
	1400	7
	1550	22
	1590	6E
	1690	5
	1750	5
	1790	17
	1800	17
	1820	12
	1820	25
	6170	16
	6740	4
S5010713	1120	28
	1150	28
	1590	20
	1760	50
	1820	17
	6740	4
S5010913	1120	45
	1260	48
	1270	48
	2100	41
	6800	41
	6820	1-9
	6820	10
S5011113	1210	1O
S5020013	1510	59
S5100003	1730	53
S5100103	1710	25
S5100203	1540	23E
	1690	40
	1700	3
	1730	39
	1780	40
	6200	6
S5100603	4391	39
	4391	46
S5100703	4391	28
	4391	32
	4391	36
	4391	43
	6820	1-12
S5102101	1530	91
S5102203	1320	30
S5102203	1510	46
	1550	8-11
S5102303	1320	5
	1330	19
	1510	31
	1520	31
	1520	31
	1540	23J
	1540	31
	1690	8
	1690	13
	1690	16
	1690	19
	1690	22
	1690	25
	1730	31
	1730	34
	1750	22
	1760	15
	1780	26
	1810	20
	6110	32
	6120	32
S5102503	1320	9
	1510	2-21
	1520	126
	1600	16
	1640	19
	1670	7
	1690	46
	1730	51
	1750	8
	1780	35
	1800	24
	1810	24
	1820	6
	1820	30
	1820	33
	1820	44
	6100	5
	6110	15
	6110	23
	6120	15
	6130	6
	6140	6
	6740	15
	6820	1-4
S5102603	1100	15
	1170	19
	1180	4
S5102603	1200	6
	1220	11
	1310	17
	1320	3
	1330	20
	1350	20
	1400	9
	1410	3
	1690	4
	1750	4
	1790	16
	1800	16
	1820	13
	1820	24
	1820	48
	2100	13
	6110	10
	6170	6
	6740	3
	6800	13
S5102702	2130	4
S5102703	1120	32
	1150	32
	1150	32
	1180	7
	1240	42
	1270	56
	1310	21
	1320	7
	1590	24
	1760	19
	1760	46
	1760	49
	1820	18
	3100	25
	3210	38
	3230	15
	6270	25
	6280	25
	6290	25
	6620	38
	6630	38
	6640	38
	6670	15
	6680	15
	6690	15
	6740	3
	6750	25
S5102803	2120	12
	3180	24

PART NO.	FIG NO.	KEY NO.
S5102803	3210	40
	3220	16
	6510	24
	6511	24
	6520	23
	6530	23
	6620	40
	6630	40
	6640	40
	6650	16
	6651	16
	6660	16
	6755	19
S5102903	1100	11
	1120	4
	1210	1E
	1260	47
	1270	47
	1300	47
	2100	36
	3100	23
	3110	17
	3230	12
	6170	3
	6270	23
	6280	23
	6290	23
	6300	17
	6310	17
	6320	17
	6330	17
	6340	17
	6570	16
	6580	14
	6670	12
	6680	12
	6690	12
	6750	23
	6760	17
	6800	36
	6820	4
S5103101	2100	4D
	6800	4D
S5103203	2100	20
	6800	20
S5110601	1500	23
	6210	11
	6710	23
S5110603	1400	6
S5110703	1240	26
S5110703	3210	39
	6570	14
	6580	12
	6620	39
	6630	39
	6640	39
S5110803	3210	24
	6570	15
	6580	13
	6620	24
	6630	24
	6640	24
S5110903	1230	22
	1240	22
S5111101	6770	6
S5210303	1550	8-8
S5231090	4150	31
	4151	31
S5735351	6210	7E
S5740800	4261	24
S5741341	4150	15
	4151	15
S5741420	2120	14
S6500380	4151	6
S6500450	4150	33
	4151	34
S6540600	1540	76
S6541200	1420	30-12
S6541500	1420	30-20
S6541900	1420	19
S6710032	4391	48
S6710041	1210	6
	1670	8
	3200	8
	6310	23
	6330	23
	6340	23
	6590	8
	6591	8
	6600	8
	6610	8
	6760	23
	6780	7
	6781	7
S6710042	3110	23
	6300	23
	6320	23
S8000111	1200	16
	1220	24
	1230	22
	1240	22
	6770	6
	1550	8-8
	4150	31
	4151	31
	6210	7E
	4261	24
	4150	15
	4151	15
	2120	14
	4151	6
	4150	33
	4151	34
	1540	76
	1420	30-12
	1420	30-20
	1420	19
	4391	48
	1210	6
	1670	8
	3200	8
	6310	23
	6330	23
	6340	23
	6590	8
	6591	8
	6600	8
	6610	8
	6760	23
	6780	7
	6781	7
	3110	23
	6300	23
	6320	23
	1200	16
	1220	24
	1330	23
S8000111	1330	23
	1340	23
	1350	23
	1350	23
	1370	23
	1380	11
	1390	11
	1400	11
	1410	4
	3210	27
	4280	6
	4290	7
	4295	6
	6220	6
	6620	27
	6630	27
	6640	27
S8000141	1220	28
	1340	25
	1350	25
	1360	25
	1370	25
	1380	12
	1390	12
	1400	12
	1410	5
	2160	11
	3210	28
	4261	5
	6620	28
	6630	28
	6640	28
S8000181	1200	19
	1210	1N
	1220	19
	1250	27
	1330	27
	1350	27
	1360	27
	1400	13
	6100	7
S8000201	4261	13
S8000231	1250	31
	2160	10
S8000291	1240	33
	1250	33
	1310	24
	3210	29
	3220	8
	6620	29

PART NO.	FIG NO.	KEY NO.
S8000291	6630	29
	6640	29
	6650	8
	6651	8
	6660	8
S8000321	1310	7A
S8000341	3210	25
	4391	35
	4391	42
	6620	25
	6630	25
	6640	25
S8000381	1310	7B
	3230	3
	6670	3
	6680	3
	6690	3
S8000401	3210	26
	6620	26
	6630	26
	6640	26
S8002701	4261	4
S8010550	2130	11
S8010701	4391	21
S8010900	2130	5
S8010901	2110	7
S8011351	4391	13
S8011450	1200	3
S8011651	1220	22
S8012000	1220	6
S8012200	1220	13
S8030041	2160	12
S8030121	1250	49
S8030161	1260	67
	1310	23
	3220	6
	6650	6
	6651	6
	6660	6
S8040061	1330	94
S8040081	1330	29
S8180211	1330	24
	2160	14
S8180221	1220	33
	6140	11
	6150	2
	6740	7
S8180251	1760	37
	1780	43
	2100	49
S8180281	1330	26
S8180321	6100	1B
S8180441	2160	13
S8450006	1140	13
S8450012	1190	15
	6740	10
S8450016	1840	37
S8450023	6100	8
S8450053	1420	47
	1430	47
S8450066	1420	12
	1430	12
S8470065	1120	16
S8470095	1240	9
S8470138	1230	7
S8510118	1170	15
S8510143	1170	14
S8510168	1170	16
S862203H	5110	15
SB18	4270	17
SBM0605	4270	30
SP0306	4270	15
SP0528	4260	24
	4265	24
SR11CS	4270	20
SR28CH	4270	13
SWP4P	4260	30
SWP4PT	4260	29
SWP6P	4265	30
SWP6PT	4265	29
T1152-33301	4240	23
T1311-46001	4250	17
T1411-18003	4250	28
T1411-18004	4240	30
T1411-18006	4240	69
T1411-28001	4250	15
T1411-36001	4250	31
T1411-36002	4250	32
T1411-36003	4250	46
T1415-19001	4250	52
T1431-44001	4250	43
T1461-16002	4240	22
T1461-19007	4250	16
T1461-20005	4240	25
T1515-10001	4240	77
	4250	77
T1515-22001	4240	76
T1515-30001	4240	78
T1631-00003	4250	44
T1631-00004	4250	56
T1631-00011	4250	34
T6510018	5100	1-36
T6510027	5100	1-37
T6510062	5100	1-25
T6510066	5100	1-26
T6510070	5100	1-27
T6510072	5100	1-28
T6510075	5100	1-29
T6510081	5100	1-30
T6510085	5100	1-31
T6510087	5100	1-32
T6510089	5100	1-33
T6510091	5100	1-34
T6510092	5100	1-35
T6550005	5100	1-17
T6550006	5100	1-18
T6550007	5100	1-19
T6550009	5100	1-20
T6550011	5100	1-21
T6550013	5100	1-22
T6550015	5100	1-23
T6550018	5100	1-24
T6580008	5100	1-2
T6580020	5100	1-3
T6600183	5100	1-38
T6600189	5100	1-39
T6600197	5100	1-40
T6600201	5100	1-41
T6600211	5100	1-42
T6600223	5100	1-43
T6600227	5100	1-44
T6690012	5100	1-12
T6690013	5100	1-13
T6750003	5100	1-14
T7050003	5100	1-4
T7050013	5100	1-5
T7050021	5100	1-6
T7050022	5100	1-7
T7260057	5100	1-9
T7500004	5100	1-8
TF-S3A-00	4280	2
	4290	2
	4295	3
TF-S3A-S-01	4280	2A
	4290	2A
	4295	3A
VDL24	4280	3
	4290	5
	4295	4
WBM0630	4270	26

PART NO.	FIG NO.	KEY NO.	PART NO.	FIG NO.	KEY NO.	PART NO.	FIG NO.	KEY NO.
WBM1042	4270	37						
WPT18	4260	2						
	4265	2						
WPT38	4270	4						
Y-3738-04	1330	2F						
Y-3738-05	1330	2G						

DOOSAN INFRACORE CO., LTD.
AROUND THE WORLD



Head Office
Hwasu-Dong 7-11, Dong-Gu, Incheon, Korea.
Tel : +82-32-211-1114 Fax : +82-32-211-1231

Seoul Office
Doosan Tower 26TH FL. 18-12, Euljiro-6Ga,
Jung-Gu, Seoul, korea 100-730
Tel : +82-2-3389-8114 Fax : +82-2-3389-8117

ASIA & OCEANIA

Doosan Infracore Machine Tools Yantai Co.,Ltd.
1, Dayu Road 1, ETDZ, Yantai, Shandong, China
Tel : +86-0535-693-5060 , Fax : +86-0535-693-5619

Doosan Infracore Liaoning Machinery Co.,Ltd.
No.32 DongLing Road, DongLing District, ShenYang,
Liaoning, China
Tel : +86-24-8841-1407, Fax : +86-24-8841-1404

Doosan Infracore Xinjiang Machinery Co.,Ltd.
No. 178, Hetanbei Road, Wurumuqi, Xinjiang, China
Tel : +86-991-469-7217 , Fax : +86-991-469-8641

Dajian(Tianjin) Mechanical Construction Co., Ltd
No.87 Gongxing Road, Tanggu, Tianjin, china
Tel : +86-22-2521-0540 Fax : +86-22-2521-0714

Doosan Infracore (China) Co., Ltd.
#28, Wuzhishan Road, Eco. & Tech, Development Zone,
Yantai, Shandong, China
Tel : +86-535-638-2000 Fax : +86-535-638-2004

Doosan Infracore Japan Corporation
3rd Floor, k-1 Bld.,19-4, Nishi-shinbashi 2-Chome,
Minato-Ku, Tokyo, Japan
Phone : +81-3-3434-2547 Fax : +81-3-3434-2548

Doosan Infracore Middle East Center(Dubai)
183127, Al-Serkal Building, Air Port Road, Dubai, U.A.E
Phone : +971-4-295-2781, 2782 Fax : +971-4-295-2783

NORTH AMERICA

Doosan Infracore America Corporation
2905 Shawnee Industrial Way, Suwanee,
Georgia 30024, U. S. A
Tel : +1-770-831-2200 Fax : +1-770-831-0480

Doosan Infracore America Corporation Cleveland Office
4530 Renaissance Parkway, Warrensville Heights, OH 44128, U.S.A
Tel : +1-216-595-1212 Fax : +1-216-595-1214

Doosan Infracore America Corporation N.J. Office
8 York Avenue, West Caldwell, N.J. 07006, U.S.A
Tel : +1-973-618-2500 Fax : +1-973-618-2501

EUROPE

Doosan Infracore U.K., Ltd.
Doosan House, Unit 6.3, Nantgarw Park, Cardiff
CF47QU, U.K.
Tel : +44-1443-84-2273 Fax : +44-1443-84-1933

Doosan Infracore Germany GmbH
Hans-Boeckler strasse 27-29, D-40764, Langenfeld-Fuhrkamp,
Germany / Tel : +49-2173-8509-20 Fax : +49-2173-8509-60

Doosan Infracore Europe S.A. (Europe Head Office)
1A, Rue Achille Degrace, 7080 Frameries, Belgium
Tel : +32-65-61-3231 Fax : +32-65-61-3238

Doosan Infracore France SARL
(Doosan Infracore Europe S.A. France Office)
2Eme Etage, 1/3 Avenue Pavlov, Z.A.I. Des Bruyeres, 78190 Trappes France
Tel : +33-1-3016-2140 Fax : +33-1-3016-2144

Doosan Infracore Europe S.A. Italy Office
Via Monfalcone 41, 20090 Cinisello B.mo (MI)
Tel : +39-2-612-0565 Fax : +39-2-612-6322

SOUTH AMERICA

Colombia Liaison Office
Diagonal127 A No. 17-34 Oficina 302
Bogota, Colombia
Tel : +57-1-625-3470 Fax : 57-1 -625-3883

AFRICA

Doosan Infracore South Africa (PTY)Ltd.
60C Electron Road, Isando 1600, Johannesburg, South Africa
Tel : +27-11-974-2095 Fax : +27-11 -974-2778