RUTHZIL TRATOR COMERCIAL DE PEÇAS LTDA 11 97083-6812 ROLANDO

Bobcat®

Parts Manual
S570 Skid-Steer Loader

S/N A7U711001 & Above

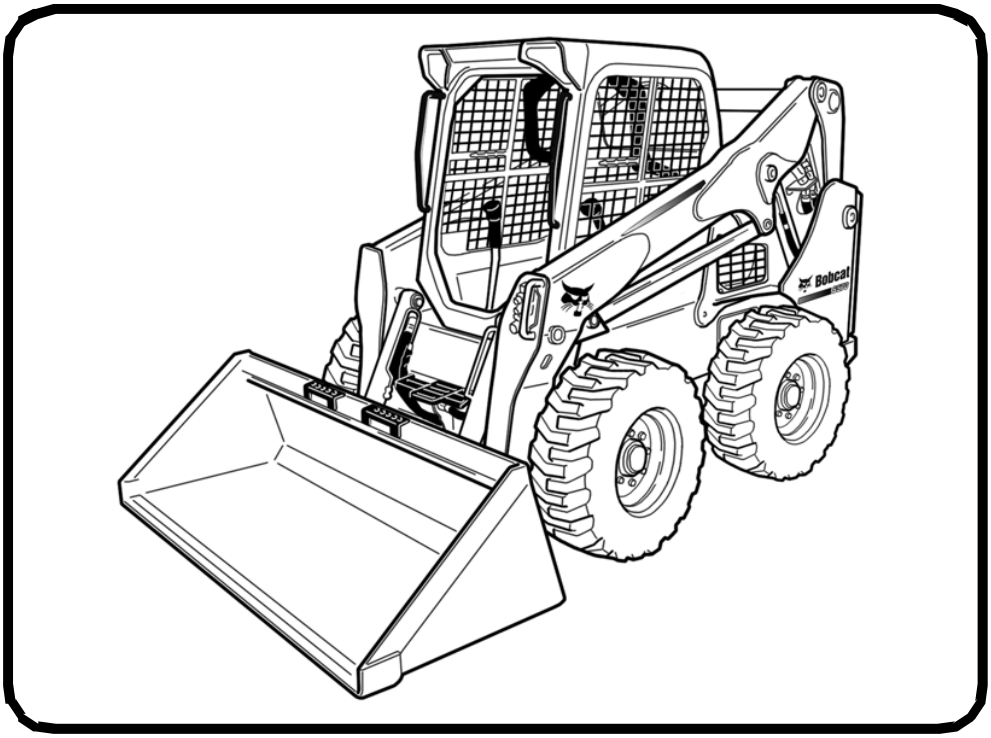

EQUIPPED WITH
BOBCAT INTERLOCK
CONTROL SYSTEM (BICS™)

6989676 (8-12)

Printed in U.S.A.

© Bobcat Company 2012

GENERAL INFORMATION

Before ordering parts, ALWAYS provide dealer with your product model number and complete serial number information. Before ordering parts, verify correct part numbers and / or serial numbers with your dealer. When using the machine serial number, use the complete number.

The number shown in the quantity column in this manual is the number of parts needed for the illustration on the page. For some parts an "x" will be shown in the quantity column. This "x" indicates that the quantity to be used is "As Needed".

When references LH (Left Hand) and RH (Right Hand) are used in this manual it is done from the operator's seat in the forward operating position.

When "See Illustration…." appears in the remarks column refer to the contents page for the illustration title to find page number location.

When "See BTI…." appears in the remarks column contact a Bobcat dealer.

For additional information on the Bobcat website visit
www.bobcat.com **or** www.bobcat.eu

TRANSLATED DECAL KITS

AR = Argentina (Spanish) BR = Brazil (Portugese) CA = French Canadian
JP = Japanese

DISPOSITION

(Found in the Remarks Column)

[A] = Use Up
[B] = Use Up on Other Applications
[C] = File SDR Report with Bobcat Parts Sales
[D] = Part Number Error

ABBREVIATION / ACRONYM LIST

A/C = Air Condition
ACS = Advanced Control System
AHC = Advanced Hand Controls
ASSY = Assembly
AUX = Auxiliary
AWS = All Wheel Steer
BICS = Bobcat Interlock Control System
BPV = Bucket Positioning Valve
BTI = Bobcat Technical Information Bulletin
C/I = Construction/Industrial
CT = Compact Tractor
CTL = Compact Track Loader
CYL = Cylinder
DIA = Diameter
DIFF = Differential
DLX = Deluxe
DPF = Diesel Particluate Filter
ECU = Electronic Control Unit
EF = EarthForce™
EGR = Exhaust Gas Recirculation
ELEC = Electrical
EMEA = Europe/Middle East/Africa
ENG = Engine
EXC = Excavator
FM = Front Mounted
FOPS = Falling Object Protective Structure
GAL = Gallon
HD = Heavy Duty
HVAC = Heating Ventilation & Air Condition
HYD = Hydraulic
ID = Inside Diameter
IGN = Ignition
INJ = Injection
ISO = International Organization for Standardization
LA = Long Arm
LDR = Loader
L/P = Low Profile
LH = Left Hand
MEA = Middle East Africa
MFR = Main Frame
MM = Millimeters
NA = North America
NAP = Not Available as Parts
NSS = Not Serviced Separately
OD = Outside Diameter
OM = Operation & Maintenance Manual
PM = Parts Manual
PTO = Power Take Off
PWM = Pulse Width Modulation
QT = Quart
Ref. = Reference
REM = Remanufactured
RH = Right Hand
ROC = Rated Operating Capacity
ROPS = Rollover Protective Structure
SA = Standard Arm
SALES = (Order Through Sales Department)
SCPA = Standard Controls W/Power Assist
SD = Severe Duty
SDR = Shipping Discrepancy Report
SJC = Selectable Joystick Controls
SL = Service Letter
SM = Service Manual
SSL = Skid Steer Loader
STD = Standard
TEMP = Temperature
THL = (Control Pattern)
TICS = Toolcat® Interlock Control System
TRANS = Transmission
USB = Universal Serial Bus
UV = Utility Vehicle
VEH = Vehicle
W/A = Welded Assembly
W/ = With
W/O = Without
WMC = Work Machine
“ = Inches
‘ = Feet

CONTENTS

MAINTENANCE ITEMS 1-12
MAINTENANCE ITEMS 1-4
SCHEDULED MAINTENANCE ITEMS 5-12

MAIN FRAME 13-42
MAIN FRAME 13
OPERATOR CAB 15-24
SEAT BAR 25-28
SEAT & SEAT BELT 29
PANELS 31-34
REAR DOOR 35
LIFT ARM & BOB-TACH 37-40
BOB-TACH 41

DRIVE TRAIN 43-54
DRIVE TRAIN 43
AXLE 45
MOTOR CARRIER 47-50
DISC BRAKE 51-54

HYDRAULIC SYSTEM 55-82
HYDRAULIC CIRCUITRY 55-62
MANUAL LIFT RELEASE SYSTEM 63
AUXILIARY HYDRAULICS 65
TILT CYLINDER 67
LIFT CYLINDER 69
CONTROL PEDALS 71
HYDRAULIC CONTROL VALVE 73-80
MANUAL LIFT RELEASE VALVE 81

HIGH FLOW HYDRAULICS 83-86
HIGH FLOW HYDRAULICS 83-86

HYDROSTATIC SYSTEM 87-138
RADIATOR/COOLER ASSEMBLY 101
HAND CONTROLS 103-106
HYDROSTATIC MOTOR 107-110
HYDROSTATIC PUMP/GEAR PUMP 111
HYDROSTATIC PUMP 113-132
GEAR PUMP 133
COOLING FAN MOTOR 135
2-SPEED VALVE 137
HYDROSTATIC CIRCUITRY 87-100

ELECTRICAL SYSTEM 139-166
CAB ELECTRICAL CIRCUITRY 139-142
ENGINE ELECTRICAL CIRCUITRY 143-150
CONTROLS ELECTRICAL 151-162
ALTERNATOR 163
STARTER 165

POWER UNIT 167-234
COOLING SYSTEM 167
ENGINE & ATTACHING PARTS 169-178
ENGINE SPEED CONTROL 179-184
FUEL SYSTEM 181
ENGINE & GASKET KITS 185
UPPER GASKET KIT 187
LOWER GASKET KIT 189

CONTENTS (Cont'd)

POWER UNIT
FRONT COVER 191
CRANKCASE 193
ROCKER ARM COVER 195
VALVE & ROCKER ARM 197
CYLINDER HEAD 199
OIL PAN 201
PISTON & CRANKSHAFT 203-206
CAMSHAFT 207
WATER PUMP & THERMOSTAT 209
MANIFOLDS 211
TURBOCHARGER 213
EGR VALVE 215
EGR COOLER 217
FUEL & INJECTION PUMP 219
INJECTION PUMP 221-224
GOVERNOR 225-228
INJECTION NOZZLES 229
INJECTION PIPES 231
AIR CLEANER 233

ACCESSORIES & OPTIONS 235-422
ACCESS COVER 235
ACCESSORIES HARNESS KIT 237
BACK-UP ALARM KIT 239-242
BEACON 243
BLOCK HEATER 245
BUCKET POSITION VALVE KIT 247
BUCKET POSITION VALVE 249
BUMPER KIT 251
CAB DOOR 253-260
CAB ENCLOSURE 261
CAB SEAL KIT 263
CAB WINDOWS 265-270
COUNTERWEIGHT KIT 271-274
COUPLER GUARD KIT 275
CUP HOLDER KIT 277
DECALS 279-284
DELUXE HEADLINER KIT 285
DELUXE INTERIOR KIT 287
ELECTRICAL CONTROLS KIT 289-292
FIRE EXTINGUISHER 293
FLASHER LIGHTS 295
F.O.P.S KIT 297
F.O.P.S WINDOW KIT 299
FUEL SEDIMENT BOWL KIT 301
GAS SPRING KIT 303
HEATER & A/C 305-322
HORN KIT 323-326
HOSE GUIDE ASSY 327
KEYLESS PANEL KIT 329-332
LIFT KIT 333-336
LIGHT GUARD KIT 337-340

CONTENTS (Cont'd)

ACCESSORIES & OPTIONS
MAINTENANCE PLATFORM KIT 341
MINE SAFETY & HEALTH ADMINISTRATION 343
MUFFLER GUARD KIT 345
MUFFLER PURIFIER 347
PEDAL EXTENDERS 349
POWER BOB-TACH 351-358
RADIO KIT 359
REAR AUXILIARY KIT 361
REAR AUXILIARY VALVE 363
REAR DOOR LOCK 365
REAR WIPER KIT 367
REMOTE CONTROL KIT 369
RESEALING KIT 371
SEAT BELT - 2" 373
SEAT BELT - 3" 375-378
SEAT BELT KIT - 3" 379
SEAT KIT - 80 mm 381-384
SEAT - 80 mm 385-388
SEAT 389-392
SHIELD KIT 393
SOUND/NOISE REDUCTION KIT 395-400
SOUND/NOISE REDUCTION OPTION 401-404
SPRING DAMPER KIT 405
STEERING DAMPENER KIT 407
STEERING LINK ISOLATOR KIT 409
STROBE LIGHT 411
TIRES & RIMS 413-416
WHITE DECAL KIT 417
BULK ITEMS 419-422
NUMERICAL INDEX 424-477

Use only Bobcat belts and hoses to maintain maximum service life.

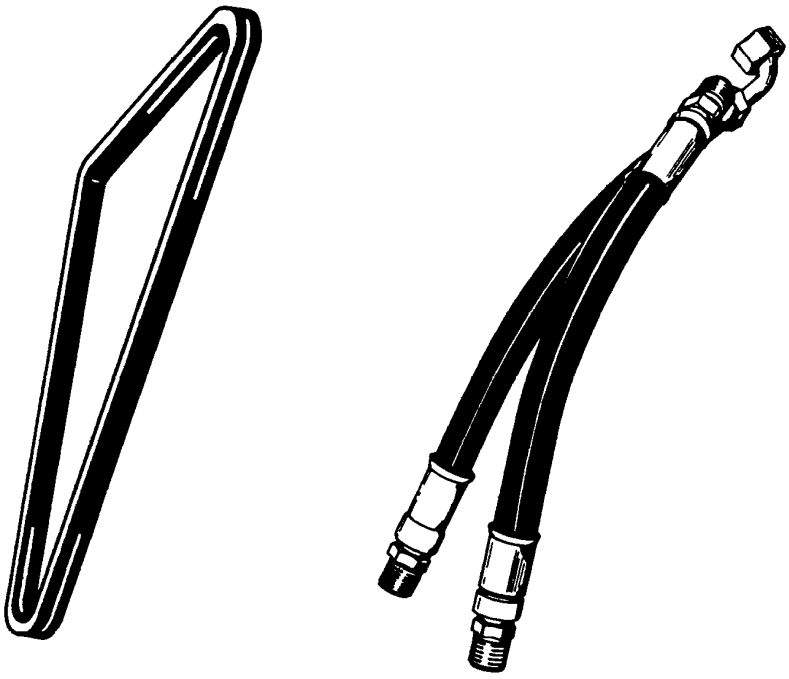

Available from Bobcat Parts.

Bobcat

MAINTENANCE ITEMS

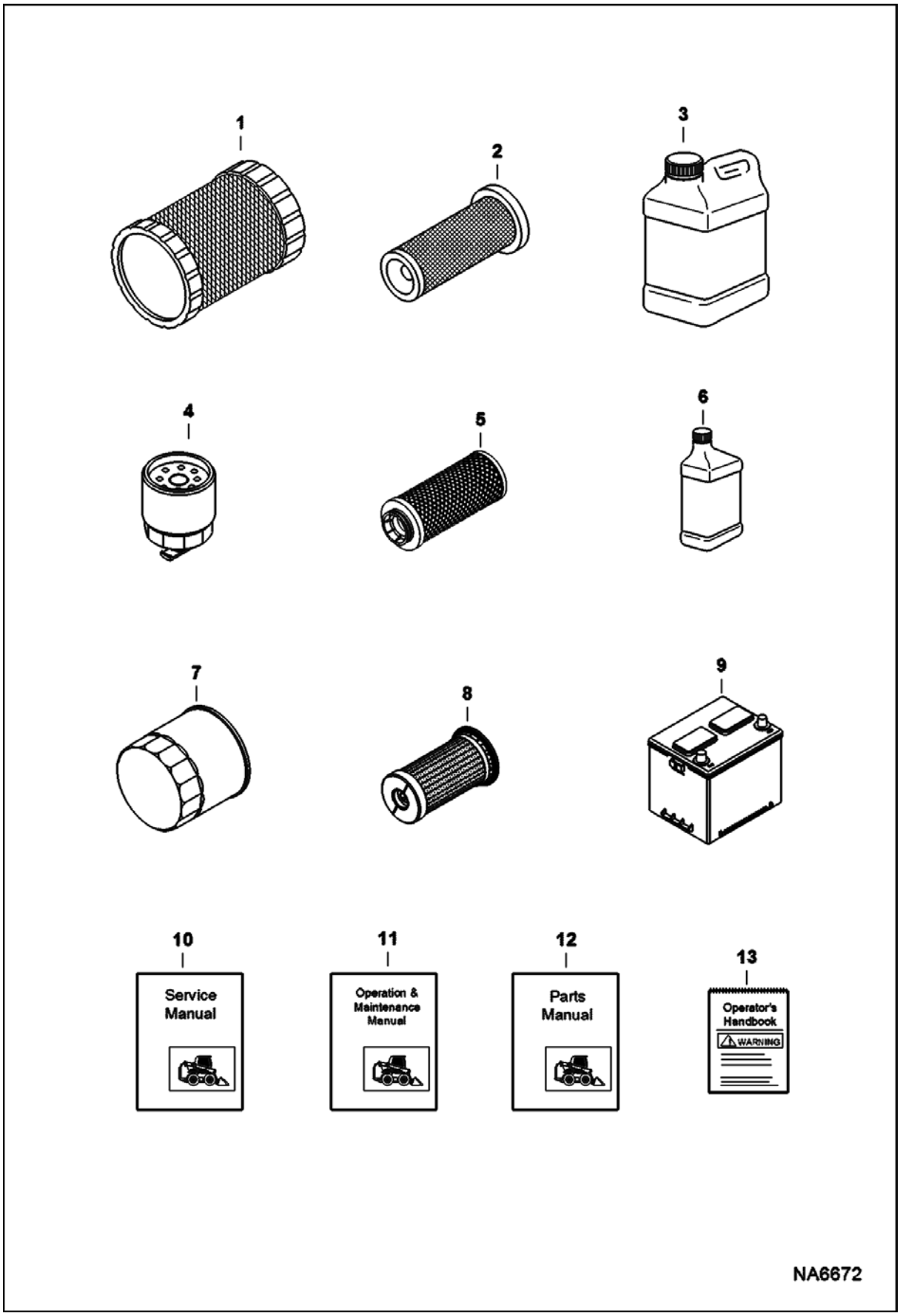

MAINTENANCE ITEMS (Cont'd)

Ref No	Part Number	Description	Remarks	Serial Number	Qty
1	6666333	FILTER, AIR OUTER			1
2	6666334	FILTER, AIR INNER			1
3	6903117	FLUID, OIL HYD 2.5 GAL 2			x
3	6903118	FLUID, OIL HYD 5 GAL			x
3	6903119	FLUID, OIL HYD 55 GAL DRUM			x
4	6667352	FILTER, FUEL W/SEPERATOR 12			1
5	7024037	FILTER, OIL HYD ELEMENT	See Illustration HYDROSTATIC CIRCUITRY/ NA6772		1
6	7023076	OIL, 10W30 QT 12			x
6	7023080	OIL, 15W40 QT 12			x
6	6903109	OIL 30W QT. 12			x
6	7023081	OIL, 15W40 GAL 6			x
6	7023077	OIL, 10W30 GAL 6			x
6	6903110	OIL, 30W GAL. 6			x
6	7023078	OIL, 10W30 2.5 GAL 2			x
6	7023082	OIL, 15W40 2.5 GAL 2			x
6	6903111	OIL 30W 2.5 GAL 2			x
7	6675517	FILTER, OIL ENG			x
8	6692337	FILTER, HYD CARTRIDGE	See Illustration COOLING FAN MOTOR/ NA6655		x
9	6674687	BATTERY, DRY 600 AMP	See Illustration ENGINE ELECTRICAL CIRCUITRY/ NA6799		1
9	6665427	BATTERY, DRY 950 AMP	See Illustration ENGINE ELECTRICAL CIRCUITRY/ NA6799		x
10	6989675	MANUAL, SERVICE S570 LOADER	printed		1
10	6989675-CD	MANUAL, SERVICE S570 LOADER CD			1
11	6989674	MANUAL, OPERATION & MAINTENANCE S570 LOADER	printed		1
11	6989674-CD	MANUAL, OPERATION & MAINTENANCE S570 LOADER CD			1
12	6989676	MANUAL, PARTS S570 LOADER	printed		1
12	6989676-CD	MANUAL, PARTS S570 LOADER			1

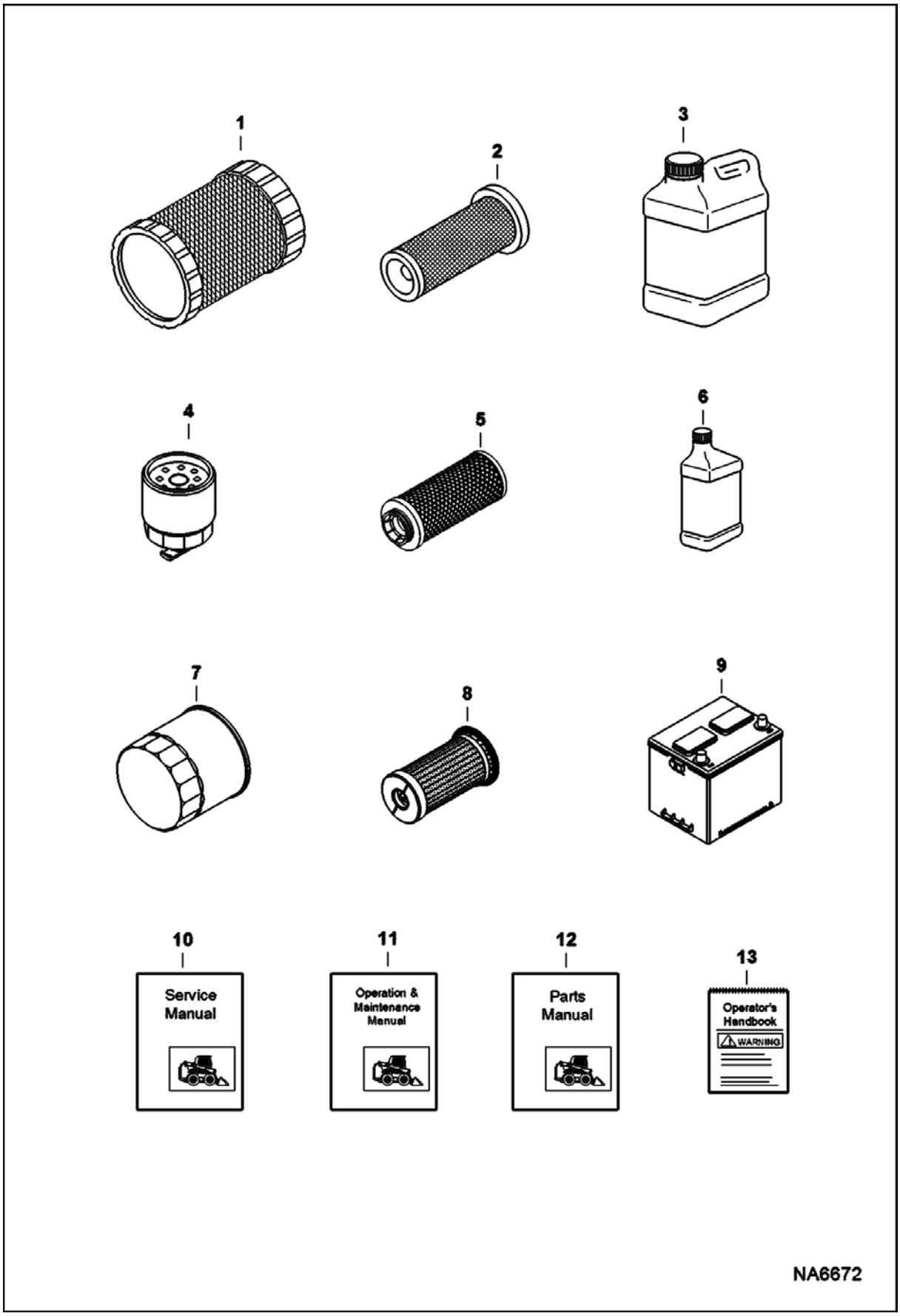
1
2
3
4
5
6
7
8
9
10
Service Manual
11
Operation & Maintenance Manual
12
Parts Manual
13
Operator's Handbook
WARNING
NA6672

MAINTENANCE ITEMS (Cont'd)

Ref No	Part Number	Description	Remarks	Serial Number	Qty
		CD			
13	6987174	HANDBOOK, OPERATOR'S W/WIRE ROPE			1
13	6987174AR	HANDBOOK, OPERATOR'S W/WIRE ROPE (SPANISH)			1
13	6987174BR	HANDBOOK, OPERATOR'S W/WIRE ROPE (PORTUGUESE)			1

SCHEDULED MAINTENANCE ITEMS
(50 Hour)

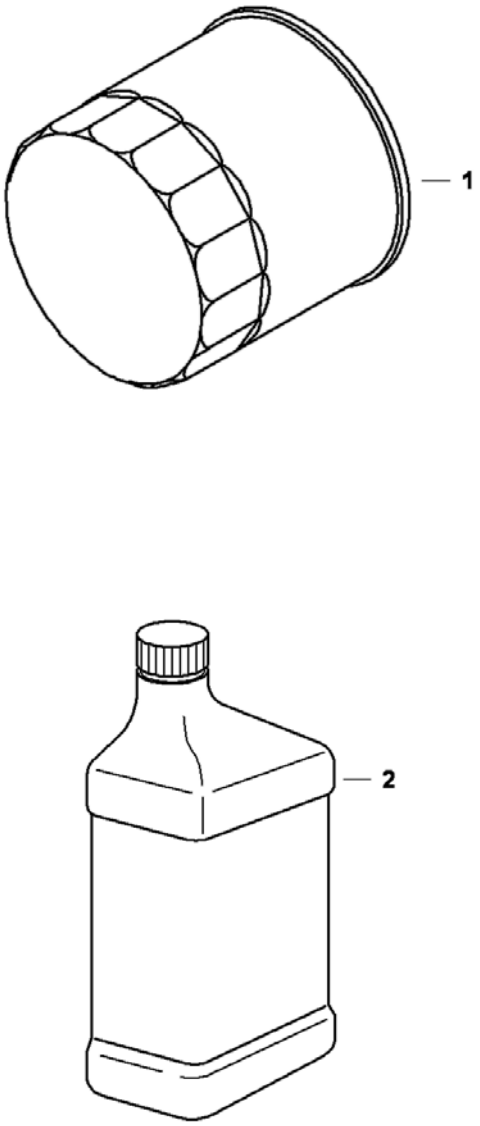

SCHEDULED MAINTENANCE ITEMS (Cont'd)
(50 Hour)

Ref No	Part Number	Description	Remarks	Serial Number	Qty
1	6675517	FILTER, OIL ENG			1
2	7023076	OIL, 10W30 QT 12			x
2	7023080	OIL, 15W40 QT 12			x
2	6903109	OIL 30W QT. 12			x
2	7023081	OIL, 15W40 GAL 6			x
2	7023077	OIL, 10W30 GAL 6			x
2	6903110	OIL, 30W GAL. 6			x
2	7023078	OIL, 10W30 2.5 GAL 2			x
2	6903111	OIL 30W 2.5 GAL 2			x
2	7023082	OIL, 15W40 2.5 GAL 2			x

SCHEDULED MAINTENANCE ITEMS
(250 Hours)

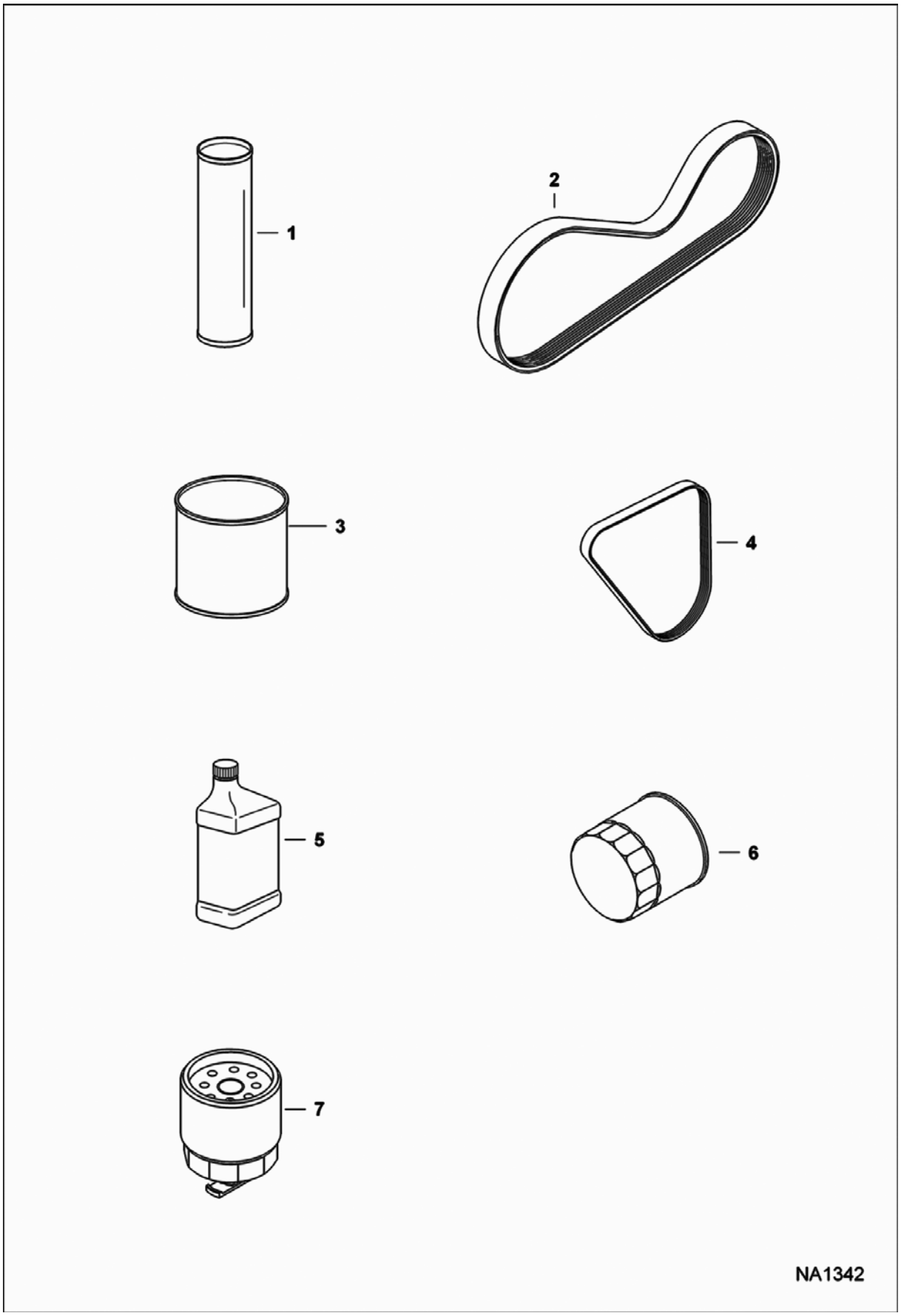

SCHEDULED MAINTENANCE ITEMS (Cont'd)
(250 Hours)

Ref No	Part Number	Description	Remarks	Serial Number	Qty
1	6903122	GREASE, MULTI PURPOSE #2 - 10			x
2	7146391	BELT, DRIVE			x
3	6903121	LUBE, GEAR 12			x
4	7100104	BELT, ALT			x
5	7023076	OIL, 10W30 QT 12			x
5	7023080	OIL, 15W40 QT 12			x
5	6903109	OIL 30W QT. 12			x
5	7023081	OIL, 15W40 GAL 6			x
5	7023077	OIL, 10W30 GAL 6			x
5	6903110	OIL, 30W GAL. 6			x
5	7023078	OIL, 10W30 2.5 GAL 2			x
5	7023082	OIL, 15W40 2.5 GAL 2			x
5	6903111	OIL 30W 2.5 GAL 2			x
6	6675517	FILTER, OIL ENG			x
7	6667352	FILTER, FUEL W/SEPERATOR 12			1

SCHEDULED MAINTENANCE ITEMS
(500 Hours)

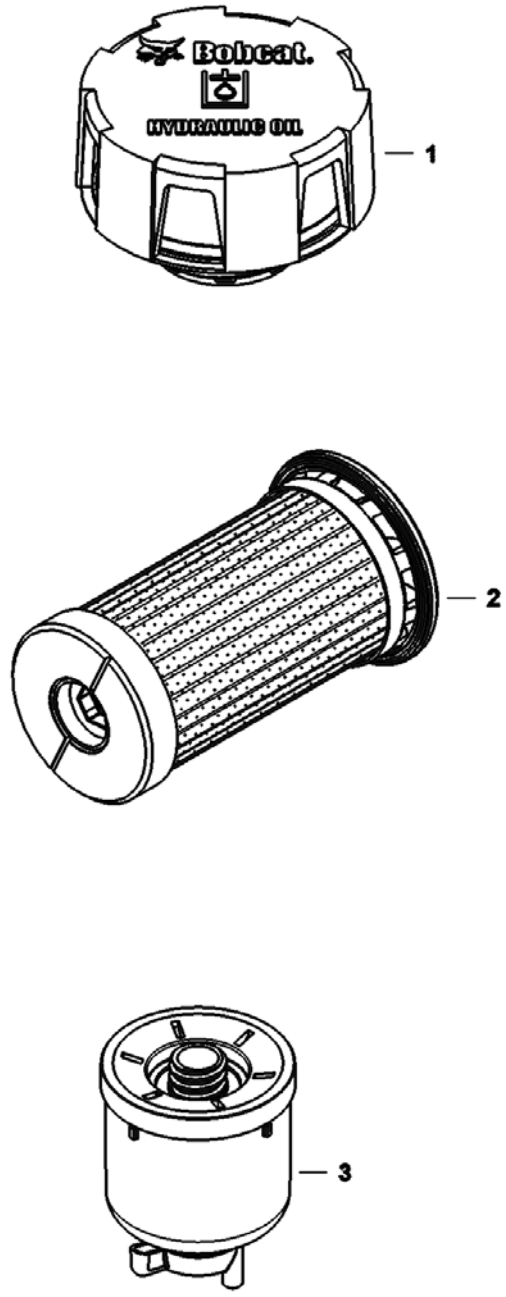

SCHEDULED MAINTENANCE ITEMS (Cont'd)
(500 Hours)

Ref No	Part Number	Description	Remarks	Serial Number	Qty
1	6727475	CAP, OIL HYD	See Illustration HYDROSTATIC CIRCUITRY/ NA6772		1
2	6692337	FILTER, HYD CARTRIDGE	See Illustration COOLING FAN MOTOR/ NA6655 - charge		1
3	6667352	FILTER, FUEL W/SEPERATOR 12			1

SCHEDULED MAINTENANCE ITEMS
(1000 Hour)

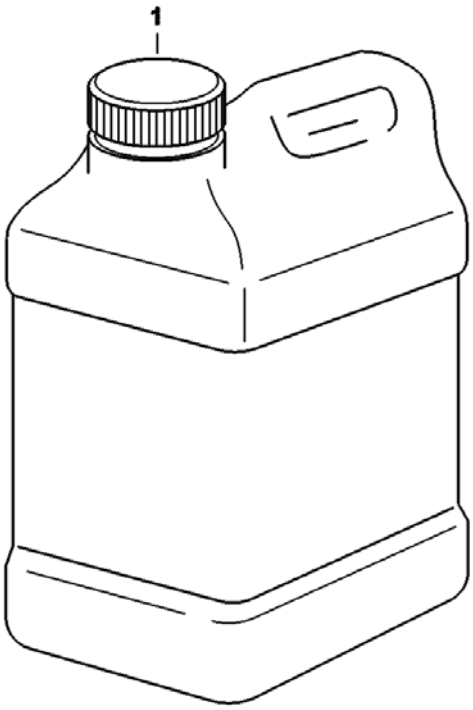

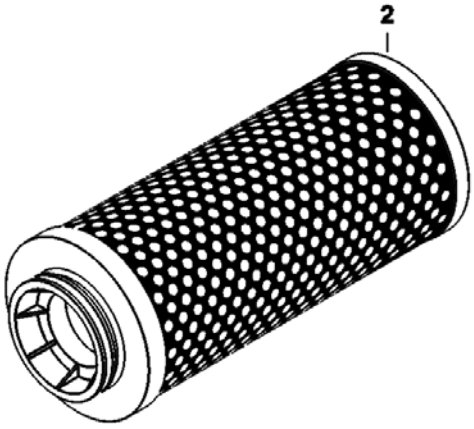

NA6674

SCHEDULED MAINTENANCE ITEMS (Cont'd)
(1000 Hour)

Ref No	Part Number	Description	Remarks	Serial Number	Qty
1	6903117	FLUID, OIL HYD 2.5 GAL 2			x
1	6903118	FLUID, OIL HYD 5 GAL			x
1	6903119	FLUID, OIL HYD 55 GAL DRUM			x
2	7024037	FILTER, OIL HYD ELEMENT	See Illustration HYDROSTATIC CIRCUITRY/ NA6772		1

MAIN FRAME

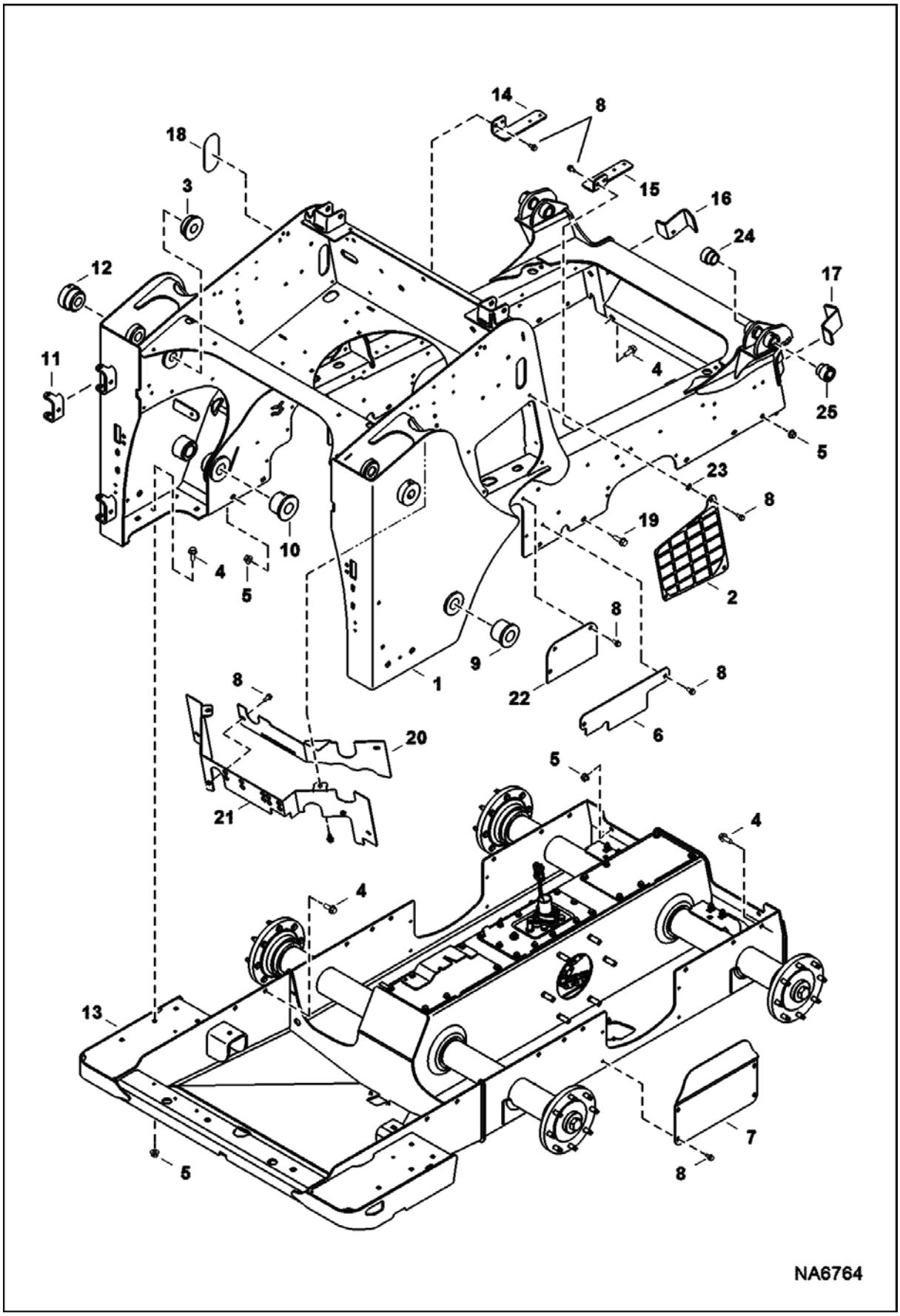
14
8
18
3
15
16
24
12
17
11
4
25
5
23
8
19
10
4
5
2
8
9
1
22
8
8
6
20
5
21
4
4
13
7
5
8
NA6764

MAIN FRAME (Cont'd)

Ref No	Part Number	Description	Remarks	Serial Number	Qty
1	7147889	FRAME, MAIN ASSY			1
2	7189453	LOUVER	RH		1
2	7189454	LOUVER	LH		1
3	7140749	BUSHING, WELD-ON	inside upright weld-on		2
4	31C820	BOLT			25
5	83D8	NUT 5			26
6	7184392	COVER	single speed		2
7	7136973	COVER			2
8	84G3712	BOLT 5			30
9	7147896	BUSHING, WELD-ON	outside upright		2
10	7147897	BUSHING, WELD-ON	inside upright		2
11	6708987	HINGE, WELD-ON			2
12	7140748	BUSHING, WELD-ON	outside upright		2
13		CHAINCASE	See Illustration DRIVE TRAIN/ NA6545		1
14	7202799	BRACKET, SUPPORT	LH		1
15	7202800	BRACKET, SUPPORT	RH		1
16	7184008	GUIDE	LH - weld-on		1
17	7184007	GUIDE	RH - weld-on		1
18	7194975	GAUGE, SIGHT			1
19	31C824	BOLT 10			1
20	7219194	PANEL, ACCESS			1
21	7219193	PANEL, CROSSMEMBER			1
22	7222629	SHIELD, LH			1
22	7222625	SHIELD, RH			1
23	6674264	RETAINER NUT			2
24	6717278	BUSHING, WELD-ON			2
25	6717277	BUSHING, WELD-ON			2

OPERATOR CAB
(Gas Spring)

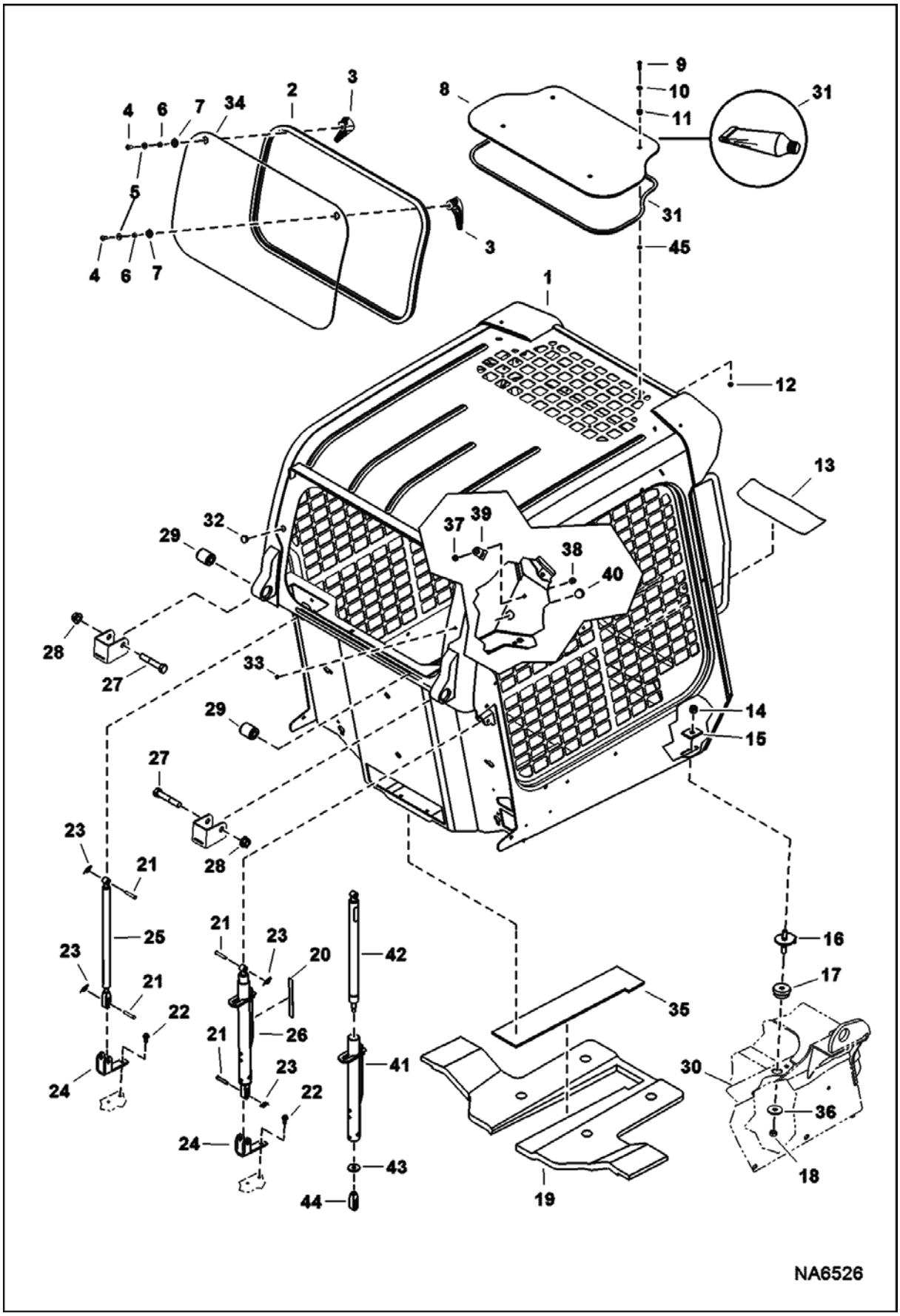

OPERATOR CAB (Cont'd)
(Gas Spring)

Ref No	Part Number	Description	Remarks	Serial Number	Qty
1	7215840	CAB, ASSY	does not include cab decals - decals must be installed matching the loaders's rated operating capacity, lift arm type & operation controls thus order decals separately		1
2	7163988	SEAL, WINDOW REAR			1
3	7150152	LATCH, WINDOW RIGHT			1
3	7150151	LATCH, WINDOW LEFT			1
4	53C512	SCREW			2
5	25E14	WSHR			2
6	6802539	SPACER			2
7	7121425	BUSHING			2
8	7120411	WINDOW, CAB TOP			1
9	53C416	SCREW			4
10	25E13	WASHER 5			4
11	6675545	GROMMET			4
12	55D4	NUT			4
13	7169747	TREAD, SAFETY			1
14	59D8	NUT 5			2
15	6553709	WASHER	rectangular		2
16	6702971	BOLT			2
17	6560633	DAMPENER			2
18	85D8	NUT, 5			2
19	7176603	INSULATION, PANEL SEAT			1
20	7169877	DECAL	push		1
21	6567743	PIN			4
22	84G3712	BOLT 5			4
23	6631418	RING, RETAINING			4
24	7144859	MOUNT, GAS SPRING			2
25	7167437	SPRING, GAS STD	LH - Also Order 7169291 decal		1
26	7144862	SPRING	RH - W/lock		1
27	17C1056	BOLT			2
28	53D10	NUT			2
29	6562602	BUSHING			2
30		MAIN FRAME	See Illustration MAIN FRAME/ NA6764		1
31	7215541	SEALANT, GASKET LIQUID 10	apply 0.38" bead of sealant to top window 0.50" from the edge of top window		1
32	6657719	PLUG	0.75" dia hole		1
33	7188745	PLUG	radio		1
34	7138973	WINDOW, REAR			1
35	7174787	INSULATION, PAN SEAT			1
36	6515817	WASHER			2
37	55D5	NUT			1
38	35C516	BOLT 10			1
39	6684641	MOUNT			1
40	6697942	PLUG, NYLON			1
41	7149091	TUBE			1
42	7149093	SPRING			1

OPERATOR CAB (Cont'd)
(Gas Spring)

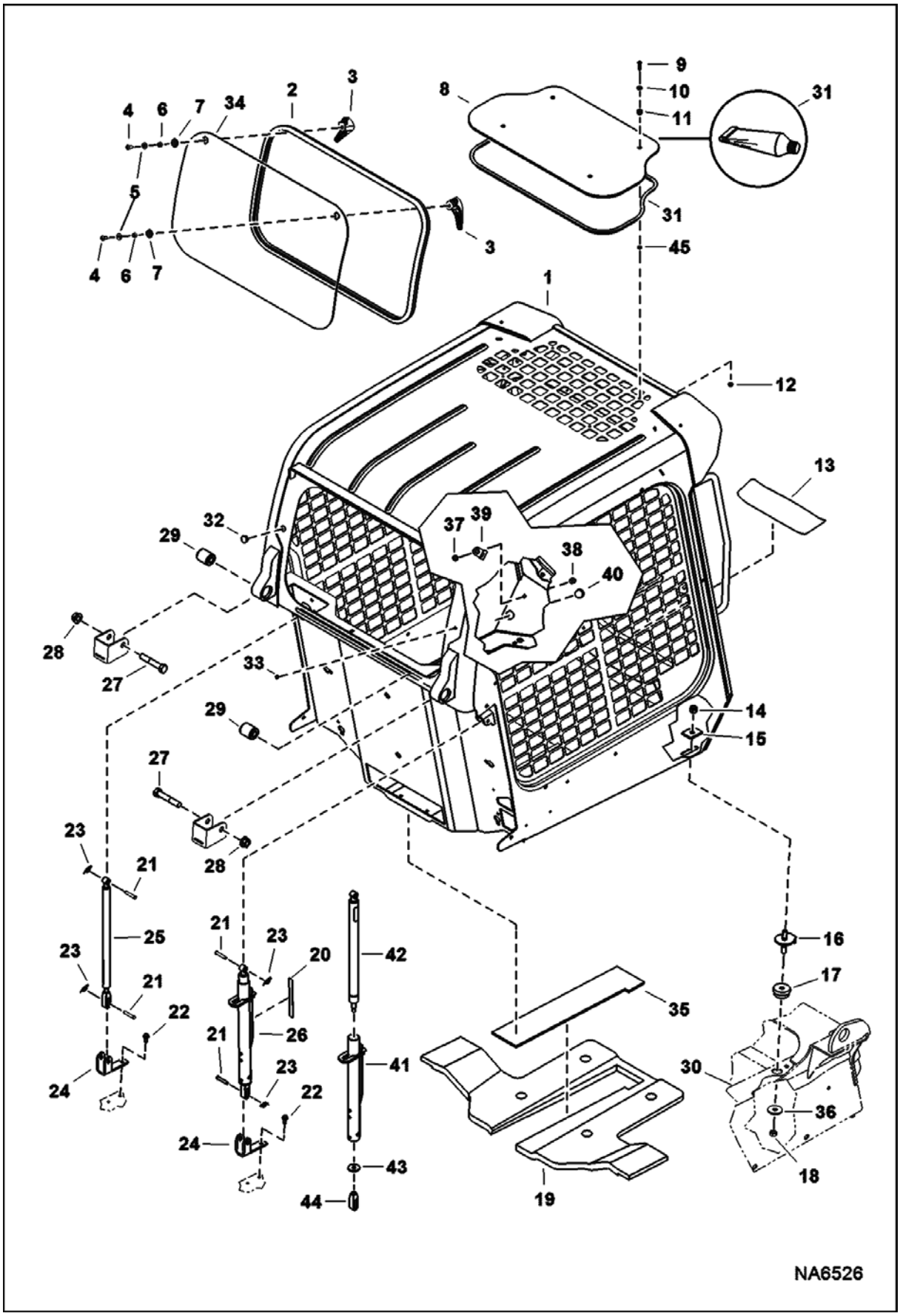

OPERATOR CAB (Cont'd)
(Gas Spring)

Ref No	Part Number	Description	Remarks	Serial Number	Qty
43	7157958	WASHER			1
44	7169606	CONNECTOR, SLOTTED			1
45	7215374	BUSHING, NYLON			4

OPERATOR CAB
(Cab Interior) (Standard)

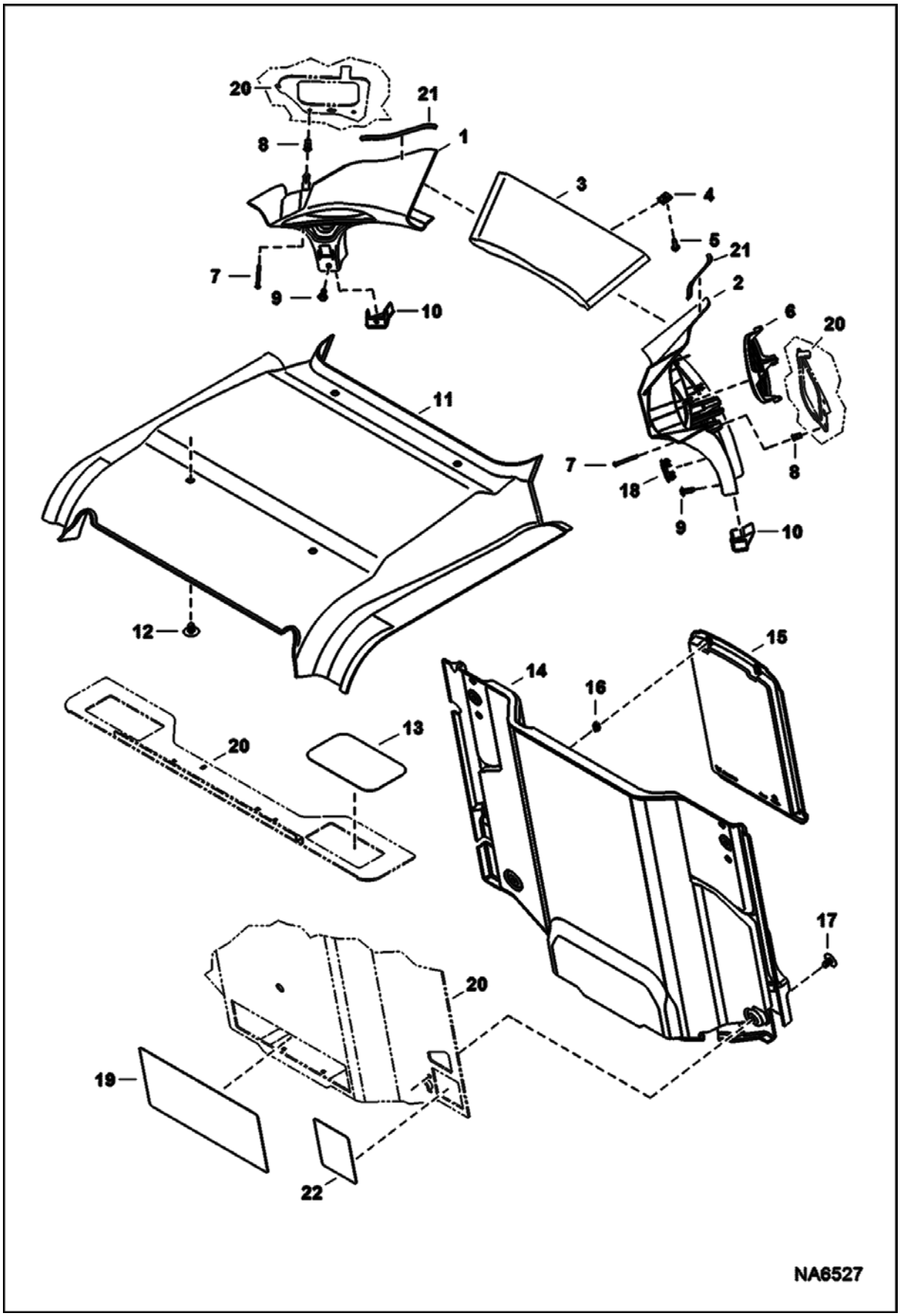

OPERATOR CAB (Cont'd)
(Cab Interior) (Standard)

Ref No	Part Number	Description	Remarks	Serial Number	Qty
1	7155792	PANEL, LH			1
2	7155791	PANEL, RH			1
3	7223412	PANEL, DASH			1
4	7142762	CLIP			2
5	6669224	BOLT			2
6	7002985	INSERT, BLANK	W/Bobcat head - if loader is equipped W/SJC & text decals, Also Order Ref. 2 & 7168114 decal - if loader is equipped W/SJC & no text decals, Also Order Ref. 2 & 7177707 decal		1
7	7165799	SCREW			4
8	6675033	INSERT			4
9	7160382	RIVET, BIRD CAGE			2
10	7165037	CAP, INST PANEL RH			1
10	7165038	CAP, INST PANEL LH			1
11	7155786	HEADLINER,STD			1
12	6674895	RETAINER			4
13	7168610	COVER			1
14	7176134	PANEL, CAB INTERIOR			1
15	6725301	OP MANUAL COVER			1
16	6675524	CLIP			2
17	6674895	RETAINER			4
18	6665314	PLUG			1
19	7178954	COVER, HVAC			1
20		CAB ASSY	See Illustration OPERATOR CAB/ NA6526		1
21	7187104	SEAL			2
22	7197972	COVER			1

OPERATOR CAB
(Cab Interior) (Deluxe)

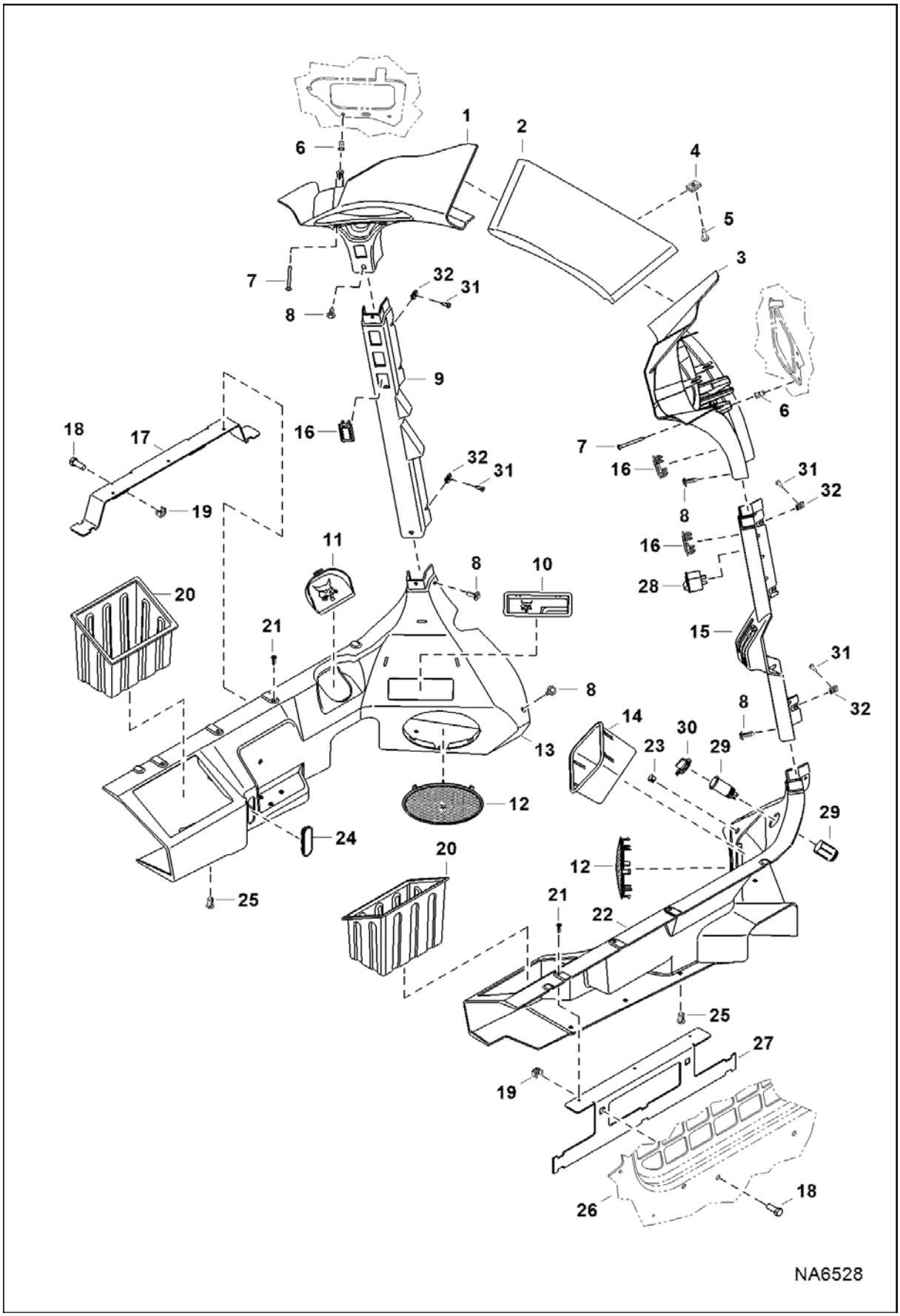

OPERATOR CAB (Cont'd)
(Cab Interior) (Deluxe)

Ref No	Part Number	Description	Remarks	Serial Number	Qty
1	7155792	PANEL, LH			1
2	7223412	PANEL, DASH			1
3	7155791	PANEL, RH			1
4	7142762	CLIP			6
5	6669224	BOLT			6
6	6675033	INSERT			4
7	7165799	SCREW			4
8	7160382	RIVET, BIRD CAGE			8
9	7164348	COLUMN, FRONT LEFT			1
10	7165344	STORAGE			1
11	7165345	DOOR, COVER			1
12	7161939	GRILL			2
13	7155643	FENDER, PANEL L.H.			1
14	7154285	BOX, STORAGE			1
15	7164347	COLUMN, FRONT RIGHT			1
16	6665314	PLUG			6
17	7116118	BRACKET			1
18	17C616	BOLT 5			4
19	7149204	NUT			4
20	7145268	CONTAINER, STORAGE			2
21	7160381	RIVET, BIRD CAGE			6
22	7155642	FENDER, PANEL RH			1
23	7182942	PLUG			1
24	7165346	DOOR, COVER			1
25	7160383	RIVET, BIRD CAGE			10
26		CAB ASSY	See Illustration OPERATOR CAB/ NA6526		1
27	7193021	BRACKET			1
28	6668742	SWITCH	EMEA		1
29	6664223	OUTLET			1
30	6664224	CAP			1
31	6669224	BOLT			6
32	7142762	CLIP			6

OPERATOR CAB
(Cab Interior) (Deluxe) (Headliner)

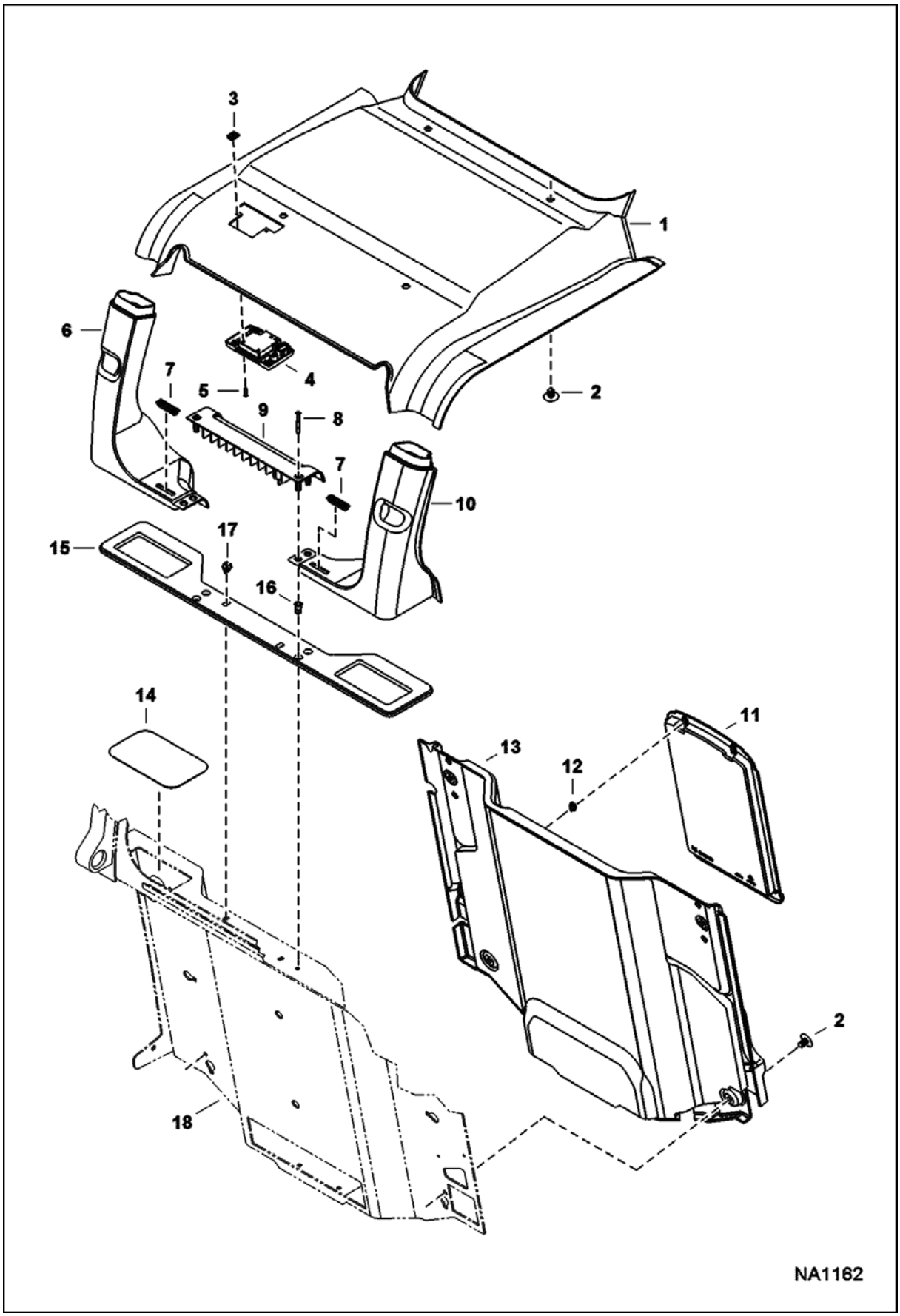

OPERATOR CAB (Cont'd)
(Cab Interior) (Deluxe) (Headliner)

Ref No	Part Number	Description	Remarks	Serial Number	Qty
1	7155798	HEADLINER, DLX			1
2	6674895	RETAINER			8
3	7142762	CLIP			2
4	7166629	LIGHT, CAB HEADLINER	2 position switch		1
5	7170114	SCREW			2
6	100334SUB	DUCT, AIR	LH - W/Ref. 7		1
7	7145885	VENT, DEFROST			2
8	7165799	SCREW			2
9	7165332	SHELF, REAR			1
10	100333SUB	DUCT, AIR	RH - W/Ref. 7		1
11	6725301	OP MANUAL COVER			1
12	6675524	CLIP			2
13	7176133	PANEL, CAB INTERIOR			1
14	7168610	COVER			2
15	7153832	SEAL, SHELF REAR			1
16	6675033	INSERT			2
17	7165333	CLIP			2
18		CAB ASSY	See Illustration OPERATOR CAB/ NA6526		1

SEAT BAR
(Manual Controls)

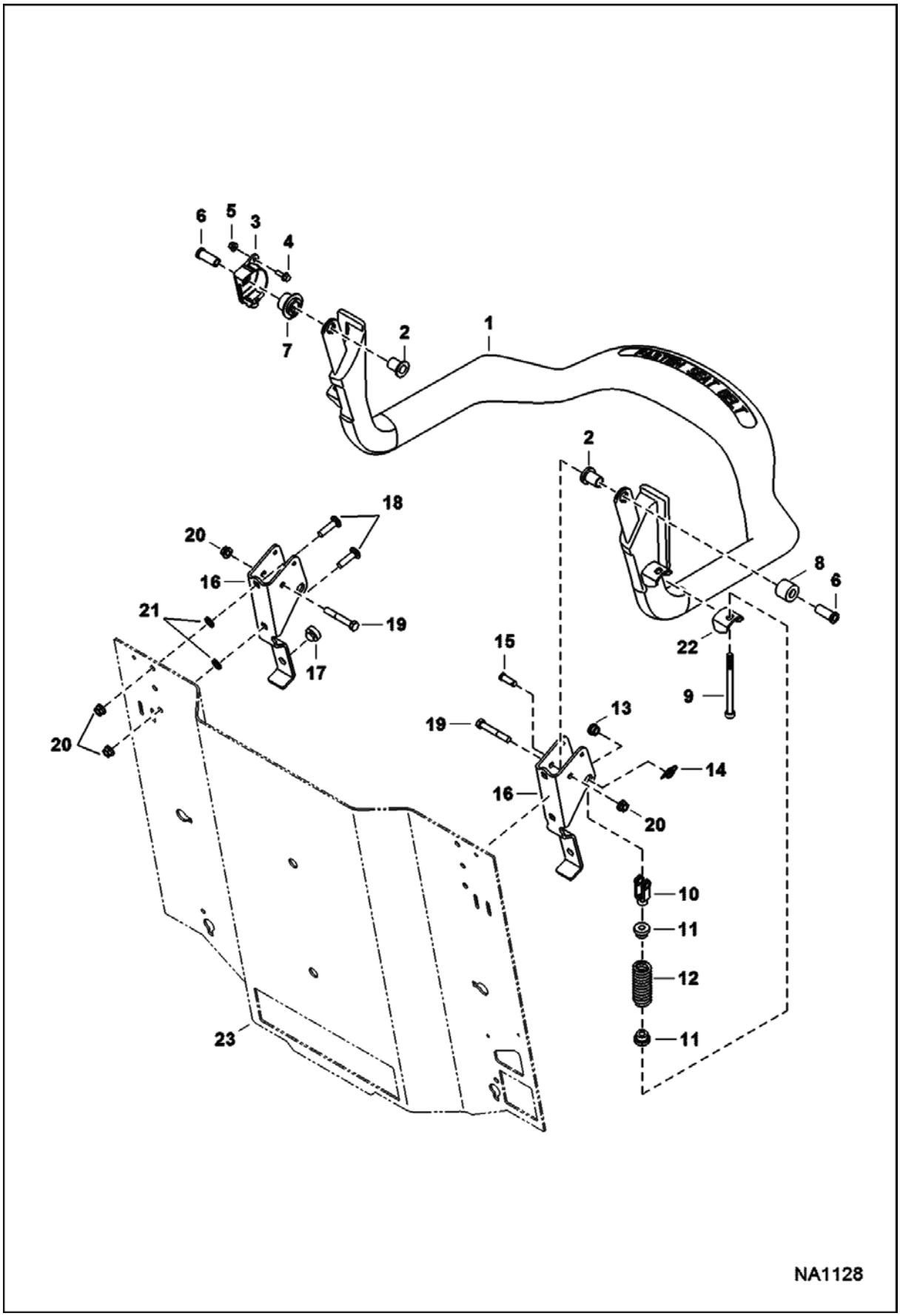

SEAT BAR (Cont'd)
(Manual Controls)

Ref No	Part Number	Description	Remarks	Serial Number	Qty
1	7143971	SEATBAR			1
2	6680441	BUSHING			2
3	6691714	SENSOR, SEATBAR BICS			1
4	35C412	BOLT			1
5	83D4	NUT 10			1
6	6715865	BUSHING			2
7	6680443	BUSHING, MAGNET			1
8	6715866	BUSHING			1
9	6713887	BOLT			2
10	6713589	CLEVIS			2
11	6710659	BUSHING			4
12	6701535	SPRING			2
13	6715864	BUSHING			2
14	6631418	RING, RETAINING			2
15	4F6106	PIN			2
16	7157719	BRACKET			2
17	6519178	BUMPER			2
18	10C616	BOLT 10			4
19	17C640	BOLT 5			2
20	53D6	NUT			6
21	6674894	NUT			4
22		MOUNT	NAP - Order Ref. 1		1
23		CAB ASSY	See Illustration OPERATOR CAB/ NA6526		1

SEAT BAR
(Selectable Joystick Controls)

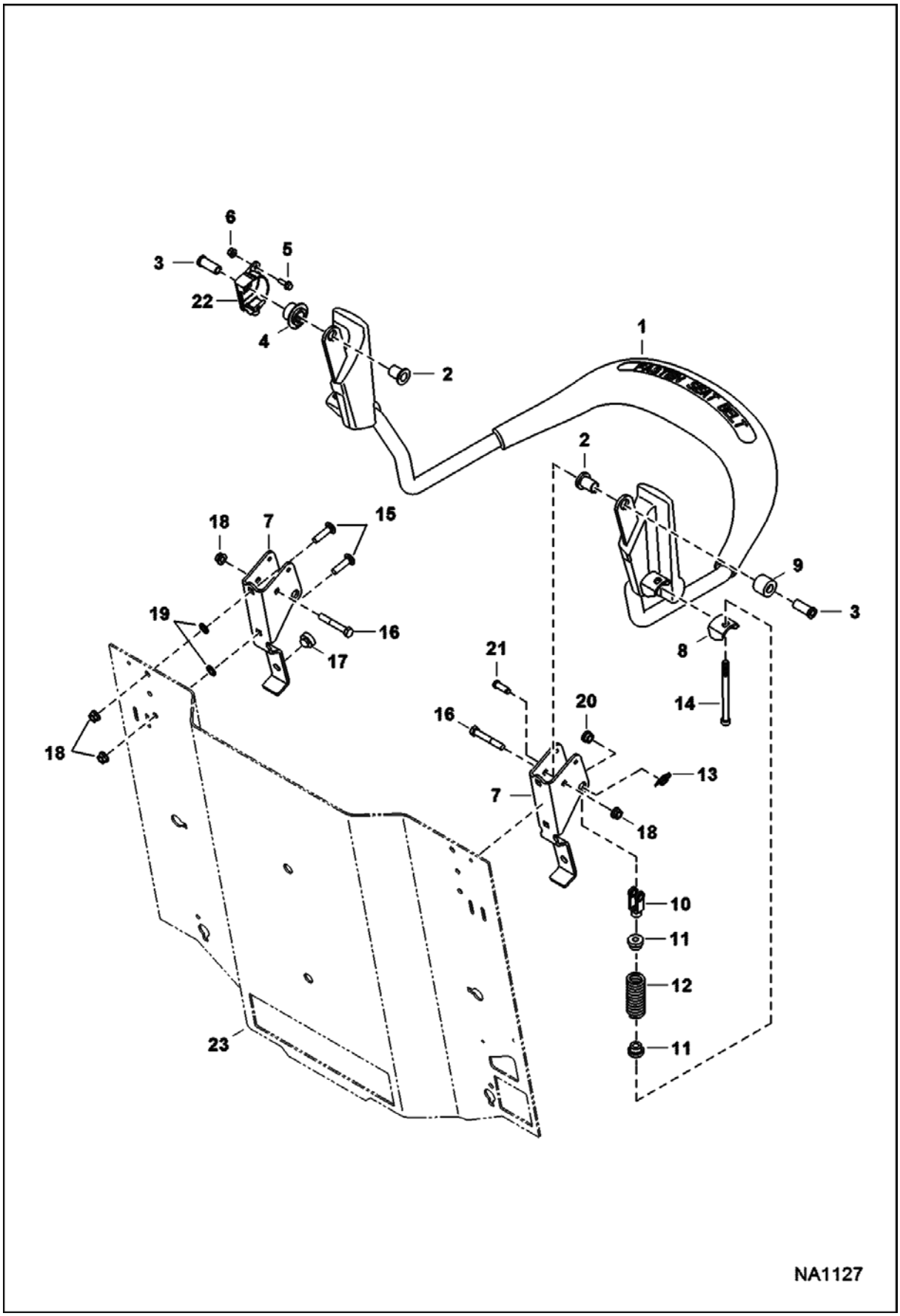

SEAT BAR (Cont'd)
(Selectable Joystick Controls)

Ref No	Part Number	Description	Remarks	Serial Number	Qty
1	7203389	SEAT BAR	SJC		1
2	6680441	BUSHING			2
3	6715865	BUSHING			2
4	6680443	BUSHING, MAGNET			1
5	35C412	BOLT			1
6	83D4	NUT 10			1
7	7157719	BRACKET			2
8		MOUNT	NAP - Order Ref. 1		1
9	6715866	BUSHING			1
10	6713589	CLEVIS			2
11	6710659	BUSHING			4
12	6701535	SPRING			2
13	6631418	RING, RETAINING			2
14	6713887	BOLT			2
15	10C616	BOLT 10			4
16	17C640	BOLT 5			2
17	6519178	BUMPER			2
18	53D6	NUT			6
19	6674894	NUT			4
20	6715864	BUSHING			2
21	4F6106	PIN			2
22	6691714	SENSOR, SEATBAR BICS			1
23		CAB ASSY	See Illustration OPERATOR CAB/ NA6526		1

SEAT & SEAT BELT

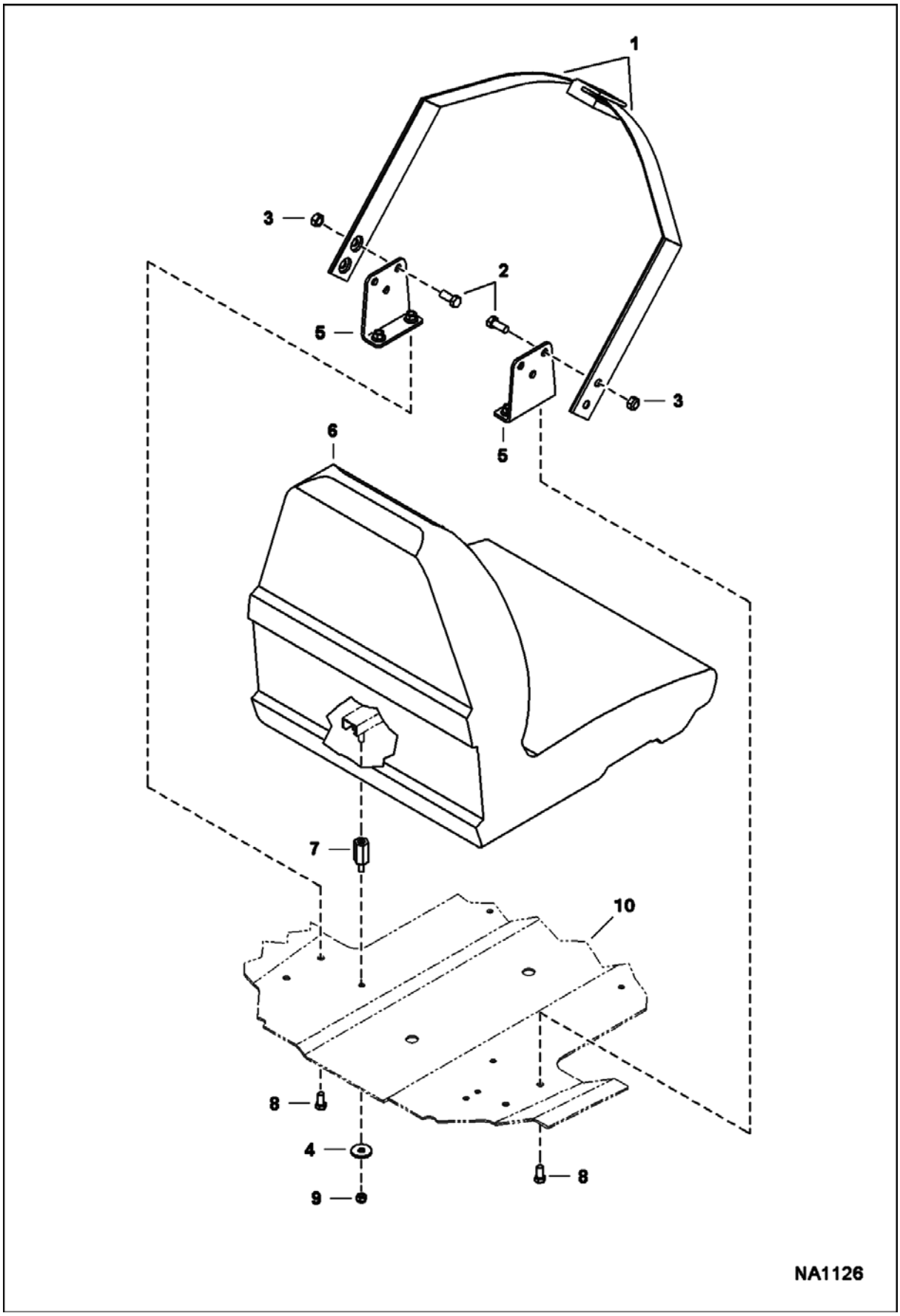

SEAT & SEAT BELT (Cont'd)

Ref No	Part Number	Description	Remarks	Serial Number	Qty
1		SEAT BELT	See Illustration SEAT BELT - 3"/ NA2043 See Illustration SEAT BELT - 2"/ NA2044 See Illustration SEAT BELT - 3"/ NA2046 lap		1
2	1C716	SCREW HEX CAP			4
3	95D7	NUT			4
4	619021	WASHER, 5			4
5	7173159	BRACKET, BELT SEAT			2
6	6669135	SEAT, OPERATOR VINYL			1
7	7170337	STAND, SEAT			4
8	43C612	BOLT			4
9	59D5	NUT 5			4
10		CAB ASSY	See Illustration OPERATOR CAB/ NA6526		1

PANELS
(Floor Pan) (Manual Controls, AHC & ACS)

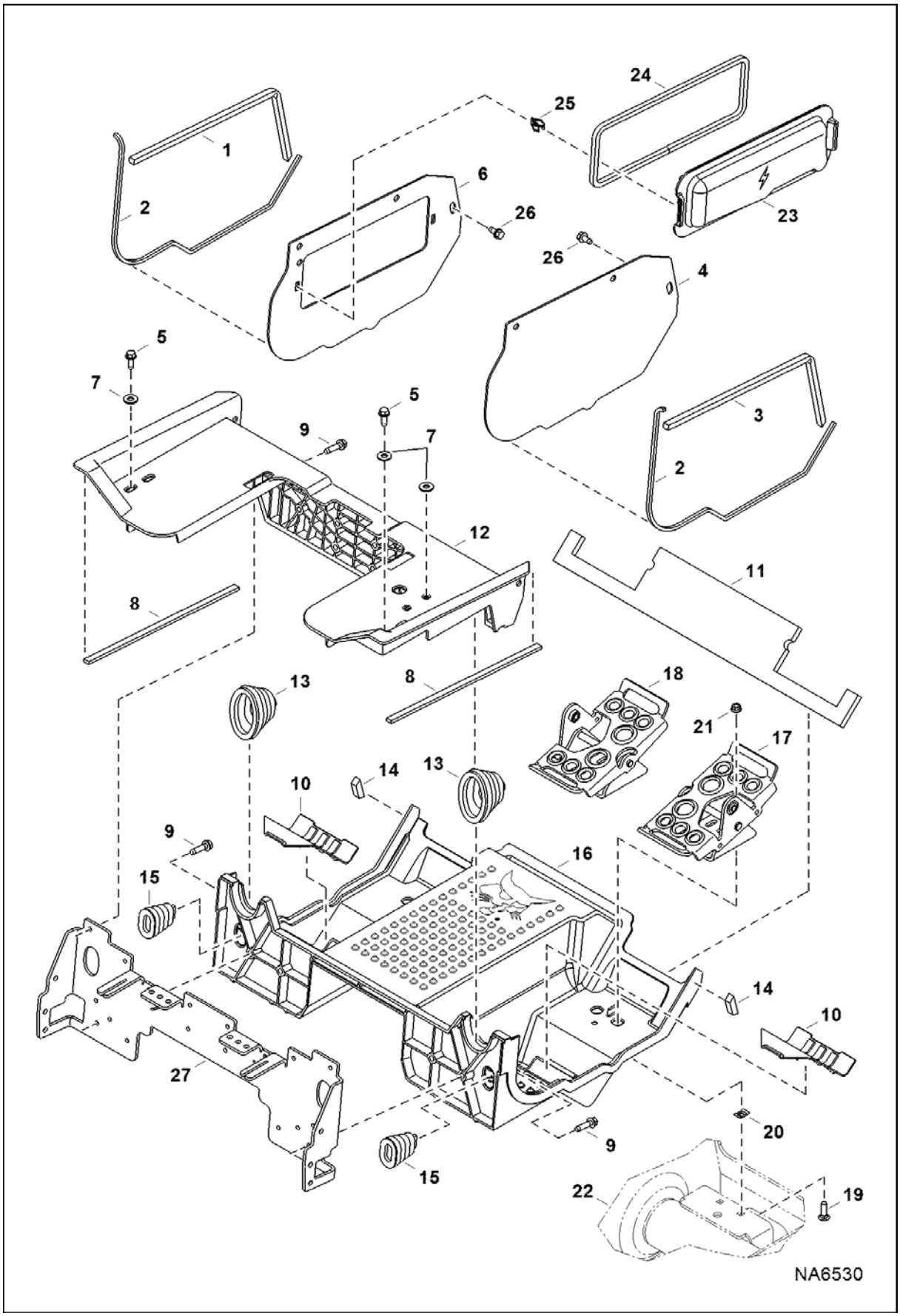

PANELS (Cont'd)
(Floor Pan) (Manual Controls, AHC & ACS)

Ref No	Part Number	Description	Remarks	Serial Number	Qty
1	7166197	FOAM, PANEL	LH		1
2	7166199	FOAM, EDGE			2
3	7166198	FOAM, PANEL	RH		1
4	7210677	PANEL, RH			1
5	84G3716	SCREW 5			4
6	7210676	PANEL, LH			1
7	25E18	WASHER			6
8	7166196	FOAM, PANEL			2
9	84G3724	BOLT			10
10	7164345	COVER, PAN FLOOR			2
11	7163132	FOAM, FRONT			1
12	7185169	PANEL, STEERING			1
13	7147815	BOOT			2
14	7166200	FOAM, PAN FLOOR			2
15	7153503	BOOT			2
16	7160950	PAN, FLOOR			1
17		PEDAL ASSEMBLY	See Illustration CONTROL PEDALS/ NA6579 - RH		1
18		PEDAL ASSEMBLY	See Illustration CONTROL PEDALS/ NA6579 - LH		1
19	37C620	BOLT			4
20	6684033	NUT			4
21	57D6	NUT 5			4
22		CHAINCASE	See Illustration DRIVE TRAIN/ NA6545		1
23	7197082	COVER	W/Ref. 34 & 35		1
24	7205329	SEAL, COVER			1
25	7165333	CLIP			2
26	84G3712	BOLT 5			6
27	7189892	MOUNT, BELLCRANK			1

PANELS
(Floor Pan) (Selectable Joystick Controls)

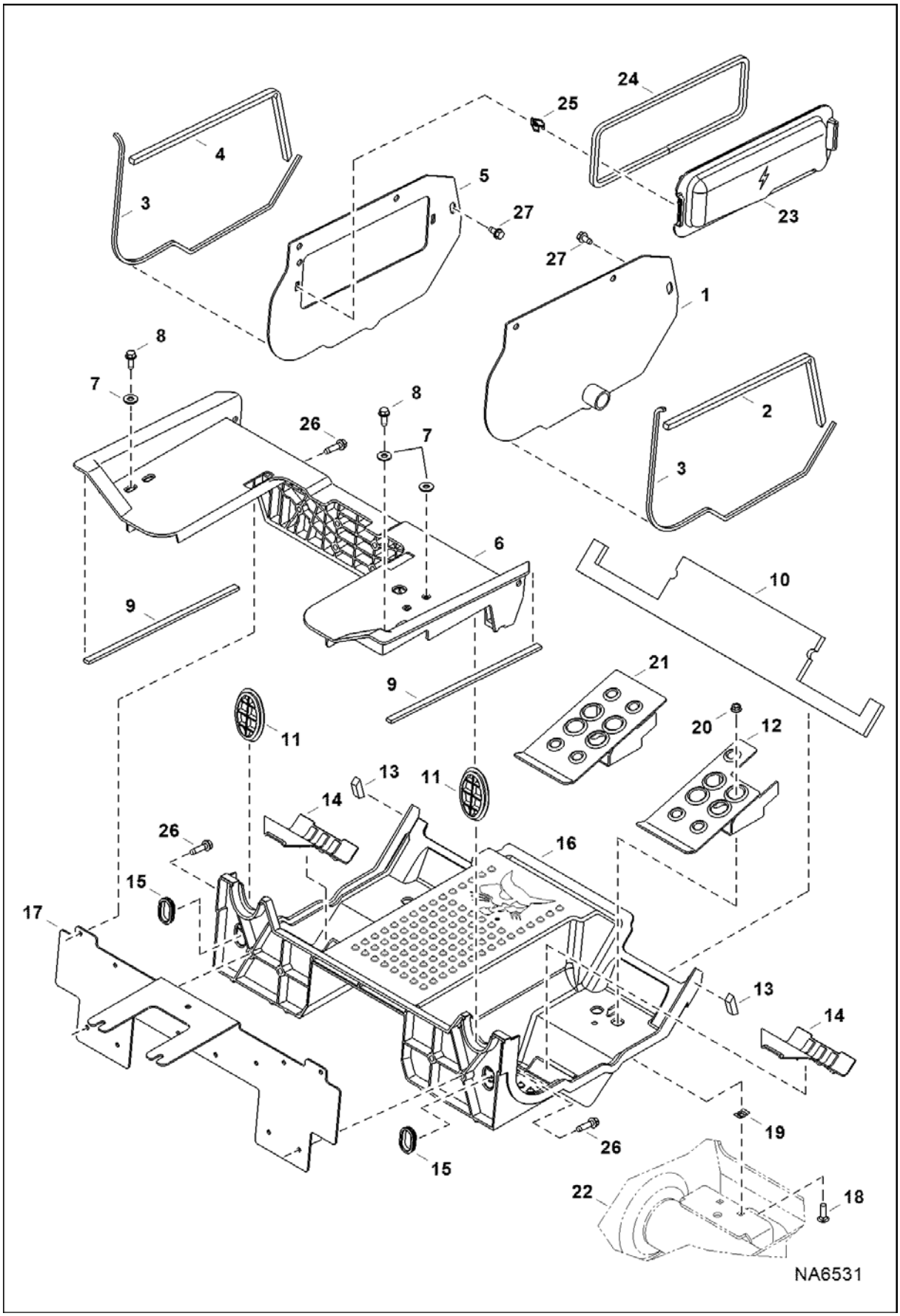

PANELS (Cont'd)
(Floor Pan) (Selectable Joystick Controls)

Ref No	Part Number	Description	Remarks	Serial Number	Qty
1	7211662	PANEL, RH			1
2	7166198	FOAM, PANEL			1
3	7166199	FOAM, EDGE			2
4	7166197	FOAM, PANEL			1
5	7210676	PANEL, LH			1
6	7185169	PANEL, STEERING			1
7	25E18	WASHER			4
8	84G3716	SCREW 5			4
9	7166196	FOAM, PANEL			2
10	7163132	FOAM, FRONT			1
11	7161131	COVER, LEVER			2
12	7181865	PEDAL ASSY	RH		1
13	7166200	FOAM, PAN FLOOR			2
14	7164345	COVER, PAN FLOOR			2
15	7161130	COVER			2
16	7160950	PAN, FLOOR			1
17	7191409	PANEL, MOUNTING			1
18	37C620	BOLT			4
19	6684033	NUT			4
20	57D6	NUT 5			4
21	7181868	PEDAL ASSY	LH		1
22		CHAINCASE	See Illustration DRIVE TRAIN/ NA6545		1
23	7197082	COVER	W/Ref. 30 & 31		1
24	7205329	SEAL, COVER			1
25	7165333	CLIP			2
26	84G3724	BOLT			14
27	84G3712	BOLT 5			6

REAR DOOR

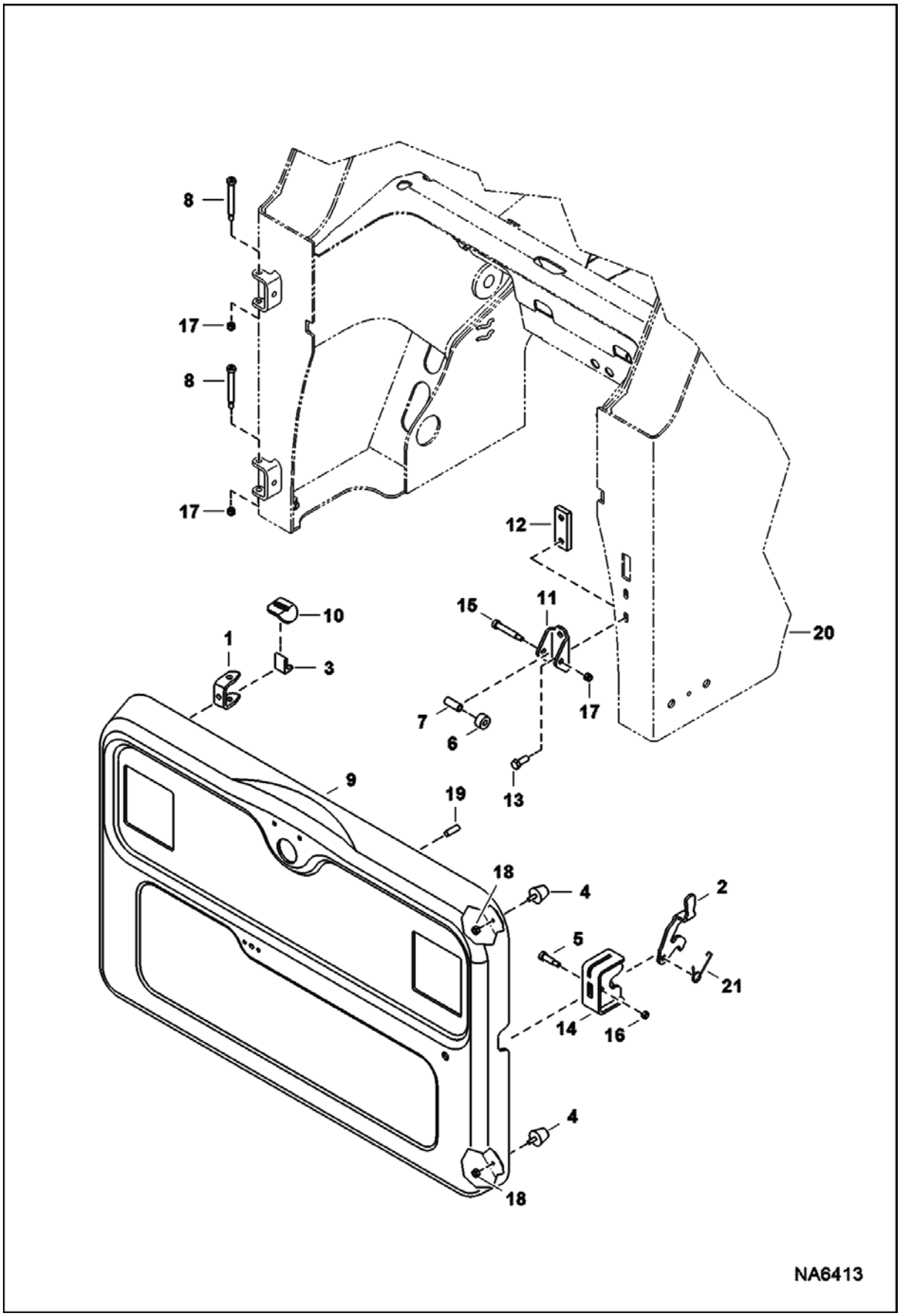

REAR DOOR (Cont'd)

Ref No	Part Number	Description	Remarks	Serial Number	Qty
1	6733575	HINGE, REAR DOOR	weld-on		2
2	7213524	HANDLE, LATCH DOOR			1
3	6719766	STOP			1
4	6733616	BUMPER			2
5	38C820	SCREW			3
6	6809726	ROLLER			1
7	7184677	BUSHING	striker		1
8	6809845	BOLT			2
9	7144158	REAR DOOR			1
10	7160704	STOP			1
11	7160705	CHANNEL			1
12	7160706	BAR	threaded striker		1
13	17C820	BOLT			2
14	7218276	PLATE, LATCH	weld-on		1
15	38C840	BOLT	carriage		1
16	85D6	NUT, 5			1
17	59D6	NUT			3
18	61D5	NUT			2
19	7191629	STUD, WELD-ON			6
20		MAIN FRAME	See Illustration MAIN FRAME/ NA6764		1
21	6810132	SPRING			1

LIFT ARM & BOB-TACH

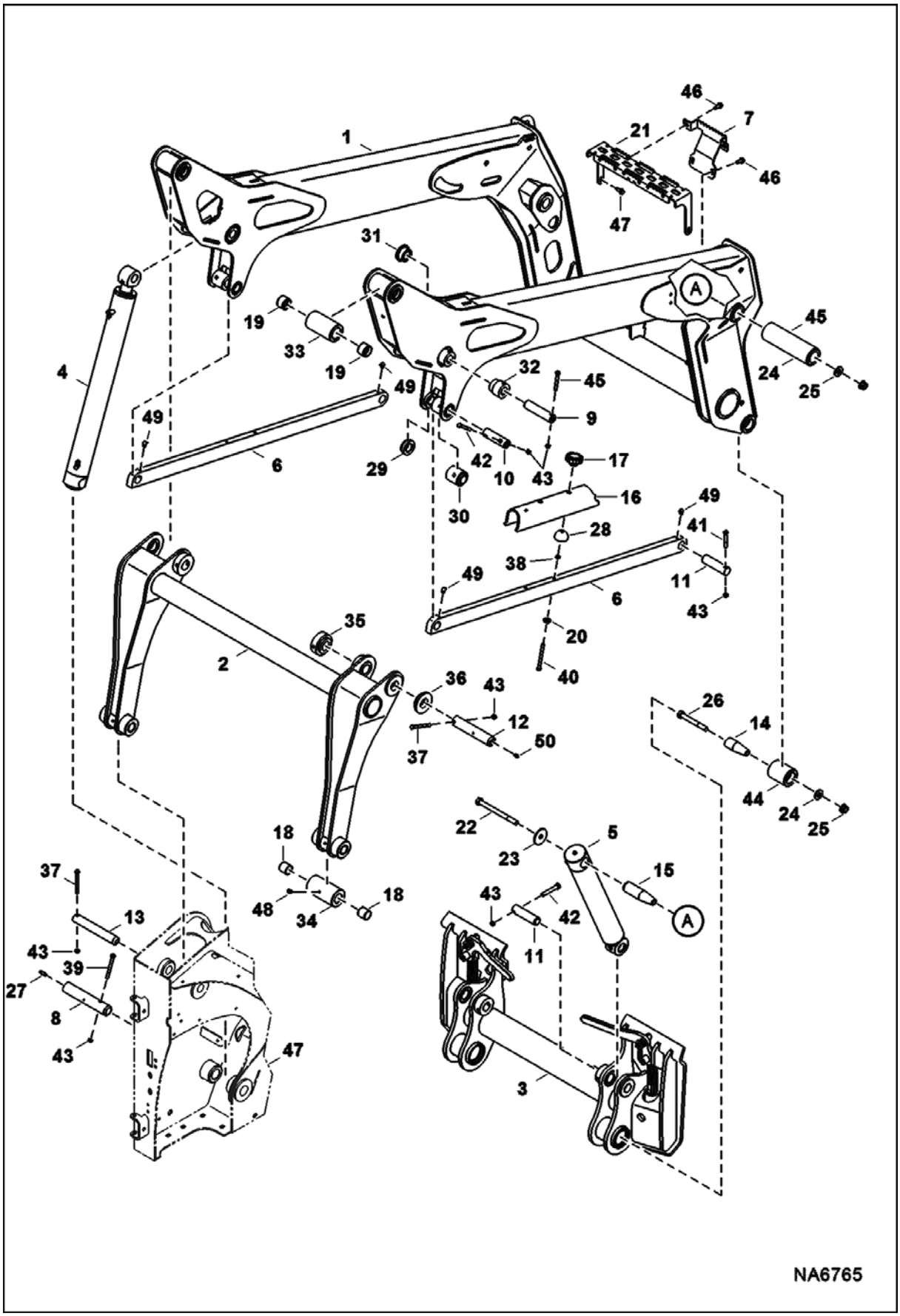

LIFT ARM & BOB-TACH (Cont'd)

Ref No	Part Number	Description	Remarks	Serial Number	Qty
1	7145417	LIFT ARM			1
2	7145418	LINK, LIFT ARM H ASSY			1
3		BOB-TACH ASSY	See Illustration BOB-TACH/ NA6534		1
4		CYLINDER, LIFT	See Illustration LIFT CYLINDER/ NA6766		2
5		CYLINDER, TILT	See Illustration TILT CYLINDER/ NA6577		1
6	7145456	LINK	LH		1
6	7145456	LINK	RH - Also Order (2) each of Ref. 28, 38 & 40 for mounting Ref. 16 lift arm stop		1
7	7211575	BRACKET			1
8	7175270	PIN, PIVOT			2
9	6729007	PIN, PIVOT			2
10	6731139	PIN, PIVOT			2
11	6577954	PIN, PIVOT			4
12	7163427	PIN, PIVOT			2
13	7209779	PIN, PIVOT			2
14	7135590	PIN, PIVOT TAPERED			2
15	7148031	PIN, PIVOT TAPERED			2
16	7158459	SUPPORT, LIFT ARM			1
17	6684932	KNOB			2
18	6717562	BUSHING, WEAR			4
19	6730997	BUSHING, WELD-ON			4
20	616783	WASHER			2
21	7211574	STEP			1
22	17C10120	BOLT			2
23	6731160	WASHER			2
24	27E10	WASHER			4
25	53D10	NUT			4
26	17C1080	SCREW			2
27	45H25	FITTING, GREASE			2
28	7209604	DAMPER			2
29	7145444	BUSHING, WELD-ON			2
30	7145443	BUSHING, WELD-ON			2
31	7196453	BUSHING, WELD-ON			2
32	7196452	BUSHING, WELD-ON			2
33	7216406	BUSHING, WELD-ON	W/Ref. 19		2
34	7216405	BUSHING, WELD-ON	W/Ref. 18		2
35	7145455	BUSHING, WELD-ON			2
36	7145454	BUSHING, PIVOT			2
37	17C660	BOLT			4
38	17C652	BOLT	Use W/O Ref. 60		2
38	17C656	BOLT	Use W/Ref. 60		2
38	7D6	NUT			2
39	17C656	BOLT			2
40	7197120	BOLT			2

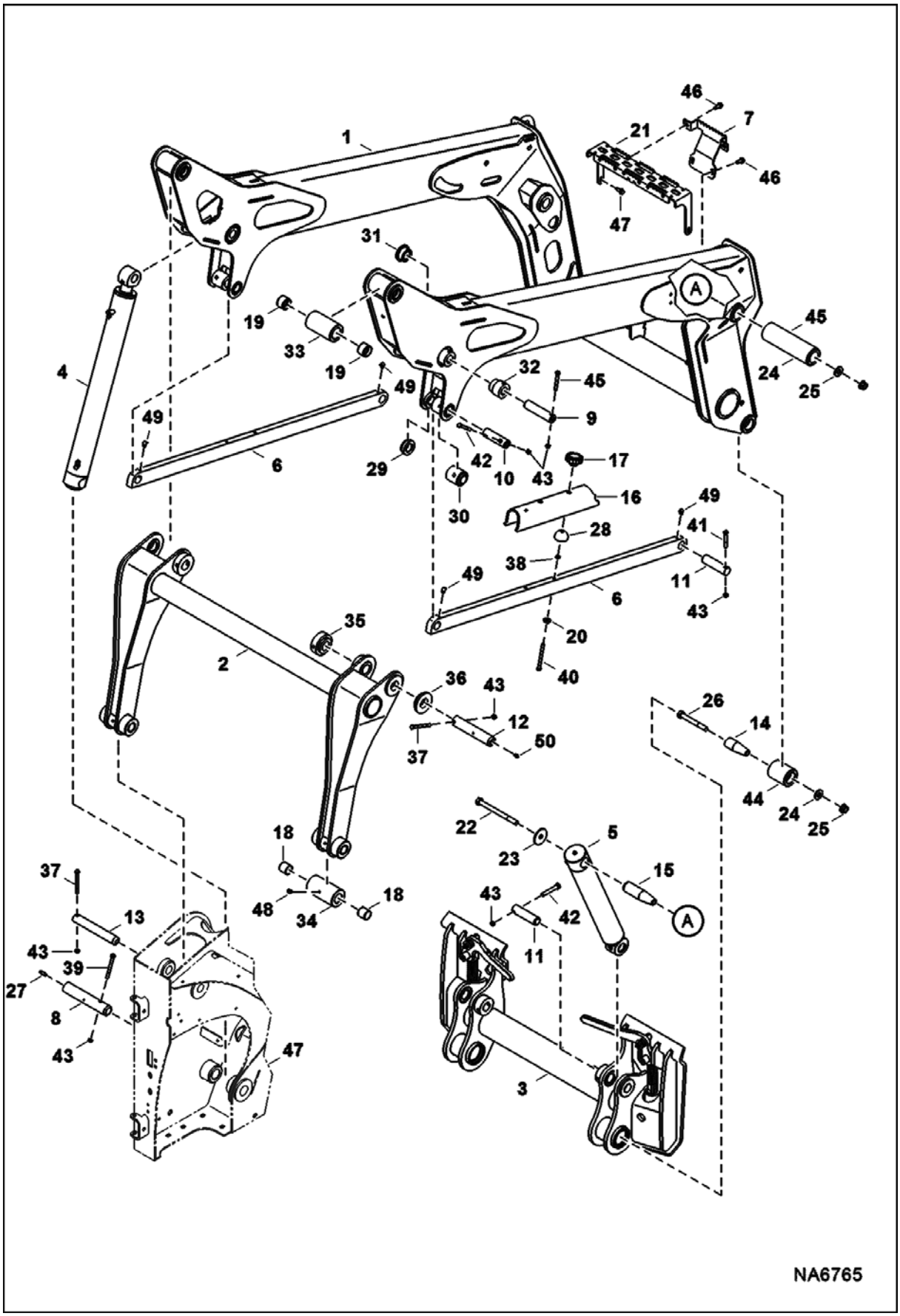
NA6765

Ref No	Part Number	Description	Remarks	Serial Number	Qty
41	17C640	BOLT 5			2
42	17C644	BOLT			6
43	85D6	NUT, 5			14
44	7145439	BUSHING, WELD-ON			2
45	7139373	BUSHING, WELD-ON			2
46	84G3716	SCREW 5			5
47	17C616	BOLT 5			2
47		MAIN FRAME	See Illustration MAIN FRAME/ NA6764		1
48	11H15	GREASE FITTING			2
49	12H15	FITTING, GREASE 5			4
50	10H25	FITTING, GREASE 5			2

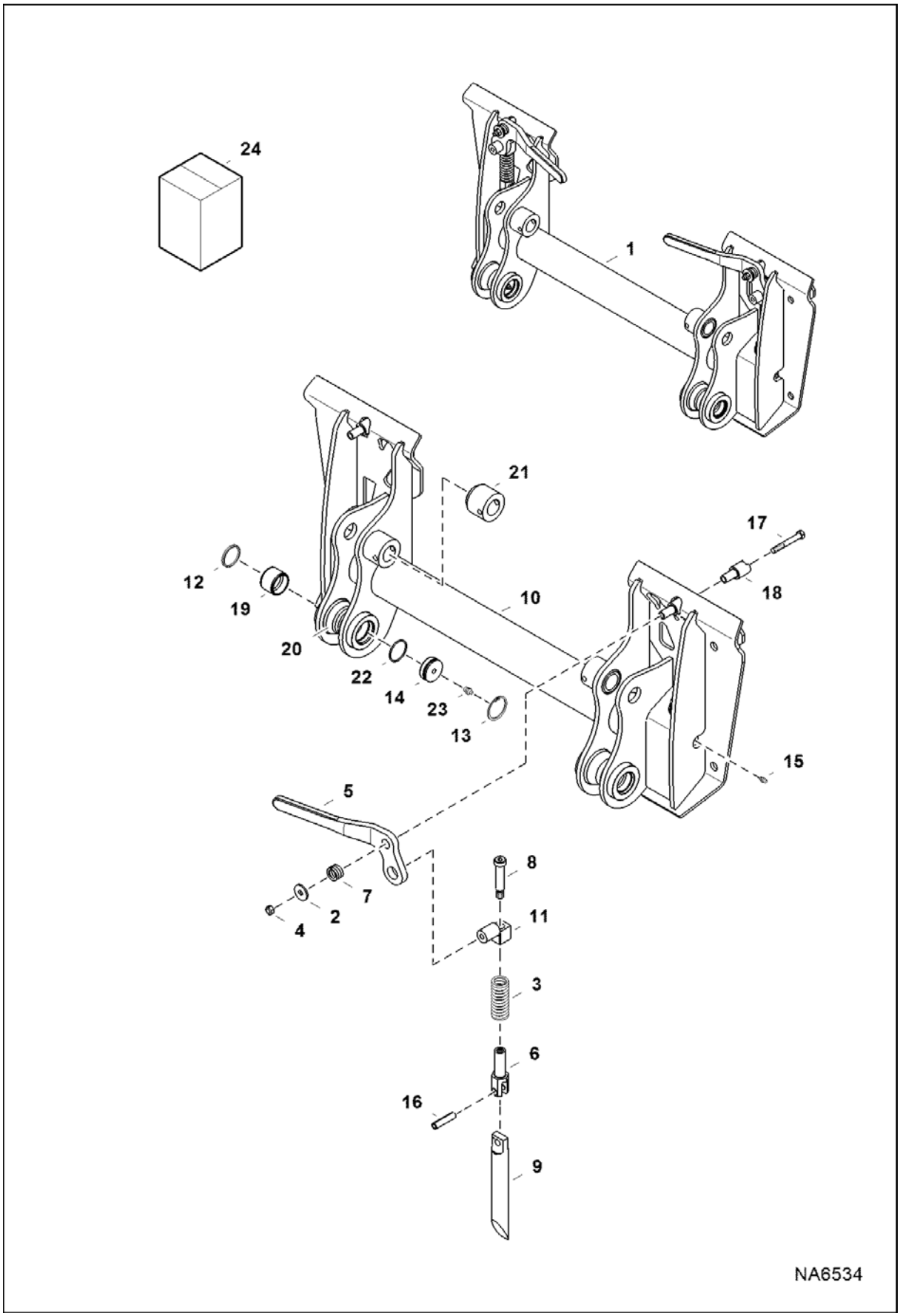
24
1
21
17
12
19
18
10
20
22
14
23
13
15
5
8
7
2
4
11
3
6
16
9
NA6534

BOB-TACH (Cont'd)

Ref No	Part Number	Description	Remarks	Serial Number	Qty
1	7148033	BOB-TACH	Ref. 2-23		1
2	619021	WASHER, 5			2
3	6578253	SPRING, COMPRESSION			2
4	85D6	NUT, 5			2
5	6702904	LEVER, BOB-TACH RH			1
5	6702903	LEVER, BOB-TACH LH			1
6	6704248	PIVOT, WEDGE			2
7	7221255	SPRING			2
8	6728473	BOLT, SHOULDER	pre-applied thread locker		2
9	6737191	WEDGE			2
10		BOBTACH	NAP - Order Ref. 1		1
11	7146538	PIVOT, BOBTACH			2
12	6631067	SEAL, OIL	install flush to Ref. 19		2
13	7180829	RING, SNAP			2
14	7180827	PLUG			1
15	10H35	FITTING, GREASE 10			2
16	14J5032	PIN, STRAIGHT			2
17	17C652	BOLT			2
18	6702958	BUSHING, WELD-ON			2
19	6730997	BUSHING, WELD-ON			2
20	7148020	BUSHING, PIVOT			2
21	7148022	BUSHING, PIVOT			2
22	25K30118	O RING 10			1
23	10H25	FITTING, GREASE 5			1
24		KIT, LEVER	NAP		1

DRIVE TRAIN

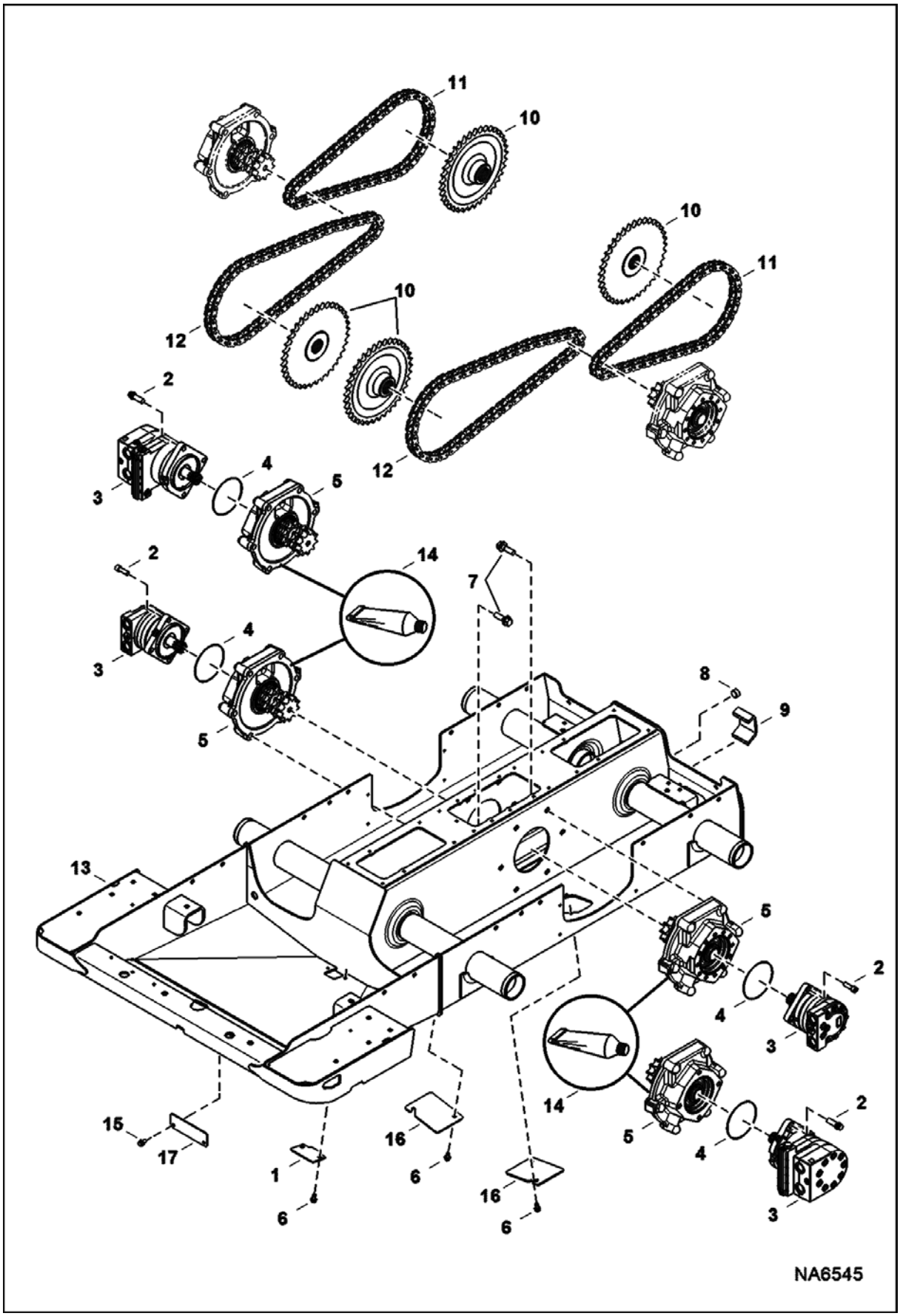
11
10
10
11
10
12
12
2
3
4
5
2
3
4
5
14
7
8
9
13
5
2
4
3
14
5
4
2
3
15
17
16
6
1
6
16
6
NA6545

DRIVE TRAIN (Cont'd)

Ref No	Part Number	Description	Remarks	Serial Number	Qty
1	7190754	COVER, DRAIN			1
2	73G824	BOLT			20
3		MOTOR	See Illustration HYDROSTATIC CIRCUITRY/ NA6648 - single speed - manual controls & ACS		2
3		MOTOR	See Illustration HYDROSTATIC CIRCUITRY/ NA6649 - 2-speed		2
4	25K30508	O-RING, 10			2
5		CARRIER, MOTOR	See Illustration MOTOR CARRIER/ NA6549 - manual controls, AHC & ACS		2
5		CARRIER, MOTOR	See Illustration MOTOR CARRIER/ NA6550 - SJC controls		2
6	84G3712	BOLT 5			6
7	35C1032	BOLT			12
8	6731121	PLUG	chaincase fill		1
9	6706485	HOOK	weld-on		2
10		SPROCKET	See Illustration AXLE/ NA6546		4
11	6689647	CHAIN, DRIVE	endless - 62 pitch		2
11	6689651	CHAIN, DRIVEX	service - 62 pitch		x
11	6690709	LINK	connecting		x
12	7202220	CHAIN, DRIVE	endless - 72 pitch		2
12	7221235	CHAIN	service - 72 pitch		x
12	6690709	LINK	connecting		x
13	7202090	CHAINCASE			1
14	6685372	SEALANT, GASKET LIQUID 10.1 OZ	tube - 0.57 kg (20 oz)		x
15	35C612	BOLT			2
16	6716010	COVER, ACCESS			2
17	7210048	COVER, PLATE			1

AXLE

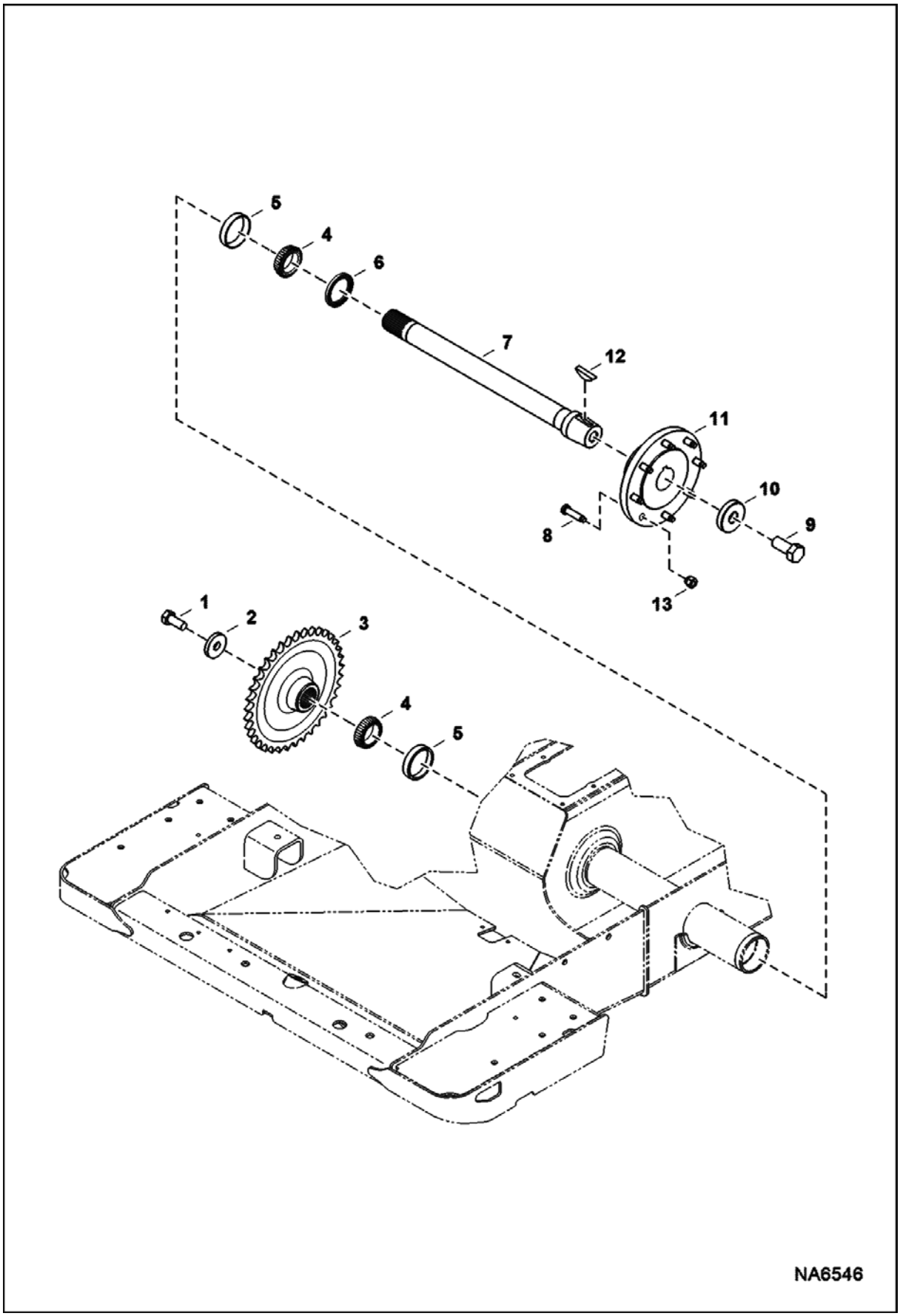

AXLE (Cont'd)

Ref No	Part Number	Description	Remarks	Serial Number	Qty
1	48C1228	BOLT	plated - pre-applied threadlocker - 44,5 mm (1.75") long		4
2	6552871	WASHER			4
3	7134137	SPROCKET			4
4	6689775	BEARING, AXLE			8
5	6689638	CUP, BEARING			8
6	6658228	SEAL, OIL			4
7	6706427	AXLE			4
8	6709170	BOLT, WHEEL			32
9	18C1636	BOLT	2.25" (57,2 mm) long		4
10	6716843	WASHER	recessed		4
11	6578689	HUB	W/Ref. 8		4
12	6J1664	KEY			4
13	6564669	NUT, 10	wheel		32

MOTOR CARRIER
(Drive Motor Mount Assy.) (Single Speed Motor)

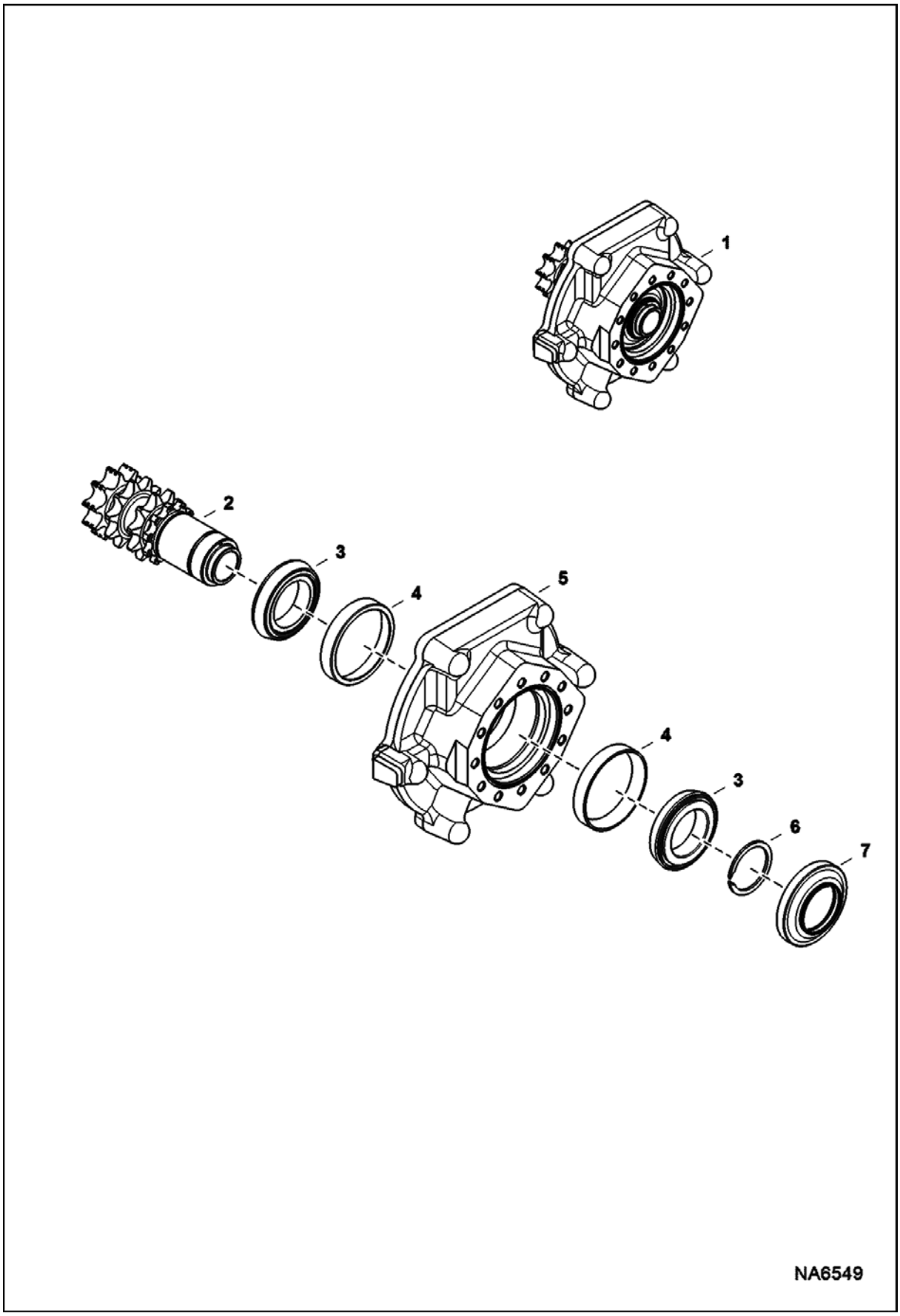

MOTOR CARRIER (Cont'd)
(Drive Motor Mount Assy.) (Single Speed Motor)

Ref No	Part Number	Description	Remarks	Serial Number	Qty
1	7180714	CARRIER, MOTOR	Ref. 2-7		1
2	7161187	SHAFT, TRANS			1
3	7010758	CONE, BEARING			2
4	7010759	CUP, BEARING			1
5		HOUSING	NAP - Order Ref. 1		1
6	6571852	SNAP RING			1
7	6705847	SEAL, OIL			1

MOTOR CARRIER
(Drive Motor Mount Assy.) (2-Speed Motor)

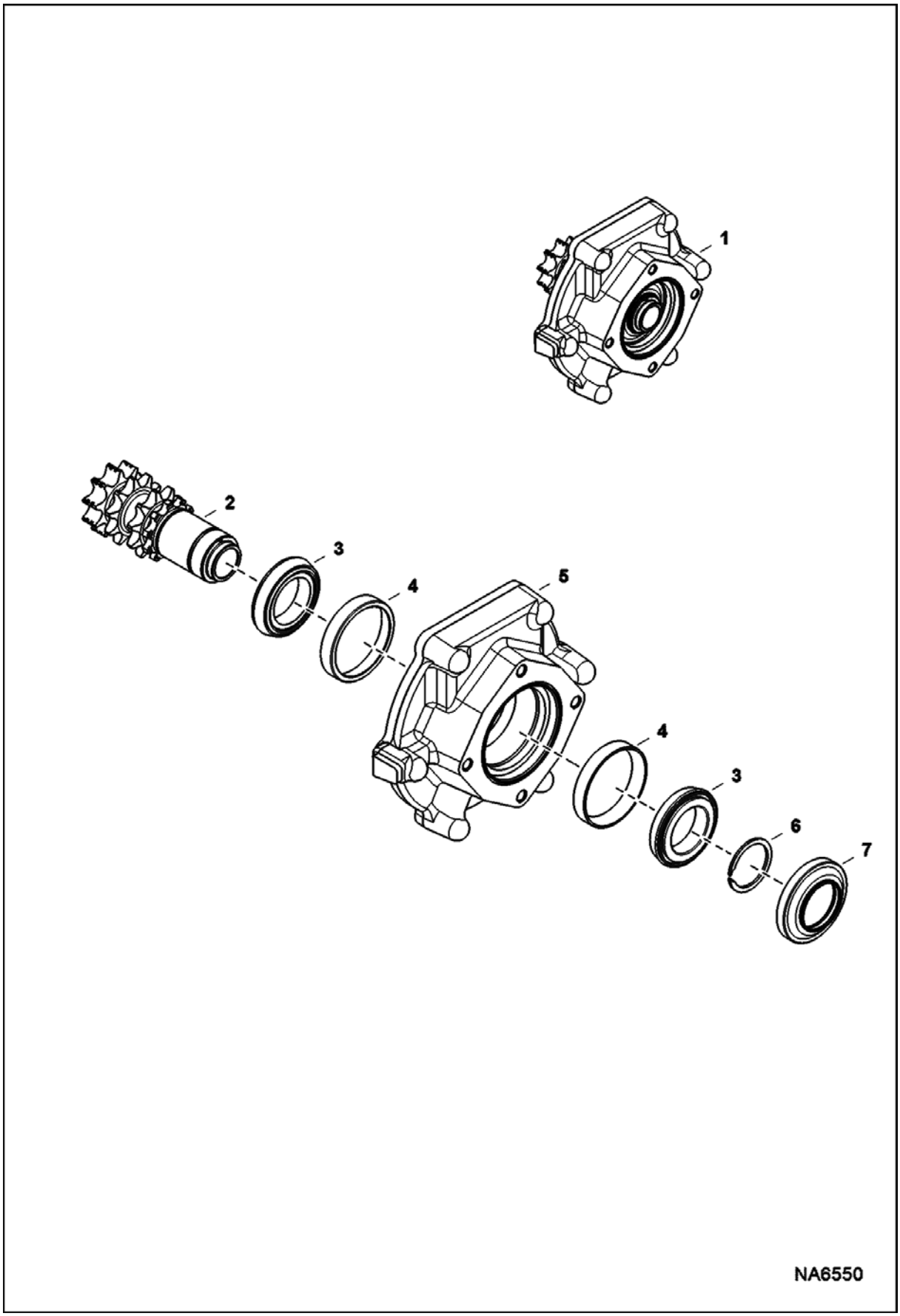

MOTOR CARRIER (Cont'd)
(Drive Motor Mount Assy.) (2-Speed Motor)

Ref No	Part Number	Description	Remarks	Serial Number	Qty
1	7148364	MOUNT ASMBLY	Ref. 2-7		1
2	7161187	SHAFT, TRANS			1
3	7010758	CONE, BEARING			2
4	7010759	CUP, BEARING			2
5		HOUSING	NAP - Order Ref. 1		1
6	6571852	SNAP RING			1
7	6705847	SEAL, OIL			1

DISC BRAKE
(Single Speed Motor)

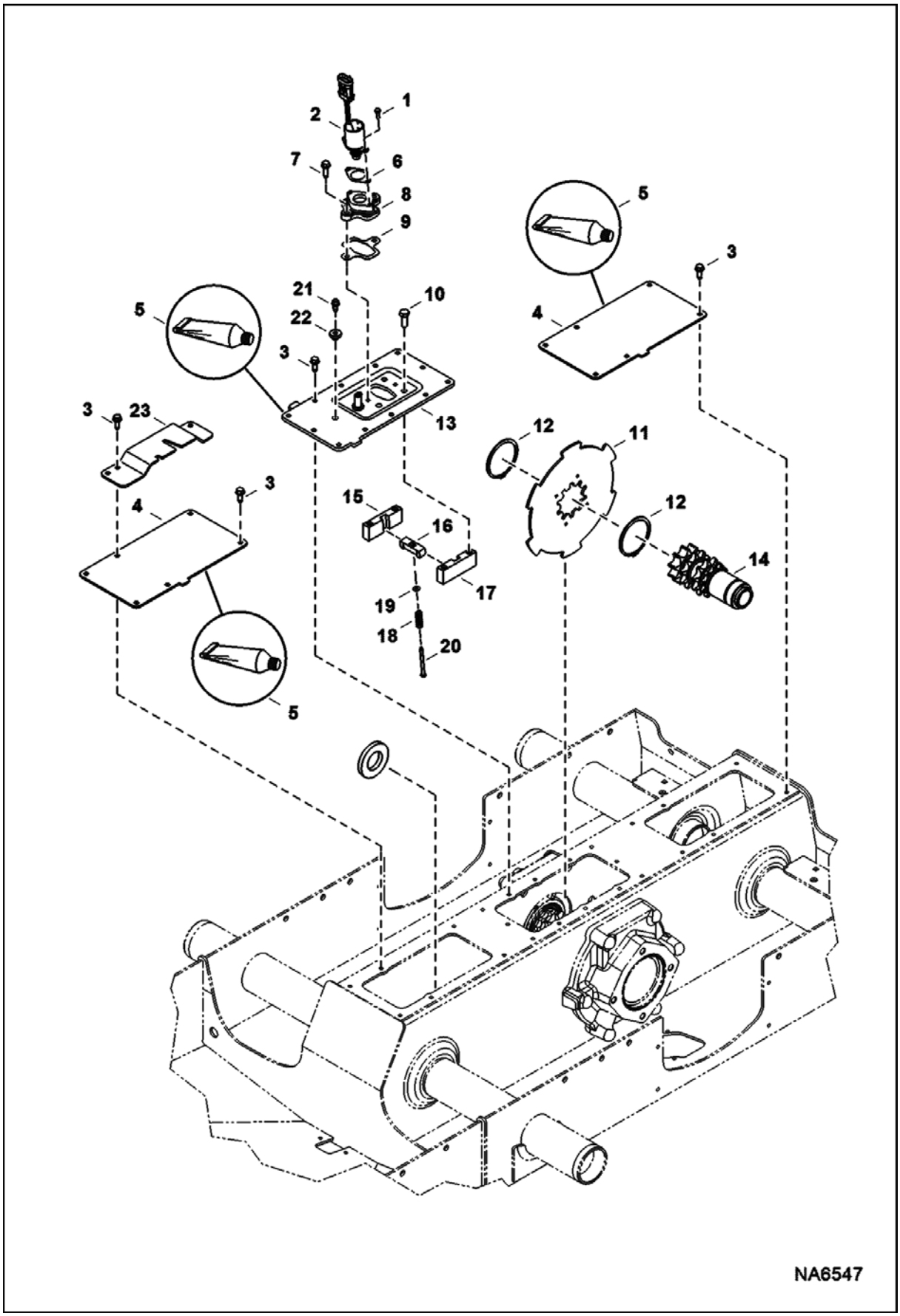

DISC BRAKE (Cont'd)
(Single Speed Motor)

Ref No	Part Number	Description	Remarks	Serial Number	Qty
1	17C412	BOLT 5			2
2	7136559	SOLENOID ASMBLY			1
3	84G3716	SCREW 5			24
4	7151692	COVER			2
5	6685372	SEALANT, GASKET LIQUID 10.1 OZ	tube - 0.57 kg (20 oz)		x
6	6706737	GASKET			1
7	84G3720	BOLT			2
8	6706718	MOUNT			1
9	6708016	GASKET			1
10	47C820	BOLT			4
11	7120111	BRAKE, DISC	disc		2
12	6658672	SNAP RING			4
13	7156265	COVER	M stamped		1
14	7161187	SHAFT, TRANS	See Illustration MOTOR CARRIER/ NA6549		2
15	6719056	BLOCK	guide - LH		1
16	6714278	WEDGE, LOCK TRACTION			1
17	6719057	BLOCK	guide - RH		1
18	6708018	SPRING			1
19	25E13	WASHER 5			1
20	6708267	BOLT			1
21	6680970	BREATHER			1
22	6553411	BUSHING			1
23	7201283	MOUNT, MANIFOLD DRAIN			1

DISC BRAKE
(2-Speed Motor)

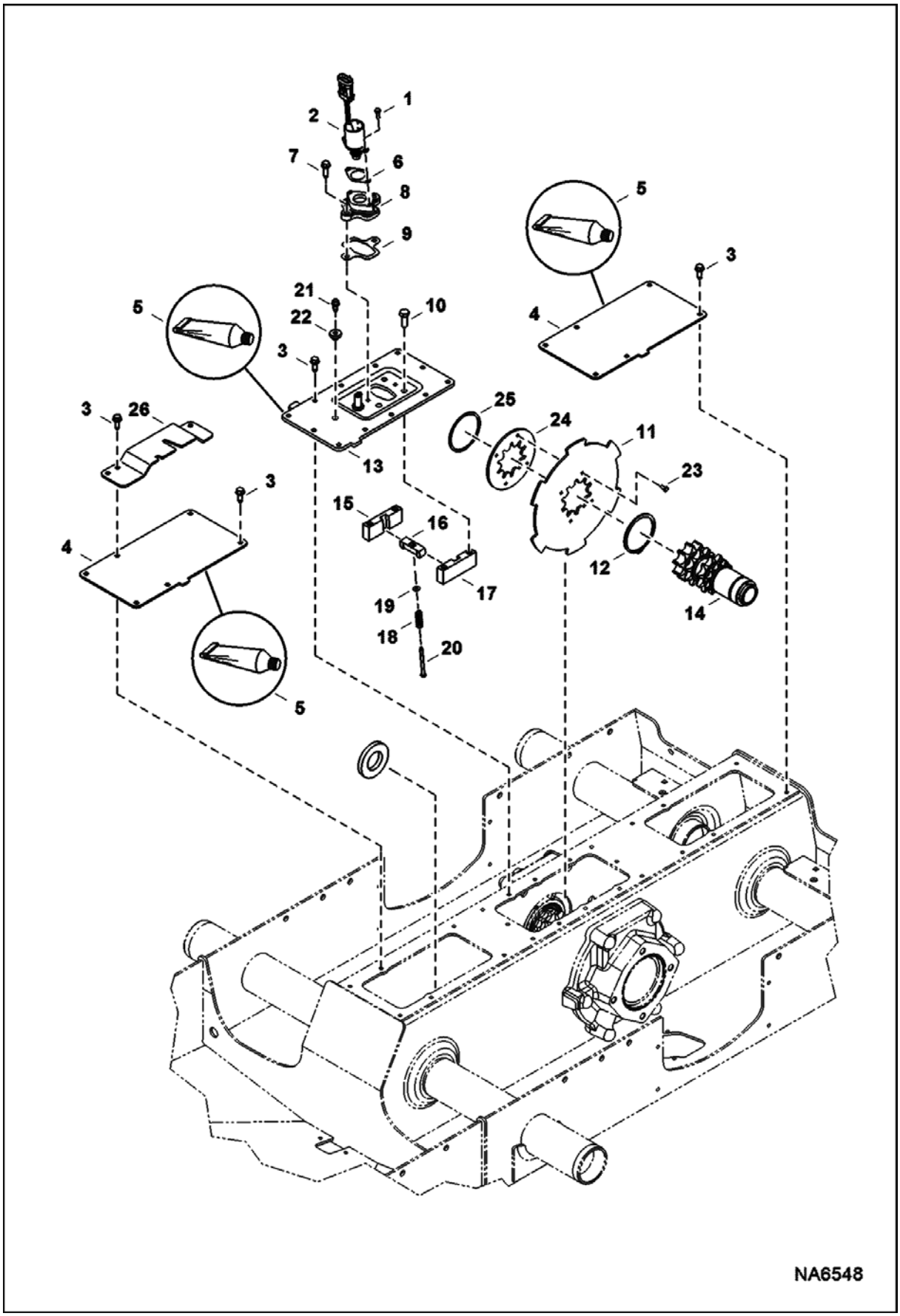

DISC BRAKE (Cont'd)
(2-Speed Motor)

Ref No	Part Number	Description	Remarks	Serial Number	Qty
1	17C412	BOLT 5			2
2	7136559	SOLENOID ASMBLY			1
3	84G3716	SCREW 5			36
4	7151692	COVER			2
5	6685372	SEALANT, GASKET LIQUID 10.1 OZ	tube - 0.57 kg (20 oz)		x
6	6706737	GASKET			1
7	84G3720	BOLT			2
8	6706718	MOUNT			1
9	6708016	GASKET			1
10	47C820	BOLT			4
11	7120107	BRAKE	disc		2
12	6658672	SNAP RING			2
13	7156265	COVER	M stamped		1
14	7161187	SHAFT, TRANS	See Illustration MOTOR CARRIER/ NA6550		2
15	6719056	BLOCK	guide - LH		1
16	6714278	WEDGE, LOCK TRACTION			1
17	6719057	BLOCK	guide - RH		1
18	6708018	SPRING			1
19	25E13	WASHER 5			1
20	6708267	BOLT			1
21	6680970	BREATHER			1
22	6553411	BUSHING			1
23	6668955	POP RIVET			8
24	7120108	DISC	isolator		2
25	6691500	SNAP RING			2
26	7201283	MOUNT, MANIFOLD DRAIN			1

HYDRAULIC CIRCUITRY
(W/O BPV Junction Block)

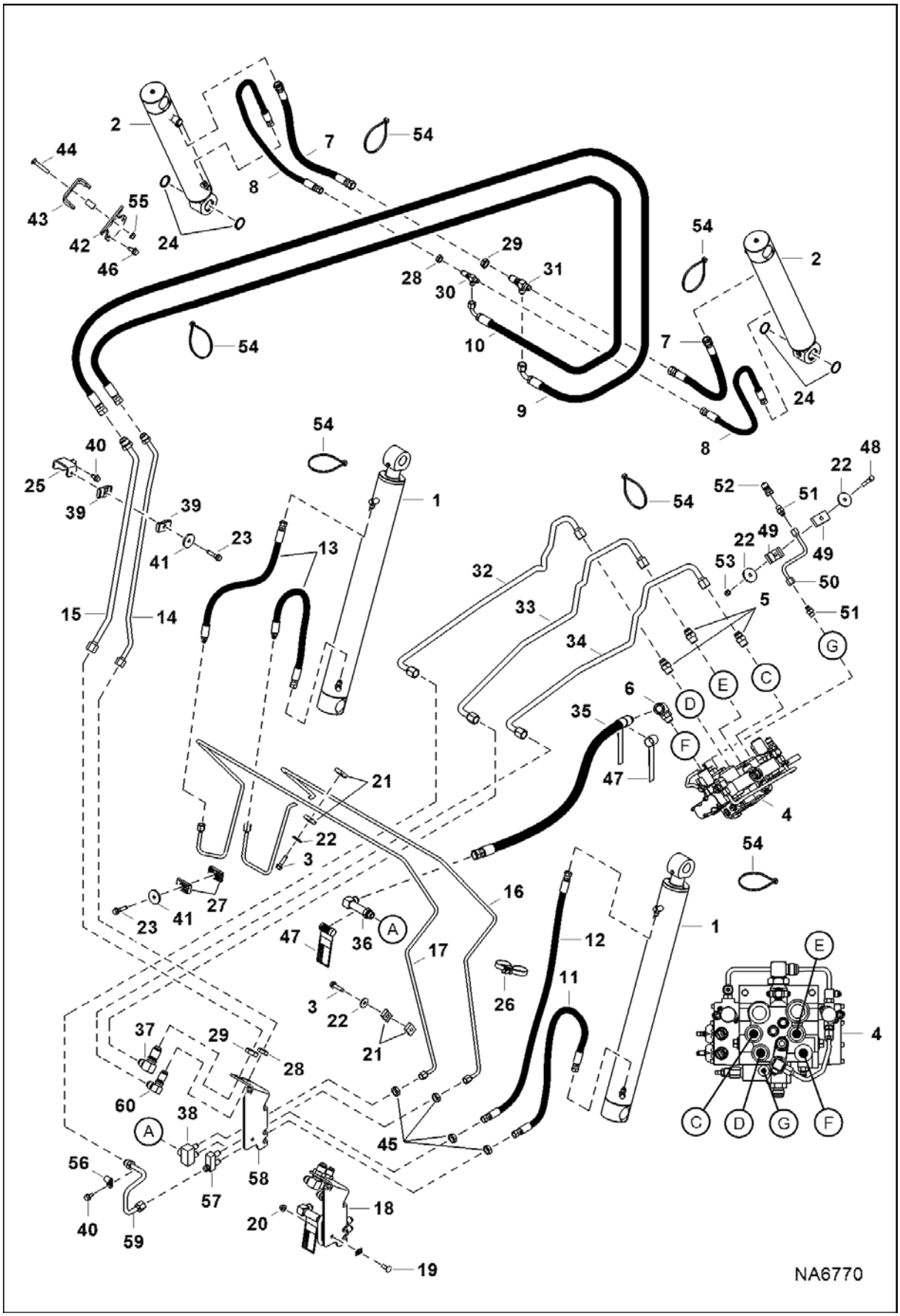

HYDRAULIC CIRCUITRY (Cont'd)
(W/O BPV Junction Block)

Ref No	Part Number	Description	Remarks	Serial Number	Qty
1		CYLINDER, LIFT	See Illustration LIFT CYLINDER/ NA6766		2
2		CYLINDER, TILT	See Illustration TILT CYLINDER/ NA6577		2
3	84G3724	BOLT			2
4		VALVE, CONTROL	See Illustration HYDRAULIC CONTROL VALVE/ NA6580 - manual controls		1
4		VALVE, CONTROL	See Illustration HYDRAULIC CONTROL VALVE/ NA6582 - ACS, AHC, SJC		1
5	15KB1010	FITTING, HYD CONNECTOR			3
5	79K10	O RING 10			x
6	6814531	ELBOW			1
6	79K10	O RING 10			1
7	7179366	HOSE, HYD			2
8	7188997	HOSE, HYD			2
9	7160586	HOSE, HYD			1
10	7160604	HOSE, HYD			1
11	7179368	HOSE, HYD			1
12	7183332	HOSE, HYD			1
13	7116564	HOSE			2
14	7197119	TUBELINE, HYD			1
15	7197117	TUBELINE, HYD			1
16	7193546	TUBELINE, HYD			1
17	7193547	TUBELINE, HYD			1
18	7204597	VALVE, LEVEL SELF NO	Ref. 28, 29, 36-38, 40 & 56-61		1
19	37C616	BOLT			2
20	83D6	NUT 5			2
21	6726277	CLAMP			4
22	619021	WASHER, 5	0.13" thick - 32 mm (1.25") OD		2
23	84G3728	BOLT			2
24	225855	SEAL, OIL 10			4
25	7197039	MOUNT, BULKHEAD	RH		1
26	6678668	STRAP, DUAL TIE			2
27	7196075	CLAMP, TUBELINE			2
28	86F5	NUT			1
29	86F6	NUT			1
30	91K7	FITTING			1
31	91K6	TEE			1
32	7194715	TUBELINE, HYD			1
33	7194713	TUBELINE, HYD			1
34	7194714	TUBELINE, HYD			1
35	7189378	HOSE, HYD	W/Ref. 47 - available only as an assembly W/one danger decal installed near the male threaded end of the hose		1
36	7211446	KIT, FITTING W/DECAL	W/Ref. 47 - this elbow must always display the danger decal		1
36	79K10	O RING 10			x
37	7212624	FITTING, HYD ELBOW			4
38	7202282	FITTING, HYD CONNECTOR			1
39	6729605	CLAMP			2
40	84G3712	BOLT 5			2
41	872229	WASHER	0.19" thick - 44.5 mm (1.75") OD		2

HYDRAULIC CIRCUITRY (Cont'd)
(W/O BPV Junction Block)

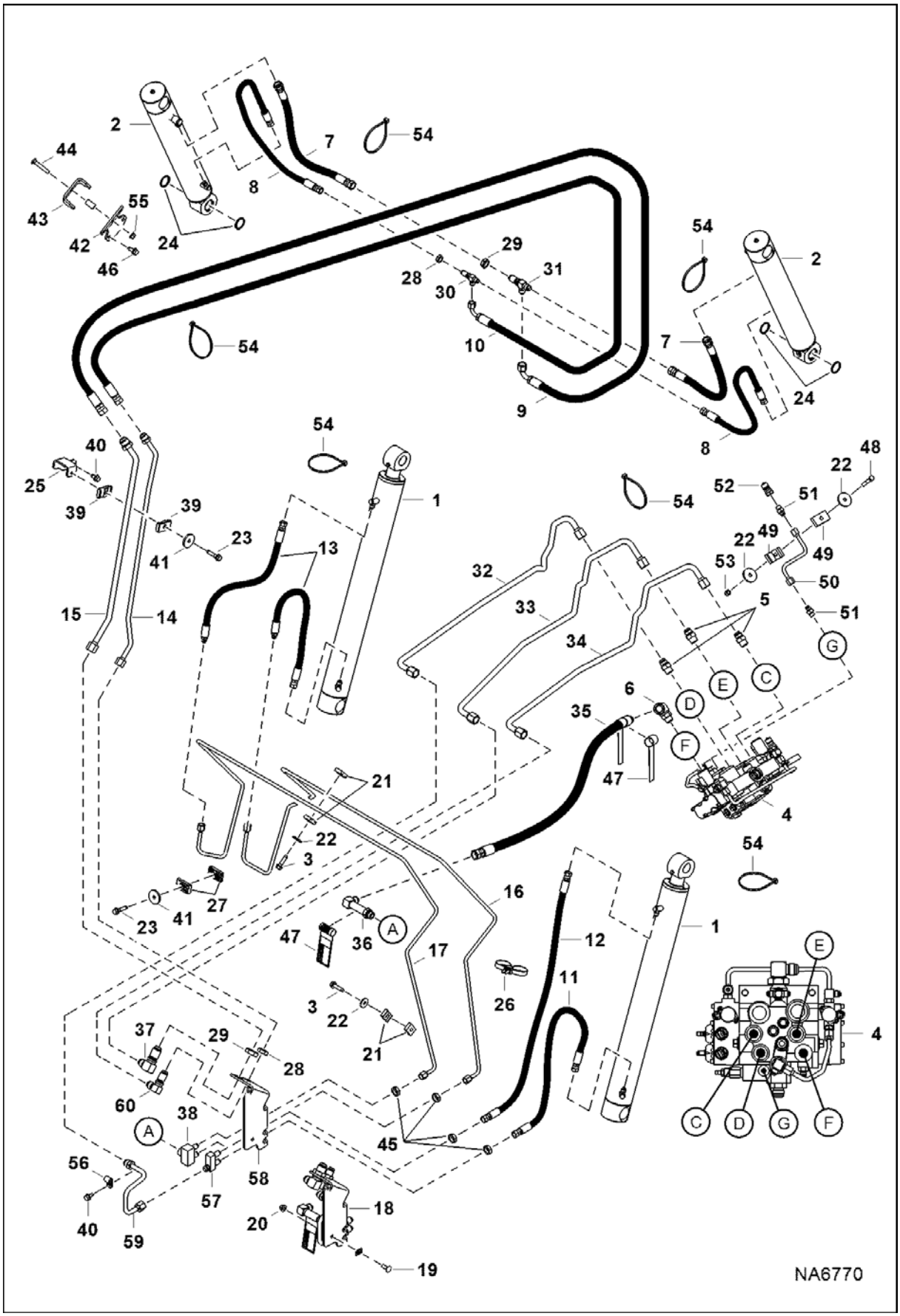

HYDRAULIC CIRCUITRY (Cont'd)
(W/O BPV Junction Block)

Ref No	Part Number	Description	Remarks	Serial Number	Qty
42	7199814	CLAMP, HOSE			1
43	7199815	CLAMP, HOSE			1
44	37C632	BOLT			2
45	86F5	NUT			5
46	84G3716	SCREW 5			3
47	7170355	DECAL, DANGER			2
48	17C632	BOLT 5			1
49	7183298	CLAMP			2
50	7182882	TUBELINE, HYD			1
51	15KB0606	FITTING, HYD CONNECTOR			2
51	79K6	O RING 10			x
52	6684125	COUPLER			1
53	85D6	NUT, 5			1
54	6624289	STRAP, TIE			4
55	89D6	NUT			2
56	30H31	CLAMP 10			1
57	7211448	FITTING, HYD CONNECTOR			1
58	7204048	BRACKET, JUNCTION			1
59	7212057	TUBELINE, HYD			1
60	7191506	FITTING, HYD ELBOW			1

HYDRAULIC CIRCUITRY
(W/BPV Junction Block)

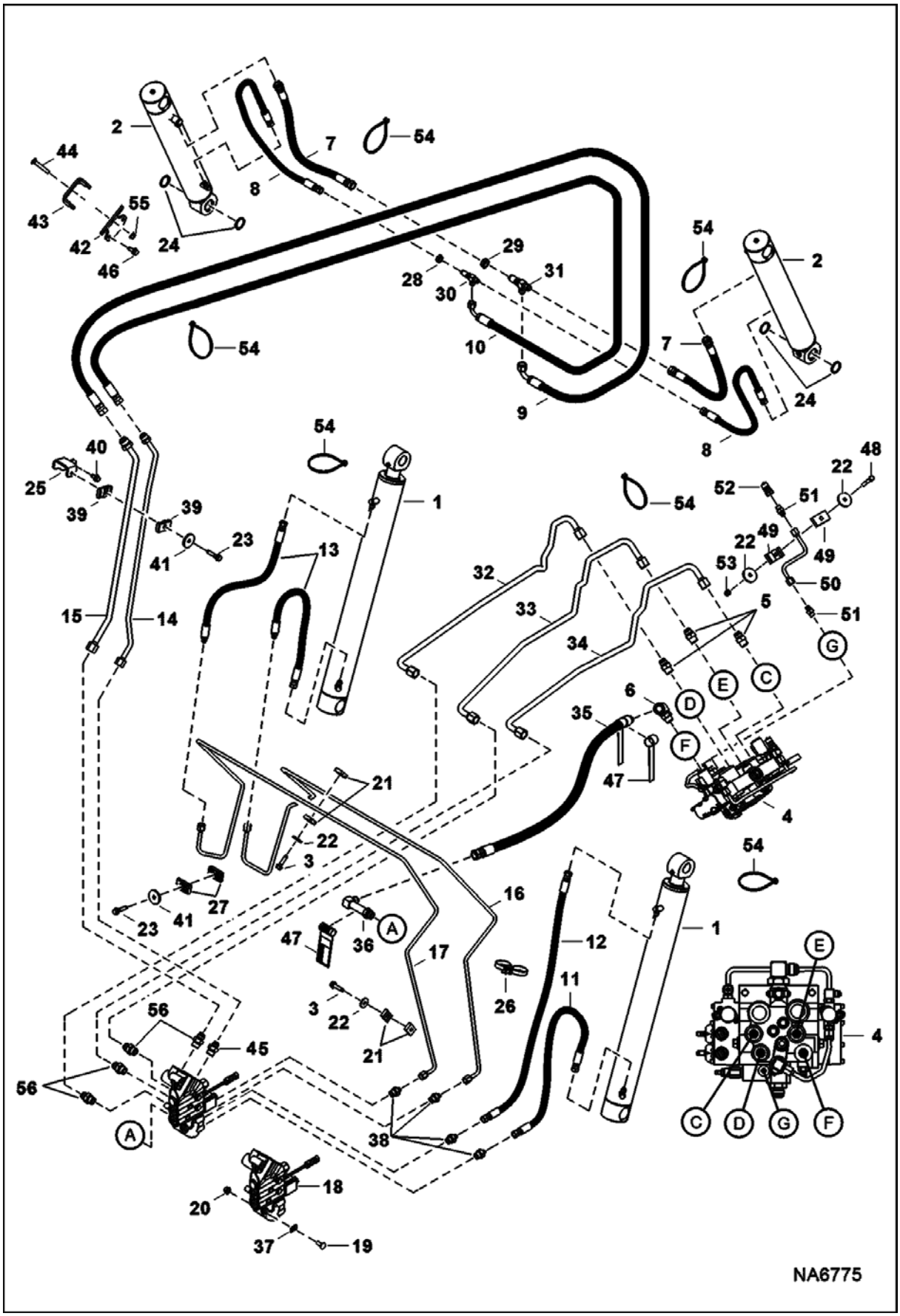

HYDRAULIC CIRCUITRY (Cont'd)
(W/BPV Junction Block)

Ref No	Part Number	Description	Remarks	Serial Number	Qty
1		CYLINDER, LIFT	See Illustration LIFT CYLINDER/ NA6766		2
2		CYLINDER, TILT	See Illustration TILT CYLINDER/ NA6577		1
3	84G3724	BOLT			2
4		VALVE, CONTROL	See Illustration HYDRAULIC CONTROL VALVE/ NA6580 - manual controls		1
4		VALVE, CONTROL	See Illustration HYDRAULIC CONTROL VALVE/ NA6582 - ACS, AHC, SJC		1
5	15KB1010	FITTING, HYD CONNECTOR			3
5	79K10	O RING 10			x
6	6814531	ELBOW			1
6	79K10	O RING 10			1
7	7179366	HOSE, HYD			2
8	7188997	HOSE, HYD			2
9	7160586	HOSE, HYD			1
10	7160604	HOSE, HYD			1
11	7179368	HOSE, HYD			1
12	7183332	HOSE, HYD			1
13	7116564	HOSE			2
14	7197118	TUBELINE, HYD			1
15	7197116	TUBELINE, HYD			1
16	7193546	TUBELINE, HYD			1
17	7193547	TUBELINE, HYD			1
18	7011060	VALVE, BPV			1
19	37C640	BOLT			2
20	83D6	NUT 5			2
21	6726277	CLAMP			4
22	619021	WASHER, 5	0.13" thick - 32 mm (1.25") OD		2
23	84G3728	BOLT			2
24	225855	SEAL, OIL 10			4
25	7197039	MOUNT, BULKHEAD	RH		1
26	6678668	STRAP, DUAL TIE			2
27	7196075	CLAMP, TUBELINE			2
28	86F5	NUT			1
29	86F6	NUT			1
30	91K7	FITTING			1
31	91K6	TEE			1
32	7194715	TUBELINE, HYD			1
33	7194713	TUBELINE, HYD			1
34	7194714	TUBELINE, HYD			1
35	7189378	HOSE, HYD	W/Ref. 47 - available only as an assembly W/one danger decal installed near the male threaded end of the hose		1
36	7211446	KIT, FITTING W/DECAL	W/Ref. 47 - this elbow must always display the danger decal		1
36	79K10	O RING 10			x
37	6684033	NUT			2
38	15KB0608	FITTING, HYD CONNECTOR			4
39	6729605	CLAMP			2
40	84G3712	BOLT 5			1
41	872229	WASHER	0.19" thick - 44.5 mm (1.75") OD		3
42	7199814	CLAMP, HOSE			1
43	7199815	CLAMP, HOSE			1

HYDRAULIC CIRCUITRY (Cont'd)
(W/BPV Junction Block)

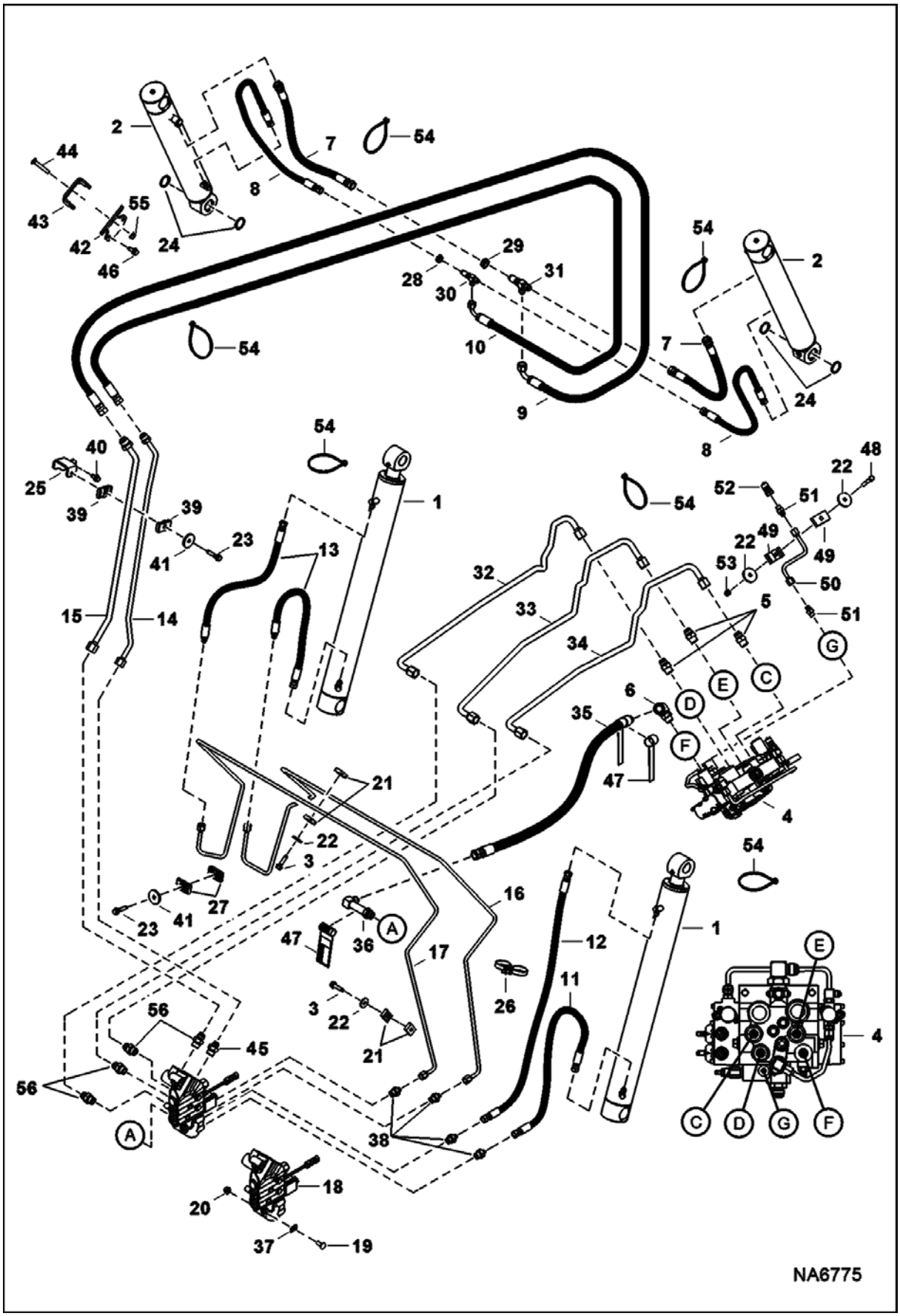

HYDRAULIC CIRCUITRY (Cont'd)
(W/BPV Junction Block)

Ref No	Part Number	Description	Remarks	Serial Number	Qty
44	37C632	BOLT			2
45	15KB0810	FITTING, HYD CONNECTOR			1
46	84G3716	SCREW 5			3
47	7170355	DECAL, DANGER			2
48	17C632	BOLT 5			1
49	7183298	CLAMP			2
50	7182882	TUBELINE, HYD			1
51	15KB0606	FITTING, HYD CONNECTOR			2
51	79K6	O RING 10			x
52	6684125	COUPLER			1
53	85D6	NUT, 5			1
54	6624289	STRAP, TIE			4
55	84G3740	BOLT			1
56	15KB1010	FITTING, HYD CONNECTOR			4

MANUAL LIFT RELEASE SYSTEM

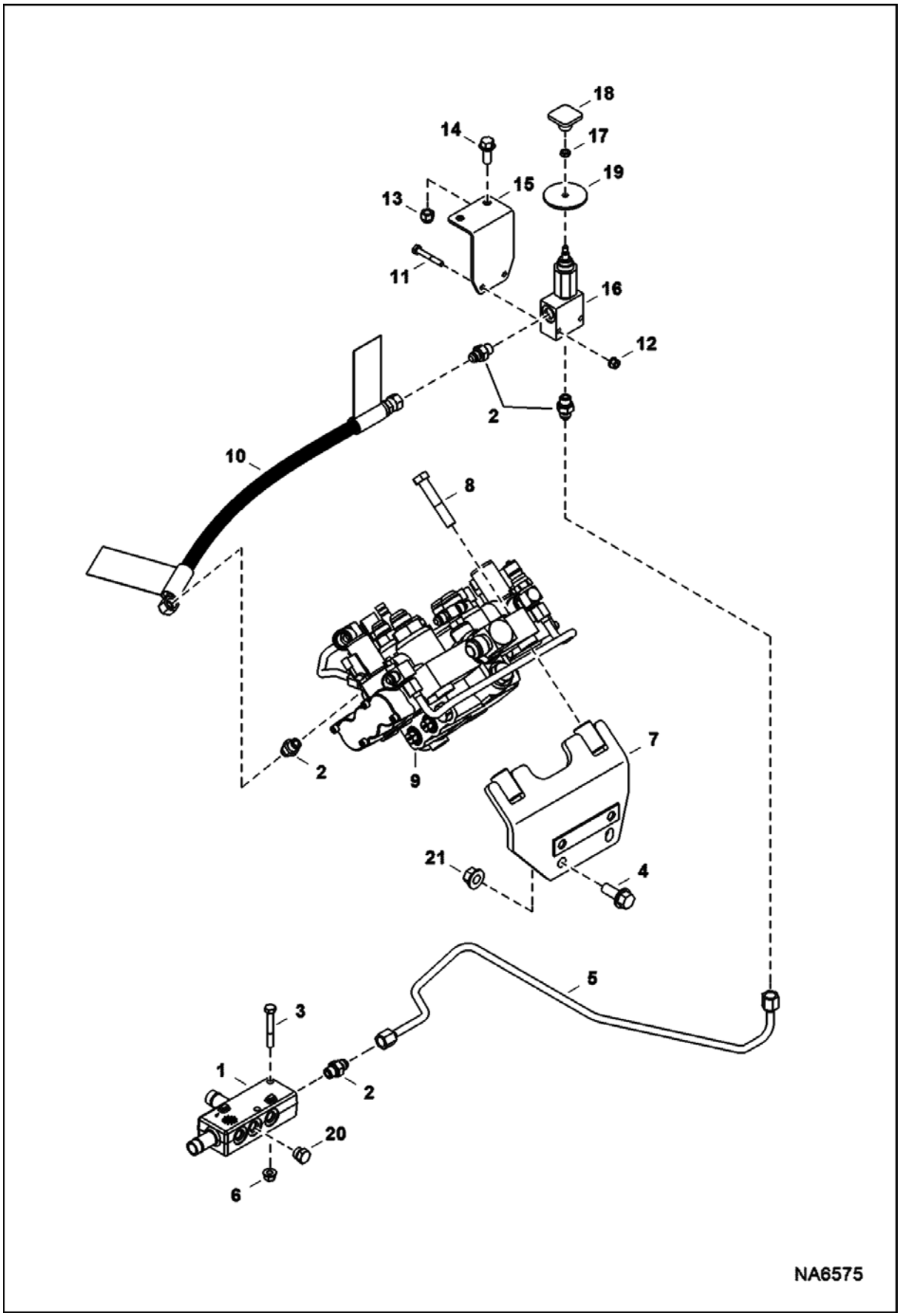

MANUAL LIFT RELEASE SYSTEM (Cont'd)

Ref No	Part Number	Description	Remarks	Serial Number	Qty
1	7201981	MANIFOLD, DRAIN CASE			1
2	15KB0606	FITTING, HYD CONNECTOR			4
2	79K6	O RING 10			x
3	17C536	BOLT			2
4	31C820	BOLT			2
5	7180719	HOSE, HYD			1
6	83D5	NUT 5			2
7	7212098	MOUNT, VALVE			1
8	17C844	BOLT			2
9		VALVE, CONTROL	See Illustration HYDRAULIC CONTROL VALVE/ NA6580 - manual controls		1
9		VALVE, CONTROL	See Illustration HYDRAULIC CONTROL VALVE/ NA6582 - ACS & SJC		1
10	7180721	HOSE, HYD	available only as an assembly W/two danger decals installed		1
10	7170355	DECAL, DANGER			2
11	17C428	BOLT			2
12	83D4	NUT 10			2
13	59D6	NUT			2
14	35C616	BOLT 5			2
15	7149166	MOUNT, BOOM DOWN			1
16		VALVE ASSY	See Illustration MANUAL LIFT RELEASE VALVE/ PE1547 - manual lift release		1
17	7D4	NUT			1
18	6737524	KNOB			1
19	6707101	SEAL	neoprene		1
20	24K5	PLUG			1
20		FITTING, HYD CONNECTOR	See Illustration POWER BOB-TACH/ NA6619		1
21	83D8	NUT 5			2

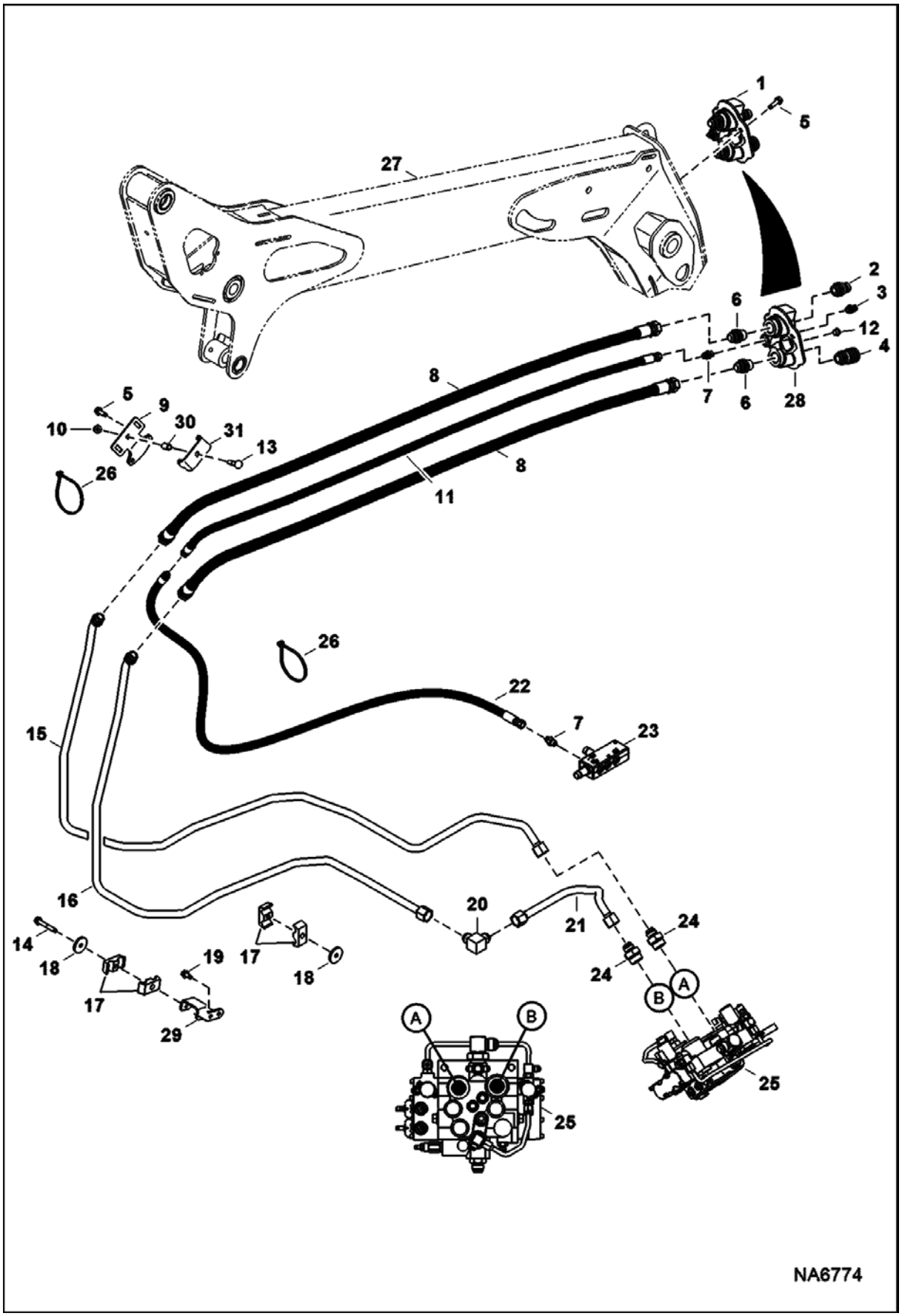
1
5
27
2
3
6
12
4
8
7
6
28
5
9
10
30
31
13
26
8
11
26
22
7
23
15
16
20
21
24
14
18
19
17
17
18
24
A
B
A
B
29
25
25
NA6774

AUXILIARY HYDRAULICS (Cont'd)

Ref No	Part Number	Description	Remarks	Serial Number	Qty
1	7141939	BLOCK, COUPLER	assy - Ref. 2-4, 6, 7 & 28		1
2	6679837	COUPLER	male		1
2	6679841	SEAL	blue - front		1
2	6680020	SEAL KIT	(3) O-rings & (3) back-up washers		1
3	6679838	KIT, COUPLER	male casedrain - W/valve, spring, seal & O-ring		1
3	6679840	SEAL	blue - front		1
4	6680018	COUPLER, KIT	female		1
4	6680020	SEAL KIT	(3) O-rings & (3) back-up washers		1
5	84G3716	SCREW 5			3
6	6679836	ADAPTER	W/spring		2
6	79K12	O RING 10			x
7	15KB0606	FITTING, HYD CONNECTOR			1
7	79K6	O RING 10			x
8	7171209	HOSE, HYD			2
9	7199814	CLAMP, HOSE			1
10	89D6	NUT			1
11	7171210	HOSE, HYD			1
12	6697942	PLUG, NYLON			1
13	17C644	BOLT			2
14	84G3712	BOLT 5			2
15	7211932	TUBELINE, HYD			1
16	7211933	TUBELINE, HYD			1
17	6592506	CLAMP			6
18	872229	WASHER			3
19	84G3740	BOLT			1
20	77F8	ELBOW			1
21	7181452	TUBELINE, HYD			1
22	7194670	HOSE, HYD			1
23		MANIFOLD, CASE DRAIN	See Illustration HYDROSTATIC CIRCUITRY/ NA6646		1
24	15KB1216	FITTING, HYD CONNECTOR			2
24	79K16	O RING 10			x
25		VALVE	See Illustration HYDRAULIC CONTROL VALVE/ NA6582 - ACS, AHC, SJC		1
25		VALVE	See Illustration HYDRAULIC CONTROL VALVE/ NA6580 - manual controls		1
26	6624289	STRAP, TIE			3
27		ARM, LIFT ASSY	See Illustration LIFT ARM & BOB-TACH/ NA6765		1
28		BLOCK	NSS - Order Ref. 1		1
29	7197038	MOUNT, BULKHEAD			1
30	7199872	SPACER, TUBE			1
31	7199815	CLAMP, HOSE			1

TILT CYLINDER

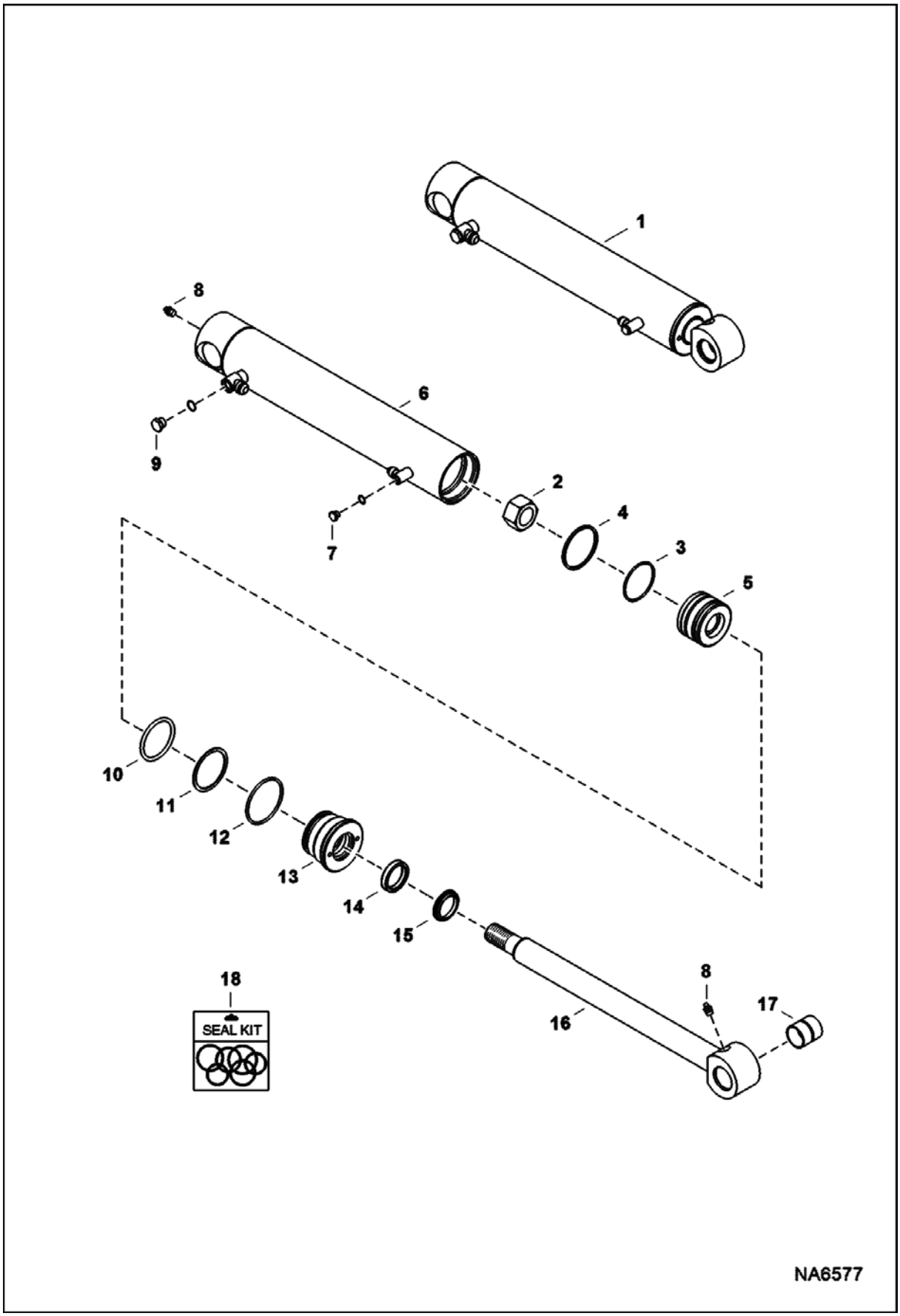

TILT CYLINDER (Cont'd)

Ref No	Part Number	Description	Remarks	Serial Number	Qty
1	7151185	CYLINDER, TILT	Ref. 2-17		1
2	6810539	NUT			1
3	6516229	PISTON SEAL			1
4	54K30210	O-RING			1
5	7214594	PISTON, CYL TILT			1
6	7151186	TUBE, CASE CYL TILT			1
7	6812170	PLUG			1
8	10H25	FITTING, GREASE 5			2
9	6812171	PLUG			1
10	54K60212	O-RING			1
11	73K332	RING	back-up		1
12	54K40224	O-RING			1
13	7214661	HEAD, CYL TILT			1
14	6667326	SEAL			1
15	6690707	WIPER, ROD CYL			1
16	7214598	SHAFT, ROD CYL TILT			1
17	7150182	BUSHING	wear		1
18	7199903	KIT, SEAL	Ref. 2-4, 12, 14 & 15		1

LIFT CYLINDER

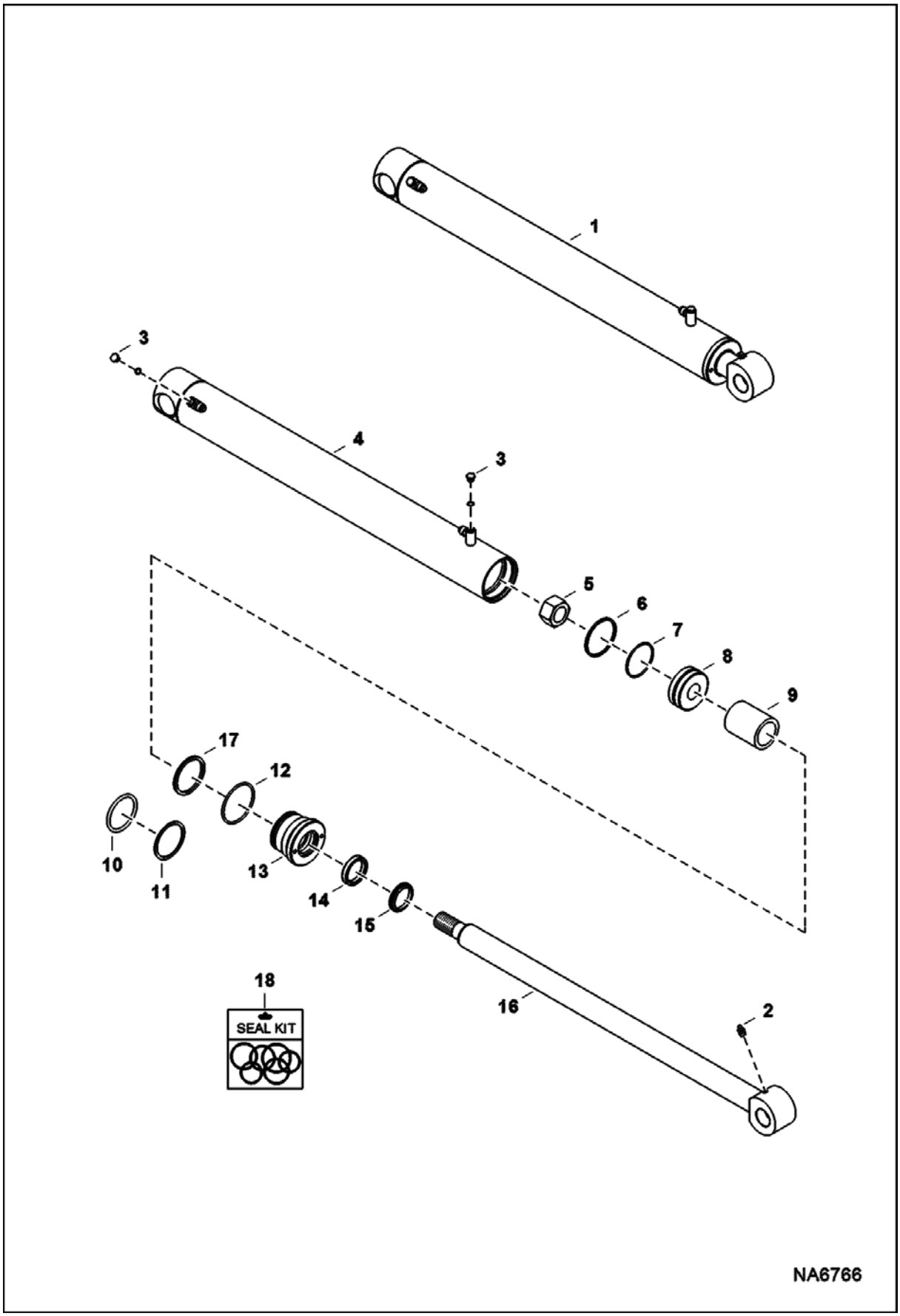

LIFT CYLINDER (Cont'd)

Ref No	Part Number	Description	Remarks	Serial Number	Qty
1	7152266	CYLINDER, LIFT	Ref. 2-18		1
2	10H25	FITTING, GREASE 5			1
3	6812170	PLUG			2
4	7152267	TUBE, CASE CYL LIFT			1
5	6810539	NUT			1
6	6516229	PISTON SEAL			1
7	25K30210	O-RING			1
8	6678932	PISTON	W/Ref. 6 & 7		1
9	7196033	SPACER			1
10	54K60212	O-RING			1
11	73K332	RING	back-up		1
12	54K40224	O-RING			1
13	6800686	HEAD, CYL TILT			1
14	6669267	SEAL	back-up		1
15	6687000	WIPER ROD	wiper		1
16	7152268	SHAFT, ROD CYL LIFT			1
17	7135489	KIT, SEAL	Ref. 5-7, 10-12, 14 & 15		1

CONTROL PEDALS

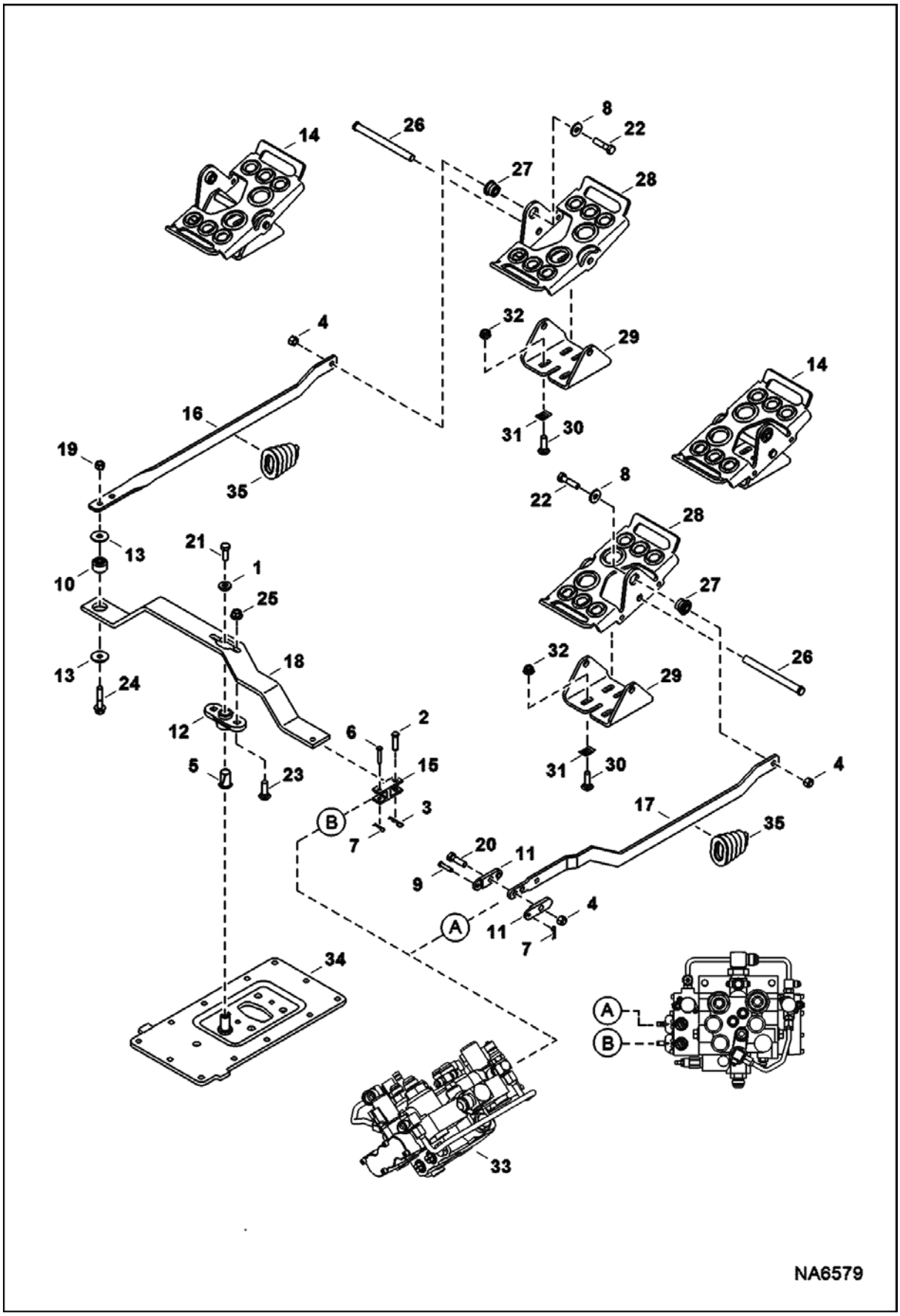

CONTROL PEDALS (Cont'd)

Ref No	Part Number	Description	Remarks	Serial Number	Qty
1	6557831	WASHER			1
2	7191333	PIN, CLEVIS			1
3	1306637	CLIP			1
4	95D6	NUT			3
5	6512026	BUSHING			1
6	7191334	PIN, CLEVIS			1
7	6513495	COTTER PIN			2
8	6563914	WASHER			2
9	6564654	PIN			1
10	6685060	BUSHING, TORSION			1
11	6708009	LINK			2
12	6708043	BUSHING			1
13	6737388	WASHER			2
14	7163421	PEDAL ASSY	Ref. 26-29		1
15	7191332	YOKE, FLANGE			1
16	7181066	LINK, PEDAL			1
17	7181067	LINK, PEDAL			1
18	7161069	LINK			1
19	63D6	NUT			1
20	17C620	BOLT			1
21	17C616	BOLT 5			1
22	17C624	BOLT 5			2
23	37C620	BOLT			2
24	49C628	BOLT			1
25	53D6	NUT			2
26		PIN	NAP - Order Ref. 14		2
27	6665701	BUSHING, PRESS FIT			2
28		PEDAL	NAP - Order Ref. 14		2
29		MOUNT	NAP - Order Ref. 14		2
30	37C620	BOLT			4
31	6684033	NUT			4
32	57D6	NUT 5			4
33		VALVE	See Illustration HYDRAULIC CONTROL VALVE/ NA6580 - manual controls		1
33		VALVE	See Illustration HYDRAULIC CONTROL VALVE/ NA6582 - ACS, AHC, SJC		1
34		COVER	See Illustration DISC BRAKE/ NA6548 See Illustration DISC BRAKE/ NA6547		1
35	7153503	BOOT			2

HYDRAULIC CONTROL VALVE
(Manual Controls)

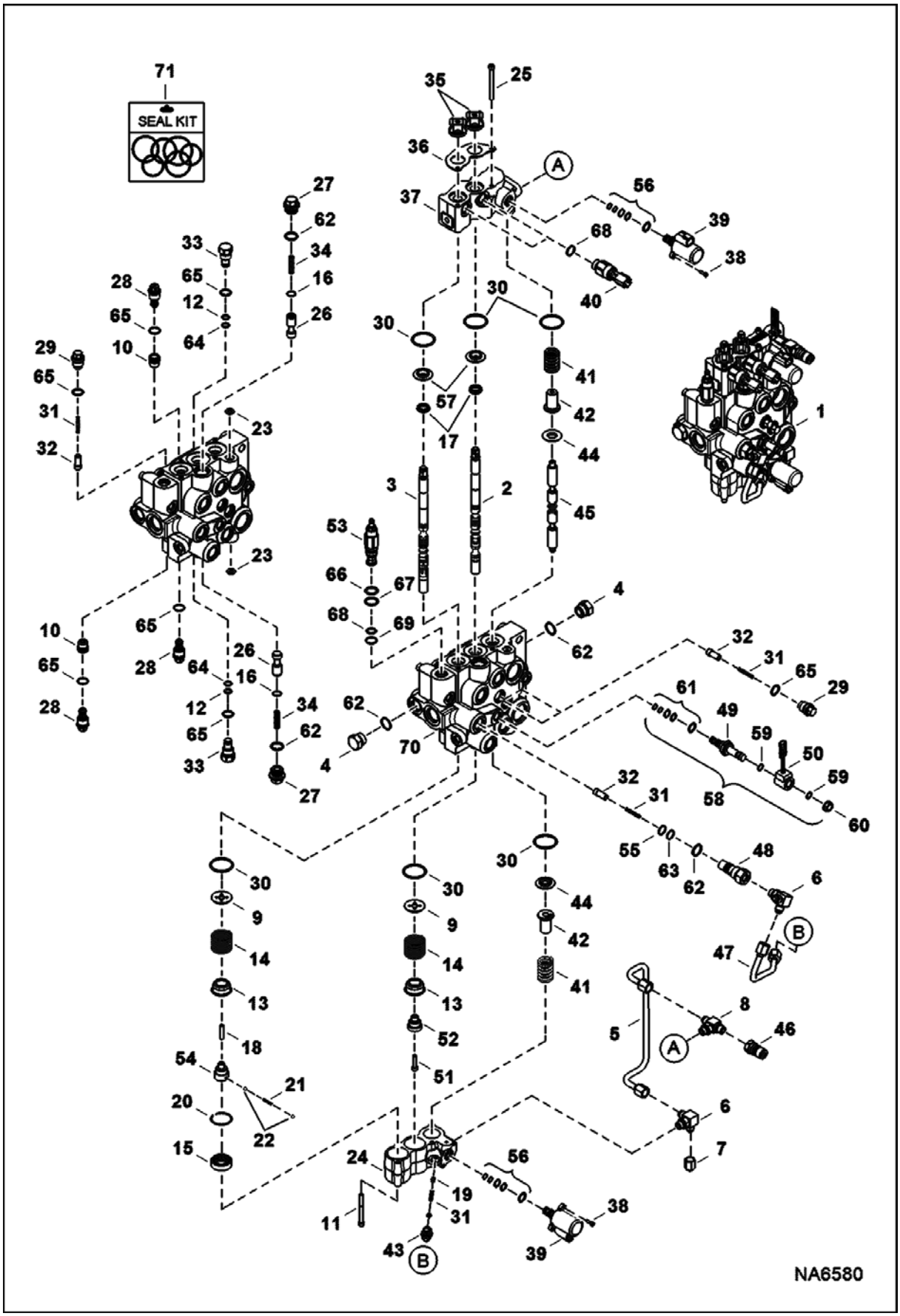

HYDRAULIC CONTROL VALVE (Cont'd)
(Manual Controls)

Ref No	Part Number	Description	Remarks	Serial Number	Qty
1	7215957	VALVE, CONTROL			1
2	6815152	SPOOL, TILT			1
3	7209460	SPOOL, LIFT LOCK			1
4	24K7	PLUG	W/Ref. 65		2
5	7157291	TUBELINE			1
6	7166338	TEE, BOSS			1
7	36K5	CAP			2
8					1
8	79K6	O RING 10			2
9	7211397	WASHER, SPRING			2
10	7208227	SEAT, RELIEF PORT			2
11	6814022	SCREW HEX SKT HD W/T			4
12	58K013	O-RING			2
13	6592100	COLLAR			2
14	6587580	SPRING			2
15	7211400	SLEEVE, DETENT			1
16	7214312	RING, RETAINING			2
17	6683274	SEAL, SPOOL 10			2
18	6586918	SCREW			1
19	7214722	VALVE, CHECK			1
20	7214856	RING, RETAINING			1
21	6592107	SPRING			1
22	6592105	BALL			2
23	55K204	O RING 10			2
24	7214959	BLOCK, VALVE CONTROL HYD			1
25	6814022	SCREW HEX SKT HD W/T			7
26	7217075	SPOOL, BICS			2
27	7219703	PLUG, BICS	W/Ref. 65		2
28	6684646	VALVE	anti-cav - W/Ref. 68		1
29	7134520	PLUG	check valve		3
30	7219080	O-RING			6
31	7166339	SPRING, LOAD CHECK			5
32	7166047	SEAT, CHECK VALVE			4
33	6816549	PLUG ASSY PORT RLF	W/Ref. 12, 48 & 64		2
34	7203643	SPRING, VALVE			2
35	6587763	BOOT			2
36	6813153	PLATE	retainer		1
37	7157286	BODY			1
38	7002716	SCREW			4
39	6698434	VALVE, PROPORTIONAL			2
40	6676029	SOLENOID, LOCK SPOOL			2
41	7121399	SPRING			2

HYDRAULIC CONTROL VALVE (Cont'd)
(Manual Controls)

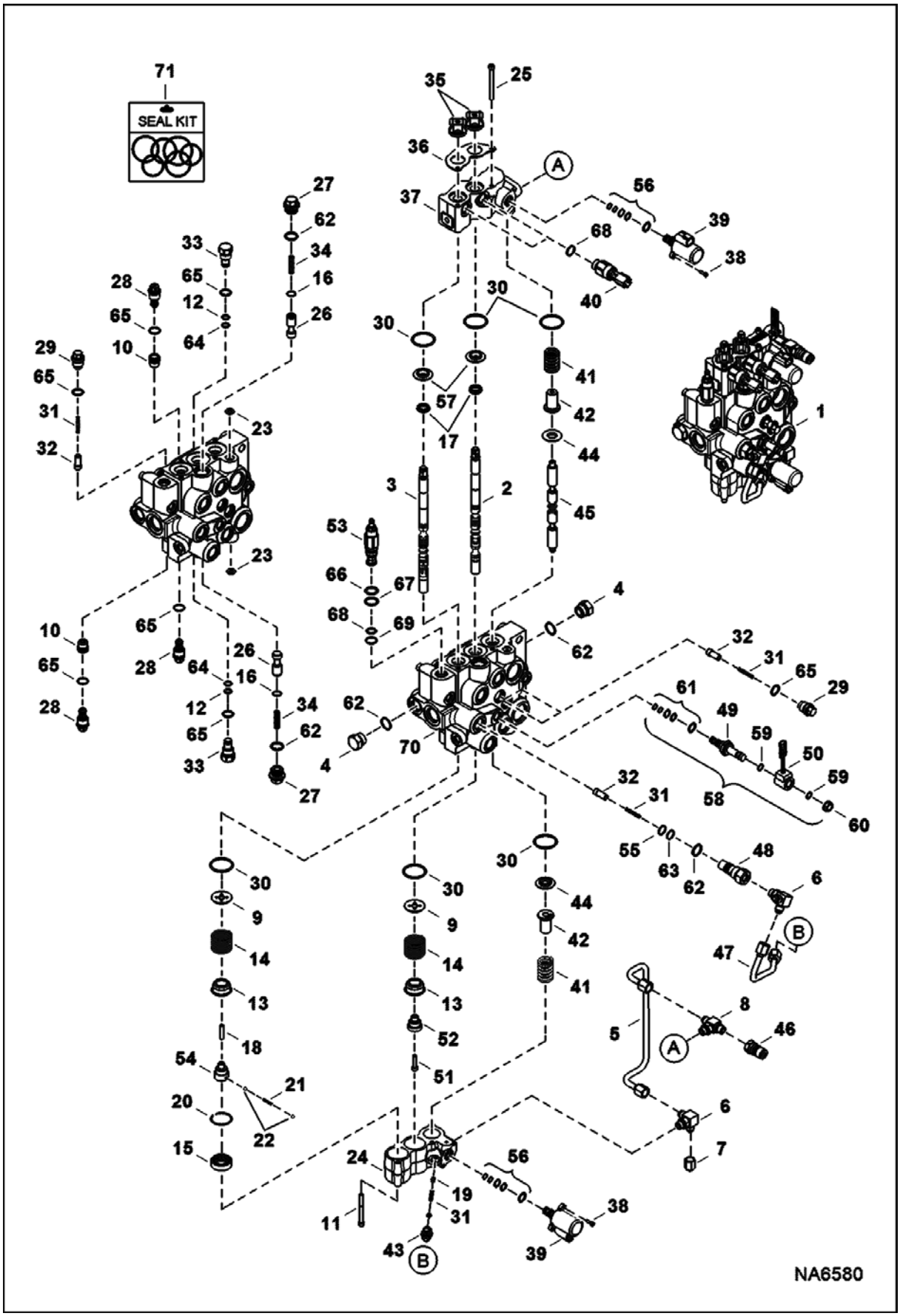

HYDRAULIC CONTROL VALVE (Cont'd)
(Manual Controls)

Ref No	Part Number	Description	Remarks	Serial Number	Qty
42	6814694	RETAINER			2
43	7202329	FITTING, HYD CONNECTOR W/SCREEN			1
43	79K6	O RING 10			1
44	7138376	BUSHING			2
45	7112383	AUX SPOOL			1
46	6684125	COUPLER			1
47	7202325	TUBELINE, HYD VALVE CONTROL			1
48	7134522	PLUG	W/Ref. 56, 65 & 66		1
49	6667687	VALVE, STEM SOLENOID			1
50	6675559	COIL	W/Ref. 61 & 62		1
51	7102652	SCREW			1
52	6592109	ADAPTER			1
53	7219324	VALVE, RELIEF	W/ O-rings - pressure to be set in field		1
54	7211394	ADAPTER, DETENT			1
55	58K016	O-RING 10			1
56	7008771	KIT, SEAL			2
57	7211393	RETAINER, SEAL			2
58	6672471	VALVE, SOLENOID	Ref. 50 & 51		1
59	54K20028	O RING 10			2
60	6668820	NUT			1
61	6669732	KIT, SEAL			1
62	79K10	O RING 10			x
63	73K016	RING, BACK-UP			1
64	73K013	RING, BACK-UP			2
65	79K8	O RING 10			x
66	58K017	O-RING 10			1
67	6665569	WASHER			1
68	25K20016	O RING 10			1
69	6665570	RING			1
70		BODY	NSS		1
71	7218923	KIT, SEAL COMPLETE			1
71	7218924	KIT, SEAL	Ref. 17, 23, 30, 35 & 68		1
71	7123965	KIT, SEAL	external fitting - Ref. 49, 61 & 65-68		1
71	7024825	KIT, SEAL			1

HYDRAULIC CONTROL VALVE
(AHC, ACS & SJC)

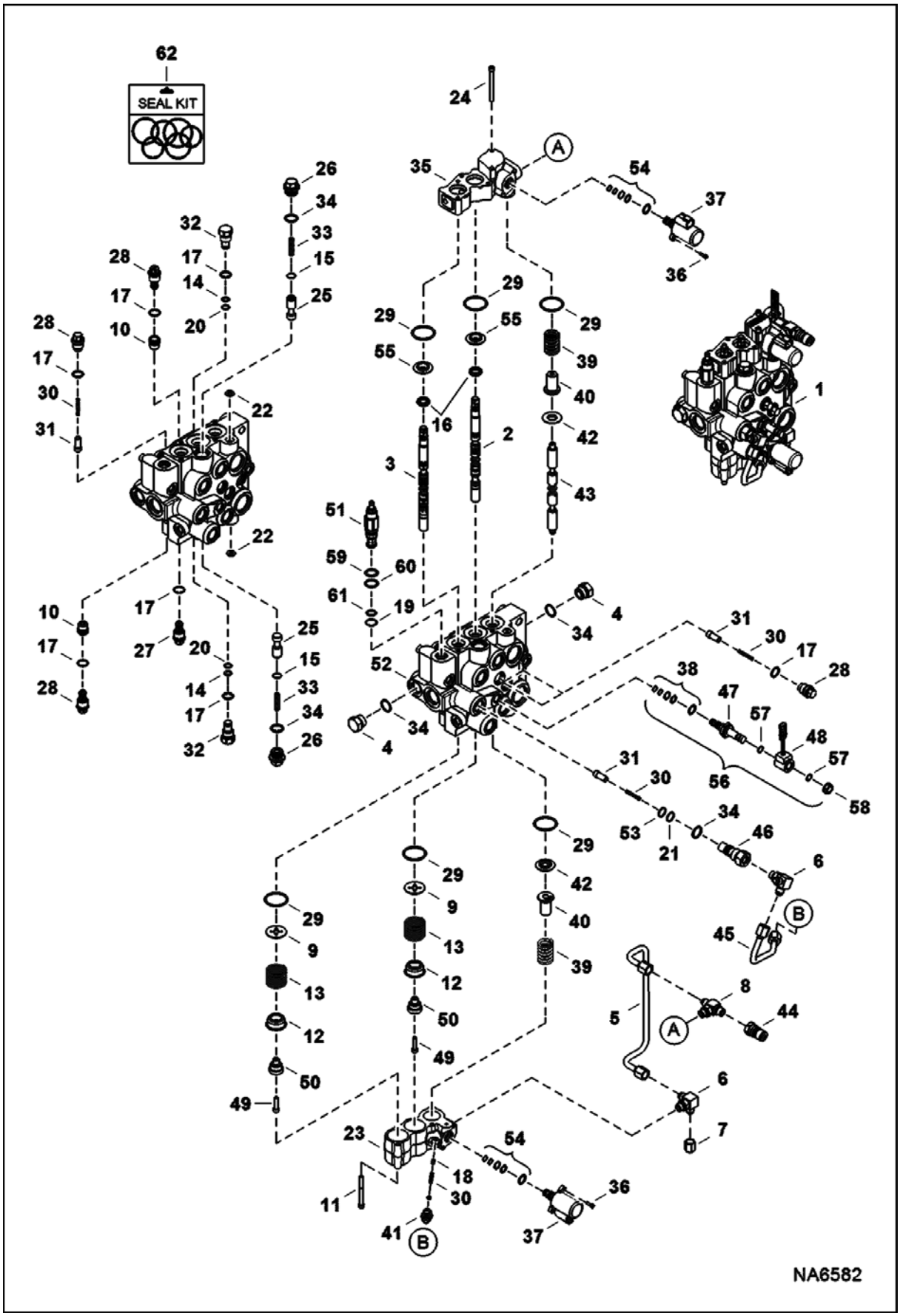

HYDRAULIC CONTROL VALVE (Cont'd)
(AHC, ACS & SJC)

Ref No	Part Number	Description	Remarks	Serial Number	Qty
1	7215960	VALVE, CONTROL			1
2	7108242	SPOOL, TILT			1
3	7209496	SPOOL, LIFT			1
4	24K7	PLUG	W/Ref. 34		2
5	7157291	TUBELINE			1
6	7166338	TEE, BOSS			1
7	36K5	CAP			3
8					1
8	79K6	O RING 10			1
9	7211397	WASHER, SPRING			2
10	7208227	SEAT, RELIEF PORT			2
11	6814022	SCREW HEX SKT HD W/T			4
12	6592100	COLLAR			2
13	6587580	SPRING			2
14	58K013	O-RING			2
15	7214312	RING, RETAINING			2
16	6683274	SEAL, SPOOL 10			2
17	79K8	O RING 10			x
18	7214722	VALVE, CHECK			1
19	6665570	RING			1
20	73K013	RING, BACK-UP			2
21	73K016	RING, BACK-UP			1
22	55K204	O RING 10			2
23	7222562	BLOCK, VALVE CONTROL HYD			1
24	6814022	SCREW HEX SKT HD W/T			7
25	7217075	SPOOL, BICS			2
26	7219703	PLUG, BICS	W/Ref. 34		2
27	6684646	VALVE	anti-cav - W/Ref. 17		1
28	7134520	PLUG	check valve - W/Ref. 17		3
29	7219080	O-RING			6
30	7166339	SPRING, LOAD CHECK			5
31	7166047	SEAT, CHECK VALVE			4
32	6816549	PLUG ASSY PORT RLF	W/Ref. 14, 17 & 20		2
33	7203643	SPRING, VALVE			2
34	79K10	O RING 10			x
35	7166388	CASTING ASSY			1
36	7002716	SCREW			4
37	6698434	VALVE, PROPORTIONAL			2
38	6669732	KIT, SEAL			1
39	7121399	SPRING			2
40	6814694	RETAINER			2
41	7202329	FITTING, HYD CONNECTOR W/SCREEN			1
42	7138376	BUSHING			2
43	7112383	AUX SPOOL			1

HYDRAULIC CONTROL VALVE (Cont'd)
(AHC, ACS & SJC)

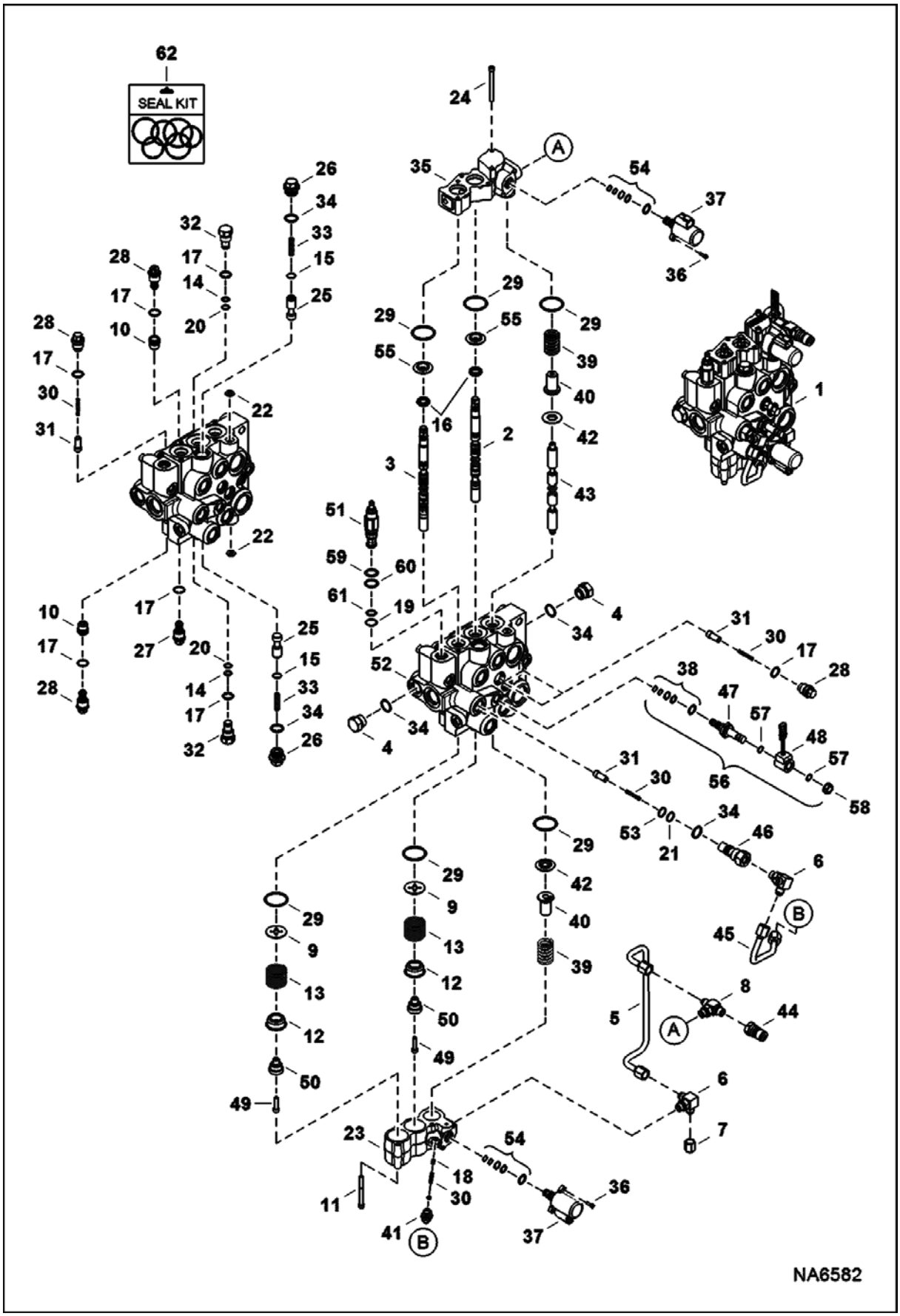

HYDRAULIC CONTROL VALVE (Cont'd)
(AHC, ACS & SJC)

Ref No	Part Number	Description	Remarks	Serial Number	Qty
44	6684125	COUPLER			1
45	7202325	TUBELINE, HYD VALVE CONTROL			1
46	7134522	PLUG	W/Ref. 21, 34 & 53		1
47	6667687	VALVE, STEM SOLENOID			1
48	6675559	COIL	W/Ref. 57 & 58		1
49	7102652	SCREW			2
50	6592109	ADAPTER			2
51	7219324	VALVE, RELIEF	W/ O-rings - pressure to be set in field		1
52		BODY	NAP		1
53	58K016	O-RING 10			1
54	7008771	KIT, SEAL			2
55	7211393	RETAINER, SEAL			2
56	6672471	VALVE, SOLENOID	Ref. 47 & 48		1
57	54K20028	O RING 10			2
58	6668820	NUT			1
59	58K017	O-RING 10			1
60	6665569	WASHER			1
61	25K20016	O RING 10			1
62	7218923	KIT, SEAL COMPLETE			1
62	7218924	KIT, SEAL	Ref. 16, 17, 22 & 29		1
62	7123965	KIT, SEAL	external fitting - Ref. 14, 17, 20, 22 & 34		1

MANUAL LIFT RELEASE VALVE

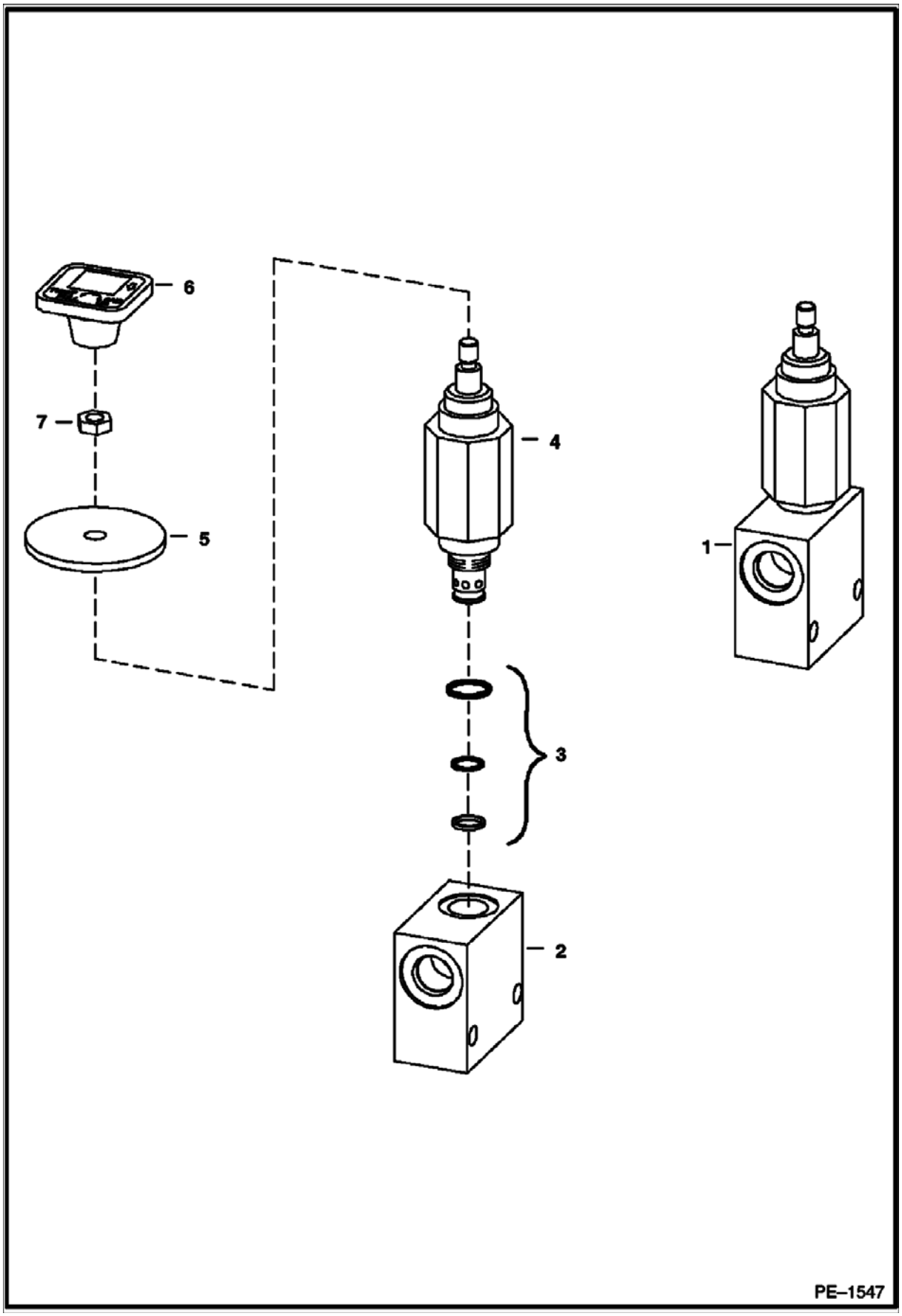

MANUAL LIFT RELEASE VALVE (Cont'd)

Ref No	Part Number	Description	Remarks	Serial Number	Qty
1	6667844	VALVE, LIFT MANUAL	Ref. 2-4		1
2		BLOCK	NSS - Order Ref. 1		1
3	6669087	SEAL KIT			1
4		VALVE	NSS - Order Ref. 1		1
5	6707101	SEAL	neoprene		1
6	6737524	KNOB	red square		1
7	7D4	NUT			1

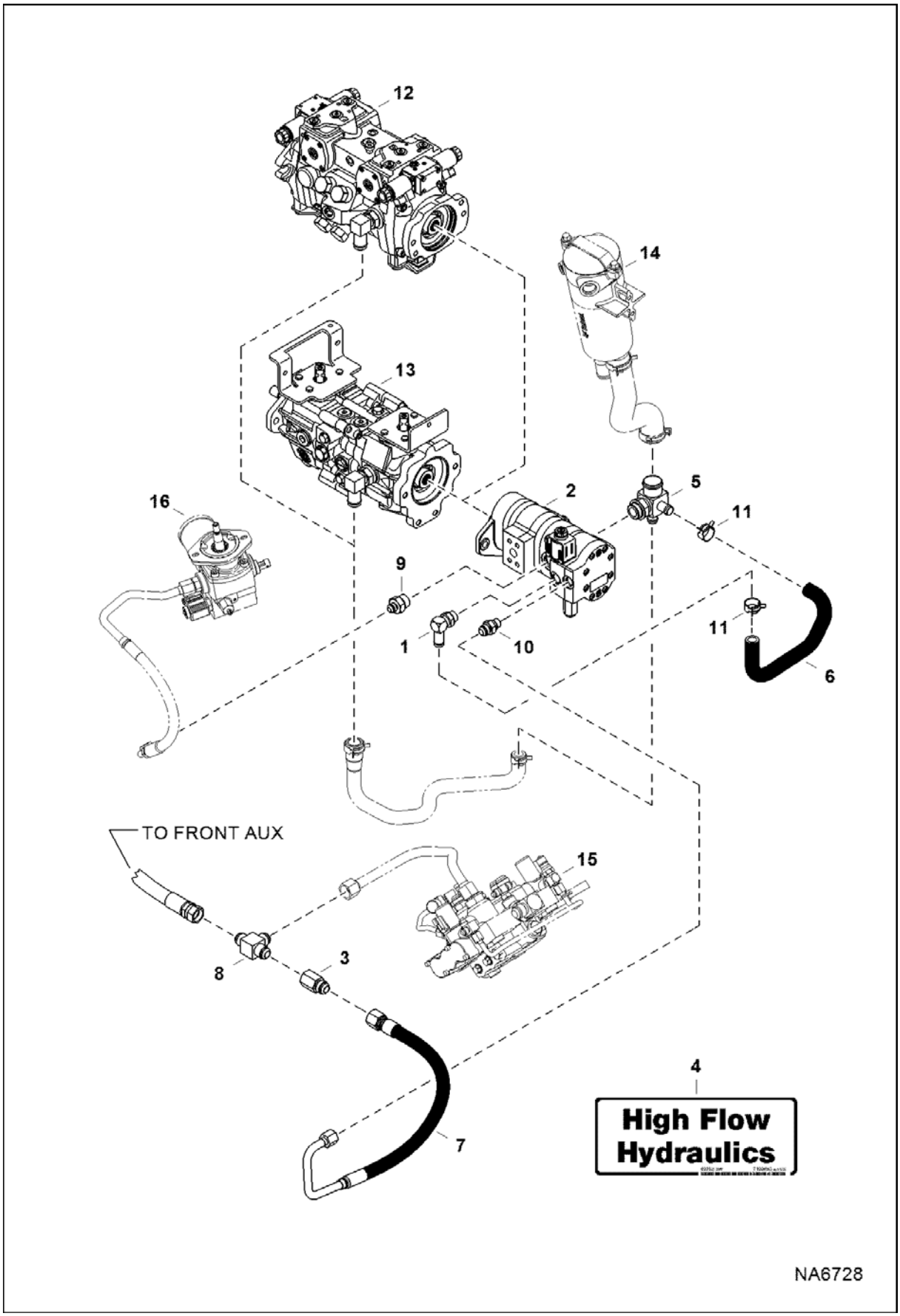
12
14
13
16
2
5
11
9
1
10
11
6
TO FRONT AUX
15
8
3
4
High Flow Hydraulics
7
NA6728

HIGH FLOW HYDRAULICS (Cont'd)

Ref No	Part Number	Description	Remarks	Serial Number	Qty
1	6717885	ELBOW			1
2	7001898	PUMP, GEAR			1
3	7010242	VALVE, CHECK			1
4	7120693	DECAL			1
5	7155660	FITTING			1
6	7155661	HOSE			1
7	7197489	HOSE, HYD TUBE ASSY			1
8	10K8	TEE			1
9	15KB0812	FITTING, HYD CONNECTOR			1
10	15KB1008	FITTING, HYD CONNECTOR			1
11	5HM27	CLAMP			2
12		PUMP, HYD	See Illustration HYDROSTATIC PUMP/GEAR PUMP/ NA6652 - SJC		1
13		PUMP, HYD	See Illustration HYDROSTATIC PUMP/GEAR PUMP/ NA6652 - manual controls, AHC & ACS		1
14		FILTER, OIL HYD ASSY			1
15		VALVE, CONTROL	See Illustration HYDRAULIC CONTROL VALVE/ NA6580 - manual controls		1
15		VALVE, CONTROL	See Illustration HYDRAULIC CONTROL VALVE/ NA6582 - SJC		1
16		MOTOR, FAN	See Illustration COOLING FAN MOTOR/ NA6655		1

HIGH FLOW HYDRAULICS
(Gear Pump)

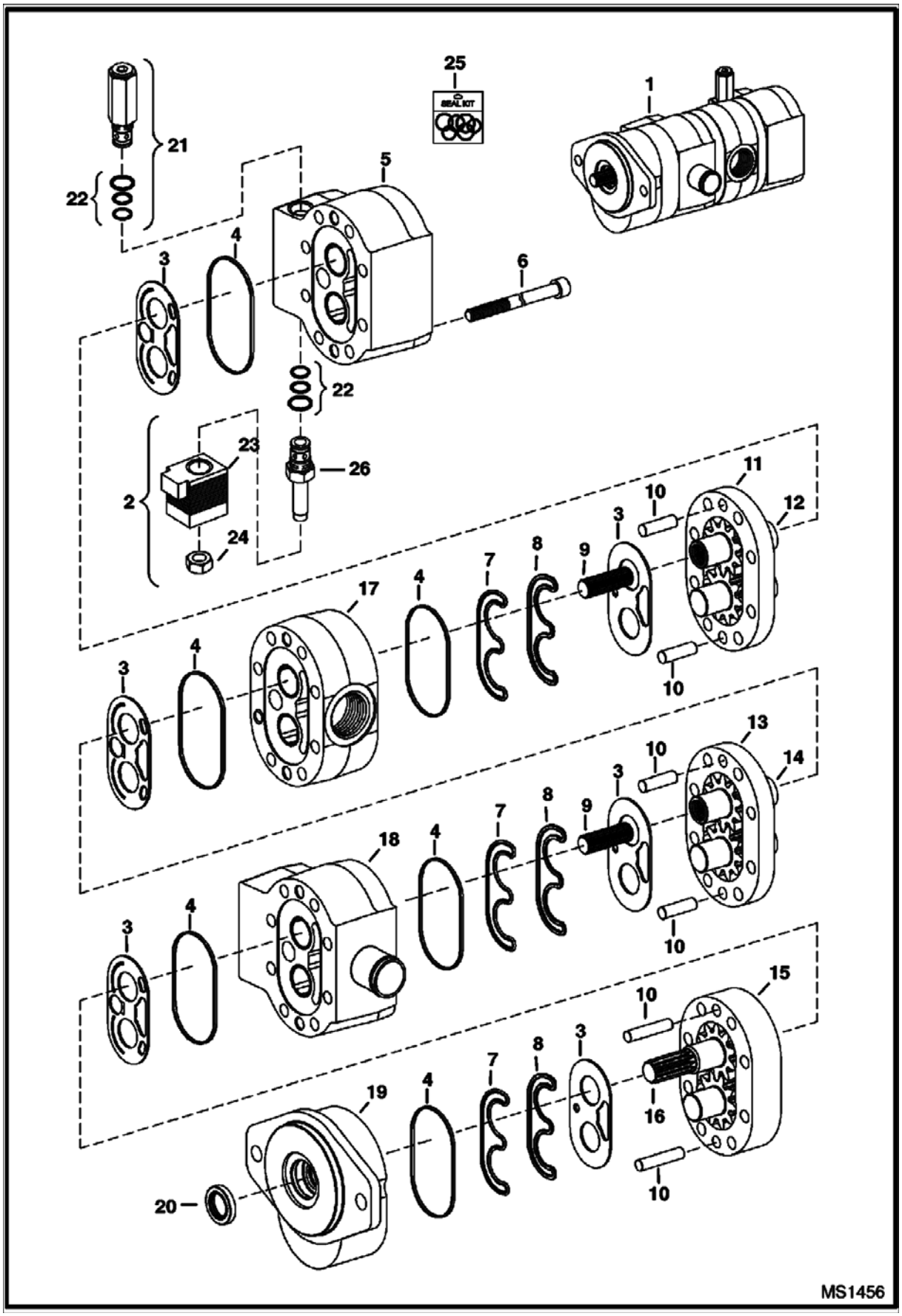

HIGH FLOW HYDRAULICS (Cont'd)
(Gear Pump)

Ref No	Part Number	Description	Remarks	Serial Number	Qty
1	7001898	PUMP, GEAR	Model 83018583		1
2	7008832	VALVE, SOLENOID	Ref. 22-24 & 26 - Use W/Ref. 1		1
3		PLATE, WEAR	NSS		6
4		SEAL, SECTION	NSS		6
5		HOUSING, REAR	NSS		1
6		BOLT	NSS		8
7		SEAL, PRE-LOAD	NSS		6
8		SEAL, LOAD	NSS		6
9		CONNECTOR, SPLINE	NSS		2
10		PIN	NSS		6
11		HOUSING, GEAR	NSS - #3		1
12		GEAR SET	NSS - #3		1
13		HOUSING, GEAR	NSS - #2		1
14		GEAR SET	NSS - #2		1
15		HOUSING, GEAR	NSS - #1		1
16		GEAR SET	NSS - drive		1
17		HOUSING, CENTER	NSS		1
18		HOUSING, CENTER	NSS		1
19		HOUSING, FRONT	NSS		1
20	7020859	SEAL			1
21	7008831	VALVE, RELIEF	W/Ref. 22		1
22		KIT, SEAL	NSS		2
23		COIL	NAP - Order Ref. 2		1
24		NUT	NAP - Order Ref. 2		1
25	7025198	KIT, SEAL	Ref. 3, 4, 7, 8 & 20 - Use W/Ref. 1		1
26		STEM	NSS - Order Ref. 2		1

HYDROSTATIC CIRCUITRY
(Tank & Filter)

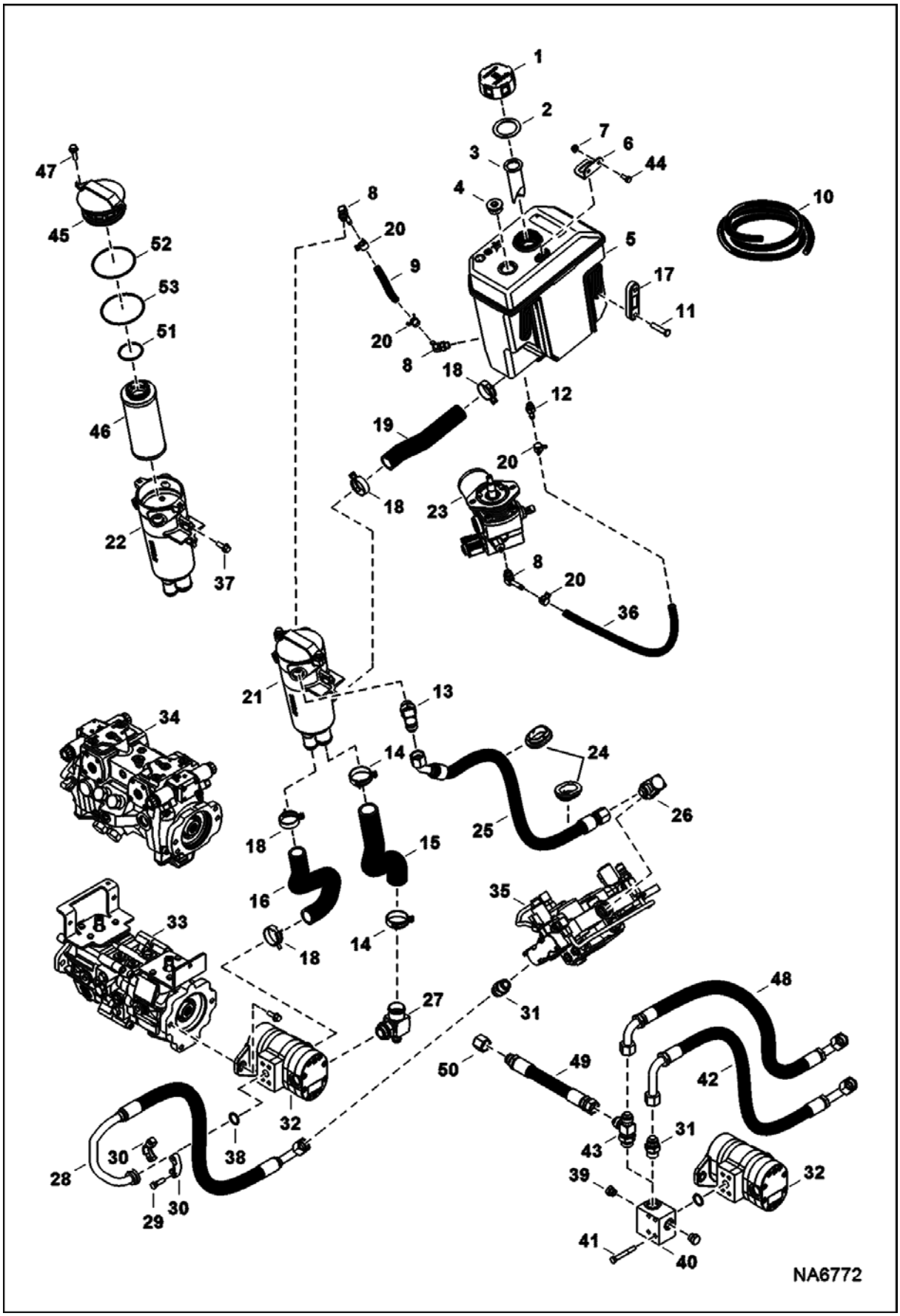

HYDROSTATIC CIRCUITRY (Cont'd)
(Tank & Filter)

Ref No	Part Number	Description	Remarks	Serial Number	Qty
1	6727475	CAP, OIL HYD			1
2	6700631	GASKET			1
3	7003487	SCREEN			1
4	47K10	PLUG			1
4	79K16	O RING 10			x
5	7198666	TANK, HYD			1
6	7199376	BRACKET			1
7	57D5	NUT			2
8	6727313	ELBOW			3
8	79K6	O RING 10			x
9		HOSE	NAP - 158,8 mm (6.25") long - Order Ref. 10		1
10	6586251	HOSE	bulk - sold per foot		x
11		BOLT	NSS - Order Ref. 17		2
12	7158632	CONNECTOR			1
13	17KB1212	FITTING, HYD ELBOW			1
13	79K12	O RING 10			x
14	5HM47	CLAMP			2
15	7183696	HOSE, HYD FORMED			1
16	7183695	HOSE, HYD FORMED			1
17	7001421	GUAGE, SIGHT			1
18	5HM42	HOSECLAMP			4
19	7189371	HOSE, HYD FORMED			1
20	5HM16	CLAMP			4
21	7024035	FILTER, OIL HYD ASSY	Ref. 22, 45-47 & 51-53		1
22	7024036	FILTER, OIL HYD CANISTER			1
23		MOTOR, HYD COOLING FAN	See Illustration COOLING FAN MOTOR/ NA6655		1
24	7002740	GROMMET			2
25	7218898	HOSE, HYD			1
26	7101371	ELBOW			1
26	79K16	O RING 10			x
27	7158921	FITTING	See Illustration HYDROSTATIC CIRCUITRY/ NA6646		1
27	79K12	O RING 10			x
28	7159044	HOSE ASSY			1
29	17C620	BOLT			4
30	19J12	CLAMP			2
31	15KB1212	FITTING, HYD CONNECTOR			2
31	79K12	O RING 10			x
32		PUMP, GEAR	See Illustration GEAR PUMP/ MS1454 - standard flow hydraulics		1
33		PUMP, HYD	See Illustration HYDROSTATIC PUMP/GEAR PUMP/ NA6652 - manual, AHC, ACS		1
34		PUMP, HYD	See Illustration HYDROSTATIC PUMP/GEAR PUMP/ NA6652 - SJC		1
35		VALVE, CONTROL	See Illustration HYDRAULIC CONTROL VALVE/ NA6580 - manual controls		1
35		VALVE, CONTROL	See Illustration HYDRAULIC CONTROL VALVE/ NA6582 - ACS, AHC & SJC		1
36		HOSE	NAP - 533,4mm (21") long - Order Ref. 10		1
37	35C616	BOLT 5			2

HYDROSTATIC CIRCUITRY (Cont'd)
(Tank & Filter)

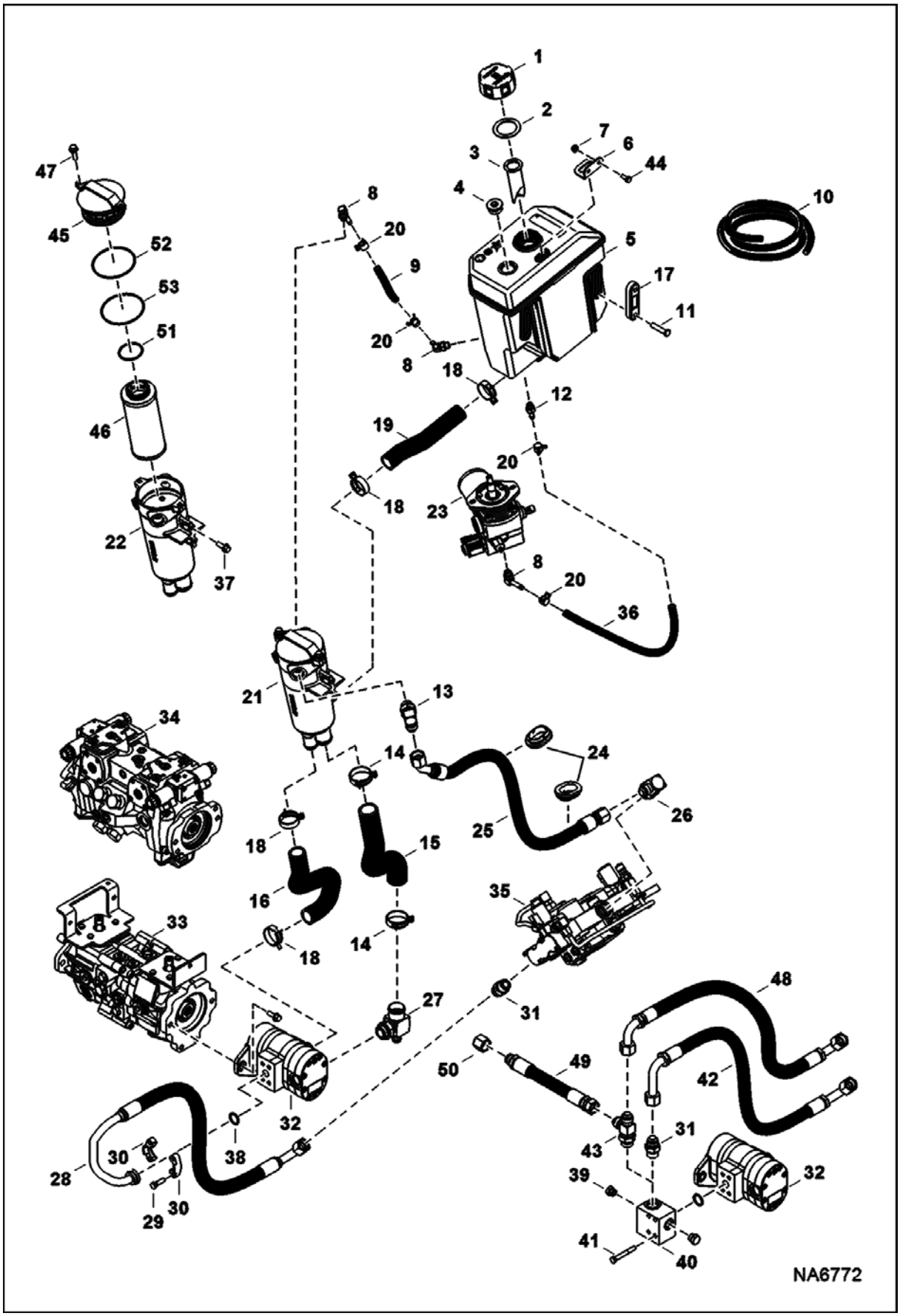

HYDROSTATIC CIRCUITRY (Cont'd)
(Tank & Filter)

Ref No	Part Number	Description	Remarks	Serial Number	Qty
38	55K214	O-RING			1
39	24K6	FITTING			1
40	7209565	MANIFOLD			1
40		VALVE, POWER BOB-TACH	See Illustration POWER BOB-TACH/ NA2823		1
41	17C644	BOLT			4
42	7219834	HOSE, HYD			1
43	21KB1212	FITTING, HYD TEE	See Illustration SOUND/NOISE REDUCTION OPTION/ NA6629		1
43	79K12	O RING 10			x
44	17C512	BOLT 5			2
45	7024038	FILTER, OIL HYD CANISTER COVER	W/Ref. 52 & 53		1
46	7024037	FILTER, OIL HYD ELEMENT	W/Ref. 51		1
47	7024429	BOLT			2
48	7219833	HOSE, HYD			1
49	7185232	HOSE, HYD			1
50	36K8	CAP			1
51		O-RING	NSS - Order Ref. 46		1
52	7025123	O-RING	top		1
53	7025124	O-RING	bottom		1

HYDROSTATIC CIRCUITRY
(Cooler)

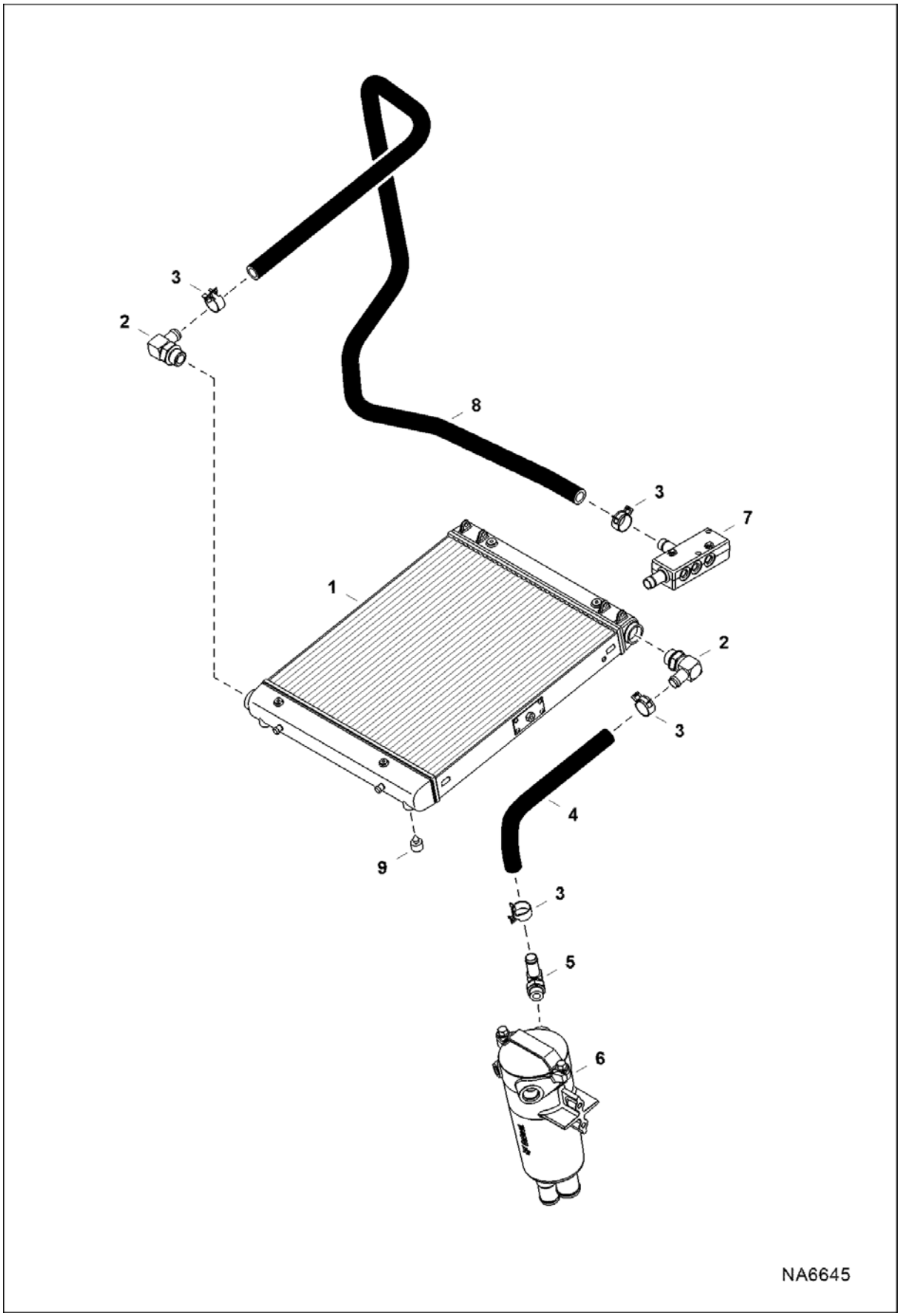

HYDROSTATIC CIRCUITRY (Cont'd)
(Cooler)

Ref No	Part Number	Description	Remarks	Serial Number	Qty
1		EXCHANGER, OIL COOLER	See Illustration RADIATOR/COOLER ASSEMBLY/ NA6801 W/Ref. 2		1
2		FITTING, ELBOW	NSS - Order Ref. 1		2
3	5HM27	CLAMP			1
4	7218899	HOSE, HYD FORMED			1
5	6587230	ELBOW			1
5	79K10	O RING 10			x
6		FILTER, OIL HYD TANK ASSY	See Illustration HYDROSTATIC CIRCUITRY/ NA6772		1
7		MANIFOLD, DRAIN CASE	See Illustration HYDROSTATIC CIRCUITRY/ NA6646		1
8	7210364	HOSE, HYD FORMED			1
9	7024107	BUMPER			1

HYDROSTATIC CIRCUITRY
(Hydrostatic Pump) (Case Drain Manifold)

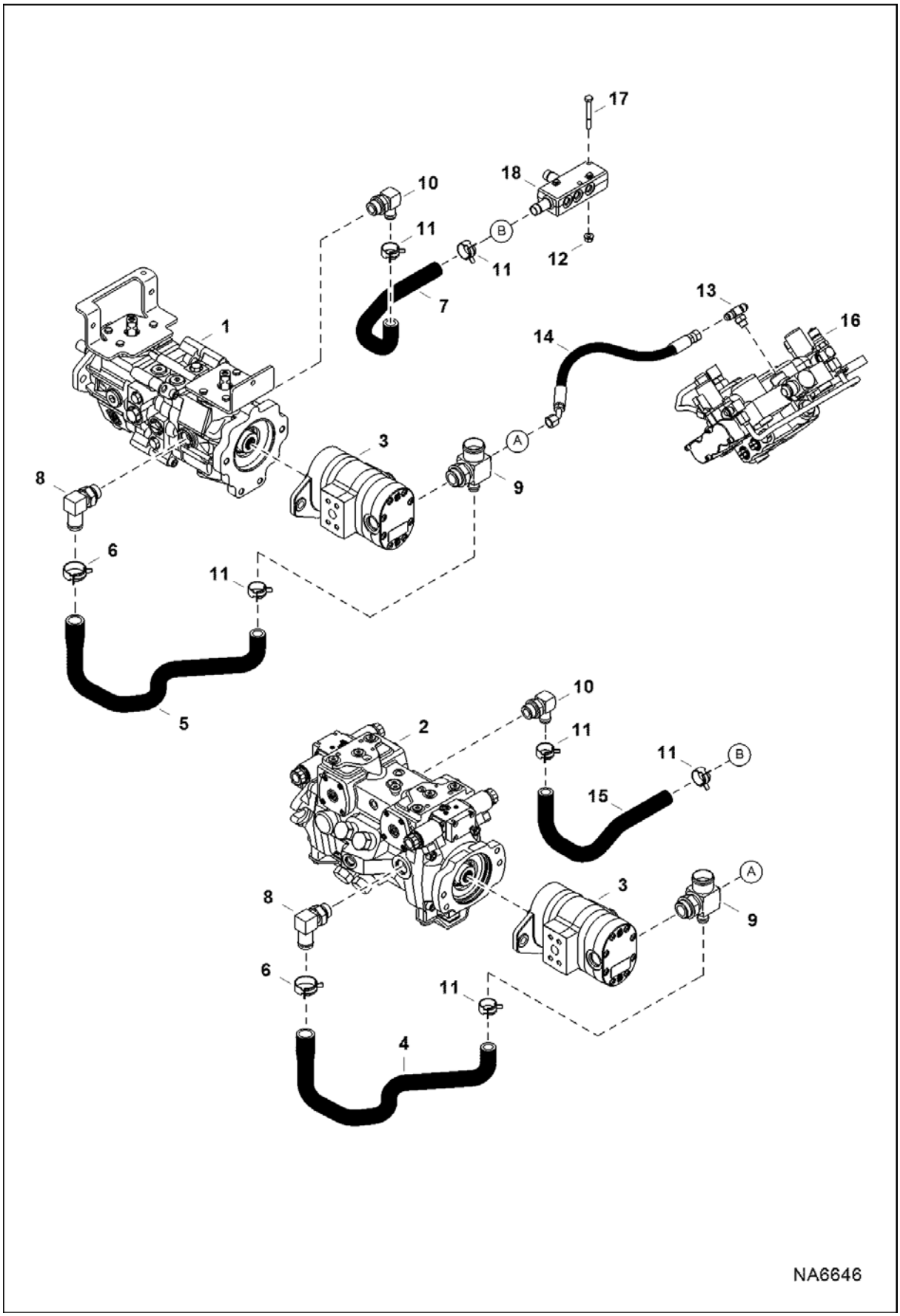

HYDROSTATIC CIRCUITRY (Cont'd)
(Hydrostatic Pump) (Case Drain Manifold)

Ref No	Part Number	Description	Remarks	Serial Number	Qty
1		PUMP, HYD	See Illustration HYDROSTATIC PUMP/GEAR PUMP/ NA6652 - manual controls, AHC, ACS		1
2		PUMP, HYD	See Illustration HYDROSTATIC PUMP/GEAR PUMP/ NA6652 - SJC		1
3		PUMP, GEAR	See Illustration GEAR PUMP/ MS1454 - standard flow hydraulics		1
4	7213016	HOSE, HYD FORMED			1
5	7213016	HOSE, HYD FORMED			1
6	5HM35	HOSECLAMP			1
7	7183864	HOSE, DRAIN			1
8	7015518	VALVE, CHECK			1
9	7158921	FITTING	See Illustration HYDROSTATIC CIRCUITRY/ NA6772		1
9	79K12	O RING 10			x
10	7113631	ELBOW			1
10	79K12	O RING 10			x
11	5HM27	CLAMP			7
12	83D5	NUT 5			2
13	19KB0606	TEE	See Illustration HYDROSTATIC CIRCUITRY/ NA6649 See Illustration HYDROSTATIC CIRCUITRY/ NA6648		1
13	79K6	O RING 10			x
14	7159735	HOSE, HYD			1
15	7183863	HOSE, DRAIN			1
16		VALVE, CONTROL	See Illustration HYDRAULIC CONTROL VALVE/ NA6580 - manual controls		1
16		VALVE, CONTROL	See Illustration HYDRAULIC CONTROL VALVE/ NA6582 - ACS, AHC & SJC		1
17	17C536	BOLT			2
18	7201981	MANIFOLD, DRAIN CASE	See Illustration HYDROSTATIC CIRCUITRY/ NA6645		1

HYDROSTATIC CIRCUITRY
(Cooling Fan)

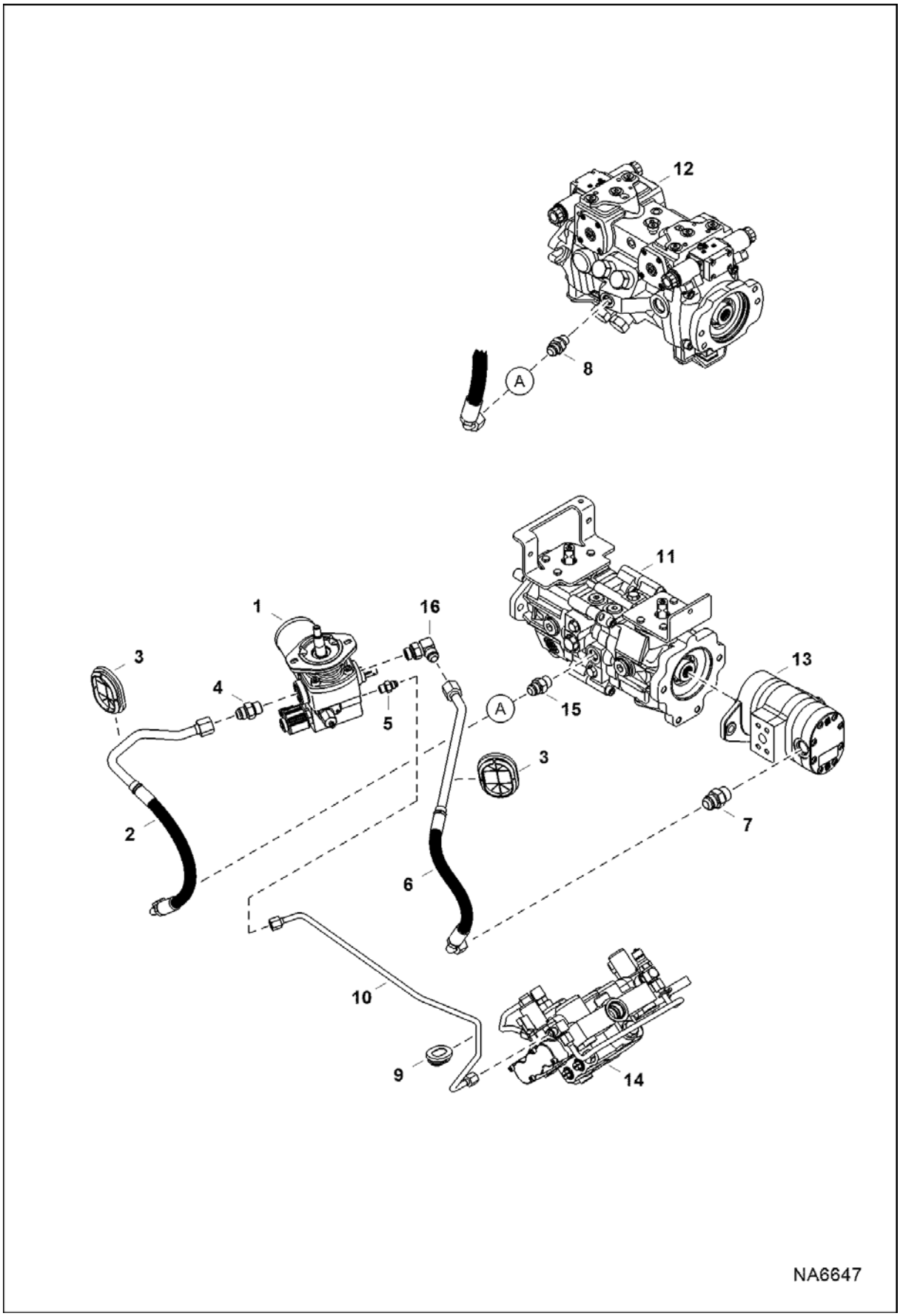

HYDROSTATIC CIRCUITRY (Cont'd)
(Cooling Fan)

Ref No	Part Number	Description	Remarks	Serial Number	Qty
1		MOTOR, HYD COOLING FAN	See Illustration COOLING FAN MOTOR/ NA6655		1
2	7220002	HOSE, HYD			1
3	7219416	GROMMET			2
4	15KB1010	FITTING, HYD CONNECTOR			1
4	79K10	O RING 10			x
5	15KB0606	FITTING, HYD CONNECTOR			1
5	79K6	O RING 10			x
6	7181453	HOSE, HYD			1
7	15KB0812	FITTING, HYD CONNECTOR			1
7	79K12	O RING 10			x
8	15KB0808	FITTING, HYD CONNECTOR			1
8	79K8	O RING 10			x
9	7002739	GROMMET			1
10	7210308	TUBELINE, HYD			1
11		PUMP, HYD	See Illustration HYDROSTATIC PUMP/GEAR PUMP/ NA6652 - manual controls, AHC, ACS		1
12		PUMP, HYD	See Illustration HYDROSTATIC PUMP/GEAR PUMP/ NA6652 - SJC		1
13		PUMP, GEAR	See Illustration GEAR PUMP/ MS1454 - standard flow hydraulics		1
14		VALVE, CONTROL	See Illustration HYDRAULIC CONTROL VALVE/ NA6582 - ACS, AHC & SJC		1
14		VALVE, CONTROL	See Illustration HYDRAULIC CONTROL VALVE/ NA6580 - manual controls		1
15	15KB0810	FITTING, HYD CONNECTOR			1
15	79K8	O RING 10			x
16	17KB1010	FITTING, HYD ELBOW			1
16	79K10	O RING 10			x

HYDROSTATIC CIRCUITRY
(Single Speed Motor)

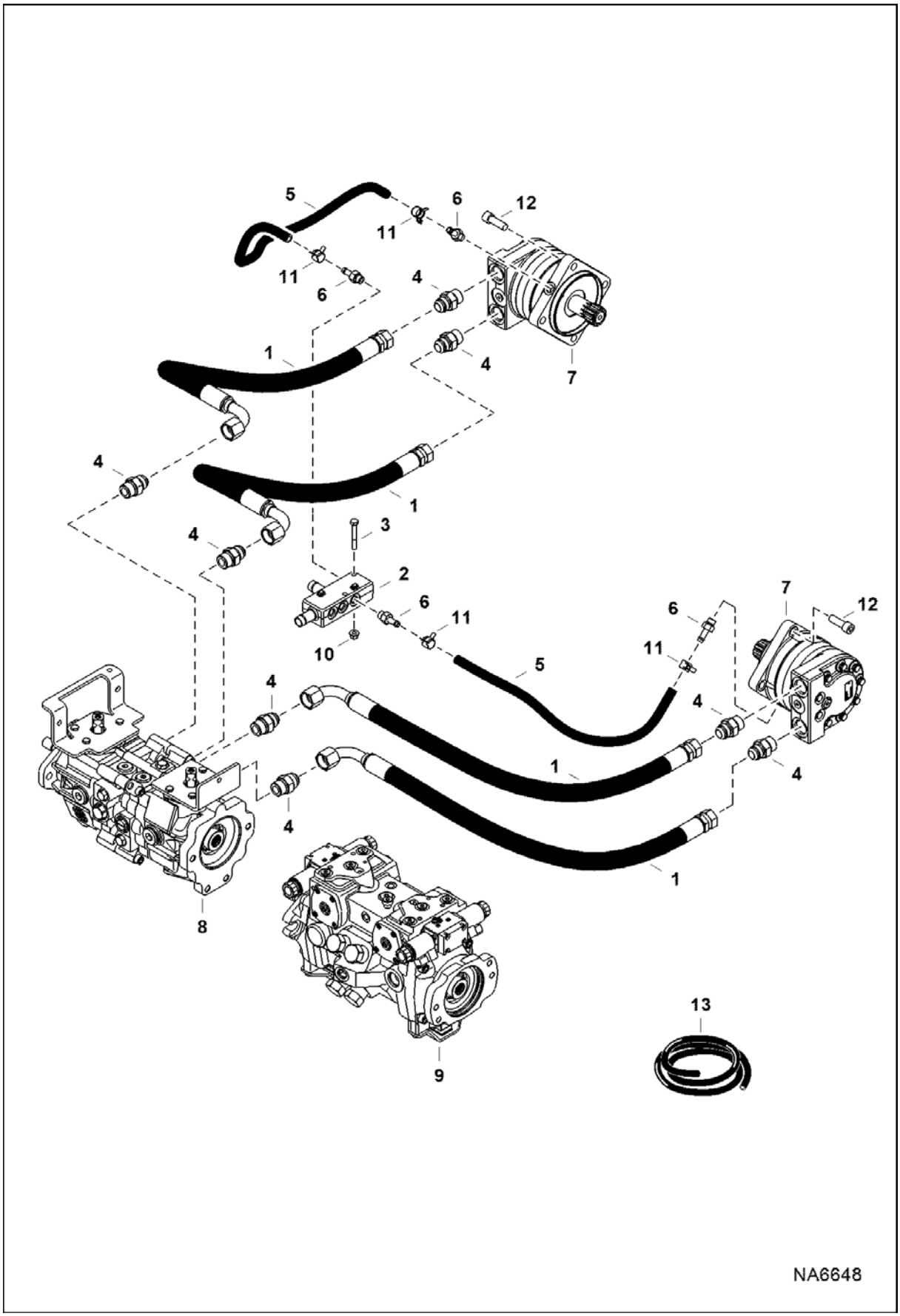

HYDROSTATIC CIRCUITRY (Cont'd)
(Single Speed Motor)

Ref No	Part Number	Description	Remarks	Serial Number	Qty
1	7200142	HOSE, HYD			1
2	7201981	MANIFOLD, DRAIN CASE			1
3	17C536	BOLT			2
4	15KB1212	FITTING, HYD CONNECTOR			8
4	79K12	O RING 10			x
5		HOSE, HYD	NAP - Order 673 mm (26.5") of Ref. 13		2
6	7158632	CONNECTOR			4
6	79K6	O RING 10			x
7	6682034	MOTOR	See Illustration HYDROSTATIC MOTOR/ PE2620		2
8		PUMP, HYD	See Illustration HYDROSTATIC PUMP/GEAR PUMP/ NA6652 - manual controls, AHC & ACS		1
9		PUMP, HYD	See Illustration HYDROSTATIC PUMP/GEAR PUMP/ NA6652 - SJC		1
10	83D5	NUT 5			2
11	5HM16	CLAMP			4
12	73G824	BOLT			8
13	6586251	HOSE	sold per foot		x

HYDROSTATIC CIRCUITRY
(2-Speed Motor)

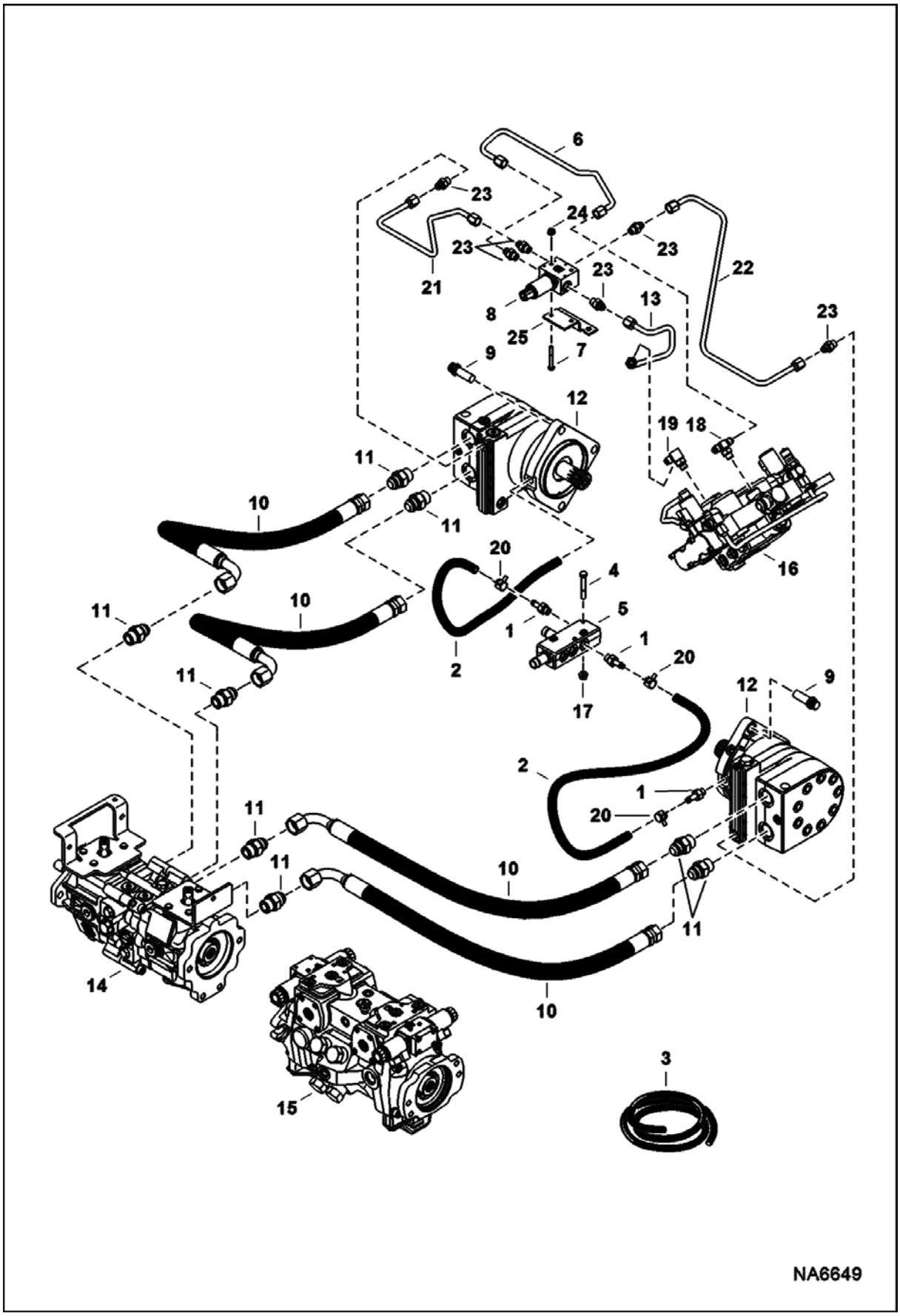

HYDROSTATIC CIRCUITRY (Cont'd)
(2-Speed Motor)

Ref No	Part Number	Description	Remarks	Serial Number	Qty
1	7158632	CONNECTOR			4
1	79K16	O RING 10			x
2		HOSE	NAP - 673,1mm (25.5") - Order Ref. 3		x
3	6586251	HOSE	bulk - sold per foot		1
4	17C536	BOLT			2
5	7201981	MANIFOLD, DRAIN CASE			1
6	7182111	TUBELINE, HYD			1
7	17C432	BOLT			2
8		VALVE, 2-SPEED	See Illustration 2-SPEED VALVE/ NA6656		1
9		BOLT	See Illustration DRIVE TRAIN/ NA6545		1
10	7200142	HOSE, HYD			1
11	15KB1212	FITTING, HYD CONNECTOR			8
12	7010868	MOTOR, DRIVE HYD 2-SPD			2
13	7182110	TUBELINE, HYD			1
14		PUMP, HYD	See Illustration HYDROSTATIC PUMP/GEAR PUMP/ NA6652 manual		1
15		PUMP, HYD	See Illustration HYDROSTATIC PUMP/GEAR PUMP/ NA6652 SJC		1
16		VALVE, CONTROL	See Illustration HYDRAULIC CONTROL VALVE/ NA6580 manual controls		1
16		VALVE, CONTROL	See Illustration HYDRAULIC CONTROL VALVE/ NA6582 ACS, AHC & SJC		1
17	83D5	NUT 5			2
18	19KB0606	TEE			1
18	79K6	O RING 10			x
19	6725182	TEE			1
19	79K6	O RING 10			x
20	5HM16	CLAMP			4
21	7182106	TUBELINE, HYD			1
22	7182107	TUBELINE, HYD			1
23	15KB0606	FITTING, HYD CONNECTOR			6
24	83D4	NUT 10			2
25	7212791	MOUNT, VALVE			1

RADIATOR/COOLER ASSEMBLY

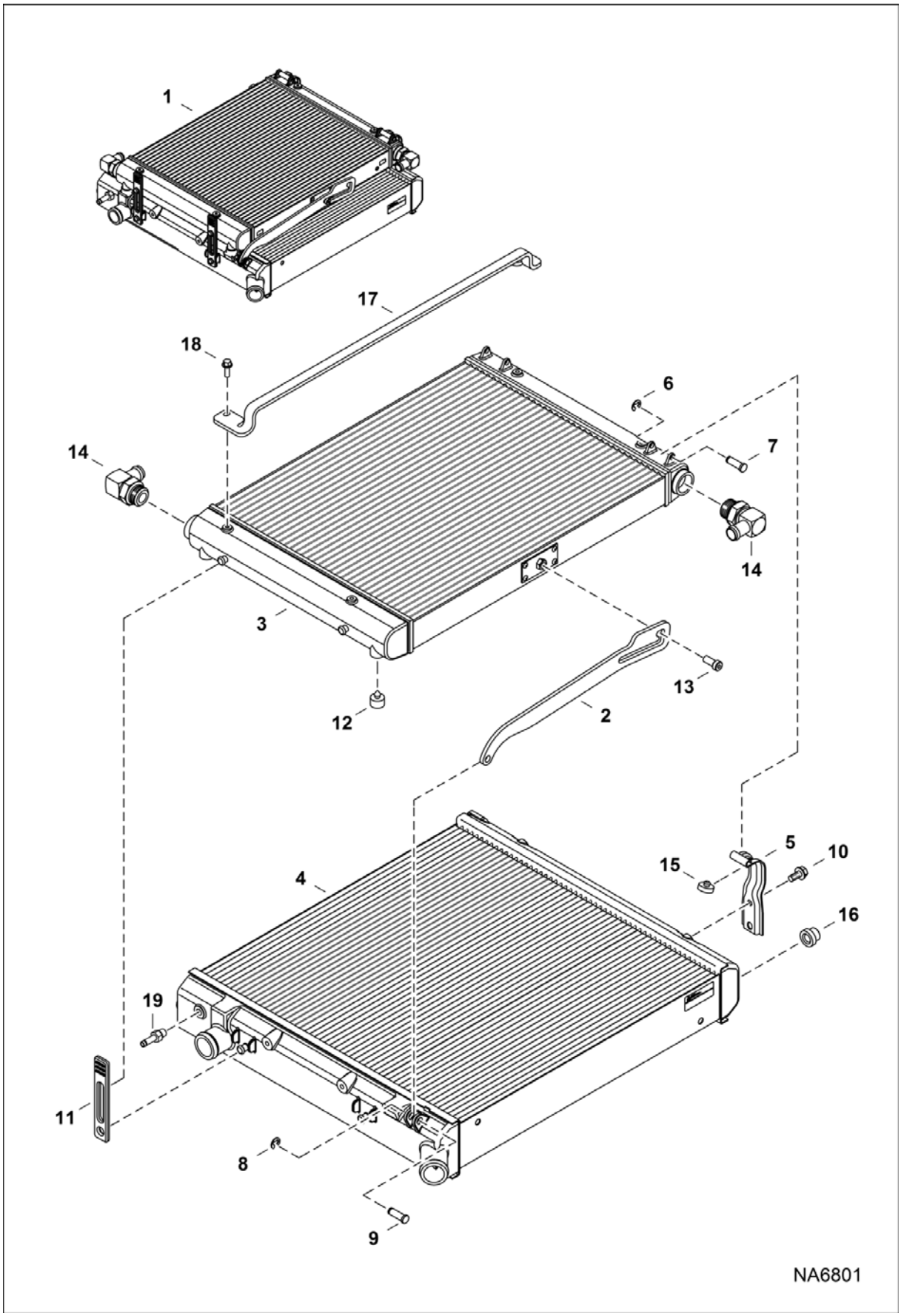

RADIATOR/COOLER ASSEMBLY (Cont'd)

Ref No	Part Number	Description	Remarks	Serial Number	Qty
1		EXCHANGER, OIL WATER	NSS		1
2	7025116	ROD, PROP UP			2
3	7012614	EXCHANGER, OIL COOLER			1
4	7024100	EXCHANGER, WATER RADIATOR			1
5	7025588	BRACKET, HINGE FORMED			2
6	7009258	RING, RETAINER			2
7	7024103	PIN			1
8	7009261	RING, RETAINER			1
9	7024104	PIN			1
10	7009256	BOLT, FLANGE			4
11	7012611	STRAP, HOLD DOWN			2
12	7024107	BUMPER			2
13	7010126	BOLT			1
14		FITTING, ELBOW	NSS - Order Ref. 3		2
15	7012613	BUMPER, RUBBER			2
16	7208181	BUSHING			2
17	7169118	GUARD, CONDENSER			2
18	49C412	BOLT			4
19	6734090	ADAPTER			1

HAND CONTROLS

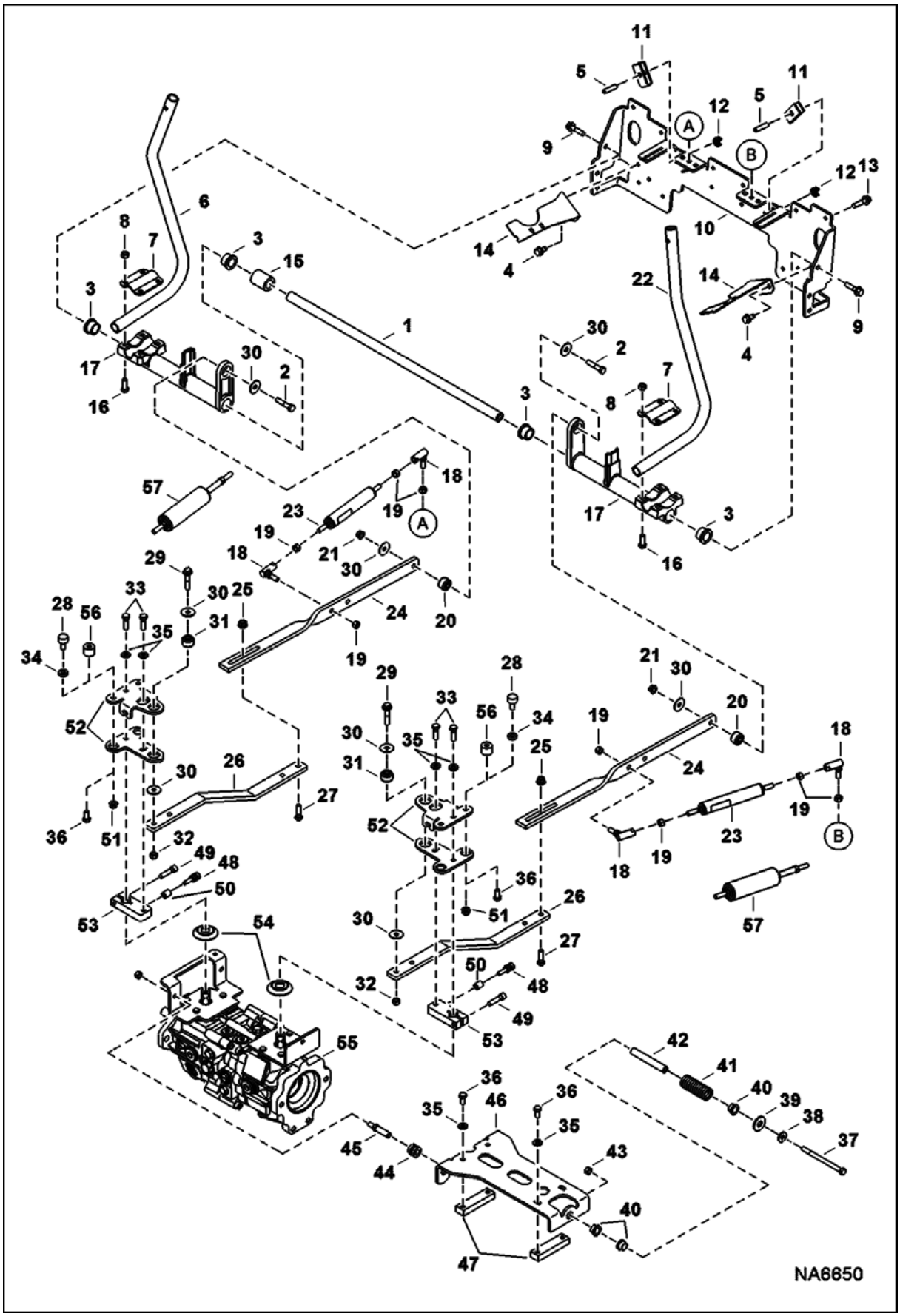

HAND CONTROLS (Cont'd)

Ref No	Part Number	Description	Remarks	Serial Number	Qty
1	7189893	SHAFT, STEERING			1
2	17C628	BOLT			2
3	7159624	BUSHING			4
4	84G3712	BOLT 5			4
5	15G624	SCREW			2
6	7153379	LEVER, STEERING	LH		1
7	7156761	PLATE			2
8	95D6	NUT			8
9	49C624	SCREW			4
10	7189892	MOUNT, BELLCRANK			1
11	7121779	PAD			2
12	6685663	NUT, RETAINING			2
13	84G3724	BOLT			12
14	7163216	BRACKET			2
15	7189894	SPACER, STEERING			1
16	17C616	BOLT 5			8
17	7151889	BELLCRANK			2
18	6599744	BALL JOINT			4
19	62D6	NUT 5			8
20	6685060	BUSHING, TORSION			2
21	53D6	NUT			2
22	7145147	LEVER, STEERING	RH		1
23		GAS SPRING	NAP - Order Ref. 57		2
24	7183799	LINK, STEERING			2
25	83D6	NUT 5			4
26	7210060	LINK, CENTER			2
27	17C636	BOLT			4
28	6673789	BEARING	ACS & AHC		4
29	17C628	BOLT			2
30	6737388	WASHER			12
31	6685060	BUSHING, TORSION			2
32	83D6	NUT 5			2
33	47C620	BOLT			4
34	7100699	WASHER	ACS & AHC		4
35	7103217	WASHER			8
36	17C616	BOLT 5			4
37	17C680	BOLT			1
38	6563914	WASHER			1
39	25E24	WASHER	AHC & ACS		1
40	6715163	BUSHING, PRESS FIT			3
41	6701535	SPRING			1
42	6715164	SLEEVE, SPRING			1
43	95D6	NUT			3
44	6706098	GUIDE			2
45	6577058	PIN			2
46	6734298	MOUNT			1
47	6702716	BLOCK			2
48	7103711	BOLT			2
49	73G624	BOLT			2

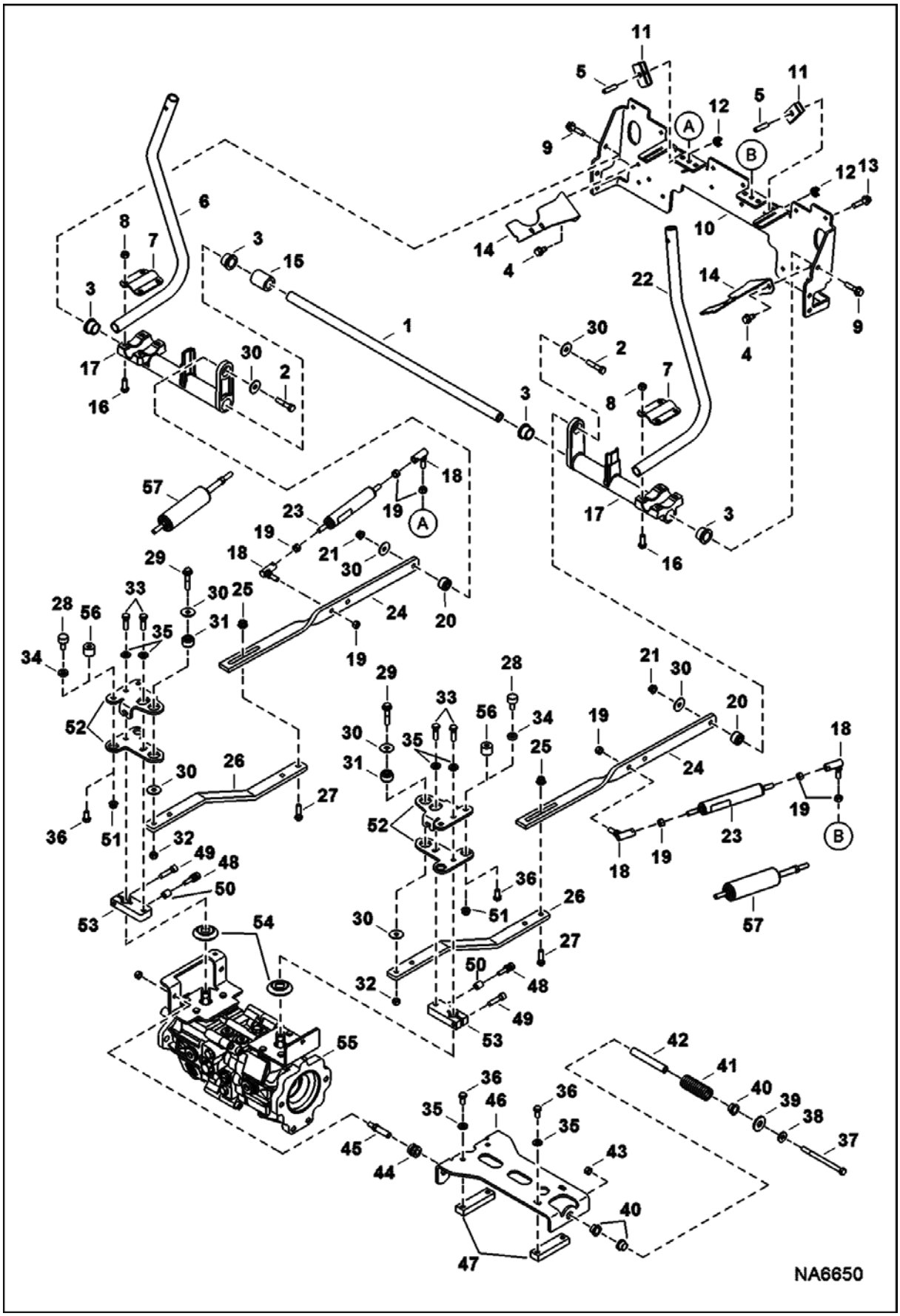
NA6650

Ref No	Part Number	Description	Remarks	Serial Number	Qty
50	7105223	SPACER			2
51	98D6	NUT			4
52	7110365	ARM, PINTLE			2
53	7103708	BRACKET	pintle arm		2
54	6687913	SEAL			2
55		PUMP, HYD	See Illustration HYDROSTATIC PUMP/GEAR PUMP/ NA6652 - manual controls, AHC & ACS		1
56	6711643	CAM	manual controls		4
57	7188108	GAS SPRING			2

HYDROSTATIC MOTOR
(Single Speed)

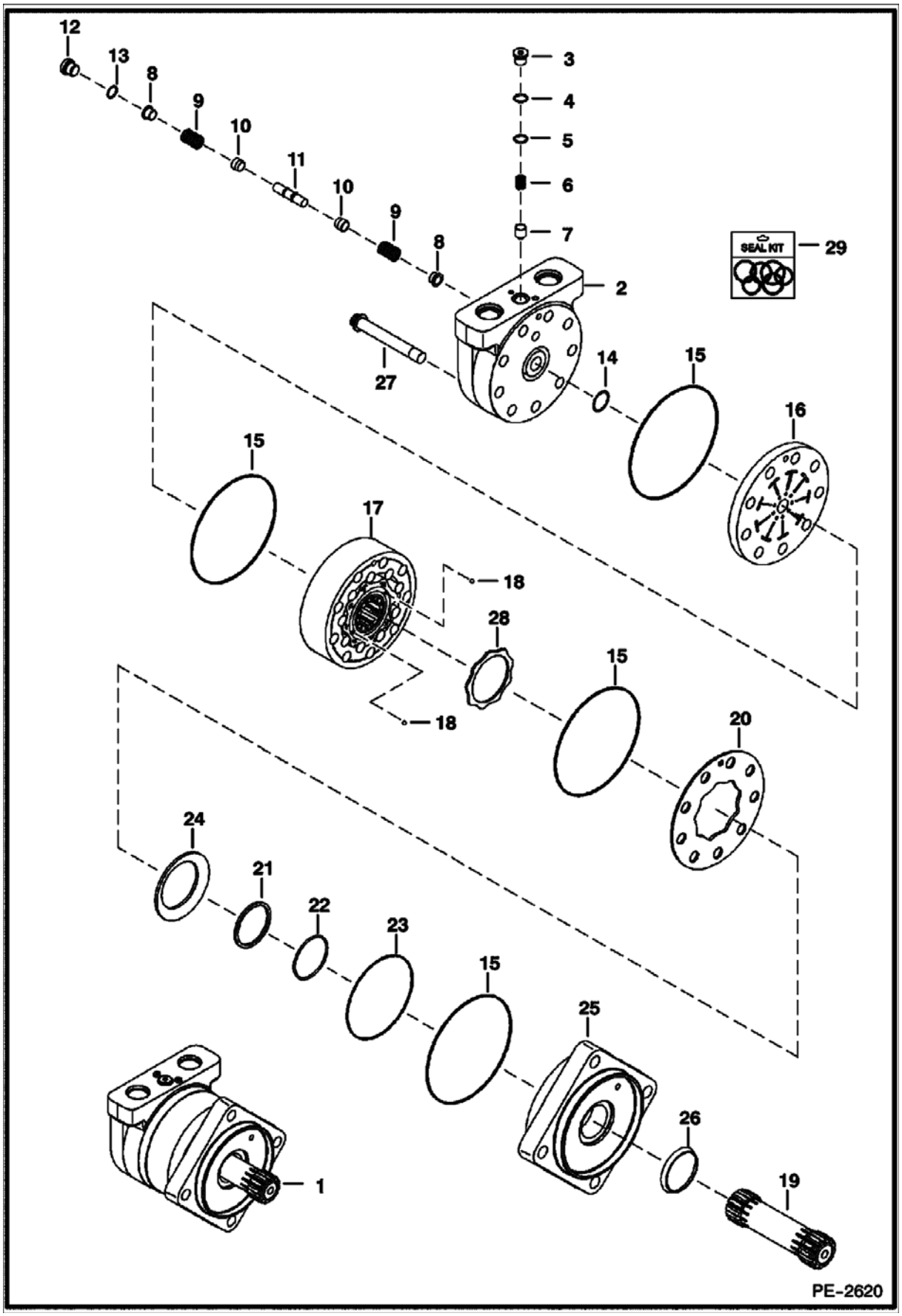

HYDROSTATIC MOTOR (Cont'd)
(Single Speed)

Ref No	Part Number	Description	Remarks	Serial Number	Qty
1	6682034	MOTOR	Ref. 2-27		1
2	6689697	HOUSING, MOTOR	W/Ref. 3-7		1
3	6668079	PLUG, MOTOR	W/Ref. 4		1
4	79K5	O RING 10			1
5	6668080	SHIM			x
6	6688521	SPRING			1
7	6668082	POPPET			1
8	6685065	SHUTTLE			2
9	6513533	SPRING			2
10	6513532	POPPET			2
11	6668088	PISTON	shuttle - W/flat - fast acting		1
12	6668089	PLUG, MOTOR	W/Ref. 13		1
13	79K6	O RING 10			1
14	6669452	O-RING			1
15	6678000	SEAL			4
16	6689698	PLATE	valve		1
17	6691343	GEROLER			1
18	6651542	BALL, STEEL			2
19	6682862	SHAFT, DRIVE			1
20	6689700	PLATE	balance - outer		1
21	6678006	RING, BACK-UP			1
22	6682860	O-RING			1
23	6682897	SEAL			1
24	6685069	RING,BACK-UP	backup		1
25	6685068	FLANGE	mounting		1
26	6664815	SEAL, OIL			1
27	6682863	BOLT			9
28	6678004	PLATE	balance - inner		1
29	6685070	KIT, SEAL COMPLETE	W/Ref. 4, 13-15, 21-23 & 26		1

HYDROSTATIC MOTOR
(2-Speed)

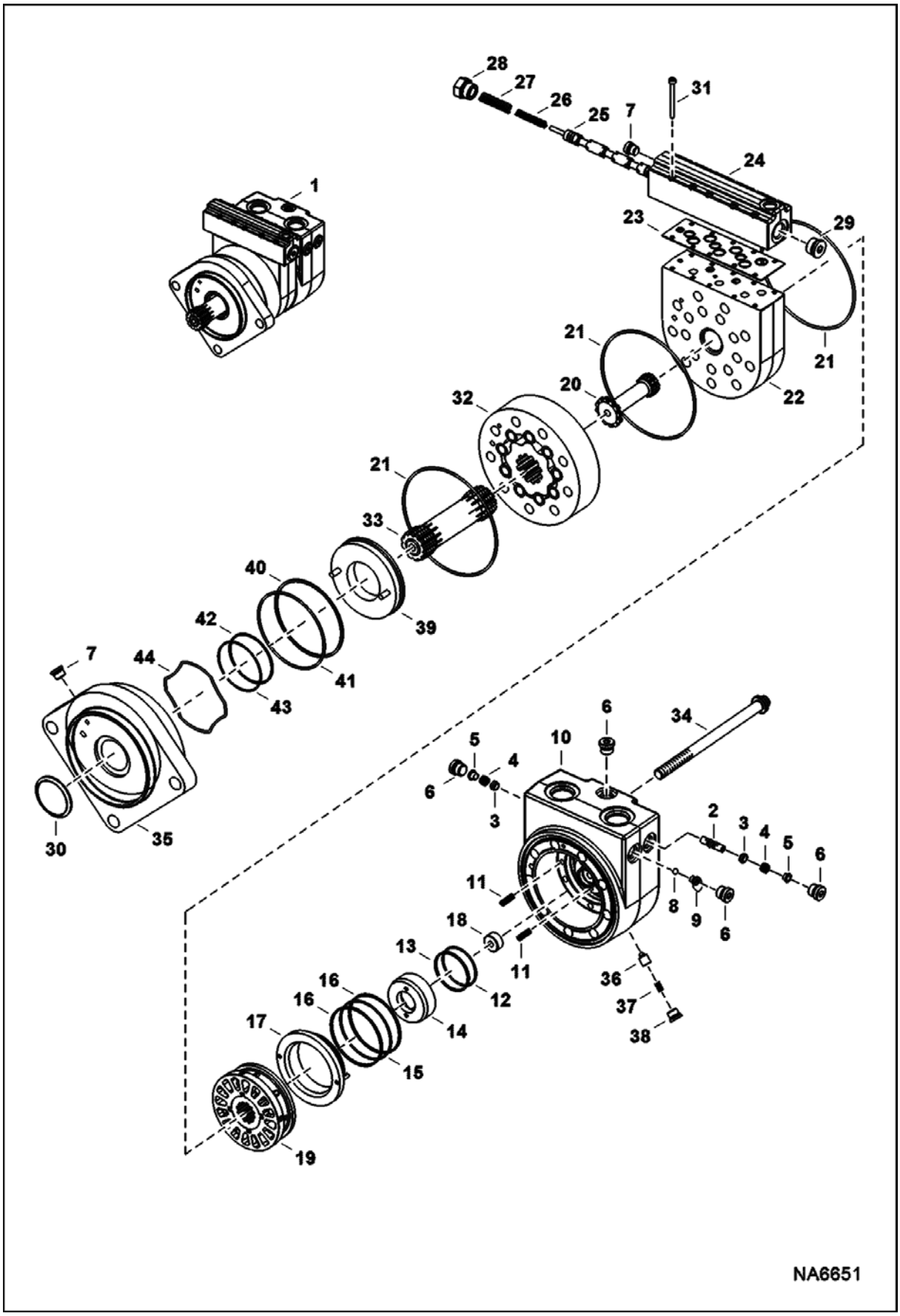

HYDROSTATIC MOTOR (Cont'd)
(2-Speed)

Ref No	Part Number	Description	Remarks	Serial Number	Qty
1	7010868	MOTOR, DRIVE HYD 2-SPD			1
2	6685066	PISTON			1
3	6692530	POPPET			2
4	6513533	SPRING	Was 6692528 [A]		2
5	6685065	SHUTTLE			2
6	6668089	PLUG, MOTOR	W/ O-ring		4
6		O-RING	NSS		X
7	6691541	PLUG	W/ O-ring		2
7		O-RING	NSS		X
8	7024892	BALL, STEEL			1
9	6691542	SEAT	ball - W/ O-ring		1
9		O-RING	NSS		X
10	7024891	HOUSING			1
11	6692523	SPRING, COMPRESSION			10
12	6691543	O-RING			1
13	6691544	RING	back-up		1
14	6691545	RING			1
15	6691546	O-RING			1
16	6691547	RING	back-up		2
17	6691548	RING	balance		1
18	6691549	PIN	dowel		1
19	6691550	VALVE			1
20	6691551	SHAFT			1
21	6691552	O-RING			3
22	6691553	PLATE			1
23	6691554	GASKET			1
24	7024893	HOUSING			1
25	6691556	SPOOL			1
26	6691557	SPRING	compression		1
27	6691558	SPRING	compression		1
28	7024894	PLUG	W/ O-ring		1
28		O-RING	NSS		X
29	6599910	PLUG ASSY.	W/ O-ring		1
29		O-RING	NSS		X
30	6691564	SEAL			1
31	6691559	BOLT			10
32	6691560	GEROLER			1
33	6691561	SHAFT			1
34	6691562	BOLT			9
35	7024895	FLANGE, MOUNTING			1
36	6685064	POPPET			1
37	6688521	SPRING			1
38	6668079	PLUG, MOTOR			1
39	7024900	PLATE			1
40	7024896	RING, BACK-UP			1
41	6679818	O-RING			1
42	7024898	RING, BACK-UP			1
43	7024897	O-RING			1
44	7024899	WASHER, WAVE			1

HYDROSTATIC PUMP/GEAR PUMP
(Identification)

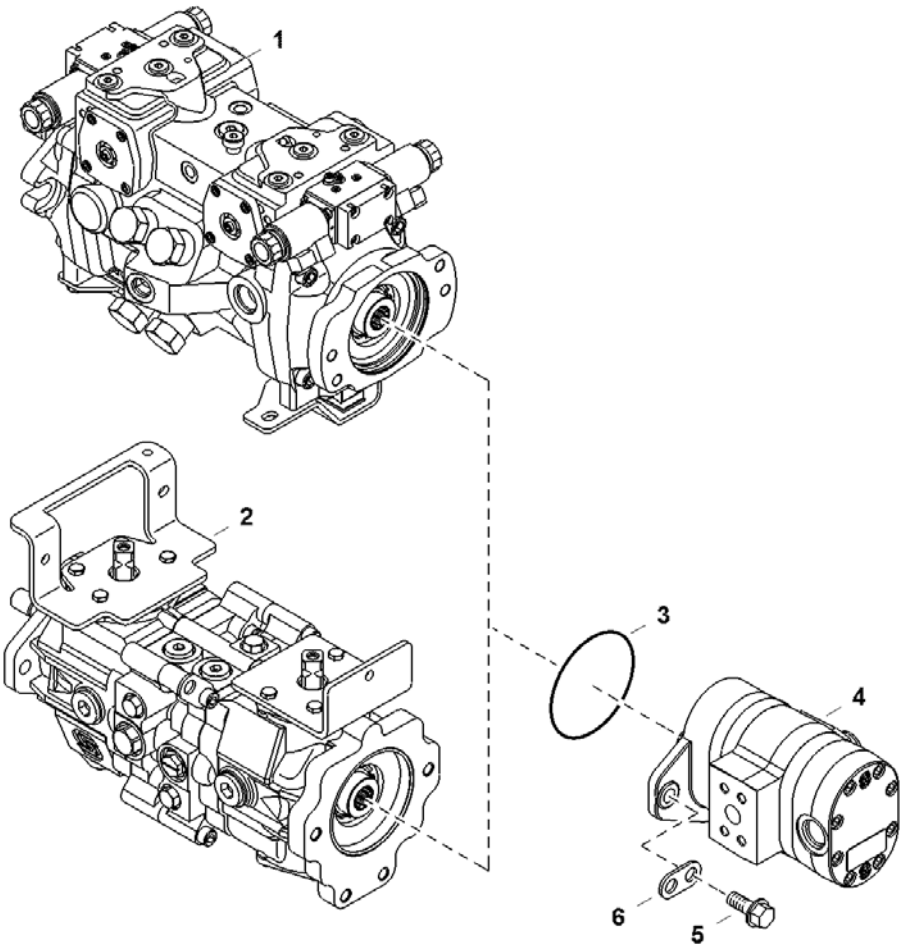

HYDROSTATIC PUMP/GEAR PUMP (Cont'd)
(Identification)

Ref No	Part Number	Description	Remarks	Serial Number	Qty
1		PUMP, HYD	See Illustration HYDROSTATIC PUMP/ NA2992 - SJC		1
2		PUMP, HYD	See Illustration HYDROSTATIC PUMP/ NA6653 See Illustration HYDROSTATIC PUMP/ NA6654 - manual controls, AHC & ACS		1
3	6671520	O-RING	manual controls, AHC & ACS		1
3	6682949	O-RING	SJC		1
4		PUMP, GEAR DOUBLE	See Illustration GEAR PUMP/ MS1454 - standard flow hydraulics		1
5	45C828	BOLT	manual controls, AHC & ACS		2
5	7131273	SCREW	SJC		2
6	6662126	BRACKET			2

HYDROSTATIC PUMP
(Manual Controls, AHC & ACS) (Left Half)

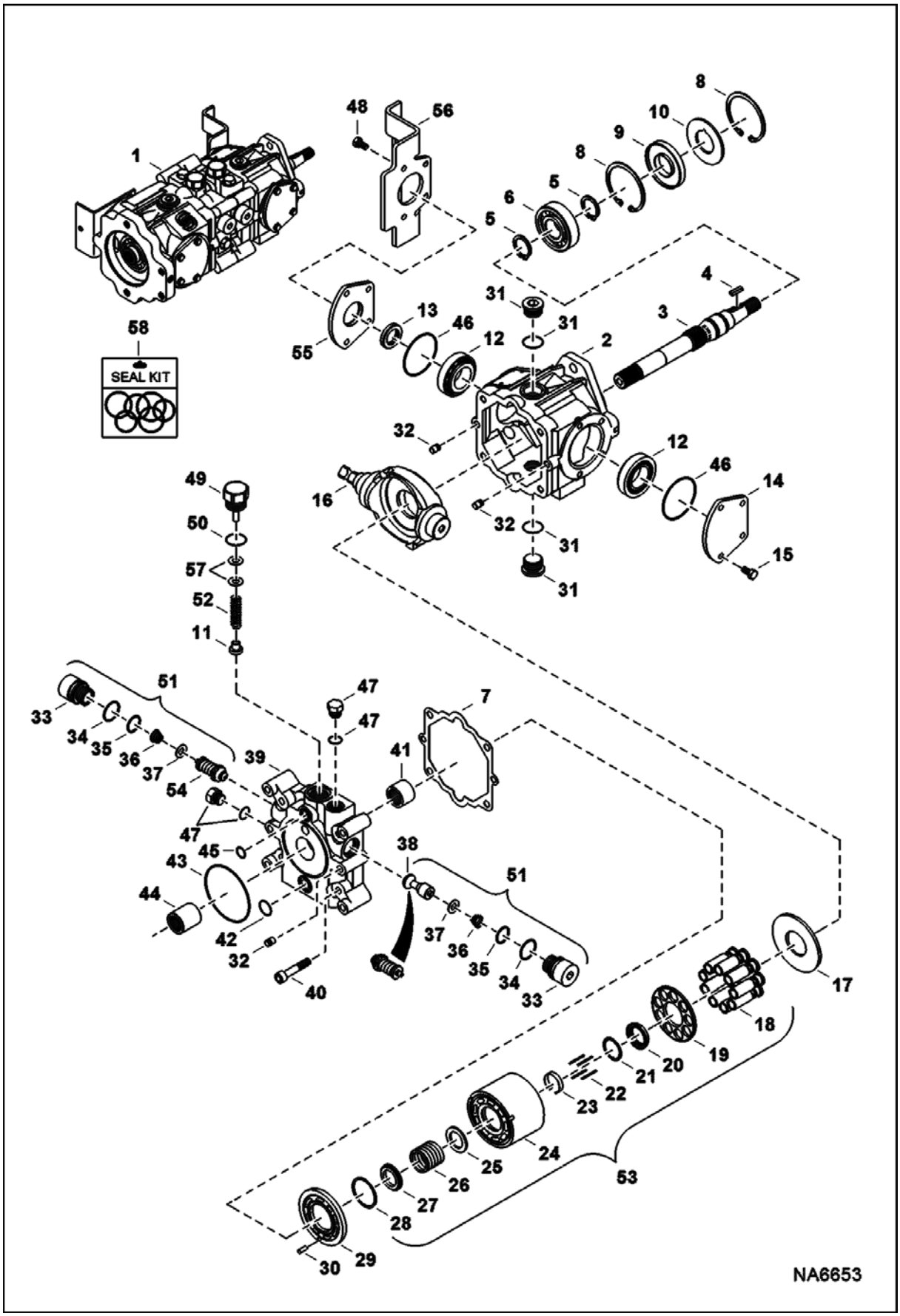

HYDROSTATIC PUMP (Cont'd)
(Manual Controls, AHC & ACS) (Left Half)

Ref No	Part Number	Description	Remarks	Serial Number	Qty
1	6687863	PUMP, HYD TANDEM W/O GEAR PUMP	Model 4445203		1
2	6669402	HOUSING			1
3	6682260	SHAFT	W/square key		1
4	6683169	KEY			1
5	658128	RING, SNAP			2
6	654299	BEARING			1
7	6650634	GASKET			1
8	669863	RING, SNAP			2
9	6687191	SEAL, OIL			1
10	7024884	WASHER			1
11	6650652	POPPET	charge relief		1
12	6669411	BEARING			2
13	6678226	SEAL, OIL			2
14	6657068	COVER			2
15	6650668	BOLT			4
16	6685344	SWASHPLATE	W/threaded shaft hole		1
17	6650627	PLATE			1
18	7023548	PISTON, ASSY			9
19	6657072	RETAINER			1
20	6657073	RETAINER			1
21	6666338	WASHER			1
22	6650629	PIN			4
23	6650630	RETAINER			1
24	6683167	CYLINDER BLOCK			1
25	6667724	WASHER			1
26	6667725	SPRING			1
27	6666882	WASHER			1
28	6666881	RETAINER			1
29	6687774	PLATE, PUMP HYD			1
30	6650636	PIN			1
31	47K8	PLUG			2
31	79K12	O RING 10			2
32	6675342	PIN			4
33		PLUG	NAP - Order Ref. 51		2
34	6657028	O-RING			2
35	79K8	O RING 10			2
36		SPRING	NAP - Order Ref. 51		2
37		RETAINER	NAP - Order Ref. 51		2
38		CHECK VALVE	NAP - poppet - Order Ref. 51		1
39	7023162	CAP, END			1
40	6650674	BOLT			4
41	6650635	BEARING			1
42	6650647	O-RING			1
43	6645081	O-RING			1
44	6650675	COUPLER			1
45	6650646	O-RING			1
46	6660814	O-RING			2
47	6645086	PLUG			2
47	6661481	O-RING			1
48	6671518	BOLT			4
49	6650648	PLUG	charge relief - W/Ref. 50		1
50	79K10	O RING 10			1
51	7024886	VALVE, RELIEF	Ref. 33-37 & 54		2

HYDROSTATIC PUMP (Cont'd)
(Manual Controls, AHC & ACS) (Left Half)

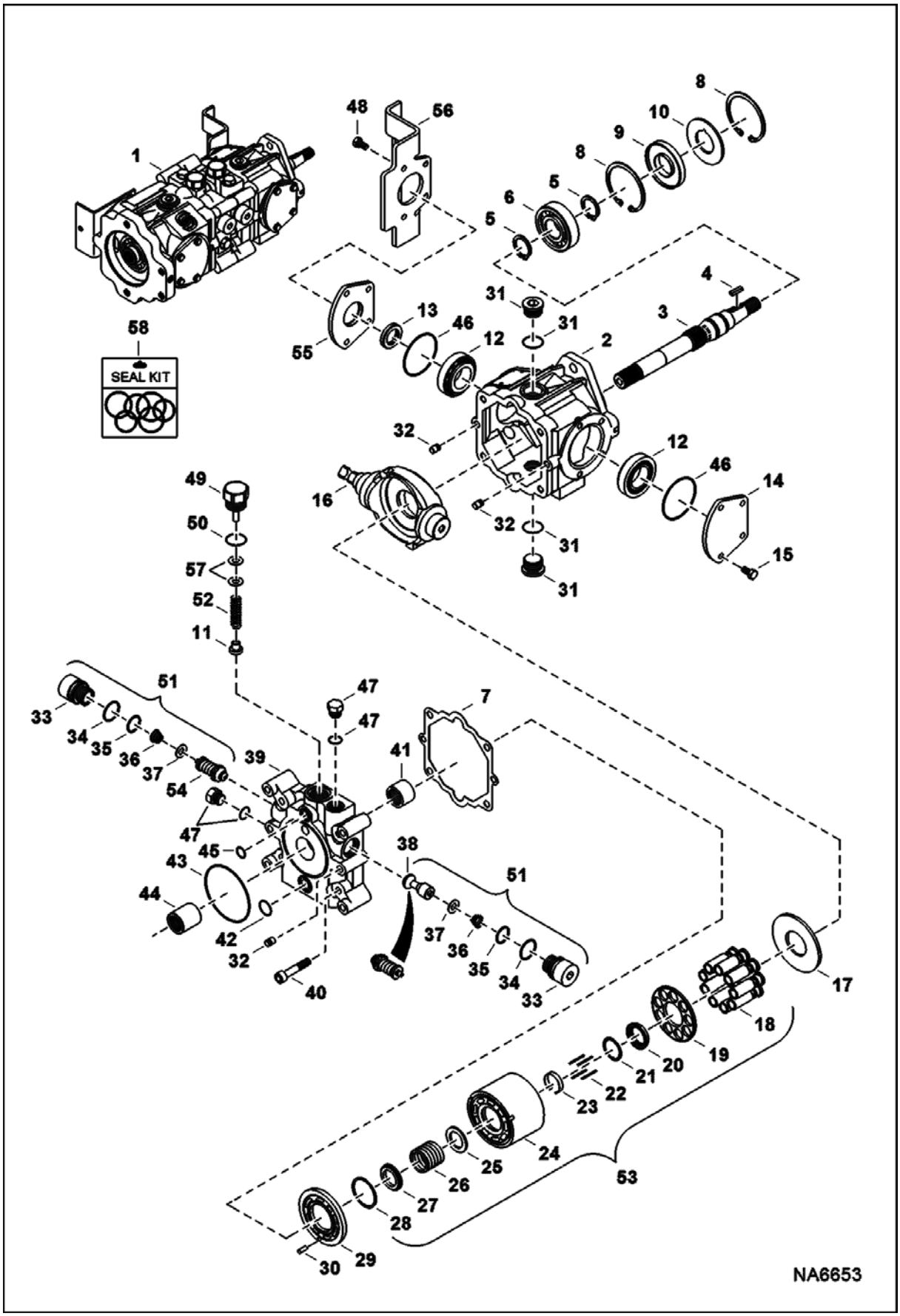

HYDROSTATIC PUMP (Cont'd)
(Manual Controls, AHC & ACS) (Left Half)

Ref No	Part Number	Description	Remarks	Serial Number	Qty
52	7008823	SPRING			1
53	6671512	GROUP, ROTARY			1
54		VALVE, RELIEF	NAP - 5000 PSI (345 bar) - Order Ref. 51		1
55	6675338	COVER	W/Ref. 13		1
56	7024887	BRACKET			1
57	6669410	KIT, SHIM	for Ref. 49 - (2) each of .010, .020 and .050 thick		1
58	6671516	KIT, SEAL	Ref. 7, 9, 13, 34, 35, 42, 43, 45, 46 & 50 - Also includes Ref. 2, 3, 12, 31 & 41 on next page		1

HYDROSTATIC PUMP
(Manual Controls & ACS) (Right Half)

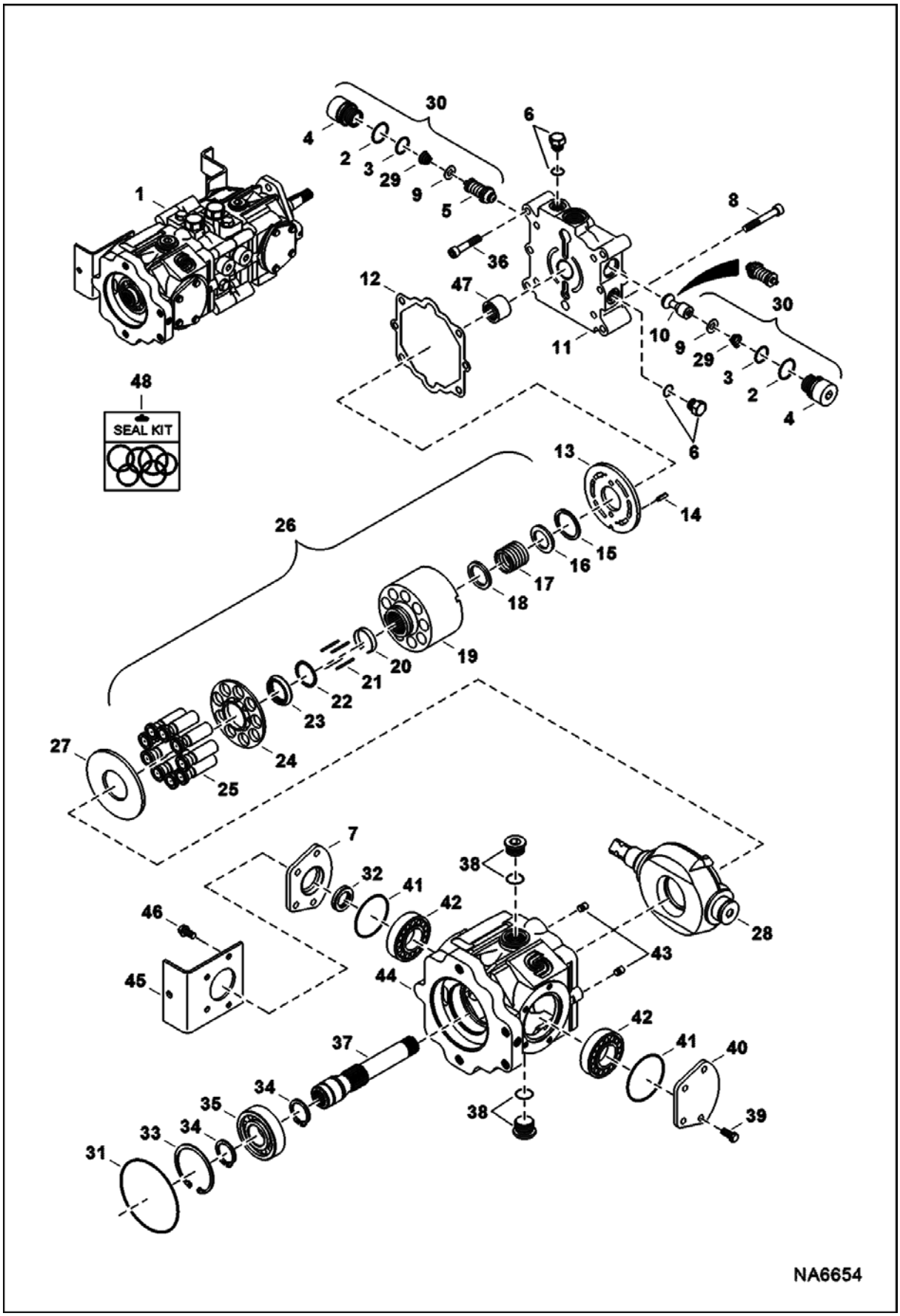

HYDROSTATIC PUMP (Cont'd)
(Manual Controls & ACS) (Right Half)

Ref No	Part Number	Description	Remarks	Serial Number	Qty
1	6687863	PUMP, HYD TANDEM W/O GEAR PUMP	Model 4445203		1
2	6657028	O-RING			2
3	79K8	O RING 10			2
4		PLUG	NAP - Order Ref. 30		2
5		VALVE, RELIEF	NAP - 5000 PSI (345 bar) - Order Ref. 30		2
6	6645086	PLUG			4
7	6657067	COVER	W/Ref. 32		1
8	6650674	BOLT			2
9		RETAINER	NAP - Order Ref. 30		4
10		VALVE, CHECK	NAP - poppet - Order Ref. 30		1
11	6669405	CAP, END			1
12	6650634	GASKET			1
13	6687773	PLATE, PUMP HYD			1
14	6650636	PIN			2
15	6666881	RETAINER			1
16	6666882	WASHER			1
17	6667725	SPRING			1
18	6667724	WASHER			1
19	6683167	CYLINDER BLOCK			1
20	6650630	RETAINER			1
21	6650629	PIN			4
22	6666338	WASHER			1
23	6657073	RETAINER			1
24	6657072	RETAINER			1
25	7023548	PISTON, ASSY			9
26	6671512	GROUP, ROTARY	W/Ref. 15-25		1
27	6650627	PLATE			1
28	6685344	SWASHPLATE	W/threaded shaft hole		1
29		SPRING	NAP - Order Ref. 30		2
30	6689601	VALVE	Ref. 2-5, 9, 10 & 29		2
31	6671520	O-RING			1
32	6678226	SEAL, OIL			1
33	669863	RING, SNAP			1
34	658128	RING, SNAP			2
35	654299	BEARING			1
36	7024885	BOLT			4
37	6682264	SHAFT			1
38	47K8	PLUG			1
38	79K12	O RING 10			2
39	6650668	BOLT			4
40	6657068	COVER			1
41	6660814	O-RING			2
42	6669411	BEARING			2
43	6675342	PIN			2
44	6693867	HOUSING			1
45	7024890	BRACKET			1
46	6671518	BOLT			4
47	6650635	BEARING			1
48	6671516	KIT, SEAL	Ref. 2, 3, 12, 31 & 41 - Also includes Ref. 7, 9, 13, 34, 35, 42, 43, 45, 46 & 50 on previous page		1

HYDROSTATIC PUMP
(Selectable Joystick Controls)

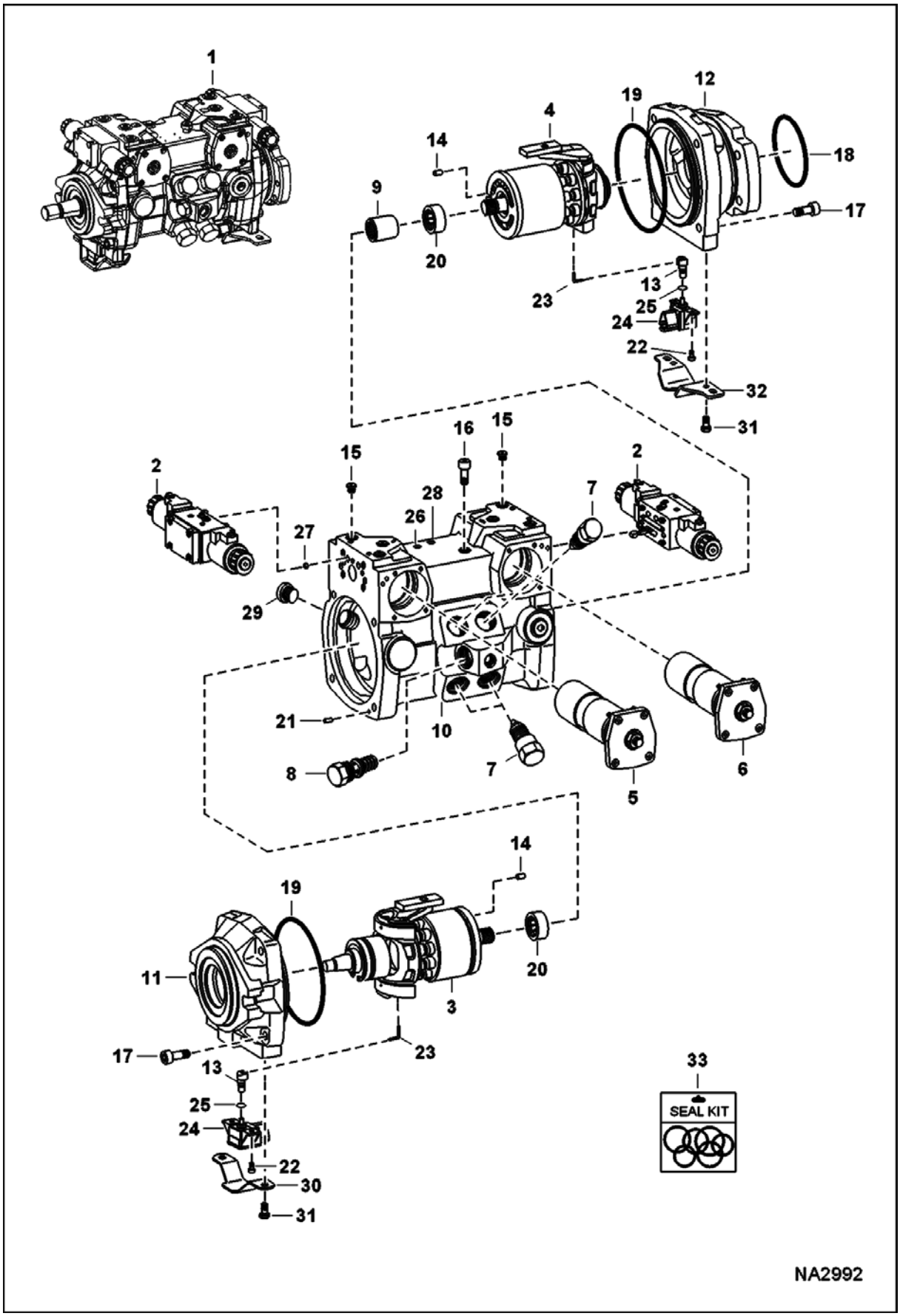

HYDROSTATIC PUMP (Cont'd)
(Selectable Joystick Controls)

Ref No	Part Number	Description	Remarks	Serial Number	Qty
1	7170197	PUMP, HYD TANDEM	Model R902136745 - Ref. 2-32		1
2	7008109	MODULE, CONTROL	See Illustration HYDROSTATIC PUMP/ B25016		2
3		GROUP, ROTATING LH	See Illustration HYDROSTATIC PUMP/ B25011 - LH rotation		1
4		GROUP ROTATING RH	See Illustration HYDROSTATIC PUMP/ B25012 - RH rotation		1
5		CONTROL	See Illustration HYDROSTATIC PUMP/ B25013 - LH - assy		1
6		CONTROL	See Illustration HYDROSTATIC PUMP/ B25013A - RH - assy		1
7	7020639	HIGH PRESSURE RELIEF VALVE	preset at 350 bar		4
8		VALVE	See Illustration HYDROSTATIC PUMP/ B25015A - charge pressure relief 15-30 bar		1
9	6687941	COUPLER			1
10	7008110	HOUSING	W/Ref 16		1
11	7008111	FLANGE, LH			1
12	7008112	FLANGE, RH			1
13	7008113	SHAFT			2
14	6688011	PIN			2
15	6688016	SCREW			11
16	6687992	SCREW			3
17	6688008	SCREW			8
18	6671520	O-RING			1
19	6688009	SEAL			2
20	6688040	BEARING			2
21	6686934	PIN			2
22	7008114	SCREW			4
23	6688014	PIN			2
24	7008115	SENSOR			2
25	54K20022	O'RING			2
26	6687932	PIN			2
27	7008116	FILTER			6
28	6688015	SCREW			1
29	6685390	SCREW			1
30	7010227	COVER			1
31	6688003	SCREW			4
32	7010227	COVER			1
33	7019150	KIT, SEAL			1

HYDROSTATIC PUMP
(Rotary Group) (LH) (Selectable Joystick Controls)

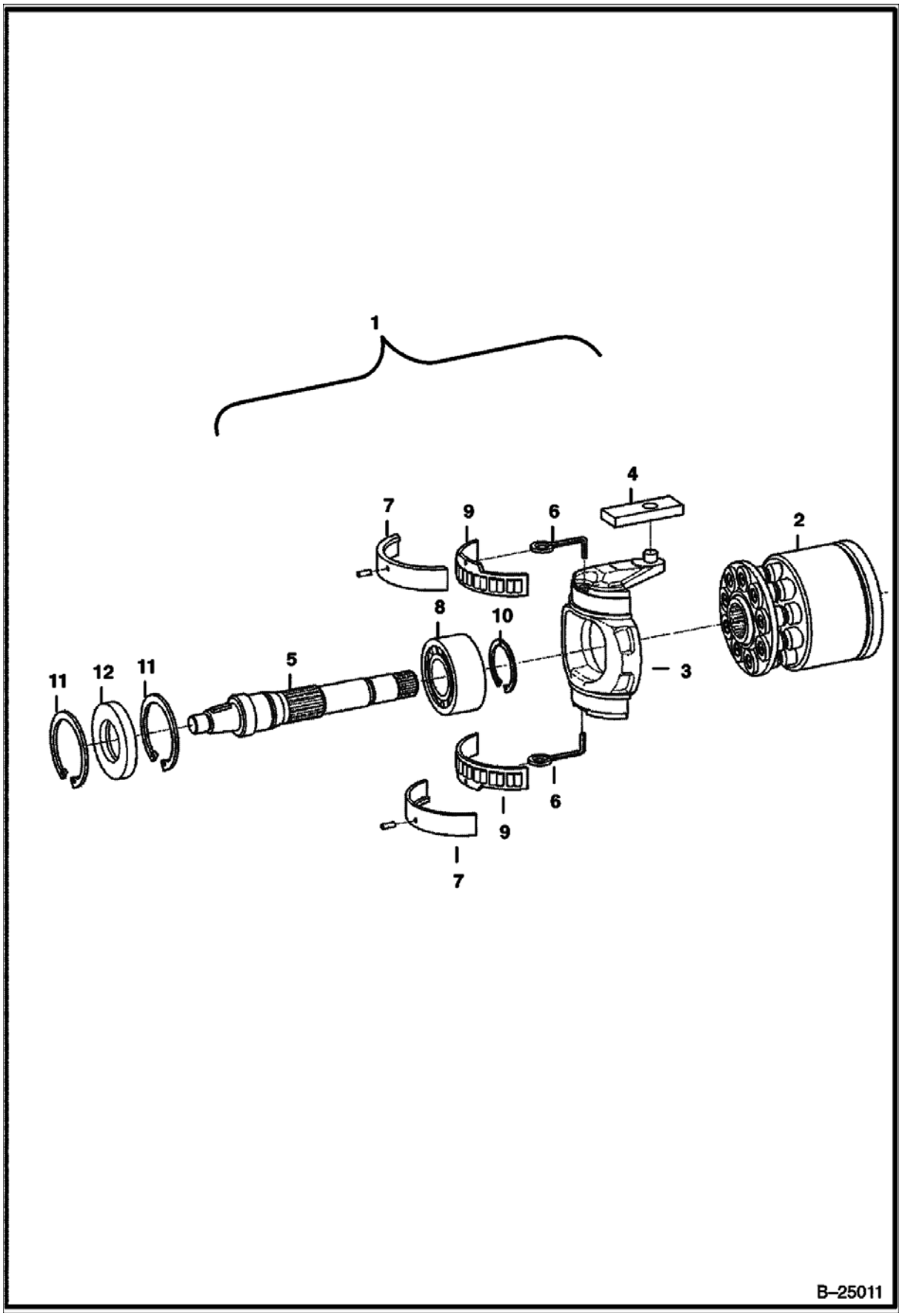

HYDROSTATIC PUMP (Cont'd)
(Rotary Group) (LH) (Selectable Joystick Controls)

Ref No	Part Number	Description	Remarks	Serial Number	Qty
1	7008105	GROUP, ROTATING LH	Ref. 2-12 - LH rotation		1
2	6693873	GROUP, ROTARY			1
3	7008117	SWASHPLATE			1
4	6687940	PLATE			1
5	7001120	SHAFT, DRIVE			1
6	6687930	WIRE			2
7	6687956	BEARING			1
8	6688018	BEARING			1
9	7008118	BEARING			1
10	6687999	RING, SNAP			1
11	6688042	RING, SNAP			2
12	6693876	SEAL, SHAFT			1

HYDROSTATIC PUMP
(Rotary Group) (RH) (Selectable Joystick Controls)

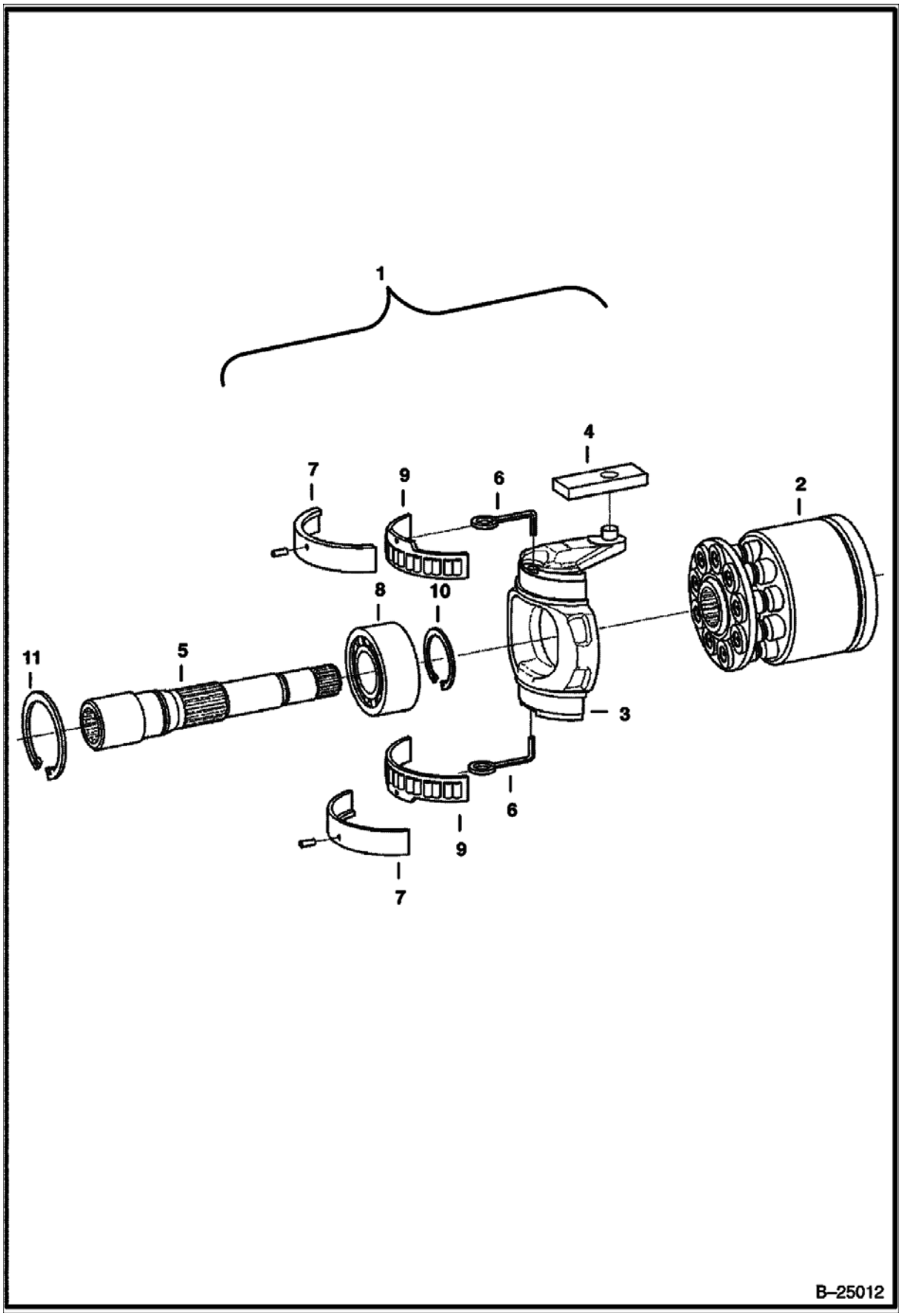

HYDROSTATIC PUMP (Cont'd)
(Rotary Group) (RH) (Selectable Joystick Controls)

Ref No	Part Number	Description	Remarks	Serial Number	Qty
1	7008106	GROUP ROTATING RH	Ref. 2-11 - RH rotation		1
2	6693874	GROUP, ROTARY			1
3	7008117	SWASHPLATE			1
4	6687940	PLATE			1
5	6687943	SHAFT			1
6	6687930	WIRE			2
7	6687956	BEARING			1
8	6688018	BEARING			1
9	6687987	BEARING			1
10	6687999	RING, SNAP			1
11	6671741	SNAP RING			2

HYDROSTATIC PUMP
(Control) (LH) (Selectable Joystick Controls)

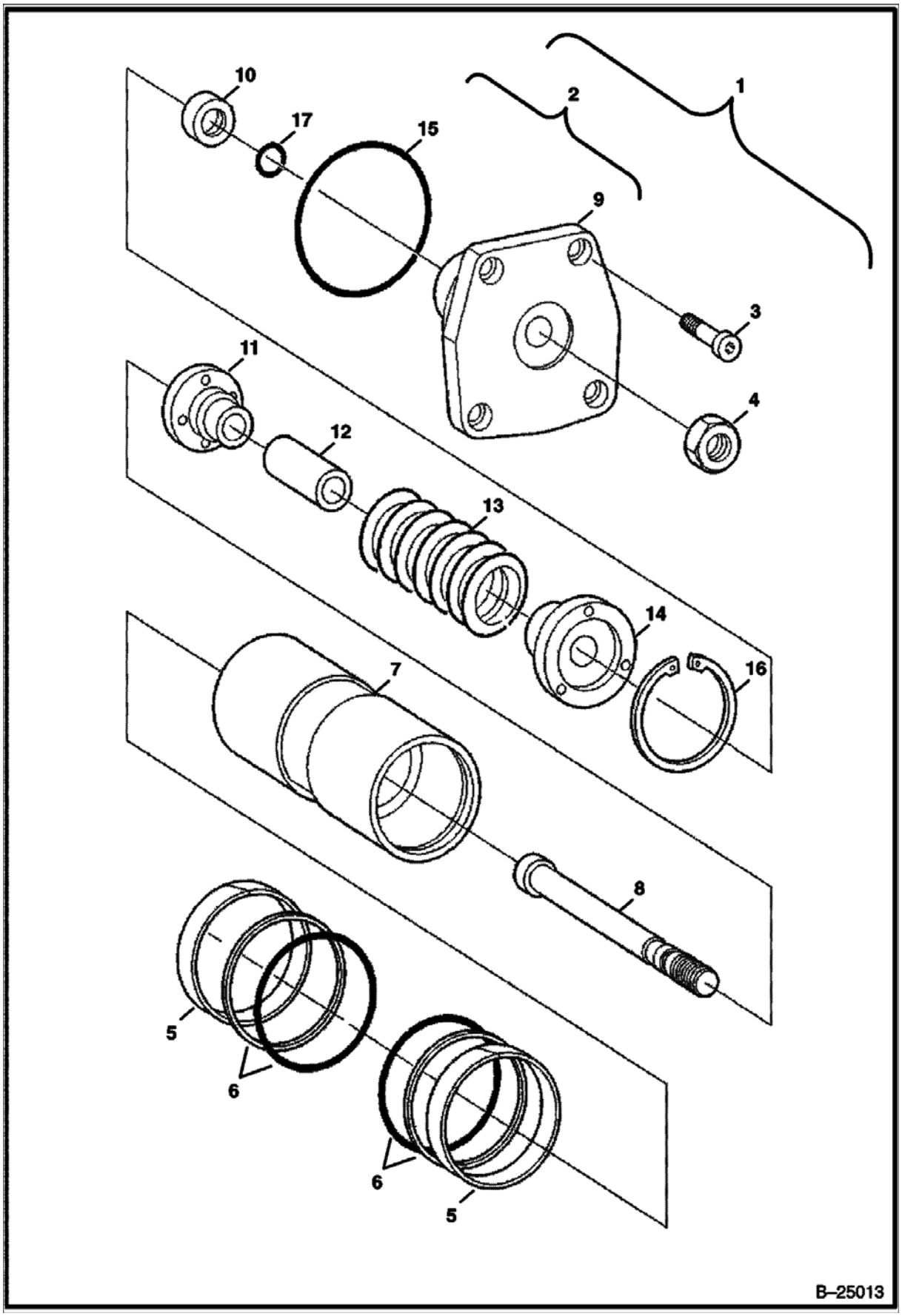

HYDROSTATIC PUMP (Cont'd)
(Control) (LH) (Selectable Joystick Controls)

Ref No	Part Number	Description	Remarks	Serial Number	Qty
1	7008107	CONTROL	Model R902124951 - Ref. 2-17		1
2	6671760	COVER			1
3	6687995	SCREW			1
4	6687925	NUT			1
5	7008119	RING			2
6	6687986	KIT			1
7	6687962	PISTON			1
8		ROD	NSS		1
9	6671760	COVER			1
10		RING	NSS		1
11		COLLAR	NSS		1
12		SPACER	NSS		1
13		SPRING	NSS		1
14		COLLAR	NSS		1
15	6688005	SEAL			1
16		RING	NSS		1
17	6688006	SEAL			1

HYDROSTATIC PUMP
(Control) (RH) (Selectable Joystick Controls)

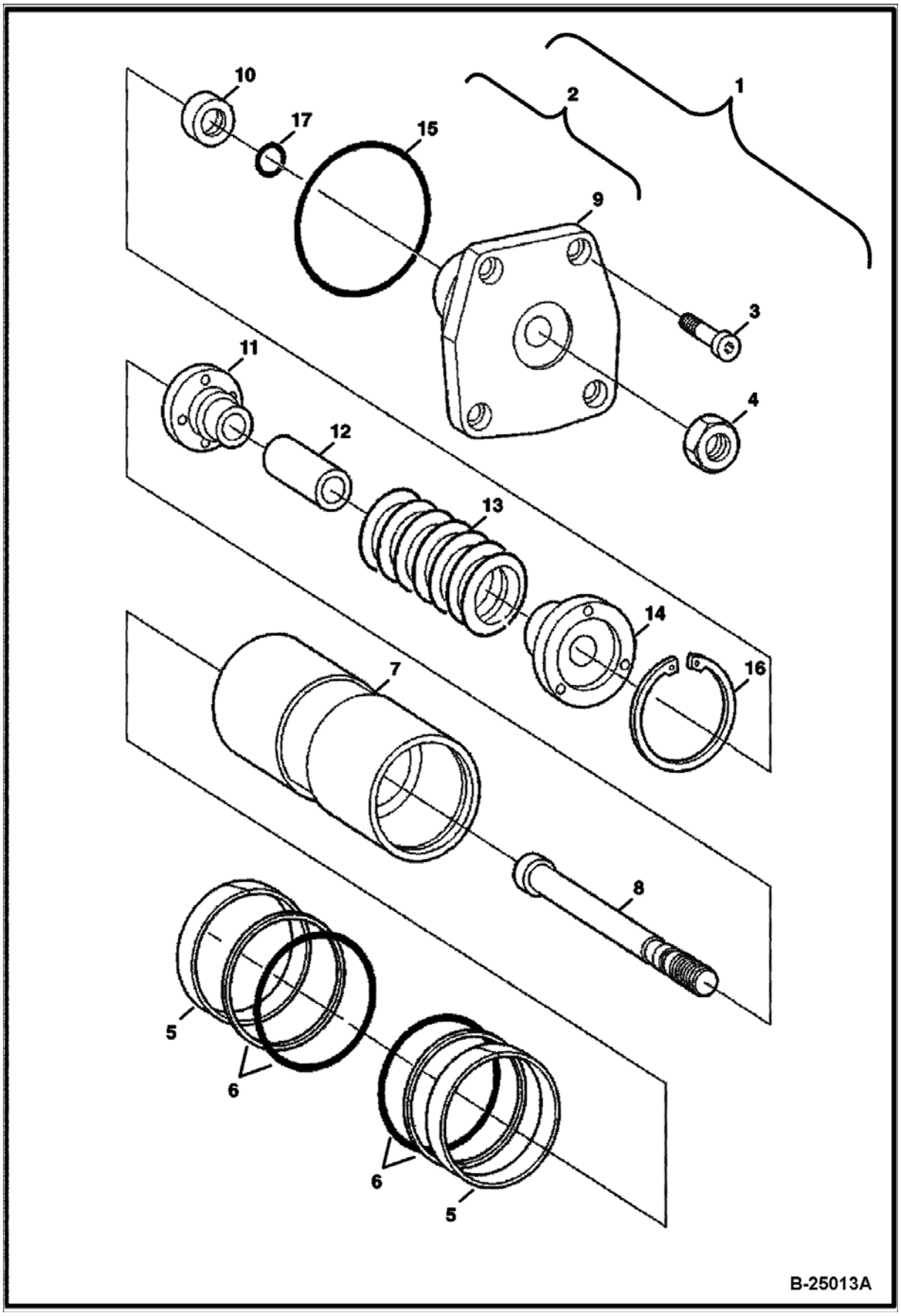

HYDROSTATIC PUMP (Cont'd)
(Control) (RH) (Selectable Joystick Controls)

Ref No	Part Number	Description	Remarks	Serial Number	Qty
1	7008108	CONTROL	Model R902124952 - Ref. 2-17		1
2	6671760	COVER			1
3	6687995	SCREW			1
4	6687925	NUT			1
5	7008119	RING			2
6	6687986	KIT			1
7	6687962	PISTON			1
8		ROD	NSS		1
9	6671760	COVER			1
10		RING	NSS		1
11		COLLAR	NSS		1
12		SPACER	NSS		1
13		SPRING	NSS		1
14		COLLAR	NSS		1
15	6688005	SEAL			1
16		RING	NSS		1
17	6688006	SEAL			1

HYDROSTATIC PUMP
(Control Module) (Selectable Joystick Controls)

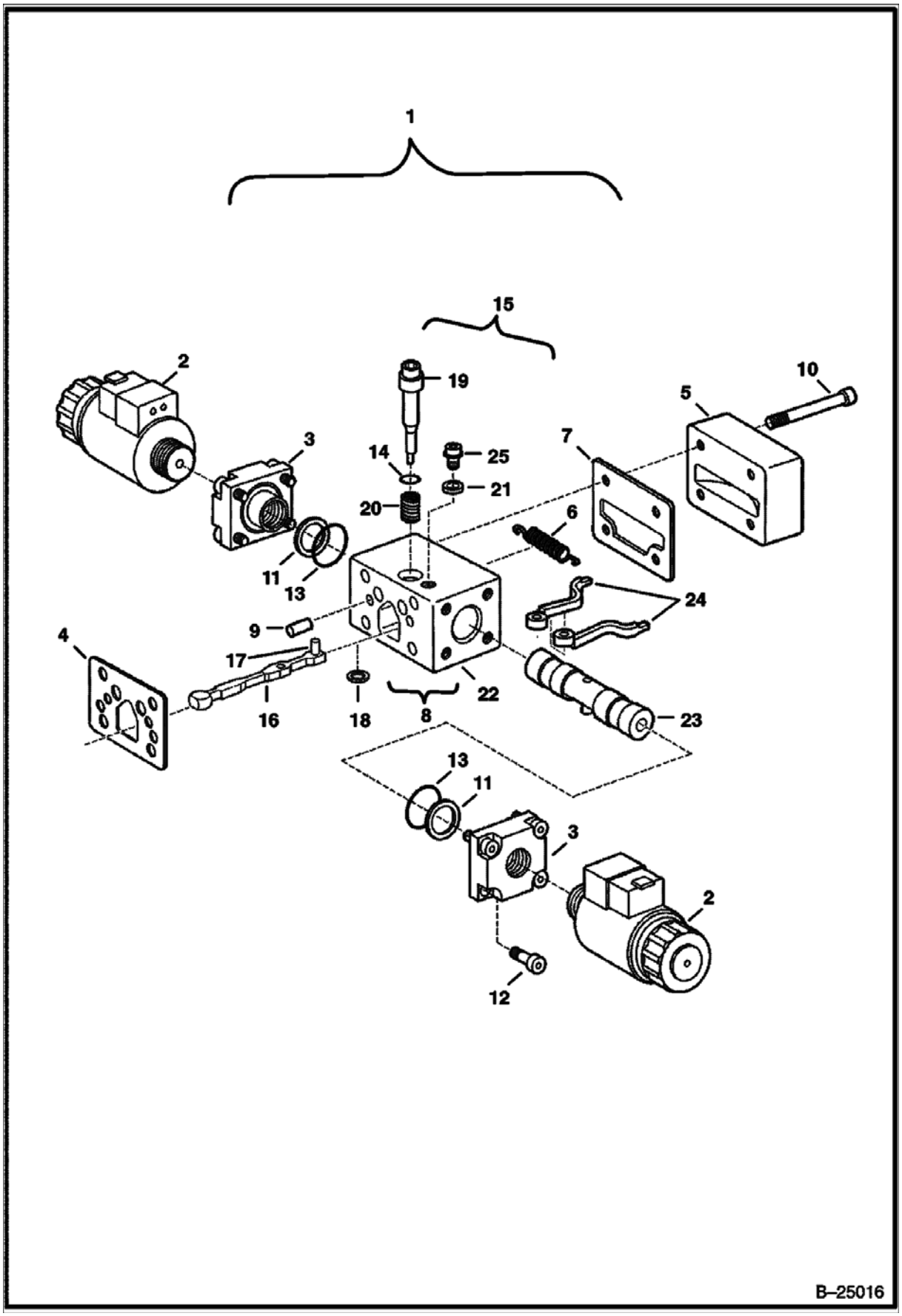

HYDROSTATIC PUMP (Cont'd)
(Control Module) (Selectable Joystick Controls)

Ref No	Part Number	Description	Remarks	Serial Number	Qty
1	7008109	MODULE, CONTROL	Ref. 2-25 - Model R902105250		2
2	6697960	SOLENOID	W/ O-Ring		2
3		BUSHING	NSS		2
4	7008121	GASKET			1
5	7008122	COVER			1
6	6687967	SPRING			1
7	7008123	GASKET			1
8	7008120	MODULE			1
9	6688010	PIN			2
10	6687996	SCREW			4
11		SPRING	NSS		2
12	6687997	SCREW			8
13		SEAL KIT	NSS		2
14		SEAL	NSS - Order Ref. 8		1
15		ROLLER	NSS		1
16		LEVER	NSS		1
17		ROLLER	NSS		1
18		SHIM	NSS		1
19		PIN	NSS - Order Ref. 8		1
20		SPRING	NSS - Order Ref. 8		1
21		PLATE	NSS - Order Ref. 8		1
22		HOUSING	NSS - Order Ref. 8		1
23		SPOOL	NSS - Order Ref. 8		1
24		LEVER	NSS		2
25		SCREW	NSS - Order Ref. 8		1

HYDROSTATIC PUMP
(Charge Pressure Relief Valve)

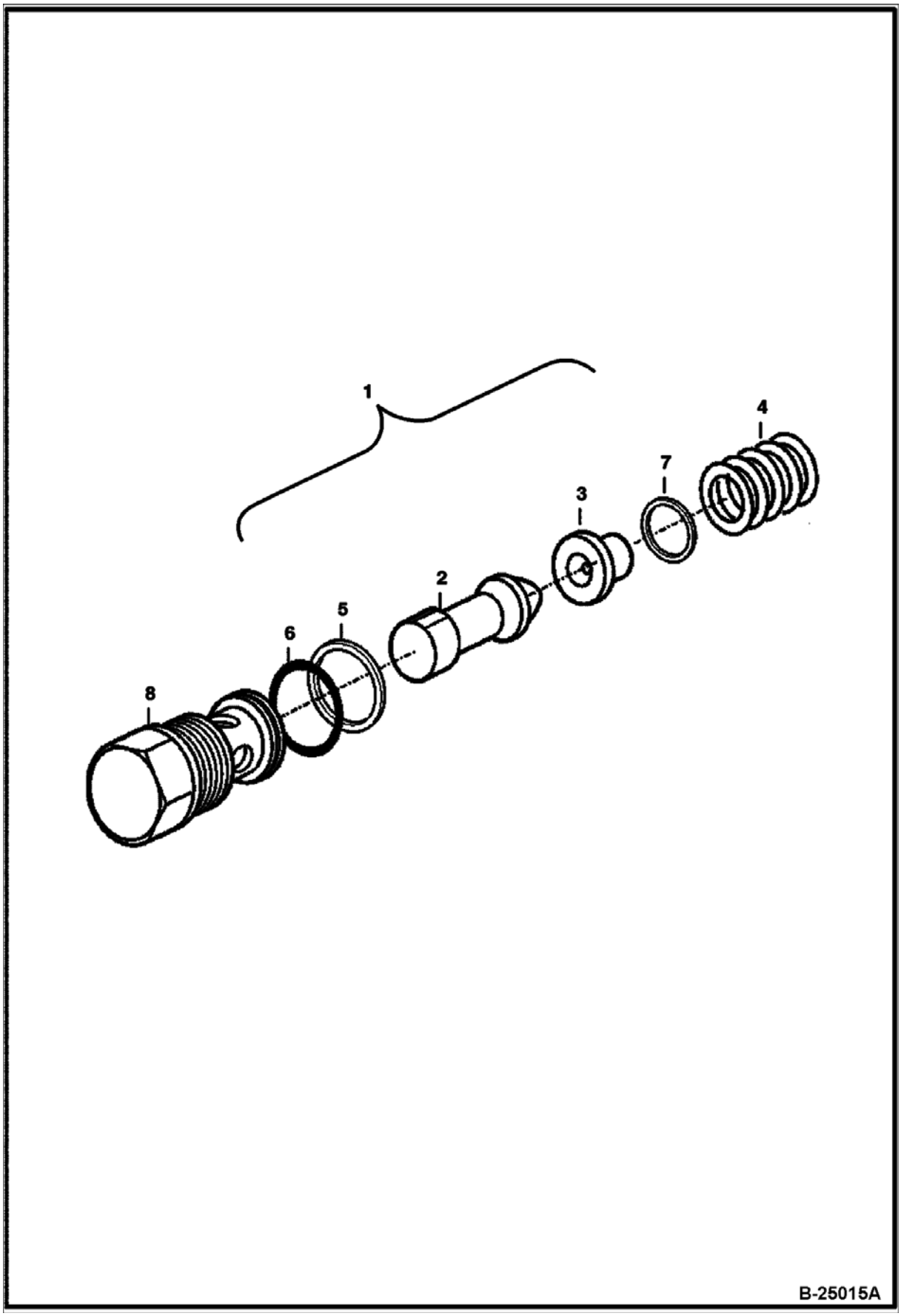

HYDROSTATIC PUMP (Cont'd)
(Charge Pressure Relief Valve)

Ref No	Part Number	Description	Remarks	Serial Number	Qty
1	6687938	VALVE			1
2	6967534	PISTON			1
3	6967535	COLLAR			1
4	6967536	SPRING			1
5		RING	NSS		1
6	6682936	O-RING			1
7	6688017	SHIM	0,3 mm		1
7	7008766	SHIM	0.5 mm		1
7	7008767	SHIM	1.0 mm		1
8	6687939	SCREW			1

GEAR PUMP
(Double)

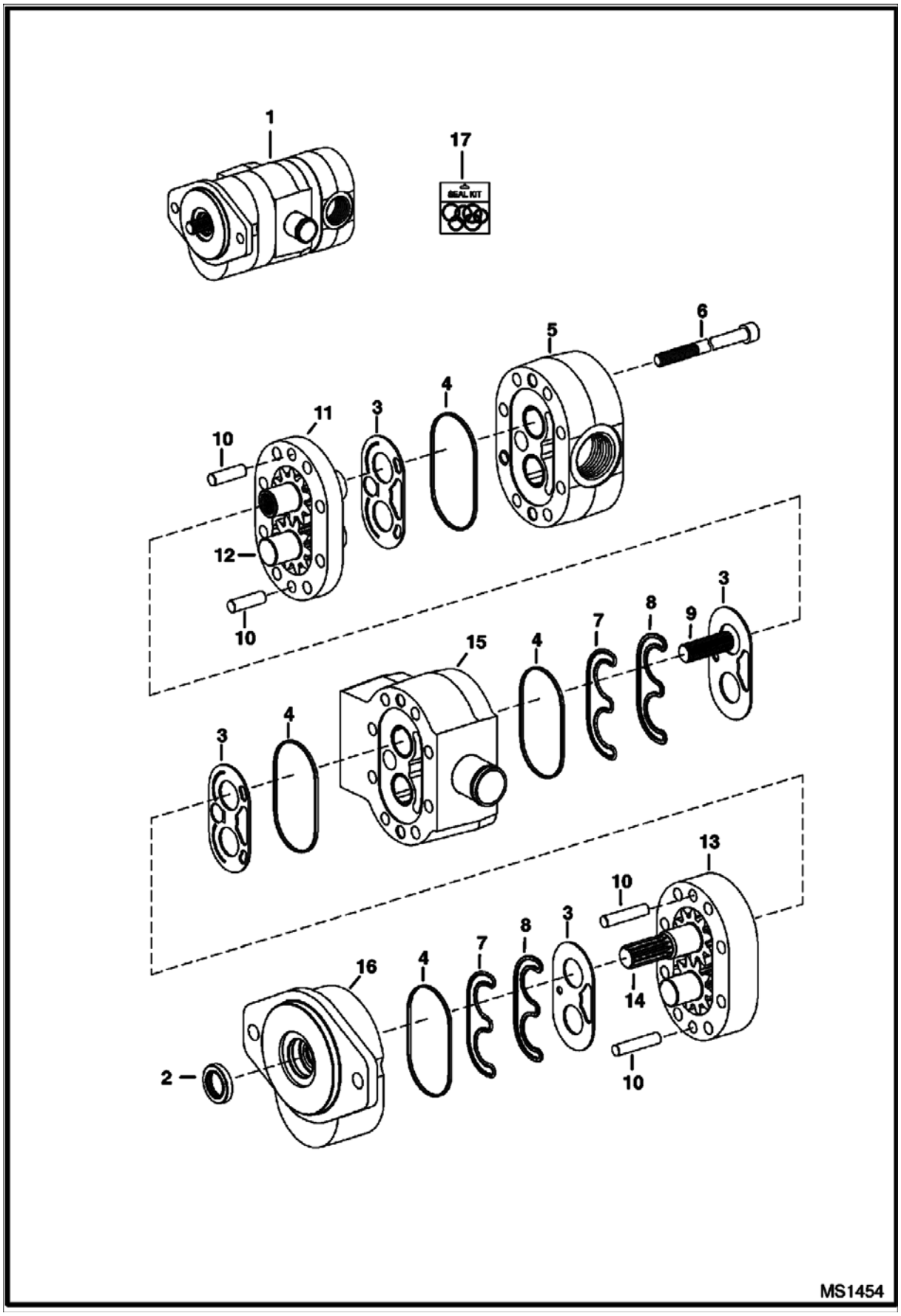

GEAR PUMP (Cont'd)
(Double)

Ref No	Part Number	Description	Remarks	Serial Number	Qty
1	7001897	PUMP, GEAR	Model 83001987		1
2		SEAL, SHAFT	NSS		1
3		WEAR PLATE	NSS		6
4		SEAL, SECTION	NSS		6
5		HOUSING, REAR	NSS		1
6		BOLT	NSS		8
7		SEAL, PRE-LOAD	NSS		6
8		SEAL, LOAD	NSS		6
9		CONNECTOR, SPLINE	NSS		2
10		PIN	NSS		6
11		HOUSING, GEAR	NSS - #2		1
12		GEAR SET	NSS - #2		1
13		HOUSING, GEAR	NSS - #1		1
14		GEAR SET	NSS - drive		1
15		HOUSING, CENTER	NSS		1
16		HOUSING, FRONT	NSS		1
17	6687866	KIT, SEAL	Ref. 2-4, 7 & 8		1

COOLING FAN MOTOR

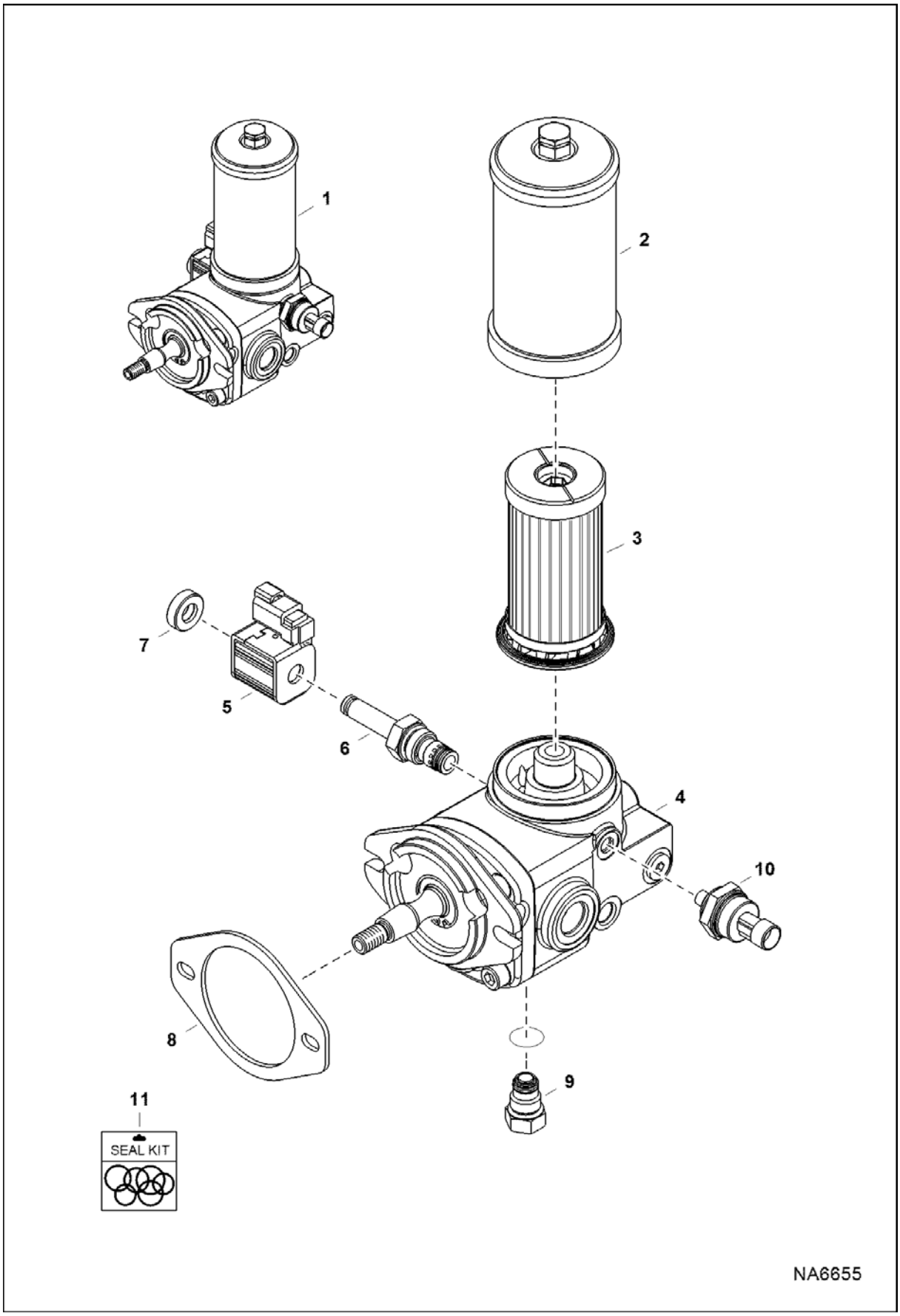

COOLING FAN MOTOR (Cont'd)

Ref No	Part Number	Description	Remarks	Serial Number	Qty
1	7010793	MOTOR, FAN	cast iron - Ref. 2-9 - Also Order (2) of 1F316 cotter pin		1
2	6698066	HOUSING, FILTER CARTRIDGE			1
3	6692337	FILTER, HYD CARTRIDGE			1
4		MOTOR	NSS - Order Ref. 1		1
5	6698065	COIL, CPP012H			1
6	7010979	VALVE, CHECK	cartridge - W/Ref. 7		1
6	6698591	KIT, SEAL			1
7		NUT, COIL SOLENOID	NAP - Order Ref. 6		1
8	6698062	GASKET, MOTOR			1
9	7000974	PLUG, MOTOR			1
10	6674316	SWITCH, PRESS OIL HYD	3-pin molded connector		1
11		KIT, SEAL	NSS - Order Ref. 1		1

2-SPEED VALVE

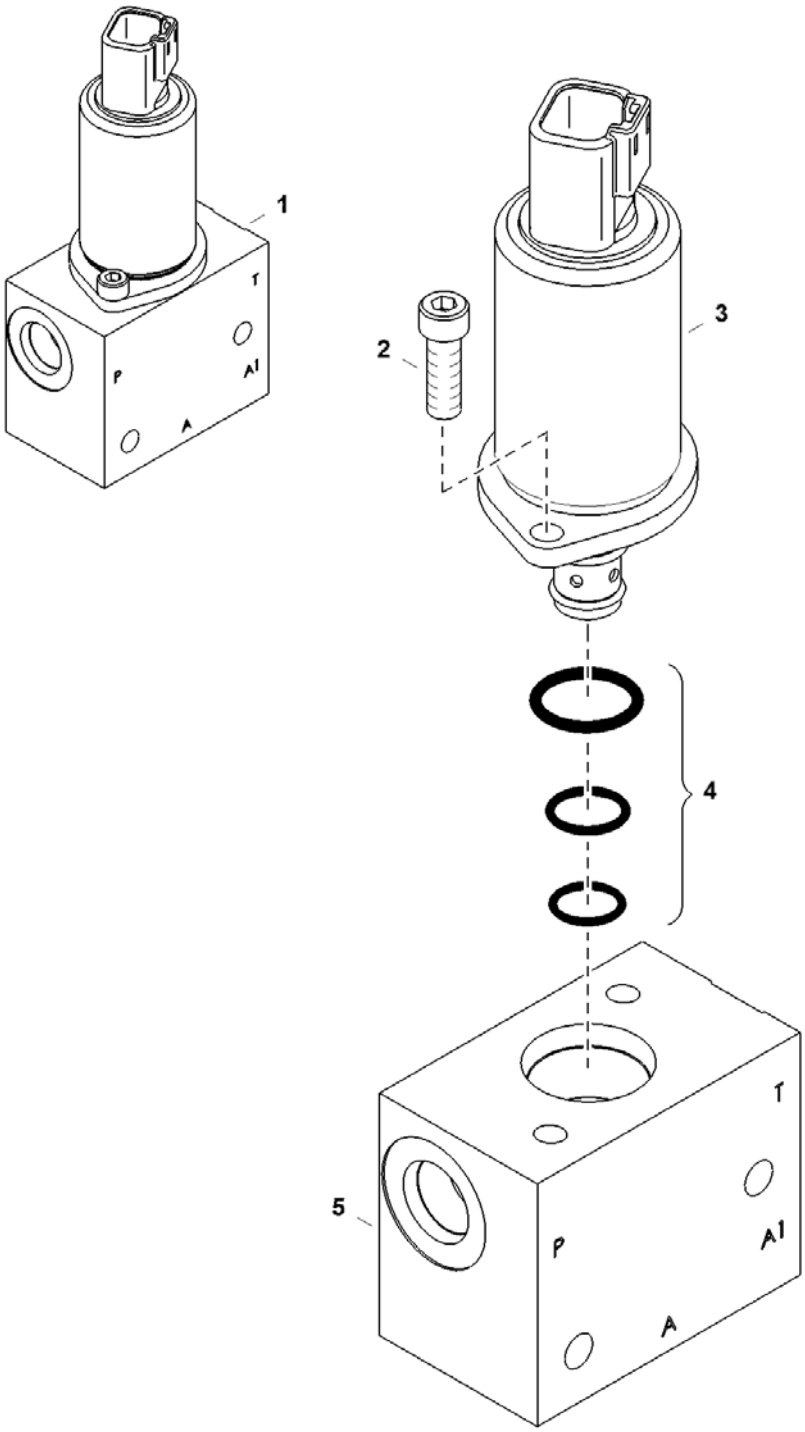

2-SPEED VALVE (Cont'd)

Ref No	Part Number	Description	Remarks	Serial Number	Qty
1	7022164	VALVE, 2-SPEED	Ref. 2-5		1
2	7024904	BOLT			2
3	7024902	SOLENOID			1
4	7024903	KIT, SEAL			1
5		BLOCK	NSS - Order Ref. 1		1

CAB ELECTRICAL CIRCUITRY
(Standard)

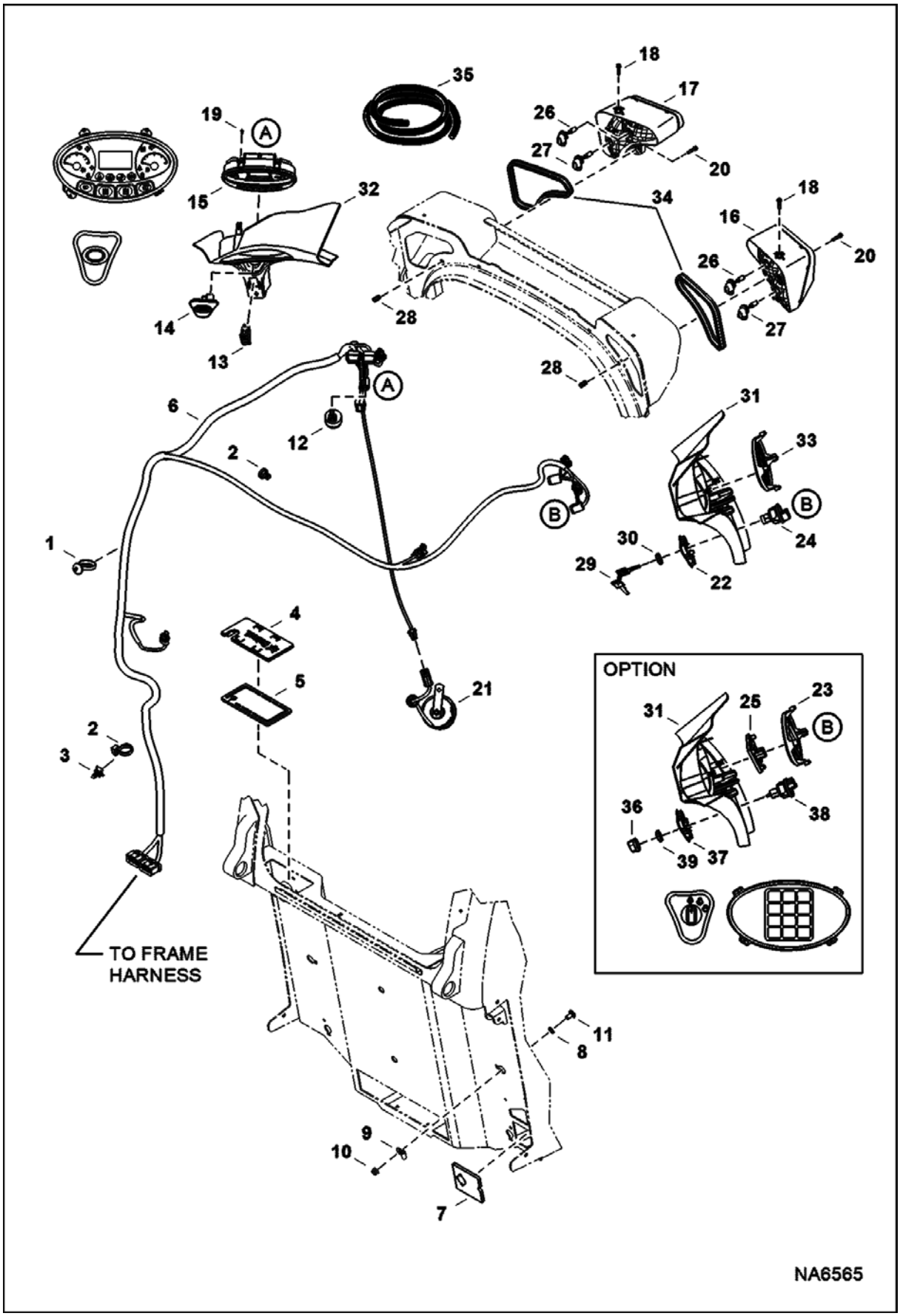

CAB ELECTRICAL CIRCUITRY (Cont'd)
(Standard)

Ref No	Part Number	Description	Remarks	Serial Number	Qty
1	6675734	STRAP, TIE			1
2	6624289	STRAP, TIE			5
3	7015668	MOUNT FIR TREE	push in - Use W/tie strap		1
4	7179136	PLUG, HARNESS CAB STD			1
5	7179137	FOAM			1
6	7210557	HARNESS, CAB			1
7	7185150	PLUG, HARNESS CAB			1
8	6674894	NUT			1
9	30H20	CLIP			1
10	57D6	NUT 5			1
11	31C612	BOLT			1
12	6692489	ALARM, BUZZER			1
13	6690948	SWITCH PARK BRAKE			1
14	7003032	SWITCH, OVERRIDE TRACTION			1
15	7022670	DISPLAY			1
16	7138040	LIGHT, RH ASSY			1
17	7138041	LIGHT, LH ASSY			1
18	35C410	BOLT 5			2
19	7179008	SCREW, PLASTIC			3
20	31C420	BOLT 5			2
21		HORN, ALARM	See Illustration HORN KIT/ NA6325 manual controls, AHC & ACS		1
21		HORN, ALARM	See Illustration HORN KIT/ NA6326 SJC		1
22	7163589	INSERT, SWITCH			1
23	7003027	INSERT, KEYPAD	if loader is equipped W/SJC & text decals, Also Order Ref. 33 & 7168114 decal - if loader is equipped W/SJC & no text decals, Also Order Ref. 33 & 7177707 decal		1
24	6693245	SWITCH, IGN	W/Ref.32		1
25	6693712	KEYPAD, PANEL			1
26	7008814	BULB, 5W			2
27	6675336	LIGHT, BULB 50W			2
28	7154910	INSERT, THREADED			2
29	6693241	KEY 10	ignition - single key W/O ring		1
30	7009081	NUT			1
31	7155791	PANEL, RH			1
32	7155792	PANEL, LH			1
33	7002985	INSERT, BLANK	W/Bobcat head - if loader is equipped W/SJC & text decals, Also Order Ref. 33 & 7168114 decal - if loader is equipped W/SJC & no text decals, Also Order Ref. 33 & 7177707 decal		1
34		SEAL	NAP - 609,6 mm (24") long - Order Ref. 35		2
35	7202956	SEAL, BULK	bulk - sold per foot		x
36	7023588	KNOB			1
37	7163589	INSERT, SWITCH			1
38	7023022	SWITCH ROTARY	W/Ref. 41		1
39	7009081	NUT			1

CAB ELECTRICAL CIRCUITRY
(Deluxe)

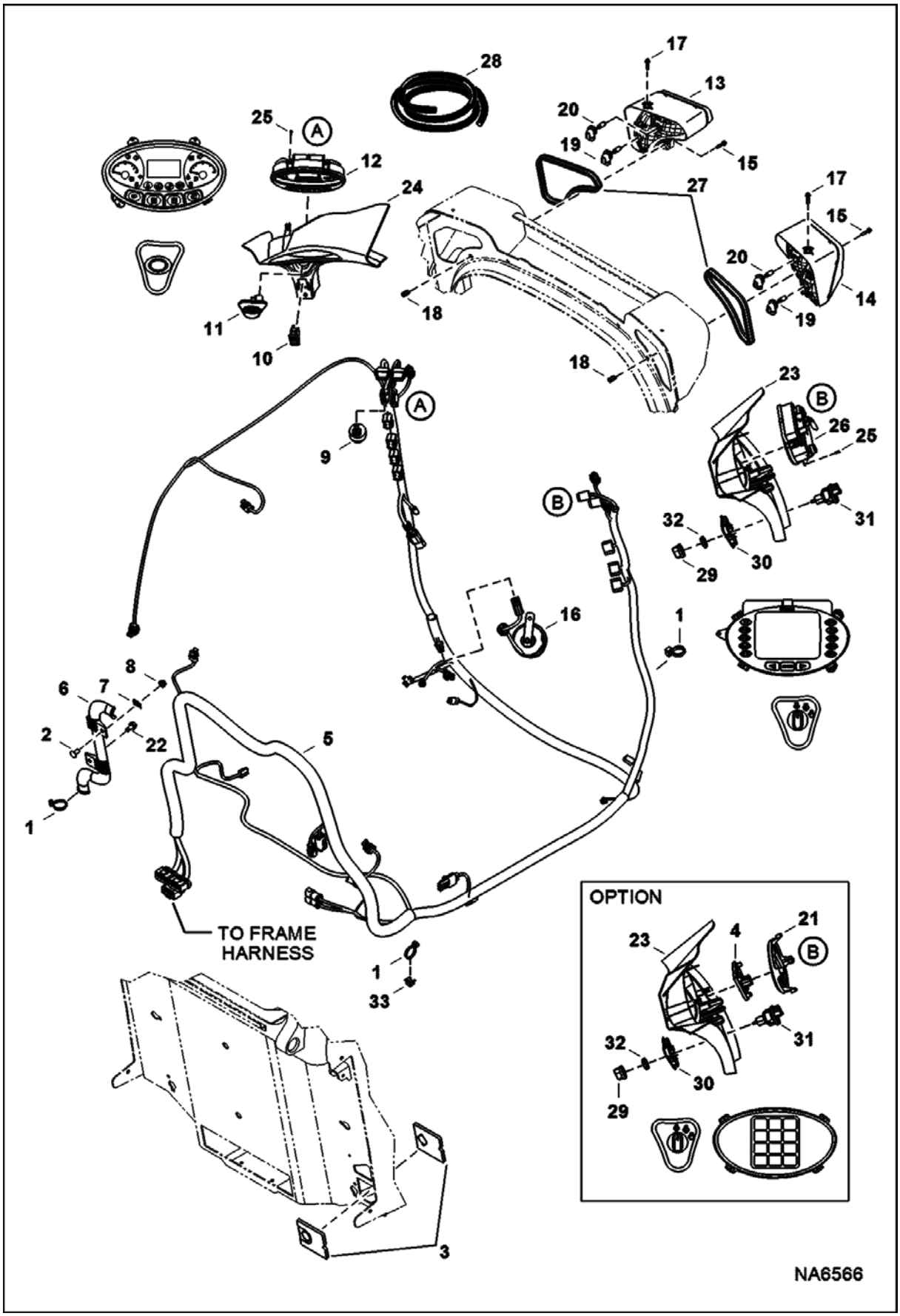

CAB ELECTRICAL CIRCUITRY (Cont'd)
(Deluxe)

Ref No	Part Number	Description	Remarks	Serial Number	Qty
1	6624289	STRAP, TIE			15
2	31C612	BOLT			2
3	7185150	PLUG, HARNESS CAB			2
4	6693712	KEYPAD, PANEL			1
5	7210556	HARNESS, CAB DLX			1
6	7164073	GUIDE			1
7	6684033	NUT			1
8	57D6	NUT 5			1
9	6692489	ALARM, BUZZER			1
10	6690948	SWITCH PARK BRAKE			1
11	7003032	SWITCH, OVERRIDE TRACTION			1
12	7022670	DISPLAY			1
13	7138041	LIGHT, LH ASSY			1
14	7138040	LIGHT, RH ASSY			1
15	31C420	BOLT 5			2
16		HORN, ALARM	See Illustration HORN KIT/ NA6325 manual controls, AHC & ACS		1
16		HORN, ALARM	See Illustration HORN KIT/ NA6326 SJC		1
17	35C410	BOLT 5			2
18	7154910	INSERT, THREADED			2
19	6675336	LIGHT, BULB 50W			2
20	7008814	BULB, 5W			2
21	7003027	INSERT, KEYPAD	if loader is equipped W/SJC & text decals, Also Order Ref. 23 & 7168114 decal - if loader is equipped W/SJC & no text decals, Also Order Ref. 23 & 7177707 decal		1
22	84G3712	BOLT 5			1
23	7155791	PANEL, RH			1
24	7155792	PANEL, LH			1
25	7179008	SCREW, PLASTIC			6
26	6693413	DISPLAY, DLX			1
27		SEAL	NAP - 609,6 mm (24") long - Order Ref. 28		2
28	7202956	SEAL, BULK	bulk - sold per foot		x
29	7023588	KNOB			1
30	7163589	INSERT, SWITCH			1
31	7023022	SWITCH ROTARY	W/Ref. 32		1
32	7009081	NUT			1
33	7010600	TREE MOUNT			1

ENGINE ELECTRICAL CIRCUITRY
(Frame Harness & Filter Sensors)

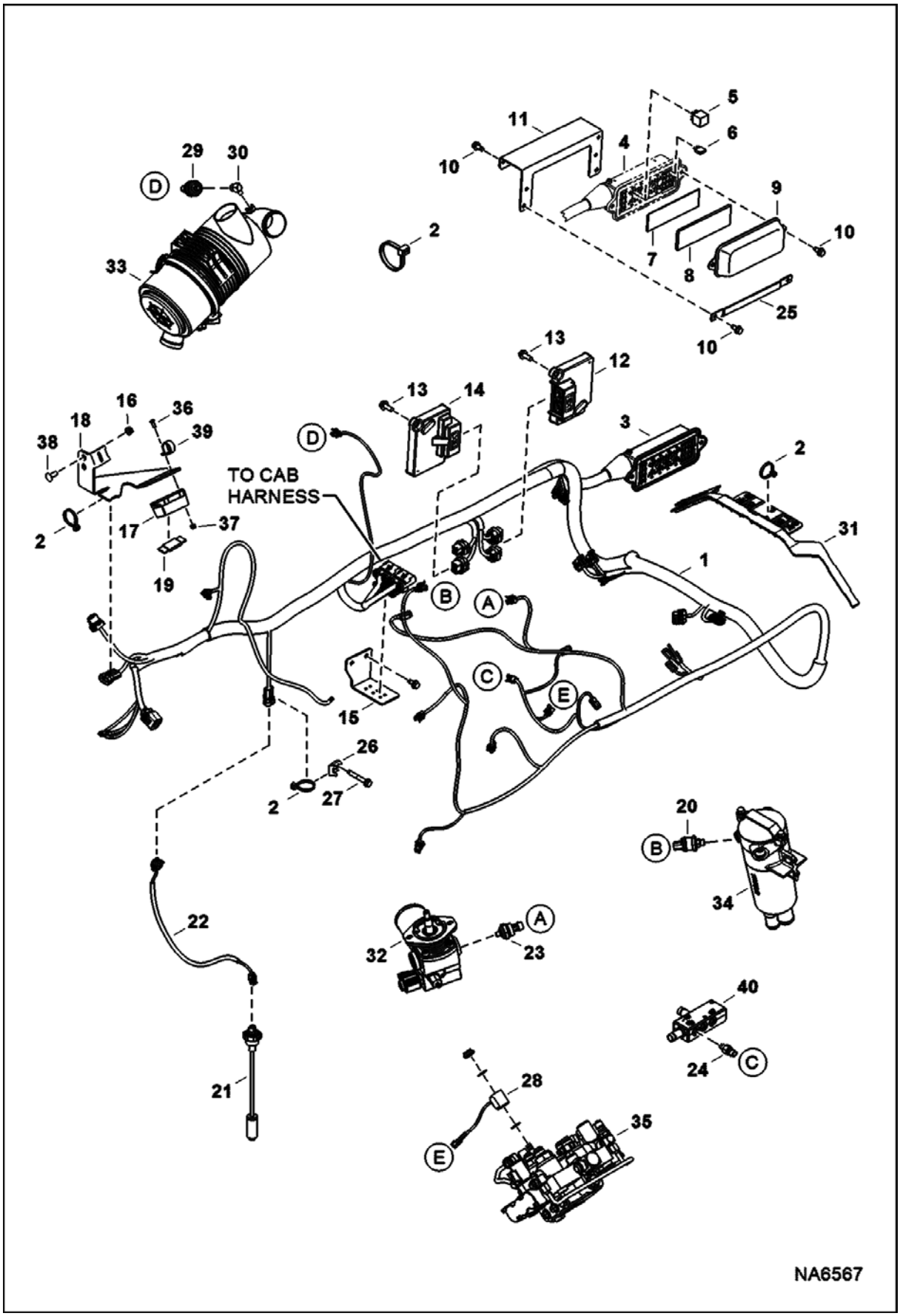

ENGINE ELECTRICAL CIRCUITRY (Cont'd)
(Frame Harness & Filter Sensors)

Ref No	Part Number	Description	Remarks	Serial Number	Qty
1	7210554	HARNESS, MF MAN	See Illustration CAB ELECTRICAL CIRCUITRY/ NA6565 - manual controls		1
1	7210555	HARNESS, MF CTRL	See Illustration CAB ELECTRICAL CIRCUITRY/ NA6566 - SJC, AHC & ACS		1
2	6624289	STRAP, TIE			29
3	7155390	HOUSING, FUSE RELAY			1
4	6673200	FUSE BLOCK			1
5	6679820	RELAY			8
6	6663289	FUSE, 5A			1
6	6654806	FUSE, 15A			2
6	6625575	FUSE, 20A			1
6	6702444	FUSE 25A 5			5
6	6718034	FUSE, 30A			2
7	7223425	DECAL, FUSE			1
8	6731275	INSULATION			1
9	6716621	COVER			1
10	84G3712	BOLT 5			7
11	7171222	BRACKET FRC			1
12	6693353	CONTROLLER, GATEWAY	Bobcat		1
13	7168429	BOLT, CONTROLLER	flanged head - M10 x 25 mm		4
14	6691288	CONTROLLER, AUX CONTROL			1
15	7212967	BRACKET, HARNESS			1
16	97D6	NUT 10			2
17	6675154	HOLDER	high amp fuse		1
18	7199121	BRACKET	mega fuse		1
19	6675155	FUSE	100 amp		1
20	7002980	SWITCH, PRESSURE			1
21	7179839	SENSOR FUEL	W/gasket - Was 6680438 [A]		1
21	6717579	GASKET			1
22	7149219	HARNESS, FUEL	std cab		1
22	7184255	HARNESS, FUEL	dlx cab		1
23	6674316	SWITCH, PRESS OIL HYD	3-pin molded connector		1
24	6727869	SENDER,HYD TEMP			1
24	79K6	O RING 10			x
25	7168173	BRACKET, COVER			1
26	6679034	MOUNT			1
27	84G3740	BOLT			1
28	6675559	COIL			1
29	6665371	SWITCH			1
30	7191672	ELBOW			1
31	7204407	BRACKET, HARNESS	plastic		1
32		MOTOR, HYD COOLING FAN	See Illustration COOLING FAN MOTOR/ NA6655		1
33		FILTER, AIR CLEANER ASSY			1
34		FILTER, HYD ASSY	See Illustration HYDROSTATIC CIRCUITRY/ NA6772		1

ENGINE ELECTRICAL CIRCUITRY (Cont'd)
(Frame Harness & Filter Sensors)

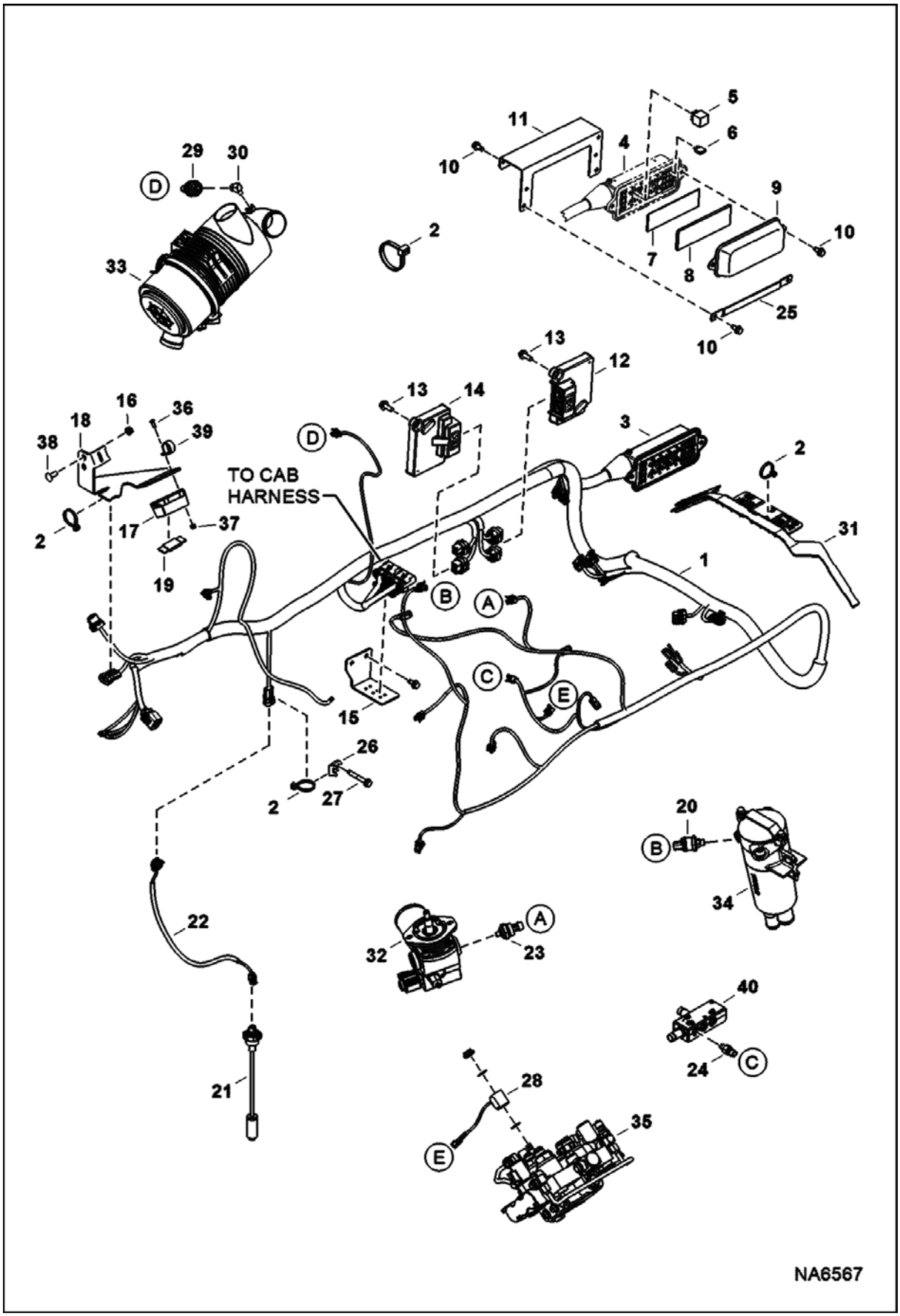

ENGINE ELECTRICAL CIRCUITRY (Cont'd)
(Frame Harness & Filter Sensors)

Ref No	Part Number	Description	Remarks	Serial Number	Qty
35		VALVE, CONTROL	See Illustration HYDRAULIC CONTROL VALVE/ NA6580 - manual controls		1
35		VALVE, CONTROL	See Illustration HYDRAULIC CONTROL VALVE/ NA6582 - ACS, AHC & SJC		1
36	25G412	CAPSCRW10			2
37	59D4	NUT 5			2
38	35C612	BOLT			2
39	30H50	CLIP			1
40	7201981	MANIFOLD, DRAIN CASE			1

ENGINE ELECTRICAL CIRCUITRY
(Engine Sensors, Battery, Alt & Starter)

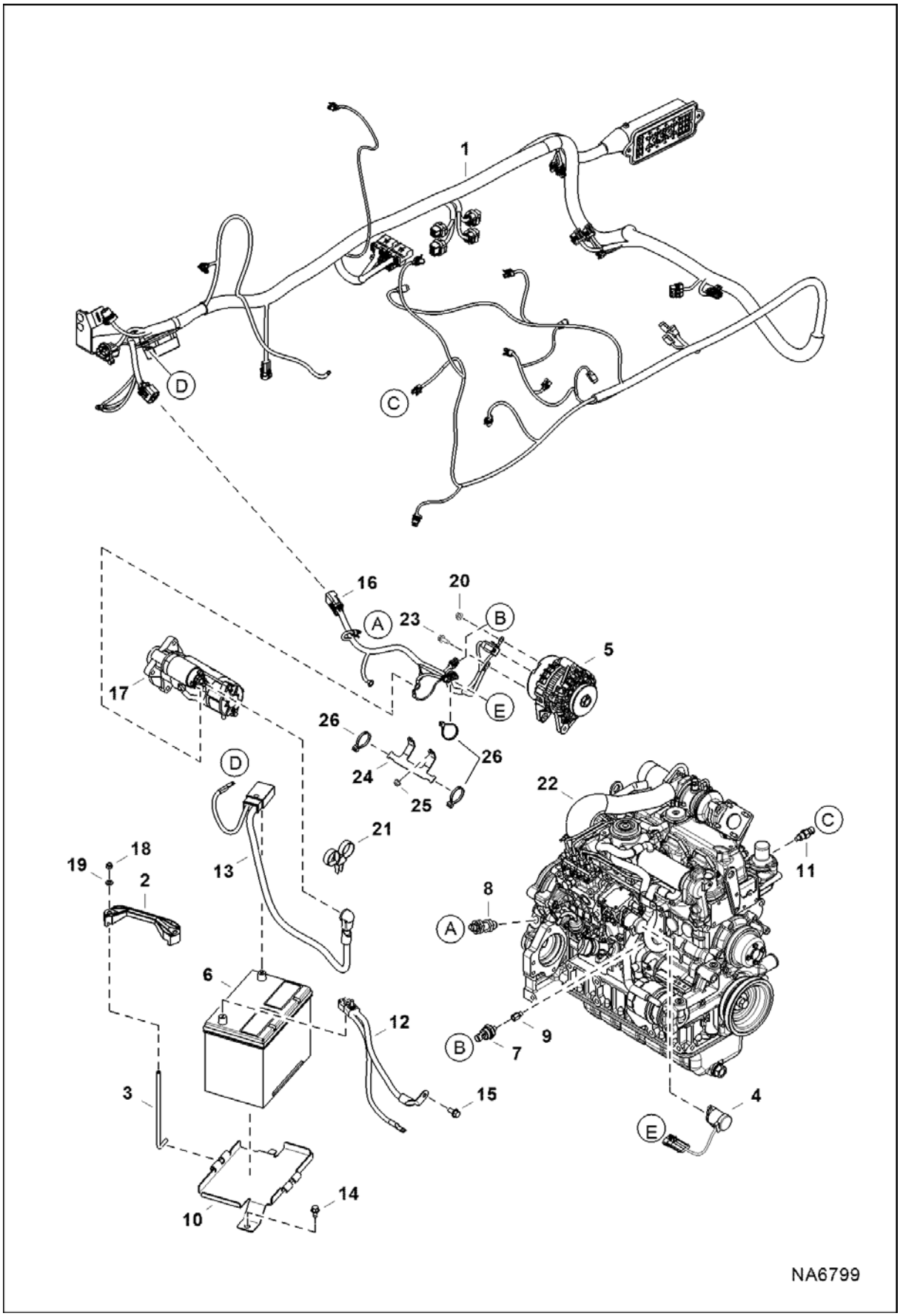

ENGINE ELECTRICAL CIRCUITRY (Cont'd)
(Engine Sensors, Battery, Alt & Starter)

Ref No	Part Number	Description	Remarks	Serial Number	Qty
1		HARNESS, MFR	See Illustration ENGINE ELECTRICAL CIRCUITRY/ NA6567		1
2	6569203	CLAMP			1
3	6576280	BOLT			2
4	7000769	SOLENOID, SHUTOFF FUEL	W/ 240 mm (9.45") lead		1
5		ALTERNATOR	See Illustration ALTERNATOR/ C3529		1
6	6674687	BATTERY, DRY 600 AMP			1
7	6697920	SENSOR, PRESS OIL ENG			1
8	6693921	SENSOR, RPM			1
9	7102451	FITTING			1
10	7192301	PAN, BATTERY			1
11	6718414	SENDER, TEMP ENG			1
12	7162966	CABLE, NEGATIVE			1
13	7162967	CABLE, POSITIVE			1
14	84G3712	BOLT 5			2
15	35C612	BOLT			1
16	7181037	HARNESS, ENG			1
17		STARTER	See Illustration STARTER/ B16488R		1
18	59D5	NUT 5			2
19	25E15	WASHER			2
20	29CM820	SCREW			3
21	6678668	STRAP, DUAL TIE			2
22		ENGINE	See Illustration ENGINE & GASKET KITS/ NA2410		1
23	43DM8	NUT			1
24	7160280	BRACKET, HARNESS			1
25	51DM8	NUT			2
26	6624289	STRAP, TIE			3

ENGINE ELECTRICAL CIRCUITRY
(Rear Lights & Back-up Alarm)

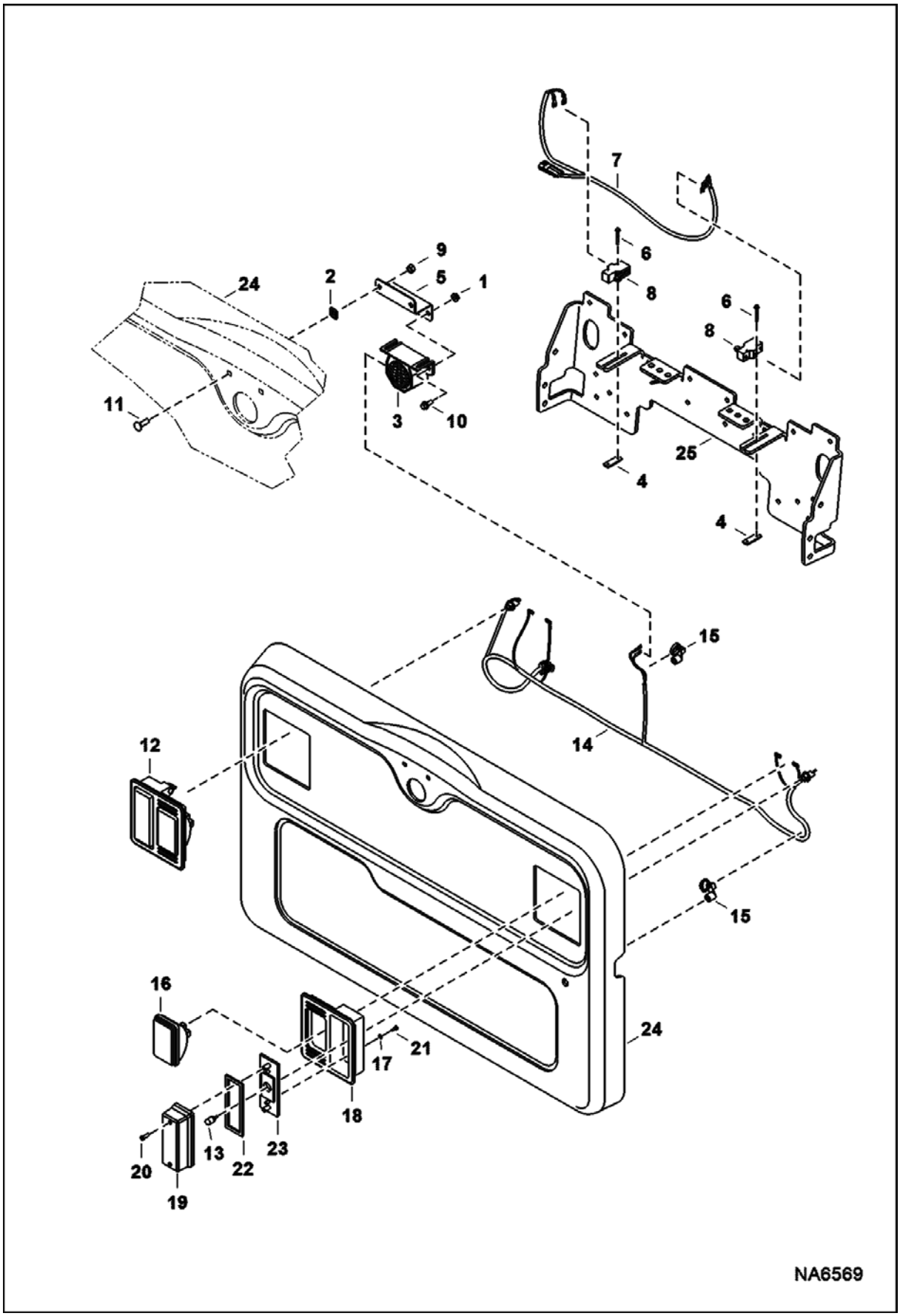

ENGINE ELECTRICAL CIRCUITRY (Cont'd)
(Rear Lights & Back-up Alarm)

Ref No	Part Number	Description	Remarks	Serial Number	Qty
1	97D4	NUT			2
2	774220	NUT			2
3	6651512	ALARM BACKUP			1
3	6737189	DECAL, WARNING	backup alarm		1
4	6702593	SPACER			2
5	7167871	MOUNT, ALARM			1
6	84G1320	BOLT			4
7	7175017	HARNESS, ALARM BACK-UP			1
8	6646781	SWITCH			2
9	61D5	NUT			2
10	35C410	BOLT 5			2
11	37C516	BOLT			2
12	6670284	LIGHT ASSY			2
13	6649481	LIGHT, WEDGE BASE			2
14	7217484	HARNESS, REAR DOOR	A]		1
15	7002988	TIE, STUD MOUNT			1
16	6661353	LIGHT ASSY	W/bulb - white		2
16	898731	1156 BULB			2
17	6672272	WASHER			4
18	6672279	MOUNT, LIGHT RUBBER			2
19	6672276	LENS, LIGHT RED			2
20	6672274	SCREW			4
21	6672273	SCREW			4
22	6672275	GASKET			2
23	6672277	BRACKET			2
24		REAR DOOR	See Illustration REAR DOOR/ NA6413		1
25		MOUNT	See Illustration PANELS/ NA6530		2

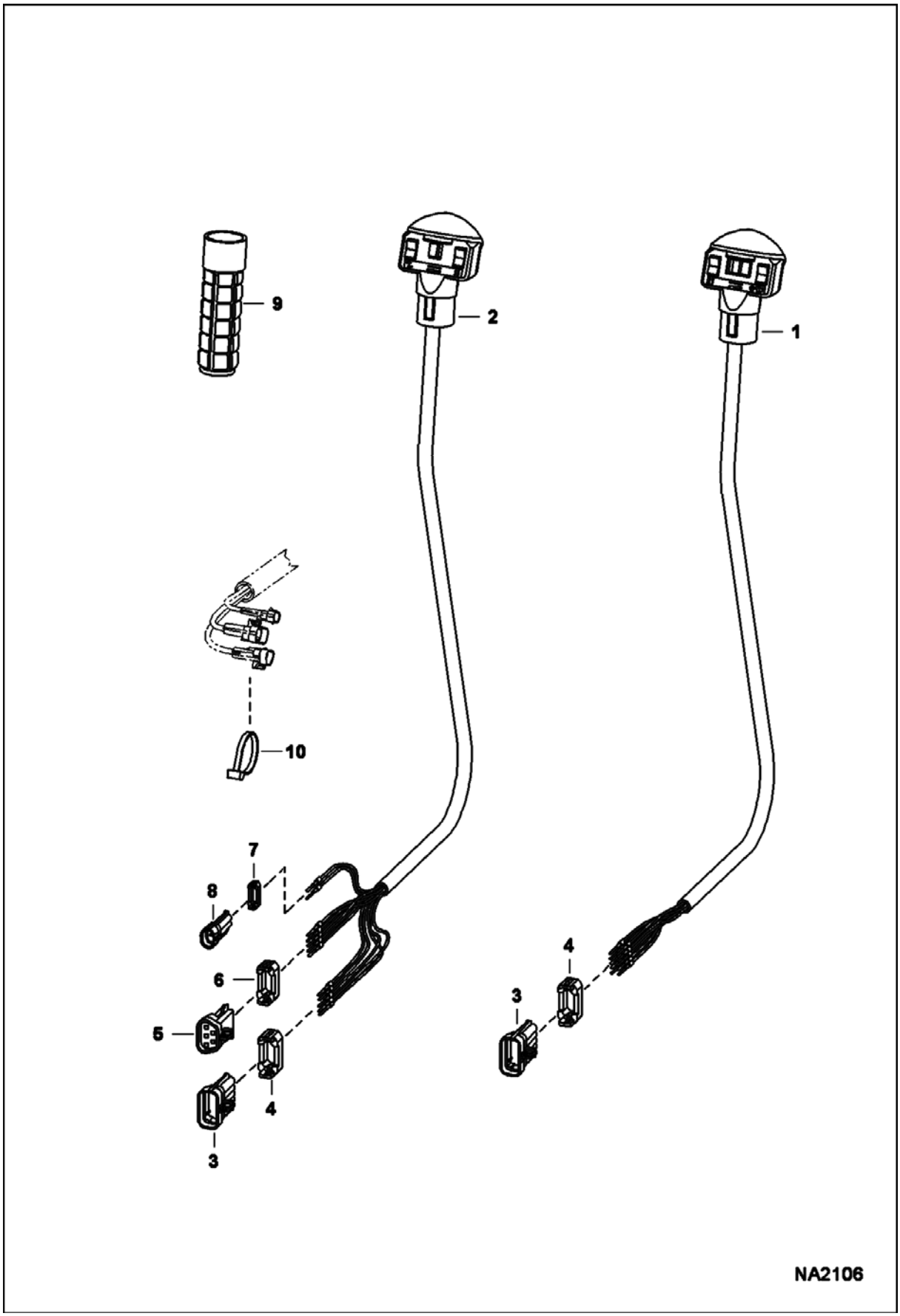
9
2
1
10
7
8
6
5
4
3
4
3
NA2106

CONTROLS ELECTRICAL (Cont'd)
(Manual Controls)

Ref No	Part Number	Description	Remarks	Serial Number	Qty
1	6680418	HANDLE ASSY.	RH - Also Order Ref. 3 & 4		1
1	6640690	PIN			9
1	6641176	SEAL			9
2	6680419	HANDLE ASSY.	LH - Also Order Ref. 3-8		1
2	6640690	PIN			10
2	6641176	SEAL			10
2	6680447	DECAL			1
3	6640692	CONNECTOR	10-pin		2
4	6640694	LOCK	Use W/ 10-pin connector		2
5	6667144	CONNECTOR	5-pin		1
6	6667145	LOCK	Use W/ 5-pin connector		1
7	6641180	LOCK	Use W/ 2-pin connector		1
8	6641179	CONNECTOR	2-pin		2
9	6702621	GRIP			2
10	6624289	STRAP, TIE			2

CONTROLS ELECTRICAL
(Selectable Joystick Controls)

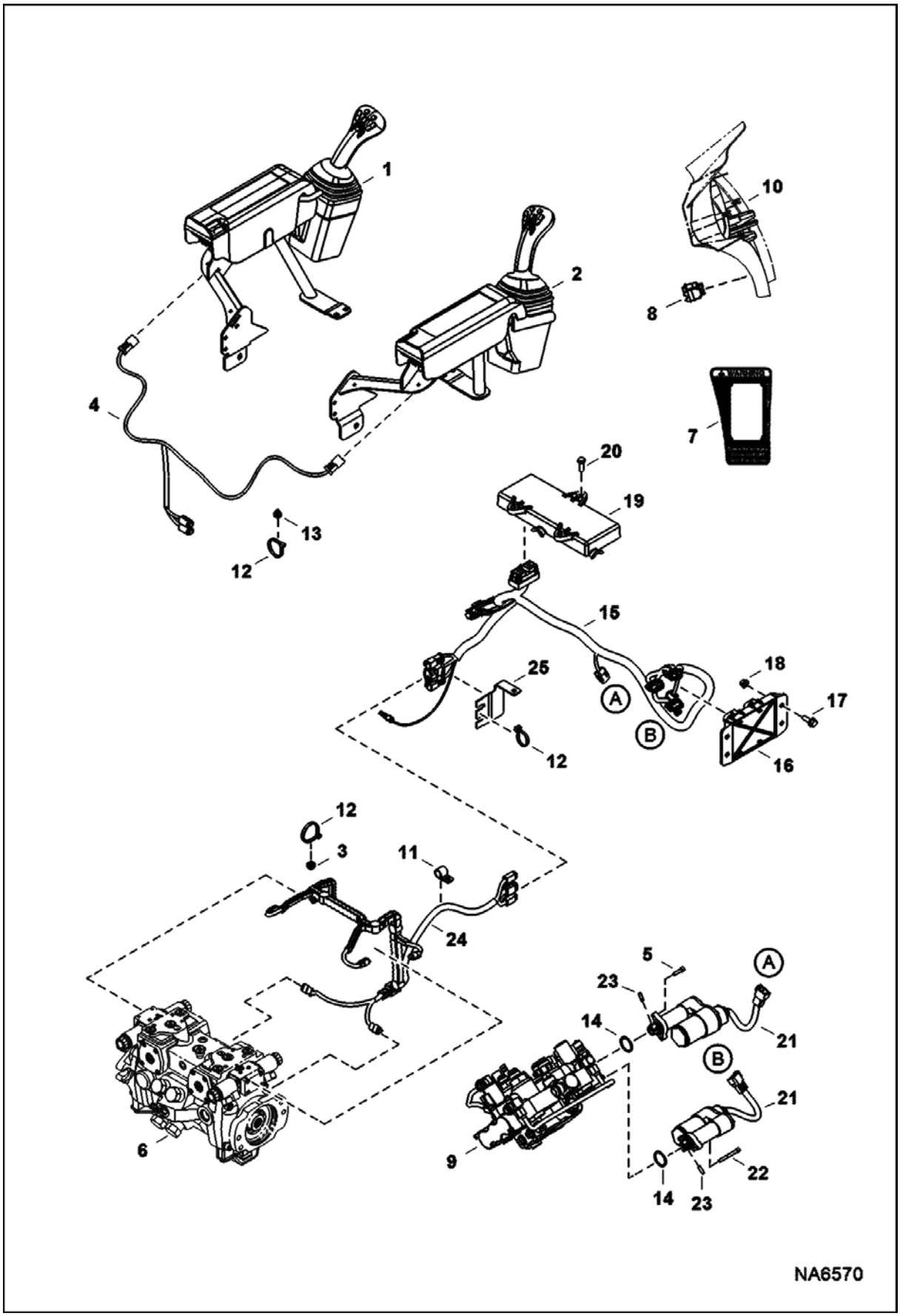

CONTROLS ELECTRICAL (Cont'd)
(Selectable Joystick Controls)

Ref No	Part Number	Description	Remarks	Serial Number	Qty
1		JOYSTICK, SJC LH	See Illustration CONTROLS ELECTRICAL/ NA6572		1
2		JOYSTICK, SJC RH	See Illustration CONTROLS ELECTRICAL/ NA6572		1
3	6690688	TREE MOUNT			4
4	7163706	HARNESS, JOYSTICK			1
5	6814021	BOLT			2
6		PUMP, HYD	See Illustration HYDROSTATIC PUMP/GEAR PUMP/ NA6652		1
7	7168114	DECAL, SWITCH			1
8	7001710	SWITCH, ISO			1
9	7215960	VALVE, CONTROL	See Illustration HYDRAULIC CONTROL VALVE/ NA6582		1
10		PANEL, RH	See Illustration OPERATOR CAB/ NA6528		1
11	30H42	CLAMP			2
12	6690690	STRAP, TIE			10
13	6690689	MOUNT, FIR TREE			4
14	58K120	O-RING			2
15	7210505	HARNESS, SJC			1
16	6680410	CONTROLLER	plastic - W/ 3-connector plug		1
17	31C616	SCREW			2
18	97D6	NUT 10			2
19	6679485	CONTROLLER SJC			1
20	43C616	BOLT			3
21	7101672	ACTUATOR	W/Ref. 14		2
22	69G436	BOLT			2
23	7108236	PIN			2
24	7198705	HARNESS, PUMP			1
25	7213230	BRACKET			1

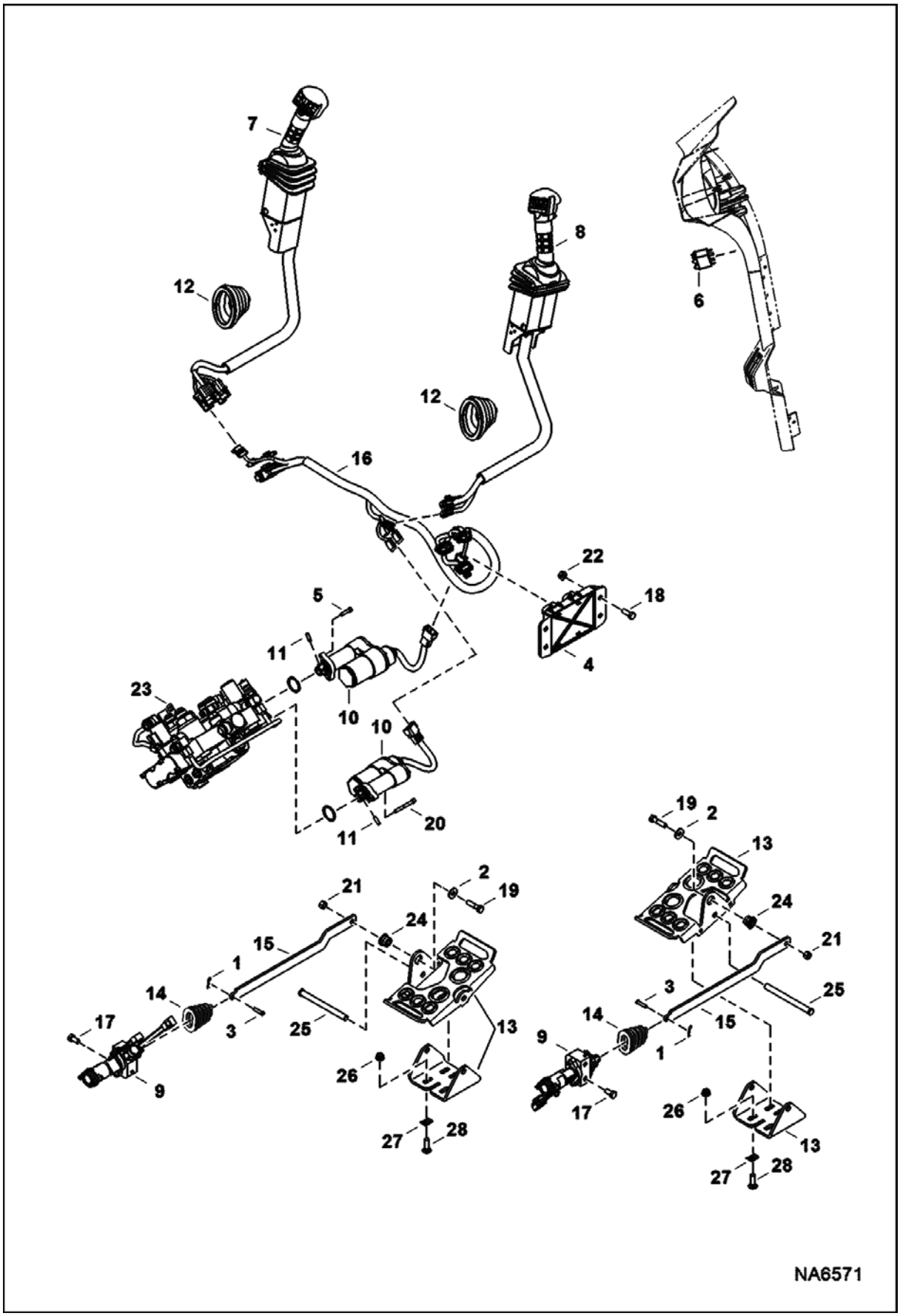
7
8
12
12
6
16
22
18
5
11
4
23
10
10
20
11
19
2
13
24
21
25
3
14
1
15
17
9
26
27
28
NA6571

CONTROLS ELECTRICAL (Cont'd)
(ACS)

Ref No	Part Number	Description	Remarks	Serial Number	Qty
1	6513495	COTTER PIN			2
2	6563914	WASHER			2
3	6564654	PIN			2
4	6680410	CONTROLLER	plastic - W/ 3-connector plug		1
5	6814021	BOLT			2
6	7001713	SWITCH			1
7		LEVER, RH	See Illustration CONTROLS ELECTRICAL/ NA2799		1
8		LEVER, LH	See Illustration CONTROLS ELECTRICAL/ NA2799		1
9	7003496	SENSOR			2
10	7101672	ACTUATOR			2
11	7108236	PIN			2
12	7147815	BOOT			2
13	7163421	PEDAL ASSY	LH		1
14	7153503	BOOT			2
15	7181914	LINK			2
16	7190593	HARNESS, ACS			1
17	17C612	BOLT 5			4
18	31C616	SCREW			2
19	17C624	BOLT 5			2
20	69G436	BOLT			2
21	95D6	NUT			2
22	97D6	NUT 10			2
23	7215960	VALVE, CONTROL	See Illustration HYDRAULIC CONTROL VALVE/ NA6582		1
24	6665701	BUSHING, PRESS FIT			2
25	7124815	PIN, PIVOT			2
26	57D6	NUT 5			2
27	6684032	SEAL KIT			2
28	37C620	BOLT			2

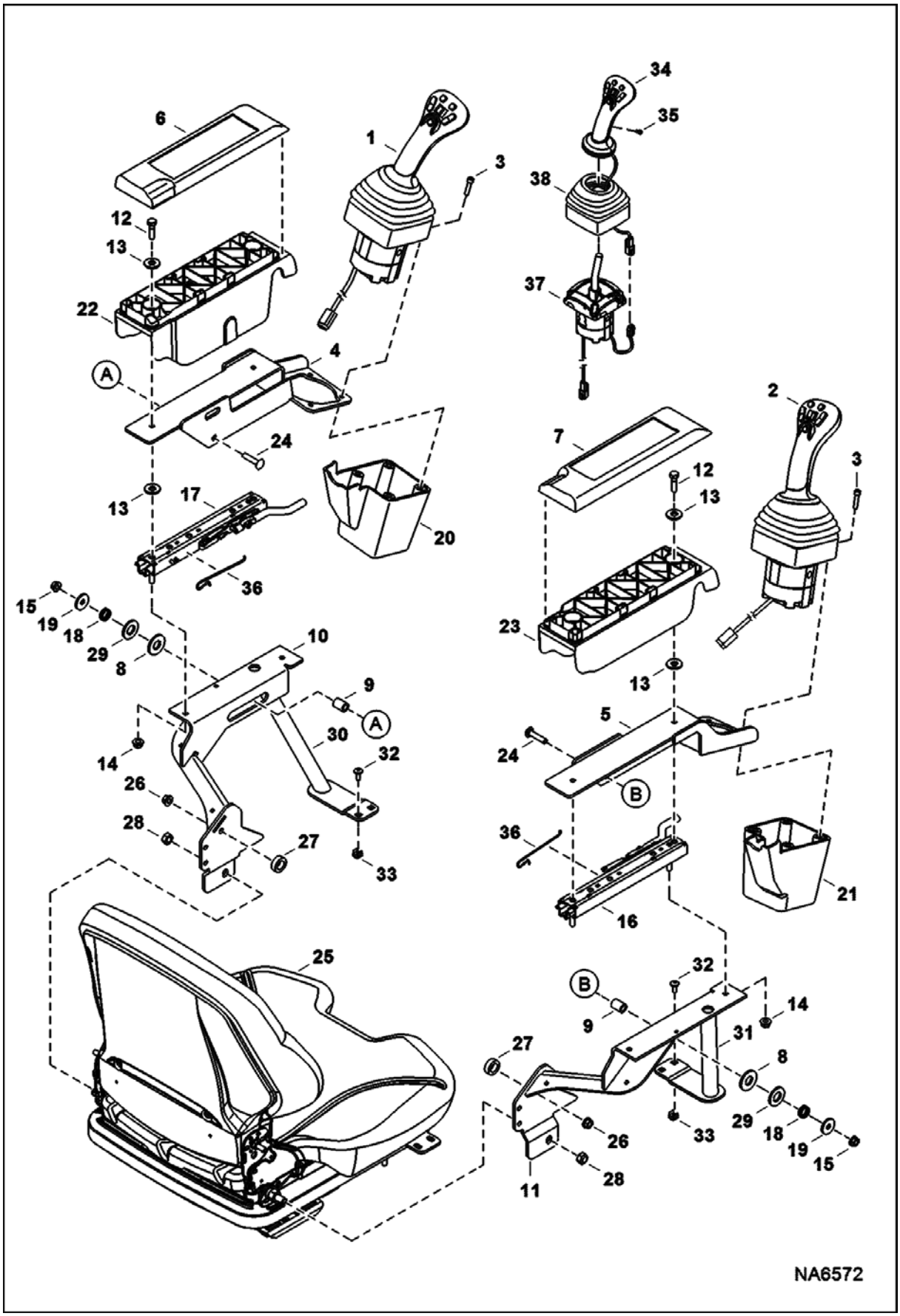
NA6572

CONTROLS ELECTRICAL (Cont'd)
(SJC) (Armrest Assembly)

Ref No	Part Number	Description	Remarks	Serial Number	Qty
1	7023150	JOYSTICK, LH ASSY	Ref. 34, 35, 37 & 38		1
2	7023149	JOYSTICK, RH ASSY	Ref. 34, 35, 37 & 38		1
3	6814021	BOLT			8
4	7197922	MOUNT, CONTROLS LH			1
5	7197921	MOUNT, CONTROLS RH			1
6	7157704	COVER ARMREST LH			1
7	7157671	COVER ARMREST, RH			1
8	7165634	WASHER, PLASTIC			2
9	7197916	SPACER			2
10	7197919	MOUNT, SEAT LH			1
11	7197917	MOUNT, SEAT RH			1
12	1CM830	BOLT			2
13	25E18	WASHER			8
14	51DM8	NUT			2
15	97D5	NUT			1
16	7200887	SLIDE	W/O torsion spring - Also Order Ref. 39		1
17	7200888	SLIDE	W/O torsion spring - Also Order Ref. 39		1
18	7197915	SPRING, COMPRESSION			2
19	6701174	WASHER			2
20	7146265	COVER, LH SJC			1
21	7146264	COVER, RH SJC			1
22	7177197	SHELL, ARMREST LH			1
23	7177196	SHELL, ARMREST RH			1
24	10C524	BOLT			2
25		SEAT	See Illustration SEAT & SEAT BELT/ NA1126 - std.		1
25		SEAT	See Illustration SEAT - 80 mm/ NA2430 - suspension		1
25		SEAT	See Illustration SEAT/ NA2429 - air suspension		1
26	51DM8	NUT			2
27	7162176	SPACER			2
28	86D7	NUT			2
29	25E25	WASHER 10			2
30	7168849	SUPPORT, TUBE LH			1
31	7168848	SUPPORT, TUBE RH			1
32	6803202	SCREW			4
33	7170765	NUT			4
34	6689922	HANDLE	LH		1
34	6689923	HANDLE	RH		1
35	6689927	BOLT			2
36	7199853	SPRING, TORSION			1
37	7023152	BASE, JOYSTICK LH	LH		1
37	7023151	BASE, JOYSTICK	RH		1

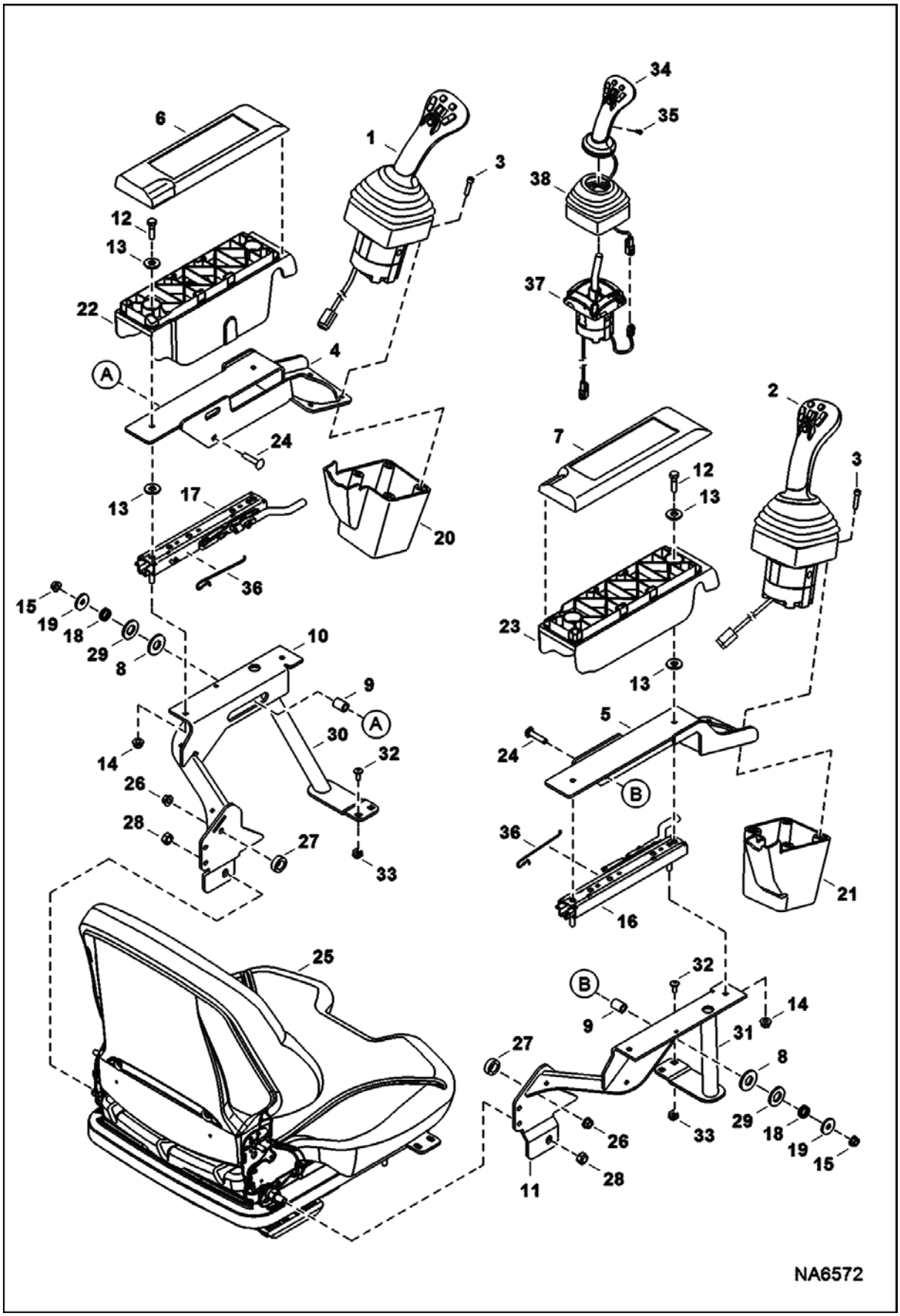
NA6572

Ref No	Part Number	Description	Remarks	Serial Number	Qty
		RH			
38	7023154	BOOT, RUBBER LH	LH - 4 pleat boot		1
38	7023153	BOOT, RUBBER RH	RH - 4 pleat boot		1

CONTROLS ELECTRICAL
(ACS) (Handle Assembly)

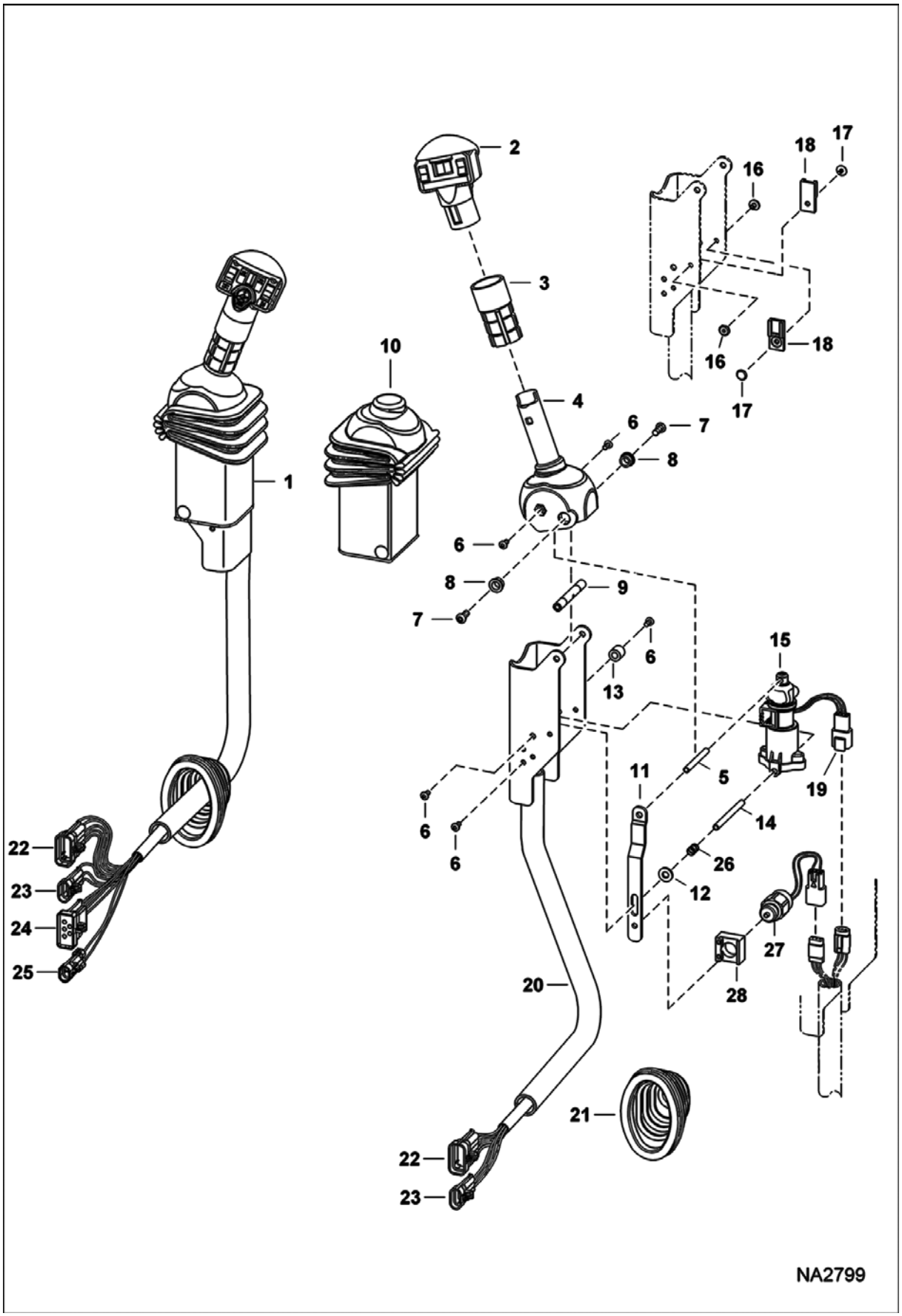

CONTROLS ELECTRICAL (Cont'd)
(ACS) (Handle Assembly)

Ref No	Part Number	Description	Remarks	Serial Number	Qty
1	7003495	LEVER, LH	tilt		1
1	7003494	LEVER, RH	lift		1
2	6680462	HANDLE, ACS RH	tilt - RH		1
2	6680417	HANDLE	lift - LH		1
3		GRIP	NAP - Order 6702621 grip & cut to 2.8" (71,1 mm) long		2
4	6729594	HANDLE	RH		1
4	6729595	HANDLE	LH		1
5	6680469	SPACER	threaded		1
6	6727065	BOLT			6
7	25GT410	SCREW			8
8	6702990	BUSHING			4
9	6713043	SPACER			4
10	6680471	COVER			2
11	6680477	STRAP	stop		1
12	25E13	WASHER 5			1
13	6719835	SLEEVE			4
14	6719834	SPACER	threaded		2
15	6684910	SENSOR, ELEC AHC			2
15	6670706	CONNECTOR			1
15	6670715	PIN			3
15	6670710	LOCK			1
16	6665322	RIVET	female		2
17	6665321	RIVET	male		2
18	6665000	CLIP			2
19	6670707	CONNECTOR			1
19	6670715	PIN			3
19	6670711	LOCK			1
20	7018011	CHANNEL	RH		1
20	7018012	CHANNEL	LH		1
21	7147815	BOOT			2
22	6640692	CONNECTOR	10-pin		1
22	6640690	PIN			8
22	6640694	LOCK	Use W/ 10-pin connector		1
22	6641176	SEAL			8
22	6646582	PLUG	cavity		1
23	6640699	CONNECTOR	3-pin		2
23	6640690	PIN			3
23	6641176	SEAL			3
23	6640700	LOCK			3
24	6667144	CONNECTOR	5-pin		2
24	6640690	PIN			3
24	6641176	SEAL			3
24	6646582	PLUG	cavity		1
24	6641180	LOCK	Use W/ 2-pin connector		1
25	6641179	CONNECTOR	2-pin		1
25	6640690	PIN			2
25	6641176	SEAL			2
25	6641180	LOCK	Use W/ 2-pin connector		1
26	6680470	SPRING			1
27	6676029	SOLENOID, LOCK SPOOL			1
28	6680468	MOUNT			1

ALTERNATOR

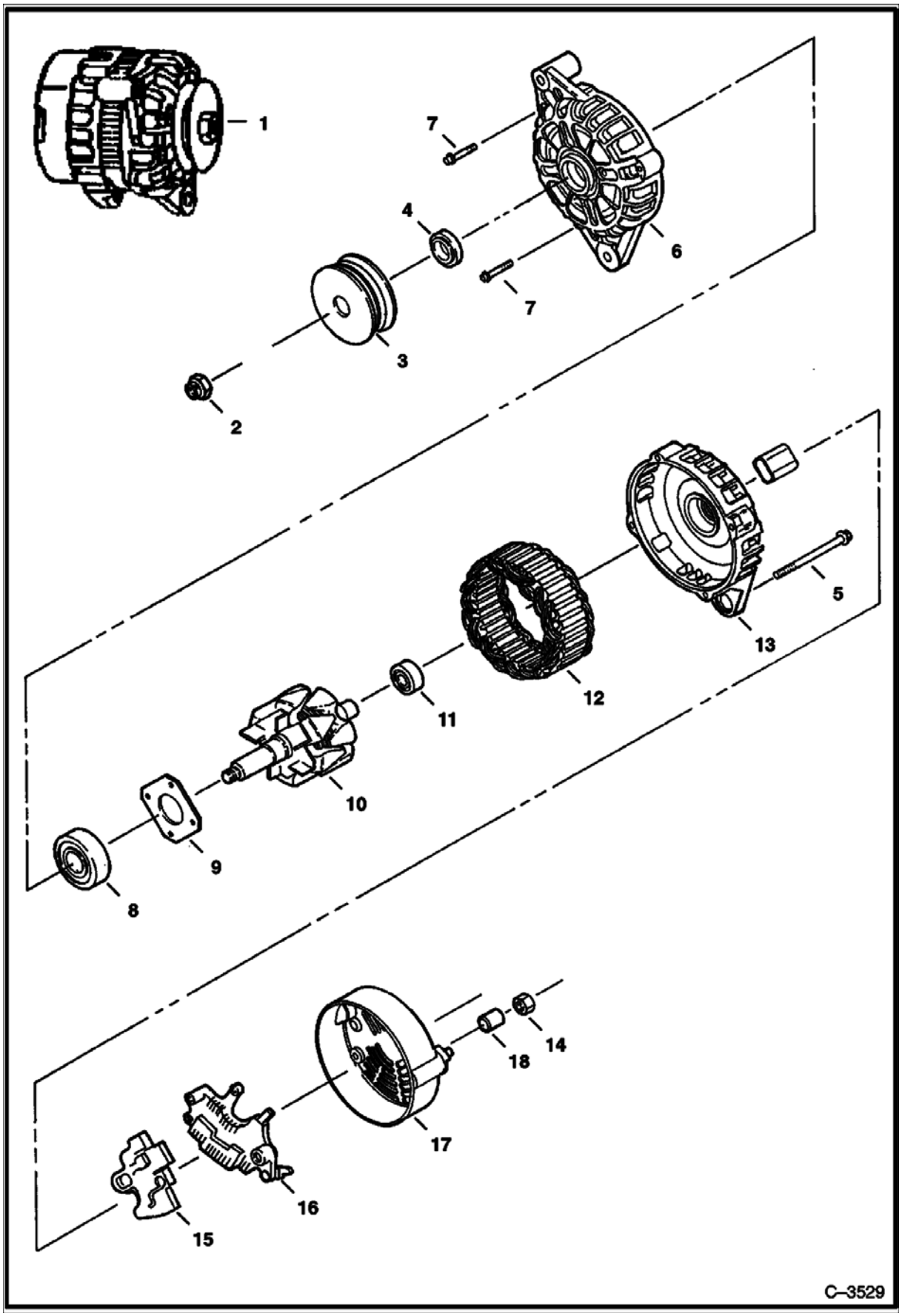

ALTERNATOR (Cont'd)

Ref No	Part Number	Description	Remarks	Serial Number	Qty
1	6678205	ALTERNATOR, 90 AMP	90 amp		1
1	6678205REM	ALTERNATOR, 90 AMP	90 amp - Ref. 2-18		1
2	6677497	NUT			1
3	6677496	PULLEY			1
4	6677495	SPACER	front		1
5	6684397	BOLT			4
6	6677491	BRACKET	rear		1
7	6677817	BOLT			4
8	6677818	BEARING			1
9	6677819	RETAINER			1
10	6677492	ROTOR			1
11	6677820	BEARING			1
12	6677493	STATOR			1
13	6677490	BRACKET			1
14	6677486	NUT			1
15	6677489	REGULATOR ASSY			1
16	6677488	RECTIFIER			1
17	6677487	COVER			1
18	6677485	SPACER	rear		1

STARTER
(Valeo)

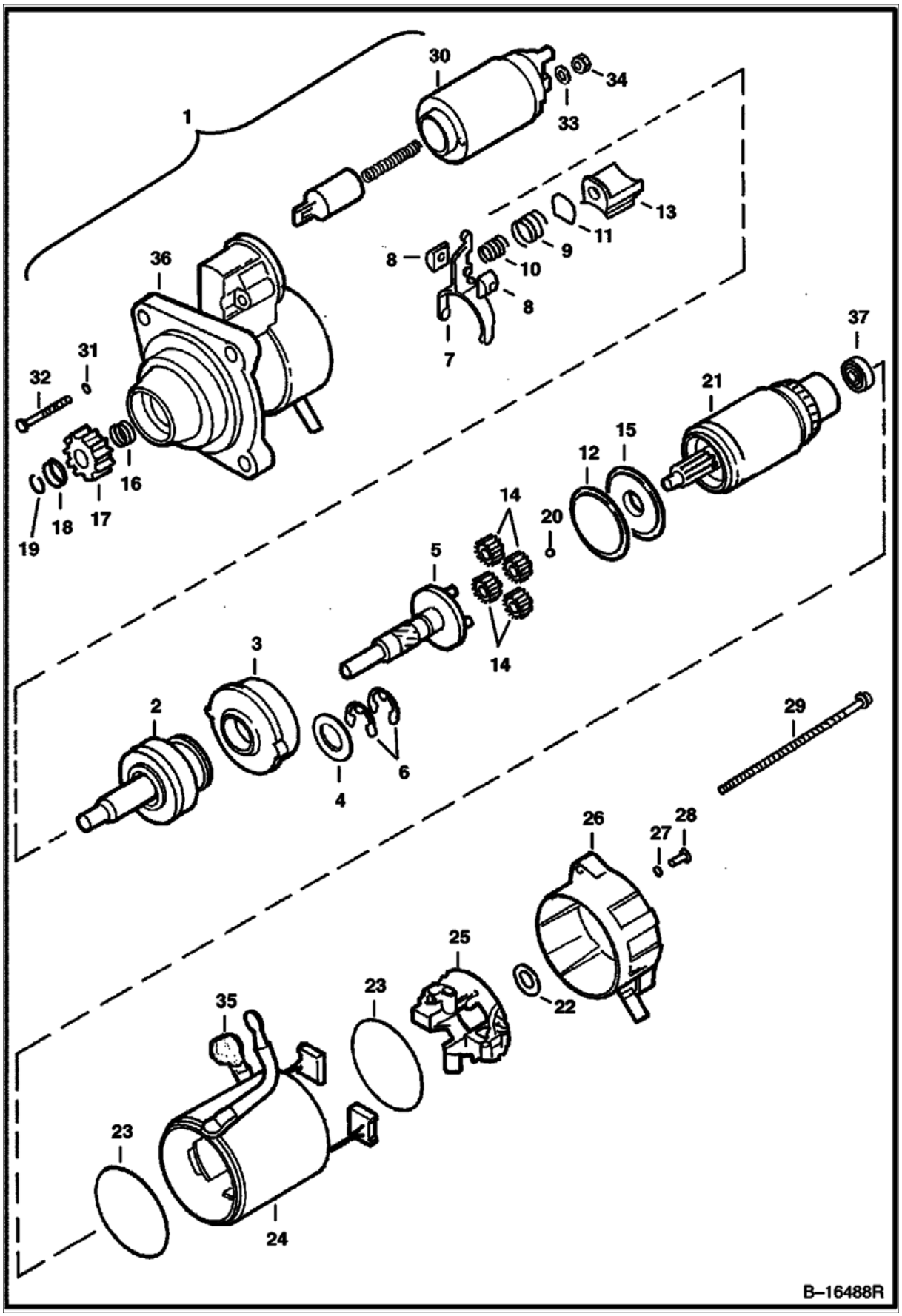

STARTER (Cont'd)
(Valeo)

Ref No	Part Number	Description	Remarks	Serial Number	Qty
1	6685190	STARTER	Ref. 2-37		1
1	6685190REM	STARTER			1
2	6680375	SHAFT	ORC assy		1
3	6680367	GEAR			1
4	6680378	WASHER			1
5	6680365	SHAFT			1
6	6680368	STOP RING			2
7	6680364	LEVER			1
8	6680357	HOLDER			2
9	6680381	SPRING			1
10	6680382	SPRING			1
11	6680370	PLATE			1
12	6680369	SEAL			1
13	6680371	LEVER			1
14	6680366	GEAR			4
15	6680372	BRACKET			1
16	6680361	SPRING			1
17	6680390	GEAR			1
18	6680360	STOP			1
19	6680359	STOP RING			1
20	6680362	BALL			1
21	6680374	ARMATURE	W/Ref. 37		1
22	6680363	WASHER			1
23	6680380	SEAL			2
24	6680373	YOKE			1
25	6680377	HOLDER			1
26	6680389	BRACKET			1
27	6680358	RING	rubber		2
28	6680384	BOLT			2
29	6680356	BOLT			2
30	6680376	SWITCH			1
31	6680379	SEAL			2
32	6680383	BOLT			2
33	6EM80	WASHER, SPRING			1
34	4DM8	NUT			1
35	6680355	BOOT			1
36	6680388	BRACKET	includes ball bearing, drain tube, front bracket & oil seal		1
37		BEARING	NAP - Order Ref. 21		1

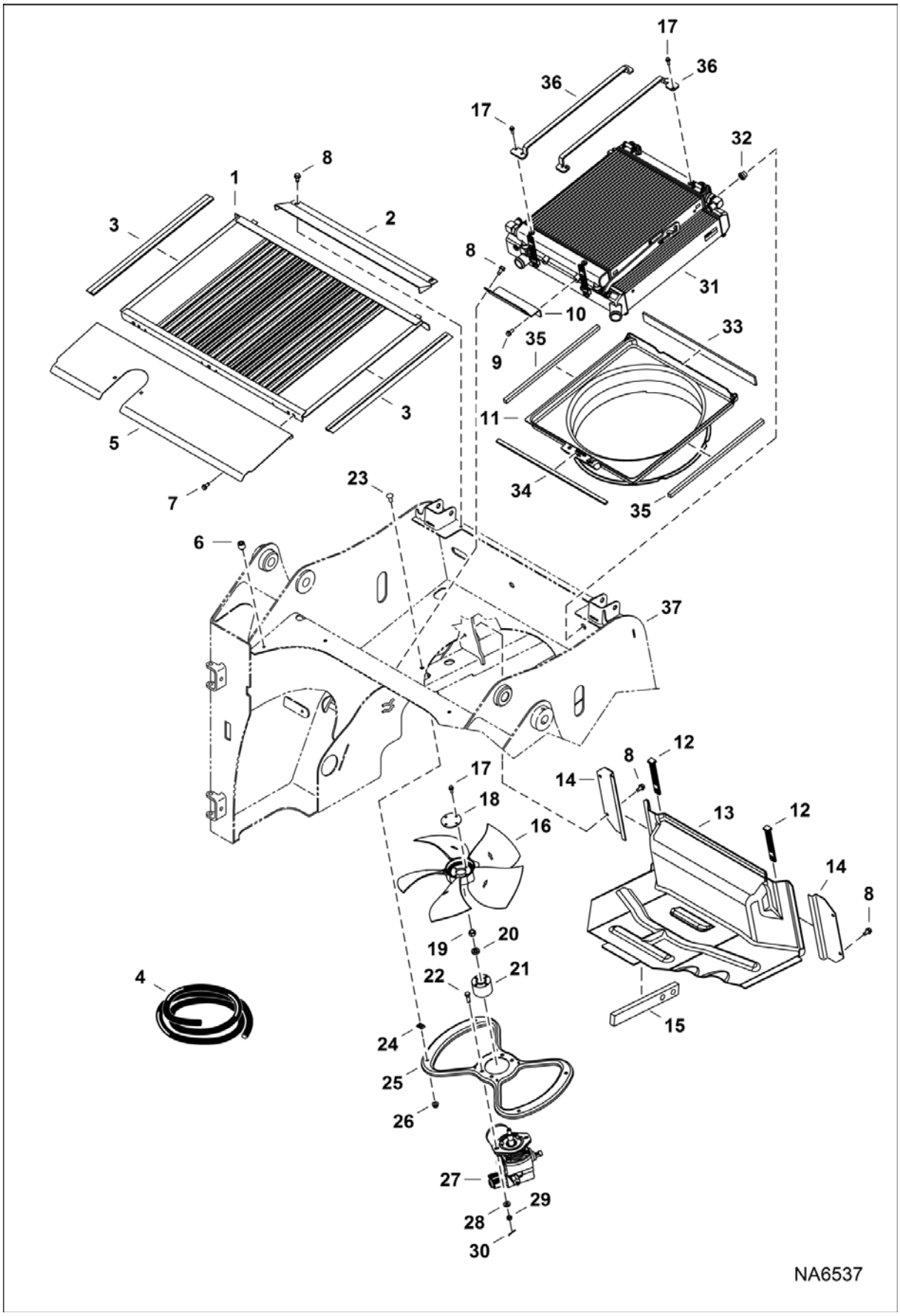
17
36
36
17
32
8
1
2
3
8
31
10
9
35
33
11
3
5
7
34
35
23
6
37
12
8
14
17
18
16
13
12
14
8
19
20
4
22
21
15
24
25
26
27
29
28
30
NA6537

Ref No	Part Number	Description	Remarks	Serial Number	Qty
1	7210805	SCREEN, EXCHANGER ASSY			1
2	7215114	SHIELD, HOOD			1
3		SEAL	NAP - 25.62" (650,7 mm) - Order Ref. 4		2
4	6646705	SEAL	bulk - sold per foot		x
5	7210917	BRACKET, HOLDING			1
6	7213012	BUMPER, PLASTIC			2
7	84G3112	BOLT 5			3
8	84G3712	BOLT 5			6
9	45C512	BOLT			2
10	7206590	MOUNT, EXCHANGER OIL			1
11	7202926	SHROUD, FAN			1
12	7141906	STRAP, RUBBER			2
13	7196437	DUCT, AIR			1
14	7204292	COVER			2
15	7204293	FOAM			1
16	7170673	FAN COOLING			1
17	49C412	BOLT			8
18	7125948	PLATE			1
19	96D8	NUT			1
20	6701097	WASHER			1
21	7130834	HUB, FAN			1
22	7147826	BOLT, CROSS DRILLED			2
23	10C616	BOLT 10			4
24	6684033	NUT	retaining		4
25	7196147	MOUNT, FAN			1
26	89D6	NUT			4
27		MOTOR, HYD COOLING FAN	See Illustration HYDROSTATIC CIRCUITRY/ NA6647		1
28	6557831	WASHER			2
29	3D6	NUT			2
30	1F316	PIN			2
31		EXCHANGER, WATER RADIATOR	See Illustration RADIATOR/COOLER ASSEMBLY/ NA6801		1
32	7208181	BUSHING			2
33	7197974	SEAL, FOAM			1
34	7196179	SEAL, FOAM			1
35	7196181	SEAL, FOAM			2
36	7167537	GUARD, CONDENSER			2
37		MAIN FRAME	See Illustration MAIN FRAME/ NA6764		1

ENGINE & ATTACHING PARTS
(Radiator Water Exchanger)

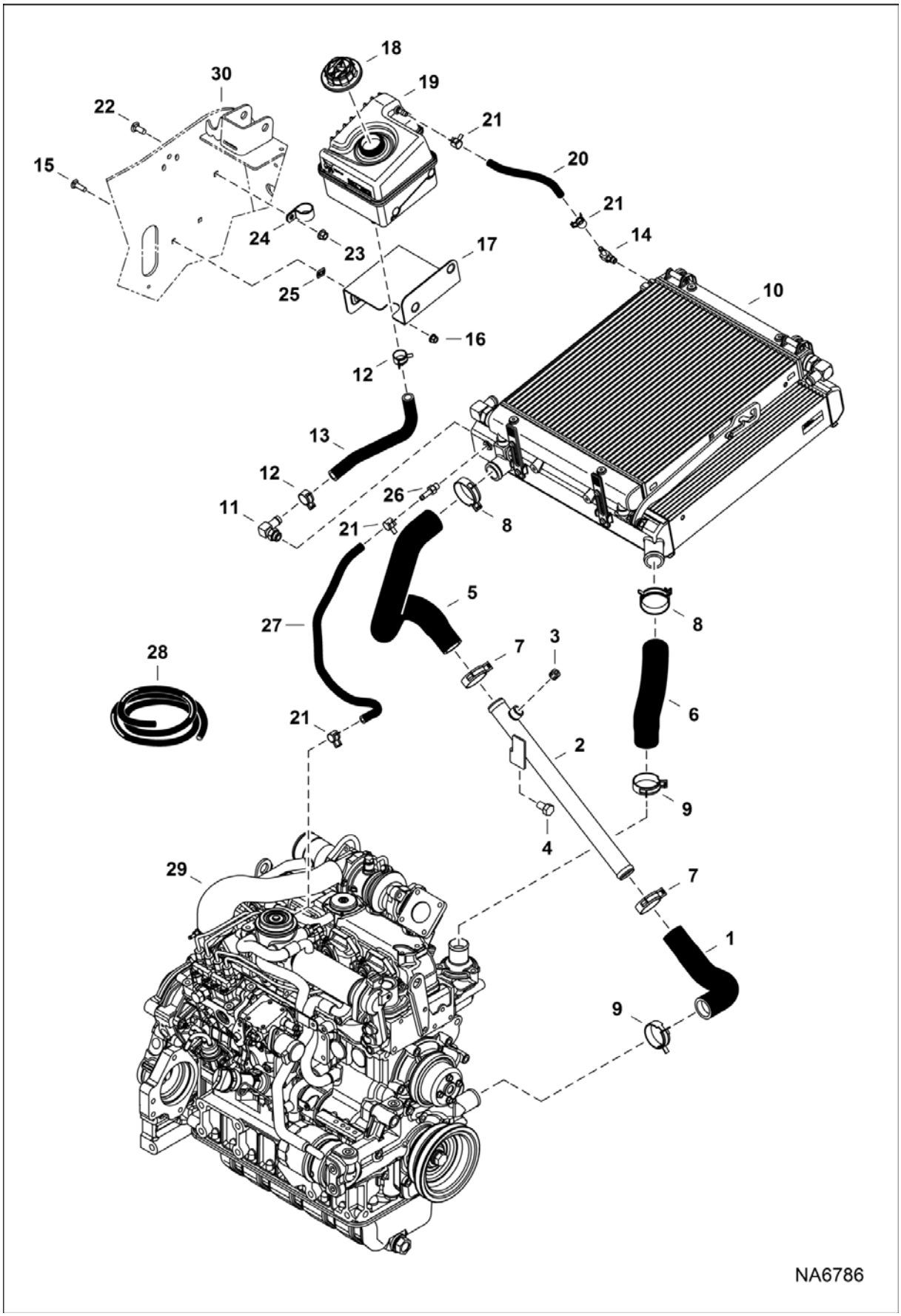

ENGINE & ATTACHING PARTS (Cont'd)
(Radiator Water Exchanger)

Ref No	Part Number	Description	Remarks	Serial Number	Qty
1	7211861	HOSE, WATER LOWER			1
2	7211695	TUBE ASSY WATER	W/Ref. 3		1
3	16F6	PLUG			1
4	6719827	BOLT			1
5	7211469	HOSE, WATER			1
6	7204637	HOSE, WATER			1
7	5HM42	HOSECLAMP			2
8	5HM44	CLAMP			2
9	5HM47	CLAMP			2
10		EXCHANGER, WATER RADIATOR	See Illustration HYDROSTATIC CIRCUITRY/ NA6647		1
11	6680952	FITTING 90 DEG BARB			1
11	79K8	O RING 10			1
12	5HM23	CLAMP			2
13	7197790	HOSE, WATER FORMED			1
14	7204614	FITTING, ELBOW			1
15	37C516	BOLT			2
16	89D5	NUT			2
17	7144265	MOUNT, TANK			1
18	6733429	CAP			1
19	7137747	TANK, EXPANSION			1
20		HOSE	NAP - 203,2 mm (8") long - Order Ref. 28		1
21	5HM14	CLAMP			2
22	37C616	BOLT			1
23	89D6	NUT			1
24	30H73	CLAMP			1
25	774220	NUT			2
26	6734090	ADAPTER			1
27		HOSE	NAP - 560 mm (22") long - Order Ref. 28		1
28	6577822	HOSE	bulk - sold per foot		x
29		ENGINE	See Illustration ENGINE & GASKET KITS/ NA2410		1
30		MAIN FRAME	See Illustration MAIN FRAME/ NA6764		1

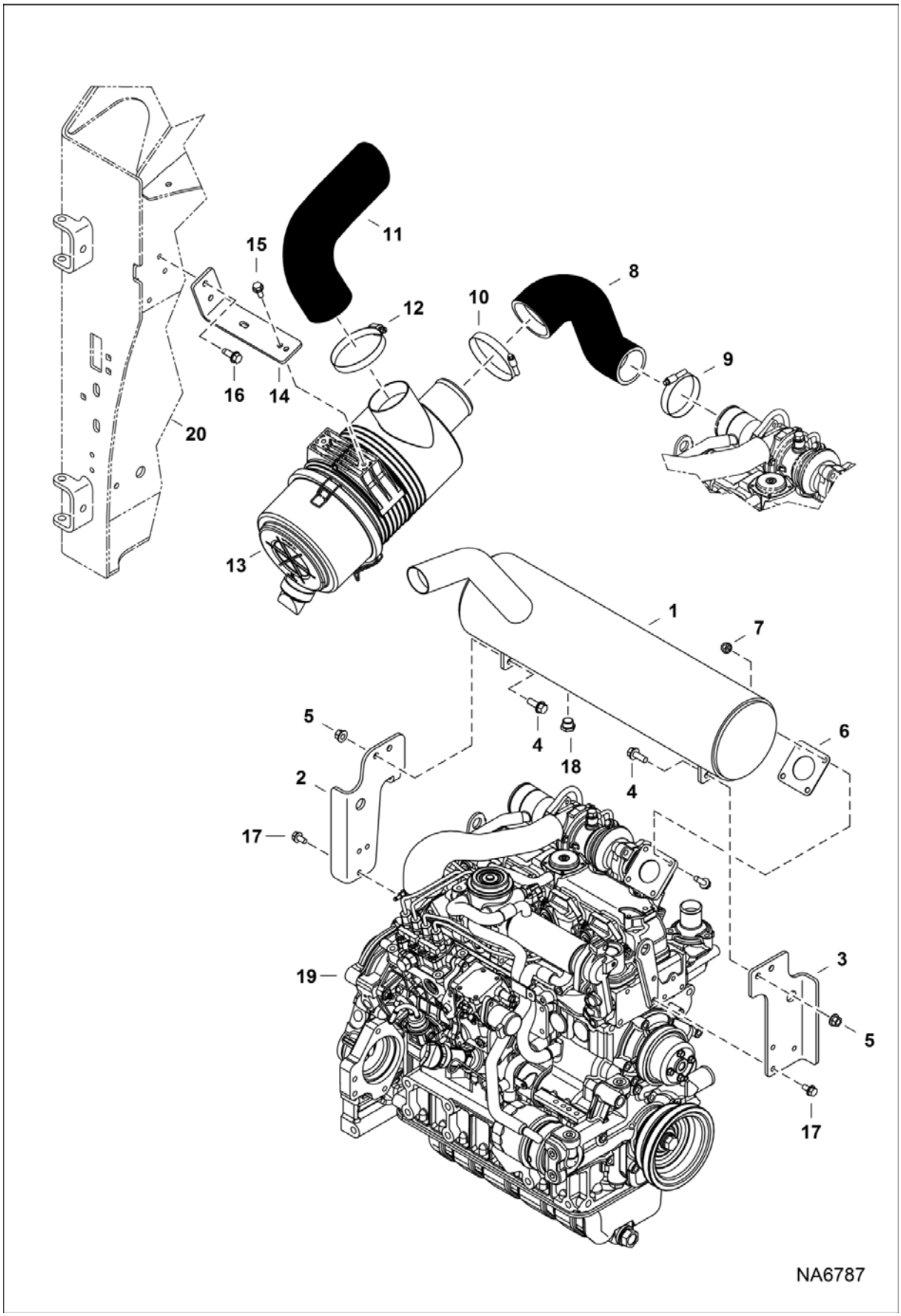
11
15
8
12
10
9
16
14
20
13
1
7
5
4
18
6
2
4
17
19
3
5
17
NA6787

ENGINE & ATTACHING PARTS (Cont'd)
(Air Cleaner & Muffler)

Ref No	Part Number	Description	Remarks	Serial Number	Qty
1	7148346	MUFFLER, EXHAUST	W/Ref. 18		1
2	7161894	MOUNT, MUFFLER	LH		1
3	7211967	MOUNT, MUFFLER	RH		1
4	35C616	BOLT 5			2
5	89D6	NUT			2
6	6727753	GASKET			1
7	43DM8	NUT			4
8	7196376	HOSE, AIR FORMED			1
9	42HC300	CLAMP			1
10	42HC375	CLAMP			1
11	7204652	HOSE, AIR FORMED			1
12	42H52	CLAMP			1
13	7197700	FILTER, AIR	See Illustration RADIATOR/COOLER ASSEMBLY/ NA6801		1
14	7197769	MOUNT, FILTER AIR			1
15	29CM820	SCREW			2
16	84G3716	SCREW 5			2
17	59CM816	BOLT			6
18	6661062	PLUG			1
19		ENGINE	See Illustration ENGINE & GASKET KITS/ NA2410		1
20		MAIN FRAME	See Illustration MAIN FRAME/ NA6764		1

ENGINE & ATTACHING PARTS
(Belt Drive System)

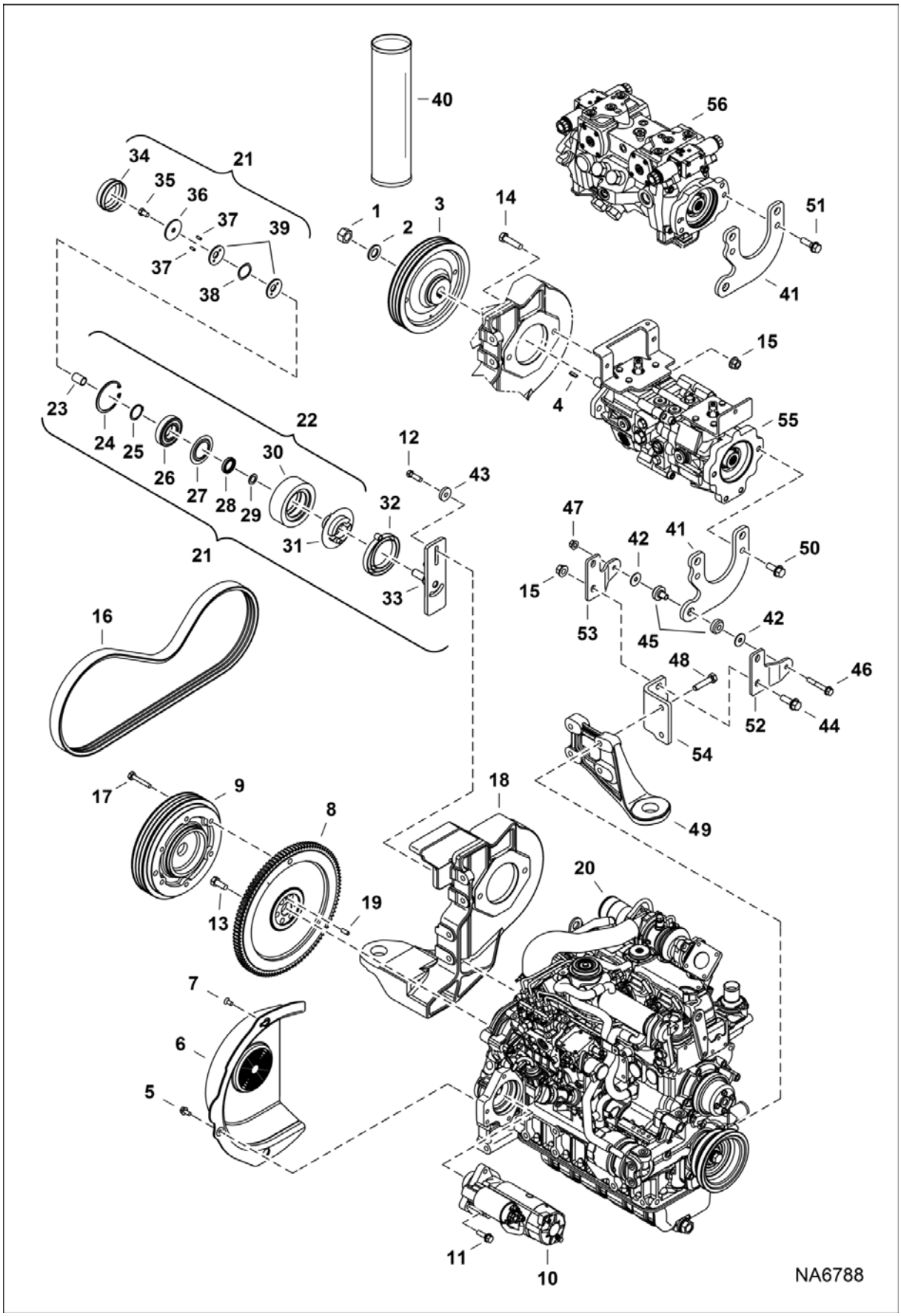

ENGINE & ATTACHING PARTS (Cont'd)
(Belt Drive System)

Ref No	Part Number	Description	Remarks	Serial Number	Qty
1	96D12	NUT			1
2	6576033	WASHER			1
3	7144809	PULLEY			1
4	6J807	KEY, WOODRUFF	SJC		1
4	6682261	KEY	manual controls		1
5	59CM816	BOLT			1
6	7142422	SHIELD, FLYWHEEL			1
7	7155238	BOLT			2
8	7000762	FLYWHEEL, ENG ASSY	W/ring gear		1
8	7000583	GEAR, RING STARTER			1
9	7152377	PULLEY, DRIVE			1
10	6685190	STARTER			1
11	45C620	BOLT			3
12	47C620	BOLT			1
13	7000615	BOLT, FLYWHEEL			7
14	17C832	BOLT	hyd pump mount		2
15	83D8	NUT 5			5
16	7146391	BELT, DRIVE			1
17	7110310	SCREW			6
18	7214069	MOUNT, PUMP			1
19	7008888	PIN, STRAIGHT			1
20		ENGINE	See Illustration ENGINE & GASKET KITS/ NA2410		1
21	6735884	IDLER ASSY.	Ref. 22-39		1
22	6714212	PULLEY ASSY.	Ref. 23-31		1
23	6682442	SLEEVE	bronze sleeve		1
24	6658847	RING			1
25	6658536	RING			1
26	6668114	BEARING	ball		1
27	6664209	SEAL			1
28	6703168	BEARING	thrust		1
29	6685735	SEAL			1
30	6704391	PULLEY	idler		1
31	6711699	HUB ASSY.			1
32	6705491	SPRING	torsion		1
33	6735883	BRACKET			1
34	6708770	CAP	dust		1
35	43C610	BOLT	pre-applied thread locker		1
36	6705232	WASHER			1
37	6713370	PIN			2
38	6710585	WASHER	wave spring		1
39	6705231	WASHER			2
40	6903122	GREASE, MULTI PURPOSE #2 - 10	Use W/Ref. 21		x
41	7193687	BRACKET, MOUNTING			1
42	6737388	WASHER			2
43	6704484	WASHER			1
44	35C824	BOLT			2
45	7223184	MOUNT, LOAD ISOLATOR			1
46	35C640	BOLT 10			1
47	83D6	NUT 5			1

ENGINE & ATTACHING PARTS (Cont'd)
(Belt Drive System)

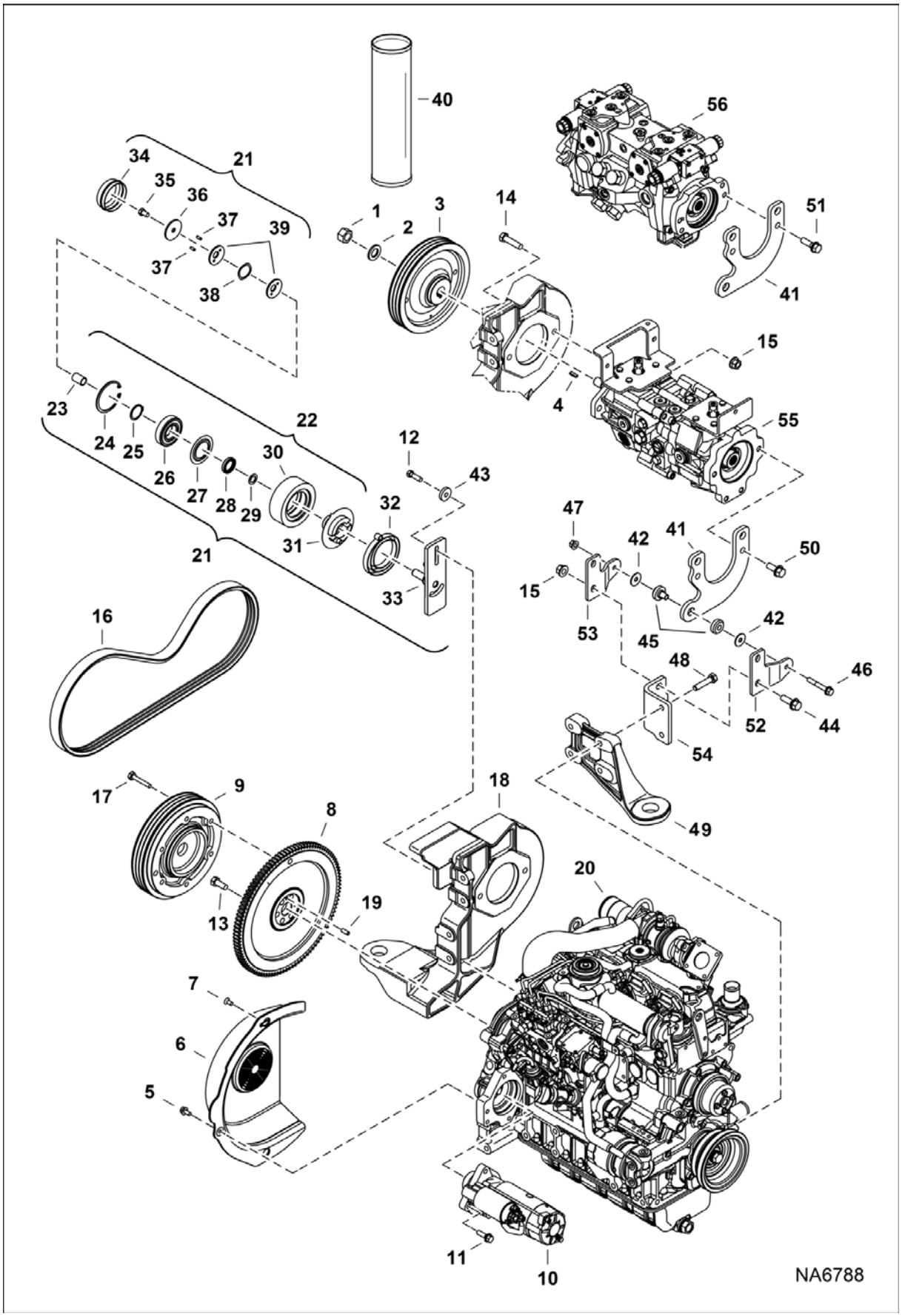

ENGINE & ATTACHING PARTS (Cont'd)
(Belt Drive System)

Ref No	Part Number	Description	Remarks	Serial Number	Qty
48	7213595	BOLT			2
49	7180029	MOUNT, ENG			1
50	45C828	BOLT			2
51	7131273	SCREW			2
52	7222080	BRACKET, MOUNTING			1
53	7222081	BRACKET, MOUNTING			1
54	7222079	BRACKET, MOUNTING			1
55		PUMP ASSY	See Illustration HYDROSTATIC PUMP/GEAR PUMP/ NA6652 Manual Control		2
56		PUMP ASSY	See Illustration HYDROSTATIC PUMP/GEAR PUMP/ NA6652 SJC		1

ENGINE & ATTACHING PARTS
(Engine Mounts)

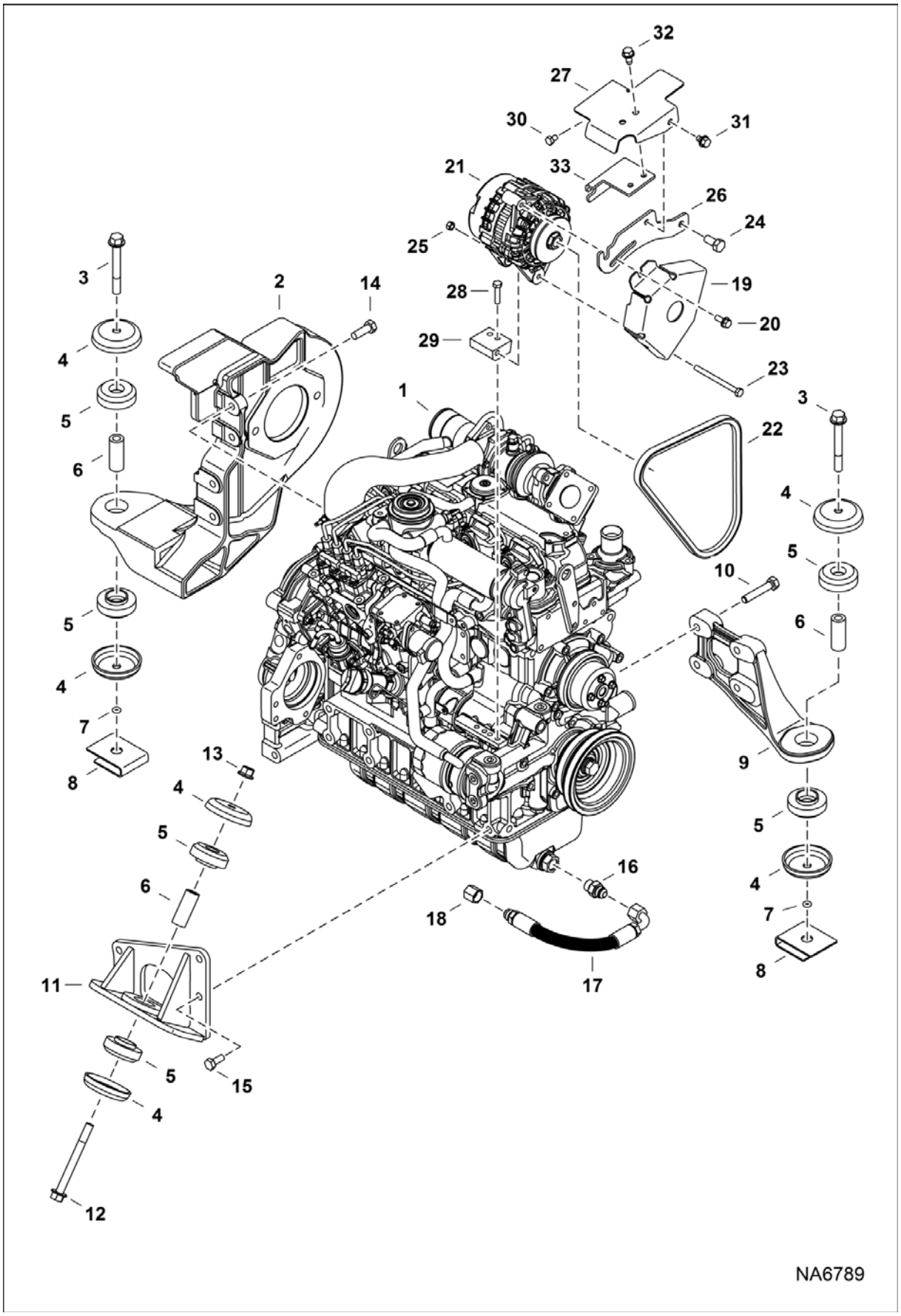

ENGINE & ATTACHING PARTS (Cont'd)
(Engine Mounts)

Ref No	Part Number	Description	Remarks	Serial Number	Qty
1		ENGINE	See Illustration ENGINE & GASKET KITS/ NA2410		1
2	7214069	MOUNT, PUMP			1
3	31C864	BOLT			2
4	7116851	CUP			6
5	7000489	DAMPER			6
6	7141405	BUSHING			3
7	7120149	O-RING, RETAINING			2
8	7152037	NUT, RETAINING			2
9	7180029	MOUNT, ENG			1
10	7135124	SCREW			2
11	7191010	MOUNT, ENG			1
12	31C880	SCREW			1
13	83D8	NUT 5			1
14	7135598	MOUNT, ALT			1
15	6719827	BOLT			3
16	15KB0808	FITTING, HYD CONNECTOR			1
17	7215765	HOSE, DRAIN			1
18	36K6	CAP			1
19	7141045	SHIELD, ALT			1
20	29CM820	SCREW			1
21	6678205	ALTERNATOR, 90 AMP			1
22	7143498	BELT			1
23	1CM8100	SCREW			1
24	7120308	BOLT			1
25	53DM8	NUT			1
26	7139335	BRACKET, ALT			1
27	7217608	SHIELD, ALT			1
28	1CM835	BOLT			2
29	7135598	MOUNT, ALT			1
30	1CM812	BOLT			1
31	84G3708	SCREW			1
32	84G3712	BOLT 5			2
33	7204325	MOUNT, THROTTLE			1

ENGINE SPEED CONTROL
(Manual Controls, AHC & ACS) (Single Cable)

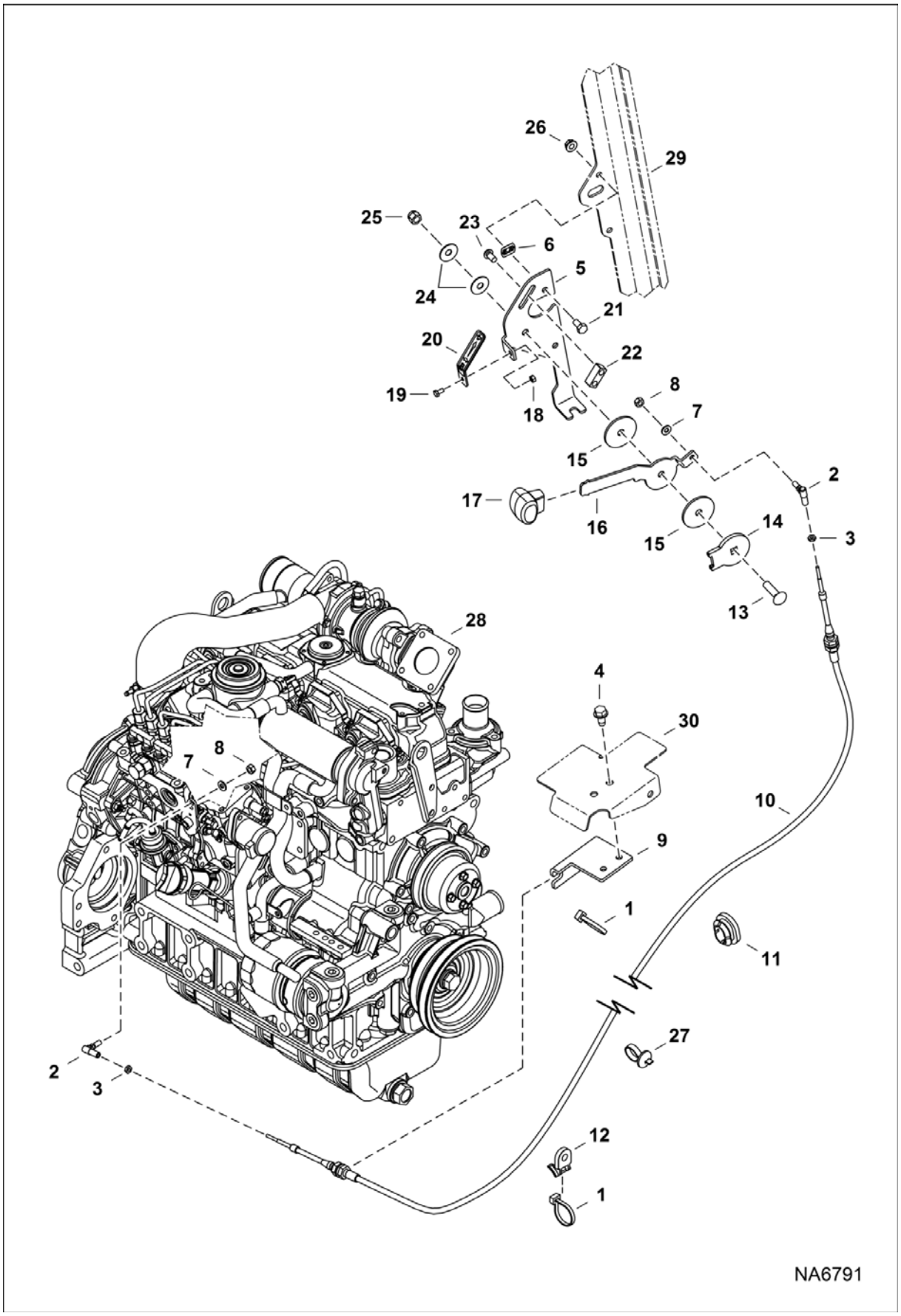

ENGINE SPEED CONTROL (Cont'd)
(Manual Controls, AHC & ACS) (Single Cable)

Ref No	Part Number	Description	Remarks	Serial Number	Qty
1	6624289	STRAP, TIE			2
2	6644965	BALL JOINT			2
3	14D10	NUT			2
4	84G3712	BOLT 5			2
5	7166171	BRACKET			1
6	774220	NUT			2
7	25E11	WASHER			2
8	62D4	NUT			2
9	7204325	MOUNT, THROTTLE			1
10	7214545	CABLE, THROTTLE			1
11	7002739	GROMMET			1
12	6679034	MOUNT			1
13	37C624	BOLT			1
14	7166269	WASHER			1
15	7159386	WASHER			2
16	7166172	HANDLE			1
17	7166173	HANDLE			1
18	61D4	NUT 5			1
19	17C408	BOLT			1
20	7169911	PLATE, DECAL			1
21	17C510	BOLT			2
22	7166174	BLOCK			1
23	25G510	BOLT			2
24	6630038	WASHER			2
25	59D6	NUT			1
26	55D5	NUT			2
27	6675734	STRAP, TIE			1
28		ENGINE	See Illustration ENGINE & GASKET KITS/ NA2410		1
29		CAB, ASSY	See Illustration OPERATOR CAB/ NA6526		1
30		SHIELD, ALT	See Illustration ENGINE & ATTACHING PARTS/ NA6789		1

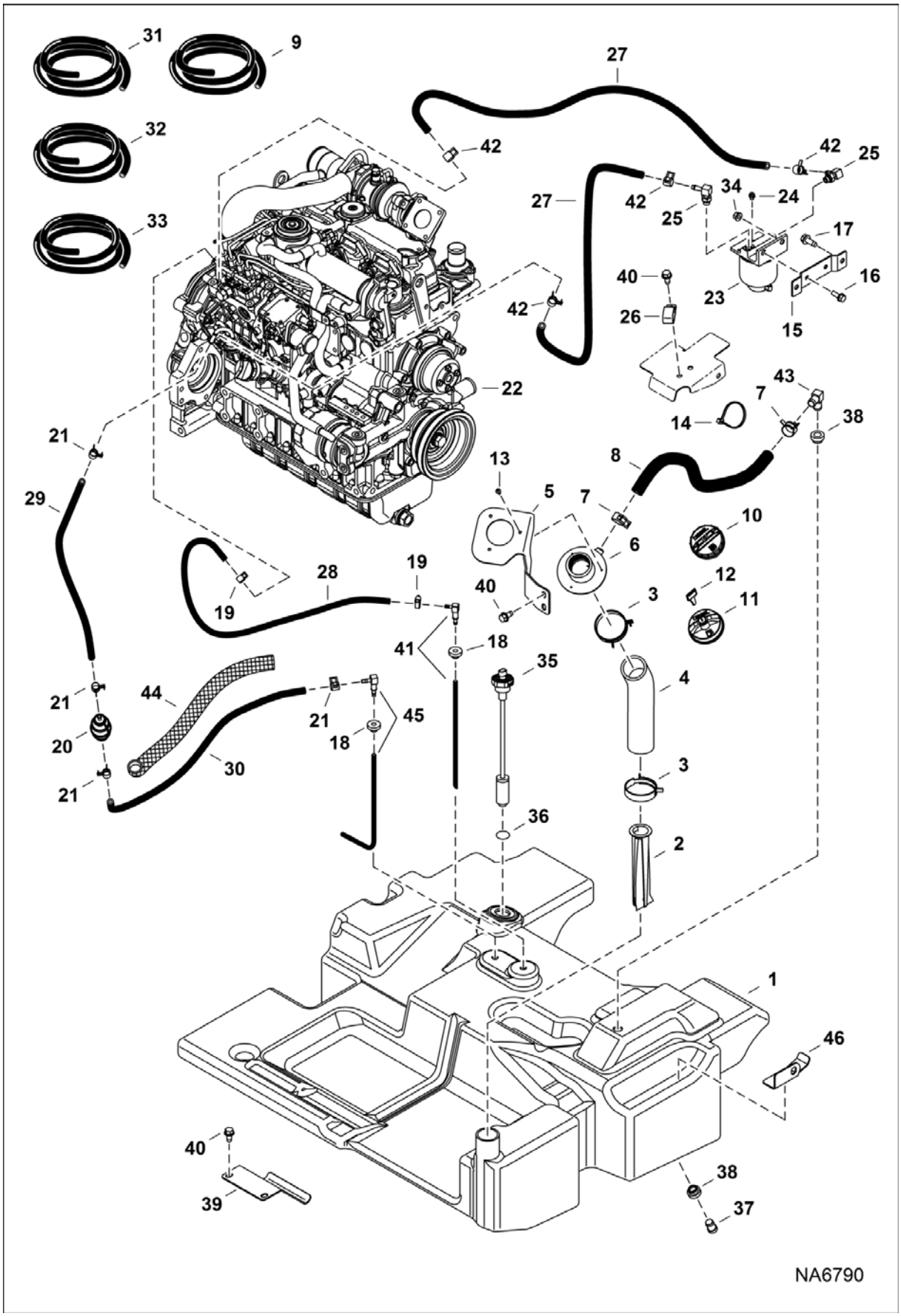
NA6790

Ref No	Part Number	Description	Remarks	Serial Number	Qty
1	7181068	TANK, FUEL			1
2	7120881	SCREEN, FILLER			1
3	5HM58	CLAMP	constant tension		2
4	7176970	HOSE, FUEL FORMED			1
5	7176971	BRACKET, FUEL	fuel fill		1
6	6701449	FILLER TUBE			1
7	5HM22	CLAMP			2
8		HOSE	NAP - 641 m (25.25") long - Order Ref. 9		1
9	6578172	HOSE	bulk - sold per foot		x
10	7113340	CAP. DIESEL	non-locking - European		1
11	7023550	CAP, DIESEL LOCKING			1
12	6693241	KEY 10			1
13	7106279	BOLT			3
14	6624289	STRAP, TIE			1
15	7212685	MOUNT, FILTER FUEL			1
16	35C514	BOLT			2
17	84G3716	SCREW 5			2
18	6735696	GROMMET			2
19	42HS04	CLAMP, HOSE			2
20	6657734	PUMP, PRIMER HAND	124 mm (4.88") long		1
21	5HM14	CLAMP			4
22		ENGINE	See Illustration ENGINE & GASKET KITS/ NA2410		1
23	6667353	FILTER ASSY	W/Ref. 24		1
23	6667352	FILTER, FUEL W/SEPERATOR 12			1
23	72F1	FITTING			1
24	6658180	PLUG, BLEED			1
25	6715183	ELBOW			2
25	79K5	O RING 10			x
26	31H38	CLAMP			1
27		HOSE	NAP - 813 mm (32") Order Ref. 32		2
28		HOSE	NAP - 1232 mm (48.5") long - Order Ref. 33		1
29		HOSE	NAP - 368 mm (14.5") long - Order Ref. 31		1
30		HOSE	NAP - 591 mm (23.25") long - Order Ref. 31		1
31	6577821	HOSE	bulk - sold per foot		x
32	6577822	HOSE	bulk - sold per foot		x
33	6578169	HOSE	bulk - sold per foot - 0.19" ID		x
34	89D5	NUT			2
35	7179839	SENSOR FUEL	W/Ref. 36		1
36	6717579	GASKET			1
37	7203382	PLUG, STEEL	fuel drain - .75" shoulder		1
38	6717402	BUSHING	0.54" ID		2
39	7181174	BRACKET, TANK			1
40	84G3712	BOLT 5			5
41	7126464	HOSE, FUEL W/ELBOW			1
42	5HM13	CLAMP			4
43	6808798	ELBOW			1
44	7198325	GUARD, HOSE	559 mm (22") long		1
45	7181144	FUEL, TUBE			1
46	7221488	BRACKET			1

ENGINE SPEED CONTROL
(SJC)

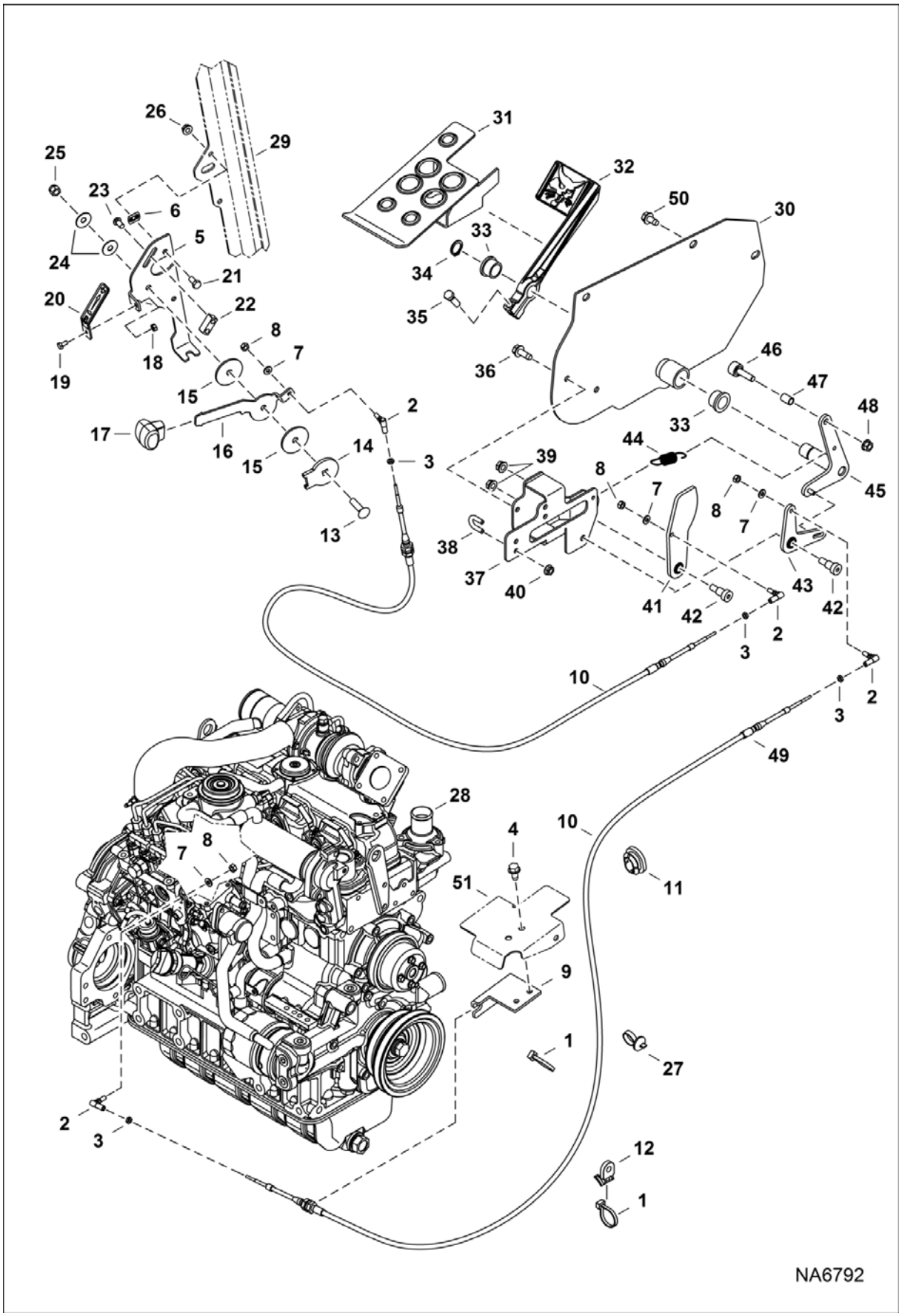

ENGINE SPEED CONTROL (Cont'd)
(SJC)

Ref No	Part Number	Description	Remarks	Serial Number	Qty
1	6624289	STRAP, TIE			1
2	6644965	BALL JOINT			2
3	14D10	NUT			2
4	84G3712	BOLT 5			2
5	7166171	BRACKET			1
6	774220	NUT			2
7	25E11	WASHER			2
8	62D4	NUT			2
9	7204325	MOUNT, THROTTLE			1
10	7214545	CABLE, THROTTLE			1
11	7002739	GROMMET			1
12	6679034	MOUNT			1
13	37C624	BOLT			1
14	7166269	WASHER			1
15	7159386	WASHER			2
16	7166172	HANDLE			1
17	7166173	HANDLE			1
18	61D4	NUT 5			1
19	17C408	BOLT			1
20	7169911	PLATE, DECAL			1
21	17C510	BOLT			2
22	7166174	BLOCK			1
23	25G510	BOLT			2
24	6630038	WASHER			2
25	59D6	NUT			1
26	55D5	NUT			2
27	6675734	STRAP, TIE			1
28		ENGINE	See Illustration ENGINE & GASKET KITS/ NA2410		1
29		CAB, ASSY	See Illustration OPERATOR CAB/ NA6526		1
30	7211662	PANEL, RH			1
31	7181865	PEDAL ASSY			1
32	7164294	PEDAL, FOOT THROTTLE			1
33	7159624	BUSHING			2
34	6534668	SNAP RING			1
35	17C620	BOLT			1
36	84G3716	SCREW 5			2
37	7176037	MOUNT			1
38	6592766	U-BOLT			2
39	57D6	NUT 5			1
40	57D5	NUT			4
41	7176043	CAM, LEVER			1
42	38C810	BOLT			2
43	7191528	LEVER			1
44	7188749	SPRING			1
45	7176039	LEVER			1
46	6737692	BEARING			1
47	6737693	SPACER			1
48	98D6	NUT			1
49	7196284	CABLE, THROTTLE			1
50	84G3712	BOLT 5			3
51		SHIELD, ALT	See Illustration ENGINE & ATTACHING PARTS/ NA6789		1

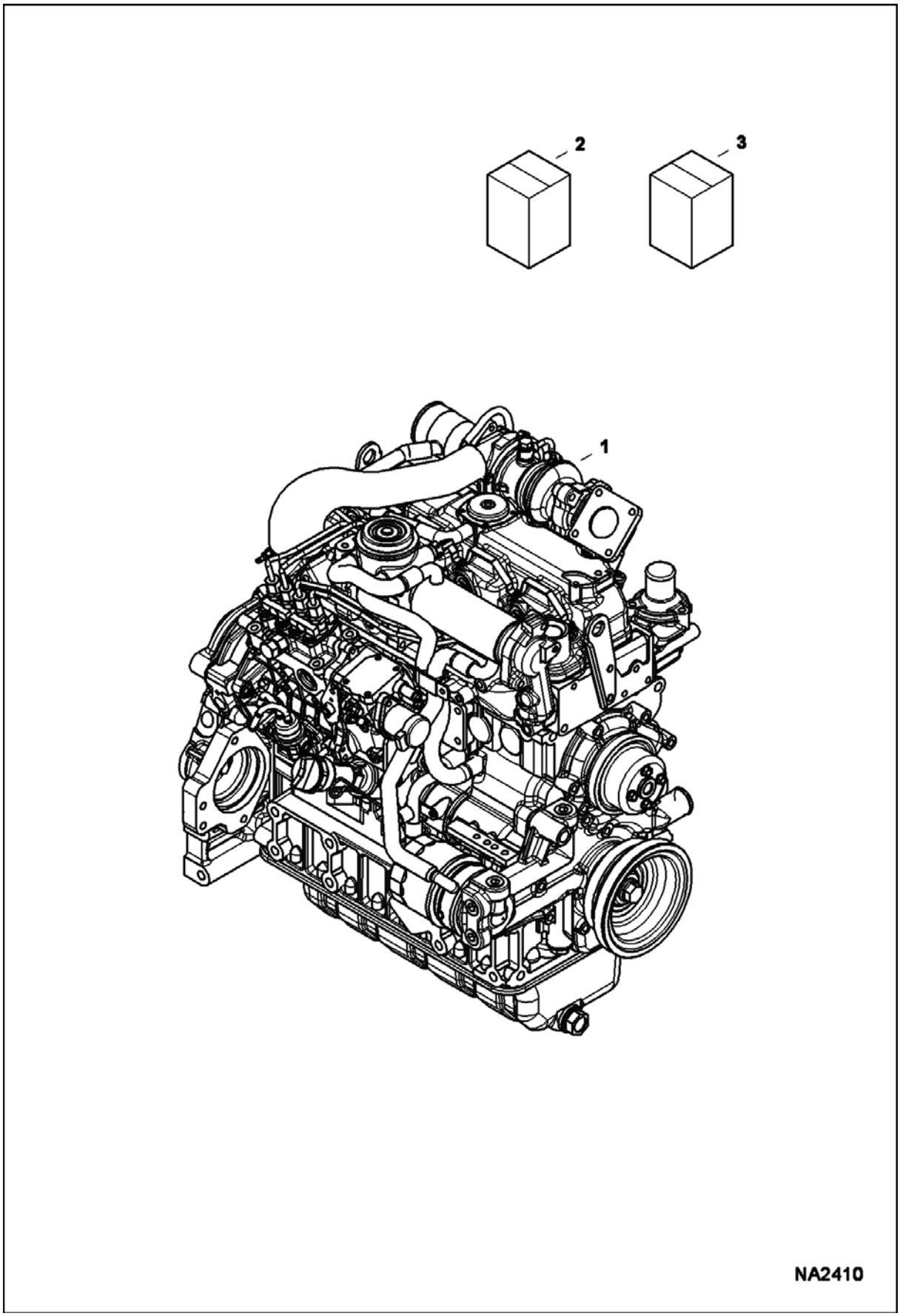
2
3
1
NA2410

Ref No	Part Number	Description	Remarks	Serial Number	Qty
1	7141593	ENGINE, V2607-DI-TE3B-BC-2			1
1	7141593REM	ENGINE, V2607-DI-TE3B-BC-2			1
2	7000587	KIT, GASKET ENG UPPER	See Illustration UPPER GASKET KIT/ B27268		1
3	7000588	KIT, GASKET ENG LOWER	See Illustration LOWER GASKET KIT/ B27269		1

UPPER GASKET KIT

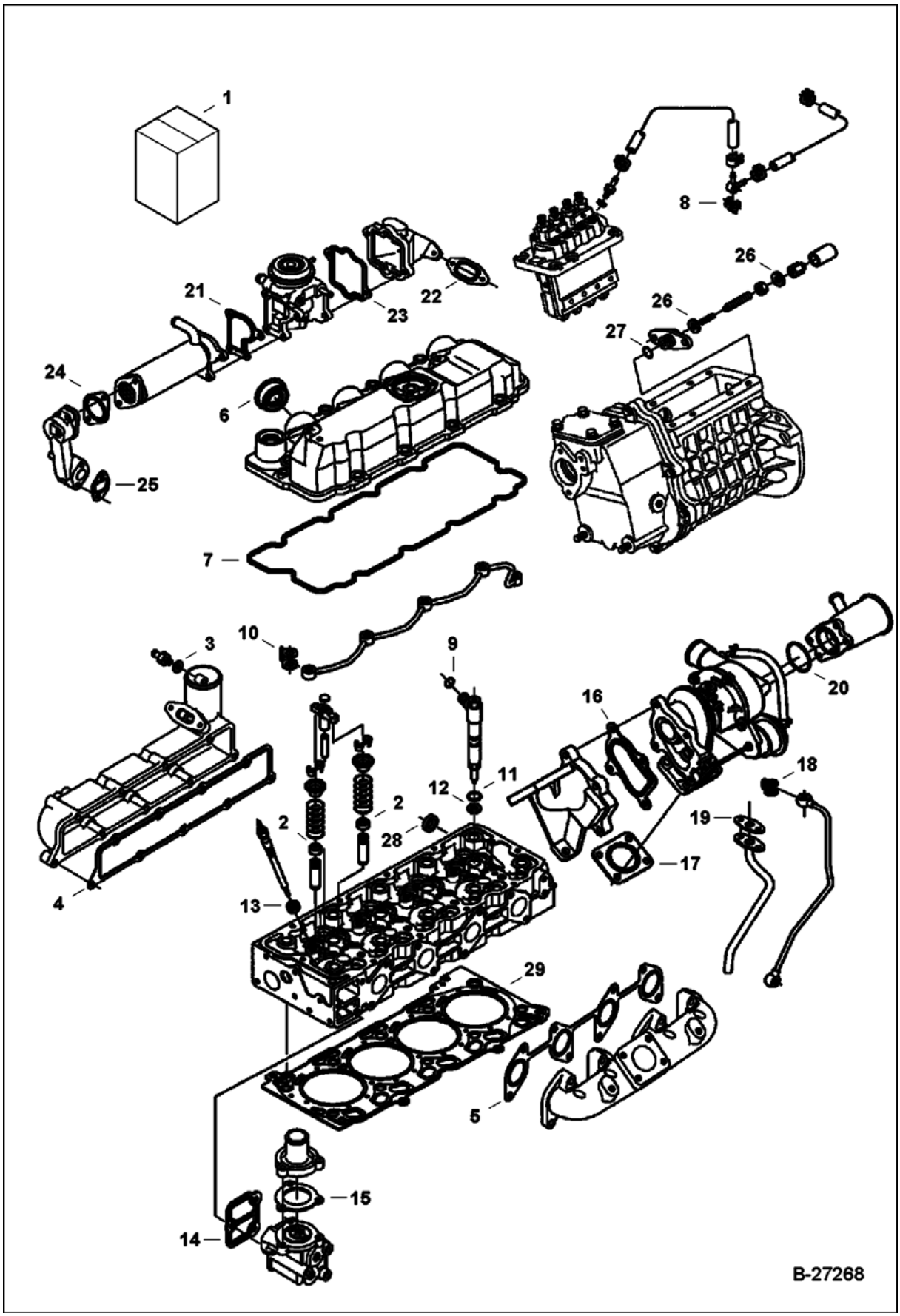

UPPER GASKET KIT (Cont'd)

Ref No	Part Number	Description	Remarks	Serial Number	Qty
1	7000587	KIT, GASKET ENG UPPER	Ref. 2-28		1
2	6670517	SEAL	See Illustration VALVE & ROCKER ARM/ B27276 - valve stem		16
3	3974972	GASKET	See Illustration MANIFOLDS/ NA6761		1
4	7000658	GASKET, MANIFOLD INTAKE	See Illustration MANIFOLDS/ NA6761		1
5	7000659	GASKET, MANIFOLD EXHAUST	See Illustration MANIFOLDS/ NA6761		1
6	6680695	SEAL	See Illustration ROCKER ARM COVER/ B27274		4
7	7000673	GASKET, COVER VALVE	See Illustration ROCKER ARM COVER/ B27274		1
8	6698528	WASHER, SEALING	See Illustration FUEL & INJECTION PUMP/ B27284		1
9	6680778	O-RING	See Illustration INJECTION NOZZLES/ B27283		4
10	6685498	GASKET	See Illustration INJECTION NOZZLES/ B27283		5
11	7000619	ORING	See Illustration INJECTION NOZZLES/ B27283		4
12	6969824	GASKET, NOZZLE INJ	See Illustration INJECTION NOZZLES/ B27283		4
13	7000626	SEAL	See Illustration INJECTION NOZZLES/ B27283 - glow plug		4
14	7000741	GASKET, FLANGE WATER	See Illustration WATER PUMP & THERMOSTAT/ B27282		1
15	7020988	GASKET	See Illustration WATER PUMP & THERMOSTAT/ B27282 - thermostat cover - Was 6680844 [A]		1
16	7000678	GASKET, TURBOCHARGER	See Illustration TURBOCHARGER/ B27271		1
17	7000679	GASKET, FLANGE MUFFLER	See Illustration TURBOCHARGER/ B27271		1
18	7000642	WASHER, SEALING COPPER	See Illustration TURBOCHARGER/ B27271		1
19	6680570	GASKET	See Illustration TURBOCHARGER/ B27271		1
20	7000598	O-RING	See Illustration TURBOCHARGER/ B27271		1
21	7000633	GASKET, EGR VALVE	See Illustration EGR VALVE/ B27272		1
22	7000632	GASKET EGR INLET	See Illustration EGR VALVE/ B27272		1
23	7000634	GASKET, EGR VALVE	See Illustration EGR VALVE/ B27272		1
24	7000635	GASKET, EGR COOLER	See Illustration EGR COOLER/ B27273		1
25	7000636	GASKET, EGR BASE	See Illustration EGR COOLER/ B27273		1
26	3974095	MET-GASK	See Illustration INJECTION PUMP/ B27288		3
27	7000731	O-RING	See Illustration INJECTION PUMP/ B27288		1
28	6698120	GASKET	See Illustration CYLINDER HEAD/ B27275		1
29		GASKET, HEAD CYL	See Illustration CYLINDER HEAD/ B27275 - not in kit - Order seperately		1

LOWER GASKET KIT

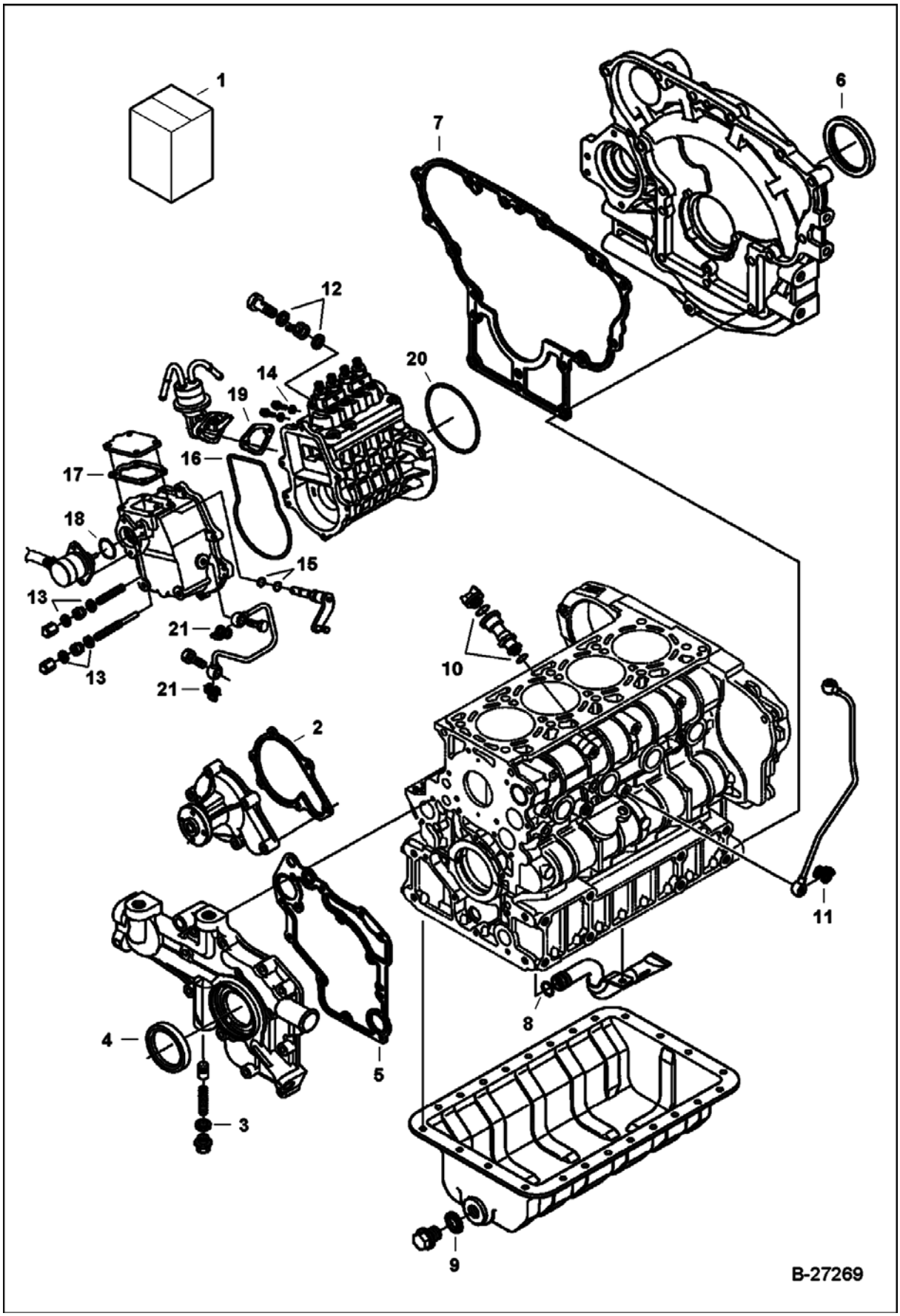

LOWER GASKET KIT (Cont'd)

Ref No	Part Number	Description	Remarks	Serial Number	Qty
1	7000588	KIT, GASKET ENG LOWER	Ref. 2-21		1
2	7000746	GASKET, PUMP WATER	See Illustration WATER PUMP & THERMOSTAT/ B27282		1
3	6670347	GASKET	See Illustration FRONT COVER/ B27281		1
4	6680680	SEAL	See Illustration FRONT COVER/ B27281		1
5	7000650	GASKET, COVER CASE	See Illustration FRONT COVER/ B27281		1
6	7000651	SEAL, OIL	See Illustration CRANKCASE/ B27278		1
7	7000653	GASKET, HOUSING	See Illustration CRANKCASE/ B27278		1
8	7000597	O-RING	See Illustration OIL PAN/ B27277		1
9	6631046	SEAL	See Illustration OIL PAN/ B27277		1
10	6683009	O-RING	See Illustration OIL PAN/ B27277		2
11	6689331	GASKET	See Illustration TURBOCHARGER/ B27271		1
12	6698120	GASKET	See Illustration INJECTION PUMP/ B27285		2
13	3974972	GASKET	See Illustration INJECTION PUMP/ B27288		4
14	3974095	MET-GASK	See Illustration INJECTION PUMP/ B27288		2
15	6683023	O-RING	See Illustration GOVERNOR/ B27286		2
16	6680829	GASKET	See Illustration GOVERNOR/ B27286		1
17	6684841	GASKET	See Illustration GOVERNOR/ B27286		1
18	6685465	O-RING	See Illustration GOVERNOR/ B27286 - stop solenoid		1
19	6670782	GASKET	See Illustration FUEL & INJECTION PUMP/ B27284		1
20	7000618	GASKET, PUMP INJ	See Illustration FUEL & INJECTION PUMP/ B27284		1
21	6685962	WASHER, SEALING ALUMINUM	See Illustration FUEL & INJECTION PUMP/ B27284		2

FRONT COVER

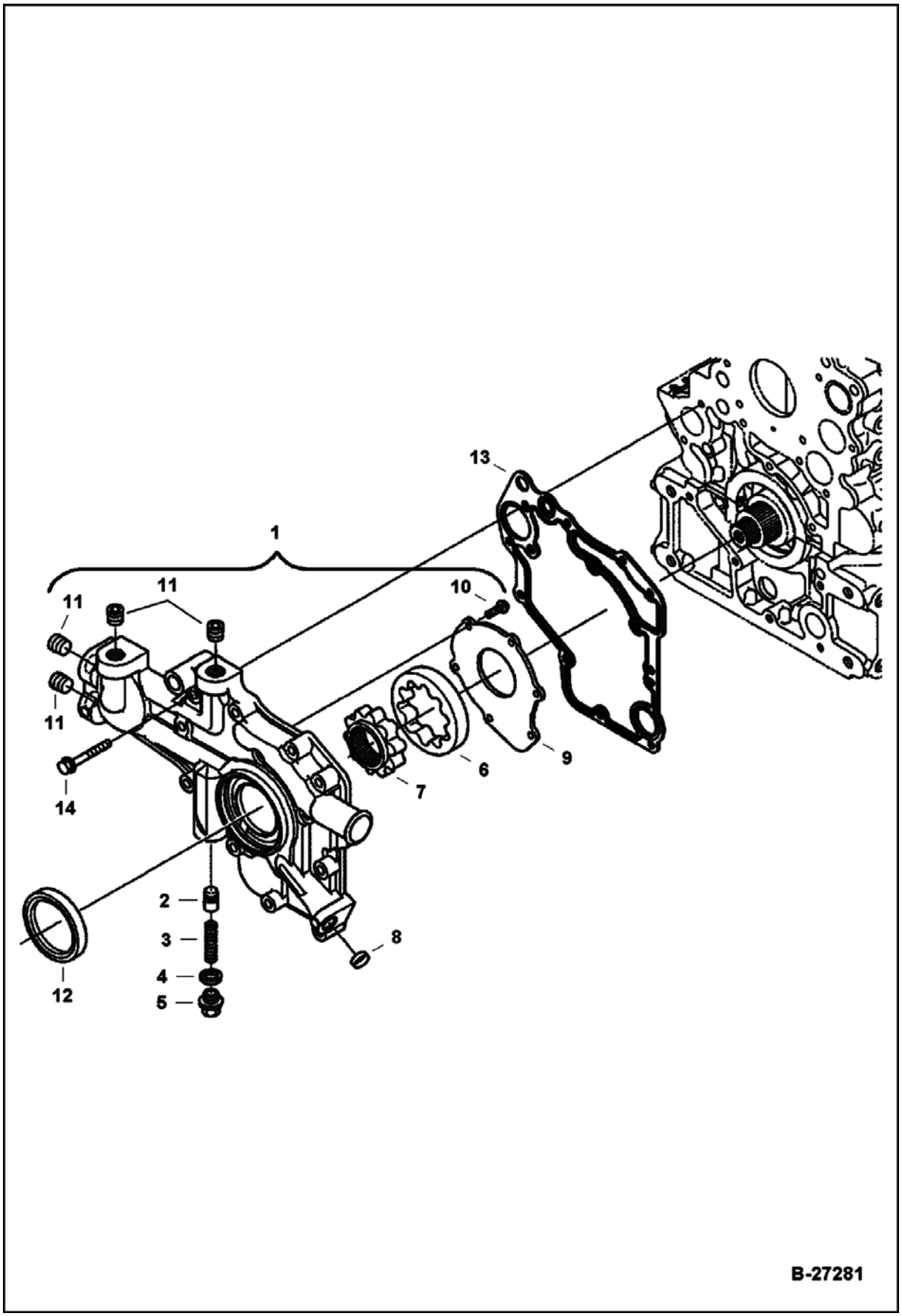

FRONT COVER (Cont'd)

Ref No	Part Number	Description	Remarks	Serial Number	Qty
1	7000649	COVER, FRONT	W/Ref. 2-10		1
2	6685929	RELIEF VALVE			1
3	7000715	SPRING, RELIEF			1
4	6670347	GASKET			1
5	6691294	PLUG			1
6	7003017	ROTOR, PUMP OIL	outer		1
7	7003018	ROTOR, PUMP OIL	inner		1
8	6670338	PLUG			1
9	7000713	COVER, PUMP OIL ENG			1
10	7000595	SCREW			6
11	6680679	PLUG			4
12	6680680	SEAL			1
13	7000650	GASKET, COVER CASE			1
14	6689192	BOLT, FLANGE			12

CRANKCASE

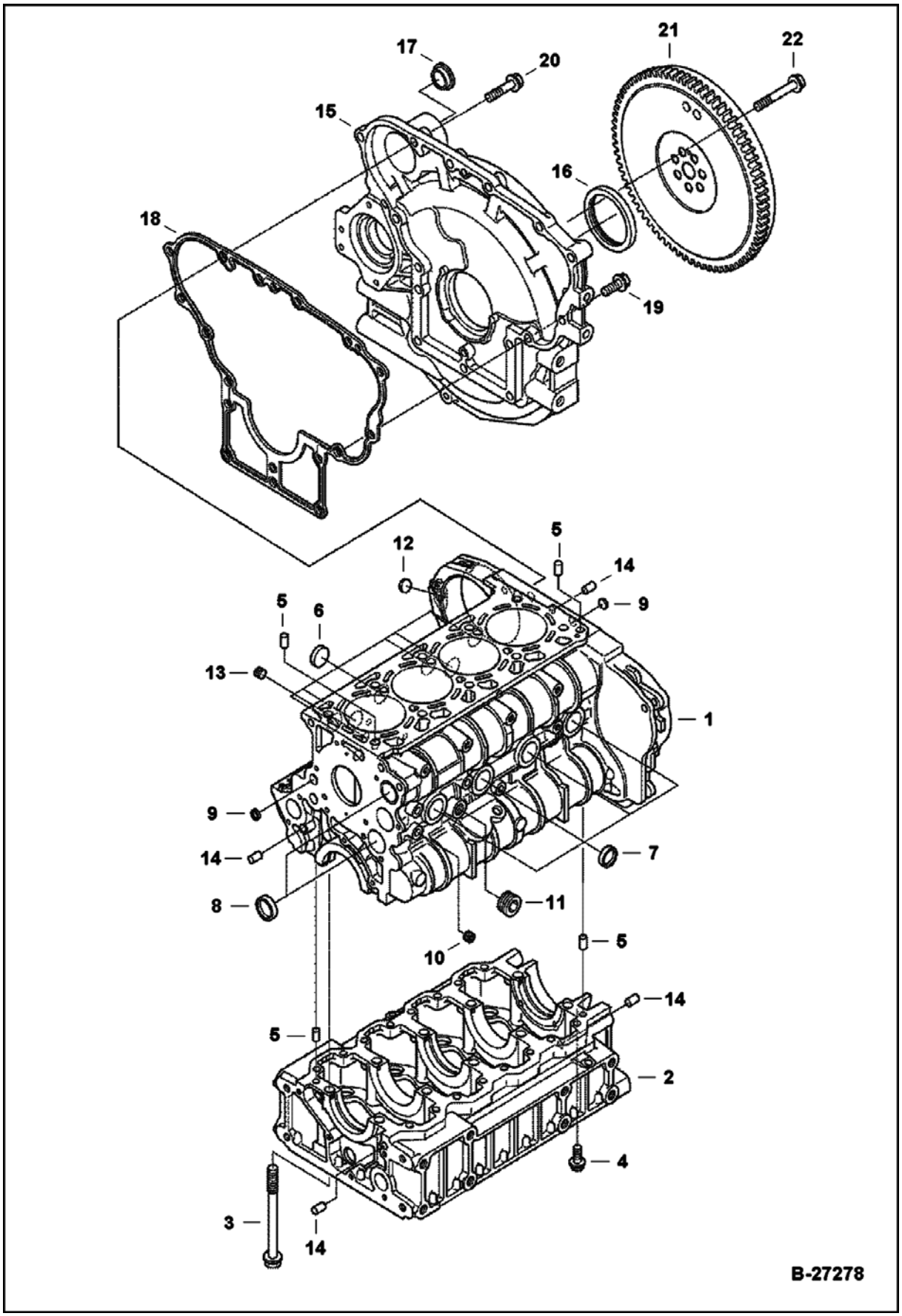
17
20
21
22
15
16
18
19
12
5
14
9
5
6
13
1
9
14
7
8
11
10
5
14
5
2
4
3
14
B-27278

Ref No	Part Number	Description	Remarks	Serial Number	Qty
1	7000750	BLOCK, ENG			1
2		BLOCK, ENG LOWER	NSS - Order Ref. 1		1
3	7000652	BOLT			10
4	7000593	BOLT			16
5	6685918	PIN			4
6	6687663	PLUG			6
7	3974033	CAP			4
8	3974433	PLUG			2
9	6680694	PLUG			2
10	6652574	PLUG			1
11	7000608	PLUG			1
12	7000600	CAP, SEALING			1
13	6655869	PLUG			1
14	6685918	PIN		E/ AHZ999 & Below	4
14	7020990	PIN, STRAIGHT		E/ AJ0001 & Above	4
15	7000752	HOUSING, FLYWHEEL		E/ 8MZ999 & Bel	1
15	7010590	HOUSING, FLYWHEEL		E/ 8N0001 & Abv	1
16	7000651	SEAL, OIL			1
17	7000586	PLUG			1
18	7000653	GASKET, HOUSING			1
19	7008454	BOLT, FLANGE			8
20	7000592	BOLT			7
21	7000762	FLYWHEEL, ENG ASSY			1
21	7000583	GEAR, RING STARTER			1
22	7000615	BOLT, FLYWHEEL			7

ROCKER ARM COVER

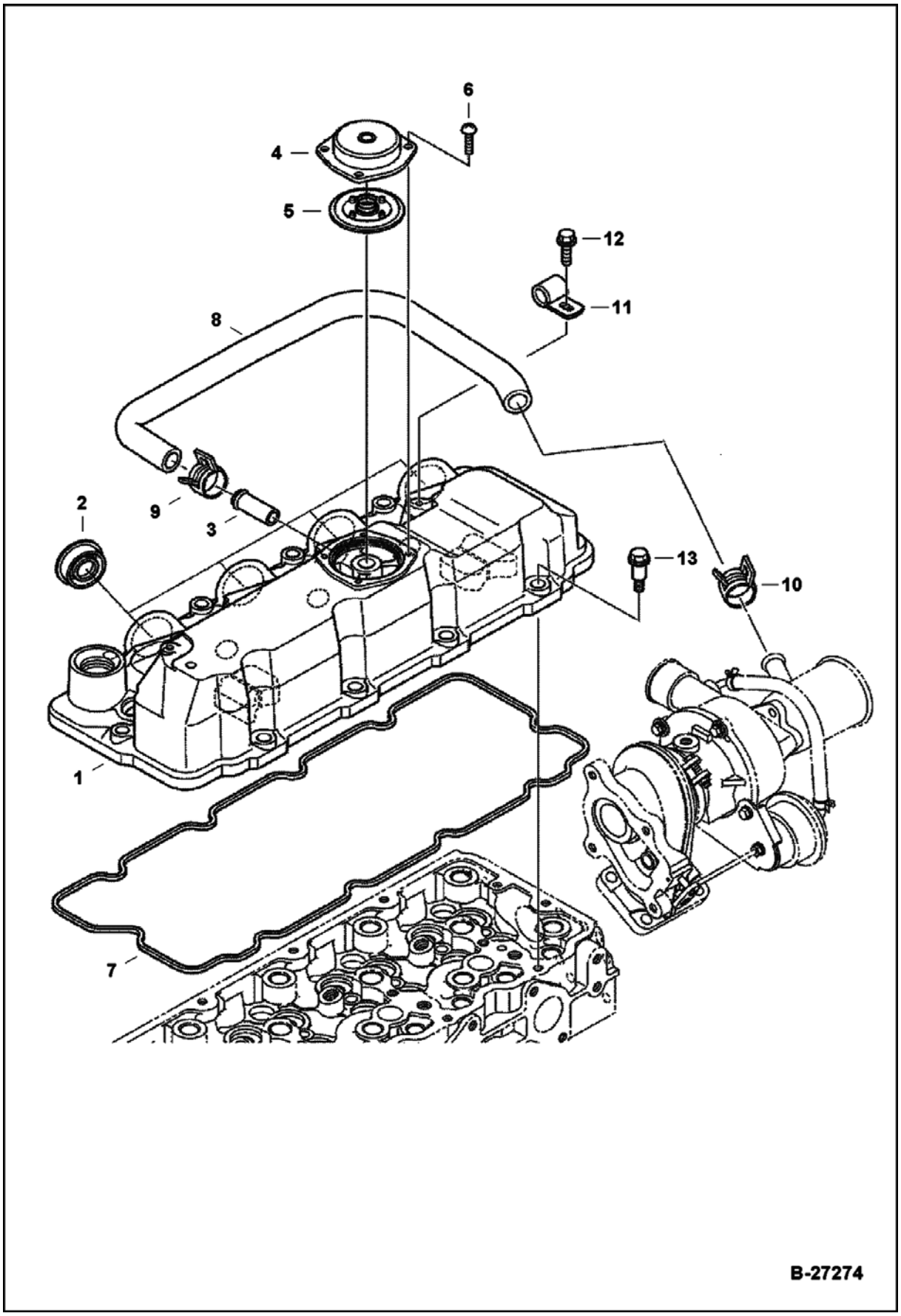

ROCKER ARM COVER (Cont'd)

Ref No	Part Number	Description	Remarks	Serial Number	Qty
1	7000756	COVER, HEAD CYL ENG	W/Ref. 2-6		1
1	6657491	ELEMENT			3
2	6680695	SEAL			4
3	6655880	PIPE			1
4	6969803	COVER, BREATHER			1
5	6685087	VALVE			1
6	6686168	BOLT	W/O washer		4
7	7000673	GASKET, COVER VALVE			1
8	7000654	HOSE, AIR FORMED			1
9	6969996	CLAMP, HOSE			1
10	6680698	CLAMP			1
11	7000655	CLAMP, HOSE			1
12	7001135	BOLT,FLANGE			1
13	6684781	BOLT			10

VALVE & ROCKER ARM

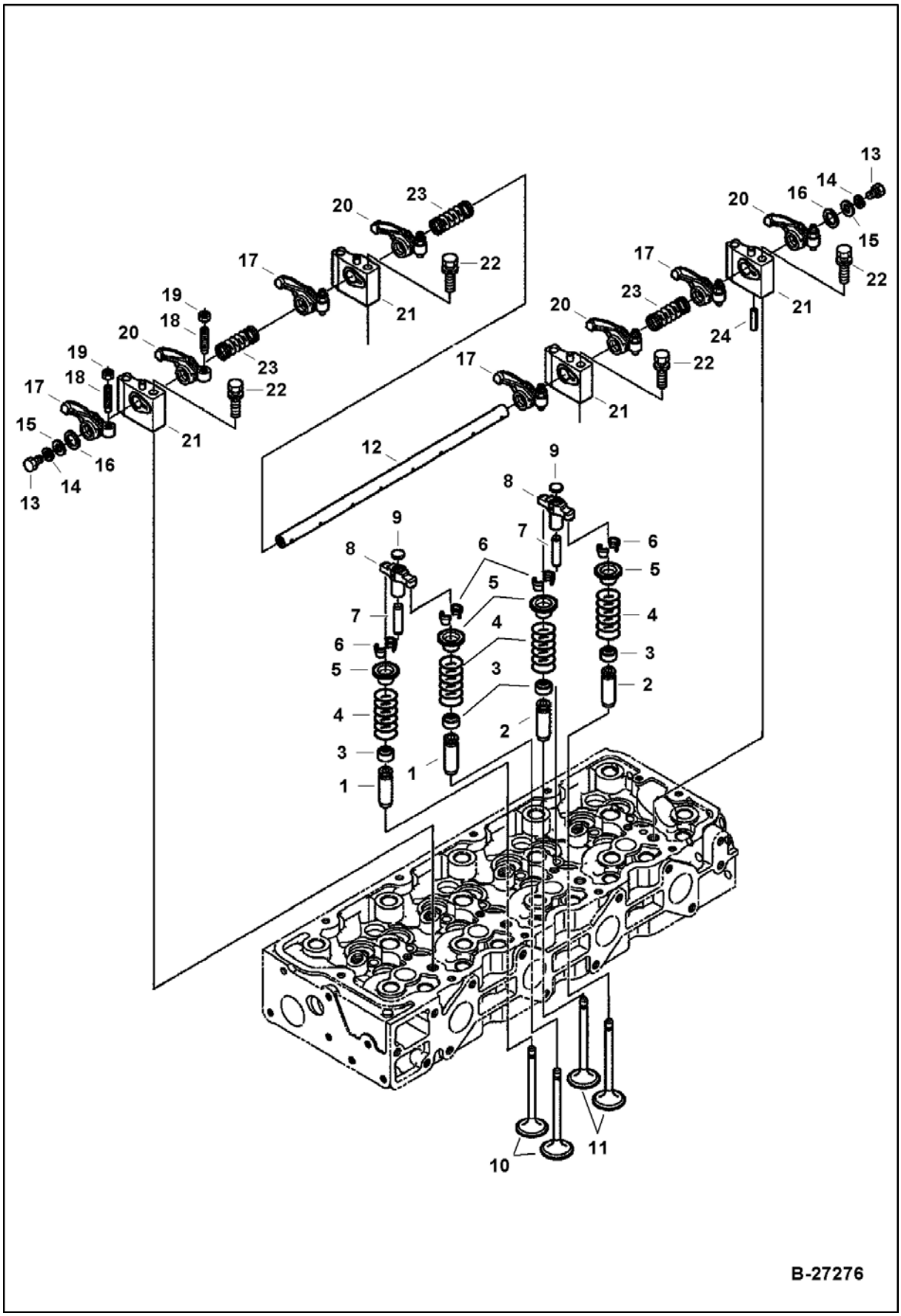

VALVE & ROCKER ARM (Cont'd)

Ref No	Part Number	Description	Remarks	Serial Number	Qty
1	7000666	GUIDE, VALVE	intake		8
2	7000667	GUIDE, VALVE	exhaust		8
3	6670517	SEAL	valve stem		16
4	7000662	SPRING, VALVE			16
5	6670514	RETAINER			16
6	6670515	COLLET	set of (2)		16
7	7000664	SHAFT, VALVE BRIDGE			8
8	7000663	ARM, VALVE BRIDGE			8
9	7000665	PAD, WEAR			8
10	7000660	VALVE, INLET			8
11	7000661	VALVE, EXHAUST			8
12	7000670	SHAFT, ROCKER ARM			1
13	5CM812	BOLT			2
14	6667422	WASHER			2
15	6667451	WASHER	plain		2
16	3974524	WASHER			2
17	7000668	ARM, ROCKER			4
18	3974920	SCREW			8
19	2DM8	NUT			8
20	7000669	ARM, ROCKER			4
21	7000672	BRACKET, ROCKER ARM			4
22	6680685	BOLT			4
23	7000671	SPRING, ROCKER ARM			3
24	7000599	PIN			1

CYLINDER HEAD

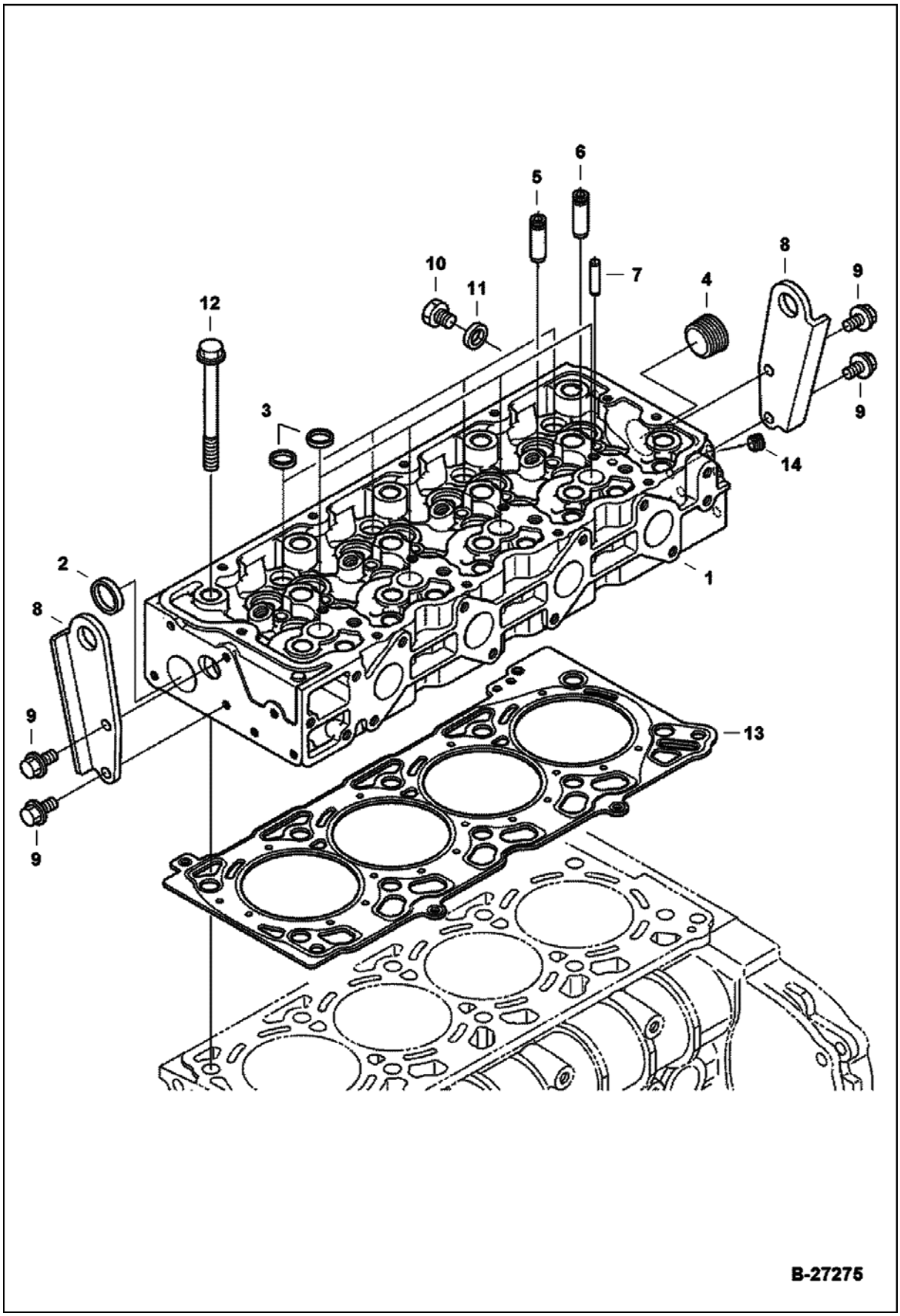

CYLINDER HEAD (Cont'd)

Ref No	Part Number	Description	Remarks	Serial Number	Qty
1	7000644	HEAD, CYL ENG	W/Ref. 2-9		1
2	3974033	CAP			1
3	6670338	PLUG			8
4	6672354	PLUG			1
5	7000666	GUIDE, VALVE	intake		8
6	7000667	GUIDE, VALVE	exhaust		8
7	7000664	SHAFT, VALVE BRIDGE			8
8	7000643	HOOK, LIFT ENG			2
9	7001138	BOLT,FLANGE			4
10	7000607	PLUG			1
11	6698120	GASKET			1
12	7000652	BOLT			10
13	7000645	GASKET, HEAD CYL	no hole		1
13	7000646	GASKET, HEAD CYL	1 hole		1
13	7000647	GASKET, HEAD CYL	2 hole		1
14	6652574	PLUG		E/ AC0001 & Above	1

OIL PAN

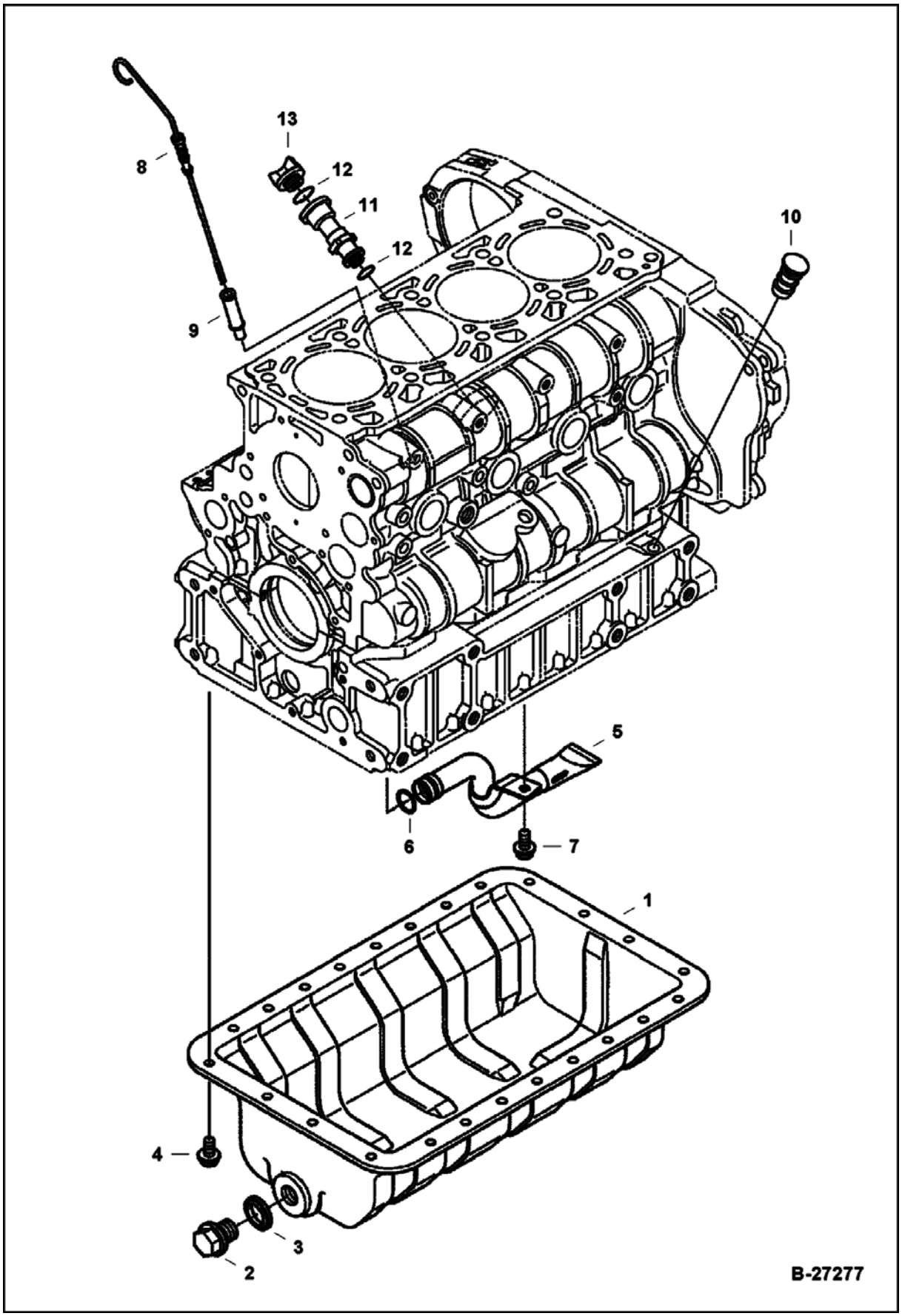

OIL PAN (Cont'd)

Ref No	Part Number	Description	Remarks	Serial Number	Qty
1	7000751	PAN, OIL			1
2	6680657	PLUG			1
3	6631046	SEAL			1
4	7001138	BOLT,FLANGE			24
5	7000763	SCREEN, OIL ENG			1
6	7000597	O-RING			1
7	7001138	BOLT,FLANGE			1
8	7000714	DIPSTICK, OIL ENG			1
9	6687904	GUIDE			1
10	6969804	PLUG,OIL GAUGE			1
11	6655507	FLANGE			1
12	6683009	O-RING			2
13	6685924	CAP			1

PISTON & CRANKSHAFT

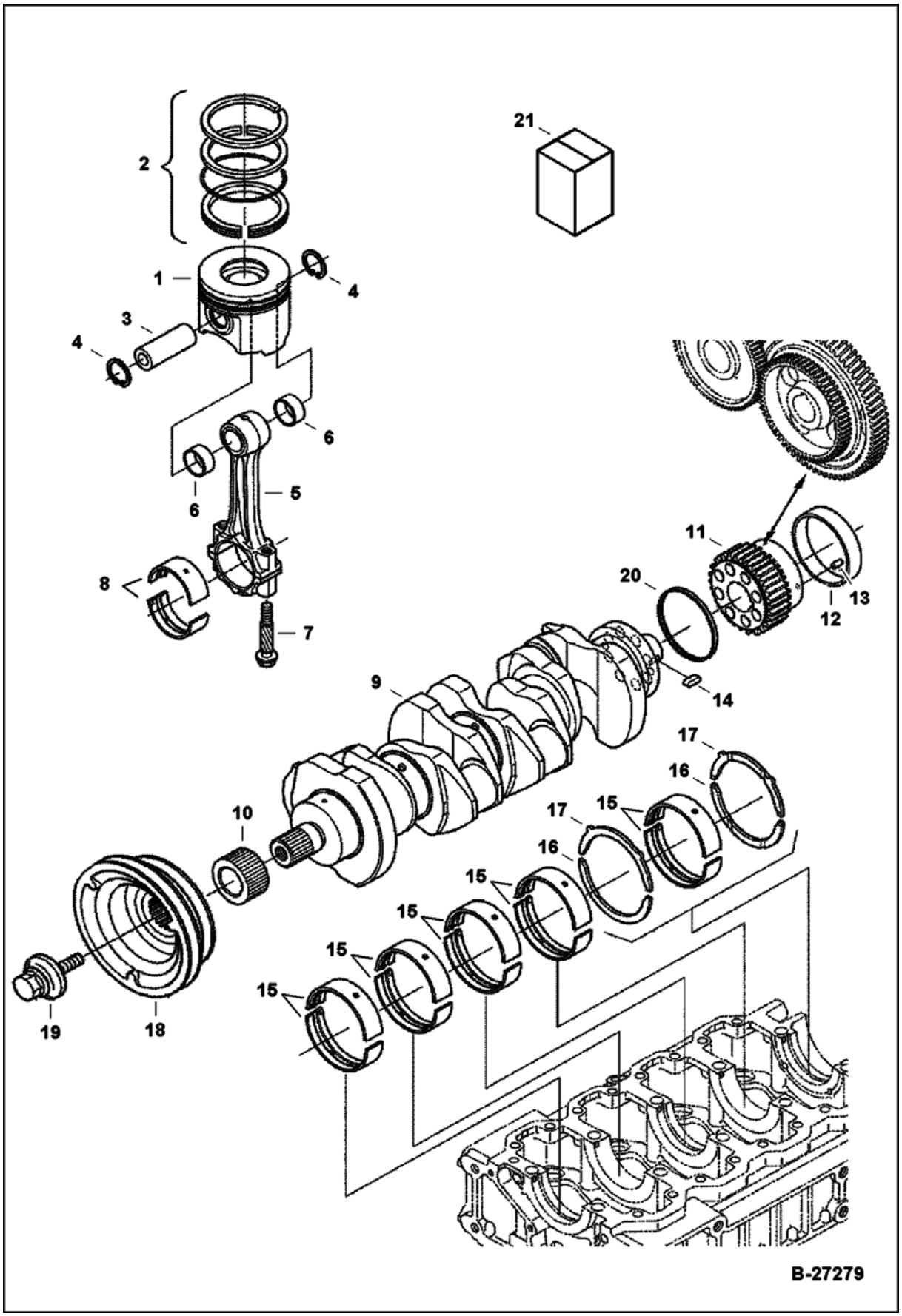

PISTON & CRANKSHAFT (Cont'd)

Ref No	Part Number	Description	Remarks	Serial Number	Qty
1	7000682	PISTON, ENG	(05) std (1J700-2111)		4
1	7000683	PISTON, ENG	(00) std (1J700-2112)		4
1	7000684	PISTON, ENG	(10) std (1J700-2113)		4
1	7000686	PISTON, ENG OS	+.25 mm (05) (1J700-2111 OS25)		4
1	7000687	PISTON, ENG OS	+.25 mm (00) (1J700-2112 OS25)		4
1	7000688	PISTON, ENG OS	(10) +0,25 mm (1J700-2113)		4
2	7000680	RING, PISTON	std		4
2	7000681	RING, PISTON	+0,25 mm		4
3	7000685	PIN, PISTON ENG			4
4	7000596	CIRCLIP			8
5	7020997	ROD, CONNECTING			4
6	7000689	BUSHING, PIN PISTON			8
7	6655498	BOLT			8
8	7000691	BEARING, ENG ROD CONNECTING	std blue set		4
8	7000692	BEARING, ENG ROD CONNECTING	std set		4
8	7000693	BEARING, ENG ROD CONNECTING	-0,20 mm set		4
8	7000694	BEARING, ENG ROD CONNECTING	-0,40 mm set		4
9	7000695	CRANKSHAFT, ENG			1
10	7000616	GEAR, DRIVE			1
11	7000759	GEAR, CRANKSHAFT			1
12	7000696	SLEEVE, WEAR			1
13	3974395	PIN			1
14	7000749	KEY, SHAFT			1
15	7000697	BEARING, ENG CRANKSHAFT	std set		5
15	7000703	BEARING, ENG CRANKSHAFT	-0,20 mm set		5
15	7000704	BEARING, ENG CRANKSHAFT	-0,40 mm set		5
16	7000698	WASHER, THRUST	std		2
16	7000705	WASHER, THRUST	+0,20 mm		2
16	7000706	WASHER, THRUST	+0,40 mm		2
17	7000699	WASHER, THRUST	std		2
17	7000707	WASHER, THRUST	+0,20 mm		2
17	7000708	WASHER, THRUST	+0,40 mm		2
18	7000585	PULLEY, DRIVE			1
19	7000748	BOLT	W/washer		1
20	7002989	SEAL, OIL			1
21	7000700	KIT, BEARING	std - Ref. 8 & 15-17		1

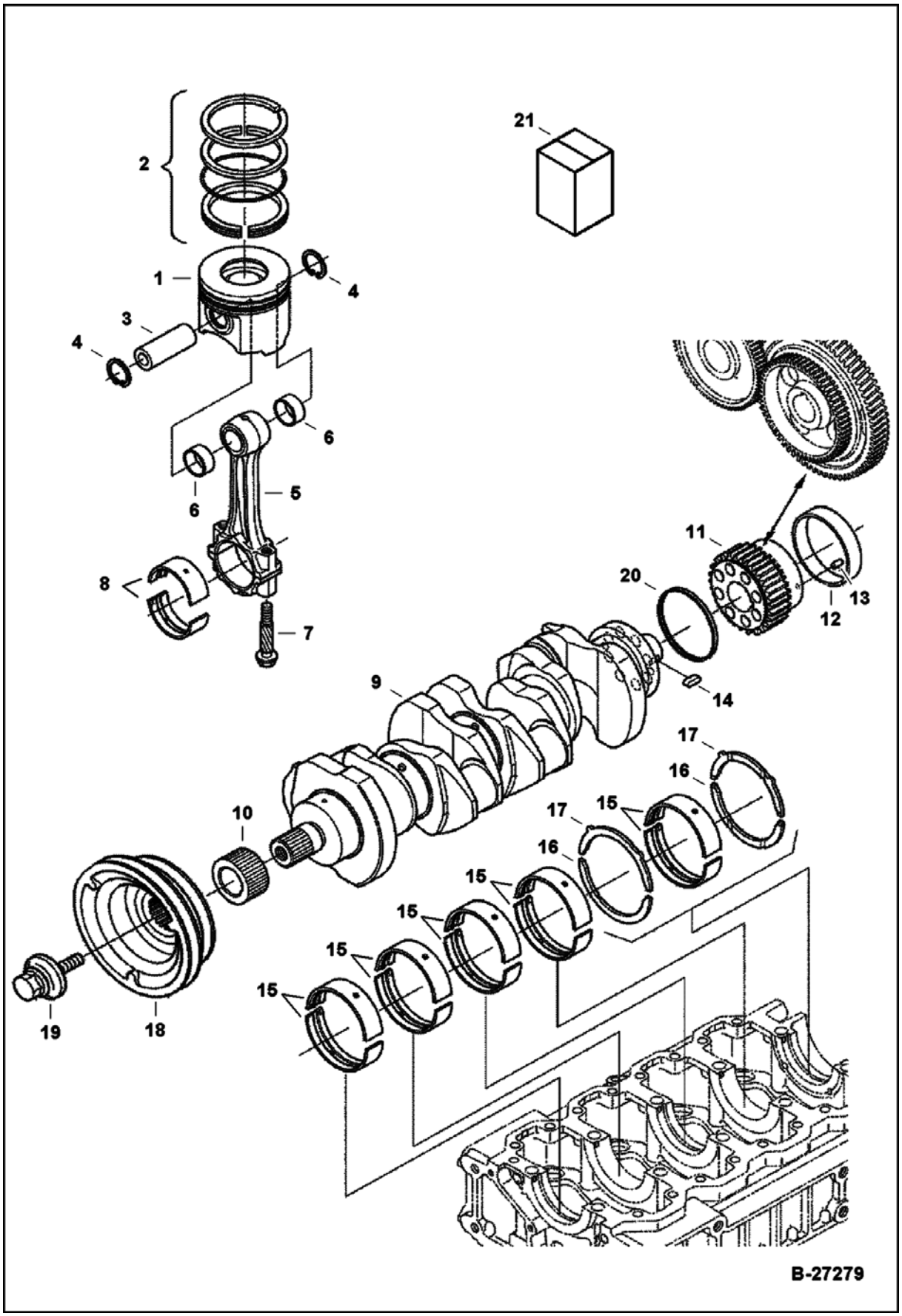
21
2
1
4
3
4
6
6
5
8
7
11
20
13
12
9
14
17
16
10
17
15
16
15
15
15
15
19
18
B-27279

Ref No	Part Number	Description	Remarks	Serial Number	Qty
		ENG			
21	7000701	KIT, BEARING ENG	-0,20 mm/+0,20 mm - Ref. 8 & 15-17		1
21	7000702	KIT, BEARING ENG	-0,40 mm/+0,40 mm - Ref. 8 & 15-17		1

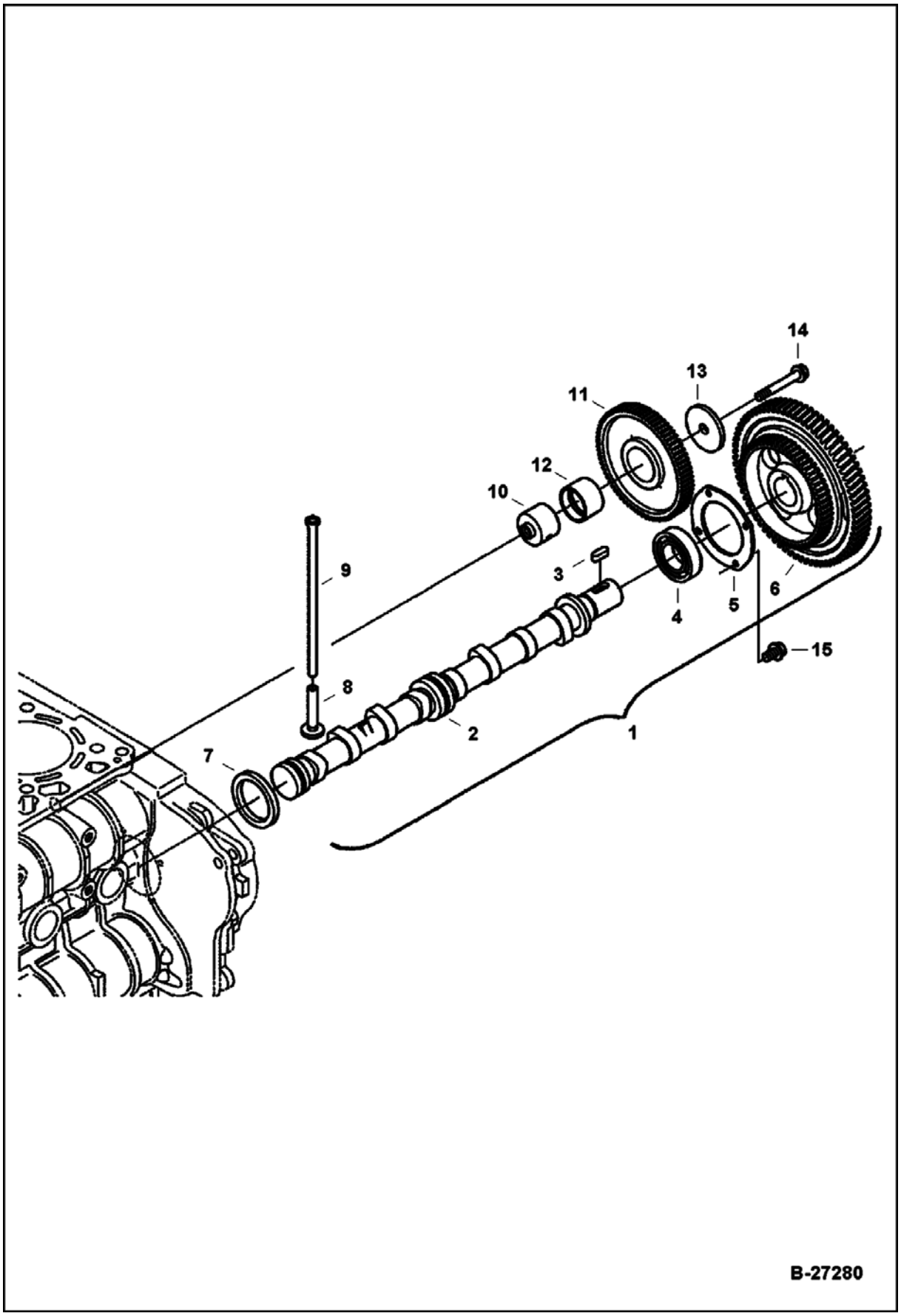
14
13
11
12
10
9
3
6
4
5
15
8
2
1
7
B-27280

CAMSHAFT (Cont'd)

Ref No	Part Number	Description	Remarks	Serial Number	Qty
1	7000757	CAMSHAFT, VALVE	Ref. 2-7		1
2		CAMSHAFT	NSS - Order Ref. 1		1
3	3974546	KEY			1
4	7000603	BEARING, BALL			1
5	7000675	RETAINER, BEARING			1
6	7000758	GEAR, CAMSHAFT			1
7	7000676	CAP, SEALING			1
8	7000612	TAPPET			8
9	7000674	ROD PUSH			8
10	7000760	SHAFT, GEAR IDLER		E/ 9PZ999 & Below	1
10	7021005	SHAFT, GEAR IDLER		E/ 9Q0001 & Above	1
11	7000709	GEAR, IDLER		E/ 9PZ999 & Below	1
11	7021004	GEAR, IDLER		E/ 9Q0001 & Above	1
12	7000710	BUSHING, GEAR IDLE		E/ 9PZ999 & Below	1
12	7021006	BUSHING, GEAR IDLE		E/ 9Q0001 & Above	1
13	7000761	COLLAR, GEAR IDLER			1
14	7000590	BOLT		E/ 9PZ999 & Below	1
14	7020983	BOLT, FLANGE		E/ 9Q0001 & Above	1
15	7001136	BOLT,FLANGE			4

WATER PUMP & THERMOSTAT

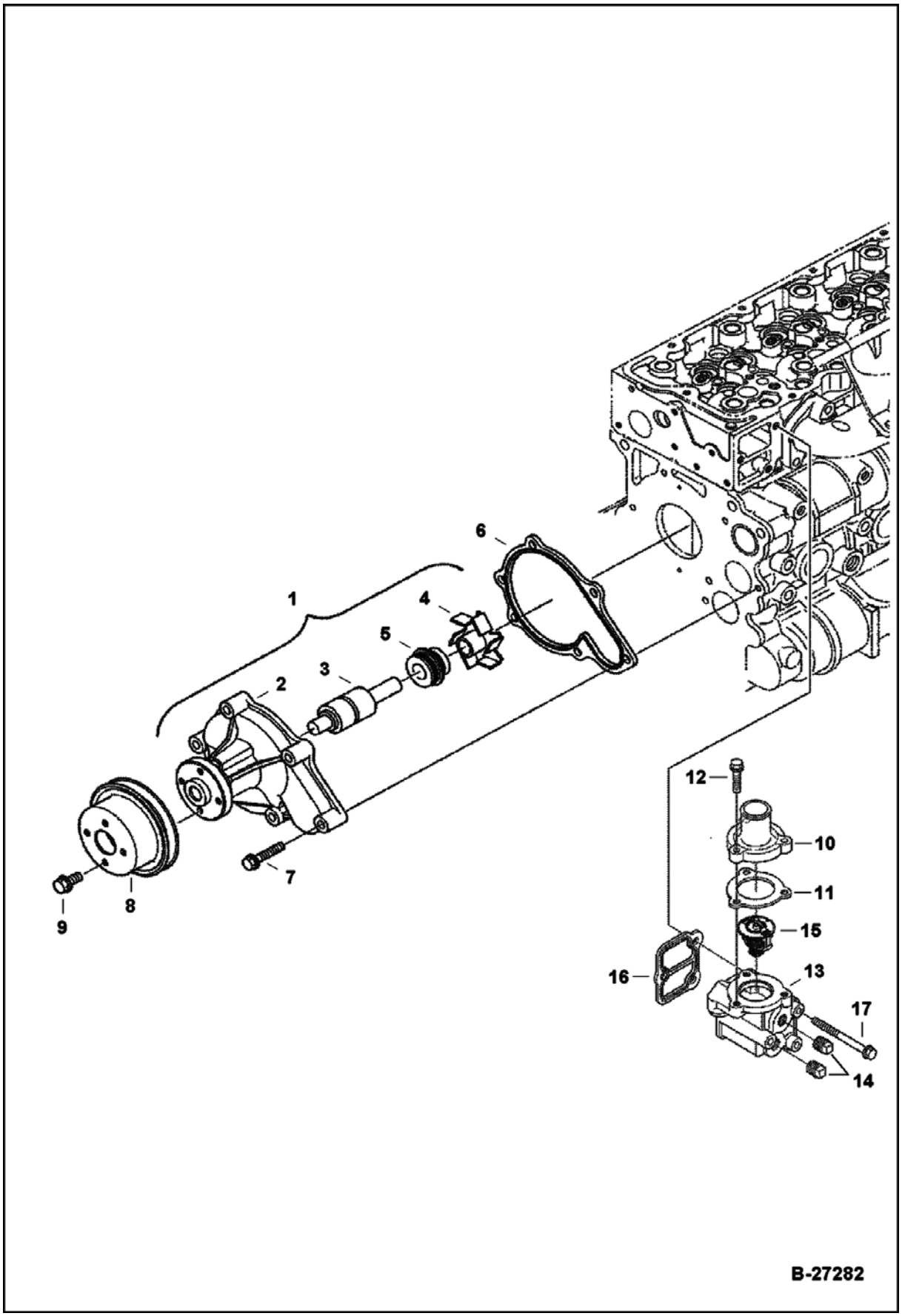

WATER PUMP & THERMOSTAT (Cont'd)

Ref No	Part Number	Description	Remarks	Serial Number	Qty
1	7000743	PUMP, WATER	Ref. 2-5		1
2		FLANGE	NSS - Order Ref. 1		1
3		SHAFT	NSS - Order Ref. 2		1
4		IMPELLAR	NSS - Order Ref. 3		1
5	6680280	SEAL			1
6	7000746	GASKET, PUMP WATER			1
7	6689192	BOLT, FLANGE			6
8	6674169	PULLEY	water pump		1
9	29CM612	BOLT, FLANGED			4
10	7000745	COVER, THERMOSTAT			1
11	7020988	GASKET	thermostat cover		1
12	7001139	BOLT,FLANGE			3
13	7000584	FLANGE, WATER	W/Ref. 14		1
14	6684857	PLUG			2
15	7000742	THERMOSTAT			1
16	7000741	GASKET, FLANGE WATER			1
17	7000582	BOLT			3

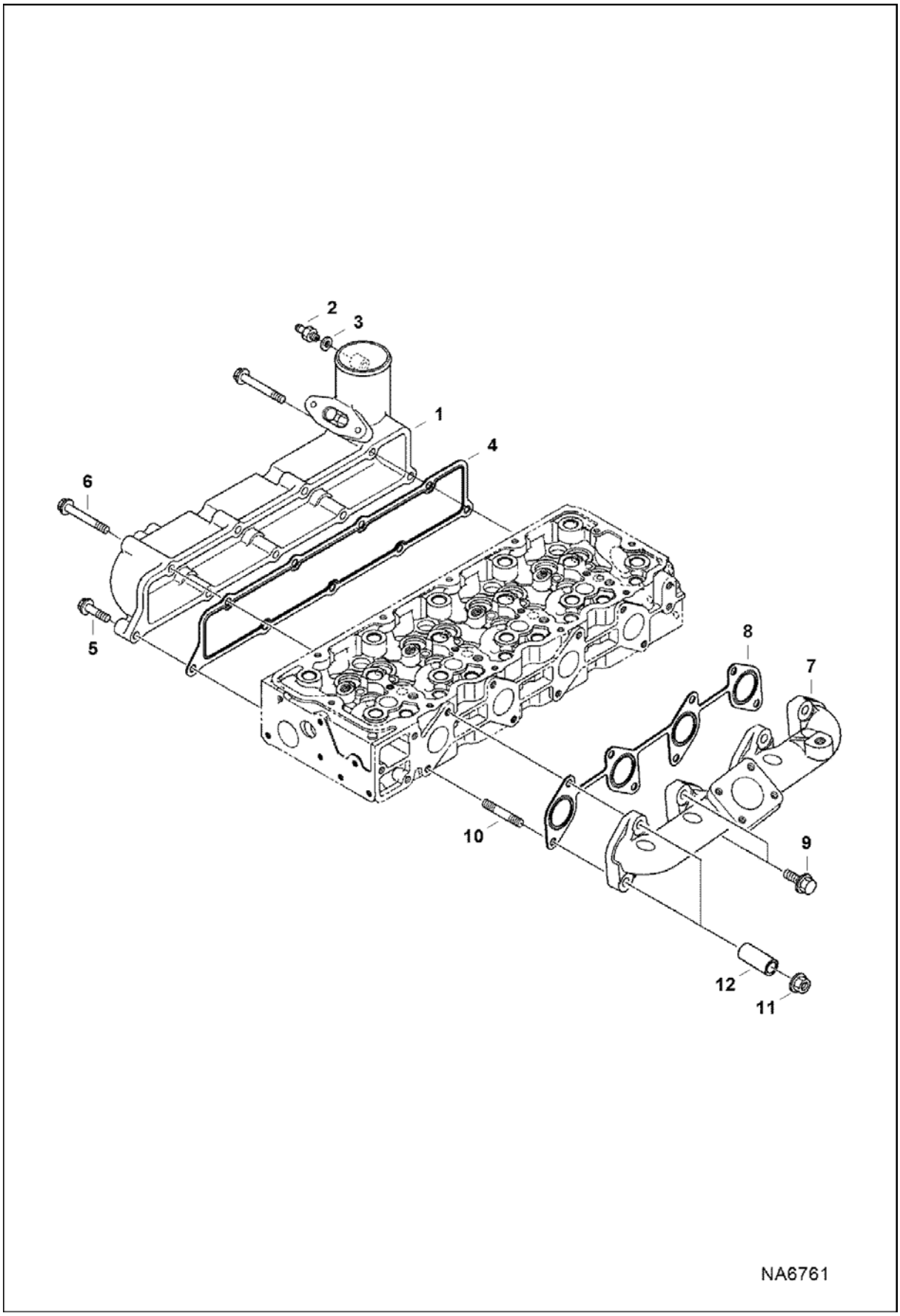
2
3
1
4
6
5
8
7
10
9
12
11
NA6761

Ref No	Part Number	Description	Remarks	Serial Number	Qty
1	7000753	MANIFOLD, INTAKE	W/Ref. 2-3		1
2	6657446	SCREW			1
3	3974972	GASKET			1
4	7000658	GASKET, MANIFOLD INTAKE			1
5	6680706	BOLT			7
6	6680687	BOLT			2
7	7000754	MANIFOLD, EXHAUST			1
8	7000659	GASKET, MANIFOLD EXHAUST			1
9	7010138	BOLT, FLANGE			4
10	7025271	STUD			4
11	7024379	NUT, FLANGE			4
12	7019303	SPACER			4

TURBOCHARGER

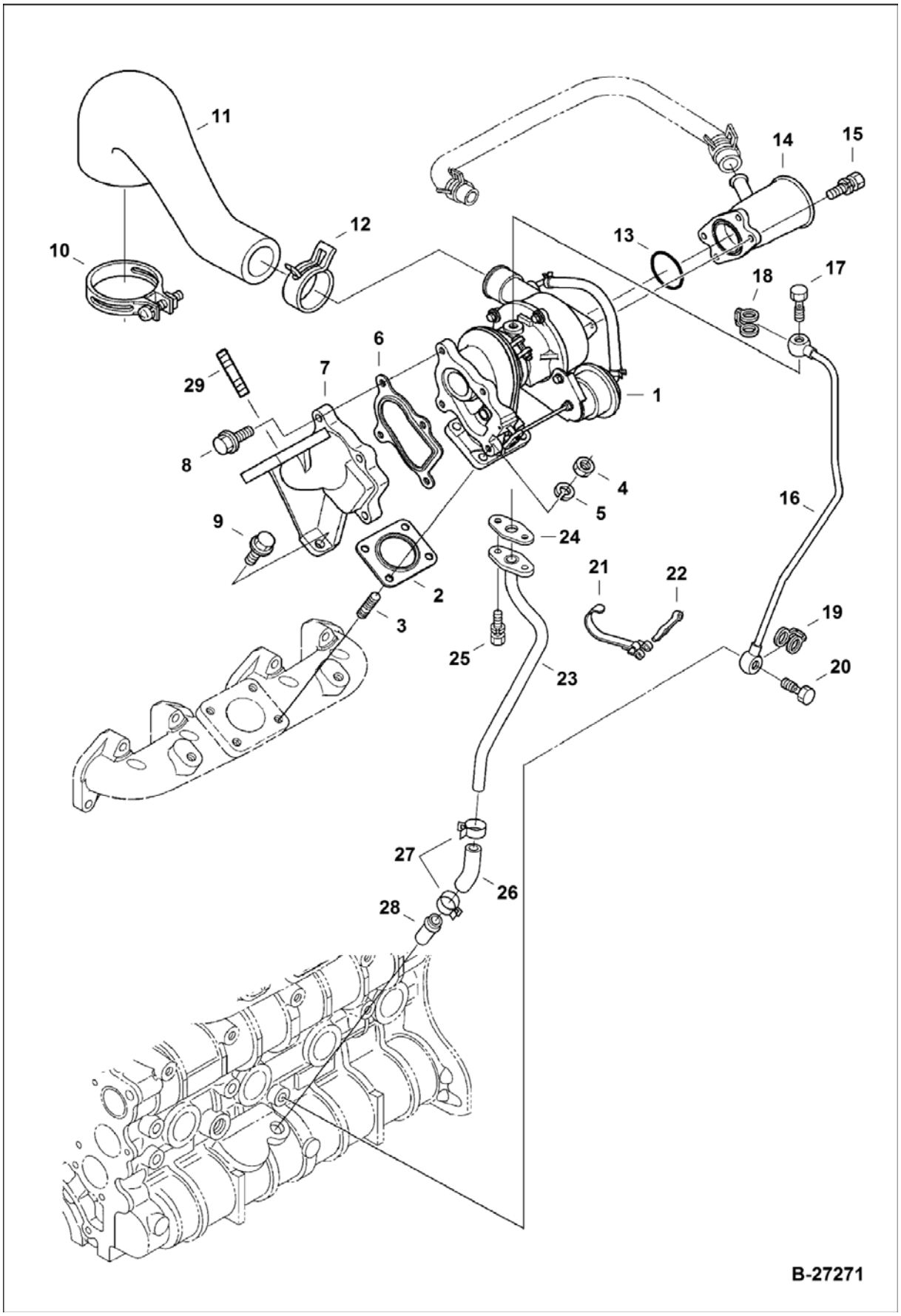

TURBOCHARGER (Cont'd)

Ref No	Part Number	Description	Remarks	Serial Number	Qty
1	7020831	TURBOCHARGER			1
2	7000678	GASKET, TURBOCHARGER			1
3	6680564	STUD			4
4	6652792	NUT			4
5	6667422	WASHER			4
6	7000679	GASKET, FLANGE MUFFLER			1
7	7000755	FLANGE, MUFFLER			1
8	6657416	BOLT			4
9	6686043	BOLT			1
10	6655143	BAND	bolt type		1
10	7012017	CLAMP, HOSE	screw type		1
11	7000657	HOSE, AIR FORMED			1
12	6686046	CLAMP			1
13	7000598	O-RING			1
14	7000656	FLANGE, INTAKE			1
15	6653584	BOLT			2
16	7000764	PIPE, OIL			1
17	6685598	BOLT			1
18	7000642	WASHER, SEALING COPPER			1
19	6689331	GASKET			1
20	7023827	BOLT, EYE			1
21	6685601	CLAMP			1
22	6680576	PIN			1
23	7000765	PIPE, OIL			1
24	6680570	GASKET			1
25	4CM614	BOLT			2
26	6685600	TUBE			1
27	6675618	CLAMP			2
28	6655880	PIPE			1
29	6680799	STUD		CJ0001 & Above	4

EGR VALVE

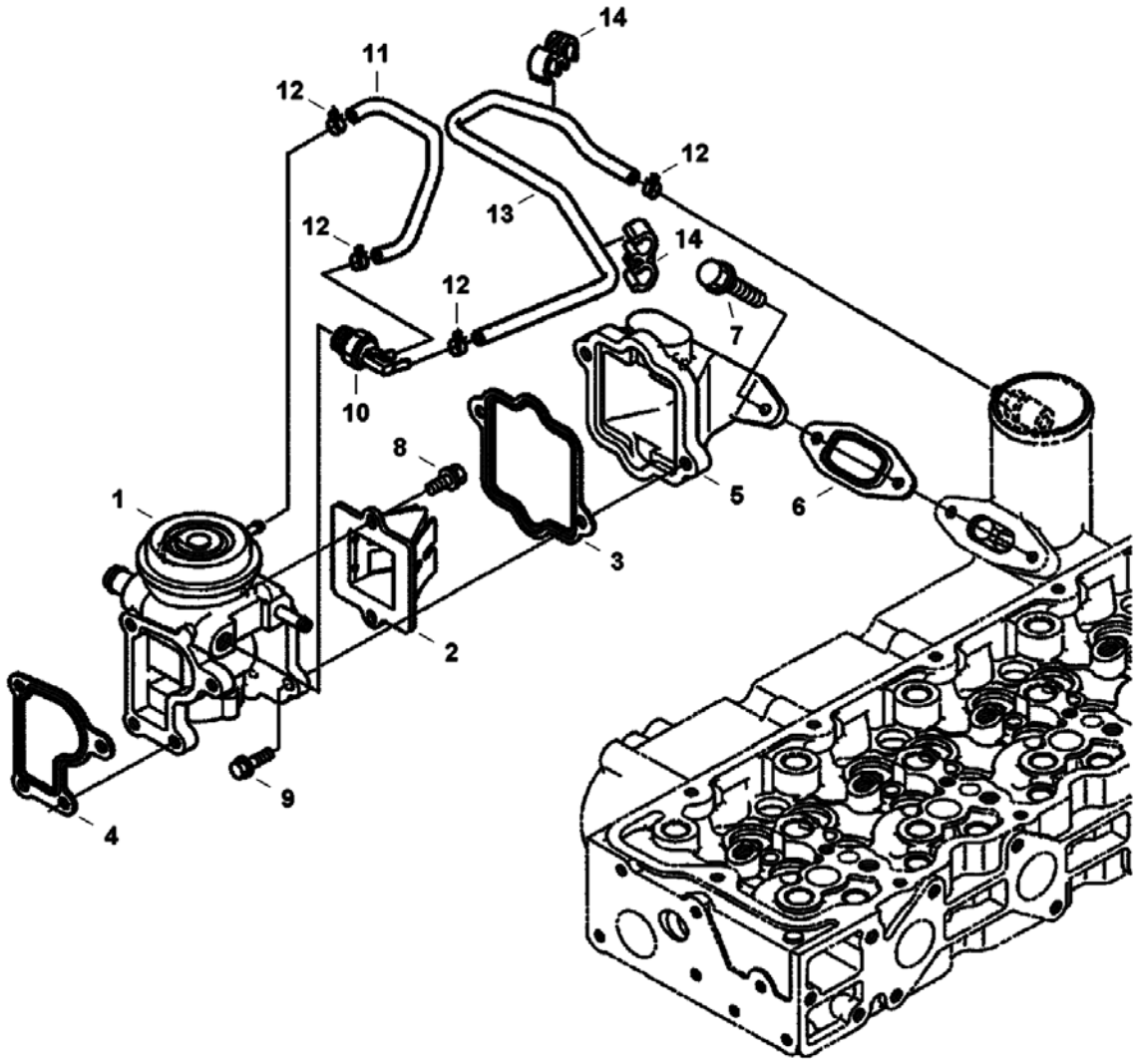

EGR VALVE (Cont'd)

Ref No	Part Number	Description	Remarks	Serial Number	Qty
1	7000770	VALVE, EGR			1
2	6698580	VALVE, LEAD			1
3	7000634	GASKET, EGR VALVE			1
4	7000633	GASKET, EGR VALVE			1
5	7000631	FLANGE, EGR			1
6	7000632	GASKET EGR INLET			1
7	7001139	BOLT,FLANGE			2
8	6680803	BOLT			2
9	6680755	BOLT			2
10	6698585	VALVE, THERMOSTATIC			1
11	7000641	HOSE, VACUUM			1
12	6657556	BAND			4
13	7000747	HOSE, VACUUM			1
14	7000611	CLIP, HOSE		E/ 8ZZ999 & Below	2
14	7012013	CLAMP, HOSE		E/ 9A0001 & Above	2

EGR COOLER

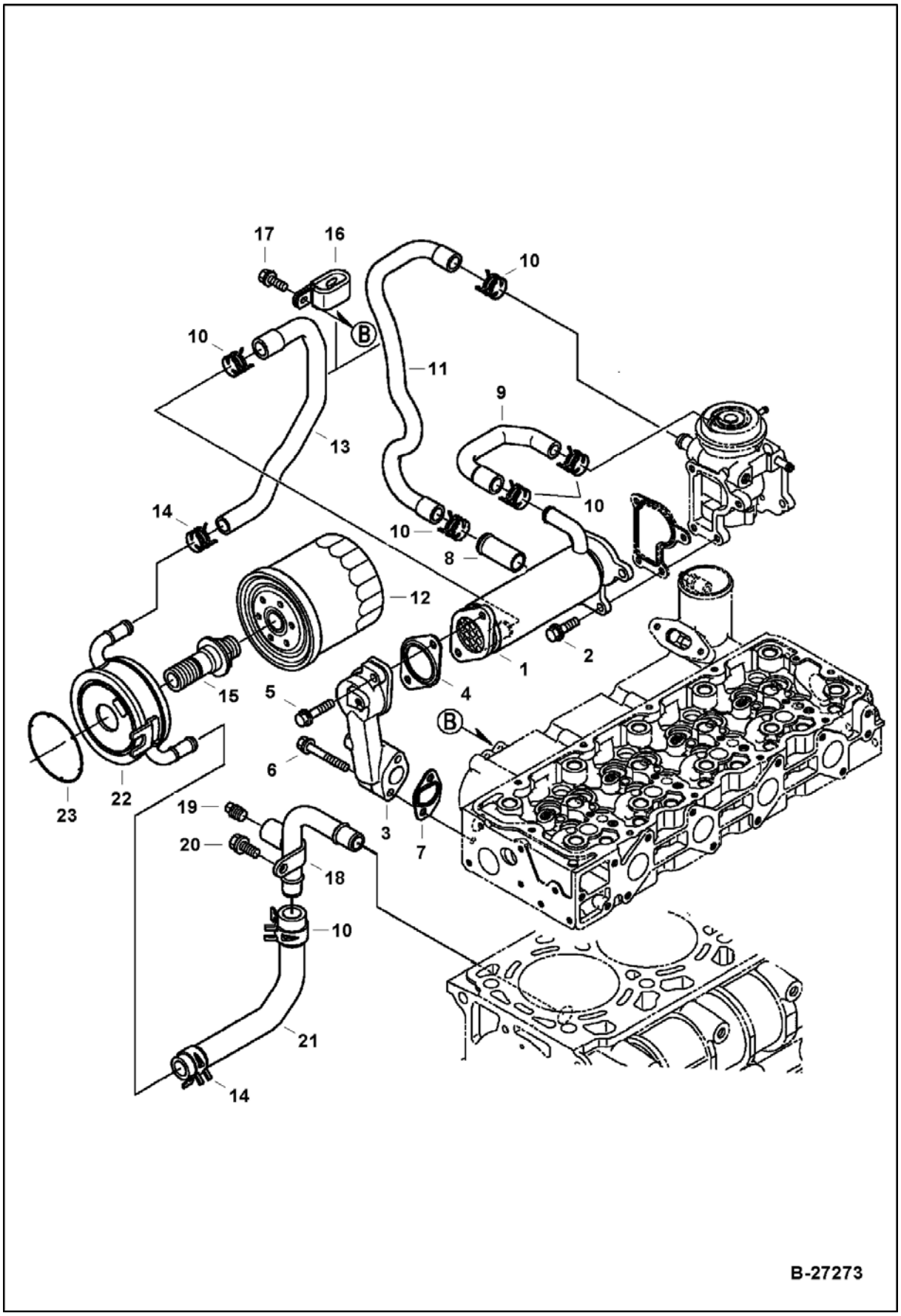
17
16
10
10
11
9
13
10
14
10
8
12
1
2
15
5
4
B
6
23
22
19
3
7
20
18
10
21
14
B-27273

EGR COOLER (Cont'd)

Ref No	Part Number	Description	Remarks	Serial Number	Qty
1	7000736	EXCHANGER, EGR			1
2	6680801	BOLT			4
3	7008809	BASE, COOLER EGR			1
4	7000635	GASKET, EGR COOLER			1
5	6680755	BOLT			2
6	7001141	BOLT,FLANGE			2
7	7000636	GASKET, EGR BASE			1
8	6680689	ADAPTER			1
9	7000738	HOSE, HEATER FORMED			1
10	6675618	CLAMP			6
11	7000739	HOSE, HEATER FORMED			1
12	6675517	FILTER, OIL ENG			1
13	7000737	HOSE, HEATER FORMED			1
14	6684889	CLAMP			2
15	7000717	CONNECTOR			1
16	7000740	CLAMP, HOSE			1
17	7001135	BOLT,FLANGE			1
18	7000744	PIPE, WATER			1
19	16F4	PLUG			1
19	7008393	PLUG			1
20	7001135	BOLT,FLANGE			1
21	7000718	PIPE, OIL			1
22	7000716	EXCHANGER, OIL COOLER	W/Ref. 23		1
23	6698244	ORING			1

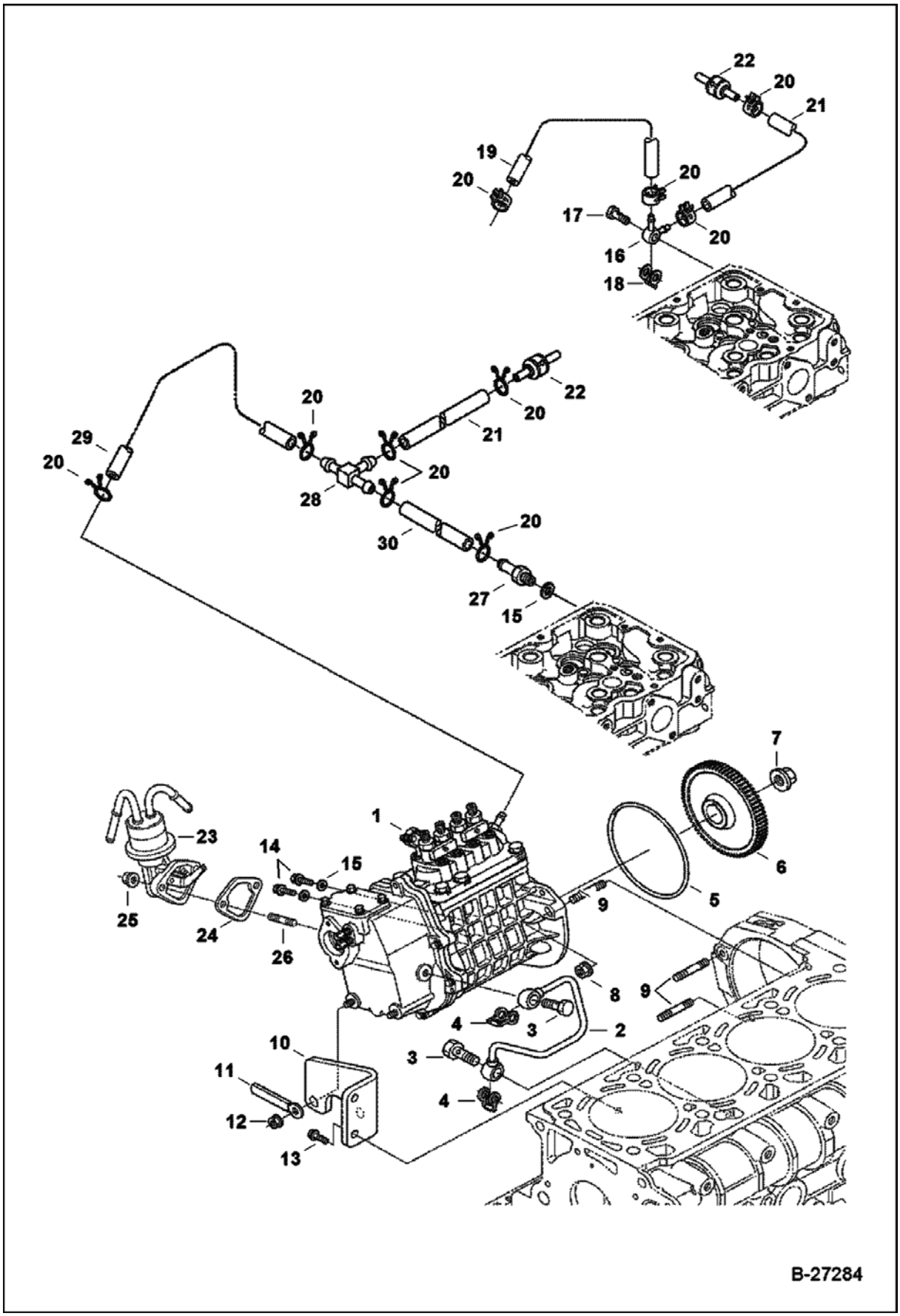
22
20
21
19
20
20
17
20
16
18
20
22
20
21
29
20
20
28
20
30
27
15
7
1
23
14
15
6
5
25
24
26
9
8
9
4
3
2
10
3
11
4
12
13
B-27284

FUEL & INJECTION PUMP (Cont'd)

Ref No	Part Number	Description	Remarks	Serial Number	Qty
1	7000766	PUMP, FUEL INJ W/GOVERNOR	See BTI418	E/ 8VZ999 & Below	1
1	7012015	PUMP, INJ FUEL UNIT	See BTI418	E/ 8W0001 & Above	1
2	7000711	PIPE, OIL			1
3	6680900	BOLT			2
4	6685962	WASHER, SEALING ALUMINUM			2
5	7000618	GASKET, PUMP INJ			1
6	7000722	GEAR, PUMP INJ			1
7	7000613	NUT			1
8	6969819	NUT, FLANGE			3
9	6685919	STUD			3
10	7000723	BRACKET, PUMP INJ			1
11	6653891	CLAMP			1
12	6969819	NUT, FLANGE			2
13	6680662	BOLT			2
14	6680662	BOLT			2
14	6680815	SET SCREW	for locking pump when removing for service		2
15	3974095	MET-GASK			3
16	7000627	FITTING, BANJO		E/ 8MZ999 & Bel	1
16	7008517	FITTING, BANJO		E/ 8N0001 & Abv	1
17	7022765	BOLT, EYE			1
18	6698528	WASHER, SEALING			1
19	7000605	TUBE, FUEL LINE ASSY			1
20	6654718	CLAMP			6
21	7000604	TUBE, FUEL LINE ASSY			1
22	6680796	VALVE			1
23	7000767	PUMP, FUEL			1
24	6670782	GASKET			1
25	6670533	NUT			2
26	6680264	STUD			2
27	7021002	SCREW, BLEEDER AIR			1
28	6680797	TEE			1
29	7020984	TUBE FUEL			1
30	6687670	TUBE, FUEL LINE ASSY			1

INJECTION PUMP
(Fuel Camshaft)

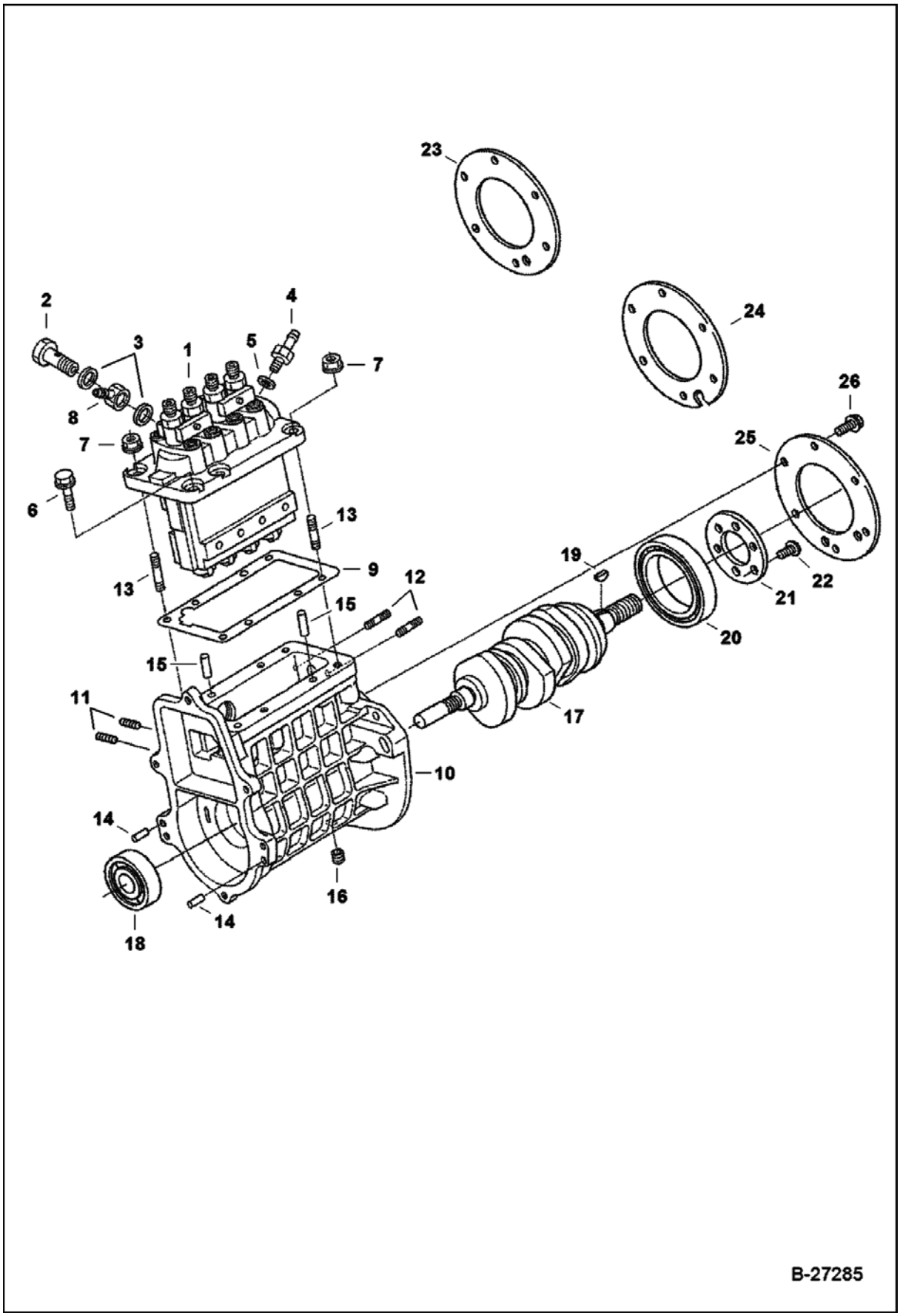

INJECTION PUMP (Cont'd)
(Fuel Camshaft)

Ref No	Part Number	Description	Remarks	Serial Number	Qty
1	7000721	PUMP, INJ FUEL			1
2	7001499	BOLT, EYE			1
3	6698120	GASKET			2
4	7000609	SCREW, AIR BLEEDER			1
5	3974095	MET-GASK			1
6	6680755	BOLT			4
7	6969819	NUT, FLANGE			2
8	6513707	JOINT	eye		1
9	6684829	SHIM	0,35 mm		1
10	7000720	HOUSING, PUMP INJ	W/Ref. 11-16	E/ 8VZ999 & Bel	1
10	7010591	HOUSING, PUMP INJ	W/Ref. 11 & 13-15	E/ 8W0001-9FZ999	1
10	7020994	HOUSING, PUMP INJ	W/Ref. 11 & 13-15	E/ 9G0001 & Above	1
12	7000606	STUD		E/ 8VZ999 & Bel	2
13	6652670	STUD			2
14	6680809	PIN			2
15	3974394	PIN			2
16	6680667	PLUG		E/ 8VZ999 & Bel	1
17	7000628	CAMSHAFT, FUEL			1
18	7000637	BEARING, BALL			1
19	6680813	KEY			1
20	7000617	BEARING, BALL			1
21	7000614	RETAINER, BEARING			1
22	7000594	SCREW			6
23	7000629	RETAINER, BEARING	W/7 holes	E/ 8VZ999 & Bel	1
24	7010592	RETAINER, BEARING	W/6 holes and 1 notch	E/ 8W0001 - 9F9999	1
25	7020993	RETAINER	W/8 holes	E/ 9G0001 & Above	1
26	29CM612	BOLT, FLANGED			6

INJECTION PUMP
(Adjustment Bolts)

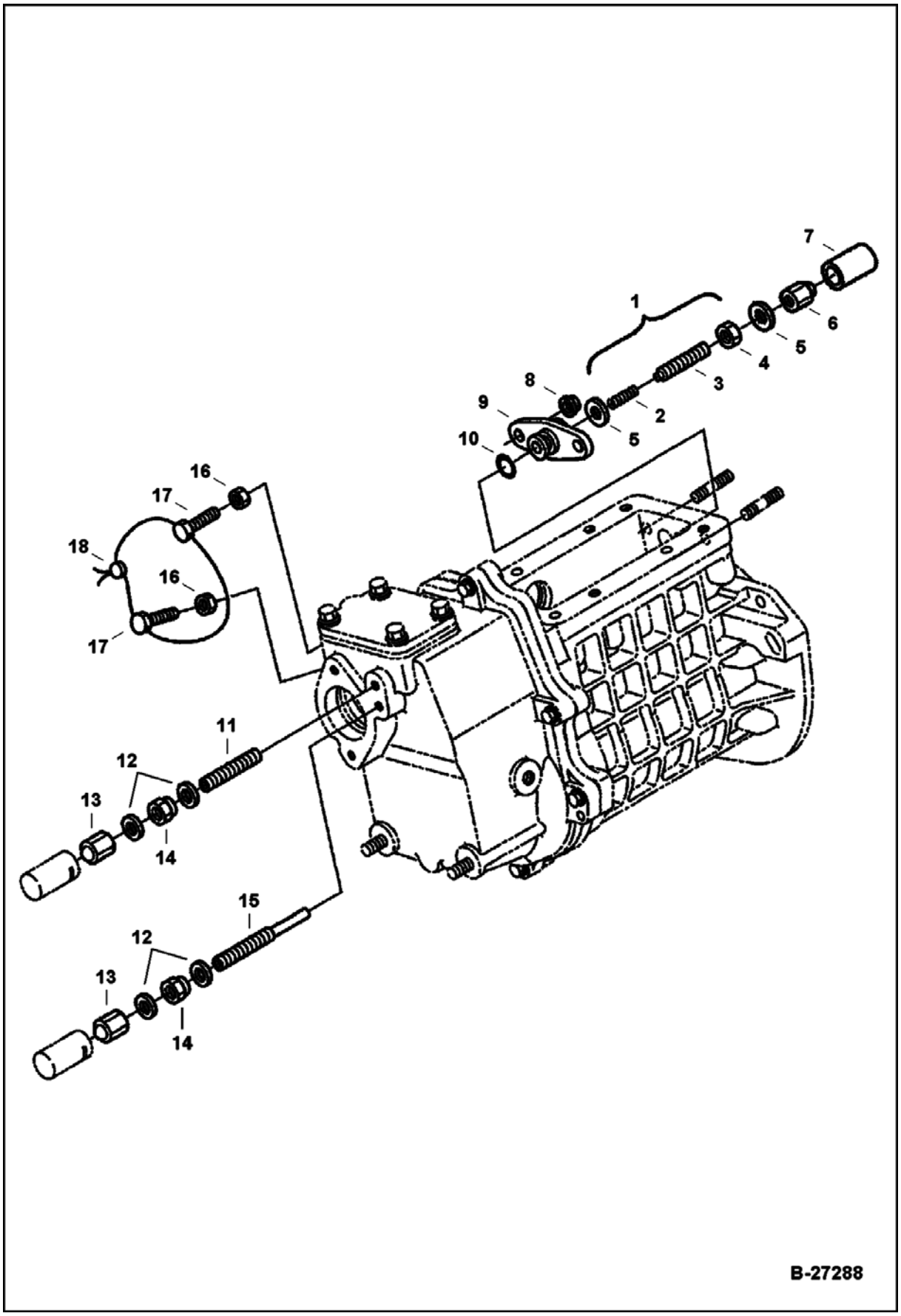

INJECTION PUMP (Cont'd)
(Adjustment Bolts)

Ref No	Part Number	Description	Remarks	Serial Number	Qty
1	7000730	BOLT, ADJUSMENT ASSY	Ref. 2-4	E/ 8TZ999 & Below	1
1	7012050	BOLT, ADJUSTMENT ASSY	Ref. 2-4	E/ 8U0001 & Above	1
2		SPRING	NAP - Order Ref. 1		1
3		BOLT, ADJUSTING	NAP - Order Ref. 1		1
4	3974425	NUT			1
5	3974095	MET-GASK			2
6	3974978	NUT			1
7	3974979	CAP			1
8	6670533	NUT		E/ 8VZ999 & Bel	2
9	7000621	BRACKET, BOLT ADJUSTING		E/ 8VZ999 & Bel	1
10	7000731	O-RING		E/ 8VZ999 & Bel	1
11	7020989	STUD	for harness bracket		2
11	7000589	BOLT, ADJUSTING			1
12	3974972	GASKET			4
13	6655223	NUT			2
14	6680272	NUT			2
15	7000620	BOLT, ADJUSTING			1
16	1DM6	NUT			2
17		BOLT	NAP		2
18		WIRE, SECURITY	NAP		1

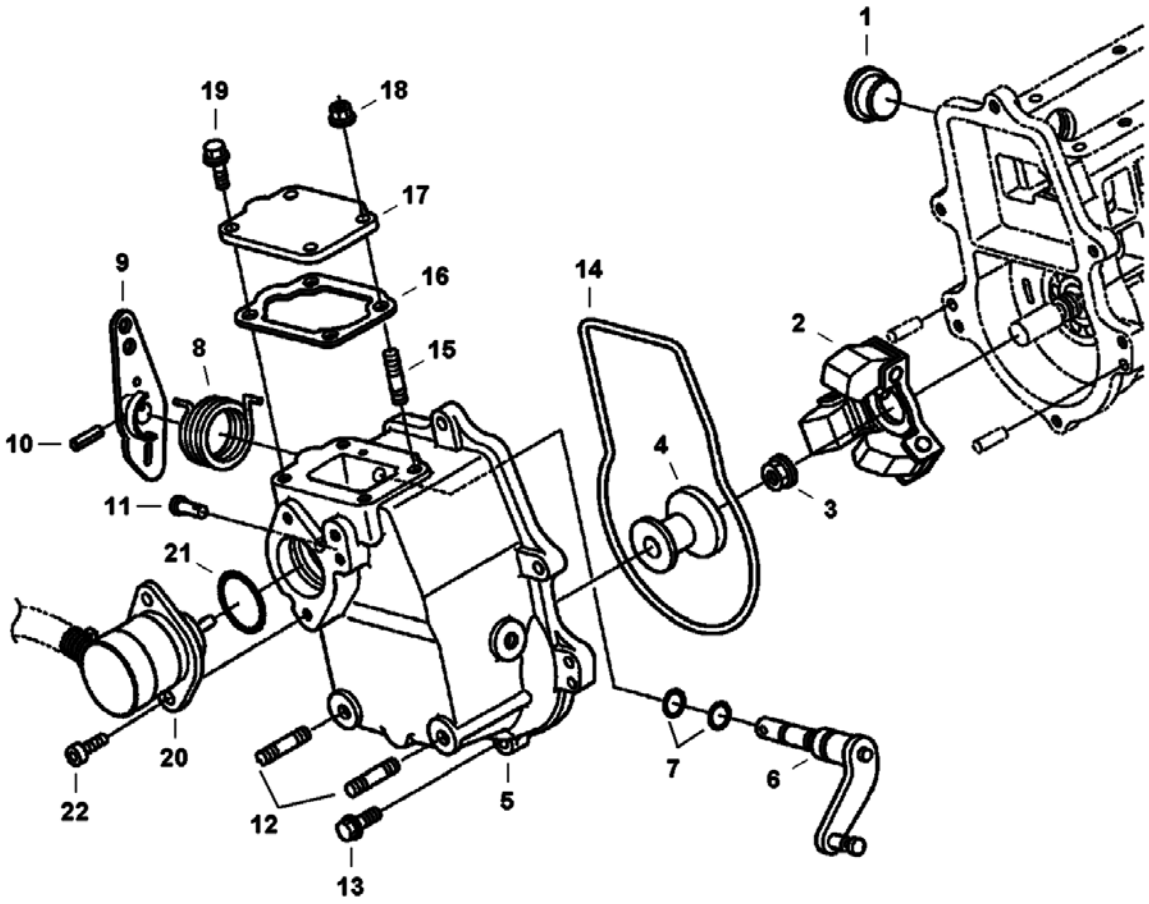
1
19
18
17
9
16
14
2
8
15
10
4
3
11
21
7
6
20
22
12
5
13
B-27286

GOVERNOR (Cont'd)

Ref No	Part Number	Description	Remarks	Serial Number	Qty
1	6680757	COVER			1
2	7000638	WEIGHT, GOVERNOR			1
3	6680759	NUT			1
4	7000622	SLEEVE, GOVERNOR			1
5		HOUSING, GOVERNOR	NAP - Order 7021007 housing and 7020987 fork lever shaft - Was 7000768 [A]		1
6	7000623	LEVER, GOVERNOR			1
7	6683023	O-RING			2
8	7000625	SPRING, SPEED CONTROL			1
9	7000640	LEVER, SPEED			1
10	6680769	PIN			1
11	6652592	PIN			1
12	6680828	STUD			2
13	6680830	BOLT		E/ AXZ999 & Below	6
13	6680544	BOLT		E/ AY0001 & Above	6
14	6680829	GASKET			1
15	6683087	STUD			1
16	6684841	GASKET			1
17	6685500	COVER			1
19	29CM612	BOLT, FLANGED			3
20	7000769	SOLENOID, SHUTOFF FUEL	W/ 240 mm (9.45") lead		1
21	6685465	O-RING			1
22	6680533	BOLT			2

GOVERNOR
(Fork Lever)

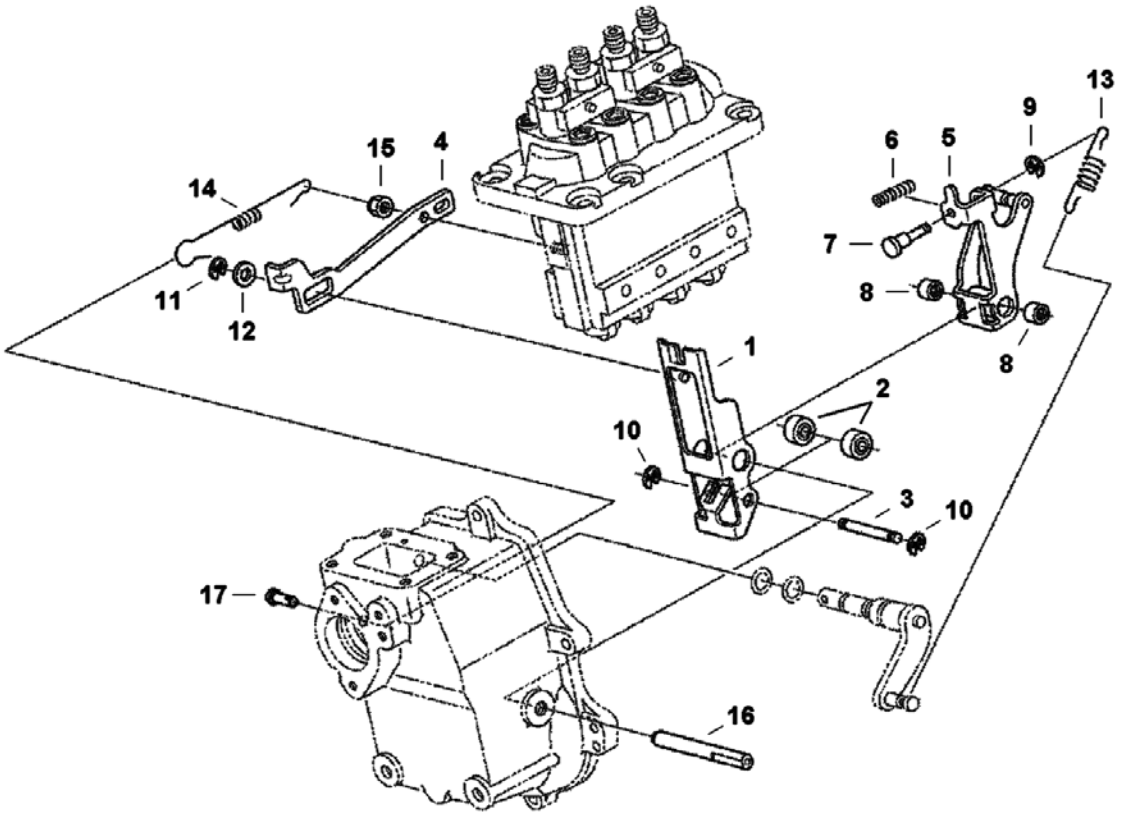

GOVERNOR (Cont'd)
(Fork Lever)

Ref No	Part Number	Description	Remarks	Serial Number	Qty
1	7000639	LEVER, FORK	W/Ref. 2-12		1
2		BEARING	NSS - Order Ref. 1		2
3		SHAFT	NSS - Order Ref. 1		1
4		BRACKET	NSS - Order Ref. 1		1
5		LEVER	NSS - Order Ref. 1		1
6		SPRING	NSS - Order Ref. 1		1
7		PIN	NSS - Order Ref. 1		1
8		BUSHING	NSS - Order Ref. 1		2
9	6680823	SNAP RING			1
10	6680822	SNAP RING			2
11	6680821	SNAP RING			1
12	6680820	WASHER			1
13	7000732	SPRING, GOVERNOR			1
14	7000733	SPRING, START			1
15	6685952	NUT			1
16	7000624	SHAFT, FORK LEVER		E/ 9FZ999 & Below	1
16	7020987	SHAFT, FORK LEVER		E/ 9G0001 & Above	1
17	6652592	PIN			1

INJECTION NOZZLES

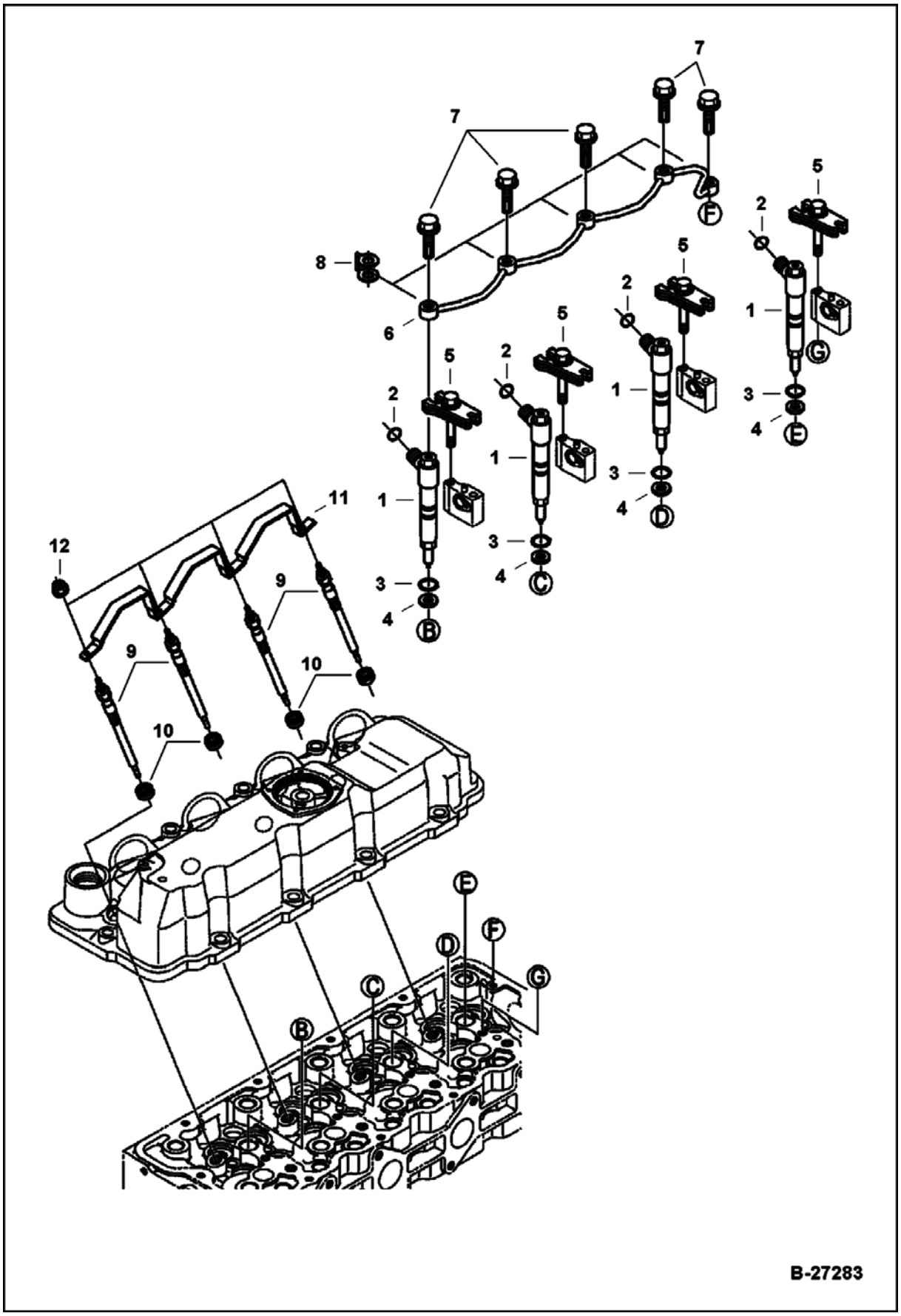

INJECTION NOZZLES (Cont'd)

Ref No	Part Number	Description	Remarks	Serial Number	Qty
1		HOLDER, NOZZLE	NAP - Order 7020613 & 6680788 - Was 7000724 [A]		4
2	6680778	O-RING			4
3	7000619	ORING			4
4	6969824	GASKET, NOZZLE INJ			4
5	7000725	CLAMP, INJECTION			4
6	7000719	PIPE, RETURN FUEL			1
7	6680788	BOLT			5
8	6685498	GASKET			5
9	7000734	GLOW PLUG			4
10	7000626	SEAL	glow plug		4
11	7000735	CORD, GLOW PLUG			1
12	6670472	NUT			4

INJECTION PIPES

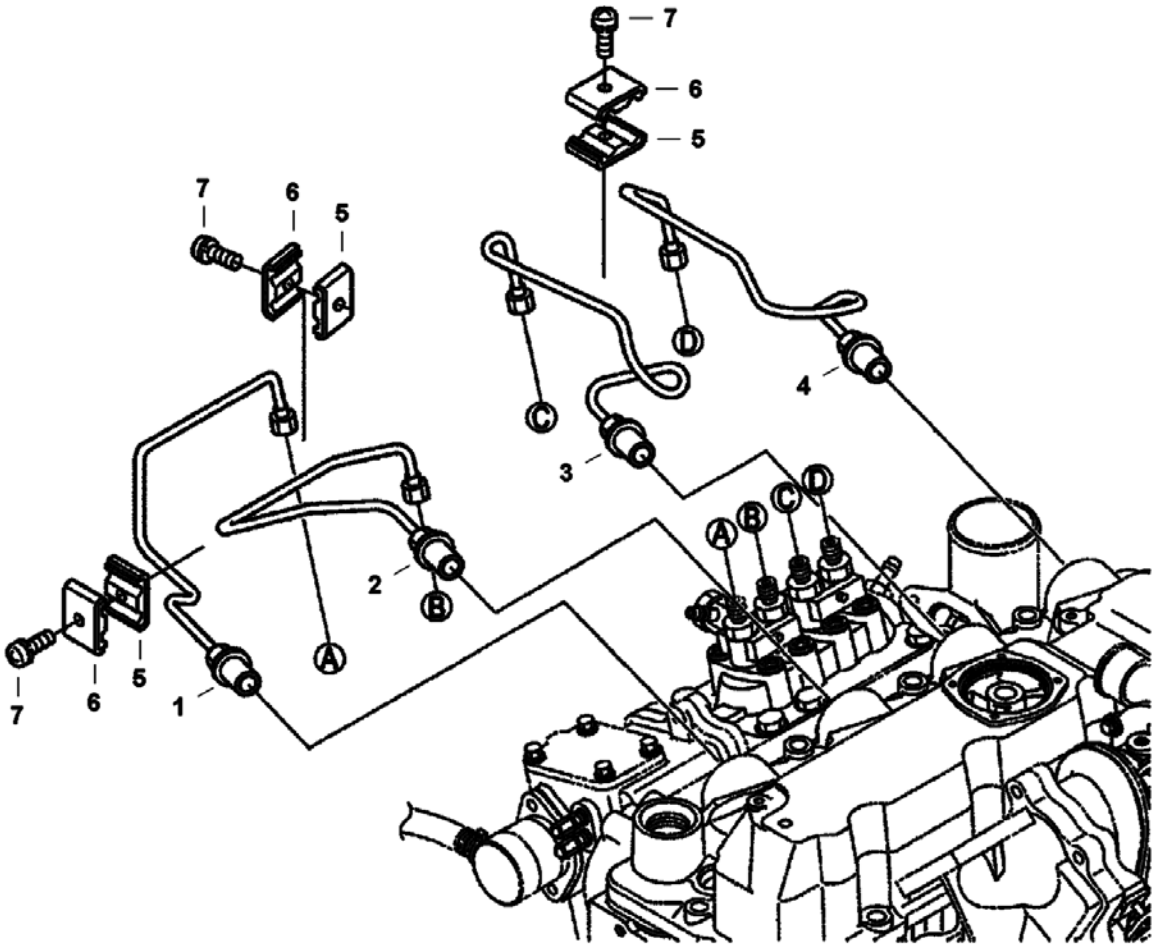

INJECTION PIPES (Cont'd)

Ref No	Part Number	Description	Remarks	Serial Number	Qty
1	7000726	PIPE, INJECTION			1
2	7000727	PIPE, INJECTION			1
3	7000728	PIPE, INJECTION			1
4	7000729	PIPE, INJECTION			1
5	6652688	CLAMP			3
6	6652689	CLAMP			3
7	3974260	SCREW			3

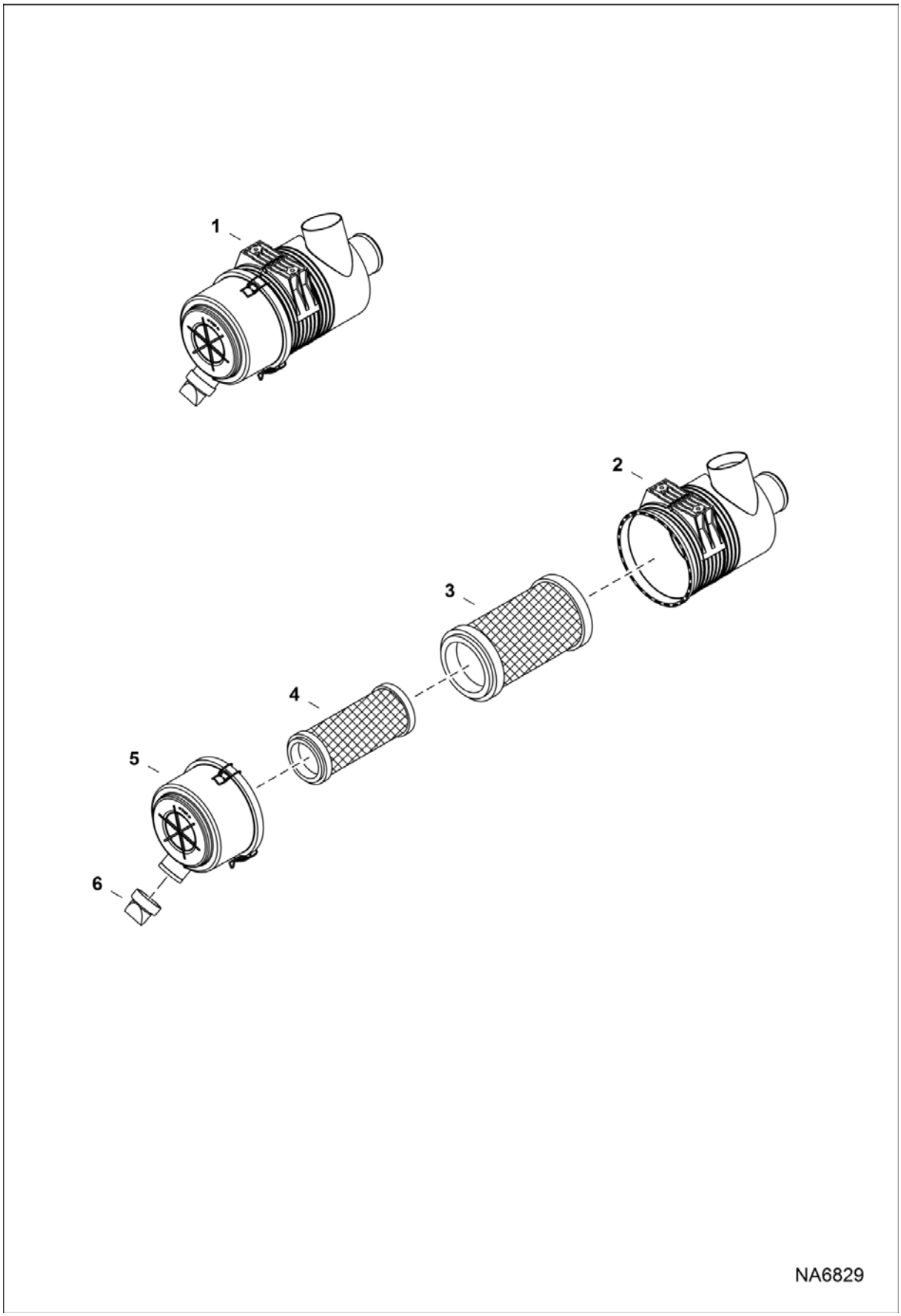
1
2
3
4
5
6
NA6829

Ref No	Part Number	Description	Remarks	Serial Number	Qty
1	7197700	FILTER, AIR	W/Ref. 2-6		1
2		TANK	NSS - Order Ref. 1		1
3	7025562	FILTER, AIR OUTER			1
4	7025561	FILTER, AIR INNER			1
5	7025563	COVER			1
6	6692954	VALVE			1

ACCESS COVER
(Cleanout - Lower Front of Chaincase)

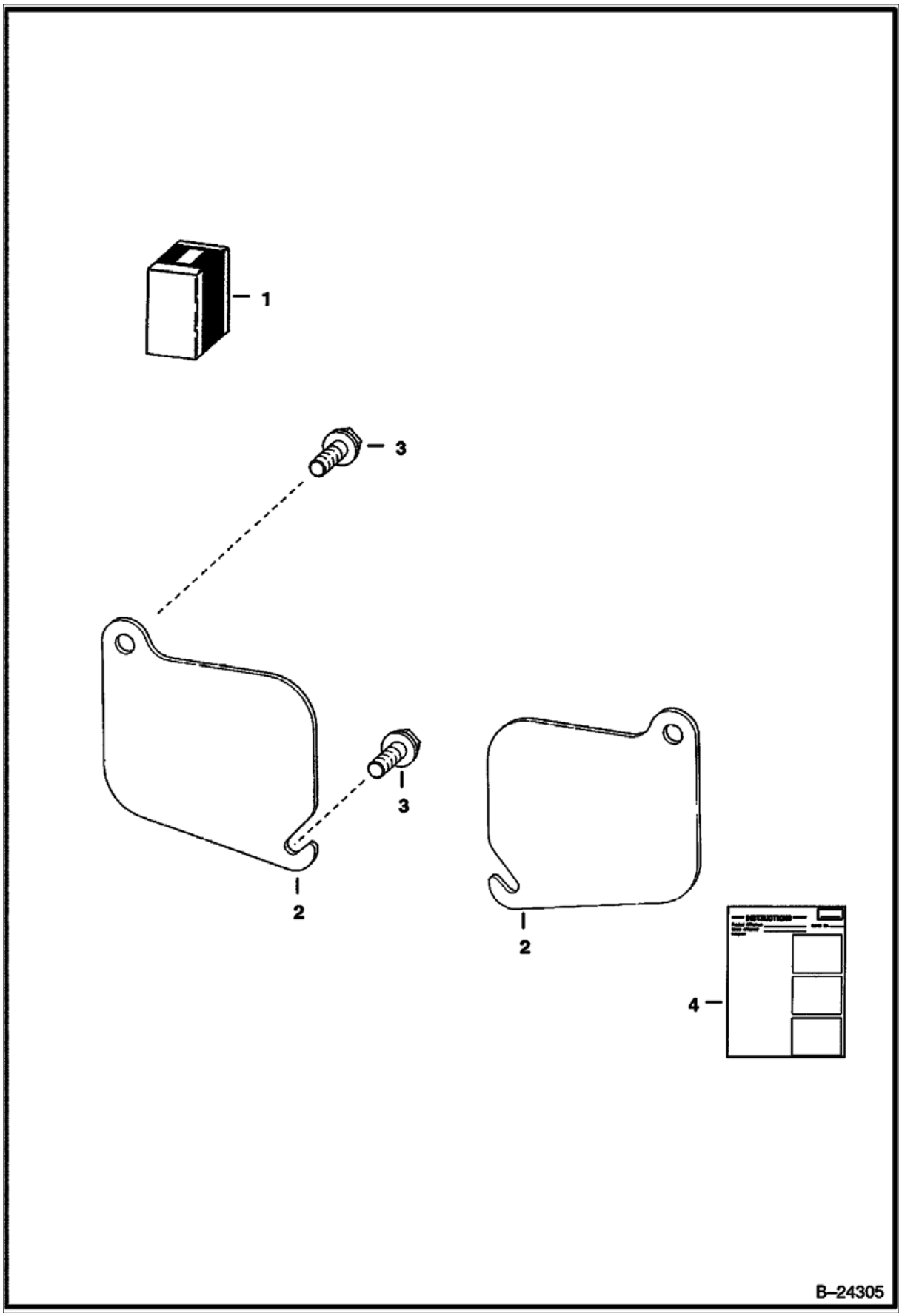

ACCESS COVER (Cont'd)
(Cleanout - Lower Front of Chaincase)

Ref No	Part Number	Description	Remarks	Serial Number	Qty
1	6716010	COVER, ACCESS			2
2	84G3712	BOLT 5			4

ACCESSORIES HARNESS KIT

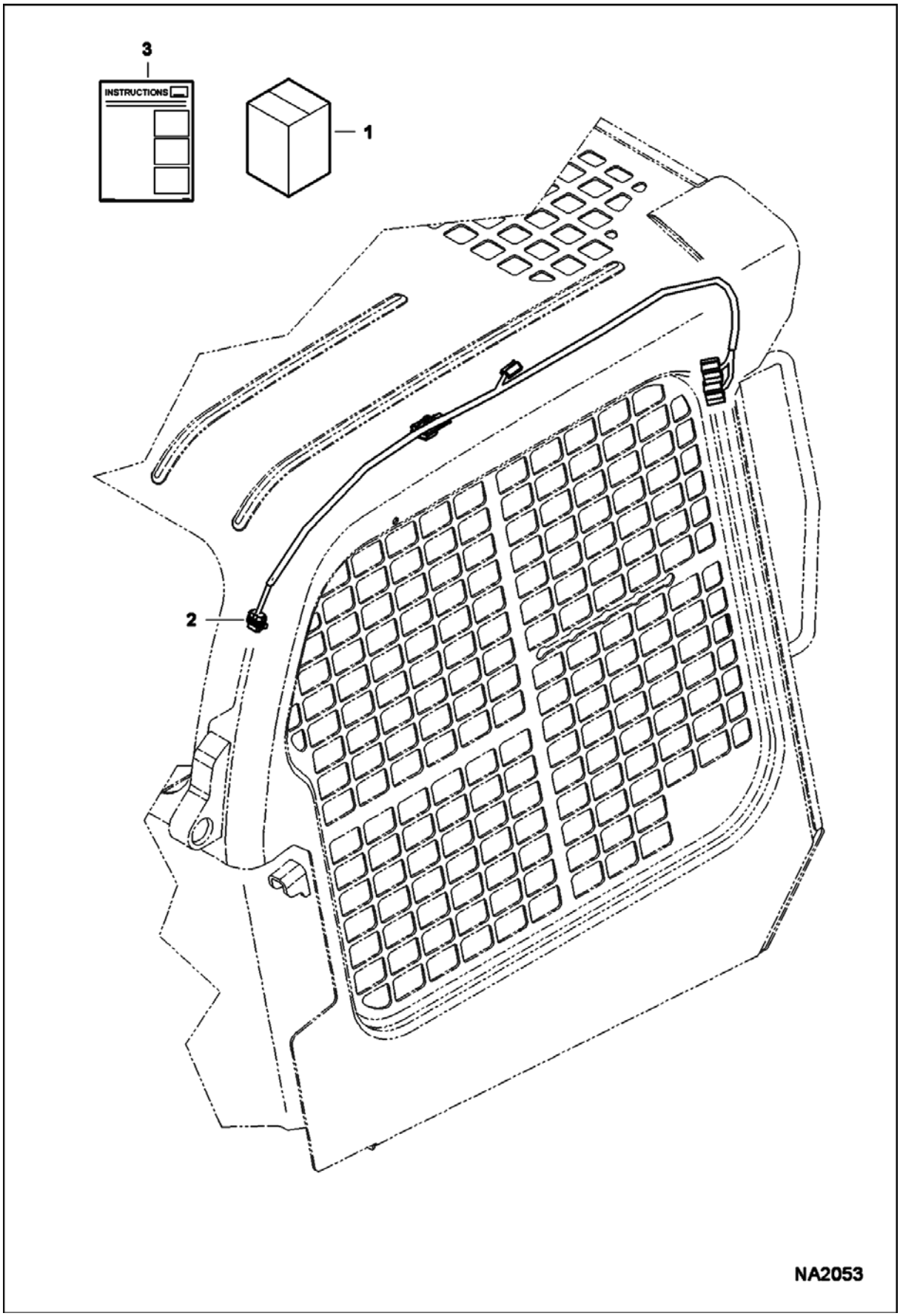

ACCESSORIES HARNESS KIT (Cont'd)

Ref No	Part Number	Description	Remarks	Serial Number	Qty
1		KIT, STD OPT ADAPTER	NAP - Order components - Was 7169103 [D]		1
2	7169130	HARNESS ACCESSORY			1
3	6987252	INSTRUCTIONS			1

BACK-UP ALARM KIT
(Manual Controls, AHC & ACS)

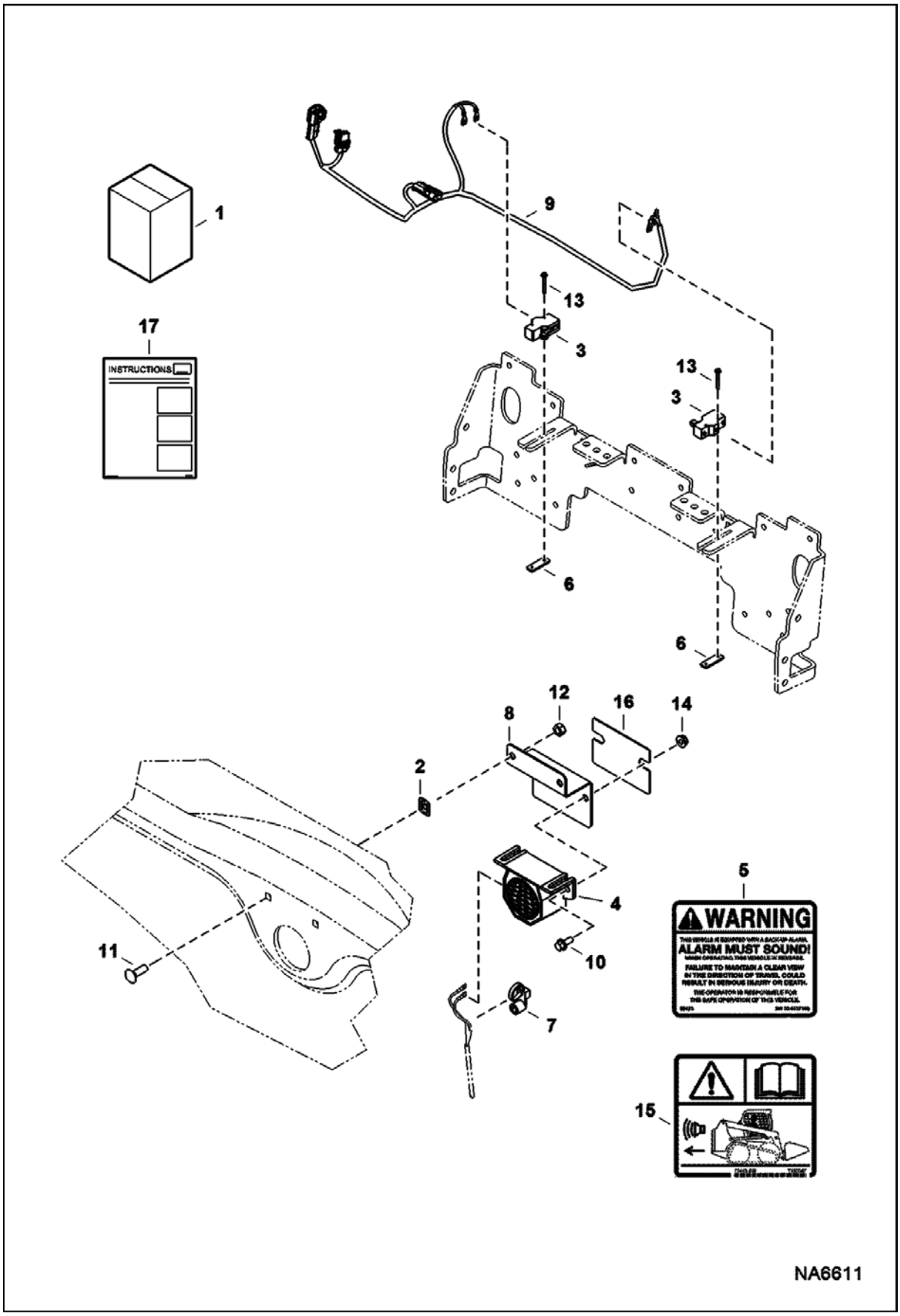

BACK-UP ALARM KIT (Cont'd)
(Manual Controls, AHC & ACS)

Ref No	Part Number	Description	Remarks	Serial Number	Qty
1	7173592	KIT, ALARM BACK-UP	Ref, 2 & 3-17		1
2	774220	NUT			2
3	6646781	SWITCH			2
4	6651512	ALARM BACKUP			1
5	6737189	DECAL, WARNING	backup alarm		1
6	6702593	SPACER			2
7	7002988	TIE, STUD MOUNT			1
8	7189077	MOUNT			1
9	7175017	HARNESS, ALARM BACK-UP			1
10	35C410	BOLT 5			2
11	37C516	BOLT			2
12	61D5	NUT			2
13	84G1320	BOLT			4
14	97D4	NUT			2
15	7180087	DECAL, WARNING			1
16	7191385	SHIELD, ALARM			1
17	6987235	INSTRUCTIONS			1

BACK-UP ALARM KIT
(Selectable Joystick Controls)

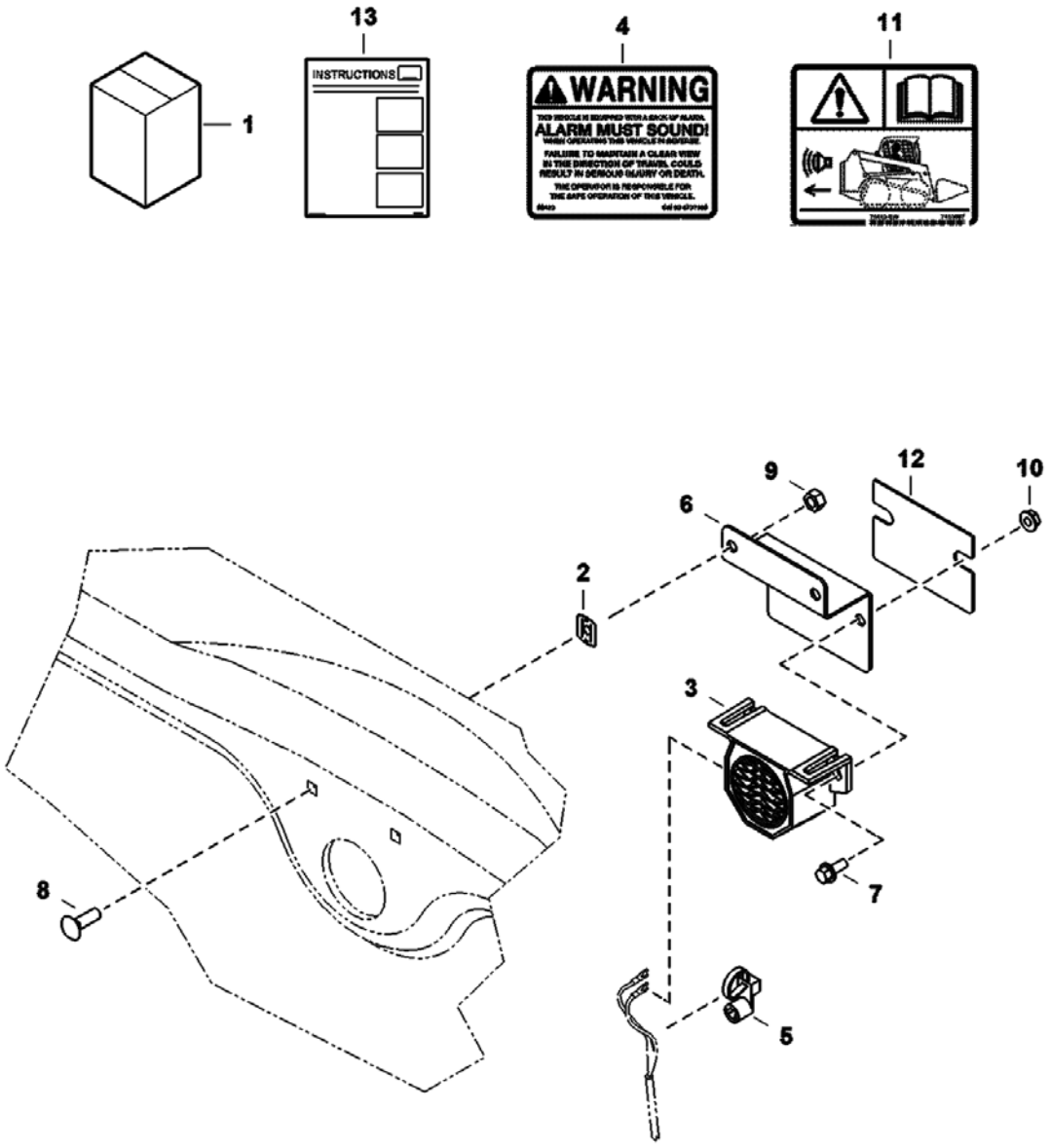

BACK-UP ALARM KIT (Cont'd)
(Selectable Joystick Controls)

Ref No	Part Number	Description	Remarks	Serial Number	Qty
1	7173593	KIT, ALARM BACK-UP	Ref. 2 & 3-13		1
2	774220	NUT			2
3	6651512	ALARM BACKUP			1
4	6737189	DECAL, WARNING	backup alarm		1
5	7002988	TIE, STUD MOUNT			1
6	7189077	MOUNT			1
7	35C410	BOLT 5			2
8	37C516	BOLT			2
9	61D5	NUT			2
10	97D4	NUT			2
11	7180087	DECAL, WARNING			1
12	7191385	SHIELD, ALARM			1
13	6987235	INSTRUCTIONS			1

BEACON

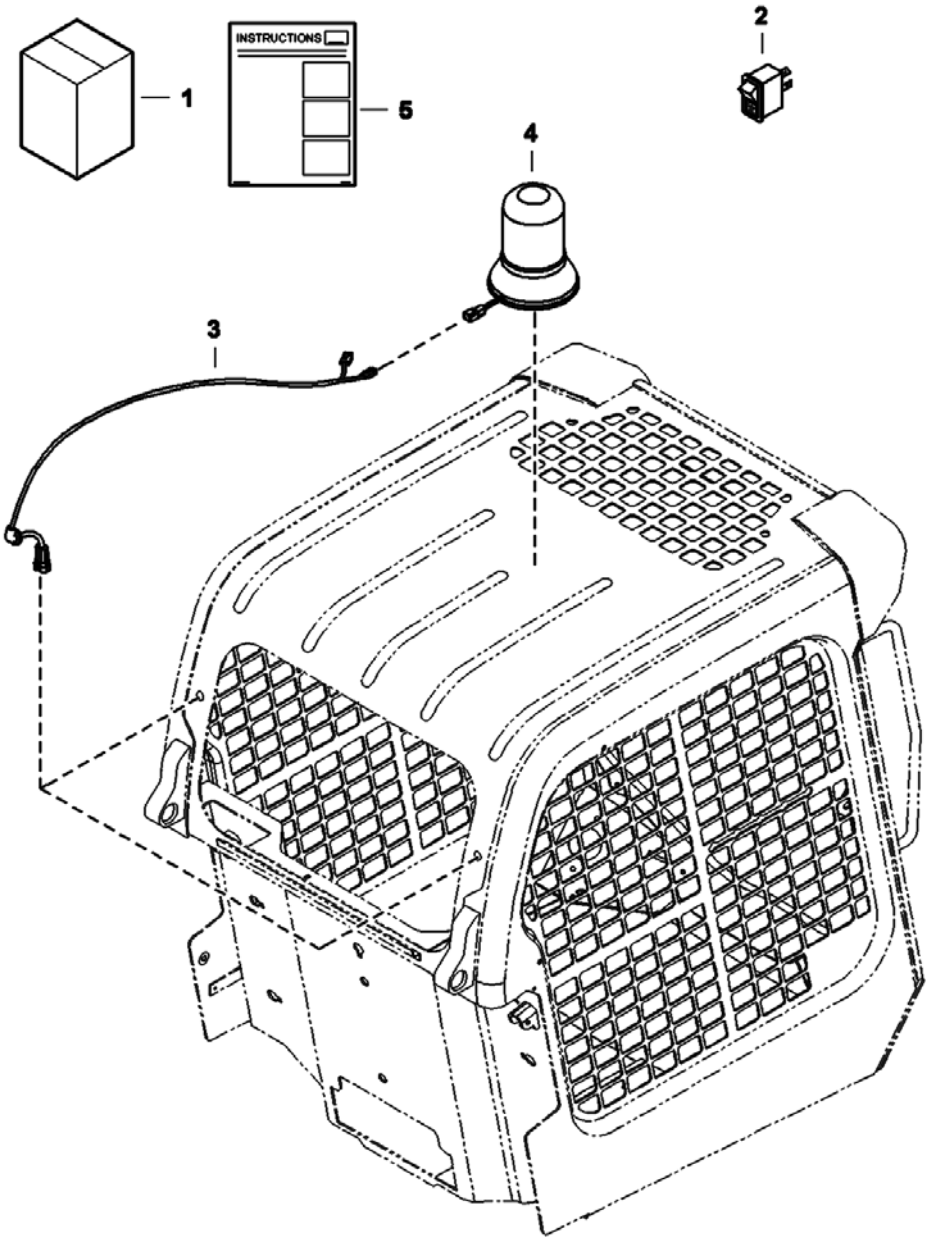

BEACON (Cont'd)

Ref No	Part Number	Description	Remarks	Serial Number	Qty
1	7129299	KIT, BEACON LIGHT	Ref. 2-5 - if equipped W/standard cab harness Also Order 7169130 harness & 6987252 instructions		1
2	6668816	SWITCH			1
3	6718872	HARNESS			1
4	6675523	BEACON			1
5	6987225	INSTRUCTIONS			1

BLOCK HEATER
(Engine)

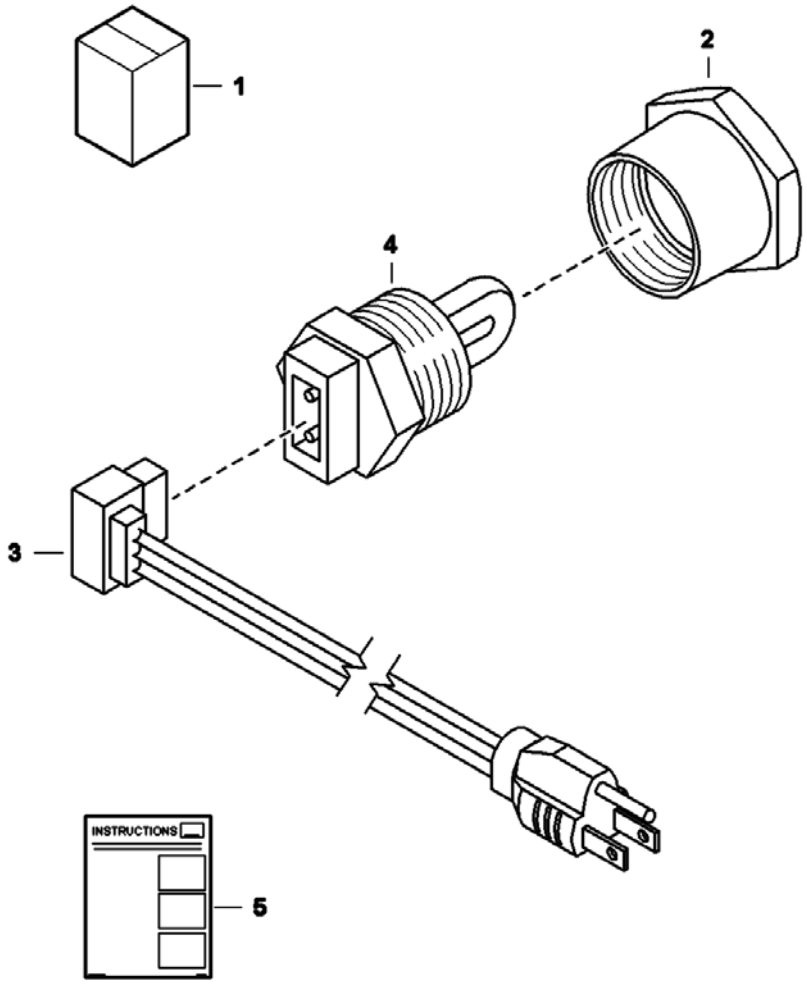

NA1308

BLOCK HEATER (Cont'd)
(Engine)

Ref No	Part Number	Description	Remarks	Serial Number	Qty
1	6720808	KIT, HEATER ENG BLOCK	W/Ref. 2, 4 & 5		1
2	19F12	BUSHING			1
3	6685850	CORD			1
4	6659369	HEATER	W/Ref. 3		1
5	6720038	INSTRUCTIONS			1

BUCKET POSITION VALVE KIT

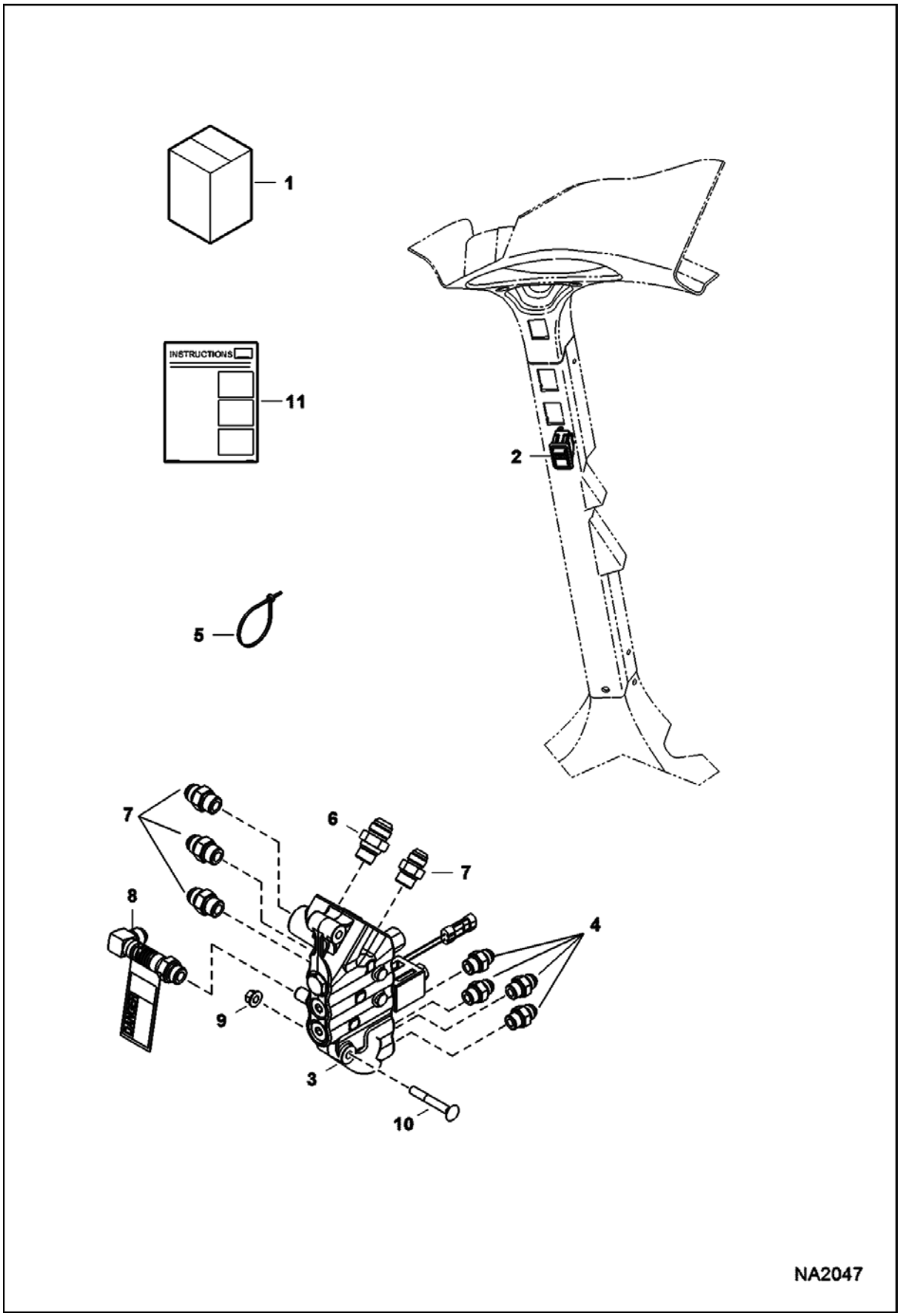

BUCKET POSITION VALVE KIT (Cont'd)

Ref No	Part Number	Description	Remarks	Serial Number	Qty
1	7128442	KIT, BPV	Ref. 2-8 & 11		1
2	6690947	SWITCH, BPV			1
3		VALVE, BPV	See Illustration BUCKET POSITION VALVE/ NA2550		1
4	15KB0808	FITTING, HYD CONNECTOR	600 & 700 models		4
4	79K8	O RING 10			x
4	15KB0608	FITTING, HYD CONNECTOR	500 models		4
4	79K8	O RING 10			x
5	6624289	STRAP, TIE			1
6	15KB1210	FITTING, HYD CONNECTOR	600 & 700 models		1
6	79K10	O RING 10			x
6	15KB1010	FITTING, HYD CONNECTOR	500 models		1
6	79K10	O RING 10			x
7	15KB1010	FITTING, HYD CONNECTOR	600 & 700 models		5
7	79K10	O RING 10			x
7	15KB0810	FITTING, HYD CONNECTOR	500 models		5
7	79K10	O RING 10			x
8	7183605	KIT, FITTING W/DECAL	600 & 700 models		1
8	7211446	KIT, FITTING W/DECAL	500 models		1
9	83D6	NUT 5	- not in kit		2
10	37C644	BOLT	- not in kit		2
11	6987250	INSTRUCTIONS			1

BUCKET POSITION VALVE

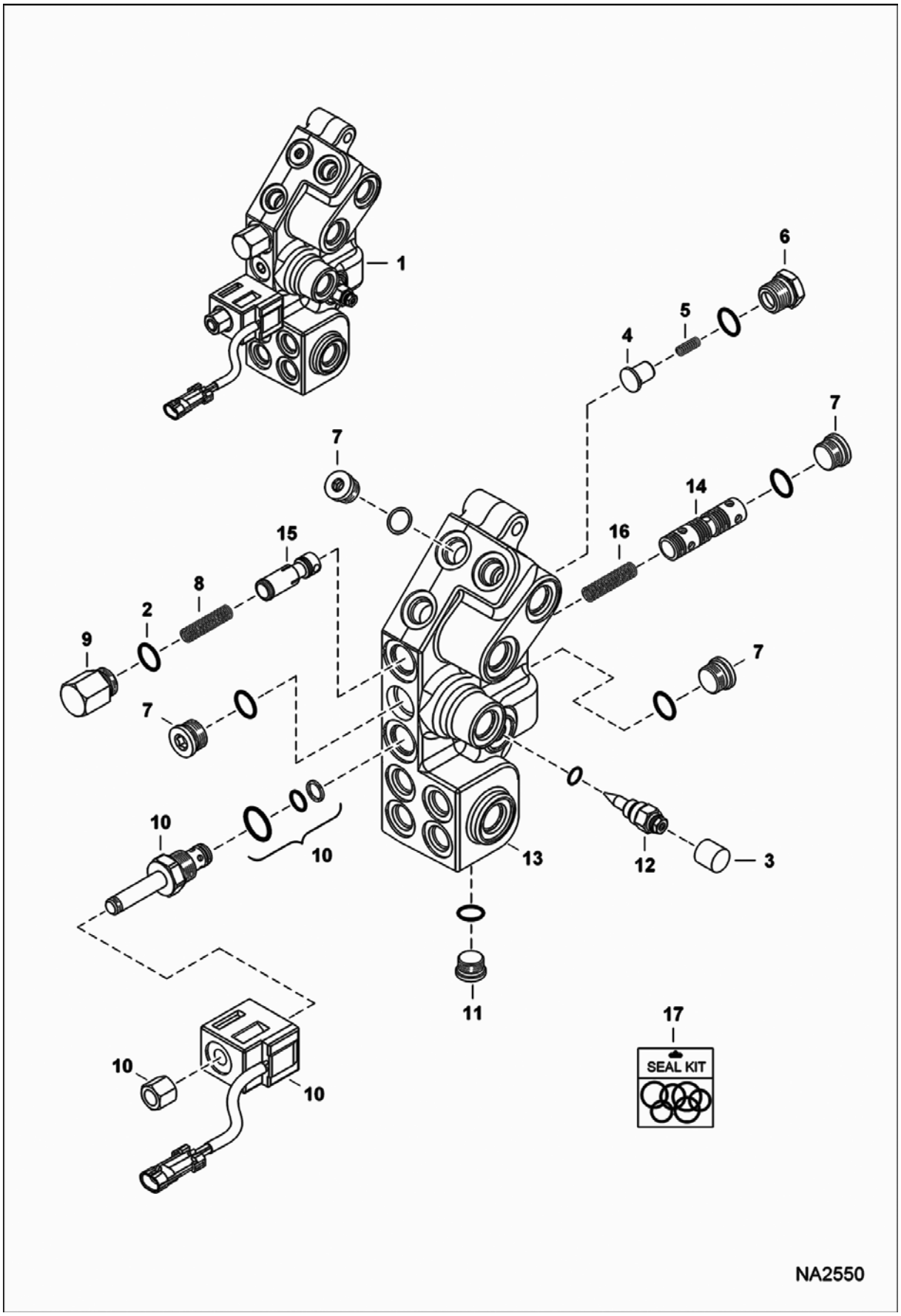

BUCKET POSITION VALVE (Cont'd)

Ref No	Part Number	Description	Remarks	Serial Number	Qty
1	7011060	VALVE, BPV	Ref. 2-16		1
2	6667680	SNAP RING			1
3	6667676	COVER			1
4	6647783	LOAD CHECK			1
5	6647785	SPRING			1
6	6647784	PLUG			1
6	79K10	O RING 10			x
7	6676543	PLUG			4
8	6648294	SPRING			1
9	6667176	PLUG			1
10	6672863	VALVE, SOLENOID			1
10	6671527	NUT			1
10	6670634	SEAL KIT			1
10	6675781	COIL			1
10	6675780	CARTRIDGE			1
11	7013201	PLUG			2
12	7010283	VALVE, REGULATOR			1
13		BLOCK	NSS - Order Ref. 1		1
14		SPOOL	NSS - Order Ref. 1		1
15		SPOOL	NSS - Order Ref. 1		1
16	6660775	SPRING			1
17	7013203	KIT, SEAL			1

BUMPER KIT
(Rear)

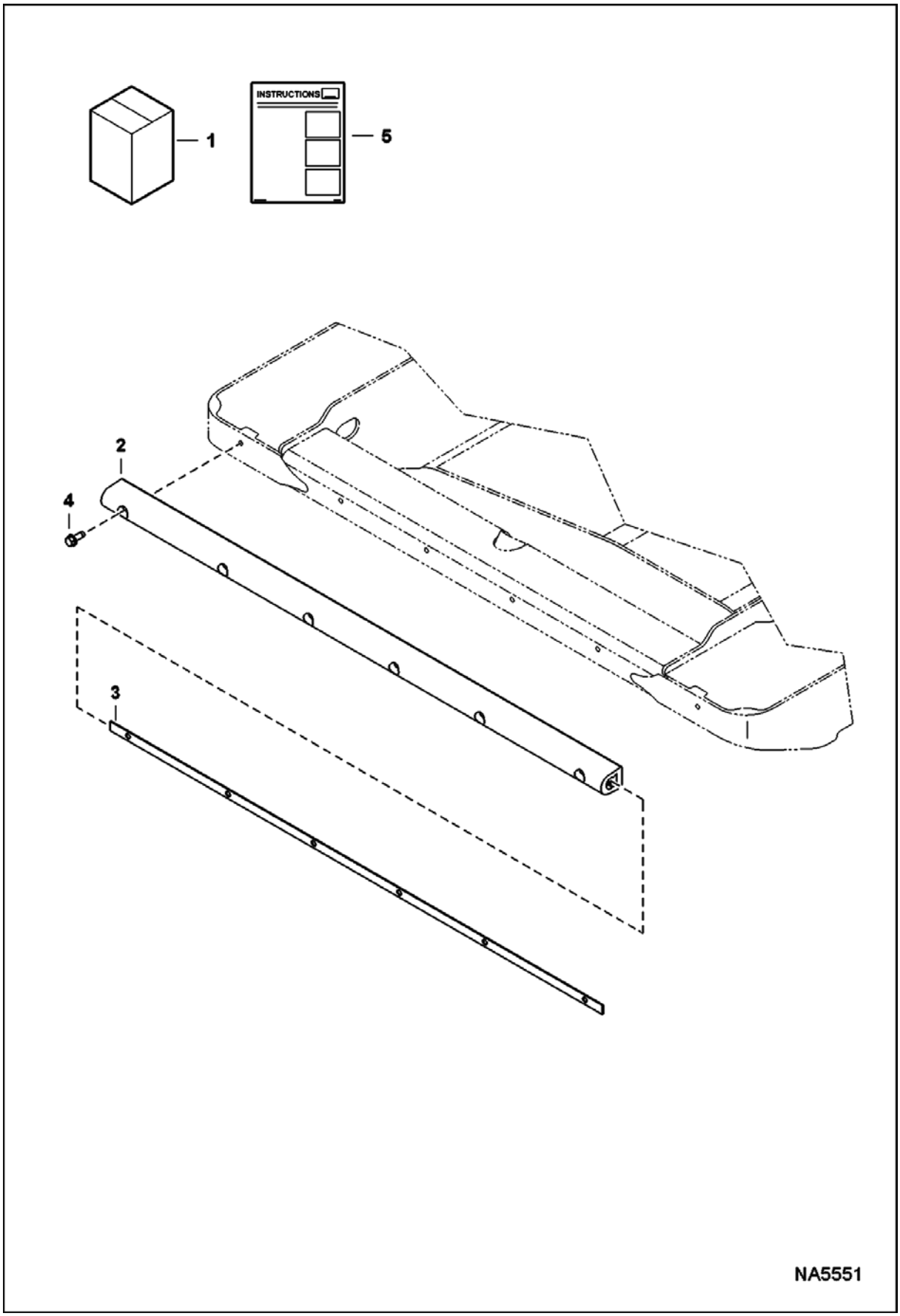

BUMPER KIT (Cont'd)
(Rear)

Ref No	Part Number	Description	Remarks	Serial Number	Qty
1	7203665	KIT, BUMPER	Ref. 2-5		1
2	7194160	BUMPER, RUBBER 'M' SERIES			1
3	7201515	RETAINING PLATE, RUBBER BUMPER			1
4	84G3716	SCREW 5			6
5	6990126	INSTRUCTIONS			1

CAB DOOR

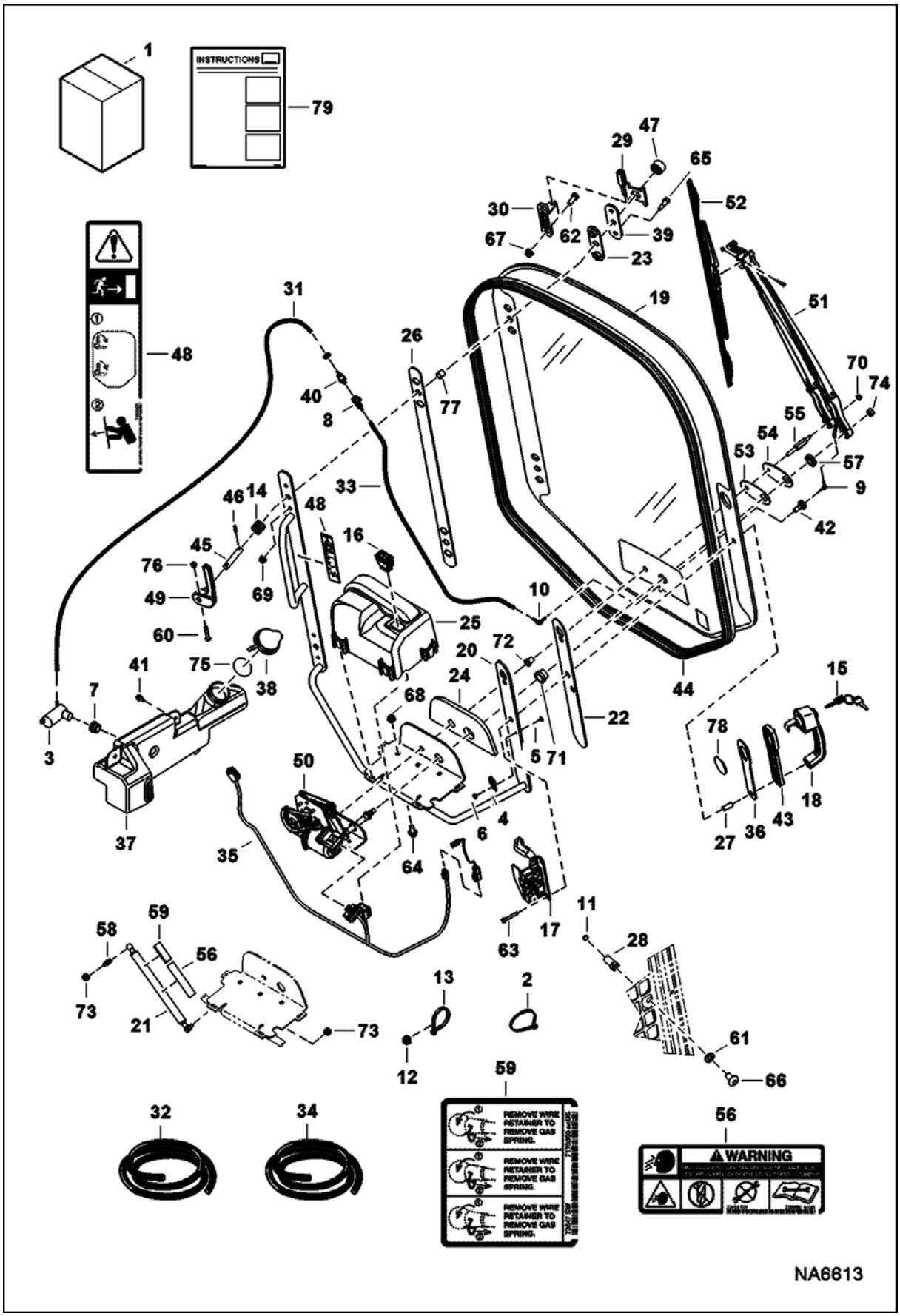
INSTRUCTIONS
REMOVE WIRE RETAINER TO REMOVE GAS SPRING.
REMOVE WIRE RETAINER TO REMOVE GAS SPRING.
REMOVE WIRE RETAINER TO REMOVE GAS SPRING.
WARNING
NA6613

Ref No	Part Number	Description	Remarks	Serial Number	Qty
1	7128393	KIT, DOOR	Ref. 2-11, 13-36 & 37-79		1
2	6610510	TIE			3
3	6664554	PUMP, WIPER WASHER			1
4	6665000	CLIP			1
5	6665321	RIVET			1
6	6665322	RIVET			1
7	6666766	GROMMET			1
8	6675298	COUPLER, BODY			1
9	6676500	ELBOW			1
10	6676917	ELBOW			1
11	6677192	SENSOR, MAGNETIC			1
12	6690688	TREE MOUNT			6
13	6690690	STRAP, TIE	203 mm (8") long - not in kit		10
13	6624289	STRAP, TIE	387,4 mm (15.25") long		5
14	6704453	SPRING			2
15	6693241	KEY 10	single key W/O ring		1
16	7001709	SWITCH FRONT WIPER			1
17	7109661	LATCH, DOOR W/SENSOR			1
18	7109662	HANDLE, LATCH DOOR			1
19	7120401	GLASS, DOOR			1
20	7120402	FRAME DOOR ASSY			1
21	7142371	SPRING GAS DOOR	Also Order Ref. 56 & 59		1
22	7148287	SEAL DOOR HANDLE			1
23	7148289	SEAL DOOR HINGE			2
24	7174837	GASKET, WIPER			1
25	7149827	COVER, WIPER			1
26	7150719	SEAL DOOR FRAME			1
27	7174841	SPACER, HANDLE			2
28	7175151	STRIKER, DOOR			1
29	7193725	HINGE, DOOR CAB			2
30	7176593	HINGE BASE			2
31		HOSE	NAP - 48" (1,219.2 mm) long - Order Ref. 32		1
32	6708310	HOSE, BULK 100	clear - 0.154" ID - sold per foot		x
33		HOSE	NAP - 31" (787.4 mm) long - Order Ref. 34		1
34	6676003	HOSE,BULK	black - 0.109" ID - sold per foor		x
35	7155024	HARNESS DOOR			1
36	7160841	SEAL HANDLE DOOR			1
37	7163259	WASHER TANK			1
38	7163263	CAP WASHER BOTTLE			1
39	7164590	DOOR PLATE			2
40	7165972	COUPLER INSERT			2
41	7166190	SCREW THREAD			3

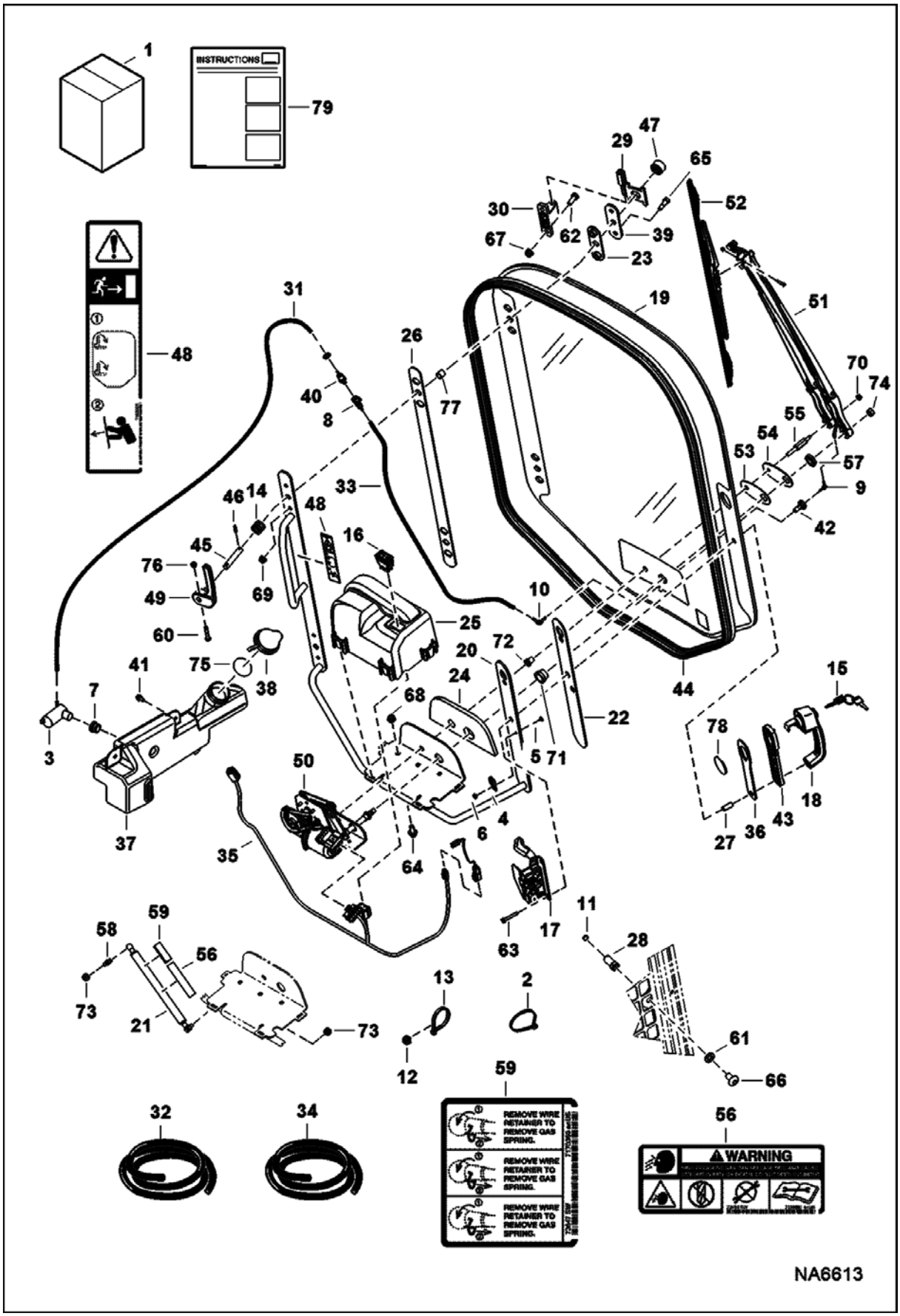
INSTRUCTIONS
REMOVE WIRE RETAINER TO REMOVE GAS SPRING.
REMOVE WIRE RETAINER TO REMOVE GAS SPRING.
REMOVE WIRE RETAINER TO REMOVE GAS SPRING.
WARNING
NA6613

Ref No	Part Number	Description	Remarks	Serial Number	Qty
		ROLLING			
42	7167177	GROMMET WIPER			1
43	7166205	SPACER HANDLE			1
44	7222790	SEAL, DOOR			1
45	7167844	SHAFT			2
46	7167845	PIN			2
47	7167846	WASHER CAST			2
48	7168025	DECAL EMERGENCY DOOR			1
49	7186972	LEVER			2
50	7168952	WIPER MOTOR			1
51	7168953	ARM WIPER ASSY			1
52	7168954	BLADE WIPER ASSY			1
53	7168955	GASKET			1
54	7168956	PLATE ADAPTOR			1
55	7168957	PLATE STUD ADAPTOR			1
56	7169291	DECAL	warning		1
57	6681905	NUT			1
58	7169849	FITTING BALLSTUD			1
59	7170360	DECAL, SPRING REMOVAL	spring removal		1
60	17C428	BOLT			2
61	18EM1224	WASHER			1
62	35C516	BOLT 10			4
63	1CM640	SCREW			2
64	31C612	BOLT			3
65	38C610	BOLT			4
66	10C816	BOLT			1
67	59D5	NUT 5			4
68	97D6	NUT 10			3
69	97D5	NUT			4
70	51DM6	NUT			1
71	7174838	SPACER			1
72	7174839	SPACER			1
73	59D5	NUT 5			2
74	2DM10	NUT			1
75	7188097	SEAL			1
76	59D4	NUT 5			2
77	7196015	BUSHING, PLASTIC			2
78	7196017	DISK, PLASTIC			1
79	6987230	INSTRUCTIONS			1

CAB DOOR
(Special Applications)

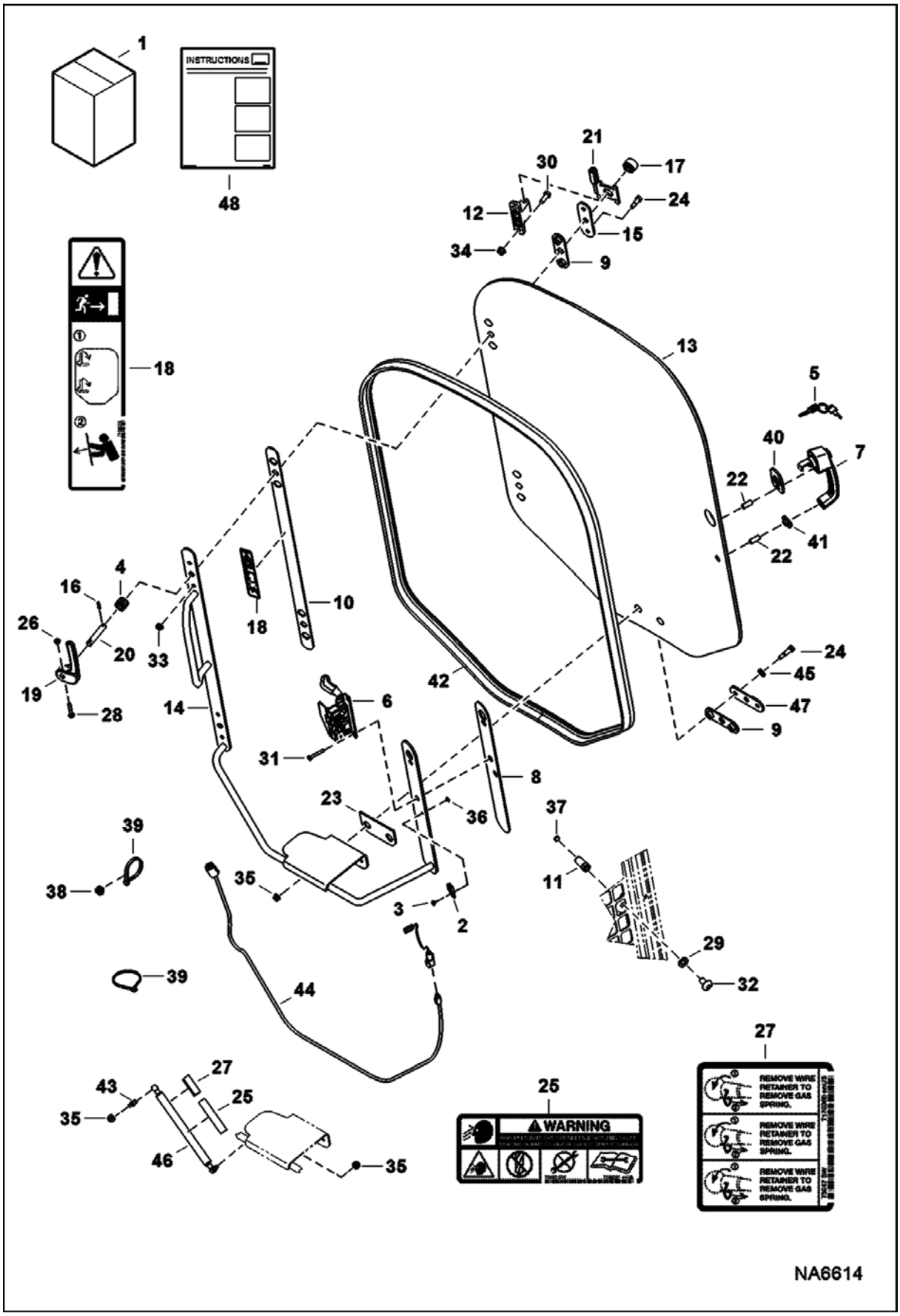

CAB DOOR (Cont'd)
(Special Applications)

Ref No	Part Number	Description	Remarks	Serial Number	Qty
1	7128395	KIT, DOOR CAB SPECIAL APPS	Ref. 2-14, 15-37 & 39-48		1
2	6665000	CLIP			1
3	6665322	RIVET			1
4	6704453	SPRING			2
5	6693241	KEY 10	single key W/O ring		1
6	7109661	LATCH, DOOR W/SENSOR			1
7	7109662	HANDLE, LATCH DOOR			1
8	7148287	SEAL DOOR HANDLE			1
9	7148289	SEAL DOOR HINGE			3
10	7150719	SEAL DOOR FRAME			1
11	7175151	STRIKER, DOOR			1
12	7176593	HINGE BASE			2
13	7155308	WINDOW			1
14	7155359	FRAME, DOOR			1
15	7164590	DOOR PLATE			2
16	7167845	PIN			2
17	7167846	WASHER CAST			2
18	7168025	DECAL EMERGENCY DOOR			1
19	7186972	LEVER			2
20	7168836	SHAFT			2
21	7168837	HINGE, DOOR			1
22	7168839	SPACER			2
23	7168841	SEAL			1
24	38C616	SCREW			6
25	7169291	DECAL			1
26	59D4	NUT 5			2
27	7170360	DECAL, SPRING REMOVAL			1
28	17C428	BOLT			2
29	18EM1224	WASHER			1
30	35C516	BOLT 10			4
31	1CM640	SCREW			2
32	10C816	BOLT			1
33	97D5	NUT			4
34	59D5	NUT 5			4
35	59D5	NUT 5			2
36	6665321	RIVET			1
37	6677192	SENSOR, MAGNETIC			1
38	6690688	TREE MOUNT			6
39	6690690	STRAP, TIE	203 mm (8") long - not in kit		10
39	6624289	STRAP, TIE	387,4 mm (15.25") long		5
40	7150745	SPACER	top		1
41	7150746	SPACER	bottom		1
42	7222790	SEAL, DOOR			1
43	7169849	FITTING BALLSTUD			1
44	7170531	HARNESS, CAB			1
45	619021	WASHER, 5			6

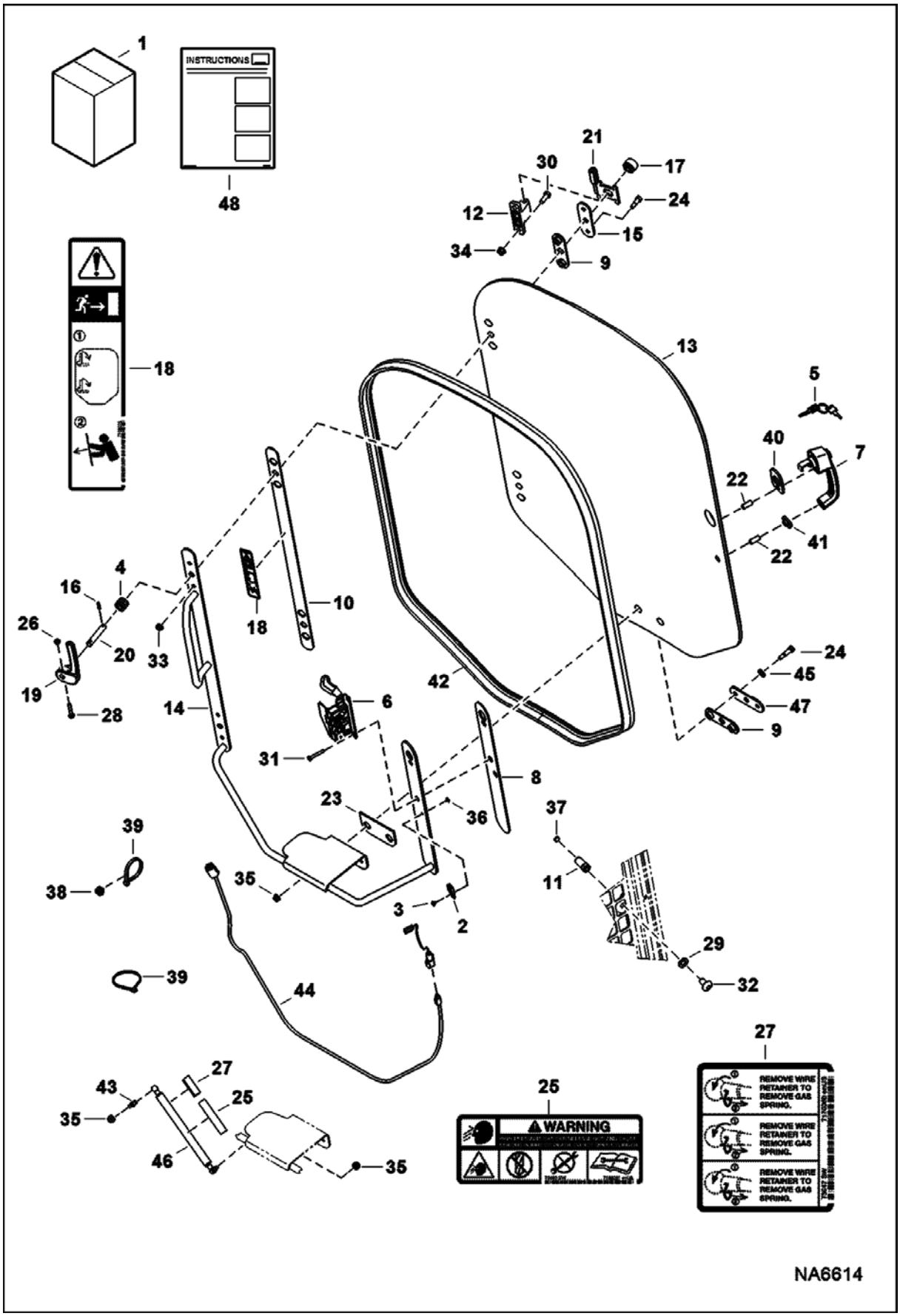
INSTRUCTIONS
WARNING
REMOVE WIRE RETAINER TO REMOVE GAS SPRING.
REMOVE WIRE RETAINER TO REMOVE GAS SPRING.
REMOVE WIRE RETAINER TO REMOVE GAS SPRING.
NA6614

CAB DOOR (Cont'd)
(Special Applications)

Ref No	Part Number	Description	Remarks	Serial Number	Qty
46	7142371	SPRING GAS DOOR			1
47	7183158	PLATE			1
48	6987232	INSTRUCTIONS			1

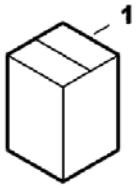

NA6323

CAB ENCLOSURE (Cont'd)
(Special Applications)

Ref No	Part Number	Description	Remarks	Serial Number	Qty
1			See Illustration CAB WINDOWS/ NA2052 See Illustration CAB DOOR/ NA6614 - NAP - Order 7128395 cab door kit & 7128389 rear window kit - Was 7204789 [A]		1

CAB SEAL KIT

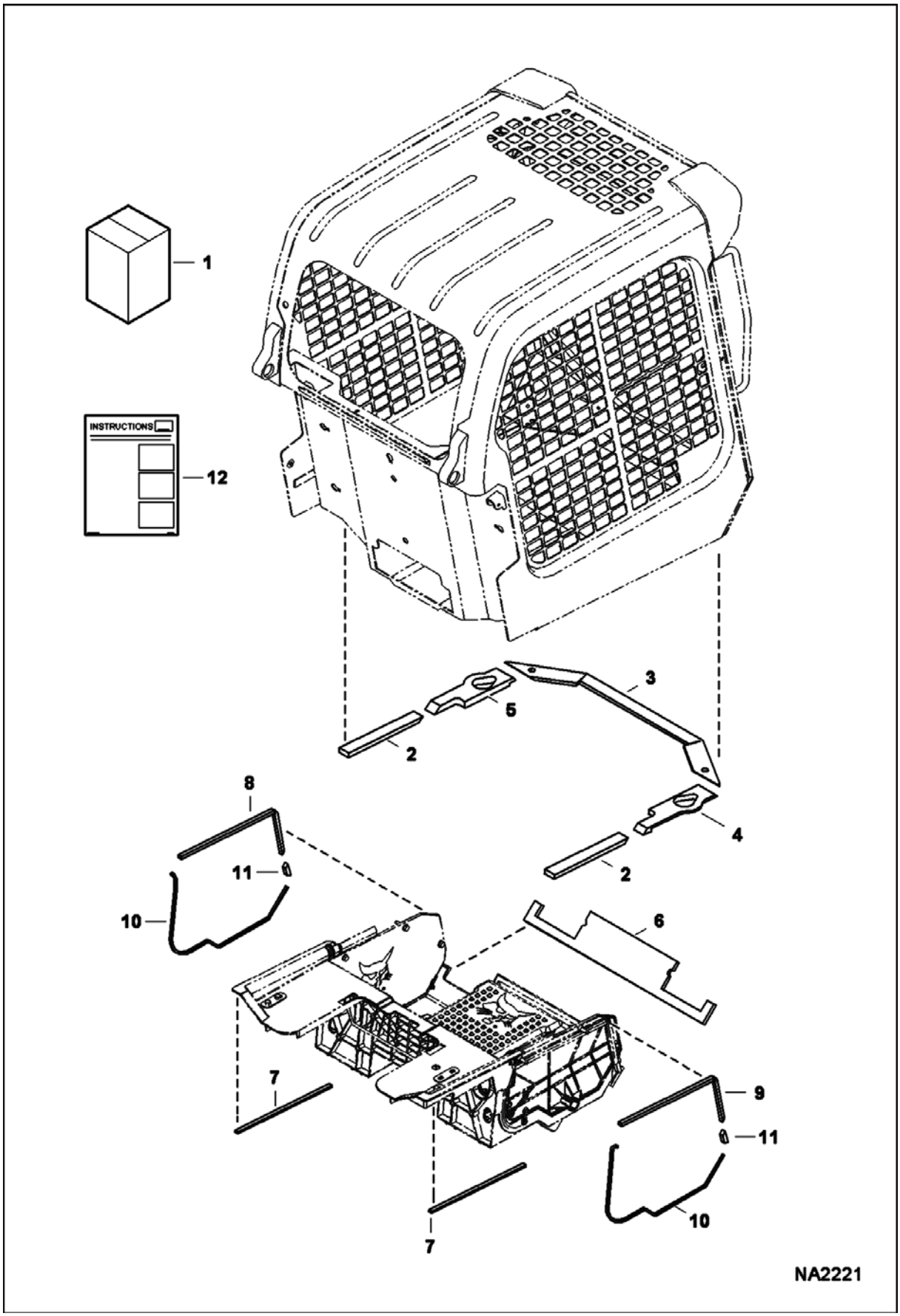

CAB SEAL KIT (Cont'd)

Ref No	Part Number	Description	Remarks	Serial Number	Qty
1	7174903	KIT, SEAL CAB	Ref. 2-12		1
2	7142873	SEAL			2
3	7142875	SEAL			1
4	7156087	SEAL	RH		1
5	7161789	SEAL	LH		1
6	7163132	FOAM, FRONT			1
7	7166196	FOAM, PANEL			2
8	7166197	FOAM, PANEL	LH		1
9	7166198	FOAM, PANEL	RH		1
10	7166199	FOAM, EDGE			2
11	7166200	FOAM, PAN FLOOR			2
12	6987388	INSTRUCTIONS			1

CAB WINDOWS
(Rear) (Polycarbonate)

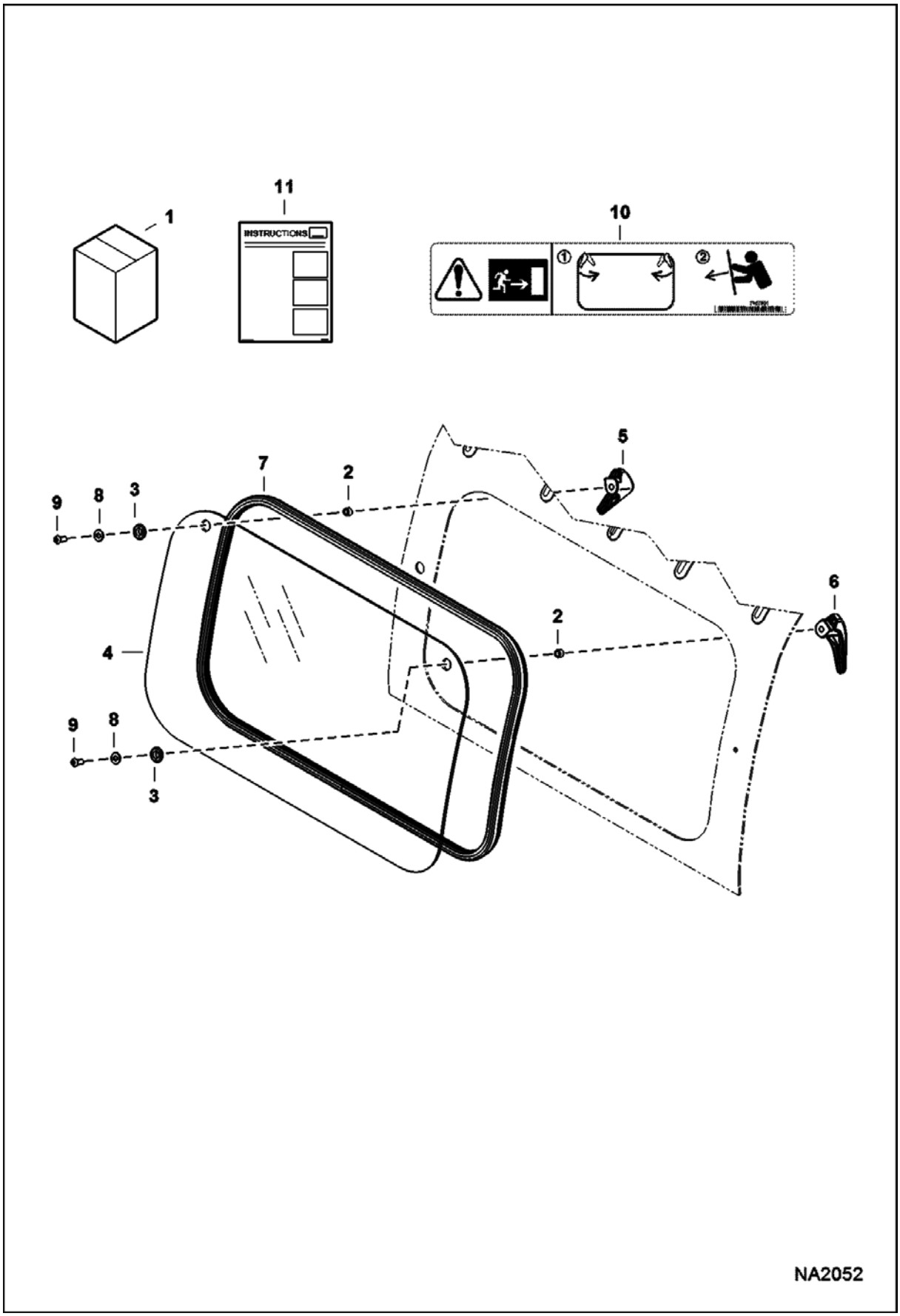

CAB WINDOWS (Cont'd)
(Rear) (Polycarbonate)

Ref No	Part Number	Description	Remarks	Serial Number	Qty
1	7128389	KIT, WINDOW REAR	polycarbonate - W/Ref. 2-11		1
2	7185137	SPACER			2
3	7121425	BUSHING			2
4	7183022	WINDOW, CAB REAR			1
5	7150151	LATCH, WINDOW LEFT			1
6	7150152	LATCH, WINDOW RIGHT			1
7	7163988	SEAL, WINDOW REAR			1
8	25E14	WSHR			2
9	53C516	BOLT			2
10	7167991	DECAL, EXIT REAR			1
11	6987229	INSTRUCTIONS			1

CAB WINDOWS
(Side) (Glass)

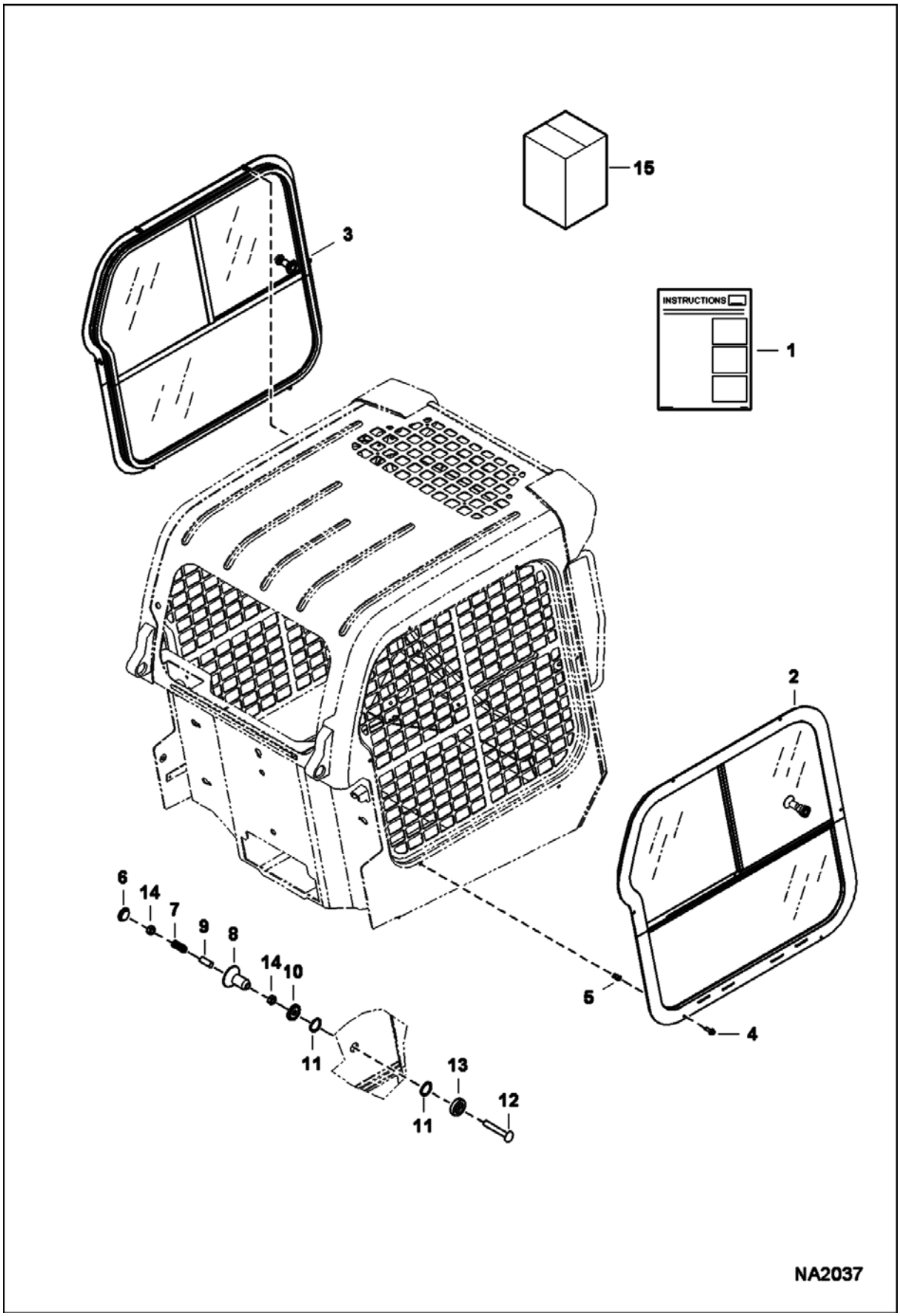

CAB WINDOWS (Cont'd)
(Side) (Glass)

Ref No	Part Number	Description	Remarks	Serial Number	Qty
1	7128342	KIT, WINDOW SIDE	Ref. 2-15		1
2	7148068	WINDOW ASSY	RH - W/Ref. 10-13		1
3	7148069	WINDOW ASSY	LH - W/Ref. 10-13		1
4	35C412	BOLT			12
5	7154910	INSERT, THREADED			12
6	7010357	CAP, END			1
7	7010358	SPRING			1
8	7010359	KNOB			1
9	7010360	SLEEVE			1
10		BUSHING	NAP - inner - Order Ref. 2 or 3		1
11		SEAL	NAP - Order Ref. 2 or 3		2
12		BOLT	NAP - Order Ref. 2 or 3		1
13		BUSHING	outer - Order Ref. 2 or 3		1
14	7010365	NUT			2
15	6987228	INSTRUCTIONS			1

CAB WINDOWS
(Side) (Polycarbonate)

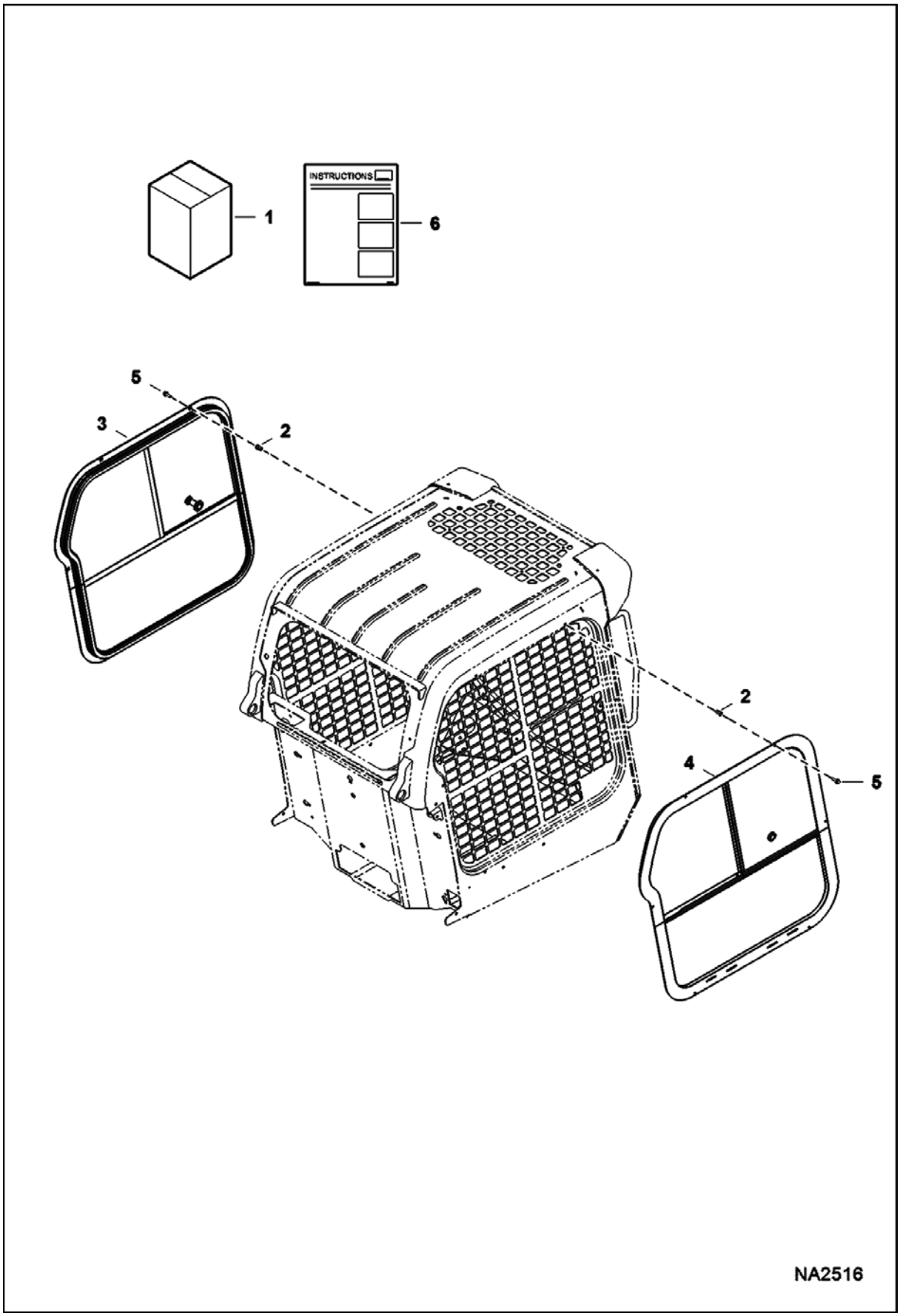

CAB WINDOWS (Cont'd)
(Side) (Polycarbonate)

Ref No	Part Number	Description	Remarks	Serial Number	Qty
1	7182335	KIT, WINDOW SIDE	Ref. 2-6		1
2	7154910	INSERT, THREADED			10
3	7180126	WINDOW, CAB SLIDING	polycarbonate		1
4	7180127	WINDOW, CAB SLIDING	polycarbonate		1
5	31C412	BOLT			12
6	6989418	INSTRUCTIONS			1

COUNTERWEIGHT KIT

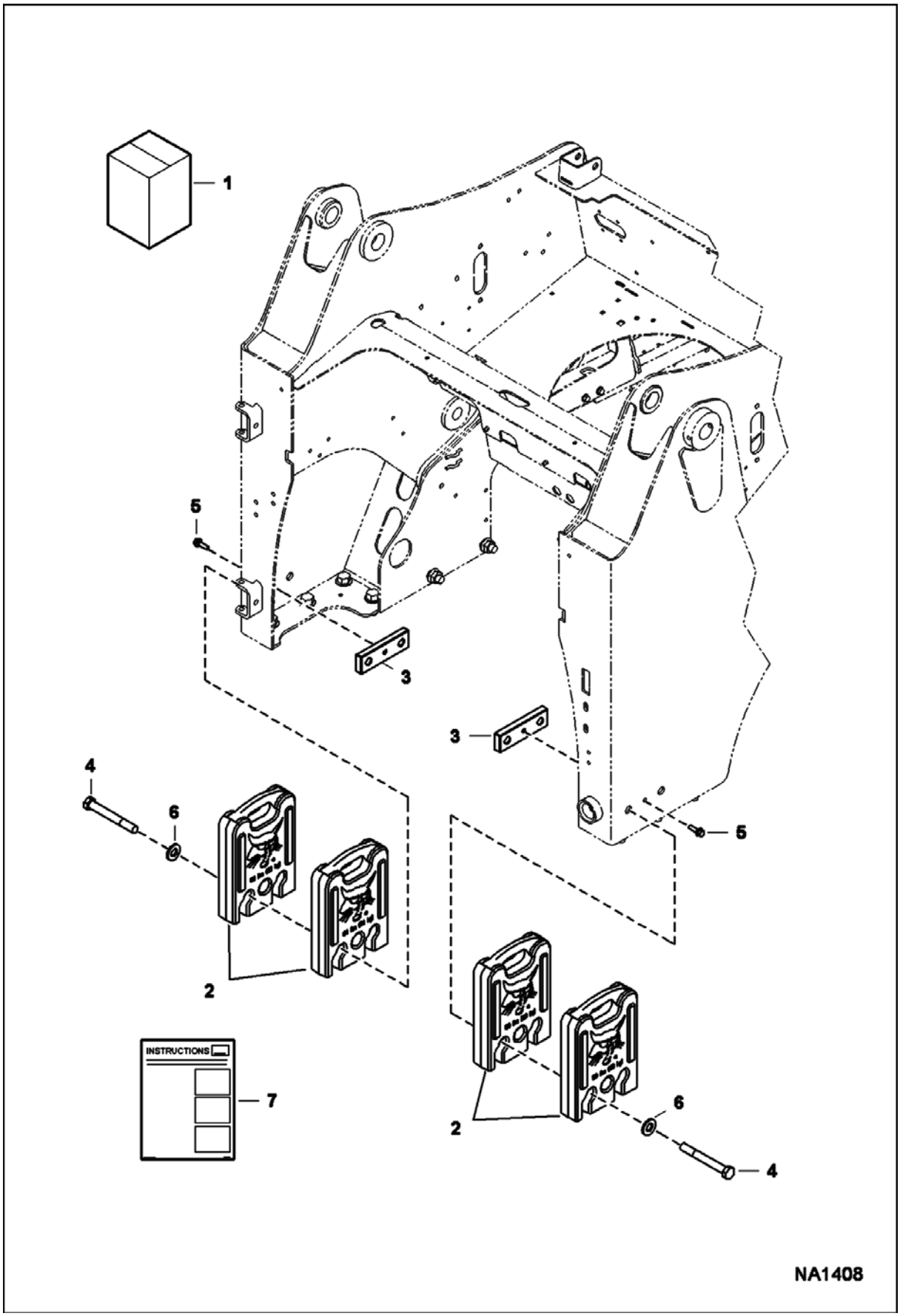

COUNTERWEIGHT KIT (Cont'd)

Ref No	Part Number	Description	Remarks	Serial Number	Qty
1	7129250	KIT, COUNTERWEIGHT	Ref. 2-7 - 91 kg (200 lb)		1
2	7129173	COUNTERWEIGHT	23 kg (50 lb)		4
3	7155158	PLATE, THREADED			2
4	1C1296	BOLT			4
5	35C620	BOLT 5			2
6	27E12	WASHER			4
7	6987128	INSTRUCTIONS			1

COUNTERWEIGHT KIT
(Front Axle)

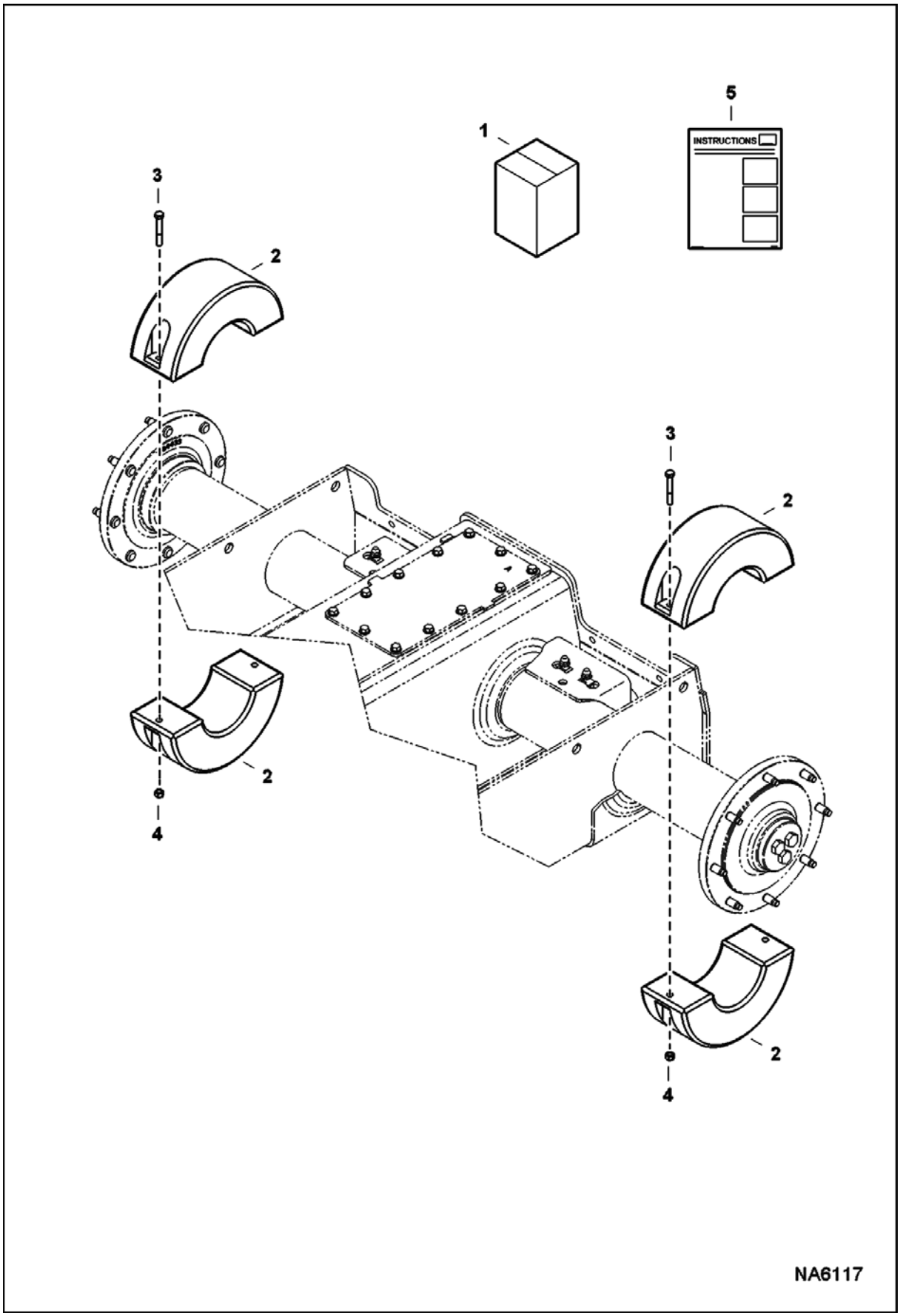

COUNTERWEIGHT KIT (Cont'd)
(Front Axle)

Ref No	Part Number	Description	Remarks	Serial Number	Qty
1	7204315	KIT, AXLE WEIGHT	Ref. 2-5		1
2	6714361	COUNTERWEIGHT, AXLE FRONT			4
3	17C640	BOLT 5			4
4	61D6	NUT 5			4
5	6990145	INSTRUCTIONS			1

COUPLER GUARD KIT

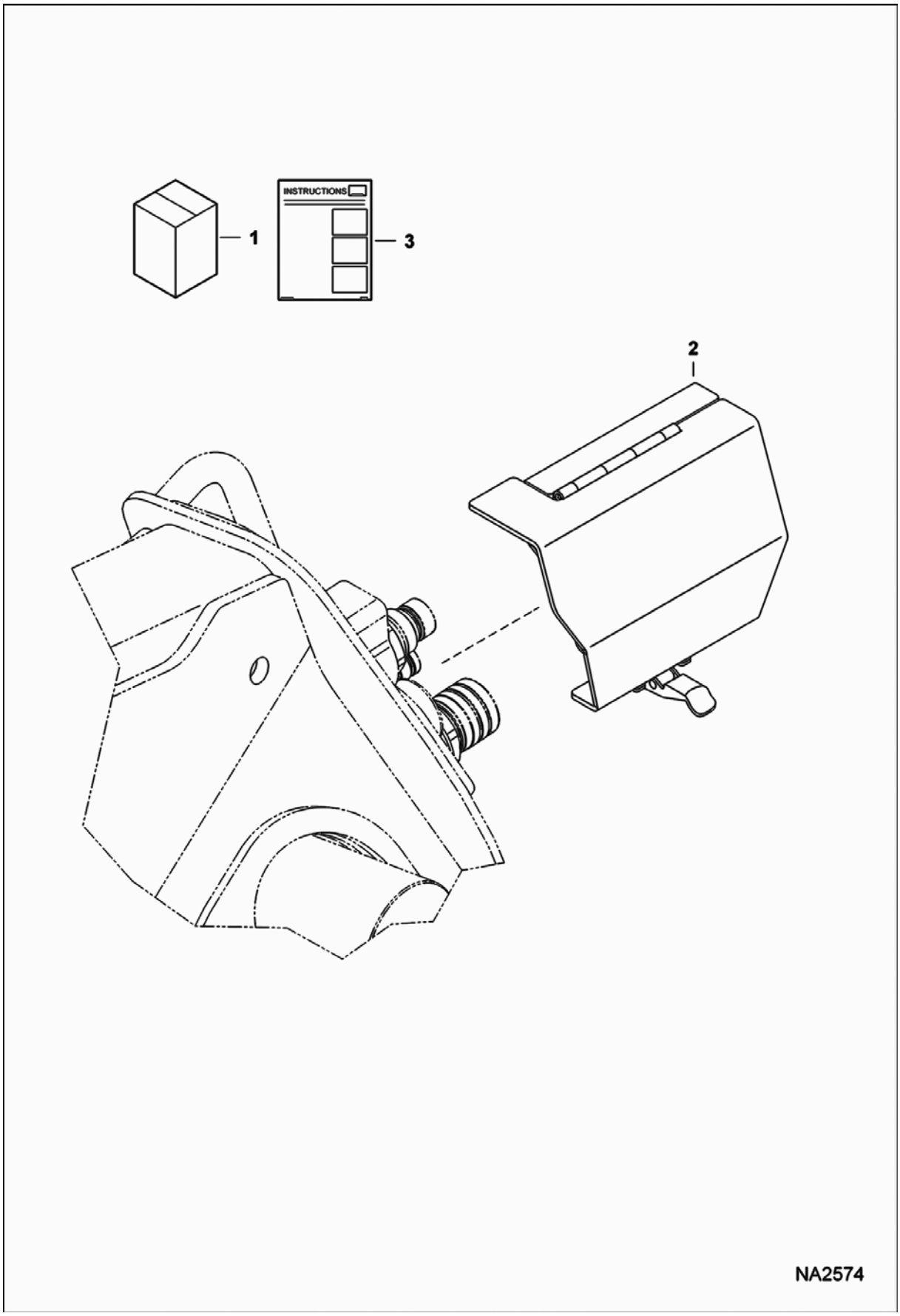

COUPLER GUARD KIT (Cont'd)

Ref No	Part Number	Description	Remarks	Serial Number	Qty
1		KIT, GUARD COUPLER	NAP - Ref. 2 & 3 - Order components - Was 7174131 [A]		1
2	7173324	GUARD, COUPLER			1
3	6987492	INSTRUCTIONS			1

CUP HOLDER KIT

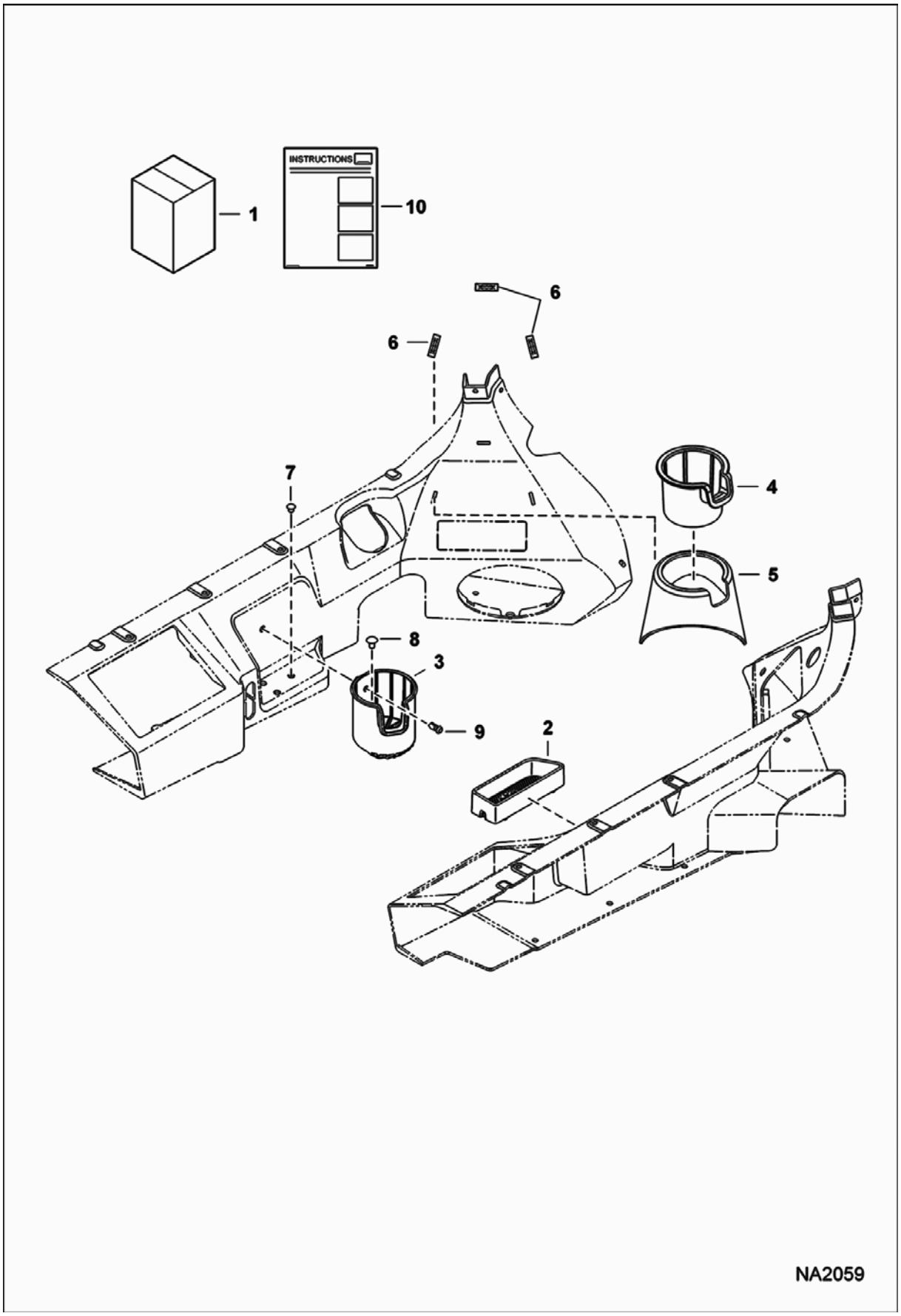

CUP HOLDER KIT (Cont'd)

Ref No	Part Number	Description	Remarks	Serial Number	Qty
1	7167395	KIT, CUP HOLDER	Ref. 3-10		1
2	7154404	CONTAINER	not in kit		1
3	7140441	HOLDER, CUP			1
4	7155649	HOLDER, CUP			1
5	7160320	HOLDER, CUP			1
6	7167003	CLIP			3
7	7188745	PLUG			4
8	6674895	RETAINER			1
9	7160383	RIVET, BIRD CAGE			1
10	6987227	INSTRUCTIONS			1

DECALS
(Inside)

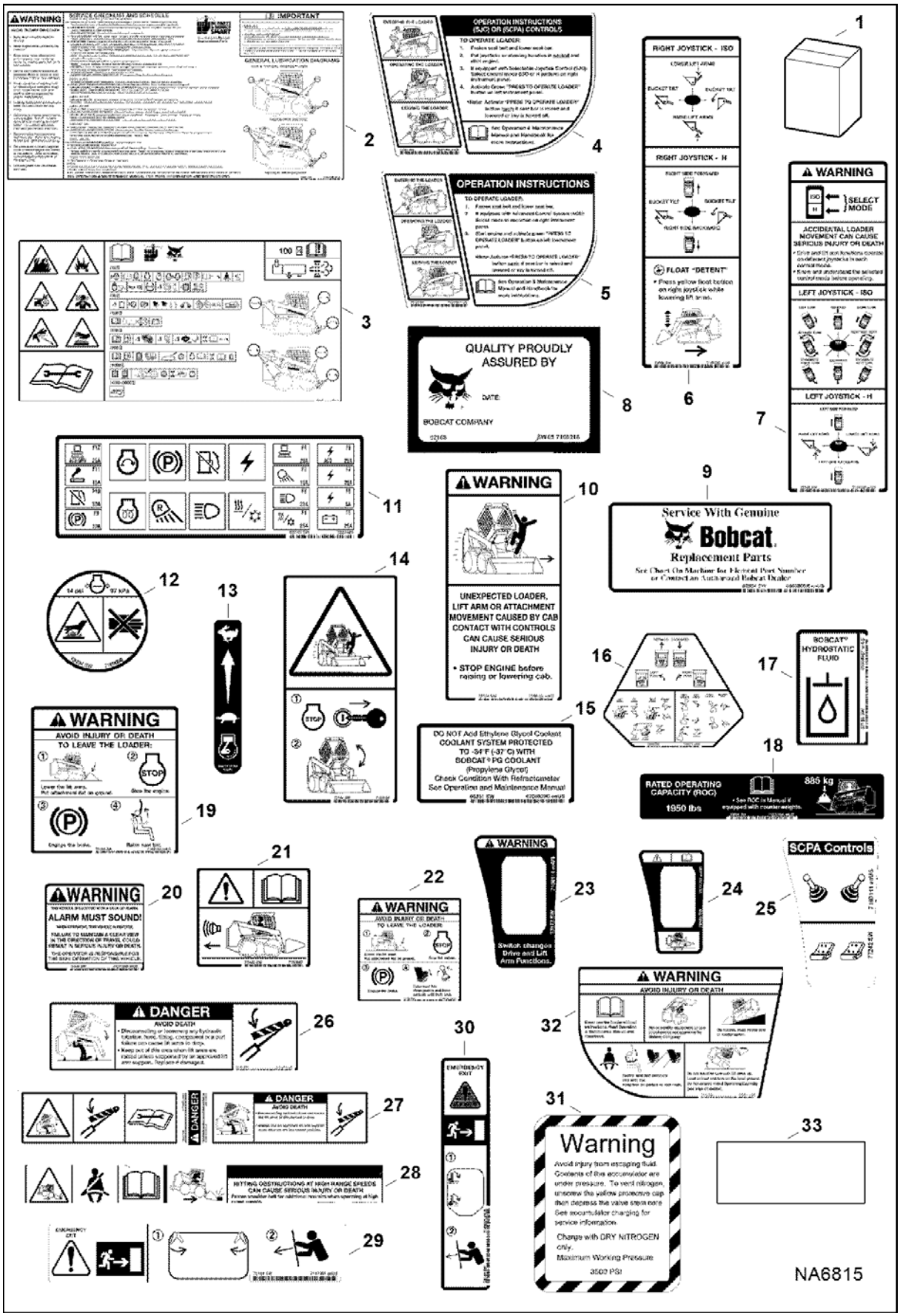

DECALS (Cont'd)
(Inside)

Ref No	Part Number	Description	Remarks	Serial Number	Qty
1	6990599	KIT, DECAL	See Illustration DECALS/ NA6816 - Ref. 2-30 & 33-39 - Also includes Ref. 2-33 on this page		1
1	7215191AR	KIT, DECAL TRANSLATION			1
1	7215191BR	KIT, DECAL TRANSLATION			1
2	7205726	DECAL, SERVICE			1
3	7205727	DECAL, SERVICE			1
4	7168144	DECAL			1
5	7168136	DECAL			1
6	7168023	DECAL			1
7	7168024	DECAL			1
8	7106218	DECAL QUALITY APPRVL			1
9	6565200	DECAL, FILTER			1
10	7168138	DECAL, WARNING			1
11	7223425	DECAL, FUSE			1
12	7169699	DECAL			1
13	7177742	DECAL			1
14	7168139	DECAL, WARNING			2
15	6708929	DECAL, COOLANT			1
16	7168272	DECAL			1
17	6565990	DECAL, OIL HYD			1
18	7183755	DECAL, CAPACITY LIFT			1
19	7168142	DECAL, WARNING			1
20	6737189	DECAL, WARNING			1
21	7180087	DECAL, WARNING			1
22	7168140	DECAL, WARNING			1
23	7168114	DECAL, SWITCH			1
24	7177707	DECAL			1
25	7190111	DECAL, CONTROL			1
26	7167988	DECAL, DANGER			1
27	7170355	DECAL, DANGER			1
28	7184346	DECAL WARNING			1
29	7167991	DECAL, EXIT REAR			1
30	7168025	DECAL EMERGENCY DOOR			1
31	6684688	DECAL, WARNING	not in kit		2
32	7167994	DECAL, WARNING			1
33	6555341	SAFETY TREAD			1

DECALS
(Outside)

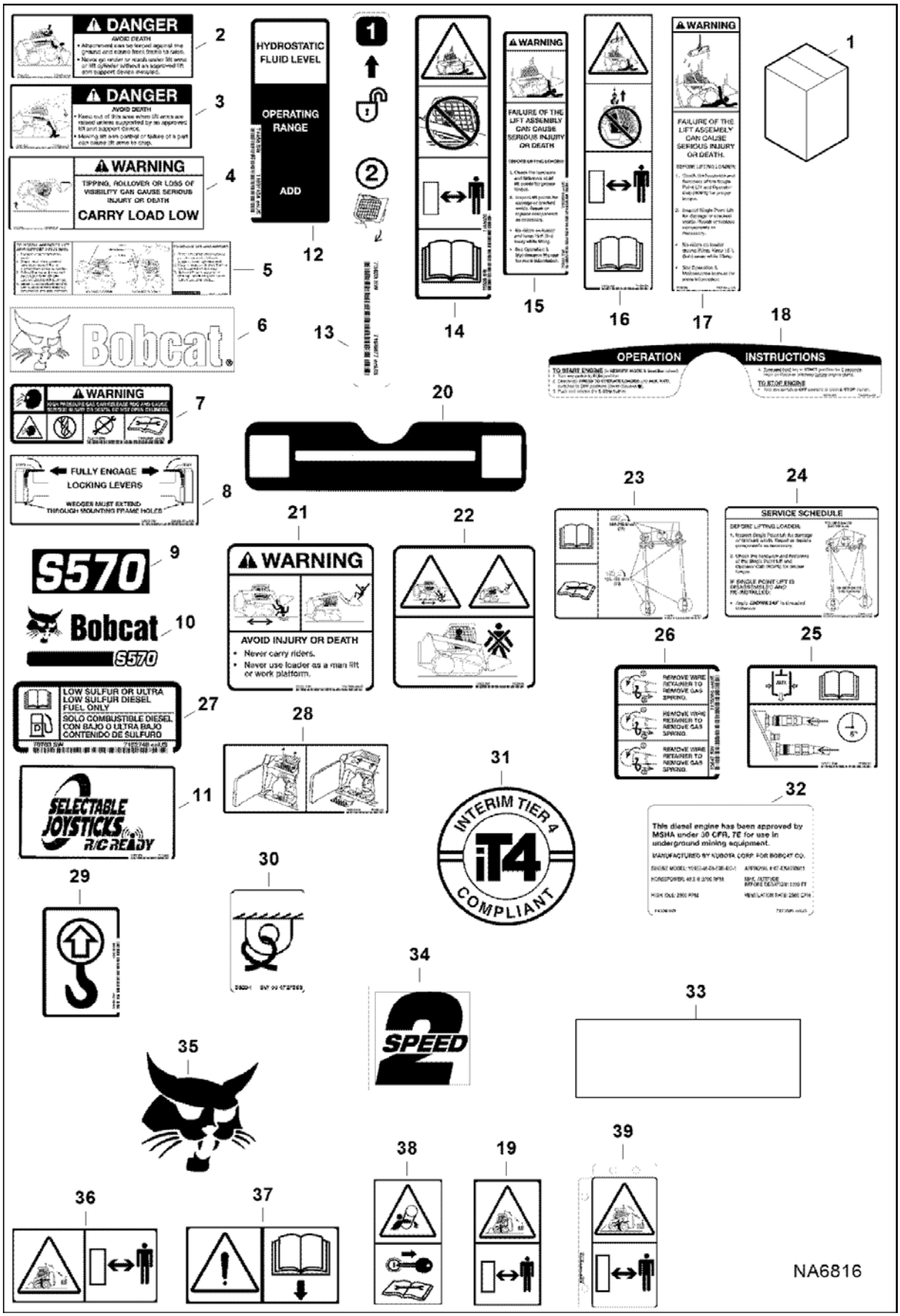

DECALS (Cont'd)
(Outside)

Ref No	Part Number	Description	Remarks	Serial Number	Qty
1	6990599	KIT, DECAL	See Illustration DECALS/ NA6815 - Ref. 2-33 - Also includes Ref. 2-30 & 33-39 on this page		1
1	7215191AR	KIT, DECAL TRANSLATION			1
1	7215191BR	KIT, DECAL TRANSLATION			1
2	7167990	DECAL, DANGER			1
3	7167989	DECAL, DANGER			1
4	7167993	DECAL, WARNING			1
5	7197993	DECAL, LASD			1
6	6735901	DECAL, LOGO BOBCAT HEAD			1
7	7169291	DECAL			1
8	6561383	DECAL, OPERATION			1
9	7211429	DECAL, MODEL	S570		1
10	7195550	DECAL, MODEL	S570		2
11	7145528	DECAL			2
12	7169710	DECAL, SIGHT GAUGE			1
13	7169877	DECAL			1
14	7168020	DECAL, WARNING			1
15	7168019	DECAL, WARNING			1
16	7142142	DECAL			1
17	7142141	DECAL			1
18	7141235	DECAL			1
19	6692768	DECAL, "REMOTE CONTROL OPERATION", SMALL	not in kit		1
20	7169965	DECAL, TAILGATE BASE			2
21	7167996	DECAL, WARNING			1
22	7168040	DECAL, WARNING			1
23	7168022	DECAL			1
24	7168021	DECAL			1
25	7168031	DECAL			1
26	7170360	DECAL, SPRING REMOVAL			1
27	7152748	DECAL, FUEL DIESEL			1
28	7188542	DECAL, INSTRUCTIONS			1
29	6533898	DECAL			1
30	6727595	DECAL,TIE-DOWN			1
31	7204037	DECAL	IT4 compliant - not in kit		1
32		DECAL NSS	NSS		1
33	6555341	SAFETY TREAD			1
34	6729078	DECAL	2-speed		1
35	7116870	DECAL, LOGO			1

DECALS (Cont'd)
(Outside)

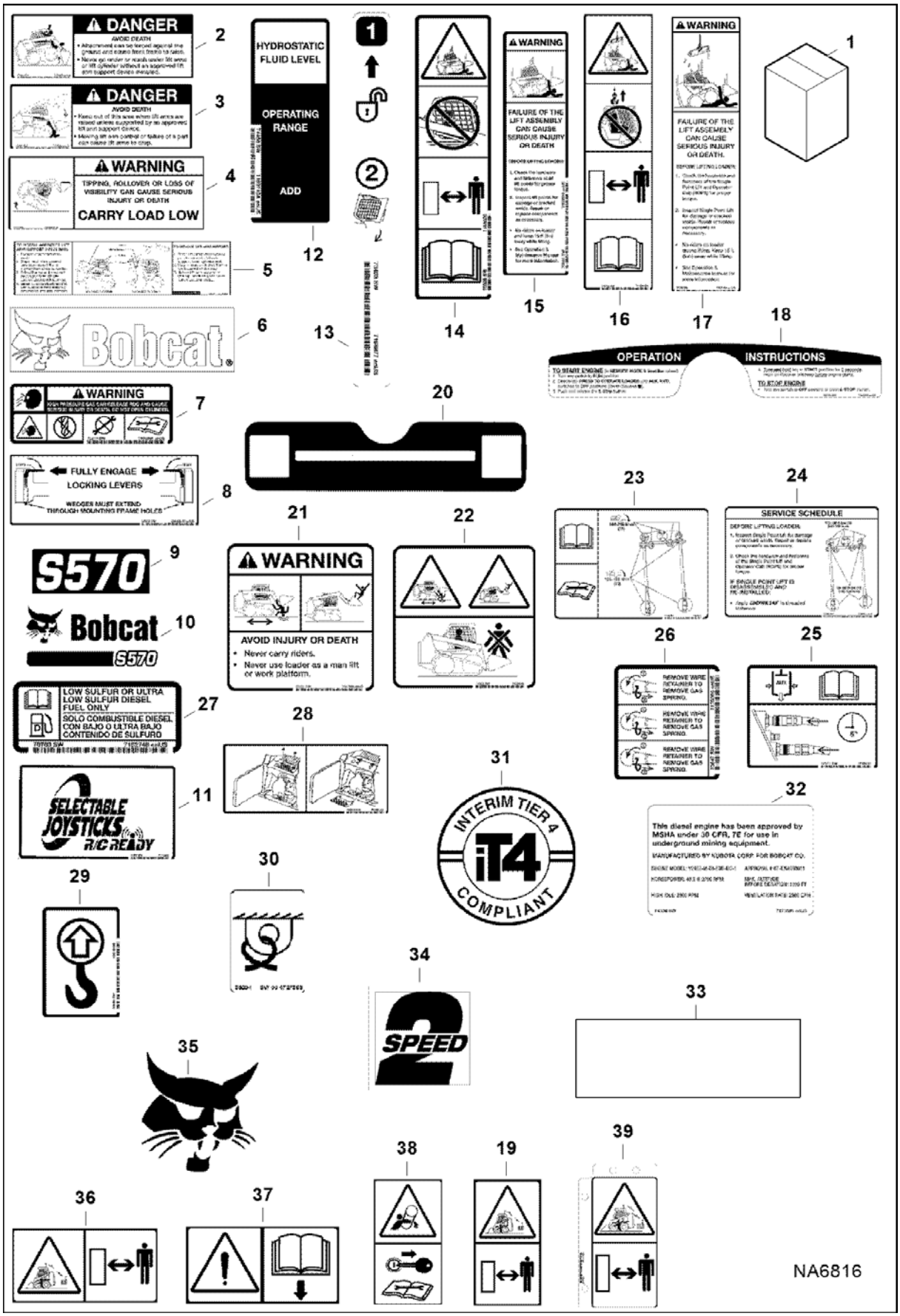

DECALS (Cont'd)
(Outside)

Ref No	Part Number	Description	Remarks	Serial Number	Qty
		BOBCAT HEAD			
36	6692757	DECAL, "REMOTE CONTROL OPERATION", LARGE	not in kit		1
37	6692763	DECAL WARNING, "READ THE MANUAL"	not in kit		1
38	6692767	DECAL, "ROTATING PARTS"	not in kit		1
39	7135569	DECAL	tag		1

DELUXE HEADLINER KIT

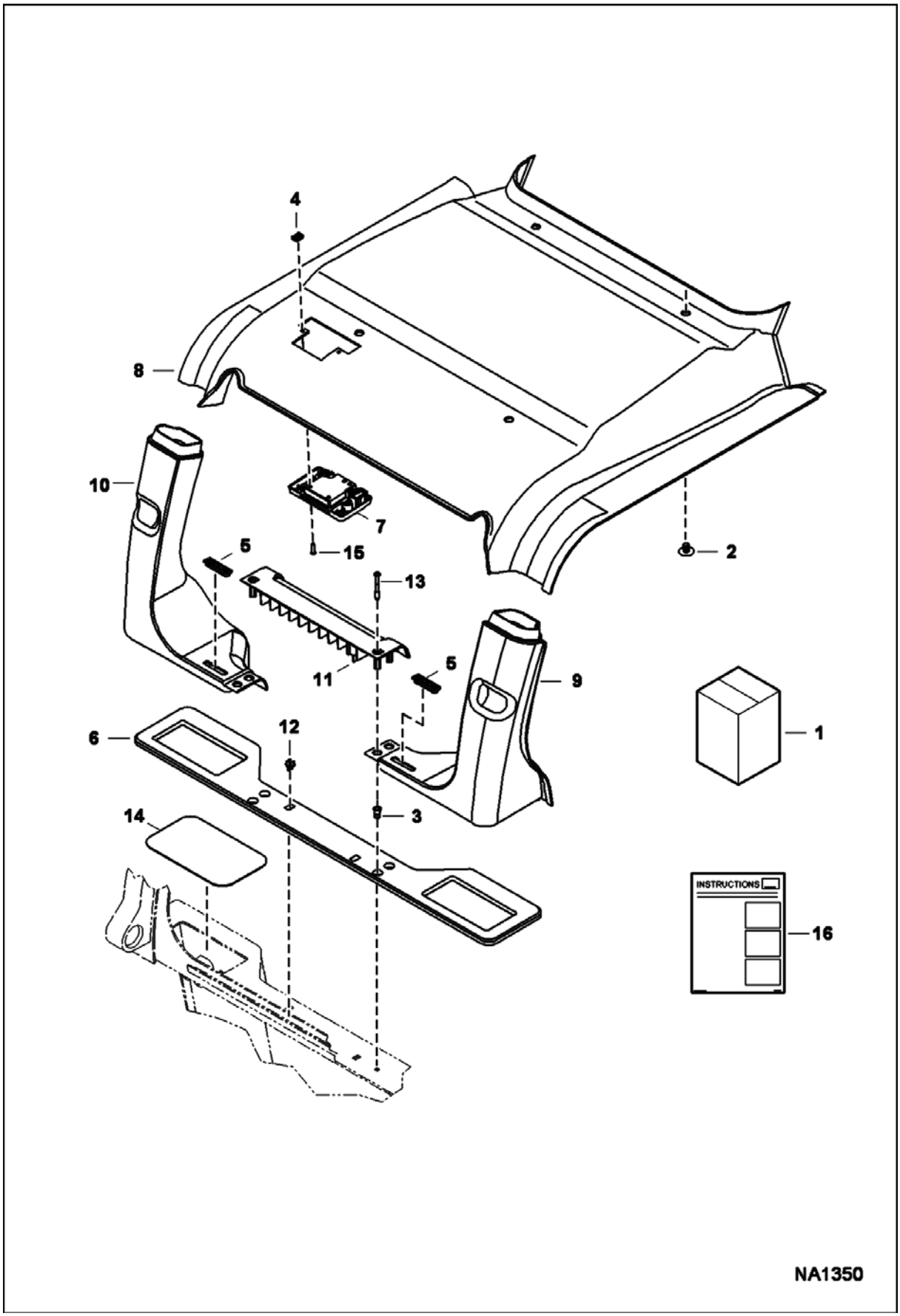

DELUXE HEADLINER KIT (Cont'd)

Ref No	Part Number	Description	Remarks	Serial Number	Qty
1	7156253	KIT, HEADLINER DLX	Ref. 2-16		1
2	6674895	RETAINER			4
3	6675033	INSERT			2
4	7142762	CLIP			2
5	7145885	VENT, DEFROST			2
6	7153832	SEAL, SHELF REAR			1
7	7166629	LIGHT, CAB HEADLINER	2 position switch		1
7		LIGHT	NAP - 3-positioin switch - Order 7166629 light - Was 7155797 [A]		1
8	7155798	HEADLINER, DLX			1
9	100333SUB	DUCT, AIR	RH - W/Ref. 5		1
10	100334SUB	DUCT, AIR	LH - W/Ref. 5		1
11	7165332	SHELF, REAR			1
12	7165333	CLIP			2
13	7165799	SCREW			2
14	7168610	COVER			2
15	7170114	SCREW			2
16	6987355	INSTRUCTIONS			1

DELUXE INTERIOR KIT

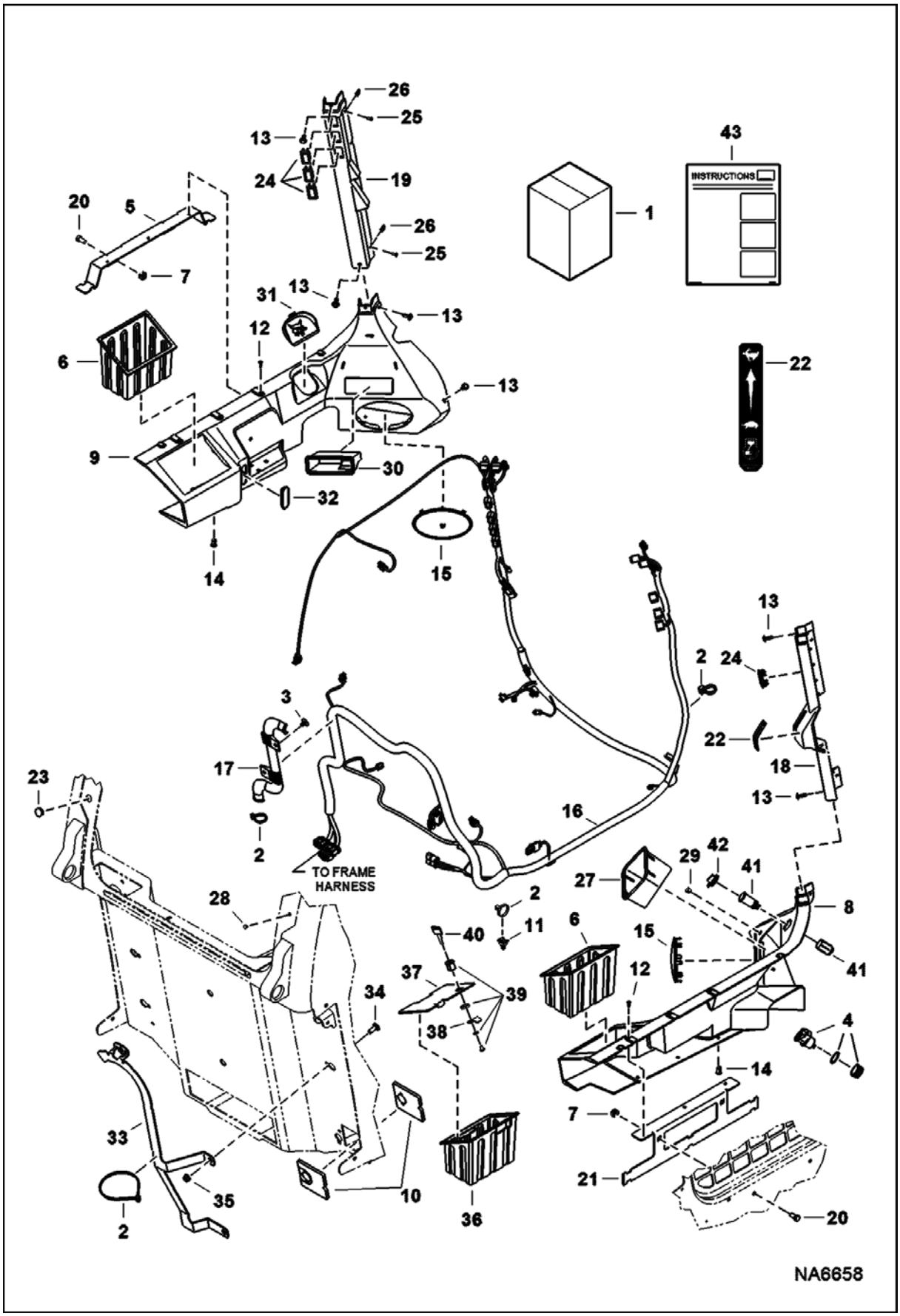

DELUXE INTERIOR KIT (Cont'd)

Ref No	Part Number	Description	Remarks	Serial Number	Qty
1	7220758	KIT, DLX HRNS/INTER	Ref. 2, 3, 5-35, & 41-43		1
2	6624289	STRAP, TIE			20
3	6674895	RETAINER			2
4	7001664	PLUG, POWER	W/hinged cover - not in kit		1
5	7116118	BRACKET			1
6	7145268	CONTAINER, STORAGE			2
7	7149204	NUT			4
8	7155642	FENDER, PANEL RH			1
9	7155643	FENDER, PANEL L.H.			1
10	7185150	PLUG, HARNESS CAB			2
11	7010600	TREE MOUNT			2
12	7160381	RIVET, BIRD CAGE			6
13	7160382	RIVET, BIRD CAGE			8
14	7160383	RIVET, BIRD CAGE			10
15	7161939	GRILL			2
16	7210556	HARNESS, CAB DLX			1
17	7164073	GUIDE			1
18	7164347	COLUMN, FRONT RIGHT			1
19	7164348	COLUMN, FRONT LEFT			1
20	17C616	BOLT 5			4
21	7193021	BRACKET			1
22	7177742	DECAL	throttle		1
23	6657719	PLUG	0.75" dia hole		2
24	6665314	PLUG			5
25	6669224	BOLT			6
26	7142762	CLIP			6
27	7154285	BOX, STORAGE			1
28	7188745	PLUG			1
29	7182942	PLUG			1
30	7165344	STORAGE			1
31	7165345	DOOR, COVER			1
32	7165346	DOOR, COVER			1
33	7199044	BRACKET			1
34	10C616	BOLT 10			3
35	97D6	NUT 10			3
36	7181555	TOOL BOX	EMEA - not in kit		1
37	7181556	COVER, TOOL BOX	EMEA - metal cover - not in kit		1
38	7181557	CAM	EMEA - not in kit		1
39	6670726	CYLINDER. LOCK	EMEA - not in kit		1
40	6693241	KEY 10	EMEA - not in kit		1
41	6664223	OUTLET			1
42	6664224	CAP			1
43	6987234	INSTRUCTIONS			1

ELECTRICAL CONTROLS KIT
(7-Pin)

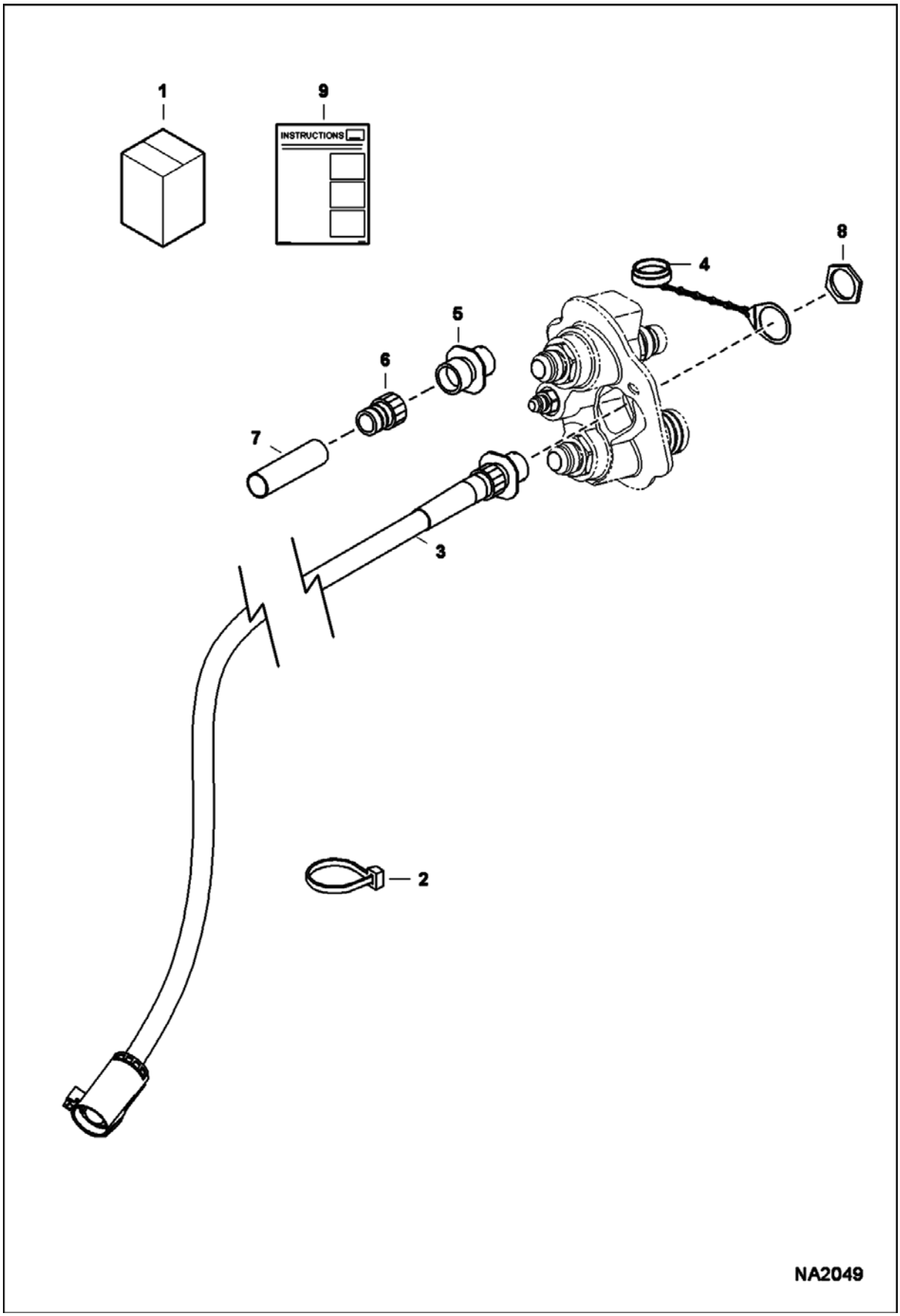

ELECTRICAL CONTROLS KIT (Cont'd)
(7-Pin)

Ref No	Part Number	Description	Remarks	Serial Number	Qty
1	7128426	KIT, ACD 7-PIN	Ref. 2-9		1
2	6624289	STRAP, TIE			1
3	7175321	HARNESS, ACD INPUT	W/Ref. 4-8 - 146" (3710 mm) long		1
4	6675026	CAP, CONNECTOR			1
5	6674802	CONNECTOR			1
5	6669549	SOCKET	18 ga - not in kit		4
5	6677136	SOCKET	12 ga - not in kit		3
6	6674799	ADAPTER	heat shrink		1
7		HEAT SHRINK	NSS - purchase locally		1
8	6688338	NUT	jam		1
9	6987238	INSTRUCTIONS			1

ELECTRICAL CONTROLS KIT
(14-Pin)

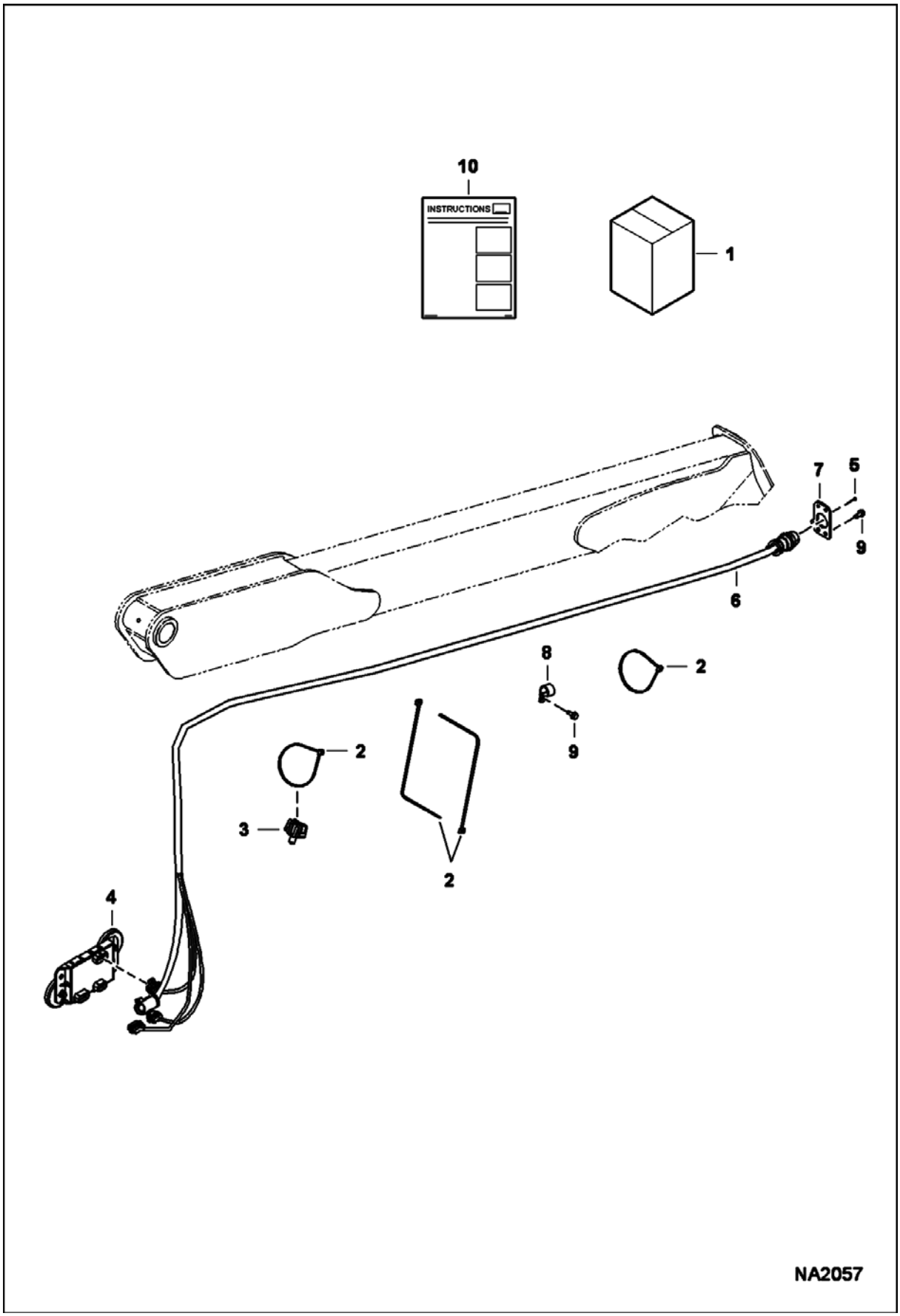

ELECTRICAL CONTROLS KIT (Cont'd)
(14-Pin)

Ref No	Part Number	Description	Remarks	Serial Number	Qty
1	6733136	KIT, ATTACHMENT 14-PIN	Ref. 2-10		1
2	6624289	STRAP, TIE			9
3	6675281	MOUNT			1
4	6678675	CONTROLLER, ACD	W/O magnets		1
4	6719448	MAGNET, CONTROL ATTACH	45 kg (100 lb) force		2
4	25G612	SCREW			2
4	83D6	NUT 5			2
5	6704892	RIVET			1
6	6732730	HARNESS			1
7	6733144	MOUNT			1
8	30H50	CLIP			6
9	84G3112	BOLT 5			8
10	6901872	INSTRUCTIONS			1

FIRE EXTINGUISHER

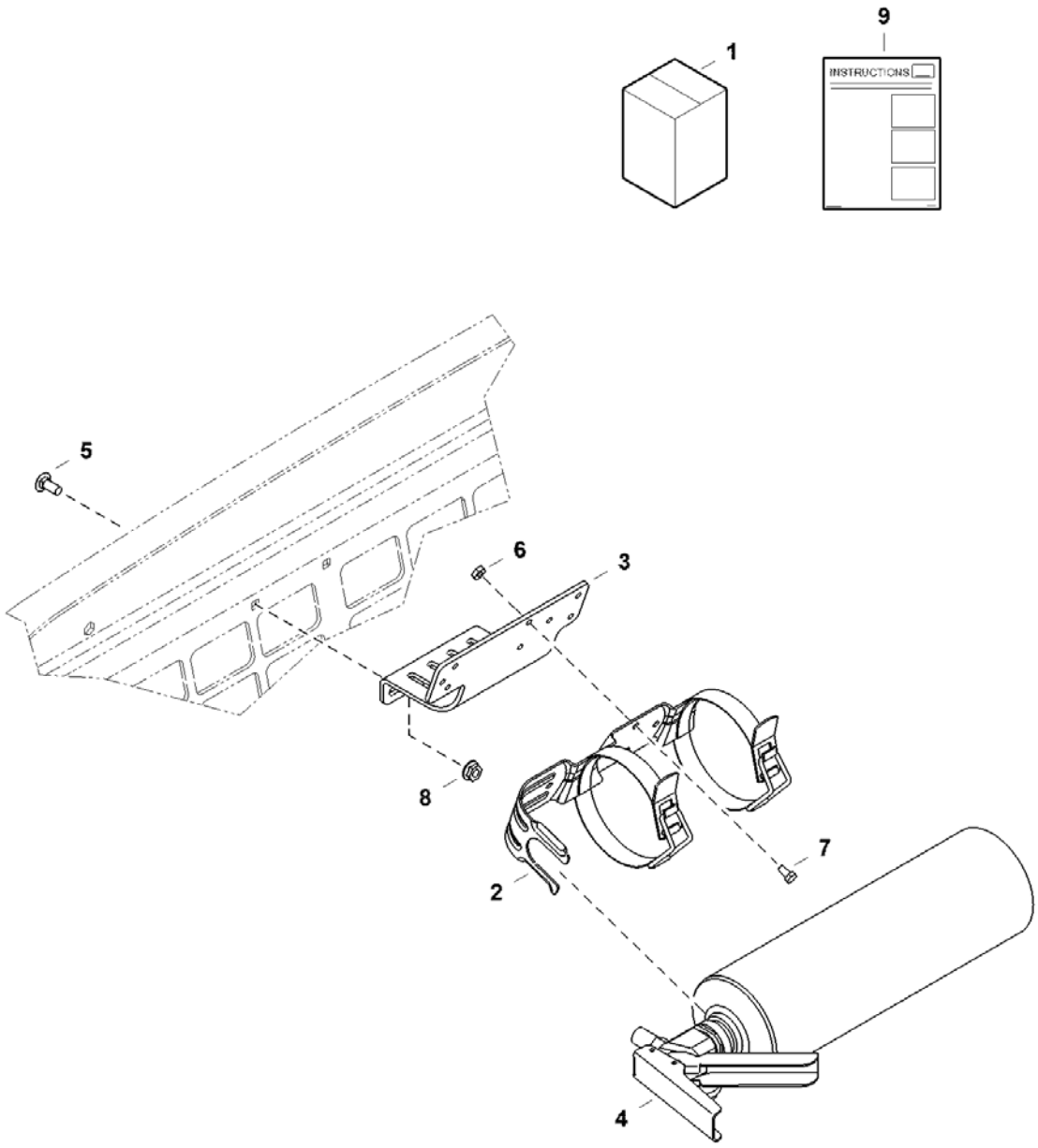

FIRE EXTINGUISHER (Cont'd)

Ref No	Part Number	Description	Remarks	Serial Number	Qty
1	7129307	KIT, EXTINGUISHER FIRE	Ref. 2-9		1
2	7224665	BRACKET, EXTINGUISHER FIRE			1
3	7223715	BRACKET, MOUNTING			1
4	7224664	EXTINGUISHER, FIRE	W/Ref. 2		1
5	10C410	BOLT			2
6	12D10	NUT			4
7	45G1006	BOLT			4
8	55D4	NUT			2
9	6987223	INSTRUCTIONS			1

FLASHER LIGHTS
(4-Way)

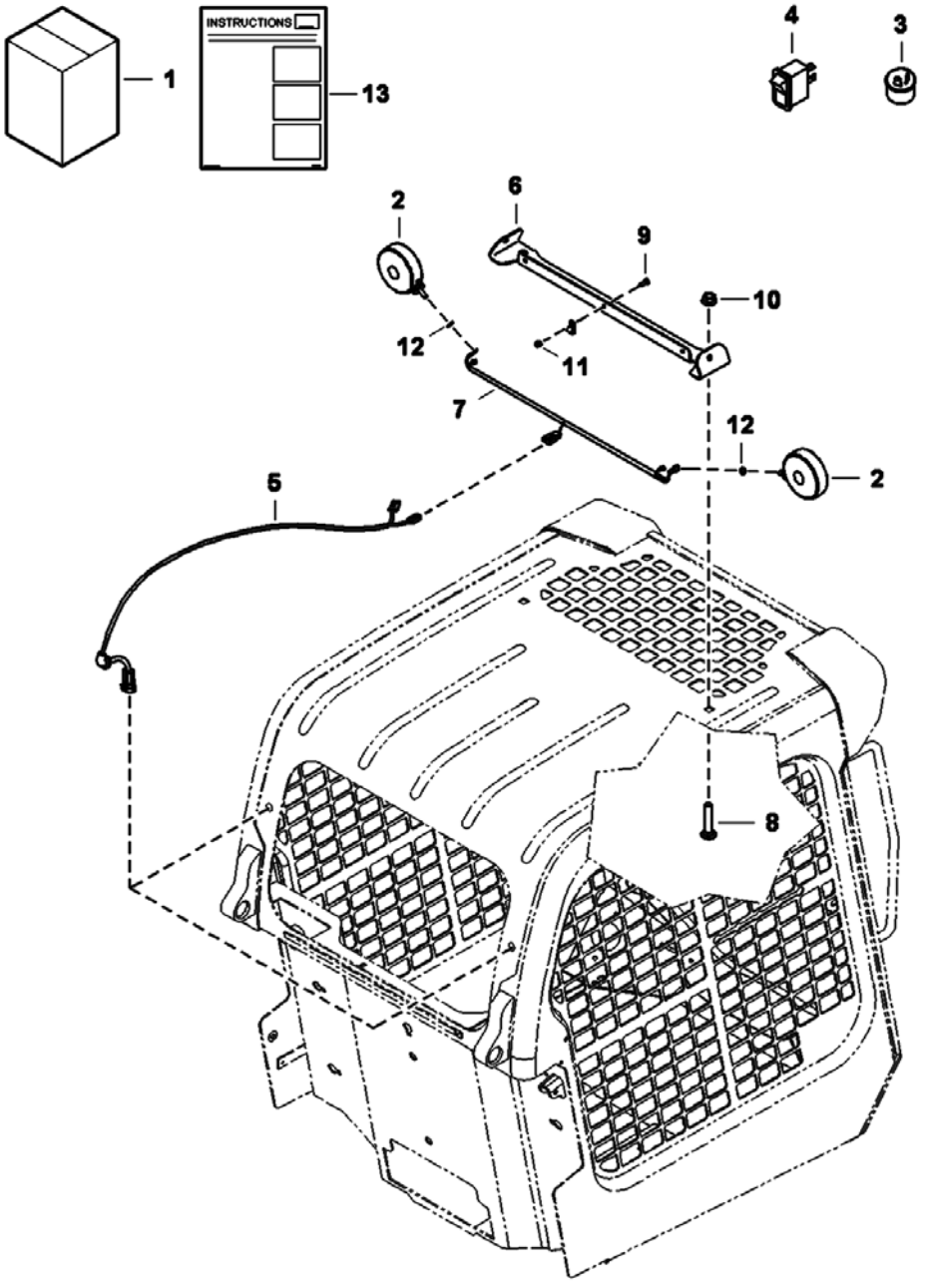

FLASHER LIGHTS (Cont'd)
(4-Way)

Ref No	Part Number	Description	Remarks	Serial Number	Qty
1	7128338	KIT, FLASHER 4-WAY	Ref. 2-13		1
1		RESEALING PLUG KIT	See Illustration RESEALING KIT/ NA2775		1
2	6517516	LIGHT			2
3	6557904	FLASHER			1
4	6668815	SWITCH	See Ref. 13 for proper placement		1
5	6718872	HARNESS			1
6	7166832	MOUNT			1
7	7169753	HARNESS, FLASHER 4-WAY			1
8	37C1032	BOLT			2
9	37C412	BOLT			3
10	55D10	NUT			2
11	59D4	NUT 5			3
12	6E5	WASHER			2
13	6987224	INSTRUCTIONS			1

F.O.P.S KIT

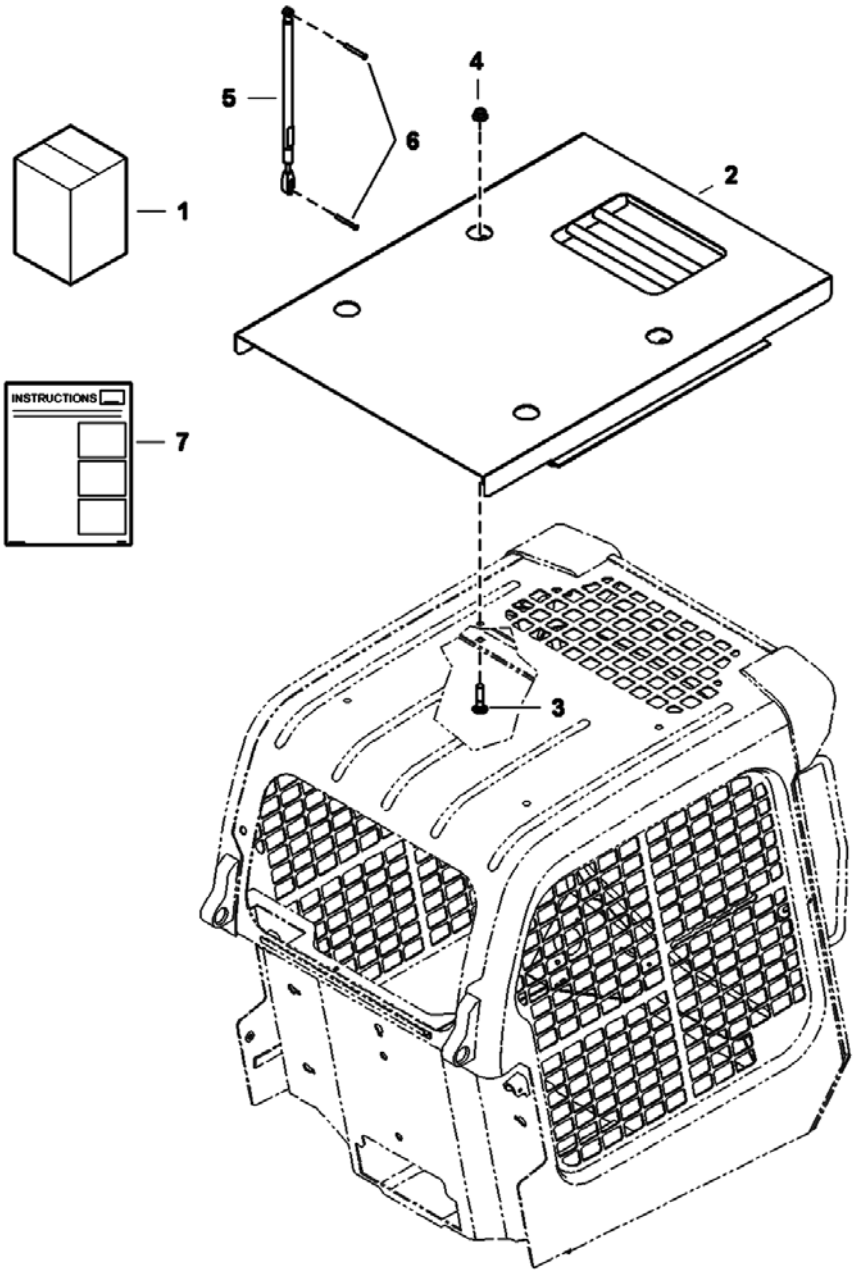

F.O.P.S KIT (Cont'd)

Ref No	Part Number	Description	Remarks	Serial Number	Qty
1	7129293	KIT, FOPS TOP	Ref. 2-7		1
1		RESEALING PLUG KIT	See Illustration RESEALING KIT/ NA2775		1
2	7167506	SHIELD, ASSY			1
3	7164686	BOLT, CARRIAGE			4
4	53D10	NUT			4
5	7167437	SPRING, GAS STD			1
6	7194471	PIN, CLEVIS			2
7	6987216	INSTRUCTIONS			1

F.O.P.S WINDOW KIT

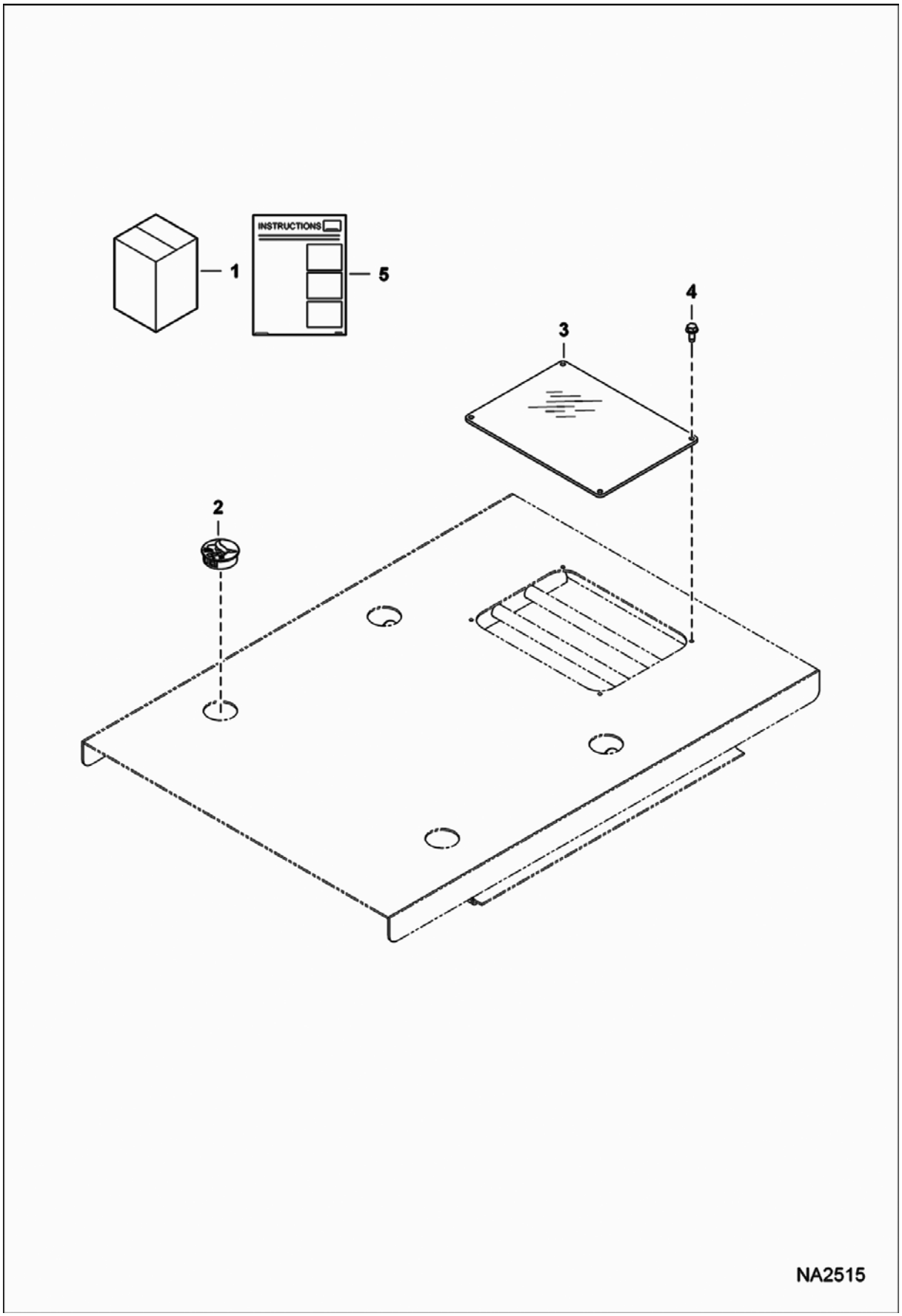

F.O.P.S WINDOW KIT (Cont'd)

Ref No	Part Number	Description	Remarks	Serial Number	Qty
1	7186723	KIT, WINDOW FOPS	Ref. 2-5		1
2	6718796	PLUG			4
3	7186644	WINDOW, FOPS			1
4	84G3112	BOLT 5			4
5	6989520	INSTRUCTIONS			1

FUEL SEDIMENT BOWL KIT

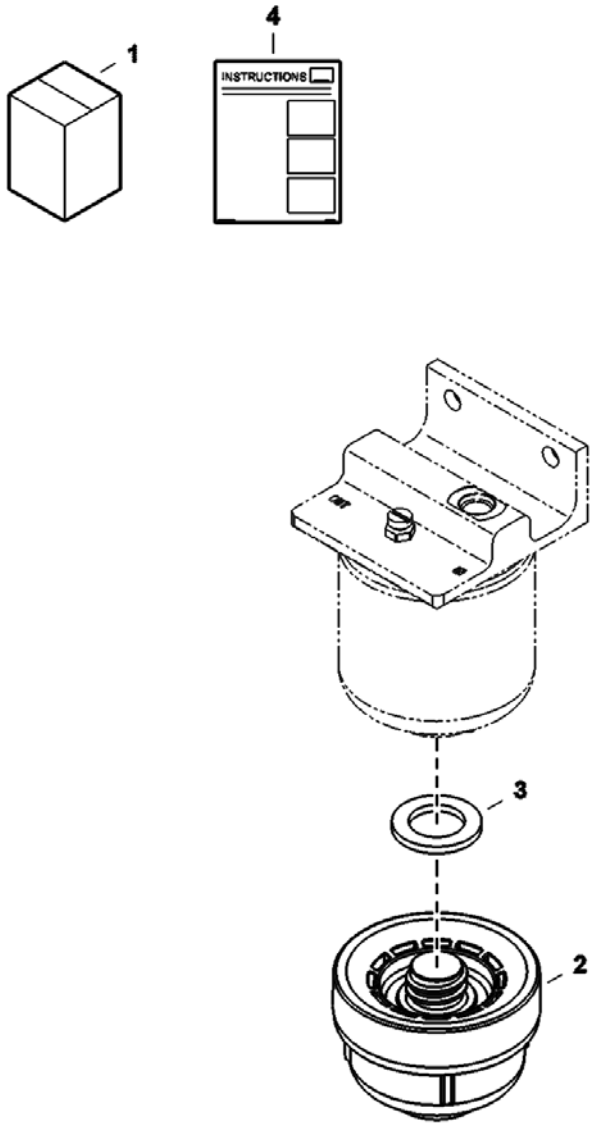

FUEL SEDIMENT BOWL KIT (Cont'd)

Ref No	Part Number	Description	Remarks	Serial Number	Qty
1	7177215	KIT, BOWL FUEL	Ref. 2-4		1
2	7167163	BOWL, FUEL	W/Ref. 3		1
3	7177212	GASKET			1
4	6987336	INSTRUCTIONS			1

GAS SPRING KIT

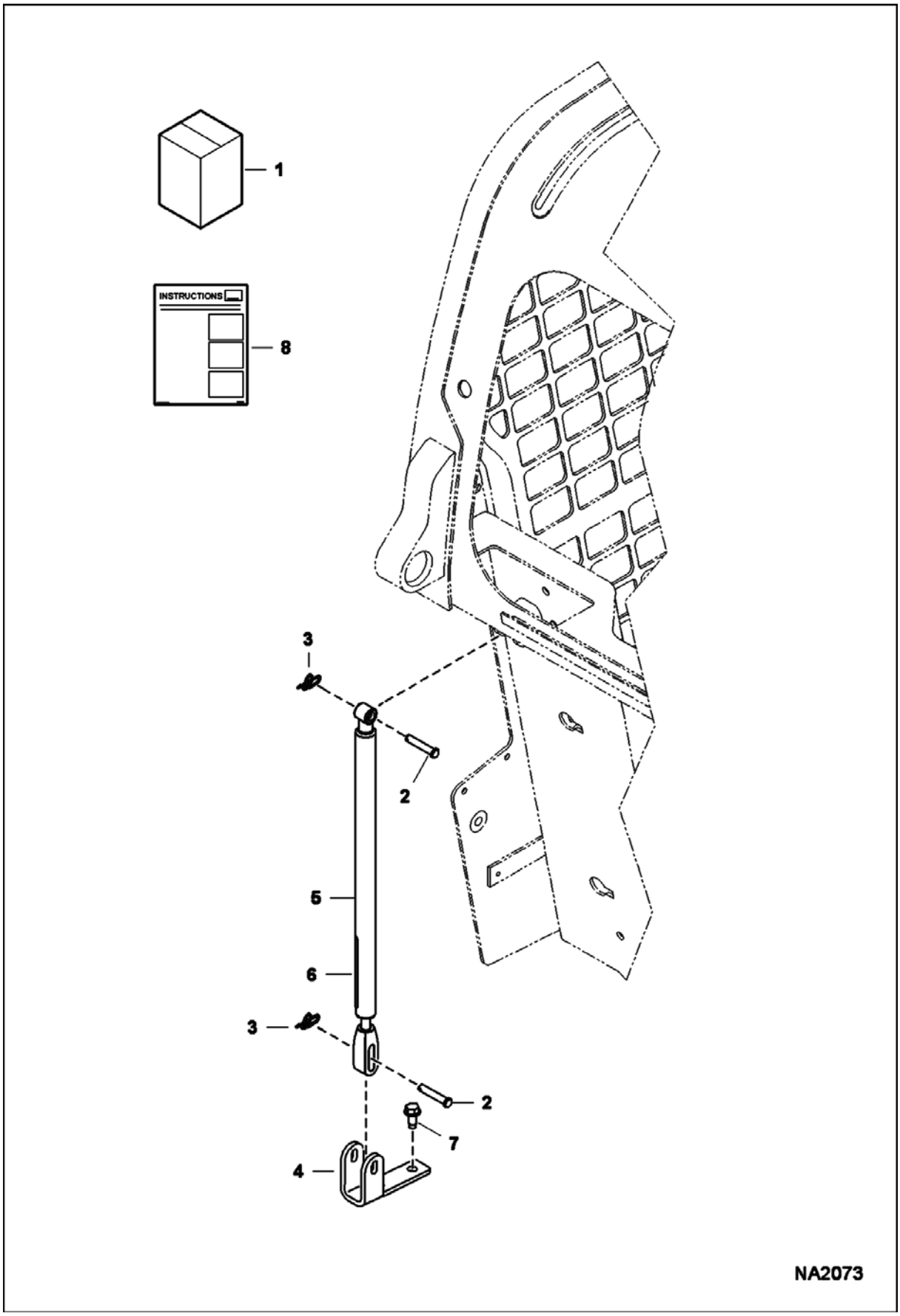

GAS SPRING KIT (Cont'd)

Ref No	Part Number	Description	Remarks	Serial Number	Qty
1	7170782	KIT, GAS SPRING DLX	Ref. 2-8		1
2	6567743	PIN			2
3	6631418	RING, RETAINING			2
4	7144859	MOUNT, GAS SPRING			1
5	7167438	GAS SPRING	Also Order Ref. 6		1
6	7169291	DECAL			1
7	84G3712	BOLT 5			2
8	6987279	INSTRUCTIONS			1

HEATER & A/C
(Heater Kit)

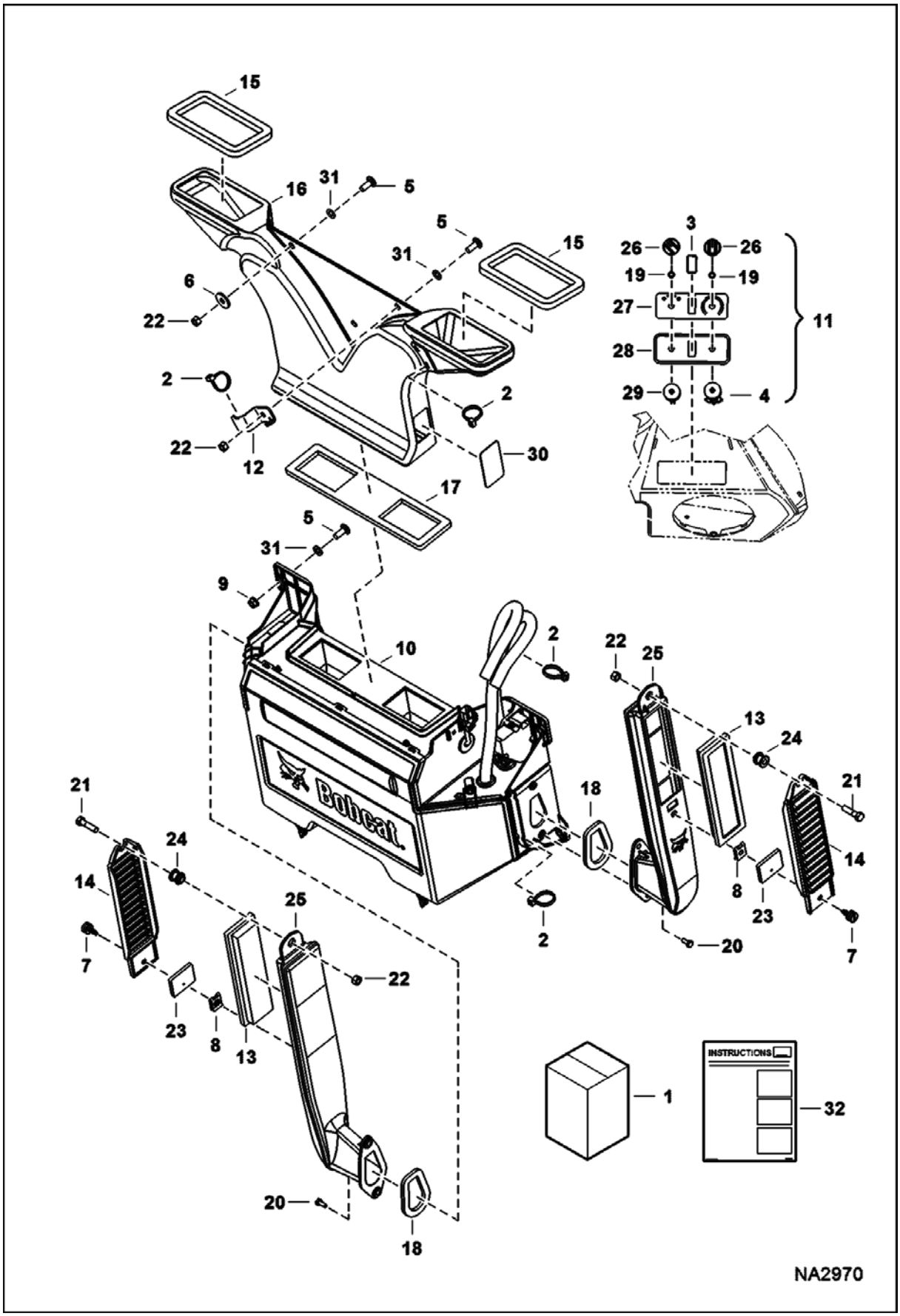

HEATER & A/C (Cont'd)
(Heater Kit)

Ref No	Part Number	Description	Remarks	Serial Number	Qty
1	7128484	KIT, HEATER	Ref. 2-32		1
2	6624289	STRAP, TIE			6
3	6675181	PLUG			1
4	7168604	RESISTOR	temp control - W/Ref. 19		1
5	10C616	BOLT 10			6
6	619021	WASHER, 5			1
7	7000983	SCREW			2
8	7000984	CLIP			2
9	97D6	NUT 10			4
10		HEATER, CAB	See Illustration HEATER & A/C/ NA2969		1
11	7176309	CONTROL	W/Ref. 4 & 26-29		1
12	7192569	BRACKET			1
13	7176099	FILTER, AIR FRESH			2
14	7176100	COVER			2
15	7165673	SEAL, CAB DUCT			2
16	7197262	DUCT			1
17	7167405	SEAL, DUCT			1
18	7176579	SEAL, FOAM			2
19		NUT	NSS		2
20	6702642	SCREW			4
21	17C624	BOLT 5			2
22	95D6	NUT			4
23	7176943	SEAL, COVER			2
24	7176942	SPACER			2
25	7176101	DUCT, AIR			2
26	6675177	KNOB			2
27	7011061	DECAL			1
28	7011062	PANEL, CONTROL			1
29	6675176	SWITCH	blower motor - W/Ref. 19		1
30	7197973	COVER			1
31	6674894	NUT			6
32	6987231	INSTRUCTIONS			1

HEATER & A/C
(Heater Assembly)

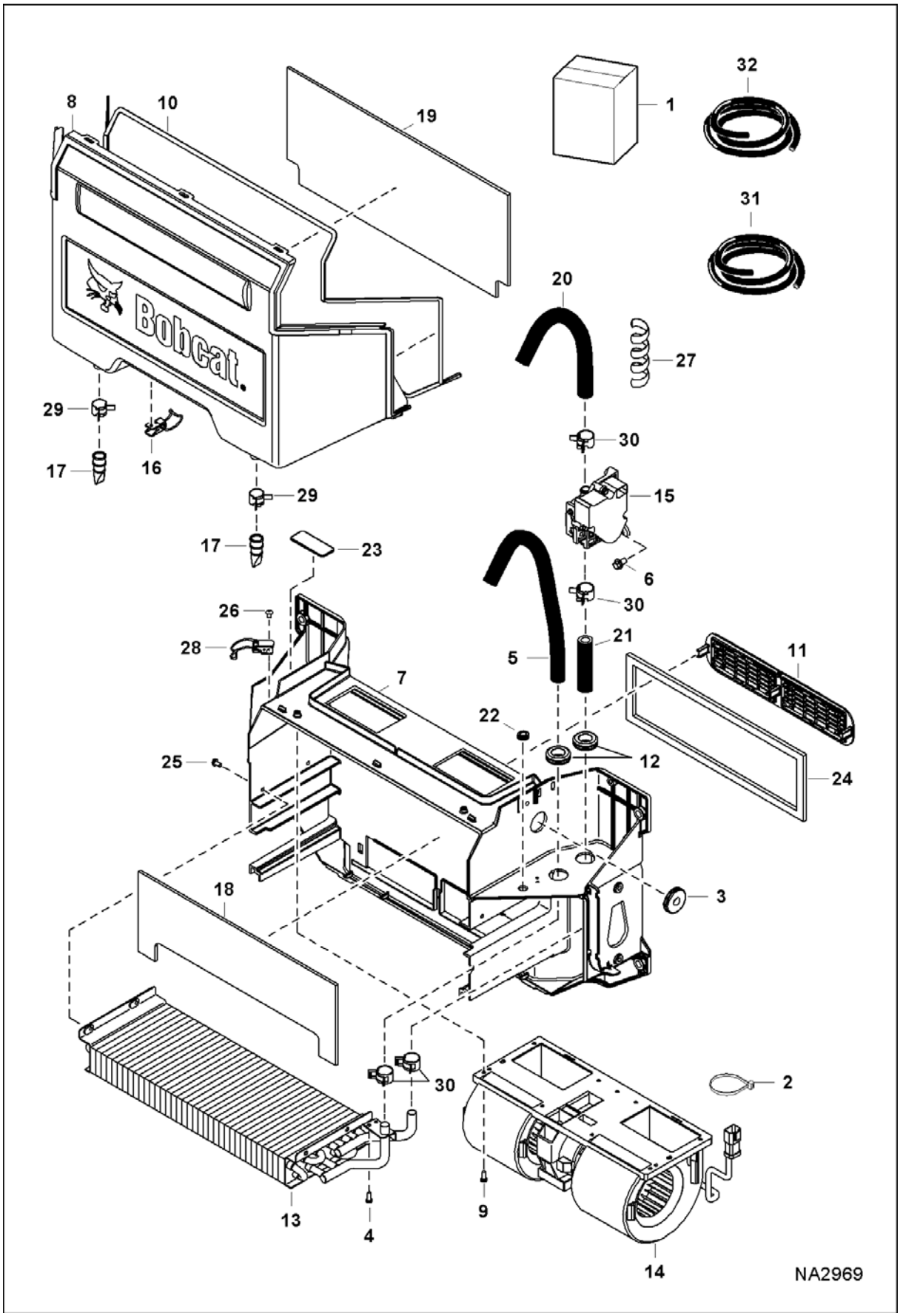

HEATER & A/C (Cont'd)
(Heater Assembly)

Ref No	Part Number	Description	Remarks	Serial Number	Qty
1	7193780	HEATER, CAB	Ref. 2-30		1
2	6624289	STRAP, TIE			1
3	6682697	GROMMET			1
4	7162770	SCREW, PLASTIC			2
5		HOSE, HEATER	NAP - 520,7 mm (20.5") long - Order Ref. 31		1
6	7166190	SCREW THREAD ROLLING			2
7	7185847	HOUSING			1
8	7185848	COVER			1
9	7192287	BOLT			2
10	7192408	SEAL			1
11	7193354	FILTER, AIR RECIRCULATING			1
12	7193532	GROMMET			2
13	7193534	COIL, HEATER			1
14		BLOWER, HEATER & A/C	See Illustration HEATER & A/C/ NA2155A		1
15	7003456	VALVE, MOTORIZED ASSY			1
16	7193540	LATCH			2
17	7193541	DRAIN, WATER SEAT			2
18	7193542	SEAL			1
19	7193543	SEAL			1
20		HOSE, WATER	NAP - 609,6 mm (24") long - Order Ref. 31		1
21		HOSE, HEATER	NAP - 85 mm (3.35") long - Order Ref. 31		1
22	7193778	PLUG			1
23	7193782	COVER			1
24	7193783	SEAL, FOAM			1
25	7193784	BOLT			4
26	7193786	RIVET, POP			4
27		WRAP, HOSE	NAP - 457 mm (18") long - Order Ref. 32		2
28	7196889	LATCH			2
29	5HM18	CLAMP			2
30	5HM20	CLAMP			4
31	6565977	HOSE	bulk - sold per foot		x
32	7194262	WRAPAROUND	bulk - sold per foot		x

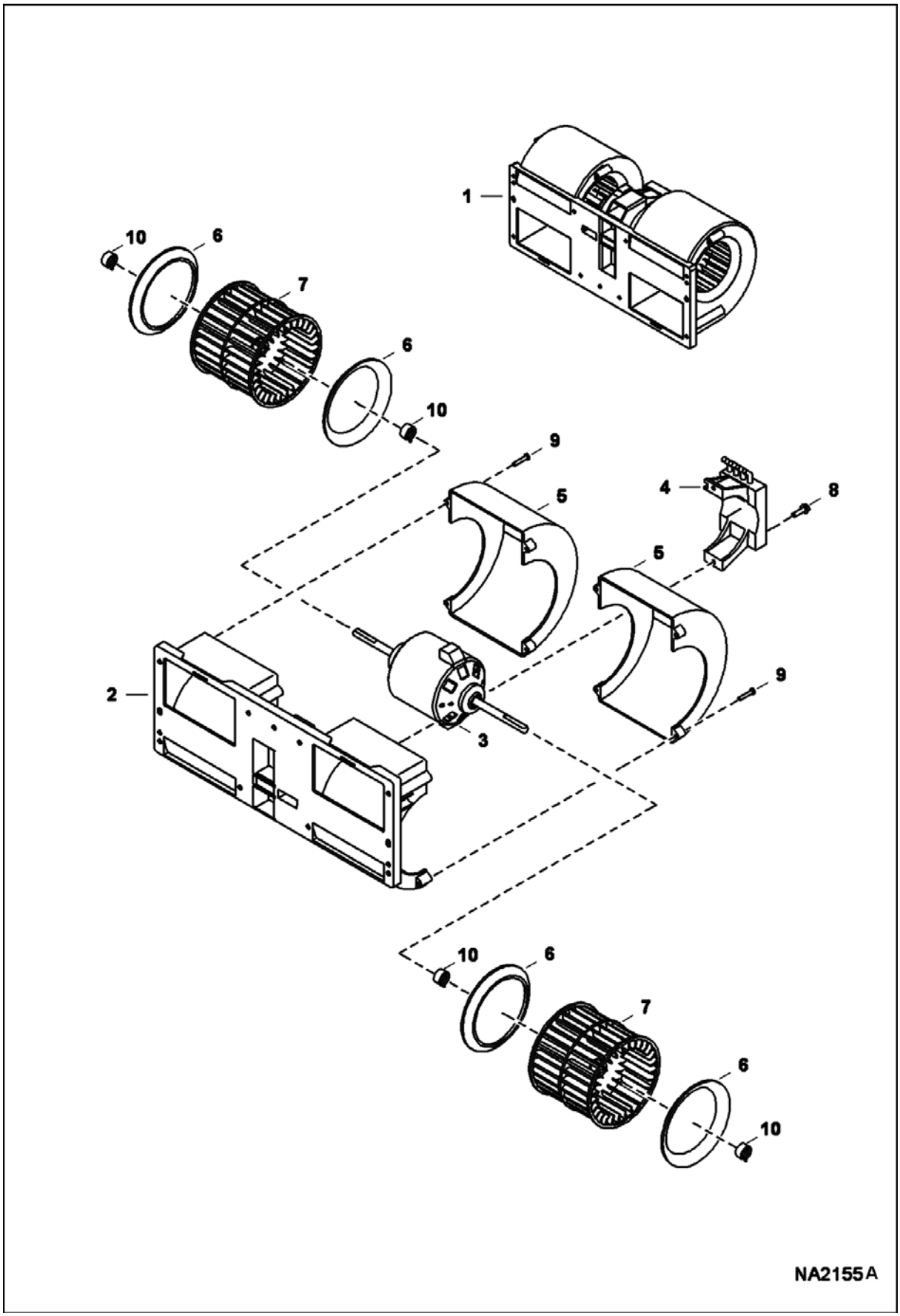
1
10
6
7
6
10
9
5
4
8
5
2
3
9
10
6
7
6
10
NA2155A

HEATER & A/C (Cont'd)
(Blower Assembly)

Ref No	Part Number	Description	Remarks	Serial Number	Qty
1	7193536	BLOWER, HEATER & A/C	Ref. 2-10		1
2	7010162	HOUSING, BLOWER			1
3	7010163	MOTOR, FAN			1
4		RESISTOR	NSS		1
5	7010165	COVER			2
6	7010166	RING, INNER			4
7	7010167	BLOWER, WHEEL			2
8	7003471	SCREW			2
9	7010168	SCREW			8
10	7010169	CLAMP, HOSE			4

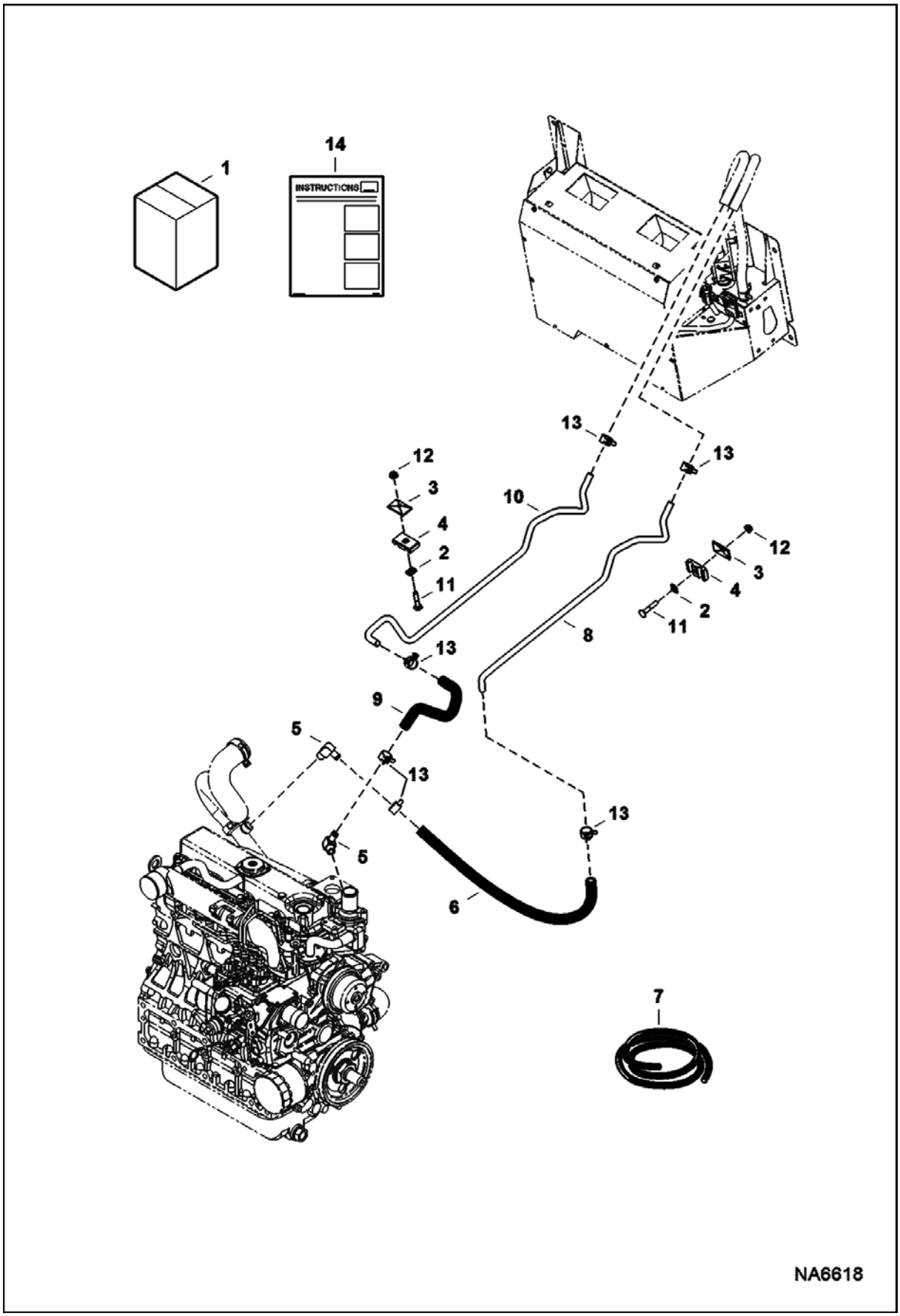
1
14
INSTRUCTIONS
13
13
12
3
10
4
2
11
12
3
4
2
11
8
13
9
5
13
5
13
6
7
NA6618

HEATER & A/C (Cont'd)
(Heater Plumbing Kit)

Ref No	Part Number	Description	Remarks	Serial Number	Qty
1	7129469	KIT, PLUMBING HEATER	Ref. 2-6 & 8-14		1
2	774220	NUT			2
3	6652521	PLATE			2
4	6701892	CLAMP			2
5	7198554	FITTING, ELBOW			1
6		HOSE	NAP - 23.5" (596.9 mm) long - Order Ref. 7		1
7	6565977	HOSE	bulk - sold per foot		x
8	7214628	TUBELINE, HEATER			2
9	7219969	HOSE, HEATER FORMED			1
10	7197727	TUBELINE, HEATER			1
11	37C528	BOLT			2
12	55D5	NUT			2
13	5HM20	CLAMP			6
14	6987231	INSTRUCTIONS			1

HEATER & A/C
(A/C Kit)

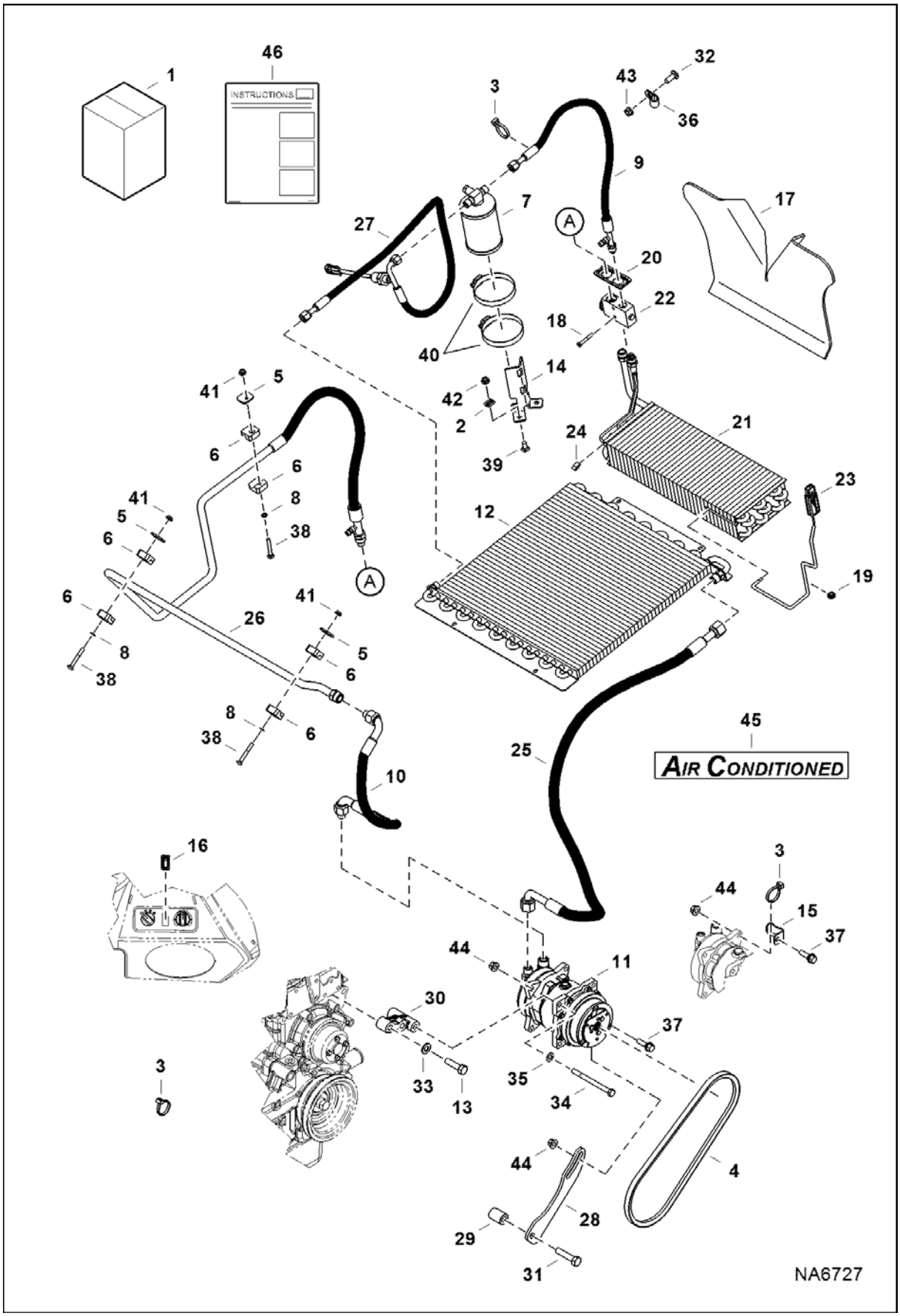

HEATER & A/C (Cont'd)
(A/C Kit)

Ref No	Part Number	Description	Remarks	Serial Number	Qty
1	7129488	KIT, A/C			1
2	774220	NUT			2
3	6624289	STRAP, TIE			7
4	6625298	BELT-PUMP			1
5	6665102	COVER			3
6	6666920	CLAMP, HALF			6
7	6674235	RECEIVER DRIER			1
8	6675212	RETAINER			3
9	6697915	HOSE			1
10	6697918	HOSE			1
11	7023445	COMPRESSOR, A/C			1
12	7024833	CONDENSER, A/C			1
13	7135124	SCREW			2
14	7151848	BRACKET			1
15	7164564	BRACKET, A/C			1
16	7169112	SWITCH, ROCKER A/C			1
17	7173651	INSULATION, HEATER			1
18	7192371	BOLT			2
19	7193531	GROMMET			1
20	7193533	GROMMET			1
21	7193535	EVAPORATOR			1
22	7193538	BLOCK, VALVE A/C			1
23	7193539	THERMOSTAT			1
24	7193785	CLIP			2
25	7193995	HOSE, A/C TUBELINE ASSY			1
26	7204044	HOSE, A/C TUBELINE ASSY			1
27	7211112	HOSE, A/C ASSY			1
28	7212215	MOUNT, COMPRESSOR A/C			1
29	7212216	SPACER, BRACKET			1
30	7213533	MOUNT, COMPRESSOR A/C			1
31	7213595	BOLT			1
32	10C616	BOLT 10			1
33	18EM1224	WASHER			2
34	17C672	BOLT			1
35	29E6	WASHER			1
36	30H35	CLAMP 10			1
37	35C620	BOLT 5			2
38	37C432	SCREW			3
39	37C512	BOLT			2
40	44H48	CLAMP			2
41	55D4	NUT			3
42	55D5	NUT			2
43	55D6	NUT			1
44	89D6	NUT			3

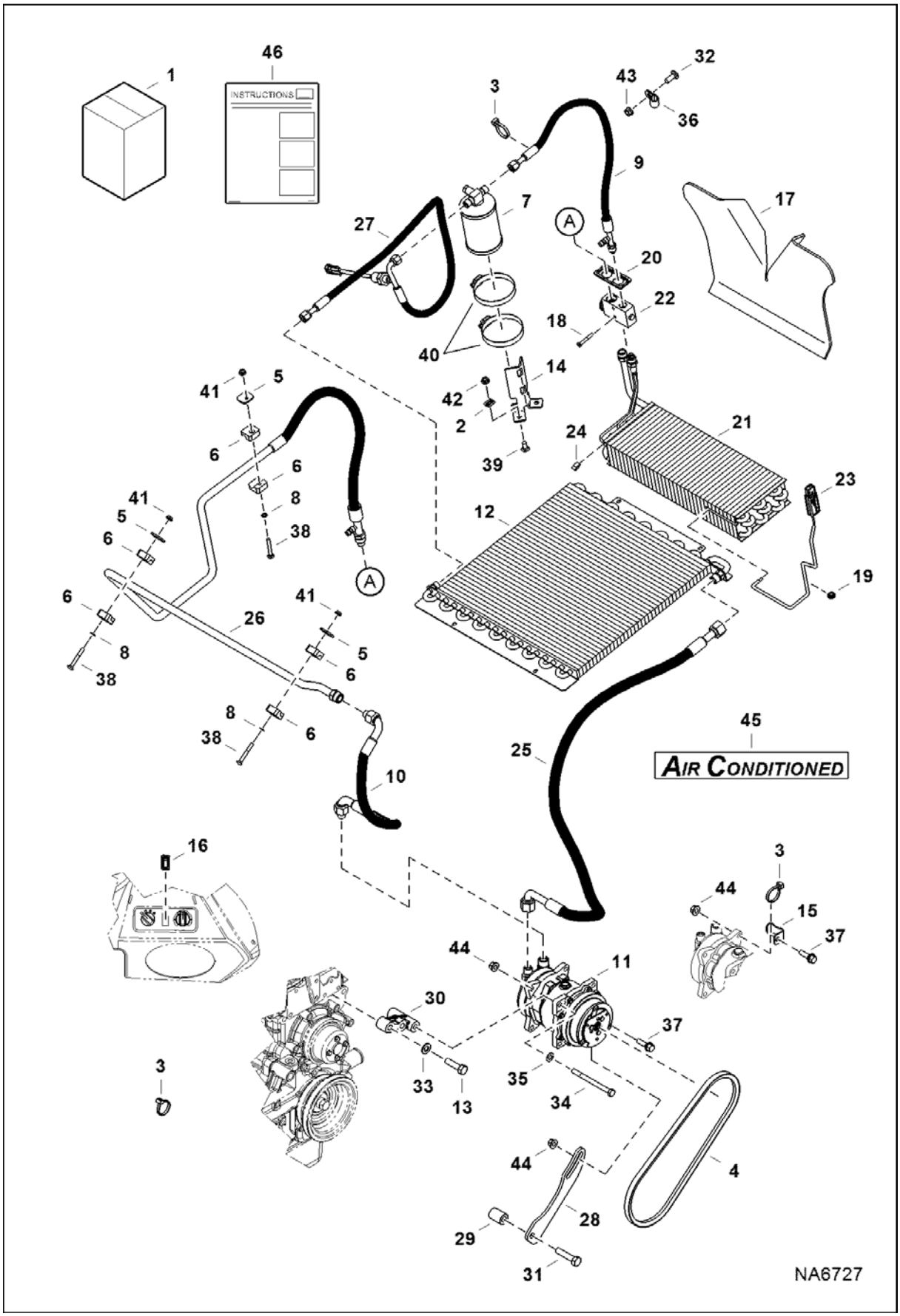
1
46
INSTRUCTIONS
3
43
32
36
9
7
27
A
17
20
22
18
40
14
42
2
39
41
5
6
24
21
23
12
8
38
19
26
25
45
AIR CONDITIONED
10
16
44
15
37
11
30
33
13
35
34
4
28
29
31
NA6727

HEATER & A/C (Cont'd)
(A/C Kit)

Ref No	Part Number	Description	Remarks	Serial Number	Qty
45	7166916	DECAL, A/C	not in kit		2
46	6990325	INSTRUCTIONS			1

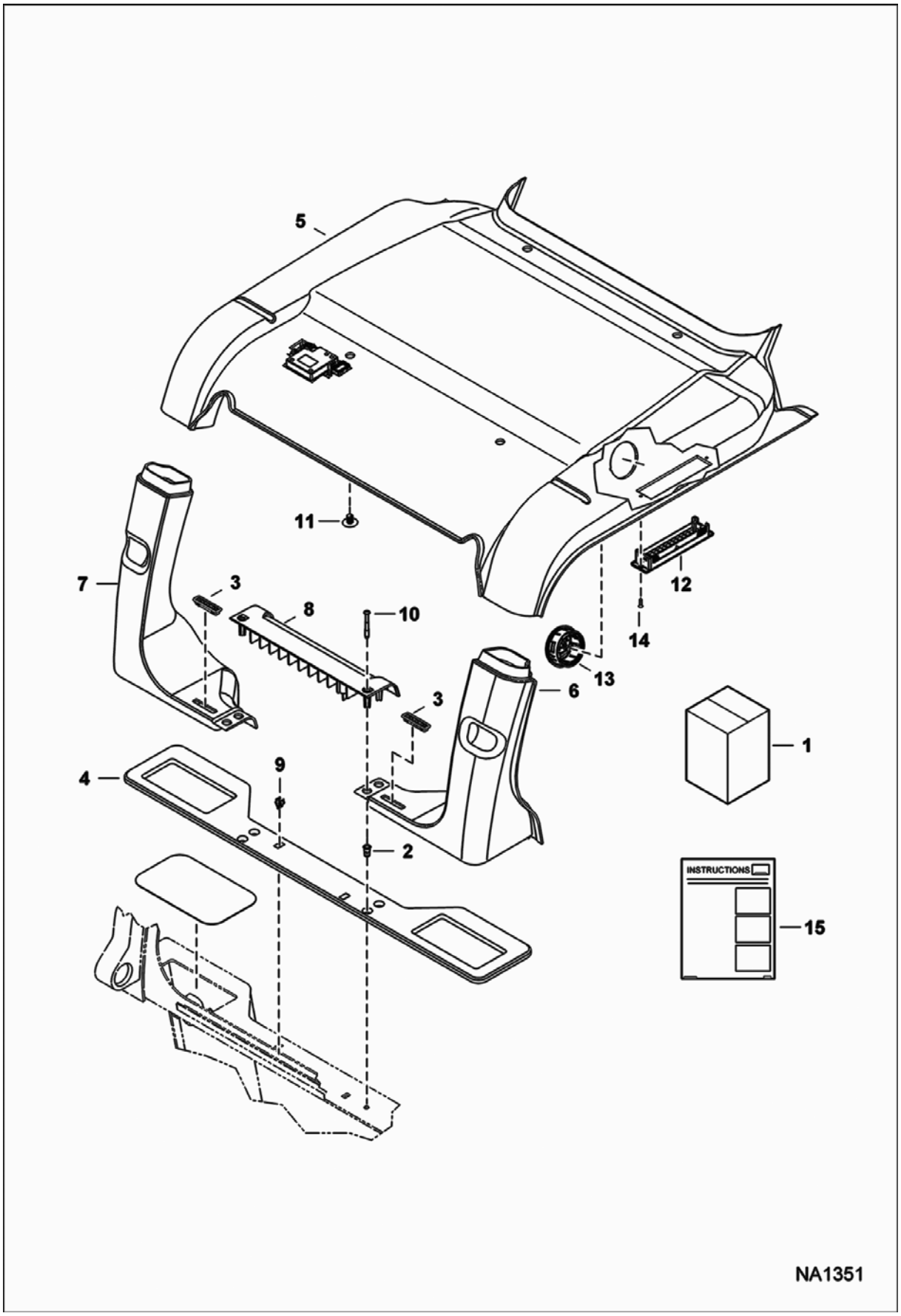
5
11
7
3
8
10
12
14
13
6
3
1
4
9
2
INSTRUCTIONS
15
NA1351

HEATER & A/C (Cont'd)
(HVAC Headliner Kit)

Ref No	Part Number	Description	Remarks	Serial Number	Qty
1	7174171	KIT, HEADLINER HVAC	Ref. 2-15		1
2	6675033	INSERT			2
3	7145885	VENT, DEFROST			2
4	7153832	SEAL, SHELF REAR			1
5	7155785	HEADLINER, HVAC			1
6	100333SUB	DUCT, AIR	RH - W/Ref. 3		1
7	100334SUB	DUCT, AIR	LH - W/Ref. 3		1
8	7165332	SHELF, REAR			1
9	7165333	CLIP			2
10	7165799	SCREW			2
11	6674895	RETAINER			4
12	7155796	LOUVER, RECTANGLE			2
13	7155794	LOUVER, ROUND			6
14	7155799	SCREW			4
15	6987356	INSTRUCTIONS			1

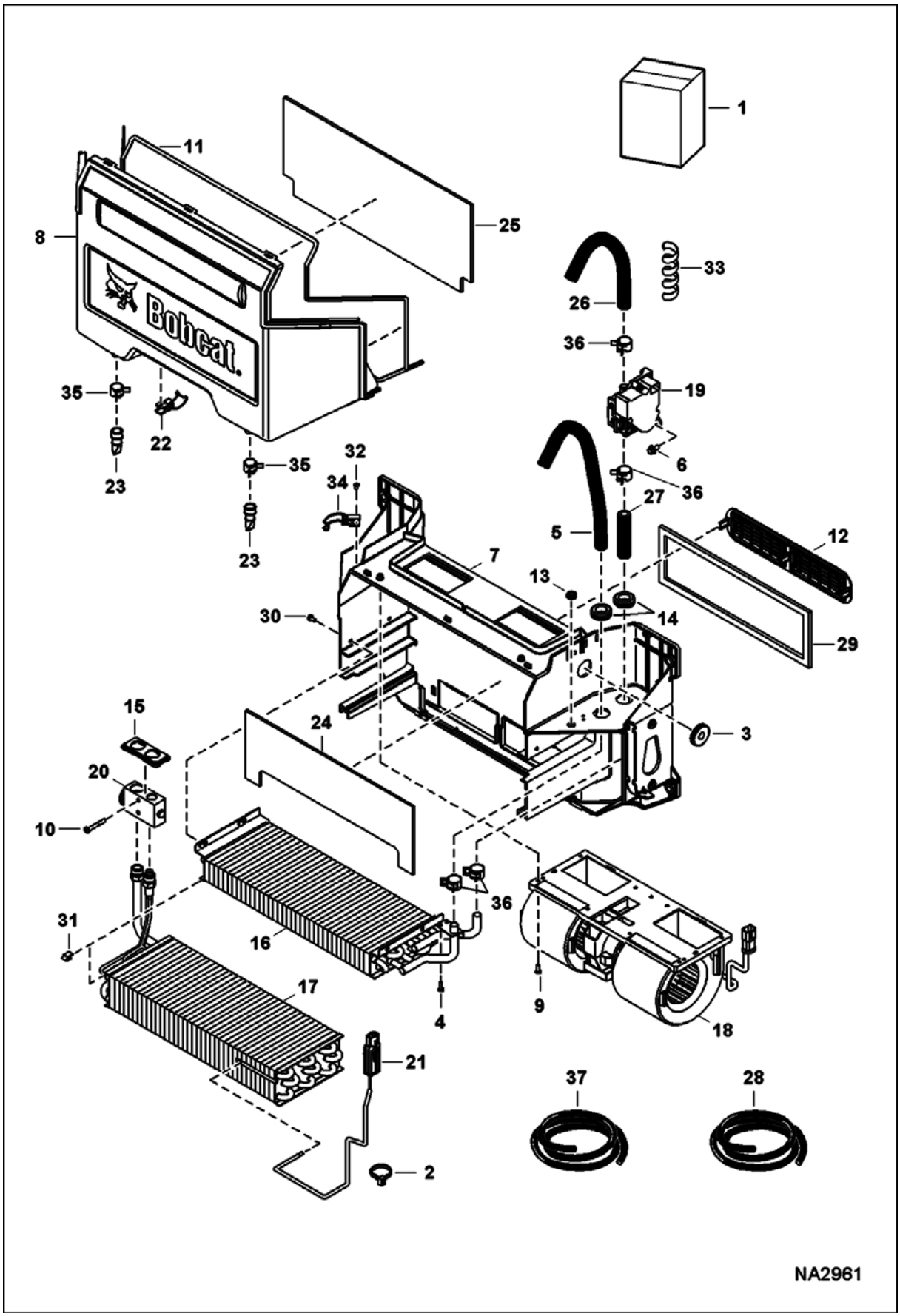
1
11
8
25
Bobcat.
33
26
36
35
19
22
6
23
32
35
34
27
36
5
12
7
13
23
30
14
29
15
24
3
20
10
36
31
16
17
4
9
18
21
37
28
2
NA2961

HEATER & A/C (Cont'd)
(HVAC Assembly)

Ref No	Part Number	Description	Remarks	Serial Number	Qty
1	7185690	HVAC ASSY	Ref. 2-36		1
2	6624289	STRAP, TIE			2
3	6682697	GROMMET			1
4	7162770	SCREW, PLASTIC			2
5		HOSE, HEATER	NAP - 520,7 mm (20.5") long - Order Ref. 28		1
6	7166190	SCREW THREAD ROLLING			2
7	7185847	HOUSING			1
8	7185848	COVER			1
9	7192287	BOLT			2
10	7192371	BOLT			2
11	7192408	SEAL			1
12	7193354	FILTER, AIR RECIRCULATING			1
13	7193531	GROMMET			1
14	7193532	GROMMET			2
15	7193533	GROMMET			1
16	7193534	COIL, HEATER			1
17	7193535	EVAPORATOR			1
18		BLOWER, HEATER & A/C	See Illustration HEATER & A/C/ NA2155A		1
19	7003456	VALVE, MOTORIZED ASSY			1
20	7193538	BLOCK, VALVE A/C			1
21	7193539	THERMOSTAT			1
22	7193540	LATCH			2
23	7193541	DRAIN, WATER SEAT			2
24	7193542	SEAL			1
25	7193543	SEAL			1
26		HOSE, HEATER	NAP - 609,6 mm (24") long - Order Ref. 28		1
27		HOSE, HEATER	NAP - 85 mm (3.35") long - Order Ref. 28		1
28	6565977	HOSE	bulk - sold per foot		x
29	7193783	SEAL, FOAM			1
30	7193784	BOLT			4
31	7193785	CLIP			2
32	7193786	RIVET, POP			4
33		WRAP, HOSE	NAP - 457 mm (18") long - Order Ref. 37		2
34	7196889	LATCH			2
35	5HM18	CLAMP			2
36	5HM20	CLAMP			4
37	7194262	WRAPAROUND	bulk - sold per foot		x

HEATER & A/C
(Lower Duct Kit)

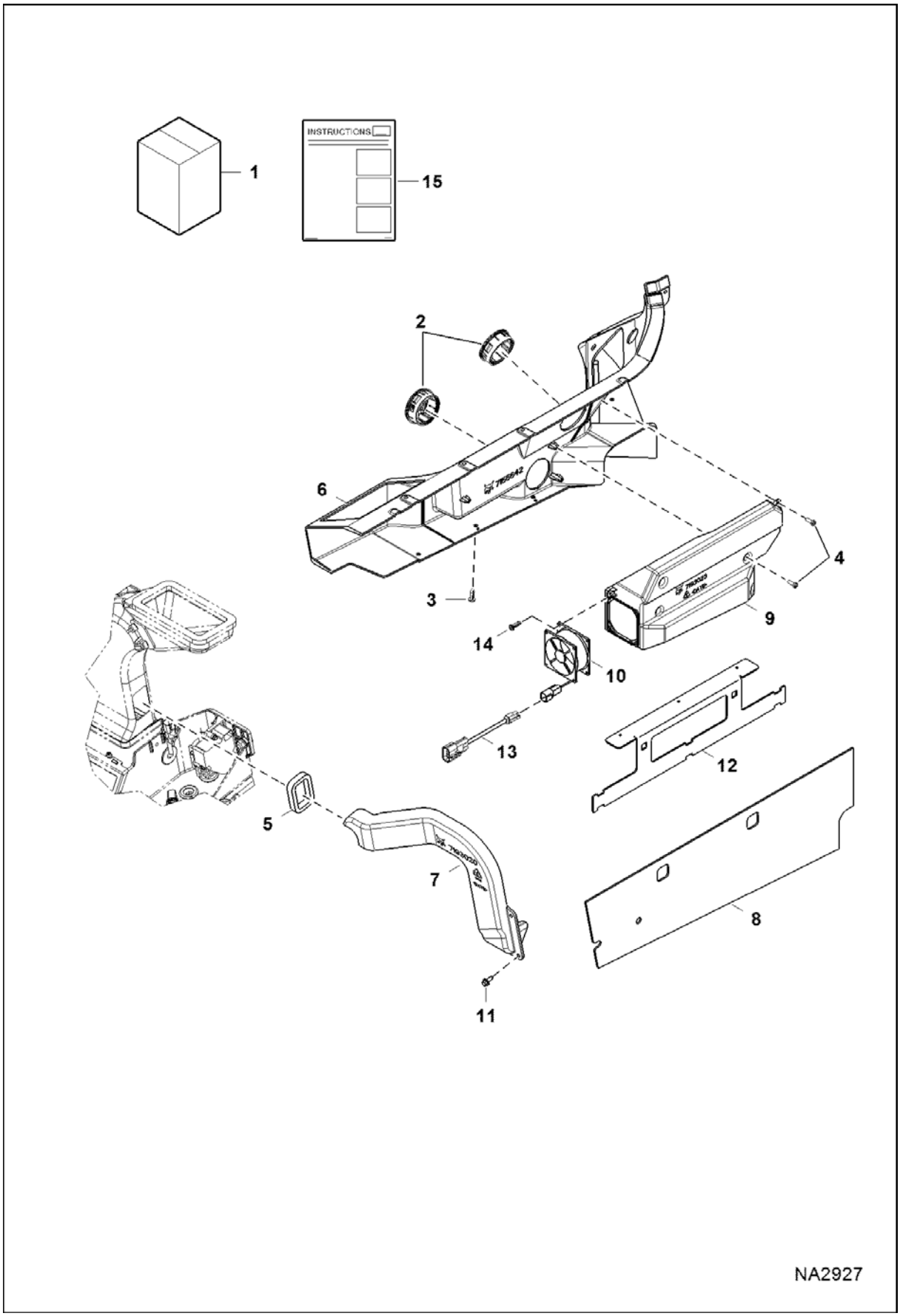

HEATER & A/C (Cont'd)
(Lower Duct Kit)

Ref No	Part Number	Description	Remarks	Serial Number	Qty
1	7200657	KIT, DUCT	Ref. 2-11, 14 & 15 - Also Order Ref. 12 & 13		1
2	7155794	LOUVER, ROUND			2
3	7160381	RIVET, BIRD CAGE			2
4	7162770	SCREW, PLASTIC			6
5	7193018	SEAL			1
6	7193019	PANEL, DUCT			1
7	7193020	DUCT, AIR			1
8	7193022	INSULATION			1
9	7193023	DUCT, AIR			1
10	7197733	FAN			1
11	26GM6016	SCREW			3
12	7193021	BRACKET	not in kit		1
13	7200883	HARNESS, JUMPER FAN	not in kit		1
14	7192287	BOLT			4
15	6990079	INSTRUCTIONS			1

HORN KIT
(Manual Controls, AHC & ACS)

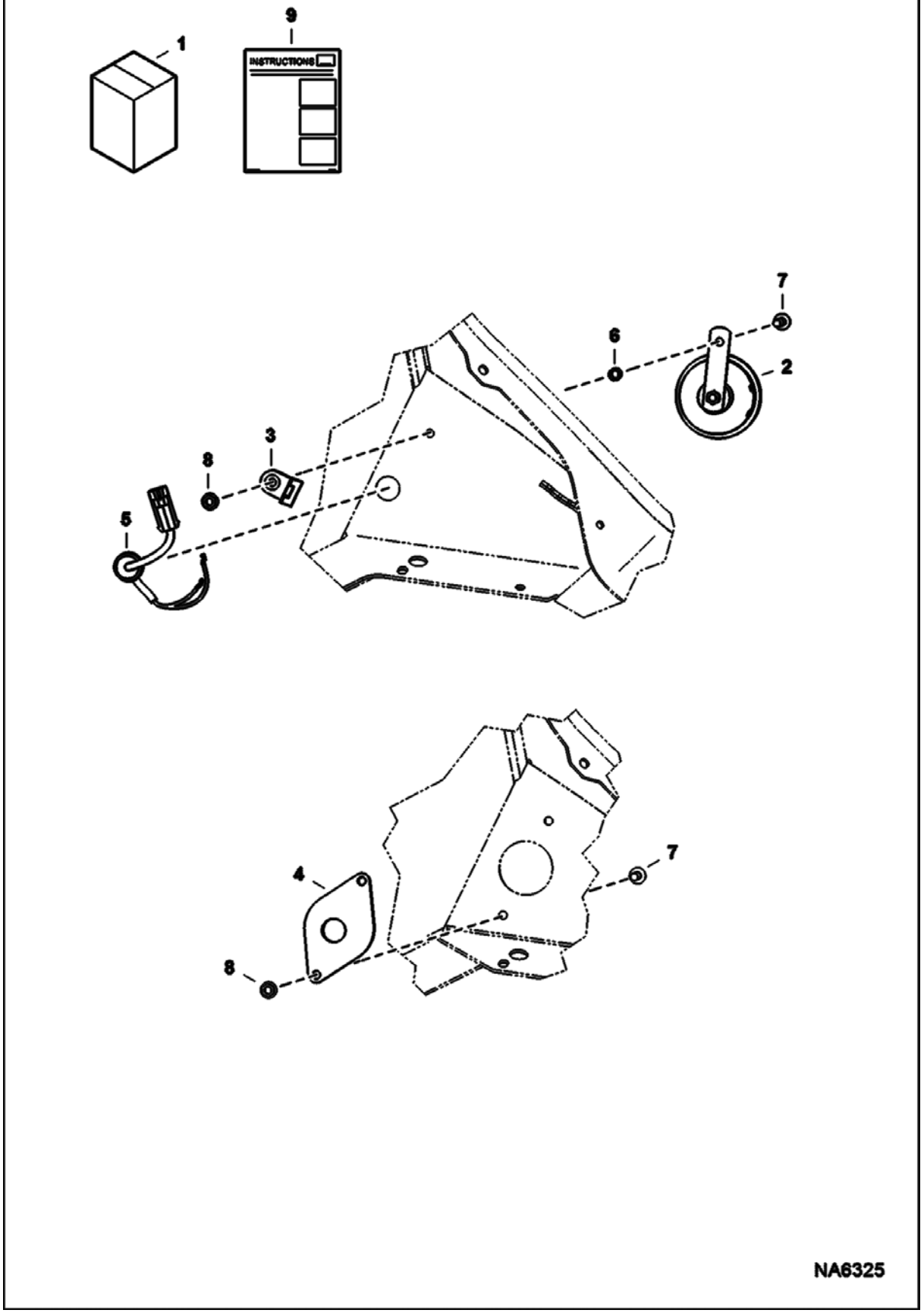

HORN KIT (Cont'd)
(Manual Controls, AHC & ACS)

Ref No	Part Number	Description	Remarks	Serial Number	Qty
1	7212947	KIT, HORN	Ref. 2-9		1
2	6671106	HORN			1
3	6684641	MOUNT			1
4	7177690	MOUNT			1
5	7183295	HARNESS, HORN			1
6	7210301	SPACER			1
7	35C524	BOLT			1
7	35C524	BOLT	not in kit		2
8	55D5	NUT			1
8	55D5	NUT	not in kit		2
9	6990338	INSTRUCTIONS			1

HORN KIT
(Selectable Joystick Controls)

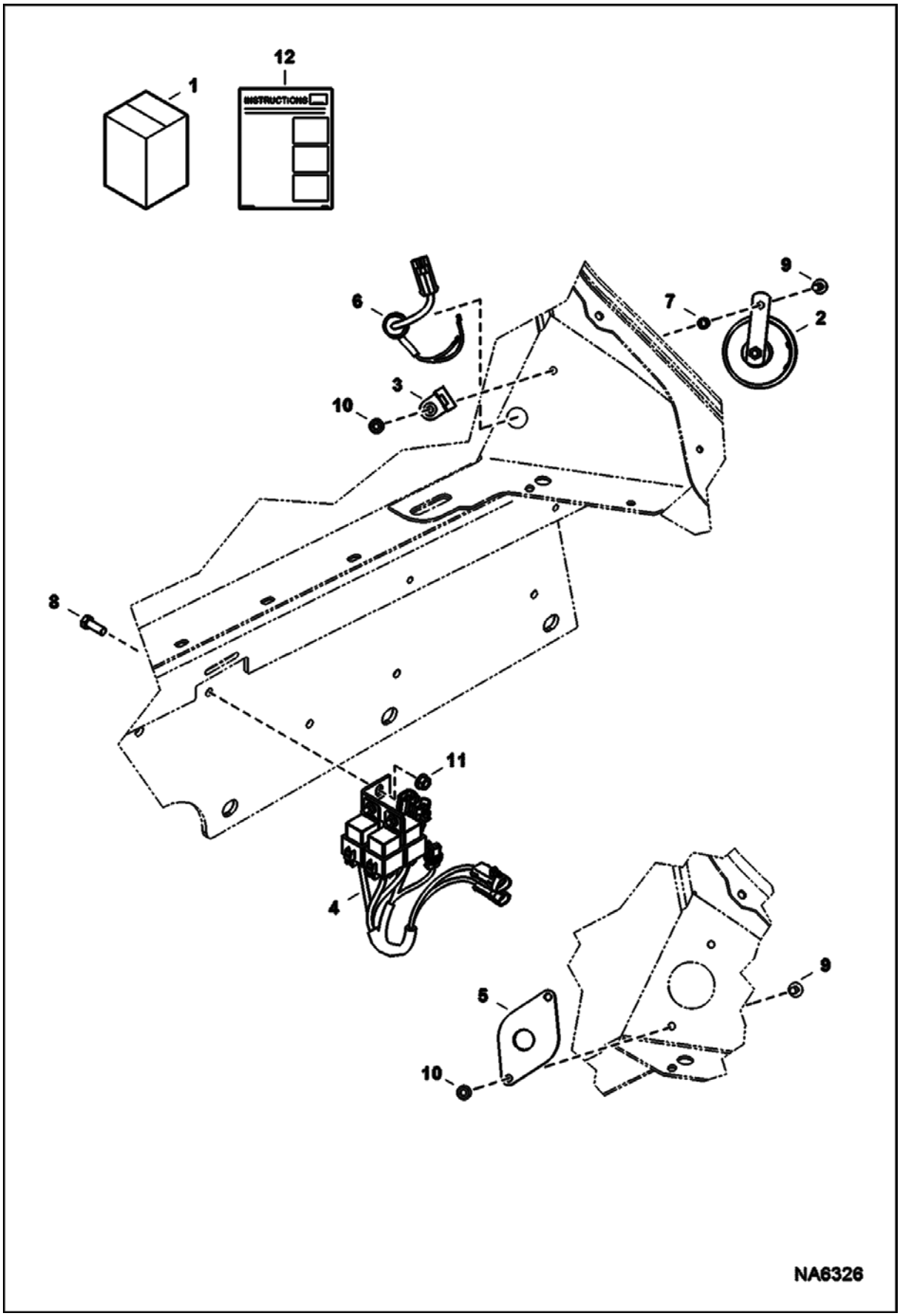

HORN KIT (Cont'd)
(Selectable Joystick Controls)

Ref No	Part Number	Description	Remarks	Serial Number	Qty
1	7212948	KIT, HORN W/JOYSTICK	Ref. 2-12		1
2	7221530	HORN, ALARM			1
3	6684641	MOUNT			1
4	7151940	HARNESS, HORN			1
5	7177690	MOUNT			1
6	7225718	HARNESS, HORN	180 mm (7")		1
6	7183295	HARNESS, HORN	225 mm (9") - not in kit		1
7	7222767	SPACER			1
8	17C616	BOLT 5			1
9	35C524	BOLT			1
9	35C524	BOLT	not in kit		2
10	55D5	NUT			1
10	55D5	NUT	not in kit		2
11	97D6	NUT 10			1
12	6990338	INSTRUCTIONS			1

HOSE GUIDE ASSY

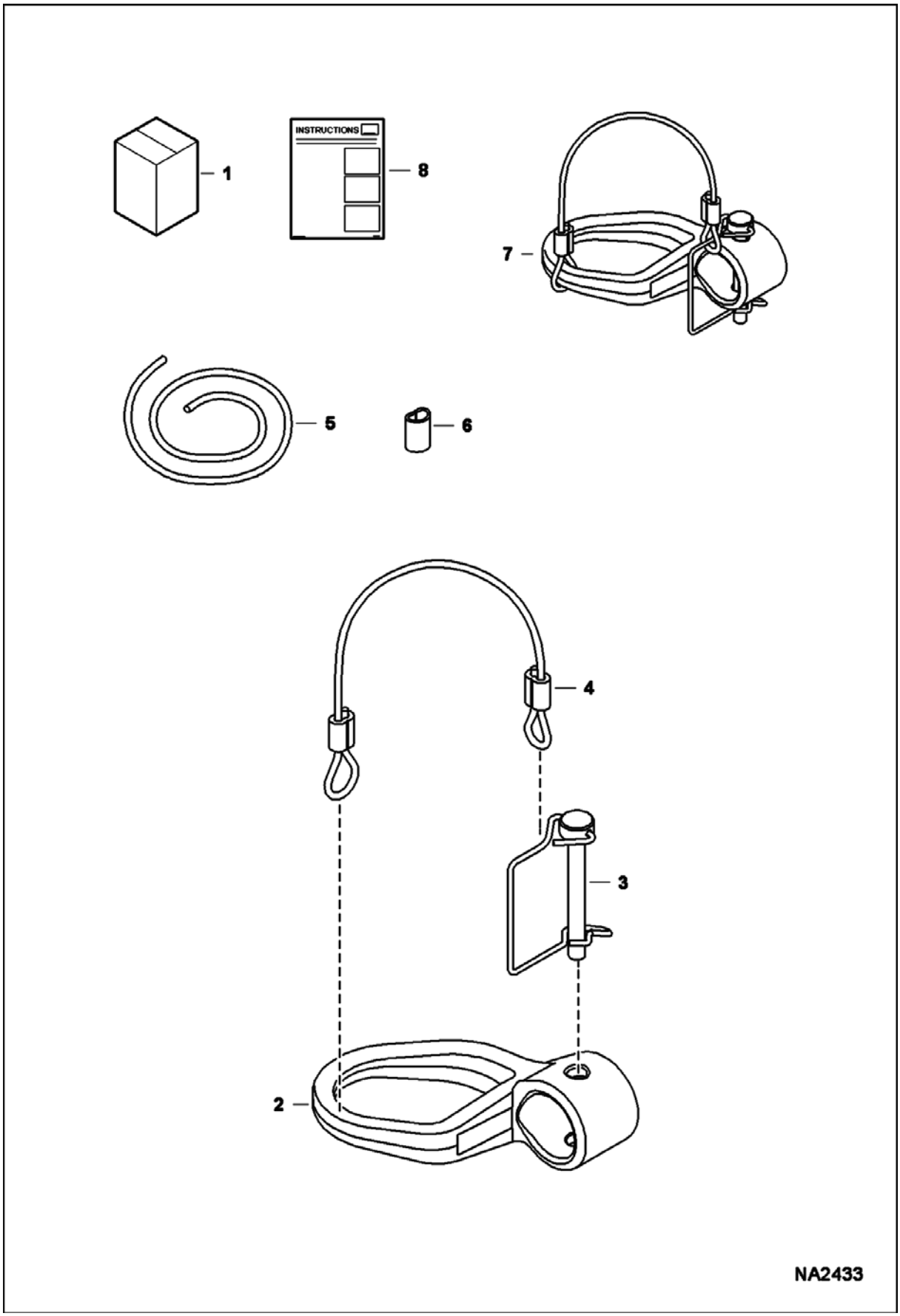

HOSE GUIDE ASSY (Cont'd)

Ref No	Part Number	Description	Remarks	Serial Number	Qty
1	7187118	KIT, GUIDE HOSE	Ref. 7 & 8		1
2		GUIDE	NSS - Order Ref. 7		1
3	7161559	PIN, SNAPPER			1
4		CABLE ASSY	NSS - 304,8 mm (12") long - Order Ref. 5 & 6		1
5	6558309	WIRE ROPE	bulk - sold per foot		x
6	6558310	SLEEVE			2
7	7161953	GUIDE, HOSE ASSY	Ref. 2-4		1
8	6989526	INSTRUCTIONS			1

KEYLESS PANEL KIT
(Rotary Switch)

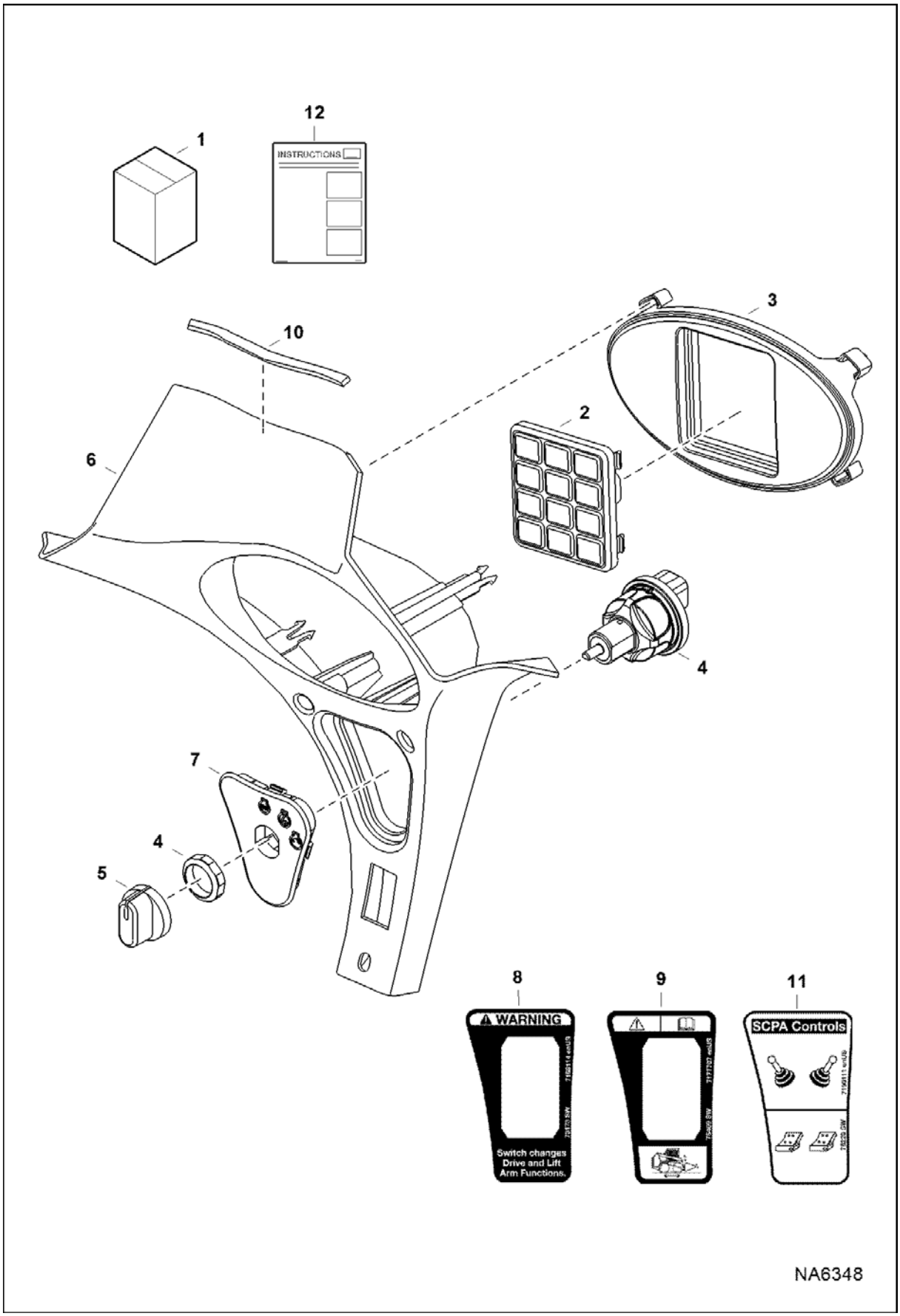

KEYLESS PANEL KIT (Cont'd)
(Rotary Switch)

Ref No	Part Number	Description	Remarks	Serial Number	Qty
1	7213929	KIT, PANEL KEYLESS	Ref. 2-12		1
2	6693712	KEYPAD, PANEL			1
3	7003027	INSERT, KEYPAD			1
4	7023022	SWITCH ROTARY			1
5	7023588	KNOB			1
6	7155791	PANEL, RH			1
7	7163589	INSERT, SWITCH			1
8	7168114	DECAL, SWITCH			1
9	7177707	DECAL			1
10	7187104	SEAL			1
11	7190111	DECAL, CONTROL			1
12	6990344	INSTRUCTIONS			1

KEYLESS PANEL KIT
(Deluxe) (Rotary Switch)

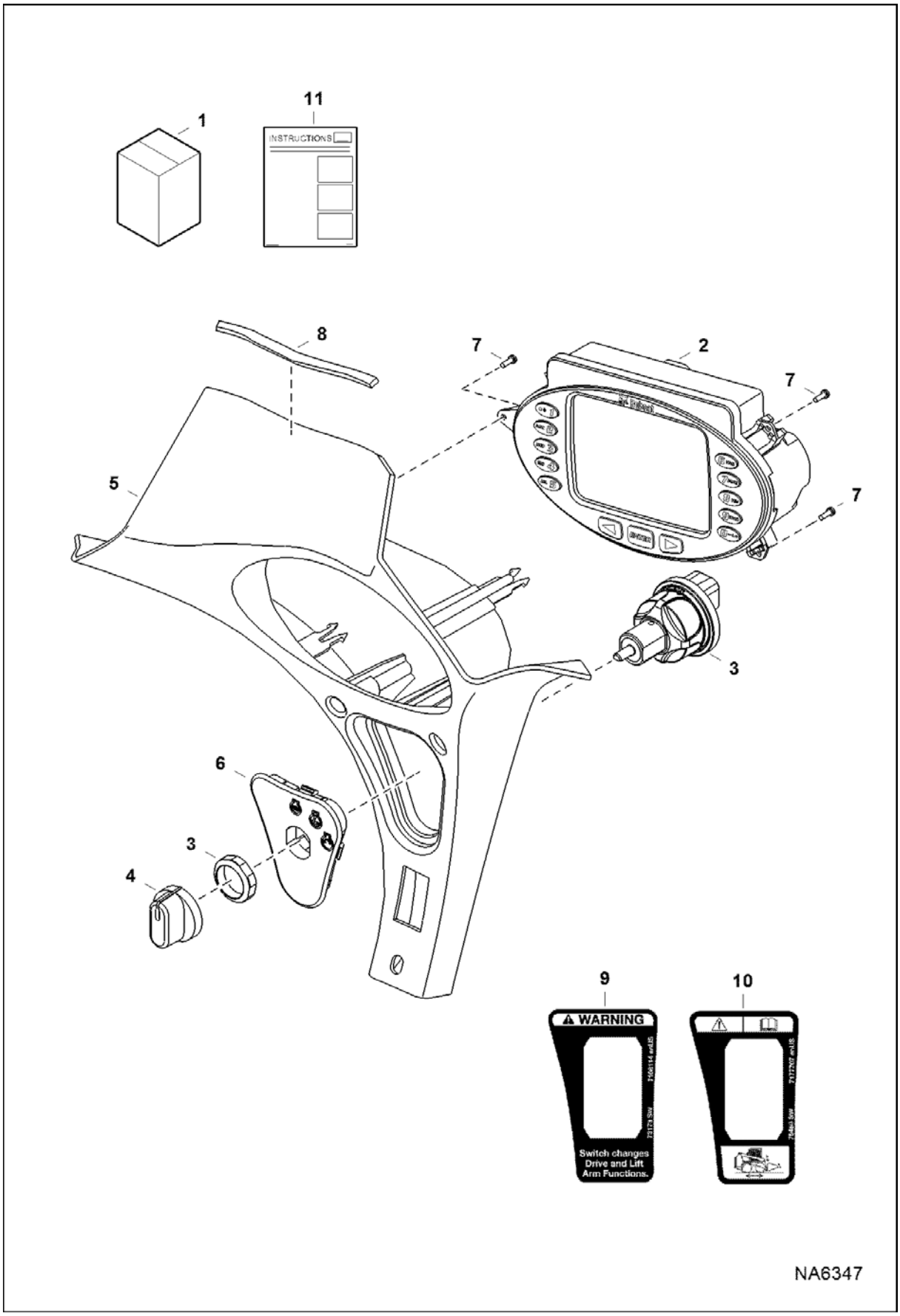

KEYLESS PANEL KIT (Cont'd)
(Deluxe) (Rotary Switch)

Ref No	Part Number	Description	Remarks	Serial Number	Qty
1	7213928	KIT, PANEL KEYLESS DELUXE	Ref. 2-8, & 11		1
2	6693413	DISPLAY, DLX			1
3	7023022	SWITCH ROTARY			1
4	7023588	KNOB			1
5	7155791	PANEL, RH			1
6	7163589	INSERT, SWITCH			1
7	7179008	SCREW, PLASTIC			1
8	7187104	SEAL			1
9	7168114	DECAL, SWITCH	not in kit		1
10	7177707	DECAL	not in kit - EMEA no-text		1
11	6990343	INSTRUCTIONS			1

LIFT KIT
(Four Point)

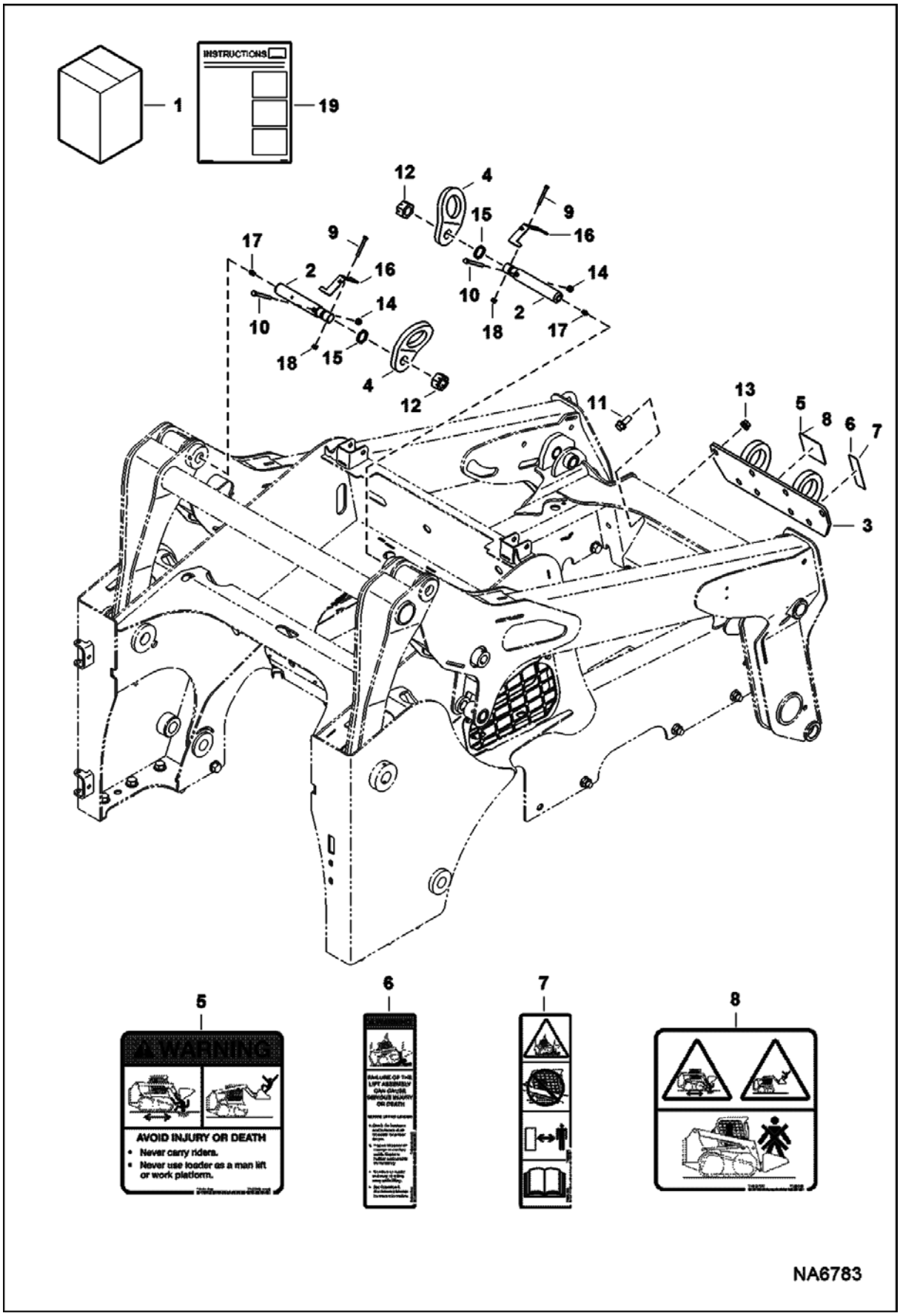

LIFT KIT (Cont'd)
(Four Point)

Ref No	Part Number	Description	Remarks	Serial Number	Qty
1	7161979	KIT, LIFT 4-POINT	Ref. 2-19		1
1		RESEALING PLUG KIT	See Illustration RESEALING KIT/ NA2775		1
2	7195483	PIN, PIVOT			2
3	7156606	BRACKET, ASSY			1
4	6706825	LIFT EYE			2
5	7167996	DECAL, WARNING			1
6	7168019	DECAL, WARNING			1
7	7168020	DECAL, WARNING	no text		1
8	7168040	DECAL, WARNING	no text		1
9	17C540	BOLT			2
10	17C660	BOLT			2
11	31C1024	BOLT			8
12	4D20	NUT			2
13	53D10	NUT			8
14	85D6	NUT, 5			4
15	7195619	WASHER, SPRING			2
16	7195617	BRACKET			2
17	10H25	FITTING, GREASE 5			2
18	87D5	NUT			2
19	6990047	INSTRUCTIONS			1

LIFT KIT
(Single Point)

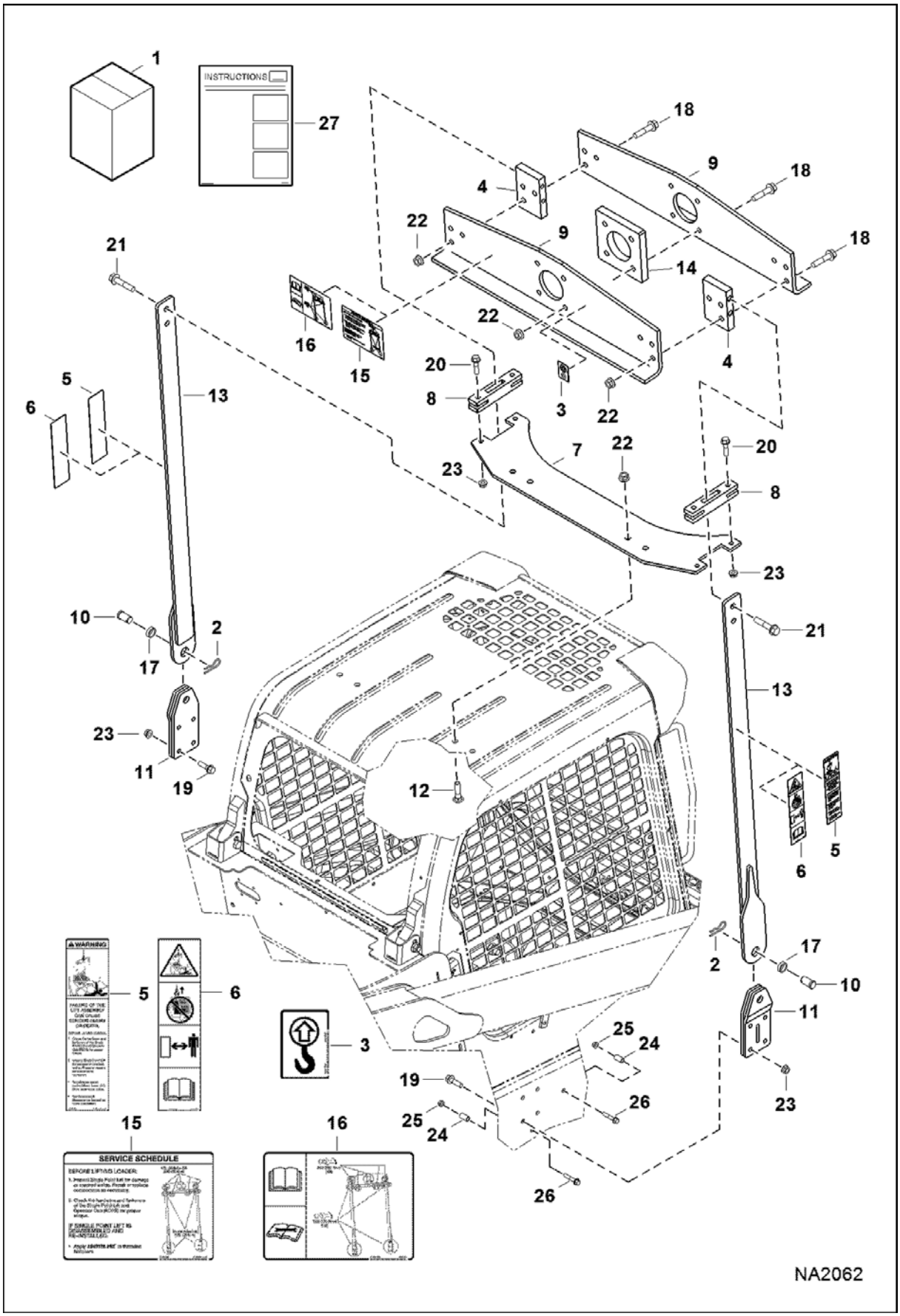

LIFT KIT (Cont'd)
(Single Point)

Ref No	Part Number	Description	Remarks	Serial Number	Qty
1	7193579	KIT, LIFT SINGLE POINT	Ref. 2-27		1
1		RESEALING PLUG KIT	See Illustration RESEALING KIT/ NA2775		1
2	1320075	PIN, COTTER			2
3	6533898	DECAL			2
4	7126682	BLOCK			2
5	7142141	DECAL			2
6	7142142	DECAL			2
7	7159102	MOUNT			1
8	7160760	MOUNT			2
9	7160779	PLATE			2
10	7161536	PIN, CLEVIS			2
11	7163748	MOUNT			2
12	7164686	BOLT, CARRIAGE			4
13	7166334	ARM LIFT			2
14	7166831	BLOCK			1
15	7168021	DECAL			2
16	7168022	DECAL			2
17	7168159	BUSHING			2
18	31C1044	BOLT			10
19	31C828	BOLT			8
20	31C832	BOLT			4
21	49C1048	BOLT			4
22	53D10	NUT			14
23	53D8	NUT			12
24	7199872	SPACER, TUBE			2
25	97D6	NUT 10			2
26	31C632	BOLT			2
27	6990240	INSTRUCTIONS			1

LIGHT GUARD KIT
(Front)

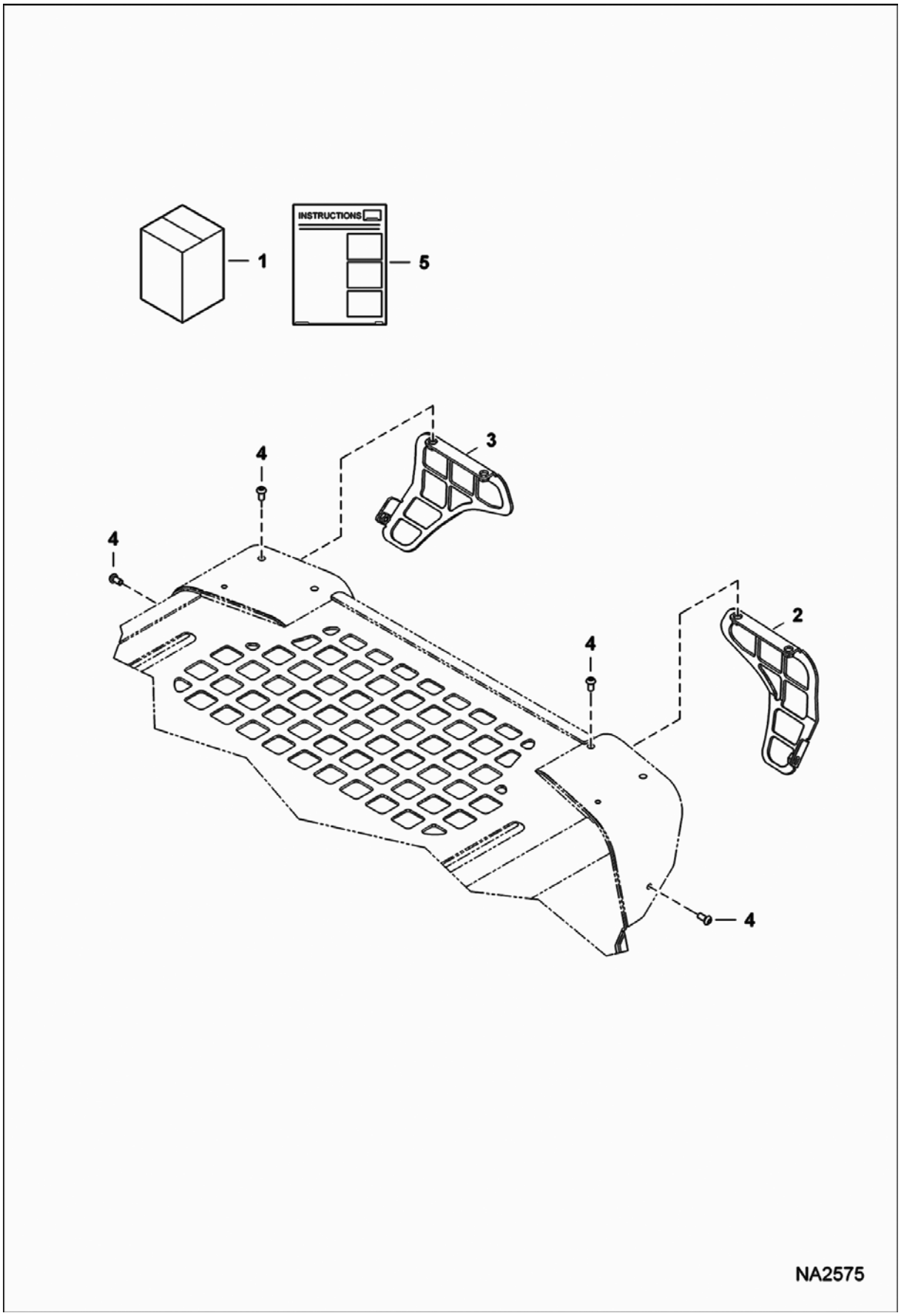

LIGHT GUARD KIT (Cont'd)
(Front)

Ref No	Part Number	Description	Remarks	Serial Number	Qty
1	7174129	KIT, GUARD LIGHT	Ref. 2-5		1
2	7183869	GUARD, LIGHT	RH		1
3	7183870	GUARD, LIGHT	LH		1
4	25G510	BOLT			6
5	6989487	INSTRUCTIONS			1

LIGHT GUARD KIT
(Rear)

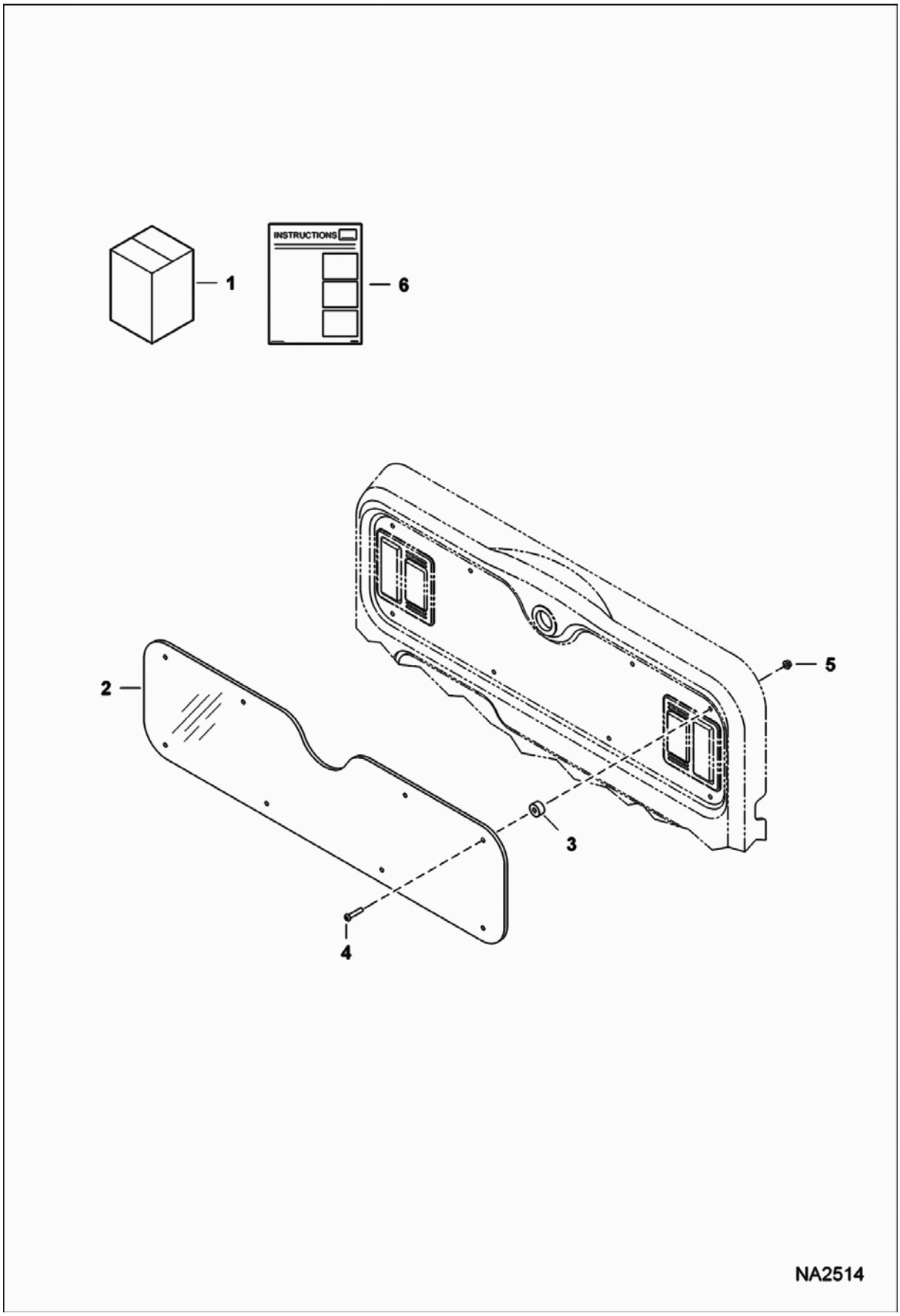

LIGHT GUARD KIT (Cont'd)
(Rear)

Ref No	Part Number	Description	Remarks	Serial Number	Qty
1	7174128	KIT, GUARD LIGHT	Ref. 2-6		1
2	7173309	GUARD, LIGHT			2
3	7173310	SPACER			8
4	25G628	SCREW			8
5	97D6	NUT 10			8
6	6987490	INSTRUCTIONS			1

MAINTENANCE PLATFORM KIT

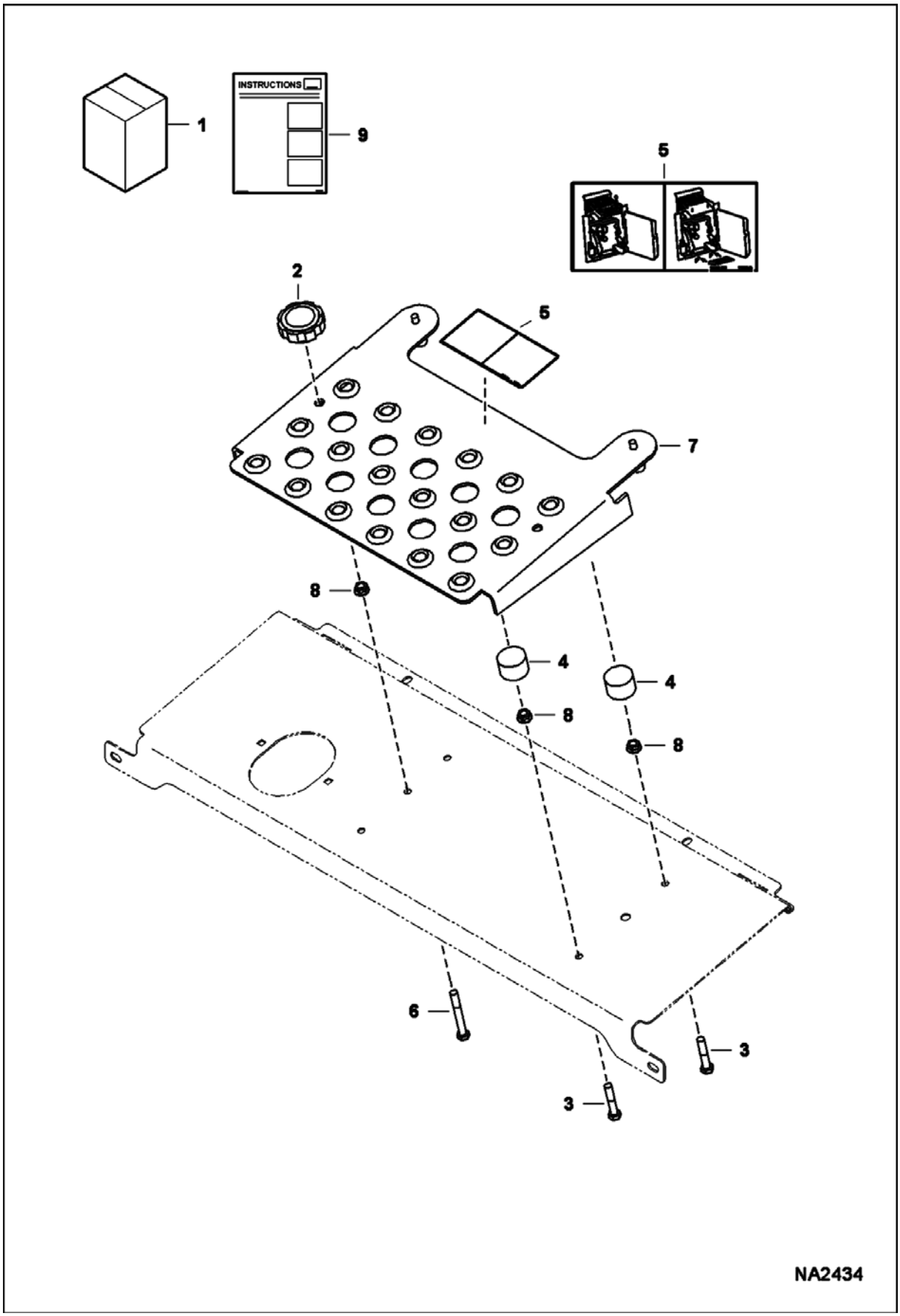

MAINTENANCE PLATFORM KIT (Cont'd)

Ref No	Part Number	Description	Remarks	Serial Number	Qty
1	7178420	KIT, PLATFORM MAINTENANCE	Ref. 2-9		1
2	6684932	KNOB			2
3	7186768	BOLT			4
4	7156809	BUMPER			4
5	7188542	DECAL, INSTRUCTIONS			1
6	7186769	BOLT			2
7	7173943	PLATFORM			1
8	55D6	NUT			6
9	6989484	INSTRUCTIONS			1

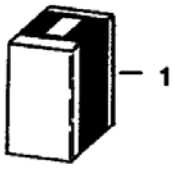

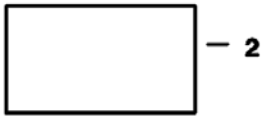

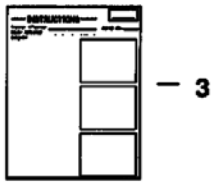

PE-3088

Ref No	Part Number	Description	Remarks	Serial Number	Qty
1	7204615	KIT, MSHA			1
2		DECAL	NSS - Order Ref. 1		1
3	6990224	INSTRUCTIONS			1

MUFFLER GUARD KIT

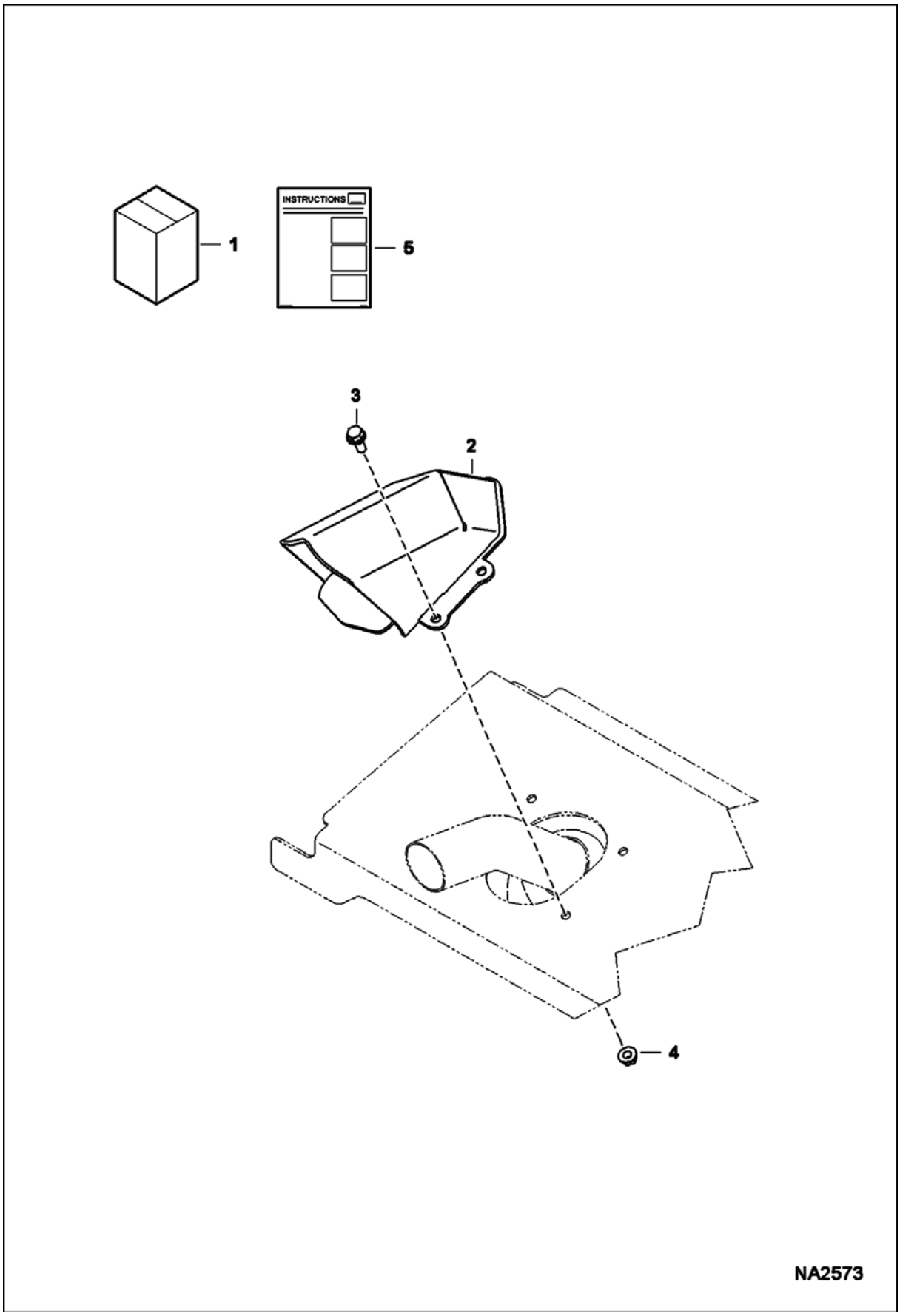

MUFFLER GUARD KIT (Cont'd)

Ref No	Part Number	Description	Remarks	Serial Number	Qty
1	7174130	KIT, GUARD MUFFLER	Ref. 2-5		1
2	7193671	GUARD, MUFFLER			1
3	31C512	BOLT			4
4	97D5	NUT			4
5	6987491	INSTRUCTIONS			1

MUFFLER PURIFIER

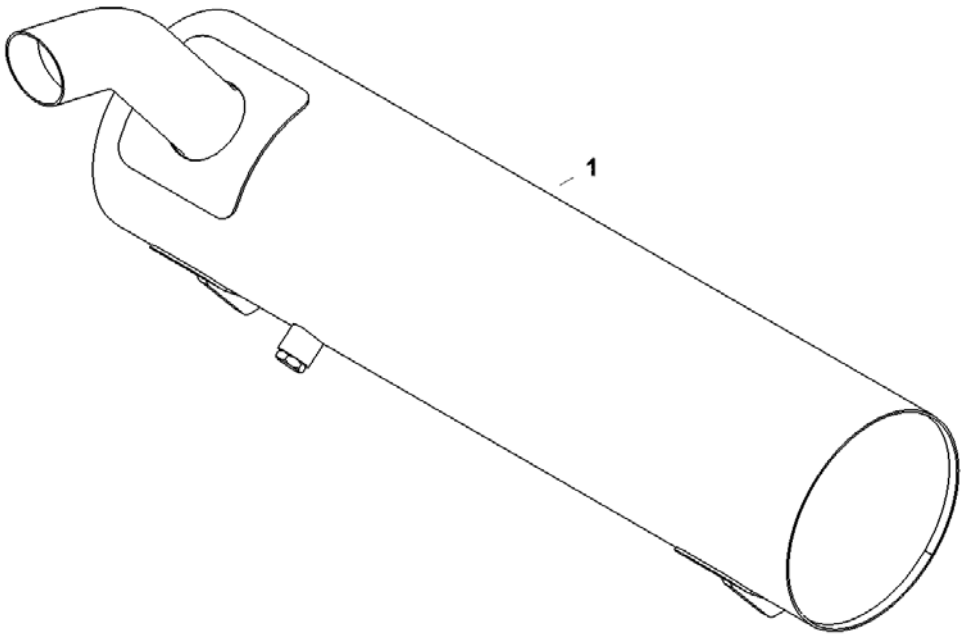

NA6827

MUFFLER PURIFIER (Cont'd)

Ref No	Part Number	Description	Remarks	Serial Number	Qty
1	7218959	MUFFLER, PURIFIER			1

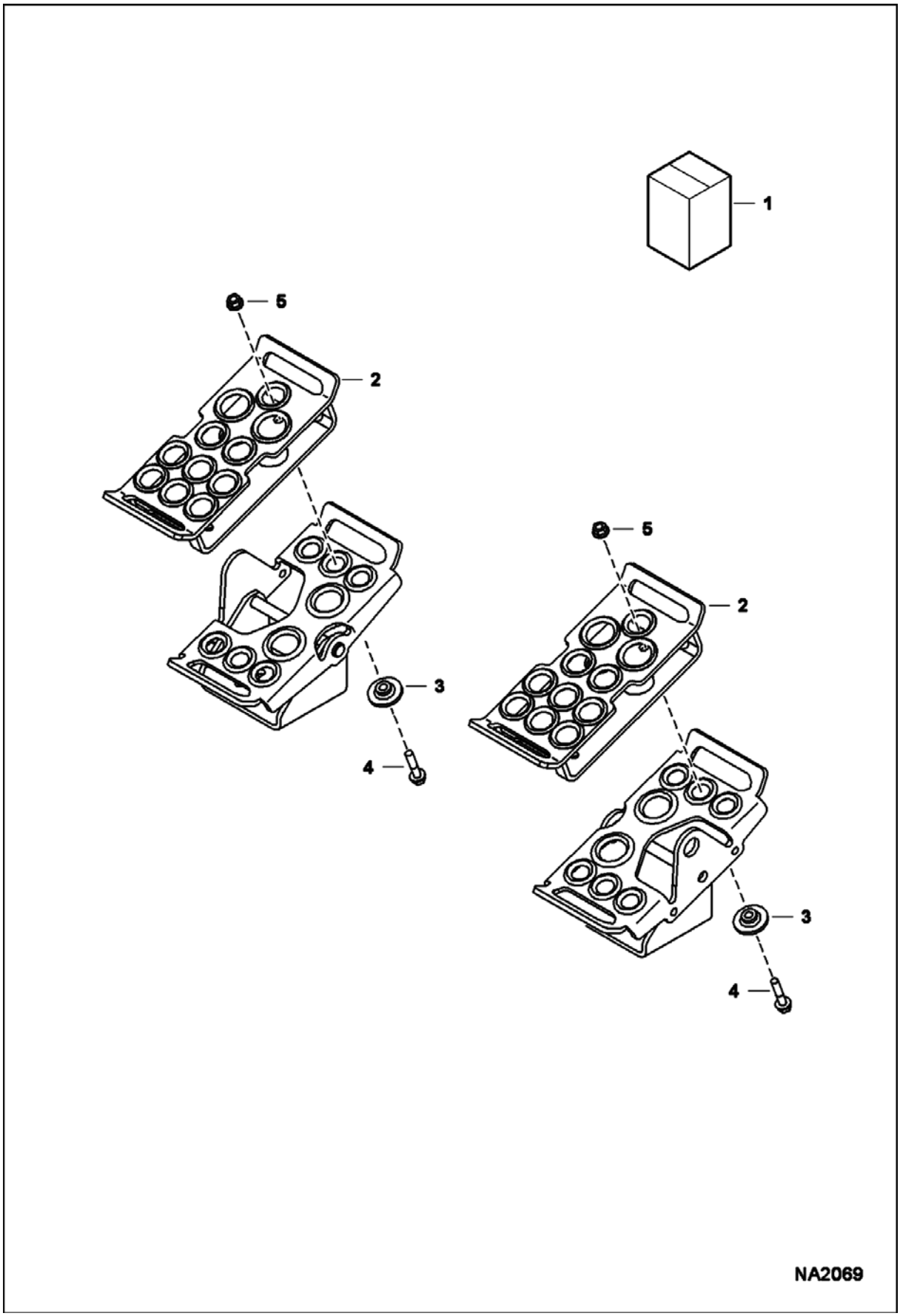
1
5
2
3
4
5
2
3
4
NA2069

PEDAL EXTENDERS (Cont'd)

Ref No	Part Number	Description	Remarks	Serial Number	Qty
1		KIT, PEDAL EXTENDER	NAP - Order components - Was 7131229 [A]		1
2	7131233	PEDAL			2
3	7131236	BUSHING			6
4	35C524	BOLT			6
5	89D5	NUT			6

POWER BOB-TACH
(Kit)

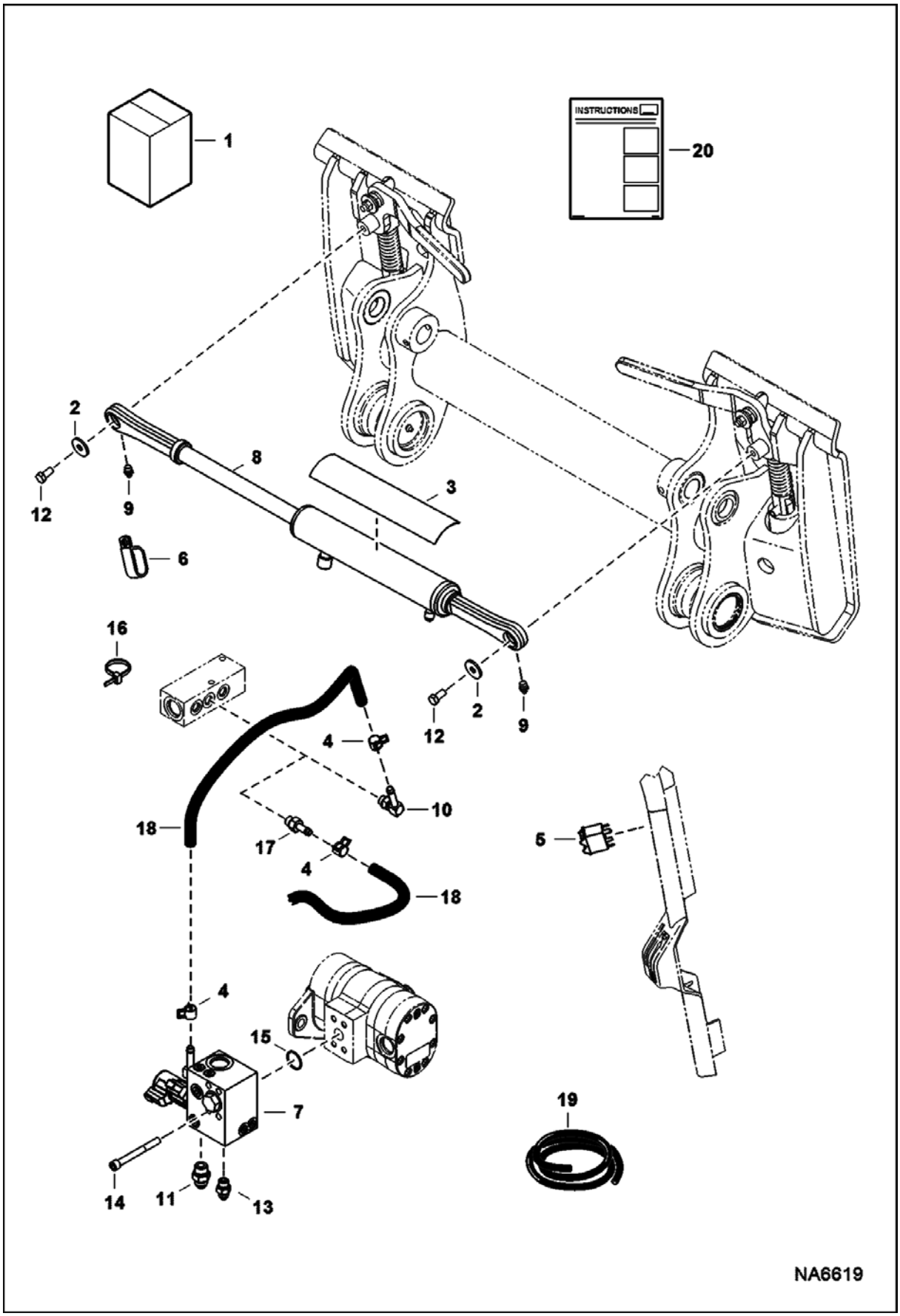

POWER BOB-TACH (Cont'd)
(Kit)

Ref No	Part Number	Description	Remarks	Serial Number	Qty
1	7218434	KIT, POWER BOB-TACH	See Illustration POWER BOB-TACH/ NA2820 Ref. 2, 3, 5, 7-14 & 17 - Also Order 7192264 plumbing kit		1
2	619021	WASHER, 5			2
3	6555341	SAFETY TREAD			1
4	5HM15	CLAMP	not in kit		1
5	7001712	SWITCH			1
6	31H42	CLIP	not in kit		1
7		VALVE, POWER BOBTACH	See Illustration POWER BOB-TACH/ NA2823		1
8		CYLINDER, POWER BOB-TACH	See Illustration POWER BOB-TACH/ NA2603		1
9	10H35	FITTING, GREASE 10			2
10	6727313	ELBOW			1
11	15KB0808	FITTING, HYD CONNECTOR			1
12	17C612	BOLT 5			2
13	15KB0606	FITTING, HYD CONNECTOR			1
14	17C652	BOLT			4
15	55K214	O-RING	not in kit		1
16	6624289	STRAP, TIE	not in kit		4
17	7158632	CONNECTOR			1
18		HOSE	NAP - 29.5" (749mm) long - Order Ref. 19		x
19	6586251	HOSE	bulk - sold per foot		x
20	6989741	INSTRUCTIONS			1

POWER BOB-TACH
(Plumbing Kit)

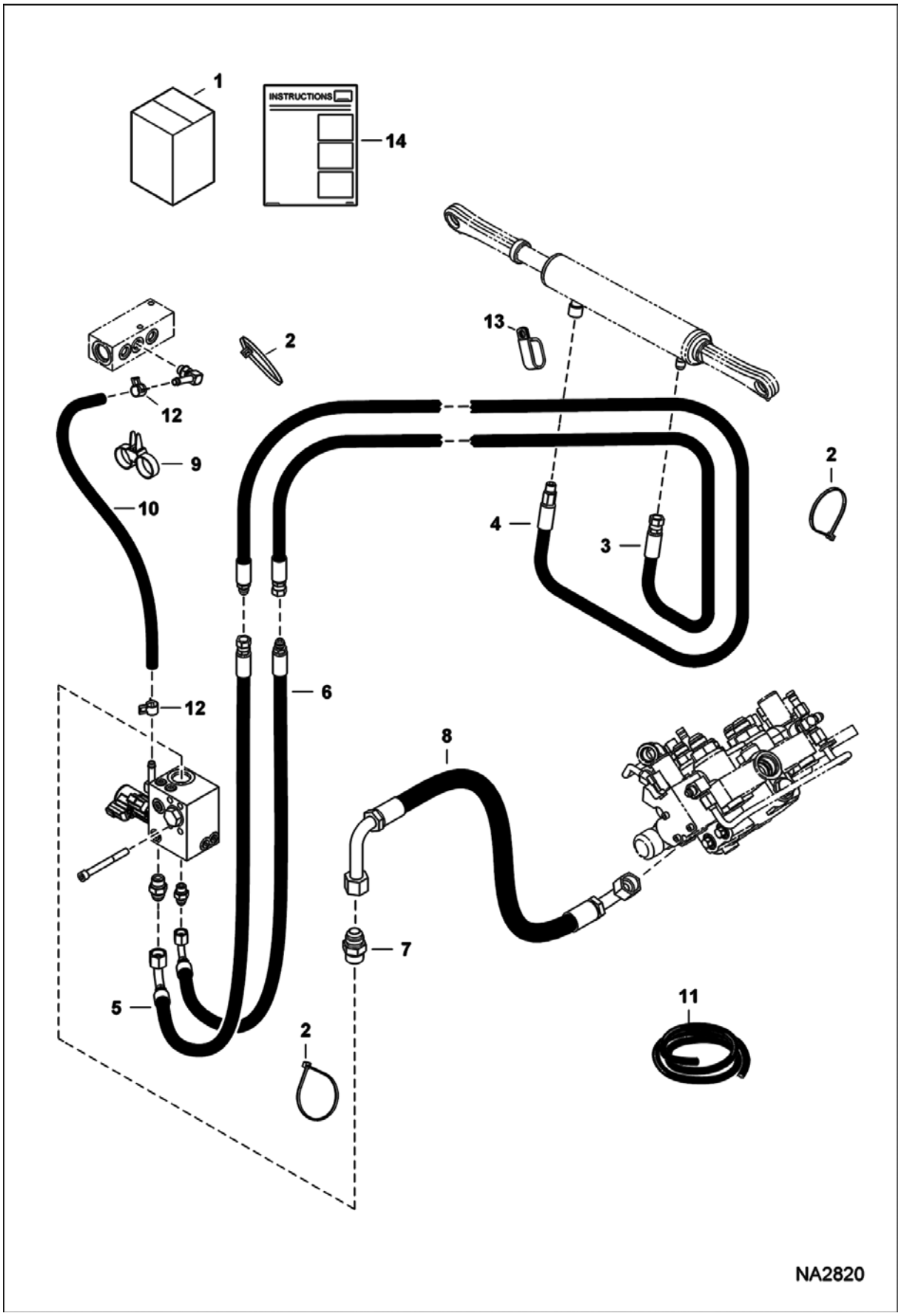

POWER BOB-TACH (Cont'd)
(Plumbing Kit)

Ref No	Part Number	Description	Remarks	Serial Number	Qty
1	7192266	KIT, PLUMBING POWER BOB-TACH	Ref. 2-13		1
2	6624289	STRAP, TIE			3
3	7161320	HOSE, HYD			1
4	7161321	HOSE, HYD			1
5	7184971	HOSE, HYD			1
6	7184972	HOSE, HYD			1
7	15KB1212	FITTING, HYD CONNECTOR			1
8	7219834	HOSE, HYD			1
9	6678668	STRAP, DUAL TIE			1
10		HOSE	NAP - 787,4 mm (31") lomg - Order Ref. 11		1
11	6586251	HOSE	bulk - sold per foot		x
12	5HM15	CLAMP			2
13	31H42	CLIP			1
14	6989741	INSTRUCTIONS	INSTRUCTIONS - not in kit - part of Power Bob-Tach kit		1

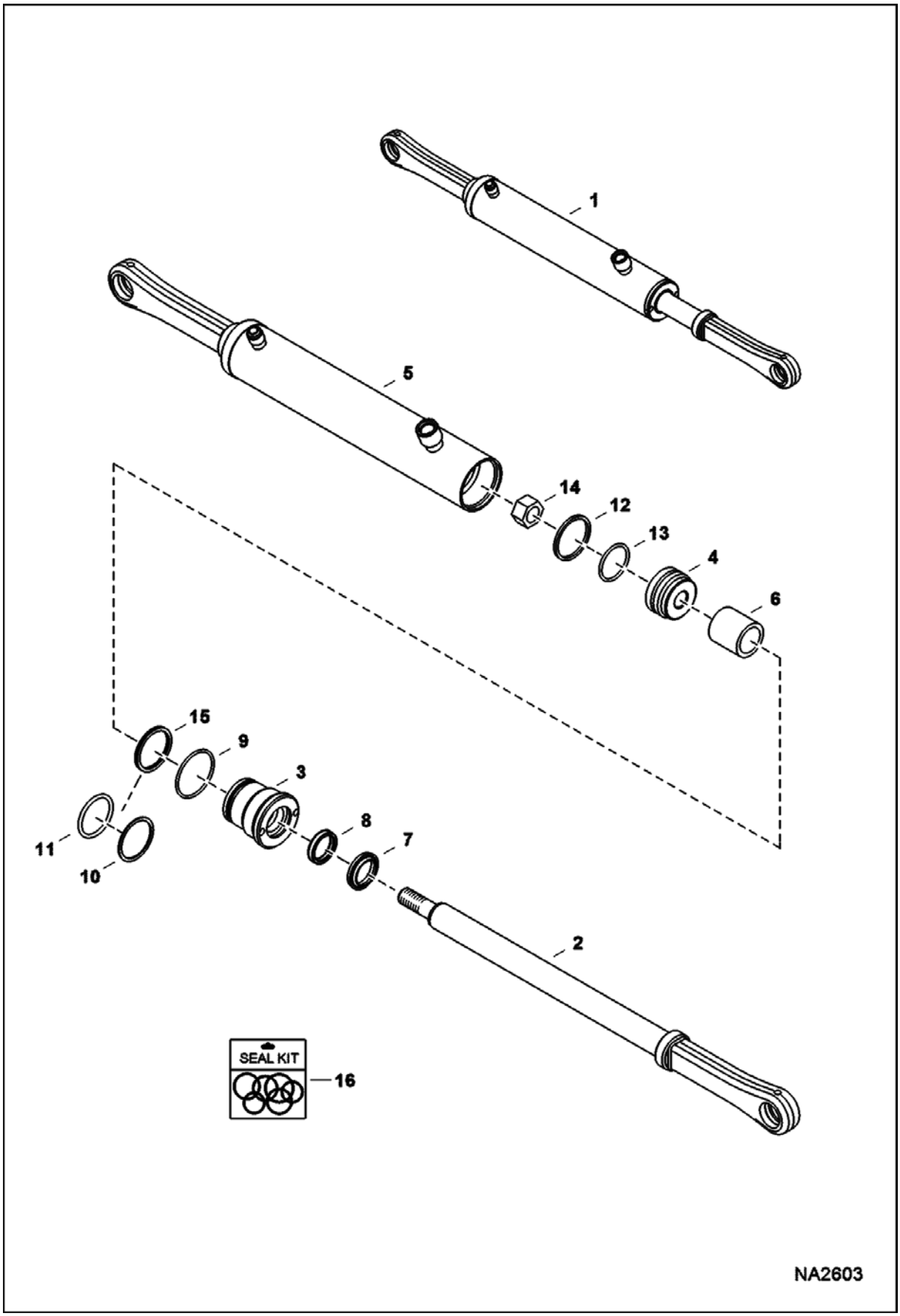
1
5
14
12
13
4
6
15
9
3
11
10
8
7
2
SEAL KIT
16
NA2603

POWER BOB-TACH (Cont'd)
(Cylinder)

Ref No	Part Number	Description	Remarks	Serial Number	Qty
1	7183318	CYLINDER, POWER BOB-TACH	Ref. 2-14		1
2	7183319	SHAFT, ROD CYL POWER BOB-TACH	20.16" (512,1 mm) to bushing center		1
3	6586542	HEAD			1
4	6586543	PISTON			1
5	7183521	CASE			1
6	6810356	SPACER			1
7	6666542	SEAL, WIPER ROD			1
8	6667323	SEAL			1
9	82K132	O-RING HYDRAULIC			1
10	73K222	RING			1
11	58K222	O-RING			1
12	25K30110	O RING 10			1
13	6532453	RING			1
14	92D10	NUT			1
15	7008782	SEAL, QUAD			1
16	7138014	SEAL KIT	Ref. 7-9, & 12-15		1

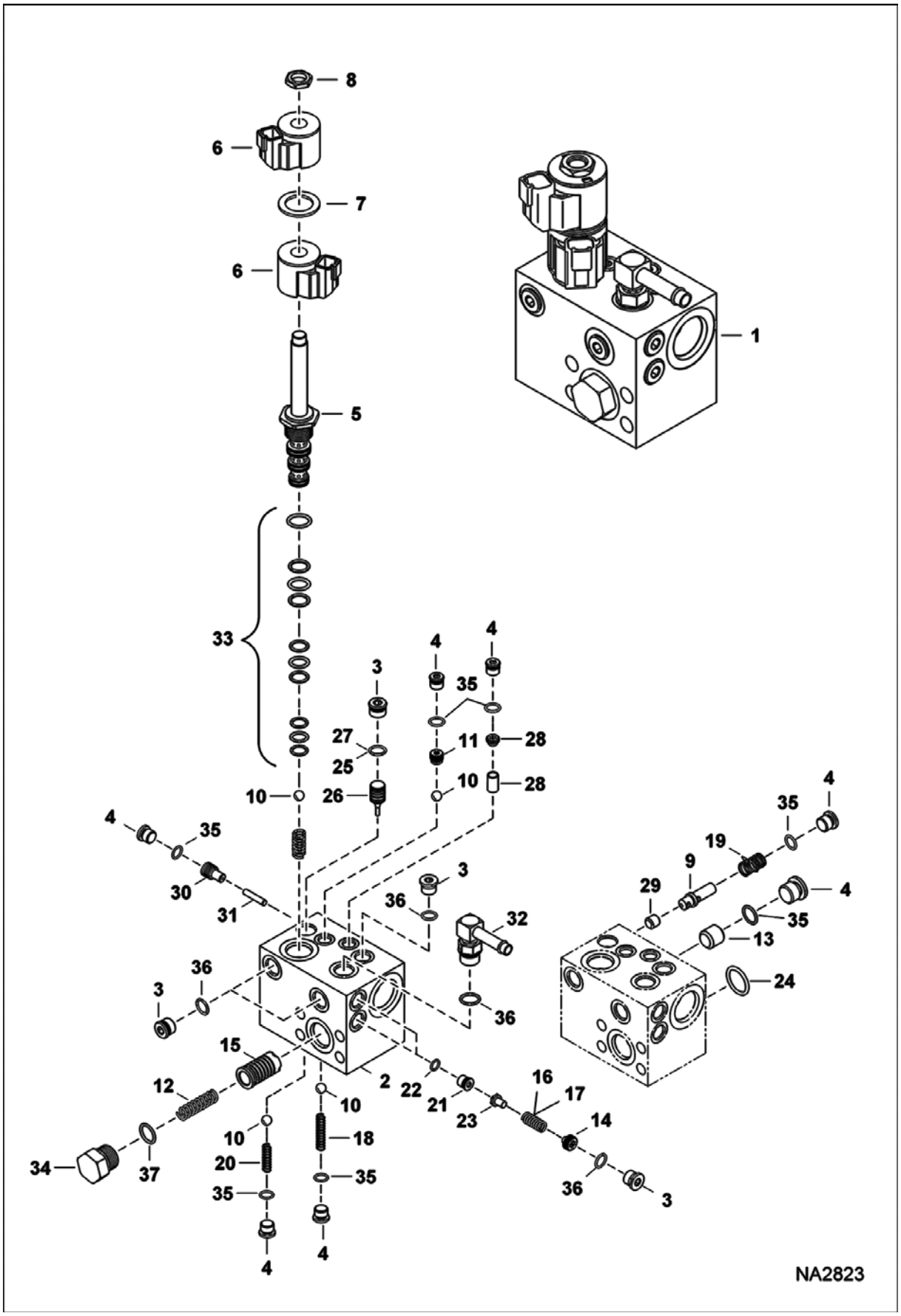
8
6
7
6
5
1
33
4
4
3
35
27
11
28
25
10
28
10
26
4
35
30
31
3
36
32
36
4
35
19
9
29
4
35
13
24
3
36
15
12
2
22
21
23
16
17
14
10
10
18
20
35
35
34
37
36
3
4
4
NA2823

POWER BOB-TACH (Cont'd)
(Valve)

Ref No	Part Number	Description	Remarks	Serial Number	Qty
1	7022766	VALVE, POWER BOB-TACH	Ref. 2-37		1
2		BLOCK	NAP - Order Ref. 1		1
3	6669620	PLUG			5
4	6665719	PLUG			7
5	6673986	SPOOL, VALVE			1
6	7010006	COIL			2
7	6689389	SPACER			1
8	7020647	NUT			1
9	7020648	SPOOL			1
10	6678705	BALL			4
11	7008561	SEAT, SHUTTLE			1
12	7020649	SPRING			1
13	6669615	ORIFICE			1
14	7020604	PLUG			2
15	7020650	SPOOL			1
16	7020651	SPRING			1
17	7020607	SPRING			1
18	7020652	SPRING			1
19	7020653	SPRING			1
20	7020654	SPRING			1
21	7020606	PLUG			2
22	7020655	O-RING			2
23	7020605	POPPET			2
24	6690299	O-RING			1
25	7020656	O-RING			2
26	7020657	PISTON			1
27	6678837	O-RING			1
28	7020658	FILTER CARTRIDGE			1
29	7020659	ORIFICE			1
30	7020660	GUIDE			1
31	7020661	SHAFT			1
32	6727313	ELBOW			1
33	6673835	SEAL KIT			1
34	7008556	PLUG			1
35	79K3	O RING 10			x
36	79K6	O RING 10			x
37	79K10	O RING 10			x

RADIO KIT

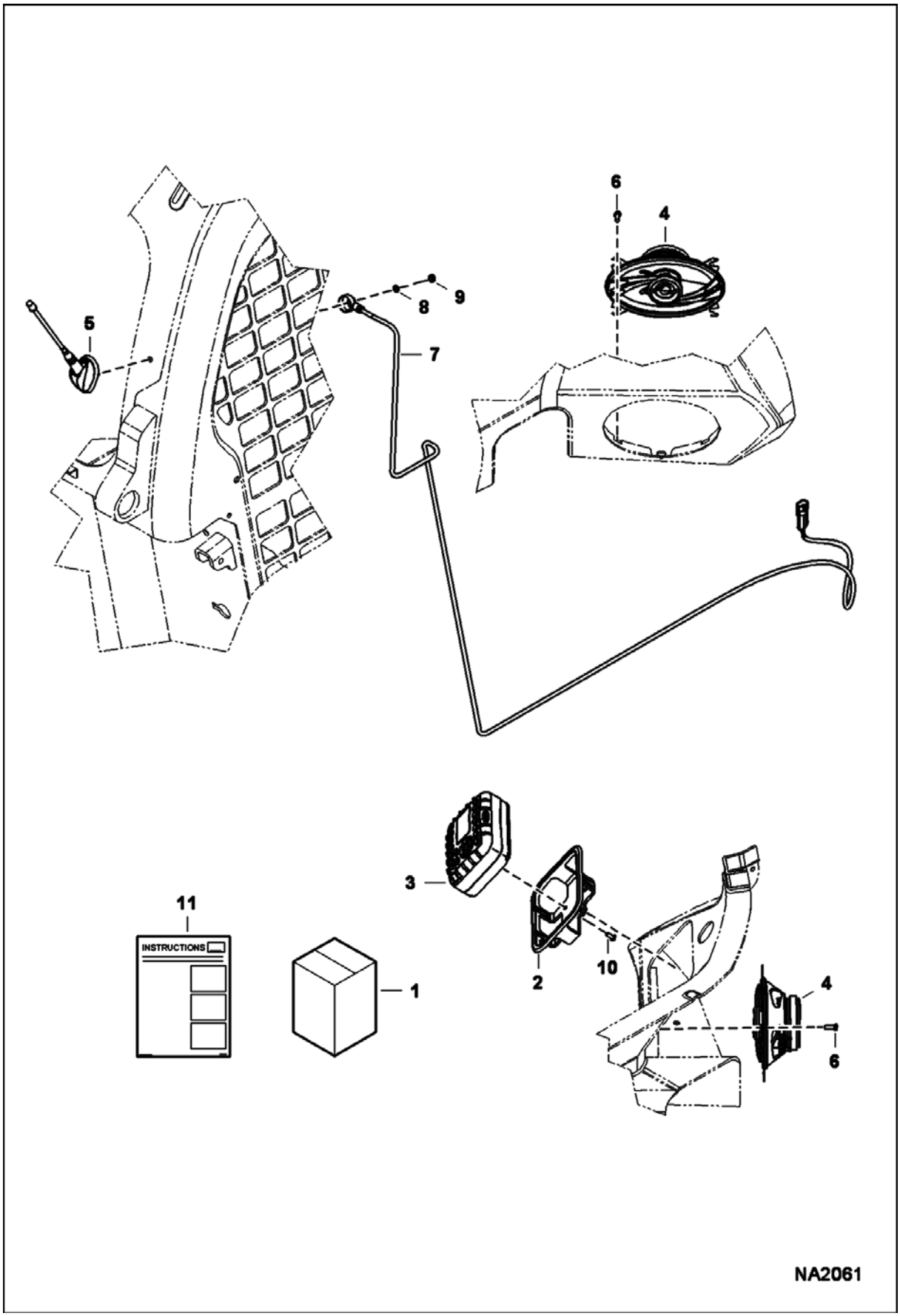

RADIO KIT (Cont'd)

Ref No	Part Number	Description	Remarks	Serial Number	Qty
1	6988435	KIT, RADIO M-SERIES LOADERS	Ref. 2-11 - deluxe cab only		1
2	7145333	BRACKET, RADIO			1
3	6988336	RADIO, MINI BOBCAT	W/Ref. 10		1
4	6988660	SPEAKER 4 X 6 RETAIL JXA462			2
5	6988661	ANTENNA, 88 INCH MOTOROLA MALE PLUG	W/Ref. 7-9		1
6	7162770	SCREW, PLASTIC			8
7		CABLE	NSS - Order Ref. 5		1
8		WASHER	NSS - Order Ref. 5		1
9		NUT	NSS - Order Ref. 5		1
10		SCREW	NSS - Order Ref. 3		4
11	6987139	INSTRUCTIONS			1

REAR AUXILIARY KIT

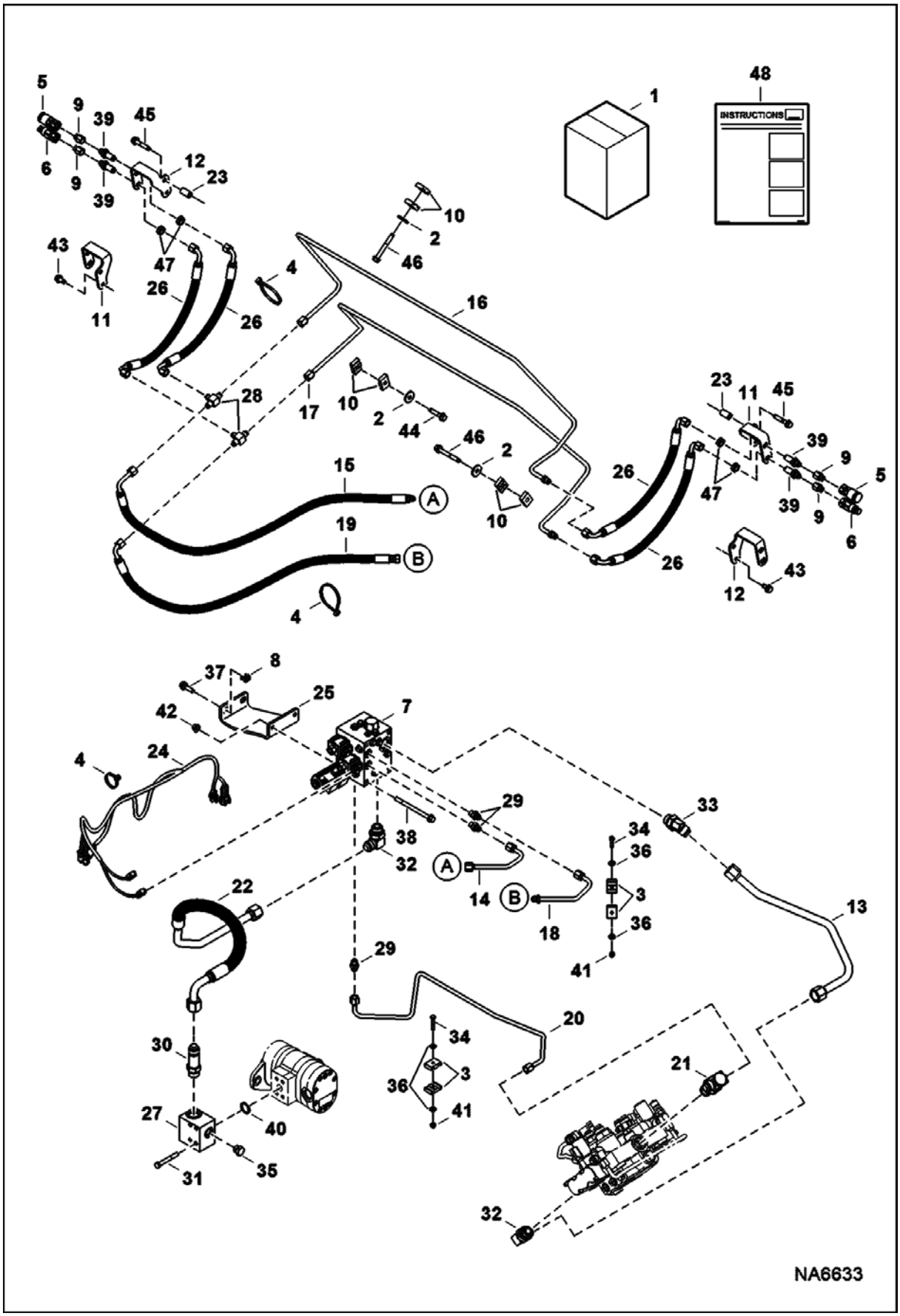

REAR AUXILIARY KIT (Cont'd)

Ref No	Part Number	Description	Remarks	Serial Number	Qty
1	7195601	KIT, AUX REAR	Ref. 2-48		1
2	619021	WASHER, 5			3
3	6578870	CLAMP			4
4	6624289	STRAP, TIE			6
5	6667803	COUPLER, FF FEMALE			2
6	6667804	CPLR MALE			2
7	6685624	VALVE, AUX REAR			1
8	6685663	NUT, RETAINING			2
9	6706633	ADAPTER			4
10	6726277	CLAMP			6
11	7189579	MOUNT			1
12	7189580	MOUNT			1
13	7195603	TUBELINE, HYD			1
14	7195604	TUBELINE, HYD			1
15	7195605	HOSE, HYD			1
16	7195606	TUBELINE, HYD			1
17	7195607	TUBELINE, HYD			1
18	7195610	TUBELINE, HYD			1
19	7195611	HOSE, HYD			1
20	7195614	TUBELINE, HYD			1
21	7195615	FITTING, HYD TEE			1
22	7195616	TUBELINE, HYD			1
23	7199872	SPACER, TUBE			4
24	7201414	HARNESS, AUX REAR			1
25	7203568	MOUNT, VALVE			1
26	7205878	HOSE, HYD			4
27	7209565	MANIFOLD			1
28	10K5	TEE			2
29	15KB0606	FITTING, HYD CONNECTOR			3
30	16KB1212	FITTING, HYD CONNECTOR			1
31	17C644	BOLT			4
32	17KB1212	FITTING, HYD ELBOW			2
33	18KB1212	FITTING, HYD ELBOW			1
34	17C424	BOLT			2
35	24K6	FITTING			1
36	25E13	WASHER 5			4
37	35C620	BOLT 5			2
38	31C680	BOLT			2
39	45K5	FITTING			4
40	55K214	O-RING			1
41	59D4	NUT 5			2
42	83D6	NUT 5			2
43	84G3712	BOLT 5			4
44	84G3728	BOLT			1
45	84G3732	BOLT			4
46	84G3748	BOLT			2
47	86F5	NUT			4
48	6990276	INSTRUCTIONS			1

REAR AUXILIARY VALVE

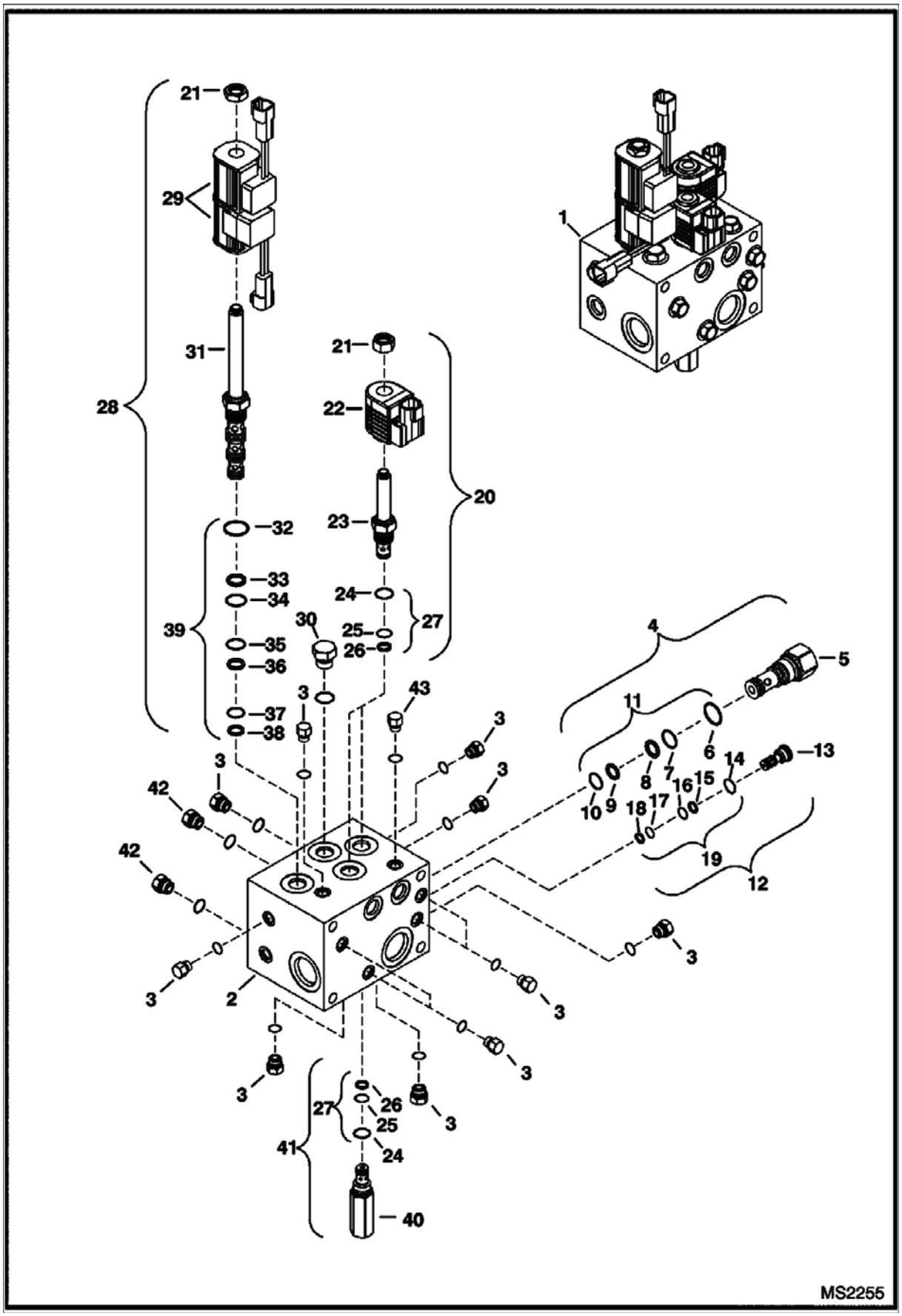

REAR AUXILIARY VALVE (Cont'd)

Ref No	Part Number	Description	Remarks	Serial Number	Qty
1	6685624	VALVE, AUX REAR			1
2		BLOCK	NSS		1
3		PLUG	NSS - #4 SAE W/ O-ring		11
4	6684044	VALVE	differential sensing - Ref. 5-10		1
5		VALVE	NSS - Order Ref. 4		1
6	6684046	O-RING			1
7	6684048	O-RING			1
8	6684047	BACK-UP RING			1
9	6684050	BACK-UP RING			1
10	6684049	O-RING			1
11	6684045	SEAL KIT	Ref. 6-10		1
12	6684061	VALVE	shuttle - Ref. 13-18		1
13		VALVE	NSS - Order Ref. 12		1
14	6684063	O-RING			1
15	6684064	BACK-UP RING			1
16	6684065	O-RING			1
17	6684066	O-RING			1
18		BACK-UP RING	NSS		1
19	6684062	SEAL KIT	Ref. 14-18		1
20	7021365	VALVE, SOLENOID	Ref. 21-26 - 13 mm dia x 38 mm (1.53") long stem		2
21	6684060	NUT	0.5" thread - Use W/Ref. 22 (6684073 coil)		2
21	7021367	NUT	13 mm thread - Use W/Ref. 22 (7021366 coil)		2
22	6684073	COIL, SOLENOID	12 volt - Use W/ 0.5" dia x 45 mm (1.78") long stem		2
22	7021366	COIL, SOLENOID	12 volt - Use W/ 13 mm dia x 38 mm (1.53") long stem		2
23		STEM	NSS - Order Ref. 20		2
24	6684070	O-RING			3
25	6684071	O-RING			3
26	6684072	BACK-UP RING			3
27	6684069	SEAL KIT	Ref. 24-26		3
28	6688933	VALVE ASSY	solenoid W/coils - Ref. 21, 29 & 31-38		1
29	6688934	COIL			2
30		PLUG	NSS - #8 SAE W/ O-ring		1
31		VALVE	NSS - Order Ref. 28		1
32		O-RING	NAP - Order Ref. 39		1
33	6684053	BACK-UP RING			1
34	6684054	O-RING			1
35	6684056	O-RING			1
36		BACK-UP RING	NSS		1
37		O-RING	NAP - Order Ref. 39		1
38		BACK-UP RING	NSS		1
39	6684052	SEAL KIT	Ref. 32-38		1
40		VALVE	NSS - Order Ref. 41		x
41	6685328	RELIEF VALVE	W/Ref. 24-26		1
42		PLUG	NSS - #6 SAE W/ O-ring		4
43		PLUG	NSS - metric		1

REAR DOOR LOCK

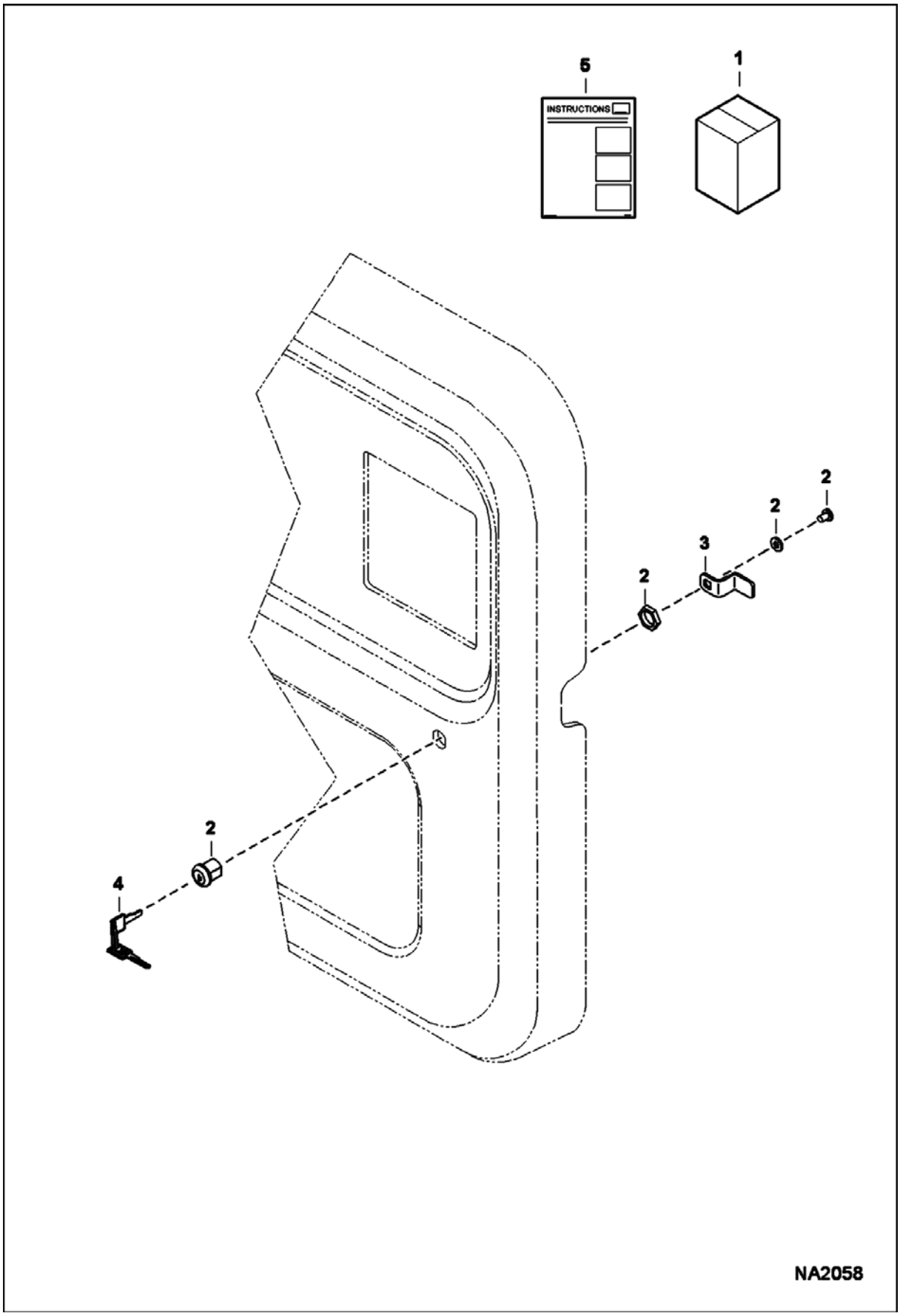

REAR DOOR LOCK (Cont'd)

Ref No	Part Number	Description	Remarks	Serial Number	Qty
1	7128403	KIT, LOCK REAR DOOR	Ref. 2-5		1
2	6670726	CYLINDER. LOCK			1
3	7149056	LATCH, CAM			1
4	6693241	KEY 10	single key W/O ring		1
5	6987239	INSTRUCTIONS			1

REAR WIPER KIT

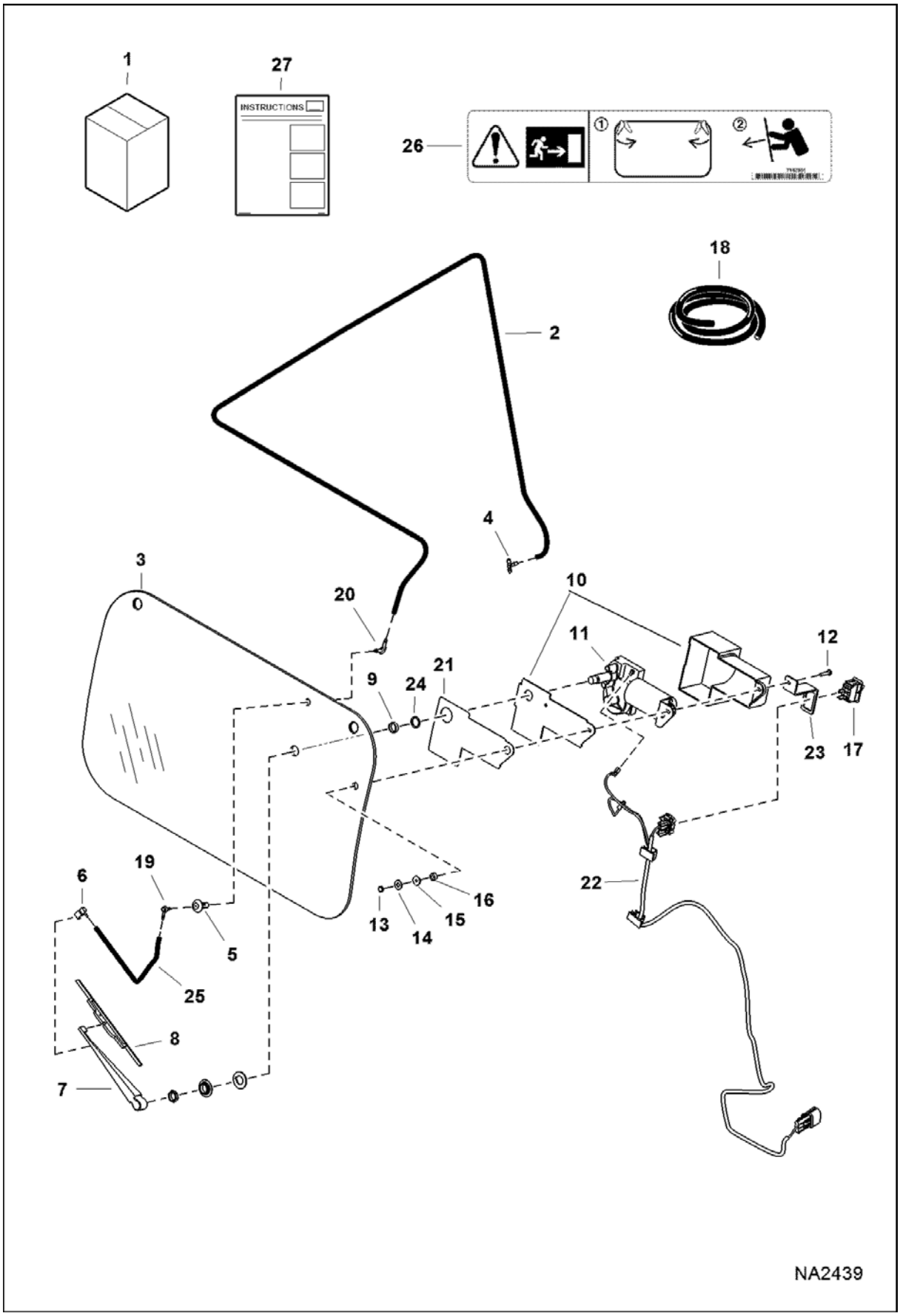

REAR WIPER KIT (Cont'd)

Ref No	Part Number	Description	Remarks	Serial Number	Qty
1	7163571	KIT, WIPER REAR	Ref. 2-27		1
2		HOSE	NAP - 2133,6 mm (84") long - Order Ref. 18		1
3	7172247	WINDOW, CAB REAR			1
4	6676000	TEE			1
5	7167177	GROMMET WIPER			1
6	6676028	NOZZLE			1
7	6676001	ARM			1
8	6676002	BLADE			1
9	6667201	SPACER			1
10	6664097	COVER			1
11	6665602	MOTOR			1
12	87G1014	SCREW, MACHINE			1
13	6664103	NUT			1
14	6664065	WASHER	nylon		1
15	6801059	WASHER	neoprene		1
16	6664085	BUSHING	nylon		1
17	6675999	SWITCH			1
18	6676003	HOSE,BULK	black - 0.109" ID - sold per foor		x
19	6676500	ELBOW	exterior		1
20	6676917	ELBOW	interior		1
21	7172119	SEAL, FOAM			1
22	7180207	HARNESS, WIPER			1
23	7172708	BRACKET, SWITCH			1
24	7172121	WASHER			1
25		HOSE	305 mm (12") long - Order Ref. 18		1
26	7167991	DECAL, EXIT REAR			1
27	6987282	INSTRUCTIONS			1

REMOTE CONTROL KIT
(Selectable Joystick Controls)

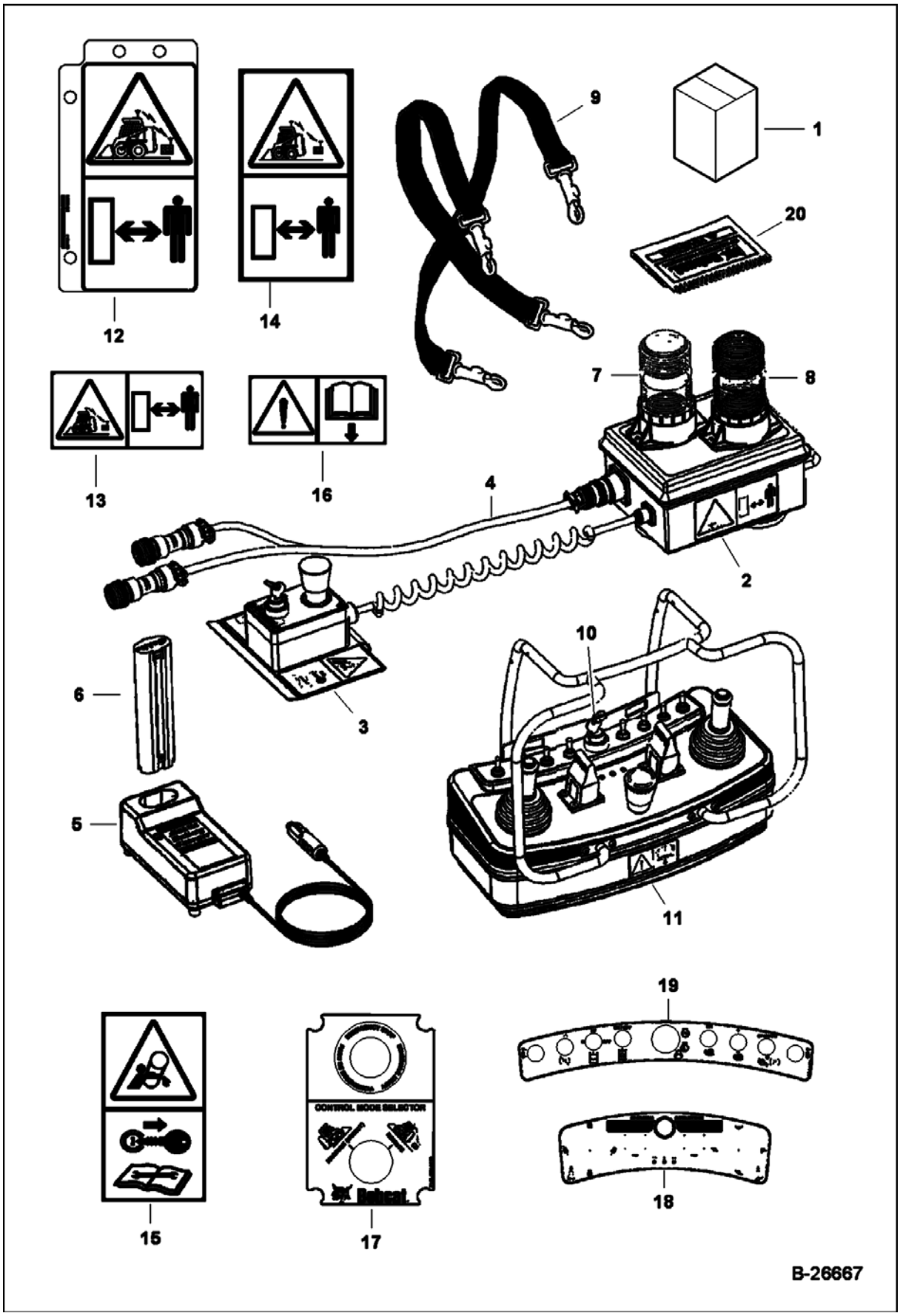

REMOTE CONTROL KIT (Cont'd)
(Selectable Joystick Controls)

Ref No	Part Number	Description	Remarks	Serial Number	Qty
1	7185234	KIT, REMOTE CONTROL	radio remote control		1
2	6692756	RECEIVER, 2.4GHZ			1
3	7011071	CONTROL, MODE SELECTOR	mode selector/E-stop box - W/Ref. 17		1
4	7011070	HARNESS, RECEIVER			1
5	6692769	CHARGER, MAKITA DC1422, 12-24VDC	W/Ref. 6		1
6	6692770	BATTERY, NICD, 9.6V, 1.3AH, MAKITA 9000			1
7	6693411	LENS	green		1
7	6693409	BULB, STROBE			1
8	6693410	LENS	amber		1
8	6693409	BULB, STROBE			1
9	6692771	SHOULER HARNESS			1
10	6692762	KEYS, SET OF 2	set of (2)		x
11	6692761	2.4GHZ TRANSMITTER	transmitter - W/Ref. 18 & 19		1
12	7135569	DECAL	remote ready identification tag		1
13	6692757	DECAL, "REMOTE CONTROL OPERATION", LARGE	operation		1
14	6692768	DECAL, "REMOTE CONTROL OPERATION", SMALL	operation		1
15	6692767	DECAL, "ROTATING PARTS"	rotating parts		1
16	6692763	DECAL WARNING, "READ THE MANUAL"	operating instructions		1
17		DECAL	NAP - Order Ref. 3		1
18		DECAL	NAP - Order Ref. 11		1
19		DECAL	NAP - Order Ref. 11		1
20	6904709	MANUAL, OPERATION & MAINTENANCE RADIO REMOTE CONTR	operation, maintenance and parts		1
20	6904709AR	MANUAL, OPERATION & MAINTENANCE RADIO REMOTE CONTR			1

RESEALING KIT
(Sealing Open Cab Holes)

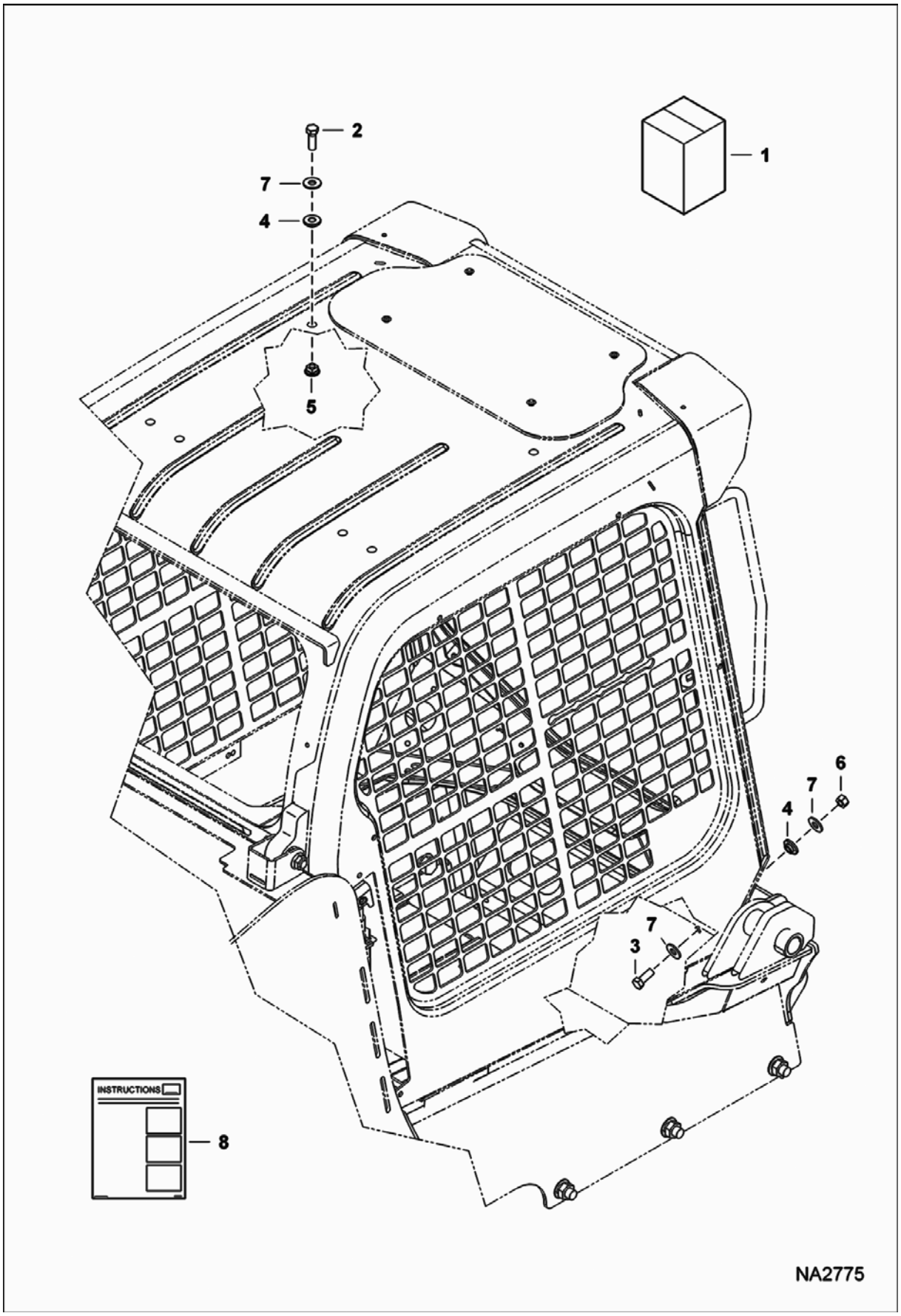

RESEALING KIT (Cont'd)
(Sealing Open Cab Holes)

Ref No	Part Number	Description	Remarks	Serial Number	Qty
1	7172897	KIT, RESEAL PLUGS	Ref. 2-8		1
2	17C824	BOLT 5			6
3	17C820	BOLT			8
4	7173453	PLUG			14
5	7192823	NUT			6
6	61D8	NUT 5			8
7	25E20	WASHER			22
8	6987335	INSTRUCTIONS			1

SEAT BELT - 2"
(Three Point Retractable)

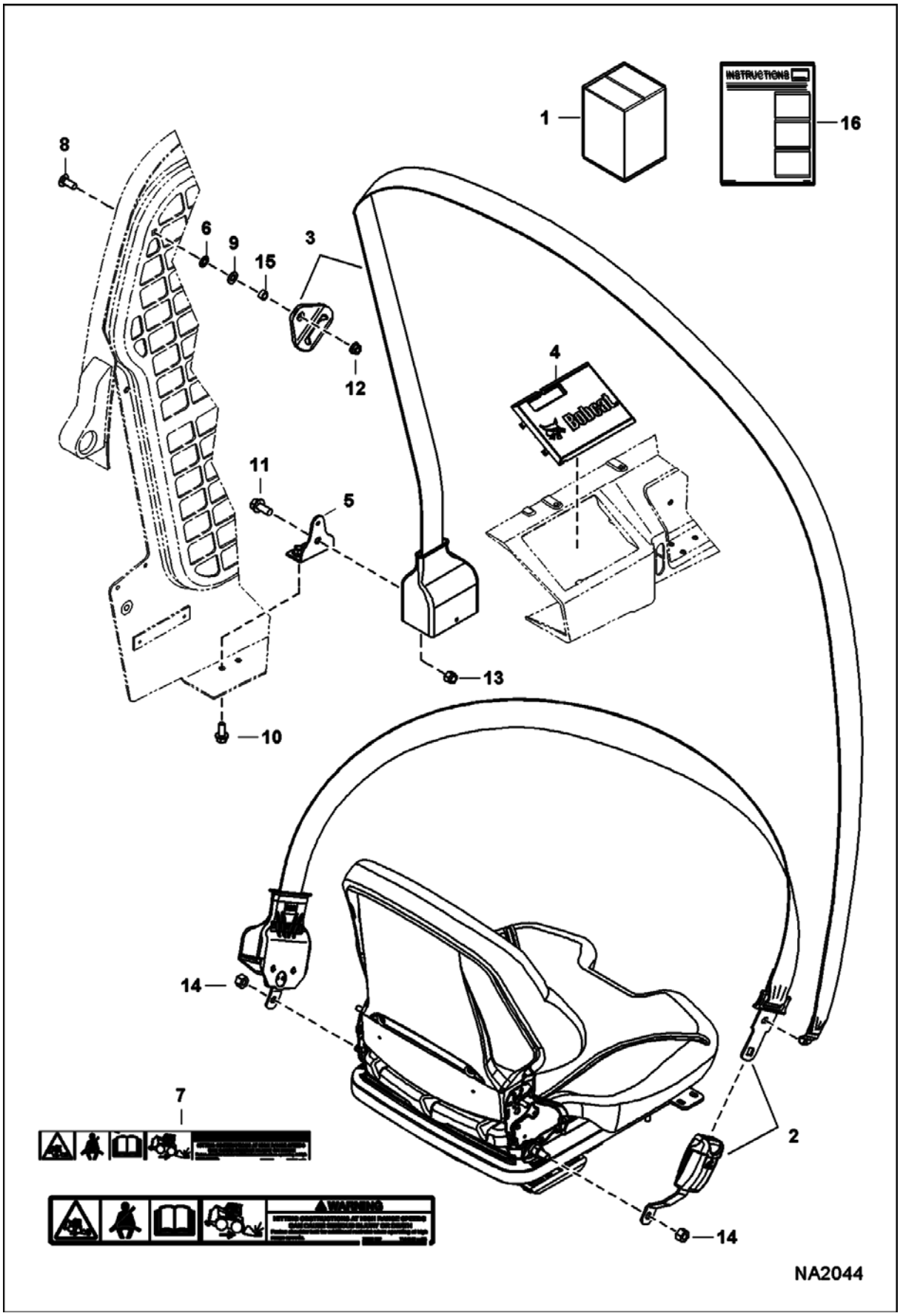

SEAT BELT - 2" (Cont'd)
(Three Point Retractable)

Ref No	Part Number	Description	Remarks	Serial Number	Qty
1	7128405	KIT, BELT SEAT 2"	Ref. 2-13, 15 & 16		1
2	7152319	BELT, RETRACTOR			1
3	7152322	BELT, SEAT 2"			1
4	7152323	COVER, RETRACTOR			1
5	7152324	BRACKET, BELT SEAT 3PT			1
6	6674264	RETAINER NUT			1
7	7184346	DECAL WARNING			1
8	10C616	BOLT 10			1
9	29E6	WASHER			1
10	43C612	BOLT			2
11	31C716	SCREW			1
12	53D6	NUT			1
13	59D7	NUT			1
14	86D7	NUT	not in kit		2
15	7184341	BUSHING			1
16	6987248	INSTRUCTIONS			1

SEAT BELT - 3"
(Retractable)

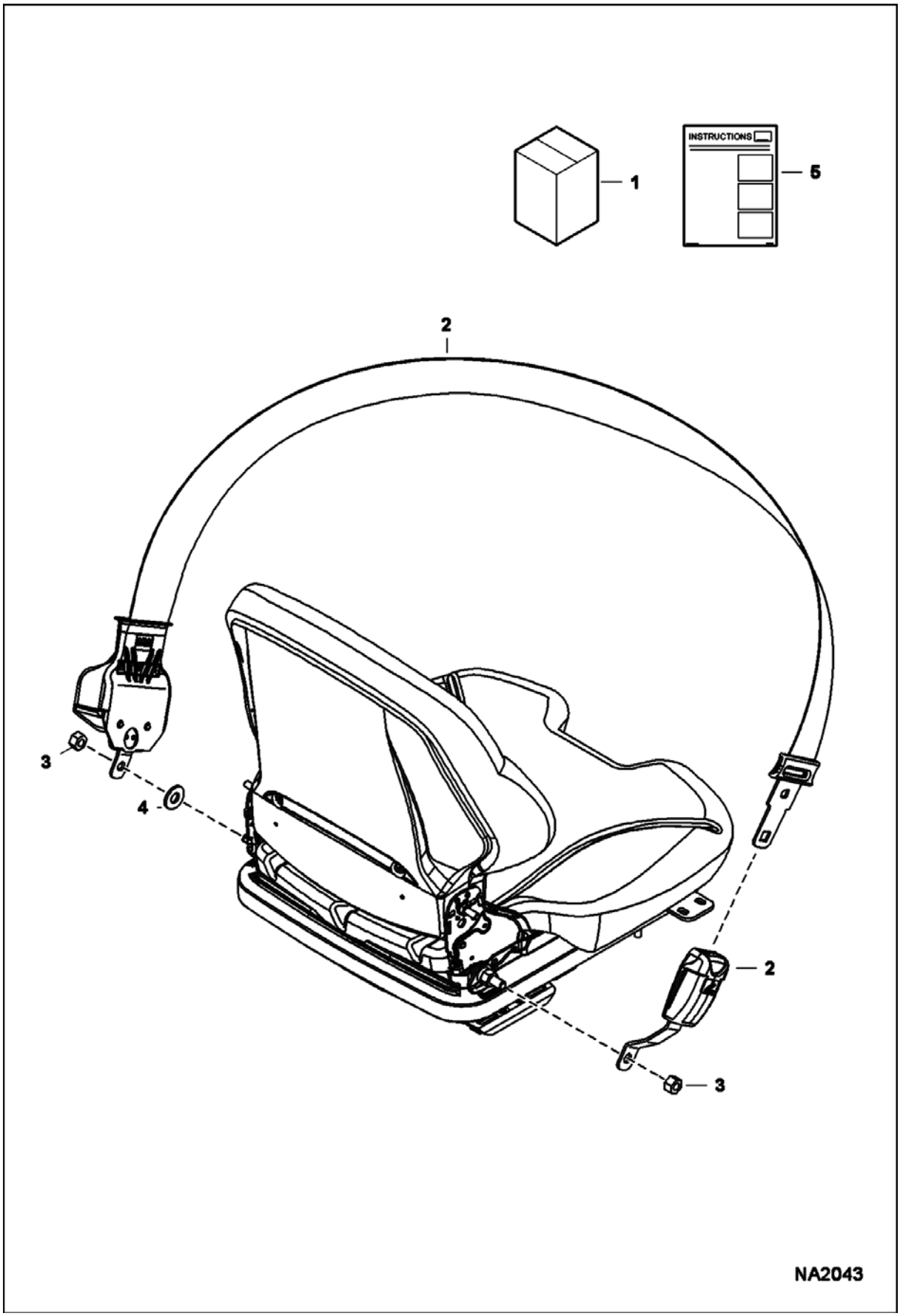

SEAT BELT - 3" (Cont'd)
(Retractable)

Ref No	Part Number	Description	Remarks	Serial Number	Qty
1	7129303	KIT, BELT SEAT 3"	Ref. 2 & 4		1
2	7168171	BELT, SEAT 3"			1
3	86D7	NUT	not in kit		2
4	6987253	INSTRUCTIONS			1

SEAT BELT - 3"
(Three Point Retractable)

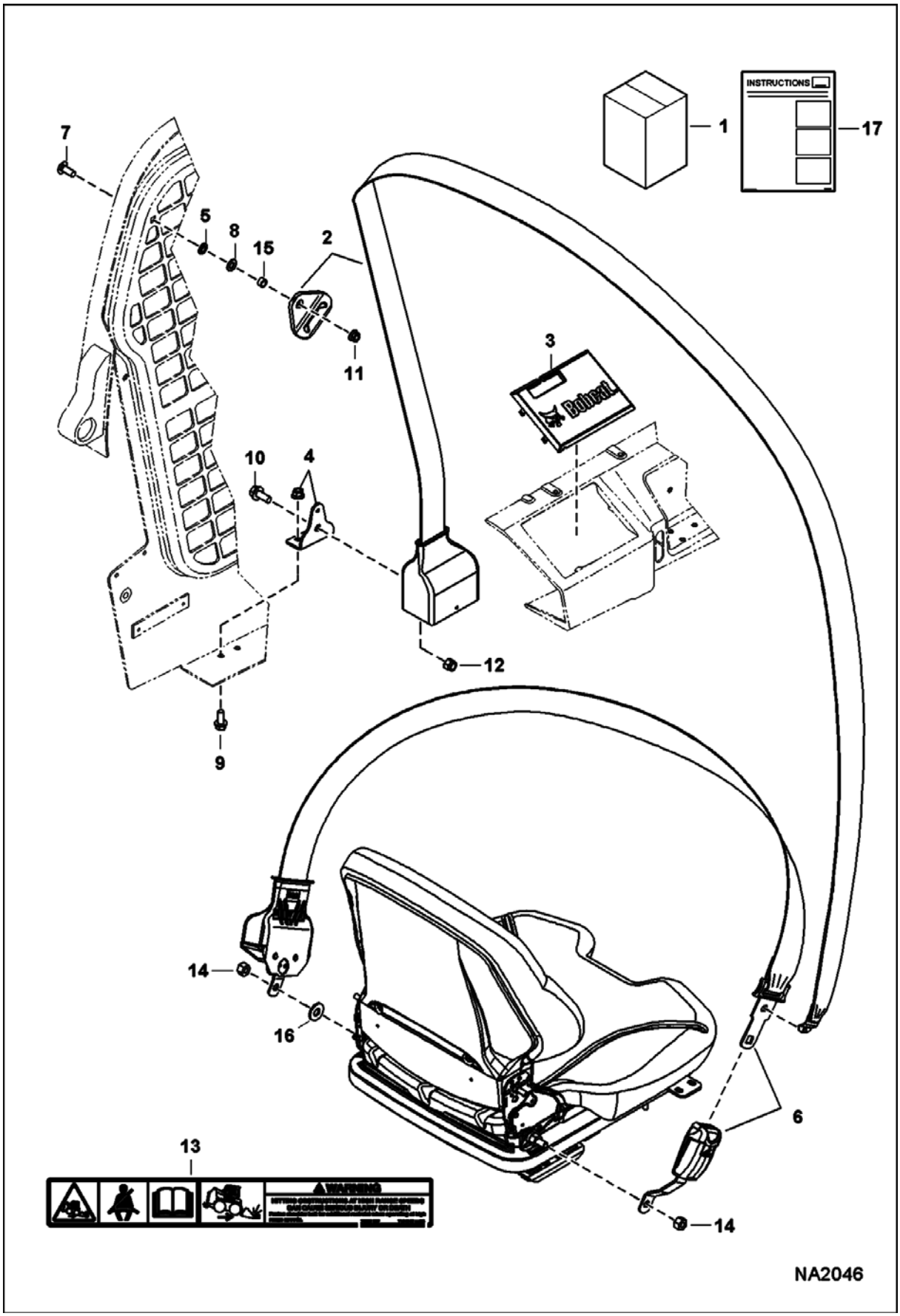

SEAT BELT - 3" (Cont'd)
(Three Point Retractable)

Ref No	Part Number	Description	Remarks	Serial Number	Qty
1	7169480	KIT, BELT SEAT 3"	Ref. 2-13 & 15-17		1
2	7152322	BELT, SEAT 2"			1
3	7152323	COVER, RETRACTOR			1
4	7152324	BRACKET, BELT SEAT 3PT			1
5	6674264	RETAINER NUT			1
6	7168172	BELT, SEAT 3"			1
7	10C616	BOLT 10			1
8	29E6	WASHER			1
9	43C612	BOLT			2
10	31C716	SCREW			1
11	53D6	NUT			1
12	59D7	NUT			1
13	7184346	DECAL WARNING			1
14	86D7	NUT	not in kit		2
15	7184341	BUSHING			1
16	25E18	WASHER			1
17	6987248	INSTRUCTIONS			1

SEAT BELT KIT - 3"

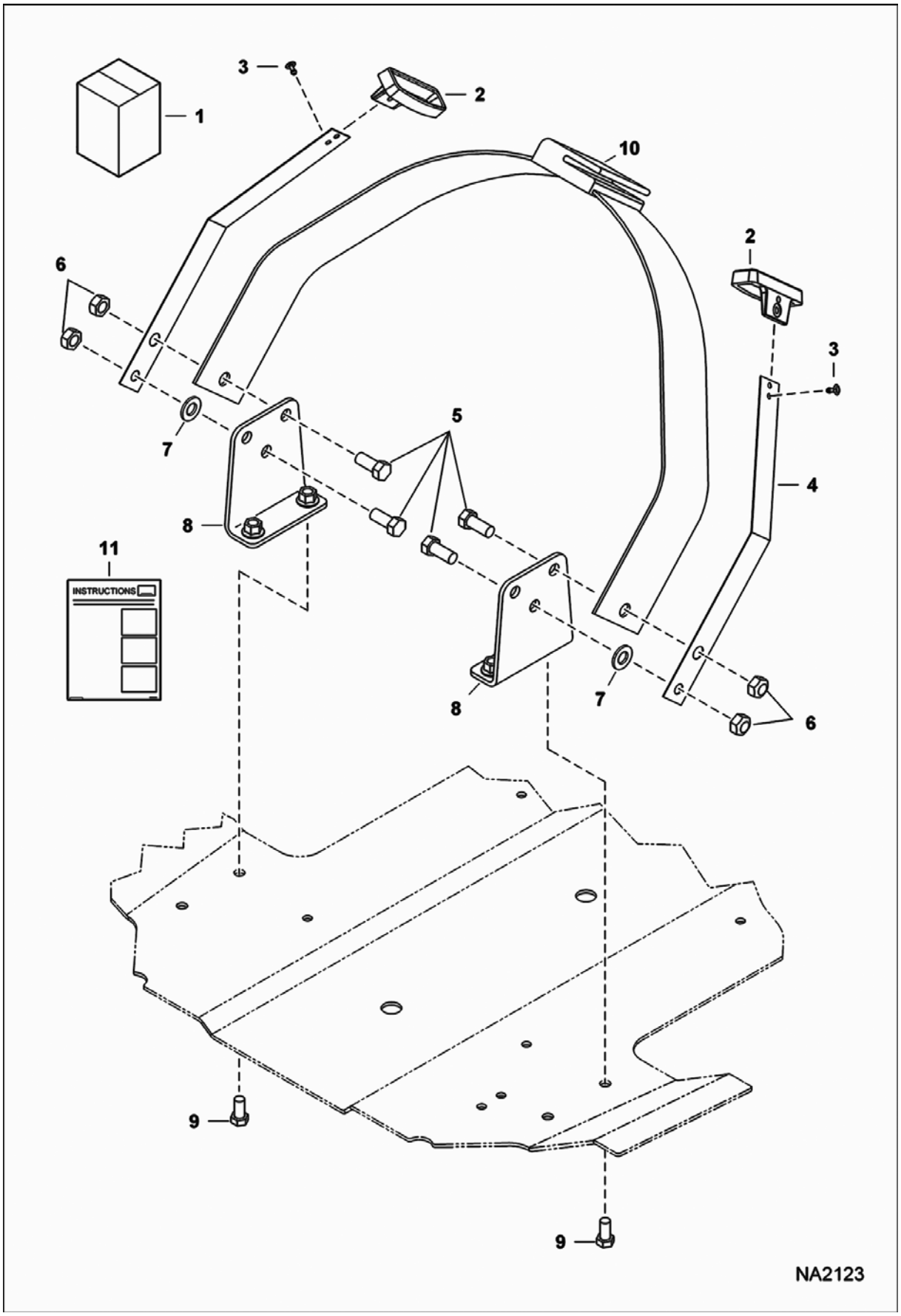

SEAT BELT KIT - 3" (Cont'd)

Ref No	Part Number	Description	Remarks	Serial Number	Qty
1	6703640	KIT	Ref. 2-6, 10 & 11		1
2	6703703	GUIDE			2
3	6512797	RIVET			4
4	6711908	SPRING PLATE			2
5	17C716	BOLT			4
6	85D7	NUT			4
7	25E19	WASHER	not in kit		2
8	7173159	BRACKET, BELT SEAT	not in kit		2
9	43C612	BOLT	not in kit		4
10	6659999	BELT, SEAT			1
11	6989663	INSTRUCTIONS			1

SEAT KIT - 80 mm
(Suspension)

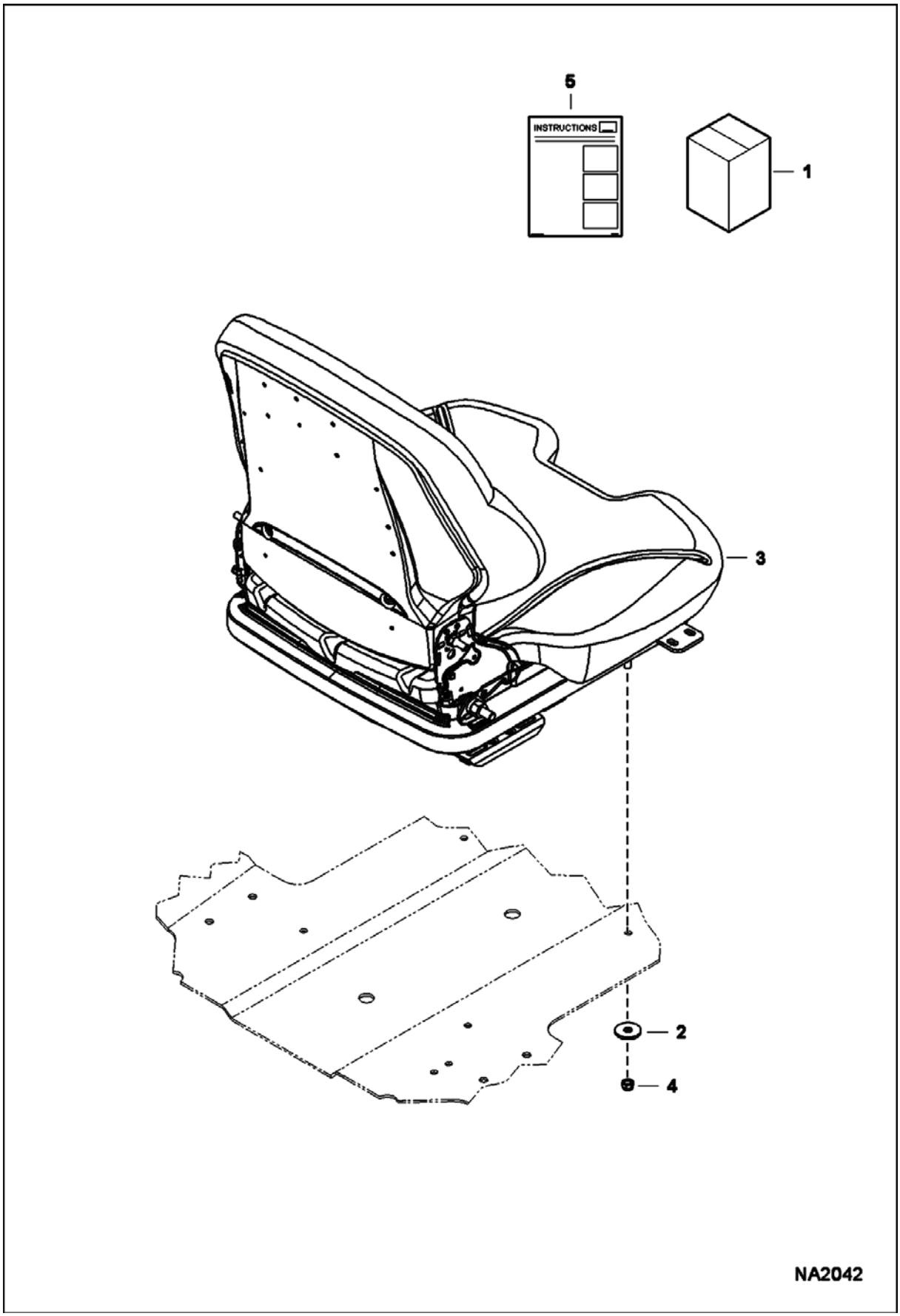

SEAT KIT - 80 mm (Cont'd)
(Suspension)

Ref No	Part Number	Description	Remarks	Serial Number	Qty
1	7128524	KIT, SEAT 80MM SUSPENSION	Ref. 2-5		1
2	619021	WASHER, 5			4
3	7149786	SEAT, SUSPENSION	See Illustration SEAT - 80 mm/ NA2430		1
4	59D5	NUT 5			4
5	6987249	INSTRUCTIONS			1

SEAT KIT - 80 mm
(Suspension) (Air)

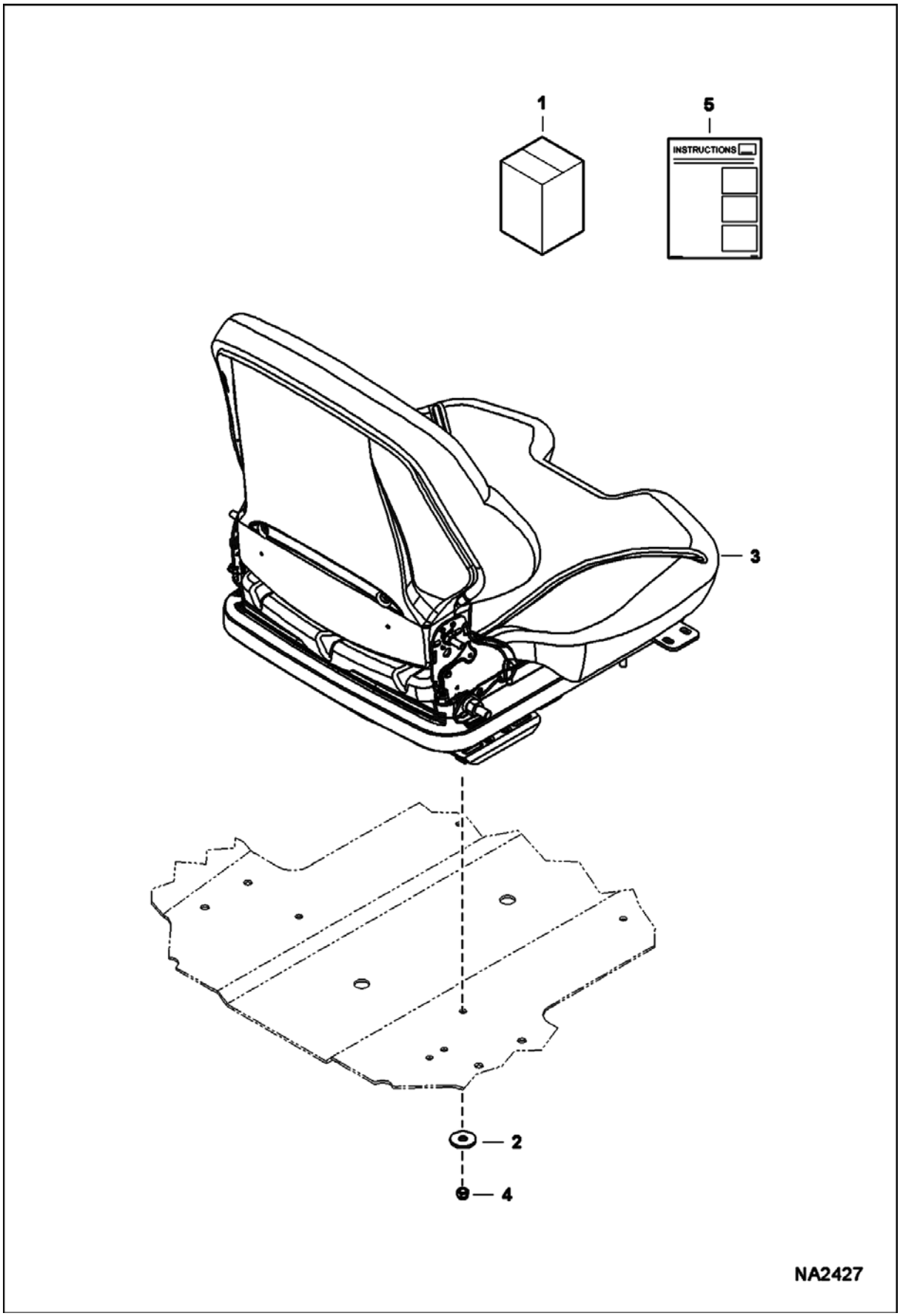

SEAT KIT - 80 mm (Cont'd)
(Suspension) (Air)

Ref No	Part Number	Description	Remarks	Serial Number	Qty
1	7183366	KIT, SEAT OPERATOR SUSPENSION AIR	Ref. 2-5 - loader must be equipped with deluxe cab harness		1
2	619021	WASHER, 5			4
3	7167603	SEAT, OPERATOR SUSPENSION AIR	See Illustration SEAT/ NA2429		1
4	59D5	NUT 5			1
5	6987249	INSTRUCTIONS			1

SEAT - 80 mm
(Suspension)

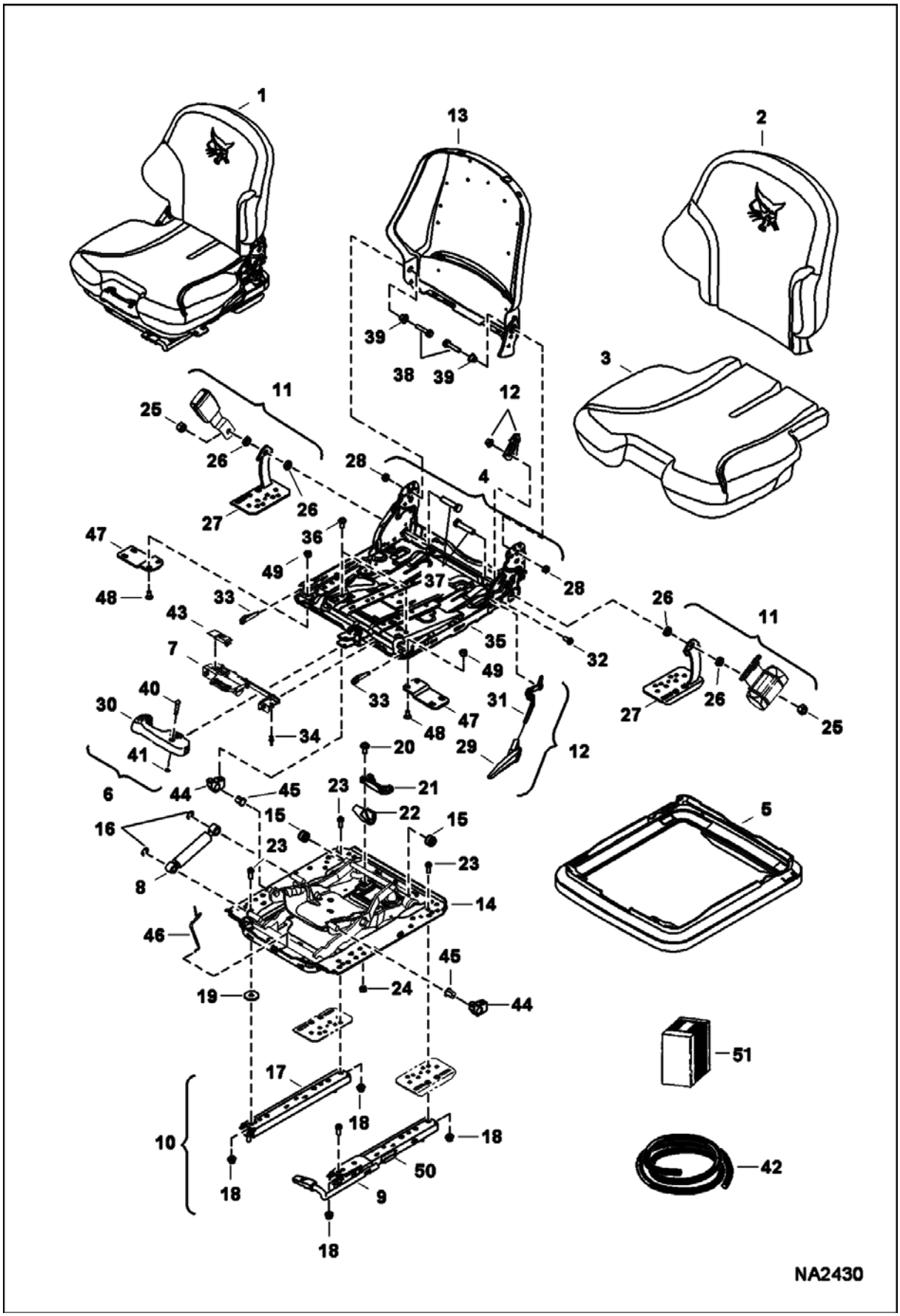

SEAT - 80 mm (Cont'd)
(Suspension)

Ref No	Part Number	Description	Remarks	Serial Number	Qty
1	7149786	SEAT, SUSPENSION	W/manual controls - Ref. 2-10, 12-24 & 28-46		1
2	7010335	KIT, CUSHION SEAT VINYL	backrest		1
3	7010336	KIT, CUSHION SEAT VINYL			1
4	7010338	KIT, BACKREST SEAT	Ref. 28, 38 & 39 - parts for backrest		1
5	7010339	BELLOW			1
6	7010340	KIT, ADJUSTER SEAT	Ref. 30, 40 & 41		1
7	7010341	KIT, HOUSING SEAT	W/Ref. 34 & 43		1
8	7010342	KIT, ABSORBER SHOCK SEAT			1
9	7010343	KIT, LEVER ADJUSTING	assy.		1
10	7010344	KIT, RAIL SLIDE SEAT	Ref. 17, 18 & 50 - handle assy not included		1
11	7010345	KIT, TETHER SEAT BELT	Ref. 25-27 - not included		1
12	7010346	KIT, BACKREST SEAT	Ref. 29 & 31		1
13		BACKREST, SEAT	NSS		1
14		FRAME, SUSPENSION	NSS		1
15		BUSHING	NSS - white plastic - Order Ref. 51		2
16		CLIP	NSS		2
17		WASHER	NSS - Order Ref. 12		2
17		RAIL, SLIDE	NSS		1
18		NUT	NSS		4
19		WASHER	NSS		4
20		SCREW	NSS - Order Ref. 51		2
21		STOP, TETHER	NSS - Order Ref. 51		1
22		TETHER, BELT	NSS - Order Ref. 51		1
23		BOLT	NSS		4
24		NUT	NSS - Order Ref. 51		4
25	86D7	NUT			2
26		SPACER	NSS - Order Ref 11		4
27		PLATE, TETHER	NSS - Order Ref. 11		2
28		NUT	NSS - Order Ref. 4		2
29		HANDLE, ADJUSTMENT	NSS - grey - Order Ref. 12		1
30		HANDLE, ADJUSTMENT	NSS - Order Ref. 6		1
31		LEVER	NSS - Order Ref. 12		1
32		SCREW	NSS - Order Ref. 12		1
33		CLIP	NSS - plastic		2
34		RIVOT	NSS - Order Ref. 7		2
35		FRAME	NSS - Order Ref. 1		2
36		BOLT	NSS		1
37		BOLT	NSS - Order Ref. 4		2
38		BOLT	NSS		2
39		BUSHINGS	NSS		2
40		BOLT	NSS - Order Ref. 6		1
41		CLIP	NSS - Order Ref. 6		1

SEAT - 80 mm (Cont'd)
(Suspension)

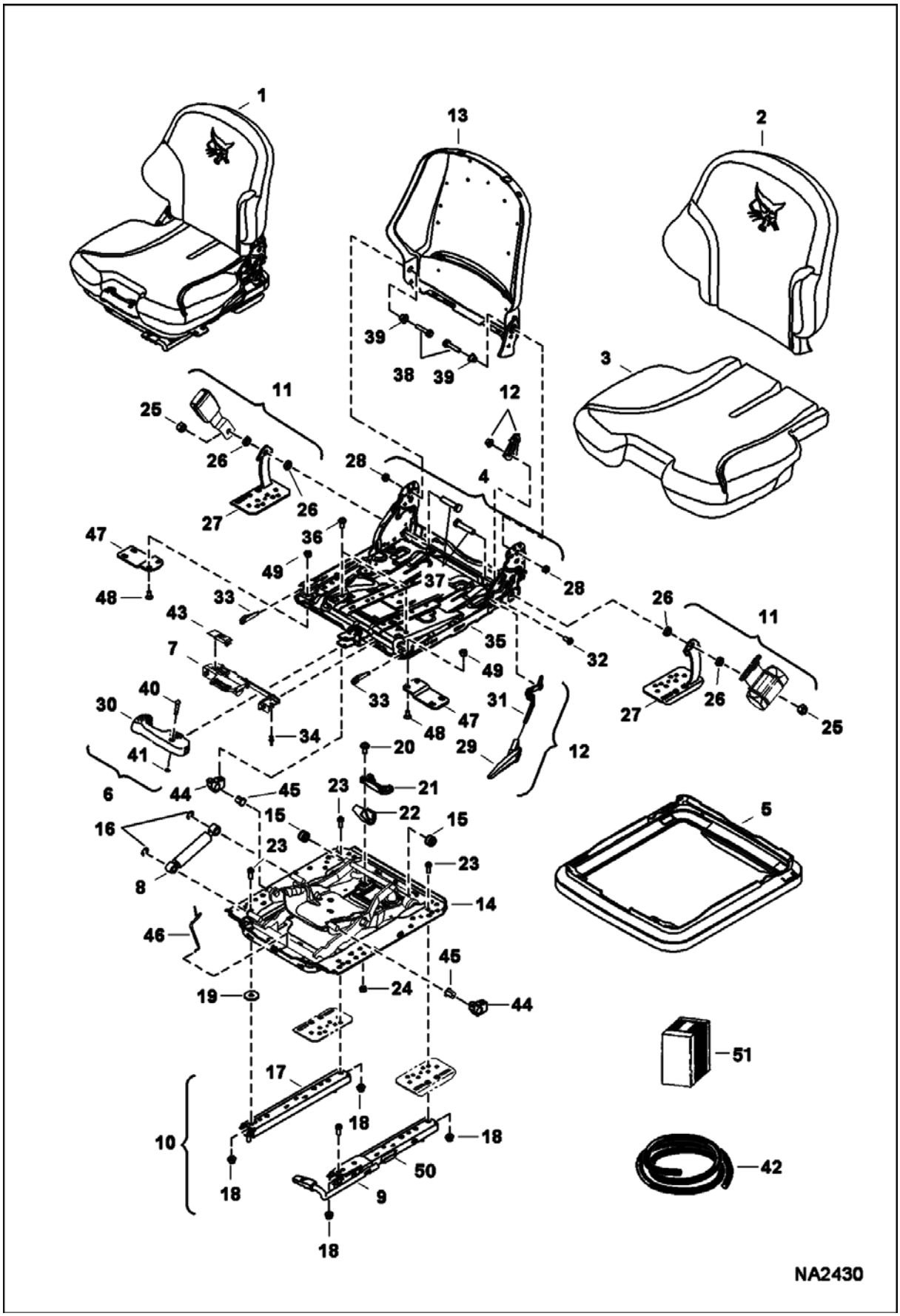

SEAT - 80 mm (Cont'd)
(Suspension)

Ref No	Part Number	Description	Remarks	Serial Number	Qty
42		SEAL	NSS		1
43		COVER	NSS - Order Ref. 7		1
44		BLOCK, STOP	NSS - silver - Order Ref. 51		2
45		BUSHING	NSS - Order Ref. 51		2
46		LEVER, GAUGE	NSS - white plastic - Order Ref. 51		1
47	7011183	KIT, BRACKET SEAT	W/Ref. 48 & 49		2
48		BOLT	NSS - Order Ref. 47		4
49		NUT	NSS - Order Ref. 47		4
50		RAIL, SLIDE	NSS - Order Ref. 10		1
51	7022791	KIT, REPAIR	Ref. 15 (2), 20 (2), 21, 22, 24 (2), 44 (2), 45 (2) & 46		x

SEAT
(Suspension) (Air)

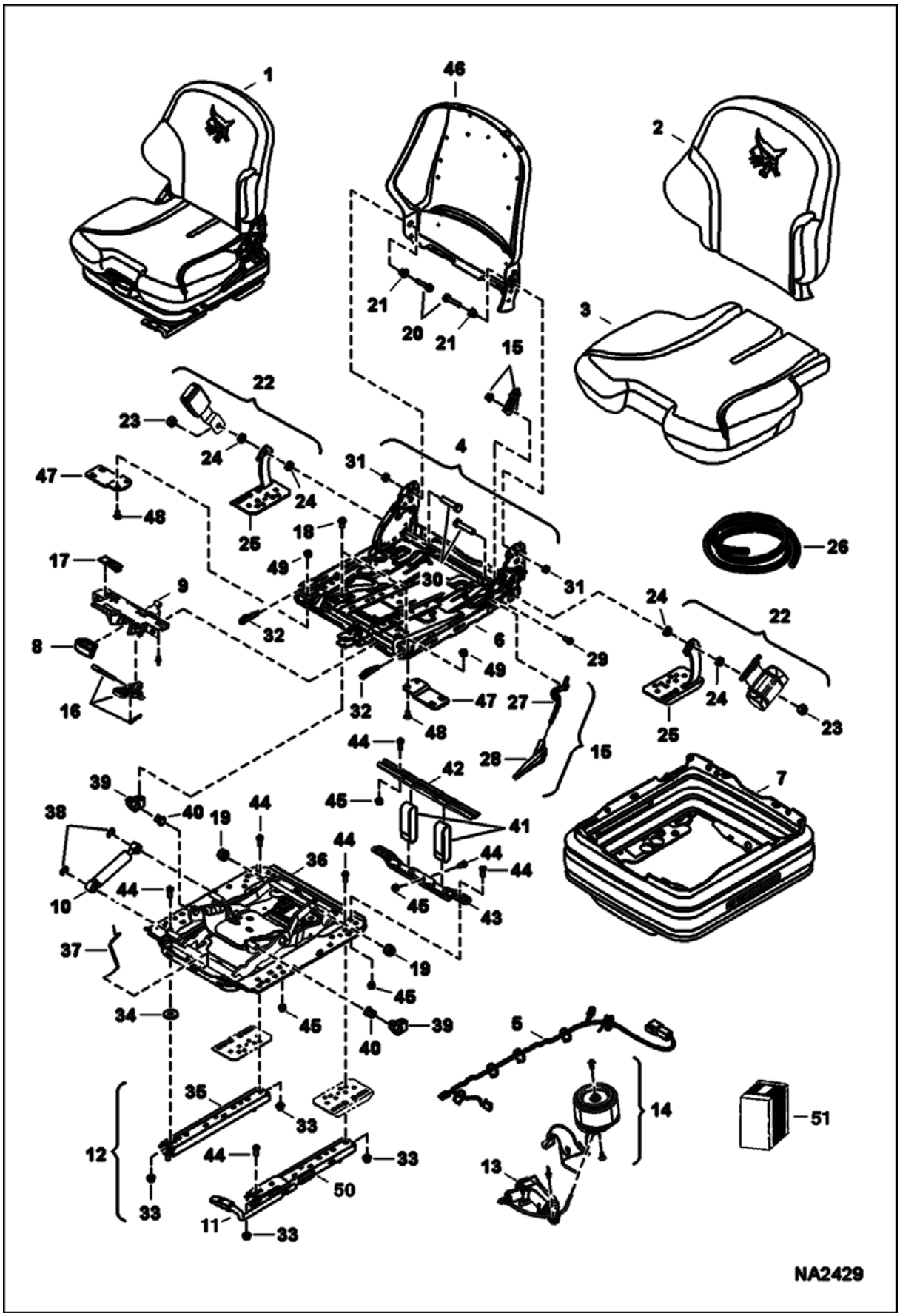

SEAT (Cont'd)
(Suspension) (Air)

Ref No	Part Number	Description	Remarks	Serial Number	Qty
1	7167603	SEAT, OPERATOR SUSPENSION AIR	Ref. 2-22 & 26-45		1
2	7010335	KIT, CUSHION SEAT VINYL	backrest		1
3	7010336	KIT, CUSHION SEAT VINYL			1
4	7010338	KIT, BACKREST SEAT	Ref. 20, 21 & 31		1
5	7011175	KIT, SWITCH SEAT			1
6		FRAME	NSS		1
7	7011176	BELLOWS, SEAT CPL			1
8	7011177	HANDLE, ADJUSTING SEAT			1
9	7011178	HOUSING			1
9		SWITCH, COMPRESSOR	NSS - Order Ref. 9		x
9		VALVE, BLEED OFF	NSS - Order Ref. 9		x
10	7010342	KIT, ABSORBER SHOCK SEAT	W/Ref. 38		1
11	7010343	KIT, LEVER ADJUSTING	assy		1
12	7011179	KIT, RAIL SLIDE SEAT	Ref. 33, 35 & 50 - handle not included		1
13	7011180	COMPRESSOR, AIR SEAT			1
13		HOSE	NSS - Order Ref. 13		x
14	7011181	KIT, SPRING AIR			1
15	7010346	KIT, BACKREST SEAT	Ref. 27, 28 & 29		1
16	7011182	KIT, LEVER			1
17		COVER	NSS - Order Ref. 9		1
18		BOLT	NSS		2
19		BUSHING	NSS - white plastic - Order Ref. 51		2
20		BOLT	NSS		2
21		BUSHING	NSS		2
22	7010345	KIT, TETHER SEAT BELT	Ref. 23-25 - not included		1
23		NUT	NSS - Order Ref 22		2
24		BUSHING	NSS - Order Ref 22		4
25		PLATE, TETHER	NSS - Order Ref 22		2
26		SEAL	NSS		1
27		LEVER	NSS - Order Ref 15		1
28		HANDLE	NSS - grey - Order Ref. 15		1
29		BOLT	NSS - Order Ref 15		2
30		BOLT	NSS - Order Ref 4		2
31		NUT	NSS - Order Ref 4		2
32		CLIP	NSS - plastic		2
33		NUT	NSS		4
34		WASHER	NSS		4
35		RAIL, SLIDE	NSS - Order Ref 12		1
36		FRAME,	NSS - Order Ref 1		1

SEAT (Cont'd)
(Suspension) (Air)

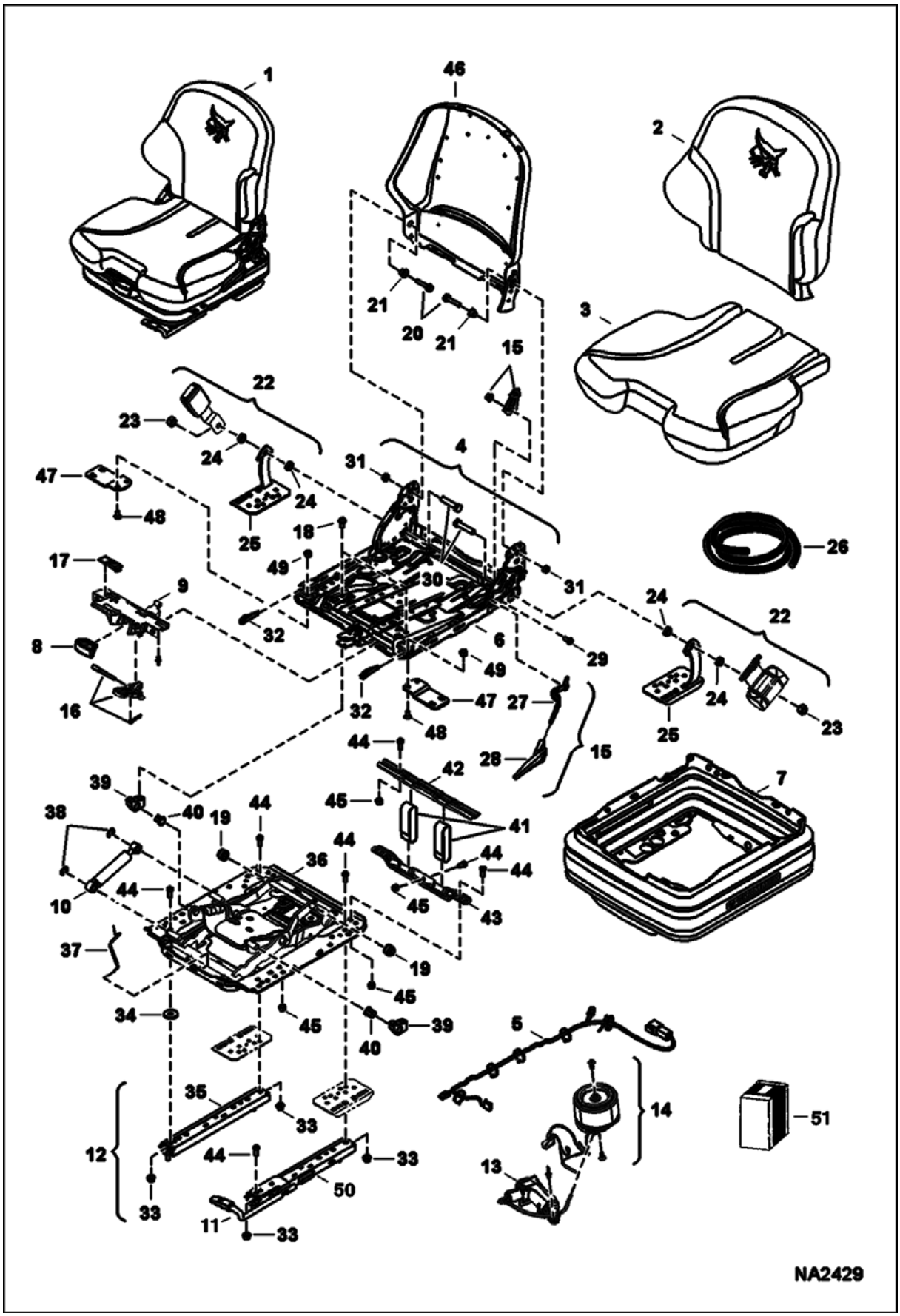

SEAT (Cont'd)
(Suspension) (Air)

Ref No	Part Number	Description	Remarks	Serial Number	Qty
		SUSPENSION			
37		LEVER, GAUGE	NSS - white plastic - Order Ref. 51		1
38		CLIP	NSS - Order Ref 10		2
39		BLOCK, STOP	NSS - Order Ref. 51		2
40		BUSHING	NSS - Order Ref. 51		2
41		STRAP, TETHER	NSS - white		2
42		MOUNT	NSS		1
43		MOUNT	NSS		1
44		BOLT	NSS		9
45		NUT	NSS		5
46		MOLDING, SEAT	NSS		1
47	7011183	KIT, BRACKET SEAT	W/Ref. 48 & 49		2
48		BOLT	NSS - Order Ref. 47		4
49		NUT	NSS - Order Ref. 47		4
50		RAIL, SLIDE	NSS - Order Ref. 12		1
51	7025560	KIT, REPAIR	Ref. 18 (2), 19, 37, 39 (2) & 40 (2)		x

SHIELD KIT
(Tilt Cylinder)

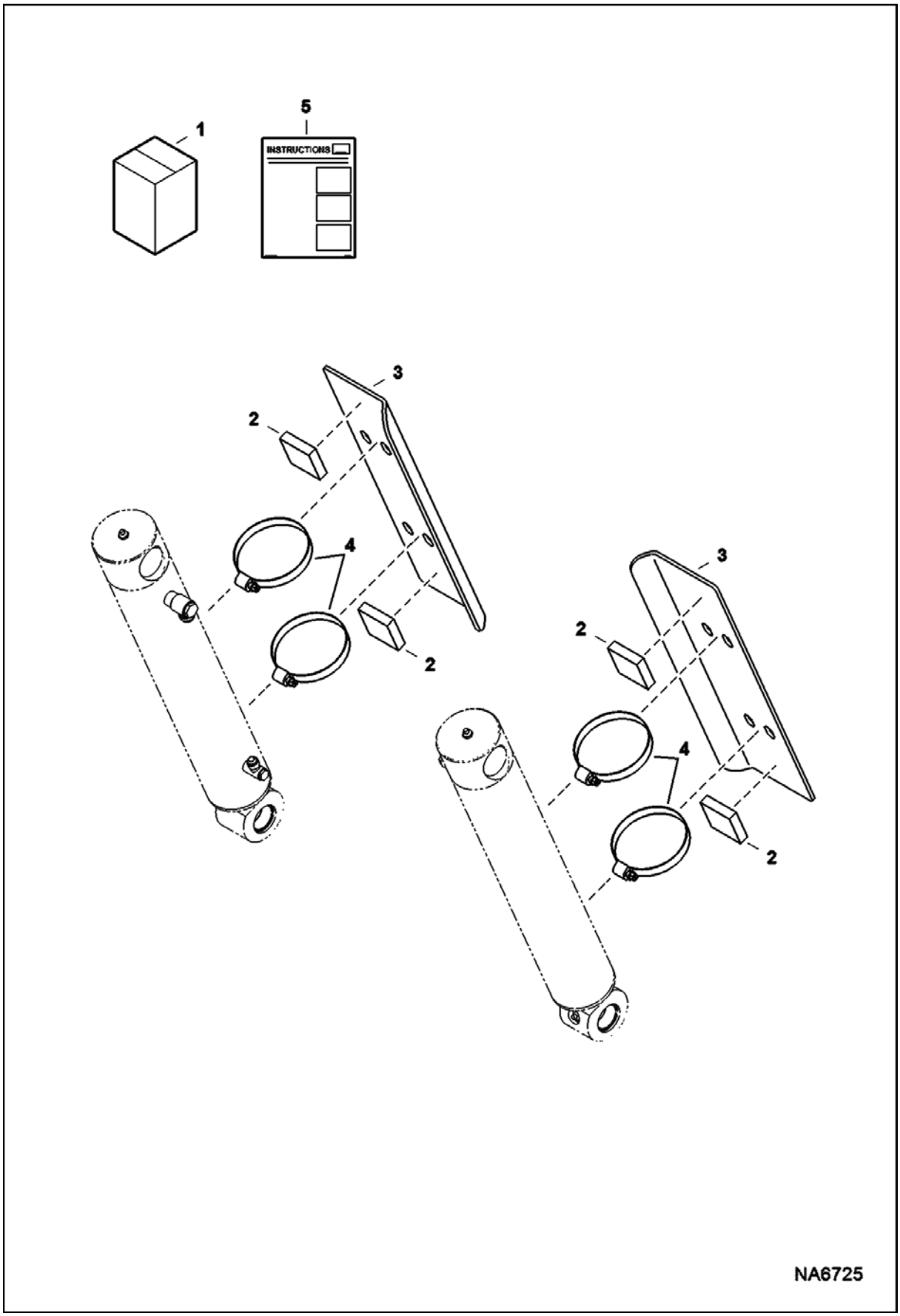

SHIELD KIT (Cont'd)
(Tilt Cylinder)

Ref No	Part Number	Description	Remarks	Serial Number	Qty
1	7222173	KIT, SHIELD CYL	Ref. 2-5		1
2	6704436	PAD			4
3	7222175	SHIELD, CYL			2
4	42H52	CLAMP			4
5	6990468	INSTRUCTIONS			1

SOUND/NOISE REDUCTION KIT
(Manual Controls)

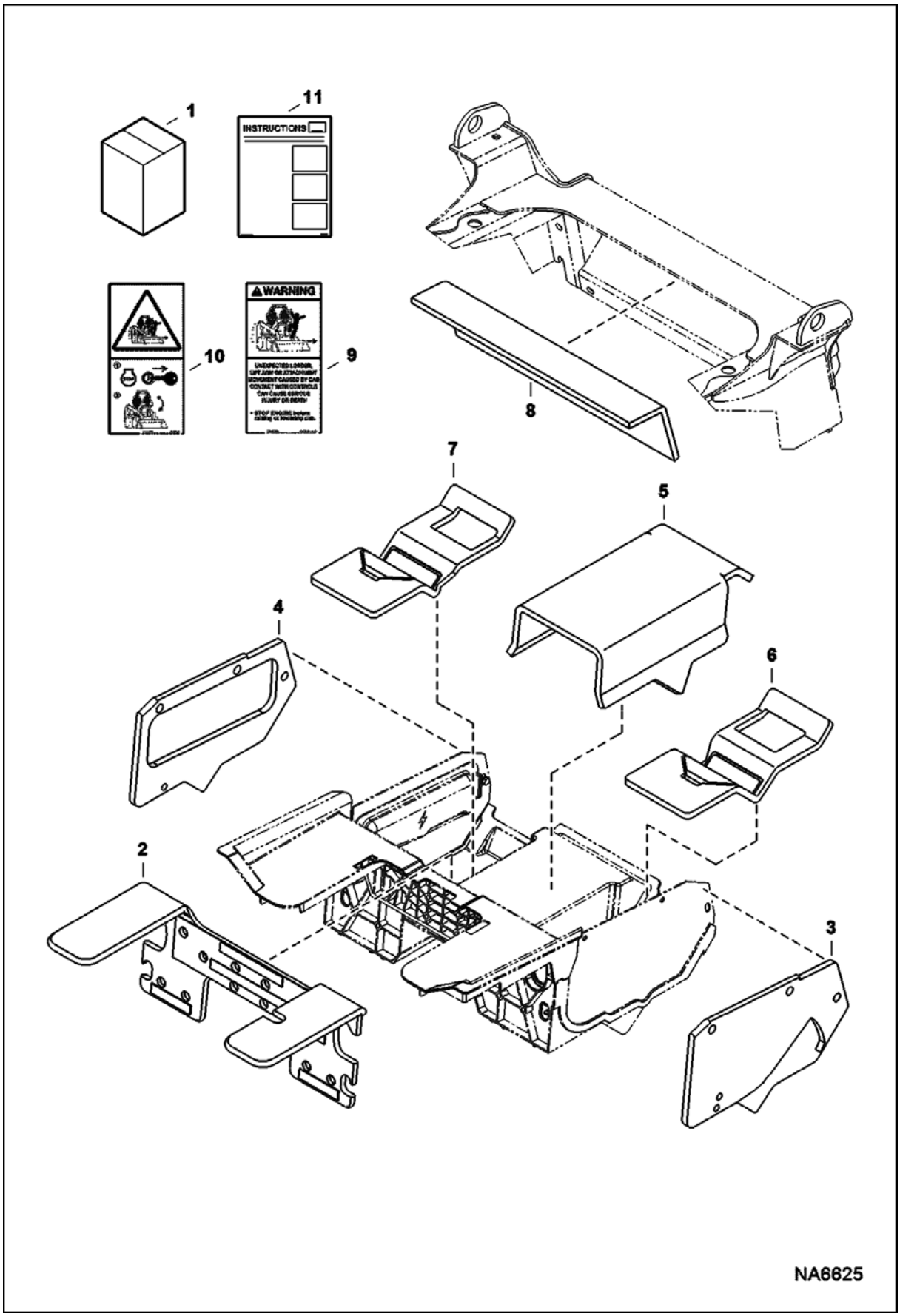

SOUND/NOISE REDUCTION KIT (Cont'd)
(Manual Controls)

Ref No	Part Number	Description	Remarks	Serial Number	Qty
1	7207380	KIT, SOUND/NOISE REDUCTION	Ref. 2-11		1
2	7195580	INSULATION	skid steer models		1
3	7195582	INSULATION	RH - panel		1
4	7195584	INSULATION, PANEL LH			1
5	7195581	INSULATION	skid steer models		1
6	7195583	INSULATION	RH		1
7	7195585	INSULATION, PANEL LH	LH		1
8	7195586	INSULATION, CROSSMEMBER			1
9	7168138	DECAL, WARNING			1
10	7168139	DECAL, WARNING	no-text		1
11	6989699	INSTRUCTIONS			1

SOUND/NOISE REDUCTION KIT
(Selectable Joystick Controls)

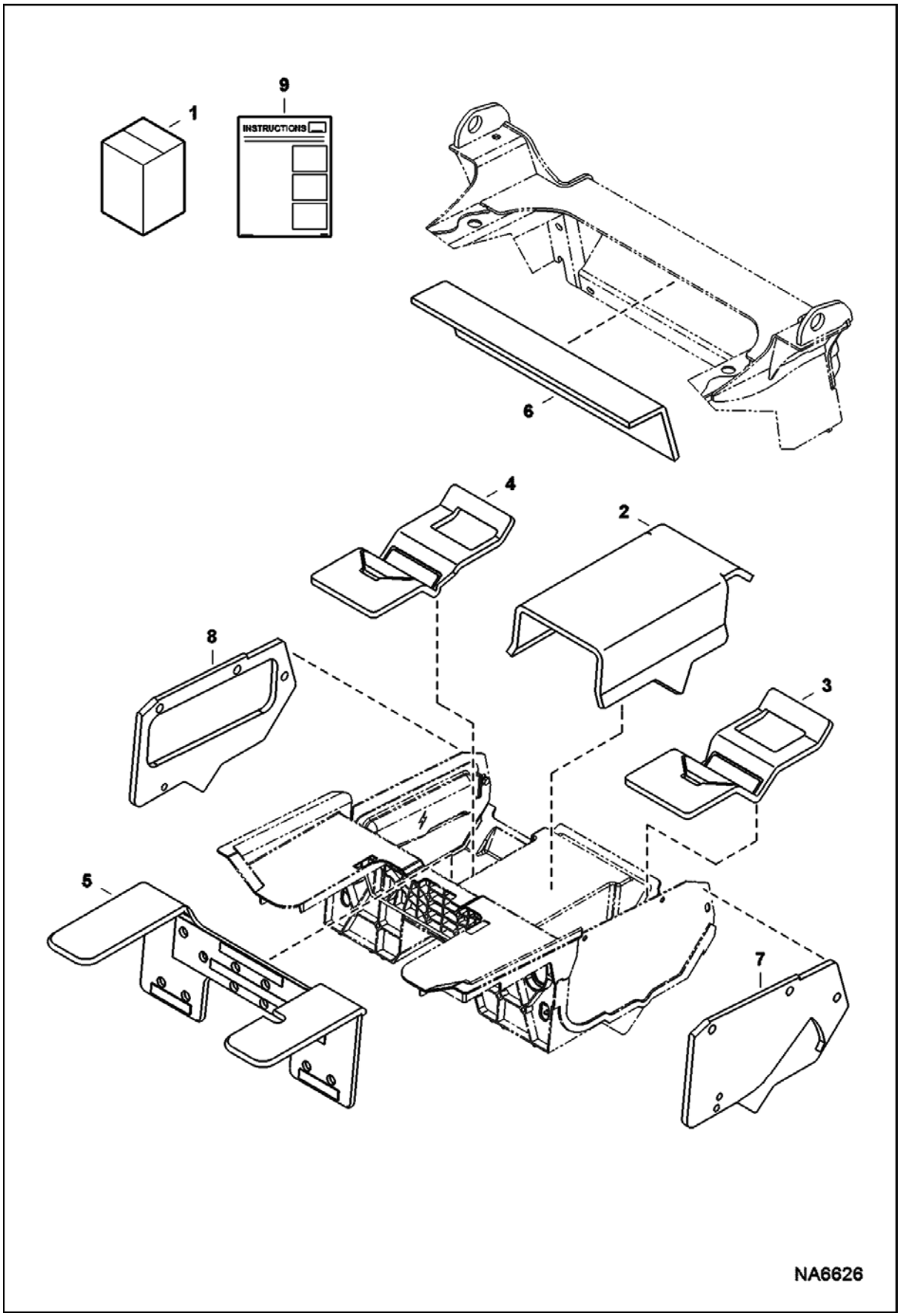

SOUND/NOISE REDUCTION KIT (Cont'd)
(Selectable Joystick Controls)

Ref No	Part Number	Description	Remarks	Serial Number	Qty
1	7207381	KIT, SOUND/NOISE REDUCTION	Ref. 2-9		1
2	7195581	INSULATION	skid steer models		1
3	7195583	INSULATION	RH		1
4	7195585	INSULATION, PANEL LH	LH		1
5	7195580	INSULATION	skid steer models		1
6	7195586	INSULATION, CROSSMEMBER			1
7	7195588	INSULATION	RH panel		1
8	7195584	INSULATION, PANEL LH			1
9	6989699	INSTRUCTIONS			1

SOUND/NOISE REDUCTION KIT

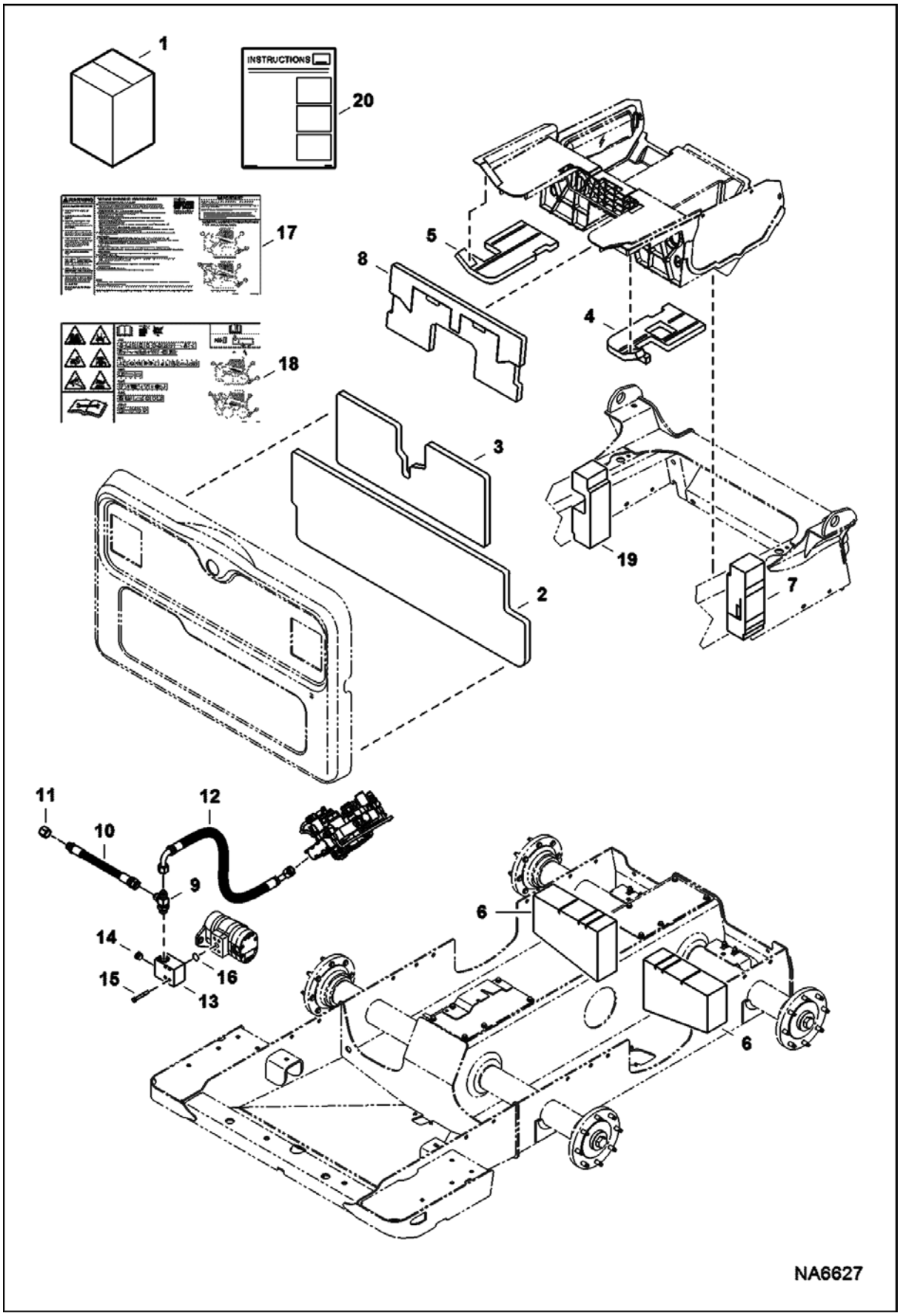

SOUND/NOISE REDUCTION KIT (Cont'd)

Ref No	Part Number	Description	Remarks	Serial Number	Qty
1	7207378	KIT, SOUND/NOISE REDUCTION	Ref. 2-20		1
2	7171192	INSULATION, DOOR REAR			1
3	7171194	INSULATION, DOOR REAR			1
4	7171219	INSULATION, PANEL RH			1
5	7171220	INSULATION, PANEL LH			1
6	7195594	INSULATION			2
7	7196318	INSULATION			1
8	7196189	INSULATION			1
9	21KB1212	FITTING, HYD TEE			1
10	7185232	HOSE, HYD	muffler		1
11	36K8	CAP			1
12	7219833	HOSE, HYD			1
13	7209565	MANIFOLD			1
14	24K6	FITTING			1
15	17C644	BOLT			4
16	55K214	O-RING			1
17	7205726	DECAL, SERVICE			1
18	7205727	DECAL, SERVICE	no text		1
19	7202003	INSULATION, FENDER			1
20	6987338	INSTRUCTIONS			1

SOUND/NOISE REDUCTION OPTION
(Bystander)

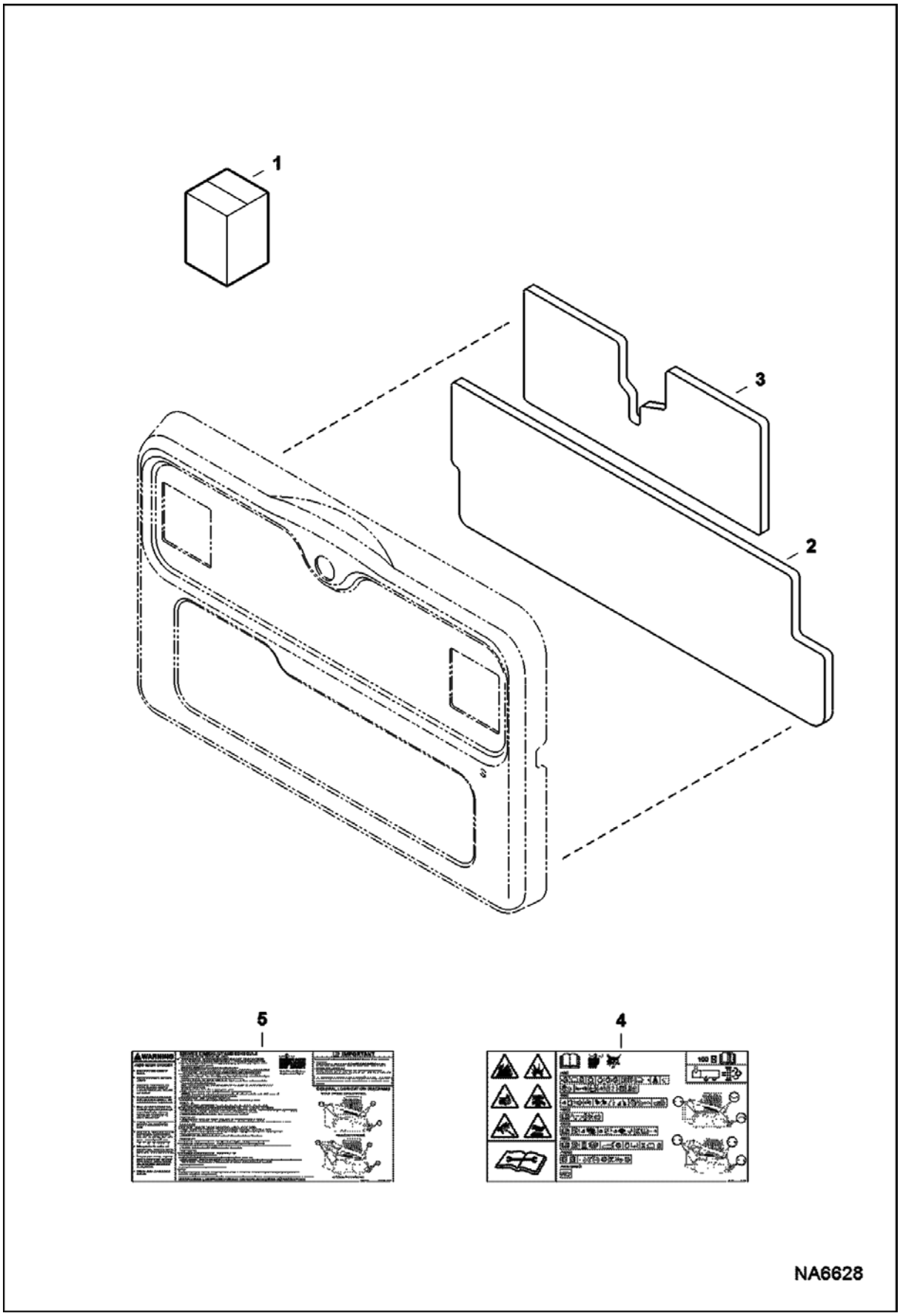

SOUND/NOISE REDUCTION OPTION (Cont'd)
(Bystander)

Ref No	Part Number	Description	Remarks	Serial Number	Qty
1		KIT, SOUND NOISE REDUCTION BYSTANDER	NAP - Order Components		1
2	7171192	INSULATION, DOOR REAR	lower		1
3	7171194	INSULATION, DOOR REAR	upper		1
4	7205727	DECAL, SERVICE	no-text		1
5	7205726	DECAL, SERVICE			1

SOUND/NOISE REDUCTION OPTION
(Operator Ear)

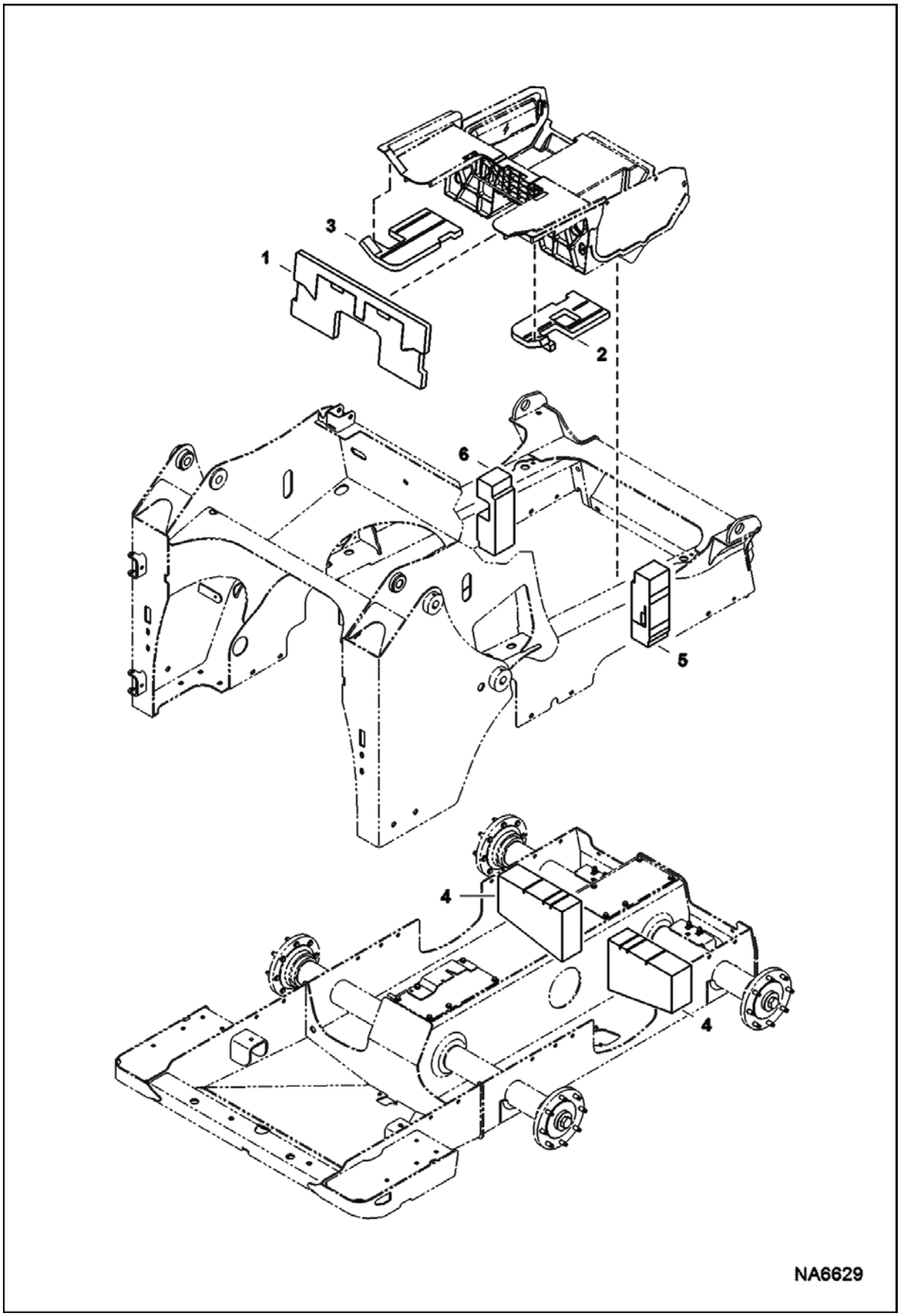

SOUND/NOISE REDUCTION OPTION (Cont'd)
(Operator Ear)

Ref No	Part Number	Description	Remarks	Serial Number	Qty
1	7196189	INSULATION			1
2	7171219	INSULATION, PANEL RH			1
3	7171220	INSULATION, PANEL LH			1
4	7195594	INSULATION			2
5	7196318	INSULATION			1
6	7202003	INSULATION, FENDER			1

SPRING DAMPER KIT

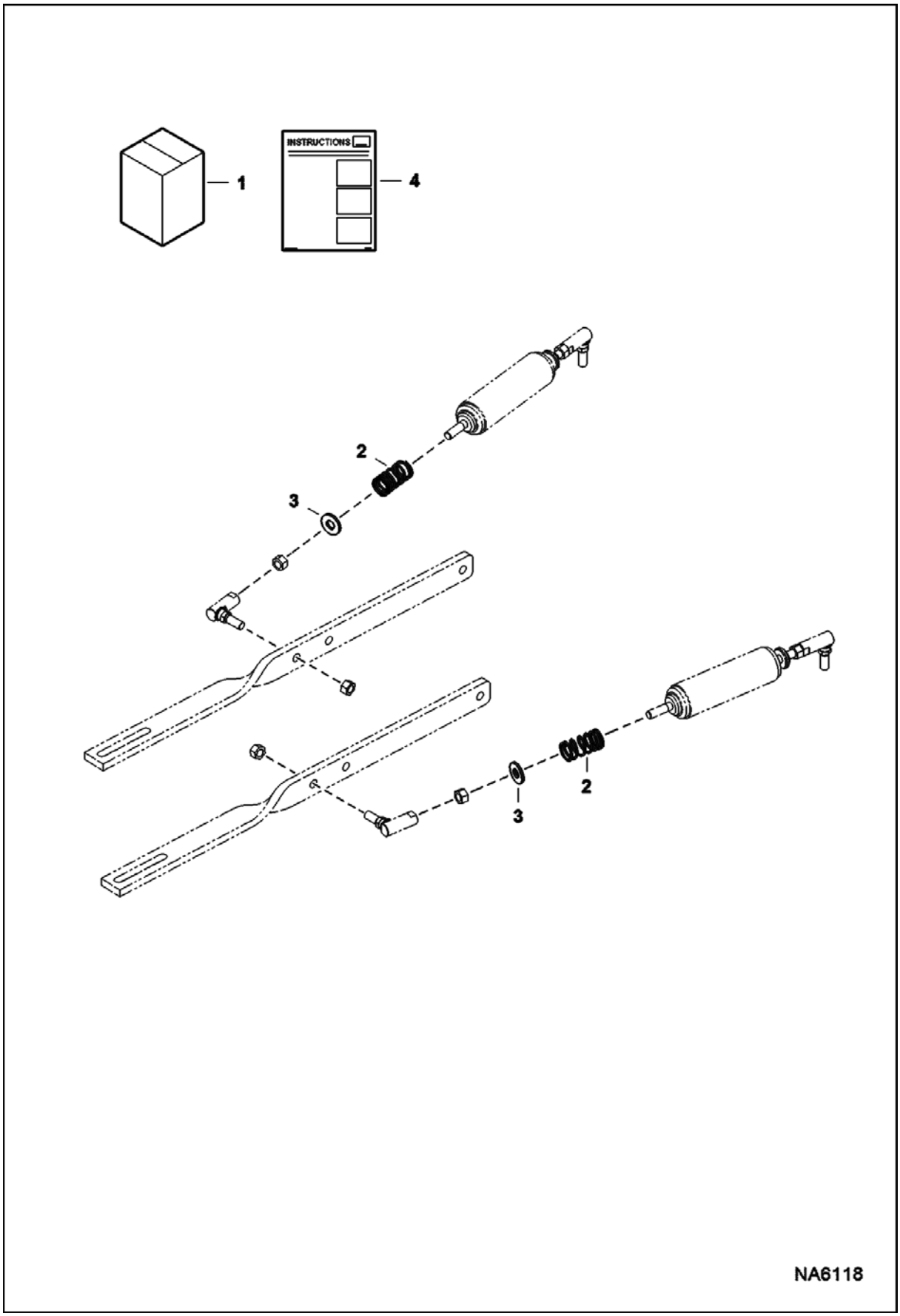

SPRING DAMPER KIT (Cont'd)

Ref No	Part Number	Description	Remarks	Serial Number	Qty
1	7204073	KIT, SPRING DAMPER	Ref. 2-4		1
2	6690564	SPRING, COMPRESSION			2
3	25E15	WASHER			2
4	6990138	INSTRUCTIONS			1

STEERING DAMPENER KIT
(Dual)

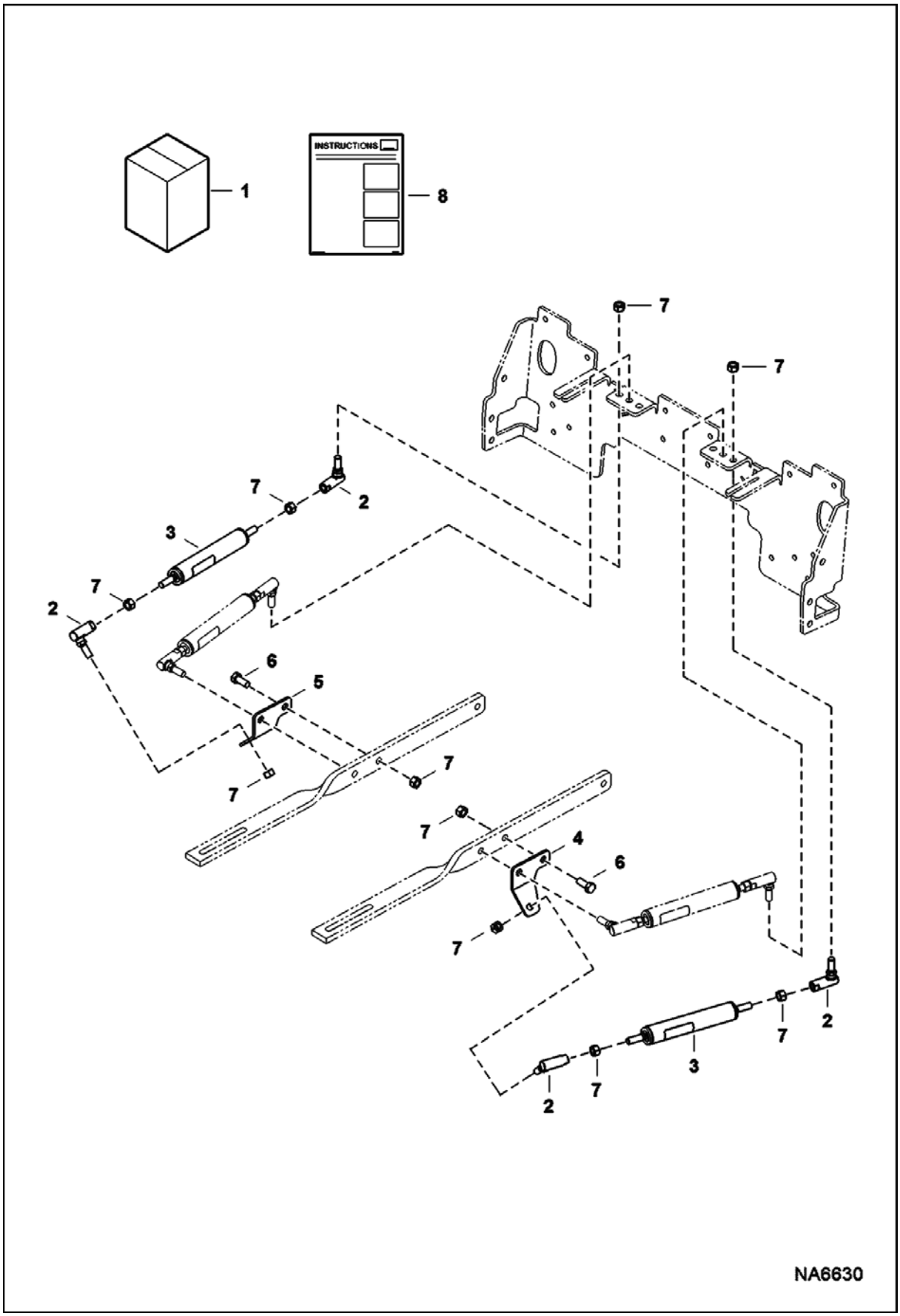

STEERING DAMPENER KIT (Cont'd)
(Dual)

Ref No	Part Number	Description	Remarks	Serial Number	Qty
1	7169070	KIT, DAMPER STEERING	Ref. 2-8		1
2	6599744	BALL JOINT			4
3	7188108	GAS SPRING			2
4	7153075	BRACKET, DAMPER			1
5	7153076	BRACKET, DAMPER			1
6	2C614	SCREW			2
7	62D6	NUT 5			10
8	6987251	INSTRUCTIONS			1

STEERING LINK ISOLATOR KIT

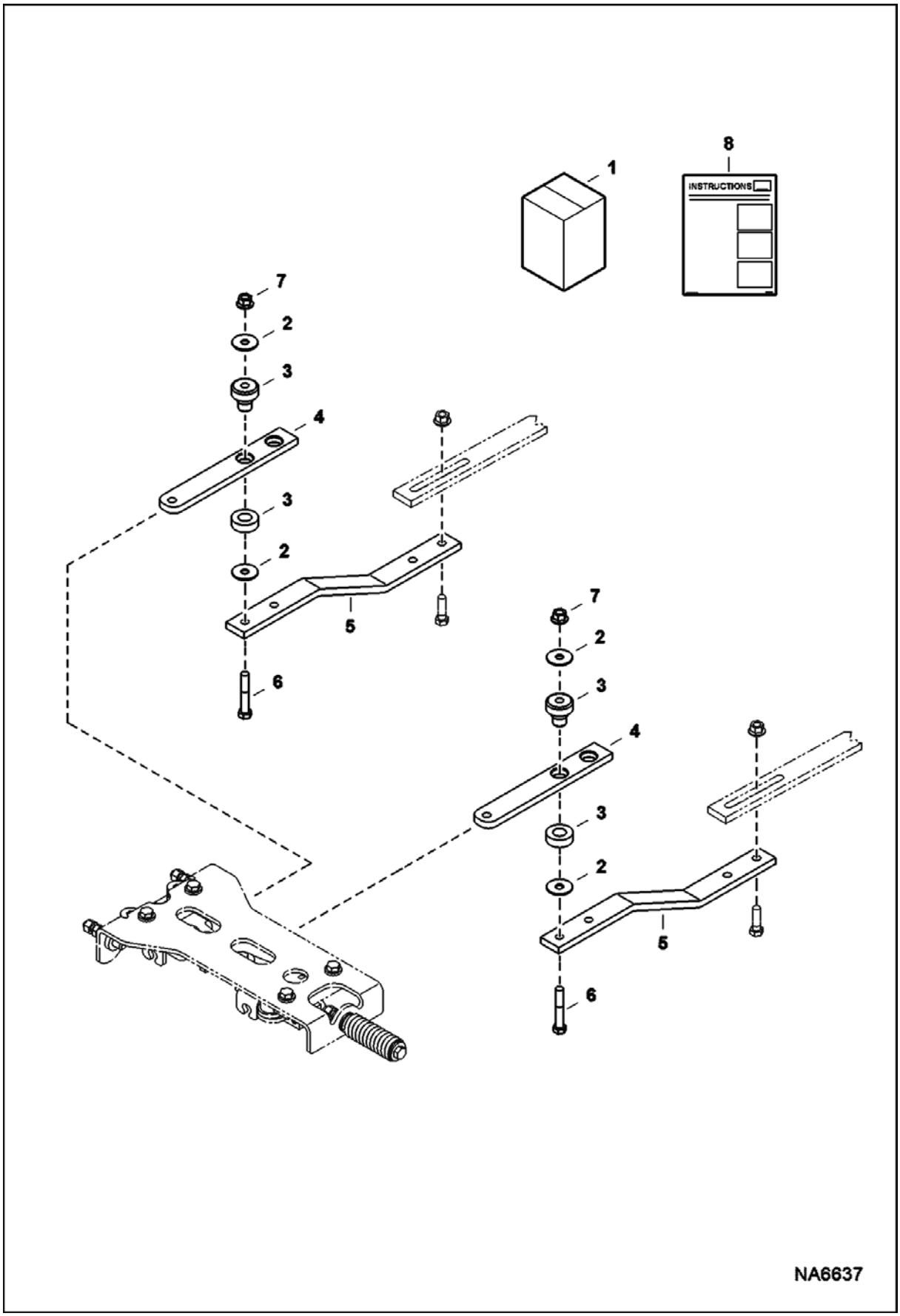

STEERING LINK ISOLATOR KIT (Cont'd)

Ref No	Part Number	Description	Remarks	Serial Number	Qty
1	7220446	KIT, LINK STEERING ISO	Ref. 2-8		1
2	6737388	WASHER			8
3	7169932	MOUNT			4
4	7192181	LINK			2
5	7192182	LINK			2
6	17C636	BOLT			4
7	83D6	NUT 5			4
8	6990533	INSTRUCTIONS			1

STROBE LIGHT

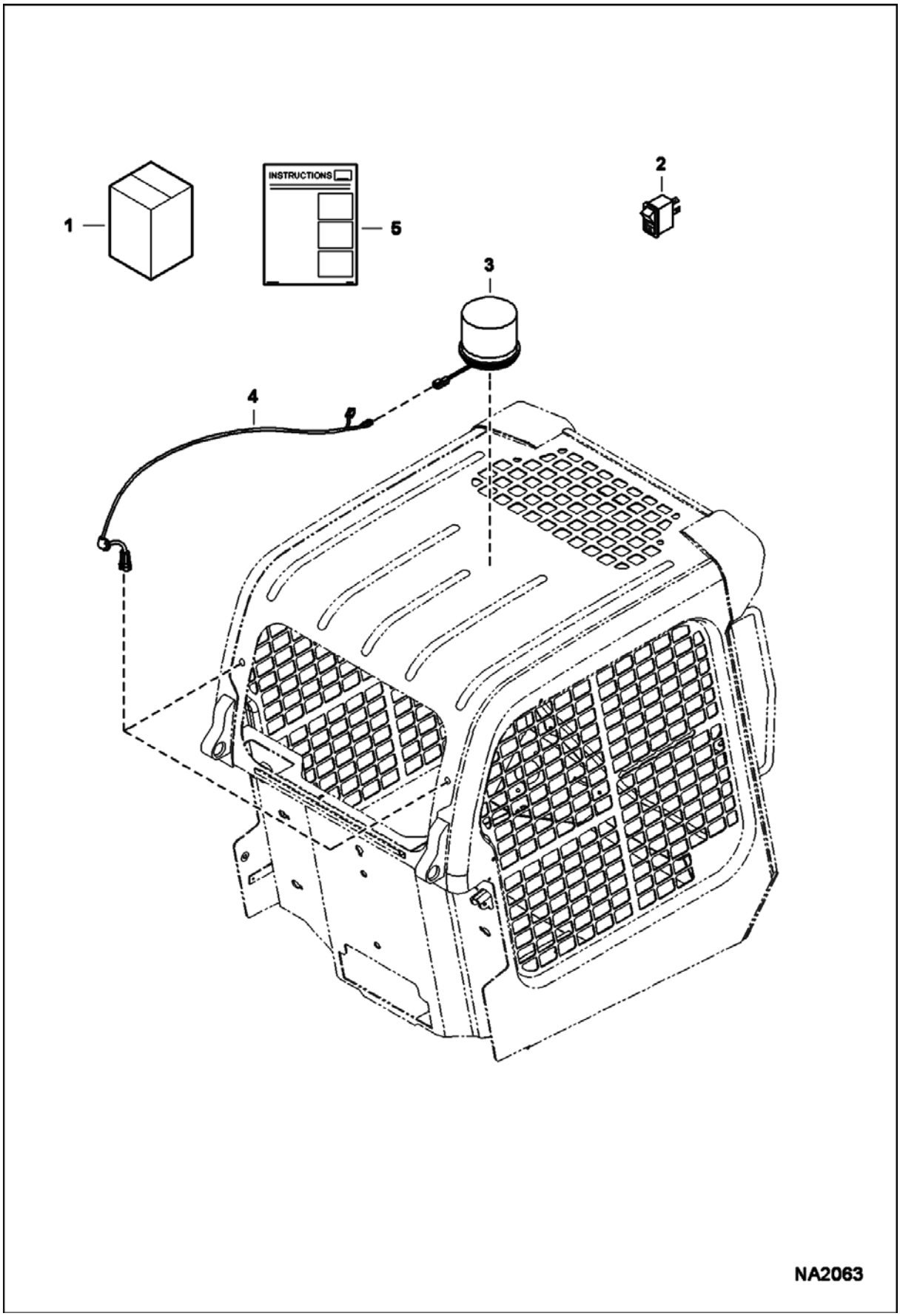

STROBE LIGHT (Cont'd)

Ref No	Part Number	Description	Remarks	Serial Number	Qty
1	7129301	KIT, STROBE LIGHT	Ref. 2-5 - if equipped with standard cab harness Also Order 7169130 harness & 6987252 instructions		1
2	6668816	SWITCH			1
3	7219903	LIGHT, STROBE			1
4	6718872	HARNESS			1
5	6987225	INSTRUCTIONS			1

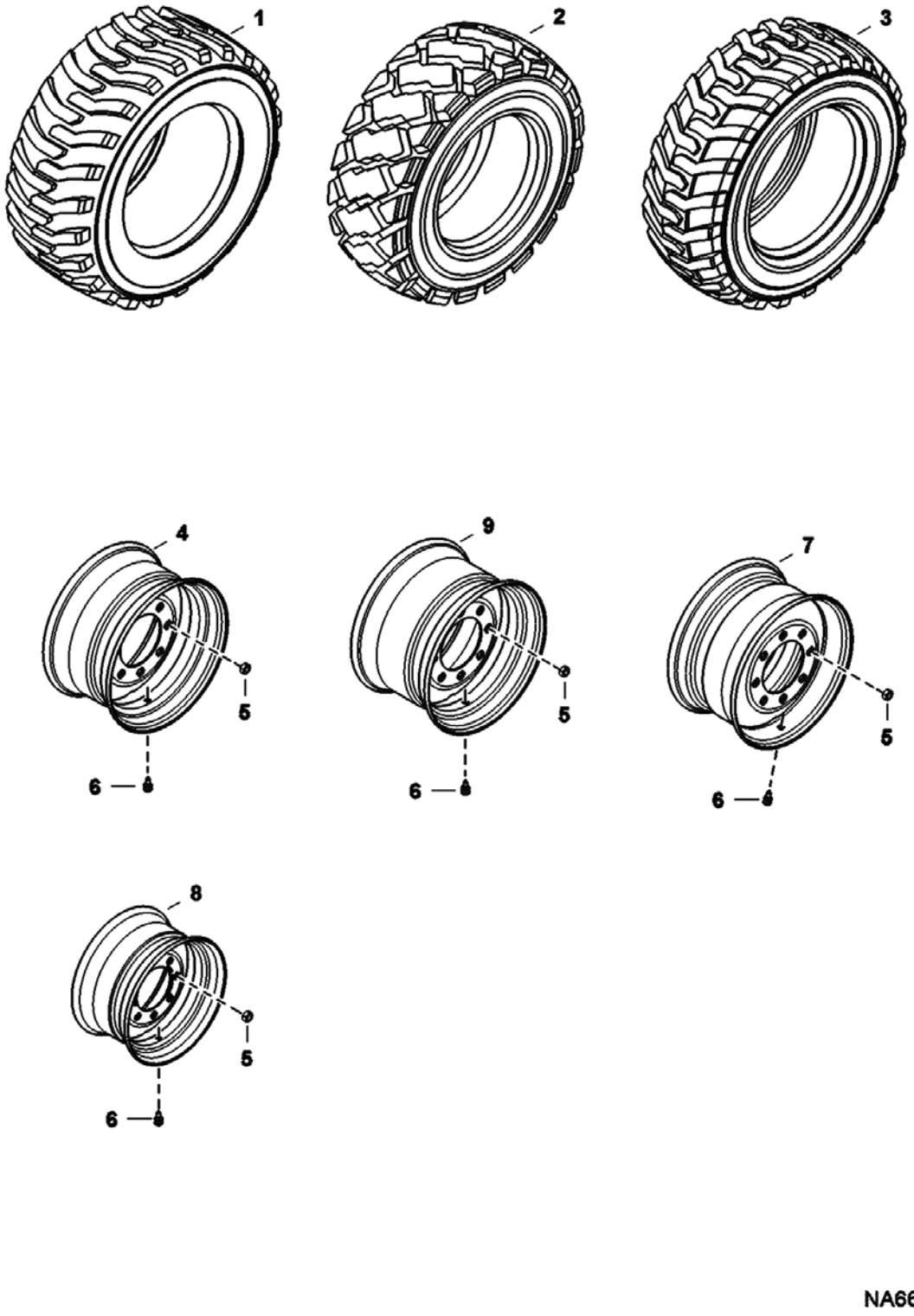
1
2
3
4
5
6
9
5
6
7
5
6
8
5
6
NA6631

TIRES & RIMS (Cont'd)
(Pneumatic Tire)

Ref No	Part Number	Description	Remarks	Serial Number	Qty
1	7211382	TIRE, SUPER FLOAT 31X12X16.5 10PLY	factory option - Bobcat		4
2	6730106	TIRE, SEVERE DUTY, 10X16.5 - 10 PLY	factory option - Bobcat		4
3	6729896	TIRE 10X16.5	factory option - Bobcat		4
3	6729900	TIRE, HEAVY DUTY - 10X16.5 - 10 PLY	factory option - Bobcat		4
3	6987705	TIRE, HEAVY DUTY - 10 X 16.5 - 10 PLY	factory option - Bobcat		4
4	6730771	WHEEL, RIM 16.5X8.25	Use W/Ref. 2 & 3		4
5	6564669	NUT, 10	wheel		32
6	1614765	VALVE STEM, TIRE	tubeless tire		4
7	6730775	WHEEL, RIM 16.5X8.25	inverted - Use W/Ref. 3 for 268 mm (10.5") wide tire		4
8	7208252	WHEEL, RIM 16.5X8.25	Use W/Ref. 3 for 276 mm (10.8") wide tire		4
9	6730772	WHEEL, RIM 16.5X9.75	Use W/Ref. 1		4

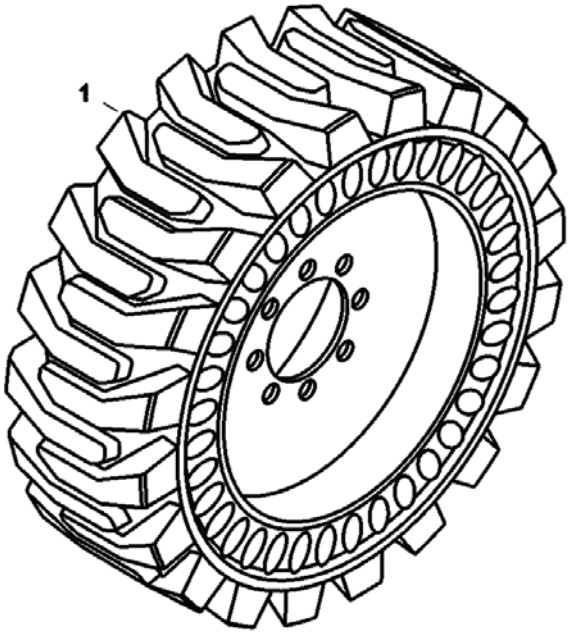

NA6632

TIRES & RIMS (Cont'd)
(Solid Tire)

Ref No	Part Number	Description	Remarks	Serial Number	Qty
1	6903766	TIRE, SOLID FLEX 31X6X10 LH	factory option		2
1	6903767	TIRE, SOLID FLEX 31X6X10 RH	factory option		2

WHITE DECAL KIT

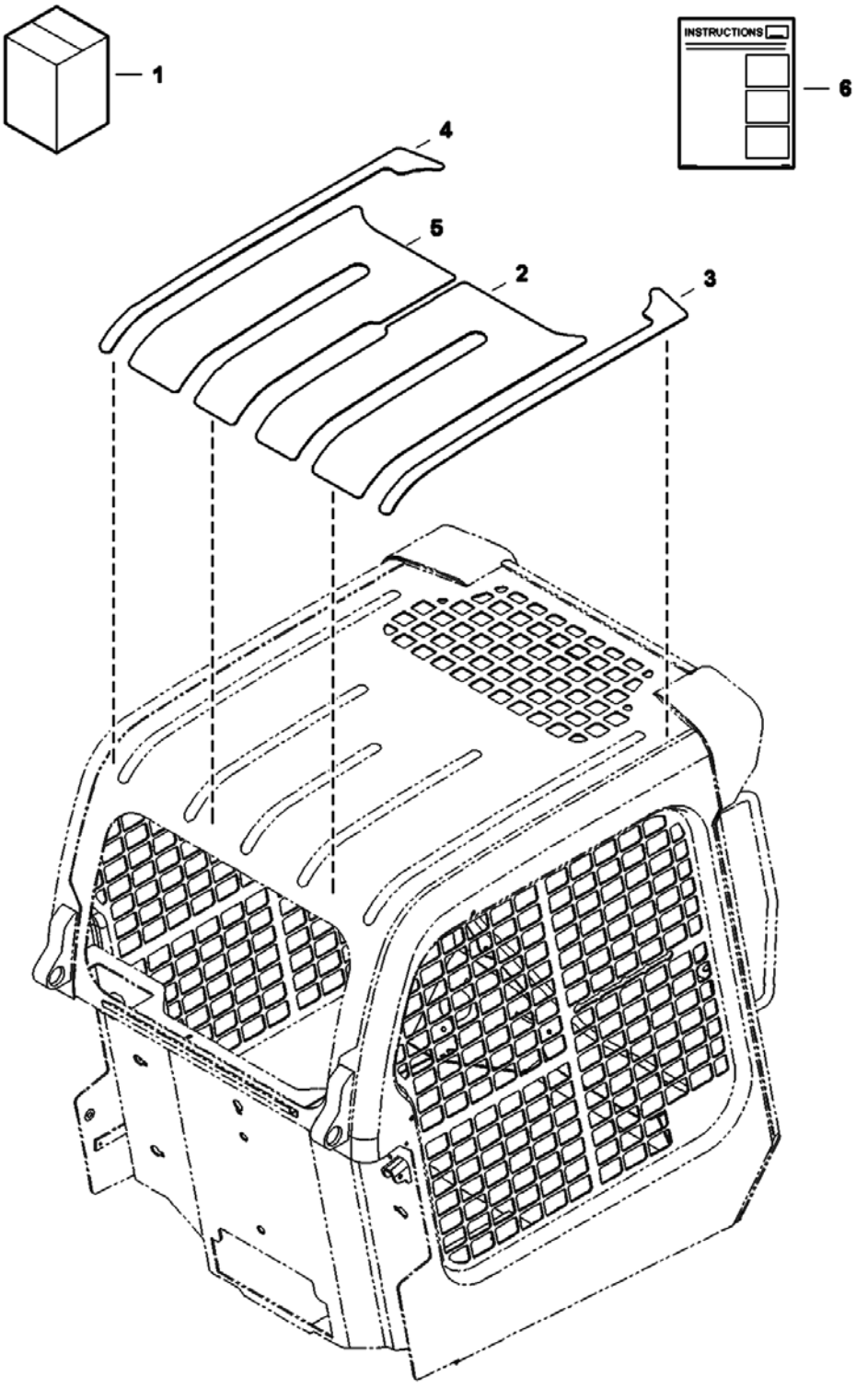

WHITE DECAL KIT (Cont'd)

Ref No	Part Number	Description	Remarks	Serial Number	Qty
1	7172903	KIT, DECAL WHITE	Ref. 2-6		1
2	7140927	DECAL			1
3	7141375	DECAL			1
4	7174328	DECAL			1
5	7174537	DECAL			1
6	6987349	INSTRUCTIONS			1

BULK ITEMS

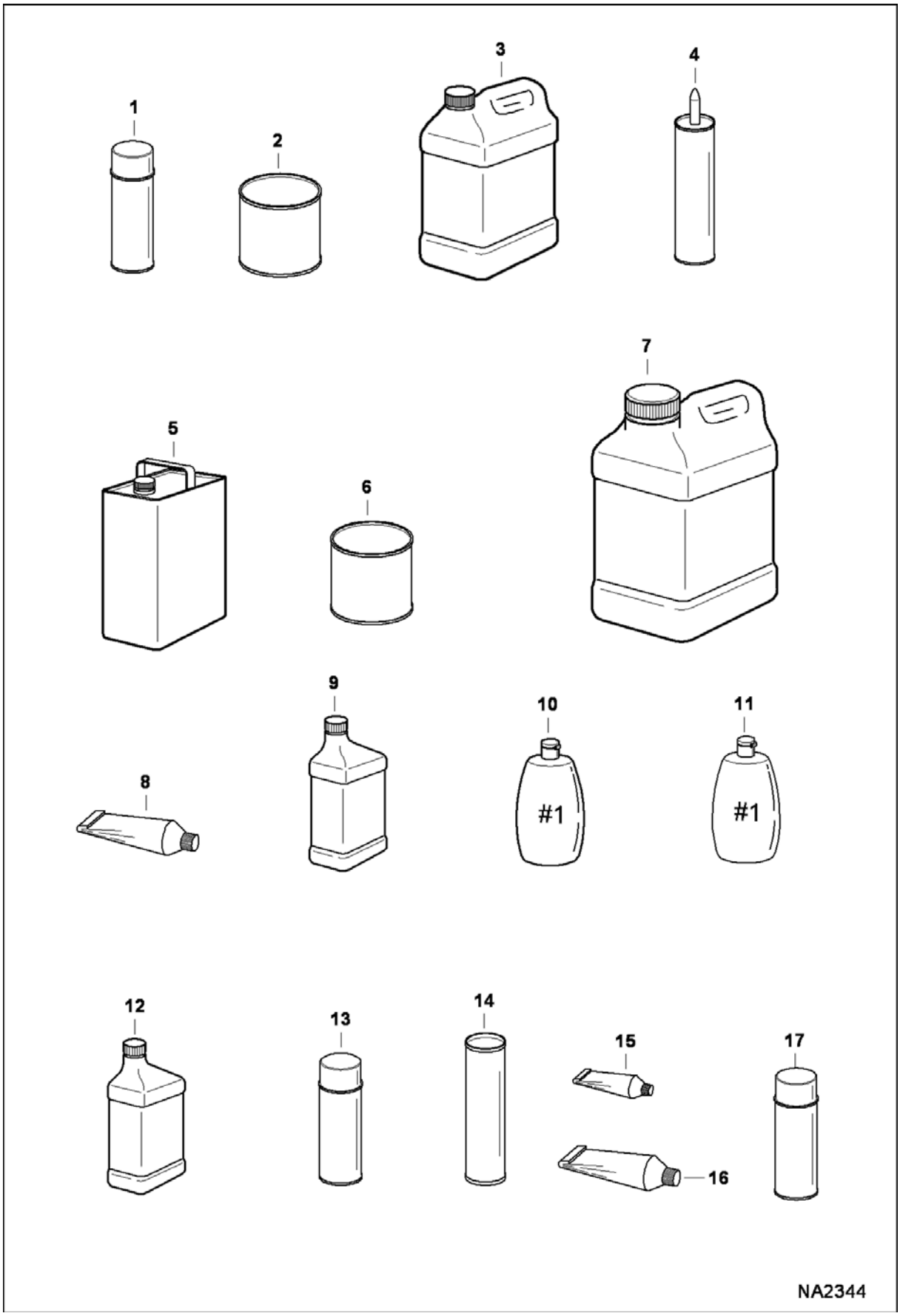

Ref No	Part Number	Description	Remarks	Serial Number	Qty
1	6902228	PAINT, ORANGE SPRAY CAN 6			x
1	6902229	PAINT, CHARCOAL SPRAY CAN 6			x
1	6902230	PAINT, WHITE SPRAY CAN 6			x
2	6902233	PAINT, ORANGE QT 6			x
2	6902234	PAINT, CHARCOAL QT 6			x
2	6902235	PAINT, WHITE QT 6			x
3	6983128	ANTIFREEZE/COOLANT, PG 53/47 PREMIX GAL 6			x
3	6983129	ANTIFREEZE/COOLANT, PG CONCENTRATE GAL 6			x
4	6633583	SEALANT, POLYURETHANE 300 ML	tube - 300 ml		x
5		REDUCER	NAP - gallon		x
6	6902236	PRIMER QT. 6	quart		x
7	6903117	FLUID, OIL HYD 2.5 GAL 2			x
7	6903118	FLUID, OIL HYD 5 GAL			x
7	6903119	FLUID, OIL HYD 55 GAL DRUM			x
8	6599360	SEALANT, ELEC .3 OZ	electrical - tube - 3 oz		x
8	6685372	SEALANT, GASKET LIQUID 10.1 OZ	tube - 0.57 kg (20 oz)		x
9	6903121	LUBE, GEAR 12			x
10	6630188	POLISH #1	window - #1 - 8 oz		x
11	6630189	POLISH #2	window - scratch remover - #2 - 8 oz		x
12	6903109	OIL 30W QT. 12			x
12	7023076	OIL, 10W30 QT 12			x
12	7023080	OIL, 15W40 QT 12			x
12	7023077	OIL, 10W30 GAL 6			x
12	7023081	OIL, 15W40 GAL 6			x
12	6903110	OIL, 30W GAL. 6			x
12	7023082	OIL, 15W40 2.5 GAL 2			x
12	7023078	OIL, 10W30 2.5 GAL 2			x
12	6903111	OIL 30W 2.5 GAL 2			x
13	6675380	ADHESIVE, SPRAY 10.5 OZ			x

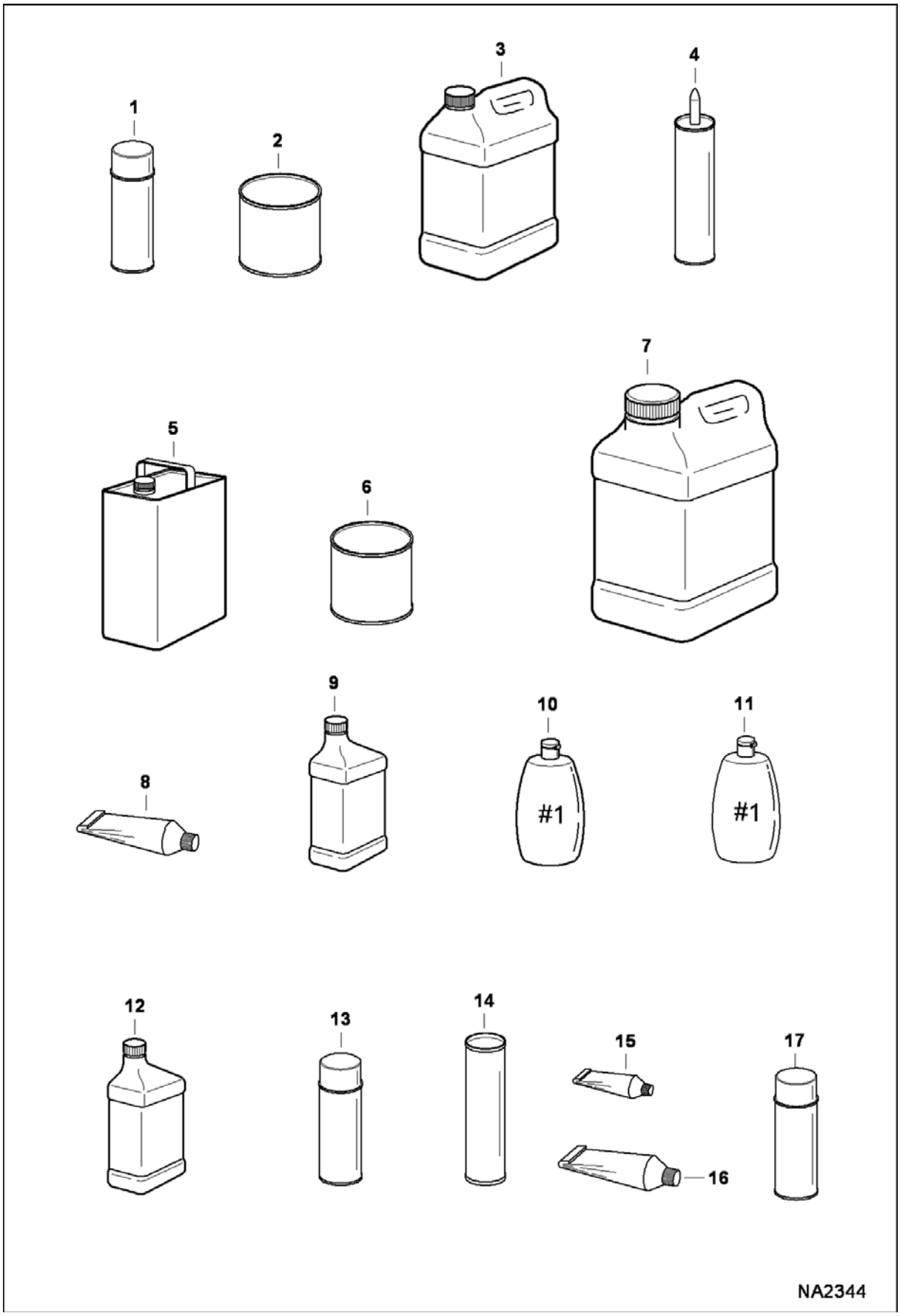
1
2
3
4
5
6
7
8
9
10
#1
11
#1
12
13
14
15
16
17
NA2344

Ref No	Part Number	Description	Remarks	Serial Number	Qty
14	6903122	GREASE, MULTI PURPOSE #2 - 10			x
14		GREASE	NAP - 14.5 oz. cartridge - For fan idler bearing & spring loaded drive idler		x
15	6650407	ADHESIVE	tube - 1 oz		x
16	6650388	SEALANT	flange		x
17	6736644	PAINT, ORANGE .5 OZ	orange - spray can - .5 oz		x
17	6736641	PAINT, CHARCOAL .5 OZ	charcoal - spray can - .5 oz		x
17	6736642	PAINT, WHITE .5 OZ	white - spray can - .5 oz		x
17	6736645	PAINT, RED .5 OZ	red - spray can - .5 oz		x

Part No.	Description	Was	Code	Page
100333SUB	DUCT, AIR			24, 286, 318
100334SUB	DUCT, AIR			24, 286, 318
10C410	BOLT			294
10C524	BOLT			158
10C616	BOLT 10			26, 28, 168, 288, 306, 314, 374, 378
10C816	BOLT			256, 258
10H25	FITTING, GREASE 5			40, 42, 68, 70, 334
10H35	FITTING, GREASE 10			42, 352
10K5	TEE			362
10K8	TEE			84
11H15	GREASE FITTING			40
12D10	NUT			294
12H15	FITTING, GREASE 5			40
1306637	CLIP			72
1320075	PIN, COTTER			336
14D10	NUT			180, 184
14J5032	PIN, STRAIGHT			42
15G624	SCREW			104
15KB0606	FITTING, HYD CONNECTOR			58, 62, 64, 66, 96, 100, 352, 362
15KB0608	FITTING, HYD CONNECTOR			60, 248
15KB0808	FITTING, HYD CONNECTOR			96, 178, 248, 352
15KB0810	FITTING, HYD CONNECTOR			62, 96, 248
15KB0812	FITTING, HYD CONNECTOR			84, 96
15KB1008	FITTING, HYD CONNECTOR			84
15KB1010	FITTING, HYD CONNECTOR			56, 60, 62, 96, 248
15KB1210	FITTING, HYD CONNECTOR			248
15KB1212	FITTING, HYD CONNECTOR			88, 98, 100, 354
15KB1216	FITTING, HYD CONNECTOR			66
1614765	VALVE STEM, TIRE			414
16F4	PLUG			218
16F6	PLUG			170
16KB1212	FITTING, HYD CONNECTOR			362
17C10120	BOLT			38
17C1056	BOLT			16
17C1080	SCREW			38
17C408	BOLT			180, 184
17C412	BOLT 5			51, 52, 53, 54
17C424	BOLT			362
17C428	BOLT			64, 256, 258
17C432	BOLT			100
17C510	BOLT			180, 184
17C512	BOLT 5			90
17C536	BOLT			64, 94, 98, 100

Code for disposition of old part number
A -- Use up
B -- Use on other application (See PNI)
C -- File PDR Report with Bobcat Parts Sales
D -- Part Number Error

Part No.	Description	Was	Code	Page
17C540	BOLT			334
17C612	BOLT 5			156, 352
17C616	BOLT 5			22, 40, 72, 104, 288, 326
17C620	BOLT			72, 88, 184
17C624	BOLT 5			72, 156, 306
17C628	BOLT			104
17C632	BOLT 5			58, 62
17C636	BOLT			104, 410
17C640	BOLT 5			26, 28, 38, 39, 40, 274
17C644	BOLT			40, 66, 90, 362, 400
17C652	BOLT			38, 42, 352
17C656	BOLT			38
17C660	BOLT			38, 334
17C672	BOLT			314
17C680	BOLT			104
17C716	BOLT			380
17C820	BOLT			36, 372
17C824	BOLT 5			372
17C832	BOLT			174
17C844	BOLT			64
17KB1010	FITTING, HYD ELBOW			96
17KB1212	FITTING, HYD ELBOW			88, 362
18C1636	BOLT			46
18EM1224	WASHER			256, 258, 314
18KB1212	FITTING, HYD ELBOW			362
19F12	BUSHING			246
19J12	CLAMP			88
19KB0606	TEE			94, 100
1C1296	BOLT			272
1C716	SCREW HEX CAP			30
1CM640	SCREW			256, 258
1CM8100	SCREW			178
1CM812	BOLT			178
1CM830	BOLT			158
1CM835	BOLT			178
1DM6	NUT			224
1F316	PIN			168
21KB1212	FITTING, HYD TEE			90, 400
225855	SEAL, OIL 10			56, 60
24K5	PLUG			64
24K6	FITTING			90, 362, 400
24K7	PLUG			74, 78
25E11	WASHER			180, 184
25E13	WASHER 5			16, 52, 54, 162, 362
25E14	WSHR			16, 266
25E15	WASHER			148, 406
25E18	WASHER			32, 34, 158, 378
25E19	WASHER			380
25E20	WASHER			372
25E24	WASHER			104
25E25	WASHER 10			158
25G412	CAPSCRW10			146

Code for disposition of old part number
A -- Use up
B -- Use on other application (See PNI)
C -- File PDR Report with Bobcat Parts Sales
D -- Part Number Error

Part No.	Description	Was	Code	Page
25G510	BOLT			180, 184, 338
25G612	SCREW			292
25G628	SCREW			340
25GT410	SCREW			162
25K20016	O RING 10			76, 80
25K30110	O RING 10			356
25K30118	O RING 10			42
25K30210	O-RING			70
25K30508	O-RING, 10			44
26GM6016	SCREW			322
27E10	WASHER			38
27E12	WASHER			272
29CM612	BOLT, FLANGED			210, 222, 226
29CM820	SCREW			148, 172, 178
29E6	WASHER			314, 374, 378
2C614	SCREW			408
2DM10	NUT			256
2DM8	NUT			198
30H20	CLIP			140
30H31	CLAMP 10			58
30H35	CLAMP 10			314
30H42	CLAMP			154
30H50	CLIP			146, 292
30H73	CLAMP			170
31C1024	BOLT			334
31C1044	BOLT			336
31C412	BOLT			270
31C420	BOLT 5			140, 142
31C512	BOLT			346
31C612	BOLT			140, 142, 256
31C616	SCREW			154, 156
31C632	BOLT			336
31C680	BOLT			362
31C716	SCREW			374, 378
31C820	BOLT			14, 64
31C824	BOLT 10			14
31C828	BOLT			336
31C832	BOLT			336
31C864	BOLT			178
31C880	SCREW			178
31H38	CLAMP			182
31H42	CLIP			352, 354
35C1032	BOLT			44
35C410	BOLT 5			140, 142, 150, 240, 242
35C412	BOLT			26, 28, 268
35C514	BOLT			182
35C516	BOLT 10			16, 256, 258
35C524	BOLT			324, 326, 350
35C612	BOLT			44, 146, 148
35C616	BOLT 5			64, 88, 172
35C620	BOLT 5			272, 314, 362
35C640	BOLT 10			174
35C824	BOLT			174
36K5	CAP			74, 78

Code for disposition of old part number
A -- Use up
B -- Use on other application (See PNI)
C -- File PDR Report with Bobcat Parts Sales
D -- Part Number Error

Part No.	Description	Was	Code	Page
36K6	CAP			178
36K8	CAP			90, 400
37C1032	BOLT			296
37C412	BOLT			296
37C432	SCREW			314
37C512	BOLT			314
37C516	BOLT			150, 170, 240, 242
37C528	BOLT			312
37C616	BOLT			56, 170
37C620	BOLT			32, 34, 72, 156
37C624	BOLT			180, 184
37C632	BOLT			58, 60, 61, 62
37C640	BOLT			60
37C644	BOLT			248
38C610	BOLT			256
38C616	SCREW			258
38C810	BOLT			184
38C820	SCREW			36
38C840	BOLT			36
3974033	CAP			194, 200
3974095	MET-GASK			188, 190, 220, 222, 224
3974260	SCREW			232
3974394	PIN			222
3974395	PIN			204
3974425	NUT			224
3974433	PLUG			194
3974524	WASHER			198
3974546	KEY			208
3974920	SCREW			198
3974972	GASKET			188, 190, 212, 224
3974978	NUT			224
3974979	CAP			224
3D6	NUT			168
42H52	CLAMP			172, 394
42HC300	CLAMP			172
42HC375	CLAMP			172
42HS04	CLAMP, HOSE			182
43C610	BOLT			174
43C612	BOLT			30, 374, 378, 380
43C616	BOLT			154
43DM8	NUT			148, 172
44H48	CLAMP			314
45C512	BOLT			168
45C620	BOLT			174
45C828	BOLT			112, 176
45G1006	BOLT			294
45H25	FITTING, GREASE			38
45K5	FITTING			362
47C620	BOLT			104, 174
47C820	BOLT			52, 54
47K10	PLUG			88
47K8	PLUG			114, 118
48C1228	BOLT			45, 46
49C1048	BOLT			336

Code for disposition of old part number

A -- Use up
B -- Use on other application (See PNI)
C -- File PDR Report with Bobcat Parts Sales
D -- Part Number Error

Part No.	Description	Was	Code	Page
49C412	BOLT			102, 168
49C624	SCREW			104
49C628	BOLT			72
4CM614	BOLT			214
4D20	NUT			334
4DM8	NUT			166
4F6106	PIN			26, 28
51DM6	NUT			256
51DM8	NUT			148, 158
53C416	SCREW			16
53C512	SCREW			16
53C516	BOLT			266
53D10	NUT			16, 38, 298, 334, 336
53D6	NUT			26, 28, 72, 104, 374, 378
53D8	NUT			336
53DM8	NUT			178
54K20022	O'RING			120
54K20028	O RING 10			76, 80
54K30210	O-RING			68
54K40224	O-RING			68, 70
54K60212	O-RING			68, 70
55D10	NUT			296
55D4	NUT			16, 294, 314
55D5	NUT			16, 180, 184, 312, 314, 324, 326
55D6	NUT			314, 342
55K204	O RING 10			74, 78
55K214	O-RING			88, 89, 90, 352, 362, 400
57D5	NUT			88, 184
57D6	NUT 5			32, 34, 72, 140, 142, 156, 184
58K013	O-RING			74, 78
58K016	O-RING 10			76, 80
58K017	O-RING 10			76, 80
58K120	O-RING			154
58K222	O-RING			356
59CM816	BOLT			172, 174
59D4	NUT 5			146, 256, 258, 296, 362
59D5	NUT 5			30, 148, 256, 258, 382, 384
59D6	NUT			36, 64, 180, 184
59D7	NUT			374, 378
59D8	NUT 5			16
5CM812	BOLT			198
5HM13	CLAMP			182
5HM14	CLAMP			170, 182
5HM15	CLAMP			352, 354
5HM16	CLAMP			88, 98, 100
5HM18	CLAMP			308, 320
5HM20	CLAMP			308, 312, 320
5HM22	CLAMP			182
5HM23	CLAMP			170
5HM27	CLAMP			84, 92, 94
5HM35	HOSECLAMP			94
5HM42	HOSECLAMP			88, 170
5HM44	CLAMP			170
5HM47	CLAMP			88, 170

Code for disposition of old part number

A -- Use up
B -- Use on other application (See PNI)
C -- File PDR Report with Bobcat Parts Sales
D -- Part Number Error

Part No.	Description	Was	Code	Page
5HM58	CLAMP			182
616783	WASHER			38
619021	WASHER, 5			30, 42, 56, 60, 258, 306, 352, 362, 382, 384
61D4	NUT 5			180, 184
61D5	NUT			36, 150, 240, 242
61D6	NUT 5			274
61D8	NUT 5			372
62D4	NUT			180, 184
62D6	NUT 5			104, 408
63D6	NUT			72
6512026	BUSHING			72
6512797	RIVET			380
6513495	COTTER PIN			72, 155, 156
6513532	POPPET			108
6513533	SPRING	6692528	A	108, 110
6513533	SPRING			108, 110
6513707	JOINT			222
6515817	WASHER			16
6516229	PISTON SEAL			68, 70
6517516	LIGHT			296
6519178	BUMPER			26, 28
6532453	RING			356
6533898	DECAL			282, 336
6534668	SNAP RING			184
654299	BEARING			114, 118
6552871	WASHER			46
6553411	BUSHING			52, 54
6553709	WASHER			16
6555341	SAFETY TREAD			280, 282, 352
6557831	WASHER			71, 72, 168
6557904	FLASHER			296
6558309	WIRE ROPE			328
6558310	SLEEVE			328
6560633	DAMPENER			16
6561383	DECAL, OPERATION			282
6562602	BUSHING			16
6563914	WASHER			72, 104, 156
6564654	PIN			72, 156
6564669	NUT, 10			46, 414
6565200	DECAL, FILTER			280
6565977	HOSE			308, 312, 320
6565990	DECAL, OIL HYD			280
6567743	PIN			16, 304
6569203	CLAMP			148
6571852	SNAP RING			48, 50
6576033	WASHER			174
6576280	BOLT			148
6577058	PIN			104
6577821	HOSE			182
6577822	HOSE			170, 182
6577954	PIN, PIVOT			38
6578169	HOSE			182
6578172	HOSE			182
6578253	SPRING, COMPRESSION			42

Code for disposition of old part number
A -- Use up
B -- Use on other application (See PNI)
C -- File PDR Report with Bobcat Parts Sales
D -- Part Number Error

Part No.	Description	Was	Code	Page
6578689	HUB			46
6578870	CLAMP			362
658128	RING, SNAP			114, 118
6586251	HOSE			88, 98, 100, 352, 354
6586542	HEAD			356
6586543	PISTON			356
6586918	SCREW			74
6587230	ELBOW			92
6587580	SPRING			74, 78
6587763	BOOT			74
6592100	COLLAR			74, 78
6592105	BALL			74
6592107	SPRING			74
6592109	ADAPTER			76, 80
6592506	CLAMP			66
6592766	U-BOLT			184
6599360	SEALANT, ELEC .3 OZ			420
6599744	BALL JOINT			104, 408
6599910	PLUG ASSY.			110
6610510	TIE			254
6624289	STRAP, TIE			58, 62, 66, 140, 141, 142, 144, 148, 152, 179, 180, 182, 183, 184, 248, 254, 258, 288, 290, 292, 306, 308, 314, 320, 352, 354, 362
6625298	BELT-PUMP			314
6625575	FUSE, 20A			144
6630038	WASHER			180, 184
6630188	POLISH #1			420
6630189	POLISH #2			420
6631046	SEAL			190, 202
6631067	SEAL, OIL			42
6631418	RING, RETAINING			16, 26, 28, 304
6633583	SEALANT, POLYURETHANE 300 ML			420
6640690	PIN			152, 162
6640692	CONNECTOR			152, 162
6640694	LOCK			152, 162
6640699	CONNECTOR			162
6640700	LOCK			162
6641176	SEAL			152, 162
6641179	CONNECTOR			152, 162
6641180	LOCK			152, 162
6644965	BALL JOINT			180, 184
6645081	O-RING			114
6645086	PLUG			114, 118
6646582	PLUG			162
6646705	SEAL			168
6646781	SWITCH			150, 240
6647783	LOAD CHECK			250
6647784	PLUG			250
6647785	SPRING			250
6648294	SPRING			250
6649481	LIGHT, WEDGE BASE			150

Code for disposition of old part number

A -- Use up
B -- Use on other application (See PNI)
C -- File PDR Report with Bobcat Parts Sales
D -- Part Number Error

Part No.	Description	Was	Code	Page
6650388	SEALANT			422
6650407	ADHESIVE			422
6650627	PLATE			114, 118
6650629	PIN			114, 118
6650630	RETAINER			114, 118
6650634	GASKET			114, 118
6650635	BEARING			114, 118
6650636	PIN			114, 118
6650646	O-RING			114
6650647	O-RING			114
6650648	PLUG			114
6650652	POPPET			114
6650668	BOLT			114, 118
6650674	BOLT			114, 118
6650675	COUPLER			114
6651512	ALARM BACKUP			150, 240, 242
6651542	BALL, STEEL			108
6652521	PLATE			312
6652574	PLUG			194, 200
6652592	PIN			226, 228
6652670	STUD			222
6652688	CLAMP			232
6652689	CLAMP			232
6652792	NUT			214
6653584	BOLT			214
6653891	CLAMP			220
6654718	CLAMP			220
6654806	FUSE, 15A			144
6655143	BAND			214
6655223	NUT			224
6655498	BOLT			204
6655507	FLANGE			202
6655869	PLUG			194
6655880	PIPE			196, 214
6657028	O-RING			114, 118
6657067	COVER			118
6657068	COVER			114, 118
6657072	RETAINER			114, 118
6657073	RETAINER			114, 118
6657416	BOLT			214
6657446	SCREW			212
6657491	ELEMENT			196
6657556	BAND			216
6657719	PLUG			16, 288
6657734	PUMP, PRIMER HAND			182
6658180	PLUG, BLEED			182
6658228	SEAL, OIL			46
6658536	RING			174
6658672	SNAP RING			52, 54
6658847	RING			174
6659369	HEATER			246
6659999	BELT, SEAT			380
6660775	SPRING			250
6660814	O-RING			114, 118

Code for disposition of old part number
A -- Use up
B -- Use on other application (See PNI)
C -- File PDR Report with Bobcat Parts Sales
D -- Part Number Error

Part No.	Description	Was	Code	Page
6661062	PLUG			172
6661353	LIGHT ASSY			150
6661481	O-RING			114
6662126	BRACKET			112
6663289	FUSE, 5A			144
6664065	WASHER			368
6664085	BUSHING			368
6664097	COVER			368
6664103	NUT			368
6664209	SEAL			174
6664223	OUTLET			22, 288
6664224	CAP			22, 288
6664554	PUMP, WIPER WASHER			254
6664815	SEAL, OIL			108
6665000	CLIP			162, 254, 258
6665102	COVER			314
6665314	PLUG			20, 22, 288
6665321	RIVET			162, 254, 258
6665322	RIVET			162, 254, 258
6665371	SWITCH			144
6665427	BATTERY, DRY 950 AMP			2
6665569	WASHER			76, 80
6665570	RING			76, 78
6665602	MOTOR			368
6665701	BUSHING, PRESS FIT			72, 156
6665719	PLUG			358
6666333	FILTER, AIR OUTER			1, 2
6666334	FILTER, AIR INNER			2
6666338	WASHER			114, 118
6666542	SEAL, WIPER ROD			356
6666766	GROMMET			254
6666881	RETAINER			114, 118
6666882	WASHER			114, 118
6666920	CLAMP, HALF			314
6667144	CONNECTOR			152, 162
6667145	LOCK			152
6667176	PLUG			250
6667201	SPACER			368
6667323	SEAL			356
6667326	SEAL			68
6667352	FILTER, FUEL W/SEPERATOR 12			2, 8, 10, 182
6667353	FILTER ASSY			182
6667422	WASHER			198, 214
6667451	WASHER			198
6667676	COVER			250
6667680	SNAP RING			250
6667687	VALVE, STEM SOLENOID			76, 80
6667724	WASHER			114, 118
6667725	SPRING			114, 118

Code for disposition of old part number
A -- Use up
B -- Use on other application (See PNI)
C -- File PDR Report with Bobcat Parts Sales
D -- Part Number Error

Part No.	Description	Was	Code	Page
6667803	COUPLER, FF FEMALE			362
6667804	CPLR MALE			362
6667844	VALVE, LIFT MANUAL			81, 82
6668079	PLUG, MOTOR			108, 110
6668080	SHIM			108
6668082	POPPET			108
6668088	PISTON			108
6668089	PLUG, MOTOR			108, 110
6668114	BEARING			174
6668742	SWITCH			22
6668815	SWITCH			296
6668816	SWITCH			244, 412
6668820	NUT			76, 80
6668955	POP RIVET			54
6669087	SEAL KIT			82
6669135	SEAT, OPERATOR VINYL			30
6669224	BOLT			20, 22, 288
6669267	SEAL			70
6669402	HOUSING			114
6669405	CAP, END			118
6669410	KIT, SHIM			116
6669411	BEARING			114, 118
6669452	O-RING			108
6669549	SOCKET			290
6669615	ORIFICE			358
6669620	PLUG			358
6669732	KIT, SEAL			76, 78
6670284	LIGHT ASSY			150
6670338	PLUG			192, 200
6670347	GASKET			190, 192
6670472	NUT			230
6670514	RETAINER			198
6670515	COLLET			198
6670517	SEAL			188, 198
6670533	NUT			220, 224
6670634	SEAL KIT			250
6670706	CONNECTOR			162
6670707	CONNECTOR			162
6670710	LOCK			162
6670711	LOCK			162
6670715	PIN			162
6670726	CYLINDER. LOCK			288, 366
6670782	GASKET			190, 220
6671106	HORN			324
6671512	GROUP, ROTARY			116, 118
6671516	KIT, SEAL			116, 118
6671518	BOLT			114, 118
6671520	O-RING			112, 118, 120
6671527	NUT			250
6671741	SNAP RING			124
6671760	COVER			126, 128
6672272	WASHER			150

Code for disposition of old part number
A -- Use up
B -- Use on other application (See PNI)
C -- File PDR Report with Bobcat Parts Sales
D -- Part Number Error

Part No.	Description	Was	Code	Page
6672273	SCREW			150
6672274	SCREW			150
6672275	GASKET			150
6672276	LENS, LIGHT RED			150
6672277	BRACKET			150
6672279	MOUNT, LIGHT RUBBER			150
6672354	PLUG			200
6672471	VALVE, SOLENOID			76, 80
6672863	VALVE, SOLENOID			250
6673200	FUSE BLOCK			144
6673789	BEARING			104
6673835	SEAL KIT			358
6673986	SPOOL, VALVE			358
6674169	PULLEY			210
6674235	RECEIVER DRIER			314
6674264	RETAINER NUT			14, 374, 378
6674316	SWITCH, PRESS OIL HYD			136, 144
6674687	BATTERY, DRY 600 AMP			2, 148
6674799	ADAPTER			290
6674802	CONNECTOR			290
6674894	NUT			26, 28, 140, 306
6674895	RETAINER			20, 24, 278, 286, 288, 318
6675026	CAP, CONNECTOR			290
6675033	INSERT			20, 22, 24, 286, 318
6675154	HOLDER			144
6675155	FUSE			144
6675176	SWITCH			306
6675177	KNOB			306
6675181	PLUG			306
6675212	RETAINER			314
6675281	MOUNT			292
6675298	COUPLER, BODY			254
6675336	LIGHT, BULB 50W			140, 142
6675338	COVER			116
6675342	PIN			114, 118
6675380	ADHESIVE, SPRAY 10.5 OZ			420
6675517	FILTER, OIL ENG			2, 5, 6, 8, 218
6675523	BEACON			244
6675524	CLIP			20, 24
6675545	GROMMET			16
6675559	COIL			76, 80, 144
6675618	CLAMP			214, 218
6675734	STRAP, TIE			139, 140, 180, 184
6675780	CARTRIDGE			250
6675781	COIL			250
6675999	SWITCH			368
6676000	TEE			368
6676001	ARM			368
6676002	BLADE			368
6676003	HOSE,BULK			254, 368
6676028	NOZZLE			368

Code for disposition of old part number
A -- Use up
B -- Use on other application (See PNI)
C -- File PDR Report with Bobcat Parts Sales
D -- Part Number Error

Part No.	Description	Was	Code	Page
6676029	SOLENOID, LOCK SPOOL			74, 162
6676500	ELBOW			254, 368
6676543	PLUG			250
6676917	ELBOW			254, 368
6677136	SOCKET			290
6677192	SENSOR, MAGNETIC			254, 258
6677485	SPACER			164
6677486	NUT			164
6677487	COVER			164
6677488	RECTIFIER			164
6677489	REGULATOR ASSY			164
6677490	BRACKET			164
6677491	BRACKET			164
6677492	ROTOR			164
6677493	STATOR			164
6677495	SPACER			164
6677496	PULLEY			164
6677497	NUT			164
6677817	BOLT			164
6677818	BEARING			164
6677819	RETAINER			164
6677820	BEARING			164
6678000	SEAL			108
6678004	PLATE			108
6678006	RING, BACK-UP			108
6678205	ALTERNATOR, 90 AMP			163, 164, 178
6678205REM	ALTERNATOR, 90 AMP			164
6678226	SEAL, OIL			114, 118
6678668	STRAP, DUAL TIE			56, 60, 148, 354
6678675	CONTROLLER, ACD			292
6678705	BALL			358
6678837	O-RING			358
6678932	PISTON			70
6679034	MOUNT			144, 180, 184
6679485	CONTROLLER SJC			154
6679818	O-RING			110
6679820	RELAY			144
6679836	ADAPTER			66
6679837	COUPLER			66
6679838	KIT, COUPLER			66
6679840	SEAL			66
6679841	SEAL			66
6680018	COUPLER, KIT			66
6680020	SEAL KIT			66
6680264	STUD			220
6680272	NUT			224
6680280	SEAL			210
6680355	BOOT			166
6680356	BOLT			166
6680357	HOLDER			166
6680358	RING			166

Code for disposition of old part number
A -- Use up
B -- Use on other application (See PNI)
C -- File PDR Report with Bobcat Parts Sales
D -- Part Number Error

Part No.	Description	Was	Code	Page
6680359	STOP RING			166
6680360	STOP			166
6680361	SPRING			166
6680362	BALL			166
6680363	WASHER			166
6680364	LEVER			166
6680365	SHAFT			166
6680366	GEAR			166
6680367	GEAR			166
6680368	STOP RING			166
6680369	SEAL			166
6680370	PLATE			166
6680371	LEVER			166
6680372	BRACKET			166
6680373	YOKE			166
6680374	ARMATURE			166
6680375	SHAFT			166
6680376	SWITCH			166
6680377	HOLDER			166
6680378	WASHER			166
6680379	SEAL			166
6680380	SEAL			166
6680381	SPRING			166
6680382	SPRING			166
6680383	BOLT			166
6680384	BOLT			166
6680388	BRACKET			166
6680389	BRACKET			166
6680390	GEAR			166
6680410	CONTROLLER			154, 156
6680417	HANDLE			162
6680418	HANDLE ASSY.			151, 152
6680419	HANDLE ASSY.			152
6680441	BUSHING			26, 28
6680443	BUSHING, MAGNET			26, 28
6680447	DECAL			152
6680462	HANDLE, ACS RH			162
6680468	MOUNT			162
6680469	SPACER			162
6680470	SPRING			162
6680471	COVER			162
6680477	STRAP			162
6680533	BOLT			226
6680544	BOLT			226
6680564	STUD			214
6680570	GASKET			188, 214
6680576	PIN			214
6680657	PLUG			202
6680662	BOLT			220
6680667	PLUG			222
6680679	PLUG			192
6680680	SEAL			190, 192
6680685	BOLT			198
6680687	BOLT			212

Code for disposition of old part number
A -- Use up
B -- Use on other application (See PNI)
C -- File PDR Report with Bobcat Parts Sales
D -- Part Number Error

Part No.	Description	Was	Code	Page
6680689	ADAPTER			218
6680694	PLUG			194
6680695	SEAL			188, 196
6680698	CLAMP			196
6680706	BOLT			212
6680755	BOLT			216, 218, 222
6680757	COVER			225, 226
6680759	NUT			226
6680769	PIN			226
6680778	O-RING			188, 230
6680788	BOLT			230
6680796	VALVE			220
6680797	TEE			220
6680799	STUD			214
6680801	BOLT			218
6680803	BOLT			216
6680809	PIN			222
6680813	KEY			222
6680815	SET SCREW			220
6680820	WASHER			228
6680821	SNAP RING			228
6680822	SNAP RING			228
6680823	SNAP RING			228
6680828	STUD			226
6680829	GASKET			190, 226
6680830	BOLT			226
6680900	BOLT			220
6680952	FITTING 90 DEG BARB			170
6680970	BREATHER			52, 54
6681905	NUT			256
6682034	MOTOR			98, 107, 108
6682260	SHAFT			114
6682261	KEY			174
6682264	SHAFT			118
6682442	SLEEVE			174
6682697	GROMMET			308, 320
6682860	O-RING			108
6682862	SHAFT, DRIVE			108
6682863	BOLT			108
6682897	SEAL			108
6682936	O-RING			132
6682949	O-RING			112
6683009	O-RING			190, 202
6683023	O-RING			190, 226
6683087	STUD			226
6683167	CYLINDER BLOCK			114, 118
6683169	KEY			114
6683274	SEAL, SPOOL 10			74, 78
6684032	SEAL KIT			156
6684033	NUT			32, 34, 60, 72, 142, 168
6684044	VALVE			364
6684045	SEAL KIT			364
6684046	O-RING			364
6684047	BACK-UP RING			364

Code for disposition of old part number
A -- Use up
B -- Use on other application (See PNI)
C -- File PDR Report with Bobcat Parts Sales
D -- Part Number Error

Part No.	Description	Was	Code	Page
6684048	O-RING			364
6684049	O-RING			364
6684050	BACK-UP RING			364
6684052	SEAL KIT			364
6684053	BACK-UP RING			364
6684054	O-RING			364
6684056	O-RING			364
6684060	NUT			364
6684061	VALVE			364
6684062	SEAL KIT			364
6684063	O-RING			364
6684064	BACK-UP RING			364
6684065	O-RING			364
6684066	O-RING			364
6684069	SEAL KIT			364
6684070	O-RING			364
6684071	O-RING			364
6684072	BACK-UP RING			364
6684073	COIL, SOLENOID			364
6684125	COUPLER			58, 62, 76, 78, 79, 80
6684397	BOLT			164
6684641	MOUNT			16, 324, 326
6684646	VALVE			74, 78
6684688	DECAL, WARNING			280
6684781	BOLT			196
6684829	SHIM			222
6684841	GASKET			190, 226
6684857	PLUG			210
6684889	CLAMP			218
6684910	SENSOR, ELEC AHC			162
6684932	KNOB			38, 342
6685060	BUSHING, TORSION			72, 104
6685064	POPPET			110
6685065	SHUTTLE			108, 110
6685066	PISTON			110
6685068	FLANGE			108
6685069	RING,BACK-UP			108
6685070	KIT, SEAL COMPLETE			108
6685087	VALVE			196
6685190	STARTER			165, 166, 174
6685190REM	STARTER			166
6685328	RELIEF VALVE			364
6685344	SWASHPLATE			114, 118
6685372	SEALANT, GASKET LIQUID 10.1 OZ			44, 52, 54, 420
6685390	SCREW			120
6685465	O-RING			190, 226
6685498	GASKET			188, 230
6685500	COVER			226
6685598	BOLT			214
6685600	TUBE			214
6685601	CLAMP			214
6685624	VALVE, AUX REAR			362, 363, 364
6685663	NUT, RETAINING			104, 362

Code for disposition of old part number

A -- Use up
B -- Use on other application (See PNI)
C -- File PDR Report with Bobcat Parts Sales
D -- Part Number Error

Part No.	Description	Was	Code	Page
6685735	SEAL			174
6685850	CORD			246
6685918	PIN			194
6685919	STUD			220
6685924	CAP			202
6685929	RELIEF VALVE			192
6685952	NUT			228
6685962	WASHER, SEALING ALUMINUM			190, 220
6686043	BOLT			214
6686046	CLAMP			214
6686168	BOLT			196
6686934	PIN			120
6687000	WIPER ROD			70
6687191	SEAL, OIL			114
6687663	PLUG			194
6687670	TUBE, FUEL LINE ASSY			220
6687773	PLATE, PUMP HYD			118
6687774	PLATE, PUMP HYD			114
6687863	PUMP, HYD TANDEM W/O GEAR PUMP			113, 114, 117, 118
6687866	KIT, SEAL			134
6687904	GUIDE			202
6687913	SEAL			106
6687925	NUT			126, 128
6687930	WIRE			122, 124
6687932	PIN			120
6687938	VALVE			131, 132
6687939	SCREW			132
6687940	PLATE			122, 124
6687941	COUPLER			120
6687943	SHAFT			124
6687956	BEARING			122, 124
6687962	PISTON			126, 128
6687967	SPRING			130
6687986	KIT			126, 128
6687987	BEARING			124
6687992	SCREW			120
6687995	SCREW			126, 128
6687996	SCREW			130
6687997	SCREW			130
6687999	RING, SNAP			122, 124
6688003	SCREW			120
6688005	SEAL			126, 128
6688006	SEAL			126, 128
6688008	SCREW			120
6688009	SEAL			120
6688010	PIN			130
6688011	PIN			120
6688014	PIN			120
6688015	SCREW			120
6688016	SCREW			120
6688017	SHIM			132

Code for disposition of old part number
A -- Use up
B -- Use on other application (See PNI)
C -- File PDR Report with Bobcat Parts Sales
D -- Part Number Error

Part No.	Description	Was	Code	Page
6688018	BEARING			122, 124
6688040	BEARING			120
6688042	RING, SNAP			122
6688338	NUT			290
6688521	SPRING			108, 110
6688933	VALVE ASSY			364
6688934	COIL			364
6689192	BOLT, FLANGE			192, 210
6689331	GASKET			190, 214
6689389	SPACER			358
6689601	VALVE			118
6689638	CUP, BEARING			46
6689647	CHAIN, DRIVE			44
6689651	CHAIN, DRIVEX			44
6689697	HOUSING, MOTOR			108
6689698	PLATE			108
6689700	PLATE			108
6689775	BEARING, AXLE			46
6689922	HANDLE			158
6689923	HANDLE			158
6689927	BOLT			158
6690299	O-RING			358
6690564	SPRING, COMPRESSION			406
6690688	TREE MOUNT			154, 254, 258
6690689	MOUNT, FIR TREE			154
6690690	STRAP, TIE			154, 254, 258
6690707	WIPER, ROD CYL			68
6690709	LINK			44
6690947	SWITCH, BPV			248
6690948	SWITCH PARK BRAKE			140, 142
6691288	CONTROLLER, AUX CONTROL			144
6691294	PLUG			192
6691343	GEROLER			108
6691500	SNAP RING			54
6691541	PLUG			110
6691542	SEAT			110
6691543	O-RING			110
6691544	RING			110
6691545	RING			110
6691546	O-RING			110
6691547	RING			110
6691548	RING			110
6691549	PIN			110
6691550	VALVE			110
6691551	SHAFT			110
6691552	O-RING			110
6691553	PLATE			110
6691554	GASKET			110
6691556	SPOOL			110
6691557	SPRING			110
6691558	SPRING			110
6691559	BOLT			110

Code for disposition of old part number
A -- Use up
B -- Use on other application (See PNI)
C -- File PDR Report with Bobcat Parts Sales
D -- Part Number Error

Part No.	Description	Was	Code	Page
6691560	GEROLER			110
6691561	SHAFT			110
6691562	BOLT			110
6691564	SEAL			110
6691714	SENSOR, SEATBAR BICS			26, 28
6692337	FILTER, HYD CARTRIDGE			2, 10, 136
6692489	ALARM, BUZZER			140, 142
6692523	SPRING, COMPRESSION			110
6692530	POPPET			110
6692756	RECEIVER, 2.4GHZ			370
6692757	DECAL, "REMOTE CONTROL OPERATION", LARGE			284, 370
6692761	2.4GHZ TRANSMITTER			370
6692762	KEYS, SET OF 2			370
6692763	DECAL WARNING, "READ THE MANUAL"			284, 370
6692767	DECAL, "ROTATING PARTS"			284, 370
6692768	DECAL, "REMOTE CONTROL OPERATION", SMALL			282, 370
6692769	CHARGER, MAKITA DC1422, 12-24VDC			370
6692770	BATTERY, NICD, 9.6V, 1.3AH, MAKITA 9000			370
6692771	SHOULER HARNESS			370
6692954	VALVE			234
6693241	KEY 10			140, 182, 254, 258, 288, 366
6693245	SWITCH, IGN			140
6693353	CONTROLLER, GATEWAY			144
6693409	BULB, STROBE			370
6693410	LENS			370
6693411	LENS			370
6693413	DISPLAY, DLX			142, 332
6693712	KEYPAD, PANEL			140, 142, 330
6693867	HOUSING			118
6693873	GROUP, ROTARY			122
6693874	GROUP, ROTARY			124
6693876	SEAL, SHAFT			122
6693921	SENSOR, RPM			148
6697915	HOSE			314
6697918	HOSE			314
6697920	SENSOR, PRESS OIL ENG			148

Code for disposition of old part number
A -- Use up
B -- Use on other application (See PNI)
C -- File PDR Report with Bobcat Parts Sales
D -- Part Number Error

Part No.	Description	Was	Code	Page
6697942	PLUG, NYLON			16, 66
6697960	SOLENOID			130
6698062	GASKET, MOTOR			136
6698065	COIL, CPP012H			136
6698066	HOUSING, FILTER CARTRIDGE			136
6698120	GASKET			188, 190, 200, 222
6698244	ORING			218
6698434	VALVE, PROPORTIONAL			74, 78
6698528	WASHER, SEALING			188, 220
6698580	VALVE, LEAD			216
6698585	VALVE, THERMOSTATIC			216
6698591	KIT, SEAL			136
669863	RING, SNAP			114, 118
6700631	GASKET			88
6701097	WASHER			168
6701174	WASHER			158
6701449	FILLER TUBE			182
6701535	SPRING			26, 28, 104
6701892	CLAMP			312
6702444	FUSE 25A 5			144
6702593	SPACER			150, 240
6702621	GRIP			152
6702642	SCREW			306
6702716	BLOCK			104
6702903	LEVER, BOB-TACH LH			42
6702904	LEVER, BOB-TACH RH			42
6702958	BUSHING, WELD-ON			42
6702971	BOLT			16
6702990	BUSHING			162
6703168	BEARING			174
6703640	KIT			379, 380
6703703	GUIDE			380
6704248	PIVOT, WEDGE			42
6704391	PULLEY			174
6704436	PAD			394
6704453	SPRING			254, 258
6704484	WASHER			174
6704892	RIVET			292
6705231	WASHER			174
6705232	WASHER			174
6705491	SPRING			174
6705847	SEAL, OIL			48, 50
6706098	GUIDE			104
6706427	AXLE			46
6706485	HOOK			44
6706633	ADAPTER			362
6706718	MOUNT			52, 54
6706737	GASKET			52, 54
6706825	LIFT EYE			334
6707101	SEAL			64, 82

Code for disposition of old part number
A -- Use up
B -- Use on other application (See PNI)
C -- File PDR Report with Bobcat Parts Sales
D -- Part Number Error

Part No.	Description	Was	Code	Page
6708009	LINK			72
6708016	GASKET			52, 54
6708018	SPRING			52, 54
6708043	BUSHING			72
6708267	BOLT			52, 54
6708310	HOSE, BULK 100			254
6708770	CAP			174
6708929	DECAL, COOLANT			280
6708987	HINGE, WELD-ON			14
6709170	BOLT, WHEEL			46
6710585	WASHER			174
6710659	BUSHING			26, 28
6711643	CAM			106
6711699	HUB ASSY.			174
6711908	SPRING PLATE			380
6713043	SPACER			162
6713370	PIN			174
6713589	CLEVIS			26, 28
6713887	BOLT			26, 28
6714212	PULLEY ASSY.			174
6714278	WEDGE, LOCK TRACTION			52, 54
6714361	COUNTERWEIGHT, AXLE FRONT			274
6715163	BUSHING, PRESS FIT			104
6715164	SLEEVE, SPRING			104
6715183	ELBOW			182
6715864	BUSHING			26, 28
6715865	BUSHING			26, 28
6715866	BUSHING			26, 28
6716010	COVER, ACCESS			44, 235, 236
6716621	COVER			144
6716843	WASHER			46
6717277	BUSHING, WELD-ON			14
6717278	BUSHING, WELD-ON			14
6717402	BUSHING			182
6717562	BUSHING, WEAR			38
6717579	GASKET			144, 182
6717885	ELBOW			83, 84
6718034	FUSE, 30A			144
6718414	SENDER, TEMP ENG			148
6718796	PLUG			300
6718872	HARNESS			244, 296, 412
6719056	BLOCK			52, 54
6719057	BLOCK			52, 54
6719448	MAGNET, CONTROL ATTACH			292
6719766	STOP			36
6719827	BOLT			170, 178
6719834	SPACER			162
6719835	SLEEVE			162
6720038	INSTRUCTIONS			246
6720808	KIT, HEATER ENG BLOCK			245, 246

Code for disposition of old part number
A -- Use up
B -- Use on other application (See PNI)
C -- File PDR Report with Bobcat Parts Sales
D -- Part Number Error

Part No.	Description	Was	Code	Page
6725182	TEE			100
6725301	OP MANUAL COVER			20, 24
6726277	CLAMP			56, 60, 362
6727065	BOLT			162
6727313	ELBOW			88, 352, 358
6727475	CAP, OIL HYD			9, 10, 87, 88
6727595	DECAL,TIE-DOWN			282
6727753	GASKET			172
6727869	SENDER,HYD TEMP			144
6728473	BOLT, SHOULDER			42
6729007	PIN, PIVOT			38
6729078	DECAL			282
6729594	HANDLE			162
6729595	HANDLE			162
6729605	CLAMP			56, 60
6729896	TIRE 10X16.5			414
6729900	TIRE, HEAVY DUTY - 10X16.5 - 10 PLY			414
6730106	TIRE, SEVERE DUTY, 10X16.5 - 10 PLY			414
6730771	WHEEL, RIM 16.5X8.25			414
6730772	WHEEL, RIM 16.5X9.75			414
6730775	WHEEL, RIM 16.5X8.25			414
6730997	BUSHING, WELD-ON			38, 42
6731121	PLUG			44
6731139	PIN, PIVOT			38
6731160	WASHER			38
6731275	INSULATION			144
6732730	HARNESS			292
6733136	KIT, ATTACHMENT 14-PIN			291, 292
6733144	MOUNT			292
6733429	CAP			170
6733575	HINGE, REAR DOOR			35, 36
6733616	BUMPER			36
6734090	ADAPTER			102, 170
6734298	MOUNT			104
6735696	GROMMET			182
6735883	BRACKET			174
6735884	IDLER ASSY.			174
6735901	DECAL, LOGO BOBCAT HEAD			282
6736641	PAINT, CHARCOAL .5 OZ			422
6736642	PAINT, WHITE .5 OZ			422
6736644	PAINT, ORANGE .5 OZ			422
6736645	PAINT, RED .5 OZ			422
6737189	DECAL, WARNING			150, 240, 242, 280
6737191	WEDGE			42
6737388	WASHER			72, 104, 174, 410

Code for disposition of old part number
A -- Use up
B -- Use on other application (See PNI)
C -- File PDR Report with Bobcat Parts Sales
D -- Part Number Error

Part No.	Description	Was	Code	Page
6737524	KNOB			64, 82
6737692	BEARING			184
6737693	SPACER			184
6800686	HEAD, CYL TILT			70
6801059	WASHER			368
6802539	SPACER			16
6803202	SCREW			158
6808798	ELBOW			182
6809726	ROLLER			36
6809845	BOLT			36
6810132	SPRING			36
6810356	SPACER			356
6810539	NUT			68, 70
6812170	PLUG			68, 70
6812171	PLUG			68
6813153	PLATE			74
6814021	BOLT			154, 156, 158
6814022	SCREW HEX SKT HD W/T			74, 78
6814531	ELBOW			56, 60
6814694	RETAINER			74, 75, 76, 78
6815152	SPOOL, TILT			74
6816549	PLUG ASSY PORT RLF			74, 78
6901872	INSTRUCTIONS			292
6902228	PAINT, ORANGE SPRAY CAN 6			419, 420
6902229	PAINT, CHARCOAL SPRAY CAN 6			420
6902230	PAINT, WHITE SPRAY CAN 6			420
6902233	PAINT, ORANGE QT 6			420
6902234	PAINT, CHARCOAL QT 6			420
6902235	PAINT, WHITE QT 6			420
6902236	PRIMER QT. 6			420
6903109	OIL 30W QT. 12			2, 6, 8, 420
6903110	OIL, 30W GAL. 6			2, 6, 8, 420
6903111	OIL 30W 2.5 GAL 2			2, 6, 8, 420
6903117	FLUID, OIL HYD 2.5 GAL 2			2, 11, 12, 420
6903118	FLUID, OIL HYD 5 GAL			2, 12, 420
6903119	FLUID, OIL HYD 55 GAL DRUM			2, 12, 420
6903121	LUBE, GEAR 12			8, 420
6903122	GREASE, MULTI PURPOSE #2 - 10			7, 8, 174, 420, 421, 422
6903766	TIRE, SOLID FLEX 31X6X10 LH			415, 416
6903767	TIRE, SOLID FLEX 31X6X10 RH			416

Code for disposition of old part number
A -- Use up
B -- Use on other application (See PNI)
C -- File PDR Report with Bobcat Parts Sales
D -- Part Number Error

Part No.	Description	Was	Code	Page
6904709	MANUAL, OPERATION & MAINTENANCE RADIO REMOTE CONTR			370
6904709AR	MANUAL, OPERATION & MAINTENANCE RADIO REMOTE CONTR			370
6967534	PISTON			132
6967535	COLLAR			132
6967536	SPRING			132
6969803	COVER, BREATHER			196
6969804	PLUG,OIL GAUGE			202
6969819	NUT, FLANGE			220, 222
6969824	GASKET, NOZZLE INJ			188, 230
6969996	CLAMP, HOSE			196
6983128	ANTIFREEZE/COOLANT, PG 53/47 PREMIX GAL 6			420
6983129	ANTIFREEZE/COOLANT, PG CONCENTRATE GAL 6			420
6987128	INSTRUCTIONS			272
6987139	INSTRUCTIONS			360
6987174	HANDBOOK, OPERATOR'S W/WIRE ROPE			4
6987174AR	HANDBOOK, OPERATOR'S W/WIRE ROPE (SPANISH)			4
6987174BR	HANDBOOK, OPERATOR'S W/WIRE ROPE (PORTUGUESE)			4
6987216	INSTRUCTIONS			298
6987223	INSTRUCTIONS			294
6987224	INSTRUCTIONS			296
6987225	INSTRUCTIONS			244, 412
6987227	INSTRUCTIONS			278
6987228	INSTRUCTIONS			268
6987229	INSTRUCTIONS			266
6987230	INSTRUCTIONS			256
6987231	INSTRUCTIONS			306, 312
6987232	INSTRUCTIONS			260
6987234	INSTRUCTIONS			288
6987235	INSTRUCTIONS			240, 242
6987238	INSTRUCTIONS			290
6987239	INSTRUCTIONS			366
6987248	INSTRUCTIONS			374, 378
6987249	INSTRUCTIONS			382, 384

Code for disposition of old part number
A -- Use up
B -- Use on other application (See PNI)
C -- File PDR Report with Bobcat Parts Sales
D -- Part Number Error

Part No.	Description	Was	Code	Page
6987250	INSTRUCTIONS			248
6987251	INSTRUCTIONS			408
6987252	INSTRUCTIONS			238
6987253	INSTRUCTIONS			376
6987279	INSTRUCTIONS			304
6987282	INSTRUCTIONS			368
6987335	INSTRUCTIONS			372
6987336	INSTRUCTIONS			302
6987338	INSTRUCTIONS			400
6987349	INSTRUCTIONS			418
6987355	INSTRUCTIONS			286
6987356	INSTRUCTIONS			318
6987388	INSTRUCTIONS			264
6987490	INSTRUCTIONS			340
6987491	INSTRUCTIONS			346
6987492	INSTRUCTIONS			276
6987705	TIRE, HEAVY DUTY - 10 X 16.5 - 10 PLY			414
6988336	RADIO, MINI BOBCAT			360
6988435	KIT, RADIO M-SERIES LOADERS			359, 360
6988660	SPEAKER 4 X 6 RETAIL JXA462			360
6988661	ANTENNA, 88 INCH MOTOROLA MALE PLUG			360
6989418	INSTRUCTIONS			270
6989484	INSTRUCTIONS			342
6989487	INSTRUCTIONS			338
6989520	INSTRUCTIONS			300
6989526	INSTRUCTIONS			328
6989663	INSTRUCTIONS			380
6989674	MANUAL, OPERATION & MAINTENANCE S570 LOADER			2
6989674-CD	MANUAL, OPERATION & MAINTENANCE S570 LOADER CD			2
6989675	MANUAL, SERVICE S570 LOADER			2
6989675-CD	MANUAL, SERVICE S570 LOADER CD			2
6989676	MANUAL, PARTS S570 LOADER			2
6989676-CD	MANUAL, PARTS S570 LOADER CD			2, 3, 4
6989699	INSTRUCTIONS			396, 398
6989741	INSTRUCTIONS			352, 354
6990047	INSTRUCTIONS			334
6990079	INSTRUCTIONS			322
6990126	INSTRUCTIONS			252
6990138	INSTRUCTIONS			406

Code for disposition of old part number
A -- Use up
B -- Use on other application (See PNI)
C -- File PDR Report with Bobcat Parts Sales
D -- Part Number Error

Part No.	Description	Was	Code	Page
6990145	INSTRUCTIONS			274
6990224	INSTRUCTIONS			344
6990240	INSTRUCTIONS			336
6990276	INSTRUCTIONS			362
6990325	INSTRUCTIONS			316
6990338	INSTRUCTIONS			324, 326
6990343	INSTRUCTIONS			332
6990344	INSTRUCTIONS			330
6990468	INSTRUCTIONS			394
6990533	INSTRUCTIONS			410
6990599	KIT, DECAL			279, 280, 281, 282
69G436	BOLT			154, 156
6E5	WASHER			296
6EM80	WASHER, SPRING			166
6J1664	KEY			46
6J807	KEY, WOODRUFF			174
7000489	DAMPER			178
7000582	BOLT			210
7000583	GEAR, RING STARTER			174, 194
7000584	FLANGE, WATER			210
7000585	PULLEY, DRIVE			204
7000586	PLUG			194
7000587	KIT, GASKET ENG UPPER			186, 187, 188
7000588	KIT, GASKET ENG LOWER			186, 189, 190
7000589	BOLT, ADJUSTING			224
7000590	BOLT			208
7000592	BOLT			194
7000593	BOLT			194
7000594	SCREW			222
7000595	SCREW			192
7000596	CIRCLIP			204
7000597	O-RING			190, 202
7000598	O-RING			188, 214
7000599	PIN			198
7000600	CAP, SEALING			194
7000603	BEARING, BALL			208
7000604	TUBE, FUEL LINE ASSY			220
7000605	TUBE, FUEL LINE ASSY			220
7000606	STUD			222
7000607	PLUG			200
7000608	PLUG			194
7000609	SCREW, AIR BLEEDER			222
7000611	CLIP, HOSE			216
7000612	TAPPET			208
7000613	NUT			220
7000614	RETAINER, BEARING			222
7000615	BOLT, FLYWHEEL			174, 194
7000616	GEAR, DRIVE			204

Code for disposition of old part number
A -- Use up
B -- Use on other application (See PNI)
C -- File PDR Report with Bobcat Parts Sales
D -- Part Number Error

Part No.	Description	Was	Code	Page
7000617	BEARING, BALL			222
7000618	GASKET, PUMP INJ			190, 220
7000619	ORING			188, 230
7000620	BOLT, ADJUSTING			224
7000621	BRACKET, BOLT ADJUSTING			224
7000622	SLEEVE, GOVERNOR			226
7000623	LEVER, GOVERNOR			226
7000624	SHAFT, FORK LEVER			228
7000625	SPRING, SPEED CONTROL			226
7000626	SEAL			188, 230
7000627	FITTING, BANJO			220
7000628	CAMSHAFT, FUEL			222
7000629	RETAINER, BEARING			222
7000631	FLANGE, EGR			216
7000632	GASKET EGR INLET			188, 216
7000633	GASKET, EGR VALVE			188, 216
7000634	GASKET, EGR VALVE			188, 216
7000635	GASKET, EGR COOLER			188, 218
7000636	GASKET, EGR BASE			188, 218
7000637	BEARING, BALL			222
7000638	WEIGHT, GOVERNOR			226
7000639	LEVER, FORK			227, 228
7000640	LEVER, SPEED			226
7000641	HOSE, VACUUM			216
7000642	WASHER, SEALING COPPER			188, 214
7000643	HOOK, LIFT ENG			200
7000644	HEAD, CYL ENG			199, 200
7000645	GASKET, HEAD CYL			200
7000646	GASKET, HEAD CYL			200
7000647	GASKET, HEAD CYL			200
7000649	COVER, FRONT			191, 192
7000650	GASKET, COVER CASE			190, 192
7000651	SEAL, OIL			190, 194
7000652	BOLT			194, 200
7000653	GASKET, HOUSING			190, 194
7000654	HOSE, AIR FORMED			196
7000655	CLAMP, HOSE			196
7000656	FLANGE, INTAKE			214
7000657	HOSE, AIR FORMED			214
7000658	GASKET, MANIFOLD INTAKE			188, 212
7000659	GASKET, MANIFOLD EXHAUST			188, 212
7000660	VALVE, INLET			198

Code for disposition of old part number
A -- Use up
B -- Use on other application (See PNI)
C -- File PDR Report with Bobcat Parts Sales
D -- Part Number Error

Part No.	Description	Was	Code	Page
7000661	VALVE, EXHAUST			198
7000662	SPRING, VALVE			198
7000663	ARM, VALVE BRIDGE			198
7000664	SHAFT, VALVE BRIDGE			198, 200
7000665	PAD, WEAR			198
7000666	GUIDE, VALVE			197, 198, 200
7000667	GUIDE, VALVE			198, 200
7000668	ARM, ROCKER			198
7000669	ARM, ROCKER			198
7000670	SHAFT, ROCKER ARM			198
7000671	SPRING, ROCKER ARM			198
7000672	BRACKET, ROCKER ARM			198
7000673	GASKET, COVER VALVE			188, 196
7000674	ROD PUSH			208
7000675	RETAINER, BEARING			208
7000676	CAP, SEALING			208
7000678	GASKET, TURBOCHARGER			188, 214
7000679	GASKET, FLANGE MUFFLER			188, 214
7000680	RING, PISTON			204
7000681	RING, PISTON			204
7000682	PISTON, ENG			203, 204
7000683	PISTON, ENG			204
7000684	PISTON, ENG			204
7000685	PIN, PISTON ENG			204
7000686	PISTON, ENG OS			204
7000687	PISTON, ENG OS			204
7000688	PISTON, ENG OS			204
7000689	BUSHING, PIN PISTON			204
7000691	BEARING, ENG ROD CONNECTING			204
7000692	BEARING, ENG ROD CONNECTING			204
7000693	BEARING, ENG ROD CONNECTING			204
7000694	BEARING, ENG ROD CONNECTING			204
7000695	CRANKSHAFT, ENG			204
7000696	SLEEVE, WEAR			204
7000697	BEARING, ENG CRANKSHAFT			204
7000698	WASHER, THRUST			204
7000699	WASHER, THRUST			204
7000700	KIT, BEARING ENG			204, 205, 206
7000701	KIT, BEARING ENG			206
7000702	KIT, BEARING ENG			206

Code for disposition of old part number
A -- Use up
B -- Use on other application (See PNI)
C -- File PDR Report with Bobcat Parts Sales
D -- Part Number Error

Part No.	Description	Was	Code	Page
7000703	BEARING, ENG CRANKSHAFT			204
7000704	BEARING, ENG CRANKSHAFT			204
7000705	WASHER, THRUST			204
7000706	WASHER, THRUST			204
7000707	WASHER, THRUST			204
7000708	WASHER, THRUST			204
7000709	GEAR, IDLER			208
7000710	BUSHING, GEAR IDLE			208
7000711	PIPE, OIL			220
7000713	COVER, PUMP OIL ENG			192
7000714	DIPSTICK, OIL ENG			202
7000715	SPRING, RELIEF			192
7000716	EXCHANGER, OIL COOLER			218
7000717	CONNECTOR			218
7000718	PIPE, OIL			218
7000719	PIPE, RETURN FUEL			230
7000720	HOUSING, PUMP INJ			222
7000721	PUMP, INJ FUEL			221, 222
7000722	GEAR, PUMP INJ			220
7000723	BRACKET, PUMP INJ			220
7000725	CLAMP, INJECTION			230
7000726	PIPE, INJECTION			231, 232
7000727	PIPE, INJECTION			232
7000728	PIPE, INJECTION			232
7000729	PIPE, INJECTION			232
7000730	BOLT, ADJUSMENT ASSY			223, 224
7000731	O-RING			188, 224
7000732	SPRING, GOVERNOR			228
7000733	SPRING, START			228
7000734	GLOW PLUG			230
7000735	CORD, GLOW PLUG			230
7000736	EXCHANGER, EGR			217, 218
7000737	HOSE, HEATER FORMED			218
7000738	HOSE, HEATER FORMED			218
7000739	HOSE, HEATER FORMED			218
7000740	CLAMP, HOSE			218
7000741	GASKET, FLANGE WATER			188, 210
7000742	THERMOSTAT			210
7000743	PUMP, WATER			209, 210
7000744	PIPE, WATER			218
7000745	COVER, THERMOSTAT			210

Code for disposition of old part number
A -- Use up
B -- Use on other application (See PNI)
C -- File PDR Report with Bobcat Parts Sales
D -- Part Number Error

Part No.	Description	Was	Code	Page
7000746	GASKET, PUMP WATER			190, 210
7000747	HOSE, VACUUM			216
7000748	BOLT			204
7000749	KEY, SHAFT			204
7000750	BLOCK, ENG			193, 194
7000751	PAN, OIL			201, 202
7000752	HOUSING, FLYWHEEL			194
7000753	MANIFOLD, INTAKE			211, 212
7000754	MANIFOLD, EXHAUST			212
7000755	FLANGE, MUFFLER			214
7000756	COVER, HEAD CYL ENG			195, 196
7000757	CAMSHAFT, VALVE			207, 208
7000758	GEAR, CAMSHAFT			208
7000759	GEAR, CRANKSHAFT			204
7000760	SHAFT, GEAR IDLER			208
7000761	COLLAR, GEAR IDLER			208
7000762	FLYWHEEL, ENG ASSY			174, 194
7000763	SCREEN, OIL ENG			202
7000764	PIPE, OIL			214
7000765	PIPE, OIL			214
7000766	PUMP, FUEL INJ W/GOVERNOR			219, 220
7000767	PUMP, FUEL			220
7000769	SOLENOID, SHUTOFF FUEL			148, 226
7000770	VALVE, EGR			215, 216
7000974	PLUG, MOTOR			136
7000983	SCREW			306
7000984	CLIP			306
7001120	SHAFT, DRIVE			122
7001135	BOLT,FLANGE			196, 218
7001136	BOLT,FLANGE			208
7001138	BOLT,FLANGE			200, 202
7001139	BOLT,FLANGE			210, 216
7001141	BOLT,FLANGE			218
7001421	GUAGE, SIGHT			88
7001499	BOLT, EYE			222
7001664	PLUG, POWER			288
7001709	SWITCH FRONT WIPER			254
7001710	SWITCH, ISO			154
7001712	SWITCH			352
7001713	SWITCH			156
7001897	PUMP, GEAR			133, 134
7001898	PUMP, GEAR			84, 85, 86
7002716	SCREW			74, 78
7002739	GROMMET			96, 180, 184
7002740	GROMMET			88

Code for disposition of old part number
A -- Use up
B -- Use on other application (See PNI)
C -- File PDR Report with Bobcat Parts Sales
D -- Part Number Error

Part No.	Description	Was	Code	Page
7002980	SWITCH, PRESSURE			144
7002985	INSERT, BLANK			20, 140
7002988	TIE, STUD MOUNT			150, 240, 242
7002989	SEAL, OIL			204
7003017	ROTOR, PUMP OIL			192
7003018	ROTOR, PUMP OIL			192
7003027	INSERT, KEYPAD			140, 142, 330
7003032	SWITCH, OVERRIDE TRACTION			140, 142
7003456	VALVE, MOTORIZED ASSY			308, 320
7003471	SCREW			310
7003487	SCREEN			88
7003494	LEVER, RH			162
7003495	LEVER, LH			161, 162
7003496	SENSOR			156
7008105	GROUP, ROTATING LH			121, 122
7008106	GROUP ROTATING RH			123, 124
7008107	CONTROL			125, 126
7008108	CONTROL			127, 128
7008109	MODULE, CONTROL			120, 129, 130
7008110	HOUSING			120
7008111	FLANGE, LH			120
7008112	FLANGE, RH			120
7008113	SHAFT			120
7008114	SCREW			120
7008115	SENSOR			120
7008116	FILTER			120
7008117	SWASHPLATE			122, 124
7008118	BEARING			122
7008119	RING			126, 128
7008120	MODULE			130
7008121	GASKET			130
7008122	COVER			130
7008123	GASKET			130
7008393	PLUG			218
7008454	BOLT, FLANGE			194
7008517	FITTING, BANJO			220
7008556	PLUG			358
7008561	SEAT, SHUTTLE			358
7008766	SHIM			132
7008767	SHIM			132
7008771	KIT, SEAL			76, 80
7008782	SEAL, QUAD			356
7008809	BASE, COOLER EGR			218
7008814	BULB, 5W			140, 142
7008823	SPRING			114, 115, 116
7008831	VALVE, RELIEF			86
7008832	VALVE, SOLENOID			86
7008888	PIN, STRAIGHT			174
7009081	NUT			140, 142
7009256	BOLT, FLANGE			102

Code for disposition of old part number
A -- Use up
B -- Use on other application (See PNI)
C -- File PDR Report with Bobcat Parts Sales
D -- Part Number Error

Part No.	Description	Was	Code	Page
7009258	RING, RETAINER			102
7009261	RING, RETAINER			102
7010006	COIL			358
7010126	BOLT			102
7010138	BOLT, FLANGE			212
7010162	HOUSING, BLOWER			310
7010163	MOTOR, FAN			310
7010165	COVER			310
7010166	RING, INNER			310
7010167	BLOWER, WHEEL			310
7010168	SCREW			310
7010169	CLAMP, HOSE			310
7010227	COVER			120
7010242	VALVE, CHECK			84
7010283	VALVE, REGULATOR			250
7010335	KIT, CUSHION SEAT VINYL			386, 390
7010336	KIT, CUSHION SEAT VINYL			386, 390
7010338	KIT, BACKREST SEAT			386, 390
7010339	BELLOW			386
7010340	KIT, ADJUSTER SEAT			386
7010341	KIT, HOUSING SEAT			386
7010342	KIT, ABSORBER SHOCK SEAT			386, 390
7010343	KIT, LEVER ADJUSTING			386, 390
7010344	KIT, RAIL SLIDE SEAT			386
7010345	KIT, TETHER SEAT BELT			386, 390
7010346	KIT, BACKREST SEAT			386, 390
7010357	CAP, END			268
7010358	SPRING			268
7010359	KNOB			268
7010360	SLEEVE			268
7010365	NUT			268
7010590	HOUSING, FLYWHEEL			194
7010591	HOUSING, PUMP INJ			222
7010592	RETAINER, BEARING			222
7010600	TREE MOUNT			142, 288
7010758	CONE, BEARING			48, 50
7010759	CUP, BEARING			48, 50
7010793	MOTOR, FAN			135, 136
7010868	MOTOR, DRIVE HYD 2-SPD			100, 109, 110
7010979	VALVE, CHECK			136
7011060	VALVE, BPV			60, 249, 250
7011061	DECAL			306

Code for disposition of old part number
A -- Use up
B -- Use on other application (See PNI)
C -- File PDR Report with Bobcat Parts Sales
D -- Part Number Error

Part No.	Description	Was	Code	Page
7011062	PANEL, CONTROL			306
7011070	HARNESS, RECEIVER			370
7011071	CONTROL, MODE SELECTOR			370
7011175	KIT, SWITCH SEAT			390
7011176	BELLOWS, SEAT CPL			390
7011177	HANDLE, ADJUSTING SEAT			390
7011178	HOUSING			390
7011179	KIT, RAIL SLIDE SEAT			390
7011180	COMPRESSOR, AIR SEAT			390
7011181	KIT, SPRING AIR			390
7011182	KIT, LEVER			390
7011183	KIT, BRACKET SEAT			388, 392
7012013	CLAMP, HOSE			216
7012015	PUMP, INJ FUEL UNIT			220
7012017	CLAMP, HOSE			214
7012050	BOLT, ADJUSTMENT ASSY			224
7012611	STRAP, HOLD DOWN			102
7012613	BUMPER, RUBBER			102
7012614	EXCHANGER, OIL COOLER			102
7013201	PLUG			250
7013203	KIT, SEAL			250
7015518	VALVE, CHECK			94
7015668	MOUNT FIR TREE			140
7018011	CHANNEL			162
7018012	CHANNEL			162
7019150	KIT, SEAL			120
7019303	SPACER			212
7020604	PLUG			358
7020605	POPPET			358
7020606	PLUG			358
7020607	SPRING			358
7020639	HIGH PRESSURE RELIEF VALVE			120
7020647	NUT			358
7020648	SPOOL			358
7020649	SPRING			358
7020650	SPOOL			358
7020651	SPRING			358
7020652	SPRING			358
7020653	SPRING			358
7020654	SPRING			358
7020655	O-RING			358
7020656	O-RING			358
7020657	PISTON			358
7020658	FILTER CARTRIDGE			358

Code for disposition of old part number
A -- Use up
B -- Use on other application (See PNI)
C -- File PDR Report with Bobcat Parts Sales
D -- Part Number Error

Part No.	Description	Was	Code	Page
7020659	ORIFICE			358
7020660	GUIDE			358
7020661	SHAFT			358
7020831	TURBOCHARGER			213, 214
7020859	SEAL			86
7020983	BOLT, FLANGE			208
7020984	TUBE FUEL			220
7020987	SHAFT, FORK LEVER			228
7020988	GASKET			188, 210
7020988	GASKET	6680844	A	188, 210
7020989	STUD			224
7020990	PIN, STRAIGHT			194
7020993	RETAINER			222
7020994	HOUSING, PUMP INJ			222
7020997	ROD, CONNECTING			204
7021002	SCREW, BLEEDER AIR			220
7021004	GEAR, IDLER			208
7021005	SHAFT, GEAR IDLER			208
7021006	BUSHING, GEAR IDLE			208
7021365	VALVE, SOLENOID			364
7021366	COIL, SOLENOID			364
7021367	NUT			364
7022164	VALVE, 2-SPEED			137, 138
7022670	DISPLAY			140, 142
7022765	BOLT, EYE			220
7022766	VALVE, POWER BOB-TACH			357, 358
7022791	KIT, REPAIR			388
7023022	SWITCH ROTARY			140, 142, 330, 332
7023076	OIL, 10W30 QT 12			2, 6, 8, 420
7023077	OIL, 10W30 GAL 6			2, 6, 8, 420
7023078	OIL, 10W30 2.5 GAL 2			2, 6, 8, 420
7023080	OIL, 15W40 QT 12			2, 6, 8, 420
7023081	OIL, 15W40 GAL 6			2, 6, 8, 420
7023082	OIL, 15W40 2.5 GAL 2			2, 6, 8, 420
7023149	JOYSTICK, RH ASSY			158
7023150	JOYSTICK, LH ASSY			157, 158
7023151	BASE, JOYSTICK RH			158, 159, 160
7023152	BASE, JOYSTICK LH			158
7023153	BOOT, RUBBER RH			160
7023154	BOOT, RUBBER LH			160
7023162	CAP, END			114
7023445	COMPRESSOR, A/C			314
7023548	PISTON, ASSY			114, 118
7023550	CAP, DIESEL LOCKING			182
7023588	KNOB			140, 142, 330, 332
7023827	BOLT, EYE			214

Code for disposition of old part number
A -- Use up
B -- Use on other application (See PNI)
C -- File PDR Report with Bobcat Parts Sales
D -- Part Number Error

Part No.	Description	Was	Code	Page
7024035	FILTER, OIL HYD ASSY			88
7024036	FILTER, OIL HYD CANISTER			88
7024037	FILTER, OIL HYD ELEMENT			2, 12, 90
7024038	FILTER, OIL HYD CANISTER COVER			90
7024100	EXCHANGER, WATER RADIATOR			102
7024103	PIN			102
7024104	PIN			102
7024107	BUMPER			92, 102
7024379	NUT, FLANGE			212
7024429	BOLT			90
7024825	KIT, SEAL			76
7024833	CONDENSER, A/C			314
7024884	WASHER			114
7024885	BOLT			118
7024886	VALVE, RELIEF			114
7024887	BRACKET			116
7024890	BRACKET			118
7024891	HOUSING			110
7024892	BALL, STEEL			110
7024893	HOUSING			110
7024894	PLUG			110
7024895	FLANGE, MOUNTING			110
7024896	RING, BACK-UP			110
7024897	O-RING			110
7024898	RING, BACK-UP			110
7024899	WASHER, WAVE			110
7024900	PLATE			110
7024902	SOLENOID			138
7024903	KIT, SEAL			138
7024904	BOLT			138
7025116	ROD, PROP UP			102
7025123	O-RING			90
7025124	O-RING			90
7025198	KIT, SEAL			86
7025271	STUD			212
7025560	KIT, REPAIR			392
7025561	FILTER, AIR INNER			234
7025562	FILTER, AIR OUTER			234
7025563	COVER			234
7025588	BRACKET, HINGE FORMED			102
7100104	BELT, ALT			8
7100699	WASHER			104
7101371	ELBOW			88
7101672	ACTUATOR			154, 156
7102451	FITTING			148
7102652	SCREW			76, 80
7103217	WASHER			104
7103708	BRACKET			106

Code for disposition of old part number
A -- Use up
B -- Use on other application (See PNI)
C -- File PDR Report with Bobcat Parts Sales
D -- Part Number Error

Part No.	Description	Was	Code	Page
7103711	BOLT			104
7105223	SPACER			104, 105, 106
7106218	DECAL QUALITY APPRVL			280
7106279	BOLT			182
7108236	PIN			154, 156
7108242	SPOOL, TILT			78
7109661	LATCH, DOOR W/SENSOR			254, 258
7109662	HANDLE, LATCH DOOR			254, 258
7110310	SCREW			174
7110365	ARM, PINTLE			106
7112383	AUX SPOOL			76, 78
7113340	CAP. DIESEL			182
7113631	ELBOW			94
7116118	BRACKET			22, 288
7116564	HOSE			56, 60
7116851	CUP			178
7116870	DECAL, LOGO BOBCAT HEAD			282, 283, 284
7120107	BRAKE			54
7120108	DISC			54
7120111	BRAKE, DISC			52
7120149	O-RING, RETAINING			178
7120308	BOLT			178
7120401	GLASS, DOOR			254
7120402	FRAME DOOR ASSY			254
7120411	WINDOW, CAB TOP			16
7120693	DECAL			84
7120881	SCREEN, FILLER			182
7121399	SPRING			74, 78
7121425	BUSHING			16, 266
7121779	PAD			104
7123965	KIT, SEAL			76, 80
7124815	PIN, PIVOT			156
7125948	PLATE			168
7126464	HOSE, FUEL W/ELBOW			182
7126682	BLOCK			336
7128338	KIT, FLASHER 4-WAY			295, 296
7128342	KIT, WINDOW SIDE			267, 268
7128389	KIT, WINDOW REAR			265, 266
7128393	KIT, DOOR			253, 254
7128395	KIT, DOOR CAB SPECIAL APPS			257, 258
7128403	KIT, LOCK REAR DOOR			365, 366
7128405	KIT, BELT SEAT 2"			373, 374
7128426	KIT, ACD 7-PIN			289, 290
7128442	KIT, BPV			247, 248
7128484	KIT, HEATER			305, 306
7128524	KIT, SEAT 80MM SUSPENSION			381, 382

Code for disposition of old part number
A -- Use up
B -- Use on other application (See PNI)
C -- File PDR Report with Bobcat Parts Sales
D -- Part Number Error

Part No.	Description	Was	Code	Page
7129173	COUNTERWEIGHT			272
7129250	KIT, COUNTERWEIGHT			271, 272
7129293	KIT, FOPS TOP			297, 298
7129299	KIT, BEACON LIGHT			243, 244
7129301	KIT, STROBE LIGHT			411, 412
7129303	KIT, BELT SEAT 3"			375, 376
7129307	KIT, EXTINGUISHER FIRE			293, 294
7129469	KIT, PLUMBING HEATER			311, 312
7129488	KIT, A/C			313, 314
7130834	HUB, FAN			168
7131233	PEDAL			350
7131236	BUSHING			350
7131273	SCREW			112, 176
7134137	SPROCKET			46
7134520	PLUG			74, 78
7134522	PLUG			76, 80
7135124	SCREW			178, 314
7135489	KIT, SEAL			70
7135569	DECAL			284, 370
7135590	PIN, PIVOT TAPERED			38
7135598	MOUNT, ALT			178
7136559	SOLENOID ASMBLY			52, 54
7136973	COVER			14
7137747	TANK, EXPANSION			170
7138014	SEAL KIT			356
7138040	LIGHT, RH ASSY			140, 142
7138041	LIGHT, LH ASSY			140, 142
7138376	BUSHING			76, 78
7138973	WINDOW, REAR			16
7139335	BRACKET, ALT			178
7139373	BUSHING, WELD-ON			40
7140441	HOLDER, CUP			278
7140748	BUSHING, WELD-ON			14
7140749	BUSHING, WELD-ON			14
7140927	DECAL			418
7141045	SHIELD, ALT			178
7141235	DECAL			282
7141375	DECAL			418
7141405	BUSHING			178
7141593	ENGINE, V2607-DI-TE3B-BC-2			185, 186
7141593REM	ENGINE, V2607-DI-TE3B-BC-2			186
7141906	STRAP, RUBBER			168
7141939	BLOCK, COUPLER			65, 66
7142141	DECAL			282, 336
7142142	DECAL			282, 336
7142371	SPRING GAS DOOR			254, 258, 259, 260
7142422	SHIELD, FLYWHEEL			174
7142762	CLIP			20, 22, 24, 286, 288
7142873	SEAL			264

Code for disposition of old part number
A -- Use up
B -- Use on other application (See PNI)
C -- File PDR Report with Bobcat Parts Sales
D -- Part Number Error

Part No.	Description	Was	Code	Page
7142875	SEAL			264
7143498	BELT			178
7143971	SEATBAR			25, 26
7144158	REAR DOOR			36
7144265	MOUNT, TANK			170
7144809	PULLEY			174
7144859	MOUNT, GAS SPRING			16, 304
7144862	SPRING			16
7145147	LEVER, STEERING			104
7145268	CONTAINER, STORAGE			22, 288
7145333	BRACKET, RADIO			360
7145417	LIFT ARM			37, 38
7145418	LINK, LIFT ARM H ASSY			38
7145439	BUSHING, WELD-ON			40
7145443	BUSHING, WELD-ON			38
7145444	BUSHING, WELD-ON			38
7145454	BUSHING, PIVOT			38
7145455	BUSHING, WELD-ON			38
7145456	LINK			38
7145528	DECAL			282
7145885	VENT, DEFROST			24, 286, 318
7146264	COVER, RH SJC			158
7146265	COVER, LH SJC			158
7146391	BELT, DRIVE			8, 174
7146538	PIVOT, BOBTACH			42
7147815	BOOT			32, 156, 162
7147826	BOLT, CROSS DRILLED			168
7147889	FRAME, MAIN ASSY			13, 14
7147896	BUSHING, WELD-ON			14
7147897	BUSHING, WELD-ON			14
7148020	BUSHING, PIVOT			42
7148022	BUSHING, PIVOT			42
7148031	PIN, PIVOT TAPERED			38
7148033	BOB-TACH			41, 42
7148068	WINDOW ASSY			268
7148069	WINDOW ASSY			268
7148287	SEAL DOOR HANDLE			254, 258
7148289	SEAL DOOR HINGE			254, 258
7148346	MUFFLER, EXHAUST			171, 172
7148364	MOUNT ASMBLY			49, 50
7149056	LATCH, CAM			366
7149091	TUBE			16
7149093	SPRING			16
7149166	MOUNT, BOOM DOWN			64
7149204	NUT			22, 288
7149219	HARNESS, FUEL			144
7149786	SEAT, SUSPENSION			382, 385, 386

Code for disposition of old part number
A -- Use up
B -- Use on other application (See PNI)
C -- File PDR Report with Bobcat Parts Sales
D -- Part Number Error

Part No.	Description	Was	Code	Page
7149827	COVER, WIPER			254
7150151	LATCH, WINDOW LEFT			16, 266
7150152	LATCH, WINDOW RIGHT			16, 266
7150182	BUSHING			68
7150719	SEAL DOOR FRAME			254, 258
7150745	SPACER			258
7150746	SPACER			258
7151185	CYLINDER, TILT			67, 68
7151186	TUBE, CASE CYL TILT			68
7151692	COVER			52, 54
7151848	BRACKET			314
7151889	BELLCRANK			104
7151940	HARNESS, HORN			326
7152037	NUT, RETAINING			178
7152266	CYLINDER, LIFT			69, 70
7152267	TUBE, CASE CYL LIFT			70
7152268	SHAFT, ROD CYL LIFT			70
7152319	BELT, RETRACTOR			374
7152322	BELT, SEAT 2"			374, 378
7152323	COVER, RETRACTOR			374, 378
7152324	BRACKET, BELT SEAT 3PT			374, 378
7152377	PULLEY, DRIVE			174
7152748	DECAL, FUEL DIESEL			282
7153075	BRACKET, DAMPER			408
7153076	BRACKET, DAMPER			408
7153379	LEVER, STEERING			104
7153503	BOOT			32, 72, 156
7153832	SEAL, SHELF REAR			24, 286, 318
7154285	BOX, STORAGE			22, 288
7154404	CONTAINER			278
7154910	INSERT, THREADED			140, 142, 268, 270
7155024	HARNESS DOOR			254
7155158	PLATE, THREADED			272
7155238	BOLT			174
7155308	WINDOW			258
7155359	FRAME, DOOR			258
7155390	HOUSING, FUSE RELAY			144
7155642	FENDER, PANEL RH			22, 288
7155643	FENDER, PANEL L.H.			22, 288
7155649	HOLDER, CUP			278
7155660	FITTING			84
7155661	HOSE			84
7155785	HEADLINER, HVAC			318
7155786	HEADLINER,STD			20
7155791	PANEL, RH			20, 22, 140, 142, 330, 332

Code for disposition of old part number
A -- Use up
B -- Use on other application (See PNI)
C -- File PDR Report with Bobcat Parts Sales
D -- Part Number Error

Part No.	Description	Was	Code	Page
7155792	PANEL, LH			19, 20, 21, 22, 140, 142
7155794	LOUVER, ROUND			318, 322
7155796	LOUVER, RECTANGLE			318
7155798	HEADLINER, DLX			23, 24, 286
7155799	SCREW			318
7156087	SEAL			264
7156253	KIT, HEADLINER DLX			285, 286
7156265	COVER			52, 54
7156606	BRACKET, ASSY			334
7156761	PLATE			104
7156809	BUMPER			342
7157286	BODY			74
7157291	TUBELINE			74, 78
7157671	COVER ARMREST, RH			158
7157704	COVER ARMREST LH			158
7157719	BRACKET			26, 28
7157958	WASHER			16, 17, 18
7158459	SUPPORT, LIFT ARM			38
7158632	CONNECTOR			88, 98, 99, 100, 352
7158921	FITTING			88, 94
7159044	HOSE ASSY			88
7159102	MOUNT			336
7159386	WASHER			180, 184
7159624	BUSHING			104, 184
7159735	HOSE, HYD			94
7160280	BRACKET, HARNESS			148
7160320	HOLDER, CUP			278
7160381	RIVET, BIRD CAGE			22, 288, 322
7160382	RIVET, BIRD CAGE			20, 22, 288
7160383	RIVET, BIRD CAGE			22, 278, 288
7160586	HOSE, HYD			56, 60
7160604	HOSE, HYD			56, 60
7160704	STOP			36
7160705	CHANNEL			36
7160706	BAR			36
7160760	MOUNT			336
7160779	PLATE			336
7160841	SEAL HANDLE DOOR			254
7160950	PAN, FLOOR			32, 34
7161069	LINK			72
7161130	COVER			34
7161131	COVER, LEVER			34
7161187	SHAFT, TRANS			48, 50, 52, 54
7161320	HOSE, HYD			354
7161321	HOSE, HYD			354
7161536	PIN, CLEVIS			336
7161559	PIN, SNAPPER			328
7161789	SEAL			264

Code for disposition of old part number
A -- Use up
B -- Use on other application (See PNI)
C -- File PDR Report with Bobcat Parts Sales
D -- Part Number Error

Part No.	Description	Was	Code	Page
7161894	MOUNT, MUFFLER			172
7161939	GRILL			22, 288
7161953	GUIDE, HOSE ASSY			328
7161979	KIT, LIFT 4-POINT			333, 334
7162176	SPACER			158
7162770	SCREW, PLASTIC			308, 320, 322, 360
7162966	CABLE, NEGATIVE			148
7162967	CABLE, POSITIVE			148
7163132	FOAM, FRONT			32, 34, 264
7163216	BRACKET			104
7163259	WASHER TANK			254
7163263	CAP WASHER BOTTLE			254
7163421	PEDAL ASSY			72, 156
7163427	PIN, PIVOT			38
7163571	KIT, WIPER REAR			367, 368
7163589	INSERT, SWITCH			140, 142, 330, 332
7163706	HARNESS, JOYSTICK			154
7163748	MOUNT			336
7163988	SEAL, WINDOW REAR			16, 266
7164073	GUIDE			142, 288
7164294	PEDAL, FOOT THROTTLE			184
7164345	COVER, PAN FLOOR			32, 34
7164347	COLUMN, FRONT RIGHT			22, 288
7164348	COLUMN, FRONT LEFT			22, 288
7164564	BRACKET, A/C			314
7164590	DOOR PLATE			254, 258
7164686	BOLT, CARRIAGE			298, 336
7165037	CAP, INST PANEL RH			20
7165038	CAP, INST PANEL LH			20
7165332	SHELF, REAR			24, 286, 318
7165333	CLIP			24, 32, 34, 286, 318
7165344	STORAGE			22, 288
7165345	DOOR, COVER			22, 288
7165346	DOOR, COVER			22, 288
7165634	WASHER, PLASTIC			158
7165673	SEAL, CAB DUCT			306
7165799	SCREW			20, 22, 24, 286, 318
7165972	COUPLER INSERT			254
7166047	SEAT, CHECK VALVE			74, 78
7166171	BRACKET			180, 184
7166172	HANDLE			180, 184
7166173	HANDLE			180, 184
7166174	BLOCK			180, 184
7166190	SCREW THREAD ROLLING			254, 255, 256, 308, 320
7166196	FOAM, PANEL			32, 34, 264

Code for disposition of old part number
A -- Use up
B -- Use on other application (See PNI)
C -- File PDR Report with Bobcat Parts Sales
D -- Part Number Error

Part No.	Description	Was	Code	Page
7166197	FOAM, PANEL			31, 32, 34, 264
7166198	FOAM, PANEL			32, 34, 264
7166199	FOAM, EDGE			32, 34, 264
7166200	FOAM, PAN FLOOR			32, 34, 264
7166205	SPACER HANDLE			256
7166269	WASHER			180, 184
7166334	ARM LIFT			336
7166338	TEE, BOSS			74, 78
7166339	SPRING, LOAD CHECK			74, 78
7166388	CASTING ASSY			78
7166629	LIGHT, CAB HEADLINER			24, 286
7166831	BLOCK			336
7166832	MOUNT			296
7166916	DECAL, A/C			314, 315, 316
7167003	CLIP			278
7167163	BOWL, FUEL			302
7167177	GROMMET WIPER			256, 368
7167395	KIT, CUP HOLDER			277, 278
7167405	SEAL, DUCT			306
7167437	SPRING, GAS STD			16, 298
7167438	GAS SPRING			304
7167506	SHIELD, ASSY			298
7167537	GUARD, CONDENSER			168
7167603	SEAT, OPERATOR SUSPENSION AIR			384, 389, 390
7167844	SHAFT			256
7167845	PIN			256, 258
7167846	WASHER CAST			256, 258
7167871	MOUNT, ALARM			150
7167988	DECAL, DANGER			280
7167989	DECAL, DANGER			282
7167990	DECAL, DANGER			282
7167991	DECAL, EXIT REAR			266, 280, 368
7167993	DECAL, WARNING			282
7167994	DECAL, WARNING			280
7167996	DECAL, WARNING			282, 334
7168019	DECAL, WARNING			282, 334
7168020	DECAL, WARNING			282, 334
7168021	DECAL			282, 336
7168022	DECAL			282, 336
7168023	DECAL			280
7168024	DECAL			280
7168025	DECAL EMERGENCY DOOR			256, 258, 280
7168031	DECAL			282
7168040	DECAL, WARNING			282, 334
7168114	DECAL, SWITCH			154, 280, 330, 332
7168136	DECAL			280
7168138	DECAL, WARNING			280, 396
7168139	DECAL, WARNING			280, 396
7168140	DECAL, WARNING			280
7168142	DECAL, WARNING			280

Code for disposition of old part number
A -- Use up
B -- Use on other application (See PNI)
C -- File PDR Report with Bobcat Parts Sales
D -- Part Number Error

Part No.	Description	Was	Code	Page
7168144	DECAL			280
7168159	BUSHING			336
7168171	BELT, SEAT 3"			376
7168172	BELT, SEAT 3"			378
7168173	BRACKET, COVER			144
7168272	DECAL			280
7168429	BOLT, CONTROLLER			144
7168604	RESISTOR			306
7168610	COVER			20, 24, 286
7168836	SHAFT			258
7168837	HINGE, DOOR			258
7168839	SPACER			258
7168841	SEAL			258
7168848	SUPPORT, TUBE RH			158
7168849	SUPPORT, TUBE LH			158
7168952	WIPER MOTOR			256
7168953	ARM WIPER ASSY			256
7168954	BLADE WIPER ASSY			256
7168955	GASKET			256
7168956	PLATE ADAPTOR			256
7168957	PLATE STUD ADAPTOR			256
7169070	KIT, DAMPER STEERING			407, 408
7169112	SWITCH, ROCKER A/C			314
7169118	GUARD, CONDENSER			102
7169130	HARNESS ACCESSORY			238
7169291	DECAL			256, 258, 282, 304
7169480	KIT, BELT SEAT 3"			377, 378
7169606	CONNECTOR, SLOTTED			18
7169699	DECAL			280
7169710	DECAL, SIGHT GAUGE			282
7169747	TREAD, SAFETY			16
7169753	HARNESS, FLASHER 4-WAY			296
7169849	FITTING BALLSTUD			256, 258
7169877	DECAL			16, 282
7169911	PLATE, DECAL			180, 184
7169932	MOUNT			410
7169965	DECAL, TAILGATE BASE			282
7170114	SCREW			24, 286
7170197	PUMP, HYD TANDEM			119, 120
7170337	STAND, SEAT			30
7170355	DECAL, DANGER			58, 62, 64, 280
7170360	DECAL, SPRING REMOVAL			256, 258, 282
7170531	HARNESS, CAB			258

Code for disposition of old part number
A -- Use up
B -- Use on other application (See PNI)
C -- File PDR Report with Bobcat Parts Sales
D -- Part Number Error

Part No.	Description	Was	Code	Page
7170673	FAN COOLING			168
7170765	NUT			158
7170782	KIT, GAS SPRING DLX			303, 304
7171192	INSULATION, DOOR REAR			400, 402
7171194	INSULATION, DOOR REAR			400, 402
7171209	HOSE, HYD			66
7171210	HOSE, HYD			66
7171219	INSULATION, PANEL RH			400, 404
7171220	INSULATION, PANEL LH			400, 404
7171222	BRACKET FRC			144
7172119	SEAL, FOAM			368
7172121	WASHER			368
7172247	WINDOW, CAB REAR			368
7172708	BRACKET, SWITCH			368
7172897	KIT, RESEAL PLUGS			371, 372
7172903	KIT, DECAL WHITE			417, 418
7173159	BRACKET, BELT SEAT			30, 380
7173309	GUARD, LIGHT			340
7173310	SPACER			340
7173324	GUARD, COUPLER			276
7173453	PLUG			372
7173592	KIT, ALARM BACK-UP			239, 240
7173593	KIT, ALARM BACK-UP			241, 242
7173651	INSULATION, HEATER			314
7173943	PLATFORM			342
7174128	KIT, GUARD LIGHT			339, 340
7174129	KIT, GUARD LIGHT			337, 338
7174130	KIT, GUARD MUFFLER			345, 346
7174171	KIT, HEADLINER HVAC			317, 318
7174328	DECAL			418
7174537	DECAL			418
7174787	INSULATION, PAN SEAT			16
7174837	GASKET, WIPER			254
7174838	SPACER			256
7174839	SPACER			256
7174841	SPACER, HANDLE			254
7174903	KIT, SEAL CAB			263, 264
7175017	HARNESS, ALARM BACK-UP			150, 240
7175151	STRIKER, DOOR			254, 258
7175270	PIN, PIVOT			38

Code for disposition of old part number
A -- Use up
B -- Use on other application (See PNI)
C -- File PDR Report with Bobcat Parts Sales
D -- Part Number Error

Part No.	Description	Was	Code	Page
7175321	HARNESS, ACD INPUT			290
7176037	MOUNT			184
7176039	LEVER			184
7176043	CAM, LEVER			184
7176099	FILTER, AIR FRESH			306
7176100	COVER			306
7176101	DUCT, AIR			306
7176133	PANEL, CAB INTERIOR			24
7176134	PANEL, CAB INTERIOR			20
7176309	CONTROL			306
7176579	SEAL, FOAM			306
7176593	HINGE BASE			254, 258
7176603	INSULATION, PANEL SEAT			16
7176942	SPACER			306
7176943	SEAL, COVER			306
7176970	HOSE, FUEL FORMED			182
7176971	BRACKET, FUEL			182
7177196	SHELL, ARMREST RH			158
7177197	SHELL, ARMREST LH			158
7177212	GASKET			302
7177215	KIT, BOWL FUEL			301, 302
7177690	MOUNT			324, 326
7177707	DECAL			280, 330, 332
7177742	DECAL			280, 288
7178420	KIT, PLATFORM MAINTENANCE			341, 342
7178954	COVER, HVAC			20
7179008	SCREW, PLASTIC			140, 142, 332
7179136	PLUG, HARNESS CAB STD			140
7179137	FOAM			140
7179366	HOSE, HYD			56, 60
7179368	HOSE, HYD			56, 60
7179839	SENSOR FUEL			144, 182
7179839	SENSOR FUEL	6680438	A	144, 182
7180029	MOUNT, ENG			176, 178
7180087	DECAL, WARNING			240, 242, 280
7180126	WINDOW, CAB SLIDING			270
7180127	WINDOW, CAB SLIDING			270
7180207	HARNESS, WIPER			368
7180714	CARRIER, MOTOR			47, 48
7180719	HOSE, HYD			64
7180721	HOSE, HYD			64
7180827	PLUG			42
7180829	RING, SNAP			42
7181037	HARNESS, ENG			148

Code for disposition of old part number
A -- Use up
B -- Use on other application (See PNI)
C -- File PDR Report with Bobcat Parts Sales
D -- Part Number Error

Part No.	Description	Was	Code	Page
7181066	LINK, PEDAL			72
7181067	LINK, PEDAL			72
7181068	TANK, FUEL			181, 182
7181144	FUEL, TUBE			182
7181174	BRACKET, TANK			182
7181452	TUBELINE, HYD			66
7181453	HOSE, HYD			96
7181555	TOOL BOX			288
7181556	COVER, TOOL BOX			288
7181557	CAM			288
7181865	PEDAL ASSY			34, 184
7181868	PEDAL ASSY			34
7181914	LINK			156
7182106	TUBELINE, HYD			100
7182107	TUBELINE, HYD			100
7182110	TUBELINE, HYD			100
7182111	TUBELINE, HYD			100
7182335	KIT, WINDOW SIDE			269, 270
7182882	TUBELINE, HYD			58, 62
7182942	PLUG			22, 288
7183022	WINDOW, CAB REAR			266
7183158	PLATE			260
7183295	HARNESS, HORN			324, 326
7183298	CLAMP			58, 62
7183318	CYLINDER, POWER BOB-TACH			355, 356
7183319	SHAFT, ROD CYL POWER BOB-TACH			356
7183332	HOSE, HYD			56, 60
7183366	KIT, SEAT OPERATOR SUSPENSION AIR			383, 384
7183521	CASE			356
7183605	KIT, FITTING W/DECAL			248
7183695	HOSE, HYD FORMED			88
7183696	HOSE, HYD FORMED			88
7183755	DECAL, CAPACITY LIFT			280
7183799	LINK, STEERING			104
7183863	HOSE, DRAIN			94
7183864	HOSE, DRAIN			94
7183869	GUARD, LIGHT			338
7183870	GUARD, LIGHT			338
7184007	GUIDE			14
7184008	GUIDE			14
7184255	HARNESS, FUEL			144
7184341	BUSHING			374, 378
7184346	DECAL WARNING			280, 374, 378
7184392	COVER			14
7184677	BUSHING			36
7184971	HOSE, HYD			354

Code for disposition of old part number
A -- Use up
B -- Use on other application (See PNI)
C -- File PDR Report with Bobcat Parts Sales
D -- Part Number Error

Part No.	Description	Was	Code	Page
7184972	HOSE, HYD			354
7185137	SPACER			266
7185150	PLUG, HARNESS CAB			140, 142, 288
7185169	PANEL, STEERING			32, 34
7185232	HOSE, HYD			90, 400
7185234	KIT, REMOTE CONTROL			369, 370
7185690	HVAC ASSY			319, 320
7185847	HOUSING			308, 320
7185848	COVER			308, 320
7186644	WINDOW, FOPS			300
7186723	KIT, WINDOW FOPS			299, 300
7186768	BOLT			342
7186769	BOLT			342
7186972	LEVER			256, 258
7187104	SEAL			20, 330, 332
7187118	KIT, GUIDE HOSE			327, 328
7188097	SEAL			256
7188108	GAS SPRING			106, 408
7188542	DECAL, INSTRUCTIONS			282, 342
7188745	PLUG			16, 278, 288
7188749	SPRING			184
7188997	HOSE, HYD			56, 60
7189077	MOUNT			240, 242
7189371	HOSE, HYD FORMED			88
7189378	HOSE, HYD			56, 60
7189453	LOUVER			14
7189454	LOUVER			14
7189579	MOUNT			362
7189580	MOUNT			362
7189892	MOUNT, BELLCRANK			32, 104
7189893	SHAFT, STEERING			103, 104
7189894	SPACER, STEERING			104
7190111	DECAL, CONTROL			280, 330
7190593	HARNESS, ACS			156
7190754	COVER, DRAIN			43, 44
7191010	MOUNT, ENG			178
7191332	YOKE, FLANGE			72
7191333	PIN, CLEVIS			72
7191334	PIN, CLEVIS			72
7191385	SHIELD, ALARM			240, 242
7191409	PANEL, MOUNTING			34
7191506	FITTING, HYD ELBOW			58
7191528	LEVER			184
7191629	STUD, WELD-ON			36
7191672	ELBOW			144
7192181	LINK			410
7192182	LINK			410
7192266	KIT, PLUMBING POWER BOB-TACH			353, 354

Code for disposition of old part number
A -- Use up
B -- Use on other application (See PNI)
C -- File PDR Report with Bobcat Parts Sales
D -- Part Number Error

Part No.	Description	Was	Code	Page
7192287	BOLT			308, 320, 322
7192301	PAN, BATTERY			148
7192371	BOLT			314, 320
7192408	SEAL			308, 320
7192569	BRACKET			306
7192823	NUT			372
7193018	SEAL			322
7193019	PANEL, DUCT			322
7193020	DUCT, AIR			322
7193021	BRACKET			22, 288, 322
7193022	INSULATION			322
7193023	DUCT, AIR			322
7193354	FILTER, AIR RECIRCULATING			308, 320
7193531	GROMMET			314, 320
7193532	GROMMET			308, 320
7193533	GROMMET			314, 320
7193534	COIL, HEATER			308, 320
7193535	EVAPORATOR			314, 320
7193536	BLOWER, HEATER & A/C			309, 310
7193538	BLOCK, VALVE A/C			314, 320
7193539	THERMOSTAT			314, 320
7193540	LATCH			308, 320
7193541	DRAIN, WATER SEAT			308, 320
7193542	SEAL			308, 320
7193543	SEAL			308, 320
7193546	TUBELINE, HYD			56, 60
7193547	TUBELINE, HYD			56, 60
7193579	KIT, LIFT SINGLE POINT			335, 336
7193671	GUARD, MUFFLER			346
7193687	BRACKET, MOUNTING			174
7193725	HINGE, DOOR CAB			254
7193778	PLUG			308
7193780	HEATER, CAB			307, 308
7193782	COVER			308
7193783	SEAL, FOAM			308, 320
7193784	BOLT			308, 320
7193785	CLIP			314, 320
7193786	RIVET, POP			308, 320
7193995	HOSE, A/C TUBELINE ASSY			314
7194160	BUMPER, RUBBER 'M' SERIES			252
7194262	WRAPAROUND			308, 320
7194471	PIN, CLEVIS			298
7194670	HOSE, HYD			66
7194713	TUBELINE, HYD			56, 60
7194714	TUBELINE, HYD			56, 60
7194715	TUBELINE, HYD			56, 60
7194975	GAUGE, SIGHT			14
7195483	PIN, PIVOT			334

Code for disposition of old part number
A -- Use up
B -- Use on other application (See PNI)
C -- File PDR Report with Bobcat Parts Sales
D -- Part Number Error

Part No.	Description	Was	Code	Page
7195550	DECAL, MODEL			282
7195580	INSULATION			396, 398
7195581	INSULATION			396, 398
7195582	INSULATION			396
7195583	INSULATION			396, 398
7195584	INSULATION, PANEL LH			396, 398
7195585	INSULATION, PANEL LH			396, 398
7195586	INSULATION, CROSSMEMBER			396, 398
7195588	INSULATION			398
7195594	INSULATION			400, 404
7195601	KIT, AUX REAR			361, 362
7195603	TUBELINE, HYD			362
7195604	TUBELINE, HYD			362
7195605	HOSE, HYD			362
7195606	TUBELINE, HYD			362
7195607	TUBELINE, HYD			362
7195610	TUBELINE, HYD			362
7195611	HOSE, HYD			362
7195614	TUBELINE, HYD			362
7195615	FITTING, HYD TEE			362
7195616	TUBELINE, HYD			362
7195617	BRACKET			334
7195619	WASHER, SPRING			334
7196015	BUSHING, PLASTIC			256
7196017	DISK, PLASTIC			256
7196033	SPACER			70
7196075	CLAMP, TUBELINE			56, 60
7196147	MOUNT, FAN			168
7196179	SEAL, FOAM			168
7196181	SEAL, FOAM			168
7196189	INSULATION			400, 403, 404
7196284	CABLE, THROTTLE			184
7196318	INSULATION			400, 404
7196376	HOSE, AIR FORMED			172
7196437	DUCT, AIR			168
7196452	BUSHING, WELD-ON			38
7196453	BUSHING, WELD-ON			38
7196889	LATCH			308, 320
7197038	MOUNT, BULKHEAD			66
7197039	MOUNT, BULKHEAD			56, 60
7197082	COVER			32, 34
7197116	TUBELINE, HYD			60
7197117	TUBELINE, HYD			56
7197118	TUBELINE, HYD			60
7197119	TUBELINE, HYD			56
7197120	BOLT			38
7197262	DUCT			306
7197489	HOSE, HYD TUBE ASSY			84
7197700	FILTER, AIR			172, 233, 234
7197727	TUBELINE, HEATER			312
7197733	FAN			322

Code for disposition of old part number
A -- Use up
B -- Use on other application (See PNI)
C -- File PDR Report with Bobcat Parts Sales
D -- Part Number Error

Part No.	Description	Was	Code	Page
7197769	MOUNT, FILTER AIR			172
7197790	HOSE, WATER FORMED			170
7197915	SPRING, COMPRESSION			158
7197916	SPACER			158
7197917	MOUNT, SEAT RH			158
7197919	MOUNT, SEAT LH			158
7197921	MOUNT, CONTROLS RH			158
7197922	MOUNT, CONTROLS LH			158
7197972	COVER			20
7197973	COVER			306
7197974	SEAL, FOAM			168
7197993	DECAL, LASD			282
7198325	GUARD, HOSE			182
7198554	FITTING, ELBOW			312
7198666	TANK, HYD			88
7198705	HARNESS, PUMP			154
7199044	BRACKET			288
7199121	BRACKET			144
7199376	BRACKET			88
7199814	CLAMP, HOSE			56, 57, 58, 60, 66
7199815	CLAMP, HOSE			58, 60, 66
7199853	SPRING, TORSION			158
7199872	SPACER, TUBE			66, 336, 362
7199903	KIT, SEAL			68
7200142	HOSE, HYD			97, 98, 100
7200657	KIT, DUCT			321, 322
7200883	HARNESS, JUMPER FAN			322
7200887	SLIDE			158
7200888	SLIDE			158
7201283	MOUNT, MANIFOLD DRAIN			52, 54
7201414	HARNESS, AUX REAR			362
7201515	RETAINING PLATE, RUBBER BUMPER			252
7201981	MANIFOLD, DRAIN CASE			63, 64, 94, 98, 100, 146
7202003	INSULATION, FENDER			400, 404
7202090	CHAINCASE			44
7202220	CHAIN, DRIVE			44
7202282	FITTING, HYD CONNECTOR			56
7202325	TUBELINE, HYD VALVE CONTROL			76, 80
7202329	FITTING, HYD CONNECTOR W/SCREEN			76, 78
7202799	BRACKET, SUPPORT			14

Code for disposition of old part number
A -- Use up
B -- Use on other application (See PNI)
C -- File PDR Report with Bobcat Parts Sales
D -- Part Number Error

Part No.	Description	Was	Code	Page
7202800	BRACKET, SUPPORT			14
7202926	SHROUD, FAN			168
7202956	SEAL, BULK			140, 142
7203382	PLUG, STEEL			182
7203389	SEAT BAR			27, 28
7203568	MOUNT, VALVE			362
7203643	SPRING, VALVE			74, 78
7203665	KIT, BUMPER			251, 252
7204037	DECAL			282
7204044	HOSE, A/C TUBELINE ASSY			314
7204048	BRACKET, JUNCTION			58
7204073	KIT, SPRING DAMPER			405, 406
7204292	COVER			168
7204293	FOAM			168
7204315	KIT, AXLE WEIGHT			273, 274
7204325	MOUNT, THROTTLE			178, 180, 184
7204407	BRACKET, HARNESS			144
7204597	VALVE, LEVEL SELF NO			56
7204614	FITTING, ELBOW			170
7204615	KIT, MSHA			343, 344
7204637	HOSE, WATER			170
7204652	HOSE, AIR FORMED			172
7205329	SEAL, COVER			32, 34
7205726	DECAL, SERVICE			280, 400, 402
7205727	DECAL, SERVICE			280, 400, 402
7205878	HOSE, HYD			362
7206590	MOUNT, EXCHANGER OIL			168
7207378	KIT, SOUND/NOISE REDUCTION			399, 400
7207380	KIT, SOUND/NOISE REDUCTION			395, 396
7207381	KIT, SOUND/NOISE REDUCTION			397, 398
7208181	BUSHING			102, 168
7208227	SEAT, RELIEF PORT			74, 78
7208252	WHEEL, RIM 16.5X8.25			414
7209460	SPOOL, LIFT LOCK			74
7209496	SPOOL, LIFT			78
7209565	MANIFOLD			90, 362, 400
7209604	DAMPER			38
7209779	PIN, PIVOT			38
7210048	COVER, PLATE			44
7210060	LINK, CENTER			104
7210301	SPACER			324
7210308	TUBELINE, HYD			96
7210364	HOSE, HYD FORMED			92

Code for disposition of old part number
A -- Use up
B -- Use on other application (See PNI)
C -- File PDR Report with Bobcat Parts Sales
D -- Part Number Error

Part No.	Description	Was	Code	Page
7210505	HARNESS, SJC			154
7210554	HARNESS, MF MAN			143, 144
7210555	HARNESS, MF CTRL			144
7210556	HARNESS, CAB DLX			142, 288
7210557	HARNESS, CAB			140
7210676	PANEL, LH			32, 34
7210677	PANEL, RH			32
7210805	SCREEN, EXCHANGER ASSY			167, 168
7210917	BRACKET, HOLDING			168
7211112	HOSE, A/C ASSY			314
7211382	TIRE, SUPER FLOAT 31X12X16.5 10PLY			413, 414
7211393	RETAINER, SEAL			76, 80
7211394	ADAPTER, DETENT			76
7211397	WASHER, SPRING			74, 78
7211400	SLEEVE, DETENT			74
7211429	DECAL, MODEL			282
7211446	KIT, FITTING W/DECAL			56, 60, 248
7211448	FITTING, HYD CONNECTOR			58
7211469	HOSE, WATER			170
7211574	STEP			38
7211575	BRACKET			38
7211662	PANEL, RH			33, 34, 184
7211695	TUBE ASSY WATER			170
7211861	HOSE, WATER LOWER			169, 170
7211932	TUBELINE, HYD			66
7211933	TUBELINE, HYD			66
7211967	MOUNT, MUFFLER			172
7212057	TUBELINE, HYD			58
7212098	MOUNT, VALVE			64
7212215	MOUNT, COMPRESSOR A/C			314
7212216	SPACER, BRACKET			314
7212624	FITTING, HYD ELBOW			56
7212685	MOUNT, FILTER FUEL			182
7212791	MOUNT, VALVE			100
7212947	KIT, HORN			323, 324
7212948	KIT, HORN W/JOYSTICK			325, 326
7212967	BRACKET, HARNESS			144
7213012	BUMPER, PLASTIC			168
7213016	HOSE, HYD FORMED			94
7213230	BRACKET			154
7213524	HANDLE, LATCH DOOR			36

Code for disposition of old part number
A -- Use up
B -- Use on other application (See PNI)
C -- File PDR Report with Bobcat Parts Sales
D -- Part Number Error

Part No.	Description	Was	Code	Page
7213533	MOUNT, COMPRESSOR A/C			314
7213595	BOLT			174, 175, 176, 314
7213928	KIT, PANEL KEYLESS DELUXE			331, 332
7213929	KIT, PANEL KEYLESS			329, 330
7214069	MOUNT, PUMP			174, 178
7214312	RING, RETAINING			74, 78
7214545	CABLE, THROTTLE			180, 184
7214594	PISTON, CYL TILT			68
7214598	SHAFT, ROD CYL TILT			68
7214628	TUBELINE, HEATER			312
7214661	HEAD, CYL TILT			68
7214722	VALVE, CHECK			74, 78
7214856	RING, RETAINING			74
7214959	BLOCK, VALVE CONTROL HYD			74
7215114	SHIELD, HOOD			168
7215191AR	KIT, DECAL TRANSLATION			280, 282
7215191BR	KIT, DECAL TRANSLATION			280, 282
7215374	BUSHING, NYLON			18
7215541	SEALANT, GASKET LIQUID 10			16
7215765	HOSE, DRAIN			178
7215840	CAB, ASSY			15, 16
7215957	VALVE, CONTROL			73, 74
7215960	VALVE, CONTROL			77, 78, 154, 156
7216405	BUSHING, WELD-ON			38
7216406	BUSHING, WELD-ON			38
7217075	SPOOL, BICS			74, 78
7217484	HARNESS, REAR DOOR		A	150
7217608	SHIELD, ALT			178
7218276	PLATE, LATCH			36
7218434	KIT, POWER BOB-TACH			351, 352
7218898	HOSE, HYD			88
7218899	HOSE, HYD FORMED			92
7218923	KIT, SEAL COMPLETE			76, 80
7218924	KIT, SEAL			76, 80
7218959	MUFFLER, PURIFIER			347, 348
7219080	O-RING			74, 78
7219193	PANEL, CROSSMEMBER			14
7219194	PANEL, ACCESS			14
7219324	VALVE, RELIEF			76, 80
7219416	GROMMET			96
7219703	PLUG, BICS			74, 78

Code for disposition of old part number
A -- Use up
B -- Use on other application (See PNI)
C -- File PDR Report with Bobcat Parts Sales
D -- Part Number Error

Part No.	Description	Was	Code	Page
7219833	HOSE, HYD			90, 400
7219834	HOSE, HYD			90, 354
7219903	LIGHT, STROBE			412
7219969	HOSE, HEATER FORMED			312
7220002	HOSE, HYD			96
7220446	KIT, LINK STEERING ISO			409, 410
7220758	KIT, DLX HRNS/INTER			287, 288
7221235	CHAIN			44
7221255	SPRING			42
7221488	BRACKET			182
7221530	HORN, ALARM			326
7222079	BRACKET, MOUNTING			176
7222080	BRACKET, MOUNTING			176
7222081	BRACKET, MOUNTING			176
7222173	KIT, SHIELD CYL			393, 394
7222175	SHIELD, CYL			394
7222562	BLOCK, VALVE CONTROL HYD			78
7222625	SHIELD, RH			14
7222629	SHIELD, LH			14
7222767	SPACER			326
7222790	SEAL, DOOR			256, 258
7223184	MOUNT, LOAD ISOLATOR			174
7223412	PANEL, DASH			20, 22
7223425	DECAL, FUSE			144, 280
7223715	BRACKET, MOUNTING			294
7224664	EXTINGUISHER, FIRE			294
7224665	BRACKET, EXTINGUISHER FIRE			294
7225718	HARNESS, HORN			326
72F1	FITTING			182
73G624	BOLT			104
73G824	BOLT			44, 98
73K013	RING, BACK-UP			76, 78
73K016	RING, BACK-UP			76, 78
73K222	RING			356
73K332	RING			68, 70
774220	NUT			150, 170, 180, 184, 240, 242, 312, 314
77F8	ELBOW			66
79K10	O RING 10			56, 60, 76, 78, 92, 96, 114, 248, 250, 358
79K12	O RING 10			66, 88, 90, 94, 96, 98, 114, 118
79K16	O RING 10			66, 88, 100
79K3	O RING 10			358
79K5	O RING 10			108, 182

Code for disposition of old part number
A -- Use up
B -- Use on other application (See PNI)
C -- File PDR Report with Bobcat Parts Sales
D -- Part Number Error

Part No.	Description	Was	Code	Page
79K6	O RING 10			58, 62, 64, 66, 74, 76, 78, 88, 94, 96, 98, 100, 108, 144, 358
79K8	O RING 10			76, 78, 96, 114, 118, 170, 248
7D4	NUT			64, 82
7D6	NUT			38
82K132	O-RING HYDRAULIC			356
83D4	NUT 10			26, 28, 64, 100
83D5	NUT 5			64, 94, 98, 100
83D6	NUT 5			56, 60, 104, 174, 248, 292, 362, 410
83D8	NUT 5			14, 64, 174, 178
84G1320	BOLT			150, 240
84G3112	BOLT 5			168, 292, 300
84G3708	SCREW			178
84G3712	BOLT 5			14, 16, 32, 34, 44, 56, 60, 66, 104, 142, 144, 148, 168, 178, 180, 182, 184, 236, 304, 362
84G3716	SCREW 5			32, 34, 40, 52, 54, 58, 62, 66, 172, 182, 184, 252
84G3720	BOLT			52, 54
84G3724	BOLT			32, 34, 56, 60, 104
84G3728	BOLT			56, 60, 362
84G3732	BOLT			362
84G3740	BOLT			62, 66, 144
84G3748	BOLT			362
85D6	NUT, 5			36, 40, 42, 58, 62, 334
85D7	NUT			380
85D8	NUT, 5			16
86D7	NUT			158, 374, 376, 378, 386
86F5	NUT			56, 58, 60, 362
86F6	NUT			56, 60
872229	WASHER			56, 60, 66
87D5	NUT			334
87G1014	SCREW, MACHINE			368
898731	1156 BULB			150
89D5	NUT			170, 182, 350
89D6	NUT			58, 66, 168, 170, 172, 314
91K6	TEE			56, 60
91K7	FITTING			56, 60
92D10	NUT			356
95D6	NUT			72, 104, 156, 306
95D7	NUT			30
96D12	NUT			173, 174
96D8	NUT			168
97D4	NUT			149, 150, 240, 242
97D5	NUT			158, 256, 258, 346
97D6	NUT 10			144, 154, 156, 256, 288, 306, 326, 336, 340
98D6	NUT			106, 184

Code for disposition of old part number
A -- Use up
B -- Use on other application (See PNI)
C -- File PDR Report with Bobcat Parts Sales
D -- Part Number Error