RUTHZIL TRATOR COMERCIAL DE PEÇAS LTDA 11 97083-6812 ROLANDO CITRANGULO

Bantam

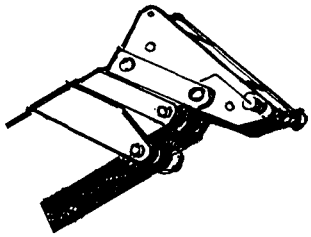

MODEL S-628 TELEKRUISER

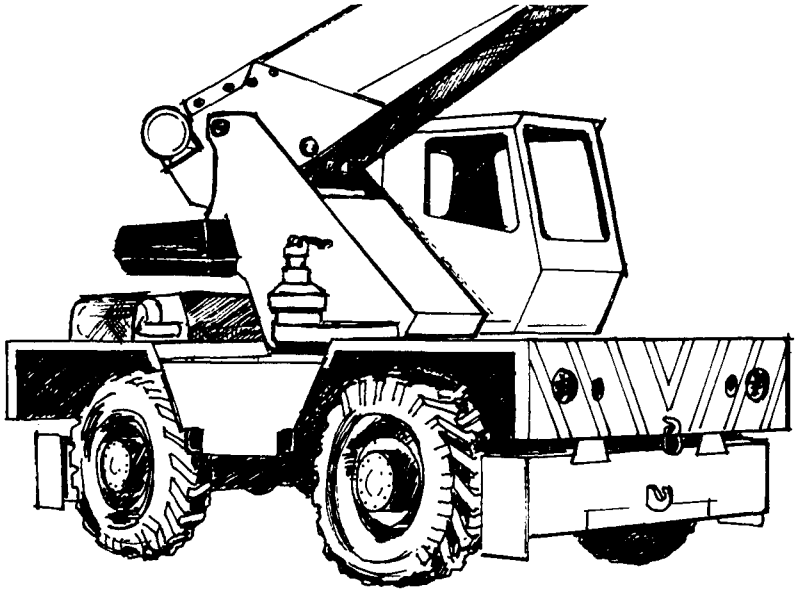

Everything possible has been done in the design and construction of your Bantam equipment to give dependable service and safe operation of the machine. To obtain best reliability, replace all parts with only genuine Bantam duplicates, obtained through your authorized Bantam distributor. When replacing wire rope, use only the types and sizes recommended in this manual. Lubricate the machine only as directed on the "Lubrication Chart" and within the frequencies specified.

SERIAL NO._____

Printed in U.S.A.

Catalog No. S-628-72

GROUP INDEX

TELEKRUISER

SUPERSTRUCTURE,	1
HYDRAULIC SYSTEM	2
SWING REDUCER	3
CAB	4
ELECTRICAL	5
BOOM	6
JIB AND BOOM ATTACHMENTS	7

SEE BLUE SECTION FOR THE CORRESPONDING MAINTENANCE GROUPS

FRAME, ENGINE HOUSING, FENDERS AXLE LOCK-OUT, FUEL TANK	11
ENGINE	12
TRANSMISSION	13
AXLES	14
BRAKES	15
STEERING	16
HYDRAULIC OUTRIGGERS	17

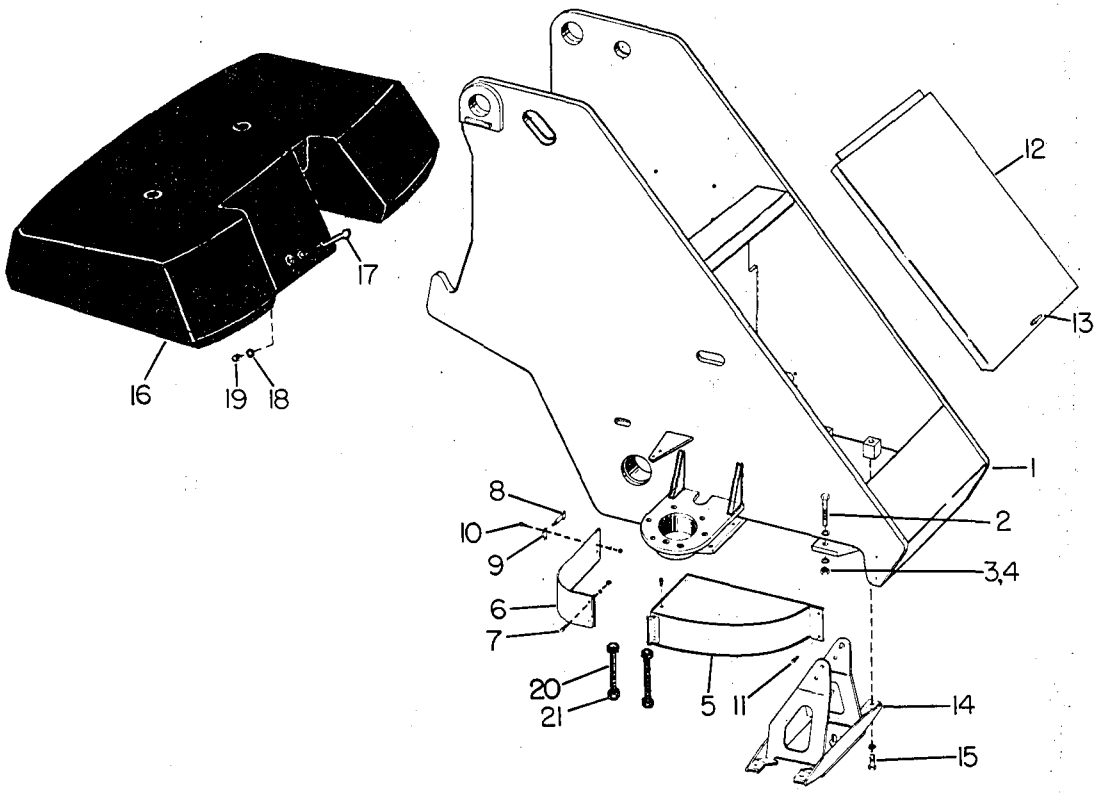

Ref. No.	Part Number	Quan. Req'd.	Name and Description
1	F41775	1	SUPERSTRUCTURE
2	1203-163	22	CAPSCREW, 7/8 UNC x 2 1/4 LG., GRADE 8
3	1209-35	44	WASHER, 1 3/8 x 13/16 x 1/16 SPECIAL
4	1209-37	22	WASHER, 7/8
5	F37060	1	GUARD
6	37064	1	PINION GUARD
7	1200-29	2	CAPSCREW, 5/16 UNC x 3/4 LG.
	1210-17	2	LOCKWASHER, 5/16 MED.
	1205-25	2	NUT, 5/16 UNC
8	1222-80	1	HOOD LATCH
9	1222-81	1	HOOD CATCH
10	1202-4	2	STOVE BOLT 3/16 UNC x 1/2 LG., RD. HEAD
	1210-8	2	LOCKWASHER, #10
	1205-12	2	NUT, 3/16 UNC

Model S-628 | Group No. 1
Date 1 MARCH 1972 | SUPERSTRUCTURE | Page 1.2

Ref. No.	Part Number	Quan. Req'd.	Name and Description
11	1200-57	4	CAPSCREW, 3/8 UNC x 3/4 LG.
	1210-20	4	LOCKWASHER, 3/8 MED.
	1209-4	2	PLAINWASHER, 3/8 REG.
12	F38623	1	COVER
13	1222-209	1	LOCK
	41535	1	LINK
14	F36599	1	SUPPORT
15	1200-144	4	CAPSCREW, 5/8 UNC x 1 1/2 LG.
	1210-32	4	LOCKWASHER, 5/8 MED.
16	B49000	1	COUNTERWEIGHT, 6000 LB.
17	1242-77	1	CAPSCREW, 1 1/4 UNC x 5 LG., GRADE 5
18	10049	2	WASHER
19	1204-25	1	LOCK NUT, 1 1/4 UNC
20	1229-168	4	CAPSCREW, 7/8 UNF x 9 LG., GRADE 8
21	1205-186	4	NUT, 7/8 UNF ESNA

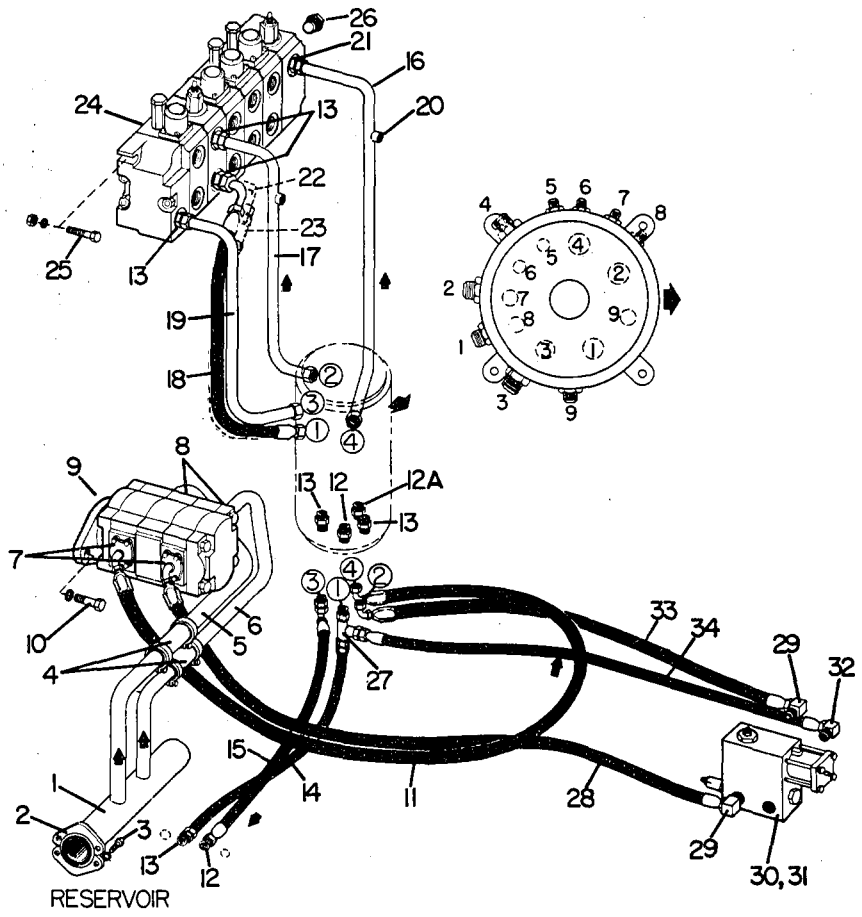

Ref. No.	Part Number	Part Number	Quan. Req'd.	Name and Description
	PRIOR TO SER. #955	BEGIN. W/ SER. #955		
1	38694	49042	1	MANIFOLD
	1218-61	1218-61	1	"O" RING, FOR ABOVE
2	1219-393	1219-393	2	SPLIT FLANGE CLAMP
3	1203-100	1203-100	4	CAPSCREW, 5/8 UNC x 1 3/4 LG., H.T.
	1210-32	1210-32	4	LOCKWASHER, 5/8 MED.
4	1219-394		2	JOINT
	1218-91		4	SEAL, FOR ABOVE
4		12367-6	2	HOSE
		1240-76	4	CLAMP, FOR ABOVE
5	38696	49041	1	TUBE
6	38695	49040	1	TUBE

Ref. No.	Part Number	Quan. Req'd.	Name and Description
7	1219-392	4	SPLIT FLANGE CLAMP
	1218-63	2	"O" RING
	1203-102	8	CAPSCREW, 7/16 UNC x 1 1/2 LG., H.T.
	1210-23	8	LOCKWASHER, 7/16 MED.
8	1219-390	4	SPLIT FLANGE CLAMP
	1218-72	2	"O" RING
	1203-101	8	CAPSCREW, 1/2 UNC x 1 1/2 LG., H.T.
	1210-26	8	LOCKWASHER, 1/2 MED.
9		1	HYDRAULIC PUMP, SEE PAGE 2.16 FOR PARTS BREAKDOWN
10	1200-102	2	CAPSCREW, 1/2 UNC x 1 3/4 LG.
	1210-26	2	LOCKWASHER, 1/2 MED.
11	A37072	AR	HOSE ASSEMBLY
12	1219-389	2	ADAPTER
12A	1219-556	1	ADAPTER
	1218-64	3	"O" RING, FOR ITEMS 12 & 12A
13	1219-385	5	ADAPTER
	1218-65	5	"O" RING, FOR ABOVE ADAPTER
14	A37161	1	HOSE ASSEMBLY
15	A37156	1	HOSE ASSEMBLY
16	37005	1	TUBE
17	37007	1	TUBE
18	A49366	1	HOSE ASSEMBLY - REPLACES 37008 & 49039 TUBES USED PRIOR TO AND BEGIN. W/SER. #955 AND ITEMS 22 AND 23
19	37006	1	TUBE
20	1219-551	3	PLUG
21	1219-659	1	ADAPTER
	1218-73	1	"O" RING, FOR ABOVE ADAPTER
22	1219-782	1	ADAPTER, 90° - PRIOR TO SER. #955
	12019-84	1	ADAPTER, 90° - BEGIN. W/SER. #955
	1218-65	1	"O" RING, FOR ABOVE ADAPTERS

Ref. No.	Part Number	Quan. Req'd.	Name and Description
23	1219-429	1	JOINT - Prior to Ser. # 955
	1218-112	1	SEAL w/restraining ring, for above
23	12365-6	1	HOSE - Begin. w/Ser. # 955
	1240-74	2	CLAMP, for above
24		1	VALVE BANK ASSEMBLY - See Page 2.19
25	1200-110	3	CAPSCREW, 1/2 UNC x 2 3/4 lg.
	1210-26	3	LOCKWASHER, 1/2 med.
	1205-58	3	NUT, 1/2 UNC
26	1219-783	1	PLUG
	1218-73	1	"O" RING, for above
27	1219-876	1	TEE
28	A49102	1	HOSE ASSEMBLY
29	1219-680	2	ADAPTER
	1218-65	2	"O" RING, for above
30		1	OUTRIGGER VALVE - See Page 2.23
31	1200-315	2	CAPSCREW, 3/8 UNC x 5/8 lg.
	1210-20	2	LOCKWASHER, 3/8 med.
32	1219-802	1	ADAPTER
	1218-64	1	"O" RING, for above
33	A49100	1	HOSE ASSEMBLY
34	A49101	1	HOSE ASSEMBLY

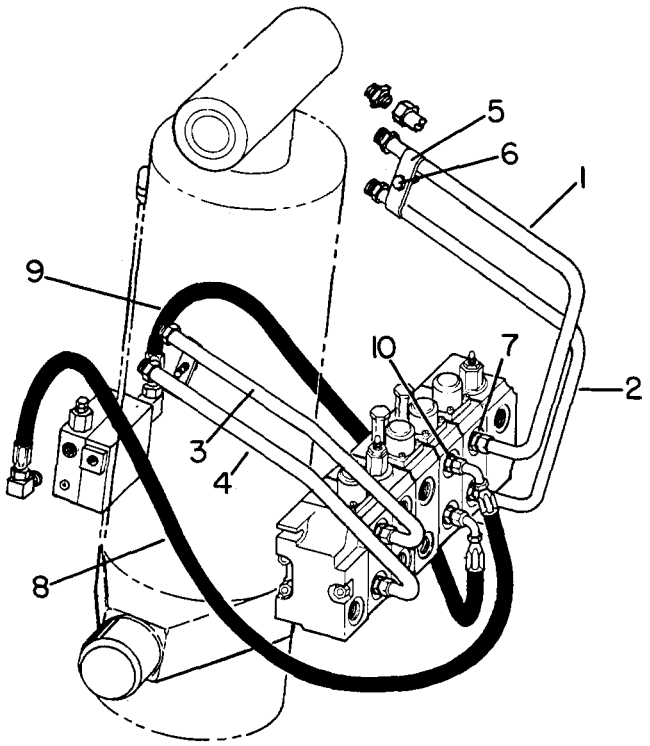

Ref. No.	Part Number	Part Number	Quan. Req'd.	Name and Description
	PRIOR TO SER.#1270	BEGIN. W/ SER.#1270		
1	38852	65332	1	TUBE
		12019-9	1	ADAPTER
2	38853	49500	1	TUBE
3	38850		1	TUBE
4	38851		1	TUBE
5	35639		2	CLAMP
6	1200-98		2	CAPSCREW, 1/2 UNC x 1 1/4 LG.
	1210-26		2	LOCKWASHER, 1/2 MED.
7	1219-282		4	ADAPTER W/"O" RING
	1218-65		4	"O" RING FOR ABOVE
8	A38678		1	HOSE ASSEMBLY
9	A38679		1	HOSE ASSEMBLY
10	1219-555		2	ADAPTER W/"O" RING
	1218-65		2	"O" RING FOR ABOVE
				REFER TO GROUP 6 FOR BOOM HYDRAULICS

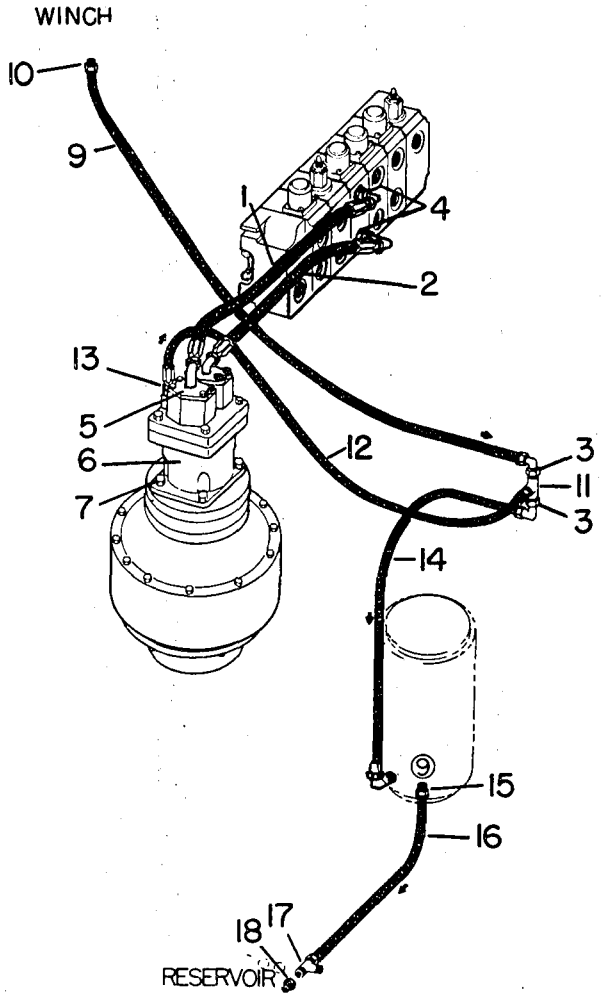

FIG. 1

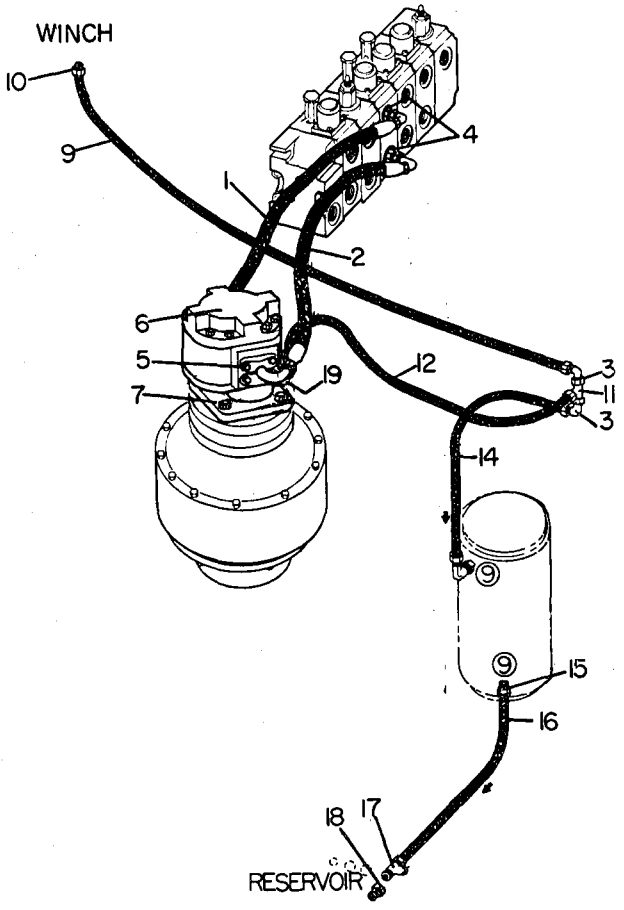

FIG. 2

Ref. No.	Part Number	Part Number	Quan. Req'd.	Name and Description
	FIG. 1	FIG. 2		
1	A38394	A49435	1	HOSE ASSEMBLY
2	A38395	A49434	1	HOSE ASSEMBLY
3	1219-440	1219-440	2	ADAPTER
4	1219-385	1219-385	2	ADAPTER
	1218-65	1218-65	2	"O" RING, FOR ABOVE
5	1219-392	1219-392	4	SPLIT FLANGE CLAMP
	1218-63	1218-63	2	"O" RING
	1203-102	1203-102	8	CAPSCREW, 7/16 UNC x 1 1/2 LG., HT
	1210-23	1210-23	8	LOCKWASHER, 7/16 MED.
6			1	HYDRAULIC MOTOR - SEE PAGES 2.18 & 2.18A
7	1200-102	1200-102	4	CAPSCREW, 1/2 UNC x 1 3/4 LG.
	1210-26	1210-26	4	LOCKWASHER, 1/2 MED.
		49433	4	STUD

Ref. Nc.	Part Number	Quan. Req'd.	Name and Description
9	A41840	1	HOSE ASSEMBLY
10	1219-464	2	ADAPTER, 90°
11	1219-704	1	TEE
12	A37073	1	HOSE ASSEMBLY
13	1219-598	1	ADAPTER
14	A37094	1	HOSE ASSEMBLY
15	1219-347	1	ADAPTER
	1218-41	1	"O" RING, FOR ABOVE
16	A37155	1	HOSE ASSEMBLY
17	1219-695	1	TEE
18	1219-688	1	REDUCER
19	1219-946	1	ELBOW

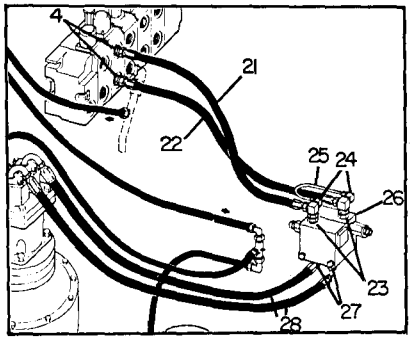

Ref. No.	Part Number	Quan. Req'd.	Name and Description
	A25124	1	HOLD VALVE KIT - INCLUDES ITEMS 21 THRU 28 (OPTIONAL)
21	A37160	1	HOSE ASSEMBLY
22	A37159	1	HOSE ASSEMBLY
23	37864	2	SWIVEL ADAPTER, 90°
	1219-555	2	ADAPTER, FOR ABOVE
24	1219-588	2	ADAPTER, 90°
25	A37901	1	TUBE ASSEMBLY
26	1219-705	1	DOUBLE HOLD VALVE
	1200-320	2	CAPSCREW, 5/16 UNC x 5 1/2 LG., FOR ABOVE
	1210-17	2	LOCKWASHER, 5/16 MED.
	1205-25	2	NUT, 5/16 UNC
27	1219-385	2	ADAPTER
28	A37158	2	HOSE ASSEMBLY

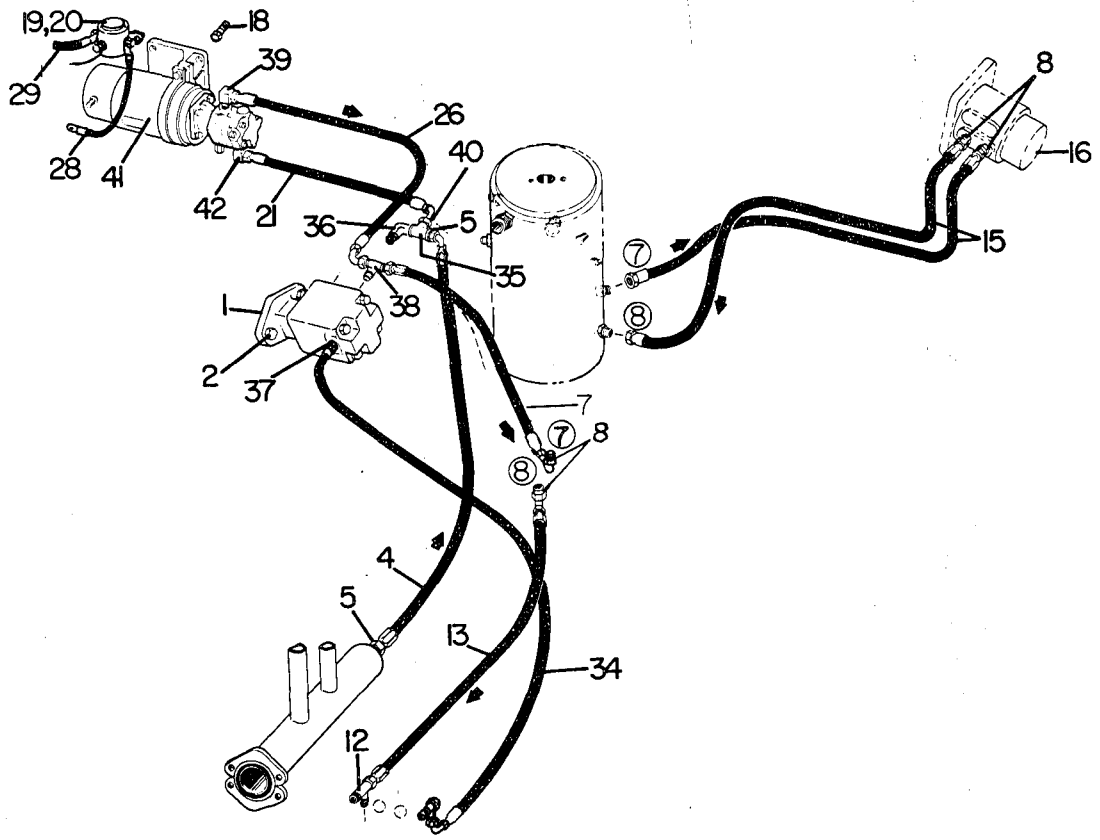

Ref. Nc.	Part Number	Quan. Req'd.	Name and Description
1	37867	1	STEERING PUMP - See Page 2.17
2	1242-6	4	CAPSCREW, 3/8 UNC x 1 1/4 LG., H.T.
	1210-20	4	LOCKWASHER, 3/8 MED.
4	A50427	1	HOSE ASSEMBLY (Replaces A38844)
5	1219-582	2	ADAPTER
7	A49103	1	HOSE ASSEMBLY
12	1219-694	1	TEE
13	A37083	1	HOSE ASSEMBLY
15	A37084	2	HOSE ASSEMBLY
16		1	STEERING VALVE - See Page 16.1
18	1242-36	4	CAPSCREW, 3/8 UNC x 1 LG. H.T.
	1210-20	4	LOCKWASHER, 3/8 MED.
	1205-36	4	NUT, 3/8 UNC

Ref. No.	Part Number	Quan. Req'd.	Name and Description
19	1246-2	1	SOLENOID
20	1200-1	2	CAPSCREW, 1/4 UNC x 3/4 LG.
	1210-14	2	LOCKWASHER, 1/4 MED.
	1205-13	2	NUT, 1/4 UNC
21	A38845	1	HOSE ASSEMBLY
26	A37967	1	HOSE ASSEMBLY
28	1223-142	AR	CABLE - CHRYSLER (2), GM DIESEL (1)
	1223-410	1	CABLE - GM DIESEL
29	1223-467	1	STARTER CABLE
34	A38842	1	HOSE ASSEMBLY
35	1219-475	1	TEE
36	1219-928	1	ELBOW
37	1219-810	1	ADAPTER
38	1219-768	1	TEE
39	1219-815	1	ELBOW
40	1219-627	1	ADAPTER
41	38749	1	PUMP & MOTOR COMPLETE - PRIOR TO SER. #887
	25330	1	PUMP ONLY
	25331	1	MOTOR ONLY
	25332	1	COUPLING
	25333	1	ADAPTER PLATE
	25334	1	MOUNTING BASE
	25335	1	STRAP
41	41979	1	PUMP & MOTOR COMPLETE - BEGIN. W/SER. #887
	27607	1	MOTOR ONLY
	27608	1	PUMP ONLY
42	1219-827	1	ELBOW

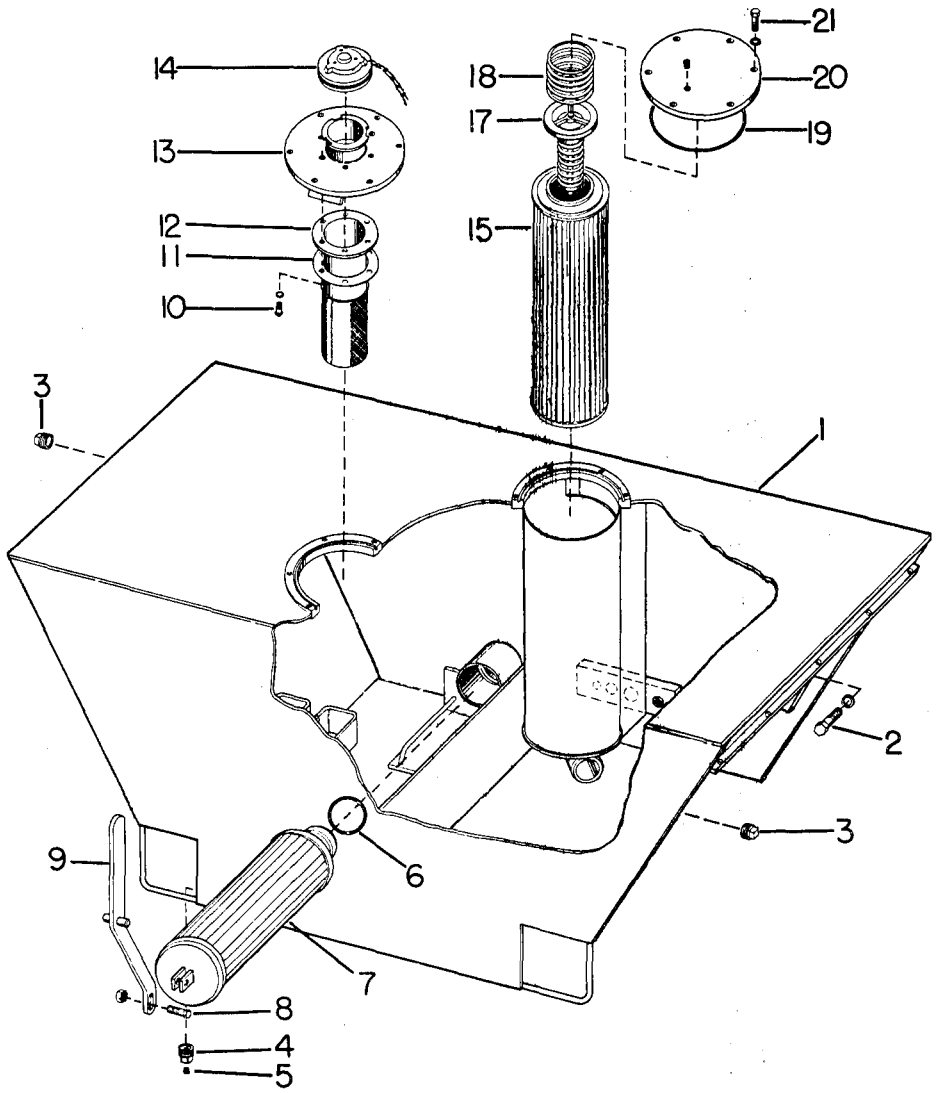

Ref. No.	Part Number	Quan. Req'd.	Name and Description
1	F38924	1	RESERVOIR
2	1200-146	2	CAPSCREW, 5/8 UNC x 1 3/4 LG.
2	1200-148	2	CAPSCREW, 5/8 UNC x 2 LG.
	1210-32	4	LOCKWASHER, 5/8 MED.
3	1219-20	2	PIPE PLUG, 1" NPT
4	37558	1	PIPE PLUG, SPECIAL
5	1219-38	1	PIPE PLUG, 1/8 NPT
6	1218-66	1	"O" RING

Ref. No.	Part Number	Quan. Req'd.	Name and Description
7	1252-5	1	FILTER
8	1200-102	1	CAPSCREW, 1/2 UNC x 1 3/4 LG.
	1205-65	1	NUT, 1/2 UNC SELF-LOCKING
9	F37556	1	LEVER
10	1233-37	6	CAPSCREW, #8-32 x 1/2 LG.
	1210-5	6	LOCKWASHER, #8 MED.
11	35330	2	GASKET
12	35313	1	FILLER STRAINER
13	F37551	1	COVER W/BREATHER
	7679	1	BREATHER, FOR ABOVE
14	F38388	1	FILLER CAP W/CHAIN
15	41181	1	SINGLE FILTER ELEMENT
17	22919	1	BY-PASS VALVE
18	22920	1	HOLD-DOWN SPRING
19	1218-89	2	"O" RING, FOR ITEMS 13 & 20
20	F37554	1	COVER
21	1200-59	12	CAPSCREW, 3/8 UNC x 1 LG.
	1210-20	12	LOCKWASHER, 3/8 MED.
	1219-869	1	PLUG, 2" NPT - HEATER PORT
	A38556	1	IMMERSION HEATER ASSEMBLY, INCLUDES THE FOLLOWING
	38552	1	HEATER
	1223-478	1	PLUG
	12239-36	1	CORD, 3 WIRE
	1223-479	1	CONNECTOR, 3/4" SCREW

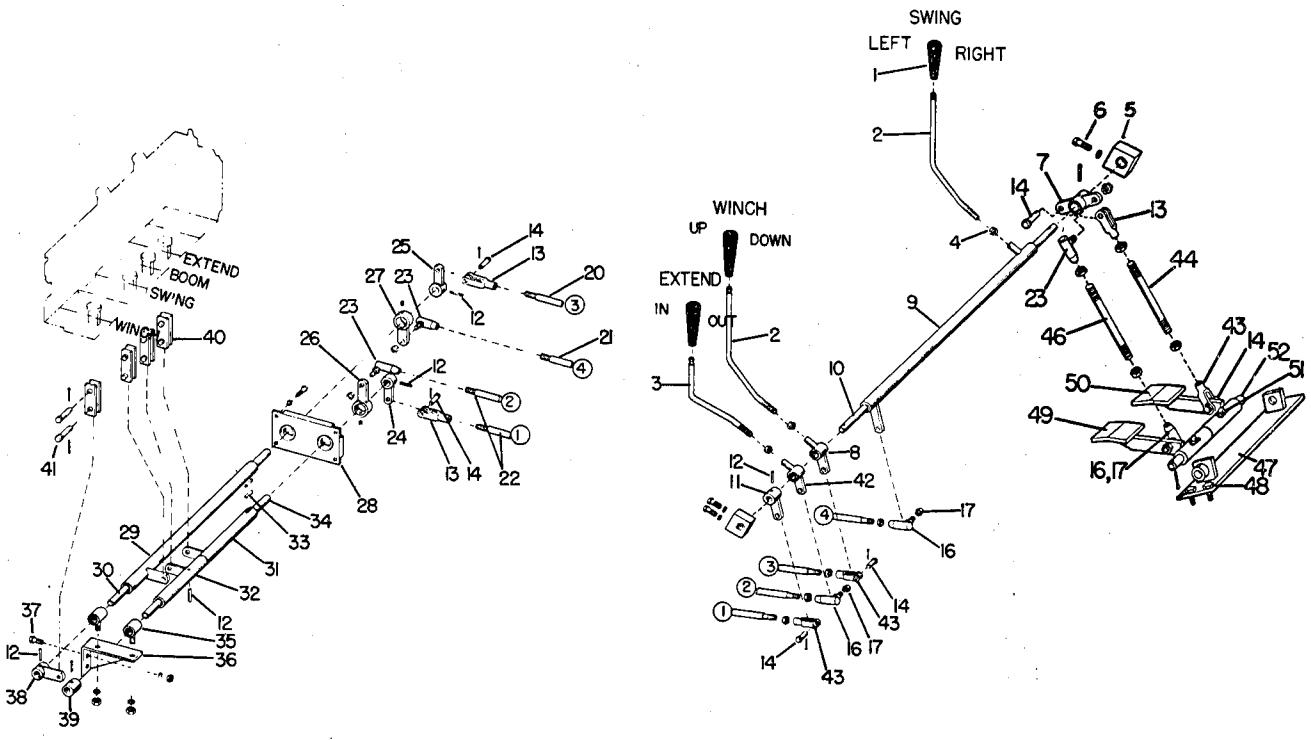

Ref. No.	Part Number	Quan. Req'd.	Name and Description
1	1221-32	3	KNOB
2	37032	2	ROD
3	37031	1	ROD
4	1205-58	3	NUT, 1/2 UNC
5	F37045	2	SUPPORT
	1214-96	1	BUSHING, FOR ABOVE
6	1200-57	4	CAPSCREW, 3/8 UNC x 3/4 LG.
	1210-20	4	LOCKWASHER, 3/8 MED.
7	F37015	1	BELLCRANK
8	F38330	1	BELLCRANK
	1214-96	1	BUSHING, FOR ABOVE

Ref. No.	Part Number	Quan. Req'd.	Name and Description
9	F38326	1	BELLCRANK
	1214-96	2	BUSHING, FOR ABOVE
10	37042	1	SHAFT
11	F38331	1	ARM
12	1227-186	6	ROLL PIN, 1/8 x 1 1/4 LG.
13	3118	3	YOKE
	1205-37	3	NUT, 3/8 UNF
14	3119	5	PIN
	1207-13	5	COTTER PIN, 3/32 x 1 LG.
16	1222-182	3	BALL JOINT, LH
	1205-162	3	NUT, 3/8 UNF JAM, LH
17	1205-37	3	NUT, 3/8 UNF
	1210-20	3	LOCKWASHER, 3/8 MED.
20	F38337	1	CONTROL ROD
21	F38339	1	CONTROL ROD
22	F36892	2	CONTROL ROD
23	1222-139	2	BALL JOINT
	1205-37	2	NUT, 3/8 UNF
	1210-20	2	LOCKWASHER, 3/8 MED.
24	F38334	1	LEVER
25	F37037	1	LEVER
26	F37018	1	LEVER
27	F38335	1	LEVER
	1206-2	2	SETSCREW, 1/4 UNC x 1/4 LG., FOR ITEMS 26 & 27
28	F37053	1	SUPPORT
	1214-44	2	BUSHING, FOR ABOVE
	1200-57	4	CAPSCREW, 3/8 UNC x 3/4 LG.
	1210-20	4	LOCKWASHER, 3/8 MED.

Ref. No.	Part Number	Quan. Req'd.	Name and Description
29	F37026	1	BELLCRANK
	1214-96	2	BUSHING, FOR ABOVE
30	37040	1	SHAFT
31	F37022	1	BELLCRANK
	1214-96	2	BUSHING, FOR ABOVE
32	F37024	1	BELLCRANK
	1214-96	2	BUSHING, FOR ABOVE
33	37893	2	KEY
34	37041	1	SHAFT
35	F37044	2	SUPPORT
	1214-96	1	BUSHING, FOR ABOVE
	1210-20	2	LOCKWASHER, 3/8 MED.
	1205-36	2	NUT, 3/8 UNC
36	F37028	1	BRACKET
37	1200-61	2	CAPSCREW, 3/8 UNC x 1 1/4 LG.
	1210-20	2	LOCKWASHER, 3/8 MED.
	1205-36	2	NUT, 3/8 UNC
38	F37035	1	ARM
39	37049	1	TUBE
40	37055	8	LINK
41	1689	8	PIN
	1207-13	8	COTTER PIN, 1/8 x 1 1/4 LG.
42	F38329	1	BELLCRANK
	1214-96	1	BUSHING, FOR ABOVE
43	35559	2	YOKE, LH
	1205-162	2	NUT, 3/8 UNF JAM, LH
44	41472	1	CONTROL ROD
46	41473	1	CONTROL ROD
47	F41468	1	BRACKET
48	1200-3	4	CAPSCREW
	1210-14	4	LOCKWASHER
	1205-13	4	NUT
49	F41476	1	PEDAL, RH
50	F41477	1	PEDAL, LH
	1216-2	4	BUSHING, FOR ABOVE PEDALS
	1208-8	2	MACHINERY BUSHING
51	1213-6	2	GREASE FITTING
52	41474	1	PIN
	1207-31	1	COTTER PIN, FOR ABOVE

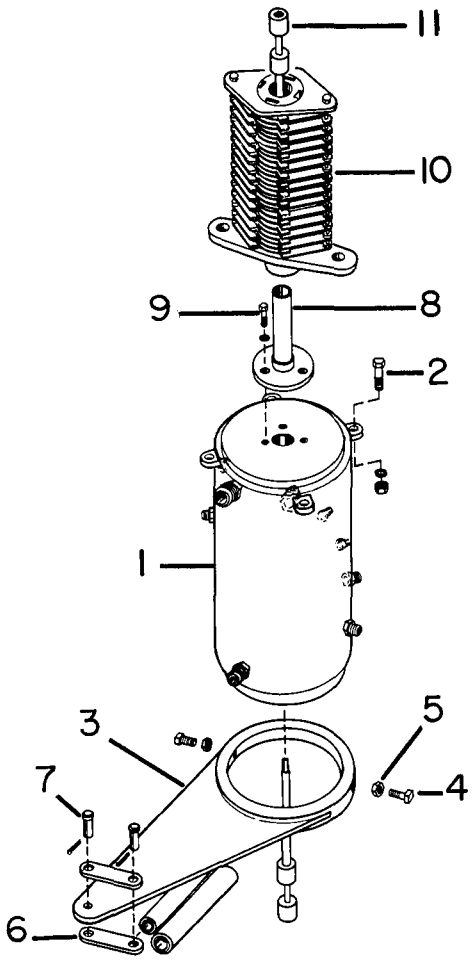

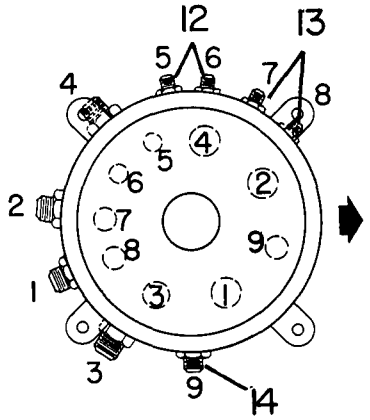

PRIOR TO SER. 955

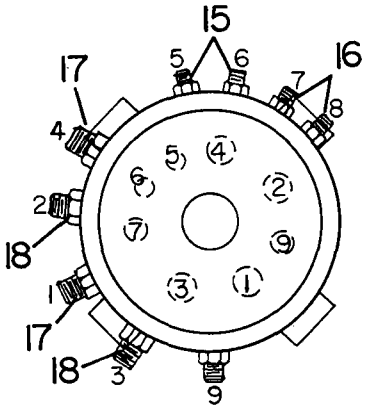

BEGIN. W/SER. 955

Ref. No.	Part Number	Quan. Req'd.	Name and Description
1		1	ROTARY GLAND - SEE PAGE 2.15 OR PAGE 2.25
2	1242-37	4	CAPSCREW, 1/2 UNC x 1 3/4 LG. GRADE 5
	1210-26	4	LOCKWASHER, 1/2 MED.
	1205-58	4	NUT, 1/2 UNC
3	F37196	1	TORQUE ARM
	1214-59	2	BUSHING, TOP) FOR ABOVE
	1214-65	2	BUSHING, BOTTOM)
4	1206-64	2	SETSCREW, 5/8 UNC x 1 1/2 LG., SOCK. HEAD, CUP PT.
5	1205-84	2	NUT, 5/8 UNC JAM
	1210-32	2	LOCKWASHER, 5/8 MED.
6	37169	2	LINK
7	1474	2	PIN
	1207-12	2	COTTER PIN, 1/8 x 1 LG.
8	F37009	1	COLUMN

Ref. No.	Part Number	Quan. Req'd.	Name and Description
9	1200-59 1210-20	3 3	CAPSCREW, 3/8 UNC x 1 LG. LOCKWASHER, 3/8 MED.
10		1	COLLECTOR RING - SEE PAGE 5.1
11		1	HYDRAULIC SWIVEL - SEE PAGE 13.4
12	1219-795	2	ADAPTER
13	1219-440	2	ADAPTER
14	1219-281	1	ADAPTER
15	1219-605	2	ADAPTER
16	1219-441	2	ADAPTER
17	1219-556	2	ADAPTER
18	1219-282	2	ADAPTER

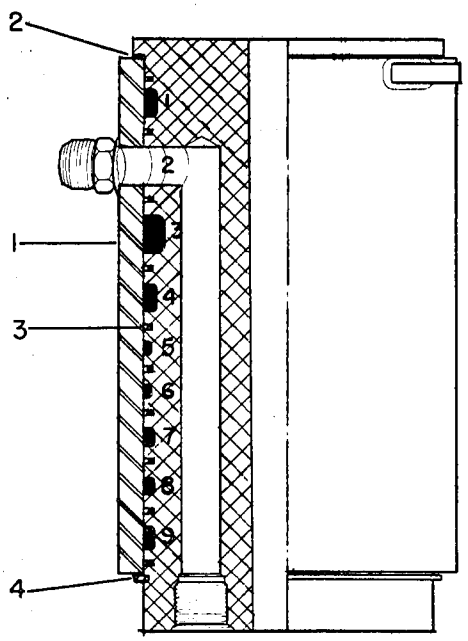

Ref. No.	Part Number	Quan. Req'd.	Name and Description
1	37004	1	ROTARY MANIFOLD COMPLETE - USED PRIOR TO SER. #955 SEE PAGE 2.25 FOR MANIFOLD USED BEGIN. W/SER. #955
2	23686	1	SPACER
3	23687	10	"O" RING & TEFLON RING
4	23688	1	SNAP RING

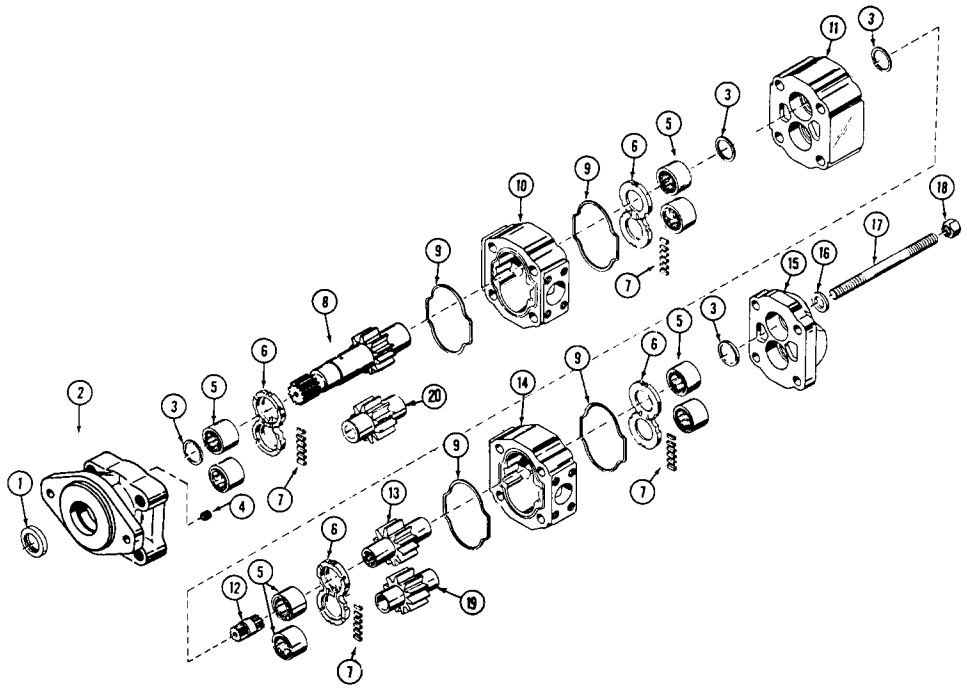

Ref. No.	Part Number	Quan. Req'd.	Name and Description
	38572	1	PUMP COMPLETE, INCLUDES ITEMS 1 THRU 18
	A24987	1	SEAL KIT, INCLUDES ITEMS 1, 3, 7, & 9
1	24244	1	DOUBLE LIP SEAL
2	24245	1	SHAFT END COVER
3	24982	4	RING SEAL
4	24674	1	PLUG
5	24248	8	ROLLER BEARING
6	24249	4	THRUST PLATE
7	24983	24	POCKET SEAL
8	24984	1	SHAFT & GEAR SET (2")
9	24252	4	GASKET
10	24985	1	GEAR HOUSING
11	24254	1	BEARING CARRIER
12	24255	1	CONNECTING SHAFT
13	24986	1	MATCHED GEAR SET (1 3/4")

Ref. No.	Part Number	Quan. Req'd.	Name and Description
14	24253	1	GEAR HOUSING
15	24258	1	PORT END COVER
16	24259	4	WASHER
17		4	STUD
18	24247	4	NUT

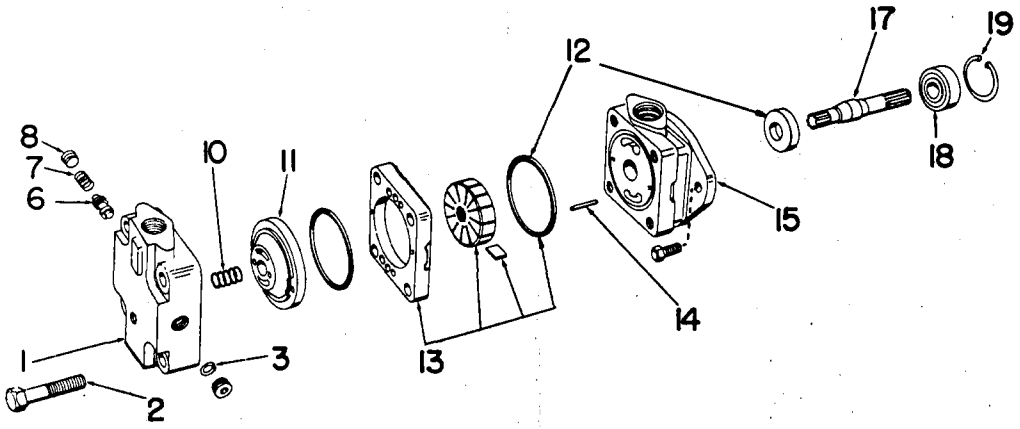

Ref. No.	Part Number	Quan. Req'd.	Name and Description
	37867	1	HYDRAULIC PUMP, COMPLETE
1	24367	1	COVER
2	24368	4	SCREW
3	24350	1	SNAP RING
6	24353	1	VALVE ASSEMBLY, RELIEF
7	24369	1	SPRING
8	24355	1	PLUG
10	24370	1	SPRING
11	24371	1	PRESSURE PLATE
	24372	1	BUSHING, FOR ABOVE PLATE
12	24373	1	SEAL KIT
13	24374	1	CARTRIDGE KIT
14	24361	2	PIN
15	24375	1	BODY
17	24376	1	SHAFT
18	24365	1	BEARING
	24377	1	SNAP RING, BEARING
19	24366	1	SNAP RING

PRIOR TO SER. #1040

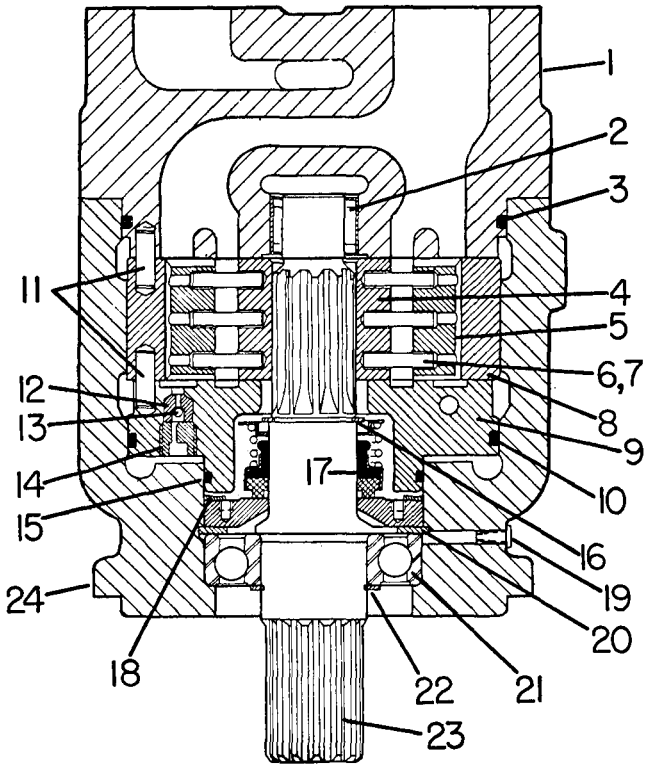

Ref. No.	Part Number	Quan. Req'd.	Name and Description
	37220	1	HYDRAULIC MOTOR COMPLETE - INCLUDES ITEMS 1 THRU 24
	24324	1	"O" RING & SEAL KIT - INCLUDES ITEMS 3, 10, 15, 17
1	24325	1	END CAP
		4	CAPSCREW, 5/8 UNC x 2 LG., SOCK. HD. - CAP TO HOUSING
2	24326	1	BEARING
3	24327	1	"O" RING
4	24328	1	ROTOR
5	24329	1	VANE KIT - INCLUDES 10 VANES
6	24330	30	SPRING GUIDE
7	24331	30	COMPRESSION SPRING
8	24332	1	CAM RING
9	24333	1	FRONT PORT PLATE ASSEMBLY - REPLACES ITEMS 12, 13, 14
	27994	1	POPPET, FOR ABOVE) LATER MODELS
	27995	1	SETSCREW, FOR ABOVE) LATER MODELS
10	24334	1	"O" RING
11	24335	2	DOWEL PIN
12			)
13			) - NOT APPLICABLE
14			)
15	24339	1	"O" RING
16	1220-37	1	RETAINING RING
17	24340	1	SEAL
18	24341	1	SPRING, WAVY WASHER
19	24342	1	CAP PLUG
20	24343	1	RETAINING RING
21	24344	1	BALL BEARING
22	24345	1	RETAINING RING
23	24346	1	SHAFT, SPLINED
24	24347	1	HOUSING

BEGIN. W/SER. #1040

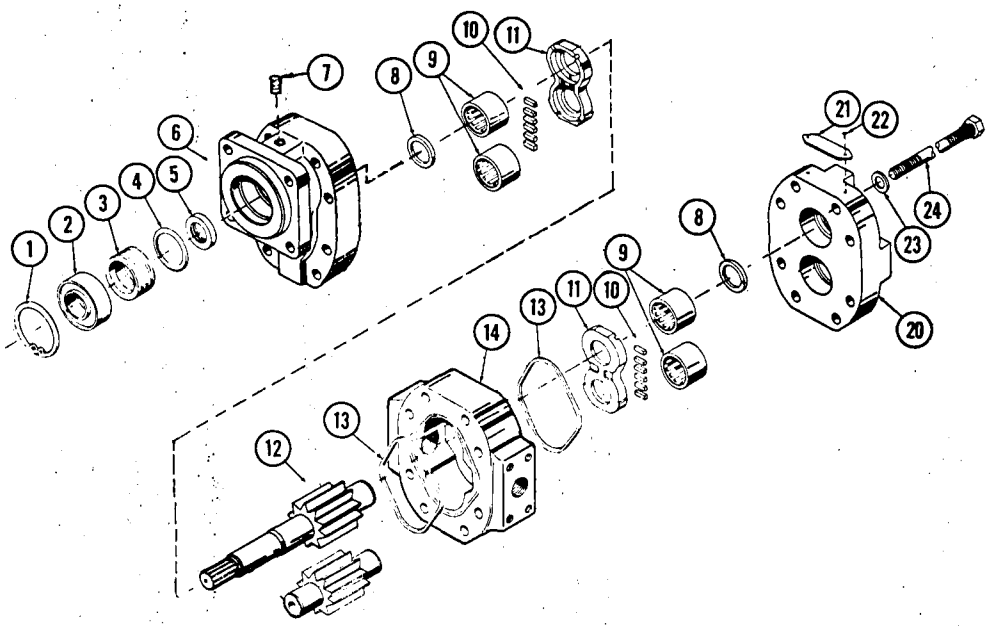

Ref. No	Part Number	Quan. Req'd.	Name and Description
	43809	1	HYDRAULIC MOTOR COMPLETE
	A25113	1	SEAL KIT, INCLUDES ITEMS 4, 5, 8, 10, 13
1	25092	1	SNAP RING
2	25096	1	BEARING
3	25093	1	SEAL RETAINER
4	25094	1	"O" RING
5	22051	1	LIP SEAL
6	25091	1	SHAFT END COVER
7	25097	1	PLUG
8	25095	2	RING SEAL
9	22064	4	BEARING
10	25106	12	POCKET SEAL
11	25105	2	THRUST PLATE
12	28145	1	GEAR SET, 1 1/4"
13	25107	2	GASKET SEAL
14	28146	1	GEAR HOUSING
20	25128	1	PORT END COVER
21	25102	1	PLATE
22	25103	2	SCREW
23	24259	8	WASHER
24		8	CAPSCREW

BEGIN. W/SER. #1241

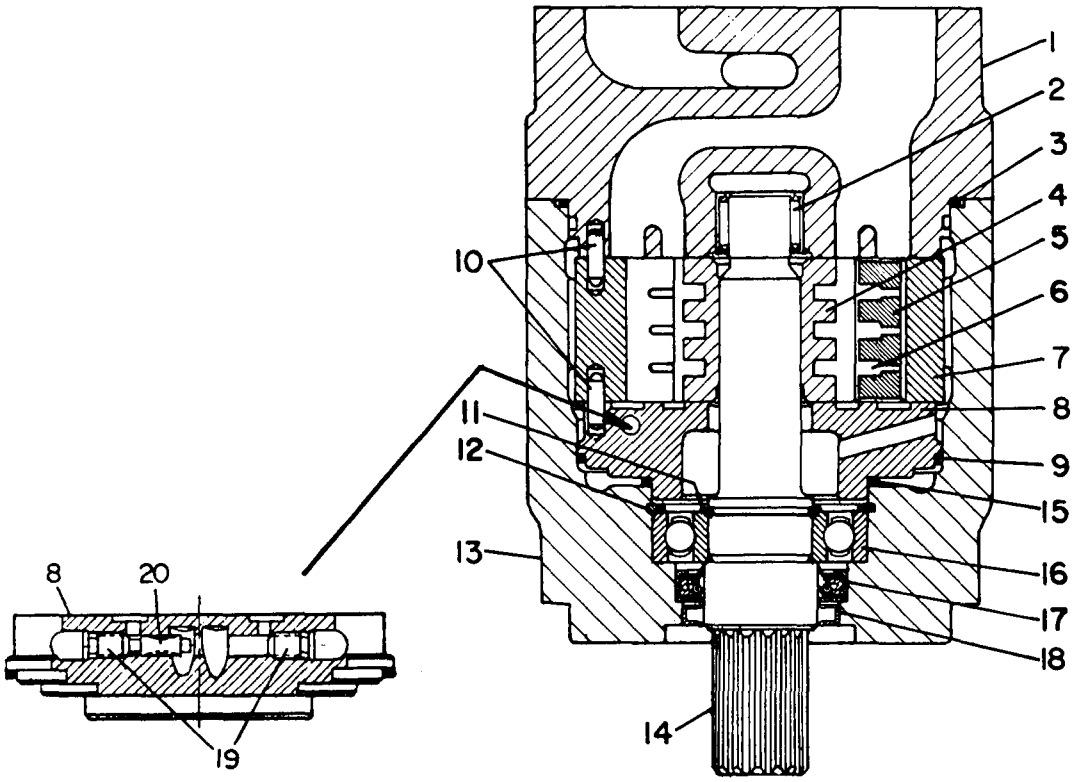

Ref. No.	Part Number	Quan. Req'd.	Name and Description
	54739	1	HYDRAULIC MOTOR COMPLETE - INCLUDES ITEMS 1 THRU 19
	28033	1	SEAL KIT (REPLACES 37220)
1	28018	1	END CAP
	28017	4	CAPSCREW, 5/8 UNC x 2 1/4 LG., SOCKET HEAD
2	28020	1	BEARING
3	28019	1	SEAL
	28022	1	CAM RING ASSEMBLY, INCLUDES ITEMS 4 THRU 7
4	28035	1	ROTOR
5	28036	1	VANE KIT - INCLUDES 10 VANES
6	28037	30	SPRING
7	28034	1	CAM RING
8	28023	1	FRONT PORT PLATE ASSEMBLY
9	28024	1	SEAL
10	28021	2	DOWEL PIN
11	28027	1	SNAP RING
12	28029	1	SNAP RING
13	28032	1	BODY
14	28031	1	SPLINED SHAFT
15	28025	1	SEAL
16	28030	1	BEARING
17	28026	1	SHAFT SEAL
18	28028	1	FELT WIPER
19	28056	2	SCREW, 5/16 UNC x 7/16 LG.
20	200736	1	SHUTTLE SPOOL

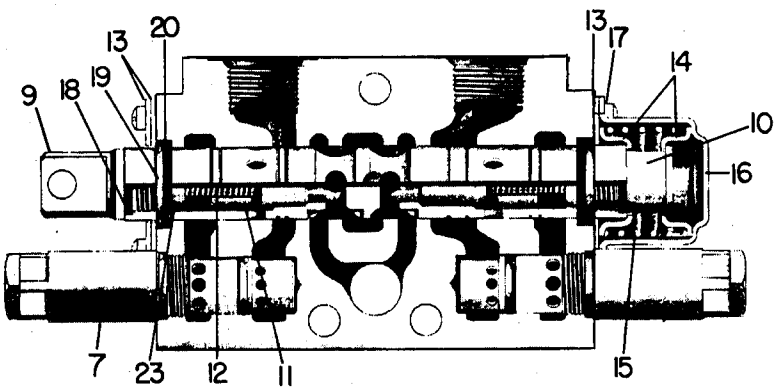

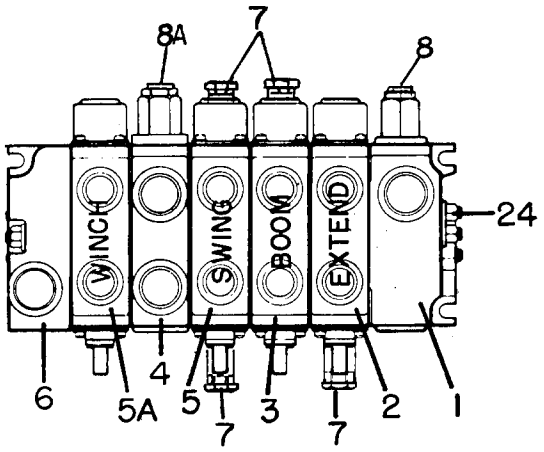

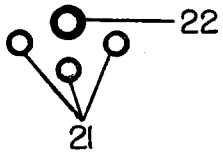

Ref. No.	Part Number	Quan. Req'd.	Name and Description
	49165		VALVE BANK COMPLETE - BEGIN. W/SER. #902 (REPLACES 41825)
	A24378		"O" RING KIT, INCL. ITEMS 18 THRU 22 FOR COMPLETE VALVE
	A24055		"O" RING KIT, INCL. ITEMS 18 THRU 22 FOR ONE WORK SECTION
1	24379	1	INLET SECTION COMPLETE, INCLUDES ITEMS 8, 21, 22
2	24381	1	WORK SECTION COMPLETE, INCLUDES ITEMS 7, 9 THRU 23
3	24494	1	WORK SECTION COMPLETE, INCLUDES ITEMS 7, 9 THRU 23
4	26556	1	MID-INLET SECTION COMPLETE, INCLUDES ITEMS 8, 21, 22
5	27124	1	WORK SECTION COMPLETE, INCLUDES ITEMS 7, 9 THRU 23) REPLACES 24496 PRIOR #902
5A	27125	1	WORK SECTION COMPLETE, INCLUDES ITEMS 9 THRU 23
6	24388	1	OUTLET SECTION

Ref. No.	Part Number	Quan. Req'd.	Name and Description
7	24390	AR	RELIEF VALVE CARTRIDGE - 2750 PSI - SEE PAGE 2.22
8		1	MAIN RELIEF VALVE CARTRIDGE - 2000 PSI | - SEE PAGE 2.21
8A		1	MAIN RELIEF VALVE CARTRIDGE - 2750 PSI |
9	24015	1	SPOOL CLEVIS
10	24016	1	STRIPPER BOLT
11	24017	2	POPPET — QUANTITIES SHOWN FOR ONE SECTION
12	24018	2	SPRING
13	24019	3	RETAINER PLATE
14	24696	2	SPRING GUIDE
15	24021	1	SPRING
16	24022	1	END CAP
17	24697	8	CAPSCREW - REPLACES 24023
	24695	8	LOCKWASHER
18	24698	2	"O" RING - REPLACES 24024
19	24003	2	BACK-UP RING
20	24699	2	"O" RING - REPLACES 24002 QUAD RING
21	24025	3	SEAL (SQUARE SECTION)) REQ'D BETWEEN EACH SECTION
22	24026	1	SEAL (SQUARE SECTION)
23	24027	1	SLUG
24	24391	3	STUD ASSEMBLY

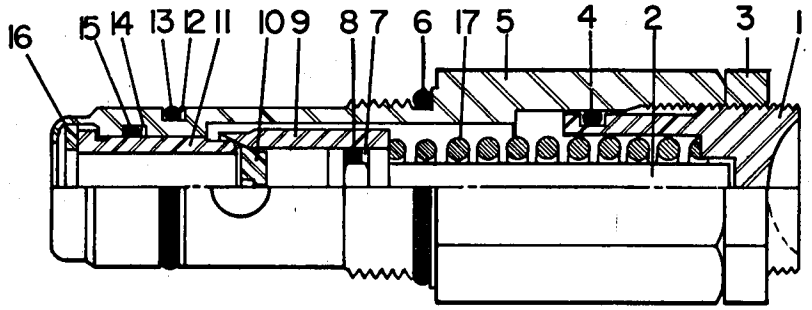

Main Relief

IMPORTANT: REPLACEMENT CARTRIDGES MUST BE ADJUSTED TO THE PROPER PSI SETTING AS SHOWN IN THE MACHINE MAINTENANCE INSTRUCTIONS.

Ref. No.	Part Number	Quan. Req'd.	Name and Description
	27088		MAIN RELIEF VALVE - 2000 PSI — REPLACES THE FOLLOWING: 26557 - 2750 PSI ADJUST REPLACEMENT CARTRIDGE TO SPECIFIED SETTING - SEE MAINTENANCE MANUAL.
1	26457	1	SCREW
2	22164	1	PLUNGER
3	22167	1	NUT
4	22159	1	"O" RING
5	26458	1	SHELL
6	1218-65	1	"O" RING
7	22163	1	BACK-UP RING
8	22162	1	"O" RING
9	26459	1	SEAT
10	25545	1	SNUBBER
11	22157	1	POPPET
12	26413	1	BACK-UP RING (PARBACK)
13	1218-114	1	"O" RING
14	26460	1	BACK-UP RING
15	22158	1	"O" RING
16	26461	1	RETAINER
17	26462	1	SPRING - 2001 TO 2800 PSI
17	22165	1	SPRING - 800 TO 2000 PSI

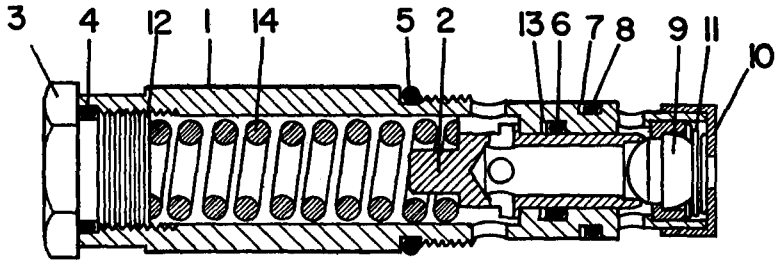

Line Relief

Ref. No.	Part Number	Quan. Req'd.	Name and Description
	24390		LINE RELIEF COMPLETE, INCLUDES ITEMS 1 THRU 14 - 2750 PSI
1	26463	1	CARTRIDGE
2	26464	1	SEAT
3	26465	1	CAP
4	26466	1	"O" RING
5	23144	1	"O" RING
6	1218-169	1	"O" RING
7	26412	1	BACK-UP RING (PARBACK)
8	23405	1	"O" RING
9	26467	1	BALL & RETAINER ASSEMBLY
10	26468	1	END CAP RETAINER
11	26469	1	SPRING
12	26470	1	SLUG
	26471	1	SLUG
	26472	1	SLUG
13	26473	1	BACK-UP RING
14	26474	1	SPRING - 1001 TO 2200 PSI
	26475	1	SPRING - 2201 TO 3800 PSI

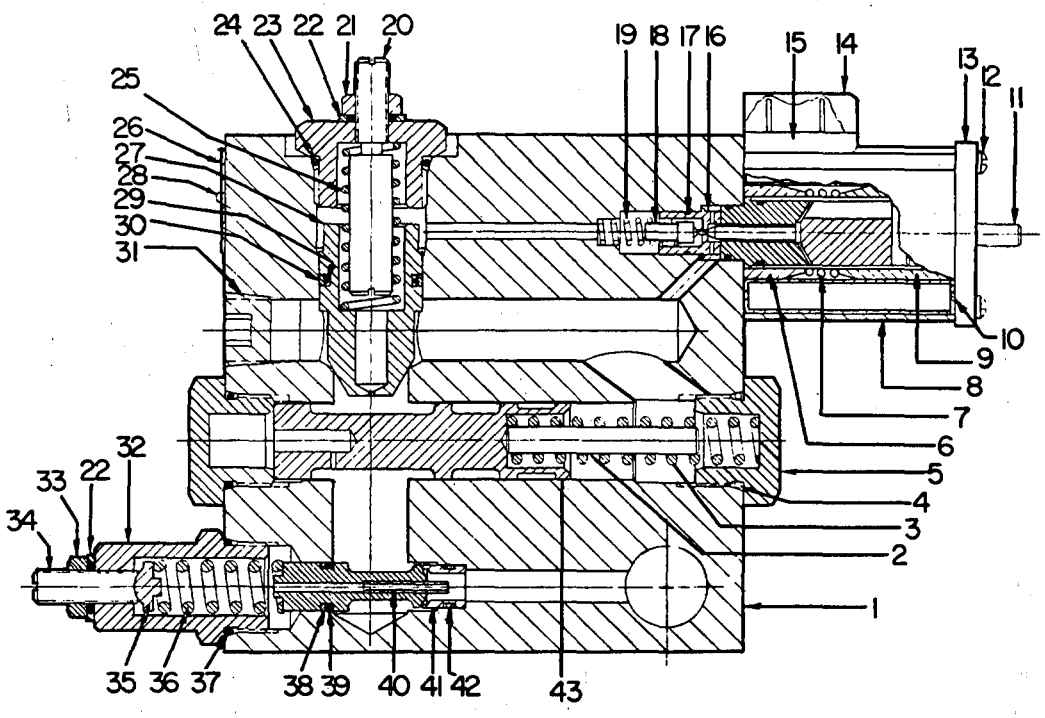

Ref. No.	Part Number	Quan. Req'd.	Name and Description
	41801	1	VALVE COMPLETE
	A29308	1	SEAL KIT - INCLUDES ITEMS 4,17,22,24,29,30,37-39,42
1	26796	1	BODY - REQUIRES SPOOL, ITEM 43
2	26797	1	STOP PIN
3	26798	1	SPRING
4	26799	2	"O" RING
5	26800	2	CAP
6	26801	1	SLEEVE
7	26802	1	SPRING
8	26803	1	SOLENOID CASE
9	26804	1	SLEEVE
10	26805	1	WASHER
11	26806	1	GUIDE TUBE ASSEMBLY
12	26807	4	TIE ROD
13	26808	1	PLATE
14	26809	1	COIL PROTECTOR
15	26810	1	COIL
16	26811	1	POPPET GUIDE
17	26812	1	"O" RING

Ref. No.	Part Number	Quan. Req'd.	Name and Description
18	26813	1	POPPET
19	26814	1	SPRING
20	26815	1	ADJUSTING STEM
21	26816	1	NUT
22	26817	2	THREAD SEAL
23	26818	1	PLUG
24	26819	1	"O" RING
25	26820	1	SPRING
26	26821	1	NAME PLATE
27	26822	1	POPPET
28	26823	2	SELF-TAPPING SCREW
29	26824	1	"O" RING
30	26825	1	SLIPPER SEAL
31	26826	1	PIPE PLUG
32	26827	1	PLUG
33	26828	2	JAM NUT
34	26829	1	SETSCREW
35	26830	1	SPRING END
36	26831	1	SPRING
37	26832	1	"O" RING
38	26833	1	BACK-UP RING
39	26834	1	"O" RING
40	26835	1	POPPET ASSEMBLY
41	26836	1	SEAT
42	26837	1	"O" RING
43	26838	1	SPOOL - REQUIRES BODY, ITEM 1

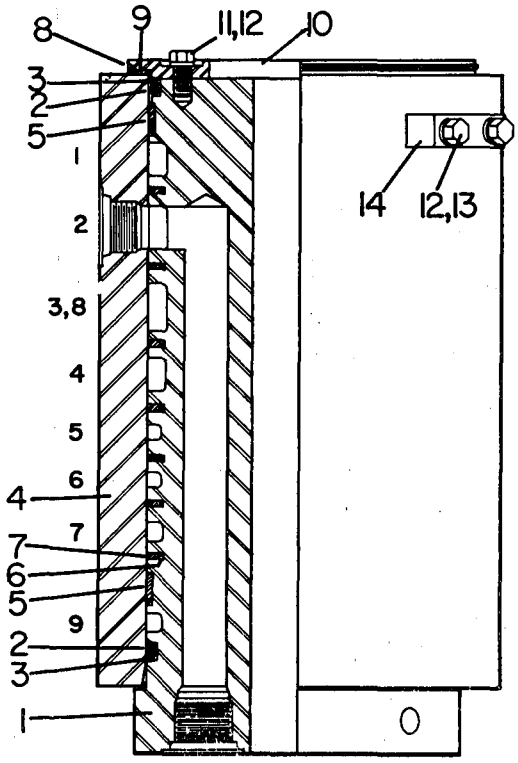

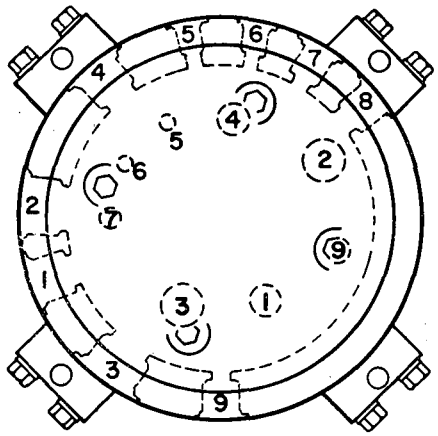

Top View

Ref. No.	Part Number	Quan. Req'd.	Name and Description
	A49131	1	HYDRAULIC ROTARY MANIFOLD - INCLUDES ITEMS 1 THRU 14
	A27119	1	SEAL KIT - INCLUDES ITEMS 2, 3, 5 THRU 9
1	49123	1	SPOOL
2	1218-187	2	"O" RING
3	1218-188	2	BACK-UP RING
4	49124	1	CASE
5	49125	2	WEAR RING
6	49126	7	RECTANGULAR RING
7	49127	7	SEAL
8	49128	1	THRUST WASHER
9	1218-52	2	"O" RING
10	49129	1	PLATE
11	1242-100	4	CAPSCREW, 3/8 UNC x 3/4 LG. GRADE 5
12	1210-20	12	LOCKWASHER, 3/8 MED.
13	1242-44	8	CAPSCREW, 3/8 UNC x 1 1/2 LG. GRADE 5
14	49130	4	BLOCK

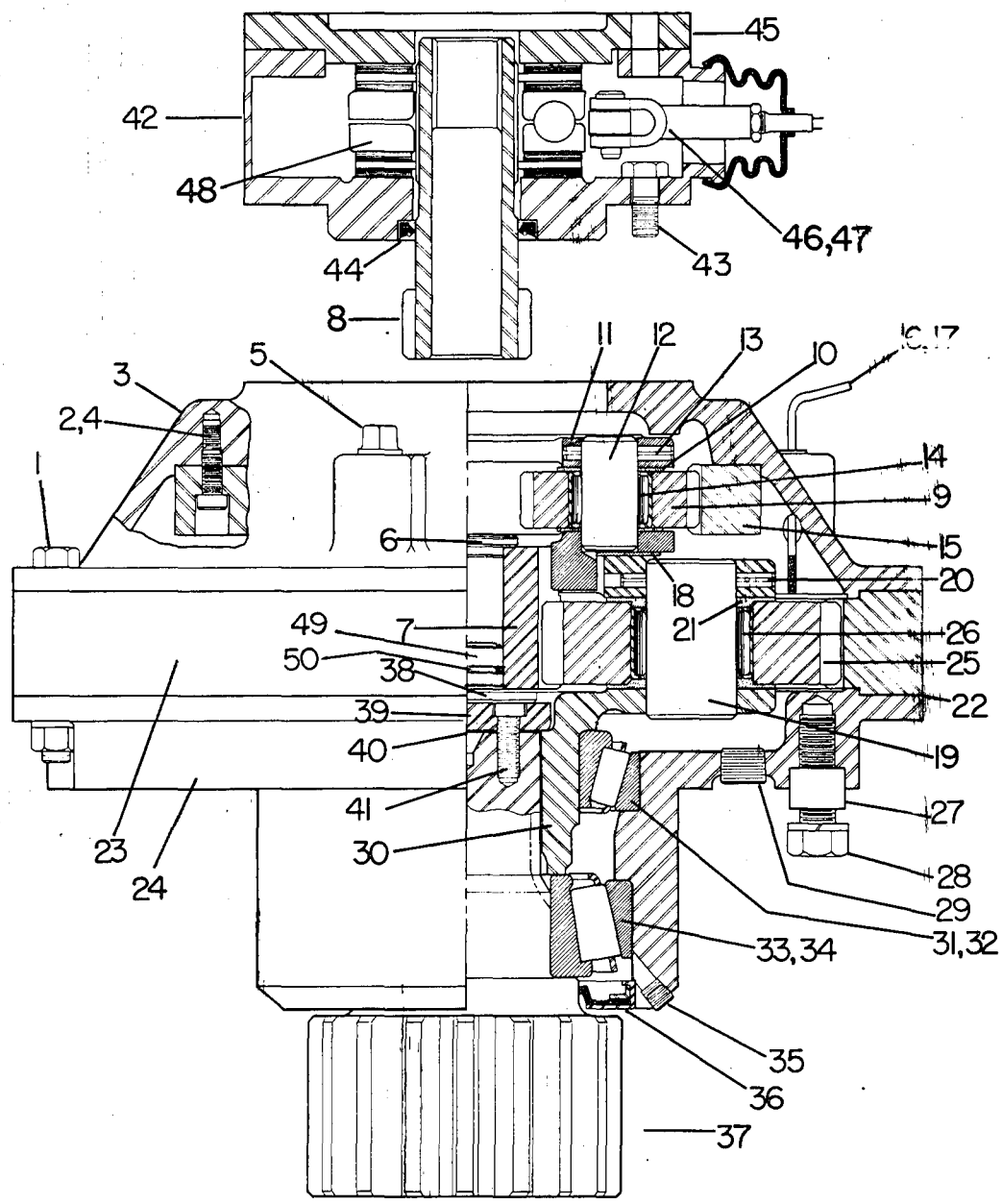

Ref. No.	Part Number	Quan. Req'd.	Name and Description
	A36510	1	SPEED REDUCER COMPLETE, INCLUDES ITEMS 1 THRU 41
1	1200-116	12	CAPSCREW, 1/2 UNC x 3 1/2 LG.
	1210-26	12	LOCKWASHER, 1/2 MED.
	1205-58	12	NUT, 1/2 UNC
2	1203-134	1	SHOULDER SCREW, 3/8
3	A46083	1	CASE ASSEMBLY, INCLUDES ITEMS 2, 4, 15
4	1203-14	5	CAPSCREW, 5/16 UNC x 1 1/4 LG., HEX SOCKET HEAD
5	1213-37	1	BREATHER

Ref. No.	Part Number	Quan. Req'd.	Name and Description
6	36533	1	BUSHING
7	36511	1	GEAR
8	37717	1	GEAR
9	36512	3	GEAR
10	36535	6	BUSHING
11	36544	1	PLANET CARRIER
12	36545	3	SHAFT
13	1227-260	3	ROLL PIN
14	1217-250	3	ROLLER BEARING
15	A25972	1	GEAR ASSEMBLY, INCLUDES 36520 GEAR, 46082 DOWEL PIN - REFER TO SERVICE BULLETIN #243.
16	F36540	1	DIPSTICK
17	1218-31	1	"O" RING
18	36524	1	BUSHING
19	36525	3	SHAFT
20	1227-261	3	ROLL PIN
21	36526	6	BUSHING
22	36527	2	SHIM
23	36516	1	GEAR
24	36529	1	CASE
25	36519	3	GEAR
26	1217-251	3	ROLLER BEARING
27	12014-2	1	BUSHING
28	1200-144	5	CAPSCREW, 5/8 UNC x 1 1/2 LG.
	1200-148	1	CAPSCREW, 5/8 UNC x 2 LG.
	1210-32	6	LOCKWASHER, 5/8 MED.
29	1219-537	1	PLUG, 1/2 NPT HEX SOCKET HEAD
30	36542	1	PLANET CARRIER
31	1217-238	1	CUP
32	1217-237	1	CONE

Model S-628
Date 1 MARCH 1972

SWING SPEED REDUCER

Group No. 3
Page 3.3

Ref. No.	Part Number	Quan Req d.	Name and Description
33	1217-249	1	CUP
34	1217-248	1	CONE
35	1219-38	1	PLUG, 1/8 NPT HEX SOCKET HEAD
36	1218-96	1	SEAL
37	36517	1	GEAR
38	36546	1	BUSHING
39	36534	1	CAP
40	36536	AR	SHIM, .002
	36537	AR	SHIM, .005
	36538	AR	SHIM, .010
41	1203-135	4	CAPSCREW, 3/8 UNC x 1 LG., HEX SOCKET HEAD
42	F37896	1	CASE
43	1203-143	3	CAPSCREW, 1/2 UNC x 1 LG., NYLOK, HEX SOCKET HEAD
	1206-36	1	CAPSCREW, 1/2 UNC x 1 1/4 LG., NYLOK, HEX SOCKET HEAD
44	1218-158	1	SEAL, 2 9/16 OD, 1/4 WIDE, DOUBLE LIP
45	37722	1	COVER
46	3118	1	YOKE
	1205-40	1	NUT, 3/8 UNF JAM
47	3119	1	PIN
	1207-4	1	COTTER PIN
48	37719	1	BRAKE ASSEMBLY
	25568	1	ACTUATING ASSEMBLY
	25567	2	MIDDLE DISC ASSEMBLY
49	42815	1	SLUG
50	1218-26	1	"O" RING

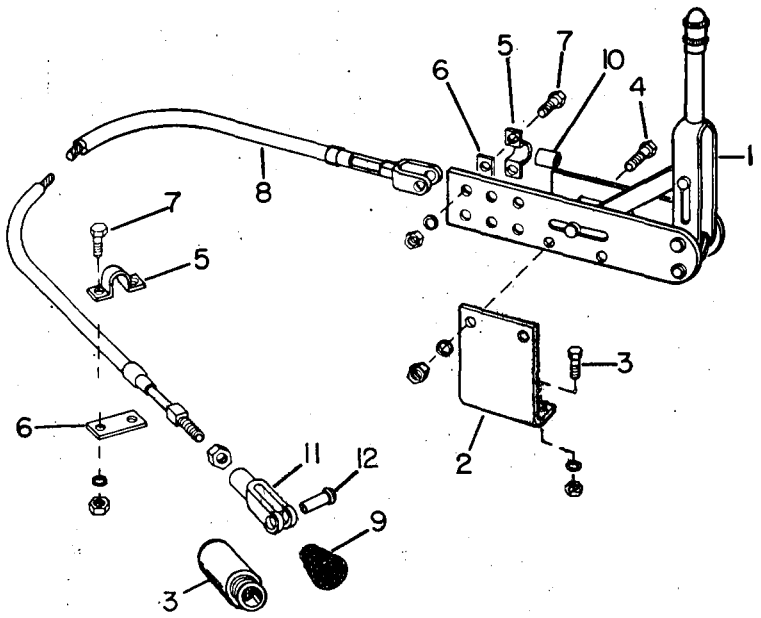

Ref. No.	Part Number	Quan Req'd.	Name and Description
1	37218	1	BRAKE LEVER
2	F49244	1	SUPPORT - BEGIN. W/SER. #961 - REPLACES 37219
3	1200 57	2	CAPSCREW 3/8 UNC x 3/4 LG.
4	1200-65	2	CAPSCREW, 3/8 UNC x 1 3/4 LG.
	1291 18	2	SPACER, FOR ABOVE
	1210 20	4	LOCKWASHER 3/8 MED.
	1205-36	4	NUT, 3/8 UNC
5	32475	1	CABLE CLAMP
6	32476	1	LINK SPACER
7	1200-32	2	CAPSCREW, 5/16 UNF x 1 LG.
	1210-17	2	LOCKWASHER, 5/16 MED.
	1205-26	2	NUT, 5/16 UNF
8	1291-7	1	BRAKE CABLE, STANDARD CAB
9	37729	1	BOOT
10	1291-19	1	SPACER
11	3118	1	YOKE
	1205-40	1	NUT, 3/8 UNF JAM
12	3119	1	PIN
	1207-4	1	COTTER PIN
13	F42762	1	CABLE ANCHOR

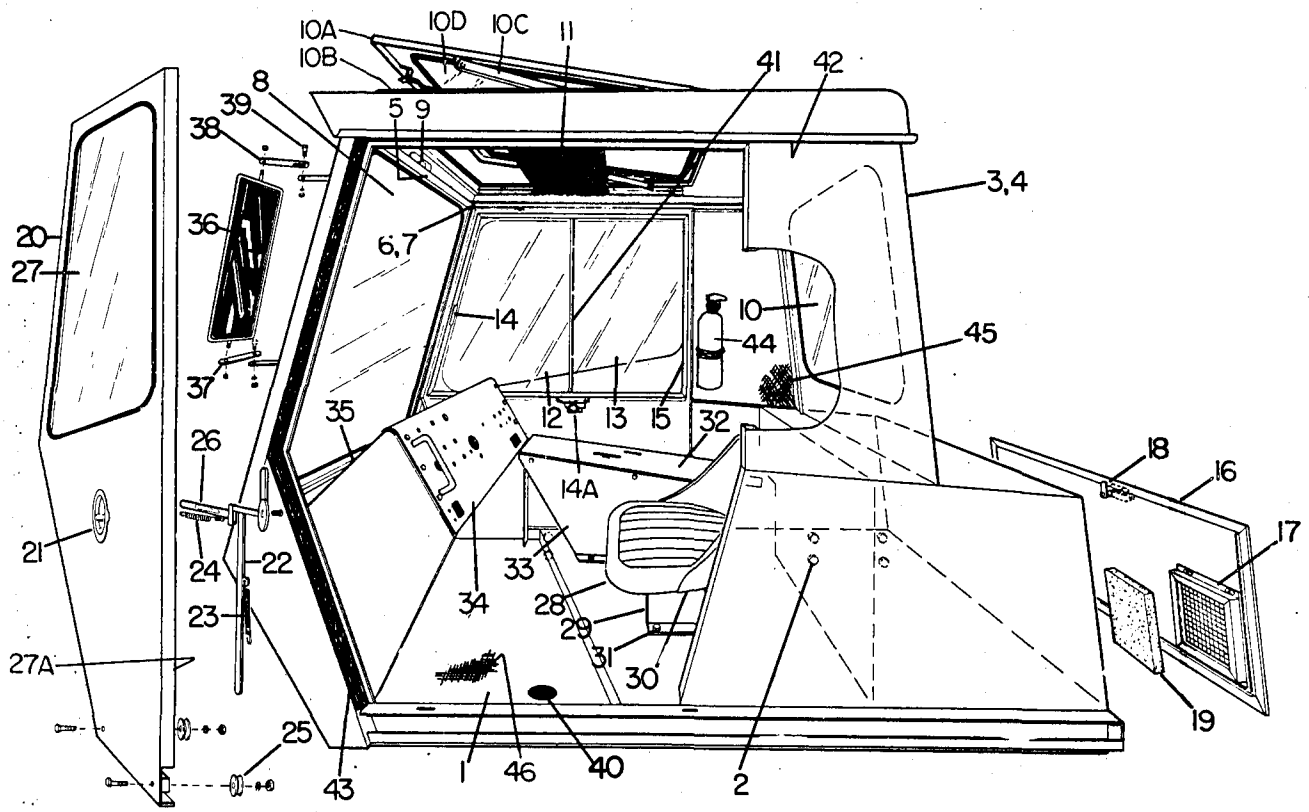

Ref. No	Part Number	Part Number	Quan Req d.	Name and Description
	ORIGINAL	REPLACEMENT		
1	F37070		1	CAB SUBFRAME
2	1200-144		6	CAPSCREW, 5/8 UNC x 1 1/2 LG., HT
	1210-32		6	LOCKWASHER, 5/8 MED.
3		65780	1	CAB ASSEMBLY - INCLUDES DOOR, FRONT WINDOW FRAME, REAR PANEL, TILT-UP ROOF FRAME - LESS GLASS. REPLACES 37234 (PRIOR #1020) & 49357 (BEG. #1020)
4	N.A.			BASIC CAB ONLY
5	23942		1	FRONT WINDOW FRAME
6	23943		4	ROLLER
7	23944		2	RH SPACER
	23945		2	LH SPACER
8	37208		1	FRONT GLASS
	49767		1	FRONT GLASS, VANDAL RESIST.
	65809		1	FRONT GLASS, VANDAL RESIST. TINTED
	1270-123		1	WEATHER STRIP
9	23554		1	LOCK BOLT W/WASHER

Ref. No.	Part Number ORIGINAL	Part Number REPLACEMENT	Quan. Req'd.	Name and Description
10	37207		1	REAR WINDOW
	49765		1	REAR WINDOW, VANDAL RESIST.
	65804		1	REAR WINDOW, VANDAL RESIST. TINTED
	1270-91		1	WEATHER STRIP FOR ABOVE
				ITEMS 10A THRU 10D APPLY TO 65780 REPLACEMENT CAB
10A		200484	1	COVER W/ HINGE & LATCHES
		200485	1	HINGE
		200486	2	LATCH
10B		200487	1	COVER GASKET
10C		200488	1	RH SLIDE PROP
		200489	1	LH SLIDE PROP
		200490	2	LOCK KNOB FOR ABOVE
10D		65796	1	TOP TINTED WINDOW
		65805	1	TOP TINTED WINDOW, VANDAL RESIST.
		12212-101	1	WEATHER STRIP FOR ABOVE
10D	38073		1	TOP TINTED WINDOW - PRIOR TO SER. #1020
	49358		1	TOP TINTED WINDOW - BEGIN. W/SER. #1020
	49764		1	TOP TINTED WINDOW, VANDAL RESIST. - BEG. #1020
11	37217	65388	1	SLIDING SHADE
	12242-33	12242-33	2	32" CHANNEL FOR ABOVE
12	37205		1	SLIDING GLASS
	49762		1	SLIDING GLASS, VANDAL RESIST.
	65807		1	SLIDING GLASS, VANDAL RESIST. TINTED
13	37206		1	SLIDING GLASS
	49763		1	SLIDING GLASS, VANDAL RESIST.
	65808		1	SLIDING GLASS, VANDAL RESIST. TINTED
14	1222-188		2	FINGER PULL
	12245-6		2	STRIPPING FOR ABOVE
14A	27971		1	WINDOW LOCK
15	12244-28		2	GLASS CHANNEL, FRONT & REAR
	12244-32		1	GLASS CHANNEL, TOP
	12244-40		1	GLASS CHANNEL, BOTTOM
16	23946		1	REAR PANEL
17	23947		1	FILTER RETAINER
	1203-75		2	CAPSCREW, 1/4 UNC x 3/8 LG.
	1210-14		2	LOCKWASHER, 1/4 MED.
18	23568		1	LOCK
19	37165		1	FILTER ELEMENT, HEATER INTAKE
20	23937		1	SLIDING DOOR
21	23558		1	HANDLE ASSEMBLY
22	23938		1	LEVER & LATCH ASSEMBLY
23	23939		1	SPRING
24	23940		1	SPRING

Ref. No.	Part Number	Quan. Req'd.	Name and Description
25	23557	1	ROLLER
	1200-33	2	CAPSCREW, 5/16 UNC x 1 1/4 LG.
	1205-29	2	JAM NUT, 5/16 UNC
26	23941	1	RETRACTABLE LEVER
27	37209	1	DOOR GLASS
	49766	1	DOOR GLASS, VANDAL RESIST.
	65806	1	DOOR GLASS, VANDAL RESIST. TINTED
	1270-112	1	WEATHER STRIP FOR ABOVE
27A	12227-48	1	DOOR SEAL, RUBBER SPONGE
28	36561	1	SEAT
29	37210	2	SUPPORT
30	1200-29	4	CAPSCREW, 5/16 UNC x 3/4 LG.
	1210-17	4	LOCKWASHER, 5/16 MED.
31	1200-315	4	CAPSCREW, 3/8 UNC x 5/8 LG.
	1210-20	4	LOCKWASHER, 3/8 MED.
	1205-36	4	NUT, 3/8 UNC
32	65461	1	CONSOLE COVER (REPLACES 37211)
33	65471	1	CONSOLE SIDE (REPLACES 37212)
34	F37213	1	DASH PANEL
35	37521	1	COVER
36	32082	1	MIRROR W/NUTS
37	41519	1	ARM
38	41520	1	ARM
39	1200-31	2	CAPSCREW, 5/16 UNC x 1 LG.
	1210-17	2	LOCKWASHER, 5/16 MED.
	1205-25	2	NUT, 5/16 UNC
40	11128	1	COVER
41	12243-27	1	WEATHER STRIP CHANNEL, SLIDING GLASS
42	12240-48	1	WOOL FELT
43	12259-60	1	WEATHER STRIP
44	A49301	1	FIRE EXTINGUISHER
45	A49275	1	CAB INSULATION KIT
	A65319	1	CAB INSULATION KIT - REPLACEMENT CAB
46	49295	1	FRONT FLOOR MAT
	49296	1	REAR FLOOR MAT
	12388-240	1	RUBBER STRIP
	1222-193	AR	PLUG BUTTON, 3/4"
	1222-192	AR	PLUG BUTTON, 5/8"
	1221-35	1	GROMMET, ELECTRICAL

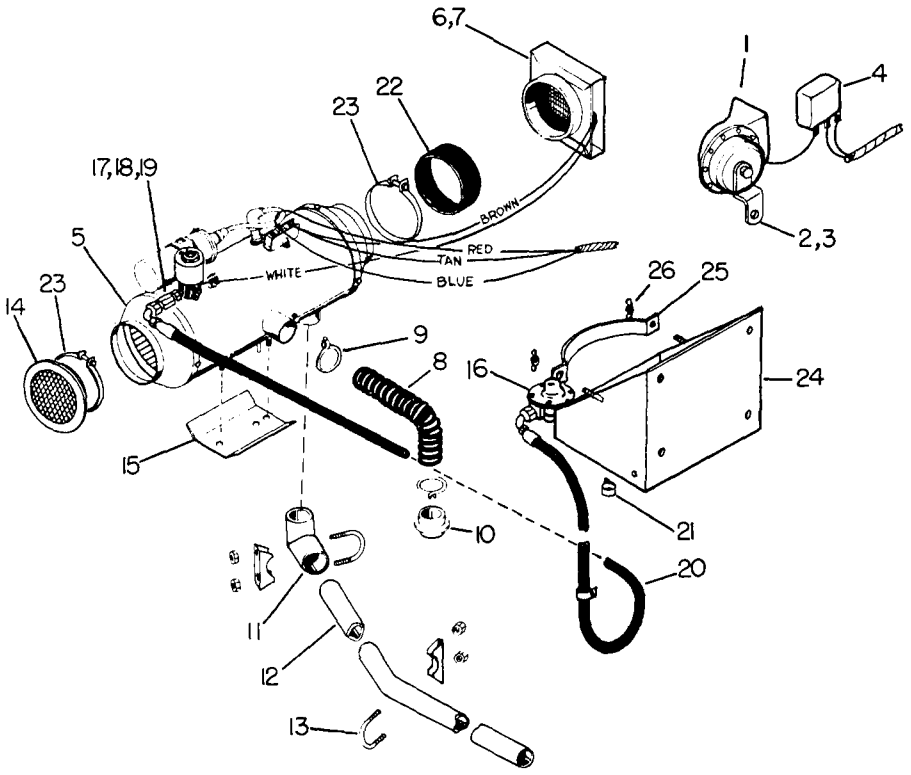

Ref. No.	Part Number	Quan. Req'd.	Name and Description
1	1223-387	1	HORN
2	1223-388	1	MOUNTING BRACKET
3	1223-389	1	NUT
4	1223-270	1	RELAY
5	A38751	1	PROPANE HEATER
6	23931	1	AIR DISTRIBUTOR
7	23932	1	THERMOSTAT
8	23933	1	COMBUSTION AIR HOSE
9	23934	2	CLAMP
10	23935	1	COLLAR
11	41408	1	ELBOW (REPLACES F37513)
12	38776	1	EXHAUST TUBE
	39601	1	EXHAUST TUBE (RAISED CAB, S-627)
13	1240-20	3	CLAMP
	1210-17	6	LOCKWASHER, 5/16 MED.
	1205-25	6	NUT, 5/16 UNC
14	24988	1	RING ASSEMBLY
15	24989	1	BRACKET
16	1222-196	1	REGULATOR w/SPUD
17	1219-880	1	REDUCING NIPPLE
18	1219-775	1	ADAPTER
19	1219-879	1	ADAPTER
20	A38775	1	HOSE ASSEMBLY
21	1240-15	2	CLAMP
22	12282-4	1	HOSE, 4" ID
23	1240-48	3	CLAMP
24	F38769	1	TANK BRACKET
25	38774	1	CLAMP
26	1231-2	2	WING NUT
	1223-44	2	GROMMET, 3/4 ID

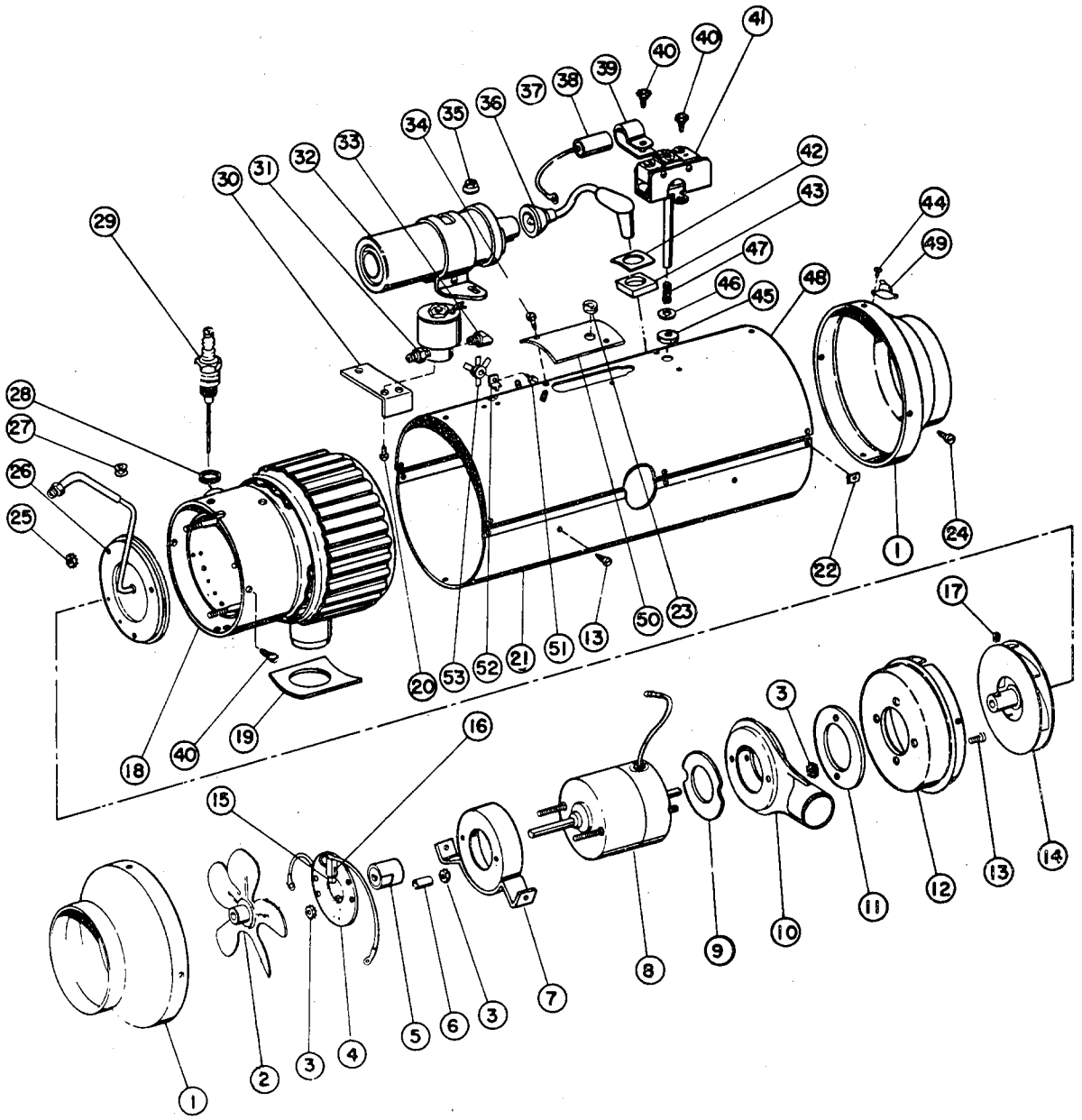

Ref. No.	Part Number	Quan. Req'd.	Name and Description	
	A38751		HEATER, COMPLETE	HUPP CORP. PART NO.
1	26763	2	ADAPTOR	B 52077-G2-2
2	26758	1	FAN	B 52076-G2
3	26764	6	NUT, #10-32	42-1032-13
4	26278	1	PLATE ASSEMBLY	B 52305-G1
5	24505	1	COMMUTATOR	A 52030-G1
6	26759	2	SPACER	A 50605-G7
7	26765	1	MOTOR SUPPORT ASSEMBLY	B 52528-G1-1
8	24506	1	MOTOR, 12 VOLT	C 52586-G4
9	24507	1	GASKET	A 60489-G1
10	26766	1	AIR DUCT ASSEMBLY	B 51777-G1-1
11	24508	1	GASKET	A 51782-G1
12	26767	1	SHELL ASSEMBLY	C 52287-G2-1
13	26768	4	SCREW, #10 x 3/8	2251-1032-06-13
14	26769	1	FAN ASSEMBLY	B 52399-G1

Ref. No.	Part Number	Quan. Req'd.	Name and Description	Perfection Part No.
15	24509	2	BRUSH	A 52304-G1
16	24510	2	SPRING	A52303-G1
17	26770	1	SCREW, #10-32 x 1/4	3180-1032-04-12
18	26771	1	CHAMBER ASSEMBLY	D 52525-G1
19	24511	1	SEAL	A 52057-G1
20	26772	2	SCREW, #8-32 x 3/8	2251-0832-06-13
21	26773	1	CASING ASSEMBLY, BOTTOM	B 52949-G1-1
22	26774	10	SPEED NUT	M 30002-67
23	26775	1	GROMMET	B 50035-G4
24	26776	10	SCREW, #10 x 3/8	1151-0010-06-13
25	26777	3	NUT, #8-32 BRASS	41-0832-31
26	26778	1	BURNER PLATE ASSEMBLY	C 54337-G1
27	26779	1	GROMMET, FUEL LINE	A 52364-G1
28	26760	1	GASKET	A 52342-G1
29	24513	1	SPARK PLUG	A 50031-G2
30	26780	1	BRACKET	A54343-G1
31	26351	1	SOLENOID VALVE ASSEMBLY	A 54435-G1
32	24515	1	IGNITION COIL, 12 VOLT	B 50229-G4
33	26781	4	45° INVERTED ELBOW	A4618
34	26782	1	SCREW	1653-0010-08-13
35	26783	2	NUT	A 52086-G1
36	24518	1	SPARK PLUG CABLE	A 51645-G1
38	24519	1	CAPACITOR	A 50603-G1
39	26784	1	BRACKET	A 50235-G1
40	26782	6	SCREW, #10 x 1/2 LG.	1653-0010-08-13
41	25494	1	FLAME SWITCH ASSEMBLY	B 51700-G2
42	24521	1	SPARK PLUG SEAL	A 52089-G1-2
43	24522	1	GASKET	A 52521-G1
44	26761	1	GROMMET	B 50035-G1
45	24523	1	SEAL, FLAME SWITCH	A 51852-G1
46	26785	1	PLAIN WASHER	A 51647-G1
47	24524	1	SPRING	A 2306
48	26786	1	TOP CASING ASSEMBLY	B 53368-G1-1
49	25501	1	LIMIT THERMOSTAT	A52373-G1
50	26787	1	CASING COVER	A 54342-G1-1
51	26772	2	SCREW, #8-32 x 3/8 LG.	2251-0832-06-13
52	26788	1	THERMOSTAT BRACKET	A 54421-G1-1
53	25493	1	SAFETY THERMOSTAT	B 54419-G1

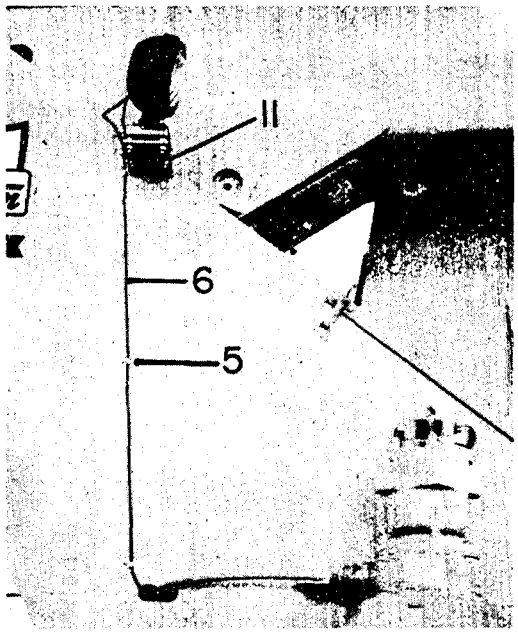

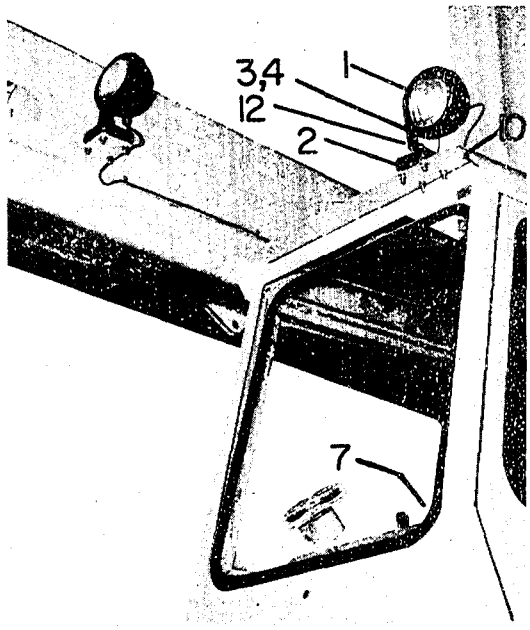

Ref. No.	Part Number	Quan. Req'd.	Name and Description
	A37292		WORK LIGHT KIT, INCLUDES ITEMS 1 THRU 12
1	1223-447	3	WORK LIGHT W/BULB
	24467	3	SEALED BEAM LAMP, FOR ABOVE
2	1223-476	3	MOUNTING BASE
3	1209-6	6	FLATWASHER, 1/2 STD.
4	1205-68	3	NUT, 1/2 UNF ELASTIC
5	1240-274	4	JIFFY CLIP
	1211-3	4	SHEET METAL SCREW, #8 x 1/2 LG.
6	1223-217	AR	WIRE, 14 GA.
7	7103	1	LIGHT SWITCH
8	6653	1	TERMINAL BLOCK (LOCATED IN HEATER COMPARTMENT)
	1233-7	2	MACHINE SCREW, #10 UNF x 3/4 LG.
	1205-6	2	NUT, #10 UNF
9	1223-466	2	BULLET TERMINAL
10	1221-35	2	GROMMET
11	38392	2	BRACKET
12	38570	3	BRACKET

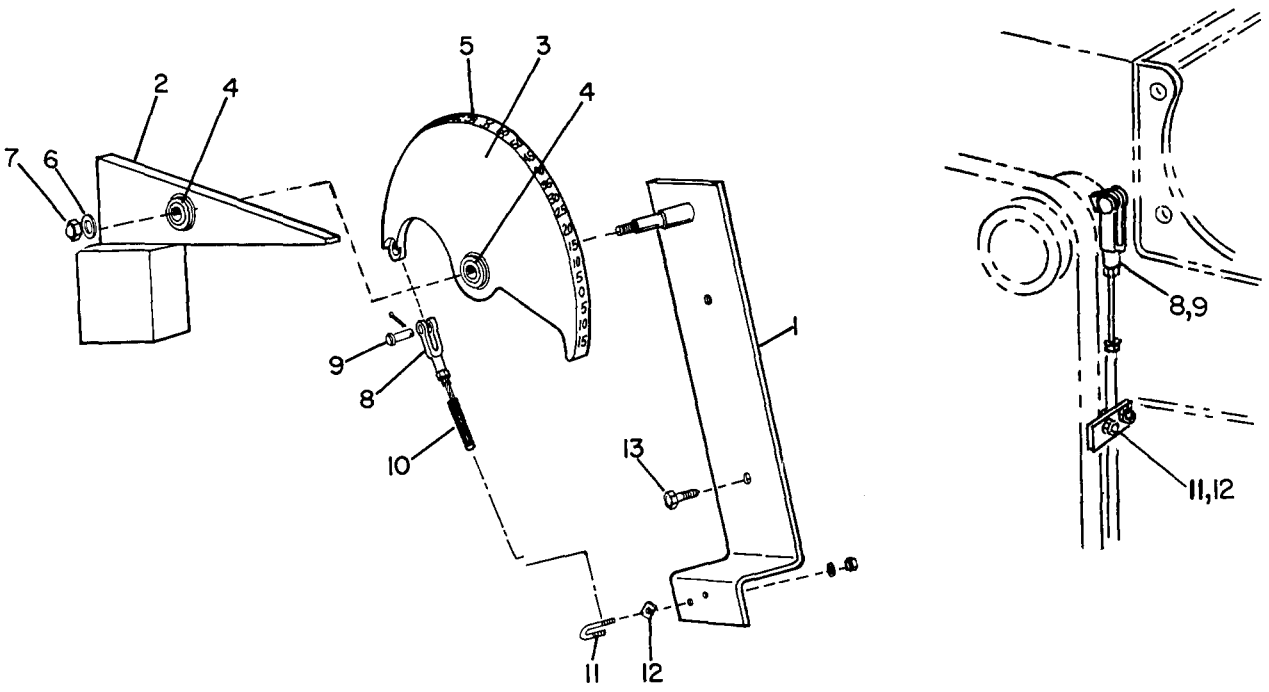

Ref. No.	Part Number	Quan. Req'd.	Name and Description
	A38805		BOOM ANGLE INDICATOR ASSEMBLY, INCLUDES ITEMS 1 THRU 13
1	F38901	1	BRACKET
2	F38898	1	PENDULUM W/BEARING
3	A38896	1	INDICATOR W/BEARING
4	1217-24	2	BEARING, FOR ITEMS 2 & 3
5	12260-97	1	DECAL
6	1209-2	1	WASHER
7	1205-22	1	LOCKNUT, 1/4 UNF SELF-LOCKING
8	2930	2	YOKE
9	2931	2	PIN
	1207-1	2	COTTER PIN, 1/16 x 1/2 LG.
10	1291-30	1	CABLE
11	2929	2	"U" BOLT
12	2938	2	PLATE
	1210-7	4	LOCKWASHER, #10 LIGHT
	1205-5	4	NUT, #10 UNC
13	1211-12	2	SELF TAPPING SCREW, 5/16 x 3/4 LG.

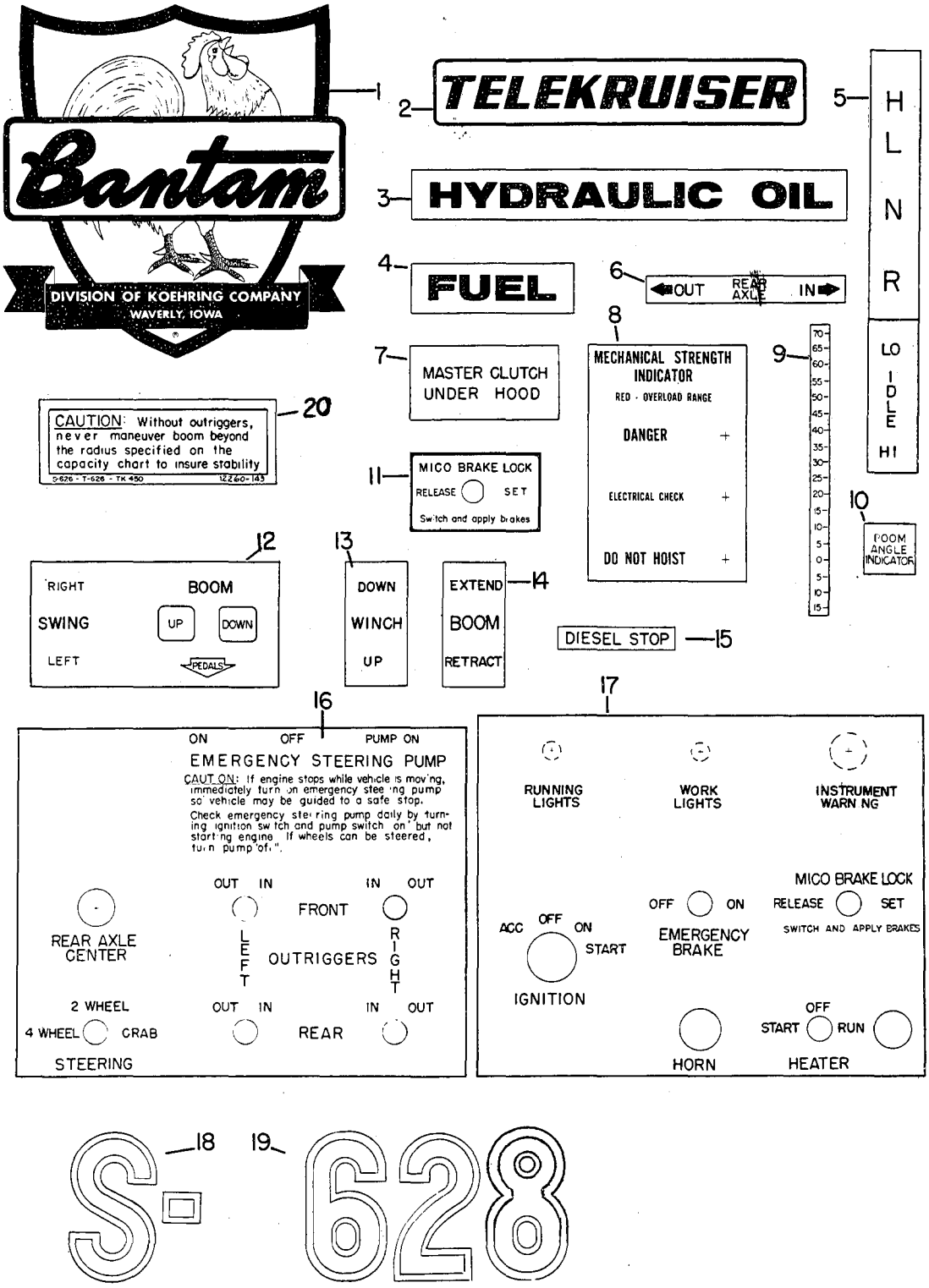
1
Bantam
DIVISION OF KOEHRING COMPANY
WAVERLY, IOWA
2
TELEKRUISER
3
HYDRAULIC OIL
4
FUEL
5
H
L
N
R
6
OUT REAR AXLE IN
7
MASTER CLUTCH UNDER HOOD
8
MECHANICAL STRENGTH INDICATOR
RED - OVERLOAD RANGE
DANGER +
ELECTRICAL CHECK +
DO NOT HOIST +
9
70 65 60 55 50 45 40 35 30 25 20 15 10 5 0 5 10 15
LO IDLE HI
10
BOOM ANGLE INDICATOR
11
MICO BRAKE LOCK
RELEASE SET
Switch and apply brakes
20
CAUTION: Without outriggers, never maneuver boom beyond the radius specified on the capacity chart to insure stability
5-626 - T-626 - TK 450 12260-143
12
RIGHT SWING LEFT
BOOM
UP
DOWN
PEDALS
13
DOWN WINCH UP
14
EXTEND BOOM RETRACT
15
DIESEL STOP
16
ON OFF PUMP ON
EMERGENCY STEERING PUMP
CAUTION: If engine stops while vehicle is moving, immediately turn on emergency steering pump so vehicle may be guided to a safe stop.
Check emergency steering pump daily by turning ignition switch and pump switch on but not starting engine. If wheels can be steered, turn pump off.
OUT IN
FRONT
IN OUT
REAR AXLE CENTER
LEFT
OUTRIGGERS
RIGHT
2 WHEEL
4 WHEEL CRAB
STEERING
OUT IN
REAR
IN OUT
17
RUNNING LIGHTS
WORK LIGHTS
INSTRUMENT WARNING
MICO BRAKE LOCK
OFF ON
EMERGENCY BRAKE
RELEASE SET
SWITCH AND APPLY BRAKES
ACC OFF ON START
IGNITION
HORN
OFF
START RUN
HEATER
18
S-
19
628

Model S-628
Date 1 MARCH 1972

MARKING DECALS

Group No. 4
Page 4.10

Ref. No.	Part Number	Quan. Req'd.	Name and Description
1	1222-95	AR	EMBLEM
2	12260-25	2	"TELEKRUISER" DECAL, BOOM
3	12260-75	1	DECAL, HYDRAULIC OIL
4	12260-76	1	DECAL, FUEL
5	12260-52	1	DECAL, SHIFT & THROTTLE
6	12260-36	1	DECAL, REAR AXLE DISCONNECT
7	12260-46	1	DECAL, MASTER CLUTCH
8	12260-61	1	DECAL, MECHANICAL STRENGTH INDICATOR
9	12260-44	1	DECAL, BOOM ANGLE INDICATOR
10	12260-45	1	DECAL, BOOM ANGLE INDICATOR
11	12260-88	1	DECAL, MICO BRAKE LOCK
12	12260-154	1	DECAL, BOOM PEDALS, SWING
13	12260-19	1	DECAL, WINCH
14	12260-51	1	DECAL, BOOM EXTEND
15	12260-89	1	DECAL, DIESEL STOP
16	12260-49	1	DECAL, DASH
17	12260-82	1	DECAL, DASH
18	12260-28	1	DECAL "S"
19	12260-249	1	DECAL, "628"
20	12260-143	1	DECAL, CAUTION

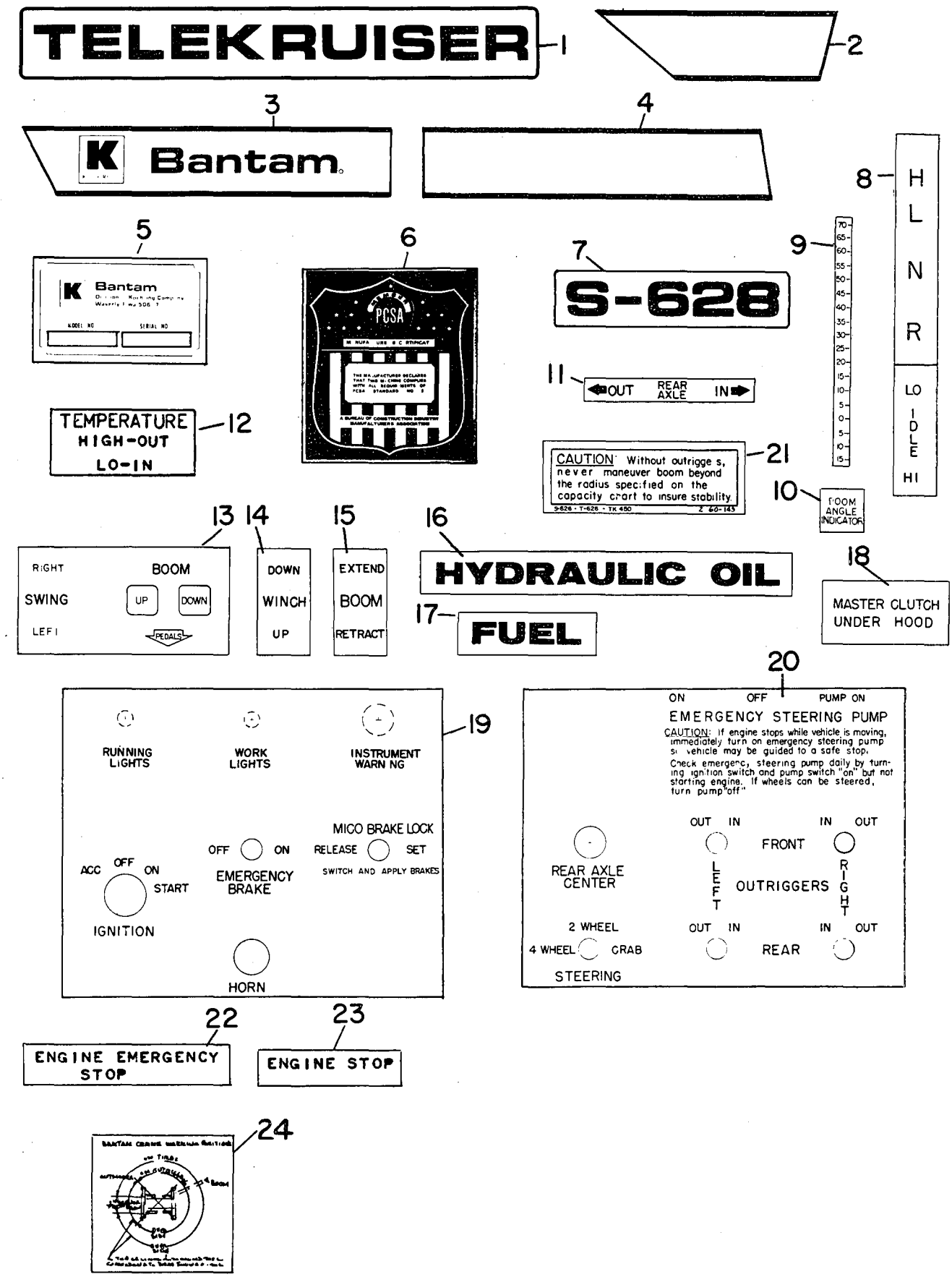
TELEKRUISER
1
2
3
Bantam
4
5
Bantam
MODEL NO
SERIAL NO
6
PCSA
7
S-628
8
H
L
N
R
LO
IDLE
HI
9
70
65
60
55
50
45
40
35
30
25
20
15
10
5
0
5
10
15
11
OUT
REAR AXLE
IN
TEMPERATURE
HIGH-OUT
LO-IN
12
CAUTION: Without outriggers, never maneuver boom beyond the radius specified on the capacity chart to insure stability.
21
10
BOOM ANGLE INDICATOR
13
14
15
16
RIGHT
BOOM
SWING
UP
DOWN
LEFT
PEDALS
DOWN
WINCH
UP
EXTEND
BOOM
RETRACT
HYDRAULIC OIL
17
FUEL
18
MASTER CLUTCH UNDER HOOD
20
ON
OFF
PUMP ON
EMERGENCY STEERING PUMP
CAUTION: If engine stops while vehicle is moving, immediately turn on emergency steering pump so vehicle may be guided to a safe stop.
Check emergency steering pump daily by turning ignition switch and pump switch "on" but not starting engine. If wheels can be steered, turn pump "off"
OUT IN
IN OUT
FRONT
REAR AXLE CENTER
LEFT
OUTRIGGERS
RIGHT
2 WHEEL
4 WHEEL
CRAB
STEERING
OUT IN
IN OUT
REAR
19
RUNNING LIGHTS
WORK LIGHTS
INSTRUMENT WARNING
MICO BRAKE LOCK
OFF
ON
RELEASE
SET
SWITCH AND APPLY BRAKES
ACC
OFF
ON
START
EMERGENCY BRAKE
IGNITION
HORN
22
ENGINE EMERGENCY STOP
23
ENGINE STOP
24

Ref. No.	Part Number	Quan. Req'd.	Name and Description
1	12260-299	1	DECAL,BOOM
2	12260-286	1	DECAL,RH.CAB
3	12260-285	1	DECAL,LH.CAB
4	12260-287	1	DECAL,LH.CAB
5	12260-265	1	SERIAL NO. PLATE
6	12260-96	1	DECAL,PCSA STANDARD # 2
7	12260-288	1	DECAL, " S-626"
	12260-291	1	DECAL, " S-628"
8	12260-52	1	DECAL, SHIFT AND THROTTLE
9	12260-44	1	DECAL, BOOM ANGLE IND. DIAL
10	12260-45	1	DECAL, BOOM ANGLE IND. DIAL
11	12260-36	1	DECAL, REAR ANGLE DISCONNECT
12	12260-324	1	DECAL, HEATER CABLE
13	12260-154	1	DECAL, CONTROLS
14	12260-19	1	DECAL, CONTROLS
15	12260-51	1	DECAL, CONTROLS
16	12260-75	1	DECAL, " HYD. OIL"
17	12260-76	1	DECAL, FUEL
18	12260-46	1	DECAL, MASTER CLUTCH
19	12260-49	1	DECAL, LH. DASH
20	12260-82	1	DECAL, RH. DASH
21	12260-143	1	DECAL, CAUTION
22	12260-315	1	DECAL, ENGINE EMERGENCY STOP
23	12260-316	1	DECAL, ENGINE STOP
24	12260-372	1	DECAL, WORKING POSITION
			CAPACITY CHART - SPECIFY PART NO.

BEGIN. SER. #1089

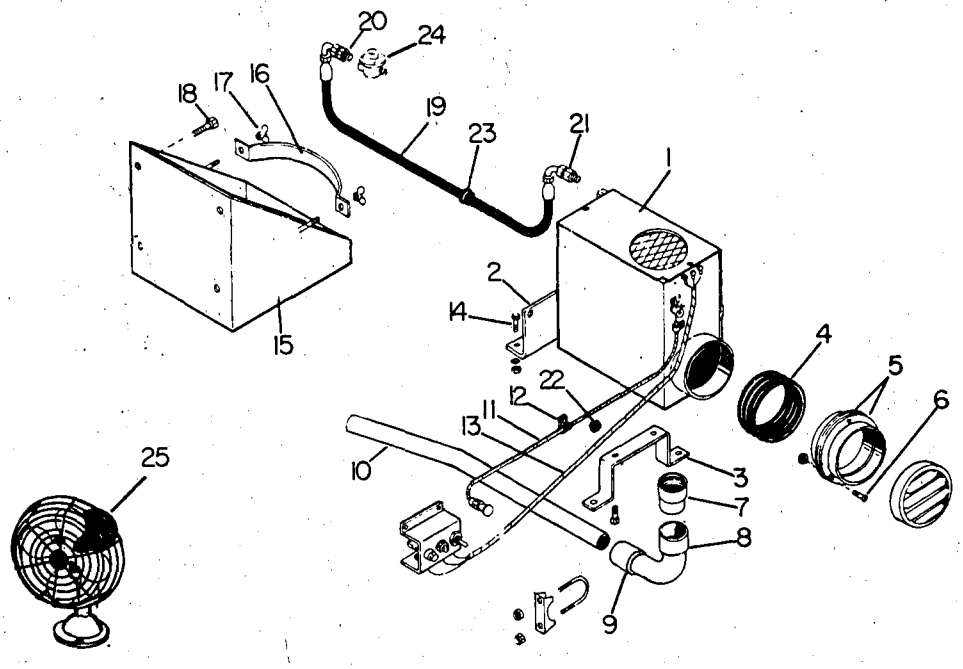

Ref. No.	Part Number	Quan Req'd.	Name and Description
1	49404	1	PROPANE HEATER - SEE PAGE 4.15
2	49413	1	BRACKET
3	49414	1	BRACKET
4	12385-2	1	HOSE
5	49409	2	FLANGE
6	1202-4	3	STOVE BOLT, 3/16 UNC x 1/2 LG.
	1205-12	3	NUT, 3/16 UNC
7	F49417	1	COUPLING
8	49416	1	ELBOW
9	1240-20	3	CLAMP
	1210-17	6	LOCKWASHER, 5/16 MED.
	1205-25	6	NUT, 5/16 UNC
10	38776	1	EXHAUST TUBE
11	49412	1	CONTROL CABLE
12	1240-43	1	CLAMP
13	49779	1	WIRE HARNESS (REPLACES 49415)

Ref. No.	Part Number	Quan. Req'd.	Name and Description
14	1200-1	9	CAPSCREW, 1/4 UNC x 3/4 LG.
	1210-14	9	LOCKWASHER, 1/4 MED.
	1205-13	4	NUT, 1/4 UNC
15	F38769	1	MOUNTING BRACKET
16	38774	1	CLAMP
17	1231-2	2	WING NUT, 5/16 UNC
18	1200-311	4	CAPSCREW, 7/16 UNC x 1 LG.
	1210-23	4	LOCKWASHER, 7/16 MED.
19	A38775	1	HOSE ASSEMBLY
20	1219-799	1	ADAPTER
21	12019-188	1	ADAPTER
22	1221-35	1	GROMMET
23	1223-44	2	GROMMET
24	200360	1	PRESSURE REGULATOR
25	1223-330	1	DEFROSTER FAN
	1211-1	2	SELF-TAPPING SCREW
	12260-324	1	DECAL, HEATER

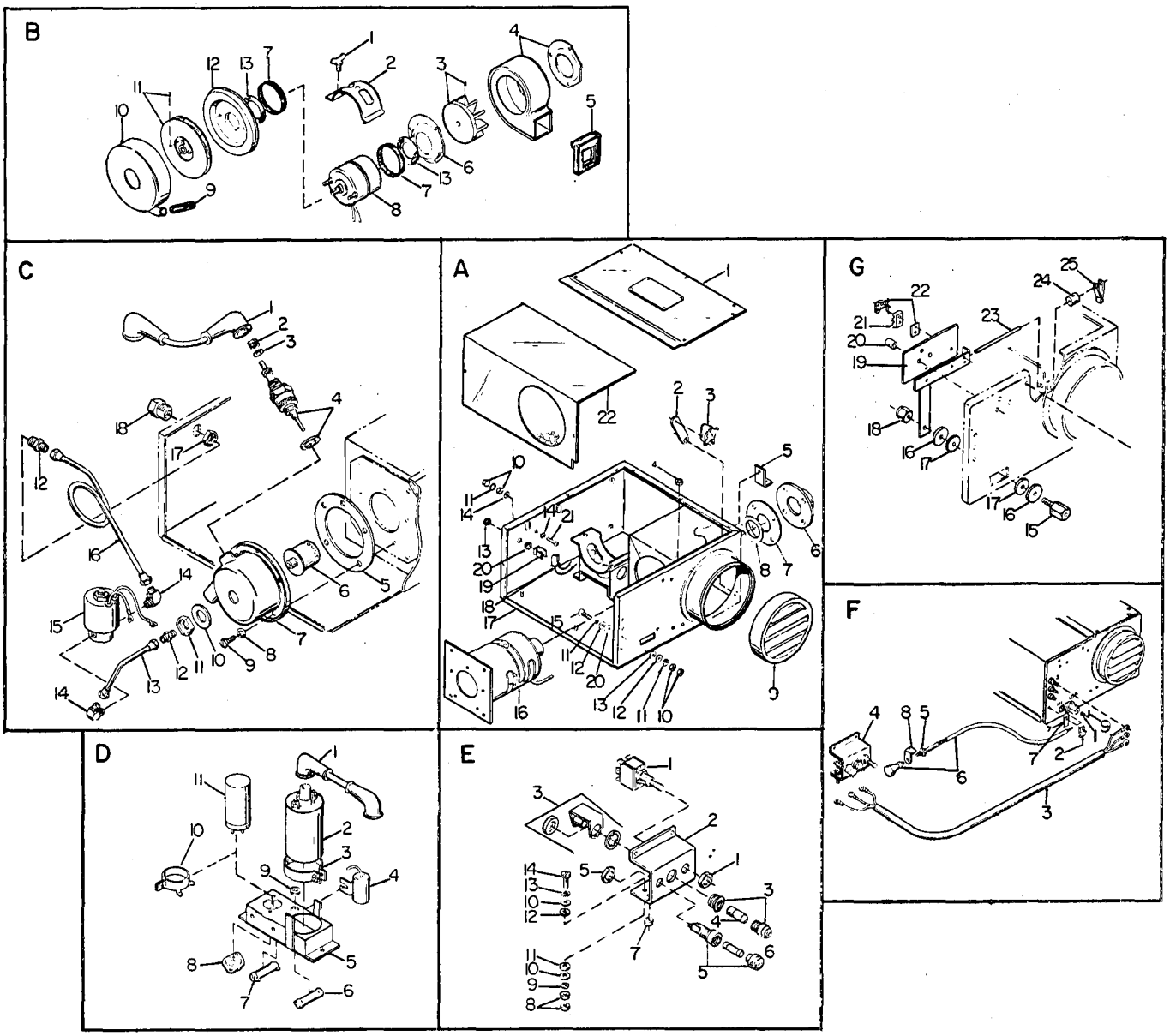

Ref. No.	Part Number	Quan. Req'd.	Name and Description
	49404		PROPANE HEATER COMPLETE
(A)			CASE & HEAT EXCHANGER
1	28217	1	TOP COVER
2	28218	1	THERMOSTAT BRACKET
3	28219	1	THERMOSTAT
4	28220	1	RUBBER GROMMET
5	28221	1	MOUNTING BRACKET
6	28222	1	EXHAUST CONNECTOR
7	28223	1	EXHAUST GASKET
8	28224	1	EXHAUST WASHER
9	28225	1	IAR DEFLECTOR
10	28226	1	HEX NUT
11	28227	1	LOCKWASHER
12	28228	1	FLAT WASHER

Ref. No.	Part Number	Quan. Req'd.	Name and Description
13	28229		FIBER WASHER
14	28230		LOCKWASHER
15	28231		MACHINE SCREW
16	28232		HEAT EXCHANGER
17	28233		CASE
18	28234		MERCURY SWITCH
19	28235		CLIP
20	28236		SHOULDERED WASHER
21	28237		MACHINE SCREW
22	28238		FRONT AND TOP COVER
(B)	28315		MOTOR & BLOWER ASSEMBLY LESS CLAMP
1	28239		THUMBSCREW
2	28240		CLAMP, MOTOR MOUNTING
3	28241		NYLON FAN
4	28242		BLOWER HOUSING, CIRCULATING AIR
5	28243		GASKET
6	28244		BLOWER MOUNTING PLATE, CIRCULATING AIR (INCLUDES GASKET, ITEM 13)
7	28245		BAND, RUBBER
8	28246		MOTOR, 12 VDC
9	28247		HOSE, COMBUSTION AIR OUTLET 2"
10	28248		BLOWER HOUSING, COMBUSTION AIR
11	28249		BLOWER WHEEL
12	28250		BLOWER MOUNTING PLATE, COMBUSTION AIR (INCLUDES GASKET, ITEM 13)
13	28251		GASKET
(C)			BURNER HEAD ASSEMBLY
1	28252		IGNITER WIRE
2	28253		KNURLED NUT
3	28254		FLAT WASHER
4	28255		IGNITER
5	28256		BURNER HEAD GASKET
	28257		BURNER HEAD ASSEMBLY (INCLUDES 6 THRU 11)
6	28258		BURNER TUBE
7	28259		BURNER HEAD
8	28260		LOCKWASHER
9	28261		MACHINE SCREW
10	28262		WASHER
11	28263		LOCK NUT
12	28264		CONNECTOR
13	28265		FUEL LINE
14	28266		MALE ELBOW
15	28267		SOLENOID VALVE
16	28268		FUEL LINE
17	28269		LOCK NUT
18	28270		CONNECTOR

Ref. No.	Part Number	Quan. Req'd.	Name and Description
(D)	28316		POWER PACK ASSEMBLY
1	28271	1	IGNITER WIRE
2	28272	1	COIL
3	28273	1	COIL CLAMP
4	28274	1	CONDENSER
5	28275	1	IGNITION PACK WRAPAROUND
6	28276	1	RESISTOR, 15 OHM, 12 WATT
7	28277	1	RESISTOR, 2 OHM, 12 WATT
8	28278	1	SOCKET
9	28279	1	RUBBER GROMMET
10	28280	1	VIBRATOR CLAMP
11	28281	1	VIBRATOR
(E)	28317		CONTROL ASSEMBLY
1	28282	1	TOGGLE SWITCH
2	28283	1	CONTROL BOX
3	28284	1	GREEN PILOT LIGHT
4	28285	1	PILOT LAMP
5	28286	1	FUSE HOLDER
6	28287	1	10 AMP FUSE
7	28288	1	GROMMET
8	28289	6	HEX NUT
9	28290	3	LOCKWASHER
10	28291	6	FLAT WASHER
11	28292	3	SHOULDERED WASHER
12	28293	1	FIBER WASHER
13	28294	1	LOCKWASHER
14	28295	3	MACHINE SCREW
(F)	28318		REMOTE CONTROL KIT LESS PANEL
1	28296	1	SETSCREW
2	28297	1	ROD CLIP
3	28298	1	HARNESS
5	28299	1	LOCK NUT
6	28300	1	PUSH-PULL CONTROL
7	28301	1	SPACER
8	28302	1	BRACKET
9	28303	1	HEX KEY
(G)			CONTROL ASSEMBLY
15	28304	1	PIVOT CONTROL
16	28305	1	STEEL WASHER
17	28306	1	NYLON WASHER
18	28307	1	LOCK NUT
19	28308	1	TEMPERATURE CONTROL
20	28309	1	SPACER
21	28310	1	MICROSWITCH

Ref. No.	Part Number	Quan. Req'd.	Name and Description
22	28311	1	MICROSWITCH ACTUATING KIT
23	28312	1	ACTUATING ROD
24	28313	1	STOP
25	28314	1	BIMETAL BLADE

SEE WIRING DIAGRAMS,
PAGES 5.4, 5.5, 5.6

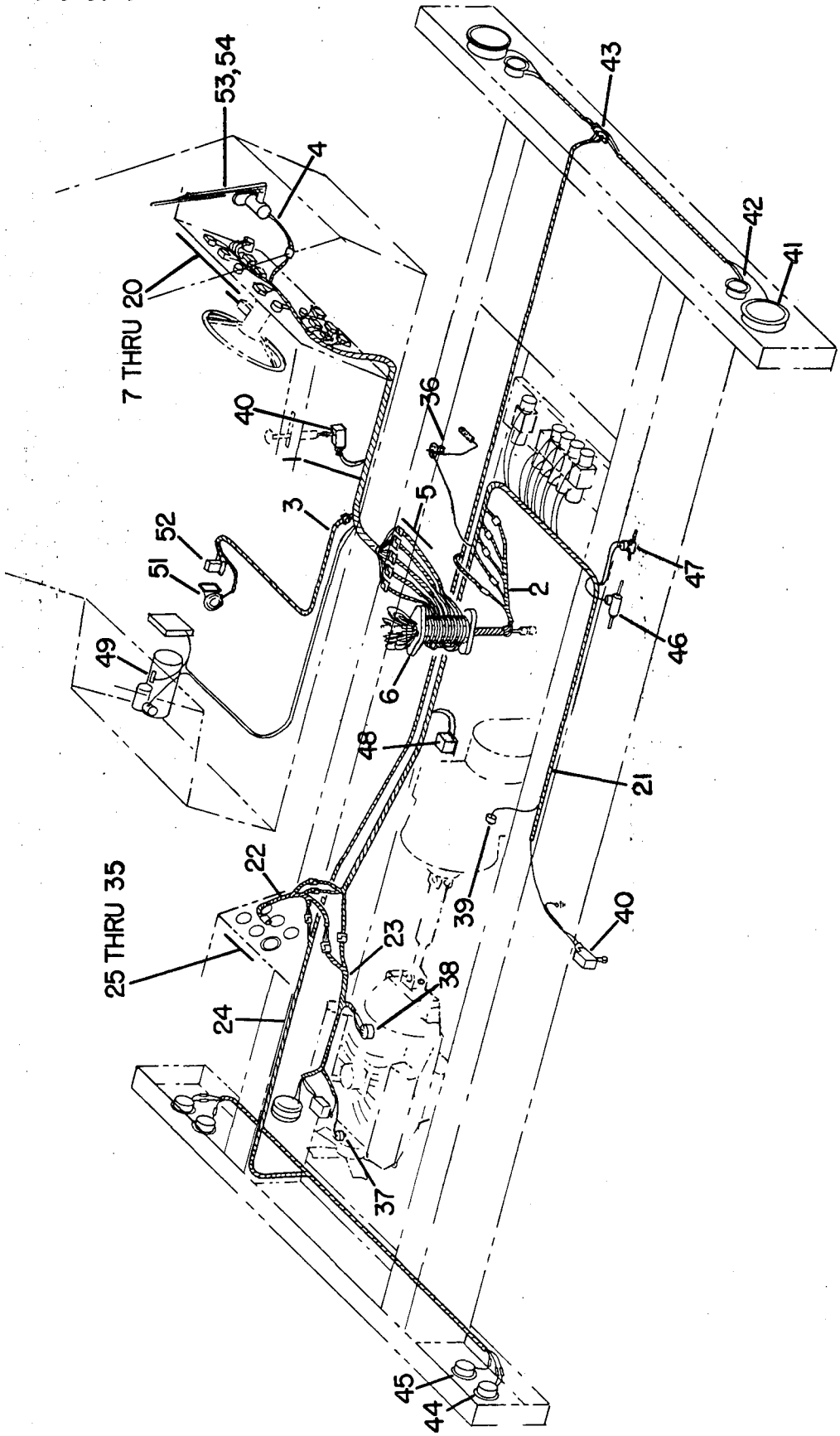

Ref. No.	Part Number	Quan. Req'd.	Name and Description
			ITEMS MARKED (*) ARE FOR OUTRIGGERS POWERED FROM THE MAIN HYDRAULIC PUMP RATHER THAN THE STEERING PUMP. REFER TO GROUPS 2 AND 17 FOR IDENTIFICATION. ITEMS MARKED (**) ARE FOR OUT-AND-DOWN OUTRIGGERS. SEE GROUP 17A.
1	38778	1	WIRE HARNESS, MAIN INSTRUMENT
	49113 *	1	WIRE HARNESS, MAIN INSTRUMENT
	41340 **	1	WIRE HARNESS, MAIN INSTRUMENT
2	37854	1	WIRE HARNESS)
	49115 *	1	WIRE HARNESS) - LOWER HARNESS TO COLLECTOR RINGS (WRAPPED TO SHIFT TUBE)
	41338 **	1	WIRE HARNESS)
3	38777	1	WIRE HARNESS, PROPANE HEATER
4	A37865	1	CONNECTOR w/WIRES, WIPER TO MAIN HARNESS
5	37856	1	CONNECTOR w/WIRES, #1
	37857	1	CONNECTOR w/WIRES, #2
	37858	1	CONNECTOR w/WIRES, #3
	49114 *	1	CONNECTOR w/WIRES, #3 — MAIN HARNESS CONNECTORS TO COLLECTOR RING LEADS — SEE WIRING DIAGRAM, PAGE 5.4 FOR IDENTIFICATION.
	37860	1	CONNECTOR w/WIRES, #4
	37859	1	CONNECTOR w/WIRES, #5
	41336 **	1	CONNECTOR w/WIRES, #5
6	A37069	1	COLLECTOR RING ASSEMBLY - SEE MAINTENANCE GROUP 5 FOR COLOR AND FUNCTION DIAGRAM.
7	1223-53	1	IGNITION SWITCH
8	7103	2	LIGHT SWITCH
9	1223-2	2	TOGGLE SWITCH, BRAKES - PRIOR TO SER. #821
	1223-531	2	TOGGLE SWITCH, BRAKES - BEGIN. W/SER. #821
	1223-480	1	TOGGLE SWITCH, PROPANE HEATER
10	1223-449	1	TOGGLE SWITCH, STEERING
11	1223-448	4	TOGGLE SWITCH, OUTRIGGER
11A	1223-491	4	TOGGLE SWITCH, OUTRIGGER (*)
12	1223-64	1	HORN BUTTON
13	1223-338	1	PUSH BUTTON SWITCH, DIESEL STOP

Ref No	Part Number	Quan Req'd.	Name and Description
14	F37863	1	DASH LAMP
15	F37851	2	INSTRUMENT WARNING LIGHT (RED)
16	F37852	2	INDICATOR LIGHT (GREEN), AXLE CENTER, PROPANE HEATER
17	1223-2	1	TOGGLE SWITCH, EMERGENCY STEERING MOTOR
18	F37862	1	TURN SIGNAL ASSEMBLY
	1223-536	1	FLASHER
	1223-276	1	FLASHER UNIT
19	1223-295	2	FUSE, 14 AMP
20	1223-443	1	CIRCUIT BREAKER, 30 AMP
	1222-184	10	PLASTIC TIE WRAP, HARNESSES
21	37296	1	MAIN WIRING HARNESS, LOWER
	49117 *	1	MAIN WIRING HARNESS, LOWER
	41339 **	1	MAIN WIRING HARNESS, LOWER
22	49154	1	LOWER DASH HARNESS, CHRYSLER (REPLACES 37871 W/REF. 33)
	49155	1	LOWER DASH HARNESS, GM DIESEL (REPLACES 37933 W/REF. 33)
23	37872	1	ENGINE HARNESS, CHRYSLER
	37934	1	ENGINE HARNESS, GM DIESEL
24	37870	1	LIGHTING HARNESS
25	1245-68	1	AMMETER
26	1245-63	1	FUEL GAUGE
27	1245-65	1	TEMPERATURE GAUGE W/BULB & CONNECTOR, ENGINE
28	1245-66	1	TEMPERATURE GAUGE W/BULB & CONNECTOR, TRANSMISSION
29	1245-64	1	OIL PRESSURE GAUGE
30	1245-59	1	HOUR METER
	1221-27	1	MOUNTING RUBBER, HOUR METER
31	1223-443	1	CIRCUIT BREAKER, 30 AMP
32	1223-444	1	CIRCUIT BREAKER, 40 AMP
33	1246-4	AR	RELAY, HEADLIGHT, HEATER, IGNITION (CHRYSLER)
33	1246-2	AR	RELAY, STARTER (REPLACES 1246-9)

Ref. No.	Part Number	Quan. Req'd.	Name and Description
34	F37863	1	DASH LAMP
	38186	1	DASH LAMP (FOR PANEL COVER ONLY)
35	1223-2	1	SWITCH, DASH LAMP
	1245-106	1	FUEL SENDER MOUNTING KIT FOR SENDERS BELOW
	1245-73	1	FUEL SENDER - SNYDER FUEL TANK
	1245-42	1	FUEL SENDER - MICHIGAN FLEET TANK
37	1223-452	1	ENGINE HIGH-TEMP SWITCH
38	1223-450	1	PRESSURE SWITCH
39	1223-464	1	TRANSMISSION HIGH-TEMP SWITCH
40	1223-477	2	CAM ROLLER SWITCH, NEUT. START, STEER. - REPLACES 1223-459
	F37828	1	CAM, FOR ABOVE — REQUIRES 49372 BRACKET
	49372	1	BRACKET - REPLACES 37830
	1221-36	2	RUBBER STOPPER
41	1223-269	2	HEADLIGHT
42	1223-454	2	LAMP, TURNSIGNAL, INCLUDES CASE, LENS & BULB
	25486	2	LENS ONLY, FOR ABOVE
	1223-273	2	BULB ONLY, FOR ABOVE
43	7099	2	TERMINAL BLOCK
44	1223-465	2	LAMP, TURNSIGNAL, INCLUDES CASE, LENS & BULB
	25485	2	LENS ONLY, FOR ABOVE
	1223-273	2	BULB ONLY, FOR ABOVE
45	1223-455	2	LAMP, TAIL, INCLUDES CASE, LENS & BULB
	25485	2	LENS ONLY, FOR ABOVE
	1223-275	2	BULB ONLY, FOR ABOVE
46			MICO BRAKE LOCK — SEE GROUP 15
47			STOP LIGHT SWITCH — SEE GROUP 15
48			EMERGENCY BRAKE VALVE — SEE GROUP 13
49			HEATER — SEE GROUP 4
51			HORN — SEE GROUP 4
52			HORN RELAY — SEE GROUP 4
53	1251-4	1	WIPER MOTOR
	1222-151	1	ARM
	1222-152	1	WIPER BLADE, 16"
54	1221-35	1	GROMMET
	1223-50	1	GROMMET (MAKES TWO)
	38082	1	GROUND WIRE (FOR WATERMAN OUTRIGGER VALVES)
	41337	1	GROUND WIRE (FOR OUT-AND-DOWN OUTRIGGER VALVE)
	1223-441	1	INDICATOR LIGHT, OIL VACUUM
	1245-76	1	MANIFOLD SWITCH, OIL VACUUM

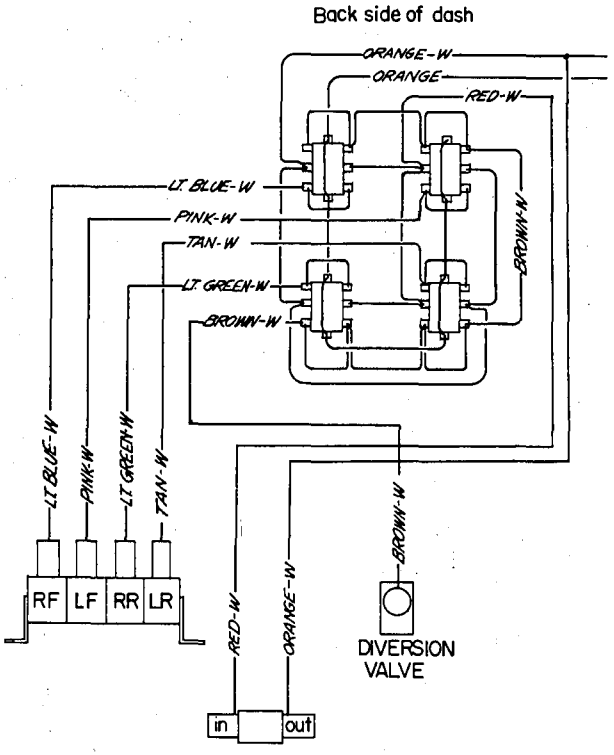

THE ABOVE SCHEMATIC IS FOR OUTRIGGERS POWERED FROM THE MAIN HYDRAULIC PUMP. REFER TO GROUPS 2 & 17 FOR FURTHER IDENTIFICATION. FOR FUNCTIONS OTHER THAN OUTRIGGERS, THE WIRE HARNESSES ARE AS SHOWN ON PAGES 5.6 THRU 5.8.

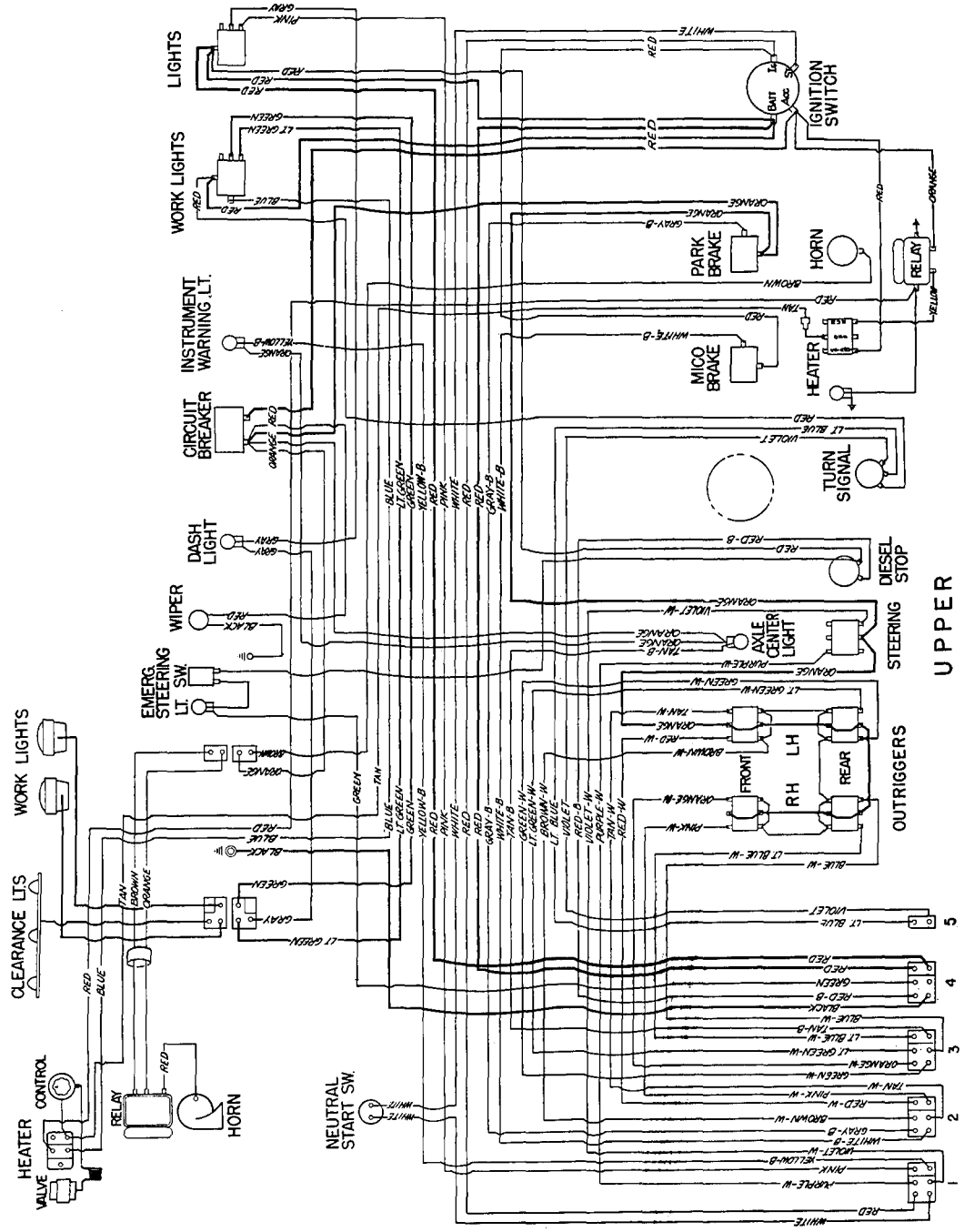
LIGHTS
WORK LIGHTS
INSTRUMENT WARNING LT.
CIRCUIT BREAKER
DASH LIGHT
WIPER
EMERG. STEERING LT. SW.
WORK LIGHTS
CLEARANCE LTS
HEATER CONTROL VALVE
RELAY
HORN
NEUTRAL START SW.
IGNITION SWITCH
PARK BRAKE
HORN
RELAY
MICO BRAKE
HEATER
TURN SIGNAL
DIESEL STOP
AXLE CENTER LIGHT
STEERING
OUTRIGGERS
FRONT
REAR
RH
LH
UPPER

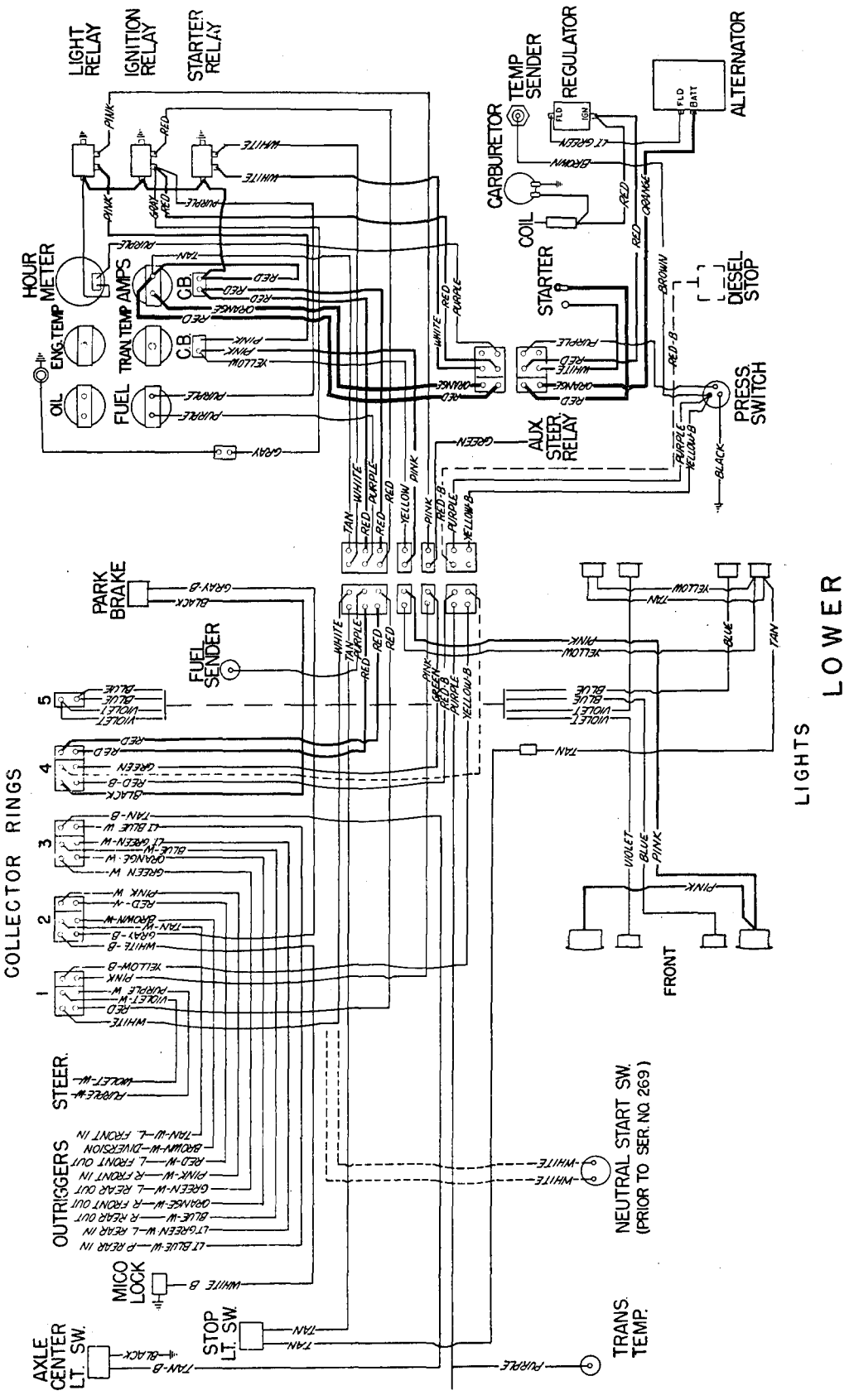
LIGHT RELAY
IGNITION RELAY
STARTER RELAY
TEMP SENDER
REGULATOR
ALTERNATOR
CARBURETOR
COIL
STARTER
DIESEL STOP
HOUR METER
AMPS
C.B.
ENG. TEMP
TRAN TEMP
OIL
FUEL
PRESS. SWITCH
AUX. STEER. RELAY
PARK BRAKE
FUEL SENDER
COLLECTOR RINGS
LIGHTS
LOWER
FRONT
STEER.
OUTRIGGERS
MICO LOCK
AXLE CENTER LT. SW.
STOP LT. SW.
NEUTRAL START SW. (PRIOR TO SER. NO. 269)
TRANS. TEMP.

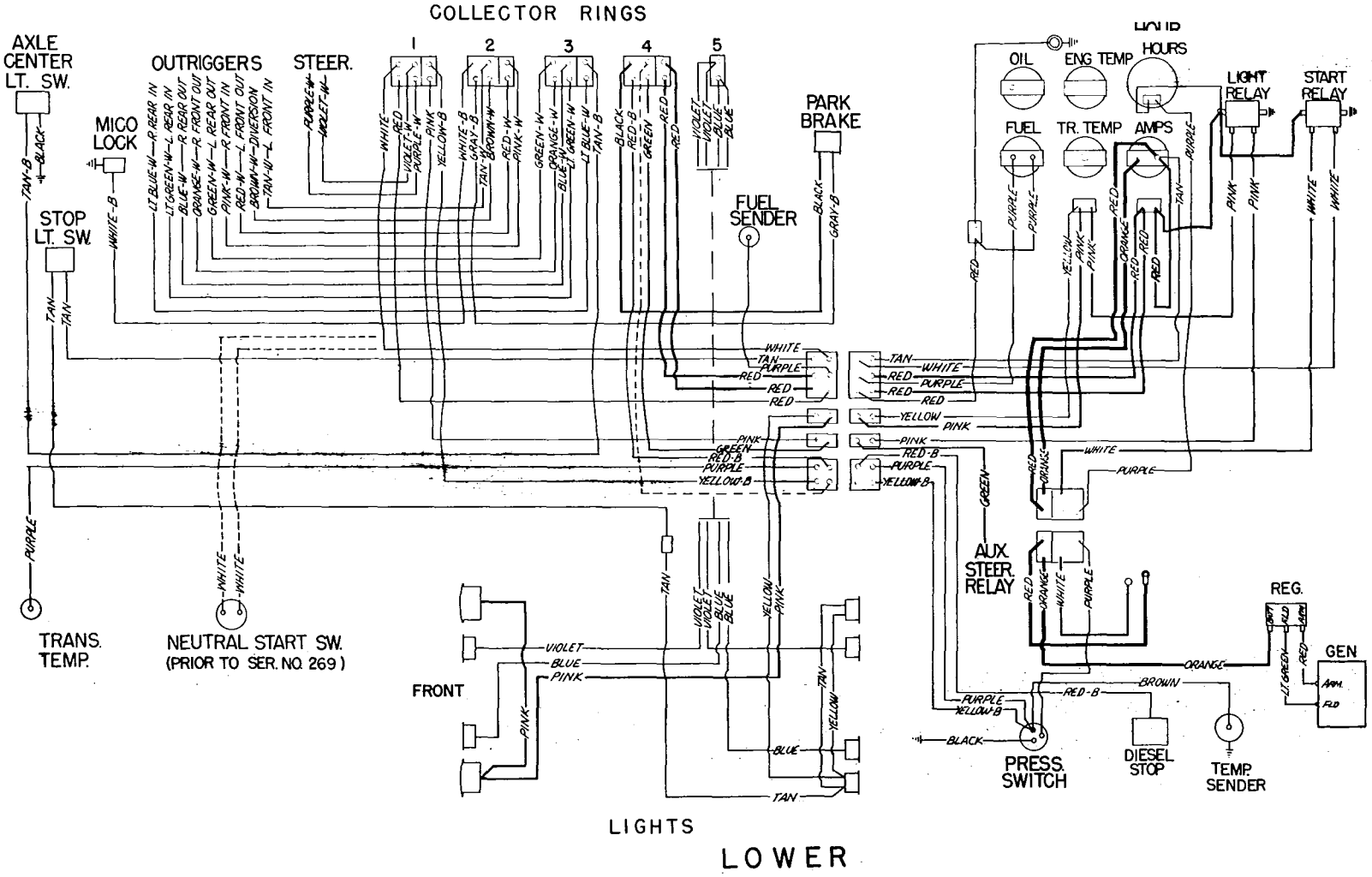
COLLECTOR RINGS
AXLE CENTER LT. SW.
OUTRIGGERS
STEER.
1
2
3
4
5
MICO LOCK
PARK BRAKE
FUEL SENDER
STOP LT. SW.
OIL
ENG TEMP
HOURS
FUEL
TR. TEMP
AMPS
LIGHT RELAY
START RELAY
AUX. STEER. RELAY
REG.
GEN
TRANS. TEMP.
NEUTRAL START SW. (PRIOR TO SER. NO. 269)
FRONT
PRESS. SWITCH
DIESEL STOP
TEMP. SENDER
LIGHTS
LOWER

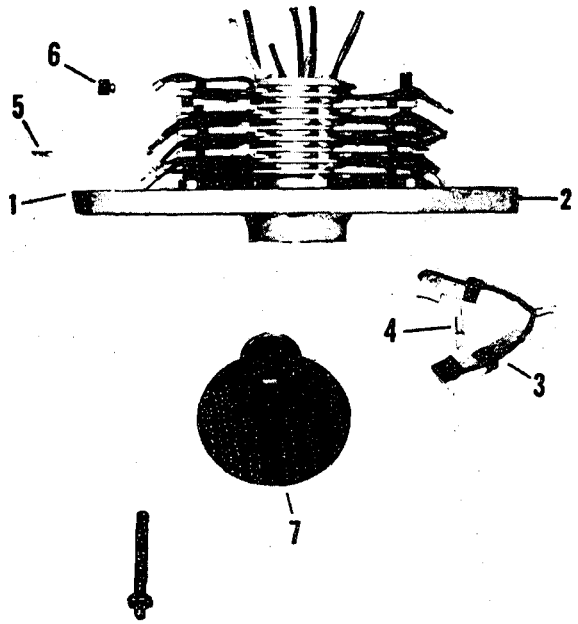

Ref. No.	Part Number	Quan. Req'd.	Name and Description
1	37069	1	COLLECTOR RING, COMPLETE - 30 CIRCUIT
2	25434	1	BRACKET
3	25435	AR	BRUSH HOLDER & BRUSHES
4	25436	AR	SPRING, BRUSH HOLDER
5	25437	AR	CLIP
6	25438	AR	SOLDERLESS CONNECTOR
7	F37009	1	MOUNTING BRACKET

60' BOOM

LOWER BOOM SECTION 6.3
CENTER BOOM SECTION. 6.5
UPPER BOOM SECTION 6.8
BOOM TIP SECTION 6.9
PROPORTIONATOR 6.10
HOIST BLOCK & LINE 6.11
HYDRAULIC SYSTEM (Prior Ser. #1270). . 6.13
BOOM LIFT CYLINDER 6.16
BOOM TELESCOPE CYLINDER. 6.17
BANTAM WINCH 6.19
AUXILIARY WINCH. 6.26
TWO-SPEED WINCH. 6.29
WINCH ROTATION INDICATOR 6.30A
HYDRAULIC SYSTEM (Beg. Ser. #1270) . . 6.31

JIBS . . . . . .
HYDRAULIC CLAM . . . . . See Group 7
ANTI-TWO BLOCK . .

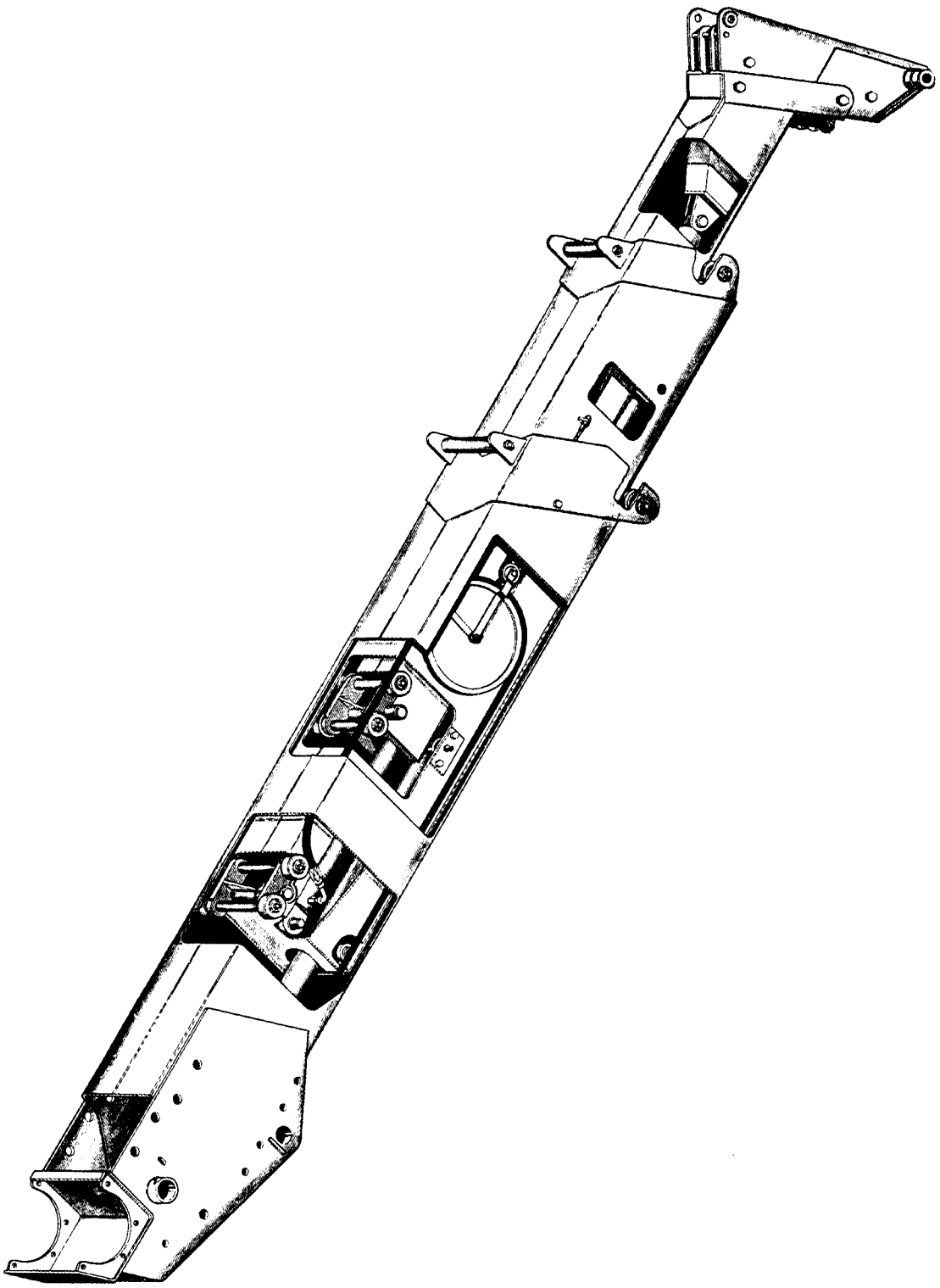

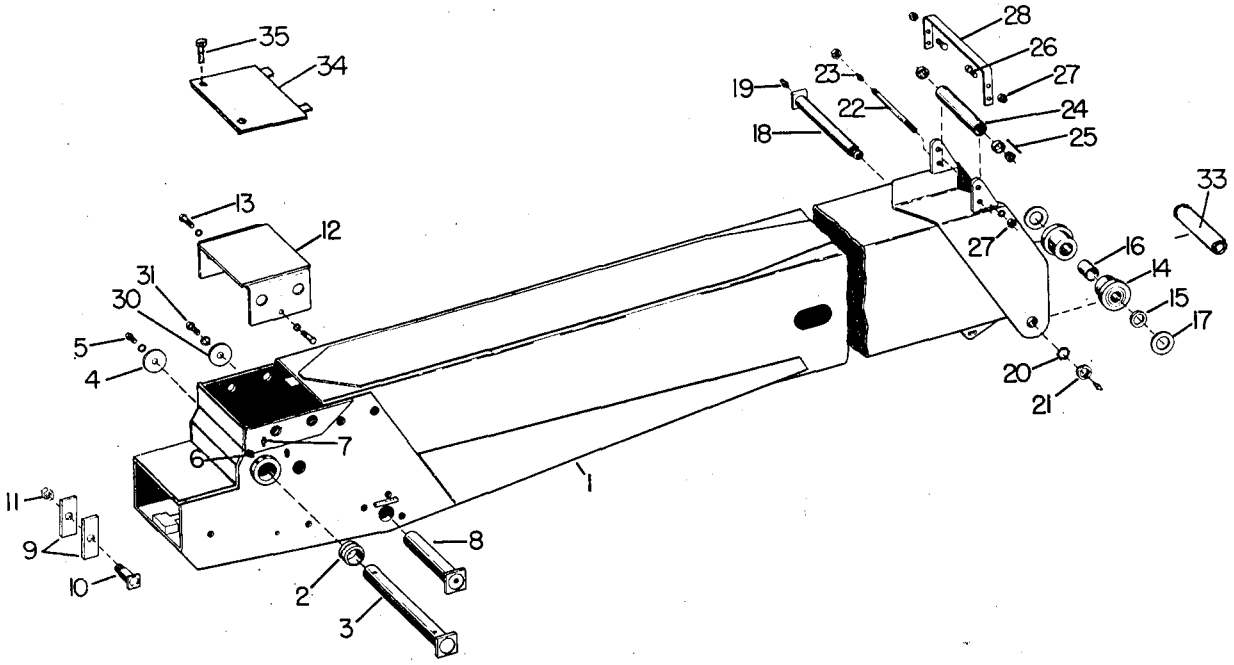

Ref. No.	Part Number	Quan. Req'd.	Name and Description
1	F41566	1	LOWER BOOM - PRIOR TO SER. #1062
	F49271	1	LOWER BOOM - SER. #1062 TO#1260
	F49526	1	LOWER BOOM - BEGIN. W/SER. #1260
2	12014-10	2	BUSHING
3	F38637	1	PIN
4	38663	1	CAP
5	1200-184	1	CAPSCREW, 3/4 UNC x 1 1/2 LG.
	1210-38	1	LOCKWASHER, 3/4 MED.
6	1206-34	2	SETSCREW, 1/2 UNC x 1 1/4 LG.
	1205-61	2	JAM NUT, 1/2 UNC
7	1213-6	2	GREASE FITTING
8	F38638	1	PIN - PRIOR TO SER. #1260
	F49520	1	PIN - BEGIN. W/SER. #1260
9	41564	2	BLOCK
10	A35717-1	1	PIN
11	1204-25	1	ELASTIC NUT

Ref. No.	Part Number	Quan. Req'd.	Name and Description
12	F41556	1	COVER- Prior to Ser. #1062
13	1200-182	2	CAPSCREW, 3/4 UNC x 1 1/4 lg.
	1210-38	2	LOCKWASHER, 3/4 med.
14	A35479-1	2	ROLLER w/bushings, items 15 & 16
15	10723	1	THRUST BUSHING
16	1214-91	1	BUSHING
17	1208-73	AR	MACHINERY BUSHING, 2 1/2 x 3 7/8 x 14 ga.
18	A35481-1	1	PIN
19	1213-1	2	GREASE FITTING, 1/8 npt
20	1228-8	1	LOCKWASHER, SAE W-12
21	1228-9	1	LOCKNUT, SAE N-12
22	38404	1	SHAFT
23	1213-10	1	GREASE FITTING, 1/4 UNF
24	35443	1	ROLLER
25	1217-66	1	ROLLER BEARING complete
26	1200-145	2	CAPSCREW, 5/8 UNF x 1 1/2 lg.
27	1205-91	4	NUT, 5/8 UNF x 1 1/2 lg.
28	35646	1	STRAP
29	36613	1	CAP - Prior to Ser. #1260
	49525	1	CAP - Begin. w/Ser. #1260
31	1200-141	1	CAPSCREW, 5/8 UNC x 1 lg.
	1210-32	1	LOCKWASHER, 5/8 med.
32	35817	2	SHIM
33	F49322	1	SPACER - Begin. w/Ser. #1019
34	F49258	1	COVER - Begin. w/Ser. #1062
35	1200-144	2	CAPSCREW, 5/8 UNC x 1 1/2 lg.
	1210-32	2	LOCKWASHER, 5/8 med.

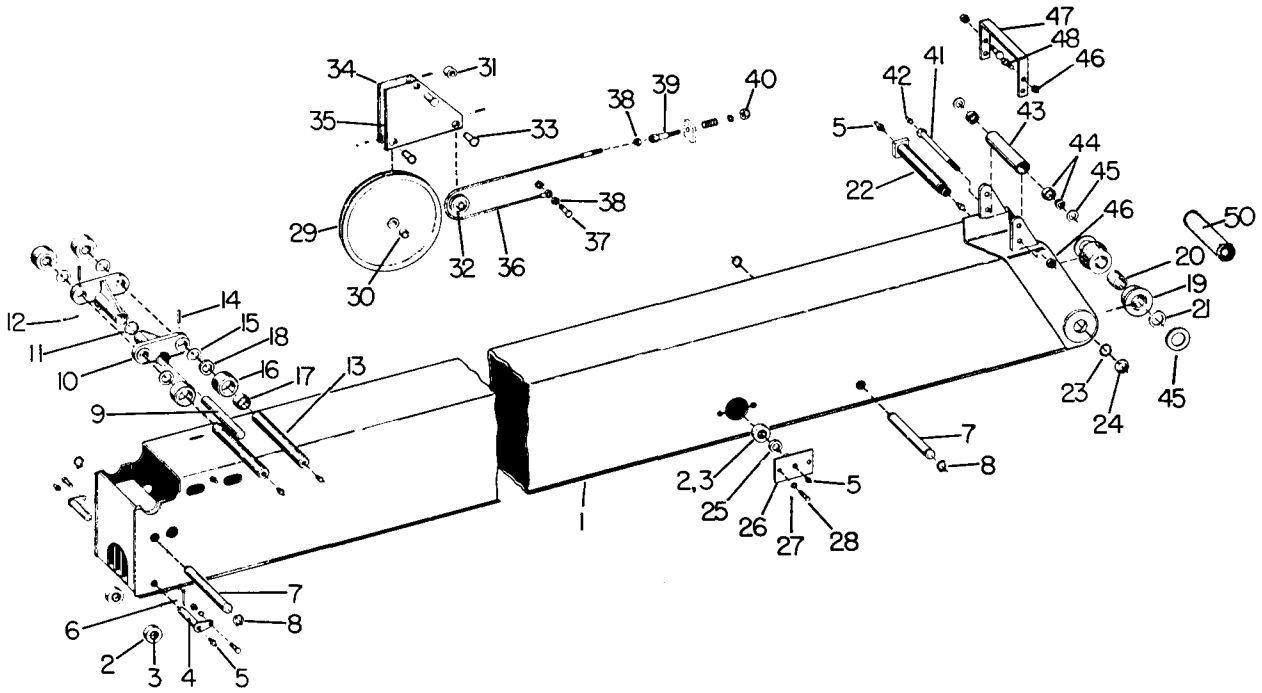

Ref. No.	Part Number	Part Number	Quan. Req'd.	Name and Description
	PRIOR TO SER. #1058	BEGIN. W/ SER.#1058		
1	A35486-1	A35486-1	1	CENTER BOOM SECTION
2	A35487-1	A47345	4	ROLLER W/BUSHING, ITEM 3
3	1214-5	1214-105	1	BUSHING
4	A5950-1	F47360	2	PIN
		1200-59	2	CAPSCREW
		1210-20	2	LOCKWASHER
5	1213-1		AR	GREASE FITTING
6	1207-57		2	COTTER PIN, 5/16 x 2 1/2 LG.
7	35488	35488	2	PIN
8	1220-45	1220-45	4	SNAP RING
	PRIOR TO SER.#1399	BEGIN. W/ SER.#1399		
9	35491		1	PIN
10	A35492-1	F65327	2/1	BRACKET (W/PIN)
		F65329	1	BRACKET (LESS PIN)
11	1208-57	1208-57	AR	MACHINERY BUSHING, 2 x 3 x 14 GA.
12	1227-297		1	ROLL PIN, 5/16 x 2 3/4 LG.
13	35489	35489	2	PIN

Ref. No.	Part Number	Quan. Req'd.	Name and Description
14	1227-302	2	ROLL PIN, 5/16 x 4 LG.
15	1208-72	AR	MACHINERY BUSHING, 2 1/2 x 3 1/2 x 14 GA.
16	A35493-1	4	ROLLER W/BUSHINGS, ITEMS 17 & 18
17	1214-94	1	BUSHING
18	10726	1	THRUST BUSHING
19	A35495-1	2	ROLLER W/BUSHINGS, ITEMS 20 & 21
20	1214-92	1	BUSHING
21	10723	1	THRUST BUSHING
22	35494	1	PIN
23	1228-8	1	LOCKWASHER
24	1228-9	1	LOCK NUT
25	35496	2	COLLAR
26	35497	2	SUPPORT
27	1210-38	4	LOCKWASHER, 3/4 MED.
28	1200-182	4	CAPSCREW, 3/4 UNC x 7/8 LG.
	A38760	2	WHEEL BRACKET ASSEMBLY, INCLUDES ITEMS 29 THRU 35
29	A35498-1	2	SHEAVE W/BUSHING, ITEM 30
30	1214-63	1	BUSHING
31	38761	1	SPACER
32	A35503-1	2	SHEAVE W/BUSHING
	1214-63	1	BUSHING, FOR ABOVE
	1208-8	1	MACHINERY BUSHING, 3/4 x 1 1/4 x 18 GA.
33	F38768	3	PIN
	1227-188	3	ROLL PIN, FOR ABOVE
34	F38762	1	SUPPORT, LH
35	F38765	1	SUPPORT, RH
36	35504	2	CABLE
37	1200-106	2	CAPSCREW, 1/2 UNC x 2 1/4 LG.
	1210-26	2	LOCKWASHER, 1/2 MED.
38	1205-61	4	NUT, 1/2 UNC JAM
	1205-65	2	NUT, 1/2 UNC SELF-LOCKING

Model S-628 | Group No. 6
Date REV. 1 MARCH 1977 | BOOM - 60' | Page 6.7

Ref. No.	Part Number	Quan. Req'd.	Name and Description
39	35556	2	SPINDLE
	16351	2	SPRING
	35557	2	EAR (WELDED TO BOOM)
	1208-3	2	MACHINERY BUSHING, 5/8 x 1 1/8 x 14 GA.
40	1205-90	2	NUT, 5/8 UNC ELASTIC
41	10957	1	SHAFT
42	1213-10	1	GREASE FITTING, 1/4 UNF STRAIGHT
43	10956	1	ROLLER
44	1217-66	2	ROLLER BEARING w/CUP & CONE
45	1208-73	2	MACHINERY BUSHING, 2 1/2 x 3 7/8 x 14 GA.
46	1205-91	1	NUT, 5/8 UNF ELASTIC
47	35647	1	STRAP
48	1200-145	2	CAPSCREW, 5/8 UNF x 1 1/2 LG.
49	1205-91	2	NUT, 5/8 UNF ELASTIC
50	F49322	1	SPACER

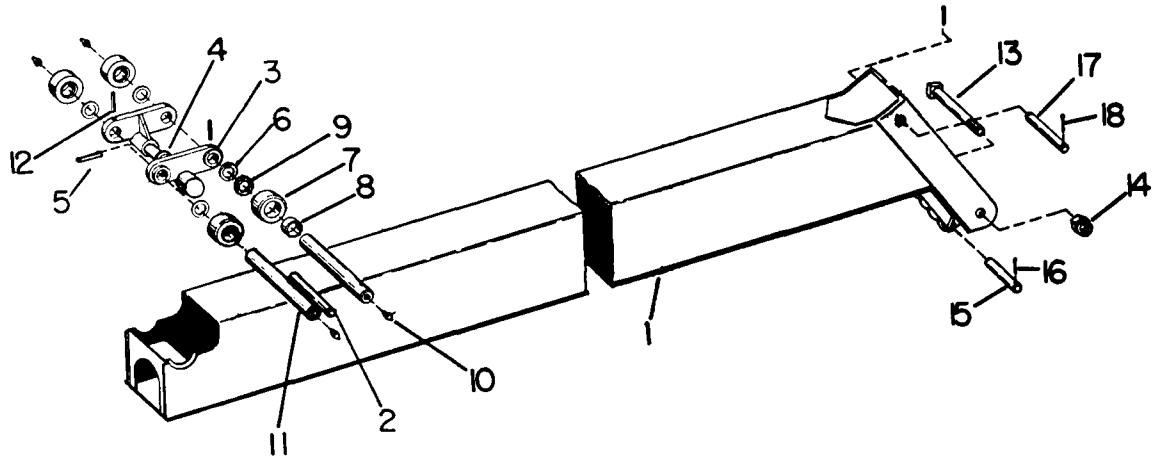

Ref. No.	Part Number	Part Number	Quan. Req'd.	Name and Description
	PRIOR TO SER.#1399	BEGIN. W/ SER.#1399		
1	A35505-1		1	BOOM SECTION, UPPER
2	35506		1	PIN
3	35507	F65323	2/1	BRACKET (W/PIN)
		F65325	1	BRACKET (LESS PIN)
4	1208-57		AR	MACHINERY BUSHING, 2 x 3 x 14 GA.
5	1227-297		1	ROLL PIN, 5/16 x 2 3/4 LG.
6	1208-72		AR	MACHINERY BUSHING
7	A35493-1		4	ROLLER W/BUSHINGS, ITEMS 8 & 9
8	1214-94		1	BUSHING
9	10726		1	THRUST BUSHING
10	1213-1		4	GREASE FITTING, 1/8 NPT STRAIGHT
11	35508		2	PIN
12	1227-302		2	ROLL PIN, 3/8 x 4 LG.
13	1235-354		1	MACHINE BOLT, 1 1/4 UNC x 13 LG.
14	1205-133		1	NUT, 1 1/4 UNC ELASTIC
15	38998		1	PIN - 8 1/4" LG.
	3696		1	PIN - 8 1/2" LG.
16	1207-42		1	COTTER PIN, 1/4 x 2 LG.
17	38199		1	PIN
18	1207-55		2	COTTER PIN, 5/16 x 2 LG.

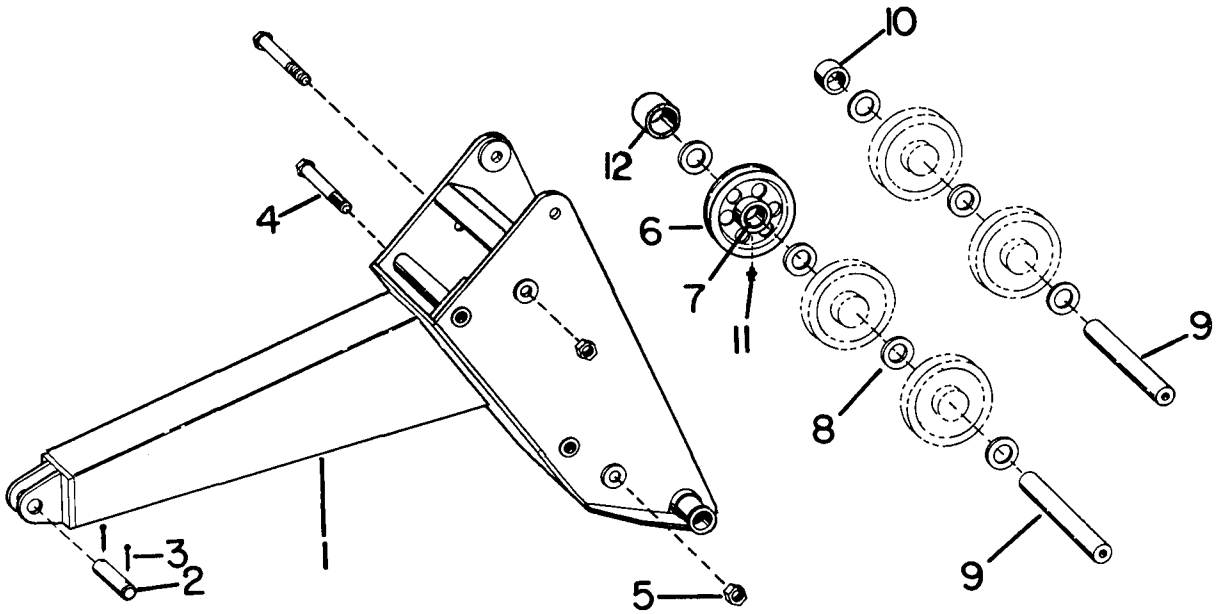

Ref. No.	Part Number	Part Number	Part Number	Quan. Req'd.	Name and Description
	A38980 3-SHEAVE	A38872 3-SHEAVE	A41260 4-SHEAVE		BOOM TIP ASSEMBLY, INCLUDES ITEMS 1 THRU 12
	10 1/2"	13 1/2"	13 1/2"		SHEAVE SIZE
1	F38981	F38873	F38873	1	BOOM TIP
2	35477	35477	35477	1	PIN
3	1207-58	1207-58	1207-58	2	COTTER PIN, 5/16 x 2 3/4 LG.
4	F38984	F38876	F38876	2	CAPSCREW
5	1205-179	1205-179	1205-179	2	ELASTIC NUT, 1 3/8 UNF
		1209-28	1209-28	2	WASHER, 1 3/8 SAE, FOR ABOVE
6	A49471			5	SHEAVE W/BEARING - 10 1/2" (REPL. A38699)
6		A38933		5	SHEAVE W/BEARING - 13 1/2"
6			A38933	6	SHEAVE W/BEARING - 13 1/2"
7	1217-236	1217-236		5	BEARING, FOR ABOVE
7			1217-236	6	BEARING, FOR ABOVE
8	1209-53	1209-52		7	NYLON SPACER
8			1209-52	8	NYLON SPACER
9	38983			2	RACE - 5 7/8" LG.
9		38874	38874	1	UPPER RACE - 4 3/16" LG.
9		38875	38875	1	LOWER RACE - 8 1/8" LG.
10	38705	38879	38879	1	SPACER
11	1213-16	1213-16	1213-16	AR	GREASE FITTING, 30°
		1213-1	1213-1	3	GREASE FITTING, STRAIGHT
12		38705		1	SPACER (REPLACES 41259)

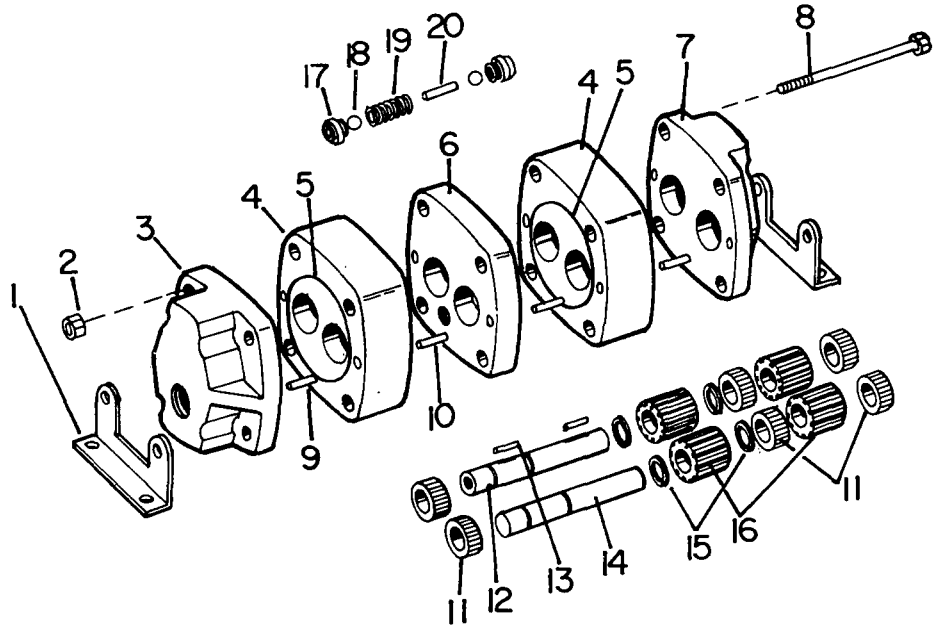

Ref. No.	Part Number	Quan. Req'd.	Name and Description
	35873		DUAL PROPORTIONATOR
1	27817	2	MOUNTING BRACKET
2	27820	4	NUT
3	200529	1	END PLATE (1 PORT)
4	27810	2	CASE
5	23250	4	"O" RING
6	27812	1	SPACER PLATE
7	27811	1	END PLATE (2 PORTS)
8	27818	2	CAPSCREW
	200527	2	CAPSCREW, MOUNTING BRACKET
9	200520	6	DOWEL PIN
10	23251	2	DOWEL PIN
11	23253	6	BEARING
12	27813	1	IDLER SHAFT
13	23252	2	DOWEL PIN
14	23249	1	IDLER SHAFT
15	23254	4	RETAINING RING
16	23248	4	GEAR
17	27814	2	VALVE HEAD
18	27815	2	BALL
19	27816	1	SPRING
20	200530	1	DOWEL PIN

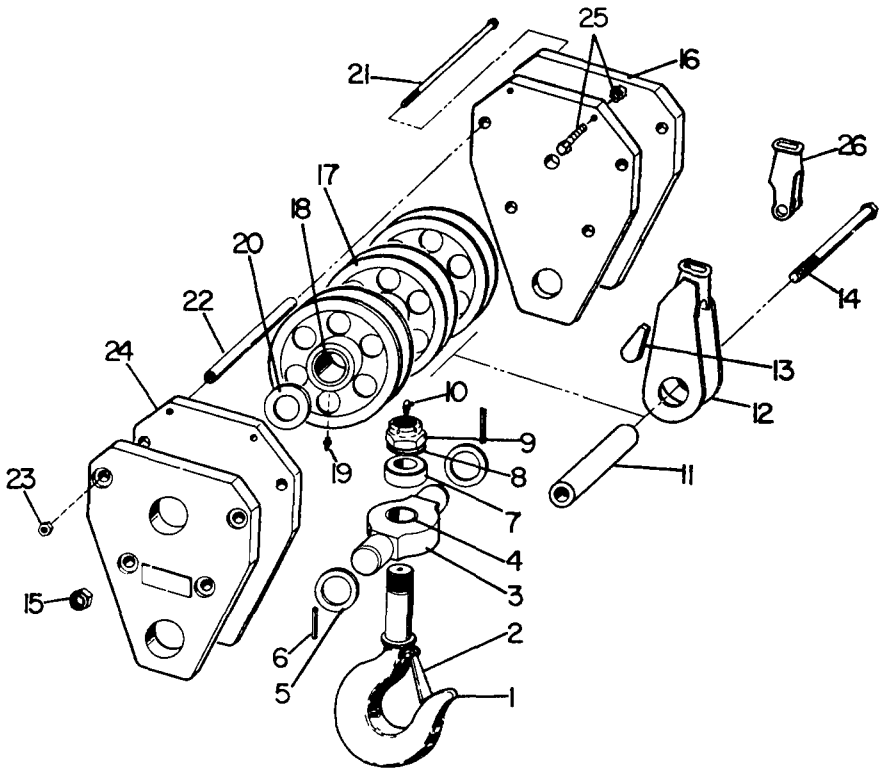

Ref. No.	Part Number	Quan. Req'd.	Name and Description
	A41276	1	HOIST BLOCK COMPLETE - INCLUDES ITEMS 1 THRU 26
1	41287	1	HOOK
2	1234-13	1	SAFETY LATCH
3	A41298	1	TRUNNION W/BUSHING
4	1214-99	1	BUSHING, FOR ABOVE
5	1208-70	2	BUSHING
6	1227-399	2	ROLL PIN
7	1217-282	1	BEARING
8	1208-57	1	BUSHING
9	1205-187	1	NUT
10	1213-6	1	GREASE FITTING
11	41290	1	INNER RACE
12	F41282	1	CABLE SOCKET
13	B17006	1	WEDGE

Ref. No.	Part Number	Quan. Req'd.	Name and Description
14	F41288	1	CAPSCREW
15	1205-185	1	NUT
16	41278	2	PLATE
17	A49471	3	SHEAVE, 10-1/2" W/BEARING (REPLACES A38699)
18	1217-236	3	BEARING, FOR ABOVE
19	1213-16	3	GREASE FITTING, 30°
20	1209-53	5	SPACER
21	1235-289	4	CAPSCREW
22	41291	4	TUBE
23	1205-100	4	ESLOK NUT
24	41277	2	PLATE
25	1200-98	2	CAPSCREW
	1205-65	2	NUT
26	B4070	1	CABLE SOCKET
	1269-300	1	HOIST CABLE (300') - 1/2" DIA. WIRE ROPE, 6 x 19 IWRC IPS PREFORMED, 23,000 LBS. BREAKING STRENGTH, SINGLE PART

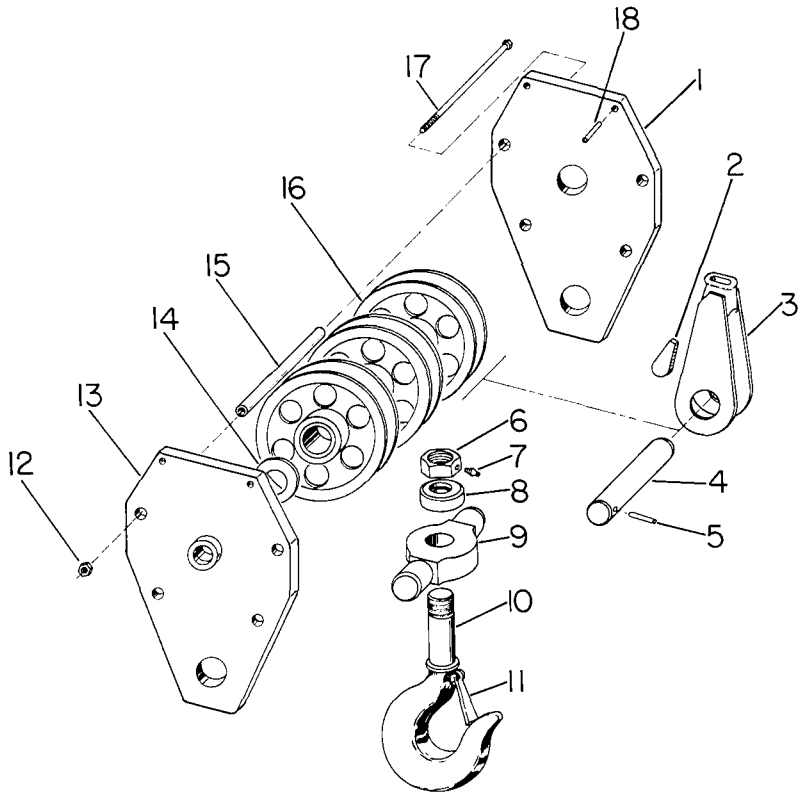

Ref. No.	Part Number	Part Number	Quan. Req'd.	Name and Description
	3-SHEAVE	4-SHEAVE		
	A47465	A49300		18-TON HOIST BLOCK - INCLUDES ITEMS 1 THRU 18
1	F49563	47454	1	PLATE
2	B17006	B17006	1	WEDGE
3	F41264	F41264	1	CABLE SOCKET
4	47568	47569	1	SHAFT
5	1227-402	1227-402	1	ROLL PIN, 1/2 x 3 1/2 LG.
6	47451	47451	1	NUT, 2-1/2 UNC
7	1213-4	1213-4	1	GREASE FITTING
8	1217-314	1217-314	1	BEARING
9	47445	47463	1	TRUNNION
10	47455	47455	1	HOOK
11	1234-17	1234-17	1	SAFETY LATCH
12	1205-100	1205-100	4	NUT, 3/4 UNC

Model S-628
Date 1 JULY 1973

18-TON HOIST BLOCK (EXPORT)

Ref. No.	Part Number	Part Number	Quan. Req'd.	Name and Description
	3-SHEAVE	4-SHEAVE		
13	F47461	F47461	1	PLATE
14	1209-62	1209-62	5/6	SPACER
15	47452	47462	4	TUBE
16	A47450	A47450	3/4	SHEAVE, 13-1/2" W/BEARING
	47457	47457	3/4	BEARING, FOR ABOVE
17	1235-372	1235-372	4	CAPSCREW, 3/4 UNC x 11-1/2 LG.
18	1227-256	1227-256	2	ROLL PIN, 1/4 x 1-1/2 LG.

PRIOR TO SER. #1270

SEE PAGE 6.31 FOR SYSTEM BEG. #1270

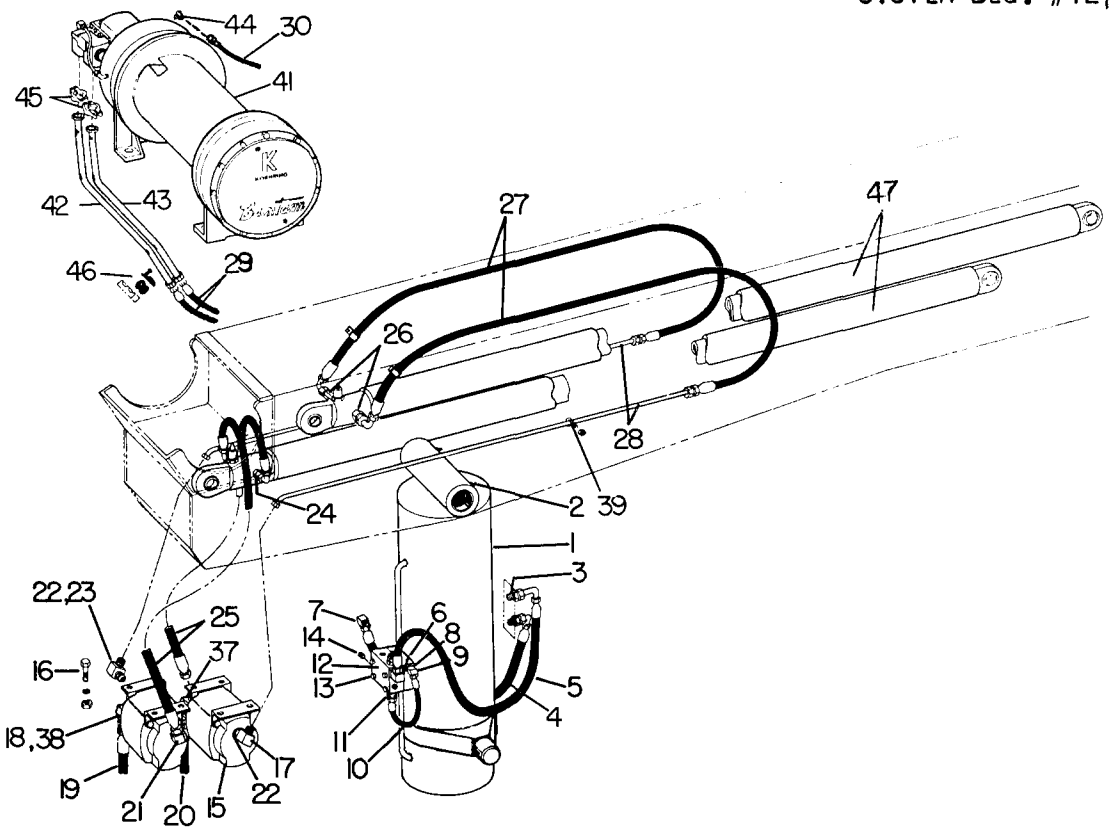

Ref. No.	Part Number	Quan. Req'd.	Name and Description
1		1	BOOM LIFT CYLINDER - SEE PAGE 6.16
2	1213-3	2	GREASE FITTING
3	1219-555 1218-65	2 2	ADAPTER "O" RING, FOR ABOVE
4	A38679	1	HOSE ASSEMBLY
5	A38678	1	HOSE ASSEMBLY
6	1219-287	1	ADAPTER, 90°
7	1219-802	1	ADAPTER, 90°
8	35249	1	PLUG ADAPTER
9	1219-588	1	ADAPTER, 90°
10	A35448	1	HOSE ASSEMBLY
11	1219-801	1	ADAPTER

Ref. No.	Part Number	Quan. Req'd.	Name and Description	
				SEAL KITS
12	1219-657	1	VALVE - RACINE	.....A23955
	12019-281	1	VALVE - FLUID CONTROL	.....A200517
	12019-345	1	VALVE - RACINE - REPLACES ABOVE VALVES (SEE SERVICE BULLETIN #276)	....A200915
	1218-126	1	"O" RING, VALVE TO CYLINDER	
13	1200-113	4	CAPSCREW, 1/2 UNF x 3 LG.	
	1210-26	4	LOCKWASHER, 1/2 MED.	
14	1219-38	1	PIPE PLUG, 1/8 NPT	
15	35873	2	PROPORTIONATOR - SEE PAGE 6.10	
16	1200-59	8	CAPSCREW, 3/8 UNC x 1 LG.	
	1210-20	8	LOCKWASHER, 3/8 MED.	
	1205-36	8	NUT, 3/8 UNC	
17	1219-286	2	ADAPTER, 90°	
18	1219-480	1	ADAPTER	
19	A39780	1	HOSE ASSEMBLY	
20	A39779	1	HOSE ASSEMBLY	
21	1219-651	2	ADAPTER	
22	1219-780	2	ADAPTER	
23	1219-864	1	ADAPTER, 90°	
24	1219-691	2	ADAPTER	
	1218-64	2	"O" RING, FOR ABOVE	
25	A38672	2	HOSE ASSEMBLY	
26	1219-389	2	ADAPTER	
	1218-64	2	"O" RING, FOR ABOVE	
27	A49036	2	HOSE ASSEMBLY	
28	38670	2	TUBE	
29	A39781	2	HOSE ASSEMBLY	
30	A41840	1	HOSE ASSEMBLY	
37	1219-765	1	ADAPTER, 45°	
38	1219-583	1	ADAPTER	
39	38937	2	"J" BOLT	
	1205-22	2	NUT	
41		1	BANTAM WINCH - SEE PAGE 6.19	

Ref. No.	Part Number	Quan. Req'd.	Name and Description
42	41586	1	TUBE
43	41587	1	TUBE
44	1219-446	1	ADAPTER
	1218-34	1	"O" RING, FOR ABOVE
45	1219-665	4	SPLIT FLANGE CLAMP
	1218-103	2	"O" RING
	1203-137	8	CAPSCREW, 3/8 UNC x 1 1/4 LG., H.T.
	1210-20	8	LOCKWASHER, 3/8 MED.
46	1240-29	2	CLAMP
	1200-94	2	CAPSCREW, 1/2 UNF x 3/4 LG.
	1210-26	2	LOCKWASHER, 1/2 MED.
47		2	EXTEND CYLINDER - SEE PAGE 6.17

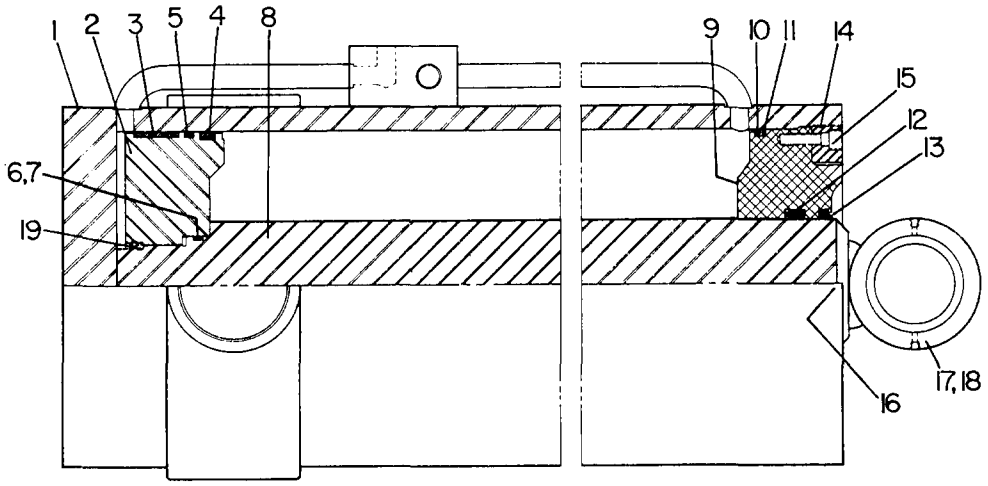

Ref. No.	Part Number	Part Number	Quan. Req'd.	Name and Description
	PRIOR TO SER.#1146	BEGIN. W/ SER.#1146		
	41735	49556	1	BOOM LIFT CYLINDER COMPLETE
	26531	28144	1	SEAL KIT, INCL. PIST. RINGS, SEALS, "O" RINGS, BACK-UP WASHERS
1	26532	26532	1	CASE
2	26533	28135	1	PISTON
3	26534	28136	1	WEAR RING
4	25006	25006	1	PISTON RING
5	26535	26535	1	TEFLON SEAL W/LOADING "O" RING
6	26536	26536	1	"O" RING
7	26537	26537	2	BACK-UP WASHER
8	26538	28141	1	SHAFT
9	26539	26539	1	HEAD GLAND
10	25012	25012	1	"O" RING
11	25013	25013	1	BACK-UP WASHER
12	26540	26540	1	"U" CUP SEAL
13	26541	26541	1	WIPER SEAL
14	25018	25018	1	THREAD RING
15	1200-102	1200-102	2	CAPSCREW, 1/2 UNC x 1 3/4 LG.
16	25017	25017	1	PLUG, BUTTRESS RING LOCK
17	25021	28142	2	BRONZE BUSHING
18	25020	28143	1	BUSHING SPACER
19	25023	25023	1	SETSCREW, 3/8 UNC x 3/4 LG., HALF DOG

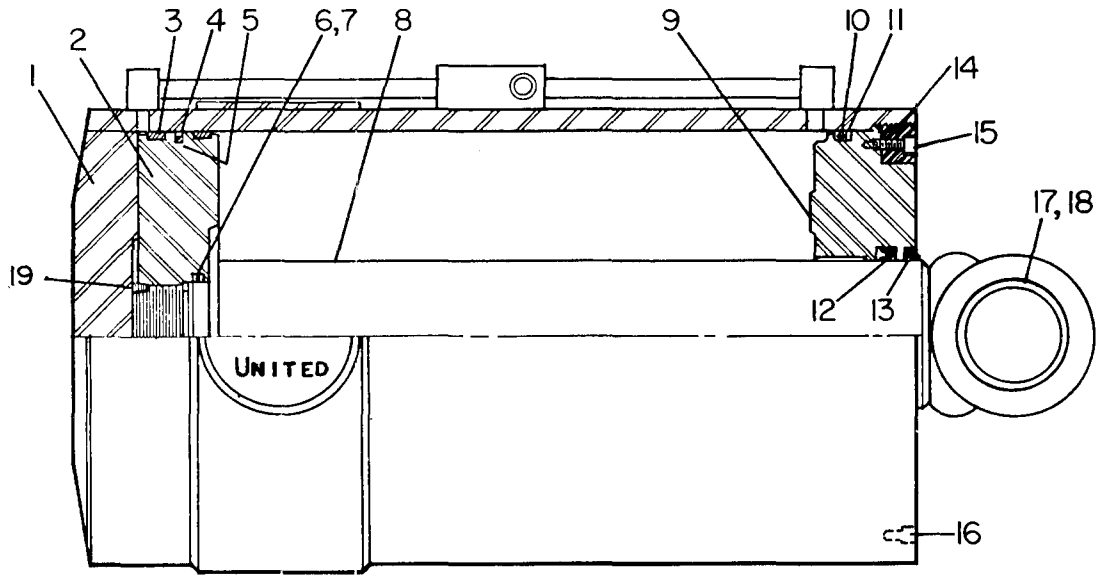

Ref. No.	Part Number	Part Number	Quan. Req'd.	Name and Description
	PRIOR TO SER.#1260	BEGIN. W/ SER.#1260		
	49788	49817	1	BOOM LIFT CYLINDER COMPLETE
	29480		1	SEAL KIT - INCLUDES ITEMS 4 THRU 7, 10 THRU 13
1	29481		1	CASE
2	29483		1	PISTON
3	29492		2	WEAR RING
4	29490		1	SIRVON SEAL
5	29491		1	"O" RING
6	29010		1	"O" RING
7	29006		2	BACK-UP WASHER
8	29482		1	SHAFT
9	29484		1	HEAD GLAND
10	25012		1	"O" RING
11	29488		1	BACK-UP WASHER
12	29013		1	"U" CUP SEAL
13	29011		1	WIPER SEAL
14	29485		1	THREAD RING
15	29494		2	SOCKET HEAD CAPSCREW, 1/2 UNC x 2 LG.
16	29493		1	SOCKET HEAD CAPSCREW, 1/4 UNF x 3/4 LG.
17	29803	29487	2	BRONZE BUSHING, 3-1/4 ID x 4 OD / 3-1/2 ID x 4 OD
18	29486		1	SPACER
19	29012		1	SETSCREW, 3/8 UNC x 3/8 LG.

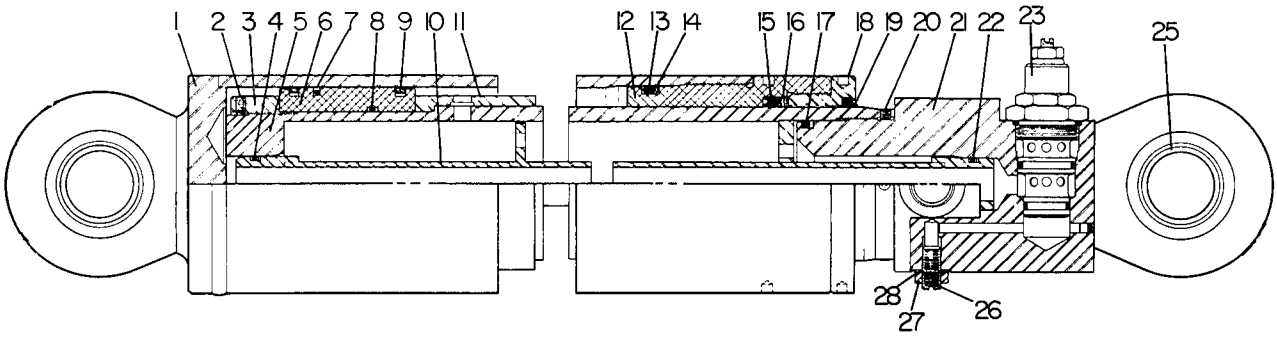

Ref. No.	Part Number	Quan. Req'd.	Name and Description
	39991	2	HYDRAULIC CYLINDER COMPLETE
	25955	2	SEAL KIT, INCLUDES SEALS, "O" RINGS, BACK-UP WASHERS - SEE REF. 23
1	25954	1	CASE
2	1206-41	1	SETSCREW, 1/4 UNC x 3/8 LG., SOCKET HEAD, CUP PT.
3	25949	1	BUTTRESS PISTON NUT
4	1218-156	1	"O" RING
	25942	1	BACK-UP RING
5	25953	1	SHAFT
6	25952	1	PISTON
7	23432	1	SEAL
	1218-146	1	"O" RING
8	24481	1	STATIC "O" RING
	25945	2	BACK-UP WASHER
9	23433	2	PISTON RING
10	25947	1	PORT TUBE
11	25948	1	SPACER
12	25951	1	HEAD GLAND
13	23985	1	"O" RING
14	25357	1	BACK-UP WASHER

Ref. No.	Part Number	Quan. Req'd.	Name and Description
15	25478	1	"U" CUP SEAL
16	25050	1	BACK-UP RING
17	25944	1	BACK-UP RING
	1218-157	1	"O" RING
18	25950	1	THREAD RING
19	25049	1	WIPER SEAL
20	1206-41	1	SETSCREW, 1/4 UNC x 3/8 LG., SOCKET HEAD, CUP PT.
21	25946	1	ROD EYE UNIT ONLY
22	1218-156	1	"O" RING
	25942	1	BACK-UP WASHER
23	24458	1	HOLD VALVE
	A25038	1	SEAL KIT, FOR ABOVE
25	1217-182	2	SELF-ALIGNING BEARING
26	25956	1	NEEDLE VALVE
27	1205-39	1	LOCK NUT, 3/8 UNC
28	27996	1	WASHER
	1218-177	1	SEAL WASHER

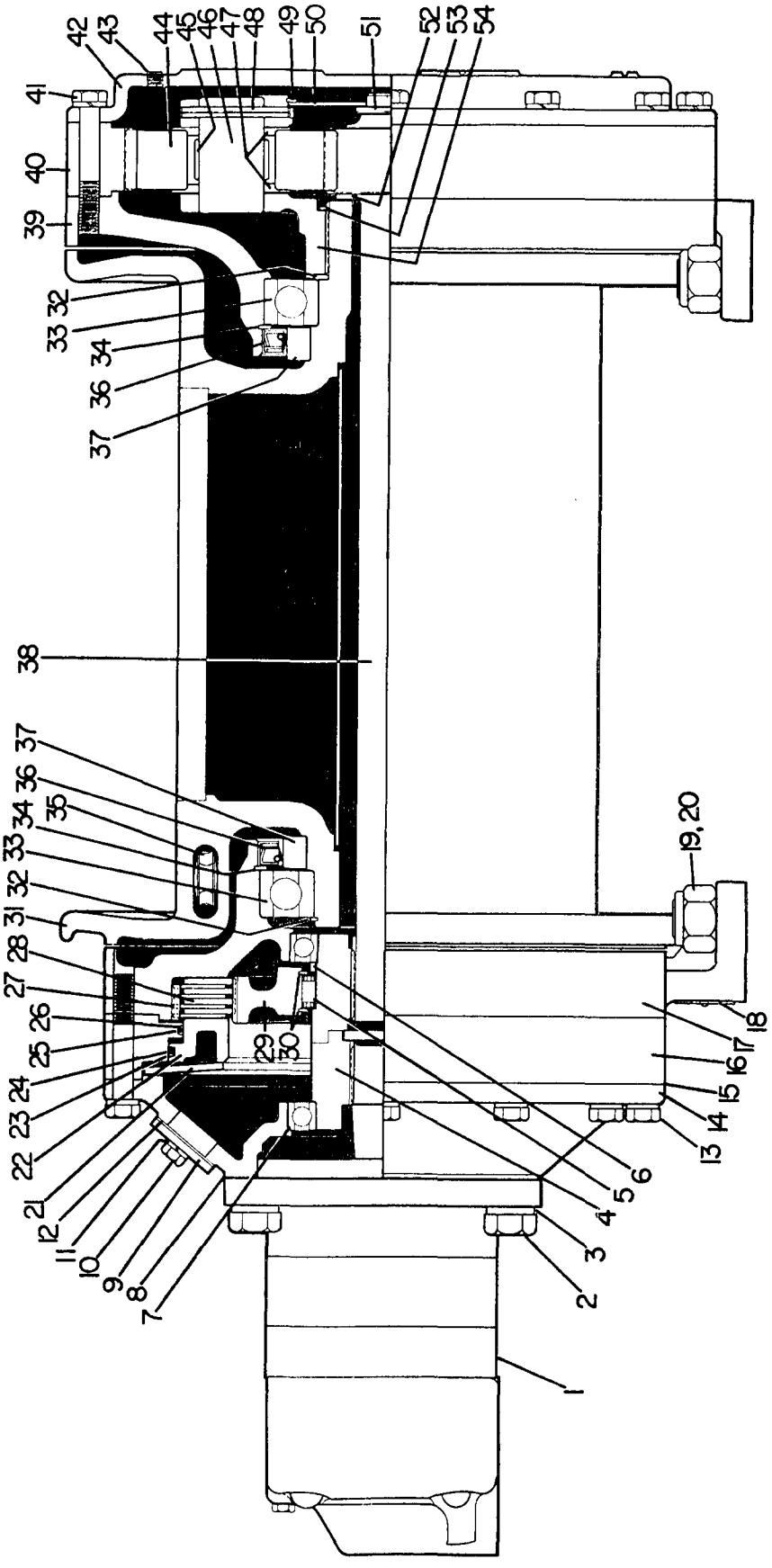
42
43
44
45
46
47
48
49
50
51
52
53
54
41
40
39
32
33
34
36
37
38
37
36
35
34
33
32
31
28
27
26
25
24
23
22
21
12
11
10
9
8
7
29
30
19, 20
18
17
16
15
14
13
6
5
4
3
2
1

Ref. No.	Part Number Prior To Winch #601	Part Number Begin. W/ Winch #601	Quan. Req'd.	Name and Description
	A38750			WINCH COMPLETE - INCLUDES ITEMS 1 THRU 54 AND ITEMS 1 THRU 6, PAGE 6.23
	A26320		1	SEAL KIT - INCLUDES SHIMS, GASKETS, "O" RINGS, BACK-UP WASHERS, LIP SEALS
1			1	MOTOR - SEE PAGE 6.24
2	1200-186		4	CAPSCREW, 5/8 UNC x 1 3/4 LG.
3	1209-9	1208-8	4	WASHER
4	41310	49355 49356	1 1	HUB ASSEMBLY (49355 REPLACES 49134) SPACER
5	41333		1	SPRAG CLUTCH
6	41330	49136	1	SPACER
7	1217-268	1217-312	2	BALL BEARING
8	41324		3	SHIM
9	41331		1	COVER
10	1200-59	1203-146	2	CAPSCREW
11	1209-4		2	LOCKWASHER
12	41575		1	GASKET
13	1200-114 1210-26		12 12	CAPSCREW, 1/2 UNC x 3 1/4 LG. LOCKWASHER, 1/2 MED.
14	41309	49133	1	END COVER
15	41321		3	SHIM
16	41317 1219-38		1 1	PISTON HOUSING PLUG, 1/8 NPT
17	41319	49132	1	MAIN DRIVE MOUNT
18	12260-160 1211-22		1 2	IDENTIFICATION PLATE DRIVE SCREW FOR ABOVE
19	1229-137 49137		4 AR	CAPSCREW, 1 UNF x 2 3/4 LG. SHIM FOR ABOVE
20	1205-123		4	LOCKNUT
21	38755		1	BELLEVILLE SPRING

Ref. No.	Part Number	Quan. Req'd.	Name and Description
22	41315	1	ANNULAR PISTON
23	1218-151	1	BACK-UP RING
24	1218-150	1	"O" RING
25	1218-152	1	"O" RING
26	1218-153	1	BACK-UP RING
27	38757	4	SEPARATOR DISC
28	38758	4	CLUTCH DISC
29	38744	1	OUTER RACE
30	1220-69	2	RETAINING RING
31	F49019	1	DRUM - BEGIN. W/SER. #488(WINCH) - REPLACES F41320
	F49690	1	DRUM - BEGIN. W/SER. #1155 (WINCH)
32	1220-70	1	RETAINING RING
33	1217-267	2	BALL BEARING
34	1220-71	2	RETAINING RING
35	38753	1	WEDGE
36	1218-154	2	LIP SEAL
37	41325	2	SEAL RACE
38	38747	1	CENTER SHAFT - 22 3/4" LG.
39	41327	1	FINAL DRIVE MOUNT
40	36516	1	RING GEAR
41	1200-114	12	CAPSCREW, 1/2 UNC x 3 1/4 LG.
	1210-26	12	LOCKWASHER, 1/2 MED.
42	41329	1	COVER
43	1219-21	2	PLUG, 3/8 NPT
44	36519	3	PLANET GEAR
45	1217-251	3	ROLLER BEARING

Ref. No.	Part Number	Quan. Req'd.	Name and Description
46	36525	3	SHAFT
47	36526	6	BUSHING
48	1227-264	3	ROLL PIN
49	1220-73	1	RETAINING RING
50	38756	1	BUSHING HOLDER BOSS
51	36533	1	BUSHING
52	38754	1	BUSHING
53	1220-79	1	RETAINING RING
54	38759	1	PLANET CARRIER
	50448	2	CABLE GUARD (NOT SHOWN) - BEGIN. W/SER. #529 (WINCH)
	49688	2	CABLE GUARD (NOT SHOWN) - BEGIN. W/SER. #1155 (WINCH)

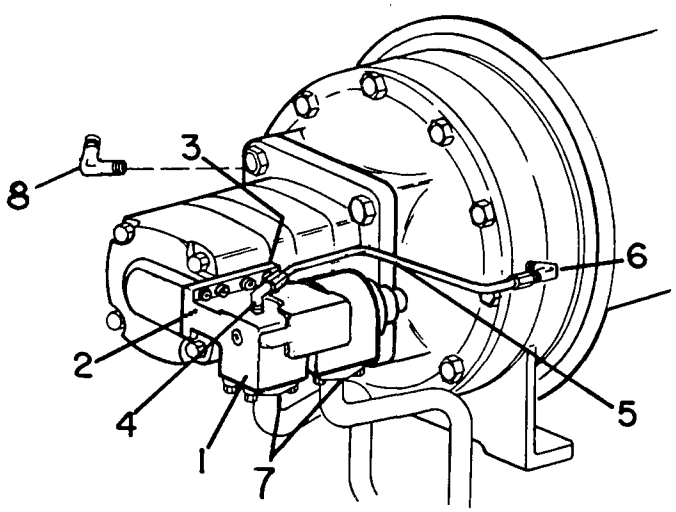

Ref. No.	Part Number	Quan. Req'd.	Name and Description
1	41980	1	HOLD VALVE - SEE PAGE 6.25
2	1218-115	2	"O" RING
3	1203-135	8	CAPSCREW, 3/8 UNC x 1 LG.
4	1219-351	2	ADAPTER
5	41577	1	TUBE
6	1219-776	1	ADAPTER
	1218-144	1	"O" RING, FOR ABOVE
7	1219-665	4	SPLIT FLANGE CLAMP
	1218-103	2	"O" RING
	1203-137	8	CAPSCREW, 3/8 UNC x 1 1/4 LG., H.T.
	1210-20	8	LOCKWASHER, 3/8 MED.
8	12019-124	1	ADAPTER

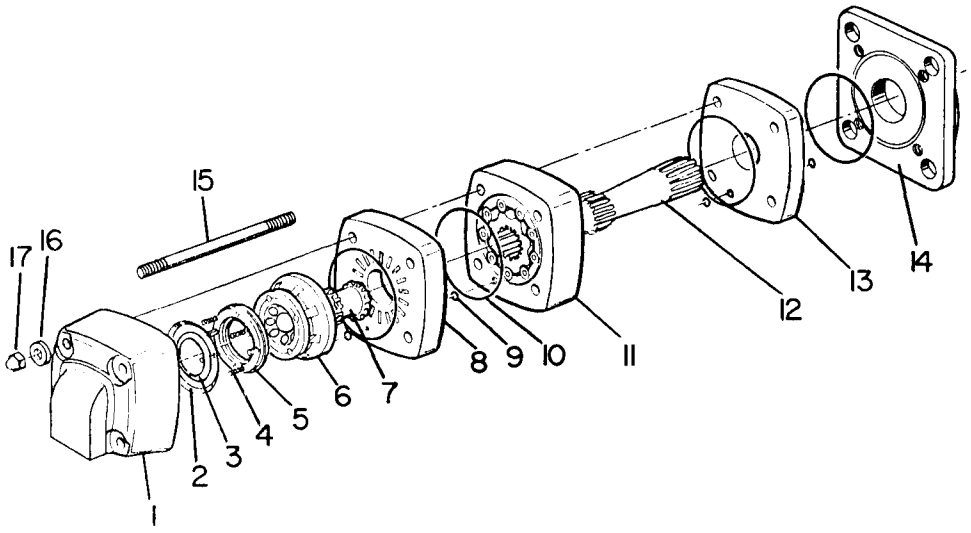

Ref. No.	Part Number	Part Number	Quan. Req'd.	Name and Description
	PRIOR TO SER.#775	BEGIN. W/ SER.#775		
	41332	49405	1	MOTOR COMPLETE
	26319	26319	1	SEAL KIT, INCLUDES ITEMS 2, 3, 9, 10
1	26321	27945	1	HOUSING
2	26322	26322	1	OUTER FACE SEAL
3	26323	26323	1	INNER FACE SEAL
4	26324	26324	4	SPRING
5	26325	26325	1	BALANCING PLATE ASSEMBLY
6	26326	27946	1	VALVE
7	26327	26327	1	VALVE DRIVE
8	26328	27947	1	VALVE PLATE
9	26329	26329	4	"O" RING
10	26330	26330	4	SEAL
11	27972	27974	1	GEROLER ASSEMBLY
12	27973	27973	1	OUTPUT SHAFT
13	26333	27949	1	WEAR PLATE
14	26334	27950	1	MOUNTING PLATE
15	26335	27951	4	STUD
	27955	27954	4	"O" RING, FOR ABOVE
16	26336	27952	4	WASHER
17	27956	27953	4	NUT

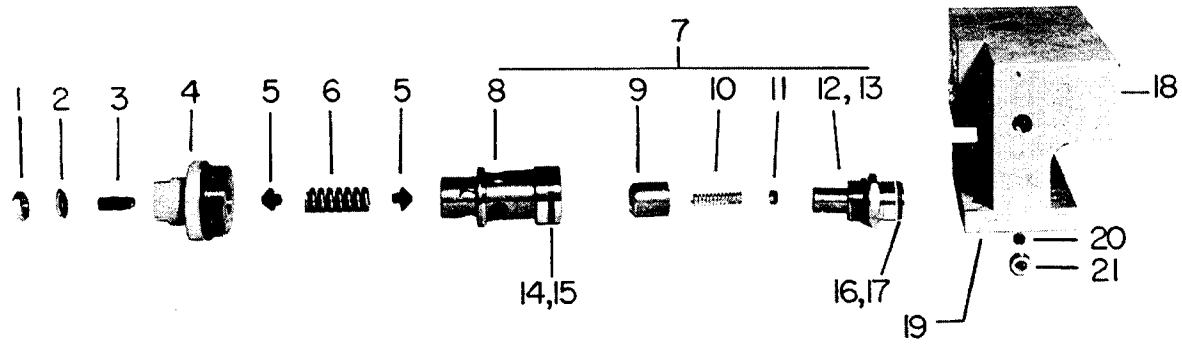

Ref. No.	Part Number	Quan. Req'd.	Name and Description
	41980	1	HOLD VALVE COMPLETE
	26560	1	REPAIR KIT, INCLUDES ITEMS 4, 7 THRU 17, 19
1	26561	1	NUT
2	26562	1	THREAD SEAL
3	26563	1	ADJUSTING SCREW
4	26564	1	PLUG
	26565	1	"O" RING, FOR ABOVE PLUG
5	26566	2	SPRING END
6	26567	1	SPRING
7	26568	1	PISTON & POPPET ASSEMBLY, INCLUDES ITEMS 8 THRU 13
8	26569	1	POPPET
9	26570	1	POPPET
10	26571	1	SPRING
11	26572	1	SPRING SPACER
12	26573	1	PLUG & GUIDE
13	13552	1	"O" RING
14	26391	1	SLIPPER SEAL
15	26393	1	"O" RING
16	26574	1	"O" RING
17	26575	1	BACK-UP RING
18	26576	1	BODY
19	1218-115	2	"O" RING
20	26577	1	ORIFICE PLUG, .030
21	26578	1	PLUG

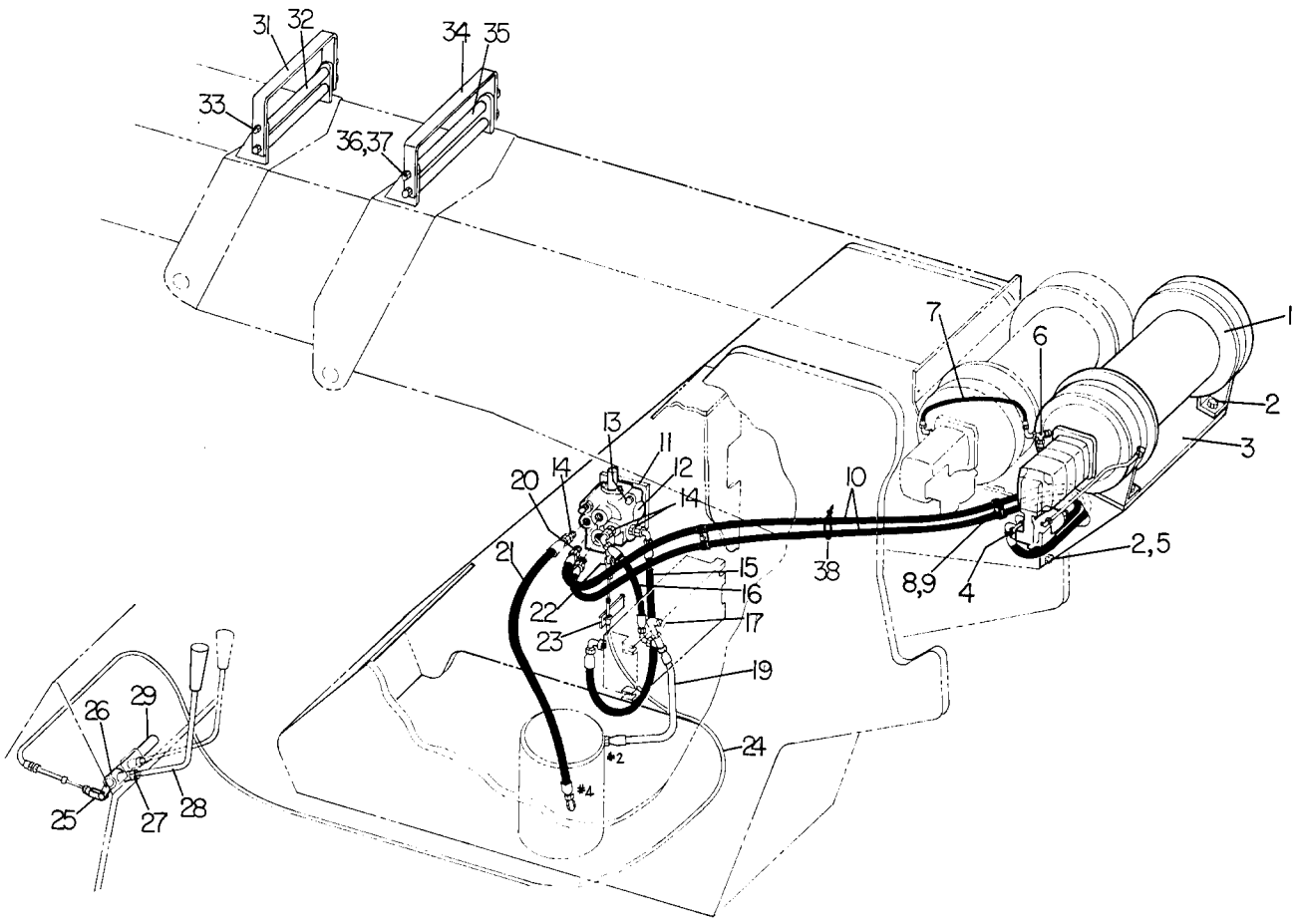

Ref. No.	Part Number	Quan. Req'd.	Name and Description
1	A38750	1	HYDRAULIC WINCH ASSEMBLY - See Page 6.19
	1269-300	1	WIRE ROPE (300')
	B4070	1	CABLE SOCKET
	B17006	1	CABLE WEDGE
2	1229-129	6	CAPSCREW, 1 UNF x 3 lg., HT Grade 5
	1205-123	6	LOCKNUT, 1 UNF
3	F49331	1	BRACKET
4	1219-665	4	SPLIT FLANGE CLAMP
	1218-103	2	"O" RING
	1203-137	8	CAPSCREW, 3/8 UNC x 1 1/4 lg., HT
	1210-20	8	LOCKWASHER, 3/8 med.
5	1242-22	2	CAPSCREW, 5/8 UNC x 1 3/4 lg., HT Grade 5
	1210-32	2	LOCKWASHER, 5/8 med.
	1205-80	2	NUT, 5/8 med.
6	1219-446	1	ADAPTER
	1219-956	1	TEE

Ref. No.	Part Number	Quan. Req'd.	Name and Description
7	A49351	1	HOSE ASSEMBLY
8	1240-91	4	CLAMP
9	1200-37	1	CAPSCREW, 5/16 UNC x 1 3/4 LG.
	1210-17	1	LOCKWASHER, 5/16 MED.
	1205-25	1	NUT, 5/16 UNC
10	A49349	2	HOSE ASSEMBLY
11	49342	1	PLATE
12	49344	1	VALVE
13	1200-68	3	CAPSCREW, 3/8 UNF x 2 LG.
	1210-20	3	LOCKWASHER, 3/8 MED.
14	1219-282	3	ADAPTER
15	A49347	1	HOSE ASSEMBLY
16	A49346	1	HOSE ASSEMBLY
17	1219-680	1	ADAPTER
18	1219-843	1	TEE
19	A49348	1	HOSE ASSEMBLY
20	1219-389	2	ADAPTER
21	A49345	1	HOSE ASSEMBLY
22	1291-56	1	CLEVIS
	3119	1	PIN
	1207-13	1	COTTER PIN
23	49343	1	BRACKET
	1291-27	1	CLAMP
	1202-6	2	STOVE BOLT, 3/16 UNC x 3/4 LG.
	1230-7	2	KEPS, 3/16 UNC
24	1291-55	1	CABLE
25	F49362	1	CLEVIS
	2234	1	PIN
	1207-13	1	COTTER PIN
26	F49338	1	BELLCRANK
27	1205-58	1	NUT
28	37032	1	LEVER
29	F49340	1	BELLCRANK

Ref. No.	Part Number	Quan. Req'd.	Name and Description
30	1221-32	1	KNOB
31	35649	1	STRAP
32	A15025-2	1	ROLLER W/BEARINGS
	1217-66	2	BEARING, FOR ABOVE
33	10957	1	SHAFT
	1213-10	1	GREASE FITTING
	1205-89	1	NUT, 5/8 UNF SELF-LOCKING
34	35648	1	STRAP
35	A35401-2	1	ROLLER W/BEARINGS
	1217-66	2	BEARING, FOR ABOVE
36	38404	1	SHAFT
	1213-10	1	GREASE FITTING
	1205-89	1	NUT, 5/8 UNF SELF-LOCKING
37	1208-73	2	MACHINERY BUSHING
38	1222-202	4	PLASTIC TIE

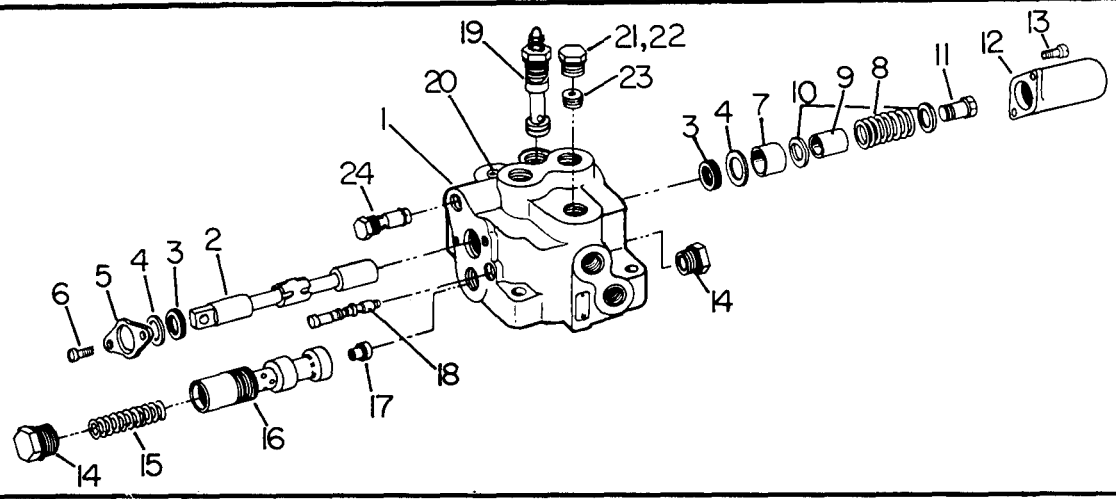

Ref. No.	Part Number	Quan. Req'd.	Name and Description
	49344		VALVE COMPLETE
	A29435	1	SEAL KIT FOR ABOVE - INCLUDES ITEMS 3, (14), (17), (22)
1	29409	1	BODY
2		1	SPOOL
3	29411	2	SEAL
4	29412	2	WASHER
5	29413	1	RETAINER PLATE
6	29414	2	MACHINE SCREW
7	29415	1	SPACER
8	29416	1	SPRING
9	29417	1	SPACER
10	29418	2	WASHER
11	29419	1	SHOULDER BOLT
12	29420	1	END CAP
13	29421	2	FILLISTER HEAD SCREW
14	29422	2	PLUG
	29423	2	"O" RING FOR ABOVE
15	29424	1	SPRING
16		1	COMPENSATING PISTON
17	29426	1	ORIFICE PLUG
	29427	1	"O" RING FOR ABOVE
18	29428	1	SHUTTLE ASSEMBLY
19	29429	1	RELIEF VALVE
20	29430	1	PLUG
21	29431	1	PLUG
22	29432	1	"O" RING
23	29433	1	PLUG
24	29434	2	ANTI-CAVITATION VALVE

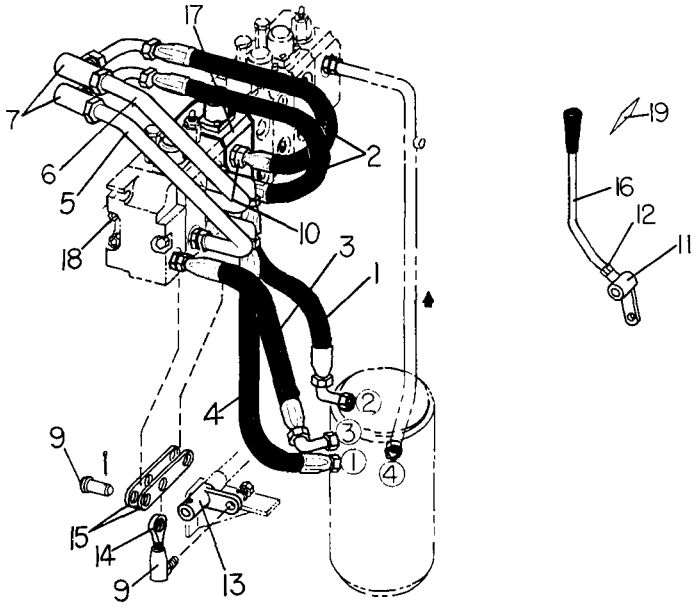

Ref. No.	Part Number	Quan. Req'd.	Name and Description
	60281		TWO-SPEED WINCH ASSEMBLY (OPTIONAL) - INCLUDES ITEMS 1 THRU
1	A49368	1	HOSE ASSEMBLY
2	A49367	2	HOSE ASSEMBLY
3	A49369	1	HOSE ASSEMBLY
4	A49366	1	HOSE ASSEMBLY
5	49371	1	TUBE
6	49370	1	TUBE
7	1219-843	2	TEE
8	1689	1	PIN
	1207-13	1	COTTER PIN
9	1222-139	1	BALL JOINT
	1210-20	1	LOCKWASHER
	1205-37	1	NUT
10	1219-282	3	ADAPTER
11	F49379	1	BELLCRANK

Ref. No.	Part Number	Quan. Req'd.	Name and Description
12	1205-70	1	NUT, 9/16 UNF
13	F49378	1	ARM
14	F49377	1	ROD END
15	49375	2	LINK
16	49380	1	ROD
17	49381	1	VALVE SECTION ASSEMBLY
18	49382	3	STUD
19	12260-311	1	DECAL
		1	

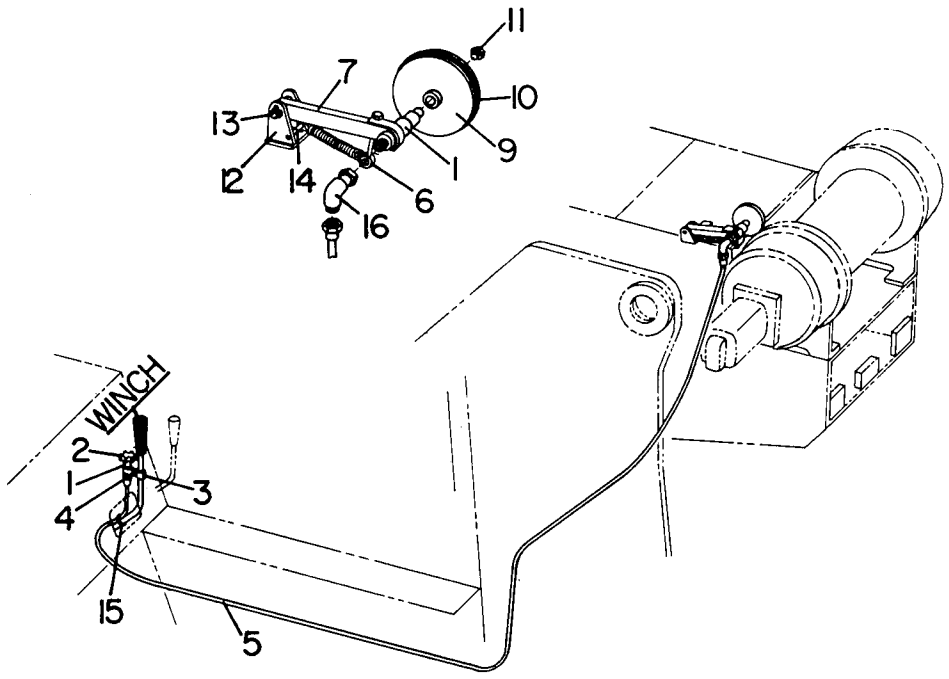

Ref. No.	Part Number	Part Number	Quan. Req'd.	Name and Description
	MAIN	AUX.		
	A41823	A49769		WINCH ROTATION INDICATOR ASSEMBLY
1	1253-13		2	DRIVE ASSEMBLY
2	1221-37		1	KNOB
3	1240-72		1	CLAMP
4	1200-57		1	CAPSCREW, 3/8 UNC x 3/4 LG.
	1210-20		1	LOCKWASHER, 3/8 MED.
	1205-36		1	NUT, 3/8 UNC
5	1253-12	1253-32	1	CABLE
6	2228		1	EYE BOLT
	1210-20		1	LOCKWASHER, 3/8 MED.
	1209-4		2	PLAINWASHER, 3/8 REG.
	1205-36		1	NUT, 3/8 UNC
7	35995		1	ARM
8	35994		1	SPRING
9	35997		1	WHEEL
10	1218-66		1	"O" RING
11	1205-32		1	NUT, 5/16 UNC SELF-LOCKING
12	F41934	F41933	1	SUPPORT
13	35996		1	PIN
	1207-4		2	COTTER PIN
14	1227-186		1	ROLL PIN, 1/8 x 1 1/4 LG.
15	1222-184		2	TIE WRAP
16	1253-14		1	90° DRIVE ADAPTER

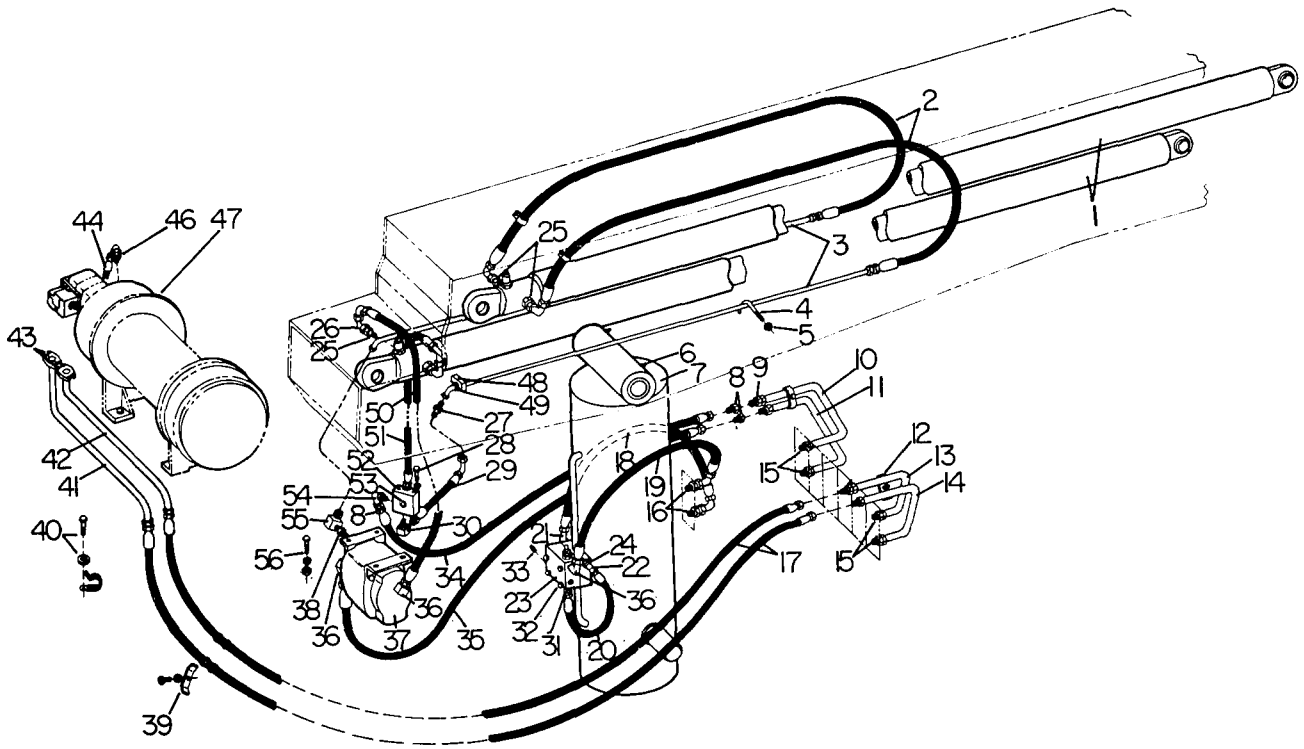

Ref. No.	Part Number	Quan. Req'd.	Name and Description
1		2	TELESCOPE CYLINDER - SEE PAGE 6.17
2	A49036	2	HOSE ASSEMBLY
3	38670	2	TUBE
4	38937	2	J-BOLT
5	1205-22	2	NUT, 1/4 UNF SELF-LOCKING
6	1213-3	2	GREASE FITTING
7		1	BOOM LIFT CYLINDER - SEE PAGE 6.16A
8	1219-585	3	REDUCER
9	12019-9	1	ADAPTER
10	65332	1	TUBE, SWIVEL
11	49500	1	TUBE, SPUD
12	35639	2	CLAMP
	1200-98	2	CAPSCREW, 1/2 UNC x 1 1/4 LG.
	1210-26	2	LOCKWASHER, 1/2 MED.
13	38850	1	TUBE
14	38851	1	TUBE

Ref. No.	Part Number	Quan. Req'd.	Name and Description	
15	1219-282	4	ADAPTER w/"O" RING	
	1218-65	4	"O" RING	
16	1219-555	3	ADAPTER w/"O" RING	
	1218-65	3	"O" RING	
17	A39781	2	HOSE ASSEMBLY	
18	A38678	1	HOSE ASSEMBLY	
19	A38679	1	HOSE ASSEMBLY	
20	A35448	1	HOSE ASSEMBLY	
21	1219-802	1	ADAPTER w/"O" RING	
	1218-64	1	"O" RING	
22	1219-588	1	ADAPTER w/"O" RING	
	1218-155	1	"O" RING	
				Seal Kits
23	1219-657	1	VALVE - Racine	.....A23955
	12019-281	1	VALVE - Fluid Control	.....A200517
	12019-345	1	VALVE - Racine - Replaces above valves (See Service Bulletin #276)	....A200915
	1218-126	1	"O" RING, valve to cylinder	
24	35249	1	PLUG	
25	1219-389	4	ADAPTER w/"O" RING	
	1218-64	4	"O" RING	
26	1219-583	2	ADAPTER	
27	12019-213	1	ADAPTER	
28	1200-59	2	CAPSCREW, 3/8 UNC x 1 lg.	
	1210-20	2	LOCKWASHER, 3/8 med.	
29	A49495	1	HOSE ASSEMBLY	
30	12019-218	1	ADAPTER	
31	1219-801	1	ADAPTER w/"O" RING	
	1218-155	1	"O" RING	
32	1229-63	4	CAPSCREW, 1/2 UNF x 3 lg.	
	1209-29	4	PLAINWASHER, 1/2	
33	1219-38	1	PLUG	
34	A39779	1	HOSE ASSEMBLY	
35	A39780	1	HOSE ASSEMBLY	
36	1219-287	3	ADAPTER	

Ref. No.	Part Number	Quan. Req'd.	Name and Description
37	35873	1	DUAL PROPORTIONATOR - See Page 6.10
38	1219-780	1	ADAPTER
39	1200-69	1	CAPSCREW, 3/8 UNC x 2-1/4 lg.
	1210-20	1	LOCKWASHER, 3/8 med.
	35324	1	CLAMP
	1221-31	2	GROMMET
40	1200-94	2	CAPSCREW, 1/2 UNF x 3/4 lg.
	1210-26	2	LOCKWASHER, 1/2 med.
	1240-29	2	CLAMP
41	41586	1	TUBE
42	41587	1	TUBE
43	1219-665	4	SPLIT FLANGE CLAMP
	1218-103	2	"O" RING, for above
	1200-61	8	CAPSCREW, 3/8 UNC x 1-1/4 lg.,H.T., Grade 5
	1210-20	8	LOCKWASHER, 3/8 med.
44	A41840	1	HOSE ASSEMBLY
46	1219-446	1	ADAPTER w/"O" RING
	1218-34	1	"O" RING, for above
47		1	BANTAM WINCH- See Page 6.19
48	43340	1	CLAMP
	1200-61	2	CAPSCREW, 3/8 UNC x 1-1/4 lg.
	1210-20	2	LOCKWASHER, 3/8 med.
49	1221-41	1	GROMMET
50	A65475	1	HOSE ASSEMBLY
51	A65476	1	HOSE ASSEMBLY
52	43407	1	BLOCK
53	1219-409	2	PLUG
54	1219-680	1	ADAPTER
55	1219-864	1	ADAPTER
56	1200-59	4	CAPSCREW, 3/8 UNC x 1 lg.
	1210-20	4	LOCKWASHER, 3/8 med.
	1205-36	4	NUT, 3/8 UNC

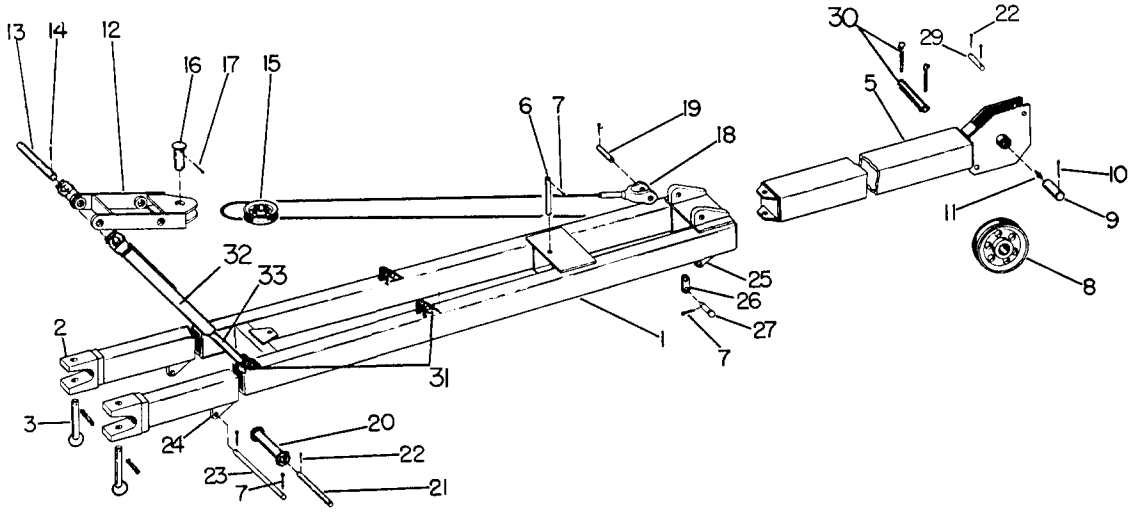

Ref. No.	Part Number	Part Number	Quan. Req'd.	Name and Description
	A49305	A49306		JIB ATTACHMENT, COMPLETE, INCLUDES ITEMS 1 THRU 33 - REPLACES A38997, A38890
	10 1/2"	13 1/2"		SHEAVE SIZE
1	F38891	F38891	1	JIB BOOM ONLY
2	35886	35886	2	BEARING BLOCK
	35553	35553	AR	SHIM, FOR ABOVE
3	35887	35887	2	PIN
	1227-335	1227-335	2	ROLL PIN, FOR ABOVE
5	A35549-1	F38910	1	EXTENSION
6	17143	17143	1	PIN
7	1207-40	1207-40	6	COTTER PIN, 1/4 x 1 1/2 LG.
8	A18389-1		1	SHEAVE WITH BUSHING, 10 1/2"
	1214-8		1	BUSHING, FOR ABOVE
8		A38934	1	SHEAVE WITH BUSHING, 13 1/2"
		1214-39	1	BUSHING, FOR ABOVE
9	4143	38895	1	PIN
10	1207-59	1207-71	1	COTTER PIN

Model S-628 | Group No. 7
Date Rev. 1 Oct. 1972 | 15' - 20' JIB | Page 7.2

Ref. No.	Part Number	Part Number	Quan. Req'd.	Name and Description	
	A38997	A38890			
11	1213-1	1213-1	1	GREASE FITTING	
12	F38979	A35551-1	1	PENDANT BRACKET	
13	41257	38732	1	PIN	
13	49314	49313	1	PIN - For Boom Stops	
14	1207-55	1207-55	2	COTTER PIN	
15	A18386-1	A18386-1	1	SHEAVE with bushing	
	1214-8	1214-8	1	BUSHING, for above	
16	A35568-1	A35568-1	1	PIN	
17	1207-57	1207-57	2	COTTER PIN, 5/16 x 2 1/2 lg.	
18	35554	35554	1	PENDANT	
19	10784	10784	2	PIN	
	1207-42	1207-42	4	COTTER PIN, for above	
20	F38871	F38906	1	ROLLER	
21	38995	9855	1	PIN	
22	1207-30	1207-30	4	COTTER PIN	
23	41272	41272	1	PIN	
24	35644	38908	2	EAR	
25	35565	35565	2	EAR	
	35566	35566	2	EAR (for crane boom)	
26	35567	35567	1	LINK	
27	1398	1398	2	PIN	
29	38490	38490	1	PIN	
30	38909	38909	1	PIN	
	1207-40	1207-40	2	COTTER PIN	
31	38768	38768	4	PIN	Items 31 thru 33 used Begin. w/Ser. #902
	1207-30	1207-30	4	COTTER PIN	
32	F49307	F49307	2	TUBE	
33	F49310	F49310	2	TUBE	

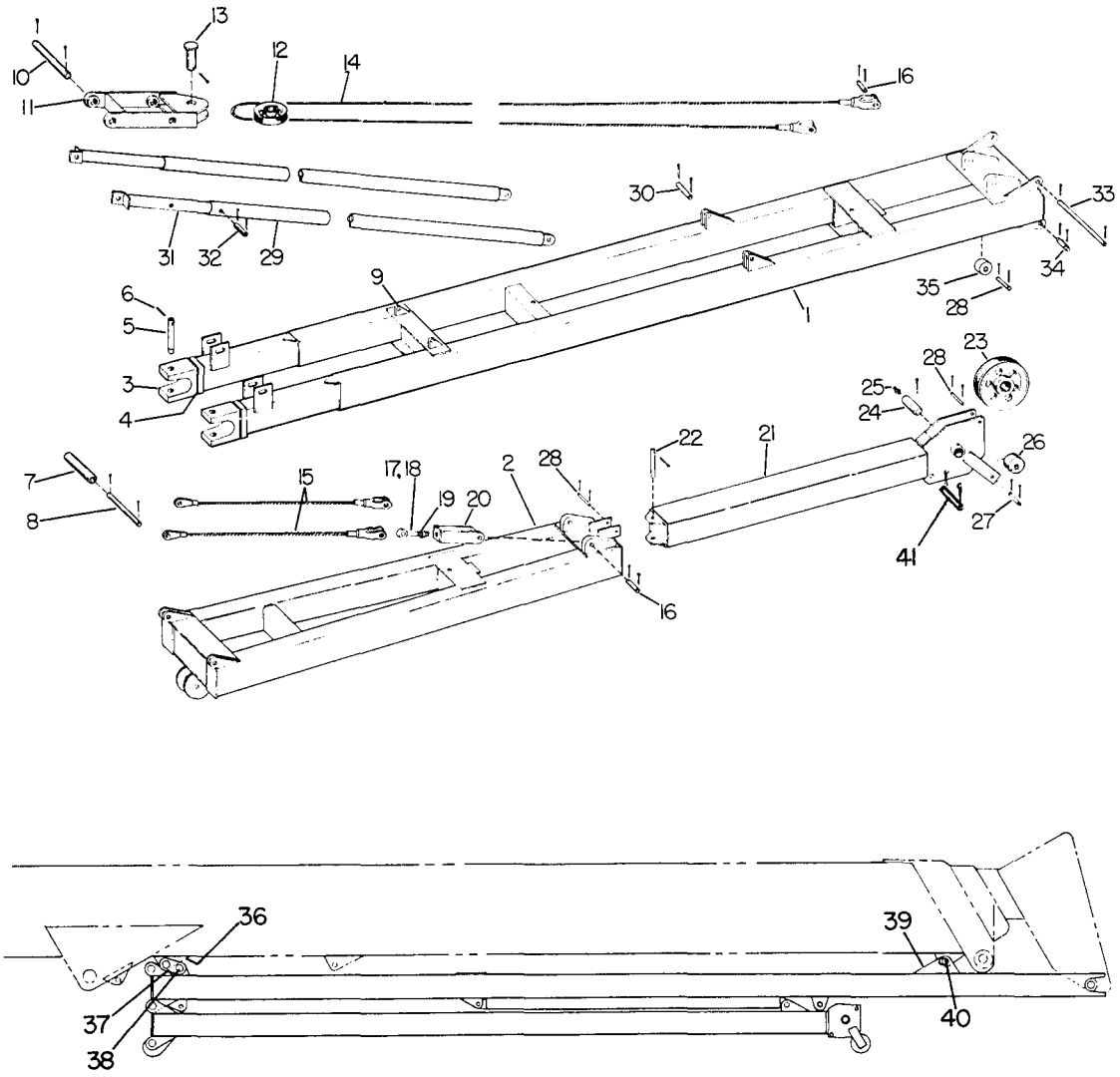

Ref. No.	Part Number	Part Number	Quan. Req'd.	Name and Description
	A41270	A41258		32' JIB ASSEMBLY, INCLUDES ITEMS 1 THRU 40
	10-1/2" SHEAVES	13-1/2" SHEAVES		
1	F41271	F41271	1	BOTTOM SECTION
2	F38461	F38461	1	TOP SECTION
3	35886	35886	2	BEARING BLOCK - ASSEMBLE TO BOOM HEAD. USE SHIMS TO CENTER JIB WITH BOOM. WELD JIB & SHIMS TO BLOCKS.
4	35553	35553	AR	SHIM, FOR ABOVE BLOCKS

Ref. No.	Part Number	Part Number	Quan. Req'd.	Name and Description
	A41270	A41258		
5	35887	35887	2	PIN
6	1227-335	1227-335	2	ROLL PIN
7	F38871	F38906	1	ROLLER
8	38995	9855	1	PIN
	1207-22	1207-22	2	COTTER PIN
9	38473	38473	2	EAR
10	41237	38474	1	PIN
	1207-66	1207-66	2	COTTER PIN
11	F38979	A35551-1	1	BRACKET
		1209-13	2	WASHER, FOR ABOVE
12	A18386-1	A18386-1	1	SHEAVE
	1214-8	1214-8	1	BUSHING, FOR ABOVE
13	A35568-1	A35568-1	1	PIN
	1207-57	1207-57	1	COTTER PIN
14	35554	35554	1	PENDANT
15	10790	10790	2	PENDANT - 10'
16	10784	10784	5	PIN
	1207-42	1207-42	10	COTTER PIN
17	F38475	F38475	1	BOLT, SHORT - FOR FULL JIB
18	F38476	F38476	1	BOLT, LONG - FOR SHORT JIB
19	1205-124	1205-124	2	NUT, 1" UNC ELASTIC
20	F38480	F38480	1	LINK
21	F38522	F38921	1	EXTENSION
22	38491	38491	1	PIN
	1207-41	1207-41	2	COTTER PIN
23	A18389-1		1	SHEAVE - 10 1/2"
	1214-8		1	BUSHING, FOR ABOVE
23		A38924	1	SHEAVE - 13 1/2"
		1214-39	1	BUSHING, FOR ABOVE
24	4143	38895	1	PIN
	1207-59	1207-71	1	COTTER PIN
25	1213-1	1213-1	1	GREASE FITTING

Model S-628 | Group No. 7
Date REV. 1 OCT. 1972 | 32' JIB | Page 7.5

Ref. No.	Part Number	Part Number	Quan. Req'd.	Name and Description
	A41270	A41258		
26	38493	38493	1	ROLLER
27	38494	38494	1	PIN
	1207-22	1207-22	2	COTTER PIN
28	38490	38490	3	PIN
	1207-30	1207-30	6	COTTER PIN
29	F41233	F41233	2	OUTER TUBE
30	2335	2335	2	PIN
	1207-22	1207-22	2	COTTER PIN
31	F41234	F41234	2	INNER TUBE
32	5882	5882	2	PIN
	1207-41	1207-41	2	COTTER PIN
33	38487	38487	1	PIN
	1207-41	1207-41	2	COTTER PIN
34	38488	38488	2	PIN
	1207-41	1207-41	2	COTTER PIN
35	38489	38489	1	ROLLER
36	35565	35565	2	EAR - PIN TO LINK & JIB TO DETERMINE LOCATION ON BOOM BEFORE WELDING.
37	35567	35567	1	LINK
38	1398	1398	2	PIN
	1207-41	1207-41	2	COTTER PIN
39	38495	38495	2	EAR - MOUNT WITH PIN OVER OUTSIDE OF BOOM EARS, THE PIN BEARING ON FRONT EDGE OF SLOT. WELD EARS TO JIB.
40	41272	41272	1	PIN
	1207-41	1207-41	2	COTTER PIN
41	38909	38909	1	PIN
	1207-40	1207-40	2	COTTER PIN

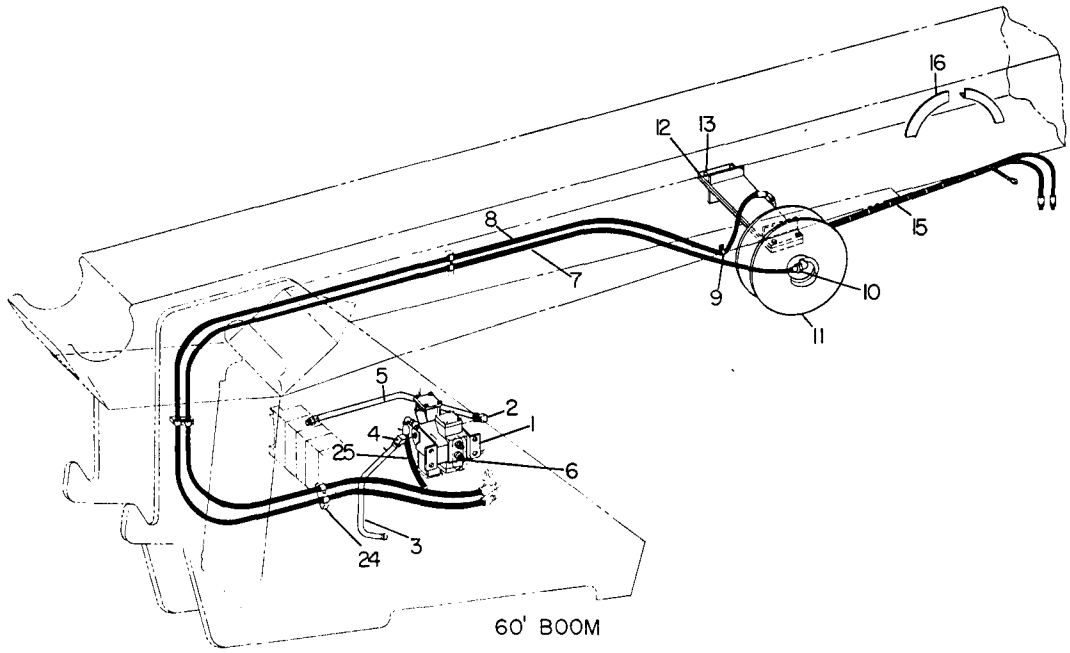

60' BOOM

Ref. No.	Part Number	Quan. Req'd.	Name and Description
	A41800		HYDRAULIC CLAM ASSEMBLY, INCLUDES ITEMS 1 THRU 24
1	39717	1	VALVE COMPLETE
	24428	2	SOLENOID, FOR ABOVE - CONTINUOUS DUTY
2	1219-826	1	ADAPTER
3	41798	1	TUBE - TO ROTARY MANIFOLD
4	1219-680	1	ADAPTER
5	41797	1	TUBE
6	1219-744	2	ADAPTER
	1218-64	2	"O" RING, FOR ABOVE
7	A41192	1	HOSE ASSEMBLY
8	A41193	1	HOSE ASSEMBLY
9	1240-29	4	CLAMP
10	1219-480	4	ADAPTER
11	F41194	1	HYDRAULIC HOSE REEL, COMPLETE

Model S-628
Date 1 MARCH 1972

HYDRAULIC CLAM

Group No. 7
Page 7.7

Ref. No.	Part Number	Quan. Req'd.	Name and Description
12	F41195	1	BRACKET
13	1200-146	4	CAPSCREW, 5/8 UNC x 1 3/4 LG.
	1210-32	4	LOCKWASHER, 5/8 MED.
	1205-80	4	NUT, 5/8 UNC
15	A41189	2	HOSE ASSEMBLY (TAPED TOGETHER)
16	F38306	2	BRACKET
18	A41186	1	WIRE ASSEMBLY
19	A39515	1	HANDLE ASSEMBLY, INCLUDES SWITCH & HARNESS
20	1223-490	1	SWITCH, FOR ABOVE
	39517	1	HARNESS, FOR ABOVE
	1266-6	1	LOOM, HARNESS
21	1223-298	1	FUSE BLOCK - CONNECT TO CIRCUIT BREAKER
22	1233-20	2	MACHINE SCREW, #6-32 x 3/4 LG.
	1210-2	2	LOCKWASHER, #6 MED.
	1205-1	2	NUT, #6-32
	1223-299	1	FUSE
23	1222-191	1	SHACKLE
24	38936	3	BLOCK
	35324	3	CLAMP
	1200-69	3	CAPSCREW, 3/8 UNC x 2 1/4 LG.
	1210-20	3	LOCKWASHER, 3/8 MED.
25	A41796	1	HOSE ASSEMBLY (RELIEF)

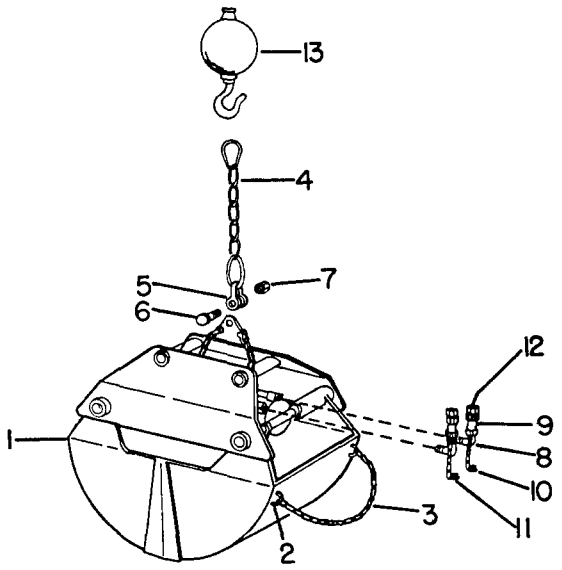

Ref. No.	Part Number	Part Number	Quan. Req'd.	Name and Description
	3/8 YD.	1/2 YD.		
1	39925	37904	1	HYDRAULIC CLAM
2	1222-29	1222-29	2	COLD SHUT
3	9513	9513	2	CHAIN
4	18534	18534	1	DRAG CHAIN
5	B10883	B10883	1	CLEVIS
6	18535	18535	1	PIN
7	18536	18536	1	NUT
8	1219-837	1219-772	2	ADAPTER
9	1219-622	1219-773	2	QUICK DISCONNECT
10	1219-743	1219-807	1	DUST CAP
11	1219-741	1219-808	1	DUST PLUG
12	1219-838		2	ADAPTER
13	A35685	A35685	1	BALL & HOOK ASSEMBLY
	24241	24241	1	WEDGE
	24242	24242	1	SOCKET
	24243	24243	1	SWIVEL HOOK

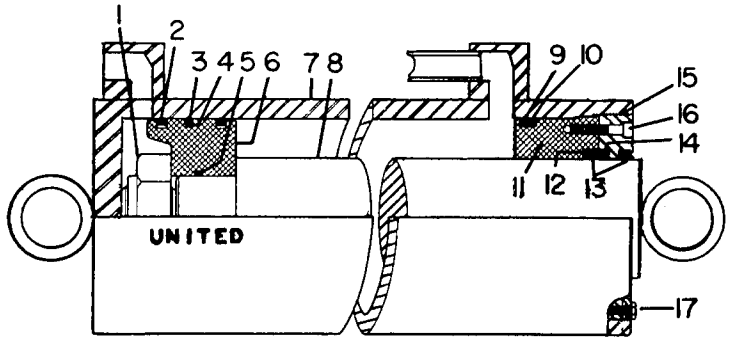

Ref. No.	Part Number	Quan. Req'd.	Name and Description
	A29564		HYDRAULIC CYLINDER - 5 1/2" BORE
	29565		SEAL KIT - INCLUDES SEALS, BACK-UPS, "O" RINGS, LESS PISTON RINGS
1	23684	1	BUTTRESS NUT
	27335	1	COTTER PIN
2	22828	2	PISTON RING
3	22829	1	SIRVON SEAL
4	29571	1	"O" RING
5	23404	1	STATIC "O" RING
6	29568	1	PISTON
7	29566	1	CASE
8	29567	1	SHAFT
9	22834	1	"O" RING
10	22835	1	BACK-UP RING
11	29569	1	HEAD GLAND
12	22029	1	"O" RING
13	23679	2	WIPER SEAL
14	23680	1	BACK-UP RING
15	29570	1	THREAD RING
16	27343	2	CAPSCREW, 1/4 UNC x 1 1/4 LG.
17	1203-73	1	LOCKING CAPSCREW, 1/4 UNF x 3/4 LG.
	1210-14	1	LOCKWASHER, 1/4 MED.

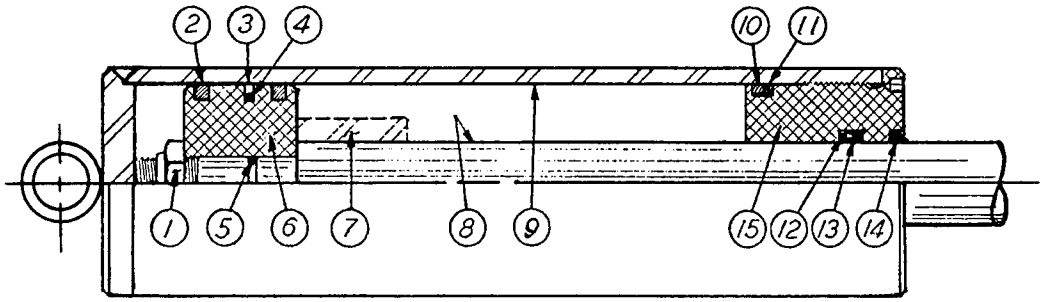

Ref. No.	Part Number	Quan. Req'd.	Name and Description
	A24705		HYDRAULIC CYLINDER, 5-1/2" BORE, INCLUDES ITEMS 1 THRU 15
1	22028	1	NUT
2	22828	2	PISTON RING
3	22829	1	TEFLON SEAL W/LOADING "O" RING
4		1	"O" RING, FOR ABOVE
5	22831	1	STATIC "O" RING
6	22832	1	PISTON
7		1	SPACER
8	24707	1	SHAFT
9		1	CASE
10	22834	1	STATIC "O" RING
11	22835	1	BACK-UP WASHER
12	22226	1	"U" CUP SEAL W/LOADING "O" RING
13		1	SEAL
14	22227	1	WIPER SEAL
15	24706	1	HEAD GLAND

SERIES "G" "H" "J" & "K" HOSE REEL

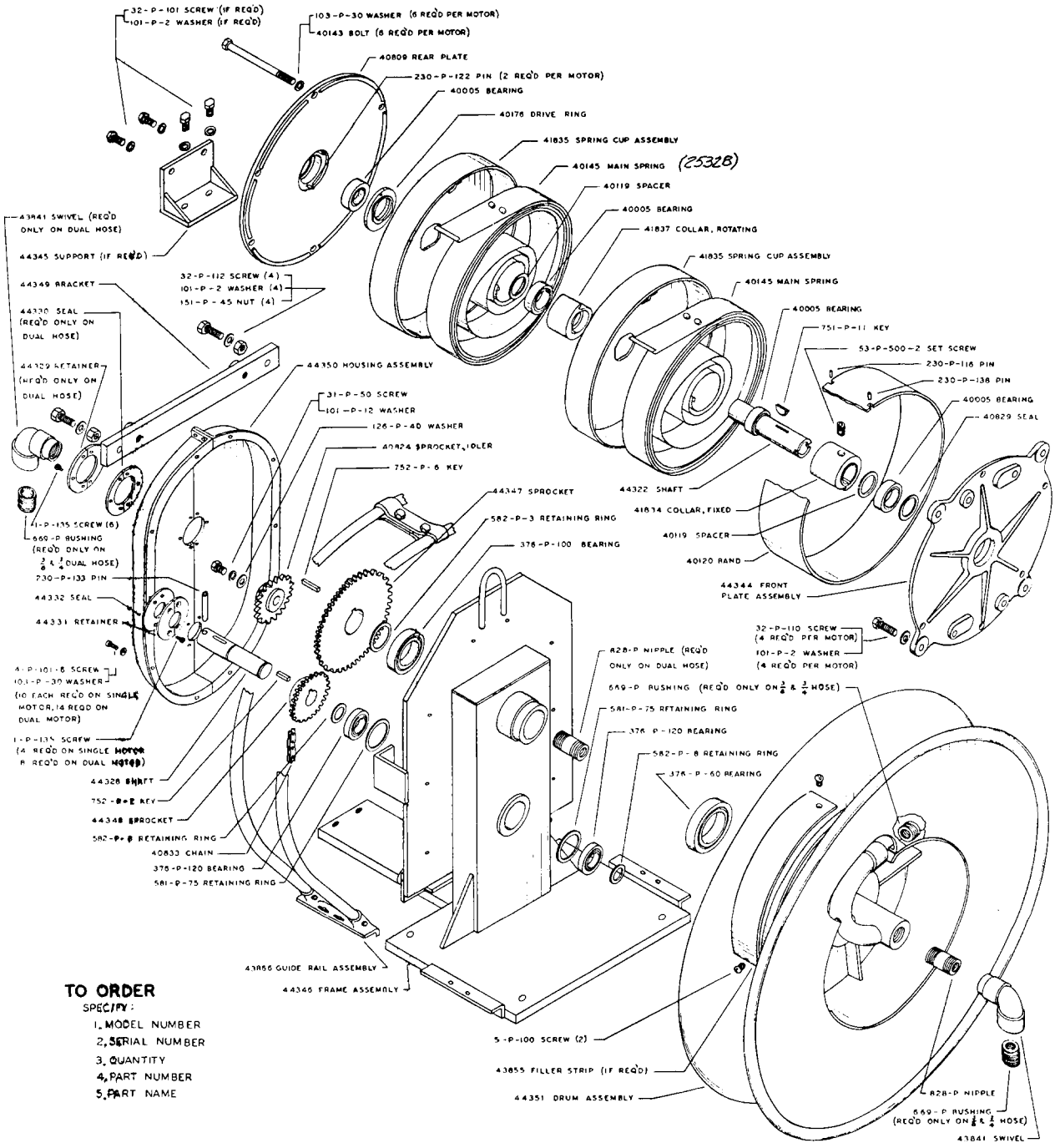

TO ORDER
SPECIFY:
1. MODEL NUMBER
2. SERIAL NUMBER
3. QUANTITY
4. PART NUMBER
5. PART NAME

AERO-MOTIVE MFG. CO. KALAMAZOO, MICHIGAN

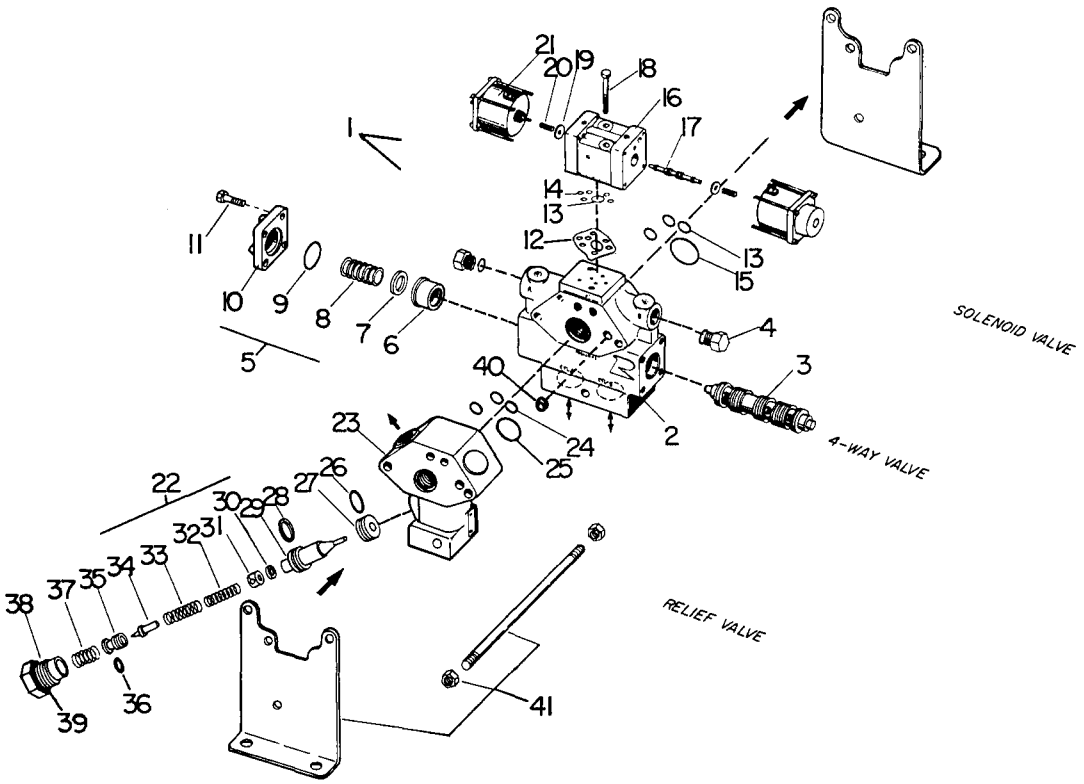

Ref. No.	Part Number	Quan. Req'd.	Name and Description
	39717		VALVE ASSEMBLY COMPLETE
1	201381	1	4-WAY VALVE - INCLUDES ITEMS 2 THRU 21
2	24681	1	VALVE BODY (SERIES)
3	N.S.S.	1	SPOOL
4	1219-624	1	PLUG w/"O" RING
	13545	1	"O" RING
5	24683	2	END CAP ASSEMBLY - INCLUDES ITEMS 6 THRU 11
6	201382	2	SPRING RETAINER
7	201383	2	WASHER
8	201384	2	SPRING
9	13541	2	"O" RING
10	201385	2	END CAP
11	201386	8	CAPSCREW
12	28197	1	SEAL PLATE
13	24685	4	"O" RING
14	28198	5	"O" RING

Model S-628 | Group No. 7
Date 1 JULY 1977 | SOLENOID VALVE | Page 7.108

Ref. No.	Part Number	Quan. Req'd.	Name and Description
15	24686	1	"O" RING
16	21191	1	BODY W/BALL PLUGS
17	21195	1	SPOOL
18	201387	2	CAPSCREW
19	23284	2	WASHER
20	21196	2	SPRING
21	24428	2	SOLENOID COMPLETE
	24688	2	COIL ONLY, FOR ABOVE
22	201390	1	RELIEF VALVE ASSEMBLY - INCLUDES ITEMS 27 THRU 43
23	201391	1	CARTRIDGE - INCLUDES ITEMS 30 THRU 41
24	24685	3	"O" RING
25	24686	1	"O" RING
26	13556	1	"O" RING
27	201392	1	SEAT
28	201393	1	PISTON RING
29	201394	1	POPPET, 2ND STAGE
30	201395	1	SHIM, .005
31	201396	1	SPACER
32	201397	1	SPRING
33	201398	1	SPRING
34	201399	1	POPPET, 1ST STAGE
35	201400	1	SEAT, 1ST STAGE
36	28060	1	"O" RING
37	201401	1	SPRING
38	201402	1	PLUG
39	27625	1	"O" RING
40	201403	1	INTERSTACK CHECK VALVE W/SNAP RING
41	201404	1	ASSEMBLY KIT (MOUNTED OPPOSITE AS SHOWN)

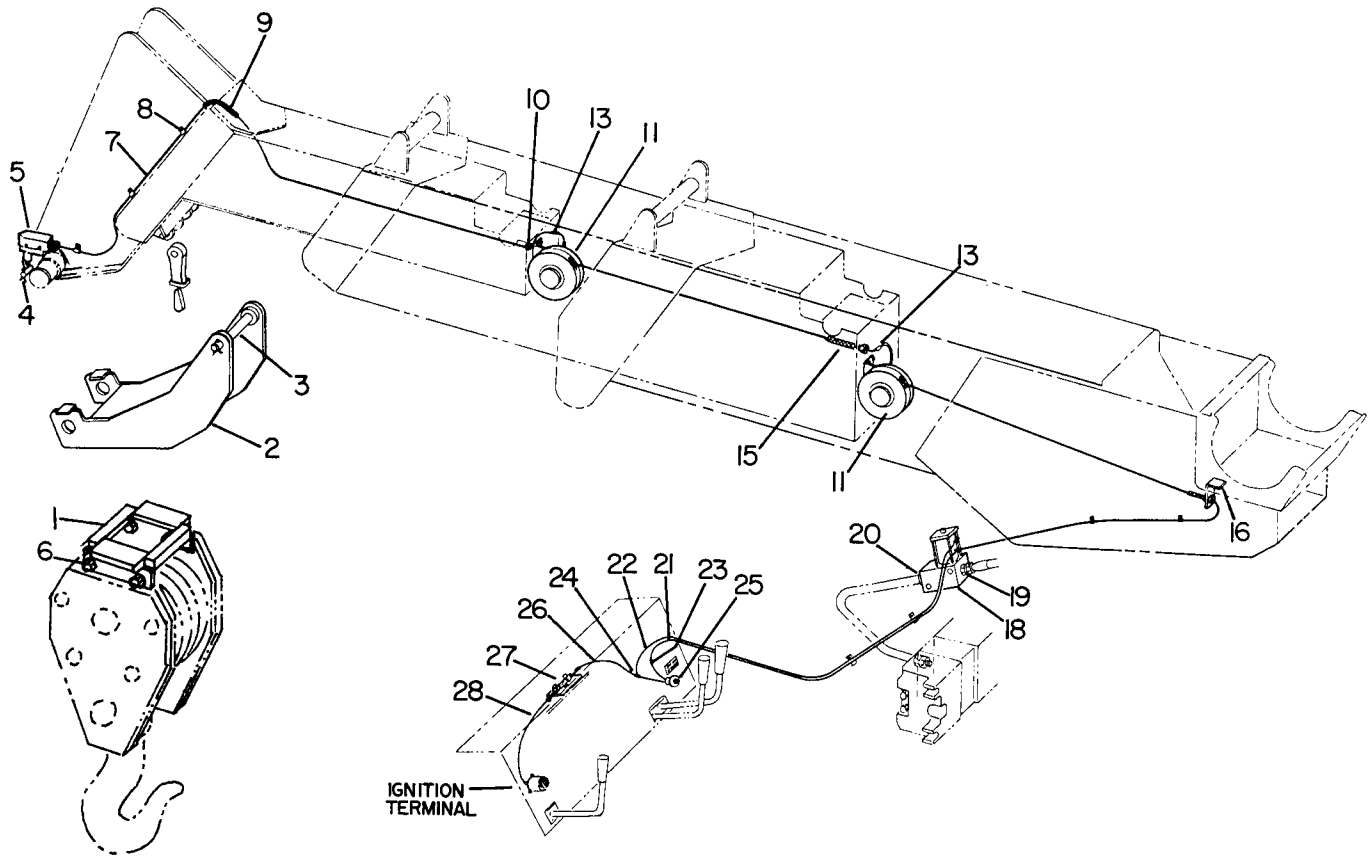

Ref. No.	Part Number	Quan. Req'd.	Name and Description
	A49238		ANTI-TWO BLOCK ASSEMBLY - INCLUDES ITEMS 1 THRU 28
1	F49230	1	BRACKET
2	F41201	1	BRACKET
3	41208	1	PIN
	1207-40	2	COTTER PIN, FOR ABOVE
4	38870	1	PIN
4	38870	1	PIN
	1207-30	2	COTTER PIN, FOR ABOVE
5	1223-477	1	SWITCH
6	1200-140	4	CAPSCREW
	1210-32	4	LOCKWASHER
	1205-80	4	NUT
7	A41216	1	WIRE
	1223-535	1	CONNECTOR, FOR ABOVE

Model S-628
Date 1 OCTOBER 1972

ANTI-TWO BLOCK

Group No. 7
Page 7.12

Ref. No.	Part Number	Quan. Req'd.	Name and Description
8	1240-10	10	CLAMP
	1211-7	10	SCREW, FOR ABOVE
9	1266-12	1	LOOM
10	1223-41	1	GROMMET
11	41210	2	REEL ASSEMBLY
13	1223-494	4	TERMINAL
	1223-496	3	PLASTIC SLEEVE
15	1222-201	2	WIRE GRIP
16	41914	1	BRACKET
18	41215	1	VALVE ASSEMBLY
19	1219-480	1	ADAPTER
20	1219-856	1	ADAPTER
21	A41212	1	WIRE
22	A41211	1	WIRE
23	1223-264	1	CONNECTOR
24	1223-287	1	CONNECTOR
25	1223-495	1	LIGHT
26	A41213	1	WIRE
27	1223-298	1	FUSE BLOCK
	1223-295	1	FUSE, FOR ABOVE
28	A41207	2	WIRE

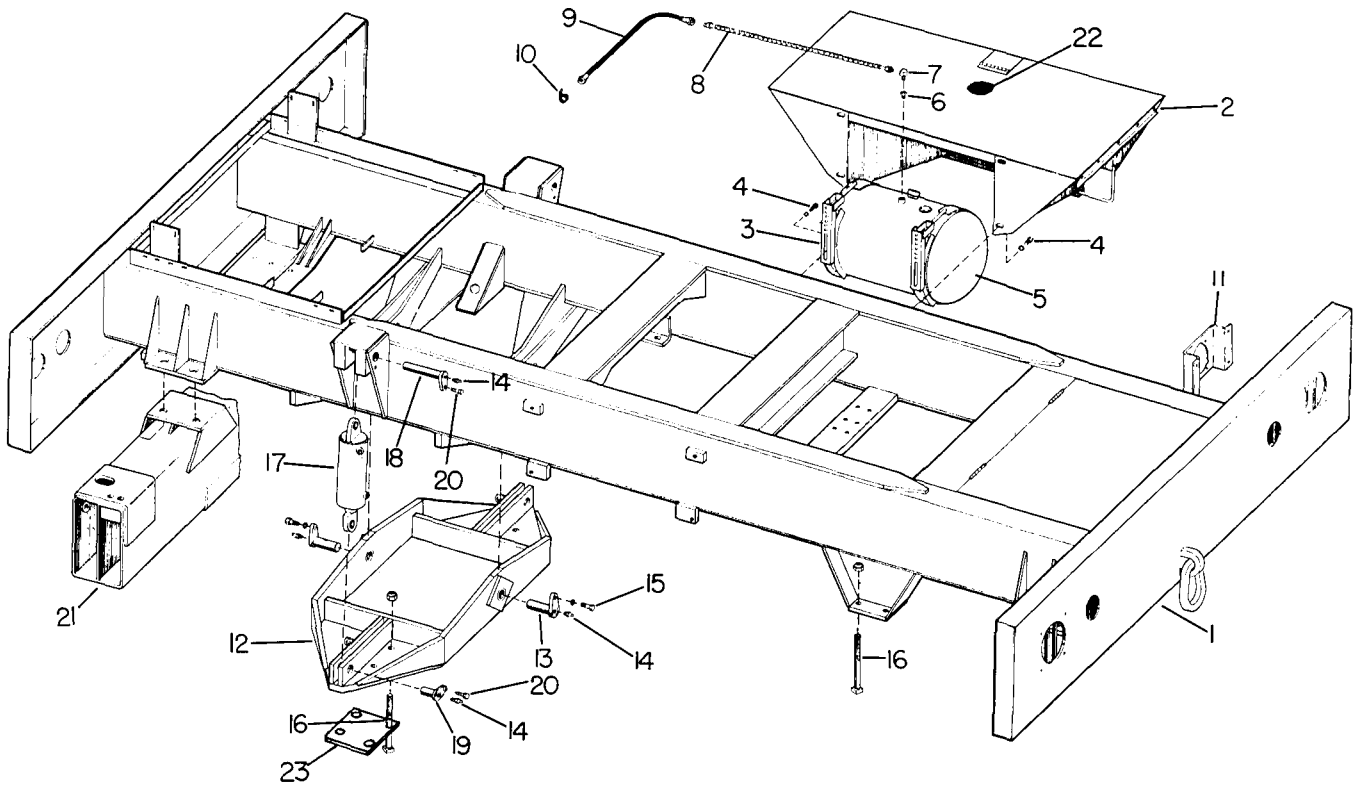

Ref. No.	Part Number	Quan. Req'd.	Name and Description
1	F41786	1	FRAME
	50049		ROTEK TURNTABLE BEARING (NOT SHOWN - WELDED TO FRAME)
2	F37503	1	FUEL TANK HOUSING
3	32599	2	BRACKET
4	1200-142	8	CAPSCREW, 5/8 UNC x 1 1/4 LG.
	1210-32	8	LOCKWASHER, 5/8 MED.
5	32797	1	FUEL TANK W/CAP
	22871	1	FILLER CAP, FOR ABOVE
		1	SENDING UNIT - SEE ELECTRICAL GROUP 5
6	1219-214	1	BUSHING
7	1219-163	1	ELBOW
8	37697	1	TUBE UNIT
9	1244-145	1	HOSE SEE GROUP 12A FOR GM DIESEL FUEL LINES AND BATTERY BOX.

Ref. No.	Part Number	Quan. Req'd.	Name and Description
10	1240-71	1	CLAMP
11	37642	2	HEADLIGHT BRACKET
12	F37596	1	AXLE BRACKET
13	F37568	2	PIVOT PIN
14	1213-1	6	GREASE FITTING, 1/8 NPT
15	1242-12	2	CAPSCREW, 1/2 UNC x 1 1/4 LG., HT
	1210-26	2	LOCKWASHER, 1/2 MED.
16	1235-299	16	MACHINE BOLT, 1 UNC x 11 LG., - PRIOR TO SER. #1101
	1235-292	16	MACHINE BOLT, 1 UNC x 9 LG., - BEGIN. W/SER. #1101
	1205-124	16	NUT, 1 UNC ELASTIC
17			AXLE LOCKOUT CYLINDER - SEE PAGE 11.4 FOR CIRCUIT
18	F37562	2	PIN, UPPER
19	F37564	2	PIN, LOWER
20	1200-59	4	CAPSCREW, 3/8 UNC x 1 LG.
	1210-20	4	LOCKWASHER, 3/8 MED.
21			OUTRIGGERS - SEE GROUP 17
22	11128	1	PLUG - BEGIN. W/SER. #936
23	37599	AR	SPACING PLATE
	40586	4	DOWEL, FOR ABOVE

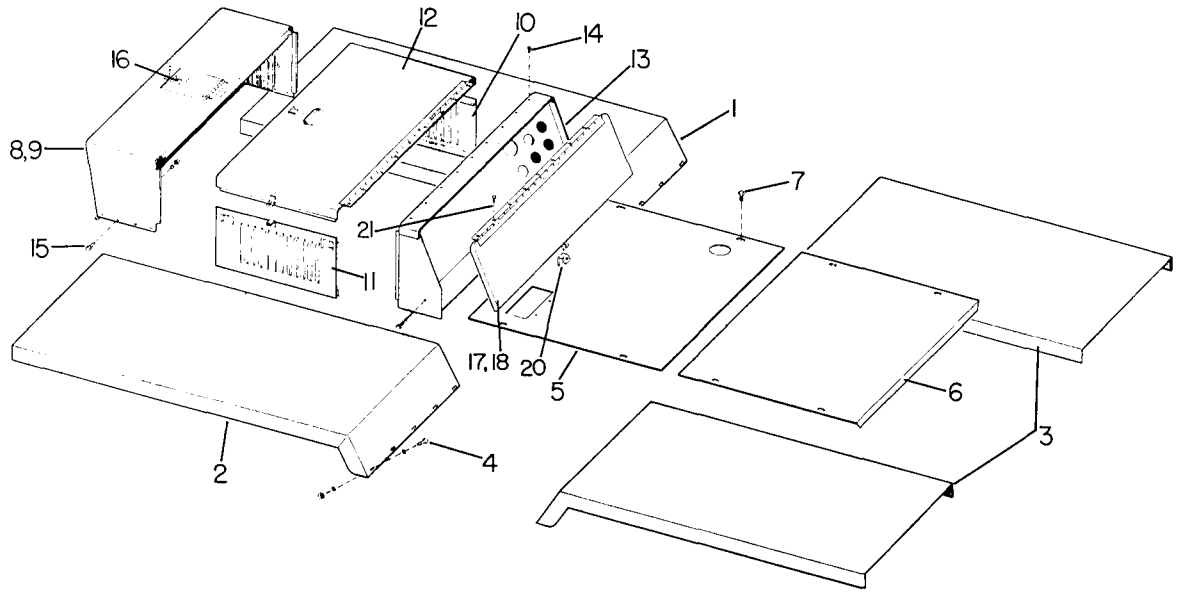

Ref. No.	Part Number	Part Number	Quan. Req'd.	Name and Description
	CHRYSLER	GM DIESEL		
1	F37607	F38387	1	REAR FENDER, LH (CURVED BEAM OUTRIGGERS)
	F39622	F39697	1	REAR FENDER, LH (WING-TYPE OUTRIGGERS)
2	F37608	F37608	1	REAR FENDER, RH (CURVED BEAM OUTRIGGERS)
	F39619	F39619	1	REAR FENDER, RH (WING-TYPE OUTRIGGERS)
3	F37609	F37609	2	FRONT FENDER (CURVED BEAM OUTRIGGERS)
	F39620	F39620	1	FRONT FENDER, RH (WING-TYPE OUTRIGGERS)
	F39621	F39621	1	FRONT FENDER, LH (WING-TYPE OUTRIGGERS)
4	1242-42	1242-42	20	CAPSCREW, 3/8 UNC x 1 1/4 LG.H.T.
	1209-4	1209-4	40	PLAINWASHER, 3/8 REG.
	1210-20	1210-20	20	LOCKWASHER, 3/8 MED.
	1205-36	1205-36	20	NUT, 3/8 UNC
5	37882	37882	1	REAR DECK (REPLACES 37656)
6	37657	37657	1	FRONT DECK
7	1211-12	1211-12	8	THREAD CUTTING SCREW, 5/16 UNC x 3/4 LG.
8	A37167	37801	1	ENGINE HOOD ASSEMBLY, INCLUDES ITEMS 9 THRU 16
9	23737	23737	1	GRILL
10	23738	23738	1	LOUVERED PANEL, LEFT
11	23739	23739	1	LOUVERED PANEL, RIGHT
12	23740	23740	1	HOOD
13	23741	24231	1	PANEL
		37941	1	COVER BOX, FOR ABOVE (NOT SHOWN)
14	1205-15	1205-15	9	STOVE BOLT, 1/4 UNC x 3/4 LG.
15	1200-31	1200-31	12	CAPSCREW, 5/16 UNC x 1 LG.
	1210-17	1210-17	12	LOCKWASHER, 5/16 MED.
	1205-25	1205-25	12	NUT, 5/16 UNC
16	23745	23745	AR	SPRING LATCH ONLY, FOR ITEMS 9, 10, & 11
17	A38195	A38195	1	PANEL COVER ASSEMBLY (OPT), INCLUDES ITEMS 18 THRU 21
18	F38187	F38187	1	PANEL COVER
19	38186	38186	1	LAMP (REPLACES ITEM 34, PAGE 5.2 NOT SHOWN)
20	38197	38197	1	HASP
21	1200-1	1200-1	7	CAPSCREW, 1/4 UNC x 3/4 LG.
	1210-14	1210-14	7	LOCKWASHER, 1/4 MED.
	1205-13	1205-13	7	NUT, 1/4 UNC

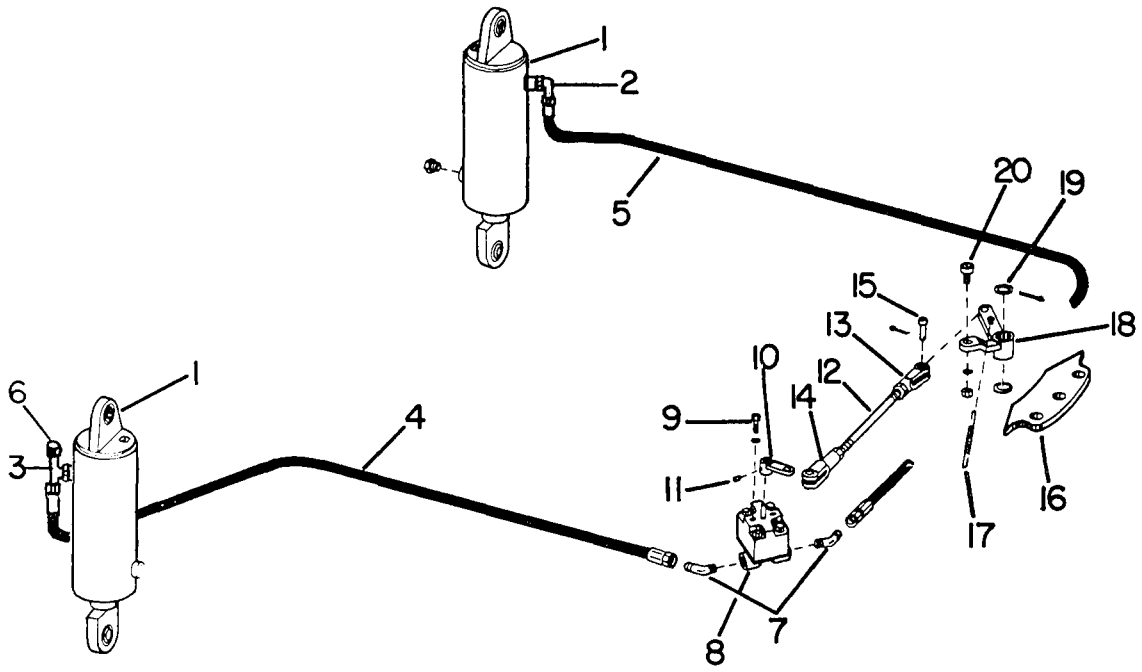

Ref. No.	Part Number	Quan. Req'd.	Name and Description
1		2	HYDRAULIC CYLINDER - SEE PAGE 11.6 FOR PARTS BREAKDOWN
2	1219-827	1	ELBOW, NPT THREAD
	1219-470	1	ELBOW, "O" RING BOSS THREAD
3	1219-913	1	TEE, NPT THREAD
	1219-768	1	TEE, "O" RING BOSS THREAD
4	A37099	1	HOSE ASSEMBLY
5	A37101	1	HOSE ASSEMBLY
6	1219-736	1	CAP
7	1219-732	2	ADAPTER
8	10711	1	VALVE
9	1200-29	2	CAPSCREW, 5/16 UNC x 3/4 LG.
	1210-17	2	LOCKWASHER, 5/16 MED.
10	F37270	1	BELLCRANK
11	1206-65	2	SETSCREW, 5/16 UNF x 3/8 LG.
12	37278	1	ROD
13	2597	1	YOKE

Ref. No.	Part Number	Quan. Req'd.	Name and Description
14	37827	1	YOKE
15	2234	2	PIN, FOR ITEMS 13 & 14
	1207-2	2	COTTER PIN, 1/16 x 3/4 LG.
16	37281	1	CAM PLATE
17	5192	1	SPRING
18	F37273	1	BELLCRANK
	1214-59	2	BUSHING, FOR ABOVE
19	1209-6	2	PLAINWASHER, 1/2 REG.
	1207-13	1	COTTER PIN, 1/8 x 1 1/4 LG.
20	1217-50	1	CAM FOLLOWER
	1210-20	1	LOCKWASHER, 3/8 MED.
	1205-40	2	NUT, 3/8 UNF JAM

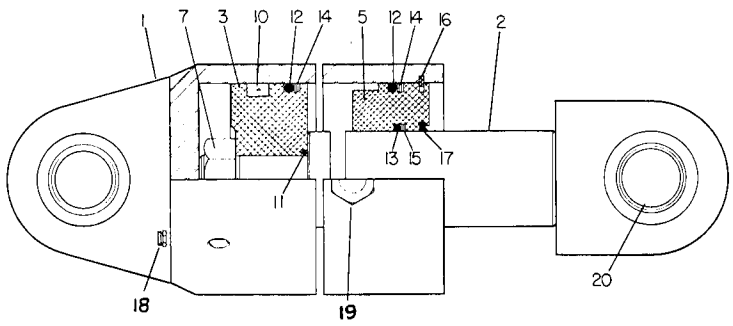

Ref. No.	Part Number	Part Number	Quan. Req'd.	Name and Description	
	NA. → 39976	49565	2	HYDRAULIC CYLINDER COMPLETE	
	A25365	29437	1	SEAL KIT - INCLUDES ITEMS 10 THRU 17	
1	23715	29438	1	TUBE	
2	23716	23716	1	PISTON ROD	
3	25369	29439	1	PISTON	
5	25370	29440	1	GLAND	
7	23721	23721	1	HEX NUT, 1 1/4 - 12	
10	25366	29441	1	"U" CUP	
11	23725	23725	1	"O" RING	
12	23726	23726	2	"O" RING	
13	23727	23727	1	"O" RING	
14	23728	23728	2	BACK-UP WASHER	
15	23729	23729	1	BACK-UP WASHER	
16	23730	29442	1	SNAP RING	
17	25367	25367	1	WIPER SEAL	
18	25368		1	BLEEDER	
18		29443	1	CAPSCREW	
		29444	1	NYLTITE SEAL, CAPSCREW	
19	25329	25329	1	BREATHER ASSEMBLY	
20	1217-241	1217-241	2	SELF-ALIGNING BUSHING	

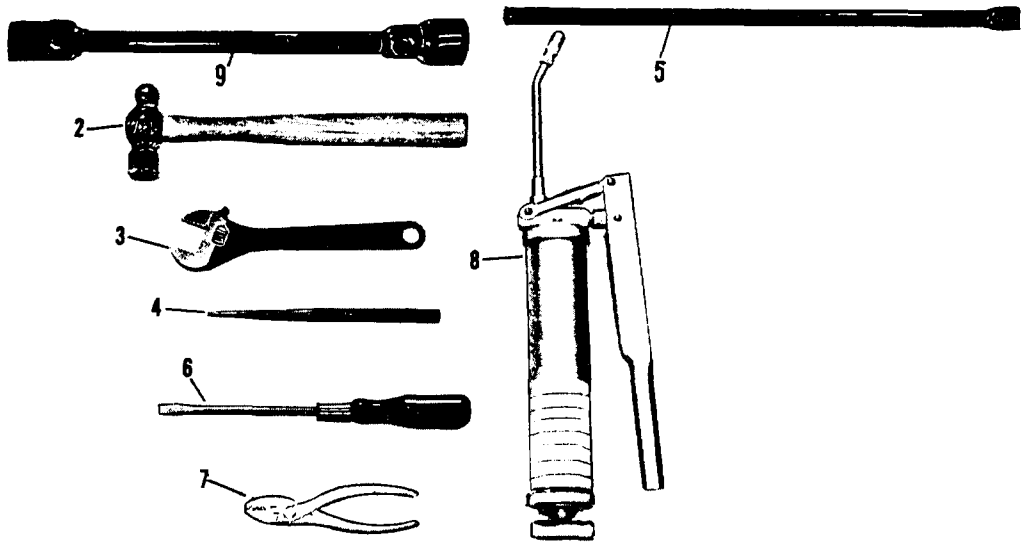

Ref. Nc.	Part Number	Quan. Req'd.	Name and Description	
1	A38077		TOOL KIT ASSEMBLY, INCLUDES ITEMS 1 THRU 9	
2	1226-1	1	BALL PEIN HAMMER, 16 oz.	
3	1226-6	1	CRESCENT WRENCH, 10"	
4	1226-5	1	TAPER PUNCH, 3/16"	
5	32179	1	HANDLE	
6	1226-4	1	SCREW DRIVER, 6"	
7	1226-3	1	PLIERS, 6"	
8	1226-2	1	LEVER TYPE GREASE GUN	
9	1226-11	1	TRUCK WHEEL WRENCH	

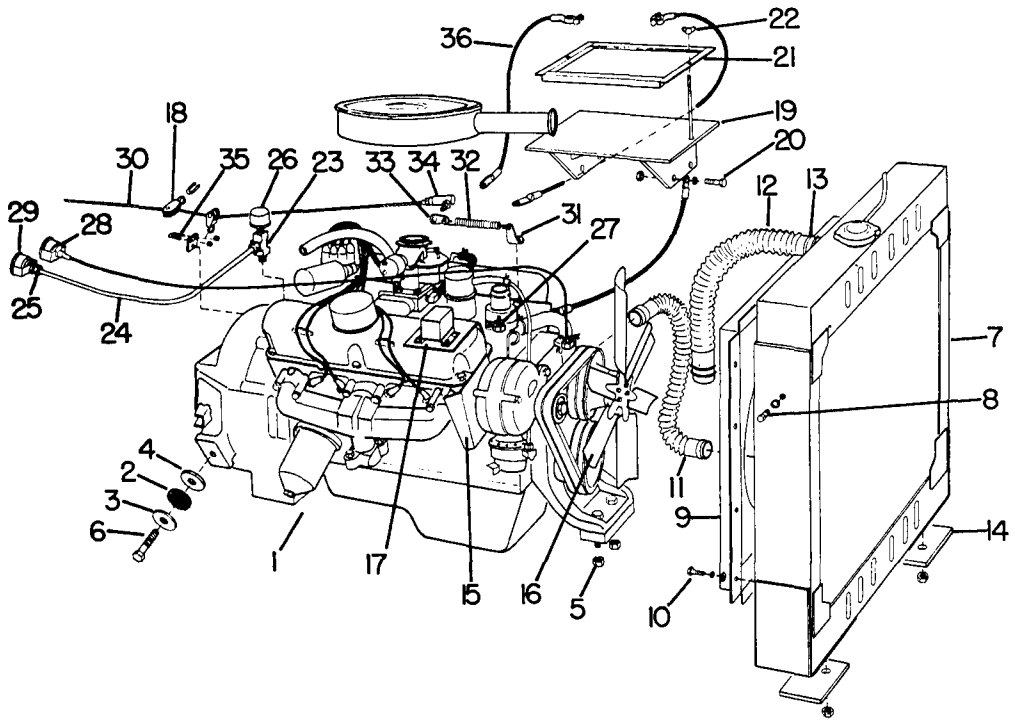

Ref. No.	Part Number	Quan. Req'd.	Name and Description
1	A37899	1	ENGINE ONLY, CHRYSLER LH-318-564, COMPLETE WITH AIR CLEANER, ALTERNATOR, FAN, OIL FILTER, CLUTCH, LESS ITEMS LISTED BELOW. SEE CHRYSLER BASE PARTS LIST 81-790-0364 AND SUPPLEMENT 81-790-0384.
2	1221-29	2	RUBBER MOUNT
3	40318	2	RETAINER
4	37886	2	SPACER
5	1205-46	2	NUT, 3/8 UNF ELASTIC
6	1200-167	2	CAPSCREW, 5/8 UNF x 4 1/2 LG.
	1205-91	2	NUT, 5/8 UNF ELASTIC
7	37791	1	RADIATOR W/TANK COOLER
8	1200-57	2	CAPSCREW, 3/8 UNC x 3/4 LG.
	1210-20	2	LOCKWASHER, 3/8 MED.
9	36531	1	SHROUD
10	1203-65	8	CAPSCREW, 1/4 UNC x 1/2 LG.
	1210-14	8	LOCKWASHER, 1/4 MED.
	1209-2	8	PLAINWASHER, 1/2 REG.
11	1244-150	1	RADIATOR HOSE, LOWER
12	1244-106	1	RADIATOR HOSE, UPPER

Ref. No.	Part Number	Quan. Req'd.	Name and Description
13	1240-24	4	CLAMP
14	4059	2	PAD
	1205-67	2	NUT, 1/2 UNC ELASTIC
15	37732	1	SHIELD GROUP
16	38437	1	FAN ASSEMBLY
17	37883	1	VOLTAGE REGULATOR BRACKET
18	1261-64	2	PULLEY
19	37707	1	BATTERY BRACKET
20	1200-61	4	CAPSCREW, 3/8 UNC x 1 1/4 LG.
	1210-20	4	LOCKWASHER, 3/8 MED.
	1205-36	4	NUT, 3/8 UNC
21	15272	1	TIE DOWN
22	2363	2	HOLD DOWN BOLT
	1231-2	2	WING NUT, 5/16 UNC
	1209-3	2	PLAINWASHER, 5/16
23	1219-756	1	TEE
24	37294	1	TUBE
25	1219-757	1	CONNECTOR
26	1223-450	1	PRESSURE SWITCH
27	1223-452	1	HIGH TEMPERATURE SWITCH
28	1245-65	1	TEMPERATURE GAUGE W/BULB & CONNECTOR
29	1245-64	1	OIL PRESSURE GAUGE
30	F37289	1	CABLE
31	8904	1	SPRING HOOK
32	6422	1	SPRING
33	8903	1	SPRING HOOK
34	1222-122	1	BALL JOINT
	1230-8	1	NUT
35	37942	1	PULLEY BRACKET
36	1223-280	1	BATTERY CABLE, POSITIVE TO STARTER
	1223-279	1	BATTERY CABLE, NEGATIVE TO ENGINE
	1223-147	1	BATTERY CABLE, ENGINE TO FRAME

CHRYSLER INDUSTRIAL 8 CYLINDER ENGINE

MODEL
IND. HA273 AND LH318

BASE ENGINE PARTS LIST

ALWAYS CONSULT THE PARTS BOOK SUPPLEMENT BEFORE ORDERING PARTS. IF ALL PARTS DESIRED ARE NOT LISTED IN THE SUPPLEMENT, REFER TO BASE ENGINE PARTS CATALOG.

IMPORTANT - Complete information as to engine type and serial number is stamped on a plate located on the manifold side of the engine, and should be mentioned in all parts orders or in any communications pertaining thereto. The number stamped on left front end of cylinder block is a manufacturing code, and should not be used for the purpose of identifications.

INDUSTRIAL PRODUCTS DIVISION
CHRYSLER CORPORATION
MARYSVILLE, MICHIGAN, U.S.A.

MAY, 1967
Printed in U.S.A.

81-790-0364

PART TYPE CODE	PART NAME AND DESCRIPTION	PER ENG. HA273	PER ENG. LH318	PART NO.

GROUP 9 - ENGINE

	ENGINE GASKET SETS			
9-01-5	GASKET SET, Engine	-	1	2808 480
	Consists of:			
	1 - 2129 012 Gasket, Chain Case Cover			
	2 - 2806 984 Gasket, Cylinder Head			
	2 - 2463 290 Gasket, Cylinder Head Cover			
	1 - 50 082 Gasket, Cylinder Water Outlet			
	1 - 1400 185 Gasket, Fuel Pump Flange			
	1 - 1326 836 Gasket, Ignition Distributor			
	2 - ---- --- Gasket, Intake Manifold			
	1 - ---- --- Gasket, Intake Manifold, Front			
	1 - ---- --- Gasket, Intake Manifold, Rear			
	2 - ---- --- Gasket, Oil Pan			
	2 - ---- --- Gasket, Oil Pan, End			
	1 - ---- --- Gasket, Water Pump Body			
	1 - 2536 694 Seal, Chain Case Cover Oil			
	2 - ---- --- Seal, Crankshaft Bearing Oil			
	1 - ---- --- Seal, Crankshaft Bearing Cap #5 Oil, Right			
	1 - ---- --- Seal, Crankshaft Bearing Cap #5 Oil, Left			
	16 - ---- --- Shield, Valve Stem Oil			
	CYLINDER BLOCK ASSEMBLY			
9-02-5	BLOCK, w/PISTON and RINGS, Assembly	1	-	2600 430
	BLOCK, w/PISTON and RINGS, Assembly	-	1	2600 434
9-02-7	DOWEL, Cylinder Block to Clutch Housing	2	2	1122 532
	DOWEL, Cylinder Block to Clutch Housing Adjusting (.007) . .	2	2	1736 347
	DOWEL, Cylinder Block to Clutch Housing Adjusting (.014) . .	2	2	1736 348
	DOWEL, Cylinder Block to Clutch Housing Adjusting (.021) . .	2	2	1736 353
	DOWEL, Cylinder Block to Intake Manifold Locating	2	2	9414 469
9-02-16	PLUG, Block Core Hole, Small	1	1	2406 387
	PLUG, Block Core Hole, Large	9	9	2406 356
	PLUG, Block Core Hole, Large Oversize	*	*	2406 575
9-02-17	PLUG, Block Oil Line	1	1	1324 464
	CYLINDER HEAD			
9-03-4	HEAD, Assembly (Up To "B" Series 1966)	2	-	2532 080
	HEAD, Assembly ("B" Series 1966)	2	-	2536 176
	HEAD, Assembly ("C" Series 1967)	2	2	2806 213
9-03-5	GASKET, Head	2	2	2463 338
9-03-10	SCREW, Head (1/2" x 1 7/8")	10	10	2463 258
	SCREW, Head (1/2" x 3 5/8")	8	8	2463 259
	SCREW, Head (1/2" x 4 5/8")	2	2	2463 260

* Indicates - use as required.

Prices and specifications subject to change without notice.

PART TYPE CODE	PART NAME AND DESCRIPTION	PER ENG. HA273	PER ENG. LH318	PART NO.
	CYLINDER HEAD - Cont'd			
9-03-18	PLUG, Head Core Hole	4	4	2406 387
9-03-28	COVER, Head, Assembly, Right (Up To "C" Series 1967)	1	-	2465 543
	COVER, Head, Assembly, Right ("C" Series 1967)	1	1	2806 072
	COVER, Head, Assembly, Left	1	1	2465 383
9-03-29	GASKET, Head Cover	2	2	2463 290
	CRANKSHAFT			
9-07-5	CRANKSHAFT, Assembly	1	1	2268 119
9-07-12	BUSHING, Pilot	1	1	53 298
9-07-17	SLINGER, Oil	1	1	1618 686
	CRANKSHAFT GEAR OR SPROCKET			
9-08-5	SPROCKET	1	1	2463 385
	KEY	1	1	152 191
	CRANKSHAFT BEARINGS			
9-09-2	BEARING PACKAGE, Nos. 1-2-4 (std.)	3	3	2084 005
	BEARING PACKAGE, Nos. 1-2-4 (.001 undersize)	3	3	2084 006
	BEARING PACKAGE, Nos. 1-2-4 (.002 undersize)	3	3	2084 007
	BEARING PACKAGE, Nos. 1-2-4 (.003 undersize)	3	3	2275 387
	BEARING PACKAGE, Nos. 1-2-4 (.010 undersize)	3	3	2084 008
	BEARING PACKAGE, Nos. 1-2-4 (.012 undersize)	3	3	2275 388
	BEARING PACKAGE, No. 3 (std.)	1	1	1879 627
	BEARING PACKAGE, No. 3 (.001 undersize)	1	1	1879 628
	BEARING PACKAGE, No. 3 (.002 undersize)	1	1	1879 629
	BEARING PACKAGE, No. 3 (.003 undersize)	1	1	2275 389
	BEARING PACKAGE, No. 3 (.010 undersize)	1	1	1879 630
	BEARING PACKAGE, No. 3 (.012 undersize)	1	1	2275 390
	BEARING PACKAGE, No. 5 (std.)	1	1	1643 151
	BEARING PACKAGE, No. 5 (.001 undersize)	1	1	1643 152
	BEARING PACKAGE, No. 5 (.002 undersize)	1	1	1643 153
	BEARING PACKAGE, No. 5 (.003 undersize)	1	1	1643 154
	BEARING PACKAGE, No. 5 (.010 undersize)	1	1	1643 155
	BEARING PACKAGE, No. 5 (.012 undersize)	1	1	1643 156
	CRANKSHAFT BEARING CAPS, STUDS AND PARTS			
9-10-2	SEAL PACKAGE, Bearing Cap No. 5 Consists of: 1 - ---- --- Oil Seal, Right 1 - ---- --- Oil Seal, Left	1	1	1326 091

* Indicates - use as required.

Prices and specifications subject to change without notice.

Printed in U.S.A.

PART TYPE CODE	PART NAME AND DESCRIPTION	PER ENG. HA273	PER ENG. LH318	PART NO.
	CRANKSHAFT BEARING CAPS, STUDS AND PARTS - Cont'd			
9-10-5	CAP, Bearing Nos. 1-2-4	3	3	1632 519
	CAP, Bearing No. 3	1	1	2463 582
	CAP PACKAGE, Bearing No. 5	1	1	2275 446
	Consists of:			
	1 - ---- --- Cap, Bearing No. 5			
	1 - ---- --- Oil Seal, Right			
	1 - ---- --- Oil Seal, Left			
9-10-19	SCREW, Bearing Cap	10	10	1618 695
	CRANKSHAFT BEARING OIL SEAL			
9-11-1	SEAL PACKAGE, Rear Bearing Oil	1	1	1326 093
	Consists of:			
	2 - ---- --- Oil Seal, Rear Bearing			
	1 - ---- --- Oil Seal, Bearing Cap No. 5, Right			
	1 - ---- --- Oil Seal, Bearing Cap No. 5, Left			
	CAMSHAFT			
9-15-1	CAMSHAFT	1	-	2463 360
	CAMSHAFT	-	1	2658 362
9-15-2	ECCENTRIC	1	1	1618 718
9-15-6	PLATE, Sprocket Thrust	1	1	1946 992
9-15-10	WASHER, Sprocket Retaining Screw	1	1	1618 732
	CAMSHAFT BEARINGS			
9-16-6	BEARING, No. 1	1	1	1632 522
	BEARING, No. 2	1	1	1632 523
	BEARING, No. 3	1	1	1632 524
	BEARING, No. 4	1	1	1632 525
	BEARING, No. 5	1	1	1632 526
9-16-17	PLUG, Rear Bearing	1	1	1821 722
	CAMSHAFT GEAR OR SPROCKET			
9-17-5	SPROCKET	1	1	2463 386
	KEY	1	1	106 751
	TIMING CHAIN			
9-20-1	CHAIN	1	1	2463 384
	CHAIN CASE COVER			
9-23-5	COVER, Assembly	1	1	1944 773

* Indicates - use as required.

PART TYPE CODE	PART NAME AND DESCRIPTION	PER ENG. HA273	PER ENG. LH318	PART NO.
	CHAIN CASE COVER - Cont'd			
9-23-17	GASKET, Cover	1	1	2129 012
9-23-18	OIL SEAL, Cover, Assembly	1	1	2536 694
9-23-40	INDICATOR, Timing (Up To "B" Series 1966)	1	-	1947 236
	CONNECTING RODS			
9-31-4	ROD, Assembly	8	8	2406 785
9-31-5	BOLT, Cap	16	16	1944 865
9-31-7	NUT, Cap Bolt	16	16	1737 695
9-31-10	BUSHING, Rod	8	8	1618 701
	CONNECTING ROD BEARINGS			
9-32-2	BEARING PACKAGE (std.)	8	-	1879 617
	BEARING PACKAGE (std.)	-	8	2421 305
	BEARING PACKAGE (.001 undersize)	8	-	1879 618
	BEARING PACKAGE (.001 undersize)	-	8	2421 306
	BEARING PACKAGE (.002 undersize)	8	-	1879 619
	BEARING PACKAGE (.002 undersize)	-	8	2421 307
	BEARING PACKAGE (.003 undersize)	8	-	1879 620
	BEARING PACKAGE (.003 undersize)	-	8	2421 308
	BEARING PACKAGE (.010 undersize)	8	-	1879 621
	BEARING PACKAGE (.010 undersize)	-	8	2421 309
	BEARING PACKAGE (.012 undersize)	8	-	1879 622
	BEARING PACKAGE (.012 undersize)	-	8	2421 310
	PISTONS			
9-34-5	PISTON, w/PIN and Lock RINGS, Assembly (std.)	8	-	2495 072
	PISTON, w/PIN and Lock RINGS, Assembly (std.)	-	8	2808 519
	PISTON, w/PIN and Lock RINGS, Assembly (.005 oversize)	8	-	2495 073
	PISTON, w/PIN and Lock RINGS, Assembly (.005 oversize)	-	8	2808 520
	PISTON, w/PIN and Lock RINGS, Assembly (.020 oversize)	8	-	2495 074
	PISTON, w/PIN and Lock RINGS, Assembly (.020 oversize)	-	8	2808 521
	PISTON, w/PIN and Lock RINGS, Assembly (.040 oversize)	8	-	2495 075
	PISTON, w/PIN and Lock RINGS, Assembly (.040 oversize)	-	8	2808 522
	PISTON RINGS			
9-35-1	RING SET, Piston (std. to .009 oversize) Consists of: 8 - ---- --- Expander, Second Compression Ring 16 - ---- --- Rail, Lower Ring 8 - ---- --- Ring, Top Compression 8 - ---- --- Ring, Second Compression 8 - ---- --- Spacer, Lower Ring	1	-	2525 407

* Indicates - use as required.

Prices and specifications subject to change without notice.

PART TYPE CODE	PART NAME AND DESCRIPTION	PER ENG. HA273	PER ENG. LH318	PART NO.
	PISTON RINGS - Cont'd			
9-35-1	RING SET, Piston (std. to .009 oversize)	-	1	2808 553
	Consists of:			
	16 - ---- --- Rail, Lower Ring			
	8 - ---- --- Ring, Intermediate			
	8 - ---- --- Ring, Upper			
	8 - ---- --- Spacer, Lower Ring			
	RING SET, Piston (.020 to .029 oversize).	1	-	2525 408
	Consists of:			
	8 - ---- --- Expander, Second Compression Ring			
	16 - ---- --- Rail, Lower Ring			
	8 - ---- --- Ring, Top Compression			
	8 - ---- --- Ring, Second Compression			
	8 - ---- --- Spacer, Lower Ring			
	RING SET, Piston (.020 to .029 oversize)	-	1	2808 554
	Consists of:			
	16 - ---- --- Rail, Lower Ring			
	8 - ---- --- Ring, Intermediate			
	8 - ---- --- Ring, Upper			
	8 - ---- --- Spacer, Lower Ring			
	RING SET, Piston (.040 to .049 oversize)	1	-	2525 409
	Consists of:			
	8 - ---- --- Expander, Second Compression Ring			
	16 - ---- --- Rail, Lower Ring			
	8 - ---- --- Ring, Top Compression			
	8 - ---- --- Ring, Second Compression			
	8 - ---- --- Spacer, Lower Ring			
	RING SET, Piston (.040 to .049 oversize)	-	1	2808 555
	Consists of:			
	16 - ---- --- Rail, Lower Ring			
	8 - ---- --- Ring, Intermediate			
	8 - ---- --- Ring, Upper			
	8 - ---- --- Spacer, Lower Ring			
	PISTON PINS			
9-36-5	PIN (std.)	8	-	2463 268
	PIN (std.)	-	8	2658 878
	PIN (.003 oversize)	8	-	2463 269
	PIN (.003 oversize)	-	8	2658 879
	PIN (.008 oversize)	8	-	2463 270
	PIN (.008 oversize)	-	8	2658 880
9-36-7	RING, Pin Retaining	16	16	1324 470

* Indicates - use as required.

PART TYPE CODE	PART NAME AND DESCRIPTION	PER ENG. HA273	PER ENG. LH318	PART NO.
	VALVES			
9-39-1	GASKET PACKAGE, Valve Grind Consists of: 2 - 2806 984 Gasket, Cylinder Head 2 - 2463 290 Gasket, Cylinder Head Cover 2 - ---- --- Gasket, Intake Manifold 1 - ---- --- Gasket, Intake Manifold, Front 1 - ---- --- Gasket, Intake Manifold, Rear 16 - 2205 958 Shield, Valve Stem Oil	-	1	2808 481
9-39-5	VALVE, Intake (std.)	8	8	2465 335
	VALVE, Intake (.005 oversize)	8	8	2465 336
	VALVE, Intake (.015 oversize)	8	8	2465 337
	VALVE, Intake (.030 oversize)	8	8	2465 338
9-39-6	VALVE, Exhaust (std.)	8	8	2465 339
	VALVE, Exhaust (.005 oversize)	8	8	2465 340
	VALVE, Exhaust (.015 oversize)	8	8	2465 341
	VALVE, Exhaust (.030 oversize)	8	8	2465 342
9-39-14	SHIELD, Intake and Exhaust Valve Stem Oil	16	16	2205 958
9-39-15	SPRING, Intake and Exhaust Valve	16	16	1739 534
9-39-16	RETAINER, Intake and Exhaust Valve Spring	16	16	2402 045
9-39-17	LOCK, Intake Valve Spring Retainer	16	16	381 875
	LOCK, Exhaust Valve Spring Retainer	16	16	1614 666
9-39-21	SPACER, Valve Spring	16	16	1639 947
	VALVE TAPPET			
9-41-4	TAPPET, Assembly (std.)	16	-	2469 501
	TAPPET, Assembly (std.)	-	16	2808 385
	TAPPET, Assembly (.001 oversize)	16	-	2469 502
	TAPPET, Assembly (.001 oversize)	-	16	2808 386
	TAPPET, Assembly (.008 oversize)	16	-	2469 503
	TAPPET, Assembly (.008 oversize)	-	16	2808 387
	TAPPET, Assembly (.030 oversize)	16	-	2469 504
	TAPPET, Assembly (.030 oversize)	-	16	2808 388
	VALVE PUSH ROD			
9-42-1	ROD, Assembly	16	-	2465 343
	ROD, Assembly	-	16	2532 152
	VALVE ROCKERS			
9-43-1	ROCKER, Assembly	16	-	2806 988
	ROCKER, Right	-	8	2536 146
	ROCKER, Left	-	8	2536 145

PART TYPE CODE	PART NAME AND DESCRIPTION	PER ENG. HA273	PER ENG. LH318	PART NO.
	VALVE ROCKERS - Cont'd			
9-43-3	SCREW, Rocker Adjusting	16	-	1855 238
9-43-5	SPACER, Rocker	8	-	2463 324
9-43-9	SHAFT, Rocker, Assembly	2	-	2536 526
	SHAFT, Rocker, Assembly	-	2	2532 149
9-43-11	RETAINER, Rocker Shaft, Ends and Center	6	6	2463 322
	RETAINER, Rocker Shaft, Intermediate	4	4	2463 323
9-43-19	PLUG, Rocker Shaft	4	4	1324 268

GROUP 10 - ENGINE OILING

	OIL LEVEL INDICATOR			
10-03-4	INDICATOR, Assembly	1	-	2402 839
	INDICATOR, Assembly	-	1	2463 571
10-03-7	TUBE, Indicator	1	1	1859 788
	OIL PUMP			
10-07-6	PUMP, Assembly (Up To "C" Series 1967)	1	-	2402 474
	PUMP, Assembly ("C" Series 1967 and After)	1	1	2843 251
10-07-7	COVER, Pump	1	1	2206 095
10-07-8	GASKET, Pump Cover	1	1	2268 921
	OIL PUMP SHAFT AND GEAR			
10-09-1	SHAFT, Pump Drive, Assembly	1	1	2121 530
10-09-5	SHAFT, Pump and Distributor Drive, w/GEAR, Assembly	1	1	2121 535
10-09-7	BUSHING, Pump and Distributor Drive Shaft	1	1	1737 725
	OIL PUMP ROTOR			
10-14-18	ROTOR, Outer	1	1	2121 531
	OIL PRESSURE RELIEF VALVE			
10-22-6	BODY, Cylinder Block Relief Valve (Up To "C" Series 1967).	1	-	1537 741
10-22-8	DISC, Cylinder Block Relief Valve (Up To "C" Series 1967)	1	-	1536 359
10-22-11	PLUNGER, Oil Pump Relief Valve (Up To "C" Series 1967)	1	-	2463 541
	PLUNGER, Oil Pump Relief Valve ("C" Series 1967 and After)	1	1	2843 208

PART TYPE CODE	PART NAME AND DESCRIPTION	PER ENG. HA273	PER ENG. LH318	PART NO.
	OIL PRESSURE RELIEF VALVE - Cont'd			
10-22-12	SLEEVE, Cylinder Block Check Valve (Up To "C" Series 1967)	1	-	E6134M
10-22-15	SPRING, Cylinder Block Relief Valve (Up To "C" Series 1967)	1	-	1536 357
	SPRING, Oil Pump Relief Valve	1	1	2264 587
10-22-17	RETAINER, Cylinder Block Relief Valve Spring (Up To "C" Series 1967)	1	-	1537 742
10-22-40	CAP, Oil Pump Relief Valve (Up To "C" Series 1967)	1	-	2264 586
	CAP, Oil Pump Relief Valve ("C" Series 1967 and After)	1	1	2806 273
10-22-42	BODY, Cylinder Block Check Valve (Used in 1630 938 Assembly) (Up To "C" Series 1967)	1	-	1630 939
	BODY, Cylinder Block Check Valve (Used in 1538 518 Assembly) (Up To "C" Series 1967)	1	-	1535 905
10-22-43	SEAL, Cylinder Block Check Valve Body (Up To "C" Series 1967)	1	-	2229 666
	OIL STRAINER			
10-23-7	STRAINER, w/Suction PIPE, Assembly	1	-	2468 849
	STRAINER, w/Suction PIPE, Assembly	-	1	2206 200
	OIL PAN			
10-24-1	GASKET PACKAGE, Oil Pan Consists of: 2 - ---- --- Gasket, Oil Pan 2 - ---- --- Gasket, Oil Pan End	1	1	1879 520
10-24-4	PAN, Assembly (Up To "C" Series 1967)	1	-	2463 517
	PAN, Assembly ("C" Series 1967 and After)	1	-	2806 393
	PAN, Assembly	-	1	2268 361
10-24-23	SCREW, Pan Attaching, w/WASHER, Assembly	16	16	1947 953
	SCREW, Pan to Chain Case Cover, w/WASHER, Assembly	2	2	6025 926
10-24-37	PLUG, Drain	1	1	2125 890
10-24-38	GASKET, Drain Plug	1	1	2268 513

CHRYSLER INDUSTRIAL 8 CYLINDER ENGINE

MODEL
IND. LH318-564

Prepared Especially for
Schield Bantam

THIS SUPPLEMENT PERTAINS TO PARTS PECULIAR TO THE ABOVE MODEL ONLY AND IS TO BE USED IN CONJUNCTION WITH BASE ENGINE PARTS LIST, 81-790-0364.

ALWAYS CONSULT THE PARTS BOOK SUPPLEMENT BEFORE ORDERING PARTS. IF ALL PARTS DESIRED ARE NOT LISTED IN THE SUPPLEMENT, REFER TO BASE ENGINE PARTS LIST.

IMPORTANT - Complete information as to engine type and serial number is stamped on a plate located on the manifold side of the engine, and should be mentioned in all parts orders or in any communications pertaining thereto. The number stamped on left front end of cylinder block is a manufacturing code, and should not be used for the purpose of identifications.

PARTS BOOK SUPPLEMENT

INDUSTRIAL PRODUCTS DIVISION
CHRYSLER CORPORATION
MARYSVILLE, MICHIGAN, U.S.A.

August 1968
Printed in U.S.A.

81-790-0384

PART TYPE CODE	PART NAME AND DESCRIPTION	PART NO.	PER ENG.

GROUP 6 - CLUTCH

	CLUTCH HOUSING		
6-09-1	HOUSING, Clutch	2826 823	1
	CLUTCH HOUSING PAN		
6-10-2	PAN, Clutch Housing	1938 248	1
	CLUTCH DISC		
6-13-1	DISC, Clutch Driving	2233 689	1
6-13-8	RIVET, Clutch Driving Disc Facing	660 146	40
	CLUTCH COVER AND PRESSURE PLATE		
6-14-1	COVER, Clutch, w/Pressure PLATE	2231 529	1
6-14-10	SCREW, Clutch Cover to Flywheel	2231 535	6
	CLUTCH PRESSURE SPRING		
6-16-1	SPRING		
	Clutch Pressure	1067 037	6
	Clutch Pressure	1400 804	6
	CLUTCH RELEASE BEARING		
6-19-2	BEARING, w/SLEEVE, Clutch Release	1799 378	1
6-19-3	BEARING, Clutch Release	1664 510	1
	CLUTCH RELEASE BEARING SLEEVE		
6-20-14	SPRING, Clutch Release Bearing Sleeve Retainer	1923 333	2
	CLUTCH RELEASE FORK		
6-22-1	FORK, w/SPRING, Clutch Release	1927 343	1
6-22-4	SEAL, Clutch Release Fork	1927 348	1
6-22-15	PIVOT, Clutch Release Fork	633 238	1
6-22-17	PIN, Clutch Release Fork Rod	1324 090	1
6-22-19	SPRING, Clutch Release Fork	1923 332	1

AR - Indicates use as required.

Prices and specifications subject to change without notice.

PART TYPE CODE	LH318-564 PART NAME AND DESCRIPTION	PART NO.	PER ENG.
	CLUTCH RELEASE FORK ROD		
6-24-1	END, Clutch Release Fork Rod	1927 345	1
6-24-3	NUT, Clutch Release Fork Rod Adjusting	1407 347	1
6-24-6	SPRING, Clutch Release Fork Rod	1634 508	1
	CLUTCH RELEASE FORK LEVER		
6-27-5	SPRING, Clutch Release Fork Return	1938 450	1
6-27-6	BRACKET, Clutch Release Fork Rod Spring	1938 449	1

GROUP 7 - COOLING

	FAN		
7-02-1	FAN	2659 176	1
	FAN ALTERNATOR BELTS		
7-03-1	BELT		
	Fan and Alternator	2846 942	2
	Fan and Alternator, Matched Set	2846 941	1
7-02-16	SPACER, Fan	1859 532	1
	FAN PULLEY HUB		
7-05-1	HUB, Water Pump Pulley	2129 265	1
	FAN PULLEY		
7-06-1	PULLEY		
	Fan Drive	2513 943	1
	Auxiliary Drive	1075 624	1
7-06-5	SPACER, Auxiliary Drive Pulley	2125 876	1
7-06-14	PULLEY, Fan	2202 519	1
	RADIATOR HOSE AND TUBE		
7-14-9	HOSE, Water Pump By-Pass	2465 085	1
	THERMOSTAT		
7-41-4	THERMOSTAT, 180° F.	2808 631	1

PART TYPE CODE	LH318-564 PART NAME AND DESCRIPTION	PART NO.	PER ENG.
	WATER PUMP		
7-42-1	PUMP PACKAGE, Water	2448 315	1
	Consists of: 1 - ---- --- Bushing, Pipe Reducing 1 - ---- --- Gasket, Body 1 - ---- --- Pump		
7-42-4	REPAIR PACKAGE, Water Pump	2421 376	1
	Consists of: 1 - ---- --- Gasket, Body 1 - ---- --- Impeller 1 - ---- --- Seal 1 - ---- --- Shaft, w/Bearing		
	WATER PUMP BODY OR HOUSING		
7-43-18	PLUG, Water Pump Housing Heater Hole	1859 127	1
	WATER PUMP BODY COVER PLATE		
7-44-3	GASKET, Water Pump Body	2129 013	1
	WATER PUMP SHAFT AND IMPELLER		
7-45-31	IMPELLER, Water Pump	2402 795	1
	WATER PUMP SEAL		
7-46-1	SEAL, Water Pump	2120 955	1
	WATER PUMP ELBOW		
7-48-22	NIPPLE, Water Pump By-Pass	1618 668	2

GROUP 8 - ELECTRICAL

	CHASSIS OR BODY WIRING CABLE AND CONNECTIONS		
8-16-6	INSULATOR, Alternator Battery Terminal	2291 093	1
	IGNITION DISTRIBUTOR		
8-27-1	DISTRIBUTOR, Ignition	2875 339	1
8-27-4	GASKET, Ignition Distributor	6027 245	1
8-27-71	CAP, Ignition Distributor	2444 507	1
8-27-76	SPRING, Cap Attaching	1838 508	2

PART TYPE CODE	PART NAME AND DESCRIPTION	PART NO.	PER ENG.
	IGNITION DISTRIBUTOR - Cont'd		
8-27-133	BEARING PACKAGE, Drive Shaft Consists of: 1 - ---- --- Shaft Bearing, Upper 1 - ---- --- Shaft Bearing, Lower 1 - ---- --- Thrust Washer, Upper 1 - ---- --- Thrust Washer, Lower 1 - ---- --- Collar 1 - ---- --- Pin	2275 229	1
8-27-137	COLLAR and PIN PACKAGE, Drive Shaft Consists of: 1 - ---- --- Collar 1 - ---- --- Pin	2084 448	1
8-27-138	PLATE, Ignition Distributor Breaker	2095 922	1
8-27-158	CONTACT, Ignition Distributor Breaker	2098 244	1
8-27-190	CONDENSER, Ignition Distributor	2098 058	1
8-27-205	CABLE, Ignition Distributor Primary	2444 282	1
8-27-250	SHAFT, Governor and Cam	2642 767	1
8-27-259	SPACER, Cam	2642 988	1
8-27-278	WEIGHT PACKAGE, Governor Consists of: 2 - ---- --- Weight	1881 945	1
8-27-279	SPRING PACKAGE, Governor Weight Consists of: 1 - ---- --- Spring (strong) 1 - ---- --- Spring (weak)	2809 075	1
8-27-292	CAM, w/Stop PLATE	2444 264	1
8-27-297	DISC and SNAP RING PACKAGE, Cam Sleeve Consists of: 1 - ---- --- Felt Disc 1 - ---- --- Snap Ring	1879 607	1
8-27-300	ROTOR, Ignition Distributor	1838 516	1
8-27-308	CONTROL, Vacuum	2444 456	1
8-27-320	TUBE, Distributor to Governor Vacuum Control	2448 621	1
8-27-321	CONNECTOR, Distributor to Governor Vacuum Control Tube	2206 146	1

PART TYPE CODE	LH318-564 PART NAME AND DESCRIPTION	PART NO.	PER ENG.
	ALTERNATOR		
8-28-3	ALTERNATOR, w/PULLEY	2642 537	1
8-28-15	STRAP, Alternator Adjusting	2946 799	1
8-28-36	BRACKET, Alternator Mounting	2806 260	1
8-28-38	SPACER, Alternator Mounting Bracket	2129 856	1
8-28-54	SHIELD, Alternator Heat	2846 457	1
8-28-74	REGULATOR, Alternator Voltage	2098 300	1
8-28-297	PULLEY, Alternator	2098 272	1
	ALTERNATOR COMPONENT PARTS		
8-29-17	BRUSH PACKAGE, Alternator Consists of: 2 - ---- --- Brush 1 - ---- --- Terminal, Field 1 - ---- --- Washer, Insulating	2084 673	1
8-29-42	HOLDER, Brush	2095 038	1
8-29-97	ROTOR	2642 650	1
8-29-98	STATOR	2642 633	1
8-29-99	SLIP RING PACKAGE, Rotor Consists of: 1 - ---- --- Capacitor, w/Bolt 1 - ---- --- Insulator, Bolt 1 - ---- --- Insulator, Heat Sink 2 - ---- --- Lockwasher 2 - ---- --- Nut, Hex 1 - ---- --- Washer, Plain	2586 512	1
8-29-131	RECTIFIER . . . . . **Positive** . . **Negative** . .	2098 288 2098 287	3 3
8-29-133	BEARING, Rectifier End Shield	2098 512	1
8-29-134	INSERT, Alternator Mounting	2095 052	1
8-29-135	SINK, Rectifier Heat	2095 925	1
8-29-143	CEMENT, Lead Wire	2299 314	AR
8-29-145	SPACER PACKAGE, Rectifier Heat Sink Consists of: 2 - ---- --- Spacer	2421 138	1

AR - Indicates use as required.
Printed in U. S. A.

Prices and specifications subject to change without notice.

PART TYPE CODE	PART NAME AND DESCRIPTION	PART NO.	PER ENG.
	ALTERNATOR COMPONENT PARTS - Cont'd		
8-29-153	SHIELD, Drive End	2095 945	1
8-29-154	BEARING, Drive End Shield	2098 478	1
8-29-155	PLATE, Drive End Bearing Retainer	2095 012	1
8-29-208	SCREW, Frame Through	2098 633	3
	IGNITION COIL AND SWITCH		
8-35-4	COIL, Ignition, w/Mounting BRACKET	2495 531	1
8-35-22	RESISTOR PACKAGE, Ignition Coil Primary Consists of: 1 - ---- --- Resistor 2 - ---- --- Terminal 2 - ---- --- Nuts 2 - ---- --- Lockwashers	2275 590	1
8-35-41	BRACKET, Ignition Coil	2642 670	1
	IGNITION WIRING AND SPARK PLUG		
8-36-1	CABLE PACKAGE, Ignition Consists of: 1 - ---- --- Cable, Ignition 47" 1 - ---- --- Terminal 1 - ---- --- Nipple	2421 835	1
8-36-14	SEPARATOR, Ignition Cable	2642 395	4
8-36-49	CABLE PACKAGE, Coil Secondary or Spark Plug Consists of: 1 - ---- --- Cable 2 - ---- --- Terminal, Distributor 1 - ---- --- Terminal, Spark Plug 1 - ---- --- Nipple, Distributor 1 - ---- --- Nipple, Coil 1 - ---- --- Cover, Spark Plug	2421 136	1
8-36-114	PLUG, Spark	2098 377	8
8-36-115	GASKET, Spark Plug	2642 919	8
	STARTING MOTOR		
8-52-4	STARTER	1889 100	1
8-52-41	CLUTCH	2642 506	1

PART TYPE CODE	LH318-564 PART NAME AND DESCRIPTION	PART NO.	PER ENG.
	STARTING MOTOR - Cont'd		
8-52-49	FORK and PIN PACKAGE, Shifting Consists of: 1 - ---- --- Fork, Shifting 1 - ---- --- Pin	2084 093	1
8-52-76	HOUSING, Pinion	1889 066	1
8-52-80	BEARING, Pinion Housing	2098 986	1
8-52-82	STOP, SNAP RING and STOP WASHER PACKAGE Consists of: 1 - ---- --- Snap Ring, Pinion Stop 1 - ---- --- Stop, Pinion 1 - ---- --- Washer, Pinion Stop	2448 804	1
8-52-88	BOOT, Shifting Fork	1889 147	1
8-52-120	ARMATURE	1889 079	1
8-52-135	BRUSH PACKAGE Consists of: 1 - ---- --- Brush 1 - ---- --- Brush, Field Shunt Coil 1 - ---- --- Screw, w/WASHER	2525 529	1
8-52-140	SPRING PACKAGE, Brush Consists of: 4 - ---- --- Spring	2084 666	1
8-52-150	HOLDER, Brush	1889 044	1
8-52-176	HEAD, Commutator End	1889 363	1
8-52-180	THRUST WASHER PACKAGE, Commutator End Consists of: 2 - ---- --- Washer (1/32") 2 - ---- --- Washer (3/64") 2 - ---- --- Washer (.080) 2 - ---- --- Washer (1/16") 2 - ---- --- Washer (.020)	2240 529	1
8-52-214	COIL PACKAGE, Field Series and Shunt Consists of: 1 - ---- --- Coil, Field Series 1 - ---- --- Coil, Field Shunt	2084 088	1
8-52-241	BOLT, Frame Through	1889 080	2

PART TYPE CODE	PART NAME AND DESCRIPTION	PART NO.	PER ENG.
	STARTING MOTOR - Cont'd		
8-52-341	CONTACT and COVER GASKET PACKAGE, Solenoid Consists of: 1 - ---- --- Contact, Solenoid 1 - ---- --- Gasket, Cover 1 - ---- --- Spring, Return 1 - ---- --- Spring, Solenoid Switch, Outer	2084 091	1
8-52-344	GASKET and COVER PACKAGE, Solenoid Consists of: 1 - ---- --- Cover 1 - ---- --- Gasket, Cover	2084 090	1
8-52-345	SOLENOID	2642 961	1
8-52-354	STUD PACKAGE, Solenoid Terminal Relay Consists of: 1 - ---- --- Insulator, Relay Stud 1 - ---- --- Nut, Hex 1 - ---- --- Stud, Solenoid Terminal Relay 1 - ---- --- Washer, Plain 1 - ---- --- Washer, Relay Stud Spacing	2084 094	1
8-52-375	CORE, Solenoid Moving	1889 151	1
	SWITCHES		
8-53-327	SWITCH, Low Oil Pressure	3004 106	1

GROUP 9 - ENGINE

	CYLINDER HEAD WATER OUTLET ELBOW OR CONNECTION		
9-05-5	CONNECTOR, Cylinder Water Outlet	2780 970	1
9-05-6	GASKET, Cylinder Water Outlet Connector	50 082	1
	CRANKSHAFT		
9-07-8	SCREW, Crankshaft	1821 414	1
9-07-22	WASHER, Crankshaft Screw	1855 561	1
	CRANKSHAFT VIBRATION DAMPER		
9-13-5	DAMPER, Vibration	2658 458	1

PART TYPE CODE	LH318-564 PART NAME AND DESCRIPTION	PART NO.	PER ENG.
	VALVE		
9-39-6	VALVE, Exhaust . . . . . Std.	2659 907	8
	.005 O/S	2659 908	8
	.015 O/S	2659 909	8
	.030 O/S	2659 910	8
9-39-14	SHIELD, Exhaust Valve Stem Oil	2205 958	8
9-39-15	SPRING, Exhaust Valve	2126 016	8
9-39-16	RETAINER, Exhaust Valve Spring	1551 002	8
9-39-17	LOCK, Exhaust Valve Spring Retainer	2402 312	16
	FLYWHEEL		
9-45-1	FLYWHEEL, w/Ring GEAR	2126 134	1
9-45-2	GEAR, Flywheel Ring	2863 494	1
	INTAKE AND EXHAUST MANIFOLD		
9-48-6	MANIFOLD, Exhaust	2468 170	2
9-48-7	MANIFOLD, Intake	2468 959	1
9-48-9	PLUG, Intake Manifold Heater Hole	1859 127	1
9-48-14	WASHER, Exhaust Manifold	2121 223	8
9-48-56	SHIELD, Intake Manifold Heat	2806 037	1
	MANIFOLD GASKETS		
9-50-1	GASKET PACKAGE, Intake Manifold	2808 350	1
	Consists of: 2 - ---- --- Gasket, Intake Manifold 1 - ---- --- Gasket, Manifold, Front 1 - ---- --- Gasket, Manifold, Rear		

GROUP 10 - ENGINE OILING

	CRANKCASE OIL FILLER OR BREATHER		
10-01-21	CLEANER, Cylinder Head Cover Breather Pipe Air	2402 013	1
	CRANKCASE VENTILATOR		
10-02-53	HOSE, Crankcase Vent Valve	883 031	AR
10-02-61	GROMMET, Vent Valve	2536 926	1

AR - Indicates use as required.
Prices and specifications subject to change without notice.

PART TYPE CODE	LH318-564 PART NAME AND DESCRIPTION	PART NO.	PER ENG.
	CRANKCASE VENTILATOR - Cont'd		
10-02-62	VALVE, Crankcase Vent	2808 622	1
	OIL FILTER		
10-26-8	CARTRIDGE, Oil Filter	2129 023	1
10-26-14	SHELL, Oil Filter	2448 371	1
10-26-27	GASKET, Oil Filter Shell	1557 575	1
10-26-37	GASKET, Oil Filter Spring Retainer	1557 584	1
10-26-65	GASKET, Oil Filter Tube Cap	1557 581	1

GROUP 14 - FUEL

	AIR CLEANER		
14-29-2	CLEANER, Air	2264 356	1
14-29-5	GASKET, Air Cleaner to Carburetor	1326 847	1
14-29-6	FILTER, Air Cleaner	1946 923	1
	FUEL FILTER		
14-67-1	FILTER, Fuel	2525 254	1
14-67-2	HOSE, Fuel Filter	1739 230	2
	GOVERNOR		
14-68-4	TUBE, Governor to Carburetor Vacuum Control	2448 621	1
14-68-5	CONNECTOR, Governor to Carburetor Vacuum Control Tube	2206 146	1
	FUEL PUMP		
14-73-1	PUMP PACKAGE, Fuel, Airtex Consists of: 1 - ---- --- Gasket, Flange 1 - ---- --- Pump	2932 797	1
	PUMP PACKAGE, Fuel, Carter Consists of: 1 - ---- --- Gasket, Flange 1 - ---- --- Pump	2495 527	1
	FUEL PUMP MOUNTING		
14-74-1	GASKET, Flange	2843 770	1

AR - Indicates use as required.
Printed in U. S. A.

Prices and specifications subject to change without notice.

PART TYPE CODE	PART NAME AND DESCRIPTION	PART NO.	PER ENG.

CARBURETOR

Carburetor Assembly (Electric Choke)	2659275
Carburetor Flange Gasket	1634701
Carburetor Ground Cable (Choke to Carb.)	2098142
Governor Assembly (Adj. Sc. Towards Fan)	2126236
Governor Flange Gasket (Tab towards Fan)	2899893
Governor & Carb. Att. Stud	4-451916
Governor & Carb. Att. Stud Nut	4-115729
Governor Crankcase Vent Elbow	E-7925-M
Governor Seal	618052

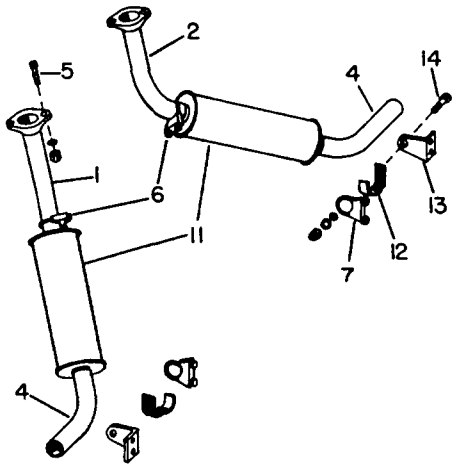

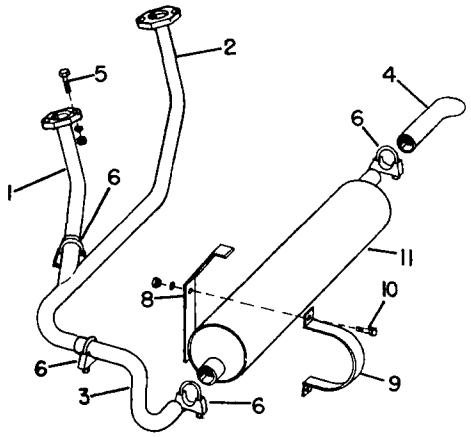

Ref. No.	Part Number	Part Number	Part Number	Quan. Req'd.	Name and Description
	SINGLE	DUAL	WITHOUT OUTRIGGERS		
1	1256-34	1256-42	1256-45	1	EXHAUST PIPE, LH
2	1256-35	1256-42	1256-45	1	EXHAUST PIPE, RH
3	1256-36			1	EXHAUST PIPE
4	1256-39			1	TAIL PIPE
4		1256-43	1256-43	2	TAIL PIPE
5	1200-63	1200-63		4	CAPSCREW, 3/8 UNC x 1 1/2 LG.
	1210-20	1210-20		4	LOCKWASHER, 3/8 MED.
	1205-170	1205-170		4	NUT, 3/8 UNC BRASS
6	1240-3	1240-34	1240-34	AR	CLAMP
7		1240-20	1240-20	2	CLAMP
8	37264			2	MUFFLER BRACKET
9	37268			2	MUFFLER STRAP
10	1200-1			4	CAPSCREW, 1/4 UNC x 3/4 LG.
	1210-14			4	LOCKWASHER, 1/4 MED.
	1205-13			4	NUT, 1/4 UNC
11	1256-37			1	MUFFLER
11		1256-7	1256-7	2	MUFFLER
12		1256-44	1256-44	2	SUPPORT
13		38390		2	BRACKET
13			38509	1	BRACKET (NOT SHOWN)
14		1200-31	1200-31	2	CAPSCREW, 5/16 UNC x 1 LG.
		1209-3	1209-3	2	PLAINWASHER, 5/16 STD.
		1210-17	1210-17	2	LOCKWASHER, 5/16 MED.
		1205-25	1205-25	2	NUT, 5/16 UNC

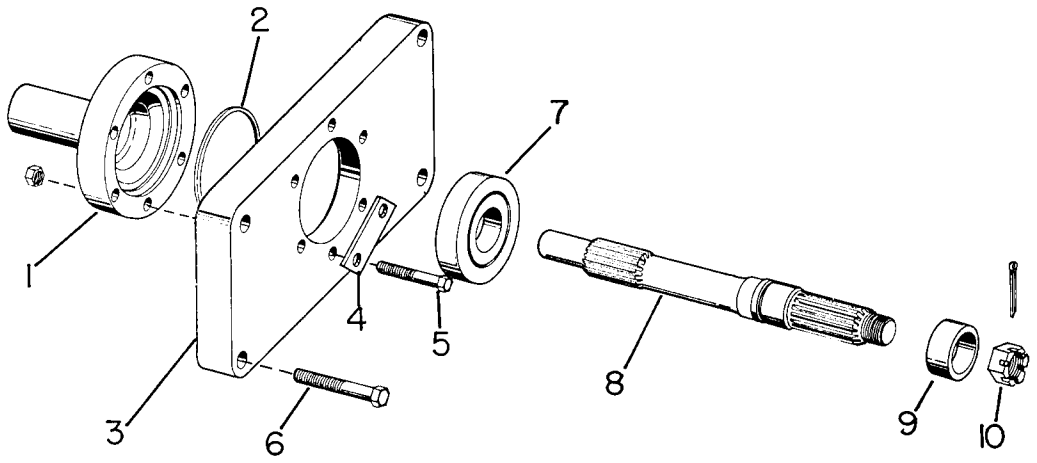

Ref. No.	Part Number	Quan. Req'd.	Name and Description
1	35044	1	RETAINER
2	1220-46	1	SNAP RING
3	37066	1	RETAINER PLATE
4	37067	3	LOCKPLATE
5	1229-26	6	CAPSCREW, 5/16 UNF x 2 1/2 LG., H.T.
	1205-26	6	NUT, 5/16 UNF
6	1200-321	4	CAPSCREW, 9/16 UNC x 2 1/2 LG.
	1210-29	4	LOCKWASHER, 9/16 MED.
7	1217-253	1	BEARING
8	37065	1	SHAFT
9	37068	1	SPACER
10	1204-27	1	NUT, 1 UNF ELASTIC
	1209-30	1	WASHER, 1"

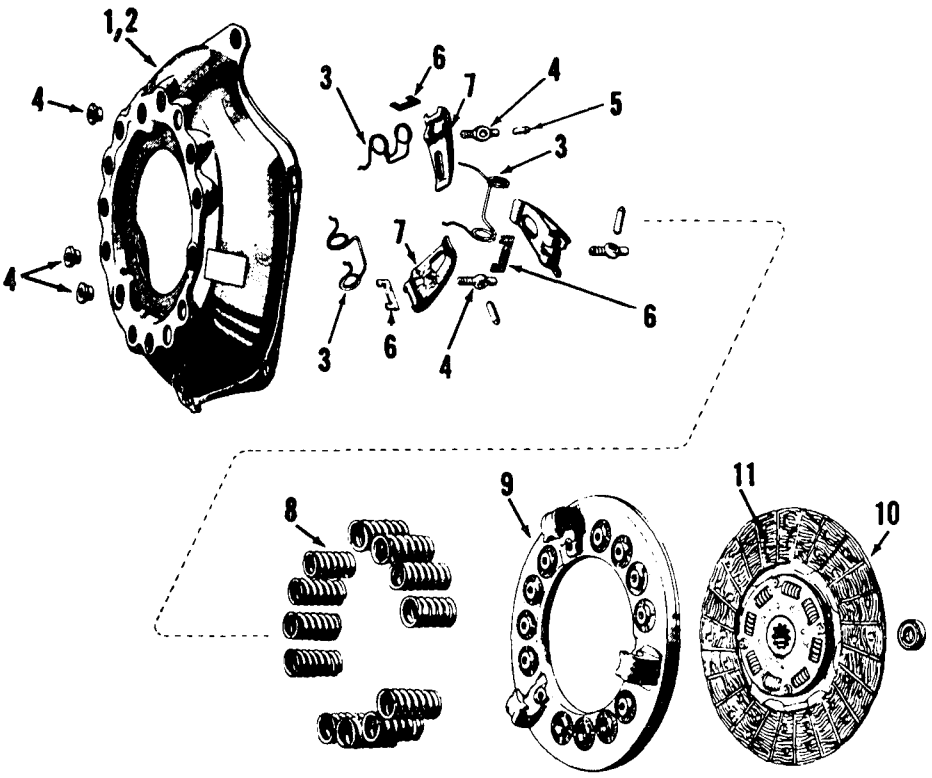

Ref. No.	Part Number	Quan. Req'd.	Name and Description
	A35218	1	CLUTCH ASSEMBLY, INCLUDES ITEMS 1 THRU 11
1	22192	1	COVER ASSEMBLY, INCLUDES ITEMS 2 THRU 9
2	22193	1	COVER & STRAP ASSEMBLY
	22194	4	SCREW, STRAP
	22195	4	FERRULE, STRAP
3	22196	4	ANTI-RATTLE SPRING
4	22197	4	EYE BOLT & NUT
5	22198	4	EYE BOLT PIN
6	22199	4	RELEASE LEVER STRUT
7	22200	4	RELEASE LEVER
8	22201	8	SPRING
8	22202	8	SPRING
9	22203	1	PRESSURE PLATE
10	22204	1	DRIVEN PLATE ASSEMBLY (FACING ATTACHED)
11	22205	1	FACING KIT, INCLUDES 2 PIECES OF FACING AND 60 RIVETS

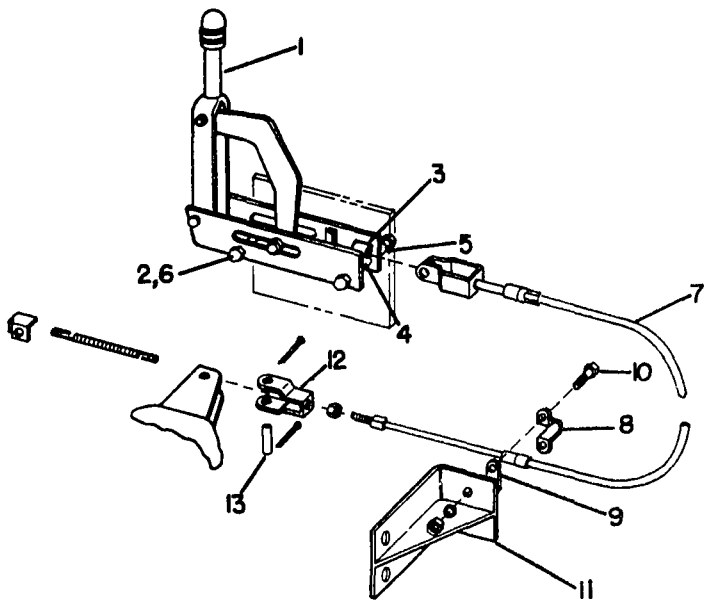

Ref. No.	Part Number	Quan. Req'd.	Name and Description
1	1291-17	1	LEVER ASSEMBLY
2	1291-18	1	SPACER
3	1209-3	7	WASHER, 5/16 STD.
4	1291-20	1	CLAMP
5	37702	2	SPACER
6	1200-39	2	CAPSCREW, 5/16 UNC x 2 LG.
	1205-25	2	NUT, 5/16 UNC
	1210-17	2	LOCKWASHER, 5/16 MED.
7	1222-126	1	CABLE
8	32475	1	CABLE CLAMP
9	32476	1	LINK SPACER
10	1200-61	2	CAPSCREW, 3/8 UNC x 1 1/4 LG.
	1210-20	2	LOCKWASHER, 3/8 MED.
	1205-36	2	NUT, 3/8 UNC
11	F37703	1	BRACKET
12	1291-16	1	CLEVIS
	1205-40	2	JAM NUT, 3/8 UNF
13	35238	1	PIN
	1207-4	2	COTTER PIN, 3/32 x 3/4 LG.

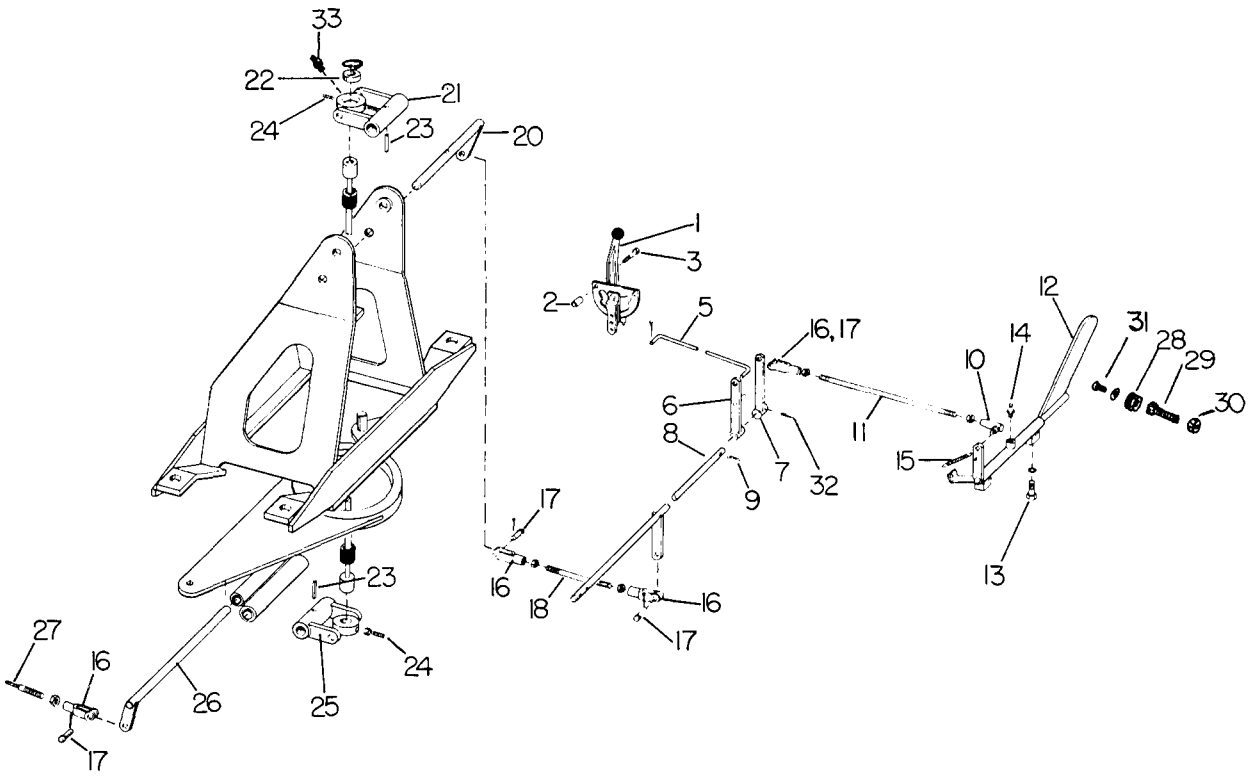

SEE SHIFT LINKAGE, PAGE 13.1

Ref. No.	Part Number	Quan. Req'd.	Name and Description
1	1222-187	1	QUADROSTAT CONTROL
2	37142	2	SPACER
3	1211-14	2	THREAD CUTTING SCREW
5	38322	1	ROD
	1207-5	2	COTTER PIN, 3/32 x 1 LG.
6	F38312	1	STOP ARM
7	F37118	1	BELLCRANK
8	F37103	1	BELLCRANK
9	1227-116	4	ROLL PIN, 1/8 x 1 LG.
10	1222-122	1	BALLJOINT
	1205-18	2	NUT, 1/4 UNF JAM
11	37140	1	ROD
12	F37106	1	PEDAL

Ref. No.	Part Number	Quan. Req'd.	Name and Description
13	1200-57	2	CAPSCREW, 3/8 UNC x 3/4 LG.
	1210-20	2	LOCKWASHER, 3/8 MED.
14	1213-1	1	GREASE FITTING
15	37141	2	SPRING
16	2597	3	YOKE
	1205-18	3	NUT, 1/4 UNF JAM
17	2234	4	PIN
	1207-1	4	COTTER PIN
18	37139	1	ROD
20	F37173	1	BELLCRANK
21	F37187	1	BELLCRANK
22	1214-48	1	BUSHING
	1220-67	2	SNAP RING, FOR ABOVE
23	1227-252	2	ROLL PIN, 1/4 x 1 LG.
24	1206-62	2	SETSCREW, 1/4 UNC x 3/4 LG. - FOR ITEM 21
	1206-63	1	SETSCREW, 1/4 UNC x 1 LG. - FOR ITEM 25
	1205-14	3	NUT, 1/4 UNC
25	F37191	1	BELLCRANK
26	F37170	1	BELLCRANK
27	37289	1	CABLE
28	40903	1	RUBBER BUMPER
29	6977	1	CAPSCREW
30	1210-17	1	LOCKWASHER, 5/16 MED.
	1205-25	1	NUT, 5/16 UNC
31	1209-1	1	PLAINWASHER, 3/16 REG.
	1233-1	1	MACHINE SCREW, #10-32 x 1/2 LG., RD. SL. HD.
32	1227-186	1	ROLL PIN
33	1213-8	2	GREASE FITTING

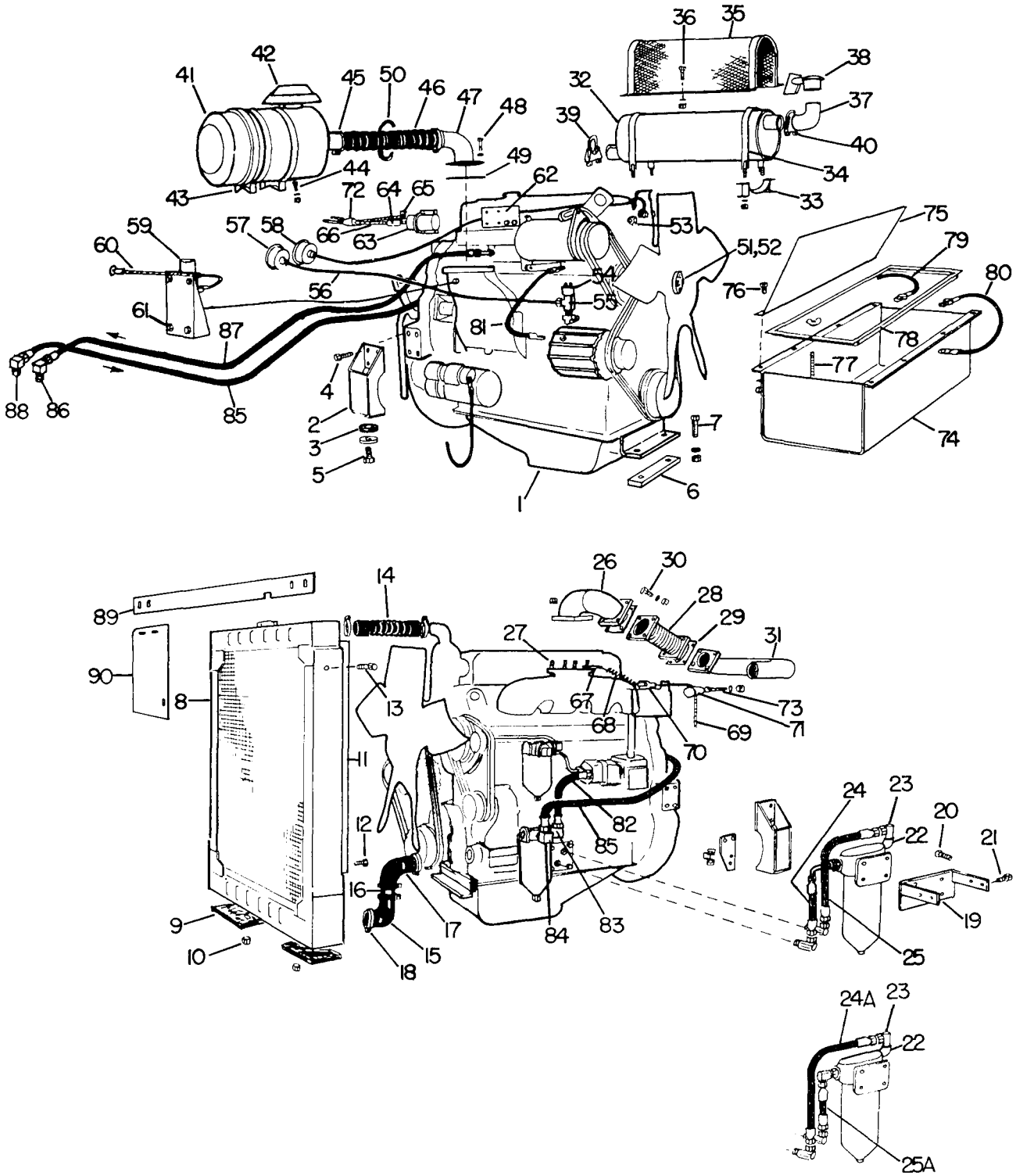
1
2
3
4
5
6
7
8
9
10
11
12
13
14
15
16
17
18
20
21
22
23
24
24A
25
25A
26
27
28
29
30
31
32
33
34
35
36
37
38
39
40
41
42
43
44
45
46
47
48
49
50
51,52
53
54
55
56
57
58
59
60
61
62
63
64
65
66
67
68
69
70
71
72
73
74
75
76
77
78
79
80
81
82
83
84
85
86
87
88
89
90

Ref. No.	Part Number	Quan. Req'd.	Name and Description
1	32979	1	ENGINE ONLY, GM 4-53 DIESEL, LESS ITEMS LISTED BELOW
	40886	1	FAN, 18" BLOWER, 4 HOLE MTG.
	41113	1	FAN, 18" BLOWER, 6 HOLE MTG.
	41625	1	FAN, 20" BLOWER, 6 HOLE MTG. - S-627 W/OIL COOLER
	1242-46	6	CAPSCREW, 5/16 UNC x 1 LG., H.T., FOR 20" FAN
2	F37779	2	BRACKET
3	1221-29	2	BUSHING
	37886	2	RETAINER, FOR ABOVE
4	1200-98	8	CAPSCREW, 1/2 UNC x 1 1/4 LG.
	1210-26	8	LOCKWASHER, 1/2 MED.
5	1200-163	2	CAPSCREW, 5/8 UNF x 3 3/4 LG.
	1205-91	2	NUT, 5/8 UNF ELASTIC
6	37768	1	BLOCK
7	1200-110	2	CAPSCREW, 1/2 UNC x 2 3/4 LG.
	1210-26	2	LOCKWASHER, 1/2 MED.
	1205-58	2	NUT, 1/2 UNC
8	37791	1	RADIATOR
	35224	1	RADIATOR CAP
9	4059	2	PAD
10	1205-67	2	NUT, 1/2 UNC ELASTIC
11	36532	1	SHROUD
	41699	1	SHROUD, S-627 W/OIL COOLER
12	1203-65	8	CAPSCREW, 1/4 UNC x 1/2 LG.
	1210-14	8	LOCKWASHER, 1/4 MED.
	1209-2	8	PLAINWASHER, 1/4 REG.
13	1200-57	2	CAPSCREW, 3/8 UNC x 3/4 LG.
	1210-20	2	LOCKWASHER, 3/8 MED.
14	1244-103	1	UPPER HOSE
	1240-24	2	CLAMP, FOR ABOVE
15	37787	1	ELBOW, 1 3/4 ID)
16	F37789	1	TUBE) - REPLACE WITH 1244-165 HOSE (BEGIN. W/SER. #764)
17	37788	1	ELBOW, 2 ID)
18	1240-2	4	CLAMP
19	F37924	1	OIL FILTER BRACKET
20	1200-61	4	CAPSCREW, 3/8 UNC x 1 1/4 LG.
	1210-20	4	LOCKWASHER, 3/8 MED.
	1205-36	4	NUT, 3/8 UNC
21	1200-33	4	CAPSCREW, 5/16 UNC x 1 1/4 LG.
	1210-17	4	LOCKWASHER, 5/16 MED.
	1205-25	4	NUT, 5/16 UNC

Ref. No.	Part Number	Quan. Req'd.	Name and Description
22	1219-70	1	ELBOW
23	1219-141	3/4	ADAPTER UNION, 90°
24	A49159	1	HOSE ASSEMBLY, BEGIN. W/SER. #796
24A	A37927	1	HOSE ASSEMBLY, PRIOR TO SER. #796
	1219-480	1	ADAPTER, FOR ITEM 24
25	A49160	1	HOSE ASSEMBLY, BEGIN. W/SER. #796
25A	A37928	1	HOSE ASSEMBLY, PRIOR TO SER. #796
26	F37807	1	EXHAUST PIPE
27	32795	4	STUD
	1205-37	4	NUT, 3/8 UNF
28	F37804	1	EXHAUST PIPE
29	35225	3	GASKET
30	1200-60	4	CAPSCREW, 3/8 UNF x 1 LG.
	1210-20	4	LOCKWASHER, 3/8 MED.
	1205-37	4	NUT, 3/8 UNF
31	F37809	1	EXHAUST PIPE
32	1256-22	1	MUFFLER
33	F36782	1	CRADLE
34	F37518	1	STRAP
	1205-25	1	NUT, 5/16 UNC
	1210-17	1	LOCKWASHER, 5/16 MED.
35	F37810	1	GUARD
36	1200-3	6	CAPSCREW, 1/4 UNC x 1 LG.
	1210-14	6	LOCKWASHER, 1/4 MED.
	1205-13	6	NUT, 1/4 UNC
37	1256-23	1	PIPE
38	1222-185	1	RAINCAP
39	1240-67	1	CLAMP
40	1240-8	1	CLAMP
41		1	AIR CLEANER ASSEMBLY
		1	ELEMENT, FOR ABOVE
42		1	STACK CAP - SEE PAGE 12A 12.9
43		1	SADDLE BRACKET
44	1200-59	4	CAPSCREW, 3/8 UNC x 1 LG.
	1210-20	4	LOCKWASHER, 3/8 MED.
	1205-36	4	NUT, 3/8 UNC

Ref. No.	Part Number	Quan. Req'd.	Name and Description
45	1240-48	2	CLAMP
46	12282-15	1	HOSE
47	F37786	1	INLET TUBE
48	1200-29	4	CAPSCREW, 5/16 UNC x 3/4 LG.
	1210-17	4	LOCKWASHER, 5/16 MED.
49	35254	1	GASKET
50	12283-16	1	HOSE GROMMET
51	1261-66	1	FAN SPACER, 4 HOLE MTG.
	41112	1	FAN SPACER, 6 HOLE MTG.
52	1242-70	4	CAPSCREW, 5/16 UNC x 2 LG., H.T.
	1210-17	4	LOCKWASHER, 5/16 MED.
53	1223-452	1	ENGINE HI-TEMP SWITCH
	1219-214	1	BUSHING, FOR ABOVE
54	1223-450	1	PRESSURE SWITCH
55	1219-756	1	TEE
	1219-180	1	NIPPLE
	1219-93	1	COUPLING
	1219-97	1	BUSHING
56	38555	1	TUBE
	1219-757	1	CONNECTOR, FOR ABOVE
57	1245-64	1	OIL PRESSURE GAUGE W/CONNECTOR
58	1245-65	1	TEMPERATURE GAUGE W/CONNECTOR
59	18715	1	STARTING AID KIT
60	1222-5	1	CONTROL CABLE
61	1200-1	4	CAPSCREW, 1/4 UNC x 3/4 LG.
	1210-14	4	LOCKWASHER, 1/4 MED.
	1205-13	4	NUT, 1/4 UNC
62	37923	1	SOLENOID BRACKET
63	1246-6	1	SOLENOID
64	37922	1	CONNECTOR
65	1246-7	1	LEVER
	1246-8	1	LINK
66	F37932	1	STOP CABLE
67	8904	1	SPRING HOOK

Ref. No.	Part Number	Quan. Req'd.	Name and Description	
68	6422	1	SPRING	
69	F37931	1	THROTTLE CABLE - SEE GROUP 12, PAGE 12.7 FOR CONTROLS	
70	37959	1	ADJUSTABLE YOKE	
	3063	1	PIN	
	1207-4	1	COTTER PIN	
71	1261-65	3	PULLEY, 1/4"	
72	1261-64	1	PULLEY, 3/16"	
73	2929	4	"U" BOLT	
	1205-5	4	NUT	
	37960	1	PULLEY BRACKET	
74	F37821	1	BATTERY BOX (WELDED TO DECK)	
75	F37816	1	LID W/HINGE	
76	1200-31	8	CAPSCREW, 5/16 UNC x 1 LG.	
	1210-17	8	LOCKWASHER, 5/16 MED.	
	1205-25	8	NUT, 5/16 UNC	
77	32089	2	HOLD DOWN BOLT	
	1205-25	2	NUT, 5/16 UNC	
78	18288	1	TIE DOWN	
79	1223-437	1	BATTERY CABLE	
80	1223-410	1	BATTERY CABLE	
81	1223-461	1	BATTERY CABLE	
	1223-44	1	GROMMET, FOR ABOVE	
82	1244-153	1	SUPPLY HOSE (REPLACES 37797 TUBE)	
83	1219-358	1	ELBOW	
84	1219-351	1	ELBOW	
85	A41835	1	HOSE (REPLACES 1219-576 HOSE & A37789 TUBE)	BEGIN. SER. No. 782
86	1219-799	1	ADAPTER	
87	A41836	1	HOSE (REPLACES 1219-177 HOSE & A37799 TUBE)	
88	12019-47	1	ADAPTER	
89	38397	1	ANGLE	
	41690	1	PLATE (FOR OIL COOLER ONLY)	
	38398	1	FOAM RUBBER, FOR ABOVE	
90	38396	2	PLATE	
	41691	1	LH PLATE - FOR OIL COOLER ONLY	
	41692	1	RH PLATE - FOR OIL COOLER ONLY	
	38399	2	FOAM RUBBER, FOR ABOVE	

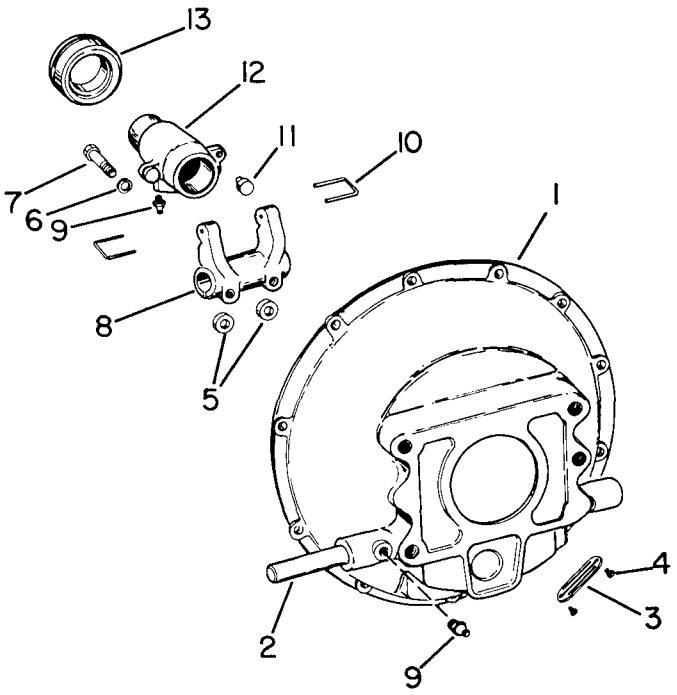

Ref. No.	Part Number	Quan. Req'd.	Name and Description
	A37930	1	BELL HOUSING ASSEMBLY, INCLUDES ITEMS 1 THRU 13, FOR GM 4-53 DIESEL ONLY. SEE PAGE 12.5 FOR CLUTCH.
1	22180	1	BELL HOUSING ONLY
2	37929	1	SHAFT
3	22182	1	ACCESS COVER
4	22183	2	SCREW AND LOCKWASHER SET
5	22184	2	WASHER KEY
6	22185	2	LOCKWASHER
7	22186	2	BOLT
8	22187	1	YOKE
9	1213-1	3	GREASE FITTING, 1/8 NPT
10	22188	2	PULL BACK SPRING
11	22189	2	PAD, CLUTCH YOKE
12	22190	1	SLEEVE
13	22191	1	BEARING
	1217-183	1	PILOT BEARING (NOT SHOWN)

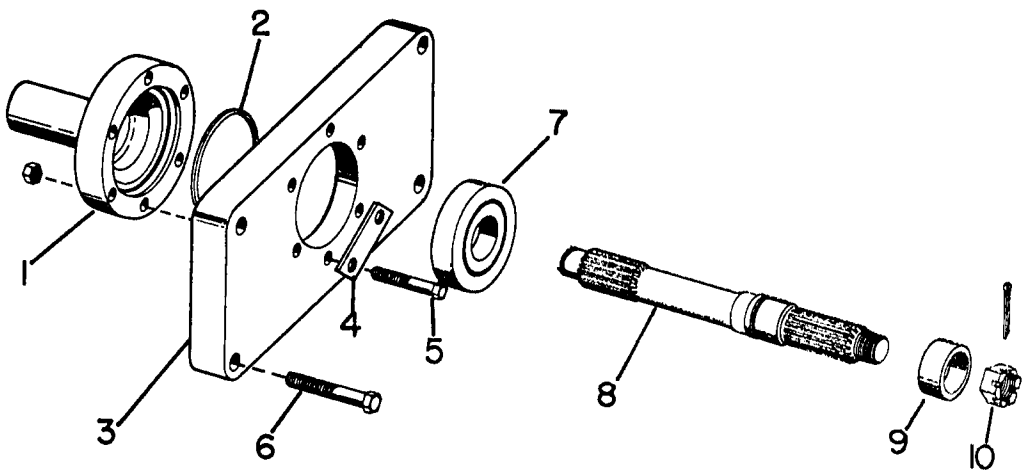

Ref. No.	Part Number	Quan. Req'd.	Name and Description
1	35048	1	RETAINER
2	1220-46	1	SNAP RING
3	37066	1	RETAINER PLATE
4	37067	3	LOCKPLATE
5	1229-26	6	CAPSCREW, 5/16 UNF x 2 1/2 LG., H.T.
	1205-26	6	NUT, 5/16 UNF
6	1200-32	4	CAPSCREW, 9/16 UNC x 2 1/2 LG.
	1210-29	4	LOCKWASHER, 9/16 MED.
7	1217-253	1	BEARING
8	37781	1	SHAFT
9	37068	1	SPACER
10	1204-27	1	NUT, 1 UNF ELASTIC
	1209-30	1	WASHER, 1"

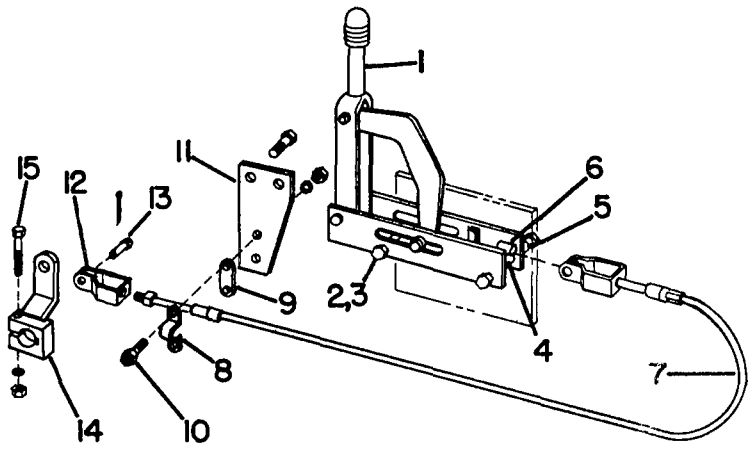

Ref. No.	Part Number	Quan. Req'd.	Name and Description
1	1291-17	1	LEVER ASSEMBLY
2	1291-18	2	SPACER
3	1200-39	2	CAPSCREW, 5/16 UNC x 2 LG.
	1205-25	2	NUT, 5/16 UNC
	1210-17	2	LOCKWASHER, 5/16 MED.
4	1291-20	1	CLAMP
5	37702	2	SPACER
6	1209-3	7	WASHER, 5/16 STD.
7	1222-126	1	CABLE
8	32475	1	CABLE CLAMP
9	32476	1	LINK SPACER
10	1200-61	2	CAPSCREW, 3/8 UNC x 1 1/4 LG.
	1210-20	2	LOCKWASHER 3/8 MED.
	1205-36	2	NUT, 3/8 UNC
11	37935	1	DEAD-END BRACKET
12	1291-13	1	CLEVIS
	1205-40	2	JAM NUT, 3/8 UNF
13	36865	1	PIN
	1207-5	2	COTTER PIN, 3/32 x 1 LG.
14	F37937	1	BLOCK
	1232-3	1	KEY
15	1200-104	1	CAPSCREW, 1/2 UNC x 2 LG.
	1210-26	1	LOCKWASHER, 1/2 MED.
	1205-58	1	NUT, 1/2 UNC

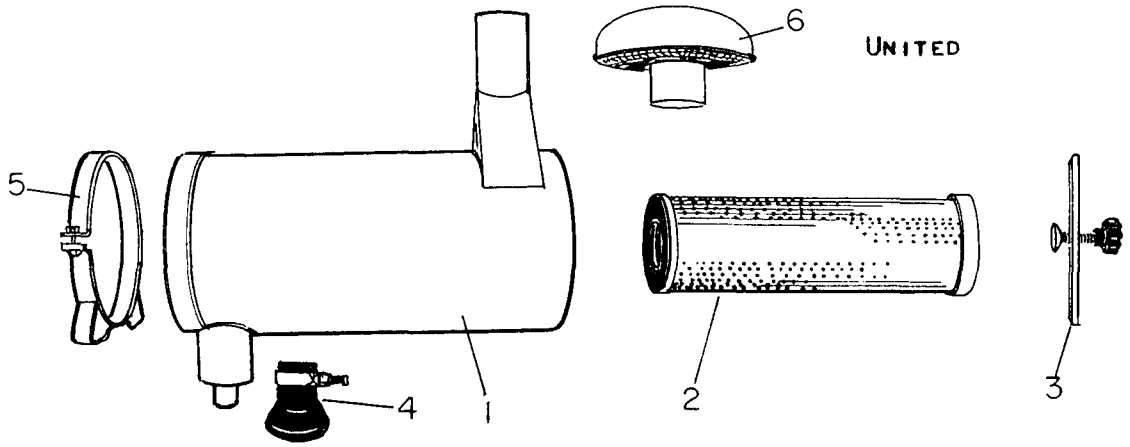

Ref. No.	Part Number	Part Number	Part Number	Quan. Req'd.	Name and Description
	10"				
1	1243-53			1	AIR CLEANER COMPLETE, INCL. 2 THRU 4
2	1243-59			1	ELEMENT
3	28148			1	RETAINING BAR
4	28151			1	1" UNLOADER LESS CLAMP
5	1243-55			2	MOUNTING BAND
6	1243-40			1	STACK CAP

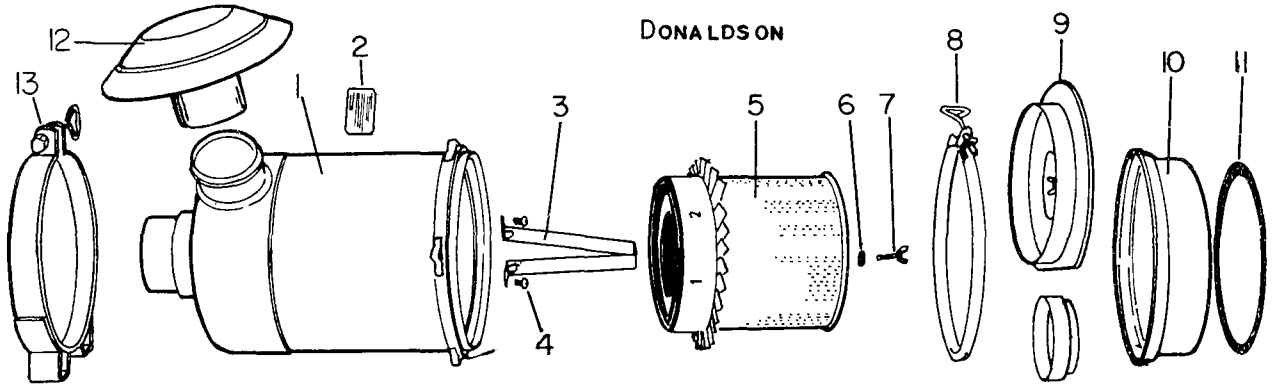

Ref. No.	Part Number	Part Number	Quan. Req'd.	Name and Description
		12"		
		1243-42	1	AIR CLEANER COMPLETE, INCL. ITEMS 1 THRU 11
1		*	1	BODY
2		27417	1	DECAL
3		*	1	YOKE
4		*	2	SCREW & LOCKWASHER
5		1243-48	1	ELEMENT
6		27412	1	GASKET WASHER
7		27413	1	THUMB SCREW
8		27414	1	CLAMP ASSEMBLY
9		27415	1	BAFFLE ASSEMBLY
10		27416	1	CUP ASSEMBLY
11		1243-52	1	CUP GASKET
12		1243-43	1	STACK CAP
13		1243-44	2	MOUNTING BAND

*NOT SERVICEABLE

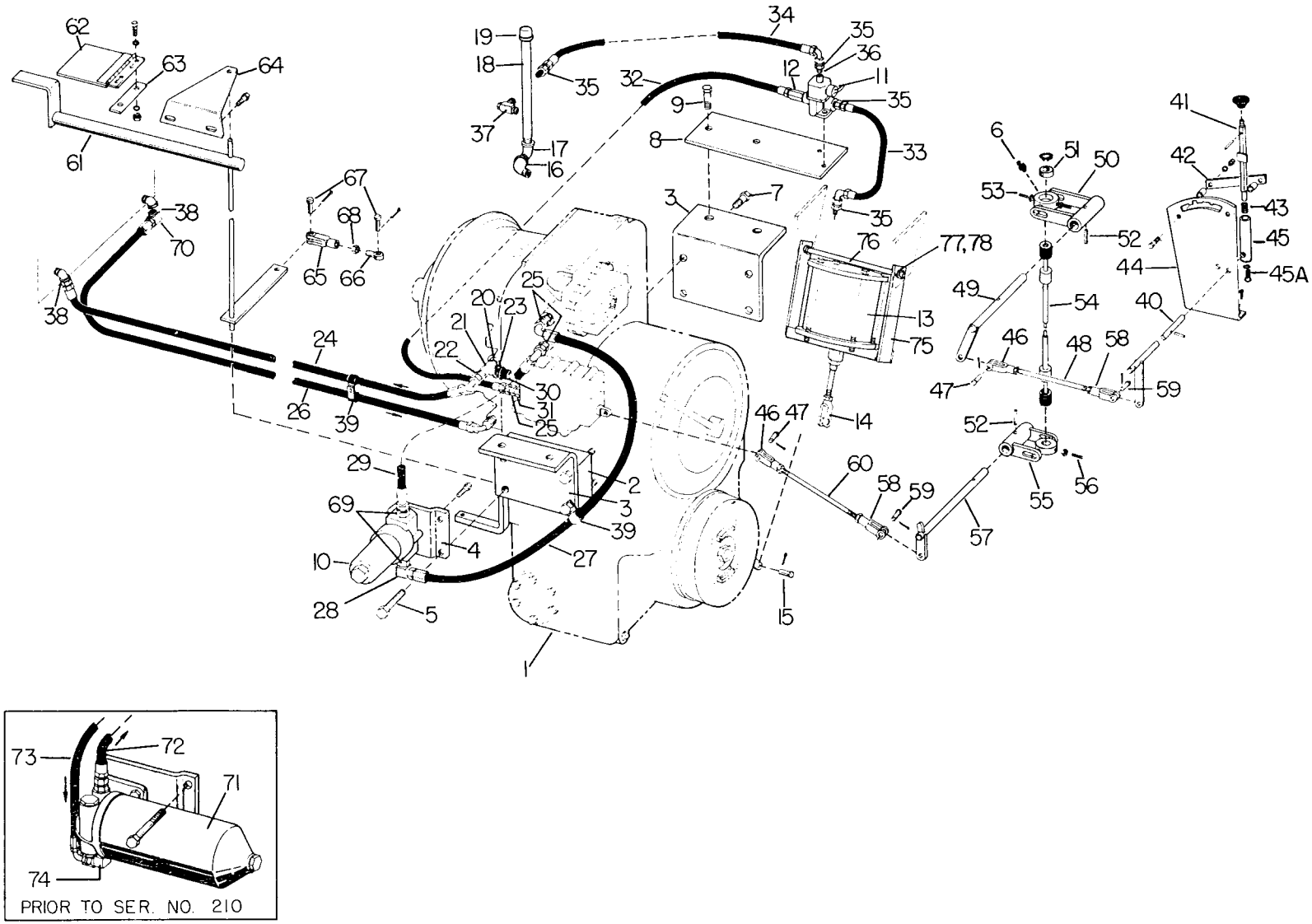

WHEN ORDERING SPECIFY BANTAM SERIAL NUMBER, PART NUMBER AND NAME OF PART REQUIRED

Ref. No.	Part Number	Quan. Req'd.	Name and Description
1	A37000	1	TRANSMISSION, ALLISON HYDRO-POWERSHIFT - SEE MANUFACTURERS MANUAL FOR PARTS BREAKDOWN - (MODEL TT 2221-1
2	F37640	1	SPACER (A/N 6837745
3	37594	2	BRACKET
4	37262	1	BRACKET
5	1242-68	4	CAPSCREW, 5/8 UNC x 4 1/2 LG., H.T.
	1210-32	4	LOCKWASHER, 5/8 MED.
6	1213-8	2	GREASE FITTING
7	1242-45	4	CAPSCREW, 5/8 UNC x 1 1/2 LG., H.T.
	1210-32	4	LOCKWASHER, 5/8 MED.
8	37695	1	PLATE
9	1200-150	4	CAPSCREW, 5/8 UNC x 2 1/4 LG.
	1205-88	4	NUT, 5/8 UNC ELASTIC
10	1252-6	1	FILTER (BEGIN. W/SER. #210, S-625)
	24229	1	CARTRIDGE, FOR ABOVE
	24230	1	"O" RING
11	37204	1	SOLENOID VALVE
12	37203	1	CHECK VALVE
13	A41940	1	ACTUATOR ASSEMBLY - SEE PAGE 13.4B FOR PARTS - REPLACES A37973 WHICH IS NO LONGER AVAILABLE OR SERVICEABLE.
13	A27114	1	ACTUATOR KIT - FOR MACHINES PRIOR TO SER. #539 - INCLUDES ACTUATOR, ITEMS 75 THRU 78, AND EARS FOR FRAME.
14	37694	1	YOKE
	1205-39	1	NUT, 3/8 UNC JAM
15	3119	1	PIN
	1207-5	1	COTTER PIN, 3/32 x 1 LG.
16	1219-154	1	ELBOW, 90° STREET
17	1219-533	1	ELBOW, 45° STREET
18	37611	1	FILL PIPE
19	1219-87	1	CAP
20	1219-607	1	ADAPTER
21	1219-475	1	TEE
22	1219-480	2	ADAPTER

Ref. No.	Part Number	Quan. Req'd.	Name and Description
23	1219-71	1	BUSHING
24	A37258	1	HOSE ASSEMBLY - CHRYSLER
	A38832	1	HOSE ASSEMBLY - GM DIESEL
25	1219-389	3	ADAPTER
26	A37259	1	HOSE ASSEMBLY
27	A38355	1	HOSE ASSEMBLY (BEGIN. W/SER. #210)
28	1219-583	1	ADAPTER, 90°
29	A38356	1	HOSE ASSEMBLY (BEGIN. W/SER. #210)
30	1223-464	1	TEMPERATURE SENDER
31	1219-716	1	REDUCER
32	A37226	1	HOSE ASSEMBLY
33	A37227	1	HOSE ASSEMBLY
34	A37228	1	HOSE ASSEMBLY
35	1219-559	5	ADAPTER
36	1219-52	1	ADAPTER
37	1219-313	1	TEE
38	1219-765	2	ADAPTER
39	1240-69	AR	CLAMP
40	F37121	1	BELLCRANK
	1227-116	1	ROLL PIN, FOR ABOVE
41	F38316	1	UPPER LEVER
	1227-252	1	ROLL PIN, FOR ABOVE
42	38320	1	PLATE
	38321	2	SPACER, FOR ABOVE
	1200-307	2	CAPSCREW, 7/16 UNC x 1 1/2 LG.
	1210-23	2	LOCKWASHER, 7/16 MED.
	1205-47	2	NUT, 7/16 UNC
43	38198	1	SPRING
44	38315	1	BRACKET
45	38319	1	LOWER LEVER
	1222-94	1	KNOB, FOR ABOVE
45A	1202-24	1	STOVE BOLT, 1/4 UNC x 1 3/4 LG., RD. SL. HD.
	1205-13	1	NUT, 1/4 UNC

Ref. No.	Part Number	Quan. Req'd.	Name and Description
46	35559	2	YOKE
	1205-162	2	NUT, 3/8 UNF, LH
47	3119	2	PIN, FOR ITEMS 46 & 47
	1207-11	2	COTTER PIN
48	37138	1	ROD
49	F37179	1	BELLCRANK
50	F37183	1	BELLCRANK
51	1214-48	1	BUSHING
52	1227-288	2	ROLL PIN, 5/16 x 1 1/4 LG.
53	1206-62	2	SETSCREW, 1/4 UNC x 3/4 LG.
	1205-14	2	NUT, 1/4 UNC
54	37182	1	HYDRAULIC SWIVEL - SEE PAGE 12.8 FOR GOVERNOR CONTROL
	1220-67	4	SNAP RING
55	F37194	1	BELLCRANK
56	1206-63	1	SETSCREW, 1/4 UNC x 1 LG.
	1205-14	1	NUT, 1/4 UNC
57	F37176	1	BELLCRANK
58	3118	2	YOKE
	1205-37	2	NUT, 3/8 UNF
59	3119	2	PIN
	1207-11	2	COTTER PIN, 1/8 x 3/4 LG.
60	37168	1	ROD
61	F37644	1	LEVER
62	F37651	1	LOCK
	1200-59	2	CAPSCREW, 3/8 UNC x 1 LG.
	1209-4	2	PLAINWASHER, 3/8 REG.
	1210-20	2	LOCKWASHER, 3/8 MED.
	1205-36	2	NUT, 3/8UNC
63	37654	1	STRIP
64	37649	1	BRACKET
65	2464	1	CLEVIS
66	37650	1	ROD END
67	2463	2	PIN
	1207-12	2	COTTER PIN, 1/8 x 1 LG.

Ref. No.	Part Number	Quan. Req'd.	Name and Description
68	1205-62	1	JAM NUT, 1/2 UNF
69	1219-555	2	ADAPTER
70	1219-351	1	ADAPTER, 90°
71	A16280	1	FILTER ASSEMBLY (PRIOR TO SER. #210, S625)
	13414	1	ELEMENT, FOR ABOVE
	13416	1	GASKET
	13420	1	STUD GASKET
72	A37261	1	HOSE ASSEMBLY
73	A37260	1	HOSE ASSEMBLY
74	1219-287	1	ADAPTER, 90°
75	F39993	1	BRACKET
76	39997	1	PIN
77	1209-9	6	PLAINWASHER
78	1207-31	2	COTTER PIN

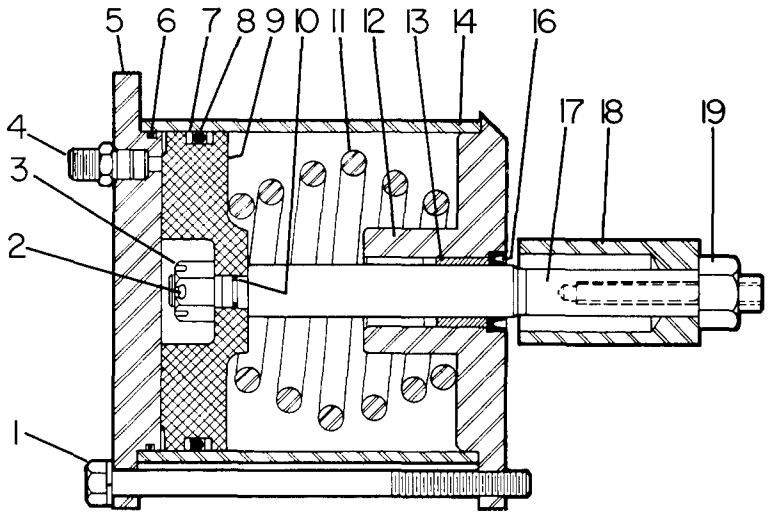

Ref. No.	Part Number	Quan. Req'd.	Name and Description
	A41940	1	ACTUATOR COMPLETE - INCLUDES ITEMS 1 THRU 19
1	1203-119	4	CAPSCREW
	1209-59	4	WASHER
2	1207-22	1	COTTER PIN
3	1204-6	1	NUT
4	1219-605	1	ADAPTER
	1218-144	1	"O" RING, FOR ABOVE
5	41942	1	FLANGE
6	1218-178	1	"O" RING
7	1218-181	1	BACK-UP RING
8	1218-180	1	"O" RING
9	41943	1	PISTON
10	1218-179	1	"O" RING
11	41945	1	SPRING
12	F41944	1	COVER
13	1214-95	1	BUSHING
14	41939	1	TUBE
16	1218-182	1	WIPER SEAL
17	41938	1	SHAFT
18	41941	1	BLOCK
19	1205-108	1	NUT

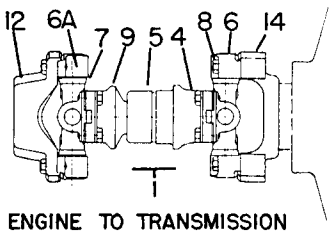

ENGINE TO TRANSMISSION

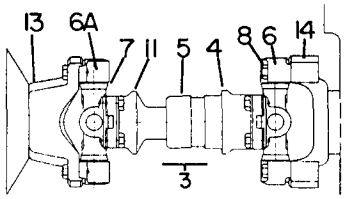

TRANSMISSION TO REAR

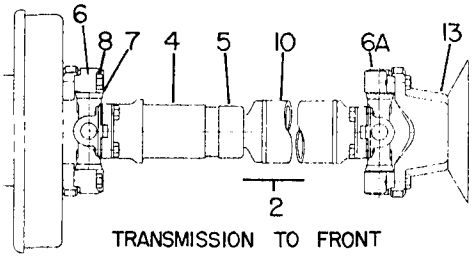

TRANSMISSION TO FRONT

Ref. No.	Part Number	Part Number	Part Number	Quan. Req'd.	Name and Description
	ENGINE TO TRANS.	TRANS. TO FRONT	TRANS. TO REAR		
1	34850			1	DRIVE SHAFT, COMPLETE
2		34852		1	DRIVE SHAFT, COMPLETE
3			34851	1	DRIVE SHAFT, COMPLETE
4	23905	23906	23907	1	SLIP YOKE
5	23908	23909	23909	1	DUST CUP
5	23910	23911	23912	1	FELT WASHER
5	23913	23914	23915	1	RETAINING WASHER
5	23916	23917	23917	1	THREADED RETAINER
6	26316	26316	26316	1	SPIDER & BEARING KIT W/FASTENERS (2 THREADED WING & 2 BLOCK BEARINGS)
6A	23918	23918	23918	1	SPIDER & BEARING KIT W/FASTENERS (4 THREADED WING BEARINGS)
7	23919	23919	23919	8	CORK WASHER
7	23920	23920	23920	8	WASHER RETAINER
7	26318	26318	26318	8	DUST SHIELD
8	23922	23922	23922	12	CAPSCREW, FOR THREADED WING BEARING
8	26317	26317	26317	4	CAPSCREW, FOR BLOCK BEARING
8	23923	23923	23923	4	LOCKPLATE
9	23921			1	STUB YOKE
10		23925		1	TUBE ASSEMBLY
11			23924	1	STUB YOKE
12	12410-1			1	YOKE
13		23902	23902	2	YOKE & SLINGER, AXLE
14				3	TRANSMISSION YOKE - SEE ALLISON DEALER FOR REPLACEMENT

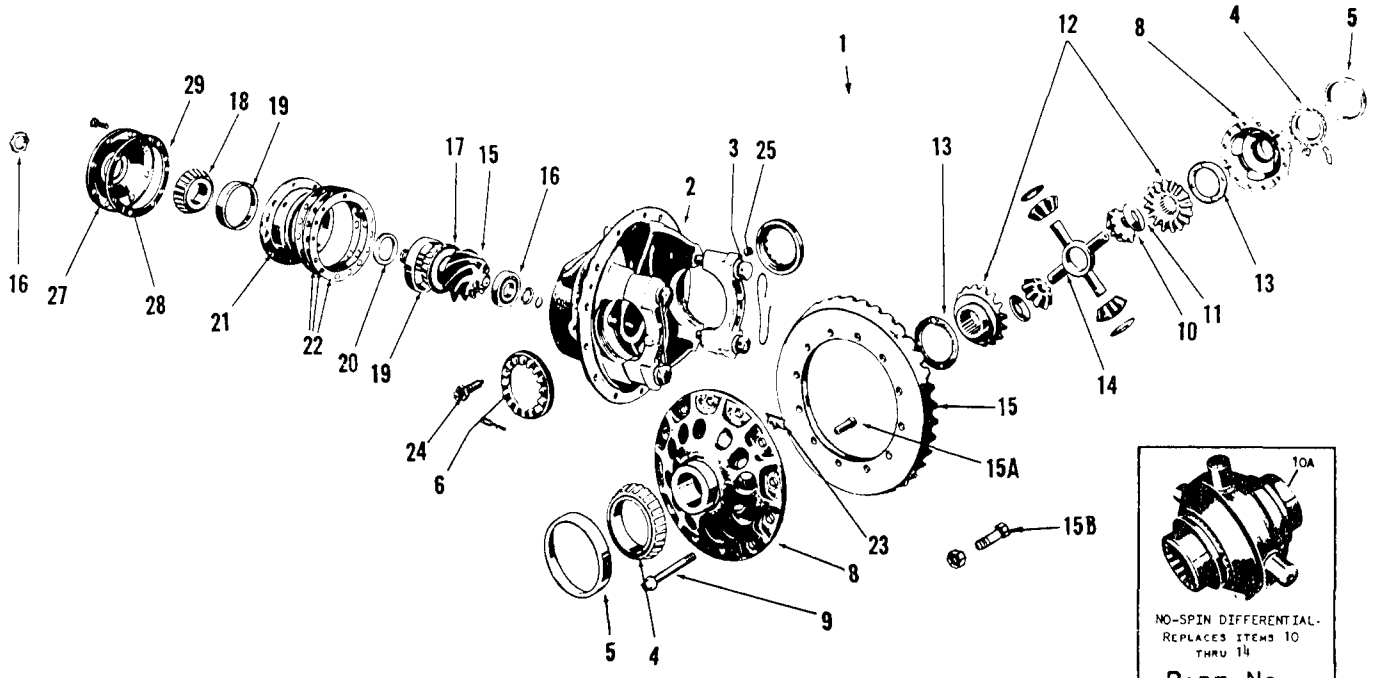

NO-SPIN DIFFERENTIAL. Replaces items 10 thru 14

Part No. 41115

Ref. No.	Part Number	Part Number	Quan. Req'd.	Name and Description
	16.65:1	25.92:1		
	4-5/8:1 RATIO	7-1/5:1 RATIO		
	49560	49559	2	AXLE ASSEMBLY, COMPLETE W/DIFFERENTIAL CARRIER (Replaces A37001 & A38358) Beg. Ser. #1101
	A23790	A23790	2	AXLE ASSEMBLY, LESS DIFFERENTIAL CARRIER, See Page 14.3
1	A23860	A24492	1	DIFFERENTIAL CARRIER ASSEMBLY, INCLUDES ITEMS 2 THRU 29
2	23861	23861	1	DIFFERENTIAL CARRIER & CAPS
3	23859	23859	4	CAPSCREW, FOR ABOVE
4	9612	9612	2	CONE
5	9588	9588	2	CUP
6	23862	23862	2	ADJUSTING RING
8	23863	23863	1	DIFFERENTIAL CASE
9	23864	23864	4	CAPSCREW, SHORT
	23865	23865	8	CAPSCREW, LONG
	23866	23866	12	NUT, FOR ABOVE CAPSCREWS
10	A23867	A23867	1	DIFFERENTIAL, INCLUDES ITEMS 10 THRU 14, SERVICED AS AN ASSEMBLY ONLY.
15	23868	24461	1	DRIVE GEAR AND PINION
15A	24462	24462	12	RIVET
15B	24578	24578	12	BOLT, REPLACES RIVET FOR FIELD REPAIR
	24579	24579	12	NUT, FOR ABOVE BOLT

Ref. No.	Part Number	Quan. Req'd.	Name and Description
16	23869	1	REAR BEARING
16	23870	1	LOCKRING
16	22257	1	NUT
16	20259	1	WASHER
17	23871	1	INNER CONE
18	23872	1	OUTER CONE
19	23873	2	CUP
20	23874	1	SPACER, .445
20	23875	1	SPACER, .477
21	23876	1	DRIVE PINION CAGE ASSEMBLY
22	A23877	1	SHIM KIT
23	22263	1	DRIVE GEAR THRUST BLOCK
24	22264	1	SCREW, FOR ABOVE
25	20283	1	INSPECTION FILLER & OIL LEVEL PLUG
27	23878	1	DRIVE PINION BEARING CAGE COVER W/OIL SEAL
	23879	8	CAPSCREW, FOR ABOVE
28	23880	1	OIL SEAL
29	23881	1	COVER GASKET
	23902	1	MECHANICS YOKE & SLINGER (NOT SHOWN)

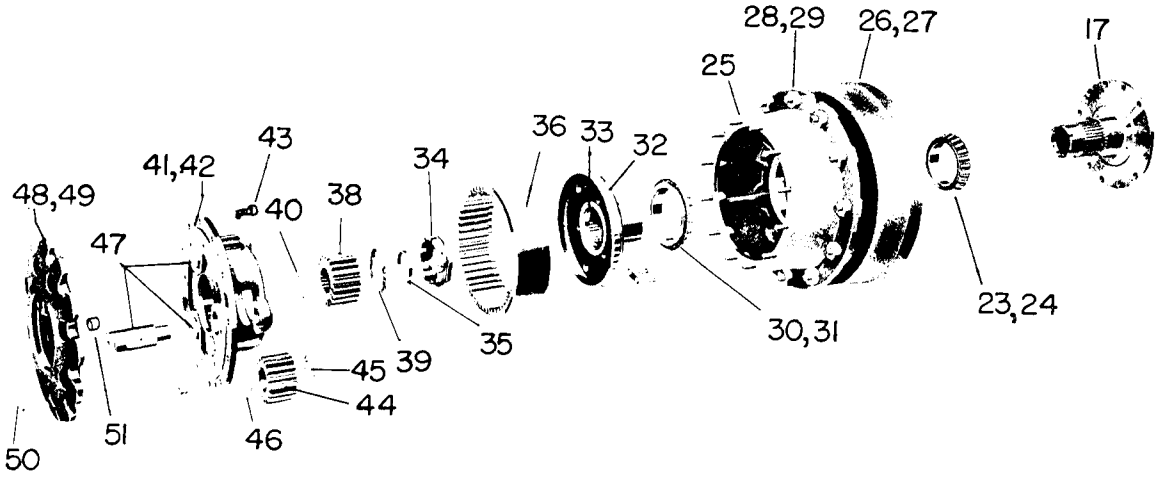
28,29
26,27
17
25
43
41,42
36
33
34
32
48,49
40
38
47
23,24
30,31
35
39
45
44
51
46
50

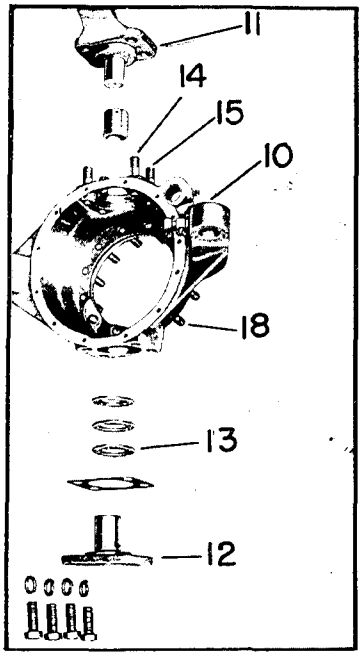
11
14
15
10
18
13
12

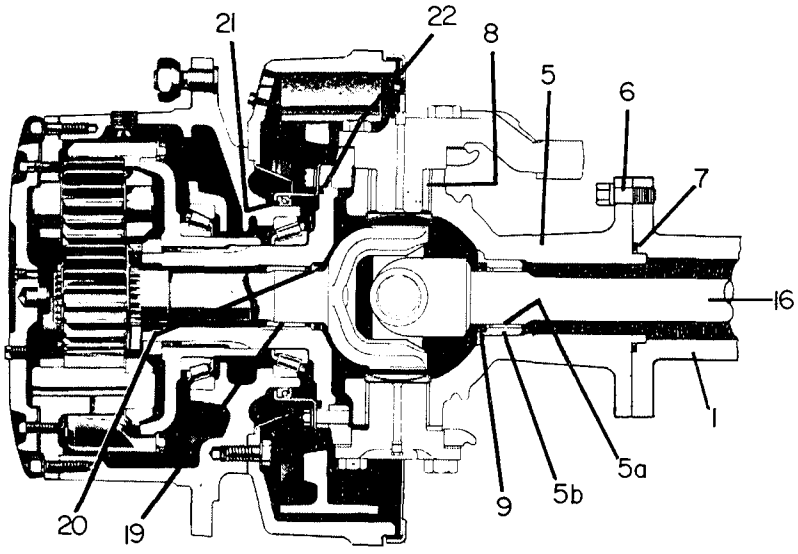
21
22
8
5
6
7
16
1
5a
5b
9
20
19

Model S-628 | Group No. 14
Date REV. 1 MARCH 1977 | AXLES | Page 14.4

Ref. No.	Part Number Prior #1138 exc. #1102 thru #1130	Part Number Beg. #1138 & #1102 thru #1130	Quan. Req'd.	Name and Description
1	23789	200997	1	AXLE HOUSING
	23791		1	CARRIER GASKET
	23792		10	STUD, SHORT
	23793		4	STUD, LONG
	23794		14	WASHER & NUT
	23857		1	FILL PLUG
	23858		1	DRAIN PLUG
	23795		1	OIL BREATHER
5	23796	-	2	TRUNNION SOCKET
5A	24530		2	BUSHING
5B	26552		2	BUSHING RETAINER
6	23797		16	STUD
	200186		16	NUT (REPLACES 23798)
7	23799	-	2	"O" RING
8	23800		4	KING PIN BUSHING
9	23801		2	AXLE HOUSING OIL SEAL
	29575		2	RETAINER FOR ABOVE
10	23802	28898	2	STEERING KNUCKLE FLANGE ASSEMBLY
11	23803		2	UPPER CAP
12	23804		2	LOWER CAP
	23805		AR	SHIM, CAP
13	23806		2	THRUST WASHER
14	23807		8	INNER CAPSCREW
15	23808		8	OUTER CAPSCREW
16	23809		2	UNIVERSAL JOINT & DRIVE SHAFT ASSEMBLY
	26688		2	CENTER PARTS KIT FOR ABOVE
17	23810		2	HUB SPINDLE
18	23811		24	STUD
	23812		24	WASHER & NUT
19	23813		2	BUSHING
20	23814		2	OIL SEAL
21	23815		2	RETAINER & SEAL
22	23816		2	"O" RING, RETAINER
23	23817		2	INNER BEARING CUP

Ref. No.	Part Number	Quan. Req'd.	Name and Description
24	23818	2	INNER BEARING CONE
25	23819	2	HUB
26	23820	2	BRAKE DRUM
27	23821	38	CAPSCREW
	23856	2	OIL DRAIN PLUG
	23855	2	FILL PLUG
28	23822	24	WHEEL STUD
	23823	24	NUT
29	23824	2	OIL SLINGER
30	23825	2	OUTER BEARING CUP
31	23826	2	OUTER BEARING CONE
32	23827	2	RING GEAR HUB
33		2	SLEEVE - NOT REPLACEABLE
34	23829	2	ADJUSTING NUT
35	23830	4	LOCK
36	23831	2	FLOATING RING GEAR
37	23832	16	CAPSCREW, PLANETARY RING GEAR
	26410	16	LOCKWASHER
	26411	1	LOCKWIRE
38	23833	2	SUN GEAR, 20 TOOTH
39	23834	2	THRUST WASHER
40	23835	2	SNAP RING
41	23836	2	PLANETARY SPIDER
42	23837	2	"O" RING, FOR ABOVE
43	23838	32	CAPSCREW, SPIDER TO HUB
44	23839	6	PLANET PINION GEAR, 16 TOOTH
45	23840	6	INNER THRUST WASHER
46	23841	6	OUTER THRUST WASHER
47	23842	6	SHAFT, PINION GEAR
48	23843	2	SPIDER COVER

Ref. No.	Part Number (PRIOR #1138 EXC. #1102 THRU #1130)	Part Number (BEG. #1138 & #1102 THRU #1130)	Quan. Req'd.	Name and Description
49	23844		2	GASKET
50	23845		16	CAPSCREW
51	23846		2	THRUST BUTTON
	23847		AR	SHIM, FOR ABOVE
	23848	28906	1	TIE ROD YOKE, 12 THREAD
	23849	28907	1	TIE ROD YOKE, 16 THREAD
	23850	29590	1	TIE ROD
	23851		4	CLAMP BOLT & NUT
	23852		2	LOCK PIN
	23853		2	YOKE BOLT BUSHING
	20971		2	NUT
	20970		1	LOCK NUT
	23854		2	YOKE BOLT
		29591	2	STEERING STOPSCREW

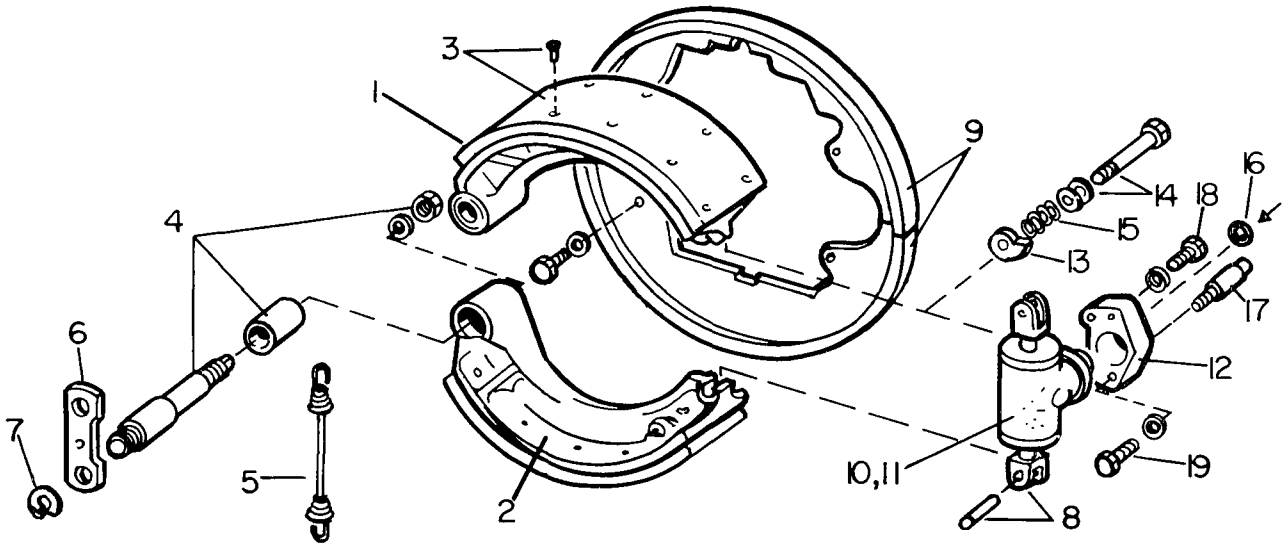

Ref. No.	Part Number	Quan. Req'd.	Name and Description
1	26454	2	BRAKE SHOE & LINING ASS'Y. (CCW FROM CYL.) REPL. 23882
2	26455	2	BRAKE SHOE & LINING ASS'Y. (CW FROM CYL.) REPL. 23883
3	26456	2	LINING KIT FOR ONE AXLE - INCL. LINING, RIVETS - REPL. 23891
4	23897	4	BRAKE SHOE PIN
	27944	4	NUT
	201171	4	BUSHING
5	23892	2	BRAKE SHOE RETURN SPRING
6	23899	2	BRAKE SHOE LINK
7	23898	4	SNAP RING
8	23900	4	CONNECTING LINK
	201172	2	PIN
9	23884	1	DUST SHIELD (CCW FROM CYL.) - REPL. 23887
	23885	1	DUST SHIELD (CW FROM CYL.) - REPL. 23886
10	23889	2	WHEEL CYLINDER, 1 3/4 DIA.
11	23890	AR	REPAIR KIT FOR ONE CYLINDER
12	23888	2	ADAPTER, CYLINDER
13	23895	4	ADJUSTING CAM
14	23894	4	CAM BOLT
	28918	4	WASHER
15	23893	4	CAM SPRING
16	23896	4	INLET GASKETS - SEE INLET FITTING & BOLT - PAGE 15.1
17	23901	2	BLEEDER SCREW
18	22281	4	CAPSCREW
	28917	4	WASHER
19	28915	4	CAPSCREW
	22783	4	LOCKWASHER

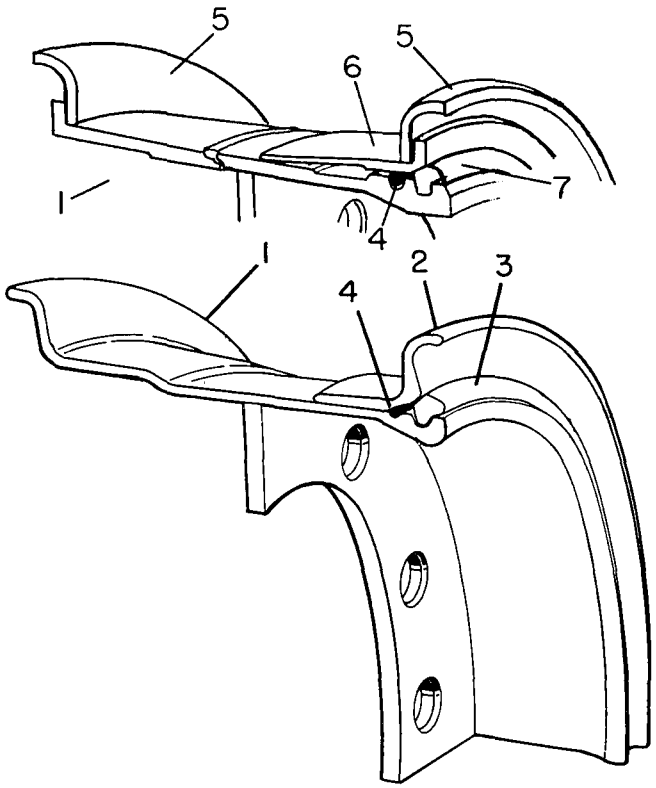

Ref. No.	Part Number				Quan. Req'd.	Name and Description
	14.00 x 24	16.00 x 24	17.50 x 25	20.5 x 25		
1	F41739	F38823	F38026	F39973	1	WHEEL
2	38827	38827	37614		1	SIDE RING
3	38828	38828	37615		1	LOCK RING
4	1218-104	1218-104	1218-104	1218-145	1	"O" RING
5				27296	2	FLANGE
6				27297	1	BEAD SEAT BAND
7				27298	1	LOCK RING
	37589	38829		30223	1	TIRE, 16 PLY
			37591		1	TIRE, 14 PLY
	38830	38830	38031		1	TIRE VALVE
			38043	38043	1	VALVE ADAPTOR
		37425		37425		SPACER PLATE (4 REQD PER OUTRIGGER)

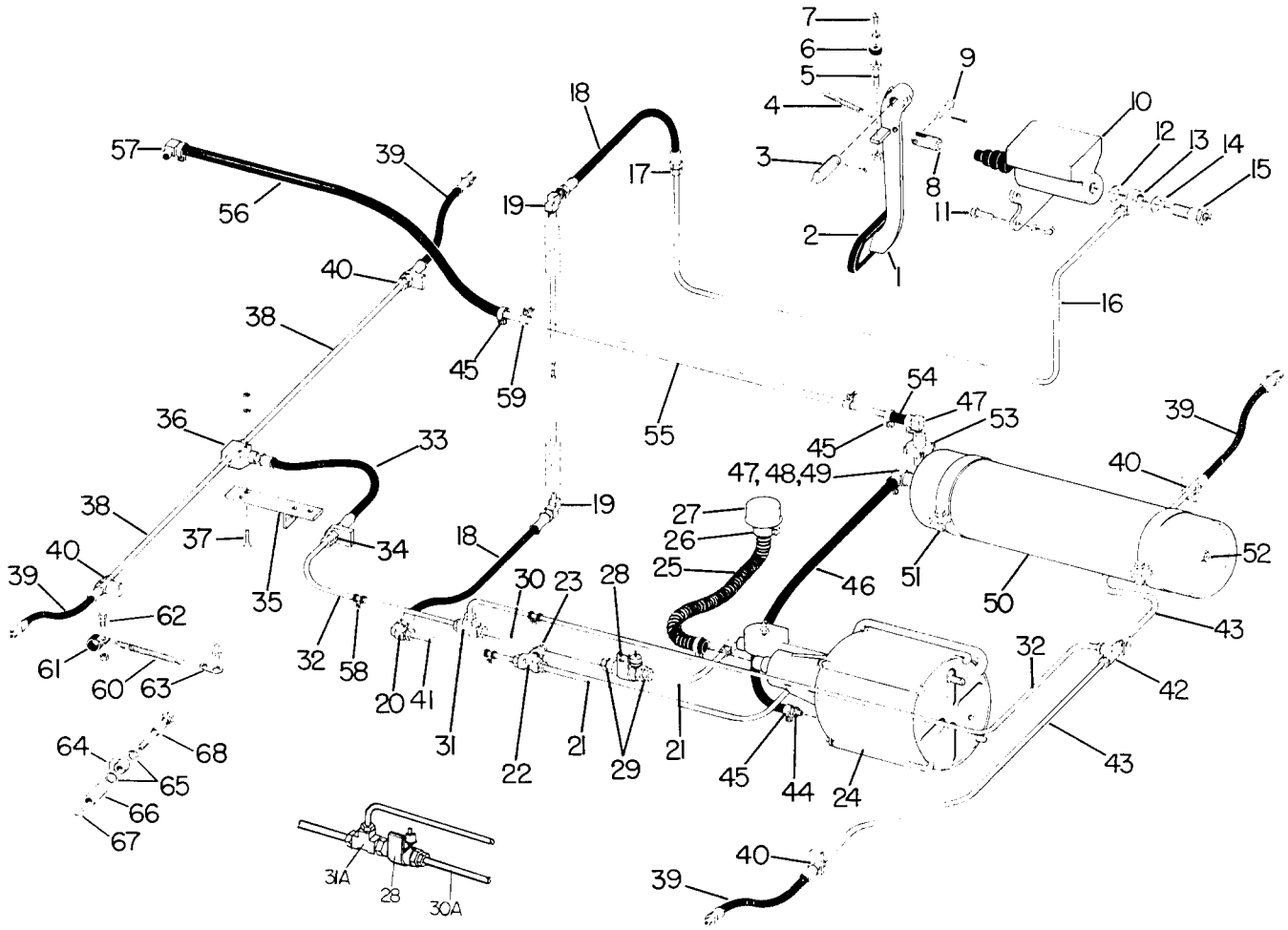

Ref. No.	Part Number	Quan. Req'd.	Name and Description
1	F37128	1	PEDAL
2	1221-19	1	PAD
3	16079	1	PIN
	1207-31	1	COTTER PIN, 3/16 x 1 1/2 LG.
4	37141	1	SPRING
5	40903	1	CAPSCREW
	1210-17	1	LOCKWASHER, 5/16 MED.
	1205-25	1	NUT, 5/16 UNC
6	6977	1	BUMPER
7	1233-1	1	MACHINE SCREW, #10 x 1/2 LG.
	1209-1	1	PLAINWASHER, 3/16 REG.
8	F37102	1	PUSH ROD
9	16238	1	PIN
	1207-1	1	COTTER PIN, 1/16 x 1/2 LG.

Model S-628 Group No. 15
Date Rev. 1 July 1973 HYDRAULIC BRAKES Page 15.2

Ref. No.	Part Number	Quan. Req'd.	Name and Description
10	40915	1	MASTER CYLINDER
	A22872	1	REPAIR KIT, FOR ABOVE
11	1200-34	4	CAPSCREW, 5/16 UNF x 1 1/4 LG.
	1210-17	4	LOCKWASHER, 5/16 MED.
	1205-26	4	NUT, 5/16 UNF
12	1239-33	3	GASKET
13	6972	3	BLOCK CONNECTOR
14	6924	3	GASKET
15	6970	3	CONNECTOR BOLT
16	37671	1	TUBE UNIT
	A15312-1	1	TUBE UNIT (RAISED CAB, MODEL S-627 ONLY)
17	1219-81	1	CONNECTOR
18	1244-11	2	HOSE ASSEMBLY
19	12019-221	1	90° ELBOW (REPLACES 1219-724)
	27988	1	SEAL KIT, FOR ABOVE W/ROUND BODY
	27987	1	SEAL KIT, FOR ABOVE W/HEX BODY
19A	1219-327	1	90° ELBOW
20	1219-163	1	ELBOW
21	37681	AR	TUBE UNIT
22	1219-727	1	TEE
23	6975	1	BRAKE SWITCH
24	A6718	1	HYDROVAC ASSEMBLY
	8520	1	REPAIR KIT, FOR ABOVE
25	6421	1	VACUUM HOSE
26	1240-16	2	CLAMP
27	6976	1	AIR CLEANER
28	6969	1	MICO BRAKE LOCK
29	1219-83	2	CONNECTOR
30	37680	1	TUBE UNIT
30A	49214	1	TUBE UNIT
31	1219-725	1	TEE
31A	12019-145	1	TEE

Ref. No.	Part Number	Quan. Req'd.	Name and Description
32	37677	1	TUBE UNIT, FRONT
	37679	1	TUBE UNIT, REAR
33	1244-143	1	HOSE UNIT
34	1205-182	1	NUT, 11/16 UNF JAM
35	49574	1	SUPPORT - REPLACES F37763
36	6984	1	TEE - REPLACES 1219-105
37	1203-32	2	CAPSCREW
	1210-23	2	LOCKWASHER
	1205-47	2	NUT
38	37676	2	TUBE UNIT
39	6921	4	HOSE UNIT
40	1205-85	4	JAM NUT, 5/8 UNF
41	38122	1	TUBE UNIT
42	1219-726	1	TEE
43	37678	2	TUBE UNIT
44	1219-104	1	CONNECTOR
45	1240-26	6	CLAMP
46	1275-32	1	HOSE
47	6719	2	ELBOW
48	1219-10	1	CLOSE NIPPLE
49	1219-66	1	TEE
50	9262	1	VACUUM TANK
51	9263	1	STRAP SET (INCLUDES TWO)
52	1219-9	1	PIPE PLUG, 1/2 NPT
53	6980	1	CHECK VALVE
54	1275-4	1	HOSE
55	37682	1	TUBE, CHRYSLER
	37939	1	TUBE, GM DIESEL
56	1275-22	1	HOSE, CHRYSLER
	1275-10	1	HOSE, GM DIESEL

Ref. No.	Part Number	Quan. Req'd.	Name and Description
57	1219-269	1	HOSE NIPPLE
	6719	1	ELBOW
58	1240-38	11	CUSHIONED CLAMP
59	1240-21	2	JIFFY CLIP
60	2235	4	SPRING
61	1240-38	4	CLAMP
62	1200-2	4	CAPSCREW, 1/4 UNF x 3/4 LG.
	1205-22	4	NUT, 1/4 UNF SELF-LOCKING
63	38124	4	SPRING HOOK
64	24237	4	FITTING
65	23896	8	GASKETS
66	24235	4	SPACER
67	24236	4	GASKET
68	24469	4	INLET CONNECTION BOLT

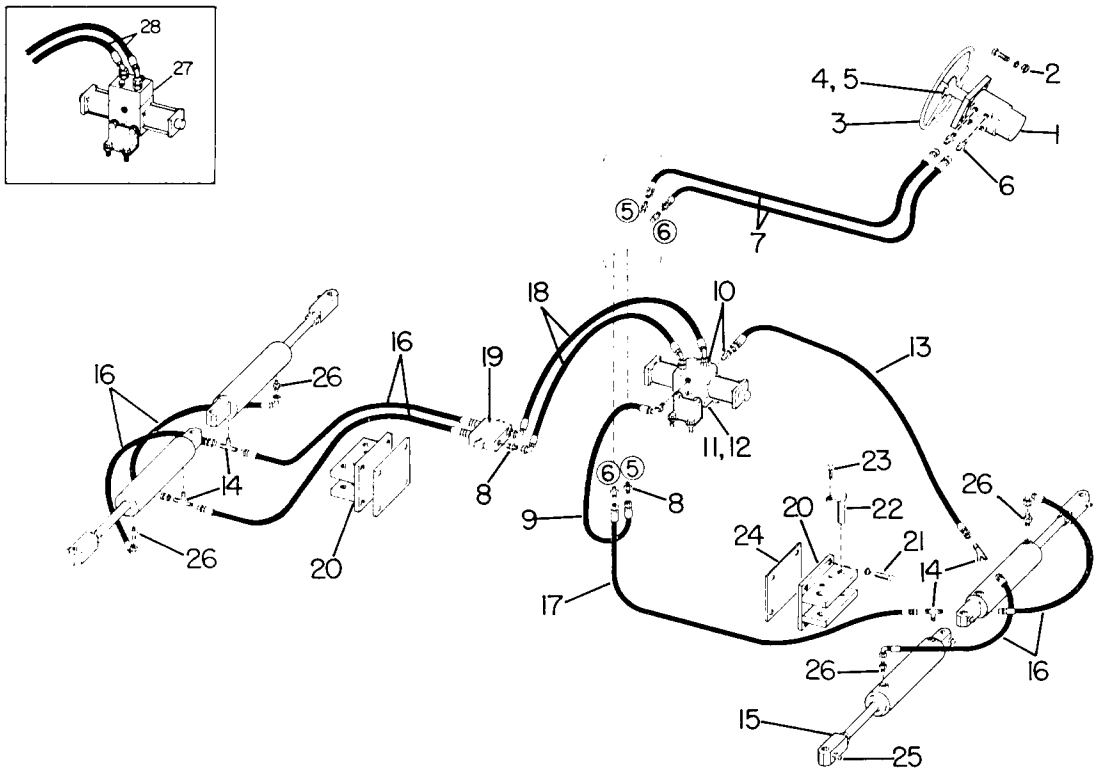

SEE PAGE 2.8 FOR MAIN AND AUXILIARY STEERING POWER CIRCUITS

Ref. No.	Part Number	Quan. Req'd.	Name and Description
1		1	ORBITROL STEERING UNIT W/COLUMN, LESS WHEEL, SEE PAGE 16.3 FOR PARTS BREAKDOWN
2	1200-61	2	CAPSCREW, 3/8 UNC x 1 1/4 LG.
	1210-20	2	LOCKWASHER, 3/8 MED.
3	36560	1	STEERING WHEEL
4	1204-31	1	NUT
5	37593	1	CAP
6	1219-620	2	ADAPTER
	1218-34	1	"O" RING, FOR ABOVE
7	A37085	2	HOSE ASSEMBLY

Ref. No.	Part Number	Quan. Req'd.	Name and Description
8	1219-605	6	ADAPTER
	1218-144	6	"O" RING, FOR ABOVE
9	A37089	1	HOSE ASSEMBLY
10	1219-620	4	ADAPTER
	1218-34	1	"O" RING, FOR ABOVE
11	A37837	1	SOLENOID VALVE , WATERMAN (REPLACES 37093) - SEE REF. 27
	24393	2	COIL, FOR ABOVE
	23954	2	COIL ONLY, FOR 37093 RACINE VALVE
	1200-95	4	CAPSCREW, 1/2 UNC x 1 LG., VALVE MOUNT
	1210-26	4	LOCKWASHER, 1/2 MED.
	1205-58	4	NUT, 1/2 UNC
12	1219-624	2	PLUG
13	A37091	1	HOSE ASSEMBLY
14	1219-774	4	TEE
15	A37095	4	HYDRAULIC CYLINDER, SEE PAGE 16.4 FOR PARTS BREAKDOWN
16	A37090	6	HOSE ASSEMBLY
17	A37088	1	HOSE ASSEMBLY
18	A37092	2	HOSE ASSEMBLY
19	1219-700	1	HOLD VALVE (NOT REQUIRED FOR ITEM 27)
20	F37571	2	STEERING BRACKET
21	1200-186	8	CAPSCREW, 3/4 UNC x 1 3/4 LG.
	1210-38	8	LOCKWASHER, 3/4 MED.
22	F37559	8	PIN
23	1200-96	8	CAPSCREW, 1/2 UNF x 1 LG.
	1210-26	8	LOCKWASHER, 1/2 MED.
24	37599	AR	SPACING PLATE
	1213-1	2	GREASE FITTING
25	1213-3	8	GREASE FITTING
26	1219-776	4	ADAPTER
27	49018	1	VALVE BANK W/HOLD VALVE - SEE PAGE 16.5
28	A38201	2	HOSE ASSEMBLY

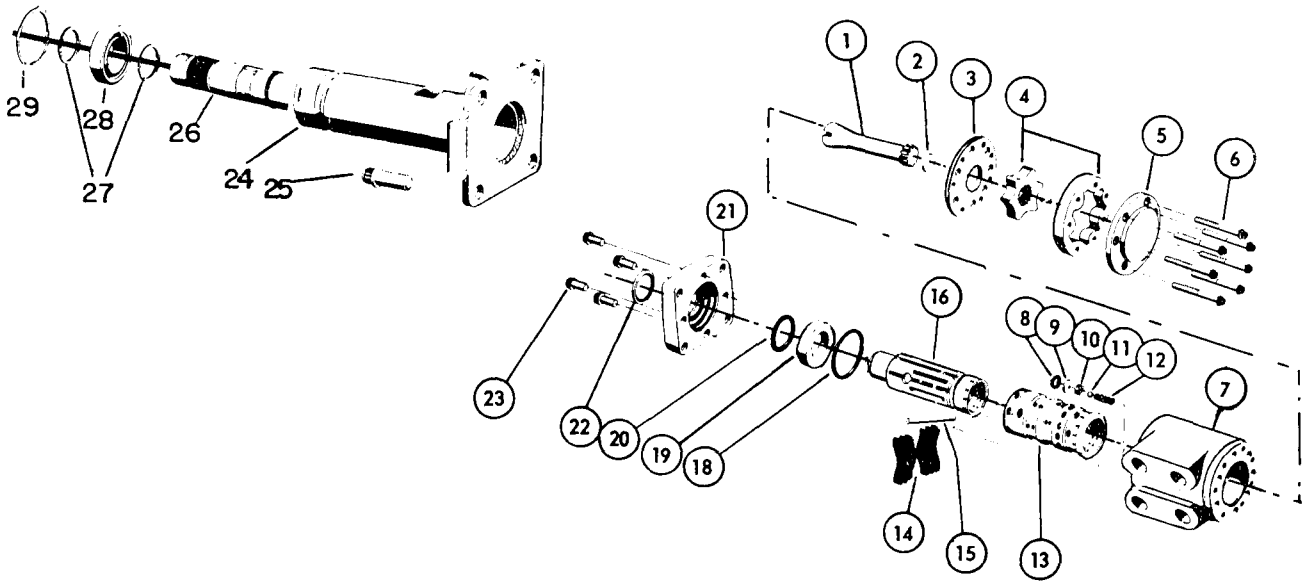

Ref. No.	Part Number	Quan. Req'd.	Name and Description
	41937	1	ORBITROL STEERING CONTROL UNIT W/COLUMN - REPLACES 38125
	23689	1	SEAL KIT, INCLUDES 1 EACH ITEMS 8, 18, 20, 22
	26733	1	CONTROL UNIT ONLY, LESS COLUMN & WHEEL
1	26726	1	DRIVE
2	26727	1	SPACER
3	26693	1	PLATE
4	26728	1	GEROTOR
5	26729	1	END CAP
6	26730	7	CAPSCREW
7	26718	1	CONTROL PARTS ASSEMBLY, INCLUDES ITEMS 7 THRU 16 *
8	22845	1	"O" RING
9	26719	1	SEAL PLUG
10	26720	1	CHECK SEAT
11	26721	1	STEEL BALL
12	26722	1	SPRING
13	*	1	CONTROL SLEEVE
14	26723	6	CENTERING SPRING
15	26725	1	CENTERING PIN
	26724	2	NYLON DISC, FOR ABOVE
16	*	1	SPOOL
18	26700	1	"O" RING
19	26717	1	CAP LOCATOR (24542 FOR 38125 UNIT)
	26716	1	RACE, FOR ABOVE) FOR 41937 UNIT ONLY
	26715	1	NEEDLE BEARING, FOR ABOVE)
20	26712	1	QUAD RING SEAL
21	26714	1	MOUNTING PLATE
22	26703	1	OIL SEAL
23	26713	4	CAPSCREW
24	26731	1	COLUMN & FLANGE
25		4	CAPSCREW, 3/8 UNC x 3/4 LG.
26	26732	1	SHAFT
27	24544	2	SNAP RING
28	24543	1	BEARING
29	24545	1	SNAP RING

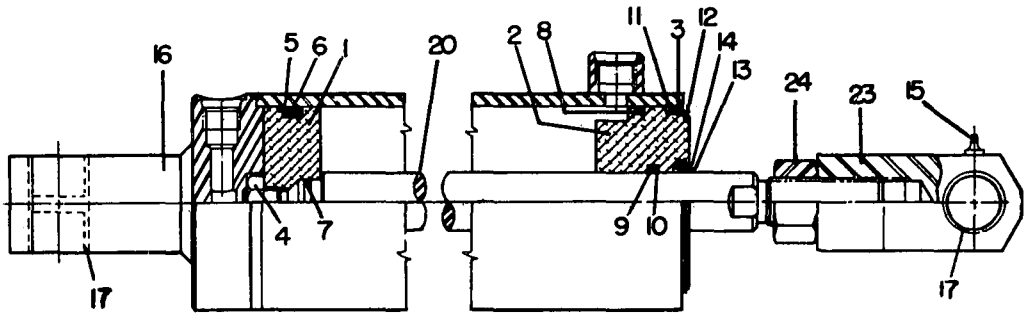

Ref. No.	Part Number	Quan. Req'd.	Name and Description
	37095	1	HYDRAULIC CYLINDER COMPLETE
	A23698	1	SEAL KIT - INCLUDES ITEMS 5 THRU 10, 13, 14
1	23690	1	PISTON
2	23691	1	HEAD GLAND
3	23692	1	SPACER
4	23693	1	JAM NUT
5	SEAL KIT	2	BACK-UP WASHER
6		1	"O" RING, PISTON
7		1	SEAL, ROD
8		1	SEAL, HEAD GLAND
9		1	"O" RING
10		1	BACK-UP WASHER
11	23694	1	LOCK RING
12	23695	1	LOCK RING
13	SEAL KIT	1	SEAL GUARD
14		1	SEAL LOCK RING
15		2	LUBE FITTING
16	29052	1	TUBE ASSEMBLY
17	29047	4	BUSHING
20	23696	1	ROD
23	23697	1	MOUNT
24	1205-116	1	JAM NUT, 1"-14

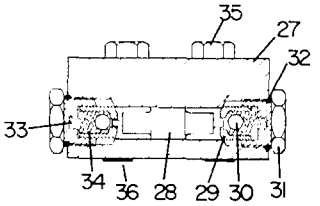

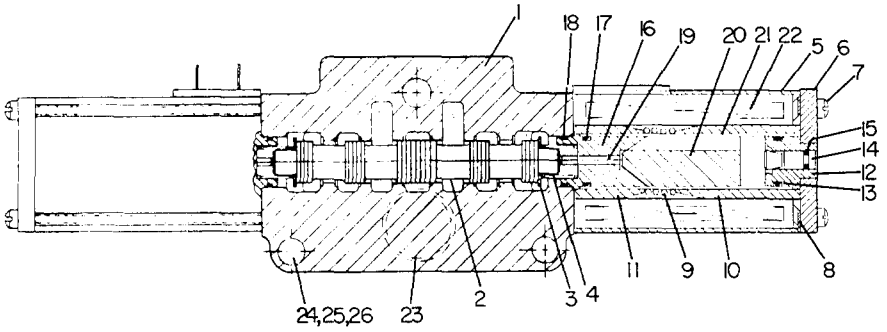

Ref. No.	Part Number	Quan. Req'd.	Name and Description
	49018	1	STEERING VALVE ASSEMBLY
1	26860	1	BODY
2	26840	1	SPOOL
3	26841	2	WASHER
4	26842	2	SPRING
5	26843	2	SOLENOID CASE & TUBE ASS'Y, INCL. ITEMS 6 THRU 21
6		2	END PLATE
7		4	SCREW
8		2	HUBBARD WASHER
9		2	SPRING
10		2	OUTER FLUX SLEEVE
11		2	INNER FLUX SLEEVE
12		2	EXTERNAL PUSH PIN GUIDE
13		2	"O" RING
14		2	ACTUATOR PUSH PIN
15		2	QUAD RING
16		2	FEMALE CONE
17		2	"O" RING
18		2	"O" RING

Model S-628
Date 1 MARCH 1972

STEERING VALVE

Group No. 16
Page 16.6

Ref. No.	Part Number	Quan. Req'd.	Name and Description
19		2	PUSH PIN
20		2	PLUNGER
21		2	GUIDE TUBE
22	24263	2	SOLENOID COIL
23	26845	1	"O" RING
24	26844	2	MOUNTING BRACKET
25		3	BOLT, 3/8 UNF x 3 1/4 LG.
26		3	NUT, 3/8 UNF
	26859	1	DOUBLE LOCK VALVE - INCLUDES ITEMS 27 THRU 36
27		1	BODY
28		1	PISTON
29		2	POPPET
30		2	BALL
31		2	PLUG
32		2	"O" RING
33		2	SPRING, SMALL
34		2	SPRING, LARGE
35		2	CAPSCREW
36		2	"O" RING

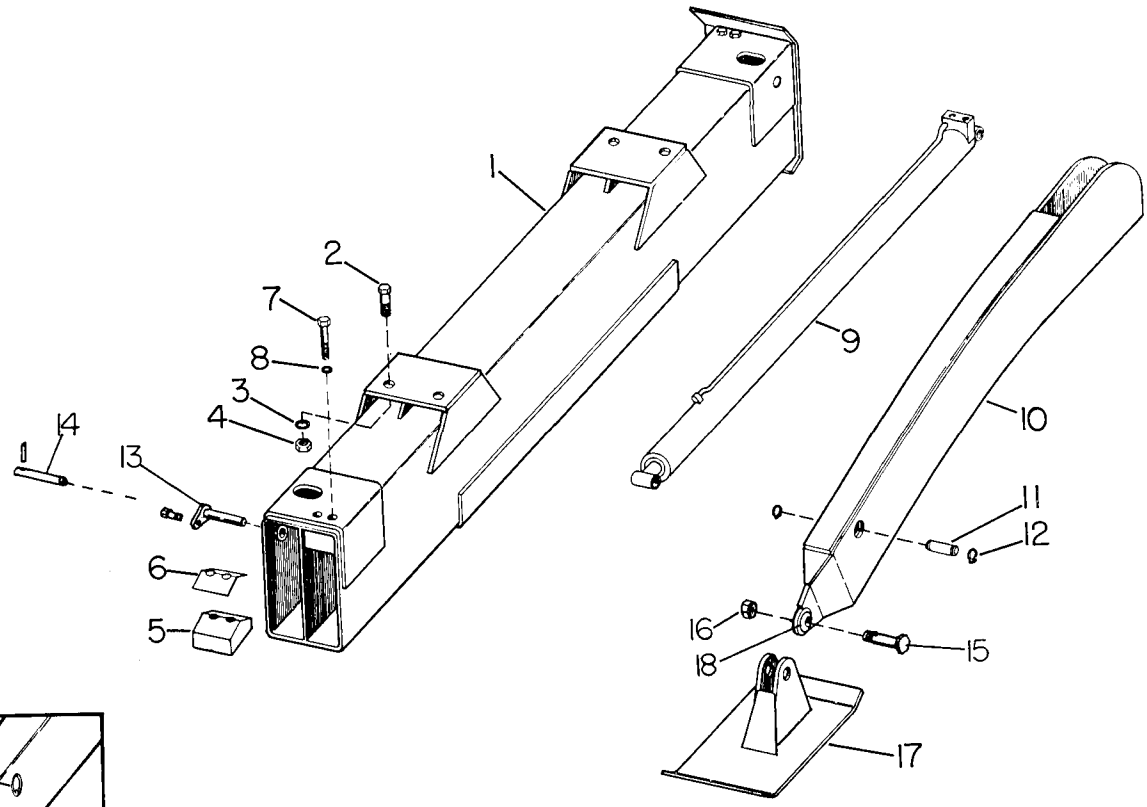

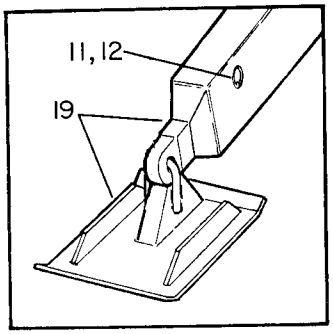

Ref. No.	Part Number	Quan. Req'd.	Name and Description
1	F37616	1	OUTRIGGER BOX
2	1229-162	4	CAPSCREW, 1 1/8 UNF x 3 LG., H.T.
3	1210-56	4	LOCKWASHER, 1 1/8 MED.
4	1205-154	4	NUT, 1 1/8 UNF
5	37661	2	SPACING BLOCK
6	37663	AR	SHIM, 1/8
6	37664	AR	SHIM, 16 GA.
7	1242-64	4	CAPSCREW, 5/8 UNC x 4 LG., H.T.
8	1210-32	4	LOCKWASHER, 5/8 MED.

Ref. No.	Part Number	Quan. Req'd.	Name and Description
9		2	HYDRAULIC CYLINDER - See Page 17.4
10	F36552	2	OUTRIGGER BEAM
11	37668	2	PIN
12	1220-63	4	RETAINING RING
13	F49320	2	PIN
	1242-35	2	CAPSCREW, 1/2 UNC x 2 lg., HT
	1210-26	2	LOCKWASHER, 1/2 med.
	1205-65	2	NUT, 1/2 UNC self-locking
14	37662	2	PIN
	1227-260	2	ROLL PIN, 1/4 x 2 lg.
15	49383	2	PIN - Begin. Ser. #1054 (Replaces F37665 pin, 1207-57 c'pin)
16	1205-179	2	NUT, 1 3/8 UNF esna
17	F36553	2	PEDESTAL BASE
18	1217-254	2	BALL JOINT (welded to item 10)
19	F39603	2	BEAM & BASE
	F39604		BEAM only, for field repair
	39610		"U" BOLT
	F39611		BASE only

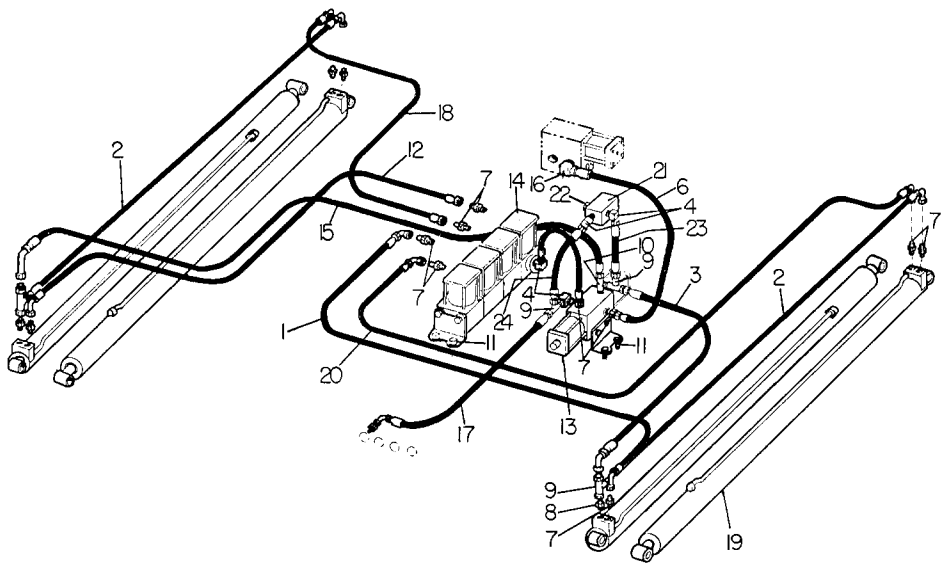

Ref. No.	Part Number	Quan. Req'd.	Name and Description
1	A49087	2	HOSE ASSEMBLY
2	A49092	2	HOSE ASSEMBLY
3	A49091	1	HOSE ASSEMBLY
4	1219-470	4	ADAPTER
	1218-34	4	"O" RING, FOR ABOVE
5	A49093	1	HOSE ASSEMBLY
6	A49089	1	HOSE ASSEMBLY
7	1219-441	12	ADAPTER
	1218-34	12	"O" RING, FOR ABOVE
8	12019-107	2	ADAPTER
9	1219-800	4	TEE
10	1219-694	1	TEE
11	1200-59	8	CAPSCREW, 3/8 UNC x 1 LG.
	1210-20	8	LOCKWASHER, 3/8 MED.
	1205-36	8	NUT, 3/8 UNC

Ref. No.	Part Number	Quan. Req'd.	Name and Description
12	A49088	1	HOSE ASSEMBLY
13	37093	1	VALVE ASSEMBLY - SEE PAGE 17.8
14	39727	1	VALVE ASSEMBLY - SEE PAGE 17.9
15	A49090	1	HOSE ASSEMBLY
16	1219-916	1	ELBOW
	1218-34	1	"O" RING, FOR ABOVE
17	A49104	1	HOSE ASSEMBLY
18	A49095	1	HOSE ASSEMBLY
19		4	HYDRAULIC CYLINDER - SEE PAGE 7.4
20	A49192	1	HOSE ASSEMBLY
21	39714	1	RELIEF VALVE
22	1219-624	1	PLUG
23	A49401	1	HOSE ASSEMBLY
24	A49402	1	HOSE ASSEMBLY

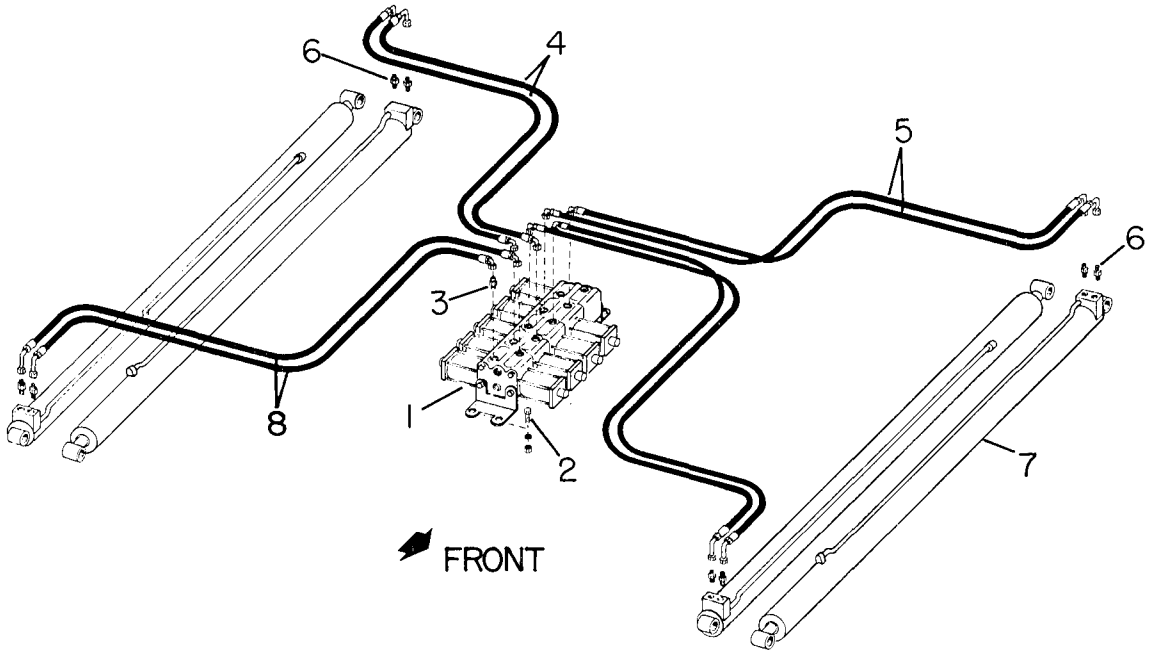

Ref. No.	Part Number	Quan. Req'd.	Name and Description
1		1	VALVE BANK ASSEMBLY, SEE PAGE 17.5 FOR PARTS BREAKDOWN
2	1200-95	4	CAPSCREW, 1/2 UNC x 1 LG.
	1210-26	4	LOCKWASHER, 1/2 MED.
	1205-58	4	NUT, 1/2 UNC
3	1219-620	8	ADAPTER
	1218-34	1	"O" RING, FOR ABOVE
4	A38558	2	HOSE ASSEMBLY
5	A37097	4	HOSE ASSEMBLY
6	1219-605	8	ADAPTER
7	37225	4	HYDRAULIC CYLINDER, SEE PAGE 17.4 FOR PARTS BREAKDOWN
8	A37098	2	HOSE ASSEMBLY

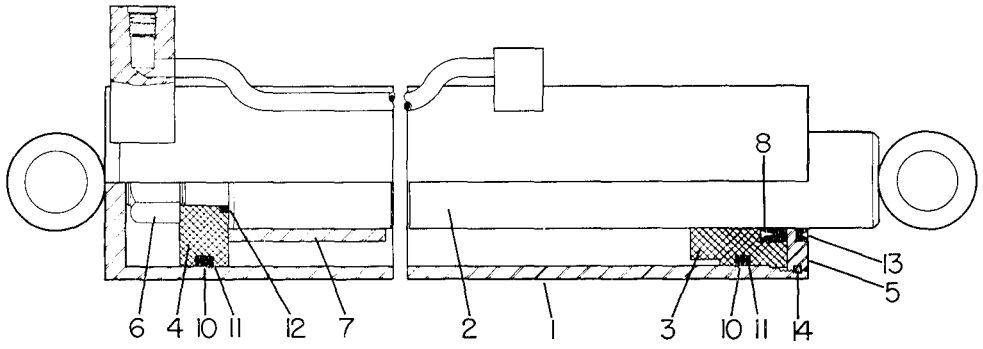

Ref. No.	Part Number	Quan. Req'd.	Name and Description
	49172	1	OUTRIGGER CYLINDER COMPLETE - REPLACES 49035. REPLACES 37225 WITH USE OF 1219-620 ADAPTERS.
	A23699	1	SEAL KIT - INCLUDES ITEMS 8 THRU 14
1	23700	1	CASE
2	23701	1	PISTON ROD
3	23702	1	GLAND
4	23703	1	PISTON
5	23704	1	GLAND LOCK
6	23705	1	LOCK NUT, 1-14
7	23706	1	SPACER
8	27092	1	"U" CUP SEAL - REPLACES 23707 CHEVRON SEAL AND 23708 WAVY WASHER - SEE SERVICE BULLETIN #253
10	23709	2	"O" RING
11	23710	3	BACK-UP WASHER
12	23711	1	"O" RING
13	23712	1	WIPER
14	23713	1	NYLON PELLET

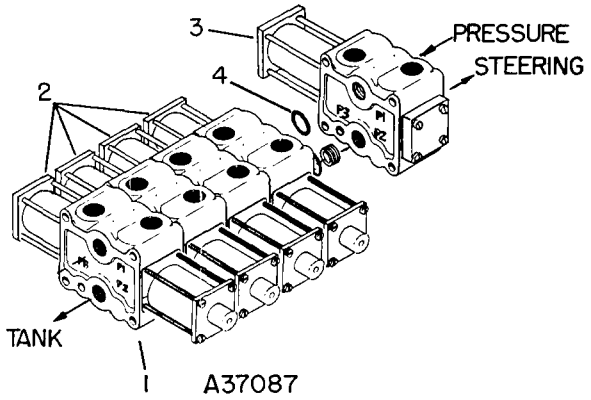

A37087

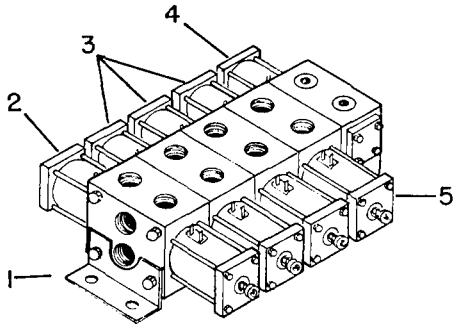

A37838

Ref. No.	Part Number	Quan. Req'd.	Name and Description
1	37087	1	VALVE BANK ASSEMBLY, RACINE
2	23733	4	VALVE SECTION, COMPLETE
3	23734	1	DIVERSION VALVE SECTION, COMPLETE
	24262	9	ENCAPSULATED SOLENOID ASSEMBLY, FOR ABOVE VALVE SECTIONS
	24263	9	COIL ONLY, FOR ABOVE SOLENOID
4	23291	8	SEAL, SECTION
1	37838	1	VALVE BANK ASSEMBLY, WATERMAN
2	24527	1	VALVE SECTION COMPLETE
3	24528	3	VALVE SECTION COMPLETE
4	24529	1	DIVERSION VALVE SECTION COMPLETE
5	24393	9	COIL ONLY, FOR ABOVE VALVE SECTIONS
	25036	8	"O" RING, FOR BETWEEN VALVE SECTIONS
	1223-493	AR	TERMINAL, FOR CONVERSION OF EARLY HARNESS FOR WATERMAN VALVE

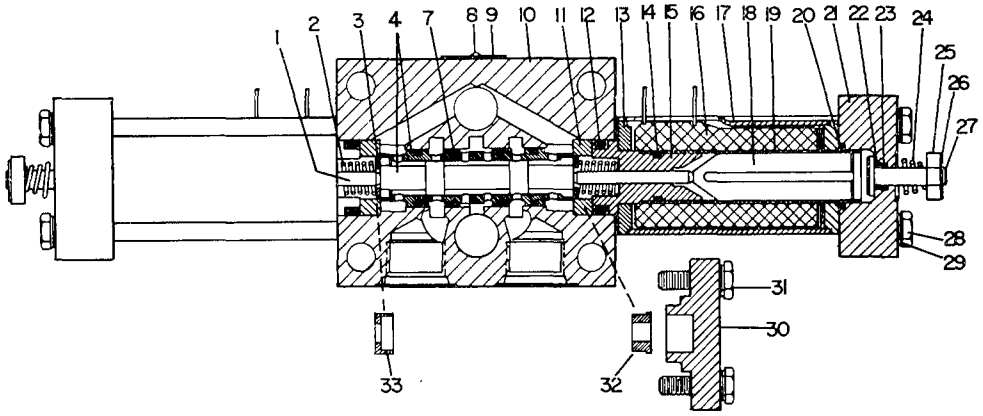

Ref. No.	Part Number	Quan. Req'd.	Name and Description
	37838	1	VALVE BANK COMPLETE
	24527	1	VALVE SECTION - INCLUDES ITEMS 1 THRU 29
	24528	3	VALVE SECTION - INCLUDES ITEMS 1 THRU 29
	24529	1	VALVE SECTION - INCLUDES ITEMS 1 THRU 33
	A29313	1	SEAL KIT - FOR ONE VALVE SECTION - INCL. 7, 12, 14, 20, 23
1	26495	2	ROLL PIN
2	26496	2	SPRING
3	26523	2	RING
4	26497	1	SLEEVE & SPOOL ASSEMBLY - FOR 24527 & 24528 SECTIONS
	26519	1	SLEEVE & SPOOL ASSEMBLY - FOR 24529 SECTION
7	21429	4	"O" RING (REPLACES 22899)
8	26498	2	RIVET
9	26499	1	NAME PLATE
10	26501	1	BLOCK - 24527 SECTION
	26500	1	BLOCK - 24528 SECTION
	26521	1	BLOCK - 24529 SECTION
11	26502	2	WASHER
12	1218-27	2	"O" RING
13	26503	2	WASHER
14	26504	1	"O" RING
15	26505	1	STOP
16	24393	1	COIL
17	26507	1	SHELL

ITEMS 13 THRU 27, QUANTITY SHOWN FOR ONE SOLENOID.

Model S-628
Date 1 MARCH 1972

VALVE BANK - WATERMAN

Group No. 17
Page 17.7

Ref. No.	Part Number	Quan. Req'd.	Name and Description
18	26508	1	PLUNGER
19	26509	1	TUBE
20	26510	1	"O" RING
21	26511	1	PLATE W/BUSHING
22	26512	1	BUSHING, FOR ABOVE
23	1218-31	1	"O" RING
24	26513	1	SPRING
25	26515	1	BUTTON
26	26516	1	SNAP RING
27	26517	1	PIN
28	26514	4	CAPSCREW
29	1210-14	4	LOCKWASHER, 1/4 MED.
30	26522	1	PLATE
31		4	CAPSCREW, 1/4 UNC x 7/8 LG.
32	26520	1	SPACER
33	26518	1	SPACER

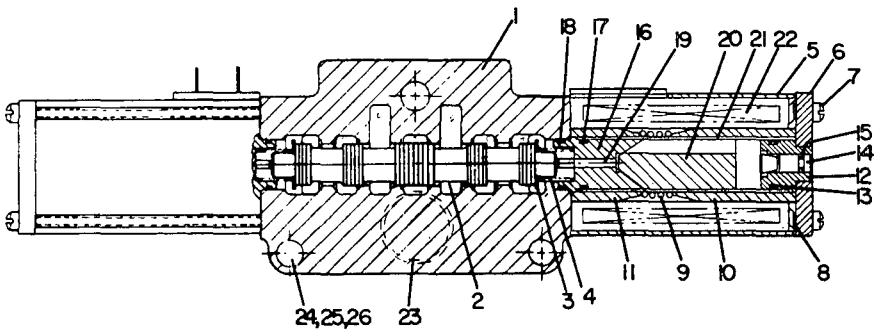

Ref. No.	Part Number	Quan. Req'd.	Name and Description
	37093		VALVE COMPLETE
	A29309		SEAL KIT
1	26839	1	BODY
2	26840	1	SPOOL
3	26841	2	WASHER
4	26842	2	SPRING
5	26843	2	SOLENOID CASE & TUBE ASSEMBLY - INCLUDES ITEMS 6 THRU 21
6	26808	2	END PLATE
7	29595	4	SCREW
8	26805	2	HUBBARD WASHER
9	26802	2	SPRING
10	29597	2	OUTER FLUX SLEEVE
11	29598	2	INNER FLUX SLEEVE
12	29599	2	EXTERNAL PUSH PIN GUIDE
13	29311	2	"O" RING
14	29624	2	ACTUATOR PUSH PIN
15	29310	2	QUAD RING
16	29602	2	FEMALE CONE
17	29311	2	"O" RING
18	29312	2	"O" RING
19	29603	2	PUSH PIN
20	29605	2	PLUNGER
21	29607	2	GUIDE TUBE
22	24263	2	SOLENOID COIL
23	26845	1	"O" RING
24	26844	2	MOUNTING BRACKET
25		3	BOLT, 3/8 UNF x 3 1/4 LG.
26		3	NUT, 3/8 UNF

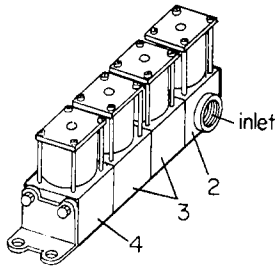

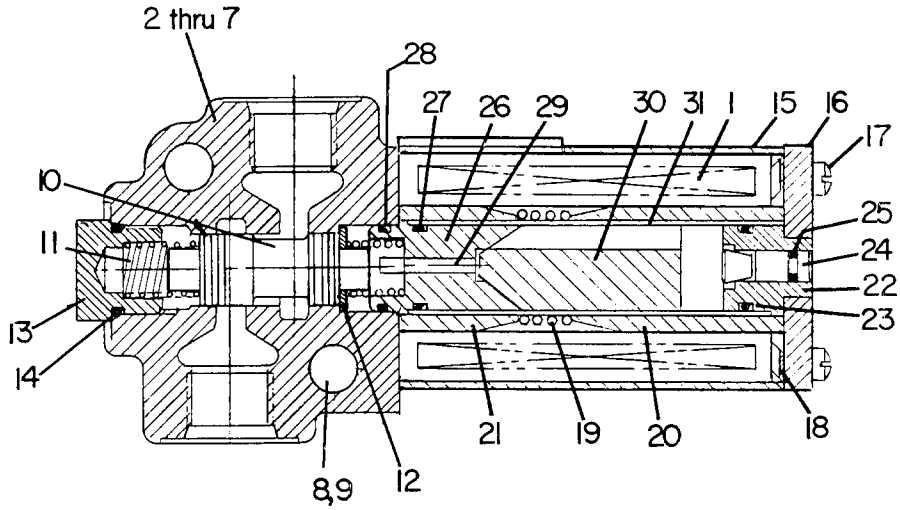

Ref. No.	Part Number	Quan. Req'd.	Name and Description	
	39727		VALVE ASSEMBLY	
1	26810	4	COIL	493482
2	26846	1	BODY ASSEMBLY, INLET, INCLUDES ITEMS 5, 6, 7	707567
3	26847	2	BODY ASSEMBLY, MIDDLE, INCLUDES ITEMS 5, 6, 7	707568
4	26848	1	BODY ASSEMBLY, END, INCLUDES ITEM 5	707569
5	26849	4	PLUG	400925
6	26850	3	"O" RING	407338
7	26851	3	SEAL PLATE	493494
8	26852	2	MOUNTING BRACKET	355345
9		2 4	STUD, 3/8 UNF x 10 7/8 LG. NUT, 3/8 UNF	405791 401034
10	26853	4	SPOOL	355358
11	26854	8	SPRING	493483
12	26855	4	WASHER	493526
13	26856	4	PLUG w/"O" RING	707554
14	26857	4	"O" RING	405393

Ref. No.	Part Number	Quan. Req'd.	Name and Description
	26858	2	SOLENOID GUIDE TUBE & CASE ASSEMBLY INCLUDES ITEMS 15 THRU 31
15		2	SOLENOID CASE
16		2	END PLATE
17		4	SCREW
18		2	HUBBARD WASHER
19		2	SPRING
20		2	OUTER FLUX SLEEVE
21		2	INNER FLUX SLEEVE
22		2	EXTERNAL PUSH PIN GUIDE
23		2	"O" RING
24		2	ACTUATOR PUSH PIN
25		2	QUAD RING
26		2	FEMALE CONE
27		2	"O" RING
28		2	"O" RING
29		2	PUSH PIN
30		2	PLUNGER
31		2	GUIDE TUBE

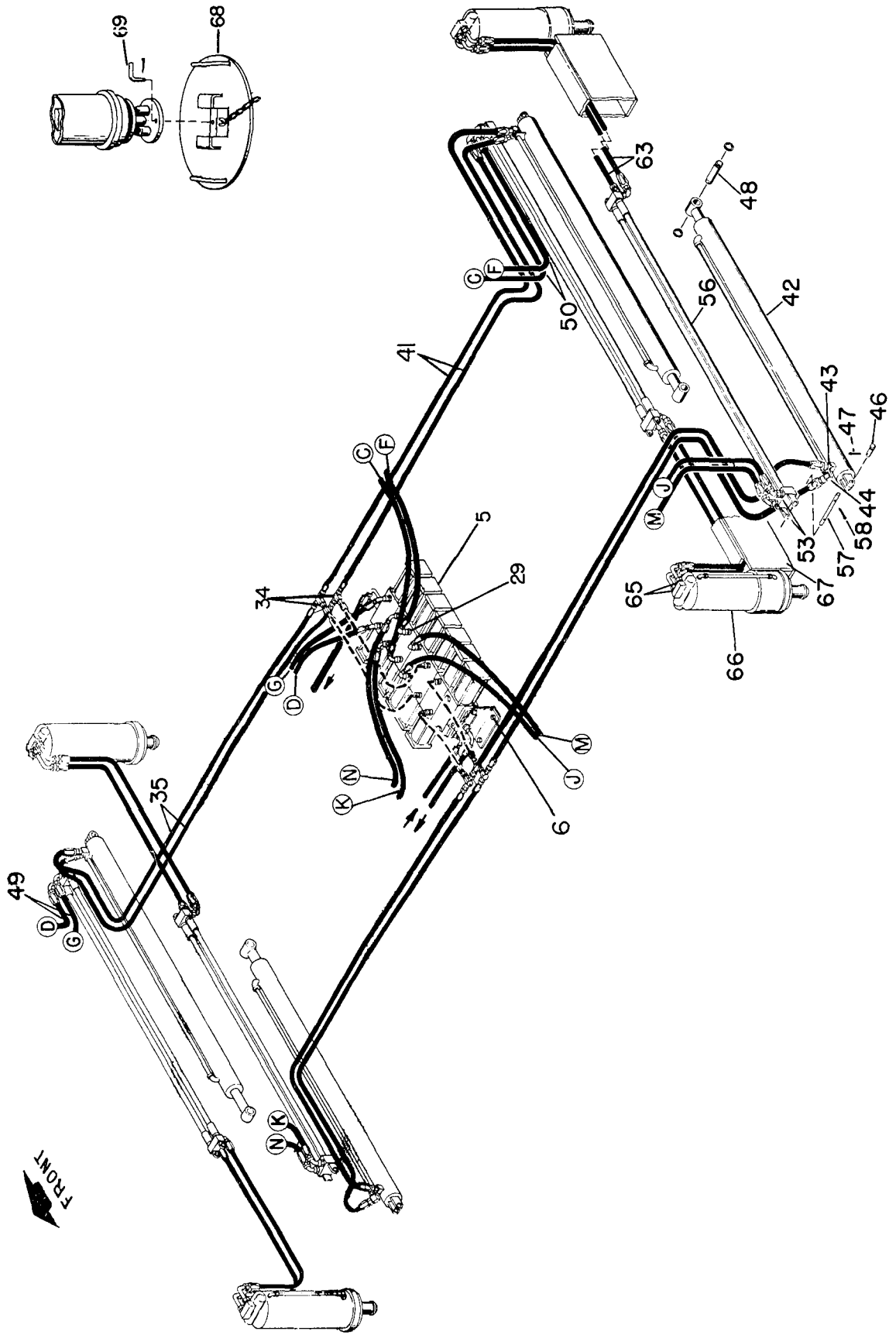
69
68
63
48
56
42
50
41
43
46
47
44
58
57
53
65
67
66
5
29
34
6
35
49
FRONT

Ref. No.	Part Number	Quan. Req'd.	Name and Description
	F41301	2	OUTRIGGER BOX (NOT SHOWN)
	1229-162	8	CAPSCREW, 1 1/8 UNF x 3 LG.
	1210-56	8	LOCKWASHER, 1 1/8 MED.
	1205-154	8	NUT, 1 1/8 UNF
5	41160	1	VALVE ASSEMBLY
	25476	13	SOLENOID COIL, FOR ABOVE
6	1200-96	4	CAPSCREW
	1210-26	4	LOCKWASHER
	1205-59	4	NUT
29	1219-441	12	ADAPTER
34	1219-768	4	TEE
	1219-853	4	REDUCER, FOR ABOVE
35	A41305	4	HOSE ASSEMBLY
41	A41304	4	HOSE ASSEMBLY
42	A40571	4	HYDRAULIC CYLINDER, SEE PAGE 17A.6
43	1219-559	4	ADAPTER
44	1219-560	4	ELBOW
46	1474	4	PIN
47	1207-14	4	COTTER PIN
48	32654	4	PIN
	1220-61	8	SNAP RING, FOR ABOVE
49	A41307	4	HOSE ASSEMBLY
50	A41306	4	HOSE ASSEMBLY
53	1219-441	16	ADAPTER
56	A40572	4	TELESCOPING PORT TUBE ASSEMBLY, SEE PAGE 17A.7
57	32678	8	PIN
58	1207-14	16	COTTER PIN
63	A40843	8	HOSE
65	1219-441	8	ADAPTER
66	A40680	4	HYDRAULIC CYLINDER, SEE PAGE 17A.4
	1219-624	4	PLUG, FOR ABOVE
	1203-133	16	COUNTERBORE CAPSCREW, CYLINDER TO BEAM

Ref. No.	Part Number	Quan. Req'd.	Name and Description
67	A32651-1	2	BEAM
68	F40685	4	PAD
69	40690	4	PIN
	1207-30	4	COTTER PIN
	F40695	2	BRACKET, OUTRIGGER PAD STORAGE

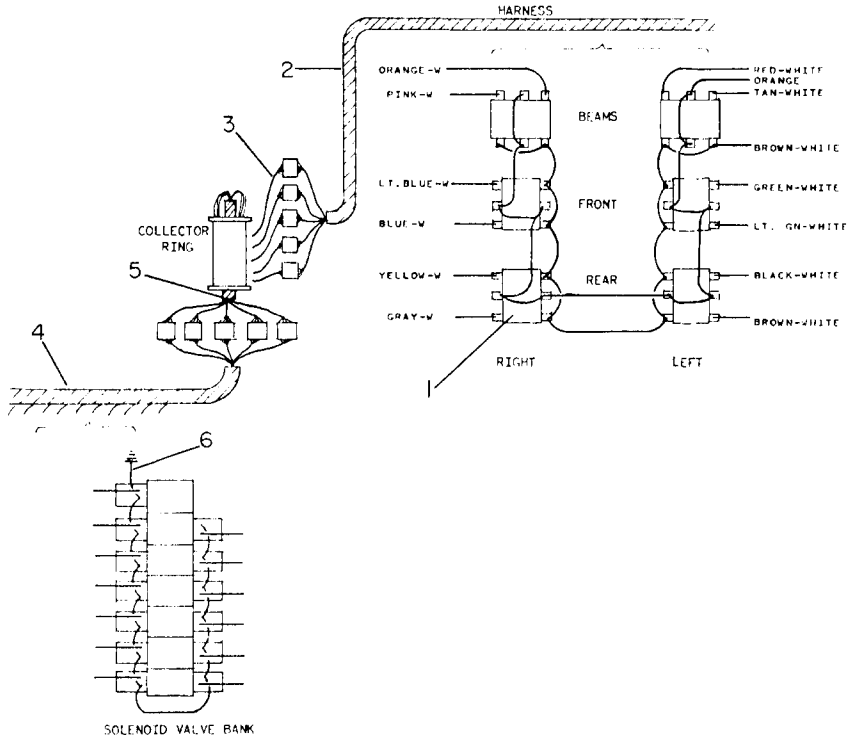

Ref. No.	Part Number	Quan. Req'd.	Name and Description
1	1223-448	6	SWITCH
2	41340	1	WIRE HARNESS, MAIN INSTRUMENT (REPLACES 38778)
3	41336	1	CONNECTOR W/WIRES (MAIN HARNESS CONNECTORS TO COLLECTOR RING LEADS - SEE REF. 5, PAGE 5.1)
4	41339	1	MAIN WIRING HARNESS, LOWER
5	41338	1	WIRE HARNESS, LOWER HARNESS TO COLLECTOR RINGS (WRAPPED TO SHIFT TUBE)
6	41337	1	HARNESS, OUTRIGGER VALVE GROUND
7	12260-118	1	DASH DECAL, OUTRIGGER

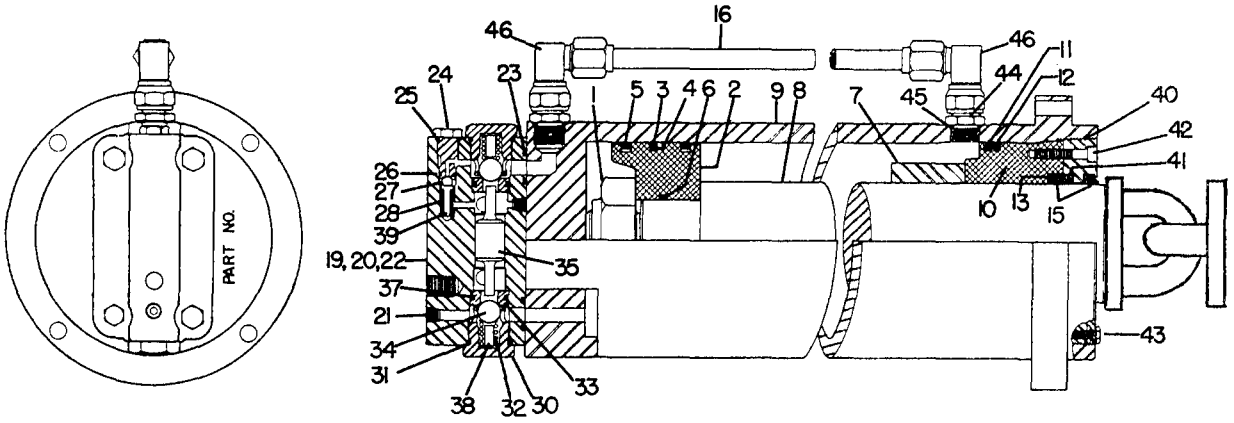

Ref. No.	Part Number	Quan. Req'd.	Name and Description
	A40680		HYDRAULIC CYLINDER, INCLUDES ITEMS 1 THRU 46
	A23682	1	SEAL KIT, INCLUDES PISTON RINGS, "O" RINGS, BACK-UP WASHERS AND SEALS
1	23684	1	BUTTRESS NUT
	1207-27	1	COTTER PIN
2	23424	1	PISTON
3	23432	1	SEAL & LOADING "O" RING
4		1	LOADING "O" RING
5	23433	2	PISTON RING
6	23404	1	STATIC "O" RING
8	23676	1	SHAFT
9	23677	1	CASE
10	23678	1	HEAD
11	23406	1	STATIC "O" RING
12	23431	1	BACK-UP WASHER
13	22029	1	"O" RING
15	23679	AR	WIPER SEAL
16	23683	1	PORT TUBE
19	A23436	1	HOLD LOCK VALVE, INCLUDES ITEMS 20 THRU 39
	A23437	1	SEAL KIT, FOR ABOVE
20	23438	1	BODY

Ref. No.	Part Number	Quan. Req'd.	Name and Description
21	1219-38	1	PIPE PLUG, 1/8 NPT SOCK. HD.
22	1229-44	4	CAPSCREW, 3/8 UNF x 2 3/4 LG., H.T.
23	23133	2	"O" RING, BODY TO CYLINDER
24	23448	1	RELIEF CAP & SEAT
25	23131	1	"O" RING, OUTER
26	22845	1	"O" RING, INNER
27	23444	1	BALL
28	23442	1	SPRING
30	23440	2	THREADED RETAINER PLUG
31	1218-64	2	"O" RING
32	23441	2	SPRING
33	23447	2	SEAT
34	23443	2	BALL
35	23439	1	SHUTTLE SPOOL STRIKER
37	23142	2	"O" RING, FOR ITEM 33
38	23445	2	SPRING STOP, MAIN
39	23446	1	SPRING STOP, RELIEF
40	23681	1	DRAW RING
41	23680	1	BACK-UP RING
42	23450	2	SOCKET HEAD CAPSCREW, 1/4 UNC x 1 1/4 LG.
43	1200-2	1	LOCKSCREW, 1/4 UNF x 3/4 LG.
44	1219-441	2	ADAPTER
45	23403	2	"O" RING
46	1219-570	2	SWIVEL ELBOW

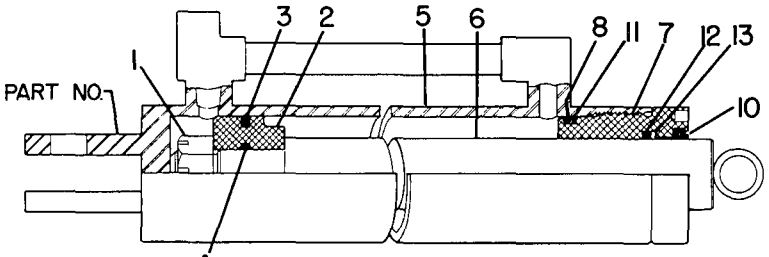

A40571

Ref. No.	Part Number	Part Number	Quan. Req'd.	Name and Description
		A40571	1	HYDRAULIC CYLINDER, IDENTIFY BY ILLUSTRATION ABOVE AND PART NUMBER STAMPED ON CYLINDER
		A23416	1	SEAL KIT, FOR ABOVE
1		1204-3	1	SLOTTED HEX NUT
		1207-15	1	COTTER PIN, FOR ABOVE
2		23410	1	PISTON
3		23415	1	SEAL & LOADING "O" RING
4		23405	1	"O" RING
5		23408	1	CASE
6		23409	1	SHAFT
7		23411	1	HEAD
8		21434	1	"O" RING
9			1	"U" CUP SEAL
10		23412	1	WIPER SCRAPER SEAL
11		23414	1	BACK-UP WASHER
12		1218-81	1	DYNAMIC "O" RING
13		23413	1	BACK-UP WASHER

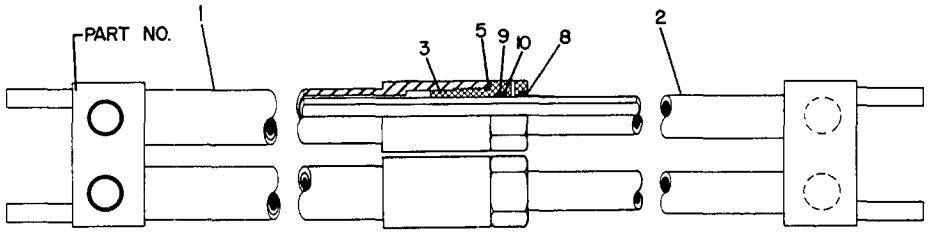

A40572

Ref. No.	Part Number	Part Number	Quan. Req'd.	Name and Description
		A40572	1	TELESCOPING PORT TUBE ASSEMBLY, INCLUDES ITEMS 1 THRU 12 AS APPLICABLE - IDENTIFY BY ILLUSTRATION OR PART NUMBER STAMPED ON CYLINDER
		A23421		SEAL KIT, INCLUDES SEALS, "O"RINGS & WASHERS
1		23417	1	OUTER CASE TUBE
2		23418	1	INNER CASE TUBE
3		23419	2	HEAD GLAND
5		23407	2	"O" RING
7			2	SNAP RING
8		23141	2	QUAD RING
9		23142	2	"O" RING, DYNAMIC
10		23420	2	BACK-UP WASHER
11			2	STATIC "O" RING
12			2	BACK-UP WASHER

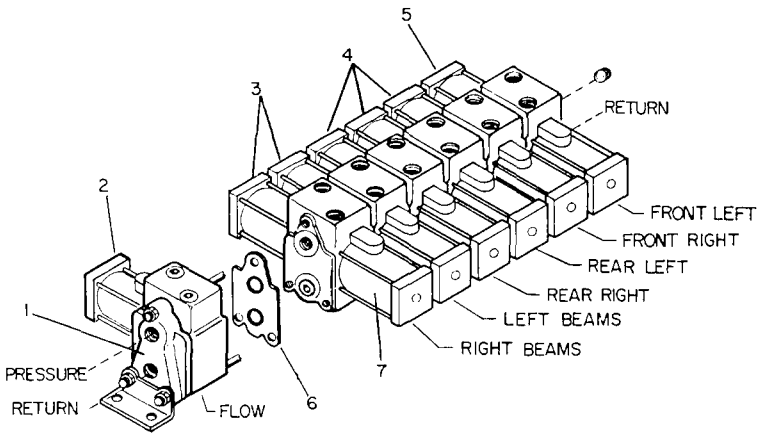

Ref. No.	Part Number	Quan. Req'd.	Name and Description
	41160	1	SOLENOID VALVE BANK ASSEMBLY, INCLUDES ITEMS 1 THRU 7
1	25474	1	END PLATE
2	25473	1	VALVE SECTION COMPLETE
3	25472	2	VALVE SECTION COMPLETE
4	25471	3	VALVE SECTION COMPLETE
5	25470	1	VALVE SECTION COMPLETE
6	25475	7	SEAL PLATE w/"O" RINGS
7	25476	13	SOLENOID COIL

(LATER MODELS)

REPLACES TYPE SHOWN ON PAGE 17A 17.8. FOR COMPONENT PARTS, IDENTIFY VALVE VISUALLY.

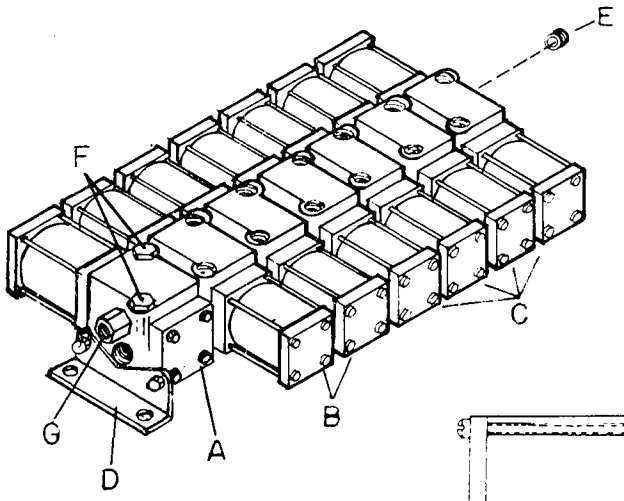

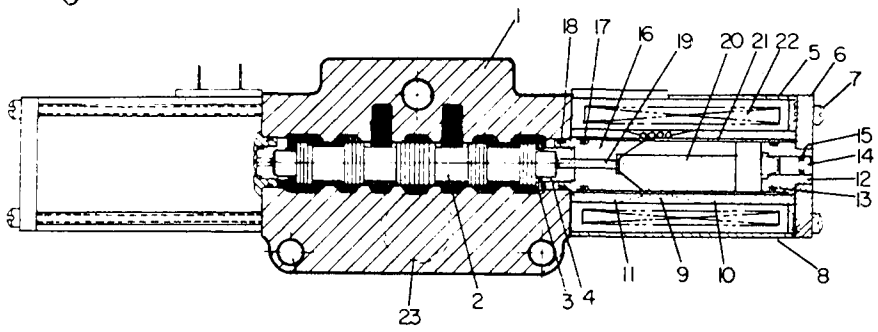

Ref. No.	Part Number	Quan. Req'd.	Name and Description
	41160		SOLENOID VALVE BANK COMPLETE
A	200272	1	VALVE SECTION, DIVERSION
B	29475	2	VALVE SECTION, BEAM EXTEND
C	29476	4	VALVE SECTION, VERTICAL CYLINDER
D	29478	1	MOUNTING KIT
E	1219-860	1	PLUG w/"O" RING
	1218-144	1	"O" RING, FOR ABOVE
F	1219-624	1	PLUG w/"O" RING
	1218-34	1	"O" RING, FOR ABOVE
G	200287	1	ADAPTER
1		1	BODY
2		1	SPOOL
3	26841	1	WASHER
4	29620	1	SPRING
5	26843	2	SOLENOID CASE & TUBE ASSEMBLY-INCL. 6 THRU 21
6	26808	2	END PLATE
7	29595	8	SCREW
8	29596	2	CASE
9	26802	2	SPRING
10	29597	2	OUTER FLUX SLEEVE
11	29598	2	INNER FLUX SLEEVE
12	29599	2	EXTERNAL PUSH PIN GUIDE
13	29311	2	"O" RING
14	29624	2	PUSH PIN
15	29310	2	QUAD RING
16	29602	2	FEMALE CONE
17	29311	2	"O" RING
18	29312	2	"O" RING
19	29603	2	PUSH PIN
20	29605	2	PLUNGER
21	29607	2	GUIDE TUBE
22	24263	2	COIL
23	23291	1	"O" RING

THE FOLLOWING HOSE REFERENCE LISTS THE HOSE AND REUSABLE FITTINGS. SOME HOSE ASSEMBLIES REQUIRE INDEXING OF ONE FITTING WITH RESPECT TO THE OPPOSITE FITTING SO THAT ALIGNMENT WILL BE CORRECT UPON INSTALLATION WITHOUT TWISTING THE HOSE. NOTE THE POSITION OF THE FITTINGS BEFORE REMOVAL AND MAINTAIN THIS POSITION UPON REASSEMBLY.

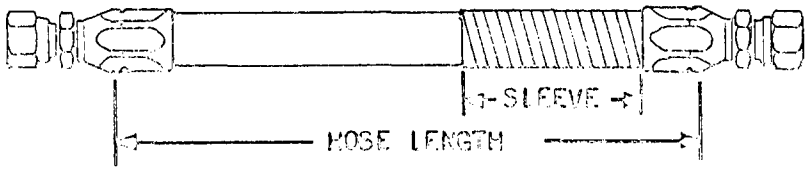

BANTAM NUMBER	HOSE LENGTH	AEROQUIP HOSE #	END A AEROQUIP #	END B AEROQUIP #	SLEEVE NUMBER	SLEEVE LENGTH
A35448	14"	1509-4-12	4721-4-4S	4721-4-4S		
A37072	48"	1508-16	476703-20-16	190469-16		
A37073	30"	PARKER 1/2-821	PARKER 1/2-8-30682-4	PARKER 1/2-8-30682-4		
A37081	54"	PARKER 13/32-201	PARKER 13/32-8-20620-1	PARKER 13/32-8-23920-1		
A37082	48"	PARKER 13/32-201	PARKER 13/32-8-23920-1	PARKER 13/32-8-23920-1		
A37083	24"	PARKER 13/32-201	PARKER 13/32-8-20620-1	PARKER 13/32-8-23920-1		
A37084	83"	PARKER 13/32-201	PARKER 13/32-8-20620-1	PARKER 13/32-8-23920-1		
A37085	80"	PARKER 5/16-201	PARKER 5/16-6-20620-1	PARKER 5/16-6-23920-1		
A37086	32"	13/32-201	13/32-8-23920-1	13/32-8-23920-1		
A37088	109"	PARKER 5/16-201	PARKER 5/16-6-23920-1	PARKER 5/16-23920-1		
A37089	40"	PARKER 5/16-201	PARKER 5/16-6-23920-1	PARKER 5/16-6-23920-1		
A37090	24"	PARKER 5/16-201	PARKER 5/16-6-20620-1	PARKER 5/16-6-20620-1		
A37091	53"	PARKER 5/16-201	PARKER 5/16-6-23920-1	PARKER 5/16-6-20620-1		
A37092	85"	PARKER 5/16-201	PARKER 5/16-6-23920-1	PARKER 5/16-6-23920-1		
A37094	21"	PARKER 5/8-821	PARKER 5/8-10-30682-4	PARKER 5/18-10-30682-4		

BANTAM NUMBER	HOSE LENGTH	AEROQUIP HOSE #	END A AEROQUIP #	END B AEROQUIP #	SLEEVE NUMBER	SLEEVE LENGTH
A37097	100"	PARKER 5/16-201	PARKER 5/16-6-23920-1	PARKER 5/16-6-24120-1		
A37098	158"	PARKER 5/16-201	PARKER 5/16-6-23920-1	PARKER 5/16-6-24120-1		
A37099	86"	PARKER 1/2-343	PARKER 1/2-8-20634-1	PARKER 1/2-8-20634-1		
A37101	114"	PARKER 1/2-343	PARKER 1/2-8-20634-1	PARKER 1/2-8-20634-1		
A37154	38"	1525-10	PARKER 5/8-10-30682-4	PARKER 5/8-10-30682-4		
A37155	28"	PARKER 5/8-821	PARKER 5/8-10-30682-4	PARKER 5/8-10-30682-4		
A37156	24"	1503-16	411-16	411-16		
A37157	31"	1503-16	411-16	412-16-16		
A37158	40"	1508-16	190469-16S	191400-20-16S		
A37159	40"	PARKER 3/4-343	PARKER 1 3/4-12-20634-1	PARKER 1 3/4-12-20634-1		
A37160	38"	PARKER 3/4-343	PARKER 1 3/4-12-20634-1	PARKER 1 3/4-12-20634-1		
A37161	20"	PARKER 3/4-821	PARKER 3/4-12-30682-4	PARKER 3/4-12-30682-4		
A37226	41"	FC107-06	FC9211-06-06S	FC9211-06-06S		
A37227	12"	FC107-06	FC9211-06-06S	FC9235-06-06S		
A37228	24"	FC107-06	FC9211-06-06S	FC9235-06-06S		
A37258	70"	107-10	FC9235-12-12S	FC9232-12-12S		
A37259	86"	107-10	FC9235-12-12S	FC9235-12-12S		
A37260	18"	107-12	FC9235-12-12S	FC9235-12-12S		
A37261	17"	107-12	FC9211-12-12S	FC9211-12-12S		
A37967	28"	1503-8	411-8S	190296-8S		
A38183	18"	1503-6	190261-6	190261-6		
A38184	25"	1503-6	411-6	190261-6		
A38201	115"	PARKER 5/16-201	PARKER 5/16-6-23920-1	PARKER 5/16-6-20620-1		
A38355	33"	1503-12	190261-12S	411-12S		

Bantam Number	Hose Length	Aeroquip Hose #	End A Aeroquip #	End B Aeroquip #	Sleeve Number1	Sleeve Length
A38356	20"	1503-12	411-12S	190261-12S		
A38394	17"	1508-16	479003-20-16	190469-16		
A38395	23"	1508-16	479003-20-16	190468-16		
A38558	168"	Parker 5/16-201	Parker 5/16-6-23920-1	Parker 5/16-6-24120-1		
A38604	100"	1525-10	4797-10B	4797-10B		
A38672	19"	1509-8	190264-8S	4721-8-8		
A38678	54"	1508-12	190468-12S	4730-12S		
A38679	48"	1508-12	190469-12S	4730-12S		
A38752	132"	2781-8	FC9789-08-08S	4725-10-8S		
A38775	75"	FC152-6	190261-6S	411-6S		
A38832	70"	107-10	FC9235-12-12S	FC9211-12-12S		
A38842	37"	2556-10	4797-10B	4797-10B		
A38844	28"	1503-16	411-16	412-16-16		
A38845	24"	1503-8	411-8	190296-8		
A38996	21"	2781-8	190264-8S	4721-8-8S		
A39779	50"	1508-12	4730-12S	4730-12S		
A39780	52"	1508-12	4730-12S	4730-12S		
A39781	53"	1508-16	4730-16S	190470-16S		
A39782	67"	1508-16	4730-16S	190469-16		
A40843	38"	1503-8	190296-8	190296-8		
A41189	540"	2781-12	4722-12-12S	4721-12S	Slack Grip Kellem #003-08-004	
A41192	166"	2781-12	4721-12S	190264-12S		
A41193	176"	2781-12S	190287-12S	190264-12		
A41304	168"	1503-6	411-6	411-6		
A41305	105"	1503-6	411-6	411-6		
A41306	168"	1503-8	190296-8	190295-8		
A41307	98"	1503-8	190296-8	190295-8		

S-626, S-628

Bantam Number	Hose Length	Aeroquip Hose #	End A Aeroquip #	End B Aeroquip #	Sleeve Number	Sleeve Length
A41794	142"	2781-12	190263-12S	4721-12S		
A41795	146"	2781-12	190263-12S	4721-12S		
A41796	11"	1508-12	190470-12S	190469-12S		
A41835	135"	FC107-06	FC9211-06-06S	FC9211-06-06S		
A41836	100"	FC107-04	FC9215-0404S	FC9402-05-04S		
A41840	118"	1525-10	4797-10B	4797-10B		
A41841	21"	2781-8	190263-8S	190263-8S		
A41842	58"	1508-16	4730-16	4730-16		
A41843	62"	1508-16	4730-16	4730-16		
A49036	172"	1508-12	190468-12	4730-12		
A49087	104"	2781-8	190263-8S	190264-8S		
A49088	158"	2781-8	190263-8S	4721-8S		
A49089	22"	2781-8	4721-8-8S	4721-8-8S		
A49090	158"	2781-8	190264-8S	190264-8S		
A49091	100"	2781-8	4721-8-8S	190264-8S		
A49092	79"	2781-8	190263-8S	4721-8-8		
A49093	16"	2781-8	4721-8-8S	4721-8-8S		
A49095	168"	2781-8	190263-8S	4721-8S		
A49100	22"	1508-16	4730-16S	190469-16S		
A49101	32"	Parker 3/4-821	Parker 3/4-12-30682-4	Parker 3/4-12-30682-4		
A49102	38"	1508-16	476703-20-16S	4730-16S		
A49103	20"	1503-8	190296-8S	411-8S		
A49104	38"	2781-8	190264-8S	4721-8-8S		
A49192	114"	2781-8	190263-8S	190264-8S		
A49345	38"	1508-16	190469-16S	190468-16S		
A49346	11"	1503-16	190261-16	411-16		
A49347	35"	1508-16	19069-16S	19069-16S		
A49348	19"	1503-16	411-16	411-16		

Bantam Number	Hose Length	Aeroquip Hose #	End A Aeroquip #	End B Aeroquip #	Sleeve Number	Sleeve Length
A49349	112"	1508-12	4730-12S	479003-16-12	900705-6	24"
A49351	19"	1525-10	4797-10B	4797-10B		
A49366	20"	1503-16	411-16S	190261-16		
A49367	33"	1508-16	190469-16S	4730-16S		
A49368	23"	1508-16	190468-16S	190469-16		
A49369	26"	1503-16	411-16S	190261-16		
A49401	4"	2781-8	4721-8-8S	4721-8-8S		
A49402	5"	2781-8	4721-8-8S	4721-8-8S		
A49434	26"	1508-16	190468-16	191400-20-16		
A49435	19"	1508-16	190469-16	479003-20-16		
A50427	31"	1503-16	412-16-16S	411-16S		