RUTHZIL TRATOR COMERCIAL DE PEÇAS LTDA 11 97083-6812 ROLANDO

Bobcat®

Parts Manual
S630 Skid-Steer Loader

S/N A3NT11001 & Above

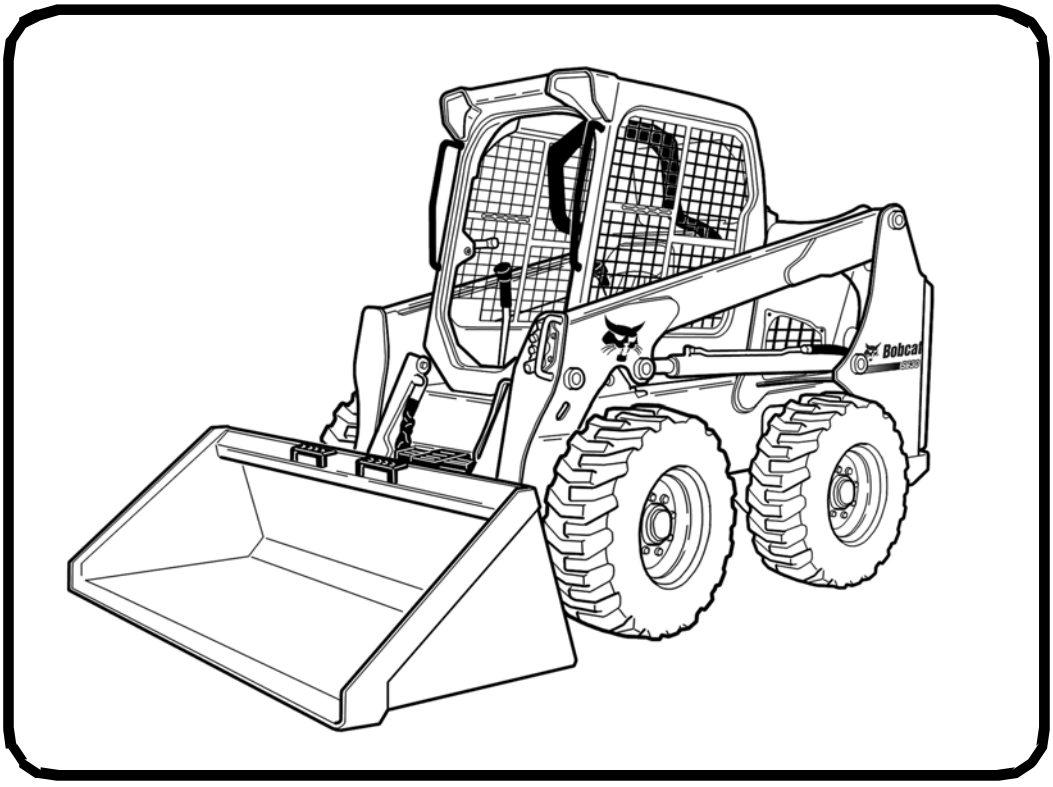

EQUIPPED WITH
BOBCAT INTERLOCK
CONTROL SYSTEM (BICS™)

6987161 (4-09)

Printed in U.S.A.

© Bobcat Company 2009

Page 1 - OSS# 2072104 - All rights reserved by Bobcat Company - 01/20/2010 - 17:21:58 - Produced by Ken Cook Co. with mediaioff

GENERAL INFORMATION

Before ordering parts, ALWAYS provide dealer with your product model number and complete serial number information. Before ordering parts, verify correct part numbers and/or serial numbers with your dealer. When using the machine serial number, use the complete number.

Some serial number breaks are not available at time of printing.
These are listed as & Bel or & Abv or - (thru)

The number shown in the quantity column in this manual is the number of parts needed for the illustration on the page. For some parts an "x" will be shown in the quantity column. This "x" indicates that the quantity to be used is "As Needed".

When references LH (Left Hand) and RH (Right Hand) are used in this manual, it is done from the operator's seat in the forward operating position.

When "See Illustration…." appears in the remarks column, refer to the contents page for the illustration title to find page number location.

Some of the illustrations and information found in this parts manual were supplied to Bobcat by machine component companies.

For additional information on the Bobcat website visit www.bobcat.com

ABBREVIATIONS

SALES = Order from Gwinner Sales Department	P/M = Parts Manual
NSS = Not Serviced Separately	S/L = Service Letter
NAP = Not Available as Parts	W/ = With
BTI = Bobcat Technical Information Bulletin	W/ O= Without
O/M = Operation & Maintenance Manual	ID = Inside Diameter
S/M = Service Manual	OD = Outside Diameter
AHC = Advanced Hand Controls	" = Inches
ACS = Advanced Control System	' = Feet
SJC = Selectable Joystick Controls	mm = Millimeters

TRANSLATION KITS & DECAL KITS

AR = Argentina (Spanish) BR = Brazil (Portugese) JP = Japanese
(Translation Kit includes Safety Manual, Operators Manual & Decal Kit)

DISPOSITION

(Found in the Remarks Column)

[A] = Use Up
[B] = Use Up on Other Applications
[C] = File PDR Report with Bobcat Parts Sales
[D] = Part Number Error

Page 2 - OSS# 2072104 - All rights reserved by Bobcat Company - 01/20/2010 - 17:21:58 - Produced by Ken Cook Co. with mediaioff

NOTE D'INFORMATION

Pour toute référence au numéro de série de l'engin, toujours donner le numéro complet.

Le chiffré apparaissant dans la colonne des quantités de ce manuel représentent le nombre de pièces nécessaires pour l'illustration reprise sur la page. Dans certains cas, on lira un "x" dans la colonne des quantités. Cet "x" indique que la quantité nécessaire est "selon besoin".

Pour toute référence vers la GAUCHE ou la DROITE dans ce manuel, considérer que la personne se trouve assise dans le siège de l'opérateur, en position de fonctionnement en marche avant.

Certaines illustrations et informations reprises dans ce manuel de pièces de rechange ont été fournies à Bobcat/Ingersoll–Rand par des fabricants de composants.

ABREVIATIONS & SYMBOLES

SALES	= Commander au Service Ventes à Bruxelles
NSS	= Pas vendu séparément
NAP	= Non disponible comme pièce de rechange
*****	= Chapitre, page ou numéro de pièce modifié ou supplémentaire
BTI	= Bobcat Technical Information Bulletin : voir à la fin de la microfiché du modèle concerné ou la microfiche générale reprenant l' ensemble des "BTI".
was 6535403	= était avant 6535403
adj. (adjustment)	= réglage
Assembly	= ensemble
available W/Ref.	= disponible avec réf.
bulk/sold per foot	= en vrac/vendu par pied
does not include	= ne comprend pas
included with	= compris dans
I.D.	= D.I. (diamètre intérieur)
O.D.	= D.E. (diamètre extérieur)
not in kit	= pas en kit
W/ – WO/	= inclus/ – non inclus/
Qty	= quantité requise
see page/ref.	= voir page/réf.
used with ref/	= utilisé avec réf.
0,05 inch thickness	= 0,05 pouce d'épaisseur (un pouce = 25.4 mm)
weld on	= à souder

Page 3 - OSS# 2072104 - All rights reserved by Bobcat Company - 01/20/2010 - 17:21:58 - Produced by Ken Cook Co. with mediaioff

ALLGEMEINE INFORMATIONEN

Bei Angabe der Maschinen-Seriennummer stets die komplette Nummer angeben.

Bei der in der Mengenspalte (Anzahl) in diesem Handbuch angegebenen Zahl handelt es sich um die Anzahl von Teilen, die für die Abbildung auf der betreffenden Seite benötigt werden. Bei manchen Teilen in der Mengenspalte ist ein “x” angegeben. Dieses “x” weist darauf hin, dass sich die Anzahl der verwendeten Teile auf den “Bedarf” bezieht.

Bei Verwendung der Seitenangaben links und rechts in diesem Handbuch gelten diese für die Blickrichtung vom Fahrersitz aus, und zwar in Vorwärts-Betriebsrichtung.

Einige der in diesem Ersatzteilhandbuch aufgeführten Abbildungen und Informationen wurden der Bobcat/Ingersoll-Rand von den Herstellern von Maschinenbauteilen zur Verfügung gestellt.

ABKÜRZUNGEN UND SYMBOLE

SALES	= Bestellung bei der Verkaufsabteilung in Brüssel
NSS	= Nicht einzeln erhältlich
NAP	= Nicht als Ersatzteil erhältlich
*****	= Geänderte oder hinzugefügte Abschnitte, Seiten oder Teilenummern
BTI	= Bobcat Technical Information Bulletin : Siehe am Ende der Mikrokarte des jeweiligen Modells oder der allgemeinen Mikrokarte der BTI.
was 6535403	= War 6535403
adj.	= Einstellung
Assembly	= Baugruppe
available W/Ref.	= erhältlich mit der Referenz
bulk/sold per foot	= Mengenabnahme / Verkauf pro Fuss
does not include	= beinhaltet nicht
included with	= enthalten in
I.D.	= Innendurchmesser
O.D.	= Aussendurchmesser
not in kit	= nicht in Bausatz
W/ - WO/	= mit/ - ohne/
Qty	= Anzahl
see page/ref.	= Siehe Seite / Referenz
used with ref.	= verwendet mit Referenz
0.05 inch thickness	= Dicke : 0.05 Zoll (ein Zoll = 25.4 mm)
weld on	= anschweissen

Page 4 - OSS# 2072104 - All rights reserved by Bobcat Company - 01/20/2010 - 17:21:58 - Produced by Ken Cook Co. with mediaioff

INFORMAZIONI GENERALI

Quando si usa il numero di serie della macchina usare il numero completo.

Il numero mostrato nella colonna della quantità di questo manuale corrisponde al numero di componenti necessari per l'illustrazione della pagina. Per alcuni componenti appare "X" nella colonna delle quantità. Questa "X" indica che la quantità da usare è "come necessario".

See in questo manuale si fa riferimento alla parte destra o sinistra, si intende dal sedile dell'operatore nella posizione in avanti di funzionamento.

Alcune delle illustrazioni e informazioni trovate in questo manuale di componenti sono state fornite alla Bobcat/Ingersoll–Rand da società di componenti di macchine.

SIMBOLI E ABBREVIAZIONI

SALES	= Ordinare al servizio vendite di Bruxelles
NSS	= Non vendute separatamente
NAP	= Non disponibile come componente
*****	= Sezioni, pagine o numeri di componente cambiati o aggiunti
BTI	= (Bobcat Technical information) Ved. al termine del microfiche del modello relativo oppure microfiche generale
was 6535403	= era 6535403
adj. (adjustment)	= regol. (regolazione)
Assembly	= Complessivo
available W/Ref.	= disponibile con rif.
bulk/sold per foot	= alla rinfusa/venduto al piede
does not include	= non comprende
Included with	= compreso con
I.D.	= d. i.
O.D.	= d. e.
not in kit	= non fa parte del kit
W/ – WO/	= con – senza
Qty	= Qtà
see page/ref	= ved. pagina/rif.
used with ref.	= usato con il rif.
0,05 inch thickness	= spessore 0,05 pollici (un pollice = 25,4 mm)
weld on	= a saldare

Page 5 - OSS# 2072104 - All rights reserved by Bobcat Company - 01/20/2010 - 17:21:58 - Produced by Ken Cook Co. with mediaioff

INFORMACION GENERAL

Al utilizar el número de serie de la máquina, debe emplearse el número completo.

El número que figura en la columna de “Unidades” en este manual es el número de piezas que se necesitan para la ilustración que consta en la página. En algunas piezas aparece una “x” en la columna de “Unidades”. Esta “x” indica que las unidades a utilizar son “según sea necesario”.

Cuando se empleen las referencias izq. y dcha., éstas se entienden mirando desde el asiento del conductor, en posición de marcha adelante.

Algunas de las ilustraciones y la información que figuran en este manual de piezas han sido facilitadas a Bobcat/Ingersoll–Rand por empresas de componentes de máquinas.

ABREVIATURAS Y SIMBOLOS

VENTAS	= Pedido al Departamento de Ventas de Bruselas
NSS	= No se vende por separado
NAP	= No disponible como pieza de repuesto
*****	= Secciones, páginas o referencias modificadas o añadidas
BTI	= (Bobcat Tecnical Information) Ver al final de la microficha del modelo afectado o en la microficha general “Boletín de Información Técnica Bobcat”.
was 6535403	= era anteriormente el 6535403
adj. (adjustment)	= ajuste
assembly	= conjunto
available W/Ref.	= disponible con la ref.
bulk/sold per foot	= a granel/vendido por pies
does not include	= no incluye
included with	= incluido en
I.D.	= diámetro interior
O.D.	= diámetro exterior
not in kit	= no en el kit
W/ – WO/	= con/ – sin
Qty	= Unidades
see page /ref.	= ver página/ref.
used with ref.	= empleado con la ref.
0,05 inch thickness	= 0,05 pulgadas de espesor (1 pulgada = 25,4 mm)
weld on	= debe ser soldado

Page 6 - OSS# 2072104 - All rights reserved by Bobcat Company - 01/20/2010 - 17:21:58 - Produced by Ken Cook Co. with mediaioff

ALGEMENE INFORMATIE

Als u het serienummer van de machine gebruikt, geef dan het gehele serienummer.

Het cijfer dat voorkomt in de kolom “Aantal”, in deze handleiding, is het aantal onderdelen dat nodig is van de illustratie op de pagina. Voor sommige onderdelen staat er een “x” in de kolom “Aantal”. Deze “x” betekent dat er een aantal “zoals nodig” vereist is.

Wanneer er in deze handleiding naar “links” en naar “rechts” gerefereerd wordt, moet dit verstaan worden voor een bestuurder die in de bestuurdersstoel zit in de voorwaartse bedrijfsstand.

Sommige van de illustraties en informatie in deze onderdelen-handleiding werden door firma’s van machine-componenten geleverd aan Bobcat/Ingersoll-Rand.

AFKORTINGEN EN SYMBOLEN

SALES	= Bestellen bij de Verkoopafdeling te Brussel
NSS	= Niet afzonderlijk te verkrijgen
NAP	= Niet beschikbaar als onderdeel
*****	= Gewijzigde of toegevoegde paragrafen, pagina’s of onderdeelnummers
BTI	= Bobcat Technical Information Bulletin : Zie einde van de microfiche van het desbetreffende model of einde van de algemene microfiche die het geheel van alle “BTI” herneemt.
was 6535403	= was vroeger 6535403
adj. (adjustment)	= afstelling
Assembly	= geheel
available W/Ref.	= beschikbaar met ref.
bulk/sold per foot	= bulk/aan de meter verkocht
does not include	= bevat niet
includes with	= is bevat in
I.D.	= ϕ inw. (inwendige diameter)
O.D.	= ϕ uitw. (uitwendige diameter)
not in kit	= niet in de kit
W/ - WO/	= met/ - zonder/
Qty	= vereiste aantal
see page/ref.	= zie pagina/ref.
used with ref/	= gebruikt met ref.
0,05 inch thickness	= 0.05 inch dik (een inch = 25.4 mm)
weld on	= te lassen

Page 7 - OSS# 2072104 - All rights reserved by Bobcat Company - 01/20/2010 - 17:21:58 - Produced by Ken Cook Co. with mediaioff

Use only Bobcat belts and hoses to maintain maximum service life.

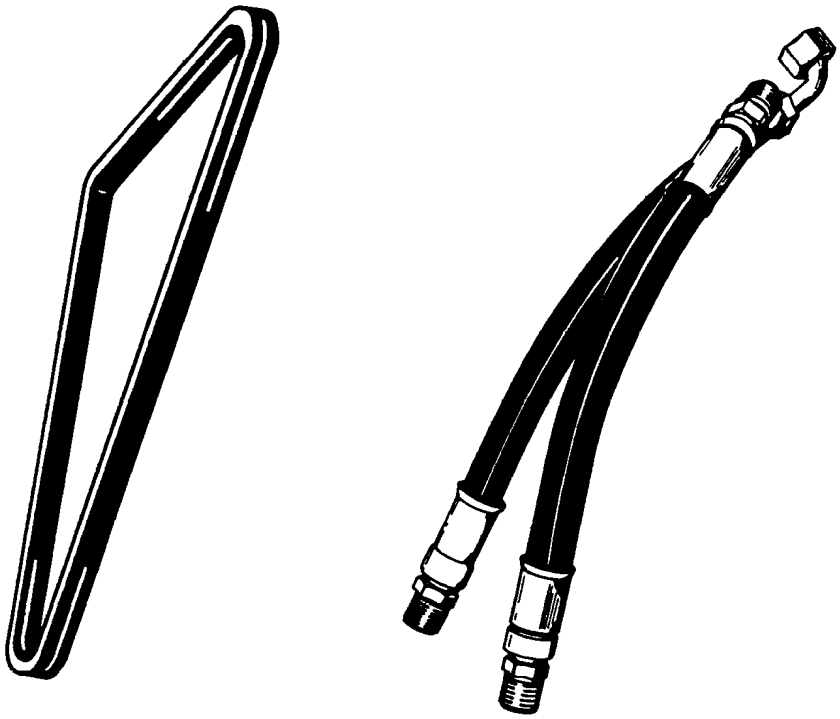

Available from Bobcat Parts.

Bobcat®

Page 8 - OSS# 2072104 - All rights reserved by Bobcat Company - 01/20/2010 - 17:21:58 - Produced by Ken Cook Co. with mediaioff

CONTENTS

MAINTENANCE ITEMS 1-10
MAINTENANCE ITEMS 1-10

MAIN FRAME 11-36
MAIN FRAME 11
OPERATOR CAB 13
CAB INTERIOR 15-36
SEAT BAR 17-20
SEAT & SEAT BELT 21
REAR DOOR 23
LIFT ARM & BOBTACH 25
BOB-TACH 27
PANELS & FLOOR PAN 29-32

DRIVE TRAIN 37-48
DRIVE TRAIN 37
AXLE 39
MOTOR CARRIER 41-44
DISC BRAKE 45
TRANSMISSION COVERS 47

HYDRAULIC SYSTEM 49-72
HYDRAULIC CIRCUITRY 49
MANUAL LIFT RELEASE SYSTEM 51
AUXILIARY HYDRAULICS 53
TILT CYLINDER 55-58
LIFT CYLINDER 59
CONTROL PEDALS 61
CONTROL VALVE 63-70
MANUAL LIFT RELEASE VALVE 71

HIGH FLOW HYDRAULICS 73-76
HIGH FLOW HYDRAULICS 73-76

HYDROSTATIC SYSTEM 77-124
HYDROSTATIC PUMP 101-118
GEAR PUMP 119
COOLING FAN MOTOR 121
2-SPEED VALVE 123
HYDROSTATIC CIRCUITRY 77-84
HYROSTATIC CIRCUITRY 85
RADIATOR/COOLER ASSEMBLY 87
HAND CONTROLS 89-92
HYDROSTATIC MOTOR 93
HYDROSTATIC MOTOR & BRAKE 95-98
HYDROSTATIC PUMP/GEAR PUMP 99

ELECTRICAL SYSTEM 125-154
CAB ELECTRICAL 125-128
ENGINE ELECTRICAL CIRCUITRY 129-136
CONNECTOR HARNESS ASSEMBLY 137
CONTROLS ELECTRICAL 139-150
ALTERNATOR 151
STARTER 153

POWER UNIT 155-220
COOLING SYSTEM 155-158
ENGINE & ATTACHING PARTS 159-166
ENGINE SPEED CONTROL 167-172

Page 9 - OSS# 2072104 - All rights reserved by Bobcat Company - 01/20/2010 - 17:21:58 - Produced by Ken Cook Co. with mediaoff

CONTENTS (Cont'd)

POWER UNIT

ENGINE & UPPER GASKET KIT 173
ENGINE LOWER GASKET KIT 175
FRONT COVER 177
CRANKCASE 179
ROCKER ARM COVER 181
VALVE & ROCKER ARM 183
CYLINDER HEAD 185
OIL PAN 187
PISTON AND CRANKSHAFT 189-192
CAMSHAFT AND IDLE GEAR SHAFT 193
WATER PUMP & THERMOSTAT 195
MANIFOLDS 197
TURBOCHARGER 199
EGR VALVE 201
EGR COOLER 203
FUEL & INJECTION PUMP 205
INJECTION PUMP 207-210
GOVERNOR 211-214
INJECTION NOZZLES 215
INJECTION PIPE 217
AIR CLEANER 219

ACCESSORIES & OPTIONS 221-362

ACS CONVERSION KIT 221
ASPIRATION HOSE KIT 223
BACKUP ALARM KIT 225-228
BEACON 229
BLOCK HEATER 231
BUCKET POSITION VALVE KIT 233
BUCKET POSITION VALVE 235
CAB 237-250
CAB DOOR 251-258
CAB SEAL KIT 259
CAB WINDOWS 261-264
COUNTERWEIGHT KIT 265-268
DECALS 269-272
ELECTRICAL CONTROLS KIT 273-276
EUROPEAN ACCESSORIES 277
FIRE EXTINGUISHER 279
FLASHER LIGHTS 281
F.O.P.S KIT 283
GAS SPRING KIT 285
HEATER & A/C 287-302
HORN KIT 303-306
LIFT KIT 307-310
PEDAL EXTENDERS 311
POWER BOB-TACH 313-320
PURIFIER 321
REAR DOOR LOCK 323
SEAT KIT 325
SEAT 327-330
SEAT BELT 331-340

Page 10 - OSS# 2072104 - All rights reserved by Bobcat Company - 01/20/2010 - 17:21:58 - Produced by Ken Cook Co. with media1off

CONTENTS (Cont'd)

ACCESSORIES & OPTIONS
STEERING CONTROLS 341
SOUND/NOISE REDUCTION KIT 343
SOUND/NOISE REDUCTION OPTION 345-348
STEERING DAMPENER KIT 349
STROBE LIGHT 351
TIRES & RIMS 353-356
WHITE DECAL KIT 357
BULK ITEMS 359-362
NUMERICAL INDEX 364-410

Page 11 - OSS# 2072104 - All rights reserved by Bobcat Company - 01/20/2010 - 17:21:58 - Produced by Ken Cook Co. with media1off

MAINTENANCE ITEMS

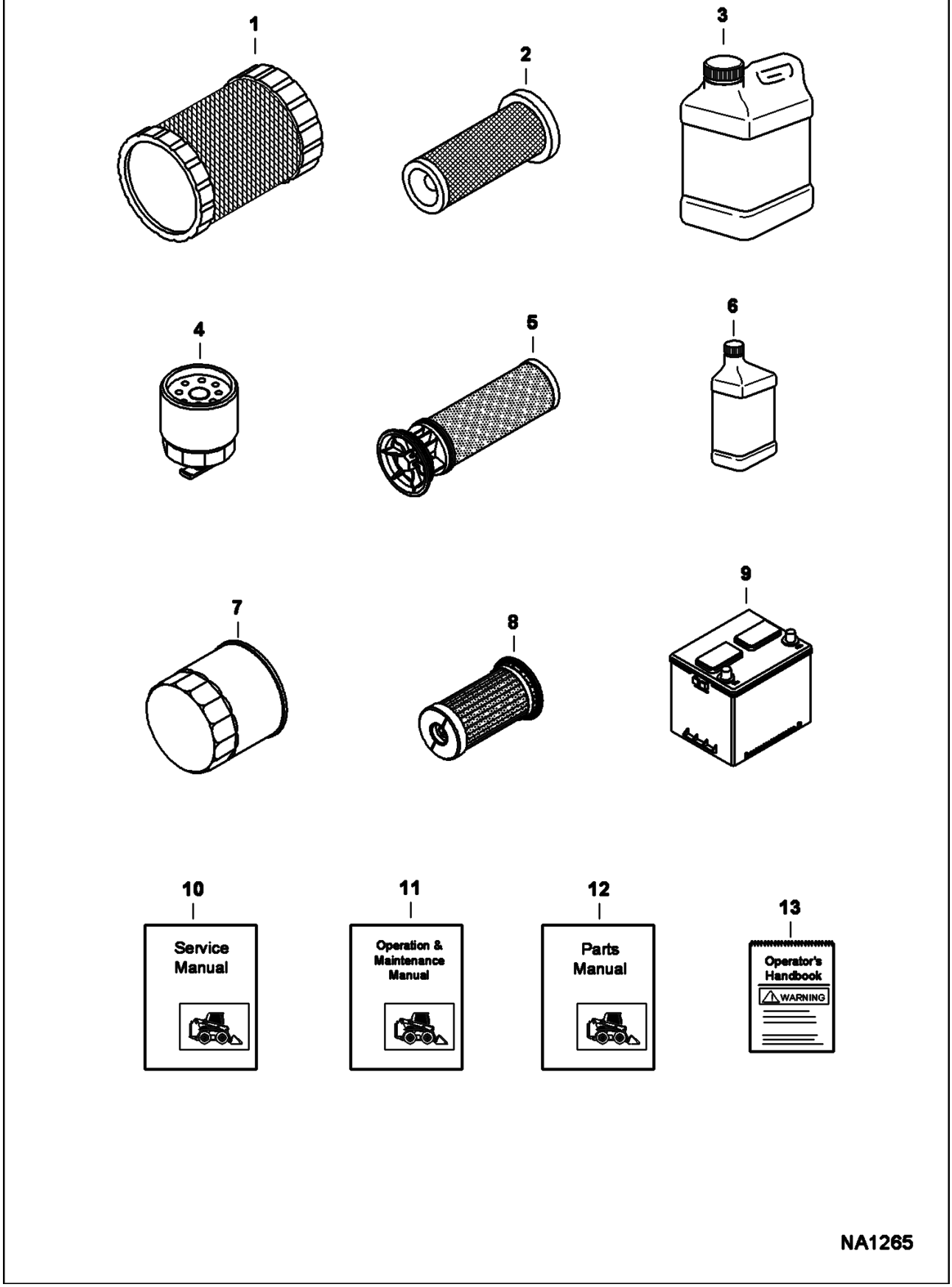

Page 12 - OSS# 2072104 - All rights reserved by Bobcat Company - 01/20/2010 - 17:21:58 - Produced by Ken Cook Co. with media1off

Ref No	Part Number	Description	Remarks	Serial Number	Qty
1	6698057	FILTER, AIR OUTER	See Illustration AIR CLEANER/ NA2170		1
2	6698058	FILTER, AIR INNER	See Illustration AIR CLEANER/ NA2170		1
3	6903117	FLUID, OIL HYD 2.5 GAL 2			x
3	6903118	FLUID, OIL HYD 5 GAL			x
3	6903119	FLUID, OIL HYD 55 GAL			x
4	6667352	FILTER FUEL	See Illustration FUEL SYSTEM/ NA1262		1
5	7002734	FILTER			1
6	6903107	OIL, 10W30 QT. 12			x
6	6903105	OIL, 15W40 QT. 12			x
6	6903109	OIL 30W QT. 12			x
6	6903106	OIL, 15W40 GAL. 6			x
6	6903108	OIL, 10W30 GAL. 6			x
6	6903110	OIL, 30W GAL. 6			x
6	6903112	OIL, 10W30 2.5 GAL 2			x
6	6903113	OIL, 15W40 2.5 GAL. 2			x
6	6903111	OIL 30W 2.5 GAL 2			x
7	6678233	OIL FILTER	See Illustration EGR COOLER/ B27843		x
8	6692337	FILTER, HYD CARTRIDGE	See Illustration COOLING FAN MOTOR/ MS2514		x
9	6674687	BATTERY, DRY 600 AMP	See Illustration ENGINE ELECTRICAL CIRCUITRY/ NA2163		1
9	6665427	BATTERY, DRY 950 AMP	See Illustration ENGINE ELECTRICAL CIRCUITRY/ NA2163		x
10	6987160	MANUAL SERVICE S215 LOADER	printed		1
10	6987160-CD	MANUAL SERVICE S215 LOADER-CD			1
11	6987159	MANUAL OPERATION & MAINTENANCE S215 LOADER	printed		1
11	6987159-CD	MANUAL OPERATION & MAINTENANCE S215 LOADER-CD			1
12	6987161	MANUAL PARTS S630 LOADER	printed		1
12	6987161-CD	MANUAL PARTS S630 LOADER-CD			1
13	7170117	MANUAL, QUICK REF	W/wire rope		1

Page 13 - OSS# 2072104 - All rights reserved by Bobcat Company - 01/20/2010 - 17:21:58 - Produced by Ken Cook Co. with media1off

MAINTENANCE ITEMS
(50 Hour)

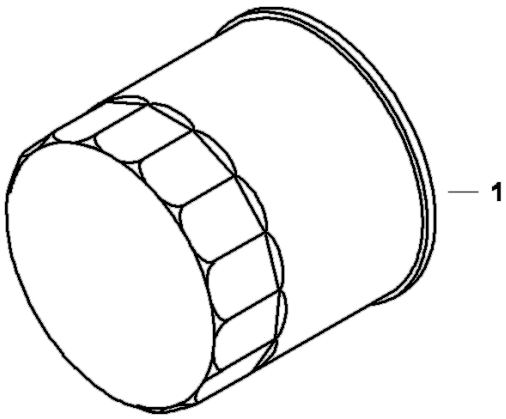

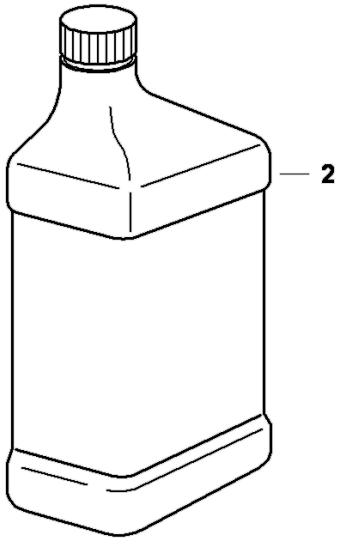

NA1341

Page 14 - OSS# 2072104 - All rights reserved by Bobcat Company - 01/20/2010 - 17:21:58 - Produced by Ken Cook Co. with media1off

MAINTENANCE ITEMS (Cont'd)
(50 Hour)

Ref No	Part Number	Description	Remarks	Serial Number	Qty
1	6678233	OIL FILTER	See Illustration EGR COOLER/ B27843		1
2	6903107	OIL, 10W30 QT. 12			x
2	6903105	OIL, 15W40 QT. 12			x
2	6903109	OIL 30W QT. 12			x
2	6903106	OIL, 15W40 GAL. 6			x
2	6903108	OIL, 10W30 GAL. 6			x
2	6903110	OIL, 30W GAL. 6			x
2	6903112	OIL, 10W30 2.5 GAL 2			x
2	6903111	OIL 30W 2.5 GAL 2			x
2	6903113	OIL, 15W40 2.5 GAL. 2			x

Page 15 - OSS# 2072104 - All rights reserved by Bobcat Company - 01/20/2010 - 17:21:58 - Produced by Ken Cook Co. with media1off

MAINTENANCE ITEMS
(250 Hours)

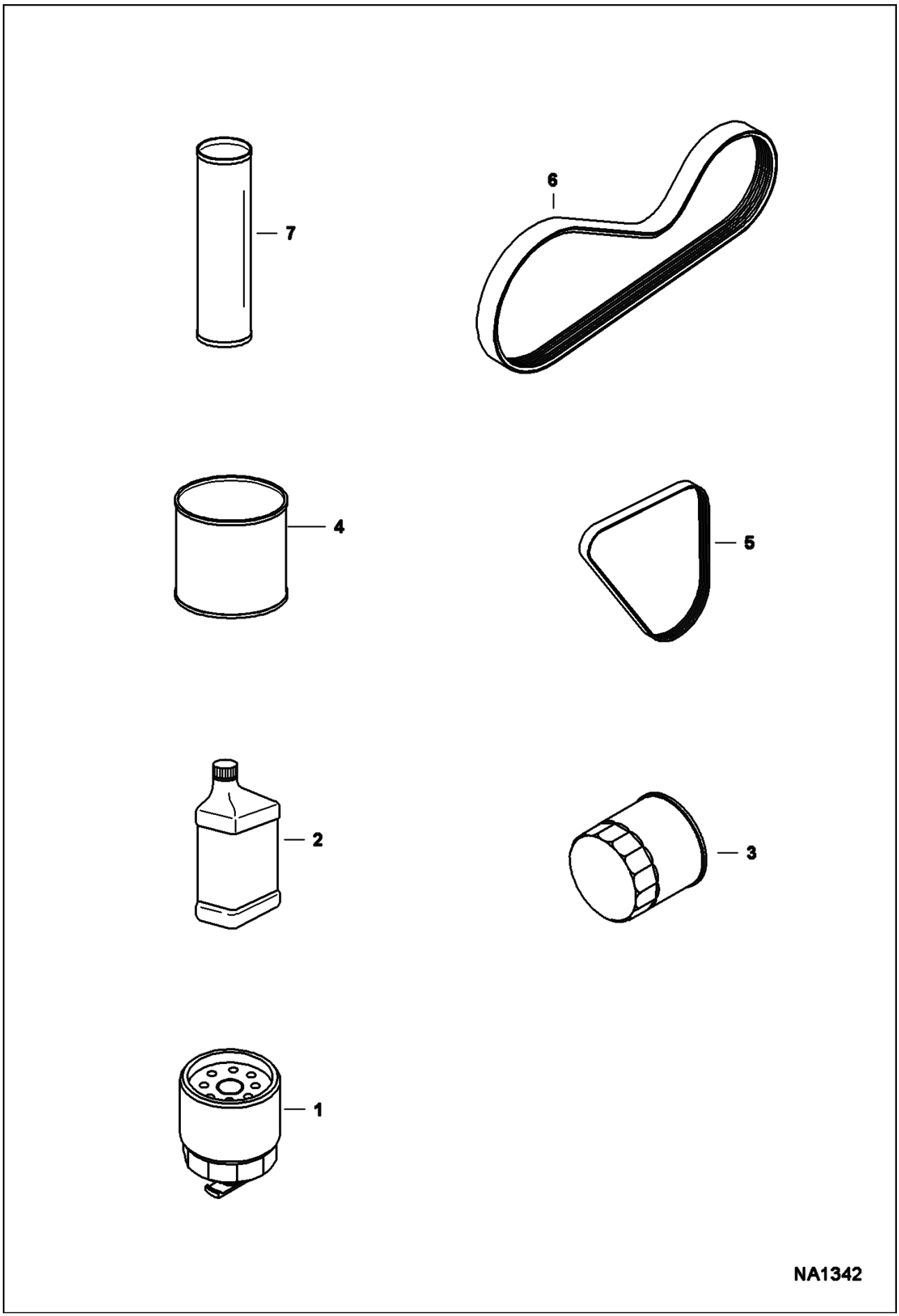

Page 16 - OSS# 2072104 - All rights reserved by Bobcat Company - 01/20/2010 - 17:21:58 - Produced by Ken Cook Co. with media1off

MAINTENANCE ITEMS (Cont'd)
(250 Hours)

Ref No	Part Number	Description	Remarks	Serial Number	Qty
1	6667352	FILTER FUEL	See Illustration FUEL SYSTEM/ NA1262		1
2	6903107	OIL, 10W30 QT. 12			x
2	6903105	OIL, 15W40 QT. 12			x
2	6903109	OIL 30W QT. 12			x
2	6903106	OIL, 15W40 GAL. 6			x
2	6903108	OIL, 10W30 GAL. 6			x
2	6903110	OIL, 30W GAL. 6			x
2	6903112	OIL, 10W30 2.5 GAL 2			x
2	6903113	OIL, 15W40 2.5 GAL. 2			x
2	6903111	OIL 30W 2.5 GAL 2			x
3	6678233	OIL FILTER	See Illustration EGR COOLER/ B27843		x
4	6903121	LUBE, GEAR 12			x
5	7142000	BELT, ALT	See Illustration ENGINE & ATTACHING PARTS/ NA1279		x
6	7147859	BELT, DRIVE	See Illustration ENGINE & ATTACHING PARTS/ NA1278 eng/hydrostatic drive		x
7	6903122	GREASE, MULTI PURPOSE #2 - 10			x

Page 17 - OSS# 2072104 - All rights reserved by Bobcat Company - 01/20/2010 - 17:21:58 - Produced by Ken Cook Co. with media1off

MAINTENANCE ITEMS
(500 Hours)

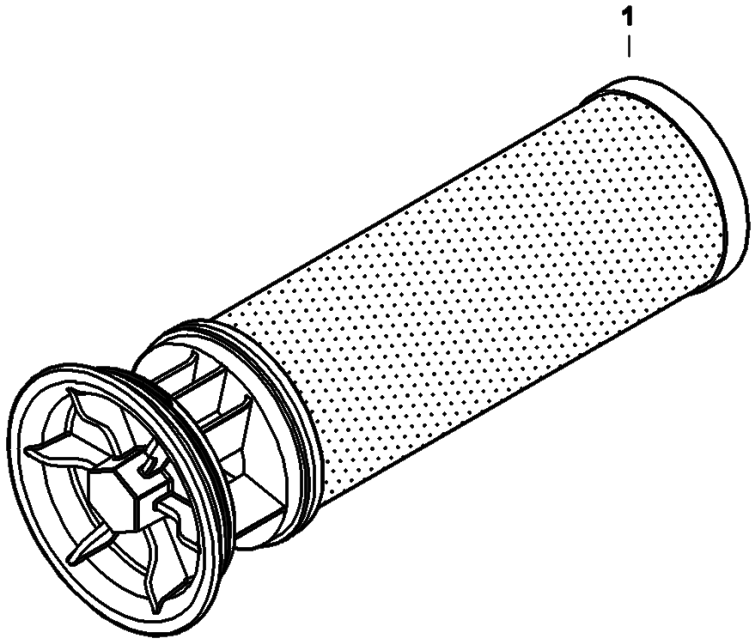

Page 18 - OSS# 2072104 - All rights reserved by Bobcat Company - 01/20/2010 - 17:21:58 - Produced by Ken Cook Co. with media1off

MAINTENANCE ITEMS (Cont'd)
(500 Hours)

Ref No	Part Number	Description	Remarks	Serial Number	Qty
1	7002734	FILTER			1
2	6727475	CAP	See Illustration HYDROSTATIC CIRCUITRY/ NA1224		1
3	6692337	FILTER, HYD CARTRIDGE	See Illustration COOLING FAN MOTOR/ MS2514 - charge		1

Page 19 - OSS# 2072104 - All rights reserved by Bobcat Company - 01/20/2010 - 17:21:58 - Produced by Ken Cook Co. with media1off

MAINTENANCE ITEMS
(1000 Hour)



NA1344

Page 20 - OSS# 2072104 - All rights reserved by Bobcat Company - 01/20/2010 - 17:21:58 - Produced by Ken Cook Co. with media1off

MAINTENANCE ITEMS (Cont'd)
(1000 Hour)

Ref No	Part Number	Description	Remarks	Serial Number	Qty
1	6903117	FLUID, OIL HYD 2.5 GAL 2			x
1	6903118	FLUID, OIL HYD 5 GAL			x
1	6903119	FLUID, OIL HYD 55 GAL			x

Page 21 - OSS# 2072104 - All rights reserved by Bobcat Company - 01/20/2010 - 17:21:58 - Produced by Ken Cook Co. with media1off

MAIN FRAME

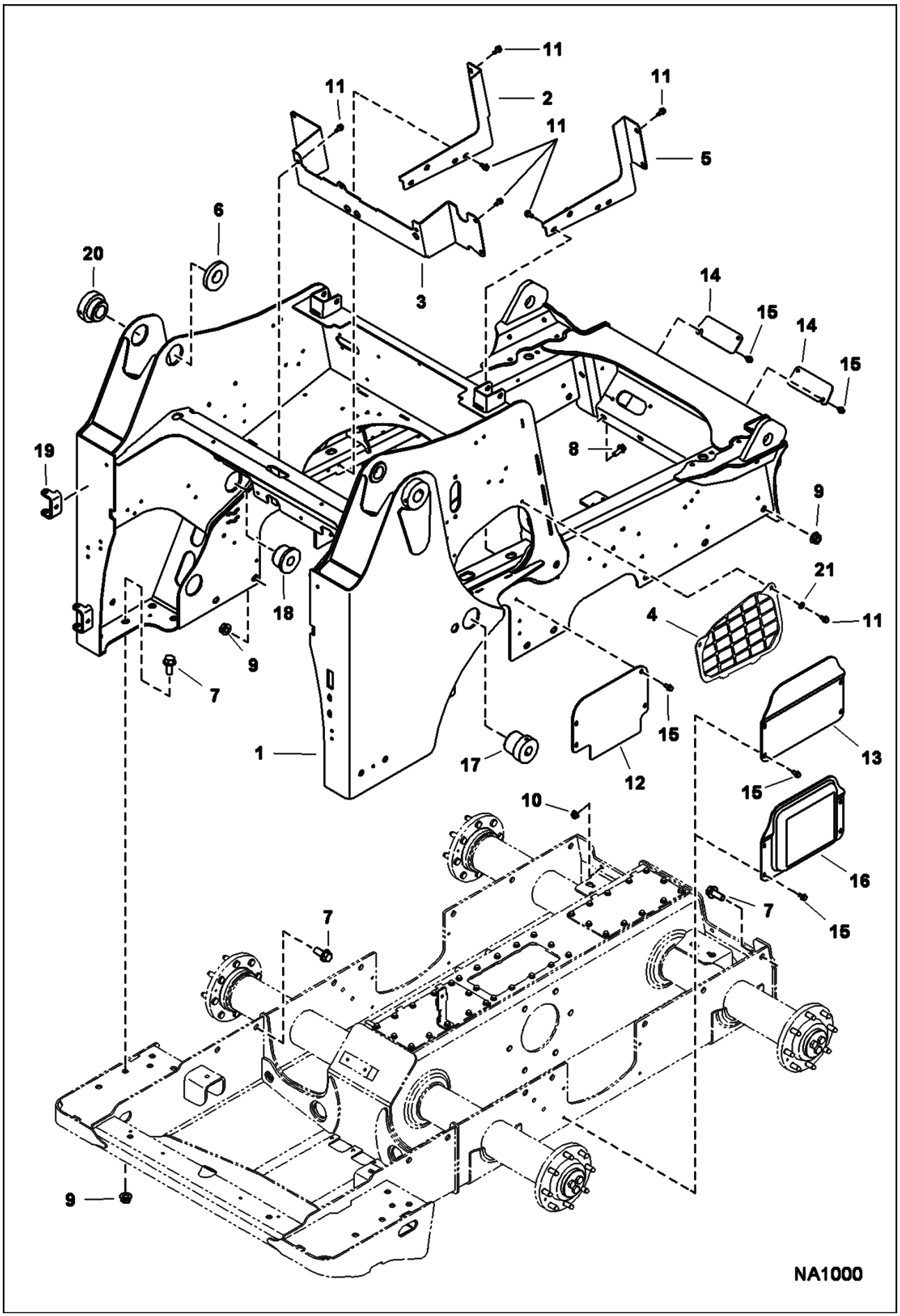

Page 22 - OSS# 2072104 - All rights reserved by Bobcat Company - 01/20/2010 - 17:21:58 - Produced by Ken Cook Co. with media1off

Ref No	Part Number	Description	Remarks	Serial Number	Qty
1	7133450	MAIN FRAME			1
2	7147354	PANEL			1
3	7151540	CROSSMEMBER			1
4	7174997	LOUVER, RH			1
4	7174998	LOUVER, LH			1
5	7161793	PANEL			1
6	7134831	BUSHING	inside upright weld-on		2
7	31C1228	BOLT			22
8	31C820	BOLT			4
9	53D12	NUT			20
10	83D8	NUT 5			4
11	84G3712	BOLT			20
12	7136971	SHIELD	single speed		2
13	7136973	COVER			2
14	7159532	COVER			2
15	84G3712	BOLT			20
16	7139459	COVER	2-speed		2
17	7134832	BUSHING	outside upright		2
18	6730785	BUSHING	inside upright		2
19	6708987	HINGE			2
20	7134830	BUSHING	outside upright		2
21	25E17	WASHER 5			4

Page 23 - OSS# 2072104 - All rights reserved by Bobcat Company - 01/20/2010 - 17:21:58 - Produced by Ken Cook Co. with media1off

OPERATOR CAB

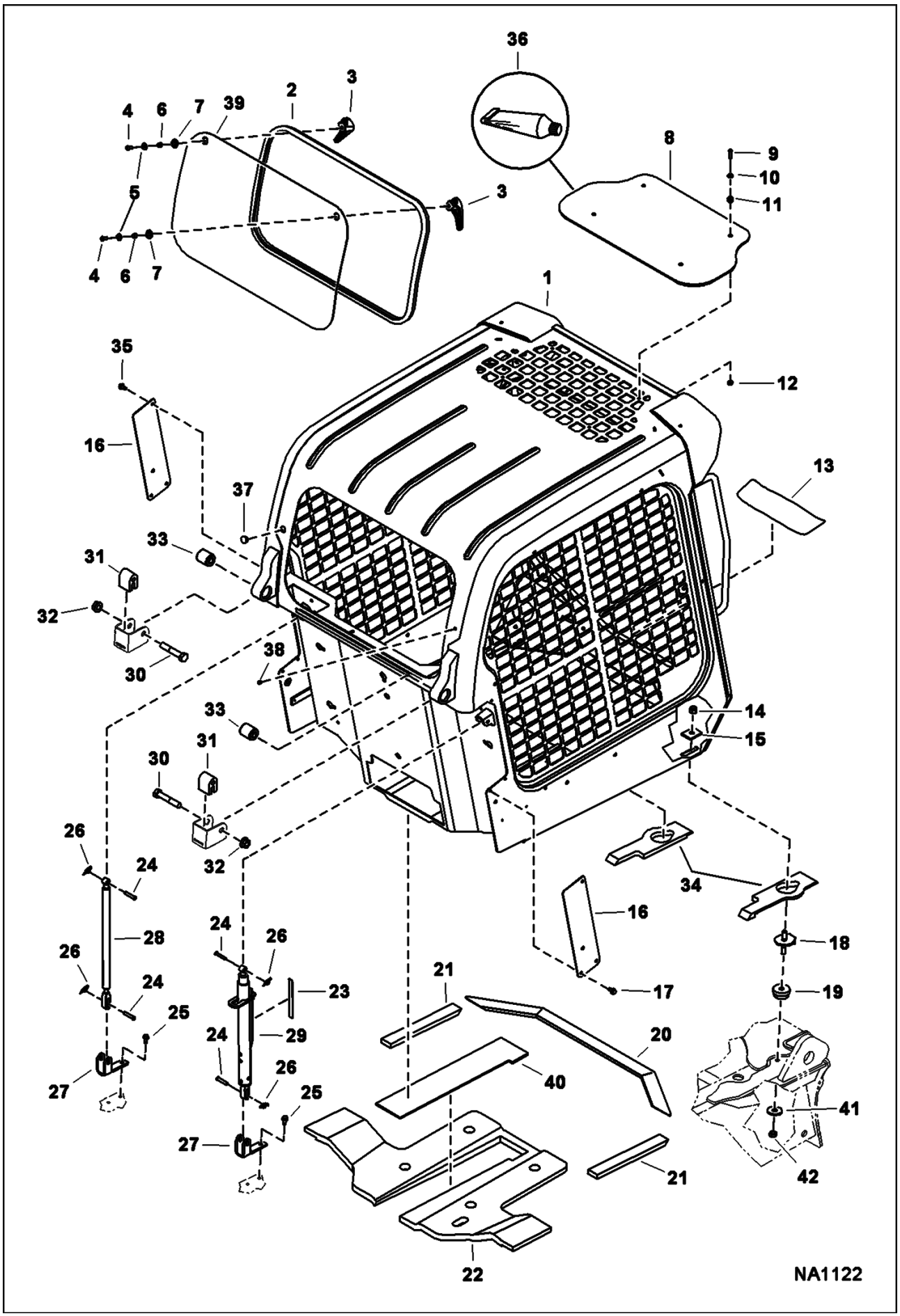

Page 24 - OSS# 2072104 - All rights reserved by Bobcat Company - 01/20/2010 - 17:21:58 - Produced by Ken Cook Co. with mediaioff

Ref No	Part Number	Description	Remarks	Serial Number	Qty
1	7116111	CAB, ASSY	does not include cab decals		1
2	7163988	SEAL, WINDOW REAR			1
3	7150152	LATCH, WINDOW RIGHT			1
3	7150151	LATCH, WINDOW LEFT			1
4	53C512	SCREW			2
5	25E14	WSHR			2
6	6802539	SPACER			2
7	7121425	BUSHING			2
8	7120411	WINDOW			1
9	53C416	SCREW			4
10	25E13	WASHER 5			4
11	6675545	GROMMET			4
12		NUT			4
13	7169747	TREAD, SAFETY			1
14	59D8	NUT 5			2
15	6553709	WASHER	rectangular		2
16	7166544	COVER, HVAC			2
17	31C612	BOLT			1
18	6702971	BOLT			2
19	6560633	DAMPENER			2
20	7142875	SEAL	seat pan		1
21	7142873	SEAL	seat pan		2
22	7176603	INSULATION, PANEL SEAT			1
23	7169877	DECAL	push		1
24	6567743	PIN			4
25	84G3112	BOLT 5			4
26	6631418	PIN	ring		4
27	7144859	MOUNT, GAS SPRING			2
28	7167437	SPRING, GAS STD	LH - Also Order 7169291 decal		1
29	7144862	SPRING	RH - W/ lock		1
30	17C1056	BOLT			2
31	6579613	STOP			2
32	53D10	NUT			2
33	6562602	BUSHING			2
34	7156087	SEAL	RH		1
34	7161789	SEAL	LH		1
35	84G3112	BOLT 5			6
36	7171167	SEALANT, GASKET LIQUID	apply .39 bead of sealant to top window .50 from the edge of top window		1
37	6657719	PLUG	flashers		1
38	7174012	PLUG	radio		1
39	7138973	WINDOW, REAR			1
40	7174787	INSULATION, PANEL SEAT CENTER			1
41	6515817	WASHER			2
42	85D8	NUT, 5			2

Page 25 - OSS# 2072104 - All rights reserved by Bobcat Company - 01/20/2010 - 17:21:58 - Produced by Ken Cook Co. with media1off

CAB INTERIOR

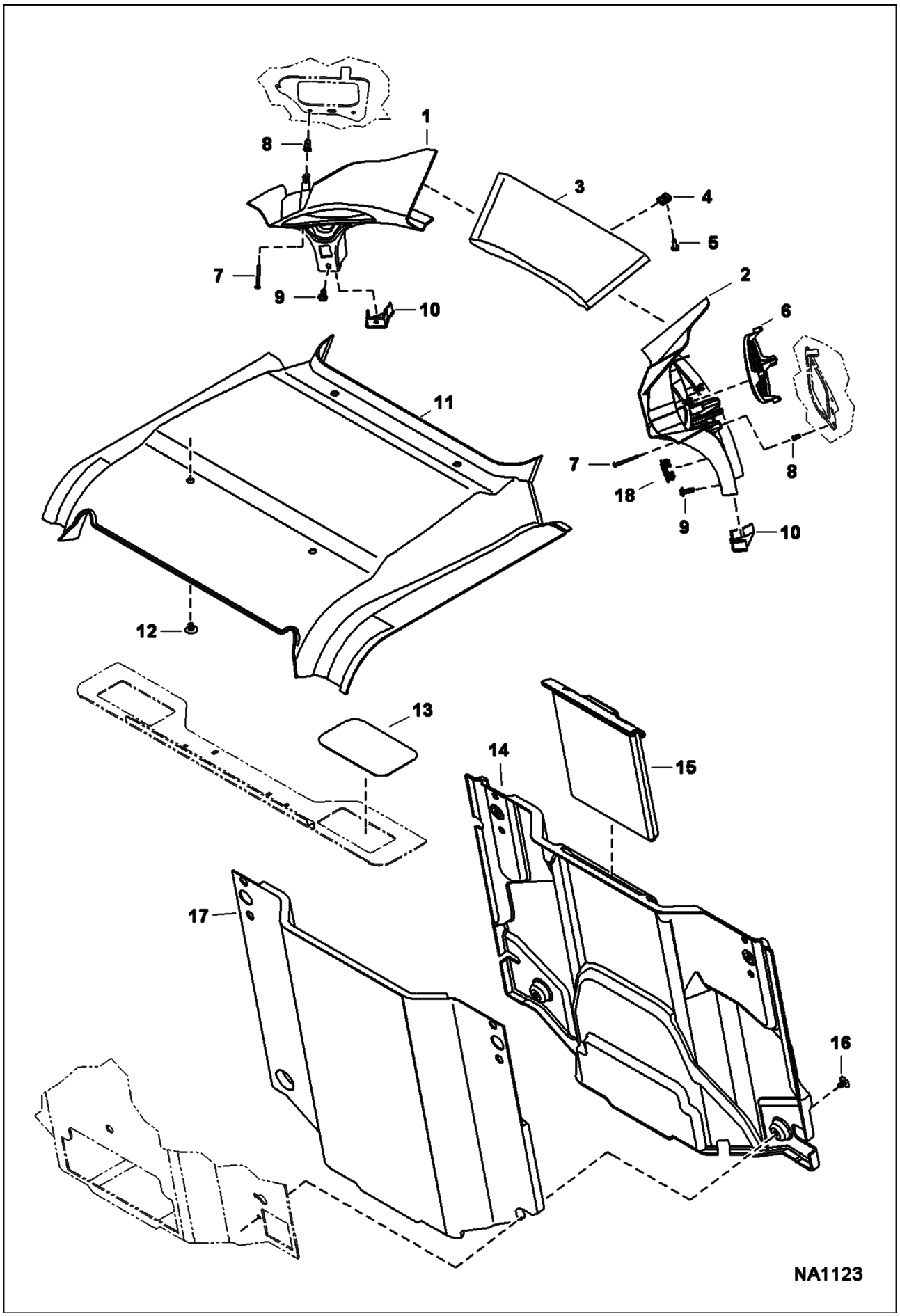

Page 26 - OSS# 2072104 - All rights reserved by Bobcat Company - 01/20/2010 - 17:21:58 - Produced by Ken Cook Co. with media1off

Ref No	Part Number	Description	Remarks	Serial Number	Qty
1	7155792	PANEL, LH			1
2	7155791	PANEL, RH			1
3	7155788	PANEL, CENTER			1
4	7142762	CLIP			2
5	6669224	BOLT			2
6	7002985	CAP	Bobcat insert		1
7	7165799	SCREW			4
8	6675033	INSERT			4
9	7160382	RIVET, BIRD CAGE			2
10	7165037	CAP, INST PANEL RH			1
10	7165038	CAP, INST PANEL LH			1
11	6674895	RETAINER			1
12	6674895	RETAINER			4
13	7168610	COVER			1
14	7165055	COVER, INSULATOR			1
15	7166532	HOLDER, MANUAL			1
16	6674895	RETAINER			4
17	7165056	INSULATOR, STD			1
18	6665314	PLUG			1

Page 27 - OSS# 2072104 - All rights reserved by Bobcat Company - 01/20/2010 - 17:21:58 - Produced by Ken Cook Co. with media1off

SEAT BAR

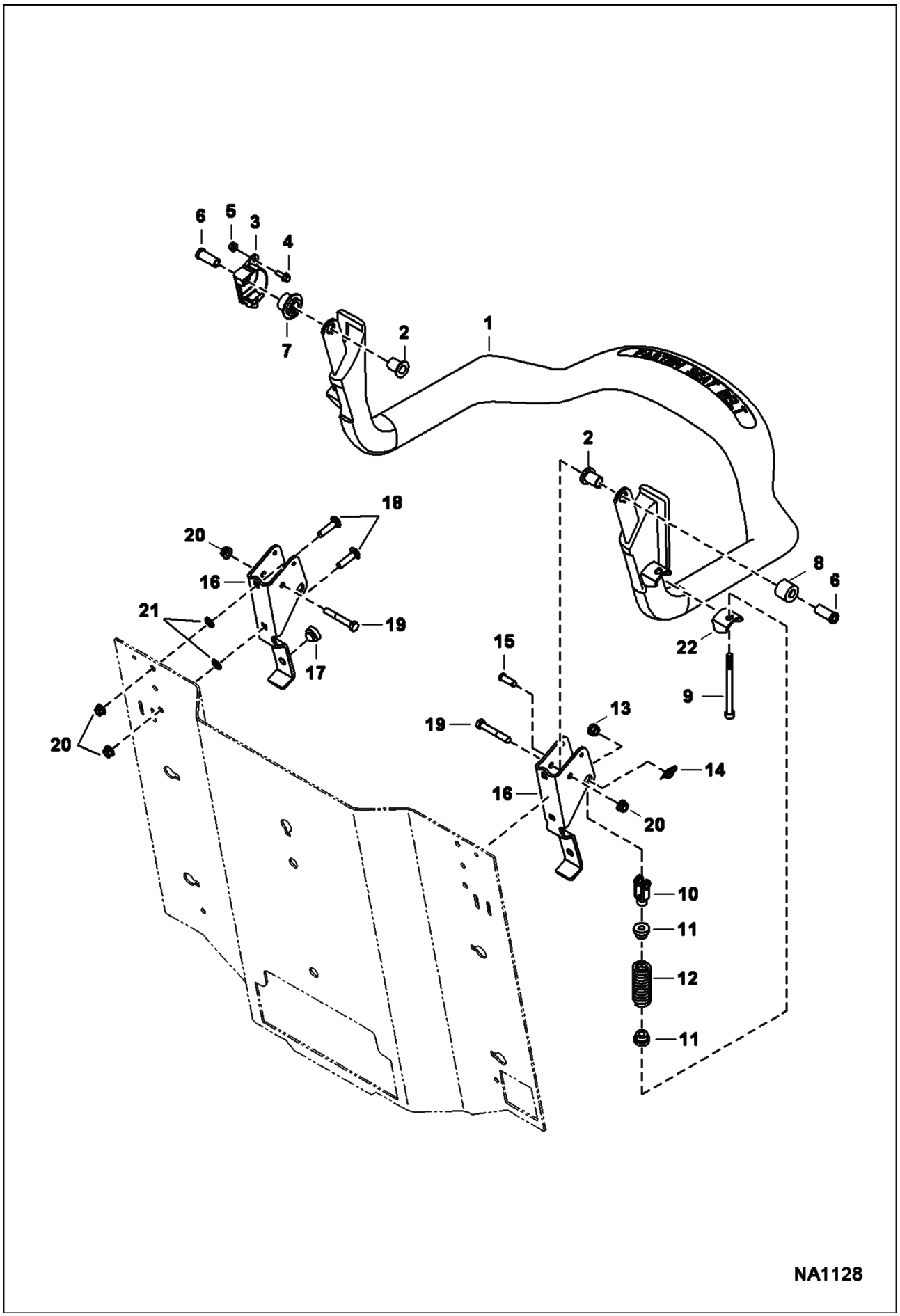

Page 28 - OSS# 2072104 - All rights reserved by Bobcat Company - 01/20/2010 - 17:21:58 - Produced by Ken Cook Co. with media1off

SEAT BAR (Cont'd)

Ref No	Part Number	Description	Remarks	Serial Number	Qty
1	7143971	SEATBAR			1
2	6680441	BUSHING			2
3	6691714	SENSOR, SEATBAR BICS			1
4	35C412	BOLT			1
5	83D4	NUT 10			1
6	6715865	BUSHING			2
7	6680443	BUSHING, MAGNET			1
8	6715866	BUSHING			1
9	6713887	BOLT			2
10	6713589	CLEVIS			2
11	6710659	BUSHING			4
12	6701535	SPRING			2
13	6715864	BUSHING			2
14	6631418	PIN	ring		2
15	4F6106	PIN			2
16	7157719	BRACKET			2
17	6519178	BUMPER			2
18	10C624	BOLT			4
19	17C640	BOLT 5			2
20	53D6	NUT			6
21	6674894	NUT			4
22		MOUNT	NAP - Order Ref. 1		1

Page 29 - OSS# 2072104 - All rights reserved by Bobcat Company - 01/20/2010 - 17:21:58 - Produced by Ken Cook Co. with media1off

SEAT BAR
(SJC)

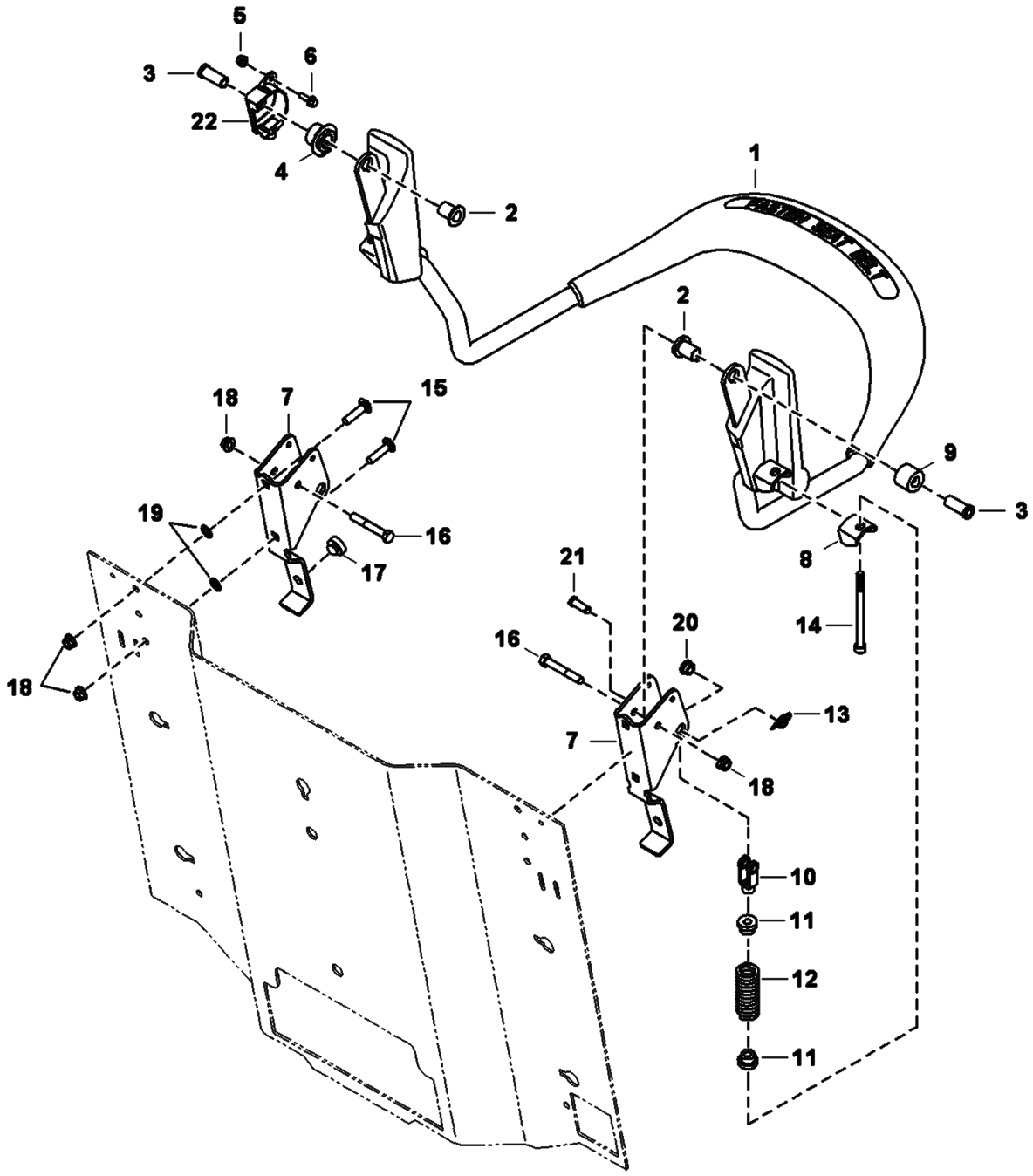

Page 30 - OSS# 2072104 - All rights reserved by Bobcat Company - 01/20/2010 - 17:21:58 - Produced by Ken Cook Co. with media1off

SEAT BAR (Cont'd)
(SJC)

Ref No	Part Number	Description	Remarks	Serial Number	Qty
1	7153408	SEATBAR SJC			1
2	6680441	BUSHING			2
3	6715865	BUSHING			2
4	6680443	BUSHING, MAGNET			1
5	35C412	BOLT			1
6	83D4	NUT 10			1
7	7157719	BRACKET			2
8		MOUNT	NAP - Order Ref. 1		1
9	6715866	BUSHING			1
10	6713589	CLEVIS			2
11	6710659	BUSHING			4
12	6701535	SPRING			2
13	6631418	PIN	ring		2
14	6713887	BOLT			2
15	10C624	BOLT			4
16	17C640	BOLT 5			2
17	6519178	BUMPER			2
18	53D6	NUT			6
19	6674894	NUT			4
20	6715864	BUSHING			2
21	4F6106	PIN			2
22	6691714	SENSOR, SEATBAR BICS			1

Page 31 - OSS# 2072104 - All rights reserved by Bobcat Company - 01/20/2010 - 17:21:58 - Produced by Ken Cook Co. with media1off

SEAT & SEAT BELT

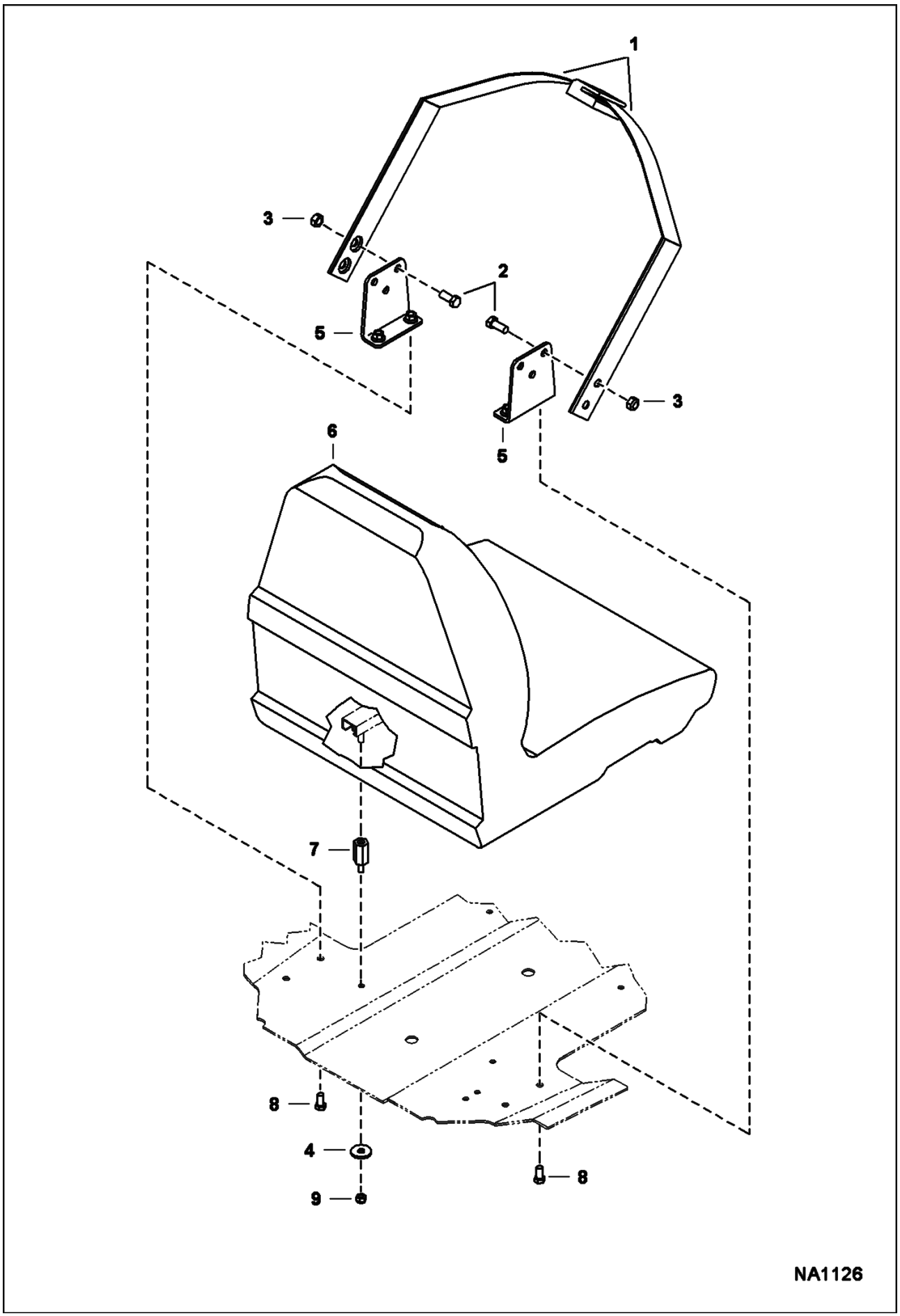

Page 32 - OSS# 2072104 - All rights reserved by Bobcat Company - 01/20/2010 - 17:21:58 - Produced by Ken Cook Co. with media1off

Ref No	Part Number	Description	Remarks	Serial Number	Qty
1	6725403	SEAT BELT	lap		1
2	1C716	SCREW HEX CAP			2
3	85D7	NUT			4
4	619021	WASHER, 5			4
5	7173159	BRACKET, BELT SEAT			2
6	6669135	SEAT			1
7	7170337	STAND, SEAT			4
8	43C612	BOLT			4
9	59D5	NUT 5			4

Page 33 - OSS# 2072104 - All rights reserved by Bobcat Company - 01/20/2010 - 17:21:58 - Produced by Ken Cook Co. with media1off

REAR DOOR

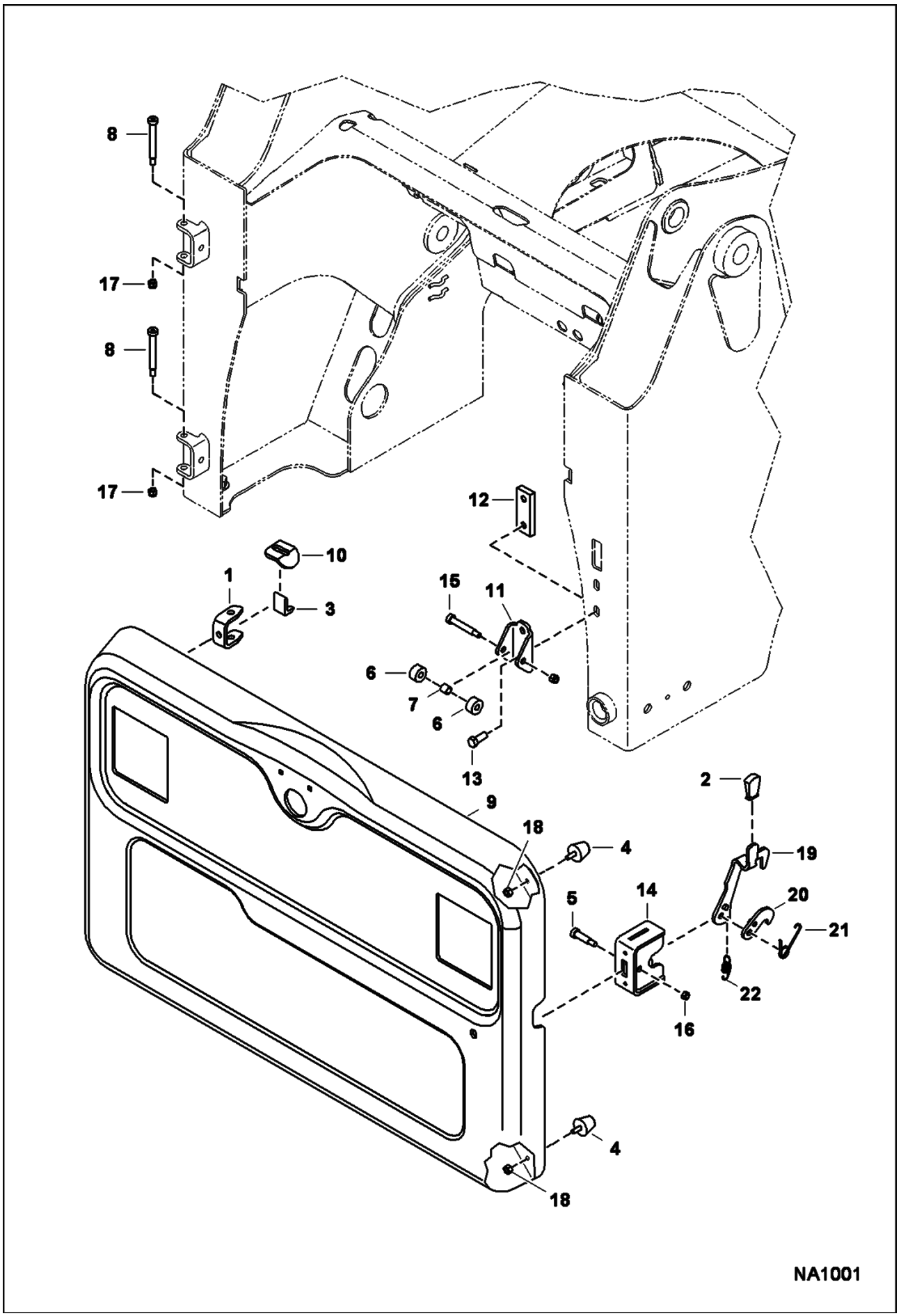

Page 34 - OSS# 2072104 - All rights reserved by Bobcat Company - 01/20/2010 - 17:21:58 - Produced by Ken Cook Co. with media1off

Ref No	Part Number	Description	Remarks	Serial Number	Qty
1	6733575	HINGE, REAR DOOR	weld-on		2
2	6564452	GRIP			1
3	6719766	STOP			1
4	6733616	BUMPER			2
5	38C824	SCREW			1
6	6809726	ROLLER			2
7	6809734	BUSHING	striker		1
8	6809845	BOLT			2
9	7144158	REAR DOOR			1
10	7160704	STOP			1
11	7160705	CHANNEL			1
12	7160706	BAR	threaded striker		1
13	17C820	BOLT			2
14	7160698	LATCH	weld-on		1
15	38C840	BOLT	carriage		1
16	85D6	LOCK NUT			1
17	59D6	NUT			3
18	61D5	NUT			2
19	7160703	HANDLE			1
20	7160701	LATCH			1
21	6810132	SPRING			1
22	6810141	SPRING			1

Page 35 - OSS# 2072104 - All rights reserved by Bobcat Company - 01/20/2010 - 17:21:58 - Produced by Ken Cook Co. with media1off

LIFT ARM & BOBTACH

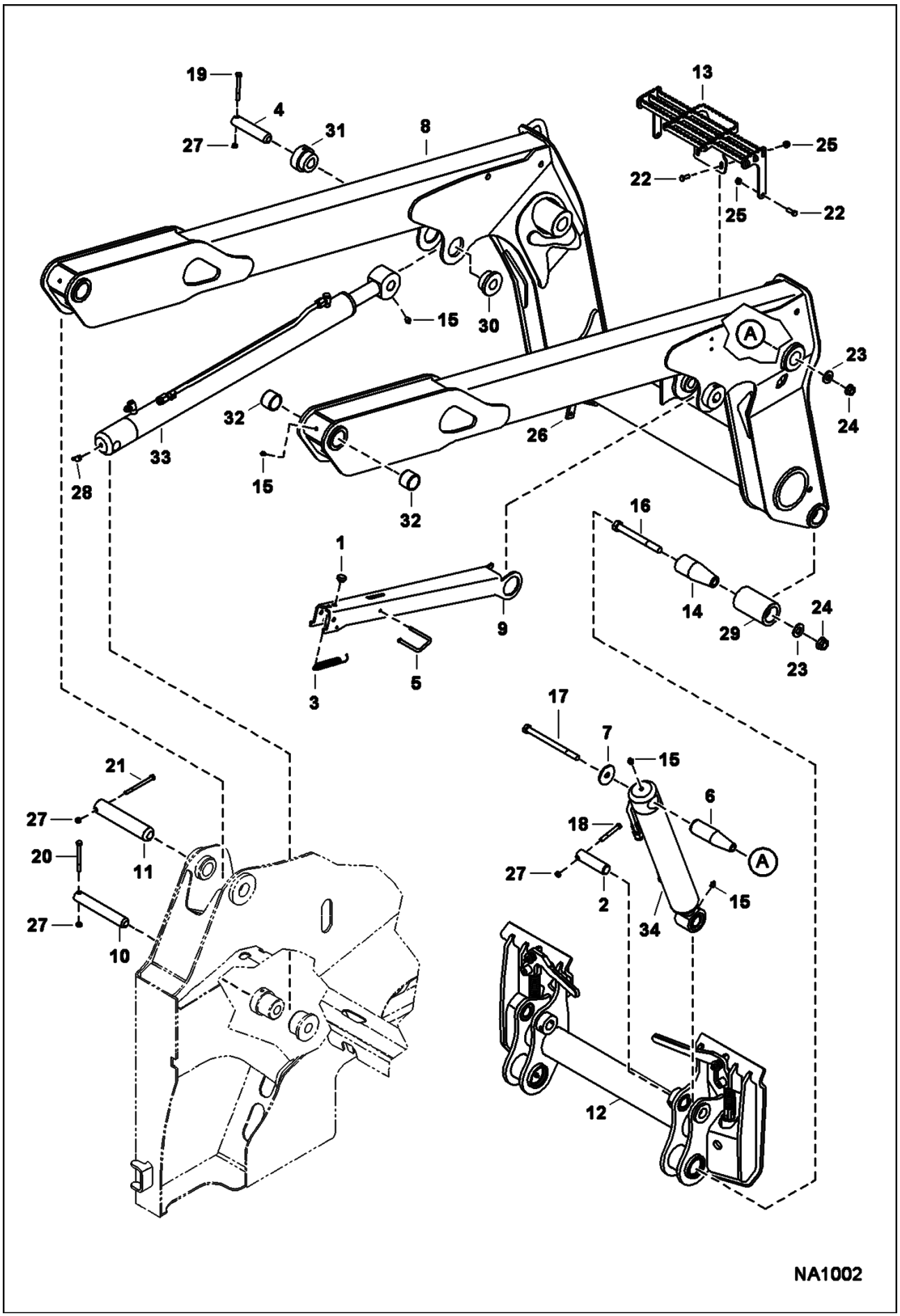

Page 36 - OSS# 2072104 - All rights reserved by Bobcat Company - 01/20/2010 - 17:21:58 - Produced by Ken Cook Co. with media1off

Ref No	Part Number	Description	Remarks	Serial Number	Qty
1	6519178	BUMPER			1
2	6577954	PIN	rod end - tilt cylinder		2
3	6700743	SPRING			1
4	6702935	PIN, PIVOT	rod end - lift cylinder		2
5	6714810	PIN	retainer		1
6	6728971	PIN, PIVOT TAPERED	tilt cylinder - base end		2
7	6731160	WASHER			2
8	7132914	LIFTARM			1
9	7136616	SUPPORT			1
10	7147803	PIN	lift cylinder - base end		2
11	7147804	PIN	boom to upright		2
12		BOB-TACH	See Illustration BOB-TACH/ NA1003		1
13	7159749	STEP			1
14	7170609	PIN, PIVOT TAPERED	lift arm to bobtach		2
15	10H25	FITTING, GREASE			8
16	17C10112	BOLT			2
17	17C10136	BOLT			2
18	17C648	BOLT 5			2
19	17C656	BOLT			2
20	17C664	BOLT			2
21	17C672	BOLT			2
22	17C616	BOLT 5			3
23	27E10	WASHER			4
24	53D10	NUT			4
25	53D6	NUT			3
26	7135693	MOUNT	weld-on		1
27	85D6	LOCK NUT			8
28	11H15	GREASE FITTING			2
29	7170608	BUSHING, WELD ON	weld-on		2
30	7132935	BUSHING	weld-on		2
31	7132937	BUSHING	weld-on		2
32	6730995	BUSHING, WEAR			4
33		CYLINDER, LIFT	See Illustration LIFT CYLINDER/ NA1211		2
34		CYLINDER, TILT	See Illustration TILT CYLINDER/ NA1210 - LH		1
34		CYLINDER, TILT	See Illustration TILT CYLINDER/ NA1209 - RH		1

Page 37 - OSS# 2072104 - All rights reserved by Bobcat Company - 01/20/2010 - 17:21:58 - Produced by Ken Cook Co. with media1off

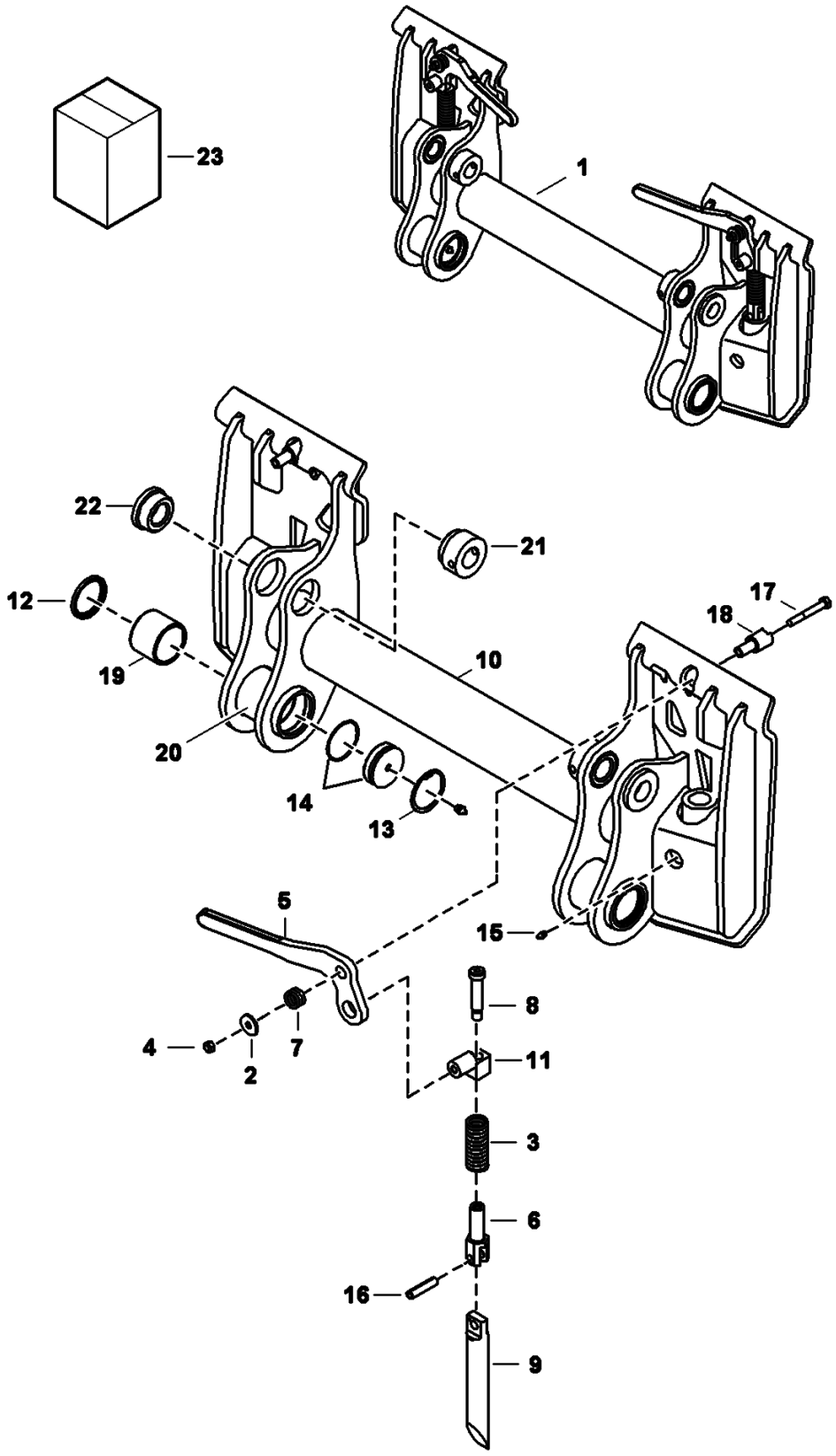

Page 38 - OSS# 2072104 - All rights reserved by Bobcat Company - 01/20/2010 - 17:21:58 - Produced by Ken Cook Co. with media1off

Ref No	Part Number	Description	Remarks	Serial Number	Qty
1	7128962	BOB-TACH	Ref. 2-22		1
2	619021	WASHER, 5			2
3	6578253	SPRING, COMPRESSION			2
4	85D6	LOCK NUT			2
5	6702904	LEVER	RH		1
5	6702903	LEVER	LH		1
6	6704248	PIVOT			2
7	6704453	SPRING			2
8	6728473	BOLT			2
9	6737191	WEDGE			2
10	7136460	BOBTACH			1
11	7146538	PIVOT, BOBTACH			2
12	7168594	SEAL			2
13	7168595	SNAP RING			2
14	7170613	PLUG			1
15	10H35	GREASE ZERK			2
16	14J5032	PIN, STRAIGHT			2
17	17C644	BOLT			2
18	6702958	BUSHING			2
19	7170615	BUSHING, WEAR			2
20	7170610	BUSHING, WELD-ON			2
21	7136465	BUSHING, WELD-ON			2
22	7136464	BUSHING, WELD-ON			2
23		LEVER KIT	NAP		1

Page 39 - OSS# 2072104 - All rights reserved by Bobcat Company - 01/20/2010 - 17:21:58 - Produced by Ken Cook Co. with media1off

PANELS & FLOOR PAN
(Manual, AHC & ACS)

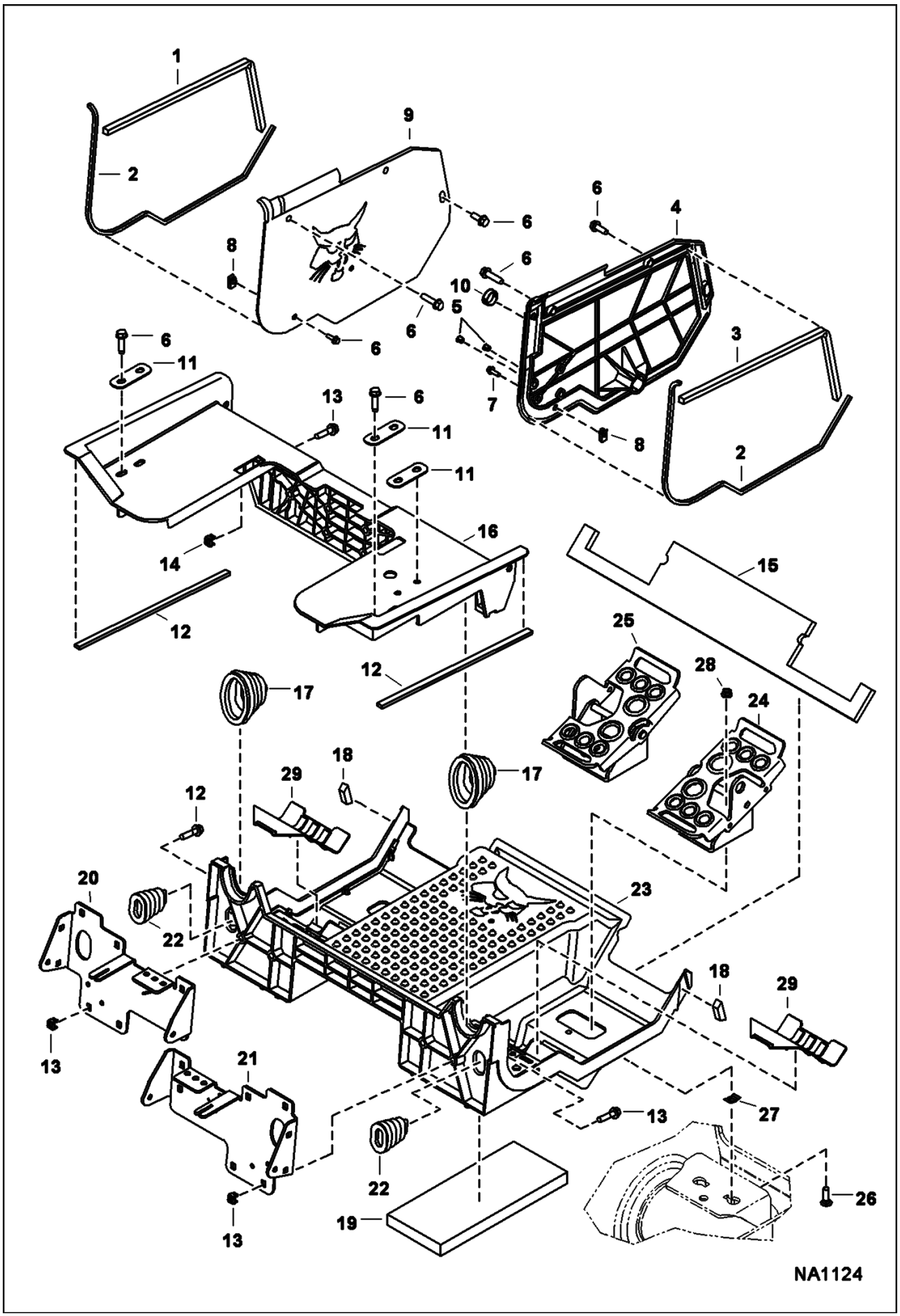

Page 40 - OSS# 2072104 - All rights reserved by Bobcat Company - 01/20/2010 - 17:21:58 - Produced by Ken Cook Co. with media1off

Ref No	Part Number	Description	Remarks	Serial Number	Qty
1	7166197	FOAM, PANEL	LH		1
2	7166199	FOAM, EDGE			2
3	7166198	FOAM, PANEL	RH		1
4	7156919	PANEL, RH			1
5	5289686	PLUG			2
6	84G3716	SCREW 5			10
7	35C412	BOLT			2
8	7160765	NUT			2
9	7156920	PANEL, LH			1
10	7166315	PLUG			1
11	7167118	PLATE, WASHER			3
12	7166196	FOAM, PANEL			2
13	84G3724	BOLT			4
14	6685663	RETAINER			2
15	7163132	FOAM, FRONT			1
16	7156918	PANEL, STEERING			1
17	7147815	BOOT			2
18	7166200	FOAM, PAN FLOOR			2
19	7166195	PAD, PAN FLOOR			1
20	7176118	MOUNT			1
21	7176117	MOUNT			1
22	7153503	BOOT			2
23	7156916	PAN, FLOOR			1
24		PEDAL ASSEMBLY	See Illustration CONTROL PEDALS/ NA1261 RH		1
25		PEDAL ASSEMBLY	See Illustration CONTROL PEDALS/ NA1261 LH		1
26	37C620	BOLT			4
27	6684033	NUT			4
28	57D6	NUT 5			4
29	7164345	COVER, PAN FLOOR			2

Page 41 - OSS# 2072104 - All rights reserved by Bobcat Company - 01/20/2010 - 17:21:58 - Produced by Ken Cook Co. with media1off

PANELS & FLOOR PAN
(SJC)

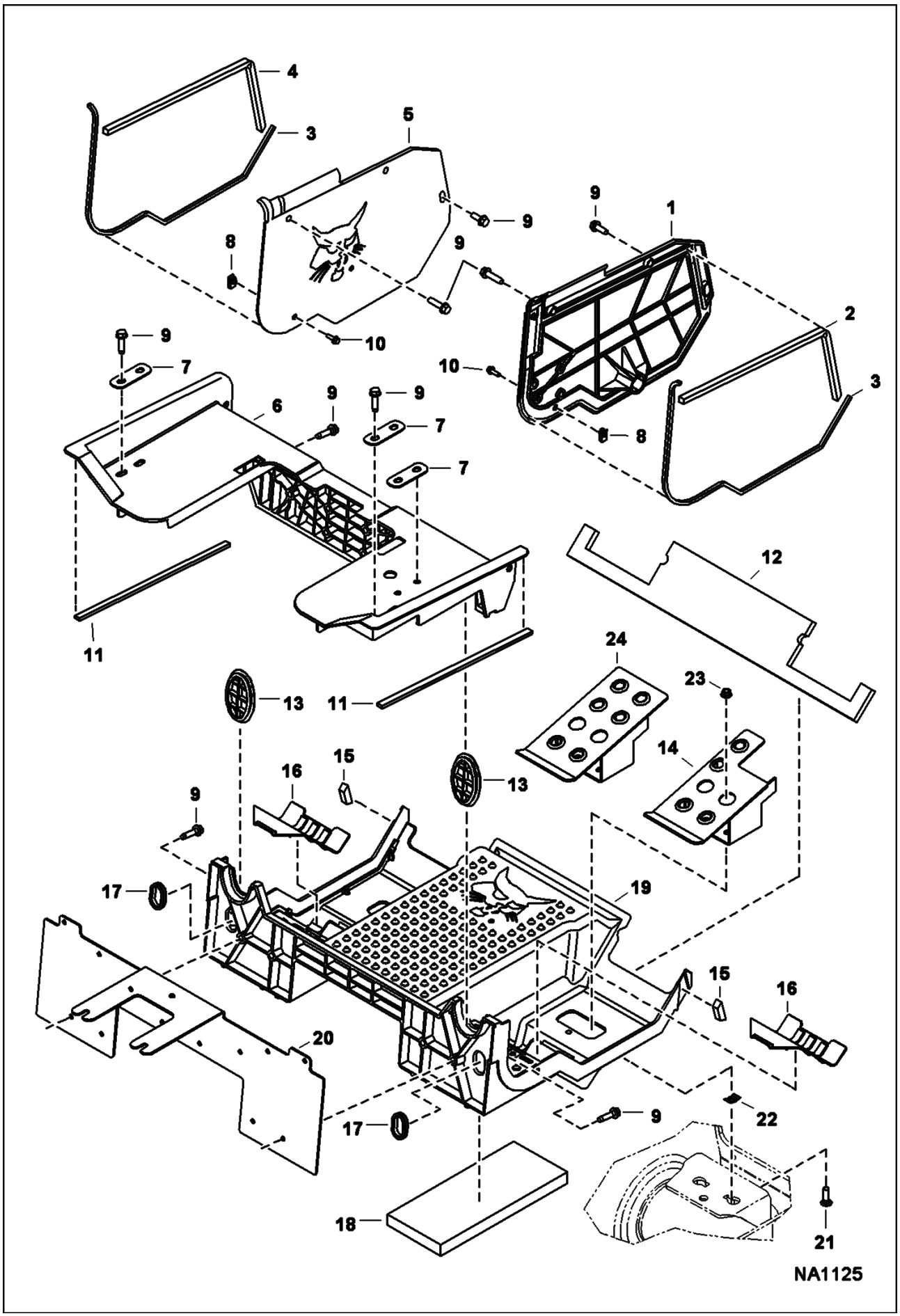

Page 42 - OSS# 2072104 - All rights reserved by Bobcat Company - 01/20/2010 - 17:21:58 - Produced by Ken Cook Co. with media1off

Ref No	Part Number	Description	Remarks	Serial Number	Qty
1	7156919	PANEL, RH			1
2	7166198	FOAM, PANEL			1
3	7166199	FOAM, EDGE			2
4	7166197	FOAM, PANEL			1
5	7156920	PANEL, LH			1
6	7156918	PANEL, STEERING			1
7	7167118	PLATE, WASHER			3
8	7160765	NUT			2
9	84G3716	SCREW 5			24
10	35C412	BOLT			2
11	7166196	FOAM, PANEL			2
12	7163132	FOAM, FRONT			1
13	7161131	COVER, LEVER			2
14	7157725	PEDAL ASSY	RH		1
15	7166200	FOAM, PAN FLOOR			2
16	7164345	COVER, PAN FLOOR			2
17	7161130	COVER			2
18	7166195	PAD, PAN FLOOR			1
19	7156916	PAN, FLOOR			1
20	7159224	COVER, FOOTPOD			1
21	37C620	BOLT			4
22	6684033	NUT			4
23	57D6	NUT 5			4
24	7158574	PEDAL ASSY	LH		1

Page 43 - OSS# 2072104 - All rights reserved by Bobcat Company - 01/20/2010 - 17:21:58 - Produced by Ken Cook Co. with media1off

CAB INTERIOR
(Deluxe)

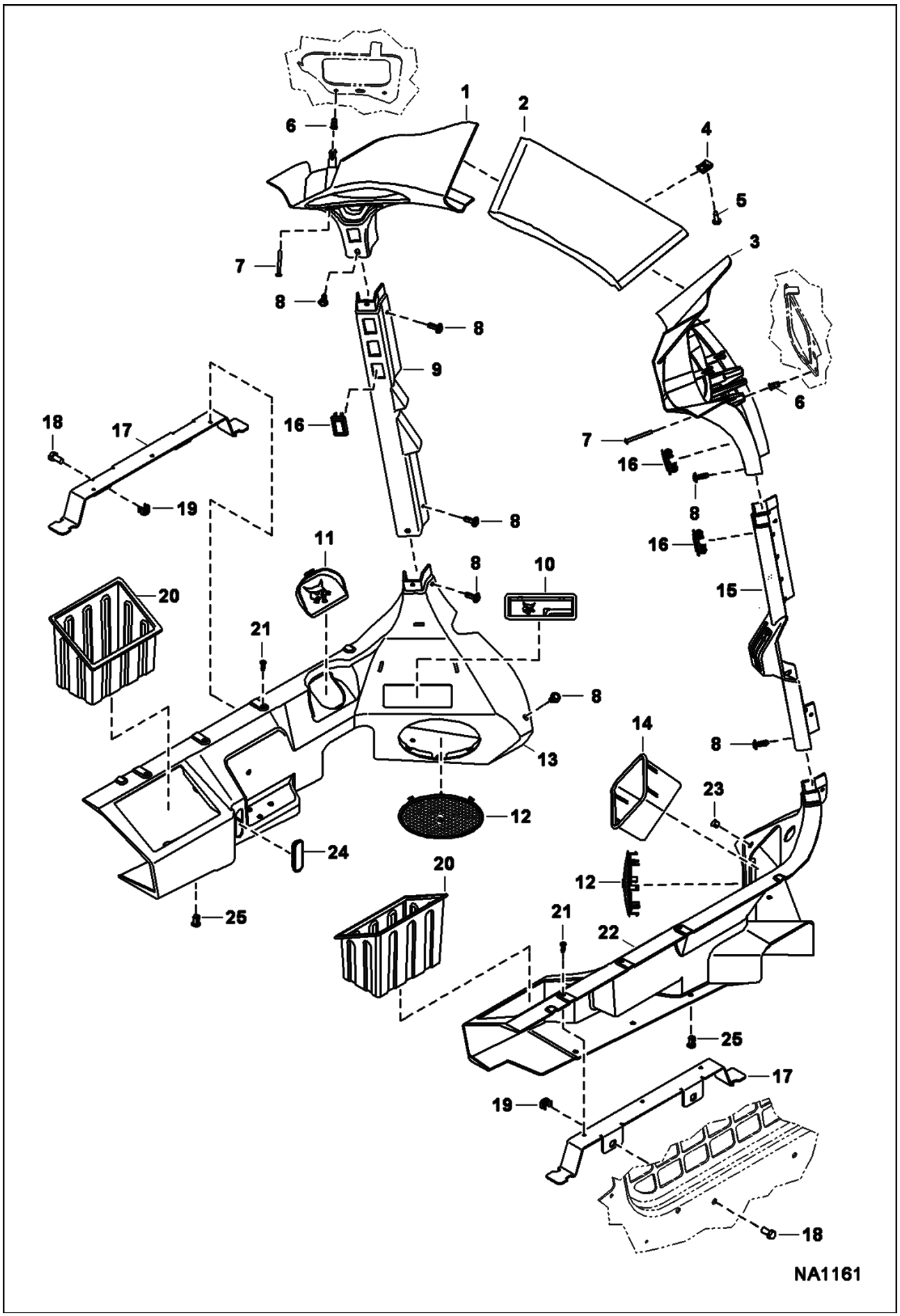

Page 44 - OSS# 2072104 - All rights reserved by Bobcat Company - 01/20/2010 - 17:21:58 - Produced by Ken Cook Co. with media1off

Ref No	Part Number	Description	Remarks	Serial Number	Qty
1	7155792	PANEL, LH			1
2	7155788	PANEL, CENTER			1
3	7155791	PANEL, RH			1
4	7142762	CLIP			6
5	6669224	BOLT			6
6	6675033	INSERT			4
7	7165799	SCREW			4
8	7160382	RIVET, BIRD CAGE			8
9	7164348	COLUMN, FRONT LEFT			1
10	7165344	STORAGE			1
11	7165345	DOOR, COVER			1
12	7161939	GRILL			2
13	7155643	FENDER, PANEL L.H.			1
14	7154285	BOX, STORAGE			1
15	7164347	COLUMN, FRONT RIGHT			1
16	6665314	PLUG			6
17	7116118	BRACKET			2
18	17C612	BOLT 5			4
19	7149204	NUT			4
20	7145268	CONTAINER, STORAGE			2
21	7160381	RIVET, BIRD CAGE			6
22	7155642	FENDER, PANEL RH			1
23	7162771	PLUG, HOLE			1
24	7165346	DOOR, COVER			1
25	7160383	RIVET, BIRD CAGE			10

Page 45 - OSS# 2072104 - All rights reserved by Bobcat Company - 01/20/2010 - 17:21:58 - Produced by Ken Cook Co. with media1off

CAB INTERIOR
(Deluxe)

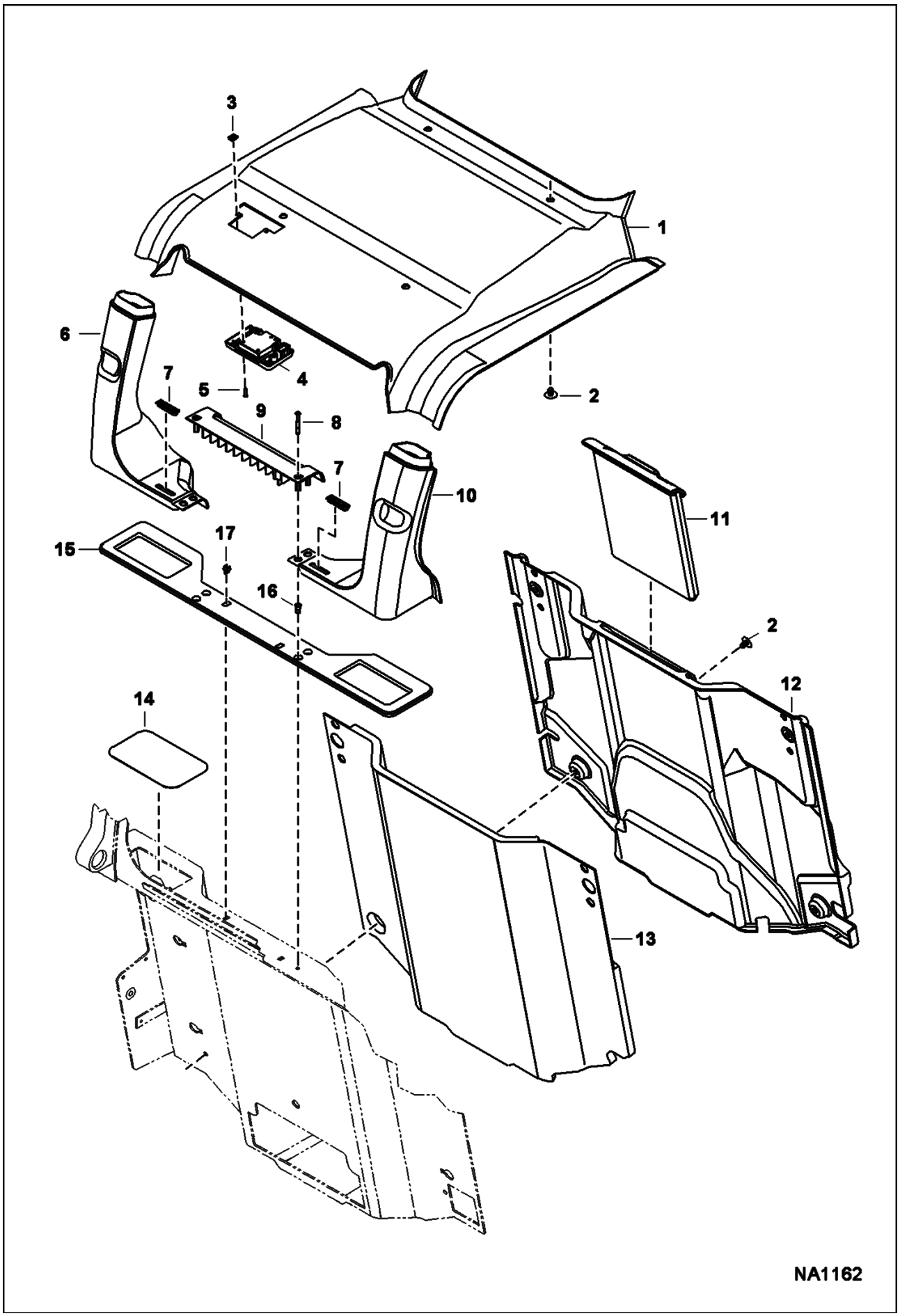

Page 46 - OSS# 2072104 - All rights reserved by Bobcat Company - 01/20/2010 - 17:21:58 - Produced by Ken Cook Co. with media1off

Ref No	Part Number	Description	Remarks	Serial Number	Qty
1	7155798	HEADLINER, DELUXE			1
2	6674895	RETAINER			8
3	7142762	CLIP			2
4	7155797	LIGHT			1
5	7170114	SCREW			2
6	7165331	DUCT, RL			1
7	7145885	VENT, DEFROST			2
8	7165799	SCREW			2
9	7165332	SHELF, REAR			1
10	7165330	DUCT, RR			1
11	7166532	HOLDER, MANUAL			1
12	7165055	COVER, INSULATOR			1
13	7165056	INSULATOR, STD			1
14	7168610	COVER			2
15	7153832	SEAL, SHELF REAR			1
16	6675033	INSERT			2
17	7165333	CLIP			2

Page 47 - OSS# 2072104 - All rights reserved by Bobcat Company - 01/20/2010 - 17:21:58 - Produced by Ken Cook Co. with media1off

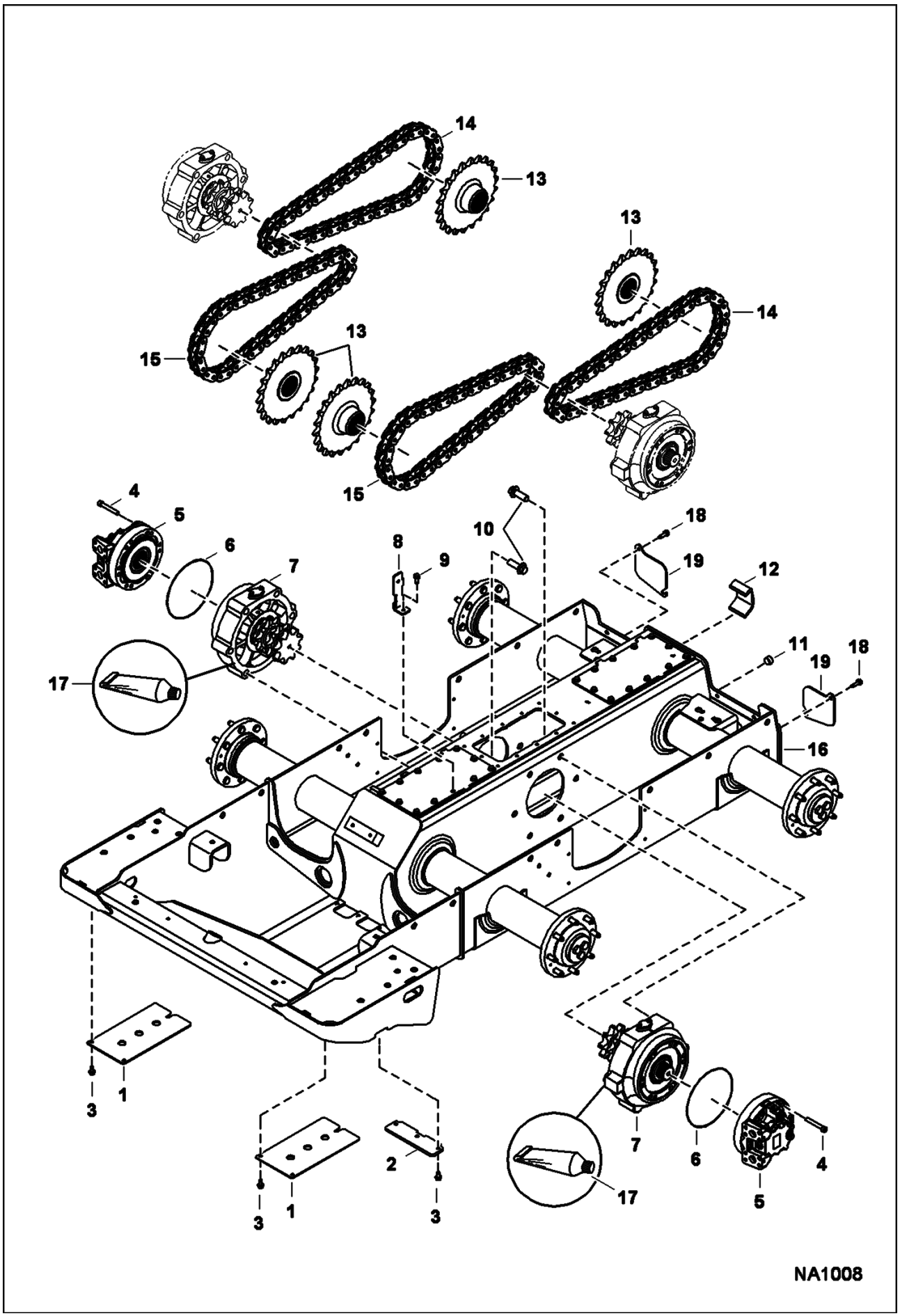

Page 48 - OSS# 2072104 - All rights reserved by Bobcat Company - 01/20/2010 - 17:21:58 - Produced by Ken Cook Co. with mediaioff

Ref No	Part Number	Description	Remarks	Serial Number	Qty
1	7145347	COVER			2
2	7159094	COVER, DRAIN	drain		1
3	84G3712	BOLT			9
4	6717806	BOLT			20
5		MOTOR	See Illustration HYDROSTATIC MOTOR/ MS2199 - single speed - manual controls & ACS		2
5		MOTOR	See Illustration HYDROSTATIC MOTOR & BRAKE/ MS1467 - 2-speed		2
6	25K30812	O-RING, 10			2
7		CARRIER, MOTOR	See Illustration MOTOR CARRIER/ NA2154 - manual controls, AHC & ACS		2
7		CARRIER, MOTOR	See Illustration MOTOR CARRIER/ NA1007 - SJC controls		2
8	7151466	BRACKET			1
9	84G3716	SCREW 5			1
10	6678971	BOLT			12
11	6731121	PLUG	chaincase fill		1
12	7134445	BRACKET	tie-down - weld-on		2
13		SPROCKET	See Illustration AXLE/ NA1004		4
14	7106862	CHAIN, DRIVE	endless - 48 pitch		2
14	6690988	CHAIN, DRIVE	service - 48 pitch		x
14	6691078	LINK	connecting		x
15	7130811	CHAIN, DRIVE	endless - 44 pitch		2
15	7181282	CHAIN, DRIVE	service - 44 pitch		x
15	6691078	LINK	connecting		x
16	7130785	HOUSING			1
17	6685372	SEALANT, GASKET LIQUID	tube - 20 oz		x
18	84G3720	BOLT			4
19	6737088	COVER, FRONT ACCESS			2

Page 49 - OSS# 2072104 - All rights reserved by Bobcat Company - 01/20/2010 - 17:21:58 - Produced by Ken Cook Co. with media1off

AXLE

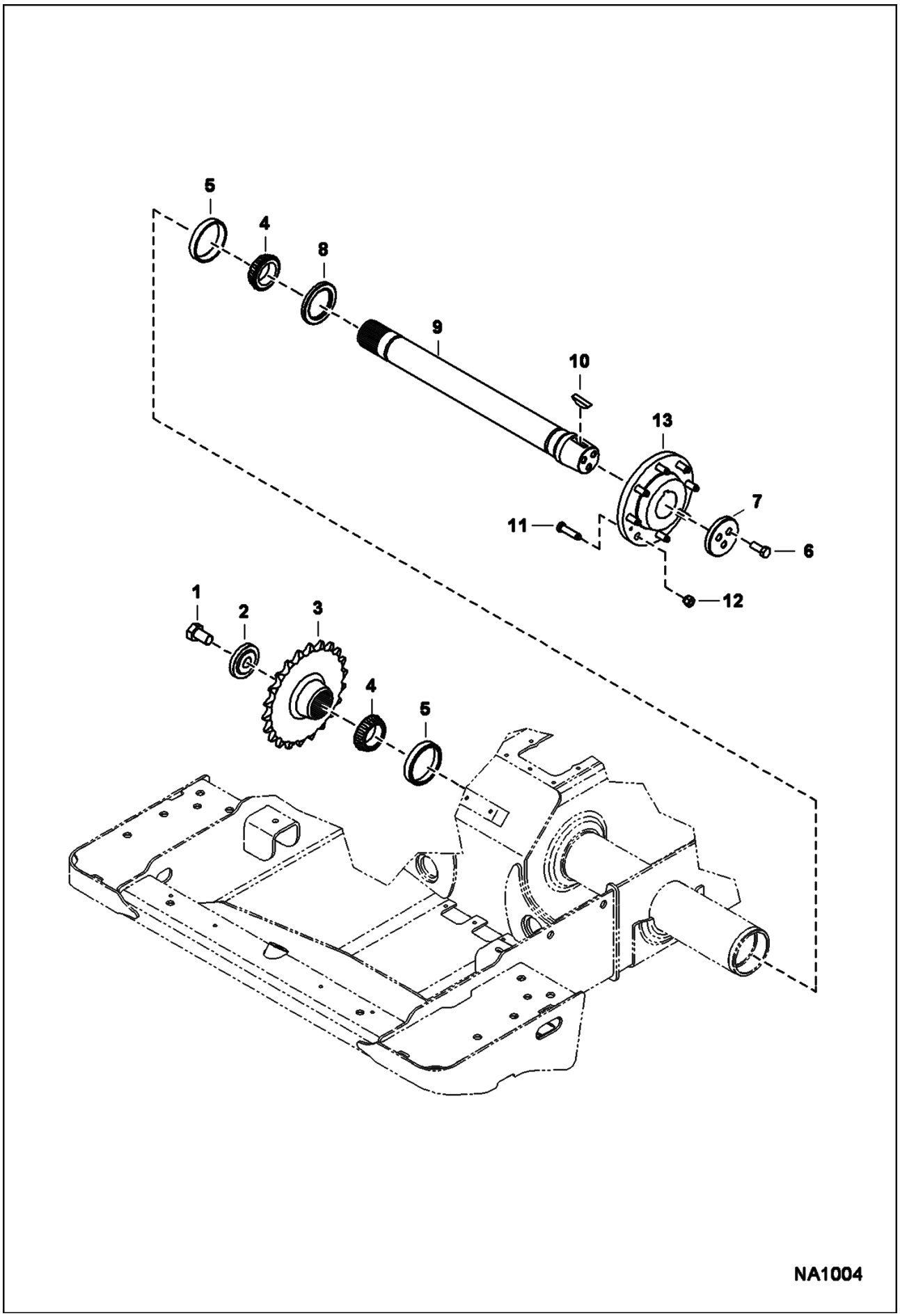

Page 50 - OSS# 2072104 - All rights reserved by Bobcat Company - 01/20/2010 - 17:21:58 - Produced by Ken Cook Co. with media1off

Ref No	Part Number	Description	Remarks	Serial Number	Qty
1	2C1626	BOLT			4
2	7107271	WASHER			4
3	7134153	SPROCKET			4
4	1321608	BEARING, CONE			8
5	1321607	CUP, BEARING			8
6	17C1024	BOLT			12
7	6565947	WASHER			4
8	6671138	SEAL, OIL			4
9	6709757	SHAFT, AXLE			4
10	6J1664	KEY			4
11	7130936	STUD			32
12	7131115	NUT			32
13	6578857	HUB, WHEEL			4

Page 51 - OSS# 2072104 - All rights reserved by Bobcat Company - 01/20/2010 - 17:21:58 - Produced by Ken Cook Co. with media1off

MOTOR CARRIER
(Drive Motor Mount Assy) (Manual Controls, AHC & ACS)

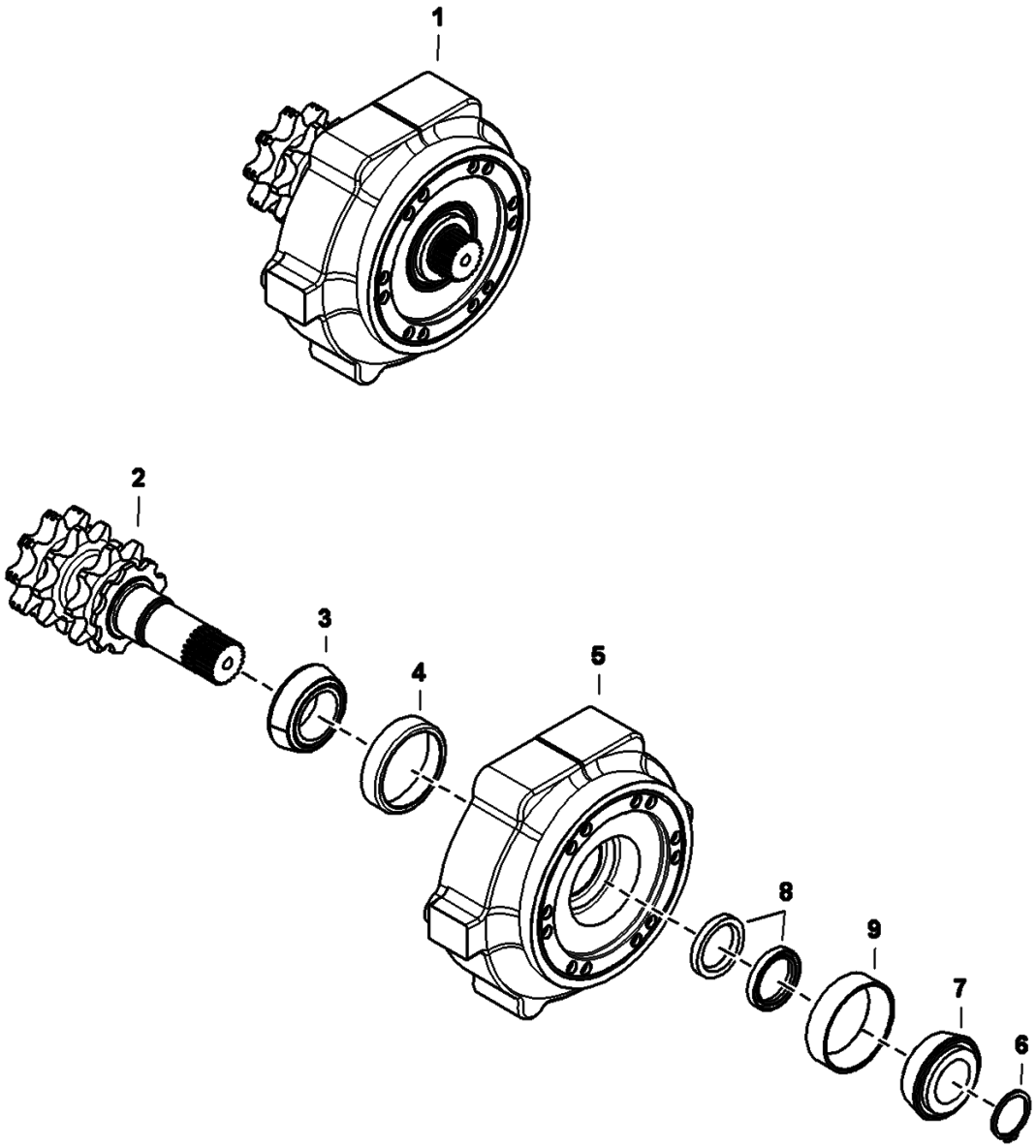

Page 52 - OSS# 2072104 - All rights reserved by Bobcat Company - 01/20/2010 - 17:21:58 - Produced by Ken Cook Co. with media1off

Ref No	Part Number	Description	Remarks	Serial Number	Qty
1	7126215	CARRIER, MOTOR			1
2	7147579	SHAFT TRANS			1
3	6664845	CONE, BEARING			1
4	6650120	RACE			1
5	6717242	HOUSING			1
6	6693415	RING			1
7	6693525	BEARING			1
8	6665755	SEAL, OIL			2
9	7100240	RACE			1

Page 53 - OSS# 2072104 - All rights reserved by Bobcat Company - 01/20/2010 - 17:21:58 - Produced by Ken Cook Co. with media1off

MOTOR CARRIER
(Drive Motor Mount Assy) (SJC)

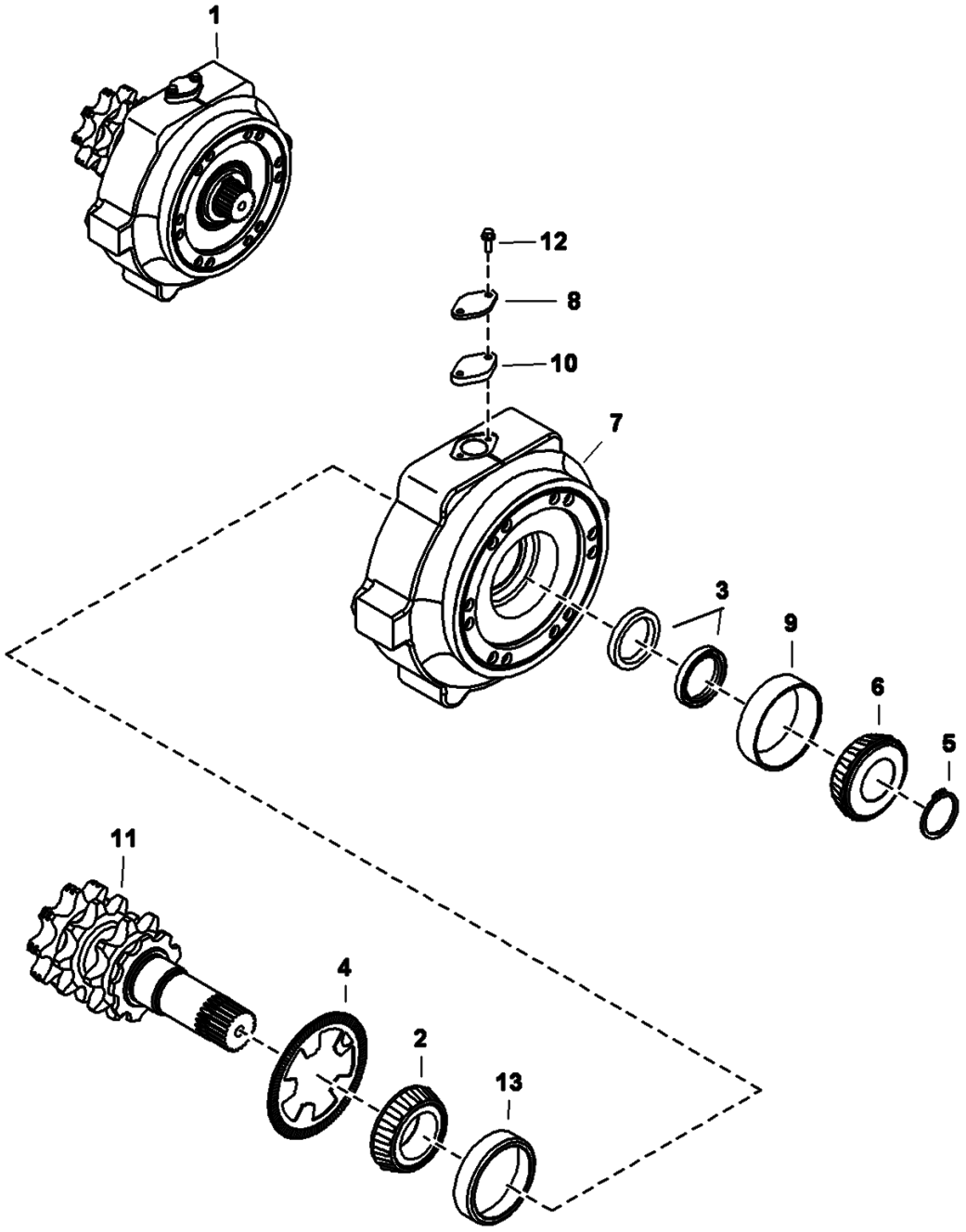

Page 54 - OSS# 2072104 - All rights reserved by Bobcat Company - 01/20/2010 - 17:21:58 - Produced by Ken Cook Co. with media1off

MOTOR CARRIER (Cont'd)
(Drive Motor Mount Assy) (SJC)

Ref No	Part Number	Description	Remarks	Serial Number	Qty
1	7136291	CARRIER, MOTOR	Ref. 2-13		1
2	6664845	CONE, BEARING			1
3	6665755	SEAL, OIL			2
4	6690561	MAGNET			1
5	6693415	RING			1
6	6693525	BEARING			1
7	6729663	HOUSING			1
8	6730013	COVER			1
9	7100240	RACE			1
10	7110287	GASKET			1
11	7147579	SHAFT TRANS	W/ grooves		1
12	35C412	BOLT			2
13	6650120	RACE			1

Page 55 - OSS# 2072104 - All rights reserved by Bobcat Company - 01/20/2010 - 17:21:58 - Produced by Ken Cook Co. with media1off

DISC BRAKE
(Single Speed Motor)

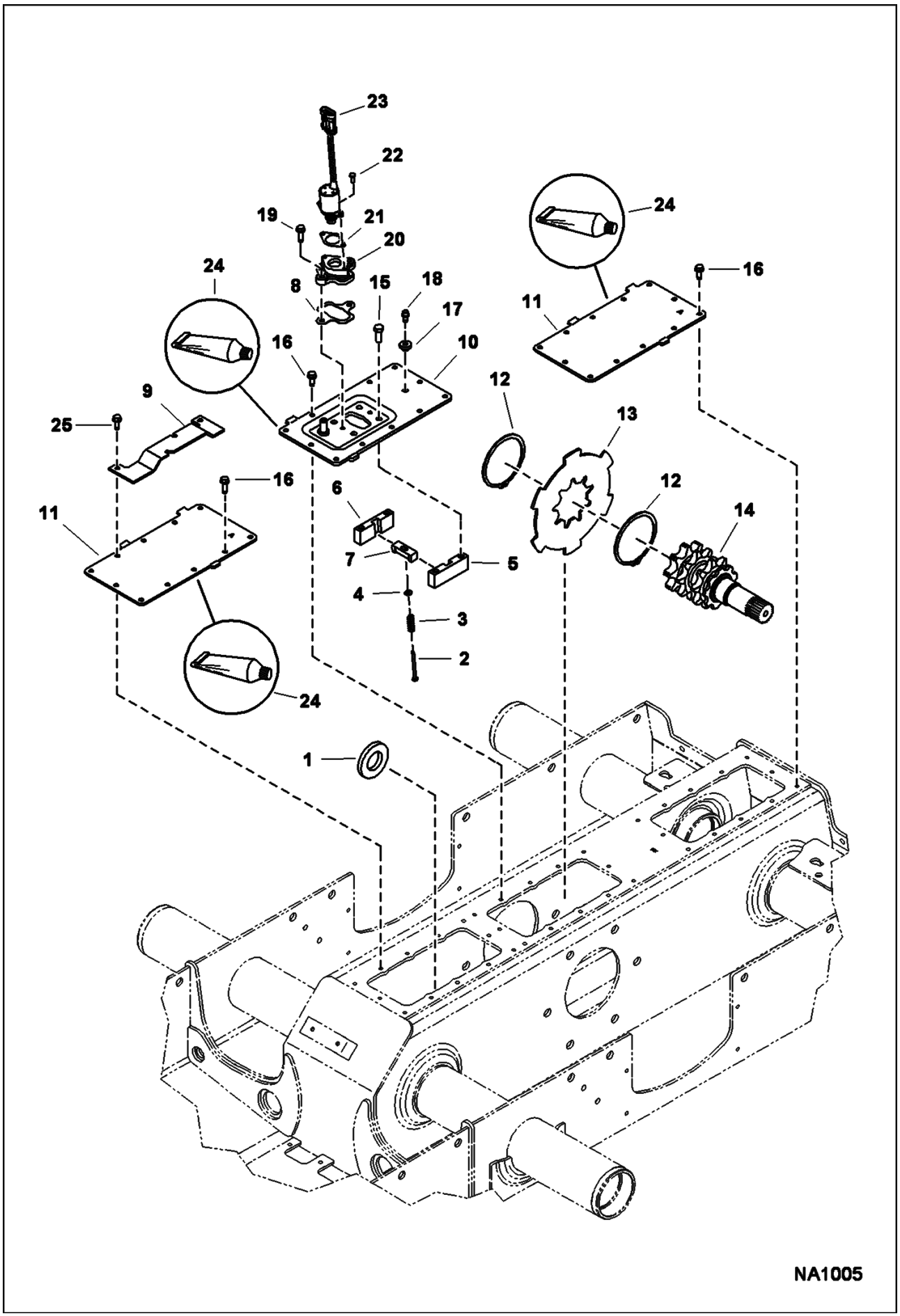

Page 56 - OSS# 2072104 - All rights reserved by Bobcat Company - 01/20/2010 - 17:21:58 - Produced by Ken Cook Co. with media1off

Ref No	Part Number	Description	Remarks	Serial Number	Qty
1	6680055	MAGNET	for SJC		2
2	6708267	BOLT			1
3	6708018	SPRING			1
4	25E13	WASHER 5			1
5	6719057	BLOCK	guide - RH		1
6	6719056	BLOCK	guide - LH		1
7	6714278	GUIDE	disc brake		1
8	6708016	GASKET			1
9	7157080	MOUNT			1
10	7161527	COVER, BRAKE ASSY			1
11	7129987	COVER			2
12	6690163	RING			4
13	7126213	DISC			2
14		SHAFT	See Illustration MOTOR CARRIER/ NA2154		2
14		SHAFT	See Illustration MOTOR CARRIER/ NA1007		2
15	47C820	BOLT			4
16	84G3716	SCREW 5			35
17	6553411	BUSHING			1
18	6680970	BREATHER			1
19	17C412	BOLT 5			2
20	6706718	MOUNT			4
21	6708016	GASKET			1
22	17C412	BOLT 5			2
23	7136559	SOLENOID ASMBLY			1
24	6685372	SEALANT, GASKET LIQUID	tube - 20 oz		x
25	84G3732	BOLT			1

Page 57 - OSS# 2072104 - All rights reserved by Bobcat Company - 01/20/2010 - 17:21:58 - Produced by Ken Cook Co. with media1off

TRANSMISSION COVERS

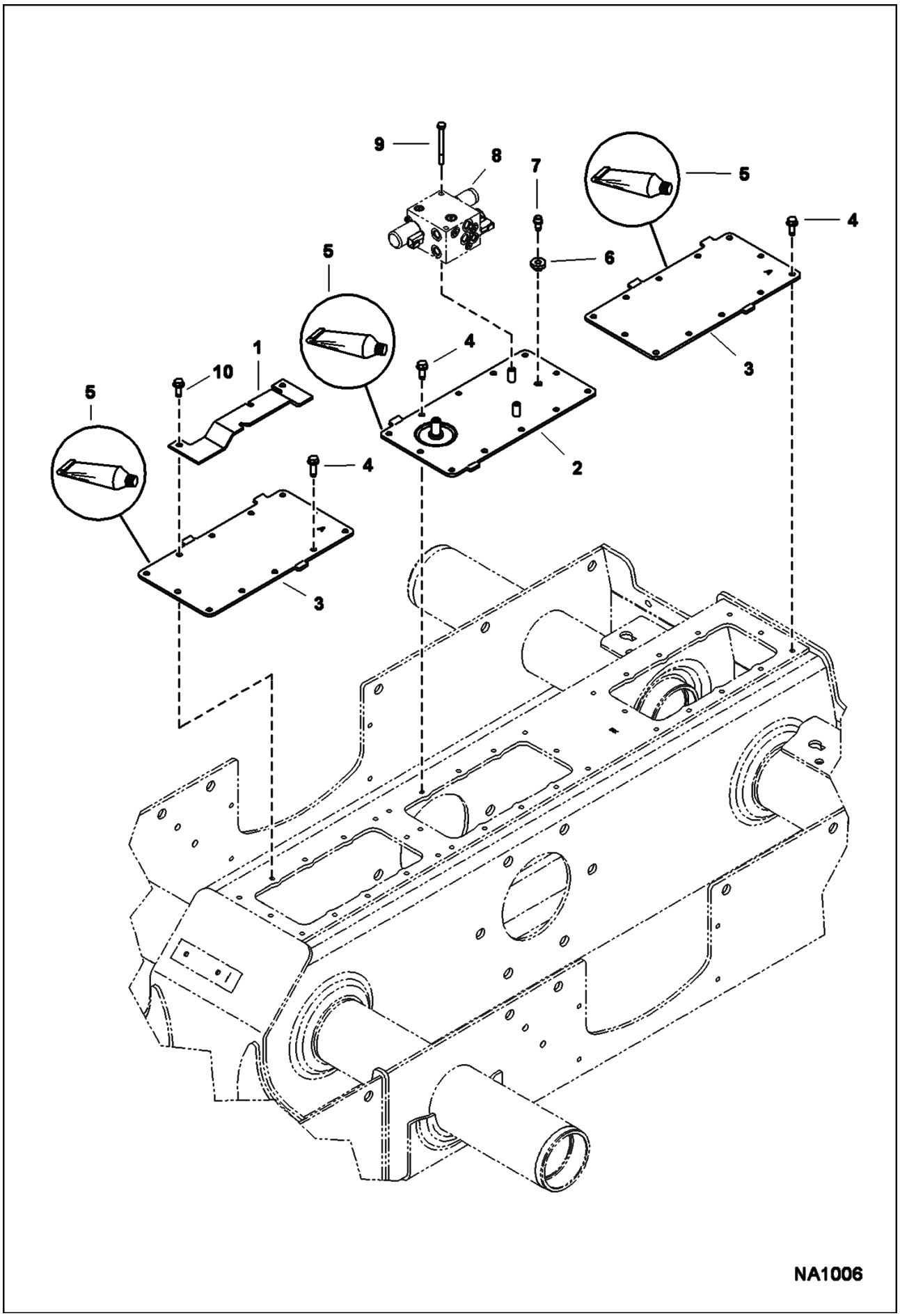

Page 58 - OSS# 2072104 - All rights reserved by Bobcat Company - 01/20/2010 - 17:21:58 - Produced by Ken Cook Co. with media1off

Ref No	Part Number	Description	Remarks	Serial Number	Qty
1	7157080	MOUNT			1
2	7153655	COVER, BRAKE ASSY			1
3	7129987	COVER			2
4	84G3716	SCREW 5			35
5	6685372	SEALANT, GASKET LIQUID	tube - 20 oz		x
6	6553411	BUSHING			1
7	6680970	BREATHER			1
8	6697971	VALVE, 2 SPEED			1
9	17C552	BOLT			2
10	84G3732	BOLT			1

Page 59 - OSS# 2072104 - All rights reserved by Bobcat Company - 01/20/2010 - 17:21:58 - Produced by Ken Cook Co. with media1off

HYDRAULIC CIRCUITRY

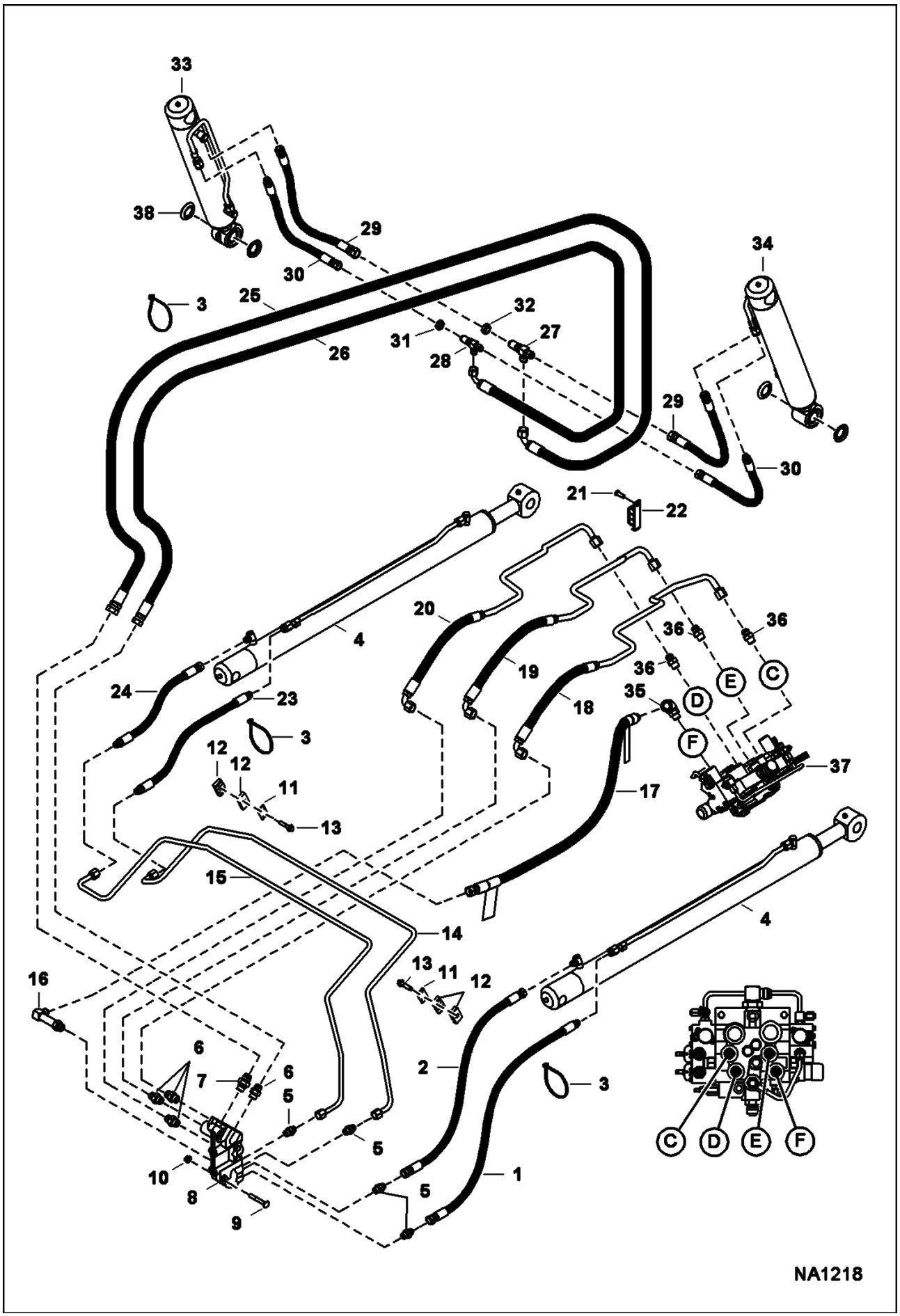

Page 60 - OSS# 2072104 - All rights reserved by Bobcat Company - 01/20/2010 - 17:21:58 - Produced by Ken Cook Co. with media1off

Ref No	Part Number	Description	Remarks	Serial Number	Qty
1	7154306	HOSE			1
2	7154305	HOSE			1
3	6624289	TIE STRAP			3
4		CYLINDER, LIFT	See Illustration LIFT CYLINDER/ NA1211		2
5	15KB808	CONNECTOR			4
6	15KB1010	FITTING			4
7	15KB1210	ADAPTER			1
8	7001921	BLOCK, JUNCTION			1
9	37C644	BOLT			2
10	83D6	NUT 5			2
11	6652521	COVER			2
12	6701892	CLAMP			4
13	84G3728	BOLT			1
14	7138172	TUBELINE	lift		1
15	7138173	TUBELINE	lift		1
16	7154528	ELBOW			1
17	7150692	HOSE, HYD	available only as an assembly W/ two danger decals installed		1
17	7170355	DECAL, DANGER			1
18	7152005	HOSE, HYD			1
19	7152004	HOSE, HYD			1
20	7152003	HOSE, HYD			1
21	17C616	BOLT 5			1
22	7157358	CLAMP			1
23	7154308	HOSE			1
24	7154307	HOSE			1
25	7171054	HOSE			1
26	7171056	HOSE			1
27	91K7	FITTING			1
28	91K6	TEE			1
29	7153006	HOSE			2
30	7153008	HOSE			2
31	86F6	NUT			1
32	86F7	LOCK NUT			1
33		CYLINDER, TILT	See Illustration TILT CYLINDER/ NA1210 LH		1
34		CYLINDER, TILT	See Illustration TILT CYLINDER/ NA1209 RH		1
35	7109623	ELBOW			1
36	15KB1010	FITTING			3
37		VALVE, CONTROL	See Illustration CONTROL VALVE/ NA1216 - manual controls		1
37		VALVE, CONTROL	See Illustration CONTROL VALVE/ NA1217 - ACS, SJC		1
38	6689112	SEAL			4
39	7171057	HOSE			1
40	7171055	HOSE			1

Page 61 - OSS# 2072104 - All rights reserved by Bobcat Company - 01/20/2010 - 17:21:58 - Produced by Ken Cook Co. with media1off

MANUAL LIFT RELEASE SYSTEM

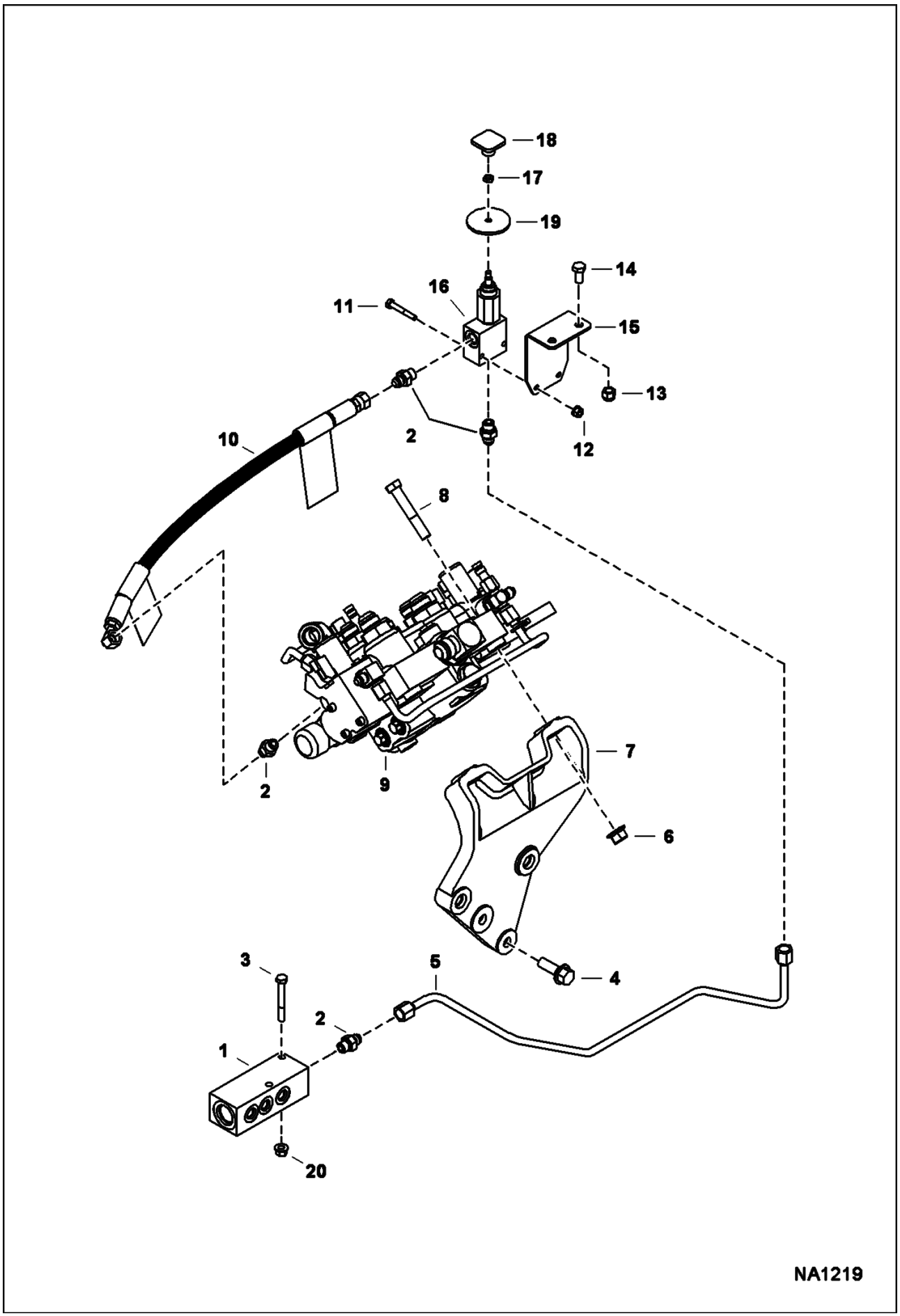

Page 62 - OSS# 2072104 - All rights reserved by Bobcat Company - 01/20/2010 - 17:21:58 - Produced by Ken Cook Co. with media1off

Ref No	Part Number	Description	Remarks	Serial Number	Qty
1	7178129	MANIFOLD, CASE DRAIN			1
2	15KB606	ADAPTER			4
3	17C540	BOLT			2
4	31C824	BOLT 10			2
5	7176927	TUBELINE, HYD			1
6	83D8	NUT 5			2
7	7156150	MOUNT			1
8	17C848	SCREW			2
9		VALVE, CONTROL	See Illustration CONTROL VALVE/ NA1216 - manual controls		1
9		VALVE, CONTROL	See Illustration CONTROL VALVE/ NA1217 - ACS & SJC		1
10	7168337	HOSE, HYD	available only as an assembly W/ two danger decals installed		1
10	7170355	DECAL, DANGER			2
11	17C428	BOLT			2
12	83D4	NUT 10			2
13	59D6	NUT			2
14	17C612	BOLT 5			2
15	7149166	MOUNT, BOOM DOWN			1
16		VALVE ASSY	See Illustration MANUAL LIFT RELEASE VALVE/ PE1547 manual lift release		1
17	7D4	NUT			1
18	6737524	KNOB			1
19	6707101	SEAL	neoprene		1
20	83D5	NUT 5			2

Page 63 - OSS# 2072104 - All rights reserved by Bobcat Company - 01/20/2010 - 17:21:58 - Produced by Ken Cook Co. with media1off

AUXILIARY HYDRAULICS

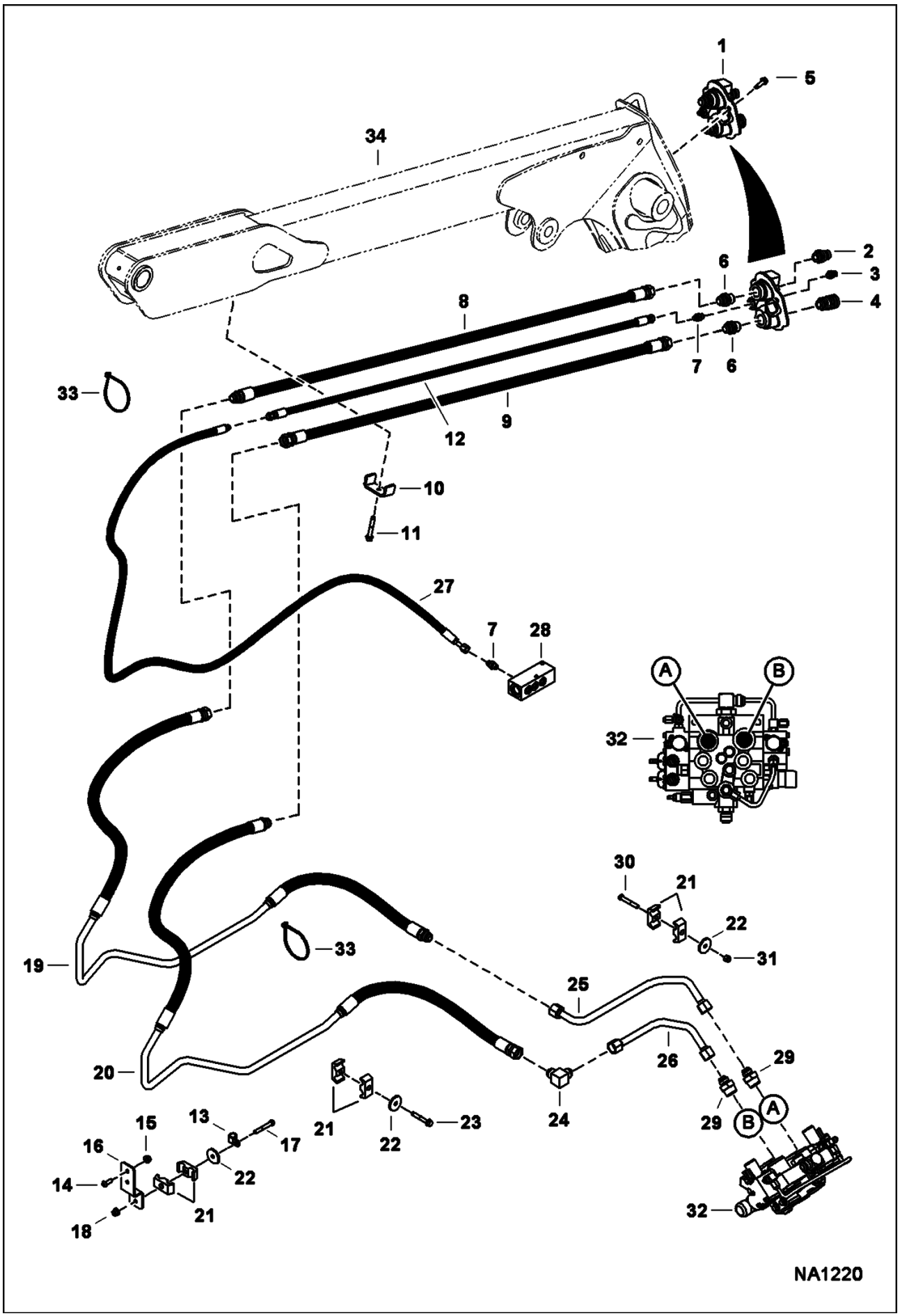

Page 64 - OSS# 2072104 - All rights reserved by Bobcat Company - 01/20/2010 - 17:21:58 - Produced by Ken Cook Co. with media1off

Ref No	Part Number	Description	Remarks	Serial Number	Qty
1	7141939	BLOCK, COUPLER	assy		1
2	6679837	COUPLER	male		1
2	6679841	SEAL	blue - front		1
2	6680020	SEAL KIT	(3) O-rings & (3) back-up washers		1
3	6679838	COUPLER	male casedrain - W/ spring, valve, seal & O-ring		1
3	6679840	SEAL	blue - front		1
4	6680018	KIT	coupler - female		1
4	6680020	SEAL KIT	(3) O-rings & (3) back-up washers		1
5	84G3720	BOLT			2
6	6679836	ADAPTER	W/ spring		2
6	79K12	O RING 10			x
7	15KB606	ADAPTER			1
8	7171077	HOSE			1
9	7171003	HOSE			1
10	7157545	CLAMP			2
11	84G3740	BOLT			3
12	7171045	HOSE			1
13	30H42	CLAMP			1
14	53C616	BOLT			2
15	83D6	NUT 5			2
16	7175549	MOUNT, HOSE			1
17	17C640	BOLT 5			1
18	86D6	NUT			1
19	7177816	HOSE, HYD			1
20	7177817	HOSE, HYD			1
21	6592506	CLAMP			6
22	872229	WASHER			3
23	84G3740	BOLT			1
24	77F8	ELBOW			1
25	7154522	TUBELINE			1
26	7154523	TUBELINE			1
27	7175556	HOSE, HYD			1
28	7178129	MANIFOLD, CASE DRAIN	See Illustration HYDROSTATIC CIRCUITRY/ NA1225		1
29	15KB1216	ADAPTER			2
30	31C640	BOLT			1
31	59D6	NUT			3
32		VALVE	See Illustration CONTROL VALVE/ NA1217 - ACS, SJC		1
32		VALVE	See Illustration CONTROL VALVE/ NA1216 - manual controls		1
33	6624289	TIE STRAP			3
34		LIFT ARM	See Illustration LIFT ARM & BOBTACH/ NA1002		1

Page 65 - OSS# 2072104 - All rights reserved by Bobcat Company - 01/20/2010 - 17:21:58 - Produced by Ken Cook Co. with media1off

TILT CYLINDER
(LH)

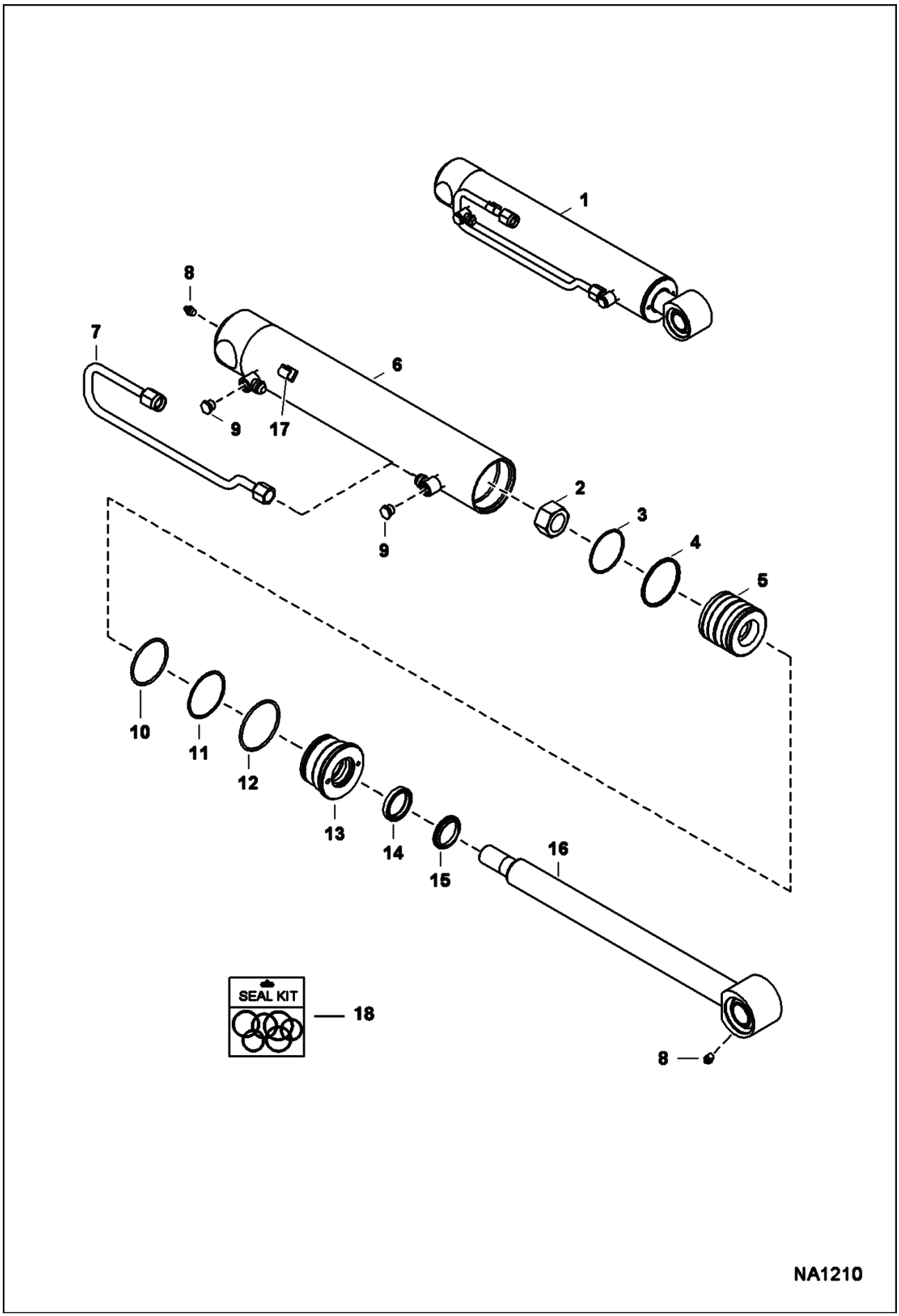

Page 66 - OSS# 2072104 - All rights reserved by Bobcat Company - 01/20/2010 - 17:21:58 - Produced by Ken Cook Co. with media1off

TILT CYLINDER (Cont'd)
(LH)

Ref No	Part Number	Description	Remarks	Serial Number	Qty
1	7154161	CYLINDER, TILT	Ref. 2-16		1
2	6810539	NUT			1
3	947088	RING			1
4	54K30218	O-RING			1
5	7152338	PISTON, CYL TILT			1
6	7154162	TUBE, CYL			1
7	7154163	TUBELINE, HYD			1
8	10H25	FITTING, GREASE			2
9	6812171	PLUG			2
10	54K40224	O-RING			1
11	73K232	RING	back-up		1
12	54K40300	O-RING			1
13	6804427	HEAD, CYL LIFT			1
14	6669267	SEAL			1
15	6687000	WIPER ROD			1
16	7150359	SHAFT			1
17	6690911	CLAMP			1
18	7137939	KIT, SEAL	Ref. 3, 4, 10-12, 14 & 15		1

Page 67 - OSS# 2072104 - All rights reserved by Bobcat Company - 01/20/2010 - 17:21:58 - Produced by Ken Cook Co. with media1off

TILT CYLINDER
(RH)

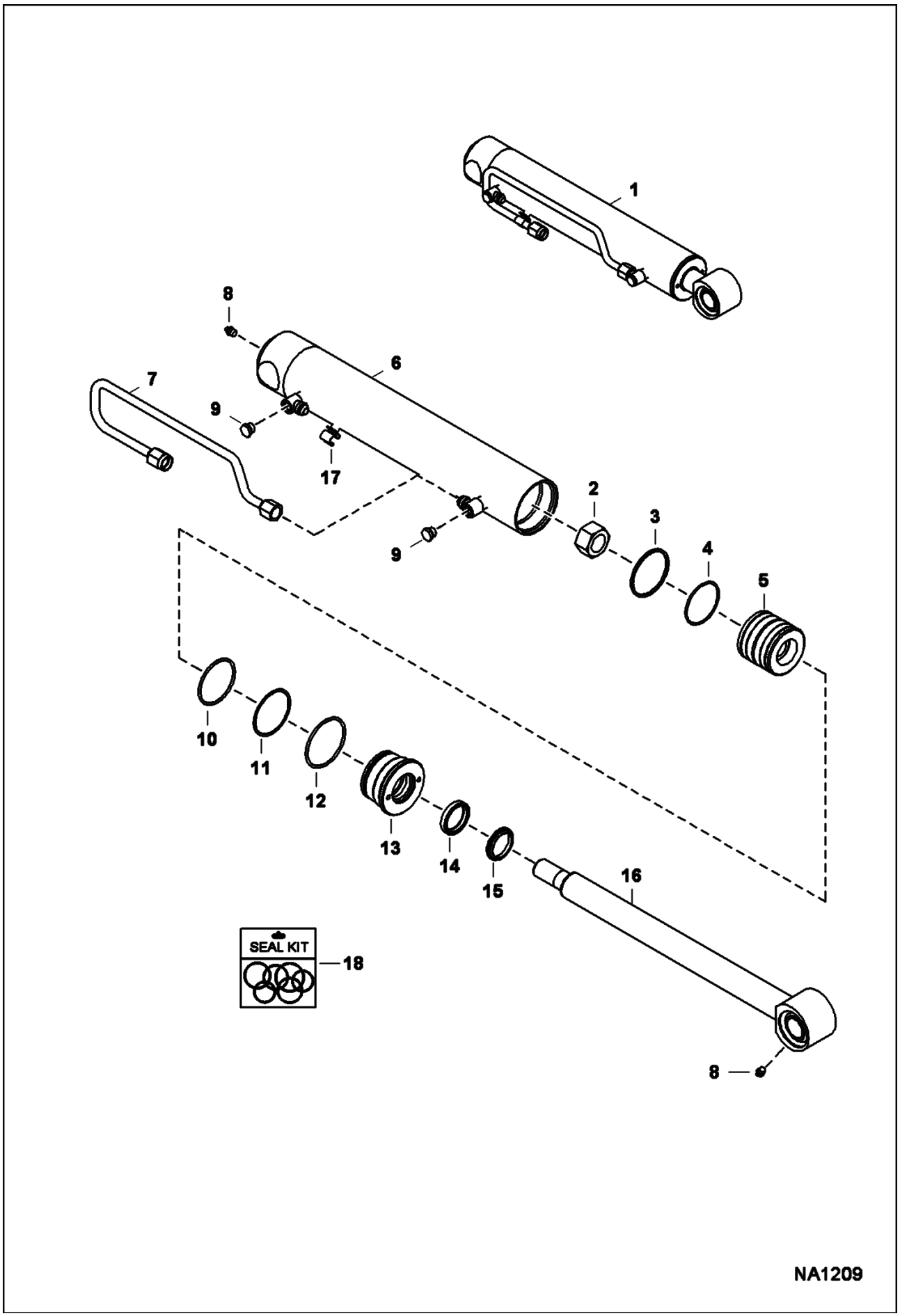

Page 68 - OSS# 2072104 - All rights reserved by Bobcat Company - 01/20/2010 - 17:21:58 - Produced by Ken Cook Co. with media1off

TILT CYLINDER (Cont'd)
(RH)

Ref No	Part Number	Description	Remarks	Serial Number	Qty
1	7150357	CYLINDER, TILT	tilt - Ref. 2-17		1
2	6810539	NUT			1
3	947088	RING			1
4	54K30218	O-RING			1
5	7152338	PISTON, CYL TILT			1
6	7150358	TUBE			1
7	7150467	TUBELINE, HYD			1
8	10H25	FITTING, GREASE			2
9	6812171	PLUG			2
10	54K40224	O-RING			1
11	73K232	RING	back-up		1
12	54K40300	O-RING			1
13	6804427	HEAD, CYL LIFT			1
14	6669267	SEAL			1
15	6687000	WIPER ROD			1
16	7150359	SHAFT			1
17	6690911	CLAMP			1
18	7137939	KIT, SEAL	Ref. 3, 4, 10-12, 14 & 15		1

Page 69 - OSS# 2072104 - All rights reserved by Bobcat Company - 01/20/2010 - 17:21:58 - Produced by Ken Cook Co. with media1off

LIFT CYLINDER

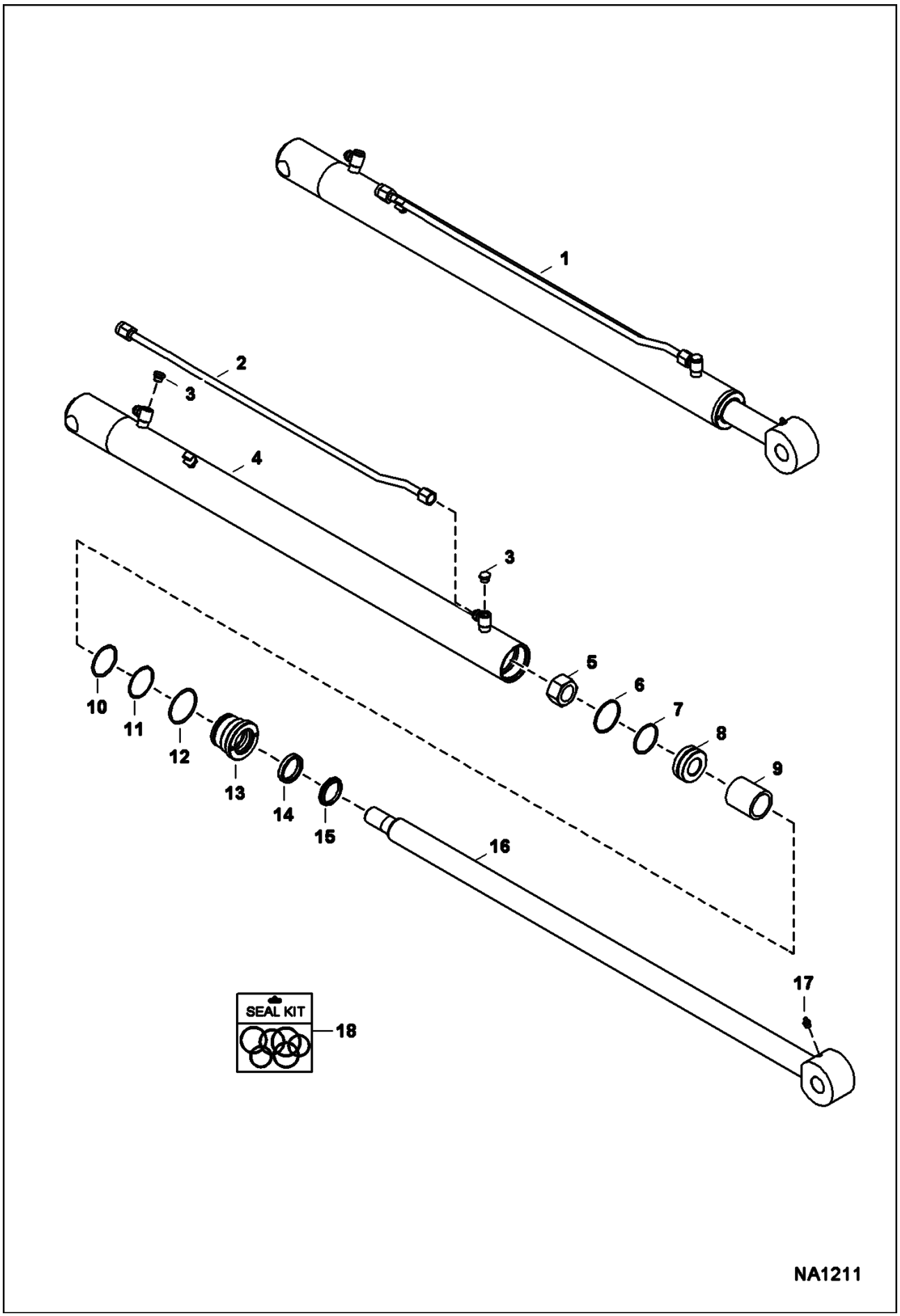

Page 70 - OSS# 2072104 - All rights reserved by Bobcat Company - 01/20/2010 - 17:21:58 - Produced by Ken Cook Co. with media1off

Ref No	Part Number	Description	Remarks	Serial Number	Qty
1	7171120	CYLINDER, LIFT	lift - Ref. 2-17		1
2	7136037	TUBELINE			1
3	6812171	PLUG			2
4	7136058	TUBE, CYL			1
5	6810540	NUT			1
6	1522534	SEAL			1
7	25K30202	O RING 10			1
8	6697792	PISTON, ASSY	W/Ref. 6 & 7		1
9	7136036	SPACER			1
10	54K40208	O-RING			1
11	73K228	BACK-UP RING			1
12	82K230	SEAL			1
13	6597009	HEAD			1
14	6667327	SEAL	back-up		1
15	6686999	SEAL	wiper		1
16	7136033	SHAFT			1
17	10H25	FITTING, GREASE			1
18	7137869	KIT, SEAL	Ref. 6, 7, 10-12, 14 & 15		1

Page 71 - OSS# 2072104 - All rights reserved by Bobcat Company - 01/20/2010 - 17:21:58 - Produced by Ken Cook Co. with media1off

CONTROL PEDALS

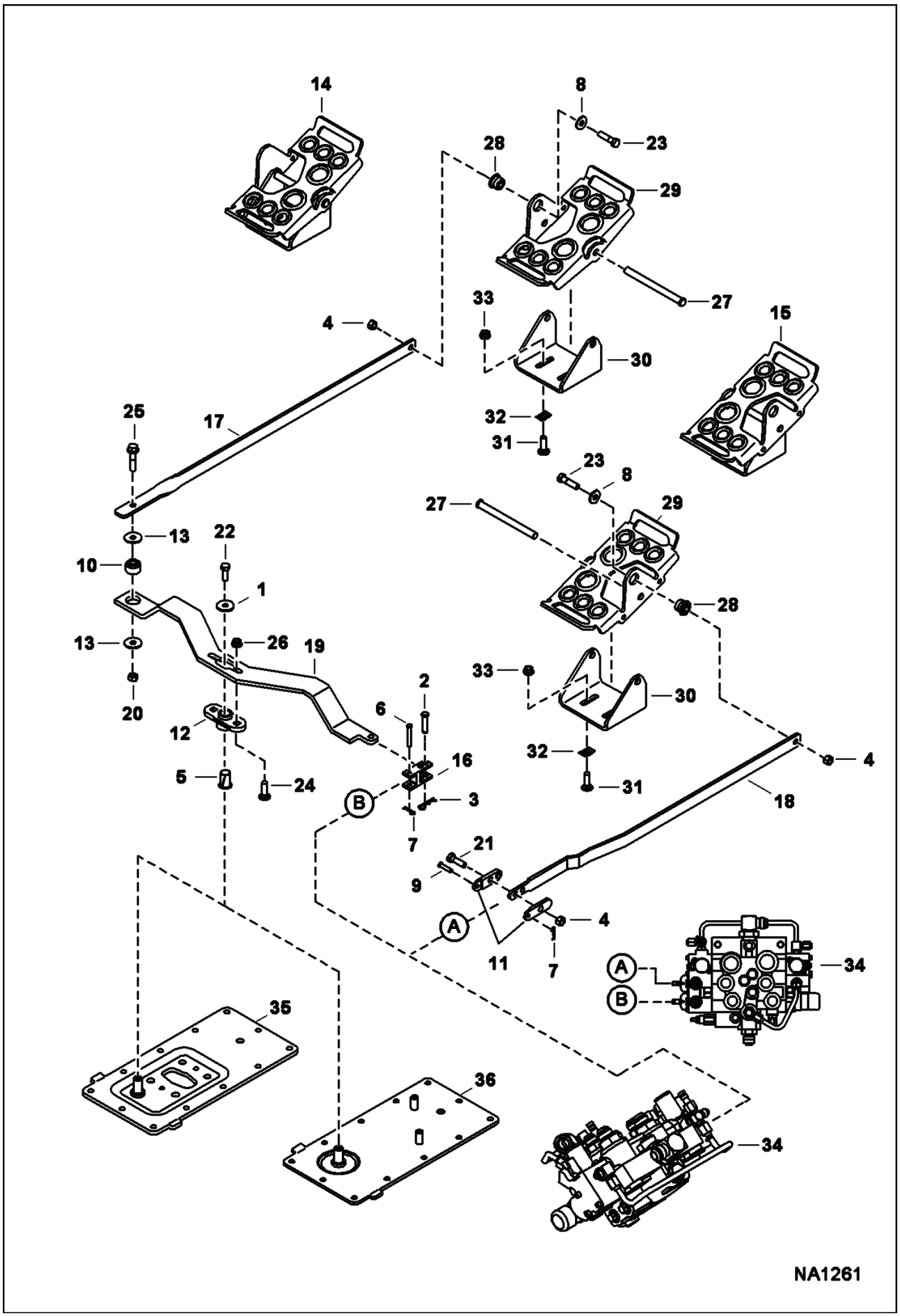

Page 72 - OSS# 2072104 - All rights reserved by Bobcat Company - 01/20/2010 - 17:21:58 - Produced by Ken Cook Co. with mediaioff

Ref No	Part Number	Description	Remarks	Serial Number	Qty
1	619021	WASHER, 5			1
2	1303190	PIN, CLEVIS			1
3	1306637	CLIP			1
4	95D6	NUT			3
5	6512026	BUSHING			1
6	6512353	CLEVIS PIN			1
7	6513495	COTTER PIN			2
8	6563914	WASHER			2
9	6564654	PIN			1
10	6685060	BUSHING, TORSION			1
11	6708009	LINK			2
12	6708043	BUSHING			1
13	6737388	WASHER			2
14	7151868	PEDAL ASSY	LH - W/Ref. 28-31		1
15	7151871	PEDAL ASSY	RH - W/Ref. 28-31		1
16	7152501	YOKE			1
17	7153048	LINK, PEDAL			1
18	7153049	LINK, PEDAL			1
19	7153058	LINK, BELLCRANK			1
20	63D6	NUT			1
21	17C620	BOLT			1
22	17C616	BOLT 5			1
23	17C624	BOLT 5			2
24	37C620	BOLT			2
25	49C628	BOLT			1
26	53D6	NUT			2
27		PIN	NAP - Order Ref. 14 or Ref. 15		2
28	6665701	BUSHING, PRESS FIT			2
29		PEDAL	NAP - Order Ref. 14 or Ref. 15		2
30	7157611	MOUNT			2
31	37C620	BOLT			4
32	6684033	NUT			4
33	57D6	NUT 5			4
34		VALVE	See Illustration CONTROL VALVE/ NA1217 - ACS, SJC		1
34		VALVE	See Illustration CONTROL VALVE/ NA1216 - manual controls		1
35		COVER	See Illustration DISC BRAKE/ NA1005		1
36		COVER	See Illustration TRANSMISSION COVERS/ NA1006		1

Page 73 - OSS# 2072104 - All rights reserved by Bobcat Company - 01/20/2010 - 17:21:58 - Produced by Ken Cook Co. with media1off

CONTROL VALVE
(Manual Controls)

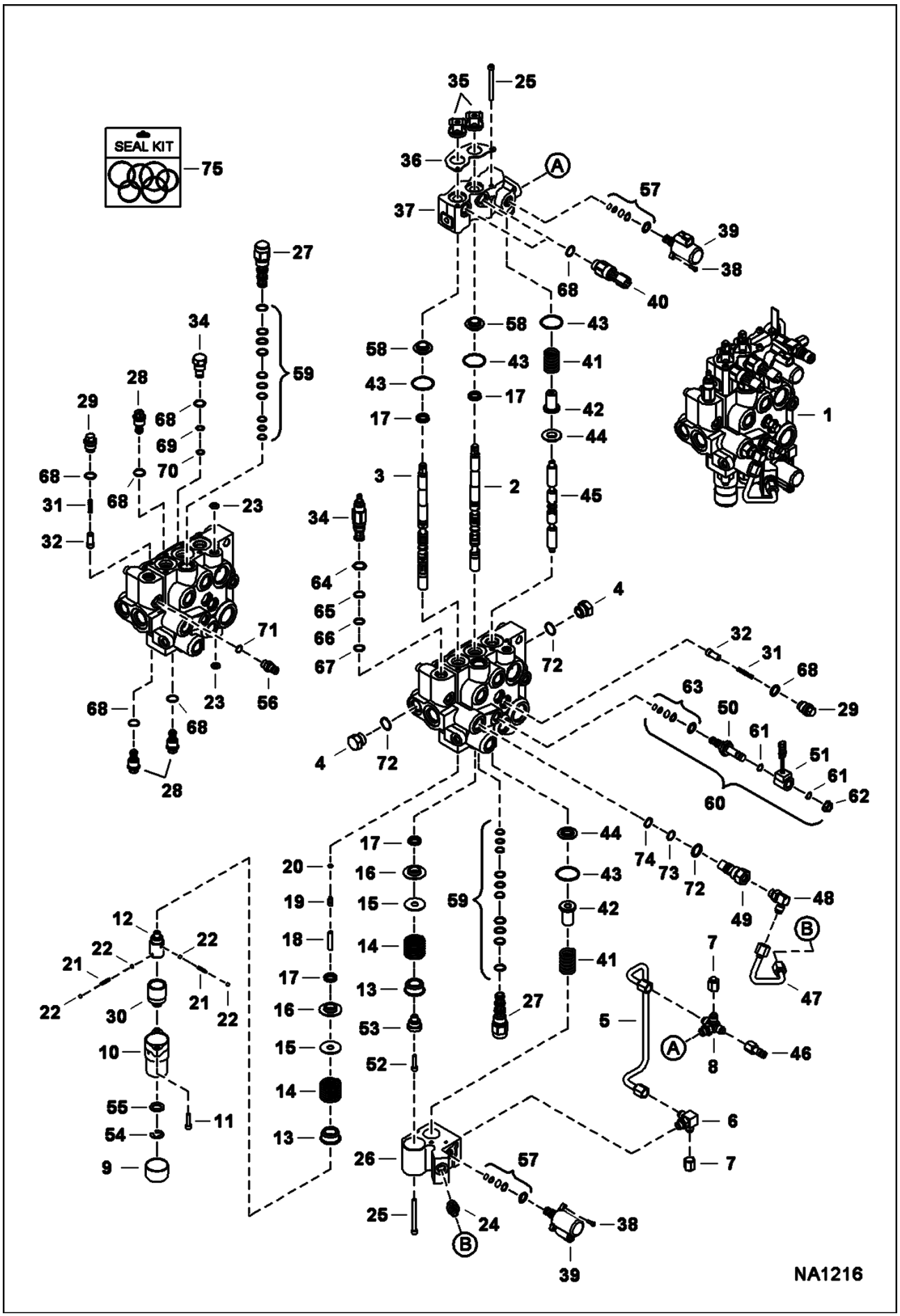

Page 74 - OSS# 2072104 - All rights reserved by Bobcat Company - 01/20/2010 - 17:21:58 - Produced by Ken Cook Co. with media1off

CONTROL VALVE (Cont'd)
(Manual Controls)

Ref No	Part Number	Description	Remarks	Serial Number	Qty
1	7166046	VALVE, CONTROL			1
2	6815152	SPOOL	tilt		1
3	7170321	SPOOL, LIFT LOCK	lift		1
4	24K7	PLUG			2
5	7157291	TUBELINE			1
6	7166338	TEE, BOSS			1
7	36K5	CAP			2
8	7102019	CROSS			1
9	6660644	CAP			1
10	6589226	BONNET			1
11	29G416	BOLT			2
12	6587575	ADAPTER			1
13	6592100	COLLAR			2
14	6587580	SPRING			2
15	6587523	WASHER			2
16	6595663	BUSHING			2
17	6683274	SEAL, SPOOL			4
18	6586918	SCREW			1
19	6596807	PLUG			1
20	58K004	O-RING			1
21	6592107	SPRING			2
22	6592105	BALL			4
23	55K204	O RING 10			2
24	6688845	VALVE	check		1
25	6814022	SCREW HEX SKT HD W/T			7
26	7157289	BLOCK			1
27	6689739	VALVE	W/Ref. 56		2
28	6684646	VALVE	anti-cav		3
29	7134520	PLUG	check valve		3
30	7170051	SLEEVE			1
31	7166339	SPRING, LOAD CHECK			4
32	7166047	SEAT, CHECK VALVE			4
33	6816549	PLUG ASSY PORT RLF			1
34	6686360	VALVE	main relief - pressure to be set in field		1
35	6587763	BOOT			2
36	6813153	PLATE	retainer		1
37	7157286	BODY			1
38	7002716	SCREW			2
39	6698434	VALVE, PROPORTIONAL			2
40	6676029	SOLENOID			2
41	7121399	SPRING			2
42	6814694	RETAINER			2
43	1K127	O-RING 10			4
44	7138376	BUSHING			2
45	7112383	AUX SPOOL			1
46	6661753	PLUG			1
47	7157290	TUBELINE			1
48	17KB606	ELBOW			1
49	7134522	PLUG			1
50	6667687	STEM			1

Page 75 - OSS# 2072104 - All rights reserved by Bobcat Company - 01/20/2010 - 17:21:58 - Produced by Ken Cook Co. with media1off

CONTROL VALVE (Cont'd)
(Manual Controls)

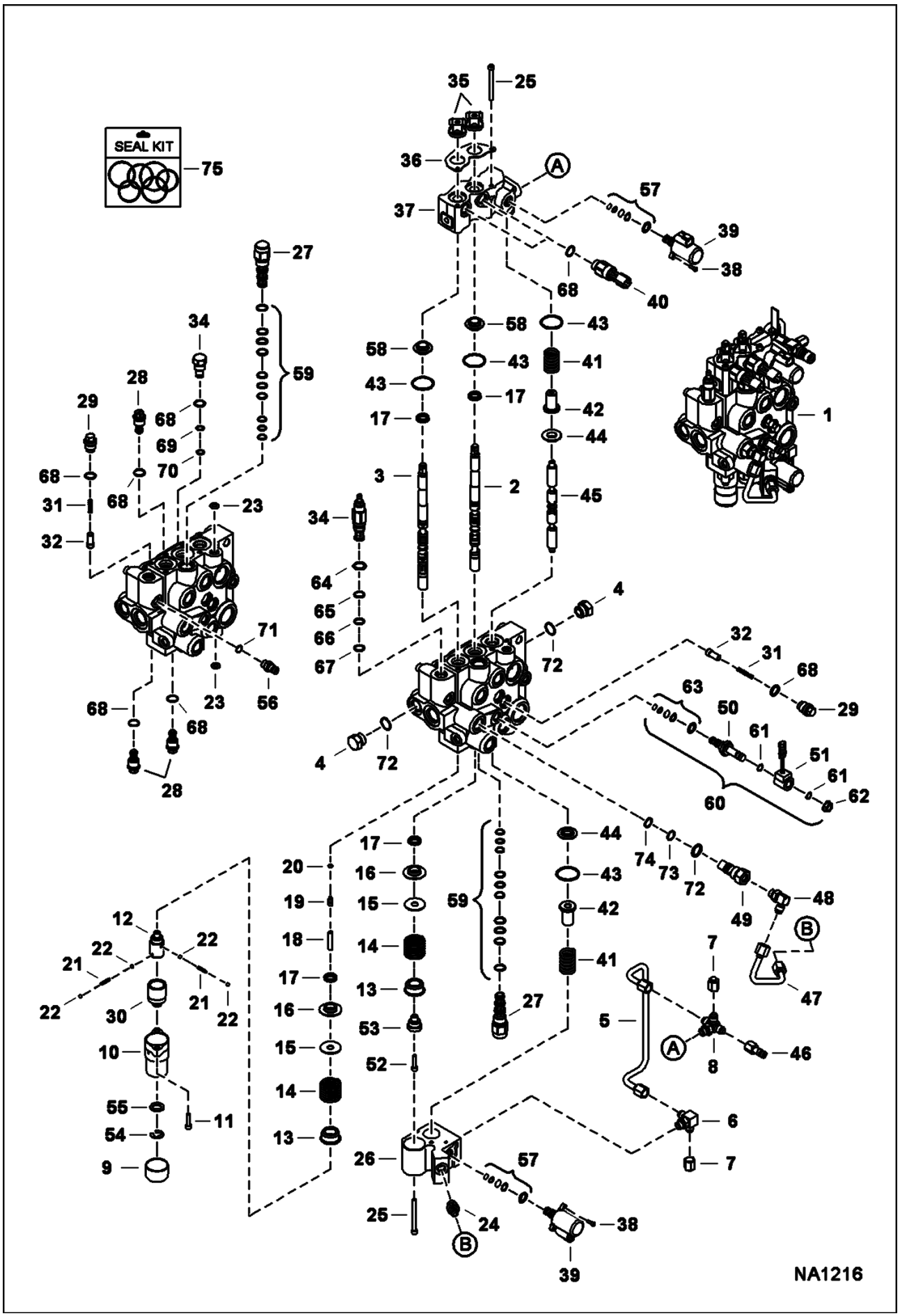

Page 76 - OSS# 2072104 - All rights reserved by Bobcat Company - 01/20/2010 - 17:21:58 - Produced by Ken Cook Co. with media1off

CONTROL VALVE (Cont'd)
(Manual Controls)

Ref No	Part Number	Description	Remarks	Serial Number	Qty
51	6671025	COIL			1
51	6675559	COIL	W/Ref. 61 & 62		1
52	7102652	SCREW			1
53	6592109	ADAPTER			1
54	799119	RING			1
55	6592098	WASHER			1
56	6630168	COUPLER			1
57	7008771	KIT, SEAL	use for Ref. 39		2
58	6805102	BUSHING			2
59	6669734	KIT, SEAL			x
60	6672471	VALVE	solenoid		1
61	54K20028	O RING 10			2
62	6691022	NUT			1
63	6669732	KIT, SEAL			1
64	58K17	O RING 10			1
65	6665569	WASHER			1
66	25K20016	O RING 10			1
67	6665570	RING			1
68	79K8	O RING 10			x
69	58K13	O-RING			1
70	73K13	RING			1
71	79K6	O RING 10			x
72	79K10	O RING 10			x
73	73K16	RING			1
74	58K16	O RING 10			1
75	7123964	KIT, SEAL COMPLETE			1
75	6632279	KIT, SEAL	main relief - Ref. 64-67		x
75	6669732	KIT, SEAL	solenoid valve - Ref. 63		x
75	6669734	KIT, SEAL	pilot valve - Ref. 59		x
75		SEAL KIT	proportional valve - Ref. 75		x

Page 77 - OSS# 2072104 - All rights reserved by Bobcat Company - 01/20/2010 - 17:21:58 - Produced by Ken Cook Co. with media1off

CONTROL VALVE
(ACS, SJC)

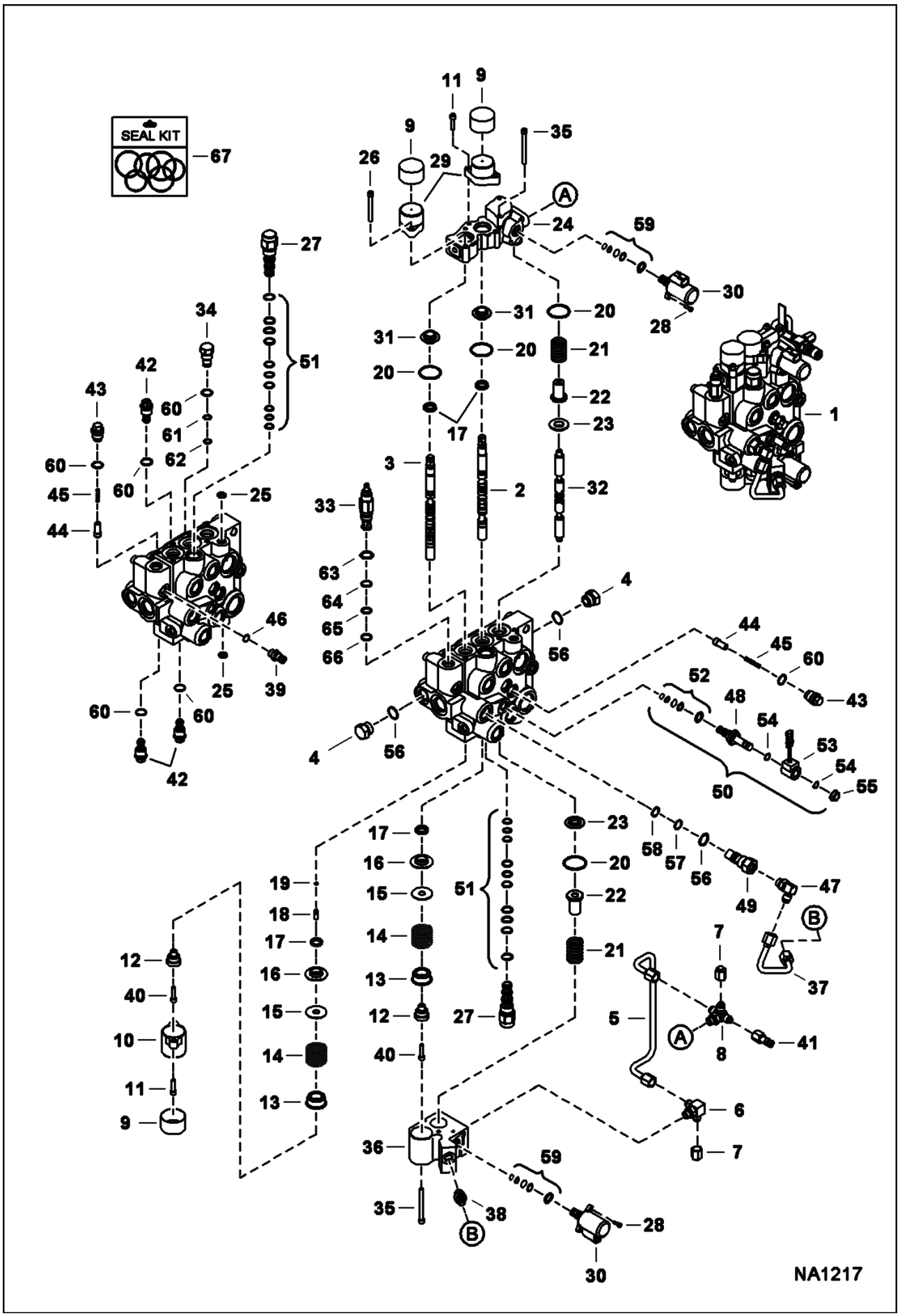

Page 78 - OSS# 2072104 - All rights reserved by Bobcat Company - 01/20/2010 - 17:21:58 - Produced by Ken Cook Co. with media1off

CONTROL VALVE (Cont'd)
(ACS, SJC)

Ref No	Part Number	Description	Remarks	Serial Number	Qty
1	7166283	VALVE, CONTROL			1
2	7108242	TILT SPOOL			1
3	7170011	SPOOL, LIFT			1
4	24K7	PLUG			2
5	7157291	TUBELINE			1
6	7166338	TEE, BOSS			1
7	36K5	CAP			2
8	7102019	CROSS			1
9	6662848	CAP			3
10	6803092	BONNET			1
11	29G416	BOLT			4
12	6592109	ADAPTER			2
13	6592100	COLLAR			2
14	6587580	SPRING			2
15	6587523	WASHER			2
16	6595663	BUSHING			2
17	6683274	SEAL, SPOOL			4
18	6801167	PLUG			1
19	58K004	O-RING			1
20	1K127	O-RING 10			4
21	7121399	SPRING			2
22	6814694	RETAINER			2
23	7138376	BUSHING			2
24	7157293	BODY			1
25	55K204	O RING 10			2
26	69G436	BOLT			2
27	6689739	VALVE	pilot operated		2
28	7002716	SCREW			4
29	7101345	BONNET, DETENT HYD VALVE			2
30	6698434	VALVE, PROPORTIONAL			2
31	6805102	BUSHING			2
32	7112383	AUX SPOOL			1
33	6686359	VALVE RELIEF	main relief - pressure to be set in field		1
34	6816549	PLUG ASSY PORT RLF			1
35	6814022	SCREW HEX SKT HD W/T			5
36	7157289	BLOCK			1
37	7157290	TUBELINE			1
38	6688845	VALVE			1
39	6630168	COUPLER			1
40	7102652	SCREW			2
41	6661753	PLUG			1
42	6684646	VALVE	anti-cav		3
43	7134520	PLUG	check valve		3
44	7166047	SEAT, CHECK VALVE			4
45	7166339	SPRING, LOAD CHECK			4
46	79K6	O RING 10			x
47	17KB606	ELBOW			1
48	6667687	STEM			1
49	7134522	PLUG			1

Page 79 - OSS# 2072104 - All rights reserved by Bobcat Company - 01/20/2010 - 17:21:58 - Produced by Ken Cook Co. with media1off

CONTROL VALVE (Cont'd)
(ACS, SJC)

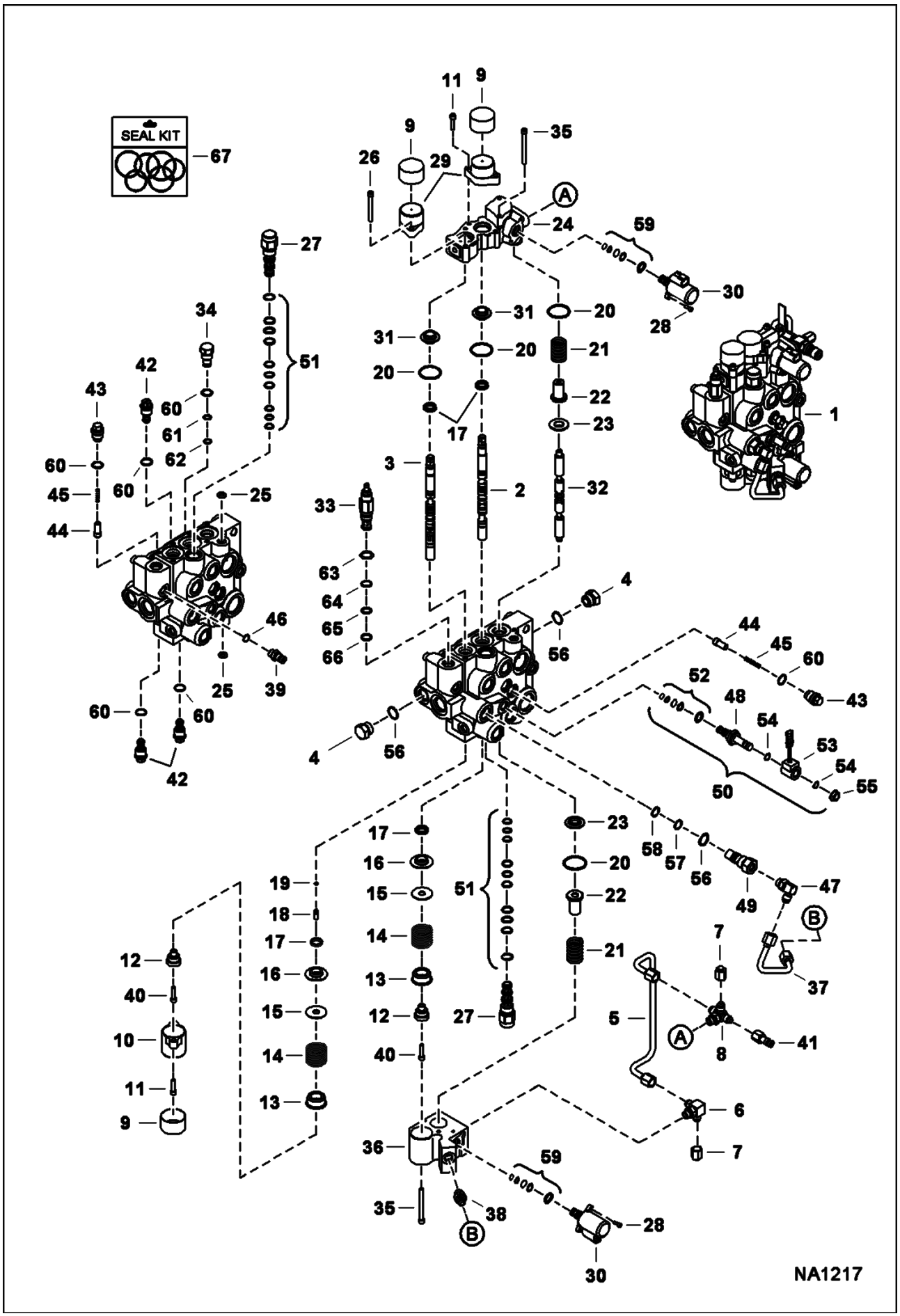

Page 80 - OSS# 2072104 - All rights reserved by Bobcat Company - 01/20/2010 - 17:21:58 - Produced by Ken Cook Co. with media1off

CONTROL VALVE (Cont'd)
(ACS, SJC)

Ref No	Part Number	Description	Remarks	Serial Number	Qty
50	6672471	VALVE	solenoid		1
51	6669734	KIT, SEAL			X
52	6669732	KIT, SEAL			1
53	6671025	COIL			1
53	6675559	COIL	W/Ref. 54 & 55		1
54	54K20028	O RING 10			2
55	6691022	NUT			1
56	79K10	O RING 10			x
57	73K16	RING			1
58	58K16	O RING 10			1
59	7008771	KIT, SEAL	use for Ref. 30		2
60	79K8	O RING 10			x
61	58K13	O-RING			1
62	73K13	RING			1
63	58K17	O RING 10			1
64	6665569	WASHER			1
65	25K20016	O RING 10			1
66	6665570	RING			1
67	7123964	KIT, SEAL COMPLETE			x
67	6632279	KIT, SEAL	main relief - Ref. 63-66		x
67	6669732	KIT, SEAL	solenoid valve - Ref. 52		x
67	6669734	KIT, SEAL	pilot valve - Ref. 51		x
67	7008771	KIT, SEAL	proportional valve - Ref. 59		x

Page 81 - OSS# 2072104 - All rights reserved by Bobcat Company - 01/20/2010 - 17:21:58 - Produced by Ken Cook Co. with media1off

MANUAL LIFT RELEASE VALVE

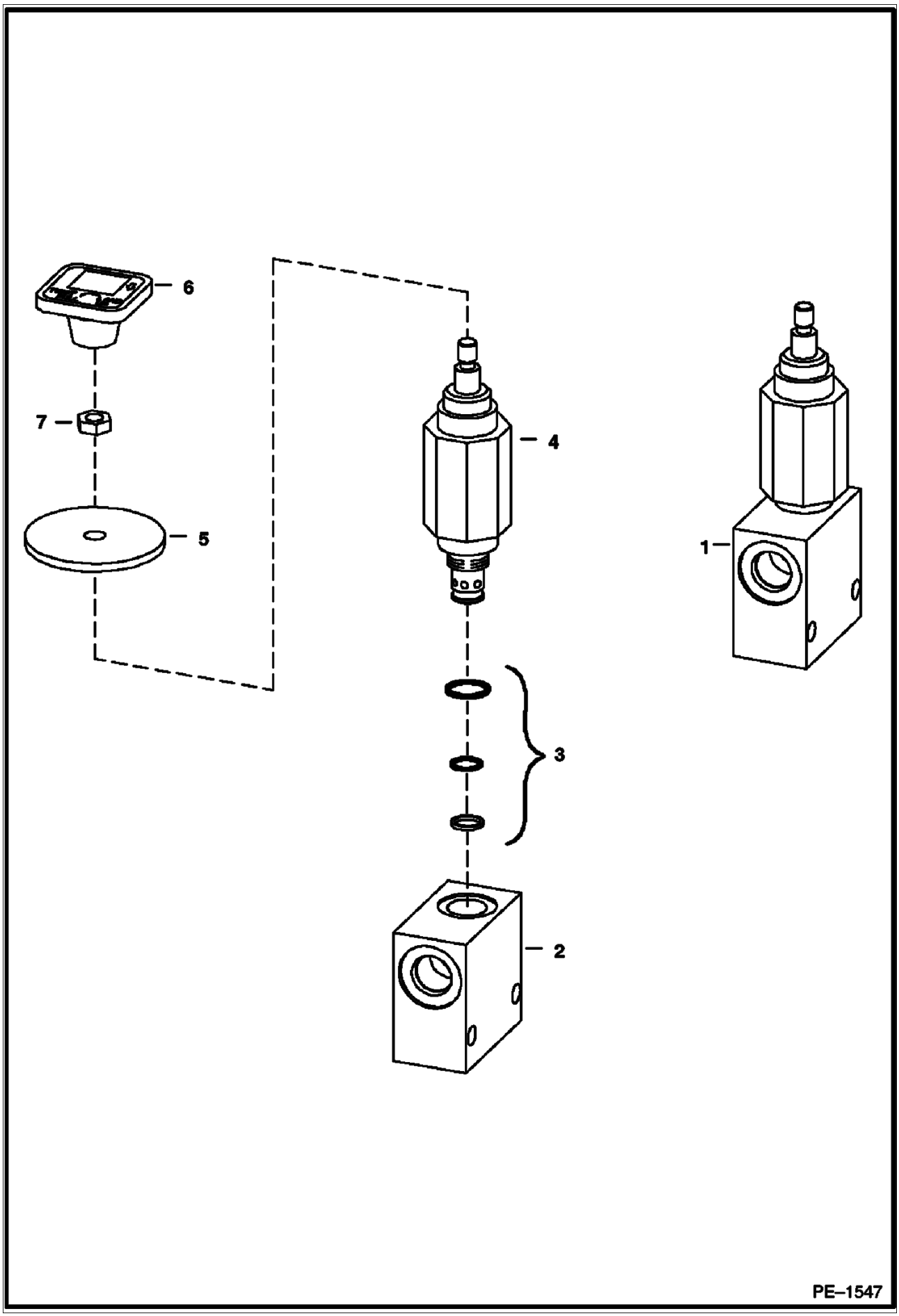

Page 82 - OSS# 2072104 - All rights reserved by Bobcat Company - 01/20/2010 - 17:21:58 - Produced by Ken Cook Co. with media1off

Ref No	Part Number	Description	Remarks	Serial Number	Qty
1	6667844	VALVE ASSY	Ref. 2-4		1
2		BLOCK	NSS		1
3	6669087	SEAL KIT			1
4		VALVE	NSS - Order Ref. 1		1
5	6707101	SEAL	neoprene		1
6	6737524	KNOB	red square		1
7	7D4	NUT			1

Page 83 - OSS# 2072104 - All rights reserved by Bobcat Company - 01/20/2010 - 17:21:58 - Produced by Ken Cook Co. with media1off

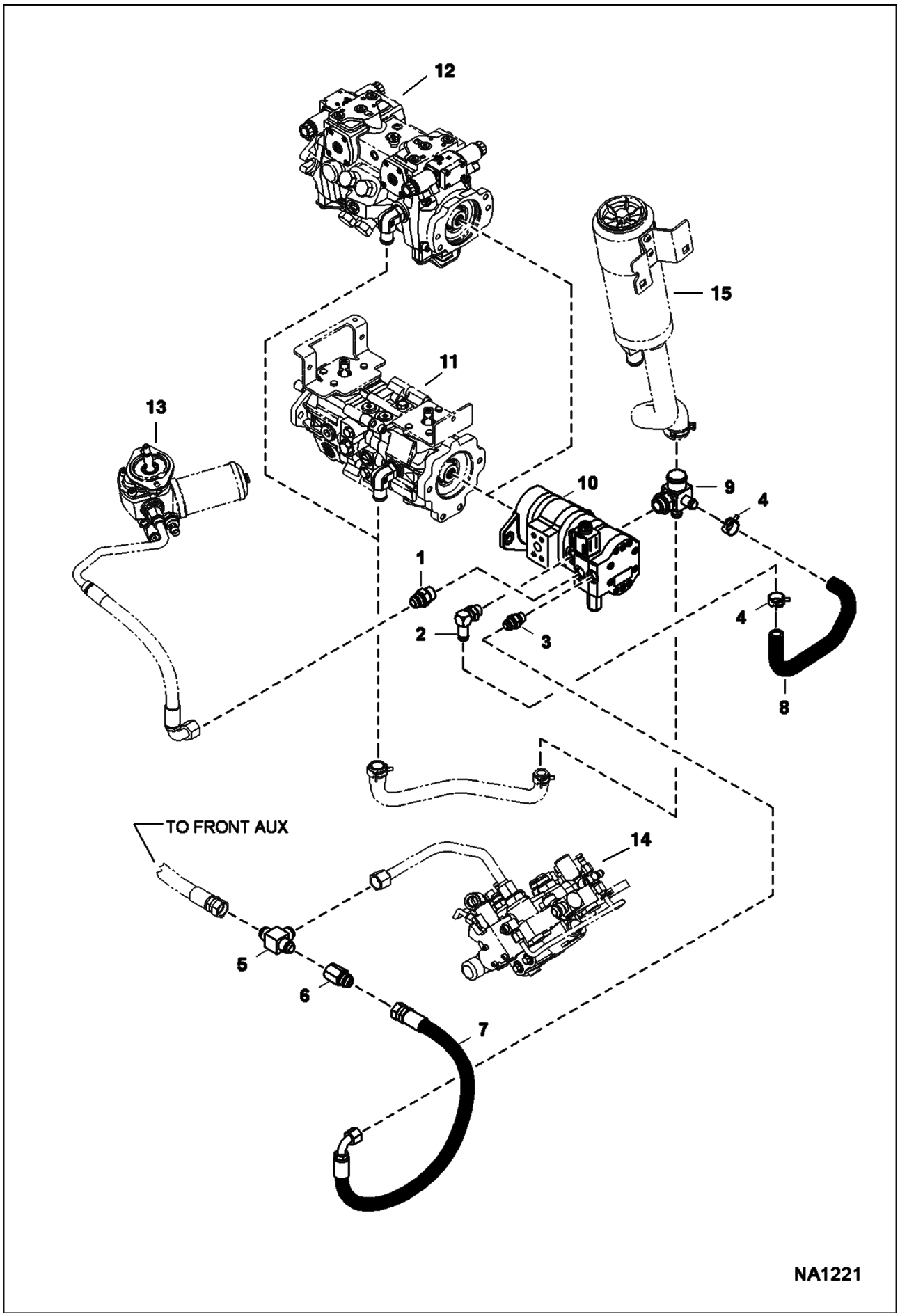

Page 84 - OSS# 2072104 - All rights reserved by Bobcat Company - 01/20/2010 - 17:21:58 - Produced by Ken Cook Co. with media1off

Ref No	Part Number	Description	Remarks	Serial Number	Qty
1	15KB1212	ADAPTER			1
2	6717885	ELBOW			1
3	15KB1008	ADAPTER			1
4	5HM29	HOSECLAMP			2
5	10K8	TEE			1
6	7113552	CHECK VALVE			1
7	7154521	HOSE			1
8	7155661	HOSE			1
9	7155660	FITTING			1
10		PUMP, GEAR TRIPLE			1
11		PUMP, HYD	See Illustration HYDROSTATIC PUMP/GEAR PUMP/ NA1309		1
12		PUMP, HYD	See Illustration HYDROSTATIC PUMP/ NA2245		1
13		MOTOR, HYD FAN COOLING	See Illustration COOLING FAN MOTOR/ MS2514		1
14		VALVE, CONTROL	See Illustration CONTROL VALVE/ NA1216 - manual controls		1
14		VALVE, CONTROL	See Illustration CONTROL VALVE/ NA1217 - ACS & SJC		1
15		FILTER, HYDRO ASSY	See Illustration HYDROSTATIC CIRCUITRY/ NA1224		1

Page 85 - OSS# 2072104 - All rights reserved by Bobcat Company - 01/20/2010 - 17:21:58 - Produced by Ken Cook Co. with media1off

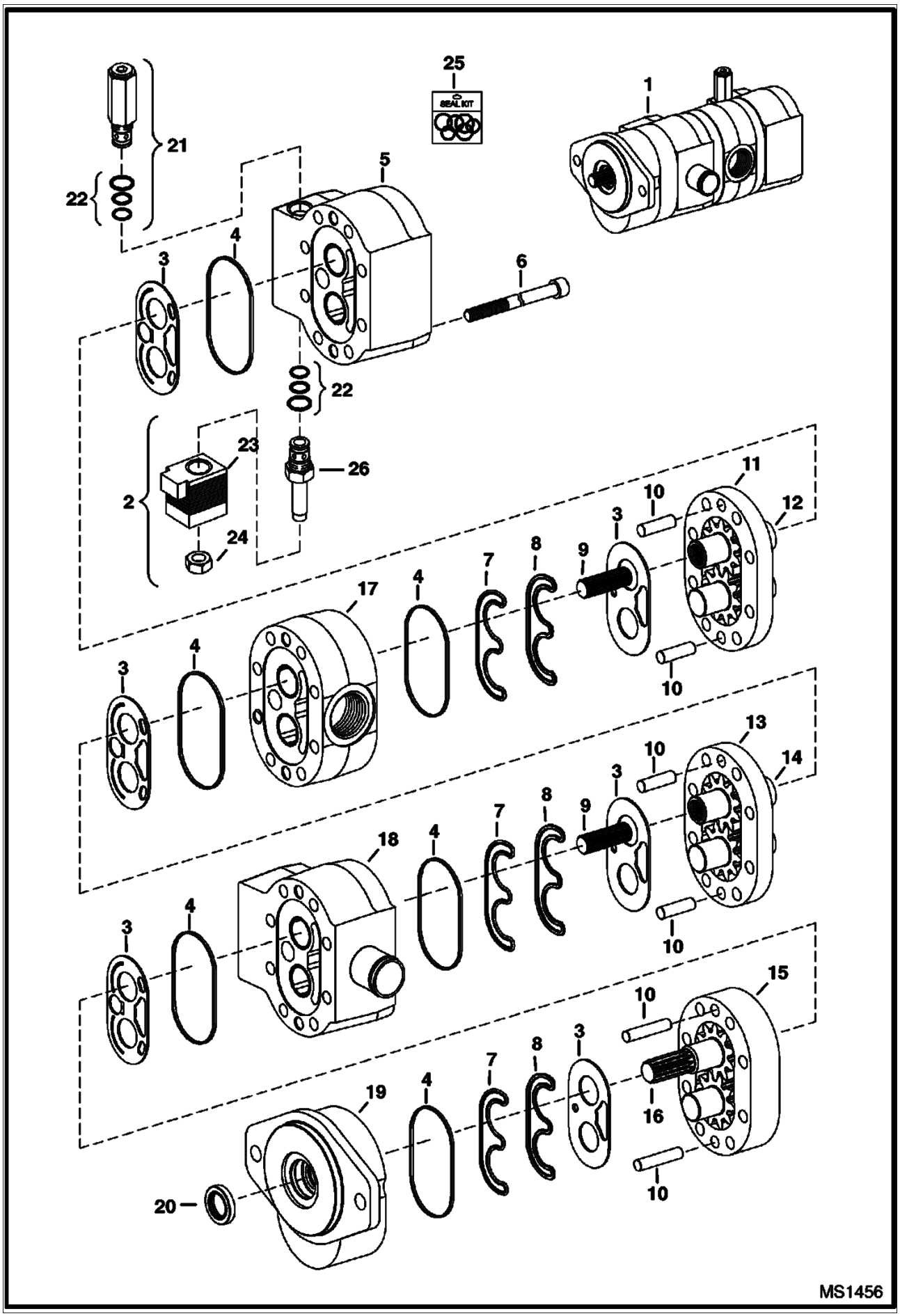

Page 86 - OSS# 2072104 - All rights reserved by Bobcat Company - 01/20/2010 - 17:21:58 - Produced by Ken Cook Co. with mediaioff

HIGH FLOW HYDRAULICS (Cont'd)
(Triple Gear Pump)

Ref No	Part Number	Description	Remarks	Serial Number	Qty
1	7001045	PUMP, GEAR TRIPLE	Model 83001569		1
2	6685027	VALVE	W/Ref. 22-24 & 26		1
3		PLATE, WEAR	NSS		6
4		SEAL, SECTION	NSS		6
5		HOUSING, REAR	NSS		1
6		BOLT	NSS		8
7		SEAL, PRE-LOAD	NSS		6
8		SEAL, LOAD	NSS		6
9		CONNECTOR, SPLINE	NSS		2
10		PIN	NSS		6
11		HOUSING, GEAR	NSS - #3		1
12		GEAR SET	NSS - #3		1
13		HOUSING, GEAR	NSS - #2		1
14		GEAR SET	NSS - #2		1
15		HOUSING, GEAR	NSS - #1		1
16		GEAR SET	NSS - drive		1
17		HOUSING, CENTER	NSS		1
18		HOUSING, CENTER	NSS		1
19		HOUSING, FRONT	NSS		1
20		SEAL, SHAFT	NSS		1
21	6693414	SOLENOID VALVE	W/Ref. 22		1
22		KIT, SEAL	NSS		2
23		COIL	NAP - Order Ref. 2		1
24		NUT	NAP - Order Ref. 2		1
25	6688322	KIT, SEAL			1
26		STEM	NSS - Order Ref. 2		1

Page 87 - OSS# 2072104 - All rights reserved by Bobcat Company - 01/20/2010 - 17:21:58 - Produced by Ken Cook Co. with media1off

HYDROSTATIC CIRCUITRY
(Tank & Filter)

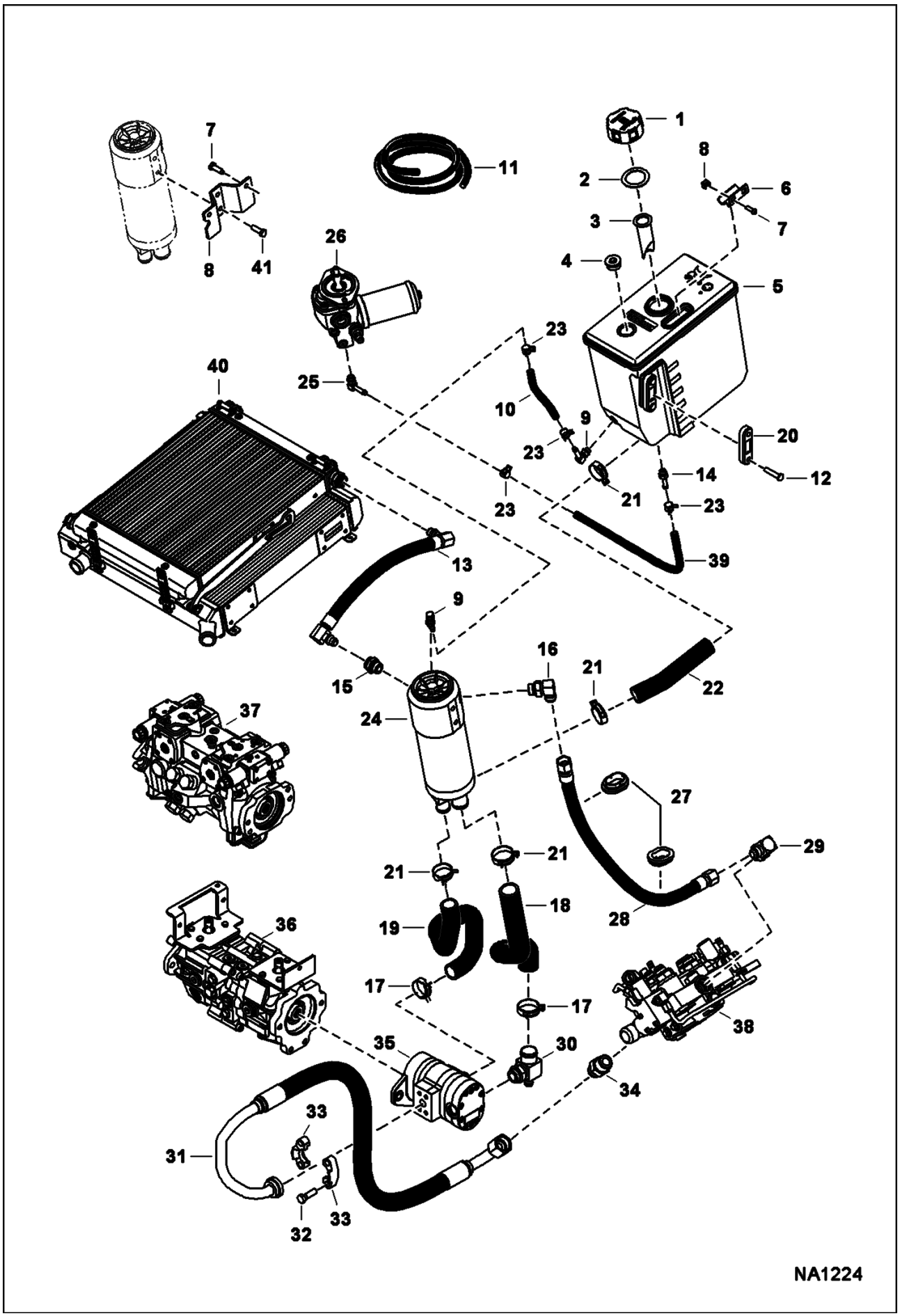

Page 88 - OSS# 2072104 - All rights reserved by Bobcat Company - 01/20/2010 - 17:21:58 - Produced by Ken Cook Co. with mediaioff

HYDROSTATIC CIRCUITRY (Cont'd)
(Tank & Filter)

Ref No	Part Number	Description	Remarks	Serial Number	Qty
1	6727475	CAP			1
2	6700631	GASKET			1
3	7003487	SCREEN			1
4	47K10	PLUG			1
5	7163919	TANK, HYDRAULIC			1
6	7165806	BRACKET			1
7	84G3712	BOLT			2
8	7179382	BRACKET			1
9	6727313	ELBOW			2
10		HOSE	NAP - 7.25" (184.15 mm) - Order Ref. 11		1
11	6586251	HOSE	bulk - sold per foot		x
12		BOLT	NSS - Order Ref. 20		2
13	7164589	HOSE			1
14	7158632	CONNECTOR			1
15	10L1212	ADAPTER			1
16	17KB1212	ELBOW			1
17	5HM47	CLAMP			2
18	7167757	HOSE			1
19	7166382	HOSE			1
20	7001421	GUAGE, SIGHT			1
21	5HM42	HOSECLAMP			4
22	7162931	HOSE			1
23	5HM16	CLAMP			4
24	7166411	TANK, OIL HYD	filter not included		1
24	7002734	FILTER			1
25	6727313	ELBOW			1
26		MOTOR, HYD COOLING FAN	See Illustration COOLING FAN MOTOR/ MS2514		1
27	7002740	GROMMET			2
28	7171394	HOSE			1
29	7101371	ELBOW			1
30	7158921	FITTING			1
31	7159044	HOSE ASSY			1
32	17C620	BOLT			4
33	19J12	CLAMP			2
34	15KB1212	ADAPTER			1
35		PUMP, GEAR	See Illustration HYDROSTATIC PUMP/GEAR PUMP/ NA1309		1
35		GEAR PUMP	See Illustration HIGH FLOW HYDRAULICS/ MS1456 - high flow		1
36		PUMP	See Illustration HYDROSTATIC PUMP/GEAR PUMP/ NA1309 - manual, AHC, ACS		1
37		PUMP	See Illustration HYDROSTATIC PUMP/ NA2245 - SJC		1
38		VALVE	See Illustration CONTROL VALVE/ NA1216 - manual controls		1
38		VALVE	See Illustration CONTROL VALVE/ NA1217 - ACS, SJC		1
39		HOSE	NAP - 21" (533.4 mm) - Order Ref. 11		1
40		EXCHANGER, OIL WATER	See Illustration RADIATOR/COOLER ASSEMBLY/ NA1395		1
41	17C610	BOLT			2

Page 89 - OSS# 2072104 - All rights reserved by Bobcat Company - 01/20/2010 - 17:21:58 - Produced by Ken Cook Co. with media1off

HYDROSTATIC CIRCUITRY
(Cooler)

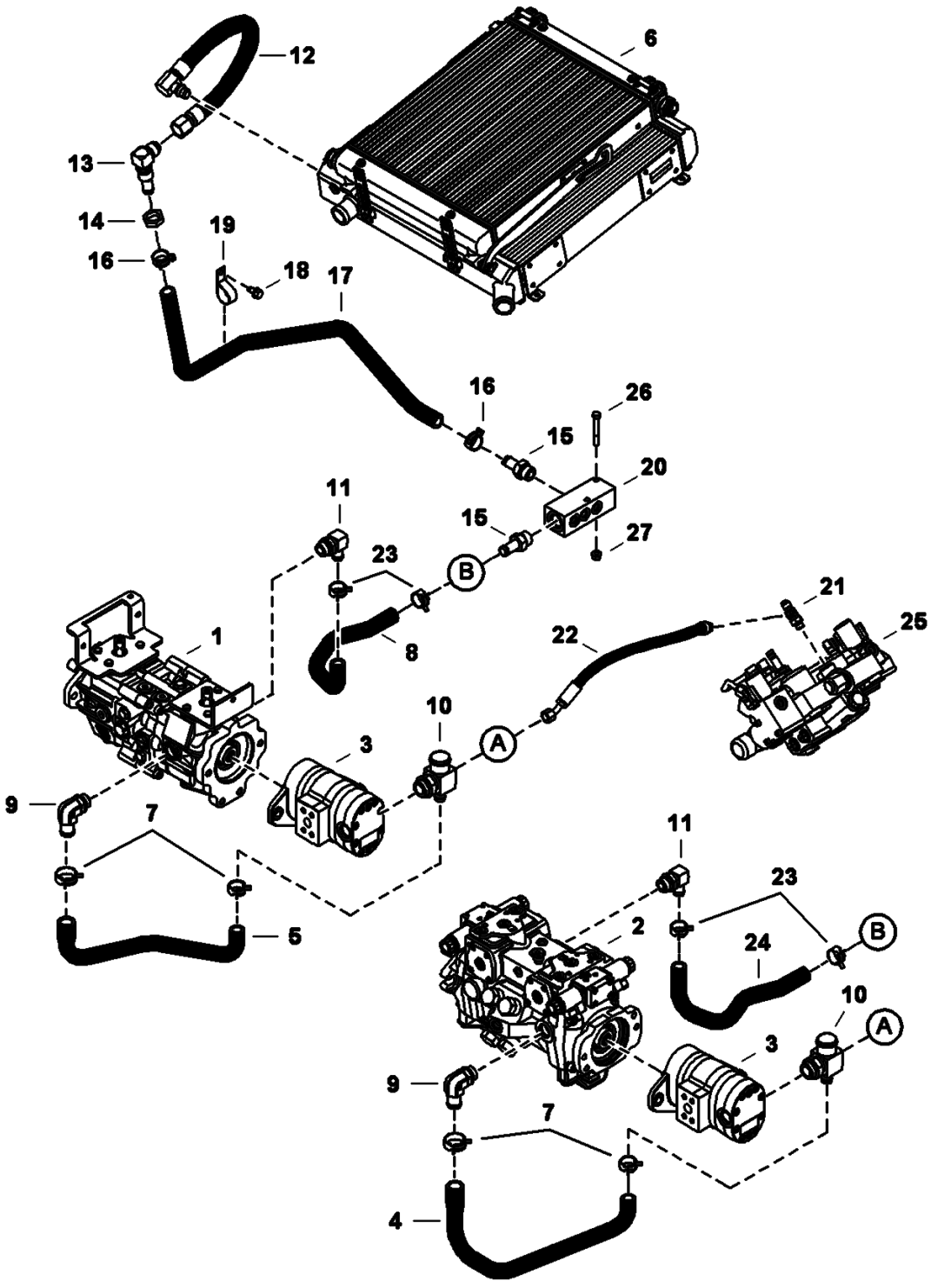

Page 90 - OSS# 2072104 - All rights reserved by Bobcat Company - 01/20/2010 - 17:21:58 - Produced by Ken Cook Co. with media1off

HYDROSTATIC CIRCUITRY (Cont'd)
(Cooler)

Ref No	Part Number	Description	Remarks	Serial Number	Qty
1		PUMP, HYD	See Illustration HYDROSTATIC PUMP/GEAR PUMP/ NA1309 - manual controls, AHC, ACS		1
2		PUMP, HYD	See Illustration HYDROSTATIC PUMP/ NA2245 - SJC		1
3		PUMP, GEAR	See Illustration GEAR PUMP/ MS1454		1
3		PUMP, GEAR	See Illustration HIGH FLOW HYDRAULICS/ MS1456 - high flow		1
4	7165206	HOSE			1
5	7165205	HOSE			1
6		EXCHANGER, OIL WATER	See Illustration RADIATOR/COOLER ASSEMBLY/ NA1395		1
7	5HM35	HOSECLAMP			1
8	7155668	HOSE			1
9	7001538	VALVE			1
10	7158921	FITTING			1
11	7113631	ELBOW			1
12	7157073	HOSE, HYD			1
13	7162930	ELBOW			1
14	86F8	NUT 5			1
15	6812865	FITTING			2
16	5HM27	CLAMP			2
17	7164698	HOSE, DRAIN			1
18	84G3712	BOLT			1
19	30HJ620	CLAMP			1
20	7178129	MANIFOLD, CASE DRAIN			1
21	21KB606	TEE	See Illustration HYROSTATIC CIRCUITRY/ NA1223 See Illustration HYDROSTATIC CIRCUITRY/ NA1222		1
22	7159735	HOSE, HYD			1
23	5HM27	CLAMP			2
24	7156859	HOSE			1
25		VALVE, CONTROL	See Illustration CONTROL VALVE/ NA1216 - manual controls		1
25		VALVE, CONTROL	See Illustration CONTROL VALVE/ NA1217 - ACS, SJC		1
26	17C540	BOLT			2
27	83D5	NUT 5			2

Page 91 - OSS# 2072104 - All rights reserved by Bobcat Company - 01/20/2010 - 17:21:58 - Produced by Ken Cook Co. with media1off

HYDROSTATIC CIRCUITRY
(Cooling Fan)

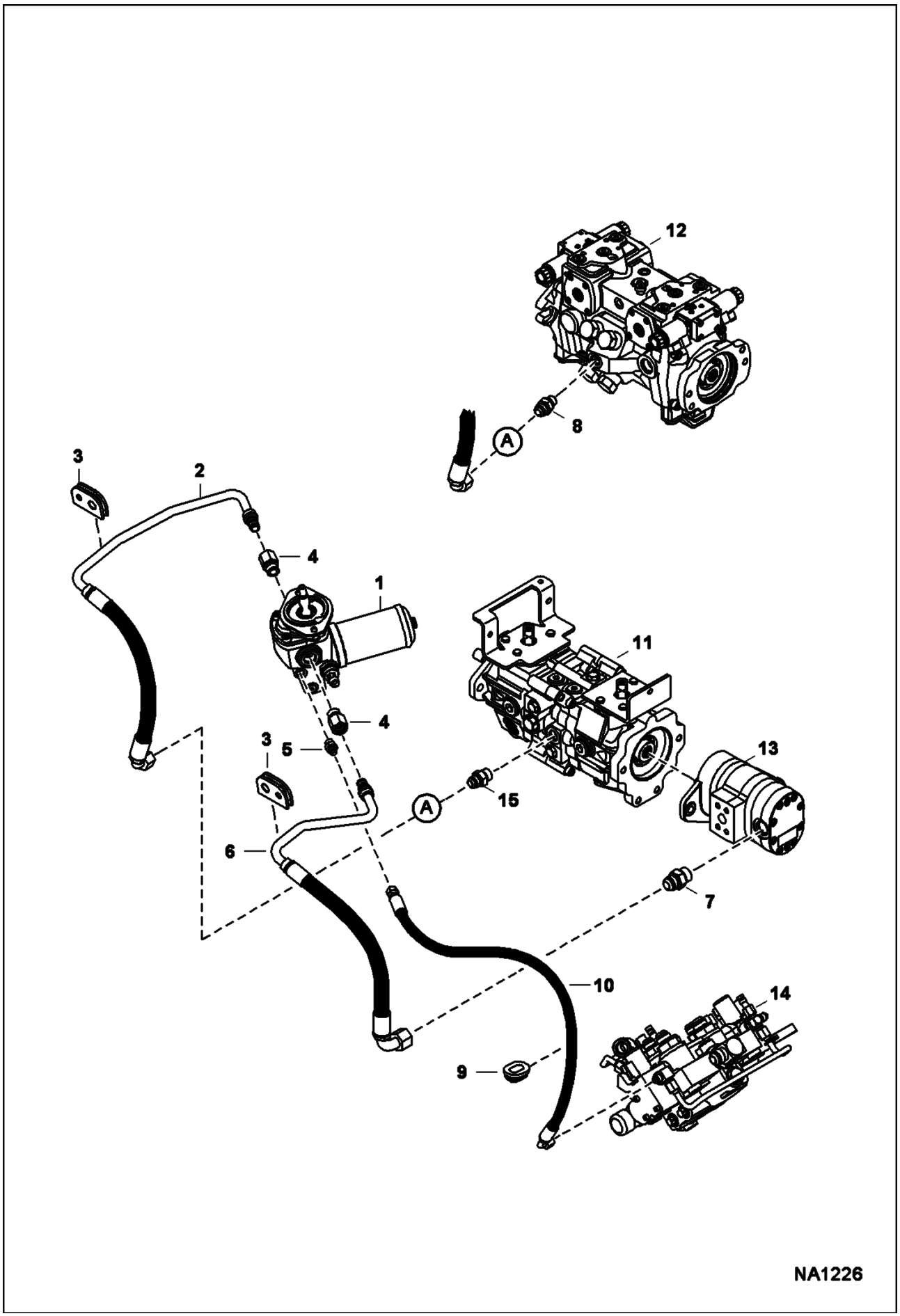

Page 92 - OSS# 2072104 - All rights reserved by Bobcat Company - 01/20/2010 - 17:21:58 - Produced by Ken Cook Co. with media1off

HYDROSTATIC CIRCUITRY (Cont'd)
(Cooling Fan)

Ref No	Part Number	Description	Remarks	Serial Number	Qty
1		MOTOR, HYD COOLING FAN	See Illustration COOLING FAN MOTOR/ MS2514		1
2	7167583	HOSE, HYD			1
3	7155070	GROMMET			2
4	15KB1010	FITTING			2
5	15KB606	ADAPTER			1
6	7167582	HOSE, HYD			1
7	15KB1212	ADAPTER			1
8	15KB1008	ADAPTER			1
9	7002739	GROMMET			1
10	7164413	HOSE, HYD			1
11		PUMP, HYD	See Illustration HYDROSTATIC PUMP/GEAR PUMP/ NA1309 - manual controls, AHC, ACS		1
12		PUMP, HYD	See Illustration HYDROSTATIC PUMP/ NA2245 - SJC		1
13		PUMP, GEAR	See Illustration GEAR PUMP/ MS1454		1
13		PUMP, GEAR	See Illustration HIGH FLOW HYDRAULICS/ MS1456 - high flow		1
14		VALVE, CONTROL	See Illustration CONTROL VALVE/ NA1217 - ACS, SJC		1
14		VALVE, CONTROL	See Illustration CONTROL VALVE/ NA1216 - manual controls		1
15	15KB1010	FITTING			1

Page 93 - OSS# 2072104 - All rights reserved by Bobcat Company - 01/20/2010 - 17:21:58 - Produced by Ken Cook Co. with media1off

HYDROSTATIC CIRCUITRY
(Single Speed Motor)

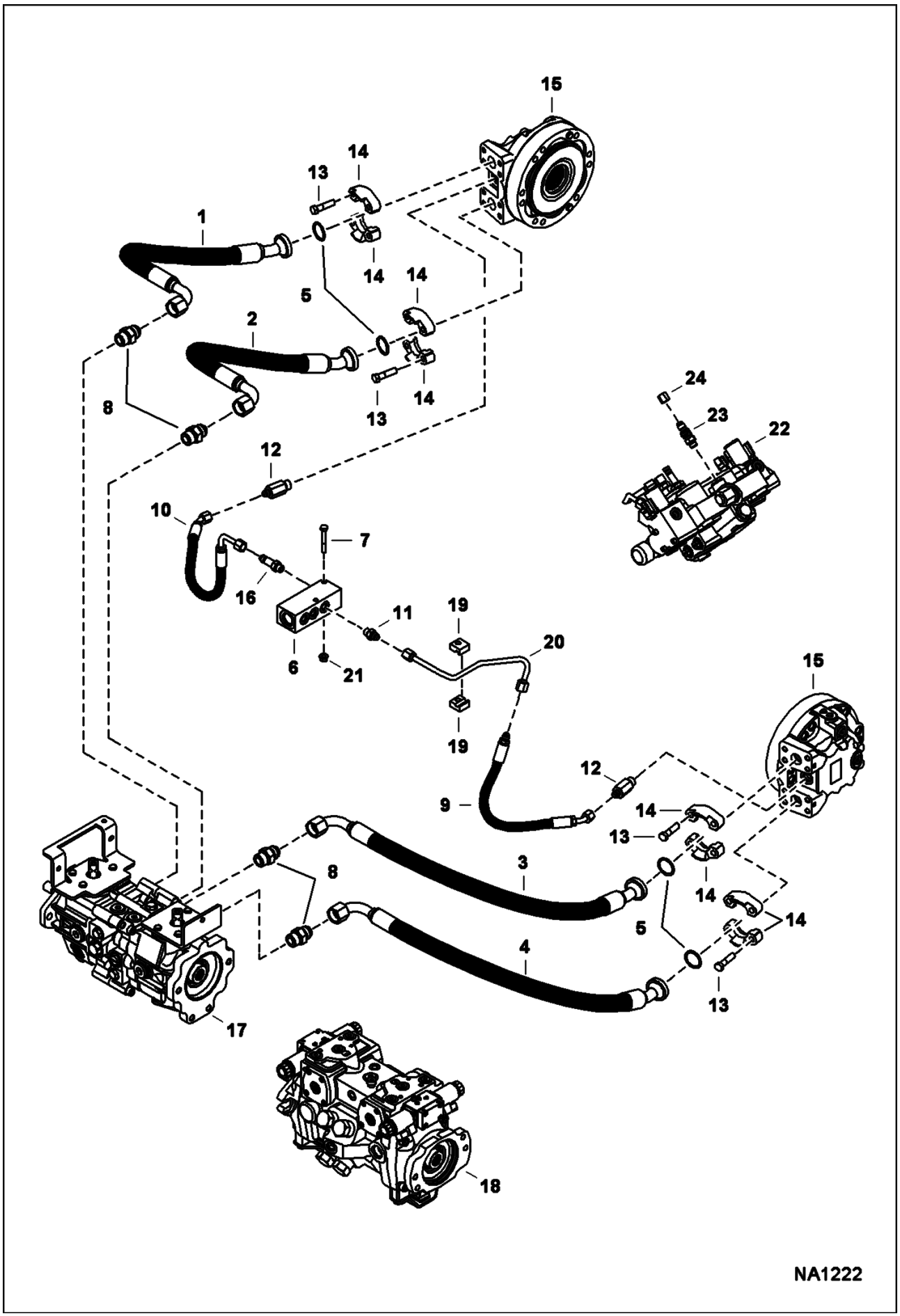

Page 94 - OSS# 2072104 - All rights reserved by Bobcat Company - 01/20/2010 - 17:21:58 - Produced by Ken Cook Co. with media1off

HYDROSTATIC CIRCUITRY (Cont'd)
(Single Speed Motor)

Ref No	Part Number	Description	Remarks	Serial Number	Qty
1	6692926	HOSE, HYD			1
2	6692927	HOSE, HYD			1
3	6692928	HOSE, HYD			1
4	6692929	HOSE, HYD			1
5	55K219	O'RING			4
6	7178129	MANIFOLD, CASE DRAIN			1
7	17C540	BOLT			2
8	15KB1212	ADAPTER			4
9	7176928	HOSE, HYD			1
10	7176926	HOSE, HYD			1
11	15KB606	ADAPTER			1
12	7168927	ADAPTER			2
13	17C728	BOLT			16
14	20J16	FLANGE			8
15		CARRIER, MOTOR	See Illustration MOTOR CARRIER/ NA2154 - manual controls, AHC & ACS		2
15		CARRIER, MOTOR	See Illustration MOTOR CARRIER/ NA1007 - SJC		2
16	16KB608	ADAPTER			1
17		PUMP, HYD	See Illustration HYDROSTATIC PUMP/GEAR PUMP/ NA1309 - manual controls, AHC & ACS		1
18		PUMP, HYD	See Illustration HYDROSTATIC PUMP/ NA2245 - SJC		1
19	6727707	CLAMP			2
20	7176929	TUBELINE, HYD			1
21	83D5	NUT 5			2
22		VALVE, CONTROL	See Illustration CONTROL VALVE/ NA1216 - manual controls		1
22		VALVE, CONTROL	See Illustration CONTROL VALVE/ NA1217 - ACS, SJC		1
23	21KB606	TEE			1
24	36K5	CAP			1

Page 95 - OSS# 2072104 - All rights reserved by Bobcat Company - 01/20/2010 - 17:21:58 - Produced by Ken Cook Co. with media1off

HYROSTATIC CIRCUITRY
(2-Speed Motor)

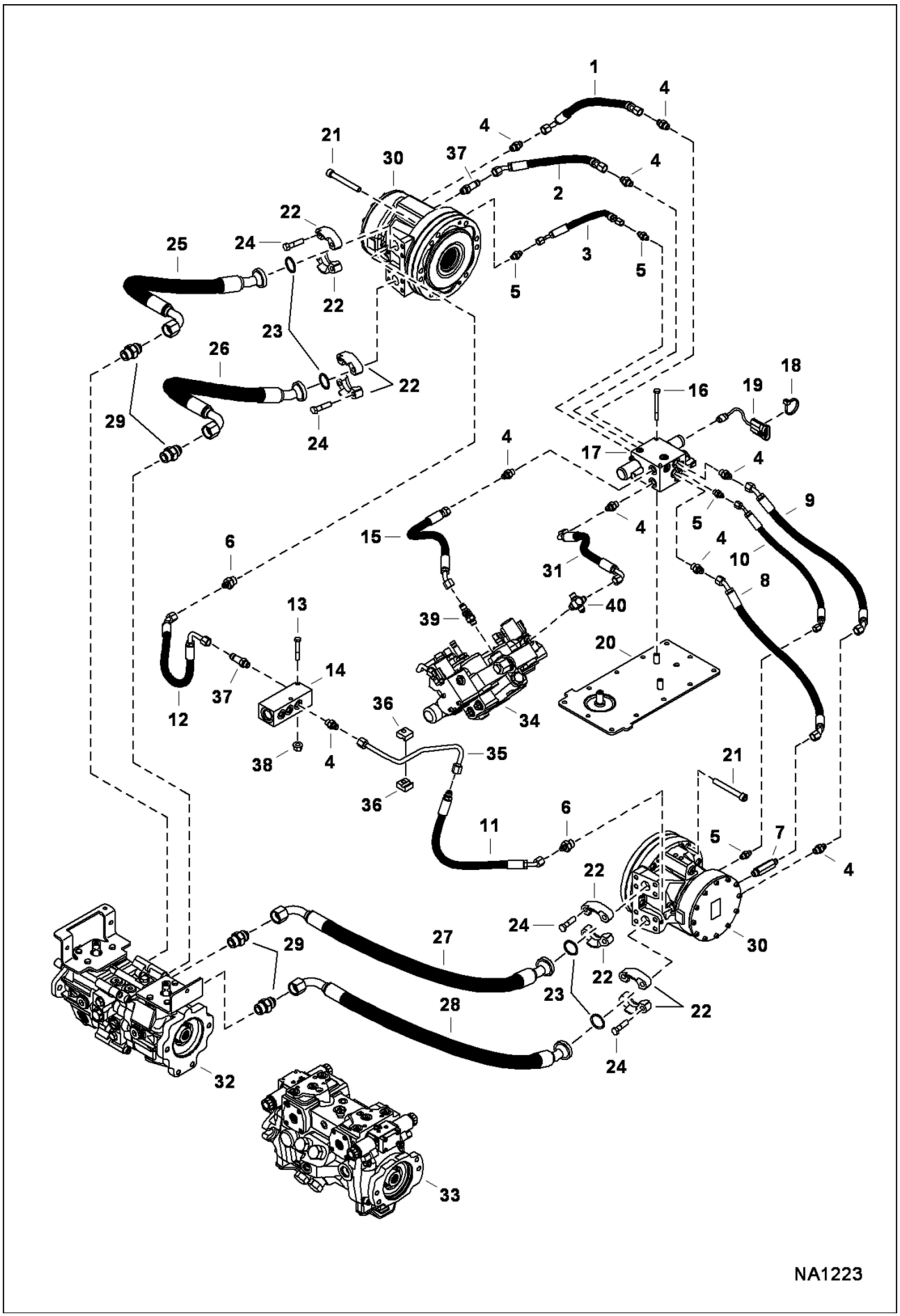

Page 96 - OSS# 2072104 - All rights reserved by Bobcat Company - 01/20/2010 - 17:21:58 - Produced by Ken Cook Co. with media1off

HYROSTATIC CIRCUITRY (Cont'd)
(2-Speed Motor)

Ref No	Part Number	Description	Remarks	Serial Number	Qty
1	7176931	HOSE, HYD			1
2	7176932	HOSE, HYD			1
3	7176933	HOSE, HYD			1
4	15KB606	ADAPTER			9
5	15KB404	CONNECTOR			4
6	15KB608	ADAPTER			2
7	7169116	ADAPTER			1
8	7176935	HOSE, HYD			1
9	7176934	HOSE, HYD			1
10	7176936	HOSE, HYD			1
11	7176928	HOSE, HYD			1
12	7176926	HOSE, HYD			1
13	17C540	BOLT			2
14	7178129	MANIFOLD, CASE DRAIN			1
15	7178294	HOSE, HYD			1
16	17C552	BOLT			2
17	6697971	VALVE, 2 SPEED			1
18	6624289	TIE STRAP			1
19	7159366	HARNESS, 2 SPEED RETURN			1
20	7153655	COVER, BRAKE ASSY			1
21	6717806	BOLT			20
22	20J16	FLANGE			8
23	58K219	O RING 10			4
24	17C728	BOLT			16
25	6692926	HOSE, HYD	mega seal		1
26	6692927	HOSE, HYD	mega seal		1
27	6692928	HOSE, HYD	mega seal		1
28	6692929	HOSE, HYD	mega seal		1
29	15KB1212	ADAPTER			4
30		MOTOR	See Illustration HYDROSTATIC MOTOR & BRAKE/ MS1467		2
31	7155269	HOSE, HYD			1
32		PUMP, HYD	See Illustration HYDROSTATIC PUMP/GEAR PUMP/ NA1309 - manual controls, AHC & ACS		1
33		PUMP, HYD	See Illustration HYDROSTATIC PUMP/ NA2245 - SJC		1
34		VALVE, CONTROL	See Illustration CONTROL VALVE/ NA1216 - manual controls		1
34		VALVE, CONTROL	See Illustration CONTROL VALVE/ NA1217 - ACS, SJC		1
35	7176929	TUBELINE, HYD			1
36	6727707	CLAMP			2
37	16KB606	FITTING			2
38	83D5	NUT 5			2
39	21KB606	TEE			1
40	7102019	CROSS			1

Page 97 - OSS# 2072104 - All rights reserved by Bobcat Company - 01/20/2010 - 17:21:58 - Produced by Ken Cook Co. with media1off

RADIATOR/COOLER ASSEMBLY

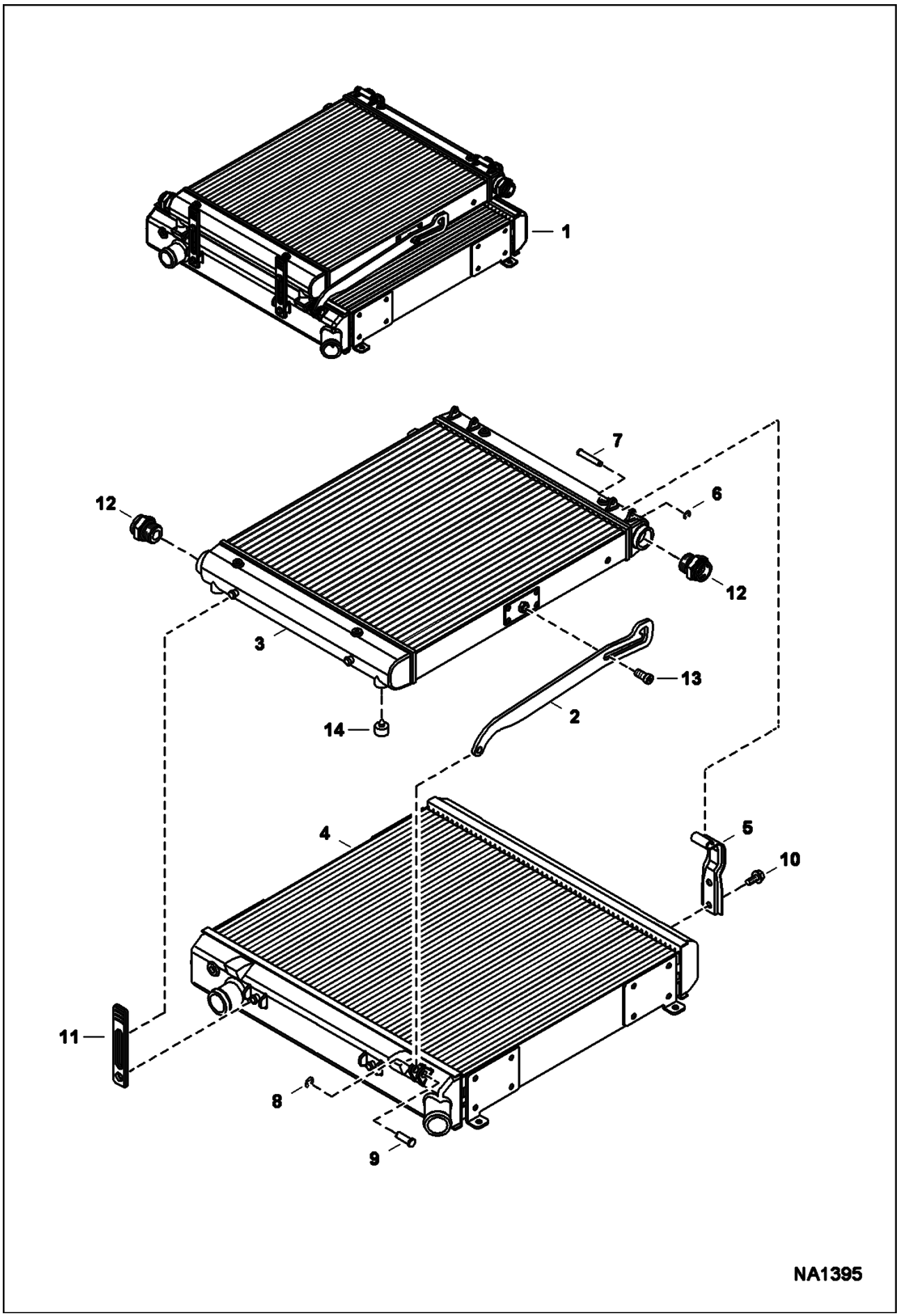

Page 98 - OSS# 2072104 - All rights reserved by Bobcat Company - 01/20/2010 - 17:21:58 - Produced by Ken Cook Co. with media1off

Ref No	Part Number	Description	Remarks	Serial Number	Qty
1	7146471	EXCHANGER, OIL WATER	Ref. 2-14		1
2	7009262	ROD, PROP UP			2
3	7009254	EXCHANGER, OIL COOLER			1
4	7009255	EXCHANGER, WATER RADIATOR			1
5	7006263	COVER PILLAR			2
6	7009258	RING, RETAINER			2
7	7009259	PIN			2
8	7009261	RING, RETAINER			1
9	7009260	PIN			1
10	7009256	BOLT, FLANGE			4
11	7009257	STRAP, HOLD DOWN			2
12	7010125	CONNECTOR			2
13	7010126	BOLT			1
14	7010127	BUMPER, RUBBER			2

Page 99 - OSS# 2072104 - All rights reserved by Bobcat Company - 01/20/2010 - 17:21:58 - Produced by Ken Cook Co. with media1off

HAND CONTROLS

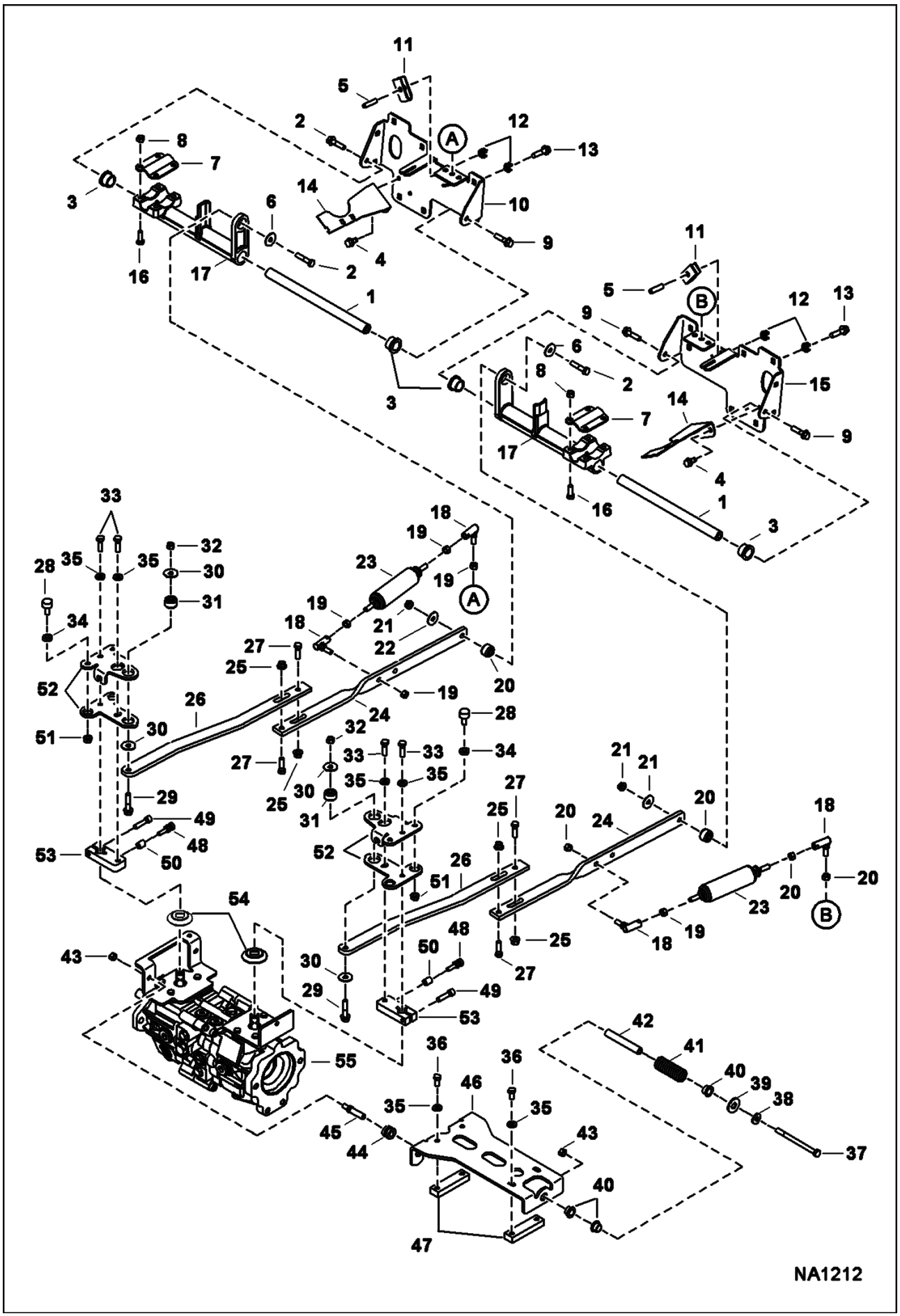

Page 100 - OSS# 2072104 - All rights reserved by Bobcat Company - 01/20/2010 - 17:21:58 - Produced by Ken Cook Co. with mediaioff

Ref No	Part Number	Description	Remarks	Serial Number	Qty
1	7145149	SHAFT, STEERING			2
2	17C628	BOLT			2
3	7159624	BUSHING			4
4	84G3712	BOLT			4
5	15G624	SCREW			2
6	6737388	WASHER			4
7	7156761	PLATE			2
8	95D6	NUT			8
9	45C620	BOLT			2
10	7176118	MOUNT			1
11	7121779	PAD			2
12	7149204	NUT			14
13	49C624	SCREW			16
14	7163216	BRACKET			2
15	7176117	MOUNT			1
16	17C616	BOLT 5			8
17	7151889	BELLCRANK			2
18	6599744	BALL JOINT			4
19	62D6	NUT 5			8
20	6685060	BUSHING, TORSION			2
21	53D6	NUT			2
22	6737388	WASHER			4
23	6649551	SHOCK			2
24	7153662	LINK			2
25	83D6	NUT 5			4
26	7152660	LINK, CENTERING			2
27	17C620	BOLT			4
28	6673789	BEARING			4
29	49C628	BOLT			2
30	6737388	WASHER			4
31	6685060	BUSHING, TORSION			2
32	63D6	NUT			2
33	47C620	BOLT			4
34	7100699	WASHER			4
35	7103217	WASHER			8
36	7105192	BOLT			4
37	17C680	BOLT			1
38	6563914	WASHER			1
39	25E24	WASHER	Used W/ ACS & AHC only		1
40	6715163	BUSHING, PRESS FIT			3
41	6701535	SPRING			1
42	6715164	SLEEVE, SPRING			1
43	95D6	NUT			3
44	6706098	GUIDE			2
45	6577058	PIN			2
46	6734298	MOUNT			1
47	6702716	BLOCK			2
48	7103711	BOLT			2
49	73G624	BOLT			2
50	7105223	SPACER			2
51	98D6	NUT			4
52	7110365	ARM, PINTLE			2

Page 101 - OSS# 2072104 - All rights reserved by Bobcat Company - 01/20/2010 - 17:21:58 - Produced by Ken Cook Co. with mediaioff

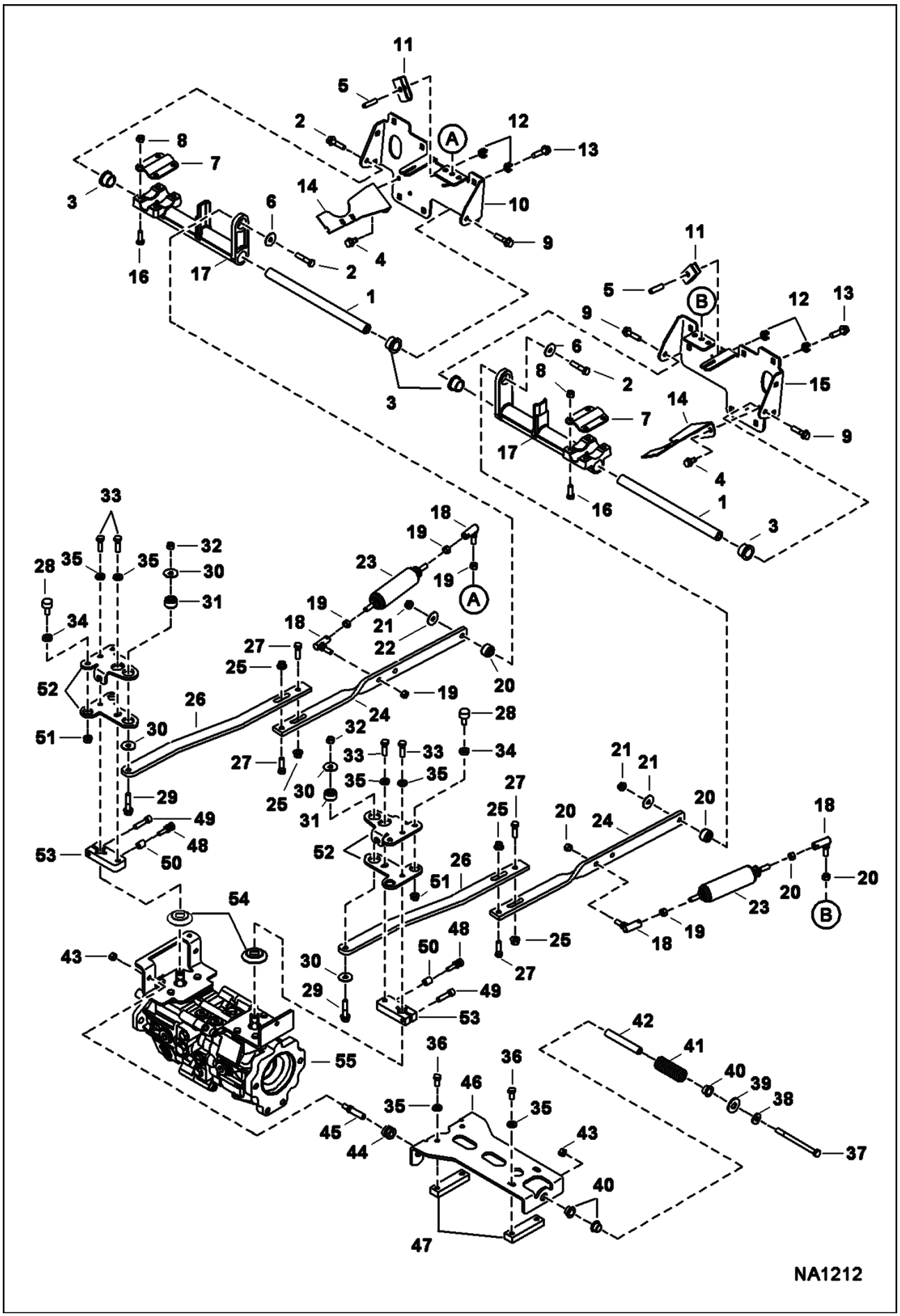

Page 102 - OSS# 2072104 - All rights reserved by Bobcat Company - 01/20/2010 - 17:21:58 - Produced by Ken Cook Co. with mediaioff

Ref No	Part Number	Description	Remarks	Serial Number	Qty
53	7103708	BRACKET	pintle arm		2
54	6687913	SEAL			2
55		PUMP, HYD	See Illustration HYDROSTATIC PUMP/GEAR PUMP/ NA1309 - manual controls, AHC & ACS		1

Page 103 - OSS# 2072104 - All rights reserved by Bobcat Company - 01/20/2010 - 17:21:58 - Produced by Ken Cook Co. with mediaioff

HYDROSTATIC MOTOR
(Single Speed) (Manual Controls & ACS)

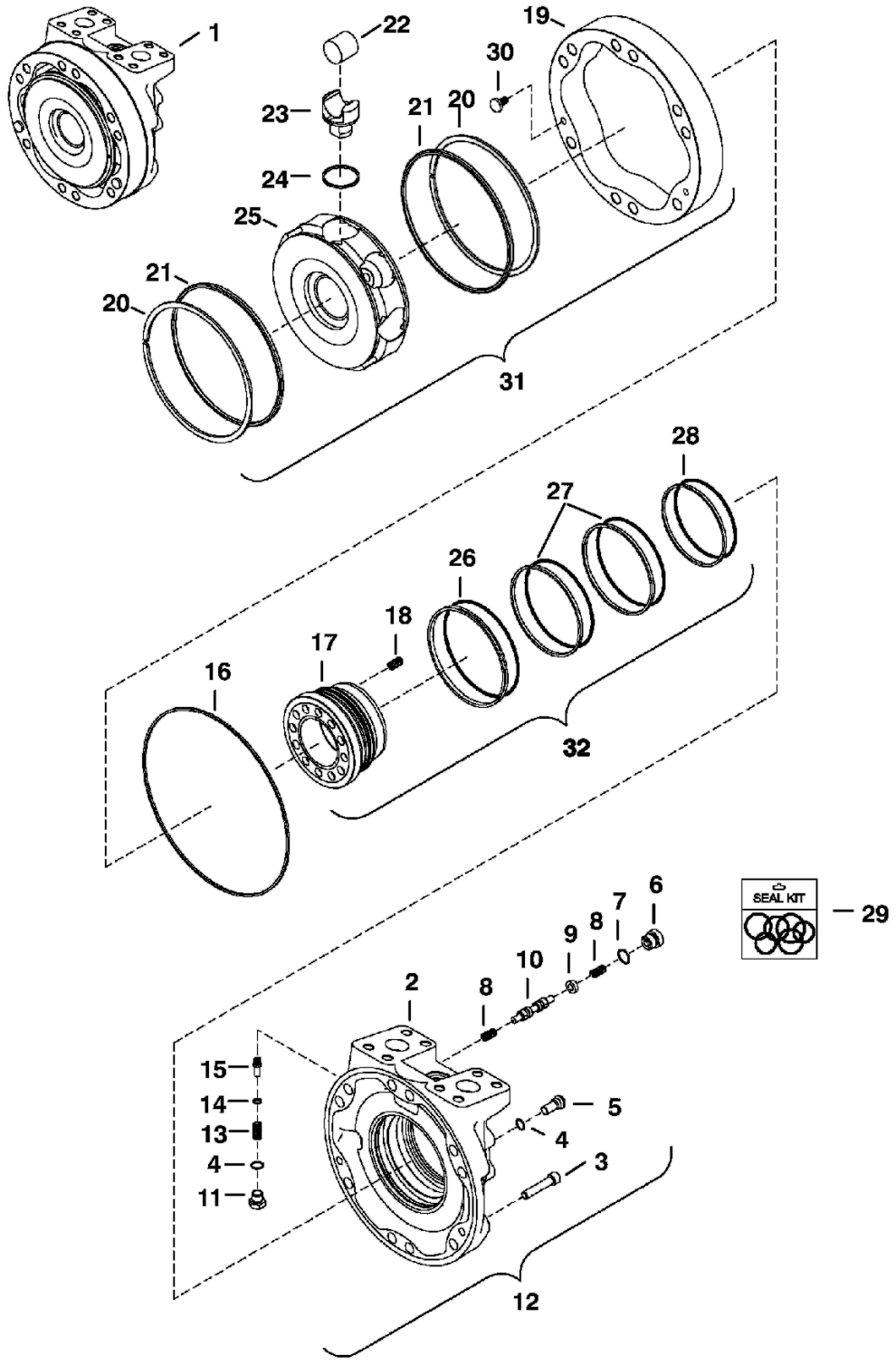

MS-2199

Page 104 - OSS# 2072104 - All rights reserved by Bobcat Company - 01/20/2010 - 17:21:58 - Produced by Ken Cook Co. with mediaioff

HYDROSTATIC MOTOR (Cont'd)
(Single Speed) (Manual Controls & ACS)

Ref No	Part Number	Description	Remarks	Serial Number	Qty
1	7001046	MOTOR	Model R921810442		1
2	6674341	HOUSING			1
3	6690039	SCREW			2
4	6676038	O-RING			2
5	6674340	PIN			1
6	6691227	PLUG			1
7	6689133	O-RING			1
8	6674841	SPRING			2
9	6675867	WASHER			1
10	6675866	SPOOL			1
11	6674345	PLUG			1
12		HOUSING, REAR ASSY.	NSS - Order individual parts or Ref. 1		1
13	6674344	SPRING			1
14	6674343	SHIM			1
15	6675868	POPPET			1
16	6675864	QUAD RING			1
17	6674184	RING			1
18	6674037	SPRING			9
19	6690025	CAM			1
20	6674035	SNAP RING			2
21	6674036	RING			2
22	6690022	ROLLER			8
23	6689126	PISTON			8
24	6690048	RING			8
25	6690021	BLOCK			1
26	6674040	SEAL	W/ O-ring - 87,15 mm ID		1
27	6675228	SEAL			2
28	6674038	SEAL			1
29	6676021	KIT, SEAL			1
30	6688449	LOCATING PIN			2
31	6690158	ROTOR GROUP	W/Ref. 19-25		1
32		KIT, RING & SEAL	NSS - Order individual parts or Ref. 1		1

Page 105 - OSS# 2072104 - All rights reserved by Bobcat Company - 01/20/2010 - 17:21:58 - Produced by Ken Cook Co. with mediaioff

HYDROSTATIC MOTOR & BRAKE
(2-Speed) (SJC)

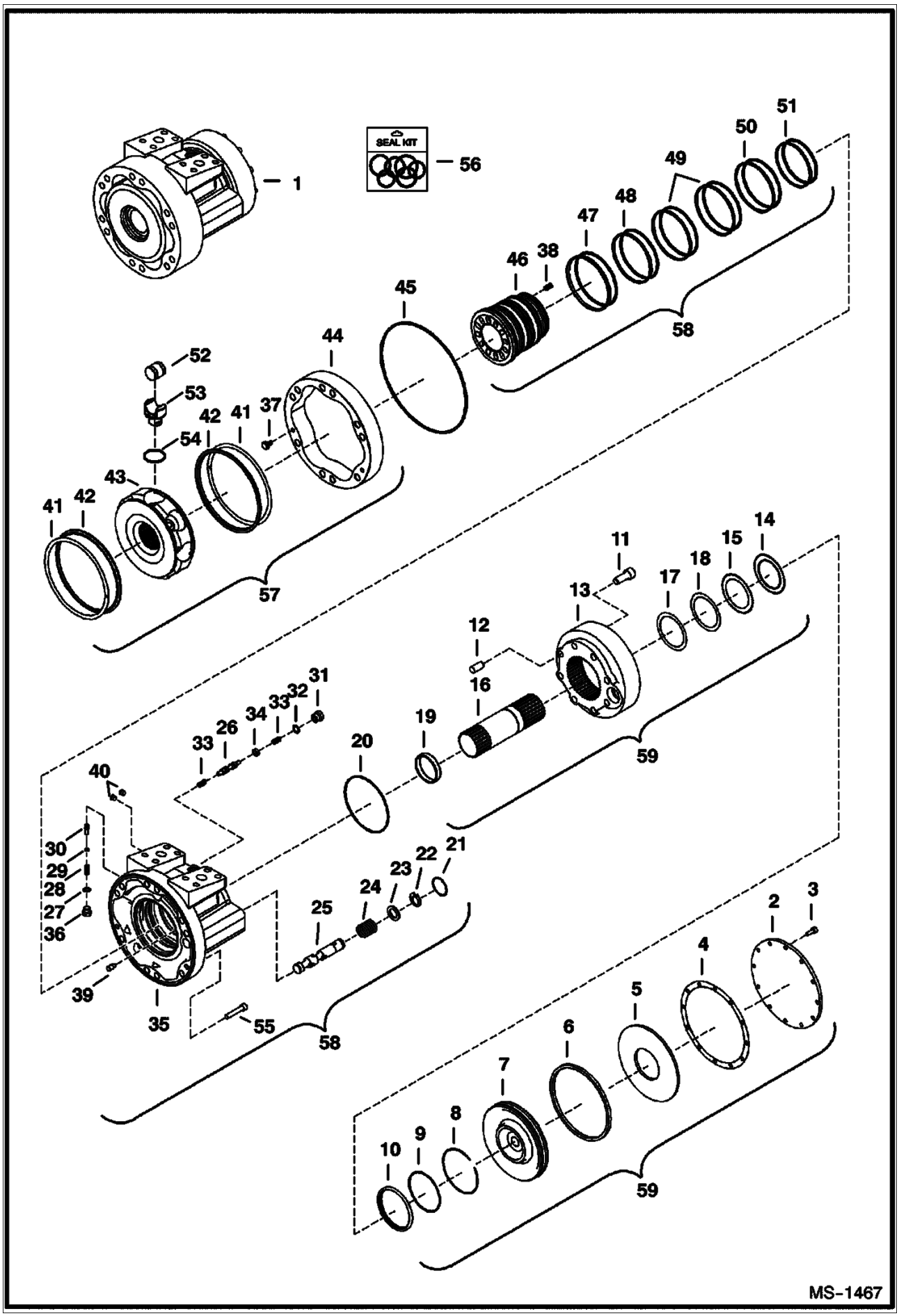

Page 106 - OSS# 2072104 - All rights reserved by Bobcat Company - 01/20/2010 - 17:21:58 - Produced by Ken Cook Co. with mediaioff

HYDROSTATIC MOTOR & BRAKE (Cont'd)
(2-Speed) (SJC)

Ref No	Part Number	Description	Remarks	Serial Number	Qty
1	6688363	MOTOR	Model R921810402 - W/Ref. 2-55		1
2	6675890	COVER			1
3	6690095	SCREW			12
4	6675892	GASKET			1
5	6675897	WASHER			1
6	6675893	O-RING			1
7	6675889	PISTON			1
8	6690094	CLAMP			1
9	6690097	O-RING			1
10	6689088	QUAD RING			1
11	6690096	SCREW			5
12	6687193	DOWEL			3
13	6690082	HOUSING			1
14	6674193	BRAKE DISC			14
15	6690087	PLATE			16
16	6690084	SHAFT			1
17	6690089	SHIM	0.1		1
18	6690090	SHIM	0.3		1
19	6675898	BUSHING			1
20	6675863	QUAD RING			1
21	6690077	O-RING			1
22	6675885	SNAP RING			1
23	6690105	WASHER			1
24	6675883	KIT, WASHER	W/Ref. 23		1
25		SPOOL	Order Ref. 59		1
26	6675866	SPOOL			1
27	6676038	O-RING			1
28	6674344	SPRING			1
29	6674343	SHIM			1
30	6675868	POPPET			1
31	6691227	PLUG	W/Ref. 32		1
32	6689133	O-RING			1
33	6674841	SPRING			2
34	6675867	WASHER			1
35		HOUSING	Order Ref. 59		1
36	6674345	PLUG			1
37	6688449	LOCATING PIN			2
38	6674037	SPRING			15
39	6690068	PIN			1
40		PLUG	NAP		1
41	6674035	SNAP RING			2
42	6674036	RING			2
43		BLOCK	NAP - Order Ref. 57		1
44	6690025	CAM			1
45	6675864	QUAD RING			1
46	6690067	RING			1
47	6675877	SEAL			1
48	6675878	SEAL			1
49	6675879	SEAL			2
50	6675880	SEAL			1
51	6675881	SEAL			1
52	6690022	ROLLER			8
53	6689126	PISTON			8
54	6690048	RING			8

Page 107 - OSS# 2072104 - All rights reserved by Bobcat Company - 01/20/2010 - 17:21:58 - Produced by Ken Cook Co. with mediaioff

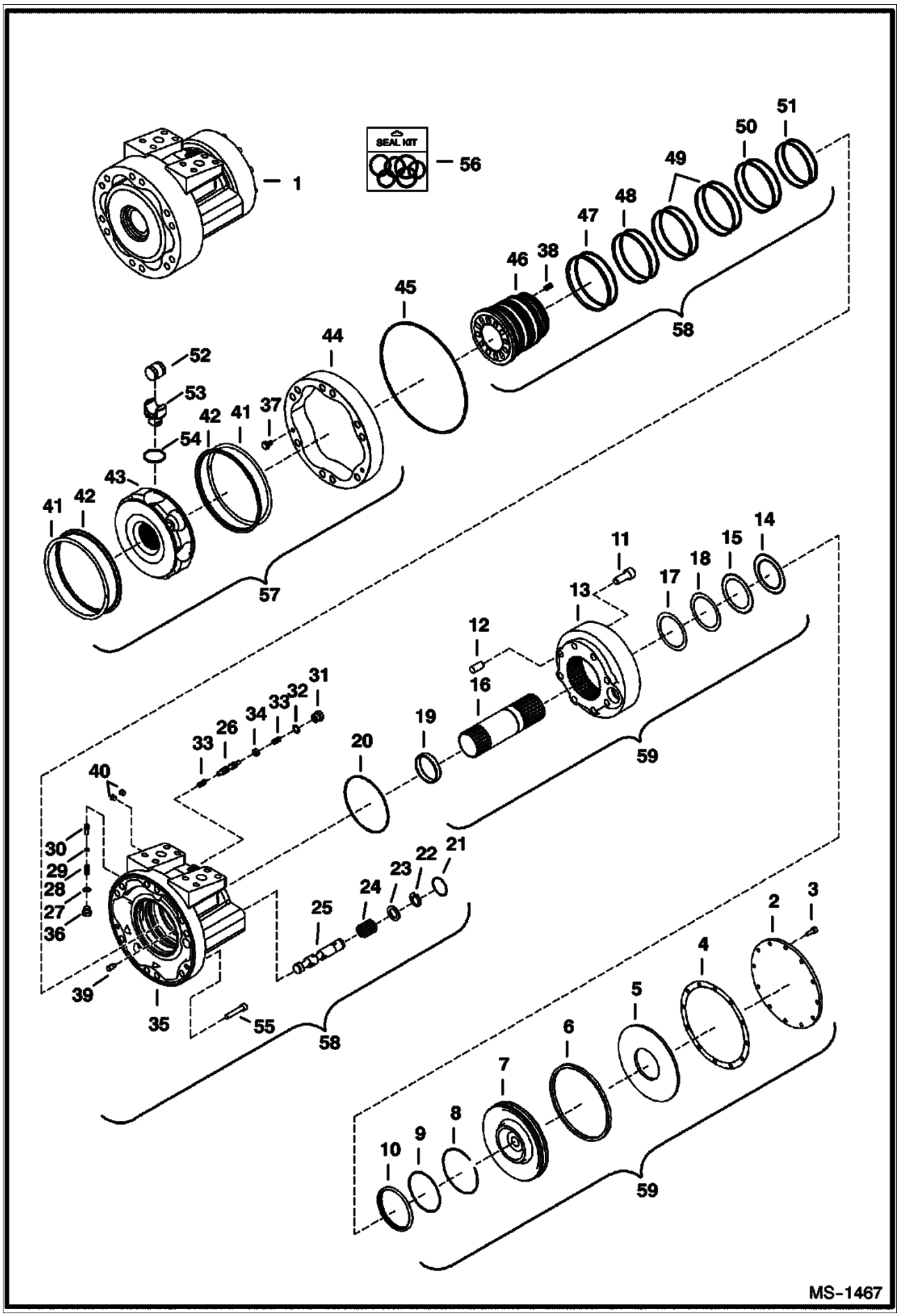

Page 108 - OSS# 2072104 - All rights reserved by Bobcat Company - 01/20/2010 - 17:21:58 - Produced by Ken Cook Co. with mediaioff

Ref No	Part Number	Description	Remarks	Serial Number	Qty
55	6690039	SCREW			1
56	6690005	SEAL KIT	W/Ref. 4, 6, 9, 10, 20, 21, 27, 45 & 47-51		1
57	6687826	MOTOR, DRIVE HYD 2-SPD	W/Ref. 37, 41-44 & 52-54		1
58	6691176	REAR CASE ASSY.	W/Ref. 21-36, 38-40, & 46-51		1
59	6691177	BRAKE ASSY.	W/Ref. 2-19		1

Page 109 - OSS# 2072104 - All rights reserved by Bobcat Company - 01/20/2010 - 17:21:58 - Produced by Ken Cook Co. with mediaioff

HYDROSTATIC PUMP/GEAR PUMP
(Identification)

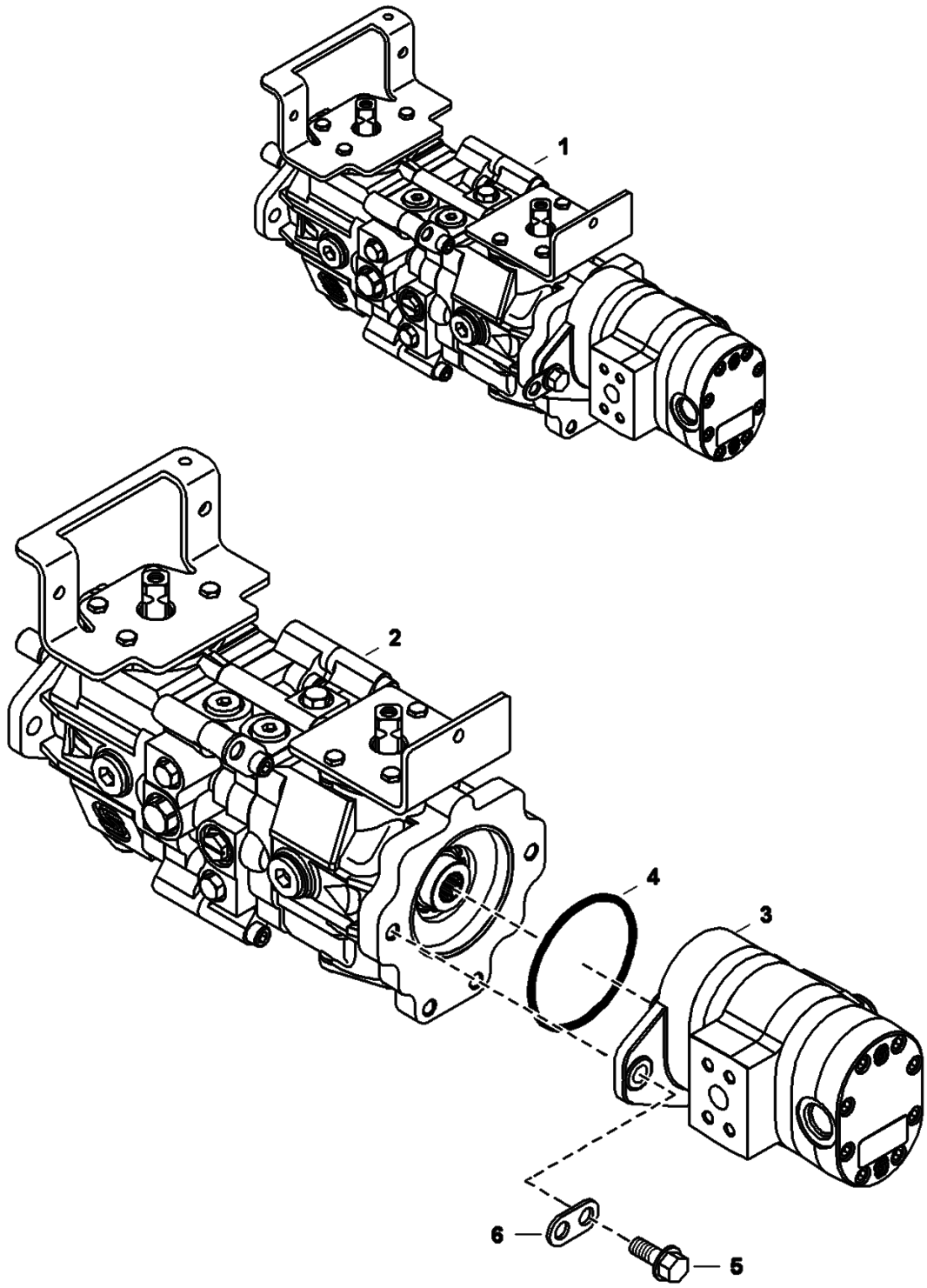

Page 110 - OSS# 2072104 - All rights reserved by Bobcat Company - 01/20/2010 - 17:21:58 - Produced by Ken Cook Co. with mediaioff

HYDROSTATIC PUMP/GEAR PUMP (Cont'd)
(Identification)

Ref No	Part Number	Description	Remarks	Serial Number	Qty
1		PUMP ASSY	See Illustration HYDROSTATIC PUMP/ MS2184 See Illustration HYDROSTATIC PUMP/ MS2183		1
2		PUMP, HYD	See Illustration HYDROSTATIC PUMP/ MS2184 See Illustration HYDROSTATIC PUMP/ MS2183 - manual controls & ACS		1
3		PUMP, GEAR DOUBLE	See Illustration GEAR PUMP/ MS1454 - standard flow		1
3		PUMP, GEAR TRIPLE	See Illustration HIGH FLOW HYDRAULICS/ MS1456 - high flow		1
4	6671520	O-RING	manual controls & ACS		1
4	6682949	O-RING	SJC		1
5	45C824	BOLT	manual controls & ACS		2
5	59CM1240	BOLT	SJC		2
6	6662126	BRACKET			2

Page 111 - OSS# 2072104 - All rights reserved by Bobcat Company - 01/20/2010 - 17:21:58 - Produced by Ken Cook Co. with mediaioff

HYDROSTATIC PUMP
(Manual Controls & ACS) (Left Half)

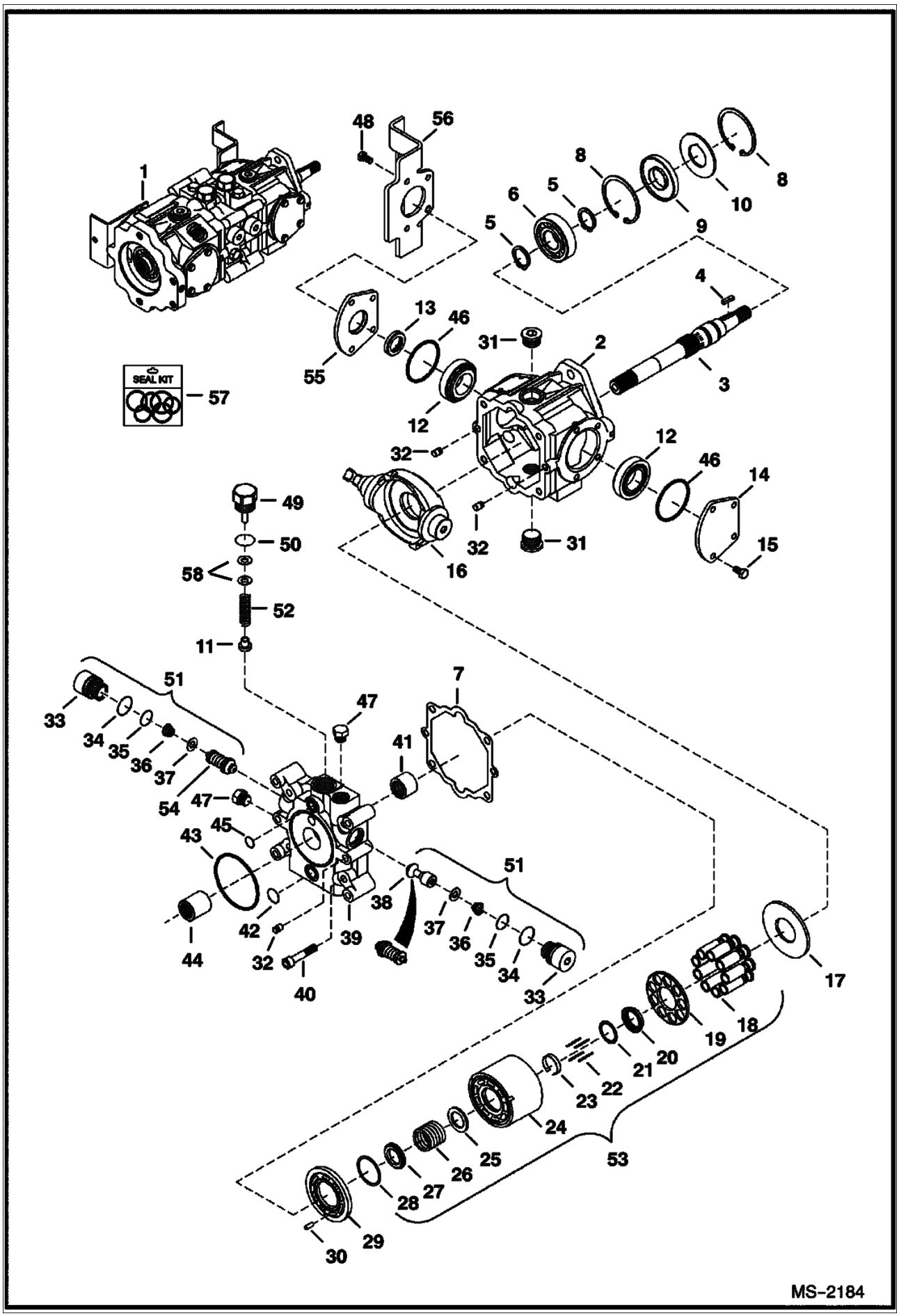

Page 112 - OSS# 2072104 - All rights reserved by Bobcat Company - 01/20/2010 - 17:21:58 - Produced by Ken Cook Co. with mediaioff

HYDROSTATIC PUMP (Cont'd)
(Manual Controls & ACS) (Left Half)

Ref No	Part Number	Description	Remarks	Serial Number	Qty
1	7001016	PUMP	Model 83002049		1
2	6669402	HOUSING			1
3	6682260	SHAFT	W/ square key		1
4	6682261	KEY			1
5	658128	RING, SNAP			2
6	654299	BEARING			1
7	6650634	GASKET			1
8	669863	RING, SNAP			2
9	6687191	SEAL, OIL			1
10	6669409	WASHER			1
11	6650652	POPPET	charge relief		1
12	6669411	BEARING			2
13	6678226	SEAL, OIL			2
14	6657068	COVER			2
15	6650668	BOLT			4
16	6685344	SWASHPLATE	W/ threaded shaft hole		1
17	6650627	PLATE			1
18	6683168	PISTON ASSEMBLY			9
19		RETAINER	NAP - Order Ref. 53		1
20		RETAINER	NAP - Order Ref. 53		1
21	6666338	WASHER			1
22	6650629	PIN			4
23	6650630	RETAINER			1
24	6683167	CYLINDER BLOCK			1
25		WASHER	NAP - Order Ref. 53		1
26		SPRING	NAP - Order Ref. 53		1
27		WASHER	NAP - Order Ref. 53		1
28		RETAINER	NAP - Order Ref. 53		1
29	6676147	PLATE, VALVE			1
30	6650636	PIN			1
31	47K8	PLUG			2
31	79K12	O RING 10			2
32	6675342	PIN			4
33		PLUG	NAP - Order Ref. 51		2
34	6657028	O-RING			2
35	79K8	O RING 10			2
36		SPRING	NAP - Order Ref. 51		2
37		RETAINER	NAP - Order Ref. 51		2
38		CHECK VALVE	NAP - poppet - Order Ref. 51		1
39	6669406	END PLATE			1
40	6650637	BOLT			4
41	6650635	BEARING			1
42	6650647	O-RING			1
43	6645081	O-RING			1
44	6650675	COUPLER			1
45	6650646	O-RING			1
46	6660814	O-RING			2
47	6645086	PLUG			2
47	6661481	O-RING			1
48	6671518	BOLT			4
49	6650648	PLUG	charge relief - W/Ref. 50		1
50	79K10	O RING 10			1
51	7008822	VALVE	Ref. 33-37 & 54		1
52	7008823	SPRING			1

Page 113 - OSS# 2072104 - All rights reserved by Bobcat Company - 01/20/2010 - 17:21:58 - Produced by Ken Cook Co. with mediaioff

HYDROSTATIC PUMP (Cont'd)
(Manual Controls & ACS) (Left Half)

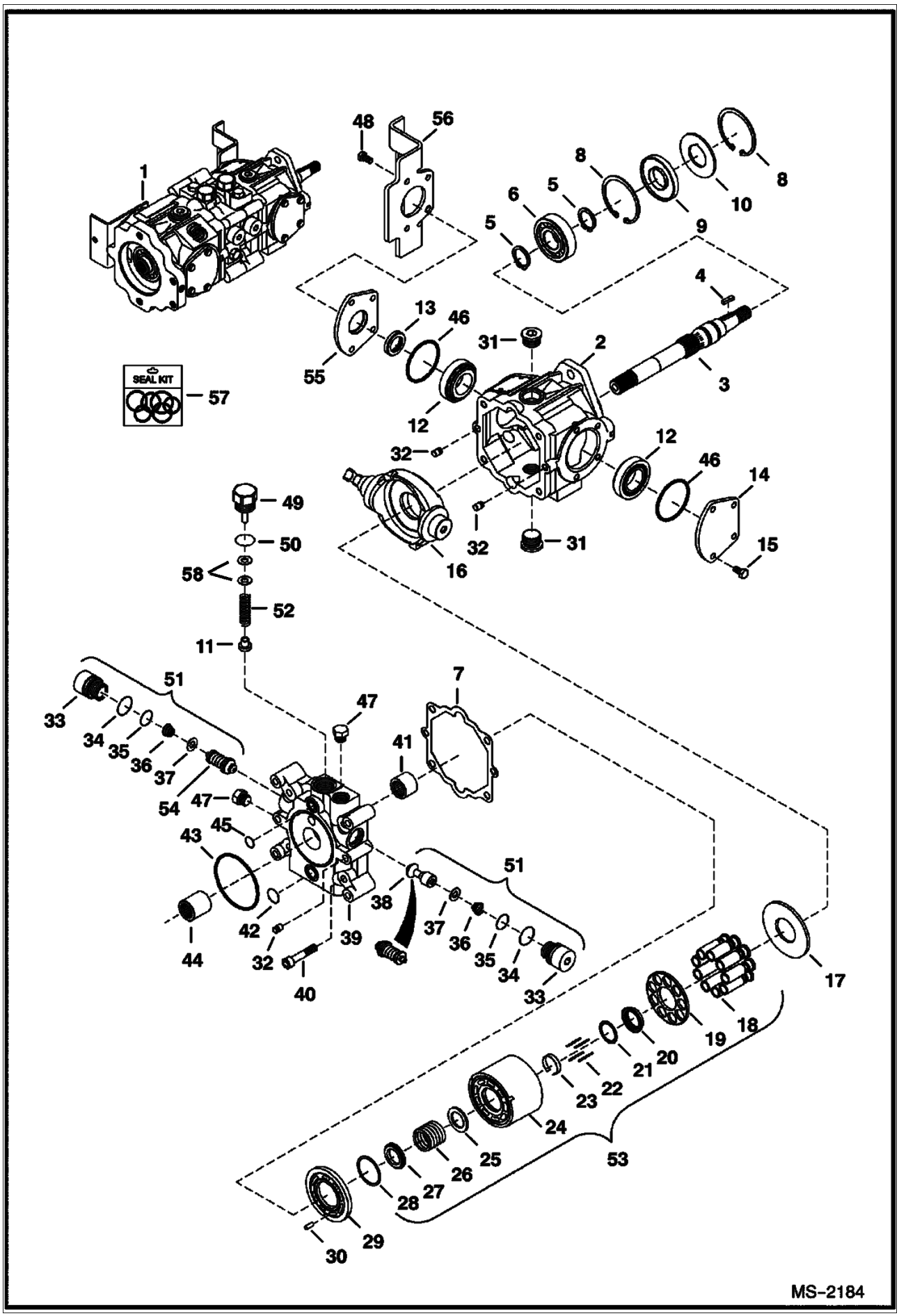

Page 114 - OSS# 2072104 - All rights reserved by Bobcat Company - 01/20/2010 - 17:21:58 - Produced by Ken Cook Co. with mediaioff

HYDROSTATIC PUMP (Cont'd)
(Manual Controls & ACS) (Left Half)

Ref No	Part Number	Description	Remarks	Serial Number	Qty
53	6675341	GROUP, ROTARY			1
54		RELIEF VALVE	NAP - 5000 PSI (345 bar) - Order Ref. 51		1
55	6657067	COVER	W/Ref. 46		1
56	7109905	BRACKET			1
57	6671516	KIT, SEAL	Ref. 7, 9, 13, 34, 35, 42, 43, 45, 46 & 50 - Also includes Ref. 2, 3, 12, 31 & 41 on next page		1
58	6669410	KIT, SHIM	for Ref. 49 - (2) each of .010, .020 and .050 thick		1

Page 115 - OSS# 2072104 - All rights reserved by Bobcat Company - 01/20/2010 - 17:21:58 - Produced by Ken Cook Co. with mediaioff

HYDROSTATIC PUMP
(Manual Controls & ACS) (Right Half)

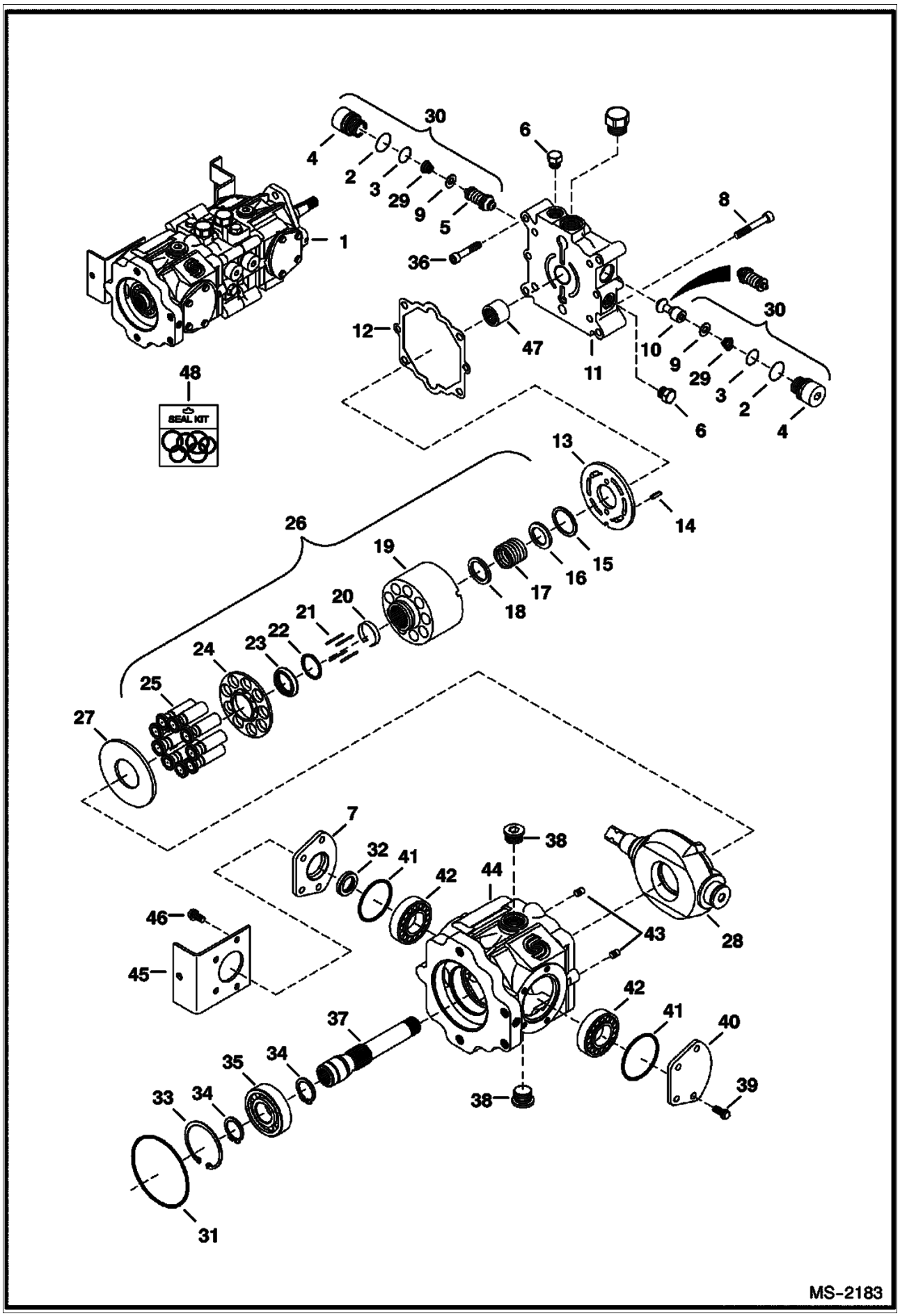

Page 116 - OSS# 2072104 - All rights reserved by Bobcat Company - 01/20/2010 - 17:21:58 - Produced by Ken Cook Co. with mediaioff

HYDROSTATIC PUMP (Cont'd)
(Manual Controls & ACS) (Right Half)

Ref No	Part Number	Description	Remarks	Serial Number	Qty
1	7001016	PUMP	Model 83002049		1
2	6657028	O-RING			2
3	79K8	O RING 10			2
4		PLUG	NAP - Order Ref. 30		2
5		RELIEF VALVE	NAP - 5000 PSI (345 bar) - Order Ref. 30		2
6	6645086	PLUG			4
7	6657067	COVER	W/Ref. 32		1
8	6650637	BOLT			2
9		RETAINER	NAP - Order Ref. 30		4
10		CHECK VALVE	NAP - poppet - Order Ref. 30		1
11	6669405	END CAP			1
12	6650634	GASKET			1
13	6676148	VALVE PLATE			1
14	6650636	PIN			2
15		RETAINER	NAP - Order Ref. 26		1
16		WASHER	NAP - Order Ref. 26		1
17		SPRING	NAP - Order Ref. 26		1
18		WASHER	NAP - Order Ref. 26		1
19	6683167	CYLINDER BLOCK			1
20	6650630	RETAINER			1
21	6650629	PIN			4
22	6666338	WASHER			1
23		RETAINER	NAP - Order Ref. 26		1
24		RETAINER	NAP - Order Ref. 26		1
25	6683168	PISTON ASSEMBLY			9
26	6675341	GROUP, ROTARY	W/Ref. 15-25		1
27	6650627	PLATE			1
28	6685344	SWASHPLATE	W/ threaded shaft hole		1
29		SPRING	NAP - Order Ref. 30		2
30	7008822	VALVE	Ref. 2-5, 9, 10 & 29		2
31	6671520	O-RING			1
32	6678226	SEAL, OIL			1
33	669863	RING, SNAP			1
34	658128	RING, SNAP			2
35	654299	BEARING			1
36	6652018	BOLT			4
37	6682264	SHAFT			1
38	47K8	PLUG			1
38	79K12	O RING 10			2
39	6650668	BOLT			4
40	6657068	COVER			1
41	6660814	O-RING			2
42	6669411	BEARING			2
43	6675342	PIN			2
44	6693867	HOUSING			1
45	7109904	BRACKET			1
46	6671518	BOLT			4
47	6650635	BEARING			1
48	6671516	KIT, SEAL	Ref. 2, 3, 12, 31 & 41 - Also includes Ref. 7, 9, 13, 34, 35, 42, 43, 45, 46 & 50 on previous page		1

Page 117 - OSS# 2072104 - All rights reserved by Bobcat Company - 01/20/2010 - 17:21:58 - Produced by Ken Cook Co. with mediaioff

HYDROSTATIC PUMP
(SJC)

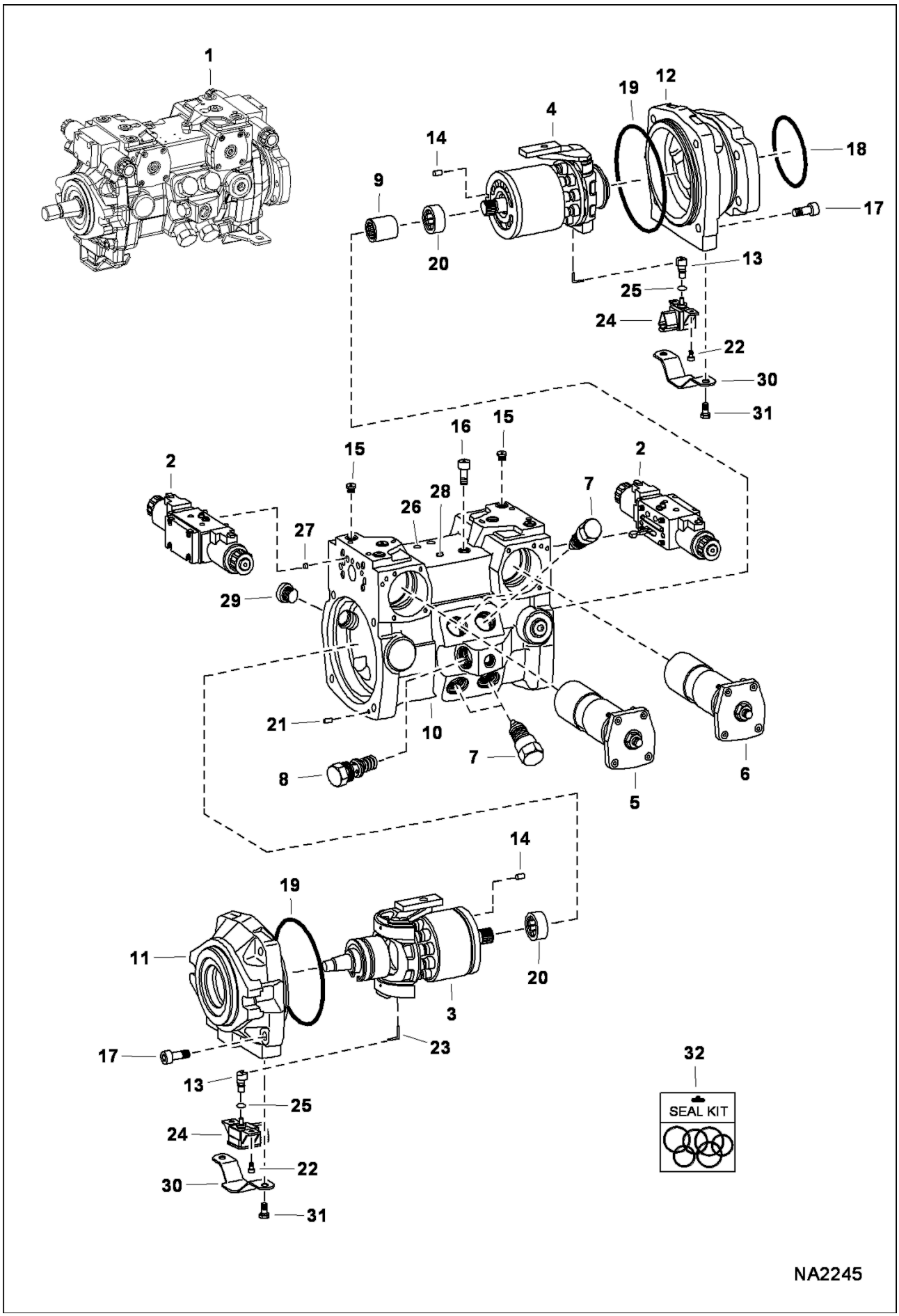

Page 118 - OSS# 2072104 - All rights reserved by Bobcat Company - 01/20/2010 - 17:21:58 - Produced by Ken Cook Co. with mediaioff

HYDROSTATIC PUMP (Cont'd)
(SJC)

Ref No	Part Number	Description	Remarks	Serial Number	Qty
1	6698594	PUMP, TANDEM	Model R902103468		1
2	7008109	MODULE, CONTROL			2
3	7008105	GROUP, ROTATING LH	See Illustration HYDROSTATIC PUMP/ B25011 LH rotation		1
4	7008106	GROUP ROTATING RH	See Illustration HYDROSTATIC PUMP/ B25012 RH rotation		1
5	7008107	CONTROL			1
6	7008108	CONTROL			1
7	7008124	VALVE, RELIEF	preset at 350 bar		4
8	6687938	VALVE	pressure relief 15-30 bar		1
9	6687941	COUPLER			1
10	7008110	HOUSING	W/Ref. 16		1
11	7008111	FLANGE, LH			1
12	7008112	FLANGE, RH			1
13	7008113	SHAFT			2
14	6688011	PIN			2
15	6688016	SCREW			11
16	6688039	PLUG			3
17	6688008	SCREW			8
18	6671520	O-RING			1
19	6688009	SEAL			2
20	6688040	BEARING			2
21	6686934	PIN			2
22	7008114	SCREW			4
23	6688014	PIN			2
24	7008115	SENSOR			2
25	54K20022	O'RING			2
26	6687932	PIN			2
27	7008116	FILTER			6
28	6688015	SCREW			1
29	6687992	SCREW			1
30	7010227	COVER			2
31	6688003	SCREW			4
32	6689021	SEAL KIT			1

Page 119 - OSS# 2072104 - All rights reserved by Bobcat Company - 01/20/2010 - 17:21:58 - Produced by Ken Cook Co. with mediaioff

HYDROSTATIC PUMP
(Rotary Group) (LH)
(SJC)

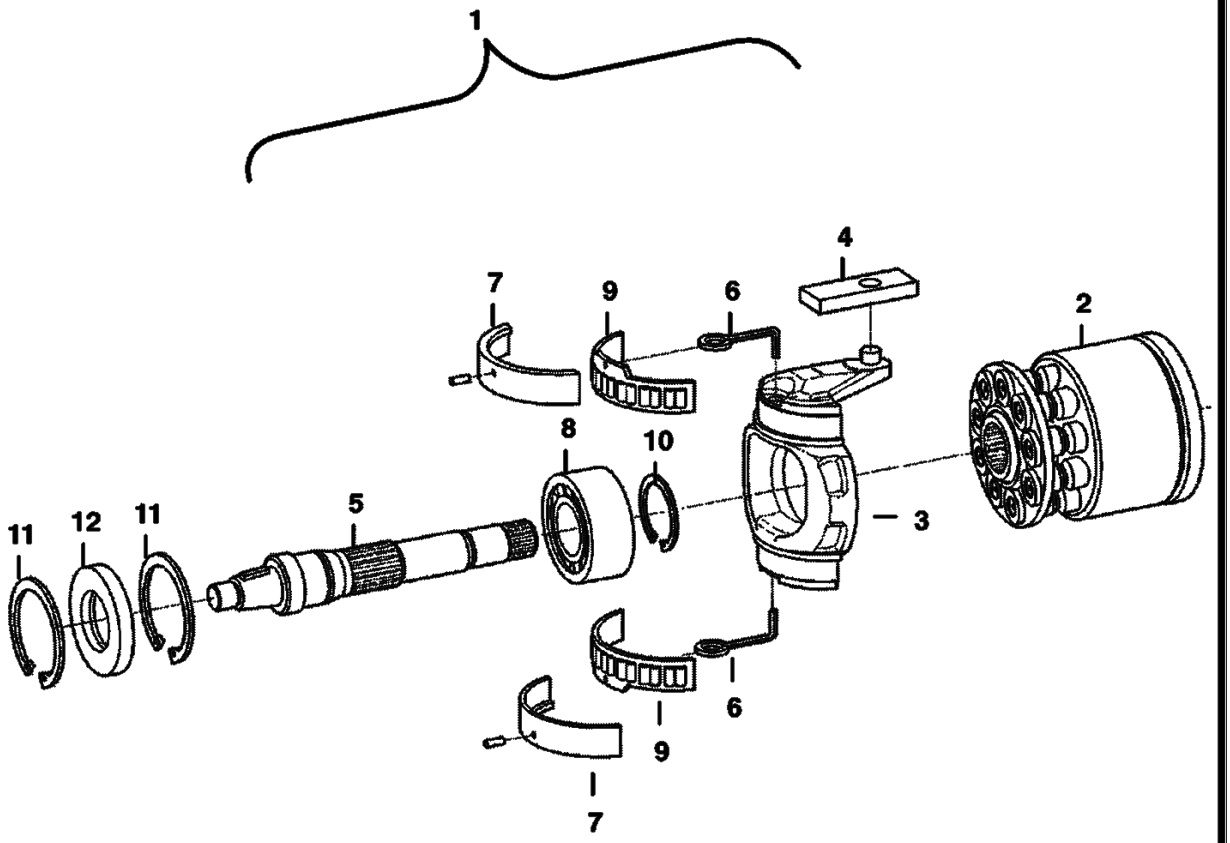

Page 120 - OSS# 2072104 - All rights reserved by Bobcat Company - 01/20/2010 - 17:21:58 - Produced by Ken Cook Co. with mediaioff

HYDROSTATIC PUMP (Cont'd)
(Rotary Group) (LH)
(SJC)

Ref No	Part Number	Description	Remarks	Serial Number	Qty
1	7008105	GROUP, ROTATING LH	LH rotation		1
2	6693873	GROUP, ROTARY			1
3	7008117	SWASHPLATE			1
4	6687940	PLATE			1
5	7001120	SHAFT, DRIVE			1
6	6687930	WIRE			2
7	6687956	BEARING			1
8	6688018	BEARING			1
9	7008118	BEARING			1
10	6687999	RING, SNAP			1
11	6688042	RING, SNAP			2
12	6693876	SEAL, SHAFT			1

Page 121 - OSS# 2072104 - All rights reserved by Bobcat Company - 01/20/2010 - 17:21:58 - Produced by Ken Cook Co. with mediaioff

HYDROSTATIC PUMP
(Rotary Group) (RH)
(SJC)

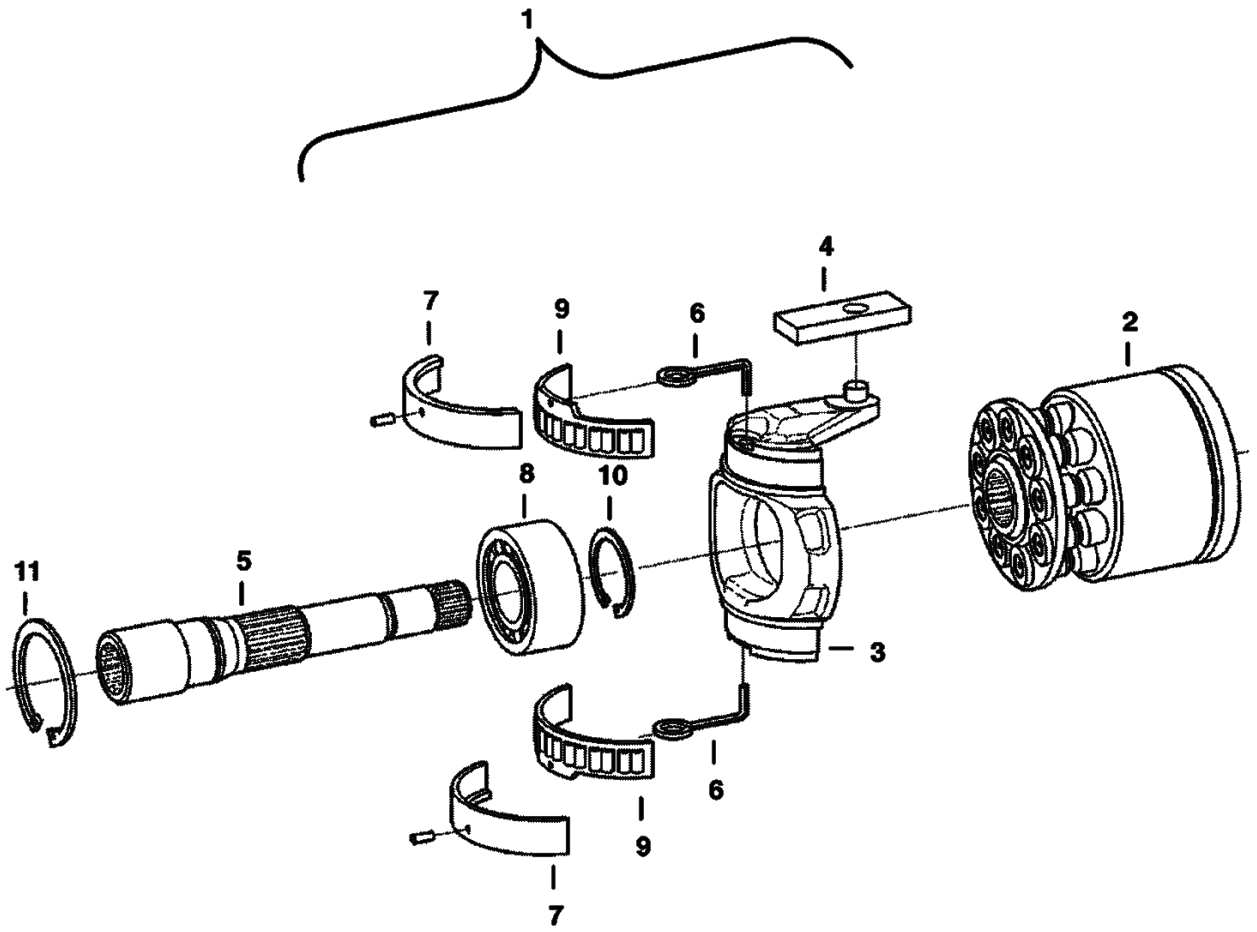

Page 122 - OSS# 2072104 - All rights reserved by Bobcat Company - 01/20/2010 - 17:21:58 - Produced by Ken Cook Co. with mediaioff

HYDROSTATIC PUMP (Cont'd)
(Rotary Group) (RH)
(SJC)

Ref No	Part Number	Description	Remarks	Serial Number	Qty
1	7008106	GROUP ROTATING RH	RH rotation		1
2	6693874	GROUP, ROTARY			1
3	7008117	SWASHPLATE			1
4	6687940	PLATE			1
5	6687943	SHAFT			1
6	6687930	WIRE			2
7	6687956	BEARING			1
8	6688018	BEARING			1
9	6687987	BEARING			1
10	6687999	RING, SNAP			1
11	6671741	SNAP RING			2

Page 123 - OSS# 2072104 - All rights reserved by Bobcat Company - 01/20/2010 - 17:21:58 - Produced by Ken Cook Co. with mediaioff

HYDROSTATIC PUMP
(Control) (LH)
(SJC)

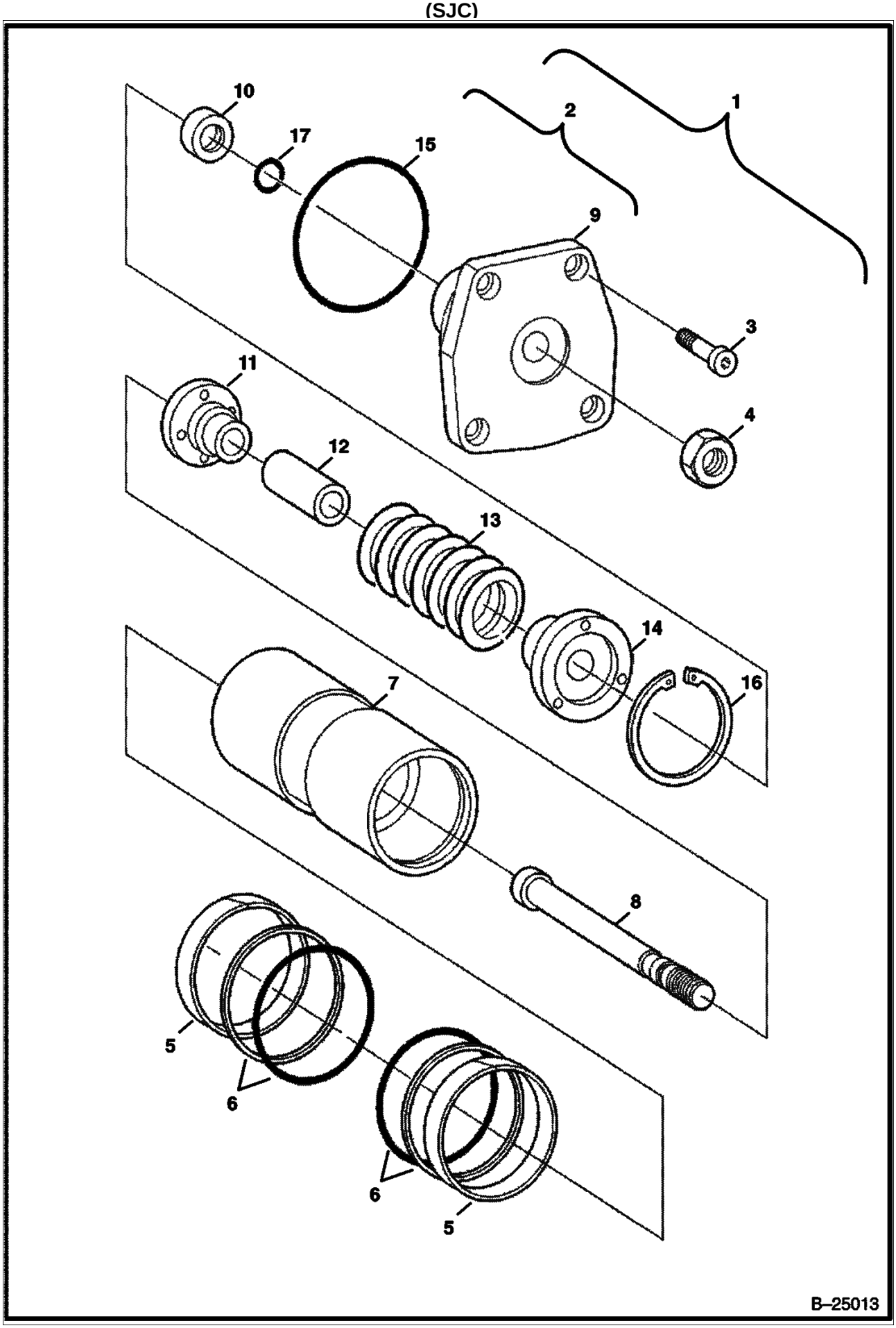

Page 124 - OSS# 2072104 - All rights reserved by Bobcat Company - 01/20/2010 - 17:21:58 - Produced by Ken Cook Co. with mediaioff

HYDROSTATIC PUMP (Cont'd)
(Control) (LH)
(SJC)

Ref No	Part Number	Description	Remarks	Serial Number	Qty
1	7008107	CONTROL	Model R902124951		1
2	6688024	COVER	assy.		1
3	6687995	SCREW			1
4	6687925	NUT			1
5	7008119	RING			2
6	6687986	KIT			1
7	6687962	PISTON	assy.		1
8		ROD	NSS		1
9	6671760	COVER			1
10		RING	NSS		1
11		COLLAR	NSS		1
12		SPACER	NSS		1
13		SPRING	NSS		1
14		COLLAR	NSS		1
15	6688005	SEAL			1
16		RING	NSS		1
17	6688006	SEAL			1

Page 125 - OSS# 2072104 - All rights reserved by Bobcat Company - 01/20/2010 - 17:21:58 - Produced by Ken Cook Co. with mediaioff

HYDROSTATIC PUMP
(Control) (RH)
(SJC)

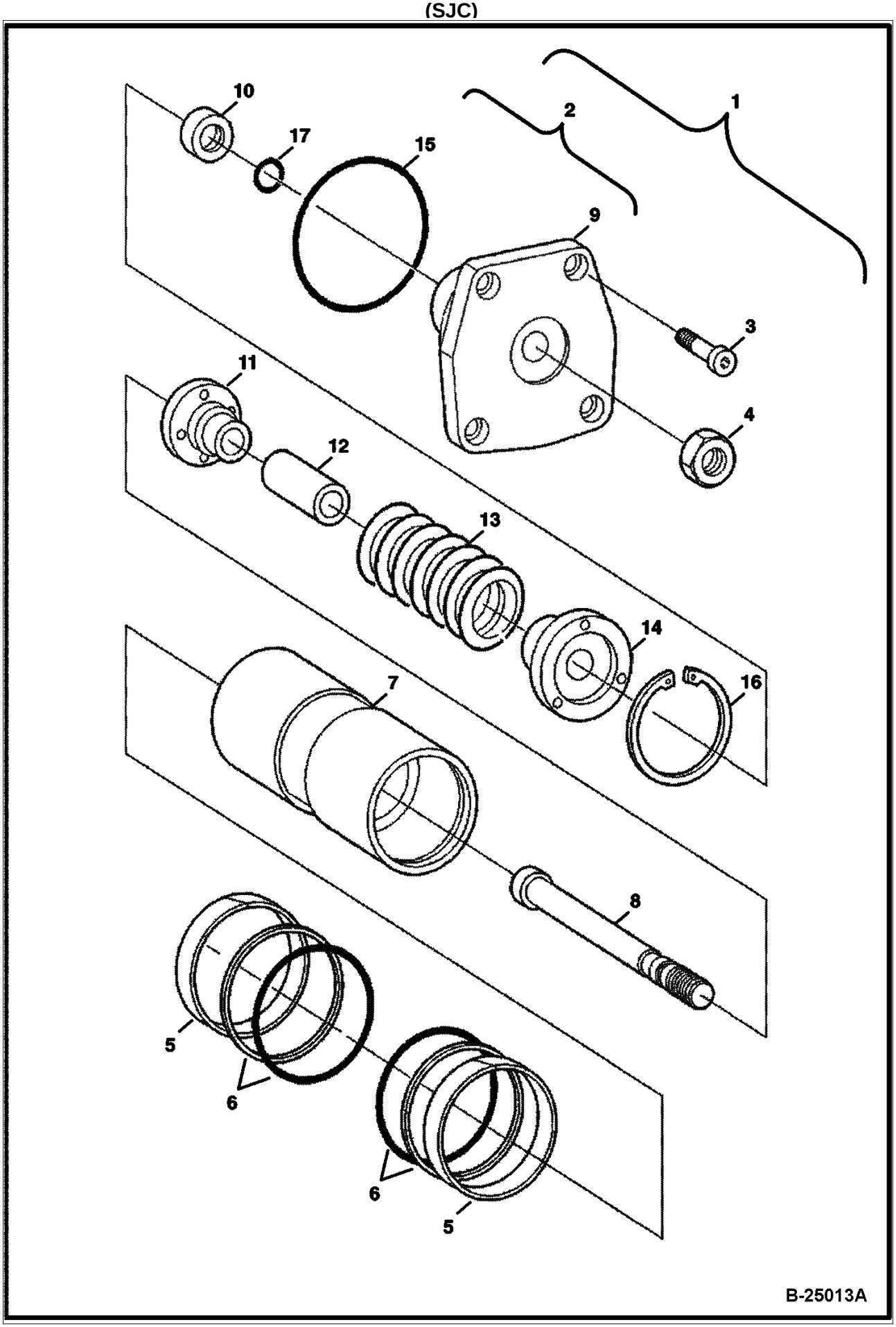

Page 126 - OSS# 2072104 - All rights reserved by Bobcat Company - 01/20/2010 - 17:21:58 - Produced by Ken Cook Co. with mediaoff

HYDROSTATIC PUMP (Cont'd)
(Control) (RH)
(SJC)

Ref No	Part Number	Description	Remarks	Serial Number	Qty
1	7008108	CONTROL	Model R902124952		1
2	6688024	COVER	assy.		1
3	6687995	SCREW			1
4	6687925	NUT			1
5	7008119	RING			2
6	6687986	KIT			1
7	6687962	PISTON	assy.		1
8		ROD	NSS		1
9	6671760	COVER			1
10		RING	NSS		1
11		COLLAR	NSS		1
12		SPACER	NSS		1
13		SPRING	NSS		1
14		COLLAR	NSS		1
15	6688005	SEAL			1
16		RING	NSS		1
17	6688006	SEAL			1

Page 127 - OSS# 2072104 - All rights reserved by Bobcat Company - 01/20/2010 - 17:21:58 - Produced by Ken Cook Co. with mediaioff

HYDROSTATIC PUMP
(Control Module)
(SJC)

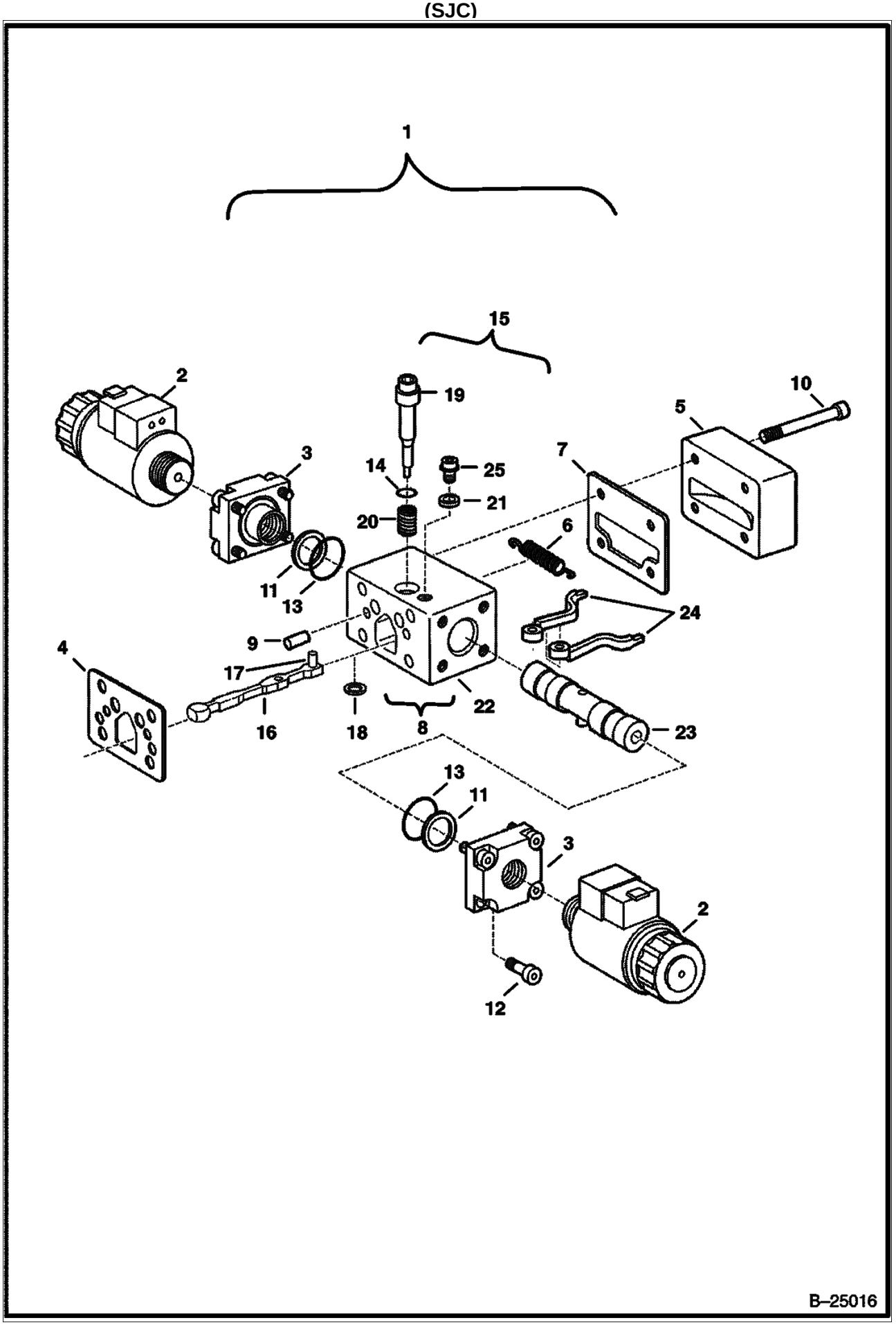

Page 128 - OSS# 2072104 - All rights reserved by Bobcat Company - 01/20/2010 - 17:21:58 - Produced by Ken Cook Co. with mediaioff

HYDROSTATIC PUMP (Cont'd)
(Control Module)
(SJC)

Ref No	Part Number	Description	Remarks	Serial Number	Qty
1	7008109	MODULE, CONTROL	Model R902105250		2
2	6697960	SOLENOID	W/ O-Ring		2
3		BUSHING	NSS		2
4	7008121	GASKET			1
5	7008122	COVER			1
6	6687967	SPRING			1
7	7008123	GASKET			1
8	7008120	MODULE	assy.		1
9	6688010	PIN			2
10	6687996	SCREW			4
11		SPRING	NSS		2
12	6687997	SCREW			8
13		SEAL KIT	NSS		2
14		SEAL	NSS - Order Ref. 8		1
15		ROLLER	NSS		1
16		LEVER	NSS		1
17		ROLLER	NSS		1
18		SHIM	NSS		1
19		PIN	NSS - Order Ref. 8		1
20		SPRING	NSS - Order Ref. 8		1
21		PLATE	NSS - Order Ref. 8		1
22		HOUSING	NSS - Order Ref. 8		1
23		SPOOL	NSS - Order Ref. 8		1
24		LEVER	NSS		2
25		SCREW	NSS - Order Ref. 8		1

Page 129 - OSS# 2072104 - All rights reserved by Bobcat Company - 01/20/2010 - 17:21:58 - Produced by Ken Cook Co. with mediaioff

GEAR PUMP
(Double)

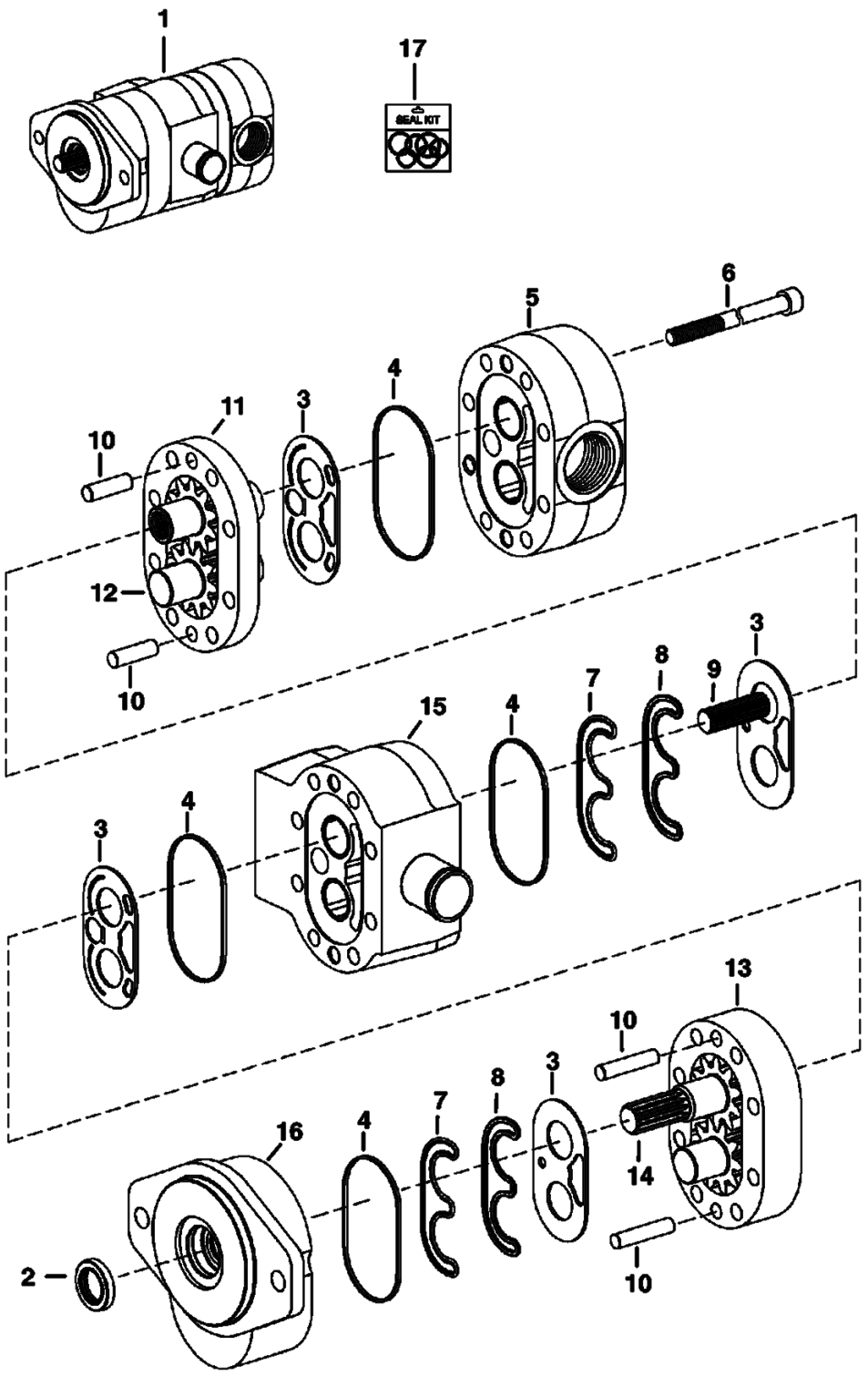

Page 130 - OSS# 2072104 - All rights reserved by Bobcat Company - 01/20/2010 - 17:21:58 - Produced by Ken Cook Co. with mediaioff

GEAR PUMP (Cont'd)
(Double)

Ref No	Part Number	Description	Remarks	Serial Number	Qty
1	7001435	PUMP, GEAR DOUBLE	Model 83001779		1
2		SEAL, SHAFT	NSS		1
3		WEAR PLATE	NSS		6
4		SEAL, SECTION	NSS		6
5		HOUSING, REAR	NSS		1
6		BOLT	NSS		8
7		SEAL, PRE-LOAD	NSS		6
8		SEAL, LOAD	NSS		6
9		CONNECTOR, SPLINE	NSS		2
10		PIN	NSS		6
11		HOUSING, GEAR	NSS - #2		1
12		GEAR SET	NSS - #2		1
13		HOUSING, GEAR	NSS - #1		1
14		GEAR SET	NSS - drive		1
15		HOUSING, CENTER	NSS		1
16		HOUSING, FRONT	NSS		1
17	6687866	KIT, SEAL			1

Page 131 - OSS# 2072104 - All rights reserved by Bobcat Company - 01/20/2010 - 17:21:58 - Produced by Ken Cook Co. with mediaioff

COOLING FAN MOTOR
(Cast Iron)

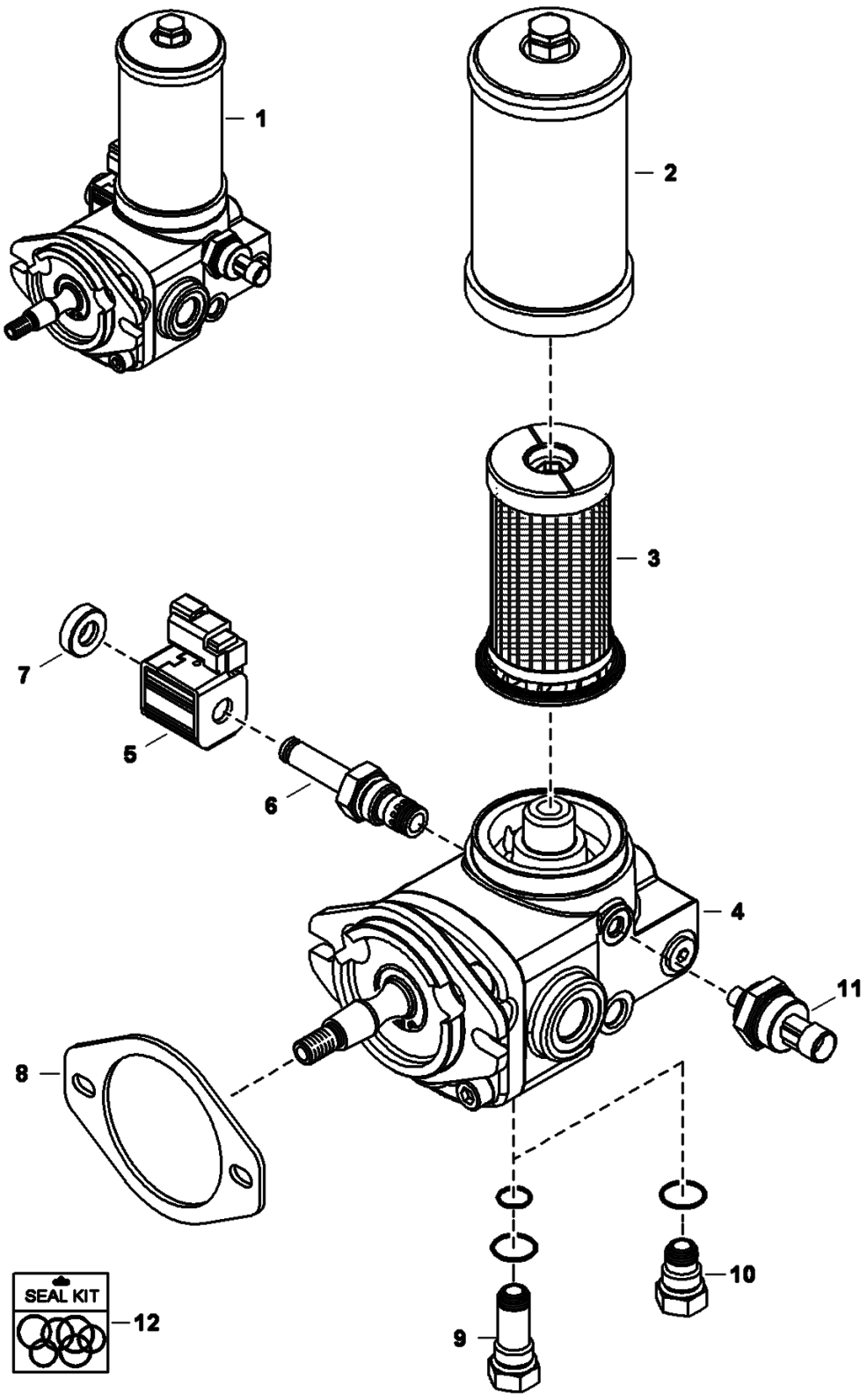

Page 132 - OSS# 2072104 - All rights reserved by Bobcat Company - 01/20/2010 - 17:21:58 - Produced by Ken Cook Co. with mediaIoff

COOLING FAN MOTOR (Cont'd)
(Cast Iron)

Ref No	Part Number	Description	Remarks	Serial Number	Qty
1	7164320	MOTOR, HYD COOLING FAN	cast iron - Ref. 2-10 - Also Order (2) of 1F316 cotter pin		1
2	6698066	HOUSING, FILTER CARTRIDGE			1
3	6692337	FILTER, HYD CARTRIDGE			1
4		MOTOR	NSS - Order Ref. 1		1
5	6698065	COIL, CPP012H			1
6	7008810	VALVE	W/Ref. 7		1
6	6698591	KIT, SEAL			1
7	6698352	NUT, COIL SOLENOID			1
8	6698062	GASKET, MOTOR			1
9	7000973	PLUG, MOTOR			1
10	7000974	PLUG, MOTOR			1
11	6674316	SENSOR	hyd pressure - 3-pin molded connector		1
12		KIT, SEAL	NSS - Order Ref. 1		1

Page 133 - OSS# 2072104 - All rights reserved by Bobcat Company - 01/20/2010 - 17:21:58 - Produced by Ken Cook Co. with mediaioff

2-SPEED VALVE

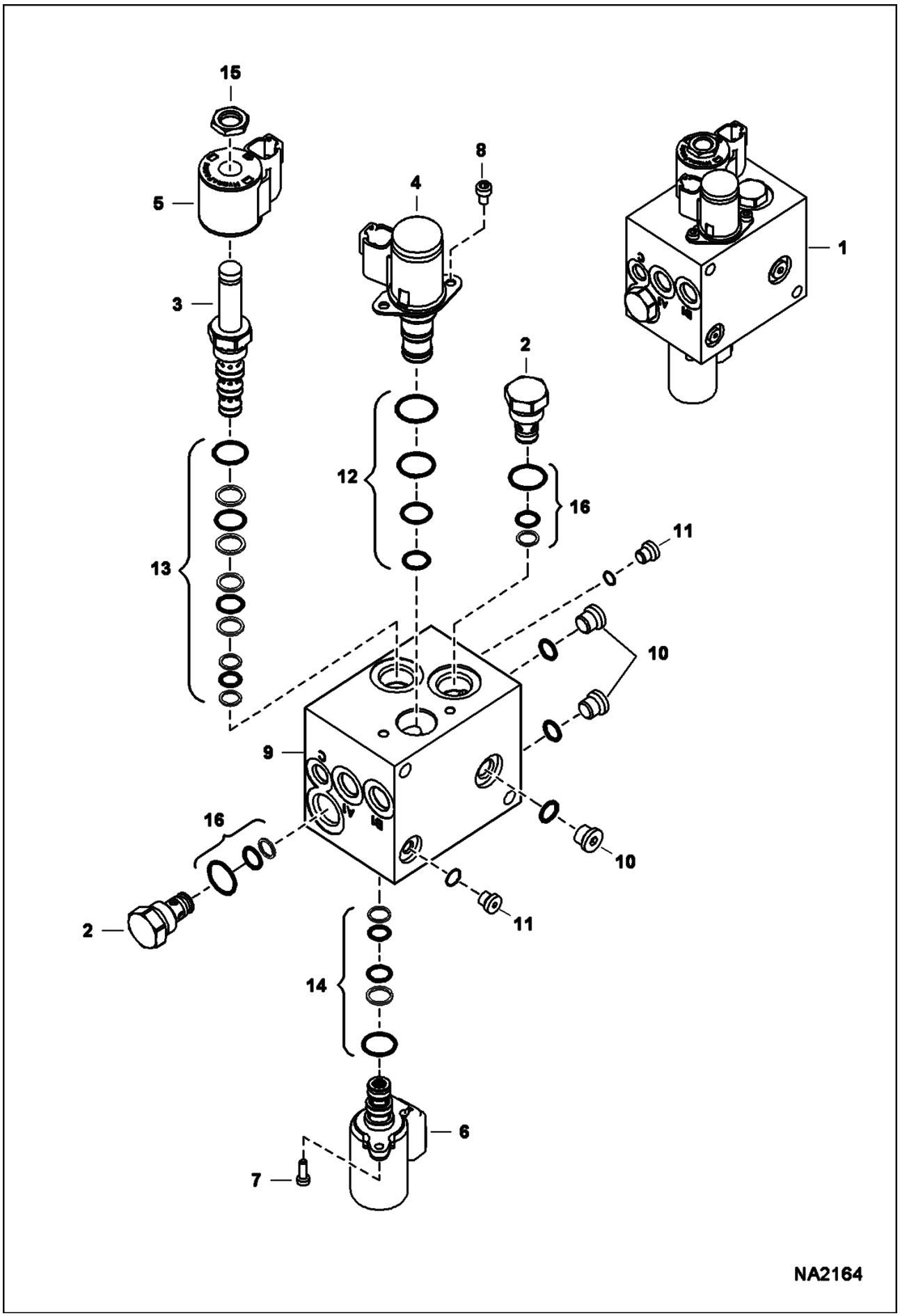

Page 134 - OSS# 2072104 - All rights reserved by Bobcat Company - 01/20/2010 - 17:21:58 - Produced by Ken Cook Co. with mediaioff

Ref No	Part Number	Description	Remarks	Serial Number	Qty
1	6697971	VALVE, 2 SPEED			1
2	7010003	VALVE, CHECK			2
3	7010004	CARTRIDGE			1
4	7010005	CARTRIDGE			1
5	7010006	COIL			1
6	7010007	FILTER. VALVE			1
7	7010008	BOLT			2
8	7010009	BOLT			2
9	7010010	BLOCK, PORT			1
10	6672762	PLUG			3
11	6677177	PLUG			2
12	7008771	KIT, SEAL			1
13	6672756	SEAL KIT			1
14	7010029	SEAL KIT			1
15	6676246	NUT			1
16	6672515	SEAL KIT			2

Page 135 - OSS# 2072104 - All rights reserved by Bobcat Company - 01/20/2010 - 17:21:58 - Produced by Ken Cook Co. with mediaioff

CAB ELECTRICAL
(Standard)

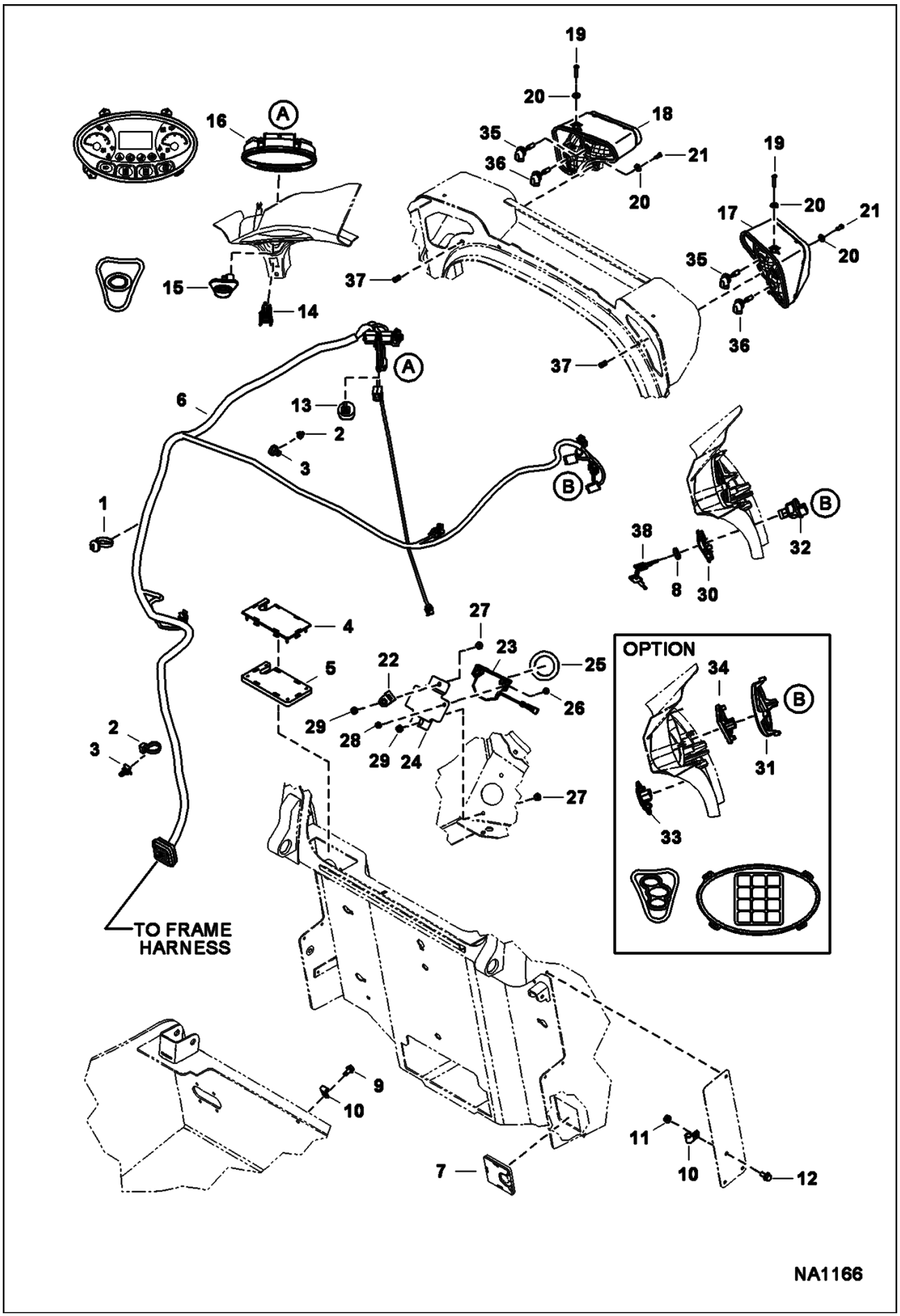

Page 136 - OSS# 2072104 - All rights reserved by Bobcat Company - 01/20/2010 - 17:21:58 - Produced by Ken Cook Co. with mediaioff

CAB ELECTRICAL (Cont'd)
(Standard)

Ref No	Part Number	Description	Remarks	Serial Number	Qty
1	6675734	STRAP			1
2	6624289	TIE STRAP			5
3	6678666	TREE MOUNT			1
4	7166528	PLUG, CAB STD			1
5	7166529	FOAM. CAB STD			1
6	7165991	HARNESS, CAB STD			1
7	7179134	PLUG, HARNESS CAB STD			1
8		NUT	NSS		1
9	84G3712	BOLT			12
10	30H20	CLIP			2
11	57D6	NUT 5			1
12	31C612	BOLT			1
13	6692489	ALARM, BUZZER			1
14	6690948	SWITCH PARK BRAKE			1
15	7003032	SWITCH, OVERRIDE TRACTION			1
16	7003034	DISPLAY, GAUGE			1
17	7138040	LIGHT, RH ASSY			1
18	7138041	LIGHT, LH ASSY			1
19	53C420	SCREW			2
20	25E14	WSHR			4
21	53C410	SCREW			2
22	6684641	MOUNT			1
23	7001044	HORN, ALARM			1
24	7171081	BRACKET, HORN			1
25	7171088	GROMMET			1
26	35C410	BOLT 5			2
27	35C516	BOLT 10			2
28	55D4	NUT			2
29	55D5	NUT			2
30	7163589	INSERT, SWITCH			1
31	7003027	CAP			1
32	6693245	SWITCH, IGN			1
33	7003033	SWITCH, IGN			1
34	6693712	KEYPAD, PANEL			1
35	7008814	BULB, 5W			2
36	6675336	BULB	50 W		2
37	7154910	INSERT, THREADED			2
38	6693241	KEY	ignition - single key W/O ring		1

Page 137 - OSS# 2072104 - All rights reserved by Bobcat Company - 01/20/2010 - 17:21:58 - Produced by Ken Cook Co. with mediaioff

CAB ELECTRICAL
(Deluxe)

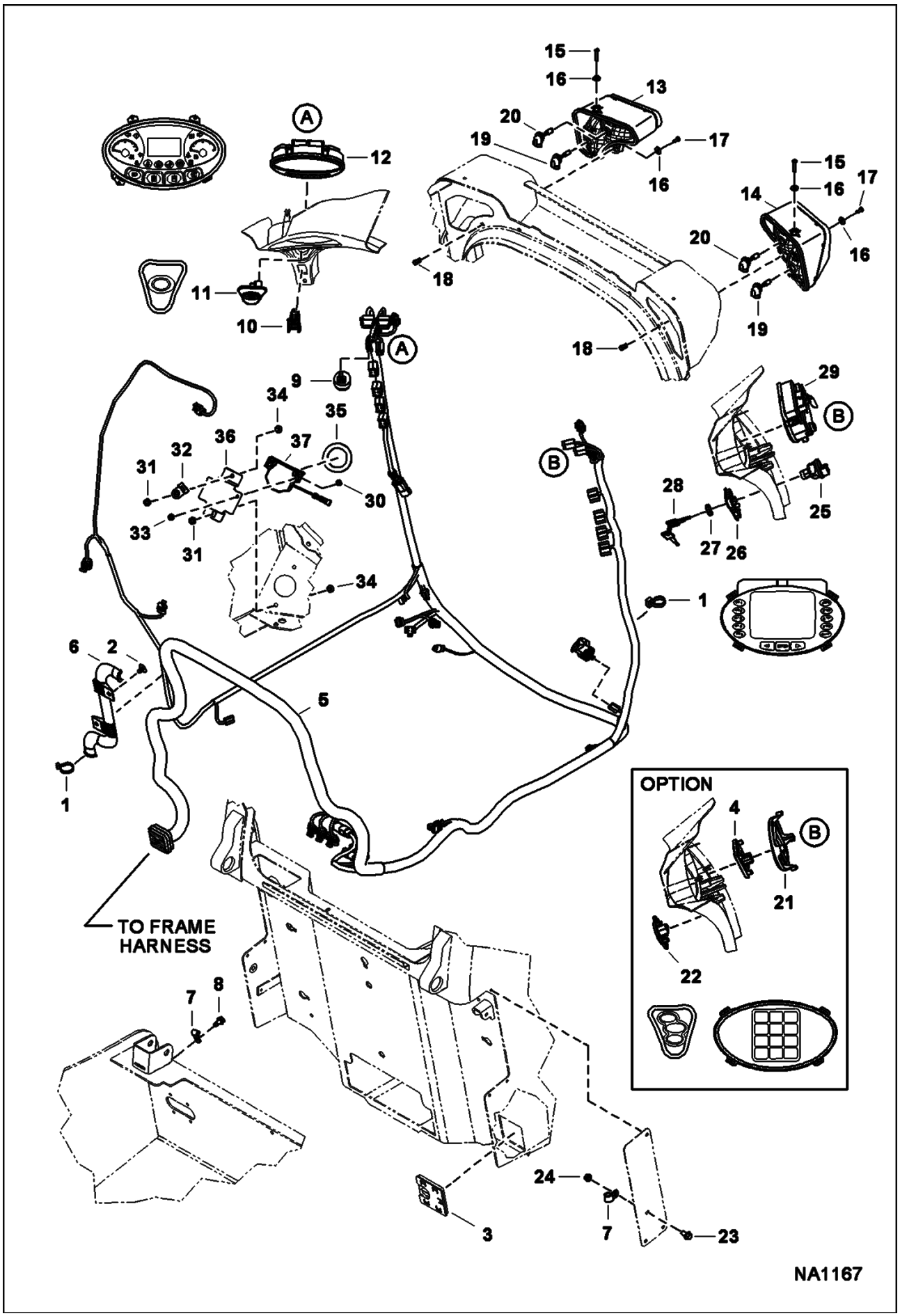

Page 138 - OSS# 2072104 - All rights reserved by Bobcat Company - 01/20/2010 - 17:21:58 - Produced by Ken Cook Co. with mediaioff

Ref No	Part Number	Description	Remarks	Serial Number	Qty
1	6624289	TIE STRAP			15
2	6674895	RETAINER			2
3	7179114	PLUG, HARNESS CAB DLX			1
4	6693712	KEYPAD, PANEL			1
5	7163689	HARNESS, CAB DLX			1
6	7164073	GUIDE			1
7	30H20	CLIP			1
8	84G3712	BOLT			1
9	6692489	ALARM, BUZZER			1
10	6690948	SWITCH PARK BRAKE			1
11	7003032	SWITCH, OVERRIDE TRACTION			1
12	7003034	DISPLAY, GAUGE			1
13	7138041	LIGHT, LH ASSY			1
14	7138040	LIGHT, RH ASSY			1
15	53C420	SCREW			2
16	25E14	WSHR			4
17	53C410	SCREW			2
18	7154910	INSERT, THREADED			2
19	6675336	BULB	50 W		2
20	7008814	BULB, 5W			2
21		CAP	See Illustration CAB/ NA2071		1
22		SWITCH, IGN	See Illustration CAB/ NA2071		1
23	31C612	BOLT			1
24	57D6	NUT 5			1
25	6693245	SWITCH, IGN			1
26	7163589	INSERT, SWITCH			1
27		NUT	NSS		1
28	6693241	KEY	ignition - single key W/O ring		1
29	6693413	DISPLAY, DLX			1
30	35C410	BOLT 5			2
31	55D5	NUT			2
32	6684641	MOUNT			1
33	55D4	NUT			2
34	35C516	BOLT 10			2
35	7171088	GROMMET			1
36	7171081	BRACKET, HORN			1
37	7001044	HORN, ALARM			1

Page 139 - OSS# 2072104 - All rights reserved by Bobcat Company - 01/20/2010 - 17:21:58 - Produced by Ken Cook Co. with mediaioff

ENGINE ELECTRICAL CIRCUITRY
(Frame Harness & Filter Sensors)

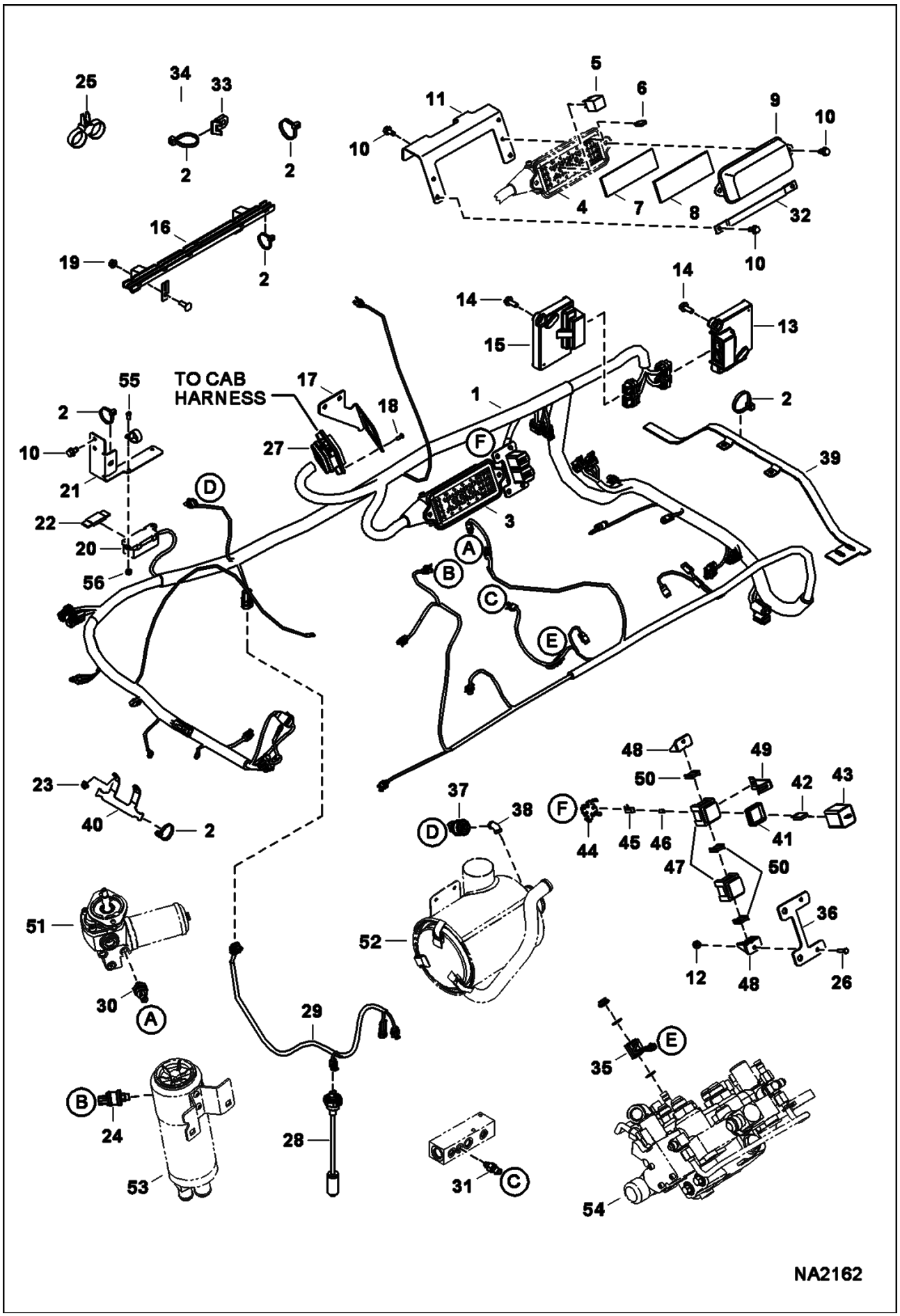

Page 140 - OSS# 2072104 - All rights reserved by Bobcat Company - 01/20/2010 - 17:21:58 - Produced by Ken Cook Co. with mediaioff

ENGINE ELECTRICAL CIRCUITRY (Cont'd)
(Frame Harness & Filter Sensors)

Ref No	Part Number	Description	Remarks	Serial Number	Qty
1	7174782	HARNESS, MFR	See Illustration ENGINE ELECTRICAL CIRCUITRY/ NA2163 - manual controls		1
1	7175625	HARNESS, MFR	See Illustration ENGINE ELECTRICAL CIRCUITRY/ NA2163 - SJC, AHC & ACS		1
2	6624289	TIE STRAP			24
3	7155390	HOUSING, FUSE RELAY			1
4	6673200	FUSE BLOCK			1
5	6679820	RELAY			8
6	6663289	FUSE, 5A			1
6	6654806	FUSE, 15A			3
6	6707621	FUSE, 15A MINI 5			1
6	6625575	FUSE, 20A			1
6	6702444	FUSE 25A 5			5
6	6707623	FUSE, 25A MINI 5			6
6	6718034	FUSE, 30A			2
7	7167945	DECAL, FUSE RELAY			1
8	6731275	INSULATION			1
9	7176546	COVER, FUSE BOX			1
10	84G3712	BOLT			9
11	7171222	BRACKET FRC			1
12	51DM8	NUT			2
13	6693353	CONTROLLER, GATEWAY	Bobcat		1
14	7168429	BOLT, CONTROLLER	flanged head - M10 x 25 mm		4
15	6691288	CONTROLLER, AUX CONTROL			1
16	7164175	BRACKET, SHORT SKI			2
17	7166489	BRACKET, CAB			1
18	6688980	BOLT	connector		4
19	97D6	NUT 10			4
20	6675154	HOLDER	high amp fuse		1
21	7159879	BRACKET, REAR DOOR	mega fuse		1
22	6675155	FUSE	100 amp		1
23	29CM820	SCREW			1
24	7002980	SWITCH, PRESSURE			1
25	6678668	STRAP, DUAL TIE			2
26	45G1212	BOLT			2
27		CONNECTOR	See Illustration CONNECTOR HARNESS ASSEMBLY/ PE3684		1
28	6680438	SENSOR, FUEL	W/ gasket		1
28	6717579	GASKET			1
29	7175293	HARNESS, FUEL			1
30	6674316	SENSOR	hyd pressure - 3-pin molded connector		1
31	6727869	SENDER	hyd temp		1
32	7168173	BRACKET, COVER			1
33	6679034	MOUNT			1
34	84G3732	BOLT			1
35	6675559	COIL			1

Page 141 - OSS# 2072104 - All rights reserved by Bobcat Company - 01/20/2010 - 17:21:58 - Produced by Ken Cook Co. with mediaioff

ENGINE ELECTRICAL CIRCUITRY (Cont'd)
(Frame Harness & Filter Sensors)

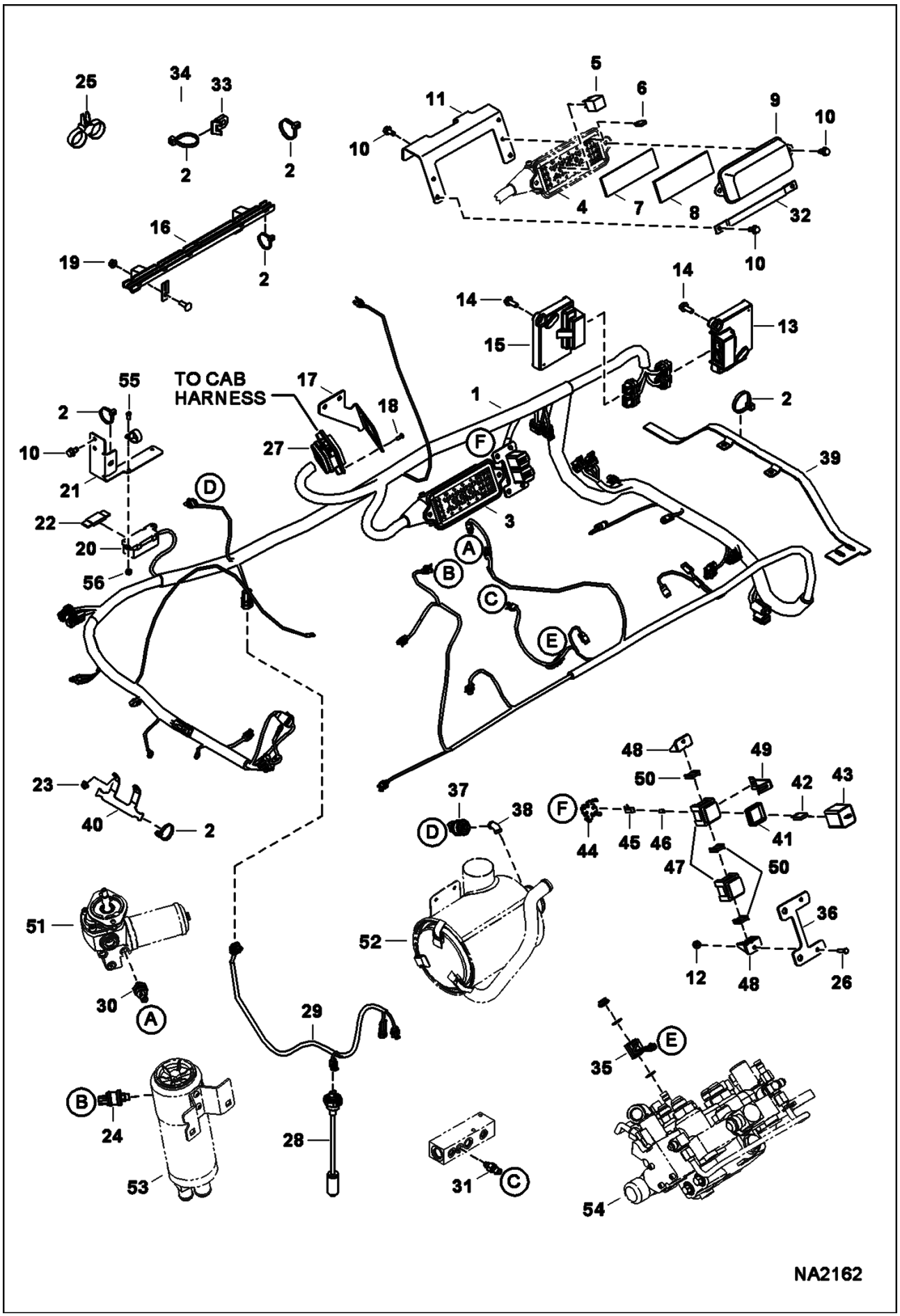

Page 142 - OSS# 2072104 - All rights reserved by Bobcat Company - 01/20/2010 - 17:21:58 - Produced by Ken Cook Co. with mediaioff

ENGINE ELECTRICAL CIRCUITRY (Cont'd)
(Frame Harness & Filter Sensors)

Ref No	Part Number	Description	Remarks	Serial Number	Qty
36	7166445	BRACKET, BLOCK DILL			1
37	6665371	SWITCH			1
38	24F1	ELBOW			1
39	7159886	BRACKET, FRONT SKI			1
40	7163597	BRACKET, HARNESS ENG			1
41	6671528	SEAL	green square		2
42	6707620	10AFUSE 5			x
42	6707621	FUSE, 15A MINI 5			x
42	6707623	FUSE, 25A MINI 5			x
42	6674099	BREAKER	25 amp		x
43	6665358	COVER , FUSE			2
44	6665357	LOCK	yellow		2
45		PIN	NAP - female - Order 6668719 pin for 16 guage wire - Order 6668720 pin for 14 guage wire		16
46	6650107	SEAL			16
47	6665356	BLOCK	fuse - W/Ref. 41		2
48	6665909	MOUNT			2
49	6708437	CLIP			2
50	6665411	WEDGE	red		3
51		MOTOR, HYD COOLING FAN	See Illustration COOLING FAN MOTOR/ MS2514		1
52		FILTER, AIR CLEANER ASSY	See Illustration AIR CLEANER/ NA2170		1
53		FILTER, HYD ASSY	See Illustration HYDROSTATIC CIRCUITRY/ NA1224		1
54		VALVE, CONTROL	See Illustration CONTROL VALVE/ NA1216 - manual controls		1
54		VALVE, CONTROL	See Illustration CONTROL VALVE/ NA1217 - ACS, SJC		1
55	25G410	CAPSCREW			2
56	59D4	NUT 5			2

Page 143 - OSS# 2072104 - All rights reserved by Bobcat Company - 01/20/2010 - 17:21:58 - Produced by Ken Cook Co. with mediaioff

ENGINE ELECTRICAL CIRCUITRY
(Engine Sensors, Battery, Alt & Starter)

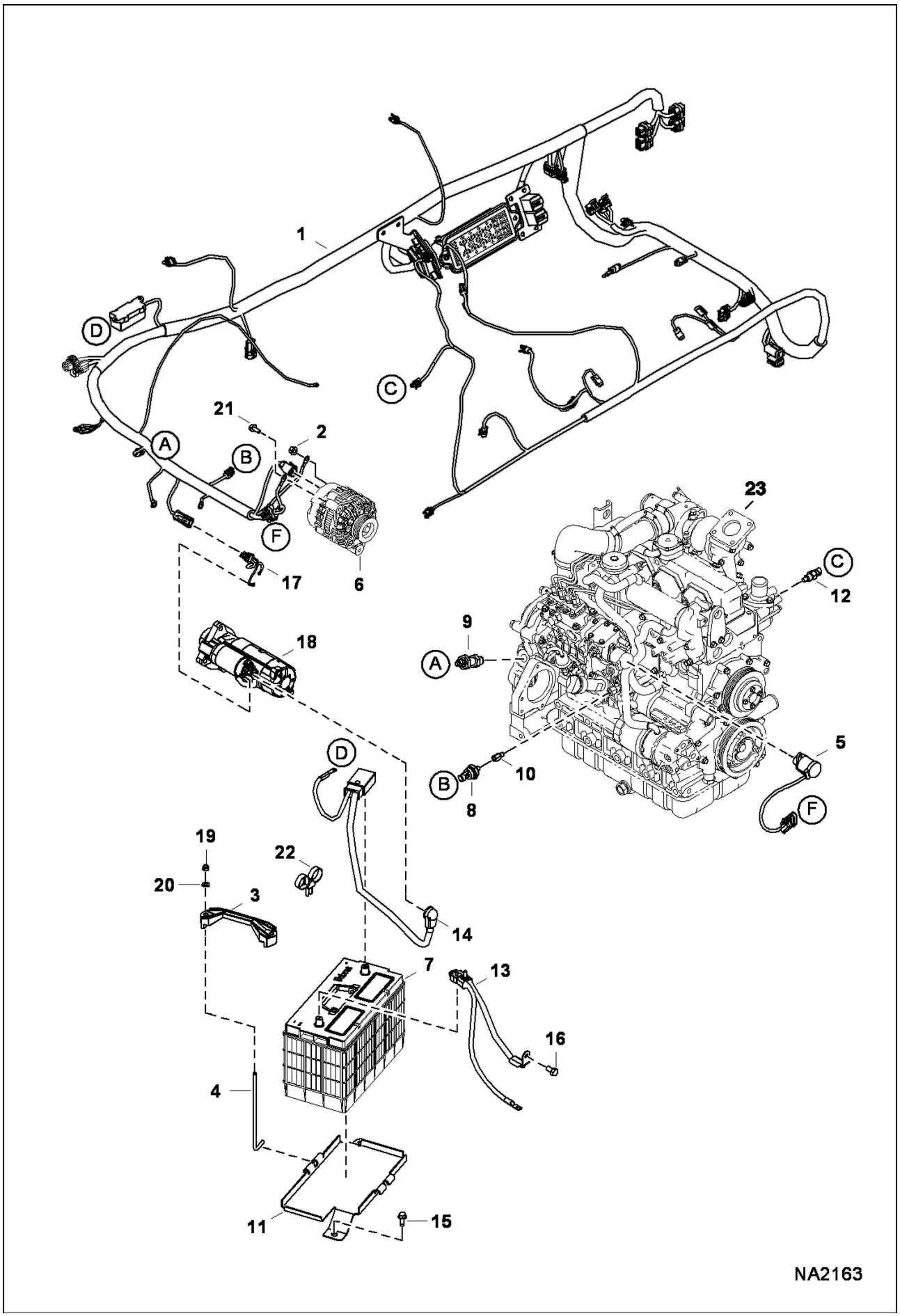

Page 144 - OSS# 2072104 - All rights reserved by Bobcat Company - 01/20/2010 - 17:21:58 - Produced by Ken Cook Co. with mediaioff

ENGINE ELECTRICAL CIRCUITRY (Cont'd)
(Engine Sensors, Battery, Alt & Starter)

Ref No	Part Number	Description	Remarks	Serial Number	Qty
1	7174782	HARNESS, MFR	See Illustration ENGINE ELECTRICAL CIRCUITRY/ NA2162 - manual controls		1
1	7175625	HARNESS, MFR	See Illustration ENGINE ELECTRICAL CIRCUITRY/ NA2162 - ACS, SJC		1
2	43DM8	NUT			1
3	6569203	CLAMP			1
4	6576280	BOLT			2
5	7000769	SOLENOID, SHUTOFF FUEL	fuel shutoff - W/ 9.45" (240,03 mm) lead		1
6		ALTERNATOR	See Illustration ALTERNATOR/ B22386		1
7	6665427	BATTERY, DRY 950 AMP			1
8	6697920	SENSOR, PRESS OIL ENG			1
9	6693921	SENSOR, RPM			1
10	7102451	FITTING			1
11	7159352	PAN, BATTERY			1
12	6718414	SENDER	eng temp		1
13	7162966	CABLE, NEGATIVE			1
14	7162967	CABLE, POSITIVE			1
15	84G3712	BOLT			2
16	5CM1020	SCREW			1
17	6733370	HARNESS			1
18		STARTER	See Illustration STARTER/ B16488R		1
19	59D5	NUT 5			2
20	25E15	WASHER			2
21	45C620	BOLT			3
22	6678668	STRAP, DUAL TIE			2
23		ENGINE	See Illustration ENGINE & UPPER GASKET KIT/ B27844		1

Page 145 - OSS# 2072104 - All rights reserved by Bobcat Company - 01/20/2010 - 17:21:58 - Produced by Ken Cook Co. with mediaioff

ENGINE ELECTRICAL CIRCUITRY
(Rear Lights & Back-up Alarm)

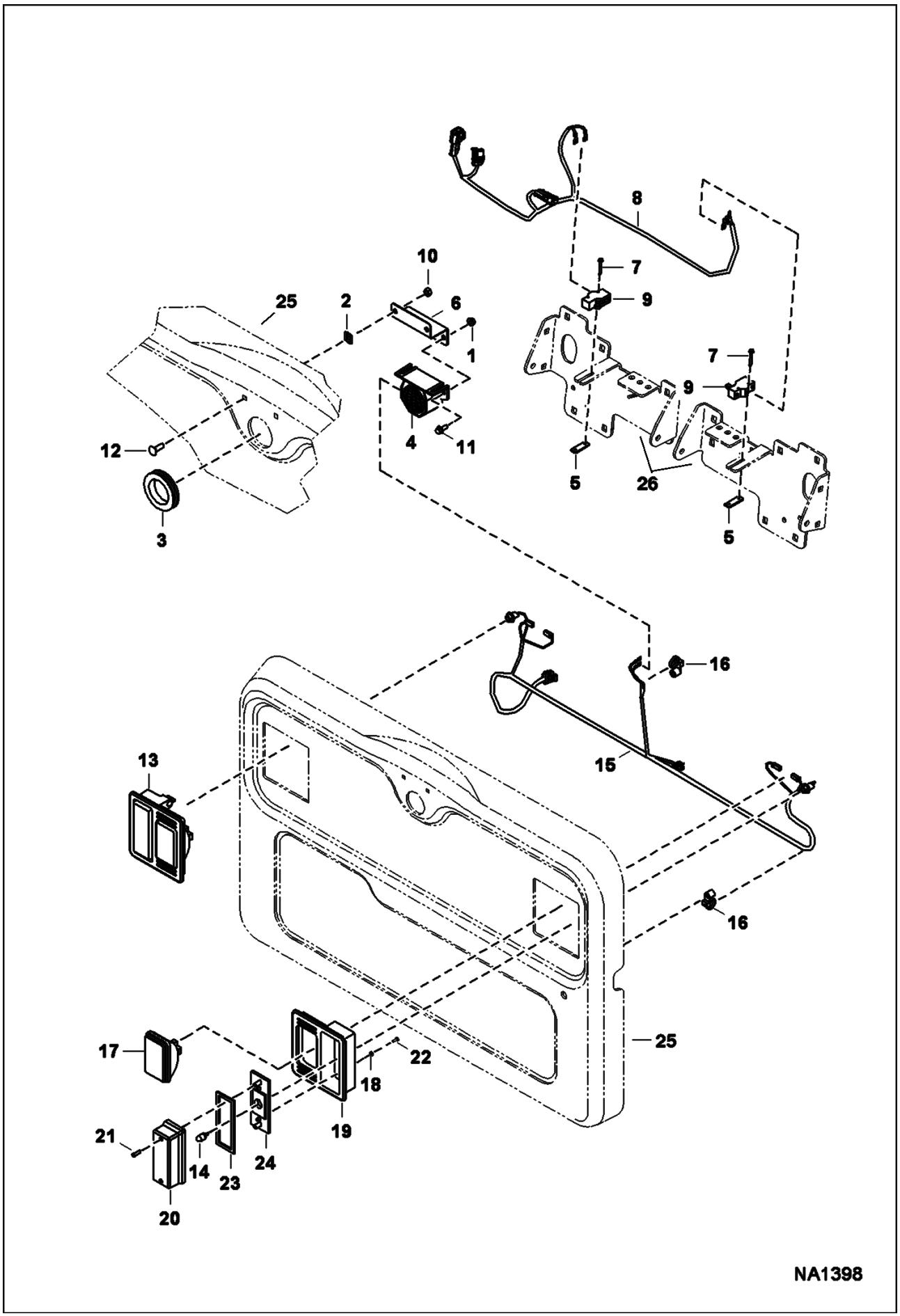

Page 146 - OSS# 2072104 - All rights reserved by Bobcat Company - 01/20/2010 - 17:21:58 - Produced by Ken Cook Co. with mediaioff

Ref No	Part Number	Description	Remarks	Serial Number	Qty
1	97D4	NUT			2
2	774220	NUT			2
3	6577545	GROMMET			1
4	6651512	ALARM BACKUP			1
4	6737189	DECAL			1
5	6702593	SPACER			2
6	7167871	MOUNT, ALARM			1
7	84G1320	BOLT			4
8	7175017	HARNESS, ALARM BACK-UP			1
9	6646781	SWITCH			2
10	57D5	NUT			2
11	35C410	BOLT 5			2
12	37C516	BOLT			2
13	6670284	LIGHT ASSY			2
13	7104670	LIGHT	European		2
14	6649481	LIGHT, WEDGE BASE			2
15	7175271	HARNESS, REAR DOOR			1
15	7175287	HARNESS, REAR DOOR	European		1
16	7002988	TIE, STUD MOUNT			1
17	6661353	LIGHT ASSY	W/ bulb - white		2
17	898731	1156 BULB			2
18	6672272	WASHER			4
19	6672279	MOUNT, LIGHT RUBBER			2
20	6672276	LENS, LIGHT RED			2
21	6672274	SCREW			4
22	6672273	SCREW			2
23	6672275	GASKET			2
24	6672277	BRACKET			2
25		REAR DOOR	See Illustration REAR DOOR/ NA1001		1
26		MOUNT	See Illustration HAND CONTROLS/ NA1212		2

Page 147 - OSS# 2072104 - All rights reserved by Bobcat Company - 01/20/2010 - 17:21:58 - Produced by Ken Cook Co. with mediaioff

CONNECTOR HARNESS ASSEMBLY

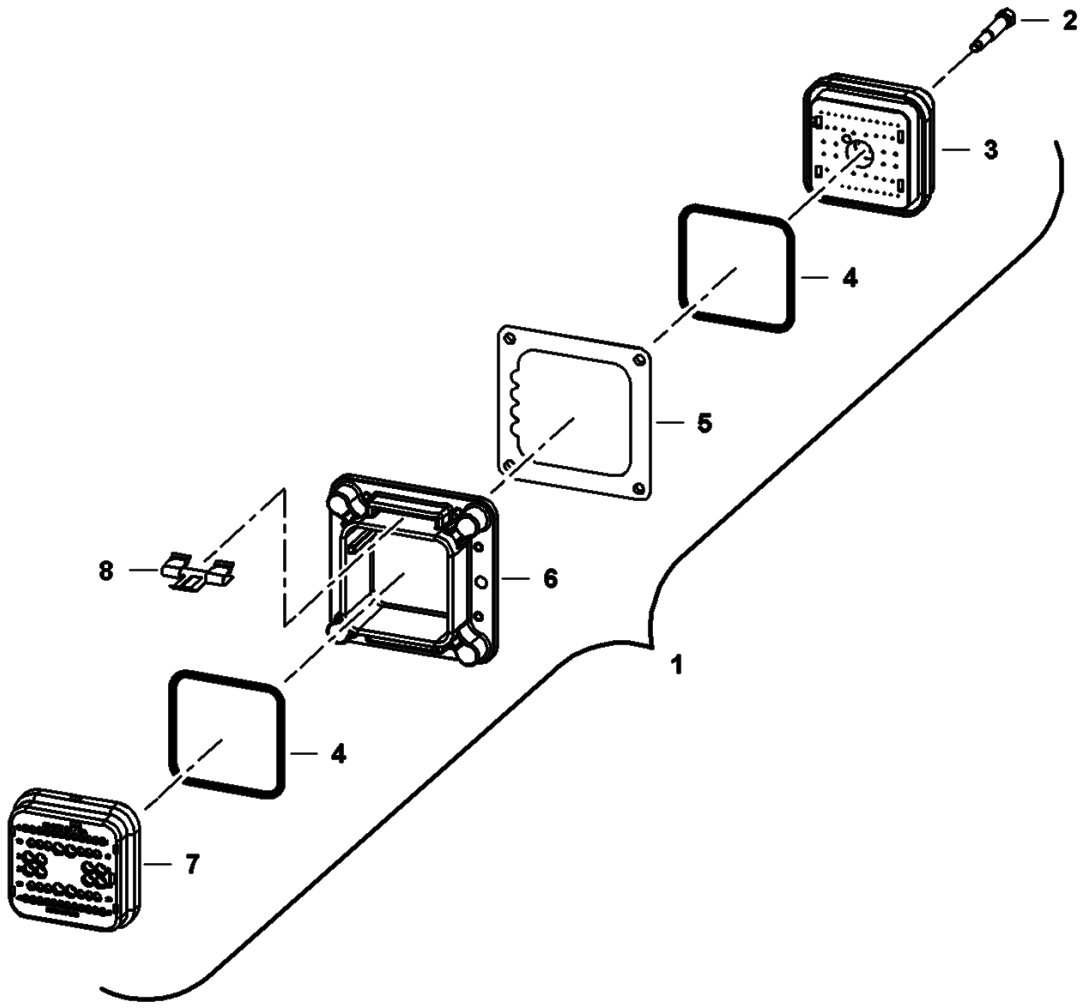

PE-3684

Page 148 - OSS# 2072104 - All rights reserved by Bobcat Company - 01/20/2010 - 17:21:58 - Produced by Ken Cook Co. with mediaioff

Ref No	Part Number	Description	Remarks	Serial Number	Qty
1		CONNECTOR	NSS - Order components		1
2		BOLT	NSS - Order Ref. 3		1
3	6688834	CONNECTOR	cab - W/Ref. 2 & 4		1
4		SEAL	NSS - Order Ref. 7		1
5		SEAL	NSS - Order Ref. 6		1
6	6688836	FLANGE	W/Ref. 5 & 8		1
7	6688833	CONNECTOR	engine - W/Ref. 4		1
8		CLIP	NSS - metal - Order Ref. 6		2

Page 149 - OSS# 2072104 - All rights reserved by Bobcat Company - 01/20/2010 - 17:21:58 - Produced by Ken Cook Co. with mediaioff

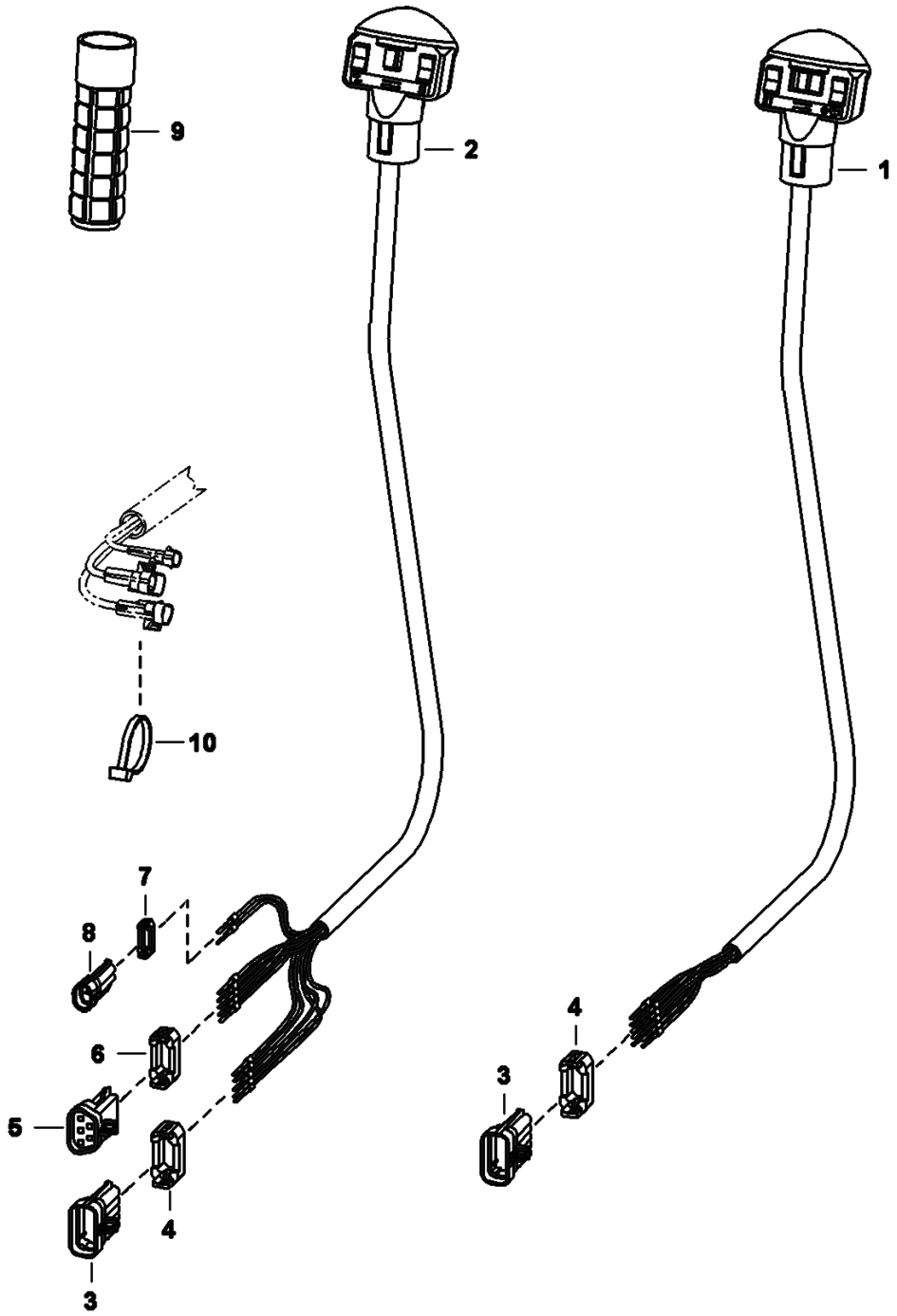

Page 150 - OSS# 2072104 - All rights reserved by Bobcat Company - 01/20/2010 - 17:21:58 - Produced by Ken Cook Co. with mediaioff

CONTROLS ELECTRICAL (Cont'd)
(Manual Controls)

Ref No	Part Number	Description	Remarks	Serial Number	Qty
1	6680418	HANDLE ASSY.	RH - Also Order Ref. 3 & 4		1
1	6640690	PIN			9
1	6641176	SEAL			9
2	6680419	HANDLE ASSY.	LH - Also Order Ref. 3-8		1
2	6640690	PIN			10
2	6641176	SEAL			10
2	6680447	DECAL			1
3	6640692	CONNECTOR	10-pin		2
4	6640694	LOCK	Use W/ 10-pin connector		2
5	6667144	CONNECTOR	5-pin		1
6	6667145	LOCK	Use W/ 5-pin connector		1
7	6641180	LOCK	Use W/ 2-pin connector		1
8	6641179	CONNECTOR	2-pin		2
9	6702621	GRIP			2
10	6624289	TIE STRAP			2

Page 151 - OSS# 2072104 - All rights reserved by Bobcat Company - 01/20/2010 - 17:21:58 - Produced by Ken Cook Co. with mediaioff

CONTROLS ELECTRICAL
(AHC)

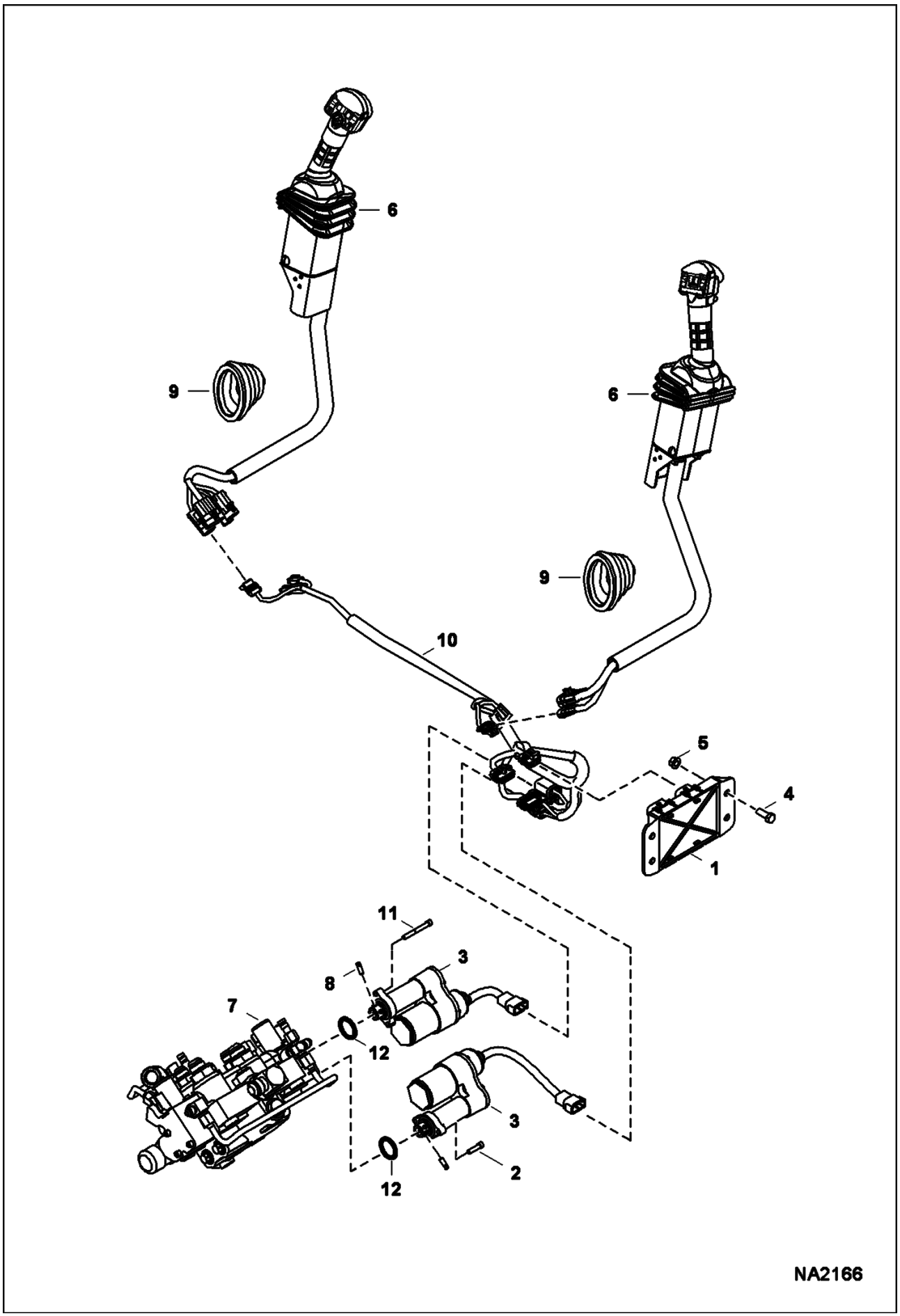

Page 152 - OSS# 2072104 - All rights reserved by Bobcat Company - 01/20/2010 - 17:21:58 - Produced by Ken Cook Co. with mediaioff

CONTROLS ELECTRICAL (Cont'd)
(AHC)

Ref No	Part Number	Description	Remarks	Serial Number	Qty
1	6680410	CONTROLLER			1
2	29G416	BOLT			2
3	7101672	ACTUATOR	W/Ref. 12		2
4	17C616	BOLT 5			2
5	95D6	NUT			2
6	7008319	LEVER, AHC	RH		1
6	7008318	LEVER, AHC	LH		1
7		VALVE	See Illustration CONTROL VALVE/ NA1217 - ACS, SJC		1
7		VALVE	See Illustration CONTROL VALVE/ NA1216 - manual		1
8	7108236	PIN			2
9	7147815	BOOT			2
10	7164144	HARNESS			1
11	69G436	BOLT			2
12	58K120	O-RING			2

Page 153 - OSS# 2072104 - All rights reserved by Bobcat Company - 01/20/2010 - 17:21:58 - Produced by Ken Cook Co. with mediaioff

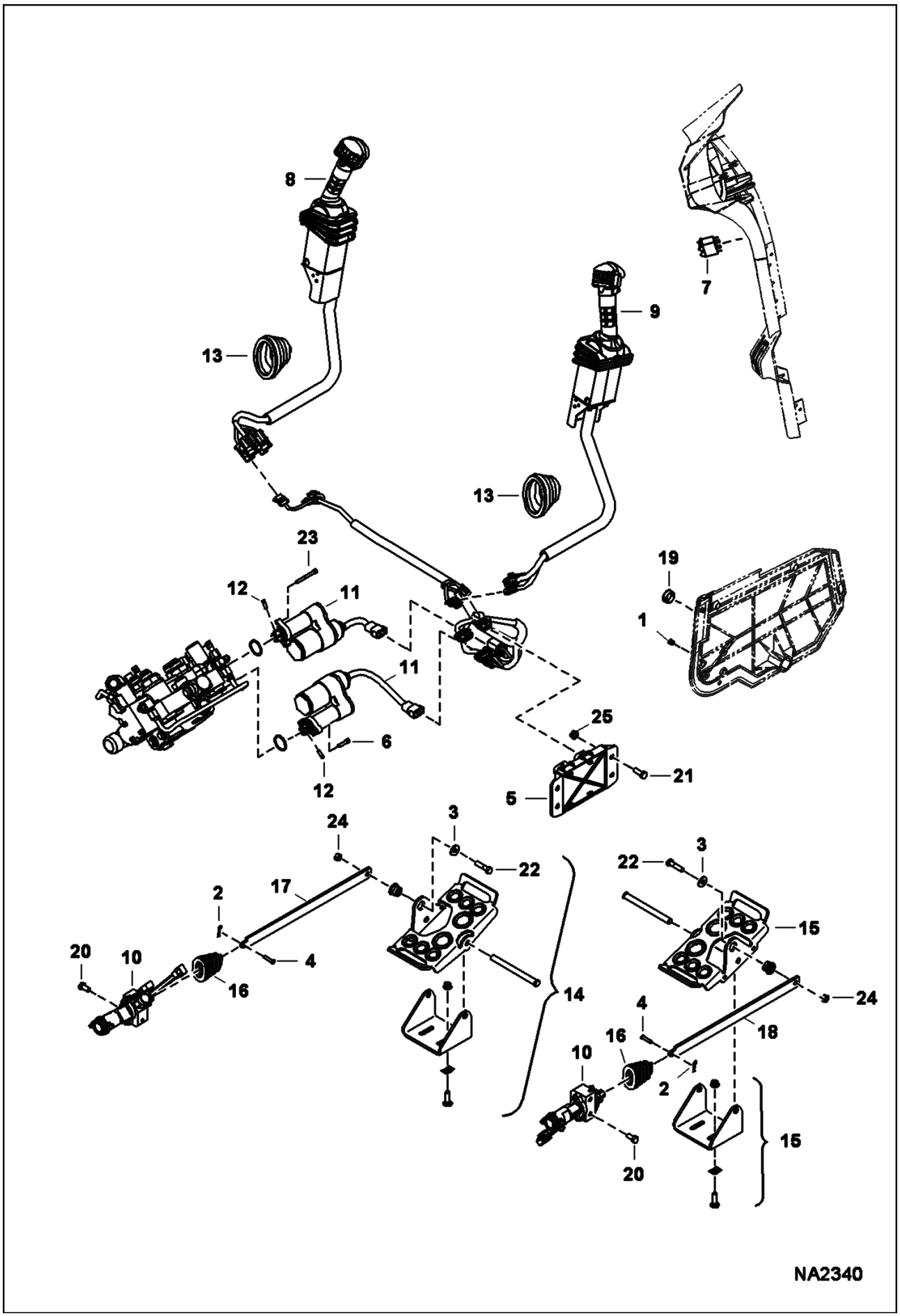

Page 154 - OSS# 2072104 - All rights reserved by Bobcat Company - 01/20/2010 - 17:21:58 - Produced by Ken Cook Co. with mediaioff

Ref No	Part Number	Description	Remarks	Serial Number	Qty
1	5289686	PLUG			2
2	6513495	COTTER PIN			2
3	6563914	WASHER			2
4	6564654	PIN			2
5	6680410	CONTROLLER			1
6	6814021	BOLT			2
7	7001713	SWITCH			1
8	7003494	LEVER, RH			1
9	7003495	LEVER, LH			1
10	7003496	SENSOR			2
11	7101672	ACTUATOR			2
12	7108236	PIN			2
13	7147815	BOOT			2
14		PEDAL ASSY	See Illustration CONTROL PEDALS/ NA1261 - LH		1
15		PEDAL ASSY	See Illustration CONTROL PEDALS/ NA1261 - RH		1
16	7153503	BOOT			2
17	7154903	LINK			2
18	7164144	HARNESS			1
19	7166315	PLUG			1
20	1C612	BOLT			4
21	1C616	BOLT			2
22	1C624	BOLT			2
23	69G436	BOLT			2
24	95D6	NUT			2
25	97D6	NUT 10			2

Page 155 - OSS# 2072104 - All rights reserved by Bobcat Company - 01/20/2010 - 17:21:58 - Produced by Ken Cook Co. with mediaioff

CONTROLS ELECTRICAL
(SJC)

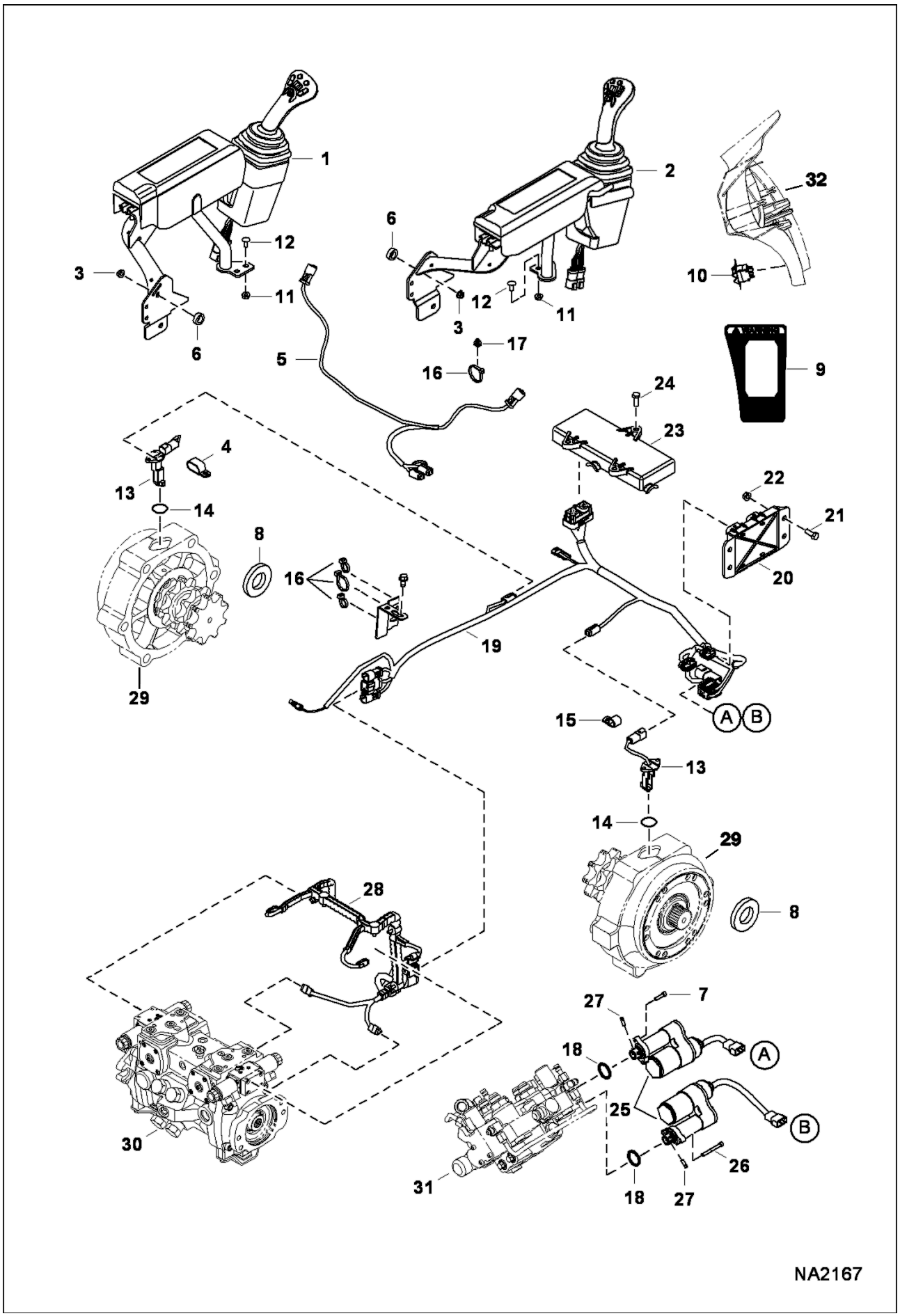

Page 156 - OSS# 2072104 - All rights reserved by Bobcat Company - 01/20/2010 - 17:21:58 - Produced by Ken Cook Co. with mediaioff

Ref No	Part Number	Description	Remarks	Serial Number	Qty
1		JOYSTICK, SJC	See Illustration CONTROLS ELECTRICAL/ NA2169 - LH		1
2		JOYSTICK, SJC	See Illustration CONTROLS ELECTRICAL/ NA2169 - RH		1
3	51DM8	NUT			2
4	31H38	CLAMP			1
5	7163706	HARNESS, JOYSTICK			1
6	7162176	SPACER			2
7	29G416	BOLT			2
8	6680055	MAGNET			2
9	7168114	DECAL, SWITCH			1
10	7001710	SWITCH, ISO			1
11	97D5	NUT			4
12	10C512	BOLT			4
13	6677181	SENSOR, SPEED WHEEL			2
14	25K20100	O RING 10			2
15	30H42	CLAMP			1
16	6690690	TIE			1
17	6690689	MOUNT, FIR TREE			4
18	58K120	O-RING			2
19	7159325	HARNESS, SJC			1
20	6680410	CONTROLLER			1
21	17C616	BOLT 5			2
22	97D6	NUT 10			2
23	6679485	CONTROLLER SJC			1
24	43C616	BOLT			3
25	7101672	ACTUATOR	W/Ref. 18		2
26	69G436	BOLT			2
27	7108236	PIN			2
28	7169309	HARNESS			1
29		CARRIER, MOTOR	See Illustration MOTOR CARRIER/ NA2154 - manual controls & ACS		1
29		CARRIER, MOTOR	See Illustration MOTOR CARRIER/ NA1007 - SJC		1
30		PUMP, HYD	See Illustration HYDROSTATIC PUMP/ NA2245		1
31		VALVE, CONTROL	See Illustration CONTROL VALVE/ NA1217		1
32		PANEL, RH	See Illustration CAB INTERIOR/ NA1161		1

Page 157 - OSS# 2072104 - All rights reserved by Bobcat Company - 01/20/2010 - 17:21:58 - Produced by Ken Cook Co. with mediaioff

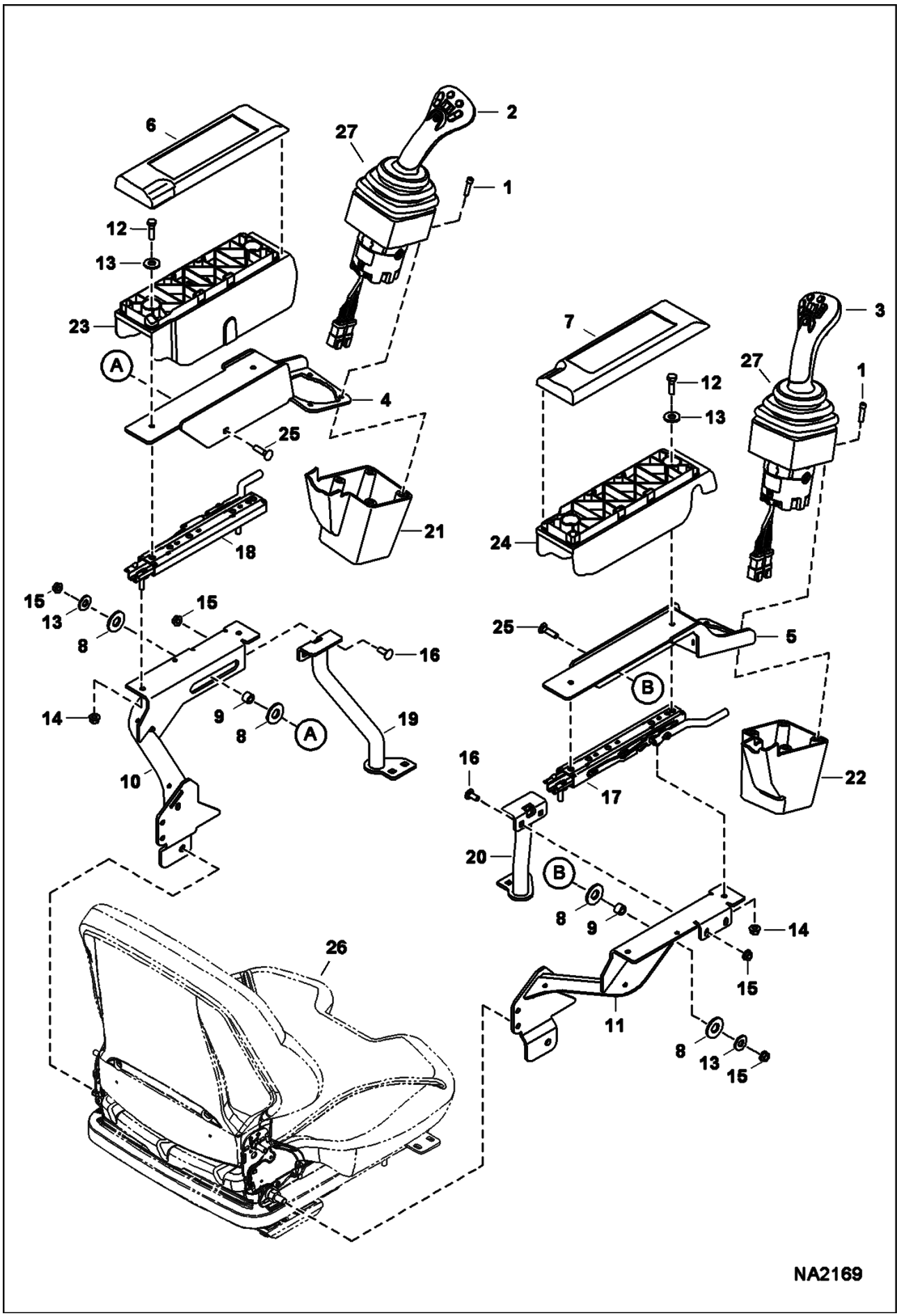

Page 158 - OSS# 2072104 - All rights reserved by Bobcat Company - 01/20/2010 - 17:21:58 - Produced by Ken Cook Co. with mediaioff

Ref No	Part Number	Description	Remarks	Serial Number	Qty
1	29G416	BOLT			4
2	7003628	JOYSTICK, SJC LH			1
3	7003629	JOYSTICK, SJC RH			1
4	7153506	MOUNT, CONTROLS LH			1
5	7156842	MOUNT, CONTROLS RH			1
6	7157704	COVER ARMREST LH			1
7	7157671	COVER ARMREST, RH			1
8	7165634	WASHER, PLASTIC			2
9	7165635	SPACER, SJC			1
10	7168863	MOUNT, ARMREST			1
11	7168862	MOUNT, ARMREST			1
12	1CM830	BOLT			2
13	25E18	WASHER			3
14	51DM8	NUT			2
15	97D5	NUT			1
16	10C512	BOLT			4
17	7162191	SLIDE RAIL, RH			1
18	7162190	SLIDE RAIL, LH			1
19	7168849	SUPPORT, TUBE LH			1
20	7168848	SUPPORT, TUBE RH			1
21	7146265	COVER, LH SJC			1
22	7146264	COVER, RH SJC			1
23	7157703	SHELL,ARMREST LH			1
24	7157670	SHELL, ARMREST RH			1
25	10C520	BOLT			1
26		SEAT	See Illustration SEAT & SEAT BELT/ NA1126 - std.		1
26		SEAT	See Illustration SEAT KIT/ NA2042 - suspension		1
27	7003698	BOOT, RUBBER			2

Page 159 - OSS# 2072104 - All rights reserved by Bobcat Company - 01/20/2010 - 17:21:58 - Produced by Ken Cook Co. with mediaioff

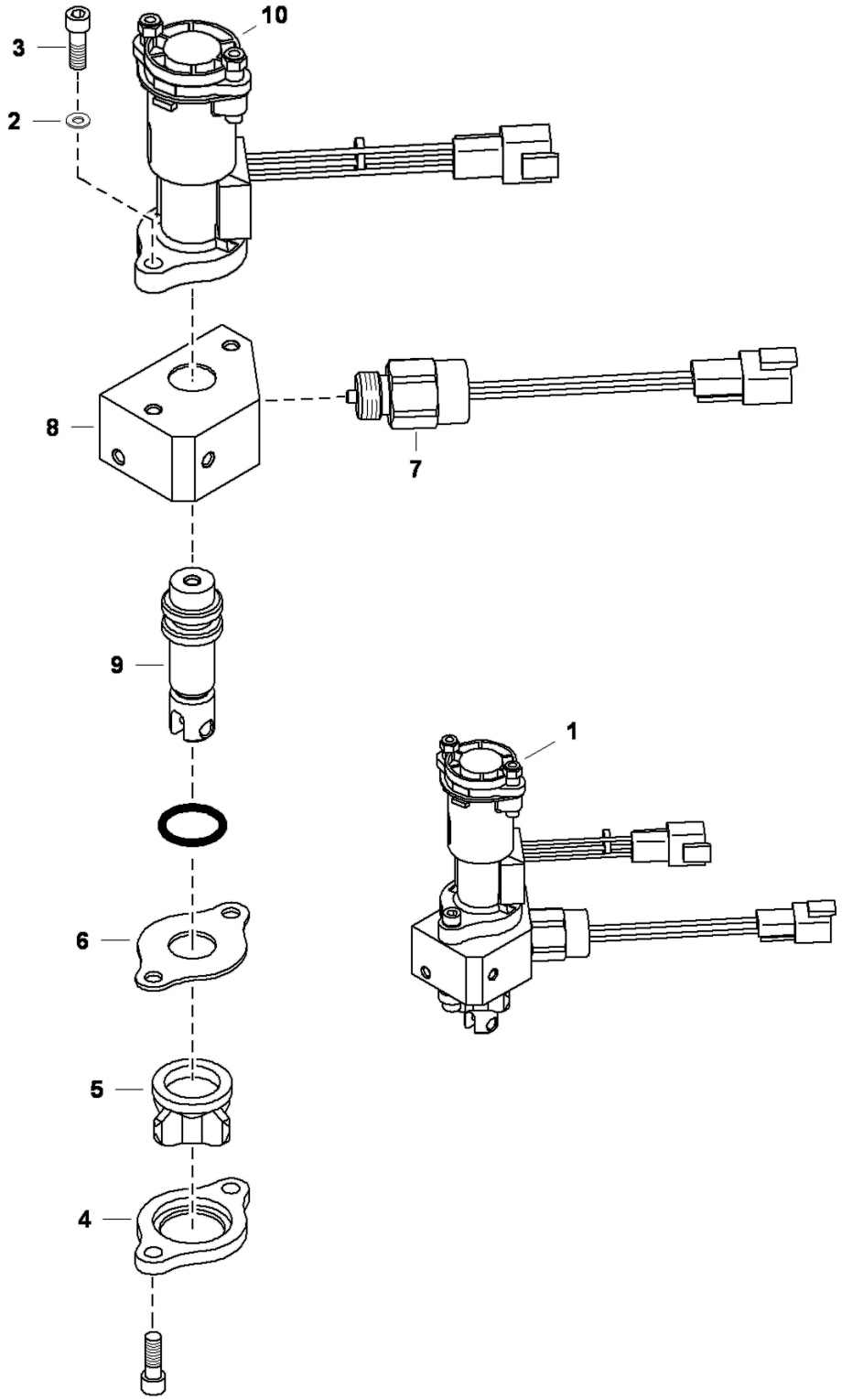

Page 160 - OSS# 2072104 - All rights reserved by Bobcat Company - 01/20/2010 - 17:21:58 - Produced by Ken Cook Co. with mediaioff

Ref No	Part Number	Description	Remarks	Serial Number	Qty
1	6684912	SENSOR, FOOT RH			1
1	6684911	SENSOR, FOOT LH			1
2	25E13	WASHER 5			2
3	98G412	BOLT			4
4		RETAINER	NAP - boot		1
5	6587763	BOOT			1
6		STOP PLATE	NAP		1
7	6676029	SOLENOID			1
8		BLOCK	NSS		1
9		SPOOL	NSS		1
10		SENSOR	NSS		1

Page 161 - OSS# 2072104 - All rights reserved by Bobcat Company - 01/20/2010 - 17:21:58 - Produced by Ken Cook Co. with mediaioff

ALTERNATOR

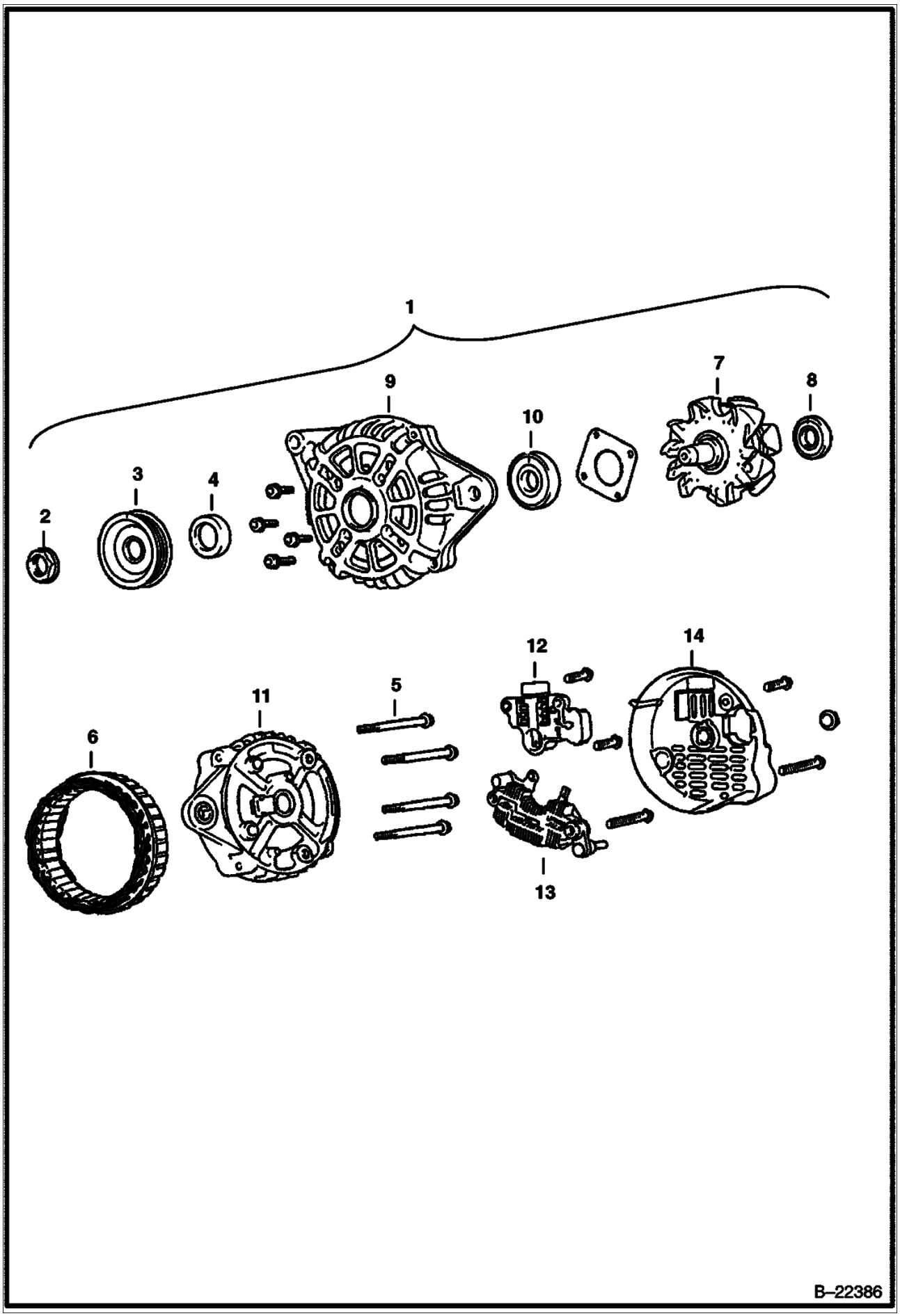

Page 162 - OSS# 2072104 - All rights reserved by Bobcat Company - 01/20/2010 - 17:21:58 - Produced by Ken Cook Co. with mediaioff

Ref No	Part Number	Description	Remarks	Serial Number	Qty
1	6681857	ALTERNATOR			1
2	6677497	NUT			1
3	6684653	PULLEY			1
4	6677495	SPACER			1
5	6677494	BOLT			4
6	6677493	STATOR			1
7	6677492	ROTOR			1
8	6684652	BEARING	rear		1
9	6677491	BRACKET			1
10	6684651	BEARING	front		1
11	6684650	REGULATOR			1
12	6677490	BRACKET	rear		1
13	6677488	RECTIFIER			1
14	6677487	COVER			1

Page 163 - OSS# 2072104 - All rights reserved by Bobcat Company - 01/20/2010 - 17:21:58 - Produced by Ken Cook Co. with mediaioff

STARTER
(Valeo)

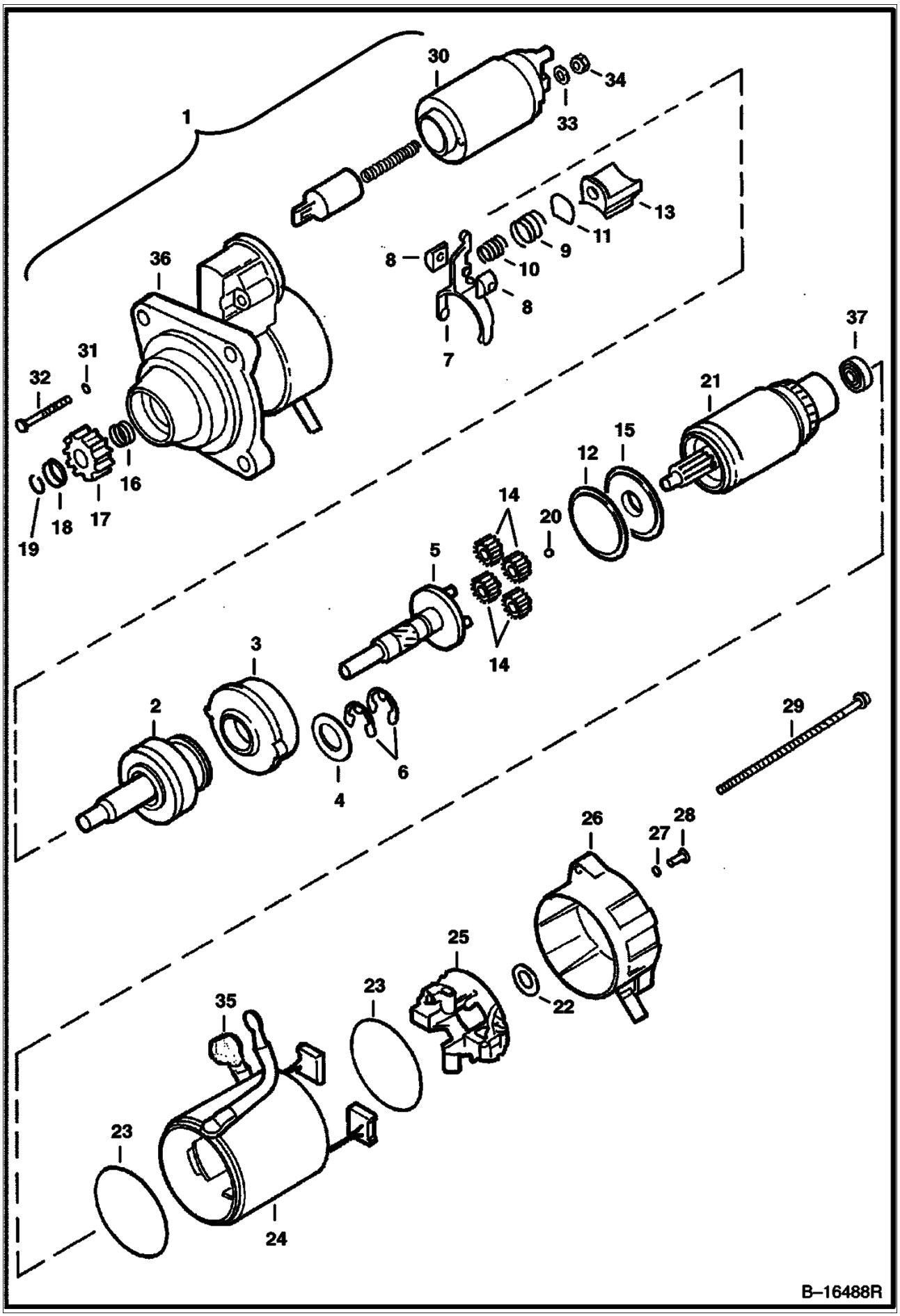

Page 164 - OSS# 2072104 - All rights reserved by Bobcat Company - 01/20/2010 - 17:21:58 - Produced by Ken Cook Co. with mediaioff

STARTER (Cont'd)
(Valeo)

Ref No	Part Number	Description	Remarks	Serial Number	Qty
1	6685190	STARTER			1
1	6685190REM	STARTER			1
2	6680375	SHAFT	ORC assy		1
3	6680367	GEAR			1
4	6680378	WASHER			1
5	6680365	SHAFT			1
6	6680368	STOP RING			2
7	6680364	LEVER			1
8	6680357	HOLDER			2
9	6680381	SPRING			1
10	6680382	SPRING			1
11	6680370	PLATE			1
12	6680369	SEAL			1
13	6680371	LEVER			1
14	6680366	GEAR			4
15	6680372	BRACKET			1
16	6680361	SPRING			1
17	6680390	GEAR			1
18	6680360	STOP			1
19	6680359	STOP RING			1
20	6680362	BALL			1
21	6680374	ARMATURE	W/Ref. 37		1
22	6680363	WASHER			1
23	6680380	SEAL			2
24	6680373	YOKE			1
25	6680377	HOLDER			1
26	6680389	BRACKET			1
27	6680358	RING	rubber		2
28	6680384	BOLT			2
29	6680356	BOLT			2
30	6680376	SWITCH			1
31	6680379	SEAL			2
32	6680383	BOLT			2
33	6EM80	WASHER, SPRING			1
34	4DM8	NUT			1
35	6680355	BOOT			1
36	6680388	BRACKET	includes ball bearing, drain tube, front bracket & oil seal		1
37		BEARING	NAP - Order Ref. 21		1

Page 165 - OSS# 2072104 - All rights reserved by Bobcat Company - 01/20/2010 - 17:21:58 - Produced by Ken Cook Co. with mediaioff

COOLING SYSTEM

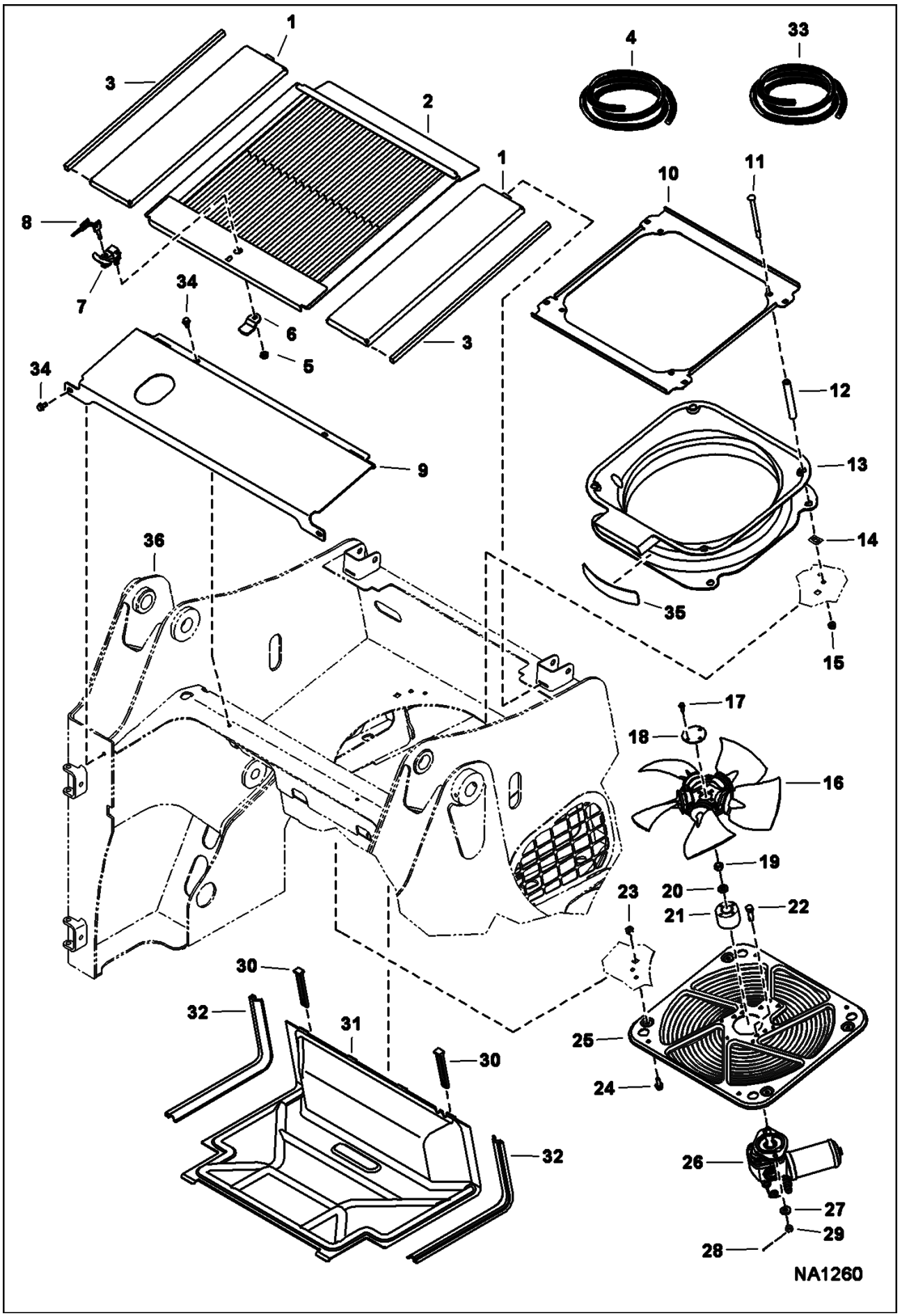

Page 166 - OSS# 2072104 - All rights reserved by Bobcat Company - 01/20/2010 - 17:21:58 - Produced by Ken Cook Co. with mediaioff

Ref No	Part Number	Description	Remarks	Serial Number	Qty
1	7157370	COVER, HOOD			2
2	7157366	SCREEN, ASSY			1
3		SEAL	NAP - Order 5 ft. of Ref. 4		2
4	6511855	SEAL	bulk - sold per foot		x
5	26DM12	NUT			1
6	7002737	LATCH, PAWL			1
7	7002736	LATCH, DRAW			1
8	6693241	KEY	single key W/O ring		1
9	7157365	COVER, ENGINE			1
10	7145139	MOUNT, RADIATOR			1
11	10C696	BOLT			4
12	7136113	BUSHING			4
13	7132835	SHROUD			1
14	6684033	NUT			4
15	97D6	NUT 10			4
16	7170673	FAN COOLING			1
17	49C412	BOLT			4
18	7125948	PLATE			1
19	96D8	NUT			1
20	6701097	WASHER			1
21	7130834	HUB, FAN			1
22	7147826	BOLT, CROSS DRILLED			2
23	6678785	NUT			4
24	31C616	SCREW			4
25	7132837	MOUNT, MOTOR FAN			1
26		MOTOR, HYD COOLING FAN	See Illustration COOLING FAN MOTOR/ MS2514		1
27	6557831	WASHER			2
28	1F316	PIN			2
29	3D6	NUT			2
30	7141906	STRAP, RUBBER			4
31	7132836	DUCT, FAN			1
32		SEAL	NAP - Order 4 ft. of Ref. 33		2
33	7169778	SEAL, BULK	bulk - sold per foot		x
34	84G3712	BOLT			4
35	7178176	SHIELD, HEAT			1
36		MAIN FRAME	See Illustration MAIN FRAME/ NA1000		1

Page 167 - OSS# 2072104 - All rights reserved by Bobcat Company - 01/20/2010 - 17:21:58 - Produced by Ken Cook Co. with mediaioff

COOLING SYSTEM
(Engine)

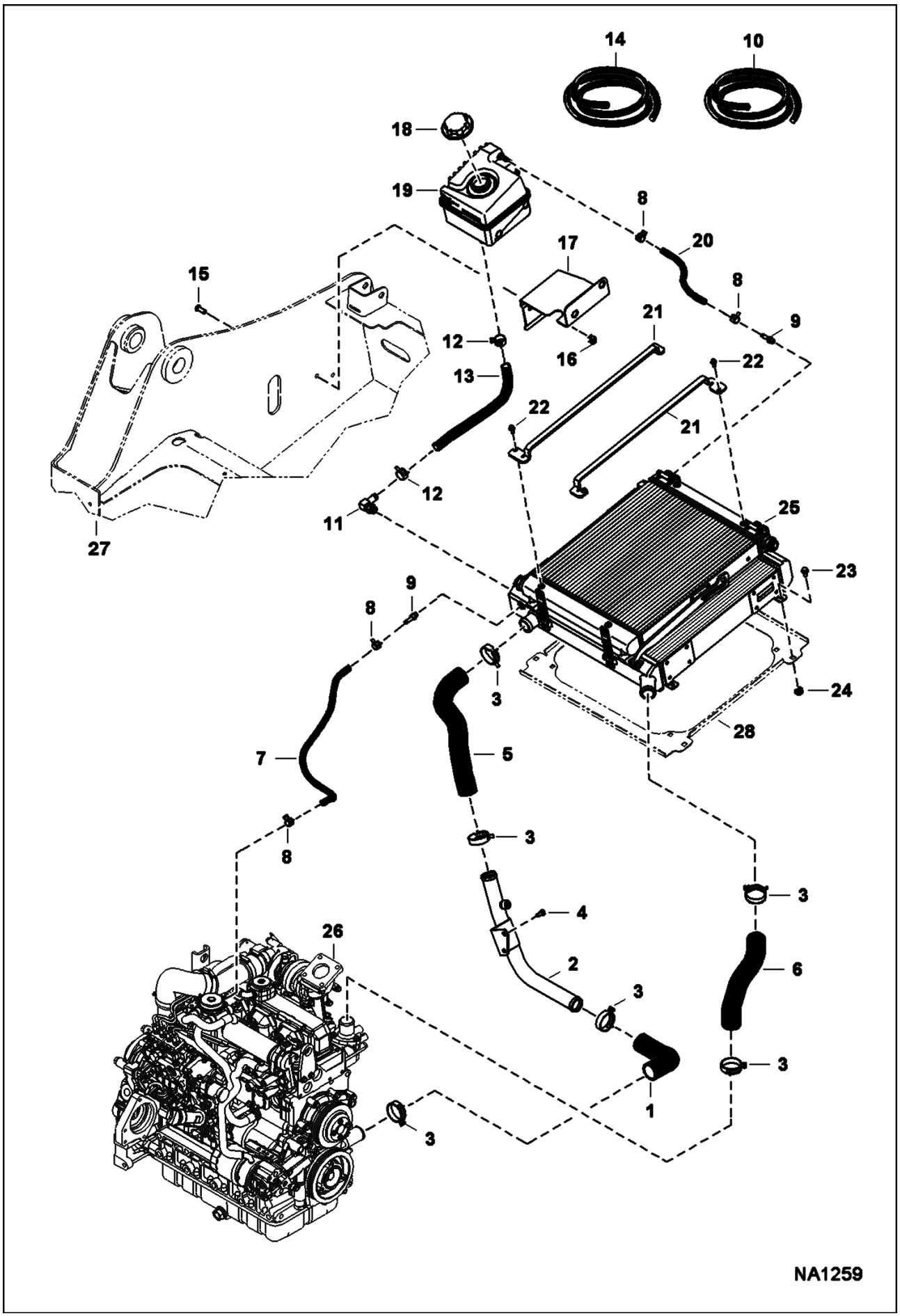

Page 168 - OSS# 2072104 - All rights reserved by Bobcat Company - 01/20/2010 - 17:21:58 - Produced by Ken Cook Co. with mediaioff

Ref No	Part Number	Description	Remarks	Serial Number	Qty
1	7143923	HOSE			1
2	7143924	TUBE			1
3	5HM47	CLAMP			6
4	7160865	SCREW			2
5	7143922	HOSE			1
6	7143921	HOSE			1
7		HOSE	NAP - Order 2 ft. of Ref. 10		1
8	5HM14	CLAMP			4
9	6734090	ADAPTER			2
10	6577822	HOSE	bulk - sold per foot		x
11	6680952	FITTING 90 DEG BARB			1
12	5HM23	CLAMP			2
13		HOSE	NAP - Order 2 ft. of Ref. 14		1
14	6578172	HOSE	bulk - sold per foot		x
15	25G514	BOLT			2
16	6678765	NUT			2
17	7144265	MOUNT, TANK			1
18	6733429	CAP			1
19	7137747	TANK, EXPANSION			1
20		HOSE	NAP - Order 1 ft. of Ref. 10		1
21	7167537	GUARD, CONDENSER			2
22	31C410	BOLT			4
23	45C516	SCREW			4
24	6678765	NUT			4
25		EXCHANGER, OIL WATER	See Illustration RADIATOR/COOLER ASSEMBLY/ NA1395		1
26		ENGINE	See Illustration ENGINE & UPPER GASKET KIT/ B27844		1
27		MAIN FRAME	See Illustration COOLING SYSTEM/ NA1260		1
28		MOUNT, RADIATOR	See Illustration COOLING SYSTEM/ NA1260		1

Page 169 - OSS# 2072104 - All rights reserved by Bobcat Company - 01/20/2010 - 17:21:58 - Produced by Ken Cook Co. with mediaioff

ENGINE & ATTACHING PARTS
(Air Cleaner & Muffler)

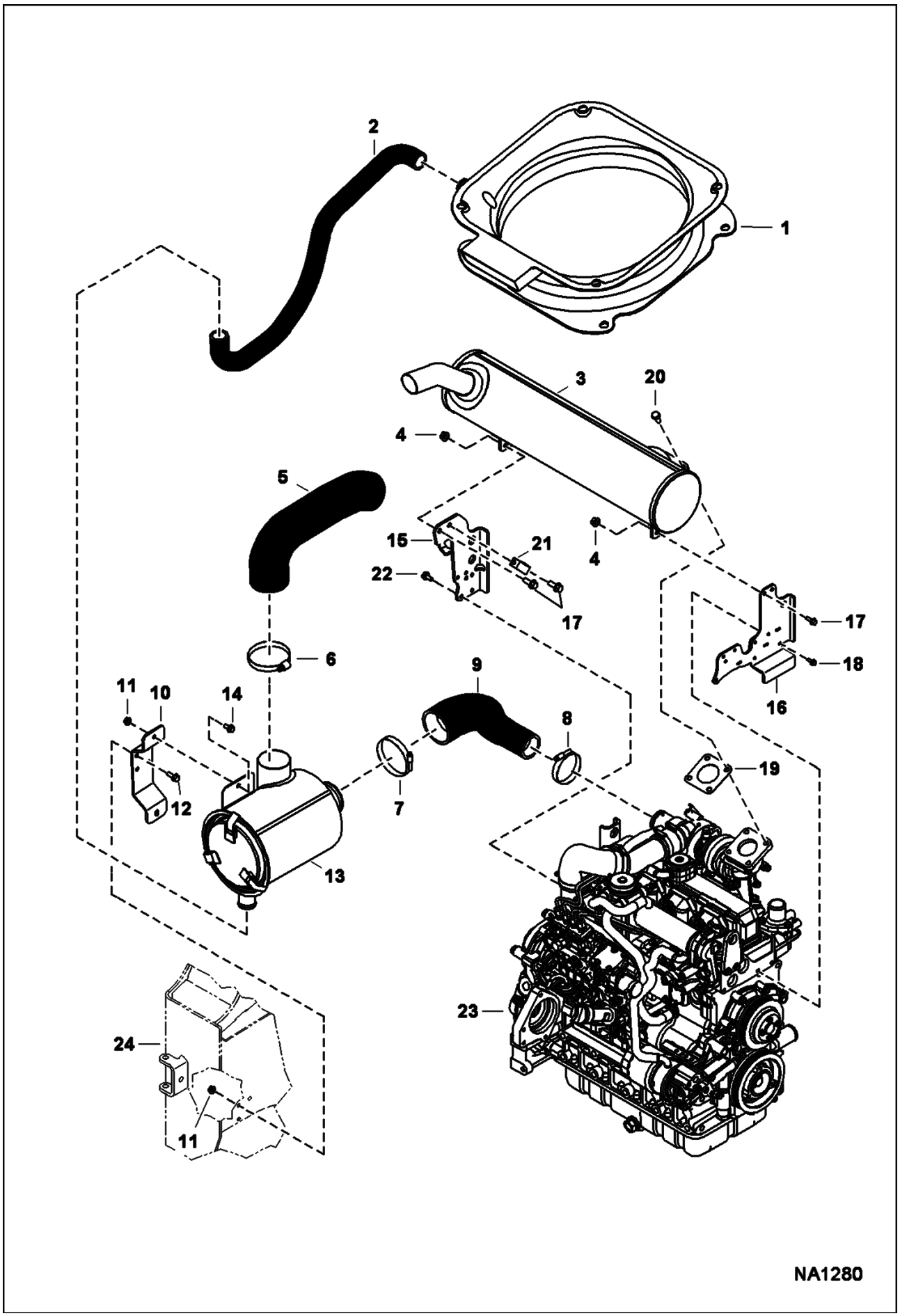

Page 170 - OSS# 2072104 - All rights reserved by Bobcat Company - 01/20/2010 - 17:21:58 - Produced by Ken Cook Co. with mediaIoff

ENGINE & ATTACHING PARTS (Cont'd)
(Air Cleaner & Muffler)

Ref No	Part Number	Description	Remarks	Serial Number	Qty
1	7132835	SHROUD			1
2	7157923	HOSE, AIR FORMED			1
3	7142021	MUFFLER			1
4	89D6	NUT			5
5	7145659	HOSE, AIR FORMED			1
6	42H52	CLAMP			1
7	42HC375	CLAMP			1
8	42HC300	CLAMP			1
9	7145660	HOSE, AIR FORMED			1
10	7157092	BRACKET			1
11	97D6	NUT 10			6
12	84G3712	BOLT			3
13		FILTER, AIR CLEANER ASSY	See Illustration AIR CLEANER/ NA2170		1
14	35C612	BOLT			3
15	7161893	MOUNT, MUFFLER			1
16	7155193	MOUNT, MUFFLER			1
17	35C616	BOLT 5			4
18	59CM820	SCREW HX FLNG W/T 8.8			4
19	7102747	GASKET			1
20	5CM1020	SCREW			4
21	30HJ612	CLAMP			1
22	59CM816	BOLT			1
23		ENGINE	See Illustration ENGINE & UPPER GASKET KIT/ B27844		1
24		MAIN FRAME	See Illustration MAIN FRAME/ NA1000		1

Page 171 - OSS# 2072104 - All rights reserved by Bobcat Company - 01/20/2010 - 17:21:58 - Produced by Ken Cook Co. with mediaioff

ENGINE & ATTACHING PARTS
(Belt Drive)

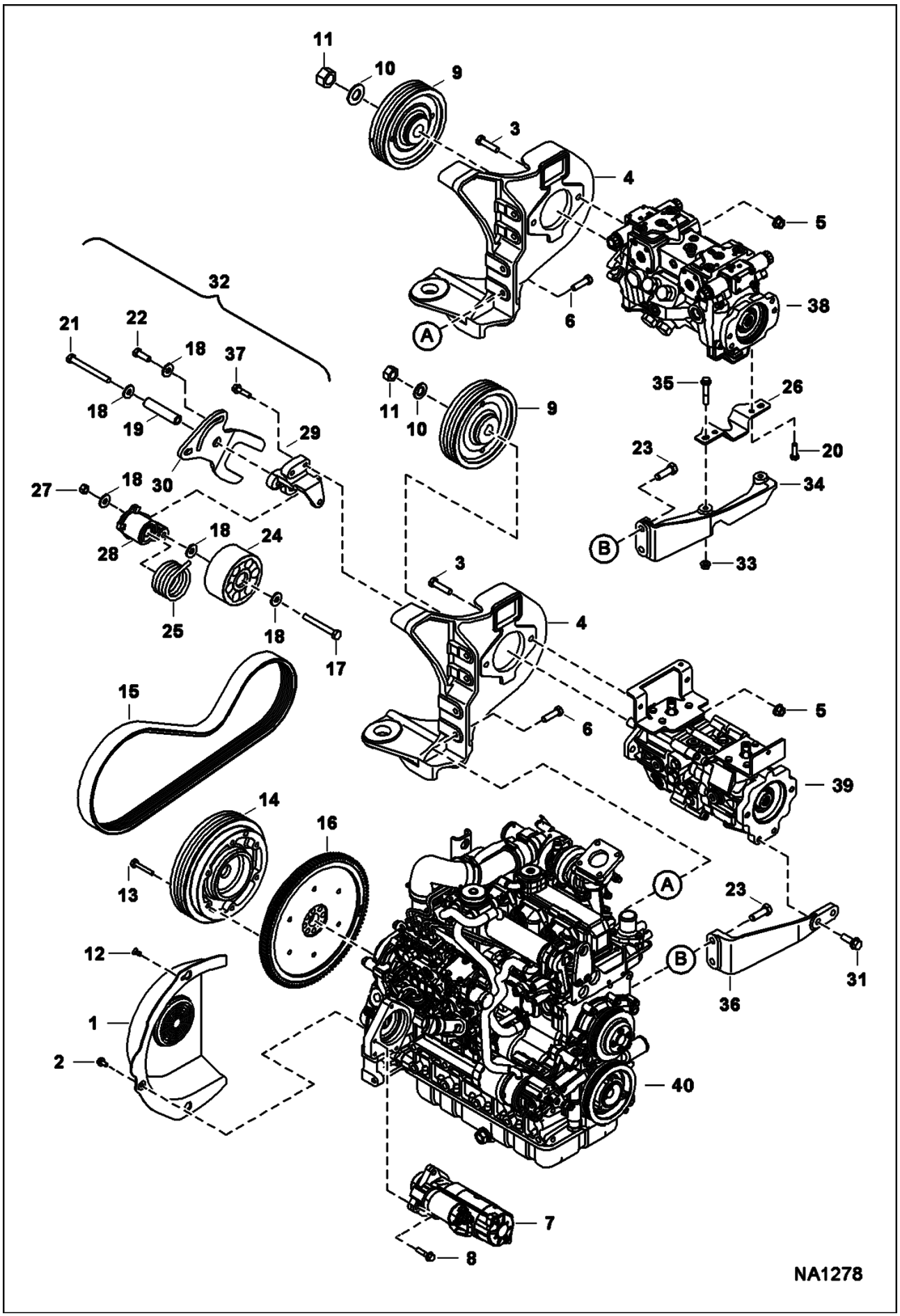

Page 172 - OSS# 2072104 - All rights reserved by Bobcat Company - 01/20/2010 - 17:21:58 - Produced by Ken Cook Co. with mediaIoff

Ref No	Part Number	Description	Remarks	Serial Number	Qty
1	7142422	SHIELD, FLYWHEEL			1
2	59CM816	BOLT			5
3	17C832	BOLT			2
4	7147861	MOUNT, ENG			1
5	83D8	NUT 5			3
6	7135124	SCREW			4
7		STARTER	See Illustration STARTER/ B16488R		1
8	45C620	BOLT			3
9	7147858	PULLEY, PUMP HYD			1
10	6576033	WASHER			1
11	96D12	NUT			1
12	7155238	BOLT			2
13	7110310	SCREW			6
14	7141780	FLYWHEEL			1
15	7147859	BELT, DRIVE			1
16		FLYWHEEL, ENG ASSY	See Illustration CRANKCASE/ B27826		1
17	7CM12100	BOLT			1
18	7152658	WASHER			5
19	7152605	SLEEVE			1
20	6688003	SCREW			2
21	55CM12120	BOLT			1
22	55CM1235	BOLT			1
23	7147745	SCREW			2
24	7167165	WHEEL, TENSIONER			1
25	7145358	SPRING			1
26	7131322	COVER			1
27	53DM12	NUT			1
28	7167164	ARM, TENSIONER			1
29	7131211	MOUNT			1
30	7174407	ARM, IDLER			1
31	49C824	SCREW			2
32	7141788	IDLER ASSY			1
33	43DM10	NUT			2
34	7142103	MOUNT, PUMP	SJC		1
35	59CM1060	SCREW			2
36	7142189	MOUNT			1
37	47C624	SCREW			2
38		PUMP, HYD	See Illustration HYDROSTATIC PUMP/ NA2245 - SJC		1
39		ENGINE	See Illustration ENGINE & UPPER GASKET KIT/ B27844		1
40		PUMP, HYD	See Illustration HYDROSTATIC PUMP/GEAR PUMP/ NA1309		1

Page 173 - OSS# 2072104 - All rights reserved by Bobcat Company - 01/20/2010 - 17:21:58 - Produced by Ken Cook Co. with mediaioff

ENGINE & ATTACHING PARTS
(Engine Mounts)

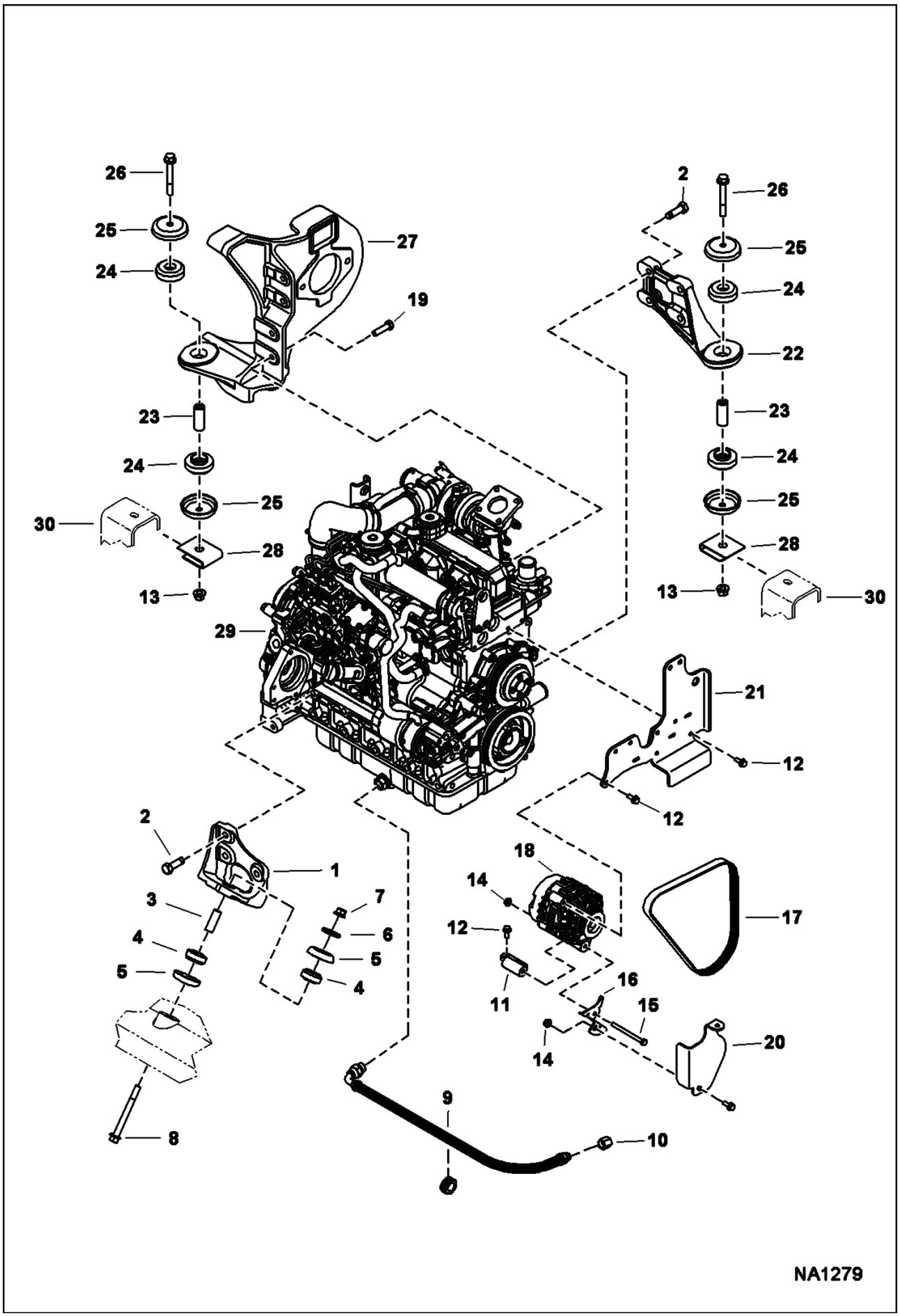

Page 174 - OSS# 2072104 - All rights reserved by Bobcat Company - 01/20/2010 - 17:21:58 - Produced by Ken Cook Co. with mediaioff

Ref No	Part Number	Description	Remarks	Serial Number	Qty
1	7142357	MOUNT, ENG			1
2	7147745	SCREW			7
3	7146236	BUSHING			1
4	7000488	DAMPER			2
5	7127305	WASHER			2
6	6515817	WASHER			1
7	83D8	NUT 5			1
8	31C880	SCREW			1
9	7136111	HOSE, DRAIN OIL			1
10	36K6	CAP			1
11	7142375	MOUNT			1
12	59CM820	SCREW HX FLNG W/T 8.8			8
13		NUT	NSS - Order Ref. 32		2
14	43DM8	NUT			6
15	1CM8100	SCREW			1
16	7164957	MOUNT			1
17	7142000	BELT, ALT			1
18		ALTERNATOR	See Illustration ALTERNATOR/ B22386		1
19	7135124	SCREW			4
20	7165035	SHIELD			1
21	7155193	MOUNT, MUFFLER			1
22	7135486	MOUNT, ENG			1
23	7141405	BUSHING			2
24	7000489	DAMPER			4
25	7116851	CUP			4
26	31C860	BOLT			2
27	7147861	MOUNT, ENG			1
28	7152037	NUT, RETAINING	W/Ref. 13		2
29		ENGINE	See Illustration ENGINE & UPPER GASKET KIT/ B27844		1
30		MAIN FRAME	See Illustration MAIN FRAME/ NA1000		1

Page 175 - OSS# 2072104 - All rights reserved by Bobcat Company - 01/20/2010 - 17:21:58 - Produced by Ken Cook Co. with mediaioff

ENGINE & ATTACHING PARTS
(Fuel System)

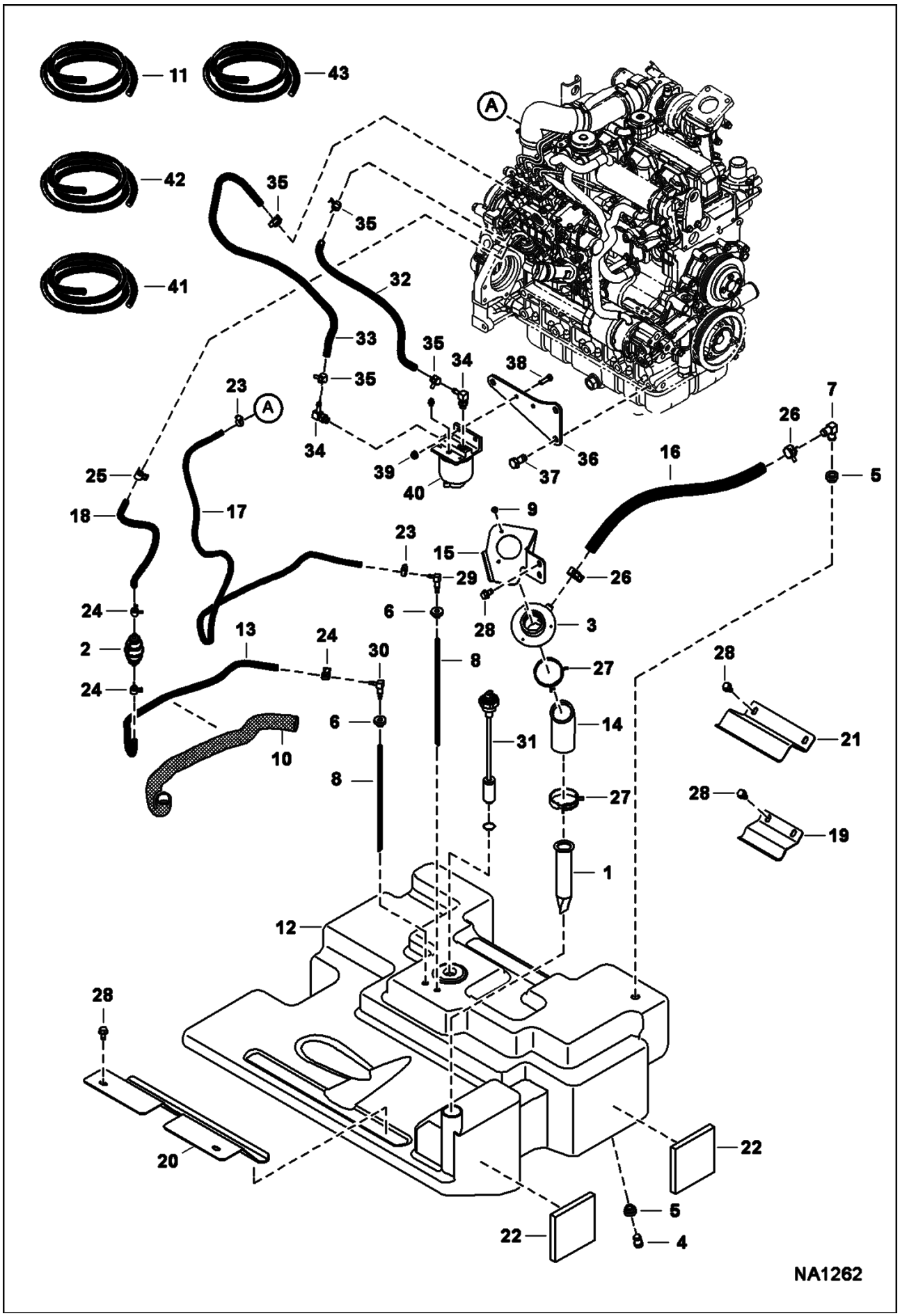

Page 176 - OSS# 2072104 - All rights reserved by Bobcat Company - 01/20/2010 - 17:21:58 - Produced by Ken Cook Co. with mediaIoff

Ref No	Part Number	Description	Remarks	Serial Number	Qty
1	6569219	SCREEN			1
2	6657734	PUMP			1
3	6701449	FILLER TUBE			1
4	6717401	PLUG			1
5	6717402	BUSHING			2
6	6735696	BUSHING			2
7	6808798	ELBOW			1
8	6735249	HOSE, FUEL			2
9	7106279	BOLT			3
10	7178623	COVER, HOSE			1
11	6577822	HOSE	bulk - sold per foot		x
12	7130652	TANK, FUEL			1
13		HOSE, FUEL	NAP - 25.25" (641.35 mm) long - Order Ref. 41		1
14	7176970	HOSE, FUEL FORMED			1
15	7176971	BRACKET, FUEL			1
16		HOSE, FUEL	NAP - 29.5" (749.3 mm) - Order Ref. 42		1
17		HOSE, FUEL	NAP - 48.5" (1,231.9 mm) - Order Ref. 43		1
18		HOSE, FUEL	NAP - 14.5" (368.3 mm) - Order Ref. 41		1
19	7163765	BRACKET, FUEL	used on wheel loaders only		1
20	7163766	BRACKET, FUEL			1
21	7163768	BRACKET, FUEL	used on track loaders only		1
22	7170635	INSULATION, TANK FUEL			2
23	42HS04	COLLAR			2
24	5HM13	CLAMP			3
25	5HM14	CLAMP			1
26	5HM22	CLAMP			2
27	5HM58	CLAMP			2
28	84G3712	BOLT			6
29	7101291	ELBOW			1
30	6598908	ELBOW			1
31	6680438	SENSOR, FUEL			1
32		HOSE, FUEL	NAP - 19.5" (495.3 mm) - Order Ref. 44		1
33		HOSE, FUEL	NAP - 27.5" (698.5 mm) - Order Ref. 44		1
34	6715183	ELBOW			2
35	5HM14	CLAMP			4
36	7143931	MOUNT, FILTER			1
37	6730894	BOLT			2
38	43C516	BOLT			2
39	55D5	NUT			2
40	6667353	FILTER ASSY			1
40	6658180	PLUG	bleed		1
41	6577821	HOSE	bulk - sold per foot		x
42	6578172	HOSE	bulk - sold per foot		x
43	6578169	HOSE	bulk - sold per foot		x
44	6624289	TIE STRAP			2

Page 177 - OSS# 2072104 - All rights reserved by Bobcat Company - 01/20/2010 - 17:21:58 - Produced by Ken Cook Co. with mediaioff

ENGINE SPEED CONTROL

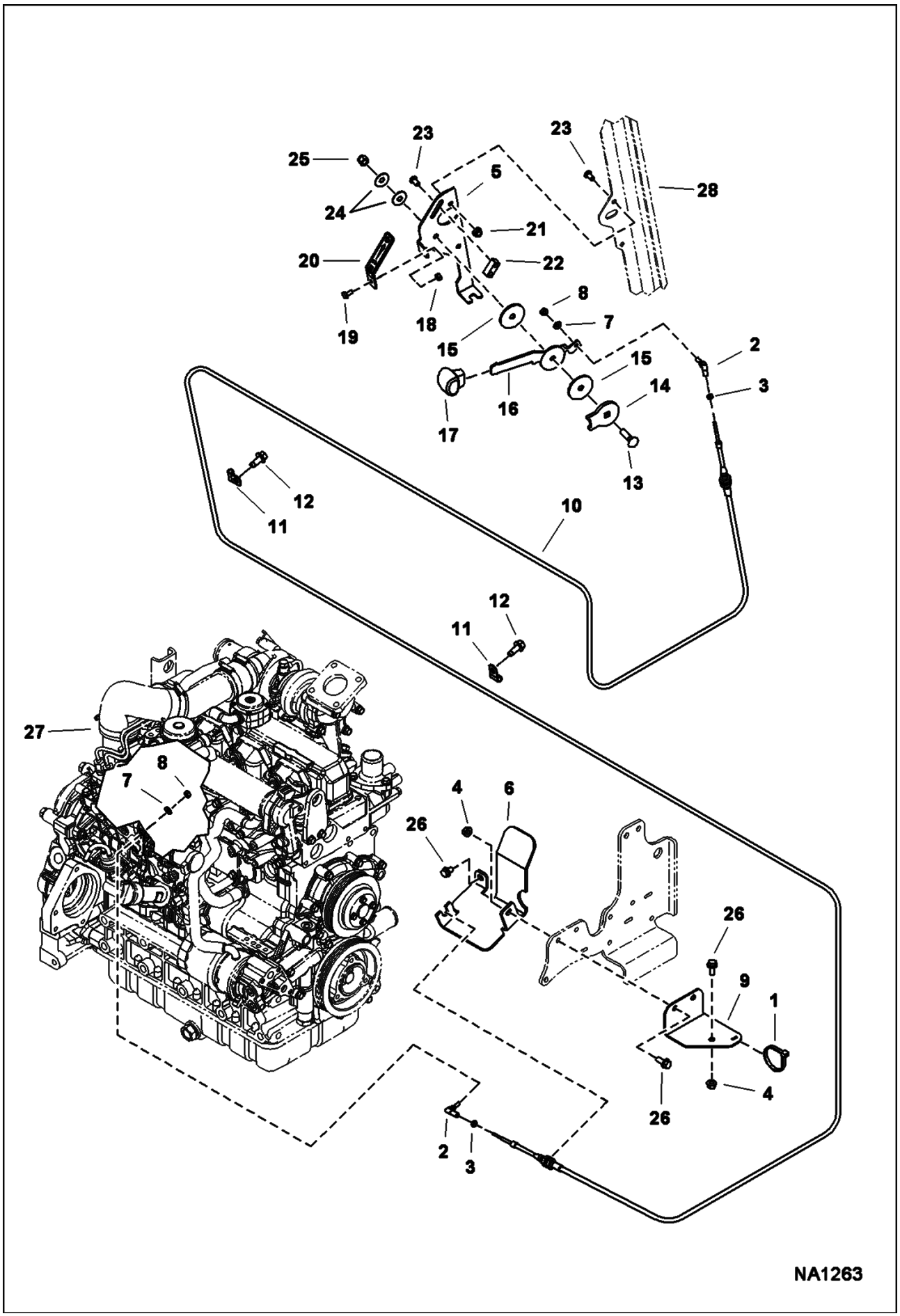

Page 178 - OSS# 2072104 - All rights reserved by Bobcat Company - 01/20/2010 - 17:21:58 - Produced by Ken Cook Co. with mediaioff

Ref No	Part Number	Description	Remarks	Serial Number	Qty
1	6624289	TIE STRAP			1
2	6644965	BALL JOINT			2
3	14D10	NUT			2
4	43DM8	NUT			3
5	7166171	BRACKET			1
6	7174813	BRACKET, CABLE			1
7	25E11	WASHER			1
8	62D4	NUT			4
9	7174914	BRACKET,THROTTLE			1
10	7174815	CABLE			1
11	30H20	CLIP			2
12	84G3712	BOLT			2
13	37C624	BOLT			1
14	7166269	WASHER			1
15	7159386	WASHER			2
16	7166172	HANDLE			1
17	7166173	HANDLE			1
18	61D4	NUT 5			1
19	17C408	BOLT			1
20	7169911	PLATE, DECAL			1
21	55D5	NUT			2
22	7166174	BLOCK			1
23	25G510	BOLT			4
24	6630038	WASHER			2
25	59D6	NUT			1
26	59CM820	SCREW HX FLNG W/T 8.8			3
27		ENGINE	See Illustration ENGINE & UPPER GASKET KIT/ B27844		1
28		CAB	See Illustration OPERATOR CAB/ NA1122		1

Page 179 - OSS# 2072104 - All rights reserved by Bobcat Company - 01/20/2010 - 17:21:58 - Produced by Ken Cook Co. with mediaioff

ENGINE SPEED CONTROL
(SJC)

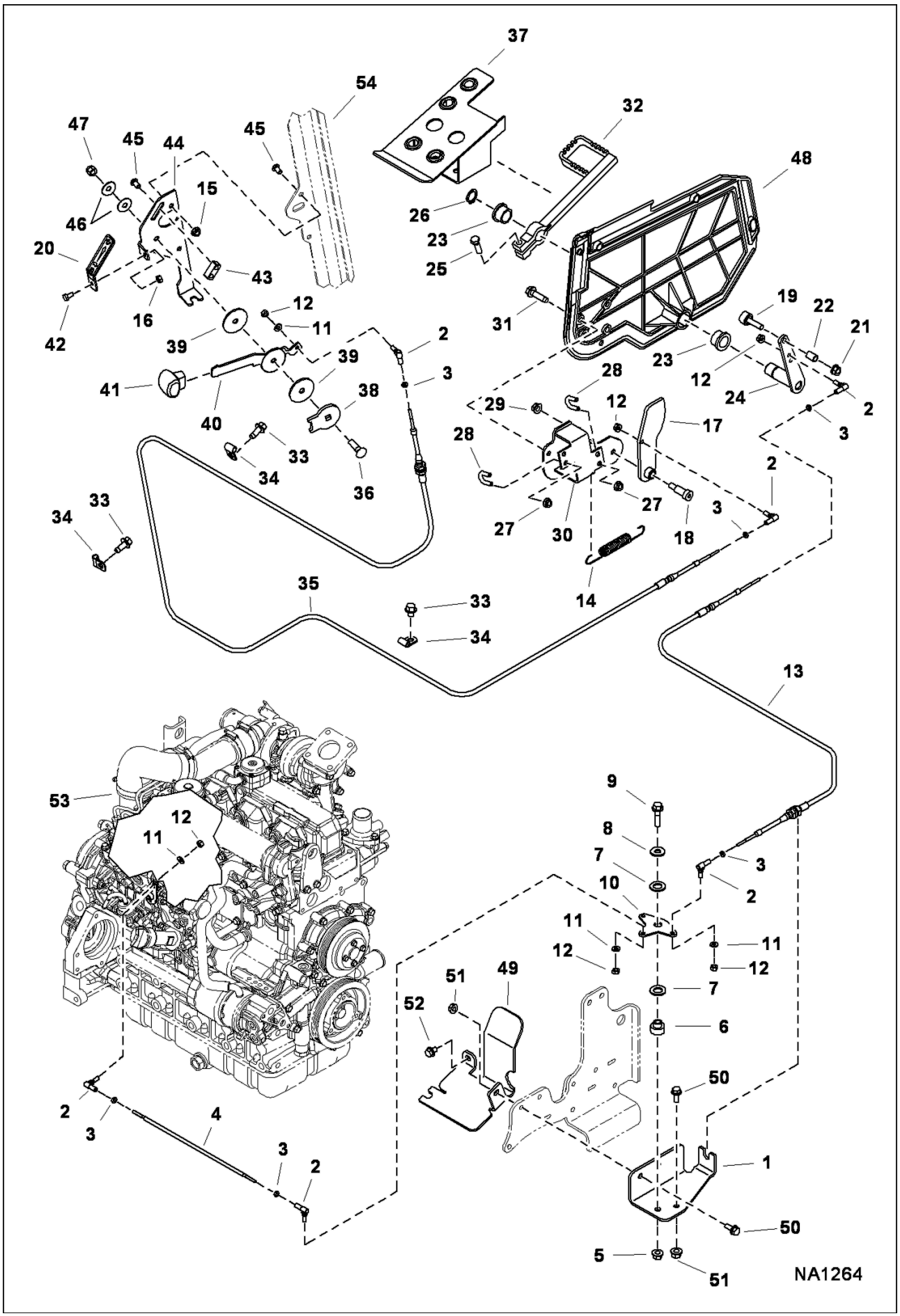

Page 180 - OSS# 2072104 - All rights reserved by Bobcat Company - 01/20/2010 - 17:21:58 - Produced by Ken Cook Co. with mediaioff

ENGINE SPEED CONTROL (Cont'd)
(SJC)

Ref No	Part Number	Description	Remarks	Serial Number	Qty
1	7180954	MOUNT, THROTTLE			1
2	6644965	BALL JOINT			6
3	14D10	NUT			6
4	7168962	ROD			1
5	89D6	NUT			1
6	7157731	TUBE SPACER			1
7	25E18	WASHER			2
8	6700170	WASHER			1
9	49C624	SCREW			1
10	7157729	BELLCRANK			1
11	25E11	WASHER			4
12	62D4	NUT			6
13	7158988	CABLE, THROTTLE			1
14	7168921	SPRING			1
15	55D5	NUT			2
16	61D4	NUT 5			1
17	7170374	CAM, WELDMENT			1
18	38C816	BOLT			1
19	6737692	BEARING			1
20	7169911	PLATE, DECAL			1
21	98D6	NUT			1
22	6737693	SPACER			1
23	7159624	BUSHING			2
24	7167173	PIVOT ASSY			1
25	17C620	BOLT			1
26	6534668	SNAP RING			1
27	57D5	NUT			4
28	6592766	U-BOLT			2
29	57D6	NUT 5			1
30	7167169	MOUNT			1
31	84G3716	SCREW 5			2
32	7164294	PEDAL, FOOT THROTTLE			1
33	31C612	BOLT			3
34	30H20	CLIP			3
35	7166623	CABLE			1
36	37C624	BOLT			1
37	7157725	PEDAL ASSY			1
38	7166269	WASHER			1
39	7159386	WASHER			2
40	7166172	HANDLE			1
41	7166173	HANDLE			1
42	17C408	BOLT			1
43	7166174	BLOCK			1
44	7166171	BRACKET			1
45	25G510	BOLT			4
46	6630038	WASHER			2
47	59D6	NUT			1
48	7156919	PANEL, RH			1
49	7174814	BRACKET, CABLE			1
50	59CM820	SCREW HX FLNG W/T 8.8			3
51	43DM8	NUT			3

Page 181 - OSS# 2072104 - All rights reserved by Bobcat Company - 01/20/2010 - 17:21:58 - Produced by Ken Cook Co. with mediaioff

ENGINE SPEED CONTROL (Cont'd)
(SJC)

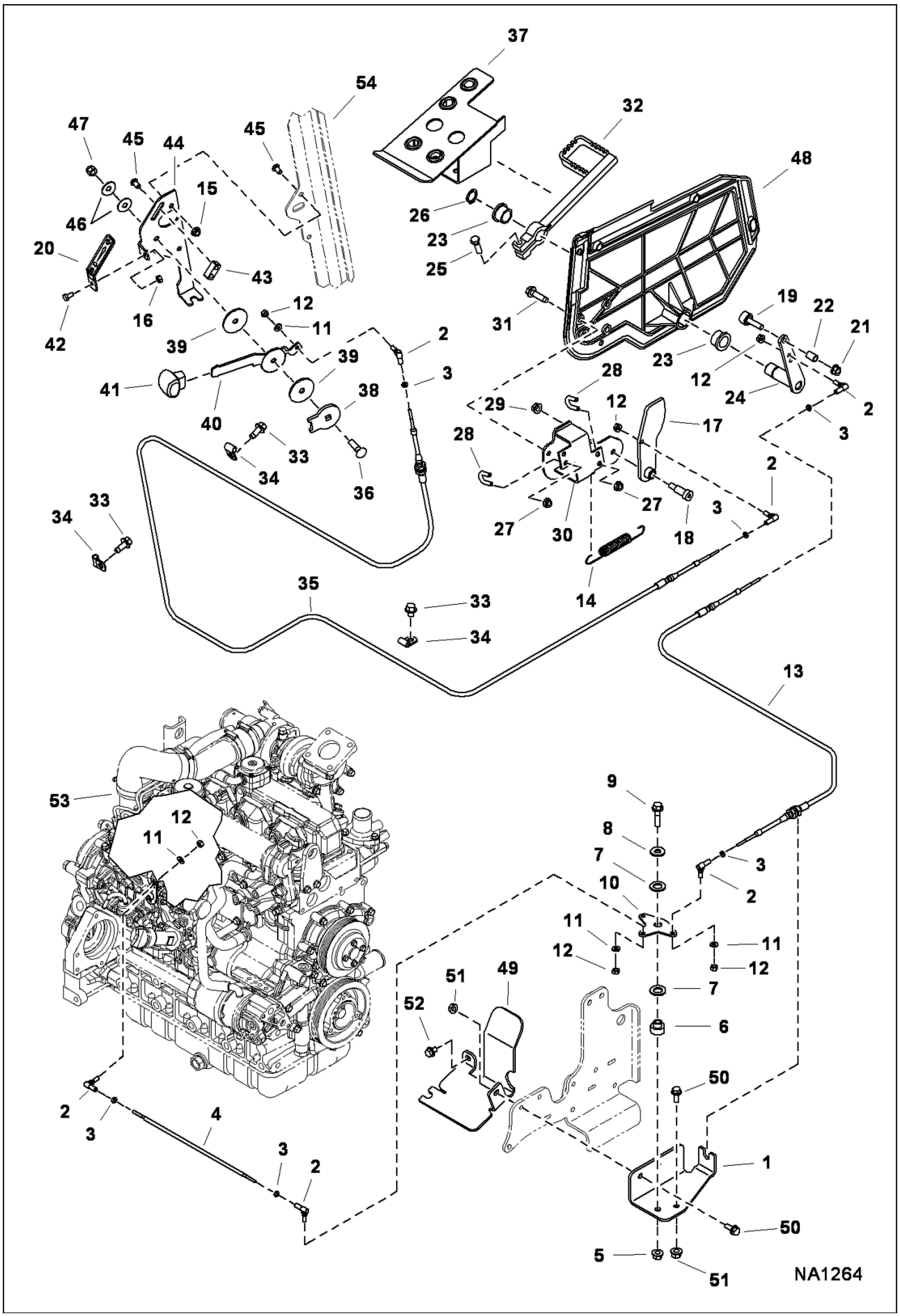

Page 182 - OSS# 2072104 - All rights reserved by Bobcat Company - 01/20/2010 - 17:21:58 - Produced by Ken Cook Co. with mediaioff

Ref No	Part Number	Description	Remarks	Serial Number	Qty
52	59CM812	SCREW HX FLNG W/T8.8			1
53		ENGINE	See Illustration ENGINE & UPPER GASKET KIT/ B27844		1
54		CAB	See Illustration OPERATOR CAB/ NA1122		1

Page 183 - OSS# 2072104 - All rights reserved by Bobcat Company - 01/20/2010 - 17:21:58 - Produced by Ken Cook Co. with mediaioff

ENGINE & UPPER GASKET KIT

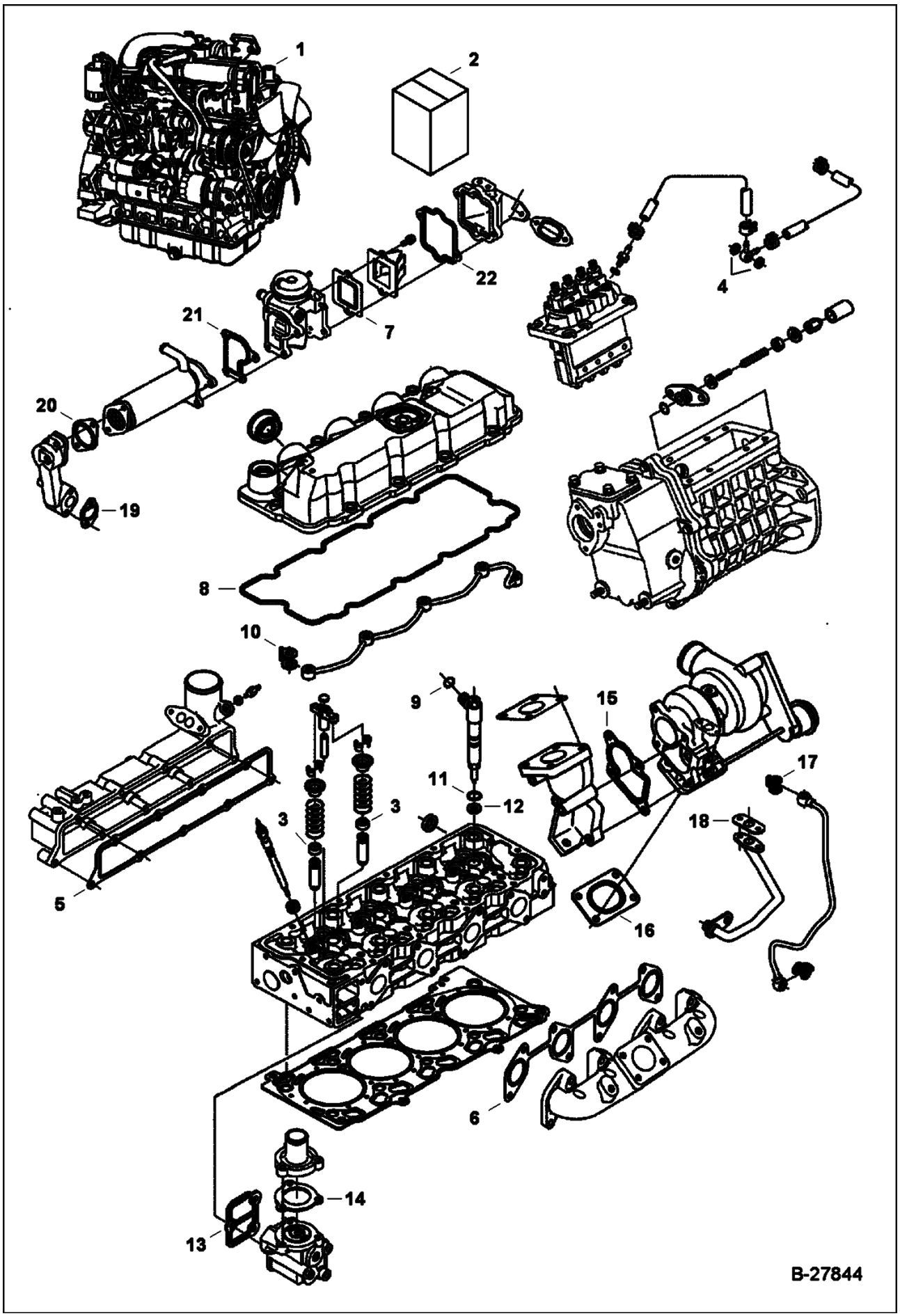

Page 184 - OSS# 2072104 - All rights reserved by Bobcat Company - 01/20/2010 - 17:21:58 - Produced by Ken Cook Co. with mediaioff

ENGINE & UPPER GASKET KIT (Cont'd)

Ref No	Part Number	Description	Remarks	Serial Number	Qty
1	6692830	ENGINE			1
2	7008510	KIT, GASKET ENG UPPER	Ref. 3-22		1
3	6672436	SEAL	See Illustration VALVE & ROCKER ARM/ B27829		16
4	3974095	MET-GASK	See Illustration FUEL & INJECTION PUMP/ B27834		2
5	7008399	GASKET, MANIFOLD INTAKE	See Illustration MANIFOLDS/ B27840		1
6	7008400	GASKET, MANIFOLD EXHAUST	See Illustration MANIFOLDS/ B27840		1
7	7008467	GASKET, EGR VALVE	See Illustration EGR VALVE/ B27842		1
8	7008409	GASKET, ROCKER ARM	See Illustration ROCKER ARM COVER/ B27830		1
9	6680778	O-RING	See Illustration INJECTION NOZZLES/ B27838		4
10	6685498	GASKET	See Illustration INJECTION NOZZLES/ B27838		5
11	7000619	ORING	See Illustration INJECTION NOZZLES/ B27838		4
12	6969824	GASKET, NOZZLE INJ	See Illustration INJECTION NOZZLES/ B27838		4
13	7008448	GASKET, FLANGE WATER	See Illustration WATER PUMP & THERMOSTAT/ B27839		1
14	6680844	GASKET	See Illustration WATER PUMP & THERMOSTAT/ B27839		1
15	6687147	GASKET	See Illustration TURBOCHARGER/ B27841 - not in kit		1
15	7008515	GASKET, TURBO			1
16	6680893	GASKET	See Illustration TURBOCHARGER/ B27841 - not in kit		1
16	7008514	GASKET, TURBO			1
17	7000642	GASKET	See Illustration TURBOCHARGER/ B27841		1
18	6680570	GASKET	See Illustration TURBOCHARGER/ B27841 - not in kit		1
18	7008516	GASKET	oil return tube		1
19	7000636	GASKET, EGR BASE	See Illustration EGR COOLER/ B27843		1
20	7000635	GASKET, EGR COOLER	See Illustration EGR COOLER/ B27843		1
21	7000633	GASKET, EGR VALVE	See Illustration EGR VALVE/ B27842		1
22	7000634	GASKET, EGR VALVE	See Illustration EGR VALVE/ B27842		1

Page 185 - OSS# 2072104 - All rights reserved by Bobcat Company - 01/20/2010 - 17:21:58 - Produced by Ken Cook Co. with mediaioff

ENGINE LOWER GASKET KIT

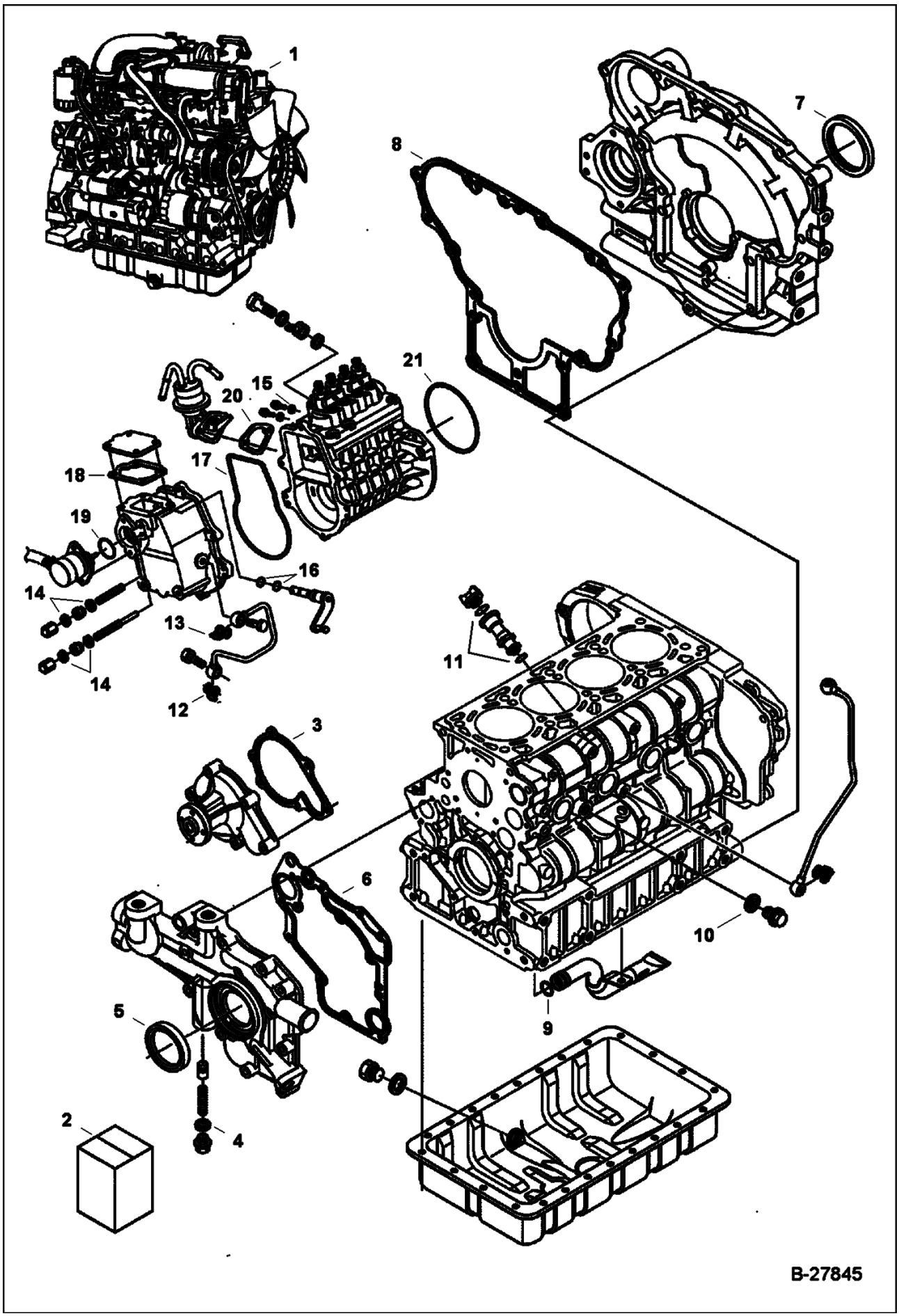

Page 186 - OSS# 2072104 - All rights reserved by Bobcat Company - 01/20/2010 - 17:21:58 - Produced by Ken Cook Co. with mediaioff

Ref No	Part Number	Description	Remarks	Serial Number	Qty
1	6692830	ENGINE			1
2	7008511	KIT, GASKET ENG LOWER	Ref. 3-21		1
3	7008451	GASKET, PUMP WATER	See Illustration WATER PUMP & THERMOSTAT/ B27839		1
4	6670347	GASKET	See Illustration FRONT COVER/ B27831		1
5	6680680	SEAL	See Illustration FRONT COVER/ B27831		1
6	7008398	GASKET, FRONT COVER	See Illustration FRONT COVER/ B27831		1
7	7008390	SEAL, OIL	See Illustration CRANKCASE/ B27826		1
8	7008461	GASKET, HOUSING	See Illustration CRANKCASE/ B27826		1
9	6686981	O-RING	See Illustration OIL PAN/ B27827		1
10	6652751	GASKET	See Illustration CRANKCASE/ B27826		1
11	6684782	O-RING	See Illustration OIL PAN/ B27827		1
12	6689331	GASKET	See Illustration FUEL & INJECTION PUMP/ B27834		1
13	6685962	GASKET	See Illustration FUEL & INJECTION PUMP/ B27834		1
14	3974972	GASKET	See Illustration INJECTION PUMP/ B27288		4
15	3974095	MET-GASK	See Illustration FUEL & INJECTION PUMP/ B27834		3
16	6683023	O-RING	See Illustration GOVERNOR/ B27836		3
17	6680829	GASKET	See Illustration GOVERNOR/ B27836		1
18	6684841	GASKET	See Illustration GOVERNOR/ B27836		1
19	6685465	O-RING	See Illustration GOVERNOR/ B27836		1
20	6670782	GASKET	See Illustration FUEL & INJECTION PUMP/ B27834		1
21	7000618	GASKET, PUMP INJ	See Illustration FUEL & INJECTION PUMP/ B27834		1

Page 187 - OSS# 2072104 - All rights reserved by Bobcat Company - 01/20/2010 - 17:21:58 - Produced by Ken Cook Co. with mediaioff

FRONT COVER

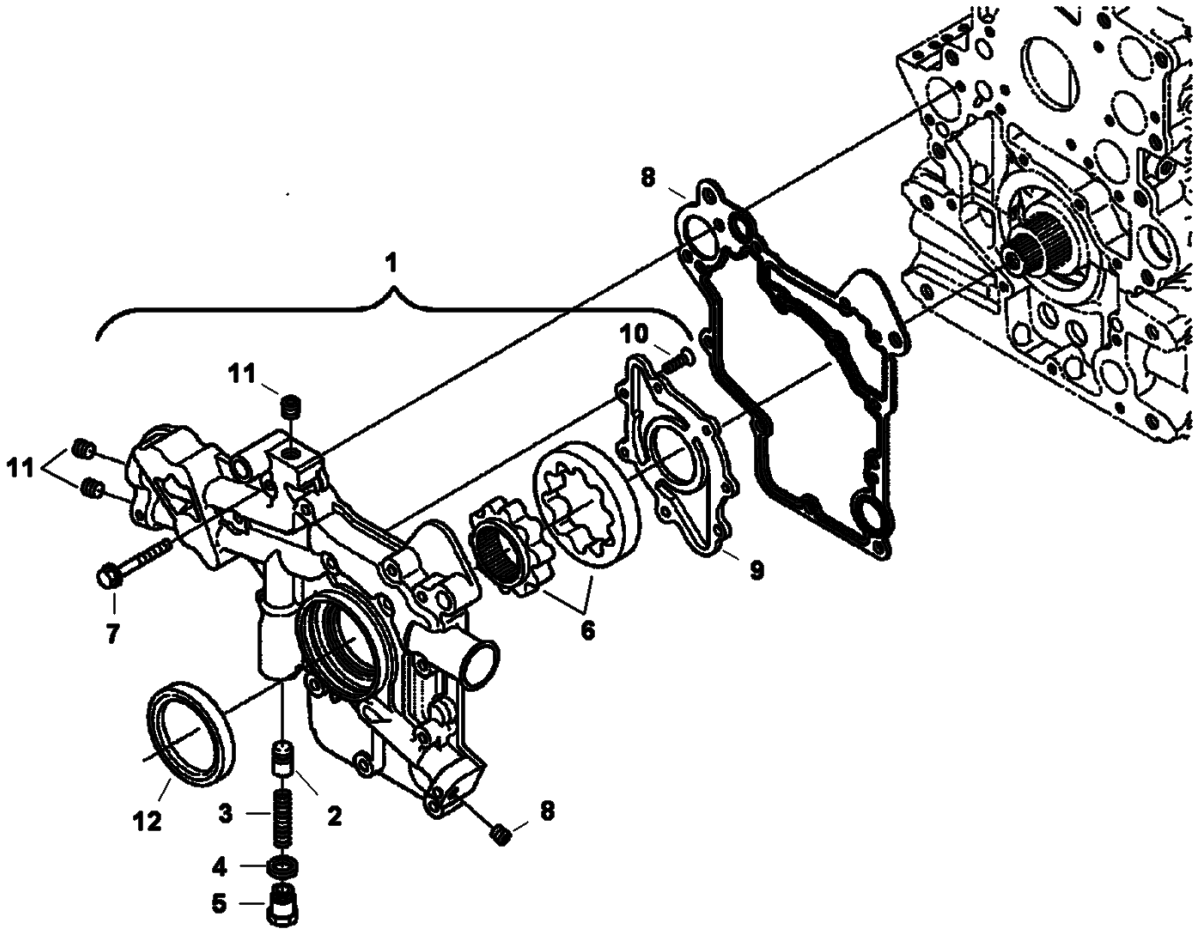

Page 188 - OSS# 2072104 - All rights reserved by Bobcat Company - 01/20/2010 - 17:21:58 - Produced by Ken Cook Co. with mediaioff

Ref No	Part Number	Description	Remarks	Serial Number	Qty
1	7008527	COVER, FRONT	W/Ref. 2-11		1
2	6685929	RELIEF VALVE			1
3	7008518	SPRING			1
4	6670347	GASKET			1
5	7008519	PLUG			1
6	7008440	PUMP, OIL ENG			1
7	7008396	BOLT, FLANGE			13
8	7008398	GASKET, FRONT COVER			1
9	7008441	COVER, PUMP OIL ENG			1
10	6680678	SCREW			7
11	6680679	PLUG			4
12	6680680	SEAL			1

Page 189 - OSS# 2072104 - All rights reserved by Bobcat Company - 01/20/2010 - 17:21:58 - Produced by Ken Cook Co. with mediaioff

CRANKCASE

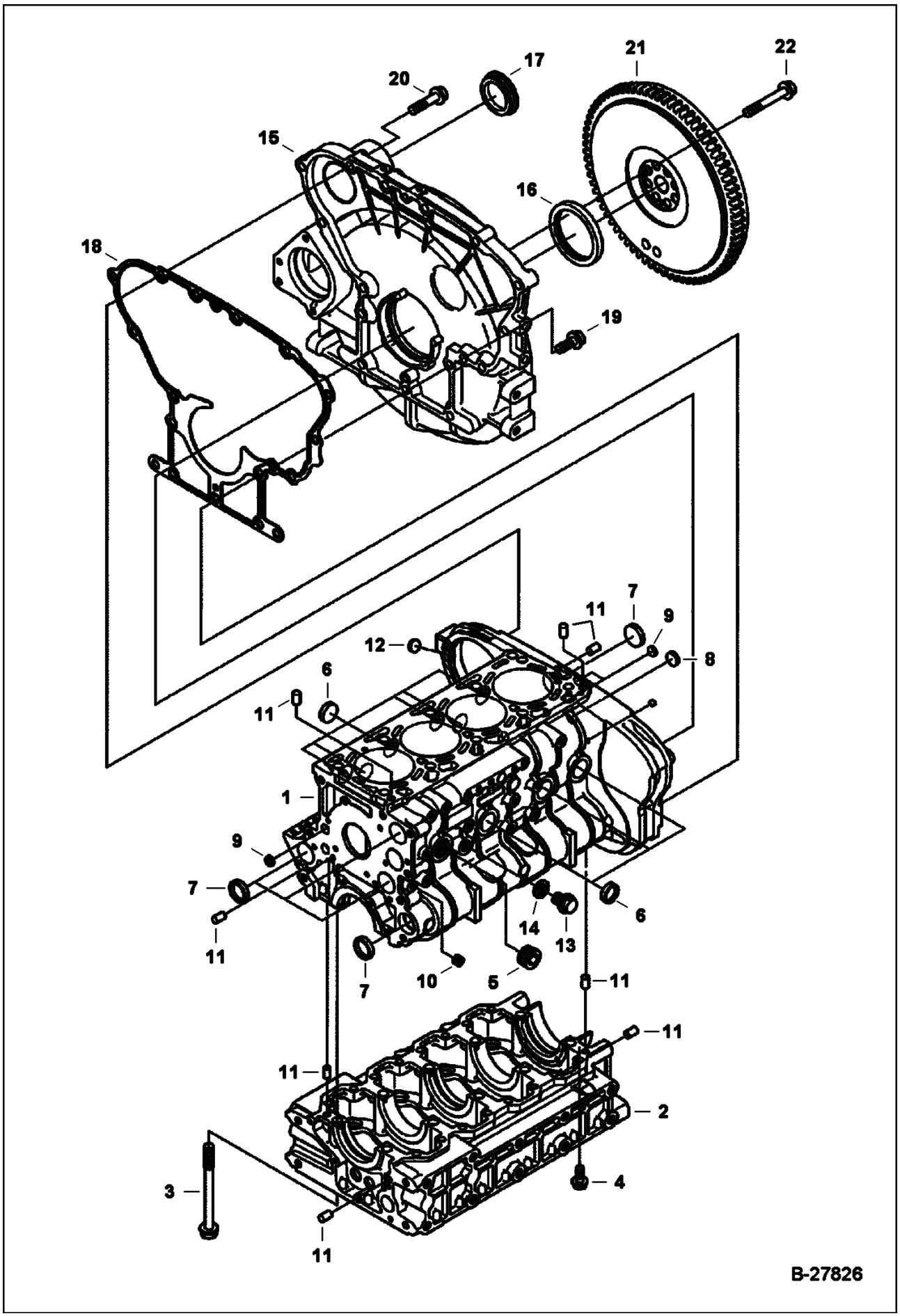

Page 190 - OSS# 2072104 - All rights reserved by Bobcat Company - 01/20/2010 - 17:21:58 - Produced by Ken Cook Co. with mediaIoff

Ref No	Part Number	Description	Remarks	Serial Number	Qty
1	7008523	BLOCK, ENG	W/Ref. 2-10		1
2		BLOCK, ENG LOWER	NSS - Order Ref. 1		1
3	7008397	BOLT			10
4	7008453	BOLT, FLANGE			16
5	6672354	PLUG			1
6	3974033	CAP			9
7	3974433	PLUG			5
8	6670338	PLUG			1
9	6680694	PLUG			3
10	6652574	PLUG			1
11	6685918	PIN			8
12	7000600	CAP, SEALING			1
13	6969968	PLUG			1
14	6652751	GASKET			1
15	7008528	HOUSING, FLYWHEEL			1
16	7008390	SEAL, OIL			1
17	7000586	PLUG			1
18	7008461	GASKET, HOUSING			1
19	7008454	BOLT, FLANGE			8
20	7008455	BOLT, FLANGE			8
21	7008535	FLYWHEEL, ENG ASSY	ring gear included		1
21	7000583	GEAR, RING STARTER			1
22	7000615	BOLT, FLYWHEEL			8

Page 191 - OSS# 2072104 - All rights reserved by Bobcat Company - 01/20/2010 - 17:21:58 - Produced by Ken Cook Co. with mediaioff

ROCKER ARM COVER

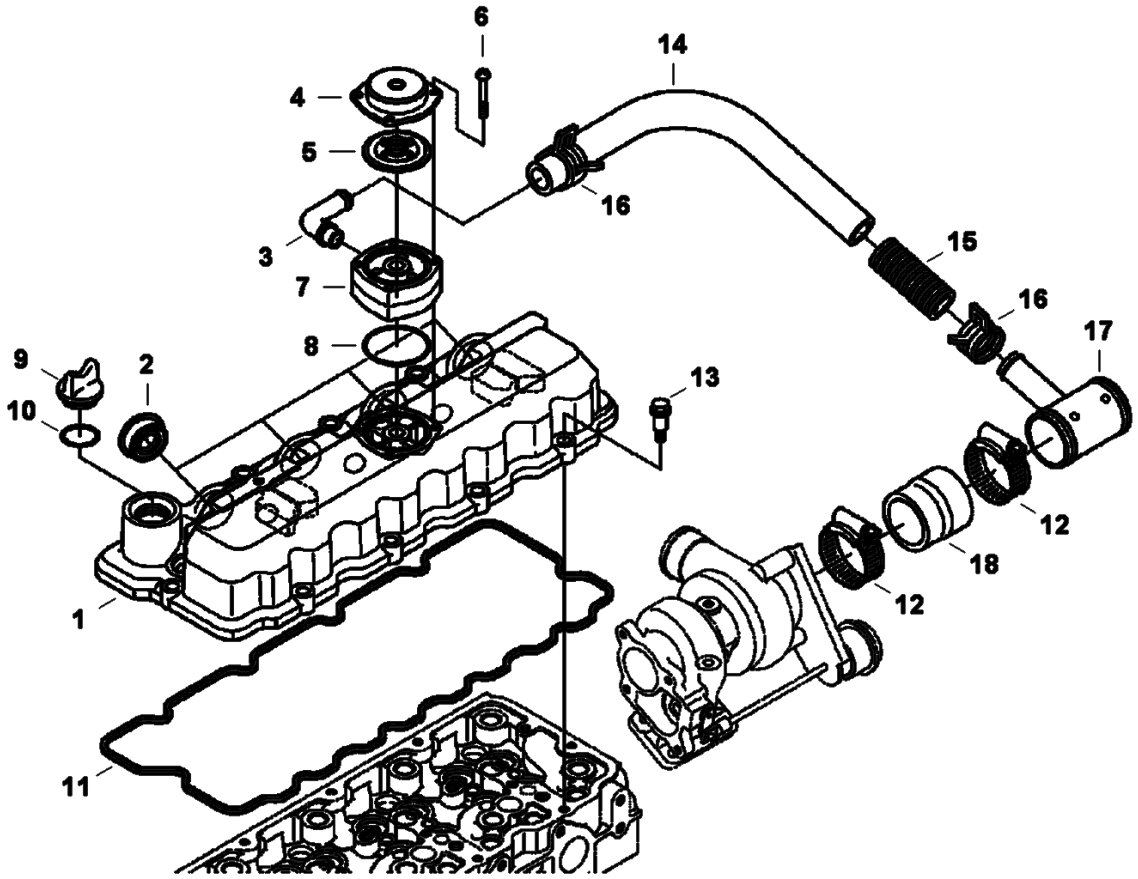

Page 192 - OSS# 2072104 - All rights reserved by Bobcat Company - 01/20/2010 - 17:21:58 - Produced by Ken Cook Co. with mediaioff

Ref No	Part Number	Description	Remarks	Serial Number	Qty
1	7008533	COVER, HEAD CYL ENG	W/Ref. 2-10		1
1	6657491	ELEMENT			6
2	6680695	SEAL			4
3	7008463	TUBE, BREATHER			1
4	6969803	COVER, BREATHER			1
5	6685087	VALVE			1
6	7008385	SCREW			4
7	7008468	SPACER			1
8	6685581	O-RING			1
9	6685924	CAP			1
10	6683009	O-RING			1
11	7008409	GASKET, ROCKER ARM			1
12	7008543	CLAMP, HOSE			2
13	6684781	BOLT			10
14	7008462	TUBE, BREATHER			1
15	7008491	HOSE, RUBBER			1
16	6680698	CLAMP			2
17	7008464	VALVE, AIR BREATHER			1
18	7008465	HOSE, AIR FORMED			1

Page 193 - OSS# 2072104 - All rights reserved by Bobcat Company - 01/20/2010 - 17:21:58 - Produced by Ken Cook Co. with mediaioff

VALVE & ROCKER ARM

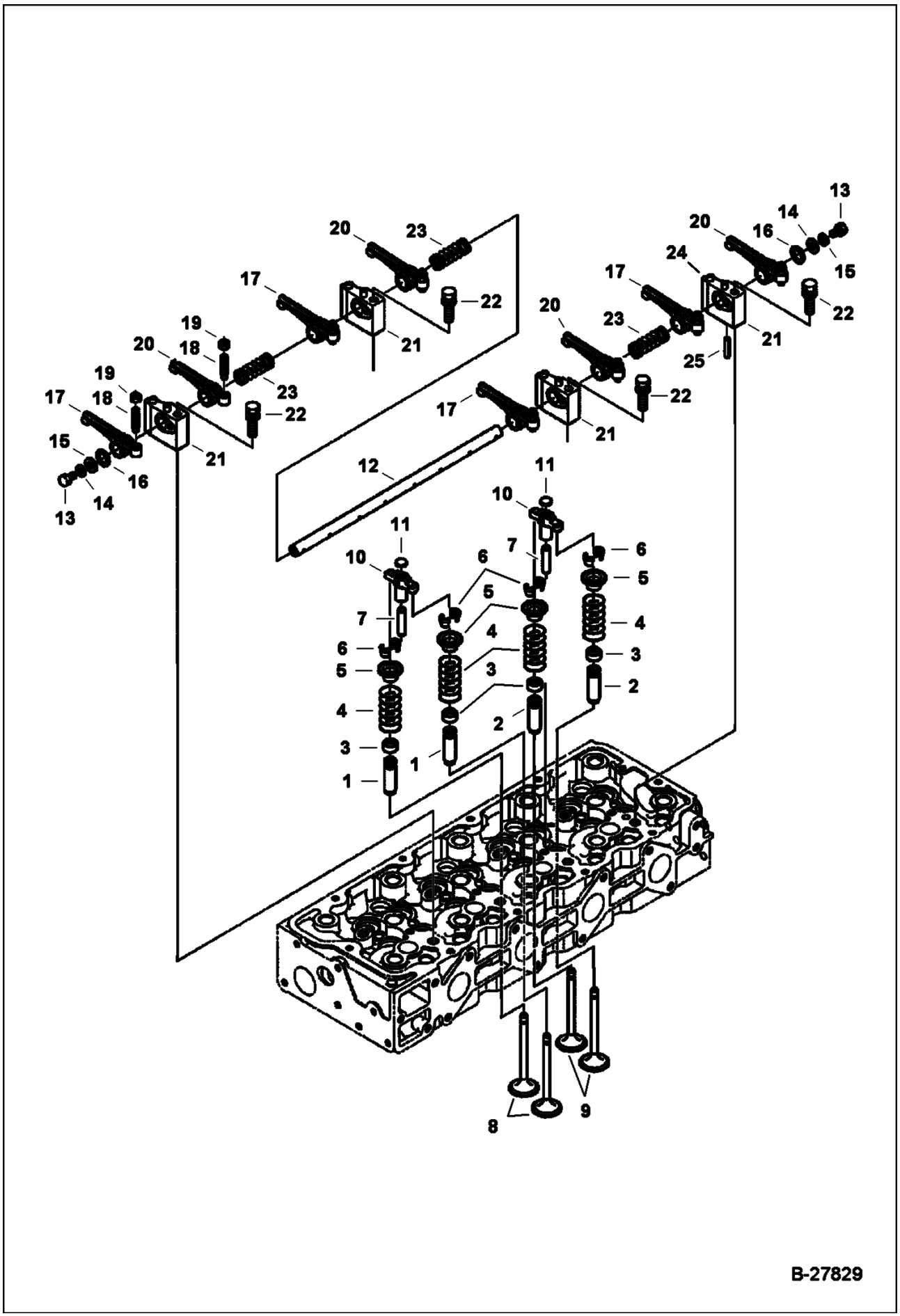

Page 194 - OSS# 2072104 - All rights reserved by Bobcat Company - 01/20/2010 - 17:21:58 - Produced by Ken Cook Co. with mediaioff

Ref No	Part Number	Description	Remarks	Serial Number	Qty
1	6680859	GUIDE			8
2	6685958	GUIDE			8
3	6672436	SEAL			16
4	6680863	VALVE SPRING			16
5	6685959	RETAINER			16
6	7008389	RETAINER, VALVE SPRING			16
7	6680866	SHAFT			8
8	7008401	VALVE, INTAKE			8
9	7008402	VALVE, EXHAUST			8
10	6698524	ARM, VALVE BRIDGE			8
11	6680882	PAD			8
12	7008405	SHAFT, ROCKER ARM			1
13	5CM812	BOLT			2
14	6667422	WASHER			2
15	6667451	WASHER	plain		2
16	7008408	WASHER			2
17	7008403	ARM, ROCKER	W/Ref. 18 & 19		4
18	3974920	SCREW			8
19	2DM8	NUT			8
20	7008404	ARM, ROCKER	W/Ref. 18 & 19		4
21	7008407	BRACKET, ROCKER ARM			4
22	7008384	BOLT, FLANGE			4
23	7008406	SPRING, ROCKER ARM			3
24	6680877	PIN			4
25	7000599	PIN			1

Page 195 - OSS# 2072104 - All rights reserved by Bobcat Company - 01/20/2010 - 17:21:58 - Produced by Ken Cook Co. with mediaioff

CYLINDER HEAD

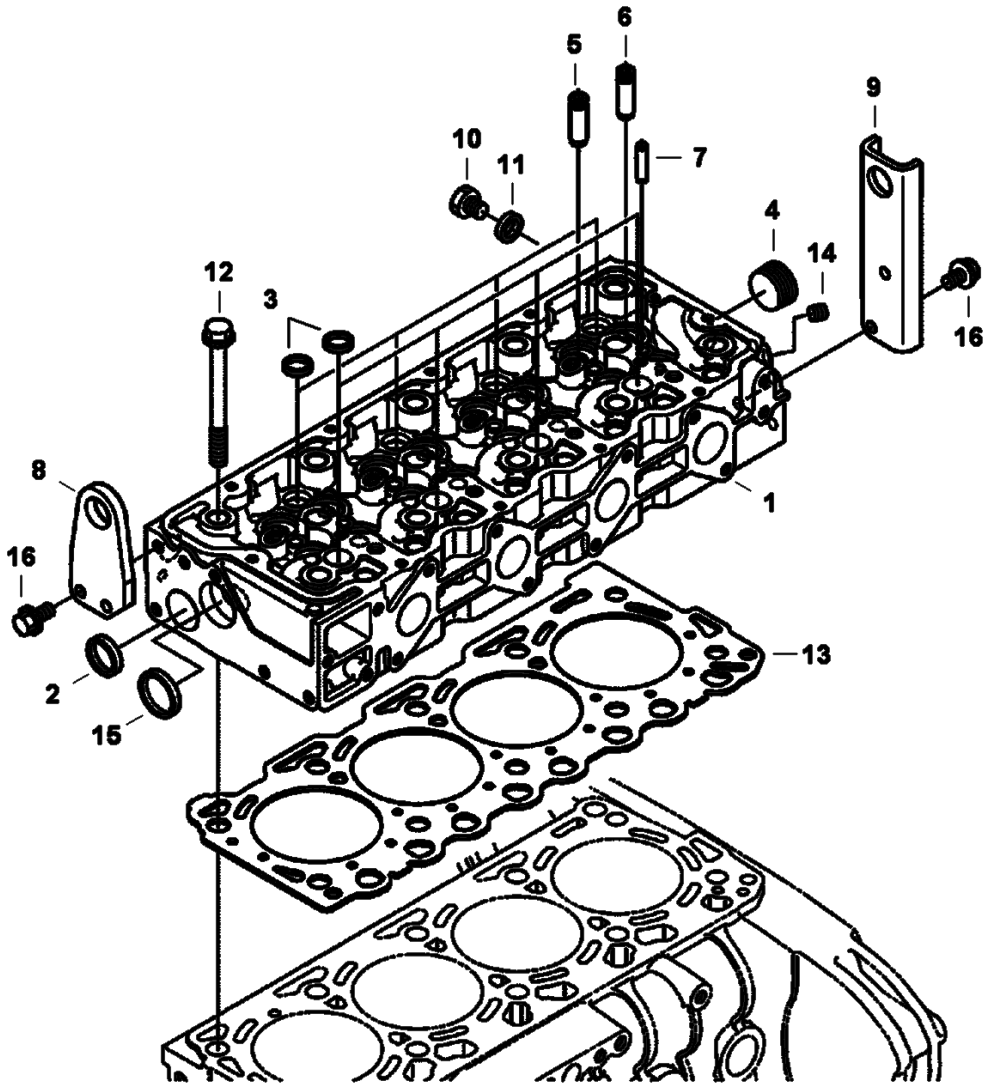

Page 196 - OSS# 2072104 - All rights reserved by Bobcat Company - 01/20/2010 - 17:21:58 - Produced by Ken Cook Co. with mediaioff

Ref No	Part Number	Description	Remarks	Serial Number	Qty
1	7008526	HEAD, CYL ENG	See Illustration VALVE & ROCKER ARM/ B27829 complete W/valves - W/Ref. 2-7 & ILL. B27829 Ref. 1-9		1
2	3974033	CAP			1
3	6670338	PLUG			8
4	6672354	PLUG			1
5	6680859	GUIDE			8
6	6685958	GUIDE			8
7	6680866	SHAFT			8
8	7008457	HOOK, ENG			1
9	7008525	HOOK, ENG			1
10	7000607	PLUG			1
11	6698120	GASKET			1
12	7008397	BOLT			10
13	7008458	GASKET, HEAD			1
13	7008459	GASKET, HEAD			1
13	7008460	GASKET, HEAD			1
14	6652574	PLUG			1
15	3974433	PLUG			1
16	6653579	BOLT			4

Page 197 - OSS# 2072104 - All rights reserved by Bobcat Company - 01/20/2010 - 17:21:58 - Produced by Ken Cook Co. with mediaioff

OIL PAN

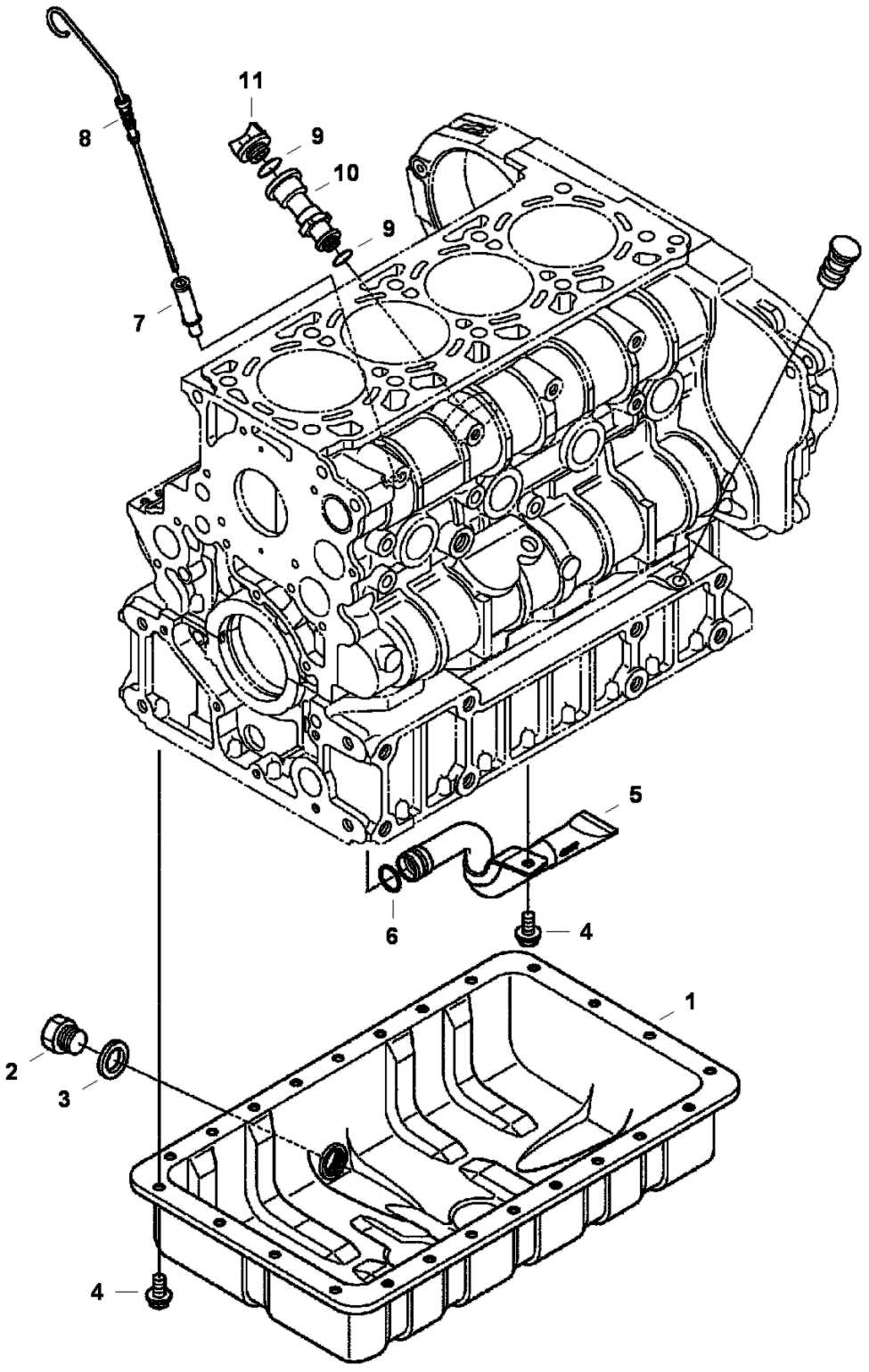

Page 198 - OSS# 2072104 - All rights reserved by Bobcat Company - 01/20/2010 - 17:21:58 - Produced by Ken Cook Co. with mediaioff

Ref No	Part Number	Description	Remarks	Serial Number	Qty
1	7008524	PAN, OIL			1
2	6680657	PLUG			1
3	6631046	SEAL			1
4	7001138	BOLT,FLANGE			26
5	7008486	SCREEN, OIL ENG			1
6	6686981	O-RING			1
7	6687904	GUIDE			1
8	7000714	DIPSTICK, OIL ENG			1
9	6683009	O-RING			2
10	6655507	FLANGE			1
11	6685924	CAP			1

Page 199 - OSS# 2072104 - All rights reserved by Bobcat Company - 01/20/2010 - 17:21:58 - Produced by Ken Cook Co. with mediaioff

PISTON AND CRANKSHAFT

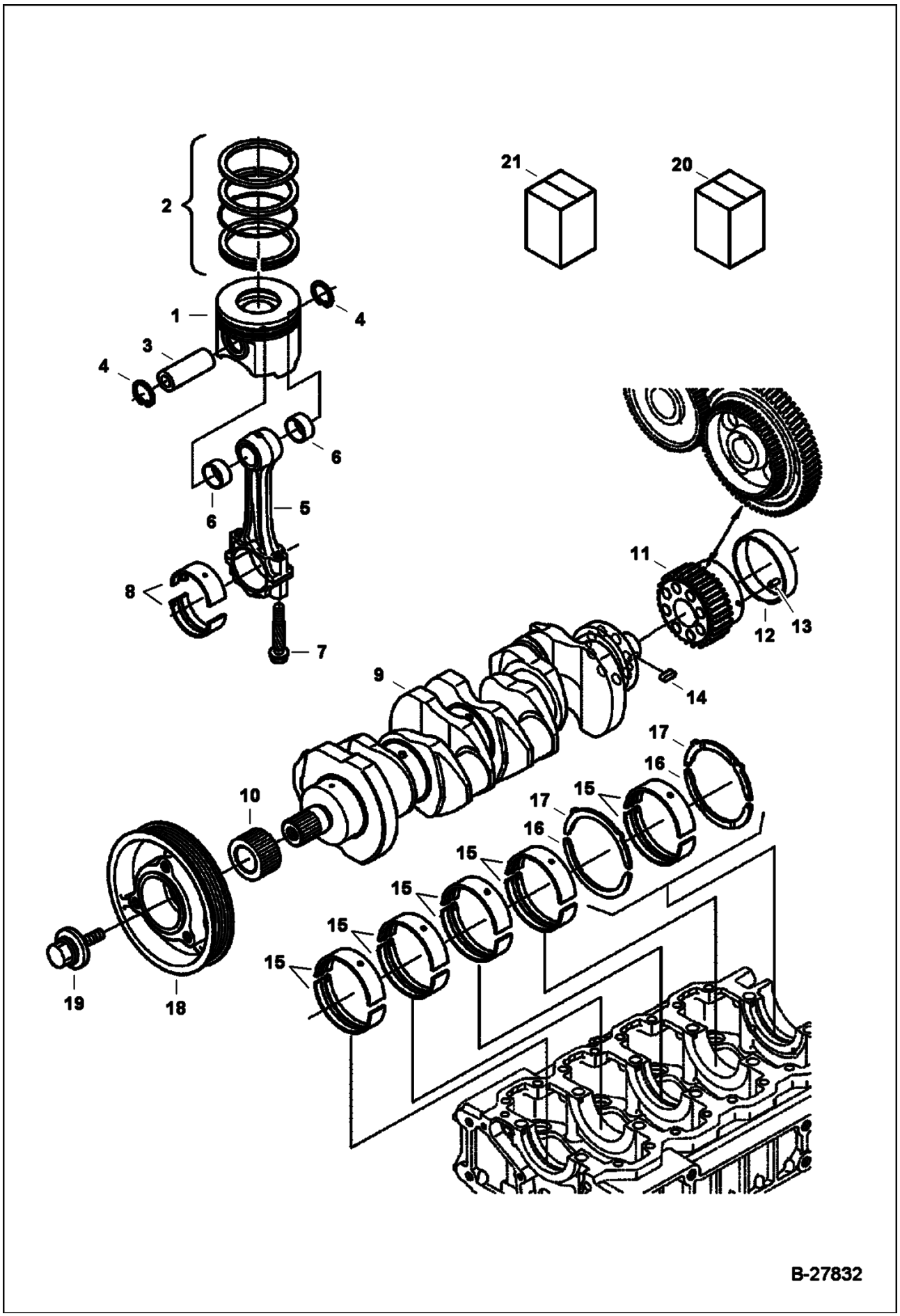

Page 200 - OSS# 2072104 - All rights reserved by Bobcat Company - 01/20/2010 - 17:21:58 - Produced by Ken Cook Co. with mediaioff

Ref No	Part Number	Description	Remarks	Serial Number	Qty
1	7008470	PISTON, ENG			4
1	7008471	PISTON, ENG OS	(05) +0,50 mm		4
1	7008472	PISTON, ENG	(00) std		4
1	7008475	PISTON, ENG OS	(00) +0,50 mm		4
1	7008476	PISTON, ENG	(10) std		4
1	7008477	PISTON, ENG OS	(10) +0,50 mm		4
2	7008415	RING, PISTON	set		4
2	7008416	RING, PISTON OS	set +0,50 mm		4
3	7008417	PIN, PISTON ENG			4
4	7008386	CIRCLIP			8
5	7008479	ROD, CONNECTING	W/Ref. 6 & 7		4
6	7008478	BUSHING, PIN PISTON			8
7	7008418	BOLT			8
8	7008419	BEARING, ENG ROD CONNECTING	std/blue/set		4
8	7008420	BEARING, ENG ROD CONNECTING	std/set		4
8	7008421	BEARING, ENG ROD CONNECTING	-0,20 mm/green/set		4
8	7008422	BEARING, ENG ROD CONNECTING	-0,40 mm/red/set		4
9	7008534	CRANKSHAFT, ENG	W/Ref. 10		1
10	7000616	GEAR, DRIVE			1
11	7008433	GEAR, CRANKSHAFT	W/Ref. 12 & 13		1
12	7008391	SLEEVE, WEAR			1
13	3974395	PIN			1
14	3974546	KEY			1
15	7008423	BEARING, ENG CRANKSHAFT	std		5
15	7008426	BEARING, ENG CRANKSHAFT	-0,20 mm		5
15	7008427	BEARING, ENG CRANKSHAFT	-0,40 mm		5
15	7008480	BEARING, ENG CRANKSHAFT	std		5
15	7008484	BEARING, ENG CRANKSHAFT	-0,20 mm		5
15	7008485	BEARING, ENG CRANKSHAFT	-0,40 mm		5
16	7008424	WASHER, THRUST	std		2
16	7008428	WASHER, THRUST	+0,20 mm		2
16	7008429	WASHER, THRUST	+0,40 mm		2
17	7008425	WASHER, THRUST	std		2
17	7008430	WASHER,	+0,20 mm		2

Page 201 - OSS# 2072104 - All rights reserved by Bobcat Company - 01/20/2010 - 17:21:58 - Produced by Ken Cook Co. with mediaioff

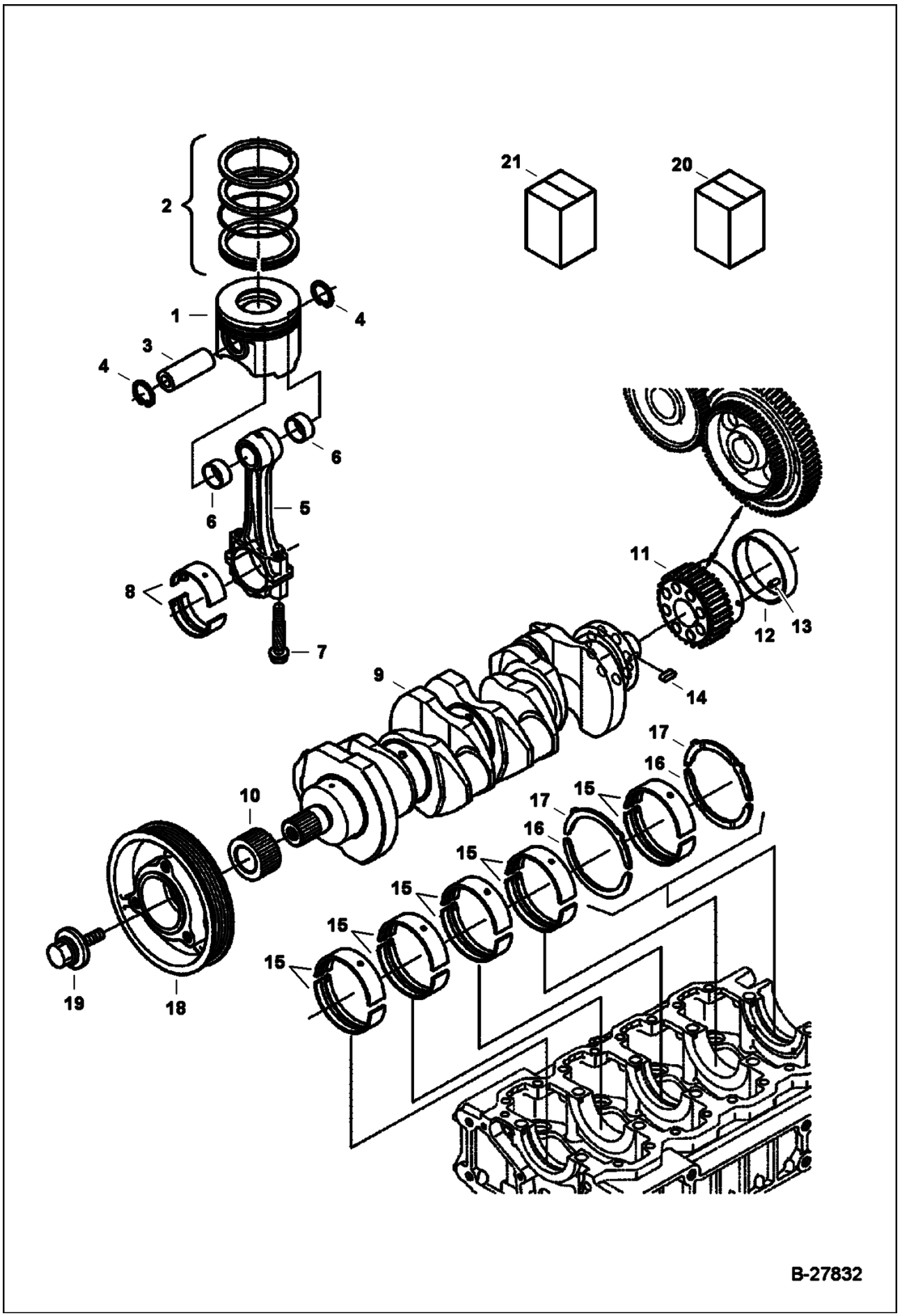

Page 202 - OSS# 2072104 - All rights reserved by Bobcat Company - 01/20/2010 - 17:21:58 - Produced by Ken Cook Co. with mediaioff

Ref No	Part Number	Description	Remarks	Serial Number	Qty
		THRUST			
17	7008431	WASHER, THRUST	+0,40 mm		2
18	7008542	PULLEY, DRIVE			1
19	7000748	BOLT			1
20	7008473	KIT, PISTON			4
20	7008474	KIT, PISTON OS	+0,50 mm		4
21	7008481	KIT, BEARING ENG			1
21	7008482	KIT, BEARING ENG	-0,20 mm/+0,20 mm		1
21	7008483	KIT, BEARING ENG	-0,40 mm/+0,40 mm		1

Page 203 - OSS# 2072104 - All rights reserved by Bobcat Company - 01/20/2010 - 17:21:58 - Produced by Ken Cook Co. with mediaioff

CAMSHAFT AND IDLE GEAR SHAFT

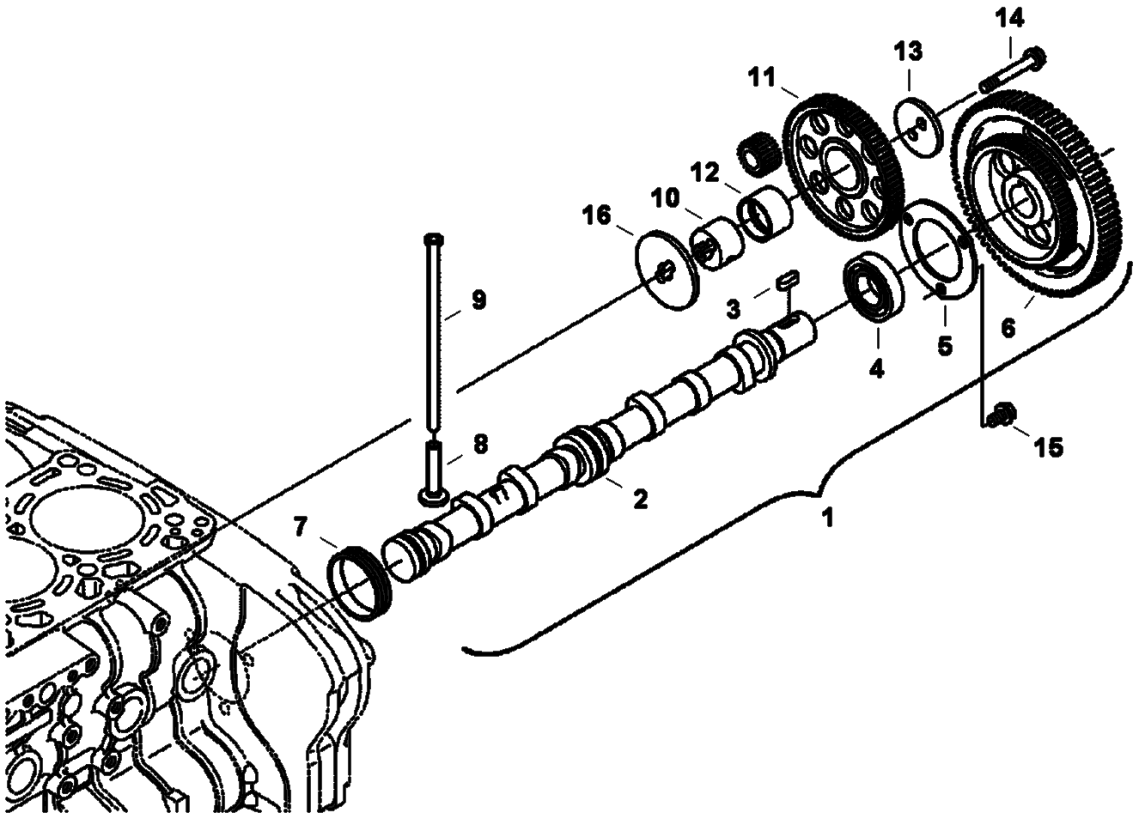

B-27833

Page 204 - OSS# 2072104 - All rights reserved by Bobcat Company - 01/20/2010 - 17:21:58 - Produced by Ken Cook Co. with mediaIoff

Ref No	Part Number	Description	Remarks	Serial Number	Qty
1	7008411	CAMSHAFT, VALVE	Ref. 2-6		1
2		CAMSHAFT	NSS - Order Ref. 1		1
3	3974546	KEY			1
4	7008388	BEARING, BALL			1
5	7008412	RETAINER, BEARING			1
6	7008414	GEAR, CAMSHAFT			1
7	7008413	CAP, SEALING			1
8	7000612	TAPPET			8
9	7008410	ROD, PUSH			8
10	7008434	SHAFT, GEAR IDLER			1
11	7008432	GEAR, IDLER	W/Ref. 12		1
12	7008437	BUSHING, GEAR IDLE			1
13	7008436	COLLAR, GEAR IDLER			1
14	7008456	BOLT, FLANGE			2
15	7001138	BOLT,FLANGE			3
16	7008435	COLLAR, GEAR IDLER			1

Page 205 - OSS# 2072104 - All rights reserved by Bobcat Company - 01/20/2010 - 17:21:58 - Produced by Ken Cook Co. with mediaioff

WATER PUMP & THERMOSTAT

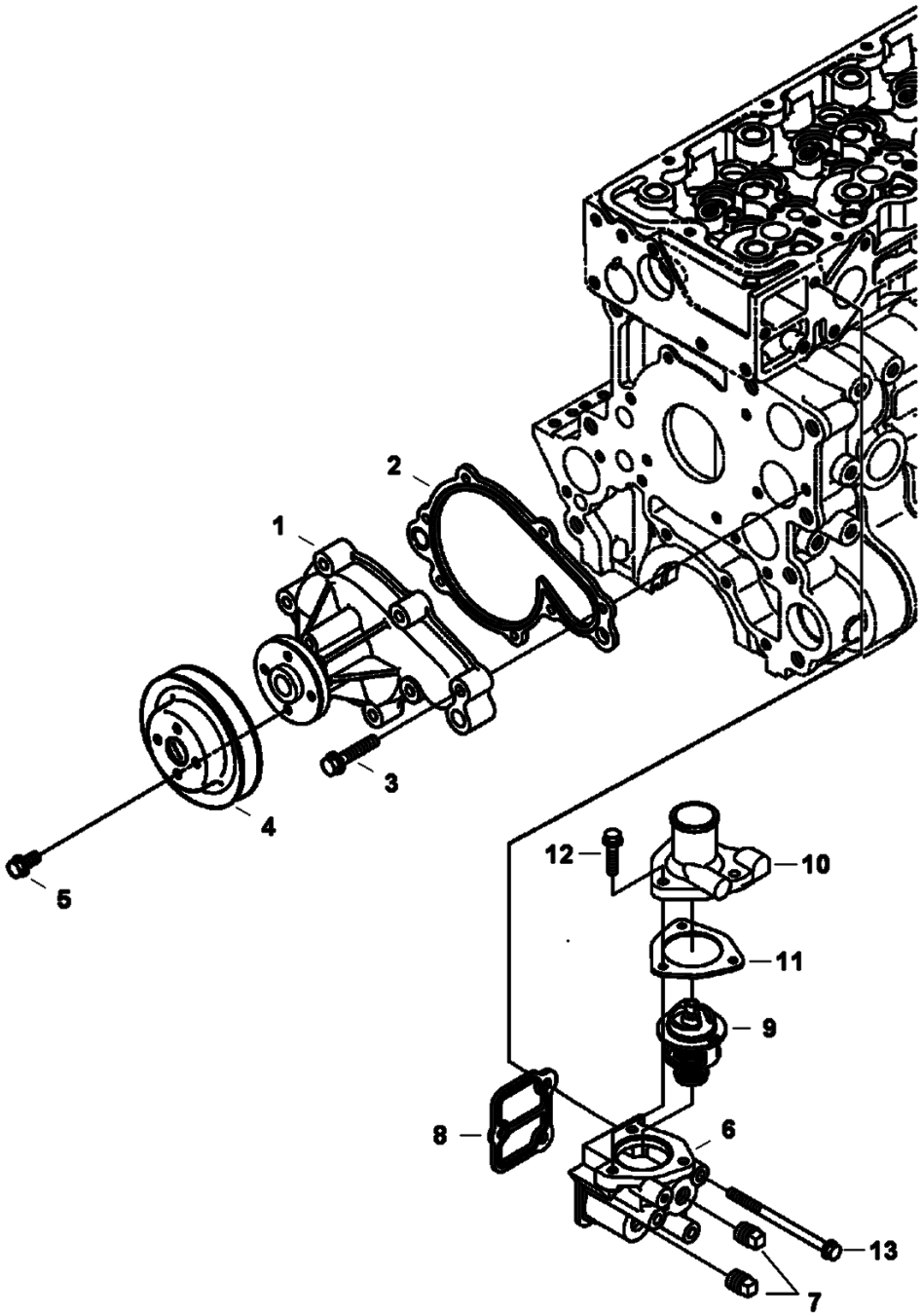

Page 206 - OSS# 2072104 - All rights reserved by Bobcat Company - 01/20/2010 - 17:21:58 - Produced by Ken Cook Co. with mediaioff

Ref No	Part Number	Description	Remarks	Serial Number	Qty
1	7008449	PUMP, WATER			1
2	7008451	GASKET, PUMP WATER			1
3	6689192	BOLT, FLANGE			7
4	7008541	PULLEY, FAN			1
5	6680803	BOLT			4
6	7008539	FLANGE, WATER	W/Ref. 7		1
7	6684857	PLUG			2
8	7008448	GASKET, FLANGE WATER			1
9	6680850	THERMOSTAT			1
10	7008450	COVER, THERMOSTAT			1
11	6680844	GASKET			1
12	6680755	BOLT			3
13	7008382	BOLT			3

Page 207 - OSS# 2072104 - All rights reserved by Bobcat Company - 01/20/2010 - 17:21:58 - Produced by Ken Cook Co. with mediaioff

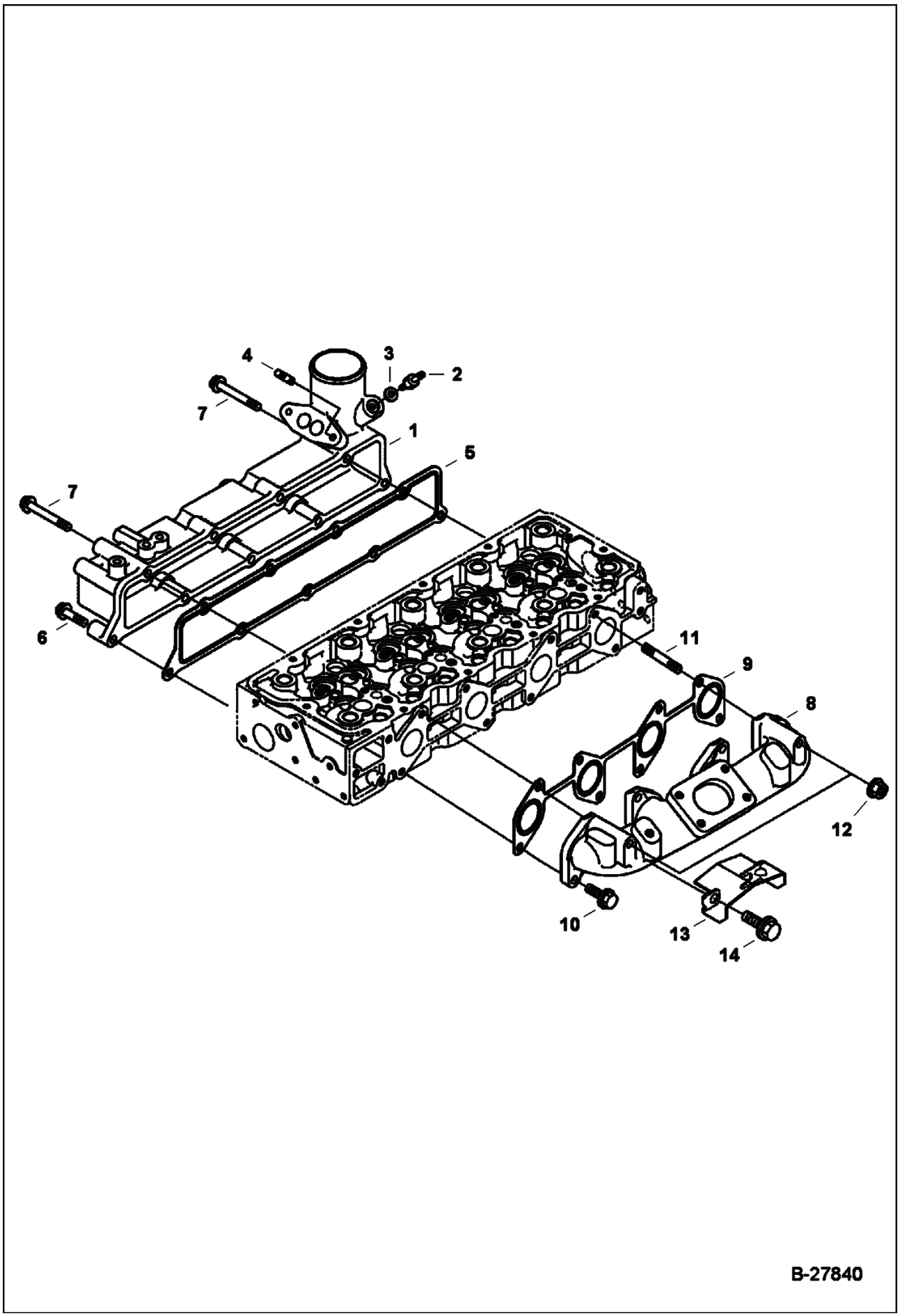

Page 208 - OSS# 2072104 - All rights reserved by Bobcat Company - 01/20/2010 - 17:21:58 - Produced by Ken Cook Co. with mediaIoff

Ref No	Part Number	Description	Remarks	Serial Number	Qty
1	7008466	MANIFOLD, INTAKE	W/Ref. 2-4		1
2	6657446	SCREW			1
3	3974972	GASKET			1
4	6680564	STUD			2
5	7008399	GASKET, MANIFOLD INTAKE			1
6	6689192	BOLT, FLANGE			7
7	7008381	BOLT			2
8	7008531	MANIFOLD, EXHAUST			1
9	7008400	GASKET, MANIFOLD EXHAUST			1
10	7008506	BOLT, FLANGE			6
11	7008509	STUD			2
12	6969819	NUT, FLANGE			2
13	7008522	SHIELD, HEAT			1
14	7008383	BOLT, FLANGE			1

Page 209 - OSS# 2072104 - All rights reserved by Bobcat Company - 01/20/2010 - 17:21:58 - Produced by Ken Cook Co. with mediaioff

TURBOCHARGER

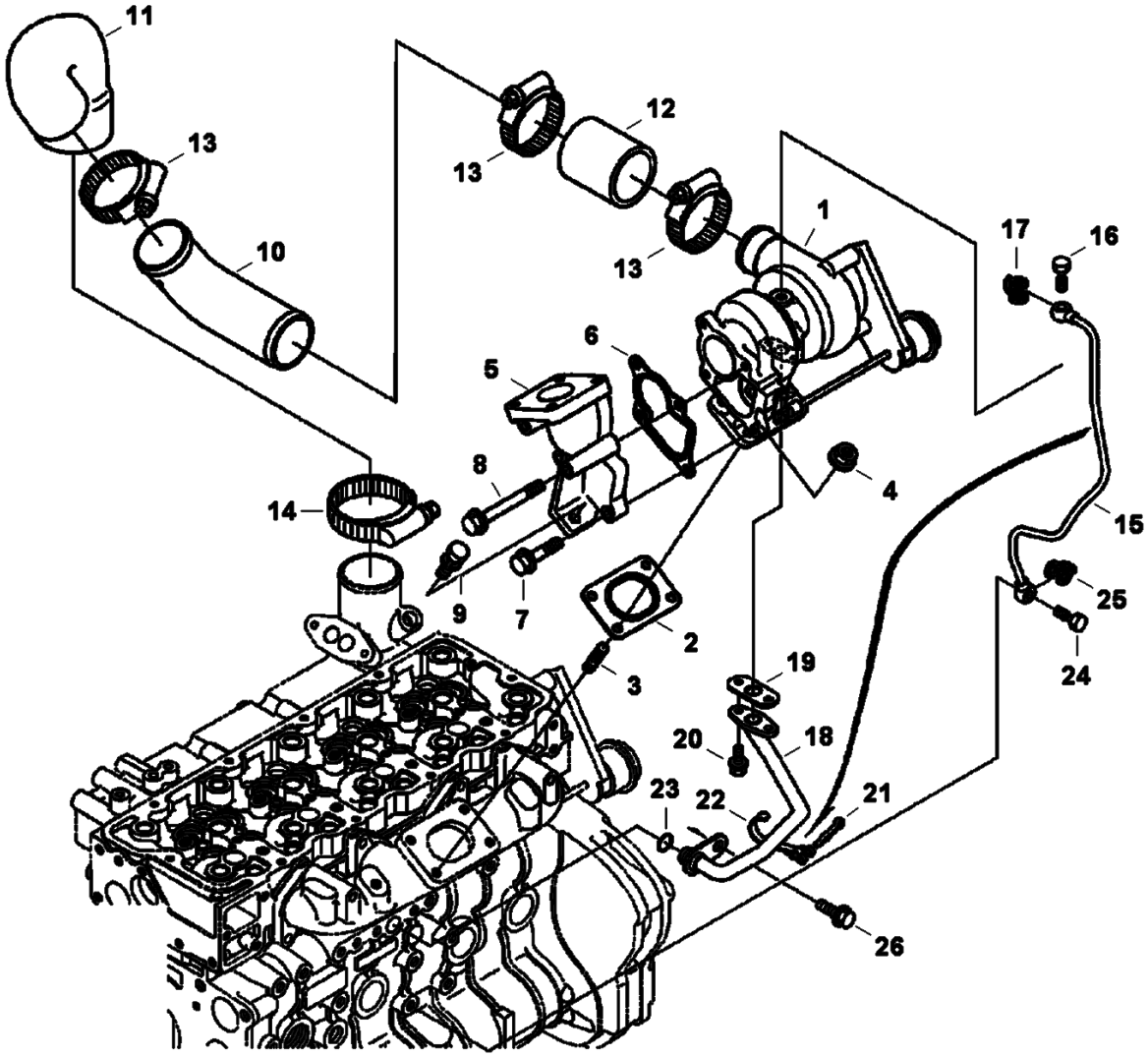

Page 210 - OSS# 2072104 - All rights reserved by Bobcat Company - 01/20/2010 - 17:21:58 - Produced by Ken Cook Co. with mediaioff

Ref No	Part Number	Description	Remarks	Serial Number	Qty
1	7008469	TURBOCHARGER			1
2	7008514	GASKET, TURBO			1
3	7008508	STUD			4
4	6969819	NUT, FLANGE			4
5	7008532	FLANGE, MUFFLER			1
6	7008515	GASKET, TURBO			1
7	7008513	BOLT, FLANGE			2
8	7008452	BOLT, FLANGE			2
9	7008507	BOLT			1
10	7008529	PIPE, INTAKE			1
11	7008530	HOSE, AIR INTAKE			1
12	7008521	HOSE, AIR FORMED			1
13	7008543	CLAMP, HOSE			3
14	7008544	CLAMP, HOSE			1
15	7008487	PIPE, OIL			1
16	6680900	BOLT			1
17	7000642	GASKET			1
18	7008488	PIPE, OIL			1
19	7008516	GASKET	oil return tube		1
20	29CM612	BOLT			2
21	6680576	PIN			1
22	6685601	CLAMP			1
23	7008387	O-RING			1
24	6680791	BOLT			1
25	6689331	GASKET			1
26	7008383	BOLT, FLANGE			1

Page 211 - OSS# 2072104 - All rights reserved by Bobcat Company - 01/20/2010 - 17:21:58 - Produced by Ken Cook Co. with mediaioff

EGR VALVE

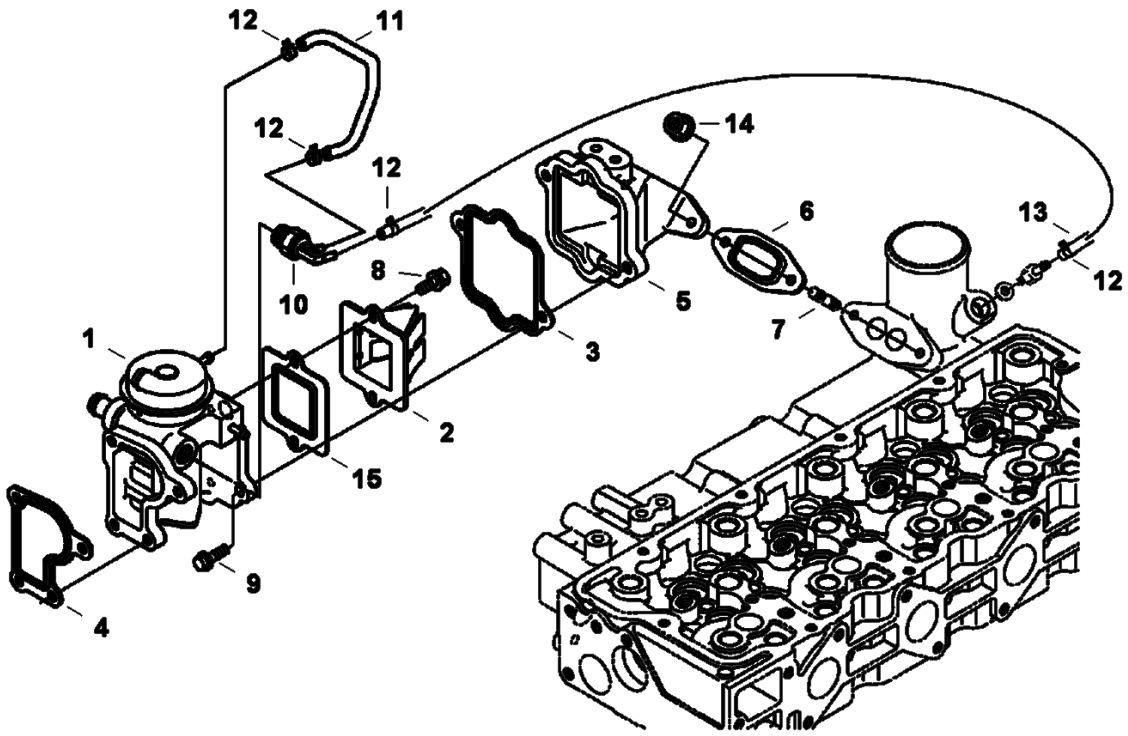

B-27842

Page 212 - OSS# 2072104 - All rights reserved by Bobcat Company - 01/20/2010 - 17:21:58 - Produced by Ken Cook Co. with mediaioff

Ref No	Part Number	Description	Remarks	Serial Number	Qty
1	7008538	VALVE, EGR			1
2	6698580	VALVE, LEAD			1
3	7000634	GASKET, EGR VALVE			1
4	7000633	GASKET, EGR VALVE			1
5	7000631	FLANGE, EGR			1
6	7000632	GASKET EGR INLET			1
7	6680564	STUD			2
8	6680803	BOLT			2
9	6680801	BOLT			2
10	6698585	VALVE, THERMOSTATIC			1
11	7000641	HOSE, VACUUM			1
12	6657556	BAND			4
13	7008505	HOSE, VACUUM			1
14	6969819	NUT, FLANGE			2
15	7008467	GASKET, EGR VALVE			1

Page 213 - OSS# 2072104 - All rights reserved by Bobcat Company - 01/20/2010 - 17:21:58 - Produced by Ken Cook Co. with mediaioff

EGR COOLER

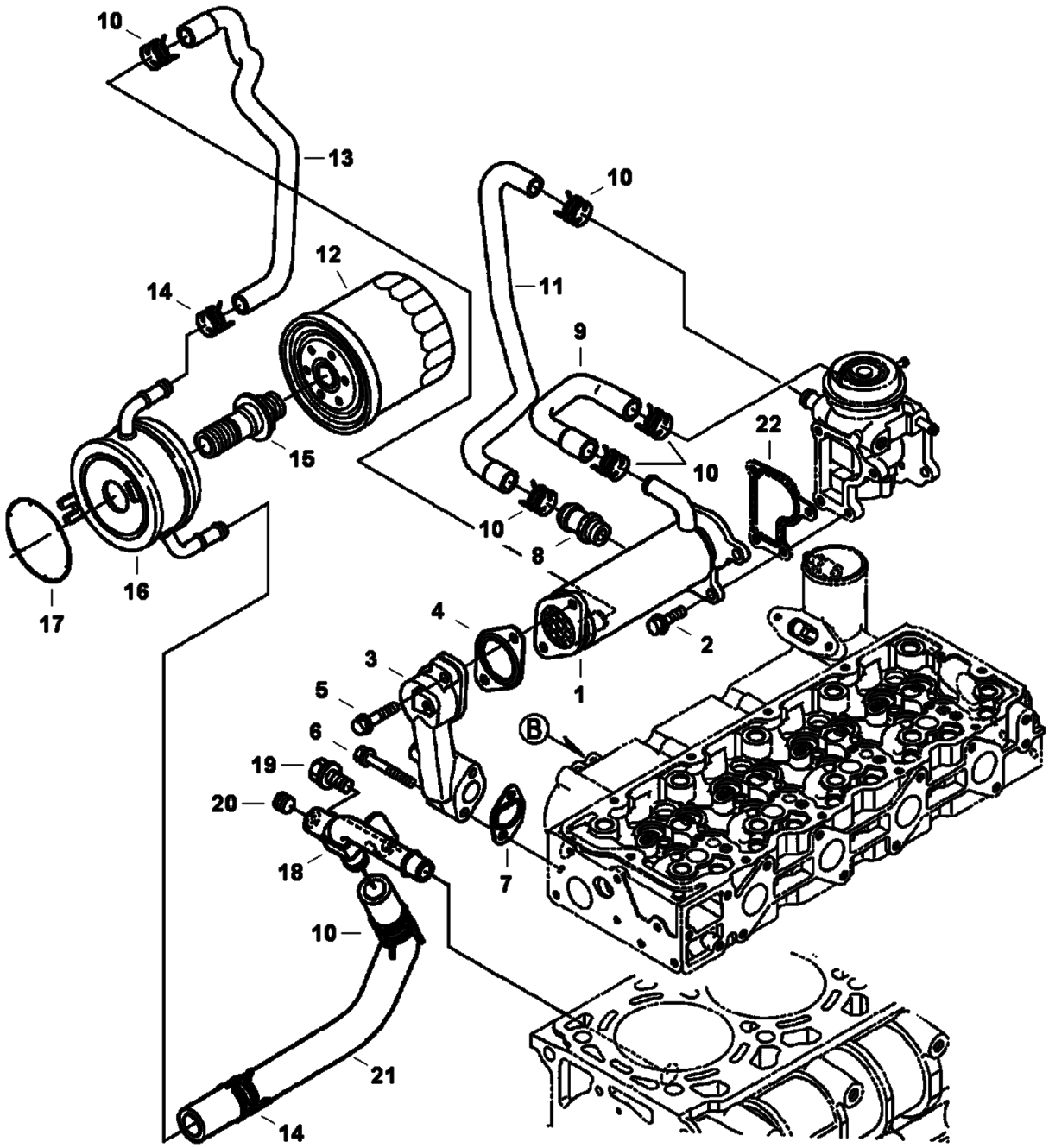

Page 214 - OSS# 2072104 - All rights reserved by Bobcat Company - 01/20/2010 - 17:21:58 - Produced by Ken Cook Co. with mediaIoff

Ref No	Part Number	Description	Remarks	Serial Number	Qty
1	7008501	EXCHANGER, EGR			1
2	6680801	BOLT			4
3	7008512	BASE, EGR COOLER			1
4	7000635	GASKET, EGR COOLER			1
5	6680755	BOLT			2
6	6680845	BOLT			2
7	7000636	GASKET, EGR BASE			1
8	6680646	ADAPTER			1
9	7008503	HOSE, WATER FORMED			1
10	6675618	CLAMP			6
11	7008504	HOSE, WATER FORMED			1
11	7000641	HOSE, VACUUM			1
12	6678233	OIL FILTER			1
13	7008502	HOSE, WATER FORMED			1
14	6684889	CLAMP			2
15	7008490	CONNECTOR			1
16	7008489	EXCHANGER, OIL ENG			1
17	6698244	ORING			1
18	7008540	PIPE, OIL			1
19	7008393	PLUG			1
20	7008380	BOLT			1
21	7008536	HOSE, WATER FORMED	W/Ref. 10 & 14		1
22	7000633	GASKET, EGR VALVE			1

Page 215 - OSS# 2072104 - All rights reserved by Bobcat Company - 01/20/2010 - 17:21:58 - Produced by Ken Cook Co. with mediaioff

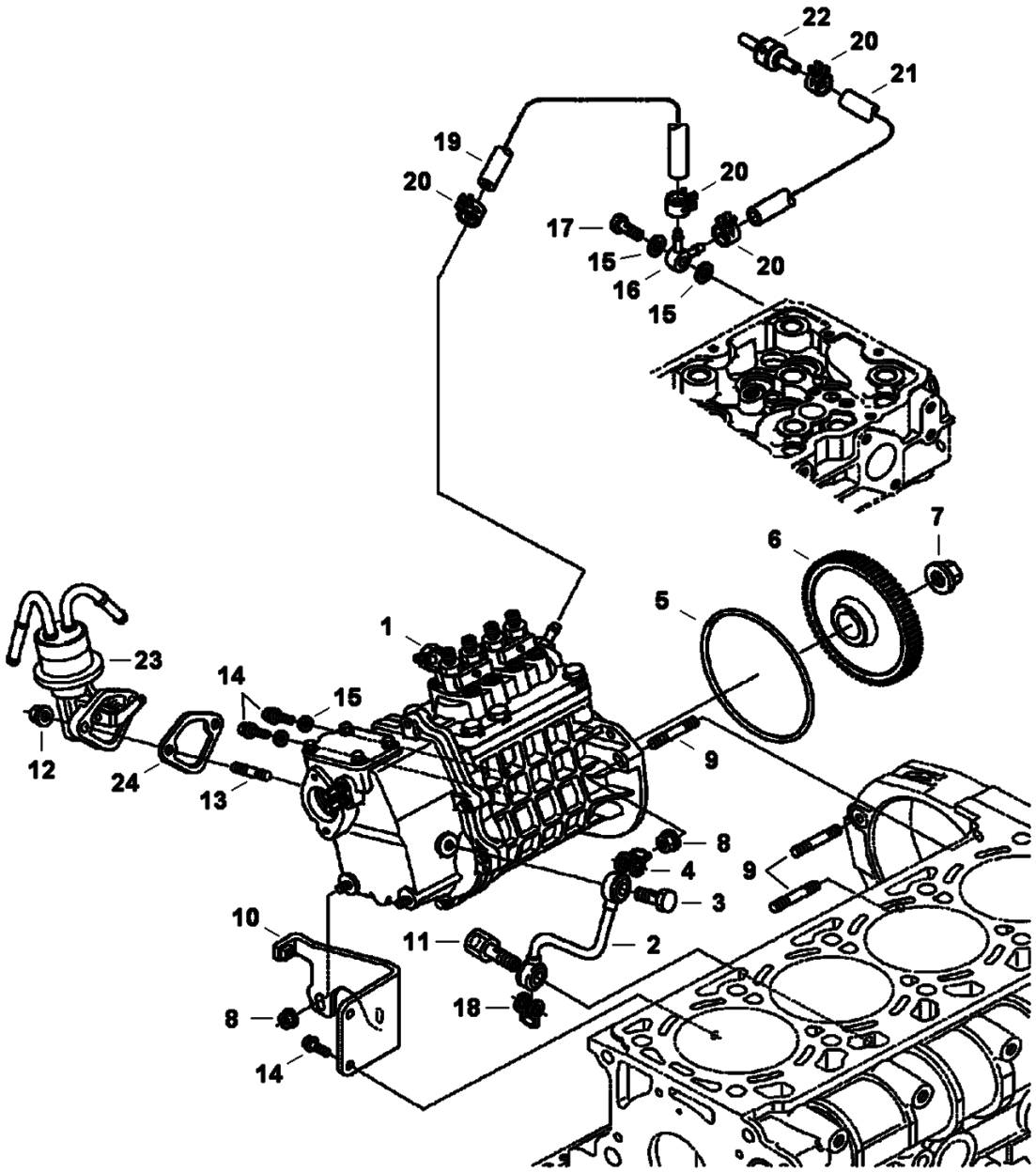

Page 216 - OSS# 2072104 - All rights reserved by Bobcat Company - 01/20/2010 - 17:21:58 - Produced by Ken Cook Co. with mediaioff

Ref No	Part Number	Description	Remarks	Serial Number	Qty
1	7008537	PUMP, FUEL INJ W/GOVERNOR	assy		1
2	7008438	PIPE, OIL			1
3	6680900	BOLT			1
4	6685962	GASKET			1
5	7000618	GASKET, PUMP INJ			1
6	7008443	GEAR, PUMP INJ			1
7	7000613	NUT			1
8	6969819	NUT, FLANGE			5
9	6685919	STUD			3
10	7008444	BRACKET, PUMP INJ			1
11	7008439	BOLT, JOINT			1
12	6670533	NUT			2
13	6680264	STUD			2
14	6680662	BOLT			4
15	3974095	MET-GASK			4
16	7008517	FITTING, BANJO			1
17	6680791	BOLT			1
18	6689331	GASKET			1
19	7000605	TUBE, FUEL LINE ASSY			1
20	6654718	CLAMP			4
21	7000604	TUBE, FUEL LINE ASSY			1
22	6680796	VALVE			1
23	7000767	PUMP, FUEL			1
24	6670782	GASKET			1

Page 217 - OSS# 2072104 - All rights reserved by Bobcat Company - 01/20/2010 - 17:21:58 - Produced by Ken Cook Co. with mediaioff

INJECTION PUMP
(Fuel Camshaft)

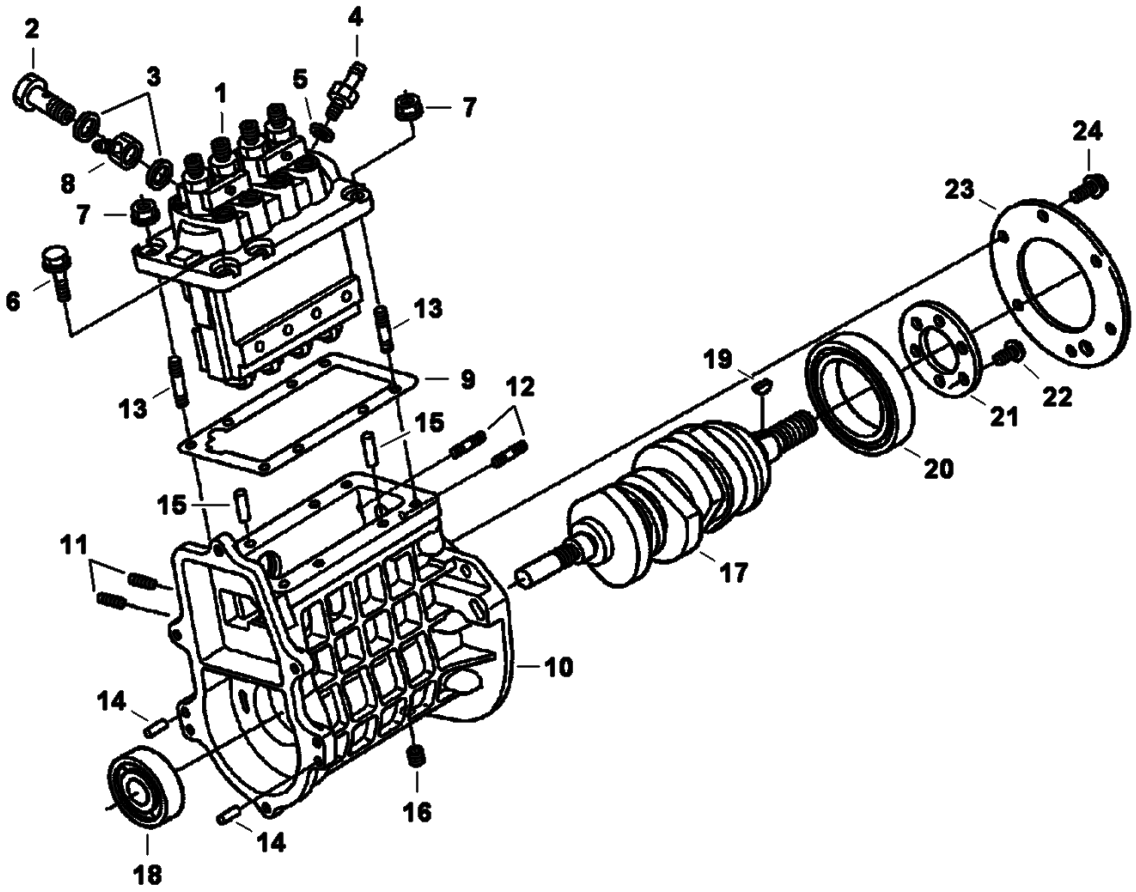

B-27835

Page 218 - OSS# 2072104 - All rights reserved by Bobcat Company - 01/20/2010 - 17:21:58 - Produced by Ken Cook Co. with mediaIoff

INJECTION PUMP (Cont'd)
(Fuel Camshaft)

Ref No	Part Number	Description	Remarks	Serial Number	Qty
1	7008493	PUMP, FUEL INJ	W/Ref. 2 & 3		1
2	7001499	BOLT, EYE			1
3	6698120	GASKET			2
4	7000609	SCREW, AIR BLEEDER			1
5	3974095	MET-GASK			2
6	6680755	BOLT			4
7	6969819	NUT, FLANGE			2
8	6513707	JOINT			1
9	6684829	SHIM			1
10	7008492	HOUSING, PUMP INJ	W/Ref. 11-16		1
11	6598156	STUD			2
12	7000606	STUD			2
13	6652670	STUD			2
14	6680809	PIN			2
15	3974394	PIN			2
16	6680667	PLUG			1
17	7000628	CAMSHAFT, FUEL			1
18	7000637	BEARING, BALL			1
19	6680813	KEY			1
20	7000617	BEARING, BALL			1
21	7000614	RETAINER, BEARING			1
22	7000594	SCREW			6
23	7000629	RETAINER, BEARING			1
24	29CM612	BOLT			6

Page 219 - OSS# 2072104 - All rights reserved by Bobcat Company - 01/20/2010 - 17:21:58 - Produced by Ken Cook Co. with mediaioff

INJECTION PUMP
(Adjustment Bolts)

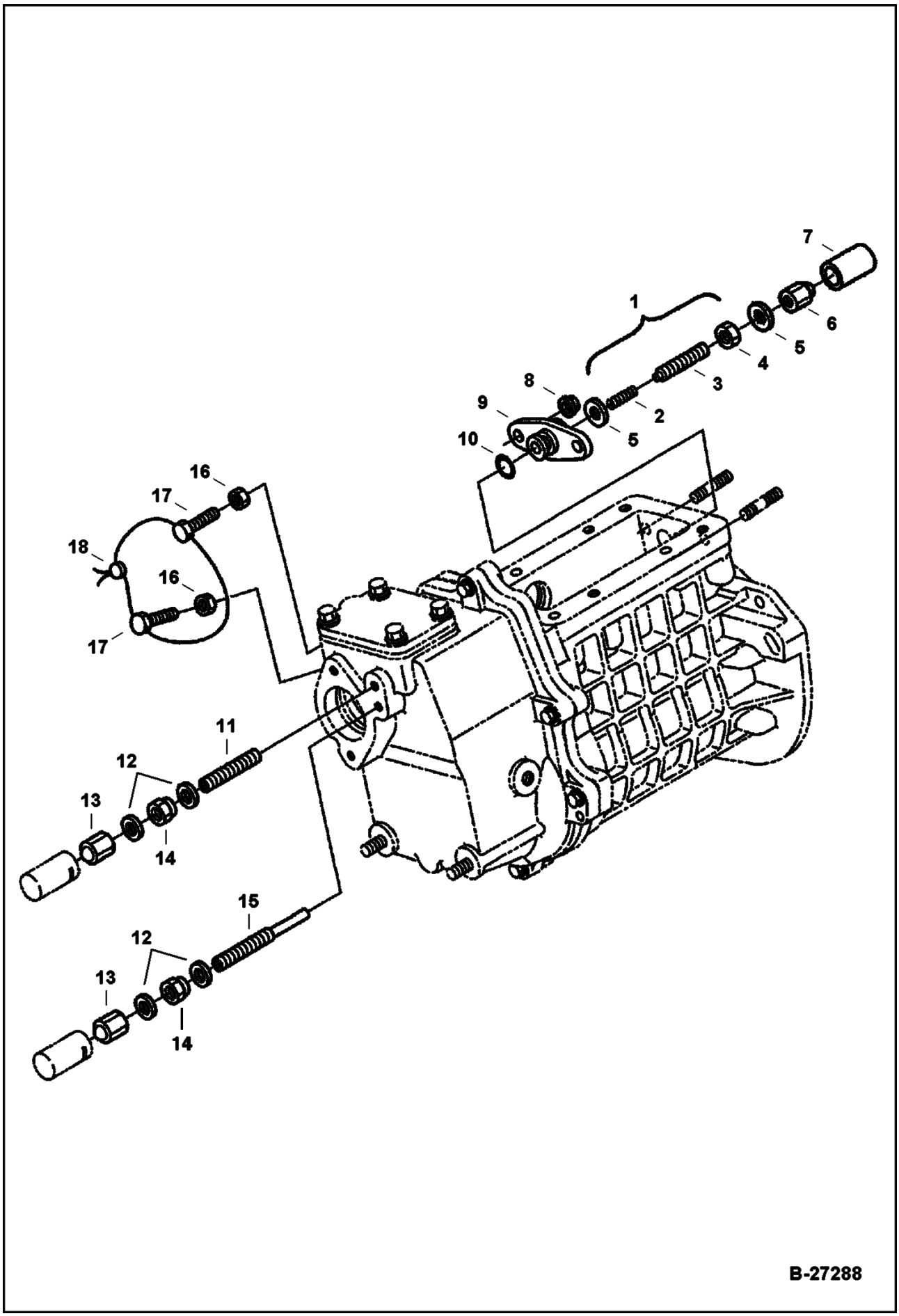

Page 220 - OSS# 2072104 - All rights reserved by Bobcat Company - 01/20/2010 - 17:21:58 - Produced by Ken Cook Co. with mediaioff

INJECTION PUMP (Cont'd)
(Adjustment Bolts)

Ref No	Part Number	Description	Remarks	Serial Number	Qty
1	7008394	BOLT, ADJUSTMENT ASSY	Ref. 2-4		1
2	7008395	SPRING			1
3		BOLT, ADJUSTMENT	NSS - Order Ref. 1		1
4	3974425	NUT			1
5	3974095	MET-GASK			1
6	3974978	NUT			1
7	3974979	CAP			1
8	6670533	NUT			2
9	7000621	BRACKET, BOLT ADJUSTING			1
10	7000731	O-RING			1
11	7000589	BOLT, ADJUSTING			1
12	3974972	GASKET			4
13	6657470	NUT			2
14	6680272	NUT			2
15	7000620	BOLT, ADJUSTING			1
16	1DM6	NUT			2
17	7008446	BOLT, ADJUSTING			2
18		WIRE, SECURITY	NAP		1

Page 221 - OSS# 2072104 - All rights reserved by Bobcat Company - 01/20/2010 - 17:21:58 - Produced by Ken Cook Co. with mediaioff

GOVERNOR

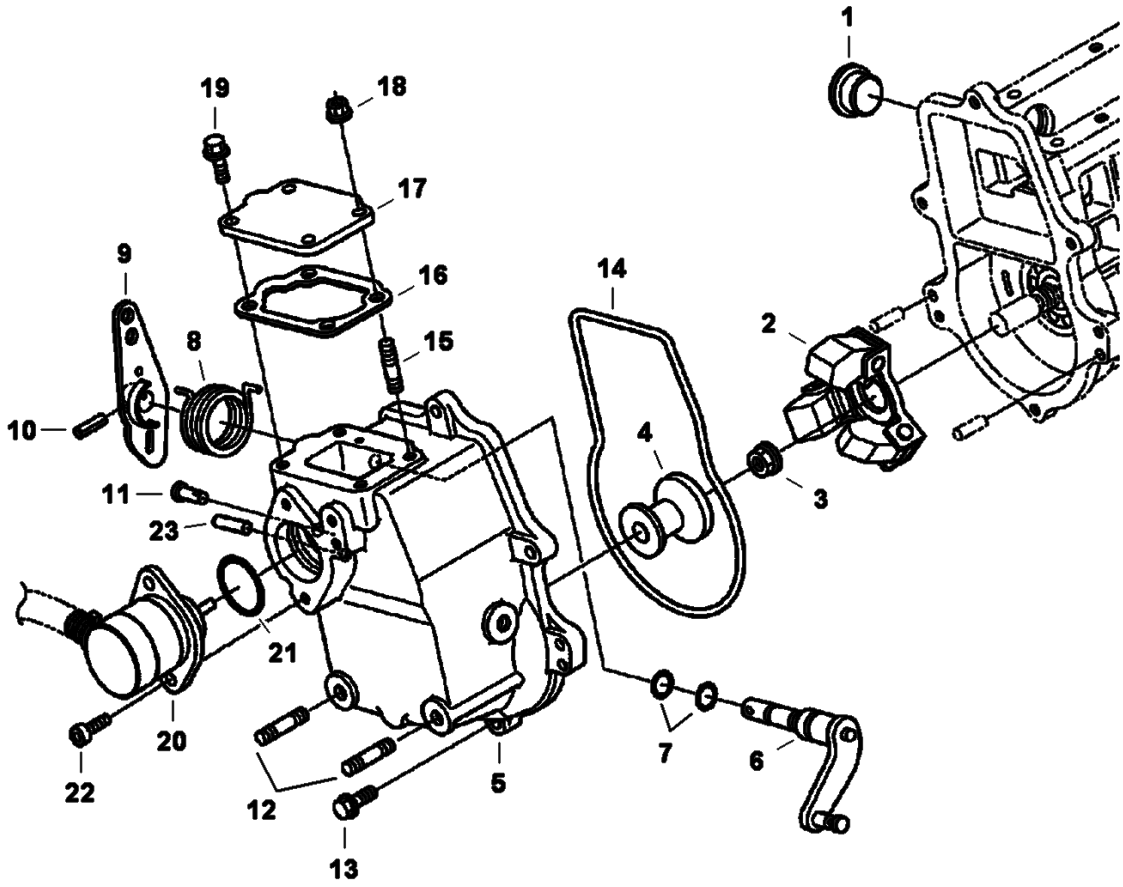

B-27836

Page 222 - OSS# 2072104 - All rights reserved by Bobcat Company - 01/20/2010 - 17:21:58 - Produced by Ken Cook Co. with mediaioff

Ref No	Part Number	Description	Remarks	Serial Number	Qty
1	6680757	COVER			1
2	7000638	WEIGHT, GOVERNOR			1
3	6680759	NUT			1
4	7000622	SLEEVE, GOVERNOR			1
5	7000768	HOUSING, GOVERNOR			1
6	7000623	LEVER, GOVERNOR			1
7	6683023	O-RING			2
8	7000625	SPRING, SPEED CONTROL			1
9	7000640	LEVER, SPEED			1
10	6680769	PIN			1
11	6652592	PIN			1
12	6680828	STUD			2
13	6680830	BOLT			6
14	6680829	GASKET			1
15	6683087	STUD			1
16	6684841	GASKET			1
17	6685500	COVER			1
18	6670533	NUT			1
19	29CM612	BOLT			3
20	7000769	SOLENOID, SHUTOFF FUEL			1
21	6685465	O-RING			1
22	6680533	BOLT			2
23	6680775	PIN			1

Page 223 - OSS# 2072104 - All rights reserved by Bobcat Company - 01/20/2010 - 17:21:58 - Produced by Ken Cook Co. with mediaioff

GOVERNOR
(Fork Lever)

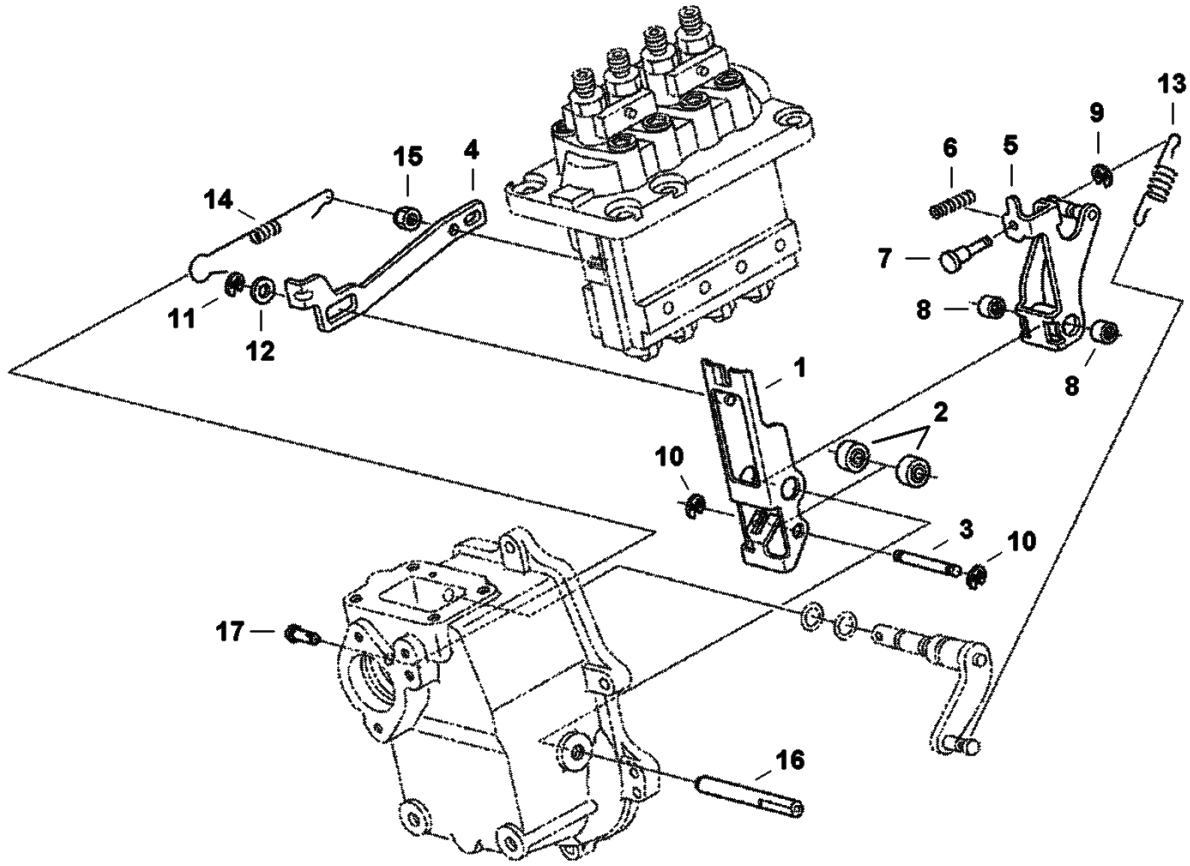

Page 224 - OSS# 2072104 - All rights reserved by Bobcat Company - 01/20/2010 - 17:21:58 - Produced by Ken Cook Co. with mediaioff

GOVERNOR (Cont'd)
(Fork Lever)

Ref No	Part Number	Description	Remarks	Serial Number	Qty
1	7000639	LEVER, FORK	W/Ref. 2-12		1
2		BEARING	NSS - Order Ref. 1		2
3		SHAFT	NSS - Order Ref. 1		1
4		BRACKET	NSS - Order Ref. 1		1
5		LEVER	NSS - Order Ref. 1		1
6		SPRING	NSS - Order Ref. 1		1
7		PIN	NSS - Order Ref. 1		1
8		BUSHING	NSS - Order Ref. 1		1
9	6680823	SNAP RING			1
10	6680822	SNAP RING			2
11	6680821	SNAP RING			1
12	6680820	WASHER			1
13	7008520	SPRING, GOVERNOR			1
14	7008499	SPRING, START			1
15	6685952	NUT			1
16	7000624	SHAFT, FORK LEVER			1
17	6652592	PIN			1

Page 225 - OSS# 2072104 - All rights reserved by Bobcat Company - 01/20/2010 - 17:21:58 - Produced by Ken Cook Co. with mediaioff

INJECTION NOZZLES

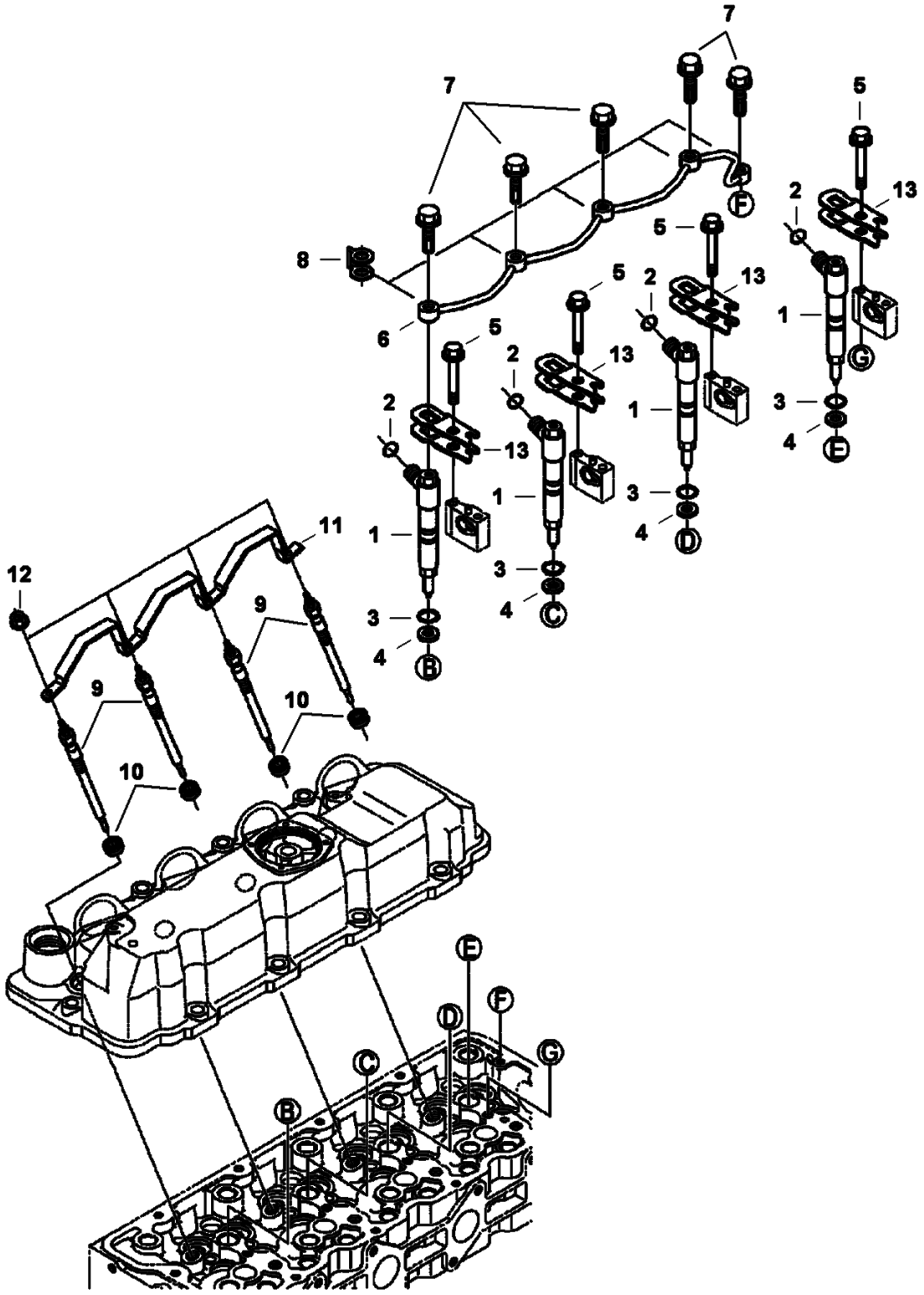

Page 226 - OSS# 2072104 - All rights reserved by Bobcat Company - 01/20/2010 - 17:21:58 - Produced by Ken Cook Co. with mediaIoff

Ref No	Part Number	Description	Remarks	Serial Number	Qty
1	7008498	HOLDER, NOZZLE	W/Ref. 2-4		4
2	6680778	O-RING			4
3	7000619	ORING			4
4	6969824	GASKET, NOZZLE INJ			4
5	7008445	CLAMP, INJECTION			8
6	7008442	PIPE, RETURN FUEL			1
7	6680788	BOLT			5
8	6685498	GASKET			5
9	7008500	GLOW PLUG			4
10	7000626	SEAL, INJ FUEL			4
11	7008447	CORD, GLOW PLUG			1
12	6670472	NUT			4
13	6680687	BOLT			4

Page 227 - OSS# 2072104 - All rights reserved by Bobcat Company - 01/20/2010 - 17:21:58 - Produced by Ken Cook Co. with mediaioff

INJECTION PIPE

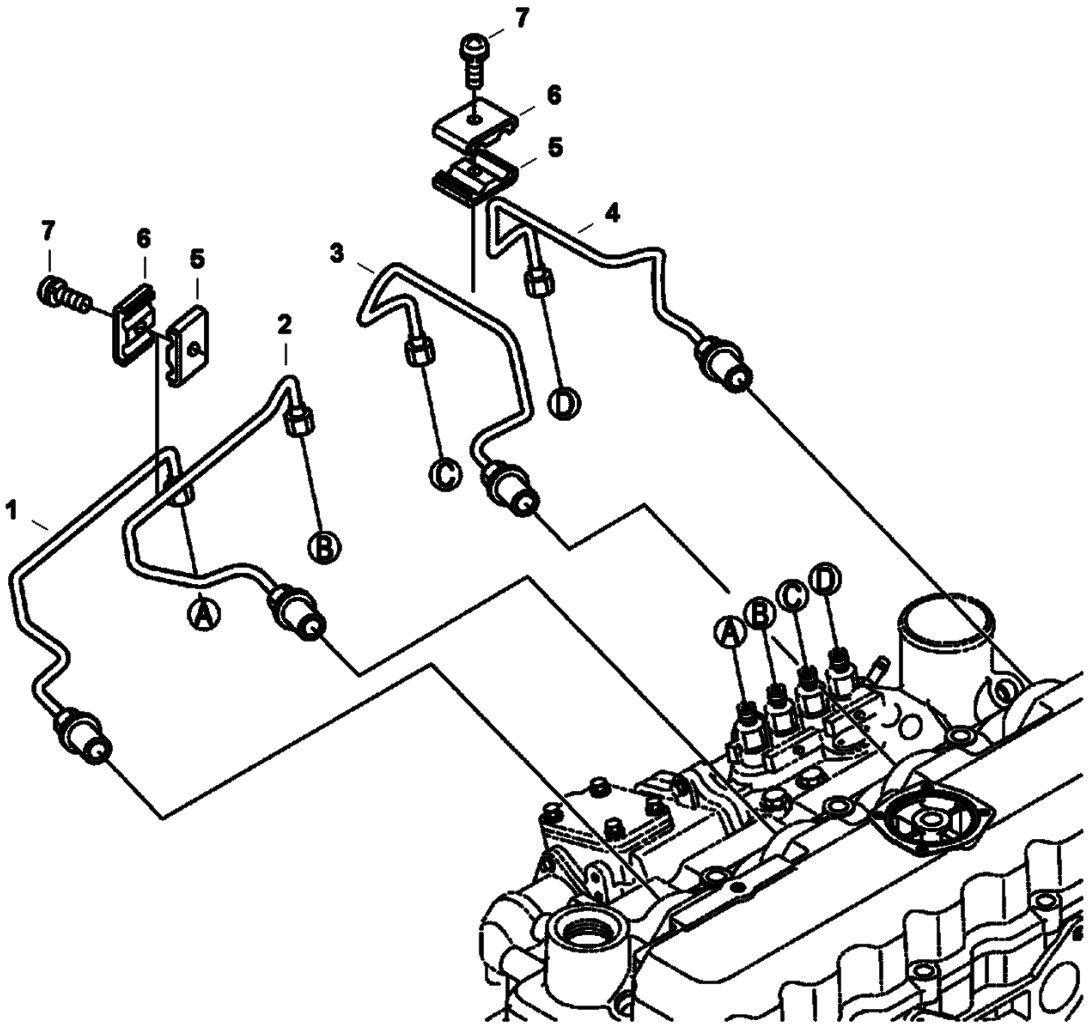

Page 228 - OSS# 2072104 - All rights reserved by Bobcat Company - 01/20/2010 - 17:21:58 - Produced by Ken Cook Co. with mediaioff

Ref No	Part Number	Description	Remarks	Serial Number	Qty
1	7008494	PIPE, INJECTION			1
2	7008495	PIPE, INJECTION			1
3	7008496	PIPE, INJECTION			1
4	7008497	PIPE, INJECTION			1
5	6652688	CLAMP			2
6	6652689	CLAMP			1
7	3974260	SCREW			2

Page 229 - OSS# 2072104 - All rights reserved by Bobcat Company - 01/20/2010 - 17:21:58 - Produced by Ken Cook Co. with mediaioff

AIR CLEANER

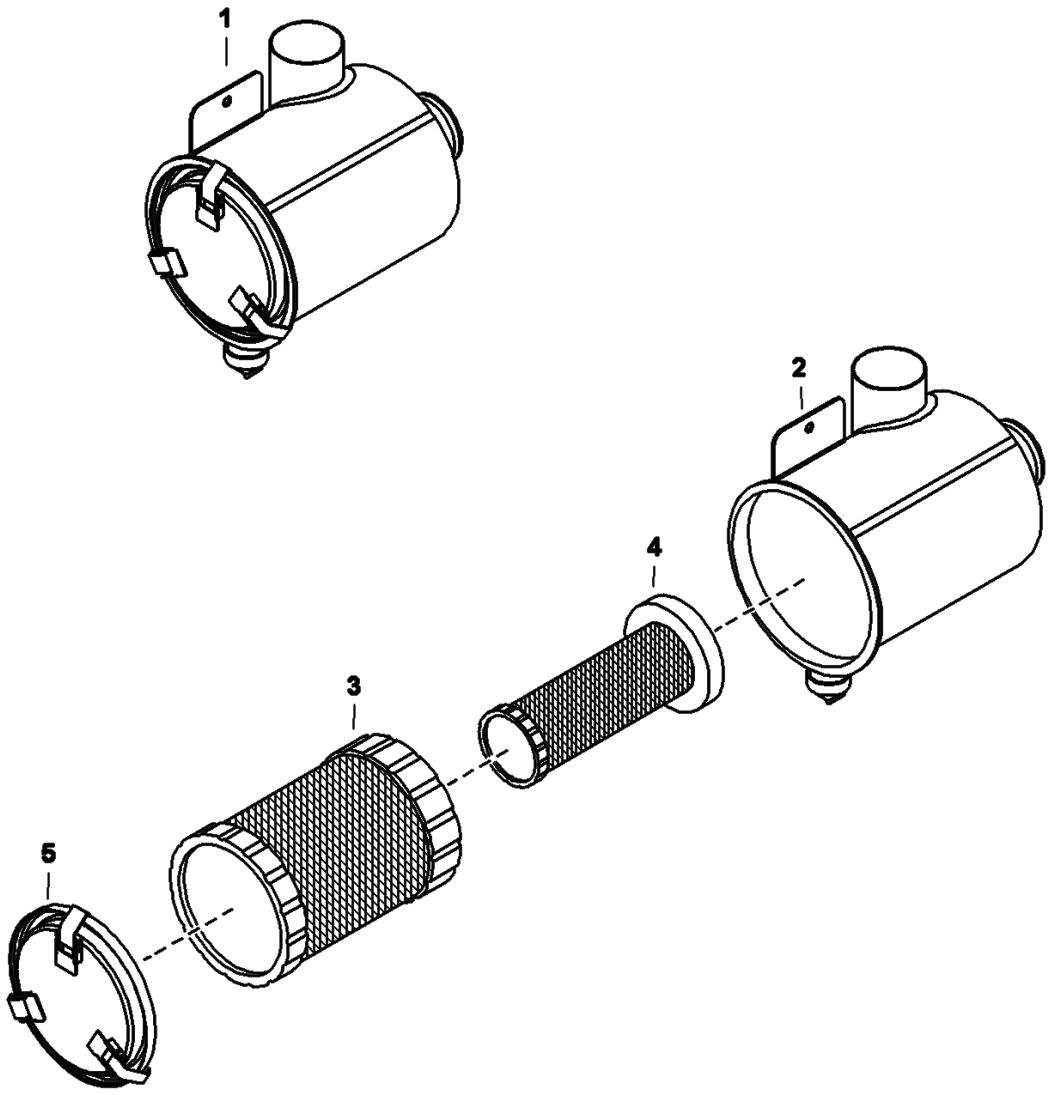

Page 230 - OSS# 2072104 - All rights reserved by Bobcat Company - 01/20/2010 - 17:21:58 - Produced by Ken Cook Co. with mediaioff

Ref No	Part Number	Description	Remarks	Serial Number	Qty
1	7148598	FILTER, AIR CLEANER ASSY			1
2		TANK	NSS		1
3	7008043	FILTER, OUTER			1
4	7008044	FILTER, INNER			1
5	7001920	COVER, FRONT			1

Page 231 - OSS# 2072104 - All rights reserved by Bobcat Company - 01/20/2010 - 17:21:58 - Produced by Ken Cook Co. with mediaioff

ACS CONVERSION KIT

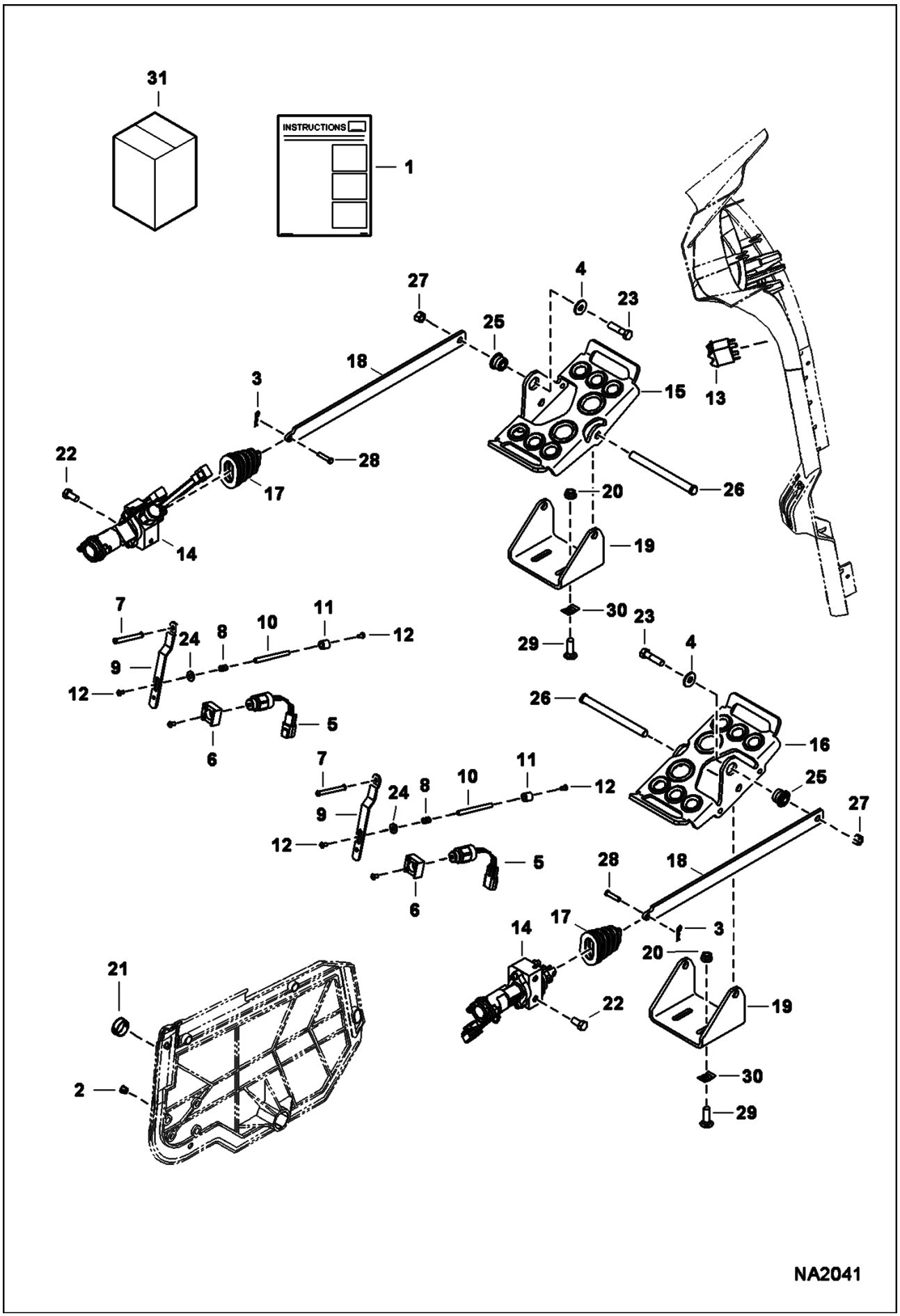

Page 232 - OSS# 2072104 - All rights reserved by Bobcat Company - 01/20/2010 - 17:21:58 - Produced by Ken Cook Co. with mediaioff

Ref No	Part Number	Description	Remarks	Serial Number	Qty
1	7129371	KIT, ACS	Ref. 2-31		1
2	5289686	PLUG			2
3	6513495	COTTER PIN			2
4	6563914	WASHER			2
5	6676029	SOLENOID			2
6	6680468	MOUNT			2
7	6680469	SPACER			2
8	6680470	SPRING			2
9	6680477	STRAP			2
10	6719834	SPACER			2
11	6719835	SLEEVE			2
12	6727065	BOLT			12
13	7001713	SWITCH			1
14	7003496	SENSOR			2
15	7151868	PEDAL ASSY	LH		1
16	7151871	PEDAL ASSY	RH		1
17	7153503	BOOT			2
18	7154903	LINK			2
19	7157611	MOUNT			2
20	57D6	NUT 5			2
21	7166315	PLUG			1
22	17C612	BOLT 5			4
23	17C624	BOLT 5			2
24	25E13	WASHER 5			2
25	6665701	BUSHING, PRESS FIT			1
26		PIN	NAP - Order Ref. 15 or 16		2
27	95D6	NUT			2
28	6564654	PIN			2
29	37C620	BOLT			4
30	6684033	NUT			4
31	6987236	INSTRUCTIONS			1

Page 233 - OSS# 2072104 - All rights reserved by Bobcat Company - 01/20/2010 - 17:21:58 - Produced by Ken Cook Co. with mediaioff

ASPIRATION HOSE KIT

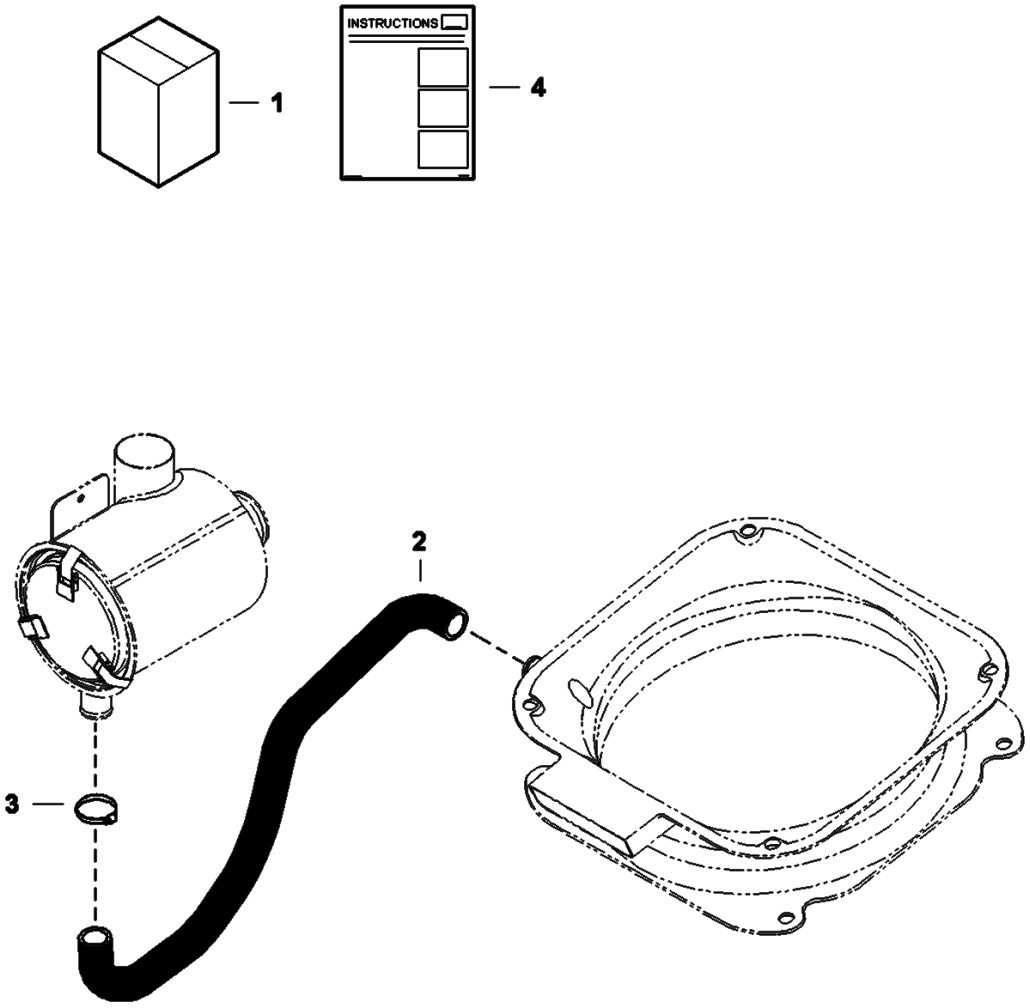

Page 234 - OSS# 2072104 - All rights reserved by Bobcat Company - 01/20/2010 - 17:21:58 - Produced by Ken Cook Co. with mediaioff

Ref No	Part Number	Description	Remarks	Serial Number	Qty
1		KIT, HOSE ASPIRATION	NAP - Order components		1
2	7157923	HOSE, AIR FORMED			1
3	5HM42	HOSECLAMP			1
4		INSTRUCTIONS	NAP		1

Page 235 - OSS# 2072104 - All rights reserved by Bobcat Company - 01/20/2010 - 17:21:58 - Produced by Ken Cook Co. with mediaioff

BACKUP ALARM KIT
(Manual Controls, AHC & ACS)

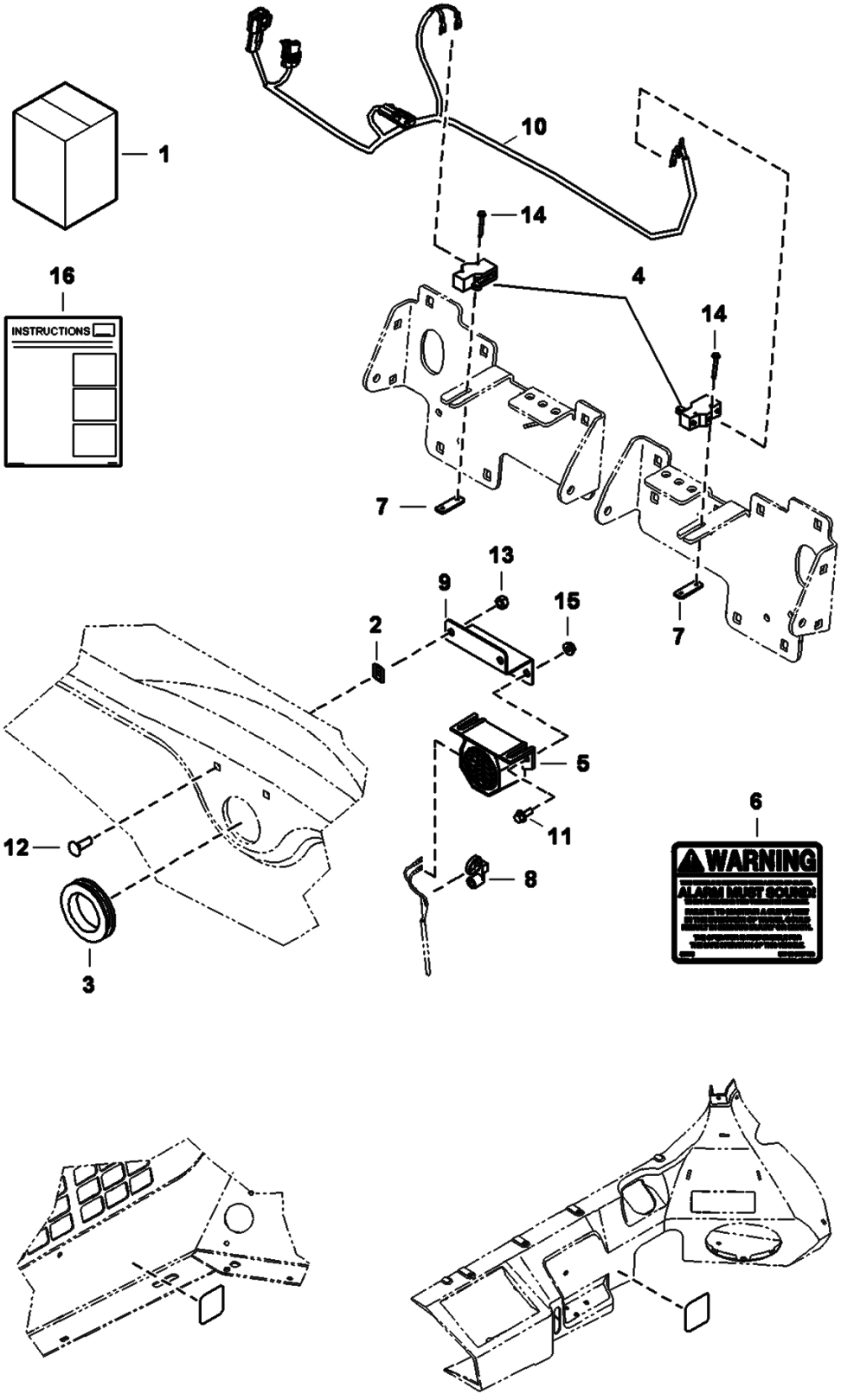

Page 236 - OSS# 2072104 - All rights reserved by Bobcat Company - 01/20/2010 - 17:21:58 - Produced by Ken Cook Co. with mediaioff

BACKUP ALARM KIT (Cont'd)
(Manual Controls, AHC & ACS)

Ref No	Part Number	Description	Remarks	Serial Number	Qty
1	7173592	KIT, ALARM BACK-UP	Ref. 2-16		1
2	774220	NUT			2
3	6577545	GROMMET			1
4	6646781	SWITCH			2
5	6651512	ALARM BACKUP			1
6	6737189	DECAL	warning		1
7	6702593	SPACER			2
8	7002988	TIE, STUD MOUNT			1
9	7167871	MOUNT, ALARM			1
10	7175017	HARNESS, ALARM BACK-UP			1
11	35C410	BOLT 5			2
12	37C516	BOLT			2
13	61D5	NUT			2
14	84G1320	BOLT			4
15	97D4	NUT			2
16	6987235	INSTRUCTIONS			1

Page 237 - OSS# 2072104 - All rights reserved by Bobcat Company - 01/20/2010 - 17:21:58 - Produced by Ken Cook Co. with mediaioff

BACKUP ALARM KIT
(SJC)

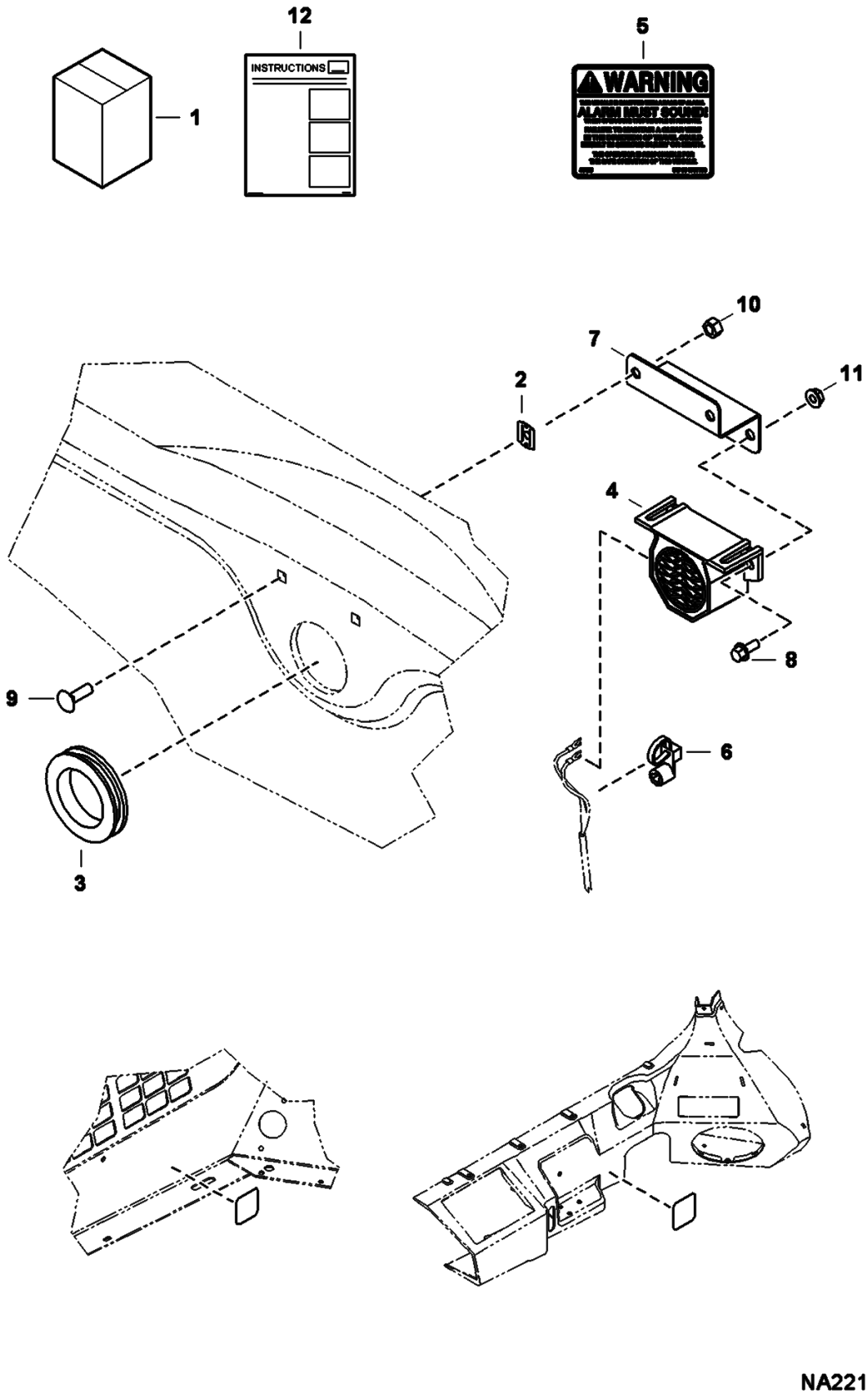

Page 238 - OSS# 2072104 - All rights reserved by Bobcat Company - 01/20/2010 - 17:21:58 - Produced by Ken Cook Co. with mediaioff

BACKUP ALARM KIT (Cont'd)
(SJC)

Ref No	Part Number	Description	Remarks	Serial Number	Qty
1	7173593	KIT, ALARM BACK-UP	Ref. 2-12		1
2	774220	NUT			2
3	6577545	GROMMET			1
4	6651512	ALARM BACKUP			1
5	6737189	DECAL	warning		1
6	7002988	TIE, STUD MOUNT			1
7	7167871	MOUNT, ALARM			1
8	35C410	BOLT 5			2
9	37C516	BOLT			2
10	61D5	NUT			2
11	97D4	NUT			2
12	6987235	INSTRUCTIONS			1

Page 239 - OSS# 2072104 - All rights reserved by Bobcat Company - 01/20/2010 - 17:21:58 - Produced by Ken Cook Co. with mediaioff

BEACON

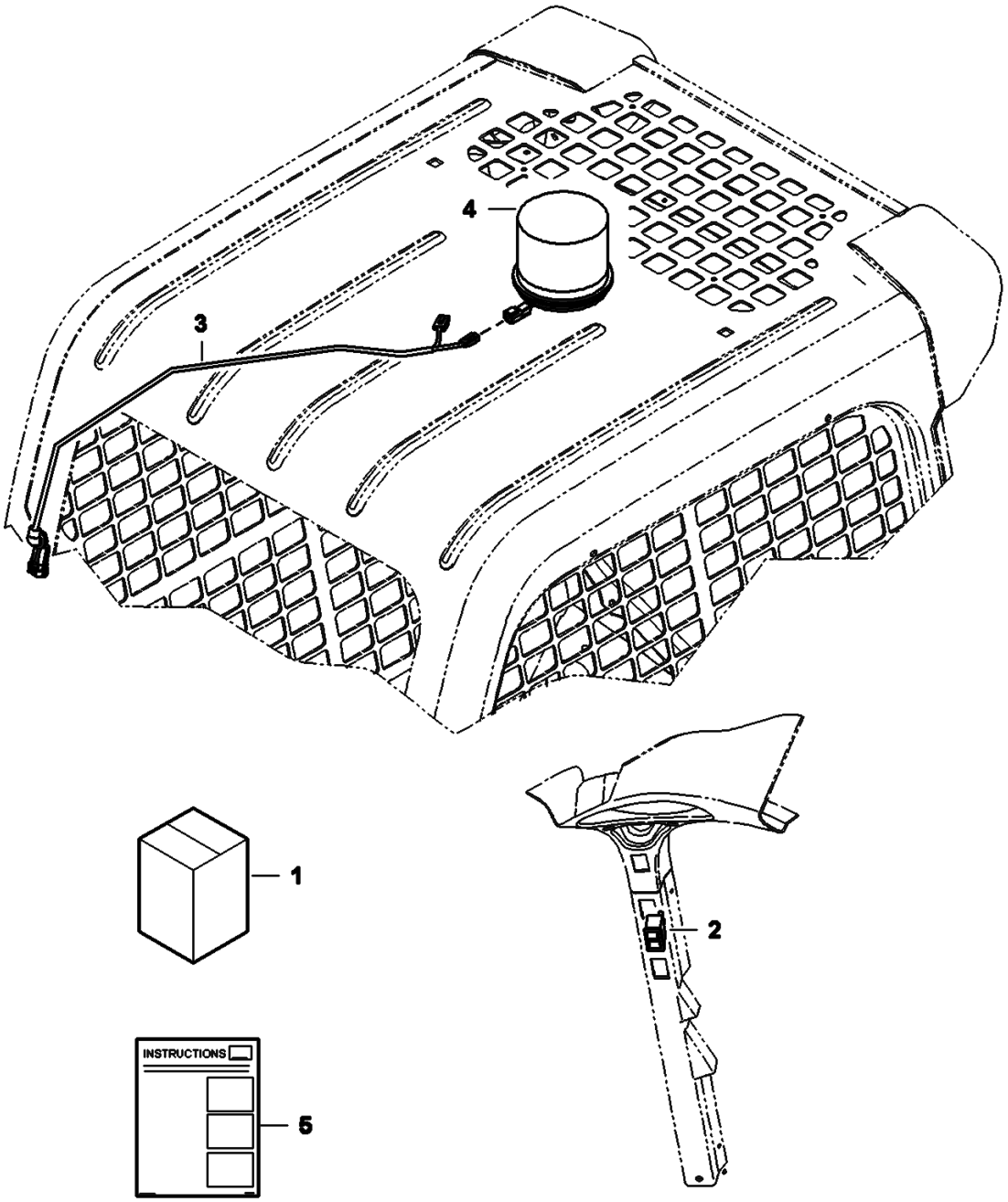

Page 240 - OSS# 2072104 - All rights reserved by Bobcat Company - 01/20/2010 - 17:21:58 - Produced by Ken Cook Co. with mediaioff

Ref No	Part Number	Description	Remarks	Serial Number	Qty
1	7129299	KIT, ROTATING BEACON	Ref. 2-5		1
2	6668816	SWITCH	horizontal		1
3	6718872	HARNESS			1
4	6675523	BEACON			1
5	6987225	INSTRUCTIONS			1

Page 241 - OSS# 2072104 - All rights reserved by Bobcat Company - 01/20/2010 - 17:21:58 - Produced by Ken Cook Co. with mediaioff

BLOCK HEATER
(Engine)

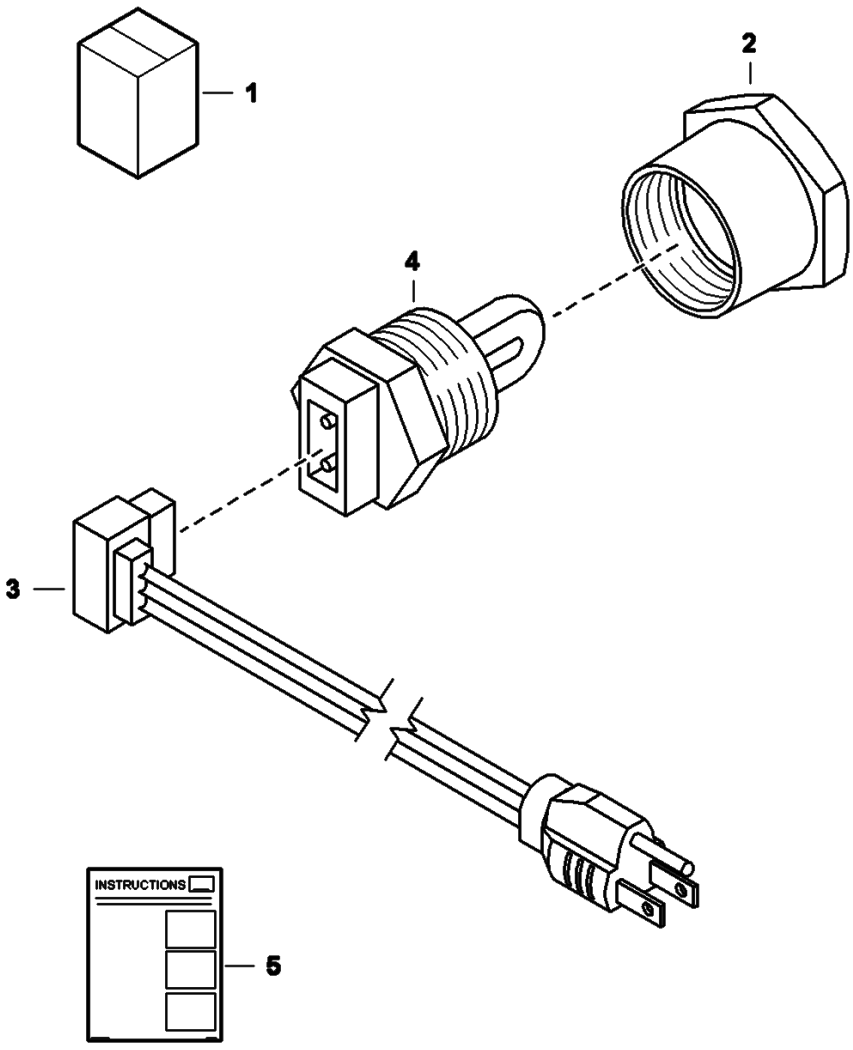

NA1308

Page 242 - OSS# 2072104 - All rights reserved by Bobcat Company - 01/20/2010 - 17:21:58 - Produced by Ken Cook Co. with mediaioff

BLOCK HEATER (Cont'd)
(Engine)

Ref No	Part Number	Description	Remarks	Serial Number	Qty
1	6720808	KIT	W/Ref. 2, 4 & 5		1
2	19F12	BUSHING			1
3	6685850	CORD			1
4	6659369	HEATER	W/Ref. 3		1
5	6720038	INSTRUCTIONS			1

Page 243 - OSS# 2072104 - All rights reserved by Bobcat Company - 01/20/2010 - 17:21:58 - Produced by Ken Cook Co. with mediaioff

BUCKET POSITION VALVE KIT

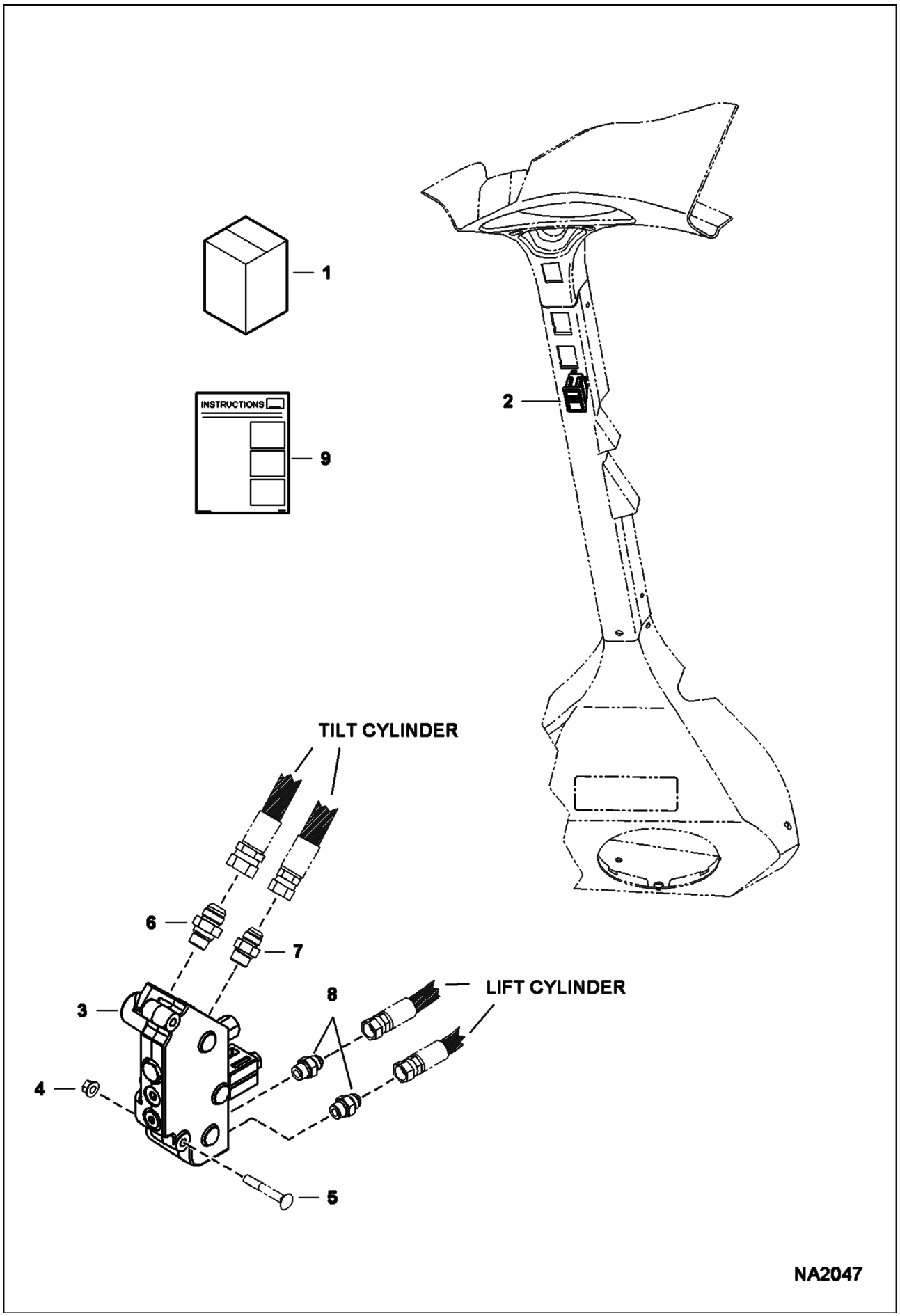

Page 244 - OSS# 2072104 - All rights reserved by Bobcat Company - 01/20/2010 - 17:21:58 - Produced by Ken Cook Co. with mediaioff

Ref No	Part Number	Description	Remarks	Serial Number	Qty
1	7129447	KIT, BPV	Ref. 2, 3 & 9		1
2	6690947	SWITCH, BPV			1
3	7002986	VALVE, BPV			1
4		NUT	See Illustration HYDRAULIC CIRCUITRY/ NA1218		2
5		BOLT	See Illustration HYDRAULIC CIRCUITRY/ NA1218		2
6		FITTING	See Illustration HYDRAULIC CIRCUITRY/ NA1218		1
7		FITTING	See Illustration HYDRAULIC CIRCUITRY/ NA1218		1
8		FITTING	See Illustration HYDRAULIC CIRCUITRY/ NA1218		2
9	6987250	INSTRUCTIONS			1

Page 245 - OSS# 2072104 - All rights reserved by Bobcat Company - 01/20/2010 - 17:21:58 - Produced by Ken Cook Co. with mediaioff

BUCKET POSITION VALVE

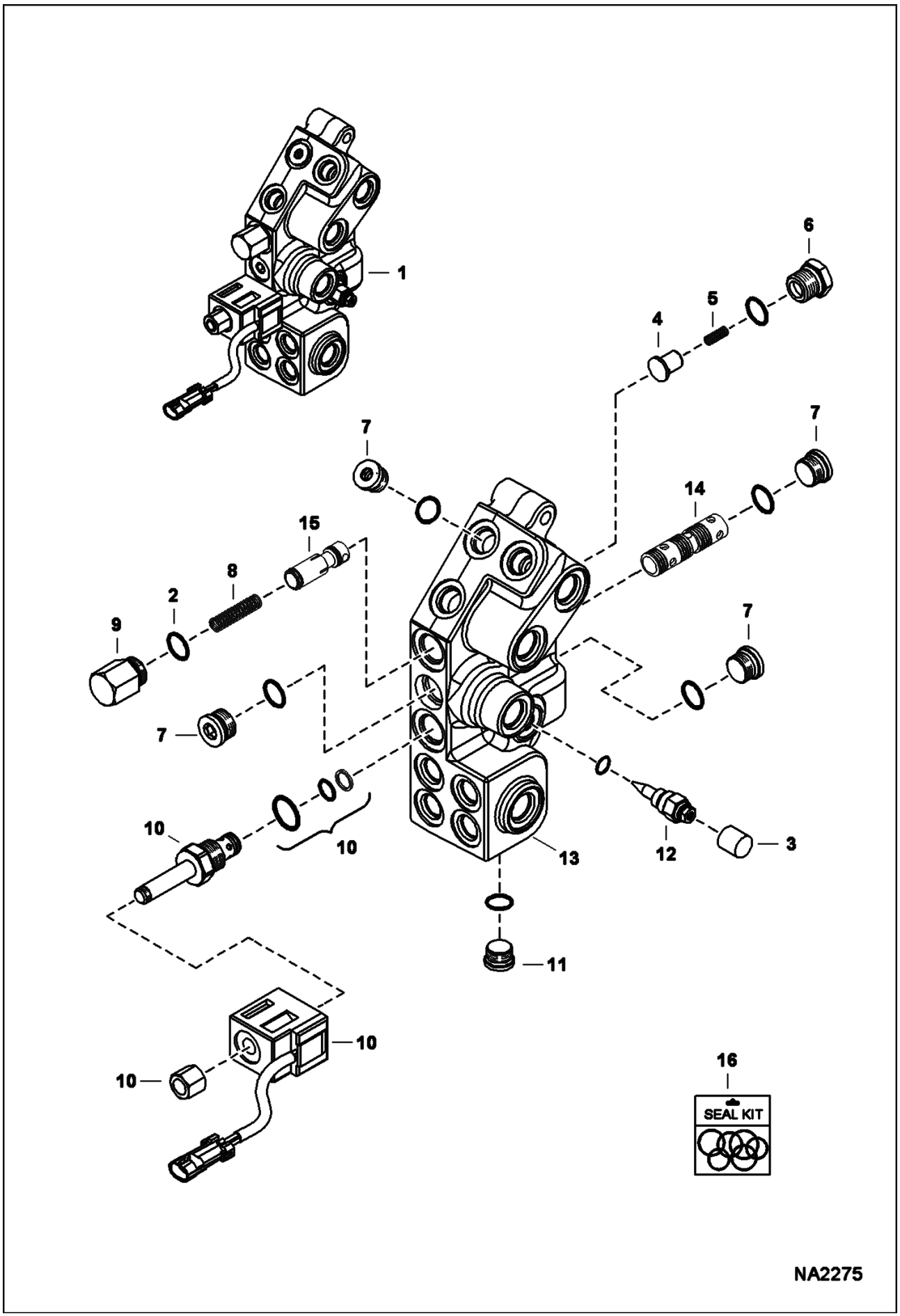

Page 246 - OSS# 2072104 - All rights reserved by Bobcat Company - 01/20/2010 - 17:21:58 - Produced by Ken Cook Co. with mediaioff

BUCKET POSITION VALVE (Cont'd)

Ref No	Part Number	Description	Remarks	Serial Number	Qty
1	7002986	VALVE, BPV	Ref. 2-15		1
2	6667680	SNAP RING			1
3	6667676	COVER			1
4	6647783	LOAD CHECK			1
5	6647785	SPRING			1
6	6647784	PLUG			1
7	6676543	PLUG			4
8	6648294	SPRING			1
9	6667176	PLUG			1
10	6672863	VALVE, SOLENOID			1
10	6671527	NUT			1
10	6670634	SEAL KIT			1
10	6675781	COIL			1
10	6675780	CARTRIDGE			1
11	7010282	PLUG			2
12	7010283	VALVE, REGULATOR			1
13		BLOCK	NSS		1
14		SPOOL	NSS		1
15		SPOOL	NSS		1
16	6667185	SEAL KIT			1

Page 247 - OSS# 2072104 - All rights reserved by Bobcat Company - 01/20/2010 - 17:21:58 - Produced by Ken Cook Co. with mediaioff

CAB
(Accessories Harness Kit)

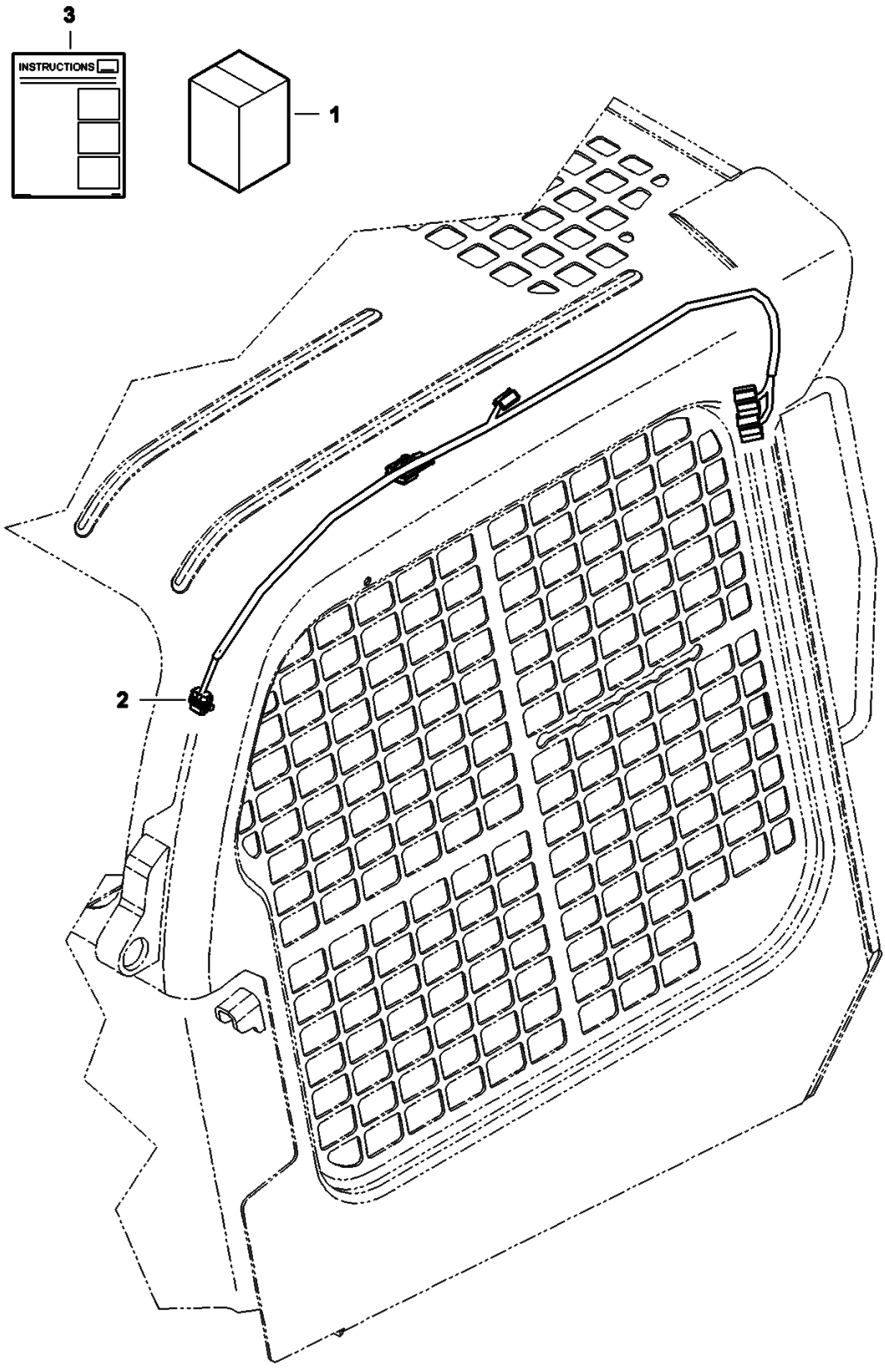

Page 248 - OSS# 2072104 - All rights reserved by Bobcat Company - 01/20/2010 - 17:21:58 - Produced by Ken Cook Co. with mediaioff

Ref No	Part Number	Description	Remarks	Serial Number	Qty
1		KIT, STD OPT ADAPTER	NAP - Order components		1
2	7169130	HARNESS ACCESSORY			1
3	6987252	INSTRUCTIONS			1

Page 249 - OSS# 2072104 - All rights reserved by Bobcat Company - 01/20/2010 - 17:21:58 - Produced by Ken Cook Co. with mediaioff

CAB
(Cup Holder Kit)

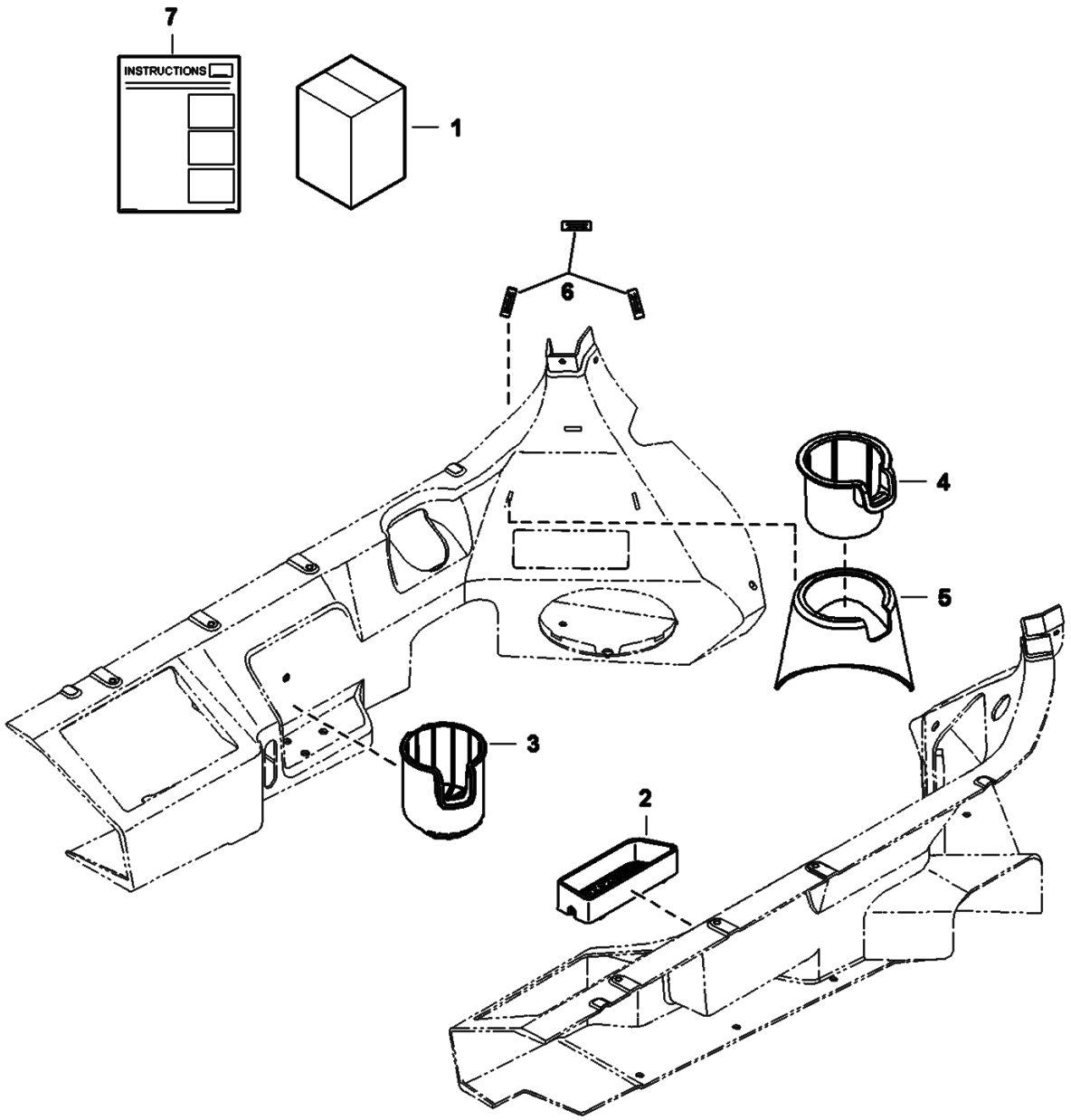

Page 250 - OSS# 2072104 - All rights reserved by Bobcat Company - 01/20/2010 - 17:21:58 - Produced by Ken Cook Co. with mediaioff

Ref No	Part Number	Description	Remarks	Serial Number	Qty
1	7167395	KIT, CUP HOLDER	Ref. 2-7		1
2	7154404	CONTAINER			1
3	7154405	CUP HOLDER			1
4	7155649	CUP HOLDER			1
5	7160320	CUP HOLDER			1
6	7167003	CLIP			3
7	6987227	INSTRUCTIONS			1

Page 251 - OSS# 2072104 - All rights reserved by Bobcat Company - 01/20/2010 - 17:21:58 - Produced by Ken Cook Co. with mediaioff

CAB
(Deluxe Interior Kit)

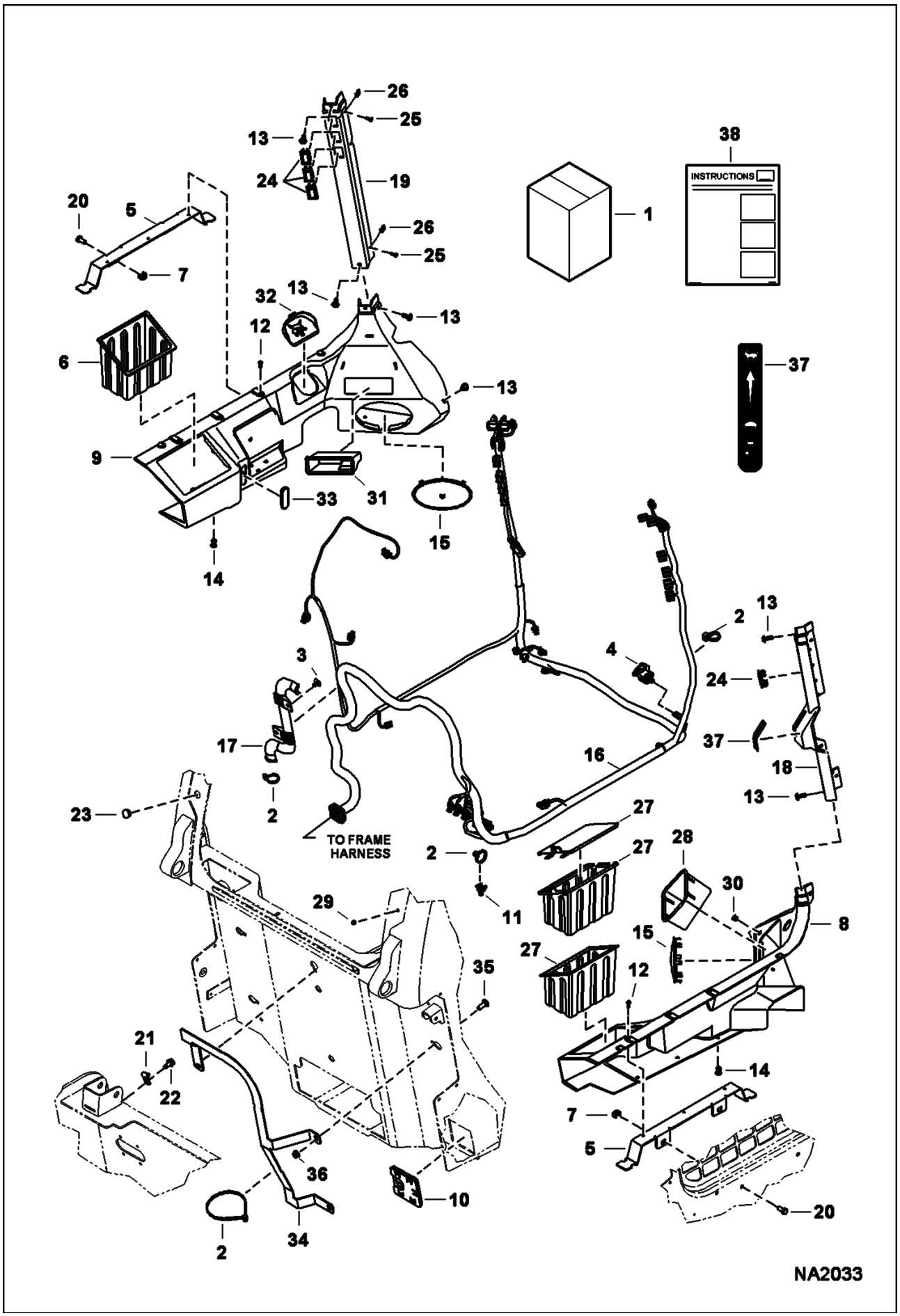

Page 252 - OSS# 2072104 - All rights reserved by Bobcat Company - 01/20/2010 - 17:21:58 - Produced by Ken Cook Co. with mediaioff

Ref No	Part Number	Description	Remarks	Serial Number	Qty
1	7129465	KIT, INTERIOR DELUXE	Ref. 2-37		1
2	6624289	TIE STRAP			17
3	6674895	RETAINER			2
4	7001664	PLUG, POWER			1
5	7116118	BRACKET			2
6	7145268	CONTAINER, STORAGE			1
7	7149204	NUT			4
8	7155642	FENDER, PANEL RH			1
9	7155643	FENDER, PANEL L.H.			1
10	7179114	PLUG, HARNESS CAB DLX			1
11	6678666	TREE MOUNT			2
12	7160381	RIVET, BIRD CAGE			6
13	7160382	RIVET, BIRD CAGE			8
14	7160383	RIVET, BIRD CAGE			10
15	7161939	GRILL			2
16	7163689	HARNESS, CAB DLX			1
17	7164073	GUIDE			1
18	7164347	COLUMN, FRONT RIGHT			1
19	7172344	COLUMN, FRONT LEFT			1
20	17C612	BOLT 5			4
21	30H20	CLIP			1
22	84G3712	BOLT			1
23	6657719	PLUG			2
24	6665314	PLUG			5
25	6669224	BOLT			6
26	7142762	CLIP			6
27	7145268	CONTAINER, STORAGE			1
27	7166865	COVER, TOOL BOX			1
27	7166865	COVER, TOOL BOX			1
28	7154285	BOX, STORAGE			1
29	7174012	PLUG			1
30	7162771	PLUG, HOLE			1
31	7165344	STORAGE			1
32	7165345	DOOR, COVER			1
33	7165346	DOOR, COVER			1
34	7166177	BRACKET			1
35	10C616	BOLT 10			3
36	97D6	NUT 10			3
37	7177742	DECAL	throttle		1
38	6987234	INSTRUCTIONS			1

Page 253 - OSS# 2072104 - All rights reserved by Bobcat Company - 01/20/2010 - 17:21:58 - Produced by Ken Cook Co. with mediaioff

CAB
(Deluxe Headliner Kit)

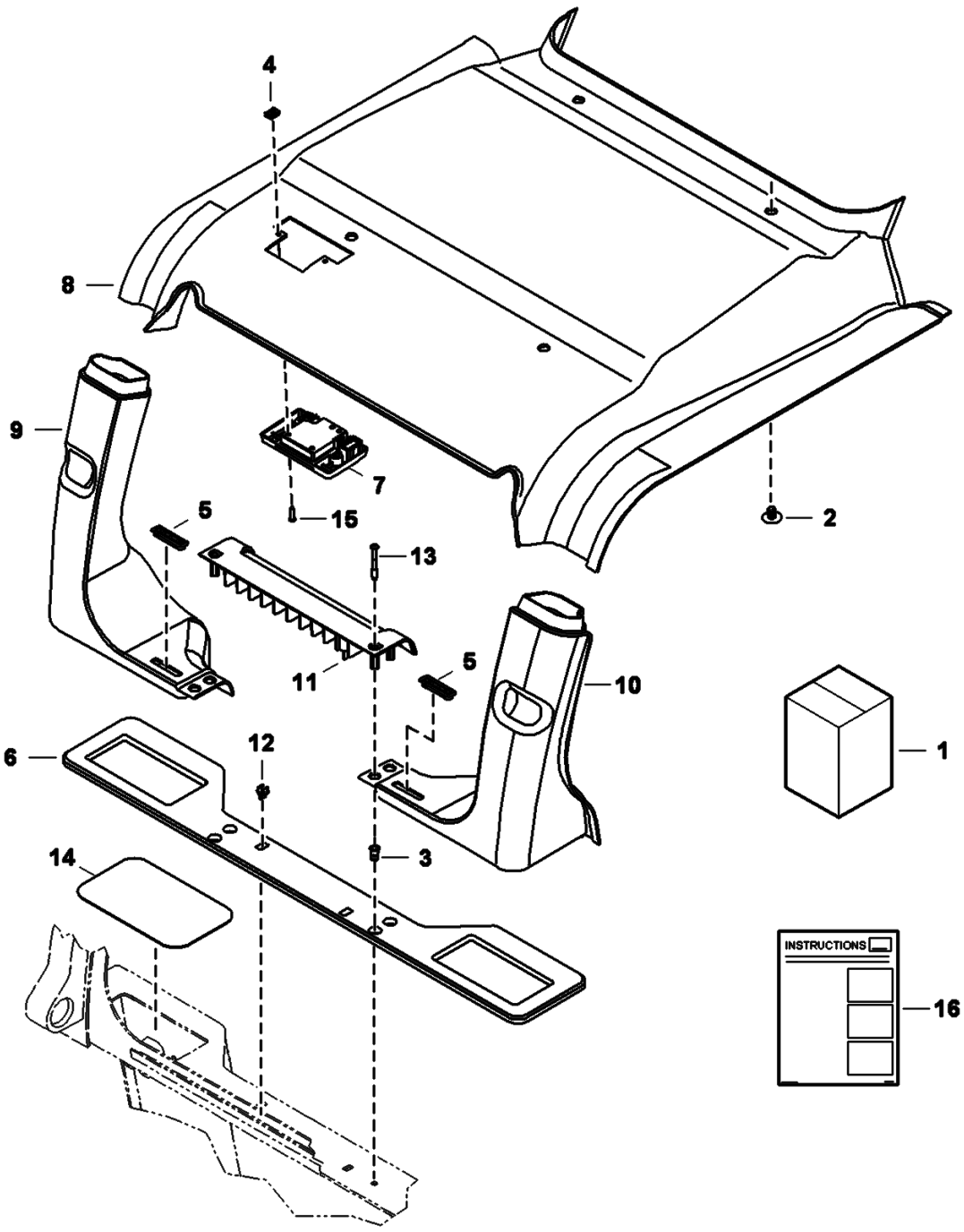

Page 254 - OSS# 2072104 - All rights reserved by Bobcat Company - 01/20/2010 - 17:21:58 - Produced by Ken Cook Co. with mediaioff

Ref No	Part Number	Description	Remarks	Serial Number	Qty
1	7156253	KIT, DLX HEADLINER	Ref. 2-16		1
2	6674895	RETAINER			4
3	6675033	INSERT			2
4	7142762	CLIP			2
5	7145885	VENT, DEFROST			2
6	7153832	SEAL, SHELF REAR			1
7	7155797	LIGHT			1
8	7155798	HEADLINER, DELUXE			1
9	7165330	DUCT, RR			1
10	7165331	DUCT, RL			1
11	7165332	SHELF, REAR			1
12	7165333	CLIP			2
13	7165799	SCREW			2
14	7168610	COVER			2
15	7170114	SCREW			2
16	6987355	INSTRUCTIONS			1

Page 255 - OSS# 2072104 - All rights reserved by Bobcat Company - 01/20/2010 - 17:21:58 - Produced by Ken Cook Co. with mediaioff

CAB
(Deluxe Panel Kit)

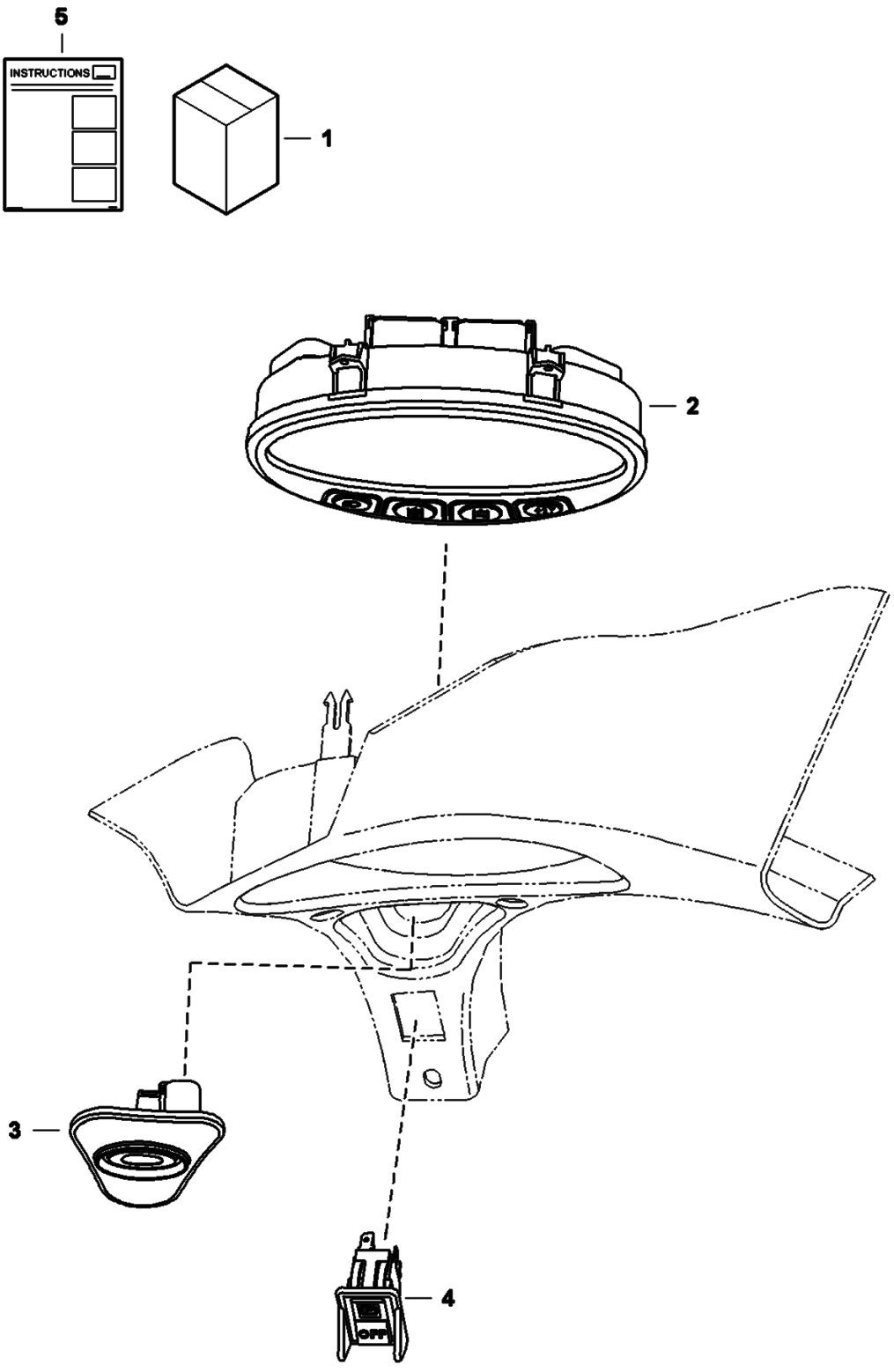

Page 256 - OSS# 2072104 - All rights reserved by Bobcat Company - 01/20/2010 - 17:21:58 - Produced by Ken Cook Co. with mediaioff

Ref No	Part Number	Description	Remarks	Serial Number	Qty
1	7128344	KIT, DELUXE PANEL	Ref. 2-5		1
2	6693413	DISPLAY, DLX			1
3	7003033	SWITCH, IGN			1
4	6690948	SWITCH PARK BRAKE			1
5	6987280	INSTRUCTIONS			1

Page 257 - OSS# 2072104 - All rights reserved by Bobcat Company - 01/20/2010 - 17:21:58 - Produced by Ken Cook Co. with mediaioff

CAB
(Keyless Panel Kit)

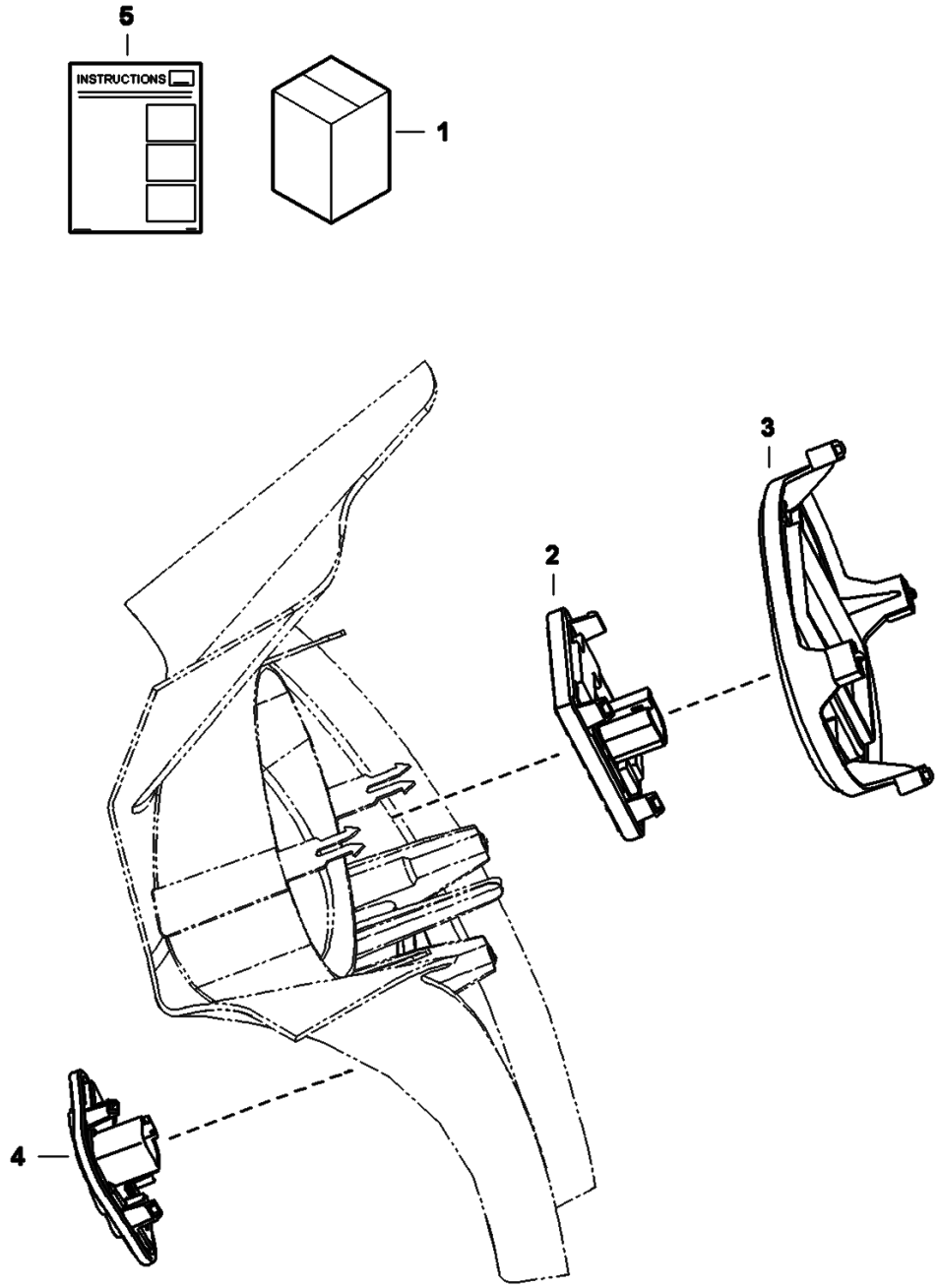

Page 258 - OSS# 2072104 - All rights reserved by Bobcat Company - 01/20/2010 - 17:21:58 - Produced by Ken Cook Co. with mediaioff

Ref No	Part Number	Description	Remarks	Serial Number	Qty
1	7129289	KIT, KEYLESS PANEL	Ref. 2-5		1
2	6693712	KEYPAD, PANEL			1
3	7003027	CAP			1
4	7003033	SWITCH, IGN			1
5	6987281	INSTRUCTIONS			1

Page 259 - OSS# 2072104 - All rights reserved by Bobcat Company - 01/20/2010 - 17:21:58 - Produced by Ken Cook Co. with mediaioff

CAB
(Radio Kit)

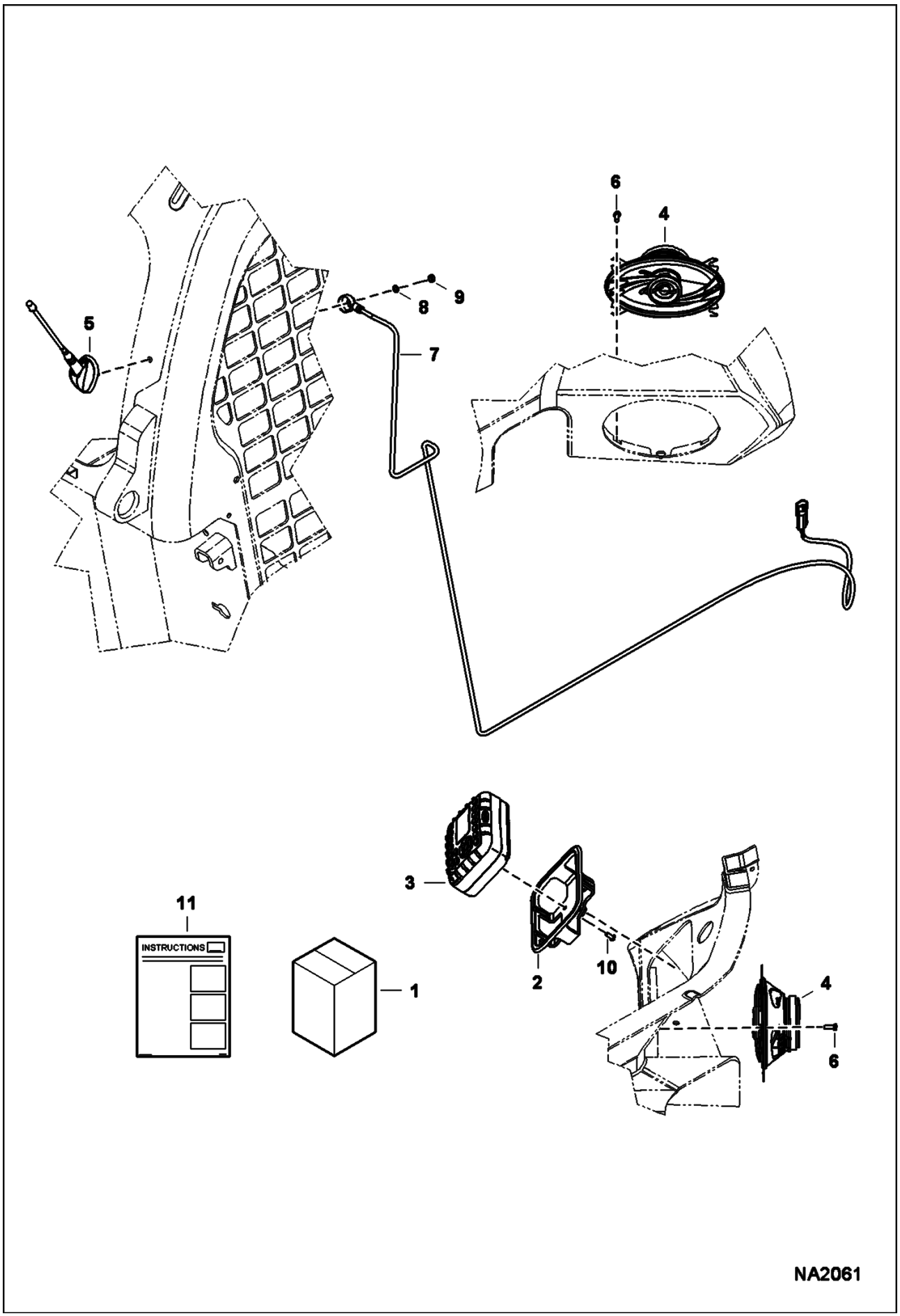

Page 260 - OSS# 2072104 - All rights reserved by Bobcat Company - 01/20/2010 - 17:21:58 - Produced by Ken Cook Co. with mediaioff

Ref No	Part Number	Description	Remarks	Serial Number	Qty
1		KIT, RADIO	NAP - Ref. 2-11 - Order components		1
2	7145333	BRACKET, RADIO			1
3	6988336	RADIO, MINI BOBCAT JHD910	W/Ref. 10 - Was 7159873 [A]		1
4	7159875	SPEAKER			2
5	7159876	ANTENNA	W/Ref. 7-9		1
6	7162770	SCREW, PLASTIC			8
7		CABLE	NSS - Order Ref. 5		1
8		WASHER	NSS - Order Ref. 5		1
9		NUT	NSS - Order Ref. 5		1
10		SCREW	NSS - Order Ref. 3		4
11	6987139	INSTRUCTIONS			1

Page 261 - OSS# 2072104 - All rights reserved by Bobcat Company - 01/20/2010 - 17:21:58 - Produced by Ken Cook Co. with mediaioff

CAB DOOR

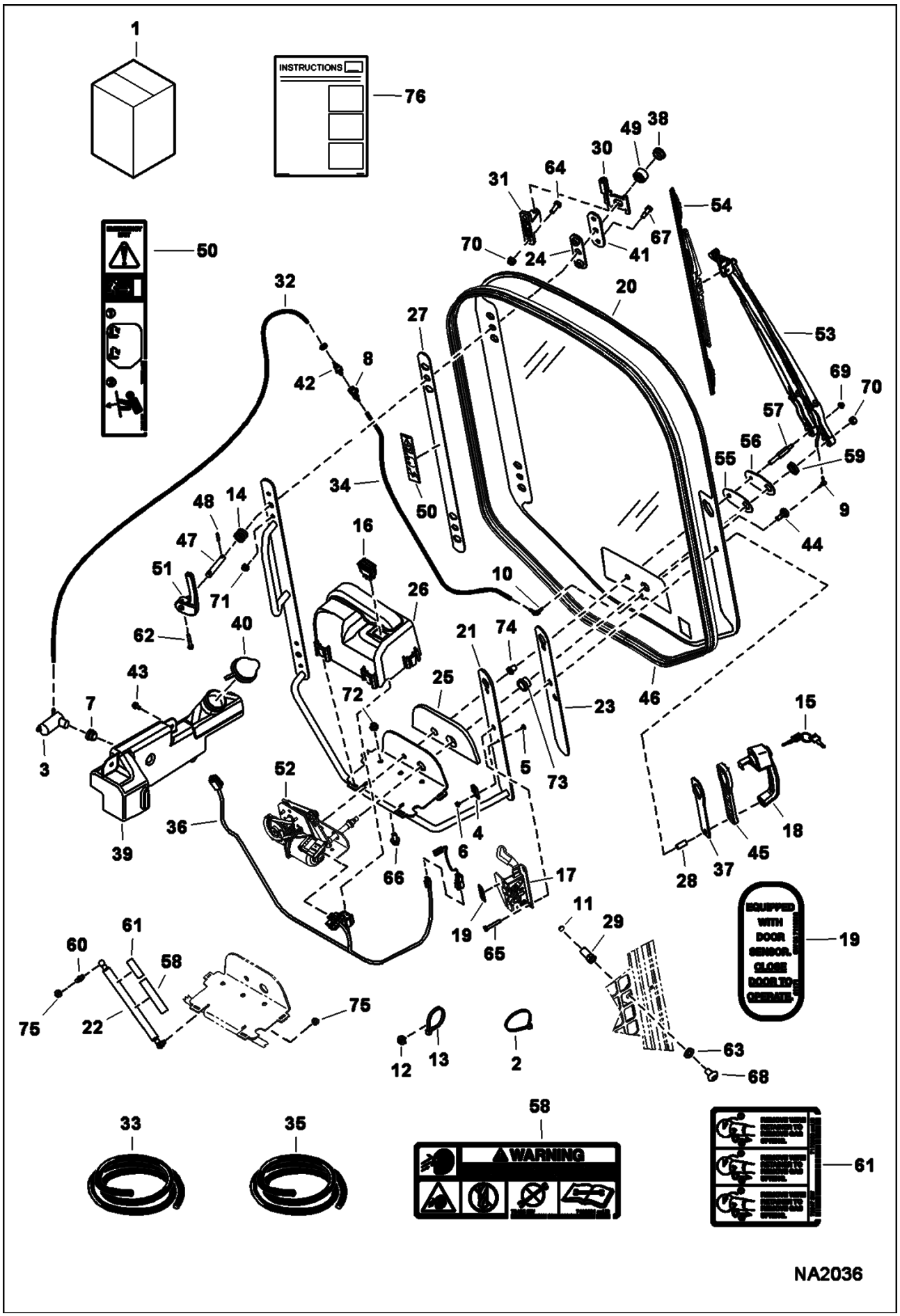

Page 262 - OSS# 2072104 - All rights reserved by Bobcat Company - 01/20/2010 - 17:21:58 - Produced by Ken Cook Co. with mediaioff

Ref No	Part Number	Description	Remarks	Serial Number	Qty
1	7128393	KIT, DOOR	Ref. 2-76		1
2	6610510	TIE			3
3	6664554	PUMP, WIPER WASHER			1
4	6665000	CLIP			1
5	6665321	RIVET			1
6	6665322	RIVET			1
7	6666766	GROMMET			1
8	6675298	COUPLER, BODY			1
9	6676500	ELBOW			1
10	6676917	ELBOW			1
11	6677192	MAGNET			1
12	6690688	TREE MOUNT			6
13	6690690	TIE			6
14	6704453	SPRING			1
15	6693241	KEY	single key W/O ring		1
16	7001709	SWITCH FRONT WIPER			1
17	7109661	LATCH, DOOR W/SENSOR			1
18	7109662	HANDLE, LATCH DOOR			1
19	7110316	DECAL			1
20	7120401	GLASS, DOOR			1
21	7120402	FRAME DOOR ASSY			1
22	7142371	SPRING GAS DOOR	Also Order Ref. 58 & 61		1
23	7148287	SEAL DOOR HANDLE			1
24	7148289	SEAL DOOR HINGE			2
25	7174837	GASKET, WIPER			1
26	7149827	COVER, WIPER			1
27	7150719	SEAL DOOR FRAME			1
28	7174841	SPACER, HANDLE			2
29	7175151	STRIKER, DOOR			1
30	7150817	HINGE DOOR W/A			2
31	7176593	HINGE BASE			2
32		HOSE	NAP - 48" (1,219.2 mm) long - Order Ref. 33		1
33	6708310	HOSE	bulk - sold per foot		x
34		HOSE	NAP - 31" (787.4 mm) long - Order Ref. 35		1
35	6676003	HOSE	bulk - sold per foot		x
36	7155024	HARNESS DOOR			1
37	7160841	SEAL HANDLE DOOR			1
38	7161429	PLUG			2
39	7163259	WASHER TANK			1
40	7163263	CAP WASHER BOTTLE			1
41	7164590	DOOR PLATE			2
42	7165972	COUPLER INSERT			2
43	7166190	SCREW THREAD			3

Page 263 - OSS# 2072104 - All rights reserved by Bobcat Company - 01/20/2010 - 17:21:58 - Produced by Ken Cook Co. with mediaioff

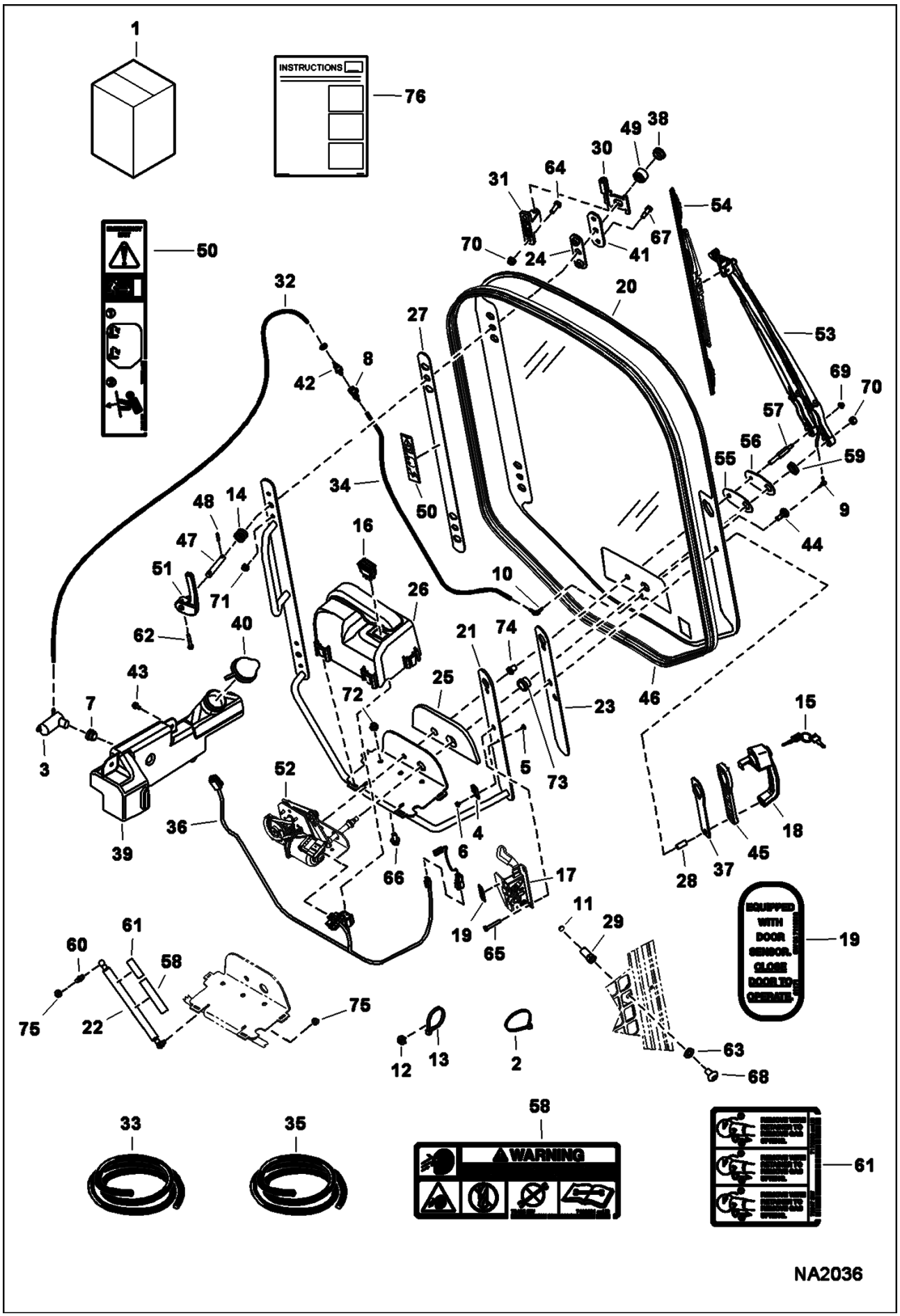

Page 264 - OSS# 2072104 - All rights reserved by Bobcat Company - 01/20/2010 - 17:21:58 - Produced by Ken Cook Co. with mediaioff

Ref No	Part Number	Description	Remarks	Serial Number	Qty
		ROLLING			
44	7166205	SPACER HANDLE			1
45	7167177	GROMMET WIPER			1
46	7167652	SEAL DOOR			1
47	7167844	SHAFT			2
48	7167845	PIN			2
49	7167846	WASHER CAST			2
50	7168025	DECAL EMERGENCY DOOR			1
51	7168288	LEVER MACHINED			1
52	7168952	WIPER MOTOR			1
53	7168953	ARM WIPER ASSY			1
54	7168954	BLADE WIPER ASSY			1
55	7168955	GASKET			1
56	7168956	PLATE ADAPTOR			1
57	7168957	PLATE STUD ADAPTOR			1
58	7169291	DECAL	warning		1
59	6681905	NUT			1
60	7169849	FITTING BALLSTUD			1
61	7170360	DECAL, SPRING REMOVAL	spring removal		1
62	17C424	BOLT			2
63	18EM1224	WASHER			1
64	17C516	BOLT			4
65	1CM640	SCREW			2
66	31C612	BOLT			3
67	38C610	BOLT			4
68	10C816	BOLT			1
69	97D5	NUT			4
70	97D6	NUT 10			7
71	51DM6	NUT			1
72	6681910	NUT			1
73	7174838	SPACER			1
74	7174839	SPACER			1
75	61D5	NUT			2
76	6987230	INSTRUCTIONS			1

Page 265 - OSS# 2072104 - All rights reserved by Bobcat Company - 01/20/2010 - 17:21:58 - Produced by Ken Cook Co. with mediaioff

CAB DOOR
(Special Applications)

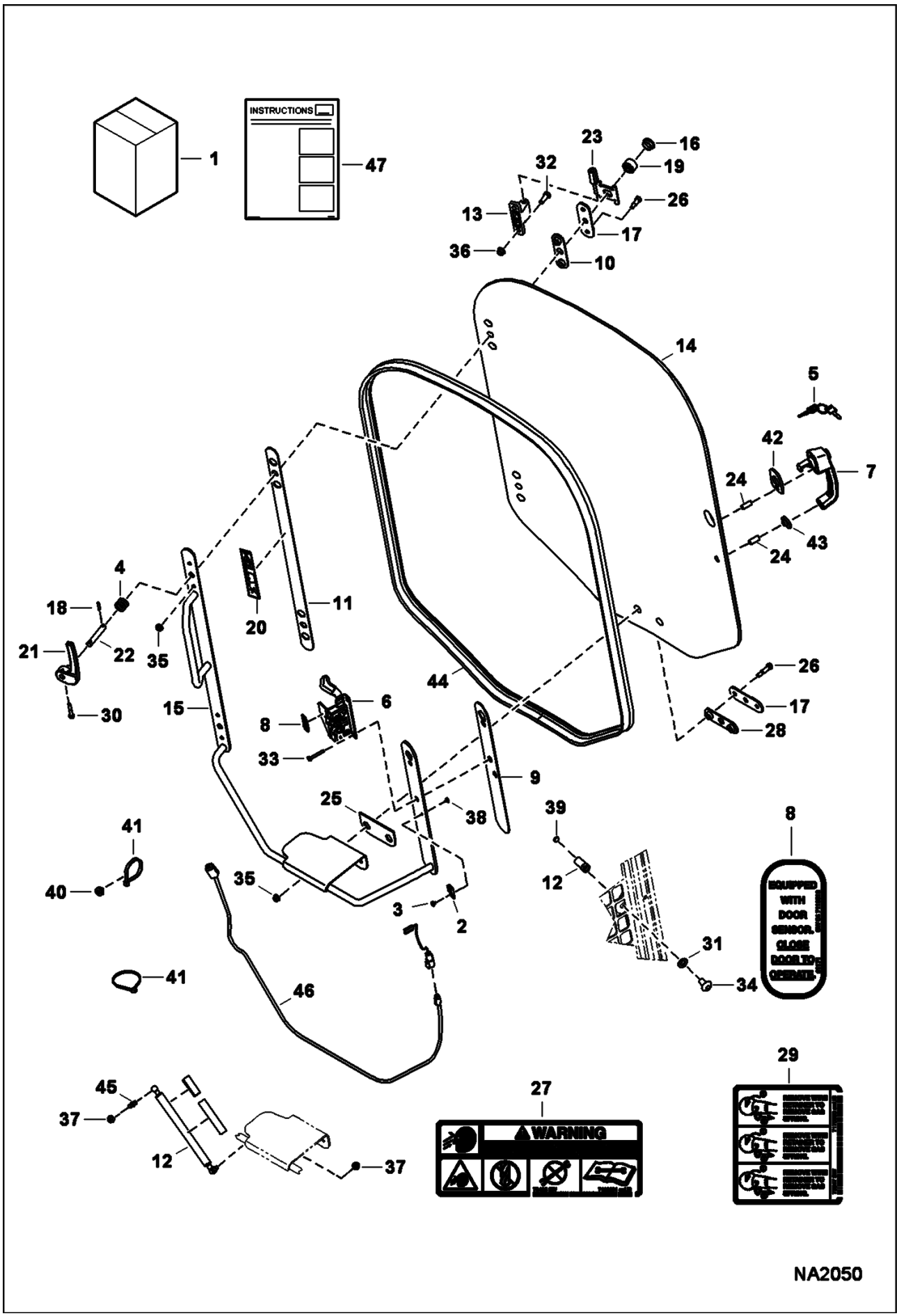

Page 266 - OSS# 2072104 - All rights reserved by Bobcat Company - 01/20/2010 - 17:21:58 - Produced by Ken Cook Co. with mediaioff

CAB DOOR (Cont'd)
(Special Applications)

Ref No	Part Number	Description	Remarks	Serial Number	Qty
1	7128395	KIT, DOOR CAB SPECIAL APPS	Ref. 2-38 & 47		1
2	6665000	CLIP			1
3	6665322	RIVET			1
4	6704453	SPRING			2
5	6693241	KEY	single key W/O ring		1
6	7109661	LATCH, DOOR W/SENSOR			1
7	7109662	HANDLE, LATCH DOOR			1
8	7110316	DECAL			1
9	7148287	SEAL DOOR HANDLE			1
10	7148289	SEAL DOOR HINGE			2
11	7150719	SEAL DOOR FRAME			1
12	7175151	STRIKER, DOOR			1
13	7176593	HINGE BASE			2
14	7155308	WINDOW			1
15	7155359	FRAME, DOOR			1
16	7161429	PLUG			2
17	7164590	DOOR PLATE			3
18	7167845	PIN			2
19	7167846	WASHER CAST			2
20	7168025	DECAL EMERGENCY DOOR			1
21	7168288	LEVER MACHINED			2
22	7168836	SHAFT			2
23	7168837	HINGE, DOOR			1
24	7168839	SPACER			2
25	7168841	SEAL			1
26	7168843	SCREW			6
27	7169291	DECAL			1
28	7169950	SEAL			1
29	7170360	DECAL, SPRING REMOVAL			1
30	17C424	BOLT			2
31	18EM1224	WASHER			1
32	17C516	BOLT			4
33	1CM640	SCREW			2
34	10C816	BOLT			1
35	97D5	NUT			4
36	59D5	NUT 5			4
37	61D5	NUT			2
38	6665321	RIVET			1
39	6677192	MAGNET	not in kit		1
40	6690688	TREE MOUNT	not in kit		6
41	6690690	TIE	not in kit		6
42	7150745	SPACER	top - not in kit		1
43	7150746	SPACER	bottom - not in kit		1
44	7167652	SEAL DOOR	not in kit		1
45	7169849	FITTING BALLSTUD	not in kit		1
46	7170531	HARNESS, CAB	not in kit		1

Page 267 - OSS# 2072104 - All rights reserved by Bobcat Company - 01/20/2010 - 17:21:58 - Produced by Ken Cook Co. with mediaioff

CAB DOOR (Cont'd)
(Special Applications)

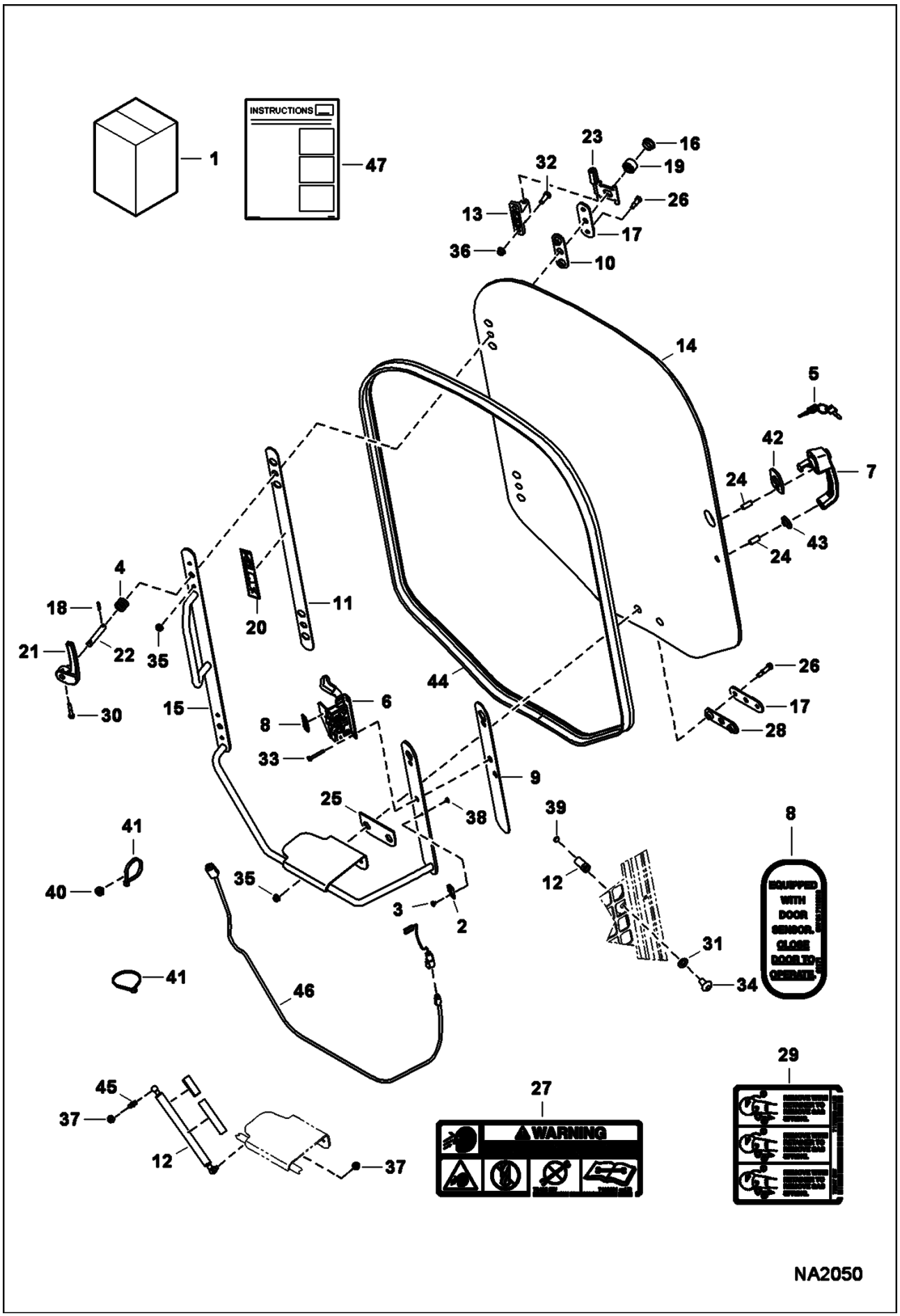

Page 268 - OSS# 2072104 - All rights reserved by Bobcat Company - 01/20/2010 - 17:21:58 - Produced by Ken Cook Co. with mediaioff

Ref No	Part Number	Description	Remarks	Serial Number	Qty
47	6987232	INSTRUCTIONS			1

Page 269 - OSS# 2072104 - All rights reserved by Bobcat Company - 01/20/2010 - 17:21:58 - Produced by Ken Cook Co. with mediaioff

CAB SEAL KIT

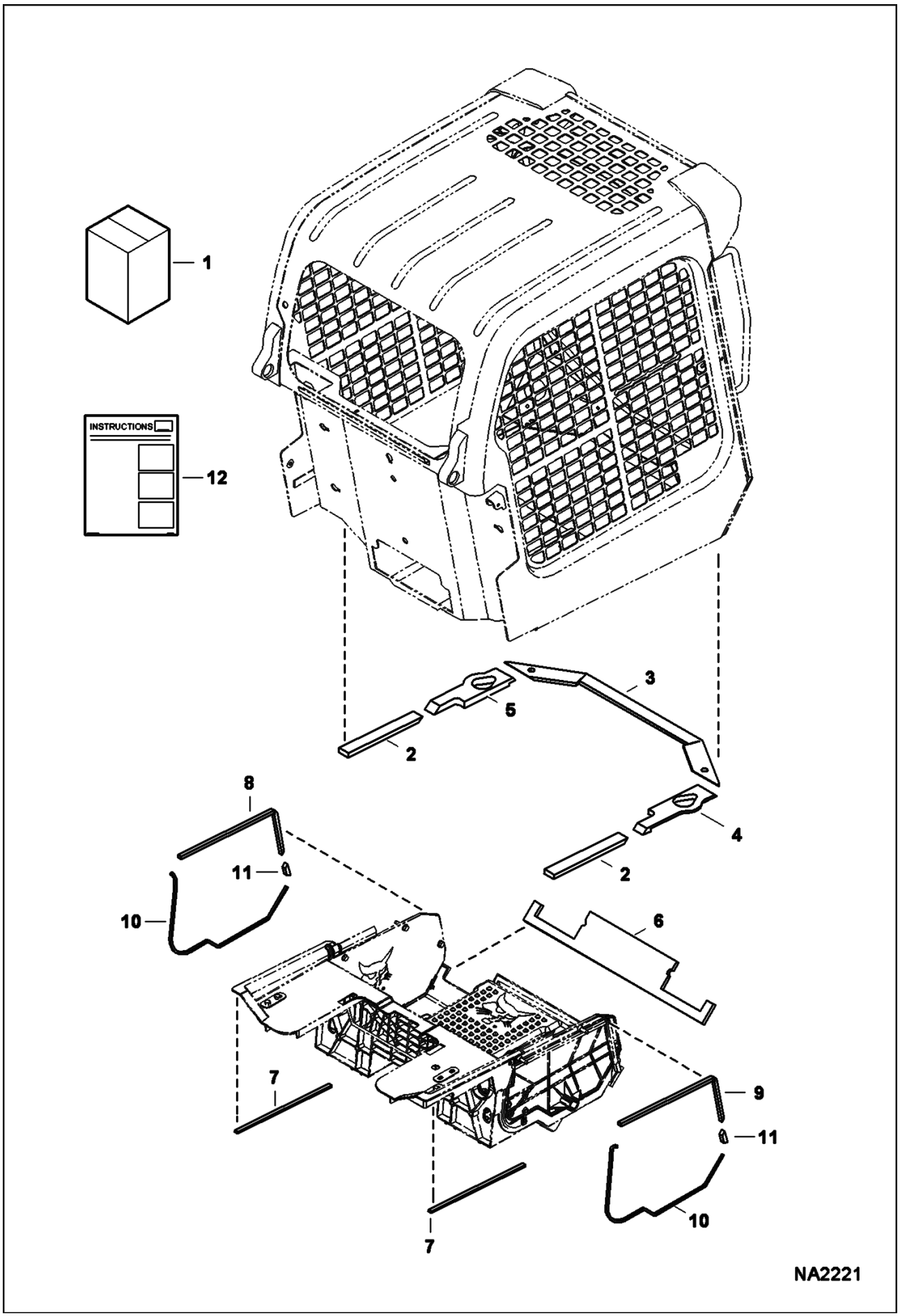

Page 270 - OSS# 2072104 - All rights reserved by Bobcat Company - 01/20/2010 - 17:21:58 - Produced by Ken Cook Co. with mediaioff

Ref No	Part Number	Description	Remarks	Serial Number	Qty
1	7174903	KIT, SEAL CAB	Ref. 2-13		1
2	7142873	SEAL			2
3	7142875	SEAL			1
4	7156087	SEAL	RH		1
5	7161789	SEAL	LH		1
6	7163132	FOAM, FRONT			1
7	7166196	FOAM, PANEL			2
8	7166197	FOAM, PANEL	LH		1
9	7166198	FOAM, PANEL	RH		1
10	7166199	FOAM, EDGE			2
11	7166200	FOAM, PAN FLOOR			2
12	6987388	INSTRUCTIONS			1

Page 271 - OSS# 2072104 - All rights reserved by Bobcat Company - 01/20/2010 - 17:21:58 - Produced by Ken Cook Co. with mediaioff

CAB WINDOWS
(Rear) (Lexan)

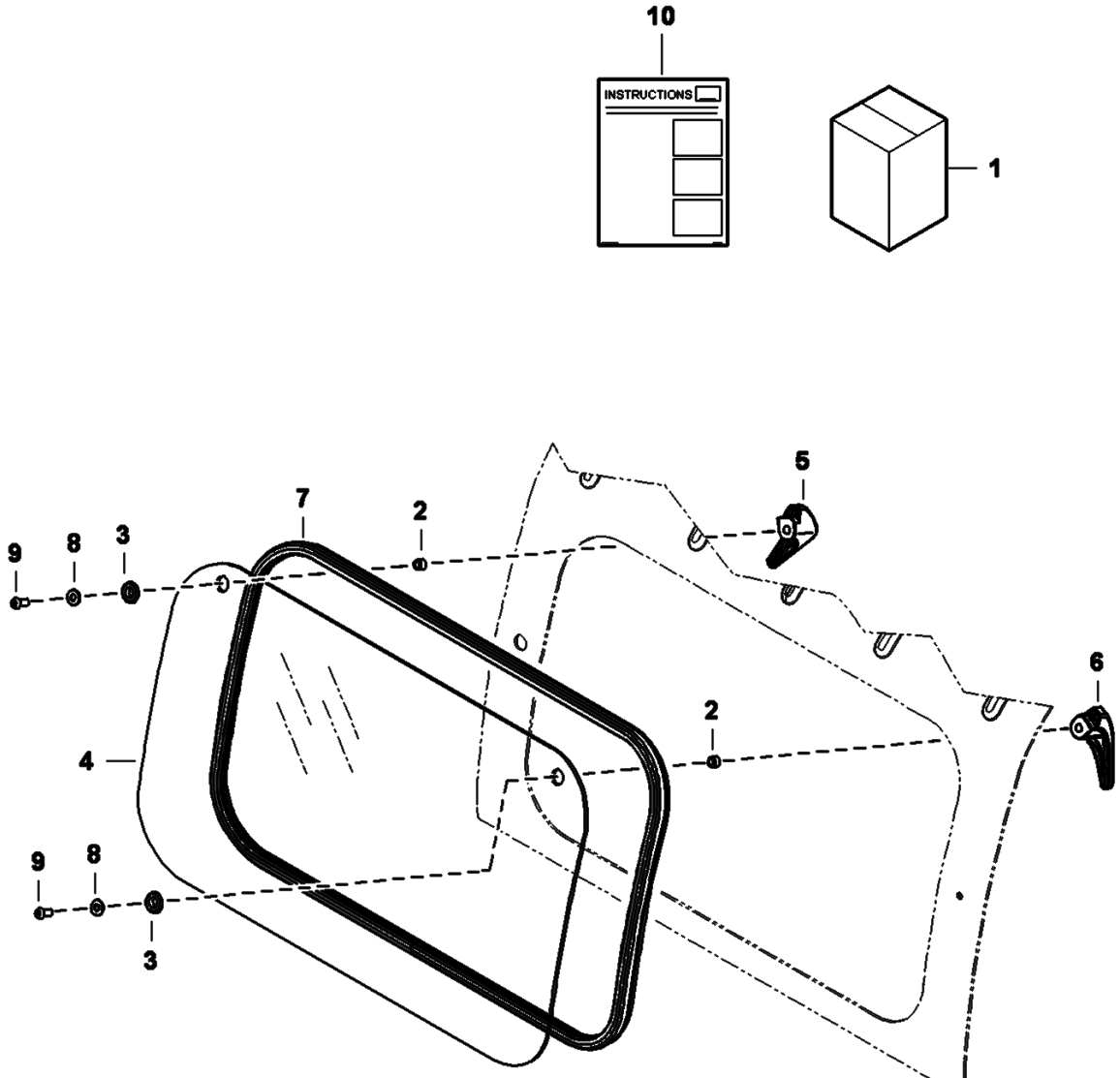

Page 272 - OSS# 2072104 - All rights reserved by Bobcat Company - 01/20/2010 - 17:21:58 - Produced by Ken Cook Co. with mediaioff

Ref No	Part Number	Description	Remarks	Serial Number	Qty
1	7128389	KIT, WINDOW REAR LEXAN	Ref. 2-10		1
2	6802539	SPACER			2
3	7121425	BUSHING			2
4	7138974	WINDOW, REAR LEXAN			1
5	7150151	LATCH, WINDOW LEFT			1
6	7150152	LATCH, WINDOW RIGHT			1
7	7163988	SEAL, WINDOW REAR			1
8	25E14	WSHR			2
9	53C512	SCREW			2
10	6987229	INSTRUCTIONS			1

Page 273 - OSS# 2072104 - All rights reserved by Bobcat Company - 01/20/2010 - 17:21:58 - Produced by Ken Cook Co. with mediaioff

CAB WINDOWS
(Side)

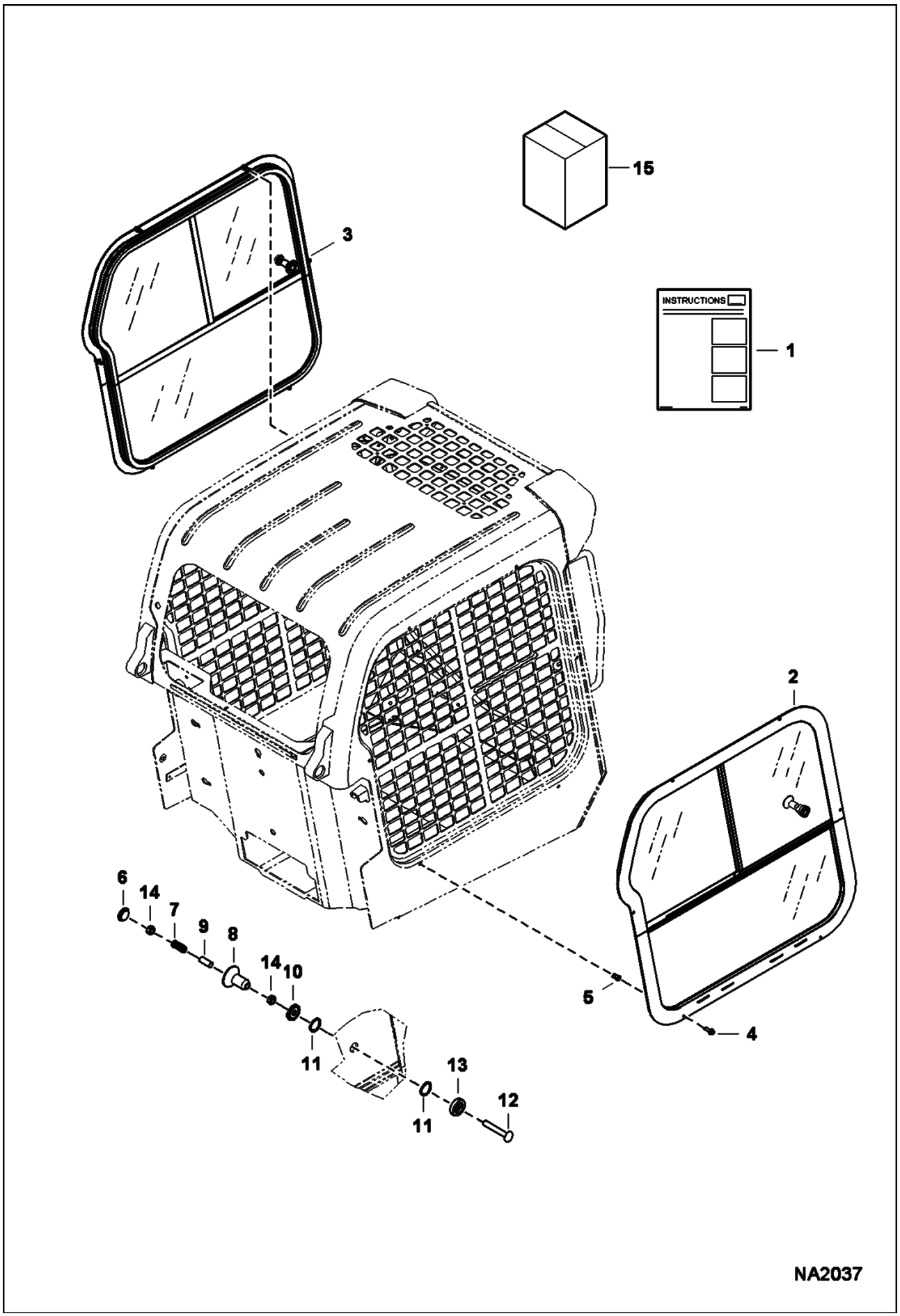

Page 274 - OSS# 2072104 - All rights reserved by Bobcat Company - 01/20/2010 - 17:21:58 - Produced by Ken Cook Co. with mediaoff

Ref No	Part Number	Description	Remarks	Serial Number	Qty
1	7128342	KIT, WINDOW ENCLOSURE	Ref. 2-6 & 15		1
2	7148068	WINDOW ASSY	RH		1
3	7148069	WINDOW ASSY	LH		1
4	7153545	SCREW			12
5	7154910	INSERT, THREADED			12
6	7010357	CAP, END	not in kit		1
7	7010358	SPRING	not in kit		1
8	7010359	KNOB	not in kit		1
9	7010360	SLEEVE	not in kit		1
10	7010361	BUSHING	inner - not in kit		1
11	7010362	SEAL	not in kit		2
12	7010363	BOLT	carriage 3/8-16 x 2 1/2 - not in kit		1
13	7010364	BUSHING	outer - not in kit		1
14	7010365	NUT	3/16 - not in kit		2
15	6987228	INSTRUCTIONS			1

Page 275 - OSS# 2072104 - All rights reserved by Bobcat Company - 01/20/2010 - 17:21:58 - Produced by Ken Cook Co. with mediaioff

COUNTERWEIGHT KIT
(200 lb) (91 kg)

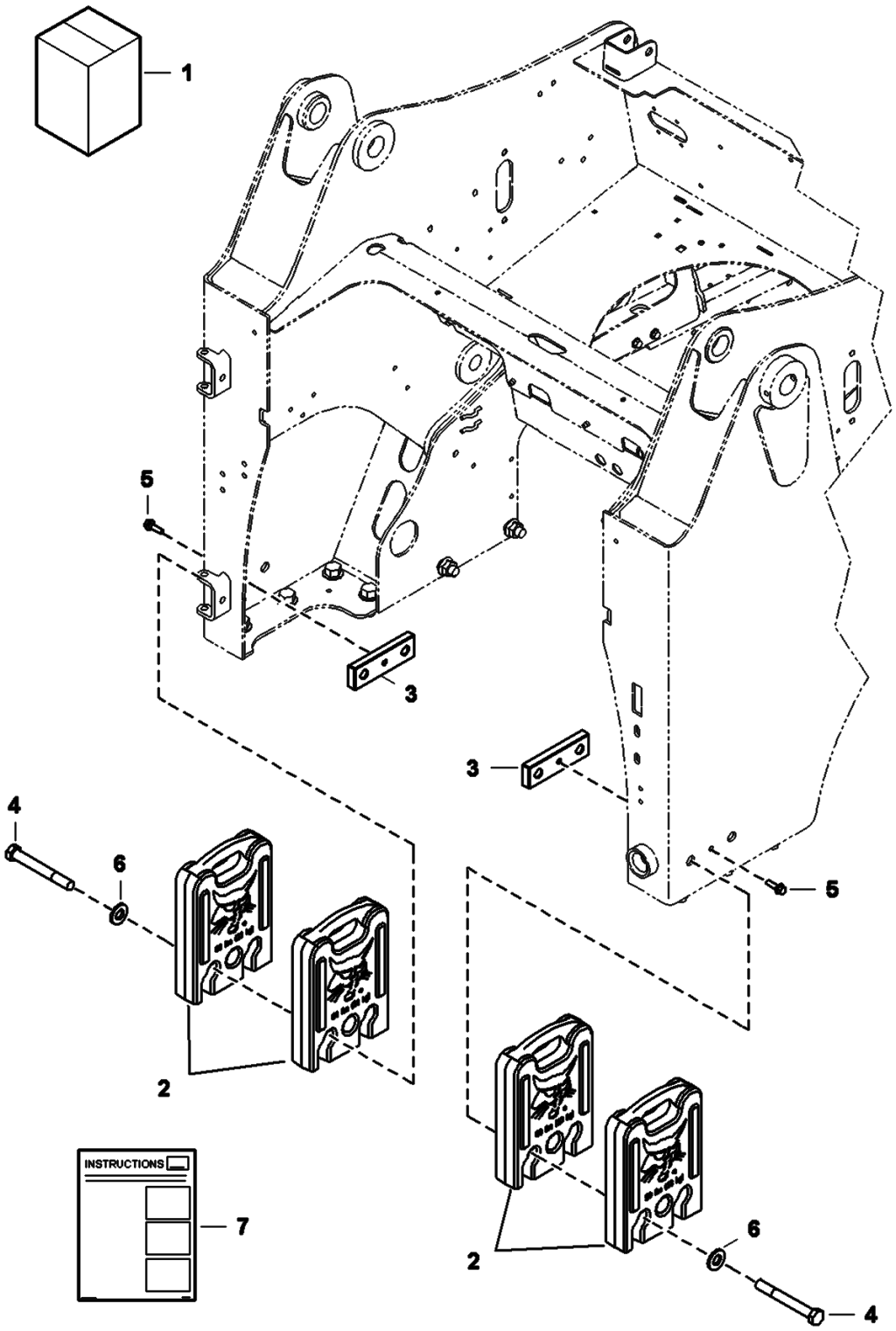

Page 276 - OSS# 2072104 - All rights reserved by Bobcat Company - 01/20/2010 - 17:21:58 - Produced by Ken Cook Co. with mediaioff

COUNTERWEIGHT KIT (Cont'd)
(200 lb) (91 kg)

Ref No	Part Number	Description	Remarks	Serial Number	Qty
1	7129250	KIT, COUNTERWEIGHT	Ref. 2-7 - 200 lb (91 kg)		1
2	7129173	COUNTERWEIGHT	50 lb (23 kg)		4
3	7155158	PLATE, THREADED			2
4	1C1296	BOLT			4
5	35C620	BOLT 5			2
6	27E12	WASHER			4
7	6987128	INSTRUCTIONS			1

Page 277 - OSS# 2072104 - All rights reserved by Bobcat Company - 01/20/2010 - 17:21:58 - Produced by Ken Cook Co. with mediaioff

COUNTERWEIGHT KIT
(300 lb) (136 kg)

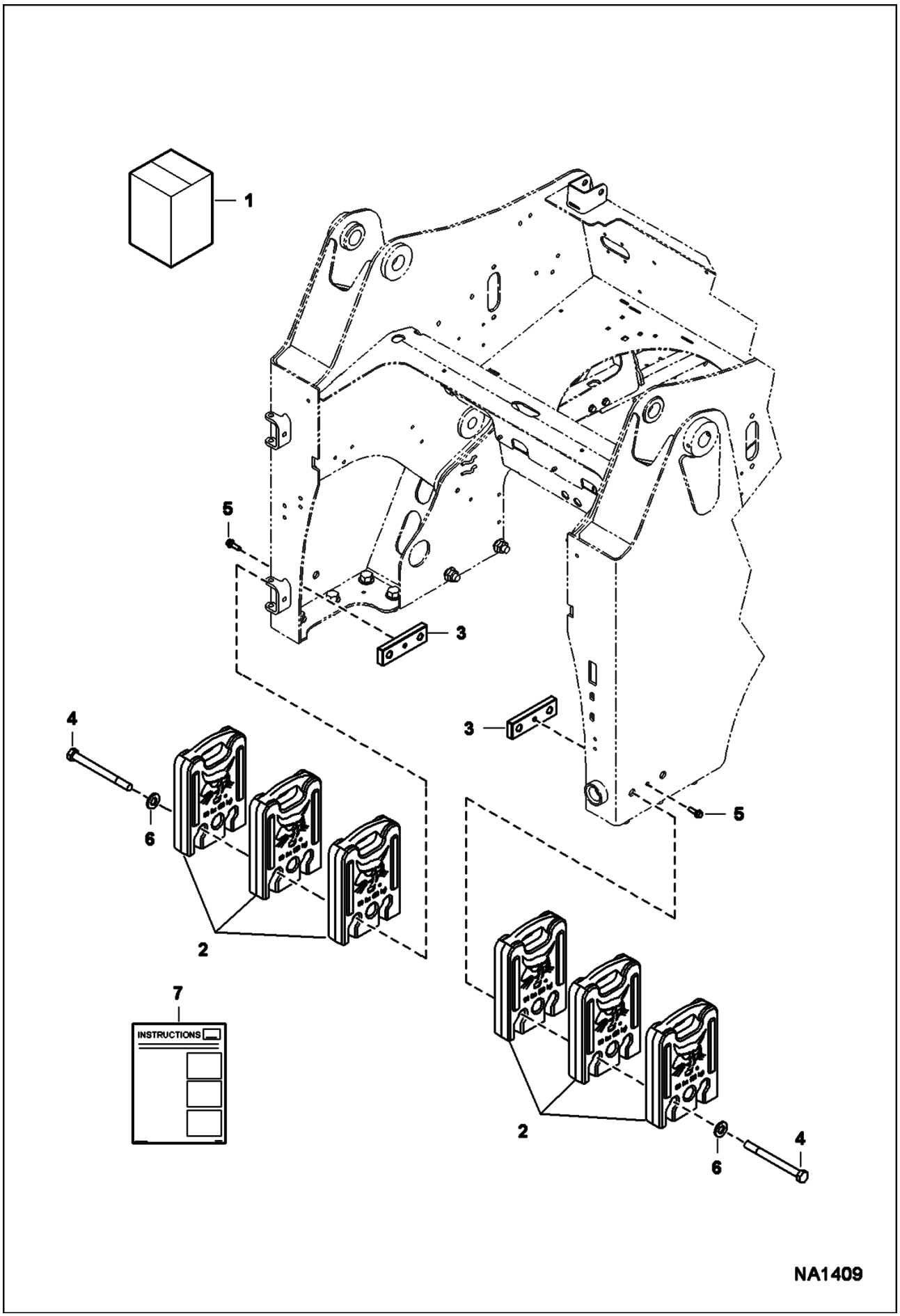

Page 278 - OSS# 2072104 - All rights reserved by Bobcat Company - 01/20/2010 - 17:21:58 - Produced by Ken Cook Co. with mediaioff

COUNTERWEIGHT KIT (Cont'd)
(300 lb) (136 kg)

Ref No	Part Number	Description	Remarks	Serial Number	Qty
1	7129251	KIT, COUNTERWEIGHT	Ref. 2-7 - 300 lb (136 kg)		1
2	7129173	COUNTERWEIGHT	50 lb (22,73 kg)		6
3	7155158	PLATE, THREADED			2
4	1C12136	BOLT			4
5	35C620	BOLT 5			2
6	27E12	WASHER			4
7	6987128	INSTRUCTIONS			1

Page 279 - OSS# 2072104 - All rights reserved by Bobcat Company - 01/20/2010 - 17:21:58 - Produced by Ken Cook Co. with mediaioff

DECALS
(Inside)

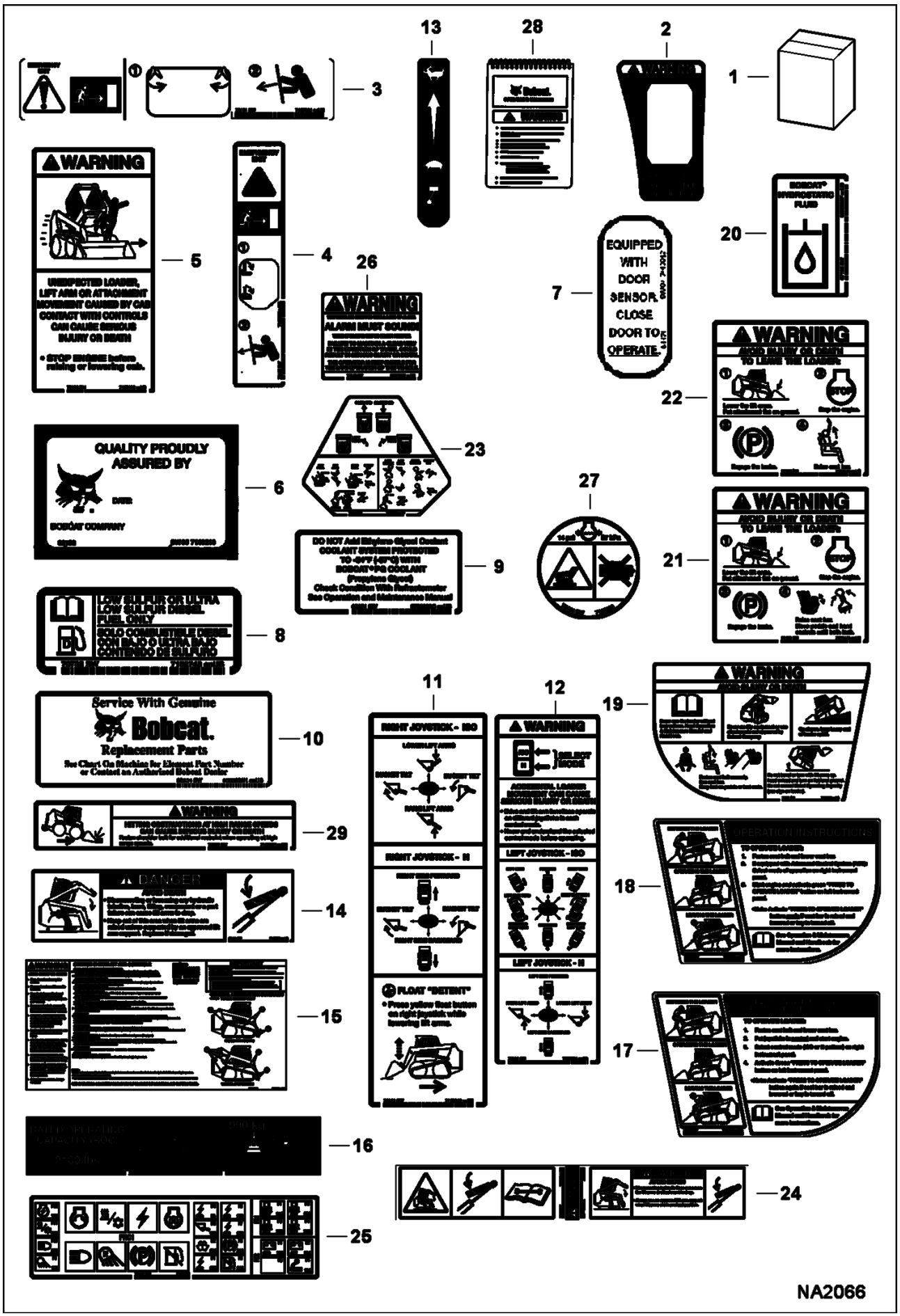

Page 280 - OSS# 2072104 - All rights reserved by Bobcat Company - 01/20/2010 - 17:21:58 - Produced by Ken Cook Co. with mediaIoff

DECALS (Cont'd)
(Inside)

Ref No	Part Number	Description	Remarks	Serial Number	Qty
1	6987507	KIT, DECAL	See Illustration DECALS/ NA2065 Ref. 2-22 - Also includes Ref. 2-26 on this page		1
1		KIT, TRANSLATION			1
2	7168114	DECAL, SWITCH			1
3	7167991	DECAL, EXIT REAR			1
4	7168025	DECAL EMERGENCY DOOR			1
5	7168138	DECAL	warning		1
6	7106218	DECAL QUALITY APPRVL			1
7	7110316	DECAL	door sensor		1
8	7152748	DECAL, FUEL DIESEL			1
9	6708929	DECAL	coolant		1
10	6565200	DECAL			1
11	7168023	DECAL	RH - SJC		1
12	7168024	DECAL	LH - SJC		1
13	7177742	DECAL	throttle		1
14	7167988	DECAL, DANGER			2
15	7167998	DECAL, SERVICE			1
16	7167999	DECAL, ROC 2180			1
17	7168144	DECAL	SJC		1
18	7168136	DECAL	operation		1
19	7167994	DECAL, WARNING			1
20	6565990	DECAL	hyd fill		1
21	7168140	DECAL	warning		1
22	7168142	DECAL			1
23	7168272	DECAL	control		1
24	7170355	DECAL, DANGER	hose and tube danger		1
25	7167945	DECAL, FUSE RELAY			1
26	6737189	DECAL	back-up alarm		1
27	7169699	DECAL	radiator cap - not in kit		1
28	7170116	MANUAL, QUICK REF	not in kit		1
29	7168303	DECAL, WARNING	not in kit		1

Page 281 - OSS# 2072104 - All rights reserved by Bobcat Company - 01/20/2010 - 17:21:58 - Produced by Ken Cook Co. with mediaioff

DECALS
(Outside)

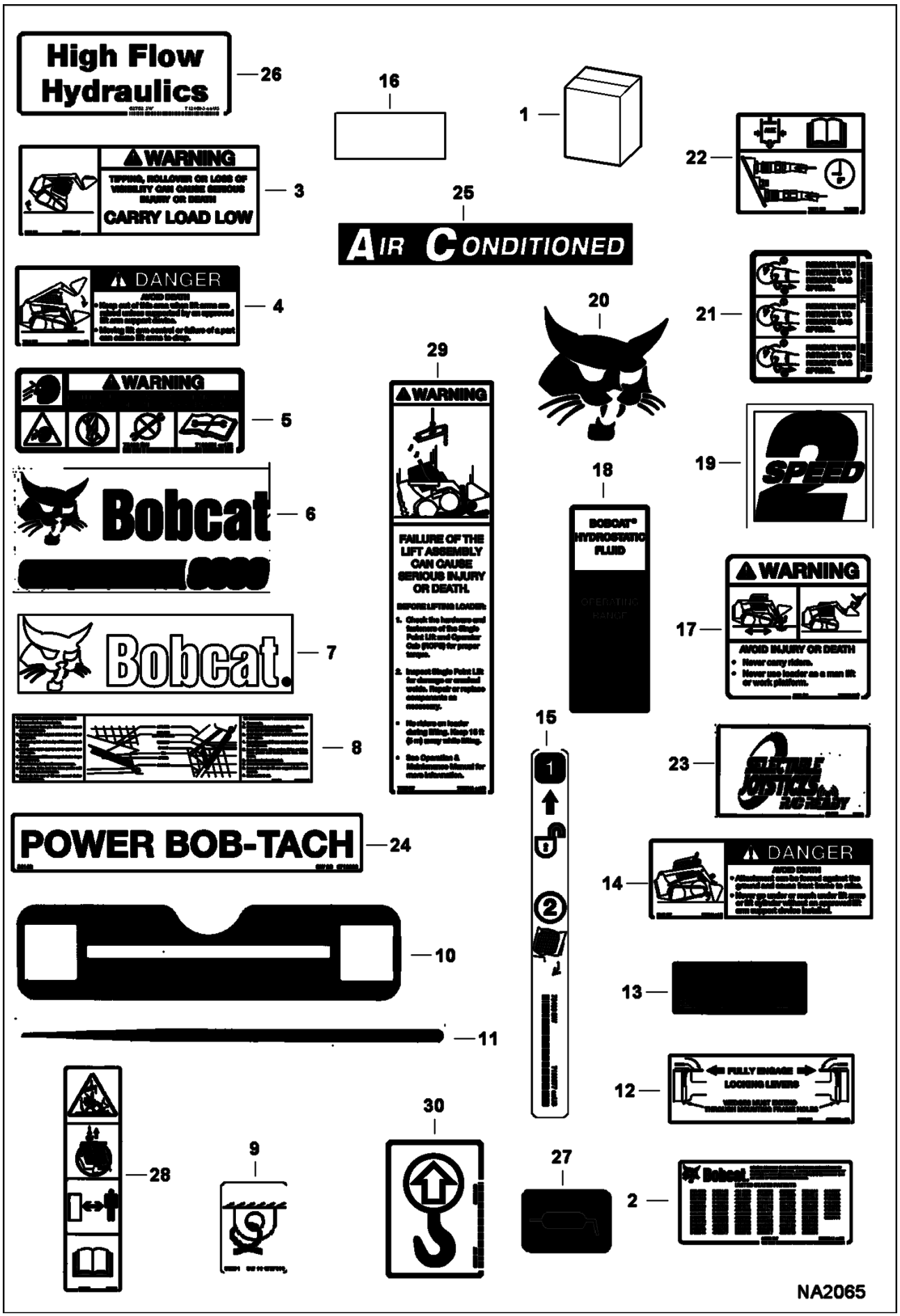

Page 282 - OSS# 2072104 - All rights reserved by Bobcat Company - 01/20/2010 - 17:21:58 - Produced by Ken Cook Co. with mediaioff

DECALS (Cont'd)
(Outside)

Ref No	Part Number	Description	Remarks	Serial Number	Qty
1	6987507	KIT, DECAL	See Illustration DECALS/ NA2066 Ref. 2-26 - Also includes Ref. 2-22 on this page		1
1		KIT, TRANSLATION			1
2	6557224	DECAL	patent		1
3	7167993	DECAL, WARNING			1
4	7167989	DECAL, DANGER			1
5	7169291	DECAL	warning		1
6	7169963	DECAL, UPRIGHT	S630		2
7	6735901	DECAL, BOBCAT			1
8	6706558	DECAL	lift arm support		1
9	6727595	DECAL			6
10	7169965	DECAL, TAILGATE BASE			1
11	7169966	DECAL, LIFTARM STRIPE			2
12	6561383	DECAL			1
13	7169967	DECAL, TAILGATE	S630		1
14	7167990	DECAL, DANGER			1
15	7169877	DECAL	gas spring		1
16	6555341	SAFETY TREAD			1
17	7167996	DECAL, WARNING			1
18	7169710	DECAL, SIGHT GAUGE			1
19	6729078	DECAL	2 speed		2
20	7116870	DECAL	Bobcat head		2
21	7170360	DECAL, SPRING REMOVAL			1
22	7168031	DECAL	coupler		1
23	7145528	DECAL	SJC ready - not in kit		1
24	6719888	DECAL	Power Bob-Tach - not in kit		1
25	7166916	DECAL, A/C	not in kit		2
26	7120693	DECAL	high flow - not in kit		1
27	6705340	DECAL	lube - european - not in kit		1
28	7142142	DECAL	warning - not in kit		1
29	7142141	DECAL	warning - single point lift - not in kit		1
30	6533898	DECAL	hook - not in kit		1

Page 283 - OSS# 2072104 - All rights reserved by Bobcat Company - 01/20/2010 - 17:21:58 - Produced by Ken Cook Co. with mediaioff

ELECTRICAL CONTROLS KIT
(7 Pin)

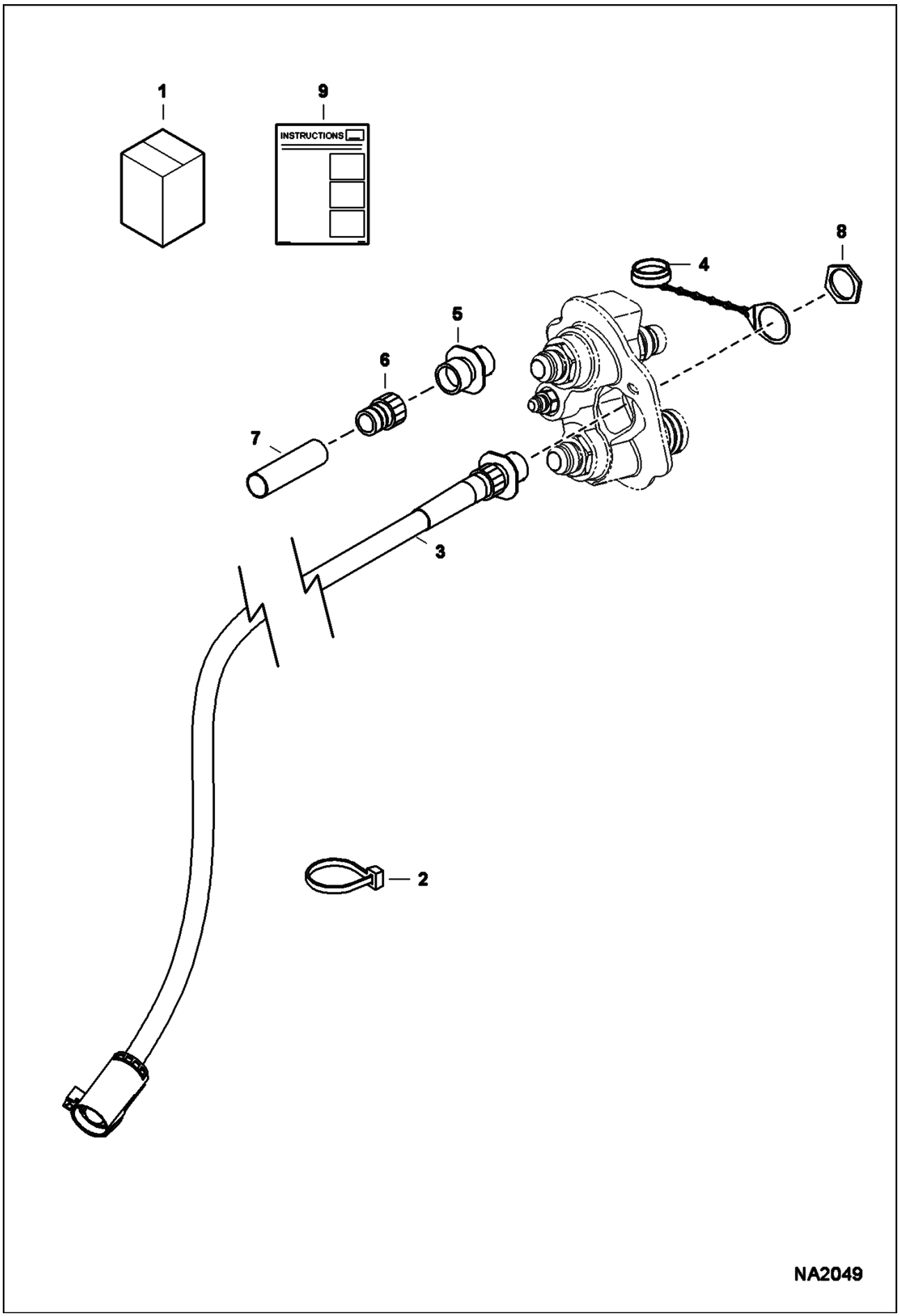

Page 284 - OSS# 2072104 - All rights reserved by Bobcat Company - 01/20/2010 - 17:21:58 - Produced by Ken Cook Co. with mediaioff

ELECTRICAL CONTROLS KIT (Cont'd)
(7 Pin)

Ref No	Part Number	Description	Remarks	Serial Number	Qty
1	7128426	KIT, ACD 7-PIN	Ref. 2-9		1
2	6624289	TIE STRAP			3
3	7175321	HARNESS, ACD INPUT	W/Ref. 4-8		1
4	6675026	CAP			1
5	6674802	CONNECTOR			1
5	6669549	SOCKET	small		4
5	6677136	SOCKET	large - 12 ga		3
6	6674799	ADAPTER	heat shrink		1
7		HEAT SHRINK	NSS - purchase locally		1
8	6688338	NUT	jam		1
9	6987238	INSTRUCTIONS			1

Page 285 - OSS# 2072104 - All rights reserved by Bobcat Company - 01/20/2010 - 17:21:58 - Produced by Ken Cook Co. with mediaioff

ELECTRICAL CONTROLS KIT
(14 Pin Attachments)

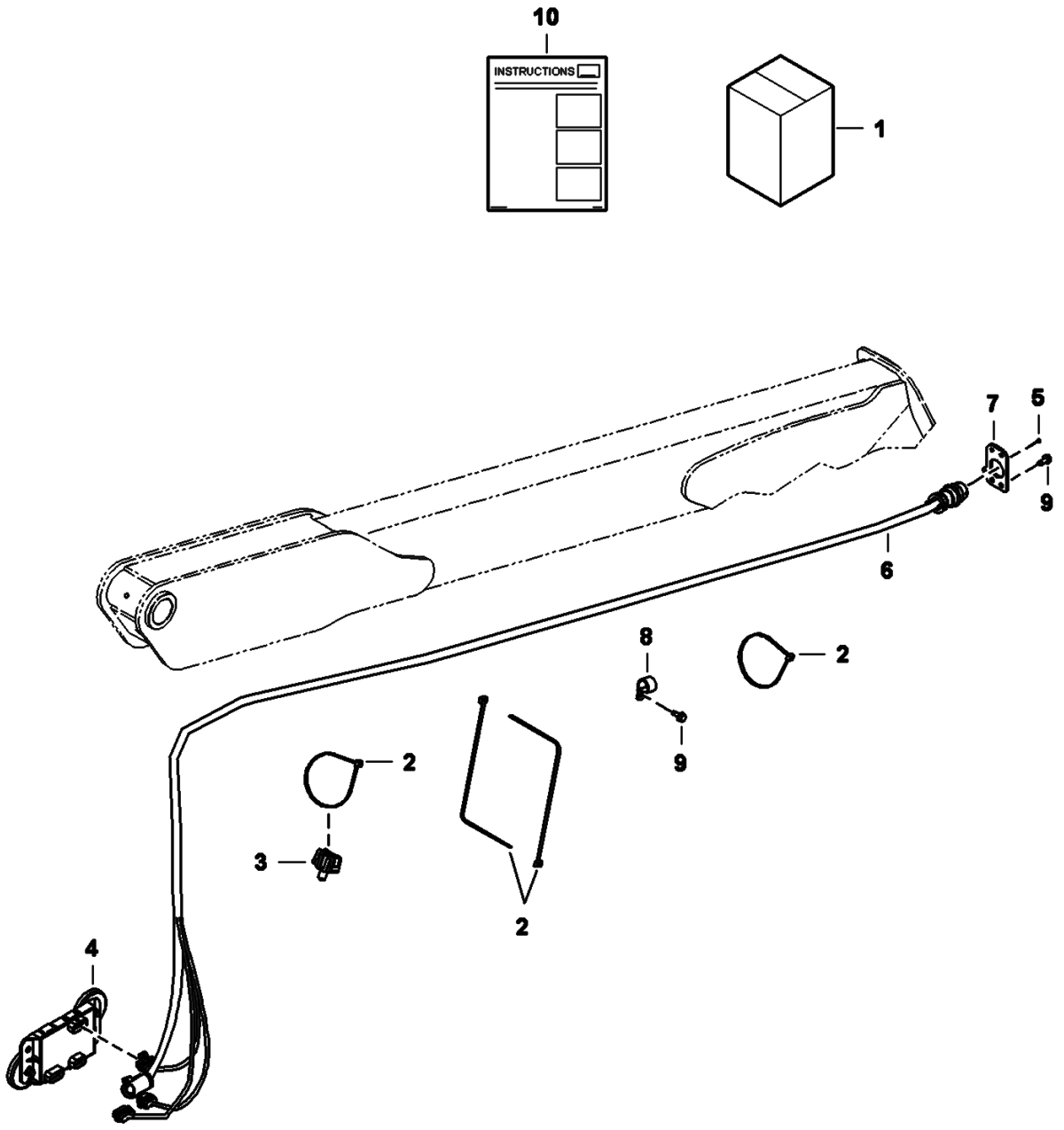

Page 286 - OSS# 2072104 - All rights reserved by Bobcat Company - 01/20/2010 - 17:21:58 - Produced by Ken Cook Co. with mediaioff

ELECTRICAL CONTROLS KIT (Cont'd)
(14 Pin Attachments)

Ref No	Part Number	Description	Remarks	Serial Number	Qty
1	6733136	KIT	Ref. 2-10		1
2	6624289	TIE STRAP			9
3	6675281	MOUNT			1
4	6678675	CONTROLLER, ACD DELUXE	W/O magnets		1
4	6719448	MAGNET, CONTROL ATTACH			2
4	25G612	SCREW			2
4	83D6	NUT 5			2
5	6704892	RIVET			1
6	6732730	HARNESS			1
7	6733144	MOUNT			1
8	30H50	CLIP			6
9	84G3112	BOLT 5			8
10	6901872	INSTRUCTIONS			1

Page 287 - OSS# 2072104 - All rights reserved by Bobcat Company - 01/20/2010 - 17:21:58 - Produced by Ken Cook Co. with mediaioff

EUROPEAN ACCESSORIES
(Rear Door Lights)

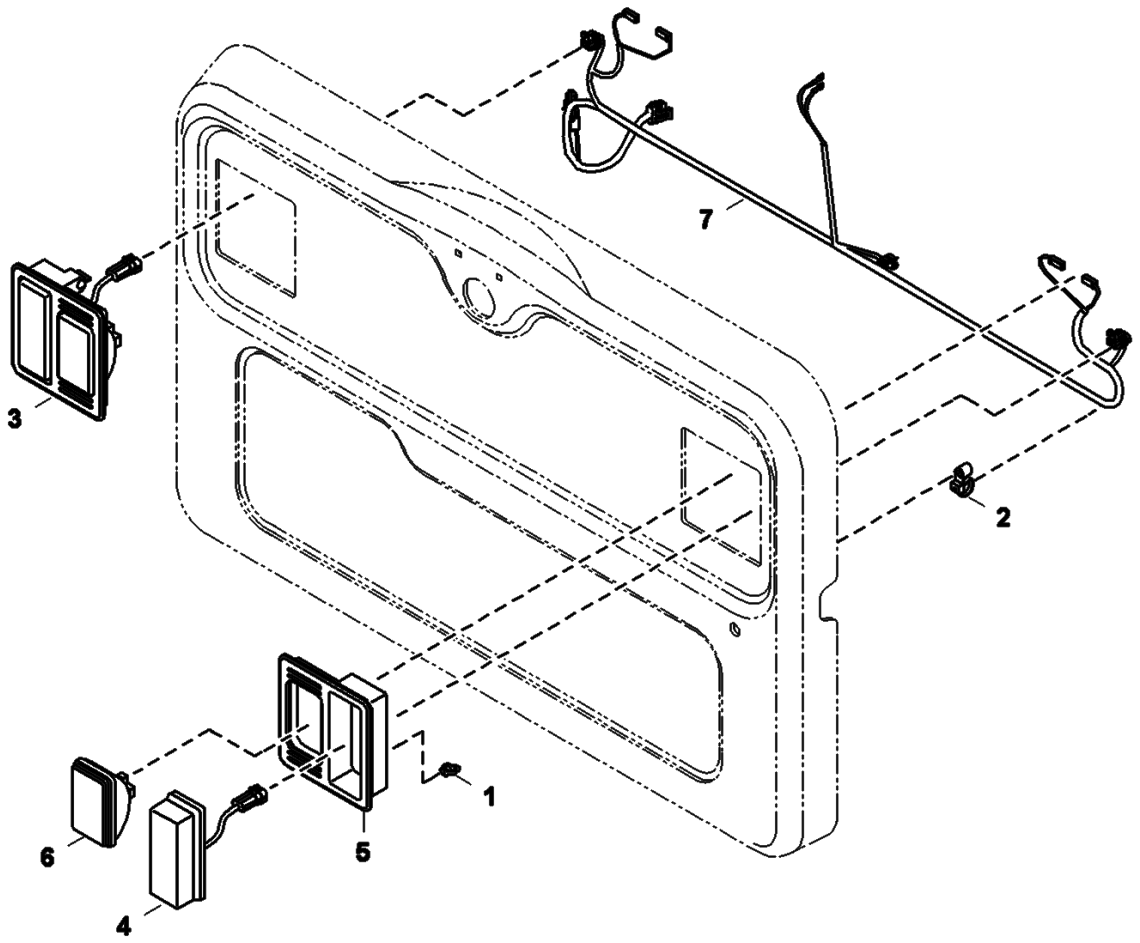

NA2165

Page 288 - OSS# 2072104 - All rights reserved by Bobcat Company - 01/20/2010 - 17:21:58 - Produced by Ken Cook Co. with mediaioff

EUROPEAN ACCESSORIES (Cont'd)
(Rear Door Lights)

Ref No	Part Number	Description	Remarks	Serial Number	Qty
1	6688637	MOUNT			2
2	7002988	TIE, STUD MOUNT			5
3	7104670	LIGHT	assy RH - Ref. 4-6		1
3	7104671	LIGHT	assy LH - Ref. 4-6		1
4	7101384	LIGHT			2
4	6686096	LENS	turn - amber		1
4	6686097	BULB	turn - 21W		1
4	6686099	LENS	stop - red		1
4	6686098	BULB	stop - 21/5W		1
4	6686100	SCREW			2
5	6672279	MOUNT, LIGHT RUBBER			1
6	6671027	LIGHT			2
7	7175287	HARNESS, REAR DOOR			1

Page 289 - OSS# 2072104 - All rights reserved by Bobcat Company - 01/20/2010 - 17:21:58 - Produced by Ken Cook Co. with mediaioff

FIRE EXTINGUISHER

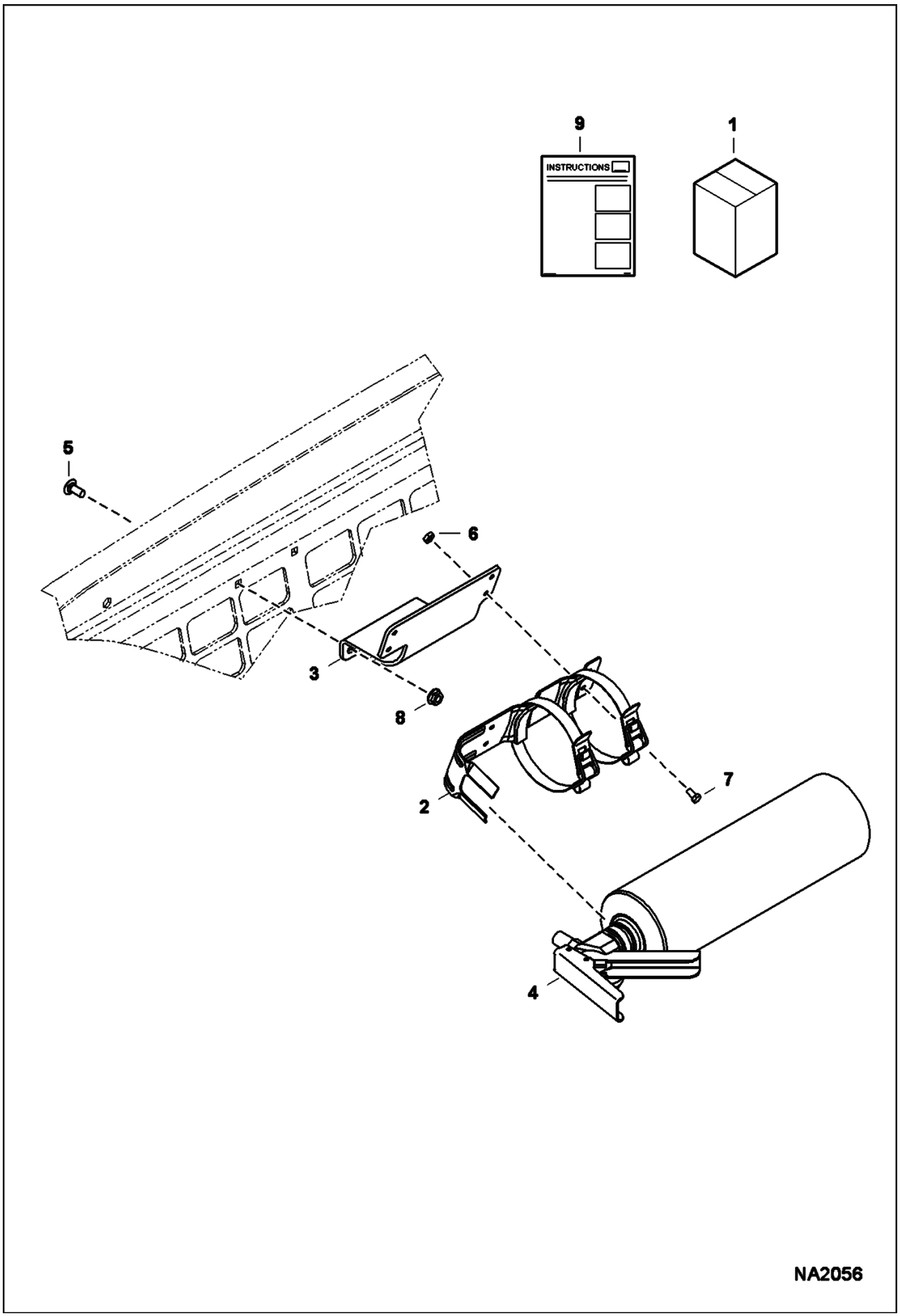

Page 290 - OSS# 2072104 - All rights reserved by Bobcat Company - 01/20/2010 - 17:21:58 - Produced by Ken Cook Co. with mediaioff

Ref No	Part Number	Description	Remarks	Serial Number	Qty
1	7129307	KIT, FIRE EXTINGUISHER	Ref. 2-9		1
2	6691173	BRACKET			1
3	7166482	BRACKET			1
4	7168164	EXTINQUISHER,FIRE			1
5	10C410	BOLT			2
6	12D10	NUT			4
7	45G1006	BOLT			4
8	55D4	NUT			2
9	6987223	INSTRUCTIONS			1

Page 291 - OSS# 2072104 - All rights reserved by Bobcat Company - 01/20/2010 - 17:21:58 - Produced by Ken Cook Co. with mediaioff

FLASHER LIGHTS
(4-Way)

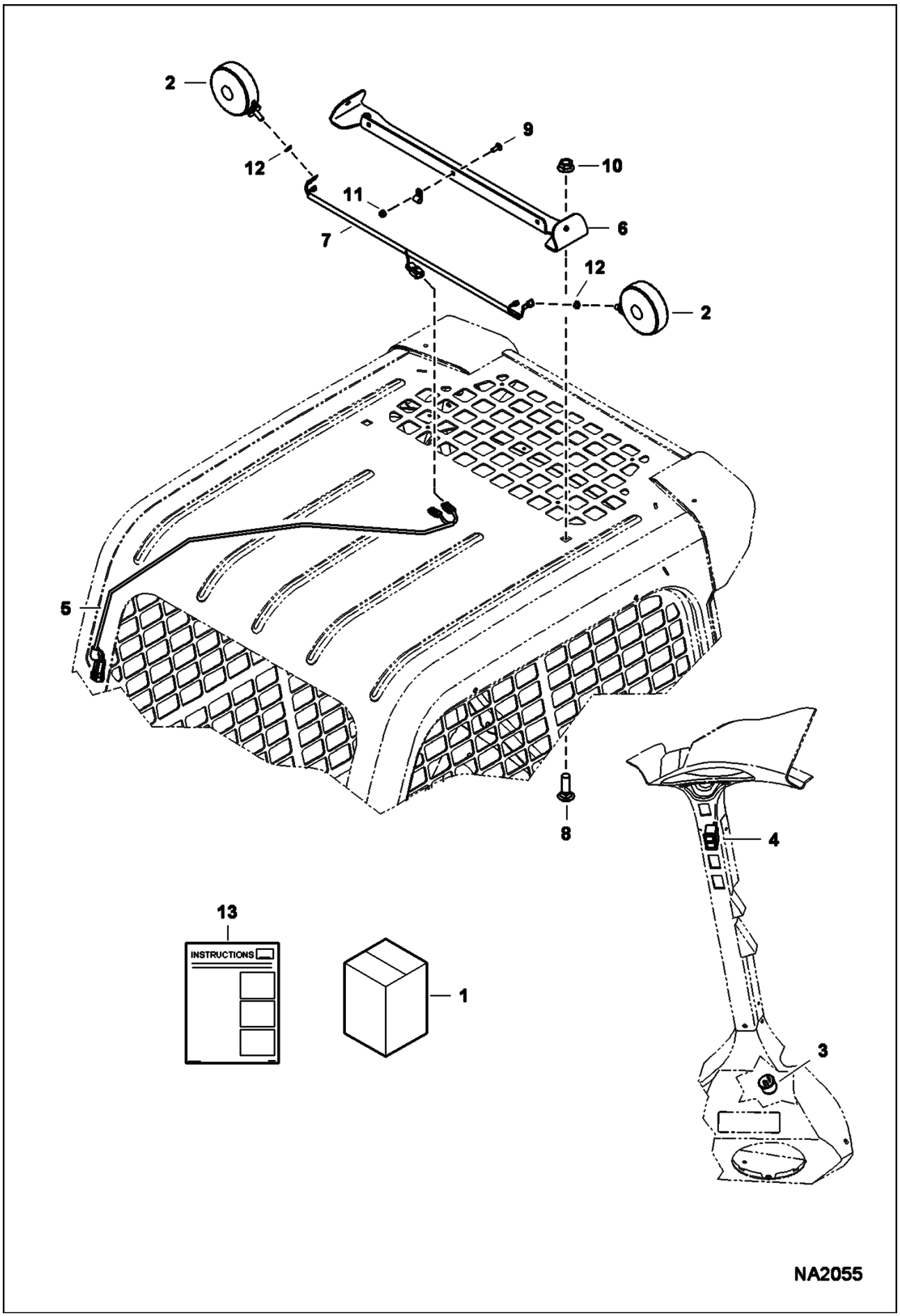

Page 292 - OSS# 2072104 - All rights reserved by Bobcat Company - 01/20/2010 - 17:21:58 - Produced by Ken Cook Co. with mediaIoff

FLASHER LIGHTS (Cont'd)
(4-Way)

Ref No	Part Number	Description	Remarks	Serial Number	Qty
1	7128338	KIT, FLASHER 4-WAY	Ref. 2-13		1
2	6517516	LIGHT			2
3	6557904	FLASHER			1
4	6668815	SWITCH			1
5	6718872	HARNESS			1
6	7166832	MOUNT			1
7	7169753	HARNESS, FLASHER 4-WAY			1
8	37C1032	BOLT			2
9	37C412	BOLT			3
10	55D10	NUT			2
11	59D4	NUT 5			3
12	6E5	WASHER			2
13	6987224	INSTRUCTIONS			1

Page 293 - OSS# 2072104 - All rights reserved by Bobcat Company - 01/20/2010 - 17:21:58 - Produced by Ken Cook Co. with mediaioff

F.O.P.S KIT

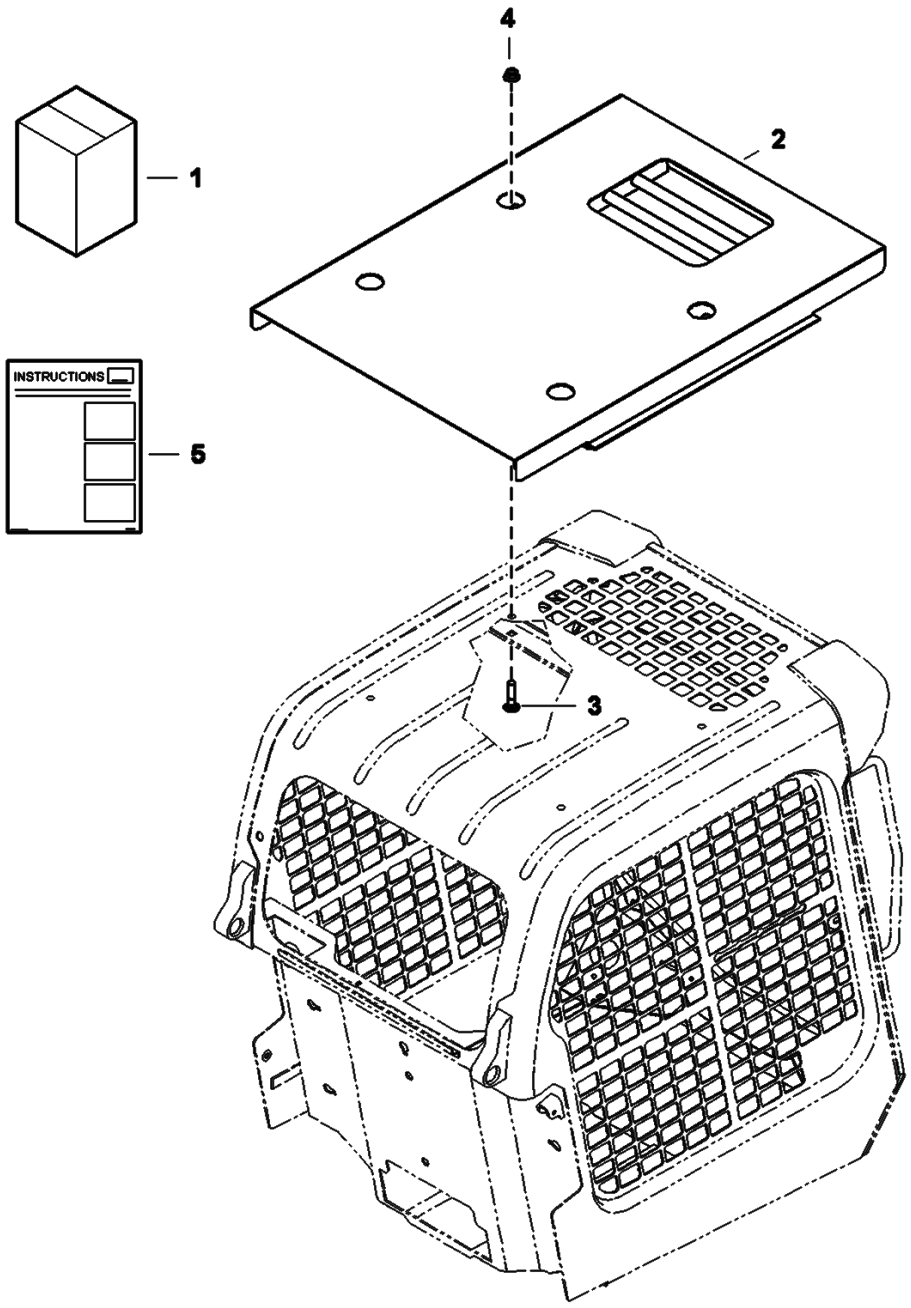

Page 294 - OSS# 2072104 - All rights reserved by Bobcat Company - 01/20/2010 - 17:21:58 - Produced by Ken Cook Co. with mediaioff

Ref No	Part Number	Description	Remarks	Serial Number	Qty
1	7129293	KIT, FOPS TOP	Ref. 2-5		1
2	7167506	SHIELD, ASSY			1
3	7164686	BOLT, CARRIAGE			4
4	53D10	NUT			4
5	6987216	INSTRUCTIONS			1

Page 295 - OSS# 2072104 - All rights reserved by Bobcat Company - 01/20/2010 - 17:21:58 - Produced by Ken Cook Co. with mediaioff

GAS SPRING KIT

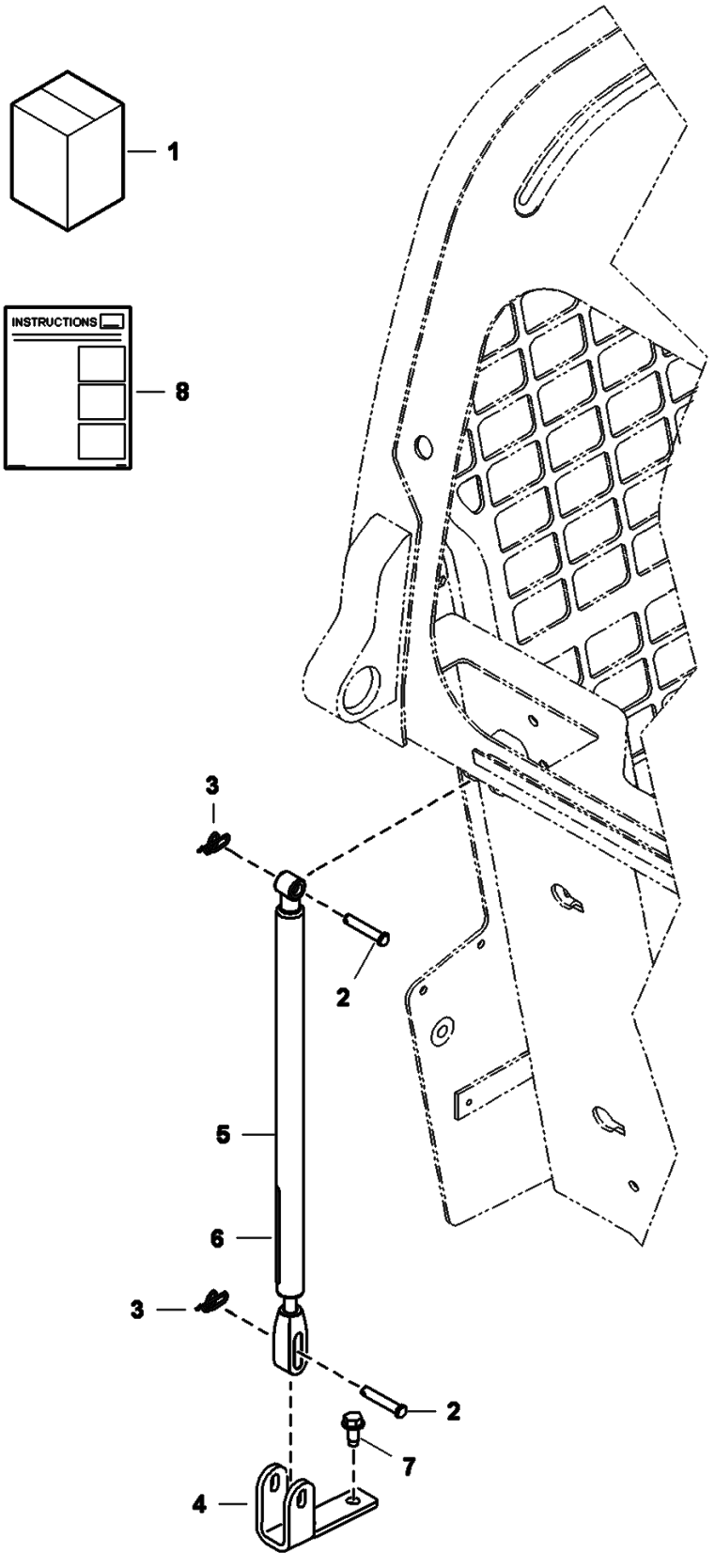

Page 296 - OSS# 2072104 - All rights reserved by Bobcat Company - 01/20/2010 - 17:21:58 - Produced by Ken Cook Co. with mediaioff

Ref No	Part Number	Description	Remarks	Serial Number	Qty
1	7170782	KIT, DLX GAS SPRING	Ref. 2-8		1
2	6567743	PIN			2
3	6631418	PIN			2
4	7144859	MOUNT, GAS SPRING			1
5	7167438	GAS SPRING	Also Order Ref. 6		1
6	7169291	DECAL			1
7	84G3112	BOLT 5			2
8	6987279	INSTRUCTIONS			1

Page 297 - OSS# 2072104 - All rights reserved by Bobcat Company - 01/20/2010 - 17:21:58 - Produced by Ken Cook Co. with mediaioff

HEATER & A/C
(Heater Kit)

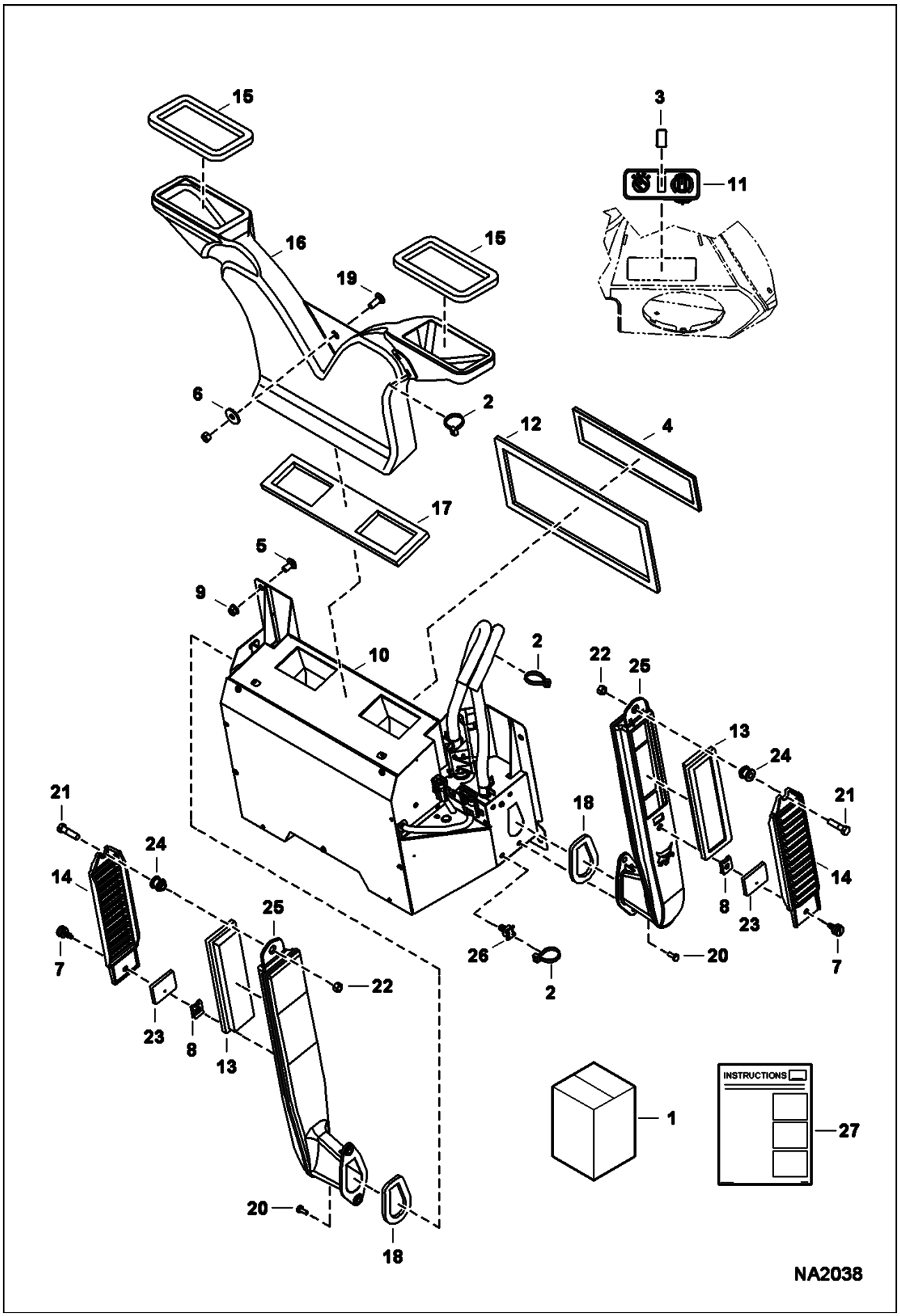

Page 298 - OSS# 2072104 - All rights reserved by Bobcat Company - 01/20/2010 - 17:21:58 - Produced by Ken Cook Co. with mediaioff

Ref No	Part Number	Description	Remarks	Serial Number	Qty
1	7128484	KIT, HEATER	Ref. 2-27		1
2	6624289	TIE STRAP			5
3	6675181	PLUG			1
4	6698096	FILTER, AIR RECIRCULATING			1
5	10C612	BOLT			4
6	619021	WASHER, 5			1
7	7000983	SCREW			2
8	7000984	CLIP			2
9	97D6	NUT 10			4
10	7141701	HEATER ASSY	See Illustration HEATER & A/C/ NA2332		1
11	7176309	CONTROL			1
12	7161595	SEAL, FOAM			1
13	7176099	FILTER, AIR FRESH			2
14	7176100	COVER			2
15	7165673	SEAL, CAB DUCT			2
16	7166534	DUCT			1
17	7167405	SEAL, DUCT			1
18	7176579	SEAL, FOAM			2
19	10C616	BOLT 10			1
20	17C410	BOLT 10			4
21	17C624	BOLT 5			2
22	95D6	NUT			3
23	7176943	SEAL, COVER			2
24	7176942	SPACER			2
25	7176101	DUCT, AIR			2
26	6678666	TREE MOUNT			2
27	6987231	INSTRUCTIONS			1

Page 299 - OSS# 2072104 - All rights reserved by Bobcat Company - 01/20/2010 - 17:21:58 - Produced by Ken Cook Co. with mediaioff

HEATER & A/C
(Heater Assembly)

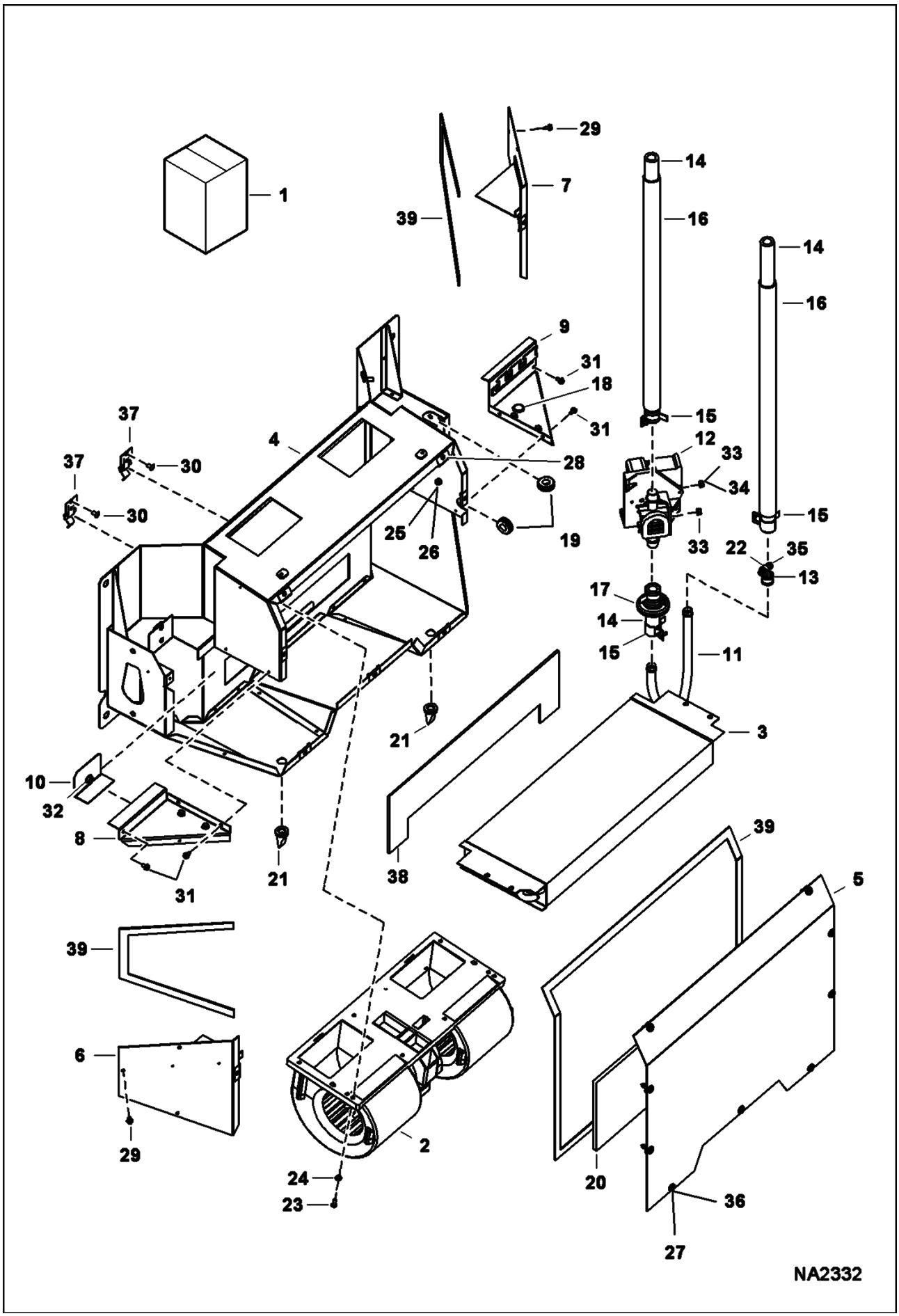

Page 300 - OSS# 2072104 - All rights reserved by Bobcat Company - 01/20/2010 - 17:21:58 - Produced by Ken Cook Co. with mediaioff

Ref No	Part Number	Description	Remarks	Serial Number	Qty
1	7141701	HEATER ASSY			1
2	7003445	BLOWER, HEATER & A/C			1
3	7010386	COIL, HEATER			1
4	7010387	HOUSING			1
5	7010388	COVER			1
6	7010389	COVER, SIDE	LH		1
7	7010390	COVER, SIDE	RH		1
8	7010391	SUPPORT, LH			1
9	7010392	SUPPORT, RH			1
10	7010393	COVER			1
11	7010394	HARNESS, HEATER			1
12	7003456	VALVE, MOTORIZED ASSY			1
13	7010395	CLAMP			1
14	7003457	HOSE, HEATER			1
15	7003458	CLAMP, HOSE			4
16	7010396	COVER, HOSE			2
17	6693222	GROMMET			1
18	7010397	PLUG, FILL			1
19	6690482	GROMMET			2
20	7010398	INSULATION, HEATER			1
21	7010399	VALVE, DRAIN			2
22	7010400	SPACER			1
23	7010401	SCREW			2
24	6693223	WASHER			2
25	7010402	SCREW			1
26	7003465	NUT			2
27	6677116	RETAINER			9
28	6677115	RECEPTACLE			9
29	6677119	SCREW			12
30	7010266	RIVET, POP			4
31	6677118	SCREW			4
32	6693864	BOLT			1
33	7010403	NUT			2
34	7010404	WASHER			2
35	6676653	SCREW			1
36	6677117	SCREW			9
37	7010405	CLIP, RECEPTACLE			2
38	7010406	INSULATION, HEATER			1
39	6693236	FOAM			1

Page 301 - OSS# 2072104 - All rights reserved by Bobcat Company - 01/20/2010 - 17:21:58 - Produced by Ken Cook Co. with mediaioff

HEATER & A/C
(Blower Assembly)

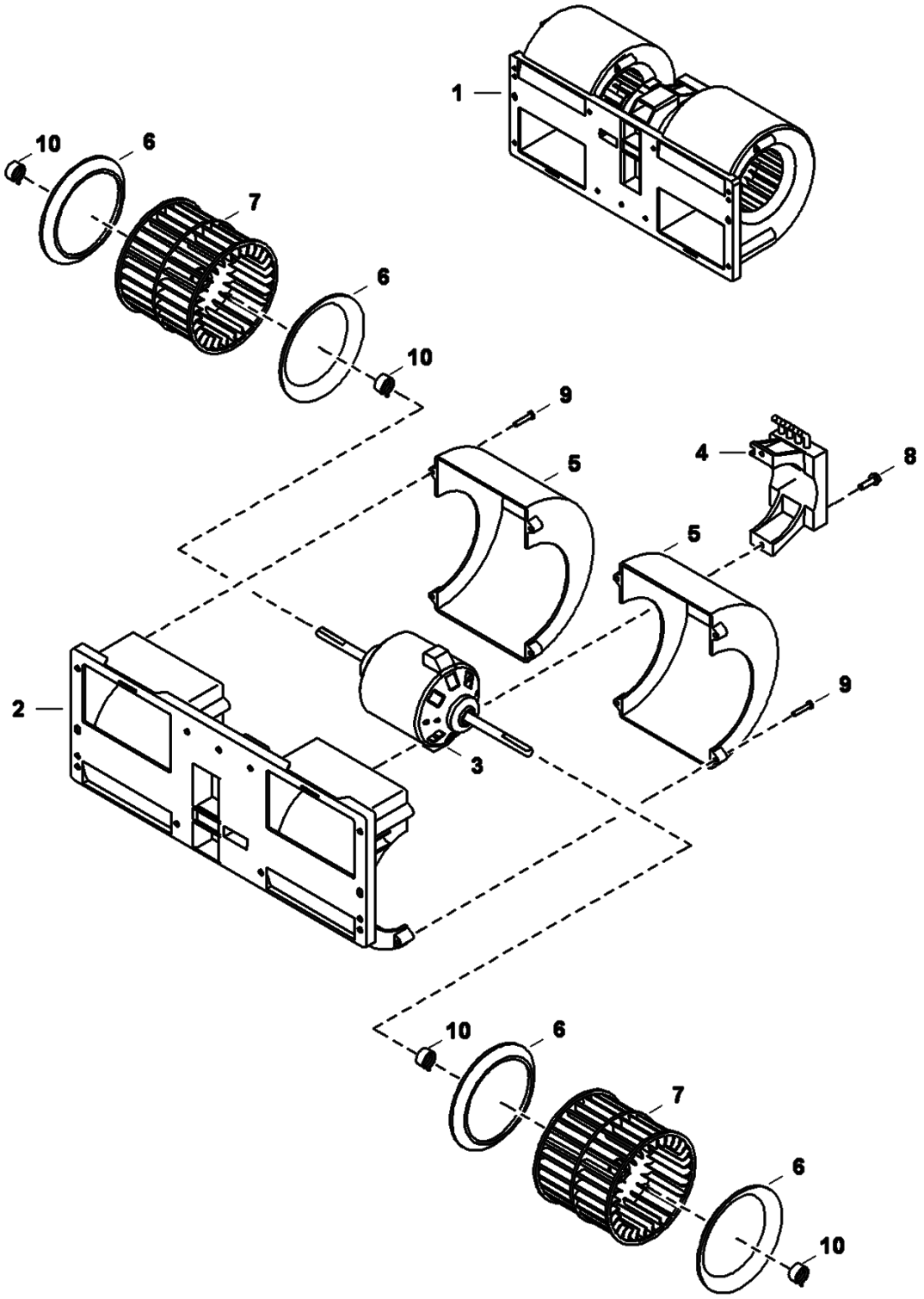

Page 302 - OSS# 2072104 - All rights reserved by Bobcat Company - 01/20/2010 - 17:21:58 - Produced by Ken Cook Co. with mediaioff

Ref No	Part Number	Description	Remarks	Serial Number	Qty
1	7003445	BLOWER, HEATER & A/C			1
2	7010162	HOUSING, BLOWER			1
3	7010163	MOTOR, FAN			1
4	7010164	RESISTOR			1
5	7010165	COVER			2
6	7010166	RING, INNER			4
7	7010167	BLOWER, WHEEL			2
8	7003471	SCREW			2
9	7010168	SCREW			8
10	7010169	CLAMP, HOSE			4

Page 303 - OSS# 2072104 - All rights reserved by Bobcat Company - 01/20/2010 - 17:21:58 - Produced by Ken Cook Co. with mediaioff

HEATER & A/C
(Heater Plumbing Kit)

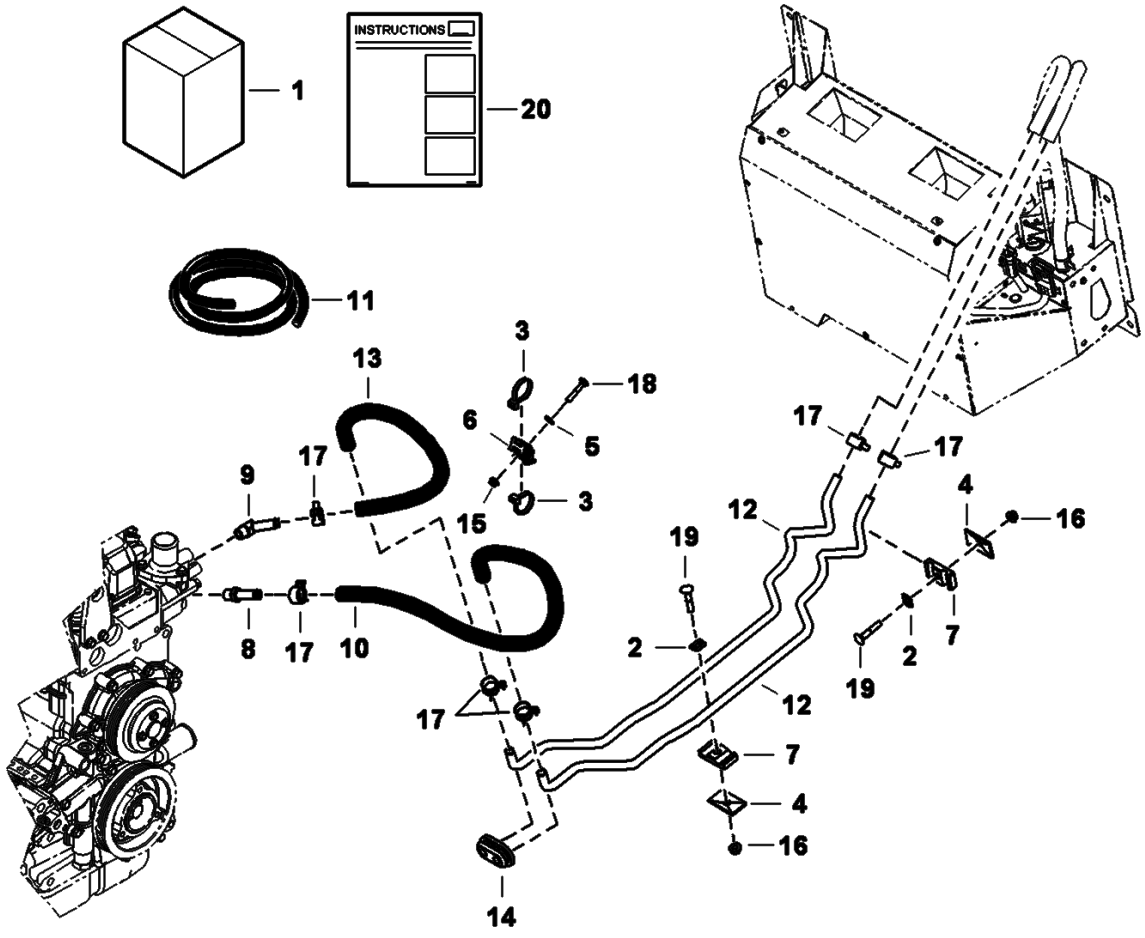

Page 304 - OSS# 2072104 - All rights reserved by Bobcat Company - 01/20/2010 - 17:21:58 - Produced by Ken Cook Co. with mediaioff

Ref No	Part Number	Description	Remarks	Serial Number	Qty
1	7129483	KIT, PLUMBING HEATER	Ref. 2-10 & 12-20		1
2	774220	NUT			2
3	6624289	TIE STRAP			2
4	6652521	COVER			2
5	6675212	RETAINER			1
6	6678974	MOUNT			1
7	6701892	CLAMP			2
8	6731084	ADAPTER			1
9	6731085	ELBOW			1
10		HOSE	NAP - 31" (787.4 mm) long - Order Ref. 11		1
11	6565977	HOSE	bulk - sold per foot		x
12	7151842	TUBE			2
13		HOSE	NAP - 21" (533.4 mm) long - Order Ref. 11		1
14	7156146	GROMMET			1
15	37C528	BOLT			2
16	55D4	NUT			1
17	55D5	NUT			2
18	5HM20	CLAMP			6
19	37C424	BOLT			1
20	6987231	INSTRUCTIONS			1

Page 305 - OSS# 2072104 - All rights reserved by Bobcat Company - 01/20/2010 - 17:21:58 - Produced by Ken Cook Co. with mediaioff

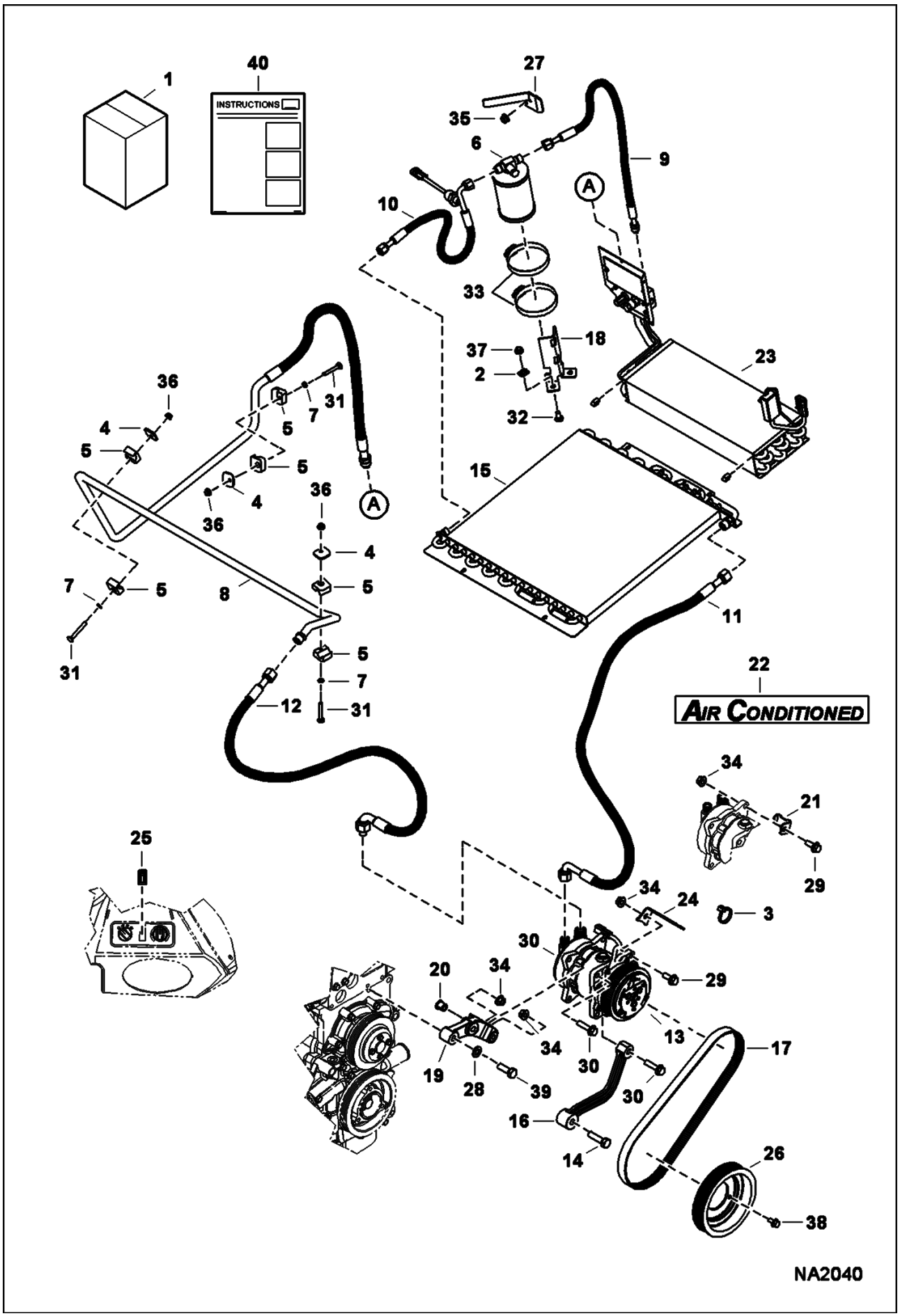

Page 306 - OSS# 2072104 - All rights reserved by Bobcat Company - 01/20/2010 - 17:21:58 - Produced by Ken Cook Co. with mediaioff

Ref No	Part Number	Description	Remarks	Serial Number	Qty
1	7129490	KIT, A/C	Ref. 2-40		1
2	774220	NUT			2
3	6624289	TIE STRAP			2
4	6665102	COVER			3
5	6666920	CLAMP, HALF			6
6	6674235	RECEIVER DRIER			1
7	6675212	RETAINER			3
8	6697914	HOSE, TUBE ASSY			3
9	6697915	HOSE			1
10	6697916	HOSE			1
10	6675779	SWITCH, PRESS			1
10	7009976	O-RING	# 6		x
11	6697917	HOSE			1
11	7009977	O-RING	# 8		x
12	6697918	HOSE			1
12	7009978	O-RING	# 10		x
13	6698590	COMPRESSOR, A/C			1
14	7135124	SCREW			1
15	7136896	CONDENSER, A/C			1
16	7140150	BRACE, COMPRES MACH			1
17	7142000	BELT, ALT			1
18	7151848	BRACKET			1
19	7157922	MOUNT			1
20	7159243	BUSHING			1
21	7164564	BRACKET, A/C			1
22	7166916	DECAL, A/C			2
23	7168310	EVAPORATOR			1
24	7168430	BRACKET			1
25	7169112	SWITCH, ROCKER A/C			1
26	7169128	PULLEY A/C			1
27	7169904	GUIDE, HOSE	LH		1
28	18EM1224	WASHER			2
29	29CM1025	BOLT			2
30	29CM1040	BOLT			3
31	37C432	SCREW			3
32	37C512	BOLT			2
33	44H48	CLAMP			2
34	51DM10	NUT			4
35	53D6	NUT			1
36	55D4	NUT			3
37	55D5	NUT			2
38	59CM816	BOLT			3
39	6CM1235	BOLT			2
40	6987233	INSTRUCTIONS			1

Page 307 - OSS# 2072104 - All rights reserved by Bobcat Company - 01/20/2010 - 17:21:58 - Produced by Ken Cook Co. with mediaioff

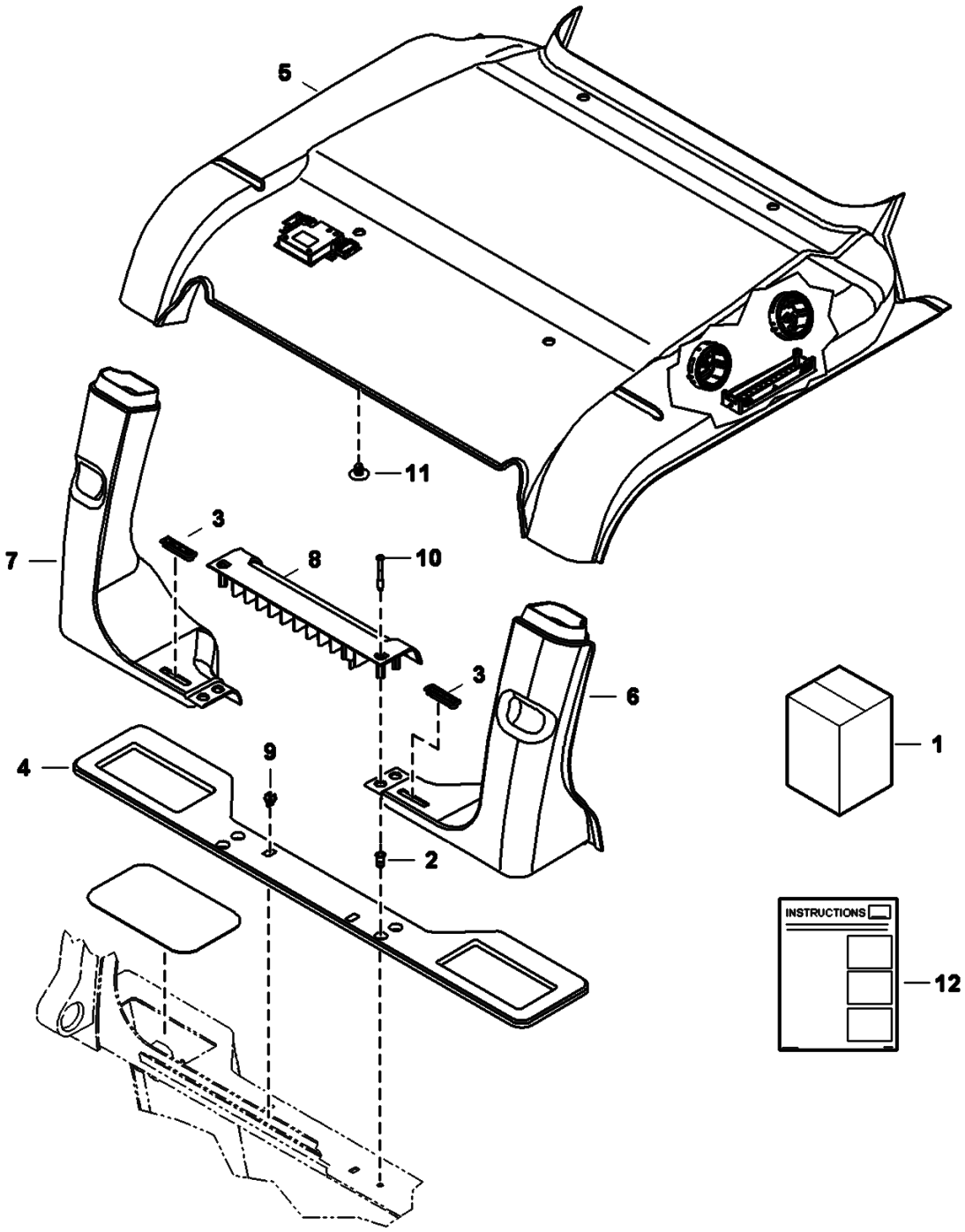

Page 308 - OSS# 2072104 - All rights reserved by Bobcat Company - 01/20/2010 - 17:21:58 - Produced by Ken Cook Co. with mediaioff

Ref No	Part Number	Description	Remarks	Serial Number	Qty
1	7174171	KIT, HEADLINER HVAC	Ref. 2-11		1
2	6675033	INSERT			2
3	7145885	VENT, DEFROST			2
4	7153832	SEAL, SHELF REAR			1
5	7155785	HEADLINER, HVAC			1
6	7165330	DUCT, RR			1
7	7165331	DUCT, RL			1
8	7165332	SHELF, REAR			1
9	7165333	CLIP			2
10	7165799	SCREW			2
11	6674895	RETAINER			5
12	6987356	INSTRUCTIONS			1

Page 309 - OSS# 2072104 - All rights reserved by Bobcat Company - 01/20/2010 - 17:21:58 - Produced by Ken Cook Co. with mediaioff

HEATER & A/C
(HVAC Assembly)

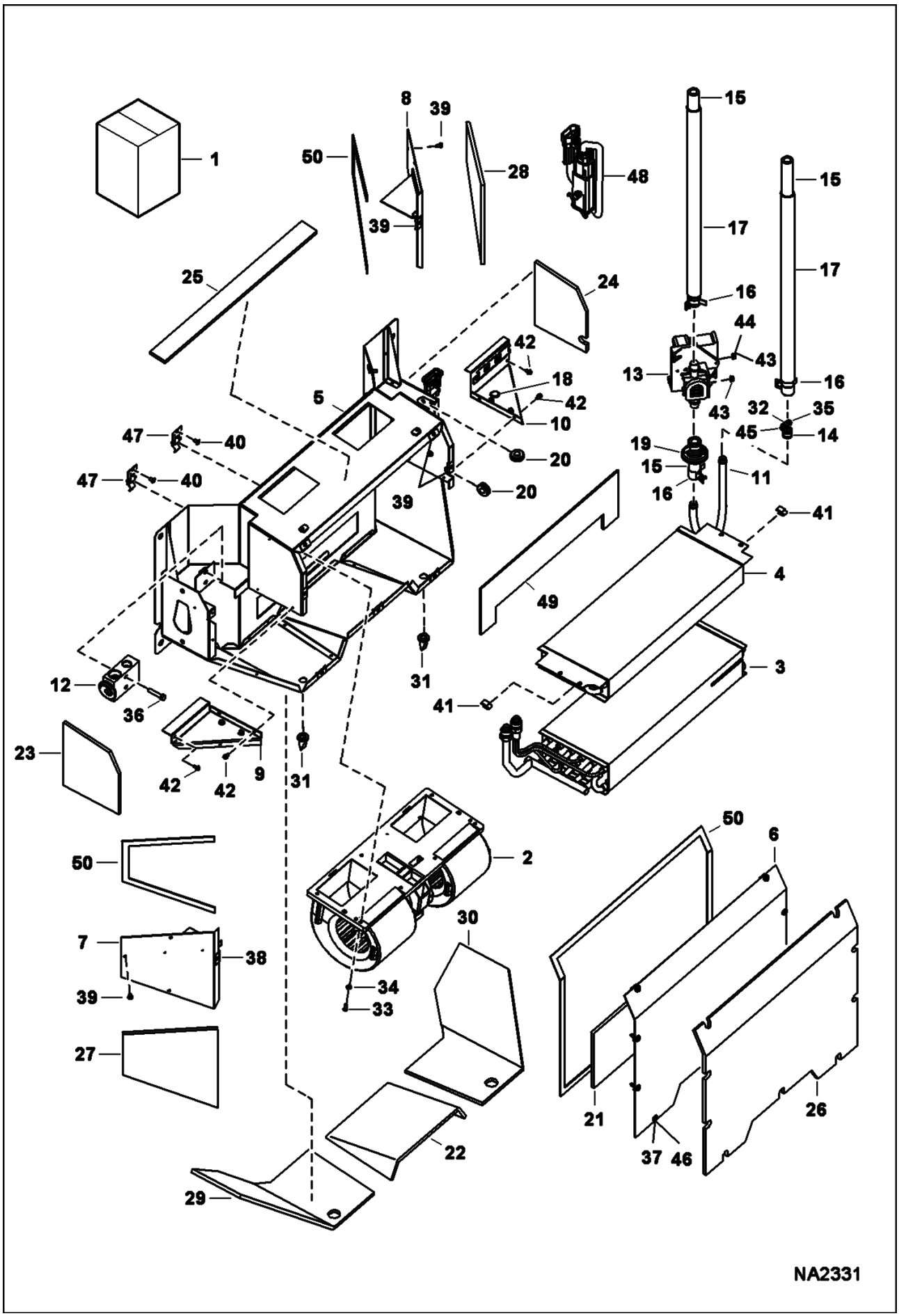

Page 310 - OSS# 2072104 - All rights reserved by Bobcat Company - 01/20/2010 - 17:21:58 - Produced by Ken Cook Co. with mediaioff

Ref No	Part Number	Description	Remarks	Serial Number	Qty
1	7141700	HVAC ASSY	Ref. 2-50		1
2		BLOWER, HEATER & A/C	See Illustration HEATER & A/C/ NA2155		1
3	7008033	EVAPORATOR			1
4	7010386	COIL, HEATER			1
5	7010387	HOUSING			1
6	7010388	COVER			1
7	7010389	COVER, SIDE			1
8	7010390	COVER, SIDE			1
9	7010391	SUPPORT, LH			1
10	7010392	SUPPORT, RH			1
11	7010394	HARNESS, HEATER			1
12	6675534	BLOCK VALVE			1
13	7003456	VALVE, MOTORIZED ASSY			1
14	7010395	CLAMP			1
15	7003457	HOSE, HEATER			1
16	7003458	CLAMP, HOSE			4
17	7010396	COVER, HOSE			2
18	6675513	GROMMET			1
19	6693222	GROMMET			1
20	6690482	GROMMET			2
21	7010398	INSULATION, HEATER			1
22	7010408	INSULATION, HEATER			1
23	7010409	INSULATION, HEATER			1
24	7010410	INSULATION, HEATER			1
25	7010411	INSULATION, HEATER			1
26	7010412	INSULATION, HEATER			1
27	7010413	INSULATION, HEATER			1
28	7010414	INSULATION, HEATER			1
29	7010415	INSULATION, HEATER			1
30	7010416	INSULATION, HEATER			1
31	7010399	VALVE, DRAIN			2
32	7010400	SPACER			1
33	7010401	SCREW			2
34	6693223	WASHER			2
35	7003465	NUT			1
36	6691534	SCREW			2
37	6677116	RETAINER			9
38	6677115	RECEPTACLE			9
39	6677119	SCREW			12
40	7010266	RIVET, POP			4
41	6676539	CLIP			2
42	6677118	SCREW			4
43	7010403	NUT			2

Page 311 - OSS# 2072104 - All rights reserved by Bobcat Company - 01/20/2010 - 17:21:58 - Produced by Ken Cook Co. with mediaioff

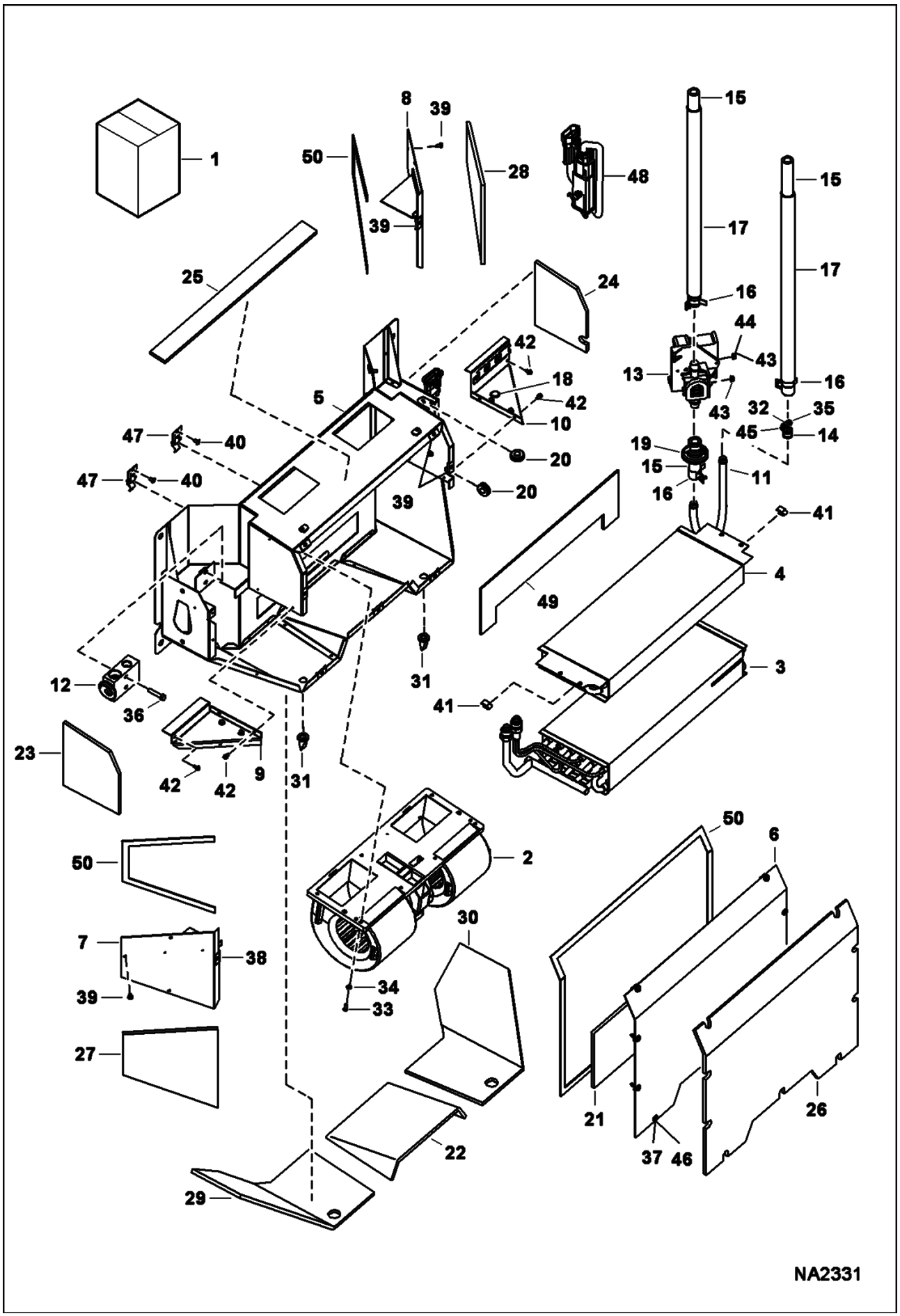

Page 312 - OSS# 2072104 - All rights reserved by Bobcat Company - 01/20/2010 - 17:21:58 - Produced by Ken Cook Co. with mediaioff

Ref No	Part Number	Description	Remarks	Serial Number	Qty
44	7010404	WASHER			2
45	6676653	SCREW			1
46	6677117	SCREW			9
47	7010405	CLIP, RECEPTACLE			2
48	7008040	THERMOSTAT			1
49	7010406	INSULATION, HEATER			1
50	6693236	FOAM			1

Page 313 - OSS# 2072104 - All rights reserved by Bobcat Company - 01/20/2010 - 17:21:58 - Produced by Ken Cook Co. with mediaioff

HORN KIT
(Manual, AHC & ACS)

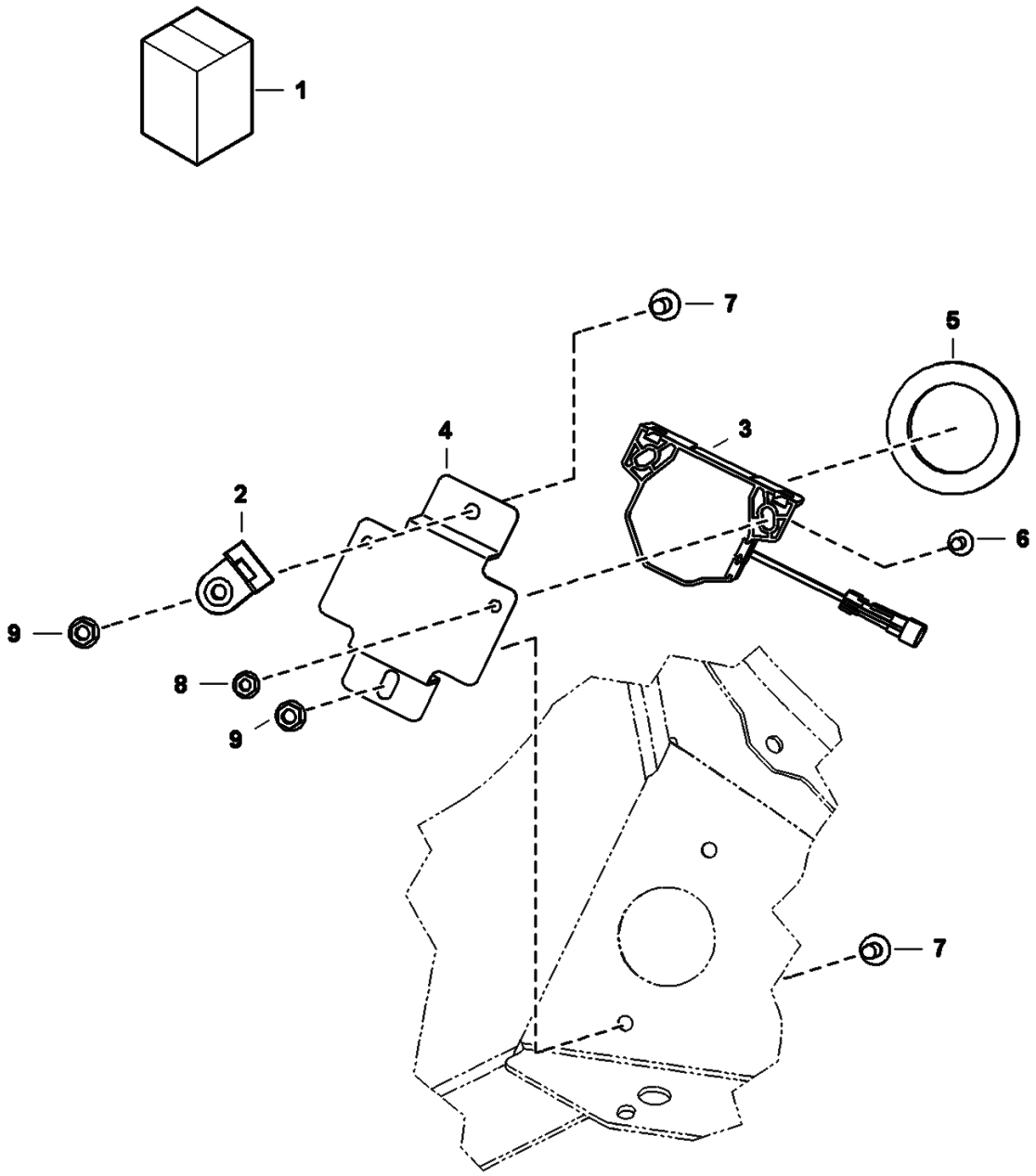

Page 314 - OSS# 2072104 - All rights reserved by Bobcat Company - 01/20/2010 - 17:21:58 - Produced by Ken Cook Co. with mediaioff

HORN KIT (Cont'd)
(Manual, AHC & ACS)

Ref No	Part Number	Description	Remarks	Serial Number	Qty
1	7173594	KIT, HORN	Ref. 2-9		1
2	6684641	MOUNT			1
3	7001044	HORN, ALARM			1
4	7171081	BRACKET, HORN			1
5	7171088	GROMMET			1
6	35C410	BOLT 5			2
7	35C516	BOLT 10			2
8	55D4	NUT			2
9	55D5	NUT			2

Page 315 - OSS# 2072104 - All rights reserved by Bobcat Company - 01/20/2010 - 17:21:58 - Produced by Ken Cook Co. with mediaioff

HORN KIT
(SJC)

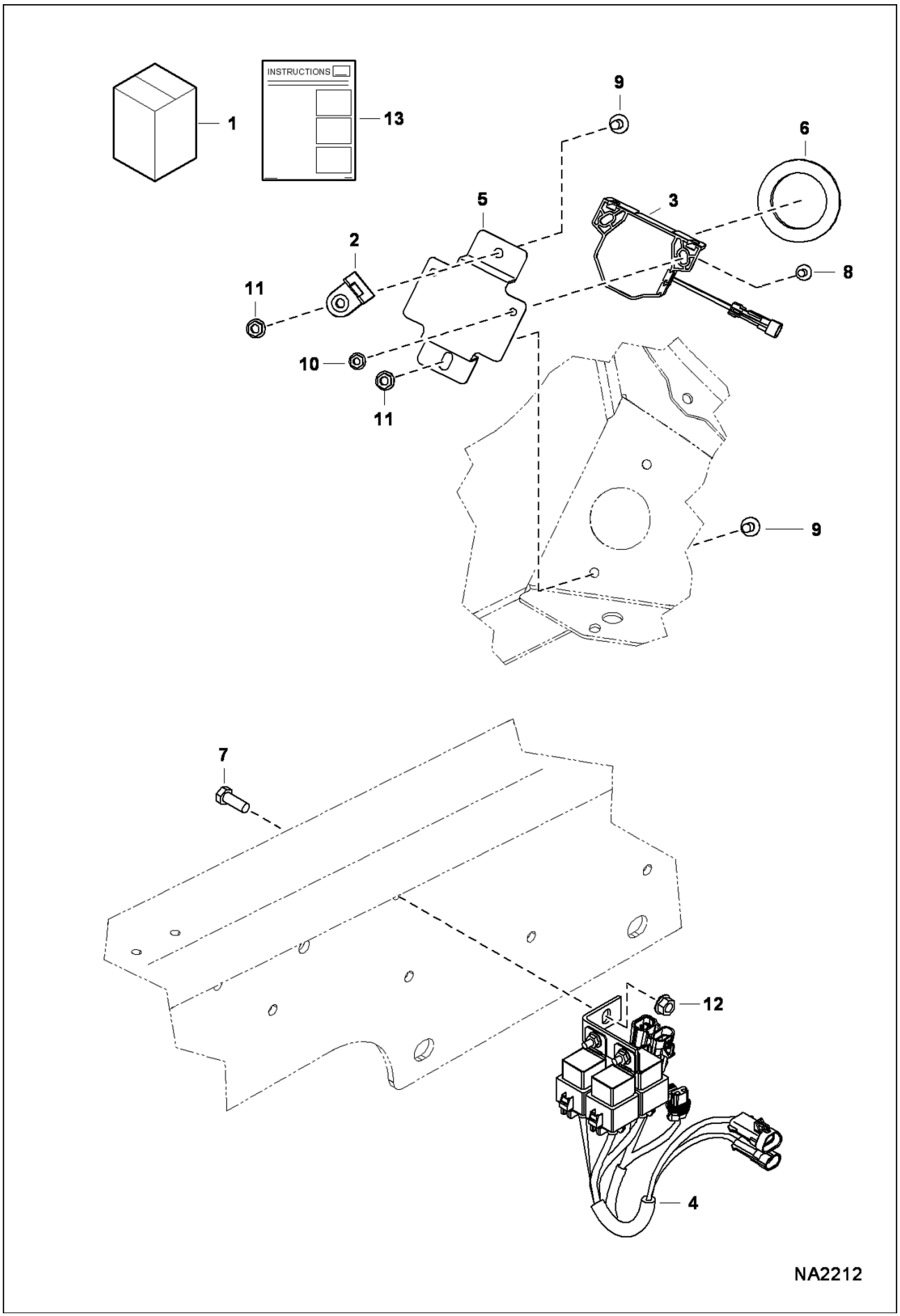

Page 316 - OSS# 2072104 - All rights reserved by Bobcat Company - 01/20/2010 - 17:21:58 - Produced by Ken Cook Co. with mediaioff

Ref No	Part Number	Description	Remarks	Serial Number	Qty
1	7173595	KIT, HORN W/JOYSTICK	Ref. 2-13		1
2	6684641	MOUNT			1
3	7001044	HORN, ALARM			1
4	7151940	HARNESS, HORN			1
5	7171081	BRACKET, HORN			1
6	7171088	GROMMET			1
7	17C616	BOLT 5			1
8	35C410	BOLT 5			2
9	35C516	BOLT 10			2
10	55D4	NUT			2
11	55D5	NUT			2
12	97D6	NUT 10			1
13	6987237	INSTRUCTIONS			1

Page 317 - OSS# 2072104 - All rights reserved by Bobcat Company - 01/20/2010 - 17:21:58 - Produced by Ken Cook Co. with mediaioff

LIFT KIT
(Four Point)

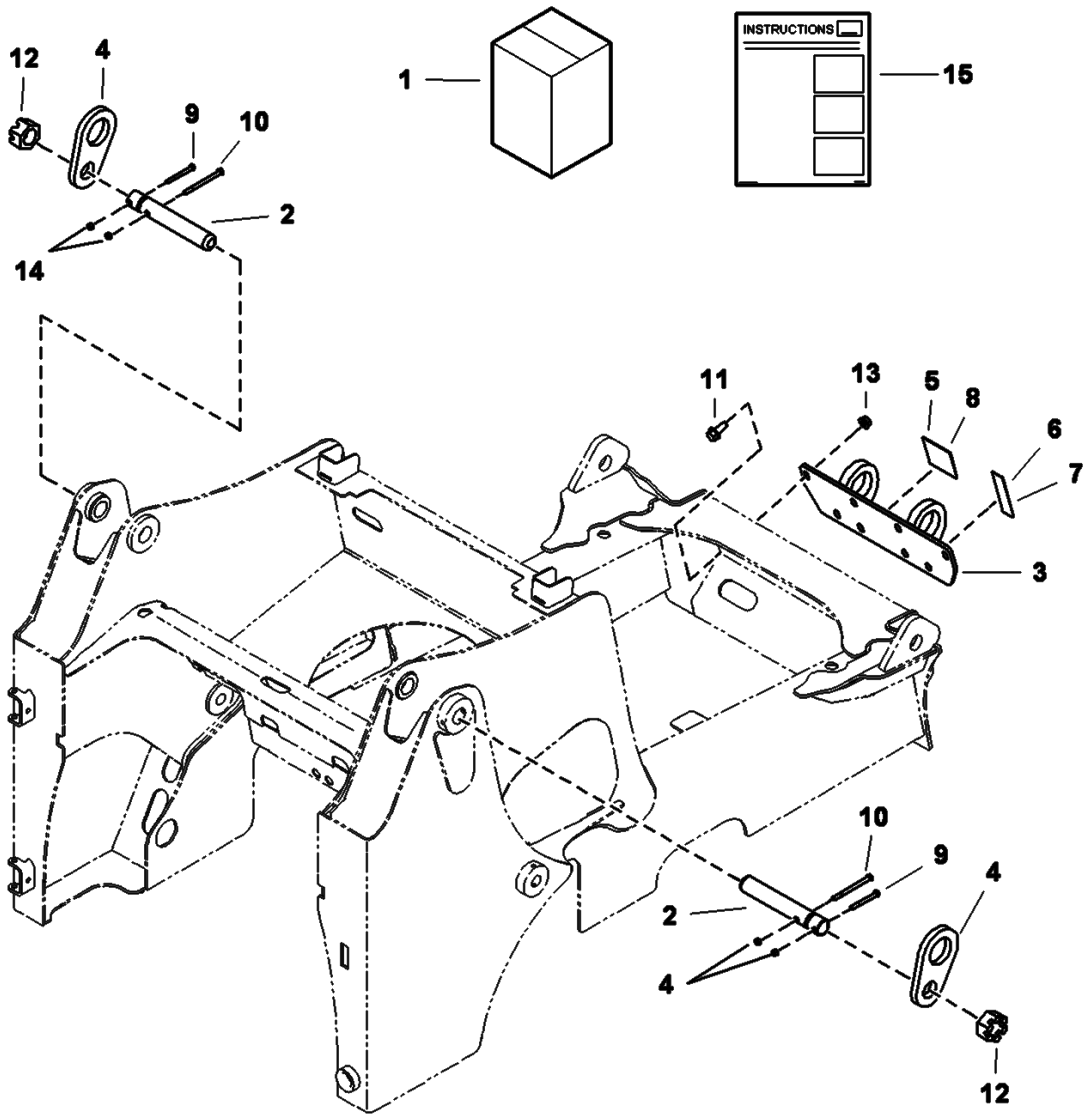

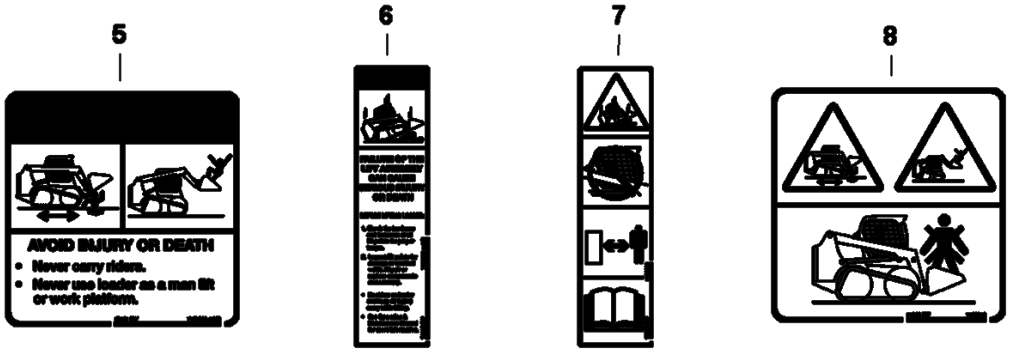

NA2328

Page 318 - OSS# 2072104 - All rights reserved by Bobcat Company - 01/20/2010 - 17:21:58 - Produced by Ken Cook Co. with mediaioff

LIFT KIT (Cont'd)
(Four Point)

Ref No	Part Number	Description	Remarks	Serial Number	Qty
1	7128411	KIT, LIFT 4-POINT	Ref.2-15		1
2	7150393	PIN, PIVOT			2
3	7156606	BRACKET, ASSY			1
4	7162933	LIFT EYE			2
5	7167996	DECAL, WARNING			1
6	7168019	DECAL, WARNING			1
7	7168020	DECAL, WARNING	no text		1
8	7168040	DECAL, WARNING	no text		1
9	17C656	BOLT			2
10	17C680	BOLT			2
11	31C1024	BOLT			8
12	4D28	NUT			2
13	53D10	NUT			8
14	85D6	LOCK NUT			4
15	6987218	INSTRUCTIONS			1

Page 319 - OSS# 2072104 - All rights reserved by Bobcat Company - 01/20/2010 - 17:21:58 - Produced by Ken Cook Co. with mediaioff

LIFT KIT
(Single Point)

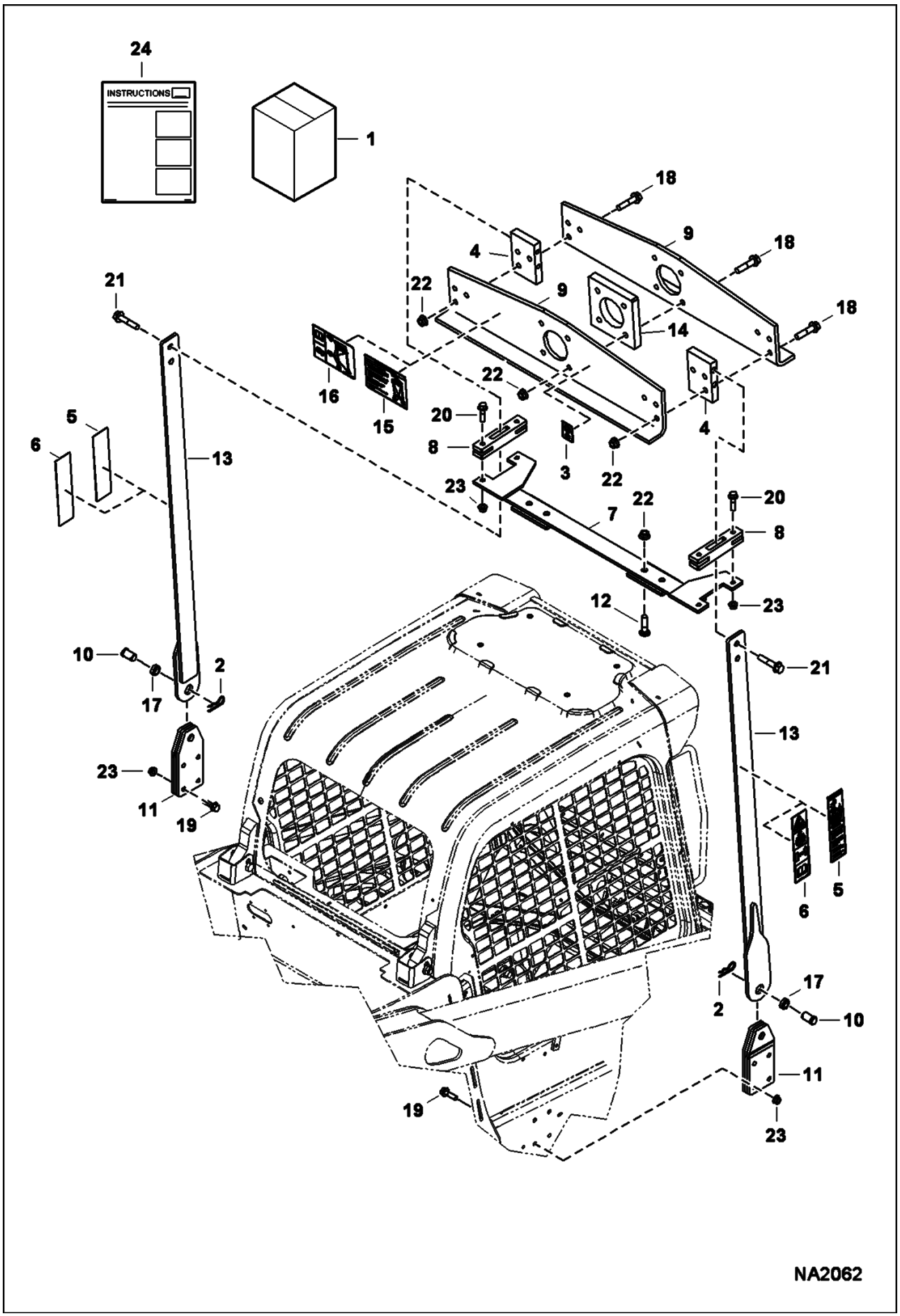

Page 320 - OSS# 2072104 - All rights reserved by Bobcat Company - 01/20/2010 - 17:21:58 - Produced by Ken Cook Co. with mediaioff

LIFT KIT (Cont'd)
(Single Point)

Ref No	Part Number	Description	Remarks	Serial Number	Qty
1	7129295	KIT, LIFT SINGLE POINT	Ref. 2-24		1
2	1320075	COTTER PIN			2
3	6533898	DECAL			2
4	7126682	BLOCK			2
5	7142141	DECAL			2
6	7142142	DECAL			2
7	7159102	MOUNT			1
8	7160760	MOUNT			2
9	7160779	PLATE			2
10	7161536	PIN, CLEVIS			2
11	7163748	MOUNT			2
12	7164686	BOLT, CARRIAGE			4
13	7166334	ARM LIFT			2
14	7166831	BLOCK			1
15	7168021	DECAL			2
16	7168022	DECAL			2
17	7168159	BUSHING			2
18	31C1044	BOLT			10
19	31C828	BOLT			8
20	31C832	BOLT			4
21	49C1048	BOLT			4
22	53D10	NUT			14
23	53D8	NUT			12
24	6987217	INSTRUCTIONS			1

Page 321 - OSS# 2072104 - All rights reserved by Bobcat Company - 01/20/2010 - 17:21:58 - Produced by Ken Cook Co. with mediaioff

PEDAL EXTENDERS

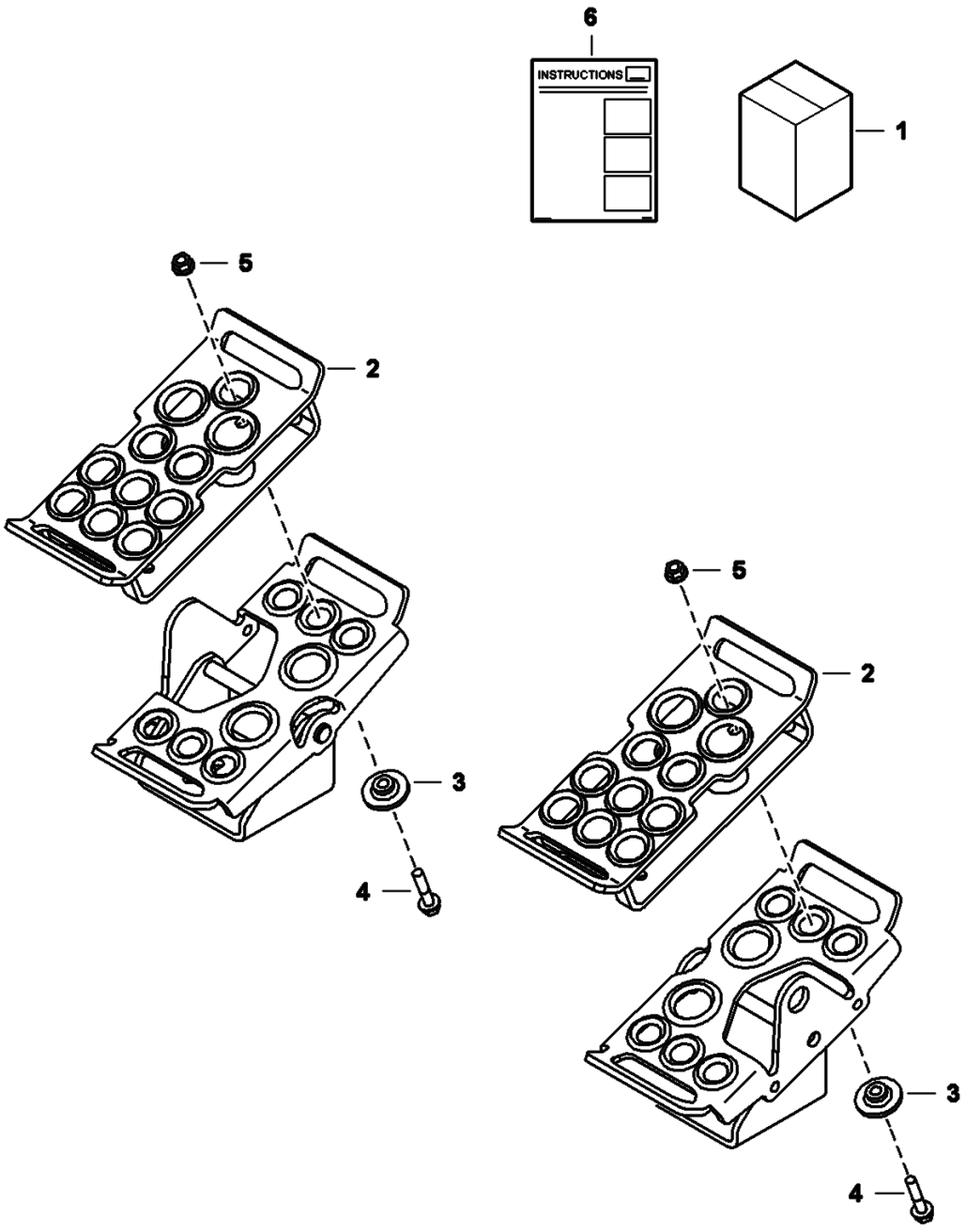

Page 322 - OSS# 2072104 - All rights reserved by Bobcat Company - 01/20/2010 - 17:21:58 - Produced by Ken Cook Co. with mediaioff

Ref No	Part Number	Description	Remarks	Serial Number	Qty
1		KIT, PEDAL EXTENDER	NAP - Order (2) of Ref. 5 & (3) of Ref. 3-5		1
2	7131233	PEDAL			2
3	7131236	BUSHING			6
4	35C524	BOLT			6
5	89D5	NUT			6

Page 323 - OSS# 2072104 - All rights reserved by Bobcat Company - 01/20/2010 - 17:21:58 - Produced by Ken Cook Co. with mediaioff

POWER BOB-TACH
(Kit)

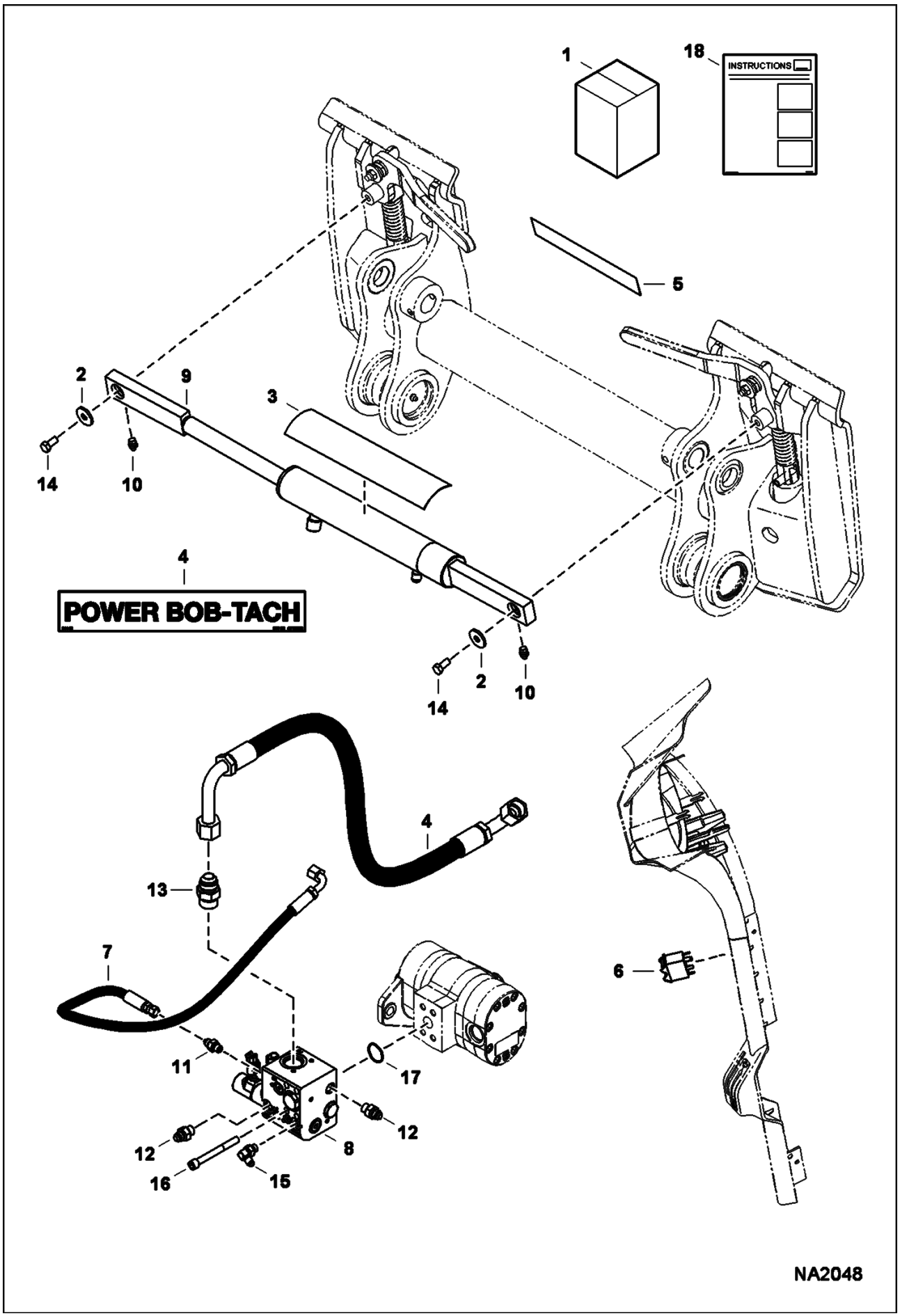

Page 324 - OSS# 2072104 - All rights reserved by Bobcat Company - 01/20/2010 - 17:21:58 - Produced by Ken Cook Co. with mediaioff

POWER BOB-TACH (Cont'd)
(Kit)

Ref No	Part Number	Description	Remarks	Serial Number	Qty
1	7167366	KIT, POWER BOB-TACH	Ref. 2-17		1
2	619021	WASHER, 5			2
3	6555341	SAFETY TREAD			1
4	6697864	HOSE ASSY			1
5	6719888	DECAL			1
6	7001712	SWITCH			1
7	7159736	HOSE ASSY			1
8		VALVE, POWER BOB-TACH	See Illustration POWER BOB-TACH/ MS2724		1
9		CYLINDER, POWER BOB-TACH	See Illustration POWER BOB-TACH/ PE3954		1
10	10H35	GREASE ZERK			2
11	15KB404	CONNECTOR			1
12	15KB606	ADAPTER			2
13	15KB1212	ADAPTER			1
14	17C612	BOLT 5			2
15	17KB404	ELBOW			1
16	73G656	SCREW			4
17	55K214	O-RING			1
18	6987220	INSTRUCTIONS			1

Page 325 - OSS# 2072104 - All rights reserved by Bobcat Company - 01/20/2010 - 17:21:58 - Produced by Ken Cook Co. with mediaioff

POWER BOB-TACH
(Plumbing Kit)

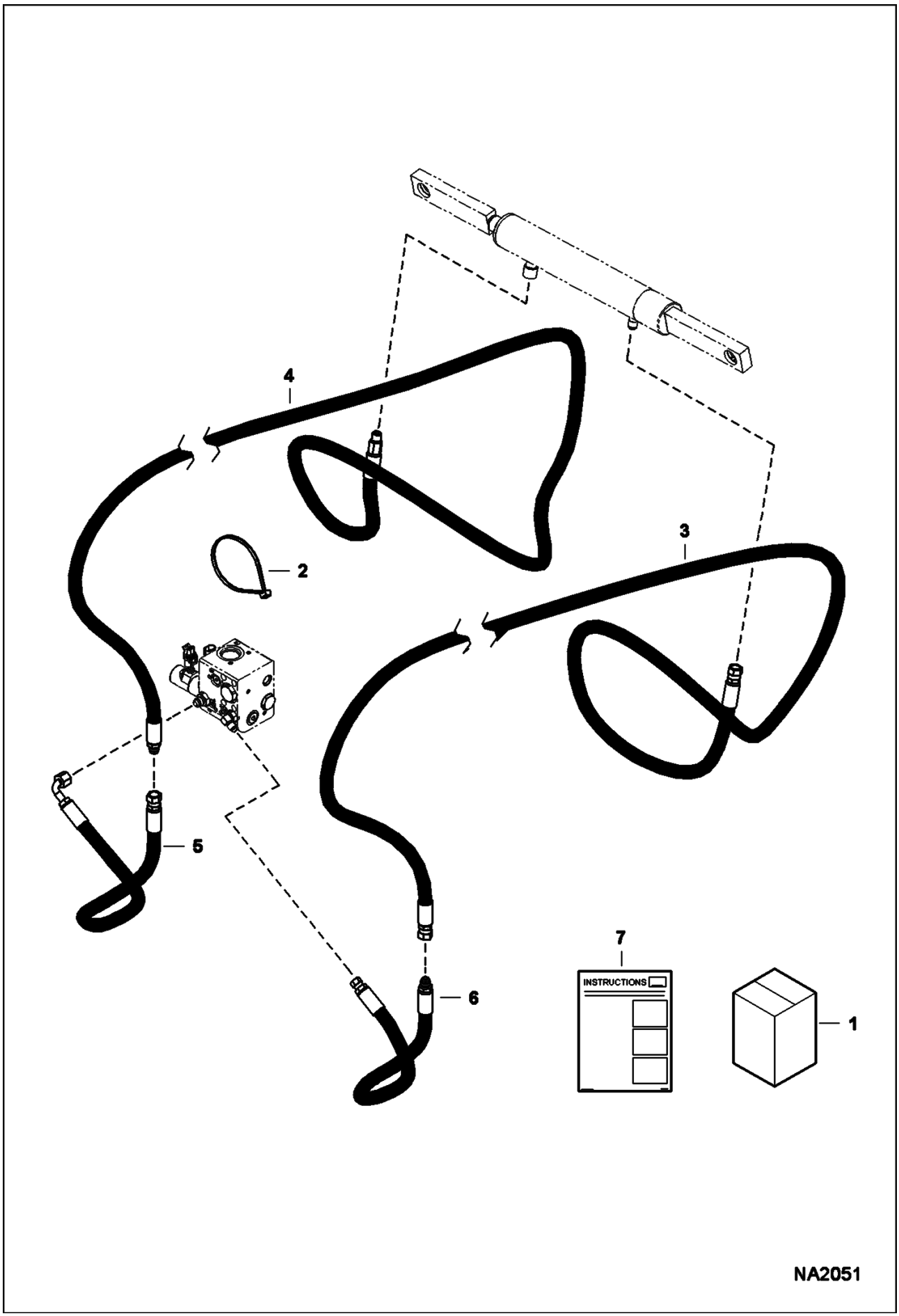

Page 326 - OSS# 2072104 - All rights reserved by Bobcat Company - 01/20/2010 - 17:21:58 - Produced by Ken Cook Co. with mediaioff

POWER BOB-TACH (Cont'd)
(Plumbing Kit)

Ref No	Part Number	Description	Remarks	Serial Number	Qty
1	7129508	KIT, PLUMBING POWER BOB-TACH	Ref. 2-6		1
2	6624289	TIE STRAP			3
3	7171252	HOSE			1
4	7171250	HOSE			1
5	7171249	HOSE			1
6	7171251	HOSE			1
7	6987220	INSTRUCTIONS	INSTRUCTIONS not in kit - part of Power Bob-Tach kit		1

Page 327 - OSS# 2072104 - All rights reserved by Bobcat Company - 01/20/2010 - 17:21:58 - Produced by Ken Cook Co. with mediaioff

POWER BOB-TACH
(Cylinder)

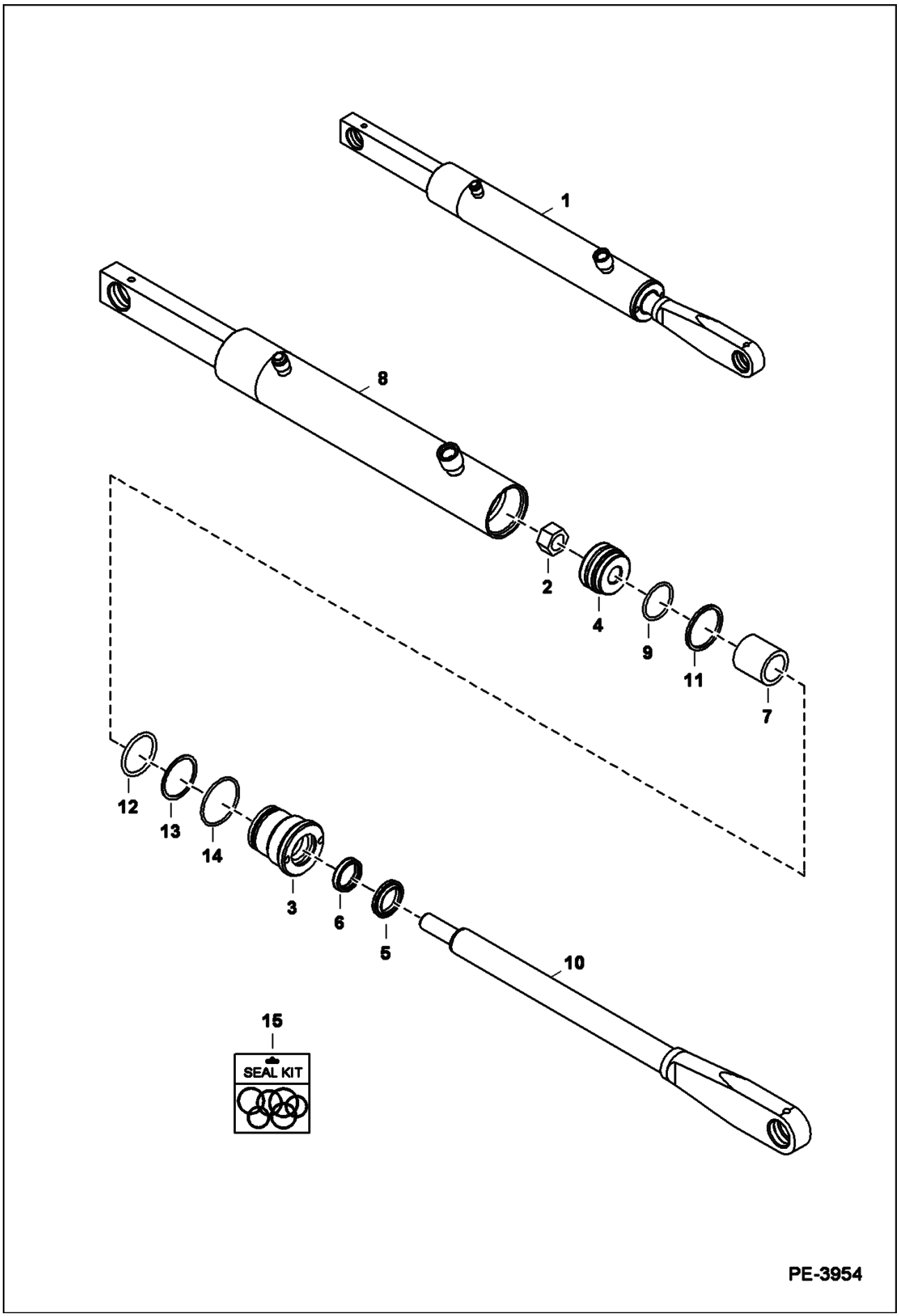

Page 328 - OSS# 2072104 - All rights reserved by Bobcat Company - 01/20/2010 - 17:21:58 - Produced by Ken Cook Co. with mediaioff

Ref No	Part Number	Description	Remarks	Serial Number	Qty
1	7167180	CYLINDER, POWER BOB-TACH	Ref. 2-14		1
2	92D10	NUT			1
3	6586542	HEAD			1
4	6586543	PISTON			1
5	6666542	SEAL			1
6	6667323	SEAL			1
7	6810356	SPACER			1
8	7167183	CASE			1
9	6532453	RING			1
10	7167184	SHAFT, ROD CYLINDER, POWER BOB-TACH			1
11	54K30110	O-RING			1
12	54K40116	O-RING			1
13	73K222	RING			1
14	82K132	O-RING HYDRAULIC			1
15	7138014	SEAL KIT			1

Page 329 - OSS# 2072104 - All rights reserved by Bobcat Company - 01/20/2010 - 17:21:58 - Produced by Ken Cook Co. with mediaioff

POWER BOB-TACH
(Valve)

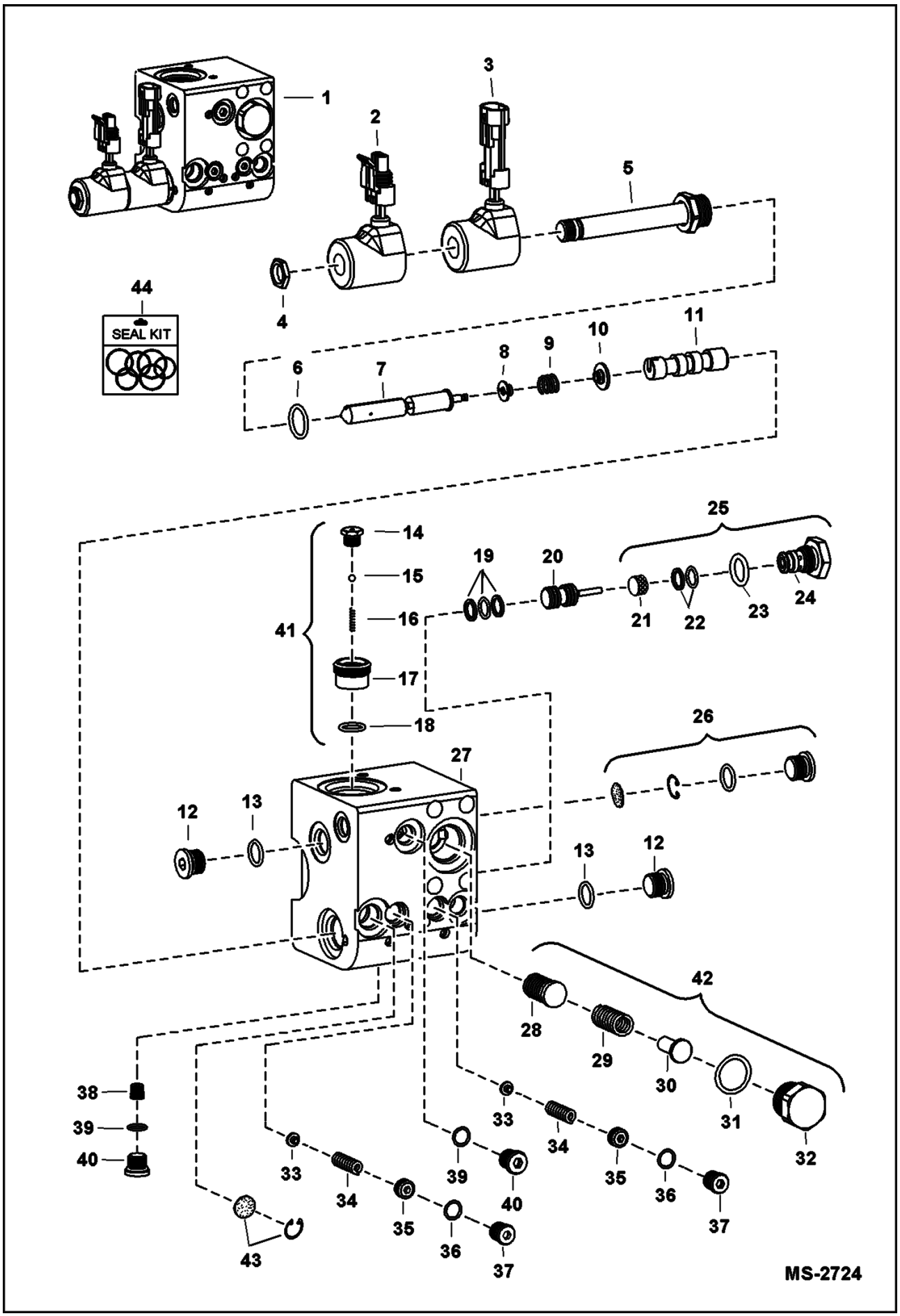

Page 330 - OSS# 2072104 - All rights reserved by Bobcat Company - 01/20/2010 - 17:21:58 - Produced by Ken Cook Co. with mediaioff

POWER BOB-TACH (Cont'd)
(Valve)

Ref No	Part Number	Description	Remarks	Serial Number	Qty
1	7161786	VALVE, POWER BOB-TACH	valve has (2) drain ports marked DR - Use which ever port best fits plumbing application		1
2	6684743	SOLENOID	W/male connector		1
3	6684744	SOLENOID	W/female connector		1
4	6684742	NUT			1
5		STEM	NSS		x
6	79K8	O RING 10			x
7		STEM	NSS		x
8		RETAINER	NSS		x
9		SPRING	NSS		x
10		WASHER	NSS		x
11		PISTON	NAP		x
12	6685545	PLUG	W/Ref. 13		x
13		ORING	NSS		x
14		PLUG	NSS		x
15		BALL	NSS		x
16		SPRING	NSS		x
17		VALVE	NSS		x
18	6685542	O-RING			x
19		RINGS	NSS		x
20	6684745	PISTON	W/Ref. 19		1
21		STEM	NSS		1
22		RINGS	NSS		x
23	79K7	O RING 10			x
24	6684746	CHECK VALVE	W/Ref. 23		1
25	7001678	VALVE, CHECK	W/Ref. 21-24		1
26	7001673	KIT, SCREEN FILTER			1
27		BLOCK	NSS		x
28			NSS		x
29		SPRING	NSS		x
30		POPPET	NSS		x
31	79K10	O RING 10			x
32		PLUG	NSS		1
33		POPPET	NSS		x
34		SPRING	NSS		x
35		PLUG	NSS		x
36	79K4	O RING 10			x
37	24K3	PLUG	W/Ref. 36		x
38	6685541	POPPET			1
39		O-RING	NSS		x
40	6685546	PLUG	W/Ref. 39		2
41	6685543	CHECK VALVE	W/Ref. 14-18		1
42	6685544	COMPENSATOR	W/Ref. 26-30		1
43	6689983	FILTER KIT			1
44	6684747	SEAL KIT	Ref. 6, 22, 23, 31 & 39 - consists of (5) O-rings & (1) back-up washer		1

Page 331 - OSS# 2072104 - All rights reserved by Bobcat Company - 01/20/2010 - 17:21:58 - Produced by Ken Cook Co. with mediaioff

PURIFIER

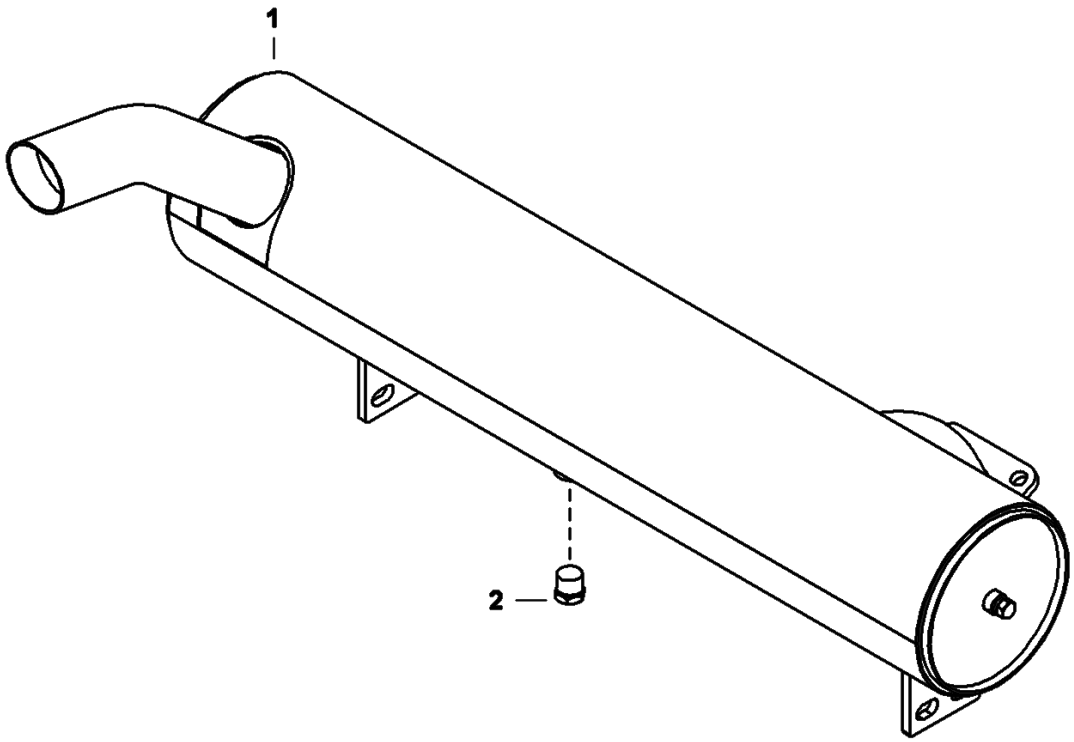

NA2072

Page 332 - OSS# 2072104 - All rights reserved by Bobcat Company - 01/20/2010 - 17:21:58 - Produced by Ken Cook Co. with mediaioff

Ref No	Part Number	Description	Remarks	Serial Number	Qty
1	7149931	MUFFLER, PURIFIER	W/Ref. 2		1
2	6661062	PLUG			1

Page 333 - OSS# 2072104 - All rights reserved by Bobcat Company - 01/20/2010 - 17:21:58 - Produced by Ken Cook Co. with mediaioff

REAR DOOR LOCK

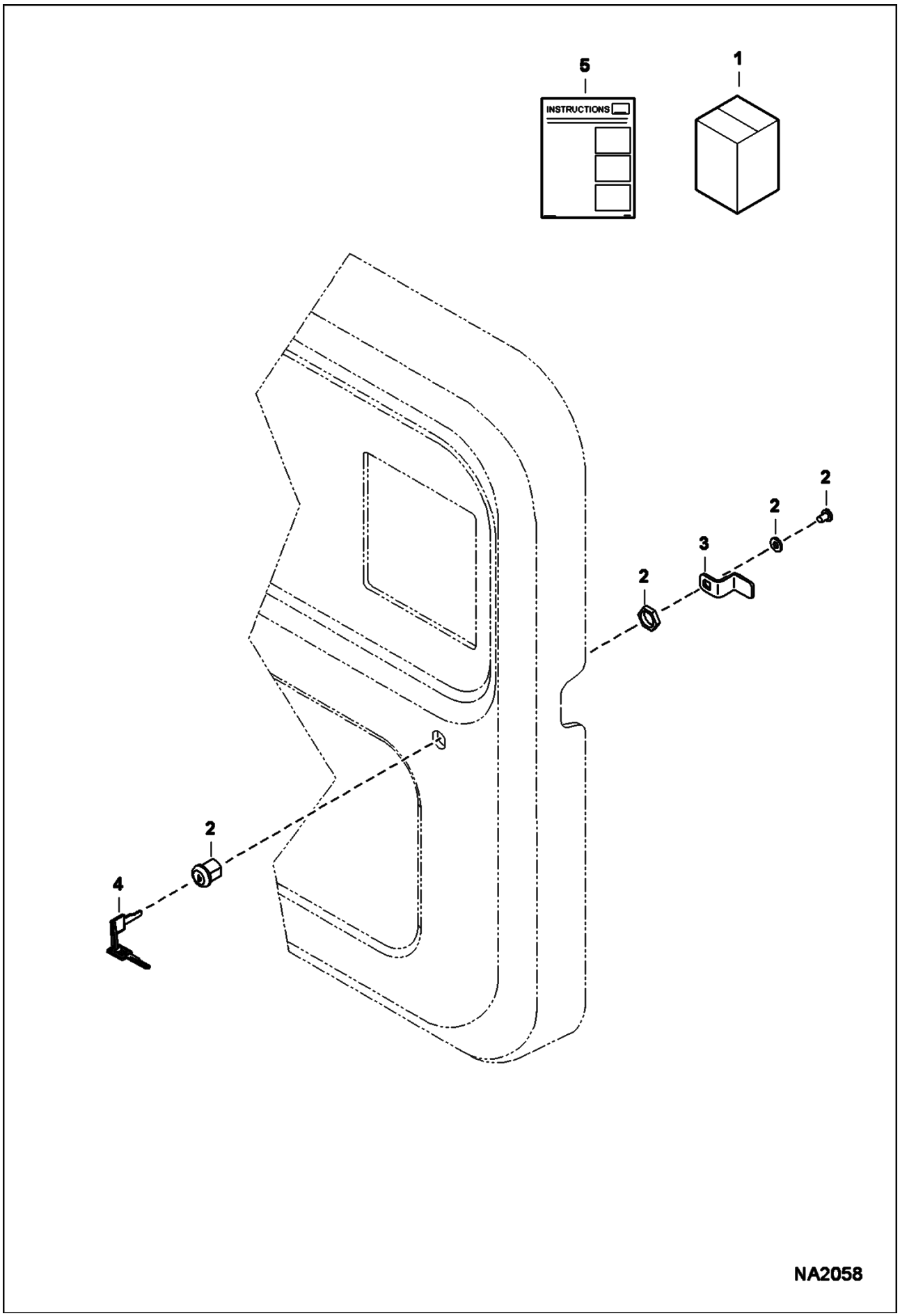

Page 334 - OSS# 2072104 - All rights reserved by Bobcat Company - 01/20/2010 - 17:21:58 - Produced by Ken Cook Co. with mediaioff

Ref No	Part Number	Description	Remarks	Serial Number	Qty
1	7128403	KIT, LOCK REAR DOOR	Ref. 2-5		1
2	6670726	LOCK			1
3	7149056	LATCH, CAM			1
4	6693241	KEY	single key W/O ring		1
5	6987239	INSTRUCTIONS			1

Page 335 - OSS# 2072104 - All rights reserved by Bobcat Company - 01/20/2010 - 17:21:58 - Produced by Ken Cook Co. with mediaioff

SEAT KIT
(Suspension) (80 mm)

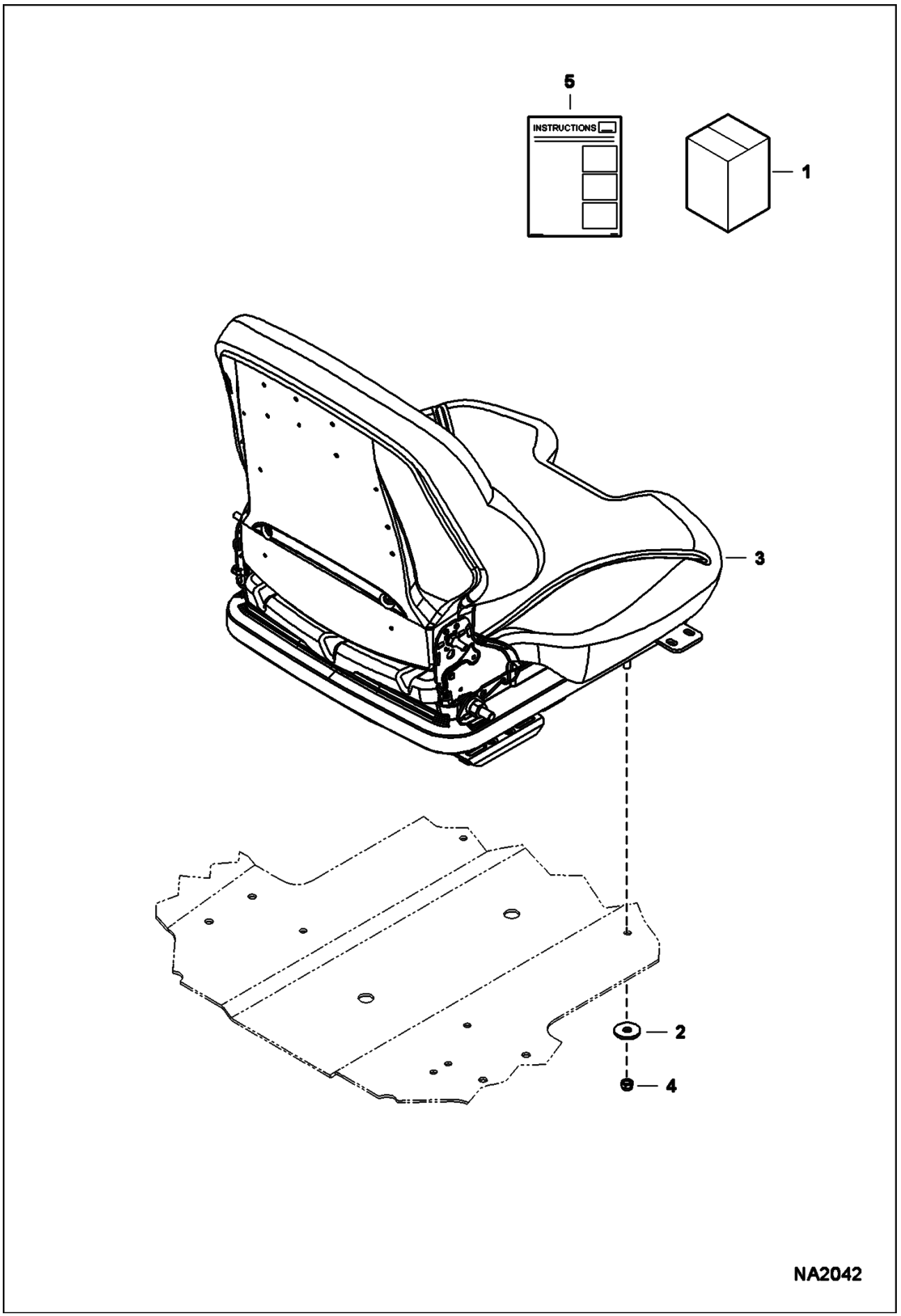

Page 336 - OSS# 2072104 - All rights reserved by Bobcat Company - 01/20/2010 - 17:21:58 - Produced by Ken Cook Co. with mediaioff

SEAT KIT (Cont'd)
(Suspension) (80 mm)

Ref No	Part Number	Description	Remarks	Serial Number	Qty
1	7128524	KIT, SEAT 80MM SUSPENSION	Ref. 2-5		1
2	619021	WASHER, 5			4
3		SEAT, SUSPENSION	See Illustration SEAT/ NA1559		1
4	7161016	NUT			4
5	6987249	INSTRUCTIONS			1

Page 337 - OSS# 2072104 - All rights reserved by Bobcat Company - 01/20/2010 - 17:21:58 - Produced by Ken Cook Co. with mediaioff

SEAT
(Suspension) (80 mm)

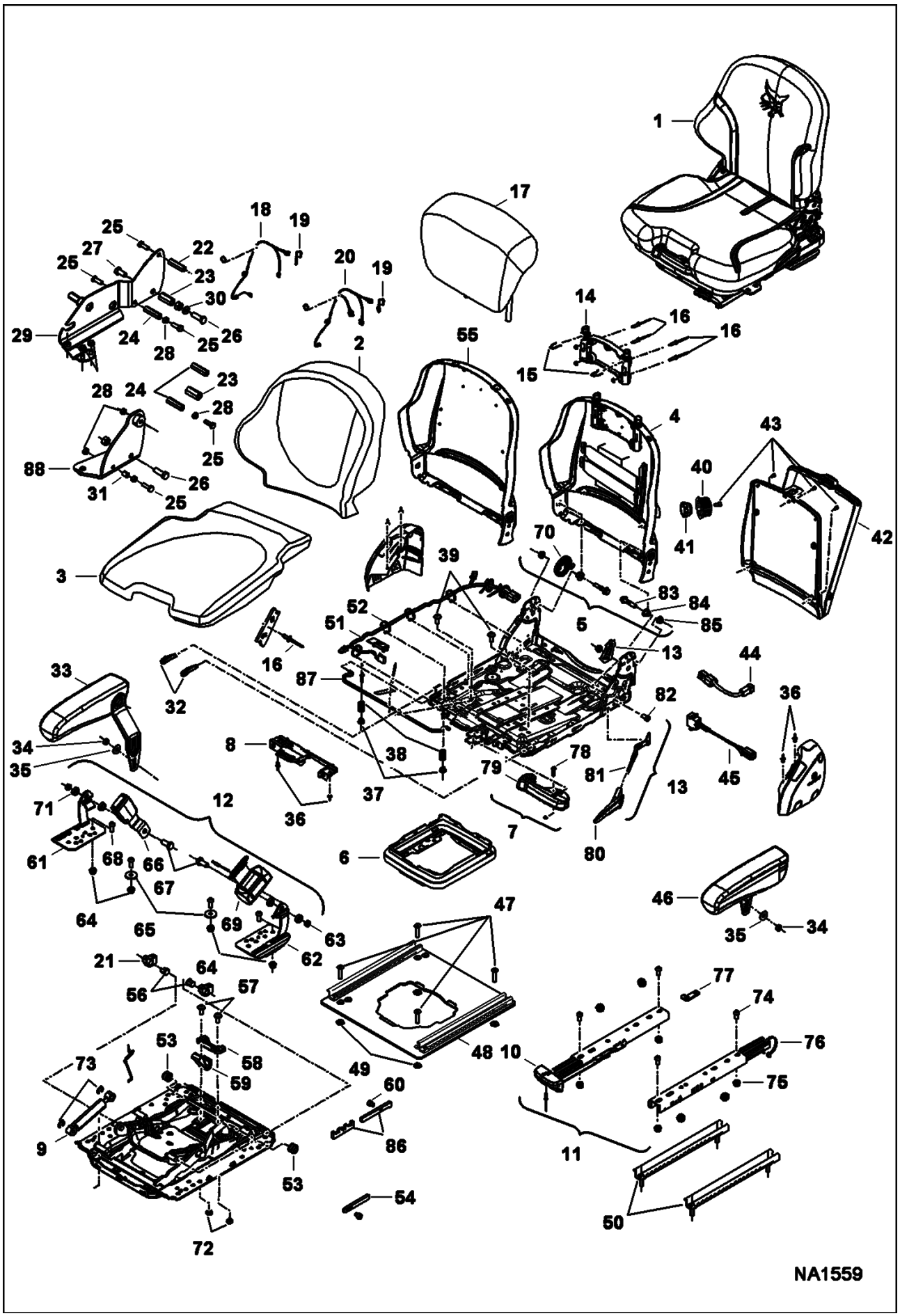

Page 338 - OSS# 2072104 - All rights reserved by Bobcat Company - 01/20/2010 - 17:21:58 - Produced by Ken Cook Co. with mediaioff

SEAT (Cont'd)
(Suspension) (80 mm)

Ref No	Part Number	Description	Remarks	Serial Number	Qty
1	7149786	SEAT, SUSPENSION	Ref. 2-88		1
2	7010335	KIT, CUSHION SEAT VINYL	vinyl		1
3	7010336	KIT, CUSHION SEAT VINYL	vinyl		1
4	7010337	KIT, BACKREST SEAT			1
5	7010338	KIT, BACKREST SEAT	parts for backrest - Ref. 70 & 83-85		1
6	7010339	BELLOW			1
7	7010340	KIT, ADJUSTER SEAT	Ref. 78 & 79		1
8	7010341	KIT, HOUSING SEAT	W/Ref. 36		1
9	7010342	KIT, ABSORBER SHOCK SEAT			1
10	7010343	KIT, RAIL SLIDE SEAT	assy.		1
11	7010344	KIT, RAIL SLIDE SEAT	Ref. 10 & 74-77		1
12	7010345	KIT, TETHER SEAT BELT	Ref. 61-69 & 71		1
13	7010346	KIT, BACKREST SEAT	Ref. 80-82		1
14		BRACKET	NSS		1
15		CLIP	NSS		2
16		RIVET	NSS		6
17		HEADREST	NSS		1
18		CORD	NSS		1
19		CLAMP	NSS		2
20		CORD	NSS		1
21		BLOCK	NSS		2
22		SPACER	NSS		1
23		SPACER	NSS		1
24		SPACER	NSS		3
25		BOLT	NSS		5
26		BOLT	NSS		2
27		BOLT	NSS		1
28		NUT	NSS		7
29		BRACKET	NSS		1
30		WASHER	NSS		1
31		SPACER	NSS		1
32		INSERT	NSS		2
33		ARMREST	NSS - RH		1
34		NUT	NSS		2
35		WASHER	NSS		2
36		STUD	NSS		2
37		NUT	NSS		2
38		SPACER	NSS		2
39		SCREW	NSS		2
40		PLUG	NSS		1
41		PLUG	NSS		1
42		BACKING	NSS		1
43		SCREW	NSS		4
44		HARNESS	NSS		1
45		HARNESS	NSS		1

Page 339 - OSS# 2072104 - All rights reserved by Bobcat Company - 01/20/2010 - 17:21:58 - Produced by Ken Cook Co. with mediaioff

SEAT (Cont'd)
(Suspension) (80 mm)

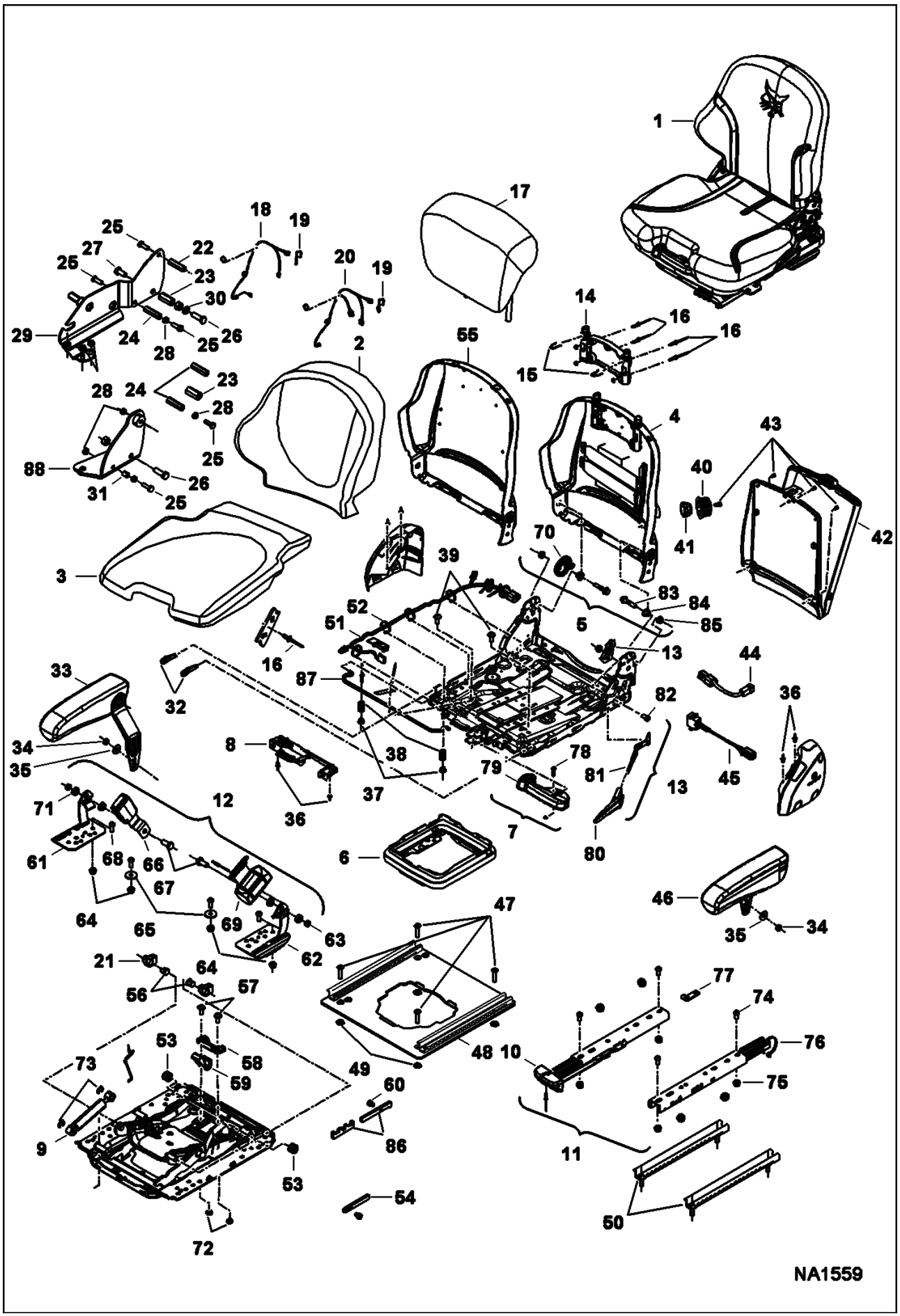

Page 340 - OSS# 2072104 - All rights reserved by Bobcat Company - 01/20/2010 - 17:21:58 - Produced by Ken Cook Co. with mediaioff

Ref No	Part Number	Description	Remarks	Serial Number	Qty
46		PAD, ARMREST	NSS		1
47		BOLT	NSS		4
48		PLATE, ADJUSTMENT	NSS		1
49		WASHER	NSS		4
50		RAIL, ADJUSTMENT	NSS		2
51		HARNESS, SEAT	NSS		1
52		TIE STRAP	NSS		6
53		BUSHING	NSS		2
54		SPACER	NSS		1
55		MOLDING, SEAT	NSS		1
56		PLUG	NSS		2
57		SCREW	NSS		2
58		MOUNT	NSS		1
59		STRAP, TETHER	NSS		1
60		SCREW	NSS		1
61		PLATE	NSS - RH - Order Ref. 12		1
62		PLATE	NSS - LH - Order Ref. 12		1
63		NUT	NSS - Order Ref. 12		2
64		NUT	NSS - Order Ref. 12		4
65		WASHER	NSS - Order Ref. 12		2
66		SEAT BELT	NSS - Order Ref. 12		1
67		BOLT	NSS - Order Ref. 12		2
68		SCREW	NSS - Order Ref. 12		4
69		SEAT BELT	NSS - Order Ref. 12		1
70		SPOOL, ADJUSTMENT	NSS - Order Ref. 5		1
71		SPACER	NSS - Order Ref. 12		4
72		NUT	NSS		2
73		CLIP	NSS		2
74		SCREW	NSS - Order Ref. 11		4
75		NUT	NSS - Order Ref. 11		4
76		RAIL, ADJUSTMENT	NSS - Order Ref. 11		2
77		PLATE	NSS - Order Ref. 11		1
78		SCREW	NSS - Order Ref. 7		1
79		HANDLE, ADJUSTMENT	NSS - grey - Order Ref. 7		1
80		HANDLE, ADJUSTMENT	NSS - Order Ref. 13		1
81		LEVER	NSS - Order Ref. 13		1
82		SCREW	NSS - Order Ref. 13		1
83		BOLT	NSS - Order Ref. 5		2
84		BUSHING	NSS - Order Ref. 5		2
85		NUT	NSS - Order Ref. 5		2
86		PLATE	NSS		1
87		HANDLE, ADJUSTMENT	NSS		1
88		BRACKET	NSS		1

Page 341 - OSS# 2072104 - All rights reserved by Bobcat Company - 01/20/2010 - 17:21:58 - Produced by Ken Cook Co. with mediaioff

SEAT BELT
(2" Wide Retractable)

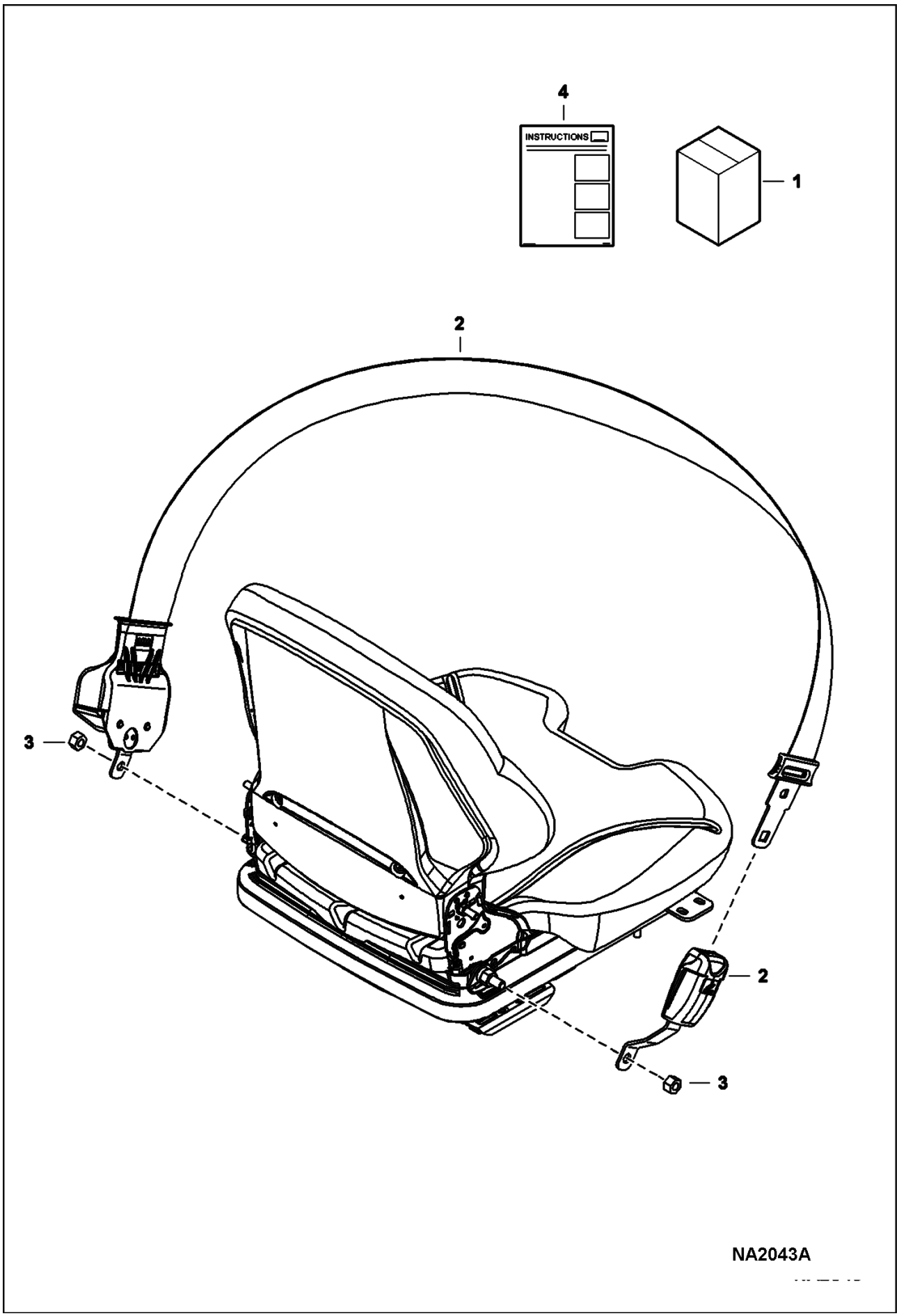

Page 342 - OSS# 2072104 - All rights reserved by Bobcat Company - 01/20/2010 - 17:21:58 - Produced by Ken Cook Co. with mediaioff

SEAT BELT (Cont'd)
(2" Wide Retractable)

Ref No	Part Number	Description	Remarks	Serial Number	Qty
1		KIT, BELT SEAT	NAP		1
2	7159542	BELT, SEAT RETRACTOR			1
3	86D7	NUT			2
4		INSTRUCTIONS	NAP		1

Page 343 - OSS# 2072104 - All rights reserved by Bobcat Company - 01/20/2010 - 17:21:58 - Produced by Ken Cook Co. with mediaioff

SEAT BELT
(2" Wide Three Point Retractable)

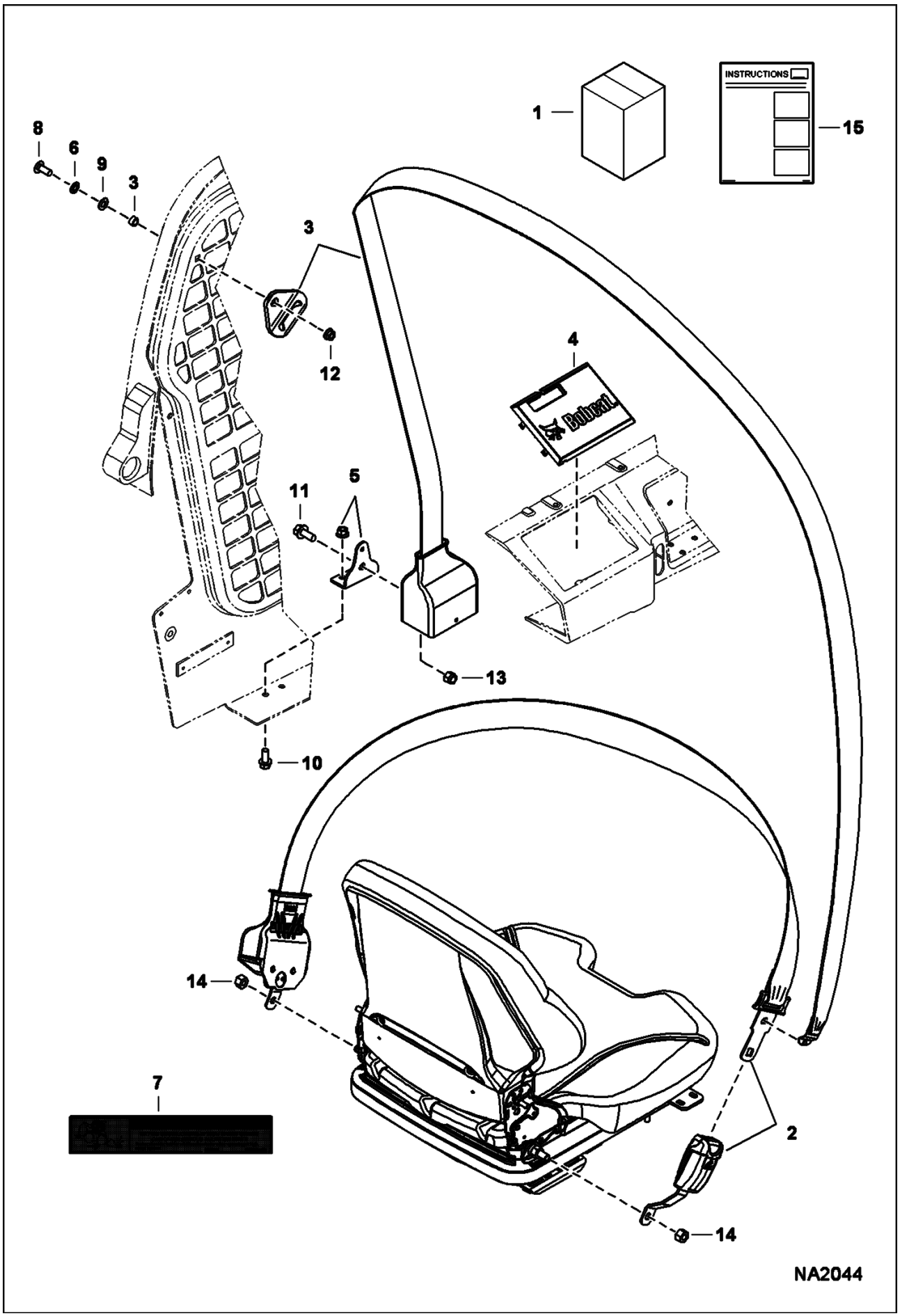

Page 344 - OSS# 2072104 - All rights reserved by Bobcat Company - 01/20/2010 - 17:21:58 - Produced by Ken Cook Co. with mediaIoff

SEAT BELT (Cont'd)
(2" Wide Three Point Retractable)

Ref No	Part Number	Description	Remarks	Serial Number	Qty
1	7128405	KIT, BELT SEAT 2"	Ref. 2-14		1
2	7152319	BELT, RETRACTOR			1
3	7152322	BELT, SEAT 3"			1
4	7152323	COVER, RETRACTOR			1
5	7152324	BRACKET, BELT SEAT 3PT			1
6	6674264	RETAINER NUT			1
7	7168303	DECAL, WARNING			1
8	10C616	BOLT 10			1
9	29E6	WASHER			1
10	43C612	BOLT			2
11	31C716	SCREW			1
12	53D6	NUT			1
13	59D7	NUT			1
14	86D7	NUT			2
15	6987248	INSTRUCTIONS			1

Page 345 - OSS# 2072104 - All rights reserved by Bobcat Company - 01/20/2010 - 17:21:58 - Produced by Ken Cook Co. with mediaioff

SEAT BELT
(3" Wide Standard)

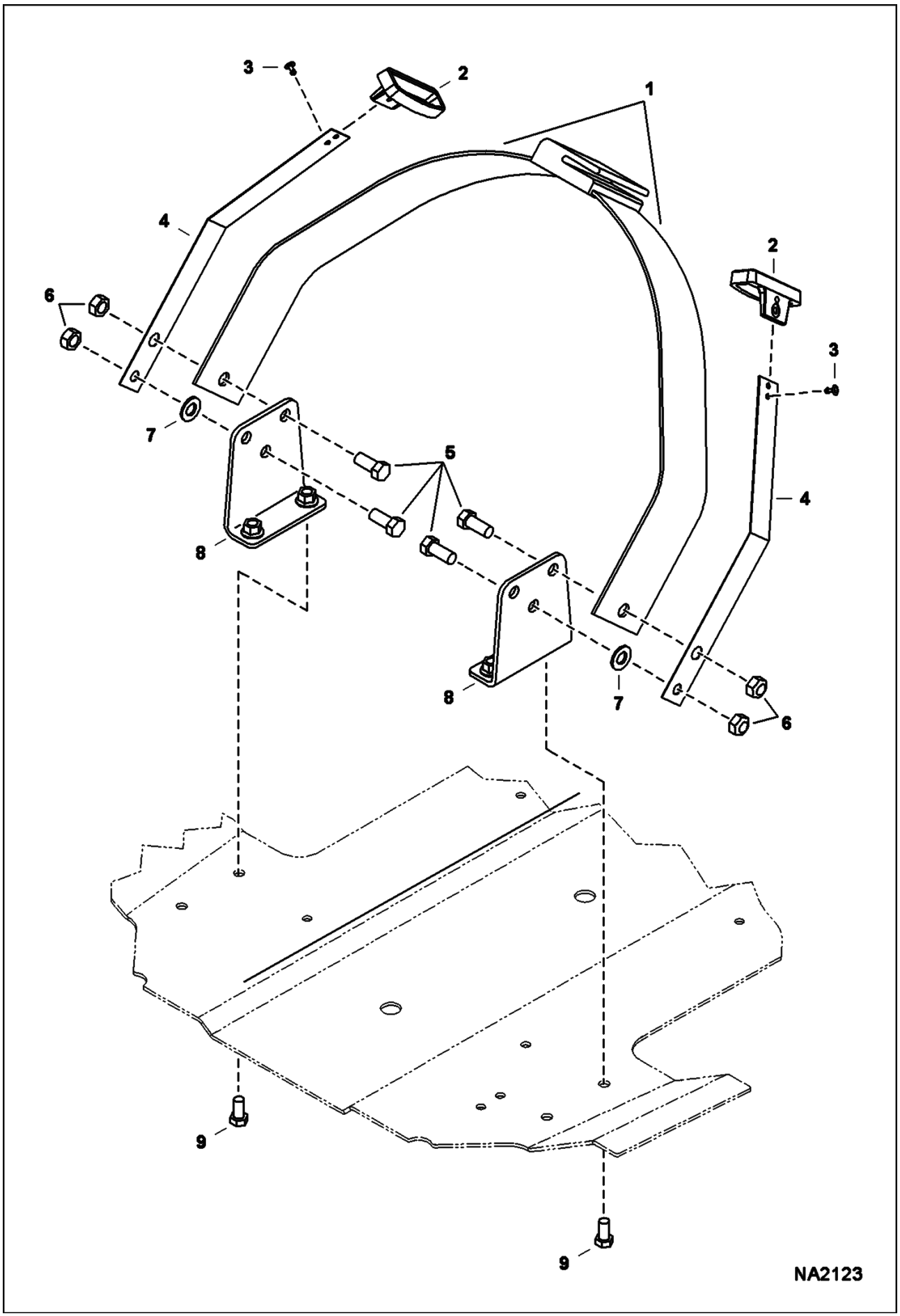

Page 346 - OSS# 2072104 - All rights reserved by Bobcat Company - 01/20/2010 - 17:21:58 - Produced by Ken Cook Co. with mediaioff

SEAT BELT (Cont'd)
(3" Wide Standard)

Ref No	Part Number	Description	Remarks	Serial Number	Qty
1	6659999	BELT			1
2	6703703	GUIDE			2
3	6512797	RIVET			4
4	6711908	SPRING PLATE			2
5	1C716	SCREW HEX CAP			4
6	85D7	NUT			4
7	25E19	WASHER			2
8	7173159	BRACKET, BELT SEAT			2
9	43C612	BOLT			4

Page 347 - OSS# 2072104 - All rights reserved by Bobcat Company - 01/20/2010 - 17:21:58 - Produced by Ken Cook Co. with mediaioff

SEAT BELT
(3" Wide Retractable)

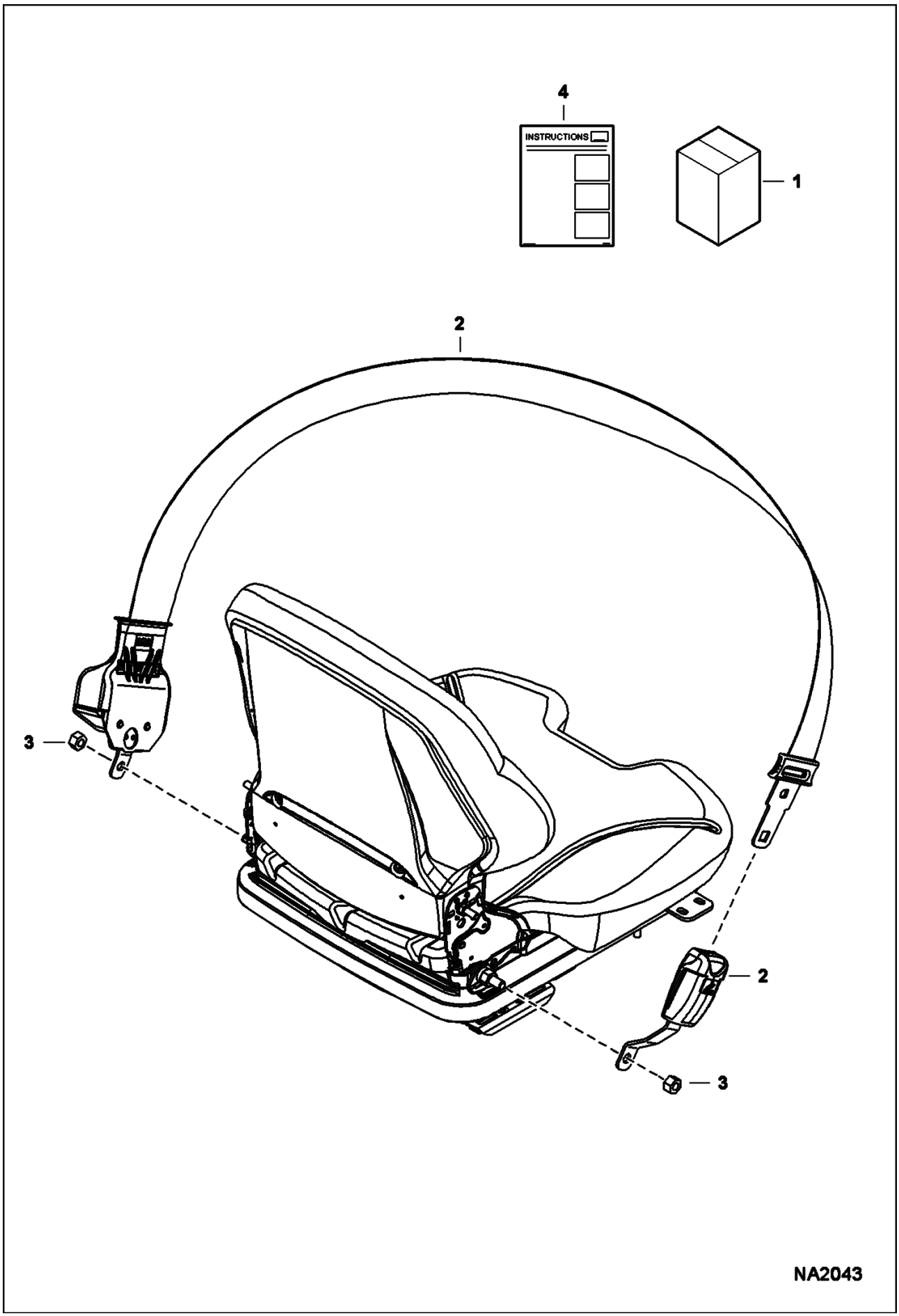

Page 348 - OSS# 2072104 - All rights reserved by Bobcat Company - 01/20/2010 - 17:21:58 - Produced by Ken Cook Co. with mediaioff

SEAT BELT (Cont'd)
(3" Wide Retractable)

Ref No	Part Number	Description	Remarks	Serial Number	Qty
1	7129303	KIT, BELT SEAT 3"	Ref. 2-4		1
2	7168171	BELT, SEAT 3"			1
3	86D7	NUT			2
4	6987253	INSTRUCTIONS			1

Page 349 - OSS# 2072104 - All rights reserved by Bobcat Company - 01/20/2010 - 17:21:58 - Produced by Ken Cook Co. with mediaioff

SEAT BELT
(3" Wide Three Point Retractable)

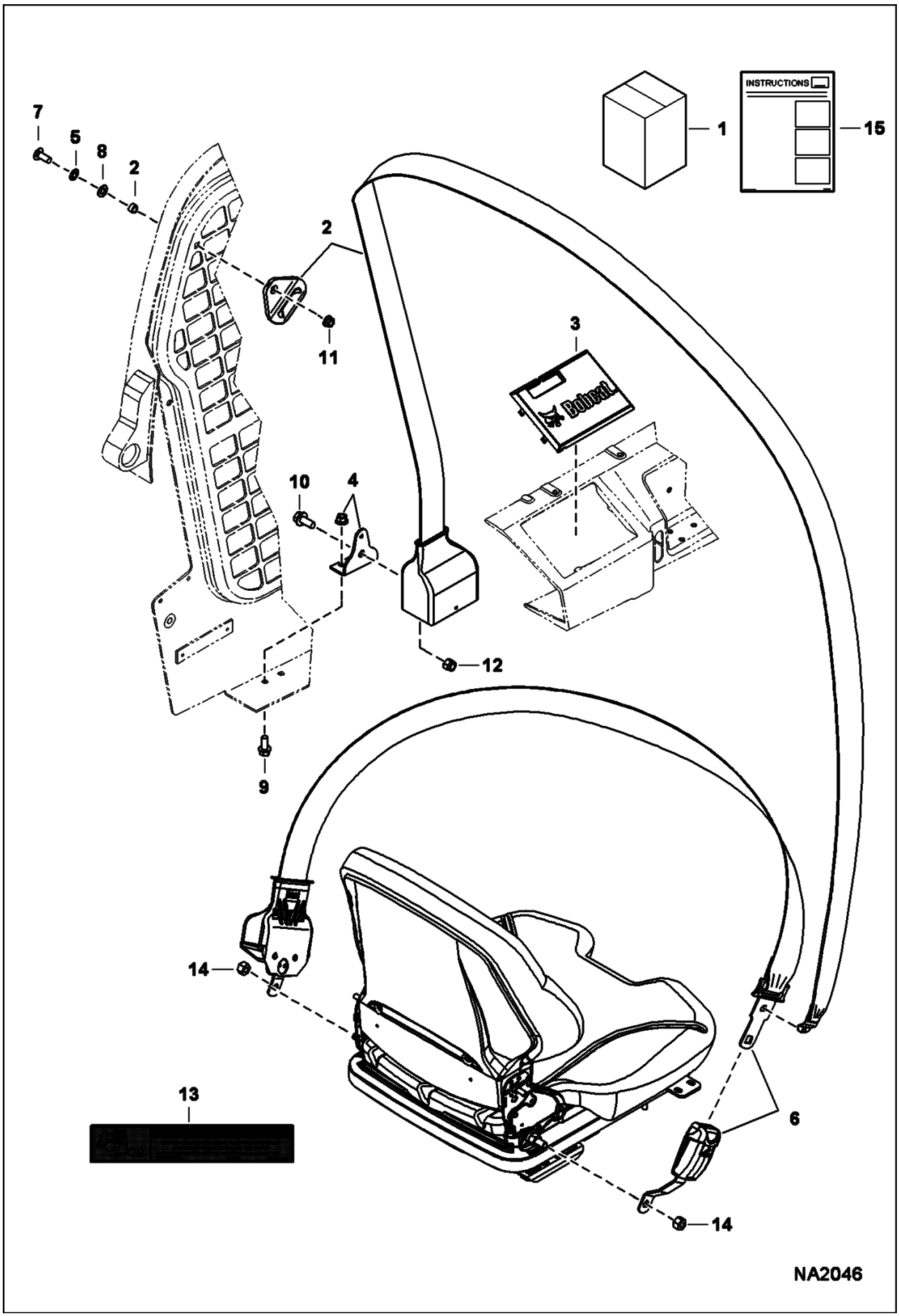

Page 350 - OSS# 2072104 - All rights reserved by Bobcat Company - 01/20/2010 - 17:21:58 - Produced by Ken Cook Co. with mediaioff

SEAT BELT (Cont'd)
(3" Wide Three Point Retractable)

Ref No	Part Number	Description	Remarks	Serial Number	Qty
1	7169480	KIT, BELT SEAT 3"	Ref. 2-15		1
2	7152322	BELT, SEAT 3"			1
3	7152323	COVER, RETRACTOR			1
4	7152324	BRACKET, BELT SEAT 3PT			1
5	6674264	RETAINER NUT			1
6	7168172	BELT, SEAT 3"			1
7	10C616	BOLT 10			1
8	29E6	WASHER			1
9	43C612	BOLT			2
10	31C716	SCREW			1
11	53D6	NUT			1
12	59D7	NUT			1
13	7168303	DECAL, WARNING			1
14	86D7	NUT			2
15	6987248	INSTRUCTIONS			1

Page 351 - OSS# 2072104 - All rights reserved by Bobcat Company - 01/20/2010 - 17:21:58 - Produced by Ken Cook Co. with mediaioff

STEERING CONTROLS
(Isolator Link Kit)

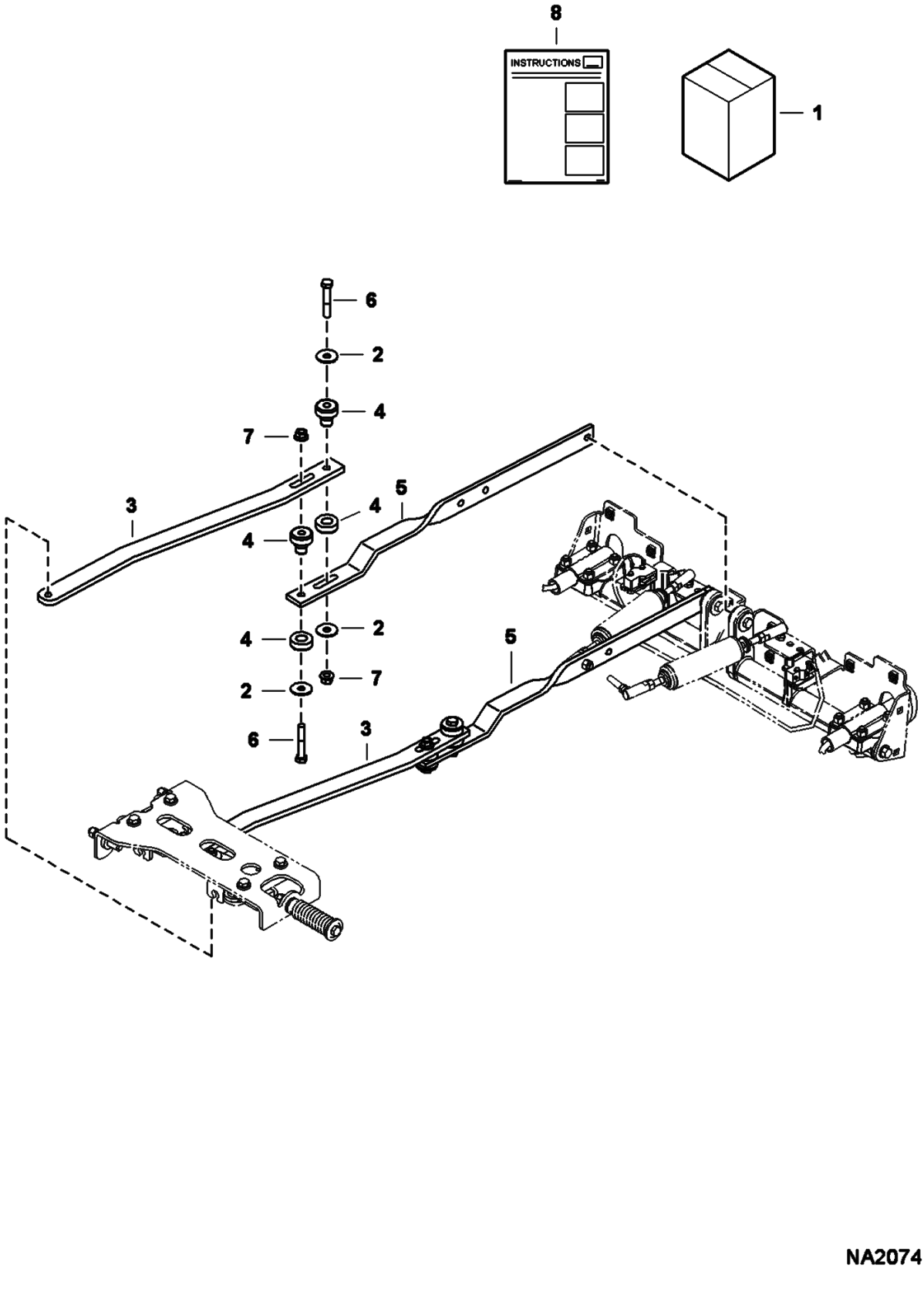

Page 352 - OSS# 2072104 - All rights reserved by Bobcat Company - 01/20/2010 - 17:21:58 - Produced by Ken Cook Co. with mediaioff

Ref No	Part Number	Description	Remarks	Serial Number	Qty
1	7172859	KIT, LINK ISOLATOR	Ref. 2-8		1
2	6737388	WASHER			8
3	7169253	LINK			2
4	7169932	MOUNT			4
5	7172779	LINK			2
6	17C636	BOLT			4
7	83D6	NUT 5			4
8	6987337	INSTRUCTIONS			1

Page 353 - OSS# 2072104 - All rights reserved by Bobcat Company - 01/20/2010 - 17:21:58 - Produced by Ken Cook Co. with mediaioff

SOUND/NOISE REDUCTION KIT

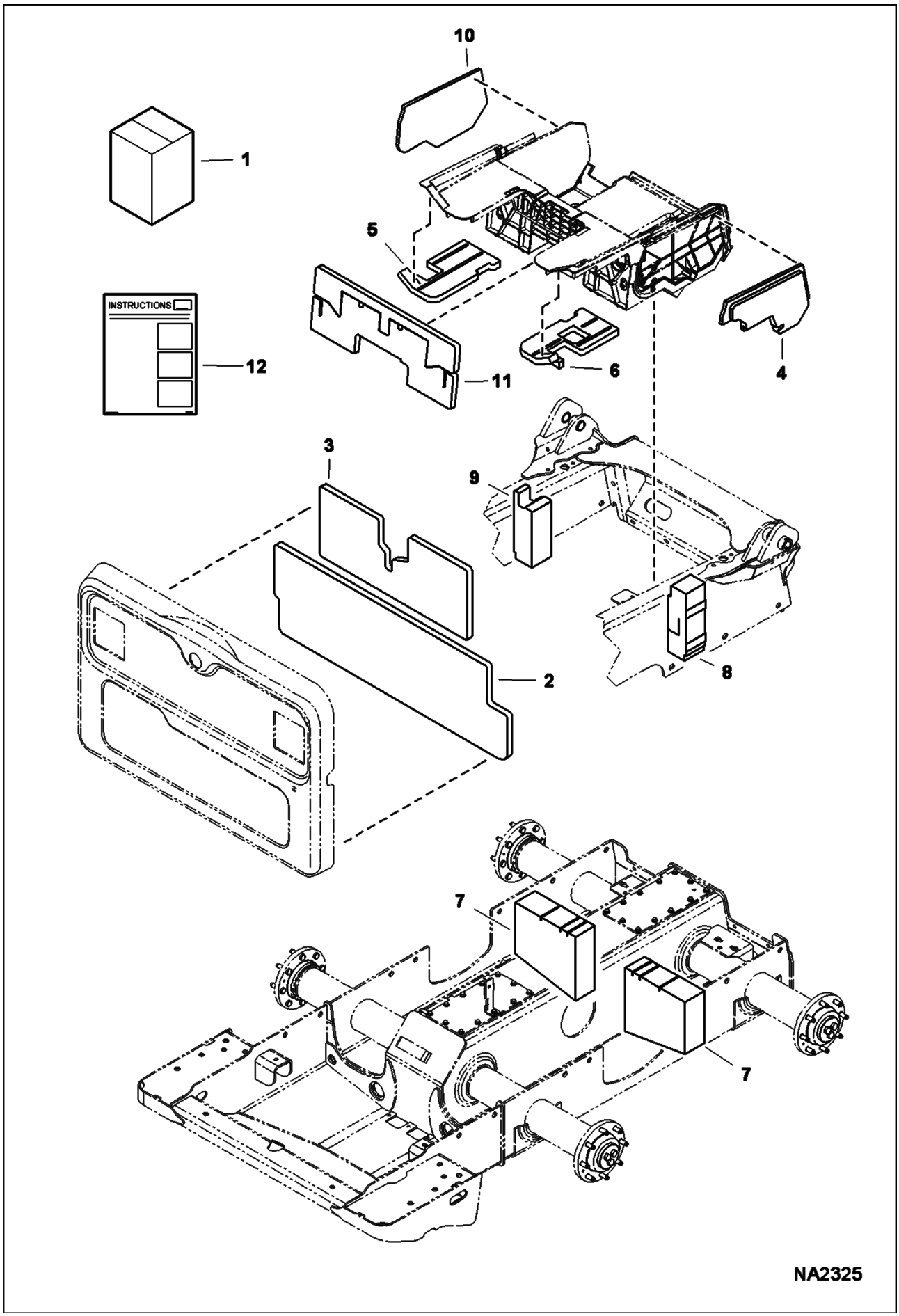

Page 354 - OSS# 2072104 - All rights reserved by Bobcat Company - 01/20/2010 - 17:21:58 - Produced by Ken Cook Co. with mediaioff

Ref No	Part Number	Description	Remarks	Serial Number	Qty
1	7172901	KIT, SOUND/NOISE REDUCTION	Ref. 2-12		1
2	7171192	INSULATION, DOOR REAR			1
3	7171194	INSULATION, DOOR REAR			1
4	7171218	INSULATION, PANEL LH			1
5	7171219	INSULATION, PANEL RH			1
6	7171220	INSULATION, PANEL LH			1
7	7171656	INSULATION, SIDE			2
8	7172022	INSULATION, FENDER			1
9	7172023	INSULATION, FENDER			1
10	7171217	INSULATION, PANEL RH			1
11	7171184	INSULATION, CROSSMEMBER			1
12	6987338	INSTRUCTIONS			1

Page 355 - OSS# 2072104 - All rights reserved by Bobcat Company - 01/20/2010 - 17:21:58 - Produced by Ken Cook Co. with mediaioff

SOUND/NOISE REDUCTION OPTION
(Bystander)

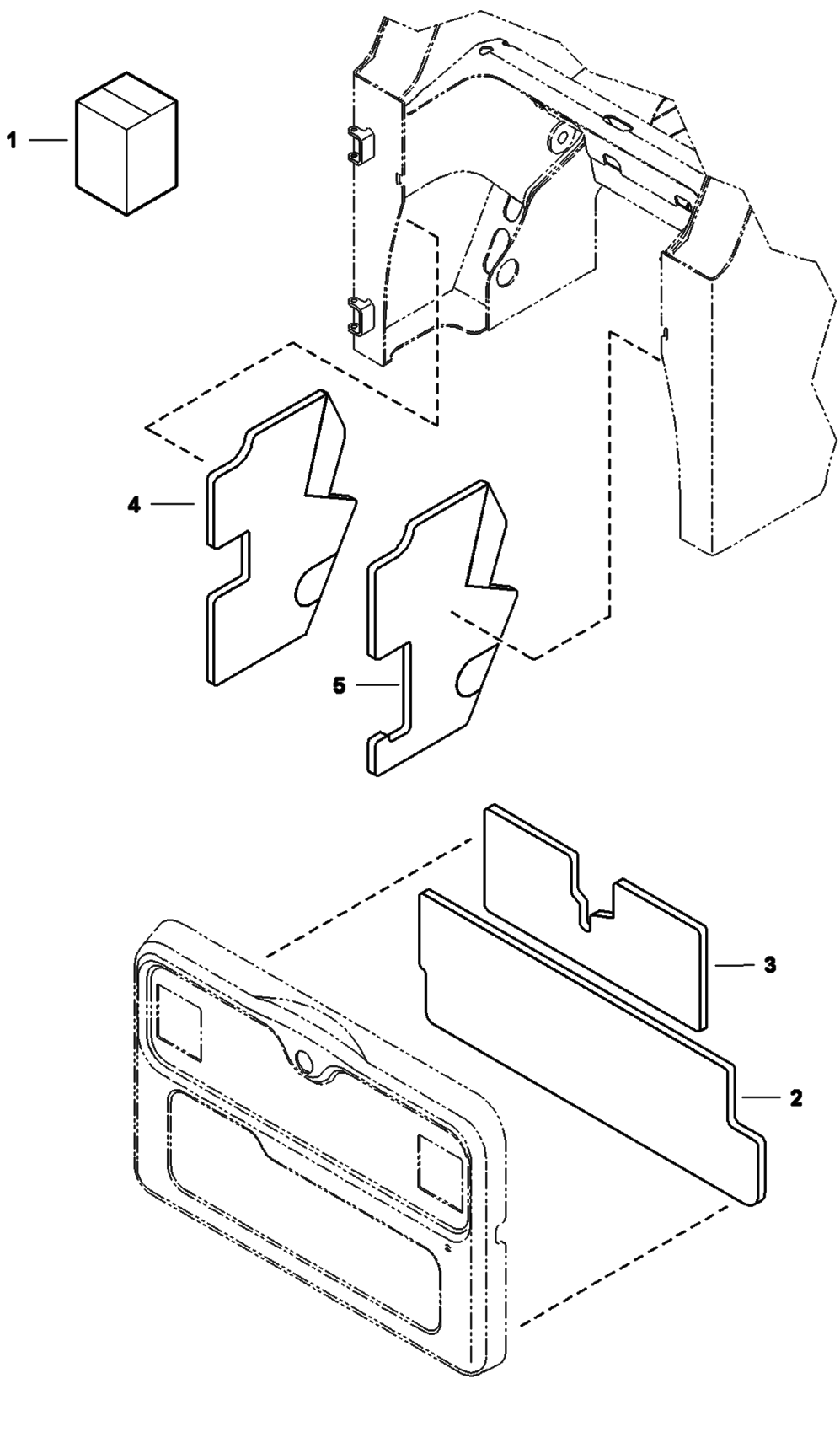

Page 356 - OSS# 2072104 - All rights reserved by Bobcat Company - 01/20/2010 - 17:21:58 - Produced by Ken Cook Co. with mediaioff

SOUND/NOISE REDUCTION OPTION (Cont'd)
(Bystander)

Ref No	Part Number	Description	Remarks	Serial Number	Qty
1		KIT, SOUND REDUCTION, BYSTANDER	NAP - Order Components		1
2	7171192	INSULATION, DOOR REAR	lower		1
3	7171194	INSULATION, DOOR REAR	upper		1
4	7171215	INSULATION, UPRIGHT	RH		1
5	7171216	INSULATION, UPRIGHT	LH		1

Page 357 - OSS# 2072104 - All rights reserved by Bobcat Company - 01/20/2010 - 17:21:58 - Produced by Ken Cook Co. with mediaioff

SOUND/NOISE REDUCTION OPTION
(Operator Ear)

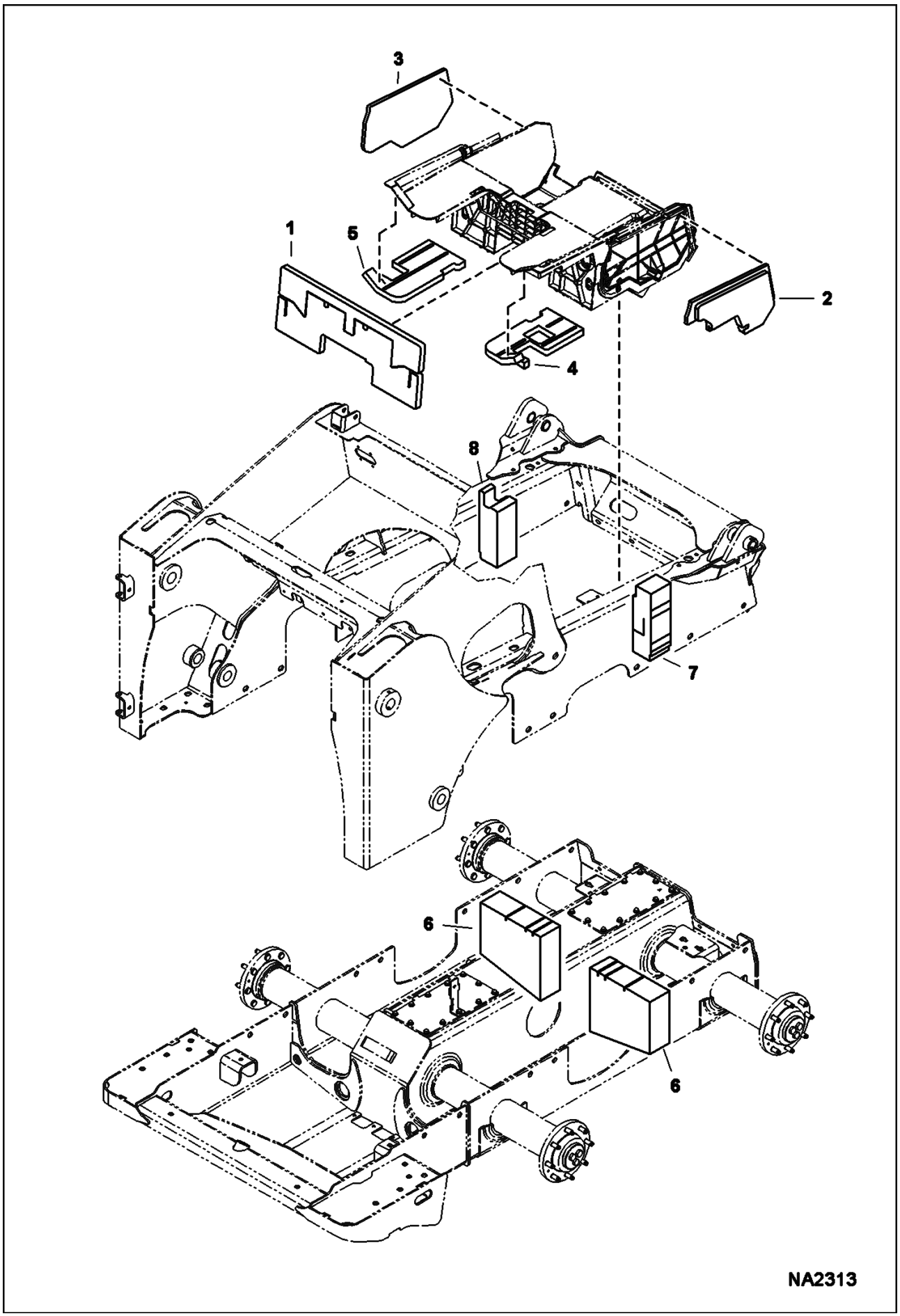

Page 358 - OSS# 2072104 - All rights reserved by Bobcat Company - 01/20/2010 - 17:21:58 - Produced by Ken Cook Co. with mediaioff

SOUND/NOISE REDUCTION OPTION (Cont'd)
(Operator Ear)

Ref No	Part Number	Description	Remarks	Serial Number	Qty
1	7171184	INSULATION, CROSSMEMBER			1
2	7171217	INSULATION, PANEL RH			1
3	7171218	INSULATION, PANEL LH			1
4	7171219	INSULATION, PANEL RH			1
5	7171220	INSULATION, PANEL LH			1
6	7171656	INSULATION, SIDE			2
7	7172022	INSULATION, FENDER			1
8	7172023	INSULATION, FENDER			1

Page 359 - OSS# 2072104 - All rights reserved by Bobcat Company - 01/20/2010 - 17:21:58 - Produced by Ken Cook Co. with mediaioff

STEERING DAMPENER KIT
(Dual)

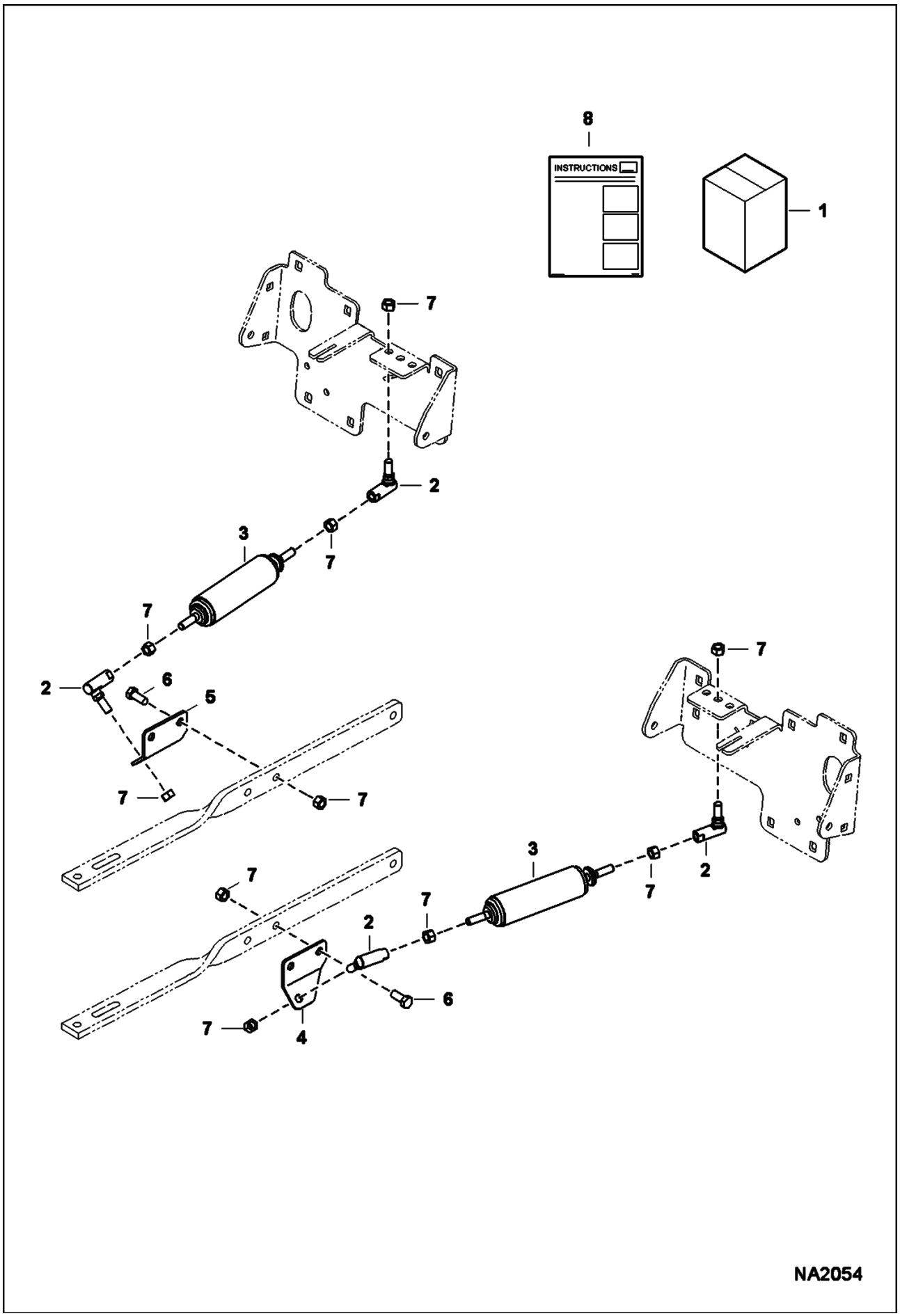

Page 360 - OSS# 2072104 - All rights reserved by Bobcat Company - 01/20/2010 - 17:21:58 - Produced by Ken Cook Co. with mediaioff

STEERING DAMPENER KIT (Cont'd)
(Dual)

Ref No	Part Number	Description	Remarks	Serial Number	Qty
1	7169070	KIT, DAMPER DUAL	Ref. 2-8		1
2	6599744	BALL JOINT			4
3	6649551	SHOCK			2
4	7153075	BRACKET, DAMPER			1
5	7153076	BRACKET, DAMPER			1
6	2C614	SCREW			2
7	62D6	NUT 5			10
8	6987251	INSTRUCTIONS			1

Page 361 - OSS# 2072104 - All rights reserved by Bobcat Company - 01/20/2010 - 17:21:58 - Produced by Ken Cook Co. with mediaioff

STROBE LIGHT

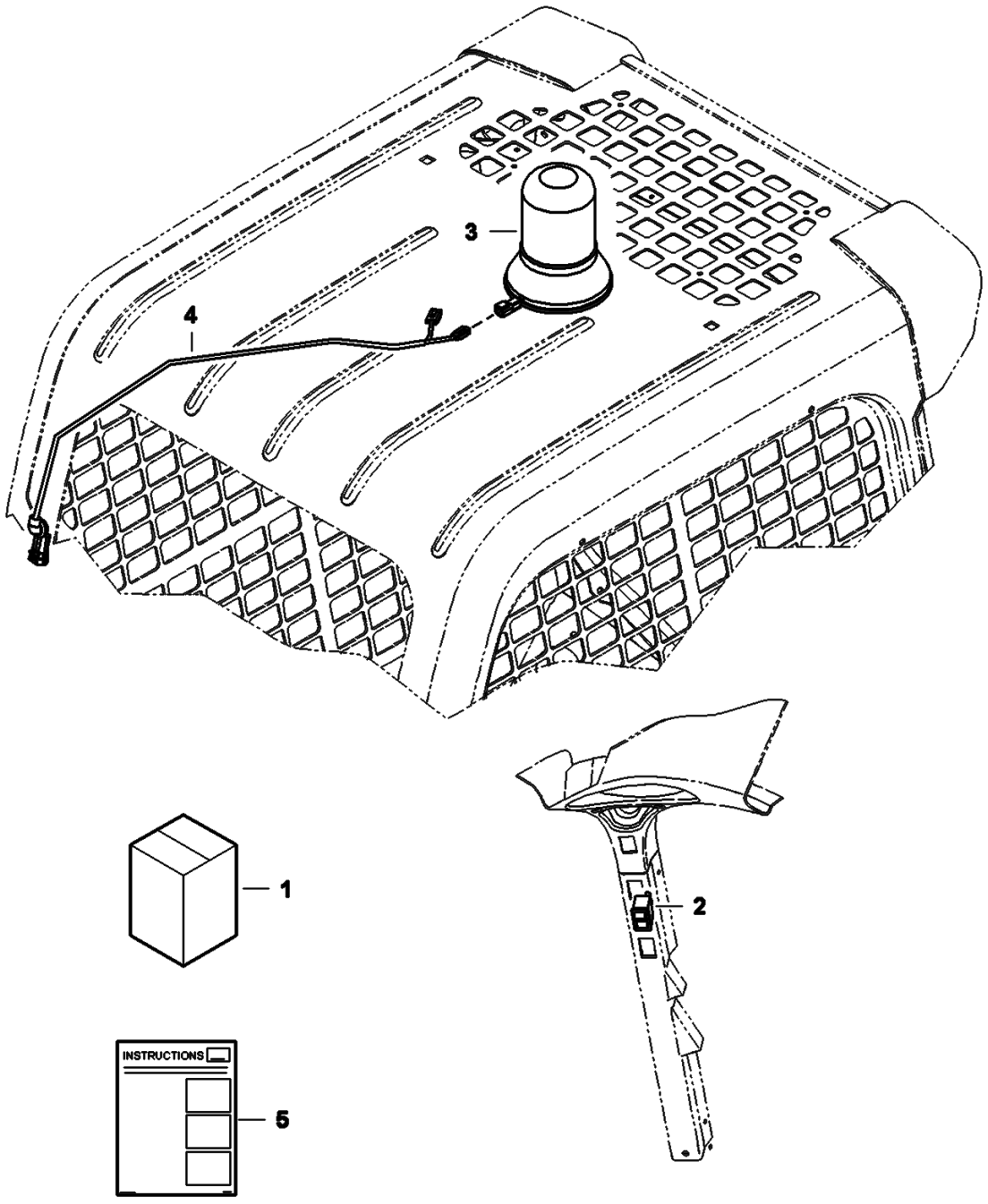

Page 362 - OSS# 2072104 - All rights reserved by Bobcat Company - 01/20/2010 - 17:21:58 - Produced by Ken Cook Co. with mediaioff

Ref No	Part Number	Description	Remarks	Serial Number	Qty
1	7129301	KIT, STROBE	Ref. 2-5		1
2	6668816	SWITCH			1
3	6675522	STROBE			1
4	6718872	HARNESS			1
5	6987226	INSTRUCTIONS			1

Page 363 - OSS# 2072104 - All rights reserved by Bobcat Company - 01/20/2010 - 17:21:58 - Produced by Ken Cook Co. with mediaioff

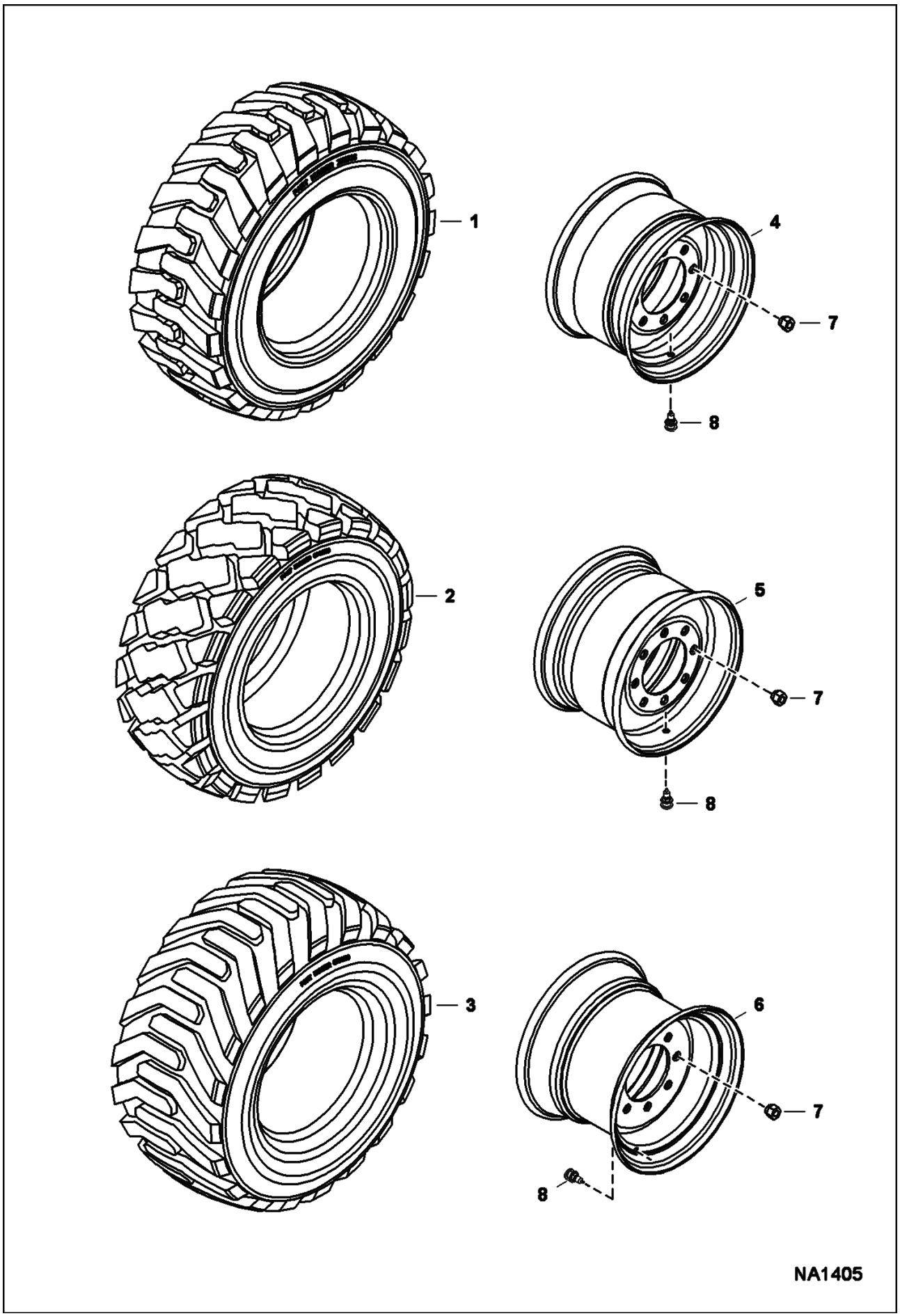

Page 364 - OSS# 2072104 - All rights reserved by Bobcat Company - 01/20/2010 - 17:21:58 - Produced by Ken Cook Co. with mediaioff

Ref No	Part Number	Description	Remarks	Serial Number	Qty
1	6729901	TIRE	12 x 16.5 12 ply rating - Bobcat - heavy duty - Note p/n on tire		4
1	7101736	TIRE, HEAVY DUTY - 12X16.5 - 12 PLY	12 x 16.5 12 ply rating - Bobcat - heavy duty - Note p/n on tire		4
2	6730108	TIRE	12 x 16.5 12 ply rating - Bobcat - severe duty		4
3	6730109	TIRE	33 x 15.5 x 16.5 12 Ply - Hippo - Galaxy		4
4	6730772	RIM	Used W/Ref. 1 - 72" wide		4
5	6733578	RIM	used W/Ref. 1 - offset - 68" wide		4
6	6732847	RIM	used W/Ref. 2 - 74" wide		4
7	6564669	NUT	wheel		32
8	1614765	STEM	valve		4

Page 365 - OSS# 2072104 - All rights reserved by Bobcat Company - 01/20/2010 - 17:21:58 - Produced by Ken Cook Co. with mediaioff

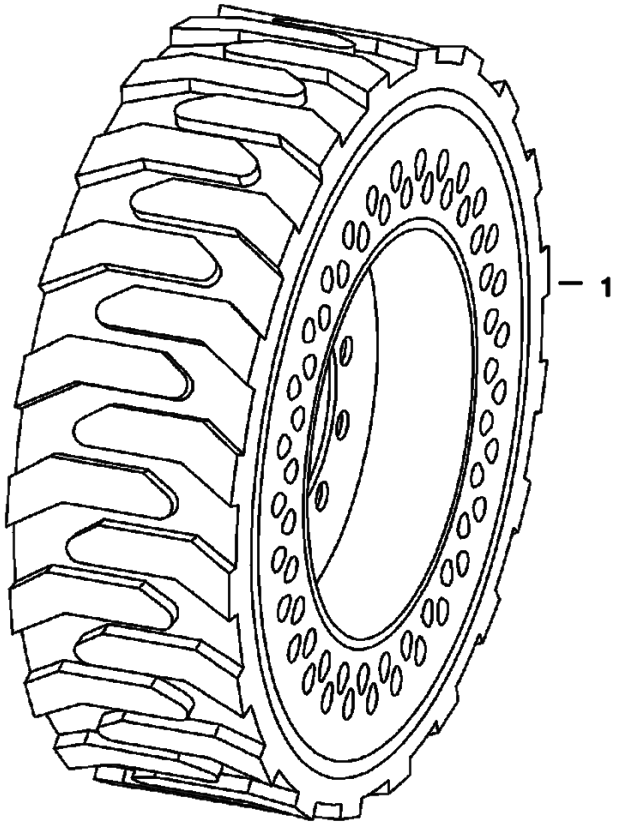

MS-2192

Page 366 - OSS# 2072104 - All rights reserved by Bobcat Company - 01/20/2010 - 17:21:58 - Produced by Ken Cook Co. with mediaIoff

Ref No	Part Number	Description	Remarks	Serial Number	Qty
1	6903773	33X6X11 TWIN FLEX TIRE & WHEEL (LEFT)	LH - 12 x 16.5		2
1	6903774	33X6X11 TWIN FLEX TIRE & WHEEL (RIGHT)	RH - 12 x 16.5		2

Page 367 - OSS# 2072104 - All rights reserved by Bobcat Company - 01/20/2010 - 17:21:58 - Produced by Ken Cook Co. with mediaioff

WHITE DECAL KIT

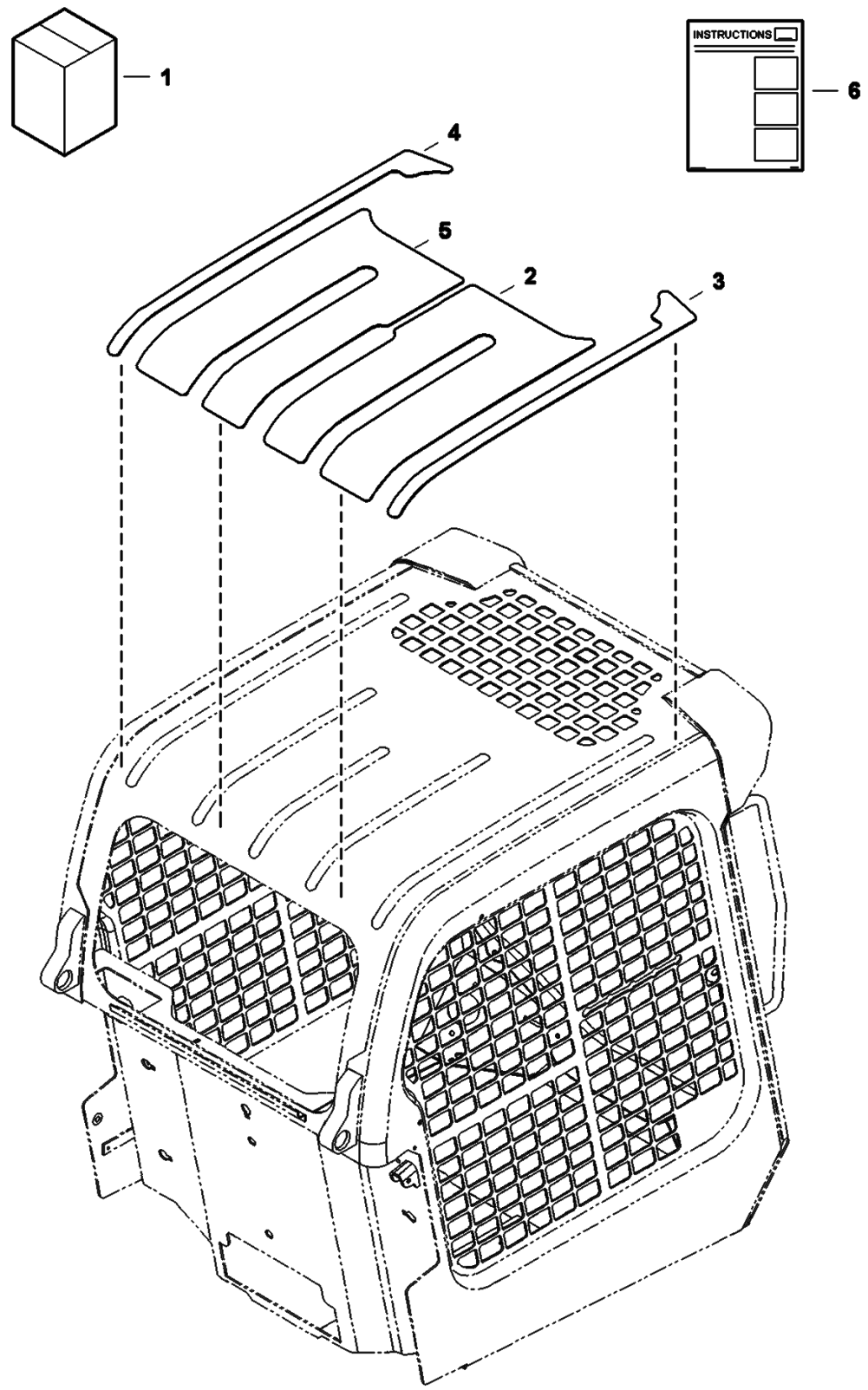

Page 368 - OSS# 2072104 - All rights reserved by Bobcat Company - 01/20/2010 - 17:21:58 - Produced by Ken Cook Co. with mediaioff

Ref No	Part Number	Description	Remarks	Serial Number	Qty
1	7172903	KIT, DECAL WHITE	Ref. 2-6		1
2	7140927	DECAL			1
3	7141375	DECAL			1
4	7174328	DECAL			1
5	7174537	DECAL			1
6	6987349	INSTRUCTIONS			1

Page 369 - OSS# 2072104 - All rights reserved by Bobcat Company - 01/20/2010 - 17:21:58 - Produced by Ken Cook Co. with mediaioff

BULK ITEMS

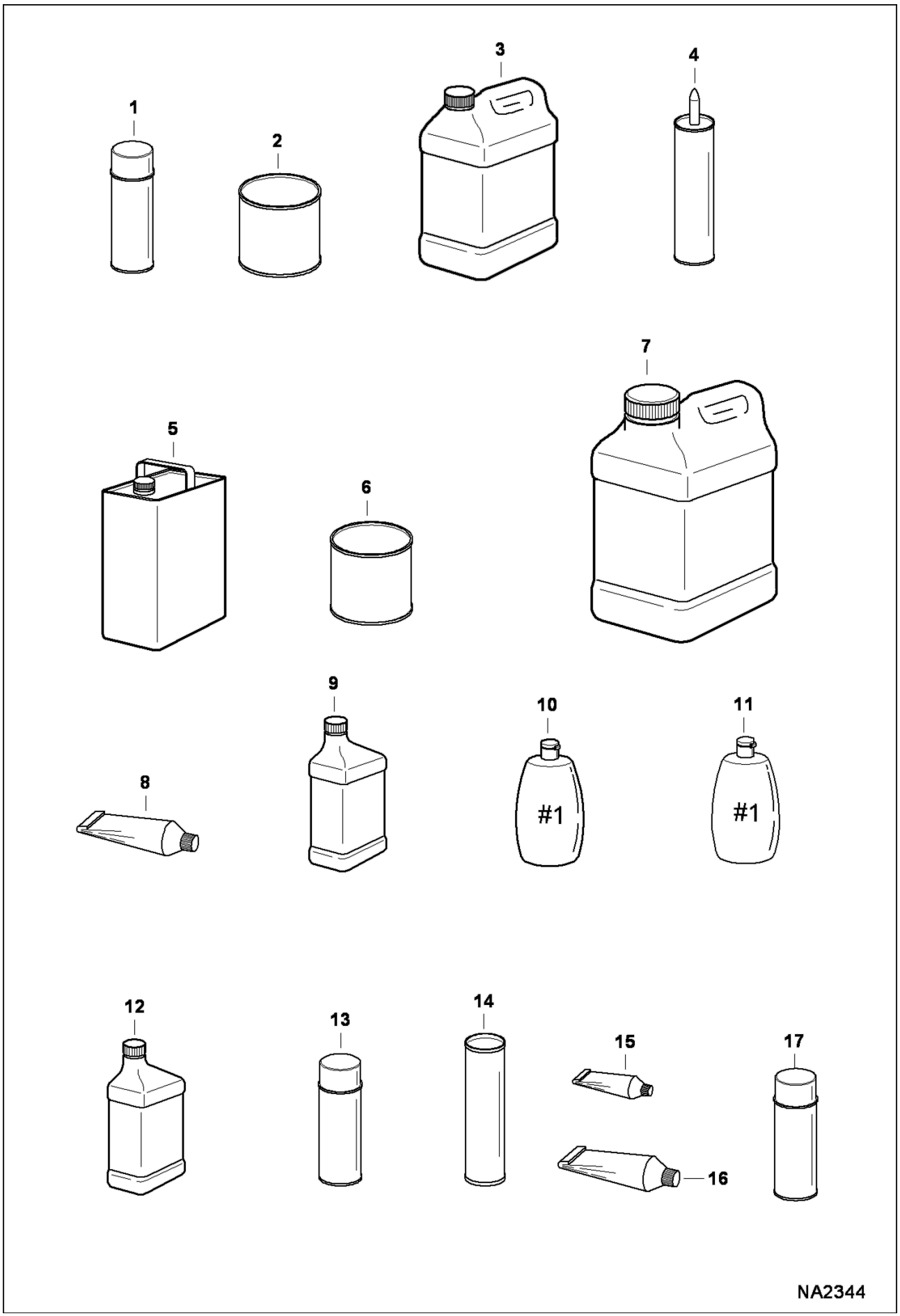

Page 370 - OSS# 2072104 - All rights reserved by Bobcat Company - 01/20/2010 - 17:21:58 - Produced by Ken Cook Co. with mediaioff

Ref No	Part Number	Description	Remarks	Serial Number	Qty
1	6902228	PAINT, ORANGE SPRAY CAN 6			x
1	6902229	PAINT, CHARCOAL SPRAY CAN 6			x
1	6902230	PAINT, WHITE SPRAY CAN 6			x
2	6902233	PAINT, ORANGE QT 6			x
2	6902234	PAINT, CHARCOAL QT 6			x
2	6902235	PAINT, WHITE QT 6			x
3	6983128	ANTI-FREEZE PG 53/47 PREMIX GAL 6			x
3	6983129	ANTI-FREEZE PG CONCENTRATE 6			x
4	6633583	SEALANT	tube - 300 ml		x
5		REDUCER	NAP - gallon		x
6	6902236	PRIMER QT. 6	quart		x
7	6903117	FLUID, OIL HYD 2.5 GAL 2			x
7	6903118	FLUID, OIL HYD 5 GAL			x
7	6903119	FLUID, OIL HYD 55 GAL			x
8	6599360	SEALANT	electrical - tube - 3 oz		x
8	6685372	SEALANT, GASKET LIQUID	tube - 20 oz		x
9	6903121	LUBE, GEAR 12			x
10	6630188	POLISH	window - #1 - 8 oz		x
11	6630189	POLISH	window - scratch remover - #2 - 8 oz		x
12	6903109	OIL 30W QT. 12			x
12	6903107	OIL, 10W30 QT. 12			x
12	6903105	OIL, 15W40 QT. 12			x
12	6903108	OIL, 10W30 GAL. 6			x
12	6903106	OIL, 15W40 GAL. 6			x
12	6903110	OIL, 30W GAL. 6			x
12	6903113	OIL, 15W40 2.5 GAL. 2			x
12	6903112	OIL, 10W30 2.5 GAL 2			x
12	6903111	OIL 30W 2.5 GAL 2			x
13	6675380	ADHESIVE	insulation - spray can		x
14	6903122	GREASE, MULTI PURPOSE #2 - 10			x
14		GREASE	NAP - 14.5 oz. cartridge - For fan idler bearing & spring loaded drive idler		x
15	6650407	ADHESIVE	tube - 1 oz		x
16	6650388	SEALANT	flange		x

Page 371 - OSS# 2072104 - All rights reserved by Bobcat Company - 01/20/2010 - 17:21:58 - Produced by Ken Cook Co. with mediaioff

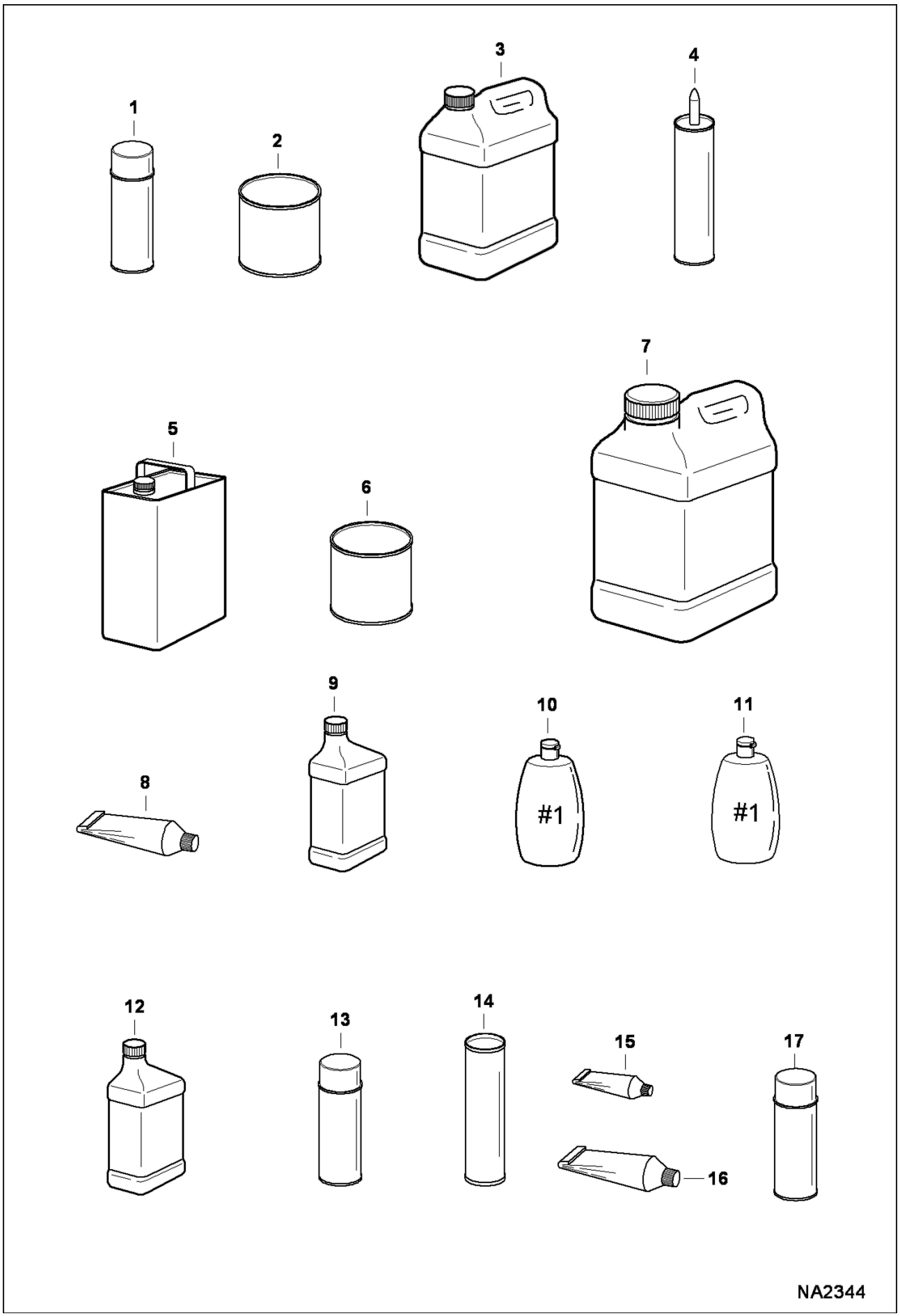

Page 372 - OSS# 2072104 - All rights reserved by Bobcat Company - 01/20/2010 - 17:21:58 - Produced by Ken Cook Co. with mediaioff

Ref No	Part Number	Description	Remarks	Serial Number	Qty
17	6736644	PAINT	orange - spray can - .5 oz		x
17	6736641	PAINT	charcoal - spray can - .5 oz		x
17	6736642	PAINT	white - spray can - .5 oz		x
17	6736645	PAINT	red - spray can - .5 oz		x

Page 373 - OSS# 2072104 - All rights reserved by Bobcat Company - 01/20/2010 - 17:21:58 - Produced by Ken Cook Co. with mediaioff

Page 374 - OSS# 2072104 - All rights reserved by Bobcat Company - 01/20/2010 - 17:21:58 - Produced by Ken Cook Co. with mediaioff

Part No.	Description	Was	Code	Page
10C410	BOLT			280
10C512	BOLT			146, 148
10C520	BOLT			148
10C612	BOLT			288
10C616	BOLT 10			242, 288, 334, 340
10C624	BOLT			18, 20
10C696	BOLT			156
10C816	BOLT			254, 256
10H25	FITTING, GREASE			26, 56, 58, 60
10H35	GREASE ZERK			28, 314
10K8	TEE			74
10L1212	ADAPTER			78
11H15	GREASE FITTING			26
12D10	NUT			280
1303190	PIN, CLEVIS			62
1306637	CLIP			62
1320075	COTTER PIN			310
1321607	CUP, BEARING			40
1321608	BEARING, CONE			40
14D10	NUT			168, 170
14J5032	PIN, STRAIGHT			28
1522534	SEAL			60
15G624	SCREW			90
15KB1008	ADAPTER			74, 82
15KB1010	FITTING			50, 82
15KB1210	ADAPTER			50
15KB1212	ADAPTER			73, 74, 78, 82, 84, 86, 314
15KB1216	ADAPTER			54
15KB404	CONNECTOR			86, 314
15KB606	ADAPTER			52, 54, 82, 84, 86, 314
15KB608	ADAPTER			86
15KB808	CONNECTOR			50
1614765	STEM			354
16KB606	FITTING			86
16KB608	ADAPTER			84
17C10112	BOLT			26
17C10136	BOLT			26
17C1024	BOLT			40
17C1056	BOLT			14
17C408	BOLT			168, 170
17C410	BOLT 10			288
17C412	BOLT 5			46
17C424	BOLT			254, 256
17C428	BOLT			52
17C516	BOLT			254, 256
17C540	BOLT			52, 80, 84, 86
17C552	BOLT			48, 86
17C610	BOLT			78
17C612	BOLT 5			34, 52, 222, 242, 314
17C616	BOLT 5			26, 50, 62, 90, 142, 146, 306
17C620	BOLT			62, 78, 90, 170
17C624	BOLT 5			62, 222, 288
17C628	BOLT			90
17C636	BOLT			342

Code for disposition of old part number

A -- Use up
B -- Use on other application (See PNI)
C -- File PDR Report with Bobcat Parts Sales
D -- Part Number Error

Page 375 - OSS# 2072104 - All rights reserved by Bobcat Company - 01/20/2010 - 17:21:58 - Produced by Ken Cook Co. with mediaioff

Part No.	Description	Was	Code	Page
17C640	BOLT 5			18, 20, 54
17C644	BOLT			28
17C648	BOLT 5			26
17C656	BOLT			26, 308
17C664	BOLT			26
17C672	BOLT			26
17C680	BOLT			90, 308
17C728	BOLT			84, 86
17C820	BOLT			24
17C832	BOLT			162
17C848	SCREW			52
17KB1212	ELBOW			78
17KB404	ELBOW			314
17KB606	ELBOW			64, 68
18EM1224	WASHER			254, 256, 296
19F12	BUSHING			232
19J12	CLAMP			78
1C12136	BOLT			268
1C1296	BOLT			266
1C612	BOLT			144
1C616	BOLT			144
1C624	BOLT			144
1C716	SCREW HEX CAP			22, 336
1CM640	SCREW			254, 256
1CM8100	SCREW			164
1CM830	BOLT			148
1DM6	NUT			210
1F316	PIN			156
1K127	O-RING 10			64, 68
20J16	FLANGE			84, 86
21KB606	TEE			80, 84, 86
24F1	ELBOW			132
24K3	PLUG			320
24K7	PLUG			64, 68
25E11	WASHER			168, 170
25E13	WASHER 5			14, 46, 150, 222
25E14	WSHR			14, 126, 128, 262
25E15	WASHER			134
25E17	WASHER 5			12
25E18	WASHER			148, 170
25E19	WASHER			336
25E24	WASHER			90
25G410	CAPSCREW			132
25G510	BOLT			168, 170
25G514	BOLT			158
25G612	SCREW			276
25K20016	O RING 10			66, 70
25K20100	O RING 10			146
25K30202	O RING 10			60
25K30812	O-RING, 10			38
26DM12	NUT			156
27E10	WASHER			26
27E12	WASHER			266, 268
29CM1025	BOLT			296

Code for disposition of old part number

A -- Use up
B -- Use on other application (See PNI)
C -- File PDR Report with Bobcat Parts Sales
D -- Part Number Error

Page 376 - OSS# 2072104 - All rights reserved by Bobcat Company - 01/20/2010 - 17:21:58 - Produced by Ken Cook Co. with mediaioff

Part No.	Description	Was	Code	Page
29CM1040	BOLT			296
29CM612	BOLT			200, 208, 212
29CM820	SCREW			130
29E6	WASHER			334, 340
29G416	BOLT			64, 68, 142, 146, 147, 148
2C1626	BOLT			39, 40
2C614	SCREW			350
2DM8	NUT			184
30H20	CLIP			126, 128, 168, 170, 242
30H42	CLAMP			54, 146
30H50	CLIP			276
30HJ612	CLAMP			160
30HJ620	CLAMP			80
31C1024	BOLT			308
31C1044	BOLT			310
31C1228	BOLT			12
31C410	BOLT			158
31C612	BOLT			14, 126, 128, 170, 254
31C616	SCREW			156
31C640	BOLT			54
31C716	SCREW			334, 340
31C820	BOLT			12
31C824	BOLT 10			52
31C828	BOLT			310
31C832	BOLT			310
31C860	BOLT			164
31C880	SCREW			164
31H38	CLAMP			146
35C410	BOLT 5			126, 128, 136, 226, 228, 304, 306
35C412	BOLT			18, 20, 30, 32, 44
35C516	BOLT 10			126, 128, 304, 306
35C524	BOLT			312
35C612	BOLT			160
35C616	BOLT 5			160
35C620	BOLT 5			266, 268
36K5	CAP			64, 68, 84
36K6	CAP			164
37C1032	BOLT			282
37C412	BOLT			282
37C424	BOLT			294
37C432	SCREW			296
37C512	BOLT			296
37C516	BOLT			136, 226, 228
37C528	BOLT			294
37C620	BOLT			30, 32, 62, 222
37C624	BOLT			168, 170
37C644	BOLT			50
38C610	BOLT			254
38C816	BOLT			170
38C824	SCREW			24
38C840	BOLT			24
3974033	CAP			180, 186
3974095	MET-GASK			174, 176, 206, 208, 210
3974260	SCREW			218

Code for disposition of old part number
A -- Use up
B -- Use on other application (See PNI)
C -- File PDR Report with Bobcat Parts Sales
D -- Part Number Error

Page 377 - OSS# 2072104 - All rights reserved by Bobcat Company - 01/20/2010 - 17:21:58 - Produced by Ken Cook Co. with mediaioff

Part No.	Description	Was	Code	Page
3974394	PIN			208
3974395	PIN			190
3974425	NUT			210
3974433	PLUG			180, 186
3974546	KEY			190, 194
3974920	SCREW			184
3974972	GASKET			176, 198, 210
3974978	NUT			210
3974979	CAP			210
3D6	NUT			156
42H52	CLAMP			160
42HC300	CLAMP			160
42HC375	CLAMP			160
42HS04	COLLAR			166
43C516	BOLT			166
43C612	BOLT			22, 334, 336, 340
43C616	BOLT			146
43DM10	NUT			162
43DM8	NUT			134, 164, 168, 170
44H48	CLAMP			296
45C516	SCREW			158
45C620	BOLT			90, 134, 162
45C824	BOLT			100
45G1006	BOLT			280
45G1212	BOLT			130
47C620	BOLT			90
47C624	SCREW			162
47C820	BOLT			46
47K10	PLUG			78
47K8	PLUG			102, 106
49C1048	BOLT			310
49C412	BOLT			156
49C624	SCREW			90, 170
49C628	BOLT			62, 90
49C824	SCREW			162
4D28	NUT			308
4DM8	NUT			154
4F6106	PIN			18, 20
51DM10	NUT			296
51DM6	NUT			254
51DM8	NUT			130, 146, 148
5289686	PLUG			30, 143, 144, 222
53C410	SCREW			126, 128
53C416	SCREW			14
53C420	SCREW			126, 128
53C512	SCREW			14, 262
53C616	BOLT			54
53D10	NUT			14, 26, 284, 308, 310
53D12	NUT			12
53D6	NUT			18, 20, 26, 62, 90, 296, 334, 340
53D8	NUT			310
53DM12	NUT			162
54K20022	O'RING			108
54K20028	O RING 10			66, 70

Code for disposition of old part number

A -- Use up
B -- Use on other application (See PNI)
C -- File PDR Report with Bobcat Parts Sales
D -- Part Number Error

Page 378 - OSS# 2072104 - All rights reserved by Bobcat Company - 01/20/2010 - 17:21:58 - Produced by Ken Cook Co. with mediaioff

Part No.	Description	Was	Code	Page
54K30110	O-RING			318
54K30218	O-RING			56, 58
54K40116	O-RING			318
54K40208	O-RING			60
54K40224	O-RING			56, 58
54K40300	O-RING			56, 58
55CM12120	BOLT			162
55CM1235	BOLT			162
55D10	NUT			282
55D4	NUT			126, 128, 280, 294, 296, 304, 306
55D5	NUT			126, 128, 166, 168, 170, 294, 296, 304, 306
55K204	O RING 10			64, 68
55K214	O-RING			314
55K219	O'RING			84
57D5	NUT			136, 170
57D6	NUT 5			30, 32, 62, 126, 128, 170, 222
58K004	O-RING			64, 68
58K120	O-RING			142, 146
58K13	O-RING			66, 70
58K16	O RING 10			66, 70
58K17	O RING 10			66, 70
58K219	O RING 10			86
59CM1060	SCREW			162
59CM1240	BOLT			100
59CM812	SCREW HX FLNG W/T8.8			170, 171, 172
59CM816	BOLT			160, 162, 296
59CM820	SCREW HX FLNG W/T 8.8			160, 164, 168, 170
59D4	NUT 5			132, 282
59D5	NUT 5			22, 134, 256
59D6	NUT			24, 52, 54, 168, 170
59D7	NUT			334, 340
59D8	NUT 5			14
5CM1020	SCREW			134, 160
5CM812	BOLT			184
5HM13	CLAMP			166
5HM14	CLAMP			158, 166
5HM16	CLAMP			78
5HM20	CLAMP			294
5HM22	CLAMP			166
5HM23	CLAMP			158
5HM27	CLAMP			80
5HM29	HOSECLAMP			74
5HM35	HOSECLAMP			80
5HM42	HOSECLAMP			78, 224
5HM47	CLAMP			78, 158
5HM58	CLAMP			166
619021	WASHER, 5			22, 28, 61, 62, 288, 314, 326
61D4	NUT 5			168, 170
61D5	NUT			24, 226, 228, 254, 256
62D4	NUT			168, 170
62D6	NUT 5			90, 350
63D6	NUT			62, 90
6511855	SEAL			156

Code for disposition of old part number

A -- Use up

B -- Use on other application (See PNI)

C -- File PDR Report with Bobcat Parts Sales

D -- Part Number Error

Page 379 - OSS# 2072104 - All rights reserved by Bobcat Company - 01/20/2010 - 17:21:58 - Produced by Ken Cook Co. with mediaioff

Part No.	Description	Was	Code	Page
6512026	BUSHING			62
6512353	CLEVIS PIN			62
6512797	RIVET			336
6513495	COTTER PIN			62, 144, 222
6513707	JOINT			208
6515817	WASHER			14, 164
6517516	LIGHT			282
6519178	BUMPER			18, 20, 25, 26
6532453	RING			318
6533898	DECAL			272, 310
6534668	SNAP RING			170
654299	BEARING			102, 106
6553411	BUSHING			46, 48
6553709	WASHER			14
6555341	SAFETY TREAD			272, 314
6557224	DECAL			272
6557831	WASHER			156
6557904	FLASHER			282
6560633	DAMPENER			14
6561383	DECAL			272
6562602	BUSHING			14
6563914	WASHER			62, 90, 144, 222
6564452	GRIP			24
6564654	PIN			62, 144, 222
6564669	NUT			354
6565200	DECAL			270
6565947	WASHER			40
6565977	HOSE			294
6565990	DECAL			270
6567743	PIN			14, 286
6569203	CLAMP			134
6569219	SCREEN			165, 166
6576033	WASHER			162
6576280	BOLT			134
6577058	PIN			90
6577545	GROMMET			136, 226, 228
6577821	HOSE			166
6577822	HOSE			158, 166
6577954	PIN			26
6578169	HOSE			166
6578172	HOSE			158, 166
6578253	SPRING, COMPRESSION			28
6578857	HUB, WHEEL			40
6579613	STOP			14
658128	RING, SNAP			102, 106
6586251	HOSE			78
6586542	HEAD			318
6586543	PISTON			318
6586918	SCREW			64
6587523	WASHER			64, 68
6587575	ADAPTER			64
6587580	SPRING			64, 68
6587763	BOOT			64, 150
6589226	BONNET			64

Code for disposition of old part number
A -- Use up
B -- Use on other application (See PNI)
C -- File PDR Report with Bobcat Parts Sales
D -- Part Number Error

Page 380 - OSS# 2072104 - All rights reserved by Bobcat Company - 01/20/2010 - 17:21:58 - Produced by Ken Cook Co. with mediaioff

Part No.	Description	Was	Code	Page
6592098	WASHER			66
6592100	COLLAR			64, 68
6592105	BALL			64
6592107	SPRING			64
6592109	ADAPTER			66, 68
6592506	CLAMP			54
6592766	U-BOLT			170
6595663	BUSHING			64, 68
6596807	PLUG			64
6597009	HEAD			60
6598156	STUD			208
6598908	ELBOW			166
6599360	SEALANT			360
6599744	BALL JOINT			90, 350
6610510	TIE			252
6624289	TIE STRAP			50, 54, 86, 126, 127, 128, 130, 140, 166, 167, 168, 242, 274, 276, 288, 294, 296, 316
6625575	FUSE, 20A			130
6630038	WASHER			168, 170
6630168	COUPLER			66, 68
6630188	POLISH			360
6630189	POLISH			360
6631046	SEAL			188
6631418	PIN			14, 18, 20, 286
6632279	KIT, SEAL			66, 70
6633583	SEALANT			360
6640690	PIN			140
6640692	CONNECTOR			140
6640694	LOCK			140
6641176	SEAL			140
6641179	CONNECTOR			140
6641180	LOCK			140
6644965	BALL JOINT			168, 170
6645081	O-RING			102
6645086	PLUG			102, 106
6646781	SWITCH			136, 226
6647783	LOAD CHECK			236
6647784	PLUG			236
6647785	SPRING			236
6648294	SPRING			236
6649481	LIGHT, WEDGE BASE			136
6649551	SHOCK			90, 350
6650107	SEAL			132
6650120	RACE			42, 44
6650388	SEALANT			360
6650407	ADHESIVE			360
6650627	PLATE			102, 106
6650629	PIN			102, 106
6650630	RETAINER			102, 106
6650634	GASKET			102, 106
6650635	BEARING			102, 106
6650636	PIN			102, 106
6650637	BOLT			102, 106
6650646	O-RING			102

Code for disposition of old part number
A -- Use up
B -- Use on other application (See PNI)
C -- File PDR Report with Bobcat Parts Sales
D -- Part Number Error

Page 381 - OSS# 2072104 - All rights reserved by Bobcat Company - 01/20/2010 - 17:21:58 - Produced by Ken Cook Co. with mediaioff

Part No.	Description	Was	Code	Page
6650647	O-RING			102
6650648	PLUG			102
6650652	POPPET			102
6650668	BOLT			102, 106
6650675	COUPLER			102
6651512	ALARM BACKUP			136, 226, 228
6652018	BOLT			106
6652521	COVER			50, 294
6652574	PLUG			180, 186
6652592	PIN			212, 214
6652670	STUD			208
6652688	CLAMP			218
6652689	CLAMP			218
6652751	GASKET			176, 180
6653579	BOLT			186
6654718	CLAMP			206
6654806	FUSE, 15A			130
6655507	FLANGE			188
6657028	O-RING			102, 106
6657067	COVER			104, 106
6657068	COVER			102, 106
6657446	SCREW			198
6657470	NUT			210
6657491	ELEMENT			182
6657556	BAND			202
6657719	PLUG			14, 242
6657734	PUMP			166
6658180	PLUG			166
6659369	HEATER			232
6659999	BELT			335, 336
6660644	CAP			64
6660814	O-RING			102, 106
6661062	PLUG			322
6661353	LIGHT ASSY			136
6661481	O-RING			102
6661753	PLUG			64, 68
6662126	BRACKET			100
6662848	CAP			68
6663289	FUSE, 5A			130
6664554	PUMP, WIPER WASHER			252
6664845	CONE, BEARING			42, 44
6665000	CLIP			252, 256
6665102	COVER			296
6665314	PLUG			16, 34, 242
6665321	RIVET			252, 256
6665322	RIVET			252, 256
6665356	BLOCK			132
6665357	LOCK			132
6665358	COVER , FUSE			132
6665371	SWITCH			132
6665411	WEDGE			132
6665427	BATTERY, DRY 950 AMP			2, 134
6665569	WASHER			66, 70

Code for disposition of old part number
A -- Use up
B -- Use on other application (See PNI)
C -- File PDR Report with Bobcat Parts Sales
D -- Part Number Error

Page 382 - OSS# 2072104 - All rights reserved by Bobcat Company - 01/20/2010 - 17:21:58 - Produced by Ken Cook Co. with mediaioff

Part No.	Description	Was	Code	Page
6665570	RING			66, 70
6665701	BUSHING, PRESS FIT			62, 222
6665755	SEAL, OIL			42, 44
6665909	MOUNT			132
6666338	WASHER			102, 106
6666542	SEAL			318
6666766	GROMMET			252
6666920	CLAMP, HALF			296
6667144	CONNECTOR			140
6667145	LOCK			140
6667176	PLUG			236
6667185	SEAL KIT			236
6667323	SEAL			318
6667327	SEAL			60
6667352	FILTER FUEL			2, 5, 6
6667353	FILTER ASSY			166
6667422	WASHER			184
6667451	WASHER			184
6667676	COVER			236
6667680	SNAP RING			236
6667687	STEM			64, 68
6667844	VALVE ASSY			71, 72
6668815	SWITCH			282
6668816	SWITCH			230, 352
6669087	SEAL KIT			72
6669135	SEAT			22
6669224	BOLT			16, 34, 242
6669267	SEAL			56, 58
6669402	HOUSING			102
6669405	END CAP			106
6669406	END PLATE			102
6669409	WASHER			102
6669410	KIT, SHIM			104
6669411	BEARING			102, 106
6669549	SOCKET			274
6669732	KIT, SEAL			66, 70
6669734	KIT, SEAL			66, 70
6670284	LIGHT ASSY			136
6670338	PLUG			180, 186
6670347	GASKET			176, 178
6670472	NUT			216
6670533	NUT			206, 210, 212
6670634	SEAL KIT			236
6670726	LOCK			324
6670782	GASKET			176, 206
6671025	COIL			64, 65, 66, 70
6671027	LIGHT			278
6671138	SEAL, OIL			40
6671516	KIT, SEAL			104, 106
6671518	BOLT			102, 106
6671520	O-RING			100, 106, 108
6671527	NUT			236
6671528	SEAL			132
6671741	SNAP RING			112

Code for disposition of old part number
A -- Use up
B -- Use on other application (See PNI)
C -- File PDR Report with Bobcat Parts Sales
D -- Part Number Error

Page 383 - OSS# 2072104 - All rights reserved by Bobcat Company - 01/20/2010 - 17:21:58 - Produced by Ken Cook Co. with mediaioff

Part No.	Description	Was	Code	Page
6671760	COVER			114, 116
6672272	WASHER			136
6672273	SCREW			136
6672274	SCREW			136
6672275	GASKET			136
6672276	LENS, LIGHT RED			136
6672277	BRACKET			136
6672279	MOUNT, LIGHT RUBBER			136, 278
6672354	PLUG			180, 186
6672436	SEAL			174, 184
6672471	VALVE			66, 68, 69, 70
6672515	SEAL KIT			124
6672756	SEAL KIT			124
6672762	PLUG			124
6672863	VALVE, SOLENOID			236
6673200	FUSE BLOCK			130
6673789	BEARING			90
6674035	SNAP RING			94, 96
6674036	RING			94, 96
6674037	SPRING			94, 96
6674038	SEAL			94
6674040	SEAL			94
6674099	BREAKER			132
6674184	RING			94
6674193	BRAKE DISC			96
6674235	RECEIVER DRIER			296
6674264	RETAINER NUT			334, 340
6674316	SENSOR			122, 130
6674340	PIN			94
6674341	HOUSING			94
6674343	SHIM			94, 96
6674344	SPRING			94, 96
6674345	PLUG			94, 96
6674687	BATTERY, DRY 600 AMP			2
6674799	ADAPTER			274
6674802	CONNECTOR			274
6674841	SPRING			94, 96
6674894	NUT			18, 20
6674895	RETAINER			16, 36, 128, 242, 244, 298
6675026	CAP			274
6675033	INSERT			16, 34, 36, 244, 298
6675154	HOLDER			130
6675155	FUSE			130
6675181	PLUG			288
6675212	RETAINER			294, 296
6675228	SEAL			94
6675281	MOUNT			276
6675298	COUPLER, BODY			252
6675336	BULB			126, 128
6675341	GROUP, ROTARY			103, 104, 106
6675342	PIN			102, 106
6675380	ADHESIVE			360
6675513	GROMMET			300

Code for disposition of old part number
A -- Use up
B -- Use on other application (See PNI)
C -- File PDR Report with Bobcat Parts Sales
D -- Part Number Error

Page 384 - OSS# 2072104 - All rights reserved by Bobcat Company - 01/20/2010 - 17:21:58 - Produced by Ken Cook Co. with mediaioff

Part No.	Description	Was	Code	Page
6675522	STROBE			352
6675523	BEACON			230
6675534	BLOCK VALVE			300
6675545	GROMMET			14
6675559	COIL			66, 70, 130
6675618	CLAMP			204
6675734	STRAP			125, 126
6675779	SWITCH, PRESS			296
6675780	CARTRIDGE			236
6675781	COIL			236
6675863	QUAD RING			96
6675864	QUAD RING			94, 96
6675866	SPOOL			94, 96
6675867	WASHER			94, 96
6675868	POPPET			94, 96
6675877	SEAL			96
6675878	SEAL			96
6675879	SEAL			96
6675880	SEAL			96
6675881	SEAL			96
6675883	KIT, WASHER			96
6675885	SNAP RING			96
6675889	PISTON			96
6675890	COVER			96
6675892	GASKET			96
6675893	O-RING			96
6675897	WASHER			96
6675898	BUSHING			96
6676003	HOSE			252
6676021	KIT, SEAL			94
6676029	SOLENOID			64, 150, 222
6676038	O-RING			94, 96
6676147	PLATE, VALVE			102
6676148	VALVE PLATE			106
6676246	NUT			124
6676500	ELBOW			252
6676539	CLIP			300
6676543	PLUG			236
6676653	SCREW			290, 302
6676917	ELBOW			252
6677115	RECEPTACLE			290, 300
6677116	RETAINER			290, 300
6677117	SCREW			290, 302
6677118	SCREW			290, 300
6677119	SCREW			290, 300
6677136	SOCKET			274
6677177	PLUG			124
6677181	SENSOR, SPEED WHEEL			146
6677192	MAGNET			252, 256
6677487	COVER			152
6677488	RECTIFIER			152
6677490	BRACKET			152
6677491	BRACKET			152
6677492	ROTOR			152

Code for disposition of old part number
A -- Use up
B -- Use on other application (See PNI)
C -- File PDR Report with Bobcat Parts Sales
D -- Part Number Error

Page 385 - OSS# 2072104 - All rights reserved by Bobcat Company - 01/20/2010 - 17:21:58 - Produced by Ken Cook Co. with mediaioff

Part No.	Description	Was	Code	Page
6677493	STATOR			152
6677494	BOLT			152
6677495	SPACER			152
6677497	NUT			152
6678226	SEAL, OIL			102, 106
6678233	OIL FILTER			2, 3, 4, 6, 204
6678666	TREE MOUNT			126, 242, 288
6678668	STRAP, DUAL TIE			130, 134
6678675	CONTROLLER, ACD DELUXE			276
6678765	NUT			158
6678785	NUT			156
6678971	BOLT			38
6678974	MOUNT			294
6679034	MOUNT			130
6679485	CONTROLLER SJC			146
6679820	RELAY			130
6679836	ADAPTER			54
6679837	COUPLER			54
6679838	COUPLER			54
6679840	SEAL			54
6679841	SEAL			54
6680018	KIT			54
6680020	SEAL KIT			54
6680055	MAGNET			45, 46, 146
6680264	STUD			206
6680272	NUT			210
6680355	BOOT			154
6680356	BOLT			154
6680357	HOLDER			154
6680358	RING			154
6680359	STOP RING			154
6680360	STOP			154
6680361	SPRING			154
6680362	BALL			154
6680363	WASHER			154
6680364	LEVER			154
6680365	SHAFT			154
6680366	GEAR			154
6680367	GEAR			154
6680368	STOP RING			154
6680369	SEAL			154
6680370	PLATE			154
6680371	LEVER			154
6680372	BRACKET			154
6680373	YOKE			154
6680374	ARMATURE			154
6680375	SHAFT			154
6680376	SWITCH			154
6680377	HOLDER			154
6680378	WASHER			154
6680379	SEAL			154
6680380	SEAL			154
6680381	SPRING			154
6680382	SPRING			154

Code for disposition of old part number

A -- Use up
B -- Use on other application (See PNI)
C -- File PDR Report with Bobcat Parts Sales
D -- Part Number Error

Page 386 - OSS# 2072104 - All rights reserved by Bobcat Company - 01/20/2010 - 17:21:58 - Produced by Ken Cook Co. with mediaioff

Part No.	Description	Was	Code	Page
6680383	BOLT			154
6680384	BOLT			154
6680388	BRACKET			154
6680389	BRACKET			154
6680390	GEAR			154
6680410	CONTROLLER			141, 142, 144, 146
6680418	HANDLE ASSY.			139, 140
6680419	HANDLE ASSY.			140
6680438	SENSOR, FUEL			130, 166
6680441	BUSHING			18, 20
6680443	BUSHING, MAGNET			18, 20
6680447	DECAL			140
6680468	MOUNT			222
6680469	SPACER			222
6680470	SPRING			222
6680477	STRAP			222
6680533	BOLT			212
6680564	STUD			198, 202
6680570	GASKET			174
6680576	PIN			200
6680646	ADAPTER			204
6680657	PLUG			188
6680662	BOLT			206
6680667	PLUG			208
6680678	SCREW			178
6680679	PLUG			178
6680680	SEAL			176, 178
6680687	BOLT			216
6680694	PLUG			180
6680695	SEAL			182
6680698	CLAMP			182
6680755	BOLT			196, 204, 208
6680757	COVER			211, 212
6680759	NUT			212
6680769	PIN			212
6680775	PIN			212
6680778	O-RING			174, 216
6680788	BOLT			216
6680791	BOLT			200, 206
6680796	VALVE			206
6680801	BOLT			202, 204
6680803	BOLT			196, 202
6680809	PIN			208
6680813	KEY			208
6680820	WASHER			214
6680821	SNAP RING			214
6680822	SNAP RING			214
6680823	SNAP RING			214
6680828	STUD			212
6680829	GASKET			176, 212
6680830	BOLT			212
6680844	GASKET			174, 196
6680845	BOLT			204
6680850	THERMOSTAT			196

Code for disposition of old part number

A -- Use up

B -- Use on other application (See PNI)

C -- File PDR Report with Bobcat Parts Sales

D -- Part Number Error

Page 387 - OSS# 2072104 - All rights reserved by Bobcat Company - 01/20/2010 - 17:21:58 - Produced by Ken Cook Co. with mediaioff

Part No.	Description	Was	Code	Page
6680859	GUIDE			183, 184, 186
6680863	VALVE SPRING			184
6680866	SHAFT			184, 186
6680877	PIN			184
6680882	PAD			184
6680893	GASKET			174
6680900	BOLT			200, 206
6680952	FITTING 90 DEG BARB			158
6680970	BREATHER			46, 48
6681857	ALTERNATOR			151, 152
6681905	NUT			254
6681910	NUT			254
6682260	SHAFT			102
6682261	KEY			102
6682264	SHAFT			106
6682949	O-RING			100
6683009	O-RING			182, 188
6683023	O-RING			176, 212
6683087	STUD			212
6683167	CYLINDER BLOCK			102, 106
6683168	PISTON ASSEMBLY			102, 106
6683274	SEAL, SPOOL			64, 68
6684033	NUT			30, 32, 62, 156, 222
6684641	MOUNT			126, 128, 304, 306
6684646	VALVE			64, 68
6684650	REGULATOR			152
6684651	BEARING			152
6684652	BEARING			152
6684653	PULLEY			152
6684742	NUT			320
6684743	SOLENOID			320
6684744	SOLENOID			320
6684745	PISTON			320
6684746	CHECK VALVE			320
6684747	SEAL KIT			320
6684781	BOLT			182
6684782	O-RING			176
6684829	SHIM			208
6684841	GASKET			176, 212
6684857	PLUG			196
6684889	CLAMP			204
6684911	SENSOR, FOOT LH			150
6684912	SENSOR, FOOT RH			149, 150
6685027	VALVE			76
6685060	BUSHING, TORSION			62, 90
6685087	VALVE			182
6685190	STARTER			153, 154
6685190REM	STARTER			154
6685344	SWASHPLATE			102, 106
6685372	SEALANT, GASKET LIQUID			38, 46, 48, 360
6685465	O-RING			176, 212
6685498	GASKET			174, 216
6685500	COVER			212

Code for disposition of old part number

A -- Use up
B -- Use on other application (See PNI)
C -- File PDR Report with Bobcat Parts Sales
D -- Part Number Error

Page 388 - OSS# 2072104 - All rights reserved by Bobcat Company - 01/20/2010 - 17:21:58 - Produced by Ken Cook Co. with mediaioff

Part No.	Description	Was	Code	Page
6685541	POPPET			320
6685542	O-RING			320
6685543	CHECK VALVE			320
6685544	COMPENSATOR			320
6685545	PLUG			320
6685546	PLUG			320
6685581	O-RING			182
6685601	CLAMP			200
6685663	RETAINER			30
6685850	CORD			232
6685918	PIN			180
6685919	STUD			206
6685924	CAP			182, 188
6685929	RELIEF VALVE			178
6685952	NUT			214
6685958	GUIDE			184, 186
6685959	RETAINER			184
6685962	GASKET			176, 206
6686096	LENS			278
6686097	BULB			278
6686098	BULB			278
6686099	LENS			278
6686100	SCREW			278
6686359	VALVE RELIEF			68
6686360	VALVE			64
6686934	PIN			108
6686981	O-RING			176, 188
6686999	SEAL			60
6687000	WIPER ROD			56, 58
6687147	GASKET			174
6687191	SEAL, OIL			102
6687193	DOWEL			96
6687826	MOTOR, DRIVE HYD 2-SPD			98
6687866	KIT, SEAL			120
6687904	GUIDE			188
6687913	SEAL			92
6687925	NUT			114, 116
6687930	WIRE			110, 112
6687932	PIN			108
6687938	VALVE			108
6687940	PLATE			110, 112
6687941	COUPLER			108
6687943	SHAFT			112
6687956	BEARING			110, 112
6687962	PISTON			114, 116
6687967	SPRING			118
6687986	KIT			114, 116
6687987	BEARING			112
6687992	SCREW			108
6687995	SCREW			114, 116
6687996	SCREW			118
6687997	SCREW			118
6687999	RING, SNAP			110, 112
6688003	SCREW			108, 162

Code for disposition of old part number

A -- Use up
B -- Use on other application (See PNI)
C -- File PDR Report with Bobcat Parts Sales
D -- Part Number Error

Page 389 - OSS# 2072104 - All rights reserved by Bobcat Company - 01/20/2010 - 17:21:58 - Produced by Ken Cook Co. with mediaioff

Part No.	Description	Was	Code	Page
6688005	SEAL			114, 116
6688006	SEAL			114, 116
6688008	SCREW			108
6688009	SEAL			108
6688010	PIN			118
6688011	PIN			108
6688014	PIN			108
6688015	SCREW			108
6688016	SCREW			108
6688018	BEARING			110, 112
6688024	COVER			114, 116
6688039	PLUG			108
6688040	BEARING			108
6688042	RING, SNAP			110
6688322	KIT, SEAL			76
6688338	NUT			274
6688363	MOTOR			95, 96
6688449	LOCATING PIN			94, 96
6688637	MOUNT			277, 278
6688833	CONNECTOR			138
6688834	CONNECTOR			138
6688836	FLANGE			138
6688845	VALVE			64, 68
6688980	BOLT			130
6689021	SEAL KIT			108
6689088	QUAD RING			96
6689112	SEAL			50
6689126	PISTON			94, 96
6689133	O-RING			94, 96
6689192	BOLT, FLANGE			196, 198
6689331	GASKET			176, 200, 206
6689739	VALVE			64, 68
6689983	FILTER KIT			320
6690005	SEAL KIT			98
6690021	BLOCK			94
6690022	ROLLER			94, 96
6690025	CAM			94, 96
6690039	SCREW			94, 97, 98
6690048	RING			94, 96
6690067	RING			96
6690068	PIN			96
6690077	O-RING			96
6690082	HOUSING			96
6690084	SHAFT			96
6690087	PLATE			96
6690089	SHIM			96
6690090	SHIM			96
6690094	CLAMP			96
6690095	SCREW			96
6690096	SCREW			96
6690097	O-RING			96
6690105	WASHER			96
6690158	ROTOR GROUP			94
6690163	RING			46

Code for disposition of old part number
A -- Use up
B -- Use on other application (See PNI)
C -- File PDR Report with Bobcat Parts Sales
D -- Part Number Error

Page 390 - OSS# 2072104 - All rights reserved by Bobcat Company - 01/20/2010 - 17:21:58 - Produced by Ken Cook Co. with mediaioff

Part No.	Description	Was	Code	Page
6690482	GROMMET			290, 300
6690561	MAGNET			44
6690688	TREE MOUNT			252, 256
6690689	MOUNT, FIR TREE			146
6690690	TIE			146, 252, 256
6690911	CLAMP			56, 58
6690947	SWITCH, BPV			234
6690948	SWITCH PARK BRAKE			126, 128, 246
6690988	CHAIN, DRIVE			38
6691022	NUT			66, 70
6691078	LINK			38
6691173	BRACKET			280
6691176	REAR CASE ASSY.			98
6691177	BRAKE ASSY.			98
6691227	PLUG			94, 96
6691288	CONTROLLER, AUX CONTROL			130
6691534	SCREW			300
6691714	SENSOR, SEATBAR BICS			18, 20
6692337	FILTER, HYD CARTRIDGE			2, 8, 122
6692489	ALARM, BUZZER			126, 128
6692830	ENGINE			173, 174, 175, 176
6692926	HOSE, HYD			83, 84, 86
6692927	HOSE, HYD			84, 86
6692928	HOSE, HYD			84, 86
6692929	HOSE, HYD			84, 86
6693222	GROMMET			290, 300
6693223	WASHER			290, 300
6693236	FOAM			290, 302
6693241	KEY			126, 128, 156, 252, 256, 324
6693245	SWITCH, IGN			126, 128
6693353	CONTROLLER, GATEWAY			130
6693413	DISPLAY, DLX			128, 246
6693414	SOLENOID VALVE			76
6693415	RING			42, 44
6693525	BEARING			42, 44
6693712	KEYPAD, PANEL			126, 128, 248
6693864	BOLT			290
6693867	HOUSING			106
6693873	GROUP, ROTARY			110
6693874	GROUP, ROTARY			112
6693876	SEAL, SHAFT			110
6693921	SENSOR, RPM			134
6697792	PISTON, ASSY			60
6697864	HOSE ASSY			314
6697914	HOSE, TUBE ASSY			296
6697915	HOSE			296
6697916	HOSE			296
6697917	HOSE			296
6697918	HOSE			296

Code for disposition of old part number

A -- Use up
B -- Use on other application (See PNI)
C -- File PDR Report with Bobcat Parts Sales
D -- Part Number Error

Page 391 - OSS# 2072104 - All rights reserved by Bobcat Company - 01/20/2010 - 17:21:58 - Produced by Ken Cook Co. with mediaioff

Part No.	Description	Was	Code	Page
6697920	SENSOR, PRESS OIL ENG			134
6697960	SOLENOID			118
6697971	VALVE, 2 SPEED			48, 86, 123, 124
6698057	FILTER, AIR OUTER			1, 2
6698058	FILTER, AIR INNER			2
6698062	GASKET, MOTOR			122
6698065	COIL, CPP012H			122
6698066	HOUSING, FILTER CARTRIDGE			122
6698096	FILTER, AIR RECIRCULATING			288
6698120	GASKET			186, 208
6698244	ORING			204
6698352	NUT, COIL SOLENOID			122
6698434	VALVE, PROPORTIONAL			64, 68
6698524	ARM, VALVE BRIDGE			184
6698580	VALVE, LEAD			202
6698585	VALVE, THERMOSTATIC			202
6698590	COMPRESSOR, A/C			296
6698591	KIT, SEAL			122
6698594	PUMP, TANDEM			107, 108
669863	RING, SNAP			102, 106
6700170	WASHER			170
6700631	GASKET			78
6700743	SPRING			26
6701097	WASHER			156
6701449	FILLER TUBE			166
6701535	SPRING			18, 20, 90
6701892	CLAMP			50, 294
6702444	FUSE 25A 5			130
6702593	SPACER			136, 226
6702621	GRIP			140
6702716	BLOCK			90
6702903	LEVER			28
6702904	LEVER			28
6702935	PIN, PIVOT			26
6702958	BUSHING			28
6702971	BOLT			14
6703703	GUIDE			336
6704248	PIVOT			28
6704453	SPRING			28, 252, 256
6704892	RIVET			276
6705340	DECAL			272
6706098	GUIDE			90
6706558	DECAL			272
6706718	MOUNT			46
6707101	SEAL			52, 72
6707620	10AFUSE 5			132
6707621	FUSE, 15A MINI 5			130, 132
6707623	FUSE, 25A MINI 5			130, 132

Code for disposition of old part number
A -- Use up
B -- Use on other application (See PNI)
C -- File PDR Report with Bobcat Parts Sales
D -- Part Number Error

Page 392 - OSS# 2072104 - All rights reserved by Bobcat Company - 01/20/2010 - 17:21:58 - Produced by Ken Cook Co. with mediaioff

Part No.	Description	Was	Code	Page
6708009	LINK			62
6708016	GASKET			46
6708018	SPRING			46
6708043	BUSHING			62
6708267	BOLT			46
6708310	HOSE			252
6708437	CLIP			132
6708929	DECAL			270
6708987	HINGE			12
6709757	SHAFT, AXLE			40
6710659	BUSHING			18, 20
6711908	SPRING PLATE			336
6713589	CLEVIS			18, 20
6713887	BOLT			18, 20
6714278	GUIDE			46
6714810	PIN			26
6715163	BUSHING, PRESS FIT			90
6715164	SLEEVE, SPRING			90
6715183	ELBOW			166
6715864	BUSHING			18, 20
6715865	BUSHING			18, 20
6715866	BUSHING			18, 20
6717242	HOUSING			42
6717401	PLUG			166
6717402	BUSHING			166
6717579	GASKET			130
6717806	BOLT			38, 86
6717885	ELBOW			74
6718034	FUSE, 30A			130
6718414	SENDER			134
6718872	HARNESS			230, 282, 352
6719056	BLOCK			46
6719057	BLOCK			46
6719448	MAGNET, CONTROL ATTACH			276
6719766	STOP			24
6719834	SPACER			222
6719835	SLEEVE			222
6719888	DECAL			272, 314
6720038	INSTRUCTIONS			232
6720808	KIT			231, 232
6725403	SEAT BELT			21, 22
6727065	BOLT			222
6727313	ELBOW			78
6727475	CAP			8, 77, 78
6727595	DECAL			272
6727707	CLAMP			84, 86
6727869	SENDER			130
6728473	BOLT			28
6728971	PIN, PIVOT TAPERED			26
6729078	DECAL			272
6729663	HOUSING			44
6729901	TIRE			353, 354

Code for disposition of old part number

A -- Use up
B -- Use on other application (See PNI)
C -- File PDR Report with Bobcat Parts Sales
D -- Part Number Error

Page 393 - OSS# 2072104 - All rights reserved by Bobcat Company - 01/20/2010 - 17:21:58 - Produced by Ken Cook Co. with mediaioff

Part No.	Description	Was	Code	Page
6730013	COVER			44
6730108	TIRE			354
6730109	TIRE			354
6730772	RIM			354
6730785	BUSHING			12
6730894	BOLT			166
6730995	BUSHING, WEAR			26
6731084	ADAPTER			294
6731085	ELBOW			294
6731121	PLUG			38
6731160	WASHER			26
6731275	INSULATION			130
6732730	HARNESS			276
6732847	RIM			354
6733136	KIT			275, 276
6733144	MOUNT			276
6733370	HARNESS			134
6733429	CAP			158
6733575	HINGE, REAR DOOR			23, 24
6733578	RIM			354
6733616	BUMPER			24
6734090	ADAPTER			158
6734298	MOUNT			90
6735249	HOSE, FUEL			166
6735696	BUSHING			166
6735901	DECAL, BOBCAT			272
6736641	PAINT			362
6736642	PAINT			362
6736644	PAINT			360, 361, 362
6736645	PAINT			362
6737088	COVER, FRONT ACCESS			38
6737189	DECAL			136, 226, 228, 270
6737191	WEDGE			28
6737388	WASHER			62, 90, 342
6737524	KNOB			52, 72
6737692	BEARING			170
6737693	SPACER			170
6801167	PLUG			68
6802539	SPACER			14, 262
6803092	BONNET			68
6804427	HEAD, CYL LIFT			56, 58
6805102	BUSHING			66, 68
6808798	ELBOW			166
6809726	ROLLER			24
6809734	BUSHING			24
6809845	BOLT			24
6810132	SPRING			24
6810141	SPRING			24
6810356	SPACER			318
6810539	NUT			56, 58
6810540	NUT			60
6812171	PLUG			56, 58, 60
6812865	FITTING			80
6813153	PLATE			64

Code for disposition of old part number

A -- Use up
B -- Use on other application (See PNI)
C -- File PDR Report with Bobcat Parts Sales
D -- Part Number Error

Page 394 - OSS# 2072104 - All rights reserved by Bobcat Company - 01/20/2010 - 17:21:58 - Produced by Ken Cook Co. with mediaioff

Part No.	Description	Was	Code	Page
6814021	BOLT			144
6814022	SCREW HEX SKT HD W/T			64, 68
6814694	RETAINER			64, 68
6815152	SPOOL			64
6816549	PLUG ASSY PORT RLF			64, 68
6901872	INSTRUCTIONS			276
6902228	PAINT, ORANGE SPRAY CAN 6			359, 360
6902229	PAINT, CHARCOAL SPRAY CAN 6			360
6902230	PAINT, WHITE SPRAY CAN 6			360
6902233	PAINT, ORANGE QT 6			360
6902234	PAINT, CHARCOAL QT 6			360
6902235	PAINT, WHITE QT 6			360
6902236	PRIMER QT. 6			360
6903105	OIL, 15W40 QT. 12			2, 4, 6, 360
6903106	OIL, 15W40 GAL. 6			2, 4, 6, 360
6903107	OIL, 10W30 QT. 12			2, 4, 6, 360
6903108	OIL, 10W30 GAL. 6			2, 4, 6, 360
6903109	OIL 30W QT. 12			2, 4, 6, 360
6903110	OIL, 30W GAL. 6			2, 4, 6, 360
6903111	OIL 30W 2.5 GAL 2			2, 4, 6, 360
6903112	OIL, 10W30 2.5 GAL 2			2, 4, 6, 360
6903113	OIL, 15W40 2.5 GAL. 2			2, 4, 6, 360
6903117	FLUID, OIL HYD 2.5 GAL 2			2, 9, 10, 360
6903118	FLUID, OIL HYD 5 GAL			2, 10, 360
6903119	FLUID, OIL HYD 55 GAL			2, 10, 360
6903121	LUBE, GEAR 12			6, 360
6903122	GREASE, MULTI PURPOSE #2 - 10			6, 360
6903773	33X6X11 TWIN FLEX TIRE & WHEEL (LEFT)			355, 356
6903774	33X6X11 TWIN FLEX TIRE & WHEEL (RIGHT)			356
6969803	COVER, BREATHER			182
6969819	NUT, FLANGE			198, 200, 202, 206, 208
6969824	GASKET, NOZZLE INJ			174, 216
6969968	PLUG			180
6983128	ANTI-FREEZE PG 53/47 PREMIX GAL 6			360
6983129	ANTI-FREEZE PG CONCENTRATE 6			360

Code for disposition of old part number

A -- Use up
B -- Use on other application (See PNI)
C -- File PDR Report with Bobcat Parts Sales
D -- Part Number Error

Page 395 - OSS# 2072104 - All rights reserved by Bobcat Company - 01/20/2010 - 17:21:58 - Produced by Ken Cook Co. with mediaioff

Part No.	Description	Was	Code	Page
6987128	INSTRUCTIONS			266, 268
6987139	INSTRUCTIONS			250
6987159	MANUAL OPERATION & MAINTENANCE S215 LOADER			2
6987159-CD	MANUAL OPERATION & MAINTENANCE S215 LOADER-CD			2
6987160	MANUAL SERVICE S215 LOADER			2
6987160-CD	MANUAL SERVICE S215 LOADER-CD			2
6987161	MANUAL PARTS S630 LOADER			2
6987161-CD	MANUAL PARTS S630 LOADER-CD			2
6987216	INSTRUCTIONS			284
6987217	INSTRUCTIONS			310
6987218	INSTRUCTIONS			308
6987220	INSTRUCTIONS			314, 316
6987223	INSTRUCTIONS			280
6987224	INSTRUCTIONS			282
6987225	INSTRUCTIONS			230
6987226	INSTRUCTIONS			352
6987227	INSTRUCTIONS			240
6987228	INSTRUCTIONS			264
6987229	INSTRUCTIONS			262
6987230	INSTRUCTIONS			254
6987231	INSTRUCTIONS			288, 294
6987232	INSTRUCTIONS			256, 257, 258
6987233	INSTRUCTIONS			296
6987234	INSTRUCTIONS			242
6987235	INSTRUCTIONS			226, 228
6987236	INSTRUCTIONS			222
6987237	INSTRUCTIONS			306
6987238	INSTRUCTIONS			274
6987239	INSTRUCTIONS			324
6987248	INSTRUCTIONS			334, 340
6987249	INSTRUCTIONS			326
6987250	INSTRUCTIONS			234
6987251	INSTRUCTIONS			350
6987252	INSTRUCTIONS			238
6987253	INSTRUCTIONS			338
6987279	INSTRUCTIONS			286
6987280	INSTRUCTIONS			246
6987281	INSTRUCTIONS			248
6987337	INSTRUCTIONS			342
6987338	INSTRUCTIONS			344
6987349	INSTRUCTIONS			358
6987355	INSTRUCTIONS			244
6987356	INSTRUCTIONS			298
6987388	INSTRUCTIONS			260
6987507	KIT, DECAL			269, 270, 271, 272

Code for disposition of old part number

A -- Use up
B -- Use on other application (See PNI)
C -- File PDR Report with Bobcat Parts Sales
D -- Part Number Error

Page 396 - OSS# 2072104 - All rights reserved by Bobcat Company - 01/20/2010 - 17:21:58 - Produced by Ken Cook Co. with mediaioff

Part No.	Description	Was	Code	Page
6988336	RADIO, MINI BOBCAT JHD910	7159873	A	250
69G436	BOLT			68, 142, 144, 146
6CM1235	BOLT			296
6E5	WASHER			282
6EM80	WASHER, SPRING			154
6J1664	KEY			40
7000488	DAMPER			164
7000489	DAMPER			164
7000583	GEAR, RING STARTER			180
7000586	PLUG			180
7000589	BOLT, ADJUSTING			210
7000594	SCREW			208
7000599	PIN			184
7000600	CAP, SEALING			180
7000604	TUBE, FUEL LINE ASSY			206
7000605	TUBE, FUEL LINE ASSY			206
7000606	STUD			208
7000607	PLUG			186
7000609	SCREW, AIR BLEEDER			208
7000612	TAPPET			194
7000613	NUT			206
7000614	RETAINER, BEARING			208
7000615	BOLT, FLYWHEEL			180
7000616	GEAR, DRIVE			190
7000617	BEARING, BALL			208
7000618	GASKET, PUMP INJ			176, 206
7000619	ORING			174, 216
7000620	BOLT, ADJUSTING			210
7000621	BRACKET, BOLT ADJUSTING			210
7000622	SLEEVE, GOVERNOR			212
7000623	LEVER, GOVERNOR			212
7000624	SHAFT, FORK LEVER			214
7000625	SPRING, SPEED CONTROL			212
7000626	SEAL, INJ FUEL			216
7000628	CAMSHAFT, FUEL			208
7000629	RETAINER, BEARING			208
7000631	FLANGE, EGR			202
7000632	GASKET EGR INLET			202
7000633	GASKET, EGR VALVE			174, 202, 204
7000634	GASKET, EGR VALVE			174, 202
7000635	GASKET, EGR COOLER			174, 204

Code for disposition of old part number
A -- Use up
B -- Use on other application (See PNI)
C -- File PDR Report with Bobcat Parts Sales
D -- Part Number Error

Page 397 - OSS# 2072104 - All rights reserved by Bobcat Company - 01/20/2010 - 17:21:58 - Produced by Ken Cook Co. with mediaioff

Part No.	Description	Was	Code	Page
7000636	GASKET, EGR BASE			174, 204
7000637	BEARING, BALL			208
7000638	WEIGHT, GOVERNOR			212
7000639	LEVER, FORK			213, 214
7000640	LEVER, SPEED			212
7000641	HOSE, VACUUM			202, 204
7000642	GASKET			174, 200
7000714	DIPSTICK, OIL ENG			188
7000731	O-RING			210
7000748	BOLT			192
7000767	PUMP, FUEL			206
7000768	HOUSING, GOVERNOR			212
7000769	SOLENOID, SHUTOFF FUEL			134, 212
7000973	PLUG, MOTOR			122
7000974	PLUG, MOTOR			122
7000983	SCREW			288
7000984	CLIP			288
7001016	PUMP			101, 102, 105, 106
7001044	HORN, ALARM			126, 128, 304, 306
7001045	PUMP, GEAR TRIPLE			75, 76
7001046	MOTOR			93, 94
7001120	SHAFT, DRIVE			110
7001138	BOLT,FLANGE			188, 194
7001421	GUAGE, SIGHT			78
7001435	PUMP, GEAR DOUBLE			119, 120
7001499	BOLT, EYE			208
7001538	VALVE			80
7001664	PLUG, POWER			242
7001673	KIT, SCREEN FILTER			320
7001678	VALVE, CHECK			320
7001709	SWITCH FRONT WIPER			252
7001710	SWITCH, ISO			146
7001712	SWITCH			314
7001713	SWITCH			144, 222
7001920	COVER, FRONT			220
7001921	BLOCK, JUNCTION			50
7002716	SCREW			64, 68
7002734	FILTER			2, 7, 8, 78
7002736	LATCH, DRAW			156
7002737	LATCH, PAWL			156
7002739	GROMMET			82
7002740	GROMMET			78
7002980	SWITCH, PRESSURE			130
7002985	CAP			16
7002986	VALVE, BPV			234, 235, 236
7002988	TIE, STUD MOUNT			136, 226, 228, 278
7003027	CAP			126, 248

Code for disposition of old part number

A -- Use up
B -- Use on other application (See PNI)
C -- File PDR Report with Bobcat Parts Sales
D -- Part Number Error

Page 398 - OSS# 2072104 - All rights reserved by Bobcat Company - 01/20/2010 - 17:21:58 - Produced by Ken Cook Co. with mediaioff

Part No.	Description	Was	Code	Page
7003032	SWITCH, OVERRIDE TRACTION			126, 128
7003033	SWITCH, IGN			126, 246, 248
7003034	DISPLAY, GAUGE			126, 128
7003445	BLOWER, HEATER & A/C			290, 291, 292
7003456	VALVE, MOTORIZED ASSY			290, 300
7003457	HOSE, HEATER			290, 300
7003458	CLAMP, HOSE			290, 300
7003465	NUT			290, 300
7003471	SCREW			292
7003487	SCREEN			78
7003494	LEVER, RH			144
7003495	LEVER, LH			144
7003496	SENSOR			144, 222
7003628	JOYSTICK, SJC LH			148
7003629	JOYSTICK, SJC RH			148
7003698	BOOT, RUBBER			148
7006263	COVER PILLAR			88
7008033	EVAPORATOR			300
7008040	THERMOSTAT			302
7008043	FILTER, OUTER			220
7008044	FILTER, INNER			220
7008105	GROUP, ROTATING LH			108, 109, 110
7008106	GROUP ROTATING RH			108, 111, 112
7008107	CONTROL			108, 113, 114
7008108	CONTROL			108, 115, 116
7008109	MODULE, CONTROL			108, 117, 118
7008110	HOUSING			108
7008111	FLANGE, LH			108
7008112	FLANGE, RH			108
7008113	SHAFT			108
7008114	SCREW			108
7008115	SENSOR			108
7008116	FILTER			108
7008117	SWASHPLATE			110, 112
7008118	BEARING			110
7008119	RING			114, 116
7008120	MODULE			118
7008121	GASKET			118
7008122	COVER			118
7008123	GASKET			118
7008124	VALVE, RELIEF			108
7008318	LEVER, AHC			142
7008319	LEVER, AHC			142
7008380	BOLT			204
7008381	BOLT			198
7008382	BOLT			196
7008383	BOLT, FLANGE			198, 200
7008384	BOLT, FLANGE			184
7008385	SCREW			182
7008386	CIRCLIP			190

Code for disposition of old part number

A -- Use up

B -- Use on other application (See PNI)

C -- File PDR Report with Bobcat Parts Sales

D -- Part Number Error

Page 399 - OSS# 2072104 - All rights reserved by Bobcat Company - 01/20/2010 - 17:21:58 - Produced by Ken Cook Co. with mediaioff

Part No.	Description	Was	Code	Page
7008387	O-RING			200
7008388	BEARING, BALL			194
7008389	RETAINER, VALVE SPRING			184
7008390	SEAL, OIL			176, 180
7008391	SLEEVE, WEAR			190
7008393	PLUG			204
7008394	BOLT, ADJUSTMENT ASSY			209, 210
7008395	SPRING			210
7008396	BOLT, FLANGE			178
7008397	BOLT			180, 186
7008398	GASKET, FRONT COVER			176, 178
7008399	GASKET, MANIFOLD INTAKE			174, 198
7008400	GASKET, MANIFOLD EXHAUST			174, 198
7008401	VALVE, INTAKE			184
7008402	VALVE, EXHAUST			184
7008403	ARM, ROCKER			184
7008404	ARM, ROCKER			184
7008405	SHAFT, ROCKER ARM			184
7008406	SPRING, ROCKER ARM			184
7008407	BRACKET, ROCKER ARM			184
7008408	WASHER			184
7008409	GASKET, ROCKER ARM			174, 182
7008410	ROD, PUSH			194
7008411	CAMSHAFT, VALVE			193, 194
7008412	RETAINER, BEARING			194
7008413	CAP, SEALING			194
7008414	GEAR, CAMSHAFT			194
7008415	RING, PISTON			190
7008416	RING, PISTON OS			190
7008417	PIN, PISTON ENG			190
7008418	BOLT			190
7008419	BEARING, ENG ROD CONNECTING			190
7008420	BEARING, ENG ROD CONNECTING			190
7008421	BEARING, ENG ROD CONNECTING			190
7008422	BEARING, ENG ROD CONNECTING			190
7008423	BEARING, ENG CRANKSHAFT			190
7008424	WASHER, THRUST			190
7008425	WASHER, THRUST			190
7008426	BEARING, ENG CRANKSHAFT			190

Code for disposition of old part number
A -- Use up
B -- Use on other application (See PNI)
C -- File PDR Report with Bobcat Parts Sales
D -- Part Number Error

Page 400 - OSS# 2072104 - All rights reserved by Bobcat Company - 01/20/2010 - 17:21:58 - Produced by Ken Cook Co. with mediaioff

Part No.	Description	Was	Code	Page
7008427	BEARING, ENG CRANKSHAFT			190
7008428	WASHER, THRUST			190
7008429	WASHER, THRUST			190
7008430	WASHER, THRUST			190, 191, 192
7008431	WASHER, THRUST			192
7008432	GEAR, IDLER			194
7008433	GEAR, CRANKSHAFT			190
7008434	SHAFT, GEAR IDLER			194
7008435	COLLAR, GEAR IDLER			194
7008436	COLLAR, GEAR IDLER			194
7008437	BUSHING, GEAR IDLE			194
7008438	PIPE, OIL			206
7008439	BOLT, JOINT			206
7008440	PUMP, OIL ENG			178
7008441	COVER, PUMP OIL ENG			178
7008442	PIPE, RETURN FUEL			216
7008443	GEAR, PUMP INJ			206
7008444	BRACKET, PUMP INJ			206
7008445	CLAMP, INJECTION			216
7008446	BOLT, ADJUSTING			210
7008447	CORD, GLOW PLUG			216
7008448	GASKET, FLANGE WATER			174, 196
7008449	PUMP, WATER			195, 196
7008450	COVER, THERMOSTAT			196
7008451	GASKET, PUMP WATER			176, 196
7008452	BOLT, FLANGE			200
7008453	BOLT, FLANGE			180
7008454	BOLT, FLANGE			180
7008455	BOLT, FLANGE			180
7008456	BOLT, FLANGE			194
7008457	HOOK, ENG			186
7008458	GASKET, HEAD			186
7008459	GASKET, HEAD			186
7008460	GASKET, HEAD			186
7008461	GASKET, HOUSING			176, 180
7008462	TUBE, BREATHER			182
7008463	TUBE, BREATHER			182
7008464	VALVE, AIR BREATHER			182
7008465	HOSE, AIR FORMED			182
7008466	MANIFOLD, INTAKE			197, 198
7008467	GASKET, EGR VALVE			174, 202
7008468	SPACER			182
7008469	TURBOCHARGER			199, 200

Code for disposition of old part number

A -- Use up

B -- Use on other application (See PNI)

C -- File PDR Report with Bobcat Parts Sales

D -- Part Number Error

Page 401 - OSS# 2072104 - All rights reserved by Bobcat Company - 01/20/2010 - 17:21:58 - Produced by Ken Cook Co. with mediaioff

Part No.	Description	Was	Code	Page
7008470	PISTON, ENG			189, 190
7008471	PISTON, ENG OS			190
7008472	PISTON, ENG			190
7008473	KIT, PISTON			192
7008474	KIT, PISTON OS			192
7008475	PISTON, ENG OS			190
7008476	PISTON, ENG			190
7008477	PISTON, ENG OS			190
7008478	BUSHING, PIN PISTON			190
7008479	ROD, CONNECTING			190
7008480	BEARING, ENG CRANKSHAFT			190
7008481	KIT, BEARING ENG			192
7008482	KIT, BEARING ENG			192
7008483	KIT, BEARING ENG			192
7008484	BEARING, ENG CRANKSHAFT			190
7008485	BEARING, ENG CRANKSHAFT			190
7008486	SCREEN, OIL ENG			188
7008487	PIPE, OIL			200
7008488	PIPE, OIL			200
7008489	EXCHANGER, OIL ENG			204
7008490	CONNECTOR			204
7008491	HOSE, RUBBER			182
7008492	HOUSING, PUMP INJ			208
7008493	PUMP, FUEL INJ			207, 208
7008494	PIPE, INJECTION			217, 218
7008495	PIPE, INJECTION			218
7008496	PIPE, INJECTION			218
7008497	PIPE, INJECTION			218
7008498	HOLDER, NOZZLE			215, 216
7008499	SPRING, START			214
7008500	GLOW PLUG			216
7008501	EXCHANGER, EGR			203, 204
7008502	HOSE, WATER FORMED			204
7008503	HOSE, WATER FORMED			204
7008504	HOSE, WATER FORMED			204
7008505	HOSE, VACUUM			202
7008506	BOLT, FLANGE			198
7008507	BOLT			200
7008508	STUD			200
7008509	STUD			198
7008510	KIT, GASKET ENG UPPER			174
7008511	KIT, GASKET ENG LOWER			176
7008512	BASE, EGR COOLER			204
7008513	BOLT, FLANGE			200

Code for disposition of old part number
A -- Use up
B -- Use on other application (See PNI)
C -- File PDR Report with Bobcat Parts Sales
D -- Part Number Error

Page 402 - OSS# 2072104 - All rights reserved by Bobcat Company - 01/20/2010 - 17:21:58 - Produced by Ken Cook Co. with mediaioff

Part No.	Description	Was	Code	Page
7008514	GASKET, TURBO			174, 200
7008515	GASKET, TURBO			174, 200
7008516	GASKET			174, 200
7008517	FITTING, BANJO			206
7008518	SPRING			178
7008519	PLUG			178
7008520	SPRING, GOVERNOR			214
7008521	HOSE, AIR FORMED			200
7008522	SHIELD, HEAT			198
7008523	BLOCK, ENG			179, 180
7008524	PAN, OIL			187, 188
7008525	HOOK, ENG			186
7008526	HEAD, CYL ENG			185, 186
7008527	COVER, FRONT			177, 178
7008528	HOUSING, FLYWHEEL			180
7008529	PIPE, INTAKE			200
7008530	HOSE, AIR INTAKE			200
7008531	MANIFOLD, EXHAUST			198
7008532	FLANGE, MUFFLER			200
7008533	COVER, HEAD CYL ENG			181, 182
7008534	CRANKSHAFT, ENG			190
7008535	FLYWHEEL, ENG ASSY			180
7008536	HOSE, WATER FORMED			204
7008537	PUMP, FUEL INJ W/GOVERNOR			205, 206
7008538	VALVE, EGR			201, 202
7008539	FLANGE, WATER			196
7008540	PIPE, OIL			204
7008541	PULLEY, FAN			196
7008542	PULLEY, DRIVE			192
7008543	CLAMP, HOSE			182, 200
7008544	CLAMP, HOSE			200
7008771	KIT, SEAL			66, 70, 124
7008810	VALVE			122
7008814	BULB, 5W			126, 128
7008822	VALVE			102, 106
7008823	SPRING			102
7009254	EXCHANGER, OIL COOLER			88
7009255	EXCHANGER, WATER RADIATOR			88
7009256	BOLT, FLANGE			88
7009257	STRAP, HOLD DOWN			88
7009258	RING, RETAINER			88
7009259	PIN			88
7009260	PIN			88
7009261	RING, RETAINER			88
7009262	ROD, PROP UP			88

Code for disposition of old part number

A -- Use up
B -- Use on other application (See PNI)
C -- File PDR Report with Bobcat Parts Sales
D -- Part Number Error

Page 403 - OSS# 2072104 - All rights reserved by Bobcat Company - 01/20/2010 - 17:21:58 - Produced by Ken Cook Co. with mediaioff

Part No.	Description	Was	Code	Page
7009976	O-RING			296
7009977	O-RING			296
7009978	O-RING			296
7010003	VALVE, CHECK			124
7010004	CARTRIDGE			124
7010005	CARTRIDGE			124
7010006	COIL			124
7010007	FILTER. VALVE			124
7010008	BOLT			124
7010009	BOLT			124
7010010	BLOCK, PORT			124
7010029	SEAL KIT			124
7010125	CONNECTOR			88
7010126	BOLT			88
7010127	BUMPER, RUBBER			88
7010162	HOUSING, BLOWER			292
7010163	MOTOR, FAN			292
7010164	RESISTOR			292
7010165	COVER			292
7010166	RING, INNER			292
7010167	BLOWER, WHEEL			292
7010168	SCREW			292
7010169	CLAMP, HOSE			292
7010227	COVER			108
7010266	RIVET, POP			290, 300
7010282	PLUG			236
7010283	VALVE, REGULATOR			236
7010335	KIT, CUSHION SEAT VINYL			328
7010336	KIT, CUSHION SEAT VINYL			328
7010337	KIT, BACKREST SEAT			328
7010338	KIT, BACKREST SEAT			328
7010339	BELLOW			328
7010340	KIT, ADJUSTER SEAT			328
7010341	KIT, HOUSING SEAT			328
7010342	KIT, ABSORBER SHOCK SEAT			328
7010343	KIT, RAIL SLIDE SEAT			328
7010344	KIT, RAIL SLIDE SEAT			328
7010345	KIT, TETHER SEAT BELT			328
7010346	KIT, BACKREST SEAT			328
7010357	CAP, END			264
7010358	SPRING			264
7010359	KNOB			264
7010360	SLEEVE			264
7010361	BUSHING			264

Code for disposition of old part number

A -- Use up
B -- Use on other application (See PNI)
C -- File PDR Report with Bobcat Parts Sales
D -- Part Number Error

Page 404 - OSS# 2072104 - All rights reserved by Bobcat Company - 01/20/2010 - 17:21:58 - Produced by Ken Cook Co. with mediaioff

Part No.	Description	Was	Code	Page
7010362	SEAL			264
7010363	BOLT			264
7010364	BUSHING			264
7010365	NUT			264
7010386	COIL, HEATER			290, 300
7010387	HOUSING			290, 300
7010388	COVER			290, 300
7010389	COVER, SIDE			290, 300
7010390	COVER, SIDE			290, 300
7010391	SUPPORT, LH			290, 300
7010392	SUPPORT, RH			290, 300
7010393	COVER			290
7010394	HARNESS, HEATER			290, 300
7010395	CLAMP			290, 300
7010396	COVER, HOSE			290, 300
7010397	PLUG, FILL			290
7010398	INSULATION, HEATER			290, 300
7010399	VALVE, DRAIN			290, 300
7010400	SPACER			290, 300
7010401	SCREW			290, 300
7010402	SCREW			290
7010403	NUT			290, 300
7010404	WASHER			290, 300, 301, 302
7010405	CLIP, RECEPTACLE			290, 302
7010406	INSULATION, HEATER			290, 302
7010408	INSULATION, HEATER			300
7010409	INSULATION, HEATER			300
7010410	INSULATION, HEATER			300
7010411	INSULATION, HEATER			300
7010412	INSULATION, HEATER			300
7010413	INSULATION, HEATER			300
7010414	INSULATION, HEATER			300
7010415	INSULATION, HEATER			300
7010416	INSULATION, HEATER			300
7100240	RACE			42, 44
7100699	WASHER			90
7101291	ELBOW			166
7101345	BONNET, DETENT HYD VALVE			68
7101371	ELBOW			78
7101384	LIGHT			278
7101672	ACTUATOR			142, 144, 146
7101736	TIRE, HEAVY DUTY - 12X16.5 - 12 PLY			354

Code for disposition of old part number
A -- Use up
B -- Use on other application (See PNI)
C -- File PDR Report with Bobcat Parts Sales
D -- Part Number Error

Page 405 - OSS# 2072104 - All rights reserved by Bobcat Company - 01/20/2010 - 17:21:58 - Produced by Ken Cook Co. with mediaioff

Part No.	Description	Was	Code	Page
7102019	CROSS			64, 68, 86
7102451	FITTING			134
7102652	SCREW			66, 68
7102747	GASKET			160
7103217	WASHER			90
7103708	BRACKET			90, 91, 92
7103711	BOLT			90
7104670	LIGHT			136, 278
7104671	LIGHT			278
7105192	BOLT			90
7105223	SPACER			90
7106218	DECAL QUALITY APPRVL			270
7106279	BOLT			166
7106862	CHAIN, DRIVE			38
7107271	WASHER			40
7108236	PIN			142, 144, 146
7108242	TILT SPOOL			68
7109623	ELBOW			50
7109661	LATCH, DOOR W/SENSOR			252, 256
7109662	HANDLE, LATCH DOOR			252, 256
7109904	BRACKET			106
7109905	BRACKET			104
7110287	GASKET			44
7110310	SCREW			162
7110316	DECAL			252, 256, 270
7110365	ARM, PINTLE			90
7112383	AUX SPOOL			64, 68
7113552	CHECK VALVE			74
7113631	ELBOW			80
7116111	CAB, ASSY			13, 14
7116118	BRACKET			34, 242
7116851	CUP			164
7116870	DECAL			272
7120401	GLASS, DOOR			252
7120402	FRAME DOOR ASSY			252
7120411	WINDOW			14
7120693	DECAL			272
7121399	SPRING			64, 68
7121425	BUSHING			14, 262
7121779	PAD			90
7123964	KIT, SEAL COMPLETE			66, 70
7125948	PLATE			156
7126213	DISC			46
7126215	CARRIER, MOTOR			41, 42
7126682	BLOCK			310
7127305	WASHER			164
7128338	KIT, FLASHER 4-WAY			281, 282
7128342	KIT, WINDOW ENCLOSURE			263, 264
7128344	KIT, DELUXE PANEL			245, 246

Code for disposition of old part number
A -- Use up
B -- Use on other application (See PNI)
C -- File PDR Report with Bobcat Parts Sales
D -- Part Number Error

Page 406 - OSS# 2072104 - All rights reserved by Bobcat Company - 01/20/2010 - 17:21:58 - Produced by Ken Cook Co. with mediaioff

Part No.	Description	Was	Code	Page
7128389	KIT, WINDOW REAR LEXAN			261, 262
7128393	KIT, DOOR			251, 252
7128395	KIT, DOOR CAB SPECIAL APPS			255, 256
7128403	KIT, LOCK REAR DOOR			323, 324
7128405	KIT, BELT SEAT 2"			333, 334
7128411	KIT, LIFT 4-POINT			307, 308
7128426	KIT, ACD 7-PIN			273, 274
7128484	KIT, HEATER			287, 288
7128524	KIT, SEAT 80MM SUSPENSION			325, 326
7128962	BOB-TACH			27, 28
7129173	COUNTERWEIGHT			266, 268
7129250	KIT, COUNTERWEIGHT			265, 266
7129251	KIT, COUNTERWEIGHT			267, 268
7129289	KIT, KEYLESS PANEL			247, 248
7129293	KIT, FOPS TOP			283, 284
7129295	KIT, LIFT SINGLE POINT			309, 310
7129299	KIT, ROTATING BEACON			229, 230
7129301	KIT, STROBE			351, 352
7129303	KIT, BELT SEAT 3"			337, 338
7129307	KIT, FIRE EXTINGUISHER			279, 280
7129371	KIT, ACS			221, 222
7129447	KIT, BPV			233, 234
7129465	KIT, INTERIOR DELUXE			241, 242
7129483	KIT, PLUMBING HEATER			293, 294
7129490	KIT, A/C			295, 296
7129508	KIT, PLUMBING POWER BOB-TACH			315, 316
7129987	COVER			46, 48
7130652	TANK, FUEL			166
7130785	HOUSING			38
7130811	CHAIN, DRIVE			38
7130834	HUB, FAN			156
7130936	STUD			40
7131115	NUT			40
7131211	MOUNT			162
7131233	PEDAL			312
7131236	BUSHING			312
7131322	COVER			162
7132835	SHROUD			156, 159, 160
7132836	DUCT, FAN			156
7132837	MOUNT, MOTOR FAN			156
7132914	LIFTARM			26

Code for disposition of old part number
A -- Use up
B -- Use on other application (See PNI)
C -- File PDR Report with Bobcat Parts Sales
D -- Part Number Error

Page 407 - OSS# 2072104 - All rights reserved by Bobcat Company - 01/20/2010 - 17:21:58 - Produced by Ken Cook Co. with mediaioff

Part No.	Description	Was	Code	Page
7132935	BUSHING			26
7132937	BUSHING			26
7133450	MAIN FRAME			11, 12
7134153	SPROCKET			40
7134445	BRACKET			38
7134520	PLUG			64, 68
7134522	PLUG			64, 68
7134830	BUSHING			12
7134831	BUSHING			12
7134832	BUSHING			12
7135124	SCREW			162, 164, 296
7135486	MOUNT, ENG			164
7135693	MOUNT			26
7136033	SHAFT			60
7136036	SPACER			60
7136037	TUBELINE			60
7136058	TUBE, CYL			60
7136111	HOSE, DRAIN OIL			164
7136113	BUSHING			156
7136291	CARRIER, MOTOR			43, 44
7136460	BOBTACH			28
7136464	BUSHING, WELD-ON			28
7136465	BUSHING, WELD-ON			28
7136559	SOLENOID ASMBLY			46
7136616	SUPPORT			26
7136896	CONDENSER, A/C			296
7136971	SHIELD			12
7136973	COVER			12
7137747	TANK, EXPANSION			158
7137869	KIT, SEAL			60
7137939	KIT, SEAL			56, 58
7138014	SEAL KIT			318
7138040	LIGHT, RH ASSY			126, 128
7138041	LIGHT, LH ASSY			126, 128
7138172	TUBELINE			50
7138173	TUBELINE			50
7138376	BUSHING			64, 68
7138973	WINDOW, REAR			14
7138974	WINDOW, REAR LEXAN			262
7139459	COVER			12
7140150	BRACE, COMPRES MACH			296
7140927	DECAL			358
7141375	DECAL			358
7141405	BUSHING			164
7141700	HVAC ASSY			299, 300
7141701	HEATER ASSY			288, 289, 290
7141780	FLYWHEEL			162
7141788	IDLER ASSY			162
7141906	STRAP, RUBBER			156
7141939	BLOCK, COUPLER			53, 54
7142000	BELT, ALT			6, 164, 296
7142021	MUFFLER			160
7142103	MOUNT, PUMP			162

Code for disposition of old part number
A -- Use up
B -- Use on other application (See PNI)
C -- File PDR Report with Bobcat Parts Sales
D -- Part Number Error

Page 408 - OSS# 2072104 - All rights reserved by Bobcat Company - 01/20/2010 - 17:21:58 - Produced by Ken Cook Co. with mediaioff

Part No.	Description	Was	Code	Page
7142141	DECAL			272, 310
7142142	DECAL			272, 310
7142189	MOUNT			162
7142357	MOUNT, ENG			163, 164
7142371	SPRING GAS DOOR			252
7142375	MOUNT			164
7142422	SHIELD, FLYWHEEL			161, 162
7142762	CLIP			16, 34, 36, 242, 244
7142873	SEAL			14, 260
7142875	SEAL			14, 260
7143921	HOSE			158
7143922	HOSE			158
7143923	HOSE			157, 158
7143924	TUBE			158
7143931	MOUNT, FILTER			166
7143971	SEATBAR			17, 18
7144158	REAR DOOR			24
7144265	MOUNT, TANK			158
7144859	MOUNT, GAS SPRING			14, 286
7144862	SPRING			14
7145139	MOUNT, RADIATOR			156
7145149	SHAFT, STEERING			89, 90
7145268	CONTAINER, STORAGE			34, 242
7145333	BRACKET, RADIO			250
7145347	COVER			37, 38
7145358	SPRING			162
7145528	DECAL			272
7145659	HOSE, AIR FORMED			160
7145660	HOSE, AIR FORMED			160
7145885	VENT, DEFROST			36, 244, 298
7146236	BUSHING			164
7146264	COVER, RH SJC			148
7146265	COVER, LH SJC			148
7146471	EXCHANGER, OIL WATER			87, 88
7146538	PIVOT, BOBTACH			28
7147354	PANEL			12
7147579	SHAFT TRANS			42, 44
7147745	SCREW			162, 164
7147803	PIN			26
7147804	PIN			26
7147815	BOOT			30, 142, 144
7147826	BOLT, CROSS DRILLED			156
7147858	PULLEY, PUMP HYD			162
7147859	BELT, DRIVE			6, 162
7147861	MOUNT, ENG			162, 164
7148068	WINDOW ASSY			264
7148069	WINDOW ASSY			264
7148287	SEAL DOOR HANDLE			252, 256
7148289	SEAL DOOR HINGE			252, 256

Code for disposition of old part number
A -- Use up
B -- Use on other application (See PNI)
C -- File PDR Report with Bobcat Parts Sales
D -- Part Number Error

Page 409 - OSS# 2072104 - All rights reserved by Bobcat Company - 01/20/2010 - 17:21:58 - Produced by Ken Cook Co. with mediaioff

Part No.	Description	Was	Code	Page
7148598	FILTER, AIR CLEANER ASSY			219, 220
7149056	LATCH, CAM			324
7149166	MOUNT, BOOM DOWN			52
7149204	NUT			34, 90, 242
7149786	SEAT, SUSPENSION			327, 328
7149827	COVER, WIPER			252
7149931	MUFFLER, PURIFIER			321, 322
7150151	LATCH, WINDOW LEFT			14, 262
7150152	LATCH, WINDOW RIGHT			14, 262
7150357	CYLINDER, TILT			57, 58
7150358	TUBE			58
7150359	SHAFT			56, 58
7150393	PIN, PIVOT			308
7150467	TUBELINE, HYD			58
7150692	HOSE, HYD			50
7150719	SEAL DOOR FRAME			252, 256
7150745	SPACER			256
7150746	SPACER			256
7150817	HINGE DOOR W/A			252
7151466	BRACKET			38
7151540	CROSSMEMBER			12
7151842	TUBE			294
7151848	BRACKET			296
7151868	PEDAL ASSY			62, 222
7151871	PEDAL ASSY			62, 222
7151889	BELLCRANK			90
7151940	HARNESS, HORN			306
7152003	HOSE, HYD			50
7152004	HOSE, HYD			50
7152005	HOSE, HYD			50
7152037	NUT, RETAINING			164
7152319	BELT, RETRACTOR			334
7152322	BELT, SEAT 3"			334, 340
7152323	COVER, RETRACTOR			334, 340
7152324	BRACKET, BELT SEAT 3PT			334, 340
7152338	PISTON, CYL TILT			56, 58
7152501	YOKE			62
7152605	SLEEVE			162
7152658	WASHER			162
7152660	LINK, CENTERING			90
7152748	DECAL, FUEL DIESEL			270
7153006	HOSE			50
7153008	HOSE			50
7153048	LINK, PEDAL			62
7153049	LINK, PEDAL			62
7153058	LINK, BELLCRANK			62
7153075	BRACKET, DAMPER			350

Code for disposition of old part number
A -- Use up
B -- Use on other application (See PNI)
C -- File PDR Report with Bobcat Parts Sales
D -- Part Number Error

Page 410 - OSS# 2072104 - All rights reserved by Bobcat Company - 01/20/2010 - 17:21:58 - Produced by Ken Cook Co. with mediaioff

Part No.	Description	Was	Code	Page
7153076	BRACKET, DAMPER			350
7153408	SEATBAR SJC			19, 20
7153503	BOOT			30, 144, 222
7153506	MOUNT, CONTROLS LH			148
7153545	SCREW			264
7153655	COVER, BRAKE ASSY			48, 86
7153662	LINK			90
7153832	SEAL, SHELF REAR			36, 244, 298
7154161	CYLINDER, TILT			55, 56
7154162	TUBE, CYL			56
7154163	TUBELINE, HYD			56
7154285	BOX, STORAGE			34, 242
7154305	HOSE			50
7154306	HOSE			49, 50
7154307	HOSE			50
7154308	HOSE			50
7154404	CONTAINER			240
7154405	CUP HOLDER			240
7154521	HOSE			74
7154522	TUBELINE			54
7154523	TUBELINE			54
7154528	ELBOW			50
7154903	LINK			144, 222
7154910	INSERT, THREADED			126, 128, 264
7155024	HARNESS DOOR			252
7155070	GROMMET			82
7155158	PLATE, THREADED			266, 268
7155193	MOUNT, MUFFLER			160, 164
7155238	BOLT			162
7155269	HOSE, HYD			86
7155308	WINDOW			256
7155359	FRAME, DOOR			256
7155390	HOUSING, FUSE RELAY			130
7155642	FENDER, PANEL RH			34, 242
7155643	FENDER, PANEL L.H.			34, 242
7155649	CUP HOLDER			240
7155660	FITTING			74
7155661	HOSE			74
7155668	HOSE			80
7155785	HEADLINER, HVAC			298
7155788	PANEL, CENTER			16, 34
7155791	PANEL, RH			16, 34
7155792	PANEL, LH			15, 16, 33, 34
7155797	LIGHT			36, 244
7155798	HEADLINER, DELUXE			35, 36, 244
7156087	SEAL			14, 260
7156146	GROMMET			294
7156150	MOUNT			52
7156253	KIT, DLX HEADLINER			243, 244

Code for disposition of old part number

A -- Use up
B -- Use on other application (See PNI)
C -- File PDR Report with Bobcat Parts Sales
D -- Part Number Error

Page 411 - OSS# 2072104 - All rights reserved by Bobcat Company - 01/20/2010 - 17:21:58 - Produced by Ken Cook Co. with mediaioff

Part No.	Description	Was	Code	Page
7156606	BRACKET, ASSY			308
7156761	PLATE			90
7156842	MOUNT, CONTROLS RH			148
7156859	HOSE			80
7156916	PAN, FLOOR			30, 32
7156918	PANEL, STEERING			30, 32
7156919	PANEL, RH			30, 31, 32, 170
7156920	PANEL, LH			30, 32
7157073	HOSE, HYD			80
7157080	MOUNT			46, 47, 48
7157092	BRACKET			160
7157286	BODY			64
7157289	BLOCK			64, 68
7157290	TUBELINE			64, 68
7157291	TUBELINE			64, 68
7157293	BODY			68
7157358	CLAMP			50
7157365	COVER, ENGINE			156
7157366	SCREEN, ASSY			156
7157370	COVER, HOOD			155, 156
7157545	CLAMP			54
7157611	MOUNT			62, 222
7157670	SHELL, ARMREST RH			148
7157671	COVER ARMREST, RH			148
7157703	SHELL,ARMREST LH			148
7157704	COVER ARMREST LH			148
7157719	BRACKET			18, 20
7157725	PEDAL ASSY			32, 170
7157729	BELLCRANK			170
7157731	TUBE SPACER			170
7157922	MOUNT			296
7157923	HOSE, AIR FORMED			160, 224
7158574	PEDAL ASSY			32
7158632	CONNECTOR			78
7158921	FITTING			78, 80
7158988	CABLE, THROTTLE			170
7159044	HOSE ASSY			78
7159094	COVER, DRAIN			38
7159102	MOUNT			310
7159224	COVER, FOOTPOD			32
7159243	BUSHING			296
7159325	HARNESS, SJC			146
7159352	PAN, BATTERY			134
7159366	HARNESS, 2 SPEED RETURN			86
7159386	WASHER			168, 170
7159532	COVER			12
7159542	BELT, SEAT RETRACTOR			332
7159624	BUSHING			90, 170

Code for disposition of old part number
A -- Use up
B -- Use on other application (See PNI)
C -- File PDR Report with Bobcat Parts Sales
D -- Part Number Error

Page 412 - OSS# 2072104 - All rights reserved by Bobcat Company - 01/20/2010 - 17:21:58 - Produced by Ken Cook Co. with mediaioff

Part No.	Description	Was	Code	Page
7159735	HOSE, HYD			80
7159736	HOSE ASSY			314
7159749	STEP			26
7159875	SPEAKER			250
7159876	ANTENNA			250
7159879	BRACKET, REAR DOOR			130
7159886	BRACKET, FRONT SKI			132
7160320	CUP HOLDER			240
7160381	RIVET, BIRD CAGE			34, 242
7160382	RIVET, BIRD CAGE			16, 34, 242
7160383	RIVET, BIRD CAGE			34, 242
7160698	LATCH			24
7160701	LATCH			24
7160703	HANDLE			24
7160704	STOP			24
7160705	CHANNEL			24
7160706	BAR			24
7160760	MOUNT			310
7160765	NUT			30, 32
7160779	PLATE			310
7160841	SEAL HANDLE DOOR			252
7160865	SCREW			158
7161016	NUT			326
7161130	COVER			32
7161131	COVER, LEVER			32
7161429	PLUG			252, 256
7161527	COVER, BRAKE ASSY			46
7161536	PIN, CLEVIS			310
7161595	SEAL, FOAM			288
7161786	VALVE, POWER BOB-TACH			319, 320
7161789	SEAL			14, 260
7161793	PANEL			12
7161893	MOUNT, MUFFLER			160
7161939	GRILL			34, 242
7162176	SPACER			146
7162190	SLIDE RAIL, LH			148
7162191	SLIDE RAIL, RH			148
7162770	SCREW, PLASTIC			250
7162771	PLUG, HOLE			34, 242
7162930	ELBOW			80
7162931	HOSE			78
7162933	LIFT EYE			308
7162966	CABLE, NEGATIVE			134
7162967	CABLE, POSITIVE			134
7163132	FOAM, FRONT			30, 32, 260
7163216	BRACKET			90
7163259	WASHER TANK			252
7163263	CAP WASHER BOTTLE			252
7163589	INSERT, SWITCH			126, 128

Code for disposition of old part number
A -- Use up
B -- Use on other application (See PNI)
C -- File PDR Report with Bobcat Parts Sales
D -- Part Number Error

Page 413 - OSS# 2072104 - All rights reserved by Bobcat Company - 01/20/2010 - 17:21:58 - Produced by Ken Cook Co. with mediaioff

Part No.	Description	Was	Code	Page
7163597	BRACKET, HARNESS ENG			132
7163689	HARNESS, CAB DLX			128, 242
7163706	HARNESS, JOYSTICK			146
7163748	MOUNT			310
7163765	BRACKET, FUEL			166
7163766	BRACKET, FUEL			166
7163768	BRACKET, FUEL			166
7163919	TANK, HYDRAULIC			78
7163988	SEAL, WINDOW REAR			14, 262
7164073	GUIDE			128, 242
7164144	HARNESS			142, 144
7164175	BRACKET, SHORT SKI			130
7164294	PEDAL, FOOT THROTTLE			170
7164320	MOTOR, HYD COOLING FAN			121, 122
7164345	COVER, PAN FLOOR			30, 32
7164347	COLUMN, FRONT RIGHT			34, 242
7164348	COLUMN, FRONT LEFT			34
7164413	HOSE, HYD			82
7164564	BRACKET, A/C			296
7164589	HOSE			78
7164590	DOOR PLATE			252, 256
7164686	BOLT, CARRIAGE			284, 310
7164698	HOSE, DRAIN			80
7164957	MOUNT			164
7165035	SHIELD			164
7165037	CAP, INST PANEL RH			16
7165038	CAP, INST PANEL LH			16
7165055	COVER, INSULATOR			16, 36
7165056	INSULATOR, STD			16, 36
7165205	HOSE			80
7165206	HOSE			80
7165330	DUCT, RR			36, 244, 298
7165331	DUCT, RL			36, 244, 298
7165332	SHELF, REAR			36, 244, 298
7165333	CLIP			36, 244, 298
7165344	STORAGE			34, 242
7165345	DOOR, COVER			34, 242
7165346	DOOR, COVER			34, 242
7165634	WASHER, PLASTIC			148
7165635	SPACER, SJC			148
7165673	SEAL, CAB DUCT			288
7165799	SCREW			16, 34, 36, 244, 298
7165806	BRACKET			78
7165972	COUPLER INSERT			252
7165991	HARNESS, CAB STD			126

Code for disposition of old part number
A -- Use up
B -- Use on other application (See PNI)
C -- File PDR Report with Bobcat Parts Sales
D -- Part Number Error

Page 414 - OSS# 2072104 - All rights reserved by Bobcat Company - 01/20/2010 - 17:21:58 - Produced by Ken Cook Co. with mediaIoff

Part No.	Description	Was	Code	Page
7166046	VALVE, CONTROL			63, 64
7166047	SEAT, CHECK VALVE			64, 68
7166171	BRACKET			168, 170
7166172	HANDLE			168, 170
7166173	HANDLE			168, 170
7166174	BLOCK			168, 170
7166177	BRACKET			242
7166190	SCREW THREAD ROLLING			252, 253, 254
7166195	PAD, PAN FLOOR			30, 32
7166196	FOAM, PANEL			30, 32, 260
7166197	FOAM, PANEL			29, 30, 32, 260
7166198	FOAM, PANEL			30, 32, 260
7166199	FOAM, EDGE			30, 32, 260
7166200	FOAM, PAN FLOOR			30, 32, 260
7166205	SPACER HANDLE			254
7166269	WASHER			168, 170
7166283	VALVE, CONTROL			67, 68
7166315	PLUG			30, 144, 222
7166334	ARM LIFT			310
7166338	TEE, BOSS			64, 68
7166339	SPRING, LOAD CHECK			64, 68
7166382	HOSE			78
7166411	TANK, OIL HYD			78
7166445	BRACKET, BLOCK DILL			130, 131, 132
7166482	BRACKET			280
7166489	BRACKET, CAB			130
7166528	PLUG, CAB STD			126
7166529	FOAM. CAB STD			126
7166532	HOLDER, MANUAL			16, 36
7166534	DUCT			288
7166544	COVER, HVAC			14
7166623	CABLE			170
7166831	BLOCK			310
7166832	MOUNT			282
7166865	COVER, TOOL BOX			242
7166916	DECAL, A/C			272, 296
7167003	CLIP			240
7167118	PLATE, WASHER			30, 32
7167164	ARM, TENSIONER			162
7167165	WHEEL, TENSIONER			162
7167169	MOUNT			170
7167173	PIVOT ASSY			170
7167177	GROMMET WIPER			254
7167180	CYLINDER, POWER BOB-TACH			317, 318
7167183	CASE			318
7167184	SHAFT, ROD CYLINDER, POWER BOB-TACH			318

Code for disposition of old part number

A -- Use up
B -- Use on other application (See PNI)
C -- File PDR Report with Bobcat Parts Sales
D -- Part Number Error

Page 415 - OSS# 2072104 - All rights reserved by Bobcat Company - 01/20/2010 - 17:21:58 - Produced by Ken Cook Co. with mediaioff

Part No.	Description	Was	Code	Page
7167366	KIT, POWER BOB-TACH			313, 314
7167395	KIT, CUP HOLDER			239, 240
7167405	SEAL, DUCT			288
7167437	SPRING, GAS STD			14
7167438	GAS SPRING			286
7167506	SHIELD, ASSY			284
7167537	GUARD, CONDENSER			158
7167582	HOSE, HYD			82
7167583	HOSE, HYD			82
7167652	SEAL DOOR			254, 256
7167757	HOSE			78
7167844	SHAFT			254
7167845	PIN			254, 256
7167846	WASHER CAST			254, 256
7167871	MOUNT, ALARM			136, 226, 228
7167945	DECAL, FUSE RELAY			130, 270
7167988	DECAL, DANGER			270
7167989	DECAL, DANGER			272
7167990	DECAL, DANGER			272
7167991	DECAL, EXIT REAR			270
7167993	DECAL, WARNING			272
7167994	DECAL, WARNING			270
7167996	DECAL, WARNING			272, 308
7167998	DECAL, SERVICE			270
7167999	DECAL, ROC 2180			270
7168019	DECAL, WARNING			308
7168020	DECAL, WARNING			308
7168021	DECAL			310
7168022	DECAL			310
7168023	DECAL			270
7168024	DECAL			270
7168025	DECAL EMERGENCY DOOR			254, 256, 270
7168031	DECAL			272
7168040	DECAL, WARNING			308
7168114	DECAL, SWITCH			146, 270
7168136	DECAL			270
7168138	DECAL			270
7168140	DECAL			270
7168142	DECAL			270
7168144	DECAL			270
7168159	BUSHING			310
7168164	EXTINQUISHER,FIRE			280
7168171	BELT, SEAT 3"			338
7168172	BELT, SEAT 3"			340
7168173	BRACKET, COVER			130
7168272	DECAL			270
7168288	LEVER MACHINED			254, 256
7168303	DECAL, WARNING			270, 334, 340
7168310	EVAPORATOR			296
7168337	HOSE, HYD			52

Code for disposition of old part number

A -- Use up
B -- Use on other application (See PNI)
C -- File PDR Report with Bobcat Parts Sales
D -- Part Number Error

Page 416 - OSS# 2072104 - All rights reserved by Bobcat Company - 01/20/2010 - 17:21:58 - Produced by Ken Cook Co. with mediaioff

Part No.	Description	Was	Code	Page
7168429	BOLT, CONTROLLER			130
7168430	BRACKET			296
7168594	SEAL			28
7168595	SNAP RING			28
7168610	COVER			16, 36, 244
7168836	SHAFT			256
7168837	HINGE, DOOR			256
7168839	SPACER			256
7168841	SEAL			256
7168843	SCREW			256
7168848	SUPPORT, TUBE RH			148
7168849	SUPPORT, TUBE LH			148
7168862	MOUNT, ARMREST			148
7168863	MOUNT, ARMREST			148
7168921	SPRING			170
7168927	ADAPTER			84
7168952	WIPER MOTOR			254
7168953	ARM WIPER ASSY			254
7168954	BLADE WIPER ASSY			254
7168955	GASKET			254
7168956	PLATE ADAPTOR			254
7168957	PLATE STUD ADAPTOR			254
7168962	ROD			170
7169070	KIT, DAMPER DUAL			349, 350
7169112	SWITCH, ROCKER A/C			296
7169116	ADAPTER			86
7169128	PULLEY A/C			296
7169130	HARNESS ACCESSORY			238
7169253	LINK			342
7169291	DECAL			254, 256, 272, 286
7169309	HARNESS			146
7169480	KIT, BELT SEAT 3"			339, 340
7169699	DECAL			270
7169710	DECAL, SIGHT GAUGE			272
7169747	TREAD, SAFETY			14
7169753	HARNESS, FLASHER 4-WAY			282
7169778	SEAL, BULK			156
7169849	FITTING BALLSTUD			254, 256
7169877	DECAL			14, 272
7169904	GUIDE, HOSE			296
7169911	PLATE, DECAL			168, 170
7169932	MOUNT			342
7169950	SEAL			256
7169963	DECAL, UPRIGHT			272
7169965	DECAL, TAILGATE BASE			272
7169966	DECAL, LIFTARM STRIPE			272
7169967	DECAL, TAILGATE			272

Code for disposition of old part number
A -- Use up
B -- Use on other application (See PNI)
C -- File PDR Report with Bobcat Parts Sales
D -- Part Number Error

Page 417 - OSS# 2072104 - All rights reserved by Bobcat Company - 01/20/2010 - 17:21:58 - Produced by Ken Cook Co. with mediaioff

Part No.	Description	Was	Code	Page
7170011	SPOOL, LIFT			68
7170051	SLEEVE			64
7170114	SCREW			36, 244
7170116	MANUAL, QUICK REF			270
7170117	MANUAL, QUICK REF			2
7170321	SPOOL, LIFT LOCK			64
7170337	STAND, SEAT			22
7170355	DECAL, DANGER			50, 52, 270
7170360	DECAL, SPRING REMOVAL			254, 256, 272
7170374	CAM, WELDMENT			170
7170531	HARNESS, CAB			256
7170608	BUSHING, WELD ON			26
7170609	PIN, PIVOT TAPERED			26
7170610	BUSHING, WELD-ON			28
7170613	PLUG			28
7170615	BUSHING, WEAR			28
7170635	INSULATION, TANK FUEL			166
7170673	FAN COOLING			156
7170782	KIT, DLX GAS SPRING			285, 286
7171003	HOSE			54
7171045	HOSE			54
7171054	HOSE			50
7171055	HOSE			50
7171056	HOSE			50
7171057	HOSE			50
7171077	HOSE			54
7171081	BRACKET, HORN			126, 128, 304, 306
7171088	GROMMET			126, 128, 304, 306
7171120	CYLINDER, LIFT			59, 60
7171167	SEALANT, GASKET LIQUID			14
7171184	INSULATION, CROSSMEMBER			344, 347, 348
7171192	INSULATION, DOOR REAR			344, 346
7171194	INSULATION, DOOR REAR			344, 346
7171215	INSULATION, UPRIGHT			346
7171216	INSULATION, UPRIGHT			346
7171217	INSULATION, PANEL RH			344, 348
7171218	INSULATION, PANEL LH			344, 348
7171219	INSULATION, PANEL RH			344, 348
7171220	INSULATION, PANEL LH			344, 348

Code for disposition of old part number
A -- Use up
B -- Use on other application (See PNI)
C -- File PDR Report with Bobcat Parts Sales
D -- Part Number Error

Page 418 - OSS# 2072104 - All rights reserved by Bobcat Company - 01/20/2010 - 17:21:58 - Produced by Ken Cook Co. with mediaioff

Part No.	Description	Was	Code	Page
7171222	BRACKET FRC			130
7171249	HOSE			316
7171250	HOSE			316
7171251	HOSE			316
7171252	HOSE			316
7171394	HOSE			78
7171656	INSULATION, SIDE			344, 348
7172022	INSULATION, FENDER			344, 348
7172023	INSULATION, FENDER			344, 348
7172344	COLUMN, FRONT LEFT			242
7172779	LINK			342
7172859	KIT, LINK ISOLATOR			341, 342
7172901	KIT, SOUND/NOISE REDUCTION			343, 344
7172903	KIT, DECAL WHITE			357, 358
7173159	BRACKET, BELT SEAT			22, 336
7173592	KIT, ALARM BACK-UP			225, 226
7173593	KIT, ALARM BACK-UP			227, 228
7173594	KIT, HORN			303, 304
7173595	KIT, HORN W/JOYSTICK			305, 306
7174012	PLUG			14, 242
7174171	KIT, HEADLINER HVAC			297, 298
7174328	DECAL			358
7174407	ARM, IDLER			162
7174537	DECAL			358
7174782	HARNESS, MFR			129, 130, 133, 134
7174787	INSULATION, PANEL SEAT CENTER			14
7174813	BRACKET, CABLE			168
7174814	BRACKET, CABLE			170
7174815	CABLE			168
7174837	GASKET, WIPER			252
7174838	SPACER			254
7174839	SPACER			254
7174841	SPACER, HANDLE			252
7174903	KIT, SEAL CAB			259, 260
7174914	BRACKET,THROTTLE			168
7174997	LOUVER, RH			12
7174998	LOUVER, LH			12
7175017	HARNESS, ALARM BACK-UP			136, 226
7175151	STRIKER, DOOR			252, 256
7175271	HARNESS, REAR DOOR			136
7175287	HARNESS, REAR DOOR			136, 278

Code for disposition of old part number
A -- Use up
B -- Use on other application (See PNI)
C -- File PDR Report with Bobcat Parts Sales
D -- Part Number Error

Page 419 - OSS# 2072104 - All rights reserved by Bobcat Company - 01/20/2010 - 17:21:58 - Produced by Ken Cook Co. with mediaioff

Part No.	Description	Was	Code	Page
7175293	HARNESS, FUEL			130
7175321	HARNESS, ACD INPUT			274
7175549	MOUNT, HOSE			54
7175556	HOSE, HYD			54
7175625	HARNESS, MFR			130, 134
7176099	FILTER, AIR FRESH			288
7176100	COVER			288
7176101	DUCT, AIR			288
7176117	MOUNT			30, 90
7176118	MOUNT			30, 90
7176309	CONTROL			288
7176546	COVER, FUSE BOX			130
7176579	SEAL, FOAM			288
7176593	HINGE BASE			252, 256
7176603	INSULATION, PANEL SEAT			14
7176926	HOSE, HYD			84, 86
7176927	TUBELINE, HYD			52
7176928	HOSE, HYD			84, 86
7176929	TUBELINE, HYD			84, 86
7176931	HOSE, HYD			85, 86
7176932	HOSE, HYD			86
7176933	HOSE, HYD			86
7176934	HOSE, HYD			86
7176935	HOSE, HYD			86
7176936	HOSE, HYD			86
7176942	SPACER			288
7176943	SEAL, COVER			288
7176970	HOSE, FUEL FORMED			166
7176971	BRACKET, FUEL			166
7177742	DECAL			242, 270
7177816	HOSE, HYD			54
7177817	HOSE, HYD			54
7178129	MANIFOLD, CASE DRAIN			51, 52, 54, 80, 84, 86
7178176	SHIELD, HEAT			156
7178294	HOSE, HYD			86
7178623	COVER, HOSE			166
7179114	PLUG, HARNESS CAB DLX			128, 242
7179134	PLUG, HARNESS CAB STD			126
7179382	BRACKET			78
7180954	MOUNT, THROTTLE			169, 170
7181282	CHAIN, DRIVE			38
73G624	BOLT			90
73G656	SCREW			314
73K13	RING			66, 70
73K16	RING			66, 70
73K222	RING			318
73K228	BACK-UP RING			60
73K232	RING			56, 58
774220	NUT			136, 226, 228, 294, 296

Code for disposition of old part number
A -- Use up
B -- Use on other application (See PNI)
C -- File PDR Report with Bobcat Parts Sales
D -- Part Number Error

Page 420 - OSS# 2072104 - All rights reserved by Bobcat Company - 01/20/2010 - 17:21:58 - Produced by Ken Cook Co. with mediaioff

Part No.	Description	Was	Code	Page
77F8	ELBOW			54
799119	RING			66
79K10	O RING 10			66, 70, 102, 320
79K12	O RING 10			54, 102, 106
79K4	O RING 10			320
79K6	O RING 10			66, 68
79K7	O RING 10			320
79K8	O RING 10			66, 70, 102, 106, 320
7CM12100	BOLT			162
7D4	NUT			52, 72
82K132	O-RING HYDRAULIC			318
82K230	SEAL			60
83D4	NUT 10			18, 20, 52
83D5	NUT 5			52, 80, 84, 86
83D6	NUT 5			50, 54, 90, 276, 342
83D8	NUT 5			12, 52, 162, 164
84G1320	BOLT			136, 226
84G3112	BOLT 5			14, 276, 286
84G3712	BOLT			12, 38, 78, 80, 90, 126, 128, 130, 134, 156, 160, 166, 168, 242
84G3716	SCREW 5			30, 32, 38, 46, 48, 170
84G3720	BOLT			38, 54
84G3724	BOLT			30
84G3728	BOLT			50
84G3732	BOLT			46, 48, 130
84G3740	BOLT			54
85D6	LOCK NUT			24, 26, 28, 308
85D7	NUT			22, 336
85D8	NUT, 5			14
86D6	NUT			54
86D7	NUT			332, 334, 338, 340
86F6	NUT			50
86F7	LOCK NUT			50
86F8	NUT 5			80
872229	WASHER			54
898731	1156 BULB			136
89D5	NUT			312
89D6	NUT			160, 170
91K6	TEE			50
91K7	FITTING			50
92D10	NUT			318
947088	RING			56, 58
95D6	NUT			62, 90, 142, 144, 222, 288
96D12	NUT			162
96D8	NUT			156
97D4	NUT			135, 136, 226, 228
97D5	NUT			146, 148, 254, 256
97D6	NUT 10			130, 144, 146, 156, 160, 242, 254, 288, 306
98D6	NUT			90, 170
98G412	BOLT			150

Code for disposition of old part number
A -- Use up
B -- Use on other application (See PNI)
C -- File PDR Report with Bobcat Parts Sales
D -- Part Number Error

Page 421 - OSS# 2072104 - All rights reserved by Bobcat Company - 01/20/2010 - 17:21:58 - Produced by Ken Cook Co. with mediaioff