RUTHZIL TRATOR COMERCIAL DE PEÇAS LTDA 11 97083-6812 ROLANDO

Bobcat®

Parts Manual
S650 Skid-Steer Loader

S/N A3NV11001 & Above
S/N A3NW11001 & Above

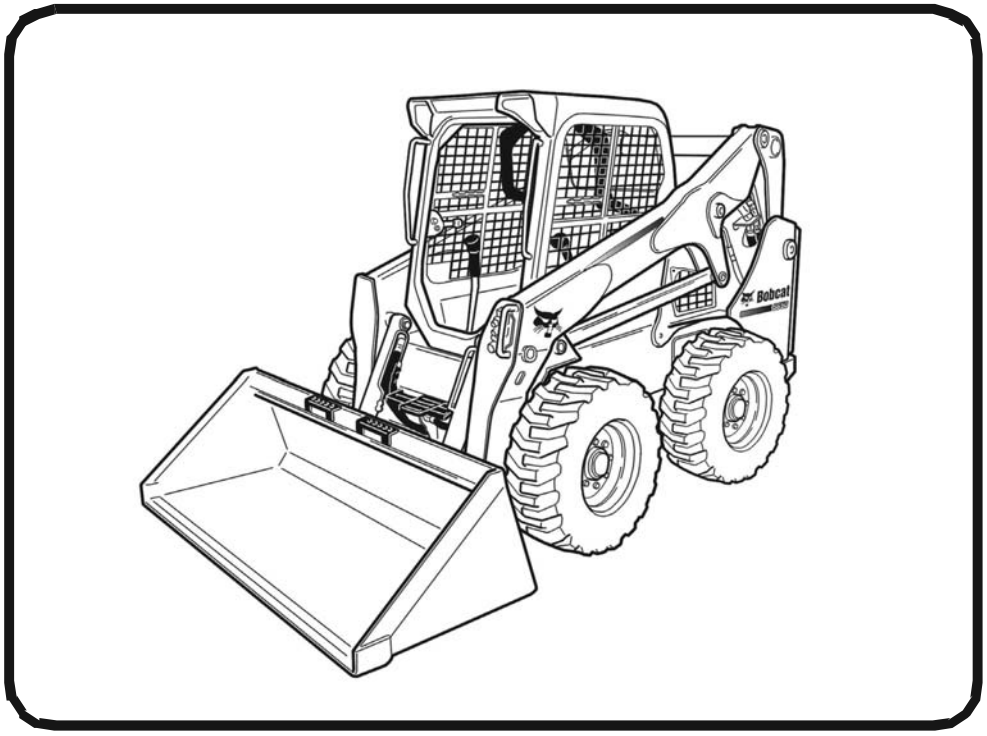

EQUIPPED WITH
BOBCAT INTERLOCK
CONTROL SYSTEM (BICS™)

6987169 (4-10) Revised (4-11)

Printed in U.S.A.

© Bobcat Company 2011

GENERAL INFORMATION

Before ordering parts, ALWAYS provide dealer with your product model number and complete serial number information. Before ordering parts, verify correct part numbers and/or serial numbers with your dealer. When using the machine serial number, use the complete number.

The number shown in the quantity column in this manual is the number of parts needed for the illustration on the page. For some parts an "x" will be shown in the quantity column. This "x" indicates that the quantity to be used is "As Needed".

When references LH (Left Hand) and RH (Right Hand) are used in this manual, it is done from the operator's seat in the forward operating position.

When "See Illustration…." appears in the remarks column, refer to the contents page for the illustration title to find page number location.

Some of the illustrations and information found in this parts manual were supplied to Bobcat by machine component companies.

For additional information on the Bobcat website visit www.bobcat.com

ABBREVIATIONS

ACS	**= Advanced Control System**	**MM**	**= Millimeters**
AHC	**= Advanced Hand Controls**	**NAP**	**= Not Available as Parts**
A/C	**= Air Condition**	**NSS**	**= Not Serviced Separately**
ASSY	**= Assembly**	**OD**	**= Outside Diameter**
AUX	**= Auxiliary**	**OM**	**= Operation & Maint Manual**
AWS	**= All Wheel Steer**	**PM**	**= Parts Manual**
BPV	**= Bucket Positioning Valve**	**PWM**	**= Pulse Width Modulation**
BTI	**= Bobcat Technical Information Bulletin**	**QT**	**= Quart**
CYL	**= Cylinder**	**RH**	**= Right Hand**
DLX	**= Deluxe**	**SALES**	**= Sales Deparment**
ELEC	**= Electrical**	**SJC**	**= Selectable Joystick Controls**
EMEA	**= Europe/Middle East/Africa**	**SL**	**= Service Letter**
ENG	**= Engine**	**SM**	**= Service Manual**
GAL	**= Gallon**	**STD**	**= Standard**
HVAC	**= Heating Ventilation & Air Condition**	**TEMP**	**= Temperature**
HYD	**= Hydraulic**	**TRANS**	**= Transmission**
ID	**= Inside Diameter**	**W/A**	**= Welded Assembly**
IGN	**= Ignition**	**W/**	**= With**
INJ	**= Injection**	**W/O**	**= Without**
LH	**= Left Hand**	**"**	**= Inches**
MFR	**= Main Frame**	**'**	**= Feet**

GENERAL INFORMATION (Cont'd)

TRANSLATION KITS & DECAL KITS

AR = Argentina (Spanish) BR = Brazil (Portugese) JP = Japanese
(Translation Kit includes Safety Manual, Operators Manual & Decal Kit)

DISPOSITION

(Found in the Remarks Column)

[A] = Use Up
[B] = Use Up on Other Applications
[C] = File PDR Report with Bobcat Parts Sales
[D] = Part Number Error

NOTE D'INFORMATION

Pour toute référence au numéro de série de l'engin, toujours donner le numéro complet.

Le chiffré apparaissant dans la colonne des quantités de ce manuel représentent le nombre de pièces nécessaires pour l'illustration reprise sur la page. Dans certains cas, on lira un "x" dans la colonne des quantités. Cet "x" indique que la quantité nécessaire est "selon besoin".

Pour toute référence vers la GAUCHE ou la DROITE dans ce manuel, considérer que la personne se trouve assise dans le siège de l'opérateur, en position de fonctionnement en marche avant.

Certaines illustrations et informations reprises dans ce manuel de pièces de rechange ont été fournies à Bobcat/Ingersoll–Rand par des fabricants de composants.

ABREVIATIONS & SYMBOLES

SALES	= Commander au Service Ventes à Bruxelles
NSS	= Pas vendu séparément
NAP	= Non disponible comme pièce de rechange
*****	= Chapitre, page ou numéro de pièce modifié ou supplémentaire
BTI	= Bobcat Technical Information Bulletin : voir à la fin de la microfiché du modèle concerné ou la microfiche générale reprenant l' ensemble des "BTI".
was 6535403	= était avant 6535403
adj. (adjustment)	= réglage
Assembly	= ensemble
available W/Ref.	= disponible avec réf.
bulk/sold per foot	= en vrac/vendu par pied
does not include	= ne comprend pas
included with	= compris dans
I.D.	= D.I. (diamètre intérieur)
O.D.	= D.E. (diamètre extérieur)
not in kit	= pas en kit
W/ – WO/	= inclus/ – non inclus/
Qty	= quantité requise
see page/ref.	= voir page/réf.
used with ref/	= utilisé avec réf.
0,05 inch thickness	= 0,05 pouce d'épaisseur (un pouce = 25.4 mm)
weld on	= à souder

ALLGEMEINE INFORMATIONEN

Bei Angabe der Maschinen-Seriennummer stets die komplette Nummer angeben.

Bei der in der Mengenspalte (Anzahl) in diesem Handbuch angegebenen Zahl handelt es sich um die Anzahl von Teilen, die für die Abbildung auf der betreffenden Seite benötigt werden. Bei manchen Teilen in der Mengenspalte ist ein "x" angegeben. Dieses "x" weist darauf hin, dass sich die Anzahl der verwendeten Teile auf den "Bedarf" bezieht.

Bei Verwendung der Seitenangaben links und rechts in diesem Handbuch gelten diese für die Blickrichtung vom Fahrersitz aus, und zwar in Vorwärts-Betriebsrichtung.

Einige der in diesem Ersatzteilhandbuch aufgeführten Abbildungen und Informationen wurden der Bobcat/Ingersoll-Rand von den Herstellern von Maschinenbauteilen zur Verfügung gestellt.

ABKÜRZUNGEN UND SYMBOLE

SALES	= Bestellung bei der Verkaufsabteilung in Brüssel
NSS	= Nicht einzeln erhältlich
NAP	= Nicht als Ersatzteil erhältlich
*****	= Geänderte oder hinzugefügte Abschnitte, Seiten oder Teilenummern
BTI	= Bobcat Technical Information Bulletin : Siehe am Ende der Mikrokarte des jeweiligen Modells oder der allgemeinen Mikrokarte der BTI.
was 6535403	= War 6535403
adj.	= Einstellung
Assembly	= Baugruppe
available W/Ref.	= erhältlich mit der Referenz
bulk/sold per foot	= Mengenabnahme / Verkauf pro Fuss
does not include	= beinhaltet nicht
included with	= enthalten in
I.D.	= Innendurchmesser
O.D.	= Aussendurchmesser
not in kit	= nicht in Bausatz
W/ - WO/	= mit/ - ohne/
Qty	= Anzahl
see page/ref.	= Siehe Seite / Referenz
used with ref.	= verwendet mit Referenz
0.05 inch thickness	= Dicke : 0.05 Zoll (ein Zoll = 25.4 mm)
weld on	= anschweissen

INFORMAZIONI GENERALI

Quando si usa il numero di serie della macchina usare il numero completo.

Il numero mostrato nella colonna della quantità di questo manuale corrisponde al numero di componenti necessari per l'illustrazione della pagina. Per alcuni componenti appare "X" nella colonna delle quantità. Questa "X" indica che la quantità da usare è "come necessario".

See in questo manuale si fa riferimento alla parte destra o sinistra, si intende dal sedile dell'operatore nella posizione in avanti di funzionamento.

Alcune delle illustrazioni e informazioni trovate in questo manuale di componenti sono state fornite alla Bobcat/Ingersoll–Rand da società di componenti di macchine.

SIMBOLI E ABBREVIAZIONI

SALES	= Ordinare al servizio vendite di Bruxelles
NSS	= Non vendute separatamente
NAP	= Non disponibile come componente
*****	= Sezioni, pagine o numeri di componente cambiati o aggiunti
BTI	= (Bobcat Technical information) Ved. al termine del microfiche del modello relativo oppure microfiche generale
was 6535403	= era 6535403
adj. (adjustment)	= regol. (regolazione)
Assembly	= Complessivo
available W/Ref.	= disponibile con rif.
bulk/sold per foot	= alla rinfusa/venduto al piede
does not include	= non comprende
Included with	= compreso con
I.D.	= d. i.
O.D.	= d. e.
not in kit	= non fa parte del kit
W/ – WO/	= con – senza
Qty	= Qtà
see page/ref	= ved. pagina/rif.
used with ref.	= usato con il rif.
0,05 inch thickness	= spessore 0,05 pollici (un pollice = 25,4 mm)
weld on	= a saldare

INFORMACION GENERAL

Al utilizar el número de serie de la máquina, debe emplearse el número completo.

El número que figura en la columna de “Unidades” en este manual es el número de piezas que se necesitan para la ilustración que consta en la página. En algunas piezas aparece una “x” en la columna de “Unidades”. Esta “x” indica que las unidades a utilizar son “según sea necesario”.

Cuando se empleen las referencias izq. y dcha., éstas se entienden mirando desde el asiento del conductor, en posición de marcha adelante.

Algunas de las ilustraciones y la información que figuran en este manual de piezas han sido facilitadas a Bobcat/Ingersoll–Rand por empresas de componentes de máquinas.

ABREVIATURAS Y SIMBOLOS

VENTAS	= Pedido al Departamento de Ventas de Bruselas
NSS	= No se vende por separado
NAP	= No disponible como pieza de repuesto
*****	= Secciones, páginas o referencias modificadas o añadidas
BTI	= (Bobcat Tecnical Information) Ver al final de la microficha del modelo afectado o en la microficha general “Boletín de Información Técnica Bobcat”.
was 6535403	= era anteriormente el 6535403
adj. (adjustment)	= ajuste
assembly	= conjunto
available W/Ref.	= disponible con la ref.
bulk/sold per foot	= a granel/vendido por pies
does not include	= no incluye
included with	= incluido en
I.D.	= diámetro interior
O.D.	= diámetro exterior
not in kit	= no en el kit
W/ – WO/	= con/ – sin
Qty	= Unidades
see page /ref.	= ver página/ref.
used with ref.	= empleado con la ref.
0,05 inch thickness	= 0,05 pulgadas de espesor (1 pulgada = 25,4 mm)
weld on	= debe ser soldado

ALGEMENE INFORMATIE

Als u het serienummer van de machine gebruikt, geef dan het gehele serienummer.

Het cijfer dat voorkomt in de kolom “Aantal”, in deze handleiding, is het aantal onderdelen dat nodig is van de illustratie op de pagina. Voor sommige onderdelen staat er een “x” in de kolom “Aantal”. Deze “x” betekent dat er een aantal “zoals nodig” vereist is.

Wanneer er in deze handleiding naar “links” en naar “rechts” gerefereerd wordt, moet dit verstaan worden voor een bestuurder die in de bestuurdersstoel zit in de voorwaartse bedrijfsstand.

Sommige van de illustraties en informatie in deze onderdelen-handleiding werden door firma’s van machine-componenten geleverd aan Bobcat/Ingersoll-Rand.

AFKORTINGEN EN SYMBOLEN

SALES	= Bestellen bij de Verkoopafdeling te Brussel
NSS	= Niet afzonderlijk te verkrijgen
NAP	= Niet beschikbaar als onderdeel
*	= Gewijzigde of toegevoegde paragrafen, pagina’s of onderdeelnummers
BTI	= Bobcat Technical Information Bulletin : Zie einde van de microfiche van het desbetreffende model of einde van de algemene microfiche die het geheel van alle “BTI” herneemt.
was 6535403	= was vroeger 6535403
adj. (adjustment)	= afstelling
Assembly	= geheel
available W/Ref.	= beschikbaar met ref.
bulk/sold per foot	= bulk/aan de meter verkocht
does not include	= bevat niet
includes with	= is bevat in
I.D.	= ϕ inw. (inwendige diameter)
O.D.	= ϕ uitw. (uitwendige diameter)
not in kit	= niet in de kit
W/ - WO/	= met/ - zonder/
Qty	= vereiste aantal
see page/ref.	= zie pagina/ref.
used with ref/	= gebruikt met ref.
0,05 inch thickness	= 0.05 inch dik (een inch = 25.4 mm)
weld on	= te lassen

CONTENTS

MAINTENANCE ITEMS 1-12
MAINTENANCE ITEMS 1-4
SCHEDULED MAINTENANCE ITEMS 5-12

MAIN FRAME 13-46
MAIN FRAME 13
OPERATORS CAB 15
OPERATOR CAB 17-24
SEAT BAR 25-28
SEAT & SEAT BELT 29
PANELS 31-38
REAR DOOR 39
LIFT ARM & BOB-TACH 41-44
BOB-TACH 45

DRIVE TRAIN 47-58
DRIVE TRAIN 47
AXLE 49
MOTOR CARRIER 51-54
DISC BRAKE 55
TRANSMISSION COVERS 57

HYDRAULIC SYSTEM 59-98
HYDRAULIC CIRCUITRY 59-70
MANUAL LIFT RELEASE SYSTEM 71
AUXILIARY HYDRAULICS 73
TILT CYLINDER 75-82
LIFT CYLINDER 83-86
CONTROL PEDALS 87
CONTROL VALVE 89-96
MANUAL LIFT RELEASE VALVE 97

HIGH FLOW HYDRAULICS 99-102
HIGH FLOW HYDRAULICS 99-102

HYDROSTATIC SYSTEM 103-162
HYDROSTATIC CIRCUITRY 103-120
RADIATOR/COOLER ASSEMBLY 121
HAND CONTROLS 123-126
HYDROSTATIC MOTOR 127
HYDROSTATIC MOTOR & BRAKE 129-132
HYDROSTATIC PUMP/GEAR PUMP 133
HYDROSTATIC PUMP 135-156
GEAR PUMP 157
COOLING FAN MOTOR 159
2-SPEED VALVE 161

ELECTRICAL SYSTEM 163-208
CAB ELECTRICAL CIRCUITRY 163-168
ENGINE ELECTRICAL CIRCUITRY 169-180
CONNECTOR HARNESS ASSEMBLY 181
CONTROLS ELECTRICAL 183-204
ALTERNATOR 205
STARTER 207

POWER UNIT 209-284
COOLING SYSTEM 209-212
ENGINE & ATTACHING PARTS 213-224
ENGINE SPEED CONTROL 225-234

CONTENTS (Cont'd)

POWER UNIT

ENGINE & GASKET KITS 235
ENGINE UPPER GASKET KIT 237
ENGINE LOWER GASKET KIT 239
FRONT COVER 241
CRANKCASE 243
ROCKER ARM COVER 245
VALVE & ROCKER ARM 247
CYLINDER HEAD 249
OIL PAN 251
PISTON AND CRANKSHAFT 253-256
CAMSHAFT AND IDLE GEAR SHAFT 257
WATER PUMP & THERMOSTAT 259
MANIFOLDS 261
TURBOCHARGER 263
EGR VALVE 265
EGR COOLER 267
FUEL & INJECTION PUMP 269
INJECTION PUMP 271-274
GOVERNOR 275-278
INJECTION NOZZLES 279
INJECTION PIPE 281
AIR CLEANER 283

ACCESSORIES & OPTIONS 285-510

ACCESSORIES HARNESS KIT 285
ACS CONVERSION KIT 287
ASPIRATION HOSE KIT 289
BACK-UP ALARM KIT 291-294
BEACON 295
BLOCK HEATER 297
BUCKET POSITION VALVE KIT 299
BUCKET POSITION VALVE 301-304
BUMPER KIT 305
CAB DOOR 307-314
CAB SEAL KIT 315
CAB WINDOWS 317-320
COUNTERWEIGHT KIT 321-324
COUPLER GUARD KIT 325
CUP HOLDER KIT 327
DECALS 329-334
DELUXE HEADLINER KIT 335
DELUXE INTERIOR KIT 337
DELUXE PANEL KIT 339
ELECTRICAL CONTROLS KIT 341-344
EUROPEAN ACCESSORIES 345-352
FIRE EXTINGUISHER 353
FLASHER LIGHTS 355
F.O.P.S KIT 357
F.O.P.S WINDOW KIT 359
FUEL BOWL KIT 361
GAS SPRING KIT 363
HEATER & A/C 365-394

CONTENTS (Cont'd)

ACCESSORIES & OPTIONS

HORN KIT 395-398
HOSE GUIDE ASSY 399
HOSE GUIDE POST KIT 401
ISOLATOR MOUNT KIT 403
KEYLESS PANEL KIT 405
LIFT KIT 407-410
LIGHT GUARD KIT 411-414
MAINTENANCE PLATFORM KIT 415
MUFFLER/PURIFIER 417
MUFFLER GUARD KIT 419
PEDAL EXTENDERS 421
POWER BOB-TACH 423-438
RADIO KIT 439
REAR AUXILIARY 441-444
REAR AUXILIARY VALVE 445
REAR DOOR LOCK 447
REAR WIPER KIT 449
REMOTE CONTROL KIT 451
RESEALING KIT 453
SEAT BELT - 2" 455-458
SEAT BELT - 3" 459-462
SEAT BELT KIT - 3" 463
SEAT KIT 465
SEAT KIT - 80 mm 467
SEAT - 80 mm 469-472
SEAT 473-476
SOUND/NOISE REDUCTION KIT 477-488
SOUND/NOISE REDUCTION OPTION 489-492
SPRING DAMPER KIT 493
STEERING DAMPENER KIT 495
STROBE LIGHT 497
TIRES & RIMS 499-502
WEIGHT KIT 503
WHITE DECAL KIT 505
BULK ITEMS 507-510

NUMERICAL INDEX 512-571

MAINTENANCE ITEMS

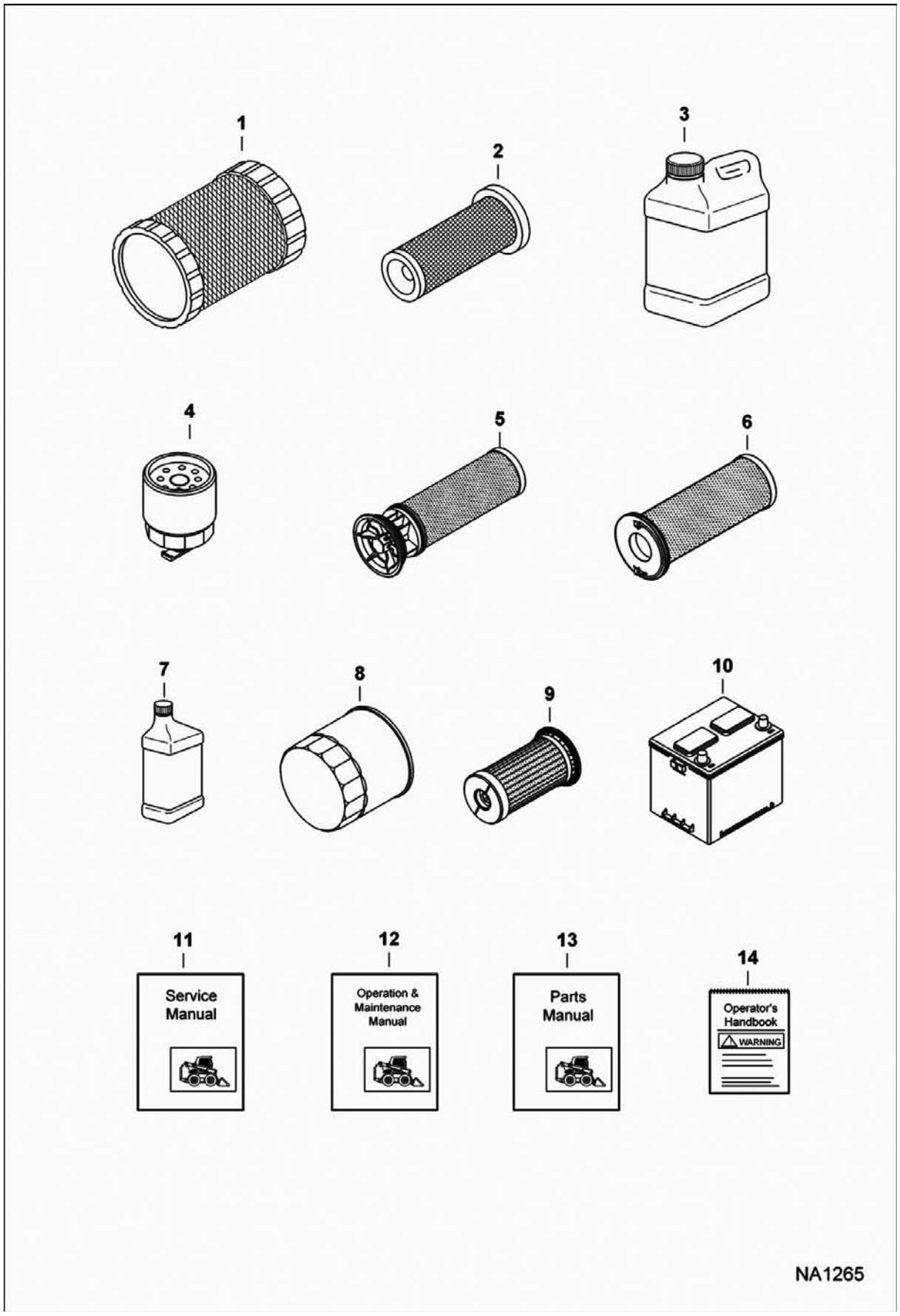

MAINTENANCE ITEMS (Cont'd)

Ref No	Part Number	Description	Remarks	Serial Number	Qty
1	7008043	FILTER, AIR OUTER	See Illustration AIR CLEANER/ NA2170		1
2	7008044	FILTER, AIR INNER	See Illustration AIR CLEANER/ NA2170		1
3	6903117	FLUID, OIL HYD 2.5 GAL 2			x
3	6903118	FLUID, OIL HYD 5 GAL			x
3	6903119	FLUID, OIL HYD 55 GAL			x
4	6667352	FILTER, FUEL W/SEPERATOR 12	See Illustration ENGINE & ATTACHING PARTS/ NA1262		1
5	7002734	FILTER, OIL HYD TANK	See Illustration HYDROSTATIC CIRCUITRY/ NA1224		1
6	7012314	FILTER, OIL HYD ASSY	See Illustration HYDROSTATIC CIRCUITRY/ NA2653 - Also Order 7015308 seal		1
7	6903107	OIL, 10W30 QT. 12			x
7	6903105	OIL, 15W40 QT. 12			x
7	6903109	OIL 30W QT. 12			x
7	6903106	OIL, 15W40 GAL. 6			x
7	6903108	OIL, 10W30 GAL. 6			x
7	6903110	OIL, 30W GAL. 6			x
7	6903112	OIL, 10W30 2.5 GAL 2			x
7	6903113	OIL, 15W40 2.5 GAL. 2			x
7	6903111	OIL 30W 2.5 GAL 2			x
8	6678233	FILTER, OIL ENG 12	See Illustration EGR COOLER/ B27843		x
9	6692337	FILTER, HYD CARTRIDGE	See Illustration COOLING FAN MOTOR/ MS2514		x
10	6674687	BATTERY, DRY 600 AMP	See Illustration ENGINE ELECTRICAL CIRCUITRY/ NA2163		1
10	6665427	BATTERY, DRY 950 AMP	See Illustration ENGINE ELECTRICAL CIRCUITRY/ NA2163		x
11	6987168	MANUAL, SERVICE S650 LOADER	printed		1
11	6987168-CD	MANUAL, SERVICE S650 LOADER-CD			1
12	6987167	MANUAL, OPERATION & MAINTENANCE S650 LOADER	printed		1
12	6987167-CD	MANUAL OPERATION & MAINTENANCE S650 LOADER-CD			1
13	6987169	MANUAL PARTS	printed		1

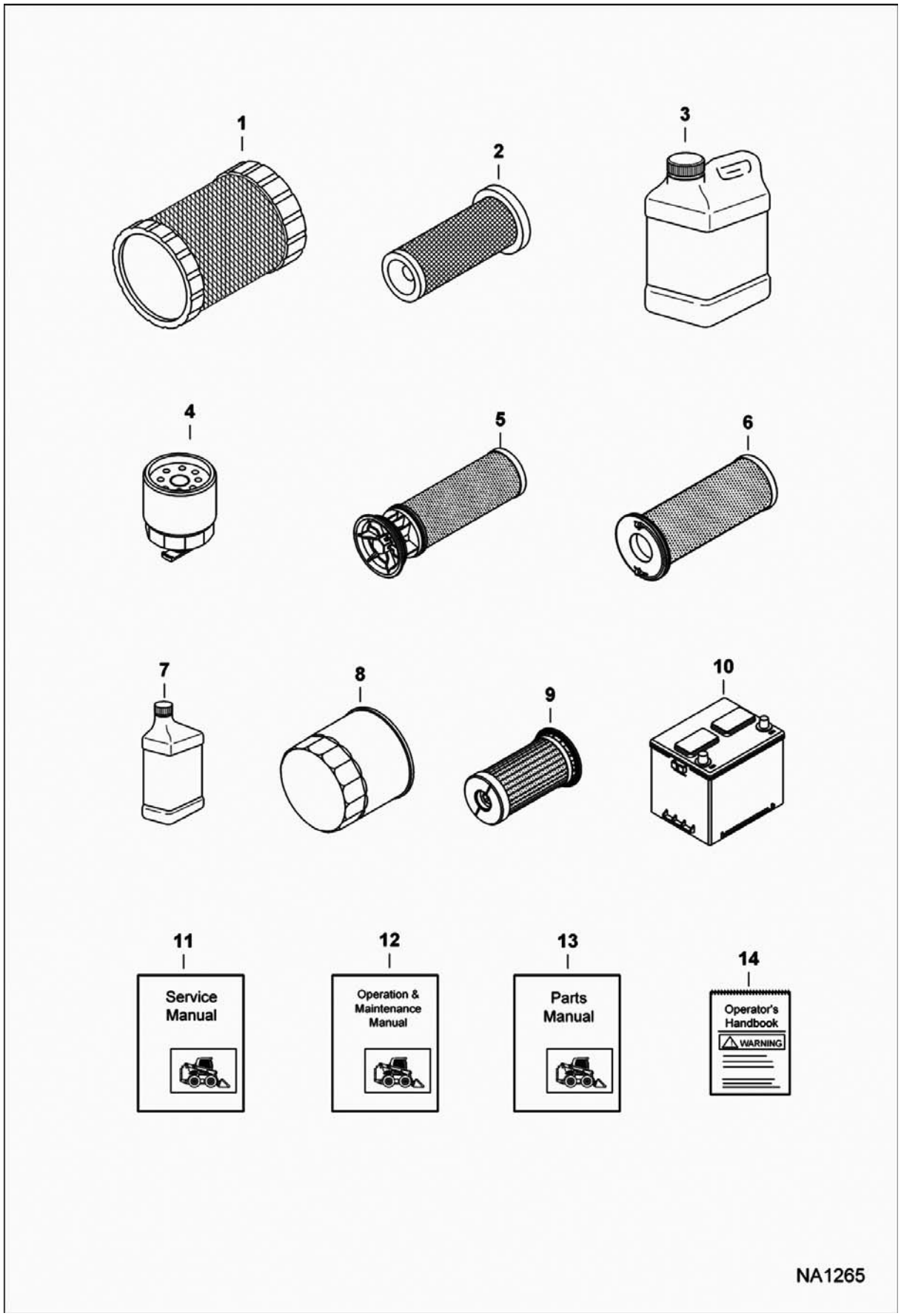
1
2
3
4
5
6
7
8
9
10
11
Service Manual
12
Operation & Maintenance Manual
13
Parts Manual
14
Operator's Handbook
WARNING
NA1265

MAINTENANCE ITEMS (Cont'd)

Ref No	Part Number	Description	Remarks	Serial Number	Qty
		S650 LOADER			
13	6987169-CD	MANUAL, PARTS S650 LOADER-CD			1
14	6987174	HANDBOOK, OPERATOR'S	W/wire rope		1

SCHEDULED MAINTENANCE ITEMS
(50 Hour)

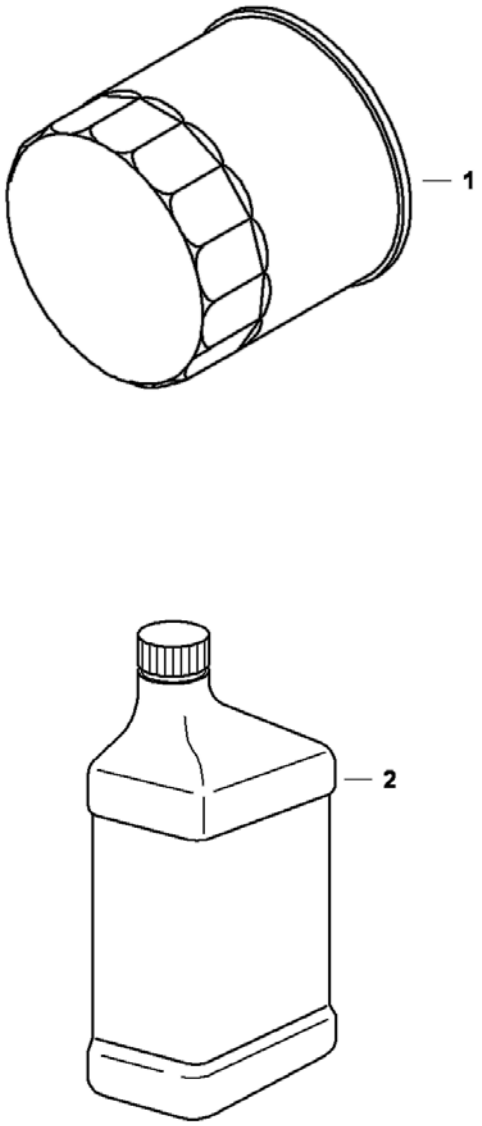

SCHEDULED MAINTENANCE ITEMS (Cont'd)
(50 Hour)

Ref No	Part Number	Description	Remarks	Serial Number	Qty
1	6678233	FILTER, OIL ENG 12	See Illustration EGR COOLER/ B27843		1
2	6903107	OIL, 10W30 QT. 12			x
2	6903105	OIL, 15W40 QT. 12			x
2	6903109	OIL 30W QT. 12			x
2	6903106	OIL, 15W40 GAL. 6			x
2	6903108	OIL, 10W30 GAL. 6			x
2	6903110	OIL, 30W GAL. 6			x
2	6903112	OIL, 10W30 2.5 GAL 2			x
2	6903111	OIL 30W 2.5 GAL 2			x
2	6903113	OIL, 15W40 2.5 GAL. 2			x

SCHEDULED MAINTENANCE ITEMS
(250 Hours)

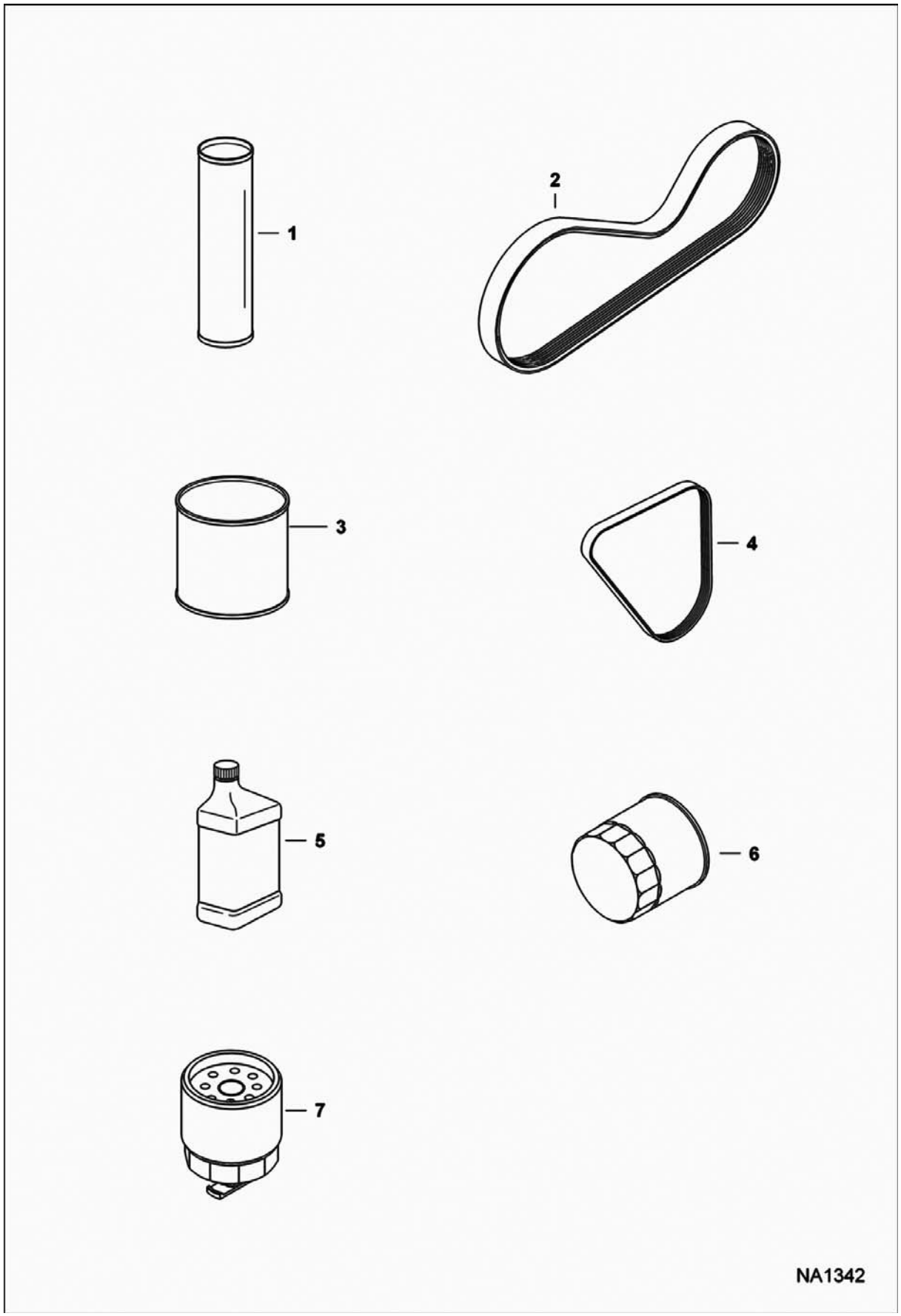

SCHEDULED MAINTENANCE ITEMS (Cont'd)
(250 Hours)

Ref No	Part Number	Description	Remarks	Serial Number	Qty
1	6903122	GREASE, MULTI PURPOSE #2 - 10			x
2	7188792	BELT, DRIVE	See Illustration ENGINE & ATTACHING PARTS/ NA1278 eng/hydrostatic - Was 7147859 [A]		x
3	6903121	LUBE, GEAR 12			x
4	7142000	BELT, ALT	See Illustration ENGINE & ATTACHING PARTS/ NA1279		x
5	6903107	OIL, 10W30 QT. 12			x
5	6903105	OIL, 15W40 QT. 12			x
5	6903109	OIL 30W QT. 12			x
5	6903106	OIL, 15W40 GAL. 6			x
5	6903108	OIL, 10W30 GAL. 6			x
5	6903110	OIL, 30W GAL. 6			x
5	6903112	OIL, 10W30 2.5 GAL 2			x
5	6903113	OIL, 15W40 2.5 GAL. 2			x
5	6903111	OIL 30W 2.5 GAL 2			x
6	6678233	FILTER, OIL ENG 12	See Illustration EGR COOLER/ B27843		x
7	6667352	FILTER, FUEL W/SEPERATOR 12	See Illustration ENGINE & ATTACHING PARTS/ NA1262		1

SCHEDULED MAINTENANCE ITEMS
(500 Hours)

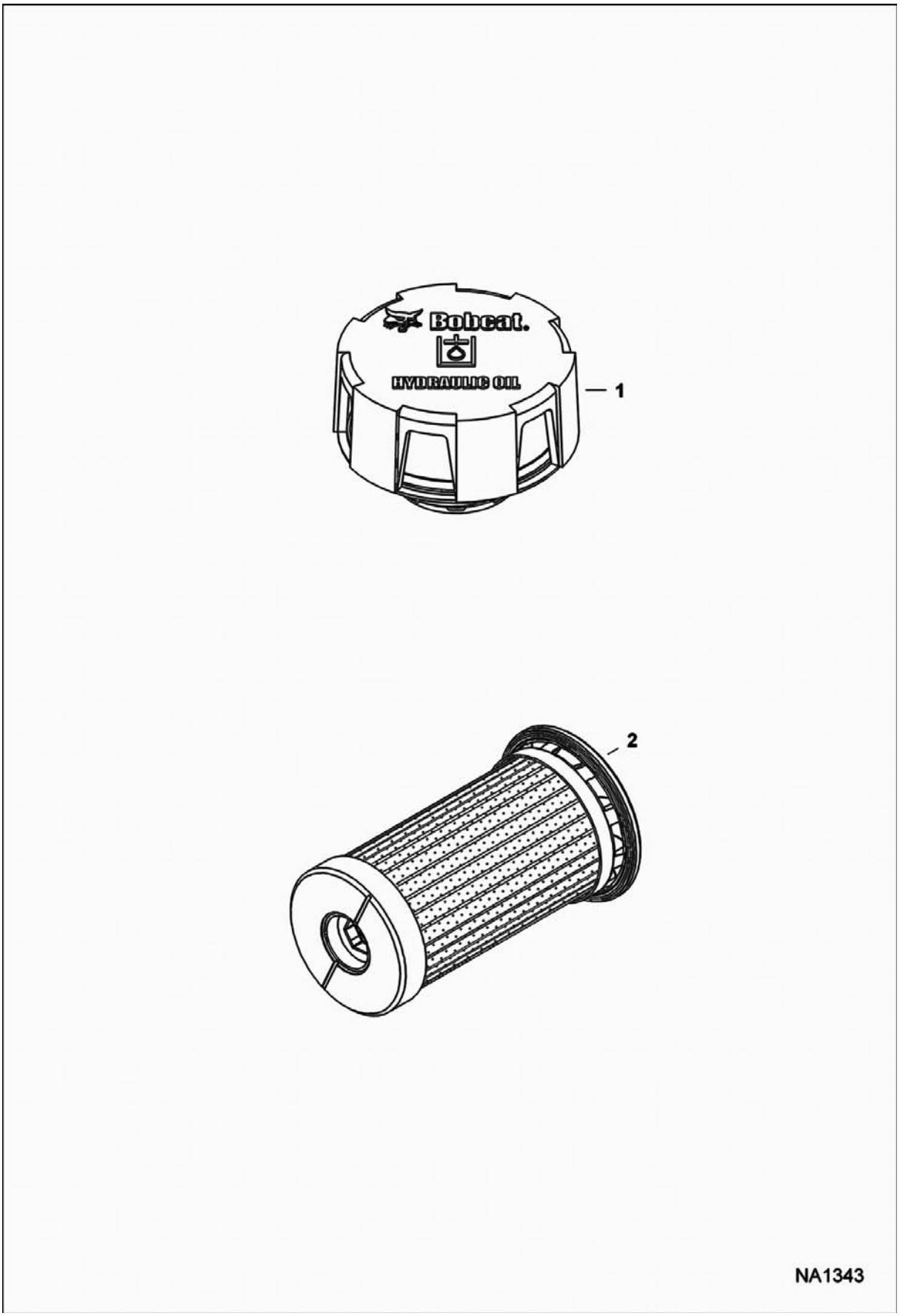

SCHEDULED MAINTENANCE ITEMS (Cont'd)
(500 Hours)

Ref No	Part Number	Description	Remarks	Serial Number	Qty
1	6727475	CAP, OIL HYD	See Illustration HYDROSTATIC CIRCUITRY/ NA1224		1
2	6692337	FILTER, HYD CARTRIDGE	See Illustration COOLING FAN MOTOR/ MS2514 - charge		1

SCHEDULED MAINTENANCE ITEMS
(1000 Hour)

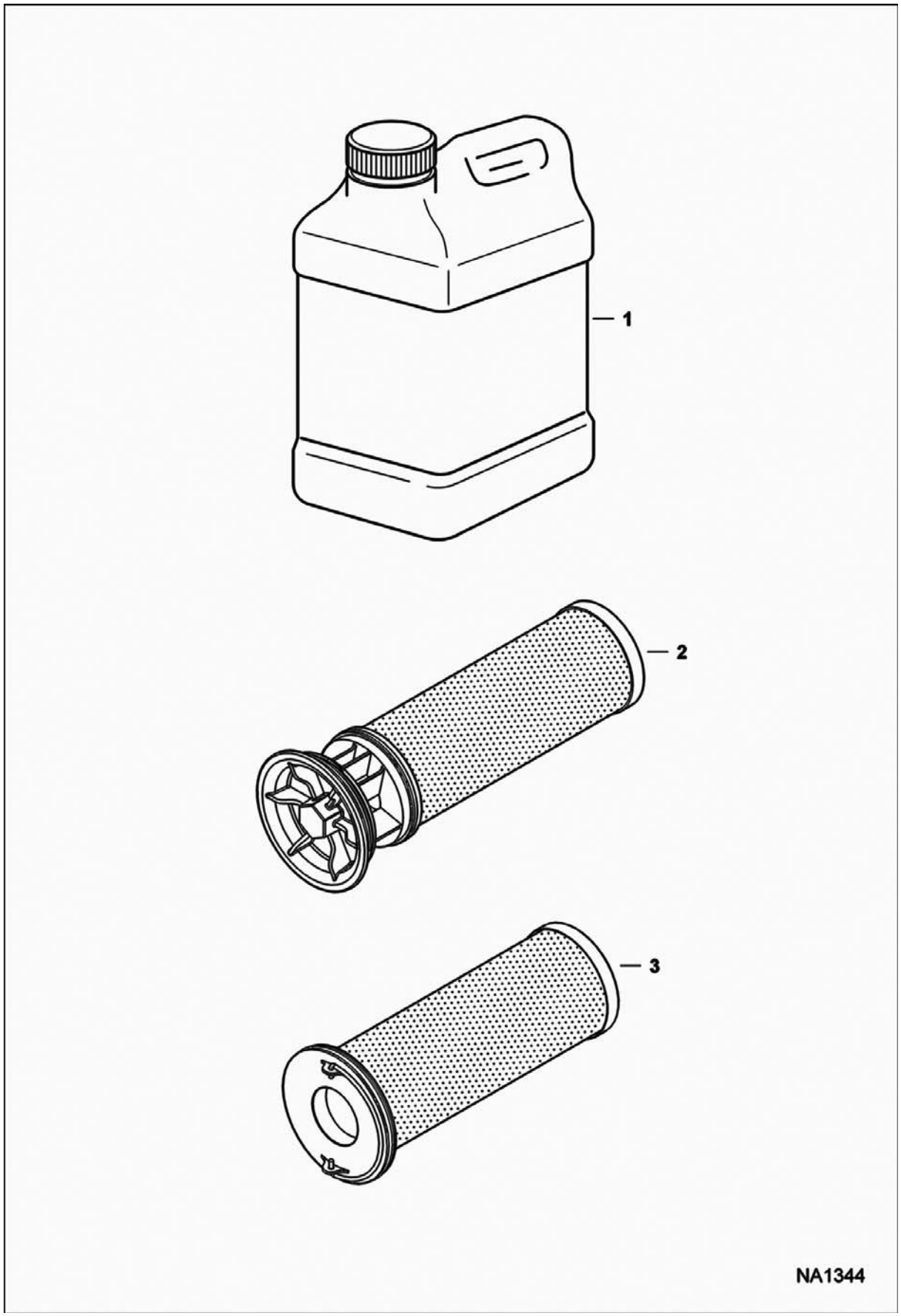

SCHEDULED MAINTENANCE ITEMS (Cont'd)
(1000 Hour)

Ref No	Part Number	Description	Remarks	Serial Number	Qty
1	6903117	FLUID, OIL HYD 2.5 GAL 2			x
1	6903118	FLUID, OIL HYD 5 GAL			x
1	6903119	FLUID, OIL HYD 55 GAL			x
2	7002734	FILTER, OIL HYD TANK	See Illustration HYDROSTATIC CIRCUITRY/ NA1224		1
3	7012314	FILTER, OIL HYD ASSY	See Illustration HYDROSTATIC CIRCUITRY/ NA2653 - Also Order 7015308 seal		1

MAIN FRAME

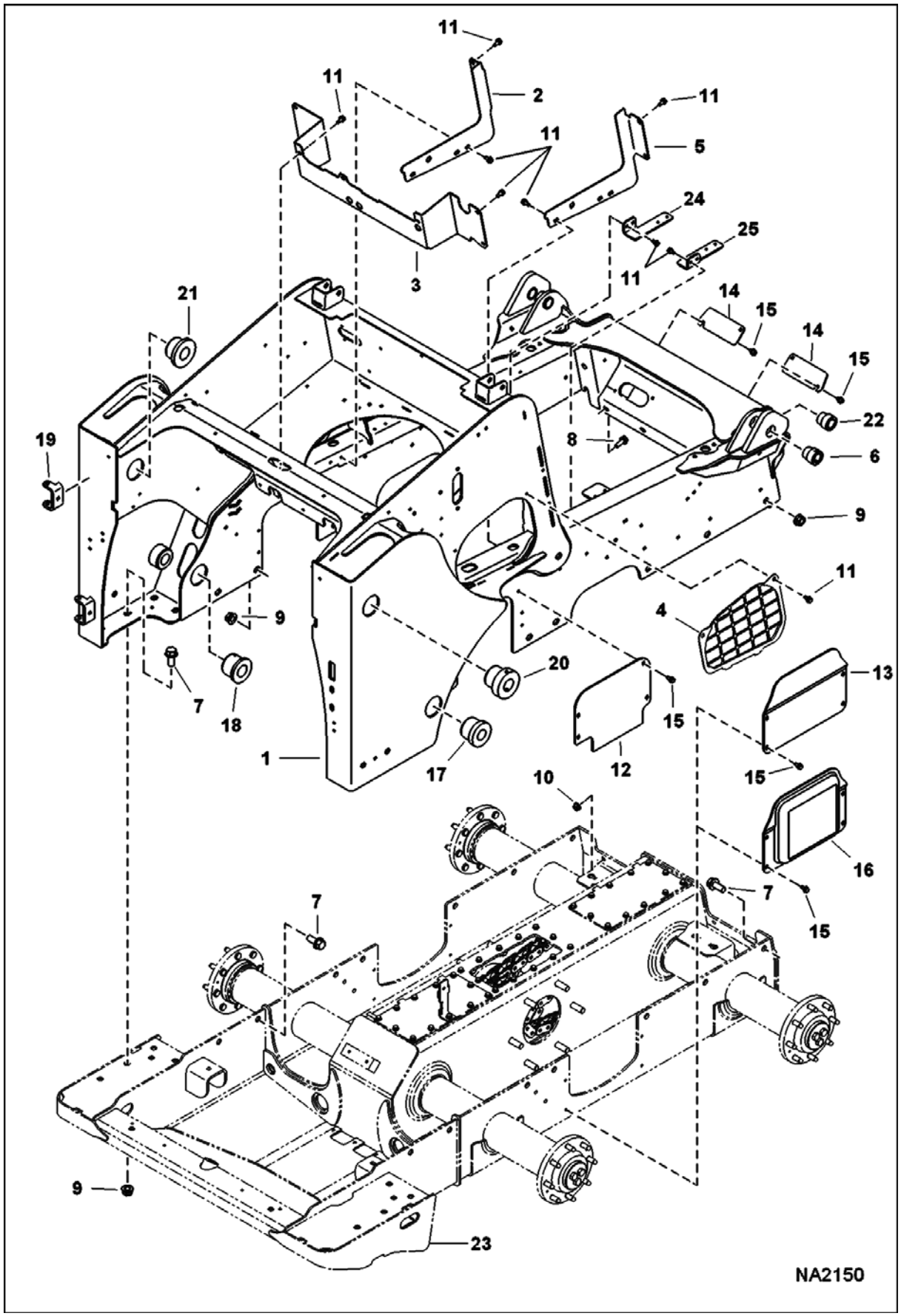
11
11
2
11
11
5
24
25
3
11
21
14
15
14
15
22
19
8
6
9
11
9
4
7
18
20
13
15
1
17
12
15
10
16
7
7
15
9
23
NA2150

MAIN FRAME (Cont'd)

Ref No	Part Number	Description	Remarks	Serial Number	Qty
1	7187123	MAIN FRAME		A3NV11001 - 11444	1
1	7187123	MAIN FRAME		A3NW11001 - 11099	1
1	7190083	MAIN FRAME		A3NW11101 & Above	1
1	7190083	MAIN FRAME		A3NV11445 & Above	1
2	7147354	PANEL			1
3	7151540	PANEL, CROSSMEMBER			1
4	7174997	LOUVER, RH			1
4	7174998	LOUVER, LH			1
5	7161793	PANEL			1
6	7162141	BUSHING, WELD-ON	outside link		2
7	31C1228	BOLT			22
8	31C820	BOLT			4
9	53D12	NUT			20
10	83D8	NUT 5			4
11	84G3712	BOLT			20
12	7174054	COVER	single speed		2
13	7136973	COVER			2
14	7159532	COVER			2
15	84G3712	BOLT			23
16	7139459	COVER	2 speed		2
17	7141675	BUSHING, WELD-ON	outside upright		2
18	7141674	BUSHING, WELD-ON	inside upright		2
19	6708987	HINGE, WELD-ON			2
20	7134830	BUSHING	outside upright		2
21	7134831	BUSHING	inside upright		2
22	6717278	BUSHING, WELD-ON	inside link		2
23		CHAINCASE	See Illustration DRIVE TRAIN/ NA1008		1
24	7202799	BRACKET, SUPPORT			1
25	7202800	BRACKET, SUPPORT			1

OPERATORS CAB
(Cab Replacement)

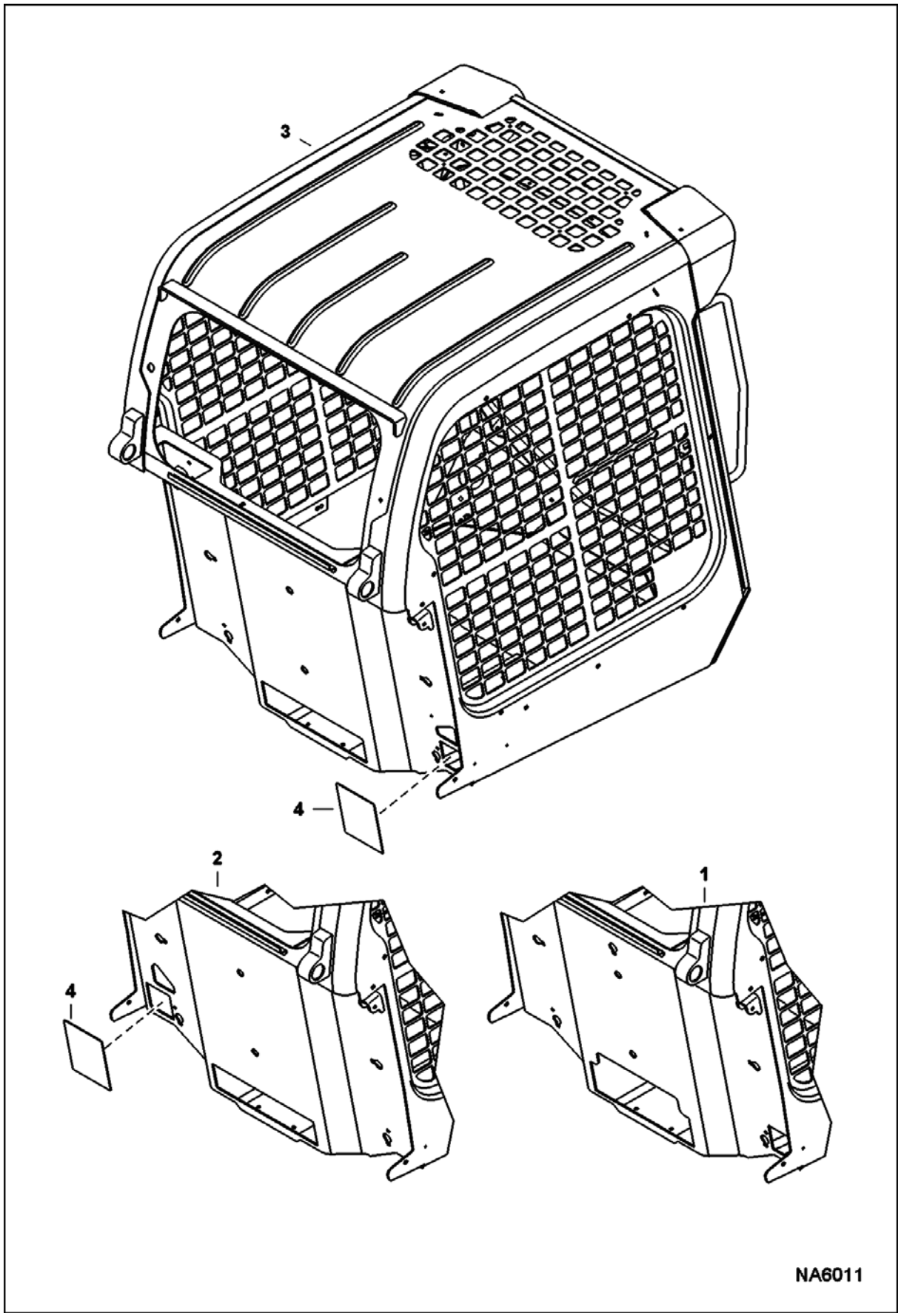

OPERATORS CAB (Cont'd)
(Cab Replacement)

Ref No	Part Number	Description	Remarks	Serial Number	Qty
1		CAB, ASSY	NAP - does not include cab decals - Order Ref. 3 - If loader is equipped W/metal housing heater Also Order 7128484 heater kit, 7203233 jumper & 7203234 jumper - Was 7116111 [A]	A3NV11001 - 12931	1
1		CAB, ASSY	NAP - does not include cab decals - Order Ref. 3 - If loader is equipped W/metal housing heater Also Order 7128484 heater kit, 7203233 jumper & 7203234 jumper - Was 7116111 [A]	A3NW11001 - 11248	1
1		CAB, ASSY	NAP - does not include cab decals - Order Ref. 3 - If loader is equipped W/metal housing heater Also Order 7128484 heater kit, 7203233 jumper & 7203234 jumper - Was 7116111 [A]	A3NV12933 - 13048	1
2		CAB, ASSY	NAP - does not include cab decals - Order Ref. 3 - Was 7116111 [A]	A3NV12932, 13049	1
2		CAB, ASSY	NAP - does not include cab decals - Order Ref. 3 - Was 7116111 [A]	A3NV13099 - 13104	1
2		CAB, ASSY	NAP - does not include cab decals - Order Ref. 3 - Was 7116111 [A]	A3NW11249 - 11250	1
3	7116111	CAB, ASSY	does not include cab decals	A3NV13105 & Above	1
3	7116111	CAB, ASSY	does not include cab decals	A3NW11251 & Above	1
4	7197972	COVER			1

OPERATOR CAB
(Gas Spring)

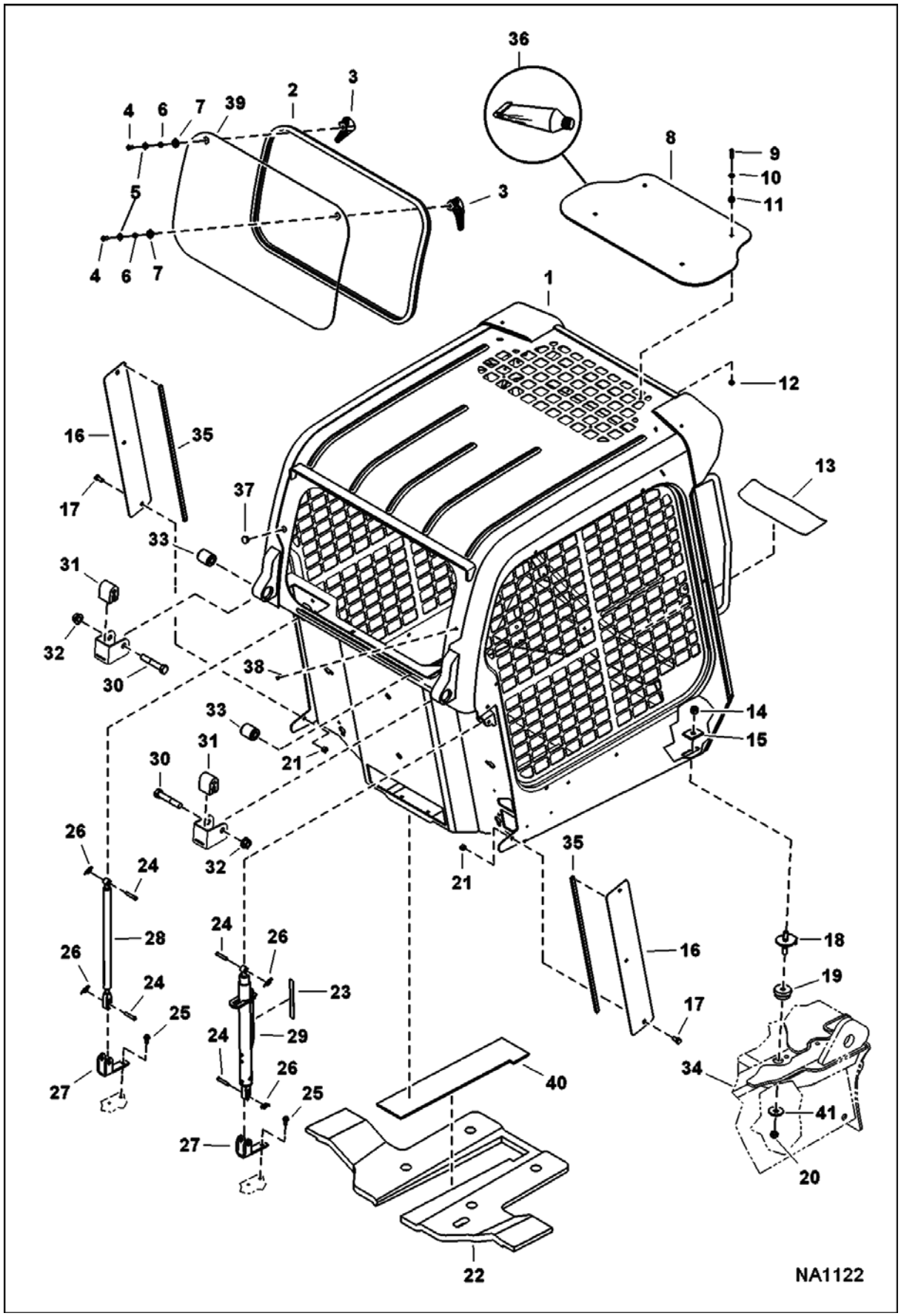

OPERATOR CAB (Cont'd)
(Gas Spring)

Ref No	Part Number	Description	Remarks	Serial Number	Qty
1	7116111	CAB, ASSY	does not include cab decals		1
2	7163988	SEAL, WINDOW REAR			1
3	7150152	LATCH, WINDOW RIGHT			1
3	7150151	LATCH, WINDOW LEFT			1
4	53C512	SCREW			2
5	25E14	WSHR			2
6	6802539	SPACER			2
7	7121425	BUSHING			2
8	7120411	WINDOW			1
9	53C416	SCREW			4
10	25E13	WASHER 5			4
11	6675545	GROMMET			4
12	55D4	NUT			4
13	7169747	TREAD, SAFETY			1
14	59D8	NUT 5			2
15	6553709	WASHER	rectangular		2
16	7166544	COVER, HVAC			2
17	17C612	BOLT 5			4
18	6702971	BOLT			2
19	6560633	DAMPENER			2
20	85D8	NUT, 5			2
21	61D6	NUT 5			4
22	7176603	INSULATION, PANEL SEAT			1
23	7169877	DECAL	push		1
24	6567743	PIN			4
25	84G3712	BOLT			4
26	6631418	PIN			4
27	7144859	MOUNT, GAS SPRING			2
28	7167437	SPRING, GAS STD	LH - Also Order 7169291 decal		1
29	7144862	SPRING	RH - W/lock		1
30	17C1056	BOLT			2
31	6579613	STOP			2
32	53D10	NUT			2
33	6562602	BUSHING			2
34		MAIN FRAME	See Illustration MAIN FRAME/ NA2150		1
35	7182796	SEAL, FOAM			4
36	7171167	SEALANT, GASKET LIQUID	apply .39" bead of sealant to top window .50" from the edge of top window		1
37	6657719	PLUG	0.75" dia hole		1
38	7188745	PLUG	radio - Was 7174012 [A]		1
39	7138973	WINDOW, REAR			1
40	7174787	INSULATION, PAN SEAT			1
41	6515817	WASHER			2

OPERATOR CAB
(Cab Interior) (Standard)

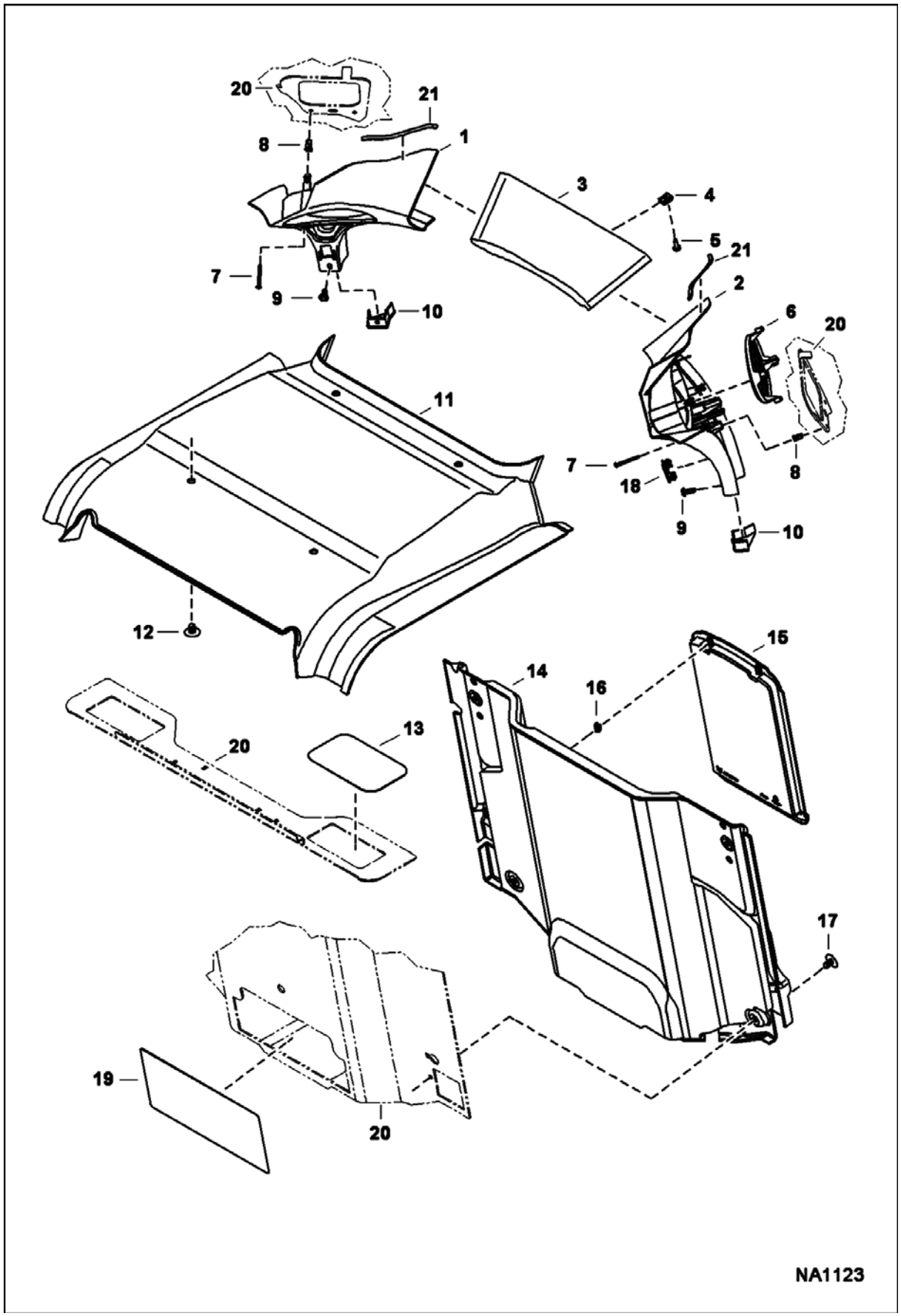

OPERATOR CAB (Cont'd)
(Cab Interior) (Standard)

Ref No	Part Number	Description	Remarks	Serial Number	Qty
1	7155792	PANEL, LH			1
2	7155791	PANEL, RH			1
3	7155788	PANEL, CENTER			1
4	7142762	CLIP			2
5	6669224	BOLT			2
6	7002985	INSERT, BLANK	W/Bobcat head - if loader is equipped W/SJC & text decals, Also Order Ref. 2 & 7168114 decal - if loader is equipped W/SJC & no text decals, Also Order Ref. 2 & 7177707 decal		1
7	7165799	SCREW			4
8	6675033	INSERT			4
9	7160382	RIVET, BIRD CAGE			2
10	7165037	CAP, INST PANEL RH			1
10	7165038	CAP, INST PANEL LH			1
11	7155786	HEADLINER,STD			1
12	6674895	RETAINER			4
13	7168610	COVER			1
14	7176134	PANEL, CAB INTERIOR			1
15	6725301	OP MANUAL COVER			1
16	6675524	CLIP			2
17	6674895	RETAINER			4
18	6665314	PLUG			1
19	7178954	COVER, HVAC			1
20		CAB ASSY	See Illustration OPERATOR CAB/ NA1122		1
21	7187104	SEAL			2

OPERATOR CAB
(Cab Interior) (Deluxe)

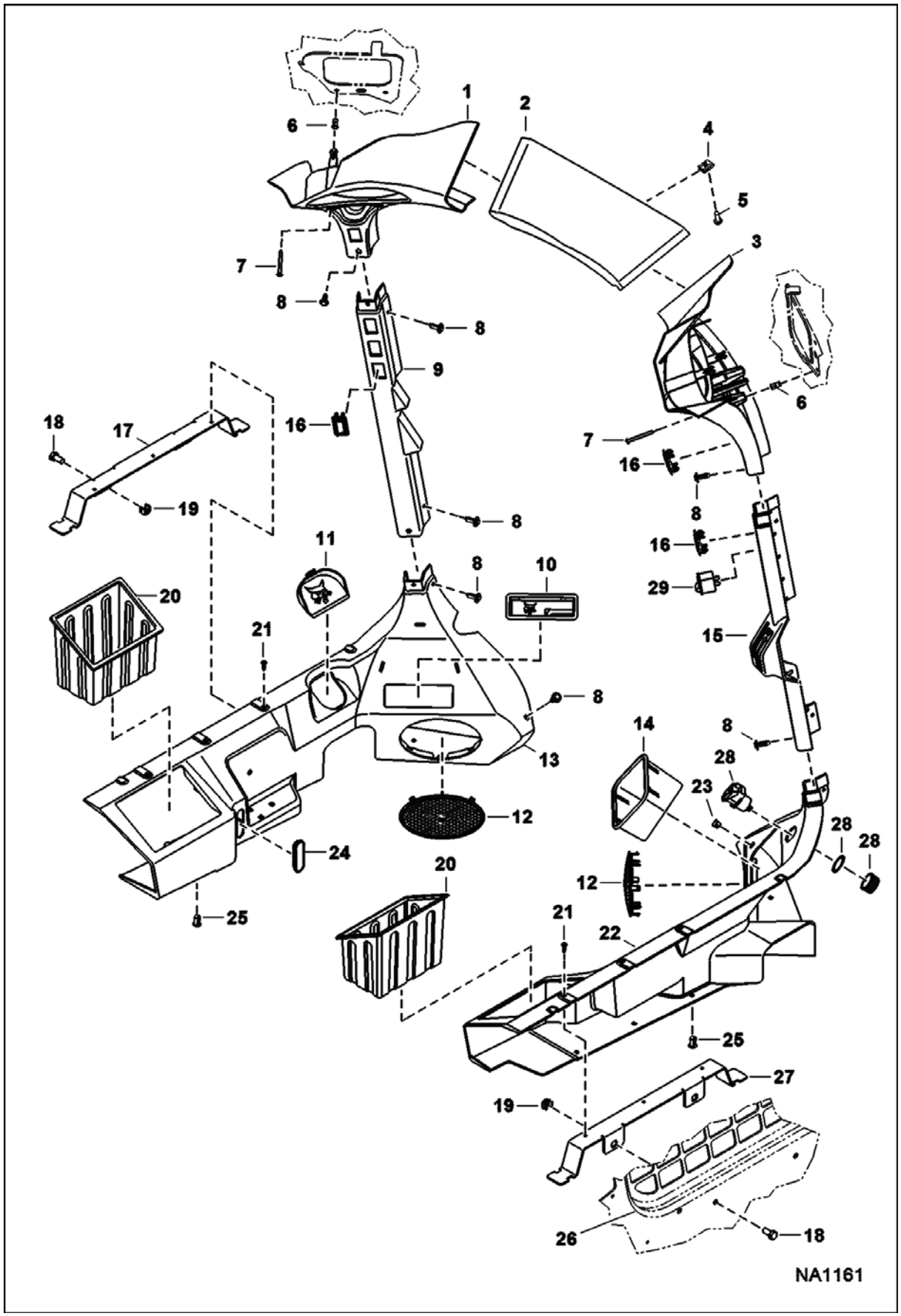

OPERATOR CAB (Cont'd)
(Cab Interior) (Deluxe)

Ref No	Part Number	Description	Remarks	Serial Number	Qty
1	7155792	PANEL, LH			1
2	7155788	PANEL, CENTER			1
3	7155791	PANEL, RH			1
4	7142762	CLIP			6
5	6669224	BOLT			6
6	6675033	INSERT			4
7	7165799	SCREW			4
8	7160382	RIVET, BIRD CAGE			8
9	7164348	COLUMN, FRONT LEFT			1
10	7165344	STORAGE			1
11	7165345	DOOR, COVER			1
12	7161939	GRILL			2
13	7155643	FENDER, PANEL L.H.			1
14	7154285	BOX, STORAGE			1
15	7164347	COLUMN, FRONT RIGHT			1
16	6665314	PLUG			6
17	7116118	BRACKET			1
18	17C612	BOLT 5			4
19	7149204	NUT			4
20	7145268	CONTAINER, STORAGE			2
21	7160381	RIVET, BIRD CAGE			6
22	7155642	FENDER, PANEL RH			1
23	7182942	PLUG	Was 7162771 [A]		1
24	7165346	DOOR, COVER			1
25	7160383	RIVET, BIRD CAGE			10
26		CAB ASSY	See Illustration OPERATOR CAB/ NA1122		1
27	7127976	BRACKET			1
28	7001664	PLUG, POWER			1
28		WASHER	NSS		1
28		NUT	plastic - NSS		1
29	6668742	SWITCH	EMEA		1

OPERATOR CAB
(Cab Interior) (Deluxe) (Headliner)

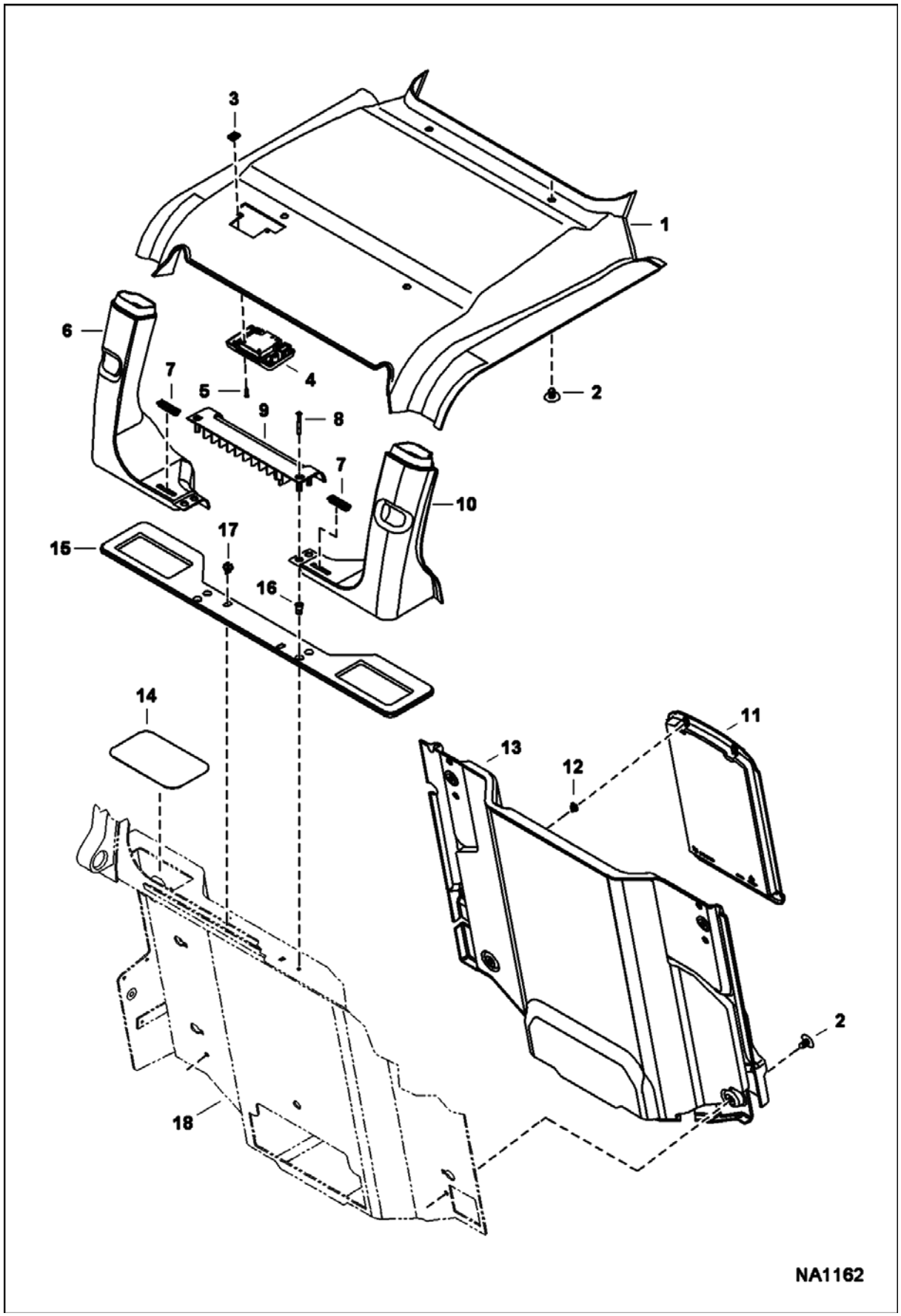

OPERATOR CAB (Cont'd)
(Cab Interior) (Deluxe) (Headliner)

Ref No	Part Number	Description	Remarks	Serial Number	Qty
1	7155798	HEADLINER, DLX			1
2	6674895	RETAINER			8
3	7142762	CLIP			2
4	7155797	LIGHT			1
5	7170114	SCREW			2
6	100334SUB	DUCT, AIR	LH - W/Ref. 7 - Was 7165331 [A]		1
7	7145885	VENT, DEFROST			2
8	7165799	SCREW			2
9	7165332	SHELF, REAR			1
10	100333SUB	DUCT, AIR	RH - W/Ref. 7 - Was 7165330 [A]		1
11	6725301	OP MANUAL COVER			1
12	6675524	CLIP			2
13	7176133	PANEL, CAB INTERIOR			1
14	7168610	COVER			2
15	7153832	SEAL, SHELF REAR			1
16	6675033	INSERT			2
17	7165333	CLIP			2
18		CAB ASSY	See Illustration OPERATOR CAB/ NA1122		1

SEAT BAR
(Manual Controls)

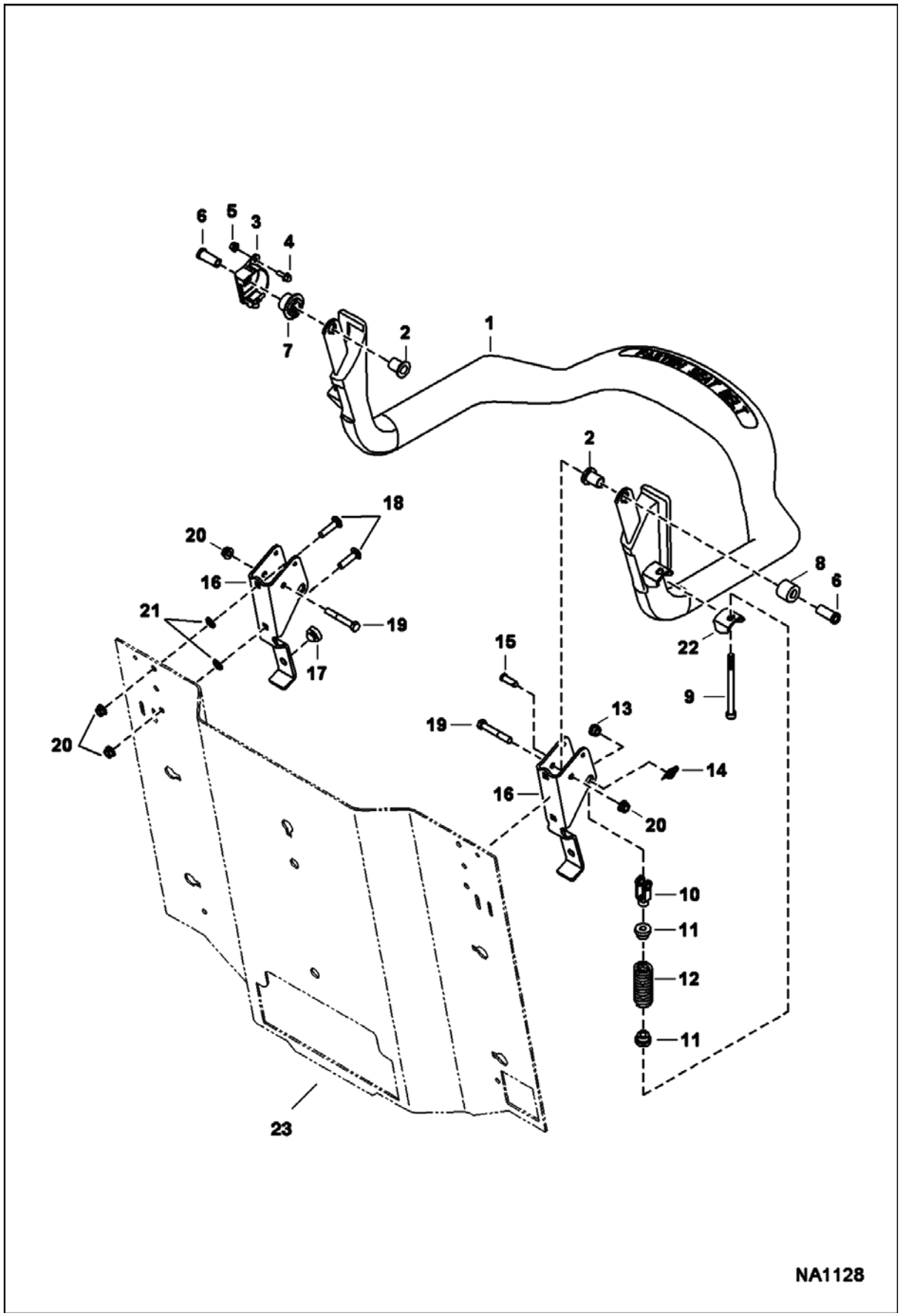

SEAT BAR (Cont'd)
(Manual Controls)

Ref No	Part Number	Description	Remarks	Serial Number	Qty
1	7143971	SEATBAR			1
2	6680441	BUSHING			2
3	6691714	SENSOR, SEATBAR BICS			1
4	35C412	BOLT			1
5	83D4	NUT 10			1
6	6715865	BUSHING			2
7	6680443	BUSHING, MAGNET			1
8	6715866	BUSHING			1
9	6713887	BOLT			2
10	6713589	CLEVIS			2
11	6710659	BUSHING			4
12	6701535	SPRING			2
13	6715864	BUSHING			2
14	6631418	PIN			2
15	4F6106	PIN			2
16	7157719	BRACKET			2
17	6519178	BUMPER			2
18	10C616	BOLT 10			4
19	17C640	BOLT 5			2
20	53D6	NUT			6
21	6674894	NUT			4
22		MOUNT	NAP - Order Ref. 1		1
23		CAB ASSY	See Illustration OPERATOR CAB/ NA1122		1

SEAT BAR
(Selectable Joystick Controls)

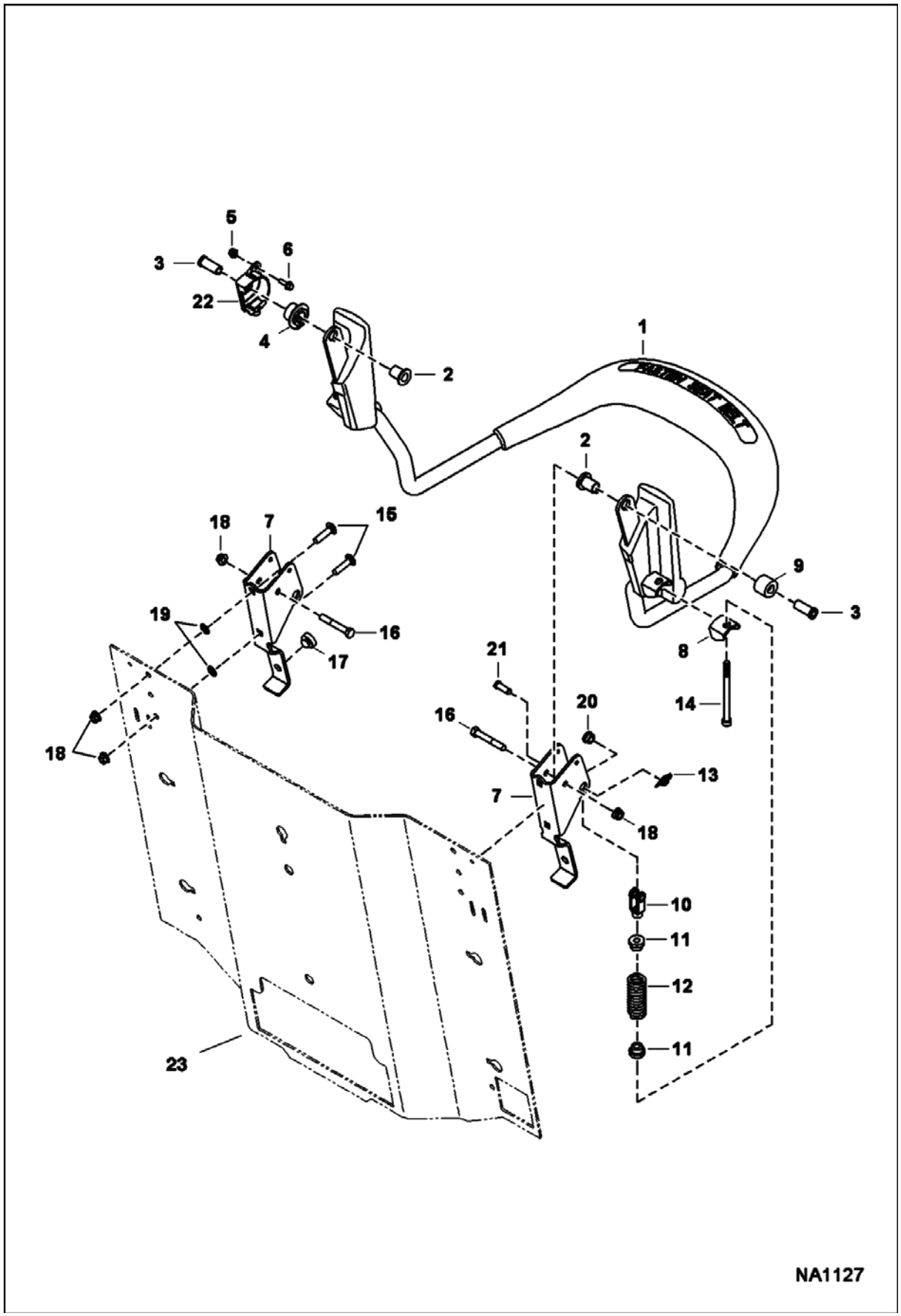

SEAT BAR (Cont'd)
(Selectable Joystick Controls)

Ref No	Part Number	Description	Remarks	Serial Number	Qty
1	7203389	SEAT BAR	SJC - Was 7153408 [A]		1
2	6680441	BUSHING			2
3	6715865	BUSHING			2
4	6680443	BUSHING, MAGNET			1
5	35C412	BOLT			1
6	83D4	NUT 10			1
7	7157719	BRACKET			2
8		MOUNT	NAP - Order Ref. 1		1
9	6715866	BUSHING			1
10	6713589	CLEVIS			2
11	6710659	BUSHING			4
12	6701535	SPRING			2
13	6631418	PIN			2
14	6713887	BOLT			2
15	10C616	BOLT 10			4
16	17C640	BOLT 5			2
17	6519178	BUMPER			2
18	53D6	NUT			6
19	6674894	NUT			4
20	6715864	BUSHING			2
21	4F6106	PIN			2
22	6691714	SENSOR, SEATBAR BICS			1
23		CAB ASSY	See Illustration OPERATOR CAB/ NA1122		1

SEAT & SEAT BELT

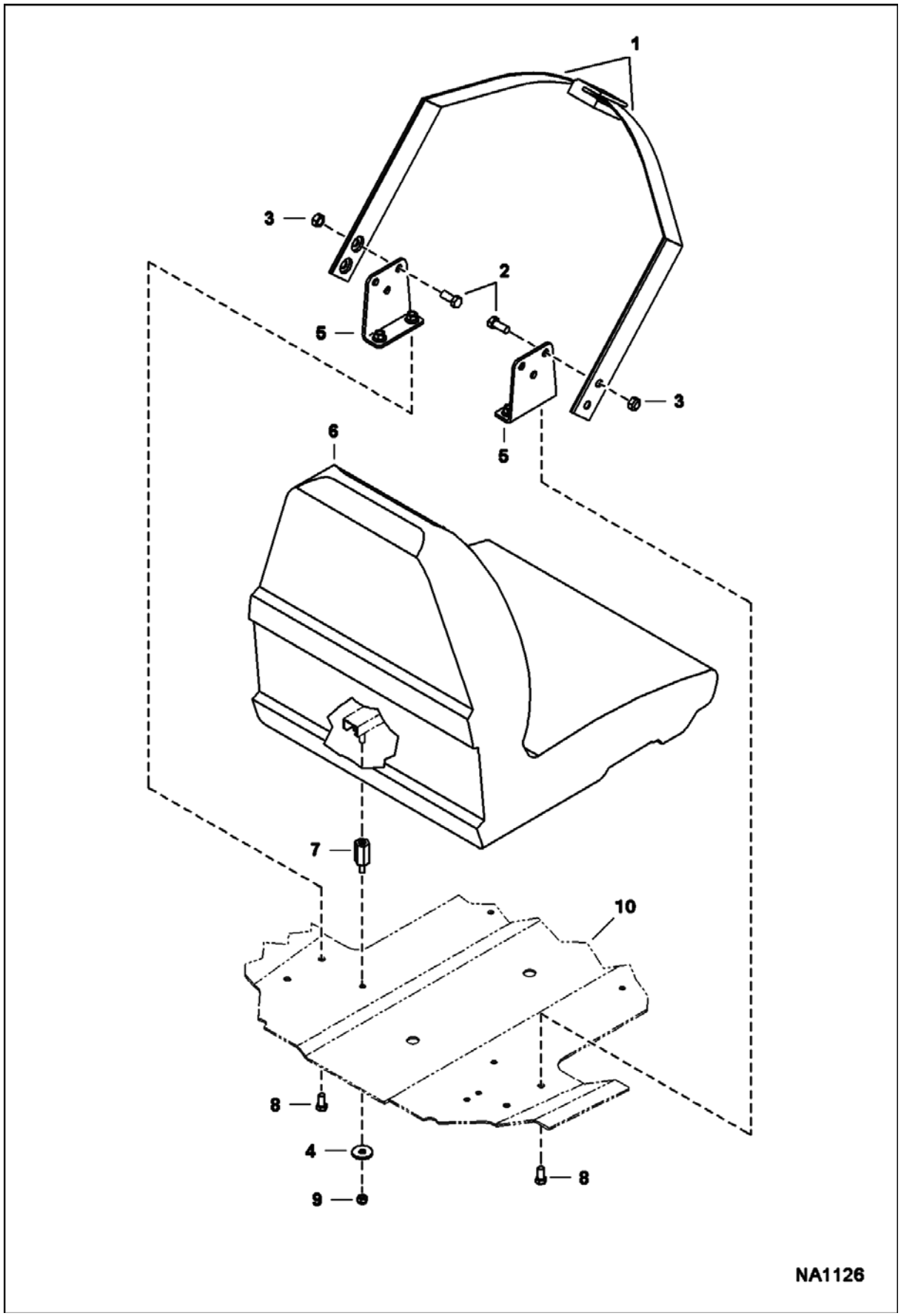

SEAT & SEAT BELT (Cont'd)

Ref No	Part Number	Description	Remarks	Serial Number	Qty
1		SEAT BELT	See Illustration SEAT BELT - 2"/ NA2043A See Illustration SEAT BELT - 3"/ NA2043 See Illustration SEAT BELT KIT - 3"/ NA2123 See Illustration SEAT BELT - 2"/ NA2044 lap		1
2	1C716	SCREW HEX CAP			2
3	85D7	NUT			4
4	619021	WASHER, 5			4
5	7173159	BRACKET, BELT SEAT			2
6	6669135	SEAT, OPERATOR VINYL			1
7	7170337	STAND, SEAT			4
8	43C612	BOLT			4
9	59D5	NUT 5			4
10		CAB ASSY	See Illustration SEAT & SEAT BELT/ NA1126		1

PANELS
(Floor Pan) (Manual Controls, AHC & ACS)
(S/N A3NV11001 - 13098, A3NW11001 - 11248)

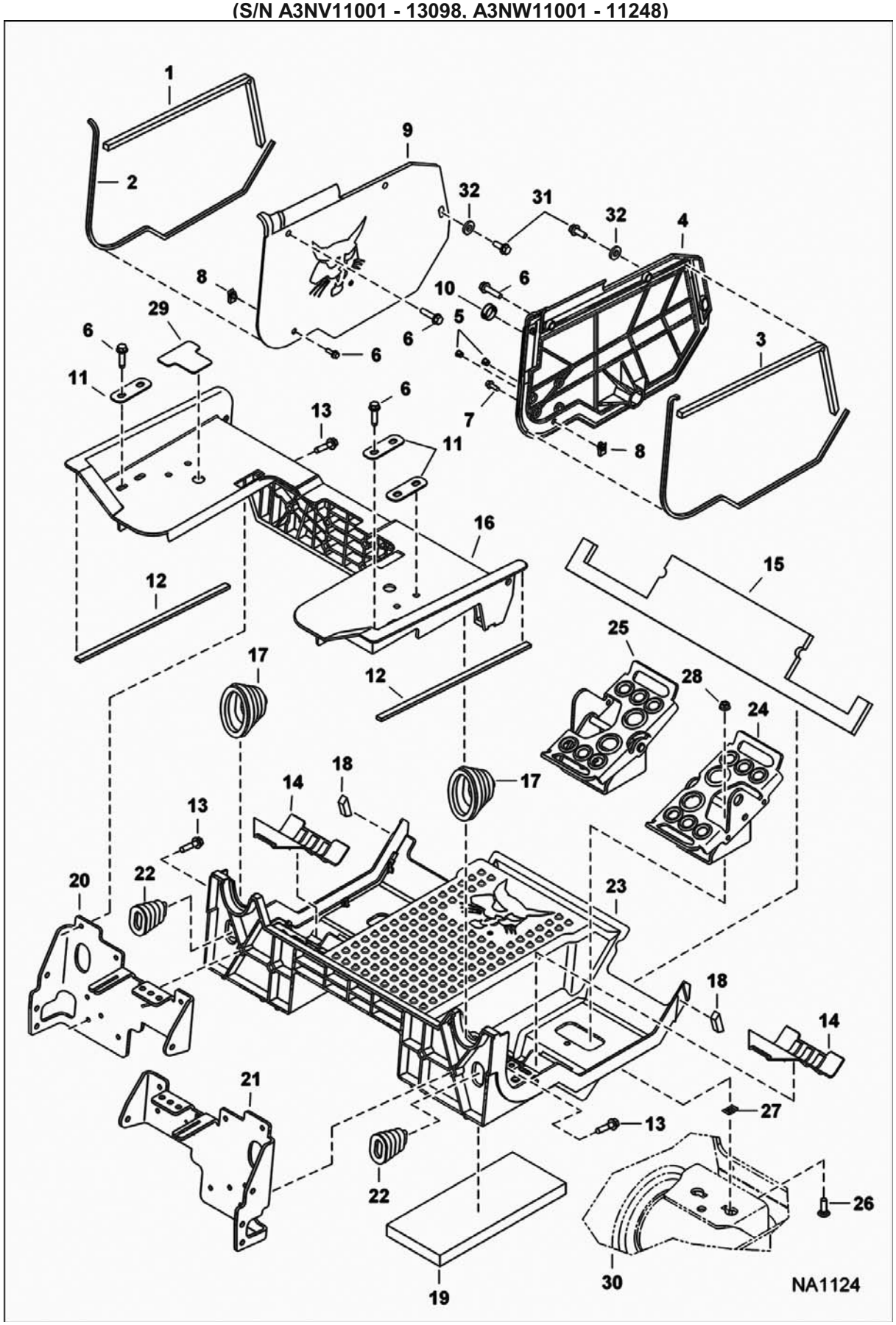

PANELS (Cont'd)
(Floor Pan) (Manual Controls, AHC & ACS)
(S/N A3NV11001 - 13098, A3NW11001 - 11248)

Ref No	Part Number	Description	Remarks	Serial Number	Qty
1	7166197	FOAM, PANEL	LH		1
2	7166199	FOAM, EDGE			2
3	7166198	FOAM, PANEL	RH		1
4	7180032	PANEL, RH	Was 7156919 [A]		1
5	5289686	PLUG	black - 0.38" dia hole		2
6	84G3716	SCREW 5			8
7	35C412	BOLT			2
8	7160765	NUT			2
9	7180031	PANEL, LH	Was 7156920 [A]		1
10	7166315	PLUG			1
11	7167118	PLATE, WASHER			3
12	7166196	FOAM, PANEL			2
13	84G3724	BOLT			4
14	7164345	COVER, PAN FLOOR			2
15	7163132	FOAM, FRONT			1
16		PANEL, STEERING	NAP - Order 7185169 panel steering & Ref. 29 - Was 7180037 [A]		1
16	7185169	PANEL, STEERING			1
17	7147815	BOOT			2
18	7166200	FOAM, PAN FLOOR			2
19	7166195	PAD, PAN FLOOR			1
20	7176118	MOUNT			1
21	7176117	MOUNT			1
22	7153503	BOOT			2
23	7156916	PAN, FLOOR			1
24		PEDAL ASSEMBLY	See Illustration CONTROL PEDALS/ NA1261 RH		1
25		PEDAL ASSEMBLY	See Illustration CONTROL PEDALS/ NA1261 LH		1
26	37C620	BOLT			4
27	6684033	NUT			4
28	57D6	NUT 5			4
29	7185170	COVER	Use W/Ref. 16 (7185169 panel)		1
30		CHAINCASE	See Illustration DRIVE TRAIN/ NA1008		1
31	84G3720	BOLT			2
32	25E18	WASHER			2

PANELS
(Floor Pan) (Manual Controls, AHC & ACS)
(S/N A3NV13099 & Above, A3NW11249 & Above)

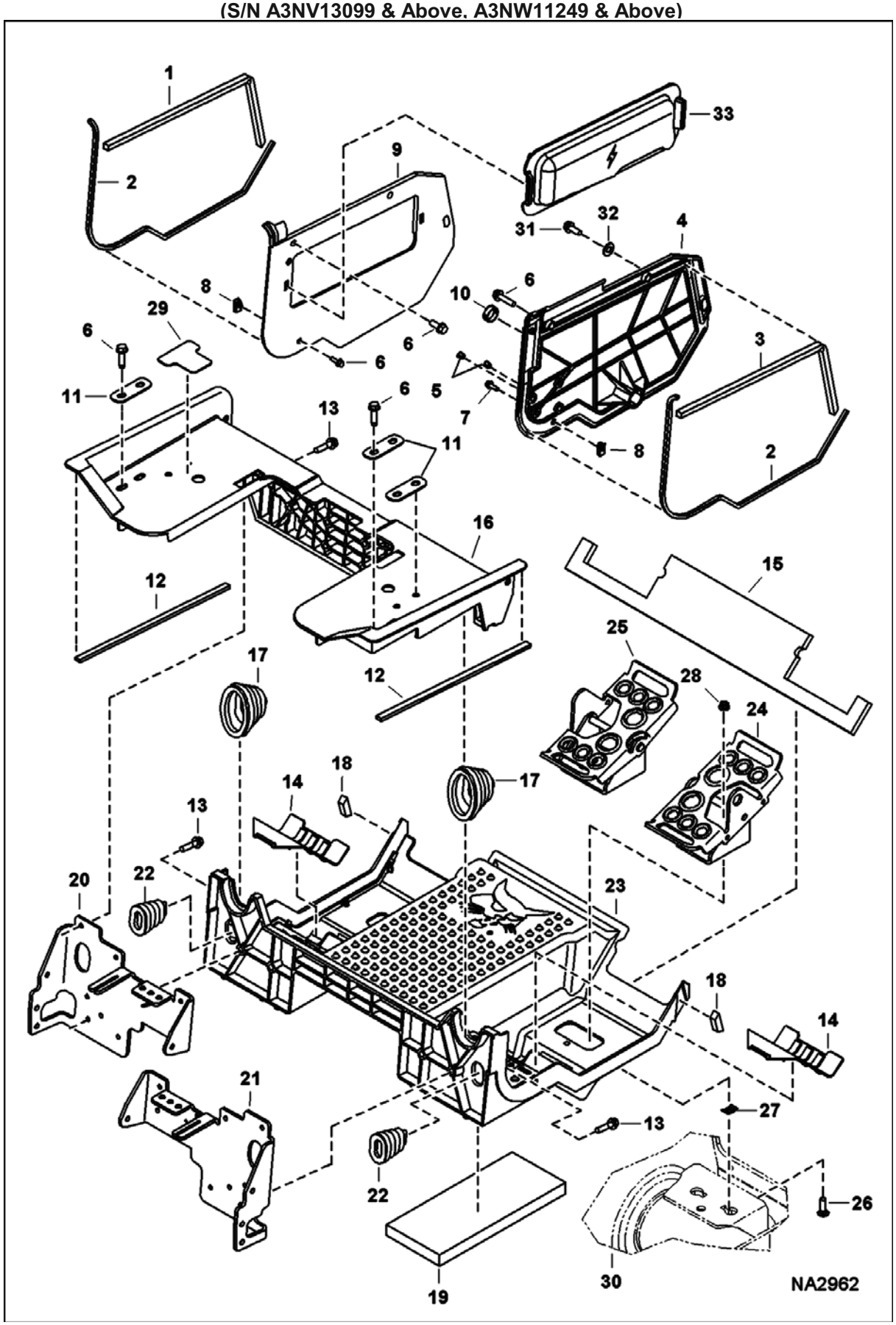

PANELS (Cont'd)
(Floor Pan) (Manual Controls, AHC & ACS)
(S/N A3NV13099 & Above, A3NW11249 & Above)

Ref No	Part Number	Description	Remarks	Serial Number	Qty
1	7166197	FOAM, PANEL	LH		1
2	7166199	FOAM, EDGE			2
3	7166198	FOAM, PANEL	RH		1
4	7180032	PANEL, RH			1
5	5289686	PLUG	black - 0.38" dia hole		2
6	84G3716	SCREW 5			8
7	35C412	BOLT			2
8	7160765	NUT			2
9	7196671	PANEL, LH			1
10	7166315	PLUG			1
11	7167118	PLATE, WASHER			3
12	7166196	FOAM, PANEL			2
13	84G3724	BOLT			4
14	7164345	COVER, PAN FLOOR			2
15	7163132	FOAM, FRONT			1
16	7185169	PANEL, STEERING			1
17	7147815	BOOT			2
18	7166200	FOAM, PAN FLOOR			2
19	7166195	PAD, PAN FLOOR			1
20	7176118	MOUNT			1
21	7176117	MOUNT			1
22	7153503	BOOT			2
23	7156916	PAN, FLOOR			1
24		PEDAL ASSEMBLY	See Illustration CONTROL PEDALS/ NA1261 - RH		1
25		PEDAL ASSEMBLY	See Illustration CONTROL PEDALS/ NA1261 - LH		1
26	37C620	BOLT			4
27	6684033	NUT			4
28	57D6	NUT 5			4
29	7185170	COVER	Use W/Ref. 16		1
30		CHAINCASE	See Illustration DRIVE TRAIN/ NA1008		1
31	84G3720	BOLT			2
32	25E18	WASHER			2
33	7197082	COVER	W/Ref. 34 & 35		1
34	7205329	SEAL, COVER			1
35	7165333	CLIP			2

PANELS
(Floor Pan) (Selectable Joystick Controls)
(S/N A3NV11001 - 13098, A3NW11001 - 11248)

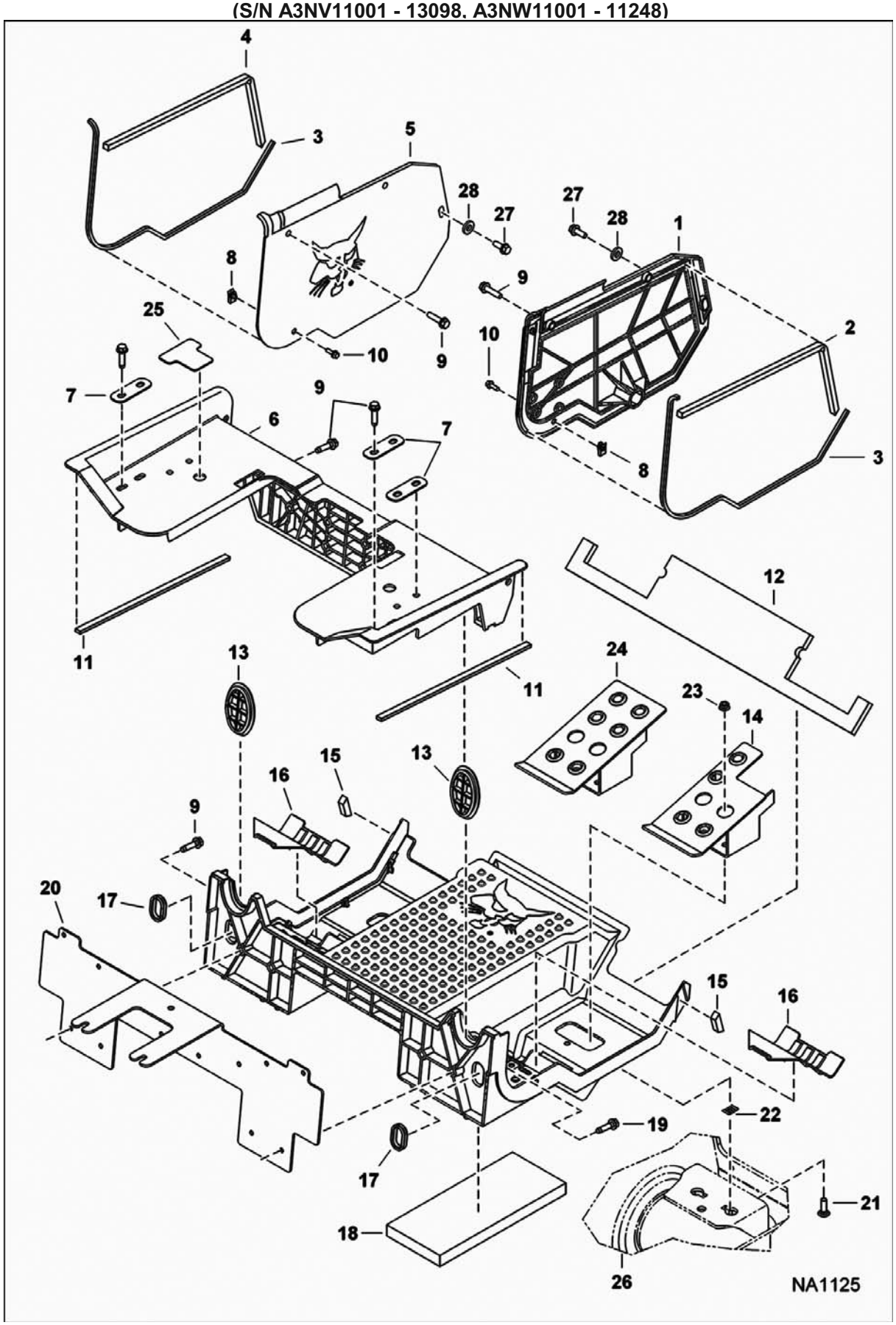

PANELS (Cont'd)
(Floor Pan) (Selectable Joystick Controls)
(S/N A3NV11001 - 13098, A3NW11001 - 11248)

Ref No	Part Number	Description	Remarks	Serial Number	Qty
1	7180032	PANEL, RH	Was 7156919 [A]		1
2	7166198	FOAM, PANEL			1
3	7166199	FOAM, EDGE			2
4	7166197	FOAM, PANEL			1
5	7180031	PANEL, LH	Was 7156920 [A]		1
6		PANEL, STEERING	NAP - Order 7185169 panel steering & Ref. 25 - Was 7180037 [A]		1
6	7185169	PANEL, STEERING			1
7	7167118	PLATE, WASHER			3
8	7160765	NUT			2
9	84G3716	SCREW 5			22
10	35C412	BOLT			2
11	7166196	FOAM, PANEL			2
12	7163132	FOAM, FRONT			1
13	7161131	COVER, LEVER			2
14	7157725	PEDAL ASSY	RH		1
15	7166200	FOAM, PAN FLOOR			2
16	7164345	COVER, PAN FLOOR			2
17	7161130	COVER			2
18	7166195	PAD, PAN FLOOR			1
19	7156916	PAN, FLOOR			1
20	7191409	PANEL, MOUNTING	Was 7159224 [A]		1
21	37C620	BOLT			4
22	6684033	NUT			4
23	57D6	NUT 5			4
24	7158574	PEDAL ASSY	LH		1
25	7185170	COVER	Use W/Ref. 6 (7185169 panel)		1
26		CHAINCASE	See Illustration DRIVE TRAIN/ NA1008		1
27	84G3720	BOLT			2
28	25E18	WASHER			2

PANELS
(Floor Pan) (Selectable Joystick Controls)
(S/N A3NV13099 & Above, A3NW11249 & Above)

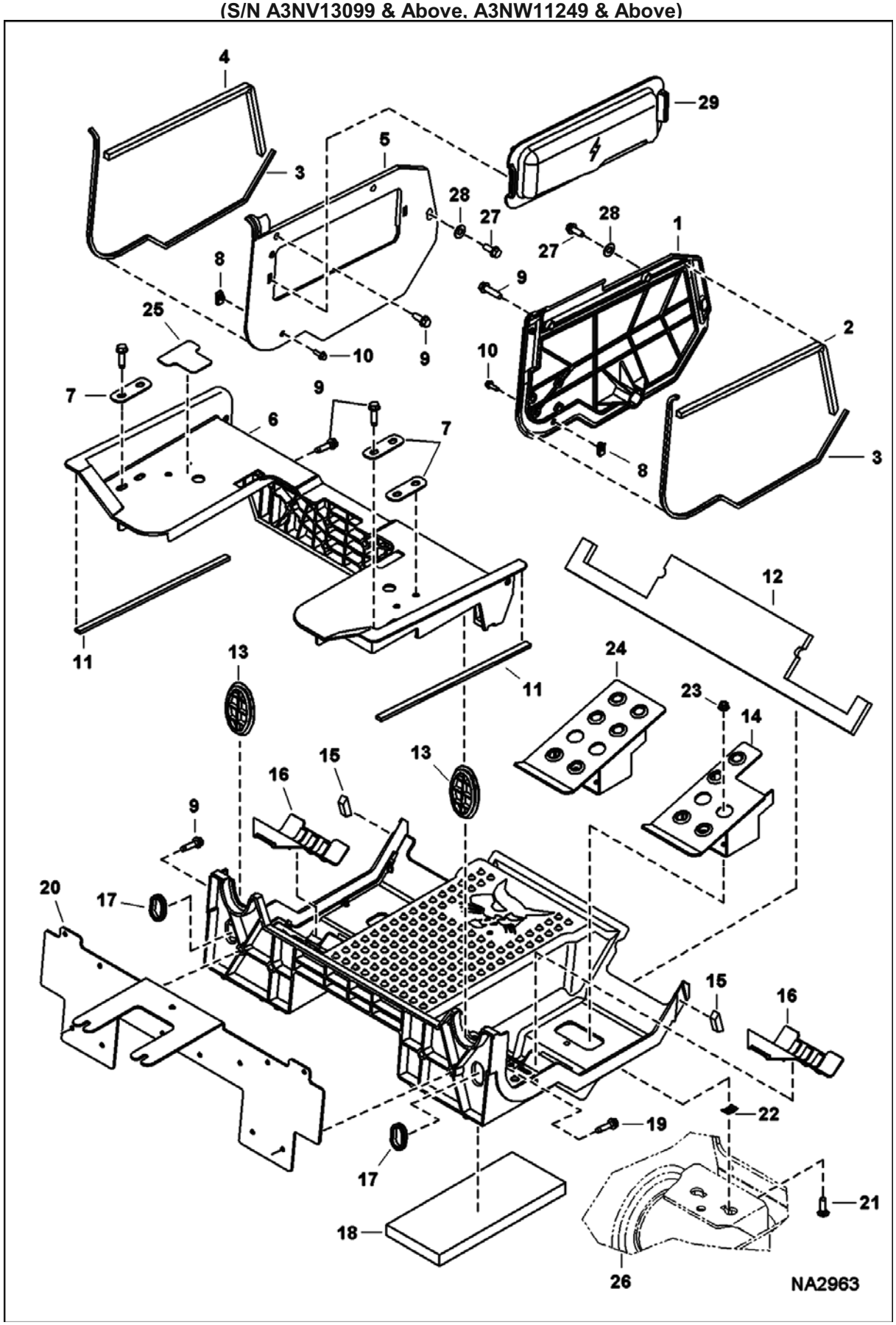

PANELS (Cont'd)
(Floor Pan) (Selectable Joystick Controls)
(S/N A3NV13099 & Above, A3NW11249 & Above)

Ref No	Part Number	Description	Remarks	Serial Number	Qty
1	7180032	PANEL, RH			1
2	7166198	FOAM, PANEL			1
3	7166199	FOAM, EDGE			2
4	7166197	FOAM, PANEL			1
5	7196671	PANEL, LH			1
6	7185169	PANEL, STEERING			1
7	7167118	PLATE, WASHER			3
8	7160765	NUT			2
9	84G3716	SCREW 5			22
10	35C412	BOLT			2
11	7166196	FOAM, PANEL			2
12	7163132	FOAM, FRONT			1
13	7161131	COVER, LEVER			2
14	7157725	PEDAL ASSY	RH		1
15	7166200	FOAM, PAN FLOOR			2
16	7164345	COVER, PAN FLOOR			2
17	7161130	COVER			2
18	7166195	PAD, PAN FLOOR			1
19	7156916	PAN, FLOOR			1
20	7191409	PANEL, MOUNTING			1
21	37C620	BOLT			4
22	6684033	NUT			4
23	57D6	NUT 5			4
24	7158574	PEDAL ASSY	LH		1
25	7185170	COVER	Use W/Ref. 6 (7185169 panel)		1
26		CHAINCASE	See Illustration DRIVE TRAIN/ NA1008		1
27	84G3720	BOLT			2
28	25E18	WASHER			2
29	7197082	COVER	W/Ref. 30 & 31		1
30	7205329	SEAL, COVER			1
31	7165333	CLIP			2

REAR DOOR

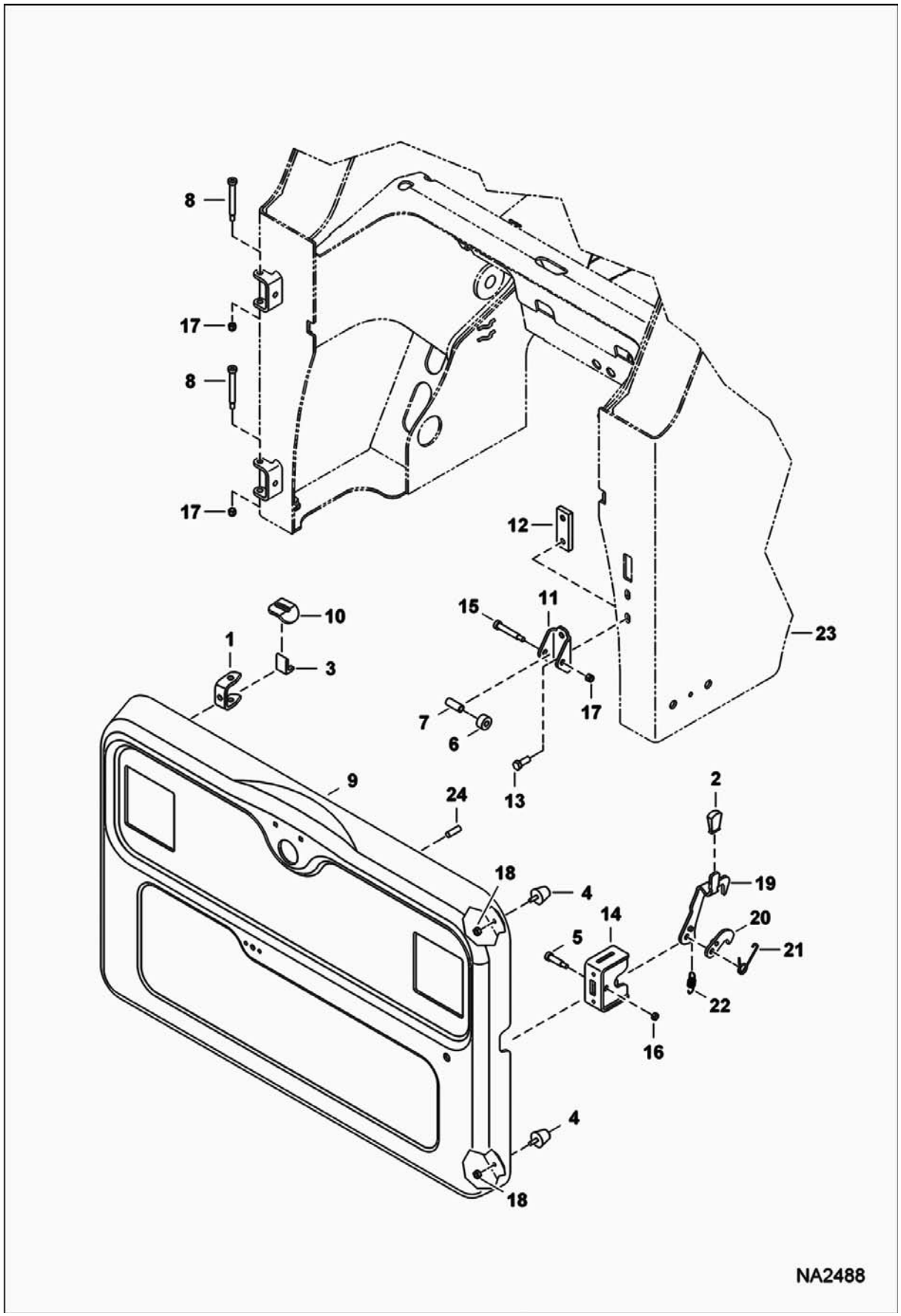
8
17
8
17
12
10
15
11
23
1
3
7
6
17
9
24
13
2
18
4
19
14
20
5
21
22
16
4
18
NA2488

REAR DOOR (Cont'd)

Ref No	Part Number	Description	Remarks	Serial Number	Qty
1	6733575	HINGE, REAR DOOR	weld-on		2
2	6564452	GRIP			1
3	6719766	STOP			1
4	6733616	BUMPER			2
5	38C824	SCREW			1
6	6809726	ROLLER			1
7	7184677	BUSHING			1
8	6809845	BOLT			2
9	7144158	REAR DOOR			1
10	7160704	STOP			1
11	7160705	CHANNEL			1
12	7160706	BAR	threaded striker		1
13	17C820	BOLT			2
14	7160698	LATCH	weld-on		1
15	38C840	BOLT	carriage		1
16	85D6	LOCK NUT			1
17	59D6	NUT			3
18	61D5	NUT			2
19	7160703	HANDLE			1
20	7160701	LATCH			1
21	6810132	SPRING			1
22	6810141	SPRING			1
23		MAIN FRAME	See Illustration MAIN FRAME/ NA2150		1
24	56G412	STUD	weld-on		6

LIFT ARM & BOB-TACH

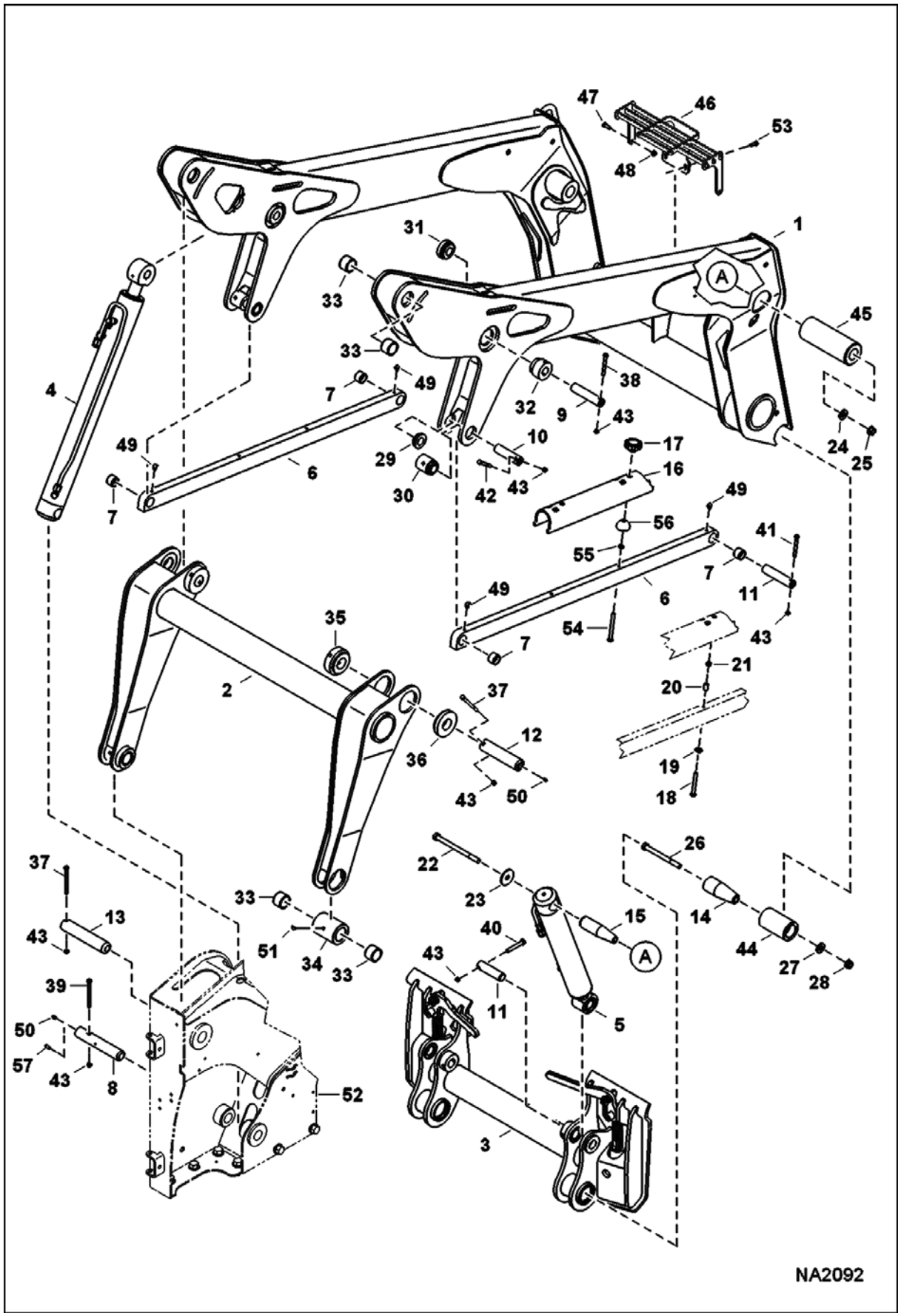

LIFT ARM & BOB-TACH (Cont'd)

Ref No	Part Number	Description	Remarks	Serial Number	Qty
1	7139845	LIFT ARM			1
2	7139846	LINK, LIFT ARM H ASSY		A3NV11001 - 11207	1
2	7139846	LINK, LIFT ARM H ASSY		A3NW11001 - 11002	1
2		LINK, LIFT ARM ASSY	See BTI408 NAP - Was 7139846 [A]	A3NV11001 - 11207	1
2		LINK, LIFT ARM ASSY	See BTI408 NAP - Was 7139846 [A]	A3NW11001 - 11002	1
2	7187124	FRAME LINK		A3NV11208 & Above	1
2	7187124	FRAME LINK		A3NW11003 & Above	1
3		BOB-TACH ASSY	See Illustration BOB-TACH/ NA1003		1
4		CYLINDER, LIFT	See Illustration LIFT CYLINDER/ NA1413		2
5		CYLINDER, TILT	See Illustration TILT CYLINDER/ NA1210 - LH		1
5		CYLINDER, TILT	See Illustration TILT CYLINDER/ NA1209 - RH		1
6	7143246	LINK, ASSY	LH - W/Ref. 7		1
6	7143246	LINK, ASSY	RH - W/Ref. 7 - Also Order (2) each of Ref. 54-56 for mounting Ref. 16 lift arm stop		1
7	7158128	BUSHING, WEAR			4
8	7175270	PIN, PIVOT			2
9	7147806	PIN, PIVOT			2
10	7143234	PIN, PIVOT			2
11	6577954	PIN			4
12	7144198	PIN, PIVOT			2
13	7147804	PIN			2
14	7170609	PIN, PIVOT TAPERED			2
15	6728971	PIN, PIVOT TAPERED			2
16	7158459	SUPPORT, LIFT ARM			1
17	6684932	KNOB			2
18	6731646	BOLT	stainless steel		2
19	6E6	WASHER			2
20	6532347	SPACER			2
21	6718942	NUT			2
22	17C10136	BOLT			2
23	6731160	WASHER			2
24	27E10	WASHER			2
25	53D10	NUT			2
26	17C12112	BOLT			2
27	27E12	WASHER			2
28	53D12	NUT			2
29	7143239	BUSHING, WELD-ON			2
30	7143238	BUSHING, WELD-ON			2
31	7143236	BUSHING, WELD-ON			2
32	7145436	BUSHING, WELD-ON			2
33	6730995	BUSHING, WEAR			8
34	7139883	BUSHING, WELD-ON			2
35	6727525	BUSHING,			2

LIFT ARM & BOB-TACH (Cont'd)

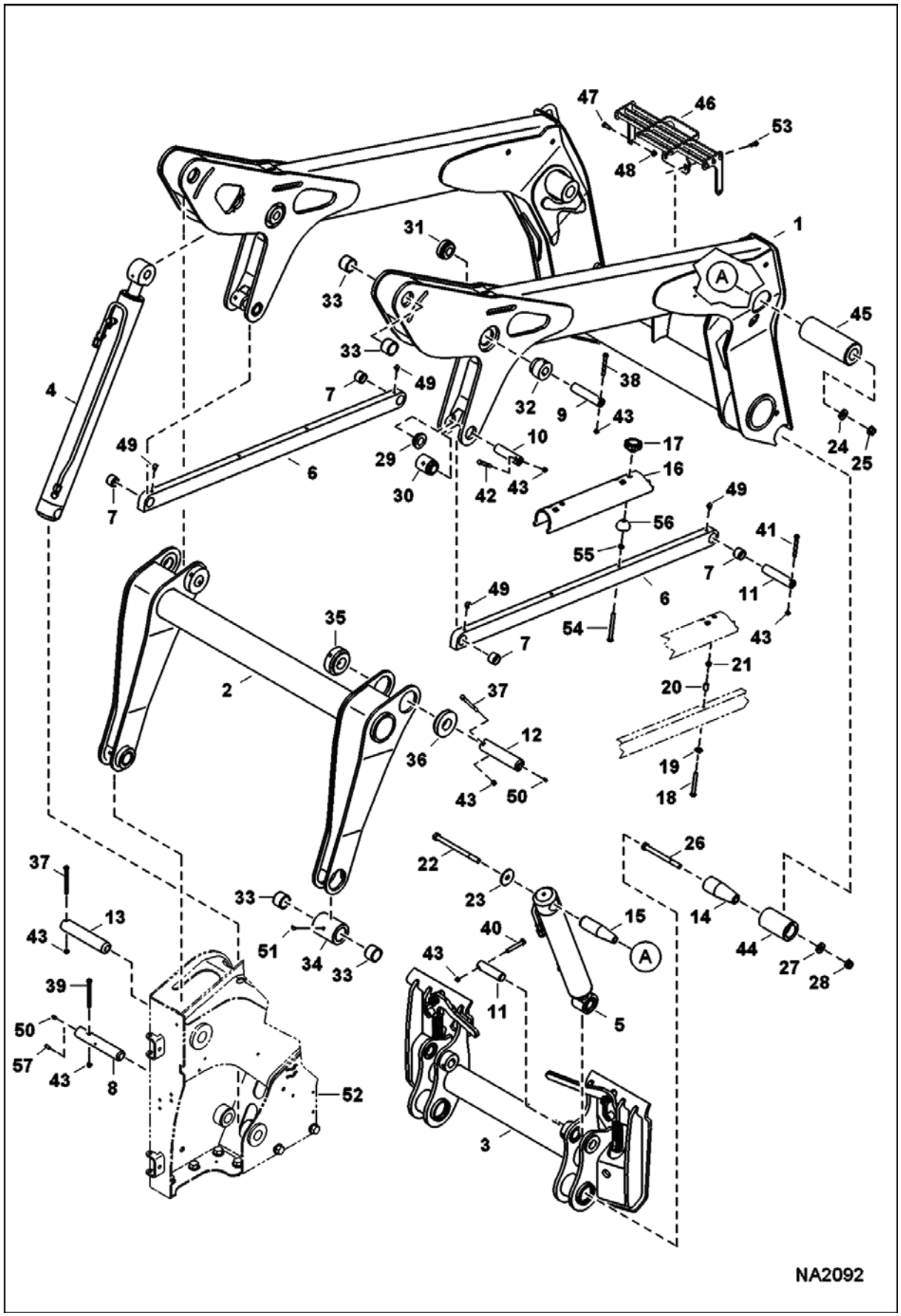

Ref No	Part Number	Description	Remarks	Serial Number	Qty
		WELD-ON			
36	6727832	BUSHING, WELD-ON			2
37	17C672	BOLT			4
38	17C652	SCREW			2
39	17C656	BOLT			2
40	17C648	BOLT 5			2
41	17C640	BOLT 5			2
42	17C644	BOLT			2
43	85D6	LOCK NUT			14
44	7170608	BUSHING, WELD-ON			2
45	7132937	BUSHING, WELD-ON			2
46	7159749	STEP			1
47	17C616	BOLT 5			2
48	53D6	NUT			2
49	12H15	GREASE ZERK			4
50	10H25	FITTING, GREASE 5			4
51	11H15	GREASE FITTING			2
52		MAIN FRAME	See Illustration MAIN FRAME/ NA2150		1
53	84G3716	SCREW 5			1
54	7197120	BOLT			2
55	7D6	NUT			2
56	7201355	DAMPER			2
57	45H25	FITTING, GREASE			2

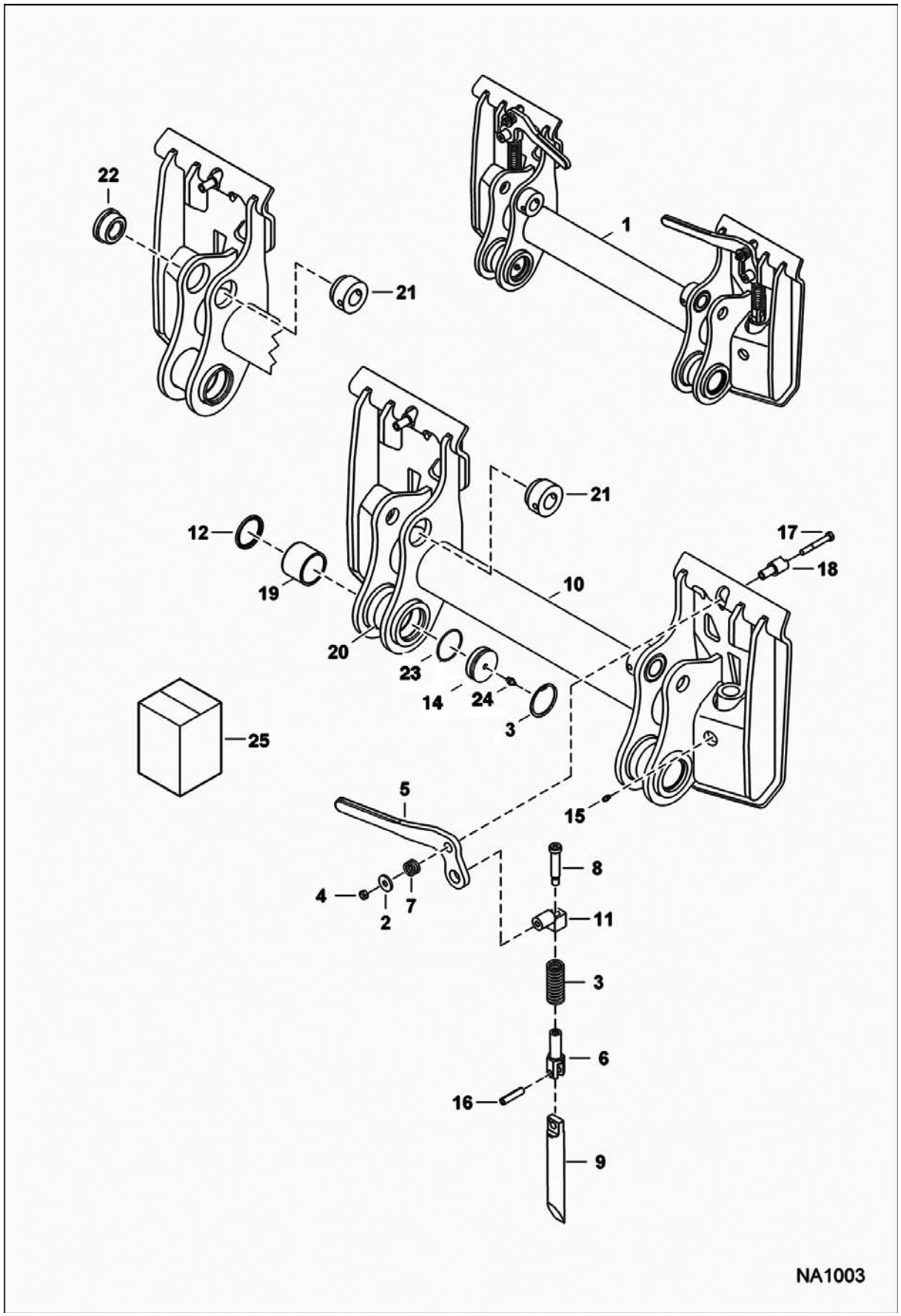
22
1
21
21
12
19
17
18
10
20
23
14
24
3
25
5
15
8
4
2
7
11
3
6
16
9
NA1003

BOB-TACH (Cont'd)

Ref No	Part Number	Description	Remarks	Serial Number	Qty
1	7128962	BOB-TACH	Ref. 2-24		1
2	619021	WASHER, 5			2
3	6578253	SPRING, COMPRESSION			2
4	85D6	LOCK NUT			2
5	6702904	LEVER, BOB-TACH RH			1
5	6702903	LEVER, BOB-TACH LH			1
6	6704248	PIVOT			2
7	6704453	SPRING			2
8	6728473	BOLT, SHOULDER	pre-applied thread locker		2
9	6737191	WEDGE			2
10	7136460	BOBTACH			1
11	7146538	PIVOT, BOBTACH			2
12	7170611	SEAL	install flush to Ref. 19		2
13	7170614	SNAP RING			2
14	7170613	PLUG			1
15	10H35	GREASE ZERK			2
16	14J5032	PIN, STRAIGHT			2
17	17C644	BOLT			2
18	6702958	BUSHING, WELD-ON			2
19	7170615	BUSHING, WEAR			2
20	7170610	BUSHING, WELD-ON			2
21	7136465	BUSHING, WELD-ON			2
22	7136464	BUSHING, WELD-ON			2
23	25K30210	O-RING			1
24	10H25	FITTING, GREASE 5			1
25		KIT, LEVER	NAP		1

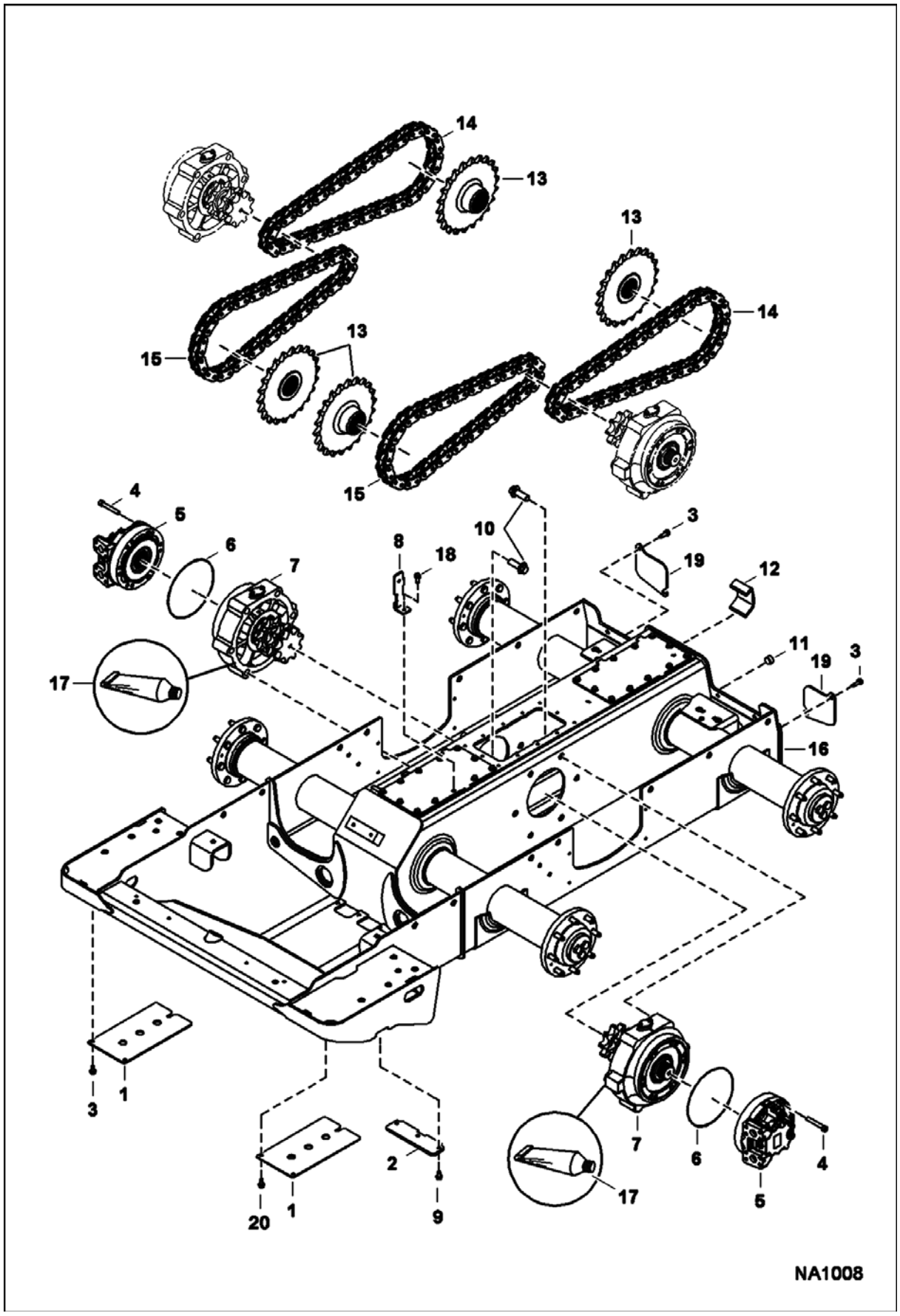
14
13
13
14
15
13
15
4
5
6
7
8
18
10
3
19
12
11
19
3
16
17
3
1
20
1
2
9
7
6
4
5
17
NA1008

DRIVE TRAIN (Cont'd)

Ref No	Part Number	Description	Remarks	Serial Number	Qty
1	7145347	COVER			2
2	7159094	COVER, DRAIN			1
3	84G3712	BOLT			5
4	6717806	BOLT			20
5		MOTOR	See Illustration HYDROSTATIC MOTOR/ MS2199 - single speed		2
5		MOTOR	See Illustration HYDROSTATIC MOTOR & BRAKE/ MS1467 - 2 speed		1
6	25K30812	O-RING, 10			2
7		MOTOR	See Illustration MOTOR CARRIER/ NA2154 - manual controls & ACS		2
7		MOTOR	See Illustration MOTOR CARRIER/ NA1007 - SJC		1
8	7151466	BRACKET			1
9	84G3716	SCREW 5			3
10	6678971	BOLT			12
11	6731121	PLUG	chaincase fill		1
12	7134445	BRACKET, TIE-DOWN	tie-down - weld-on		2
13	7134153	SPROCKET	See Illustration AXLE/ NA1004		4
14	7106862	CHAIN, DRIVE	endless - 48 pitch		2
14	6690988	CHAIN, DRIVE	service - 48 pitch		2
14	6691078	LINK	connecting		x
15	7130811	CHAIN, DRIVE	endless - 44 pitch		2
15	7181282	CHAIN, DRIVE	service - 44 pitch		2
15	6691078	LINK	connecting		x
16	7130785	CHAINCASE			1
17	6685372	SEALANT, GASKET LIQUID	tube - 20 oz		x
18	84G3732	BOLT			1
19	6737088	COVER, FRONT ACCESS			2
20	35C612	BOLT			3

AXLE

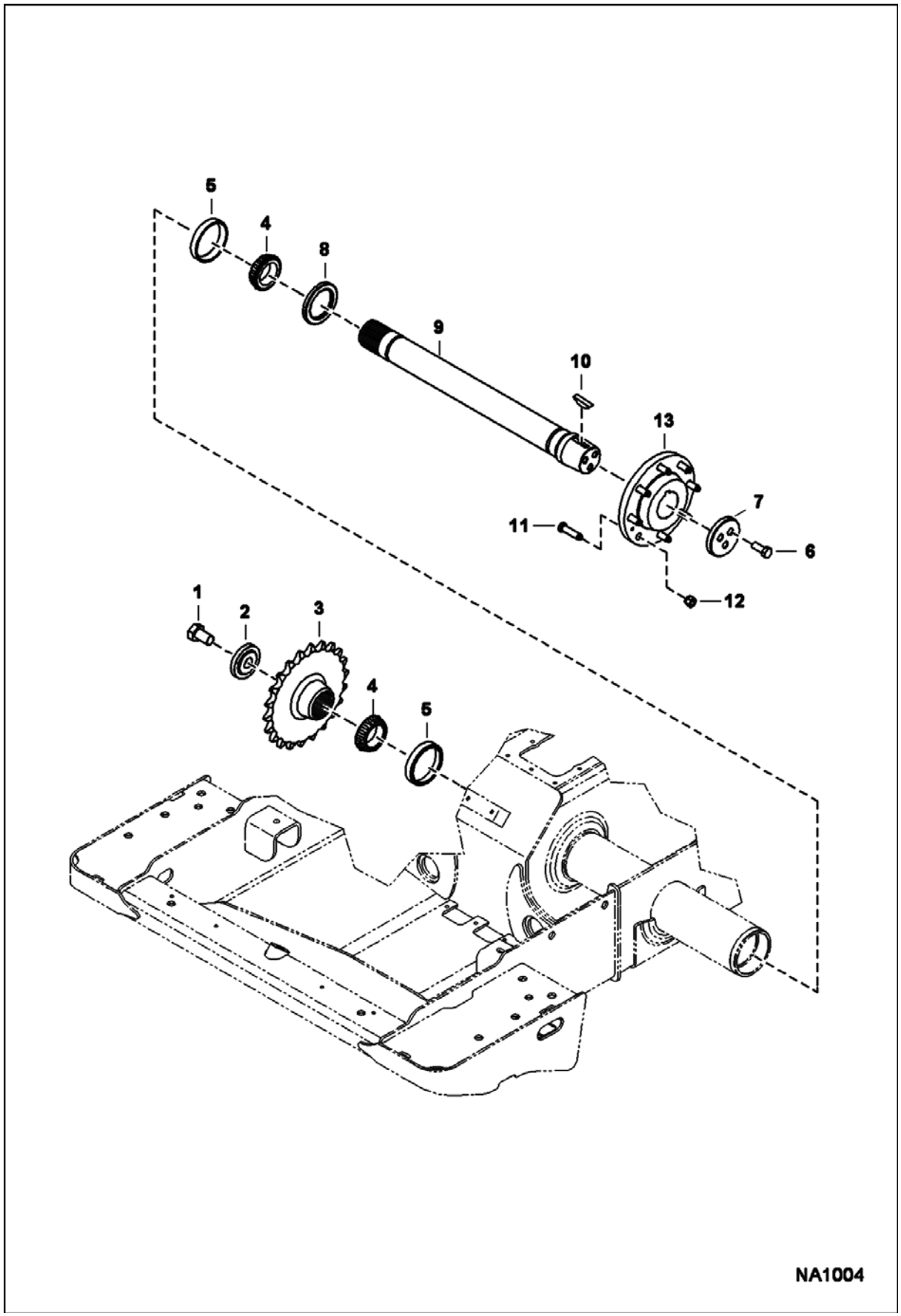

AXLE (Cont'd)

Ref No	Part Number	Description	Remarks	Serial Number	Qty
1	2C1626	BOLT			4
2	7107271	WASHER			4
3	7134153	SPROCKET			4
4	1321608	BEARING, CONE			8
5	1321607	CUP, BEARING			8
6	17C1024	BOLT			12
7	6565947	WASHER			4
8	6671138	SEAL, OIL			4
9	6709757	SHAFT, AXLE			4
10	6J1664	KEY			4
11	6709170	STUD	Was 7130936 [B,D]		32
12	6564669	NUT	Was 7131115 [B,D]		32
13	6578857	HUB, WHEEL	Was 7132551 [B,D]		4

MOTOR CARRIER
(Drive Motor Mount Assy) (Manual Controls & ACS)

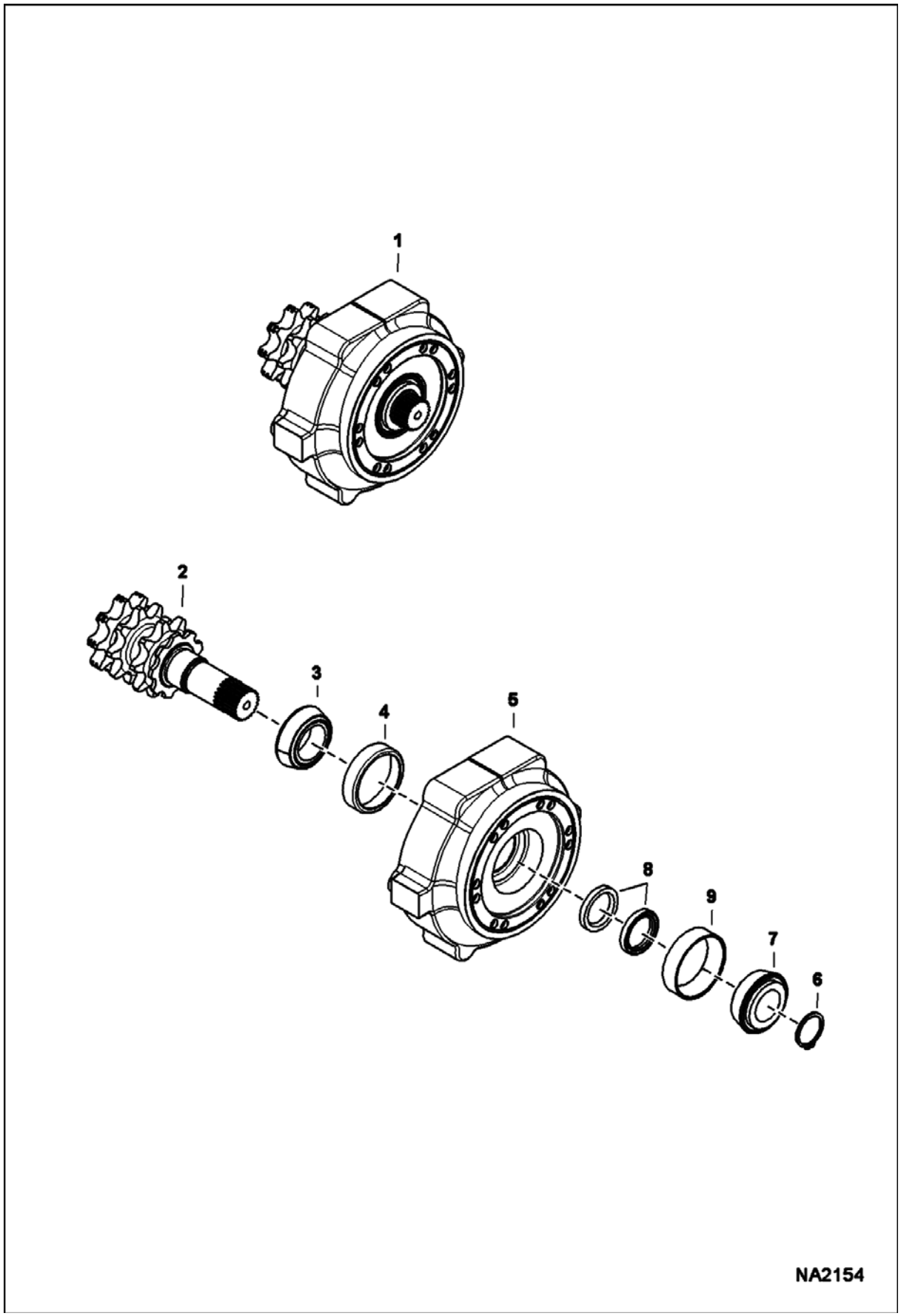

MOTOR CARRIER (Cont'd)
(Drive Motor Mount Assy) (Manual Controls & ACS)

Ref No	Part Number	Description	Remarks	Serial Number	Qty
1	7126215	CARRIER, MOTOR			1
2	7147579	SHAFT TRANS			1
3	6664845	CONE, BEARING			1
4	6650120	RACE			1
5	6717242	HOUSING			1
6	6693415	RING			1
7	6693525	BEARING			1
8	6665755	SEAL, OIL			2
9	7100240	RACE			1

MOTOR CARRIER
(Drive Motor Mount Assy) (SJC)

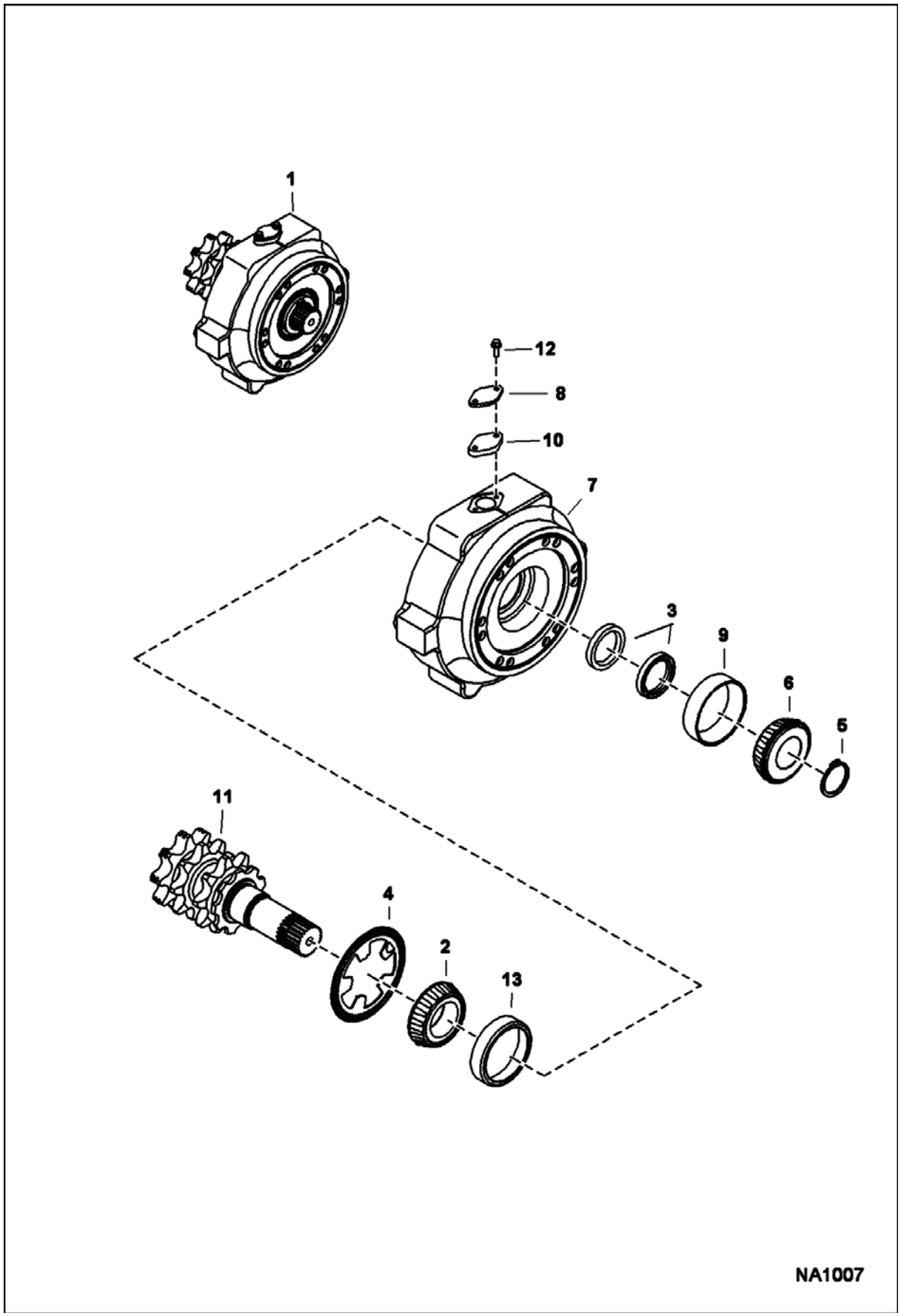

MOTOR CARRIER (Cont'd)
(Drive Motor Mount Assy) (SJC)

Ref No	Part Number	Description	Remarks	Serial Number	Qty
1	7136291	CARRIER, MOTOR	Ref. 2-13		1
2	6664845	CONE, BEARING			1
3	6665755	SEAL, OIL			2
4	6690561	MAGNET			1
5	6693415	RING			1
6	6693525	BEARING			1
7	6729663	HOUSING			1
8	6730013	COVER			1
9	7100240	RACE			1
10	7110287	GASKET			1
11	7147579	SHAFT TRANS			1
12	35C412	BOLT			2
13	6650120	RACE			1

DISC BRAKE
(Single Speed Motor)

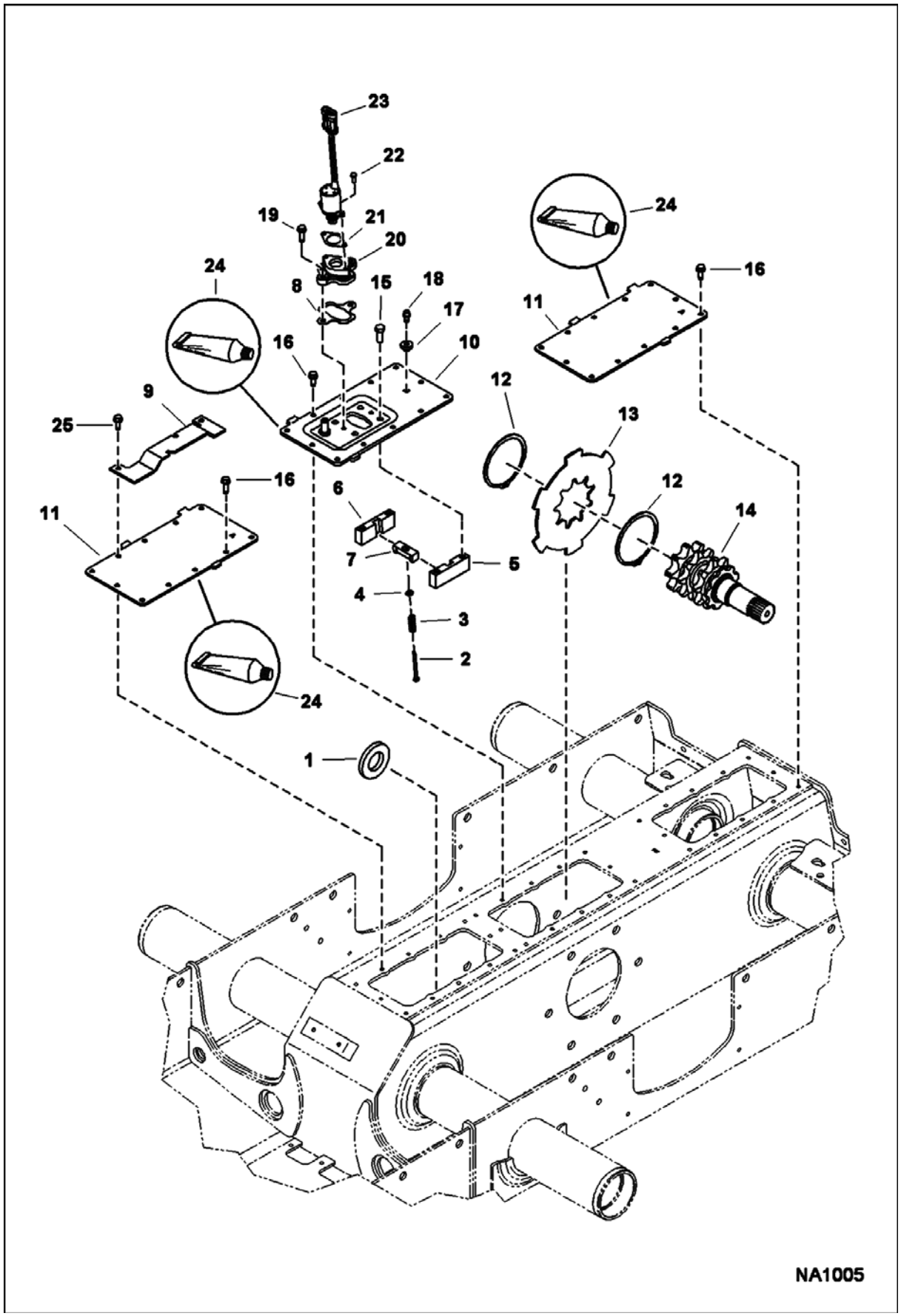

DISC BRAKE (Cont'd)
(Single Speed Motor)

Ref No	Part Number	Description	Remarks	Serial Number	Qty
1	6680055	MAGNET	for SJC		2
2	6708267	BOLT			1
3	6708018	SPRING			1
4	25E13	WASHER 5			1
5	6719057	BLOCK	guide - RH		1
6	6719056	BLOCK	guide - LH		1
7	6714278	WEDGE, LOCK TRACTION	disc brake		1
8	6708016	GASKET			1
9	7157080	MOUNT			1
10	7161527	COVER, BRAKE ASSY			1
11	7129987	COVER			2
12	6690163	RING			4
13	7126213	DISC			2
14		SHAFT	See Illustration MOTOR CARRIER/ NA2154 - manual controls & ACS		2
14		SHAFT	See Illustration MOTOR CARRIER/ NA1007 - SJC		2
15	47C820	BOLT			4
16	84G3716	SCREW 5			35
17	6553411	BUSHING			1
18	6680970	BREATHER			1
19	84G3720	BOLT			2
20	6706718	MOUNT			4
21	6706737	GASKET			1
22	17C412	BOLT 5			2
23	7136559	SOLENOID ASMBLY			1
24	6685372	SEALANT, GASKET LIQUID	tube - 20 oz		x
25	84G3732	BOLT			1

TRANSMISSION COVERS
(2-Speed Motor)

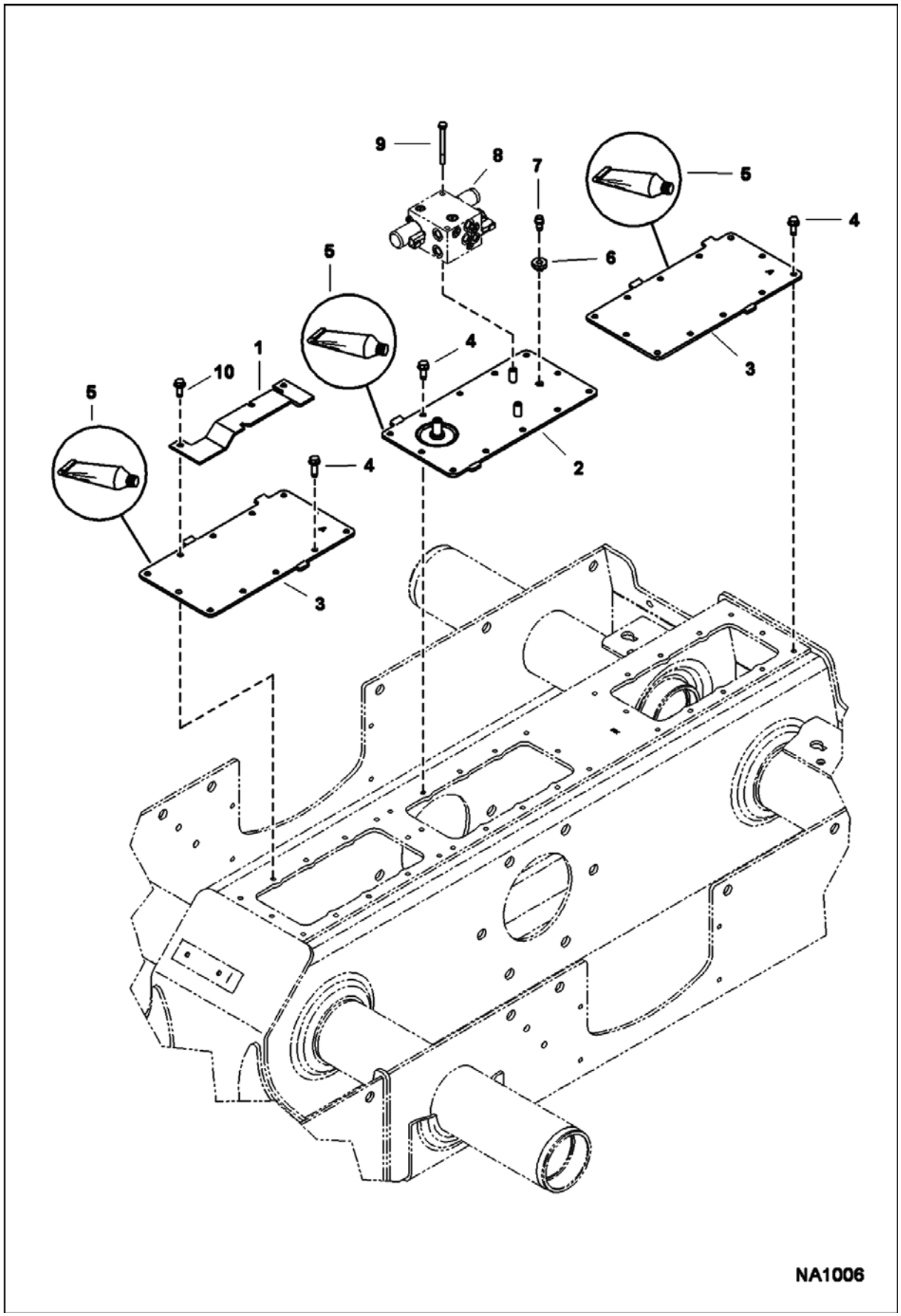

TRANSMISSION COVERS (Cont'd)
(2-Speed Motor)

Ref No	Part Number	Description	Remarks	Serial Number	Qty
1	7157080	MOUNT			1
2	7153655	COVER, BRAKE ASSY			1
3	7129987	COVER			2
4	84G3716	SCREW 5			35
5	6685372	SEALANT, GASKET LIQUID	tube - 20 oz		x
6	6553411	BUSHING			1
7	6680970	BREATHER			1
8		VALVE, 2 SPEED	See Illustration 2-SPEED VALVE/ NA2164		1
9	17C552	BOLT			2
10	84G3732	BOLT			1

HYDRAULIC CIRCUITRY
(W/BPV Junction Block)
(S/N A3NV11001 - 13576, A3NW11001 - 11397)

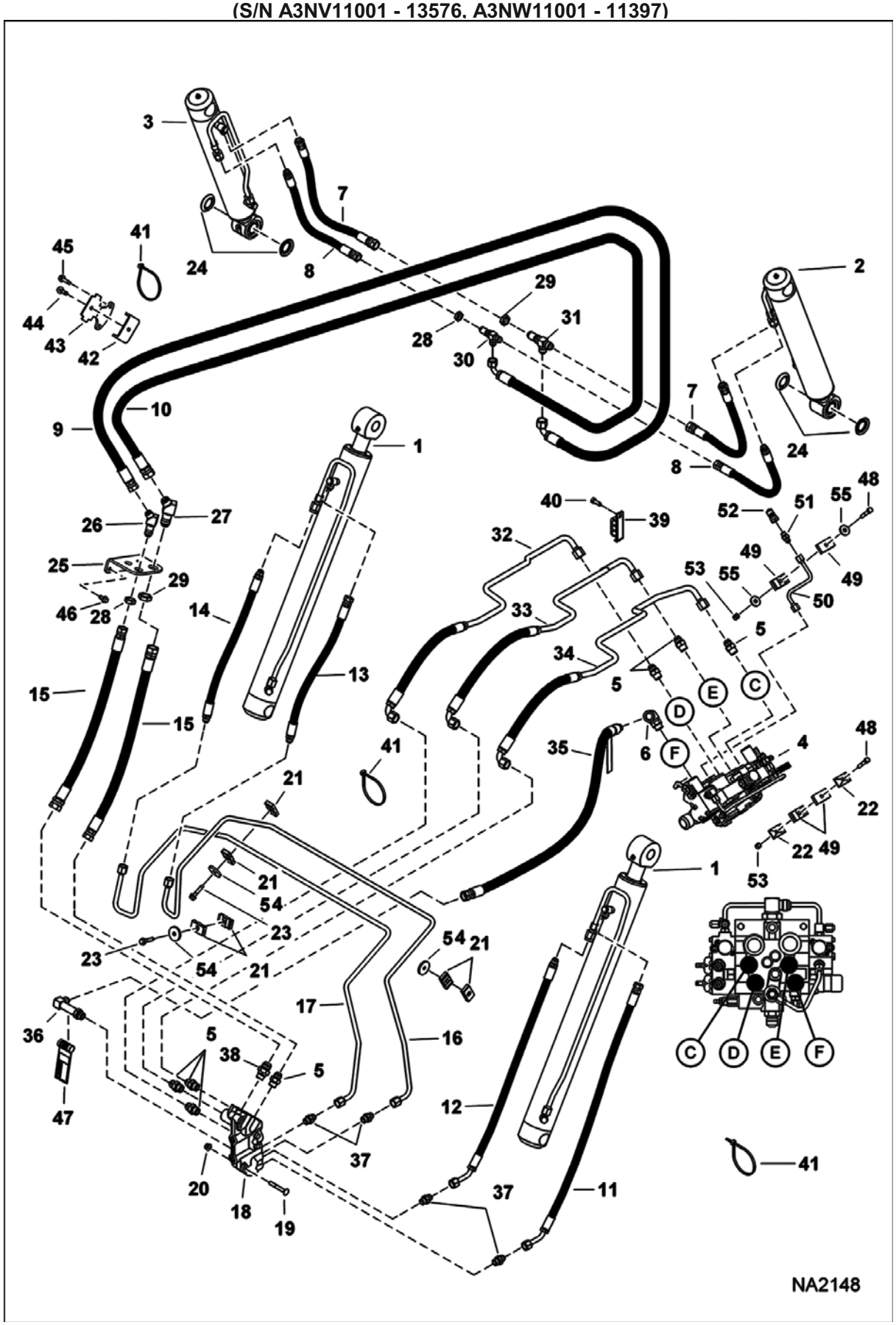

HYDRAULIC CIRCUITRY (Cont'd)
(W/BPV Junction Block)
(S/N A3NV11001 - 13576, A3NW11001 - 11397)

Ref No	Part Number	Description	Remarks	Serial Number	Qty
1		CYLINDER, LIFT	See Illustration LIFT CYLINDER/ NA1413		2
2		CYLINDER, TILT	See Illustration TILT CYLINDER/ NA1209 - RH		1
3		CYLINDER, TILT	See Illustration TILT CYLINDER/ NA1210 - LH		1
4		VALVE, CONTROL	See Illustration CONTROL VALVE/ NA1216 - manual controls		1
4		VALVE, CONTROL	See Illustration CONTROL VALVE/ NA1217 - ACS, SJC		1
5	15KB1010	FITTING, HYD CONNECTOR			8
5	79K10	O RING 10			x
6	7109623	ELBOW			1
6	79K10	O RING 10			1
7	7153006	HOSE, HYD			2
8	7153008	HOSE, HYD			2
9	7155180	HOSE, HYD			1
10	7155391	HOSE, HYD			1
11	7155829	HOSE, HYD			1
12	7155830	HOSE, HYD			1
13	7155831	HOSE, HYD	558,7 mm (22") long		1
13	7188390	HOSE, HYD	622,3 mm (24.5") long		1
13	7204727	HOSE, HYD	641,4 mm (25.25") long		1
14	7155832	HOSE, HYD		A3NV11001 - 11576	1
14	7155832	HOSE, HYD		A3NW11001 - 11102	1
14	7188391	HOSE, HYD		A3NV11577 & Above	1
14	7188391	HOSE, HYD		A3NW11103 & Above	1
15	7156319	HOSE, HYD			2
16	7167465	TUBELINE, HYD		A3NV11001 - 11576	1
16	7167465	TUBELINE, HYD		A3NW11001 - 11102	1
16	7187114	TUBELINE, HYD		A3NV11577 & Above	1
16	7187114	TUBELINE, HYD		A3NW11103 & Above	1
17	7167466	TUBELINE, HYD		A3NV11001 - 11576	1
17	7167466	TUBELINE, HYD		A3NW11001 - 11102	1
17	7187115	TUBELINE, HYD		A3NV11577 & Above	1
17	7187115	TUBELINE, HYD		A3NW11103 & Above	1
18	7001921	BLOCK, JUNCTION			1
19	37C644	BOLT			2
20	83D6	NUT 5			2
21	6701892	CLAMP			6
22	6652521	PLATE		A3NV11001 - 11576	4
22	6652521	PLATE		A3NW11001 - 11102	4
23	84G3728	BOLT			2
24	6689112	SEAL			4

HYDRAULIC CIRCUITRY (Cont'd)
(W/BPV Junction Block)
(S/N A3NV11001 - 13576, A3NW11001 - 11397)

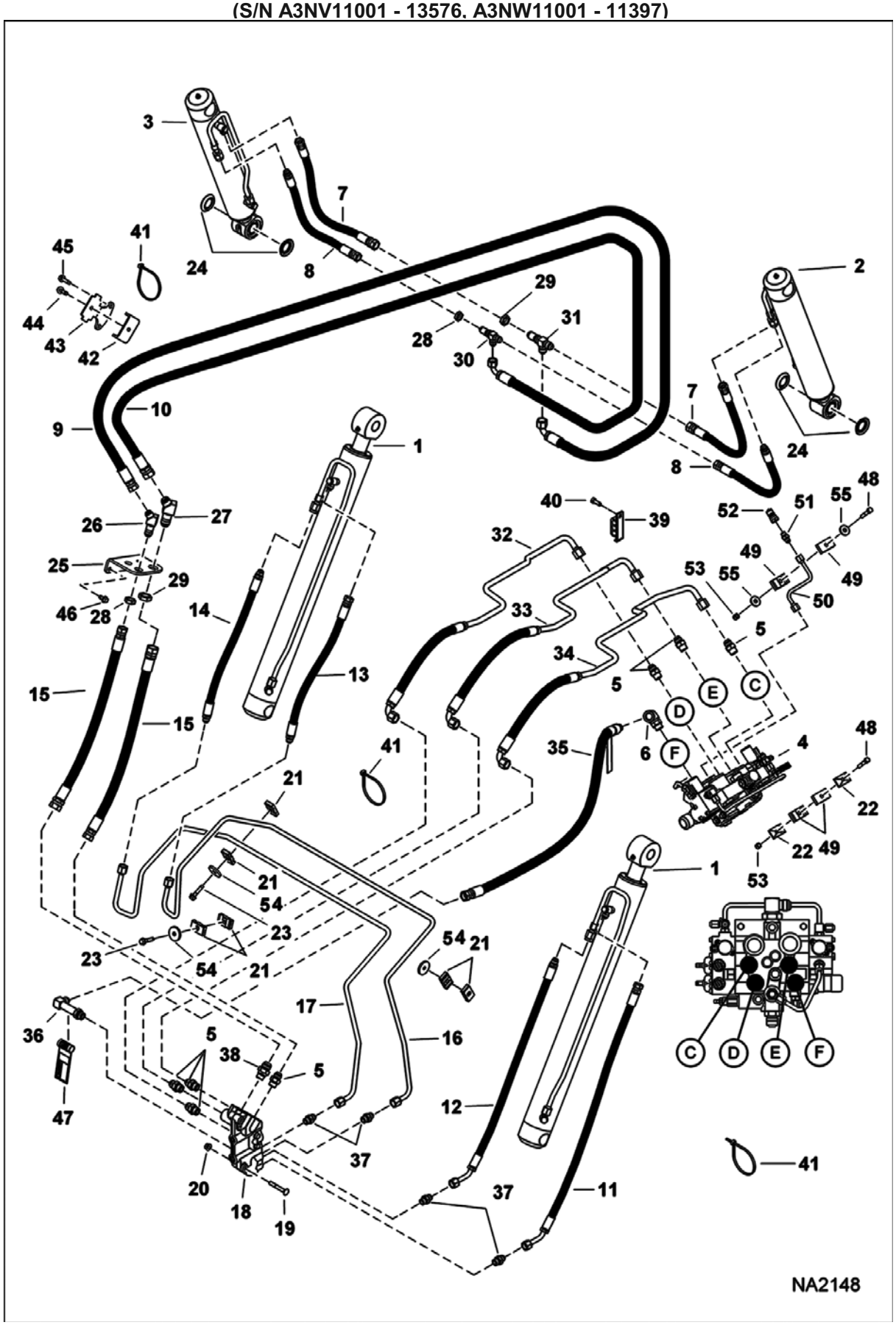

HYDRAULIC CIRCUITRY (Cont'd)
(W/BPV Junction Block)
(S/N A3NV11001 - 13576, A3NW11001 - 11397)

Ref No	Part Number	Description	Remarks	Serial Number	Qty
25	7156362	MOUNT, BLKHD			1
26	46K7	ELBOW			1
27	46K8	ELBOW			1
28	86F7	LOCK NUT	Was 86F6 [D]		1
29	86F8	NUT 5	Was 86F7 [D]		2
30	91K6	TEE			1
31	91K7	FITTING			1
32	7152003	HOSE, HYD			1
33	7152004	HOSE, HYD			1
34	7152005	HOSE, HYD			1
35	7168336	HOSE, HYD	available only as an assembly W/one danger decal installed near the male threaded end of the hose		1
35	7170355	DECAL, DANGER			1
36	7154528	ELBOW	Also Order. Ref. 47 - this elbow must always display the danger decal		1
36	79K10	O RING 10			x
37	15KB0808	FITTING, HYD CONNECTOR			3
37	79K8	O RING 10			x
38	15KB1012	FITTING, HYD CONNECTOR			1
38	79K12	O RING 10			x
39	7157358	CLAMP			1
40	84G3716	SCREW 5	Was 17C616 [B,D]		1
41	6624289	STRAP, TIE			8
42	7161042	CLAMP, HOSE			1
43	7161043	BRACKET, CLAMP HOSE			1
44	84G3732	BOLT			2
45	84G3716	SCREW 5	Was 84G3720 [B]		2
46	84G3712	BOLT			2
47	7170355	DECAL, DANGER			1
48	17C632	BOLT 5			1
49	7183298	CLAMP			2
50	7182882	TUBELINE, HYD			1
51	15KB0606	FITTING, HYD CONNECTOR			1
51	79K6	O RING 10			x
52	6684125	COUPLER			1
53	85D6	LOCK NUT			1
54	872229	WASHER	0.19" thick - 44.5 mm (1.75") OD	A3NW11103 & Above	3
54	872229	WASHER	0.19" thick - 44.5 mm (1.75") OD	A3NV11577 & Above	3
55	619021	WASHER, 5	0.13" thick - 32 mm (1.25") OD	A3NV11577 & Above	2
55	619021	WASHER, 5	0.13" thick - 32 mm (1.25") OD	A3NW11103 & Above	2

HYDRAULIC CIRCUITRY
(W/BPV Junction Block)
(S/N A3NV13577 & Above, A3NW11398 & Above)

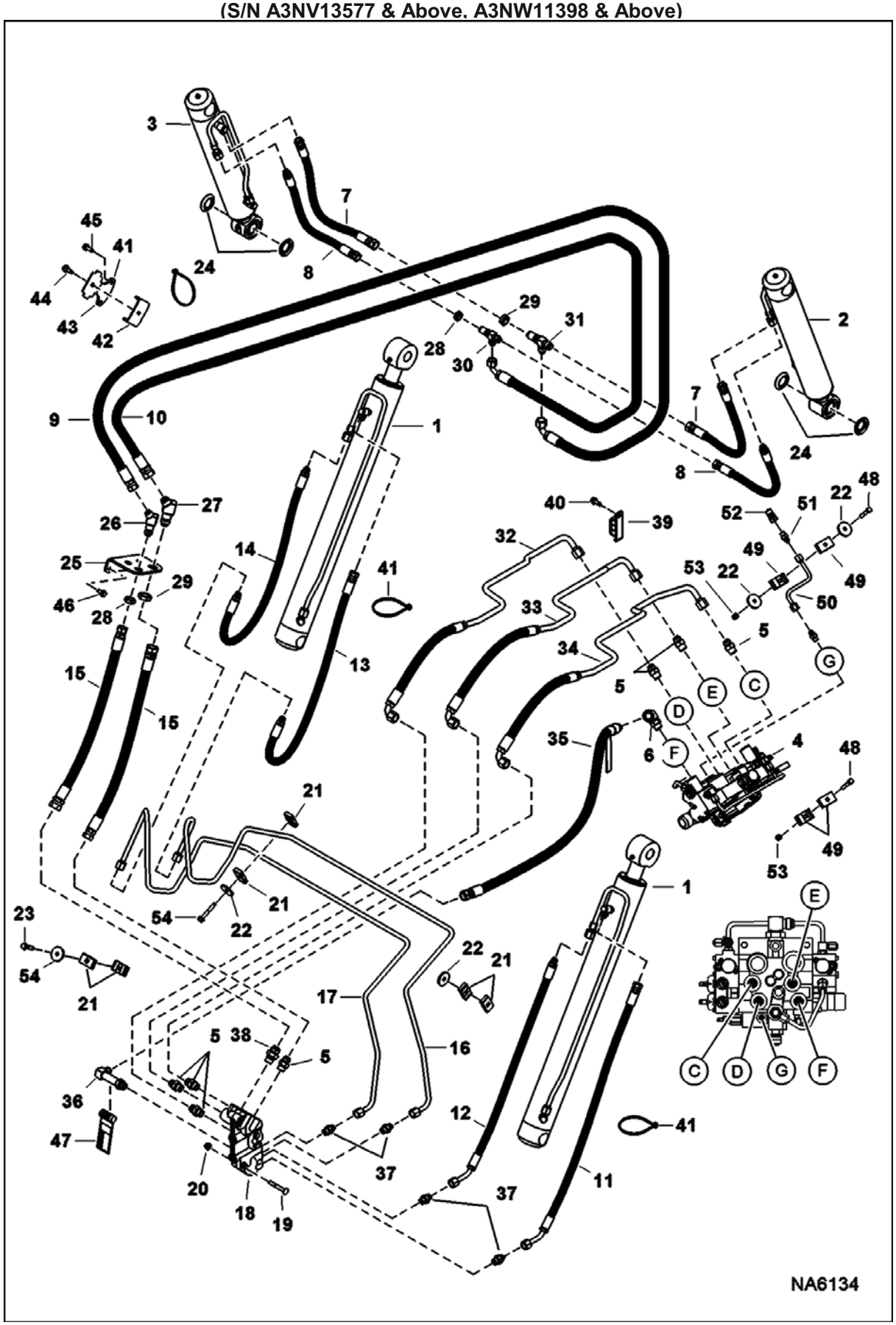

HYDRAULIC CIRCUITRY (Cont'd)
(W/BPV Junction Block)
(S/N A3NV13577 & Above, A3NW11398 & Above)

Ref No	Part Number	Description	Remarks	Serial Number	Qty
1		CYLINDER, LIFT	See Illustration LIFT CYLINDER/ NA6138		2
2		CYLINDER, TILT	See Illustration TILT CYLINDER/ NA6008 - RH		1
3		CYLINDER, TILT	See Illustration TILT CYLINDER/ NA6007 - LH		1
4		VALVE, CONTROL	See Illustration CONTROL VALVE/ NA1216 - manual controls		1
4		VALVE, CONTROL	See Illustration CONTROL VALVE/ NA1217 - ACS, SJC		1
5	15KB1010	FITTING, HYD CONNECTOR			8
5	79K10	O RING 10			x
6	7109623	ELBOW			1
6	79K10	O RING 10			1
7	7153006	HOSE, HYD			2
8	7153008	HOSE, HYD			2
9	7155180	HOSE, HYD			1
10	7155391	HOSE, HYD			1
11	7198176	HOSE, HYD			1
12	7155830	HOSE, HYD			1
13	7198280	HOSE, HYD	901,7 mm (35.5") long		1
13	7204727	HOSE, HYD	641,4 mm (25.25") long		1
14	7198281	HOSE, HYD			1
15	7156319	HOSE, HYD			2
16	7198225	TUBELINE, HYD			1
17	7198226	TUBELINE, HYD			1
18	7001921	BLOCK, JUNCTION			1
19	37C644	BOLT			2
20	83D6	NUT 5			2
21	6701892	CLAMP			6
22	619021	WASHER, 5	0.13" thick - 32 mm (1.25") OD		2
23	84G3728	BOLT			2
24	6689112	SEAL			4
25	7156362	MOUNT, BLKHD			1
26	46K7	ELBOW			1
27	46K8	ELBOW			1
28	86F7	LOCK NUT			1
29	86F8	NUT 5			2
30	91K6	TEE			1
31	91K7	FITTING			1
32	7152003	HOSE, HYD			1
33	7152004	HOSE, HYD			1
34	7152005	HOSE, HYD			1
35	7168336	HOSE, HYD	available only as an assembly W/one danger decal installed near the male threaded end of the hose		1
35	7170355	DECAL, DANGER			1
36	7154528	ELBOW	Also Order. Ref. 47 - this elbow must always display the danger decal		1
36	79K10	O RING 10			x
37	15KB0808	FITTING, HYD CONNECTOR			3
37	79K8	O RING 10			x
38	15KB1012	FITTING, HYD CONNECTOR			1
38	79K12	O RING 10			x
39	7157358	CLAMP			1
40	84G3716	SCREW 5			2
41	6624289	STRAP, TIE			8

HYDRAULIC CIRCUITRY (Cont'd)
(W/BPV Junction Block)
(S/N A3NV13577 & Above, A3NW11398 & Above)

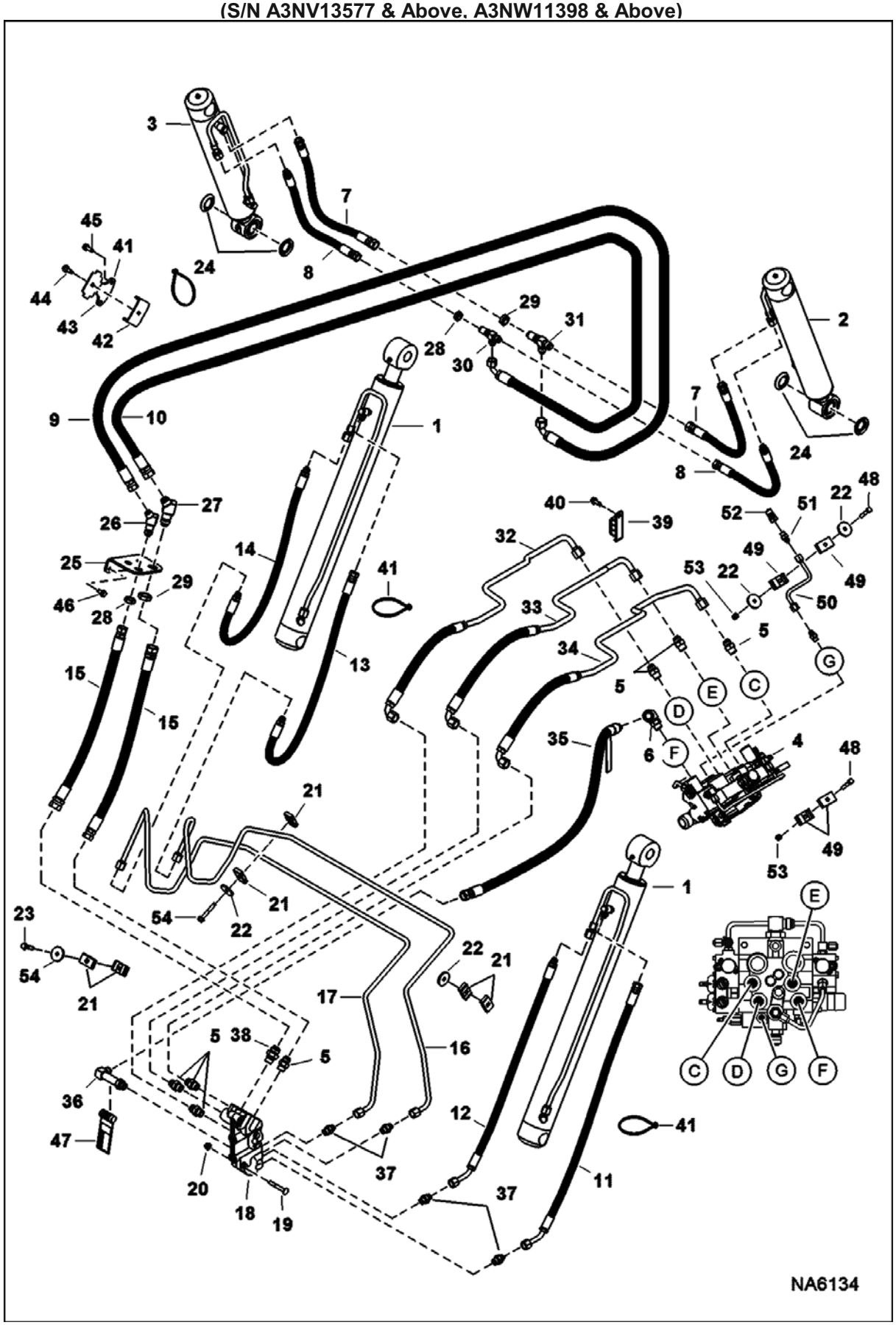

HYDRAULIC CIRCUITRY (Cont'd)
(W/BPV Junction Block)
(S/N A3NV13577 & Above, A3NW11398 & Above)

Ref No	Part Number	Description	Remarks	Serial Number	Qty
42	7161042	CLAMP, HOSE			1
43	7161043	BRACKET, CLAMP HOSE			1
44	84G3732	BOLT			2
45	35C616	BOLT 5			4
46	84G3712	BOLT			2
47	7170355	DECAL, DANGER			1
48	17C632	BOLT 5			1
49	7183298	CLAMP			2
50	7182882	TUBELINE, HYD			1
51	15KB0606	FITTING, HYD CONNECTOR			1
51	79K6	O RING 10			x
52	6684125	COUPLER			1
53	85D6	LOCK NUT			1
54	872229	WASHER	0.19" thick - 44.5 mm (1.75") OD		3

HYDRAULIC CIRCUITRY
(W/O BPV Junction Block)

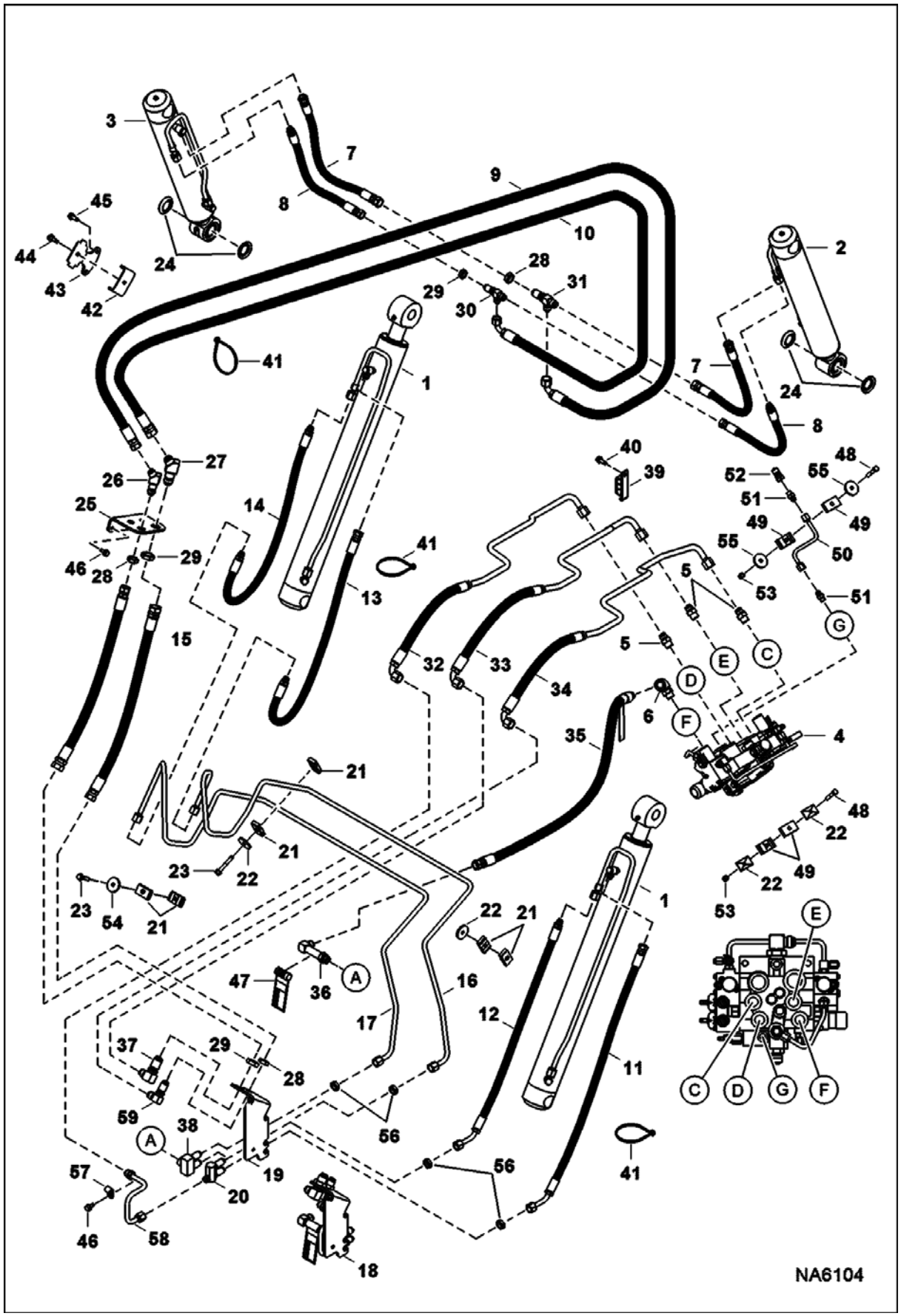

HYDRAULIC CIRCUITRY (Cont'd)
(W/O BPV Junction Block)

Ref No	Part Number	Description	Remarks	Serial Number	Qty
1		CYLINDER, LIFT	See Illustration LIFT CYLINDER/ NA1413		2
2		CYLINDER, TILT	See Illustration TILT CYLINDER/ NA6008 - RH		1
3		CYLINDER, TILT	See Illustration TILT CYLINDER/ NA6007 - LH		1
4		VALVE, CONTROL	See Illustration CONTROL VALVE/ NA1216 - manual controls		1
4		VALVE, CONTROL	See Illustration CONTROL VALVE/ NA1217 - ACS, SJC		1
5	15KB1010	FITTING, HYD CONNECTOR			3
6	7109623	ELBOW			1
6	79K10	O RING 10			1
7	7153006	HOSE, HYD			2
8	7153008	HOSE, HYD			2
9	7155180	HOSE, HYD			1
10	7155391	HOSE, HYD			1
11	7198176	HOSE, HYD			1
12	7155830	HOSE, HYD			1
13	7204727	HOSE, HYD			1
14	7198281	HOSE, HYD			1
15	7156319	HOSE, HYD			2
16	7198225	TUBELINE, HYD			1
17	7198226	TUBELINE, HYD			1
18	7204131	VALVE, LEVEL SELF NO	Ref. 5, 28, 29, 36-38, 46 & 56-60		1
19	7203491	BRACKET, JUNCTION			1
20	7203489	FITTING, HYD CONNECTOR			1
21	6701892	CLAMP			6
22	6652521	PLATE			4
23	84G3728	BOLT			2
24	6689112	SEAL			4
25	7156362	MOUNT, BLKHD			1
26	46K7	ELBOW			1
27	46K8	ELBOW			1
28	86F7	LOCK NUT			5
29	86F8	NUT 5			3
30	91K6	TEE			1
31	91K7	FITTING			1
32	7152003	HOSE, HYD			1
33	7152004	HOSE, HYD			1
34	7152005	HOSE, HYD			1
35	7168336	HOSE, HYD	available only as an assembly W/one danger decal installed near the male threaded end of the hose		1
35	7170355	DECAL, DANGER			1
36	7183605	KIT, FITTING W/DECAL	W/Ref. 47 - this elbow must always display the danger decal		1
36	79K10	O RING 10			x
37	7193758	FITTING, HYD ELBOW			4
38	7203490	FITTING, HYD CONNECTOR			1
39	7157358	CLAMP			1
40	84G3716	SCREW 5			1
41	6624289	STRAP, TIE			8
42	7161042	CLAMP, HOSE			1
43	7161043	BRACKET,			1

HYDRAULIC CIRCUITRY (Cont'd)
(W/O BPV Junction Block)

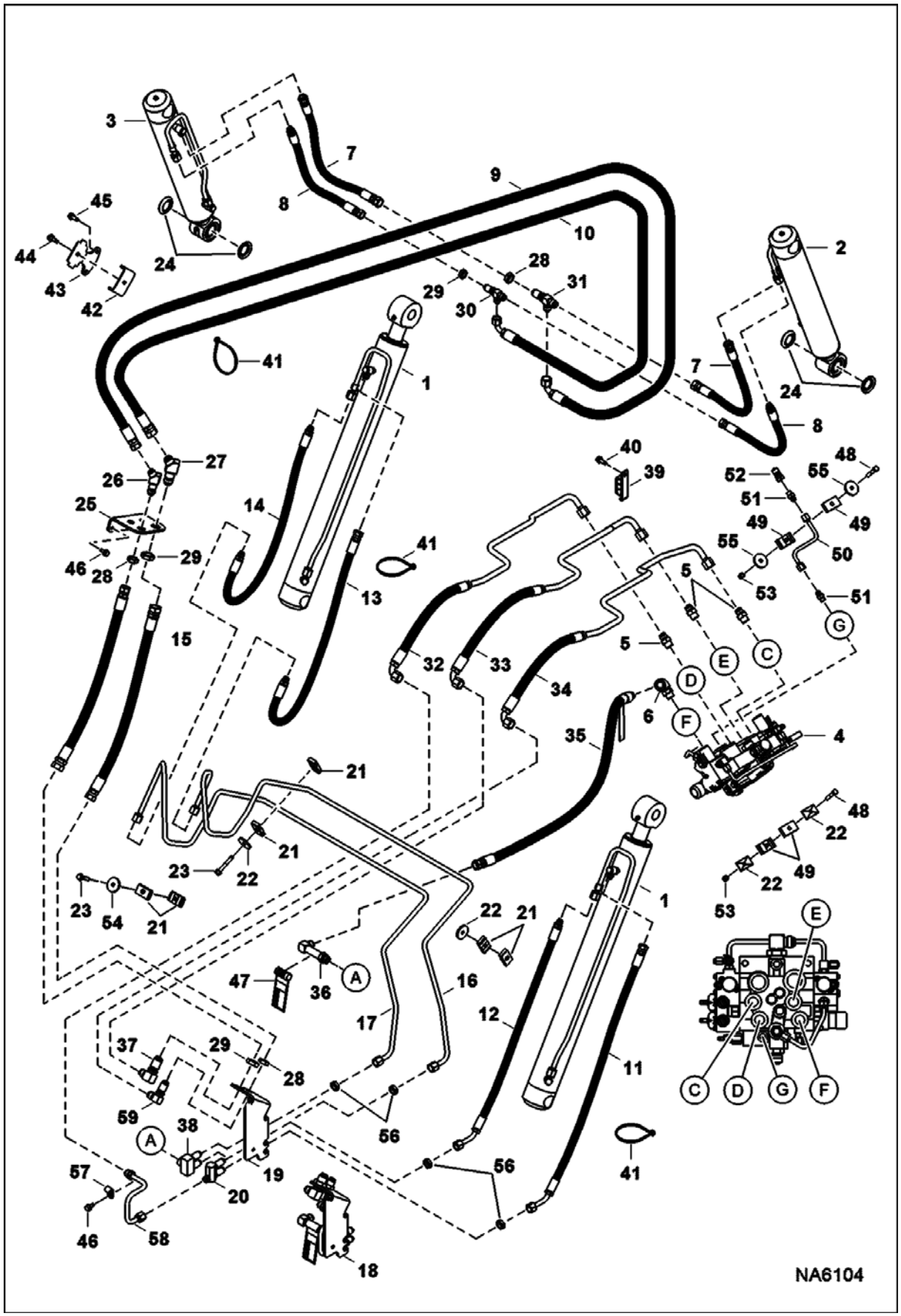

HYDRAULIC CIRCUITRY (Cont'd)
(W/O BPV Junction Block)

Ref No	Part Number	Description	Remarks	Serial Number	Qty
		CLAMP HOSE			
44	84G3732	BOLT			2
45	84G3716	SCREW 5			2
46	84G3712	BOLT			3
47	7170355	DECAL, DANGER			1
48	17C632	BOLT 5			1
49	7183298	CLAMP			2
50	7182882	TUBELINE, HYD			1
51	15KB0606	FITTING, HYD CONNECTOR			2
51	79K6	O RING 10			x
52	6684125	COUPLER			1
53	85D6	LOCK NUT			1
54	872229	WASHER	0.19" thick - 44.5 mm (1.75") OD		3
55	619021	WASHER, 5	0.13" thick - 32 mm (1.25") OD		2
56	86F6	NUT			4
57	30H31	CLAMP 10			1
58	7203506	TUBELINE, HYD			1
59	88F7	ELBOW			4

MANUAL LIFT RELEASE SYSTEM

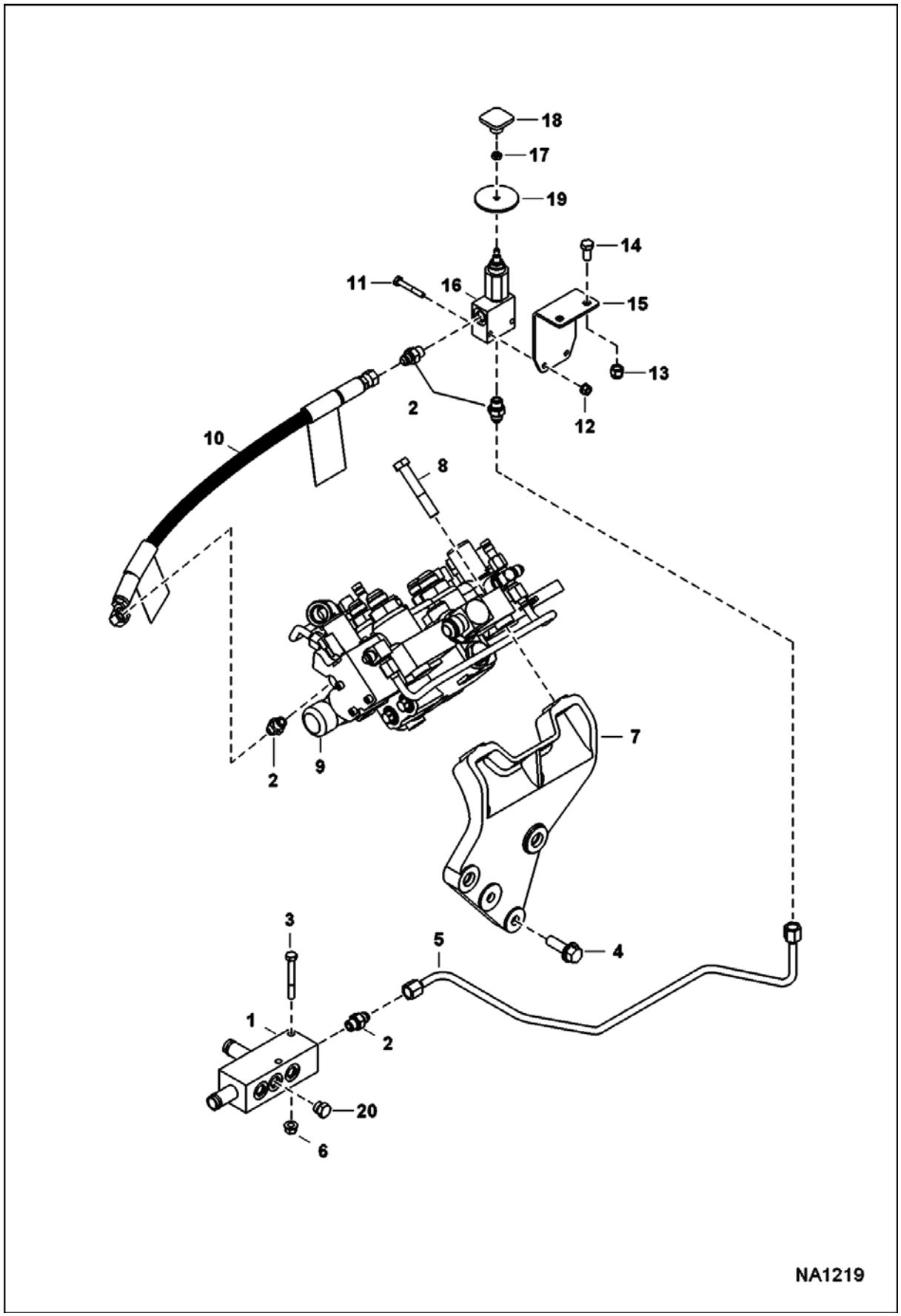

MANUAL LIFT RELEASE SYSTEM (Cont'd)

Ref No	Part Number	Description	Remarks	Serial Number	Qty
1	7201981	MANIFOLD, DRAIN CASE	Was 7178129 [A]		1
2	15KB0606	FITTING, HYD CONNECTOR			4
2	79K6	O RING 10			x
3	17C540	BOLT			2
4	31C824	BOLT 10			2
5	7176927	TUBELINE, HYD			1
6	83D5	NUT 5			2
7	7156150	MOUNT			1
8	17C844	BOLT			2
9		VALVE, CONTROL	See Illustration CONTROL VALVE/ NA1216 - manual controls		1
9		VALVE, CONTROL	See Illustration CONTROL VALVE/ NA1217 - AHC, ACS & SJC		1
10	7168337	HOSE, HYD	available only as an assembly W/two danger decals installed		1
10	7170355	DECAL, DANGER			2
11	17C428	BOLT			2
12	83D4	NUT 10			2
13	59D6	NUT			2
14	35C616	BOLT 5			2
15	7149166	MOUNT, BOOM DOWN			1
16		VALVE, LIFT MANUAL	See Illustration MANUAL LIFT RELEASE VALVE/ PE1547 - manual lift		1
17	7D4	NUT			1
18	6737524	KNOB			1
19	6707101	SEAL	neoprene		1
20	24K5	PLUG			1
20		FITTING, HYD CONNECTOR	See Illustration POWER BOB-TACH/ NA2048		1
20	79K6	O RING 10			x

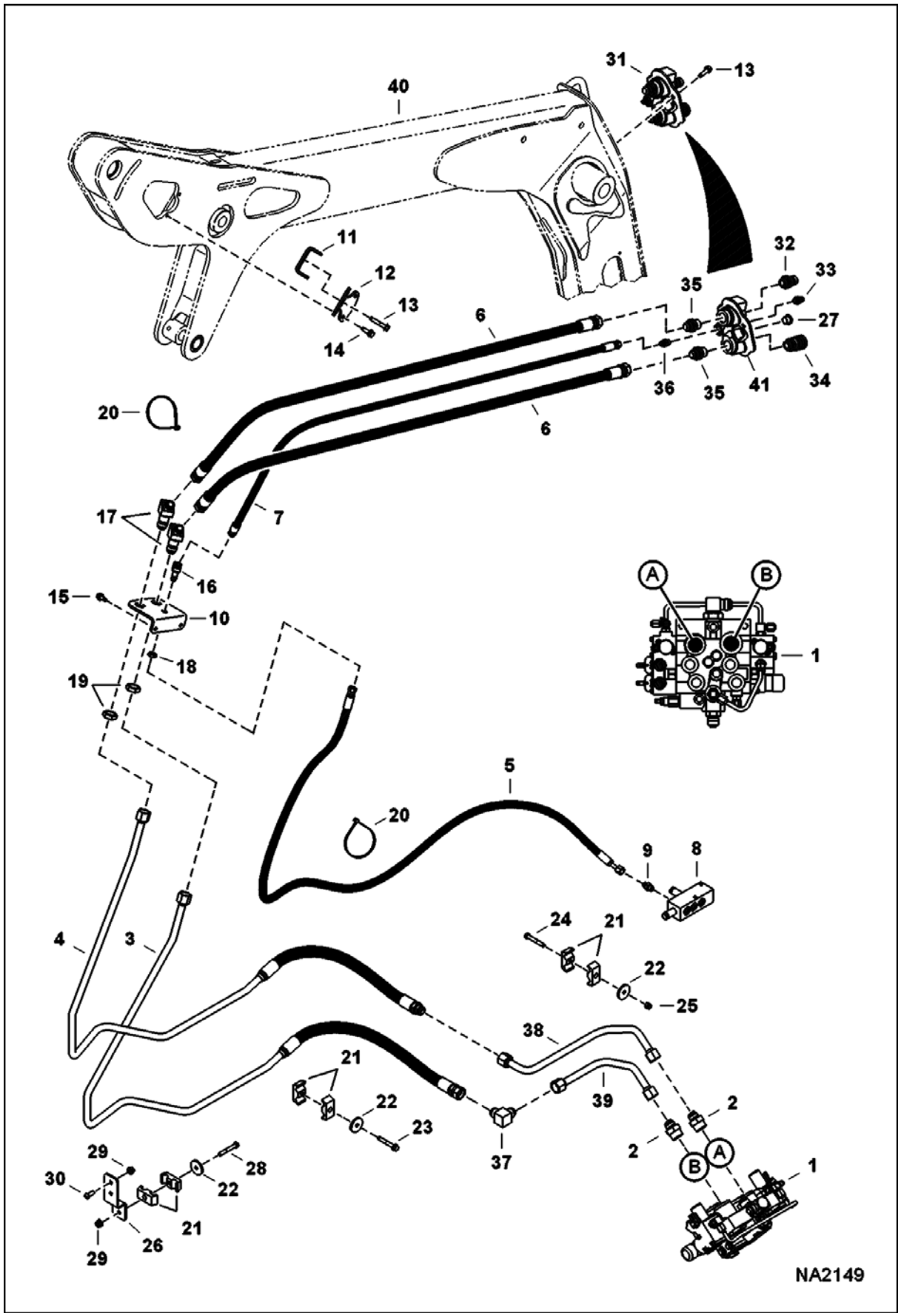
NA2149

Ref No	Part Number	Description	Remarks	Serial Number	Qty
1		VALVE, CONTROL	See Illustration CONTROL VALVE/ NA1216 - manual controls		1
1		VALVE, CONTROL	See Illustration CONTROL VALVE/ NA1217 - AHC, ACS & SJC		1
2	15KB1216	FITTING, HYD CONNECTOR			2
2	79K16	O RING 10			x
3	7177578	HOSE, HYD ASSY			1
4	7177579	HOSE, HYD ASSY			1
5	7175559	HOSE, HYD			1
6	7171209	HOSE, HYD			2
7	7171210	HOSE, HYD			1
8	7201981	MANIFOLD, DRAIN CASE	Was 7178129 [A]		1
9	15KB0606	FITTING, HYD CONNECTOR			1
9	79K6	O RING 10			x
10	7156363	MOUNT, BLKHD			1
11	7161042	CLAMP, HOSE			1
12	7161043	BRACKET, CLAMP HOSE			1
13	84G3716	SCREW 5	Was 84G3720 [B]		4
14	84G3732	BOLT			1
15	84G3712	BOLT			2
16	46K5	ELBOW			1
17	46K8	ELBOW			2
18	86F5	NUT			1
19	86F8	NUT 5			3
20	6624289	STRAP, TIE			3
21	6592506	CLAMP			6
22	872229	WASHER			3
23	84G3740	BOLT			1
24	31C640	BOLT			1
25	59D6	NUT			1
26	7175549	MOUNT, HOSE			1
27	6697942	PLUG, NYLON			1
28	17C644	BOLT	Was 17C640 [B]		1
29	83D6	NUT 5			3
30	10C616	BOLT 10	Was 53C616 [A]		2
31	7141939	BLOCK, COUPLER	assy - Ref. 32-36 & 41		1
32	6679837	COUPLER			1
33	6679838	KIT, COUPLER	male casedrain - W/valve, spring, seal & O-ring		1
34	6680018	COUPLER, KIT	female		1
35	6679836	ADAPTER			2
36	15KB0606	FITTING, HYD CONNECTOR			1
36	79K6	O RING 10			x
37	77F8	ELBOW			1
38	7154522	TUBELINE			1
39	7154523	TUBELINE			1
40		ARM, LIFT ASSY	See Illustration LIFT ARM & BOB-TACH/ NA2092		1
41		BLOCK	NSS - Order Ref. 31		1

TILT CYLINDER
(RH) (516,4 mm - 20.33")

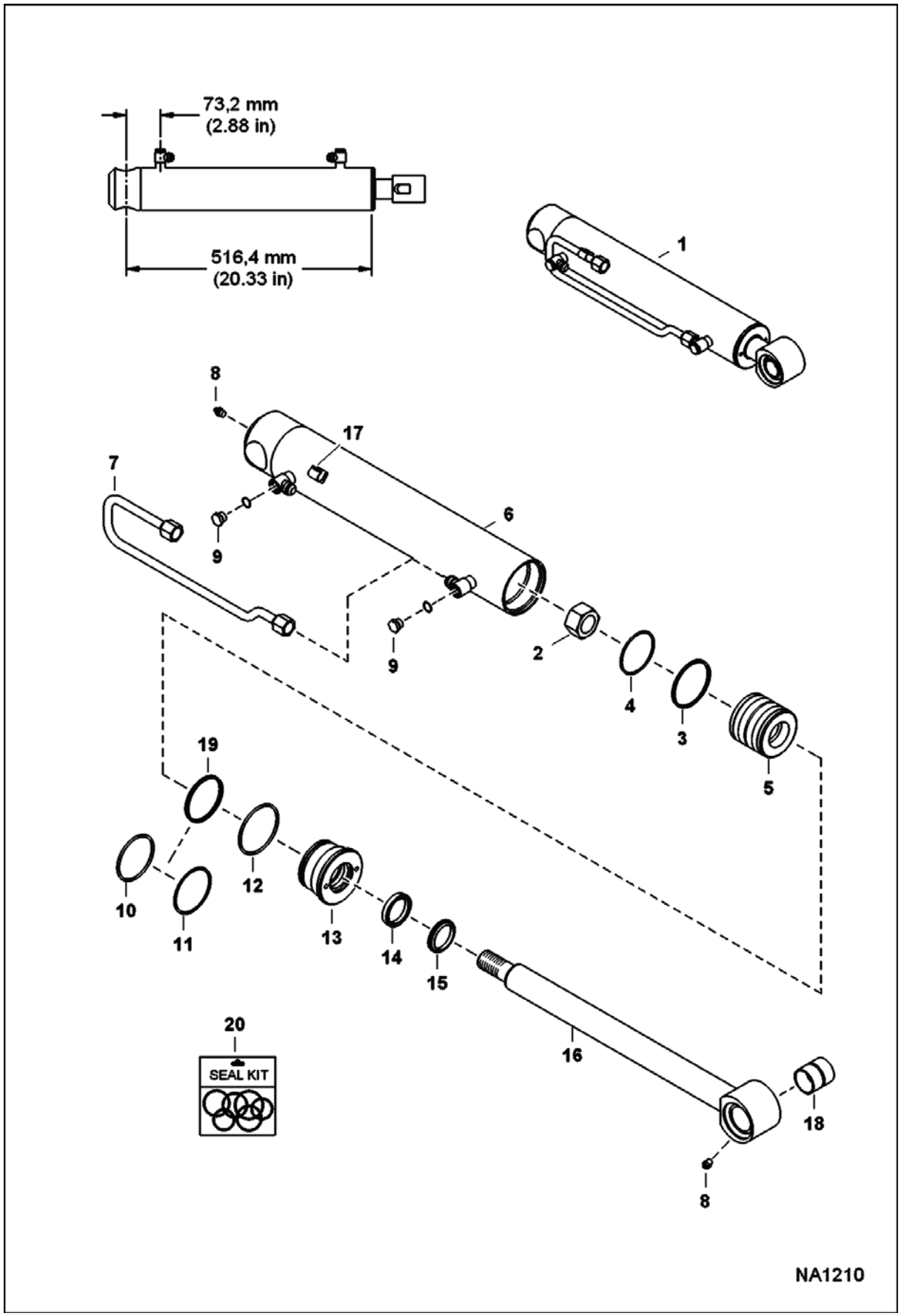

TILT CYLINDER (Cont'd)
(RH) (516,4 mm - 20.33")

Ref No	Part Number	Description	Remarks	Serial Number	Qty
1		CYLINDER, TILT	See Illustration TILT CYLINDER/ NA6008 NAP - Ref. 2-19 - Order 7202031 tilt cylinder - before ordering repair parts, make sure that this is the correct style cylinder - note the length shown on the drawing page - Was 7154161 [A]		1
2	6810539	NUT			1
3	947088	RING, BACK-UP			1
4	54K30218	O-RING			1
5		PISTON, CYL TILT	See Illustration TILT CYLINDER/ NA6008 NAP - Order 7202031 tilt cylinder - Was 7152338 [A]		1
6		TUBE, CASE CYL	See Illustration TILT CYLINDER/ NA6008 NAP - Order 7202031 tilt cylinder - Was 7154162 [A]		1
7	7154163	TUBELINE, HYD			1
8	10H25	FITTING, GREASE 5			2
9	6812171	PLUG			2
10	54K40224	O-RING			1
11	73K232	RING, BACK-UP	back-up		1
12	54K40300	O-RING			1
13		HEAD, CYL LIFT	See Illustration TILT CYLINDER/ NA6008 NAP - Order 7202031 tilt cylinder - Was 6804427 [A]		1
14	6669267	SEAL			1
15	6687000	WIPER ROD			1
16		SHAFT	See Illustration TILT CYLINDER/ NA6008 NAP - Order 7202031 tilt cylinder - Was 7150359 [A]		1
17	6690911	CLAMP			1
18	7150182	BUSHING	wear		1
19	7008355	SEAL, QUAD			1
20	7137939	KIT, SEAL	Ref. 2-4, 12, 14, 15 & 19		1

TILT CYLINDER
(RH) (538,7 mm - 21.21")

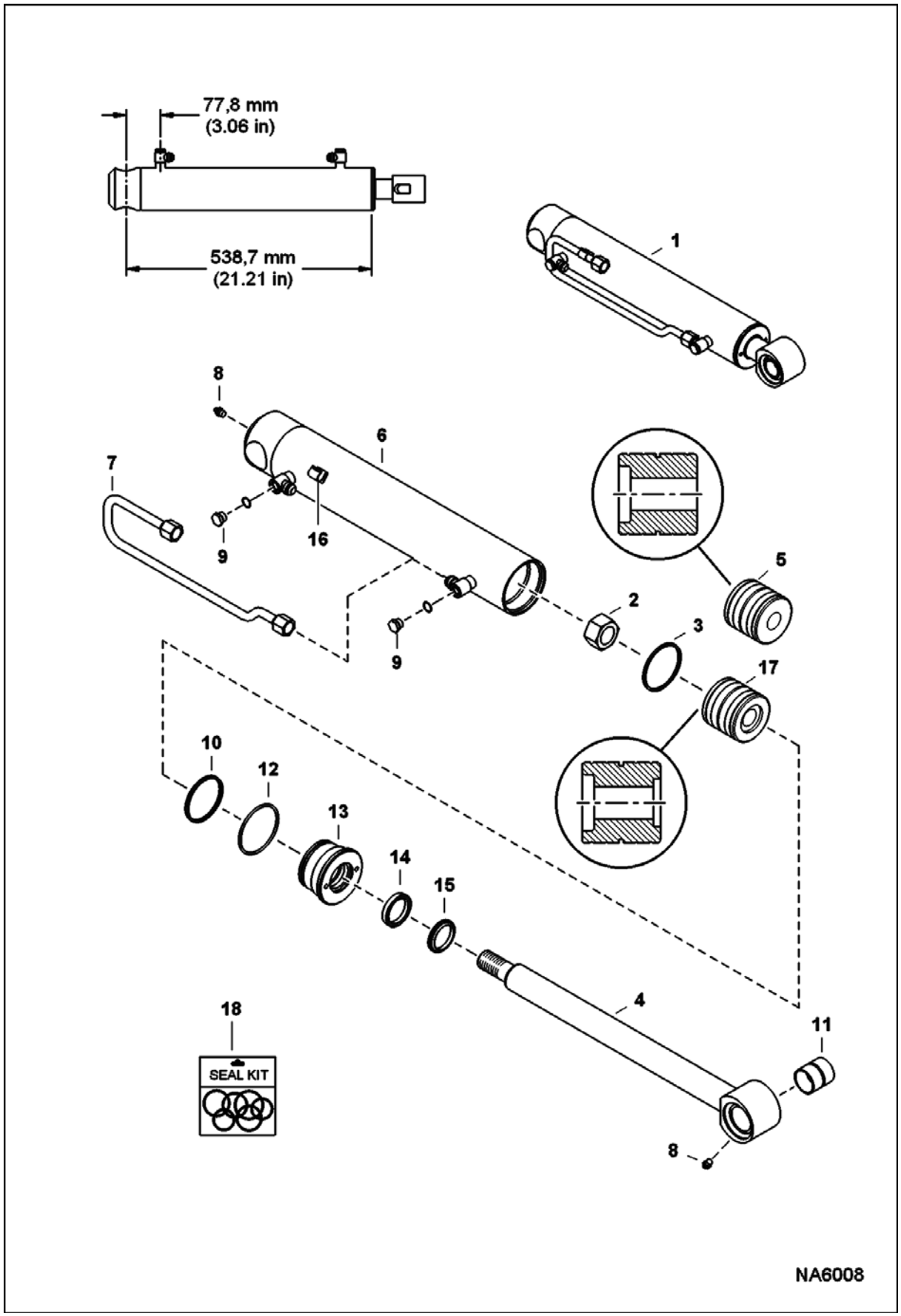

TILT CYLINDER (Cont'd)
(RH) (538,7 mm - 21.21")

Ref No	Part Number	Description	Remarks	Serial Number	Qty
1		CYLINDER, TILT	NAP - Ref. 2-16 - before ordering repair parts, make sure that this is the correct style cylinder - note the length shown on the drawing page - extended shaft length 950,7 mm (37.43") - Order 7205267 cylinder - Was 7202031 [A]		1
1	7205267	CYLINDER, TILT	Ref. 2-4 & 6-17 - before ordering repair parts, make sure that this is the correct style cylinder - note the length shown on the drawing page - extended shaft length 947,9 mm (37.32")		1
2	6810539	NUT			1
3	947088	RING, BACK-UP			1
4	7202032	SHAFT, ROD CYL			1
5		PISTON, CYL TILT	NAP - Order Ref. 17 - W/O shaft inset - Was 7202085 [A]		1
6	7202033	TUBE, CASE CYL			1
7	7154163	TUBELINE, HYD			1
8	10H25	FITTING, GREASE 5			2
9	6812171	PLUG			2
10	7008355	SEAL, QUAD			1
11	7150182	BUSHING	wear		1
12	54K40300	O-RING			1
13	7202036	HEAD, CYL TILT			1
14	6669267	SEAL			1
15	6687000	WIPER ROD			1
16	6690911	CLAMP			1
17	7205268	PISTON, CYL TILT	W/shaft inset		1
18	7202518	KIT, SEAL	Ref. 2, 3, 10, 12, 14 & 15		1

TILT CYLINDER
(LH) (516,4 mm - 20.33")

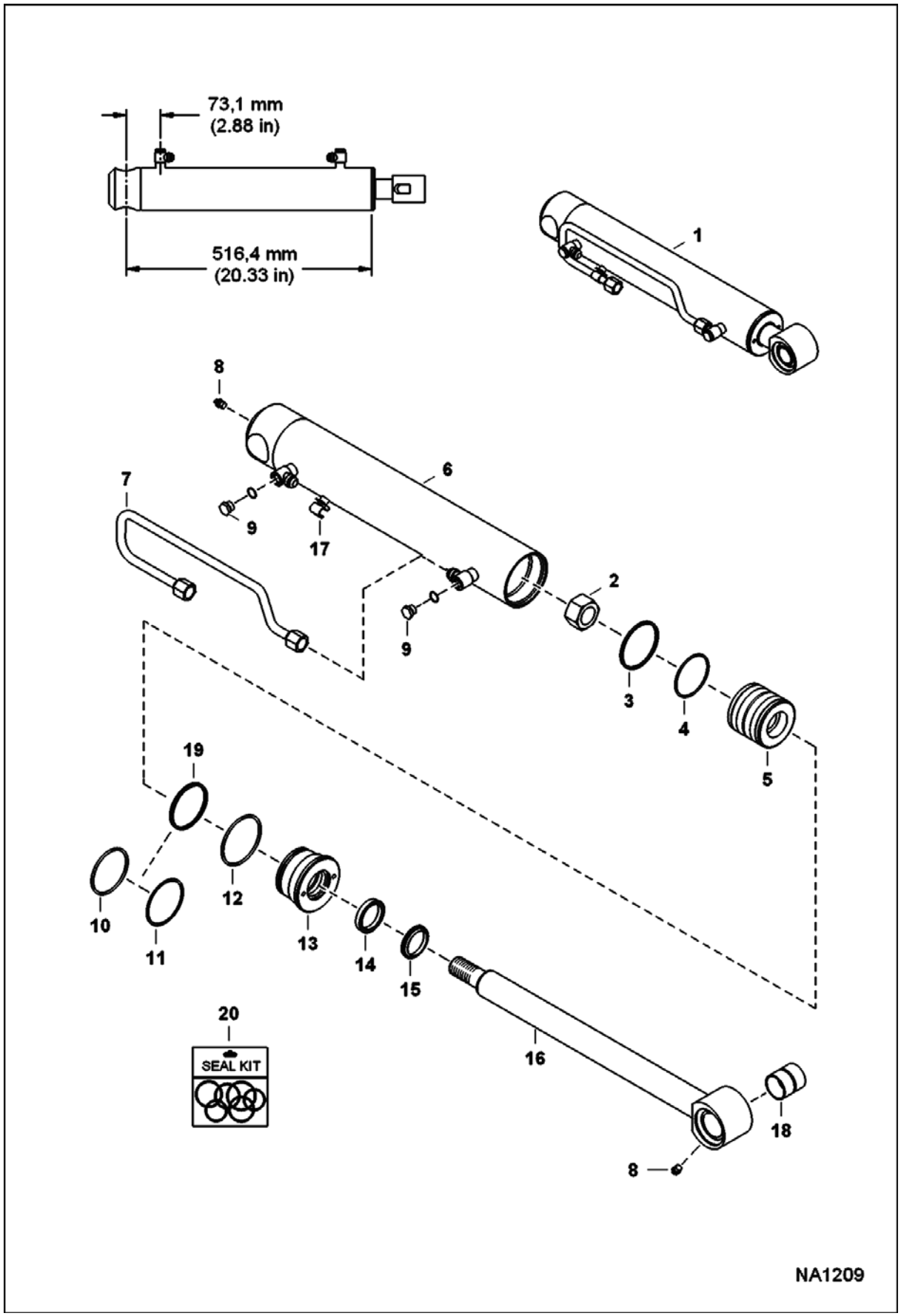

TILT CYLINDER (Cont'd)
(LH) (516,4 mm - 20.33")

Ref No	Part Number	Description	Remarks	Serial Number	Qty
1		CYLINDER, TILT	See Illustration TILT CYLINDER/ NA6007 NAP - Ref. 2-19 - Order 7201527 tilt cylinder - before ordering repair parts, make sure that this is the correct style cylinder - note the length shown on the drawing page - Was 7150357 [A]		1
2	6810539	NUT			1
3	947088	RING, BACK-UP			1
4	54K30218	O-RING			1
5		PISTON, CYL TILT	See Illustration TILT CYLINDER/ NA6007 NAP - Order 7201527 tilt cylinder - Was 7152338 [A]		1
6		TUBE, CASE CYL	See Illustration TILT CYLINDER/ NA6007 NAP - Order 7201527 tilt cylinder - Was 7150358 [A]		1
7	7150467	TUBELINE, HYD			1
8	10H25	FITTING, GREASE 5			2
9	6812171	PLUG			2
10	54K40224	O-RING			1
11	73K232	RING, BACK-UP	back-up		1
12	54K40300	O-RING			1
13		HEAD, CYL LIFT	See Illustration TILT CYLINDER/ NA6007 NAP - Order 7201527 tilt cylinder - Was 6804427 [A]		1
14	6669267	SEAL			1
15	6687000	WIPER ROD			1
16		SHAFT	See Illustration TILT CYLINDER/ NA6007 NAP - Order 7201527 tilt cylinder - Was 7150539 [A]		1
17	6690911	CLAMP			1
18	7150182	BUSHING	wear		1
19	7008355	SEAL, QUAD			1
20	7137939	KIT, SEAL	Ref. 2-4, 12, 14, 15 & 19		1

TILT CYLINDER
(LH) (538,7 mm - 21.21")

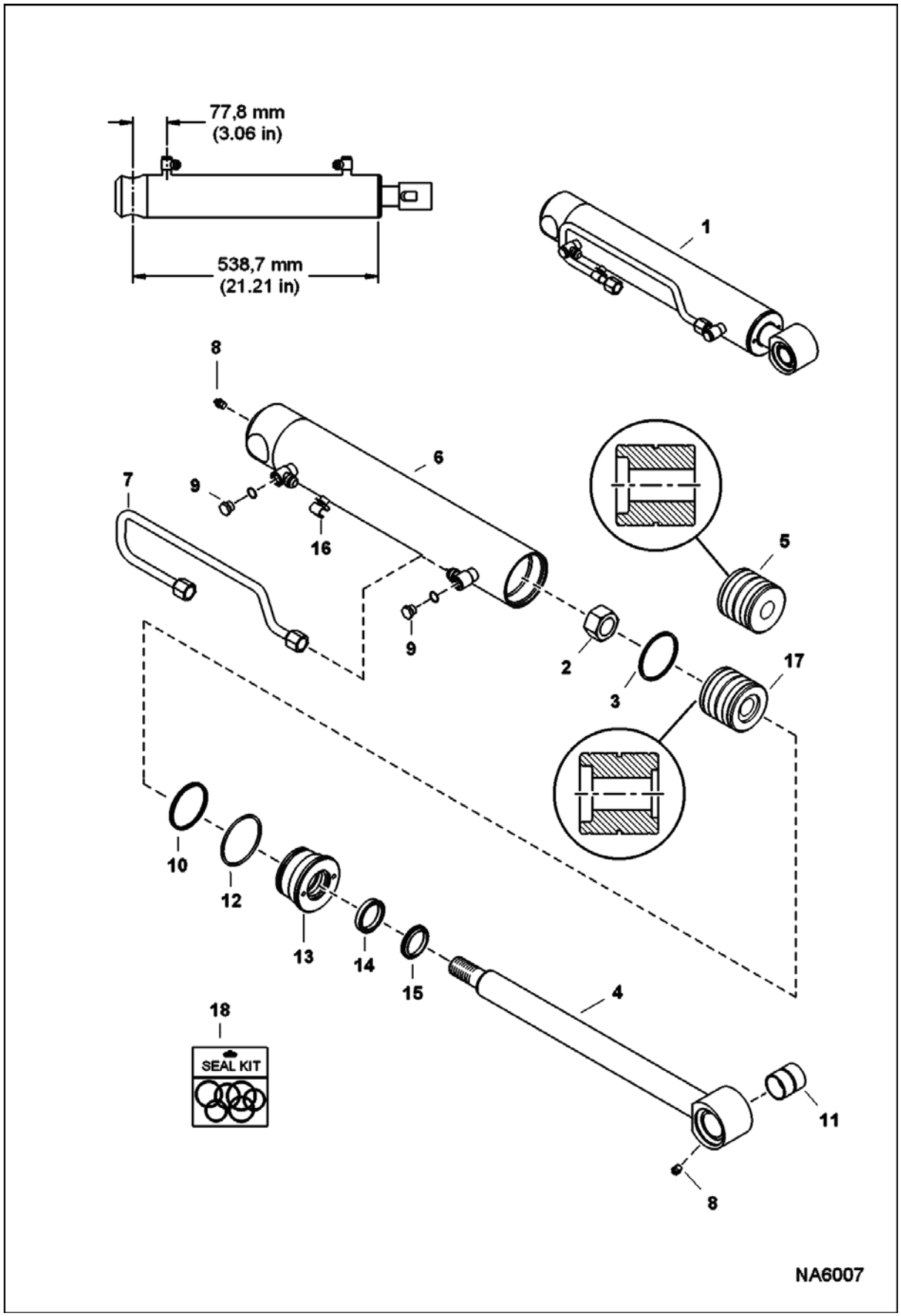

TILT CYLINDER (Cont'd)
(LH) (538,7 mm - 21.21")

Ref No	Part Number	Description	Remarks	Serial Number	Qty
1		CYLINDER, TILT	NAP - Ref. 2-16 - before ordering repair parts, make sure that this is the correct style cylinder - note the length shown on the drawing page - extended shaft length 950,7 mm (37.43") - Order 7205266 cylinder - Was 7201527 [A]		1
1	7205266	CYLINDER, TILT	Ref. 2-4 & 6-17 - before ordering repair parts, make sure that this is the correct style cylinder - note the length shown on the drawing page - extended shaft length 947,9 mm (37.32")		1
2	6810539	NUT			1
3	6692325	SEAL, PISTON			1
4	7202032	SHAFT, ROD CYL			1
5		PISTON, CYL TILT	NAP - Order Ref. 17 - W/O shaft inset - Was 7202085 [A]		1
6	7202033	TUBE, CASE CYL			1
7	7150467	TUBELINE, HYD			1
8	10H25	FITTING, GREASE 5			2
9	6812171	PLUG			2
10	7008355	SEAL, QUAD			1
11	7150182	BUSHING	wear		1
12	54K40300	O-RING			1
13	7202036	HEAD, CYL TILT			1
14	6669267	SEAL			1
15	6687000	WIPER ROD			1
16	6690911	CLAMP			1
17	7205268	PISTON, CYL TILT	W/shaft inset		1
18	7202518	KIT, SEAL	Ref. 2, 3, 10, 12, 14 & 15		1

LIFT CYLINDER

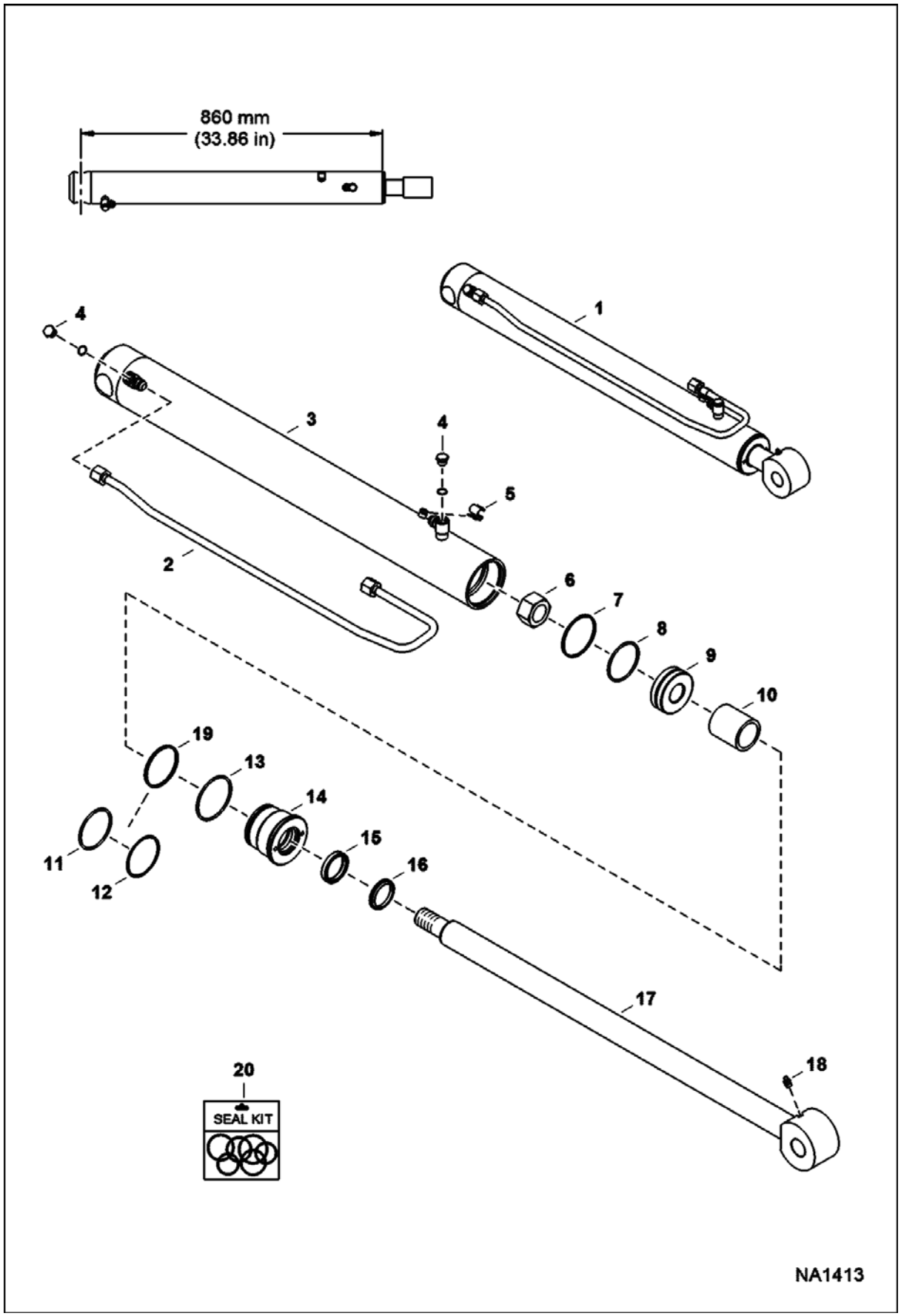

LIFT CYLINDER (Cont'd)

Ref No	Part Number	Description	Remarks	Serial Number	Qty
1		CYLINDER, LIFT	See Illustration LIFT CYLINDER/ NA6138 - NAP - Ref. 2-19 - Order 7203496 cylinder & 7204727 hose - Was 7151166 [A]		1
2	7151520	TUBELINE, HYD			1
3		TUBE, CASE CYL	See Illustration LIFT CYLINDER/ NA6138 - NAP - W/Ref. 4 & 5 - Order 7203497 case tube, 7204727 hose & 7203492 spacer - Was 7151167 [A]		1
4	6812171	PLUG			2
5	6690911	CLAMP			1
6	6810540	NUT			1
7	947088	RING, BACK-UP			1
8	25K30218	O RING 10			1
9	6697863	PISTON, ASSY	W/Ref. 7 & 8		1
10	7136036	SPACER			1
11	54K40224	O-RING			1
12	73K232	RING, BACK-UP			1
13	54K40300	O-RING			1
14	6812526	HEAD			1
15	6667327	SEAL			1
16	6686999	SEAL			1
17	7151168	SHAFT			1
18	10H25	FITTING, GREASE 5			1
19	7008355	SEAL, QUAD			1
20	7137945	SEAL KIT	Ref. 7, 8, 11-13, 15 & 16 - Was 6816351 [D]		1

LIFT CYLINDER

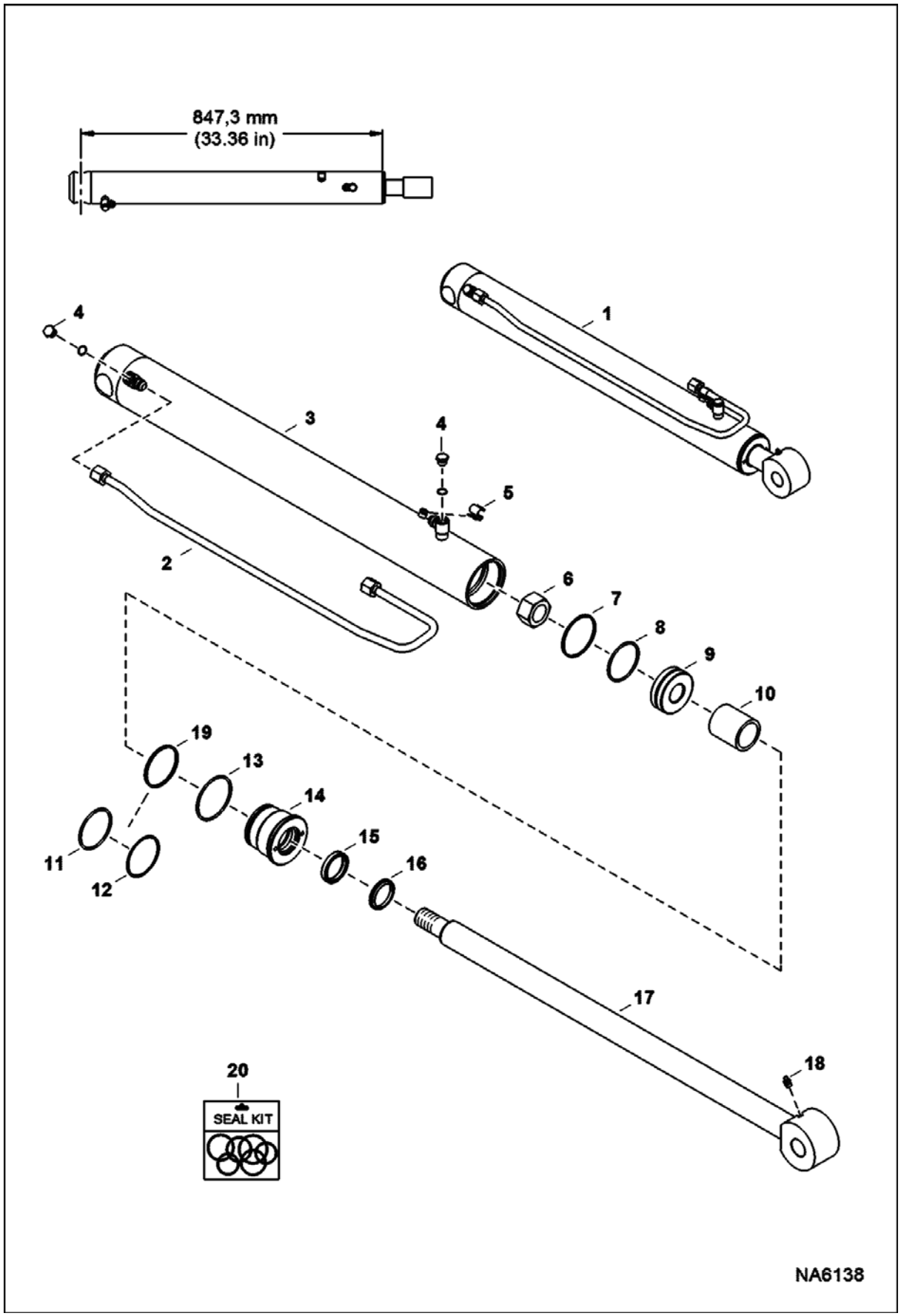

LIFT CYLINDER (Cont'd)

Ref No	Part Number	Description	Remarks	Serial Number	Qty
1	7203496	CYLINDER, LIFT			1
2	7151520	TUBELINE, HYD			1
3	7203497	TUBE, CASE CYL			1
4	6812171	PLUG			2
5	6690911	CLAMP			1
6	6810540	NUT			1
7	947088	RING, BACK-UP			1
8	25K30218	O RING 10			1
9	6697863	PISTON, ASSY	W/Ref. 7 & 8		1
10	7203498	SPACER			1
11	54K40224	O-RING			1
12	73K232	RING, BACK-UP			1
13	54K40300	O-RING			1
14	6812526	HEAD			1
15	6667327	SEAL			1
16	6686999	SEAL			1
17	7151168	SHAFT			1
18	10H25	FITTING, GREASE 5			1
19	7008355	SEAL, QUAD			1
20	7137945	SEAL KIT	Ref. 7, 8, 11-13, 15 & 16		1

CONTROL PEDALS

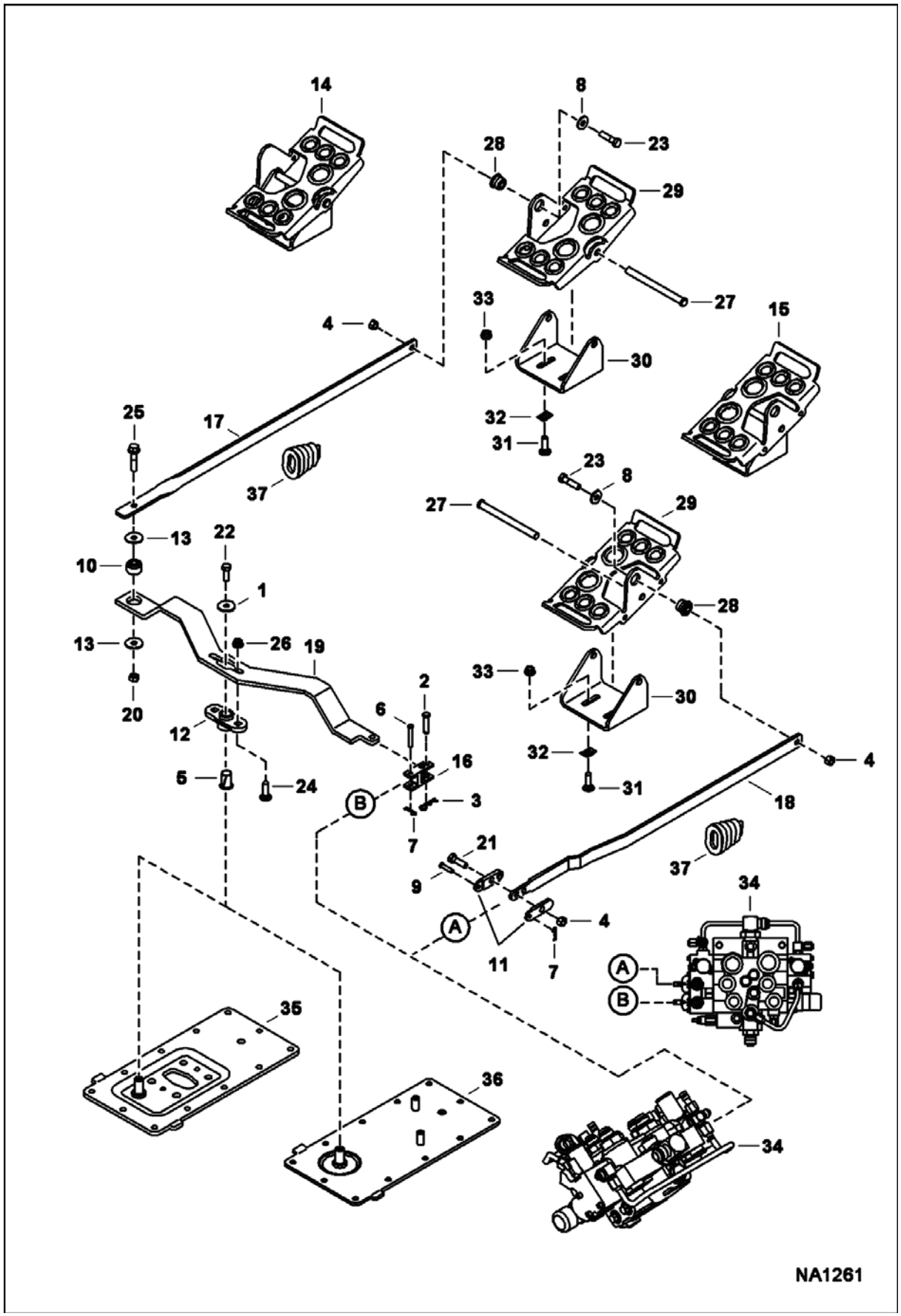

CONTROL PEDALS (Cont'd)

Ref No	Part Number	Description	Remarks	Serial Number	Qty
1	6557831	WASHER			1
2	7191333	PIN, CLEVIS	Was 7179279 [B]		1
3	1306637	CLIP			1
4	95D6	NUT			3
5	6512026	BUSHING			1
6	7191334	PIN, CLEVIS	Was 7178508 [B]		1
7	6513495	COTTER PIN			2
8	6563914	WASHER			2
9	6564654	PIN			1
10	6685060	BUSHING, TORSION			1
11	6708009	LINK			2
12	6708043	BUSHING			1
13	6737388	WASHER			2
14	7151868	PEDAL ASSY	LH - Ref. 27-30		1
15	7151871	PEDAL ASSY	RH - Ref. 27-30		1
16	7191332	YOKE	Was 7152501 [B]		1
17	7153048	LINK, PEDAL			1
18	7153049	LINK, PEDAL			1
19	7153058	LINK, BELLCRANK			1
20	63D6	NUT			1
21	17C620	BOLT			1
22	17C616	BOLT 5			1
23	17C624	BOLT 5			2
24	37C620	BOLT			2
25	49C628	BOLT			1
26	53D6	NUT			2
27		PIN	NAP - Order Ref. 14 or Ref. 15		2
28	6665701	BUSHING, PRESS FIT			2
29		PEDAL	NAP - Order Ref. 14 or Ref. 15		2
30	7157611	MOUNT			2
31	37C620	BOLT			4
32	6684033	NUT			4
33	57D6	NUT 5			4
34		VALVE, CONTROL	See Illustration CONTROL VALVE/ NA1216 - manual controls		1
34		VALVE, CONTROL	See Illustration CONTROL VALVE/ NA1217 - AHC, ACS & SJC		1
35		COVER	See Illustration DISC BRAKE/ NA1005		1
36		COVER	See Illustration TRANSMISSION COVERS/ NA1006		1
37	7153503	BOOT			2

CONTROL VALVE
(Manual Controls)

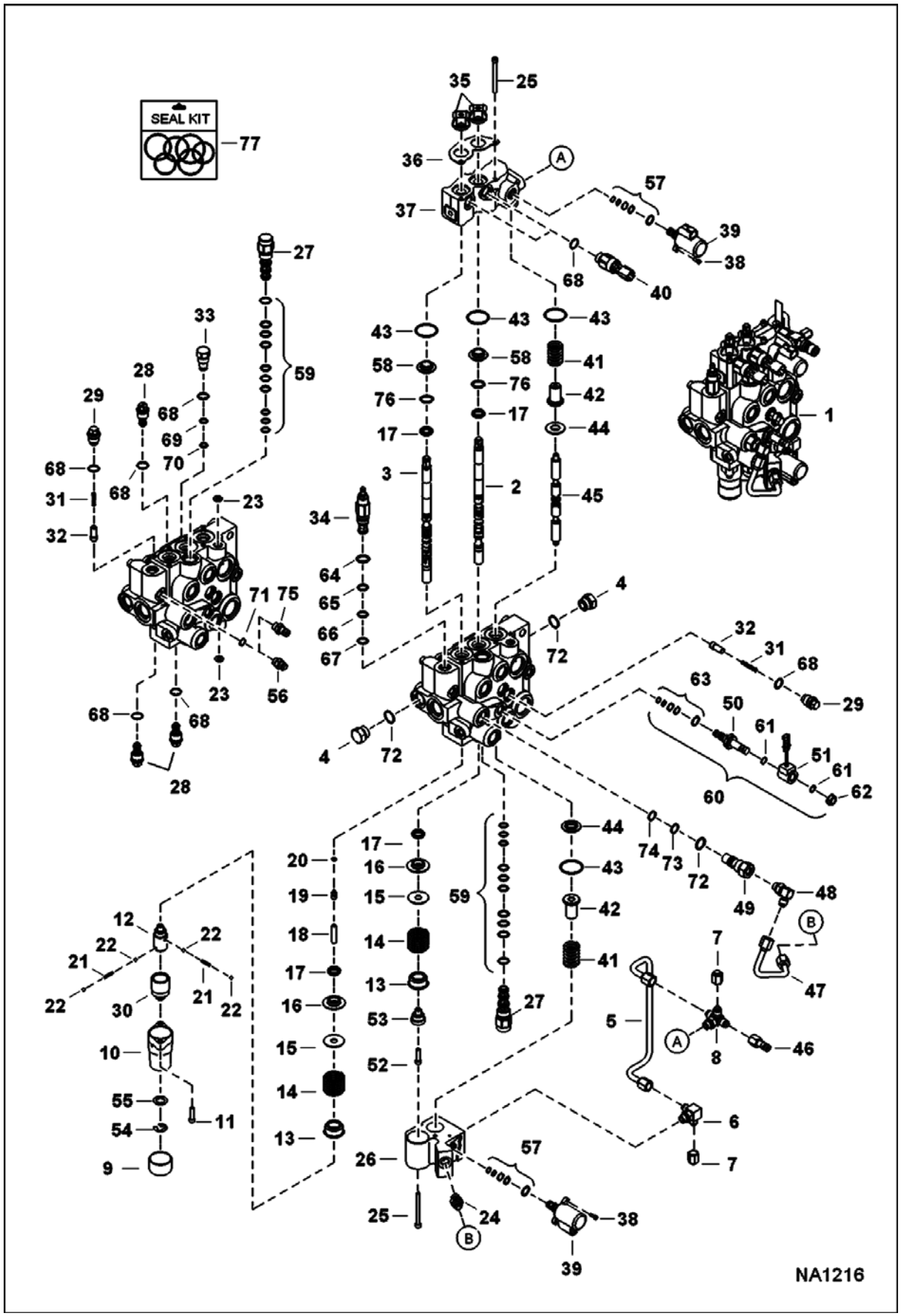

CONTROL VALVE (Cont'd)
(Manual Controls)

Ref No	Part Number	Description	Remarks	Serial Number	Qty
1	7168276	VALVE, CONTROL			1
2	6815152	SPOOL	tilt		1
3	7108781	SPOOL	lift		1
4	24K7	PLUG			2
5	7157291	TUBELINE			1
6	7166338	TEE, BOSS			1
7	36K5	CAP			2
8	7180987	FITTING, CROSS			1
8	79K6	O RING 10			2
9	6660644	CAP			1
10	6589226	BONNET	0.63" flange		1
11	29G416	BOLT			2
12	6587575	ADAPTER			1
13	6592100	COLLAR			2
14	6587580	SPRING			2
15	6587523	WASHER			2
16	6595663	BUSHING			2
17	6683274	SEAL, SPOOL 10			4
18	6586918	SCREW			1
19	6596807	PLUG	plastic - 0.46" long		1
20	58K004	O-RING			1
21	6592107	SPRING			2
22	6592105	BALL			4
23	55K204	O RING 10			2
24	6688845	VALVE	check		1
25	6814022	SCREW HEX SKT HD W/T			7
26	7157289	BLOCK			1
27	6689739	VALVE	W/Ref. 59		2
28	6684646	VALVE	anti-cav		3
29	7134520	PLUG	check valve		3
30	6531270	SLEEVE, DETENT			1
31	7166339	SPRING, LOAD CHECK			4
32	7166047	SEAT, CHECK VALVE			4
33	6816549	PLUG ASSY PORT RLF			1
34	6686360	VALVE	main relief - W/Ref. 64-67 - pressure to be set in field		1
35	6587763	BOOT			2
36	6813153	PLATE	retainer		1
37	7157286	BODY			1
38	7002716	SCREW			4
39	6698434	VALVE, PROPORTIONAL			2
40	6676029	SOLENOID, LOCK SPOOL			2
41	7121399	SPRING			2
42	6814694	RETAINER			2
43	1K127	O-RING 10			4
44	7138376	BUSHING			2
45	7112383	AUX SPOOL			1
46	6684125	COUPLER			1
47	7157290	TUBELINE			1
48	17KB0606	FITTING			1

CONTROL VALVE (Cont'd)
(Manual Controls)

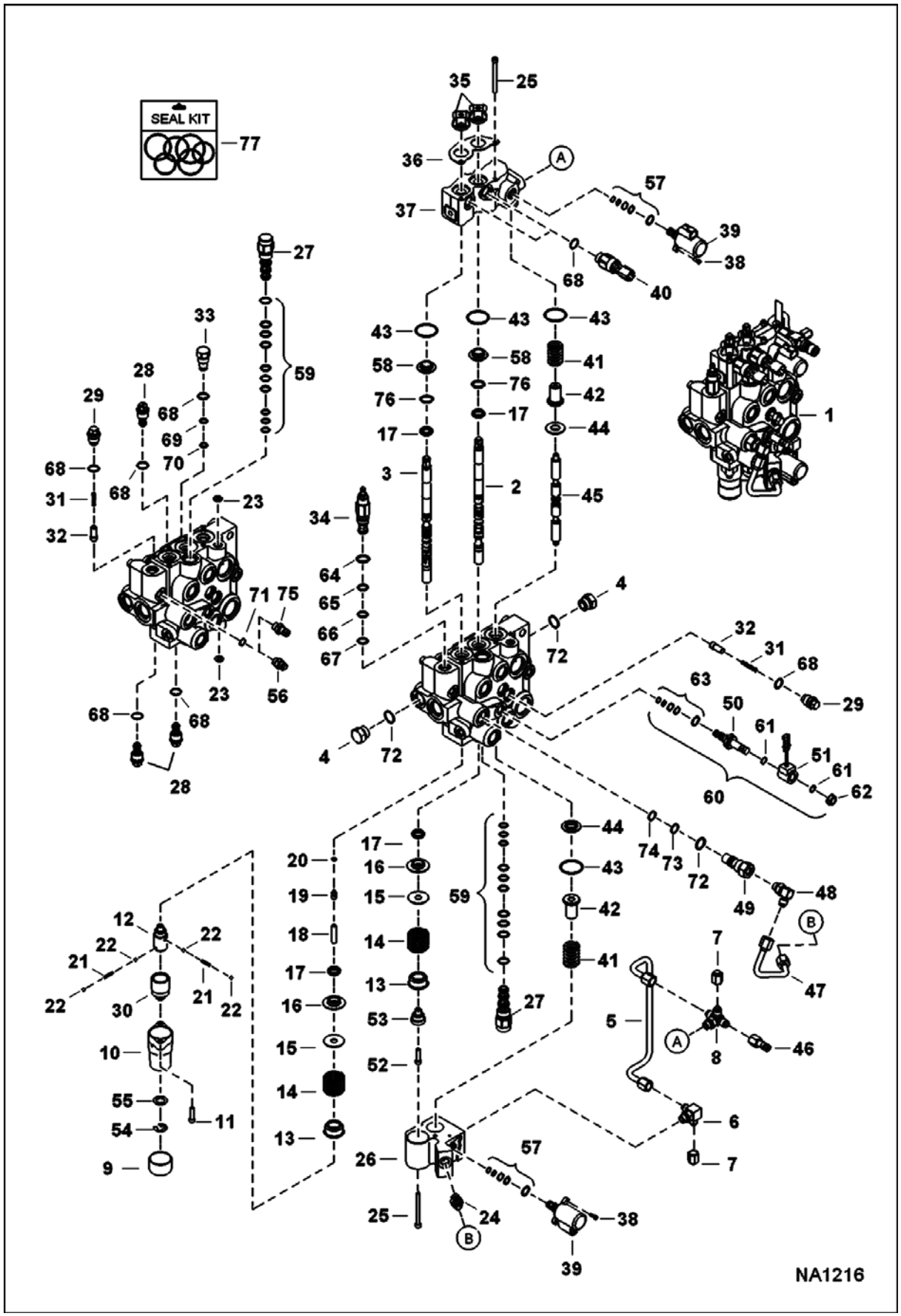

CONTROL VALVE (Cont'd)
(Manual Controls)

Ref No	Part Number	Description	Remarks	Serial Number	Qty
49	7134522	PLUG			1
50	6667687	STEM			1
51	6671025	COIL			1
51	6675559	COIL	W/Ref. 61 & 62		1
52	7102652	SCREW			1
53	6592109	ADAPTER			1
54	799119	RING			1
55	6592098	WASHER			1
56	6630168	COUPLER			1
57	7008771	KIT, SEAL	Use for Ref. 39		2
58	7202038	BUSHING, ALIGNMENT	Also Order 82K019 alignment O-ring - Was 6805102 [A]		2
59	6669734	KIT, SEAL			x
60	6672471	VALVE	solenoid		1
61	54K20028	O RING 10			2
62	6691022	NUT			1
63	6669732	KIT, SEAL			1
64	58K17	O RING 10			1
65	6665569	WASHER			1
66	25K20016	O RING 10			1
67	6665570	RING			1
68	79K8	O RING 10			x
69	58K013	O-RING			1
70	73K013	RING, BACK-UP			1
71	79K6	O RING 10			x
72	79K10	O RING 10			x
73	73K016	RING, BACK-UP			1
74	58K016	O-RING 10			1
75	15KB0606	FITTING, HYD CONNECTOR			1
76	82K019	O-RING	alignment		2
77	7123964	KIT, SEAL COMPLETE			1
77	6632279	KIT, SEAL	main relief - Ref. 64-67		x
77	6669732	KIT, SEAL	solenoid valve - Ref. 63		x
77	6669734	KIT, SEAL	pilot valve - Ref. 59		x
77	7008771	KIT, SEAL	proportional valve - Ref. 57		x

CONTROL VALVE
(ACS, SJC)

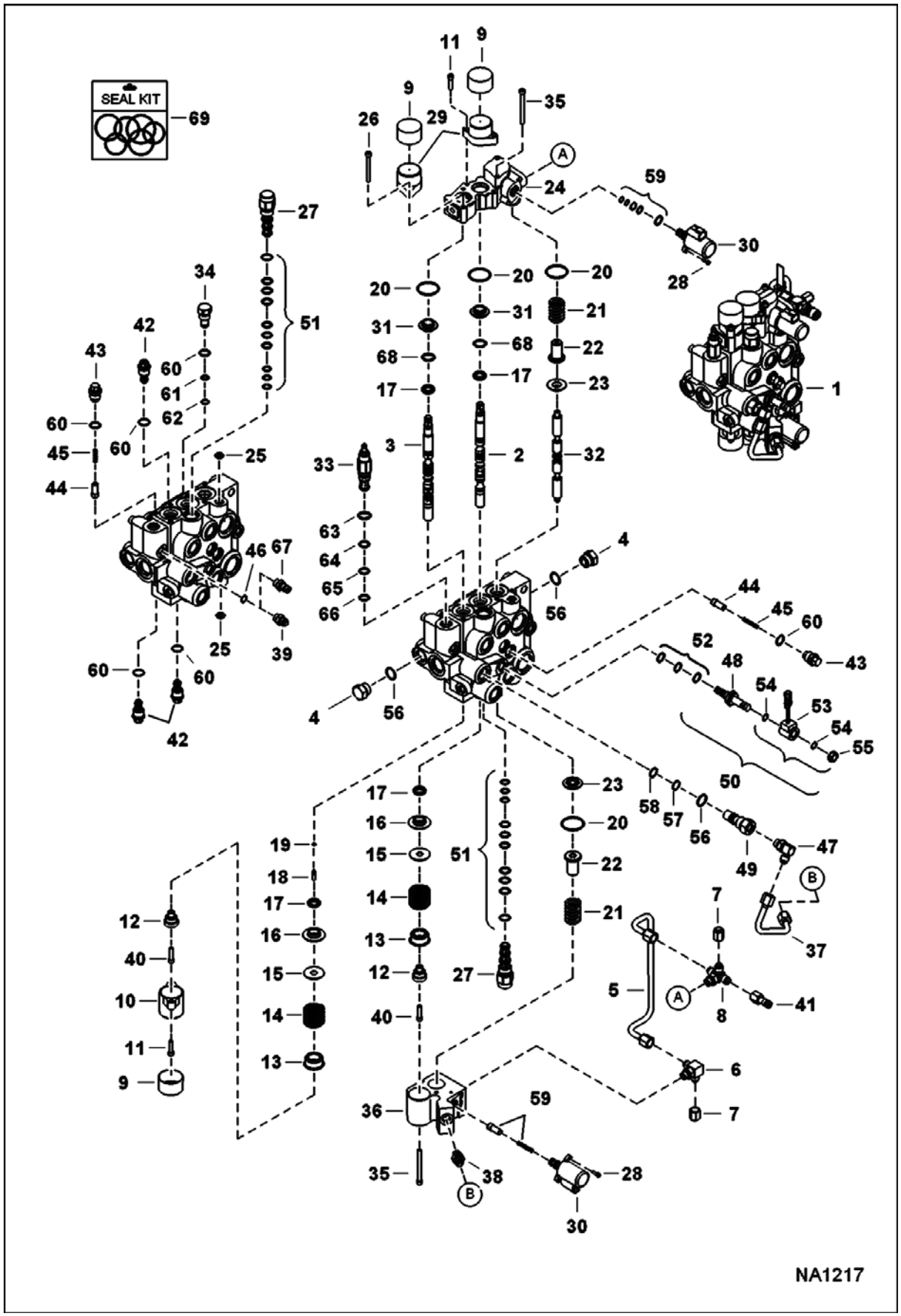

CONTROL VALVE (Cont'd)
(ACS, SJC)

Ref No	Part Number	Description	Remarks	Serial Number	Qty
1	7166283	VALVE, CONTROL			1
2	7108242	TILT SPOOL			1
3	7170011	SPOOL, LIFT			1
4	24K7	PLUG			2
5	7157291	TUBELINE			1
6	7166338	TEE, BOSS			1
7	36K5	CAP			2
8	7180987	FITTING, CROSS			1
9	6662848	CAP			3
10	6803092	BONNET			1
11	29G416	BOLT			4
12	6592109	ADAPTER			2
13	6592100	COLLAR			2
14	6587580	SPRING			2
15	6587523	WASHER			2
16	6595663	BUSHING			2
17	6683274	SEAL, SPOOL 10			4
18	6801167	PLUG			1
19	58K004	O-RING			1
20	1K127	O-RING 10			4
21	7121399	SPRING			2
22	6814694	RETAINER			2
23	7138376	BUSHING			2
24	7157293	BODY			1
25	55K204	O RING 10			2
26	69G436	BOLT			2
27	6689739	VALVE	pilot operated		2
28	7002716	SCREW			4
29	7101345	BONNET, DETENT HYD VALVE			2
30	6698434	VALVE, PROPORTIONAL			2
31	7202038	BUSHING, ALIGNMENT	Also Order 82K019 alignment O-ring - Was 6805102 [A]		2
32	7112383	AUX SPOOL			1
33	6686360	VALVE	main relief - W/Ref. 63-66 - pressure to be set in field - Was 6686359 [D]		1
34	6816549	PLUG ASSY PORT RLF			1
35	6814022	SCREW HEX SKT HD W/T			5
36	7157289	BLOCK			1
37	7157290	TUBELINE			1
38	6688845	VALVE			1
39	6630168	COUPLER			1
40	7102652	SCREW			2
41	6684125	COUPLER			1
42	6684646	VALVE	anti-cav		3
43	7134520	PLUG	check valve		3
44	7166047	SEAT, CHECK VALVE			4
45	7166339	SPRING, LOAD CHECK			4
46	79K6	O RING 10			x
47	17KB0606	FITTING			1

CONTROL VALVE (Cont'd)
(ACS, SJC)

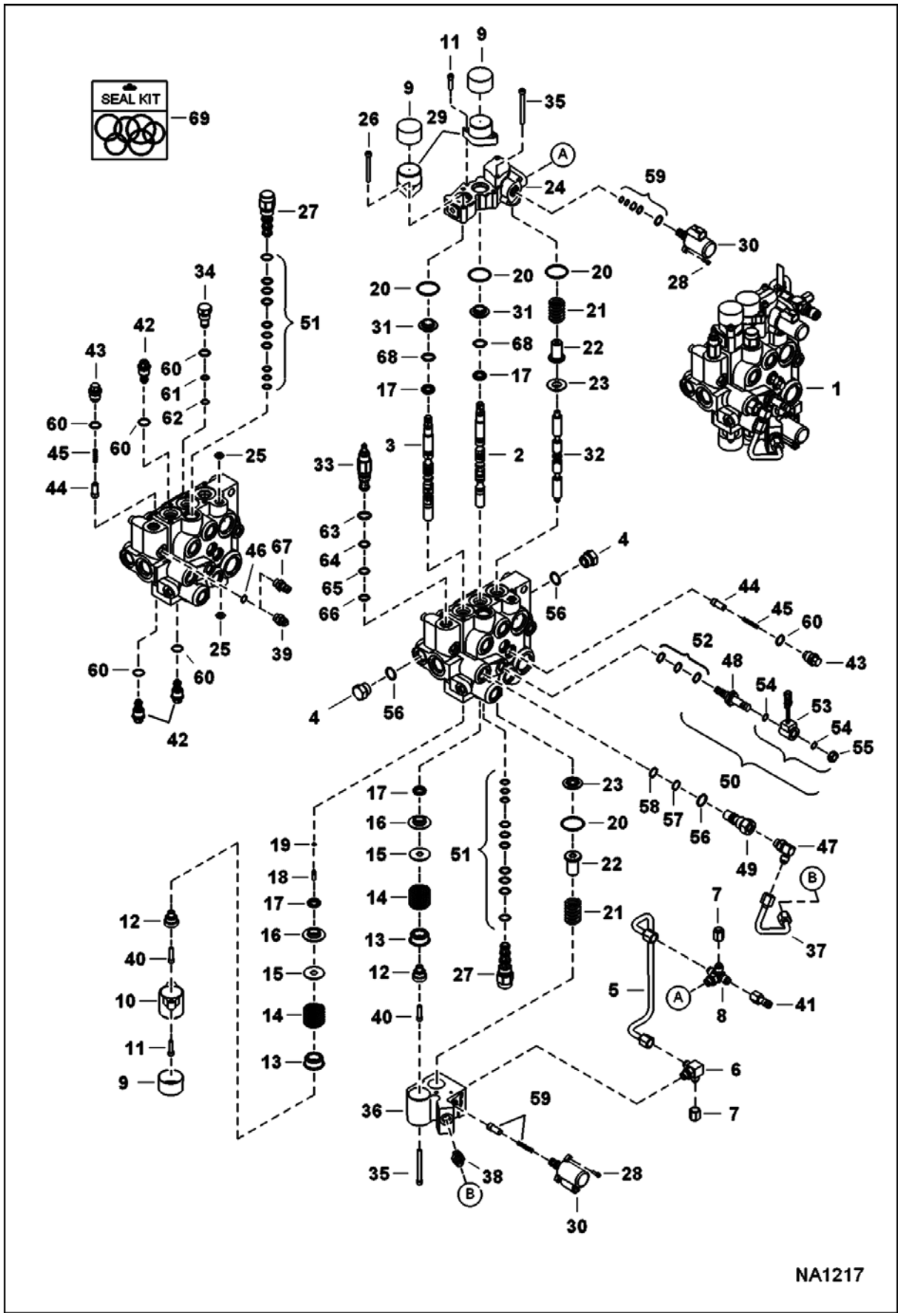

CONTROL VALVE (Cont'd)
(ACS, SJC)

Ref No	Part Number	Description	Remarks	Serial Number	Qty
48	6667687	STEM			1
49	7134522	PLUG			1
50	6672471	VALVE	solenoid		1
51	6669734	KIT, SEAL			X
52	6669732	KIT, SEAL			1
53	6671025	COIL			1
53	6675559	COIL	W/Ref. 54 & 55		1
54	54K20028	O RING 10			2
55	6691022	NUT			1
56	79K10	O RING 10			x
57	73K016	RING, BACK-UP			1
58	58K016	O-RING 10			1
59	7008771	KIT, SEAL			2
60	79K8	O RING 10			x
61	58K013	O-RING			1
62	73K013	RING, BACK-UP			1
63	58K17	O RING 10			1
64	6665569	WASHER			1
65	25K20016	O RING 10			1
66	6665570	RING			1
67	15KB0606	FITTING, HYD CONNECTOR			1
68	82K019	O-RING	alignment		2
69	7123964	KIT, SEAL COMPLETE			x
69	6632279	KIT, SEAL	main relief - Ref. 63-66		x
69	6669732	KIT, SEAL	solenoid valve - Ref. 52		x
69	6669734	KIT, SEAL	pilot valve - Ref. 51		x
69	7008771	KIT, SEAL	proportional valve - Ref. 59		x

MANUAL LIFT RELEASE VALVE

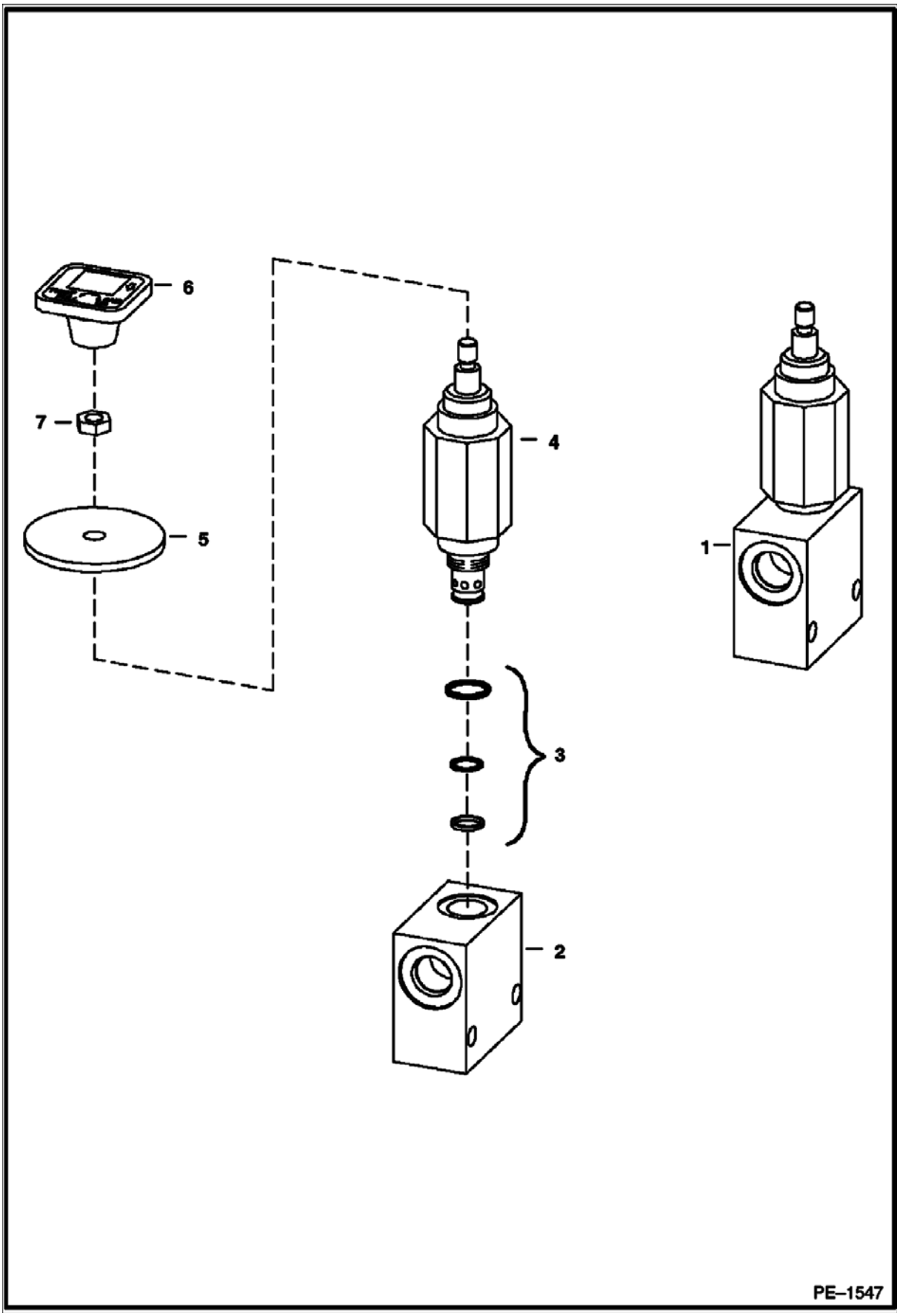

MANUAL LIFT RELEASE VALVE (Cont'd)

Ref No	Part Number	Description	Remarks	Serial Number	Qty
1	6667844	VALVE, LIFT MANUAL	Ref. 2-4		1
2		BLOCK	NSS		1
3	6669087	SEAL KIT			1
4		VALVE	NSS - Order Ref. 1		1
5	6707101	SEAL	neoprene		1
6	6737524	KNOB	red square		1
7	7D4	NUT			1

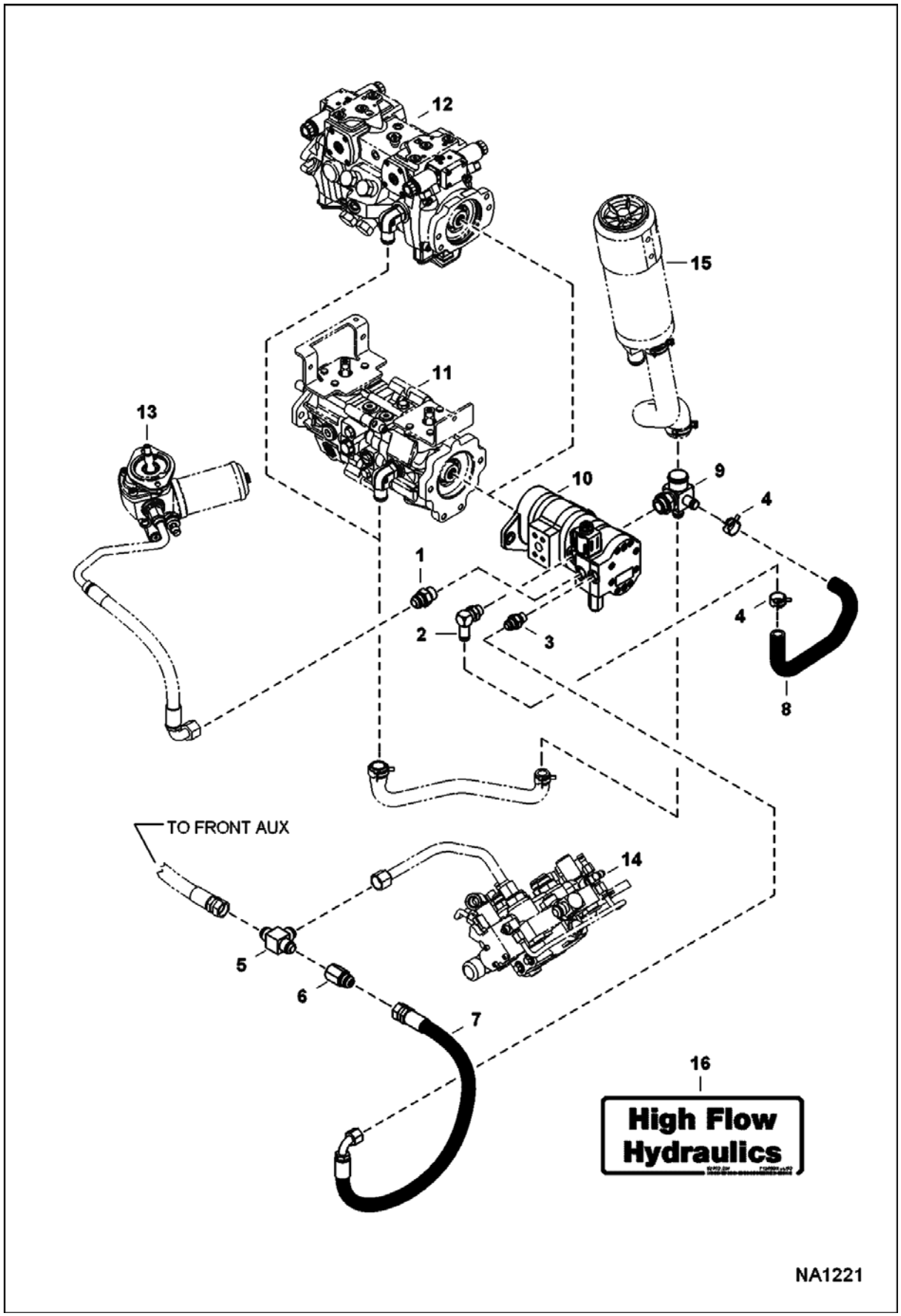
12
15
11
13
10
9
4
1
2
3
4
8
TO FRONT AUX
14
5
6
7
16
High Flow
Hydraulics
NA1221

Ref No	Part Number	Description	Remarks	Serial Number	Qty
1	15KB1212	FITTING, HYD CONNECTOR			1
1	79K12	O RING 10			x
2	6717885	ELBOW			1
2	79K10	O RING 10			x
3	15KB1008	FITTING, HYD CONNECTOR			1
3	79K8	O RING 10			x
4	5HM29	HOSECLAMP			2
5	10K8	TEE			1
6	7010242	VALVE, CHECK	in-line		1
7	7154521	HOSE			1
8	7155661	HOSE			1
9	7155660	FITTING			1
10		PUMP, GEAR TRIPLE	See Illustration HIGH FLOW HYDRAULICS/ MS1456		1
11		PUMP, HYD	See Illustration HYDROSTATIC PUMP/GEAR PUMP/ NA1309 - manual controls, AHC & ACS		1
12		PUMP, HYD	See Illustration HYDROSTATIC PUMP/GEAR PUMP/ NA1309 - SJC		1
13		MOTOR, HYD FAN COOLING	See Illustration COOLING FAN MOTOR/ MS2514		1
14		VALVE, CONTROL	See Illustration CONTROL VALVE/ NA1216 - manual controls		1
14		VALVE, CONTROL	See Illustration CONTROL VALVE/ NA1217 ACS, SJC & AHC		1
15		FILTER, HYDRO ASSY	See Illustration HYDROSTATIC CIRCUITRY/ NA1224	A3NV11001 - 11444	1
15		FILTER, HYDRO ASSY	See Illustration HYDROSTATIC CIRCUITRY/ NA1224	A3NW11001 - 11099	1
15		FILTER, HYDRO ASSY	See Illustration HYDROSTATIC CIRCUITRY/ NA2653	A3NV11445 & Above	1
15		FILTER, HYDRO ASSY	See Illustration HYDROSTATIC CIRCUITRY/ NA2653	A3NW11101 & Above	1
16	7120693	DECAL	high flow		1

HIGH FLOW HYDRAULICS
(Gear Pump)

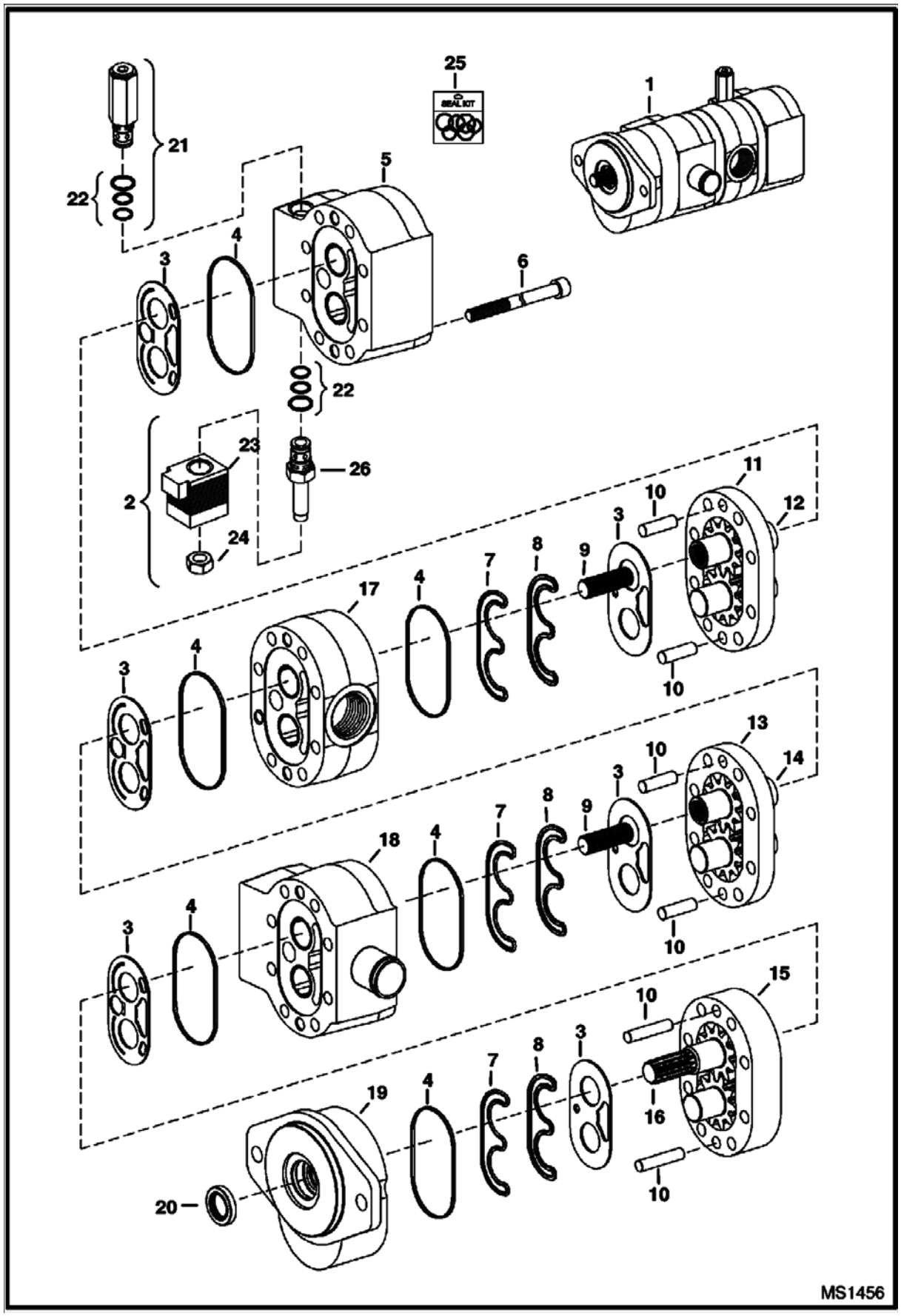

HIGH FLOW HYDRAULICS (Cont'd)
(Gear Pump)

Ref No	Part Number	Description	Remarks	Serial Number	Qty
1		PUMP, GEAR TRIPLE	NAP - Model 83001569 - Order 7010330 gear pump - Was 7001045 [A]		1
1	7010330	PUMP, GEAR TRIPLE	Model 83006231		1
2	6685027	VALVE	W/Ref. 22-24 & 26 - Use W/Ref. 1 (NAP/7001045 pump)		1
2	7008832	VALVE, SOLENOID	Ref. 22-24 & 26 - Use W/Ref. 1 (7010330 pump)		1
3		PLATE, WEAR	NSS		6
4		SEAL, SECTION	NSS		6
5		HOUSING, REAR	NSS		1
6		BOLT	NSS		8
7		SEAL, PRE-LOAD	NSS		6
8		SEAL, LOAD	NSS		6
9		CONNECTOR, SPLINE	NSS		2
10		PIN	NSS		6
11		HOUSING, GEAR	NSS - #3		1
12		GEAR SET	NSS - #3		1
13		HOUSING, GEAR	NSS - #2		1
14		GEAR SET	NSS - #2		1
15		HOUSING, GEAR	NSS - #1		1
16		GEAR SET	NSS - drive		1
17		HOUSING, CENTER	NSS		1
18		HOUSING, CENTER	NSS		1
19		HOUSING, FRONT	NSS		1
20	7020643	SEAL, SHAFT			1
21	6693414	VALVE, SOLENOID	W/Ref. 22 - Use W/Ref. 1 (NAP/ 7001045 pump)		1
21	7008832	VALVE, SOLENOID	Ref. 22-24 & 26 - Use W/Ref. 1 (7010330 pump)		1
22		KIT, SEAL	NSS		2
23		COIL	NAP - Order Ref. 2		1
24		NUT	NAP - Order Ref. 2		1
25	6688322	KIT, SEAL	Use W/Ref. 1 (NAP/ 7001045 pump)		1
25	6688320	SEAL KIT	Use W/Ref. 1 (7010330 pump)		1
26		STEM	NSS - Order Ref. 2		1

HYDROSTATIC CIRCUITRY
(Tank & Filter)
(S/N A3NV11001 - 11444, A3NW11001 - 11099)

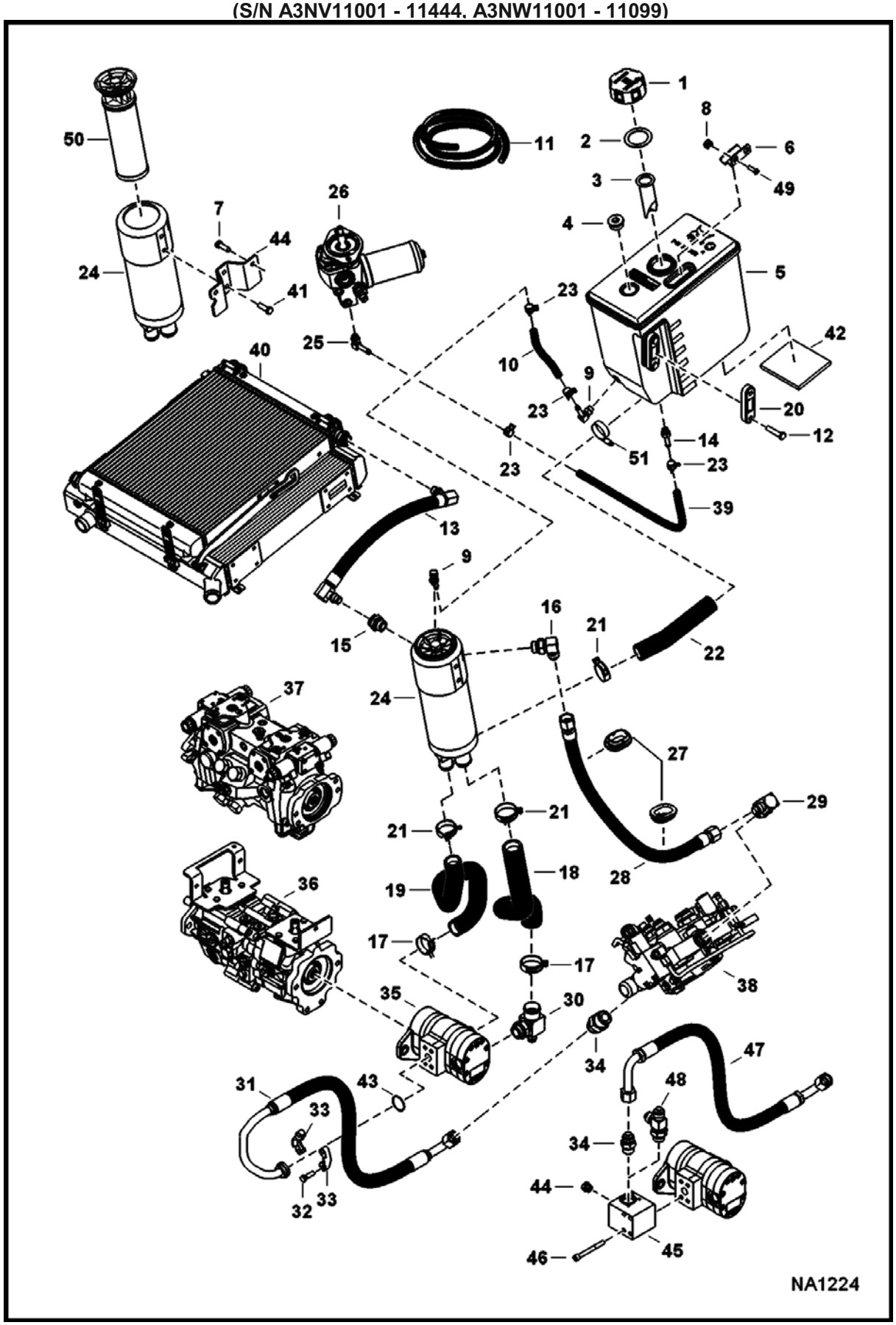

HYDROSTATIC CIRCUITRY (Cont'd)
(Tank & Filter)
(S/N A3NV11001 - 11444, A3NW11001 - 11099)

Ref No	Part Number	Description	Remarks	Serial Number	Qty
1	6727475	CAP, OIL HYD			1
2	6700631	GASKET			1
3	7003487	SCREEN			1
4	47K10	PLUG			1
4	79K16	O RING 10			x
5	7163919	TANK, HYDRAULIC			1
6	7165806	BRACKET			1
7	17C610	BOLT			2
8	57D5	NUT			2
9	42HC175	CLAMP			1
10		HOSE	NAP - 7.5" (190,5 mm) - Order Ref. 11		1
11	6586251	HOSE	bulk - sold per foot		x
12		BOLT	NSS - Order Ref. 20		2
13	7164589	HOSE, HYD			1
14	7158632	CONNECTOR			1
14	79K6	O RING 10			x
15	10L1212	ADAPTER			1
15	78K12	O-RING			x
16	17KB1212	FITTING, HYD ELBOW			1
16	79K12	O RING 10			x
17	5HM47	CLAMP			2
18	7167757	HOSE, HYD FORMED			1
19	7166382	HOSE, HYD FORMED			1
20	7001421	GUAGE, SIGHT			1
21	5HM42	HOSECLAMP			3
22	7162931	HOSE, HYD FORMED			1
23	5HM16	CLAMP			4
24	7166410	TANK, HYD FILTERED	filter not included		1
24		TANK, HYD FILTERED	See BTI401 - NAP - filter not included - Was 7166410 [A]		1
25	6727313	ELBOW			3
25	79K6	O RING 10			x
26		MOTOR, HYD COOLING FAN	See Illustration COOLING FAN MOTOR/ MS2514		1
27	7002740	GROMMET			2
28	7171394	HOSE			1
29	7101371	ELBOW			1
29	79K16	O RING 10	base		x
29	58K022	O-RING 10	end		x
30	7158921	FITTING	See Illustration HYDROSTATIC CIRCUITRY/ NA1225		1
30	79K16	O RING 10			x
31	7159044	HOSE ASSY			1
32	17C620	BOLT			4
33	19J12	CLAMP			2
34	15KB1212	FITTING, HYD CONNECTOR	See Illustration POWER BOB-TACH/ NA2048		2
34	79K12	O RING 10			1
35		PUMP, GEAR	See Illustration GEAR PUMP/ MS1454 - standard flow hydraulics		1
35		PUMP, GEAR	See Illustration HIGH FLOW HYDRAULICS/ MS1456 - high flow hydraulics		1

HYDROSTATIC CIRCUITRY (Cont'd)
(Tank & Filter)
(S/N A3NV11001 - 11444, A3NW11001 - 11099)

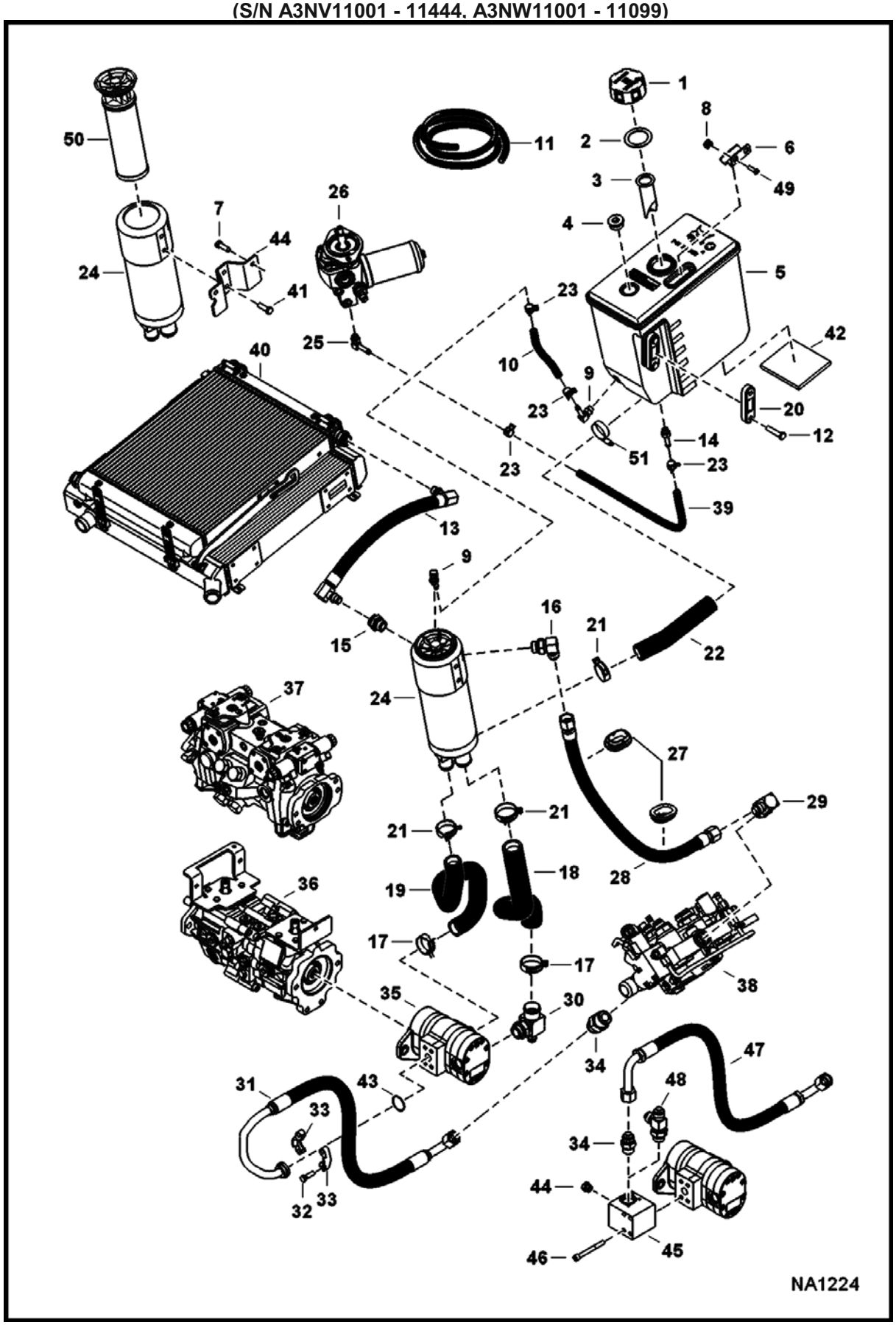

HYDROSTATIC CIRCUITRY (Cont'd)
(Tank & Filter)
(S/N A3NV11001 - 11444, A3NW11001 - 11099)

Ref No	Part Number	Description	Remarks	Serial Number	Qty
36		PUMP, HYD	See Illustration HYDROSTATIC PUMP/GEAR PUMP/ NA1309 - manual controls, AHC & ACS		1
37		PUMP, HYD	See Illustration HYDROSTATIC PUMP/GEAR PUMP/ NA1309 - SJC		1
38		VALVE, CONTROL	See Illustration CONTROL VALVE/ NA1217 - manual controls		1
38		VALVE, CONTROL	See Illustration CONTROL VALVE/ NA1216 - AHC, ACS & SJC		1
39		HOSE	NAP - 21" (533.4 mm) - Order Ref. 11		1
40		EXCHANGER, OIL WATER	See Illustration RADIATOR/COOLER ASSEMBLY/ NA1395		1
41	17C610	BOLT			2
42	7181309	PAD, WEAR			2
43	55K214	O-RING			1
44	7179382	BRACKET			1
45	7171996	MANIFOLD, HYD ASSY			1
45		VALVE, POWER BOB-TACH	See Illustration POWER BOB-TACH/ NA2048		1
46	17C644	BOLT			4
47	7172234	HOSE, HYD ASSY			1
48	21KB1212	FITTING, HYD TEE	See Illustration SOUND/NOISE REDUCTION KIT/ NA2325		1
48	79K12	O RING 10			x
49	53C516	BOLT			2
50	7002734	FILTER, OIL HYD TANK			1
50	7015488	O-RING, FILTER TOP			1
50	7015489	O-RING, FILTER BOTTOM			1

HYDROSTATIC CIRCUITRY
(Tank & Filter)
(S/N A3NV11445 & Above, A3NW11101 & Above)

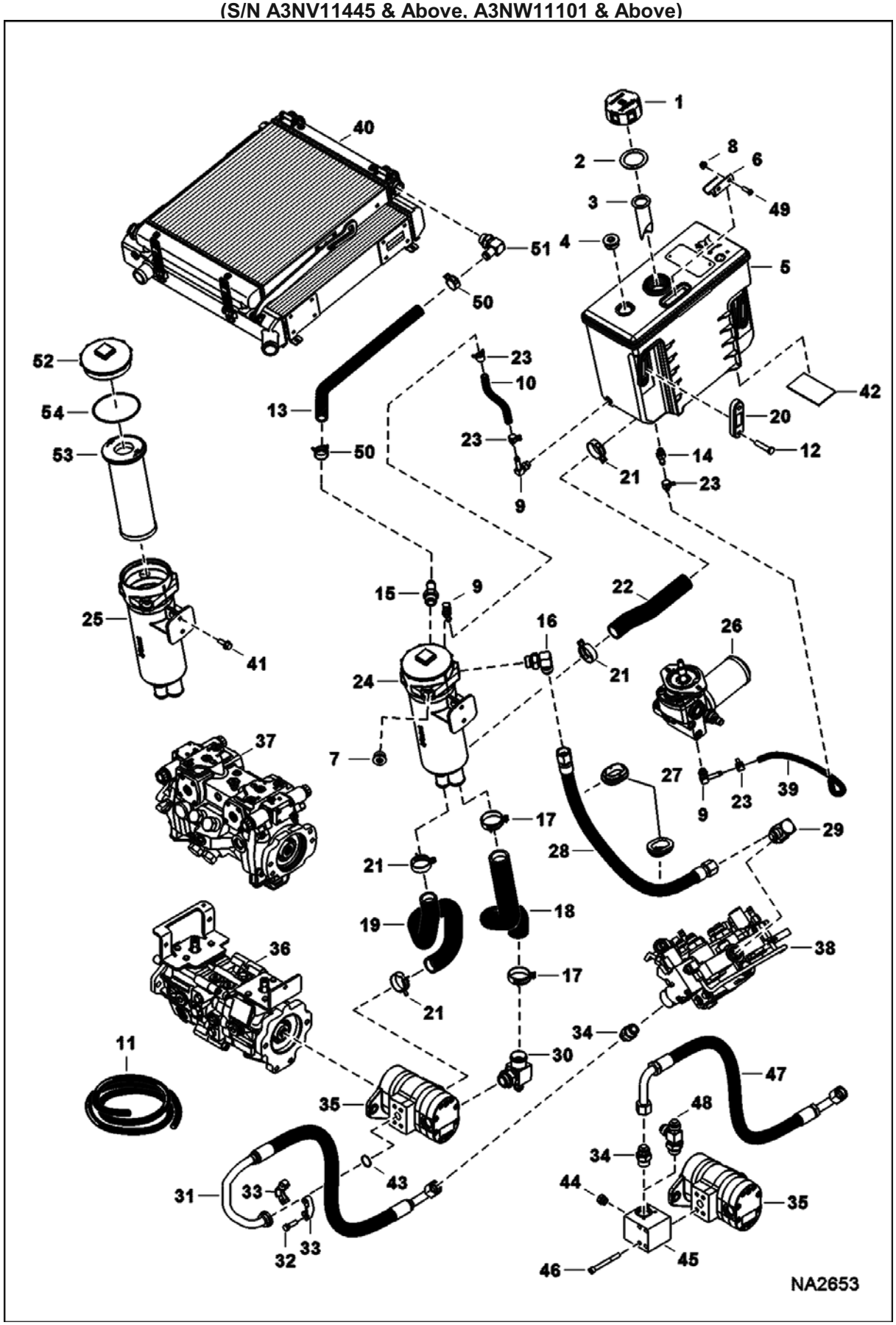

HYDROSTATIC CIRCUITRY (Cont'd)
(Tank & Filter)
(S/N A3NV11445 & Above, A3NW11101 & Above)

Ref No	Part Number	Description	Remarks	Serial Number	Qty
1	6727475	CAP, OIL HYD			1
2	6700631	GASKET			1
3	7003487	SCREEN			1
4	47K10	PLUG			1
4	79K16	O RING 10			x
5	7163919	TANK, HYDRAULIC			1
6	7165806	BRACKET			1
7	47K8	PLUG			1
7	79K12	O RING 10			x
8	57D5	NUT			2
9	6727313	ELBOW			3
9	79K6	O RING 10			x
10		HOSE	NAP - 7.5" (190,5 mm) - Order Ref. 11		1
11	6586251	HOSE	bulk - sold per foot		x
12		BOLT	NSS - Order Ref. 20		2
13	7189370	HOSE, HYD FORMED			1
14	7158632	CONNECTOR			1
15	6812865	FITTING			1
15	79K10	O RING 10			x
16	17KB1212	FITTING, HYD ELBOW			1
16	79K12	O RING 10			x
17	5HM47	CLAMP			2
18	7188778	HOSE, HYD FORMED			1
19	7188779	HOSE, HYD FORMED			1
20	7001421	GUAGE, SIGHT			1
21	5HM42	HOSECLAMP			4
22	7189371	HOSE, HYD FORMED			1
23	5HM16	CLAMP			4
24	7012312	FILTER, OIL HYD TANK ASSY	Ref. 9 & 52-54 - Was 7012313 [D]		1
25		TANK, HYD FILTERED	NAP - Order Ref. 24		1
26		MOTOR, HYD COOLING FAN	See Illustration COOLING FAN MOTOR/ MS2514		1
27	7002740	GROMMET			2
28	7171394	HOSE			1
29	7101371	ELBOW			1
29	79K16	O RING 10			x
30	7158921	FITTING	See Illustration HYDROSTATIC CIRCUITRY/ NA1225		1
30	79K12	O RING 10			x
31	7159044	HOSE ASSY			1
32	17C620	BOLT			4
33	19J12	CLAMP			2
34	15KB1212	FITTING, HYD CONNECTOR			2
34	79K12	O RING 10			x
35		PUMP, GEAR	See Illustration GEAR PUMP/ MS1454 - standard flow hydraulics		1
35		PUMP, GEAR	See Illustration HIGH FLOW HYDRAULICS/ MS1456 - high flow hydraulics		1
36		PUMP, HYD	See Illustration HYDROSTATIC PUMP/GEAR PUMP/		1

HYDROSTATIC CIRCUITRY (Cont'd)
(Tank & Filter)
(S/N A3NV11445 & Above, A3NW11101 & Above)

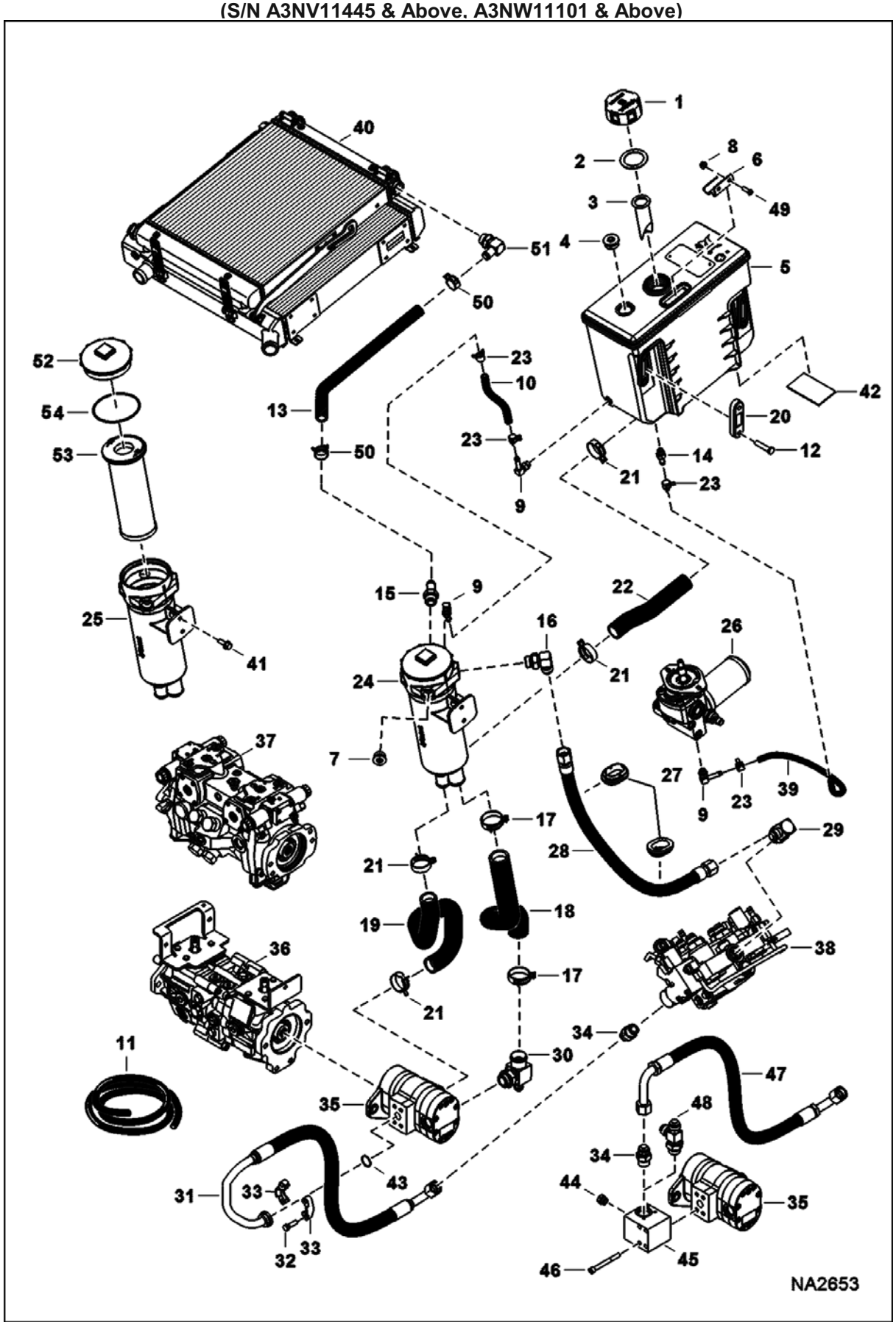

HYDROSTATIC CIRCUITRY (Cont'd)
(Tank & Filter)
(S/N A3NV11445 & Above, A3NW11101 & Above)

Ref No	Part Number	Description	Remarks	Serial Number	Qty
			NA1309 - manual, AHC, ACS		
37		PUMP, HYD	See Illustration HYDROSTATIC PUMP/GEAR PUMP/ NA1309 - SJC		1
38		VALVE, CONTROL	See Illustration CONTROL VALVE/ NA1216 - manual controls		1
38		VALVE, CONTROL	See Illustration CONTROL VALVE/ NA1217 - ACS, AHC & SJC		1
39		HOSE	NAP - 21" (533.4 mm) - Order Ref. 11		1
40		EXCHANGER, OIL WATER	See Illustration RADIATOR/COOLER ASSEMBLY/ NA1395		1
41	35C616	BOLT 5			2
42	7181309	PAD, WEAR			2
43	55K214	O-RING			1
44	24K5	PLUG			1
45	7171996	MANIFOLD, HYD ASSY			1
45		VALVE, POWER BOB-TACH	See Illustration POWER BOB-TACH/ NA2048		1
46	17C644	BOLT			4
47	7172234	HOSE, HYD ASSY			1
48	21KB1212	FITTING, HYD TEE	See Illustration SOUND/NOISE REDUCTION KIT/ NA2325		1
48	79K12	O RING 10			x
49	53C516	BOLT			2
50	5HM27	CLAMP			2
51	7022635	FITTING, ELBOW	Was 7113631 [B,D]		1
52	7012315	CAP, FILTER	W/Ref. 54		1
53	7012314	FILTER, OIL HYD ASSY	Also Order Ref. 54		1
54	7015308	SEAL			1

HYDROSTATIC CIRCUITRY
(Cooler)

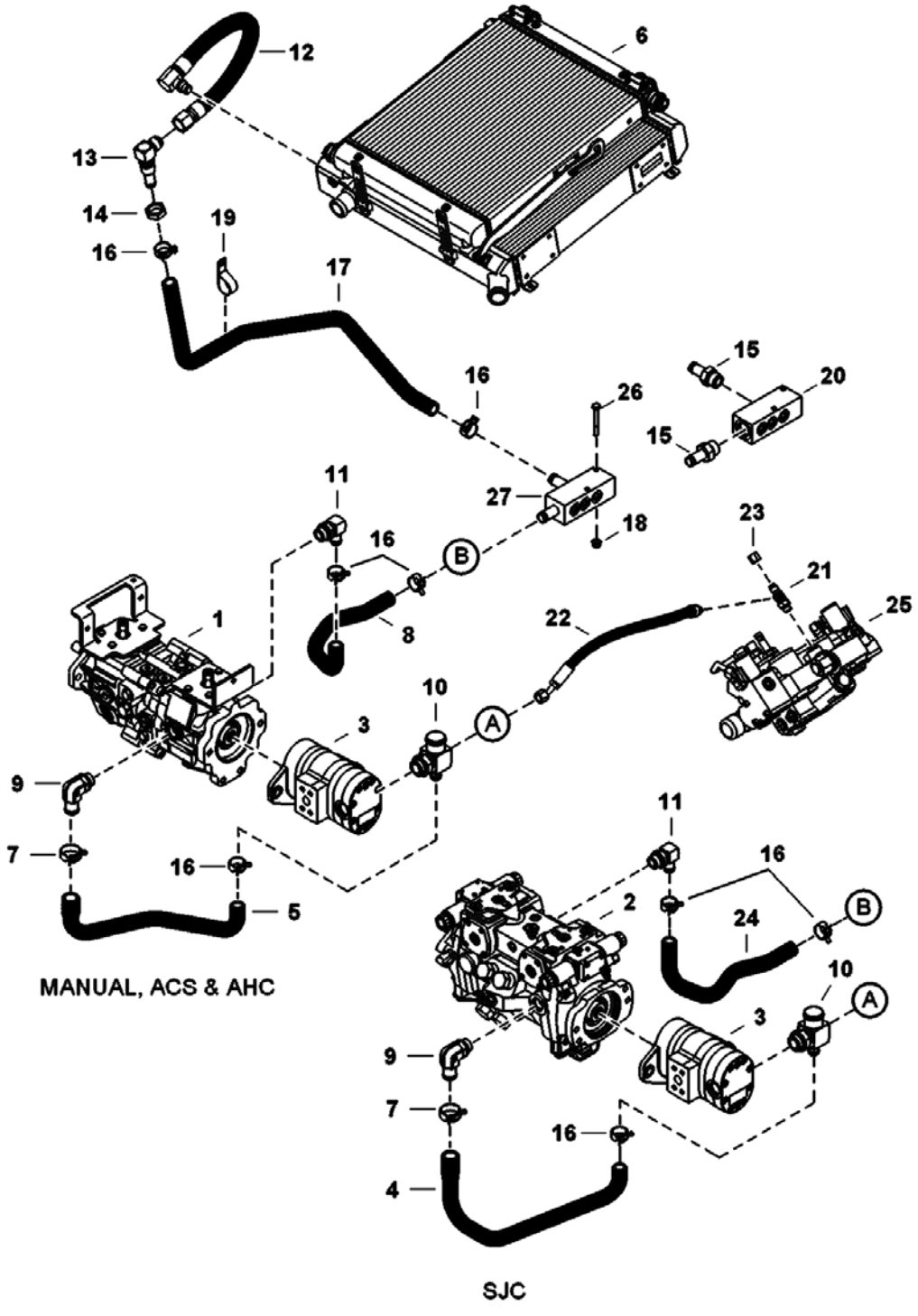

HYDROSTATIC CIRCUITRY (Cont'd)
(Cooler)

Ref No	Part Number	Description	Remarks	Serial Number	Qty
1		PUMP, HYD	See Illustration HYDROSTATIC PUMP/GEAR PUMP/ NA1309 - manual controls, AHC & ACS		1
2		PUMP, HYD	See Illustration HYDROSTATIC PUMP/GEAR PUMP/ NA1309 - SJC		1
3		PUMP, GEAR	See Illustration GEAR PUMP/ MS1454 - standard flow hydraulics		1
3		PUMP, GEAR	See Illustration HIGH FLOW HYDRAULICS/ MS1456 - high flow hydraulics		1
4	7165206	HOSE, HYD FORMED			1
5	7165205	HOSE, HYD FORMED			1
6		EXCHANGER, OIL WATER	See Illustration RADIATOR/COOLER ASSEMBLY/ NA1395		1
7	5HM35	HOSECLAMP			1
8	7155668	HOSE, HYD FORMED			1
9	7015518	VALVE, CHECK	Was 7001538 [A]		1
10	7158921	FITTING	See Illustration HYDROSTATIC CIRCUITRY/ NA2653		1
10	79K16	O RING 10			x
11	7113631	ELBOW			1
11	79K12	O RING 10			x
12	7157073	HOSE, HYD			1
13	7162930	ELBOW			1
14	86F8	NUT 5			1
15	6812865	FITTING			2
15	79K12	O RING 10			x
16	5HM27	CLAMP			5
17	7164698	HOSE, HYD FORMED			1
18	83D5	NUT 5			2
19	30HJ620	CLAMP			1
20		MANIFOLD, CASE DRAIN	NAP - Order Ref. 27 - Was 7178129 [A]		1
21	21KB0606	FTG HYD STRAIGHT TEE	See Illustration HYDROSTATIC CIRCUITRY/ NA1223 See Illustration HYDROSTATIC CIRCUITRY/ NA1222		1
21	79K6	O RING 10			x
22	7181582	HOSE, HYD ASSY	Was 7159735 [B]		1
23	36K5	CAP			1
24	7156859	HOSE, HYD FORMED			1
25		VALVE, CONTROL	See Illustration CONTROL VALVE/ NA1216 - manual controls		1
25		VALVE, CONTROL	See Illustration CONTROL VALVE/ NA1217 - ACS, AHC & SJC		1
26	17C540	BOLT			2

HYDROSTATIC CIRCUITRY
(Cooling Fan)

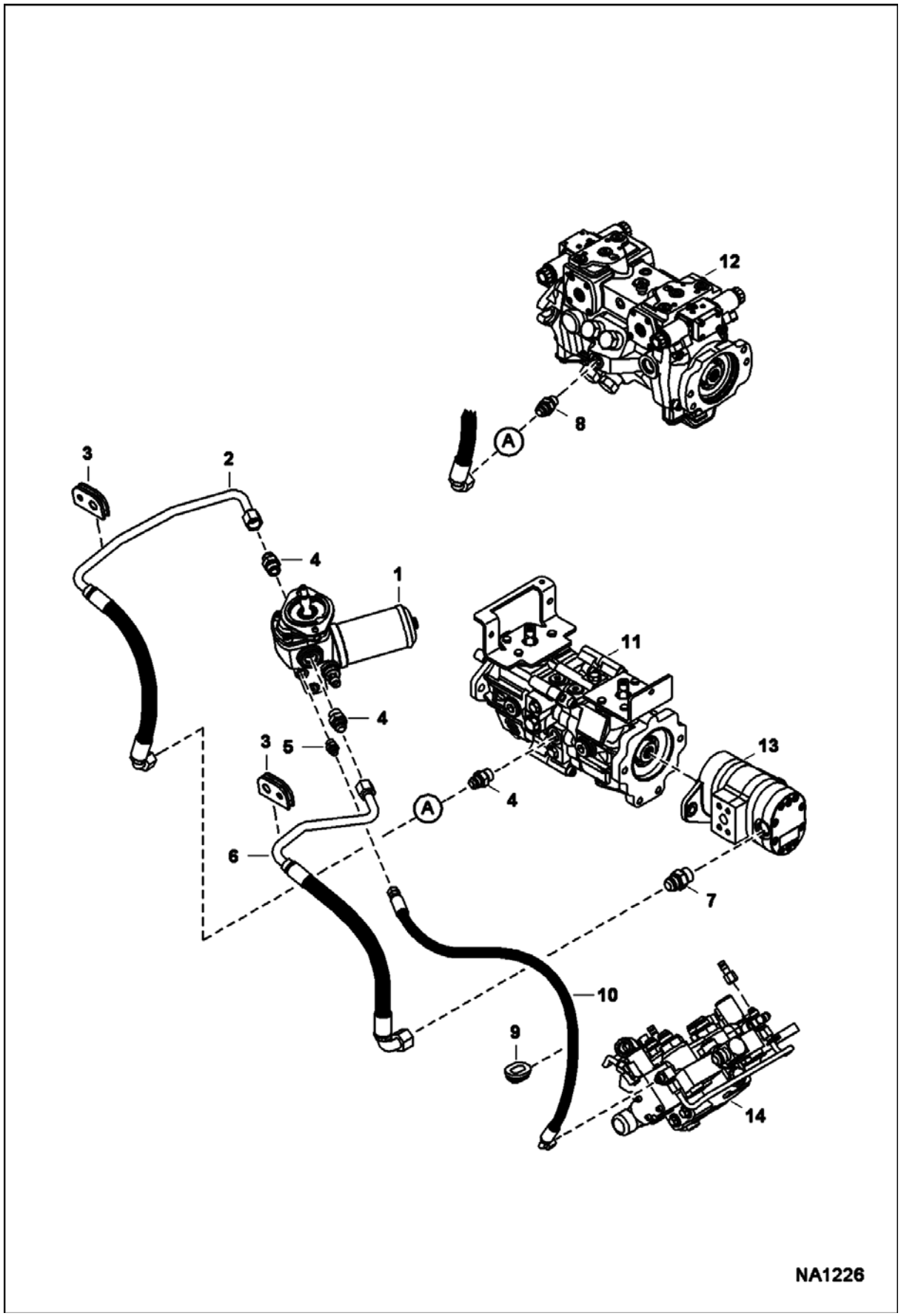

HYDROSTATIC CIRCUITRY (Cont'd)
(Cooling Fan)

Ref No	Part Number	Description	Remarks	Serial Number	Qty
1		MOTOR, HYD COOLING FAN	See Illustration COOLING FAN MOTOR/ MS2514		1
2	7167583	HOSE, HYD			1
3	7155070	GROMMET			2
4	15KB1010	FITTING, HYD CONNECTOR			3
4	79K10	O RING 10			x
5	15KB0606	FITTING, HYD CONNECTOR			1
5	79K6	O RING 10			x
6	7167582	HOSE, HYD			1
7	15KB1212	FITTING, HYD CONNECTOR			1
7	79K12	O RING 10			x
8	15KB1008	FITTING, HYD CONNECTOR			1
8	79K8	O RING 10			x
9	7002739	GROMMET			1
10	7164413	HOSE, HYD			1
11		PUMP, HYD	See Illustration HYDROSTATIC PUMP/GEAR PUMP/ NA1309 - manual controls, AHC & ACS		1
12		PUMP, HYD	See Illustration HYDROSTATIC PUMP/GEAR PUMP/ NA1309 - SJC		1
13		PUMP, GEAR	See Illustration GEAR PUMP/ MS1454 - standard flow hydraulics		1
13		PUMP, GEAR	See Illustration HIGH FLOW HYDRAULICS/ MS1456 - high flow hydraulics		1
14		VALVE, CONTROL	See Illustration CONTROL VALVE/ NA1216 - manual controls		1
14		VALVE, CONTROL	See Illustration CONTROL VALVE/ NA1217 - ACS, AHC & SJC		1

HYDROSTATIC CIRCUITRY
(Single Speed Motor)

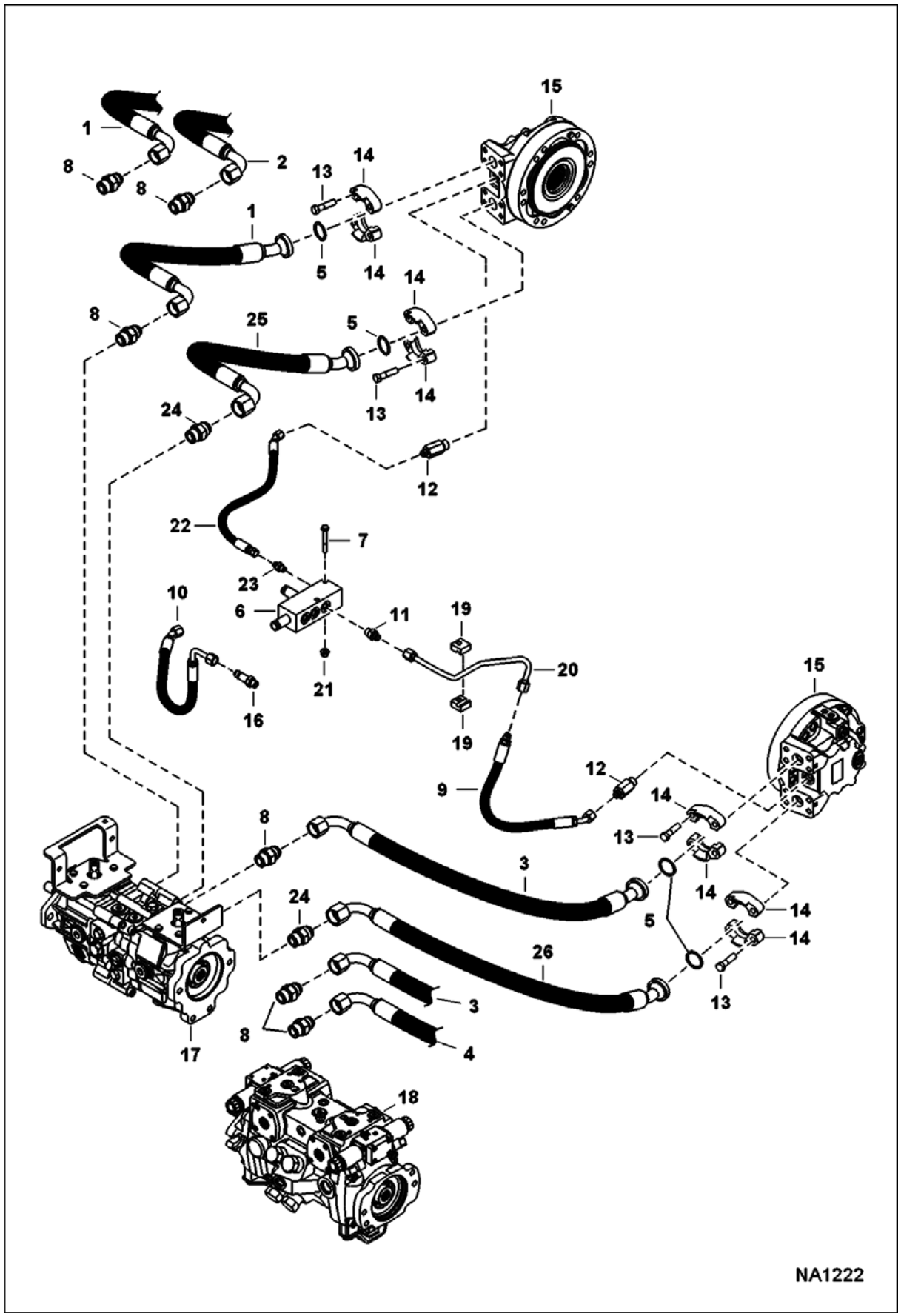

HYDROSTATIC CIRCUITRY (Cont'd)
(Single Speed Motor)

Ref No	Part Number	Description	Remarks	Serial Number	Qty
1	6692926	HOSE, HYD			1
2		HOSE, HYD	NAP - Order Ref. 24 & 25 - Was 6692927 [A]		1
3	6692928	HOSE, HYD			1
4		HOSE, HYD	NAP - Order Ref. 24 & 26 - Was 6692929 [A]		1
5	55K219	O'RING			4
6	7201981	MANIFOLD, DRAIN CASE	Was 7178129 [A]		1
7	17C536	BOLT			2
8	15KB1212	FITTING, HYD CONNECTOR			2
8	79K12	O RING 10			x
9	7176928	HOSE, HYD			1
10		HOSE, HYD	NAP - Order Ref. 22 & 23 - Was 7176926 [A]		1
11	15KB0606	FITTING, HYD CONNECTOR			1
11	79K6	O RING 10			x
12	7168927	ADAPTER			2
13	17C728	BOLT			16
14	20J16	FLANGE			8
15		CARRIER, MOTOR	See Illustration MOTOR CARRIER/ NA1007		1
16	16KB0606	FTG HYD L CONNECTOR	Use W/Ref. 10 hose		1
16	79K6	O RING 10			x
17		PUMP, HYD	See Illustration HYDROSTATIC PUMP/GEAR PUMP/ NA1309 - manual controls, AHC & ACS		1
18		PUMP, HYD	See Illustration HYDROSTATIC PUMP/GEAR PUMP/ NA1309 - SJC		1
19	6727707	CLAMP			2
20	7176929	TUBELINE, HYD			1
21	83D5	NUT 5			2
22	7159735	HOSE, HYD	Was 7186609 [C]		1
23	15KB0606	FITTING, HYD CONNECTOR	Use W/Ref. 22 hose		1
23	79K6	O RING 10			x
24	15KB1612	FITTING, HYD CONNECTOR			2
24	79K12	O RING 10			x
25	7193006	HOSE, HYD			1
26	7193007	HOSE, HYD			1

HYDROSTATIC CIRCUITRY
(2-Speed Motor)

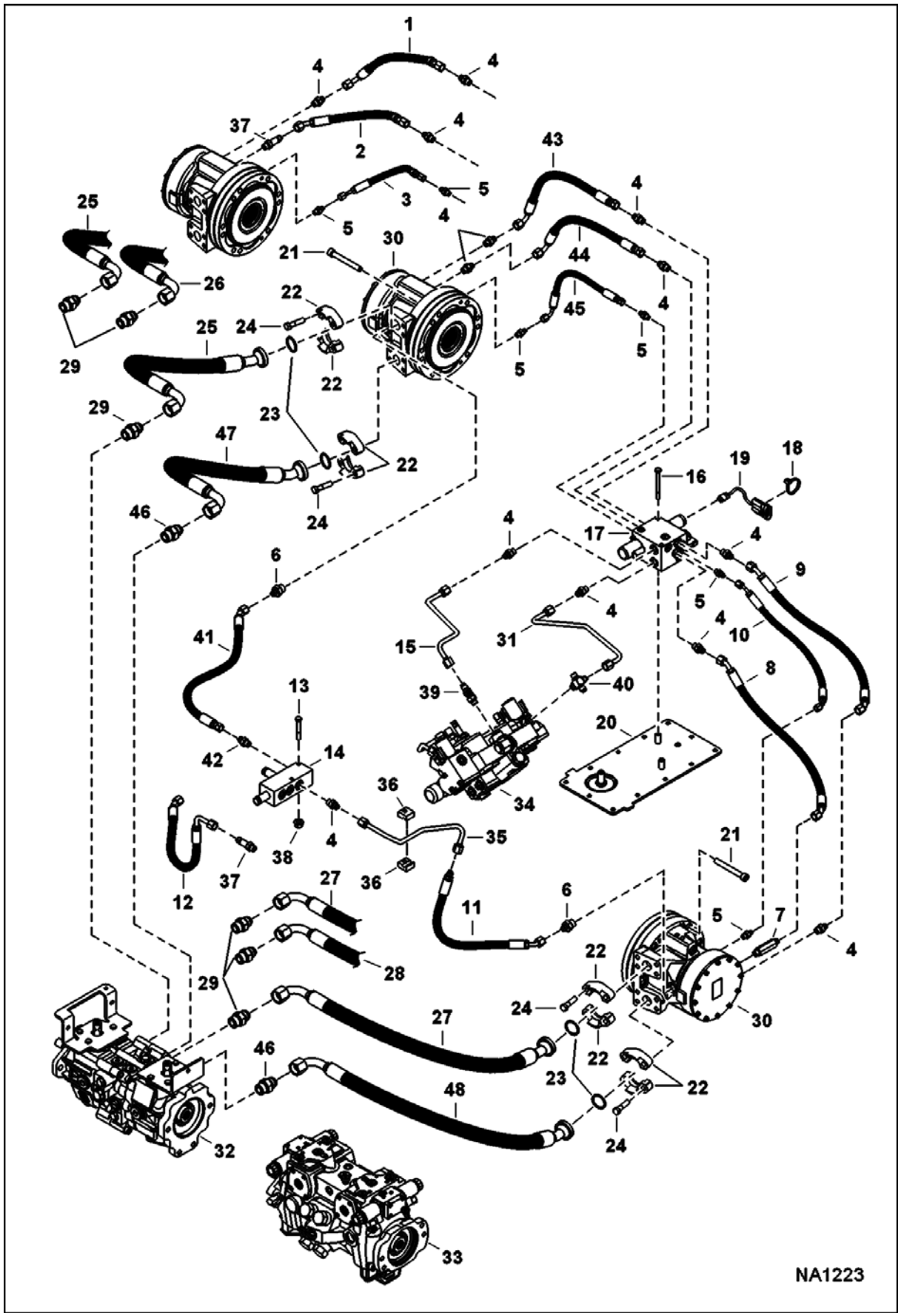

HYDROSTATIC CIRCUITRY (Cont'd)
(2-Speed Motor)

Ref No	Part Number	Description	Remarks	Serial Number	Qty
1		HOSE, HYD	NAP - Order Ref. 43 - Was 7176931 [A]		1
2		HOSE, HYD	NAP - Order Ref. 4 & 44 - Was 7176932 [A]		1
3		HOSE, HYD	NAP - Order Ref. 45 - Was 7176933 [A]		1
4	15KB0606	FITTING, HYD CONNECTOR			10
4	79K6	O RING 10			x
5	15KB0404	FTG HYD S Connector			4
5	79K4	O RING 10			x
6	15KB0608	FITTING, HYD CONNECTOR			2
6	79K8	O RING 10			x
7	7169116	ADAPTER			1
7	79K6	O RING 10			x
8	7176935	HOSE, HYD			1
9	7176934	HOSE, HYD			1
10	7196362	HOSE, HYD	Was 7176936 [A]		1
11	7176928	HOSE, HYD			1
12		HOSE, HYD	NAP - Order Ref. 41 & 42 - Was 7176926 [A]		1
13	17C536	BOLT			2
14	7201981	MANIFOLD, DRAIN CASE	Was 7178129 [A]		1
15	7178294	HOSE, HYD			1
16	17C552	BOLT			2
17		VALVE, 2 SPEED	See Illustration 2-SPEED VALVE/ NA2164		1
18	6624289	STRAP, TIE			1
19	7159366	HARNESS, 2 SPEED RETURN			1
20	7153655	COVER, BRAKE ASSY			1
21	6717806	BOLT			20
22	20J16	FLANGE			8
23	55K219	O'RING			4
24	17C728	BOLT			16
25	6692926	HOSE, HYD	mega seal		1
26		HOSE, HYD	NAP - mega seal - Order Ref. 46 & 47 - Was 6692927 [A]		1
27	6692928	HOSE, HYD	mega seal		1
28	7193007	HOSE, HYD	NAP - mega seal - Order Ref. 46 & 48 - Was 6692929 [A]		1
29	15KB1212	FITTING, HYD CONNECTOR			4
29	79K12	O RING 10			x
30		MOTOR, DRIVE HYD	See Illustration HYDROSTATIC MOTOR & BRAKE/ MS1467		2
31	7155269	HOSE, HYD			1
32		PUMP, HYD	See Illustration HYDROSTATIC PUMP/GEAR PUMP/ NA1309 - manual controls, AHC & ACS		1
33		PUMP, HYD	See Illustration HYDROSTATIC PUMP/GEAR PUMP/ NA1309 - SJC		1
34		VALVE, CONTROL	See Illustration CONTROL VALVE/ NA1216 - manual controls		1
34		VALVE, CONTROL	See Illustration CONTROL VALVE/ NA1217 - AHC, ACS & SJC		1
35	7176929	TUBELINE, HYD			1
36	6727707	CLAMP			2
37	16KB0606	FTG HYD L			2

HYDROSTATIC CIRCUITRY (Cont'd)
(2-Speed Motor)

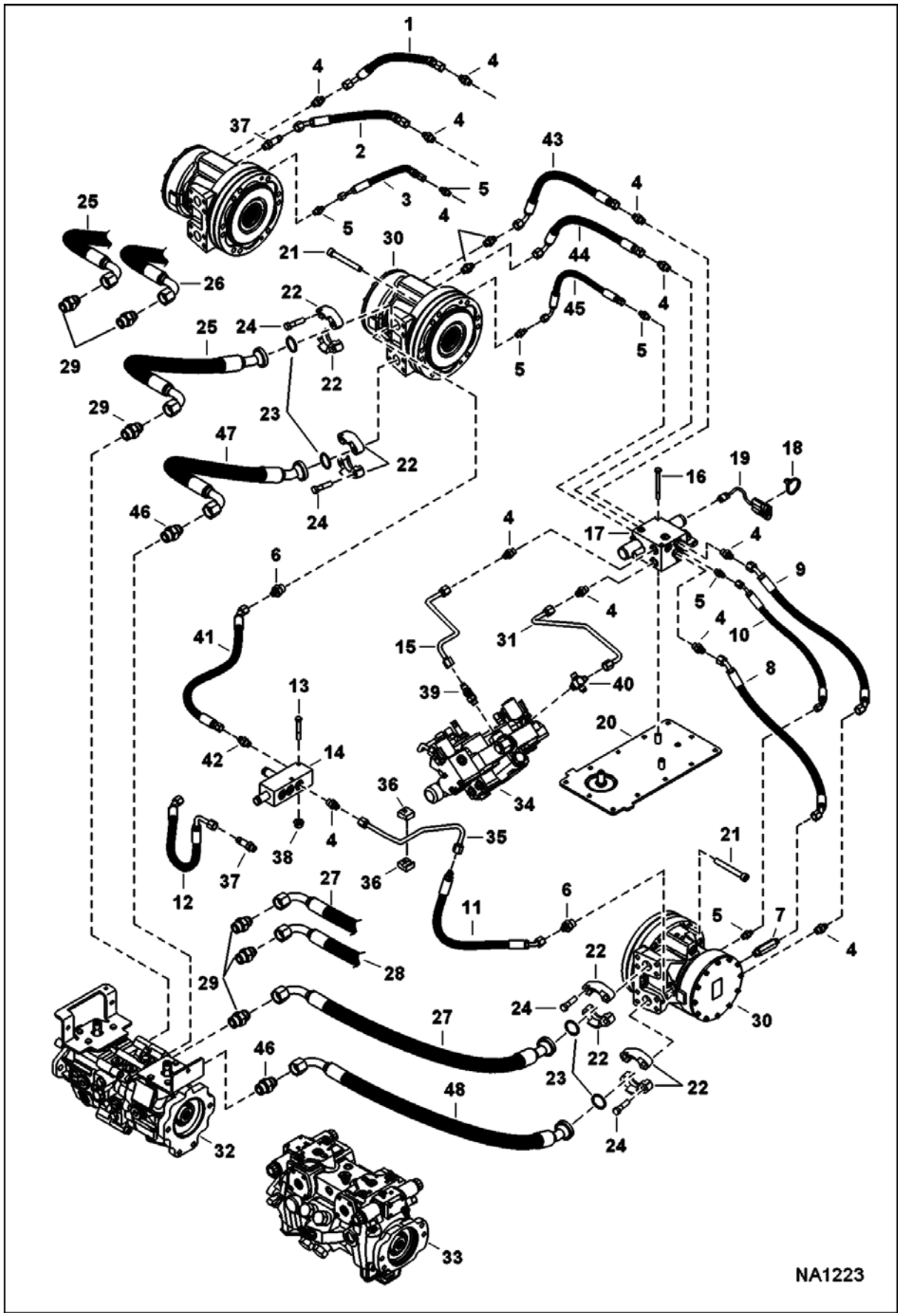

HYDROSTATIC CIRCUITRY (Cont'd)
(2-Speed Motor)

Ref No	Part Number	Description	Remarks	Serial Number	Qty
		CONNECTOR			
37	79K6	O RING 10			x
38	86D5	NUT			2
39	21KB0606	FTG HYD STRAIGHT TEE			1
39	79K6	O RING 10			x
40	7180987	FITTING, CROSS			1
40	79K6	O RING 10			x
41	7159735	HOSE, HYD	Was 7186609 [C]		1
42	15KB0606	FITTING, HYD CONNECTOR	Use W/Ref. 41 hose		1
42	79K6	O RING 10			x
43	6578327	HOSE			1
44	7187472	HOSE			1
45	7196361	HOSE, HYD	Was 7188370 [A]		1
46	15KB1612	FITTING, HYD CONNECTOR			2
46	79K12	O RING 10			x
47	7193006	HOSE, HYD			1
48	7193007	HOSE, HYD			1

RADIATOR/COOLER ASSEMBLY

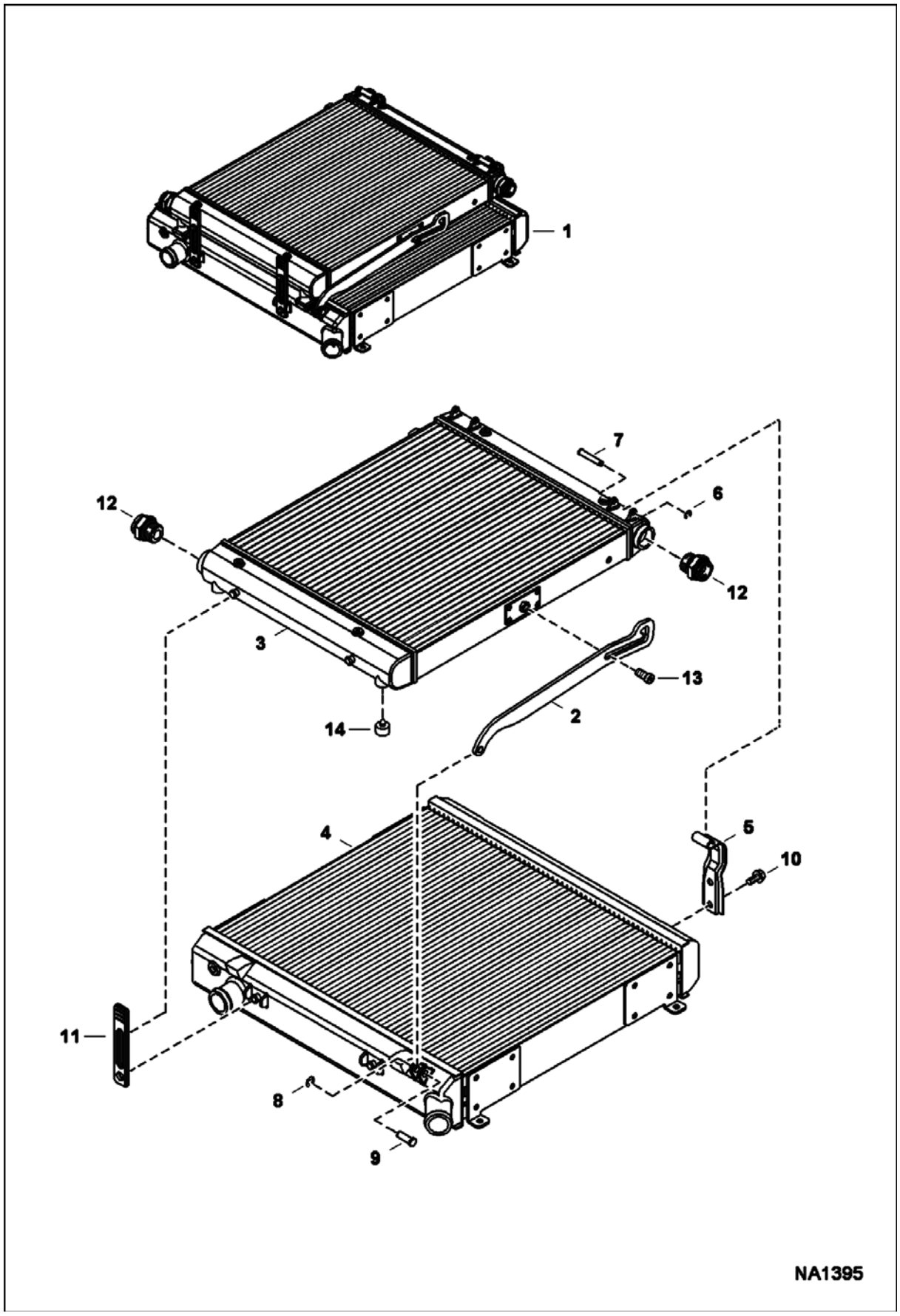

RADIATOR/COOLER ASSEMBLY (Cont'd)

Ref No	Part Number	Description	Remarks	Serial Number	Qty
1	7146471	EXCHANGER, OIL WATER	Ref. 2-14		1
2	7009262	ROD, PROP UP			2
3	7009254	EXCHANGER, OIL COOLER			1
4	7009255	EXCHANGER, WATER RADIATOR			1
5	7009263	BRACKET, HINGE FORMED			2
6	7009258	RING, RETAINER			2
7	7009259	PIN			2
8	7009261	RING, RETAINER			1
9	7009260	PIN			1
10	7009256	BOLT, FLANGE			4
11	7009257	STRAP, HOLD DOWN			2
12	7010125	CONNECTOR			2
13	7010126	BOLT			1
14	7010127	BUMPER, RUBBER			2

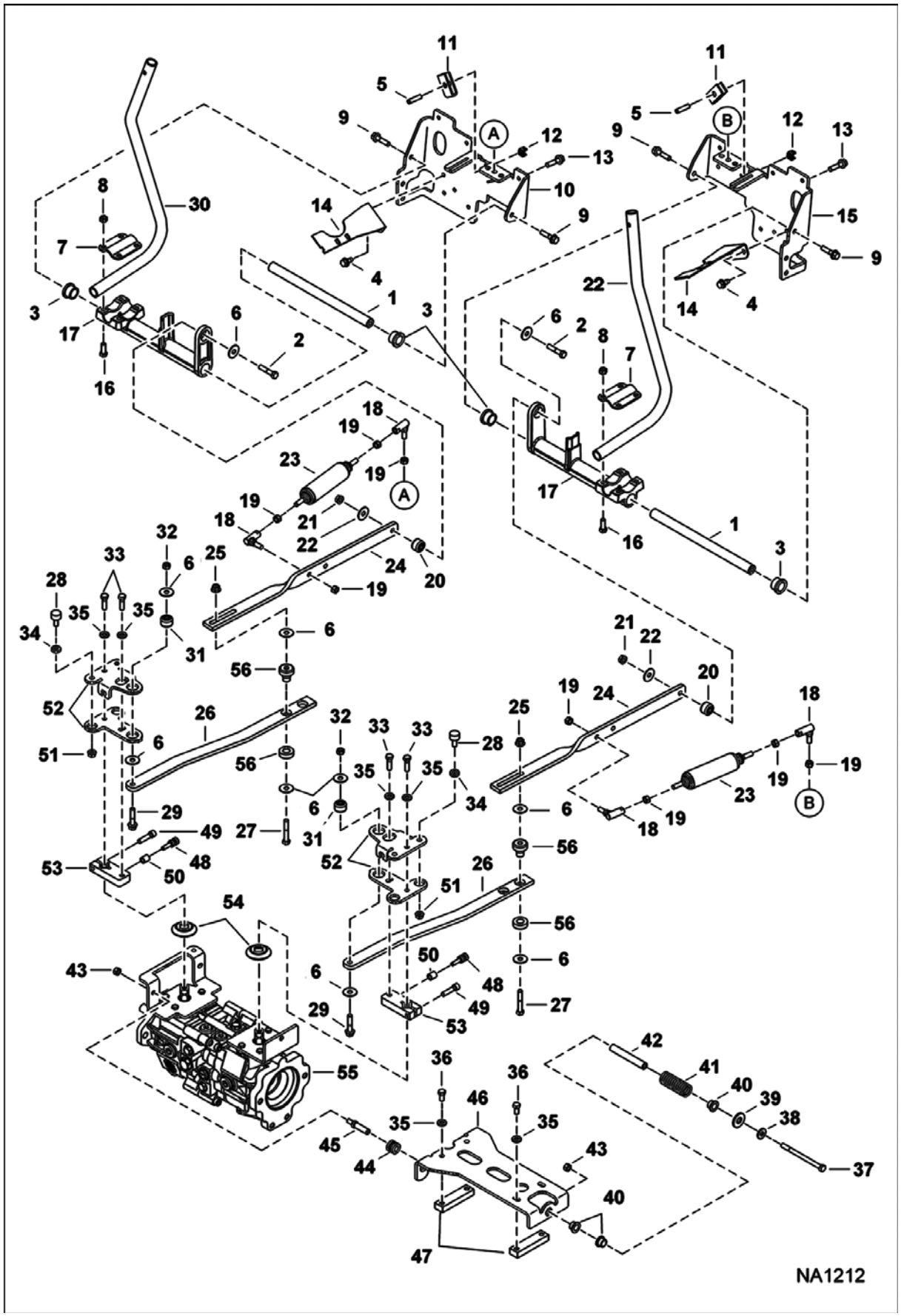
NA1212

Ref No	Part Number	Description	Remarks	Serial Number	Qty
1	7145149	SHAFT, STEERING			2
2	17C628	BOLT			2
3	7159624	BUSHING			4
4	84G3712	BOLT			4
5	15G628	SCREW	Was 15G624 [B]		2
6	6737388	WASHER			12
7	7156761	PLATE			2
8	95D6	NUT			8
9	49C624	SCREW			4
10	7176118	MOUNT			1
11	7121779	PAD			2
12	6685663	RETAINER			2
13	84G3724	BOLT			12
14	7163216	BRACKET			2
15	7176117	MOUNT			1
16	17C616	BOLT 5			8
17	7151889	BELLCRANK			2
18	6599744	BALL JOINT			4
19	62D6	NUT 5			8
20	6685060	BUSHING, TORSION			2
21	53D6	NUT			2
22	7145147	LEVER, STEERING	RH		1
23	6649551	GAS SPRING			2
24	7183799	LINK, STEERING			2
25	83D6	NUT 5			4
26	7183957	LINK, CENTER			2
27	17C636	BOLT			4
28	6673789	BEARING			4
29	49C628	BOLT			2
30	7153379	LEVER, STEERING	LH		1
31	6685060	BUSHING, TORSION			2
32	63D6	NUT			2
33	47C620	BOLT			4
34	7100699	WASHER			4
35	7103217	WASHER			8
36	7105192	BOLT			4
37	17C680	BOLT			1
38	6563914	WASHER			1
39	25E24	WASHER	AHC & ACS		1
40	6715163	BUSHING, PRESS FIT			3
41	6701535	SPRING			1
42	6715164	SLEEVE, SPRING			1
43	95D6	NUT			3
44	6706098	GUIDE			2
45	6577058	PIN			2
46	6734298	MOUNT			1
47	6702716	BLOCK			2
48	7103711	BOLT			2
49	73G624	BOLT			2
50	7105223	SPACER			2
51	98D6	NUT			4

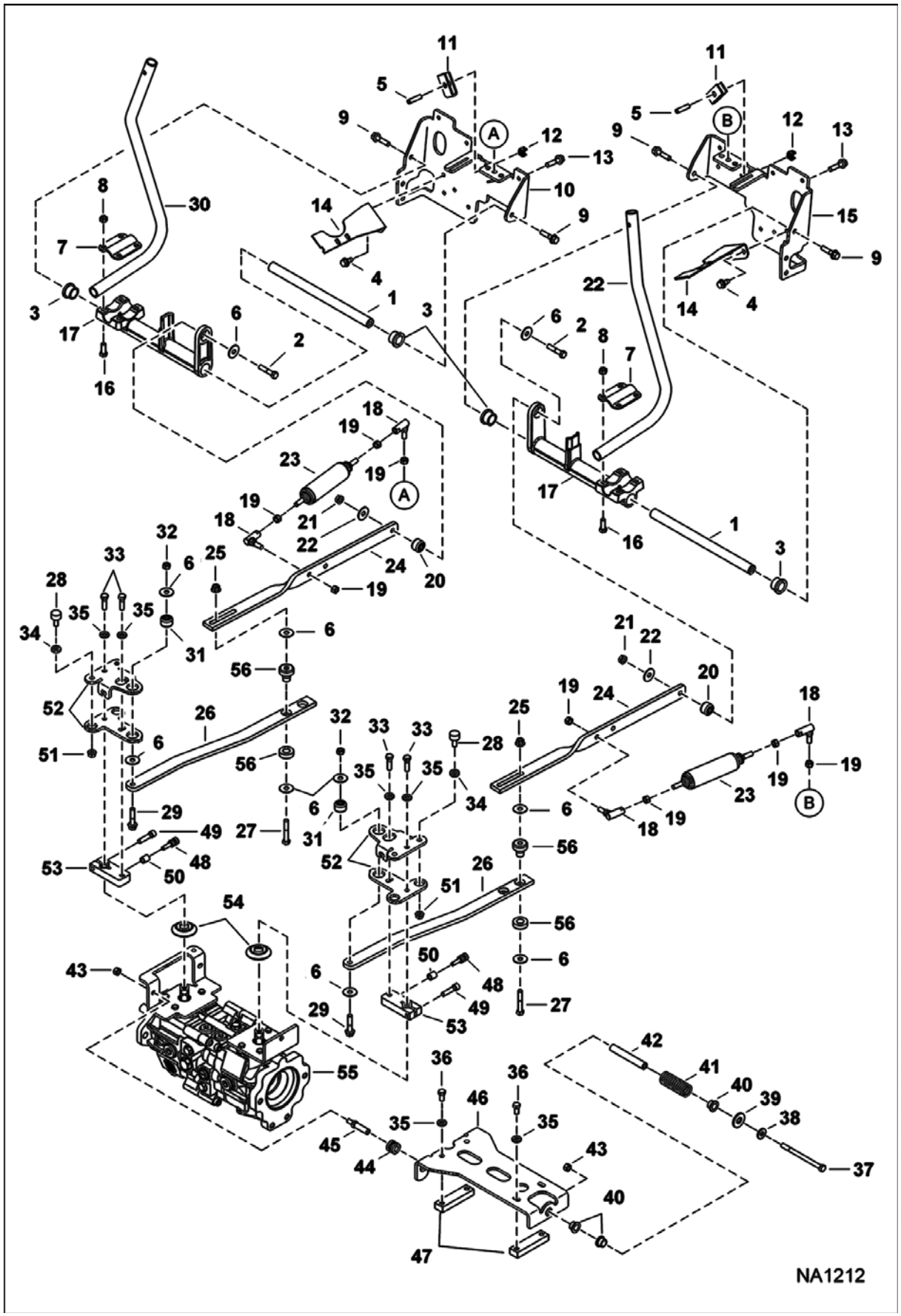
NA1212

Ref No	Part Number	Description	Remarks	Serial Number	Qty
52	7110365	ARM, PINTLE			2
53	7103708	BRACKET	pintle arm		2
54	6687913	SEAL			2
55		PUMP, HYD	See Illustration HYDROSTATIC PUMP/GEAR PUMP/ NA1309 - manual controls, AHC & ACS		1
56	7169932	MOUNT			4

HYDROSTATIC MOTOR
(Single Speed) (Manual Controls & ACS)

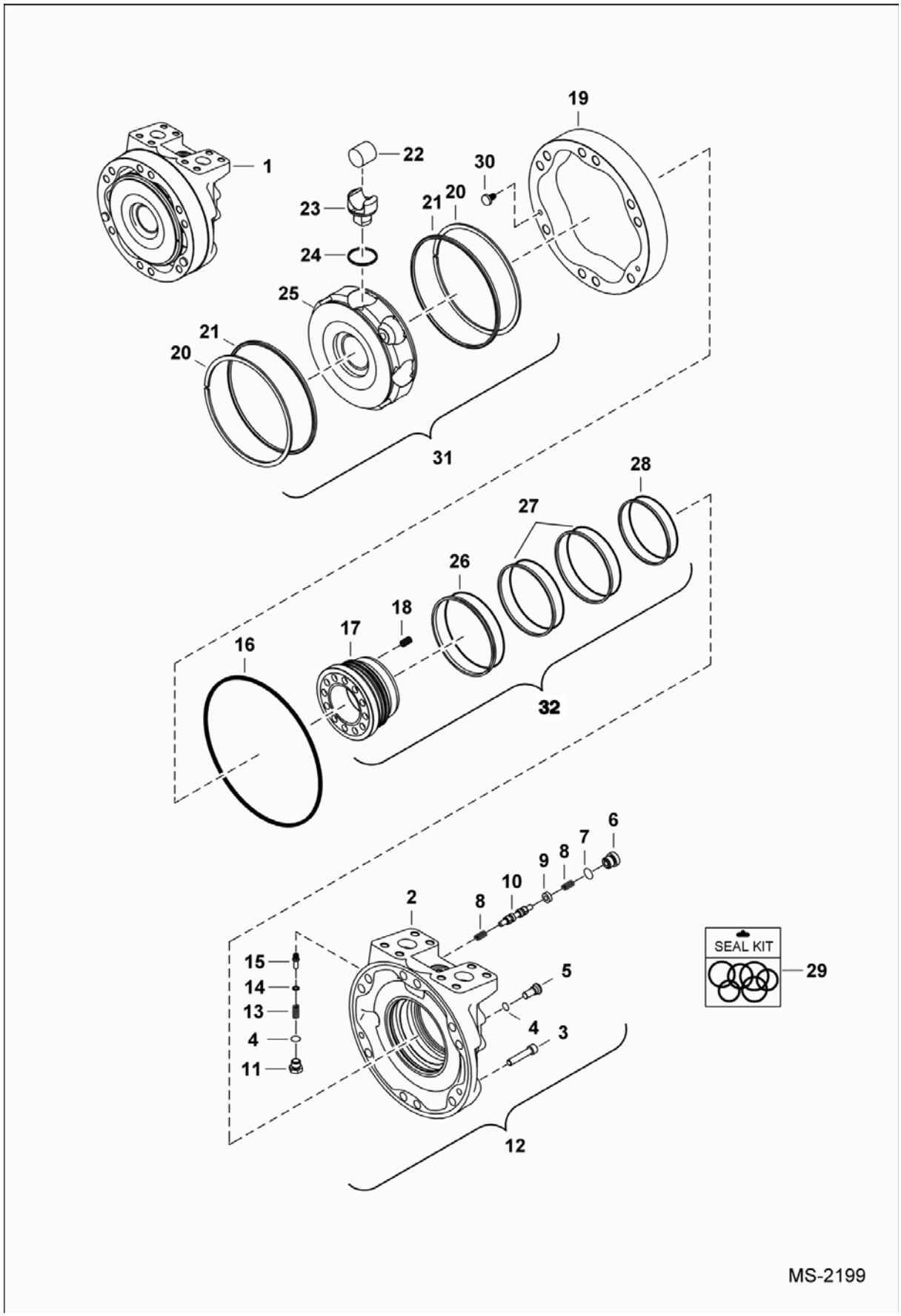

HYDROSTATIC MOTOR (Cont'd)
(Single Speed) (Manual Controls & ACS)

Ref No	Part Number	Description	Remarks	Serial Number	Qty
1	7001046	MOTOR, DRIVE HYD	Model R921810442		1
2	6674341	HOUSING			1
3	6690039	SCREW			2
4	6676038	O-RING			2
5	6674340	PIN			1
6	6691227	PLUG			1
7	6689133	O-RING			1
8	6674841	SPRING			2
9	6675867	WASHER			1
10	6675866	SPOOL			1
11	6674345	PLUG			1
12		REAR HOUSING ASSY.	NSS - Order individual parts or Ref. 1		1
13	6674344	SPRING			1
14	6674343	SHIM			1
15	6675868	POPPET			1
16	6675864	QUAD RING			1
17	6674184	RING			1
18	6674037	SPRING			9
19	6690025	CAM			1
20	6674035	SNAP RING			2
21	6674036	RING			2
22	6690022	ROLLER			8
23	6689126	PISTON			8
24	6690048	RING			8
25	6690021	BLOCK			1
26	6674040	SEAL	W/ O-ring - 87,15 mm ID		1
27	6675228	SEAL			2
28	6674038	SEAL			1
29	6676021	KIT, SEAL			1
30	6688449	LOCATING PIN			2
31	6690158	ROTOR GROUP	Ref. 21-25		1
32		KIT, RING AND SEALS	NSS - Order individual parts or Ref. 1		1

HYDROSTATIC MOTOR & BRAKE
(2-Speed) (SJC)

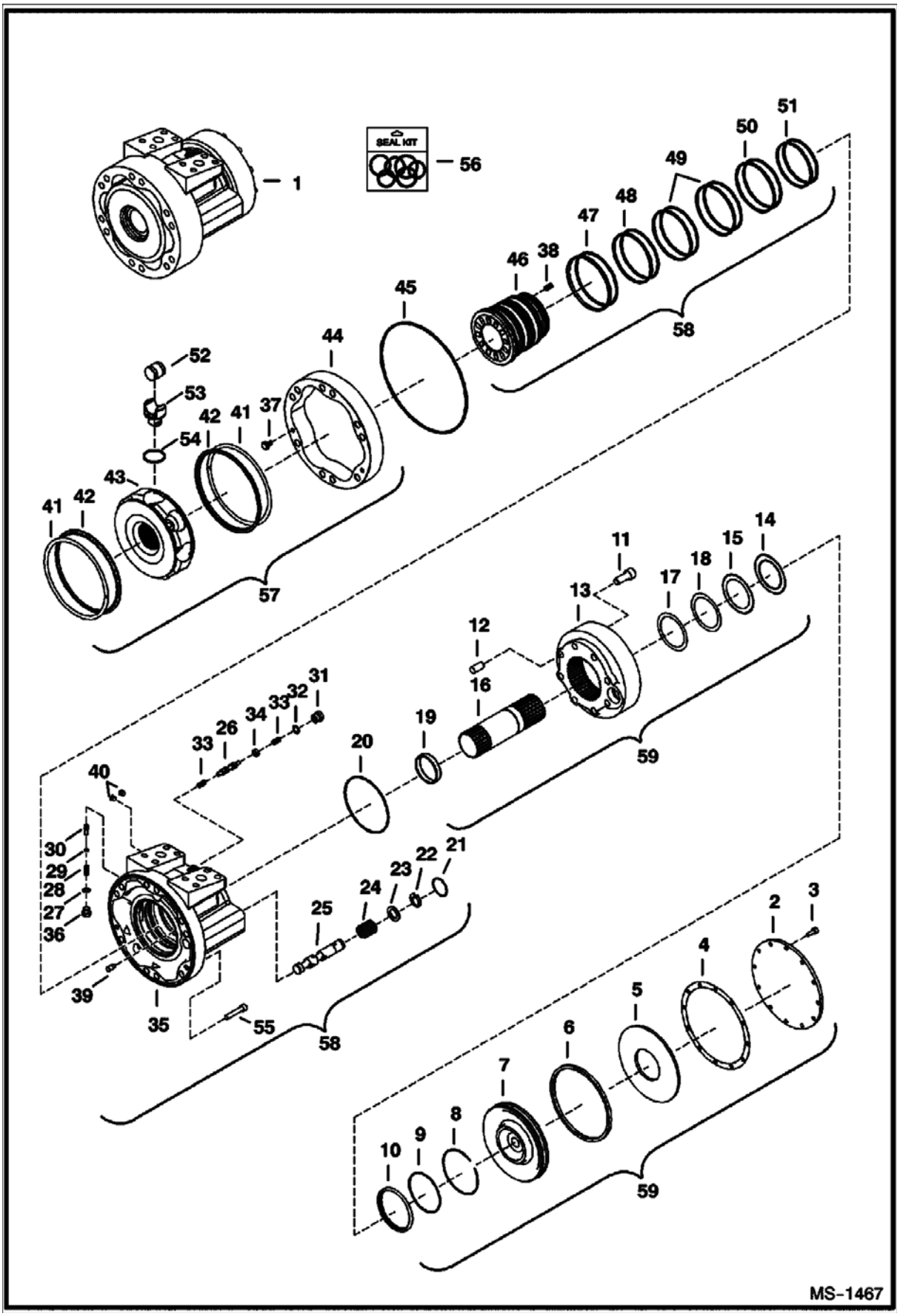

HYDROSTATIC MOTOR & BRAKE (Cont'd)
(2-Speed) (SJC)

Ref No	Part Number	Description	Remarks	Serial Number	Qty
1	6688363	MOTOR, DRIVE HYD 2-SPD	Model R921810402 - Ref. 2-55		1
2	6675890	COVER			1
3	6690095	SCREW			12
4	6675892	GASKET			1
5	6675897	WASHER			1
6	6675893	O-RING			1
7	6675889	PISTON			1
8	6690094	CLAMP			1
9	6689089	O-RING			1
10	6689088	QUAD RING			1
11	6690096	SCREW			5
12	6691100	PIN			3
13	6690082	HOUSING			1
14	6674193	BRAKE DISC			14
15	6674192	BRAKE DISC			16
16	6690084	SHAFT			1
17	6690089	SHIM	0,1 mm		1
18	6674191	SHIM	0,3 mm		1
19	6675898	BUSHING			1
20	6675863	QUAD RING			1
21	6689090	O-RING	Was 6690077 [D]		1
22	6675885	SNAP RING			1
23	6690105	WASHER			1
24	6675883	KIT, WASHER	W/Ref. 23		1
25		SPOOL	Order Ref. 58		1
26	6675866	SPOOL			1
27	6676038	O-RING			1
28	6674344	SPRING			1
29	6674343	SHIM			1
30	6675868	POPPET			1
31	6691227	PLUG	W/Ref. 32		1
32	6689133	O-RING			1
33	6674841	SPRING			2
34	6675867	WASHER			1
35		HOUSING	NSS - Order Ref. 58		1
36	6674345	PLUG			1
37	6688449	LOCATING PIN			2
38	6674037	SPRING			15
39	6690068	PIN			1
40		PLUG	NAP		1
41	6674035	SNAP RING			2
42	6674036	RING			2
43		BLOCK	NSS - Order Ref. 57		1
44	6690025	CAM			1
45	6675864	QUAD RING			1
46	6690067	RING			1
47	6675877	SEAL			1
48	6675878	SEAL			1
49	6675879	SEAL			2
50	6675880	SEAL			1
51	6675881	SEAL			1
52	6690022	ROLLER			8
53	6689126	PISTON			8
54	6690048	RING			8

HYDROSTATIC MOTOR & BRAKE (Cont'd)
(2-Speed) (SJC)

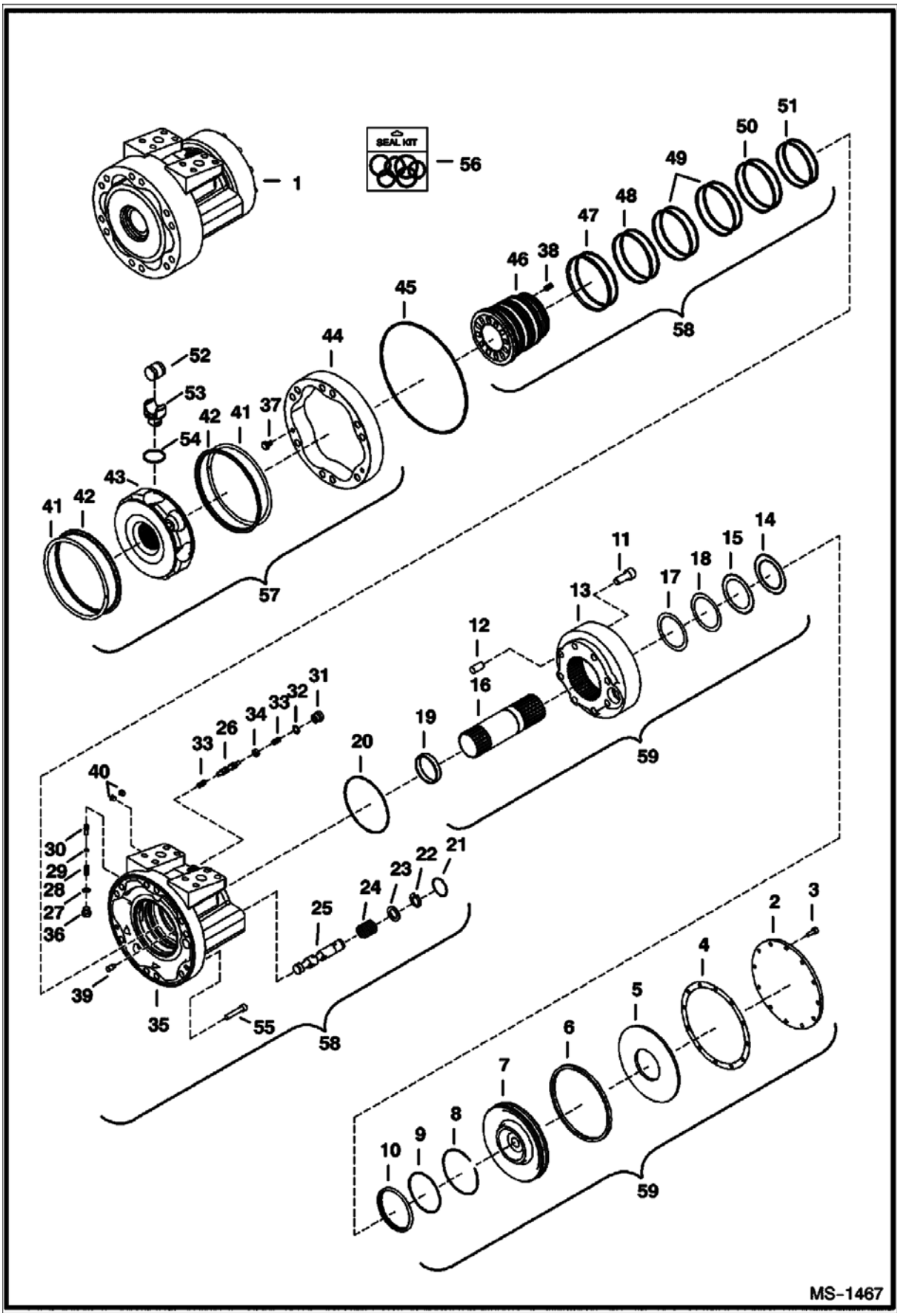

HYDROSTATIC MOTOR & BRAKE (Cont'd)
(2-Speed) (SJC)

Ref No	Part Number	Description	Remarks	Serial Number	Qty
55	6690039	SCREW			1
56	6690005	KIT, SEAL	Ref. 4, 6, 9, 10, 20, 21, 27, 45 & 47-51		1
57		ROTOR GROUP	NAP - Order Ref. 1 - W/Ref. 37, 41-44 & 52-54 - Was 6690157 [A]		1
58	6691176	REAR CASE ASSY.	Ref. 21-36, 38-40 & 46-51		1
59	6691177	BRAKE ASSY.	Ref. 2-19		1

HYDROSTATIC PUMP/GEAR PUMP
(Identification)

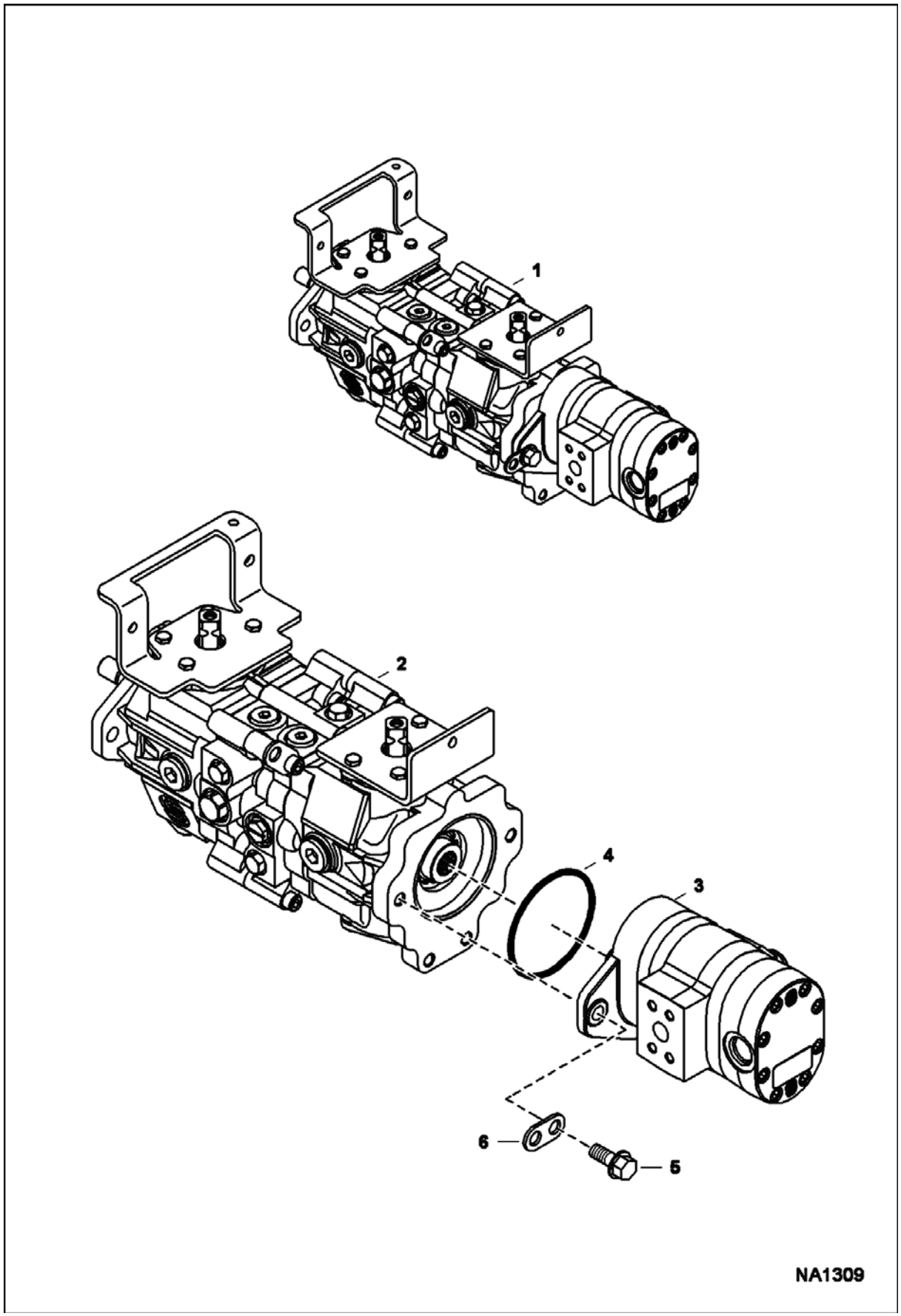

HYDROSTATIC PUMP/GEAR PUMP (Cont'd)
(Identification)

Ref No	Part Number	Description	Remarks	Serial Number	Qty
1		PUMP, HYD ASSY	NAP - Order Ref. 2-6		1
2		PUMP, HYD	See Illustration HYDROSTATIC PUMP/ MS2184 See Illustration HYDROSTATIC PUMP/ MS2183 - AHC, ACS, manual controls		1
2		PUMP, HYD	See Illustration HYDROSTATIC PUMP/ NA2245 - SJC		1
3		PUMP, GEAR DOUBLE	See Illustration GEAR PUMP/ MS1454 - standard flow hydraulics		1
3		PUMP, GEAR TRIPLE	See Illustration HIGH FLOW HYDRAULICS/ MS1456 - high flow hydraulics		1
4	6671520	O-RING	manual controls & ACS		1
4	6682949	O-RING	SJC		1
5	45C824	BOLT	manual controls & ACS		2
5	59CM1240	BOLT	SJC		2
6	6662126	BRACKET			2

HYDROSTATIC PUMP
(Manual Controls, AHC & ACS) (Left Half)

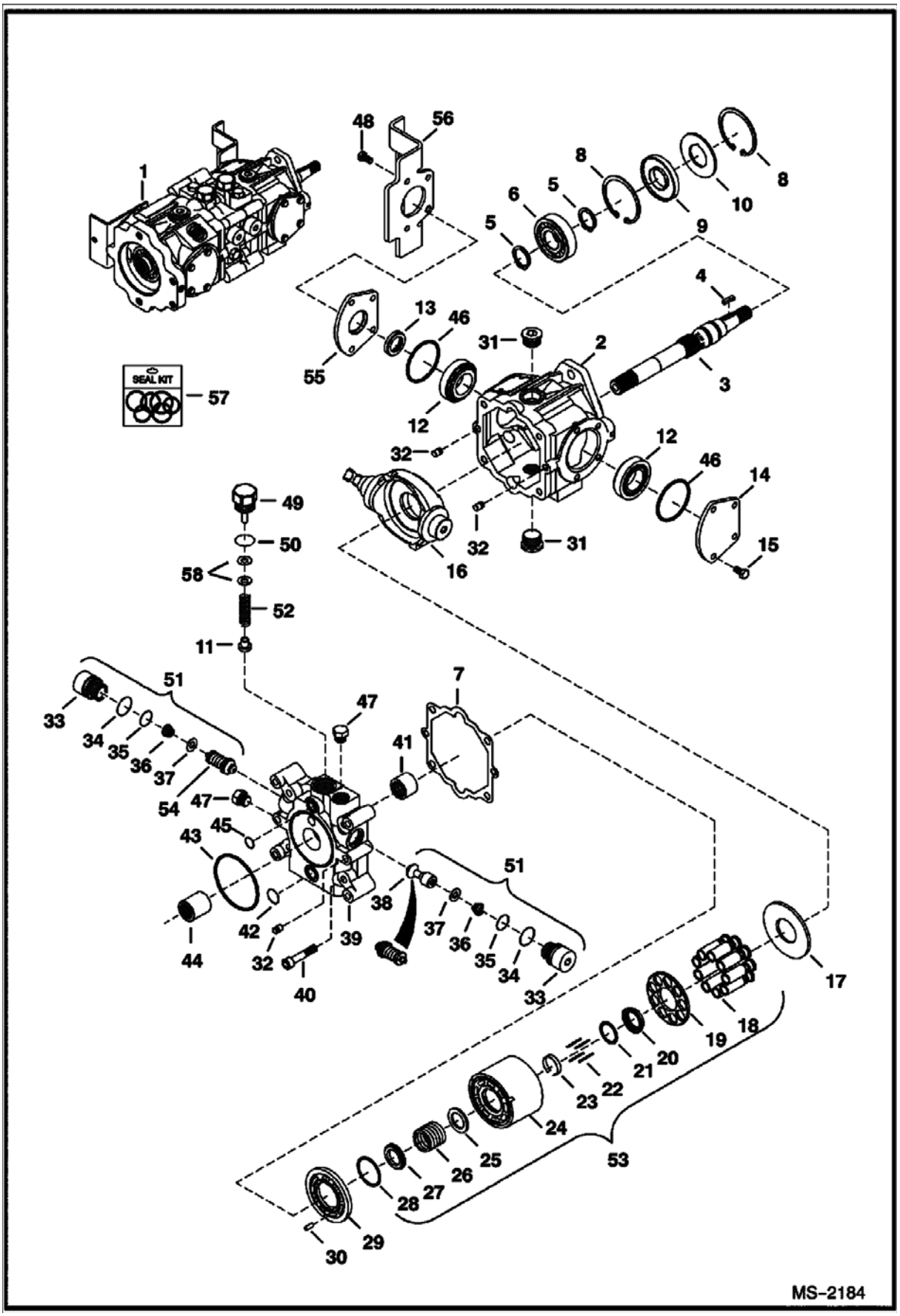

HYDROSTATIC PUMP (Cont'd)
(Manual Controls, AHC & ACS) (Left Half)

Ref No	Part Number	Description	Remarks	Serial Number	Qty
1	7001016	PUMP	Model 83002049		1
2	6669402	HOUSING			1
3	6682260	SHAFT	W/square key		1
4	6682261	KEY			1
5	658128	RING, SNAP			2
6	654299	BEARING			1
7	6650634	GASKET			1
8	669863	RING, SNAP			2
9	6687191	SEAL, OIL			1
10	6669409	WASHER			1
11	6650652	POPPET	charge relief		1
12	6669411	BEARING			2
13	6678226	SEAL, OIL			2
14	6657068	COVER			2
15	6650668	BOLT			4
16	6685344	SWASHPLATE	W/threaded shaft hole		1
17	6650627	PLATE			1
18	6683168	PISTON ASSEMBLY			9
19		RETAINER	NAP - Order Ref. 53		1
20		RETAINER	NAP - Order Ref. 53		1
21	6666338	WASHER			1
22	6650629	PIN			4
23	6650630	RETAINER			1
24	6683167	CYLINDER BLOCK			1
25		WASHER	NAP - Order Ref. 53		1
26		SPRING	NAP - Order Ref. 53		1
27		WASHER	NAP - Order Ref. 53		1
28		RETAINER	NAP - Order Ref. 53		1
29	6676147	PLATE, VALVE			1
30	6650636	PIN			1
31	47K8	PLUG			2
31	79K12	O RING 10			2
32	6675342	PIN			4
33		PLUG	NAP - Order Ref. 51		2
34	6657028	O-RING			2
35	79K8	O RING 10			2
36		SPRING	NAP - Order Ref. 51		2
37		RETAINER	NAP - Order Ref. 51		2
38		CHECK VALVE	NAP - poppet - Order Ref. 51		1
39	6669406	END PLATE			1
40	6650637	BOLT			4
41	6650635	BEARING			1
42	6650647	O-RING			1
43	6645081	O-RING			1
44	6650675	COUPLER			1
45	6650646	O-RING			1
46	6660814	O-RING			2
47	6645086	PLUG			2
47	6661481	O-RING			1
48	6671518	BOLT			4
49	6650648	PLUG	charge relief - W/Ref. 50		1
50	79K10	O RING 10			1
51	6684565	VALVE, RELIEF	Ref. 33-37 & 54 - Was 7008822 [A]		1
52	6673882	SPRING	Was 7008823 [A]		1

HYDROSTATIC PUMP (Cont'd)
(Manual Controls, AHC & ACS) (Left Half)

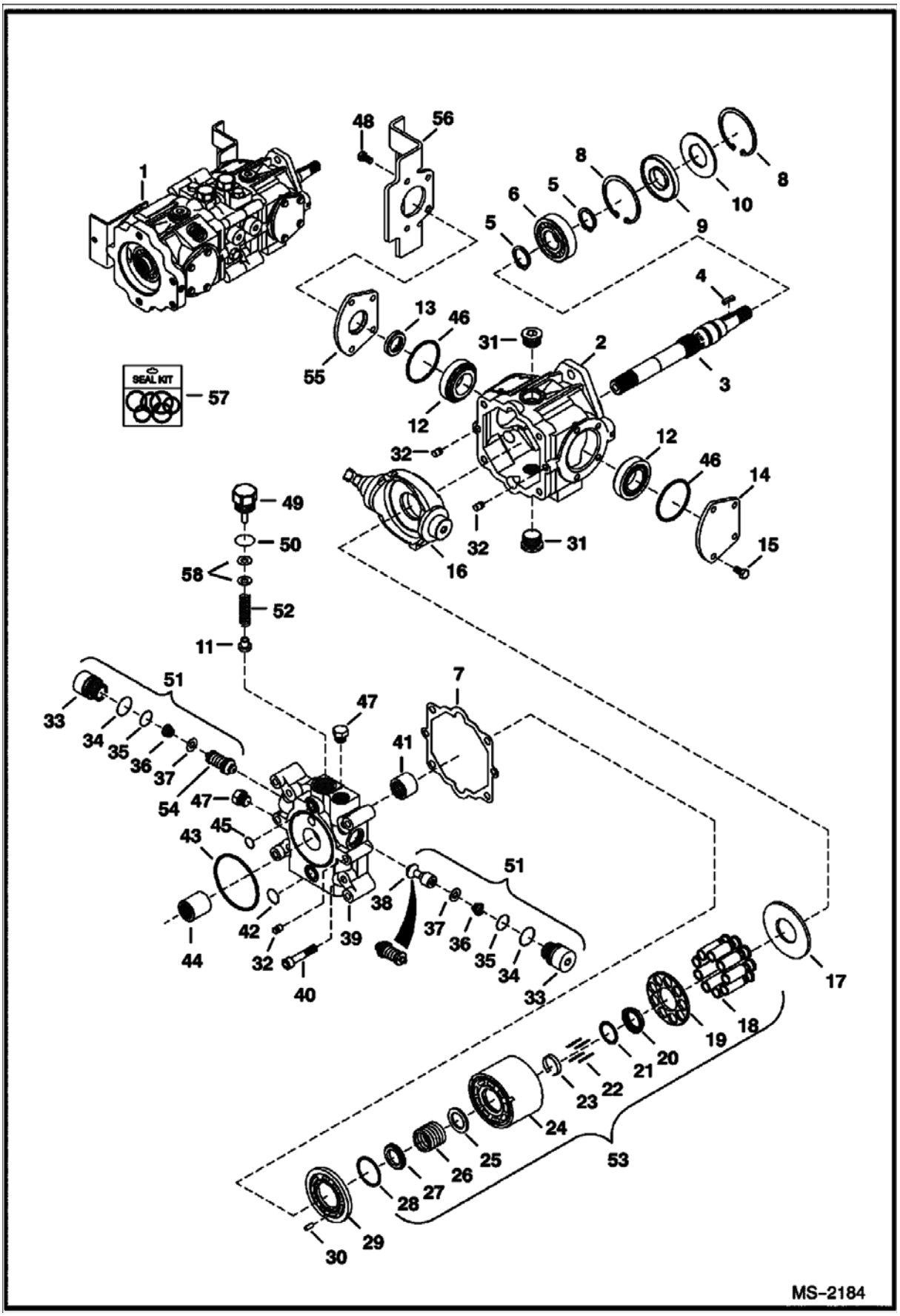

HYDROSTATIC PUMP (Cont'd)
(Manual Controls, AHC & ACS) (Left Half)

Ref No	Part Number	Description	Remarks	Serial Number	Qty
53	6675341	GROUP, ROTARY			1
54		VALVE, RELIEF	NAP - 5000 PSI (345 bar) - Order Ref. 51		1
55	6657067	COVER	W/Ref. 46		1
56	7109905	BRACKET			1
57	6671516	KIT, SEAL	Ref. 7, 9, 13, 34, 35, 42, 43, 45, 46 & 50 - Also includes Ref. 2, 3, 12, 31 & 41 on next page		1
58	6669410	KIT, SHIM	for Ref. 49 - (2) each of .010, .020 and .050 thick		1

HYDROSTATIC PUMP
(Manual Controls & ACS) (Right Half)

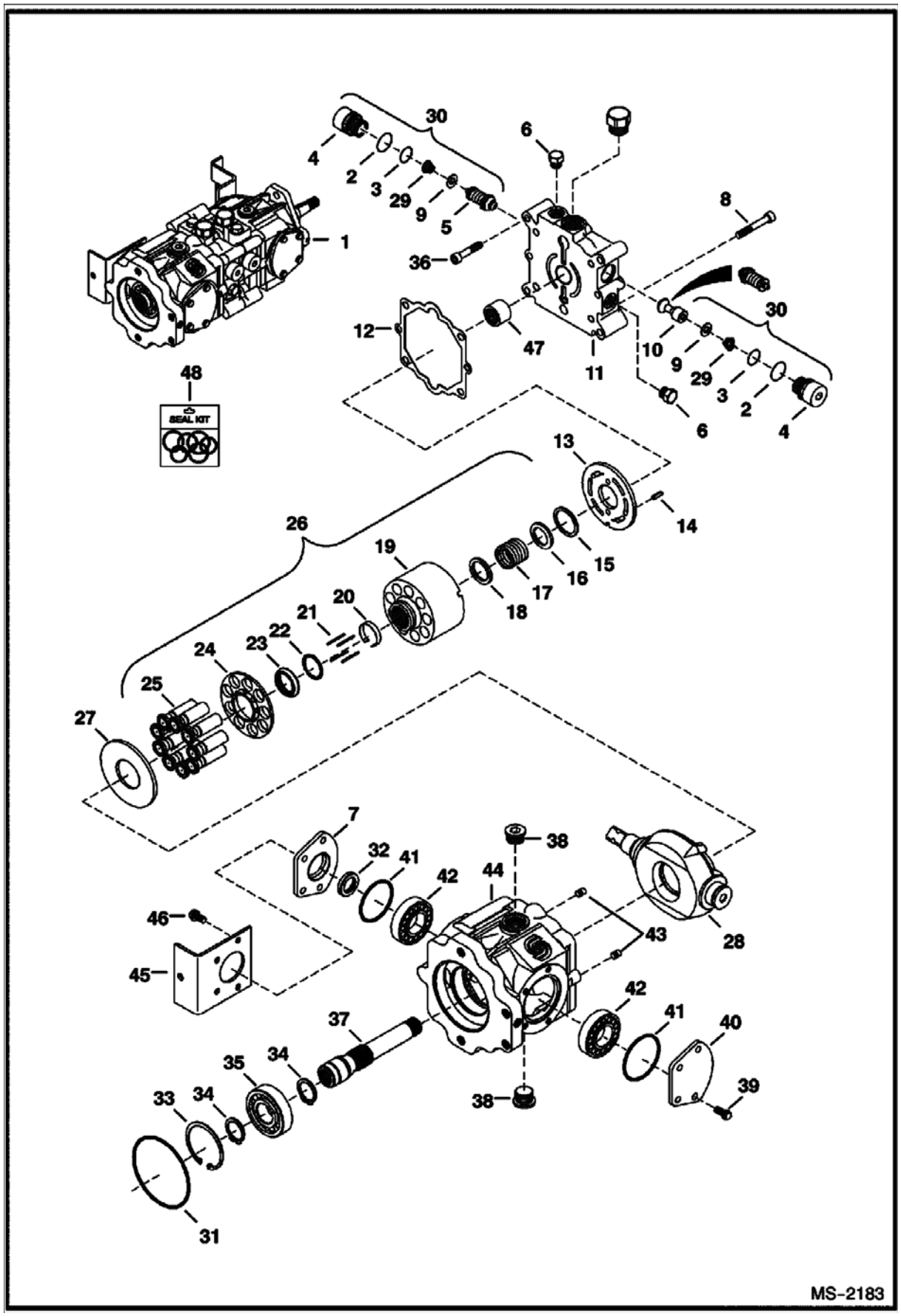

HYDROSTATIC PUMP (Cont'd)
(Manual Controls & ACS) (Right Half)

Ref No	Part Number	Description	Remarks	Serial Number	Qty
1	7001016	PUMP	Model 83002049		1
2	6657028	O-RING			2
3	79K8	O RING 10			2
4		PLUG	NAP - Order Ref. 30		2
5		VALVE, RELIEF	NAP - 5000 PSI (345 bar) - Order Ref. 30		2
6	6645086	PLUG			4
7	6657067	COVER	W/Ref. 32		1
8	6650637	BOLT			2
9		RETAINER	NAP - Order Ref. 30		4
10		VALVE, CHECK	NAP - poppet - Order Ref. 30		1
11	6669405	END CAP			1
12	6650634	GASKET			1
13	6676148	PLATE, VALVE			1
14	6650636	PIN			2
15		RETAINER	NAP - Order Ref. 26		1
16		WASHER	NAP - Order Ref. 26		1
17		SPRING	NAP - Order Ref. 26		1
18		WASHER	NAP - Order Ref. 26		1
19	6683167	CYLINDER BLOCK			1
20	6650630	RETAINER			1
21	6650629	PIN			4
22	6666338	WASHER			1
23		RETAINER	NAP - Order Ref. 26		1
24		RETAINER	NAP - Order Ref. 26		1
25	6683168	PISTON ASSEMBLY			9
26	6675341	GROUP, ROTARY	W/Ref. 15-25		1
27	6650627	PLATE			1
28	6685344	SWASHPLATE	W/threaded shaft hole		1
29		SPRING	NAP - Order Ref. 30		2
30	6684565	VALVE, RELIEF	Ref. 2-5, 9, 10 & 29 - Was 7008822 [A]		2
31	6671520	O-RING			1
32	6678226	SEAL, OIL			1
33	669863	RING, SNAP			1
34	658128	RING, SNAP			2
35	654299	BEARING			1
36	6652018	BOLT			4
37	6682264	SHAFT			1
38	47K8	PLUG			1
38	79K12	O RING 10			2
39	6650668	BOLT			4
40	6657068	COVER			1
41	6660814	O-RING			2
42	6669411	BEARING			2
43	6675342	PIN			2
44	6693867	HOUSING			1
45	7109904	BRACKET			1
46	6671518	BOLT			4
47	6650635	BEARING			1
48	6671516	KIT, SEAL	Ref. 2, 3, 12, 31 & 41 - Also includes Ref. 7, 9, 13, 34, 35, 42, 43, 45, 46 & 50 on previous page		1

HYDROSTATIC PUMP
(Selectable Joystick Controls)
(S/N A3NV11001 - 12697, A3NW11001 - 11134)

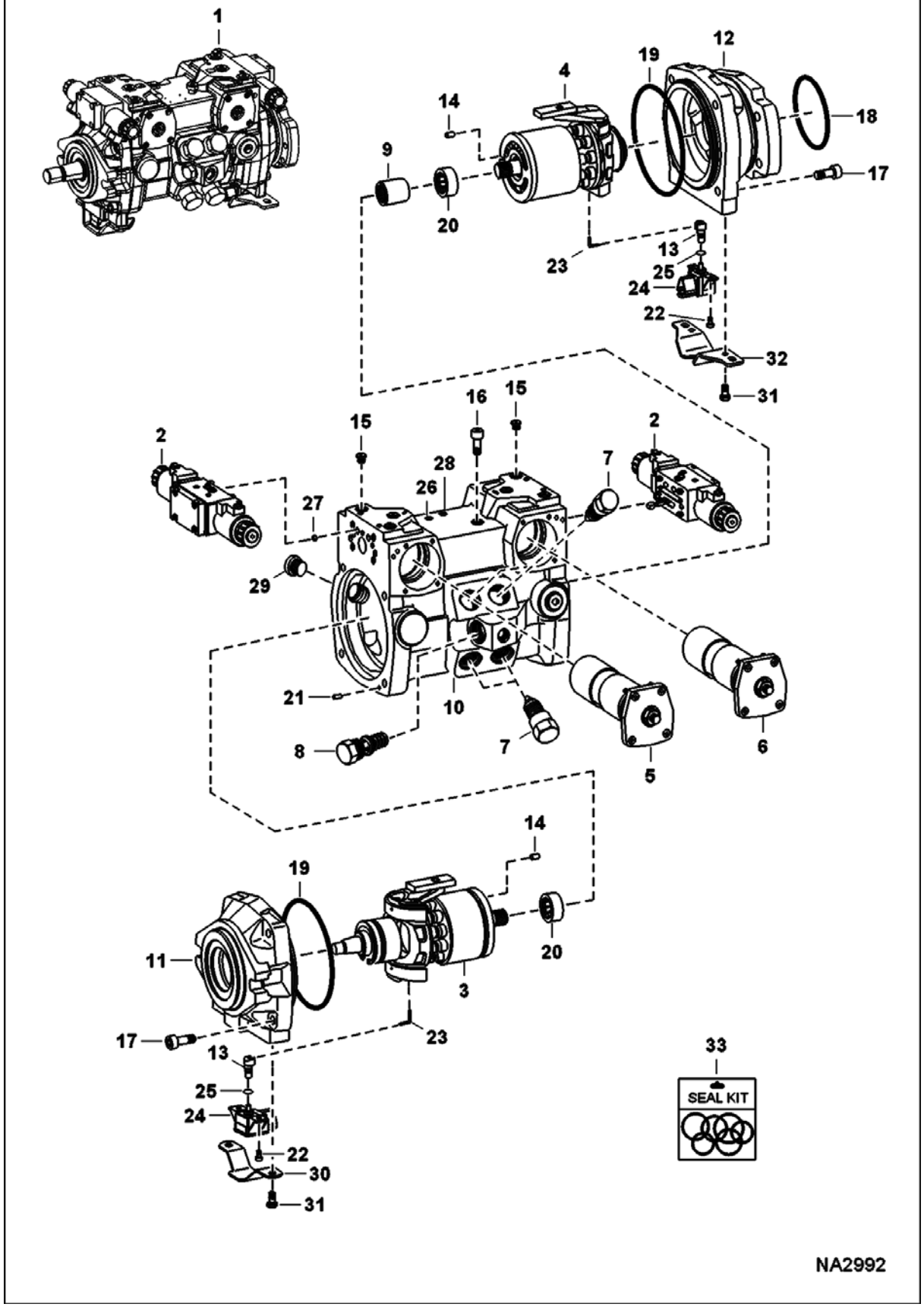

HYDROSTATIC PUMP (Cont'd)
(Selectable Joystick Controls)
(S/N A3NV11001 - 12697, A3NW11001 - 11134)

Ref No	Part Number	Description	Remarks	Serial Number	Qty
1	6698594	PUMP, TANDEM	Model R902103468 - Ref. 2-32		1
2		MODULE, CONTROL	See Illustration HYDROSTATIC PUMP/ B25016		2
3		GROUP, ROTATING LH	See Illustration HYDROSTATIC PUMP/ B25011 - LH rotation		1
4		GROUP ROTATING RH	See Illustration HYDROSTATIC PUMP/ B25012 - RH rotation		1
5		CONTROL	See Illustration HYDROSTATIC PUMP/ B25013 - LH - assy		1
6		CONTROL	See Illustration HYDROSTATIC PUMP/ B25013A - RH - assy		1
7	7008124	VALVE, RELIEF	preset at 350 bar		4
8		VALVE	See Illustration HYDROSTATIC PUMP/ B25015A - charge pressure relief 15-30 bar		1
9	6687941	COUPLER			1
10	7008110	HOUSING	W/Ref 16		1
11	7008111	FLANGE, LH			1
12	7008112	FLANGE, RH			1
13	7008113	SHAFT			2
14	6688011	PIN			2
15	6688016	SCREW			11
16	6687992	SCREW	Was 6688039 [D]		3
17	6688008	SCREW			8
18	6671520	O-RING			1
19	6688009	SEAL			2
20	6688040	BEARING			2
21	6686934	PIN			2
22	7008114	SCREW			4
23	6688014	PIN			2
24	7008115	SENSOR			2
25	54K20022	O'RING			2
26	6687932	PIN			2
27	7008116	FILTER			6
28	6688015	SCREW			1
29	6685390	SCREW			1
30	7010227	COVER			1
31	6688003	SCREW			4
32	7194123	SHIELD, SENSOR			1
33	6689021	SEAL KIT			1

HYDROSTATIC PUMP
(Selectable Joystick Controls)
(S/N A3NV12698 & Above, A3NW11135 & Above)

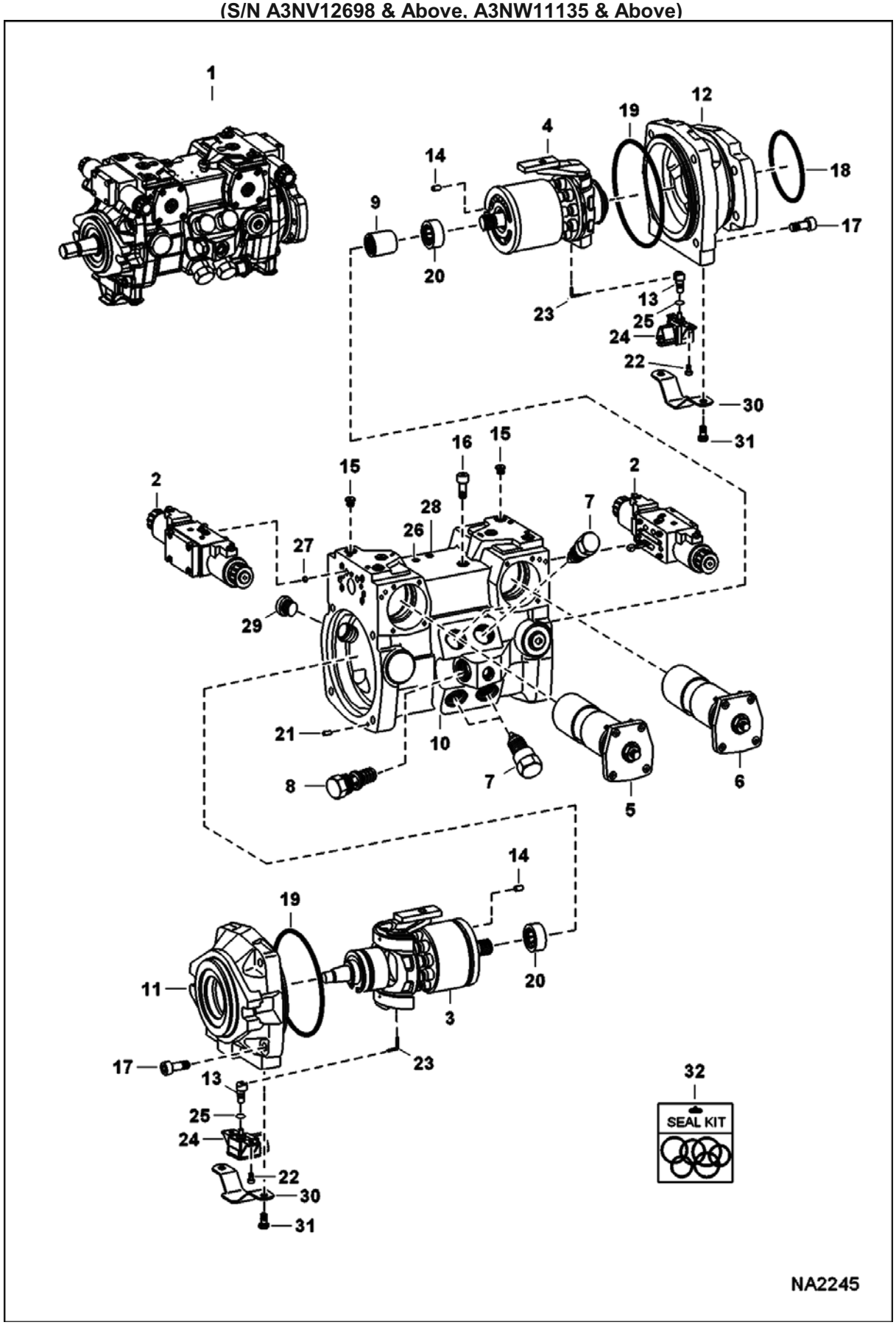

HYDROSTATIC PUMP (Cont'd)
(Selectable Joystick Controls)
(S/N A3NV12698 & Above, A3NW11135 & Above)

Ref No	Part Number	Description	Remarks	Serial Number	Qty
1	7013178	PUMP, HYD	Ref. 2-31 - Model R902148155		1
2		MODULE, CONTROL	See Illustration HYDROSTATIC PUMP/ B25016		2
3		GROUP, ROTATING LH	See Illustration HYDROSTATIC PUMP/ B25011 - LH rotation		1
4		GROUP ROTATING RH	See Illustration HYDROSTATIC PUMP/ B25012 - RH rotation		1
5		CONTROL	See Illustration HYDROSTATIC PUMP/ B25013 - LH - assy		1
6		CONTROL	See Illustration HYDROSTATIC PUMP/ B25013A - RH - assy		1
7	7008124	VALVE, RELIEF	preset at 350 bar		4
8		VALVE	See Illustration HYDROSTATIC PUMP/ B25015A - charge pressure relief 15-30 bar		1
9	6687941	COUPLER			1
10	7008110	HOUSING	W/Ref 16		1
11	7008111	FLANGE, LH			1
12	7008112	FLANGE, RH			1
13	7008113	SHAFT			2
14	6688011	PIN			2
15	6688016	SCREW			11
16	6687992	SCREW	Was 6688039 [D]		3
17	6688008	SCREW			8
18	6671520	O-RING			1
19	6688009	SEAL			2
20	6688040	BEARING			2
21	6686934	PIN			2
22	7008114	SCREW			4
23	6688014	PIN			2
24	7008115	SENSOR			2
25	54K20022	O'RING			2
26	6687932	PIN			2
27	7008116	FILTER			6
28	6688015	SCREW			1
29	6685390	SCREW	Was 6687992 [D]		1
30	7010227	COVER			2
31	6688003	SCREW			4
32	6689021	SEAL KIT			1

HYDROSTATIC PUMP
(Rotary Group) (LH)
(SJC)

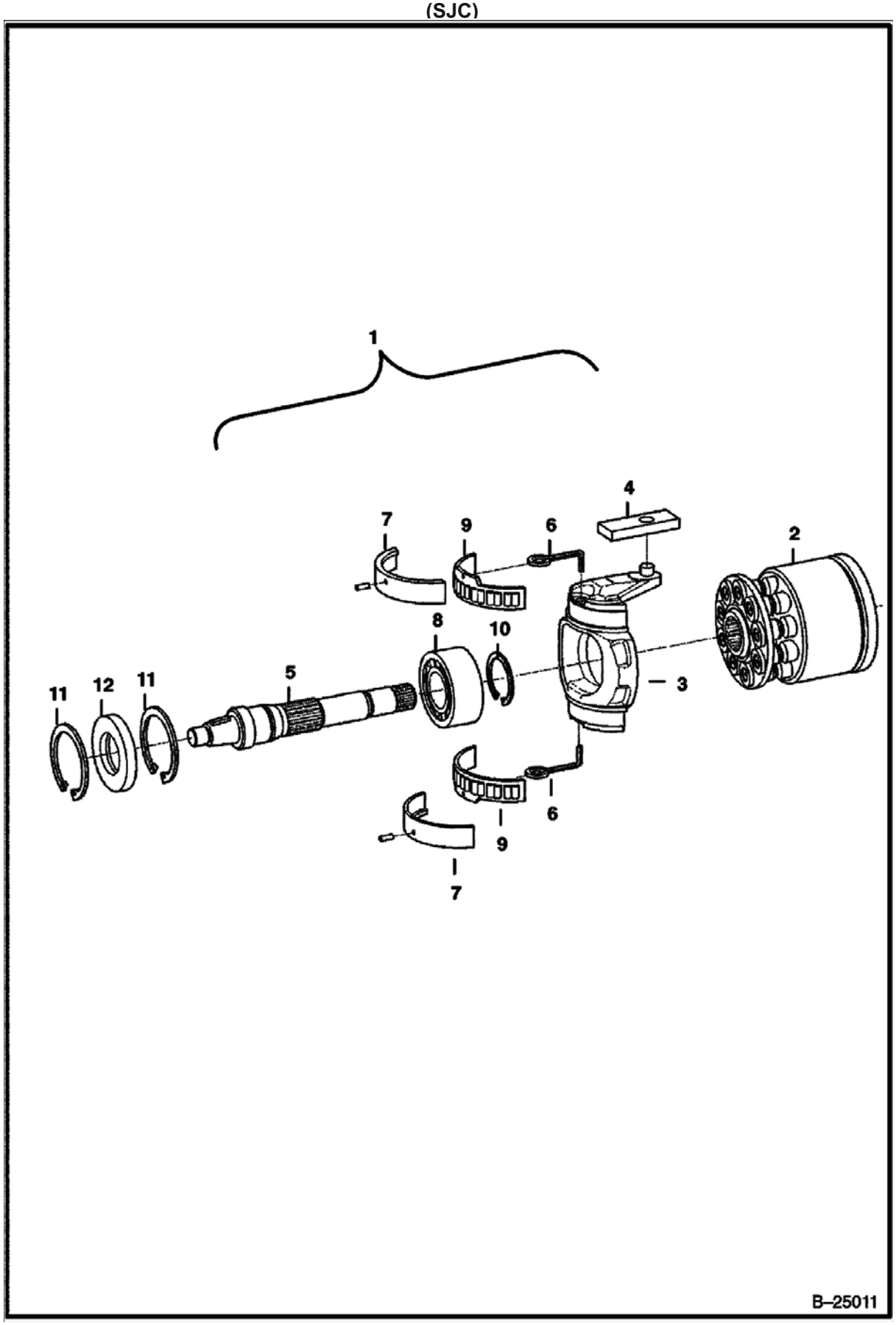

HYDROSTATIC PUMP (Cont'd)
(Rotary Group) (LH)
(SJC)

Ref No	Part Number	Description	Remarks	Serial Number	Qty
1	7008105	GROUP, ROTATING LH	Ref. 2-12 - LH rotation		1
2	6693873	GROUP, ROTARY			1
3	7008117	SWASHPLATE			1
4	6687940	PLATE			1
5	7001120	SHAFT, DRIVE			1
6	6687930	WIRE			2
7	6687956	BEARING			1
8	6688018	BEARING			1
9	7008118	BEARING			1
10	6687999	RING, SNAP			1
11	6688042	RING, SNAP			2
12	6693876	SEAL, SHAFT			1

HYDROSTATIC PUMP
(Rotary Group) (RH)
(SJC)

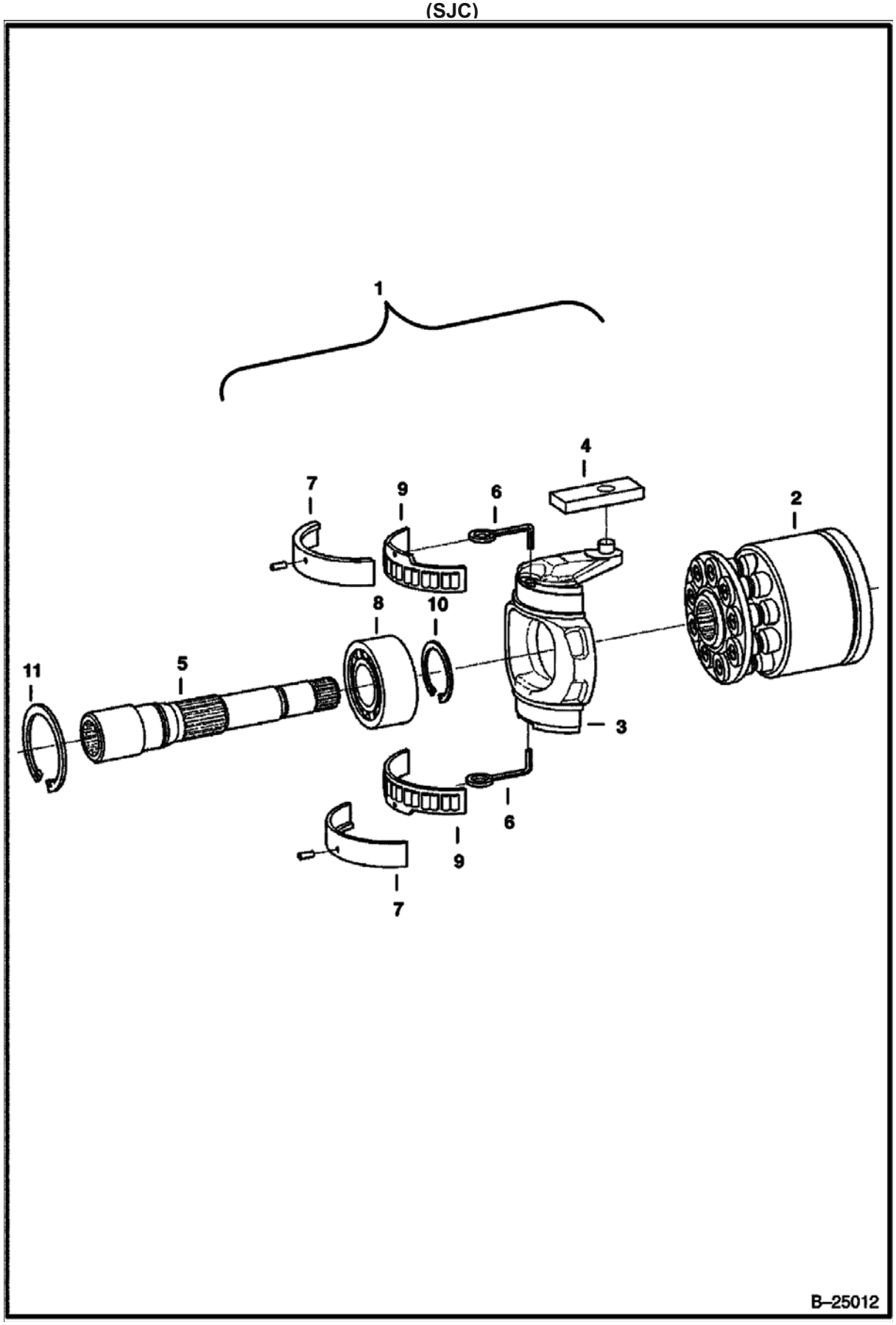

HYDROSTATIC PUMP (Cont'd)
(Rotary Group) (RH)
(SJC)

Ref No	Part Number	Description	Remarks	Serial Number	Qty
1	7008106	GROUP ROTATING RH	Ref. 2-11 - RH rotation		1
2	6693874	GROUP, ROTARY			1
3	7008117	SWASHPLATE			1
4	6687940	PLATE			1
5	6687943	SHAFT			1
6	6687930	WIRE			2
7	6687956	BEARING			1
8	6688018	BEARING			1
9	6687987	BEARING			1
10	6687999	RING, SNAP			1
11	6671741	SNAP RING			2

HYDROSTATIC PUMP
(Control) (LH)
(SJC)

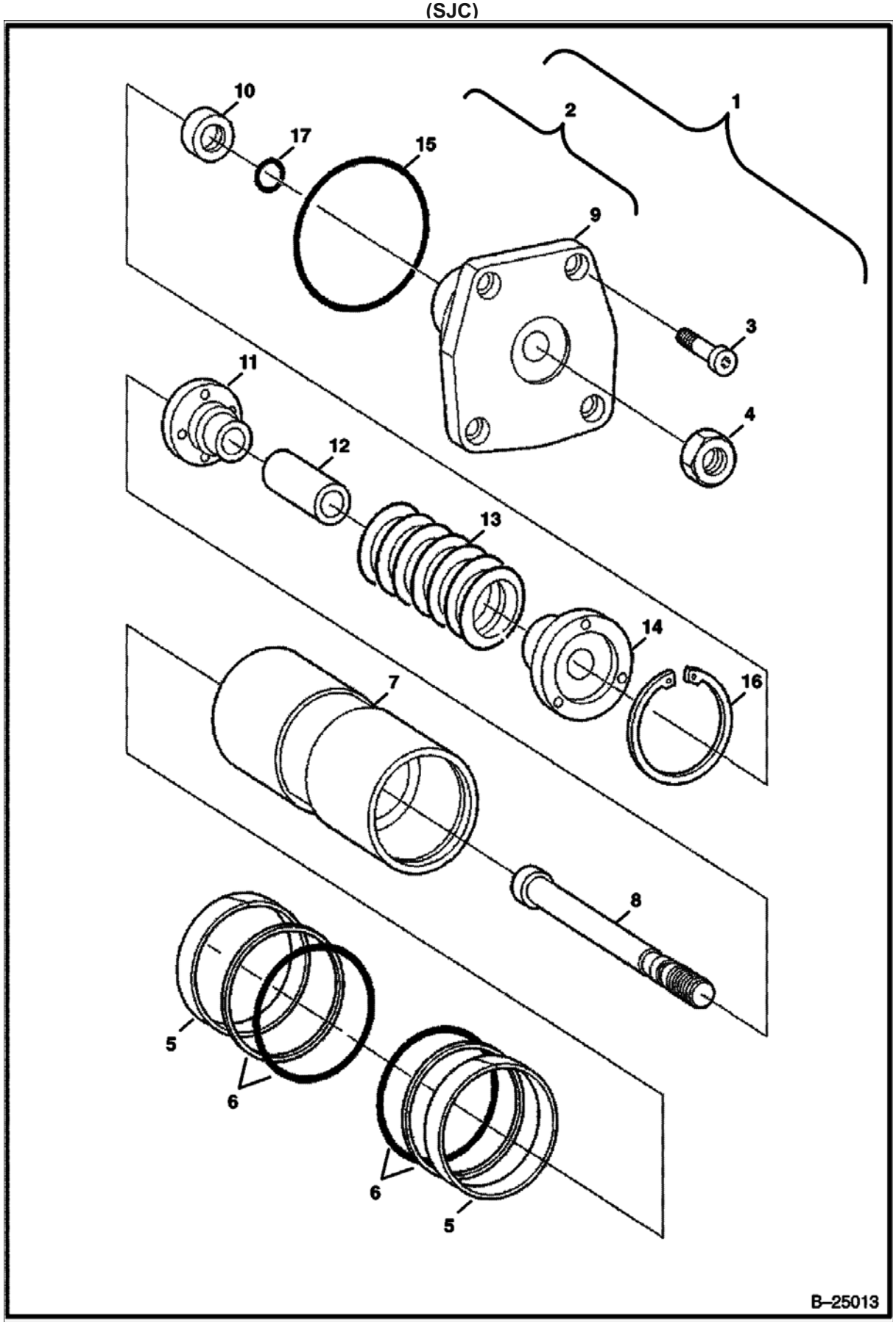

HYDROSTATIC PUMP (Cont'd)
(Control) (LH)
(SJC)

Ref No	Part Number	Description	Remarks	Serial Number	Qty
1	7008107	CONTROL	Model R902124951 - Ref. 2-17		1
2	6671760	COVER			1
3	6687995	SCREW			1
4	6687925	NUT			1
5	7008119	RING			2
6	6687986	KIT			1
7	6687962	PISTON			1
8		ROD	NSS		1
9	6671760	COVER			1
10		RING	NSS		1
11		COLLAR	NSS		1
12		SPACER	NSS		1
13		SPRING	NSS		1
14		COLLAR	NSS		1
15	6688005	SEAL			1
16		RING	NSS		1
17	6688006	SEAL			1

HYDROSTATIC PUMP
(Control) (RH)
(SJC)

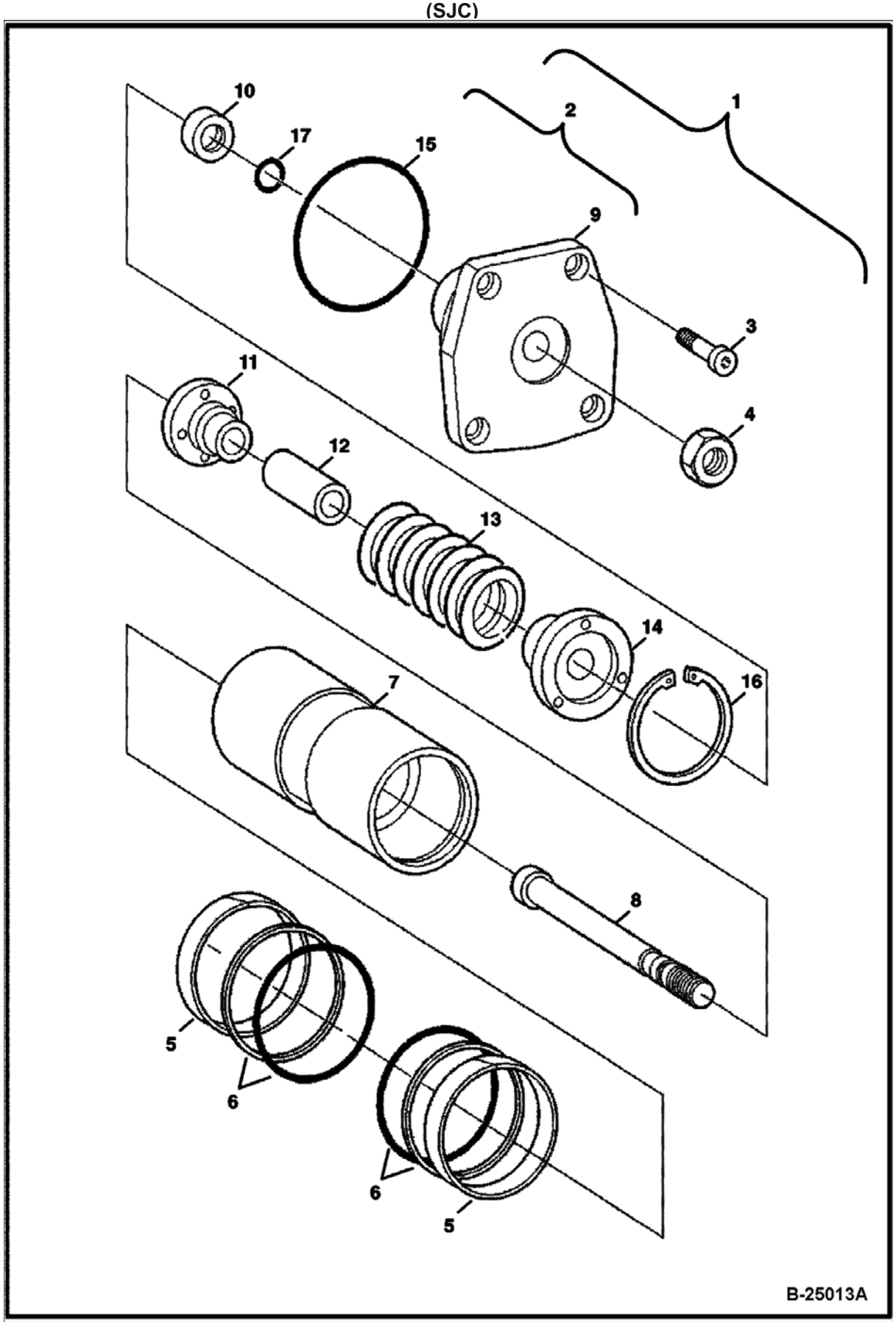

HYDROSTATIC PUMP (Cont'd)
(Control) (RH)
(SJC)

Ref No	Part Number	Description	Remarks	Serial Number	Qty
1	7008108	CONTROL	Model R902124952 - Ref. 2-17		1
2	6671760	COVER			1
3	6687995	SCREW			1
4	6687925	NUT			1
5	7008119	RING			2
6	6687986	KIT			1
7	6687962	PISTON			1
8		ROD	NSS		1
9	6671760	COVER			1
10		RING	NSS		1
11		COLLAR	NSS		1
12		SPACER	NSS		1
13		SPRING	NSS		1
14		COLLAR	NSS		1
15	6688005	SEAL			1
16		RING	NSS		1
17	6688006	SEAL			1

HYDROSTATIC PUMP
(Control Module)
(SJC)

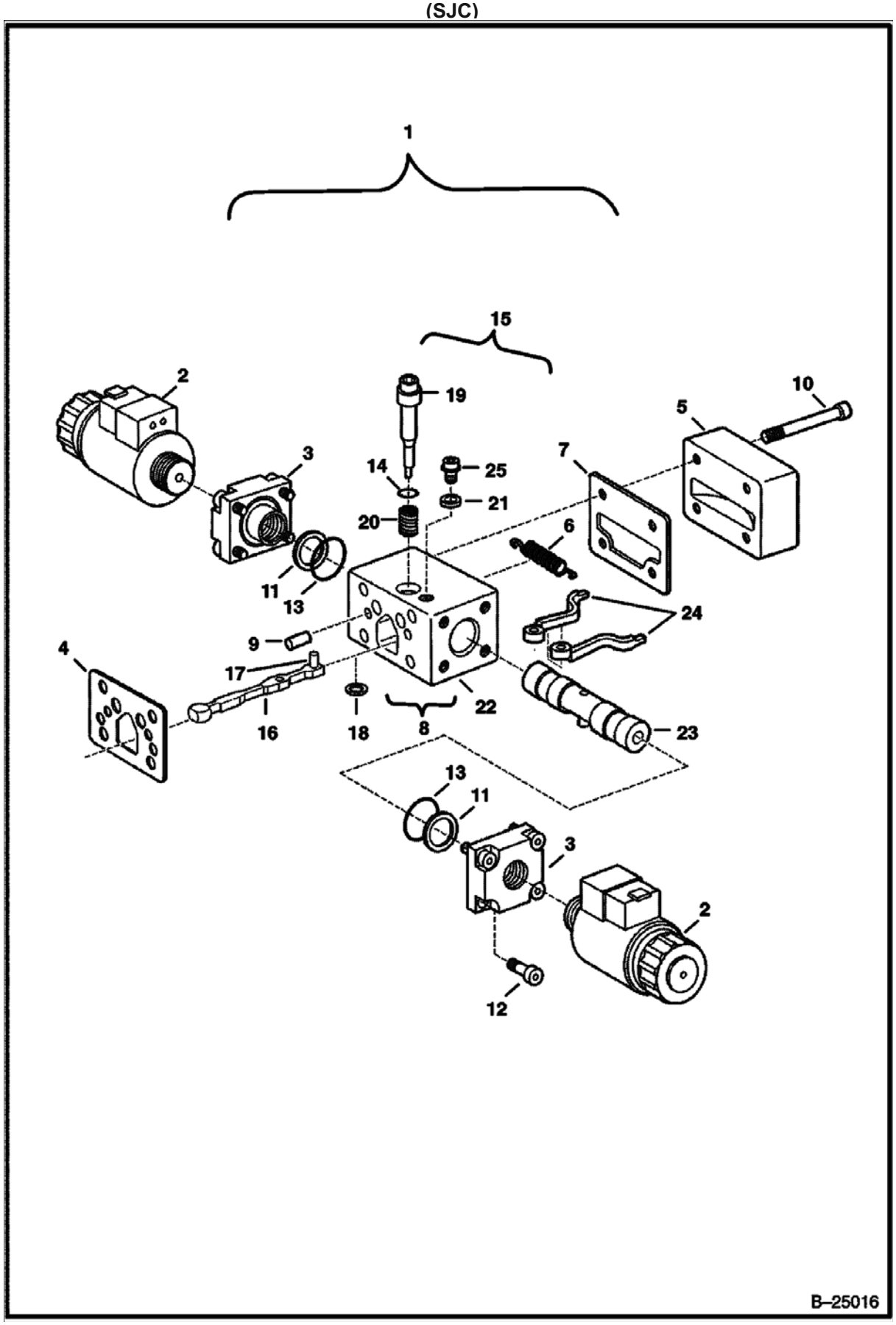

HYDROSTATIC PUMP (Cont'd)
(Control Module)
(SJC)

Ref No	Part Number	Description	Remarks	Serial Number	Qty
1	7008109	MODULE, CONTROL	Ref. 2-25 - Model R902105250		2
2	6697960	SOLENOID	W/ O-Ring		2
3		BUSHING	NSS		2
4	7008121	GASKET			1
5	7008122	COVER			1
6	6687967	SPRING			1
7	7008123	GASKET			1
8	7008120	MODULE			1
9	6688010	PIN			2
10	6687996	SCREW			4
11		SPRING	NSS		2
12	6687997	SCREW			8
13		SEAL KIT	NSS		2
14		SEAL	NSS - Order Ref. 8		1
15		ROLLER	NSS		1
16		LEVER	NSS		1
17		ROLLER	NSS		1
18		SHIM	NSS		1
19		PIN	NSS - Order Ref. 8		1
20		SPRING	NSS - Order Ref. 8		1
21		PLATE	NSS - Order Ref. 8		1
22		HOUSING	NSS - Order Ref. 8		1
23		SPOOL	NSS - Order Ref. 8		1
24		LEVER	NSS		2
25		SCREW	NSS - Order Ref. 8		1

HYDROSTATIC PUMP
(Charge Pressure Relief Valve)

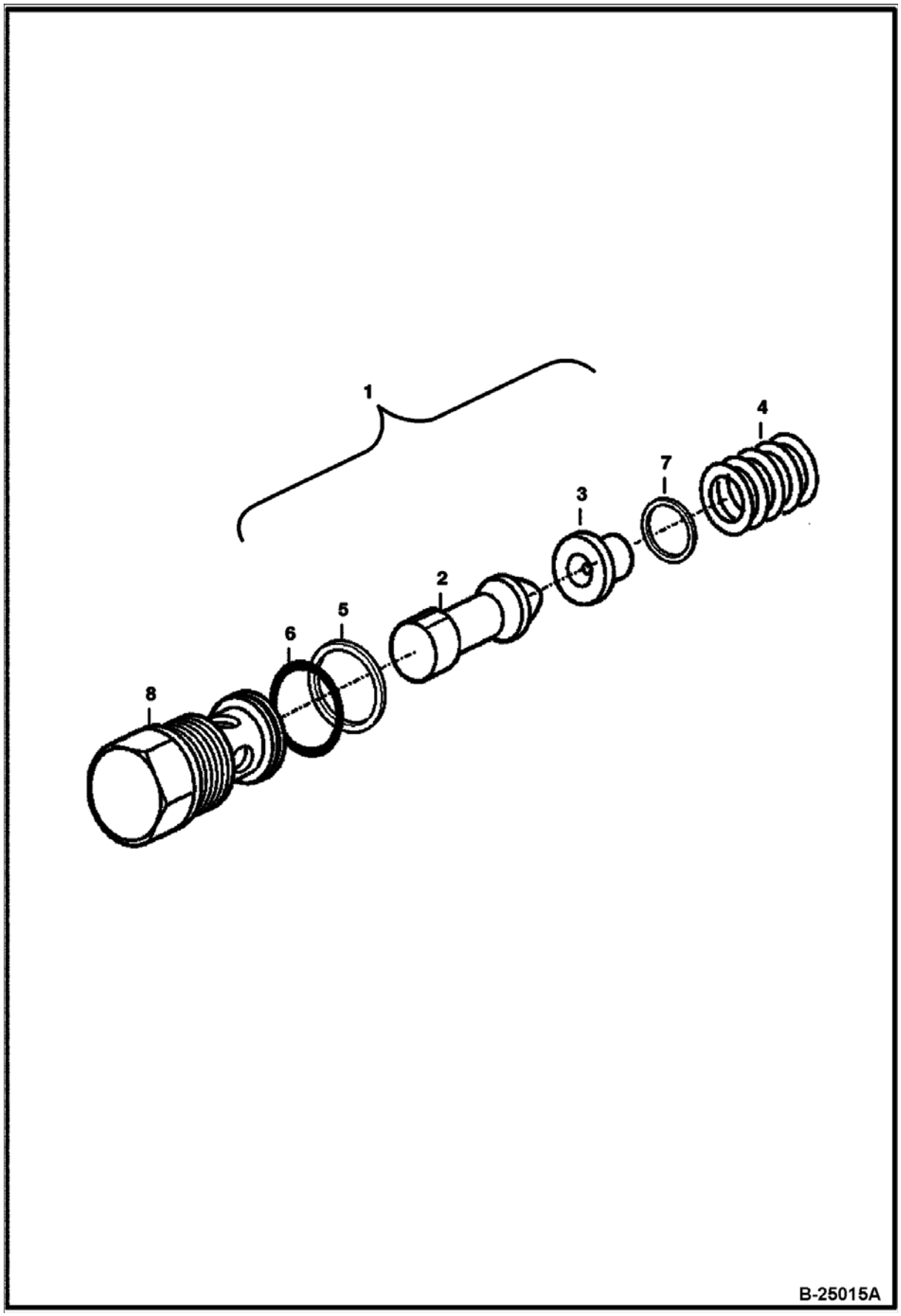

HYDROSTATIC PUMP (Cont'd)
(Charge Pressure Relief Valve)

Ref No	Part Number	Description	Remarks	Serial Number	Qty
1	6687938	VALVE			1
2	6967534	PISTON			1
3	6967535	COLLAR			1
4	6967536	SPRING			1
5		RING	NAP		1
6	6682936	O-RING			1
7	6688017	SHIM	0,3 mm		1
7	7008766	SHIM	0.5 mm		1
7	7008767	SHIM	1.0 mm		1
8	6687939	SCREW			1

GEAR PUMP
(Double)

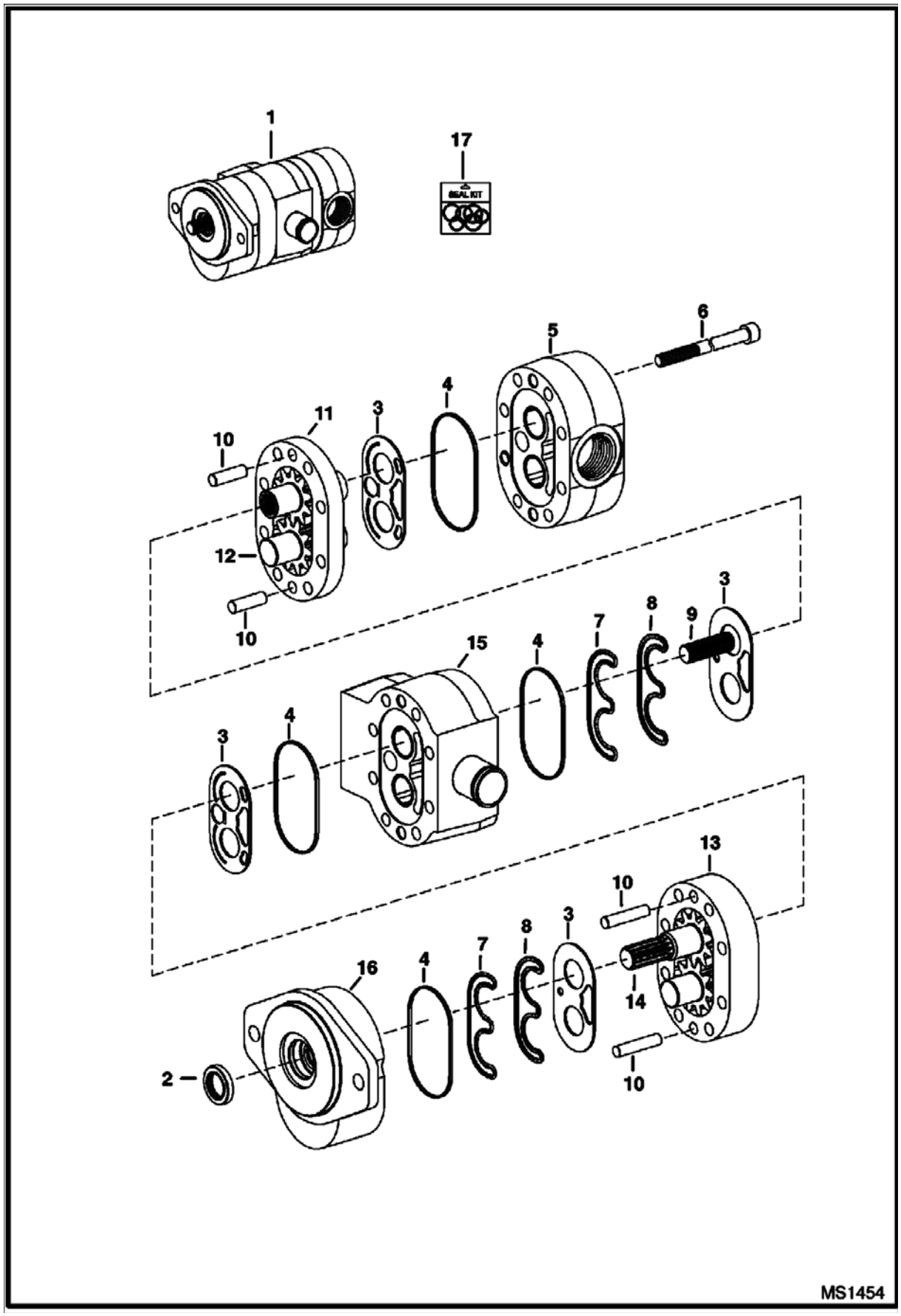

GEAR PUMP (Cont'd)
(Double)

Ref No	Part Number	Description	Remarks	Serial Number	Qty
1		PUMP, GEAR DOUBLE	NAP - Ref. 2-16 - Model 83001779 - Order 7010172 pump - Was 7001435 [A]		1
1	7010172	PUMP, GEAR DOUBLE	Model 83005638		1
2		SEAL, SHAFT	NSS		1
3		WEAR PLATE	NSS		6
4		SEAL, SECTION	NSS		6
5		HOUSING, REAR	NSS		1
6		BOLT	NSS		8
7		SEAL, PRE-LOAD	NSS		6
8		SEAL, LOAD	NSS		6
9		CONNECTOR, SPLINE	NSS		2
10		PIN	NSS		6
11		HOUSING, GEAR	NSS - #2		1
12		GEAR SET	NSS - #2		1
13		HOUSING, GEAR	NSS - #1		1
14		GEAR SET	NSS - drive		1
15		HOUSING, CENTER	NSS		1
16		HOUSING, FRONT	NSS		1
17	6687866	KIT, SEAL			1

COOLING FAN MOTOR
(Cast Iron)

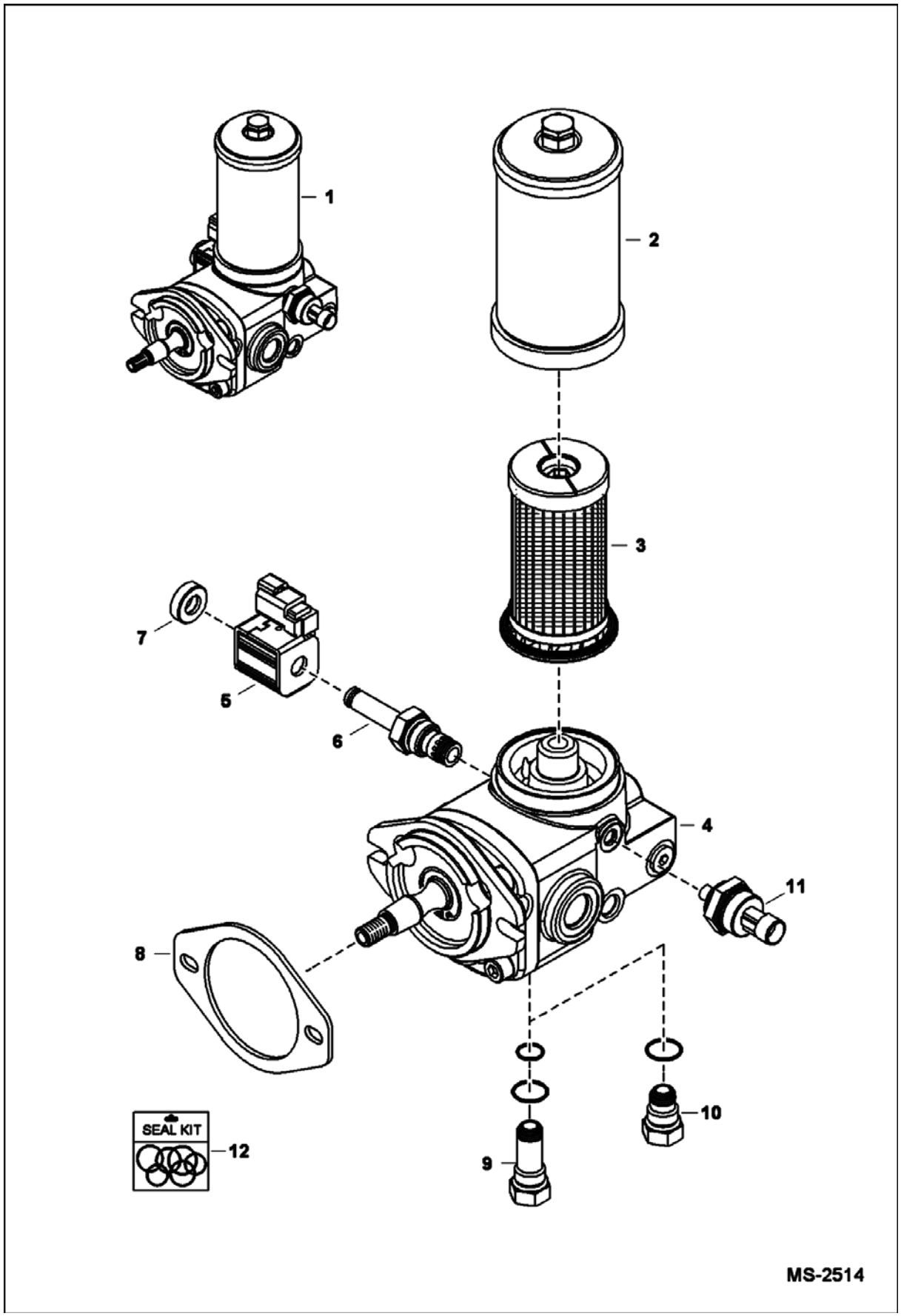

COOLING FAN MOTOR (Cont'd)
(Cast Iron)

Ref No	Part Number	Description	Remarks	Serial Number	Qty
1	7010793	MOTOR, FAN	cast iron - Ref. 2-10 - Also Order (2) of 1F316 cotter pin		1
2	6698066	HOUSING, FILTER CARTRIDGE			1
3	6692337	FILTER, HYD CARTRIDGE			1
4		MOTOR	NSS - Order Ref. 1		1
5	6698065	COIL, CPP012H			1
6	7008810	VALVE	cartridge - W/Ref. 7 - Was 7010979 [B,D]		1
6	6698591	KIT, SEAL			1
7		NUT, COIL SOLENOID	NAP - Was 6698352 [A]		1
8	6698062	GASKET, MOTOR			1
9	7000973	PLUG, MOTOR			1
10	7000974	PLUG, MOTOR			1
11	6674316	SWITCH, PRESS OIL HYD	3-pin molded connector		1
12		KIT, SEAL	NSS - Order Ref. 1		1

2-SPEED VALVE

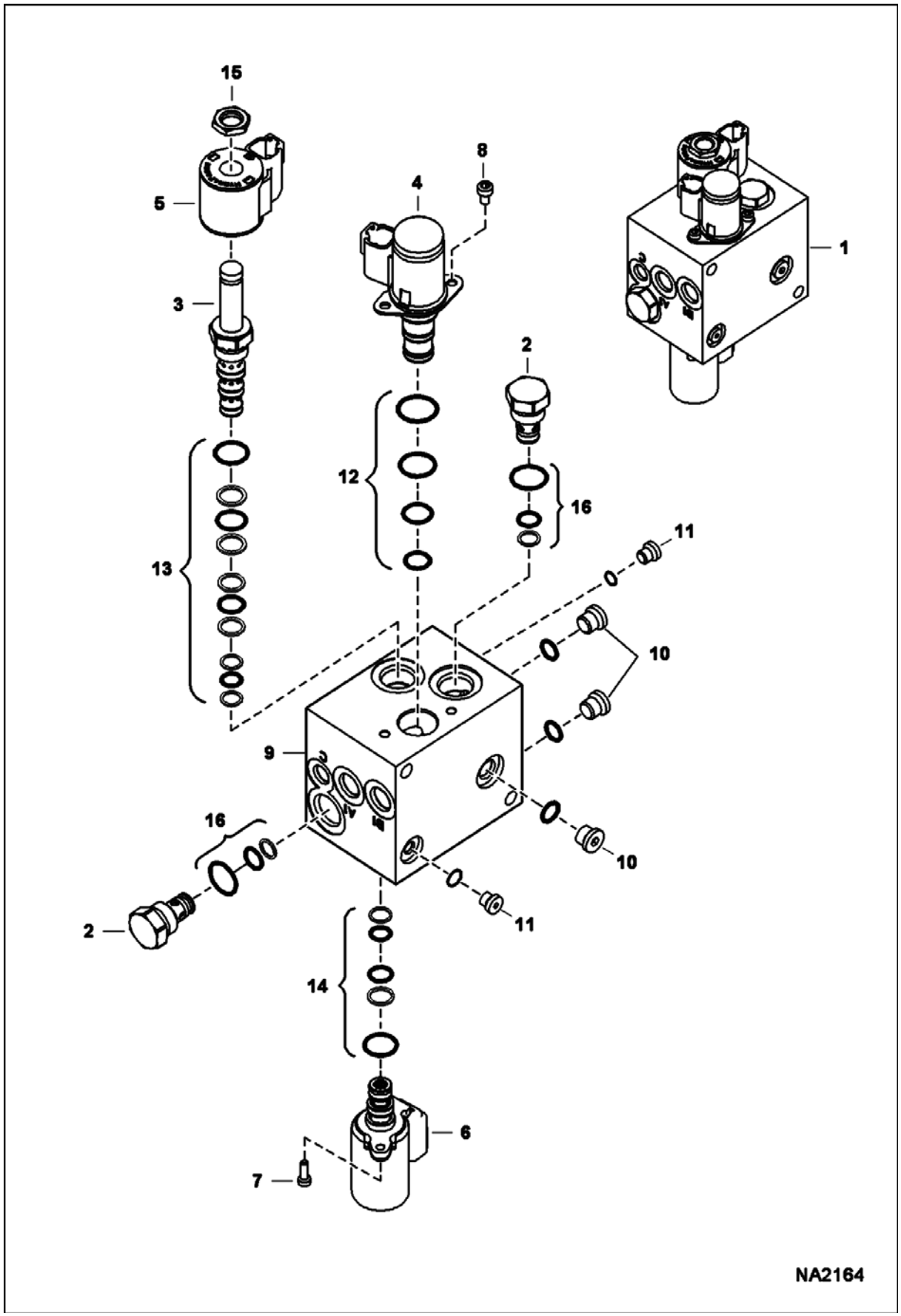

2-SPEED VALVE (Cont'd)

Ref No	Part Number	Description	Remarks	Serial Number	Qty
1	6697971	VALVE, 2 SPEED	Ref. 2-15		1
2	7010003	VALVE, CHECK			2
3	7010004	CARTRIDGE			1
4	7010005	CARTRIDGE			1
5	7010006	COIL			1
6	7010007	FILTER. VALVE			1
7	7010008	BOLT			2
8	7010009	BOLT			2
9	7010010	BLOCK, PORT			1
10	6672762	PLUG			3
11	6677177	PLUG			2
12	7008771	KIT, SEAL			1
13	6672756	KIT, SEAL			1
14	7010029	KIT, SEAL			1
15	6676246	NUT			1
16	6672515	KIT, SEAL			2

CAB ELECTRICAL CIRCUITRY
(Standard)

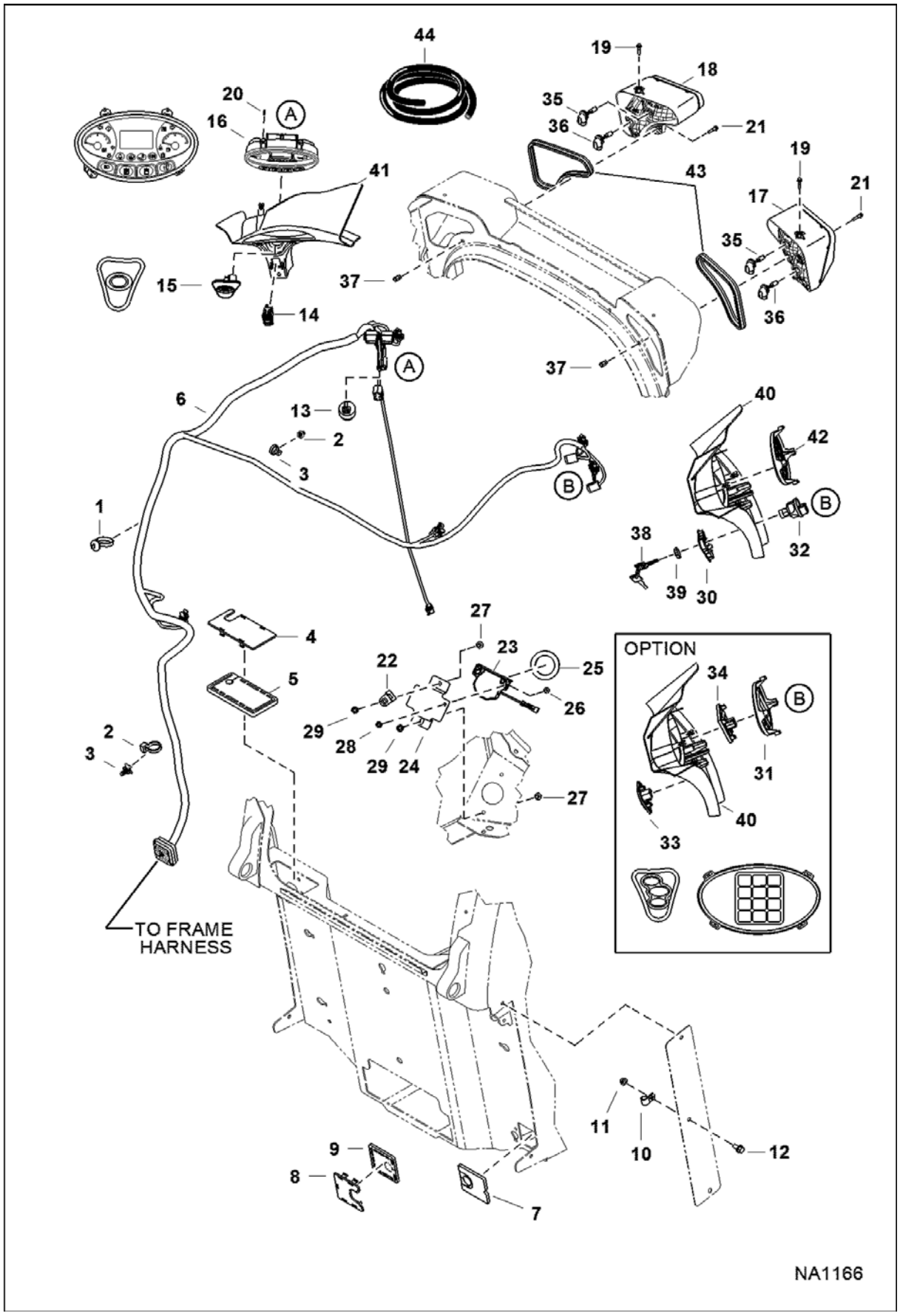

CAB ELECTRICAL CIRCUITRY (Cont'd)
(Standard)

Ref No	Part Number	Description	Remarks	Serial Number	Qty
1	6675734	STRAP			1
2	6624289	STRAP, TIE			5
3	7015668	MOUNT FIR TREE	push in - Use W/tie strap - Was 6678666 [B]		1
4	7179136	PLUG, HARNESS CAB STD			1
5	7179137	FOAM			1
6	7165991	HARNESS, CAB STD			1
7	7185150	PLUG, HARNESS CAB	replaces both Ref. 8 & 9		2
8		PLUG, HARNESS CAB DLX	NAP - Order Ref. 7 - Was 7179115 [A]		1
9		FOAM	NAP - Order Ref. 7 - Was 7179116 [A]		1
10	30H20	CLIP			1
11	57D6	NUT 5			1
12	31C612	BOLT			1
13	6692489	ALARM, BUZZER			1
14	6690948	SWITCH PARK BRAKE			1
15	7003032	SWITCH, OVERRIDE TRACTION			1
16	7003034	DISPLAY, GAUGE			1
17	7138040	LIGHT, RH ASSY			1
18	7138041	LIGHT, LH ASSY			1
19	35C410	BOLT 5	Was 53C410 [B]		2
20	7179008	SCREW, PLASTIC			3
21	31C420	BOLT 5	Was 53C416 [B]		2
22	6684641	MOUNT			1
23	7001044	HORN, ALARM			1
24	7171081	BRACKET, HORN			1
25	7171088	GROMMET			1
26	35C410	BOLT 5			2
27	35C516	BOLT 10			2
28	55D4	NUT			2
29	55D5	NUT			2
30	7163589	INSERT, SWITCH			1
31	7003027	INSERT, KEYPAD	See Illustration KEYLESS PANEL KIT/ NA2071 if loader is equipped W/SJC & text decals, Also Order Ref. 40 & 7168114 decal - if loader is equipped W/SJC & no text decals, Also Order Ref. 40 & 7177707 decal		1
32	6693245	SWITCH, IGN	W/Ref. 8		1
33	7003033	SWITCH, IGN	See Illustration KEYLESS PANEL KIT/ NA2071		1
34	6693712	KEYPAD, PANEL			1
35	7008814	BULB, 5W			2
36	6675336	LIGHT, BULB 50W			2
37	7154910	INSERT, THREADED			2
38	6693241	KEY 10	ignition - single key W/O ring		1
39	7009081	NUT			1
40	7155791	PANEL, RH			1
41	7155792	PANEL, LH			1

CAB ELECTRICAL CIRCUITRY (Cont'd)
(Standard)

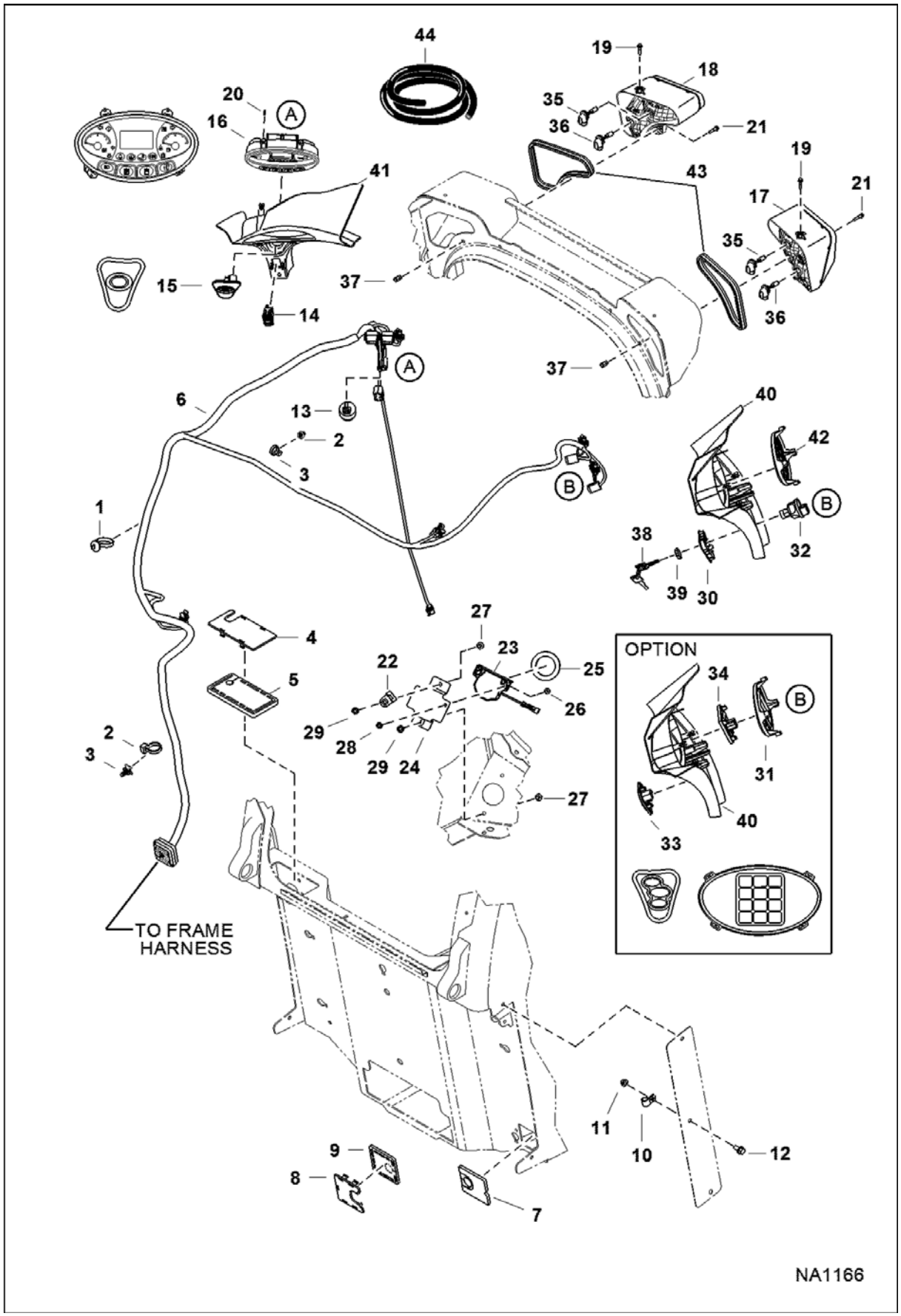

Ref No	Part Number	Description	Remarks	Serial Number	Qty
42	7002985	INSERT, BLANK	W/Bobcat head - if loader is equipped W/SJC & text decals, Also Order Ref. 40 & 7168114 decal - if loader is equipped W/SJC & no text decals, Also Order Ref. 40 & 7177707 decal		1
43		SEAL	NAP - 609,6 mm (24") long - Order Ref. 44		2
44	7202956	SEAL, BULK	bulk - sold per foot		x

CAB ELECTRICAL CIRCUITRY
(Deluxe)

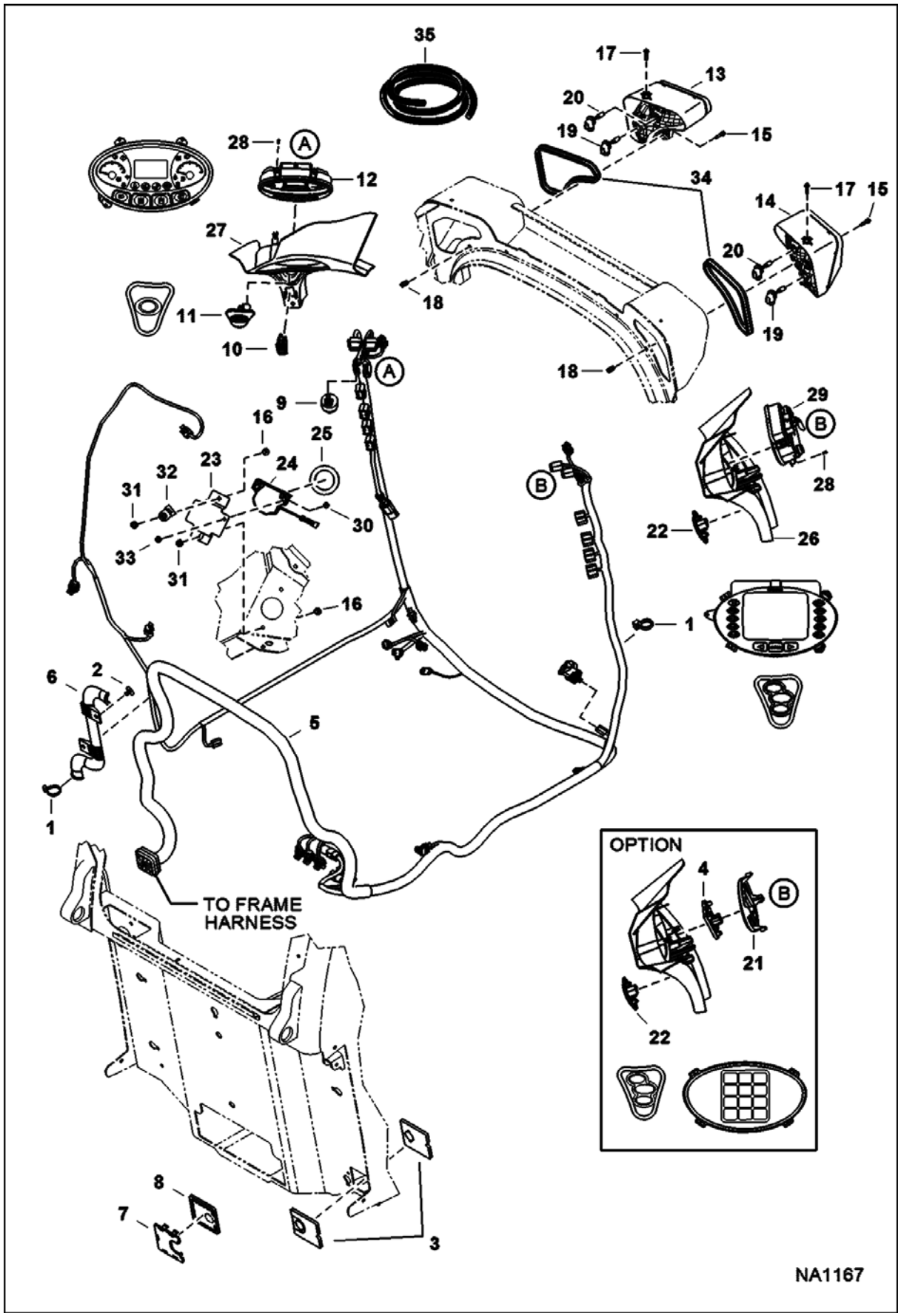

CAB ELECTRICAL CIRCUITRY (Cont'd)
(Deluxe)

Ref No	Part Number	Description	Remarks	Serial Number	Qty
1	6624289	STRAP, TIE			15
2	6674895	RETAINER			2
3	7185150	PLUG, HARNESS CAB	replaces both Ref. 7 & 8		2
4	6693712	KEYPAD, PANEL	See Illustration KEYLESS PANEL KIT/ NA2071		1
5	7176098	HARNESS, CAB DELUXE		A3NV11001 - 13098	1
5	7176098	HARNESS, CAB DELUXE		A3NW11001 - 11248	1
5	7196753	HARNESS, CAB DLX		A3NV13099 & Above	1
5	7196753	HARNESS, CAB DLX		A3NW11249 & Above	1
6	7164073	GUIDE			1
7		PLUG, HARNESS CAB DLX	NAP - Order Ref. 3 - Was 7179115 [A]		1
8		FOAM	NAP - Order Ref. 3 - Was 7179116 [A]		1
9	6692489	ALARM, BUZZER			1
10	6690948	SWITCH PARK BRAKE			1
11	7003032	SWITCH, OVERRIDE TRACTION			1
12	7003034	DISPLAY, GAUGE			1
13	7138041	LIGHT, LH ASSY			1
14	7138040	LIGHT, RH ASSY			1
15	31C420	BOLT 5	Was 53C420 [B]		2
16	35C516	BOLT 10			2
17	35C410	BOLT 5	Was 53C410 [B]		2
18	7154910	INSERT, THREADED			2
19	6675336	LIGHT, BULB 50W			2
20	7008814	BULB, 5W			2
21	7003027	INSERT, KEYPAD	See Illustration KEYLESS PANEL KIT/ NA2071 if loader is equipped W/SJC & text decals, Also Order Ref. 26 & 7168114 decal - if loader is equipped W/SJC & no text decals, Also Order Ref. 26 & 7177707 decal		1
22	7003033	SWITCH, IGN	See Illustration KEYLESS PANEL KIT/ NA2071		1
23	7171081	BRACKET, HORN			1
24	7001044	HORN, ALARM			1
25	7171088	GROMMET			1
26	7155791	PANEL, RH			1
27	7155792	PANEL, LH			1
28	7179008	SCREW, PLASTIC			6
29	6693413	DISPLAY, DLX			1
30	35C410	BOLT 5			2
31	55D5	NUT			2
32	6684641	MOUNT			1
33	55D4	NUT			2
34		SEAL	NAP - 609,6 mm (24") long - Order Ref. 35		2
35	7202956	SEAL, BULK	bulk - sold per foot		x

ENGINE ELECTRICAL CIRCUITRY
(Frame Harness & Filter Sensors)
(S/N A3NV11001 - 13098, A3NW11001 - 11248)

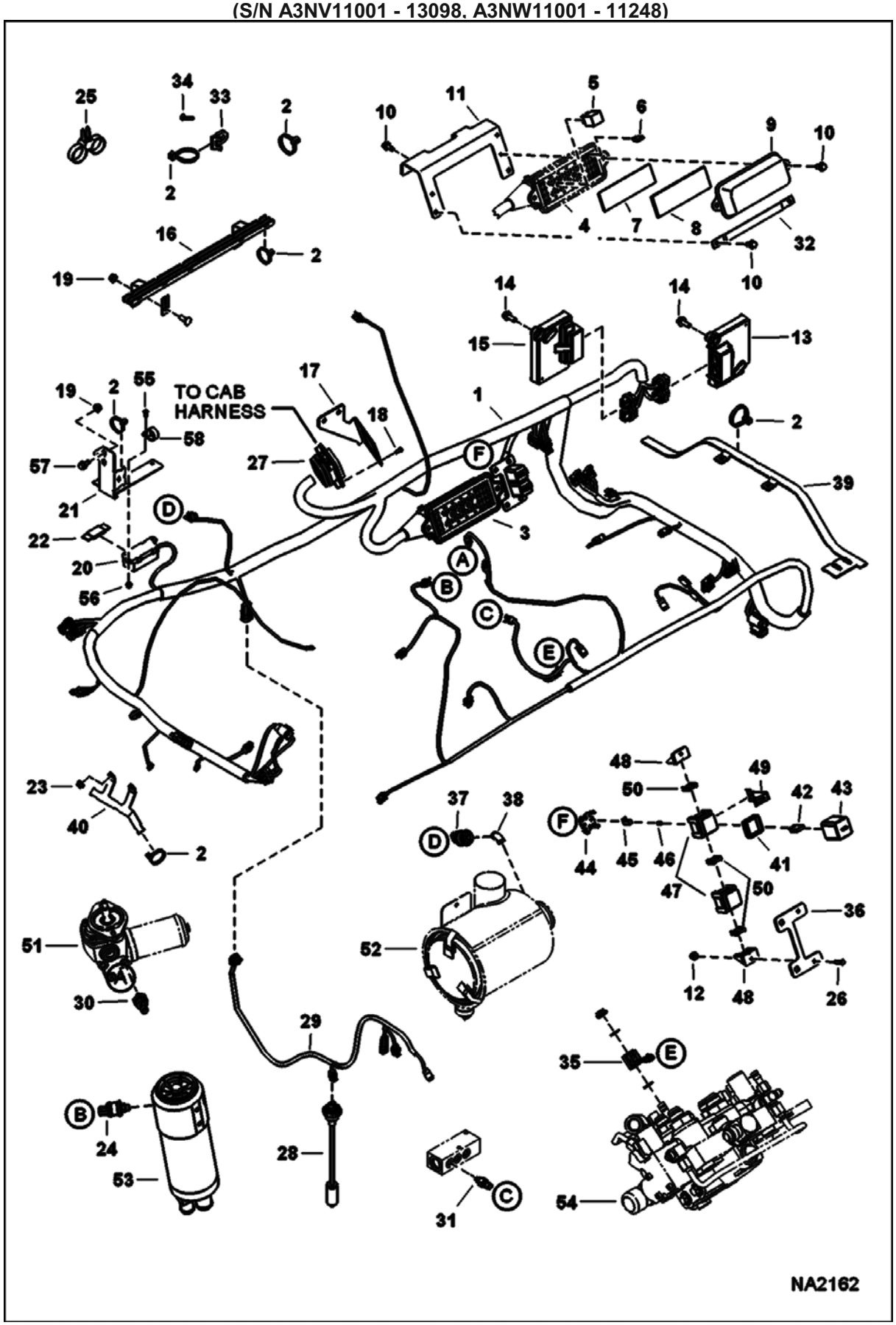

ENGINE ELECTRICAL CIRCUITRY (Cont'd)
(Frame Harness & Filter Sensors)
(S/N A3NV11001 - 13098, A3NW11001 - 11248)

Ref No	Part Number	Description	Remarks	Serial Number	Qty
1	7174782	HARNESS, MFR	See Illustration ENGINE ELECTRICAL CIRCUITRY/ NA2163 - manual controls		1
1	7175625	HARNESS, MFR	See Illustration ENGINE ELECTRICAL CIRCUITRY/ NA2163 - SJC, AHC & ACS		1
2	6624289	STRAP, TIE			27
3	7155390	HOUSING, FUSE RELAY			1
4	6673200	FUSE BLOCK			1
5	6679820	RELAY			8
6	6663289	FUSE, 5A			1
6	6654806	FUSE, 15A			3
6	6707621	FUSE, 15A MINI 5			1
6	6625575	FUSE, 20A			1
6	6702444	FUSE 25A 5			5
6	6707623	FUSE, 25A MINI 5			6
6	6718034	FUSE, 30A			2
7	7167945	DECAL, FUSE RELAY			1
8	6731275	INSULATION			1
9	6716621	COVER	Was 7176546 [A]		1
10	84G3712	BOLT			7
11	7171222	BRACKET FRC			1
12	51DM8	NUT			2
13	6693353	CONTROLLER, GATEWAY	Bobcat		1
14	7168429	BOLT, CONTROLLER	flanged head - M10 x 25 mm		4
15	6691288	CONTROLLER, AUX CONTROL			1
16	7164175	BRACKET, SHORT SKI			2
17	7166489	BRACKET, CAB			1
18	6688980	BOLT	connector		4
19	97D6	NUT 10			6
20	6675154	HOLDER	high amp fuse		1
21	7177235	BRACKET, HARNESS	mega fuse - Was 7159879 [A]		1
22	6675155	FUSE	100 amp		1
23	29CM820	SCREW			1
24	7002980	SWITCH, PRESSURE			1
25	6678668	STRAP, DUAL TIE			2
26	45G1212	BOLT			2
27		CONNECTOR			1
28	6680438	SENSOR, FUEL	W/gasket		1
28	6717579	GASKET			1
29	7149219	HARNESS	fuel sender - std		1
29	7175293	HARNESS, FUEL	sender - dlx		1
30	6674316	SWITCH, PRESS OIL HYD	3-pin molded connector		1
31	6727869	SENDER,HYD TEMP			1
32	7168173	BRACKET, COVER			1
33	6679034	MOUNT			1
34	84G3732	BOLT			1

ENGINE ELECTRICAL CIRCUITRY (Cont'd)
(Frame Harness & Filter Sensors)
(S/N A3NV11001 - 13098, A3NW11001 - 11248)

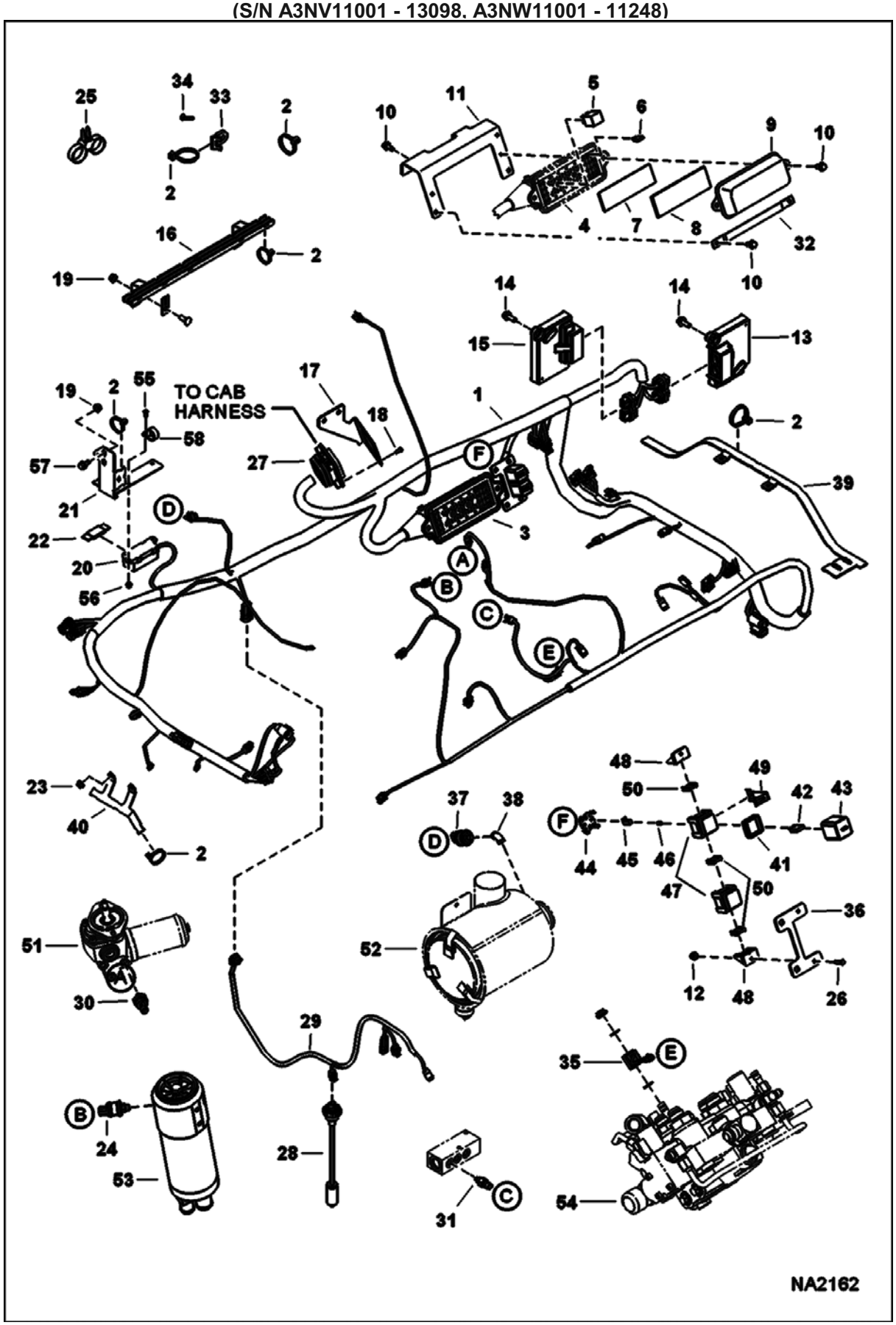

ENGINE ELECTRICAL CIRCUITRY (Cont'd)
(Frame Harness & Filter Sensors)
(S/N A3NV11001 - 13098, A3NW11001 - 11248)

Ref No	Part Number	Description	Remarks	Serial Number	Qty
35	6675559	COIL			1
36	7166445	BRACKET, BLOCK DILL			1
37	6665371	SWITCH			1
38	24F1	ELBOW			1
39		BRACKET, FRONT SKI	NAP - steel - Order 7171188 bracket - Was 7159886 [A]		1
39	7171188	BRACKET	plastic		1
40	7189581	BRACKET, HARNESS	Was 7163597 [A]		1
41	6671528	SEAL	green square		2
42	6707620	FUSE, 10A MINI 5			x
42	6707621	FUSE, 15A MINI 5			x
42	6707623	FUSE, 25A MINI 5			x
42	6674099	BREAKER, 25A			x
43	6665358	COVER , FUSE			2
44	6665357	LOCK	yellow		2
45		PIN	NAP - female - Order 6668719 pin for 16 guage wire - Order 6668720 pin for 14 guage wire		16
46	6650107	SEAL			16
47	6665356	BLOCK	fuse - W/Ref. 41		2
48	6665909	MOUNT			2
49	6708437	CLIP			2
50	6665411	WEDGE	red		3
51		MOTOR, HYD COOLING FAN	See Illustration COOLING FAN MOTOR/ MS2514		1
52		FILTER, AIR CLEANER ASSY	See Illustration AIR CLEANER/ NA2170		1
53		FILTER, HYD ASSY	See Illustration HYDROSTATIC CIRCUITRY/ NA1224	A3NV11001 - 11444	1
53		FILTER, HYD ASSY	See Illustration HYDROSTATIC CIRCUITRY/ NA1224	A3NW11001 - 11099	1
53		FILTER, HYD ASSY	See Illustration HYDROSTATIC CIRCUITRY/ NA2653	A3NV11445 & Above	1
53		FILTER, HYD ASSY	See Illustration HYDROSTATIC CIRCUITRY/ NA2653	A3NW11101 & Above	1
54		VALVE, CONTROL	See Illustration CONTROL VALVE/ NA1216 - manual controls		1
54		VALVE, CONTROL	See Illustration CONTROL VALVE/ NA1217 - ACS, AHC & SJC		1
55	25G410	CAPSCREW			2
56	59D4	NUT 5			2
57	35C612	BOLT			2
58	30H50	CLIP			1

ENGINE ELECTRICAL CIRCUITRY
(Frame Harness & Filter Sensors)
(S/N A3NV13099 & Above, A3NW11249 & Above)

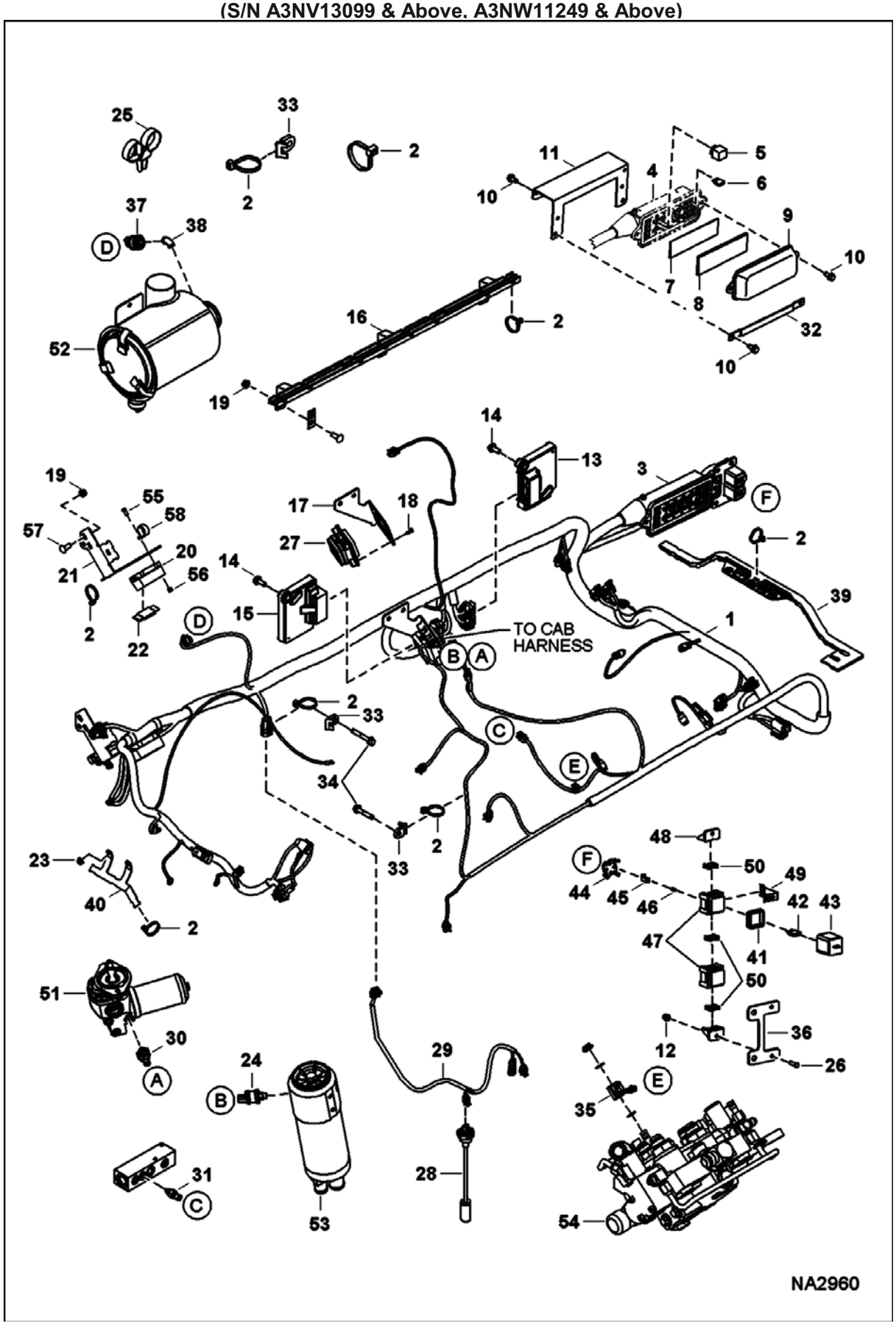

ENGINE ELECTRICAL CIRCUITRY (Cont'd)
(Frame Harness & Filter Sensors)
(S/N A3NV13099 & Above, A3NW11249 & Above)

Ref No	Part Number	Description	Remarks	Serial Number	Qty
1	7199263	HARNESS, MFR	See Illustration ENGINE ELECTRICAL CIRCUITRY/ NA2163 manual controls		1
1	7199264	HARNESS, MFR	See Illustration ENGINE ELECTRICAL CIRCUITRY/ NA2163 SJC, AHC & ACS		1
2	6624289	STRAP, TIE			32
3	7155390	HOUSING, FUSE RELAY			1
4	6673200	FUSE BLOCK			1
5	6679820	RELAY			8
6	6663289	FUSE, 5A			1
6	6654806	FUSE, 15A			3
6	6707621	FUSE, 15A MINI 5			1
6	6625575	FUSE, 20A			1
6	6702444	FUSE 25A 5			5
6	6707623	FUSE, 25A MINI 5			6
6	6718034	FUSE, 30A			2
7	7167945	DECAL, FUSE RELAY			1
8	6731275	INSULATION			1
9	6716621	COVER	Was 7176546 [A]		1
10	84G3712	BOLT			7
11	7196673	BRACKET			1
12	51DM8	NUT			2
13	6693353	CONTROLLER, GATEWAY	Bobcat		1
14	7168429	BOLT, CONTROLLER	flanged head - M10 x 25 mm		4
15	6691288	CONTROLLER, AUX CONTROL			1
16	7164175	BRACKET, SHORT SKI			2
17	7166489	BRACKET, CAB			1
18	6688980	BOLT	connector		4
19	97D6	NUT 10			6
20	6675154	HOLDER	high amp fuse		1
21	7177235	BRACKET, HARNESS	mega fuse - Was 7159879 [A]		1
22	6675155	FUSE	100 amp		1
23	29CM820	SCREW			1
24	7002980	SWITCH, PRESSURE			1
25	6678668	STRAP, DUAL TIE			2
26	45G1212	BOLT			2
27		CONNECTOR	See Illustration CONNECTOR HARNESS ASSEMBLY/ PE3684		1
28	6680438	SENSOR, FUEL	W/gasket		1
28	6717579	GASKET			1
29	7149219	HARNESS	fuel sender - std		1
29	7175293	HARNESS, FUEL	sender - dlx		1
30	6674316	SWITCH, PRESS OIL HYD	3-pin molded connector		1
31	6727869	SENDER,HYD TEMP			1
31	79K6	O RING 10			x
32	7168173	BRACKET, COVER			1

ENGINE ELECTRICAL CIRCUITRY (Cont'd)
(Frame Harness & Filter Sensors)
(S/N A3NV13099 & Above, A3NW11249 & Above)

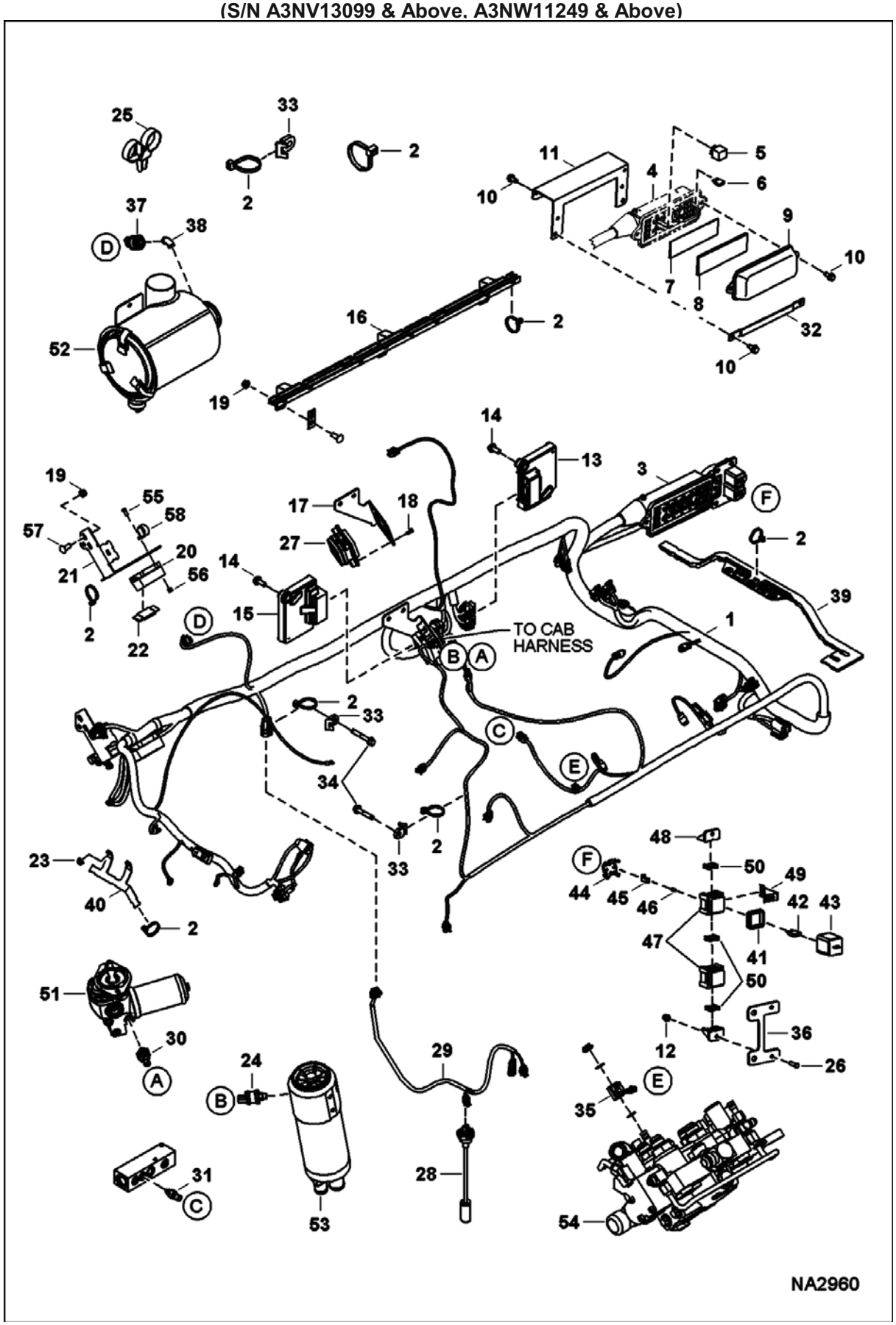

ENGINE ELECTRICAL CIRCUITRY (Cont'd)
(Frame Harness & Filter Sensors)
(S/N A3NV13099 & Above, A3NW11249 & Above)

Ref No	Part Number	Description	Remarks	Serial Number	Qty
33	6679034	MOUNT			2
34	84G3732	BOLT			1
35	6675559	COIL			1
36	7166445	BRACKET, BLOCK DILL			1
37	6665371	SWITCH			1
38	24F1	ELBOW			1
39		BRACKET, FRONT SKI	NAP - steel - Order 7171188 bracket - Was 7159886 [A]		1
39	7171188	BRACKET	plastic		1
40	7189581	BRACKET, HARNESS	Was 7163597 [A]		1
41	6671528	SEAL	green square		2
42	6707620	FUSE, 10A MINI 5			x
42	6707621	FUSE, 15A MINI 5			x
42	6707623	FUSE, 25A MINI 5			x
42	6674099	BREAKER, 25A			x
43	6665358	COVER , FUSE			2
44	6665357	LOCK	yellow		2
45		PIN	NAP - female - Order 6668719 pin for 16 guage wire - Order 6668720 pin for 14 guage wire		16
46	6650107	SEAL			16
47	6665356	BLOCK	fuse - W/Ref. 41		2
48	6665909	MOUNT			2
49	6708437	CLIP			2
50	6665411	WEDGE	red		3
51		MOTOR, HYD COOLING FAN			1
52		FILTER, AIR CLEANER ASSY			1
53		FILTER, HYD ASSY		A3NT11001 - 11547	1
53		FILTER, HYD ASSY		A3NU11001 - 11099	1
53		FILTER, HYD ASSY		A3NT11548 & Above	1
53		FILTER, HYD ASSY		A3NU11101 & Above	1
54		VALVE, CONTROL	- manual controls		1
54		VALVE, CONTROL	- ACS, AHC & SJC		1
55	25G410	CAPSCREW			2
56	59D4	NUT 5			2
57	35C612	BOLT			2
58	30H50	CLIP			1

ENGINE ELECTRICAL CIRCUITRY
(Engine Sensors, Battery, Alt & Starter)

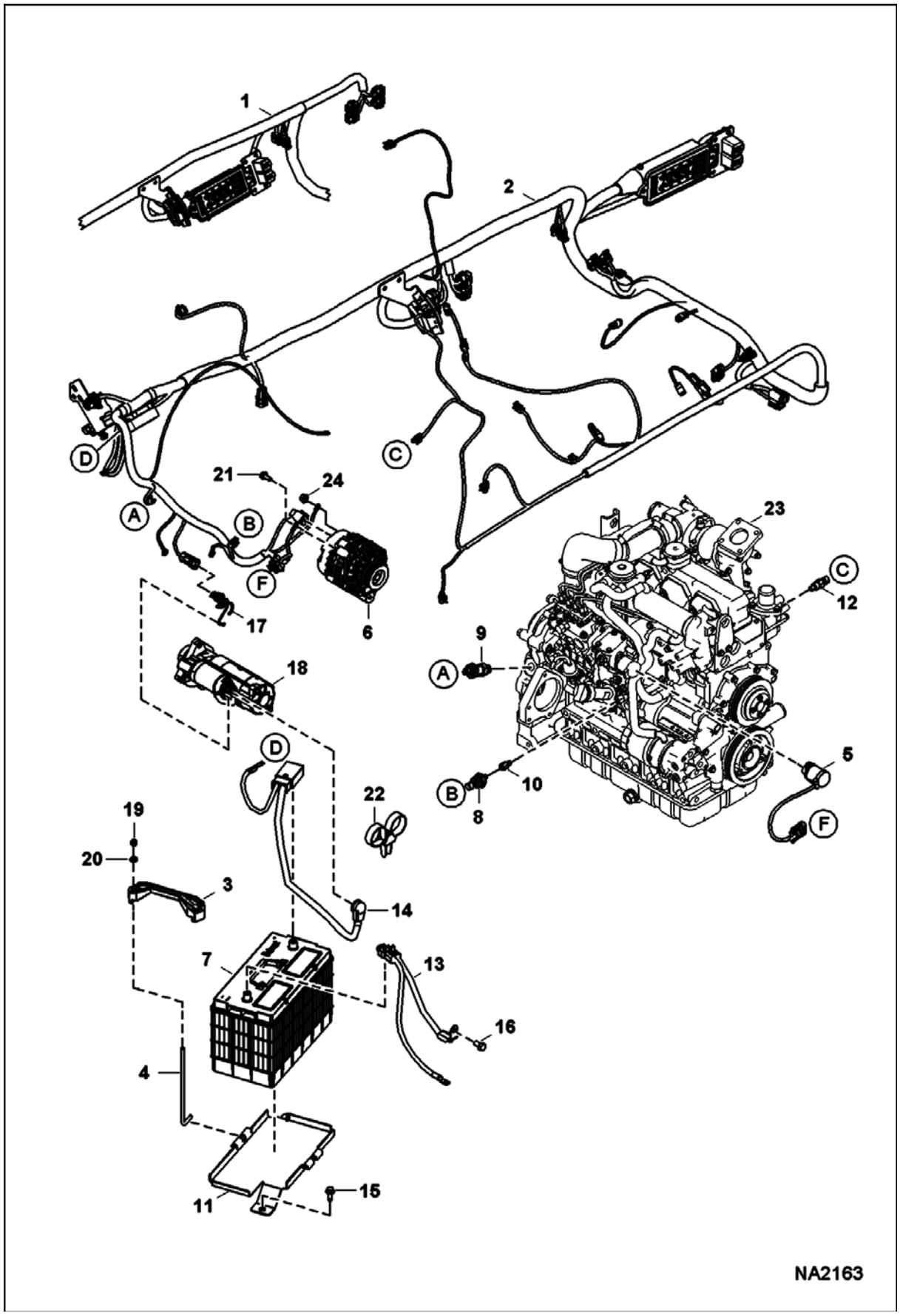

ENGINE ELECTRICAL CIRCUITRY (Cont'd)
(Engine Sensors, Battery, Alt & Starter)

Ref No	Part Number	Description	Remarks	Serial Number	Qty
1		HARNESS, MFR	See Illustration ENGINE ELECTRICAL CIRCUITRY/ NA2162	& Bel	1
2		HARNESS, MFR	See Illustration ENGINE ELECTRICAL CIRCUITRY/ NA2960	& Abv	1
3	6569203	CLAMP			1
4	6576280	BOLT			2
5	7000769	SOLENOID, SHUTOFF FUEL	W/ 240 mm (9.45") lead		1
6		ALTERNATOR	See Illustration ALTERNATOR/ B22386		1
7	6665427	BATTERY, DRY 950 AMP			1
8	6697920	SENSOR, PRESS OIL ENG			1
9	6693921	SENSOR, RPM			1
10	7102451	FITTING			1
11	7159352	PAN, BATTERY			1
12	6718414	SENDER, TEMP ENG			1
13	7162966	CABLE, NEGATIVE			1
14	7162967	CABLE, POSITIVE			1
15	84G3712	BOLT			2
16	35C612	BOLT	Was 5CM1020 [B]		1
17	6733370	HARNESS			1
18		STARTER	See Illustration STARTER/ B16488R		1
19	59D5	NUT 5			2
20	25E15	WASHER			2
21	45C620	BOLT			3
22	6678668	STRAP, DUAL TIE			2
23		ENGINE	See Illustration ENGINE & GASKET KITS/ NA2401		1
24	43DM8	NUT			1

ENGINE ELECTRICAL CIRCUITRY
(Rear Lights & Back-up Alarm)

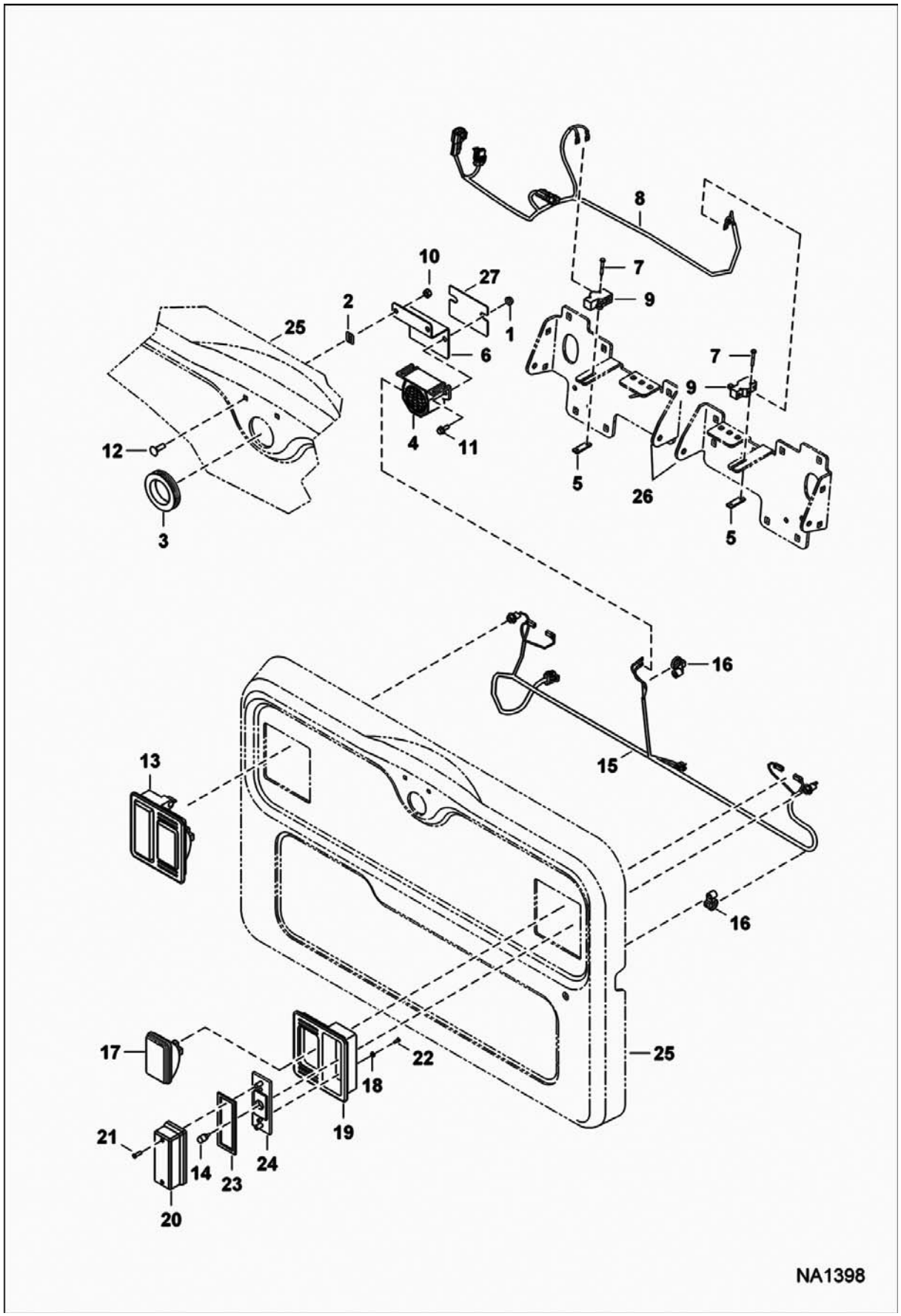

ENGINE ELECTRICAL CIRCUITRY (Cont'd)
(Rear Lights & Back-up Alarm)

Ref No	Part Number	Description	Remarks	Serial Number	Qty
1	97D4	NUT			2
2	774220	NUT			2
3	6577545	GROMMET			1
4	6651512	ALARM BACKUP			1
4	6737189	DECAL, WARNING	backup alarm		1
5	6702593	SPACER			2
6	7189077	MOUNT	Was 7167871 [B]		1
7	84G1320	BOLT			4
8	7175017	HARNESS, ALARM BACK-UP			1
9	6646781	SWITCH			2
10	57D5	NUT			2
11	35C410	BOLT 5			2
12	37C516	BOLT			2
13	6670284	LIGHT ASSY			2
13	7104670	LIGHT	rear - RH - EMEA		2
14	6649481	LIGHT, WEDGE BASE			2
15	7175271	HARNESS, REAR DOOR			1
15	7175287	HARNESS, REAR DOOR	European		1
16	7002988	TIE, STUD MOUNT			1
17	6661353	LIGHT ASSY	W/bulb - white		2
17	898731	1156 BULB			2
18	6672272	WASHER			4
19	6672279	MOUNT, LIGHT RUBBER			2
20	6672276	LENS, LIGHT RED			2
21	6672274	SCREW			4
22	6672273	SCREW			4
23	6672275	GASKET			2
24	6672277	BRACKET			2
25		REAR DOOR	See Illustration REAR DOOR/ NA2488		1
26		MOUNT	See Illustration HAND CONTROLS/ NA1212		2
27	7191385	SHIELD, ALARM			1

CONNECTOR HARNESS ASSEMBLY

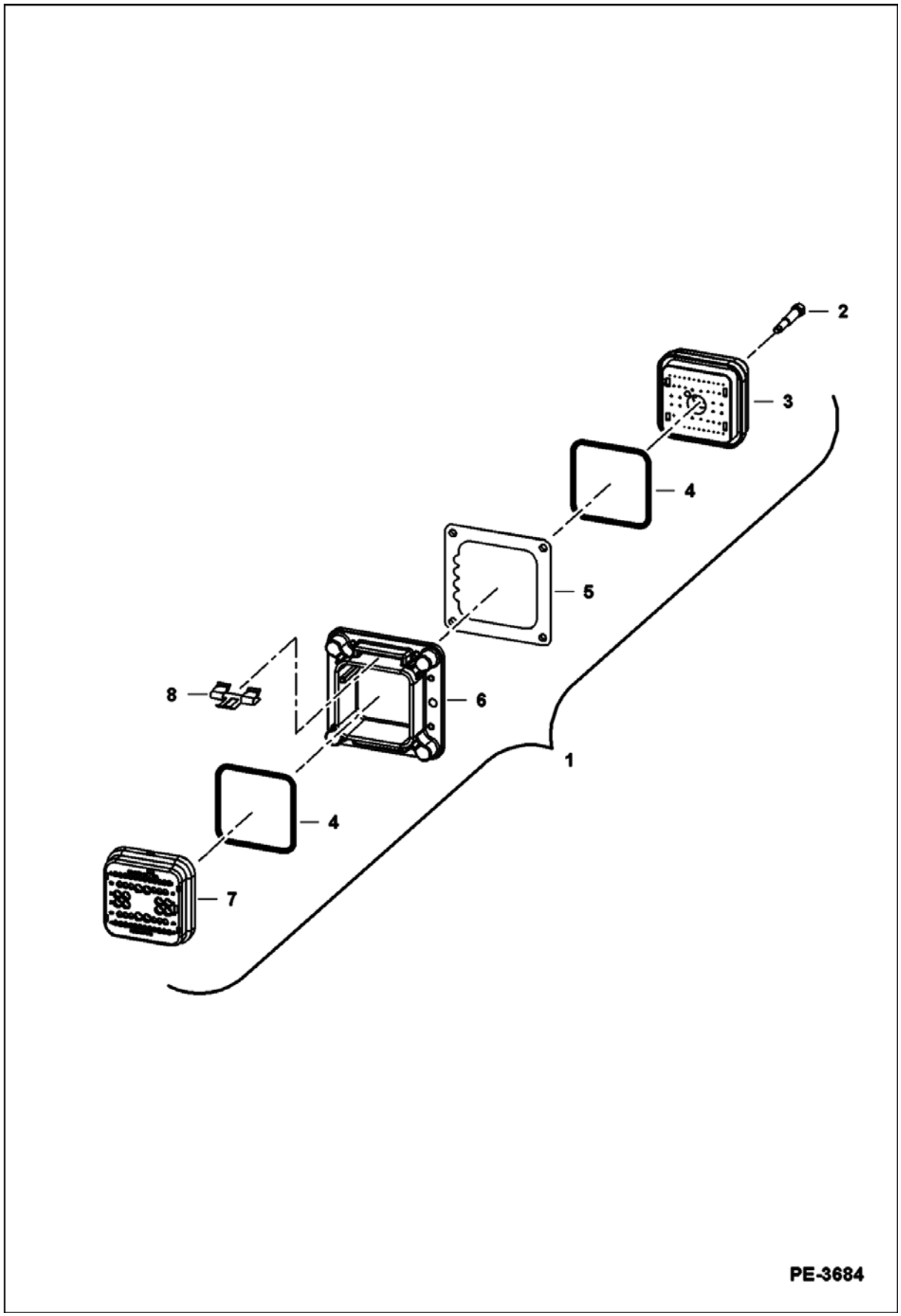

CONNECTOR HARNESS ASSEMBLY (Cont'd)

Ref No	Part Number	Description	Remarks	Serial Number	Qty
1		CONNECTOR	NSS - Order components		1
2		BOLT	NSS - Order Ref. 3		1
3	6688834	CONNECTOR	cab - W/Ref. 2 & 4		1
4		SEAL	NSS - Order Ref. 3 or 7		1
5		SEAL	NSS - Order Ref. 6		1
6	6688836	FLANGE	W/Ref. 5 & 8		1
7	6688833	CONNECTOR	engine - W/Ref. 4		1
8		CLIP	NSS - metal - Order Ref. 6		2

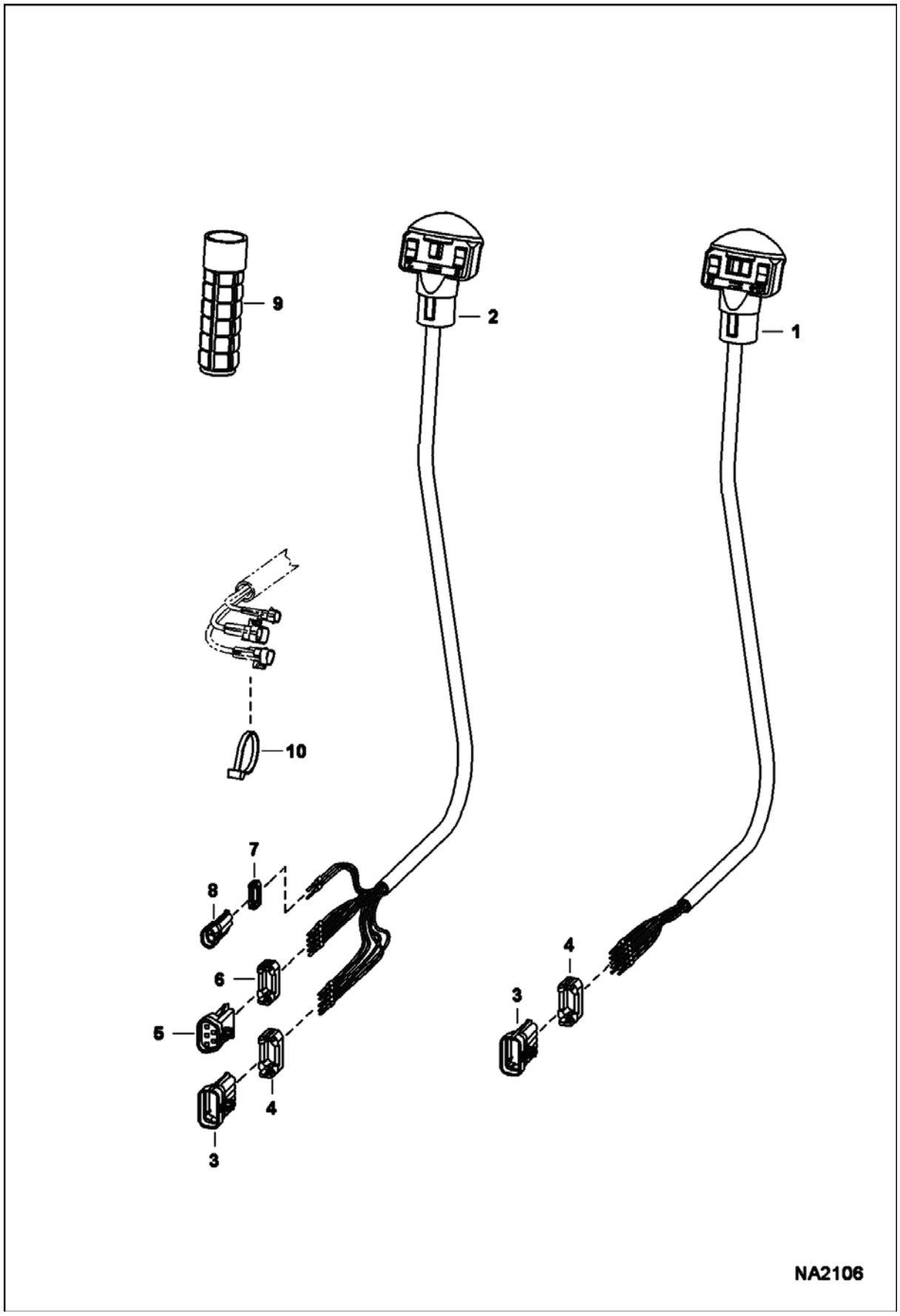
9
2
1
10
7
8
6
5
4
3
4
3
NA2106

CONTROLS ELECTRICAL (Cont'd)
(Manual Controls)

Ref No	Part Number	Description	Remarks	Serial Number	Qty
1	6680418	HANDLE ASSY.	RH - Also Order Ref. 3 & 4		1
1	6640690	PIN			9
1	6641176	SEAL			9
2	6680419	HANDLE ASSY.	LH - Also Order Ref. 3-8		1
2	6640690	PIN			10
2	6641176	SEAL			10
2	6680447	DECAL			1
3	6640692	CONNECTOR	10-pin		2
4	6640694	LOCK	Use W/ 10-pin connector		2
5	6667144	CONNECTOR	5-pin		1
6	6667145	LOCK	Use W/ 5-pin connector		1
7	6641180	LOCK	Use W/ 2-pin connector		1
8	6641179	CONNECTOR	2-pin		2
9	6702621	GRIP			2
10	6624289	STRAP, TIE			2

CONTROLS ELECTRICAL
(Selectable Joystick Controls)

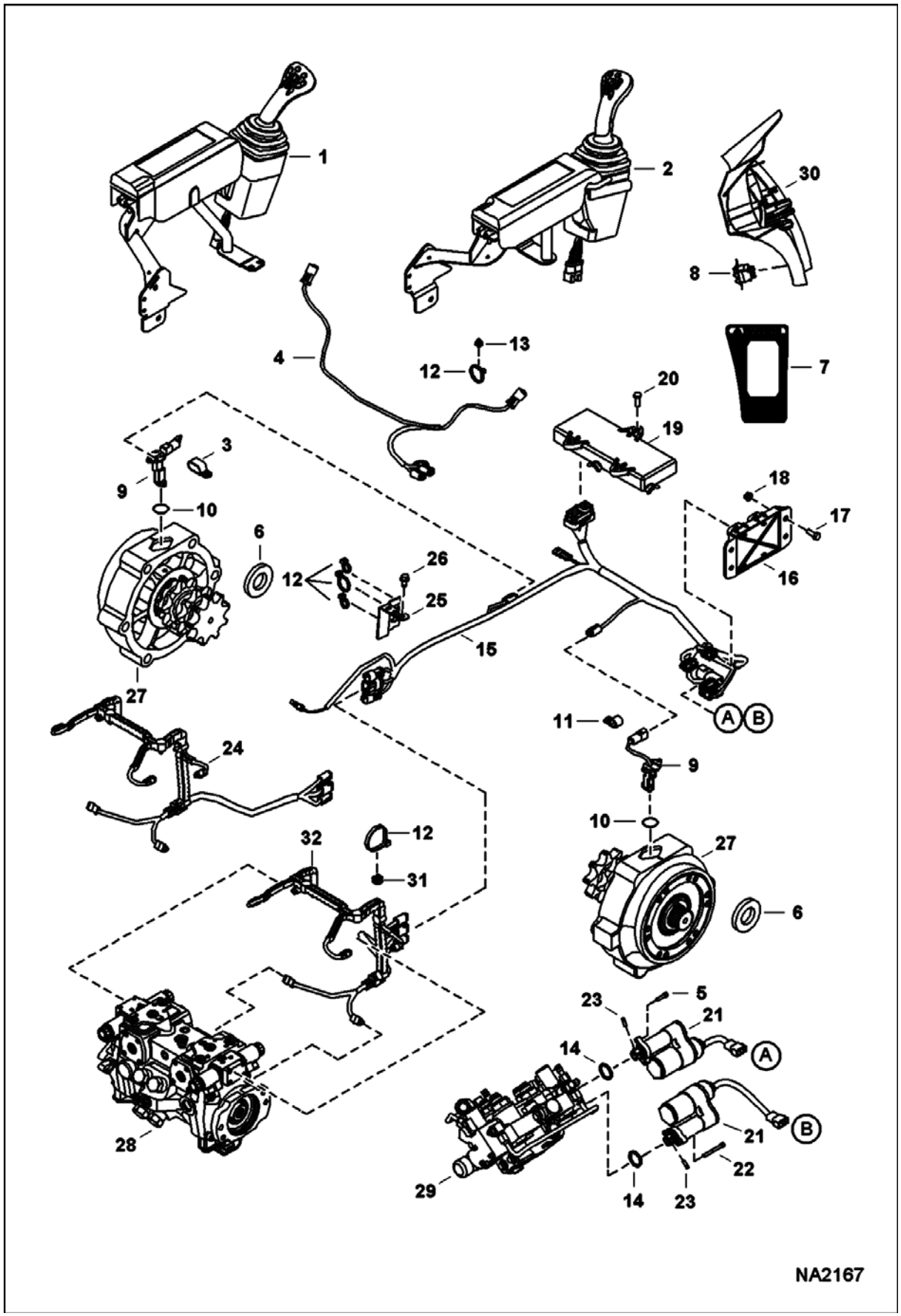

CONTROLS ELECTRICAL (Cont'd)
(Selectable Joystick Controls)

Ref No	Part Number	Description	Remarks	Serial Number	Qty
1		JOYSTICK, SJC LH	See Illustration CONTROLS ELECTRICAL/ NA2169		1
2		JOYSTICK, SJC RH	See Illustration CONTROLS ELECTRICAL/ NA2169		1
3	31H38	CLAMP			1
4	7163706	HARNESS, JOYSTICK			1
5	29G416	BOLT			2
6	6680055	MAGNET			2
7	7168114	DECAL, SWITCH			1
8	7001710	SWITCH, ISO			1
9	6677181	SENSOR, SPEED TRAVEL			2
10	25K20100	O RING 10			2
11	30H42	CLAMP			2
12	6690690	STRAP, TIE			10
12	6690690	STRAP, TIE	Use W/Ref. 32		1
13	6690689	MOUNT, FIR TREE			4
14	58K120	O-RING			2
15	7159325	HARNESS, SJC			1
16	6680410	CONTROLLER	plastic - W/ 3-connector plug		1
17	17C616	BOLT 5			2
18	97D6	NUT 10			2
19	6679485	CONTROLLER SJC			1
20	43C616	BOLT			3
21	7101672	ACTUATOR	W/Ref. 14		2
22	69G436	BOLT			2
23	7108236	PIN			2
24		HARNESS, PUMP	NAP - Order Ref. 32 - Was 7169309 [A]		1
25	84G3712	BOLT			1
26	7122359	BRACKET			1
27		CARRIER, MOTOR	See Illustration MOTOR CARRIER/ NA1007		1
28		PUMP, HYD	See Illustration HYDROSTATIC PUMP/GEAR PUMP/ NA1309		1
29		VALVE, CONTROL	See Illustration CONTROL VALVE/ NA1217		1
30		PANEL, RH	See Illustration OPERATOR CAB/ NA1161		1
31	6690688	TREE MOUNT			4
32	7188448	HARNESS, PUMP			1

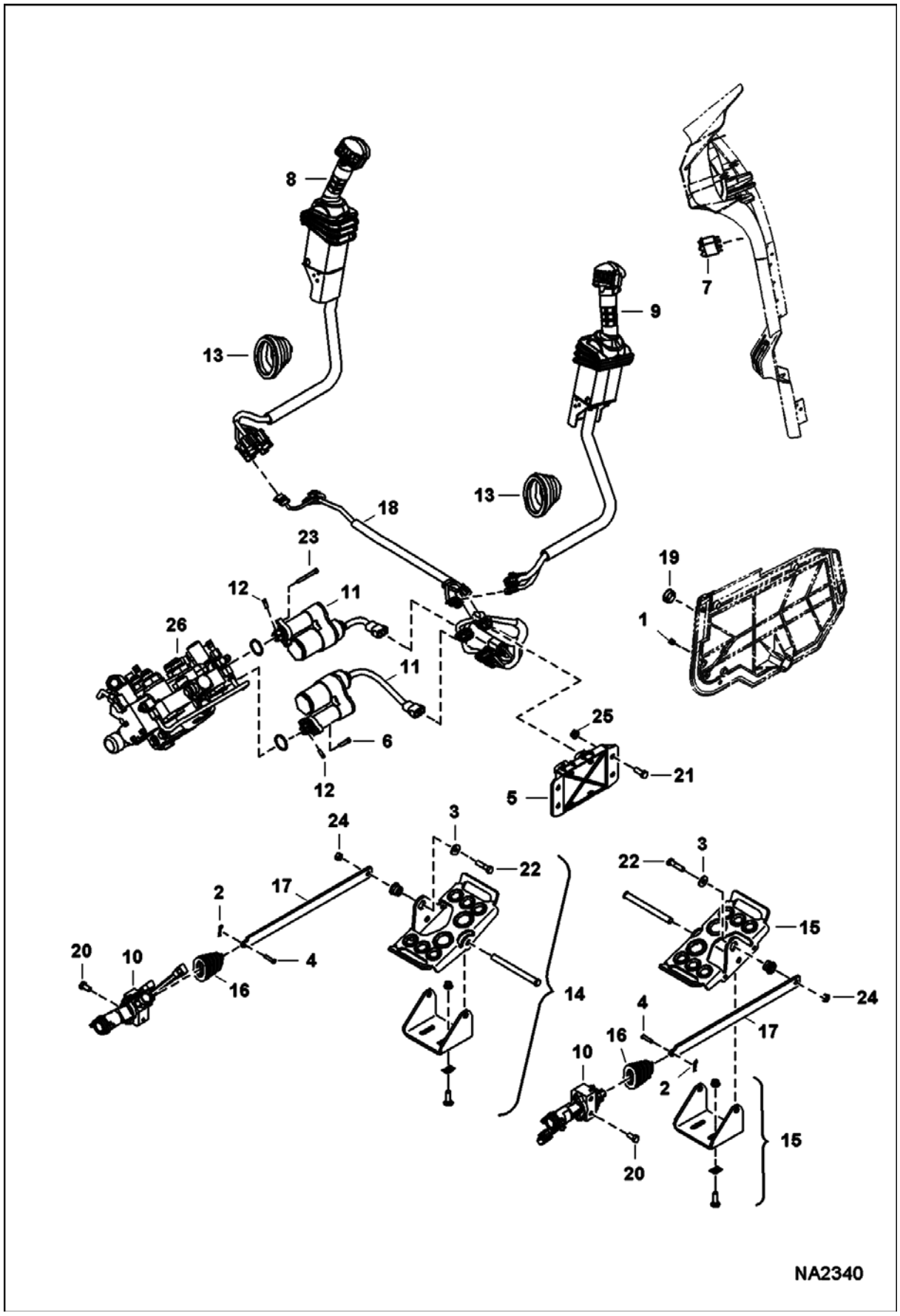
8
9
7
13
13
18
23
12
11
26
11
6
12
19
1
25
21
5
24
3
22
17
2
4
20
10
16
14
3
22
15
24
4
17
16
10
2
20
15
NA2340

CONTROLS ELECTRICAL (Cont'd)
(ACS)

Ref No	Part Number	Description	Remarks	Serial Number	Qty
1	5289686	PLUG	black - 0.38" dia hole		2
2	6513495	COTTER PIN			2
3	6563914	WASHER			2
4	6564654	PIN			2
5	6680410	CONTROLLER	plastic - W/ 3-connector plug		1
6	29G416	BOLT	Was 6814021 [A]		2
7	7001713	SWITCH			1
8		LEVER, RH	See Illustration CONTROLS ELECTRICAL/ NA2799		1
9		LEVER, LH	See Illustration CONTROLS ELECTRICAL/ NA2799		1
10	7003496	SENSOR			2
11	7101672	ACTUATOR			2
12	7108236	PIN			2
13	7147815	BOOT			2
14		PEDAL ASSY	See Illustration CONTROL PEDALS/ NA1261 - LH		1
15		PEDAL ASSY	See Illustration CONTROL PEDALS/ NA1261 - RH		1
16	7153503	BOOT			2
17	7154903	LINK			2
18	7164144	HARNESS			1
19	7166315	PLUG			1
20	1C612	BOLT			4
21	1C616	BOLT			2
22	1C624	BOLT			2
23	69G436	BOLT			2
24	95D6	NUT			2
25	97D6	NUT 10			2
26		VALVE, CONTOL	See Illustration CONTROL VALVE/ NA1217		1

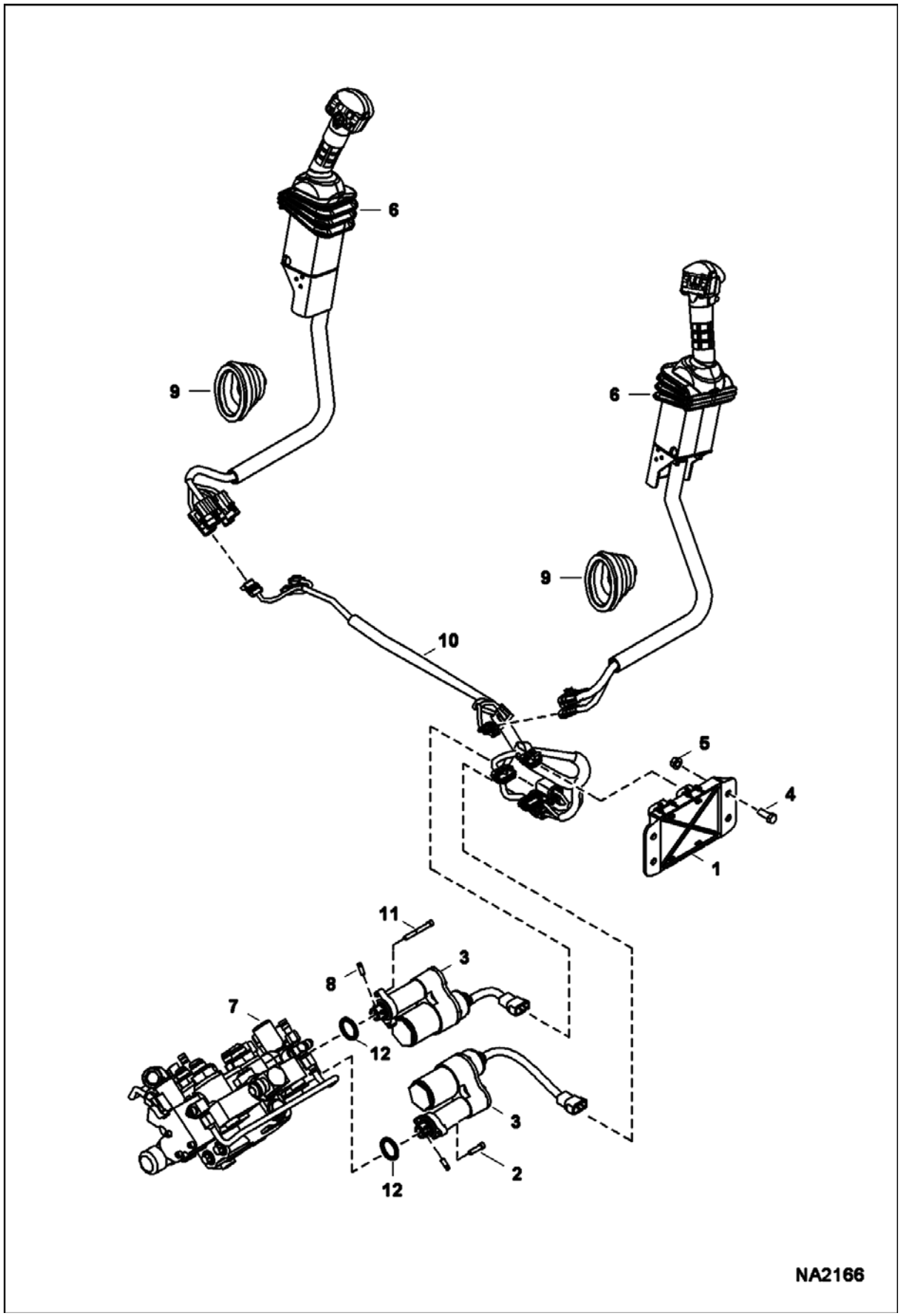
6
9
6
9
10
5
4
1
11
3
8
7
12
3
12
2
NA2166

CONTROLS ELECTRICAL (Cont'd)
(AHC)

Ref No	Part Number	Description	Remarks	Serial Number	Qty
1	6680410	CONTROLLER	plastic - W/ 3-connector plug		1
2	29G416	BOLT			2
3	7101672	ACTUATOR	W/Ref. 12		2
4	17C616	BOLT 5			2
5	95D6	NUT			2
6		LEVER, AHC	See Illustration CONTROLS ELECTRICAL/ NA2798 RH		1
6		LEVER, AHC	See Illustration CONTROLS ELECTRICAL/ NA2798 LH		1
7		VALVE, CONTROL	See Illustration CONTROL VALVE/ NA1217		1
8	7108236	PIN			2
9	7147815	BOOT			2
10	7164144	HARNESS			1
11	69G436	BOLT			2
12	58K120	O-RING			2

CONTROLS ELECTRICAL
(SJC) (Armrest Assembly)
(S/N A3NV11001 - 13344, A3NW11001 - 11366)

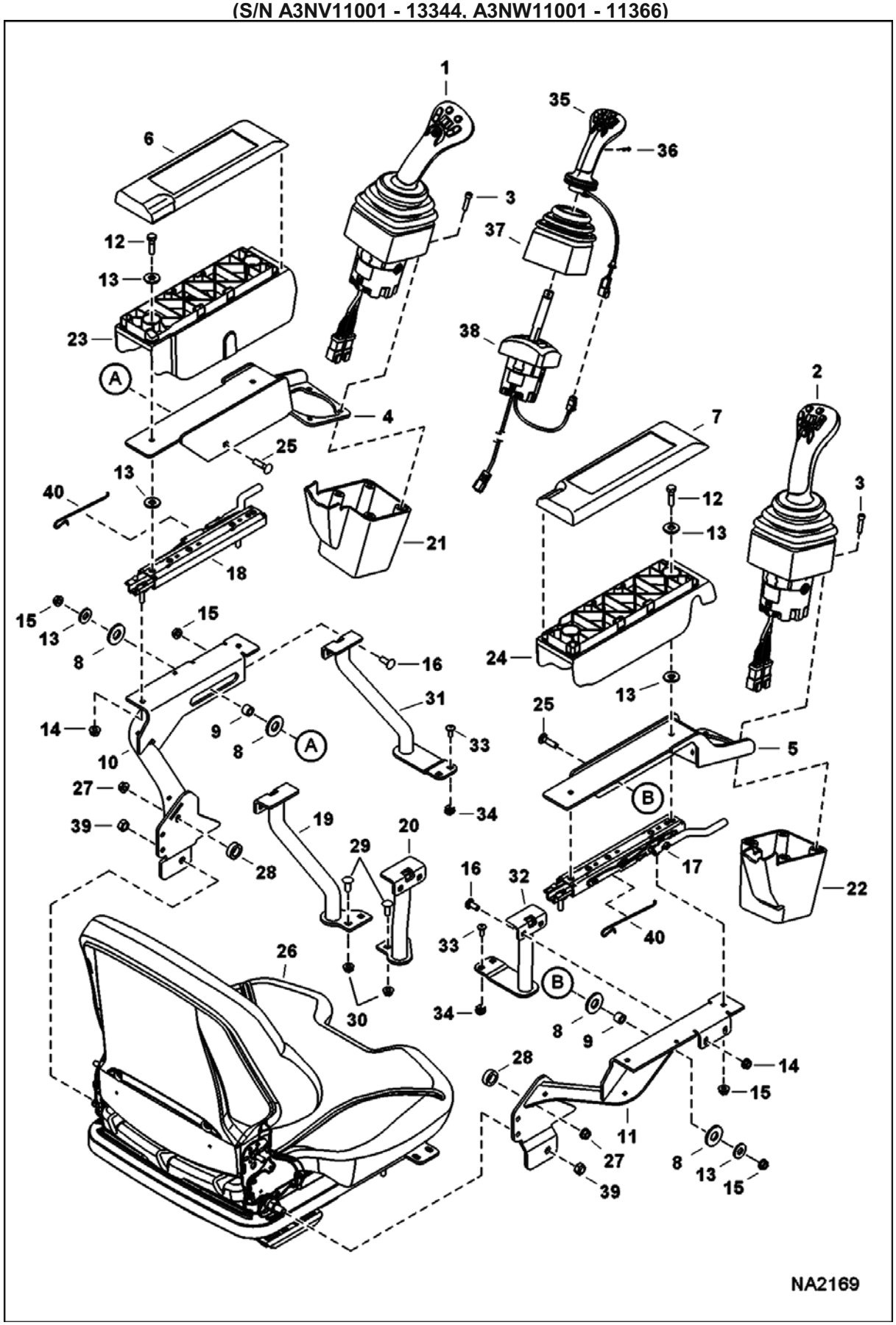

CONTROLS ELECTRICAL (Cont'd)
(SJC) (Armrest Assembly)
(S/N A3NV11001 - 13344, A3NW11001 - 11366)

Ref No	Part Number	Description	Remarks	Serial Number	Qty
1	7003628	JOYSTICK, LH			1
2	7003629	JOYSTICK, RH			1
3	29G416	BOLT			8
4	7177417	MOUNT, CONTROLS LH	Was 7153506 [A]		1
5	7177418	MOUNT, CONTROLS RH	Was 7156842 [A]		1
6	7157704	COVER ARMREST LH			1
7	7157671	COVER ARMREST, RH			1
8	7165634	WASHER, PLASTIC			4
9	7165635	SPACER, SJC			2
10	7168863	MOUNT, ARMREST			1
11	7168862	MOUNT, ARMREST			1
12	1CM830	BOLT			2
13	25E18	WASHER			10
14	51DM8	NUT			2
15	97D5	NUT			1
16	10C512	BOLT			4
17		SLIDE	NAP - W/torsion spring - Order 7200887 slide & Ref. 40 - Was 7177169 [A]		1
17	7200887	SLIDE	W/O torsion spring - Also Order Ref. 40		1
18		SLIDE	NAP - W/torsion spring - Order 7200888 slide & Ref. 40 - Was 7177170 [A]		1
18	7200888	SLIDE	W/O torsion spring - Also Order Ref. 40		1
19		SUPPORT, TUBE LH	See Illustration SEAT - 80 mm/ NA2430 & discard Ref. 47 - Order Ref. 31 & (2) each of Ref. 33 & 34 from this page - NAP - Was 7168849 [D]		1
20		SUPPORT, TUBE RH	See Illustration SEAT - 80 mm/ NA2430 & discard Ref. 47 - Order Ref. 32 & (2) each of Ref. 33 & 34 from this page - NAP - Was 7168848 [D]		1
21	7146265	COVER, LH SJC			1
22	7146264	COVER, RH SJC			1
23	7177197	SHELL, ARMREST LH	Was 7157703 [A]		1
24	7177196	SHELL, ARMREST RH	Was 7157670 [A]		1
25	10C520	BOLT			2
26		SEAT	See Illustration SEAT & SEAT BELT/ NA1126 - std.		1
26		SEAT	See Illustration SEAT KIT/ NA2042 - suspension		1
26		SEAT	See Illustration SEAT KIT - 80 mm/ NA2427 - air suspension		1
27	51DM8	NUT			2
28	7162176	SPACER			2
29	10C512	BOLT			4
30	97D5	NUT			4
31	7168849	SUPPORT, TUBE LH			1
32	7168848	SUPPORT, TUBE RH			1
33	6803202	SCREW			4
34	7170765	NUT			4
35	6689922	HANDLE	LH		1

CONTROLS ELECTRICAL (Cont'd)
(SJC) (Armrest Assembly)
(S/N A3NV11001 - 13344, A3NW11001 - 11366)

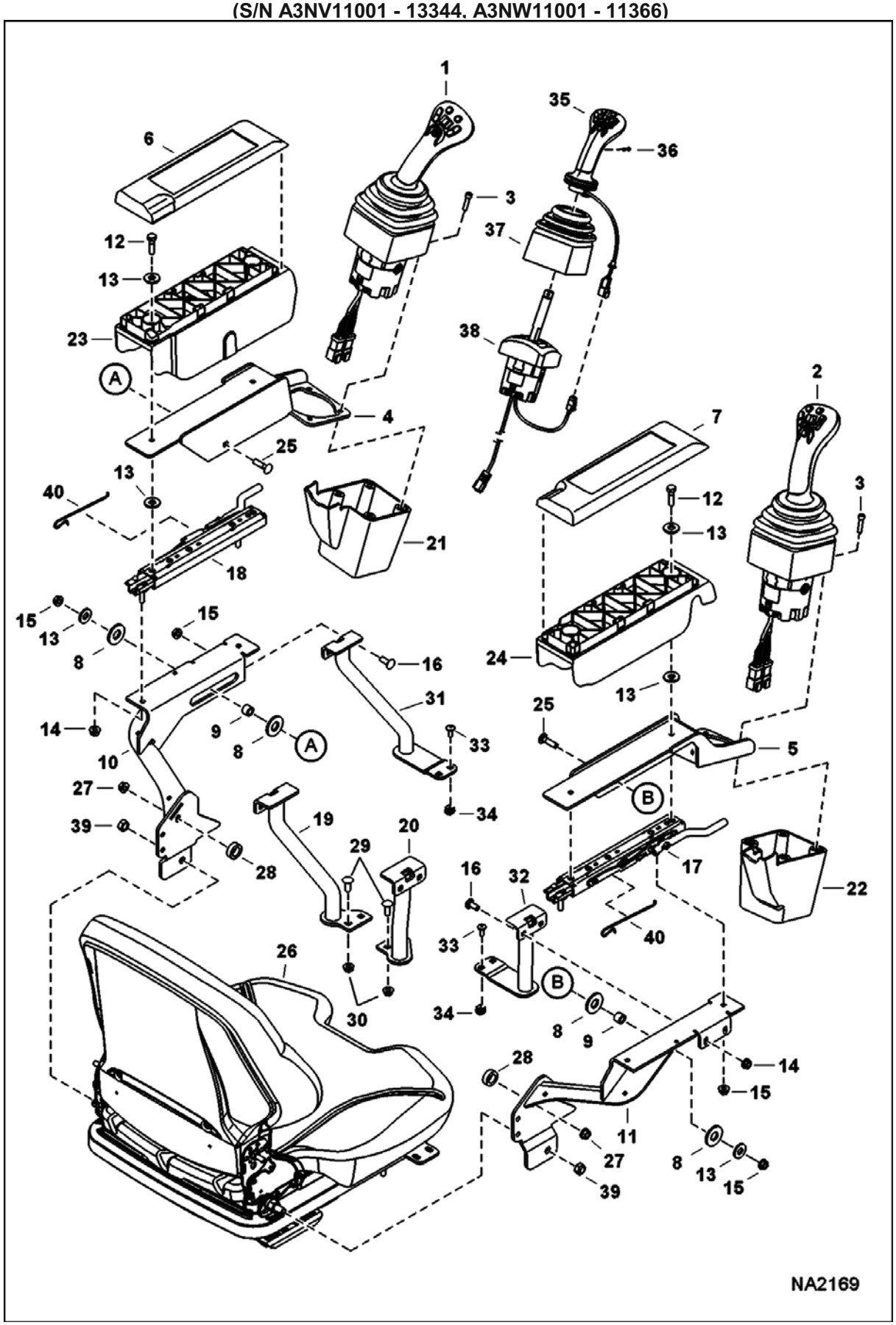

CONTROLS ELECTRICAL (Cont'd)
(SJC) (Armrest Assembly)
(S/N A3NV11001 - 13344, A3NW11001 - 11366)

Ref No	Part Number	Description	Remarks	Serial Number	Qty
35	6689923	HANDLE	RH		1
36	6689927	BOLT			2
37	7003698	BOOT, RUBBER			2
38	6697938	BASE, JOYSTICK	LH		1
38	6697939	BASE, JOYSTICK	RH		1
39	86D7	NUT			2
40	7199853	SPRING, TORSION			1

CONTROLS ELECTRICAL
(SJC) (Armrest Assembly)
(S/N A3NV13345 & Above, A3NW11367 & Above)

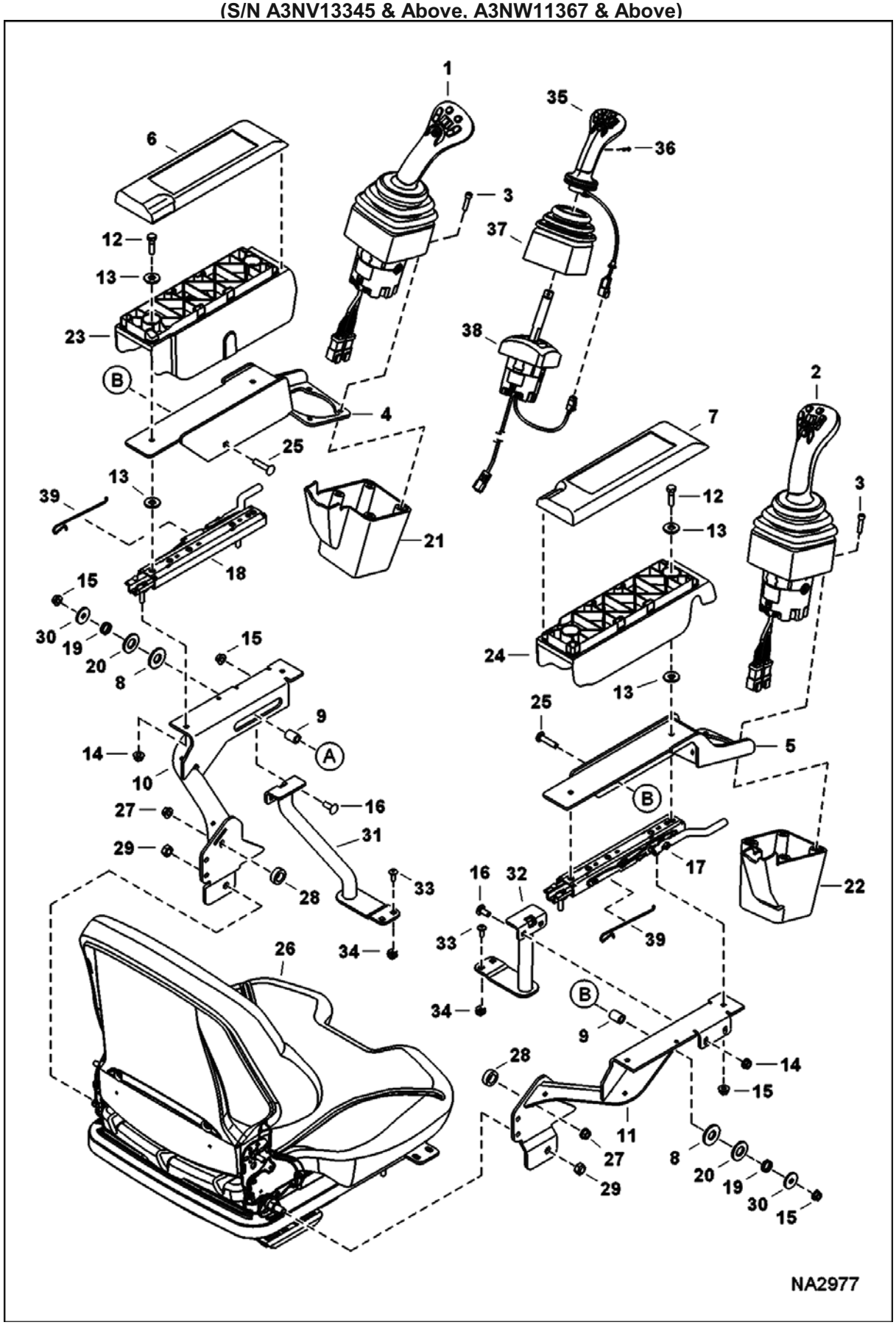

CONTROLS ELECTRICAL (Cont'd)
(SJC) (Armrest Assembly)
(S/N A3NV13345 & Above, A3NW11367 & Above)

Ref No	Part Number	Description	Remarks	Serial Number	Qty
1	7003628	JOYSTICK, LH			1
2	7003629	JOYSTICK, RH			1
3	29G416	BOLT			8
4	7197922	MOUNT, CONTROLS LH			1
5	7197921	MOUNT, CONTROLS RH			1
6	7157704	COVER ARMREST LH			1
7	7157671	COVER ARMREST, RH			1
8	7165634	WASHER, PLASTIC			2
9	7197916	SPACER			2
10	7197919	MOUNT, SEAT LH			1
11	7197917	MOUNT, SEAT RH			1
12	1CM830	BOLT			2
13	25E18	WASHER			8
14	51DM8	NUT			2
15	97D5	NUT			1
16	10C512	BOLT			4
17		SLIDE	NAP - W/torsion spring - Order 7200887 slide & Ref. 39 - Was 7177169 [A]		1
17	7200887	SLIDE	W/O torsion spring - Also Order Ref. 39		1
18		SLIDE	NAP - W/torsion spring - Order 7200888 slide & Ref. 39 - Was 7177170		1
18	7200888	SLIDE	W/O torsion spring - Also Order Ref. 39		1
19	7197915	SPRING, COMPRESSION			2
20	6701174	WASHER			2
21	7146265	COVER, LH SJC			1
22	7146264	COVER, RH SJC			1
23	7177197	SHELL, ARMREST LH			1
24	7177196	SHELL, ARMREST RH			1
25	10C524	BOLT			2
26		SEAT	See Illustration SEAT & SEAT BELT/ NA1126 - std.		1
26		SEAT	See Illustration SEAT KIT/ NA2042 - suspension		1
26		SEAT	See Illustration SEAT KIT - 80 mm/ NA2427 - air suspension		1
27	51DM8	NUT			2
28	7162176	SPACER			2
29	86D7	NUT			2
30	25E25	WASHER 10			2
31	7168849	SUPPORT, TUBE LH			1
32	7168848	SUPPORT, TUBE RH			1
33	6803202	SCREW			4
34	7170765	NUT			4
35	6689922	HANDLE	LH		1
35	6689923	HANDLE	RH		1
36	6689927	BOLT			2
37	7003698	BOOT, RUBBER			2

CONTROLS ELECTRICAL (Cont'd)
(SJC) (Armrest Assembly)
(S/N A3NV13345 & Above, A3NW11367 & Above)

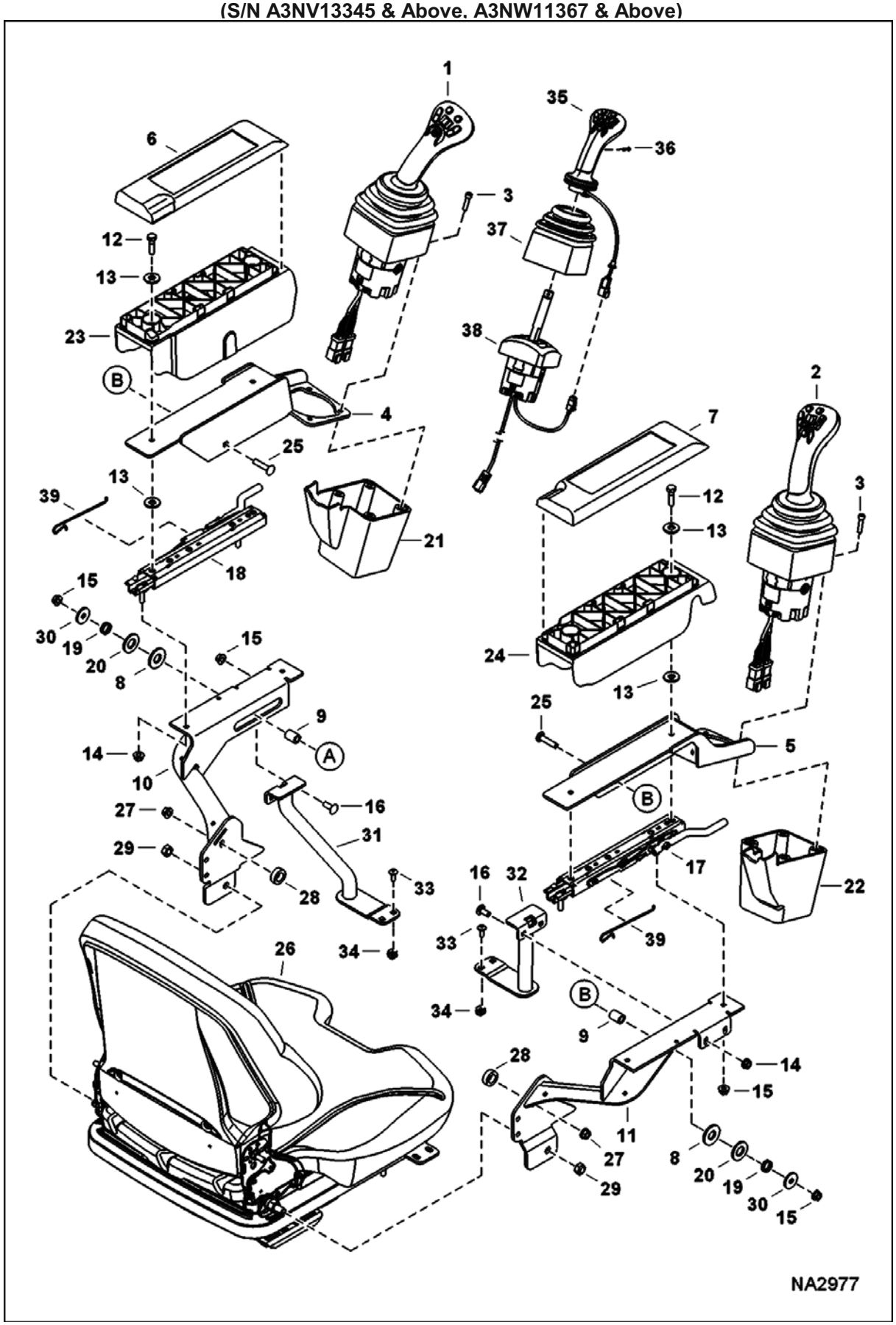

CONTROLS ELECTRICAL (Cont'd)
(SJC) (Armrest Assembly)
(S/N A3NV13345 & Above, A3NW11367 & Above)

Ref No	Part Number	Description	Remarks	Serial Number	Qty
38	6697938	BASE, JOYSTICK	LH		1
38	6697939	BASE, JOYSTICK	RH		1
39	7199853	SPRING, TORSION			1

CONTROLS ELECTRICAL
(ACS) (Handle Assembly)

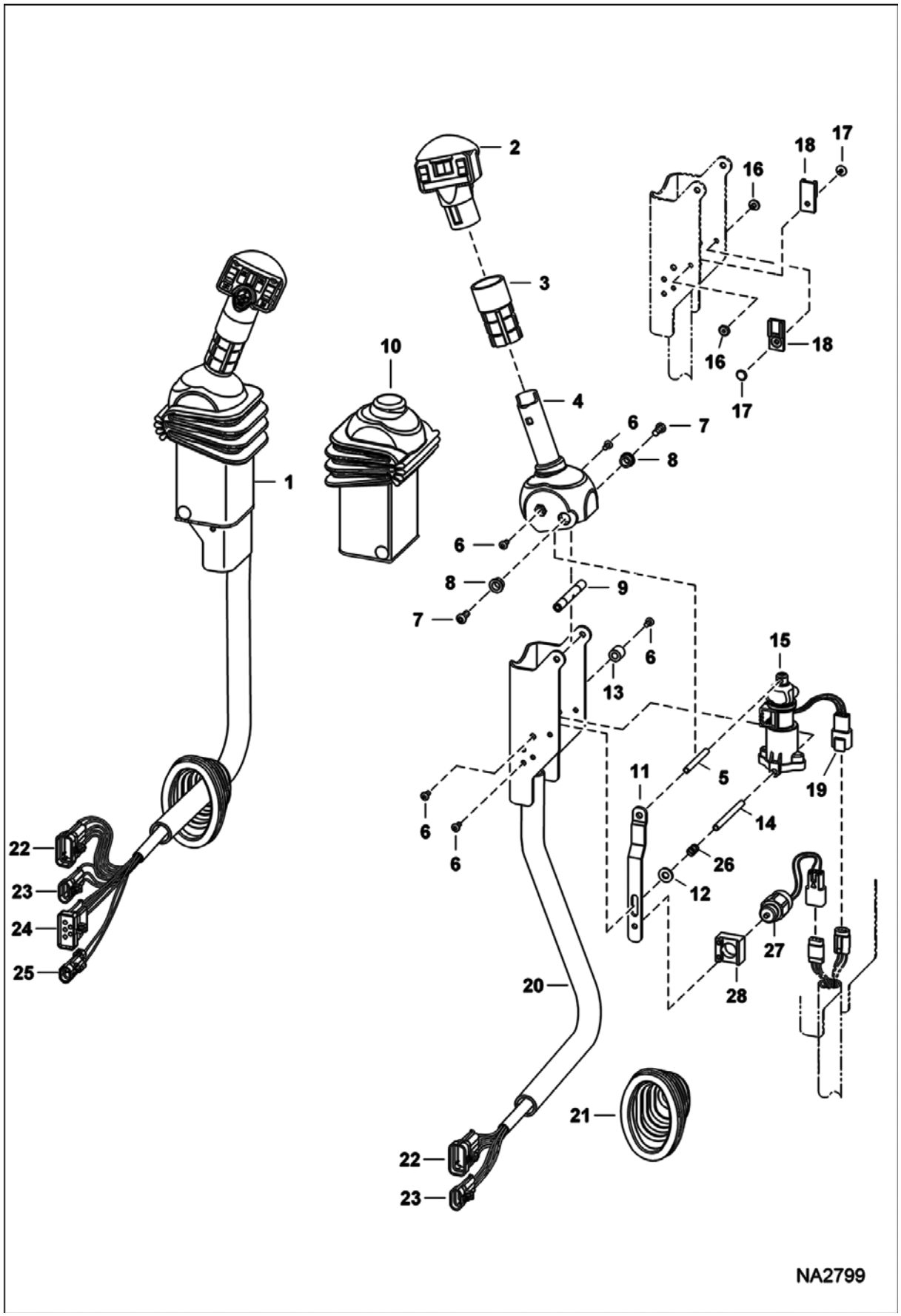

CONTROLS ELECTRICAL (Cont'd)
(ACS) (Handle Assembly)

Ref No	Part Number	Description	Remarks	Serial Number	Qty
1	7003495	LEVER, LH	tilt		1
1	7003494	LEVER, RH	lift		1
2	6680462	HANDLE, ACS RH	tilt - RH		1
2	6680417	HANDLE	lift - LH		1
3		GRIP	NAP - Order 6702621 grip & cut to 2.8" (71,1 mm) long		2
4	6729594	HANDLE	RH		1
4	6729595	HANDLE	LH		1
5	6680469	SPACER	threaded		1
6	6727065	BOLT			6
7	25GT410	SCREW			8
8	6702990	BUSHING			4
9	6713043	SPACER			4
10	6680471	COVER			2
11	6680477	STRAP	stop		1
12	25E13	WASHER 5			1
13	6719835	SLEEVE			4
14	6719834	SPACER	threaded		2
15	6684910	SENSOR, ELEC AHC			2
15	6670706	CONNECTOR			1
15	6670715	PIN			3
15	6670710	LOCK			1
16	6665322	RIVET	female		2
17	6665321	RIVET	male		2
18	6665000	CLIP			2
19	6670707	CONNECTOR			1
19	6670715	PIN			3
19	6670711	LOCK			1
20	7018011	CHANNEL	RH		1
20	7018012	CHANNEL	LH		1
21	7147815	BOOT			2
22	6640692	CONNECTOR	10-pin		1
22	6640690	PIN			8
22	6640694	LOCK	Use W/ 10-pin connector		1
22	6641176	SEAL			8
22	6646582	PLUG	cavity		1
23	6640699	CONNECTOR	3-pin		2
23	6640690	PIN			3
23	6641176	SEAL			3
23	6640700	LOCK			3
24	6667144	CONNECTOR	5-pin		2
24	6640690	PIN			3
24	6641176	SEAL			3
24	6646582	PLUG	cavity		1
24	6641180	LOCK	Use W/ 2-pin connector		1
25	6641179	CONNECTOR	2-pin		1
25	6640690	PIN			2
25	6641176	SEAL			2
25	6641180	LOCK	Use W/ 2-pin connector		1
26	6680470	SPRING			1
27	6676029	SOLENOID, LOCK SPOOL			1
28	6680468	MOUNT			1

CONTROLS ELECTRICAL
(AHC) (Handle Assembly)

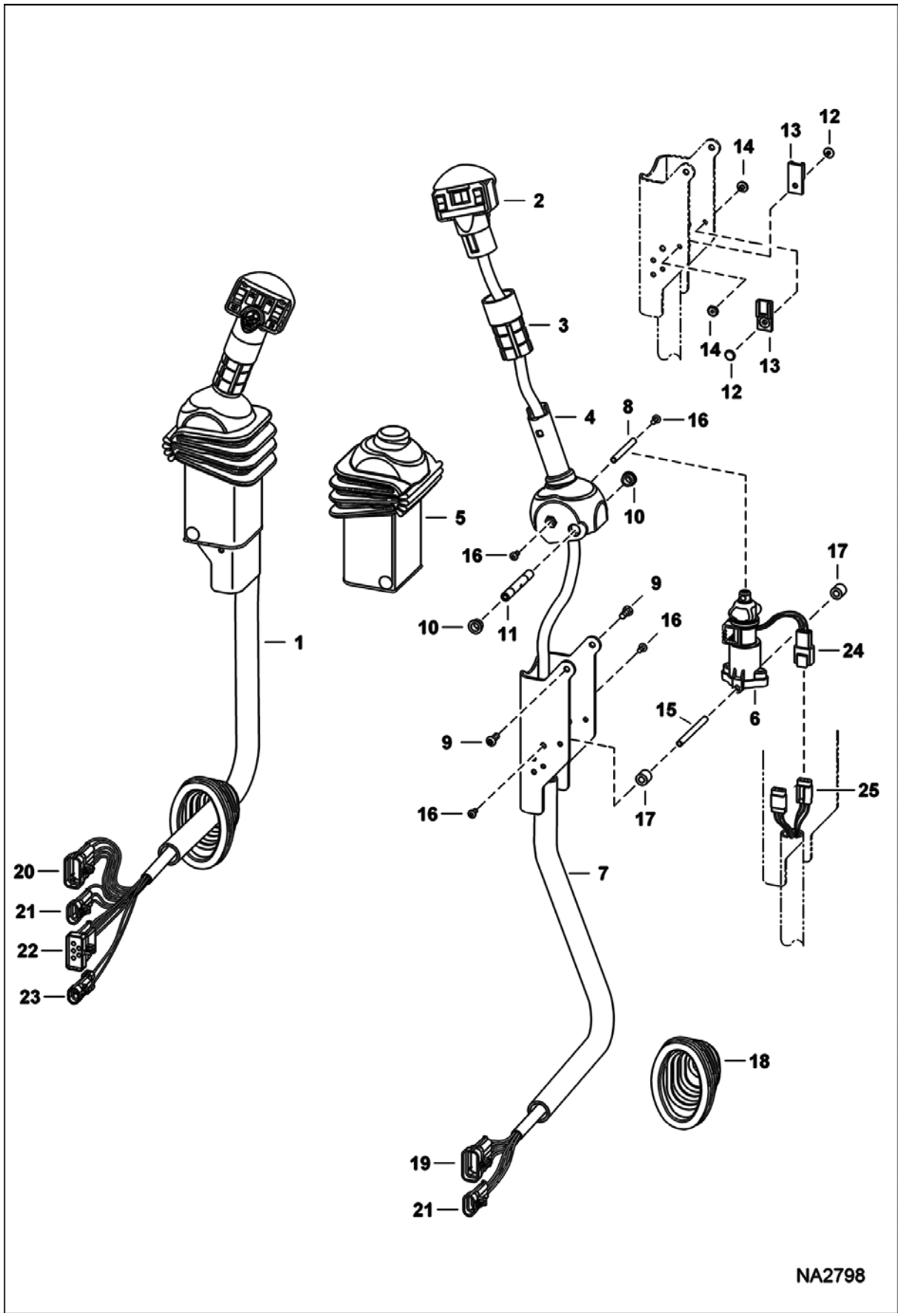

CONTROLS ELECTRICAL (Cont'd)
(AHC) (Handle Assembly)

Ref No	Part Number	Description	Remarks	Serial Number	Qty
1	7008319	LEVER, AHC	tilt - RH		1
1	7008318	LEVER, AHC	lift - LH		1
2	6680462	HANDLE, ACS RH	tilt - RH		1
2	6680417	HANDLE	lift - LH		1
3	6702621	GRIP			2
4	6729594	HANDLE	RH		1
4	6729595	HANDLE	LH		1
5	6680471	COVER			2
6	6684910	SENSOR, ELEC AHC			2
6	6670706	CONNECTOR	3-pin		1
6	6670714	PIN			3
6	6670710	LOCK			1
7	7018011	CHANNEL	RH		1
7	7018012	CHANNEL	LH		1
8	6680469	SPACER			1
9	25GT410	SCREW			4
10	6702990	BUSHING			4
11	6713043	SPACER			2
12	6665321	RIVET	male		4
13	6665000	CLIP			4
14	6665322	RIVET	female		4
15	6719834	SPACER	threaded		2
16	6727065	BOLT			8
17	6719835	SLEEVE			4
18	7147815	BOOT			2
19	6640692	CONNECTOR	10-pin		1
19	6640690	PIN			8
19	6640694	LOCK	Use W/ 10-pin connector		1
19	6641176	SEAL			8
19	6646582	PLUG	cavity		2
20	6640692	CONNECTOR	10-pin		1
20	6640690	PIN			6
20	6640694	LOCK	Use W/ 10-pin connector		1
20	6641176	SEAL			6
20	6646582	PLUG	cavity		4
21	6640699	CONNECTOR	3-pin - RH & LH		2
21	6640690	PIN			3
21	6641176	SEAL			3
21	6640700	LOCK			1
22	6667144	CONNECTOR	5-pin		1
22	6640690	PIN			3
22	6641176	SEAL			3
22	6646582	PLUG	cavity		1
22	6667145	LOCK	Use W/ 5-pin connector		1
23	6641179	CONNECTOR	2-pin		1
23	6640690	PIN			2
23	6641176	SEAL			2
23	6641180	LOCK	Use W/ 2-pin connector		1
24	6670707	CONNECTOR	3-pin		1
24	6670715	PIN			3
24	6670711	LOCK			1
25	6676870	CONNECTOR	3 - pin		1
25	6670711	LOCK			1
25	6670715	PIN			3

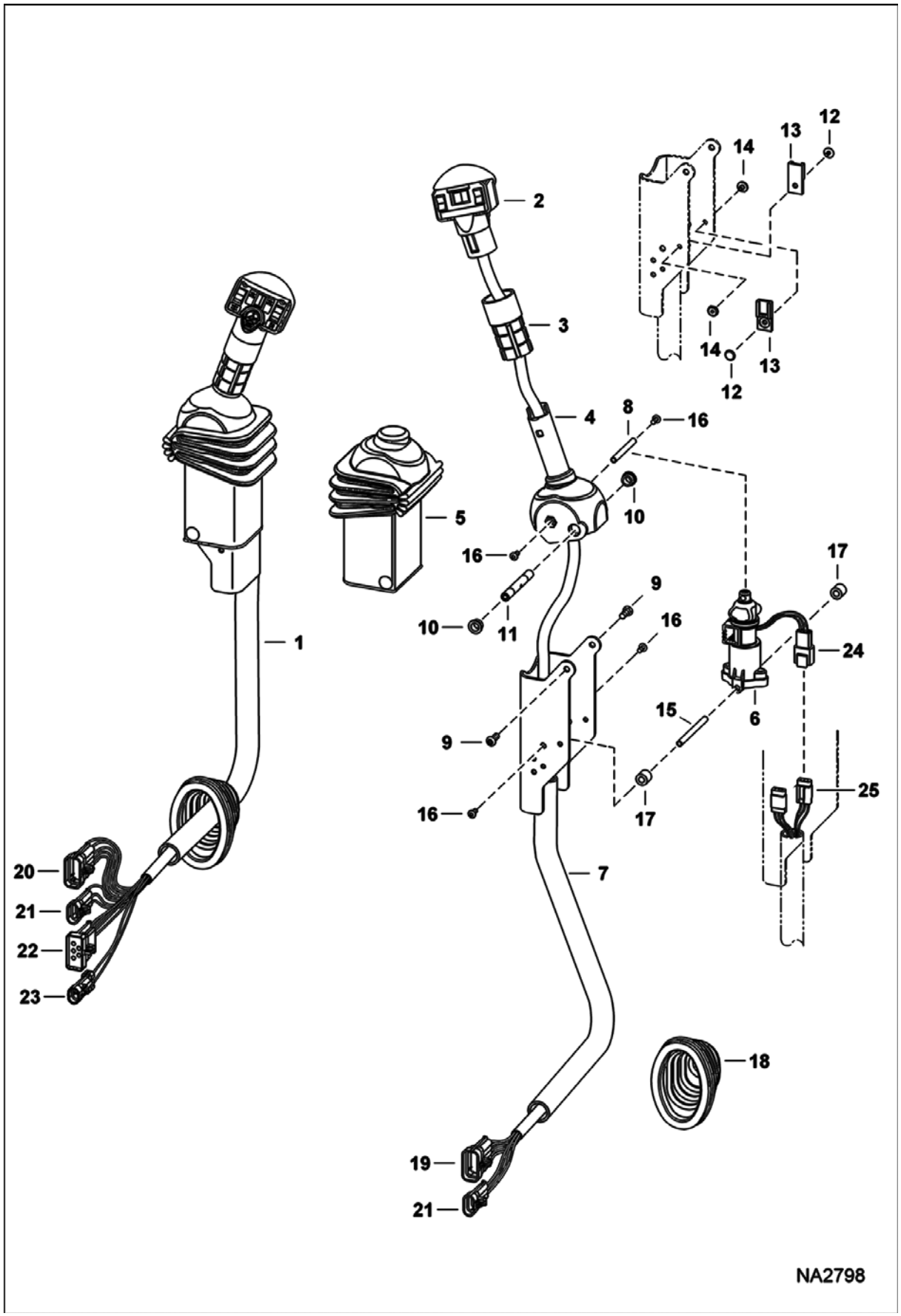
1
2
3
4
5
6
7
8
9
10
11
12
13
14
15
16
17
18
19
20
21
22
23
24
25
NA2798

Ref No	Part Number	Description	Remarks	Serial Number	Qty
25	6676640	SEAL	plug		1

ALTERNATOR

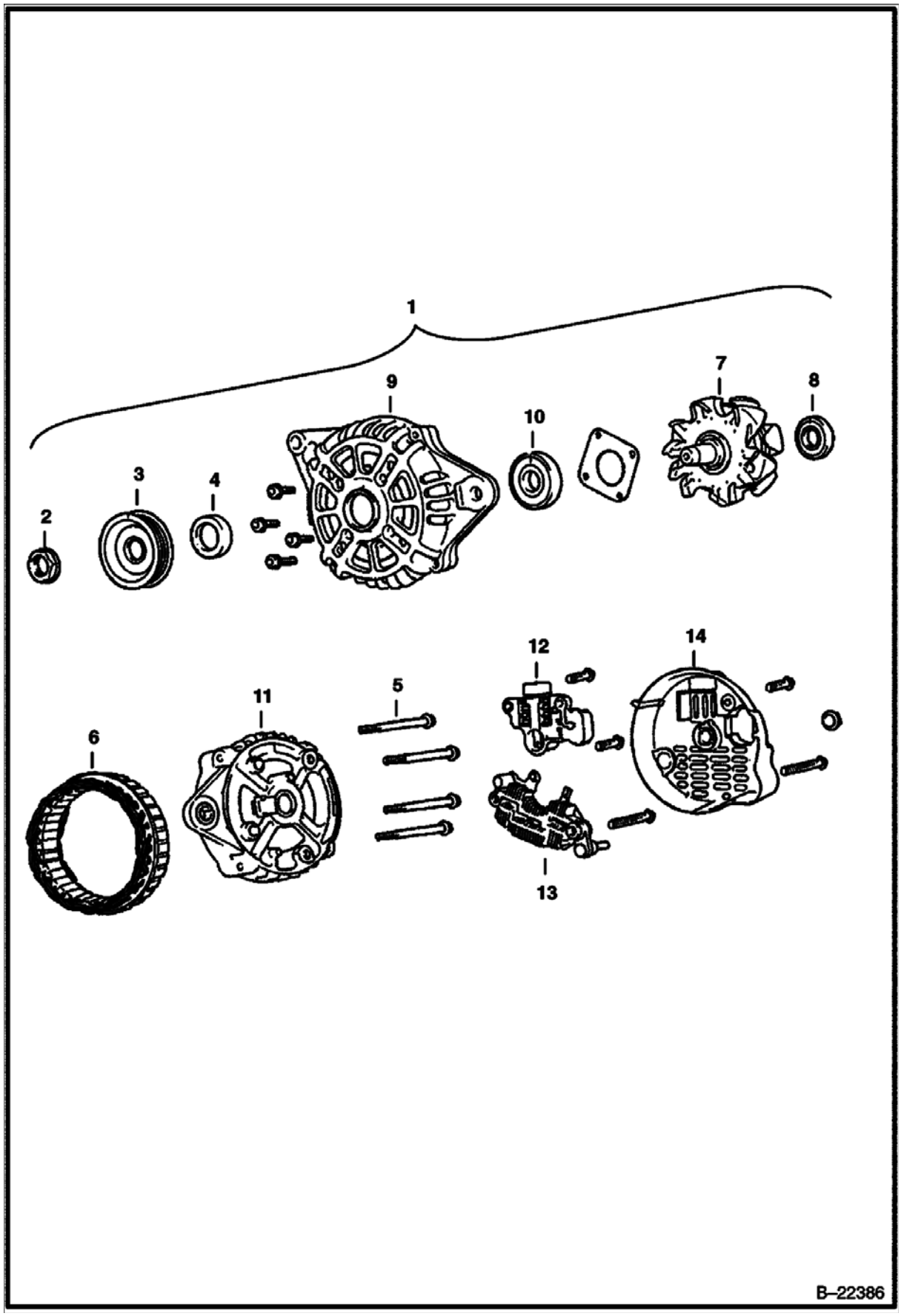

ALTERNATOR (Cont'd)

Ref No	Part Number	Description	Remarks	Serial Number	Qty
1	6681857	ALTERNATOR			1
2	6677497	NUT			1
3	6684653	PULLEY			1
4	6677495	SPACER			1
5	6677494	BOLT			4
6	6677493	STATOR			1
7	6677492	ROTOR			1
8	6684652	BEARING	rear		1
9	6677491	BRACKET			1
10	6684651	BEARING	front		1
11	6684650	REGULATOR			1
12	6677490	BRACKET	rear		1
13	6677488	RECTIFIER			1
14	6677487	COVER			1

STARTER
(Valeo)

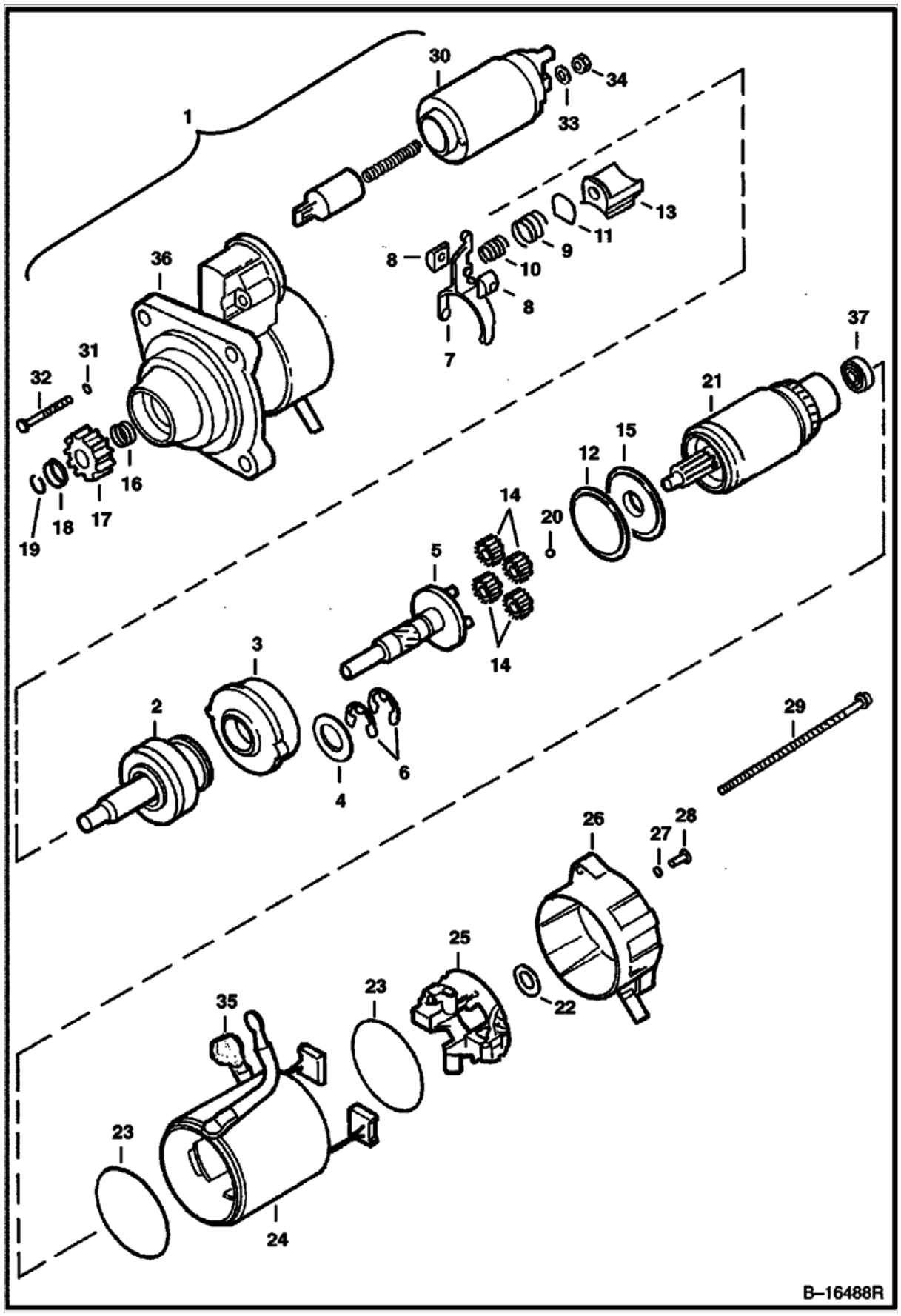

STARTER (Cont'd)
(Valeo)

Ref No	Part Number	Description	Remarks	Serial Number	Qty
1	6685190	STARTER			1
1	6685190REM	STARTER			1
2	6680375	SHAFT	ORC assy		1
3	6680367	GEAR			1
4	6680378	WASHER			1
5	6680365	SHAFT			1
6	6680368	STOP RING			2
7	6680364	LEVER			1
8	6680357	HOLDER			2
9	6680381	SPRING			1
10	6680382	SPRING			1
11	6680370	PLATE			1
12	6680369	SEAL			1
13	6680371	LEVER			1
14	6680366	GEAR			4
15	6680372	BRACKET			1
16	6680361	SPRING			1
17	6680390	GEAR			1
18	6680360	STOP			1
19	6680359	STOP RING			1
20	6680362	BALL			1
21	6680374	ARMATURE	W/Ref. 37		1
22	6680363	WASHER			1
23	6680380	SEAL			2
24	6680373	YOKE			1
25	6680377	HOLDER			1
26	6680389	BRACKET			1
27	6680358	RING	rubber		2
28	6680384	BOLT			2
29	6680356	BOLT			2
30	6680376	SWITCH			1
31	6680379	SEAL			2
32	6680383	BOLT			2
33	6EM80	WASHER, SPRING			1
34	4DM8	NUT			1
35	6680355	BOOT			1
36	6680388	BRACKET	includes ball bearing, drain tube, front bracket & oil seal		1
37		BEARING	NAP - Order Ref. 21		1

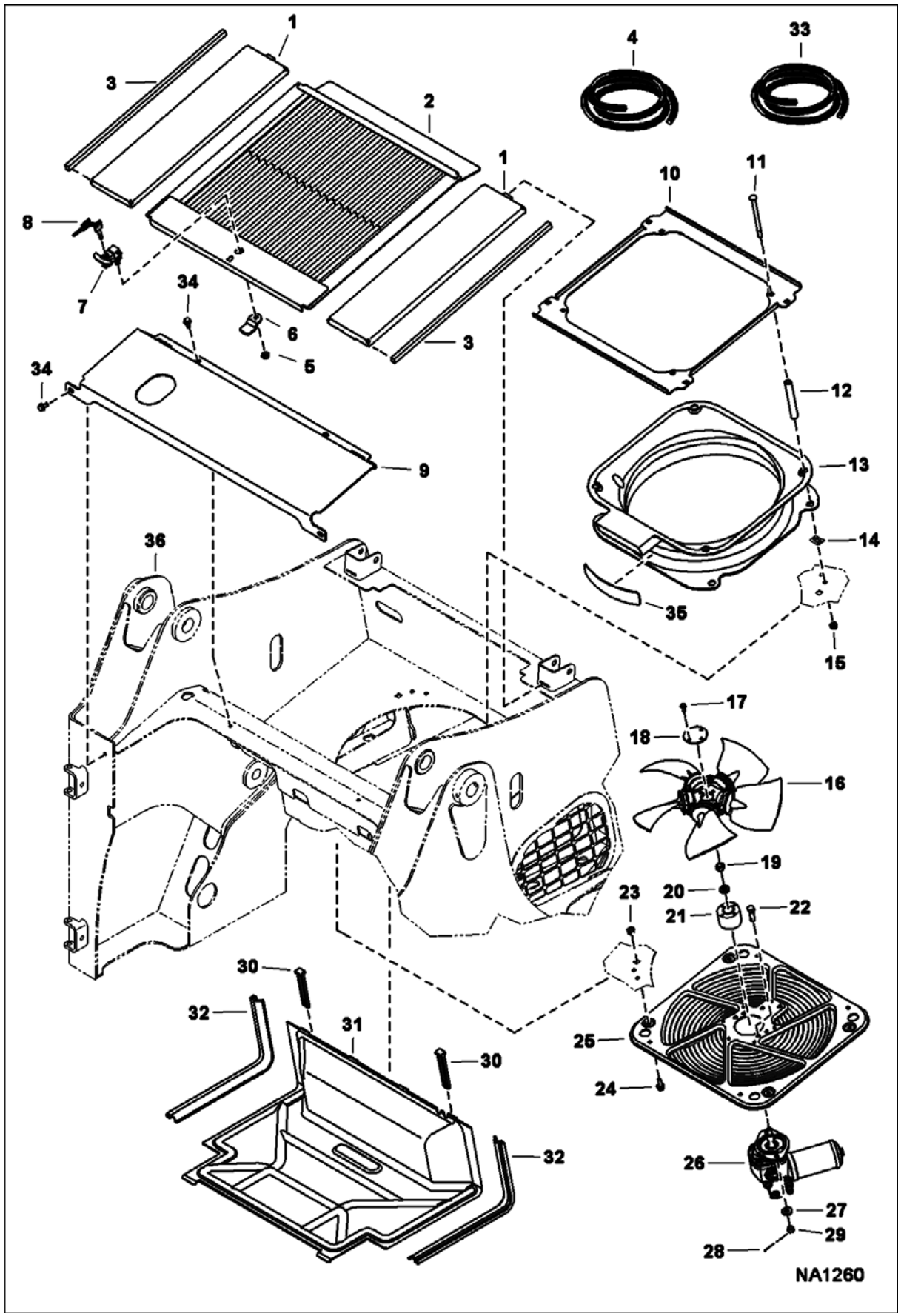
1
3
2
4
33
1
10
11
8
7
34
6
5
3
34
12
9
13
14
36
35
15
17
18
16
19
20
23
21
22
30
32
31
25
30
24
32
26
27
29
28
NA1260

Ref No	Part Number	Description	Remarks	Serial Number	Qty
1	7157370	COVER, HOOD			2
2	7157366	SCREEN, ASSY			1
3		SEAL	NAP - 25.62" (650,7 mm) - Order Ref. 4		2
4	6511855	SEAL	bulk - sold per foot		x
5	26DM12	NUT			1
6	7002737	LATCH, PAWL			1
7	7002736	LATCH, DRAW			1
8	6693241	KEY 10	single key W/O ring		1
9	7157365	COVER, ENGINE			1
10	7145139	MOUNT, RADIATOR			1
11	10C696	BOLT			4
12	7136113	BUSHING			4
13	7132835	SHROUD			1
14	6684033	NUT			4
15	97D6	NUT 10			4
16	7170673	FAN COOLING			1
17	49C412	BOLT			4
18	7125948	PLATE			1
19	96D8	NUT			1
20	6701097	WASHER			1
21	7130834	HUB, FAN			1
22	7147826	BOLT, CROSS DRILLED			2
23	6678785	NUT			4
24	49C616	BOLT	Was 31C616 [B]		4
25	7132837	MOUNT, MOTOR FAN			1
26		MOTOR, HYD COOLING FAN	See Illustration COOLING FAN MOTOR/ MS2514		1
27	6557831	WASHER			2
28	1F316	PIN			2
29	3D6	NUT			2
30	7141906	STRAP, RUBBER			4
31	7132836	DUCT, FAN			1
32		SEAL	NAP - 23.6" (599,4 mm) - Order Ref. 33		2
33	7169778	SEAL, BULK	bulk - sold per foot		x
34	84G3712	BOLT			4
35	7178176	SHIELD, HEAT			1
36		MAIN FRAME	See Illustration MAIN FRAME/ NA2150		1

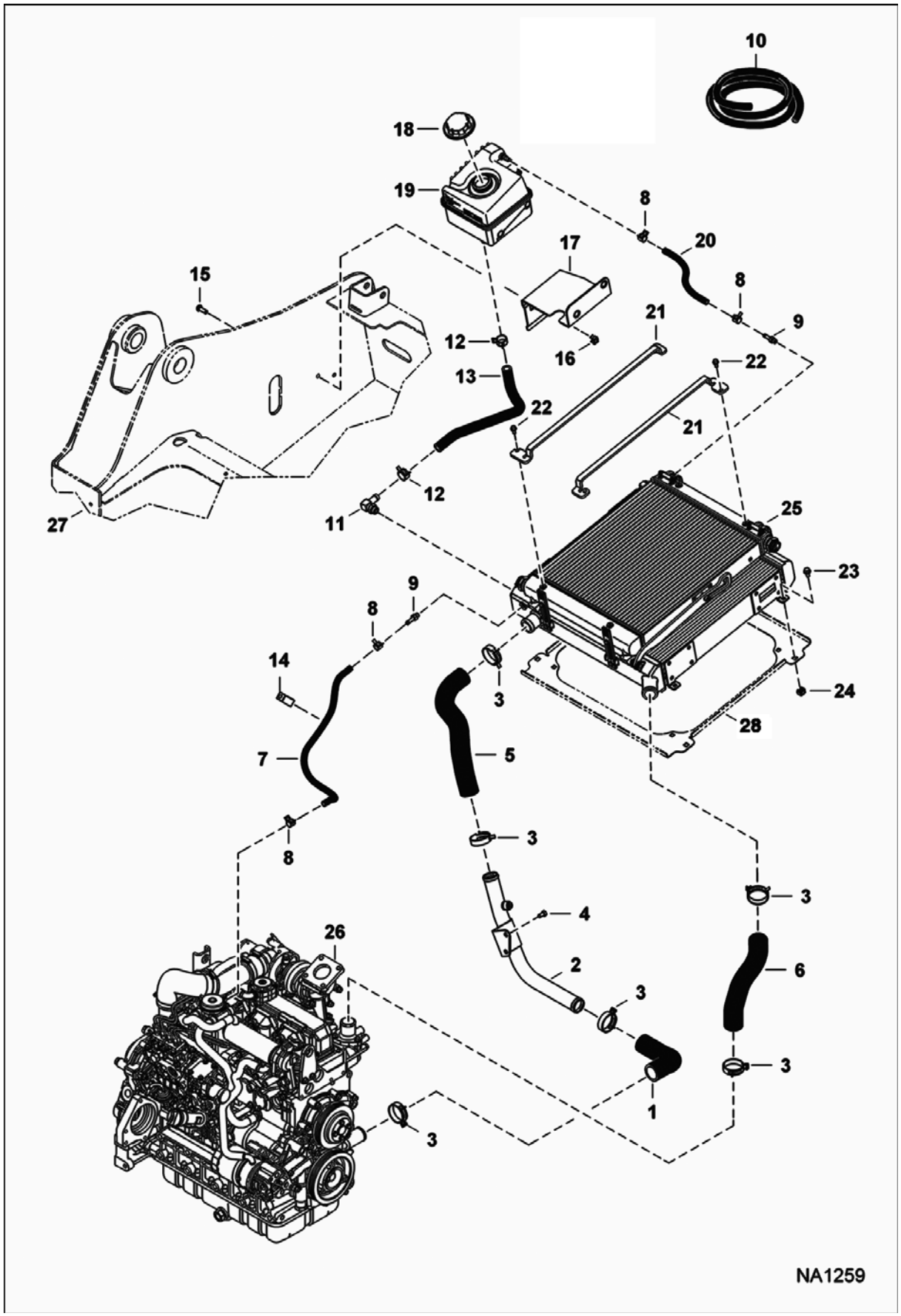
10
18
19
8
20
17
15
8
9
21
12
16
22
13
22
21
12
11
25
27
23
9
8
14
3
24
28
7
5
3
8
3
4
26
2
6
3
3
1
3
NA1259

COOLING SYSTEM (Cont'd)
(Engine)

Ref No	Part Number	Description	Remarks	Serial Number	Qty
1	7143923	HOSE			1
2	7143924	TUBE			1
3	5HM47	CLAMP			6
4	7160865	SCREW			2
5	7143922	HOSE			1
6	7143921	HOSE			1
7		HOSE	NAP - 20.9" (530,9 mm) long - Order Ref. 10		1
8	5HM14	CLAMP			4
9	6734090	ADAPTER			2
10	6577822	HOSE	bulk - sold per foot		x
11	6680952	FITTING 90 DEG BARB			1
11	79K8	O RING 10			1
12	5HM23	CLAMP			2
13		HOSE	NAP - 19" (482,6 mm) - Order 7185717 hose		1
13	7185717	HOSE, WATER FORMED			1
14	30H65	CLIP			1
15	53C516	BOLT	Was 25G514 [B]		2
16	6678765	NUT			2
17	7144265	MOUNT, TANK			1
18	6733429	CAP			1
19	7137747	TANK, EXPANSION			1
20		HOSE	NAP - 8" (203,2 mm) long - Order Ref. 10		1
21	7167537	GUARD, CONDENSER			2
22	49C412	BOLT			4
23	43C512	BOLT	Was 45C516 [B]		4
24	6678765	NUT			4
25		EXCHANGER, OIL WATER	See Illustration RADIATOR/COOLER ASSEMBLY/ NA1395		1
26		ENGINE	See Illustration ENGINE & GASKET KITS/ NA2401		1
27		MAIN FRAME	See Illustration MAIN FRAME/ NA2150		1
28		MOUNT, RADIATOR	See Illustration COOLING SYSTEM/ NA1260		1

ENGINE & ATTACHING PARTS
(Air Cleaner & Muffler)

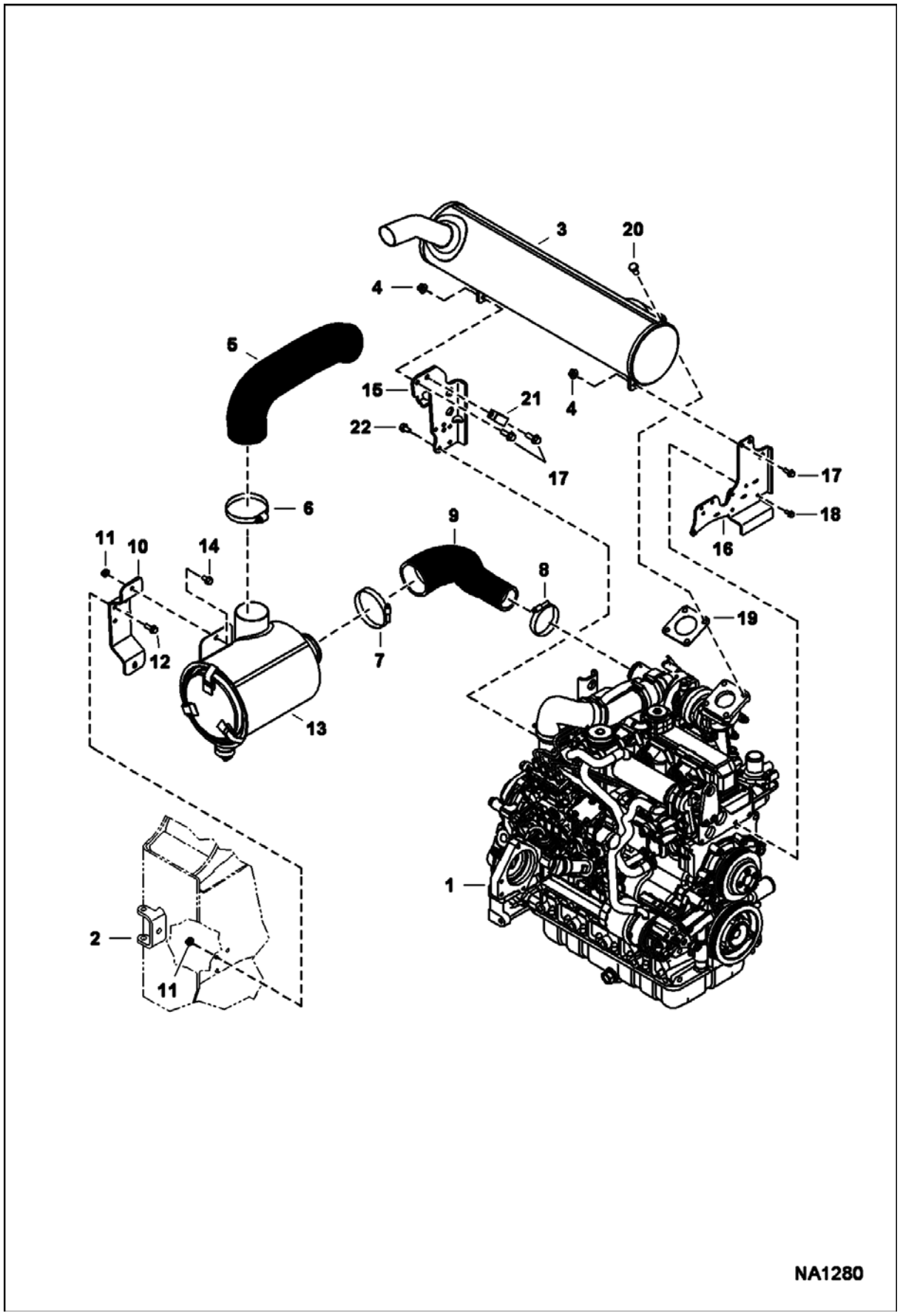

ENGINE & ATTACHING PARTS (Cont'd)
(Air Cleaner & Muffler)

Ref No	Part Number	Description	Remarks	Serial Number	Qty
1		ENGINE	See Illustration ENGINE & GASKET KITS/ NA2401		1
2		MAIN FRAME	See Illustration MAIN FRAME/ NA2150		1
3	7142021	MUFFLER	See Illustration MUFFLER/PURIFIER/ NA2072		1
4	89D6	NUT			5
5	7145659	HOSE, AIR FORMED			1
6	42H52	CLAMP			1
7	42HC375	CLAMP			1
8	42HC300	CLAMP			1
9	7145660	HOSE, AIR FORMED			1
10	7157092	BRACKET			1
11	97D6	NUT 10			6
12	84G3712	BOLT			3
13		FILTER, AIR CLEANER ASSY	See Illustration AIR CLEANER/ NA2170		1
14	35C612	BOLT			3
15	7161893	MOUNT, MUFFLER			1
16	7155193	MOUNT, MUFFLER			1
17	35C616	BOLT 5			4
18	59CM820	SCREW HX FLNG W/T 8.8			4
19	7102747	GASKET			1
20	5CM1020	SCREW			4
21	30H65	CLIP	Was 30HJ612 [B]		1
22	59CM816	BOLT			4

ENGINE & ATTACHING PARTS
(Belt Drive)
(S/N A3NV11001 - 12697, A3NW11001 - 11134)

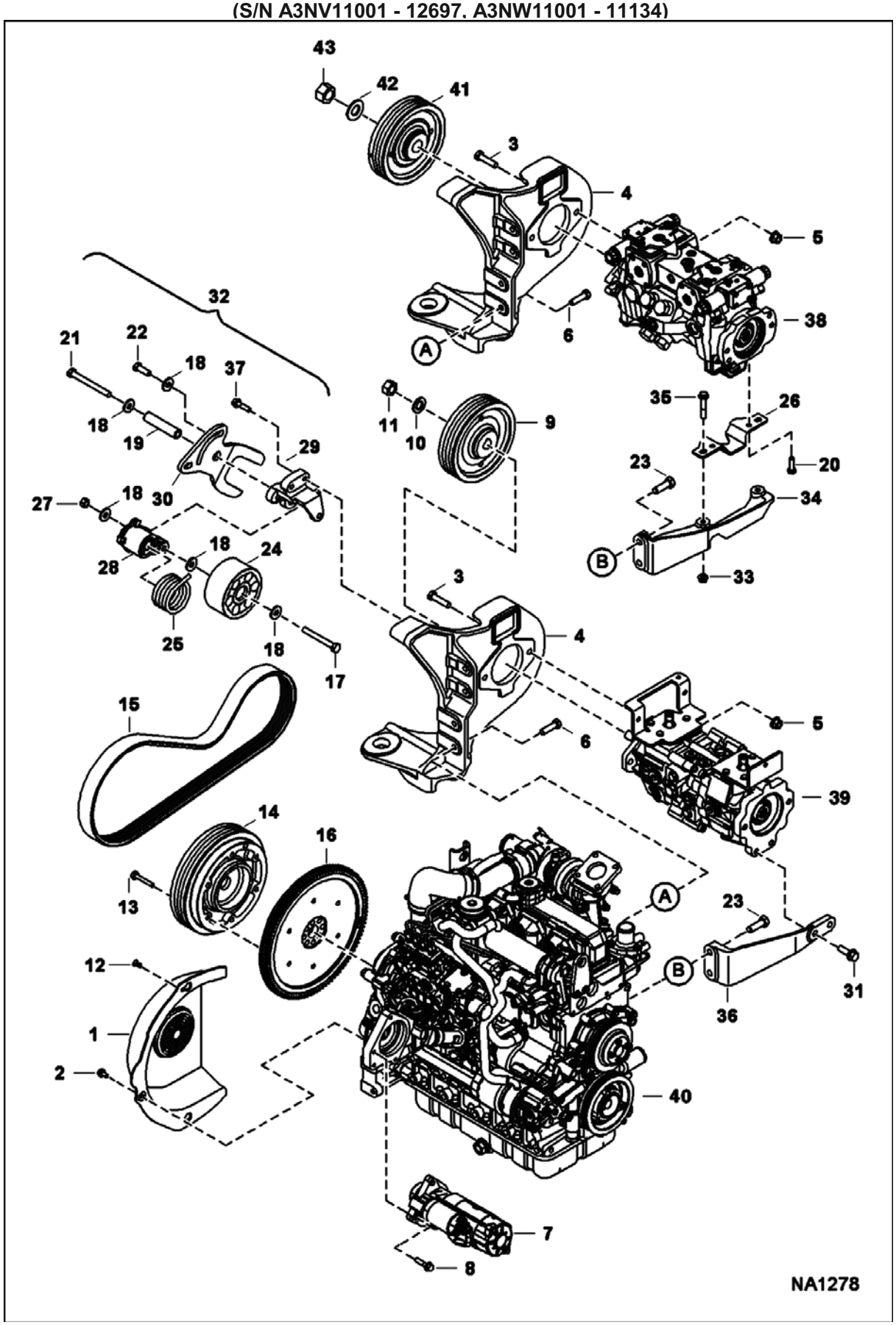

ENGINE & ATTACHING PARTS (Cont'd)
(Belt Drive)
(S/N A3NV11001 - 12697, A3NW11001 - 11134)

Ref No	Part Number	Description	Remarks	Serial Number	Qty
1	7142422	SHIELD, FLYWHEEL			1
2	59CM816	BOLT			5
3	17C832	BOLT			2
4	7147861	MOUNT, ENG			1
5	83D8	NUT 5			3
6	7135124	SCREW			4
7		STARTER	See Illustration STARTER/ B16488R		1
8	45C620	BOLT			3
9	7147858	PULLEY, PUMP HYD			1
10	6576033	WASHER			1
11	96D12	NUT			1
12	7155238	BOLT			2
13	7110310	SCREW			6
14	7141780	FLYWHEEL			1
15	7188792	BELT, DRIVE	Was 7147859 [A]		1
16		FLYWHEEL, ENG ASSY	See Illustration CRANKCASE/ B27826		1
17	7CM12100	BOLT			1
18	7152658	WASHER			5
19	7152605	SLEEVE			1
20	6688003	SCREW			2
21	55CM12120	BOLT			1
22	55CM1235	BOLT			1
23	7147745	SCREW			2
24	7167165	WHEEL, TENSIONER			1
25	7145358	SPRING			1
26	7194123	SHIELD, SENSOR	Was 7131322 [A]		1
27	53DM12	NUT			1
28	7167164	ARM, TENSIONER			1
29	7131211	MOUNT			1
30	7174407	ARM, IDLER			1
31	45C824	BOLT	Was 49C824 [B]		2
32	7141788	IDLER ASSY			1
33	43DM10	NUT			2
34		MOUNT, PUMP	See Illustration ISOLATOR MOUNT KIT/ NA5481 NAP - SJC - Order 7201407 kit, mount - Was 7142103 [A]		1
35	59CM1060	SCREW			2
36		MOUNT	See Illustration ISOLATOR MOUNT KIT/ NA5481 NAP - manual controls - Order 7201407 kit, mount - Was 7142189 [A]		1
37	49C636	BOLT			2
38		PUMP, HYD	See Illustration HYDROSTATIC PUMP/ NA2245 - SJC		1
39		PUMP, HYD	See Illustration HYDROSTATIC PUMP/GEAR PUMP/ NA1309 - manual controls & ACS		1
40		ENGINE	See Illustration ENGINE & GASKET KITS/ NA2401		1
41	7155309	PULLEY			1
42	6805550	WASHER			1
43	96D16	NUT			1

ENGINE & ATTACHING PARTS
(Belt Drive)
(S/N A3NV12698 & Above, A3NW11135 & Above)

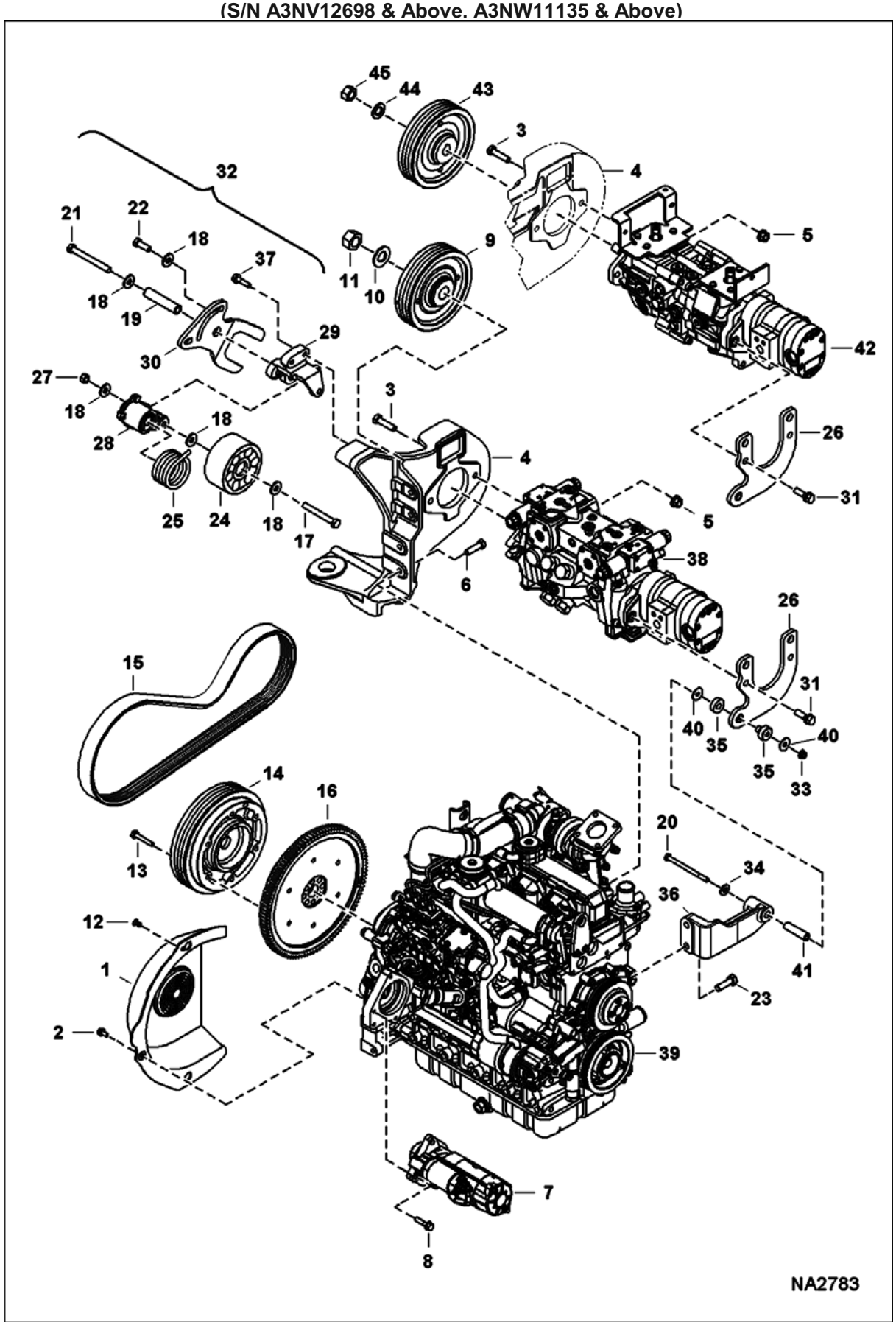

ENGINE & ATTACHING PARTS (Cont'd)
(Belt Drive)
(S/N A3NV12698 & Above, A3NW11135 & Above)

Ref No	Part Number	Description	Remarks	Serial Number	Qty
1	7142422	SHIELD, FLYWHEEL			1
2	59CM816	BOLT			5
3	17C832	BOLT			2
4	7147861	MOUNT, ENG			1
5	83D8	NUT 5			3
6	7135124	SCREW			4
7		STARTER	See Illustration STARTER/ B16488R		1
8	45C620	BOLT			3
9	7147858	PULLEY, PUMP HYD			1
10	6576033	WASHER			1
11	96D12	NUT			1
12	7155238	BOLT			2
13	7110310	SCREW			6
14	7141780	FLYWHEEL			1
15	7188792	BELT, DRIVE	Was 7147859 [A]		1
16		FLYWHEEL, ENG ASSY	See Illustration CRANKCASE/ B27826		1
17	7CM12100	BOLT			1
18	7152658	WASHER			5
19	7152605	SLEEVE			1
20	17C680	BOLT			1
21	55CM12120	BOLT			1
22	55CM1235	BOLT			1
23	7147745	SCREW			2
24	7167165	WHEEL, TENSIONER			1
25	7145358	SPRING			1
26	7193687	BRACKET, MOUNTING			1
27	53DM12	NUT			1
28	7167164	ARM, TENSIONER			1
29	7131211	MOUNT			1
30	7174407	ARM, IDLER			1
31	45C828	BOLT			2
32	7141788	IDLER ASSY			1
33	53D6	NUT			1
34	27E6	WASHER 5			1
35	7149357	MOUNT, LOAD ISOLATOR			1
36	7194572	MOUNT			1
37	49C636	BOLT			2
38		PUMP, HYD	See Illustration HYDROSTATIC PUMP/GEAR PUMP/ NA1309 - SJC		1
39		ENGINE	See Illustration ENGINE & GASKET KITS/ NA2401		1
40	6737388	WASHER			1
41	7147350	SPACER, TUBE			1
42		PUMP, HYD	See Illustration HYDROSTATIC PUMP/GEAR PUMP/ NA1309 - manual controls, AHC & ACS		1
43	7155309	PULLEY			1
44	6805550	WASHER			1
45	96D16	NUT			1

ENGINE & ATTACHING PARTS
(Engine Mounts)

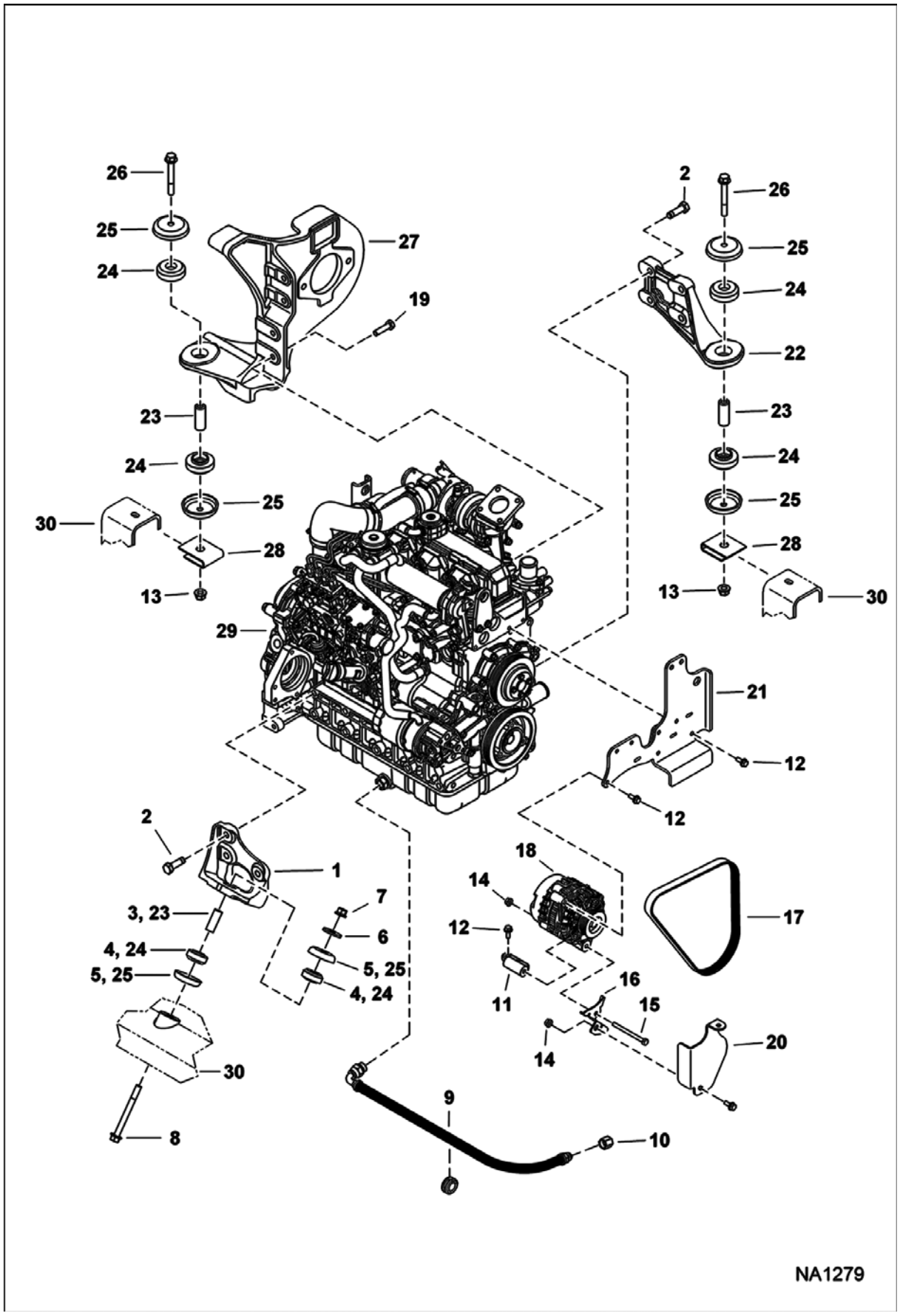

ENGINE & ATTACHING PARTS (Cont'd)
(Engine Mounts)

Ref No	Part Number	Description	Remarks	Serial Number	Qty
1		MOUNT, ENG	NAP - Order 7193452 - Was 7142357 [A]	A3NV11001 - 11868	1
1		MOUNT, ENG	NAP - Order 7193452 - Was 7142357 [A]	A3NW11001 - 11002	1
1	7193452	MOUNT, ENG		A3NV11869 & Above	1
1	7193452	MOUNT, ENG		A3NW11103 & Above	1
2	7147745	SCREW			7
3	7146236	BUSHING		A3NV11001 - 11868	1
3	7146236	BUSHING		A3NW11001 - 11102	1
4	7000488	DAMPER		A3NV11001 - 11868	2
4	7000488	DAMPER		A3NW11001 - 11002	2
5	7127305	WASHER		A3NV11001 - 11868	2
5	7127305	WASHER		A3NW11001 - 11002	2
6	6515817	WASHER		A3NV11001 - 11868	1
6	6515817	WASHER		A3NW11001 - 11002	1
7	83D8	NUT 5			1
8	31C880	SCREW			1
9	7136111	HOSE, DRAIN OIL			1
10	36K6	CAP			1
11	7142375	MOUNT			1
12	59CM820	SCREW HX FLNG W/T 8.8			8
13	83D8	NUT 5			2
14	43DM8	NUT			6
15	1CM8100	SCREW			1
16	7164957	MOUNT			1
17	7142000	BELT, ALT			1
18	6681857	ALTERNATOR			1
19	7135124	SCREW			4
20	7165035	SHIELD			1
21	7155193	MOUNT, MUFFLER			1
22	7135486	MOUNT, ENG			1
23	7141405	BUSHING	Use W/Ref. 22 & 27	A3NV11001 - 11868	2
23	7141405	BUSHING	Use W/Ref. 22 & 27	A3NW11001 - 11002	2
23	7141405	BUSHING	Use W/Ref. 1 (7193452 mount), Ref. 22 & 27	A3NV11869 & Above	3
23	7141405	BUSHING	Use W/Ref. 1 (7193452 mount), Ref. 22 & 27	A3NW11103 & Above	3
24	7000489	DAMPER	Use W/Ref. 22 & 27	A3NV11001 - 11868	4
24	7000489	DAMPER	Use W/Ref. 22 & 27	A3NW11001 - 11002	4
24	7000489	DAMPER	Use W/Ref. 1 (7193452 mount), Ref. 22 & 27	A3NV11869 &	6

ENGINE & ATTACHING PARTS (Cont'd)
(Engine Mounts)

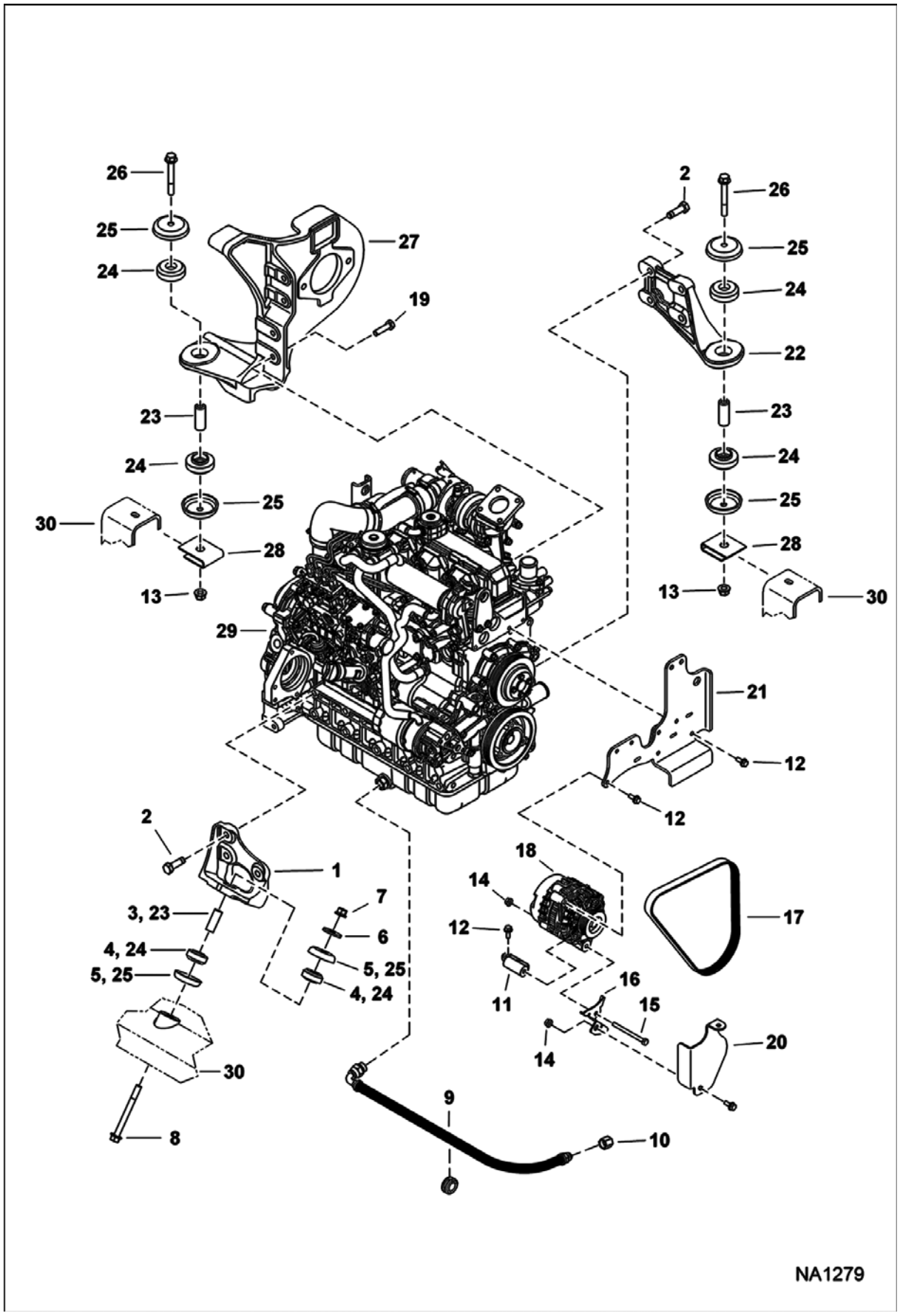

ENGINE & ATTACHING PARTS (Cont'd)
(Engine Mounts)

Ref No	Part Number	Description	Remarks	Serial Number	Qty
				Above	
24	7000489	DAMPER	Use W/Ref. 1 (7193452 mount), Ref. 22 & 27	A3NW11103 & Above	6
25	7116851	CUP	Use W/Ref. 22 & 27	A3NV11001 - 11868	4
25	7116851	CUP	Use W/Ref. 22 & 27	A3NW11001 - 11002	4
25	7116851	CUP	Use W/Ref. 1 (7193452 mount), Ref. 22 & 27	A3NV11869 & Above	6
25	7116851	CUP	Use W/Ref. 1 (7193452 mount), Ref. 22 & 27	A3NW11103 & Above	6
26	31C860	BOLT			2
27	7147861	MOUNT, ENG			1
28	7152037	NUT, RETAINING	W/Ref. 13		2
29		ENGINE	See Illustration ENGINE & GASKET KITS/ NA2401		1
30		MAIN FRAME	See Illustration MAIN FRAME/ NA2150		1

ENGINE & ATTACHING PARTS
(Fuel System)

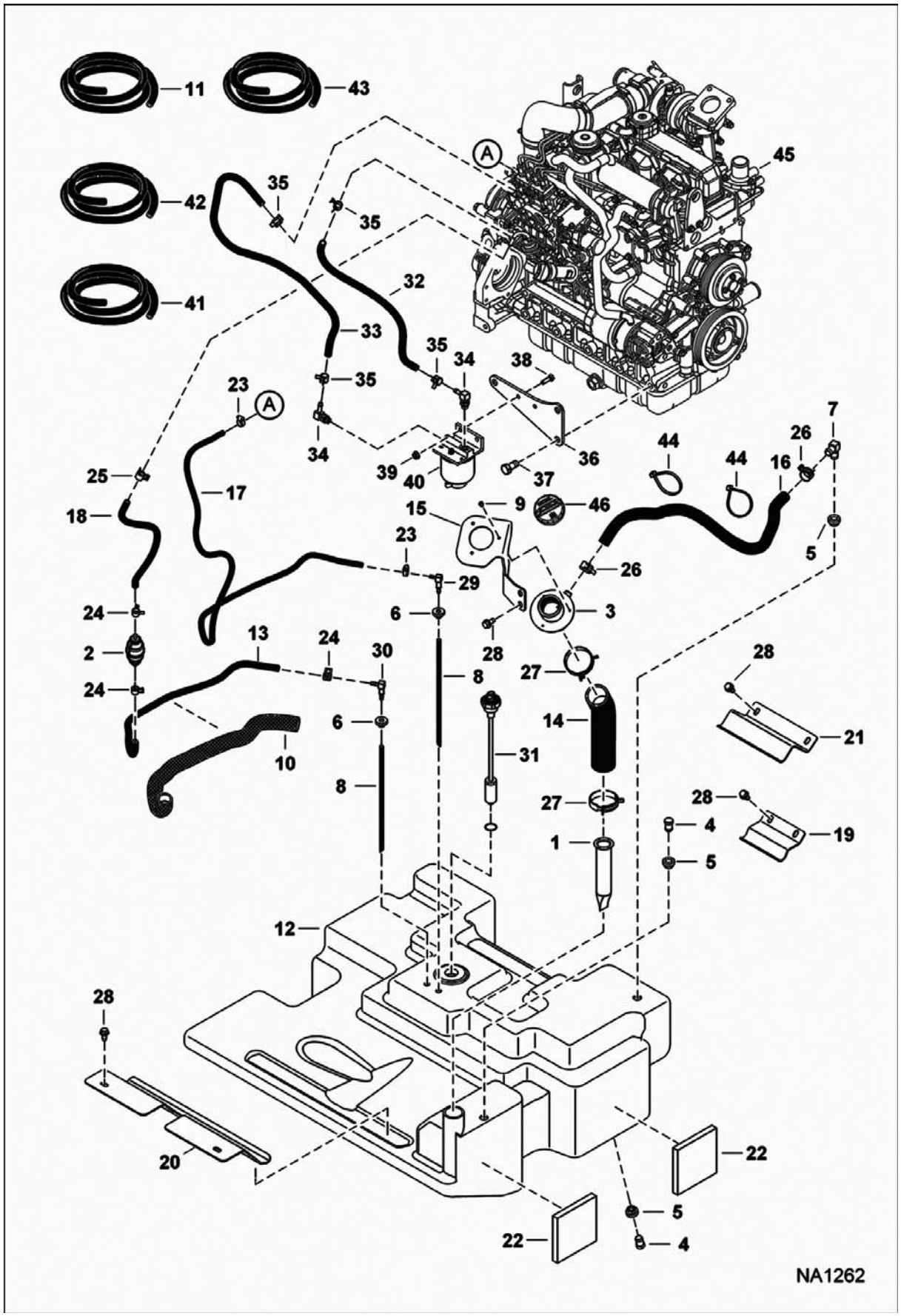

ENGINE & ATTACHING PARTS (Cont'd)
(Fuel System)

Ref No	Part Number	Description	Remarks	Serial Number	Qty
1	7120881	SCREEN, FILLER	Was 6569219 [A]		1
2	6657734	PUMP, PRIMER HAND	124 mm (4.88") long		1
3	6701449	FILLER TUBE			1
4	6717401	PLUG			2
5	6717402	BUSHING	0.54" ID		3
6	6735696	BUSHING			2
7	6808798	ELBOW			1
8	6735249	HOSE, FUEL			1
9	7106279	BOLT			3
10	7178623	COVER, HOSE			1
11	6577822	HOSE	bulk - sold per foot		1
12	7130652	TANK, FUEL			1
13		HOSE	NAP - 25.25" (641,35 mm) long - Order Ref. 41		1
14	7176970	HOSE, FUEL FORMED			1
15	7176971	BRACKET, FUEL			1
16		HOSE	NAP - 29.5" (749,3 mm) long - Order Ref. 42		1
17		HOSE	NAP - 48.5" (1231,9 mm) long - Order Ref. 43		1
18		HOSE	NAP - 14.5" (368,3 mm) long - Order Ref. 41		1
19	7163765	BRACKET, FUEL	Use on wheel loaders only		1
20	7183784	BRACKET FUEL	Was 7163766 [A]		1
21	7163768	BRACKET, FUEL	Use on track loaders only		1
22	7170635	INSULATION, TANK FUEL			2
23	42HS04	COLLAR			2
24	5HM13	CLAMP			3
25	5HM14	CLAMP			1
26	5HM22	CLAMP			2
27	5HM58	CLAMP			2
28	84G3712	BOLT			6
29	7101291	ELBOW	3 barb on outlet end		1
30	6598908	ELBOW			1
31	6680438	SENSOR, FUEL			1
32		HOSE	NAP - 19.5" (495,3 mm) long - Order Ref. 44		1
33		HOSE	NAP - 27.5" (698,5 mm) long - Order Ref. 44		1
34	6715183	ELBOW			2
35	5HM14	CLAMP			4
36	7143931	MOUNT, FILTER			1
37	6730894	BOLT			2
38	43C516	BOLT			2
39	55D5	NUT			2
40	6667353	FILTER ASSY			1
40	6667352	FILTER, FUEL W/SEPERATOR 12			1
40	6658180	PLUG, BLEED			1
41	6577821	HOSE	bulk - sold per foot		x
42	6578172	HOSE	bulk - sold per foot		x
43	6578169	HOSE	bulk - sold per foot - .1875" ID		x
44	6624289	STRAP, TIE			2
45		ENGINE	See Illustration ENGINE & GASKET KITS/ NA2401		1
46	7113340	CAP. DIESEL	black fuel fill		1
46	7121223	CAP. DIESEL LOCKING	black		1

ENGINE SPEED CONTROL
(Manual Controls, AHC & ACS) (Single Cable)

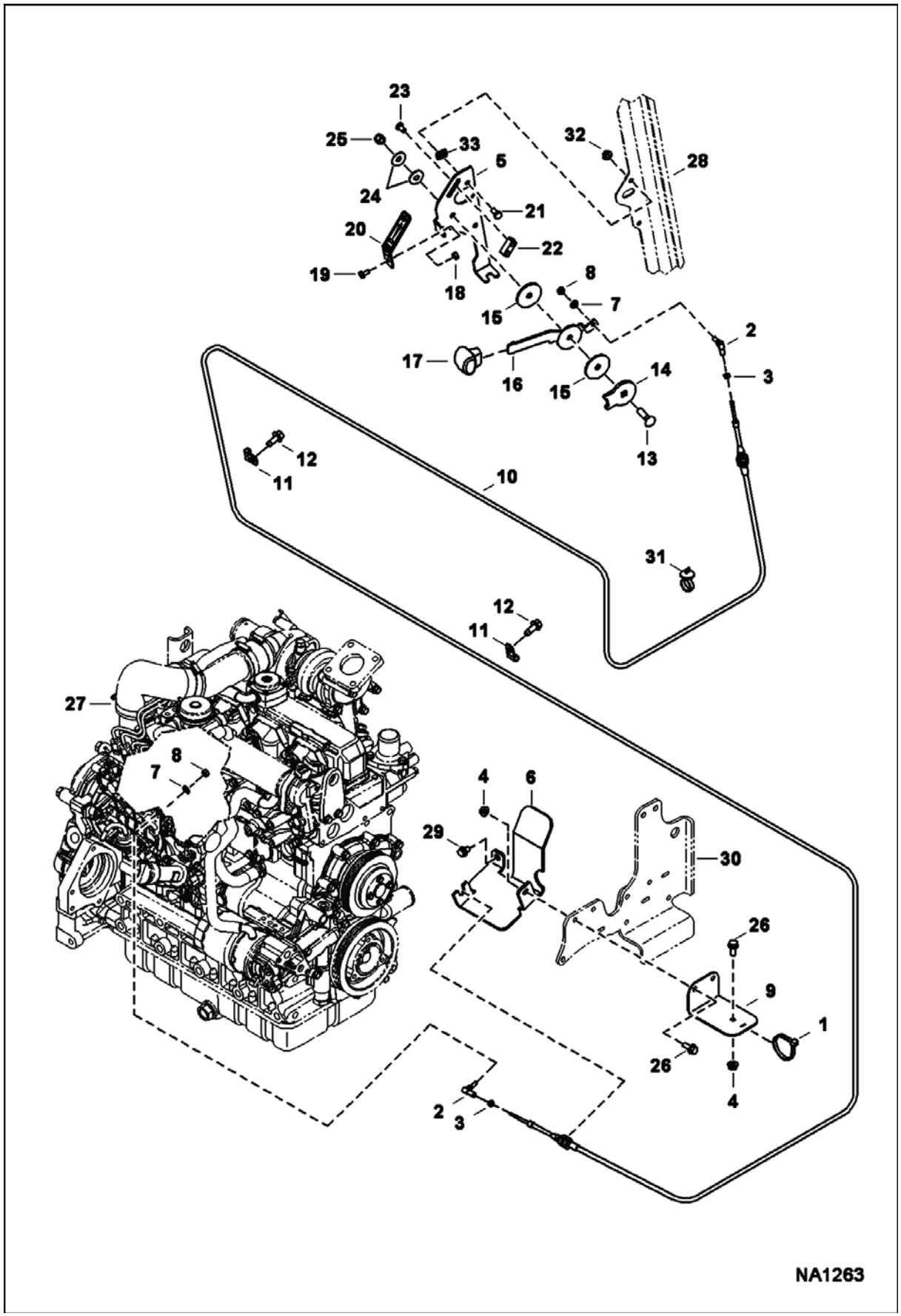

ENGINE SPEED CONTROL (Cont'd)
(Manual Controls, AHC & ACS) (Single Cable)

Ref No	Part Number	Description	Remarks	Serial Number	Qty
1	6624289	STRAP, TIE			1
2	6644965	BALL JOINT			2
3	14D10	NUT			2
4	43DM8	NUT			3
5	7166171	BRACKET			1
6	7174813	BRACKET, CABLE			1
7	25E11	WASHER			1
8	62D4	NUT			4
9	7190164	BRACKET, THROTTLE	Was 7174914 [A]		1
10	7174815	CABLE			1
11	30H20	CLIP			3
12	84G3712	BOLT			2
13	37C624	BOLT			2
14	7166269	WASHER			1
15	7159386	WASHER			2
16	7166172	HANDLE			1
17	7166173	HANDLE			1
18	61D4	NUT 5			1
19	17C408	BOLT			1
20	7169911	PLATE, DECAL			1
21	55D5	NUT			2
22	7166174	BLOCK			1
23	25G510	BOLT			2
24	6630038	WASHER			2
25	59D6	NUT			1
26	59CM825	Screw Hex FLNG W/T8.8			3
27		ENGINE	See Illustration ENGINE & GASKET KITS/ NA2401		1
28		CAB, ASSY	See Illustration OPERATOR CAB/ NA1122		1
29	59CM816	BOLT			1
30		MOUNT, MUFFLER	See Illustration ENGINE & ATTACHING PARTS/ NA1279		1
31	6675734	STRAP			1
32	17C510	BOLT			2
33	774220	NUT			2

ENGINE SPEED CONTROL
(SJC) (3-Cable)
(S/N A3NV11001 - 12468, A3NW11001 - 11129)

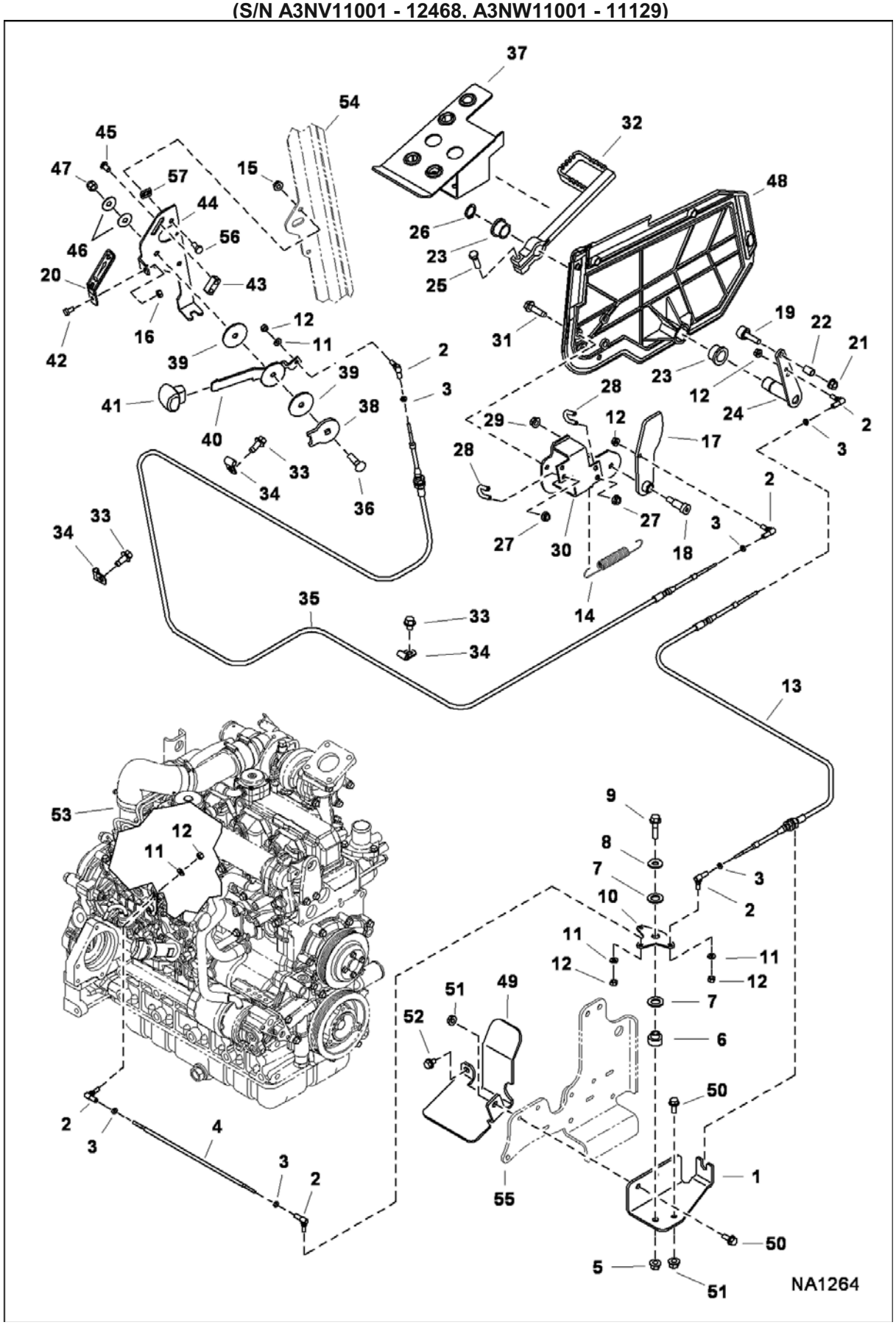

ENGINE SPEED CONTROL (Cont'd)
(SJC) (3-Cable)
(S/N A3NV11001 - 12468, A3NW11001 - 11129)

Ref No	Part Number	Description	Remarks	Serial Number	Qty
1	7180954	MOUNT			1
2	6644965	BALL JOINT			6
3	14D10	NUT			6
4	7168962	ROD			1
5	89D6	NUT			1
6	7157731	TUBE SPACER			1
7	25E18	WASHER			2
8	6700170	WASHER			1
9	49C624	SCREW			1
10	7157729	BELLCRANK			1
11	25E11	WASHER			4
12	62D4	NUT			6
13	7158988	CABLE, THROTTLE			1
14	7168921	SPRING			1
15	55D5	NUT			2
16	61D4	NUT 5			1
17	7170374	CAM, WELDMENT			1
18	38C816	BOLT			1
19	6737692	BEARING			1
20	7169911	PLATE, DECAL			1
21	98D6	NUT			1
22	6737693	SPACER			1
23	7159624	BUSHING			2
24	7167173	PIVOT ASSY			1
25	17C620	BOLT			1
26	6534668	SNAP RING			1
27	57D5	NUT			4
28	6592766	U-BOLT			2
29	57D6	NUT 5			1
30	7167169	MOUNT			1
31	84G3716	SCREW 5			2
32	7164294	PEDAL, FOOT THROTTLE			1
33	31C612	BOLT			3
34	30H20	CLIP			3
35	7166623	CABLE			1
36	37C624	BOLT			1
37	7157725	PEDAL ASSY			1
38	7166269	WASHER			1
39	7159386	WASHER			2
40	7166172	HANDLE			1
41	7166173	HANDLE			1
42	17C408	BOLT			1
43	7166174	BLOCK			1
44	7166171	BRACKET			1
45	25G510	BOLT			2
46	6630038	WASHER			2
47	59D6	NUT			1
48	7180032	PANEL, RH			1
49	7174814	BRACKET, CABLE			1
50	59CM825	Screw Hex FLNG W/T8.8			3
51	43DM8	NUT			3
52	59CM816	BOLT			1

ENGINE SPEED CONTROL (Cont'd)
(SJC) (3-Cable)
(S/N A3NV11001 - 12468, A3NW11001 - 11129)

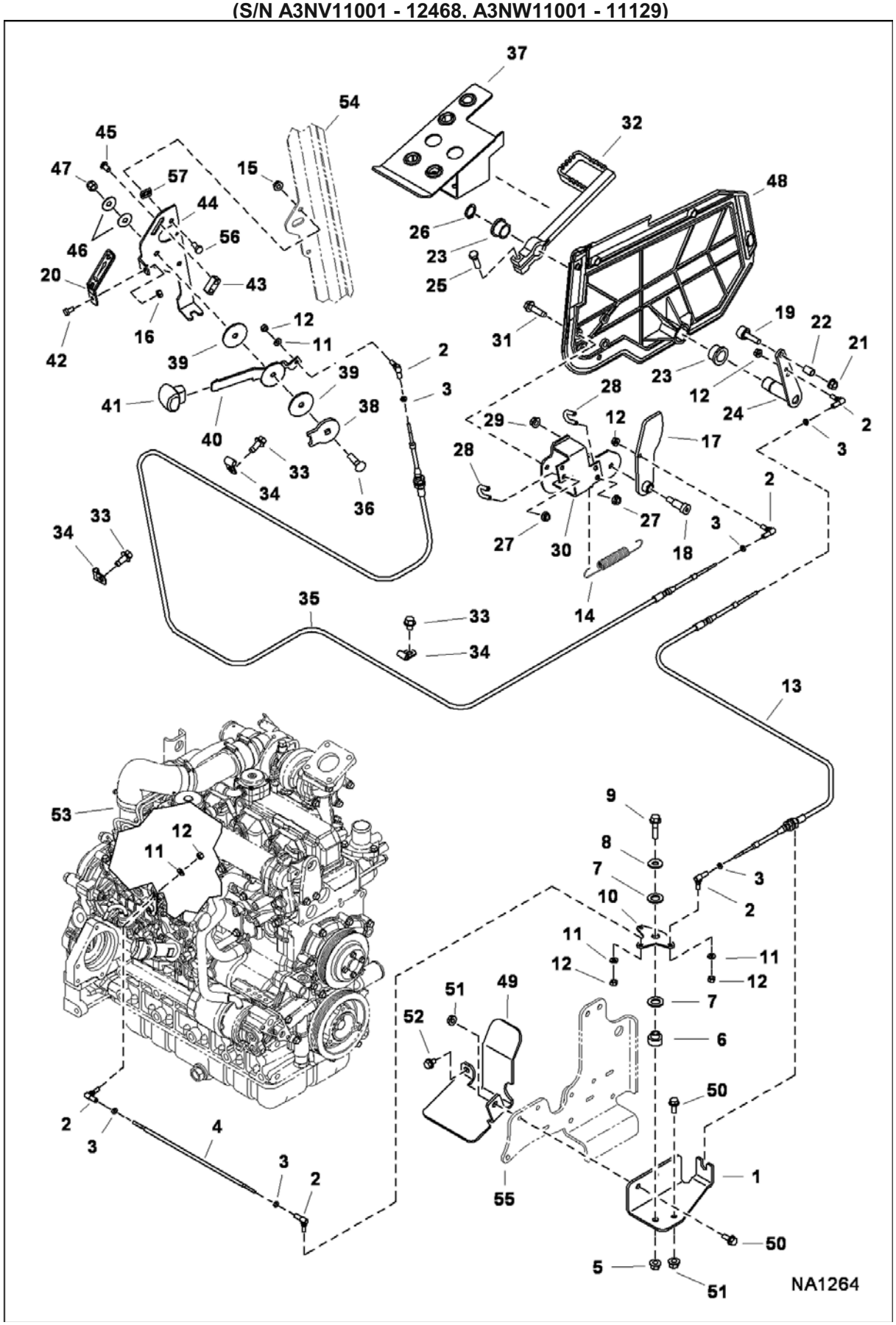

ENGINE SPEED CONTROL (Cont'd)
(SJC) (3-Cable)
(S/N A3NV11001 - 12468, A3NW11001 - 11129)

Ref No	Part Number	Description	Remarks	Serial Number	Qty
53		ENGINE	See Illustration ENGINE & GASKET KITS/ NA2401		1
54		CAB, ASSY	See Illustration OPERATOR CAB/ NA1122		1
55		MOUNT, MUFFLER	See Illustration ENGINE & ATTACHING PARTS/ NA1279		1
56	17C510	BOLT			2
57	774220	NUT			2

ENGINE SPEED CONTROL
(SJC) (2-Cable)
(S/N A3NV12469 & Above, A3NW11130 & Above)

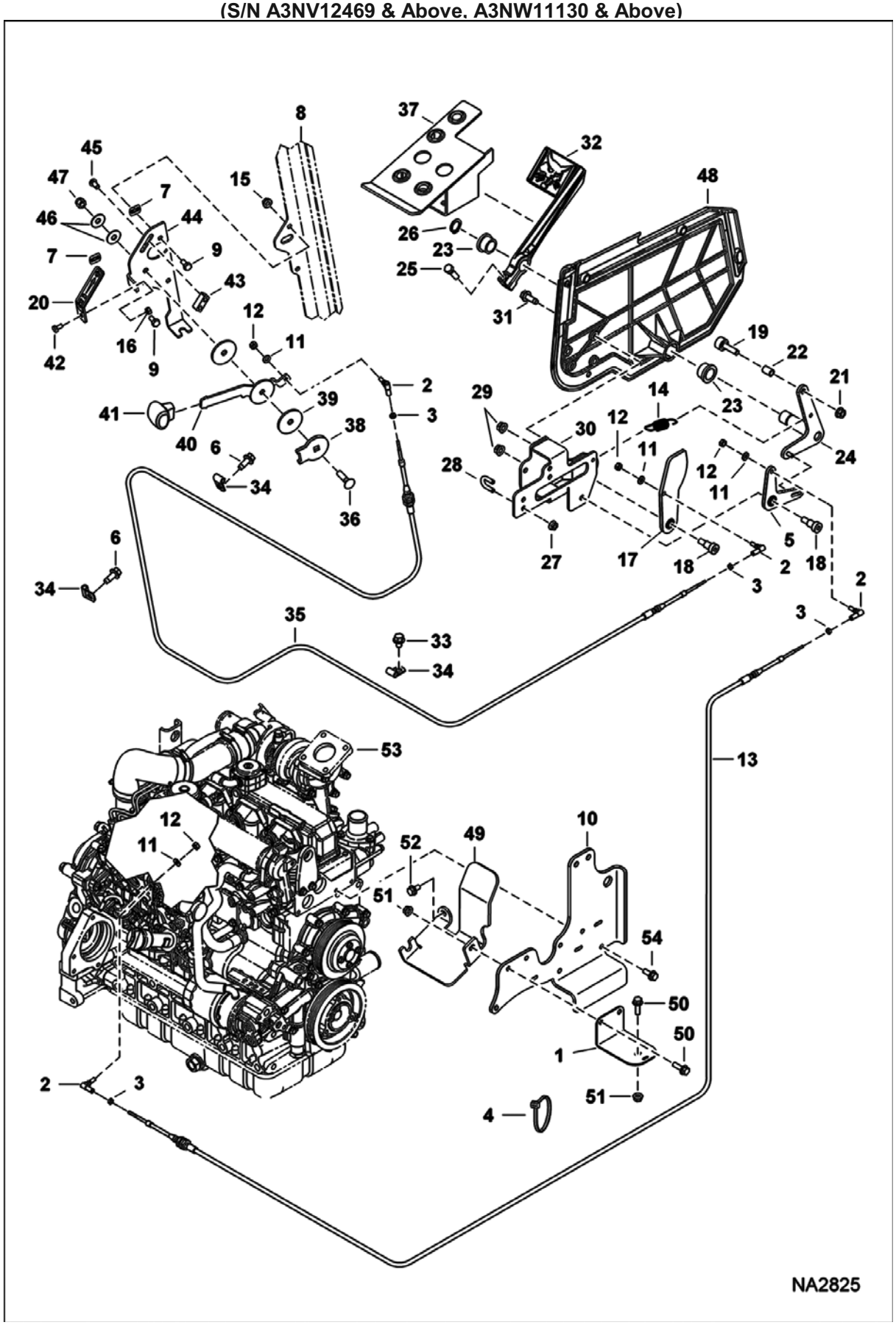

ENGINE SPEED CONTROL (Cont'd)
(SJC) (2-Cable)
(S/N A3NV12469 & Above, A3NW11130 & Above)

Ref No	Part Number	Description	Remarks	Serial Number	Qty
1	7190164	BRACKET, THROTTLE			1
2	6644965	BALL JOINT			4
3	14D10	NUT			4
4	6624289	STRAP, TIE			1
5	7191528	LEVER			1
6	84G3712	BOLT			3
7	774220	NUT			2
8		CAB, ASSY	See Illustration OPERATOR CAB/ NA1122		1
9	17C510	BOLT			2
10		MOUNT, MUFFLER	See Illustration ENGINE & ATTACHING PARTS/ NA1279		1
11	25E11	WASHER			4
12	62D4	NUT			4
13	7196284	CABLE, THROTTLE			1
14	7188749	SPRING			1
15	55D5	NUT			2
16	61D4	NUT 5			1
17	7176043	CAM, LEVER			1
18	38C816	BOLT			1
19	6737692	BEARING			1
20	7169911	PLATE, DECAL			1
21	98D6	NUT			1
22	6737693	SPACER			1
23	7159624	BUSHING			2
24	7176039	LEVER			1
25	17C620	BOLT			1
26	6534668	SNAP RING			1
27	57D5	NUT			4
28	6592766	U-BOLT			2
29	57D6	NUT 5			1
30	7176037	MOUNT			1
31	84G3716	SCREW 5			2
32	7164294	PEDAL, FOOT THROTTLE			1
33	35C612	BOLT			1
34	30H20	CLIP			4
35	7166623	CABLE			1
36	37C624	BOLT			1
37	7157725	PEDAL ASSY			1
38	7166269	WASHER			1
39	7159386	WASHER			2
40	7166172	HANDLE			1
41	7166173	HANDLE			1
42	17C408	BOLT			1
43	7166174	BLOCK			1
44	7166171	BRACKET			1
45	25G510	BOLT			2
46	6630038	WASHER			2
47	59D6	NUT			1
48	7180032	PANEL, RH			1
49	7174813	BRACKET, CABLE			1
50	59CM825	Screw Hex FLNG W/T8.8			3
51	43DM8	NUT			3

ENGINE SPEED CONTROL (Cont'd)
(SJC) (2-Cable)
(S/N A3NV12469 & Above, A3NW11130 & Above)

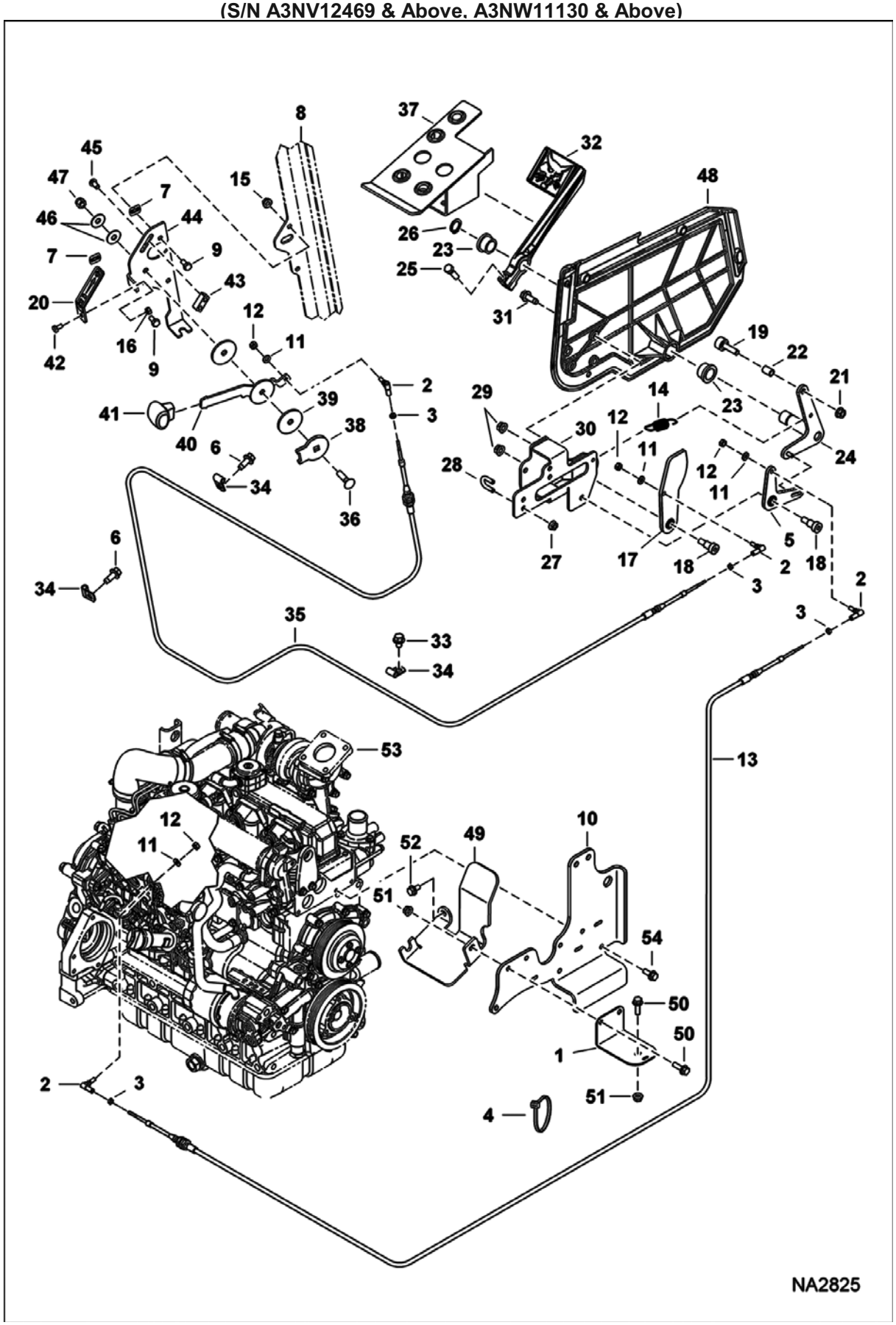

ENGINE SPEED CONTROL (Cont'd)
(SJC) (2-Cable)
(S/N A3NV12469 & Above, A3NW11130 & Above)

Ref No	Part Number	Description	Remarks	Serial Number	Qty
52	59CM816	BOLT			1
53		ENGINE	See Illustration ENGINE & GASKET KITS/ NA2401		1
54	6700170	WASHER			2

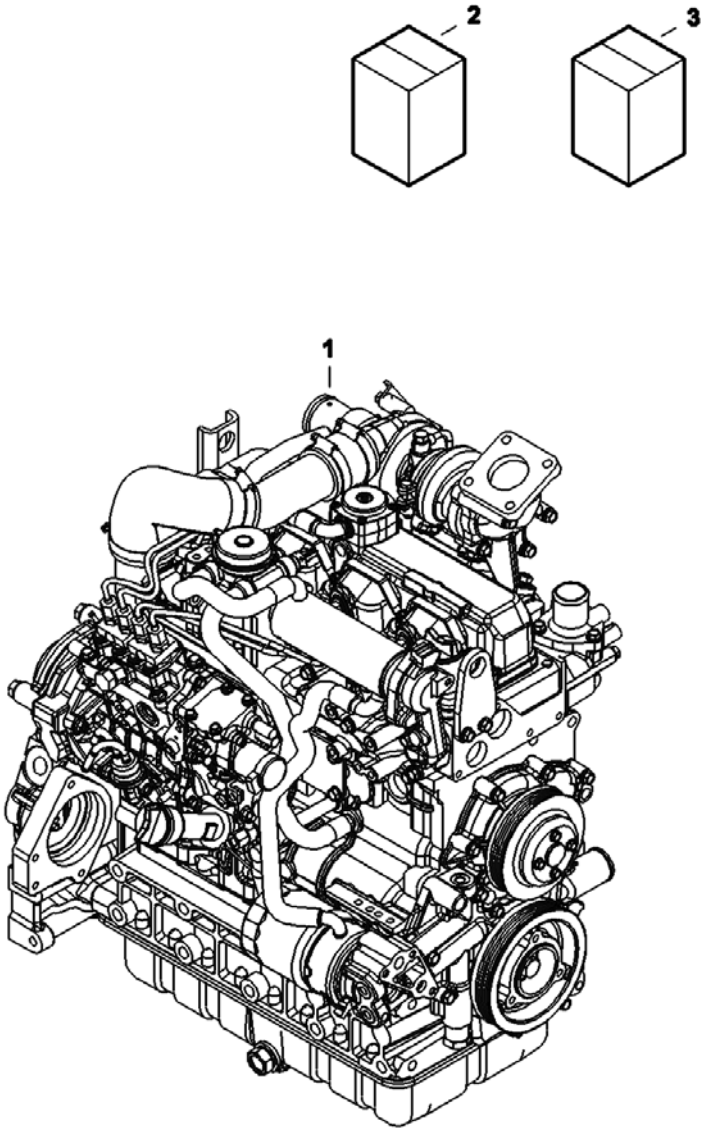

NA2401

Ref No	Part Number	Description	Remarks	Serial Number	Qty
1	6692830	ENGINE, V3307DI-T-E3B-BC-1	V3307		1
2	7008510	KIT, GASKET ENG UPPER	See Illustration ENGINE UPPER GASKET KIT/ B27844		1
3	7008511	KIT, GASKET ENG LOWER	See Illustration ENGINE LOWER GASKET KIT/ B27845		1

ENGINE UPPER GASKET KIT

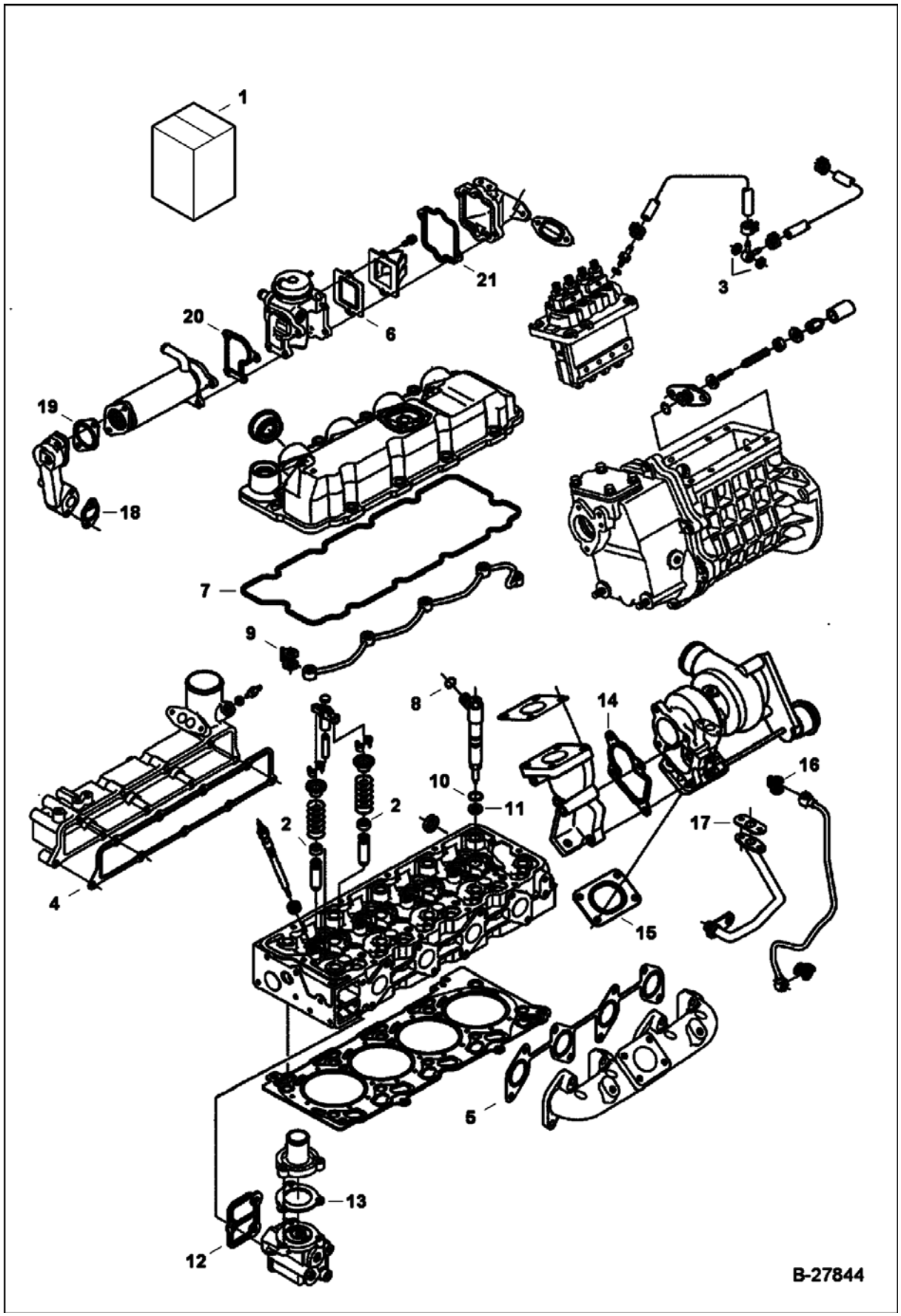

ENGINE UPPER GASKET KIT (Cont'd)

Ref No	Part Number	Description	Remarks	Serial Number	Qty
1	7008510	KIT, GASKET ENG UPPER	Ref. 2-21		1
2	6672436	SEAL	See Illustration VALVE & ROCKER ARM/ B27829 - valve stem		16
3	3974095	MET-GASK	See Illustration FUEL & INJECTION PUMP/ B27834		2
4	7008399	GASKET, MANIFOLD INTAKE	See Illustration MANIFOLDS/ B27840		1
5	7008400	GASKET, MANIFOLD EXHAUST	See Illustration MANIFOLDS/ B27840		1
6	7008467	GASKET, EGR VALVE	See Illustration EGR VALVE/ B27842		1
7	7008409	GASKET, ROCKER ARM	See Illustration ROCKER ARM COVER/ B27830		1
8	6680778	O-RING	See Illustration INJECTION NOZZLES/ B27838		4
9	6685498	GASKET	See Illustration INJECTION NOZZLES/ B27838		5
10	7000619	ORING	See Illustration INJECTION NOZZLES/ B27838		4
11	6969824	GASKET, NOZZLE INJ	See Illustration INJECTION NOZZLES/ B27838		4
12	7008448	GASKET, FLANGE WATER	See Illustration WATER PUMP & THERMOSTAT/ B27839		1
13	6680844	GASKET	See Illustration WATER PUMP & THERMOSTAT/ B27839		1
14	7008515	GASKET, TURBO	See Illustration TURBOCHARGER/ B27841 - Was 6687147 [A]		1
15	7008514	GASKET, TURBO	See Illustration TURBOCHARGER/ B27841 - Was 6680893 [A]		1
16	7000642	WASHER, SEALING COPPER	See Illustration TURBOCHARGER/ B27841		1
17	7008516	GASKET	See Illustration TURBOCHARGER/ B27841 - not in kit - can use 6680570		1
17	6680570	GASKET	oil return tube - will replace 7008516		1
18	7000636	GASKET, EGR BASE	See Illustration EGR COOLER/ B27843		1
19	7000635	GASKET, EGR COOLER	See Illustration EGR COOLER/ B27843		1
20	7000633	GASKET, EGR VALVE	See Illustration EGR VALVE/ B27842		1
21	7000634	GASKET, EGR VALVE	See Illustration EGR VALVE/ B27842		1

ENGINE LOWER GASKET KIT

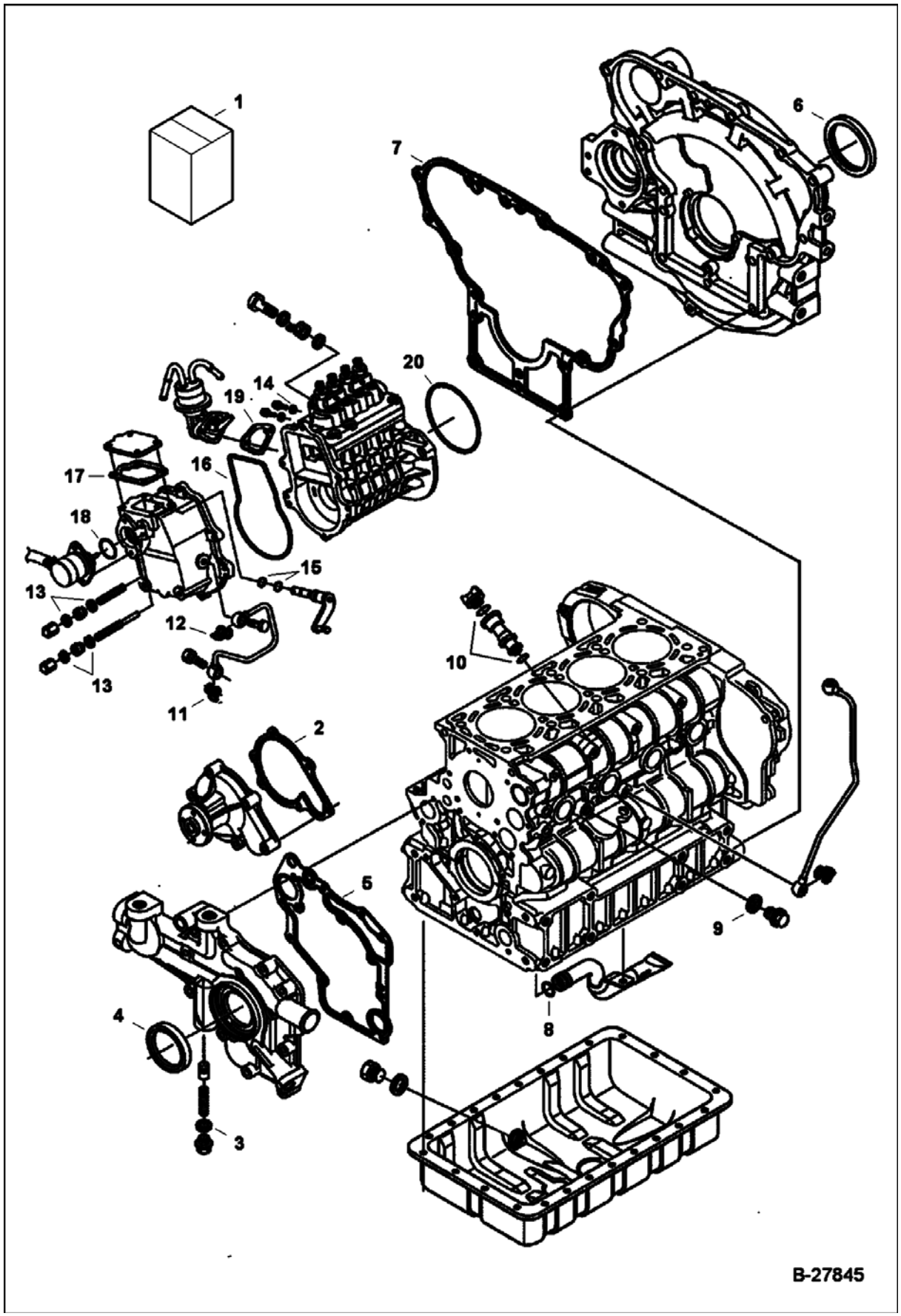

ENGINE LOWER GASKET KIT (Cont'd)

Ref No	Part Number	Description	Remarks	Serial Number	Qty
1	7008511	KIT, GASKET ENG LOWER	Ref. 2-20		1
2	7008451	GASKET, PUMP WATER	See Illustration WATER PUMP & THERMOSTAT/ B27839		1
3	6670347	GASKET	See Illustration FRONT COVER/ B27831		1
4	6680680	SEAL	See Illustration FRONT COVER/ B27831		1
5	7008398	GASKET, FRONT COVER	See Illustration FRONT COVER/ B27831		1
6	7008390	SEAL, OIL	See Illustration CRANKCASE/ B27826		1
7	7008461	GASKET, HOUSING	See Illustration CRANKCASE/ B27826		1
8	6686981	O-RING	See Illustration OIL PAN/ B27827		1
9	6652751	GASKET	See Illustration CRANKCASE/ B27826		1
10	6684782	O-RING	See Illustration OIL PAN/ B27827		1
11	6689331	GASKET	See Illustration FUEL & INJECTION PUMP/ B27834		1
12	6685962	WASHER, SEALING ALUMINUM	See Illustration FUEL & INJECTION PUMP/ B27834		1
13	3974972	GASKET	See Illustration INJECTION PUMP/ B27288		4
14	3974095	MET-GASK	See Illustration FUEL & INJECTION PUMP/ B27834		3
15	6683023	O-RING	See Illustration GOVERNOR/ B27836		3
16	6680829	GASKET	See Illustration GOVERNOR/ B27836		1
17	6684841	GASKET	See Illustration GOVERNOR/ B27836		1
18	6685465	O-RING	See Illustration GOVERNOR/ B27836 - stop solenoid		1
19	7010133	GASKET, PUMP FUEL	See Illustration FUEL & INJECTION PUMP/ B27834 Was 6670782 [B]		1
20	7000618	GASKET, PUMP INJ	See Illustration FUEL & INJECTION PUMP/ B27834		1

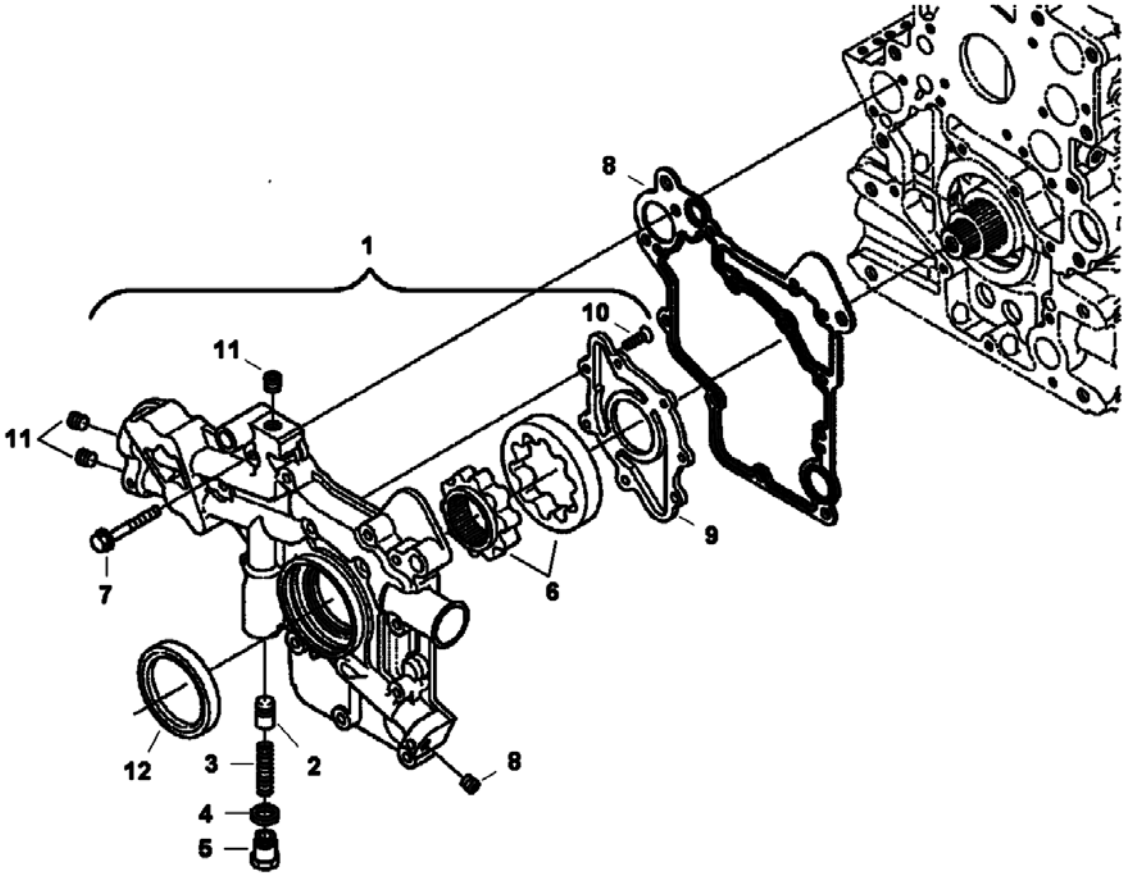
1
2
3
4
5
6
7
8
8
9
10
11
11
12
B-27831

FRONT COVER (Cont'd)

Ref No	Part Number	Description	Remarks	Serial Number	Qty
1	7008527	COVER, FRONT	W/Ref. 2-11		1
2	6685929	RELIEF VALVE			1
3	7008518	SPRING			1
4	6670347	GASKET			1
5	7008519	PLUG			1
6	7008440	PUMP, OIL ENG			1
7	7008396	BOLT, FLANGE			13
8	7008398	GASKET, FRONT COVER			1
9	7008441	COVER, PUMP OIL ENG			1
10	6680678	SCREW			7
11	6680679	PLUG			4
12	6680680	SEAL			1

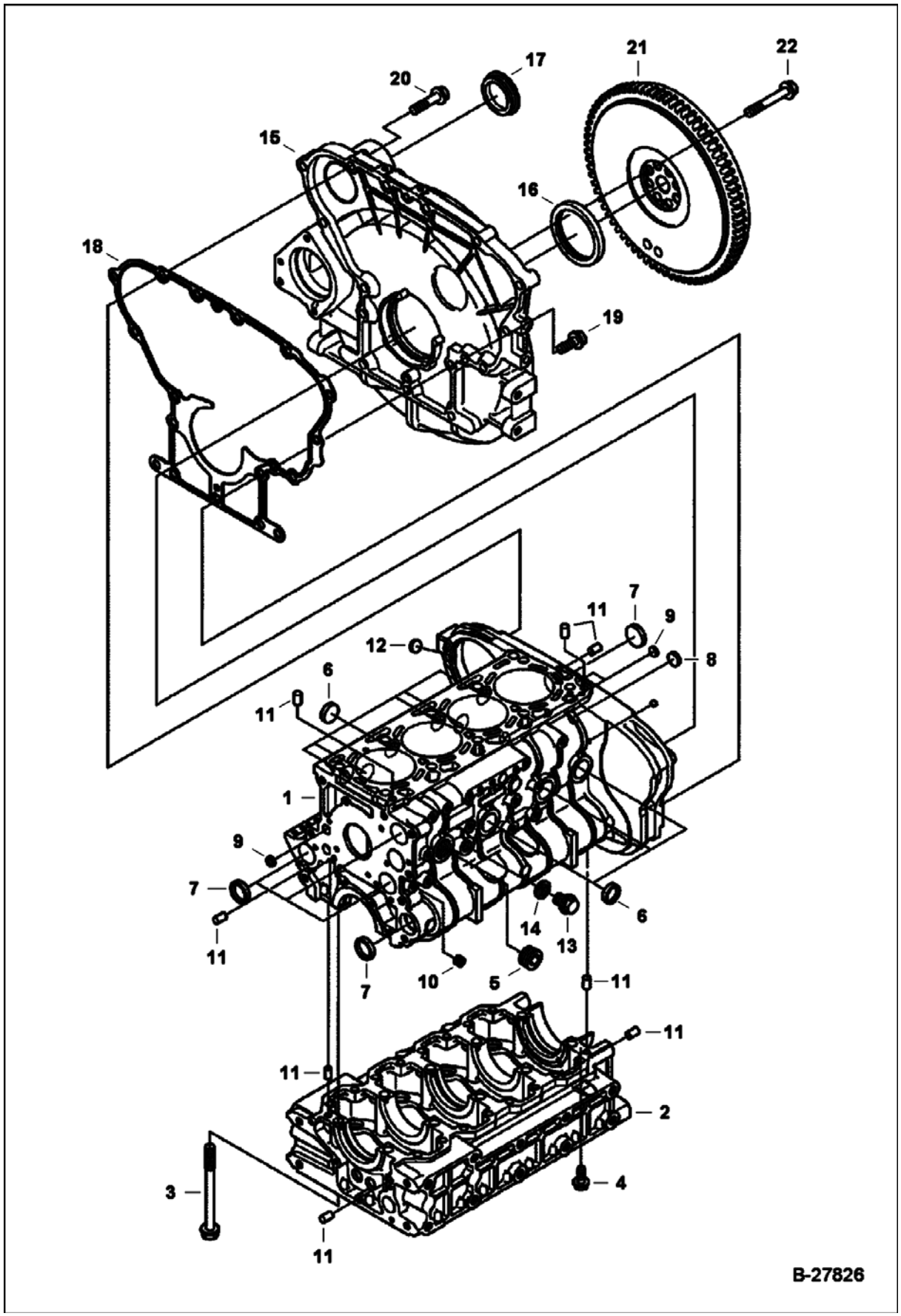
17
21
22
20
15
16
18
19
7
11
9
12
8
6
11
1
9
7
11
14
13
6
7
10
5
11
11
11
2
3
4
11
B-27826

Ref No	Part Number	Description	Remarks	Serial Number	Qty
1	7008523	BLOCK, ENG	W/Ref. 2-10		1
2		BLOCK, ENG LOWER	NSS - Order Ref. 1		1
3	7008397	BOLT			10
4	7008453	BOLT, FLANGE			16
5	6672354	PLUG			1
6	3974033	CAP			9
7	3974433	PLUG			5
8	6670338	PLUG			1
9	6680694	PLUG			3
10	6652574	PLUG			1
11	6685918	PIN			8
12	7000600	CAP, SEALING			1
13	6969968	PLUG			1
14	6652751	GASKET			1
15	7008528	HOUSING, FLYWHEEL			1
16	7008390	SEAL, OIL			1
17	7000586	PLUG			1
18	7008461	GASKET, HOUSING			1
19	7008454	BOLT, FLANGE			8
20	7008455	BOLT, FLANGE			8
21	7008535	FLYWHEEL, ENG ASSY			1
21	7000583	GEAR, RING STARTER			1
22	7000615	BOLT, FLYWHEEL			8

ROCKER ARM COVER

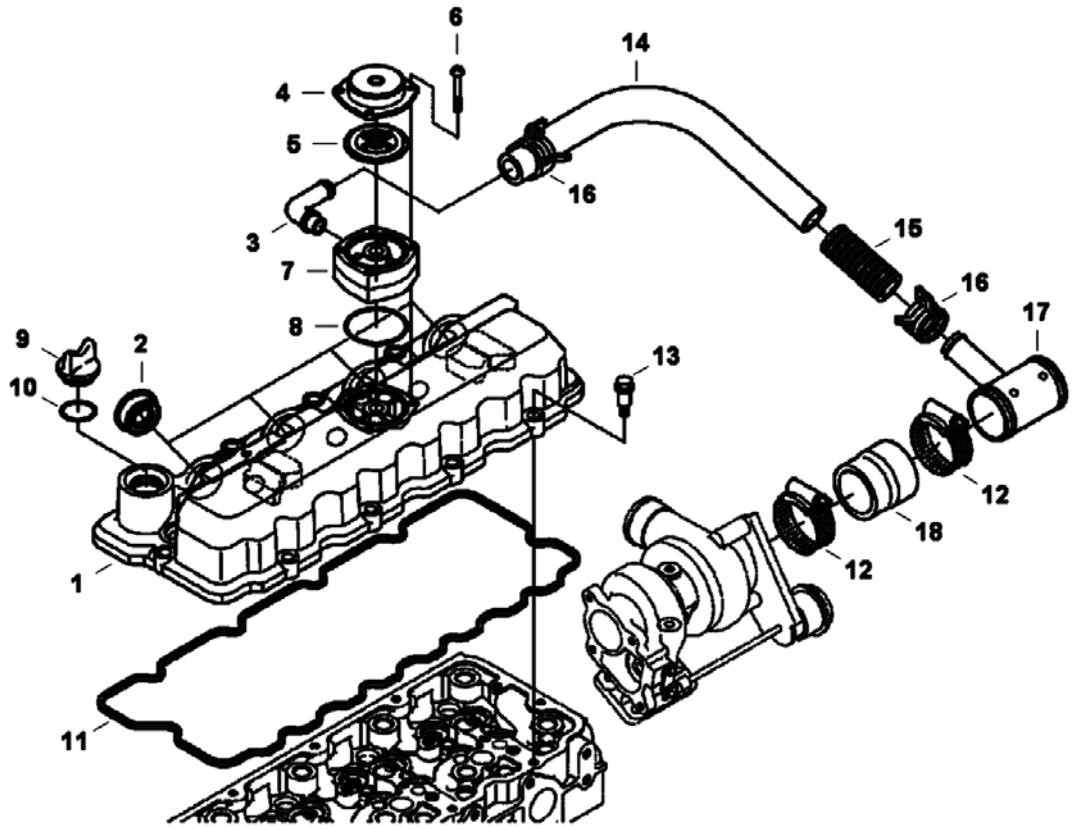

ROCKER ARM COVER (Cont'd)

Ref No	Part Number	Description	Remarks	Serial Number	Qty
1	7008533	COVER, HEAD CYL ENG	W/Ref. 2-10		1
1	6657491	ELEMENT			4
2	6680695	SEAL			4
3	7008463	TUBE, BREATHER			1
4	6969803	COVER, BREATHER			1
5	6685087	VALVE			1
6	7008385	SCREW			4
7	7008468	SPACER			1
8	6685581	O-RING			1
9	6685924	CAP			1
10	6683009	O-RING			1
11	7008409	GASKET, ROCKER ARM			1
12	7008543	CLAMP, HOSE			2
13	6684781	BOLT			10
14	7008462	TUBE, BREATHER			1
15	7008491	HOSE, RUBBER			1
16	6684889	CLAMP	Was 6680698 [B]		2
17	7008464	VALVE, AIR BREATHER			1
18	7008465	HOSE, AIR FORMED			1

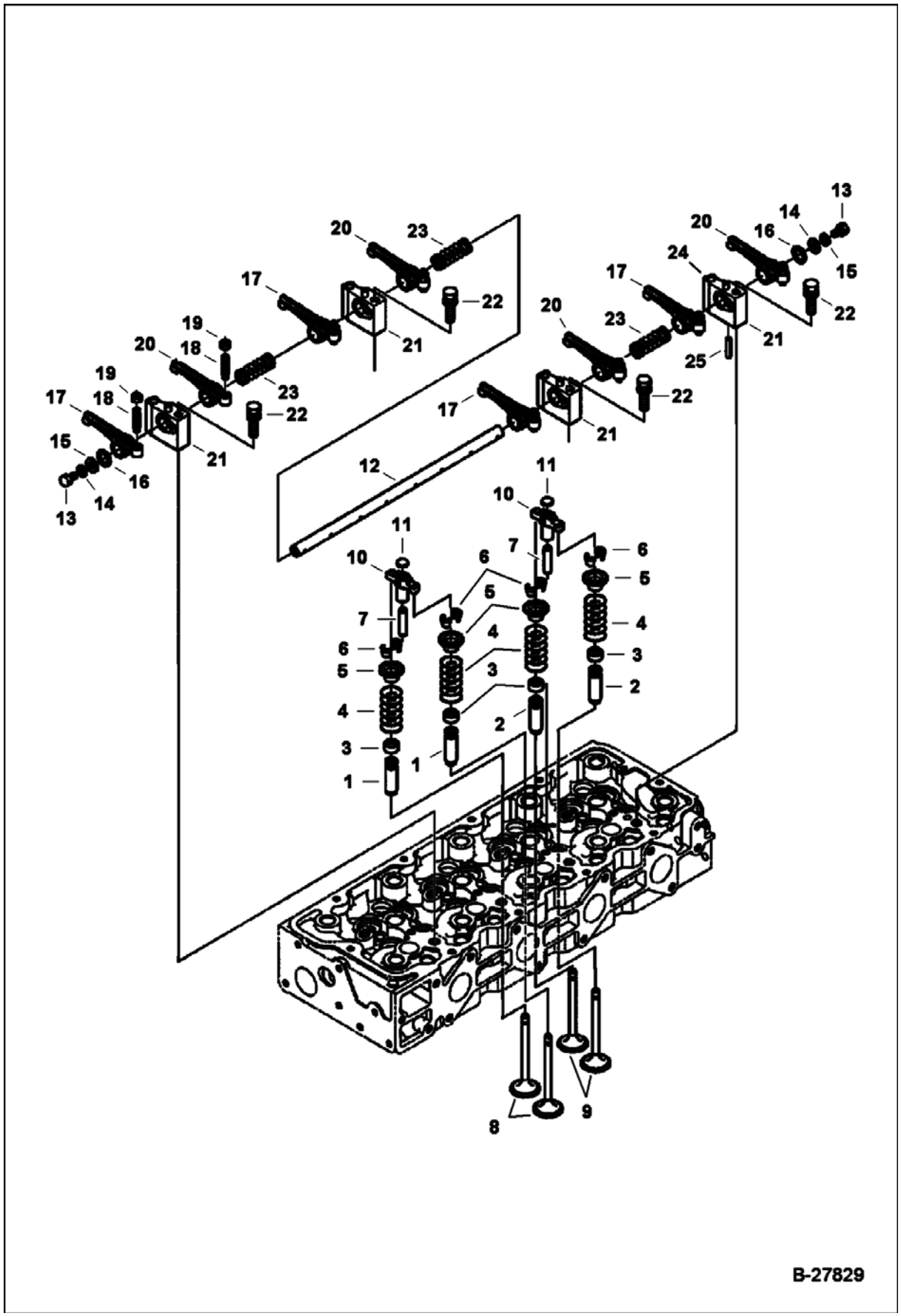
B-27829

Ref No	Part Number	Description	Remarks	Serial Number	Qty
1	6680859	GUIDE			8
2	6685958	GUIDE			8
3	6672436	SEAL	valve stem		16
4	6680863	VALVE SPRING			16
5	6685959	RETAINER			16
6	7008389	RETAINER, VALVE SPRING			16
7	6680866	SHAFT			8
8	7008401	VALVE, INTAKE			8
9	7008402	VALVE, EXHAUST			8
10	6698524	ARM, VALVE BRIDGE			8
11	6680882	PAD			8
12	7008405	SHAFT, ROCKER ARM			1
13	5CM812	BOLT			2
14	6667422	WASHER			2
15	6667451	WASHER	plain		2
16	7008408	WASHER			2
17	7008403	ARM, ROCKER	W/Ref. 18 & 19		4
18	3974920	SCREW			8
19	2DM8	NUT			8
20	7008404	ARM, ROCKER	W/Ref. 18 & 19		4
21	7008407	BRACKET, ROCKER ARM			4
22	7008384	BOLT, FLANGE			4
23	7008406	SPRING, ROCKER ARM			3
24	6680877	PIN			4
25	7000599	PIN			1

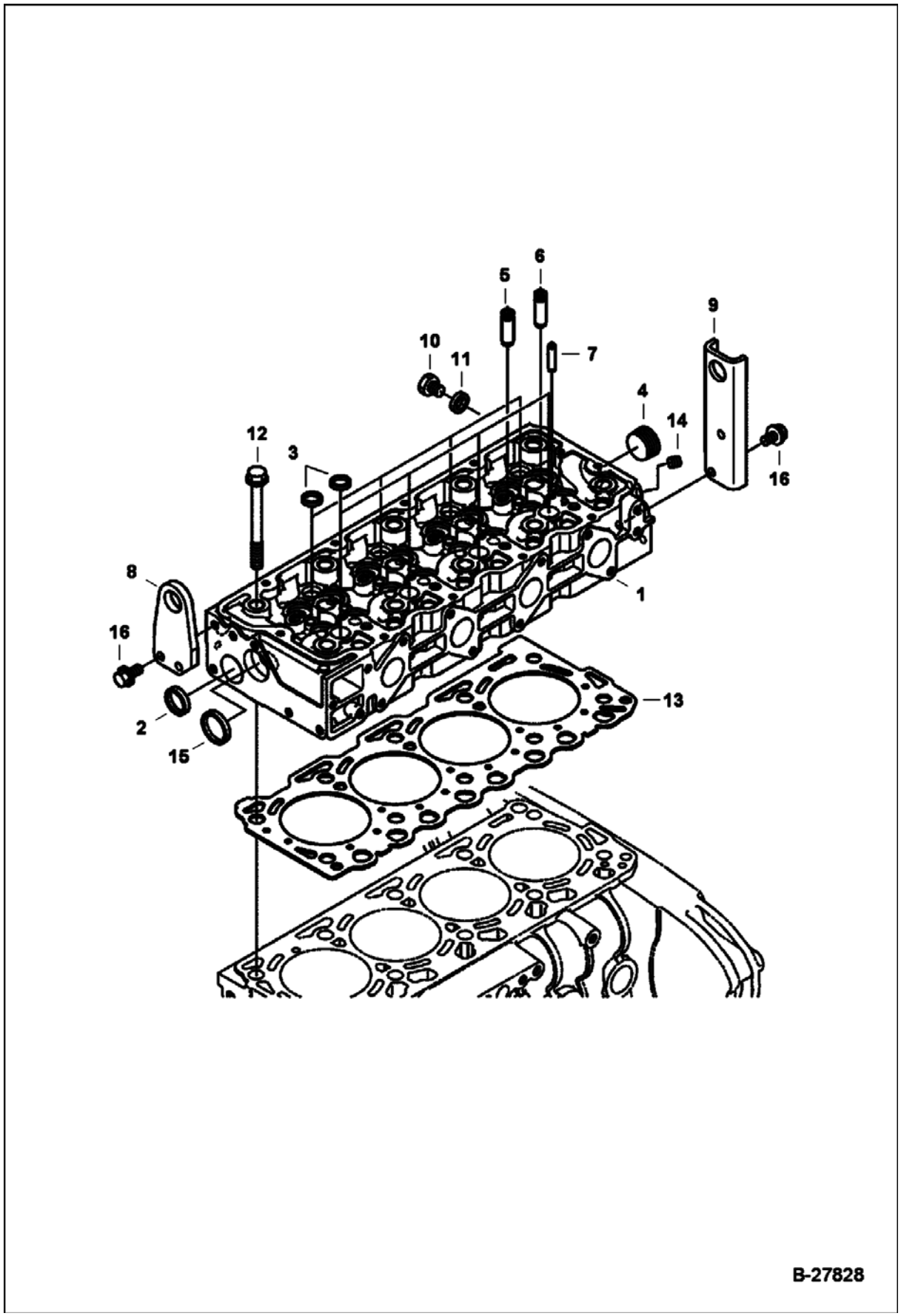
6
5
9
10
11
7
4
14
12
3
16
8
1
16
13
2
15
B-27828

CYLINDER HEAD (Cont'd)

Ref No	Part Number	Description	Remarks	Serial Number	Qty
1	7008526	HEAD, CYL ENG	See Illustration VALVE & ROCKER ARM/ B27829 - complete W/valves - W/Ref. 2-7 & ILL. B27829 Ref. 1-9		1
2	3974033	CAP			1
3	6670338	PLUG			8
4	6672354	PLUG			1
5	6680859	GUIDE			8
6	6685958	GUIDE			8
7	6680866	SHAFT			8
8	7008457	HOOK, ENG			1
9	7008525	HOOK, ENG			1
10	7000607	PLUG			1
11	6698120	GASKET			1
12	7008397	BOLT			10
13	7008458	GASKET, HEAD	2-notch		1
13	7008459	GASKET, HEAD	1-notch		1
13	7008460	GASKET, HEAD	no notch		1
14	6652574	PLUG			1
15	3974433	PLUG			1
16	6653579	BOLT			4

OIL PAN

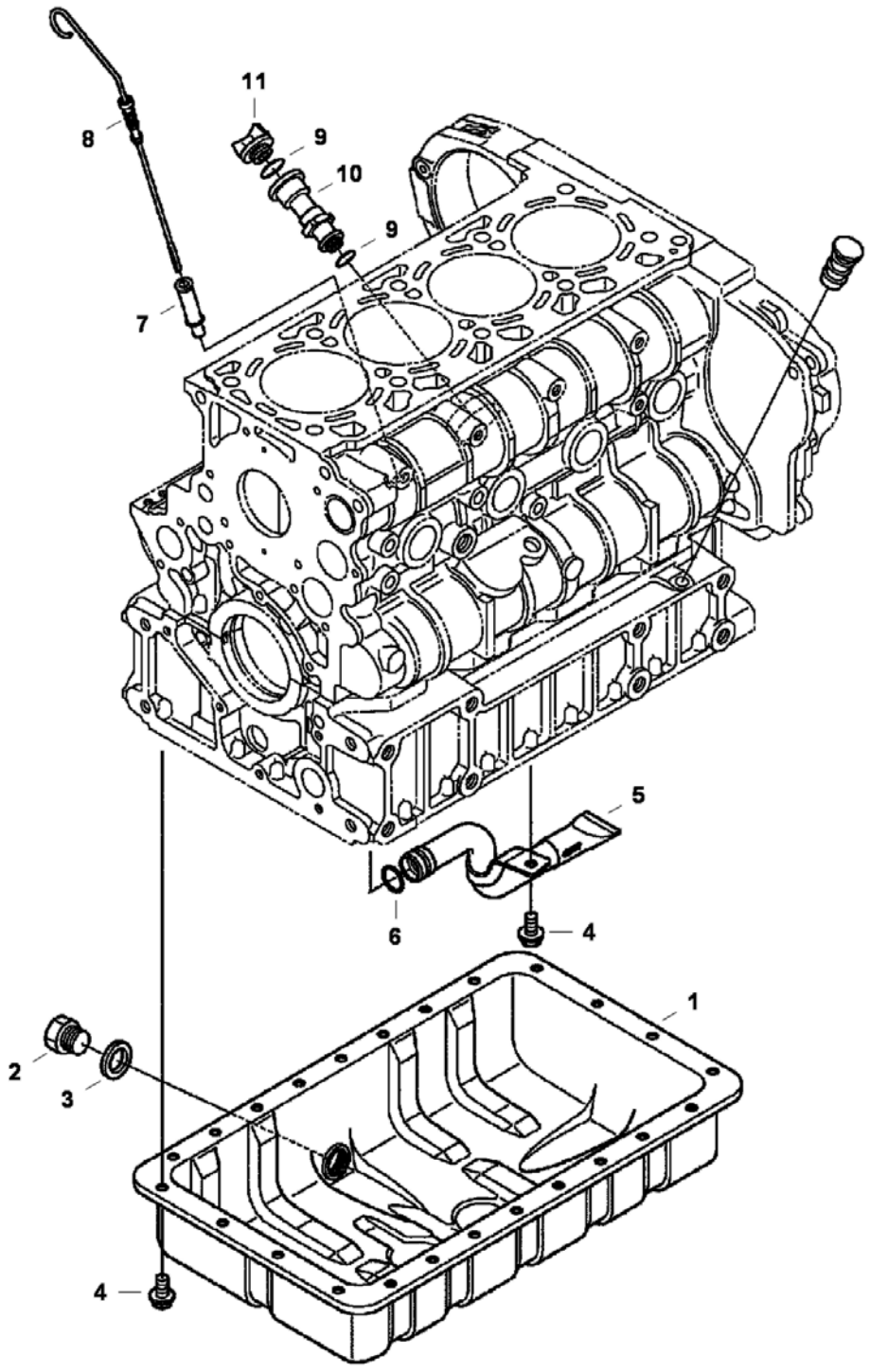

OIL PAN (Cont'd)

Ref No	Part Number	Description	Remarks	Serial Number	Qty
1	7008524	PAN, OIL			1
2	6680657	PLUG			1
3	6631046	SEAL			1
4	7001138	BOLT,FLANGE			26
5	7008486	SCREEN, OIL ENG			1
6	6686981	O-RING			1
7	6687904	GUIDE			1
8	7000714	DIPSTICK, OIL ENG			1
9	6683009	O-RING			2
10	6655507	FLANGE			1
11	6685924	CAP			1

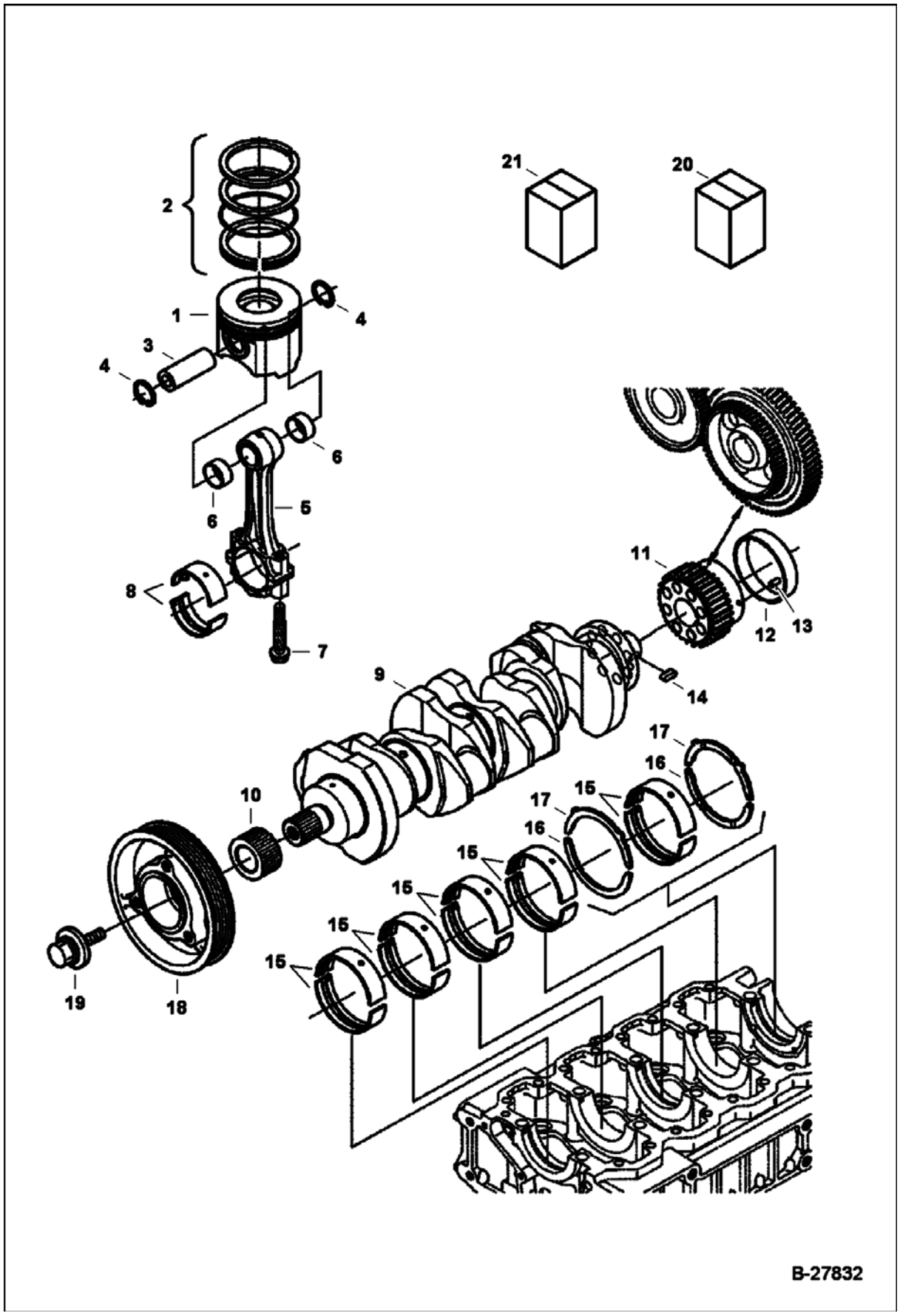
21
20
2
1
4
3
4
6
6
5
8
7
11
12
13
9
14
17
16
15
17
16
15
15
15
15
10
19
18
B-27832

Ref No	Part Number	Description	Remarks	Serial Number	Qty
1	7008470	PISTON, ENG	(05) std	E/ 9DZ999 & Below	4
1	7022423	PISTON, ENG	(05) std	E/ 9E0001 & Above	4
1	7008471	PISTON, ENG	(05) +0,50 mm	E/ 9DZ999 & Below	4
1	7022426	PISTON, ENG OS	(05) +0,50 mm	E/ 9E0001 & Above	4
1	7008472	PISTON, ENG	(00) std	E/ 9DZ999 & Below	4
1	7022424	PISTON, ENG	(00) std	E/ 9E0001 & Above	4
1	7008475	PISTON, ENG OS	(00) +0,50 mm	E/ 9DZ999 & Below	4
1	7022427	PISTON, ENG OS	(00) +0,50 mm	E/ 9E0001 & Above	4
1	7008476	PISTON, ENG OS	(10) std	E/ 9DZ999 & Below	4
1	7022425	PISTON, ENG	(10) std	E/ 9E0001 & Above	4
1	7008477	PISTON, ENG OS	(10) +0,50 mm	E/ 9DZ999 & Below	4
1	7022428	PISTON, ENG OS	(10) +0,50 mm	E/ 9E0001 & Above	4
2	7008415	RING, PISTON	set		4
2	7008416	RING, PISTON OS	set +0,50 mm		4
3	7008417	PIN, PISTON ENG			4
4	7008386	CIRCLIP			8
5	7008479	ROD, CONNECTING	W/Ref. 6 & 7	E/ 9DZ999 & Below	4
5	7022429	ROD, CONNECTING	W/Ref. 6 & 7	E/ 9E0001 & Above	4
6	7008478	BUSHING, PIN PISTON		E/ 9DZ999 & Below	8
6	7022430	BUSHING, PIN PISTON		E/ 9E0001 & Above	8
7	7008418	BOLT			8
8	7008419	BEARING, ENG ROD CONNECTING	std/blue/set		4
8	7008420	BEARING, ENG ROD CONNECTING	std/set		4
8	7008421	BEARING, ENG ROD CONNECTING	-0,20 mm/green/set		4
8	7008422	BEARING, ENG ROD CONNECTING	-0,40 mm/red/set		4
9	7008534	CRANKSHAFT, ENG	W/Ref. 10		1
10	7000616	GEAR, DRIVE			1
11	7008433	GEAR, CRANKSHAFT	W/Ref. 12 & 13		1
12	7008391	SLEEVE, WEAR			1
13	3974395	PIN			1

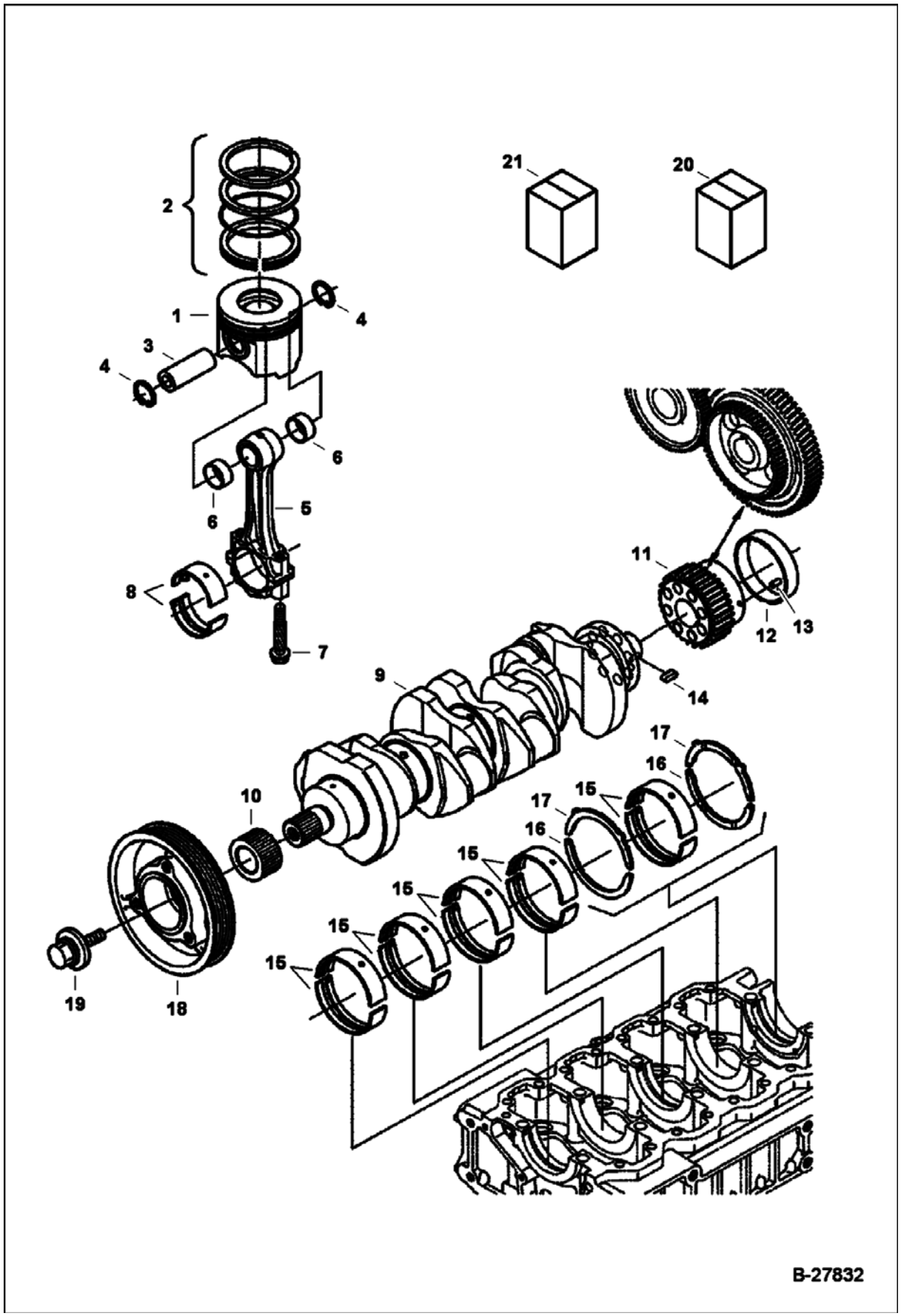
21
20
2
1
4
3
4
6
6
5
8
7
11
12
13
9
14
17
16
15
17
16
15
15
15
15
10
19
18
B-27832

Ref No	Part Number	Description	Remarks	Serial Number	Qty
14	7000749	KEY, SHAFT	Was 3974546 [B]		1
15	7008423	BEARING, ENG CRANKSHAFT	std		5
15	7008426	BEARING, ENG CRANKSHAFT	-0,20 mm		5
15	7008427	BEARING, ENG CRANKSHAFT	-0,40 mm		5
15	7008480	BEARING, ENG CRANKSHAFT	std		5
15	7008484	BEARING, ENG CRANKSHAFT	-0,20 mm		5
15	7008485	BEARING, ENG CRANKSHAFT	-0,40 mm		5
16	7008424	WASHER, THRUST	std		2
16	7008428	WASHER, THRUST	+0,20 mm		2
16	7008429	WASHER, THRUST	+0,40 mm		2
17	7008425	WASHER, THRUST	std		2
17	7008430	WASHER, THRUST	+0,20 mm		2
17	7008431	WASHER, THRUST	+0,40 mm		2
18	7008542	PULLEY, DRIVE			1
19	7020991	BOLT	Was 7000748 [B]		1
20	7008473	KIT, PISTON	(10) std - Ref. 1-3 & 6	E/ 9DZ999 & Below	4
20	7008474	KIT, PISTON OS	(10) +0,50 mm - Ref. 1-3 & 6	E/ 9DZ999 & Below	4
21	7008481	KIT, BEARING ENG			1
21	7008482	KIT, BEARING ENG	-0,20 mm/+0,20 mm		1
21	7008483	KIT, BEARING ENG	-0,40 mm/+0,40 mm		1

CAMSHAFT AND IDLE GEAR SHAFT

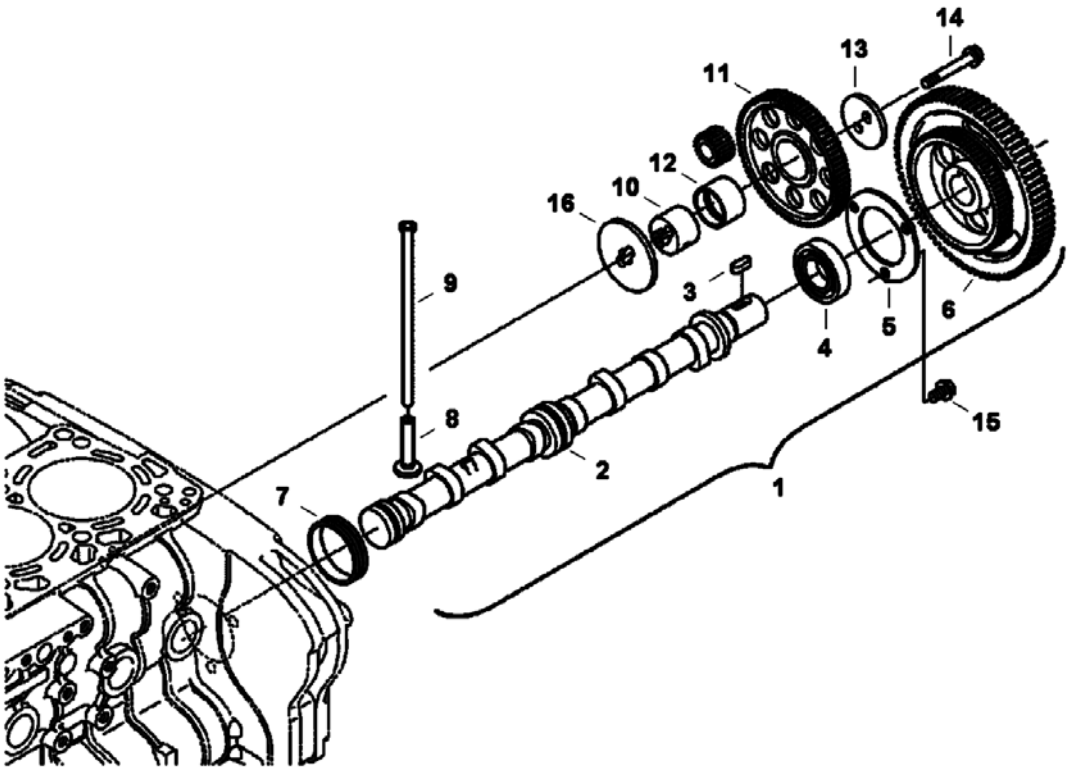

CAMSHAFT AND IDLE GEAR SHAFT (Cont'd)

Ref No	Part Number	Description	Remarks	Serial Number	Qty
1	7008411	CAMSHAFT, VALVE	Ref. 2-6		1
2		CAMSHAFT	NSS - Order Ref. 1		1
3	3974546	KEY			1
4	7008388	BEARING, BALL			1
5	7008412	RETAINER, BEARING			1
6	7008414	GEAR, CAMSHAFT			1
7	7008413	CAP, SEALING			1
8	7000612	TAPPET			8
9	7008410	ROD, PUSH			8
10	7008434	SHAFT, GEAR IDLER		E/ 9TZ999 & Below	1
10	7022431	SHAFT, GEAR IDLER		E/ 9U0001 & Above	1
11	7008432	GEAR, IDLER	W/Ref. 12	E/ 9TZ999 & Below	1
11	7022432	GEAR, IDLER	W/Ref. 12	E/ 9U0001 & Above	1
12	7008437	BUSHING, GEAR IDLE			1
13	7008436	COLLAR, GEAR IDLER			1
14	7008456	BOLT, FLANGE		E/ 9TZ999 & Below	2
14	7008396	BOLT, FLANGE		E/ 9U0001 & Above	2
15	7001138	BOLT,FLANGE			3
16	7008435	COLLAR, GEAR IDLER			1

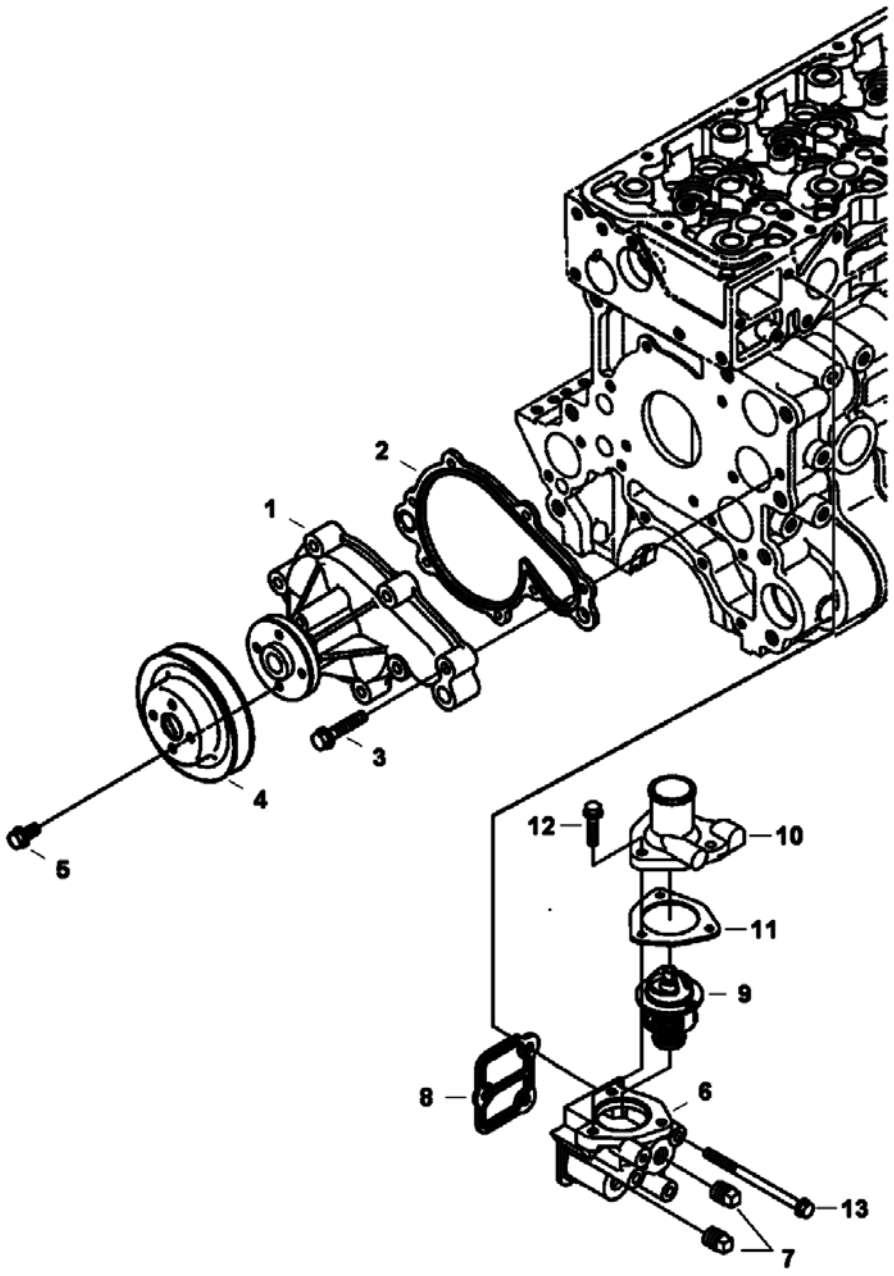
1
2
3
4
5
6
7
8
9
10
11
12
13
B-27839

WATER PUMP & THERMOSTAT (Cont'd)

Ref No	Part Number	Description	Remarks	Serial Number	Qty
1	7008449	PUMP, WATER			1
2	7008451	GASKET, PUMP WATER			1
3	6689192	BOLT, FLANGE			7
4	7008541	PULLEY, FAN			1
5	6680803	BOLT			4
6	7008539	FLANGE, WATER	W/Ref. 7		1
7	6684857	PLUG			2
8	7008448	GASKET, FLANGE WATER			1
9	6680850	THERMOSTAT			1
10	7008450	COVER, THERMOSTAT			1
11	6680844	GASKET			1
12	6680755	BOLT			3
13	7008382	BOLT			3

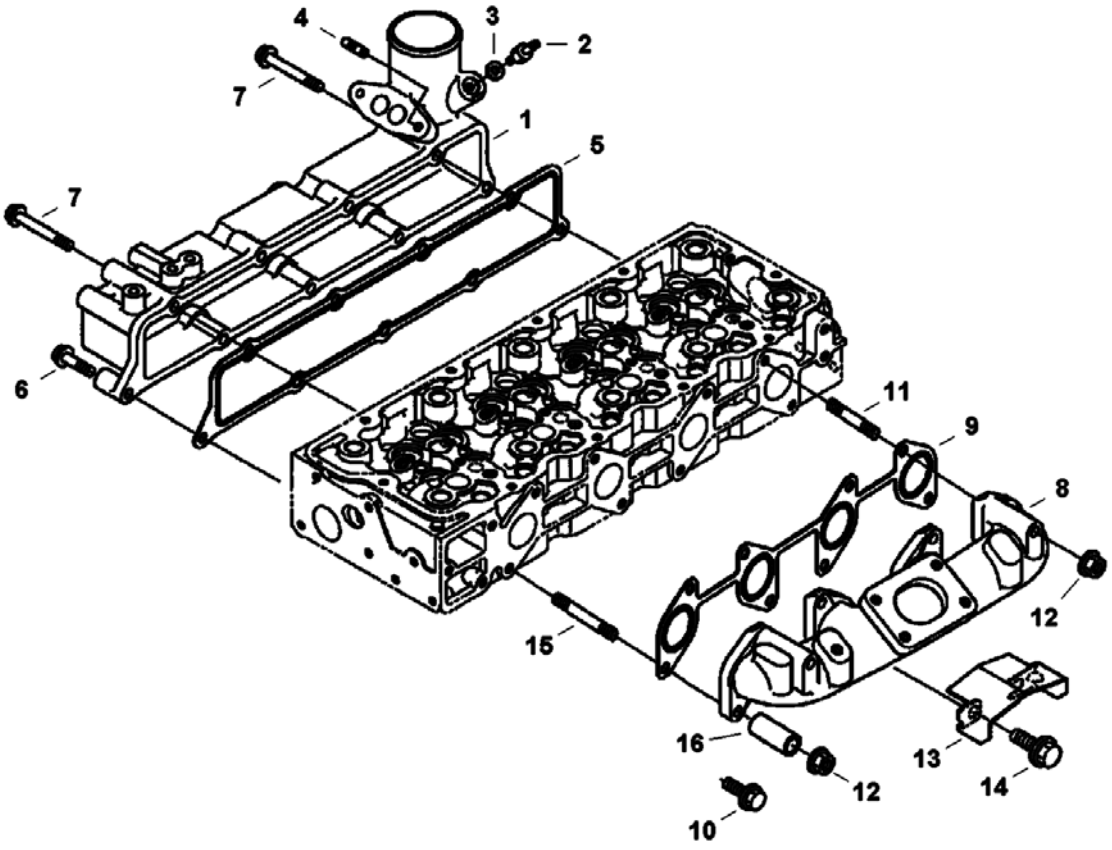

B-27840

Ref No	Part Number	Description	Remarks	Serial Number	Qty
1	7008466	MANIFOLD, INTAKE	W/Ref. 2-3		1
2	6657446	SCREW			1
3	3974972	GASKET			1
4	6680564	STUD			2
5	7008399	GASKET, MANIFOLD INTAKE			1
6	6689192	BOLT, FLANGE			7
7	7008381	BOLT			2
8	7008531	MANIFOLD, EXHAUST			1
9	7008400	GASKET, MANIFOLD EXHAUST			1
10	7008506	BOLT, FLANGE		E/ AH9999 & Below	6
10	7008506	BOLT, FLANGE		E/ AJ0001 & Above	4
11	7008509	STUD			2
12	6969819	NUT, FLANGE		E/ AH9999 & Below	2
12	6969819	NUT, FLANGE		E/ AJ0001 & Above	4
13	7022434	SHIELD, HEAT	Was 7008522 [A]		1
14	7008383	BOLT, FLANGE			1
15	6653827	STUD	Was 7019302 [A]	E/ AJ0001 & Above	2
16	7019303	SPACER		E/ AJ0001 & Above	2

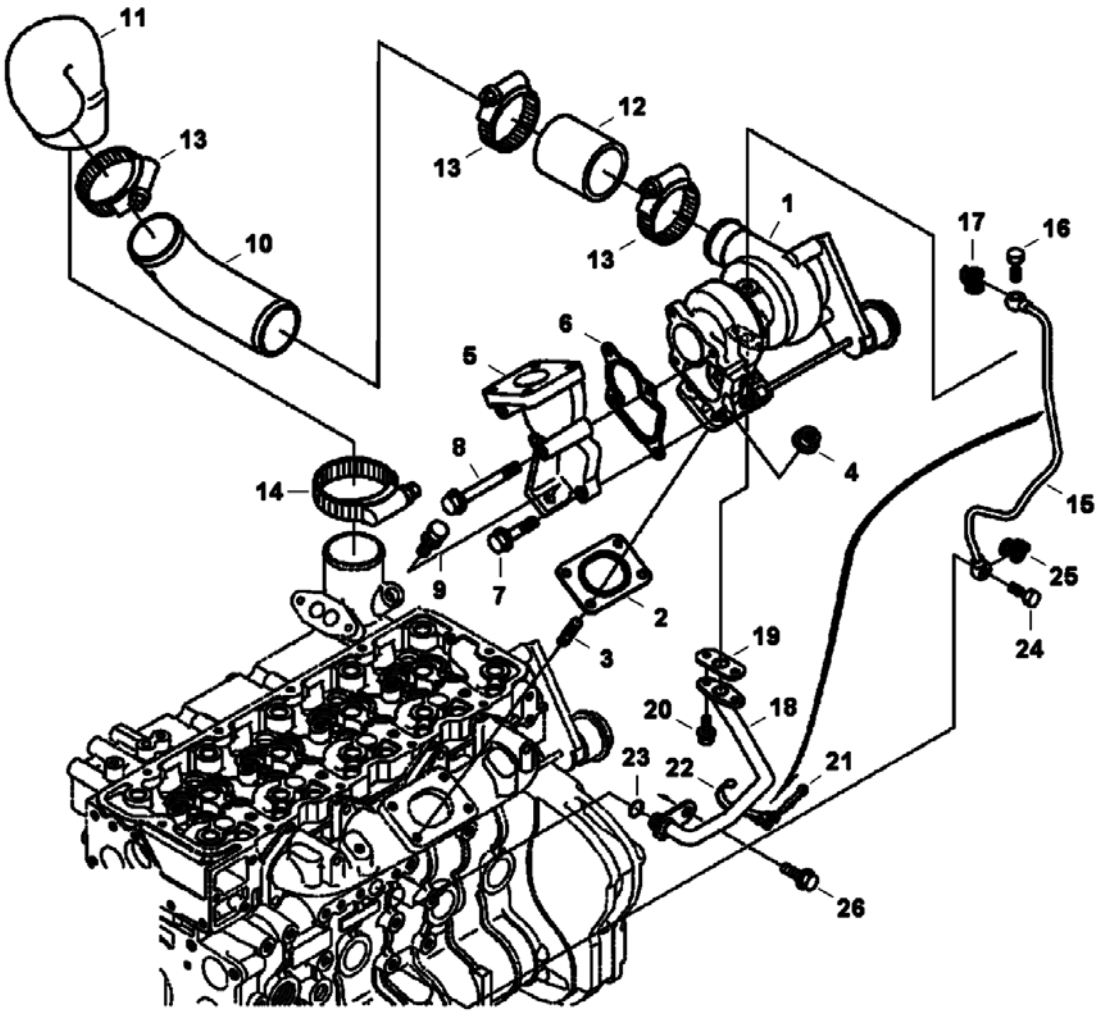
11
13
10
13
12
13
1
17
16
6
5
8
14
4
15
9
7
2
25
24
3
19
20
18
23
22
21
26
B-27841

TURBOCHARGER (Cont'd)

Ref No	Part Number	Description	Remarks	Serial Number	Qty
1	7008469	TURBOCHARGER			1
2	7008514	GASKET, TURBO			1
3	7008508	STUD			4
4	6969819	NUT, FLANGE			4
5	7008532	FLANGE, MUFFLER			1
6	7008515	GASKET, TURBO			1
7	7008513	BOLT, FLANGE			2
8	7008452	BOLT, FLANGE			2
9	7008507	BOLT			1
10	7008529	PIPE, INTAKE			1
11	7008530	HOSE, AIR INTAKE			1
12	7008521	HOSE, AIR FORMED			1
13	7008543	CLAMP, HOSE			3
14	7008544	CLAMP, HOSE			1
15	7008487	PIPE, OIL			1
16	6680900	BOLT			1
17	7000642	WASHER, SEALING COPPER			1
18	7008488	PIPE, OIL			1
19	7008516	GASKET	oil return tube		1
20	29CM612	BOLT			2
21	6680576	PIN			1
22	6685601	CLAMP			1
23	7008387	O-RING			1
24	6680791	BOLT			1
25	6689331	GASKET			1
26	7008383	BOLT, FLANGE			1

EGR VALVE

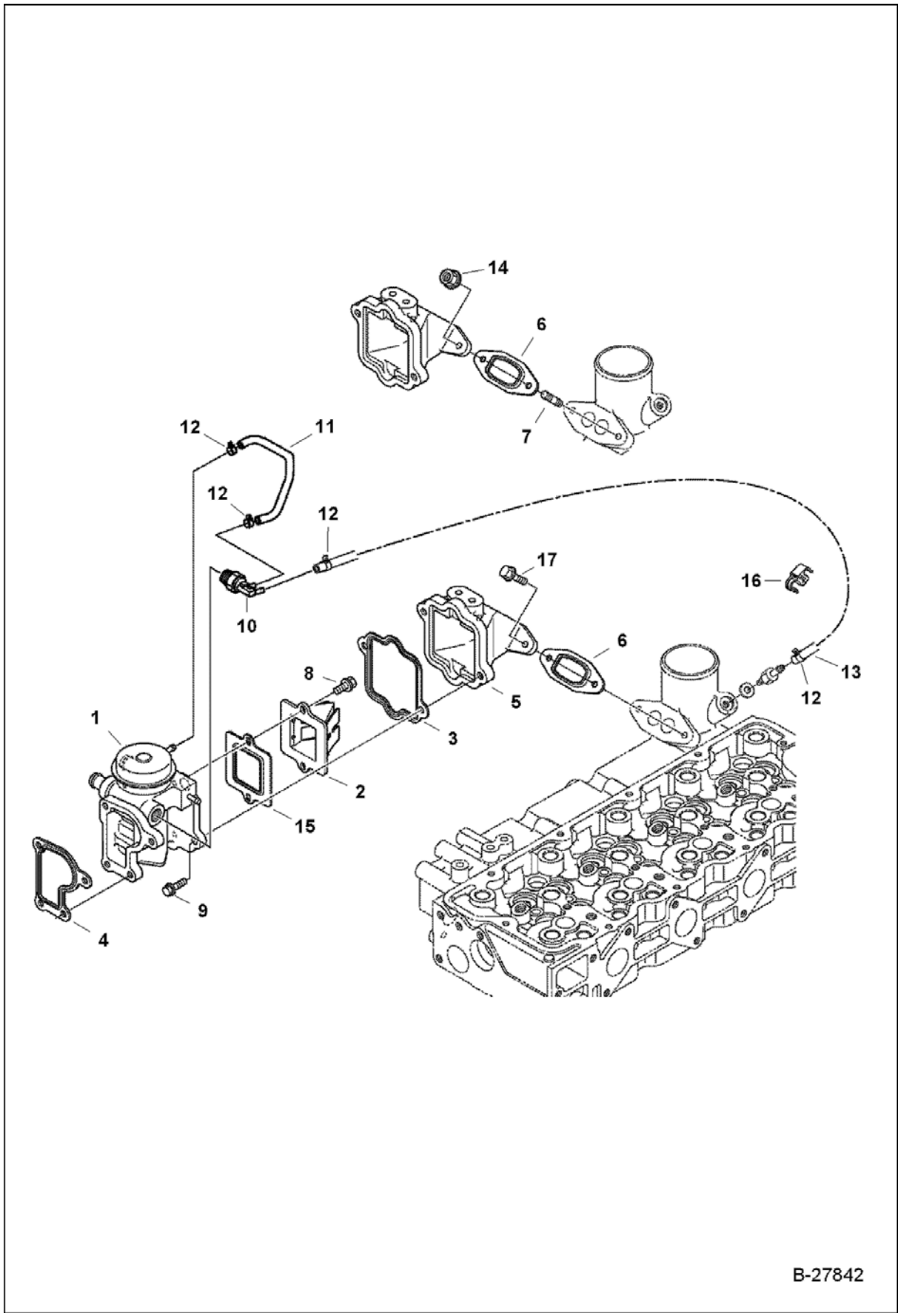

EGR VALVE (Cont'd)

Ref No	Part Number	Description	Remarks	Serial Number	Qty
1	7008538	VALVE, EGR			1
2	6698580	VALVE, LEAD			1
3	7000634	GASKET, EGR VALVE			1
4	7000633	GASKET, EGR VALVE			1
5	7000631	FLANGE, EGR			1
6	7000632	GASKET EGR INLET			1
7	6680564	STUD		E/ 9TZ999 & Below	2
8	6680803	BOLT			2
9	6680801	BOLT			2
10	6698585	VALVE, THERMOSTATIC			1
11	7012014	HOSE, VACUUM	Was 7000641 [B]		1
12	6657556	BAND			4
13	7008505	HOSE, VACUUM			1
14	6969819	NUT, FLANGE		E/ 9TZ999 & Below	2
15	7008467	GASKET, EGR VALVE			1
16	7012013	CLAMP, HOSE		E/ 8Q0001 & Above	2
17	7001139	BOLT,FLANGE		E/ 9U0001 & Above	2

EGR COOLER

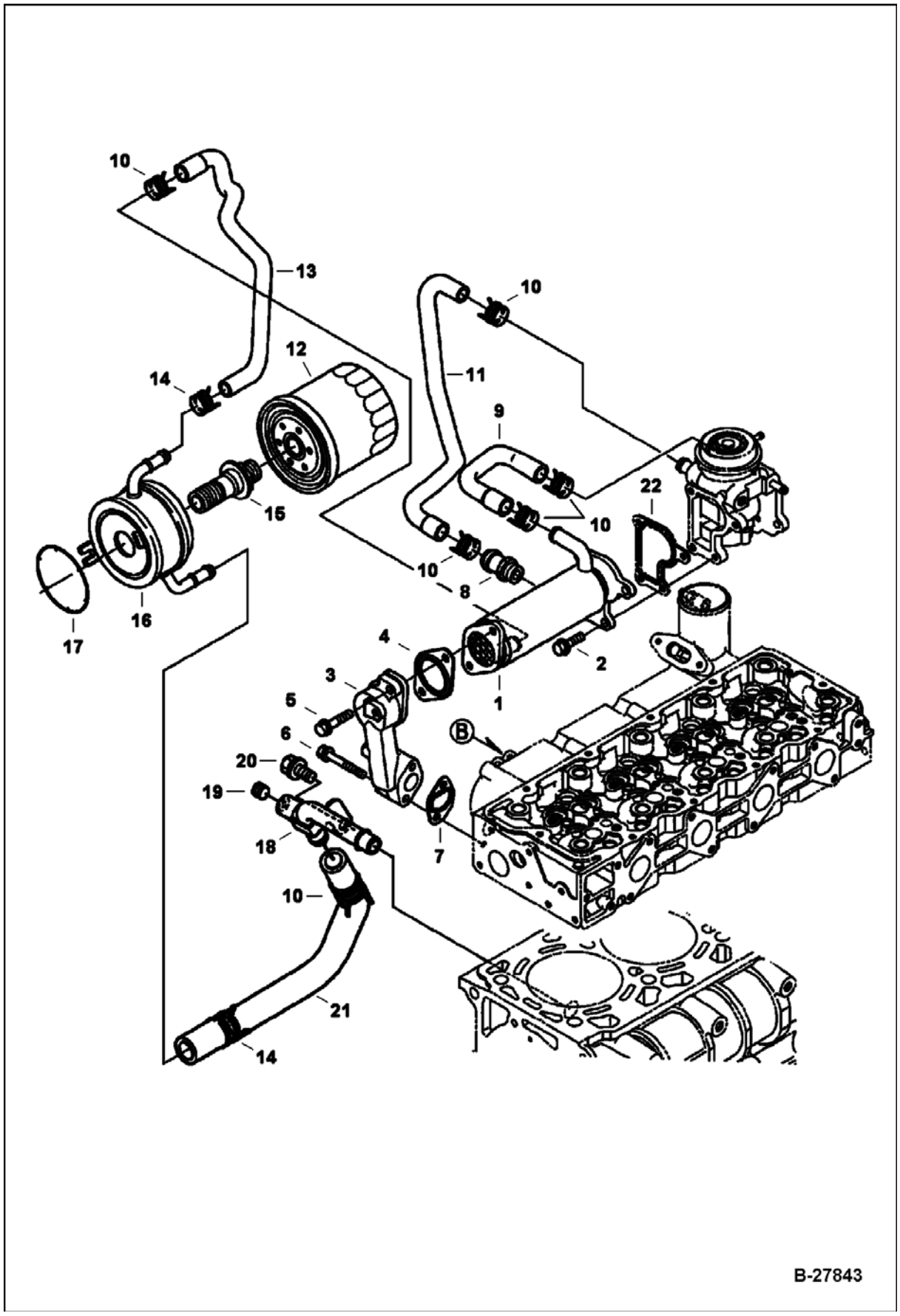
10
13
12
14
15
16
17
10
11
9
10
22
10
8
4
3
5
6
20
19
18
7
2
1
B
10
21
14
B-27843

EGR COOLER (Cont'd)

Ref No	Part Number	Description	Remarks	Serial Number	Qty
1	7008501	EXCHANGER, EGR			1
2	6680801	BOLT			4
3	7008512	BASE, EGR COOLER			1
4	7000635	GASKET, EGR COOLER			1
5	6680755	BOLT			2
6	6680845	BOLT			2
7	7000636	GASKET, EGR BASE			1
8	6680646	ADAPTER			1
9	7008503	HOSE, WATER FORMED			1
10	6675618	CLAMP			6
11	7008504	HOSE, WATER FORMED			1
12	6678233	FILTER, OIL ENG 12			1
13	7008502	HOSE, WATER FORMED			1
14	6684889	CLAMP			2
15	7008490	CONNECTOR			1
16	7008489	EXCHANGER, OIL ENG			1
17	6698244	ORING			1
18	7008540	PIPE, OIL			1
19	7008393	PLUG			1
20	7008380	BOLT		E/ 8RZ999 & Below	1
20	6685109	BOLT, FLANGE		E/ 8S0001 & Above	1
21	7008536	HOSE, WATER FORMED	W/Ref. 10 & 14		1
22	7000633	GASKET, EGR VALVE			1

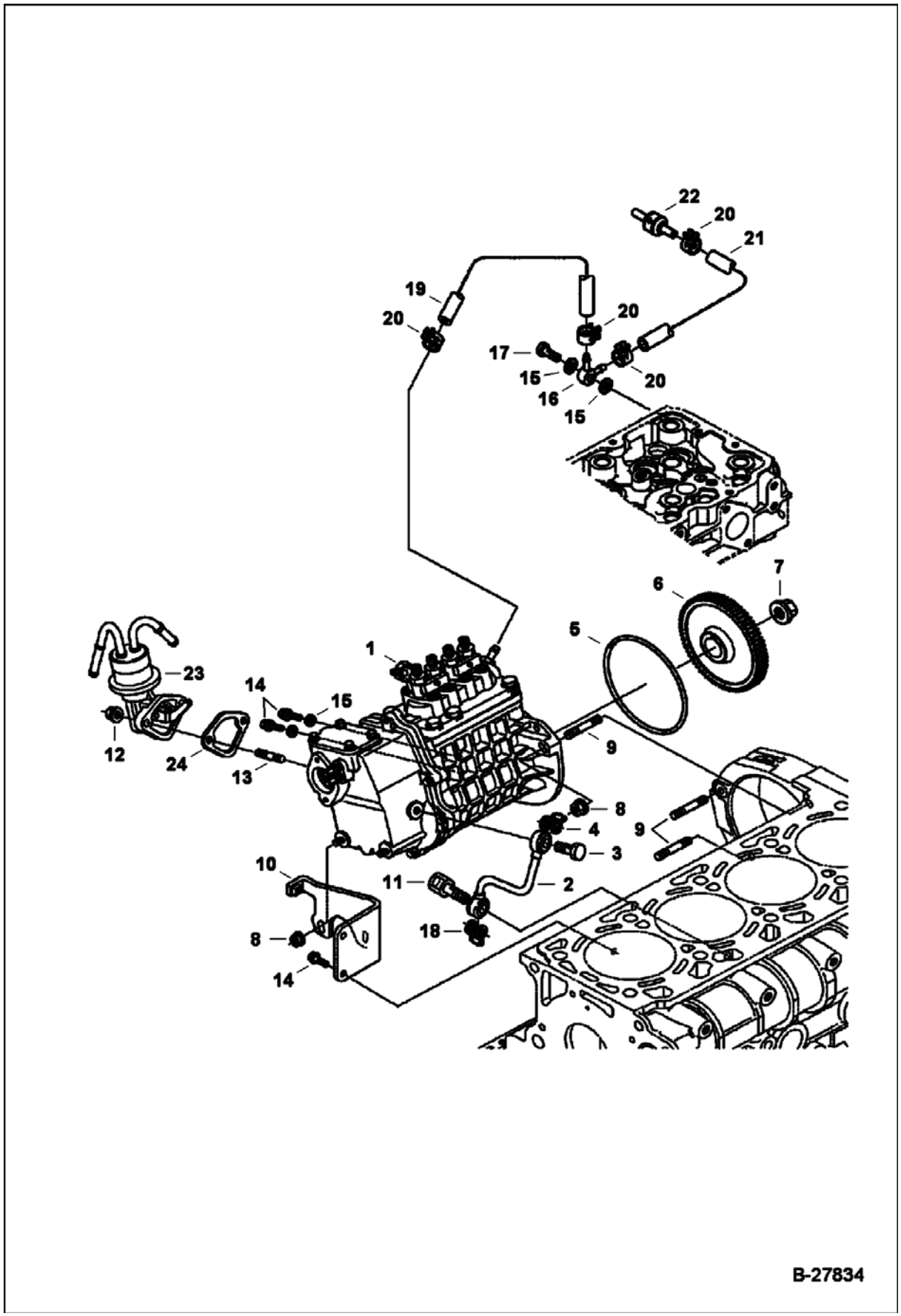
22
20
21
19
20
20
17
15
16
15
20
7
6
5
1
23
14
15
12
24
13
9
8
4
3
9
10
11
2
18
8
14
B-27834

FUEL & INJECTION PUMP (Cont'd)

Ref No	Part Number	Description	Remarks	Serial Number	Qty
1	7020827	PUMP, FUEL INJ	assy - Was 7008537 [A]		1
2	7008438	PIPE, OIL			1
3	6680900	BOLT			1
4	6685962	WASHER, SEALING ALUMINUM			1
5	7000618	GASKET, PUMP INJ			1
6	7008443	GEAR, PUMP INJ		E/ 8RZ999 & Below	1
6	7022433	GEAR, PUMP INJ		E/ 8S0001 & Above	1
7	7000613	NUT			1
8	6969819	NUT, FLANGE			5
9	7021003	STUD	Was 6685919 [B]		3
10	7008444	BRACKET, PUMP INJ			1
11	7008439	BOLT, JOINT			1
12	6670533	NUT			2
13	6680264	STUD			2
14	6680662	BOLT			4
15	3974095	MET-GASK			4
16	7008517	FITTING, BANJO			1
17	6680791	BOLT			1
18	6689331	GASKET			1
19	7000605	TUBE, FUEL LINE ASSY			1
20	6654718	CLAMP			4
21	7000604	TUBE, FUEL LINE ASSY			1
22	6680796	VALVE			1
23	7000767	PUMP, FUEL			1
24	7010133	GASKET, PUMP FUEL	Was 6670782 [B]		1

INJECTION PUMP
(Fuel Camshaft)

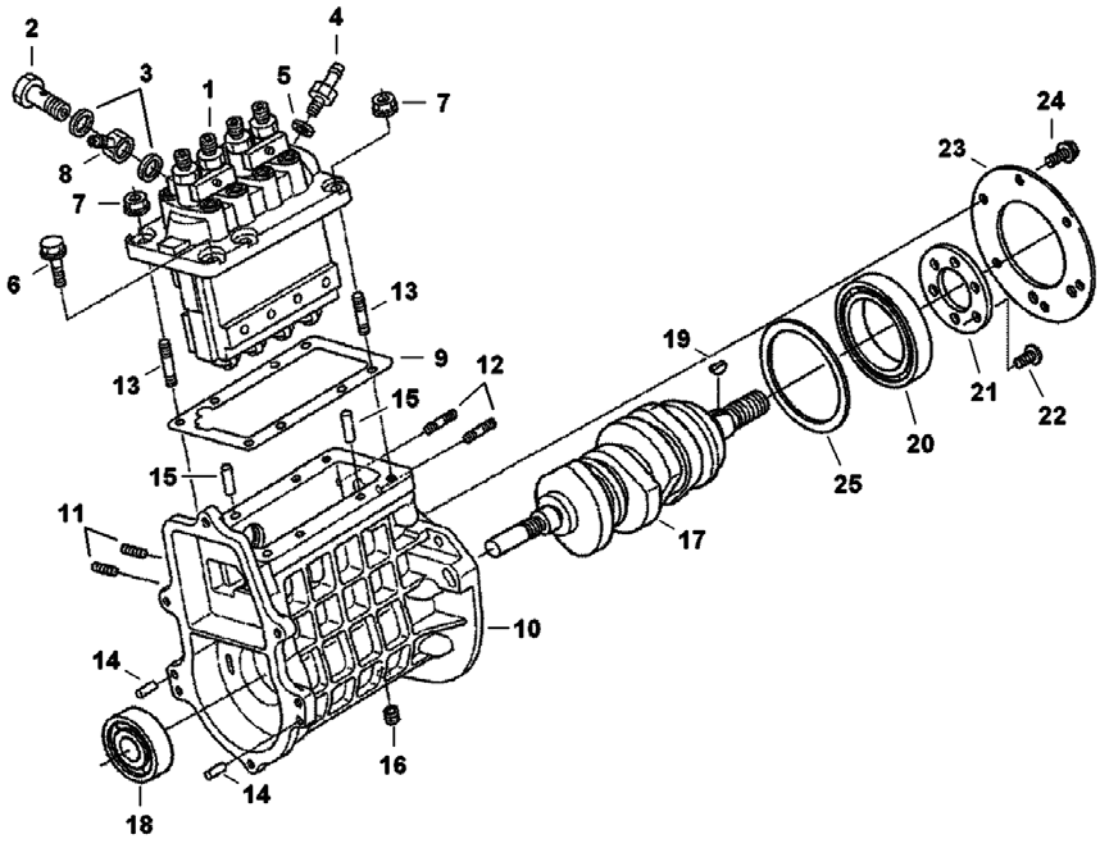

INJECTION PUMP (Cont'd)
(Fuel Camshaft)

Ref No	Part Number	Description	Remarks	Serial Number	Qty
1	7008493	PUMP, FUEL INJ	W/Ref. 2 & 3		1
2	7001499	BOLT, EYE			1
3	6698120	GASKET			2
4	7000609	SCREW, AIR BLEEDER			1
5	3974095	MET-GASK			2
6	6680755	BOLT			4
7	6969819	NUT, FLANGE			2
8	6513707	JOINT			1
9	6684829	SHIM			1
10	7008492	HOUSING, PUMP INJ	W/Ref. 11-16	E/ 8VZ999 & Below	1
10	7012012	HOUSING, PUMP INJ	W/Ref. 11 & 13-16	E/ 8W0001 - 9F9999	1
10	7020994	HOUSING, PUMP INJ	W/Ref. 11 & 13-16	E/ 9G0001 & Above	1
11	7020989	STUD	for harness bracket - Was 6598156 [B]		2
12	7000606	STUD		E/ 8VZ999 & Below	2
13	6652670	STUD			2
14	6680809	PIN			2
15	3974394	PIN			2
16	6680667	PLUG			1
17	7000628	CAMSHAFT, FUEL			1
18	7000637	BEARING, BALL			1
19	6680813	KEY			1
20	7000617	BEARING, BALL			1
21	7000614	RETAINER, BEARING			1
22	7000594	SCREW			6
23	7000629	RETAINER, BEARING	W/7 holes	E/ 8VZ999 & Below	1
23	7010592	RETAINER, BEARING	W/6 holes and 1 notch	E/ 8W0001 - 9F9999	1
23	7020993	RETAINER	W/8 holes	E/ 9G0001 & Above	1
24	29CM612	BOLT			6
25	7020986	COLLAR		E/ 9G0001 & Above	1

INJECTION PUMP
(Adjustment Bolts)

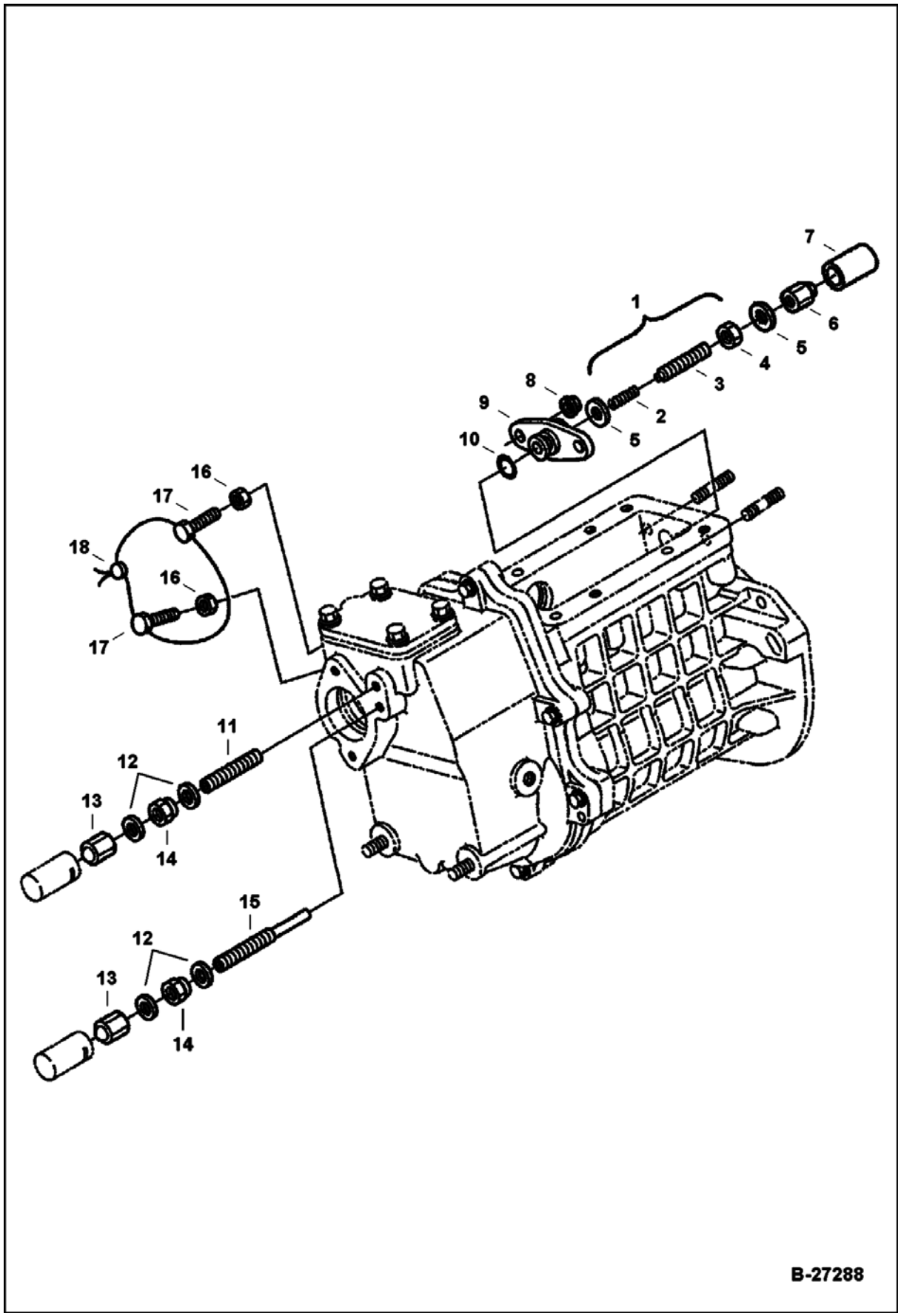

INJECTION PUMP (Cont'd)
(Adjustment Bolts)

Ref No	Part Number	Description	Remarks	Serial Number	Qty
1	7008394	BOLT, ADJUSTMENT ASSY	Ref. 2-4	E/ 8TZ999 & Below	1
1	7012049	BOLT, ADJUSTMENT ASSY	Ref. 2-4	E/ 8U0001 & Above	1
2	7008395	SPRING			1
3		BOLT, ADJUSTMENT	NSS - Order Ref. 1		1
4	3974425	NUT			1
5	3974095	MET-GASK			1
6	3974978	NUT			1
7	3974979	CAP			1
8	6670533	NUT		E/ 8VZ999 & Below	2
9	7000621	BRACKET, BOLT ADJUSTING		E/ 8VZ999 & Below	1
10	7000731	O-RING		E/ 8VZ999 & Below	1
11	7000589	BOLT, ADJUSTING			1
12	3974972	GASKET			4
13	6657470	NUT			2
14	6680272	NUT			2
15	7000620	BOLT, ADJUSTING			1
16	1DM6	NUT			2
17	7008446	BOLT, ADJUSTING			2
18		Wire, Security	NAP		1

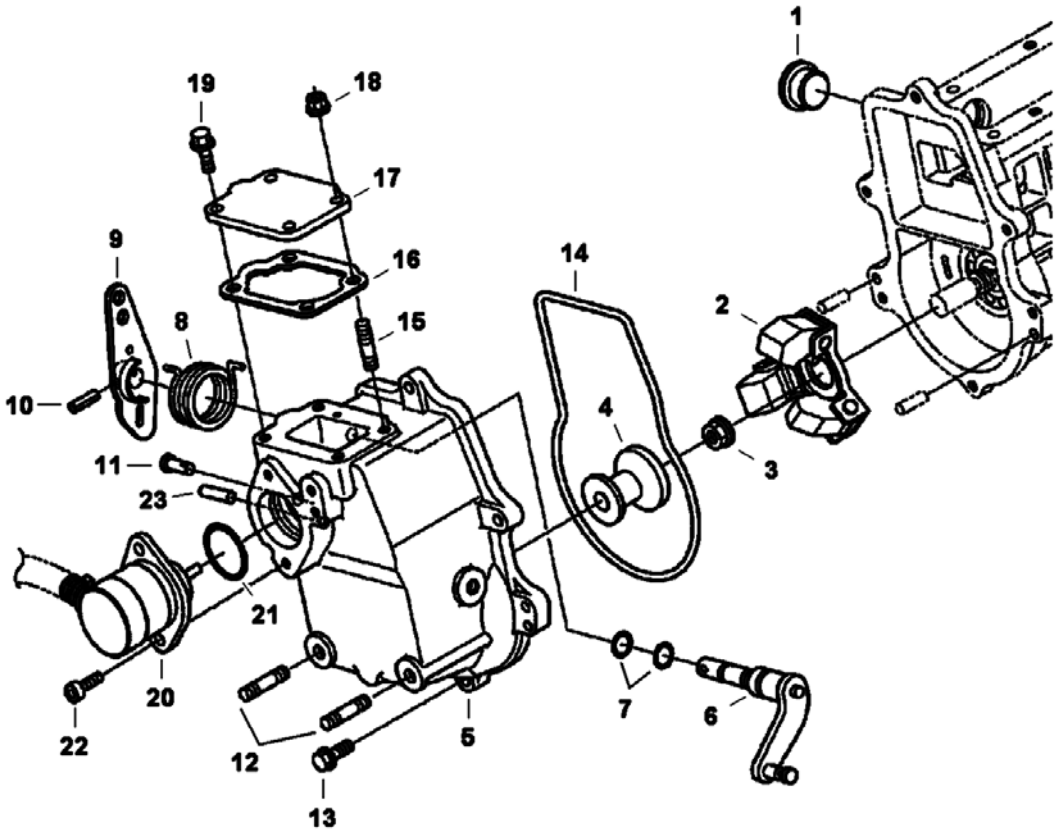

B-27836

GOVERNOR (Cont'd)

Ref No	Part Number	Description	Remarks	Serial Number	Qty
1	6680757	COVER			1
2	7000638	WEIGHT, GOVERNOR			1
3	6680759	NUT			1
4	7000622	SLEEVE, GOVERNOR			1
5	7021007	HOUSING, GOVERNOR	Was 7000768 [B]		1
6	7000623	LEVER, GOVERNOR			1
7	6683023	O-RING			2
8	7000625	SPRING, SPEED CONTROL			1
9	7020992	LEVER, SPEED CONTROL	Was 7000640 [B]		1
10	6680769	PIN			1
11	6652592	PIN			1
12	6680828	STUD			2
13	6680830	BOLT			6
14	6680829	GASKET			1
15	6683087	STUD			1
16	6684841	GASKET			1
17	6685500	COVER			1
18	6670533	NUT			1
19	29CM612	BOLT			3
20	7000769	SOLENOID, SHUTOFF FUEL	W/ 240 mm (9.45") lead		1
21	6685465	O-RING			1
22	6680533	BOLT			2
23	6680775	PIN			1

GOVERNOR
(Fork Lever)

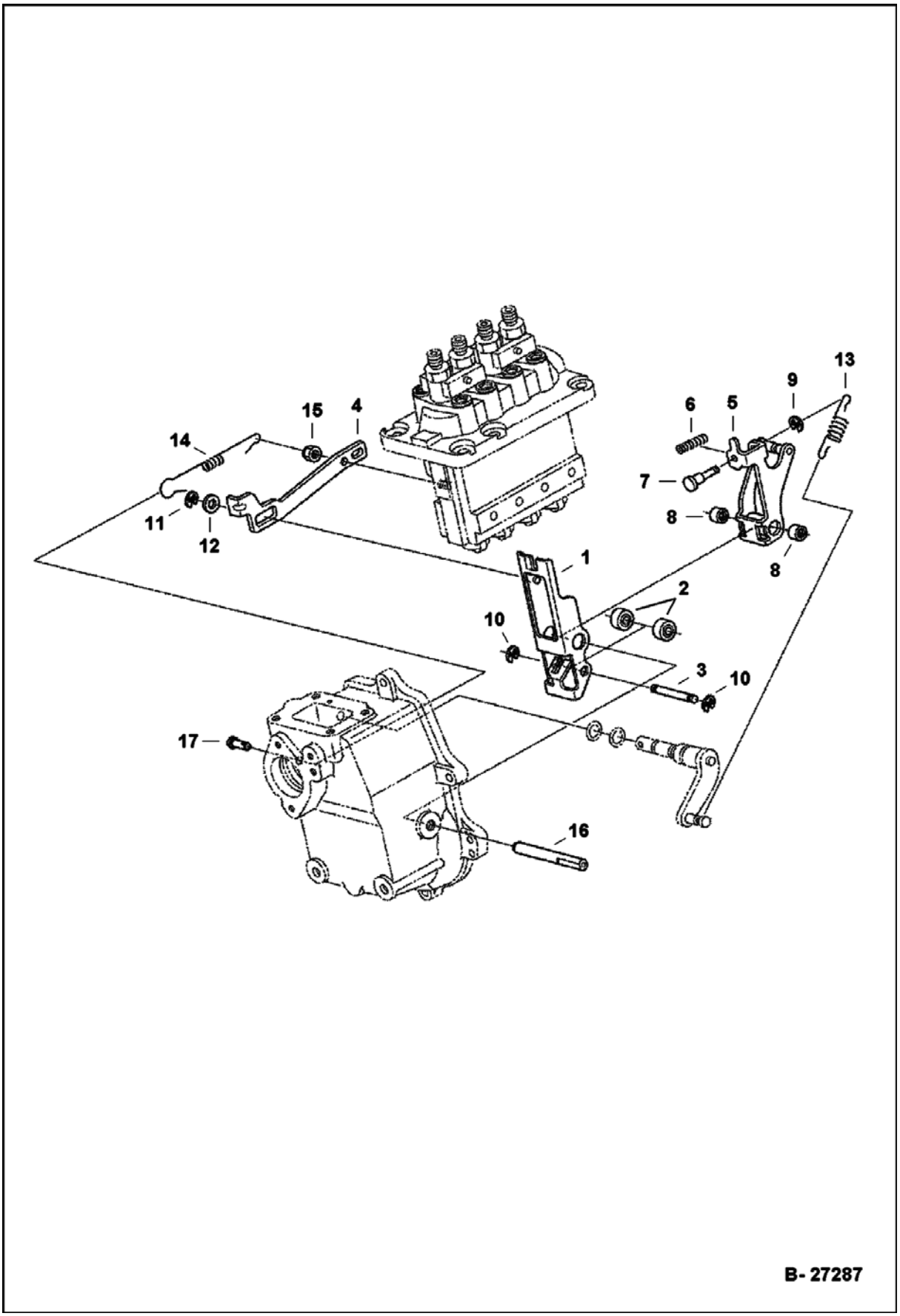

GOVERNOR (Cont'd)
(Fork Lever)

Ref No	Part Number	Description	Remarks	Serial Number	Qty
1	7000639	LEVER, FORK	W/Ref. 2-12		1
2		BEARING	NSS - Order Ref. 1		2
3		SHAFT	NSS - Order Ref. 1		1
4		BRACKET	NSS - Order Ref. 1		1
5		LEVER	NSS - Order Ref. 1		1
6		SPRING	NSS - Order Ref. 1		1
7		PIN	NSS - Order Ref. 1		1
8		BUSHING	NSS - Order Ref. 1		1
9	6680823	SNAP RING			1
10	6680822	SNAP RING			2
11	6680821	SNAP RING			1
12	6680820	WASHER			1
13	7008520	SPRING, GOVERNOR			1
14	7008499	SPRING, START			1
15	6685952	NUT			1
16	7000624	SHAFT, FORK LEVER		E/ 9F9999 & Below	1
16	7020987	SHAFT, FORK LEVER		E/ 9G0001 & Above	1
17	6652592	PIN			1

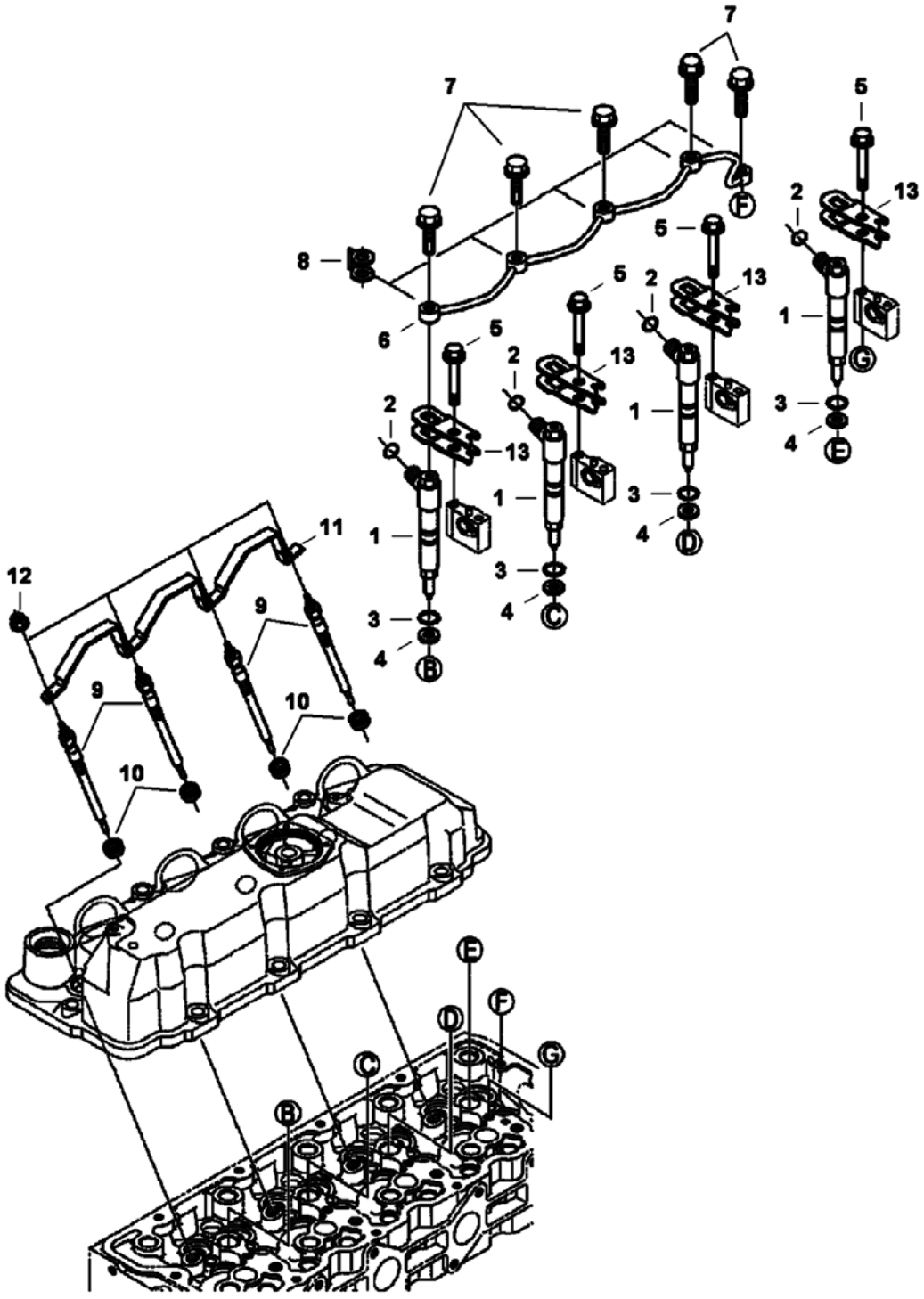
7
7
5
8
2
13
5
6
5
2
13
1
2
13
3
4
1
3
4
11
12
9
9
10
10
B-27838

INJECTION NOZZLES (Cont'd)

Ref No	Part Number	Description	Remarks	Serial Number	Qty
1		HOLDER, NOZZLE	NAP - Was 7008498 [A]		4
2	6680778	O-RING			4
3	7000619	ORING			4
4	6969824	GASKET, NOZZLE INJ			4
5	7008445	CLAMP, INJECTION			8
6	7008442	PIPE, RETURN FUEL			1
7	6680788	BOLT			5
8	6685498	GASKET			5
9	7008500	GLOW PLUG			4
10	7000626	SEAL	glow plug		4
11	7008447	CORD, GLOW PLUG			1
12	6670472	NUT			4
13	6680687	BOLT			4

INJECTION PIPE

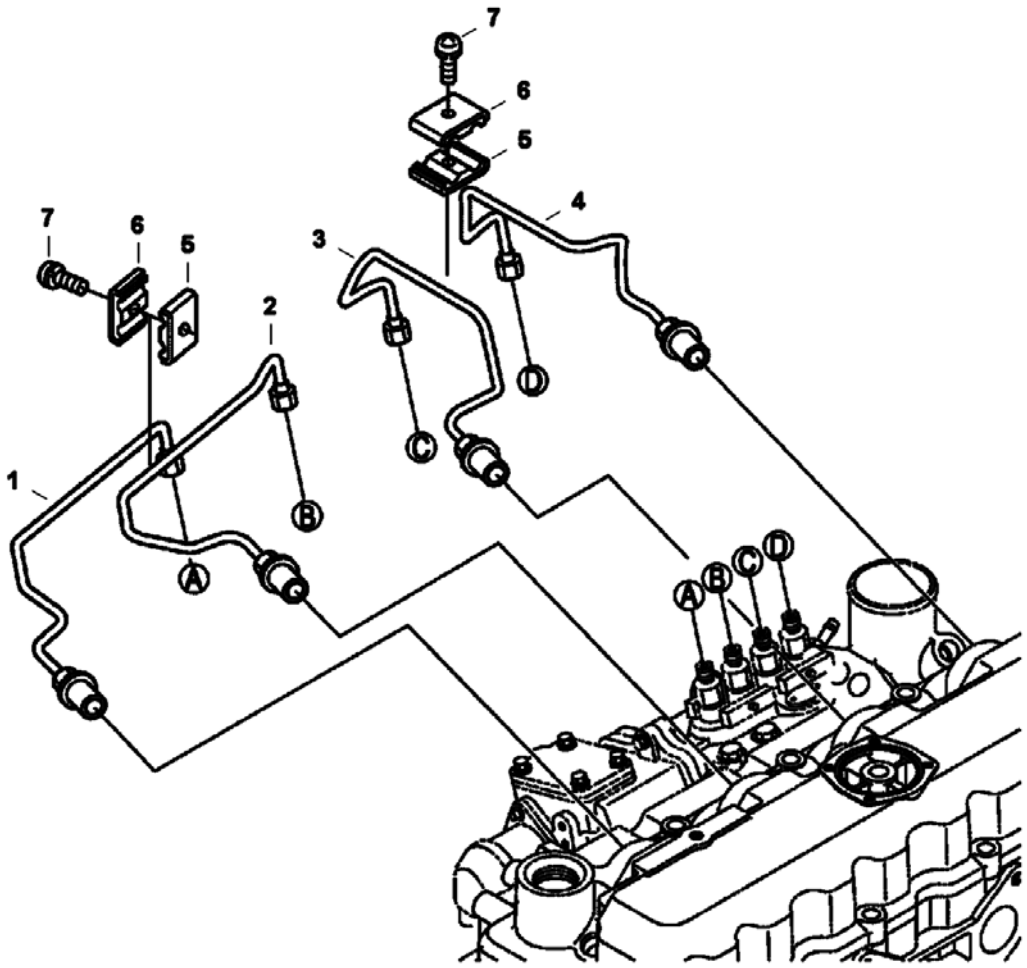

INJECTION PIPE (Cont'd)

Ref No	Part Number	Description	Remarks	Serial Number	Qty
1	7008494	PIPE, INJECTION			1
2	7008495	PIPE, INJECTION			1
3	7008496	PIPE, INJECTION			1
4	7008497	PIPE, INJECTION			1
5	6652688	CLAMP			2
6	6652689	CLAMP			1
7	3974260	SCREW			2

AIR CLEANER

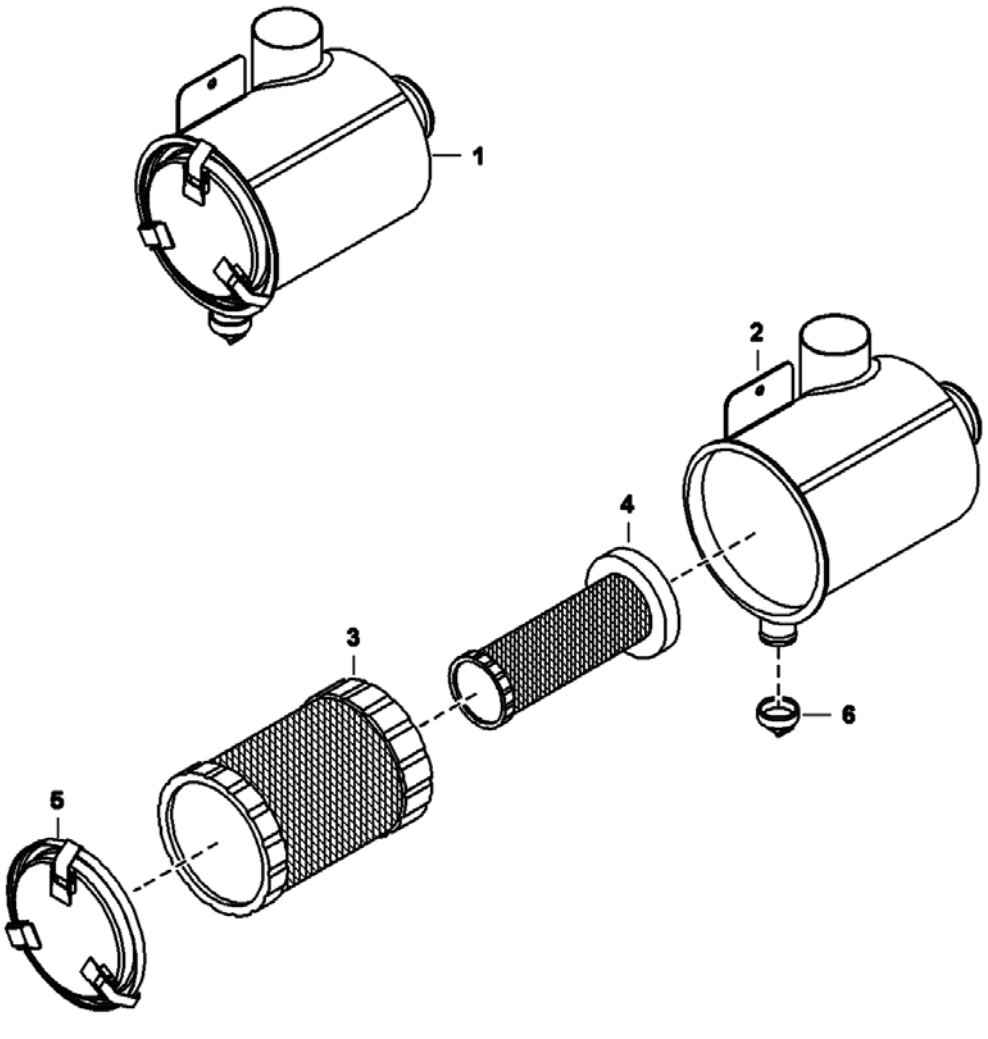

Ref No	Part Number	Description	Remarks	Serial Number	Qty
1	7148598	FILTER, AIR CLEANER ASSY			1
2		TANK	NSS - Order Ref. 1		1
3	7008043	FILTER, AIR OUTER			1
4	7008044	FILTER, AIR INNER			1
5	7001920	COVER, FRONT			1
6	6691536	DUST EJECTION VALVE	1.48" (37,59 mm) ID		1

ACCESSORIES HARNESS KIT

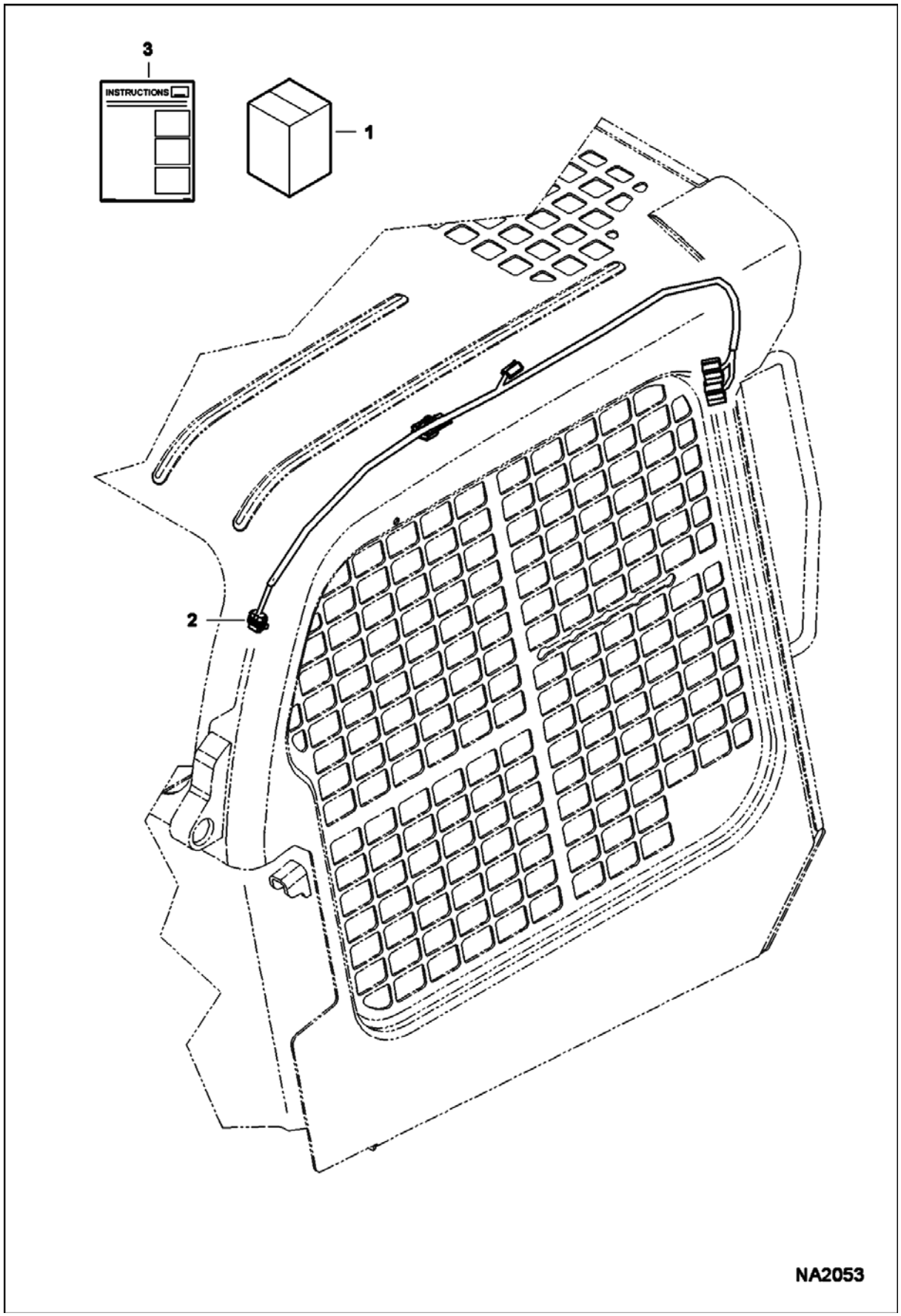

ACCESSORIES HARNESS KIT (Cont'd)

Ref No	Part Number	Description	Remarks	Serial Number	Qty
1		KIT, STD OPT ADAPTER	NAP - Order components - Was 7169103 [D]		1
2	7169130	HARNESS ACCESSORY			1
3	6987252	INSTRUCTIONS			1

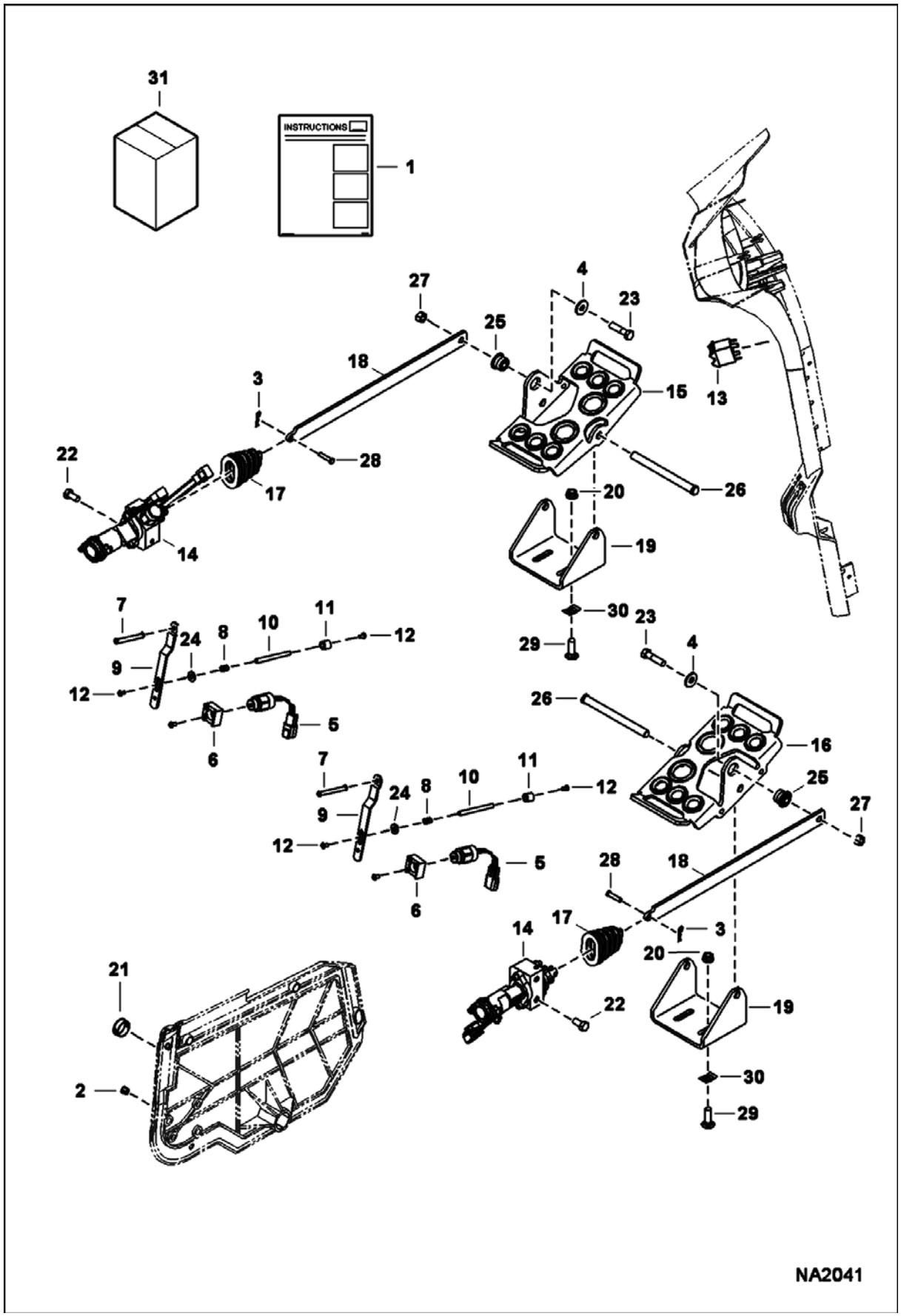
31
INSTRUCTIONS
1
27
4
23
25
18
3
15
13
22
28
17
26
20
14
19
30
29
7
24
8
10
11
12
9
12
5
6
23
4
26
16
7
24
8
10
11
12
25
27
9
12
5
6
28
18
17
14
3
20
21
22
19
30
2
29
NA2041

ACS CONVERSION KIT (Cont'd)

Ref No	Part Number	Description	Remarks	Serial Number	Qty
1	7129371	KIT, ACS	Ref. 2-29		1
2	5289686	PLUG	black - 0.38" dia hole		2
3	6513495	COTTER PIN			2
4	6563914	WASHER			2
5	6676029	SOLENOID, LOCK SPOOL			2
6	6680468	MOUNT			2
7	6680469	SPACER			2
8	6680470	SPRING			2
9	6680477	STRAP			2
10	6719834	SPACER			2
11	6719835	SLEEVE			2
12	6727065	BOLT			12
13	7001713	SWITCH			1
14	7003496	SENSOR			2
15	7151868	PEDAL ASSY	LH		1
16	7151871	PEDAL ASSY	RH		1
17	7153503	BOOT			2
18	7154903	LINK			2
19	7157611	MOUNT			2
20	57D6	NUT 5			2
21	7166315	PLUG			1
22	17C612	BOLT 5			4
23	17C624	BOLT 5			2
24	25E13	WASHER 5			2
25	6665701	BUSHING, PRESS FIT			1
26		PIN	NAP - Order Ref. 15 or 16		2
27	95D6	NUT			2
28	6564654	PIN			2
29	37C620	BOLT			4
30	6684033	NUT			4
31	6987236	INSTRUCTIONS			1

ASPIRATION HOSE KIT

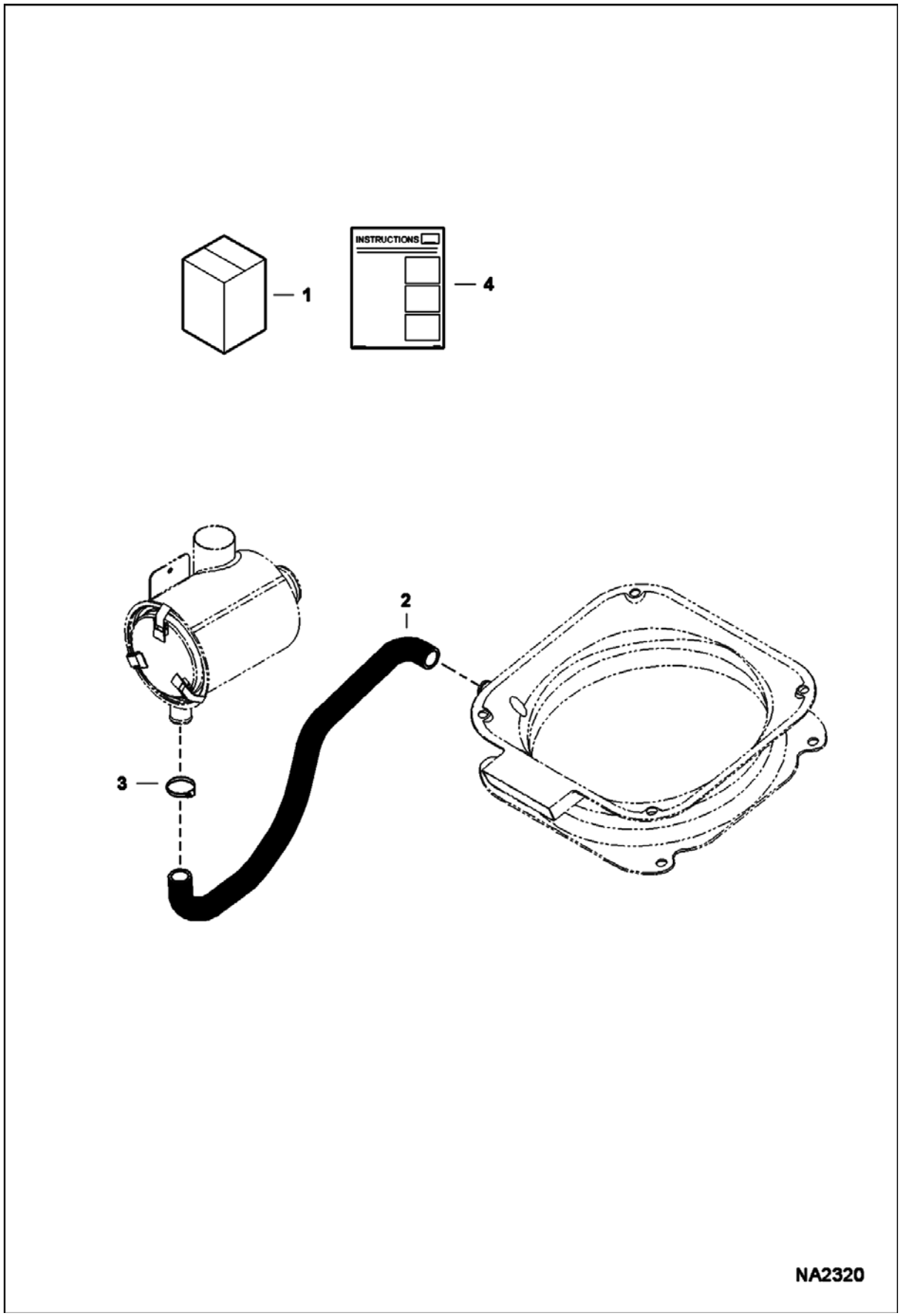

ASPIRATION HOSE KIT (Cont'd)

Ref No	Part Number	Description	Remarks	Serial Number	Qty
1		KIT, HOSE ASPIRATION	NAP - Order components - Was 7177065 [A]		1
2	7157923	HOSE, AIR FORMED			1
3	5HM42	HOSECLAMP			1
4	6987475	INSTRUCTIONS			1

BACK-UP ALARM KIT
(Manual Controls, AHC & ACS)

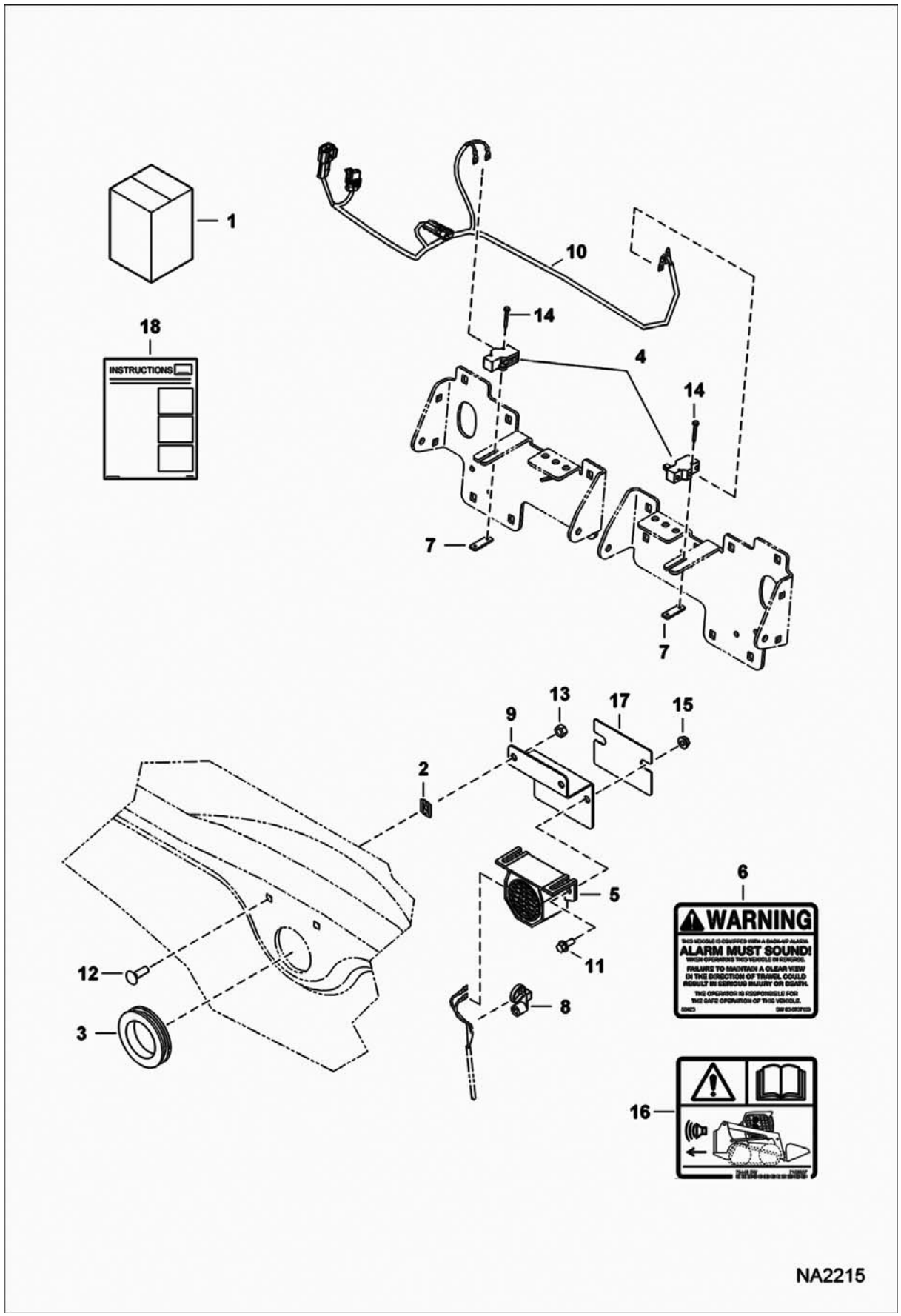

BACK-UP ALARM KIT (Cont'd)
(Manual Controls, AHC & ACS)

Ref No	Part Number	Description	Remarks	Serial Number	Qty
1	7173592	KIT, ALARM BACK-UP	Ref, 2-18		1
2	774220	NUT			2
3	6577545	GROMMET			1
4	6646781	SWITCH			2
5	6651512	ALARM BACKUP			1
6	6737189	DECAL, WARNING	backup alarm		1
7	6702593	SPACER			2
8	7002988	TIE, STUD MOUNT			1
9	7189077	MOUNT	Was 7167871 [B]		1
10	7175017	HARNESS, ALARM BACK-UP			1
11	35C410	BOLT 5			2
12	37C516	BOLT			2
13	61D5	NUT			2
14	84G1320	BOLT			4
15	97D4	NUT			2
16	7180087	DECAL, WARNING			1
17	7191385	SHIELD, ALARM			1
18	6987235	INSTRUCTIONS			1

BACK-UP ALARM KIT
(Selectable Joystick Controls)

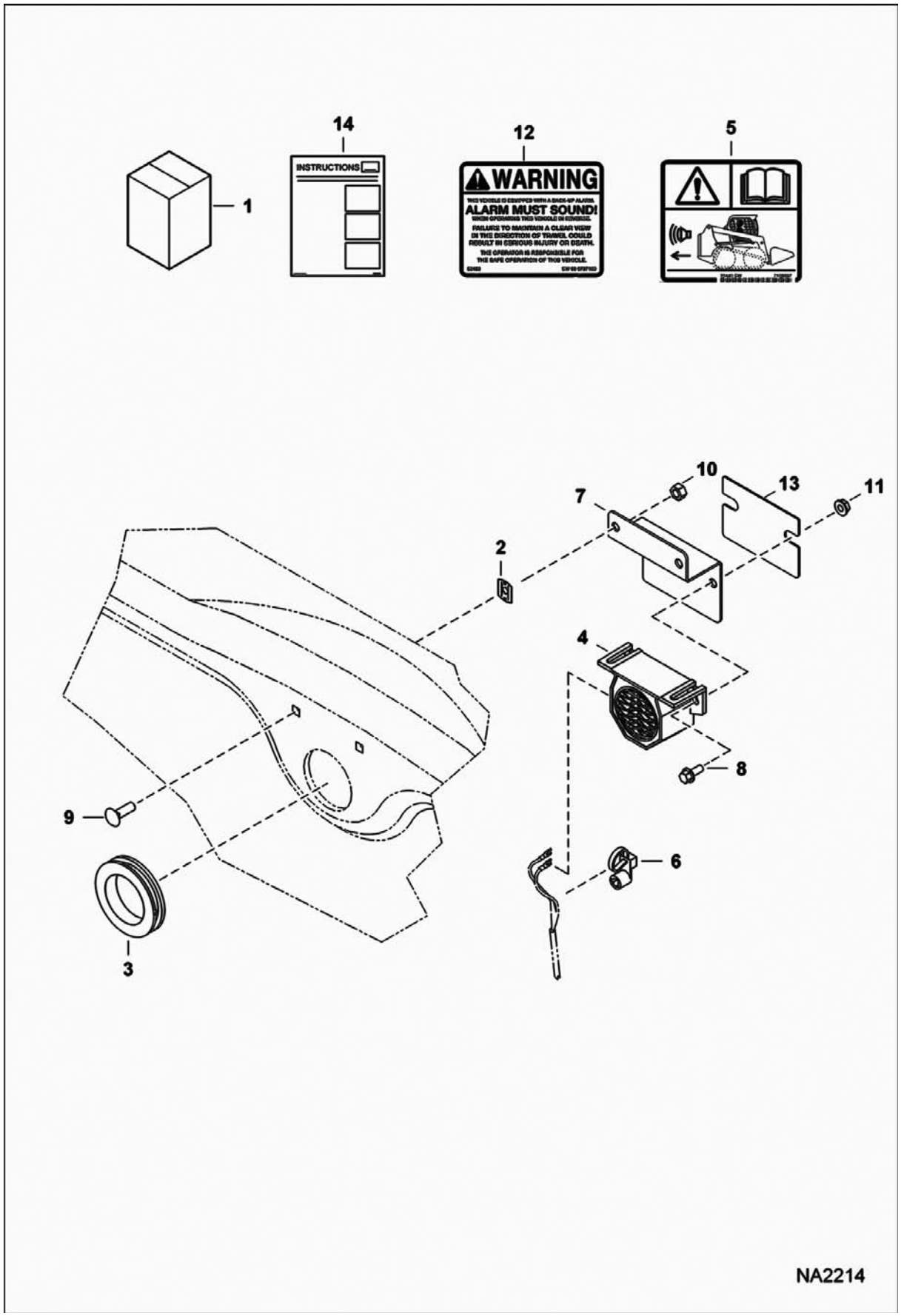

BACK-UP ALARM KIT (Cont'd)
(Selectable Joystick Controls)

Ref No	Part Number	Description	Remarks	Serial Number	Qty
1	7173593	KIT, ALARM BACK-UP	Ref. 2-14		1
2	774220	NUT			2
3	6577545	GROMMET			1
4	6651512	ALARM BACKUP			1
5	6737189	DECAL, WARNING	backup alarm		1
6	7002988	TIE, STUD MOUNT			1
7	7189077	MOUNT	Was 7167871 [B]		1
8	35C410	BOLT 5			2
9	37C516	BOLT			2
10	61D5	NUT			2
11	97D4	NUT			2
12	7180087	DECAL, WARNING			1
13	7191385	SHIELD, ALARM			1
14	6987235	INSTRUCTIONS			1

BEACON

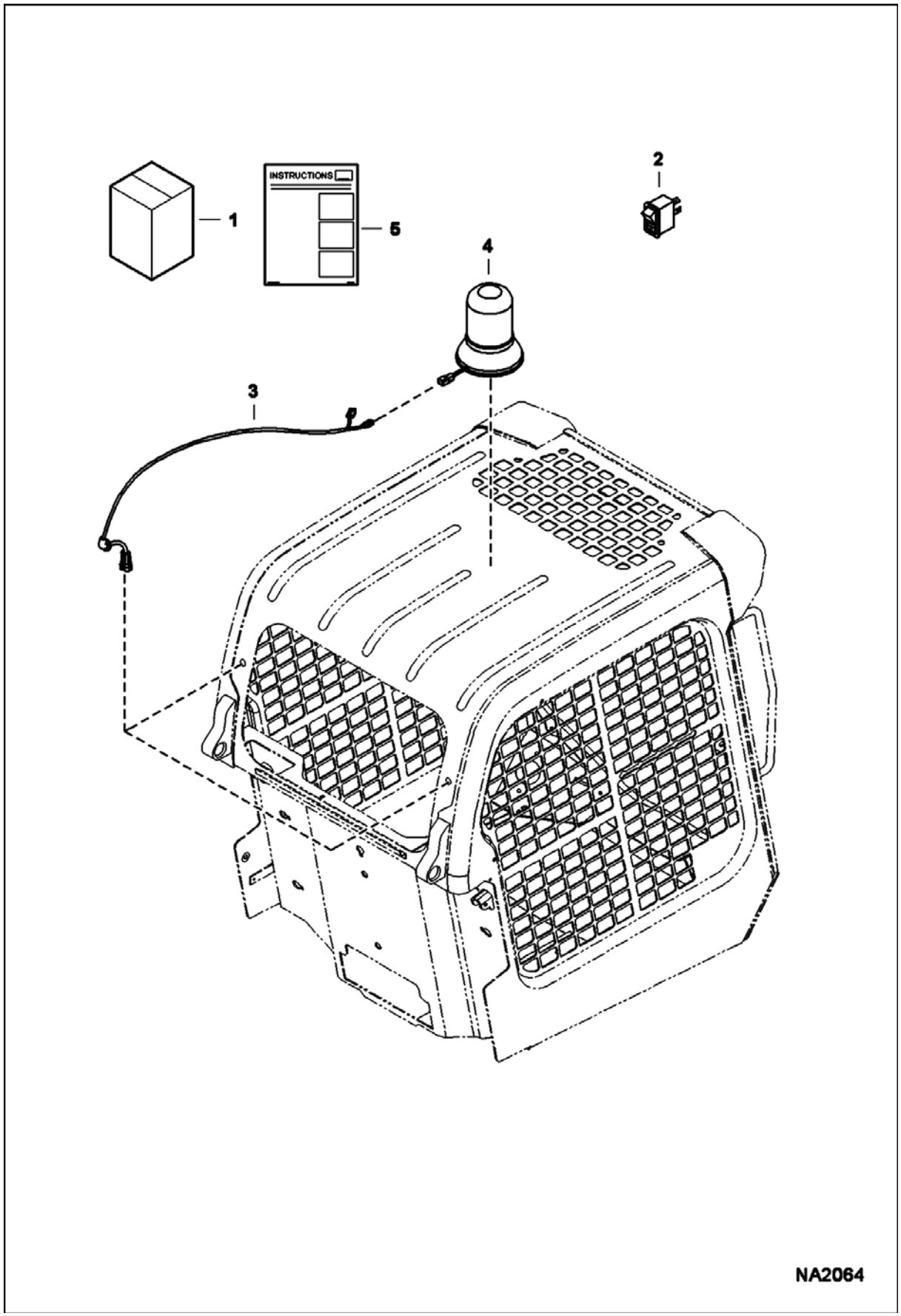

BEACON (Cont'd)

Ref No	Part Number	Description	Remarks	Serial Number	Qty
1	7129299	KIT, BEACON LIGHT	Ref. 2-5 - if equipped W/standard cab harness Also Order 7169130 harness & 6987252 instructions		1
2	6668816	SWITCH			1
3	6718872	HARNESS			1
4	6675523	BEACON			1
5	6987225	INSTRUCTIONS			1

BLOCK HEATER
(Engine)

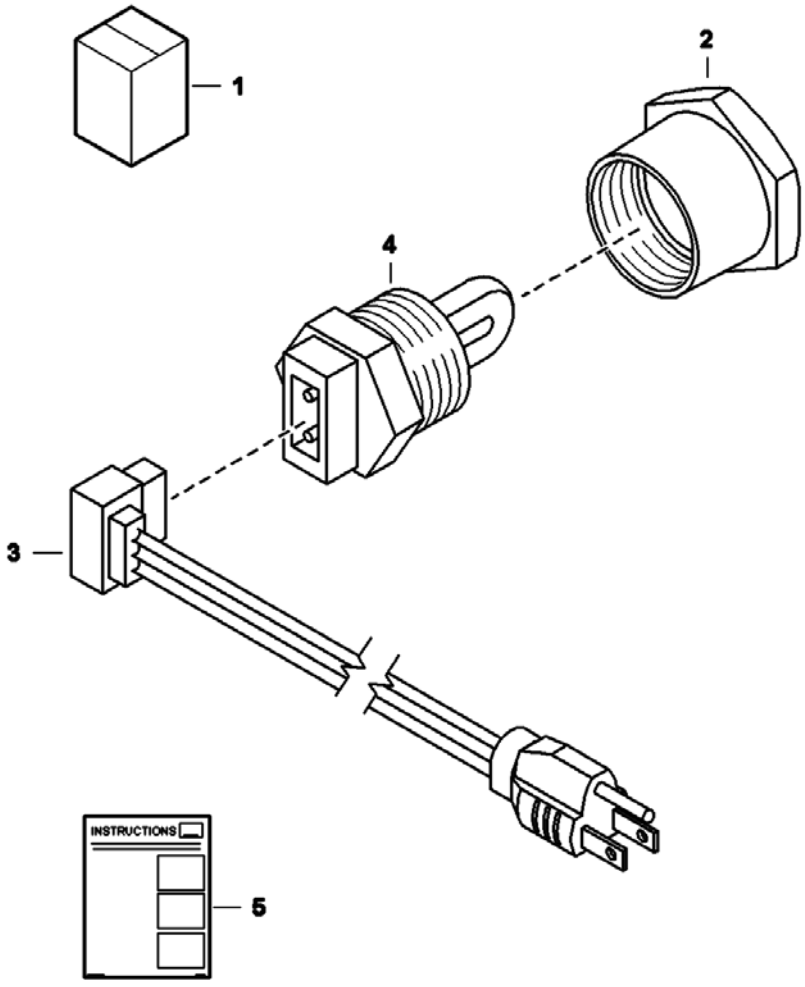

NA1308

BLOCK HEATER (Cont'd)
(Engine)

Ref No	Part Number	Description	Remarks	Serial Number	Qty
1	6720808	KIT, ENGINE BLOCK HEATER	W/Ref. 2, 4 & 5		1
2	19F12	BUSHING			1
3	6685850	CORD			1
4	6659369	HEATER	W/Ref. 3		1
5	6720038	INSTRUCTIONS			1

BUCKET POSITION VALVE KIT

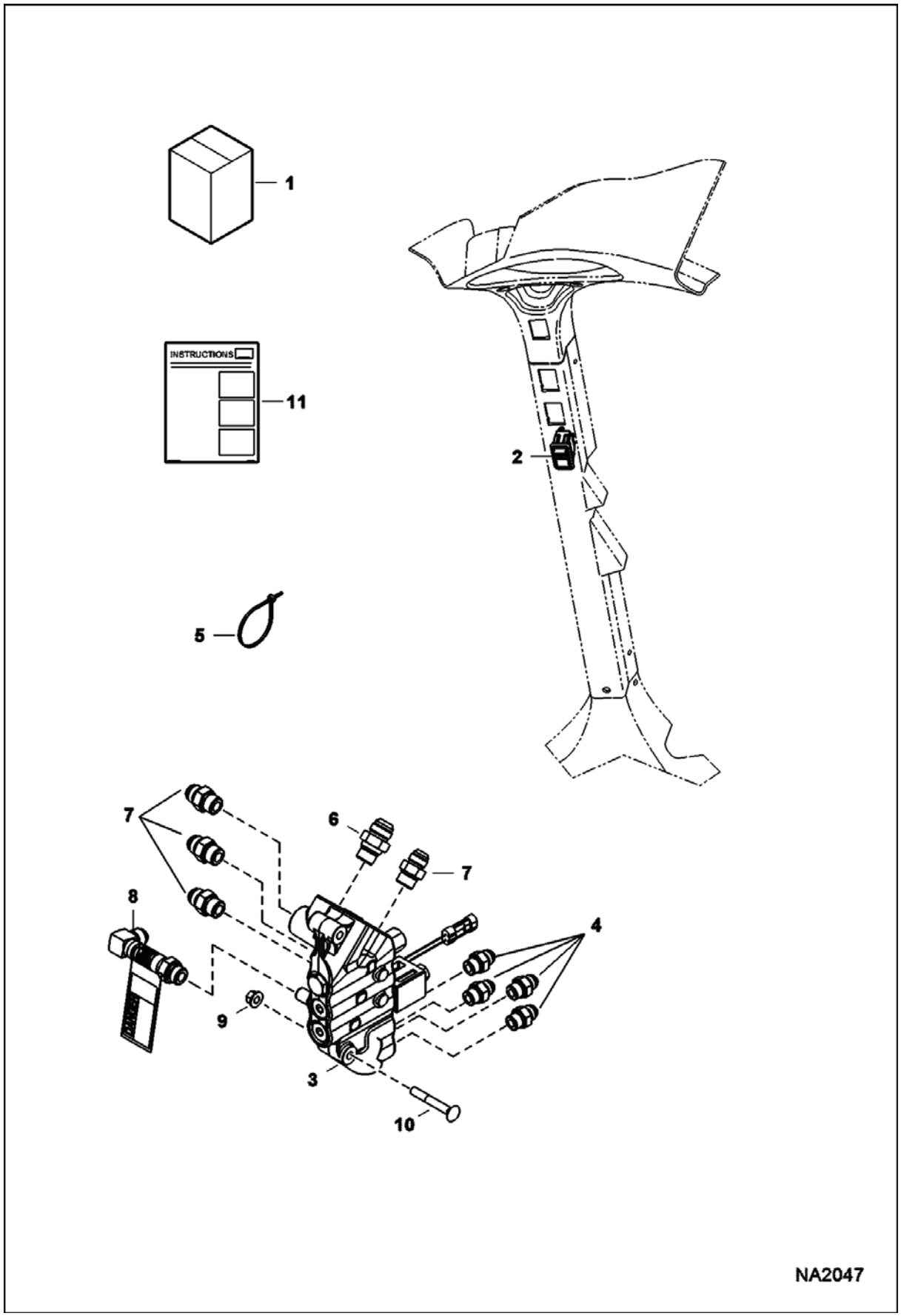

BUCKET POSITION VALVE KIT (Cont'd)

Ref No	Part Number	Description	Remarks	Serial Number	Qty
1	7128442	KIT, BPV	Ref. 2-8 & 11		1
2	6690947	SWITCH, BPV			1
3		VALVE, BPV	See Illustration BUCKET POSITION VALVE/ NA2550		1
4	15KB0808	FITTING, HYD CONNECTOR	600 & 700 models		4
4	15KB0608	FITTING, HYD CONNECTOR	500 models		4
5	6624289	STRAP, TIE			1
6	15KB1210	FITTING, HYD CONNECTOR			1
7	15KB1010	FITTING, HYD CONNECTOR			5
8	7183605	KIT, FITTING W/DECAL			1
9	83D6	NUT 5	See Illustration HYDRAULIC CIRCUITRY/ NA2148 - not in kit		2
10	37C644	BOLT	See Illustration HYDRAULIC CIRCUITRY/ NA2148 - not in kit		2
11	6987250	INSTRUCTIONS			1

BUCKET POSITION VALVE

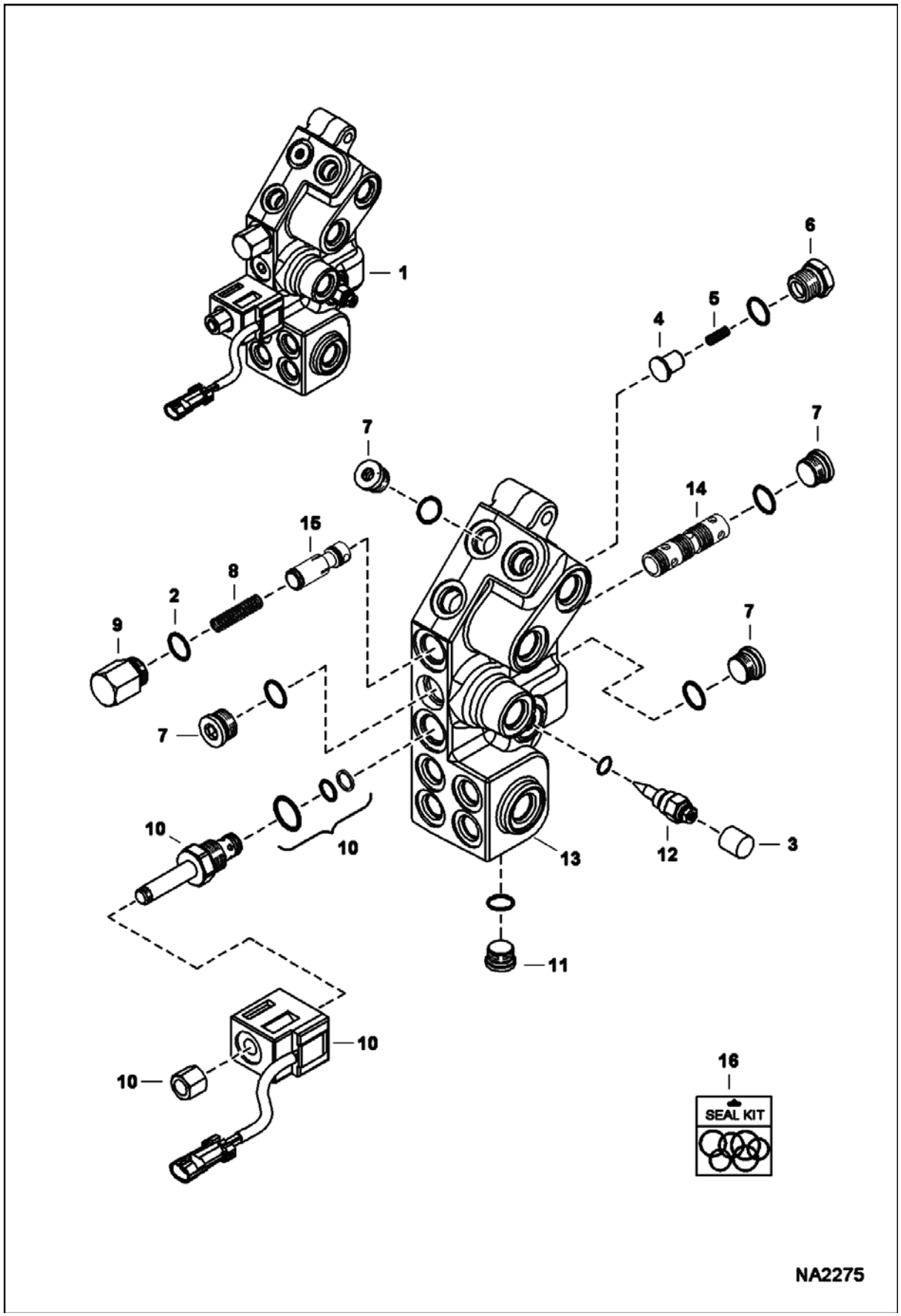

BUCKET POSITION VALVE (Cont'd)

Ref No	Part Number	Description	Remarks	Serial Number	Qty
1		VALVE, BPV	See Illustration BUCKET POSITION VALVE/ NA2550 - NAP - Ref. 2-15 - Order 7011060 valve - Was 6697952 [A]		1
2	6667680	SNAP RING			1
3	6667676	COVER			1
4	6647783	LOAD CHECK			1
5	6647785	SPRING			1
6	6647784	PLUG			1
6	79K10	O RING 10			x
7	6676543	PLUG			4
8	6648294	SPRING			1
9	6667176	PLUG			1
10	6672863	VALVE, SOLENOID			1
10	6671527	NUT			1
10	6670634	SEAL KIT			1
10	6675781	COIL			1
10	6675780	CARTRIDGE			1
11	7010282	PLUG			2
12	7010283	VALVE, REGULATOR			1
13		BLOCK	NSS - Order Ref. 1		1
14		SPOOL	NSS - Order Ref. 1		1
15		SPOOL	NSS - Order Ref. 1		1
16	6667185	KIT, SEAL			1

BUCKET POSITION VALVE

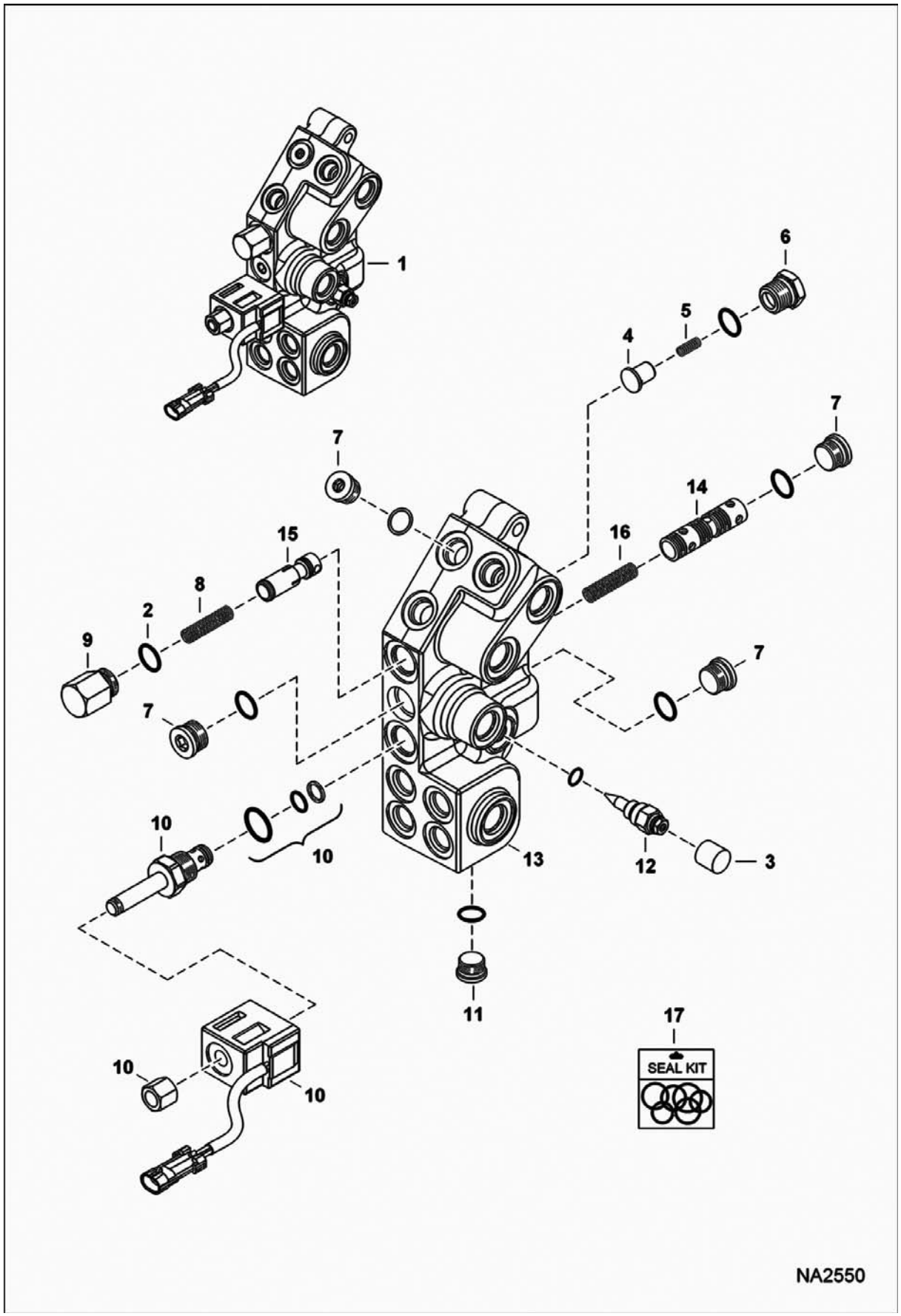

BUCKET POSITION VALVE (Cont'd)

Ref No	Part Number	Description	Remarks	Serial Number	Qty
1	7011060	VALVE, BPV	Ref. 2-16		1
2	6667680	SNAP RING			1
3	6667676	COVER			1
4	6647783	LOAD CHECK			1
5	6647785	SPRING			1
6	6647784	PLUG			1
6	79K10	O RING 10			x
7	6676543	PLUG			4
8	6648294	SPRING			1
9	6667176	PLUG			1
10	6672863	VALVE, SOLENOID			1
10	6671527	NUT			1
10	6670634	SEAL KIT			1
10	6675781	COIL			1
10	6675780	CARTRIDGE			1
11	7013201	PLUG			2
12	7010283	VALVE, REGULATOR			1
13		BLOCK	NSS - Order Ref. 1		1
14		SPOOL	NSS - Order Ref. 1		1
15		SPOOL	NSS - Order Ref. 1		1
16	6660775	SPRING			1
17	7013203	KIT, SEAL			1

BUMPER KIT
(Rear)

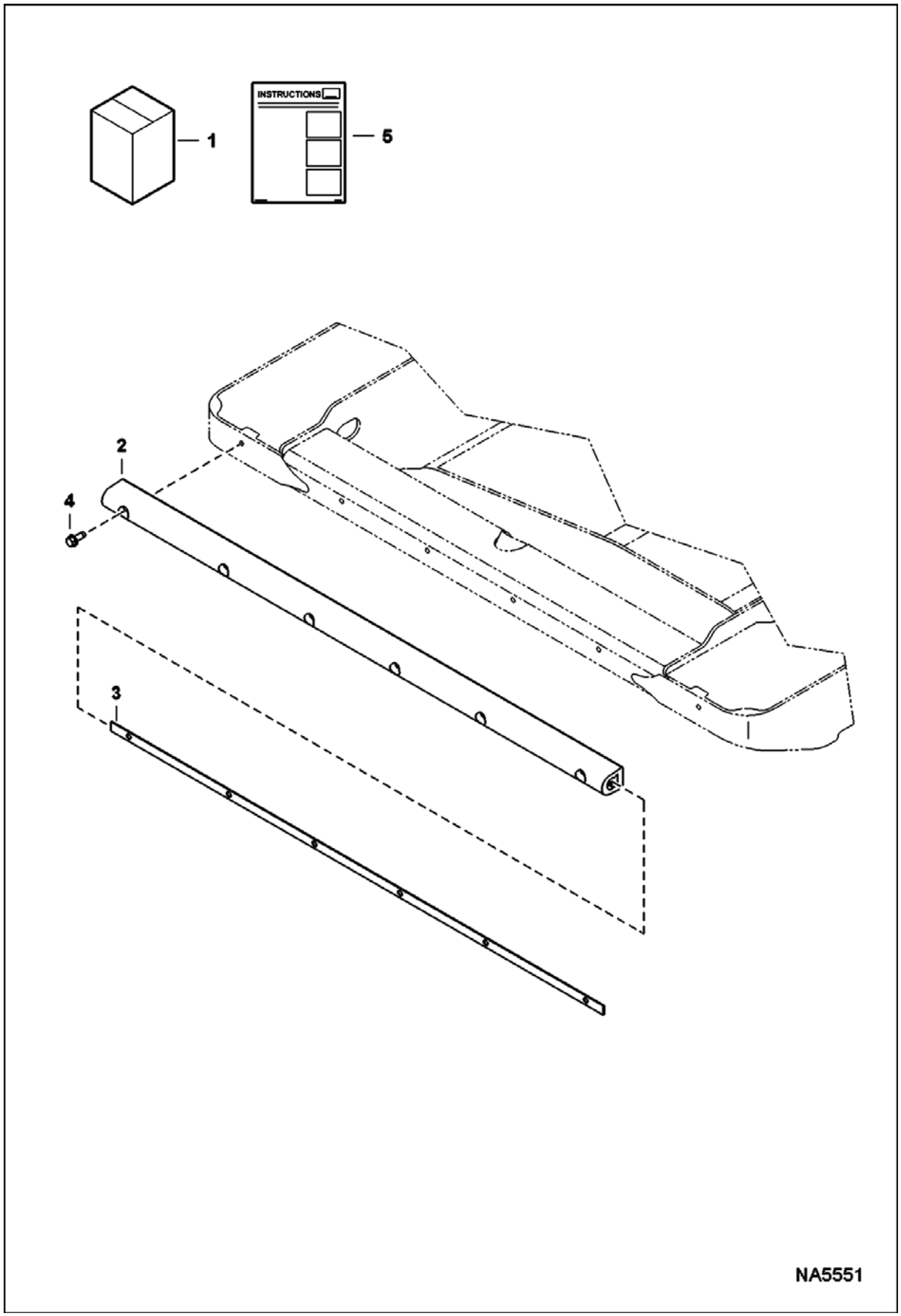

BUMPER KIT (Cont'd)
(Rear)

Ref No	Part Number	Description	Remarks	Serial Number	Qty
1	7203665	KIT, BUMPER	Ref. 2-5		1
2	7194160	BUMPER, RUBBER 'M' SERIES			1
3	7201515	RETAINING PLATE, RUBBER BUMPER			1
4	84G3716	SCREW 5			6
5	6990126	INSTRUCTIONS			1

CAB DOOR

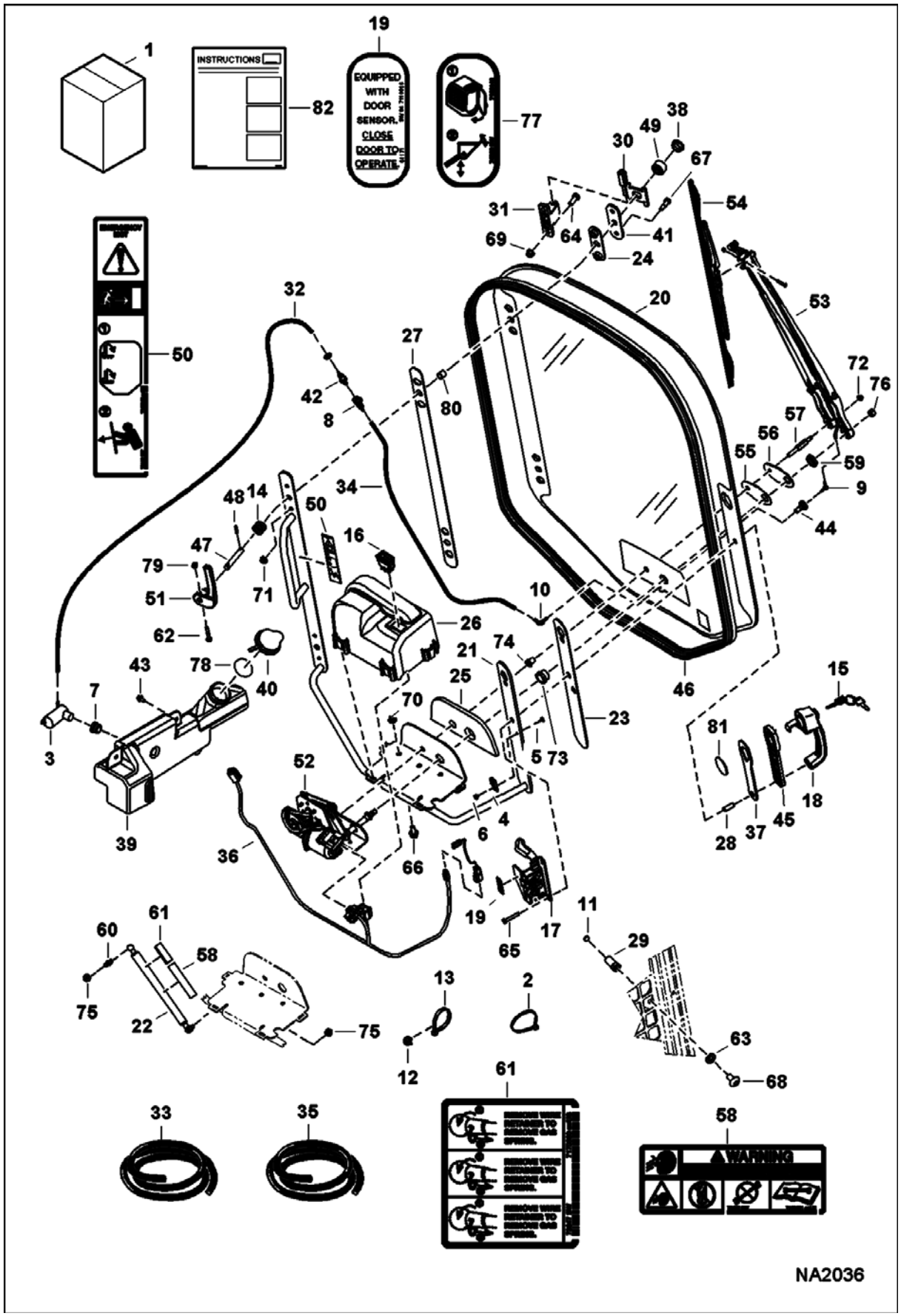
INSTRUCTIONS
EQUIPPED WITH DOOR SENSOR. CLOSE DOOR TO OPERATE.
WARNING
NA2036

Ref No	Part Number	Description	Remarks	Serial Number	Qty
1	7128393	KIT, DOOR	Ref. 2-82		1
2	6610510	TIE			3
3	6664554	PUMP, WIPER WASHER			1
4	6665000	CLIP			1
5	6665321	RIVET			1
6	6665322	RIVET			1
7	6666766	GROMMET			1
8	6675298	COUPLER, BODY			1
9	6676500	ELBOW			1
10	6676917	ELBOW			1
11	6677192	MAGNET			1
12	6690688	TREE MOUNT			6
13	6690690	STRAP, TIE			10
14	6704453	SPRING			1
15	6693241	KEY 10	single key W/O ring		1
16	7001709	SWITCH FRONT WIPER			1
17	7109661	LATCH, DOOR W/SENSOR			1
18	7109662	HANDLE, LATCH DOOR			1
19	7110316	DECAL, SAFETY	door sensor		1
20	7120401	GLASS, DOOR			1
21	7120402	FRAME DOOR ASSY			1
22	7142371	SPRING GAS DOOR	Also Order Ref. 58 & 61		1
23	7148287	SEAL DOOR HANDLE			1
24	7148289	SEAL DOOR HINGE			2
25	7174837	GASKET, WIPER			1
26	7149827	COVER, WIPER			1
27	7150719	SEAL DOOR FRAME			1
28	7174841	SPACER, HANDLE			2
29	7175151	STRIKER, DOOR			1
30	7193725	HINGE, DOOR CAB	Was 7150817 [A]		2
31	7176593	HINGE BASE			2
32		HOSE	NAP - 48" (1,219,2 mm) long - Order Ref. 33		1
33	6708310	HOSE, BULK 100	clear - 0.154" ID - sold per foot		x
34		HOSE	NAP - 31" (787,4 mm) long - Order Ref. 35		1
35	6676003	HOSE,BULK	black - 0.109" ID - sold per foor		x
36	7155024	HARNESS DOOR			1
37	7160841	SEAL HANDLE DOOR			1
38	7161429	PLUG			2
39	7163259	WASHER TANK			1
40	7163263	CAP WASHER BOTTLE			1
41	7164590	DOOR PLATE			2
42	7165972	COUPLER INSERT			2
43	7166190	SCREW THREAD			3

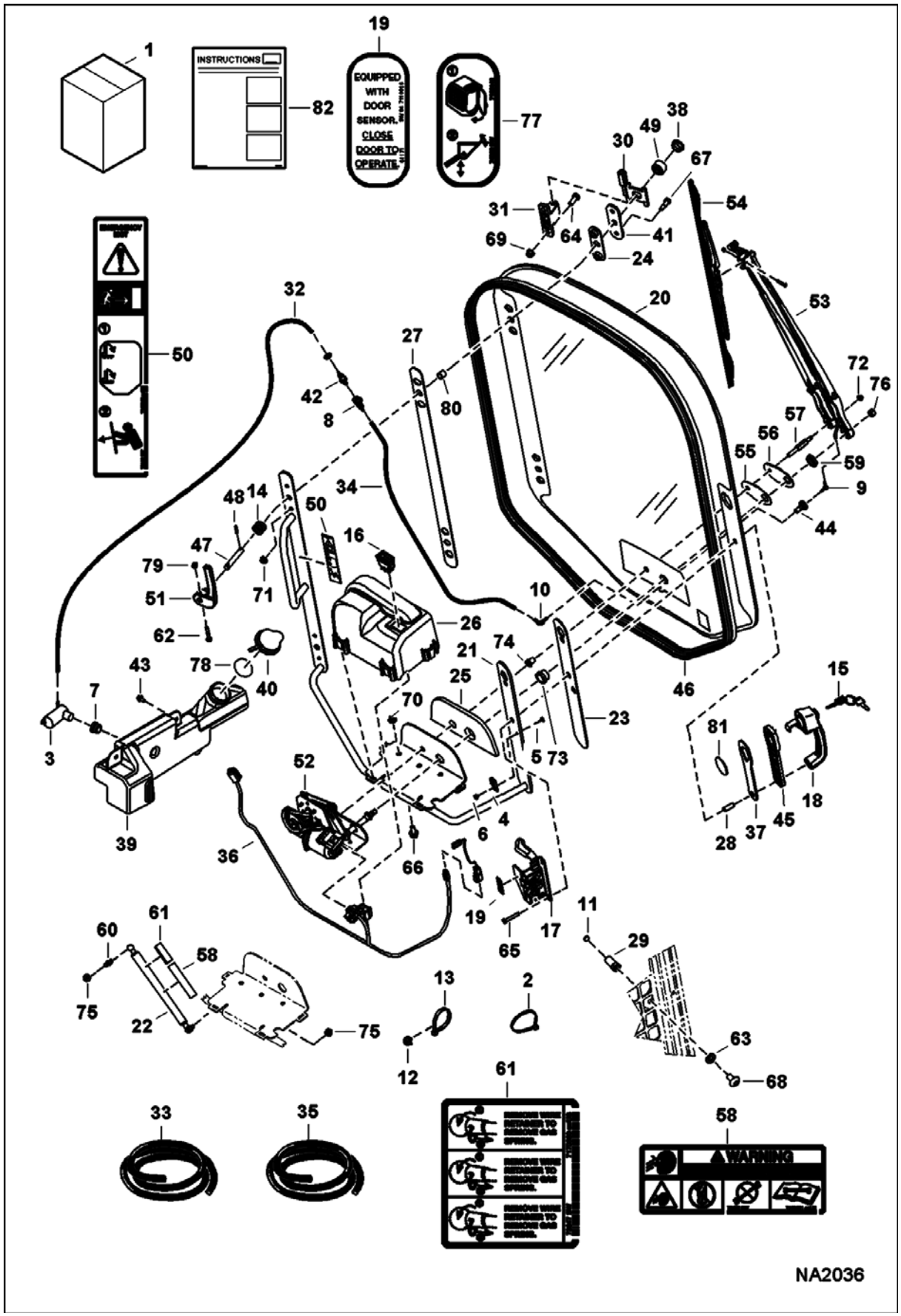
INSTRUCTIONS
EQUIPPED WITH DOOR SENSOR. CLOSE DOOR TO OPERATE.
WARNING
NA2036

Ref No	Part Number	Description	Remarks	Serial Number	Qty
		ROLLING			
44	7167177	GROMMET WIPER			1
45	7166205	SPACER HANDLE			1
46	7167652	SEAL DOOR			1
47	7167844	SHAFT			2
48	7167845	PIN			2
49	7167846	WASHER CAST			2
50	7168025	DECAL EMERGENCY DOOR			1
51	7186972	LEVER	Was 7168288 [A]		1
52	7168952	WIPER MOTOR			1
53	7168953	ARM WIPER ASSY			1
54	7168954	BLADE WIPER ASSY			1
55	7168955	GASKET			1
56	7168956	PLATE ADAPTOR			1
57	7168957	PLATE STUD ADAPTOR			1
58	7169291	DECAL	warning		1
59	6681905	NUT			1
60	7169849	FITTING BALLSTUD			1
61	7170360	DECAL, SPRING REMOVAL	spring removal		1
62	17C428	BOLT	Was 17C424 [B]		2
63	18EM1224	WASHER			1
64	17C516	BOLT			4
65	1CM640	SCREW			2
66	31C612	BOLT			3
67	38C610	BOLT			4
68	10C816	BOLT			1
69	59D5	NUT 5			4
70	97D6	NUT 10			3
71	97D5	NUT			4
72	51DM6	NUT			1
73	7174838	SPACER			1
74	7174839	SPACER			1
75	61D5	NUT			2
76	2DM10	NUT			1
77	7168146	DECAL	EMEA - no-text		1
78	7188097	SEAL			1
79	59D4	NUT 5			2
80	7196015	BUSHING, PLASTIC			2
81	7196017	DISK, PLASTIC			1
82	6987230	INSTRUCTIONS			1

CAB DOOR
(Special Applications)

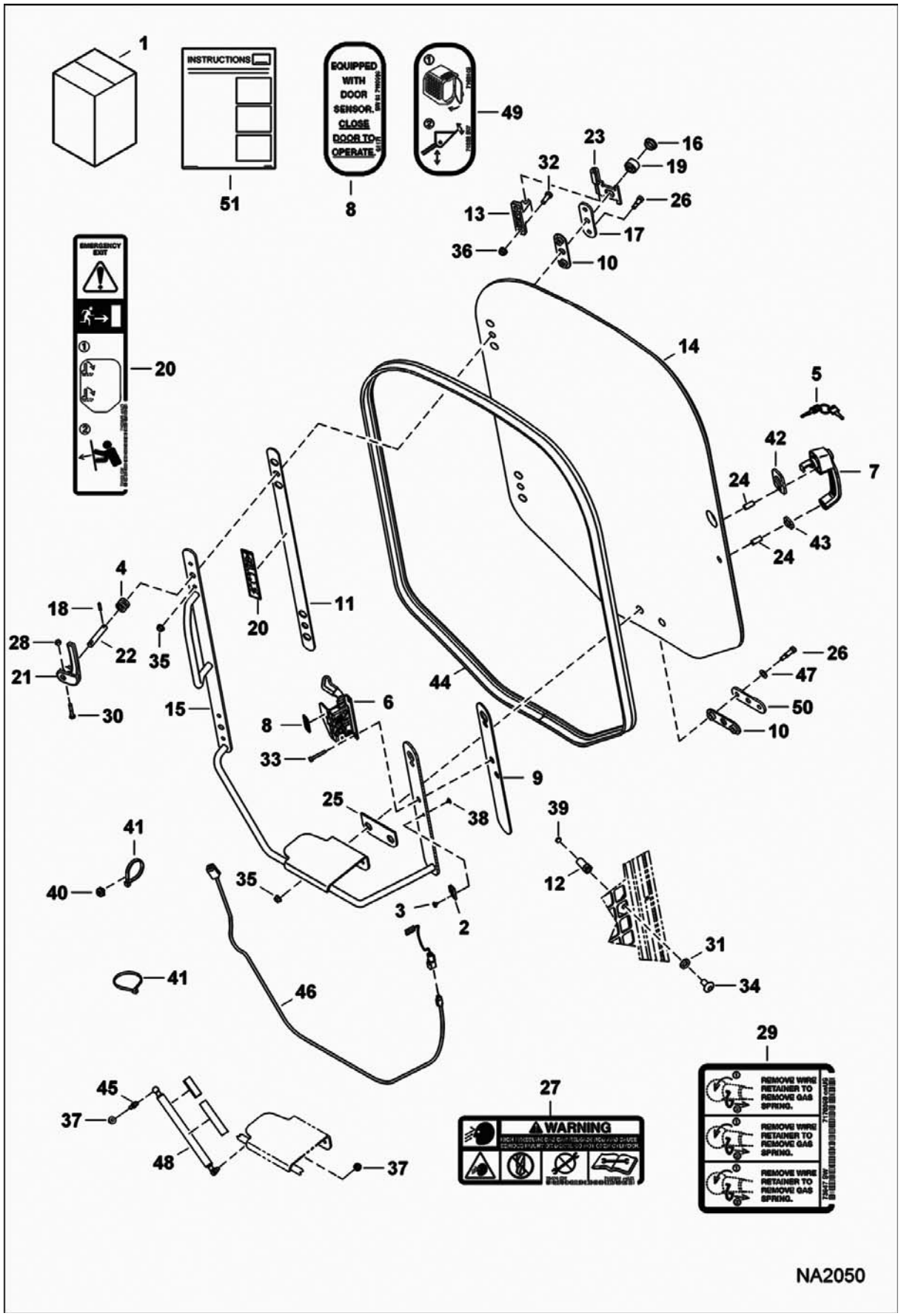

CAB DOOR (Cont'd)
(Special Applications)

Ref No	Part Number	Description	Remarks	Serial Number	Qty
1	7128395	KIT, DOOR CAB SPECIAL APPS	Ref. 2-51		1
2	6665000	CLIP			1
3	6665322	RIVET			1
4	6704453	SPRING			2
5	6693241	KEY 10	single key W/O ring		1
6	7109661	LATCH, DOOR W/SENSOR			1
7	7109662	HANDLE, LATCH DOOR			1
8	7110316	DECAL, SAFETY	door sensor		1
9	7148287	SEAL DOOR HANDLE			1
10	7148289	SEAL DOOR HINGE			3
11	7150719	SEAL DOOR FRAME			1
12	7175151	STRIKER, DOOR			1
13	7176593	HINGE BASE			2
14	7155308	WINDOW			1
15	7155359	FRAME, DOOR			1
16	7161429	PLUG			2
17	7164590	DOOR PLATE			3
18	7167845	PIN			2
19	7167846	WASHER CAST			2
20	7168025	DECAL EMERGENCY DOOR			1
21	7186972	LEVER	Was 7168288 [A]		2
22	7168836	SHAFT			2
23	7168837	HINGE, DOOR			1
24	7168839	SPACER			2
25	7168841	SEAL			1
26	38C616	SCREW			6
27	7169291	DECAL			1
28	59D4	NUT 5			2
29	7170360	DECAL, SPRING REMOVAL			1
30	17C428	BOLT	Was 17C424 [B]		2
31	18EM1224	WASHER			1
32	17C516	BOLT			4
33	1CM640	SCREW			2
34	10C816	BOLT			1
35	97D5	NUT			4
36	59D5	NUT 5			4
37	61D5	NUT			2
38	6665321	RIVET			1
39	6677192	MAGNET			1
40	6690688	TREE MOUNT			6
41	6690690	STRAP, TIE			10
42	7150745	SPACER	top		1
43	7150746	SPACER	bottom		1
44	7167652	SEAL DOOR			1
45	7169849	FITTING BALLSTUD			1
46	7170531	HARNESS, CAB			1
47	619021	WASHER, 5			6

CAB DOOR (Cont'd)
(Special Applications)

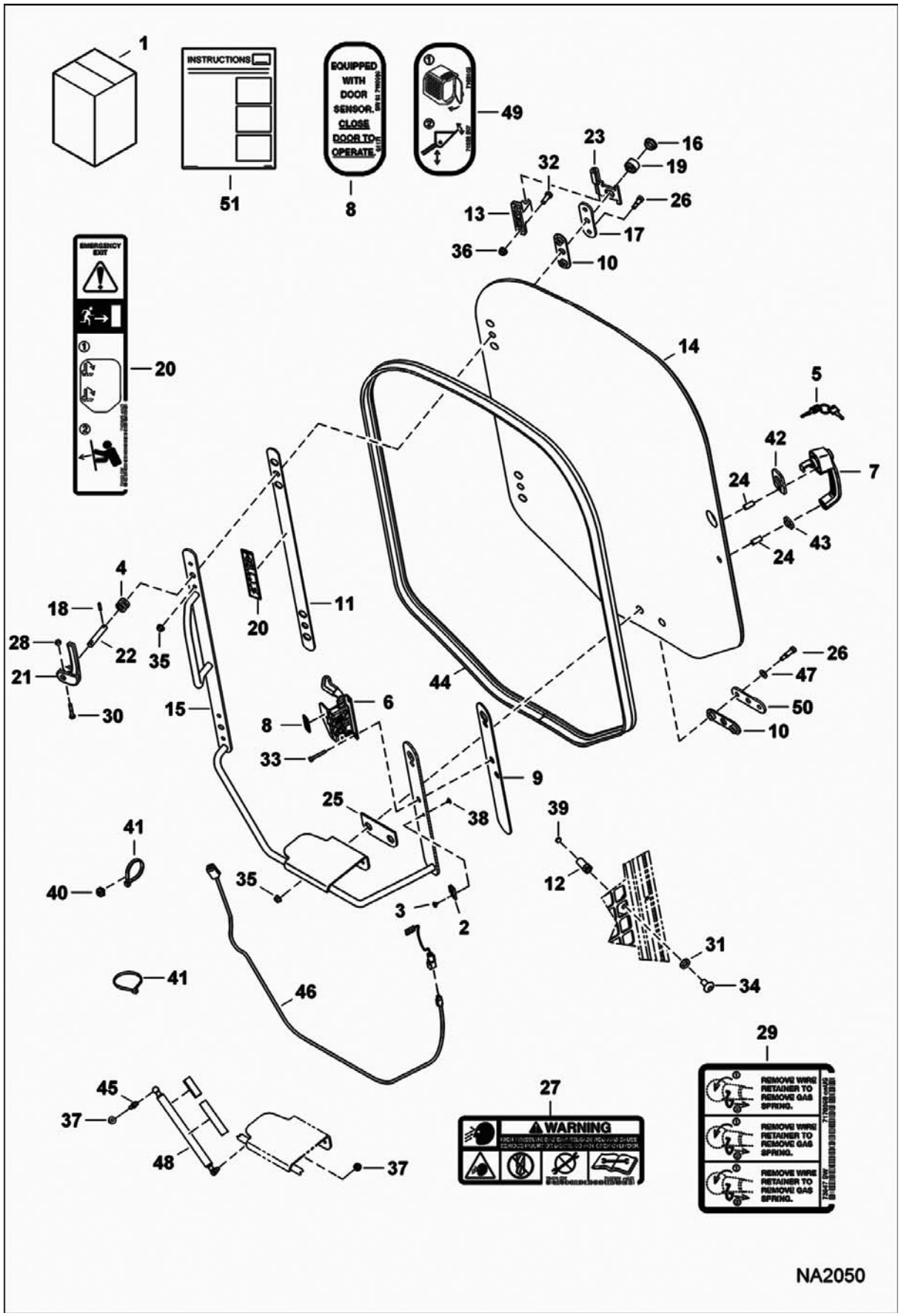

CAB DOOR (Cont'd)
(Special Applications)

Ref No	Part Number	Description	Remarks	Serial Number	Qty
48	7142371	SPRING GAS DOOR			1
49	7168146	DECAL	EMEA - no-text		1
50	7183158	PLATE			1
51	6987232	INSTRUCTIONS			1

CAB SEAL KIT

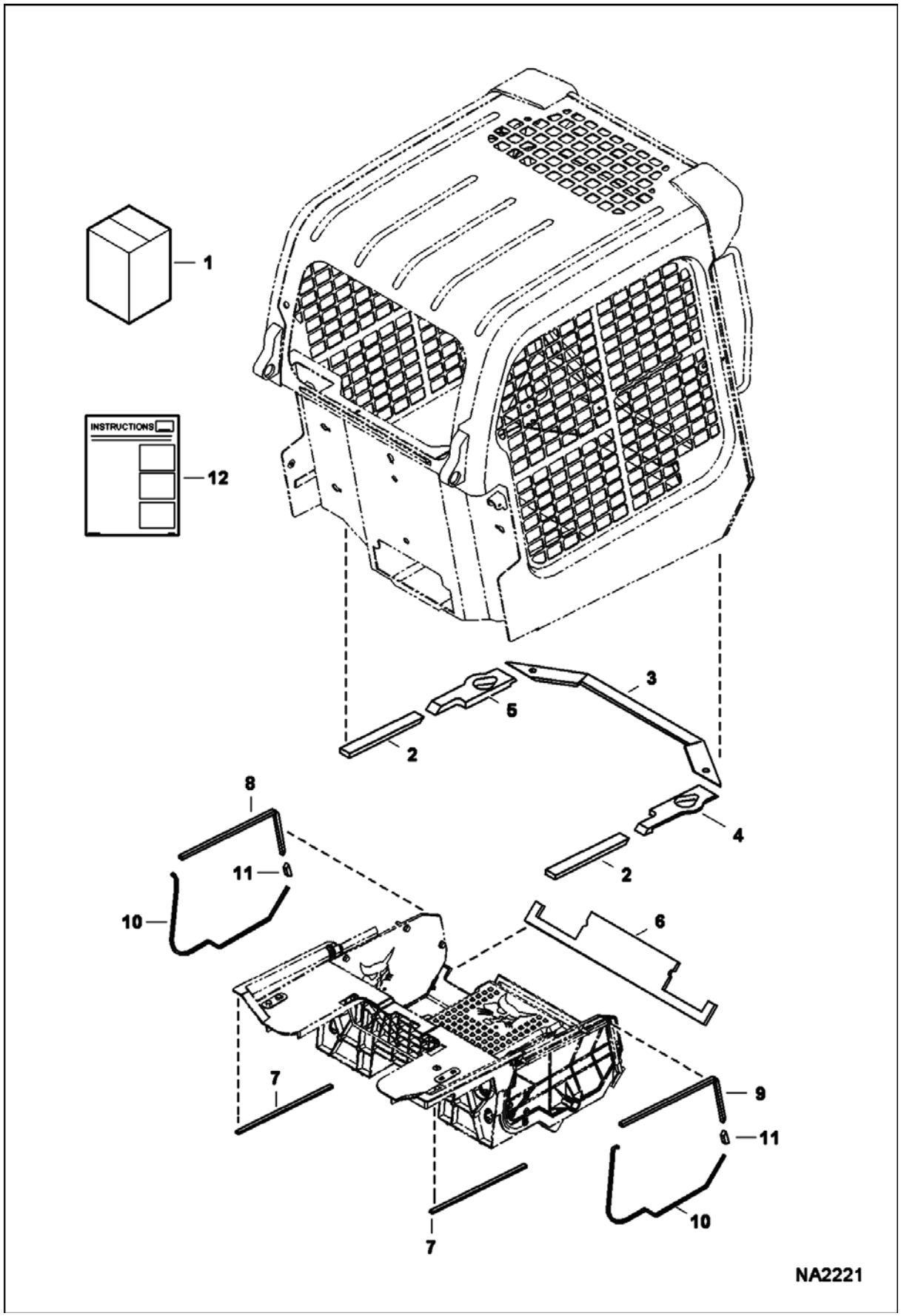

CAB SEAL KIT (Cont'd)

Ref No	Part Number	Description	Remarks	Serial Number	Qty
1	7174903	KIT, SEAL CAB	Ref. 2-12		1
2	7142873	SEAL			2
3	7142875	SEAL			1
4	7156087	SEAL	RH		1
5	7161789	SEAL	LH		1
6	7163132	FOAM, FRONT			1
7	7166196	FOAM, PANEL			2
8	7166197	FOAM, PANEL	LH		1
9	7166198	FOAM, PANEL	RH		1
10	7166199	FOAM, EDGE			2
11	7166200	FOAM, PAN FLOOR			2
12	6987388	INSTRUCTIONS			1

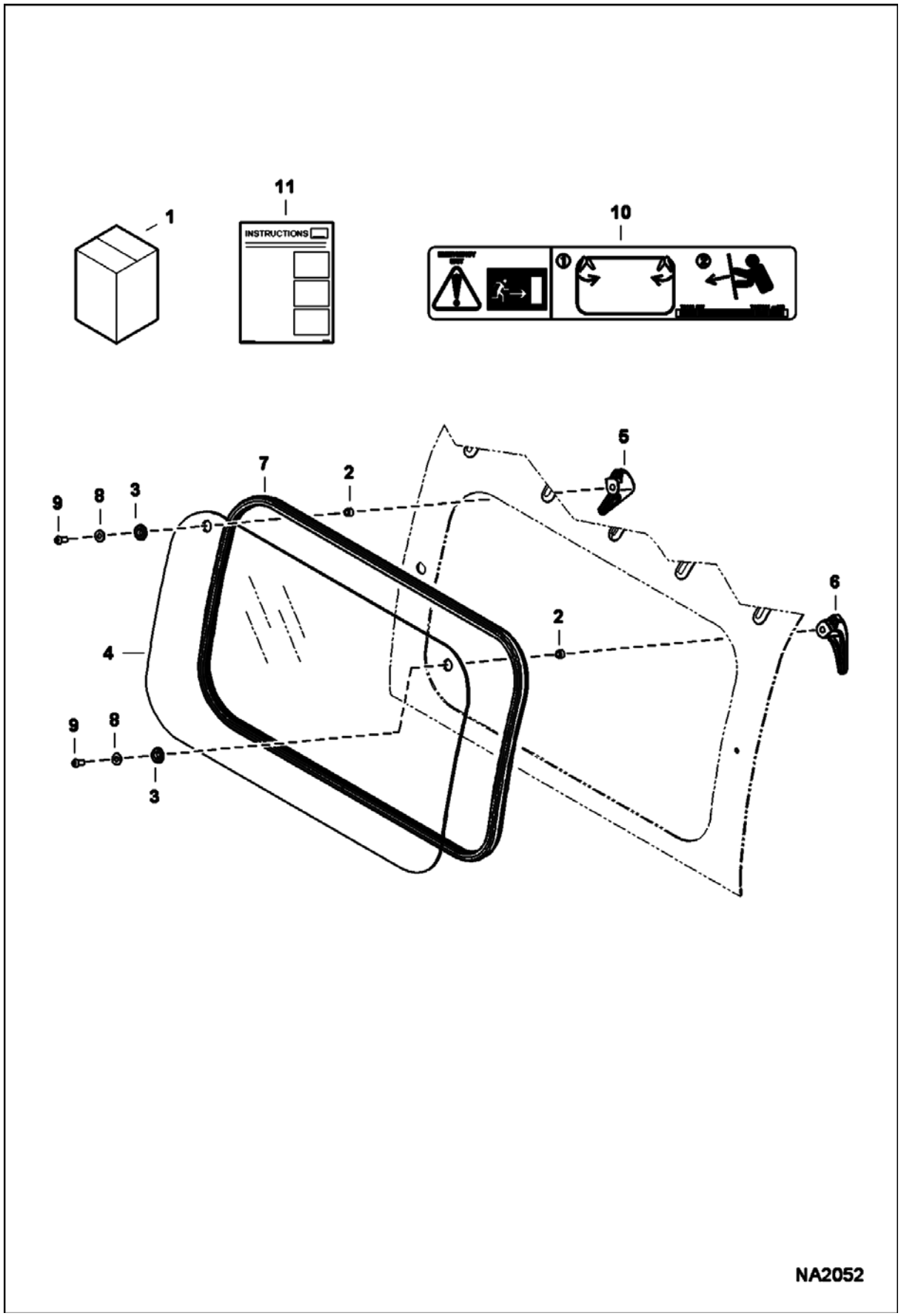
1
11
INSTRUCTIONS
10
5
7
2
9
8
3
6
4
2
9
8
3
NA2052

CAB WINDOWS (Cont'd)
(Rear) (Lexan)

Ref No	Part Number	Description	Remarks	Serial Number	Qty
1	7128389	KIT, WINDOW REAR LEXAN	Ref. 2-11		1
2	7185137	SPACER			2
3	7121425	BUSHING			2
4	7183022	WINDOW, CAB REAR			1
5	7150151	LATCH, WINDOW LEFT			1
6	7150152	LATCH, WINDOW RIGHT			1
7	7163988	SEAL, WINDOW REAR			1
8	25E14	WSHR			2
9	53C516	BOLT			2
10	7167991	DECAL, EXIT REAR			1
11	6987229	INSTRUCTIONS			1

CAB WINDOWS
(Side)

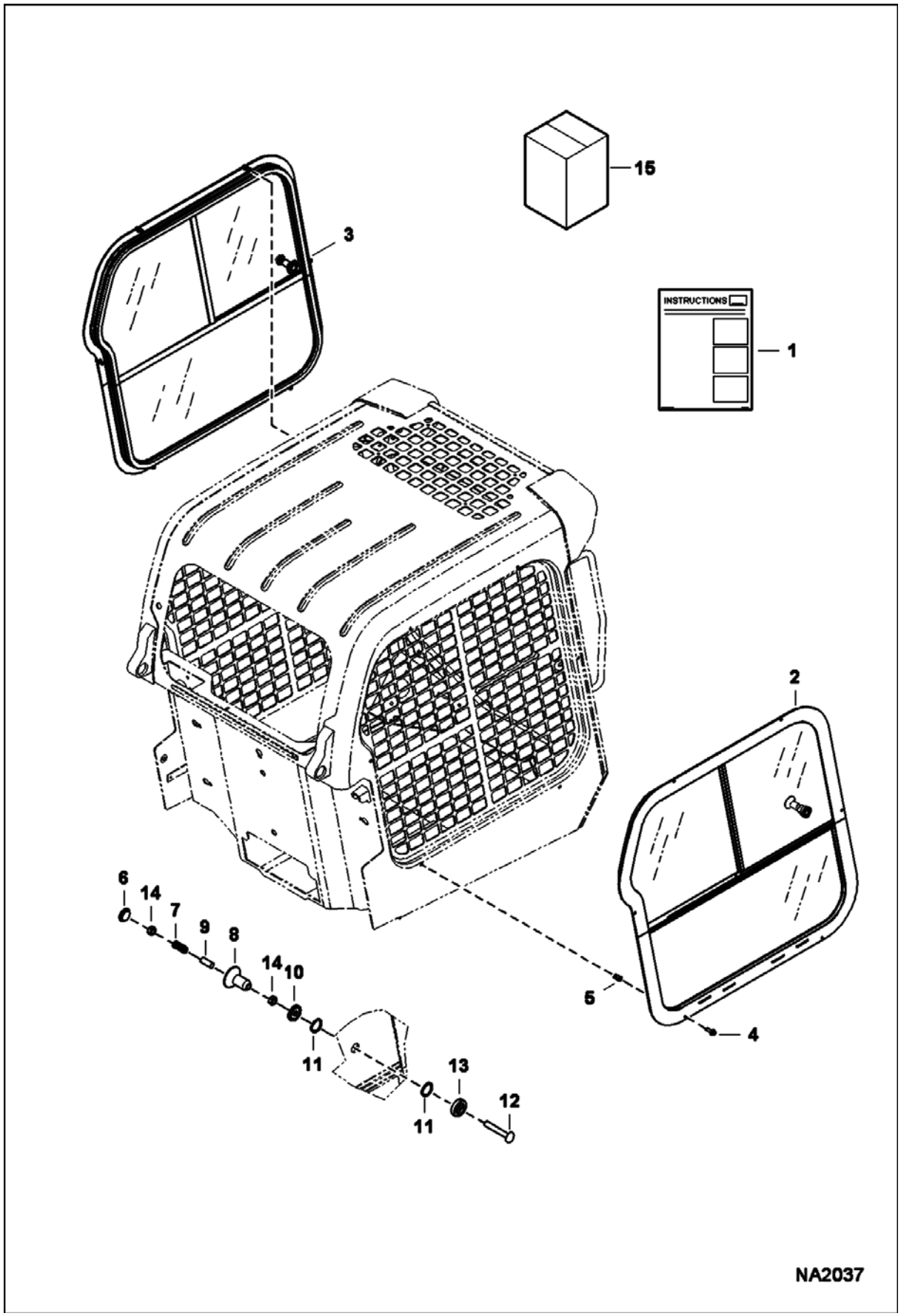

CAB WINDOWS (Cont'd)
(Side)

Ref No	Part Number	Description	Remarks	Serial Number	Qty
1	7128342	KIT, WINDOW SIDE	Ref. 2-15		1
2	7148068	WINDOW ASSY	RH - W/Ref. 10-13		1
3	7148069	WINDOW ASSY	LH - W/Ref. 10-13		1
4	35C412	BOLT			12
5	7154910	INSERT, THREADED			12
6	7010357	CAP, END			1
7	7010358	SPRING			1
8	7010359	KNOB			1
9	7010360	SLEEVE			1
10		BUSHING	NAP - inner - Order Ref. 2 or 3 - Was 7010361 [D]		1
11		SEAL	NAP - Order Ref. 2 or 3 - Was 7010362 [D]		2
12		BOLT	NAP - Order Ref. 2 or 3 - Was 7010363 [D]		1
13		BUSHING	outer - Order Ref. 2 or 3 - Was 7010364 [D]		1
14	7010365	NUT			2
15	6987228	INSTRUCTIONS			1

COUNTERWEIGHT KIT
(200 lb) (91 kg)

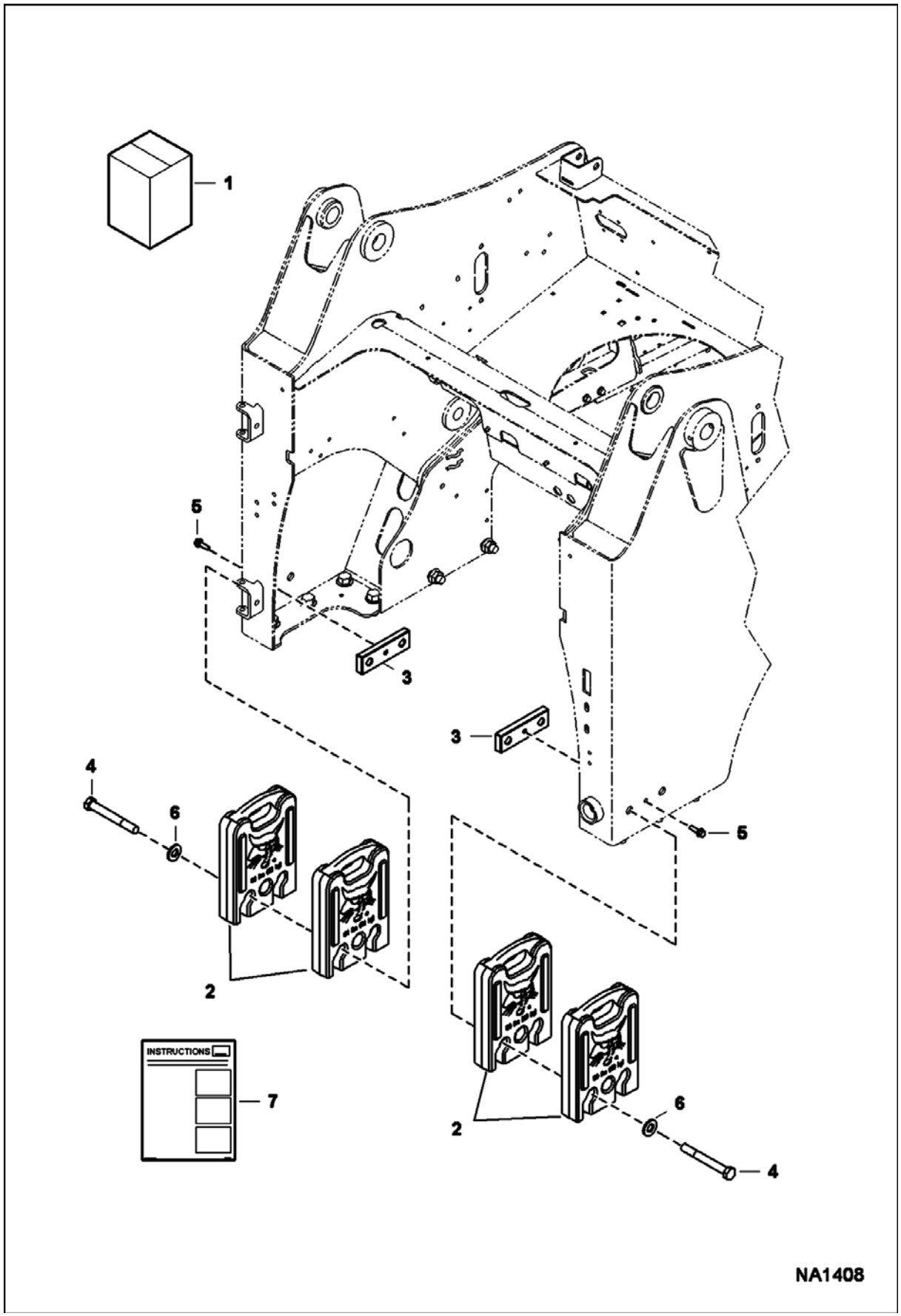

COUNTERWEIGHT KIT (Cont'd)
(200 lb) (91 kg)

Ref No	Part Number	Description	Remarks	Serial Number	Qty
1	7129250	KIT, COUNTERWEIGHT	Ref. 2-7 - 91 kg (200 lb)		1
2	7129173	COUNTERWEIGHT	23 kg (50 lb)		4
3	7155158	PLATE, THREADED			2
4	1C1296	BOLT			4
5	35C620	BOLT 5			2
6	27E12	WASHER			4
7	6987128	INSTRUCTIONS			1

COUNTERWEIGHT KIT
(300 lb) (136 kg)

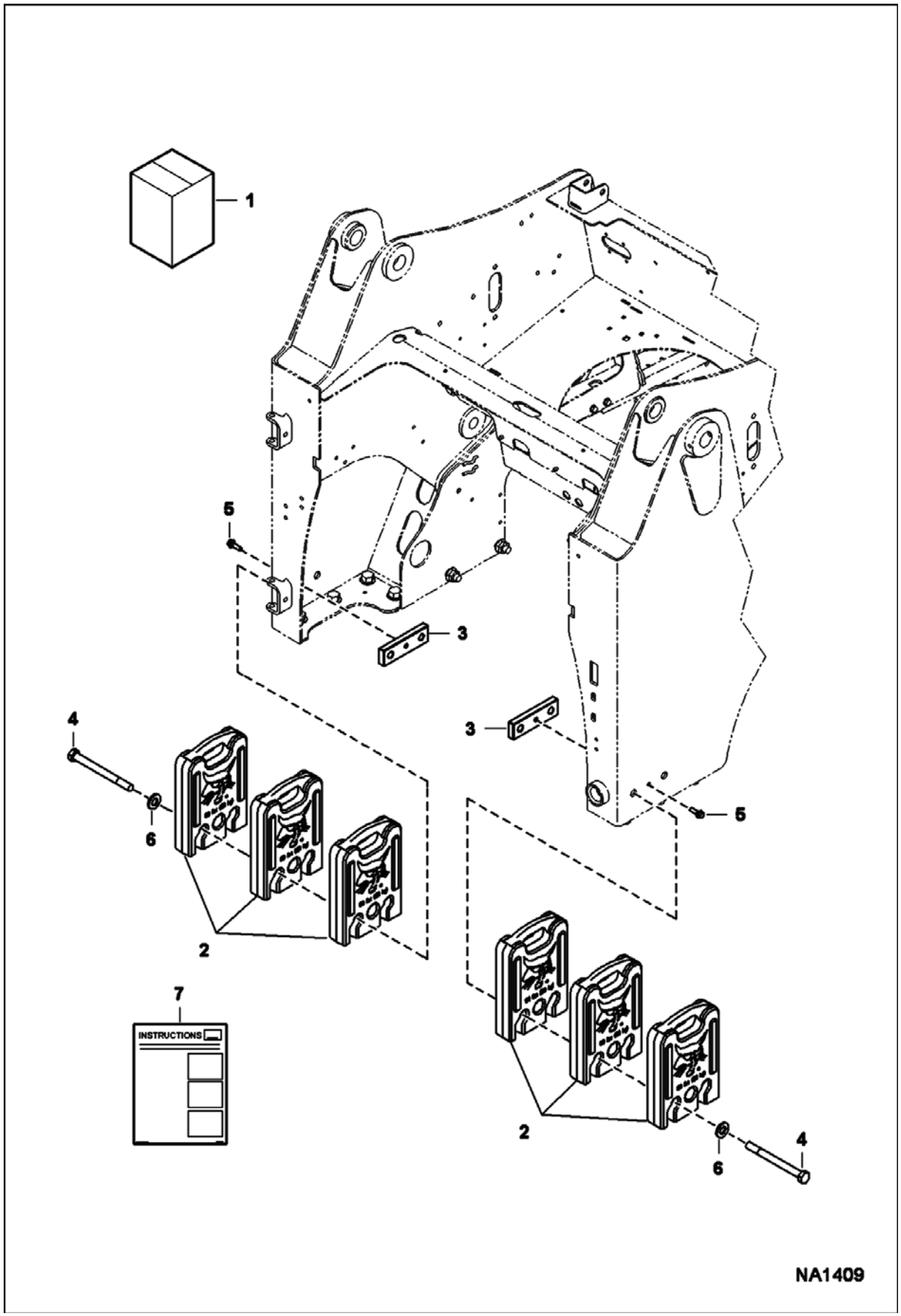

COUNTERWEIGHT KIT (Cont'd)
(300 lb) (136 kg)

Ref No	Part Number	Description	Remarks	Serial Number	Qty
1	7129251	KIT, COUNTERWEIGHT	Ref. 2-7 - 136 kg (300 lb)		1
2	7129173	COUNTERWEIGHT	23 kg (50 lb)		6
3	7155158	PLATE, THREADED			2
4	1C12136	BOLT			4
5	35C620	BOLT 5			2
6	27E12	WASHER			4
7	6987128	INSTRUCTIONS			1

COUPLER GUARD KIT

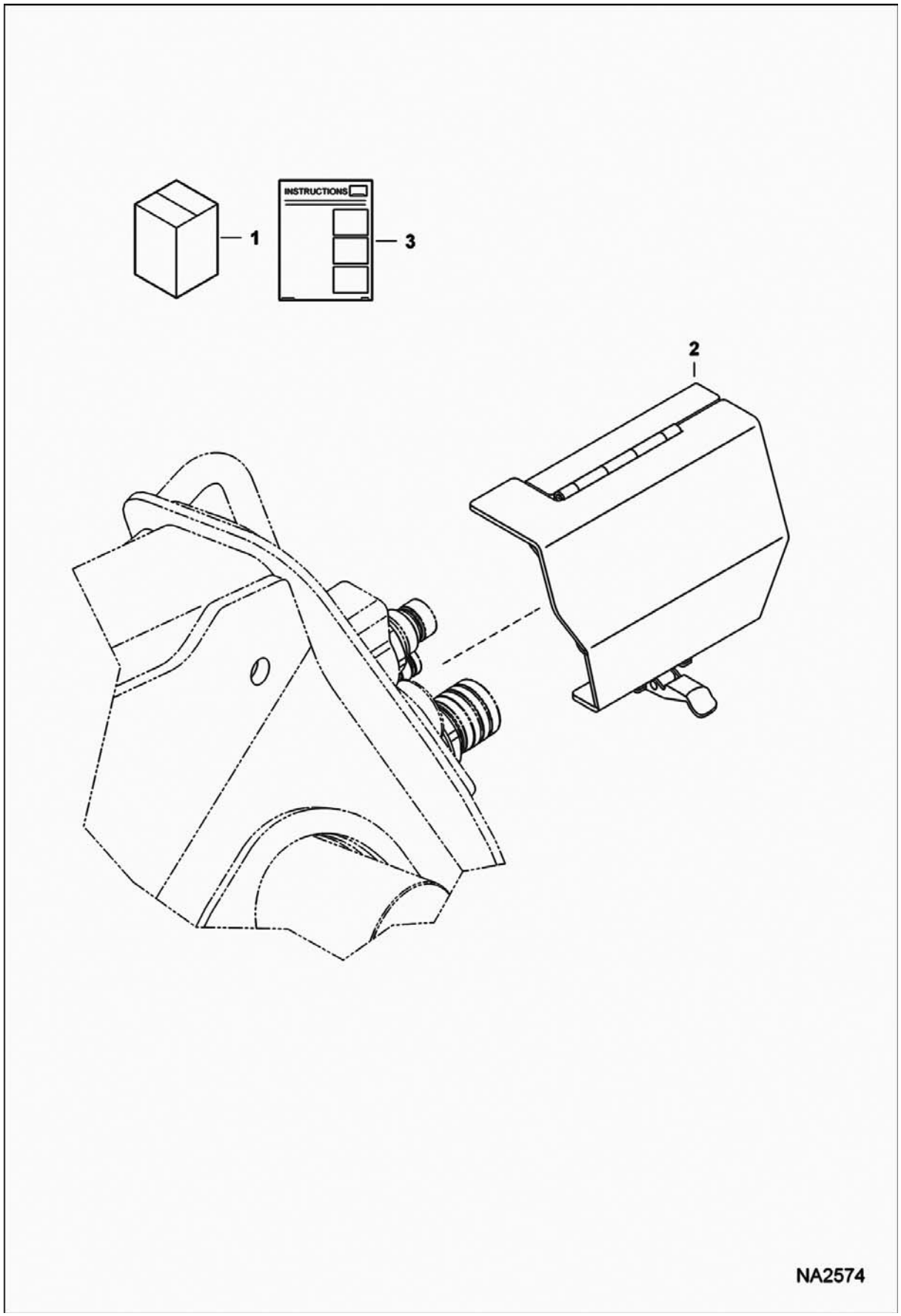

COUPLER GUARD KIT (Cont'd)

Ref No	Part Number	Description	Remarks	Serial Number	Qty
1		KIT, GUARD COUPLER	NAP - Ref. 2 & 3 - Order components - Was 7174131 [A]		1
2	7173324	GUARD, COUPLER			1
3	6987492	INSTRUCTIONS			1

CUP HOLDER KIT

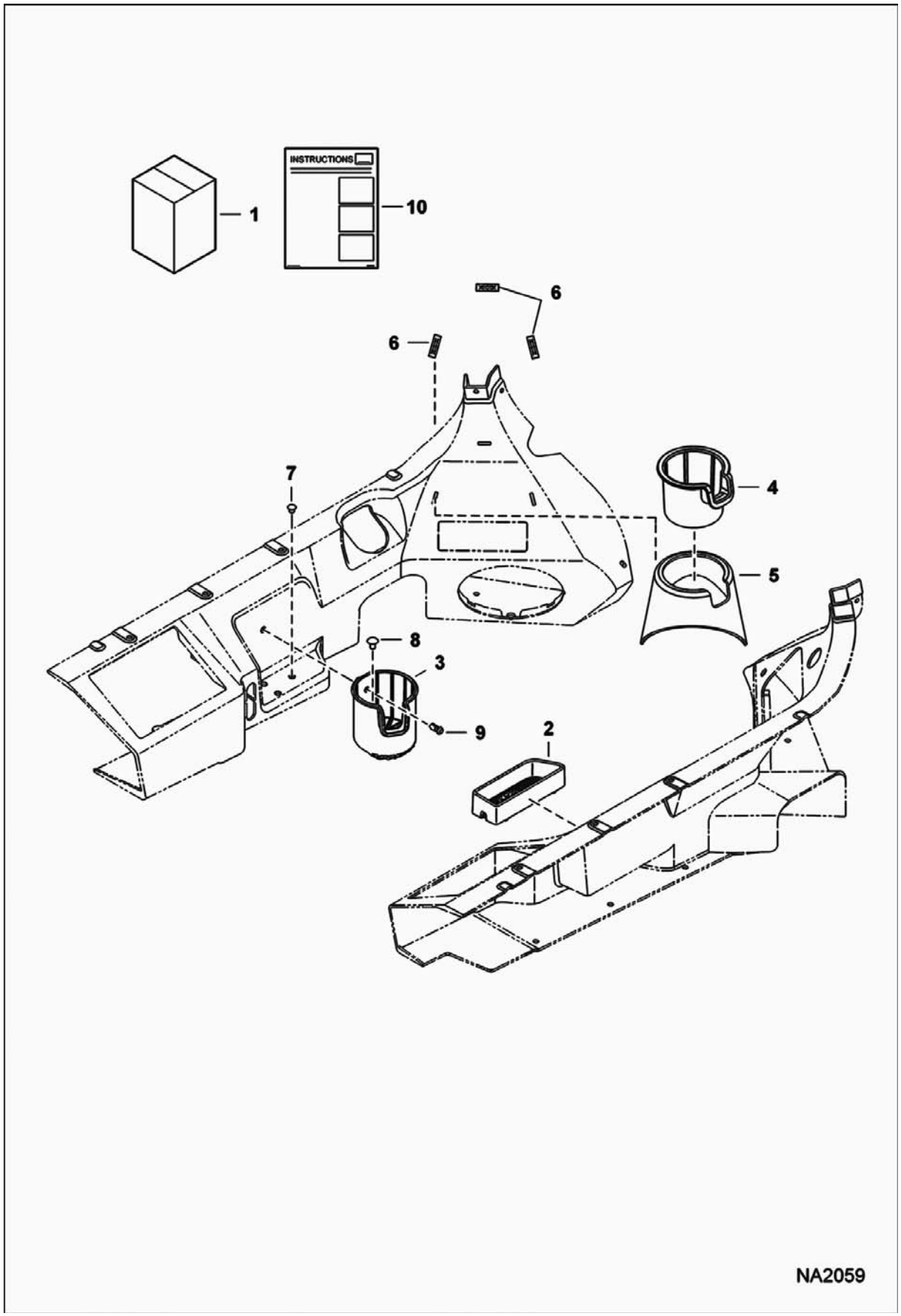

CUP HOLDER KIT (Cont'd)

Ref No	Part Number	Description	Remarks	Serial Number	Qty
1	7167395	KIT, CUP HOLDER	Ref. 2-10		1
2	7154404	CONTAINER			1
3	7140441	HOLDER, CUP	Was 7154405 [A]		1
4	7155649	HOLDER, CUP			1
5	7160320	HOLDER, CUP			1
6	7167003	CLIP			3
7	7188745	PLUG	Was 7174012 [A]		8
8	6674895	RETAINER			1
9	7160383	RIVET, BIRD CAGE			1
10	6987227	INSTRUCTIONS			1

DECALS
(Inside)

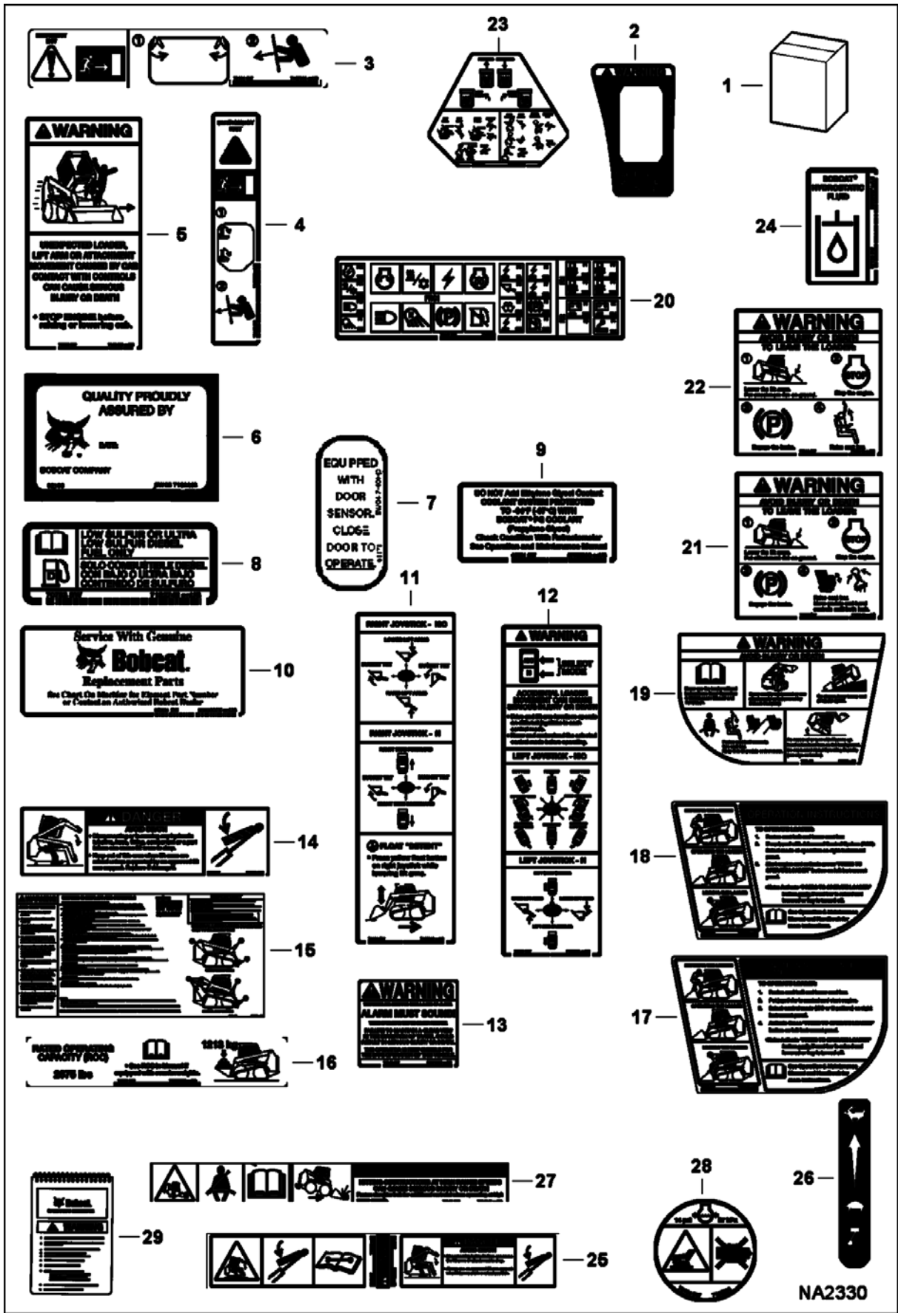

DECALS (Cont'd)
(Inside)

Ref No	Part Number	Description	Remarks	Serial Number	Qty
1	6989419	KIT, DECAL	See Illustration DECALS/ NA2329 - Ref. 2-21 & Ref. 2-26 on this page		1
1	7184194AR	KIT, DECAL			1
1	7184194BR	KIT, DECAL			1
1	7184194JP	KIT, DECAL			1
1	7184198AR	KIT, TRANSLATION			1
1	7184198BR	KIT, TRANSLATION			1
2	7168114	DECAL, SWITCH			1
3	7167991	DECAL, EXIT REAR			1
4	7168025	DECAL EMERGENCY DOOR			1
5	7168138	DECAL, WARNING			1
6	7106218	DECAL QUALITY APPRVL			1
7	7110316	DECAL, SAFETY	door sensor		1
8	7152748	DECAL, FUEL DIESEL			1
9	6708929	DECAL, COOLANT	propylene glycol		1
10	6565200	DECAL, FILTER	not in kit		1
11	7168023	DECAL	RH - SJC		1
12	7168024	DECAL	LH - SJC		1
13	6737189	DECAL, WARNING	backup alarm		1
14	7167988	DECAL, DANGER			2
15	7167998	DECAL, SERVICE			1
16	7168000	DECAL, ROC 2690	2690 lb		1
17	7168144	DECAL	SJC		1
18	7168136	DECAL	operation		1
19	7167994	DECAL, WARNING			1
20	7167945	DECAL, FUSE RELAY			1
21	7168140	DECAL, WARNING	warning		1
22	7168142	DECAL, WARNING			1
23	7168272	DECAL	control		1
24	6565990	DECAL, OIL HYD	hyd fill		1
25	7170355	DECAL, DANGER	hose and tube danger		1
26	7177742	DECAL	throttle		1
27	7184346	DECAL WARNING	not in kit - Was 7168303 [A]		1
28	7169699	DECAL	radiator cap - not in kit		1
29	6987174	HANDBOOK, OPERATOR'S	W/wire rope - not in kit		1

DECALS
(Outside)

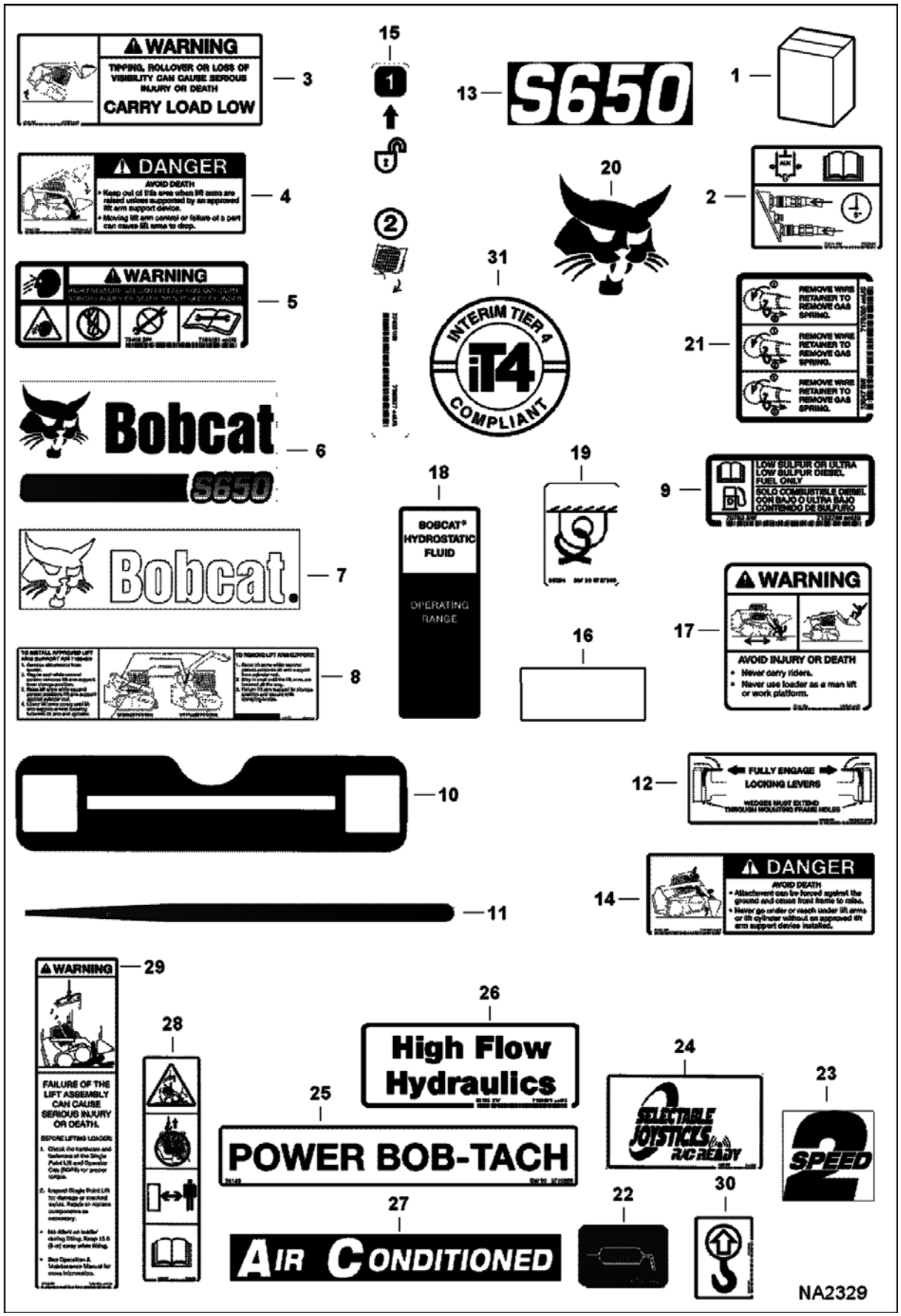

DECALS (Cont'd)
(Outside)

Ref No	Part Number	Description	Remarks	Serial Number	Qty
1	6989419	KIT, DECAL	See Illustration DECALS/ NA2330 - Ref. 2-26 & Ref. 2-21 on this page		1
1	7184194AR	KIT, DECAL			1
1	7184194BR	KIT, DECAL			1
1	7184194JP	KIT, DECAL			1
1	7184198AR	KIT, TRANSLATION			1
1	7184198BR	KIT, TRANSLATION			1
2	7168031	DECAL	coupler		1
3	7167993	DECAL, WARNING	danger		1
4	7167989	DECAL, DANGER	danger		1
5	7169291	DECAL	warning		1
6	7169969	DECAL, MODEL	S650 - upright		2
7	6735901	DECAL, LOGO BOBCAT HEAD	white		1
8	7169340	DECAL	lift arm support		1
9	7152748	DECAL, FUEL DIESEL	low sulfer		1
10	7169965	DECAL, TAILGATE BASE			1
11	7169971	DECAL, LIFT ARM STRIPE			2
12	6561383	DECAL, OPERATION	Bob-Tach locking levers		1
13	7169972	DECAL, MODEL	S650 - rear door		1
14	7167990	DECAL, DANGER	danger		1
15	7169877	DECAL	gas spring		1
16	6555341	SAFETY TREAD			1
17	7167996	DECAL, WARNING	warning		1
18	7169710	DECAL, SIGHT GAUGE			1
19	6727595	DECAL,TIE-DOWN			6
20	7116870	DECAL, LOGO BOBCAT HEAD			2
21	7170360	DECAL, SPRING REMOVAL	spring removal		1
22	6705340	DECAL, LUBRICANT	EMEA - not in kit		1
23	6729078	DECAL	2 speed - not in kit		2
24	7145528	DECAL	SJC ready - not in kit		1
25	6719888	DECAL	Power Bob-Tach - not in kit		1
26	7120693	DECAL	high flow - not in kit		1
27	7166916	DECAL, A/C	A/C - not in kit		2
28	7142142	DECAL	warning - not in kit		1
29	7142141	DECAL	warning - single point lift - not in kit		1
30	6533898	DECAL	hook - not in kit		1
31	7204037	DECAL	iT4 compliant - not in kit		1

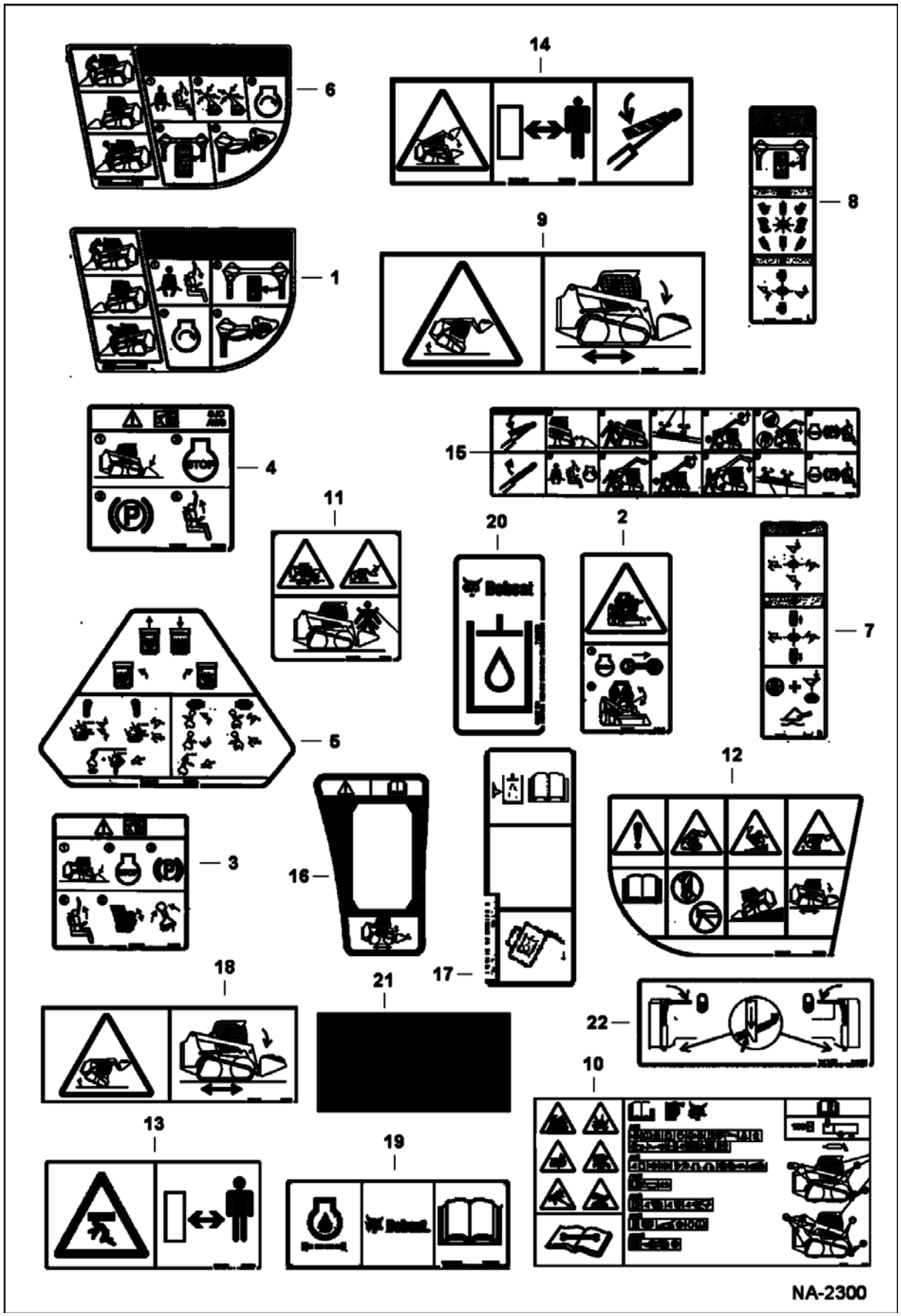
6
14
8
1
9
4
15
11
20
2
7
5
12
3
16
17
18
21
22
10
13
19
NA-2300

DECALS (Cont'd)
(EMEA)

Ref No	Part Number	Description	Remarks	Serial Number	Qty
1	7168137	DECAL, OPERATION			1
2	7168139	DECAL, WARNING			1
3	7168141	DECAL, WARNING			1
4	7168143	DECAL, WARNING			1
5	7168273	DECAL, CONTROL			1
6	7168145	DECAL, WARNING	SJC		1
7	7168081	DECAL, OPERATION	SJC - RH		1
8	7168082	DECAL, OPERATION	SJC - LH		1
9	7168033	DECAL, DANGER			1
10	7168042	DECAL, SERVICE			1
11	7168040	DECAL, WARNING			1
12	7168038	DECAL, WARNING			1
13	7168037	DECAL, WARNING			1
14	7168034	DECAL, DANGER			1
15	7169341	DECAL, LIFT ARM			1
16	7177707	DECAL	SJC switch		1
17	7173294	DECAL	sight guage		1
18	6713507	DECAL	stay clear		2
19	7120569	DECAL, FILTER			1
20	7120570	DECAL	hyd oil		1
21	7120573	DECAL	eng coolant		1
22	7173403	DECAL, OPERATION	Bob-tach		1

DELUXE HEADLINER KIT

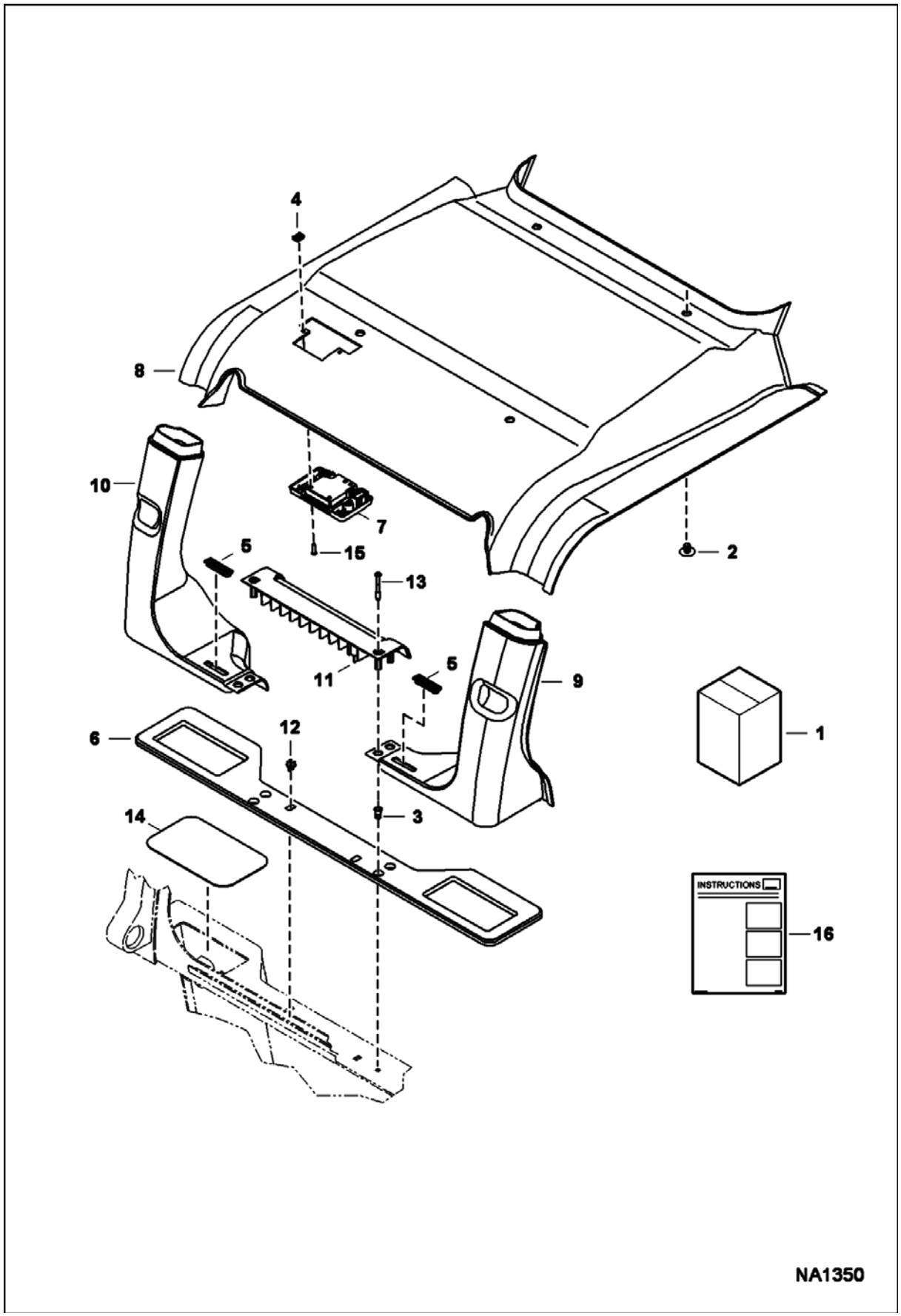

DELUXE HEADLINER KIT (Cont'd)

Ref No	Part Number	Description	Remarks	Serial Number	Qty
1	7156253	KIT, HEADLINER DLX	Ref. 2-16		1
2	6674895	RETAINER			4
3	6675033	INSERT			2
4	7142762	CLIP			2
5	7145885	VENT, DEFROST			2
6	7153832	SEAL, SHELF REAR			1
7	7155797	LIGHT			1
8	7155798	HEADLINER, DLX			1
9	100333SUB	DUCT, AIR	RH - W/Ref. 5 - Was 7165330 [A]		1
10	100334SUB	DUCT, AIR	LH - W/Ref. 5 - Was 7165331 [A]		1
11	7165332	SHELF, REAR			1
12	7165333	CLIP			2
13	7165799	SCREW			2
14	7168610	COVER			2
15	7170114	SCREW			2
16	6987355	INSTRUCTIONS			1

DELUXE INTERIOR KIT

(A3NV11001 - 13098, A3NW11001 - 11248)

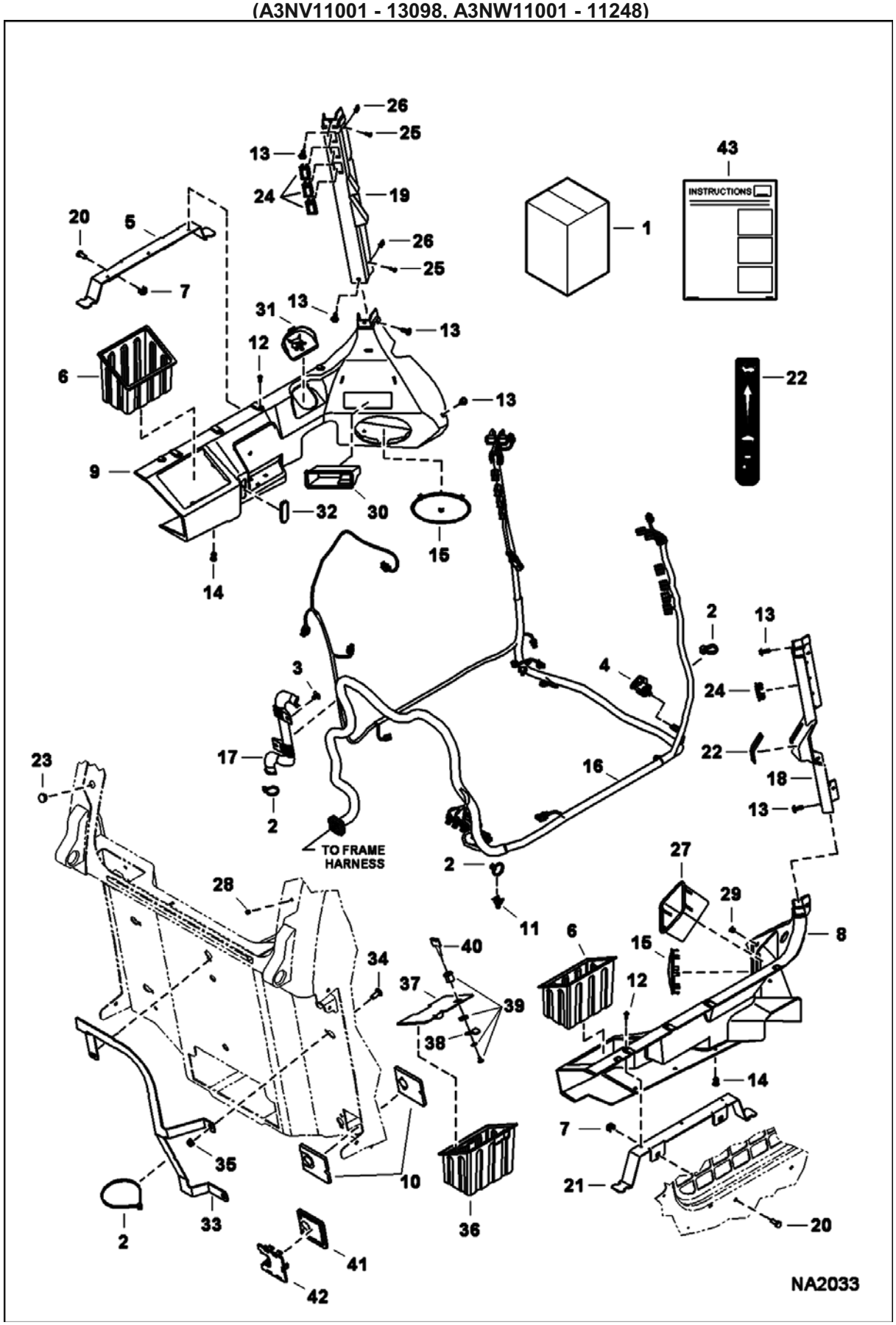

DELUXE INTERIOR KIT (Cont'd)

(A3NV11001 - 13098, A3NW11001 - 11248)

Ref No	Part Number	Description	Remarks	Serial Number	Qty
1	7129465	KIT, INTERIOR DLX	Ref. 2-35 & 43		1
2	6624289	STRAP, TIE			20
3	6674895	RETAINER			2
4	7001664	PLUG, POWER			1
5	7116118	BRACKET			1
6	7145268	CONTAINER, STORAGE			2
7	7149204	NUT			4
8	7155642	FENDER, PANEL RH			1
9	7155643	FENDER, PANEL L.H.			1
10	7185150	PLUG, HARNESS CAB	replaces both Ref. 41 & 42		2
11	7010600	TREE MOUNT	Was 6678666 [B]		2
12	7160381	RIVET, BIRD CAGE			6
13	7160382	RIVET, BIRD CAGE			8
14	7160383	RIVET, BIRD CAGE			10
15	7161939	GRILL			2
16	7196753	HARNESS, CAB DLX	Was 7176098 [B]		1
17	7164073	GUIDE			1
18	7164347	COLUMN, FRONT RIGHT			1
19	7164348	COLUMN, FRONT LEFT			1
20	17C612	BOLT 5			4
21	7127976	BRACKET			1
22	7177742	DECAL			1
23	6657719	PLUG	0.75" dia hole		2
24	6665314	PLUG			5
25	6669224	BOLT			6
26	7142762	CLIP			6
27	7154285	BOX, STORAGE			1
28	7188745	PLUG	Was 7174012 [A]		1
29	7182942	PLUG			1
30	7165344	STORAGE			1
31	7165345	DOOR, COVER			1
32	7165346	DOOR, COVER			1
33	7166177	BRACKET			1
34	10C616	BOLT 10			3
35	97D6	NUT 10			3
36	7181555	TOOL BOX	EMEA - not in kit		1
37	7181556	COVER, TOOL BOX	EMEA - metal cover - not in kit		1
38	7181557	CAM	EMEA - not in kit		1
39	6670726	CYLINDER. LOCK	EMEA - not in kit		1
40	6693241	KEY 10	EMEA - not in kit		1
41		PLUG, HARNESS CAB DLX	NAP - Order Ref. 10 - Was 7179115 [A]		1
42		FOAM	NAP - Order Ref. 10 - Was 7179116 [A]		1
43	6987234	INSTRUCTIONS			1

DELUXE PANEL KIT

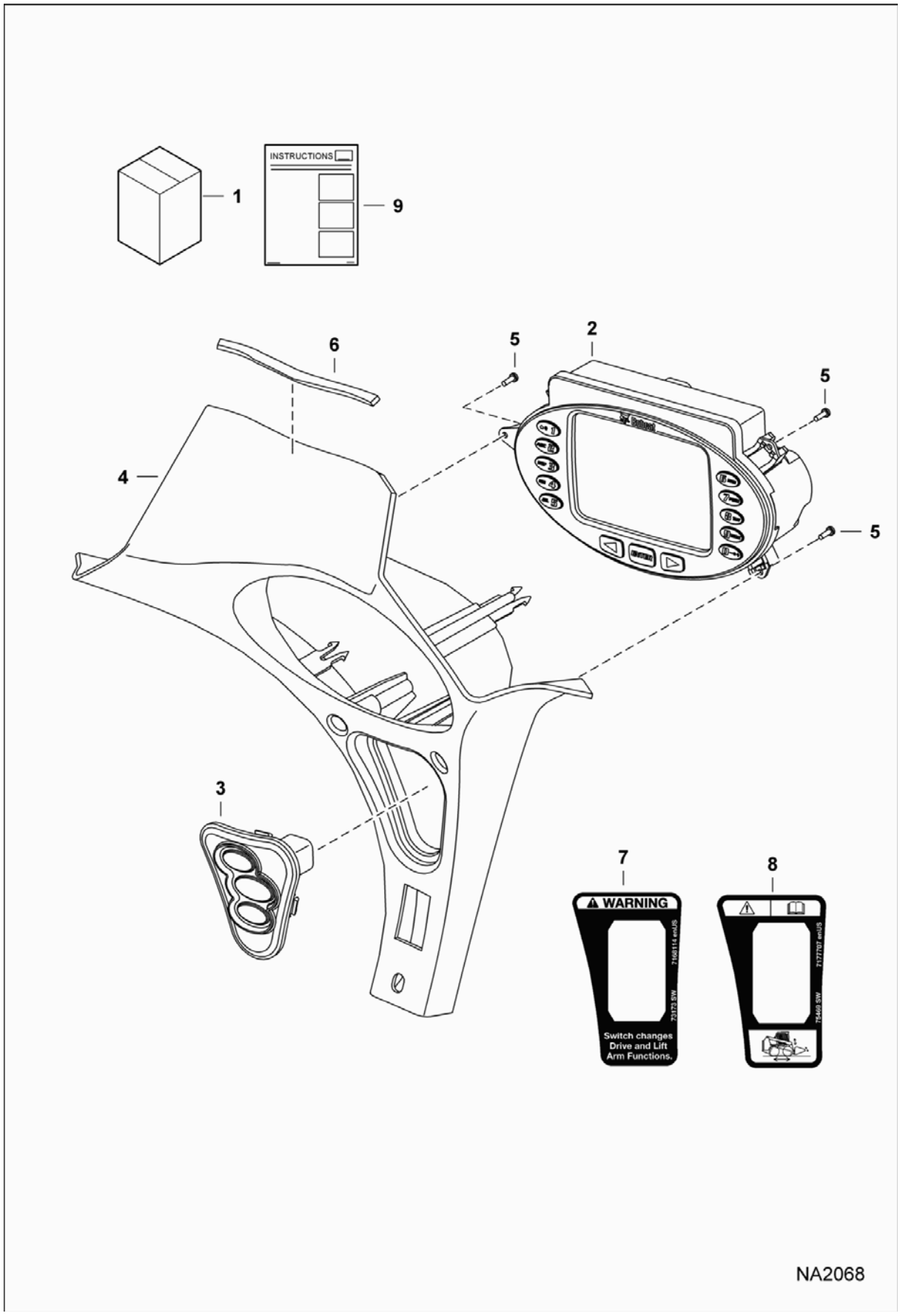

DELUXE PANEL KIT (Cont'd)

Ref No	Part Number	Description	Remarks	Serial Number	Qty
1	7128344	KIT, PANEL DLX	Ref. 2-6 & 9		1
2	6693413	DISPLAY, DLX			1
3	7003033	SWITCH, IGN			1
4	7155791	PANEL, RH			1
5	7179008	SCREW, PLASTIC			3
6	7187104	SEAL			1
7	7168114	DECAL, SWITCH			1
8	7177707	DECAL	switch - EMEA no-text		1
9	6987280	INSTRUCTIONS			1

ELECTRICAL CONTROLS KIT
(7 Pin)

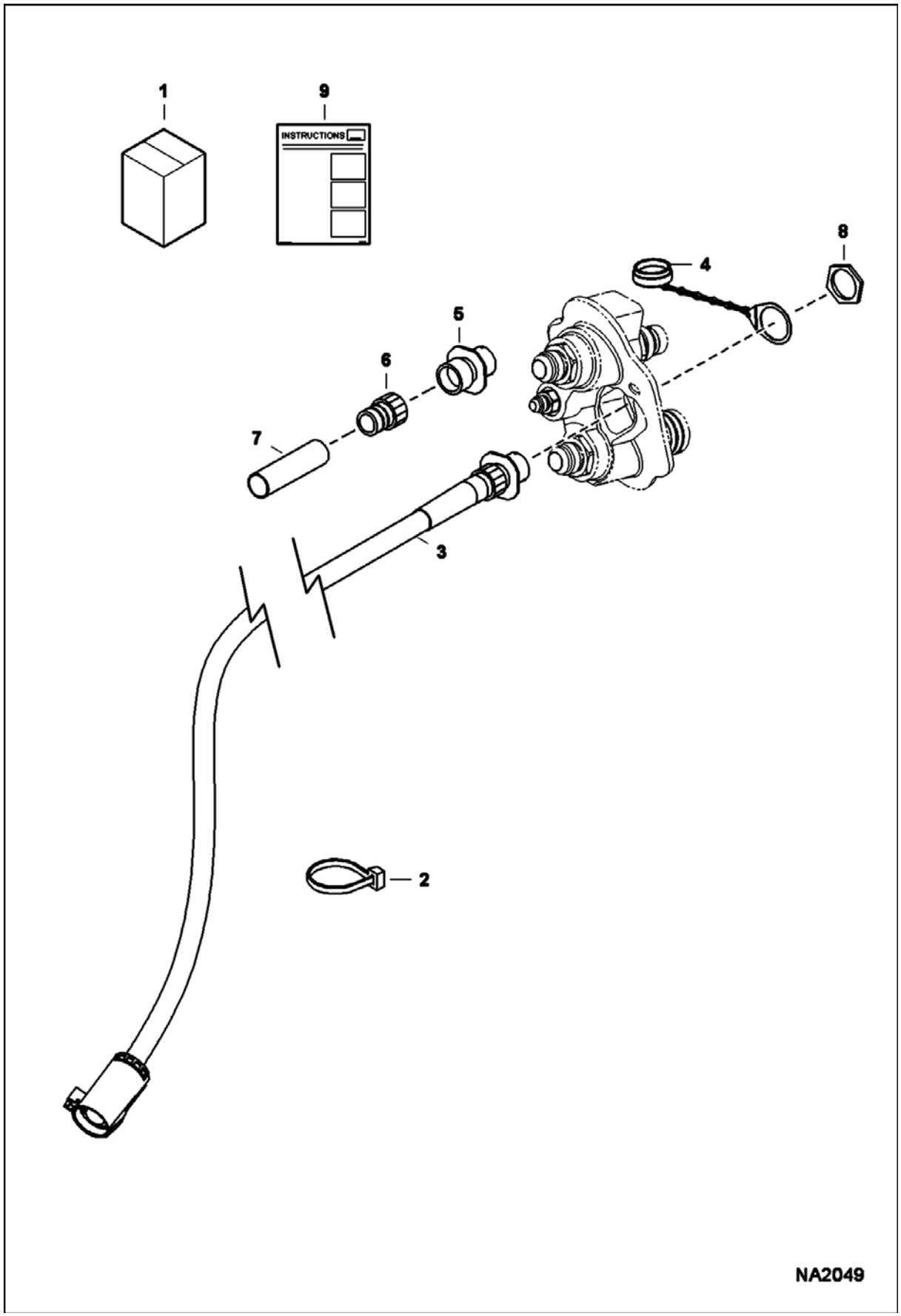

ELECTRICAL CONTROLS KIT (Cont'd)
(7 Pin)

Ref No	Part Number	Description	Remarks	Serial Number	Qty
1	7128426	KIT, ACD 7-PIN	Ref. 2-9		1
2	6624289	STRAP, TIE			4
3	7175321	HARNESS, ACD INPUT	W/Ref. 4-8 - 146" (3710 mm) long		1
3		HARNESS, ACD INPUT	NAP - W/Ref. 4-8 - 124" (3150 mm) long - Order 7175321		1
4	6675026	CAP			1
5	6674802	CONNECTOR			1
5	6669549	SOCKET	18 ga - not in kit		4
5	6677136	SOCKET	12 ga - not in kit		3
6	6674799	ADAPTER	heat shrink		1
7		HEAT SHRINK	NSS - purchase locally		1
8	6688338	NUT	jam		1
9	6987238	INSTRUCTIONS			1

ELECTRICAL CONTROLS KIT
(14 Pin Attachments)

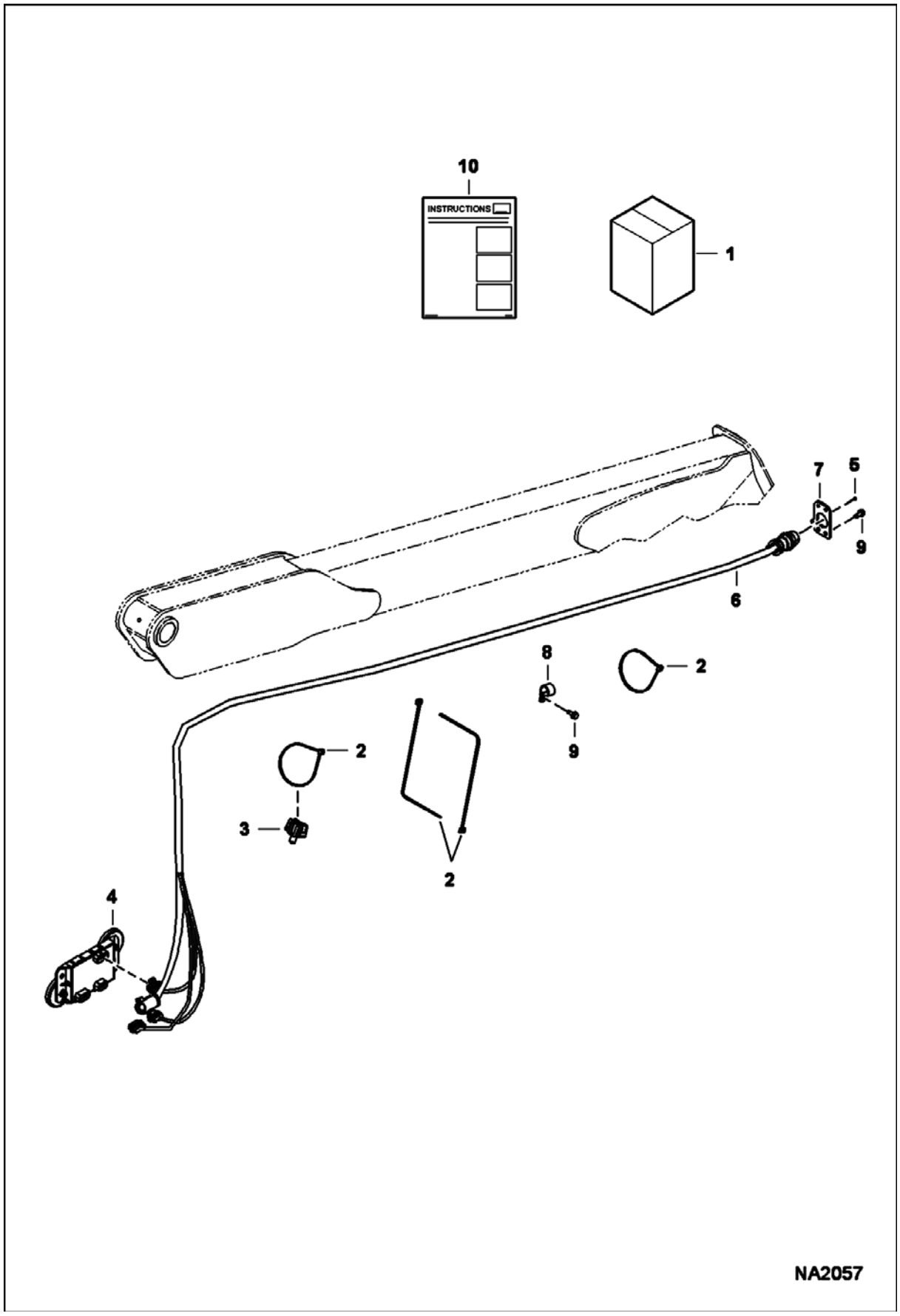

ELECTRICAL CONTROLS KIT (Cont'd)
(14 Pin Attachments)

Ref No	Part Number	Description	Remarks	Serial Number	Qty
1	6733136	KIT, ATTACHMENT 14-PIN	Ref. 2-10		1
2	6624289	STRAP, TIE			9
3	6675281	MOUNT			1
4	83D6	NUT 5			2
4	6678675	CONTROLLER, ACD	W/O magnets		1
4	6719448	MAGNET, CONTROL ATTACH	45 kg (100 lb) force		2
4	25G612	SCREW			2
5	6704892	RIVET			1
6	6732730	HARNESS			1
7	6733144	MOUNT			1
8	30H50	CLIP			6
9	84G3112	BOLT 5			8
10	6901872	INSTRUCTIONS			1

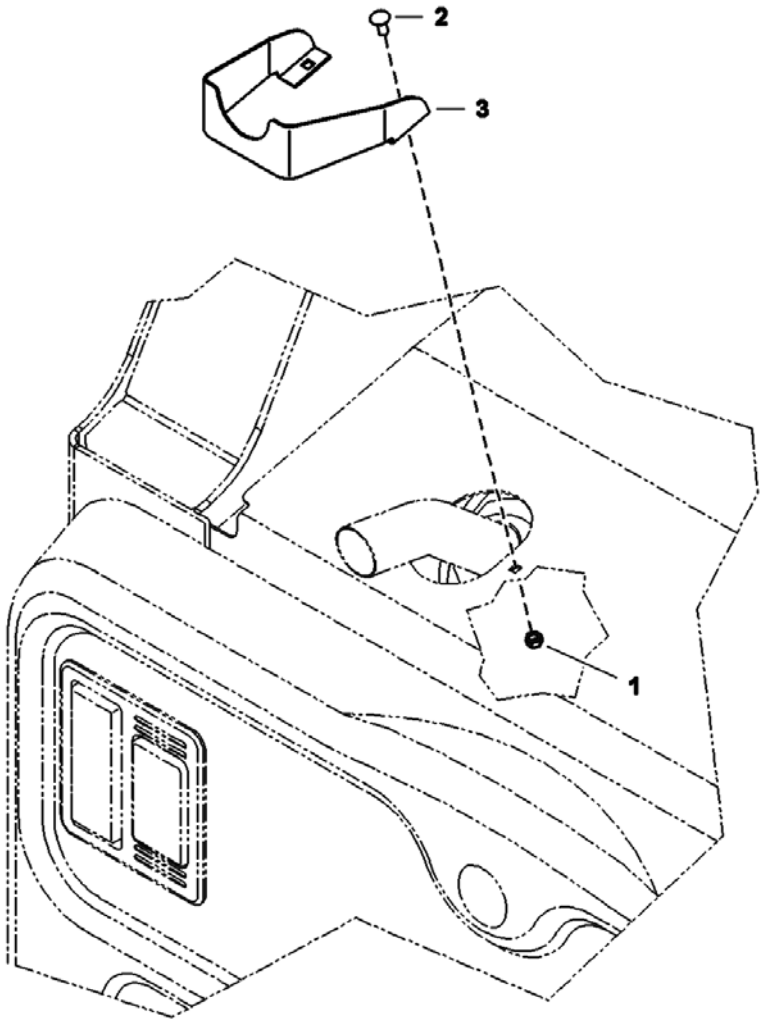

NA2304

EUROPEAN ACCESSORIES (Cont'd)
(Exhaust Pipe Shield)

Ref No	Part Number	Description	Remarks	Serial Number	Qty
1	61D5	NUT			2
2	37C512	BOLT			2
3	7174811	SHIELD, ISOLATOR			1

EUROPEAN ACCESSORIES
(Light Extenders) (Wide Attachment)

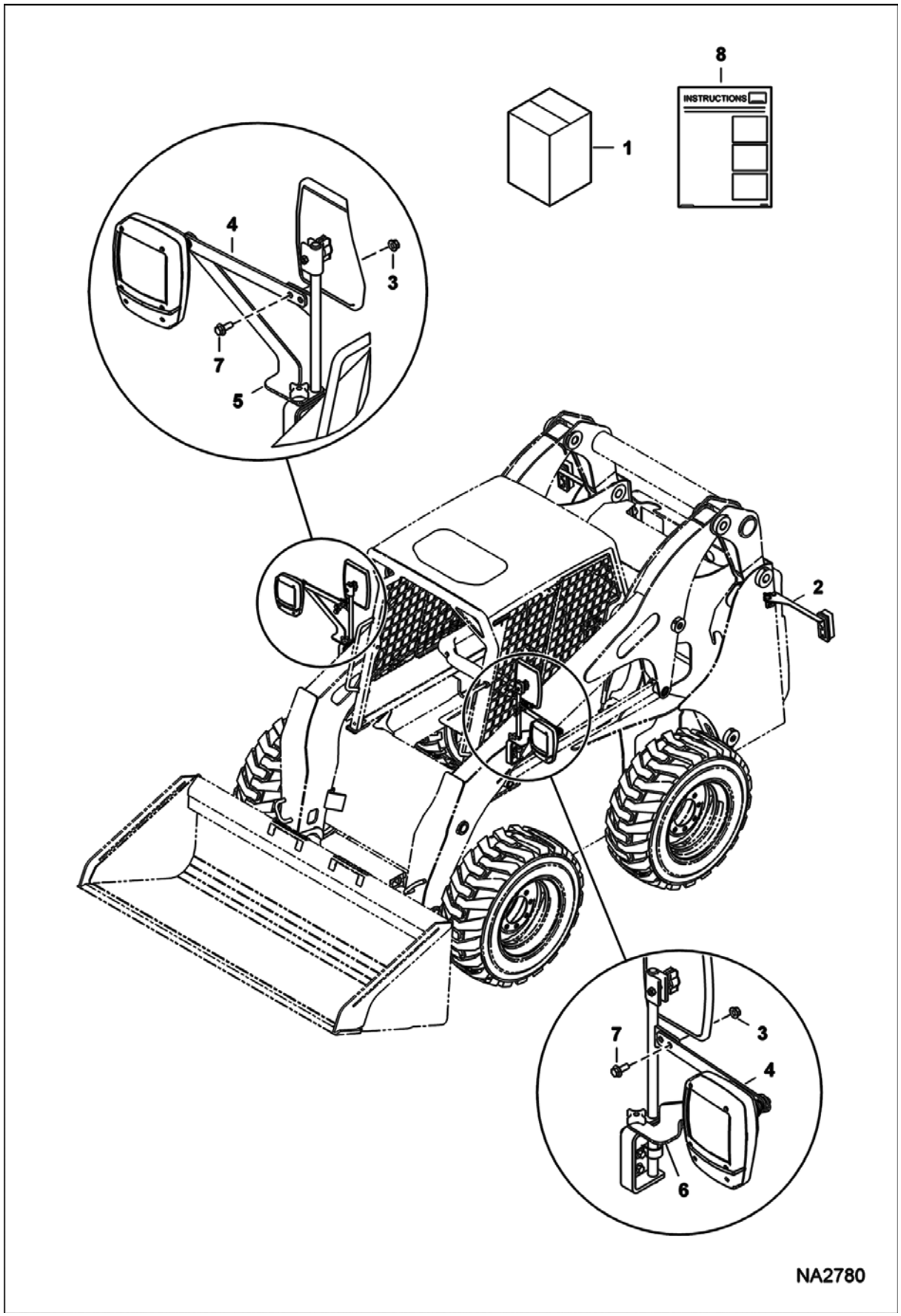

EUROPEAN ACCESSORIES (Cont'd)
(Light Extenders) (Wide Attachment)

Ref No	Part Number	Description	Remarks	Serial Number	Qty
1	7188129	KIT, EXTENTION LIGHT	Ref. 2-8		1
2	7180997	HOLDER	LH		1
2	7180998	HOLDER	RH		1
3	43DM10	NUT			4
4	7188130	HOLDER			2
5	7188131	HOLDER	RH		1
6	7188132	HOLDER	LH		1
7	29CM1025	BOLT			4
8	6987366	INSTRUCTIONS			1

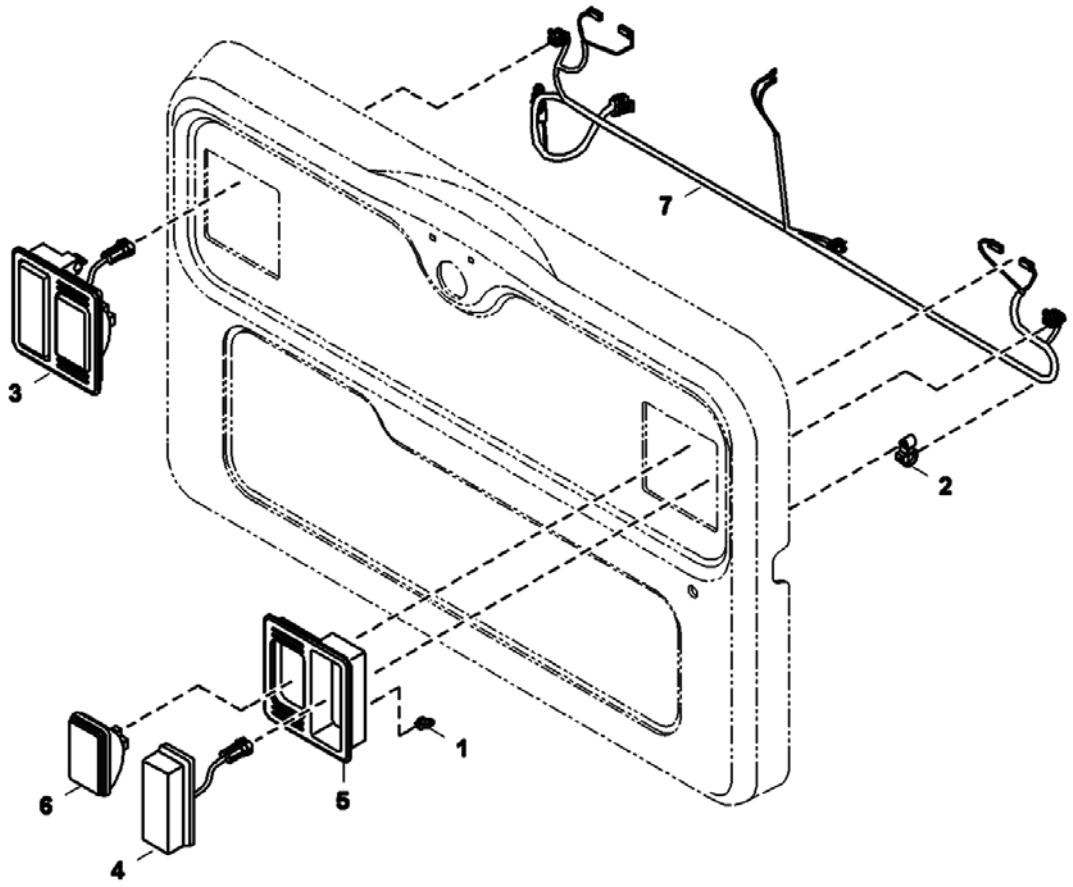

NA2165

EUROPEAN ACCESSORIES (Cont'd)
(Rear Door Lights)

Ref No	Part Number	Description	Remarks	Serial Number	Qty
1	6688637	MOUNT			2
2	7002988	TIE, STUD MOUNT			5
3	7104670	LIGHT	assy RH - Ref. 4-6		1
3	7104671	LIGHT	assy LH - Ref. 4-6		1
4	7101384	LIGHT			2
4	6686096	LENS	turn - amber		1
4	6686097	BULB	turn - 21W		1
4	6686099	LENS	stop - red		1
4	6686098	BULB	stop - 21/5W		1
4	6686100	SCREW			2
5	6672279	MOUNT, LIGHT RUBBER			1
6	6671027	LIGHT			2
7	7175287	HARNESS, REAR DOOR			1

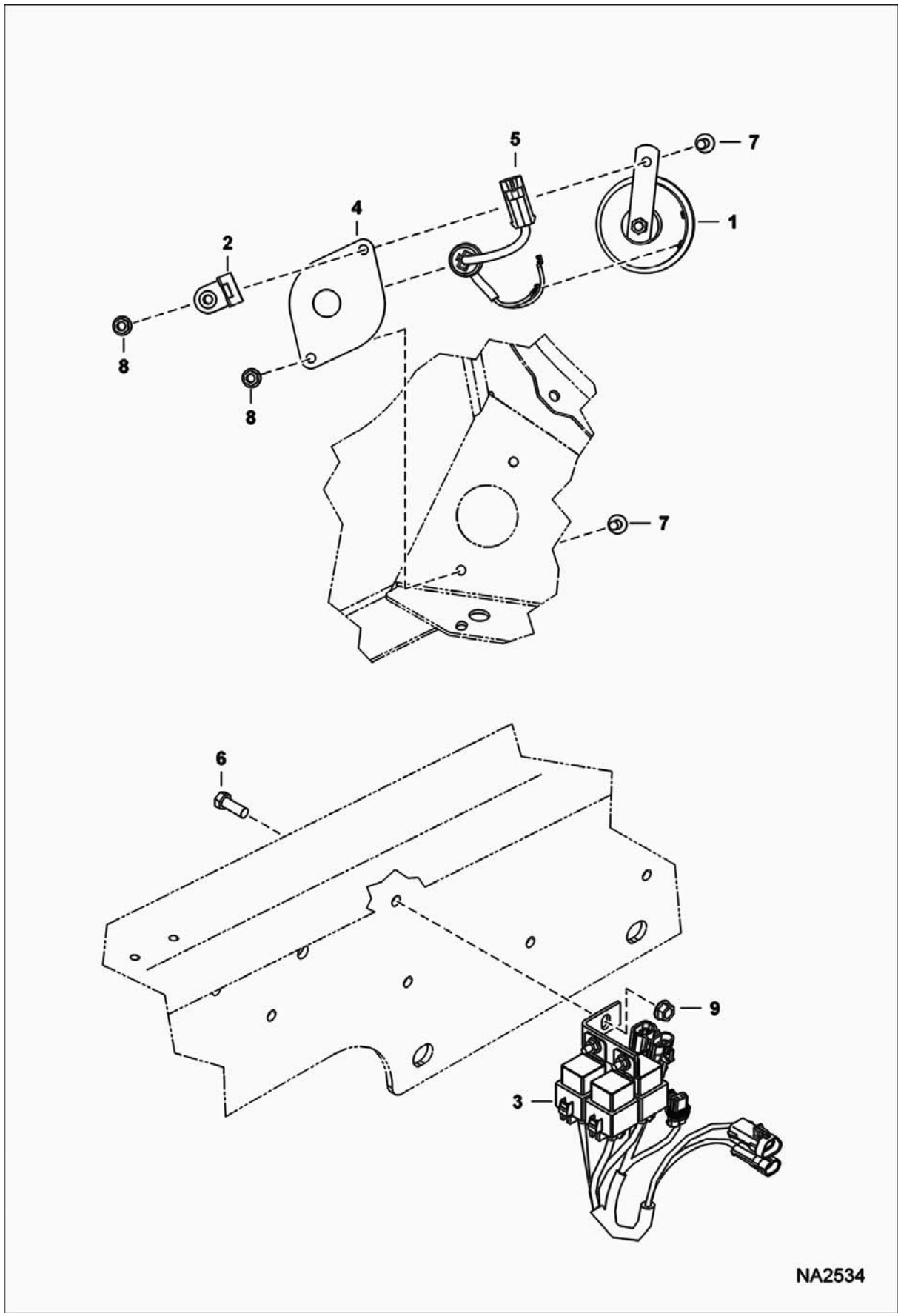
5
7
4
1
2
8
8
7
6
9
3
NA2534

EUROPEAN ACCESSORIES (Cont'd)
(Horn)

Ref No	Part Number	Description	Remarks	Serial Number	Qty
1	6671106	HORN			1
2	6684641	MOUNT			1
3	7151940	HARNESS, HORN	SJC		1
4	7177690	MOUNT			1
5	7183295	HARNESS, HORN			1
6	17C616	BOLT 5			1
7	35C516	BOLT 10			2
8	55D5	NUT			2
9	97D6	NUT 10			1

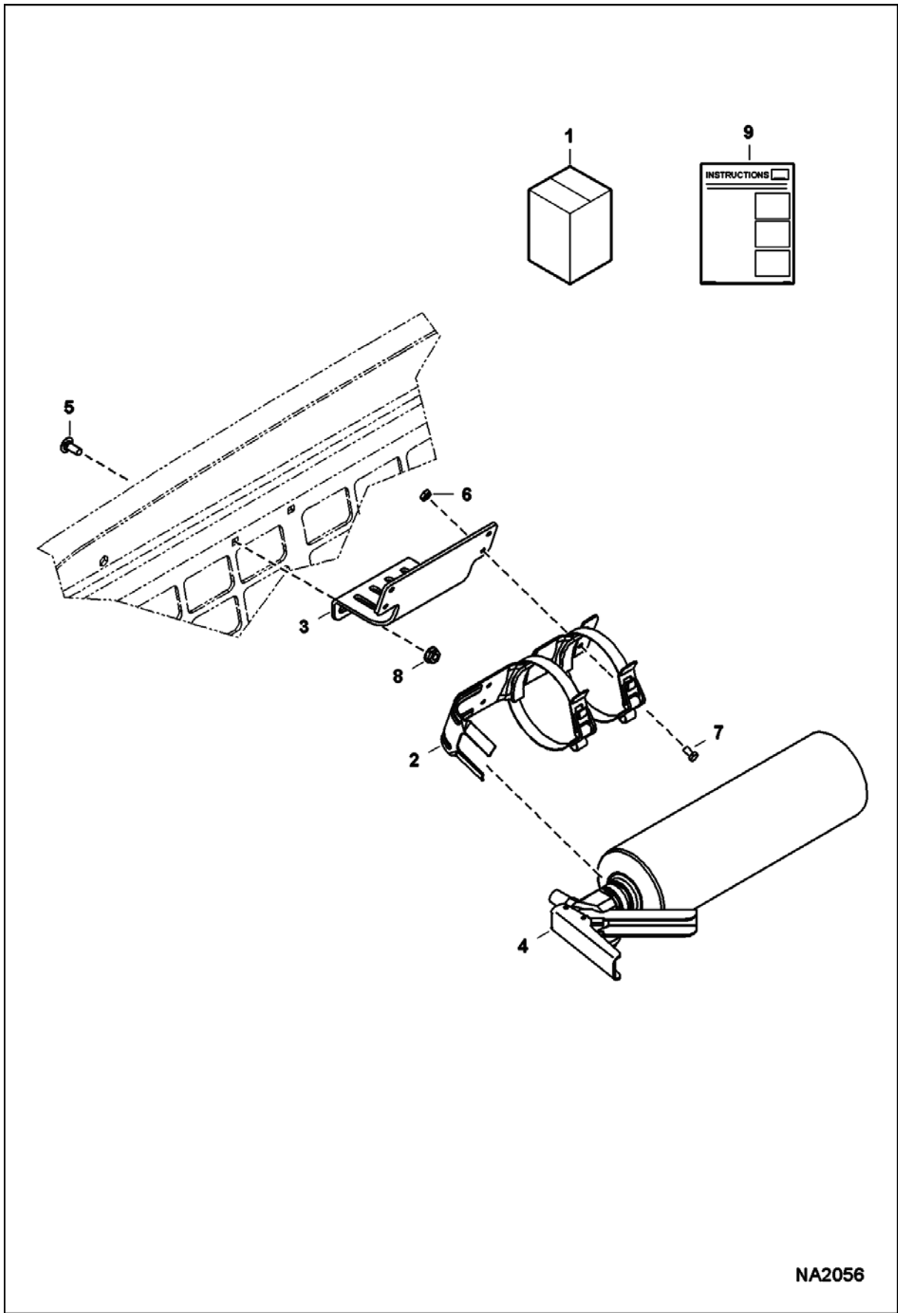
1
9
INSTRUCTIONS
5
6
3
8
2
7
4
NA2056

FIRE EXTINGUISHER (Cont'd)

Ref No	Part Number	Description	Remarks	Serial Number	Qty
1	7129307	KIT, EXTINGUISHER FIRE	Ref. 2-9		1
2	6691173	BRACKET			1
3	7166482	BRACKET			1
4	7168164	EXTINQUISHER,FIRE			1
5	10C410	BOLT			2
6	12D10	NUT			4
7	45G1006	BOLT			4
8	55D4	NUT			2
9	6987223	INSTRUCTIONS			1

FLASHER LIGHTS
(4-Way)

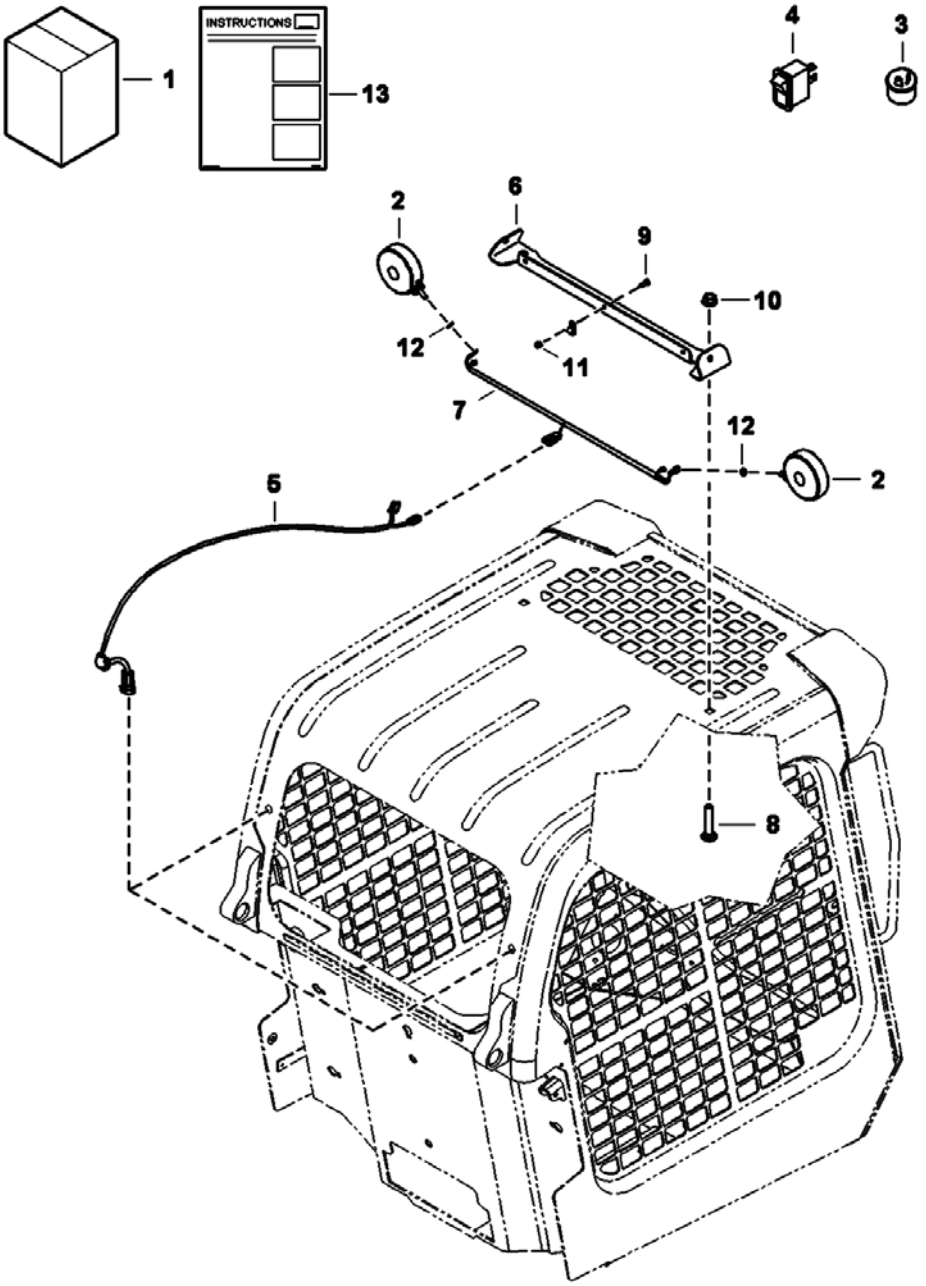

FLASHER LIGHTS (Cont'd)
(4-Way)

Ref No	Part Number	Description	Remarks	Serial Number	Qty
1	7128338	KIT, FLASHER 4-WAY	Ref. 2-13		1
1		RESEALING PLUG KIT	See Illustration RESEALING KIT/ NA2775		1
2	6517516	LIGHT			2
3	6557904	FLASHER			1
4	6668815	SWITCH	See Ref. 13 for proper placement		1
5	6718872	HARNESS			1
6	7166832	MOUNT			1
7	7169753	HARNESS, FLASHER 4-WAY			1
8	37C1032	BOLT			2
9	37C412	BOLT			3
10	55D10	NUT			2
11	59D4	NUT 5			3
12	6E5	WASHER			2
13	6987224	INSTRUCTIONS			1

F.O.P.S KIT

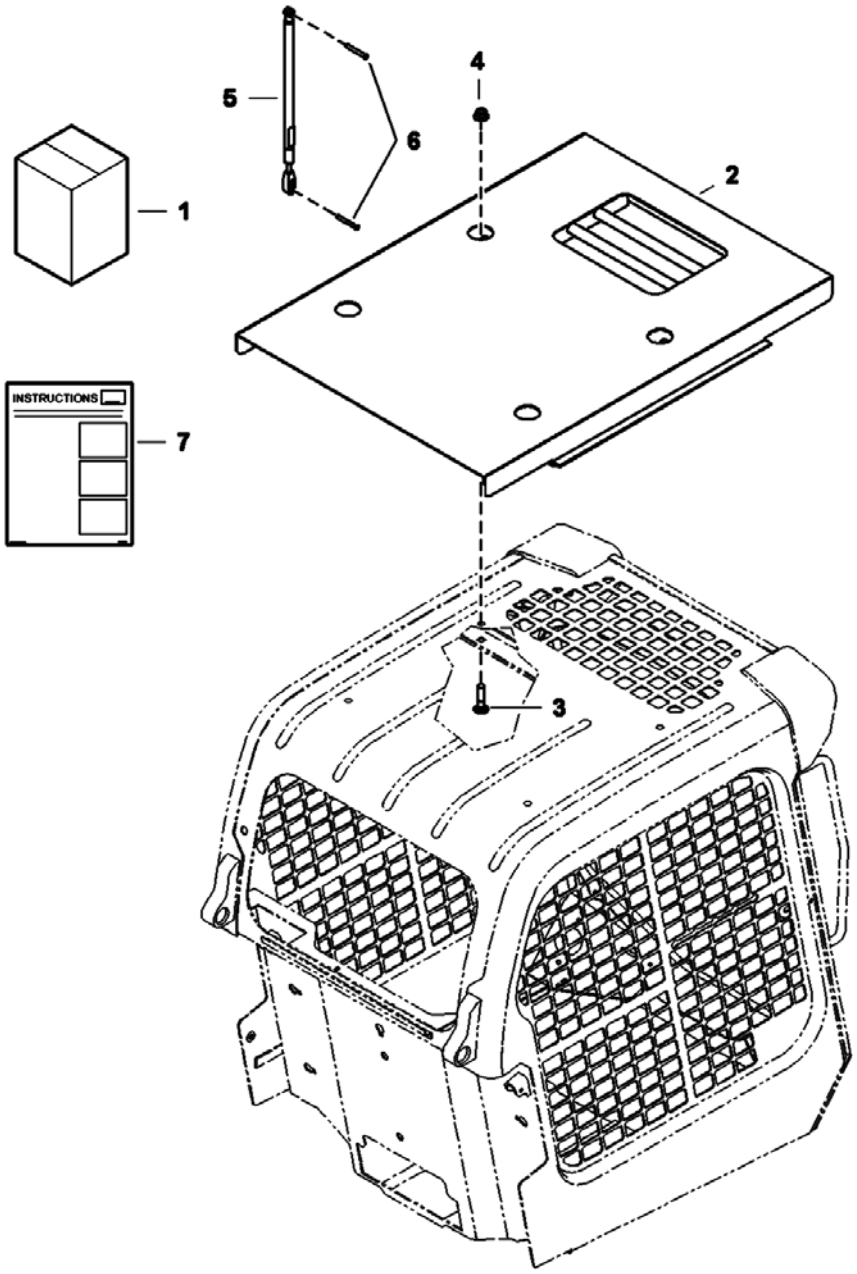

F.O.P.S KIT (Cont'd)

Ref No	Part Number	Description	Remarks	Serial Number	Qty
1	7129293	KIT, FOPS TOP	Ref. 2-7		1
1		RESEALING PLUG KIT	See Illustration RESEALING KIT/ NA2775		1
2	7167506	SHIELD, ASSY			1
3	7164686	BOLT, CARRIAGE			4
4	53D10	NUT			4
5	7167437	SPRING, GAS STD			1
6	7194471	PIN, CLEVIS			2
7	6987216	INSTRUCTIONS			1

F.O.P.S WINDOW KIT

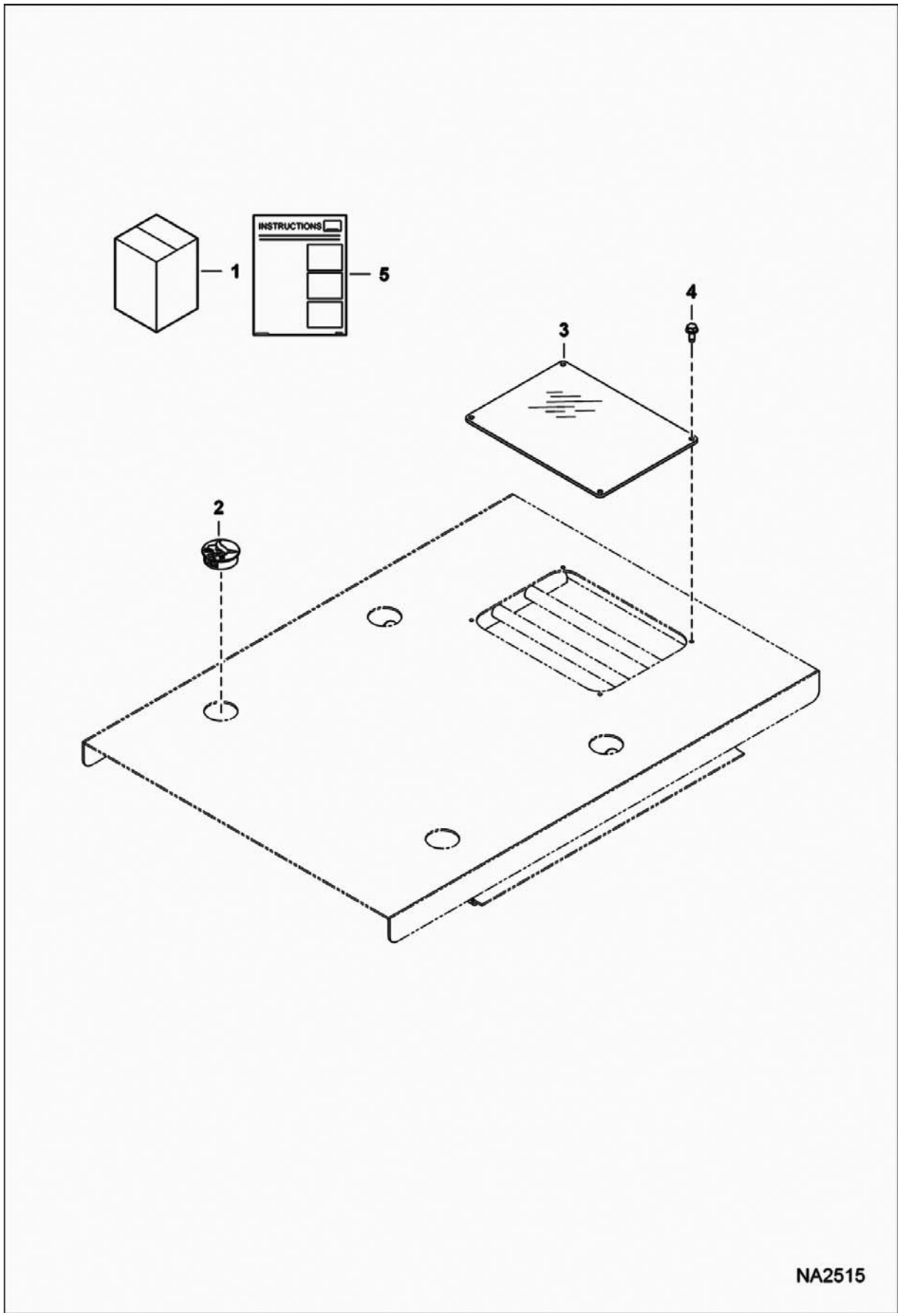

F.O.P.S WINDOW KIT (Cont'd)

Ref No	Part Number	Description	Remarks	Serial Number	Qty
1	7186723	KIT, WINDOW FOPS	Ref. 2-5		1
2	6718796	PLUG			4
3	7186644	WINDOW, FOPS			1
4	84G3112	BOLT 5			4
5	6989520	INSTRUCTIONS			1

FUEL BOWL KIT

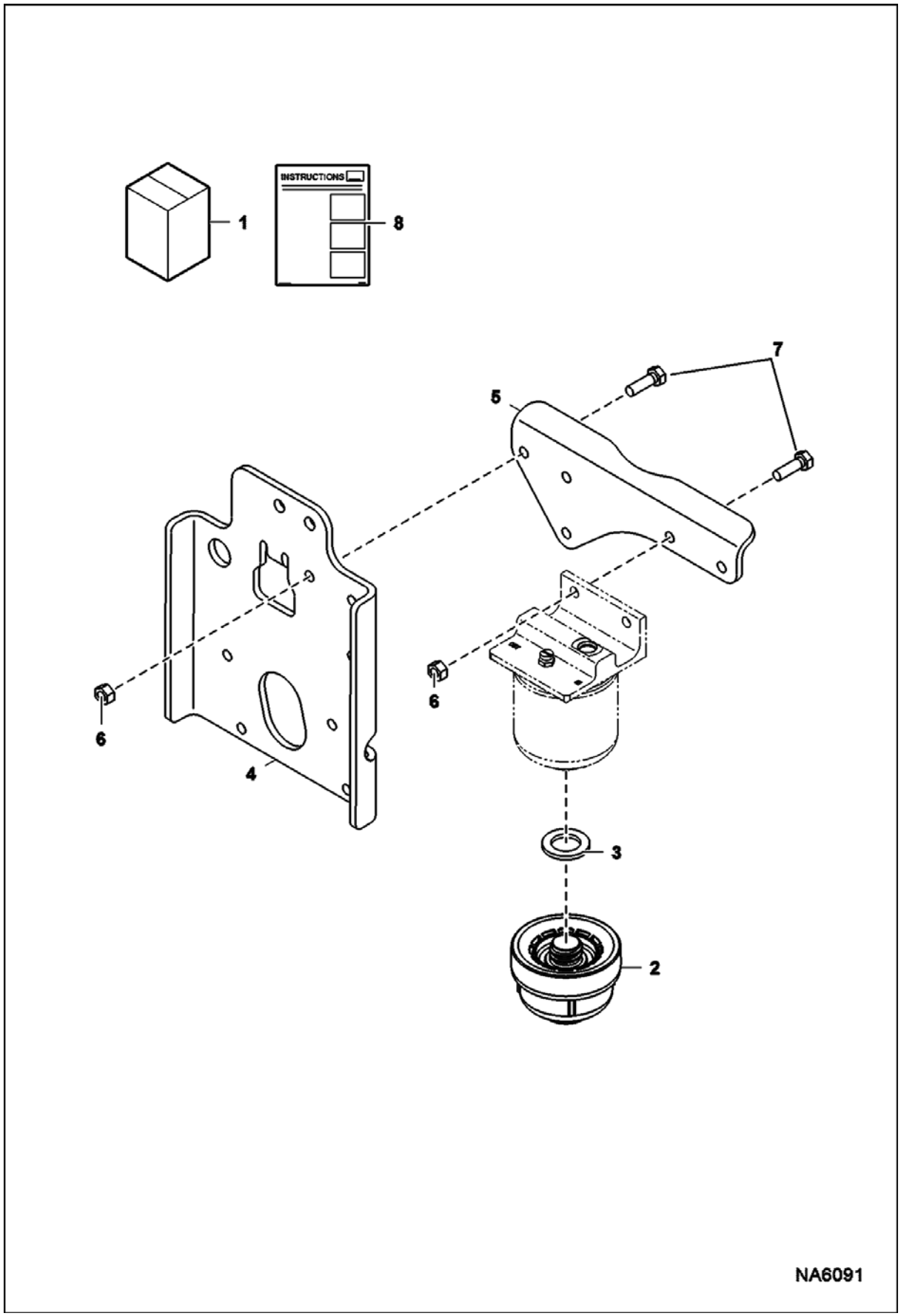

FUEL BOWL KIT (Cont'd)

Ref No	Part Number	Description	Remarks	Serial Number	Qty
1	7172899	KIT, BOWL FUEL	Ref. 2-8 - Was 7178299 [D]		1
2	7167163	BOWL, FUEL	W/Ref. 3		1
3	7177212	GASKET			1
4	7203241	MOUNT, MUFFLER			1
5	7144600	MOUNT, FILTER FUEL			1
6	95D5	NUT			5
7	17C516	BOLT			5
8	6987336	INSTRUCTIONS			1

GAS SPRING KIT

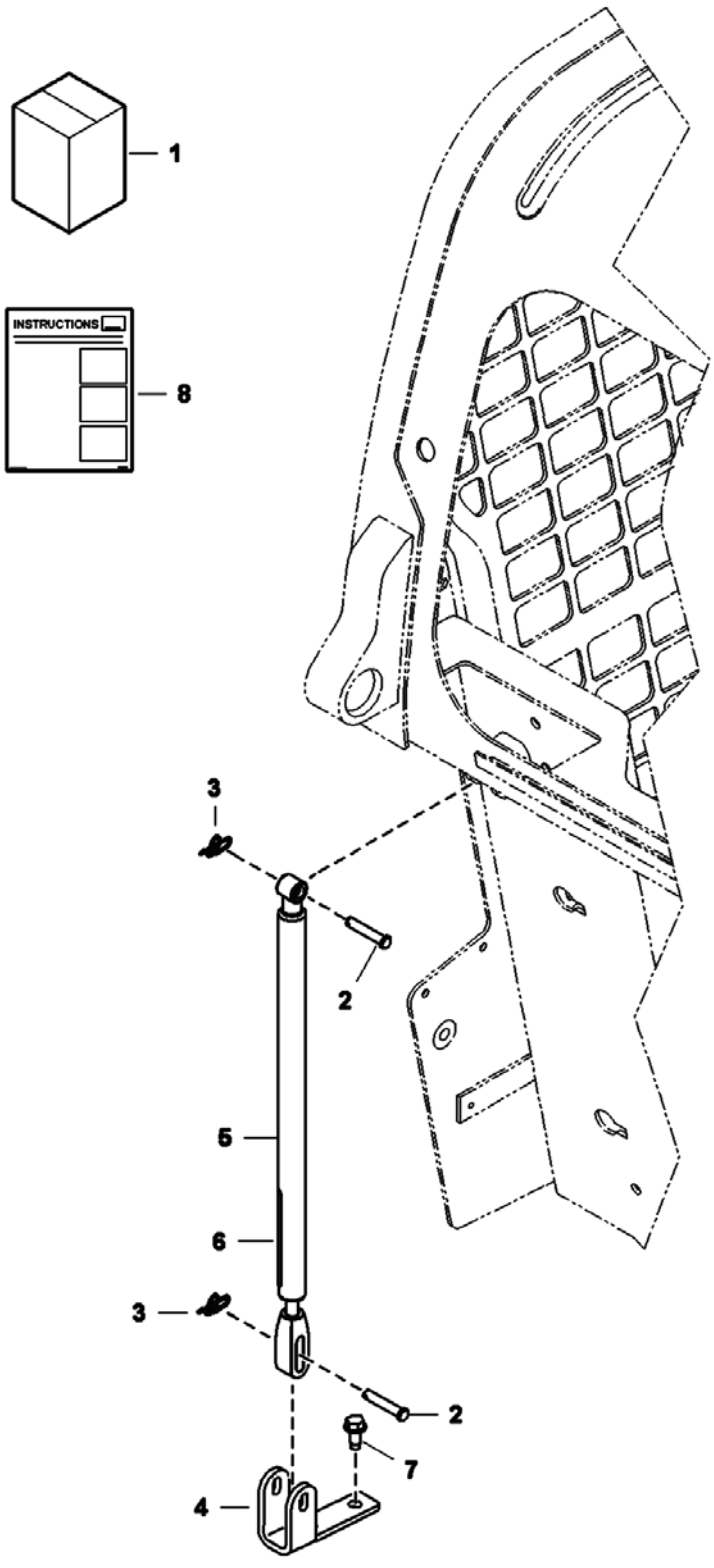

GAS SPRING KIT (Cont'd)

Ref No	Part Number	Description	Remarks	Serial Number	Qty
1	7170782	KIT, GAS SPRING DLX	Ref. 2-8		1
2	6567743	PIN			2
3	6631418	PIN			2
4	7144859	MOUNT, GAS SPRING			1
5	7167438	GAS SPRING	deluxe - Also Order Ref. 6		1
6	7169291	DECAL			1
7	84G3712	BOLT			2
8	6987279	INSTRUCTIONS			1

HEATER & A/C
(Heater Kit)
(Metal Housing)

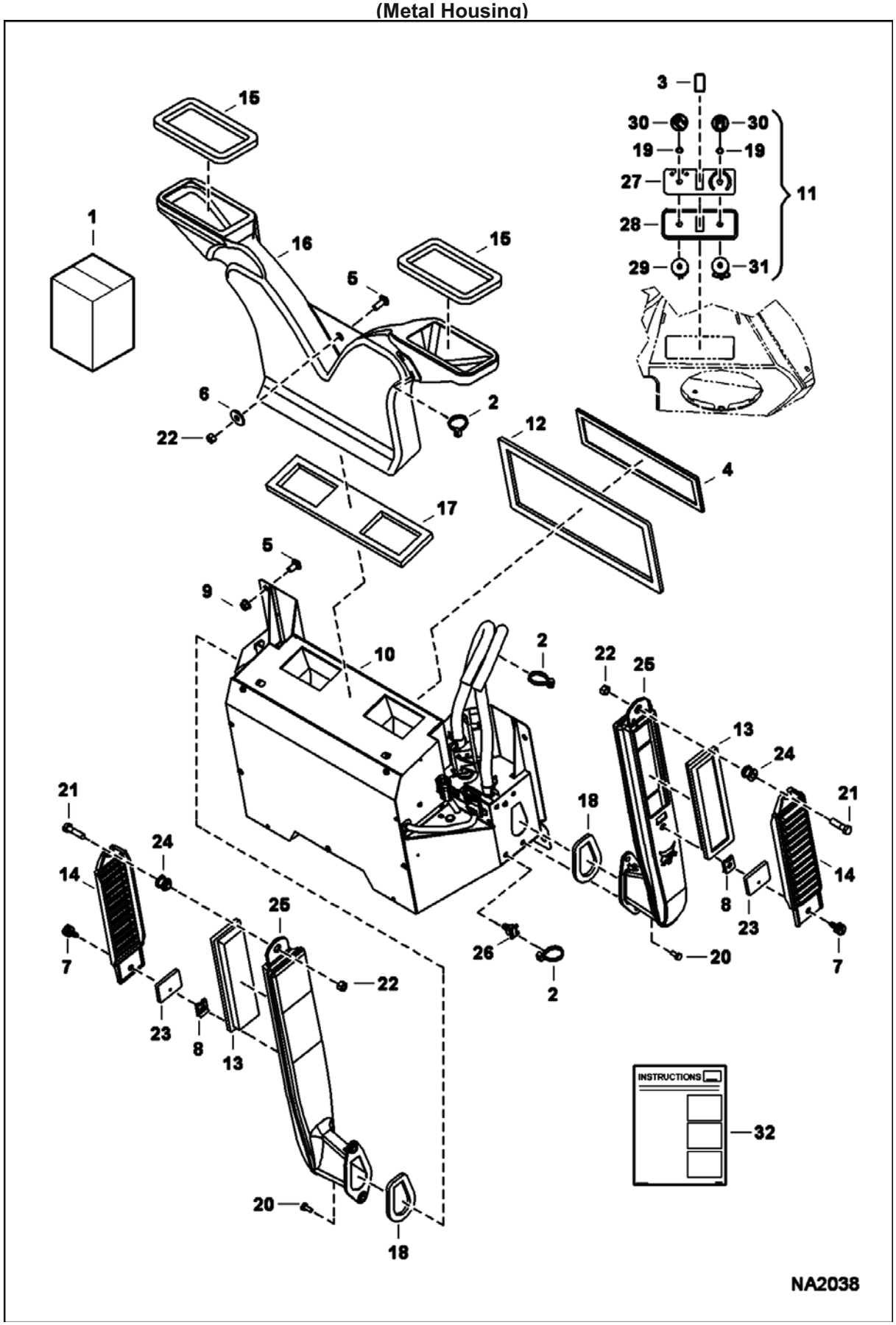

HEATER & A/C (Cont'd)
(Heater Kit)
(Metal Housing)

Ref No	Part Number	Description	Remarks	Serial Number	Qty
1		KIT, HEATER	See Illustration HEATER & A/C/ NA2970 NAP - Ref. 2-32 - Order 7128484 kit, heater, 7203232 jumper & 7203233 jumper - Was 7128484 [A]		1
2	6624289	STRAP, TIE			5
3	6675181	PLUG			1
4	6698096	FILTER, AIR RECIRCULATING			1
5	10C612	BOLT			5
6	619021	WASHER, 5			1
7	7000983	SCREW			2
8	7000984	CLIP			2
9	97D6	NUT 10			4
10	7141701	HEATER ASSY	See Illustration HEATER & A/C/ NA2332		1
11	7176309	CONTROL	W/Ref. 27-31		1
12	7161595	SEAL, FOAM			1
13	7176099	FILTER, AIR FRESH			2
14	7176100	COVER			2
15	7165673	SEAL, CAB DUCT			2
16	7166534	DUCT			1
17	7167405	SEAL, DUCT			1
18	7176579	SEAL, FOAM			2
19		NUT	NSS		2
20	17C410	BOLT 10			4
21	17C624	BOLT 5			2
22	95D6	NUT			3
23	7176943	SEAL, COVER			2
24	7176942	SPACER			2
25	7176101	DUCT, AIR			2
26	7015668	MOUNT FIR TREE	push in - Use W/tie strap - Was 6678666 [B]		2
27	7011061	DECAL			1
28	7011062	PANEL, CONTROL			1
29	6675176	SWITCH	blower motor - W/Ref. 19		1
30	6675177	KNOB			2
31	7168604	RESISTOR	temp control - W/Ref. 19		1
32	6987231	INSTRUCTIONS			1

HEATER & A/C
(Heater Kit)
(Plastic Housing)

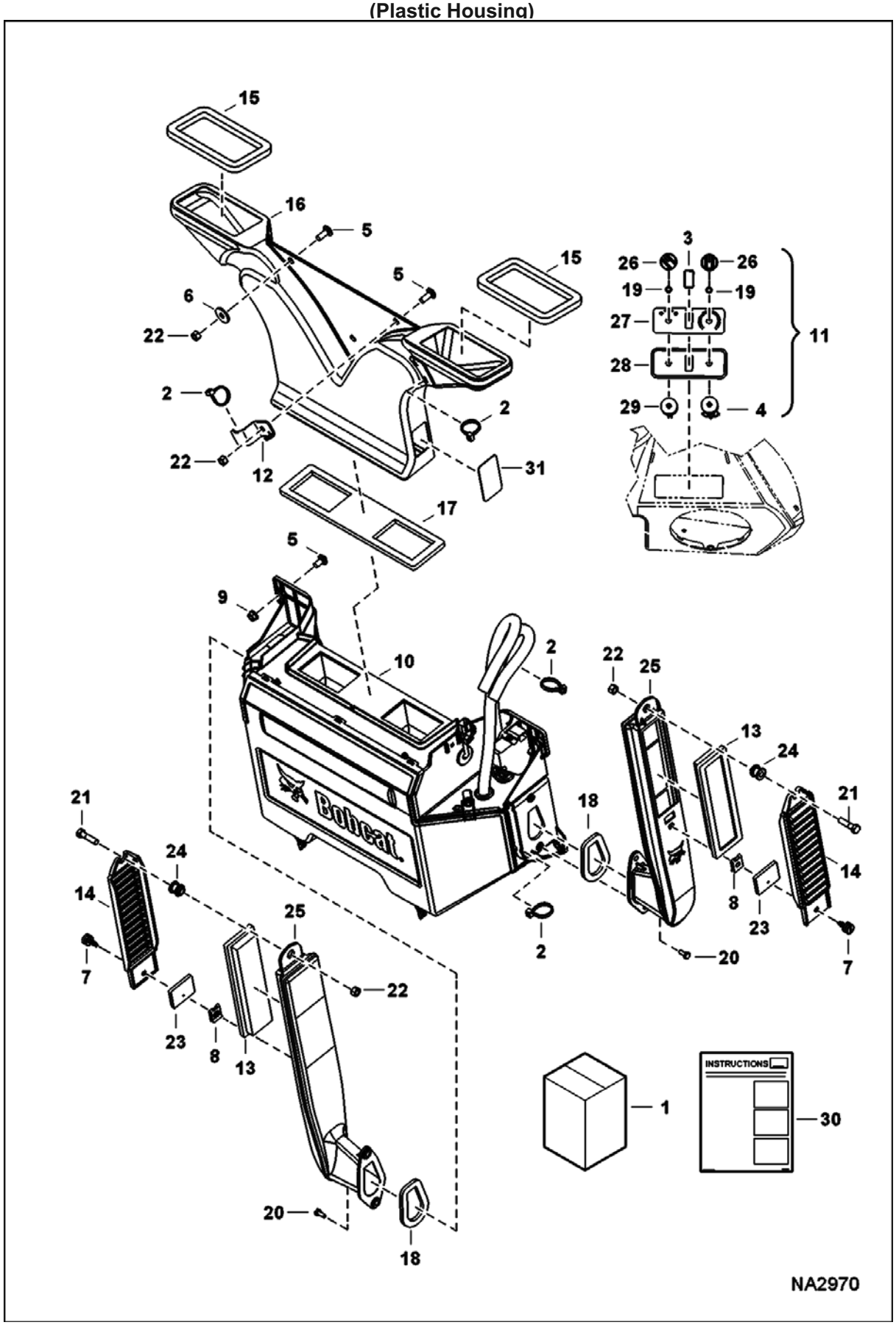

HEATER & A/C (Cont'd)
(Heater Kit)
(Plastic Housing)

Ref No	Part Number	Description	Remarks	Serial Number	Qty
1	7128484	KIT, HEATER	Ref. 2-31		1
2	6624289	STRAP, TIE			6
3	6675181	PLUG			1
4	7168604	RESISTOR	temp control - W/Ref. 19		1
5	10C616	BOLT 10			6
6	619021	WASHER, 5			1
7	7000983	SCREW			2
8	7000984	CLIP			2
9	97D6	NUT 10			4
10		HEATER, CAB	See Illustration HEATER & A/C/ NA2969		1
11	7176309	CONTROL	W/Ref. 4, 26-29		1
12	7192569	BRACKET			1
13	7176099	FILTER, AIR FRESH			2
14	7176100	COVER			2
15	7165673	SEAL, CAB DUCT			2
16	7197262	DUCT			1
17	7167405	SEAL, DUCT			1
18	7176579	SEAL, FOAM			2
19		NUT	NSS		2
20	7166190	SCREW THREAD ROLLING			4
21	17C624	BOLT 5			2
22	95D6	NUT			4
23	7176943	SEAL, COVER			2
24	7176942	SPACER			2
25	7176101	DUCT, AIR			2
26	6675177	KNOB			2
27	7011061	DECAL			1
28	7011062	PANEL, CONTROL			1
29	6675176	SWITCH	blower motor - W/Ref. 19		1
30	6987231	INSTRUCTIONS			1
31	7197973	COVER			1

HEATER & A/C
(Heater Assembly)
(Metal Housing)

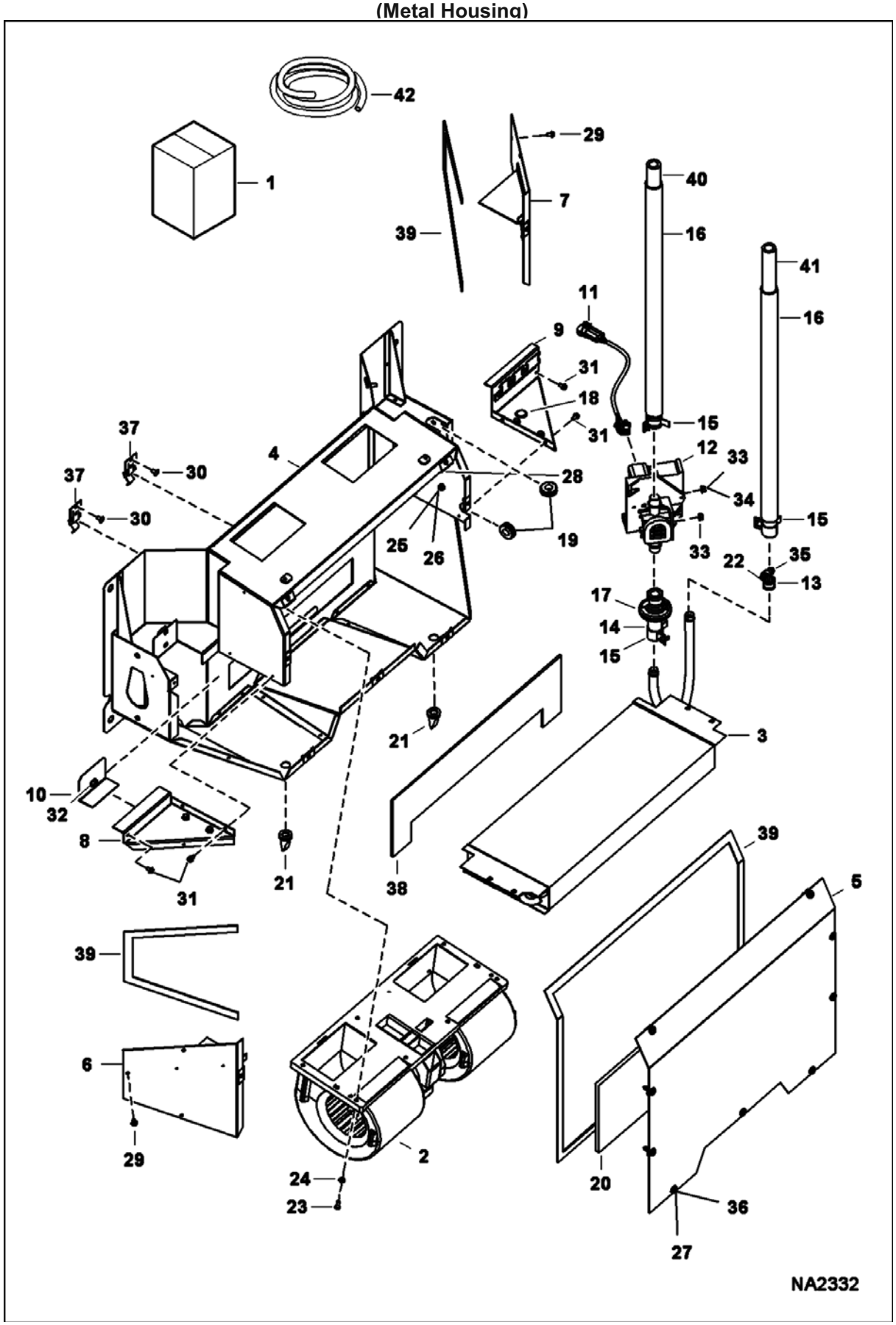

HEATER & A/C (Cont'd)
(Heater Assembly)
(Metal Housing)

Ref No	Part Number	Description	Remarks	Serial Number	Qty
1		HEATER ASSY	See Illustration HEATER & A/C/ NA2969 NAP - Ref. 2-39 - Order 7193780 heater - Was 7141701 [A]		1
2		BLOWER, HEATER & A/C	See Illustration HEATER & A/C/ NA2155		1
3	7010386	COIL, HEATER			1
4	7010387	HOUSING			1
5	7010388	COVER			1
6	7010389	COVER, SIDE	LH		1
7	7010390	COVER, SIDE	RH		1
8	7010391	SUPPORT, LH			1
9	7010392	SUPPORT, RH			1
10	7010393	COVER			1
11	7010394	HARNESS, HEATER			1
12	7003456	VALVE, MOTORIZED ASSY			1
13	7010395	CLAMP			1
14		HOSE, HEATER	NAP - 3.35" (85, mm) long - Order Ref. 42		1
15	7003458	CLAMP, HOSE			4
16	7010396	COVER, HOSE			2
17	6693222	GROMMET			1
18	7010397	PLUG, FILL			1
19	6690482	GROMMET			2
20	7010398	INSULATION, HEATER			1
21	7010399	VALVE, DRAIN			2
22	7010400	SPACER			1
23	7010401	SCREW			2
24	6693223	WASHER			2
25	7010402	SCREW			1
26	7003465	NUT			2
27	6677116	RETAINER			9
28	6677115	RECEPTACLE			9
29	6677119	SCREW			12
30	7010266	RIVET, POP			4
31	6677118	SCREW			4
32	6693864	BOLT			1
33	7010403	NUT			2
34	7010404	WASHER			2
35	6676653	SCREW			1
36	6677117	SCREW			9
37	7010405	CLIP, RECEPTACLE			2
38	7010406	INSULATION, HEATER			1
39	6693236	FOAM			1
40		HOSE, HEATER	NAP - 20.5" (520,7 mm) long - Order Ref. 42		1
41		HOSE, HEATER	NAP - 22.5" (571,5 mm) long - Order Ref. 42		1
42	7003457	HOSE, HEATER	bulk - sold per foot		x

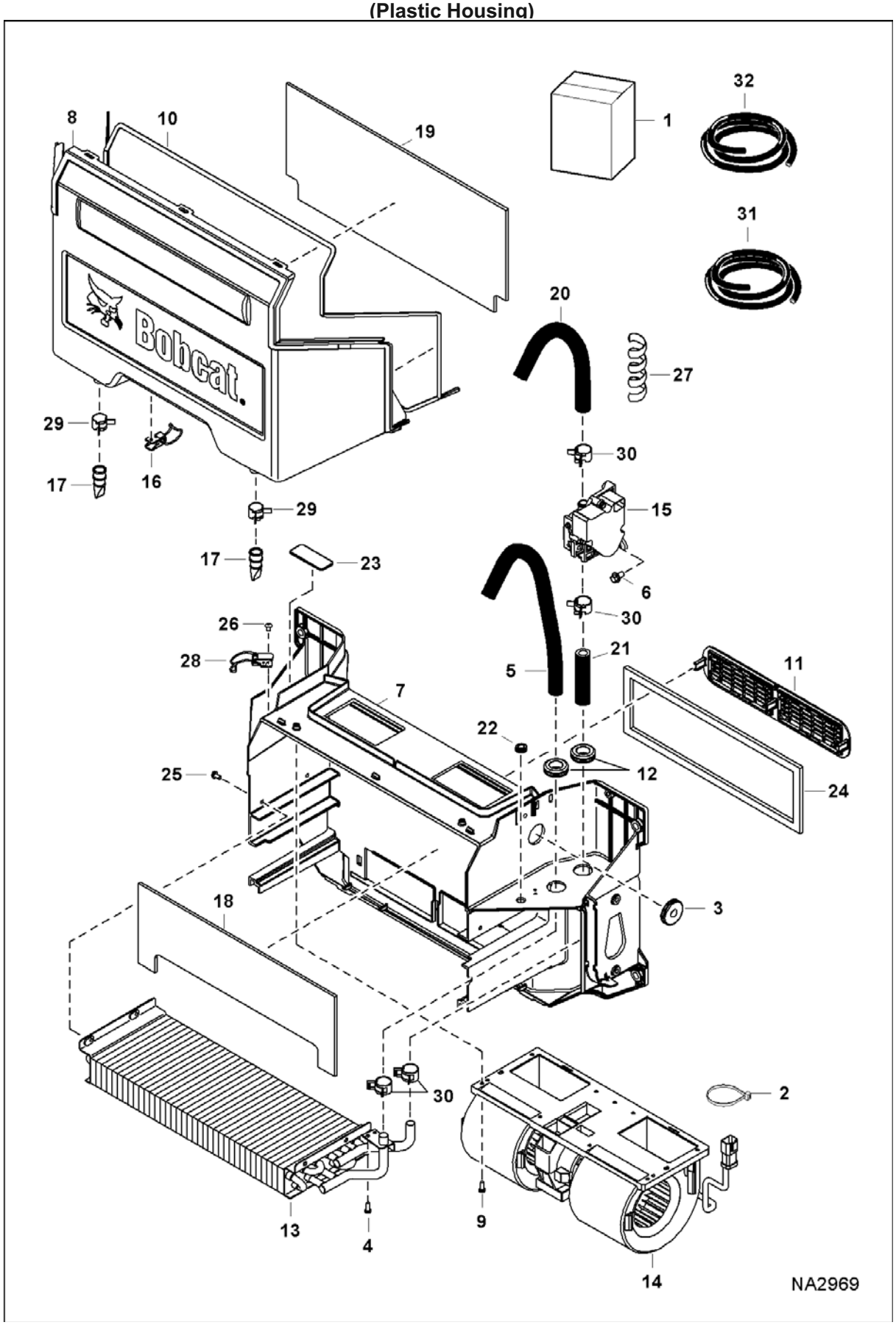
8
10
19
1
32
31
20
27
29
17
16
30
15
6
23
26
28
5
21
11
7
22
12
25
24
18
3
30
2
13
4
9
14
NA2969

HEATER & A/C (Cont'd)
(Heater Assembly)
(Plastic Housing)

Ref No	Part Number	Description	Remarks	Serial Number	Qty
1	7193780	HEATER, CAB	Ref. 2-30		1
2	6624289	STRAP, TIE			1
3	6682697	GROMMET			1
4	7162770	SCREW, PLASTIC			2
5		HOSE, HEATER	NAP - 520,7 mm (20.5") long - Order Ref. 28		1
6	7166190	SCREW THREAD ROLLING			2
7	7185847	HOUSING			1
8	7185848	COVER			1
9	7192287	BOLT			2
10	7192408	SEAL			1
11	7193354	FILTER, AIR RECIRCULATING			1
12	7193532	GROMMET			2
13	7193534	COIL, HEATER			1
14		BLOWER, HEATER & A/C	See Illustration HEATER & A/C/ NA2155A		1
15	7003456	VALVE, MOTORIZED ASSY	Was 7193537 [A]		1
16	7193540	LATCH			2
17	7193541	DRAIN, WATER SEAT			2
18	7193542	SEAL			1
19	7193543	SEAL			1
20		HOSE, WATER	NAP - 609,6 mm (24") long - Order Ref. 31		1
21		HOSE, HEATER	NAP - 85 mm (3.35") long - Order Ref. 31		1
22	7193778	PLUG			1
23	7193782	COVER			1
24	7193783	SEAL, FOAM			1
25	7193784	BOLT			4
26	7193786	RIVET, POP			4
27		WRAP, HOSE	NAP - 457 mm (18") long - Order Ref. 32		2
28	7196889	LATCH			2
29	5HM18	CLAMP			2
30	5HM20	CLAMP			4
31	6565977	HOSE	bulk - sold per foot		x
32	7194262	WRAPAROUND	bulk - sold per foot		x

HEATER & A/C
(Blower Assembly)
(Used on Heater W/ Metal Housing)

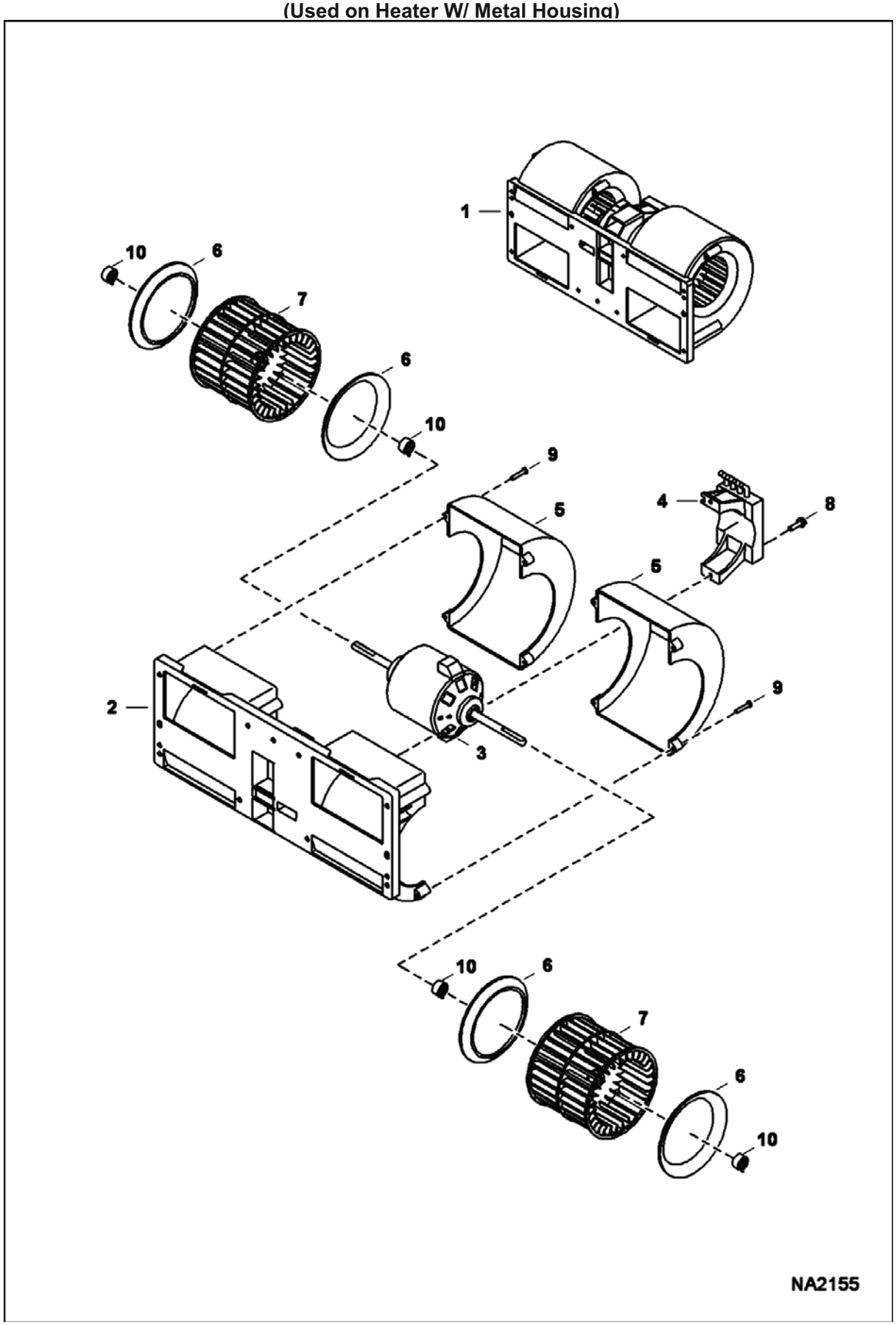

HEATER & A/C (Cont'd)
(Blower Assembly)
(Used on Heater W/ Metal Housing)

Ref No	Part Number	Description	Remarks	Serial Number	Qty
1	7003445	BLOWER, HEATER & A/C	Ref. 2-10		1
2	7010162	HOUSING, BLOWER			1
3	7010163	MOTOR, FAN			1
4	7010164	RESISTOR			1
5	7010165	COVER			2
6	7010166	RING, INNER			4
7	7010167	BLOWER, WHEEL			2
8	7003471	SCREW			2
9	7010168	SCREW			8
10	7010169	CLAMP, HOSE			4

HEATER & A/C
(Blower Assembly)
(Used on Heaters W/ Plastic Housing)

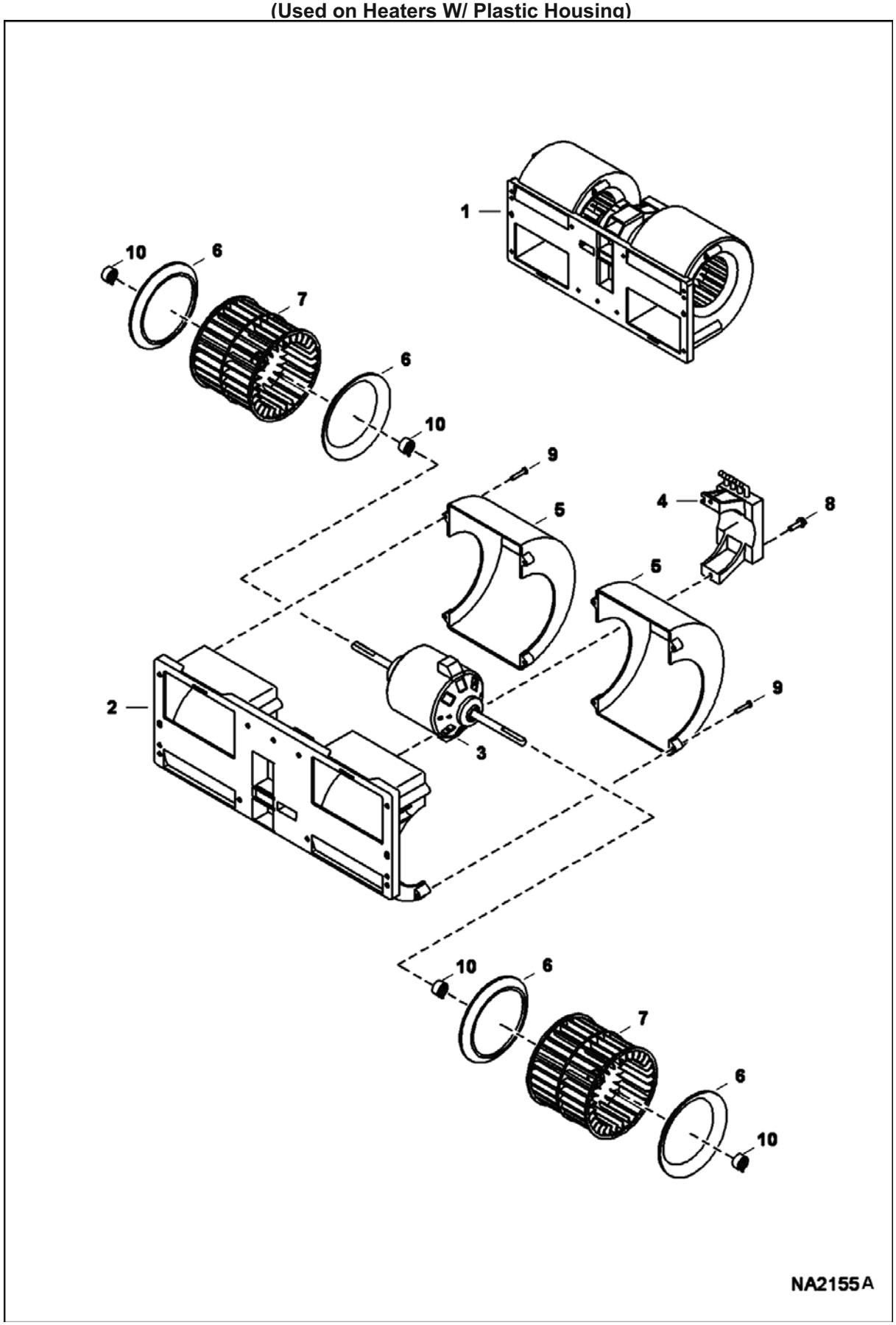

HEATER & A/C (Cont'd)
(Blower Assembly)
(Used on Heaters W/ Plastic Housing)

Ref No	Part Number	Description	Remarks	Serial Number	Qty
1	7193536	BLOWER, HEATER & A/C	Ref 2-10		1
2	7010162	HOUSING, BLOWER			1
3	7010163	MOTOR, FAN			1
4		RESISTOR	NAP - Was 7021380 [A]		1
5	7010165	COVER			2
6	7010166	RING, INNER			4
7	7010167	BLOWER, WHEEL			2
8	7003471	SCREW			2
9	7010168	SCREW			8
10	7010169	CLAMP, HOSE			4

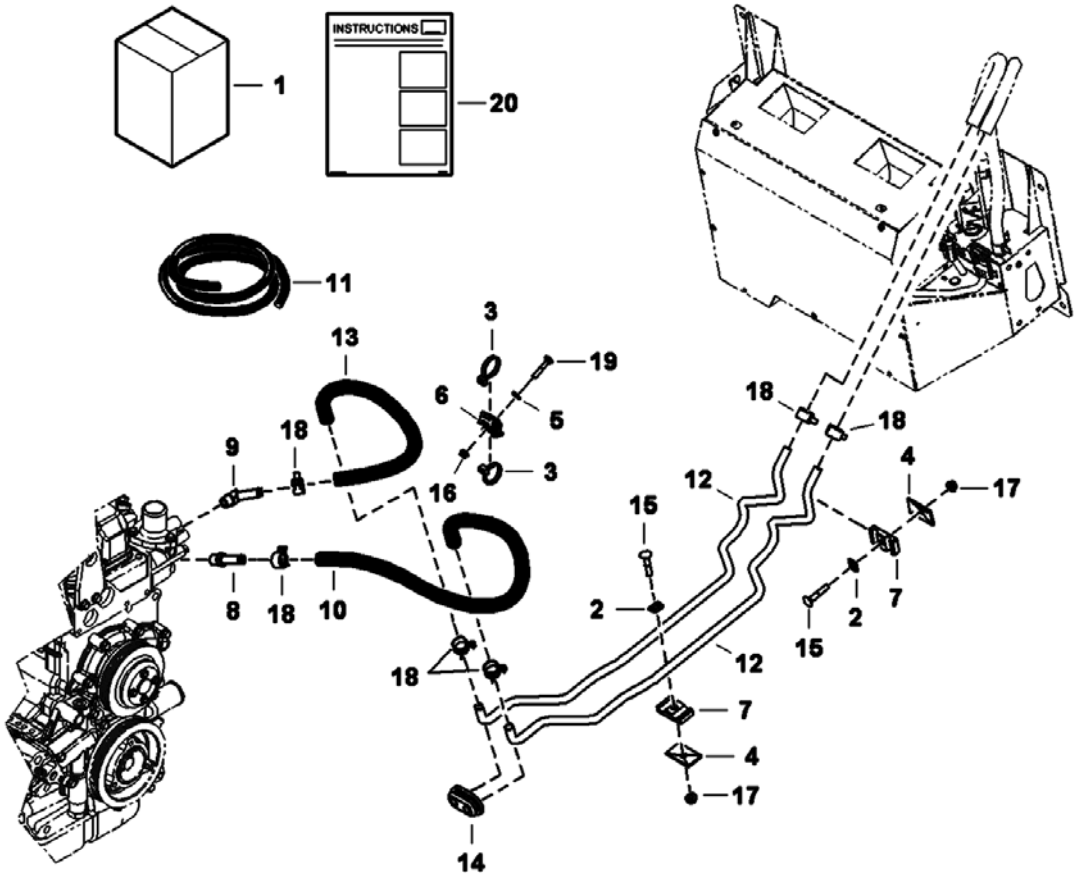
INSTRUCTIONS
1
20
11
3
19
13
6
5
18
9
16
3
18
18
4
12
17
15
2
12
8
18
10
18
7
2
15
7
4
17
14
NA2039

HEATER & A/C (Cont'd)
(Heater Plumbing Kit)

Ref No	Part Number	Description	Remarks	Serial Number	Qty
1	7129483	KIT, PLUMBING HEATER	Ref. 2-10 & 12-20		1
2	774220	NUT			2
3	6624289	STRAP, TIE			2
4	6652521	PLATE			2
5	6675212	RETAINER			1
6	6678974	MOUNT			1
7	6701892	CLAMP			2
8	6731084	ADAPTER			1
9	6731085	ELBOW			1
10		HOSE	NAP - 31" (787,4 mm) long - Order Ref. 11		1
11	6565977	HOSE	bulk - sold per foot		x
12	7151842	TUBE			2
13		HOSE	NAP - 22" (558,8 mm) long - Order Ref. 11		1
14	7156146	GROMMET			1
15	37C528	BOLT			2
16	55D4	NUT			1
17	55D5	NUT			2
18	5HM20	CLAMP			6
19	37C424	BOLT			1
20	6987231	INSTRUCTIONS			1

HEATER & A/C
(A/C Kit)
(Used on Heaters W/ Metal Housing)

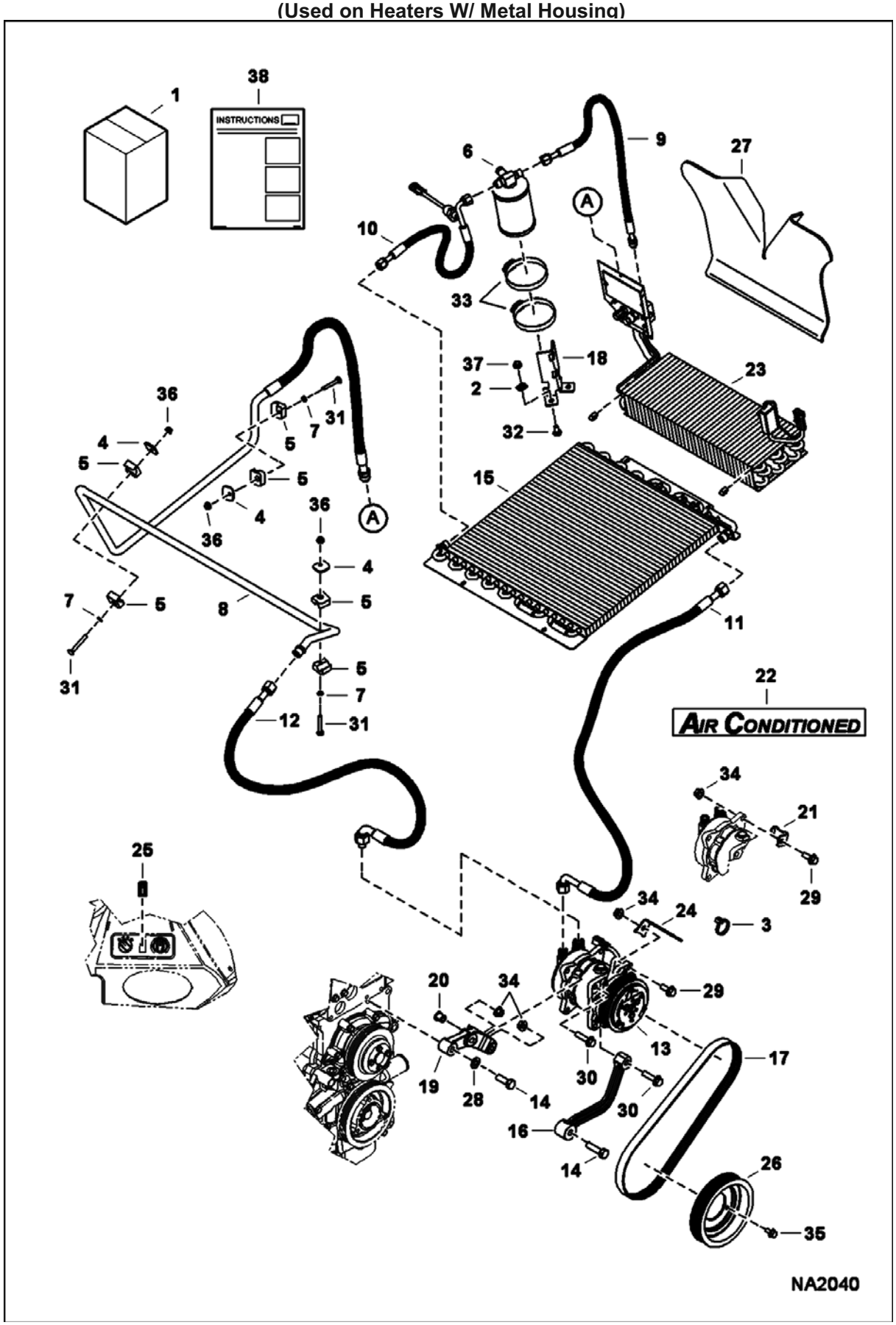

HEATER & A/C (Cont'd)
(A/C Kit)
(Used on Heaters W/ Metal Housing)

Ref No	Part Number	Description	Remarks	Serial Number	Qty
1	7129490	KIT, A/C	Ref. 2-40		1
2	774220	NUT			2
3	6624289	STRAP, TIE			3
4	6665102	COVER			3
5	6666920	CLAMP, HALF			6
6	6674235	RECEIVER DRIER			1
7	6675212	RETAINER			3
8	6697914	HOSE, TUBE ASSY			1
9	6697915	HOSE			1
10	6697916	HOSE			1
10	6675779	SWITCH, PRESS			1
10	7009976	O-RING	# 6		x
11	6697917	HOSE			1
11	7009977	O-RING	# 8		x
12	6697918	HOSE			1
12	7009978	O-RING	# 10		x
13	6698590	COMPRESSOR, A/C			1
14	7135124	SCREW			3
15	7136896	CONDENSER, A/C			1
16	7140150	BRACE, COMPRES MACH			1
17	7142000	BELT, ALT			1
18	7151848	BRACKET			1
19	7157922	MOUNT			1
20	7159243	BUSHING			1
21	7164564	BRACKET, A/C			1
22	7166916	DECAL, A/C			2
23	7168310	EVAPORATOR			1
24	7168430	BRACKET			1
25	7169112	SWITCH, ROCKER A/C			1
26	7169128	PULLEY A/C			1
27	7173651	INSULATION, HEATER			1
28	18EM1224	WASHER			2
29	29CM1025	BOLT			2
30	29CM1040	BOLT			3
31	37C432	SCREW			3
32	37C512	BOLT			2
33	44H48	CLAMP			2
34	51DM10	NUT			4
35	59CM816	BOLT			3
36	55D4	NUT			3
37	55D5	NUT			2
38	6987233	INSTRUCTIONS			1

HEATER & A/C
(A/C Kit)
(Used on Heaters W/Plastic Housing)

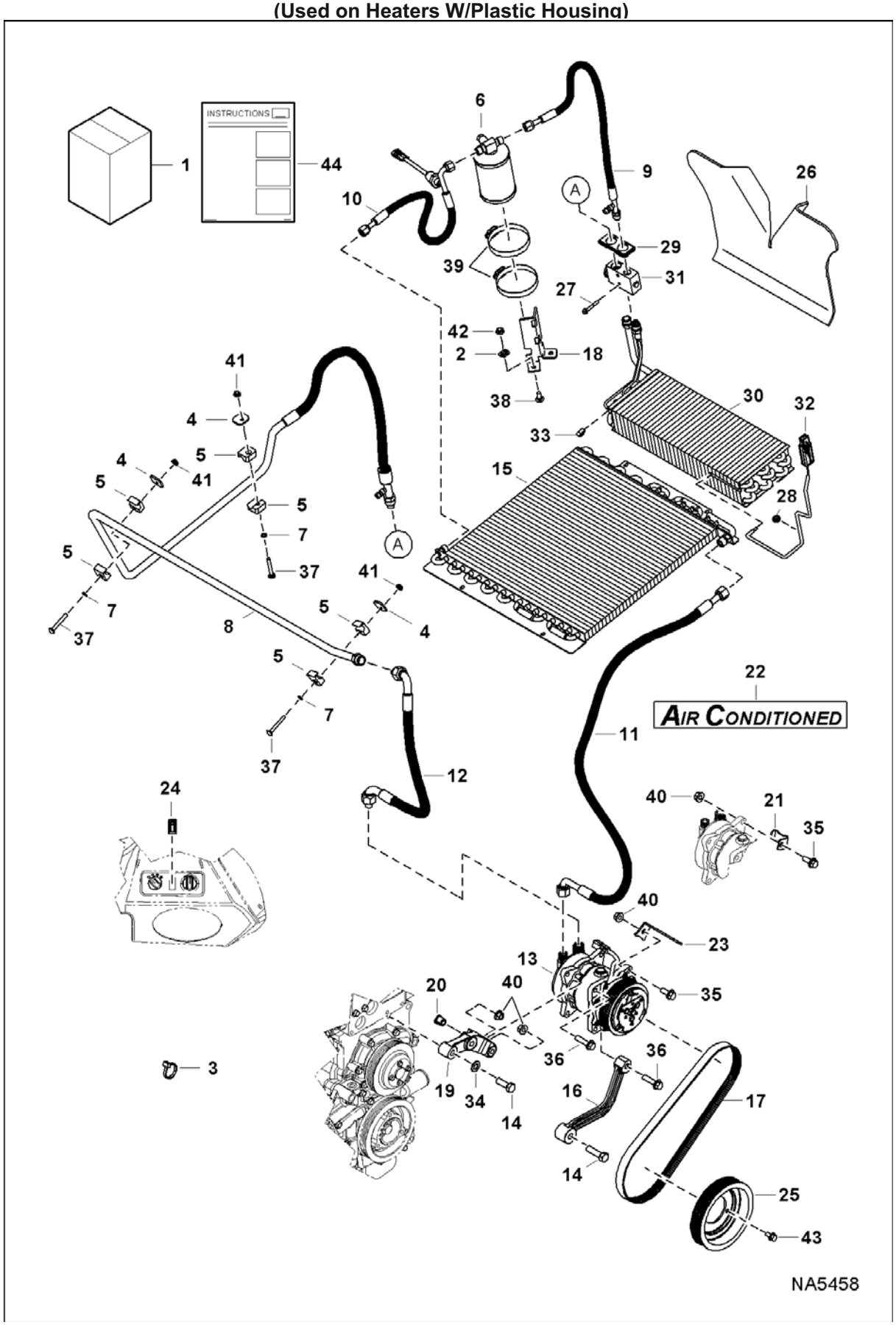

HEATER & A/C (Cont'd)
(A/C Kit)
(Used on Heaters W/Plastic Housing)

Ref No	Part Number	Description	Remarks	Serial Number	Qty
1	7198711	KIT, A/C	Ref. 2-44 - Also Order 7203234 jumper	A3NV11001 - 12931	1
1	7198711	KIT, A/C	Ref. 2-44 - Also Order 7203234 jumper	A3NV12933 - 13048	1
1	7198711	KIT, A/C	Ref. 2-44 - Also Order 7203234 jumper	A3NW11001 - 11248	1
1	7198711	KIT, A/C	Ref. 2-44 - Also Order 7203234 jumper	A3NV13050 - 13098	1
1	7198711	KIT, A/C	Ref. 2-44	A3NV 12932, 13049	1
1	7198711	KIT, A/C	Ref. 2-44	A3NW11249 & Above	1
1	7198711	KIT, A/C	Ref. 2-44	A3NV13099 & Above	1
2	774220	NUT			2
3	6624289	STRAP, TIE			4
4	6665102	COVER			3
5	6666920	CLAMP, HALF			6
6	6674235	RECEIVER DRIER			1
7	6675212	RETAINER			3
8	6697914	HOSE, TUBE ASSY			1
9	6697915	HOSE			1
10	6697916	HOSE			1
11	6697917	HOSE			1
12	6697918	HOSE			1
13	6698590	COMPRESSOR, A/C			1
14	7135124	SCREW			3
15	7136896	CONDENSER, A/C			1
16	7140150	BRACE, COMPRES MACH			1
17	7142000	BELT, ALT			1
18	7151848	BRACKET			1
19	7157922	MOUNT			1
20	7159243	BUSHING			1
21	7164564	BRACKET, A/C			1
22	7166916	DECAL, A/C			2
23	7168430	BRACKET			1
24	7169112	SWITCH, ROCKER A/C			1
25	7169128	PULLEY A/C			1
26	7173651	INSULATION, HEATER			1
27	7192371	BOLT			2
28	7193531	GROMMET			1
29	7193533	GROMMET			1
30	7193535	EVAPORATOR			1
31	7193538	BLOCK, VALVE A/C			1
32	7193539	THERMOSTAT			1
33	7193785	CLIP			2
34	18EM1224	WASHER			2
35	29CM1025	BOLT			2
36	29CM1040	BOLT			3

HEATER & A/C (Cont'd)
(A/C Kit)
(Used on Heaters W/Plastic Housing)

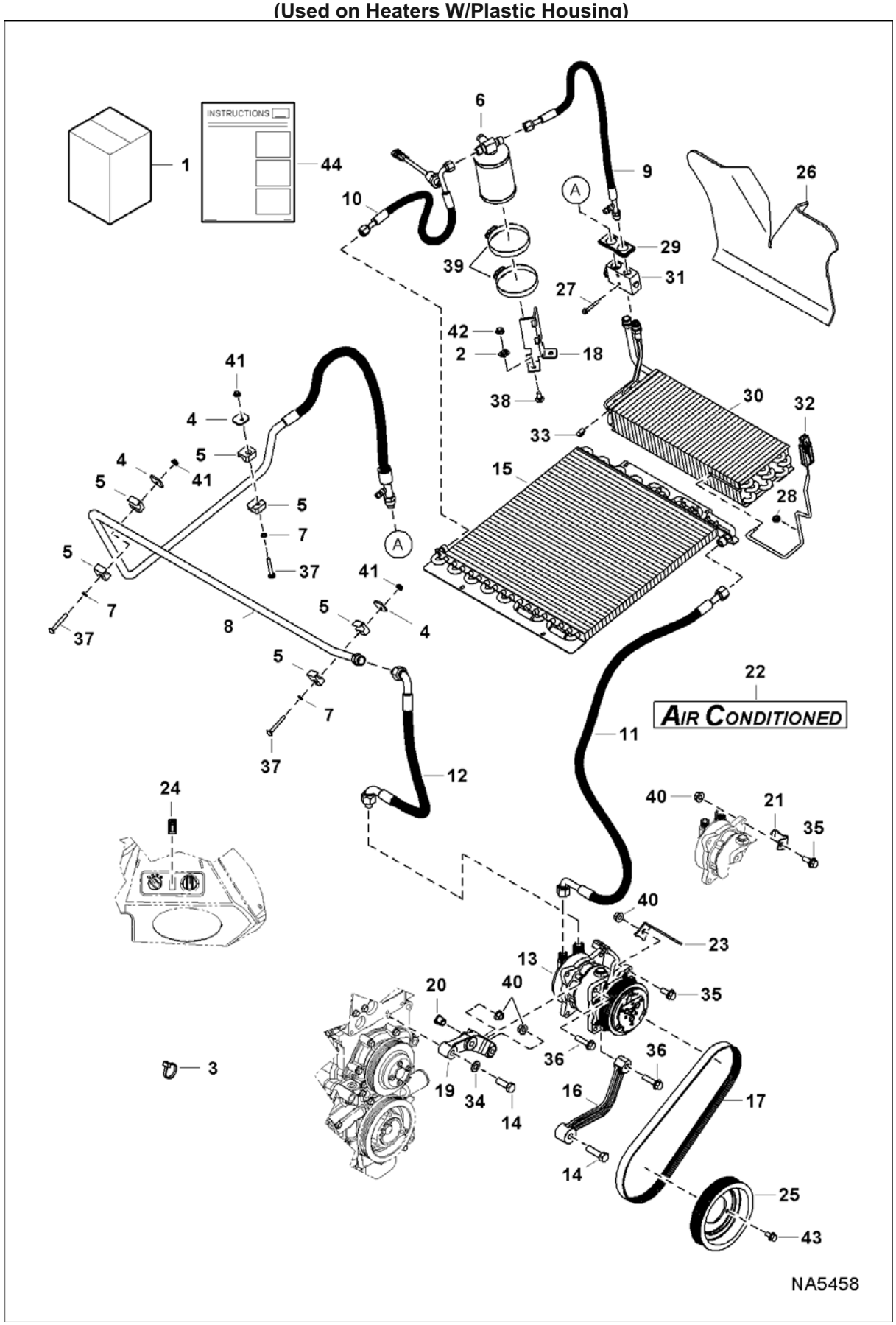

HEATER & A/C (Cont'd)
(A/C Kit)
(Used on Heaters W/Plastic Housing)

Ref No	Part Number	Description	Remarks	Serial Number	Qty
37	37C432	SCREW			3
38	37C512	BOLT			2
39	44H48	CLAMP			2
40	51DM10	NUT			4
41	55D4	NUT			3
42	55D5	NUT			2
43	59CM816	BOLT			3
44	6990077	INSTRUCTIONS			1

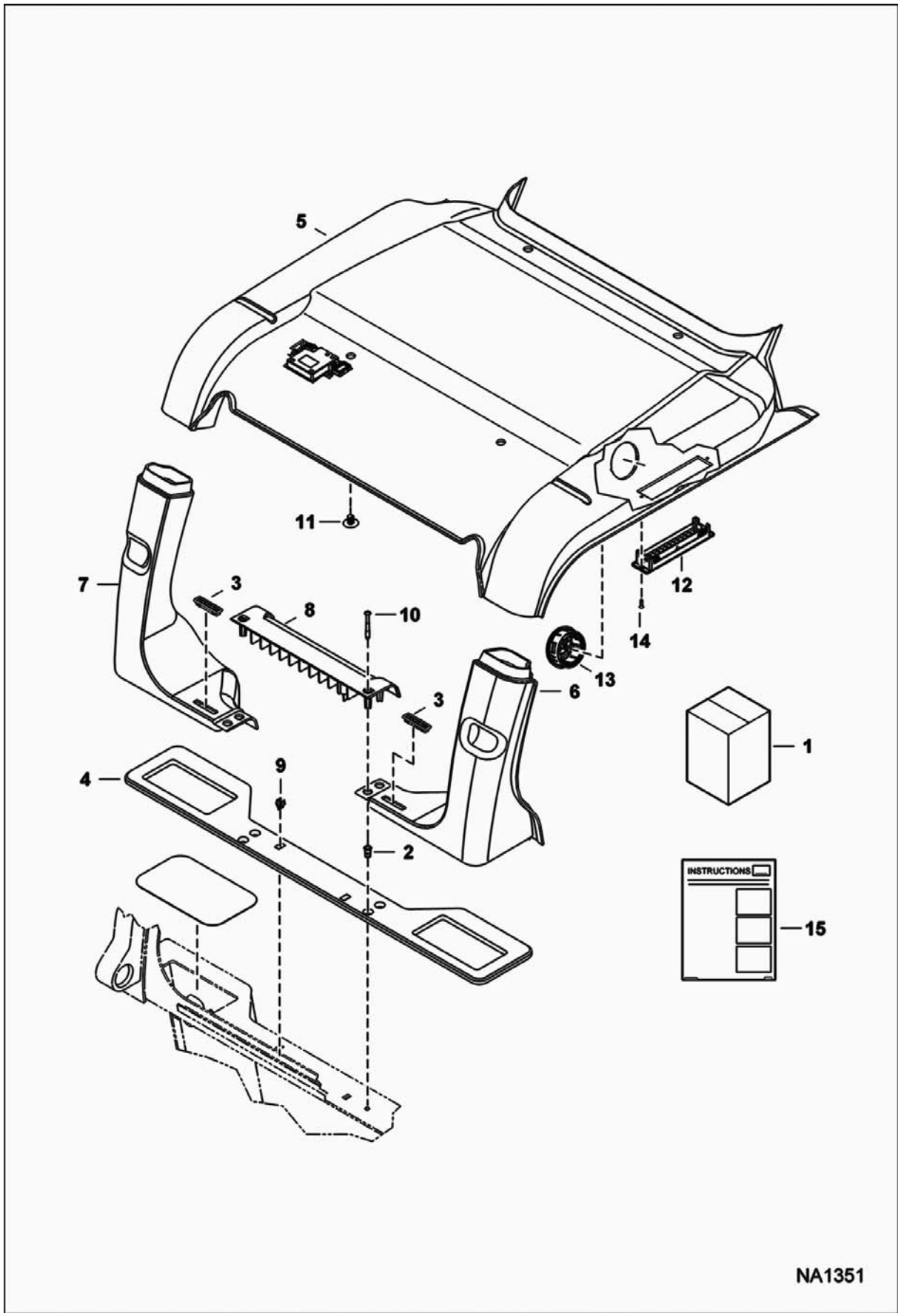
5
11
7
3
8
10
12
14
13
6
3
1
4
9
2
INSTRUCTIONS
15
NA1351

HEATER & A/C (Cont'd)
(HVAC Headliner Kit)

Ref No	Part Number	Description	Remarks	Serial Number	Qty
1	7174171	KIT, HEADLINER HVAC	Ref. 2-15		1
2	6675033	INSERT			2
3	7145885	VENT, DEFROST			2
4	7153832	SEAL, SHELF REAR			1
5	7155785	HEADLINER, HVAC			1
6	100333SUB	DUCT, AIR	RH - W/Ref. 3 - Was 7165330 [A]		1
7	100334SUB	DUCT, AIR	LH - W/Ref. 3 - Was 7165331 [A]		1
8	7165332	SHELF, REAR			1
9	7165333	CLIP			2
10	7165799	SCREW			2
11	6674895	RETAINER			4
12	7155796	LOUVER, RECTANGLE			2
13	7155794	LOUVER, ROUND			6
14	7155799	SCREW			4
15	6987356	INSTRUCTIONS			1

HEATER & A/C
(HVAC Assembly)
(Metal Housing)

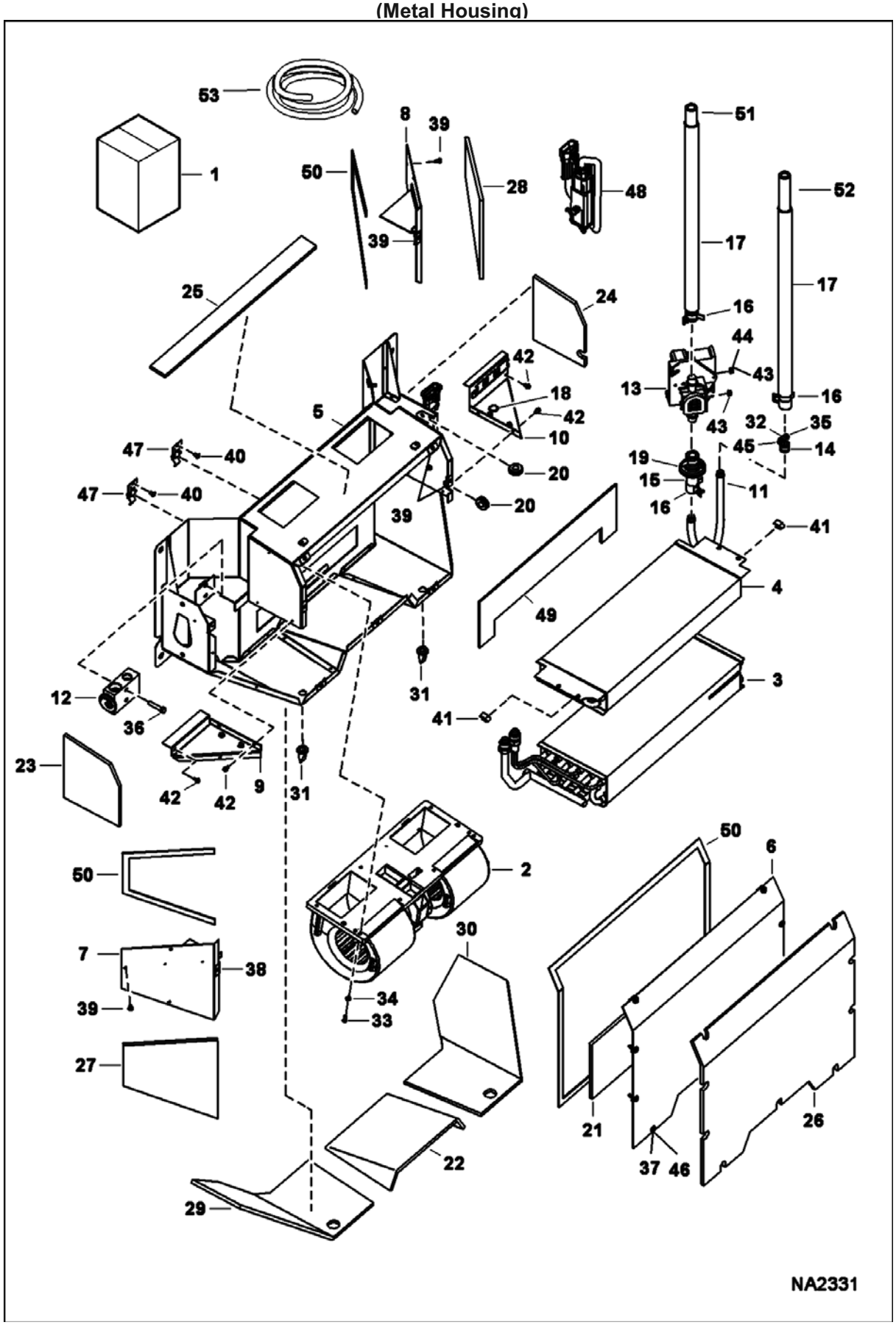

HEATER & A/C (Cont'd)
(HVAC Assembly)
(Metal Housing)

Ref No	Part Number	Description	Remarks	Serial Number	Qty
1	7141700	HVAC ASSY	Ref. 2-50		1
2		BLOWER, HEATER & A/C	See Illustration HEATER & A/C/ NA2155		1
3	7008033	EVAPORATOR			1
4	7010386	COIL, HEATER			1
5	7010387	HOUSING			1
6	7010388	COVER			1
7	7010389	COVER, SIDE			1
8	7010390	COVER, SIDE			1
9	7010391	SUPPORT, LH			1
10	7010392	SUPPORT, RH			1
11		TUBE, HEATER	NAP - Order Ref. 4		1
12	6675534	BLOCK, A/C VALVE			1
13	7003456	VALVE, MOTORIZED ASSY			1
14	7010395	CLAMP			1
15		HOSE, HEATER	NAP - 3.35" (85, mm) long - Order Ref. 53		1
16	7003458	CLAMP, HOSE			4
17	7010396	COVER, HOSE			2
18	6675513	GROMMET			1
19	6693222	GROMMET			1
20	6690482	GROMMET			2
21	7010398	INSULATION, HEATER			1
22	7010408	INSULATION, HEATER			1
23	7010409	INSULATION, HEATER			1
24	7010410	INSULATION, HEATER			1
25	7010411	INSULATION, HEATER			1
26	7010412	INSULATION, HEATER			1
27	7010413	INSULATION, HEATER			1
28	7010414	INSULATION, HEATER			1
29	7010415	INSULATION, HEATER			1
30	7010416	INSULATION, HEATER			1
31	7010399	VALVE, DRAIN			2
32	7010400	SPACER			1
33	7010401	SCREW			2
34	6693223	WASHER			2
35	7003465	NUT			1
36	6691534	SCREW			2
37	6677116	RETAINER			9
38	6677115	RECEPTACLE			9
39	6677119	SCREW			12
40	7010266	RIVET, POP			4
41	6676539	CLIP			2
42	6677118	SCREW			4
43	7010403	NUT			2

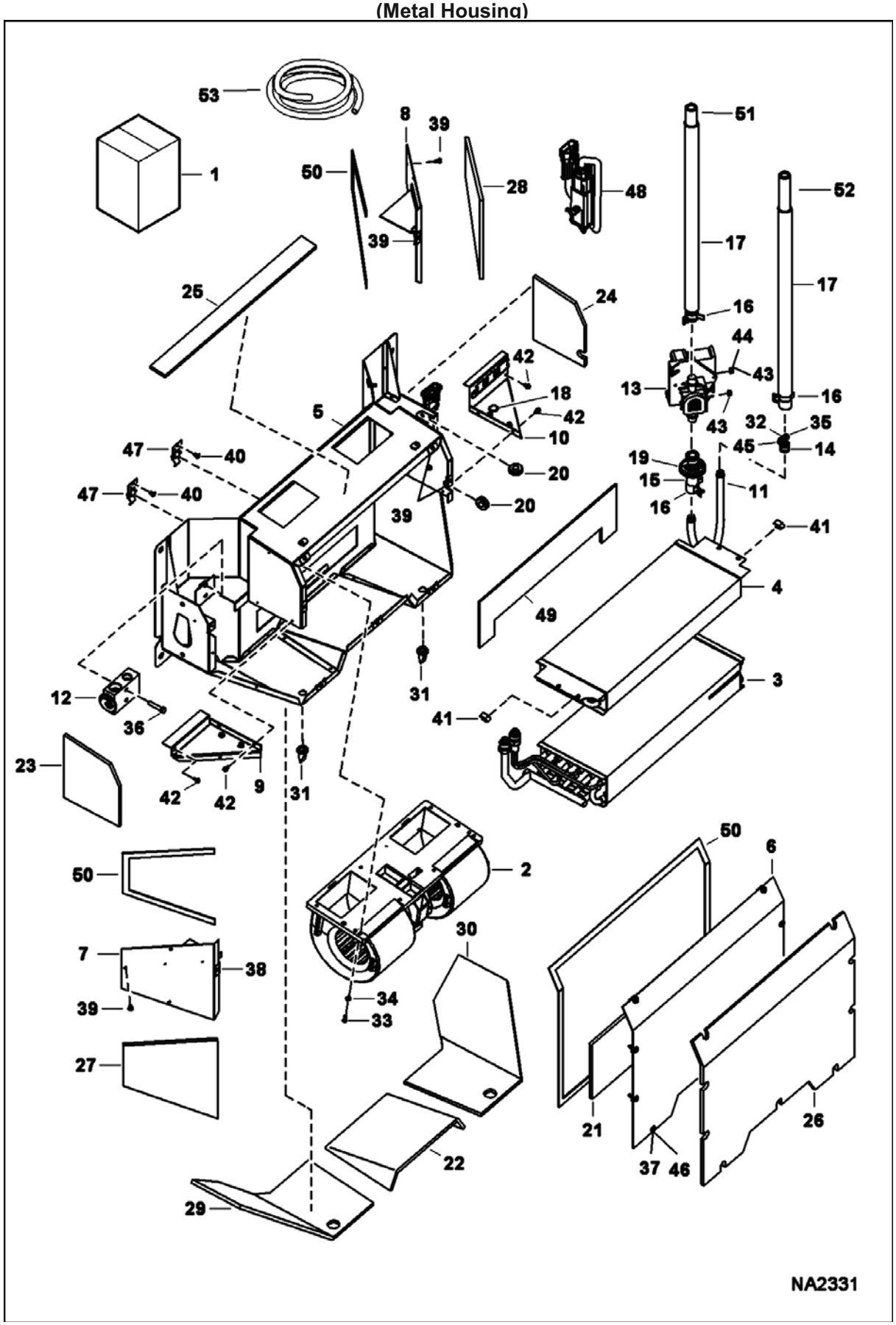
53
1
8
39
50
28
48
51
52
17
17
16
16
25
24
44
42
43
13
18
42
43
32
35
5
10
45
14
47
40
20
19
47
40
15
11
20
16
39
41
4
49
31
3
12
41
36
23
42
42
9
31
50
2
50
6
30
7
38
34
39
33
27
21
26
22
37
46
29
NA2331

Ref No	Part Number	Description	Remarks	Serial Number	Qty
44	7010404	WASHER			2
45	6676653	SCREW			1
46	6677117	SCREW			9
47	7010405	CLIP, RECEPTACLE			2
48	7008040	MODULE, DE-ICER ELECTRONIC			1
49	7010406	INSULATION, HEATER			1
50	6693236	FOAM			1
51		HOSE, HEATER	NAP - 20.5" (520,7 mm) long - Order Ref. 53		1
52		HOSE, HEATER	NAP - 22.5" (571,5 mm) long - Order Ref. 53		1
53	7003457	HOSE, HEATER	bulk - sold per foot		x

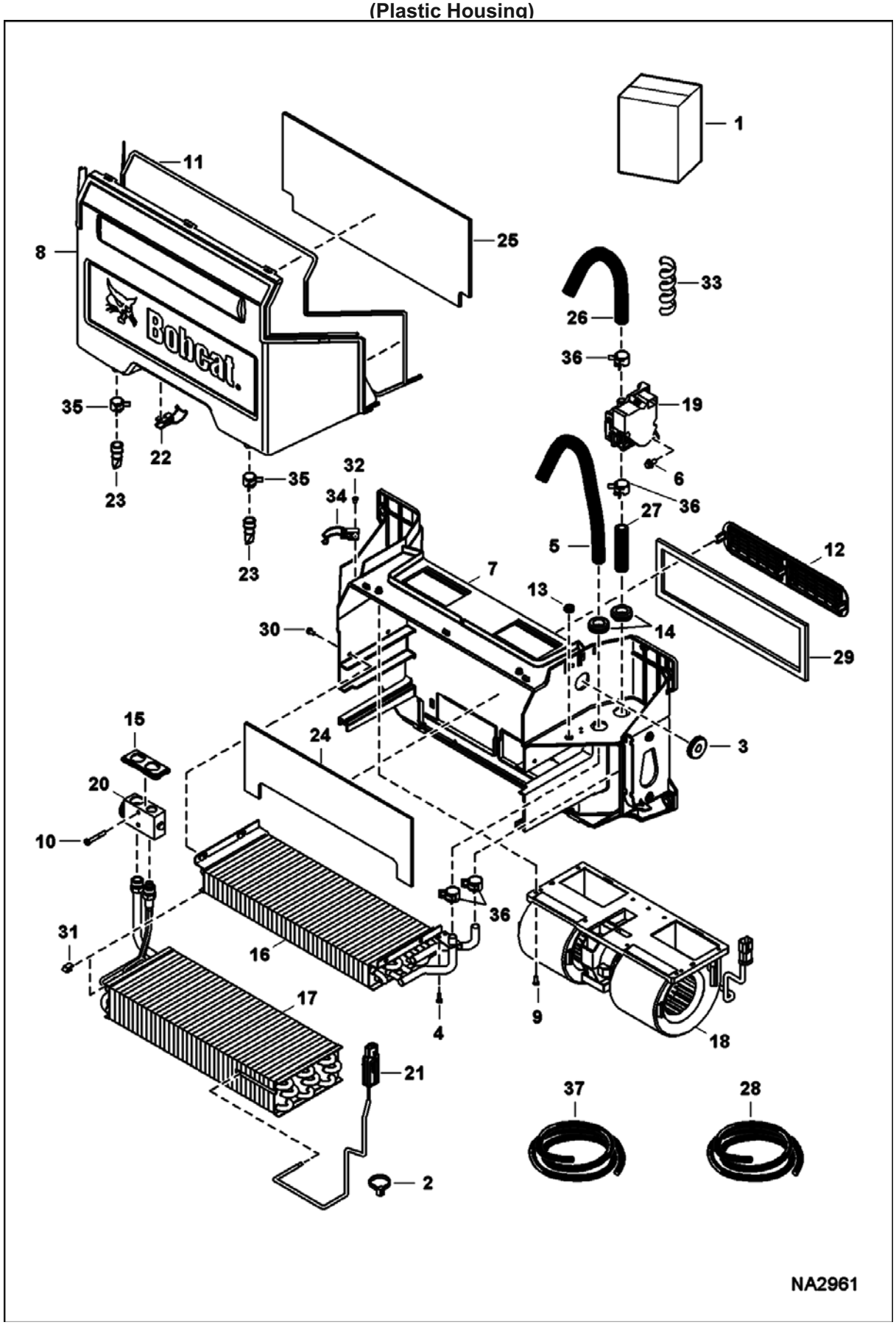
1
11
25
8
Bobcat.
33
26
36
35
19
22
6
23
32
35
34
27
36
5
12
7
13
14
30
29
23
15
24
3
20
10
36
31
16
17
4
9
18
21
37
28
2
NA2961

HEATER & A/C (Cont'd)
(HVAC Assembly)
(Plastic Housing)

Ref No	Part Number	Description	Remarks	Serial Number	Qty
1	7185690	HVAC ASSY	Ref. 2-36		1
2	6624289	STRAP, TIE			2
3	6682697	GROMMET			1
4	7162770	SCREW, PLASTIC			2
5		HOSE, HEATER	NAP - 520,7 mm (20.5") long - Order Ref. 28		1
6	7166190	SCREW THREAD ROLLING			2
7	7185847	HOUSING			1
8	7185848	COVER			1
9	7192287	BOLT			2
10	7192371	BOLT			2
11	7192408	SEAL			1
12	7193354	FILTER, AIR RECIRCULATING			1
13	7193531	GROMMET			1
14	7193532	GROMMET			2
15	7193533	GROMMET			1
16	7193534	COIL, HEATER			1
17	7193535	EVAPORATOR			1
18		BLOWER, HEATER & A/C	See Illustration HEATER & A/C/ NA2155A		1
19	7003456	VALVE, MOTORIZED ASSY	Was 7193537 [A]		1
20	7193538	BLOCK, VALVE A/C			1
21	7193539	THERMOSTAT			1
22	7193540	LATCH			2
23	7193541	DRAIN, WATER SEAT			2
24	7193542	SEAL			1
25	7193543	SEAL			1
26		HOSE, HEATER	NAP - 609,6 mm (24") long - Order Ref. 28		1
27		HOSE, HEATER	NAP - 85 mm (3.35") long - Order Ref. 28		1
28	6565977	HOSE	bulk - sold per foot		x
29	7193783	SEAL, FOAM			1
30	7193784	BOLT			4
31	7193785	CLIP			2
32	7193786	RIVET, POP			4
33		WRAP, HOSE	NAP - 457 mm (18") long - Order Ref. 37		2
34	7196889	LATCH			2
35	5HM18	CLAMP			2
36	5HM20	CLAMP			4
37	7194262	WRAPAROUND	bulk - sold per foot		x

HEATER & A/C
(Lower Duct Kit)

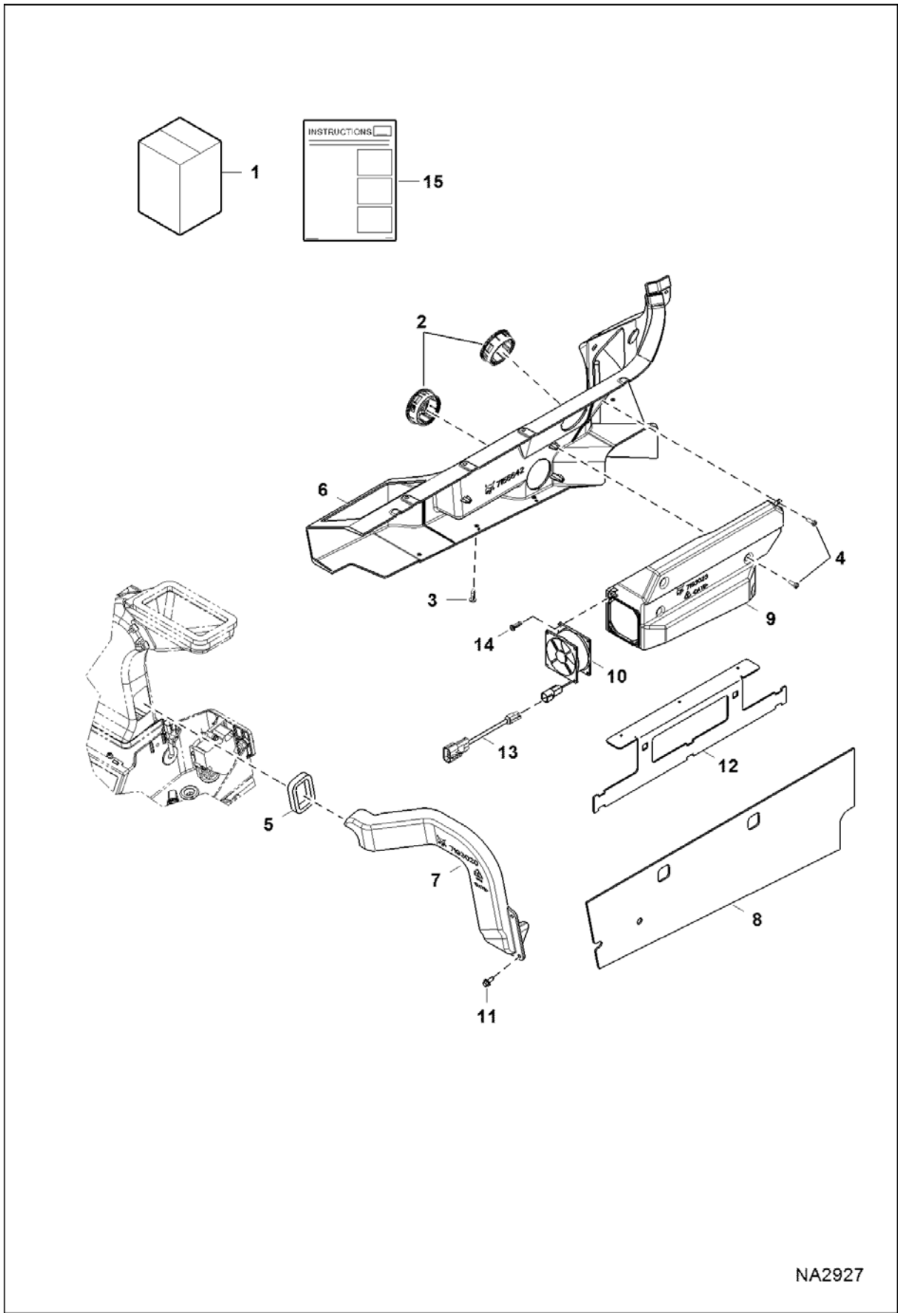

HEATER & A/C (Cont'd)
(Lower Duct Kit)

Ref No	Part Number	Description	Remarks	Serial Number	Qty
1	7200657	KIT, DUCT	Ref. 2-11, 14 & 15		1
2	7155794	LOUVER, ROUND			2
3	7160381	RIVET, BIRD CAGE			2
4	7162770	SCREW, PLASTIC			6
5	7193018	SEAL			1
6	7193019	PANEL, DUCT			1
7	7193020	DUCT, AIR			1
8	7193022	INSULATION			1
9	7193023	DUCT, AIR			1
10	7197733	FAN			1
11	26GM6016	SCREW			3
12	7193021	BRACKET	not in kit	A3NV11001 -	1
12	7193021	BRACKET	not in kit	A3NW11001 -	1
13	7200883	HARNESS, JUMPER FAN	not in kit	A3NW11001 -	1
13	7200883	HARNESS, JUMPER FAN	not in kit	A3NV11001 -	1
14	7192287	BOLT			4
15	6990079	INSTRUCTIONS			1

HORN KIT
(Manual Controls, AHC & ACS)

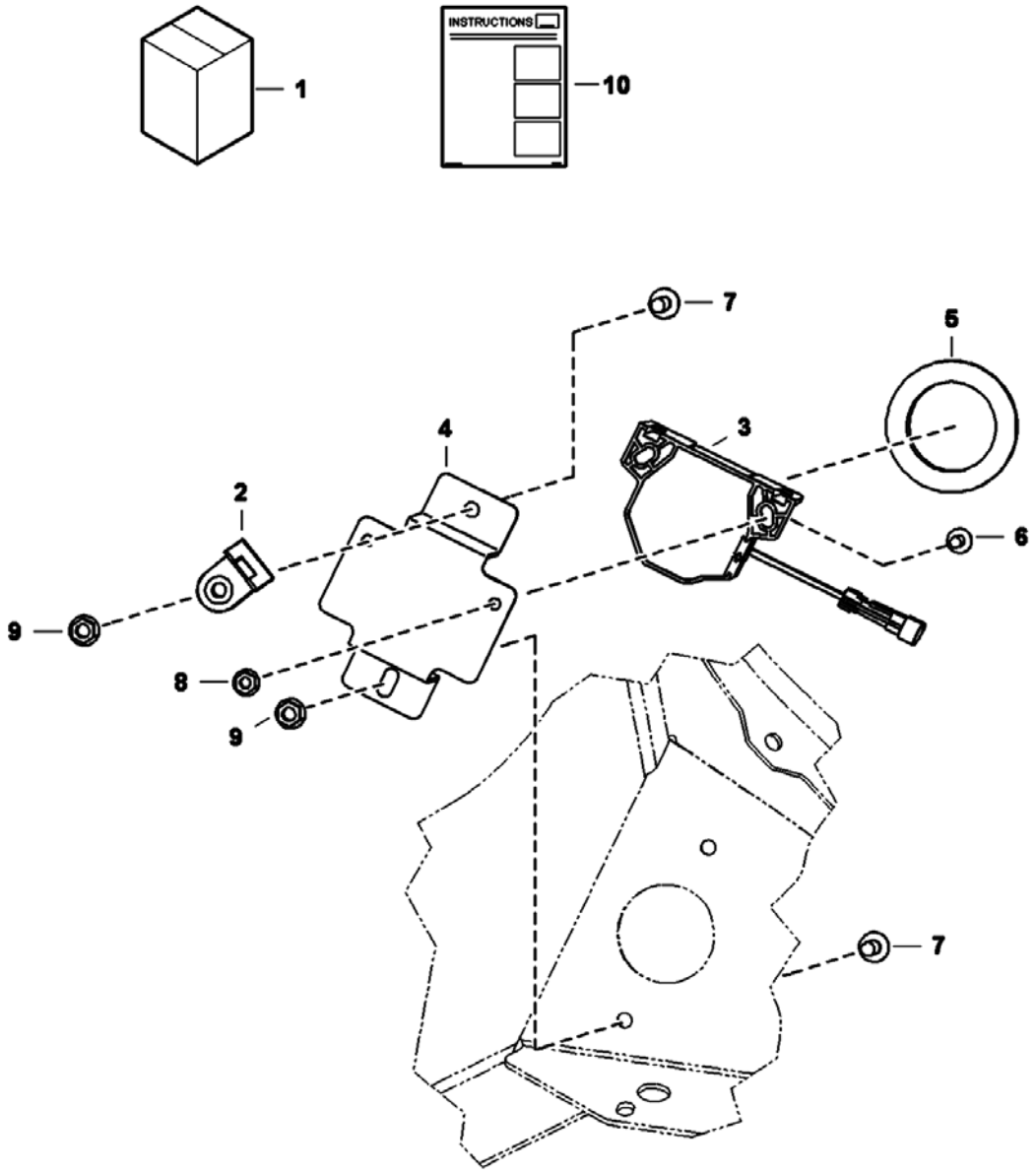

HORN KIT (Cont'd)
(Manual Controls, AHC & ACS)

Ref No	Part Number	Description	Remarks	Serial Number	Qty
1	7173594	KIT, HORN	Ref. 2-10		1
2	6684641	MOUNT			1
3	7001044	HORN, ALARM			1
4	7171081	BRACKET, HORN			1
5	7171088	GROMMET			1
6	35C410	BOLT 5			2
7	35C516	BOLT 10			2
8	55D4	NUT			2
9	55D5	NUT			2
10	6987237	INSTRUCTIONS			1

HORN KIT
(Selectable Joystick Controls)

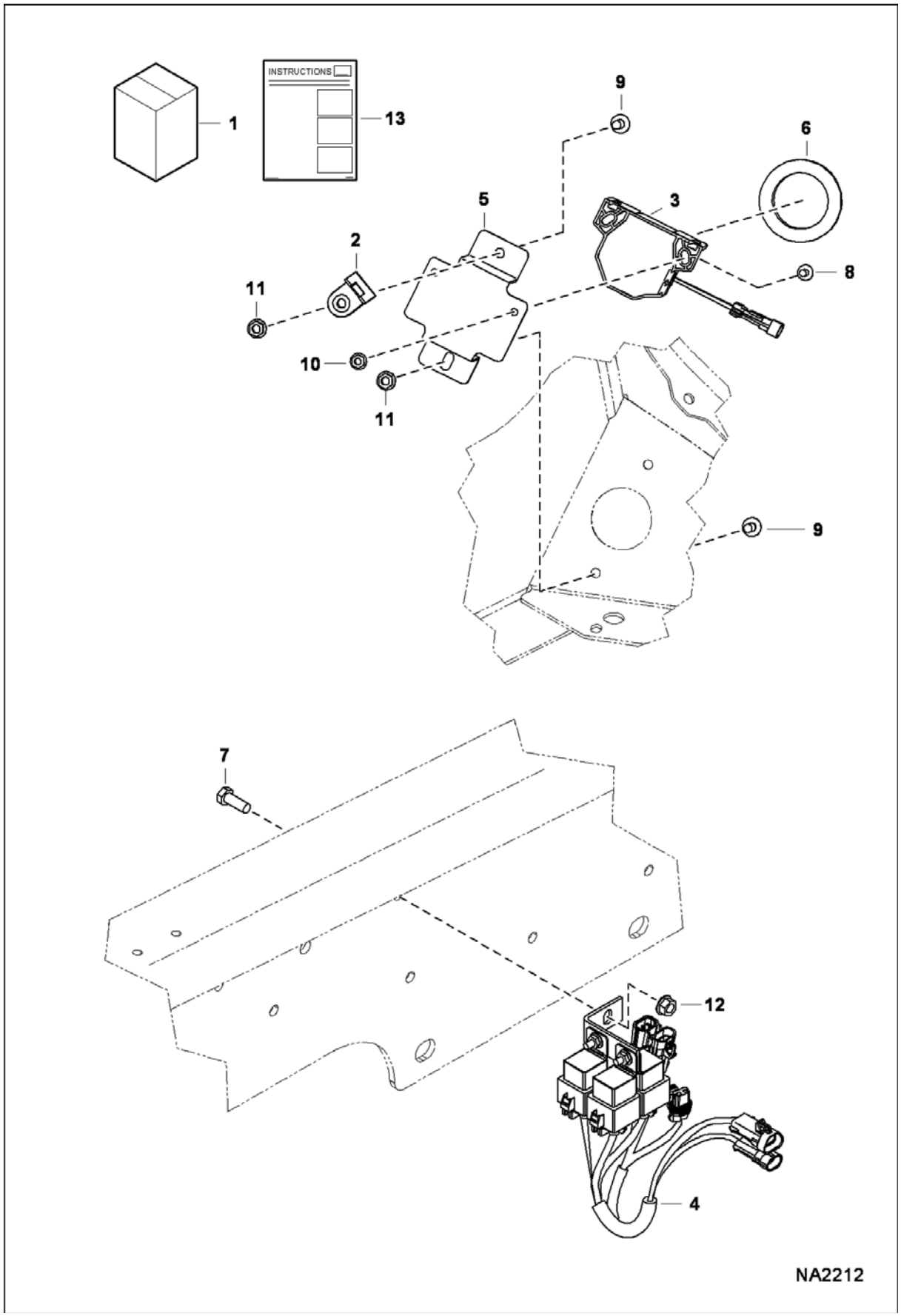

HORN KIT (Cont'd)
(Selectable Joystick Controls)

Ref No	Part Number	Description	Remarks	Serial Number	Qty
1	7173595	KIT, HORN W/JOYSTICK	Ref. 2-13		1
2	6684641	MOUNT			1
3	7001044	HORN, ALARM			1
4	7151940	HARNESS, HORN			1
5	7171081	BRACKET, HORN			1
6	7171088	GROMMET			1
7	17C616	BOLT 5			1
8	35C410	BOLT 5			2
9	35C516	BOLT 10			2
10	55D4	NUT			2
11	55D5	NUT			2
12	97D6	NUT 10			1
13	6987237	INSTRUCTIONS			1

HOSE GUIDE ASSY

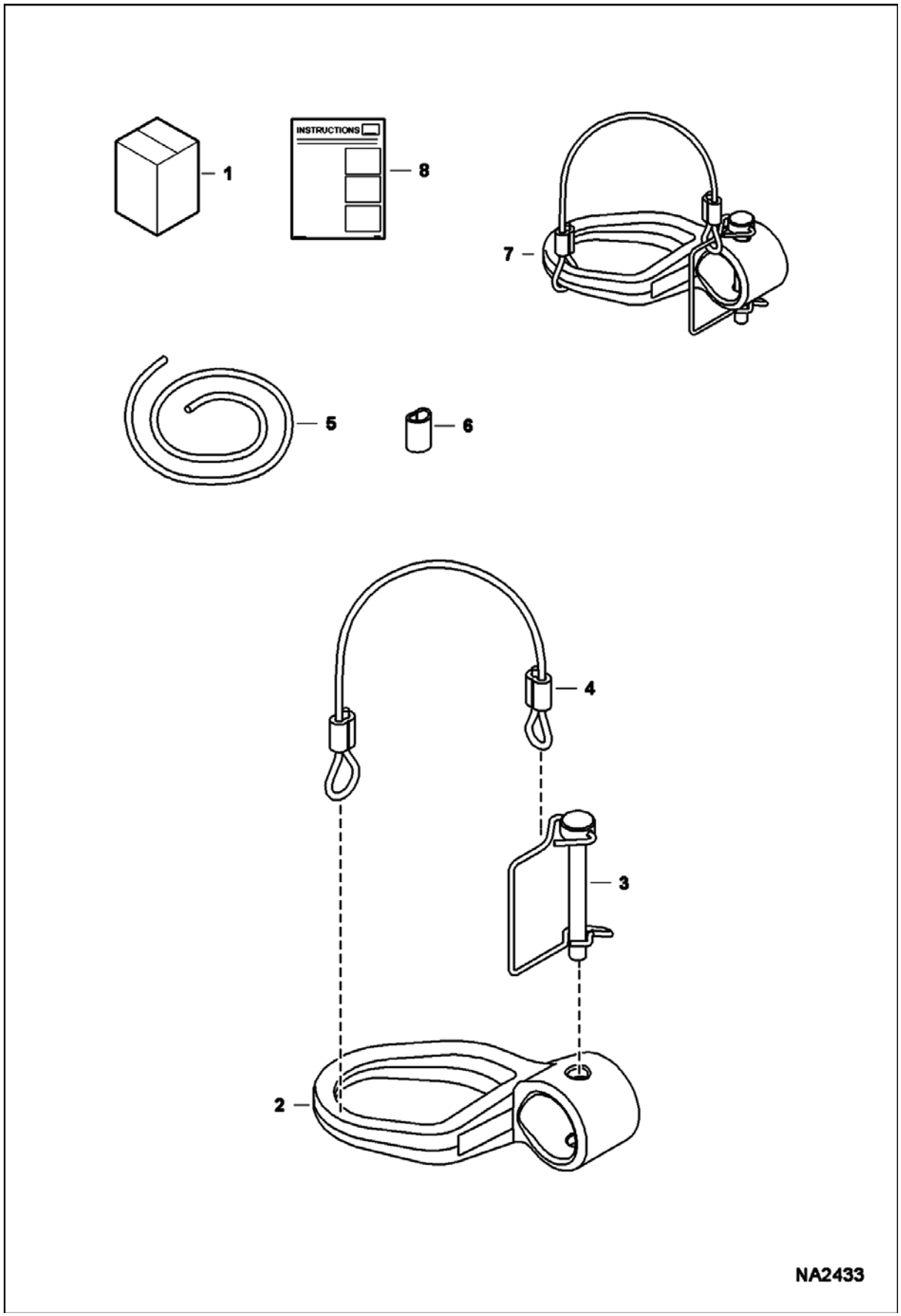

HOSE GUIDE ASSY (Cont'd)

Ref No	Part Number	Description	Remarks	Serial Number	Qty
1	7187118	KIT, GUIDE HOSE	Ref. 7 & 8		1
2		GUIDE	NSS - Order Ref. 7		1
3	7161559	PIN, SNAPPER			1
4		CABLE ASSY	NSS - 304,8 mm (12") long - Order Ref. 5 & 6		1
5	6558309	WIRE ROPE	bulk - sold per foot		x
6	6558310	SLEEVE			2
7	7161953	GUIDE, HOSE ASSY	Ref. 2-4		1
8	6989526	INSTRUCTIONS			1

HOSE GUIDE POST KIT

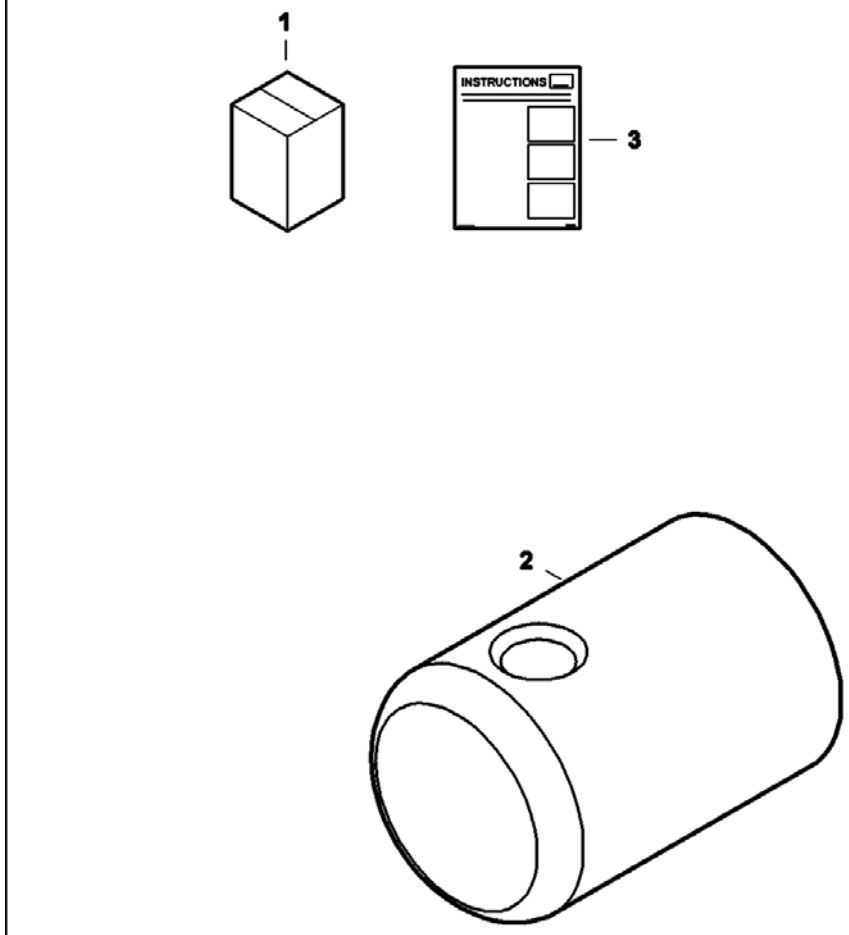

HOSE GUIDE POST KIT (Cont'd)

Ref No	Part Number	Description	Remarks	Serial Number	Qty
1	7177863	KIT, POST GUIDE HOSE	Ref. 2 & 3		1
2	7170300	PIN, PIVOT			1
3	6987421	INSTRUCTIONS			1

ISOLATOR MOUNT KIT

(S/N A3NV11001 - 12697, A3NW11001 - 11134)

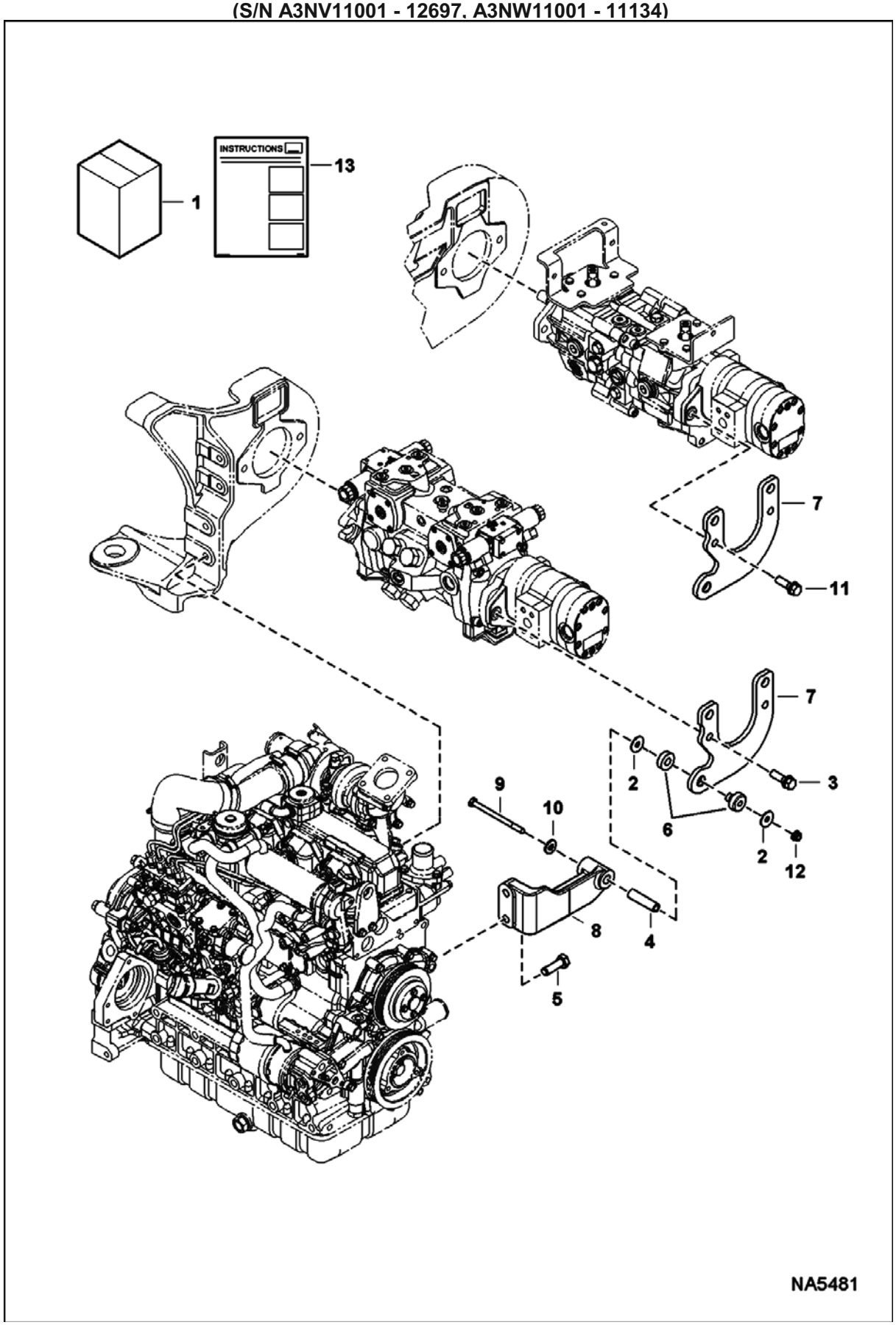

ISOLATOR MOUNT KIT (Cont'd)

(S/N A3NV11001 - 12697, A3NW11001 - 11134)

Ref No	Part Number	Description	Remarks	Serial Number	Qty
1	7201407	KIT, MOUNT ISOLATOR	If equipped W/7161786 Power Bob-Tach valve Also Order 7010992 valve, 6727313 fitting, 15KB0808 fitting, 17KB0808 fitting, 55K214 O-ring, 5HM15 clamp, 15KB1212 fitting, 7184969 hose, 7184970 hose, (4) of 17C652 bolt & (914,4 mm) 3 ft of 6586251 hose		1
2	6737388	WASHER			2
3	7131273	SCREW			2
4	7147350	SPACER, TUBE			1
5	7147745	SCREW			2
6	7149357	MOUNT, LOAD ISOLATOR			1
7	7193687	BRACKET, MOUNTING			1
8	7194572	MOUNT			1
9	17C680	BOLT			1
10	27E6	WASHER 5			1
11	45C828	BOLT			2
12	53D6	NUT			1
13	6990106	INSTRUCTIONS			1

KEYLESS PANEL KIT

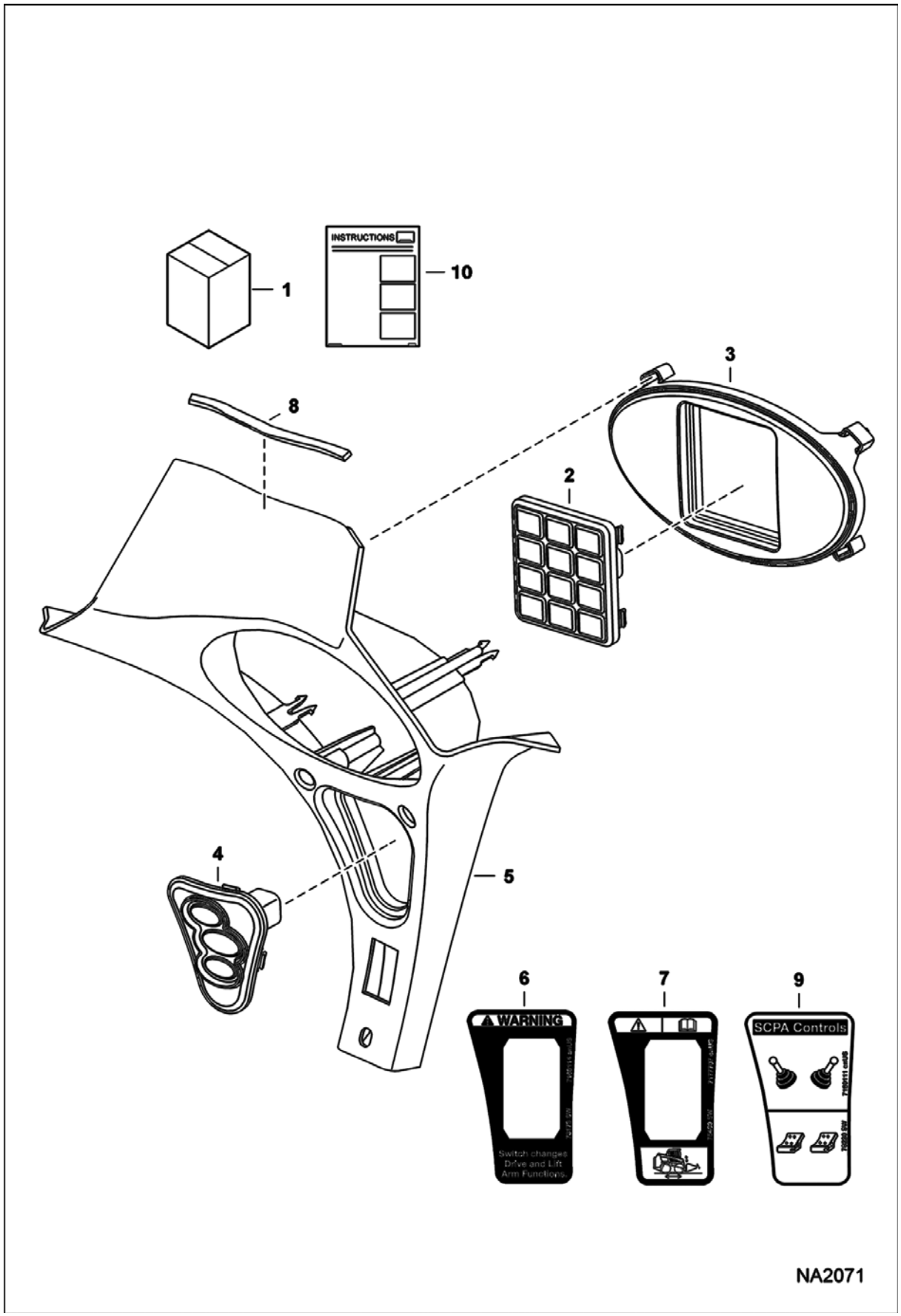

KEYLESS PANEL KIT (Cont'd)

Ref No	Part Number	Description	Remarks	Serial Number	Qty
1	7129289	KIT, START KEYLESS	Ref. 2-10		1
2	6693712	KEYPAD, PANEL			1
3	7003027	INSERT, KEYPAD			1
4	7003033	SWITCH, IGN			1
5	7155791	PANEL, RH			1
6	7168114	DECAL, SWITCH			1
7	7177707	DECAL			1
8	7187104	SEAL			1
9	7190111	DECAL, CONTROL	control		1
10	6987281	INSTRUCTIONS			1

LIFT KIT
(Single Point)

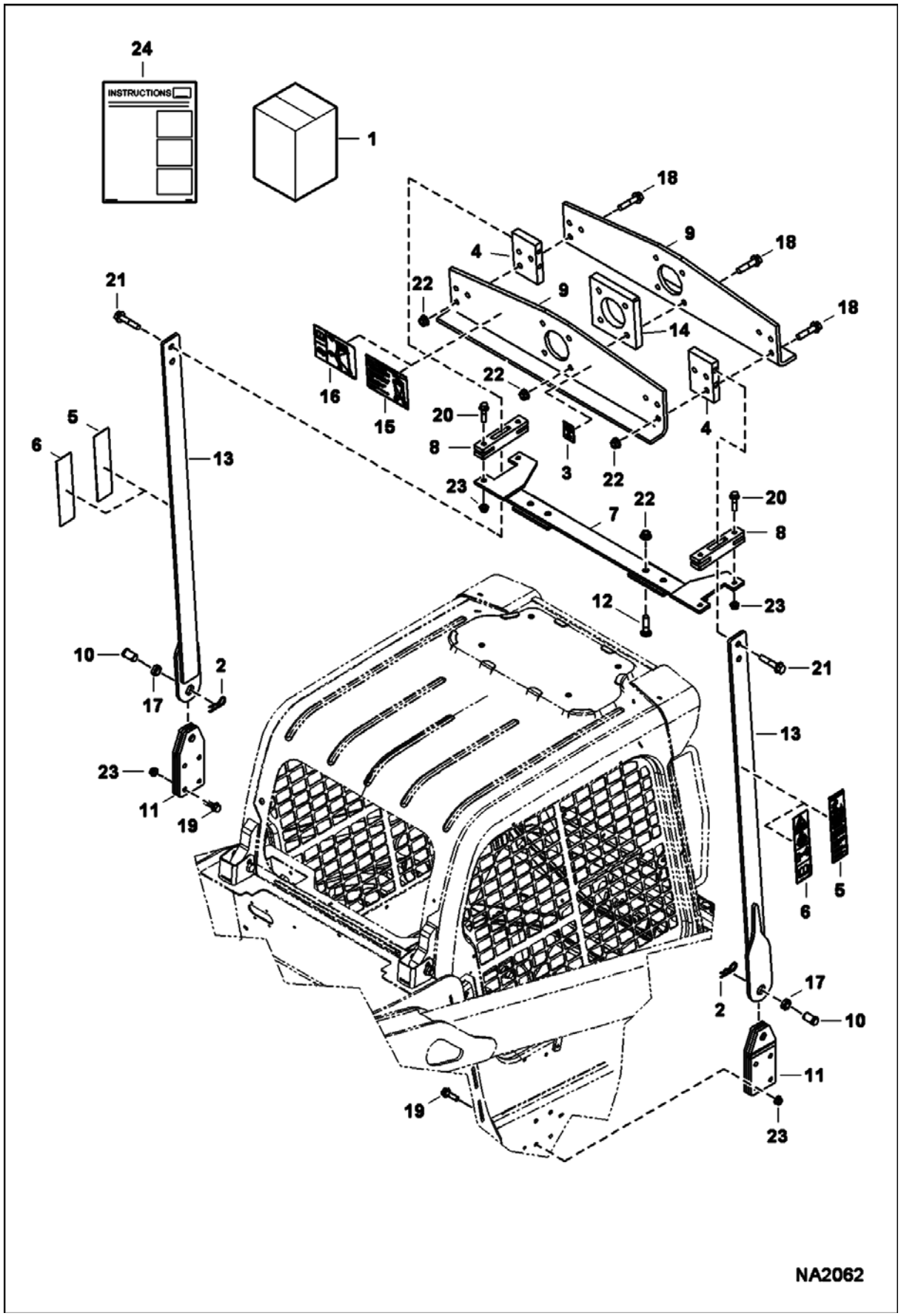

LIFT KIT (Cont'd)
(Single Point)

Ref No	Part Number	Description	Remarks	Serial Number	Qty
1	7129295	KIT, LIFT SINGLE POINT	Ref. 2-24		1
1		RESEALING PLUG KIT	See Illustration RESEALING KIT/ NA2775		1
2	1320075	COTTER PIN			2
3	6533898	DECAL			2
4	7126682	BLOCK			2
5	7142141	DECAL			2
6	7142142	DECAL			2
7	7159102	MOUNT			1
8	7160760	MOUNT			2
9	7160779	PLATE			2
10	7161536	PIN, CLEVIS			2
11	7163748	MOUNT			2
12	7164686	BOLT, CARRIAGE			4
13	7166334	ARM LIFT			2
14	7166831	BLOCK			1
15	7168021	DECAL			2
16	7168022	DECAL			2
17	7168159	BUSHING			2
18	31C1044	BOLT			10
19	31C828	BOLT			8
20	31C832	BOLT			4
21	49C1048	BOLT			4
22	53D10	NUT			14
23	53D8	NUT			12
24	6987217	INSTRUCTIONS			1

LIFT KIT
(Four Point)

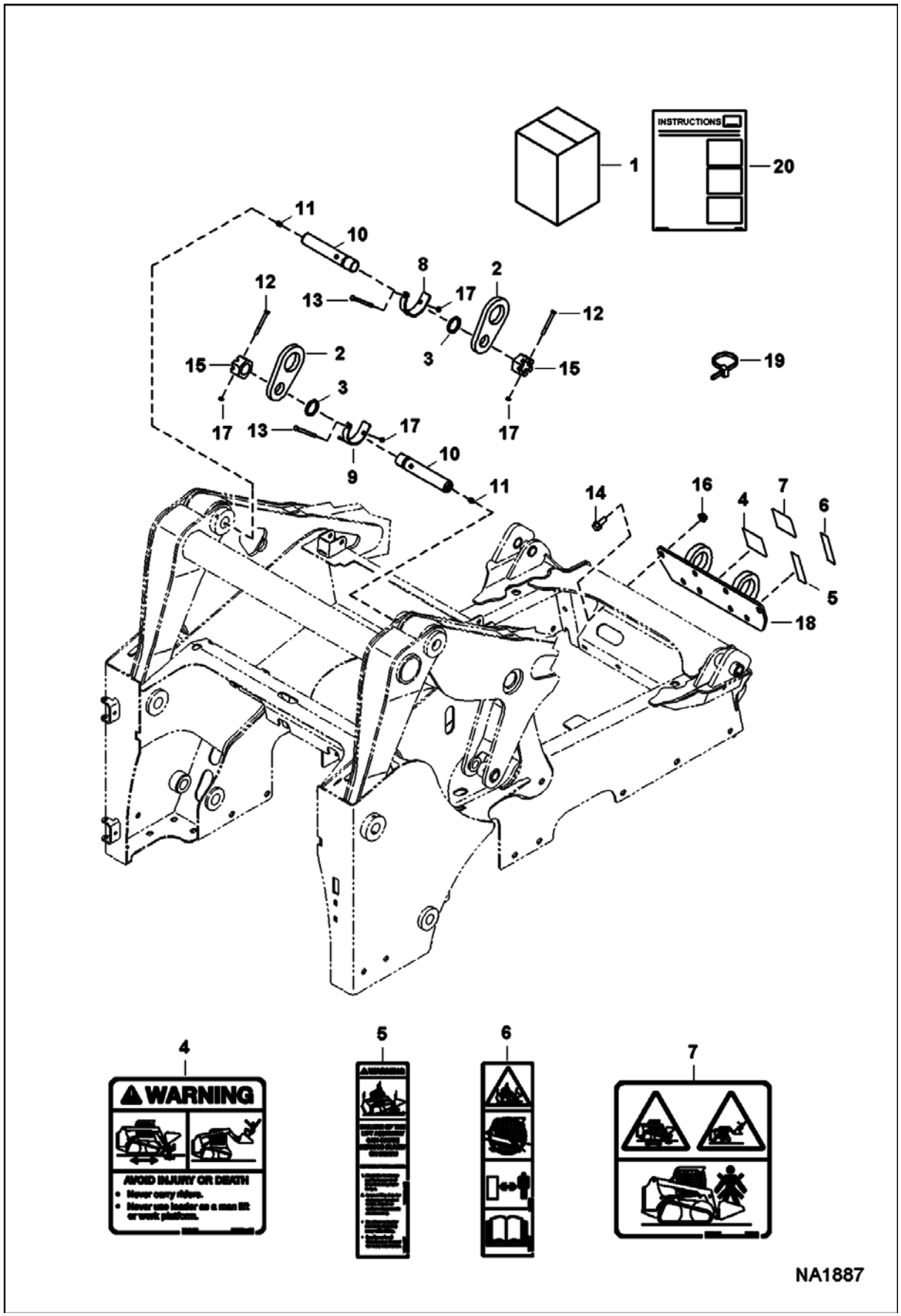

LIFT KIT (Cont'd)
(Four Point)

Ref No	Part Number	Description	Remarks	Serial Number	Qty
1	7156605	KIT, LIFT	Ref. 2-20		1
1		RESEALING PLUG KIT	See Illustration RESEALING KIT/ NA2775		1
2	7162933	LIFT EYE			2
3	7163507	WASHER, SPRING			2
4	7167996	DECAL, WARNING			1
5	7168019	DECAL, WARNING			1
6	7168020	DECAL, WARNING	no text		1
7	7168040	DECAL, WARNING			1
8	7185837	BRACKET			1
9	7185838	BRACKET			1
10	7188343	PIN			2
11	10H25	FITTING, GREASE 5			2
12	17C656	BOLT			2
13	17C680	BOLT			2
14	31C1024	BOLT			8
15	4D28	NUT			2
16	53D10	NUT			8
17	85D6	LOCK NUT			4
18	7156606	BRACKET, ASSY			1
19	6624289	STRAP, TIE			4
20	6987219	INSTRUCTIONS			1

LIGHT GUARD KIT
(Front)

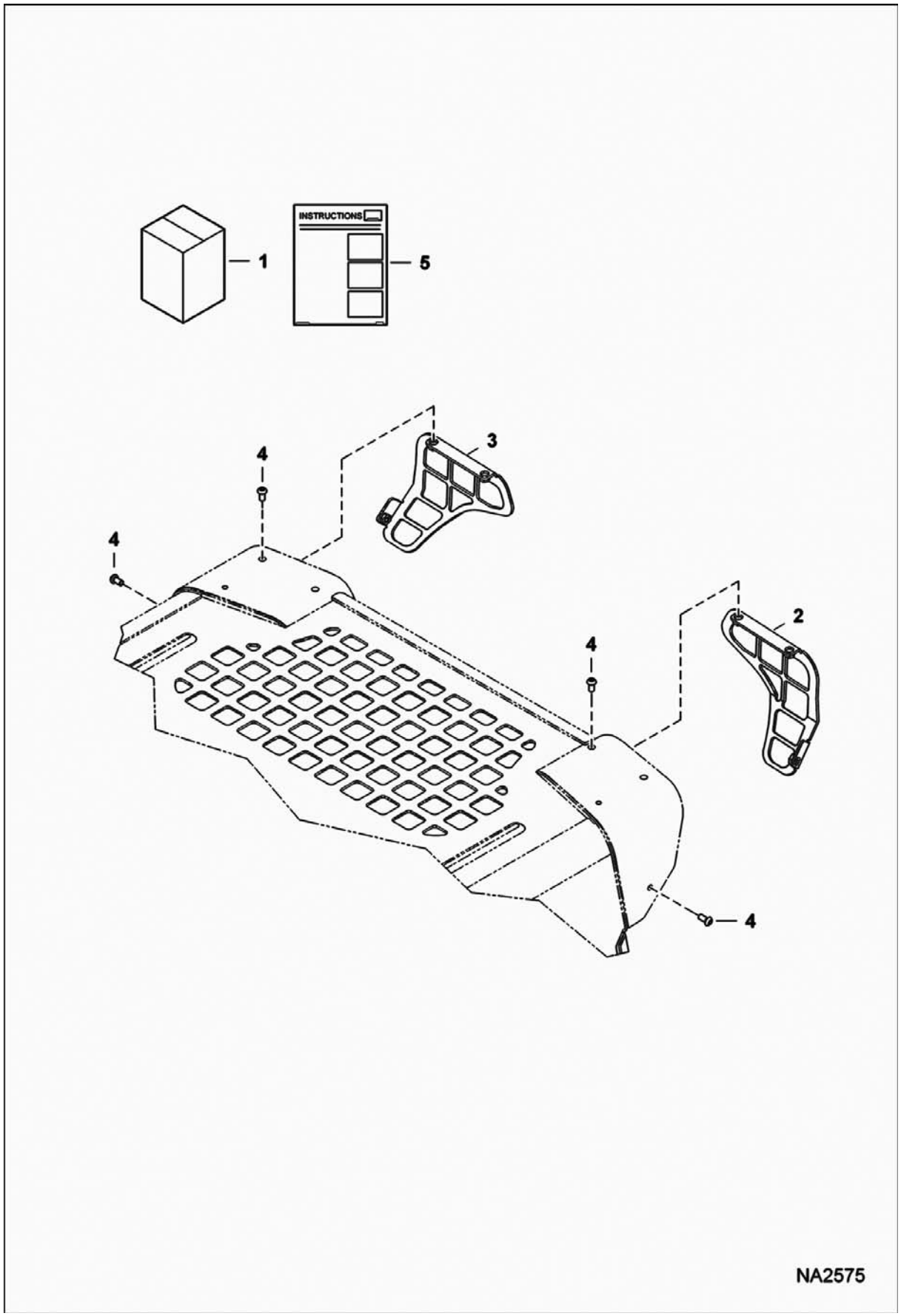

LIGHT GUARD KIT (Cont'd)
(Front)

Ref No	Part Number	Description	Remarks	Serial Number	Qty
1	7174129	KIT, GUARD LIGHT	Ref. 2-5		1
2	7183869	GUARD, LIGHT	RH		1
3	7183870	GUARD, LIGHT	LH		1
4	25G510	BOLT			6
5	6989487	INSTRUCTIONS			1

LIGHT GUARD KIT
(Rear)

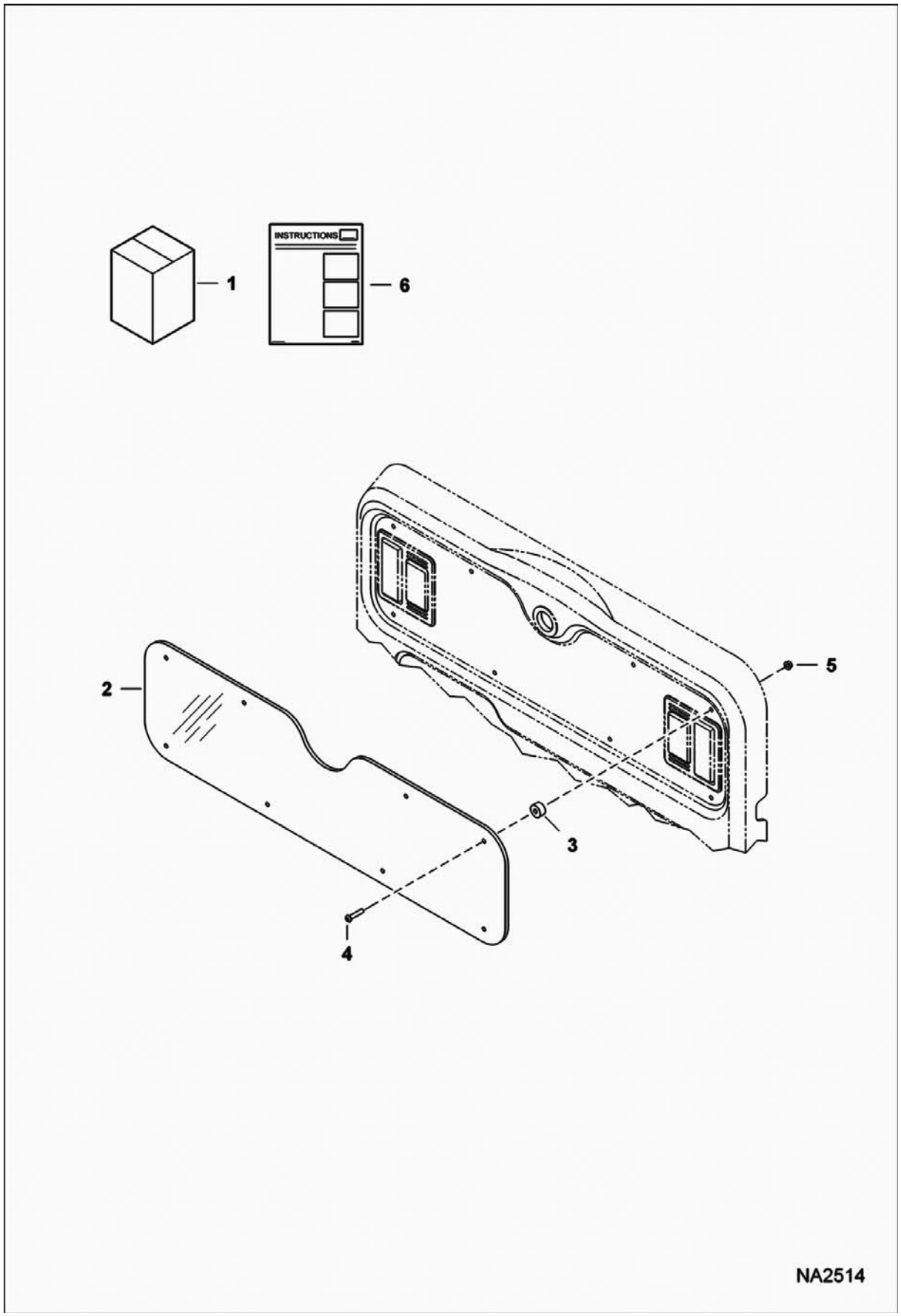

LIGHT GUARD KIT (Cont'd)
(Rear)

Ref No	Part Number	Description	Remarks	Serial Number	Qty
1	7174128	KIT, GUARD LIGHT	Ref. 2-6		1
2	7173309	GUARD, LIGHT			2
3	7173310	SPACER			8
4	25G628	SCREW			8
5	97D6	NUT 10			8
6	6987490	INSTRUCTIONS			1

MAINTENANCE PLATFORM KIT

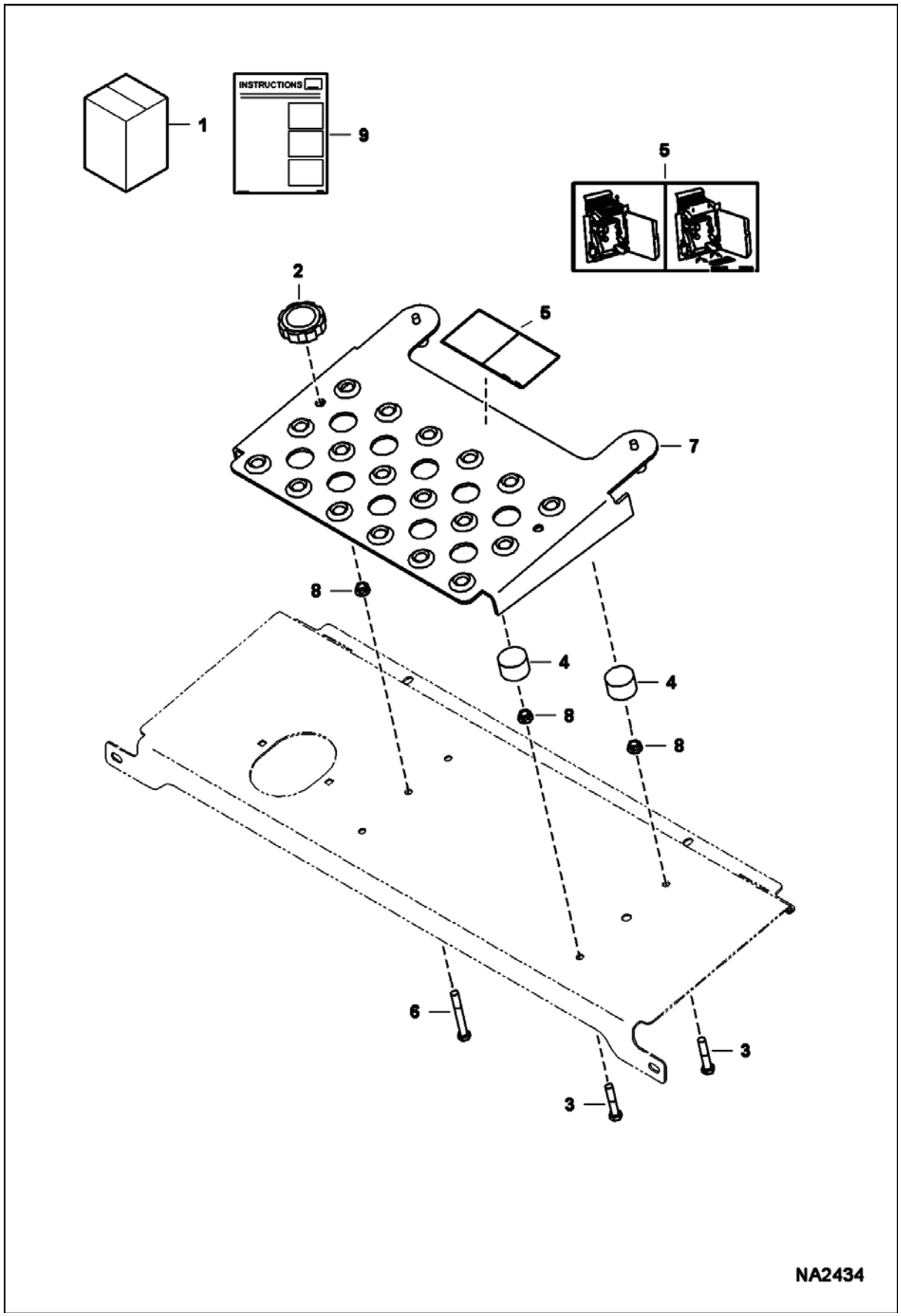

MAINTENANCE PLATFORM KIT (Cont'd)

Ref No	Part Number	Description	Remarks	Serial Number	Qty
1	7178420	KIT, PLATFORM MAINTENANCE	Ref. 2-9		1
2	6684932	KNOB			2
3	7186768	BOLT	Was 7156722 [B]		4
4	7156809	BUMPER			4
5	7188542	DECAL, INSTRUCTIONS	Was 7162648 [B]		1
6	7186769	BOLT	Was 7164618 [B]		2
7	7173943	PLATFORM			1
8	55D6	NUT			6
9	6989484	INSTRUCTIONS			1

MUFFLER/PURIFIER

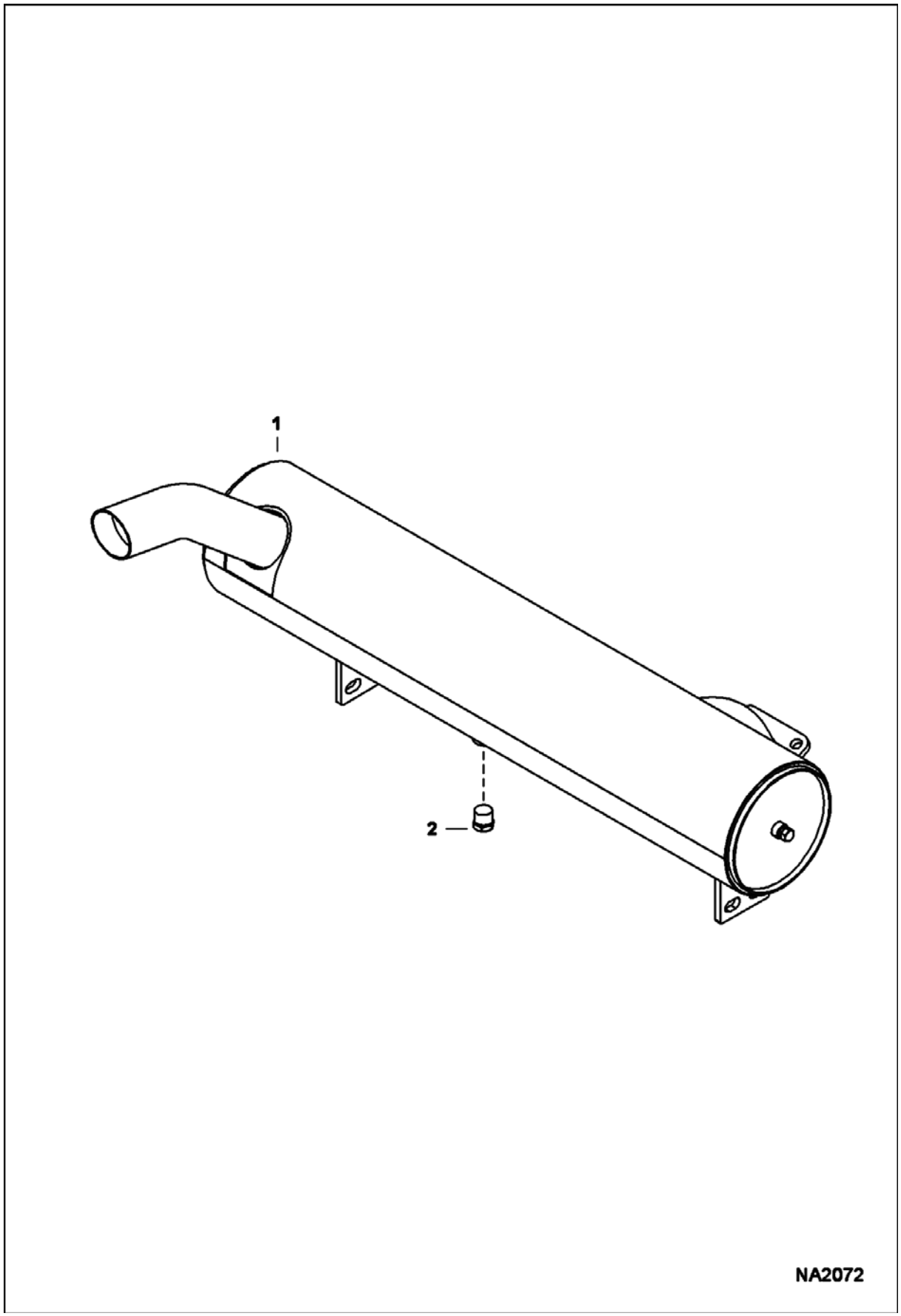

MUFFLER/PURIFIER (Cont'd)

Ref No	Part Number	Description	Remarks	Serial Number	Qty
1	7149931	MUFFLER, PURIFIER	W/Ref. 2		1
2	6661062	PLUG	brass - 0.38"		1

MUFFLER GUARD KIT

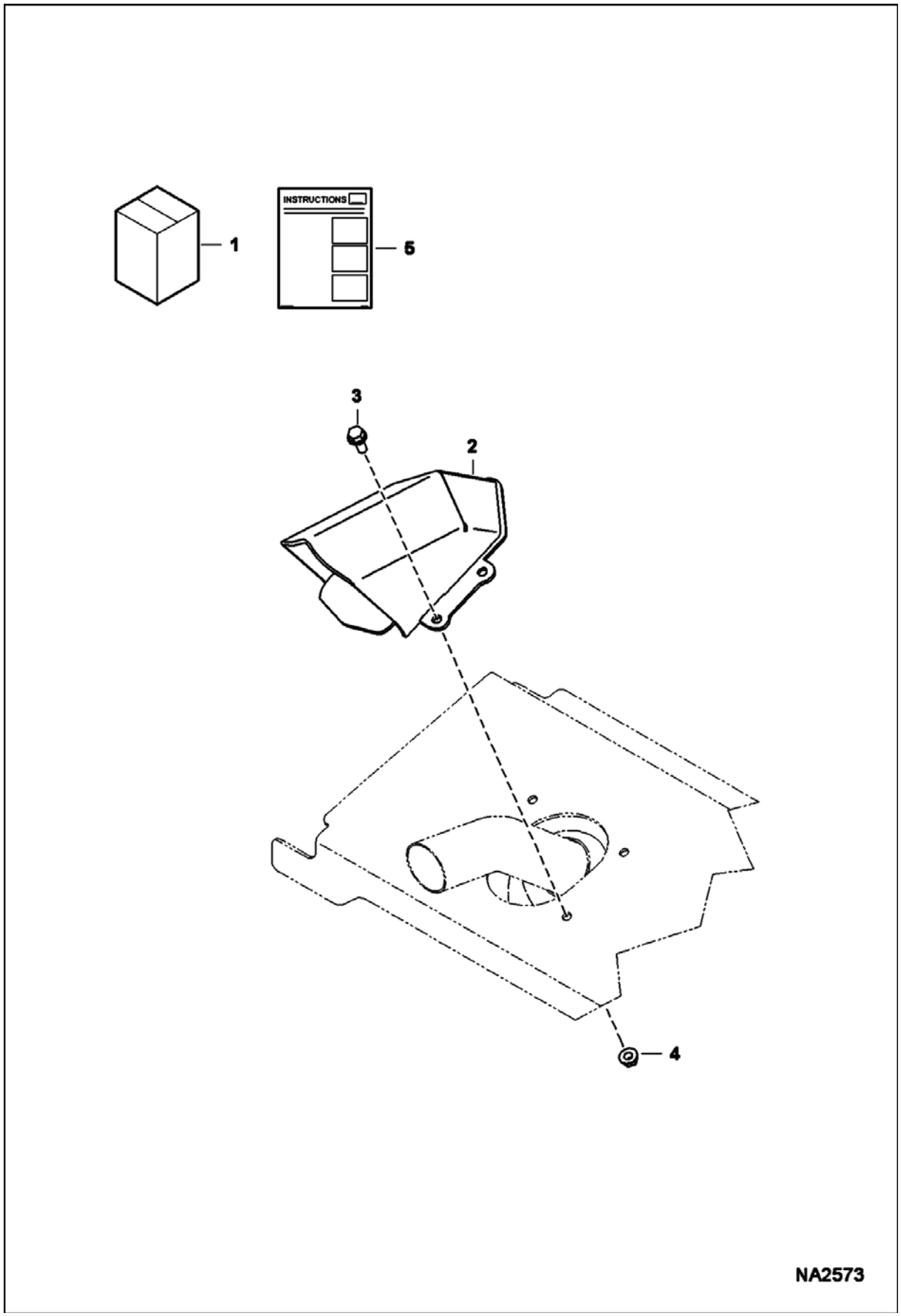

MUFFLER GUARD KIT (Cont'd)

Ref No	Part Number	Description	Remarks	Serial Number	Qty
1	7174130	KIT, GUARD MUFFLER	Ref. 2-5		1
2	7193671	GUARD, MUFFLER			1
3	31C512	BOLT			4
4	97D5	NUT			4
5	6987491	INSTRUCTIONS			1

PEDAL EXTENDERS

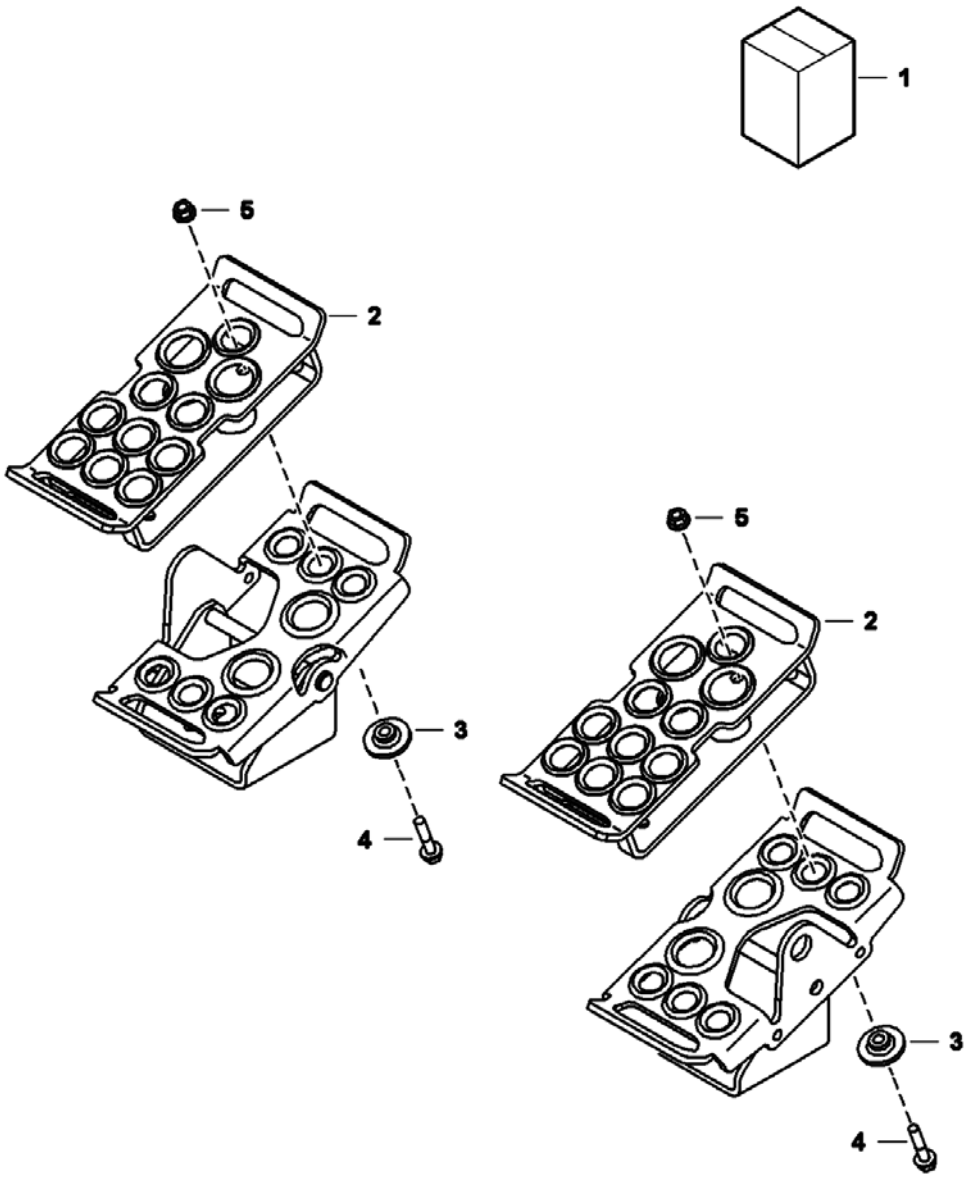

PEDAL EXTENDERS (Cont'd)

Ref No	Part Number	Description	Remarks	Serial Number	Qty
1		KIT, PEDAL EXTENDER	NAP - Order components - Was 7131229 [A]		1
2	7131233	PEDAL			2
3	7131236	BUSHING			6
4	35C524	BOLT			6
5	89D5	NUT			6

POWER BOB-TACH
(Kit)
(S/N A3NV11001 - 12444, A3NW11001 - 11129)

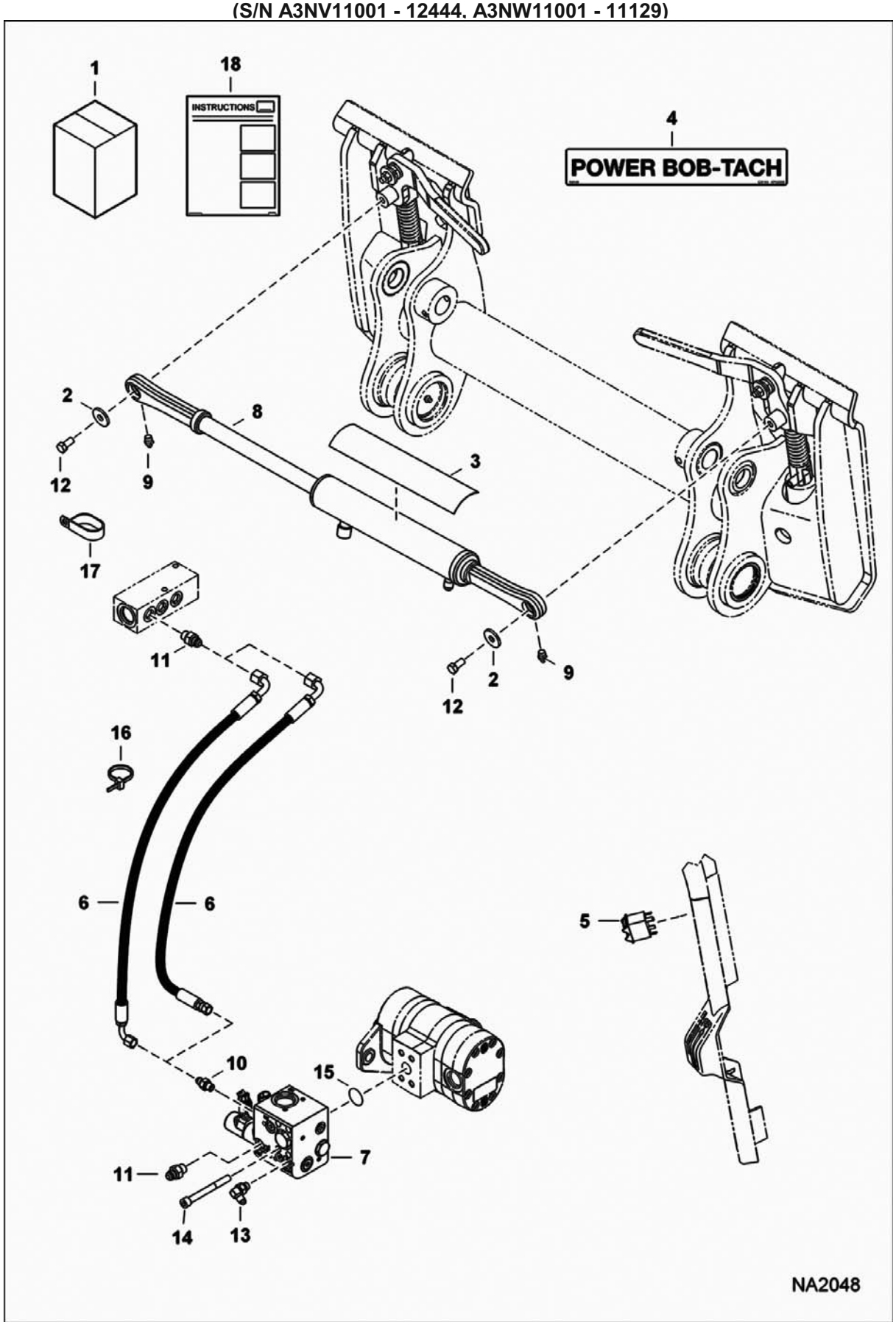

POWER BOB-TACH (Cont'd)
(Kit)
(S/N A3NV11001 - 12444, A3NW11001 - 11129)

Ref No	Part Number	Description	Remarks	Serial Number	Qty
1		KIT, POWER BOB-TACH	See Illustration POWER BOB-TACH/ NA2821 See Illustration POWER BOB-TACH/ NA2819 NAP - Ref. 2-18 - Order 7192250 Power Bob-Tach kit & 7192254 plumbing kit - if loader is not equipped W/deluxe cab harness, Also Order 7176098 deluxe cab harness & 7175293 fuel harness - Was 7167366 [A]		1
2	619021	WASHER, 5			2
3	6555341	SAFETY TREAD			1
4	6719888	DECAL			1
5	7001712	SWITCH			1
6		HOSE, HYD ASSY	NAP - Order 7184314 hose - this hose can only be used on track loaders - valve end of hose is straight - Was 7159736 [A]		1
6	7184314	HOSE, HYD ASSY	this hose must be used on skid steer loaders - valve end of hose is 90 degrees		1
7		VALVE, POWER BOB-TACH	See Illustration POWER BOB-TACH/ MS2724		1
8		CYLINDER, POWER BOB-TACH	See Illustration POWER BOB-TACH/ PE3954		1
9	10H35	GREASE ZERK			2
10	15KB0404	FTG HYD S Connector			1
11	15KB0606	FITTING, HYD CONNECTOR			2
12	17C612	BOLT 5			2
13	17KB0404	FTG HYD ELBOW 90			1
14	73G656	SCREW			4
15	55K214	O-RING			1
16	6624289	STRAP, TIE			4
17	31H42	CLIP			1
18	6987220	INSTRUCTIONS			1

POWER BOB-TACH
(Kit)
(S/N A3NV12445 & Above, A3NW11130 & Above)

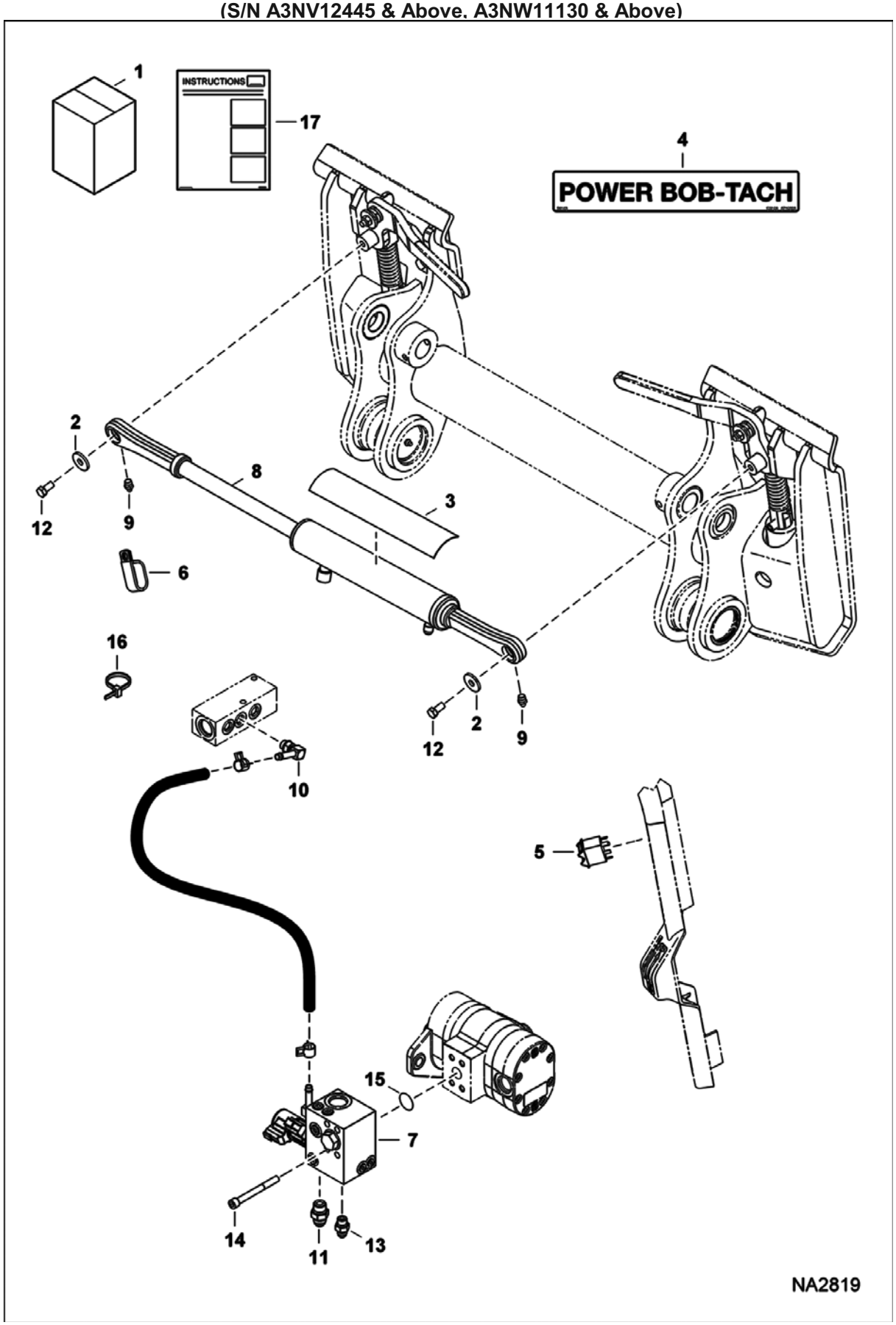

POWER BOB-TACH (Cont'd)
(Kit)
(S/N A3NV12445 & Above, A3NW11130 & Above)

Ref No	Part Number	Description	Remarks	Serial Number	Qty
1	7192250	KIT, POWER BOB-TACH	See Illustration POWER BOB-TACH/ NA2821 Ref. 2-5, 7-14 & 18 - Also Order 7192254 plumbing kit - if loader is not equipped W/deluxe cab harness, Also Order 7176098 deluxe cab harness & 7175293 fuel harness		1
2	619021	WASHER, 5			2
3	6555341	SAFETY TREAD			1
4	6719888	DECAL			1
5	7001712	SWITCH			1
6	31H42	CLIP	not in kit		1
7		VALVE, POWER BOBTACH	See Illustration POWER BOB-TACH/ NA2823		1
8		CYLINDER, POWER BOB-TACH	See Illustration POWER BOB-TACH/ NA2603		1
9	10H35	GREASE ZERK			2
10	6727313	ELBOW			1
11	15KB0808	FITTING, HYD CONNECTOR			1
12	17C612	BOLT 5			2
13	15KB0606	FITTING, HYD CONNECTOR			1
14	17C652	SCREW			4
15	55K214	O-RING	not in kit		1
16	6624289	STRAP, TIE	not in kit		4
17	6989741	INSTRUCTIONS			1

POWER BOB-TACH
(Plumbing Kit)
(S/N A3NV11001 - 12444, A3NW11001 - 11129)

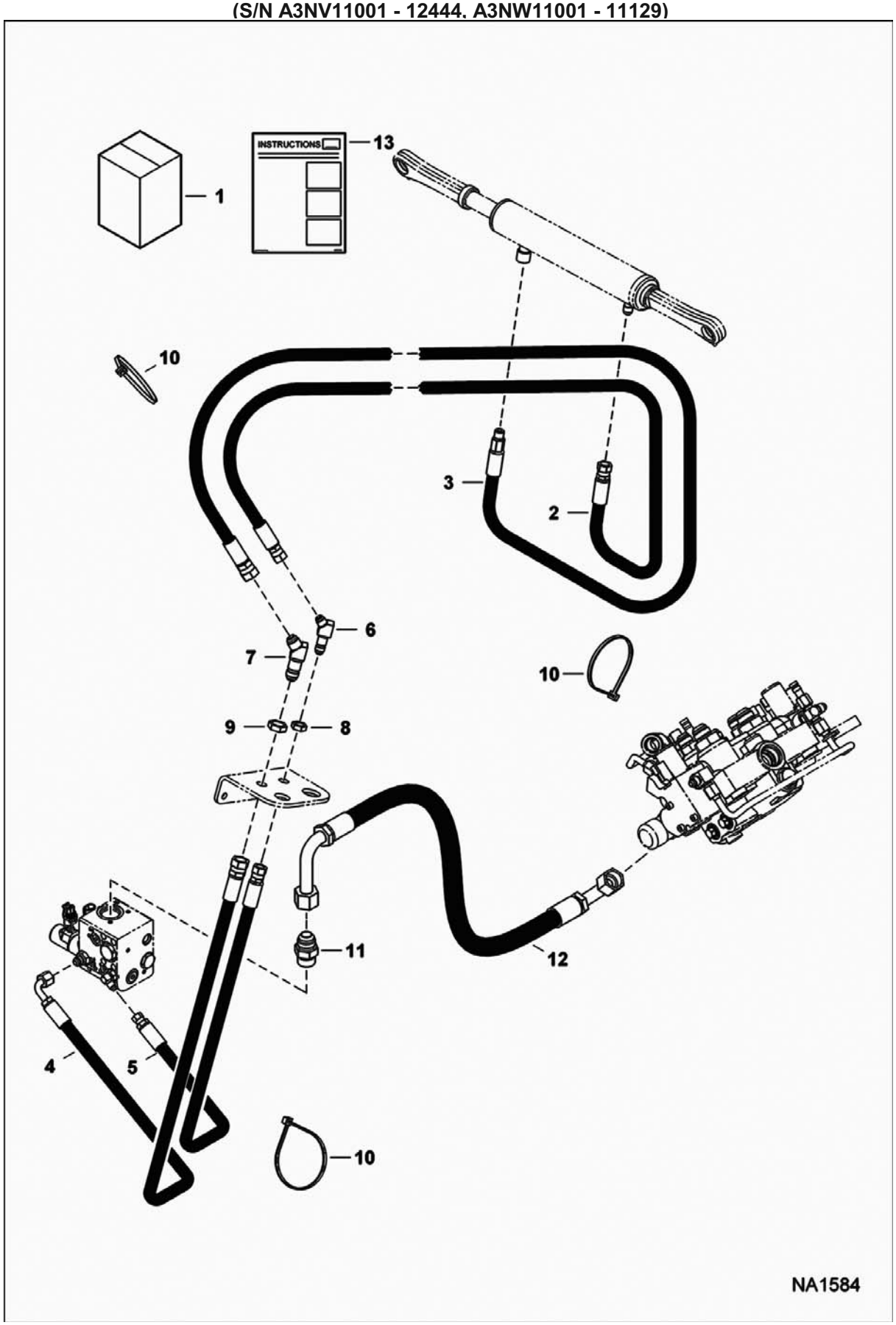

POWER BOB-TACH (Cont'd)
(Plumbing Kit)
(S/N A3NV11001 - 12444, A3NW11001 - 11129)

Ref No	Part Number	Description	Remarks	Serial Number	Qty
1		KIT, PLUMBING POWER BOB-TACH	See Illustration POWER BOB-TACH/ NA2821 NAP - Ref. 2-10 - Order 7192254 plumbing Kit - Was 7129510 [A]		1
2	7153018	HOSE ASSY			1
3	7155834	HOSE, HYD			1
4	7156321	HOSE, HYD			1
5	7156322	HOSE, HYD			1
6	46K5	ELBOW			1
7	46K6	ELBOW			1
8	86F5	NUT			1
9	86F6	NUT			1
10	6624289	STRAP, TIE			3
11	15KB1212	FITTING, HYD CONNECTOR			1
12	7172234	HOSE, HYD ASSY			1
13	6987220	INSTRUCTIONS	INSTRUCTIONS - not in kit - part of Power Bob-Tach kit		1

POWER BOB-TACH
(Plumbing Kit)
(S/N A3NV12445 & Above, A3NW11130 & Above)

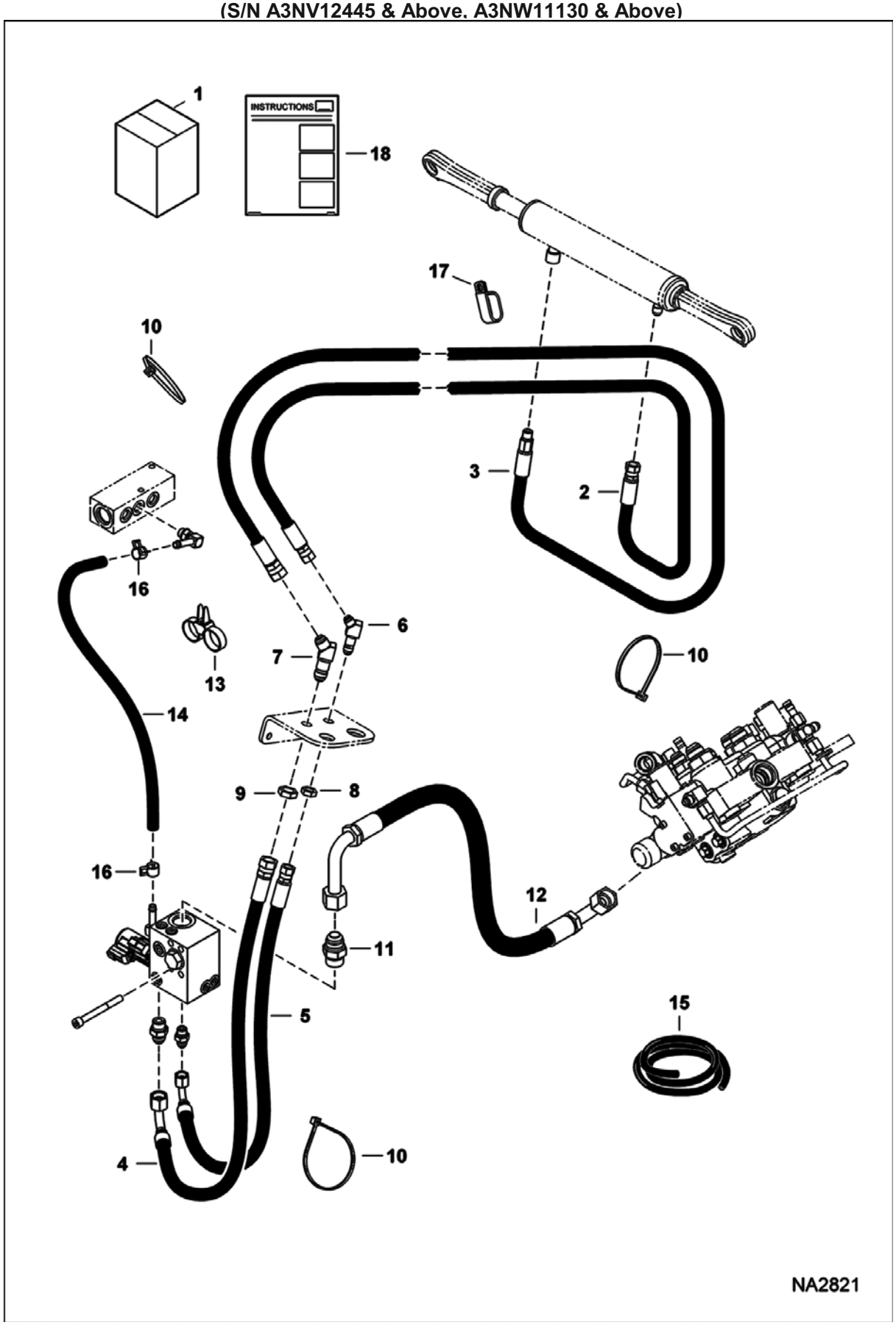

POWER BOB-TACH (Cont'd)
(Plumbing Kit)
(S/N A3NV12445 & Above, A3NW11130 & Above)

Ref No	Part Number	Description	Remarks	Serial Number	Qty
1	7192254	KIT, PLUMBING POWER BOB-TACH	Ref. 2-18		1
2	7153018	HOSE ASSY			1
3	7155834	HOSE, HYD			1
4	7184969	HOSE, HYD			1
5	7184970	HOSE, HYD			1
6	46K5	ELBOW			1
7	46K6	ELBOW			1
8	86F5	NUT			1
9	86F6	NUT			1
10	6624289	STRAP, TIE			4
11	15KB1212	FITTING, HYD CONNECTOR			1
12	7172234	HOSE, HYD ASSY			1
13	6678668	STRAP, DUAL TIE			1
14		HOSE	NAP - 29.5" (749,3 mm) - Order Ref. 15		1
15	6586251	HOSE	bulk - sold per foot		x
16	5HM15	CLAMP			2
17	31H42	CLIP			1
18	6989741	INSTRUCTIONS	INSTRUCTIONS - not in kit - part of Power Bob-Tach kit		1

POWER BOB-TACH
(Cylinder)
(S/N A3NV11001 - 12444, A3NW11001 - 11129)

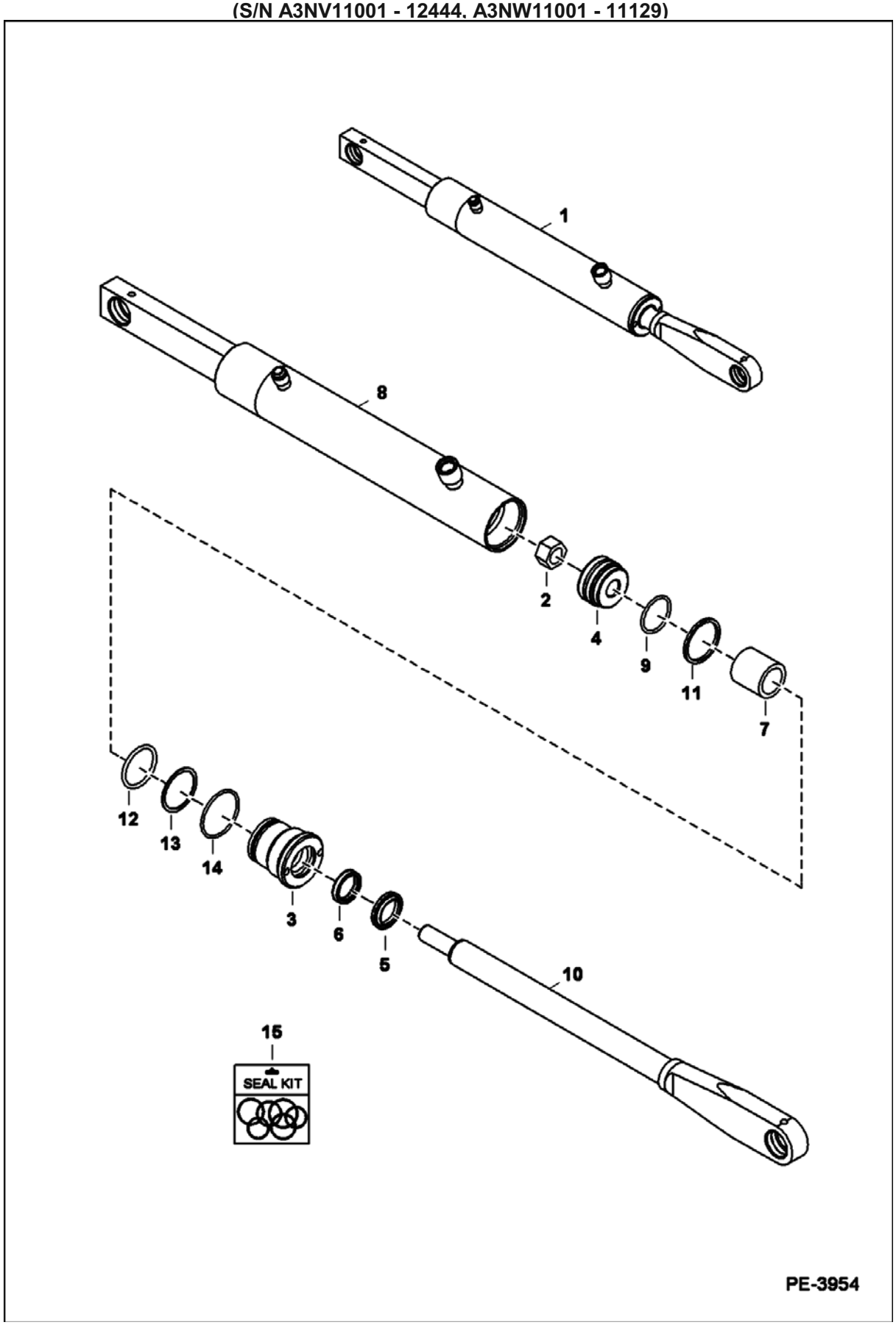

POWER BOB-TACH (Cont'd)
(Cylinder)
(S/N A3NV11001 - 12444, A3NW11001 - 11129)

Ref No	Part Number	Description	Remarks	Serial Number	Qty
1		CYLINDER, POWER BOB-TACH	See Illustration POWER BOB-TACH/ NA2603 NAP - Ref. 2-14 - Order 7183318 cylinder - Was 7167180 [A]		1
2		SHAFT, ROD CYLINDER, POWER BOB-TACH	See Illustration POWER BOB-TACH/ NA2603 NAP - 18.6" (472,4 mm) to bushing center - Order 7183318 cylinder [A]		1
3	6586542	HEAD			1
4	6586543	PISTON			1
5		CASE	See Illustration POWER BOB-TACH/ NA2603 NAP - Order 7183318 cylinder [A]		1
6	6810356	SPACER			1
7	6666542	SEAL			1
8	6667323	SEAL			1
9	82K132	O-RING HYDRAULIC			1
10	73K222	RING			1
11	58K222	O-RING	Was 54K40116 [B]		1
12	25K30110	O RING 10	Was 54K30110 [A]		1
13	6532453	RING			1
14	92D10	NUT			1
15	7138014	SEAL KIT	Ref. 7-14		1

POWER BOB-TACH
(Cylinder)
(S/N A3NV12445 & Above, A3NW11130 & Above)

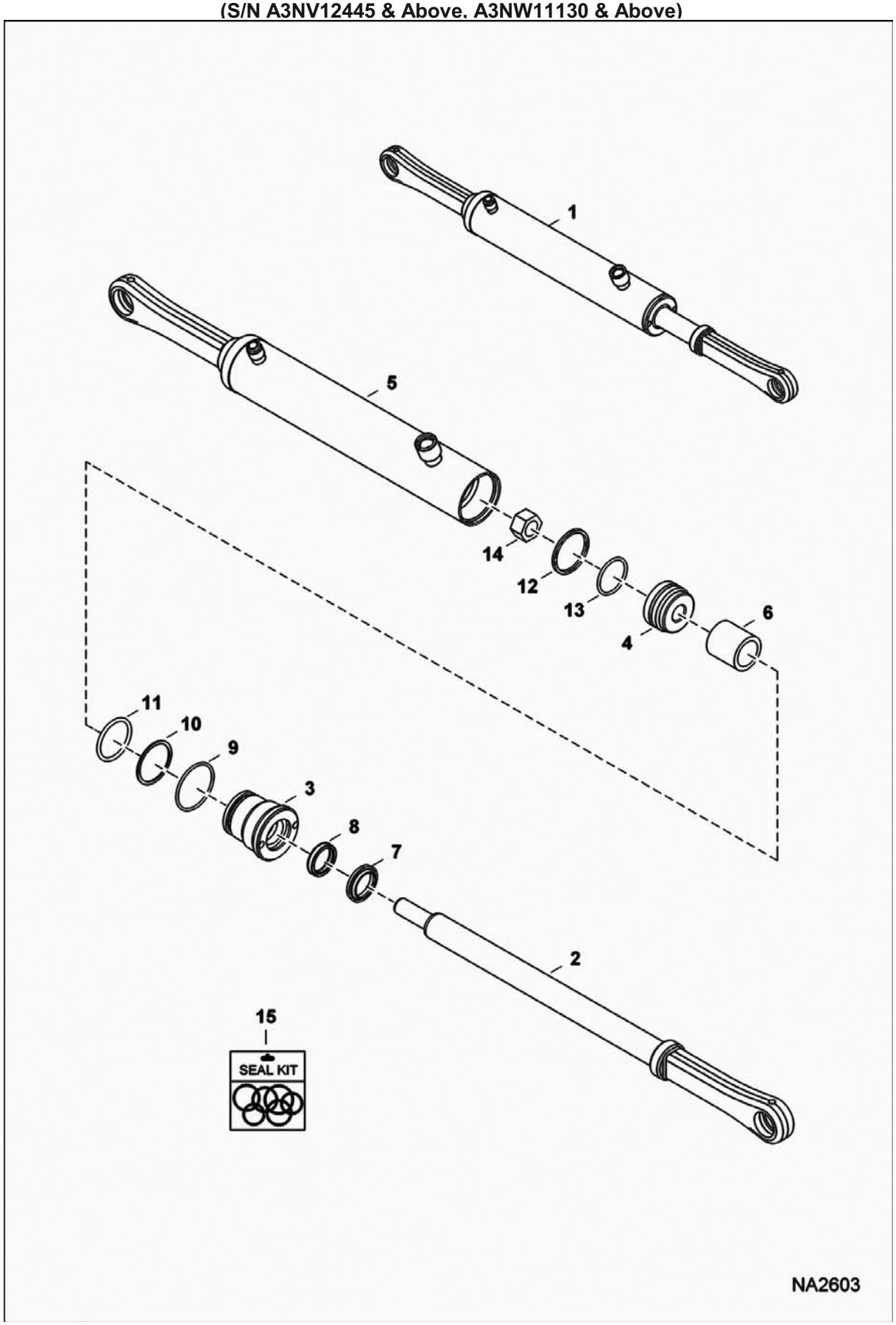

POWER BOB-TACH (Cont'd)
(Cylinder)
(S/N A3NV12445 & Above, A3NW11130 & Above)

Ref No	Part Number	Description	Remarks	Serial Number	Qty
1	7183318	CYLINDER, POWER BOB-TACH	Ref. 2-14		1
2	7183319	SHAFT, ROD CYL POWER BOB-TACH	20.16" (512,1 mm) to bushing center		1
3	6586542	HEAD			1
4	6586543	PISTON			1
5	7183521	CASE			1
6	6810356	SPACER			1
7	6666542	SEAL			1
8	6667323	SEAL			1
9	82K132	O-RING HYDRAULIC			1
10	73K222	RING			1
11	58K222	O-RING	Was 54K40116 [B]		1
12	25K30110	O RING 10			1
13	6532453	RING			1
14	92D10	NUT			1
15	7138014	SEAL KIT	Ref. 7-14		1

POWER BOB-TACH
(Valve)
(S/N A3NV11001 - 12444, A3NW11001 - 11129)

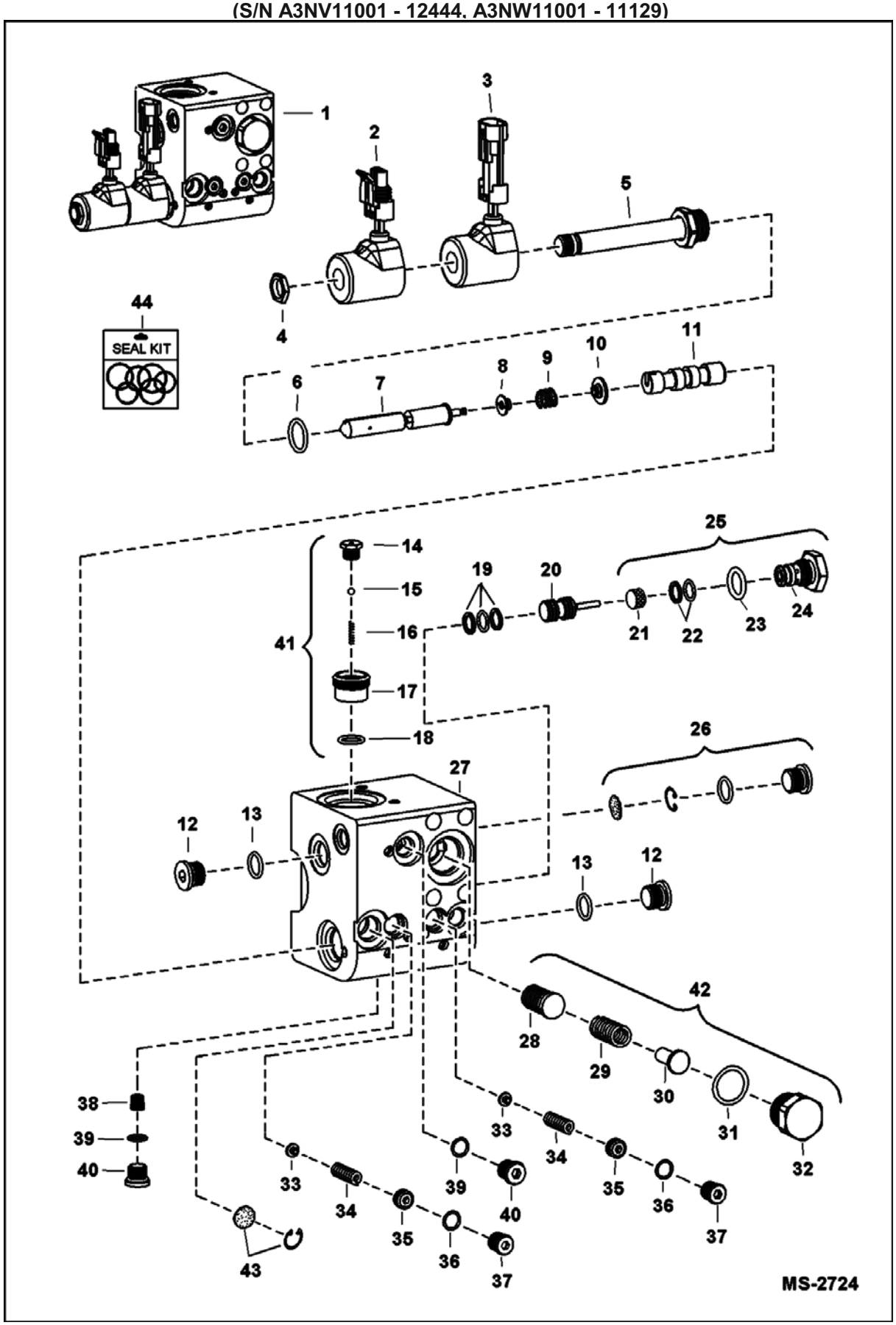

POWER BOB-TACH (Cont'd)
(Valve)
(S/N A3NV11001 - 12444, A3NW11001 - 11129)

Ref No	Part Number	Description	Remarks	Serial Number	Qty
1	7161786	VALVE, POWER BOB-TACH	valve has (2) drain ports labeled DR - use which ever port best fits plumbing application		1
2	6684743	SOLENOID	W/male connector		1
3	6684744	SOLENOID	W/female connector		1
4	6684742	NUT			1
5		STEM	NSS		x
6	79K8	O RING 10			x
7		STEM	NSS		x
8		RETAINER	NSS		x
9		SPRING	NSS		x
10		WASHER	NSS		x
11		PISTON	NAP		x
12	6685545	PLUG	W/Ref. 13		x
13		ORING	NSS		x
14		PLUG	NSS		x
15		BALL	NSS		x
16		SPRING	NSS		x
17		VALVE	NSS		x
18	6685542	O-RING			x
19		RINGS	NSS		x
20	6684745	PISTON	W/Ref. 19		1
21		STEM	NSS		1
22		RINGS	NSS		x
23	79K7	O RING 10			x
24	6684746	CHECK VALVE	W/Ref. 23		1
25	7001678	VALVE, CHECK	W/Ref. 21-24		1
26	7001673	KIT, SCREEN FILTER			1
27		BLOCK	NSS		x
28			NSS		x
29		SPRING	NSS		x
30		POPPET	NSS		x
31	79K10	O RING 10			x
32		PLUG	NSS		1
33		POPPET	NSS		x
34		SPRING	NSS		x
35		PLUG	NSS		x
36	79K4	O RING 10			x
37	24K3	PLUG	W/Ref. 36		x
38	6685541	POPPET			1
39		O-RING	NSS		x
40	6685546	PLUG	W/Ref. 39		2
41	6685543	CHECK VALVE	W/Ref. 14-18		1
42	6685544	COMPENSATOR	W/Ref. 26-30		1
43	6689983	FILTER KIT			1
44	6684747	SEAL KIT	Ref. 6, 22, 23, 31 & 39 - consists of (5) O-rings & (1) back-up washer		1

POWER BOB-TACH
(Valve)
(S/N A3NV12445 & Above, A3NW11130 & Above)

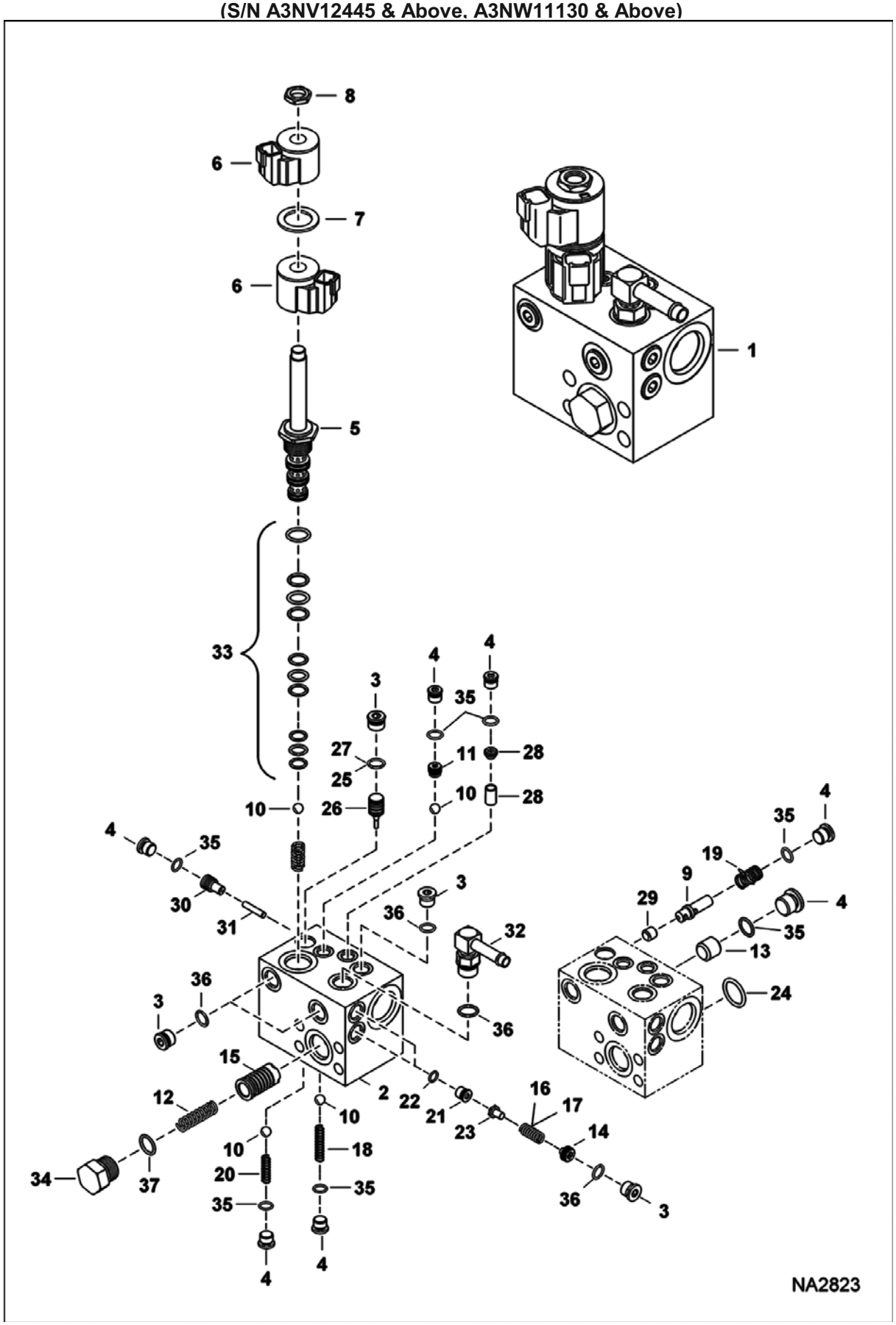

POWER BOB-TACH (Cont'd)
(Valve)
(S/N A3NV12445 & Above, A3NW11130 & Above)

Ref No	Part Number	Description	Remarks	Serial Number	Qty
1	7010992	VALVE, BPV	Ref. 2-37		1
2		BLOCK	NAP - Order Ref. 1		1
3	6669620	PLUG			5
4	6669727	PLUG			7
5	6673986	SPOOL			1
6	7010006	COIL			2
7	6689389	SPACER			1
8	7020647	NUT			1
9	7020648	SPOOL			1
10	6678705	BALL			4
11	7008561	SEAT, SHUTTLE			1
12	7020649	SPRING			1
13	6664029	ORIFICE			1
14	7020604	PLUG			2
15	7020650	SPOOL			1
16	7020651	SPRING			1
17	7020607	SPRING			1
18	7020652	SPRING			1
19	7020653	SPRING			1
20	7020654	SPRING			1
21	7020606	PLUG			2
22	7020655	O-RING			2
23	7020605	POPPET			2
24	6690299	O-RING			1
25	7020656	O-RING			2
26	7020657	PISTON			1
27	6678837	O-RING			1
28	7020658	FILTER CARTRIDGE			1
29	7020659	ORIFICE			1
30	7020660	GUIDE			1
31	7020661	SHAFT			1
32	6727313	ELBOW			1
33	6673835	SEAL KIT			1
34	7008556	PLUG			1
35	79K3	O RING 10			x
36	79K6	O RING 10			x
37	79K10	O RING 10			x

RADIO KIT

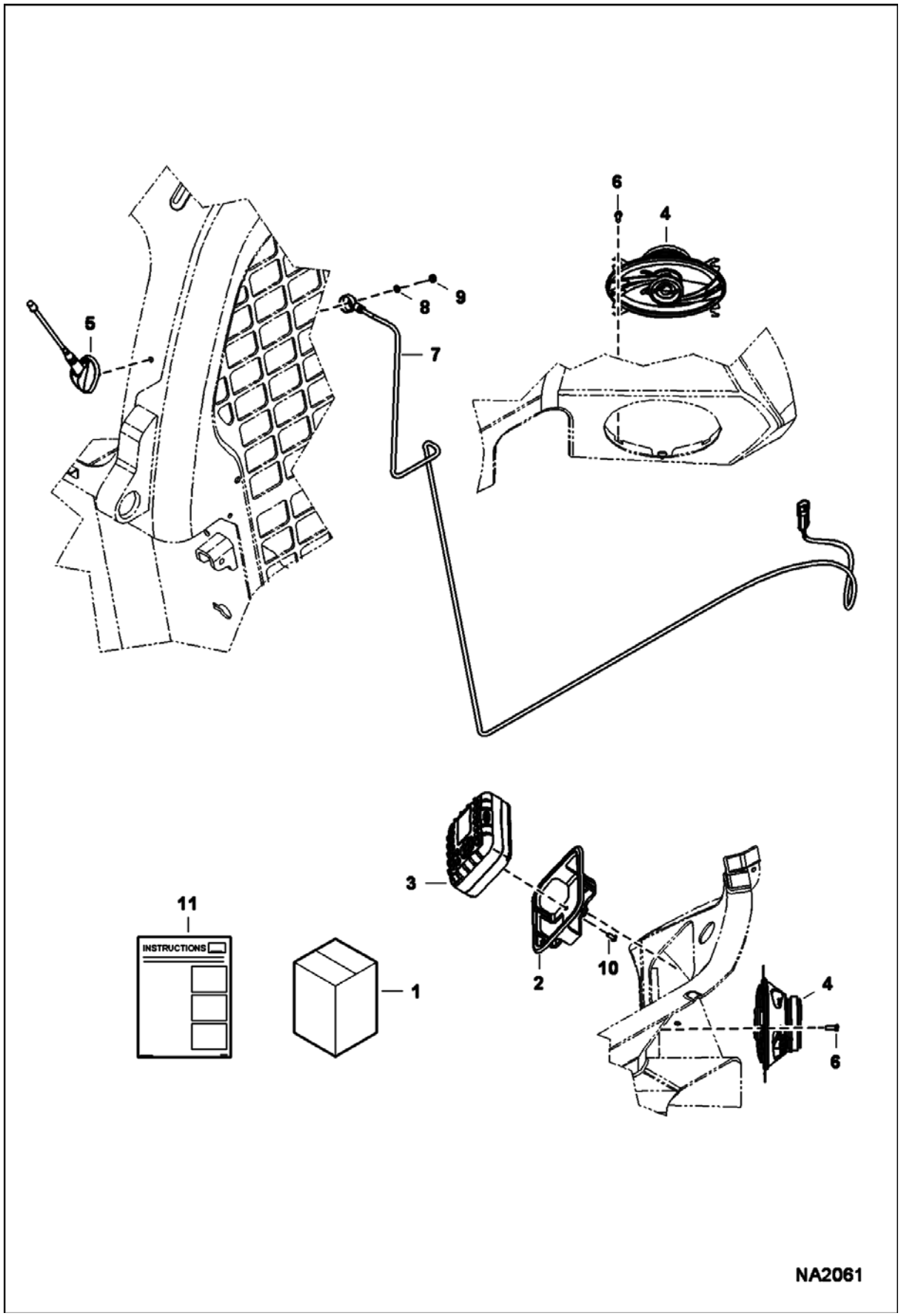

RADIO KIT (Cont'd)

Ref No	Part Number	Description	Remarks	Serial Number	Qty
1	6988435	KIT, RADIO M-SERIES LOADERS	Ref. 2-11 - deluxe cab only - Was NAP [D]		1
2	7145333	BRACKET, RADIO			1
3	6988336	RADIO, MINI BOBCAT	W/Ref. 10		1
4	6988660	SPEAKER 4 X 6 RETAIL JXA462	Was 7159875 [A]		2
5	6988661	ANTENNA, 94 INCH MOTOROLA MALE PLUG	W/Ref. 7-9 - Was 7159877 [A]		1
6	7162770	SCREW, PLASTIC			8
7		CABLE	NSS - Order Ref. 5		1
8		WASHER	NSS - Order Ref. 5		1
9		NUT	NSS - Order Ref. 5		1
10		SCREW	NSS - Order Ref. 3		4
11	6987139	INSTRUCTIONS			1

REAR AUXILIARY
(Kit)

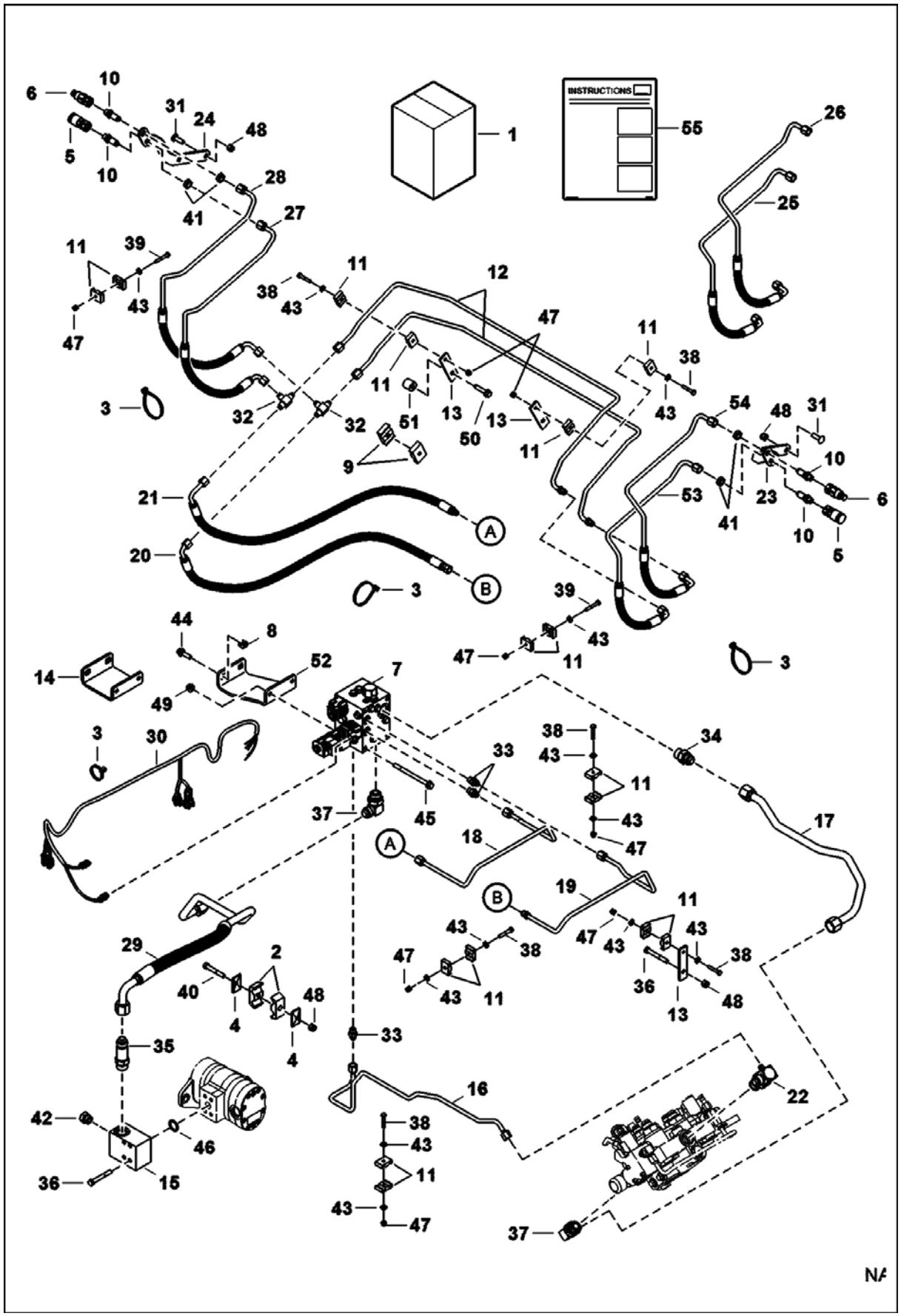

REAR AUXILIARY (Cont'd)
(Kit)

Ref No	Part Number	Description	Remarks	Serial Number	Qty
1	7184621	KIT, AUX REAR	Ref. 2-13, 15-24, 27-50, 52-55		1
2	6592506	CLAMP			2
3	6624289	STRAP, TIE			9
4	6652521	PLATE			2
5	6667803	COUPLER			2
6	6667804	COUPLER			2
7	6685624	VALVE, AUX REAR	See Illustration REAR AUXILIARY VALVE/ MS2255		1
8	6685663	RETAINER			2
9	7198236	SPACER, TUBE			1
10	6716089	CONNECTOR			4
10	79K6	O RING 10			1
11	6578870	CLAMP			16
12	7169741	TUBELINE, HYD			2
13	7170354	ADAPTER			3
14		MOUNT, VALVE	NAP - Order Ref. 52 - Was 7170537 [A]		1
15	7171996	MANIFOLD, HYD ASSY			1
16	7175643	TUBELINE, HYD			1
17	7176078	TUBELINE, HYD			1
18	7177102	TUBELINE, HYD			1
19	7177103	TUBELINE, HYD			1
20	7177104	HOSE, HYD			1
21	7177105	HOSE, HYD			1
22	7178841	TEE			1
22	79K16	O RING 10			1
23	7186827	MOUNT, BULKHEAD			1
24	7186828	MOUNT, BULKHEAD			1
25	7186835	HOSE, HYD	241,3 mm (9.5") hose length		1
26	7186836	HOSE, HYD	292 mm (11.5") hose length		1
27	7202688	HOSE, HYD	Was 7186837 [A]		1
28	7202689	HOSE, HYD	Was 7186838 [A]		1
29	7189310	HOSE, HYD			1
30	7201414	HARNESS, AUX REAR	Was 7191339 [A]		1
31	10C620	BOLT			4
32	10K5	TEE			2
33	15KB0606	FITTING, HYD CONNECTOR	Was 15KB606 [A]		3
33	79K6	O RING 10			1
34	15KB1212	FITTING, HYD CONNECTOR			1
34	79K12	O RING 10			1
35	16KB1212	FITTING, HYD CONNECTOR			1
35	79K12	O RING 10			1
36	17C644	BOLT			5
37	17KB1212	FITTING, HYD ELBOW			2
37	79K12	O RING 10			1
38	17C424	BOLT			6
39	17C428	BOLT			2
40	17C640	BOLT 5			1
41	86F5	NUT			4
42	47K7	PLUG	Was 24K7 [B]		1

REAR AUXILIARY (Cont'd)
(Kit)

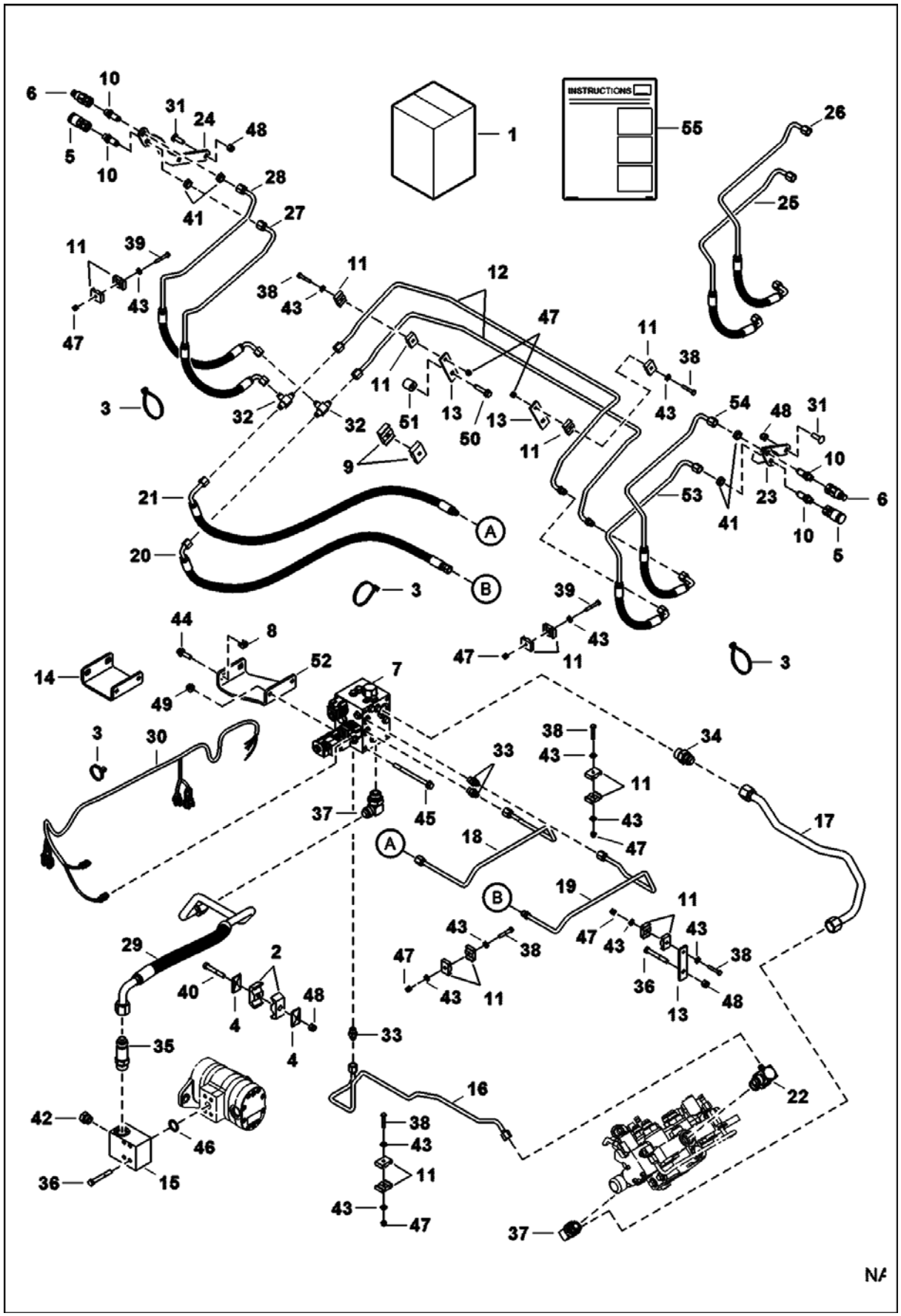

REAR AUXILIARY (Cont'd)
(Kit)

Ref No	Part Number	Description	Remarks	Serial Number	Qty
42	79K10	O RING 10			1
43	25E13	WASHER 5			12
44	35C620	BOLT 5			2
45	31C680	BOLT	Was 17C680 [B]		2
46	55K214	O-RING			1
47	59D4	NUT 5			8
48	59D6	NUT			6
49	83D6	NUT 5			2
50	84G3728	BOLT			1
51	6701892	CLAMP	not in kit		2
52	7203568	MOUNT, VALVE			1
53	7204328	HOSE, HYD	316 mm (12.44") hose length		1
54	7204327	HOSE, HYD	354,3 mm (13.95") hose length		1
55	6987299	INSTRUCTIONS			1

REAR AUXILIARY VALVE

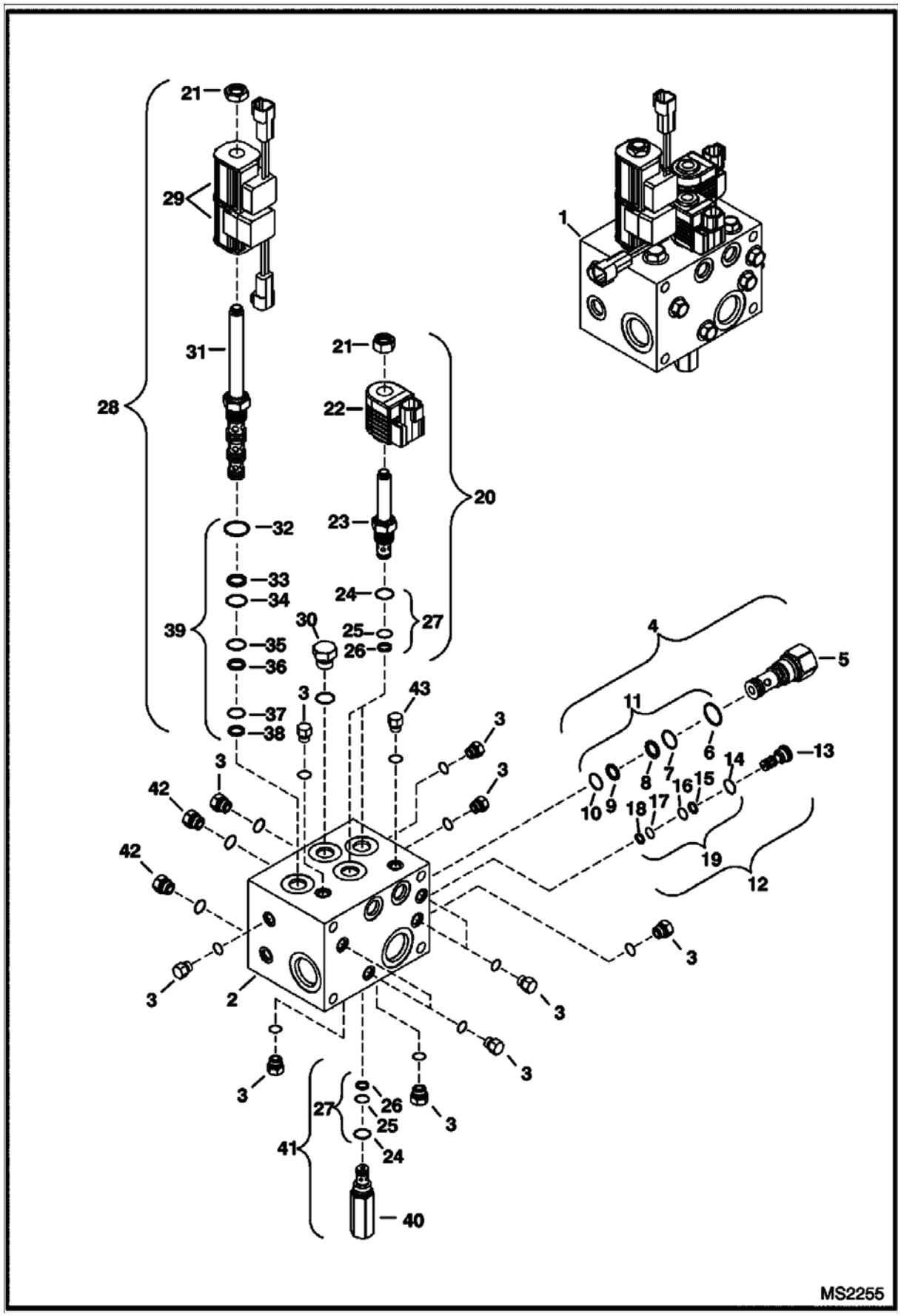

REAR AUXILIARY VALVE (Cont'd)

Ref No	Part Number	Description	Remarks	Serial Number	Qty
1	6685624	VALVE, AUX REAR	CP12646		1
2		BLOCK	NSS		1
3		PLUG	NSS - #4 SAE W/ O-ring		11
4	6684044	VALVE	differential sensing - Ref. 5-10		1
5		VALVE	NSS - Order Ref. 4		1
6	6684046	O-RING			1
7	6684048	O-RING			1
8	6684047	BACK-UP RING			1
9	6684050	BACK-UP RING			1
10	6684049	O-RING			1
11	6684045	SEAL KIT	Ref. 6-10		1
12	6684061	VALVE	shuttle - Ref. 13-18		1
13		VALVE	NSS - Order Ref. 12		1
14	6684063	O-RING			1
15	6684064	BACK-UP RING			1
16	6684065	O-RING			1
17	6684066	O-RING			1
18		BACK-UP RING	NAP - Was 6684067 [A]		1
19	6684062	SEAL KIT	Ref. 14-18		1
20		VALVE	NAP - Ref. 21-26 - .5" dia x 45 mm (1.78") long stem - Order 7021365 solenoid valve - Was 6685061 [A]		2
20	7021365	VALVE, SOLENOID	Ref. 21-26 - 13 mm dia x 38 mm (1.53") long stem		2
21	6684060	NUT	0.5" thread - Use W/Ref. 22 (6684073 coil)		2
21	7021367	NUT	13 mm thread - Use W/Ref. 22 (7021366 coil)		2
22	6684073	COIL, SOLENOID	12 volt - Use W/ 0.5" dia x 45 mm (1.78") long stem		2
22	7021366	COIL, SOLENOID	12 volt - Use W/ 13 mm dia x 38 mm (1.53") long stem		2
23		STEM	NSS - Order Ref. 20		2
24	6684070	O-RING			3
25	6684071	O-RING			3
26	6684072	BACK-UP RING			3
27	6684069	SEAL KIT	Ref. 24-26		3
28	6688933	VALVE ASSY	solenoid W/coils - Ref. 21, 29 & 31-38		1
29	6688934	COIL			2
30		PLUG	NSS - #8 SAE W/ O-ring		1
31		VALVE	NSS - Order Ref. 28		1
32		O-RING	NAP - Order Ref. 39		1
33	6684053	BACK-UP RING			1
34	6684054	O-RING			1
35	6684056	O-RING			1
36		BACK-UP RING	NAP - Was 6684055 [A]		1
37		O-RING	NAP - Order Ref. 39		1
38		BACK-UP RING	NAP - Was 6684057 [A]		1
39	6684052	SEAL KIT	Ref. 32-38		1
40		VALVE	NSS - Order Ref. 41		x
41	6685328	RELIEF VALVE	W/Ref. 24-26		1
42		PLUG	NSS - #6 SAE W/ O-ring		4
43		PLUG	NSS - metric		1

REAR DOOR LOCK

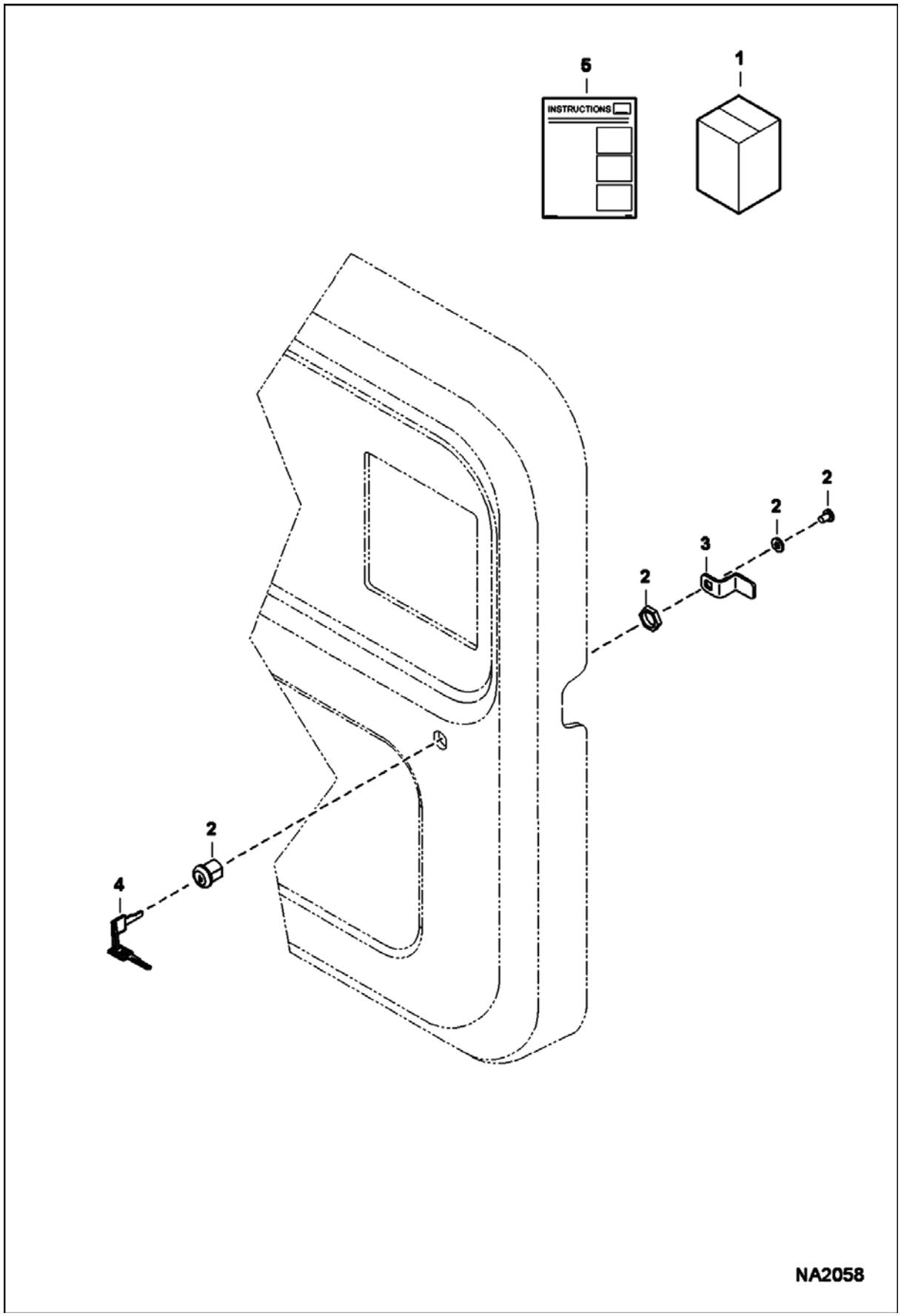

REAR DOOR LOCK (Cont'd)

Ref No	Part Number	Description	Remarks	Serial Number	Qty
1	7128403	KIT, LOCK REAR DOOR	Ref. 2-5		1
2	6670726	CYLINDER. LOCK			1
3	7149056	LATCH, CAM			1
4	6693241	KEY 10	single key W/O ring		1
5	6987239	INSTRUCTIONS			1

REAR WIPER KIT

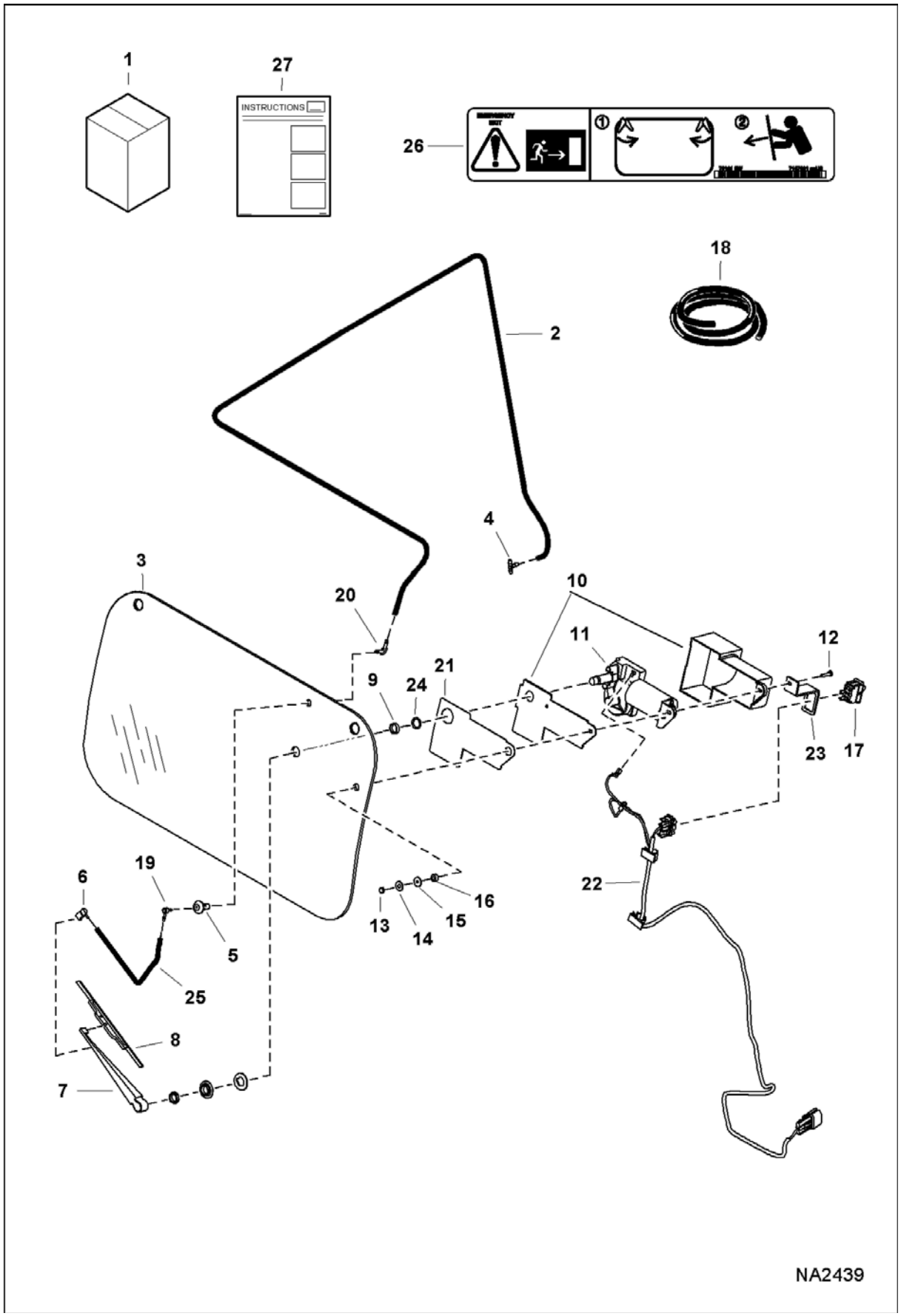

REAR WIPER KIT (Cont'd)

Ref No	Part Number	Description	Remarks	Serial Number	Qty
1	7163571	KIT, WIPER REAR	Ref. 2-27		1
2		HOSE	NAP - 2133,6 mm (84") long - Order Ref. 18		1
3	7172247	WINDOW, CAB REAR			1
4	6676000	TEE			1
5	7167177	GROMMET WIPER			1
6	6676028	NOZZLE			1
7	6676001	ARM			1
8	6676002	BLADE			1
9	6667201	SPACER			1
10	6664097	COVER			1
11	6665602	MOTOR			1
12	87G1014	SCREW, MACHINE			1
13	6664103	NUT			1
14	6664065	WASHER	nylon		1
15	6801059	WASHER	neoprene		1
16	6664085	BUSHING	nylon		1
17	6675999	SWITCH			1
18	6676003	HOSE,BULK	black - 0.109" ID - sold per foor		x
19	6676500	ELBOW	exterior		1
20	6676917	ELBOW	interior		1
21	7172119	SEAL, FOAM			1
22	7180207	HARNESS, WIPER			1
23	7172708	BRACKET, SWITCH			1
24	7172121	WASHER			1
25		HOSE	305 mm (12") long - Order Ref. 18		1
26	7167991	DECAL, EXIT REAR			1
27	6987282	INSTRUCTIONS			1

REMOTE CONTROL KIT
(Selectable Joystick Controls)

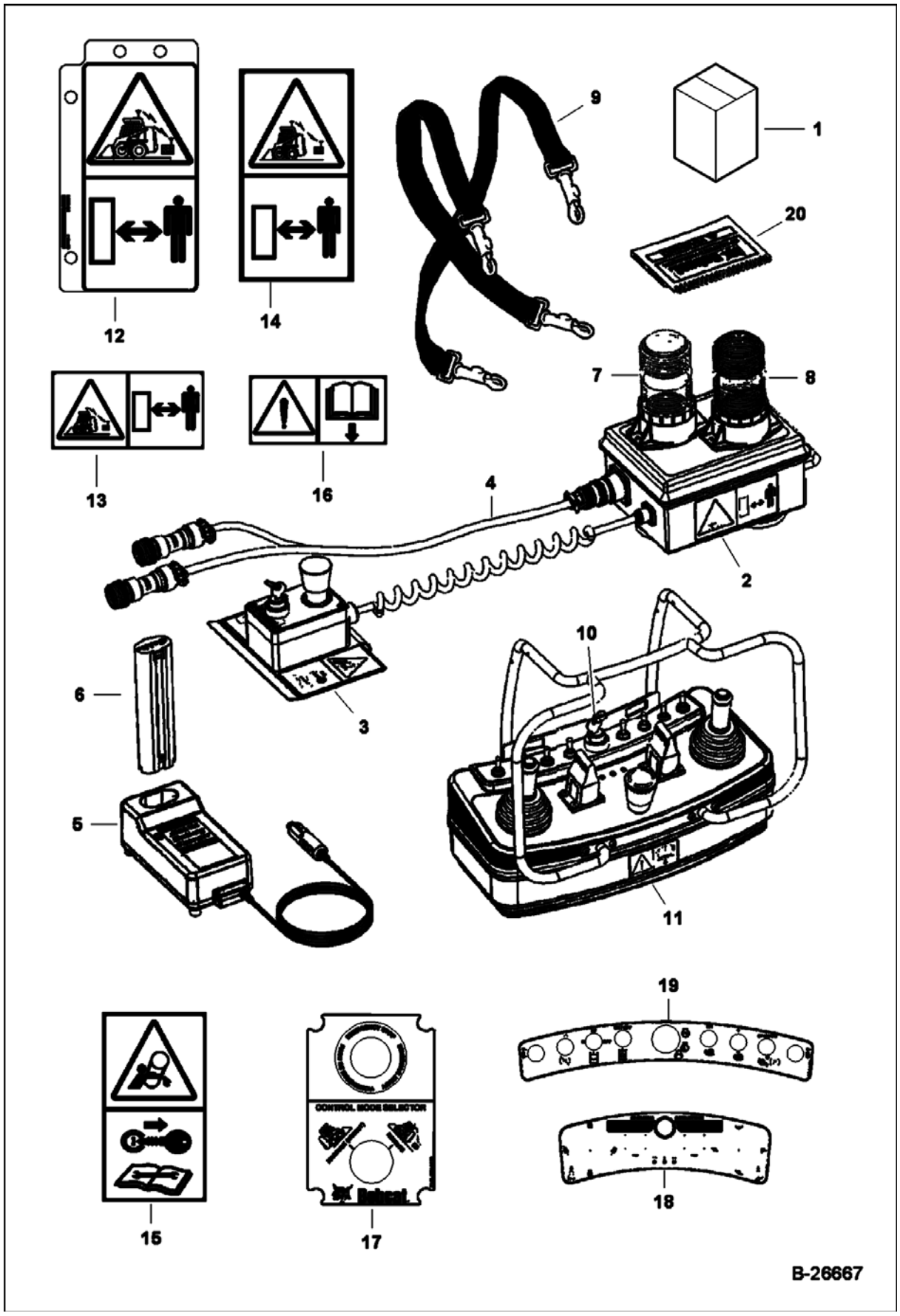

REMOTE CONTROL KIT (Cont'd)
(Selectable Joystick Controls)

Ref No	Part Number	Description	Remarks	Serial Number	Qty
1	7185234	KIT, REMOTE CONTROL	radio remote control		1
2		RECEIVER, 2.4GHZ	Was 6692756 [B]		1
3	7011071	CONTROL, MODE SELECTOR	See BTI392 - mode selector/E-stop box - W/Ref. 17		1
4	7011070	HARNESS, RECEIVER			1
5	6692769	CHARGER, MAKITA DC1422, 12-24VDC	W/Ref. 6		1
6	6692770	BATTERY, NICD, 9.6V, 1.3AH, MAKITA 9000			1
7	6693411	LENS	green		1
7	6693409	BULB, STROBE			1
8	6693410	LENS	amber		1
8	6693409	BULB, STROBE			1
9	6692771	SHOULER HARNESS			1
10	6692762	KEYS, SET OF 2	set of (2)		x
11		2.4GHZ TRANSMITTER	See BTI392 - transmitter - W/Ref. 18 & 19 - Was 6692761 [B]		1
12	7135569	DECAL	remote ready identification tag		1
13	6692757	DECAL, "REMOTE CONTROL OPERATION", LARGE	operation		1
14	6692768	DECAL, "REMOTE CONTROL OPERATION", SMALL	operation		1
15	6692767	DECAL, "ROTATING PARTS"	rotating parts		1
16	6692763	DECAL WARNING, "READ THE MANUAL"	operating instructions		1
17		DECAL	NAP - Order Ref. 3		1
18		DECAL	NAP - Order Ref. 11		1
19		DECAL	NAP - Order Ref. 11		1
20	6904709	MANUAL	operation, maintenance and parts		1

RESEALING KIT
(Sealing Open Cab Holes)

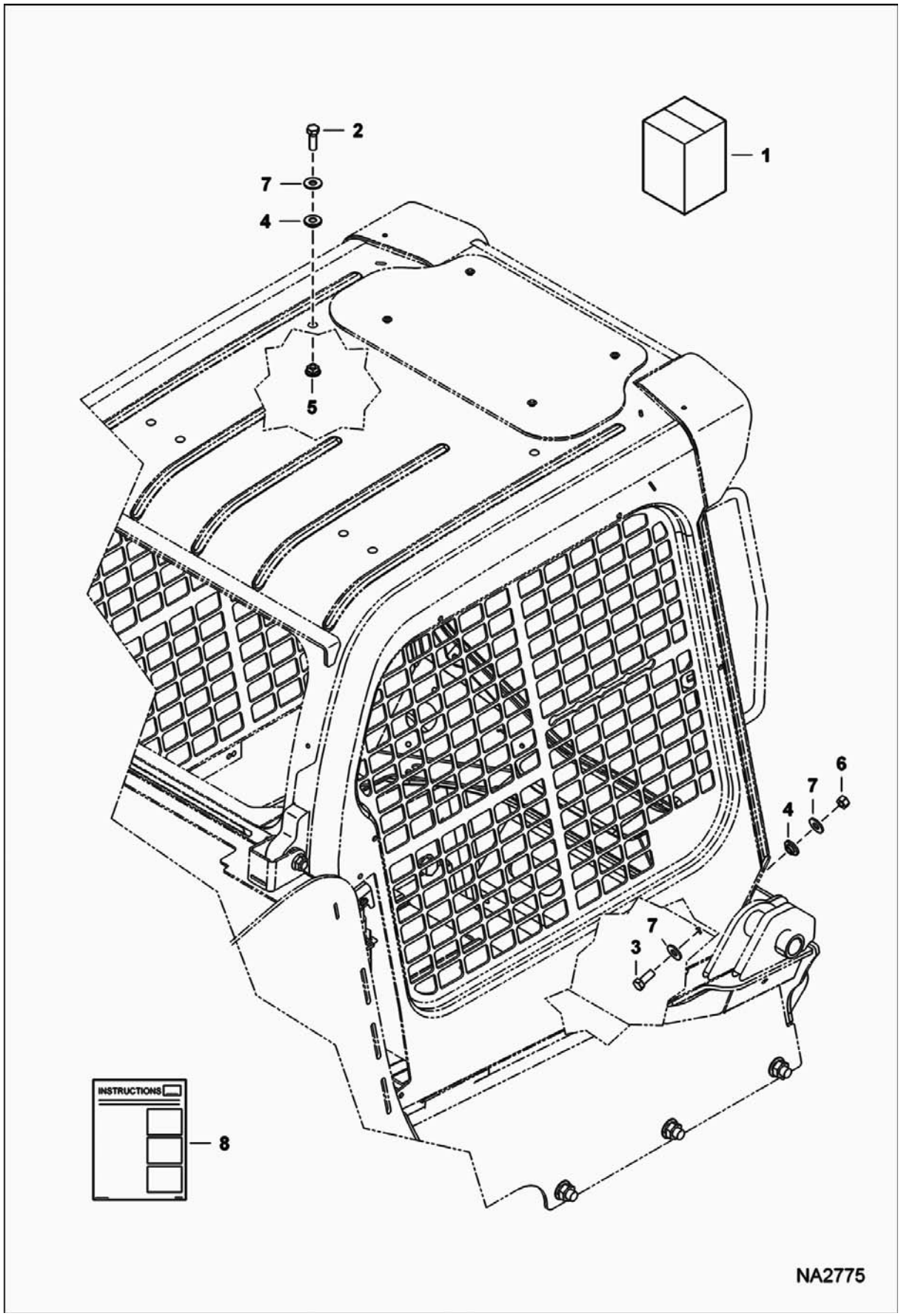

RESEALING KIT (Cont'd)
(Sealing Open Cab Holes)

Ref No	Part Number	Description	Remarks	Serial Number	Qty
1	7172897	KIT, RESEAL PLUGS	Ref. 2-8		1
2	17C824	BOLT 5			6
3	17C820	BOLT			8
4	7173453	PLUG			14
5	7192823	NUT			6
6	61D8	NUT 5			8
7	25E20	WASHER			22
8	6987335	INSTRUCTIONS			1

SEAT BELT - 2"
(Retractable)

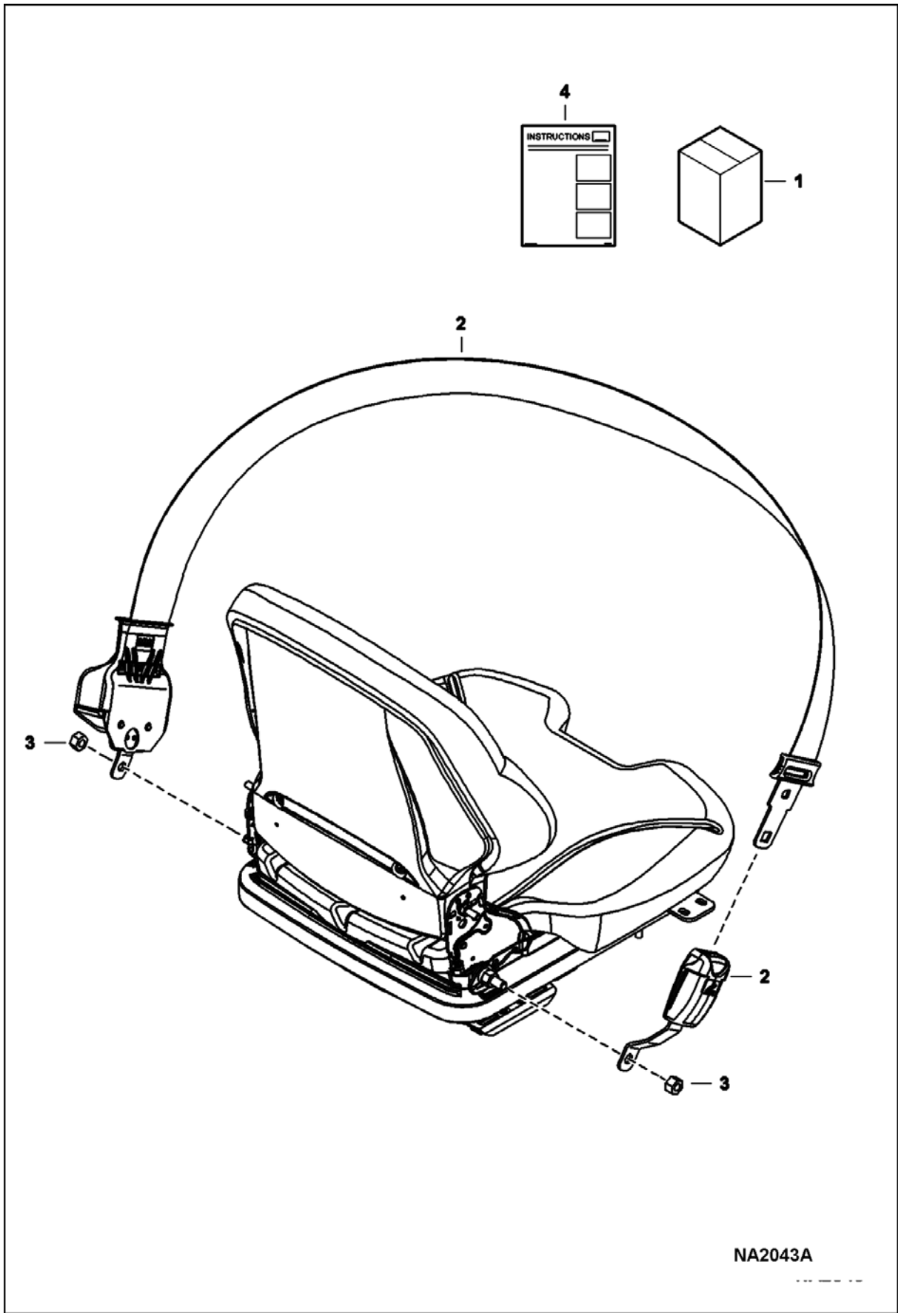

SEAT BELT - 2" (Cont'd)
(Retractable)

Ref No	Part Number	Description	Remarks	Serial Number	Qty
1		KIT, BELT SEAT	NAP		1
2	7159542	BELT, SEAT RETRACTOR			1
3	86D7	NUT	not in kit		2
4		INSTRUCTIONS	NAP		1

SEAT BELT - 2"
(Three Point Retractable)

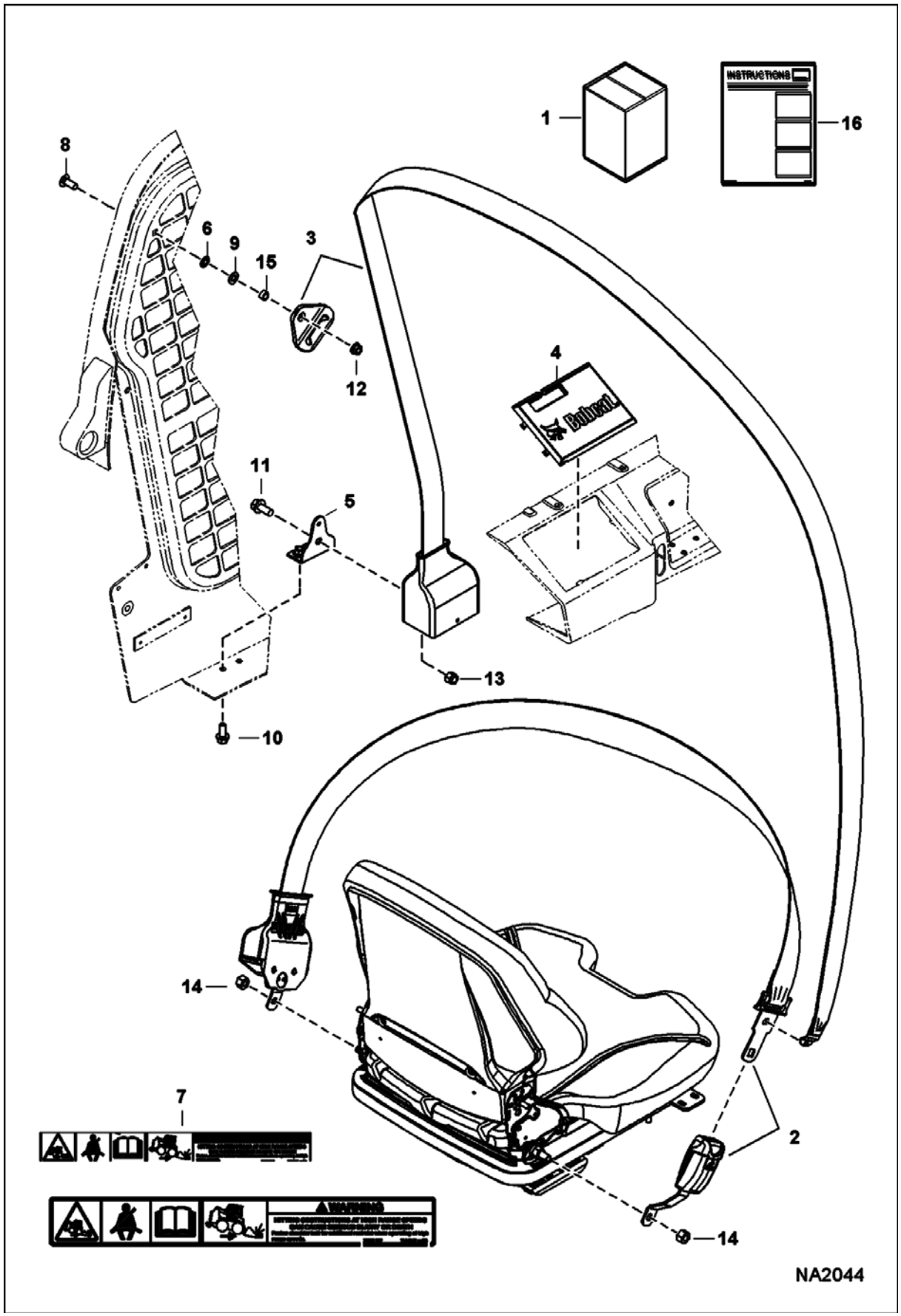

SEAT BELT - 2" (Cont'd)
(Three Point Retractable)

Ref No	Part Number	Description	Remarks	Serial Number	Qty
1	7128405	KIT, BELT SEAT 2"	Ref. 2-16		1
2	7152319	BELT, RETRACTOR			1
3	7152322	BELT, SEAT 2"			1
4	7152323	COVER, RETRACTOR			1
5	7152324	BRACKET, BELT SEAT 3PT			1
6	6674264	RETAINER NUT			1
7	7184346	DECAL WARNING	Was 7168303 [A]		1
8	10C616	BOLT 10			1
9	29E6	WASHER			1
10	43C612	BOLT			2
11	31C716	SCREW			1
12	53D6	NUT			1
13	59D7	NUT			1
14	86D7	NUT	not in kit		2
15	7184341	BUSHING			1
16	6987248	INSTRUCTIONS			1

SEAT BELT - 3"
(Retractable)

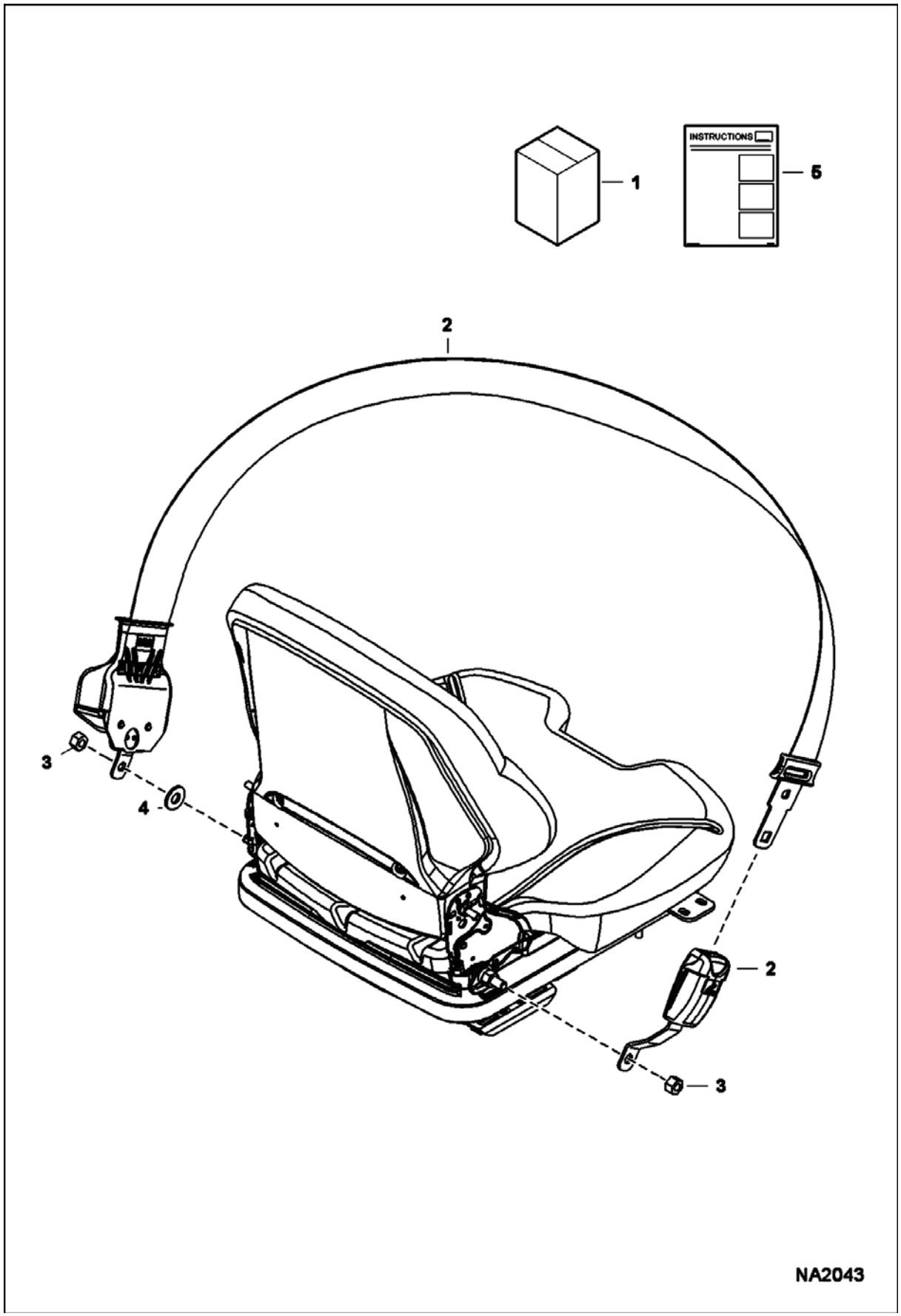

SEAT BELT - 3" (Cont'd)
(Retractable)

Ref No	Part Number	Description	Remarks	Serial Number	Qty
1	7129303	KIT, BELT SEAT 3"	Ref. 2-4		1
2	7168171	BELT, SEAT 3"			1
3	86D7	NUT	not in kit		2
4	6987253	INSTRUCTIONS			1

SEAT BELT - 3"
(Three Point Retractable)

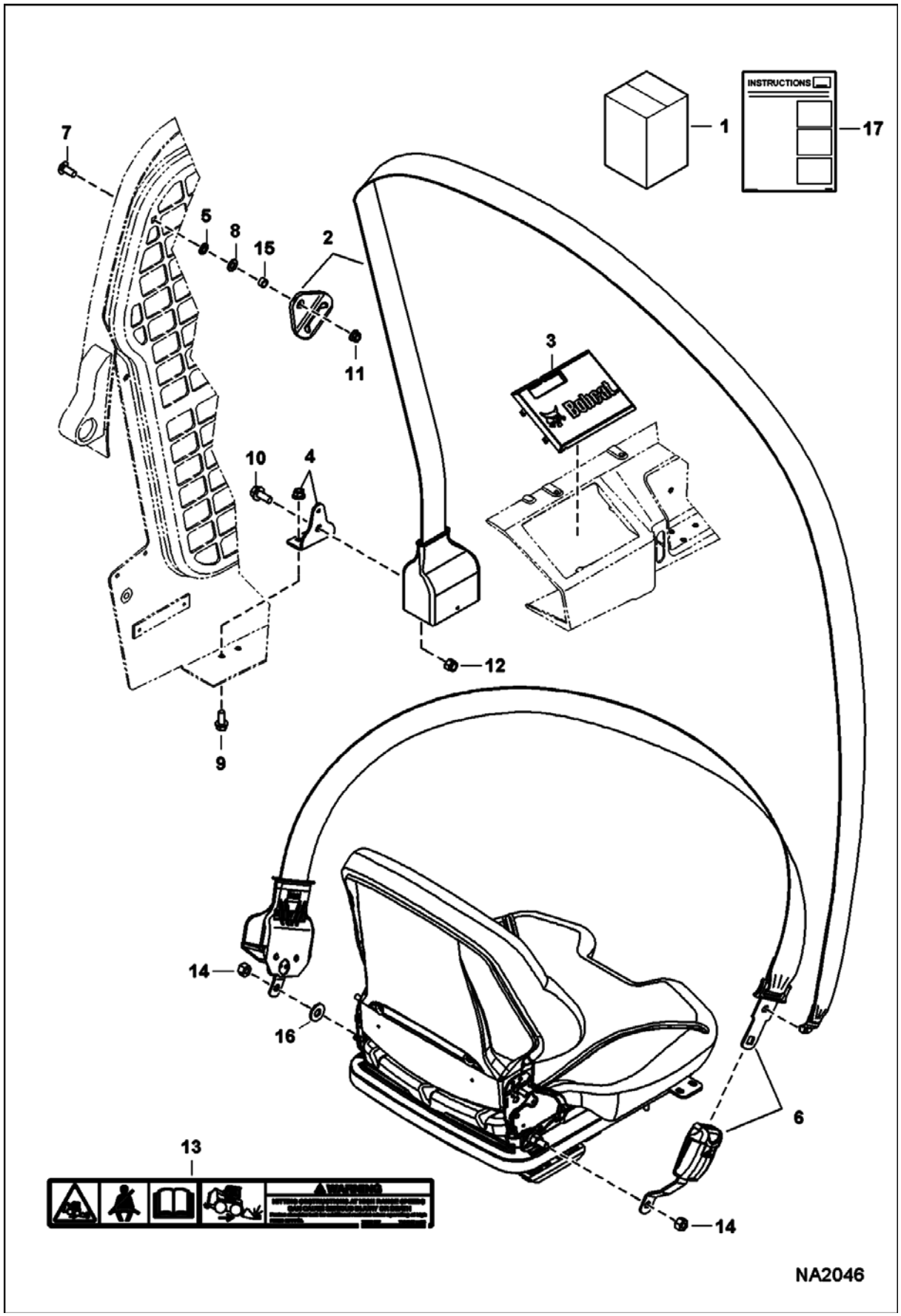

SEAT BELT - 3" (Cont'd)
(Three Point Retractable)

Ref No	Part Number	Description	Remarks	Serial Number	Qty
1	7169480	KIT, BELT SEAT 3"	Ref. 2-17		1
2	7152322	BELT, SEAT 2"			1
3	7152323	COVER, RETRACTOR			1
4	7152324	BRACKET, BELT SEAT 3PT			1
5	6674264	RETAINER NUT			1
6	7168172	BELT, SEAT 3"			1
7	10C616	BOLT 10			1
8	29E6	WASHER			1
9	43C612	BOLT			2
10	31C716	SCREW			1
11	53D6	NUT			1
12	59D7	NUT			1
13	7184346	DECAL WARNING	Was 7168303 [A]		1
14	86D7	NUT	not in kit		2
15	7184341	BUSHING			1
16	25E18	WASHER			1
17	6987248	INSTRUCTIONS			1

SEAT BELT KIT - 3"

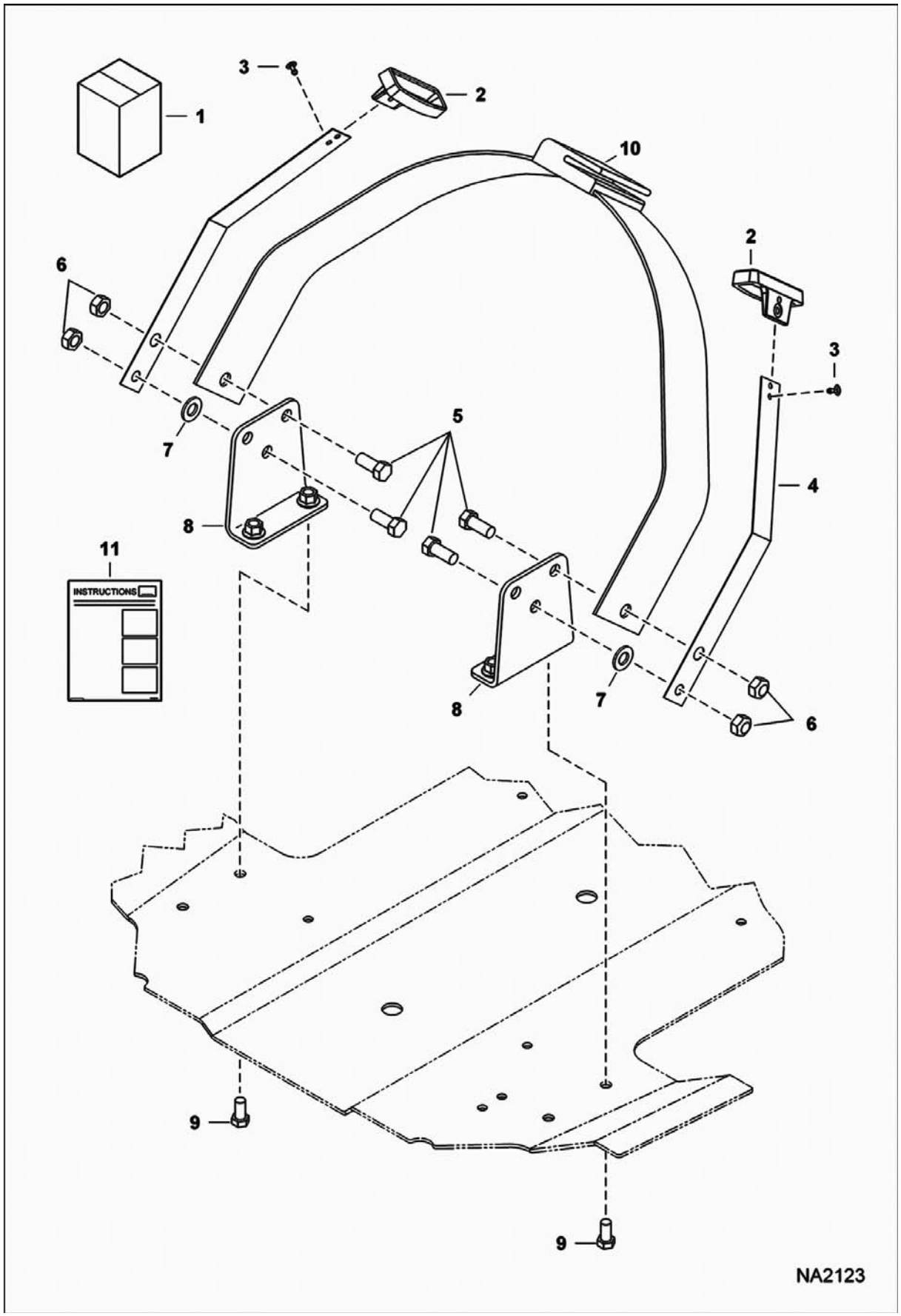

SEAT BELT KIT - 3" (Cont'd)

Ref No	Part Number	Description	Remarks	Serial Number	Qty
1	6703640	KIT	Ref. 2-4, 10 & 11		1
2	6703703	GUIDE			2
3	6512797	RIVET			4
4	6711908	SPRING PLATE			2
5	17C716	BOLT	not in kit		4
6	85D7	NUT	not in kit		4
7	25E19	WASHER	not in kit		2
8	7173159	BRACKET, BELT SEAT	not in kit		2
9	43C612	BOLT	not in kit		4
10	6659999	BELT, SEAT			1
11	6989663	INSTRUCTIONS			1

SEAT KIT
(Suspension) (80 mm)

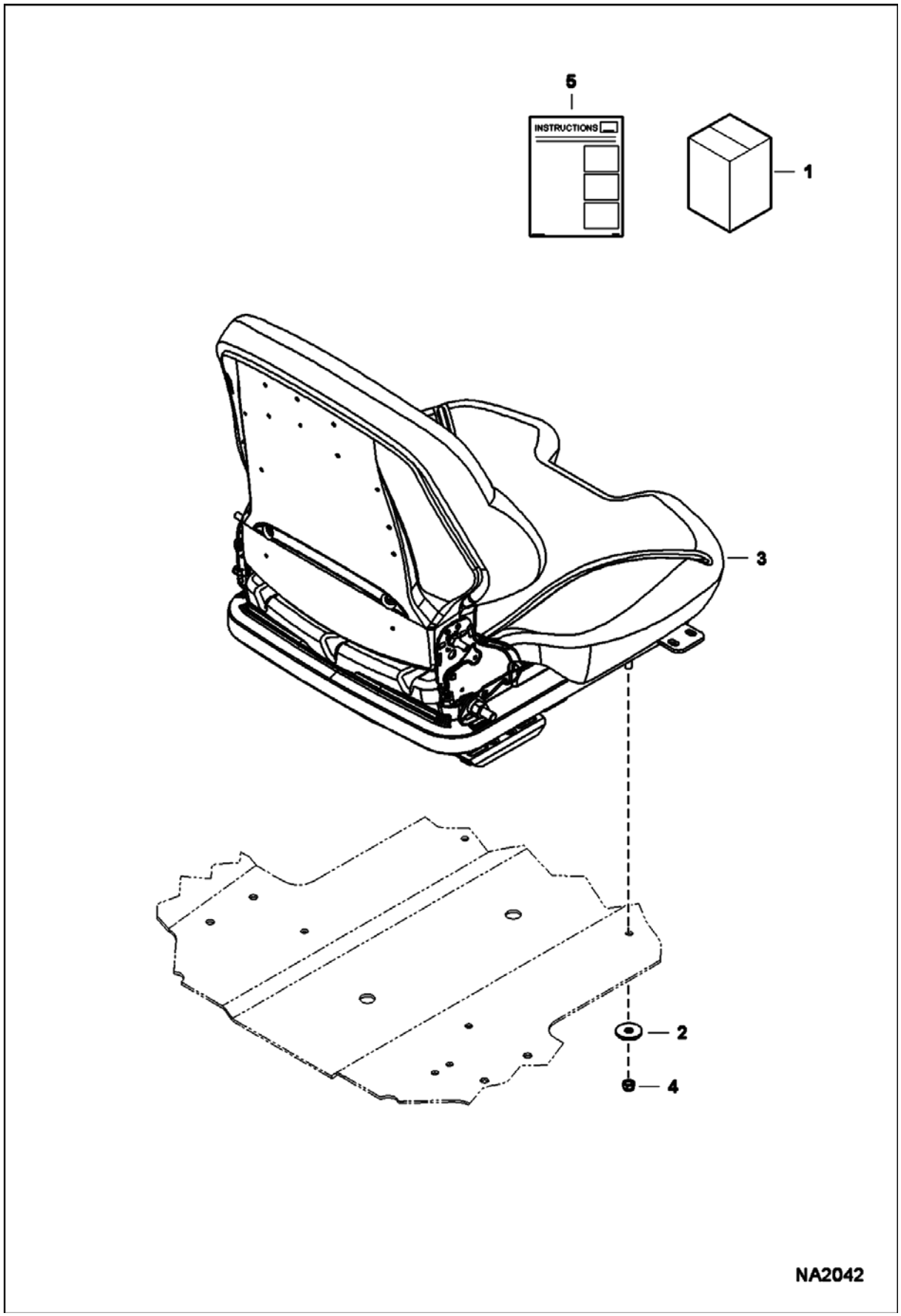

SEAT KIT (Cont'd)
(Suspension) (80 mm)

Ref No	Part Number	Description	Remarks	Serial Number	Qty
1	7128524	KIT, SEAT 80MM SUSPENSION	Ref. 2-5		1
2	619021	WASHER, 5			4
3	7149786	SEAT, SUSPENSION	See Illustration SEAT - 80 mm/ NA2430 Was 7182357 [A]		1
4	59D5	NUT 5			4
5	6987249	INSTRUCTIONS			1

SEAT KIT - 80 mm
(Suspension) (Air)

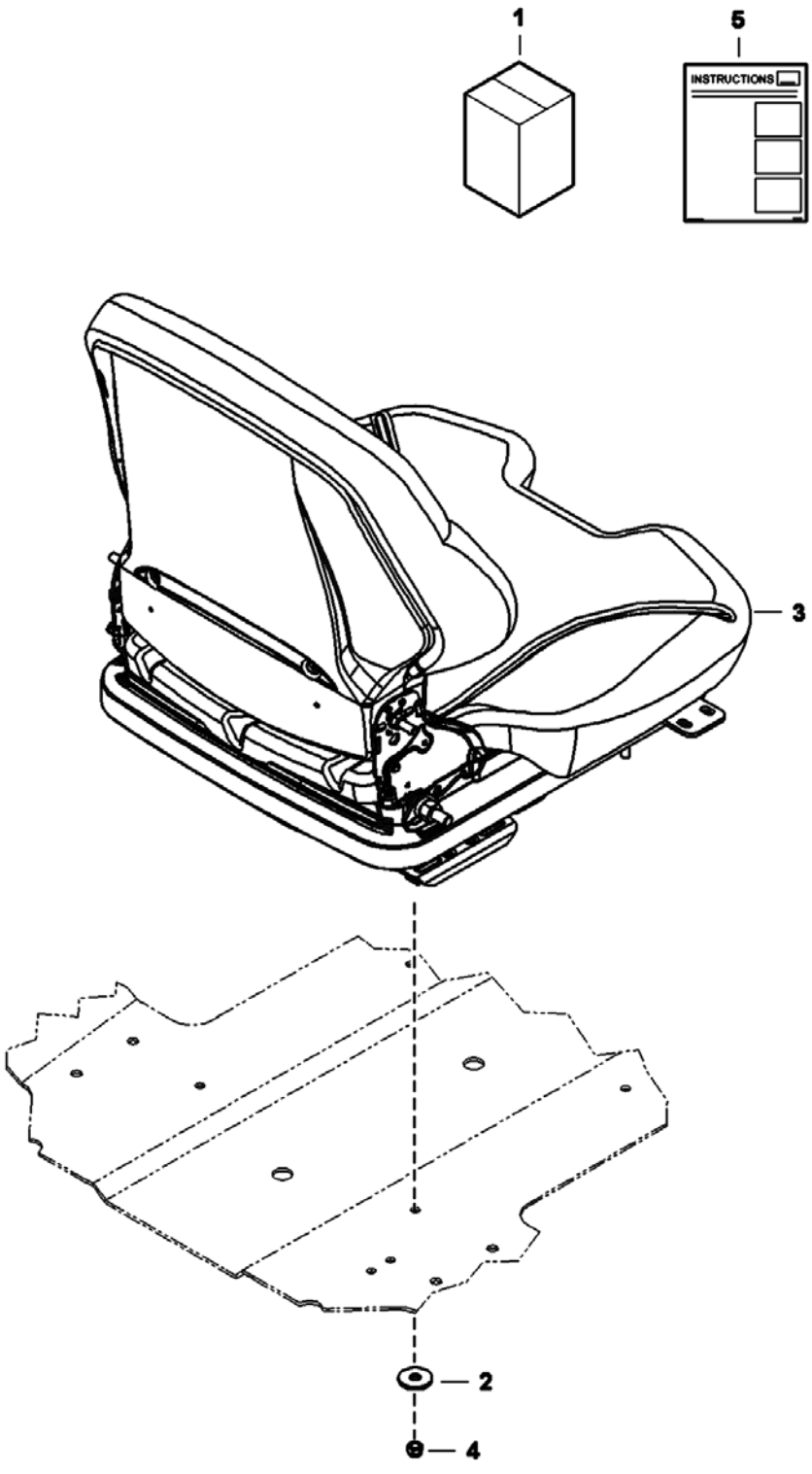

SEAT KIT - 80 mm (Cont'd)
(Suspension) (Air)

Ref No	Part Number	Description	Remarks	Serial Number	Qty
1	7183366	KIT, SEAT OPERATOR SUSPENSION AIR	Ref. 2-5		1
2	619021	WASHER, 5			4
3	7167603	SEAT, OPERATOR SUSPENSION AIR	See Illustration SEAT/ NA2429 Was 7182356 [A]		1
4	59D5	NUT 5			4
5	6987249	INSTRUCTIONS			1

SEAT - 80 mm
(Suspension)

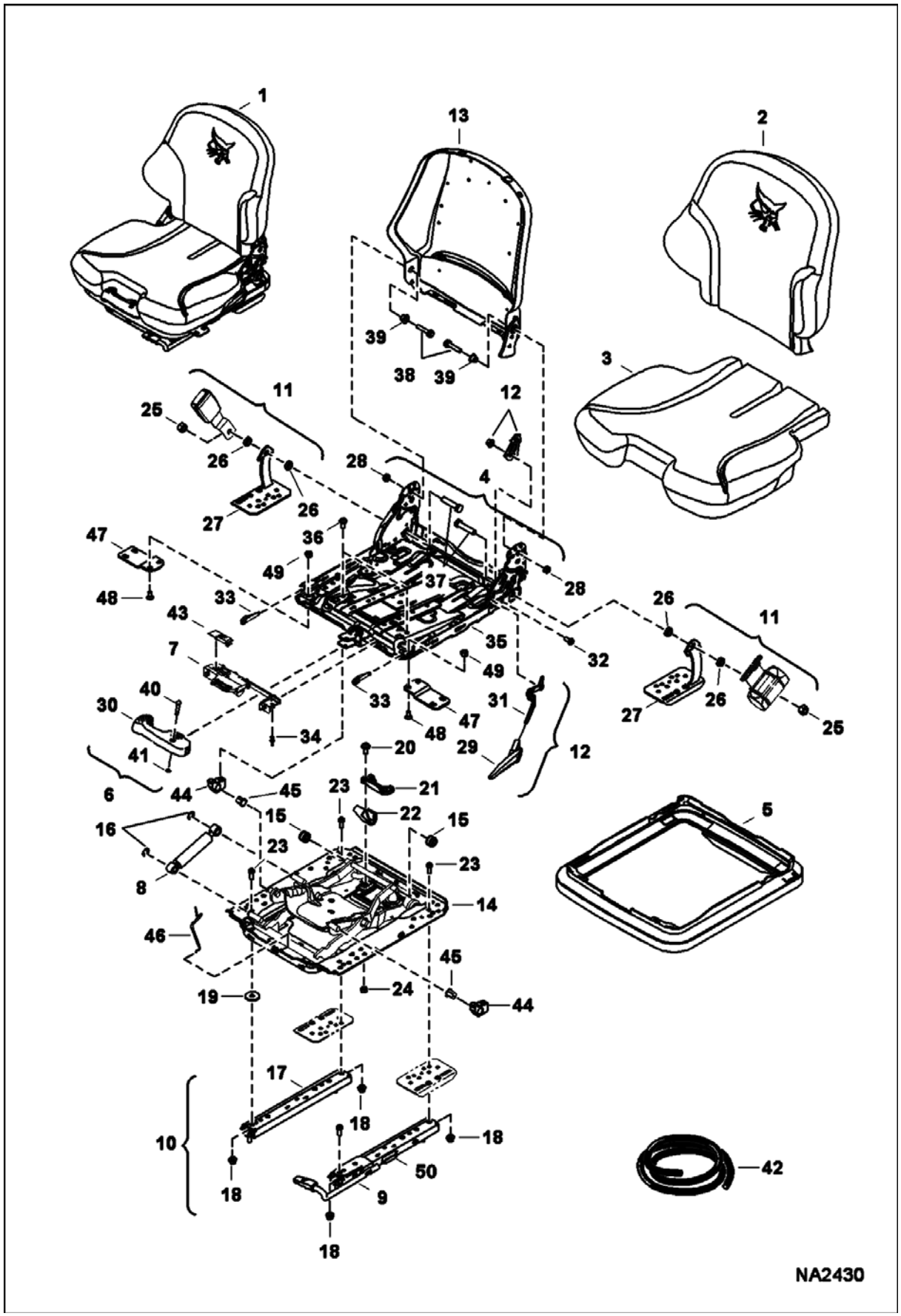

SEAT - 80 mm (Cont'd)
(Suspension)

Ref No	Part Number	Description	Remarks	Serial Number	Qty
1		SEAT, SUSPENSION	NAP - W/SJC - Ref. 2-49 - Order 7149786 seat and Also Order Ref. 47 or reuse from existing seat - Was 7182357		1
1	7149786	SEAT, SUSPENSION	W/manual controls - Ref. 2-10, 12-24 & 28-46		1
2	7010335	KIT, CUSHION SEAT VINYL	backrest		1
3	7010336	KIT, CUSHION SEAT VINYL			1
4	7010338	KIT, BACKREST SEAT	Ref. 28, 38 & 39 - parts for backrest		1
5	7010339	BELLOW			1
6	7010340	KIT, ADJUSTER SEAT	Ref. 30, 40 & 41		1
7	7010341	KIT, HOUSING SEAT	W/Ref. 34 & 43		1
8	7010342	KIT, ABSORBER SHOCK SEAT			1
9	7010343	KIT, LEVER ADJUSTING	assy.		1
10	7010344	KIT, RAIL SLIDE SEAT	Ref. 17, 18 & 50 - handle assy not included		1
11	7010345	KIT, TETHER SEAT BELT	Ref. 25-27 - not included		1
12	7010346	KIT, BACKREST SEAT	Ref. 29 & 31		1
13		BACKREST, SEAT	NSS		1
14		FRAME, SUSPENSION	NSS		1
15		BUSHING	NSS - white plastic		2
16		CLIP	NSS		2
17		WASHER	NSS - Order Ref. 12		2
17		RAIL, SLIDE	NSS		1
18		NUT	NSS		4
19		WASHER	NSS		4
20		SCREW	NSS		2
21		STOP, TETHER	NSS		1
22		TETHER, BELT	NSS		1
23		BOLT	NSS		4
24		NUT	NSS		4
25	86D7	NUT			2
26		SPACER	NSS - Order Ref 11		4
27		PLATE, TETHER	NSS - Order Ref. 11		2
28		NUT	NSS - Order Ref. 4		2
29		HANDLE, ADJUSTMENT	NSS - grey - Order Ref. 12		1
30		HANDLE, ADJUSTMENT	NSS - Order Ref. 6		1
31		LEVER	NSS - Order Ref. 12		1
32		SCREW	NSS - Order Ref. 12		1
33		CLIP	NSS - plastic		2
34		RIVOT	NSS - Order Ref. 7		2
35		FRAME	NSS - Order Ref. 1		2
36		BOLT	NSS		1
37		BOLT	NSS - Order Ref. 4		2
38		BOLT	NSS		2

SEAT - 80 mm (Cont'd)
(Suspension)

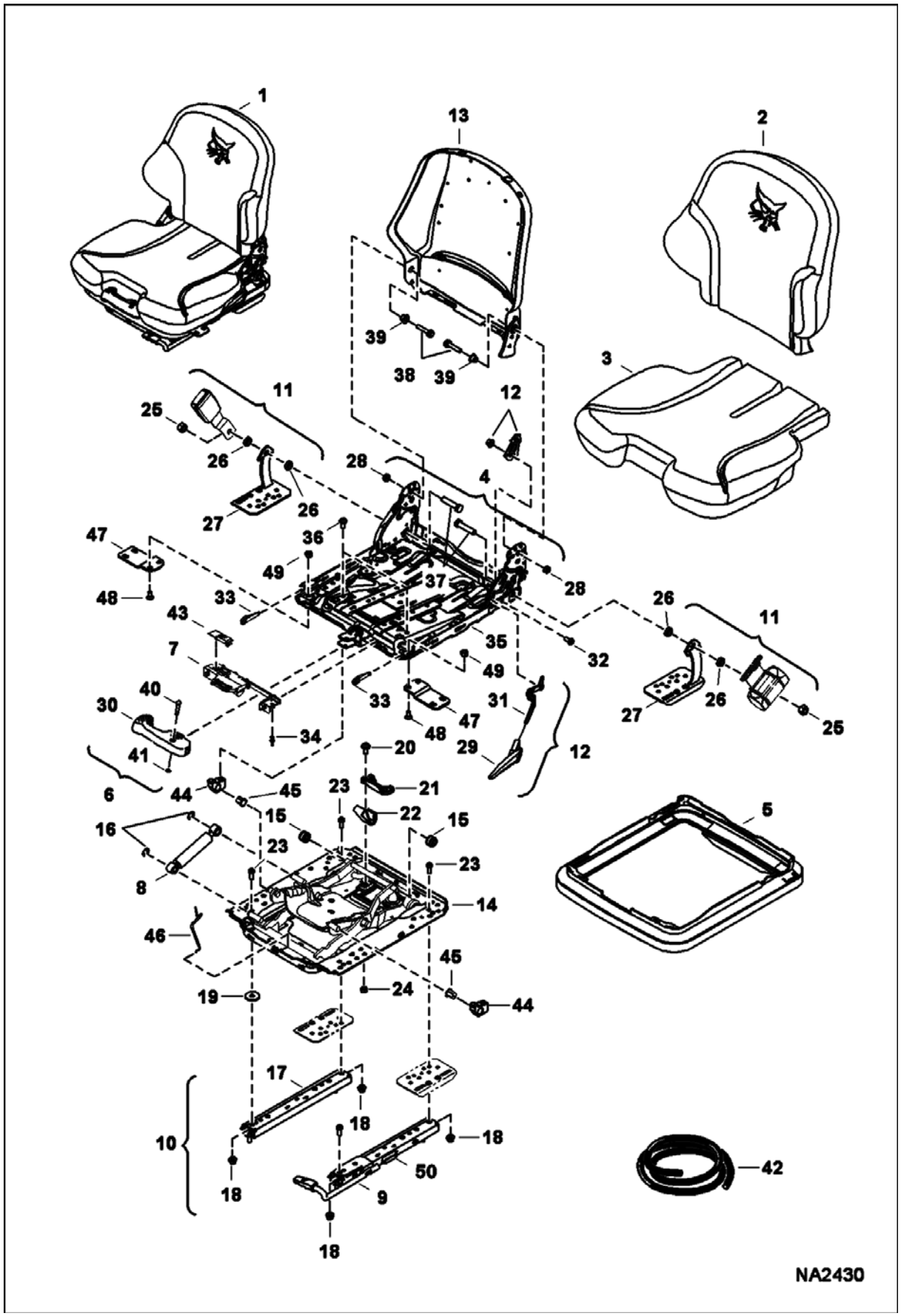

SEAT - 80 mm (Cont'd)
(Suspension)

Ref No	Part Number	Description	Remarks	Serial Number	Qty
39		BUSHINGS	NSS		2
40		BOLT	NSS - Order Ref. 6		1
41		CLIP	NSS - Order Ref. 6		1
42		SEAL	NSS		1
43		COVER	NSS - Order Ref. 7		1
44		BUSHING	NSS		2
45		BLOCK, STOP	NSS - silver		2
46		LEVER, GAUGE	NSS - white plastic		1
47	7011183	KIT, BRACKET SEAT	W/Ref. 48 & 49		2
48		BOLT	NSS - Order Ref. 47		4
49		NUT	NSS - Order Ref. 47		4
50		RAIL, SLIDE	NSS - Order Ref. 10		1

SEAT
(Suspension) (Air)

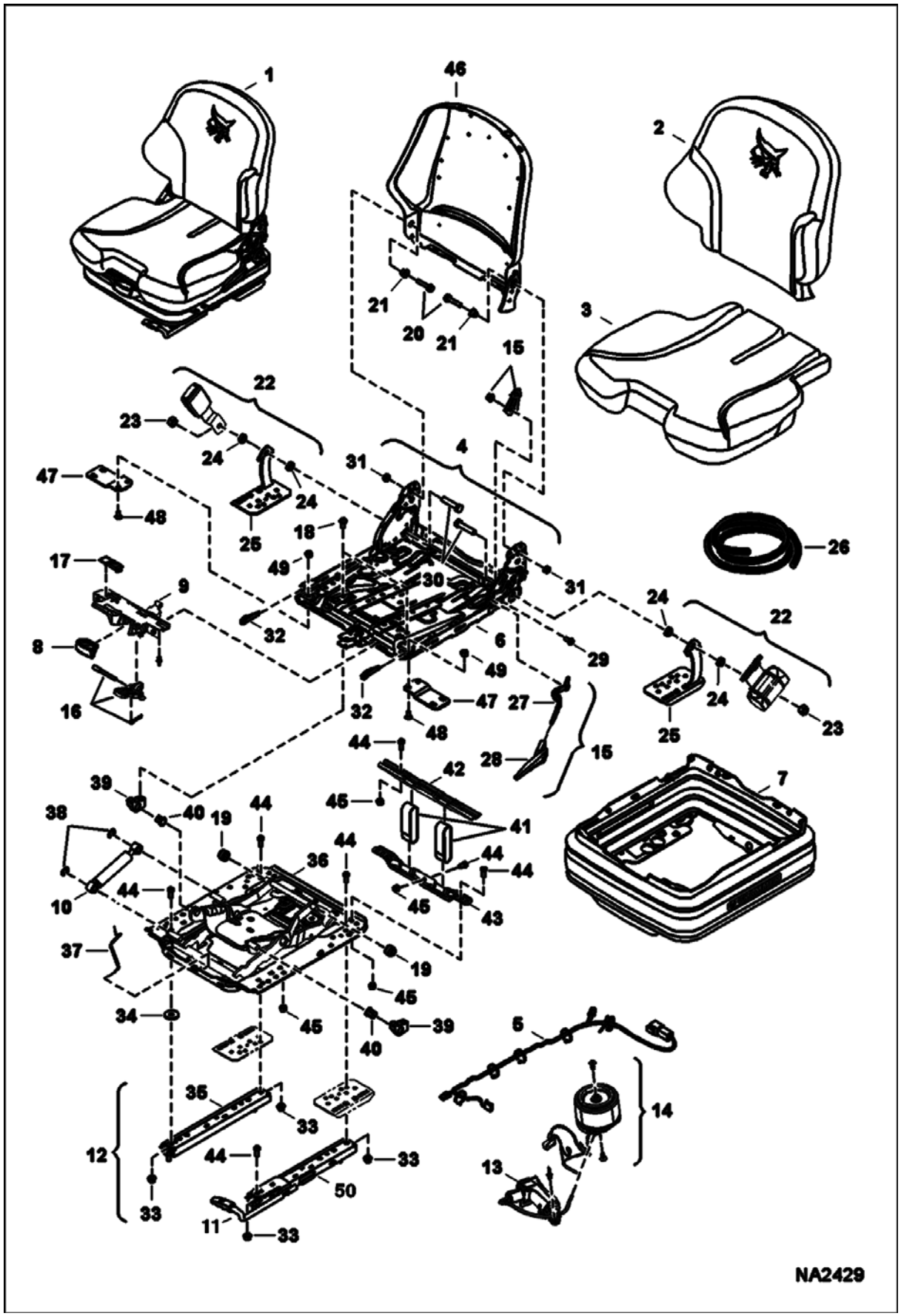

Ref No	Part Number	Description	Remarks	Serial Number	Qty
1		SEAT, OPERATOR SUSPENSION AIR	NAP - Ref. 2-49 - Order 7167603 seat and Also Order Ref. 46 or reuse from existing seat - Was 7182356		1
1	7167603	SEAT, OPERATOR SUSPENSION AIR	Ref. 2-22 & 26-45		1
2	7010335	KIT, CUSHION SEAT VINYL	backrest		1
3	7010336	KIT, CUSHION SEAT VINYL			1
4	7010338	KIT, BACKREST SEAT	Ref. 20, 21 & 31		1
5	7011175	KIT, SWITCH SEAT			1
6		FRAME	NSS		1
7	7011176	BELLOWS, SEAT CPL			1
8	7011177	HANDLE, ADJUSTING SEAT			1
9	7011178	HOUSING			1
10	7010342	KIT, ABSORBER SHOCK SEAT	W/Ref. 38		1
11	7010343	KIT, LEVER ADJUSTING	assy		1
12	7011179	KIT, RAIL SLIDE SEAT	Ref. 33, 35 & 50 - handle not included		1
13	7011180	COMPRESSOR, AIR SEAT			1
14	7011181	KIT, SPRING AIR			1
15	7010346	KIT, BACKREST SEAT	Ref. 27, 28 & 29		1
16	7011182	KIT, LEVER			1
17		COVER	NSS - Order Ref. 9		1
18		BOLT	NSS		2
19		BUSHING	NSS - white plastic		2
20		BOLT	NSS		2
21		BUSHING	NSS		2
22	7010345	KIT, TETHER SEAT BELT	Ref. 23-25 - not included		1
23		NUT	NSS - Order Ref 22		2
24		BUSHING	NSS - Order Ref 22		4
25		PLATE, TETHER	NSS - Order Ref 22		2
26		SEAL	NSS		1
27		LEVER	NSS - Order Ref 15		1
28		HANDLE	NSS - grey - Order Ref. 15		1
29		BOLT	NSS - Order Ref 15		2
30		BOLT	NSS - Order Ref 4		2
31		NUT	NSS - Order Ref 4		2
32		CLIP	NSS - plastic		2
33		NUT	NSS		4
34		WASHER	NSS		4
35		RAIL, SLIDE	NSS - Order Ref 12		1
36		FRAME, SUSPENSION	NSS - Order Ref 1		1

SEAT (Cont'd)
(Suspension) (Air)

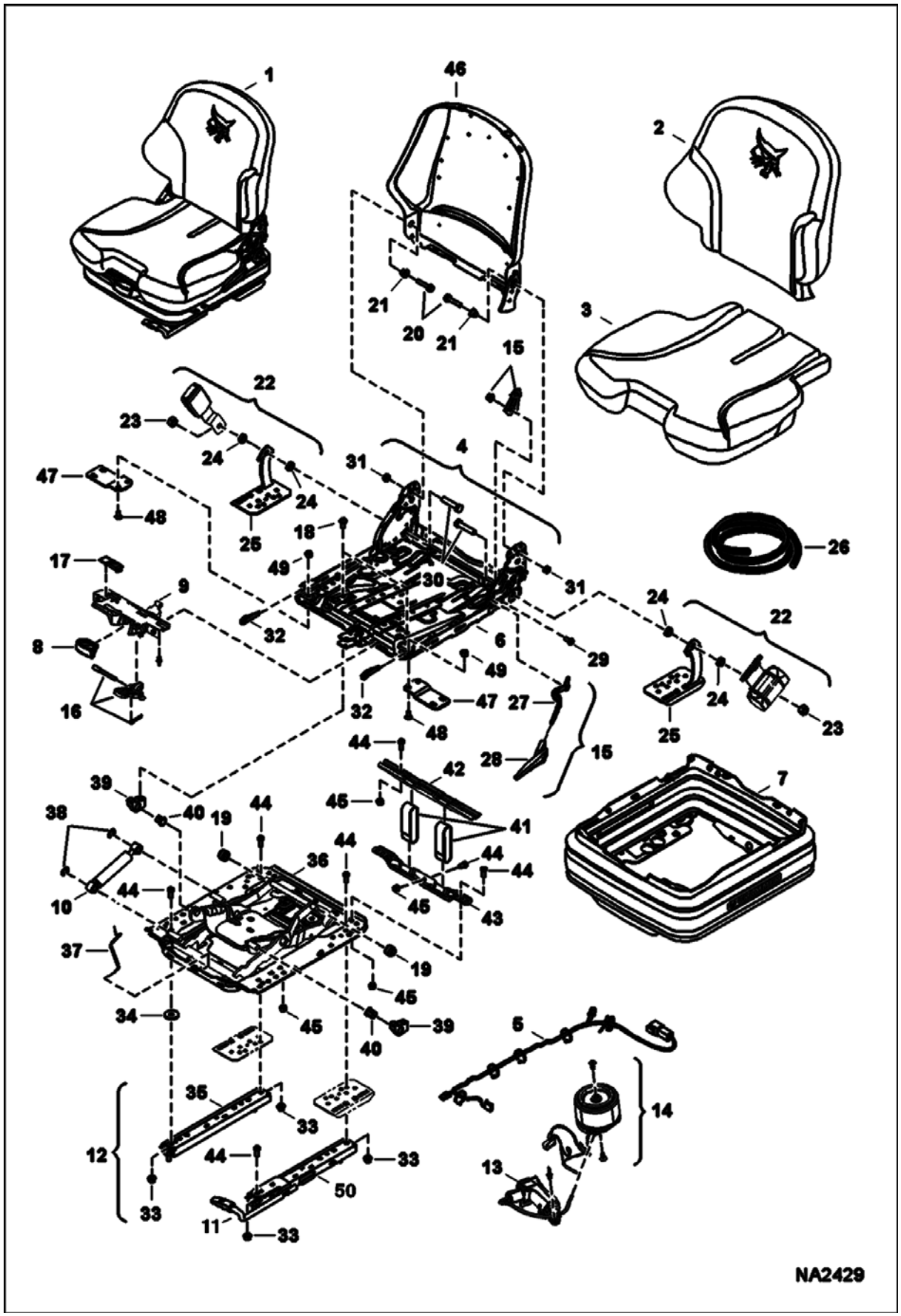

SEAT (Cont'd)
(Suspension) (Air)

Ref No	Part Number	Description	Remarks	Serial Number	Qty
37		LEVER, GAUGE	NSS - white plastic		1
38		CLIP	NSS - Order Ref 10		2
39		BLOCK, STOP	NSS		2
40		BUSHING	NSS		2
41		STRAP, TETHER	NSS - white		2
42		MOUNT	NSS		1
43		MOUNT	NSS		1
44		BOLT	NSS		9
45		NUT	NSS		5
46		MOLDING, SEAT	NSS		1
47	7011183	KIT, BRACKET SEAT	W/Ref. 48 & 49		2
48		BOLT	NSS - Order Ref. 47		4
49		NUT	NSS - Order Ref. 47		4
50		RAIL, SLIDE	NSS - Order Ref. 12		1

SOUND/NOISE REDUCTION KIT
(Manual Controls)
(S/N A3NV11001 - 12931, 12933 - 13048, 13050 - 13098, A3NW11001 - 11248)

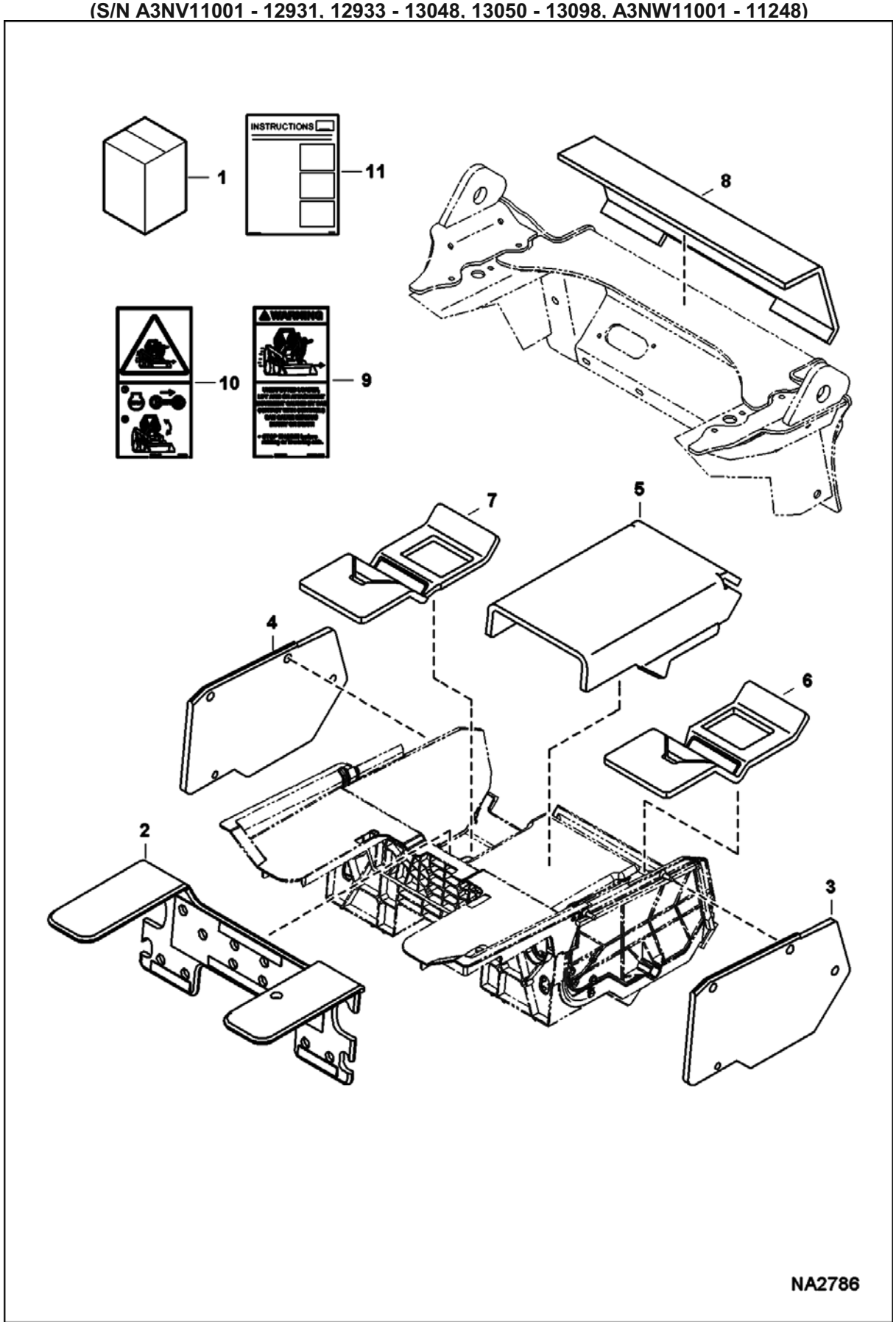

SOUND/NOISE REDUCTION KIT (Cont'd)
(Manual Controls)
(S/N A3NV11001 - 12931, 12933 - 13048, 13050 - 13098, A3NW11001 - 11248)

Ref No	Part Number	Description	Remarks	Serial Number	Qty
1	7192147	KIT, SOUND/NOISE REDUCTION	Ref. 2-11		1
2	7173206	INSULATION, PAN SEAT	skid steer models		1
3	7192066	INSULATION	RH - panel		1
4	7192067	INSULATION, PANEL LH			1
5	7192068	INSULATION, FLOOR	skid steer models		1
6	7192069	INSULATION, FLOOR			1
7	7192070	INSULATION, FLOOR	LH		1
8	7192071	INSULATION, CROSSMEMBER			1
9	7168138	DECAL, WARNING			1
10	7168139	DECAL, WARNING	no-text		1
11	6989699	INSTRUCTIONS			1

SOUND/NOISE REDUCTION KIT
(Manual Controls)
(S/N A3NV12932, 13049, 13099 & Above, A3NW11249 & Above)

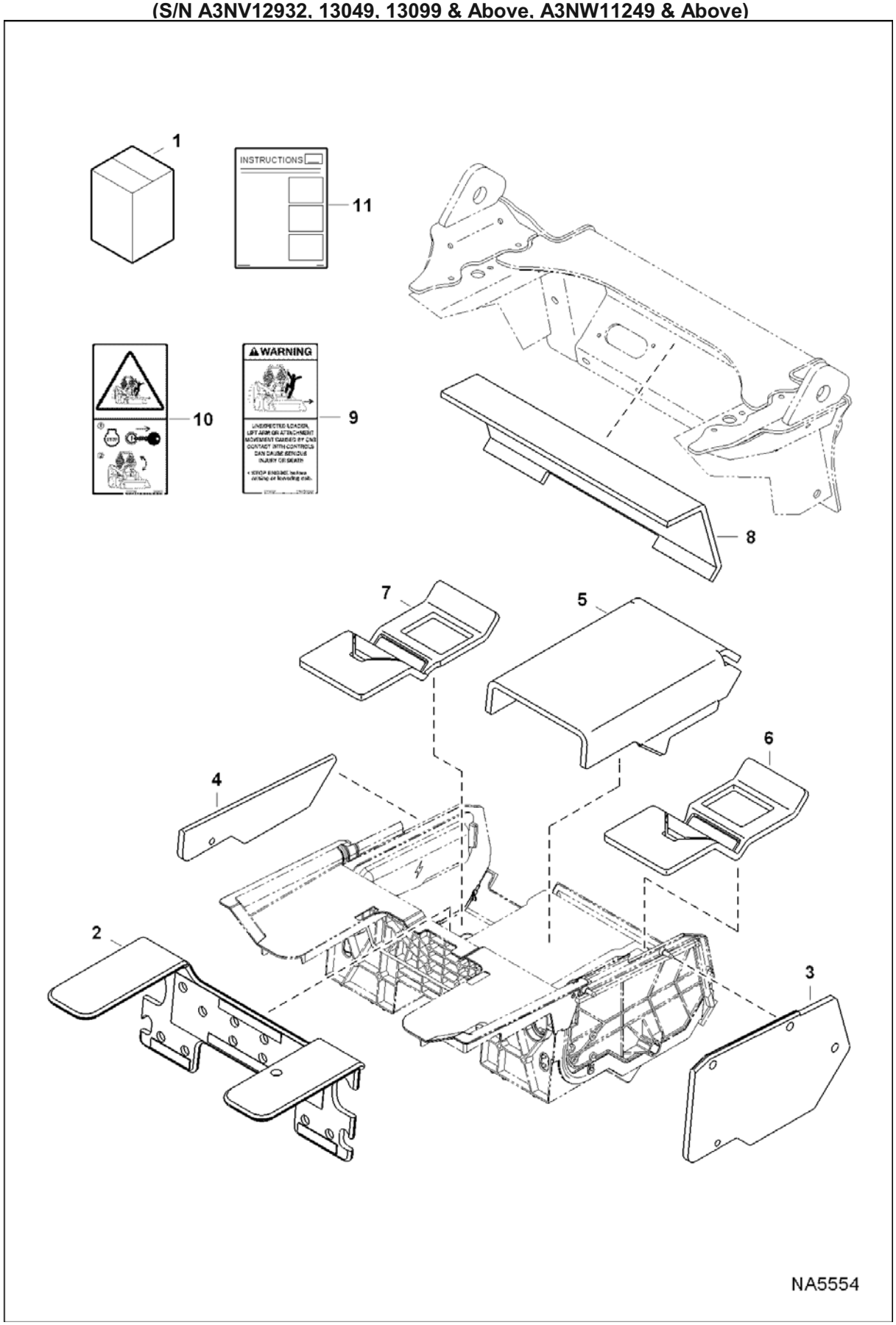

SOUND/NOISE REDUCTION KIT (Cont'd)
(Manual Controls)
(S/N A3NV12932, 13049, 13099 & Above, A3NW11249 & Above)

Ref No	Part Number	Description	Remarks	Serial Number	Qty
1		KIT, SOUND/NOISE REDUCTION	Ref. 2-11 - Was 7192147 [A]		1
2	7173206	INSULATION, PAN SEAT	skid steer models		1
3	7192066	INSULATION	RH - panel		1
4	7198494	INSULATION, PANEL LH			1
5	7192068	INSULATION, FLOOR	skid steer models		1
6	7192069	INSULATION, FLOOR			1
7	7192070	INSULATION, FLOOR	LH		1
8	7192071	INSULATION, CROSSMEMBER			1
9	7168138	DECAL, WARNING			1
10	7168139	DECAL, WARNING	no-text		1
11	6989699	INSTRUCTIONS			1

SOUND/NOISE REDUCTION KIT
(Selectable Joystick Controls)
(S/N A3NV11001 -12931, 12933 - 13048, 13050 - 13098, A3NW11001 - 11248)

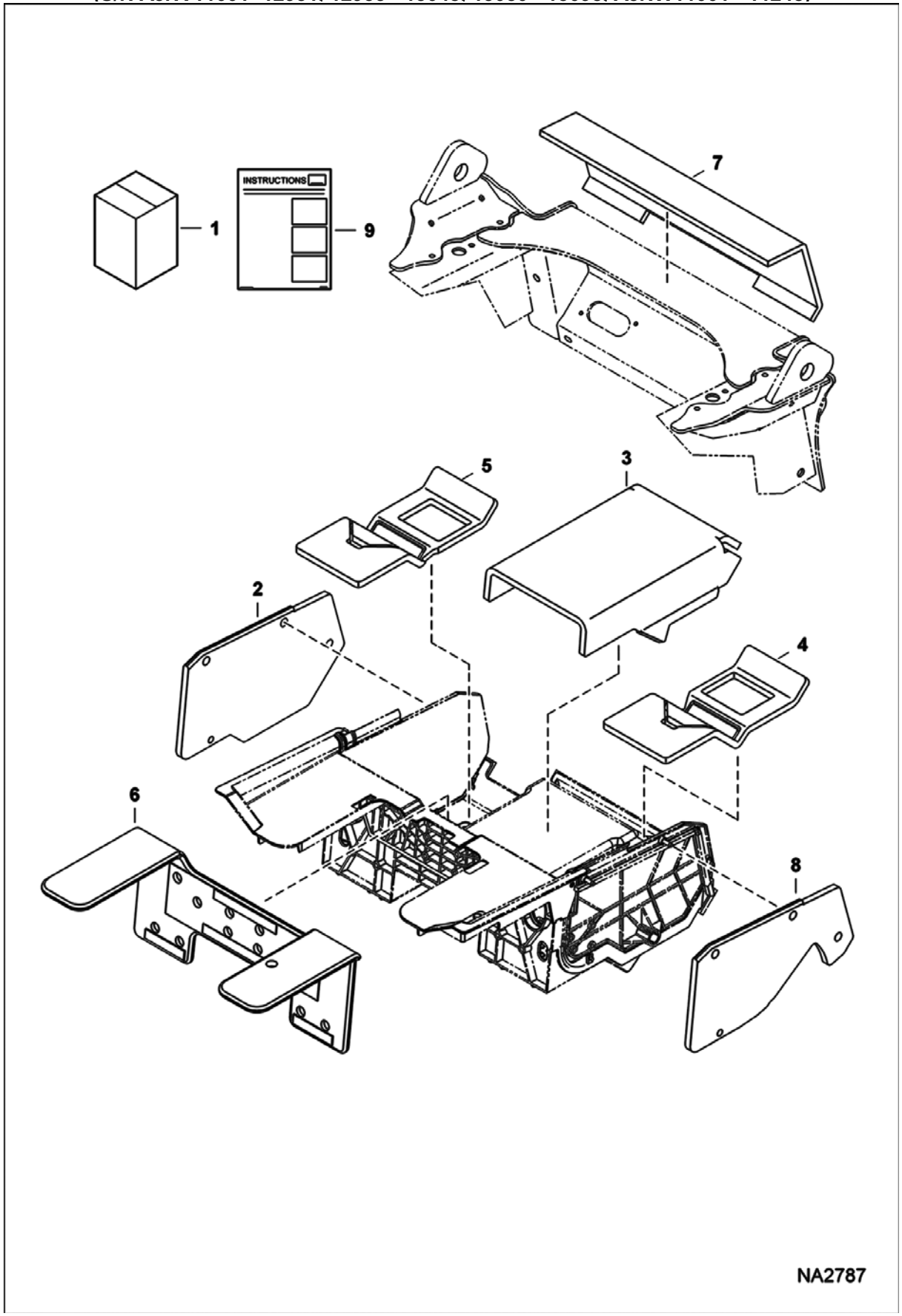

SOUND/NOISE REDUCTION KIT (Cont'd)
(Selectable Joystick Controls)
(S/N A3NV11001 -12931, 12933 - 13048, 13050 - 13098, A3NW11001 - 11248)

Ref No	Part Number	Description	Remarks	Serial Number	Qty
1	7192148	KIT, SOUND/NOISE REDUCTION	Ref. 2-9		1
2	7192067	INSULATION, PANEL LH			1
3	7192068	INSULATION, FLOOR	skid steer models		1
4	7192069	INSULATION, FLOOR	RH		1
5	7192070	INSULATION, FLOOR	LH		1
6	7192153	INSULATION	skid steer models		1
7	7192071	INSULATION, CROSSMEMBER			1
8	7192184	INSULATION	RH panel		1
9	6989699	INSTRUCTIONS			1

SOUND/NOISE REDUCTION KIT
(Selectable Joystick Controls)
(S/N A3NV12932, 13049, 13099 & Above, A3NW11249 & Above)

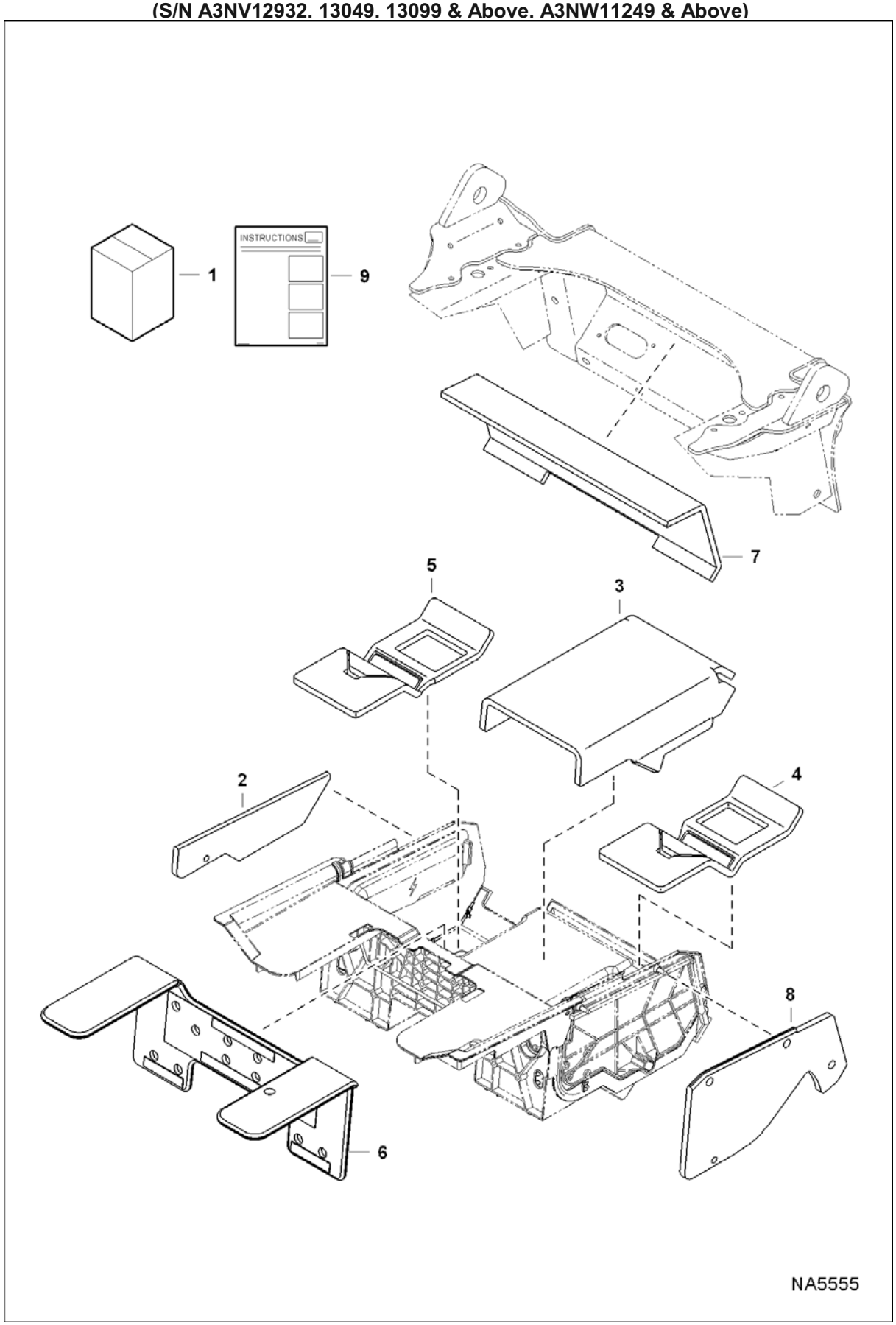

SOUND/NOISE REDUCTION KIT (Cont'd)
(Selectable Joystick Controls)
(S/N A3NV12932, 13049, 13099 & Above, A3NW11249 & Above)

Ref No	Part Number	Description	Remarks	Serial Number	Qty
1		KIT, SOUND/NOISE REDUCTION	Ref. 2-9 - Was 7192148 [A]		1
2	7198494	INSULATION, PANEL LH			1
3	7192068	INSULATION, FLOOR	skid steer models		1
4	7192069	INSULATION, FLOOR	RH		1
5	7192070	INSULATION, FLOOR	LH		1
6	7192153	INSULATION	skid steer models		1
7	7192071	INSULATION, CROSSMEMBER			1
8	7192184	INSULATION	RH panel		1
9	6989699	INSTRUCTIONS			1

SOUND/NOISE REDUCTION KIT

(S/N A3NV11001 -12931, 12933 - 13048, 13050 - 13098, A3NW11001 - 11248)

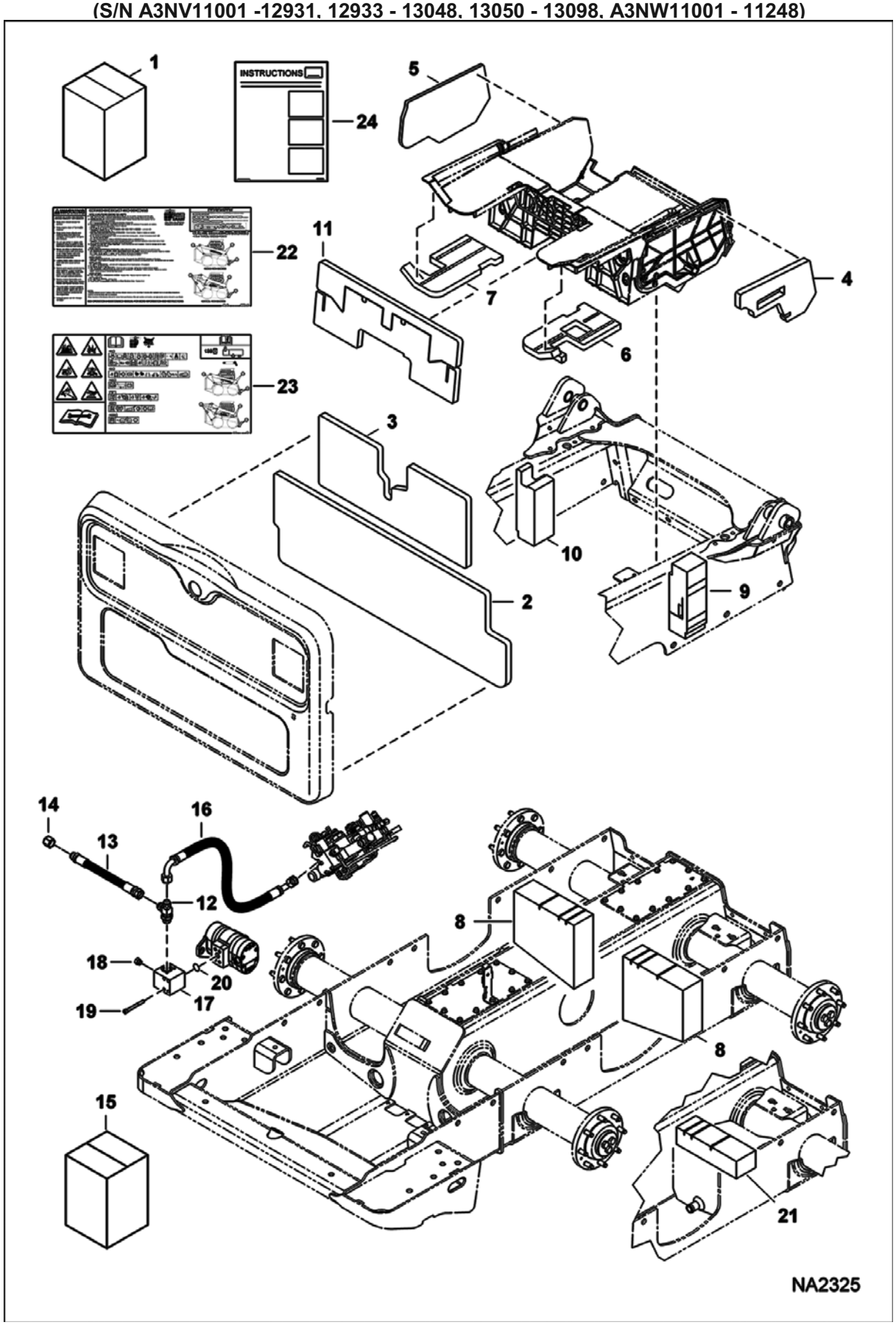

SOUND/NOISE REDUCTION KIT (Cont'd)

(S/N A3NV11001 -12931, 12933 - 13048, 13050 - 13098, A3NW11001 - 11248)

Ref No	Part Number	Description	Remarks	Serial Number	Qty
1	7172901	KIT, SOUND/NOISE REDUCTION	Ref. 2-14 & 16-24 - for loaders W/O Ref. 17 & not equipped W/Power Bob-Tach Also Order Ref. 15		1
2	7171192	INSULATION, DOOR REAR			1
3	7171194	INSULATION, DOOR REAR			1
4	7196358	INSULATION	RH - Was 7171217 [A]		1
5	7171218	INSULATION, PANEL LH			1
6	7171219	INSULATION, PANEL RH			1
7	7171220	INSULATION, PANEL LH			1
8	7171656	INSULATION, SIDE			2
9	7196318	INSULATION	Was 7172022 [A]		1
10	7172023	INSULATION, FENDER			1
11	7171184	INSULATION, CROSSMEMBER			1
12	21KB1212	FITTING, HYD TEE			1
13	7185232	HOSE, HYD	muffler - Was 7112348 [A]		1
14	36K8	CAP			1
15		KIT, MANIFOLD	NAP - not in kit - Order Ref. 16-20		1
16	7172235	HOSE, HYD ASSY			1
17	7171996	MANIFOLD, HYD ASSY			1
18	47K7	PLUG	Was 24K7 [B]		1
19	17C644	BOLT			4
20	55K214	O-RING			1
21	7180052	INSULATION, TRANS			1
22	7167998	DECAL, SERVICE			1
23	7168042	DECAL, SERVICE	no text - EMEA		1
24	6987338	INSTRUCTIONS			1

SOUND/NOISE REDUCTION KIT

(S/N A3NV12932, 13049, 13099 & Above, A3NW11249 & Above)

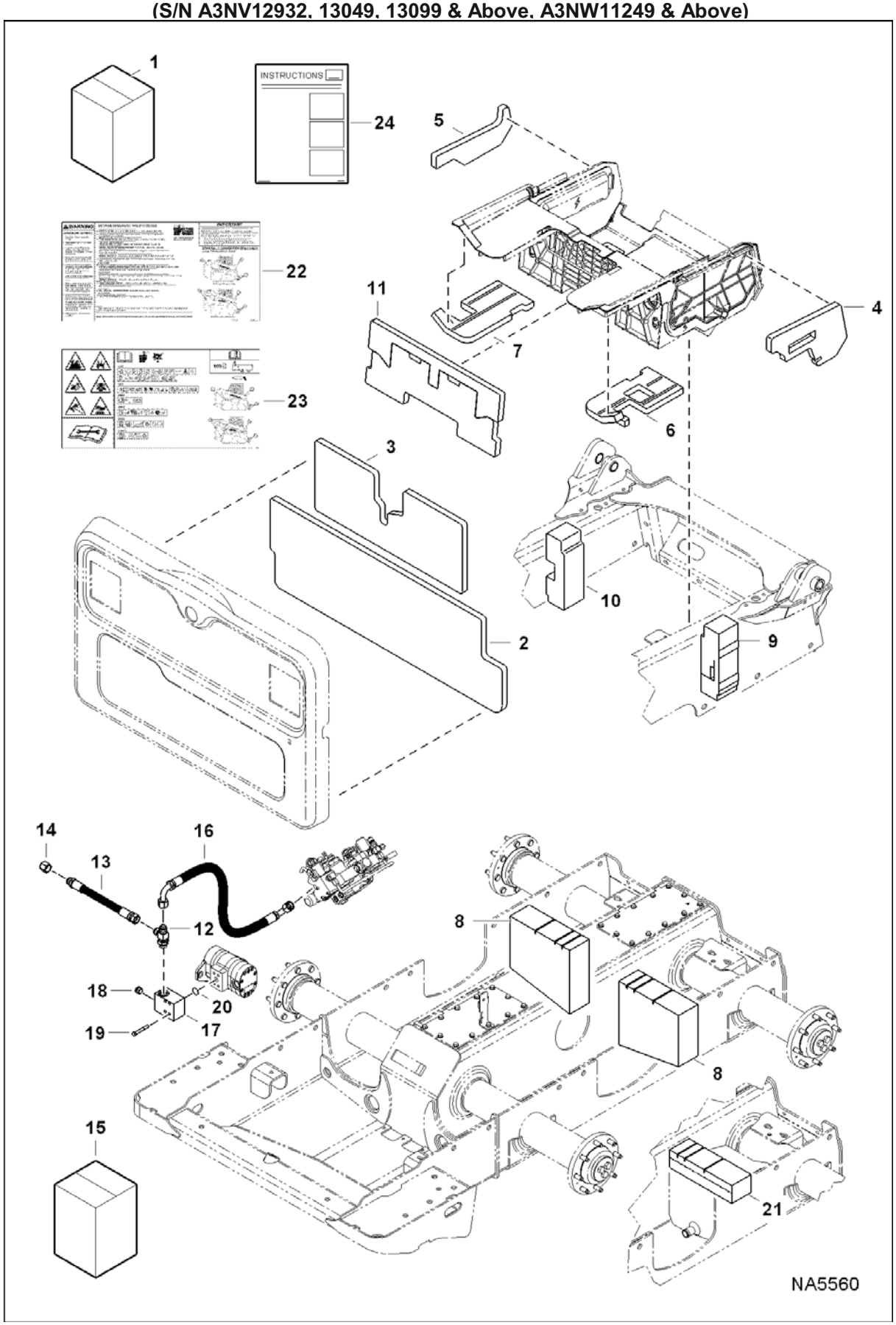

SOUND/NOISE REDUCTION KIT (Cont'd)

(S/N A3NV12932, 13049, 13099 & Above, A3NW11249 & Above)

Ref No	Part Number	Description	Remarks	Serial Number	Qty
1		KIT, SOUND/NOISE REDUCTION	Ref. 2-14 & 16-24 - for loaders W/O Ref. 17 & not equipped W/Power Bob-Tach Also Order Ref. 15		1
2	7171192	INSULATION, DOOR REAR			1
3	7171194	INSULATION, DOOR REAR			1
4	7196358	INSULATION	RH		1
5	7198481	INSULATION, PANEL LH			1
6	7171219	INSULATION, PANEL RH			1
7	7171220	INSULATION, PANEL LH			1
8	7171656	INSULATION, SIDE			2
9	7196318	INSULATION			1
10	7172023	INSULATION, FENDER			1
11	7171184	INSULATION, CROSSMEMBER			1
12	21KB1212	FITTING, HYD TEE			1
13	7185232	HOSE, HYD	muffler		1
14	36K8	CAP			1
15		KIT, MANIFOLD	NAP - not in kit - Order Ref. 16-20		1
16	7172235	HOSE, HYD ASSY			1
17	7171996	MANIFOLD, HYD ASSY			1
18	47K7	PLUG			1
19	17C644	BOLT			4
20	55K214	O-RING			1
21	7180052	INSULATION, TRANS			1
22	7167998	DECAL, SERVICE			1
23	7168042	DECAL, SERVICE	no text - EMEA		1
24	6987338	INSTRUCTIONS			1

SOUND/NOISE REDUCTION OPTION
(Bystander)

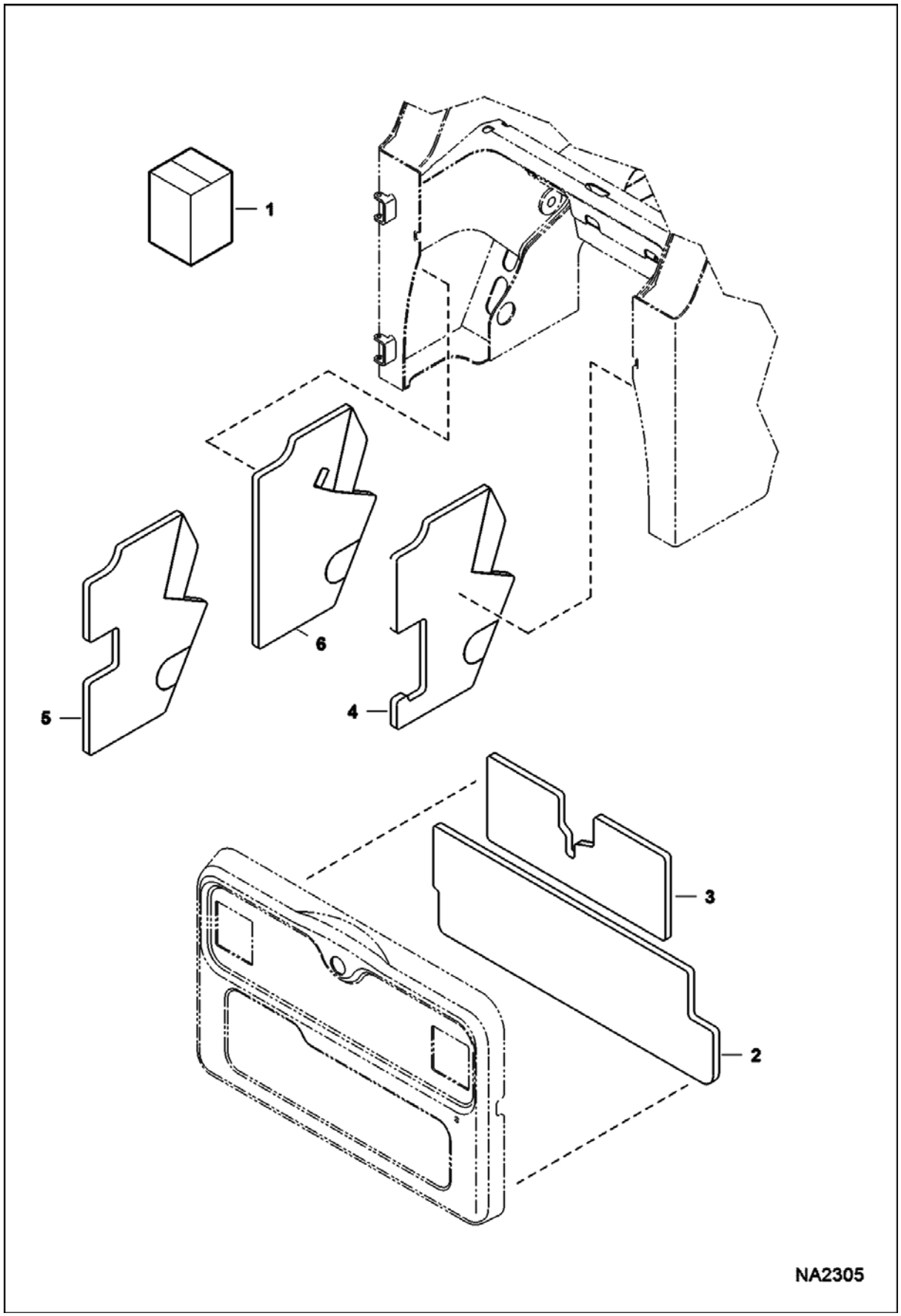

SOUND/NOISE REDUCTION OPTION (Cont'd)
(Bystander)

Ref No	Part Number	Description	Remarks	Serial Number	Qty
1		KIT, SOUND NOISE REDUCTION BYSTANDER	NAP - Order Components		1
2	7171192	INSULATION, DOOR REAR	lower		1
3	7171194	INSULATION, DOOR REAR	upper		1
4	7171215	INSULATION, UPRIGHT	RH		1
5		INSULATION, UPRIGHT	NAP - LH - Order Ref. 6 - Was 7171216		1
6	7204041	INSULATION, UPRIGHT	LH		1

SOUND/NOISE REDUCTION OPTION
(Operator Ear)

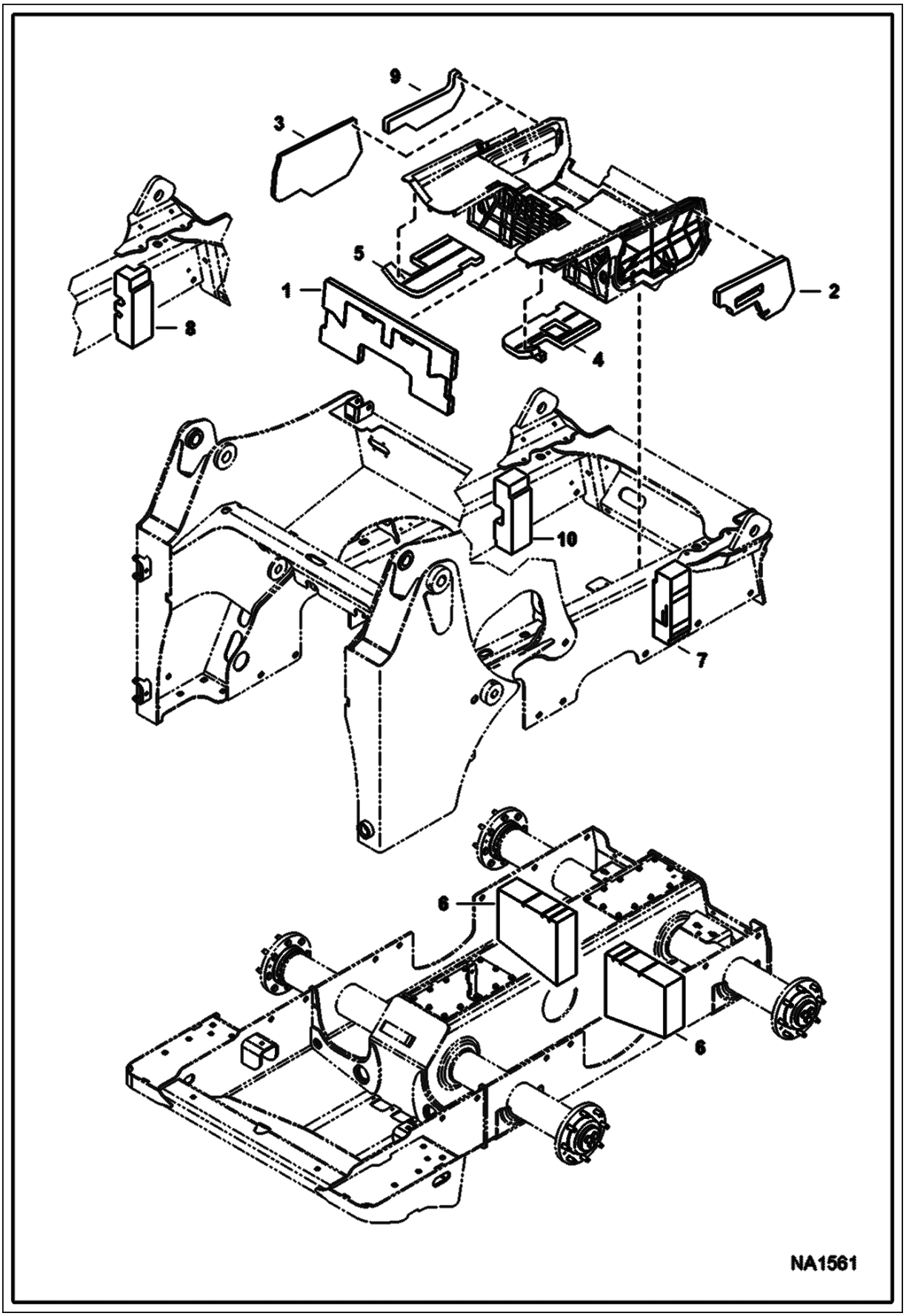

SOUND/NOISE REDUCTION OPTION (Cont'd)
(Operator Ear)

Ref No	Part Number	Description	Remarks	Serial Number	Qty
1	7171184	INSULATION, CROSSMEMBER			1
2	7196358	INSULATION	RH - Was 7171217 [A]		1
3	7171218	INSULATION, PANEL LH		& Bel	1
4	7171219	INSULATION, PANEL RH			1
5	7171220	INSULATION, PANEL LH			1
6	7171656	INSULATION, SIDE			2
7	7196318	INSULATION	Was 7172022 [A]		1
8	7172023	INSULATION, FENDER		& Bel	1
9	7198481	INSULATION, PANEL LH		& Abv	1
10	7202003	INSULATION, FENDER		& Abv	1

SPRING DAMPER KIT

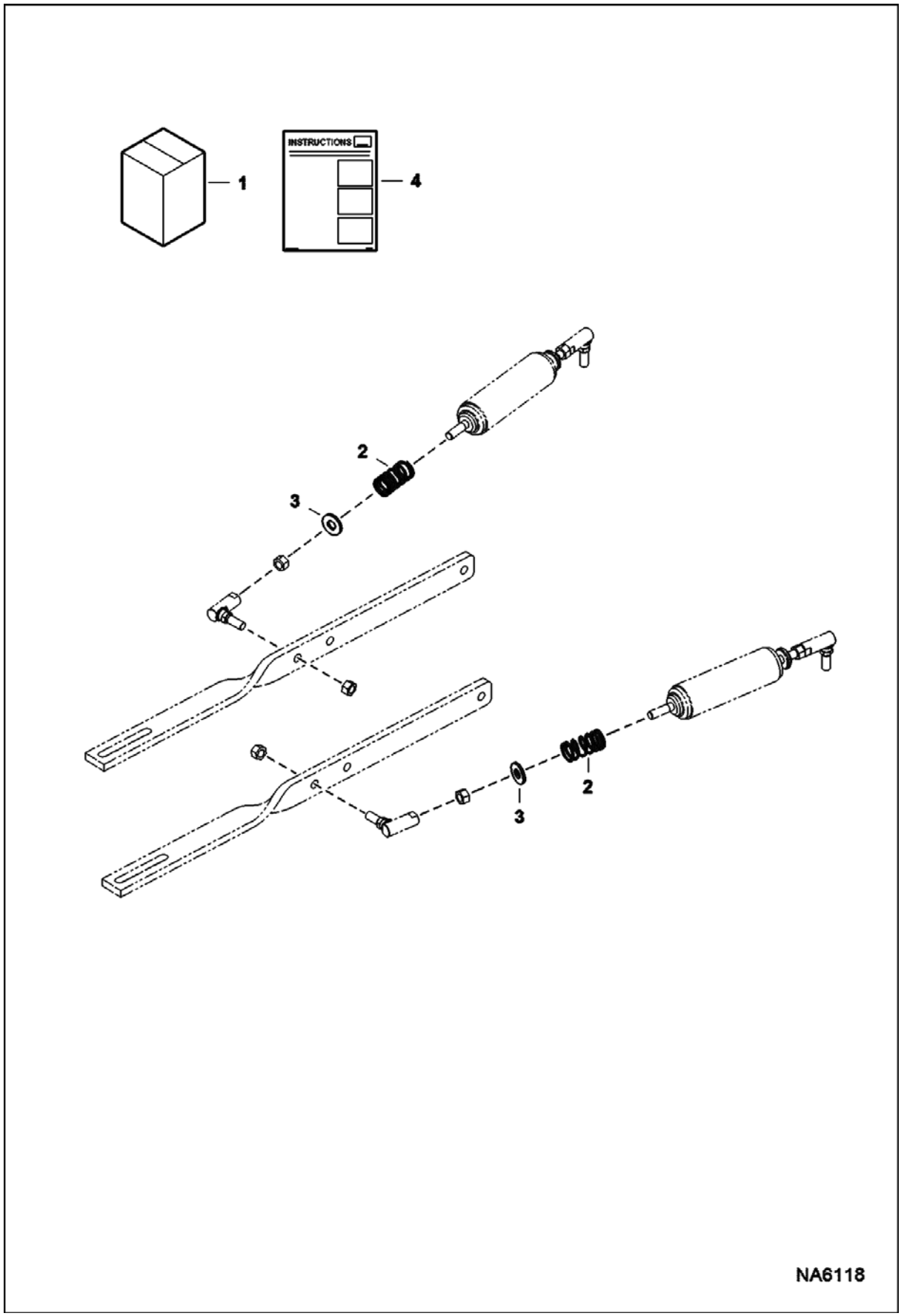

SPRING DAMPER KIT (Cont'd)

Ref No	Part Number	Description	Remarks	Serial Number	Qty
1	7204073	KIT, SPRING DAMPER	Ref. 2-4		1
2	6690564	SPRING, COMPRESSION			2
3	25E15	WASHER			2
4	6990138	INSTRUCTIONS			1

STEERING DAMPENER KIT
(Dual)

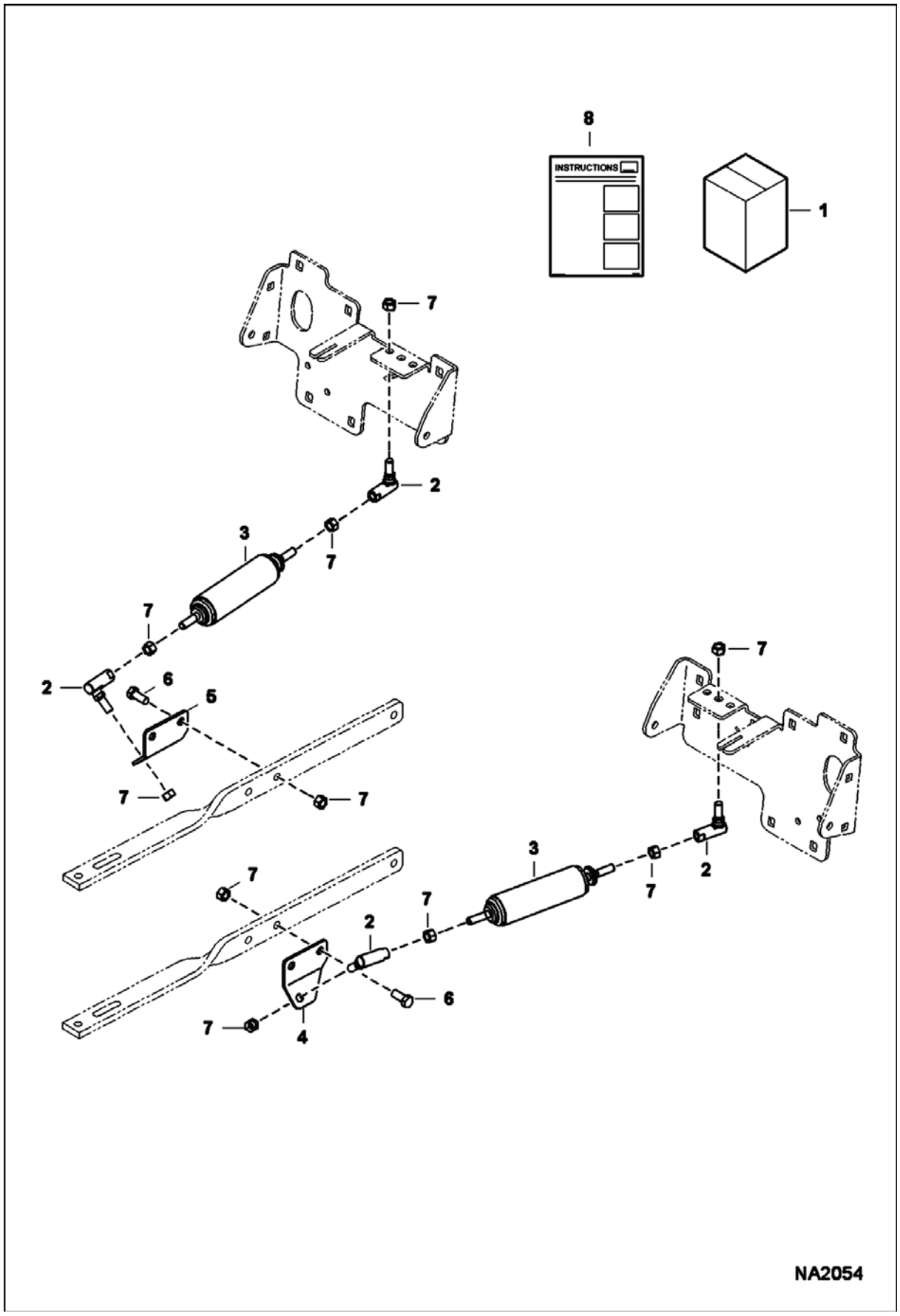

STEERING DAMPENER KIT (Cont'd)
(Dual)

Ref No	Part Number	Description	Remarks	Serial Number	Qty
1	7169070	KIT, DAMPER DUAL	Ref. 2-8		1
2	6599744	BALL JOINT			4
3	6649551	GAS SPRING			2
4	7153075	BRACKET, DAMPER			1
5	7153076	BRACKET, DAMPER			1
6	2C614	SCREW			2
7	62D6	NUT 5			10
8	6987251	INSTRUCTIONS			1

STROBE LIGHT

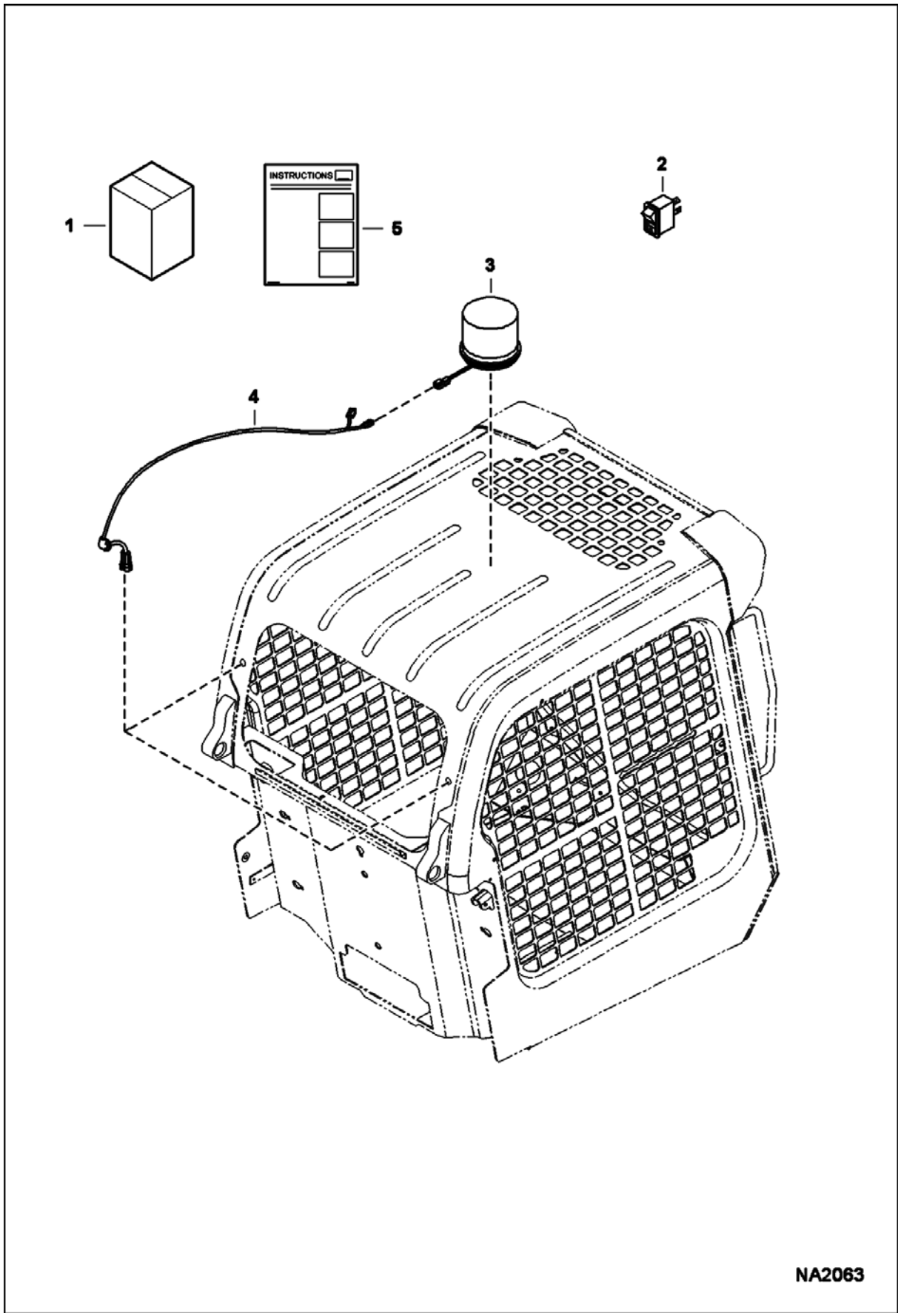

STROBE LIGHT (Cont'd)

Ref No	Part Number	Description	Remarks	Serial Number	Qty
1	7129301	KIT, STROBE LIGHT	Ref. 2-5 - If equipped with standard cab harness also order 7169130 Harness & 6987252 Instructions		1
2	6668816	SWITCH			1
3	6675522	STROBE			1
4	6718872	HARNESS			1
5	6987225	INSTRUCTIONS			1

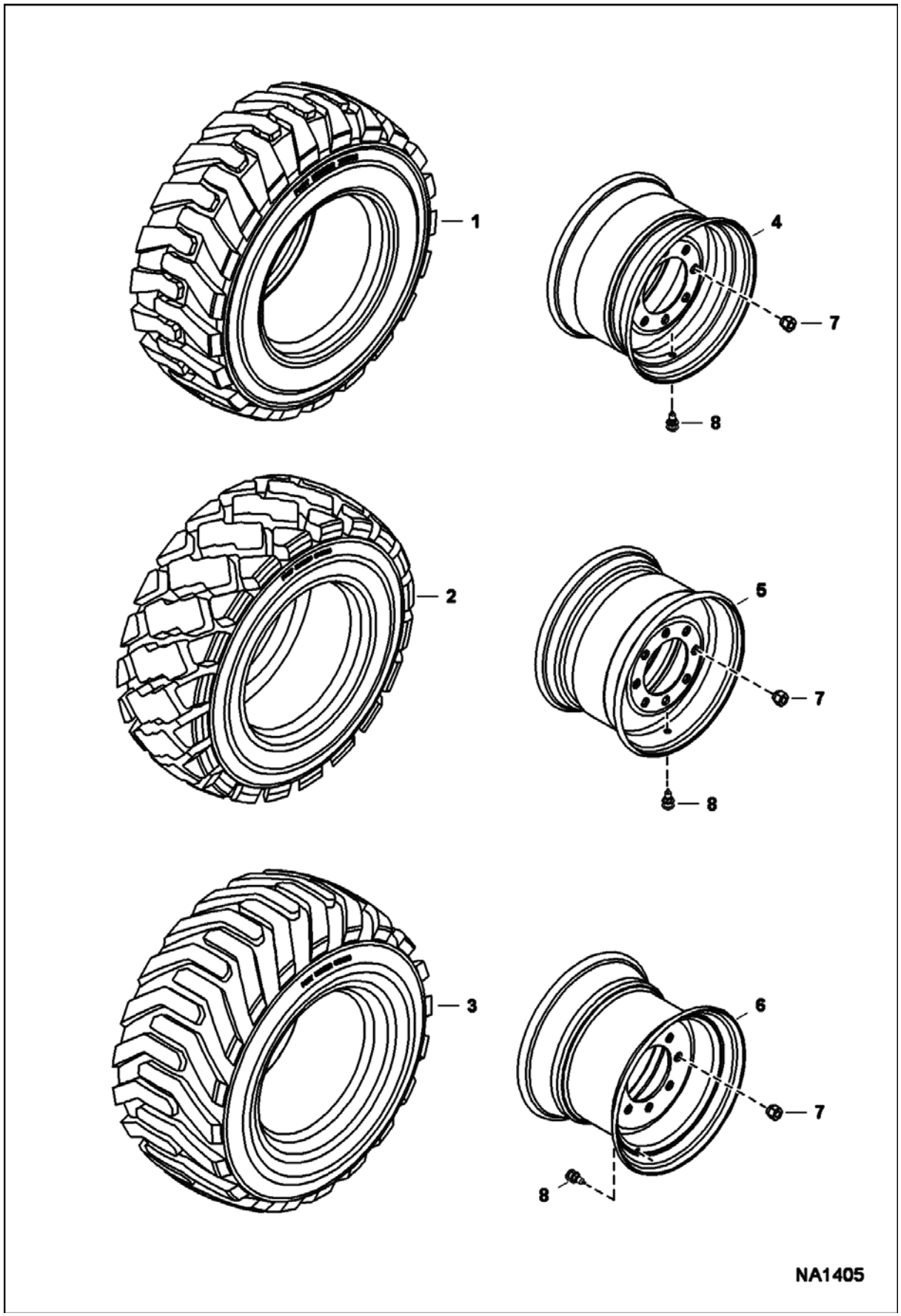
1
2
3
4
5
6
7
8
7
8
7
8
NA1405

Ref No	Part Number	Description	Remarks	Serial Number	Qty
1	6729901	TIRE	12 x 16.5 12 ply rating - Bobcat - heavy duty - Note p/n on tire		4
1	7101736	TIRE, HEAVY DUTY - 12X16.5 - 12 PLY	Bobcat		4
2	6730108	TIRE	12 x 16.5 12 ply rating - Bobcat - severe duty		4
3	6730109	TIRE	33 x 15.5 x 16.5 12 Ply - Hippo - Galaxy		4
4	6730772	RIM	See BTI197Idr - Use W/Ref. 1 - 72" wide		4
5	6733578	RIM	See BTI197Idr - Use W/Ref. 1 - offset - 68" wide		4
6	6732847	RIM	Use W/Ref. 2 - 74" wide		4
7	6564669	NUT	wheel		32
8	1614765	STEM	valve		4

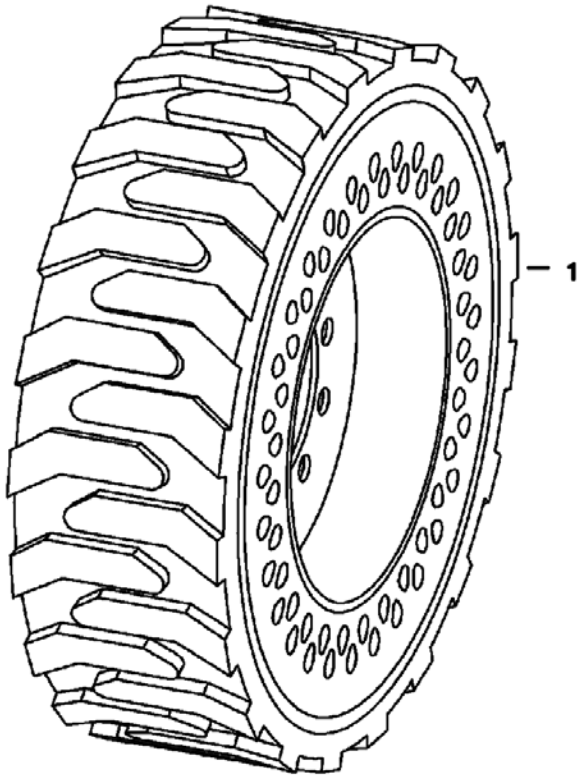

MS-2192

TIRES & RIMS (Cont'd)
(Solid Tire)

Ref No	Part Number	Description	Remarks	Serial Number	Qty
1	6903773	33X6X11 TWIN FLEX TIRE & WHEEL (LEFT)	LH - 12 x 16.5		2
1	6903774	33X6X11 TWIN FLEX TIRE & WHEEL (RIGHT)	RH - 12 x 16.5		2

WEIGHT KIT
(Front Axle)

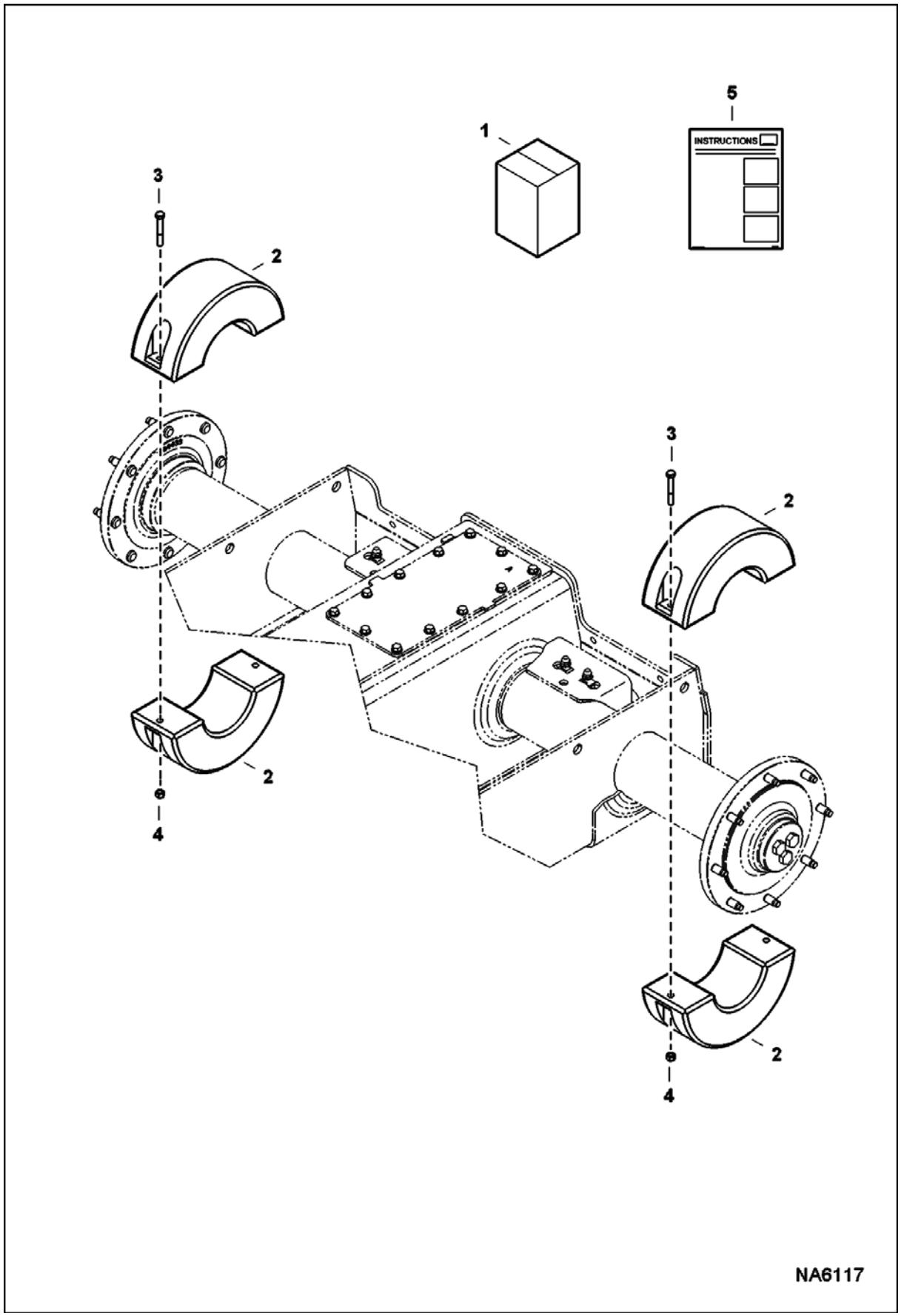

WEIGHT KIT (Cont'd)
(Front Axle)

Ref No	Part Number	Description	Remarks	Serial Number	Qty
1	7204279	KIT, AXLE WEIGHT	Ref. 2-5		1
2	6714362	COUNTERWEIGHT, AXLE REAR			4
3	17C640	BOLT 5			4
4	61D6	NUT 5			4
5	6990145	INSTRUCTIONS			1

WHITE DECAL KIT

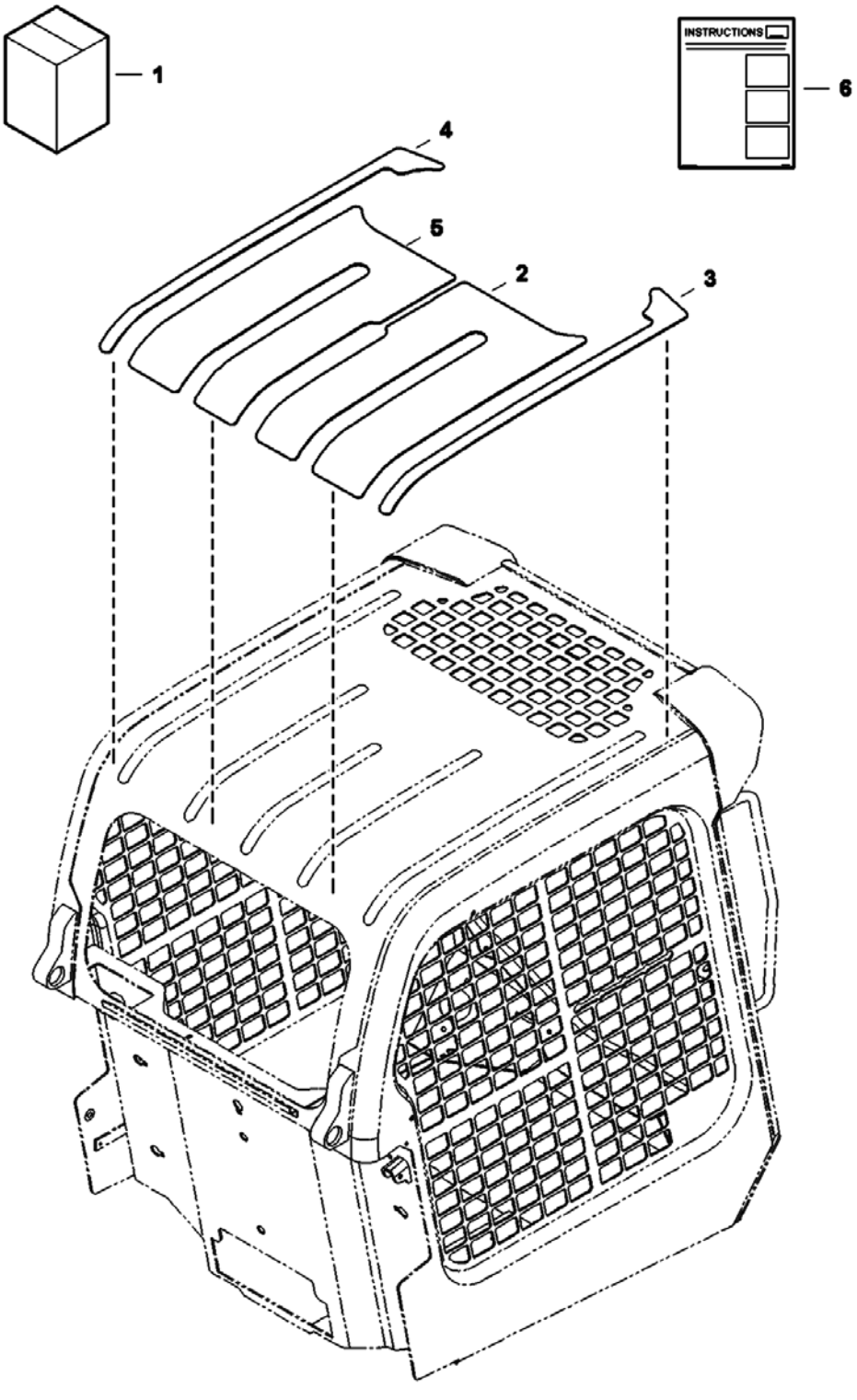

WHITE DECAL KIT (Cont'd)

Ref No	Part Number	Description	Remarks	Serial Number	Qty
1	7172903	KIT, DECAL WHITE	Ref. 2-6		1
2	7140927	DECAL			1
3	7141375	DECAL			1
4	7174328	DECAL			1
5	7174537	DECAL			1
6	6987349	INSTRUCTIONS			1

BULK ITEMS

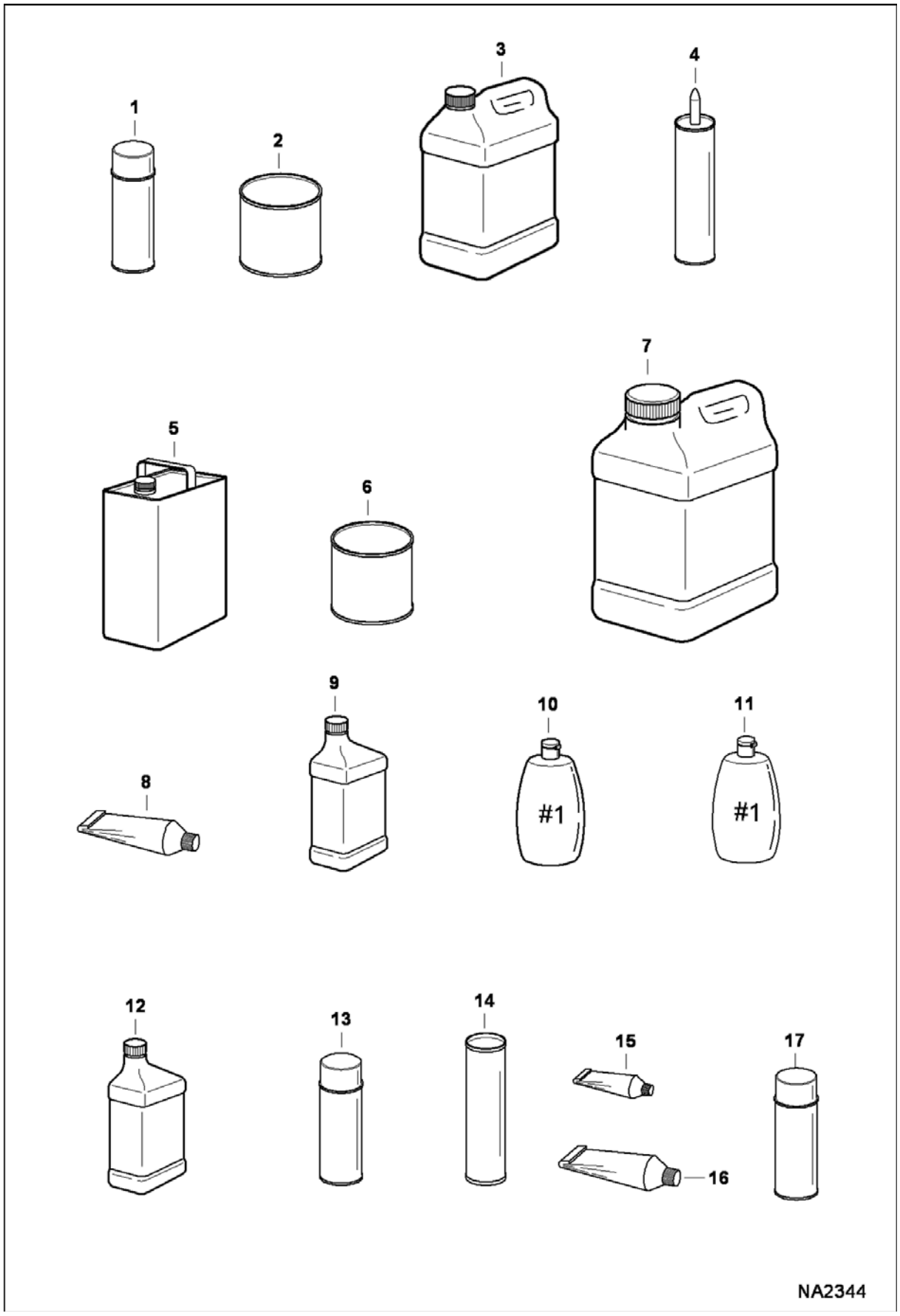

Ref No	Part Number	Description	Remarks	Serial Number	Qty
1	6902228	PAINT, ORANGE SPRAY CAN 6			x
1	6902229	PAINT, CHARCOAL SPRAY CAN 6			x
1	6902230	PAINT, WHITE SPRAY CAN 6			x
2	6902233	PAINT, ORANGE QT 6			x
2	6902234	PAINT, CHARCOAL QT 6			x
2	6902235	PAINT, WHITE QT 6			x
3	6983128	ANTI-FREEZE PG 53/47 PREMIX GAL 6			x
3	6983129	ANTI-FREEZE PG CONCENTRATE 6			x
4	6633583	SEALANT	tube - 300 ml		x
5		REDUCER	NAP - gallon		x
6	6902236	PRIMER QT. 6	quart		x
7	6903117	FLUID, OIL HYD 2.5 GAL 2			x
7	6903118	FLUID, OIL HYD 5 GAL			x
7	6903119	FLUID, OIL HYD 55 GAL			x
8	6599360	SEALANT	electrical - tube - 3 oz		x
8	6685372	SEALANT, GASKET LIQUID	tube - 20 oz		x
9	6903121	LUBE, GEAR 12			x
10	6630188	POLISH	window - #1 - 8 oz		x
11	6630189	POLISH	window - scratch remover - #2 - 8 oz		x
12	6903109	OIL 30W QT. 12			x
12	6903107	OIL, 10W30 QT. 12			x
12	6903105	OIL, 15W40 QT. 12			x
12	6903108	OIL, 10W30 GAL. 6			x
12	6903106	OIL, 15W40 GAL. 6			x
12	6903110	OIL, 30W GAL. 6			x
12	6903113	OIL, 15W40 2.5 GAL. 2			x
12	6903112	OIL, 10W30 2.5 GAL 2			x
12	6903111	OIL 30W 2.5 GAL 2			x
13	6675380	ADHESIVE	insulation - spray can		x
14	6903122	GREASE, MULTI PURPOSE #2 - 10			x
14		GREASE	NAP - 14.5 oz. cartridge - For fan idler bearing & spring loaded drive idler		x
15	6650407	ADHESIVE	tube - 1 oz		x
16	6650388	SEALANT	flange		x

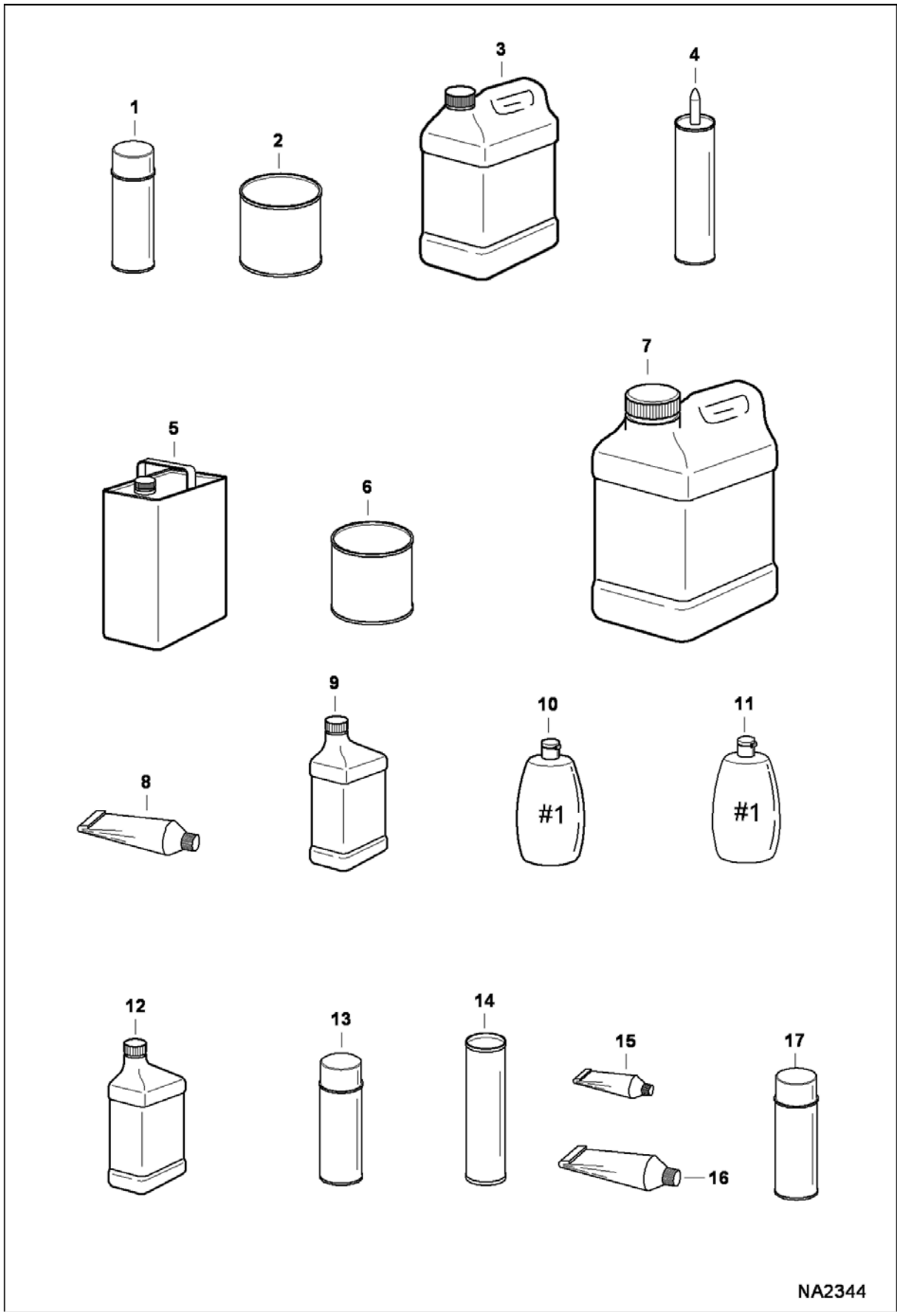
1
2
3
4
5
6
7
8
9
10
#1
11
#1
12
13
14
15
16
17
NA2344

BULK ITEMS (Cont'd)

Ref No	Part Number	Description	Remarks	Serial Number	Qty
17	6736644	PAINT	orange - spray can - .5 oz		x
17	6736641	PAINT	charcoal - spray can - .5 oz		x
17	6736642	PAINT	white - spray can - .5 oz		x
17	6736645	PAINT	red - spray can - .5 oz		x

Part No.	Description	Was	Code	Page
100333SUB	DUCT, AIR	7165330	A	24, 336, 386
100334SUB	DUCT, AIR	7165331	A	24, 336, 386
10C410	BOLT			354
10C512	BOLT			192, 196
10C520	BOLT			192
10C524	BOLT			196
10C612	BOLT			366
10C616	BOLT 10			26, 28, 74, 338, 368, 458, 462
10C616	BOLT 10	53C616	A	26, 28, 74, 338, 368, 458, 462
10C620	BOLT			442
10C696	BOLT			210
10C816	BOLT			310, 312
10H25	FITTING, GREASE 5			44, 46, 76, 78, 80, 82, 84, 86, 410
10H35	GREASE ZERK			46, 424, 426
10K5	TEE			442
10K8	TEE			100
10L1212	ADAPTER			104
11H15	GREASE FITTING			44
12D10	NUT			354
12H15	GREASE ZERK			44
1306637	CLIP			88
1320075	COTTER PIN			408
1321607	CUP, BEARING			50
1321608	BEARING, CONE			50
14D10	NUT			226, 228, 232
14J5032	PIN, STRAIGHT			46
15G628	SCREW	15G624	B	124
15KB0404	FTG HYD S Connector			118, 424
15KB0606	FITTING, HYD CONNECTOR			62, 66, 70, 72, 74, 92, 96, 114, 116, 118, 120, 424, 426, 442
15KB0606	FITTING, HYD CONNECTOR	15KB606	A	62, 66, 70, 72, 74, 92, 96, 114, 116, 118, 120, 424, 426, 442
15KB0608	FITTING, HYD CONNECTOR			118, 300
15KB0808	FITTING, HYD CONNECTOR			62, 64, 300, 426
15KB1008	FITTING, HYD CONNECTOR			100, 114
15KB1010	FITTING, HYD CONNECTOR			60, 64, 68, 114, 300
15KB1012	FITTING, HYD CONNECTOR			62, 64
15KB1210	FITTING, HYD CONNECTOR			300
15KB1212	FITTING, HYD CONNECTOR			99, 100, 104, 108, 114, 116, 118, 428, 430, 442
15KB1216	FITTING, HYD CONNECTOR			74
15KB1612	FITTING, HYD CONNECTOR			116, 120
1614765	STEM			500
16KB0606	FTG HYD L CONNECTOR			116, 118, 119, 120

Code for disposition of old part number
A -- Use up
B -- Use on other application (See PNI)
C -- File PDR Report with Bobcat Parts Sales
D -- Part Number Error

Part No.	Description	Was	Code	Page
16KB1212	FITTING, HYD CONNECTOR			442
17C10136	BOLT			42
17C1024	BOLT			50
17C1056	BOLT			18
17C12112	BOLT			42
17C408	BOLT			226, 228, 232
17C410	BOLT 10			366
17C412	BOLT 5			56
17C424	BOLT			442
17C428	BOLT			72, 310, 312, 442
17C428	BOLT	17C424	B	72, 310, 312, 442
17C510	BOLT			226, 230, 232
17C516	BOLT			310, 312, 362
17C536	BOLT			116, 118
17C540	BOLT			72, 112
17C552	BOLT			58, 118
17C610	BOLT			104, 106
17C612	BOLT 5			18, 22, 288, 338, 424, 426
17C616	BOLT 5			44, 88, 124, 186, 190, 352, 398
17C620	BOLT			88, 104, 108, 228, 232
17C624	BOLT 5			88, 288, 366, 368
17C628	BOLT			124
17C632	BOLT 5			62, 66, 70
17C636	BOLT			124
17C640	BOLT 5			26, 28, 44, 442, 504
17C644	BOLT	17C640	B	44, 46, 74, 106, 110, 442, 486, 488
17C644	BOLT			44, 46, 74, 106, 110, 442, 486, 488
17C648	BOLT 5			44
17C652	SCREW			44, 426
17C656	BOLT			44, 410
17C672	BOLT			44
17C680	BOLT			124, 218, 404, 410
17C716	BOLT			464
17C728	BOLT			116, 118
17C820	BOLT			40, 454
17C824	BOLT 5			454
17C832	BOLT			216, 218
17C844	BOLT			72
17KB0404	FTG HYD ELBOW 90			424
17KB0606	FITTING			90, 94
17KB1212	FITTING, HYD ELBOW			104, 108, 442
18EM1224	WASHER			310, 312, 380, 382
19F12	BUSHING			298
19J12	CLAMP			104, 108
1C12136	BOLT			324
1C1296	BOLT			322
1C612	BOLT			188
1C616	BOLT			188
1C624	BOLT			188
1C716	SCREW HEX CAP			30
1CM640	SCREW			310, 312
1CM8100	SCREW			220
1CM830	BOLT			192, 196

Code for disposition of old part number
A -- Use up
B -- Use on other application (See PNI)
C -- File PDR Report with Bobcat Parts Sales
D -- Part Number Error

Part No.	Description	Was	Code	Page
1DM6	NUT			274
1F316	PIN			210
1K127	O-RING 10			90, 94
20J16	FLANGE			116, 118
21KB0606	FTG HYD STRAIGHT TEE			112, 120
21KB1212	FITTING, HYD TEE			106, 110, 486, 488
24F1	ELBOW			172, 176
24K3	PLUG			436
24K5	PLUG			72, 110
24K7	PLUG			90, 94
25E11	WASHER			226, 228, 232
25E13	WASHER 5			18, 56, 200, 288, 444
25E14	WSHR			18, 318
25E15	WASHER			178, 494
25E18	WASHER			32, 34, 36, 38, 192, 196, 228, 462
25E19	WASHER			464
25E20	WASHER			454
25E24	WASHER			124
25E25	WASHER 10			196
25G410	CAPSCREW			172, 176
25G510	BOLT			226, 228, 232, 412
25G612	SCREW			344
25G628	SCREW			414
25GT410	SCREW			200, 202
25K20016	O RING 10			92, 96
25K20100	O RING 10			186
25K30110	O RING 10	54K30110	A	432, 434
25K30110	O RING 10			432, 434
25K30210	O-RING			46
25K30218	O RING 10			84, 86
25K30812	O-RING, 10			48
26DM12	NUT			210
26GM6016	SCREW			394
27E10	WASHER			42
27E12	WASHER			42, 322, 324
27E6	WASHER 5			218, 404
29CM1025	BOLT			348, 380, 382
29CM1040	BOLT			380, 382
29CM612	BOLT			264, 272, 276
29CM820	SCREW			170, 174
29E6	WASHER			458, 462
29G416	BOLT			90, 94, 186, 188, 190, 192, 196
29G416	BOLT	6814021	A	90, 94, 186, 188, 190, 192, 196
2C1626	BOLT			49, 50
2C614	SCREW			496
2DM10	NUT			310
2DM8	NUT			248
30H20	CLIP			164, 226, 228, 232
30H31	CLAMP 10			70
30H42	CLAMP			186
30H50	CLIP			172, 176, 344
30H65	CLIP	30HJ612	B	212, 214
30H65	CLIP			212, 214
30HJ620	CLAMP			112

Code for disposition of old part number
A -- Use up
B -- Use on other application (See PNI)
C -- File PDR Report with Bobcat Parts Sales
D -- Part Number Error

Part No.	Description	Was	Code	Page
31C1024	BOLT			410
31C1044	BOLT			408
31C1228	BOLT			14
31C420	BOLT 5	53C416	B	164, 168
31C420	BOLT 5	53C420	B	164, 168
31C512	BOLT			420
31C612	BOLT			164, 228, 310
31C640	BOLT			74
31C680	BOLT	17C680	B	444
31C716	SCREW			458, 462
31C820	BOLT			14
31C824	BOLT 10			72
31C828	BOLT			408
31C832	BOLT			408
31C860	BOLT			222
31C880	SCREW			220
31H38	CLAMP			186
31H42	CLIP			424, 426, 430
35C410	BOLT 5	53C410	B	164, 168, 180, 292, 294, 396, 398
35C410	BOLT 5			164, 168, 180, 292, 294, 396, 398
35C412	BOLT			26, 28, 32, 34, 36, 38, 54, 320
35C516	BOLT 10			164, 168, 352, 396, 398
35C524	BOLT			422
35C612	BOLT			48, 172, 176, 178, 214, 232
35C612	BOLT	5CM1020	B	48, 172, 176, 178, 214, 232
35C616	BOLT 5			66, 72, 110, 214
35C620	BOLT 5			322, 324, 444
36K5	CAP			90, 94, 112
36K6	CAP			220
36K8	CAP			486, 488
37C1032	BOLT			356
37C412	BOLT			356
37C424	BOLT			378
37C432	SCREW			380, 382, 383, 384
37C512	BOLT			346, 380, 384
37C516	BOLT			180, 292, 294
37C528	BOLT			378
37C620	BOLT			32, 34, 36, 38, 88, 288
37C624	BOLT			226, 228, 232
37C644	BOLT			60, 64, 300
38C610	BOLT			310
38C616	SCREW			312
38C816	BOLT			228, 232
38C824	SCREW			40
38C840	BOLT			40
3974033	CAP			244, 250
3974095	MET-GASK			238, 240, 270, 272, 274
3974260	SCREW			282
3974394	PIN			272
3974395	PIN			254
3974425	NUT			274
3974433	PLUG			244, 250
3974546	KEY			258
3974920	SCREW			248

Code for disposition of old part number
A -- Use up
B -- Use on other application (See PNI)
C -- File PDR Report with Bobcat Parts Sales
D -- Part Number Error

Part No.	Description	Was	Code	Page
3974972	GASKET			240, 262, 274
3974978	NUT			274
3974979	CAP			274
3D6	NUT			210
42H52	CLAMP			214
42HC175	CLAMP			104
42HC300	CLAMP			214
42HC375	CLAMP			214
42HS04	COLLAR			224
43C512	BOLT	45C516	B	212
43C516	BOLT			224
43C612	BOLT			30, 458, 462, 464
43C616	BOLT			186
43DM10	NUT			216, 348
43DM8	NUT			178, 220, 226, 228, 232
44H48	CLAMP			380, 384
45C620	BOLT			178, 216, 218
45C824	BOLT	49C824	B	134, 216
45C824	BOLT			134, 216
45C828	BOLT			218, 404
45G1006	BOLT			354
45G1212	BOLT			170, 174
45H25	FITTING, GREASE			44
46K5	ELBOW			74, 428, 430
46K6	ELBOW			428, 430
46K7	ELBOW			62, 64, 68
46K8	ELBOW			62, 64, 68, 74
47C620	BOLT			124
47C820	BOLT			56
47K10	PLUG			104, 108
47K7	PLUG	24K7	B	442, 486, 488
47K7	PLUG			442, 486, 488
47K8	PLUG			108, 136, 140
49C1048	BOLT			408
49C412	BOLT			210, 212
49C616	BOLT	31C616	B	210
49C624	SCREW			124, 228
49C628	BOLT			88, 124
49C636	BOLT			216, 218
4D28	NUT			410
4DM8	NUT			208
4F6106	PIN			26, 28
51DM10	NUT			380, 384
51DM6	NUT			310
51DM8	NUT			170, 174, 192, 196
5289686	PLUG			32, 34, 187, 188, 288
53C416	SCREW			18
53C512	SCREW			18
53C516	BOLT	25G514	B	106, 110, 212, 318
53C516	BOLT			106, 110, 212, 318
53D10	NUT			18, 42, 358, 408, 410
53D12	NUT			14, 42
53D6	NUT			26, 28, 44, 88, 124, 218, 404, 458, 462
53D8	NUT			408

Code for disposition of old part number
A -- Use up
B -- Use on other application (See PNI)
C -- File PDR Report with Bobcat Parts Sales
D -- Part Number Error

Part No.	Description	Was	Code	Page
53DM12	NUT			216, 218
54K20022	O'RING			142, 144
54K20028	O RING 10			92, 96
54K30218	O-RING			76, 80
54K40224	O-RING			76, 80, 84, 86
54K40300	O-RING			76, 78, 80, 82, 84, 86
55CM12120	BOLT			216, 218
55CM1235	BOLT			216, 218
55D10	NUT			356
55D4	NUT			18, 164, 168, 354, 378, 380, 384, 396, 398
55D5	NUT			164, 168, 224, 226, 228, 232, 352, 378, 380, 384, 396, 398
55D6	NUT			416
55K204	O RING 10			90, 94
55K214	O-RING			106, 110, 424, 426, 444, 486, 488
55K219	O'RING			116, 118
56G412	STUD			40
57D5	NUT			104, 108, 180, 228, 232
57D6	NUT 5			32, 34, 36, 38, 88, 164, 228, 232, 288
58K004	O-RING			90, 94
58K013	O-RING			92, 96
58K016	O-RING 10			92, 96
58K022	O-RING 10			104
58K120	O-RING			186, 190
58K17	O RING 10			92, 96
58K222	O-RING	54K40116	B	432, 434
59CM1060	SCREW			216
59CM1240	BOLT			134
59CM816	BOLT			214, 216, 218, 226, 228, 232, 233, 234, 380, 384
59CM820	SCREW HX FLNG W/T 8.8			214, 220
59CM825	Screw Hex FLNG W/T8.8			226, 228, 232
59D4	NUT 5			172, 176, 310, 312, 356, 444
59D5	NUT 5			30, 178, 310, 312, 466, 468
59D6	NUT			40, 72, 74, 226, 228, 232, 444
59D7	NUT			458, 462
59D8	NUT 5			18
5CM1020	SCREW			214
5CM812	BOLT			248
5HM13	CLAMP			224
5HM14	CLAMP			212, 224
5HM15	CLAMP			430
5HM16	CLAMP			104, 108
5HM18	CLAMP			372, 392
5HM20	CLAMP			372, 378, 392
5HM22	CLAMP			224
5HM23	CLAMP			212
5HM27	CLAMP			110, 112
5HM29	HOSECLAMP			100
5HM35	HOSECLAMP			112
5HM42	HOSECLAMP			104, 108, 290
5HM47	CLAMP			104, 108, 212
5HM58	CLAMP			224

Code for disposition of old part number
A -- Use up
B -- Use on other application (See PNI)
C -- File PDR Report with Bobcat Parts Sales
D -- Part Number Error

Part No.	Description	Was	Code	Page
619021	WASHER, 5			30, 46, 62, 64, 70, 312, 366, 368, 424, 426, 466, 468
61D4	NUT 5			226, 228, 232
61D5	NUT			40, 292, 294, 310, 312, 345, 346
61D6	NUT 5			18, 504
61D8	NUT 5			454
62D4	NUT			226, 228, 232
62D6	NUT 5			124, 496
63D6	NUT			88, 124
6511855	SEAL			210
6512026	BUSHING			88
6512797	RIVET			464
6513495	COTTER PIN			88, 188, 288
6513707	JOINT			272
6515817	WASHER			18, 220
6517516	LIGHT			356
6519178	BUMPER			26, 28
6531270	SLEEVE, DETENT			90
6532347	SPACER			42
6532453	RING			432, 434
6533898	DECAL			332, 408
6534668	SNAP RING			228, 232
654299	BEARING			136, 140
6553411	BUSHING			56, 58
6553709	WASHER			18
6555341	SAFETY TREAD			332, 424, 426
6557831	WASHER			87, 88, 210
6557904	FLASHER			356
6558309	WIRE ROPE			400
6558310	SLEEVE			400
6560633	DAMPENER			18
6561383	DECAL, OPERATION			332
6562602	BUSHING			18
6563914	WASHER			88, 124, 188, 288
6564452	GRIP			40
6564654	PIN			88, 188, 288
6564669	NUT			50, 500
6564669	NUT	7131115	B,D	50, 500
6565200	DECAL, FILTER			330
6565947	WASHER			50
6565977	HOSE			372, 378, 392
6565990	DECAL, OIL HYD			330
6567743	PIN			18, 364
6569203	CLAMP			178
6576033	WASHER			216, 218
6576280	BOLT			178
6577058	PIN			124
6577545	GROMMET			180, 292, 294
6577821	HOSE			224
6577822	HOSE			212, 224
6577954	PIN			42
6578169	HOSE			224
6578172	HOSE			224
6578253	SPRING, COMPRESSION			46

Code for disposition of old part number
A -- Use up
B -- Use on other application (See PNI)
C -- File PDR Report with Bobcat Parts Sales
D -- Part Number Error

Part No.	Description	Was	Code	Page
6578327	HOSE			120
6578857	HUB, WHEEL	7132551	B,D	50
6578870	CLAMP			442
6579613	STOP			18
658128	RING, SNAP			136, 140
6586251	HOSE			104, 108, 430
6586542	HEAD			432, 434
6586543	PISTON			432, 434
6586918	SCREW			90
6587523	WASHER			90, 94
6587575	ADAPTER			90
6587580	SPRING			90, 94
6587763	BOOT			90
6589226	BONNET			90
6592098	WASHER			92
6592100	COLLAR			90, 94
6592105	BALL			90
6592107	SPRING			90
6592109	ADAPTER			92, 94
6592506	CLAMP			74, 442
6592766	U-BOLT			228, 232
6595663	BUSHING			90, 94
6596807	PLUG			90
6598908	ELBOW			224
6599360	SEALANT			508
6599744	BALL JOINT			124, 496
6610510	TIE			308
6624289	STRAP, TIE			62, 64, 68, 74, 118, 164, 167, 168, 170, 174, 184, 224, 225, 226, 232, 300, 338, 342, 344, 366, 368, 372, 378, 380, 382, 392, 410, 424, 426, 428, 430, 442
6625575	FUSE, 20A			170, 174
6630038	WASHER			226, 228, 232
6630168	COUPLER			92, 94
6630188	POLISH			508
6630189	POLISH			508
6631046	SEAL			252
6631418	PIN			18, 26, 28, 364
6632279	KIT, SEAL			92, 96
6633583	SEALANT			508
6640690	PIN			184, 200, 202
6640692	CONNECTOR			184, 200, 202
6640694	LOCK			184, 200, 202
6640699	CONNECTOR			200, 202
6640700	LOCK			200, 202
6641176	SEAL			184, 200, 202
6641179	CONNECTOR			184, 200, 202
6641180	LOCK			184, 200, 202
6644965	BALL JOINT			226, 228, 232
6645081	O-RING			136
6645086	PLUG			136, 140
6646582	PLUG			200, 202
6646781	SWITCH			180, 292
6647783	LOAD CHECK			302, 304
6647784	PLUG			302, 304

Code for disposition of old part number

A -- Use up
B -- Use on other application (See PNI)
C -- File PDR Report with Bobcat Parts Sales
D -- Part Number Error

Part No.	Description	Was	Code	Page
6647785	SPRING			302, 304
6648294	SPRING			302, 304
6649481	LIGHT, WEDGE BASE			180
6649551	GAS SPRING			124, 496
6650107	SEAL			172, 176
6650120	RACE			52, 54
6650388	SEALANT			508
6650407	ADHESIVE			508
6650627	PLATE			136, 140
6650629	PIN			136, 140
6650630	RETAINER			136, 140
6650634	GASKET			136, 140
6650635	BEARING			136, 140
6650636	PIN			136, 140
6650637	BOLT			136, 140
6650646	O-RING			136
6650647	O-RING			136
6650648	PLUG			136
6650652	POPPET			136
6650668	BOLT			136, 140
6650675	COUPLER			136
6651512	ALARM BACKUP			180, 292, 294
6652018	BOLT			140
6652521	PLATE			60, 68, 378, 442
6652574	PLUG			244, 250
6652592	PIN			276, 278
6652670	STUD			272
6652688	CLAMP			282
6652689	CLAMP			282
6652751	GASKET			240, 244
6653579	BOLT			250
6653827	STUD	7019302	A	262
6654718	CLAMP			270
6654806	FUSE, 15A			170, 174
6655507	FLANGE			252
6657028	O-RING			136, 140
6657067	COVER			138, 140
6657068	COVER			136, 140
6657446	SCREW			262
6657470	NUT			274
6657491	ELEMENT			246
6657556	BAND			266
6657719	PLUG			18, 338
6657734	PUMP, PRIMER HAND			224
6658180	PLUG, BLEED			224
6659369	HEATER			298
6659999	BELT, SEAT			464
6660644	CAP			90
6660775	SPRING			304
6660814	O-RING			136, 140
6661062	PLUG			418
6661353	LIGHT ASSY			180
6661481	O-RING			136

Code for disposition of old part number
A -- Use up
B -- Use on other application (See PNI)
C -- File PDR Report with Bobcat Parts Sales
D -- Part Number Error

Part No.	Description	Was	Code	Page
6662126	BRACKET			134
6662848	CAP			94
6663289	FUSE, 5A			170, 174
6664029	ORIFICE			438
6664065	WASHER			450
6664085	BUSHING			450
6664097	COVER			450
6664103	NUT			450
6664554	PUMP, WIPER WASHER			308
6664845	CONE, BEARING			52, 54
6665000	CLIP			200, 202, 308, 312
6665102	COVER			380, 382
6665314	PLUG			20, 22, 338
6665321	RIVET			200, 202, 308, 312
6665322	RIVET			200, 202, 308, 312
6665356	BLOCK			172, 176
6665357	LOCK			172, 176
6665358	COVER , FUSE			172, 176
6665371	SWITCH			172, 176
6665411	WEDGE			172, 176
6665427	BATTERY, DRY 950 AMP			2, 178
6665569	WASHER			92, 96
6665570	RING			92, 96
6665602	MOTOR			450
6665701	BUSHING, PRESS FIT			88, 288
6665755	SEAL, OIL			52, 54
6665909	MOUNT			172, 176
6666338	WASHER			136, 140
6666542	SEAL			432, 434
6666766	GROMMET			308
6666920	CLAMP, HALF			380, 382
6667144	CONNECTOR			184, 200, 202
6667145	LOCK			184, 202
6667176	PLUG			302, 304
6667185	KIT, SEAL			302
6667201	SPACER			450
6667323	SEAL			432, 434
6667327	SEAL			84, 86
6667352	FILTER, FUEL W/SEPERATOR 12			2, 8, 224
6667353	FILTER ASSY			224
6667422	WASHER			248
6667451	WASHER			248
6667676	COVER			302, 304
6667680	SNAP RING			302, 304
6667687	STEM			92, 94, 95, 96
6667803	COUPLER			442
6667804	COUPLER			442
6667844	VALVE, LIFT MANUAL			97, 98
6668742	SWITCH			22
6668815	SWITCH			356

Code for disposition of old part number
A -- Use up
B -- Use on other application (See PNI)
C -- File PDR Report with Bobcat Parts Sales
D -- Part Number Error

Part No.	Description	Was	Code	Page
6668816	SWITCH			296, 498
6669087	SEAL KIT			98
6669135	SEAT, OPERATOR VINYL			30
6669224	BOLT			20, 22, 338
6669267	SEAL			76, 78, 80, 82
6669402	HOUSING			136
6669405	END CAP			140
6669406	END PLATE			136
6669409	WASHER			136
6669410	KIT, SHIM			138
6669411	BEARING			136, 140
6669549	SOCKET			342
6669620	PLUG			438
6669727	PLUG			438
6669732	KIT, SEAL			92, 96
6669734	KIT, SEAL			92, 96
6670284	LIGHT ASSY			180
6670338	PLUG			244, 250
6670347	GASKET			240, 242
6670472	NUT			280
6670533	NUT			270, 274, 276
6670634	SEAL KIT			302, 304
6670706	CONNECTOR			200, 202
6670707	CONNECTOR			200, 202
6670710	LOCK			200, 202
6670711	LOCK			200, 202
6670714	PIN			202
6670715	PIN			200, 202
6670726	CYLINDER. LOCK			338, 448
6671025	COIL			92, 96
6671027	LIGHT			350
6671106	HORN			351, 352
6671138	SEAL, OIL			50
6671516	KIT, SEAL			138, 140
6671518	BOLT			136, 140
6671520	O-RING			134, 140, 142, 144
6671527	NUT			302, 304
6671528	SEAL			172, 176
6671741	SNAP RING			148
6671760	COVER			150, 152
6672272	WASHER			180
6672273	SCREW			180
6672274	SCREW			180
6672275	GASKET			180
6672276	LENS, LIGHT RED			180
6672277	BRACKET			180
6672279	MOUNT, LIGHT RUBBER			180, 350
6672354	PLUG			244, 250
6672436	SEAL			238, 248
6672471	VALVE			92, 96
6672515	KIT, SEAL			162
6672756	KIT, SEAL			162
6672762	PLUG			162

Code for disposition of old part number
A -- Use up
B -- Use on other application (See PNI)
C -- File PDR Report with Bobcat Parts Sales
D -- Part Number Error

Part No.	Description	Was	Code	Page
6672863	VALVE, SOLENOID			302, 304
6673200	FUSE BLOCK			170, 174
6673789	BEARING			124
6673835	SEAL KIT			438
6673882	SPRING	7008823	A	136
6673986	SPOOL			438
6674035	SNAP RING			128, 130
6674036	RING			128, 130
6674037	SPRING			128, 130
6674038	SEAL			128
6674040	SEAL			128
6674099	BREAKER, 25A			172, 176
6674184	RING			128
6674191	SHIM			130
6674192	BRAKE DISC			130
6674193	BRAKE DISC			130
6674235	RECEIVER DRIER			380, 382
6674264	RETAINER NUT			458, 462
6674316	SWITCH, PRESS OIL HYD			160, 170, 174
6674340	PIN			128
6674341	HOUSING			128
6674343	SHIM			128, 130
6674344	SPRING			128, 130
6674345	PLUG			128, 130
6674687	BATTERY, DRY 600 AMP			2
6674799	ADAPTER			342
6674802	CONNECTOR			342
6674841	SPRING			128, 130
6674894	NUT			26, 28
6674895	RETAINER			20, 24, 168, 328, 336, 338, 386
6675026	CAP			342
6675033	INSERT			20, 22, 24, 336, 386
6675154	HOLDER			170, 174
6675155	FUSE			170, 174
6675176	SWITCH			366, 368
6675177	KNOB			366, 368
6675181	PLUG			366, 368
6675212	RETAINER			378, 380, 382
6675228	SEAL			128
6675281	MOUNT			344
6675298	COUPLER, BODY			308
6675336	LIGHT, BULB 50W			164, 168
6675341	GROUP, ROTARY			137, 138, 140
6675342	PIN			136, 140
6675380	ADHESIVE			508
6675513	GROMMET			388
6675522	STROBE			498
6675523	BEACON			296
6675524	CLIP			20, 24
6675534	BLOCK, A/C VALVE			388
6675545	GROMMET			18
6675559	COIL			92, 96, 170, 171, 172, 176
6675618	CLAMP			268

Code for disposition of old part number
A -- Use up
B -- Use on other application (See PNI)
C -- File PDR Report with Bobcat Parts Sales
D -- Part Number Error

Part No.	Description	Was	Code	Page
6675734	STRAP			163, 164, 226
6675779	SWITCH, PRESS			380
6675780	CARTRIDGE			302, 304
6675781	COIL			302, 304
6675863	QUAD RING			130
6675864	QUAD RING			128, 130
6675866	SPOOL			128, 130
6675867	WASHER			128, 130
6675868	POPPET			128, 130
6675877	SEAL			130
6675878	SEAL			130
6675879	SEAL			130
6675880	SEAL			130
6675881	SEAL			130
6675883	KIT, WASHER			130
6675885	SNAP RING			130
6675889	PISTON			130
6675890	COVER			130
6675892	GASKET			130
6675893	O-RING			130
6675897	WASHER			130
6675898	BUSHING			130
6675999	SWITCH			450
6676000	TEE			450
6676001	ARM			450
6676002	BLADE			450
6676003	HOSE,BULK			308, 450
6676021	KIT, SEAL			128
6676028	NOZZLE			450
6676029	SOLENOID, LOCK SPOOL			90, 200, 288
6676038	O-RING			128, 130
6676147	PLATE, VALVE			136
6676148	PLATE, VALVE			140
6676246	NUT			162
6676500	ELBOW			308, 450
6676539	CLIP			388
6676543	PLUG			302, 304
6676640	SEAL			203, 204
6676653	SCREW			370, 390
6676870	CONNECTOR			202
6676917	ELBOW			308, 450
6677115	RECEPTACLE			370, 388
6677116	RETAINER			370, 388
6677117	SCREW			370, 390
6677118	SCREW			370, 388
6677119	SCREW			370, 388
6677136	SOCKET			342
6677177	PLUG			162
6677181	SENSOR, SPEED TRAVEL			186
6677192	MAGNET			308, 312
6677487	COVER			206
6677488	RECTIFIER			206
6677490	BRACKET			206

Code for disposition of old part number

A -- Use up
B -- Use on other application (See PNI)
C -- File PDR Report with Bobcat Parts Sales
D -- Part Number Error

Part No.	Description	Was	Code	Page
6677491	BRACKET			206
6677492	ROTOR			206
6677493	STATOR			206
6677494	BOLT			206
6677495	SPACER			206
6677497	NUT			206
6678226	SEAL, OIL			136, 140
6678233	FILTER, OIL ENG 12			2, 5, 6, 8, 268
6678668	STRAP, DUAL TIE			170, 174, 178, 430
6678675	CONTROLLER, ACD			344
6678705	BALL			438
6678765	NUT			212
6678785	NUT			210
6678837	O-RING			438
6678971	BOLT			48
6678974	MOUNT			378
6679034	MOUNT			170, 174, 175, 176
6679485	CONTROLLER SJC			186
6679820	RELAY			170, 174
6679836	ADAPTER			74
6679837	COUPLER			74
6679838	KIT, COUPLER			74
6680018	COUPLER, KIT			74
6680055	MAGNET			55, 56, 186
6680264	STUD			270
6680272	NUT			274
6680355	BOOT			208
6680356	BOLT			208
6680357	HOLDER			208
6680358	RING			208
6680359	STOP RING			208
6680360	STOP			208
6680361	SPRING			208
6680362	BALL			208
6680363	WASHER			208
6680364	LEVER			208
6680365	SHAFT			208
6680366	GEAR			208
6680367	GEAR			208
6680368	STOP RING			208
6680369	SEAL			208
6680370	PLATE			208
6680371	LEVER			208
6680372	BRACKET			208
6680373	YOKE			208
6680374	ARMATURE			208
6680375	SHAFT			208
6680376	SWITCH			208
6680377	HOLDER			208
6680378	WASHER			208
6680379	SEAL			208
6680380	SEAL			208
6680381	SPRING			208
6680382	SPRING			208

Code for disposition of old part number
A -- Use up
B -- Use on other application (See PNI)
C -- File PDR Report with Bobcat Parts Sales
D -- Part Number Error

Part No.	Description	Was	Code	Page
6680383	BOLT			208
6680384	BOLT			208
6680388	BRACKET			208
6680389	BRACKET			208
6680390	GEAR			208
6680410	CONTROLLER			186, 188, 189, 190
6680417	HANDLE			200, 202
6680418	HANDLE ASSY.			183, 184
6680419	HANDLE ASSY.			184
6680438	SENSOR, FUEL			170, 174, 224
6680441	BUSHING			26, 28
6680443	BUSHING, MAGNET			26, 28
6680447	DECAL			184
6680462	HANDLE, ACS RH			200, 202
6680468	MOUNT			200, 288
6680469	SPACER			200, 202, 288
6680470	SPRING			200, 288
6680471	COVER			200, 202
6680477	STRAP			200, 288
6680533	BOLT			276
6680564	STUD			262, 266
6680570	GASKET			238
6680576	PIN			264
6680646	ADAPTER			268
6680657	PLUG			252
6680662	BOLT			270
6680667	PLUG			272
6680678	SCREW			242
6680679	PLUG			242
6680680	SEAL			240, 242
6680687	BOLT			280
6680694	PLUG			244
6680695	SEAL			246
6680755	BOLT			260, 268, 272
6680757	COVER			275, 276
6680759	NUT			276
6680769	PIN			276
6680775	PIN			276
6680778	O-RING			238, 280
6680788	BOLT			280
6680791	BOLT			264, 270
6680796	VALVE			270
6680801	BOLT			266, 268
6680803	BOLT			260, 266
6680809	PIN			272
6680813	KEY			272
6680820	WASHER			278
6680821	SNAP RING			278
6680822	SNAP RING			278
6680823	SNAP RING			278
6680828	STUD			276
6680829	GASKET			240, 276
6680830	BOLT			276
6680844	GASKET			238, 260

Code for disposition of old part number
A -- Use up
B -- Use on other application (See PNI)
C -- File PDR Report with Bobcat Parts Sales
D -- Part Number Error

Part No.	Description	Was	Code	Page
6680845	BOLT			268
6680850	THERMOSTAT			260
6680859	GUIDE			247, 248, 250
6680863	VALVE SPRING			248
6680866	SHAFT			248, 250
6680877	PIN			248
6680882	PAD			248
6680900	BOLT			264, 270
6680952	FITTING 90 DEG BARB			212
6680970	BREATHER			56, 58
6681857	ALTERNATOR			205, 206, 220
6681905	NUT			310
6682260	SHAFT			136
6682261	KEY			136
6682264	SHAFT			140
6682697	GROMMET			372, 392
6682936	O-RING			156
6682949	O-RING			134
6683009	O-RING			246, 252
6683023	O-RING			240, 276
6683087	STUD			276
6683167	CYLINDER BLOCK			136, 140
6683168	PISTON ASSEMBLY			136, 140
6683274	SEAL, SPOOL 10			90, 94
6684033	NUT			32, 34, 36, 38, 88, 210, 288
6684044	VALVE			446
6684045	SEAL KIT			446
6684046	O-RING			446
6684047	BACK-UP RING			446
6684048	O-RING			446
6684049	O-RING			446
6684050	BACK-UP RING			446
6684052	SEAL KIT			446
6684053	BACK-UP RING			446
6684054	O-RING			446
6684056	O-RING			446
6684060	NUT			446
6684061	VALVE			446
6684062	SEAL KIT			446
6684063	O-RING			446
6684064	BACK-UP RING			446
6684065	O-RING			446
6684066	O-RING			446
6684069	SEAL KIT			446
6684070	O-RING			446
6684071	O-RING			446
6684072	BACK-UP RING			446
6684073	COIL, SOLENOID			446
6684125	COUPLER			62, 66, 70, 90, 94
6684565	VALVE, RELIEF	7008822	A	136, 140
6684641	MOUNT			164, 168, 352, 396, 398
6684646	VALVE			90, 94
6684650	REGULATOR			206
6684651	BEARING			206

Code for disposition of old part number
A -- Use up
B -- Use on other application (See PNI)
C -- File PDR Report with Bobcat Parts Sales
D -- Part Number Error

Part No.	Description	Was	Code	Page
6684652	BEARING			206
6684653	PULLEY			206
6684742	NUT			436
6684743	SOLENOID			436
6684744	SOLENOID			436
6684745	PISTON			436
6684746	CHECK VALVE			436
6684747	SEAL KIT			436
6684781	BOLT			246
6684782	O-RING			240
6684829	SHIM			272
6684841	GASKET			240, 276
6684857	PLUG			260
6684889	CLAMP	6680698	B	246, 268
6684889	CLAMP			246, 268
6684910	SENSOR, ELEC AHC			200, 202
6684932	KNOB			42, 416
6685027	VALVE			102
6685060	BUSHING, TORSION			88, 124
6685087	VALVE			246
6685109	BOLT, FLANGE			268
6685190	STARTER			207, 208
6685190REM	STARTER			208
6685328	RELIEF VALVE			446
6685344	SWASHPLATE			136, 140
6685372	SEALANT, GASKET LIQUID			48, 56, 58, 508
6685390	SCREW			142, 144
6685390	SCREW	6687992	D	142, 144
6685465	O-RING			240, 276
6685498	GASKET			238, 280
6685500	COVER			276
6685541	POPPET			436
6685542	O-RING			436
6685543	CHECK VALVE			436
6685544	COMPENSATOR			436
6685545	PLUG			436
6685546	PLUG			436
6685581	O-RING			246
6685601	CLAMP			264
6685624	VALVE, AUX REAR			442, 445, 446
6685663	RETAINER			124, 442
6685850	CORD			298
6685918	PIN			244
6685924	CAP			246, 252
6685929	RELIEF VALVE			242
6685952	NUT			278
6685958	GUIDE			248, 250
6685959	RETAINER			248
6685962	WASHER, SEALING ALUMINUM			240, 270
6686096	LENS			350
6686097	BULB			350
6686098	BULB			350
6686099	LENS			350

Code for disposition of old part number
A -- Use up
B -- Use on other application (See PNI)
C -- File PDR Report with Bobcat Parts Sales
D -- Part Number Error

Part No.	Description	Was	Code	Page
6686100	SCREW			350
6686360	VALVE			90, 94
6686360	VALVE	6686359	D	90, 94
6686934	PIN			142, 144
6686981	O-RING			240, 252
6686999	SEAL			84, 86
6687000	WIPER ROD			76, 78, 80, 82
6687191	SEAL, OIL			136
6687866	KIT, SEAL			158
6687904	GUIDE			252
6687913	SEAL			126
6687925	NUT			150, 152
6687930	WIRE			146, 148
6687932	PIN			142, 144
6687938	VALVE			155, 156
6687939	SCREW			156
6687940	PLATE			146, 148
6687941	COUPLER			142, 144
6687943	SHAFT			148
6687956	BEARING			146, 148
6687962	PISTON			150, 152
6687967	SPRING			154
6687986	KIT			150, 152
6687987	BEARING			148
6687992	SCREW	6688039	D	142, 144
6687995	SCREW			150, 152
6687996	SCREW			154
6687997	SCREW			154
6687999	RING, SNAP			146, 148
6688003	SCREW			142, 144, 216
6688005	SEAL			150, 152
6688006	SEAL			150, 152
6688008	SCREW			142, 144
6688009	SEAL			142, 144
6688010	PIN			154
6688011	PIN			142, 144
6688014	PIN			142, 144
6688015	SCREW			142, 144
6688016	SCREW			142, 144
6688017	SHIM			156
6688018	BEARING			146, 148
6688040	BEARING			142, 144
6688042	RING, SNAP			146
6688320	SEAL KIT			102
6688322	KIT, SEAL			102
6688338	NUT			342
6688363	MOTOR, DRIVE HYD 2-SPD			129, 130
6688449	LOCATING PIN			128, 130
6688637	MOUNT			349, 350
6688833	CONNECTOR			182
6688834	CONNECTOR			182
6688836	FLANGE			182
6688845	VALVE			90, 94
6688933	VALVE ASSY			446

Code for disposition of old part number
A -- Use up
B -- Use on other application (See PNI)
C -- File PDR Report with Bobcat Parts Sales
D -- Part Number Error

Part No.	Description	Was	Code	Page
6688934	COIL			446
6688980	BOLT			170, 174
6689021	SEAL KIT			142, 144
6689088	QUAD RING			130
6689089	O-RING			130
6689090	O-RING	6690077	D	130
6689112	SEAL			60, 64, 68
6689126	PISTON			128, 130
6689133	O-RING			128, 130
6689192	BOLT, FLANGE			260, 262
6689331	GASKET			240, 264, 270
6689389	SPACER			438
6689739	VALVE			90, 94
6689922	HANDLE			192, 196
6689923	HANDLE			192, 193, 194, 196
6689927	BOLT			194, 196
6689983	FILTER KIT			436
6690005	KIT, SEAL			132
6690021	BLOCK			128
6690022	ROLLER			128, 130
6690025	CAM			128, 130
6690039	SCREW			128, 131, 132
6690048	RING			128, 130
6690067	RING			130
6690068	PIN			130
6690082	HOUSING			130
6690084	SHAFT			130
6690089	SHIM			130
6690094	CLAMP			130
6690095	SCREW			130
6690096	SCREW			130
6690105	WASHER			130
6690158	ROTOR GROUP			128
6690163	RING			56
6690299	O-RING			438
6690482	GROMMET			370, 388
6690561	MAGNET			54
6690564	SPRING, COMPRESSION			494
6690688	TREE MOUNT			186, 308, 312
6690689	MOUNT, FIR TREE			186
6690690	STRAP, TIE			186, 308, 312
6690911	CLAMP			76, 78, 80, 82, 84, 86
6690947	SWITCH, BPV			300
6690948	SWITCH PARK BRAKE			164, 168
6690988	CHAIN, DRIVE			48
6691022	NUT			92, 96
6691078	LINK			48
6691100	PIN			130
6691173	BRACKET			354
6691176	REAR CASE ASSY.			132
6691177	BRAKE ASSY.			132
6691227	PLUG			128, 130

Code for disposition of old part number
A -- Use up
B -- Use on other application (See PNI)
C -- File PDR Report with Bobcat Parts Sales
D -- Part Number Error

Part No.	Description	Was	Code	Page
6691288	CONTROLLER, AUX CONTROL			170, 174
6691534	SCREW			388
6691536	DUST EJECTION VALVE			284
6691714	SENSOR, SEATBAR BICS			26, 28
6692325	SEAL, PISTON			82
6692337	FILTER, HYD CARTRIDGE			2, 10, 160
6692489	ALARM, BUZZER			164, 168
6692757	DECAL, "REMOTE CONTROL OPERATION", LARGE			452
6692762	KEYS, SET OF 2			452
6692763	DECAL WARNING, "READ THE MANUAL"			452
6692767	DECAL, "ROTATING PARTS"			452
6692768	DECAL, "REMOTE CONTROL OPERATION", SMALL			452
6692769	CHARGER, MAKITA DC1422, 12-24VDC			452
6692770	BATTERY, NICD, 9.6V, 1.3AH, MAKITA 9000			452
6692771	SHOULER HARNESS			452
6692830	ENGINE, V3307DI-T-E3B-BC-1			235, 236
6692926	HOSE, HYD			115, 116, 118
6692928	HOSE, HYD			116, 118
6693222	GROMMET			370, 388
6693223	WASHER			370, 388
6693236	FOAM			370, 390
6693241	KEY 10			164, 210, 308, 312, 338, 448
6693245	SWITCH, IGN			164
6693353	CONTROLLER, GATEWAY			170, 174
6693409	BULB, STROBE			452
6693410	LENS			452
6693411	LENS			452
6693413	DISPLAY, DLX			168, 340
6693414	VALVE, SOLENOID			102
6693415	RING			52, 54
6693525	BEARING			52, 54
6693712	KEYPAD, PANEL			164, 168, 406
6693864	BOLT			370
6693867	HOUSING			140
6693873	GROUP, ROTARY			146
6693874	GROUP, ROTARY			148

Code for disposition of old part number
A -- Use up
B -- Use on other application (See PNI)
C -- File PDR Report with Bobcat Parts Sales
D -- Part Number Error

Part No.	Description	Was	Code	Page
6693876	SEAL, SHAFT			146
6693921	SENSOR, RPM			178
6697863	PISTON, ASSY			84, 86
6697914	HOSE, TUBE ASSY			380, 382
6697915	HOSE			380, 382
6697916	HOSE			380, 382
6697917	HOSE			380, 382
6697918	HOSE			380, 382
6697920	SENSOR, PRESS OIL ENG			178
6697938	BASE, JOYSTICK			194, 196, 197, 198
6697939	BASE, JOYSTICK			194, 198
6697942	PLUG, NYLON			74
6697960	SOLENOID			154
6697971	VALVE, 2 SPEED			161, 162
6698062	GASKET, MOTOR			160
6698065	COIL, CPP012H			160
6698066	HOUSING, FILTER CARTRIDGE			160
6698096	FILTER, AIR RECIRCULATING			366
6698120	GASKET			250, 272
6698244	ORING			268
6698434	VALVE, PROPORTIONAL			90, 94
6698524	ARM, VALVE BRIDGE			248
6698580	VALVE, LEAD			266
6698585	VALVE, THERMOSTATIC			266
6698590	COMPRESSOR, A/C			380, 382
6698591	KIT, SEAL			160
6698594	PUMP, TANDEM			141, 142
669863	RING, SNAP			136, 140
6700170	WASHER			228, 234
6700631	GASKET			104, 108
6701097	WASHER			210
6701174	WASHER			196
6701449	FILLER TUBE			224
6701535	SPRING			26, 28, 124
6701892	CLAMP			60, 64, 68, 378, 444
6702444	FUSE 25A 5			170, 174
6702593	SPACER			180, 292
6702621	GRIP			184, 202
6702716	BLOCK			124
6702903	LEVER, BOB-TACH LH			46
6702904	LEVER, BOB-TACH RH			46
6702958	BUSHING, WELD-ON			46
6702971	BOLT			18
6702990	BUSHING			200, 202
6703640	KIT			463, 464
6703703	GUIDE			464
6704248	PIVOT			46

Code for disposition of old part number
A -- Use up
B -- Use on other application (See PNI)
C -- File PDR Report with Bobcat Parts Sales
D -- Part Number Error

Part No.	Description	Was	Code	Page
6704453	SPRING			46, 308, 312
6704892	RIVET			344
6705340	DECAL, LUBRICANT			332
6706098	GUIDE			124
6706718	MOUNT			56
6706737	GASKET			56
6707101	SEAL			72, 98
6707620	FUSE, 10A MINI 5			172, 176
6707621	FUSE, 15A MINI 5			170, 172, 174, 176
6707623	FUSE, 25A MINI 5			170, 172, 174, 176
6708009	LINK			88
6708016	GASKET			56
6708018	SPRING			56
6708043	BUSHING			88
6708267	BOLT			56
6708310	HOSE, BULK 100			308
6708437	CLIP			172, 176
6708929	DECAL, COOLANT			330
6708987	HINGE, WELD-ON			14
6709170	STUD	7130936	B,D	50
6709757	SHAFT, AXLE			50
6710659	BUSHING			26, 28
6711908	SPRING PLATE			464
6713043	SPACER			200, 202
6713507	DECAL			334
6713589	CLEVIS			26, 28
6713887	BOLT			26, 28
6714278	WEDGE, LOCK TRACTION			56
6714362	COUNTERWEIGHT, AXLE REAR			504
6715163	BUSHING, PRESS FIT			124
6715164	SLEEVE, SPRING			124
6715183	ELBOW			224
6715864	BUSHING			26, 28
6715865	BUSHING			26, 28
6715866	BUSHING			26, 28
6716089	CONNECTOR			442
6716621	COVER	7176546	A	170, 174
6717242	HOUSING			52
6717278	BUSHING, WELD-ON			14
6717401	PLUG			224
6717402	BUSHING			224
6717579	GASKET			170, 174
6717806	BOLT			48, 118
6717885	ELBOW			100
6718034	FUSE, 30A			170, 174
6718414	SENDER, TEMP ENG			178
6718796	PLUG			360
6718872	HARNESS			296, 356, 498
6718942	NUT			42
6719056	BLOCK			56
6719057	BLOCK			56

Code for disposition of old part number

A -- Use up
B -- Use on other application (See PNI)
C -- File PDR Report with Bobcat Parts Sales
D -- Part Number Error

Part No.	Description	Was	Code	Page
6719448	MAGNET, CONTROL ATTACH			344
6719766	STOP			40
6719834	SPACER			200, 202, 288
6719835	SLEEVE			200, 202, 288
6719888	DECAL			332, 424, 426
6720038	INSTRUCTIONS			298
6720808	KIT, ENGINE BLOCK HEATER			297, 298
6725301	OP MANUAL COVER			20, 24
6727065	BOLT			200, 202, 288
6727313	ELBOW			104, 108, 426, 438
6727475	CAP, OIL HYD			9, 10, 103, 104, 107, 108
6727525	BUSHING, WELD-ON			42, 43, 44
6727595	DECAL,TIE-DOWN			332
6727707	CLAMP			116, 118
6727832	BUSHING, WELD-ON			44
6727869	SENDER,HYD TEMP			170, 174
6728473	BOLT, SHOULDER			46
6728971	PIN, PIVOT TAPERED			42
6729078	DECAL			332
6729594	HANDLE			200, 202
6729595	HANDLE			200, 202
6729663	HOUSING			54
6729901	TIRE			499, 500
6730013	COVER			54
6730108	TIRE			500
6730109	TIRE			500
6730772	RIM			500
6730894	BOLT			224
6730995	BUSHING, WEAR			42
6731084	ADAPTER			378
6731085	ELBOW			378
6731121	PLUG			48
6731160	WASHER			42
6731275	INSULATION			170, 174
6731646	BOLT			42
6732730	HARNESS			344
6732847	RIM			500
6733136	KIT, ATTACHMENT 14-PIN			343, 344
6733144	MOUNT			344
6733370	HARNESS			178
6733429	CAP			212
6733575	HINGE, REAR DOOR			39, 40
6733578	RIM			500
6733616	BUMPER			40
6734090	ADAPTER			212
6734298	MOUNT			124
6735249	HOSE, FUEL			224
6735696	BUSHING			224
6735901	DECAL, LOGO BOBCAT HEAD			332
6736641	PAINT			510

Code for disposition of old part number
A -- Use up
B -- Use on other application (See PNI)
C -- File PDR Report with Bobcat Parts Sales
D -- Part Number Error

Part No.	Description	Was	Code	Page
6736642	PAINT			510
6736644	PAINT			508, 509, 510
6736645	PAINT			510
6737088	COVER, FRONT ACCESS			48
6737189	DECAL, WARNING			180, 292, 294, 330
6737191	WEDGE			46
6737388	WASHER			88, 124, 218, 404
6737524	KNOB			72, 98
6737692	BEARING			228, 232
6737693	SPACER			228, 232
6801059	WASHER			450
6801167	PLUG			94
6802539	SPACER			18
6803092	BONNET			94
6803202	SCREW			192, 196
6805550	WASHER			216, 218
6808798	ELBOW			224
6809726	ROLLER			40
6809845	BOLT			40
6810132	SPRING			40
6810141	SPRING			40
6810356	SPACER			432, 434
6810539	NUT			76, 78, 80, 82
6810540	NUT			84, 86
6812171	PLUG			76, 78, 80, 82, 84, 86
6812526	HEAD			84, 86
6812865	FITTING			108, 112
6813153	PLATE			90
6814022	SCREW HEX SKT HD W/T			90, 94
6814694	RETAINER			90, 94
6815152	SPOOL			90
6816549	PLUG ASSY PORT RLF			90, 94
6901872	INSTRUCTIONS			344
6902228	PAINT, ORANGE SPRAY CAN 6			507, 508
6902229	PAINT, CHARCOAL SPRAY CAN 6			508
6902230	PAINT, WHITE SPRAY CAN 6			508
6902233	PAINT, ORANGE QT 6			508
6902234	PAINT, CHARCOAL QT 6			508
6902235	PAINT, WHITE QT 6			508
6902236	PRIMER QT. 6			508
6903105	OIL, 15W40 QT. 12			2, 6, 8, 508
6903106	OIL, 15W40 GAL. 6			2, 6, 8, 508
6903107	OIL, 10W30 QT. 12			2, 6, 8, 508
6903108	OIL, 10W30 GAL. 6			2, 6, 8, 508
6903109	OIL 30W QT. 12			2, 6, 8, 508
6903110	OIL, 30W GAL. 6			2, 6, 8, 508
6903111	OIL 30W 2.5 GAL 2			2, 6, 8, 508

Code for disposition of old part number
A -- Use up
B -- Use on other application (See PNI)
C -- File PDR Report with Bobcat Parts Sales
D -- Part Number Error

Part No.	Description	Was	Code	Page
6903112	OIL, 10W30 2.5 GAL 2			2, 6, 8, 508
6903113	OIL, 15W40 2.5 GAL. 2			2, 6, 8, 508
6903117	FLUID, OIL HYD 2.5 GAL 2			2, 11, 12, 508
6903118	FLUID, OIL HYD 5 GAL			2, 12, 508
6903119	FLUID, OIL HYD 55 GAL			2, 12, 508
6903121	LUBE, GEAR 12			8, 508
6903122	GREASE, MULTI PURPOSE #2 - 10			7, 8, 508
6903773	33X6X11 TWIN FLEX TIRE & WHEEL (LEFT)			501, 502
6903774	33X6X11 TWIN FLEX TIRE & WHEEL (RIGHT)			502
6904709	MANUAL			452
6967534	PISTON			156
6967535	COLLAR			156
6967536	SPRING			156
6969803	COVER, BREATHER			246
6969819	NUT, FLANGE			262, 264, 266, 270, 272
6969824	GASKET, NOZZLE INJ			238, 280
6969968	PLUG			244
6983128	ANTI-FREEZE PG 53/47 PREMIX GAL 6			508
6983129	ANTI-FREEZE PG CONCENTRATE 6			508
6987128	INSTRUCTIONS			322, 324
6987139	INSTRUCTIONS			440
6987167	MANUAL, OPERATION & MAINTENANCE S650 LOADER			2
6987167-CD	MANUAL OPERATION & MAINTENANCE S650 LOADER-CD			2
6987168	MANUAL, SERVICE S650 LOADER			2
6987168-CD	MANUAL, SERVICE S650 LOADER-CD			2
6987169	MANUAL PARTS S650 LOADER			2, 3, 4
6987169-CD	MANUAL, PARTS S650 LOADER-CD			4
6987174	HANDBOOK, OPERATOR'S			4, 330
6987216	INSTRUCTIONS			358
6987217	INSTRUCTIONS			408
6987219	INSTRUCTIONS			410

Code for disposition of old part number
A -- Use up
B -- Use on other application (See PNI)
C -- File PDR Report with Bobcat Parts Sales
D -- Part Number Error

Part No.	Description	Was	Code	Page
6987220	INSTRUCTIONS			424, 428
6987223	INSTRUCTIONS			354
6987224	INSTRUCTIONS			356
6987225	INSTRUCTIONS			296, 498
6987227	INSTRUCTIONS			328
6987228	INSTRUCTIONS			320
6987229	INSTRUCTIONS			318
6987230	INSTRUCTIONS			310
6987231	INSTRUCTIONS			366, 368, 378
6987232	INSTRUCTIONS			314
6987233	INSTRUCTIONS			380
6987234	INSTRUCTIONS			338
6987235	INSTRUCTIONS			292, 294
6987236	INSTRUCTIONS			288
6987237	INSTRUCTIONS			396, 398
6987238	INSTRUCTIONS			342
6987239	INSTRUCTIONS			448
6987248	INSTRUCTIONS			458, 462
6987249	INSTRUCTIONS			466, 468
6987250	INSTRUCTIONS			300
6987251	INSTRUCTIONS			496
6987252	INSTRUCTIONS			286
6987253	INSTRUCTIONS			460
6987279	INSTRUCTIONS			364
6987280	INSTRUCTIONS			340
6987281	INSTRUCTIONS			406
6987282	INSTRUCTIONS			450
6987299	INSTRUCTIONS			444
6987335	INSTRUCTIONS			454
6987336	INSTRUCTIONS			362
6987338	INSTRUCTIONS			486, 488
6987349	INSTRUCTIONS			506
6987355	INSTRUCTIONS			336
6987356	INSTRUCTIONS			386
6987366	INSTRUCTIONS			348
6987388	INSTRUCTIONS			316
6987421	INSTRUCTIONS			402
6987475	INSTRUCTIONS			290
6987490	INSTRUCTIONS			414
6987491	INSTRUCTIONS			420
6987492	INSTRUCTIONS			326
6988336	RADIO, MINI BOBCAT			440
6988435	KIT, RADIO M-SERIES LOADERS	NAP	D	439, 440
6988660	SPEAKER 4 X 6 RETAIL JXA462	7159875	A	440
6988661	ANTENNA, 94 INCH MOTOROLA MALE PLUG	7159877	A	440
6989419	KIT, DECAL			329, 330, 331, 332
6989484	INSTRUCTIONS			416
6989487	INSTRUCTIONS			412
6989520	INSTRUCTIONS			360
6989526	INSTRUCTIONS			400

Code for disposition of old part number
A -- Use up
B -- Use on other application (See PNI)
C -- File PDR Report with Bobcat Parts Sales
D -- Part Number Error

Part No.	Description	Was	Code	Page
6989663	INSTRUCTIONS			464
6989699	INSTRUCTIONS			478, 480, 482, 484
6989741	INSTRUCTIONS			426, 430
6990077	INSTRUCTIONS			384
6990079	INSTRUCTIONS			394
6990106	INSTRUCTIONS			404
6990126	INSTRUCTIONS			306
6990138	INSTRUCTIONS			494
6990145	INSTRUCTIONS			504
69G436	BOLT			94, 186, 188, 190
6E5	WASHER			356
6E6	WASHER			42
6EM80	WASHER, SPRING			208
6J1664	KEY			50
7000488	DAMPER			220
7000489	DAMPER			220, 221, 222
7000583	GEAR, RING STARTER			244
7000586	PLUG			244
7000589	BOLT, ADJUSTING			274
7000594	SCREW			272
7000599	PIN			248
7000600	CAP, SEALING			244
7000604	TUBE, FUEL LINE ASSY			270
7000605	TUBE, FUEL LINE ASSY			270
7000606	STUD			272
7000607	PLUG			250
7000609	SCREW, AIR BLEEDER			272
7000612	TAPPET			258
7000613	NUT			270
7000614	RETAINER, BEARING			272
7000615	BOLT, FLYWHEEL			244
7000616	GEAR, DRIVE			254
7000617	BEARING, BALL			272
7000618	GASKET, PUMP INJ			240, 270
7000619	ORING			238, 280
7000620	BOLT, ADJUSTING			274
7000621	BRACKET, BOLT ADJUSTING			274
7000622	SLEEVE, GOVERNOR			276
7000623	LEVER, GOVERNOR			276
7000624	SHAFT, FORK LEVER			278
7000625	SPRING, SPEED CONTROL			276
7000626	SEAL			280
7000628	CAMSHAFT, FUEL			272
7000629	RETAINER, BEARING			272
7000631	FLANGE, EGR			266

Code for disposition of old part number
A -- Use up
B -- Use on other application (See PNI)
C -- File PDR Report with Bobcat Parts Sales
D -- Part Number Error

Part No.	Description	Was	Code	Page
7000632	GASKET EGR INLET			266
7000633	GASKET, EGR VALVE			238, 266, 268
7000634	GASKET, EGR VALVE			238, 266
7000635	GASKET, EGR COOLER			238, 268
7000636	GASKET, EGR BASE			238, 268
7000637	BEARING, BALL			272
7000638	WEIGHT, GOVERNOR			276
7000639	LEVER, FORK			277, 278
7000642	WASHER, SEALING COPPER			238, 264
7000714	DIPSTICK, OIL ENG			252
7000731	O-RING			274
7000749	KEY, SHAFT	3974546	B	254, 255, 256
7000767	PUMP, FUEL			270
7000769	SOLENOID, SHUTOFF FUEL			178, 276
7000973	PLUG, MOTOR			160
7000974	PLUG, MOTOR			160
7000983	SCREW			366, 368
7000984	CLIP			366, 368
7001016	PUMP			135, 136, 139, 140
7001044	HORN, ALARM			164, 168, 396, 398
7001046	MOTOR, DRIVE HYD			127, 128
7001120	SHAFT, DRIVE			146
7001138	BOLT,FLANGE			252, 258
7001139	BOLT,FLANGE			266
7001421	GUAGE, SIGHT			104, 108
7001499	BOLT, EYE			272
7001664	PLUG, POWER			22, 338
7001673	KIT, SCREEN FILTER			436
7001678	VALVE, CHECK			436
7001709	SWITCH FRONT WIPER			308
7001710	SWITCH, ISO			186
7001712	SWITCH			424, 426
7001713	SWITCH			188, 288
7001920	COVER, FRONT			284
7001921	BLOCK, JUNCTION			60, 64
7002716	SCREW			90, 94
7002734	FILTER, OIL HYD TANK			2, 12, 106
7002736	LATCH, DRAW			210
7002737	LATCH, PAWL			210
7002739	GROMMET			114
7002740	GROMMET			104, 108
7002980	SWITCH, PRESSURE			170, 174
7002985	INSERT, BLANK			20, 164, 165, 166
7002988	TIE, STUD MOUNT			180, 292, 294, 350
7003027	INSERT, KEYPAD			164, 168, 406

Code for disposition of old part number
A -- Use up
B -- Use on other application (See PNI)
C -- File PDR Report with Bobcat Parts Sales
D -- Part Number Error

Part No.	Description	Was	Code	Page
7003032	SWITCH, OVERRIDE TRACTION			164, 168
7003033	SWITCH, IGN			164, 168, 340, 406
7003034	DISPLAY, GAUGE			164, 168
7003445	BLOWER, HEATER & A/C			373, 374
7003456	VALVE, MOTORIZED ASSY	7193537	A	370, 372, 388, 392
7003456	VALVE, MOTORIZED ASSY			370, 372, 388, 392
7003457	HOSE, HEATER			370, 390
7003458	CLAMP, HOSE			370, 388
7003465	NUT			370, 388
7003471	SCREW			374, 376
7003487	SCREEN			104, 108
7003494	LEVER, RH			200
7003495	LEVER, LH			199, 200
7003496	SENSOR			188, 288
7003628	JOYSTICK, LH			191, 192, 195, 196
7003629	JOYSTICK, RH			192, 196
7003698	BOOT, RUBBER			194, 196
7008033	EVAPORATOR			388
7008040	MODULE, DE-ICER ELECTRONIC			390
7008043	FILTER, AIR OUTER			1, 2, 284
7008044	FILTER, AIR INNER			2, 284
7008105	GROUP, ROTATING LH			145, 146
7008106	GROUP ROTATING RH			147, 148
7008107	CONTROL			149, 150
7008108	CONTROL			151, 152
7008109	MODULE, CONTROL			153, 154
7008110	HOUSING			142, 144
7008111	FLANGE, LH			142, 144
7008112	FLANGE, RH			142, 144
7008113	SHAFT			142, 144
7008114	SCREW			142, 144
7008115	SENSOR			142, 144
7008116	FILTER			142, 144
7008117	SWASHPLATE			146, 148
7008118	BEARING			146
7008119	RING			150, 152
7008120	MODULE			154
7008121	GASKET			154
7008122	COVER			154
7008123	GASKET			154
7008124	VALVE, RELIEF			142, 144
7008318	LEVER, AHC			202
7008319	LEVER, AHC			201, 202
7008355	SEAL, QUAD			76, 78, 80, 82, 84, 86
7008380	BOLT			268
7008381	BOLT			262
7008382	BOLT			260
7008383	BOLT, FLANGE			262, 264

Code for disposition of old part number

A -- Use up

B -- Use on other application (See PNI)

C -- File PDR Report with Bobcat Parts Sales

D -- Part Number Error

Part No.	Description	Was	Code	Page
7008384	BOLT, FLANGE			248
7008385	SCREW			246
7008386	CIRCLIP			254
7008387	O-RING			264
7008388	BEARING, BALL			258
7008389	RETAINER, VALVE SPRING			248
7008390	SEAL, OIL			240, 244
7008391	SLEEVE, WEAR			254
7008393	PLUG			268
7008394	BOLT, ADJUSTMENT ASSY			273, 274
7008395	SPRING			274
7008396	BOLT, FLANGE			242, 258
7008397	BOLT			244, 250
7008398	GASKET, FRONT COVER			240, 242
7008399	GASKET, MANIFOLD INTAKE			238, 262
7008400	GASKET, MANIFOLD EXHAUST			238, 262
7008401	VALVE, INTAKE			248
7008402	VALVE, EXHAUST			248
7008403	ARM, ROCKER			248
7008404	ARM, ROCKER			248
7008405	SHAFT, ROCKER ARM			248
7008406	SPRING, ROCKER ARM			248
7008407	BRACKET, ROCKER ARM			248
7008408	WASHER			248
7008409	GASKET, ROCKER ARM			238, 246
7008410	ROD, PUSH			258
7008411	CAMSHAFT, VALVE			257, 258
7008412	RETAINER, BEARING			258
7008413	CAP, SEALING			258
7008414	GEAR, CAMSHAFT			258
7008415	RING, PISTON			254
7008416	RING, PISTON OS			254
7008417	PIN, PISTON ENG			254
7008418	BOLT			254
7008419	BEARING, ENG ROD CONNECTING			254
7008420	BEARING, ENG ROD CONNECTING			254
7008421	BEARING, ENG ROD CONNECTING			254
7008422	BEARING, ENG ROD CONNECTING			254
7008423	BEARING, ENG CRANKSHAFT			256
7008424	WASHER, THRUST			256

Code for disposition of old part number

A -- Use up
B -- Use on other application (See PNI)
C -- File PDR Report with Bobcat Parts Sales
D -- Part Number Error

Part No.	Description	Was	Code	Page
7008425	WASHER, THRUST			256
7008426	BEARING, ENG CRANKSHAFT			256
7008427	BEARING, ENG CRANKSHAFT			256
7008428	WASHER, THRUST			256
7008429	WASHER, THRUST			256
7008430	WASHER, THRUST			256
7008431	WASHER, THRUST			256
7008432	GEAR, IDLER			258
7008433	GEAR, CRANKSHAFT			254
7008434	SHAFT, GEAR IDLER			258
7008435	COLLAR, GEAR IDLER			258
7008436	COLLAR, GEAR IDLER			258
7008437	BUSHING, GEAR IDLE			258
7008438	PIPE, OIL			270
7008439	BOLT, JOINT			270
7008440	PUMP, OIL ENG			242
7008441	COVER, PUMP OIL ENG			242
7008442	PIPE, RETURN FUEL			280
7008443	GEAR, PUMP INJ			270
7008444	BRACKET, PUMP INJ			270
7008445	CLAMP, INJECTION			280
7008446	BOLT, ADJUSTING			274
7008447	CORD, GLOW PLUG			280
7008448	GASKET, FLANGE WATER			238, 260
7008449	PUMP, WATER			259, 260
7008450	COVER, THERMOSTAT			260
7008451	GASKET, PUMP WATER			240, 260
7008452	BOLT, FLANGE			264
7008453	BOLT, FLANGE			244
7008454	BOLT, FLANGE			244
7008455	BOLT, FLANGE			244
7008456	BOLT, FLANGE			258
7008457	HOOK, ENG			250
7008458	GASKET, HEAD			250
7008459	GASKET, HEAD			250
7008460	GASKET, HEAD			250
7008461	GASKET, HOUSING			240, 244
7008462	TUBE, BREATHER			246
7008463	TUBE, BREATHER			246
7008464	VALVE, AIR BREATHER			246
7008465	HOSE, AIR FORMED			246
7008466	MANIFOLD, INTAKE			261, 262

Code for disposition of old part number
A -- Use up
B -- Use on other application (See PNI)
C -- File PDR Report with Bobcat Parts Sales
D -- Part Number Error

Part No.	Description	Was	Code	Page
7008467	GASKET, EGR VALVE			238, 266
7008468	SPACER			246
7008469	TURBOCHARGER			263, 264
7008470	PISTON, ENG			253, 254
7008471	PISTON, ENG			254
7008472	PISTON, ENG			254
7008473	KIT, PISTON			256
7008474	KIT, PISTON OS			256
7008475	PISTON, ENG OS			254
7008476	PISTON, ENG OS			254
7008477	PISTON, ENG OS			254
7008478	BUSHING, PIN PISTON			254
7008479	ROD, CONNECTING			254
7008480	BEARING, ENG CRANKSHAFT			256
7008481	KIT, BEARING ENG			256
7008482	KIT, BEARING ENG			256
7008483	KIT, BEARING ENG			256
7008484	BEARING, ENG CRANKSHAFT			256
7008485	BEARING, ENG CRANKSHAFT			256
7008486	SCREEN, OIL ENG			252
7008487	PIPE, OIL			264
7008488	PIPE, OIL			264
7008489	EXCHANGER, OIL ENG			268
7008490	CONNECTOR			268
7008491	HOSE, RUBBER			246
7008492	HOUSING, PUMP INJ			272
7008493	PUMP, FUEL INJ			271, 272
7008494	PIPE, INJECTION			281, 282
7008495	PIPE, INJECTION			282
7008496	PIPE, INJECTION			282
7008497	PIPE, INJECTION			282
7008499	SPRING, START			278
7008500	GLOW PLUG			280
7008501	EXCHANGER, EGR			267, 268
7008502	HOSE, WATER FORMED			268
7008503	HOSE, WATER FORMED			268
7008504	HOSE, WATER FORMED			268
7008505	HOSE, VACUUM			266
7008506	BOLT, FLANGE			262
7008507	BOLT			264
7008508	STUD			264
7008509	STUD			262
7008510	KIT, GASKET ENG UPPER			236, 237, 238
7008511	KIT, GASKET ENG LOWER			236, 239, 240

Code for disposition of old part number
A -- Use up
B -- Use on other application (See PNI)
C -- File PDR Report with Bobcat Parts Sales
D -- Part Number Error

Part No.	Description	Was	Code	Page
7008512	BASE, EGR COOLER			268
7008513	BOLT, FLANGE			264
7008514	GASKET, TURBO			238, 264
7008514	GASKET, TURBO	6680893	A	238, 264
7008515	GASKET, TURBO			238, 264
7008515	GASKET, TURBO	6687147	A	238, 264
7008516	GASKET			238, 264
7008517	FITTING, BANJO			270
7008518	SPRING			242
7008519	PLUG			242
7008520	SPRING, GOVERNOR			278
7008521	HOSE, AIR FORMED			264
7008523	BLOCK, ENG			243, 244
7008524	PAN, OIL			251, 252
7008525	HOOK, ENG			250
7008526	HEAD, CYL ENG			249, 250
7008527	COVER, FRONT			241, 242
7008528	HOUSING, FLYWHEEL			244
7008529	PIPE, INTAKE			264
7008530	HOSE, AIR INTAKE			264
7008531	MANIFOLD, EXHAUST			262
7008532	FLANGE, MUFFLER			264
7008533	COVER, HEAD CYL ENG			245, 246
7008534	CRANKSHAFT, ENG			254
7008535	FLYWHEEL, ENG ASSY			244
7008536	HOSE, WATER FORMED			268
7008538	VALVE, EGR			265, 266
7008539	FLANGE, WATER			260
7008540	PIPE, OIL			268
7008541	PULLEY, FAN			260
7008542	PULLEY, DRIVE			256
7008543	CLAMP, HOSE			246, 264
7008544	CLAMP, HOSE			264
7008556	PLUG			438
7008561	SEAT, SHUTTLE			438
7008766	SHIM			156
7008767	SHIM			156
7008771	KIT, SEAL			92, 96, 162
7008810	VALVE	7010979	B,D	160
7008814	BULB, 5W			164, 168
7008832	VALVE, SOLENOID			102
7009081	NUT			164
7009254	EXCHANGER, OIL COOLER			122
7009255	EXCHANGER, WATER RADIATOR			122
7009256	BOLT, FLANGE			122

Code for disposition of old part number
A -- Use up
B -- Use on other application (See PNI)
C -- File PDR Report with Bobcat Parts Sales
D -- Part Number Error

Part No.	Description	Was	Code	Page
7009257	STRAP, HOLD DOWN			122
7009258	RING, RETAINER			122
7009259	PIN			122
7009260	PIN			122
7009261	RING, RETAINER			122
7009262	ROD, PROP UP			122
7009263	BRACKET, HINGE FORMED			122
7009976	O-RING			380
7009977	O-RING			380
7009978	O-RING			380
7010003	VALVE, CHECK			162
7010004	CARTRIDGE			162
7010005	CARTRIDGE			162
7010006	COIL			162, 438
7010007	FILTER. VALVE			162
7010008	BOLT			162
7010009	BOLT			162
7010010	BLOCK, PORT			162
7010029	KIT, SEAL			162
7010125	CONNECTOR			122
7010126	BOLT			122
7010127	BUMPER, RUBBER			122
7010133	GASKET, PUMP FUEL	6670782	B	240, 270
7010162	HOUSING, BLOWER			374, 376
7010163	MOTOR, FAN			374, 376
7010164	RESISTOR			374
7010165	COVER			374, 376
7010166	RING, INNER			374, 376
7010167	BLOWER, WHEEL			374, 376
7010168	SCREW			374, 376
7010169	CLAMP, HOSE			374, 376
7010172	PUMP, GEAR DOUBLE			158
7010227	COVER			142, 144
7010242	VALVE, CHECK			100
7010266	RIVET, POP			370, 388
7010282	PLUG			302
7010283	VALVE, REGULATOR			302, 304
7010330	PUMP, GEAR TRIPLE			102
7010335	KIT, CUSHION SEAT VINYL			470, 474
7010336	KIT, CUSHION SEAT VINYL			470, 474
7010338	KIT, BACKREST SEAT			470, 474
7010339	BELLOW			470
7010340	KIT, ADJUSTER SEAT			470
7010341	KIT, HOUSING SEAT			470

Code for disposition of old part number
A -- Use up
B -- Use on other application (See PNI)
C -- File PDR Report with Bobcat Parts Sales
D -- Part Number Error

Part No.	Description	Was	Code	Page
7010342	KIT, ABSORBER SHOCK SEAT			470, 474
7010343	KIT, LEVER ADJUSTING			470, 474
7010344	KIT, RAIL SLIDE SEAT			470
7010345	KIT, TETHER SEAT BELT			470, 474
7010346	KIT, BACKREST SEAT			470, 474
7010357	CAP, END			320
7010358	SPRING			320
7010359	KNOB			320
7010360	SLEEVE			320
7010365	NUT			320
7010386	COIL, HEATER			370, 388
7010387	HOUSING			370, 388
7010388	COVER			370, 388
7010389	COVER, SIDE			370, 388
7010390	COVER, SIDE			370, 388
7010391	SUPPORT, LH			370, 388
7010392	SUPPORT, RH			370, 388
7010393	COVER			370
7010394	HARNESS, HEATER			370
7010395	CLAMP			370, 388
7010396	COVER, HOSE			370, 388
7010397	PLUG, FILL			370
7010398	INSULATION, HEATER			370, 388
7010399	VALVE, DRAIN			370, 388
7010400	SPACER			370, 388
7010401	SCREW			370, 388
7010402	SCREW			370
7010403	NUT			370, 388
7010404	WASHER			370, 388, 389, 390
7010405	CLIP, RECEPTACLE			370, 390
7010406	INSULATION, HEATER			370, 390
7010408	INSULATION, HEATER			388
7010409	INSULATION, HEATER			388
7010410	INSULATION, HEATER			388
7010411	INSULATION, HEATER			388
7010412	INSULATION, HEATER			388
7010413	INSULATION, HEATER			388
7010414	INSULATION, HEATER			388
7010415	INSULATION, HEATER			388

Code for disposition of old part number

A -- Use up

B -- Use on other application (See PNI)

C -- File PDR Report with Bobcat Parts Sales

D -- Part Number Error

Part No.	Description	Was	Code	Page
7010416	INSULATION, HEATER			388
7010592	RETAINER, BEARING			272
7010600	TREE MOUNT	6678666	B	338
7010793	MOTOR, FAN			159, 160
7010992	VALVE, BPV			437, 438
7011060	VALVE, BPV			303, 304
7011061	DECAL			366, 368
7011062	PANEL, CONTROL			366, 368
7011070	HARNESS, RECEIVER			452
7011071	CONTROL, MODE SELECTOR			452
7011175	KIT, SWITCH SEAT			474
7011176	BELLOWS, SEAT CPL			474
7011177	HANDLE, ADJUSTING SEAT			474
7011178	HOUSING			474
7011179	KIT, RAIL SLIDE SEAT			474
7011180	COMPRESSOR, AIR SEAT			474
7011181	KIT, SPRING AIR			474
7011182	KIT, LEVER			474
7011183	KIT, BRACKET SEAT			472, 476
7012012	HOUSING, PUMP INJ			272
7012013	CLAMP, HOSE			266
7012014	HOSE, VACUUM	7000641	B	266
7012049	BOLT, ADJUSTMENT ASSY			274
7012312	FILTER, OIL HYD TANK ASSY	7012313	D	108
7012314	FILTER, OIL HYD ASSY			2, 12, 110
7012315	CAP, FILTER			110
7013178	PUMP, HYD			143, 144
7013201	PLUG			304
7013203	KIT, SEAL			304
7015308	SEAL			110
7015488	O-RING, FILTER TOP			106
7015489	O-RING, FILTER BOTTOM			106
7015518	VALVE, CHECK	7001538	A	112
7015668	MOUNT FIR TREE	6678666	B	164, 366
7018011	CHANNEL			200, 202
7018012	CHANNEL			200, 202
7019303	SPACER			262
7020604	PLUG			438
7020605	POPPET			438
7020606	PLUG			438
7020607	SPRING			438
7020643	SEAL, SHAFT			102

Code for disposition of old part number
A -- Use up
B -- Use on other application (See PNI)
C -- File PDR Report with Bobcat Parts Sales
D -- Part Number Error

Part No.	Description	Was	Code	Page
7020647	NUT			438
7020648	SPOOL			438
7020649	SPRING			438
7020650	SPOOL			438
7020651	SPRING			438
7020652	SPRING			438
7020653	SPRING			438
7020654	SPRING			438
7020655	O-RING			438
7020656	O-RING			438
7020657	PISTON			438
7020658	FILTER CARTRIDGE			438
7020659	ORIFICE			438
7020660	GUIDE			438
7020661	SHAFT			438
7020827	PUMP, FUEL INJ	7008537	A	269, 270
7020986	COLLAR			272
7020987	SHAFT, FORK LEVER			278
7020989	STUD	6598156	B	272
7020991	BOLT	7000748	B	256
7020992	LEVER, SPEED CONTROL	7000640	B	276
7020993	RETAINER			272
7020994	HOUSING, PUMP INJ			272
7021003	STUD	6685919	B	270
7021007	HOUSING, GOVERNOR	7000768	B	276
7021365	VALVE, SOLENOID			446
7021366	COIL, SOLENOID			446
7021367	NUT			446
7022423	PISTON, ENG			254
7022424	PISTON, ENG			254
7022425	PISTON, ENG			254
7022426	PISTON, ENG OS			254
7022427	PISTON, ENG OS			254
7022428	PISTON, ENG OS			254
7022429	ROD, CONNECTING			254
7022430	BUSHING, PIN PISTON			254
7022431	SHAFT, GEAR IDLER			258
7022432	GEAR, IDLER			258
7022433	GEAR, PUMP INJ			270
7022434	SHIELD, HEAT	7008522	A	262
7022635	FITTING, ELBOW	7113631	B,D	110
7100240	RACE			52, 54
7100699	WASHER			124
7101291	ELBOW			224
7101345	BONNET, DETENT HYD VALVE			94
7101371	ELBOW			104, 108
7101384	LIGHT			350
7101672	ACTUATOR			186, 188, 190
7101736	TIRE, HEAVY DUTY - 12X16.5 - 12 PLY			500

Code for disposition of old part number
A -- Use up
B -- Use on other application (See PNI)
C -- File PDR Report with Bobcat Parts Sales
D -- Part Number Error

Part No.	Description	Was	Code	Page
7102451	FITTING			178
7102652	SCREW			92, 94
7102747	GASKET			214
7103217	WASHER			124
7103708	BRACKET			126
7103711	BOLT			124
7104670	LIGHT			180, 350
7104671	LIGHT			350
7105192	BOLT			124
7105223	SPACER			124
7106218	DECAL QUALITY APPRVL			330
7106279	BOLT			224
7106862	CHAIN, DRIVE			48
7107271	WASHER			50
7108236	PIN			186, 188, 190
7108242	TILT SPOOL			94
7108781	SPOOL			90
7109623	ELBOW			60, 64, 68
7109661	LATCH, DOOR W/SENSOR			308, 312
7109662	HANDLE, LATCH DOOR			308, 312
7109904	BRACKET			140
7109905	BRACKET			138
7110287	GASKET			54
7110310	SCREW			216, 218
7110316	DECAL, SAFETY			308, 312, 330
7110365	ARM, PINTLE			124, 125, 126
7112383	AUX SPOOL			90, 94
7113340	CAP. DIESEL			224
7113631	ELBOW			112
7116111	CAB, ASSY			16, 17, 18
7116118	BRACKET			22, 338
7116851	CUP			222
7116870	DECAL, LOGO BOBCAT HEAD			332
7120401	GLASS, DOOR			308
7120402	FRAME DOOR ASSY			308
7120411	WINDOW			18
7120569	DECAL, FILTER			334
7120570	DECAL			334
7120573	DECAL			334
7120693	DECAL			100, 332
7120881	SCREEN, FILLER	6569219	A	223, 224
7121223	CAP. DIESEL LOCKING			224
7121399	SPRING			90, 94
7121425	BUSHING			18, 318
7121779	PAD			124
7122359	BRACKET			186
7123964	KIT, SEAL COMPLETE			92, 96
7125948	PLATE			210
7126213	DISC			56

Code for disposition of old part number
A -- Use up
B -- Use on other application (See PNI)
C -- File PDR Report with Bobcat Parts Sales
D -- Part Number Error

Part No.	Description	Was	Code	Page
7126215	CARRIER, MOTOR			51, 52
7126682	BLOCK			408
7127305	WASHER			220
7127976	BRACKET			22, 338
7128338	KIT, FLASHER 4-WAY			355, 356
7128342	KIT, WINDOW SIDE			319, 320
7128344	KIT, PANEL DLX			339, 340
7128389	KIT, WINDOW REAR LEXAN			317, 318
7128393	KIT, DOOR			307, 308
7128395	KIT, DOOR CAB SPECIAL APPS			311, 312
7128403	KIT, LOCK REAR DOOR			447, 448
7128405	KIT, BELT SEAT 2"			457, 458
7128426	KIT, ACD 7-PIN			341, 342
7128442	KIT, BPV			299, 300
7128484	KIT, HEATER			367, 368
7128524	KIT, SEAT 80MM SUSPENSION			465, 466
7128962	BOB-TACH			45, 46
7129173	COUNTERWEIGHT			322, 324
7129250	KIT, COUNTERWEIGHT			321, 322
7129251	KIT, COUNTERWEIGHT			323, 324
7129289	KIT, START KEYLESS			405, 406
7129293	KIT, FOPS TOP			357, 358
7129295	KIT, LIFT SINGLE POINT			407, 408
7129299	KIT, BEACON LIGHT			295, 296
7129301	KIT, STROBE LIGHT			497, 498
7129303	KIT, BELT SEAT 3"			459, 460
7129307	KIT, EXTINGUISHER FIRE			353, 354
7129371	KIT, ACS			287, 288
7129465	KIT, INTERIOR DLX			337, 338
7129483	KIT, PLUMBING HEATER			377, 378
7129490	KIT, A/C			379, 380
7129987	COVER			56, 58
7130652	TANK, FUEL			224
7130785	CHAINCASE			48
7130811	CHAIN, DRIVE			48
7130834	HUB, FAN			210
7131211	MOUNT			216, 218
7131233	PEDAL			422
7131236	BUSHING			422
7131273	SCREW			404
7132835	SHROUD			210
7132836	DUCT, FAN			210
7132837	MOUNT, MOTOR FAN			210

Code for disposition of old part number
A -- Use up
B -- Use on other application (See PNI)
C -- File PDR Report with Bobcat Parts Sales
D -- Part Number Error

Part No.	Description	Was	Code	Page
7132937	BUSHING, WELD-ON			44
7134153	SPROCKET			48, 50
7134445	BRACKET, TIE-DOWN			48
7134520	PLUG			90, 94
7134522	PLUG			90, 91, 92, 96
7134830	BUSHING			14
7134831	BUSHING			14
7135124	SCREW			216, 218, 220, 380, 382
7135486	MOUNT, ENG			220
7135569	DECAL			452
7136036	SPACER			84
7136111	HOSE, DRAIN OIL			220
7136113	BUSHING			210
7136291	CARRIER, MOTOR			53, 54
7136460	BOBTACH			46
7136464	BUSHING, WELD-ON			46
7136465	BUSHING, WELD-ON			46
7136559	SOLENOID ASMBLY			56
7136896	CONDENSER, A/C			380, 382
7136973	COVER			14
7137747	TANK, EXPANSION			212
7137939	KIT, SEAL			76, 80
7137945	SEAL KIT			84, 86
7137945	SEAL KIT	6816351	D	84, 86
7138014	SEAL KIT			432, 434
7138040	LIGHT, RH ASSY			164, 168
7138041	LIGHT, LH ASSY			164, 168
7138376	BUSHING			90, 94
7138973	WINDOW, REAR			18
7139459	COVER			14
7139845	LIFT ARM			41, 42
7139846	LINK, LIFT ARM H ASSY			42
7139883	BUSHING, WELD-ON			42
7140150	BRACE, COMPRES MACH			380, 382
7140441	HOLDER, CUP	7154405	A	328
7140927	DECAL			506
7141375	DECAL			506
7141405	BUSHING			220
7141674	BUSHING, WELD-ON			14
7141675	BUSHING, WELD-ON			14
7141700	HVAC ASSY			387, 388
7141701	HEATER ASSY			366
7141780	FLYWHEEL			216, 218
7141788	IDLER ASSY			216, 218
7141906	STRAP, RUBBER			210
7141939	BLOCK, COUPLER			74
7142000	BELT, ALT			8, 220, 380, 382
7142021	MUFFLER			214
7142141	DECAL			332, 408
7142142	DECAL			332, 408
7142371	SPRING GAS DOOR			308, 312, 313, 314
7142375	MOUNT			220

Code for disposition of old part number
A -- Use up
B -- Use on other application (See PNI)
C -- File PDR Report with Bobcat Parts Sales
D -- Part Number Error

Part No.	Description	Was	Code	Page
7142422	SHIELD, FLYWHEEL			215, 216, 217, 218
7142762	CLIP			20, 22, 24, 336, 338
7142873	SEAL			316
7142875	SEAL			316
7143234	PIN, PIVOT			42
7143236	BUSHING, WELD-ON			42
7143238	BUSHING, WELD-ON			42
7143239	BUSHING, WELD-ON			42
7143246	LINK, ASSY			42
7143921	HOSE			212
7143922	HOSE			212
7143923	HOSE			211, 212
7143924	TUBE			212
7143931	MOUNT, FILTER			224
7143971	SEATBAR			25, 26
7144158	REAR DOOR			40
7144198	PIN, PIVOT			42
7144265	MOUNT, TANK			212
7144600	MOUNT, FILTER FUEL			362
7144859	MOUNT, GAS SPRING			18, 364
7144862	SPRING			18
7145139	MOUNT, RADIATOR			210
7145147	LEVER, STEERING			124
7145149	SHAFT, STEERING			123, 124
7145268	CONTAINER, STORAGE			22, 338
7145333	BRACKET, RADIO			440
7145347	COVER			47, 48
7145358	SPRING			216, 218
7145436	BUSHING, WELD-ON			42
7145528	DECAL			332
7145659	HOSE, AIR FORMED			214
7145660	HOSE, AIR FORMED			214
7145885	VENT, DEFROST			24, 336, 386
7146236	BUSHING			220
7146264	COVER, RH SJC			192, 196
7146265	COVER, LH SJC			192, 196
7146471	EXCHANGER, OIL WATER			121, 122
7146538	PIVOT, BOBTACH			46
7147350	SPACER, TUBE			218, 404
7147354	PANEL			14
7147579	SHAFT TRANS			52, 54
7147745	SCREW			216, 218, 220, 404
7147804	PIN			42
7147806	PIN, PIVOT			42
7147815	BOOT			32, 34, 188, 190, 200, 202
7147826	BOLT, CROSS DRILLED			210
7147858	PULLEY, PUMP HYD			216, 218
7147861	MOUNT, ENG			216, 218, 222
7148068	WINDOW ASSY			320
7148069	WINDOW ASSY			320

Code for disposition of old part number
A -- Use up
B -- Use on other application (See PNI)
C -- File PDR Report with Bobcat Parts Sales
D -- Part Number Error

Part No.	Description	Was	Code	Page
7148287	SEAL DOOR HANDLE			308, 312
7148289	SEAL DOOR HINGE			308, 312
7148598	FILTER, AIR CLEANER ASSY			283, 284
7149056	LATCH, CAM			448
7149166	MOUNT, BOOM DOWN			72
7149204	NUT			22, 338
7149219	HARNESS			170, 174
7149357	MOUNT, LOAD ISOLATOR			218, 404
7149786	SEAT, SUSPENSION			466, 470
7149786	SEAT, SUSPENSION	7182357	A	466, 470
7149827	COVER, WIPER			308
7149931	MUFFLER, PURIFIER			417, 418
7150151	LATCH, WINDOW LEFT			18, 318
7150152	LATCH, WINDOW RIGHT			18, 318
7150182	BUSHING			76, 78, 80, 82
7150467	TUBELINE, HYD			80, 82
7150719	SEAL DOOR FRAME			308, 312
7150745	SPACER			312
7150746	SPACER			312
7151168	SHAFT			84, 86
7151466	BRACKET			48
7151520	TUBELINE, HYD			84, 86
7151540	PANEL, CROSSMEMBER			14
7151842	TUBE			378
7151848	BRACKET			380, 382
7151868	PEDAL ASSY			88, 288
7151871	PEDAL ASSY			88, 288
7151889	BELLCRANK			124
7151940	HARNESS, HORN			352, 398
7152003	HOSE, HYD			62, 64, 68
7152004	HOSE, HYD			62, 64, 68
7152005	HOSE, HYD			62, 64, 68
7152037	NUT, RETAINING			222
7152319	BELT, RETRACTOR			458
7152322	BELT, SEAT 2"			458, 462
7152323	COVER, RETRACTOR			458, 462
7152324	BRACKET, BELT SEAT 3PT			458, 462
7152605	SLEEVE			216, 218
7152658	WASHER			216, 218
7152748	DECAL, FUEL DIESEL			330, 332
7153006	HOSE, HYD			60, 64, 68
7153008	HOSE, HYD			60, 64, 68
7153018	HOSE ASSY			428, 430
7153048	LINK, PEDAL			88

Code for disposition of old part number
A -- Use up
B -- Use on other application (See PNI)
C -- File PDR Report with Bobcat Parts Sales
D -- Part Number Error

Part No.	Description	Was	Code	Page
7153049	LINK, PEDAL			88
7153058	LINK, BELLCRANK			88
7153075	BRACKET, DAMPER			496
7153076	BRACKET, DAMPER			496
7153379	LEVER, STEERING			124
7153503	BOOT			32, 34, 88, 188, 288
7153655	COVER, BRAKE ASSY			58, 118
7153832	SEAL, SHELF REAR			24, 336, 386
7154163	TUBELINE, HYD			76, 78
7154285	BOX, STORAGE			22, 338
7154404	CONTAINER			328
7154521	HOSE			100
7154522	TUBELINE			74
7154523	TUBELINE			74
7154528	ELBOW			62, 64
7154903	LINK			188, 288
7154910	INSERT, THREADED			164, 168, 320
7155024	HARNESS DOOR			308
7155070	GROMMET			114
7155158	PLATE, THREADED			322, 324
7155180	HOSE, HYD			60, 64, 68
7155193	MOUNT, MUFFLER			214, 220
7155238	BOLT			216, 218
7155269	HOSE, HYD			118
7155308	WINDOW			312
7155309	PULLEY			216, 218
7155359	FRAME, DOOR			312
7155390	HOUSING, FUSE RELAY			170, 174
7155391	HOSE, HYD			60, 64, 68
7155642	FENDER, PANEL RH			22, 338
7155643	FENDER, PANEL L.H.			22, 338
7155649	HOLDER, CUP			328
7155660	FITTING			100
7155661	HOSE			100
7155668	HOSE, HYD FORMED			112
7155785	HEADLINER, HVAC			386
7155786	HEADLINER,STD			20
7155788	PANEL, CENTER			20, 22
7155791	PANEL, RH			20, 22, 164, 168, 340, 406
7155792	PANEL, LH			19, 20, 21, 22, 164, 168
7155794	LOUVER, ROUND			386, 394
7155796	LOUVER, RECTANGLE			386
7155797	LIGHT			24, 336
7155798	HEADLINER, DLX			23, 24, 336
7155799	SCREW			386
7155829	HOSE, HYD			60
7155830	HOSE, HYD			60, 64, 68
7155831	HOSE, HYD			60
7155832	HOSE, HYD			60
7155834	HOSE, HYD			428, 430

Code for disposition of old part number
A -- Use up
B -- Use on other application (See PNI)
C -- File PDR Report with Bobcat Parts Sales
D -- Part Number Error

Part No.	Description	Was	Code	Page
7156087	SEAL			316
7156146	GROMMET			378
7156150	MOUNT			72
7156253	KIT, HEADLINER DLX			335, 336
7156319	HOSE, HYD			60, 64, 68
7156321	HOSE, HYD			428
7156322	HOSE, HYD			428
7156362	MOUNT, BLKHD			60, 61, 62, 64, 68
7156363	MOUNT, BLKHD			74
7156605	KIT, LIFT			409, 410
7156606	BRACKET, ASSY			410
7156761	PLATE			124
7156809	BUMPER			416
7156859	HOSE, HYD FORMED			112
7156916	PAN, FLOOR			32, 34, 36, 38
7157073	HOSE, HYD			112
7157080	MOUNT			56, 57, 58
7157092	BRACKET			214
7157286	BODY			90
7157289	BLOCK			90, 94
7157290	TUBELINE			90, 94
7157291	TUBELINE			90, 94
7157293	BODY			94
7157358	CLAMP			62, 64, 68
7157365	COVER, ENGINE			210
7157366	SCREEN, ASSY			210
7157370	COVER, HOOD			209, 210
7157611	MOUNT			88, 288
7157671	COVER ARMREST, RH			192, 196
7157704	COVER ARMREST LH			192, 196
7157719	BRACKET			26, 28
7157725	PEDAL ASSY			36, 38, 228, 232
7157729	BELLCRANK			228
7157731	TUBE SPACER			228
7157922	MOUNT			380, 382
7157923	HOSE, AIR FORMED			290
7158128	BUSHING, WEAR			42
7158459	SUPPORT, LIFT ARM			42
7158574	PEDAL ASSY			36, 38
7158632	CONNECTOR			104, 108
7158921	FITTING			104, 108, 112
7158988	CABLE, THROTTLE			228
7159044	HOSE ASSY			104, 108
7159094	COVER, DRAIN			48
7159102	MOUNT			408
7159243	BUSHING			380, 382
7159325	HARNESS, SJC			186
7159352	PAN, BATTERY			178
7159366	HARNESS, 2 SPEED RETURN			118

Code for disposition of old part number
A -- Use up
B -- Use on other application (See PNI)
C -- File PDR Report with Bobcat Parts Sales
D -- Part Number Error

Part No.	Description	Was	Code	Page
7159386	WASHER			226, 228, 232
7159532	COVER			14
7159542	BELT, SEAT RETRACTOR			456
7159624	BUSHING			124, 228, 232
7159735	HOSE, HYD	7186609	C	116, 120
7159749	STEP			44
7160320	HOLDER, CUP			328
7160381	RIVET, BIRD CAGE			22, 338, 394
7160382	RIVET, BIRD CAGE			20, 22, 338
7160383	RIVET, BIRD CAGE			22, 328, 338
7160698	LATCH			40
7160701	LATCH			40
7160703	HANDLE			40
7160704	STOP			40
7160705	CHANNEL			40
7160706	BAR			40
7160760	MOUNT			408
7160765	NUT			32, 34, 36, 38
7160779	PLATE			408
7160841	SEAL HANDLE DOOR			308
7160865	SCREW			212
7161042	CLAMP, HOSE			62, 64, 65, 66, 68, 74
7161043	BRACKET, CLAMP HOSE			62, 66, 68, 69, 70, 74
7161130	COVER			36, 38
7161131	COVER, LEVER			36, 38
7161429	PLUG			308, 312
7161527	COVER, BRAKE ASSY			56
7161536	PIN, CLEVIS			408
7161559	PIN, SNAPPER			400
7161595	SEAL, FOAM			366
7161786	VALVE, POWER BOB-TACH			435, 436
7161789	SEAL			316
7161793	PANEL			14
7161893	MOUNT, MUFFLER			214
7161939	GRILL			22, 338
7161953	GUIDE, HOSE ASSY			400
7162141	BUSHING, WELD-ON			14
7162176	SPACER			192, 196
7162770	SCREW, PLASTIC			372, 392, 394, 440
7162930	ELBOW			112
7162931	HOSE, HYD FORMED			104
7162933	LIFT EYE			410
7162966	CABLE, NEGATIVE			178
7162967	CABLE, POSITIVE			178
7163132	FOAM, FRONT			32, 34, 36, 38, 316
7163216	BRACKET			124
7163259	WASHER TANK			308
7163263	CAP WASHER BOTTLE			308

Code for disposition of old part number
A -- Use up
B -- Use on other application (See PNI)
C -- File PDR Report with Bobcat Parts Sales
D -- Part Number Error

Part No.	Description	Was	Code	Page
7163507	WASHER, SPRING			410
7163571	KIT, WIPER REAR			449, 450
7163589	INSERT, SWITCH			164
7163706	HARNESS, JOYSTICK			186
7163748	MOUNT			408
7163765	BRACKET, FUEL			224
7163768	BRACKET, FUEL			224
7163919	TANK, HYDRAULIC			104, 108
7163988	SEAL, WINDOW REAR			18, 318
7164073	GUIDE			168, 338
7164144	HARNESS			188, 190
7164175	BRACKET, SHORT SKI			170, 174
7164294	PEDAL, FOOT THROTTLE			228, 232
7164345	COVER, PAN FLOOR			32, 34, 36, 38
7164347	COLUMN, FRONT RIGHT			22, 338
7164348	COLUMN, FRONT LEFT			22, 338
7164413	HOSE, HYD			114
7164564	BRACKET, A/C			380, 382
7164589	HOSE, HYD			104
7164590	DOOR PLATE			308, 312
7164686	BOLT, CARRIAGE			358, 408
7164698	HOSE, HYD FORMED			112
7164957	MOUNT			220
7165035	SHIELD			220
7165037	CAP, INST PANEL RH			20
7165038	CAP, INST PANEL LH			20
7165205	HOSE, HYD FORMED			112
7165206	HOSE, HYD FORMED			112
7165332	SHELF, REAR			24, 336, 386
7165333	CLIP			24, 34, 38, 336, 386
7165344	STORAGE			22, 338
7165345	DOOR, COVER			22, 338
7165346	DOOR, COVER			22, 338
7165634	WASHER, PLASTIC			192, 196
7165635	SPACER, SJC			192
7165673	SEAL, CAB DUCT			366, 368
7165799	SCREW			20, 22, 24, 336, 386
7165806	BRACKET			104, 108
7165972	COUPLER INSERT			308
7165991	HARNESS, CAB STD			164
7166047	SEAT, CHECK VALVE			90, 94
7166171	BRACKET			226, 228, 232
7166172	HANDLE			226, 228, 232

Code for disposition of old part number
A -- Use up
B -- Use on other application (See PNI)
C -- File PDR Report with Bobcat Parts Sales
D -- Part Number Error

Part No.	Description	Was	Code	Page
7166173	HANDLE			226, 228, 232
7166174	BLOCK			226, 228, 232
7166177	BRACKET			338
7166190	SCREW THREAD ROLLING			308, 309, 310, 368, 372, 392
7166195	PAD, PAN FLOOR			32, 34, 36, 38
7166196	FOAM, PANEL			32, 34, 36, 38, 316
7166197	FOAM, PANEL			31, 32, 33, 34, 36, 38, 316
7166198	FOAM, PANEL			32, 34, 36, 38, 316
7166199	FOAM, EDGE			32, 34, 36, 38, 316
7166200	FOAM, PAN FLOOR			32, 34, 36, 38, 316
7166205	SPACER HANDLE			310
7166269	WASHER			226, 228, 232
7166283	VALVE, CONTROL			93, 94
7166315	PLUG			32, 34, 188, 288
7166334	ARM LIFT			408
7166338	TEE, BOSS			90, 94
7166339	SPRING, LOAD CHECK			90, 94
7166382	HOSE, HYD FORMED			104
7166410	TANK, HYD FILTERED			104
7166445	BRACKET, BLOCK DILL			172, 176
7166482	BRACKET			354
7166489	BRACKET, CAB			170, 174
7166534	DUCT			366
7166544	COVER, HVAC			18
7166623	CABLE			228, 232
7166831	BLOCK			408
7166832	MOUNT			356
7166916	DECAL, A/C			332, 380, 382
7167003	CLIP			328
7167118	PLATE, WASHER			32, 34, 36, 38
7167163	BOWL, FUEL			362
7167164	ARM, TENSIONER			216, 218
7167165	WHEEL, TENSIONER			216, 218
7167169	MOUNT			228
7167173	PIVOT ASSY			228
7167177	GROMMET WIPER			310, 450
7167395	KIT, CUP HOLDER			327, 328
7167405	SEAL, DUCT			366, 368
7167437	SPRING, GAS STD			18, 358
7167438	GAS SPRING			364
7167465	TUBELINE, HYD			60
7167466	TUBELINE, HYD			60
7167506	SHIELD, ASSY			358
7167537	GUARD, CONDENSER			212
7167582	HOSE, HYD			114
7167583	HOSE, HYD			114
7167603	SEAT, OPERATOR SUSPENSION AIR	7182356	A	468, 474

Code for disposition of old part number
A -- Use up
B -- Use on other application (See PNI)
C -- File PDR Report with Bobcat Parts Sales
D -- Part Number Error

Part No.	Description	Was	Code	Page
7167603	SEAT, OPERATOR SUSPENSION AIR			468, 474
7167652	SEAL DOOR			310, 312
7167757	HOSE, HYD FORMED			104
7167844	SHAFT			310
7167845	PIN			310, 312
7167846	WASHER CAST			310, 312
7167945	DECAL, FUSE RELAY			170, 174, 330
7167988	DECAL, DANGER			330
7167989	DECAL, DANGER			332
7167990	DECAL, DANGER			332
7167991	DECAL, EXIT REAR			318, 330, 450
7167993	DECAL, WARNING			332
7167994	DECAL, WARNING			330
7167996	DECAL, WARNING			332, 410
7167998	DECAL, SERVICE			330, 486, 488
7168000	DECAL, ROC 2690			330
7168019	DECAL, WARNING			410
7168020	DECAL, WARNING			410
7168021	DECAL			408
7168022	DECAL			408
7168023	DECAL			330
7168024	DECAL			330
7168025	DECAL EMERGENCY DOOR			310, 312, 330
7168031	DECAL			332
7168033	DECAL, DANGER			334
7168034	DECAL, DANGER			334
7168037	DECAL, WARNING			334
7168038	DECAL, WARNING			334
7168040	DECAL, WARNING			334, 410
7168042	DECAL, SERVICE			334, 486, 488
7168081	DECAL, OPERATION			334
7168082	DECAL, OPERATION			334
7168114	DECAL, SWITCH			186, 330, 340, 406
7168136	DECAL			330
7168137	DECAL, OPERATION			333, 334
7168138	DECAL, WARNING			330, 478, 480
7168139	DECAL, WARNING			334, 478, 480
7168140	DECAL, WARNING			330
7168141	DECAL, WARNING			334
7168142	DECAL, WARNING			330
7168143	DECAL, WARNING			334
7168144	DECAL			330
7168145	DECAL, WARNING			334
7168146	DECAL			310, 314
7168159	BUSHING			408
7168164	EXTINQUISHER,FIRE			354
7168171	BELT, SEAT 3"			460
7168172	BELT, SEAT 3"			462
7168173	BRACKET, COVER			170, 174
7168272	DECAL			330

Code for disposition of old part number
A -- Use up
B -- Use on other application (See PNI)
C -- File PDR Report with Bobcat Parts Sales
D -- Part Number Error

Part No.	Description	Was	Code	Page
7168273	DECAL, CONTROL			334
7168276	VALVE, CONTROL			89, 90
7168310	EVAPORATOR			380
7168336	HOSE, HYD			62, 64, 68
7168337	HOSE, HYD			72
7168429	BOLT, CONTROLLER			170, 174
7168430	BRACKET			380, 382
7168604	RESISTOR			366, 368
7168610	COVER			20, 24, 336
7168836	SHAFT			312
7168837	HINGE, DOOR			312
7168839	SPACER			312
7168841	SEAL			312
7168848	SUPPORT, TUBE RH			192, 196
7168849	SUPPORT, TUBE LH			192, 196
7168862	MOUNT, ARMREST			192
7168863	MOUNT, ARMREST			192
7168921	SPRING			228
7168927	ADAPTER			116
7168952	WIPER MOTOR			310
7168953	ARM WIPER ASSY			310
7168954	BLADE WIPER ASSY			310
7168955	GASKET			310
7168956	PLATE ADAPTOR			310
7168957	PLATE STUD ADAPTOR			310
7168962	ROD			228
7169070	KIT, DAMPER DUAL			495, 496
7169112	SWITCH, ROCKER A/C			380, 382
7169116	ADAPTER			118
7169128	PULLEY A/C			380, 382
7169130	HARNESS ACCESSORY			286
7169291	DECAL			310, 312, 332, 364
7169340	DECAL			332
7169341	DECAL, LIFT ARM			334
7169480	KIT, BELT SEAT 3"			461, 462
7169699	DECAL			330
7169710	DECAL, SIGHT GAUGE			332
7169741	TUBELINE, HYD			442
7169747	TREAD, SAFETY			18
7169753	HARNESS, FLASHER 4-WAY			356
7169778	SEAL, BULK			210
7169849	FITTING BALLSTUD			310, 312
7169877	DECAL			18, 332
7169911	PLATE, DECAL			226, 228, 232
7169932	MOUNT			126
7169965	DECAL, TAILGATE BASE			332
7169969	DECAL, MODEL			332

Code for disposition of old part number
A -- Use up
B -- Use on other application (See PNI)
C -- File PDR Report with Bobcat Parts Sales
D -- Part Number Error

Part No.	Description	Was	Code	Page
7169971	DECAL, LIFT ARM STRIPE			332
7169972	DECAL, MODEL			332
7170011	SPOOL, LIFT			94
7170114	SCREW			24, 336
7170300	PIN, PIVOT			402
7170337	STAND, SEAT			30
7170354	ADAPTER			442
7170355	DECAL, DANGER			62, 64, 66, 68, 70, 72, 330
7170360	DECAL, SPRING REMOVAL			310, 312, 332
7170374	CAM, WELDMENT			228
7170531	HARNESS, CAB			312
7170608	BUSHING, WELD-ON			44
7170609	PIN, PIVOT TAPERED			42
7170610	BUSHING, WELD-ON			46
7170611	SEAL			46
7170613	PLUG			46
7170614	SNAP RING			46
7170615	BUSHING, WEAR			46
7170635	INSULATION, TANK FUEL			224
7170673	FAN COOLING			210
7170765	NUT			192, 196
7170782	KIT, GAS SPRING DLX			363, 364
7171081	BRACKET, HORN			164, 168, 396, 398
7171088	GROMMET			164, 168, 396, 398
7171167	SEALANT, GASKET LIQUID			18
7171184	INSULATION, CROSSMEMBER			486, 488, 491, 492
7171188	BRACKET			172, 176
7171192	INSULATION, DOOR REAR			486, 488, 490
7171194	INSULATION, DOOR REAR			486, 488, 490
7171209	HOSE, HYD			74
7171210	HOSE, HYD			74
7171215	INSULATION, UPRIGHT			490
7171218	INSULATION, PANEL LH			486, 492
7171219	INSULATION, PANEL RH			486, 488, 492
7171220	INSULATION, PANEL LH			486, 488, 492
7171222	BRACKET FRC			170
7171394	HOSE			104, 108
7171656	INSULATION, SIDE			486, 488, 492
7171996	MANIFOLD, HYD ASSY			106, 110, 442, 486, 488
7172023	INSULATION, FENDER			486, 488, 492

Code for disposition of old part number
A -- Use up
B -- Use on other application (See PNI)
C -- File PDR Report with Bobcat Parts Sales
D -- Part Number Error

Part No.	Description	Was	Code	Page
7172119	SEAL, FOAM			450
7172121	WASHER			450
7172234	HOSE, HYD ASSY			106, 110, 428, 430
7172235	HOSE, HYD ASSY			486, 488
7172247	WINDOW, CAB REAR			450
7172708	BRACKET, SWITCH			450
7172897	KIT, RESEAL PLUGS			453, 454
7172899	KIT, BOWL FUEL	7178299	D	361, 362
7172901	KIT, SOUND/NOISE REDUCTION			485, 486
7172903	KIT, DECAL WHITE			505, 506
7173159	BRACKET, BELT SEAT			30, 464
7173206	INSULATION, PAN SEAT			478, 480
7173294	DECAL			334
7173309	GUARD, LIGHT			414
7173310	SPACER			414
7173324	GUARD, COUPLER			326
7173403	DECAL, OPERATION			334
7173453	PLUG			454
7173592	KIT, ALARM BACK-UP			291, 292
7173593	KIT, ALARM BACK-UP			293, 294
7173594	KIT, HORN			395, 396
7173595	KIT, HORN W/JOYSTICK			397, 398
7173651	INSULATION, HEATER			380, 382
7173943	PLATFORM			416
7174054	COVER			14
7174128	KIT, GUARD LIGHT			413, 414
7174129	KIT, GUARD LIGHT			411, 412
7174130	KIT, GUARD MUFFLER			419, 420
7174171	KIT, HEADLINER HVAC			385, 386
7174328	DECAL			506
7174407	ARM, IDLER			216, 218
7174537	DECAL			506
7174782	HARNESS, MFR			169, 170
7174787	INSULATION, PAN SEAT			18
7174811	SHIELD, ISOLATOR			346
7174813	BRACKET, CABLE			226, 232
7174814	BRACKET, CABLE			228
7174815	CABLE			226
7174837	GASKET, WIPER			308
7174838	SPACER			310
7174839	SPACER			310
7174841	SPACER, HANDLE			308
7174903	KIT, SEAL CAB			315, 316
7174997	LOUVER, RH			14

Code for disposition of old part number
A -- Use up
B -- Use on other application (See PNI)
C -- File PDR Report with Bobcat Parts Sales
D -- Part Number Error

Part No.	Description	Was	Code	Page
7174998	LOUVER, LH			14
7175017	HARNESS, ALARM BACK-UP			180, 292
7175151	STRIKER, DOOR			308, 312
7175270	PIN, PIVOT			42
7175271	HARNESS, REAR DOOR			180
7175287	HARNESS, REAR DOOR			180, 350
7175293	HARNESS, FUEL			170, 174
7175321	HARNESS, ACD INPUT			342
7175549	MOUNT, HOSE			74
7175559	HOSE, HYD			74
7175625	HARNESS, MFR			170
7175643	TUBELINE, HYD			442
7176037	MOUNT			232
7176039	LEVER			232
7176043	CAM, LEVER			232
7176078	TUBELINE, HYD			442
7176098	HARNESS, CAB DELUXE			168
7176099	FILTER, AIR FRESH			366, 368
7176100	COVER			366, 368
7176101	DUCT, AIR			366, 368
7176117	MOUNT			32, 34, 124
7176118	MOUNT			32, 34, 124
7176133	PANEL, CAB INTERIOR			24
7176134	PANEL, CAB INTERIOR			20
7176309	CONTROL			366, 368
7176579	SEAL, FOAM			366, 368
7176593	HINGE BASE			308, 312
7176603	INSULATION, PANEL SEAT			18
7176927	TUBELINE, HYD			72
7176928	HOSE, HYD			116, 118
7176929	TUBELINE, HYD			116, 118
7176934	HOSE, HYD			118
7176935	HOSE, HYD			118
7176942	SPACER			366, 368
7176943	SEAL, COVER			366, 368
7176970	HOSE, FUEL FORMED			224
7176971	BRACKET, FUEL			224
7177102	TUBELINE, HYD			442
7177103	TUBELINE, HYD			442
7177104	HOSE, HYD			442
7177105	HOSE, HYD			442
7177196	SHELL, ARMREST RH			192, 196
7177196	SHELL, ARMREST RH	7157670	A	192, 196

Code for disposition of old part number
A -- Use up
B -- Use on other application (See PNI)
C -- File PDR Report with Bobcat Parts Sales
D -- Part Number Error

Part No.	Description	Was	Code	Page
7177197	SHELL, ARMREST LH			192, 196
7177197	SHELL, ARMREST LH	7157703	A	192, 196
7177212	GASKET			362
7177235	BRACKET, HARNESS	7159879	A	170, 174
7177417	MOUNT, CONTROLS LH	7153506	A	192
7177418	MOUNT, CONTROLS RH	7156842	A	192
7177578	HOSE, HYD ASSY			74
7177579	HOSE, HYD ASSY			74
7177690	MOUNT			352
7177707	DECAL			334, 340, 406
7177742	DECAL			330, 338
7177863	KIT, POST GUIDE HOSE			401, 402
7178176	SHIELD, HEAT			210
7178294	HOSE, HYD			118
7178420	KIT, PLATFORM MAINTENANCE			415, 416
7178623	COVER, HOSE			224
7178841	TEE			442
7178954	COVER, HVAC			20
7179008	SCREW, PLASTIC			164, 168, 340
7179136	PLUG, HARNESS CAB STD			164
7179137	FOAM			164
7179382	BRACKET			106
7180031	PANEL, LH	7156920	A	32, 36
7180032	PANEL, RH			32, 34, 35, 36, 37, 38, 228, 232
7180032	PANEL, RH	7156919	A	32, 34, 35, 36, 37, 38, 228, 232
7180052	INSULATION, TRANS			486, 488
7180087	DECAL, WARNING			292, 294
7180207	HARNESS, WIPER			450
7180954	MOUNT			227, 228
7180987	FITTING, CROSS			90, 94, 120
7180997	HOLDER			348
7180998	HOLDER			348
7181282	CHAIN, DRIVE			48
7181309	PAD, WEAR			106, 110
7181555	TOOL BOX			338
7181556	COVER, TOOL BOX			338
7181557	CAM			338
7181582	HOSE, HYD ASSY	7159735	B	112
7182796	SEAL, FOAM			18
7182882	TUBELINE, HYD			62, 66, 70
7182942	PLUG	7162771	A	22, 338
7182942	PLUG			22, 338
7183022	WINDOW, CAB REAR			318
7183158	PLATE			314
7183295	HARNESS, HORN			352

Code for disposition of old part number
A -- Use up
B -- Use on other application (See PNI)
C -- File PDR Report with Bobcat Parts Sales
D -- Part Number Error

Part No.	Description	Was	Code	Page
7183298	CLAMP			62, 66, 70
7183318	CYLINDER, POWER BOB-TACH			433, 434
7183319	SHAFT, ROD CYL POWER BOB-TACH			434
7183366	KIT, SEAT OPERATOR SUSPENSION AIR			467, 468
7183521	CASE			434
7183605	KIT, FITTING W/DECAL			68, 300
7183784	BRACKET FUEL	7163766	A	224
7183799	LINK, STEERING			124
7183869	GUARD, LIGHT			412
7183870	GUARD, LIGHT			412
7183957	LINK, CENTER			124
7184194AR	KIT, DECAL			330, 332
7184194BR	KIT, DECAL			330, 332
7184194JP	KIT, DECAL			330, 332
7184198AR	KIT, TRANSLATION			330, 332
7184198BR	KIT, TRANSLATION			330, 332
7184314	HOSE, HYD ASSY			424
7184341	BUSHING			458, 462
7184346	DECAL WARNING	7168303	A	330, 458, 462
7184621	KIT, AUX REAR			441, 442
7184677	BUSHING			40
7184969	HOSE, HYD			430
7184970	HOSE, HYD			430
7185137	SPACER			318
7185150	PLUG, HARNESS CAB			164, 168, 338
7185169	PANEL, STEERING			32, 34, 36, 38
7185170	COVER			32, 34, 36, 38
7185232	HOSE, HYD	7112348	A	486, 488
7185232	HOSE, HYD			486, 488
7185234	KIT, REMOTE CONTROL			451, 452
7185690	HVAC ASSY			391, 392
7185717	HOSE, WATER FORMED			212
7185837	BRACKET			410
7185838	BRACKET			410
7185847	HOUSING			372, 392
7185848	COVER			372, 392
7186644	WINDOW, FOPS			360
7186723	KIT, WINDOW FOPS			359, 360
7186768	BOLT	7156722	B	416
7186769	BOLT	7164618	B	416
7186827	MOUNT, BULKHEAD			442
7186828	MOUNT, BULKHEAD			442
7186835	HOSE, HYD			442
7186836	HOSE, HYD			442
7186972	LEVER	7168288	A	310, 312
7187104	SEAL			20, 340, 406
7187114	TUBELINE, HYD			60

Code for disposition of old part number
A -- Use up
B -- Use on other application (See PNI)
C -- File PDR Report with Bobcat Parts Sales
D -- Part Number Error

Part No.	Description	Was	Code	Page
7187115	TUBELINE, HYD			60
7187118	KIT, GUIDE HOSE			399, 400
7187123	MAIN FRAME			13, 14
7187124	FRAME LINK			42
7187472	HOSE			120
7188097	SEAL			310
7188129	KIT, EXTENTION LIGHT			347, 348
7188130	HOLDER			348
7188131	HOLDER			348
7188132	HOLDER			348
7188343	PIN			410
7188390	HOSE, HYD			60
7188391	HOSE, HYD			60
7188448	HARNESS, PUMP			186
7188542	DECAL, INSTRUCTIONS	7162648	B	416
7188745	PLUG	7174012	A	18, 328, 338
7188749	SPRING			232
7188778	HOSE, HYD FORMED			108
7188779	HOSE, HYD FORMED			108
7188792	BELT, DRIVE	7147859	A	8, 216, 218
7189077	MOUNT	7167871	B	180, 292, 294
7189310	HOSE, HYD			442
7189370	HOSE, HYD FORMED			108
7189371	HOSE, HYD FORMED			108
7189581	BRACKET, HARNESS	7163597	A	172, 176
7190083	MAIN FRAME			14
7190111	DECAL, CONTROL			406
7190164	BRACKET, THROTTLE	7174914	A	226, 231, 232
7190164	BRACKET, THROTTLE			226, 231, 232
7191332	YOKE	7152501	B	88
7191333	PIN, CLEVIS	7179279	B	88
7191334	PIN, CLEVIS	7178508	B	88
7191385	SHIELD, ALARM			180, 292, 294
7191409	PANEL, MOUNTING			36, 38
7191409	PANEL, MOUNTING	7159224	A	36, 38
7191528	LEVER			232
7192066	INSULATION			478, 480
7192067	INSULATION, PANEL LH			478, 482
7192068	INSULATION, FLOOR			478, 480, 482, 484
7192069	INSULATION, FLOOR			478, 480, 482, 484
7192070	INSULATION, FLOOR			478, 480, 482, 484

Code for disposition of old part number
A -- Use up
B -- Use on other application (See PNI)
C -- File PDR Report with Bobcat Parts Sales
D -- Part Number Error

Part No.	Description	Was	Code	Page
7192071	INSULATION, CROSSMEMBER			478, 480, 482, 484
7192147	KIT, SOUND/NOISE REDUCTION			477, 478
7192148	KIT, SOUND/NOISE REDUCTION			481, 482
7192153	INSULATION			482, 484
7192184	INSULATION			482, 484
7192250	KIT, POWER BOB-TACH			425, 426
7192254	KIT, PLUMBING POWER BOB-TACH			429, 430
7192287	BOLT			372, 392, 394
7192371	BOLT			382, 392
7192408	SEAL			372, 392
7192569	BRACKET			368
7192823	NUT			454
7193006	HOSE, HYD			116, 120
7193007	HOSE, HYD			116, 118, 120
7193007	HOSE, HYD	6692929	A	116, 118, 120
7193018	SEAL			394
7193019	PANEL, DUCT			394
7193020	DUCT, AIR			394
7193021	BRACKET			394
7193022	INSULATION			394
7193023	DUCT, AIR			394
7193354	FILTER, AIR RECIRCULATING			372, 392
7193452	MOUNT, ENG			220
7193531	GROMMET			382, 392
7193532	GROMMET			372, 392
7193533	GROMMET			382, 392
7193534	COIL, HEATER			372, 392
7193535	EVAPORATOR			382, 392
7193536	BLOWER, HEATER & A/C			375, 376
7193538	BLOCK, VALVE A/C			382, 392
7193539	THERMOSTAT			382, 392
7193540	LATCH			372, 392
7193541	DRAIN, WATER SEAT			372, 392
7193542	SEAL			372, 392
7193543	SEAL			372, 392
7193671	GUARD, MUFFLER			420
7193687	BRACKET, MOUNTING			218, 404
7193725	HINGE, DOOR CAB	7150817	A	308
7193758	FITTING, HYD ELBOW			68
7193778	PLUG			372
7193780	HEATER, CAB			371, 372
7193782	COVER			372
7193783	SEAL, FOAM			372, 392
7193784	BOLT			372, 392
7193785	CLIP			382, 392

Code for disposition of old part number
A -- Use up
B -- Use on other application (See PNI)
C -- File PDR Report with Bobcat Parts Sales
D -- Part Number Error

Part No.	Description	Was	Code	Page
7193786	RIVET, POP			372, 392
7194123	SHIELD, SENSOR			142, 216
7194123	SHIELD, SENSOR	7131322	A	142, 216
7194160	BUMPER, RUBBER 'M' SERIES			306
7194262	WRAPAROUND			372, 392
7194471	PIN, CLEVIS			358
7194572	MOUNT			218, 404
7196015	BUSHING, PLASTIC			310
7196017	DISK, PLASTIC			310
7196284	CABLE, THROTTLE			232
7196318	INSULATION			486, 488, 492
7196318	INSULATION	7172022	A	486, 488, 492
7196358	INSULATION			486, 488, 492
7196358	INSULATION	7171217	A	486, 488, 492
7196361	HOSE, HYD	7188370	A	120
7196362	HOSE, HYD	7176936	A	118
7196671	PANEL, LH			34, 38
7196673	BRACKET			174
7196753	HARNESS, CAB DLX			168, 338
7196753	HARNESS, CAB DLX	7176098	B	168, 338
7196889	LATCH			372, 392
7197082	COVER			34, 38
7197120	BOLT			44
7197262	DUCT			368
7197733	FAN			394
7197915	SPRING, COMPRESSION			196
7197916	SPACER			196
7197917	MOUNT, SEAT RH			196
7197919	MOUNT, SEAT LH			196
7197921	MOUNT, CONTROLS RH			196
7197922	MOUNT, CONTROLS LH			196
7197972	COVER			16
7197973	COVER			368
7198176	HOSE, HYD			64, 68
7198225	TUBELINE, HYD			64, 68
7198226	TUBELINE, HYD			64, 68
7198236	SPACER, TUBE			442
7198280	HOSE, HYD			64
7198281	HOSE, HYD			64, 68
7198481	INSULATION, PANEL LH			488, 492
7198494	INSULATION, PANEL LH			480, 484
7198711	KIT, A/C			381, 382
7199263	HARNESS, MFR			173, 174
7199264	HARNESS, MFR			174
7199853	SPRING, TORSION			194, 198
7200657	KIT, DUCT			393, 394
7200883	HARNESS, JUMPER FAN			394
7200887	SLIDE			192, 196

Code for disposition of old part number
A -- Use up
B -- Use on other application (See PNI)
C -- File PDR Report with Bobcat Parts Sales
D -- Part Number Error

Part No.	Description	Was	Code	Page
7200888	SLIDE			192, 196
7201355	DAMPER			44
7201407	KIT, MOUNT ISOLATOR			403, 404
7201414	HARNESS, AUX REAR	7191339	A	442
7201515	RETAINING PLATE, RUBBER BUMPER			306
7201981	MANIFOLD, DRAIN CASE	7178129	A	71, 72, 74, 116, 118
7202003	INSULATION, FENDER			492
7202032	SHAFT, ROD CYL			78, 82
7202033	TUBE, CASE CYL			78, 82
7202036	HEAD, CYL TILT			78, 82
7202038	BUSHING, ALIGNMENT	6805102	A	92, 94
7202518	KIT, SEAL			78, 82
7202688	HOSE, HYD	7186837	A	442
7202689	HOSE, HYD	7186838	A	442
7202799	BRACKET, SUPPORT			14
7202800	BRACKET, SUPPORT			14
7202956	SEAL, BULK			166, 168
7203241	MOUNT, MUFFLER			362
7203389	SEAT BAR	7153408	A	27, 28
7203489	FITTING, HYD CONNECTOR			68
7203490	FITTING, HYD CONNECTOR			68
7203491	BRACKET, JUNCTION			68
7203496	CYLINDER, LIFT			85, 86
7203497	TUBE, CASE CYL			86
7203498	SPACER			86
7203506	TUBELINE, HYD			70
7203568	MOUNT, VALVE			444
7203665	KIT, BUMPER			305, 306
7204037	DECAL			332
7204041	INSULATION, UPRIGHT			490
7204073	KIT, SPRING DAMPER			493, 494
7204131	VALVE, LEVEL SELF NO			68
7204279	KIT, AXLE WEIGHT			503, 504
7204327	HOSE, HYD			444
7204328	HOSE, HYD			444
7204727	HOSE, HYD			60, 64, 68
7205266	CYLINDER, TILT			82
7205267	CYLINDER, TILT			78
7205268	PISTON, CYL TILT			78, 82
7205329	SEAL, COVER			34, 38
73G624	BOLT			124

Code for disposition of old part number
A -- Use up
B -- Use on other application (See PNI)
C -- File PDR Report with Bobcat Parts Sales
D -- Part Number Error

Part No.	Description	Was	Code	Page
73G656	SCREW			424
73K013	RING, BACK-UP			92, 96
73K016	RING, BACK-UP			92, 96
73K222	RING			432, 434
73K232	RING, BACK-UP			76, 80, 84, 86
774220	NUT			180, 226, 230, 232, 292, 294, 378, 380, 382
77F8	ELBOW			74
78K12	O-RING			104
799119	RING			92
79K10	O RING 10			60, 62, 64, 68, 92, 96, 100, 108, 114, 136, 302, 304, 436, 438, 442, 443, 444
79K12	O RING 10			62, 64, 100, 104, 106, 108, 110, 112, 114, 116, 118, 120, 136, 140, 442
79K16	O RING 10			74, 104, 108, 112, 442
79K3	O RING 10			438
79K4	O RING 10			118, 436
79K6	O RING 10			62, 66, 70, 72, 74, 90, 92, 94, 104, 108, 112, 114, 116, 118, 120, 174, 438, 442
79K7	O RING 10			436
79K8	O RING 10			62, 64, 92, 96, 100, 114, 118, 136, 140, 212, 436
7CM12100	BOLT			216, 218
7D4	NUT			72, 98
7D6	NUT			44
82K019	O-RING			92, 96
82K132	O-RING HYDRAULIC			432, 434
83D4	NUT 10			26, 28, 72
83D5	NUT 5			72, 112, 116
83D6	NUT 5			60, 64, 74, 124, 300, 344, 444
83D8	NUT 5			14, 216, 218, 220
84G1320	BOLT			180, 292
84G3112	BOLT 5			344, 360
84G3712	BOLT			14, 18, 48, 62, 66, 70, 74, 124, 170, 174, 178, 186, 210, 214, 224, 226, 232, 364
84G3716	SCREW 5	17C616	B,D	32, 34, 36, 38, 44, 48, 56, 58, 62, 64, 68, 70, 74, 228, 232, 306
84G3716	SCREW 5	84G3720	B	32, 34, 36, 38, 44, 48, 56, 58, 62, 64, 68, 70, 74, 228, 232, 306
84G3716	SCREW 5			32, 34, 36, 38, 44, 48, 56, 58, 62, 64, 68, 70, 74, 228, 232, 306
84G3720	BOLT			32, 34, 36, 38, 56
84G3724	BOLT			32, 34, 124
84G3728	BOLT			60, 64, 68, 444
84G3732	BOLT			48, 56, 58, 62, 66, 70, 74, 170, 176
84G3740	BOLT			74
85D6	LOCK NUT			40, 44, 46, 62, 66, 70, 410
85D7	NUT			30, 464
85D8	NUT, 5			18
86D5	NUT			120
86D7	NUT			194, 196, 456, 458, 460, 462, 470
86F5	NUT			74, 428, 430, 442
86F6	NUT			70, 428, 430
86F7	LOCK NUT	86F6	D	62, 64, 68
86F7	LOCK NUT			62, 64, 68
86F8	NUT 5	86F7	D	62, 64, 68, 74, 112

Code for disposition of old part number
A -- Use up
B -- Use on other application (See PNI)
C -- File PDR Report with Bobcat Parts Sales
D -- Part Number Error

Part No.	Description	Was	Code	Page
86F8	NUT 5			62, 64, 68, 74, 112
872229	WASHER			62, 66, 70, 74
87G1014	SCREW, MACHINE			450
88F7	ELBOW			70
898731	1156 BULB			180
89D5	NUT			422
89D6	NUT			214, 228
91K6	TEE			62, 64, 68
91K7	FITTING			62, 64, 68
92D10	NUT			432, 434
947088	RING, BACK-UP			76, 78, 80, 84, 86
95D5	NUT			362
95D6	NUT			88, 124, 188, 190, 288, 366, 368
96D12	NUT			216, 218
96D16	NUT			216, 218
96D8	NUT			210
97D4	NUT			179, 180, 292, 294
97D5	NUT			192, 196, 310, 312, 420
97D6	NUT 10			170, 174, 186, 188, 210, 214, 310, 338, 352, 366, 368, 398, 414
98D6	NUT			124, 228, 232

Code for disposition of old part number
A -- Use up
B -- Use on other application (See PNI)
C -- File PDR Report with Bobcat Parts Sales
D -- Part Number Error