Title: Air Cleaner

Model Number: S70 BOBCAT

Serial Number: A3W611001 & Above, A3W711001 & Above

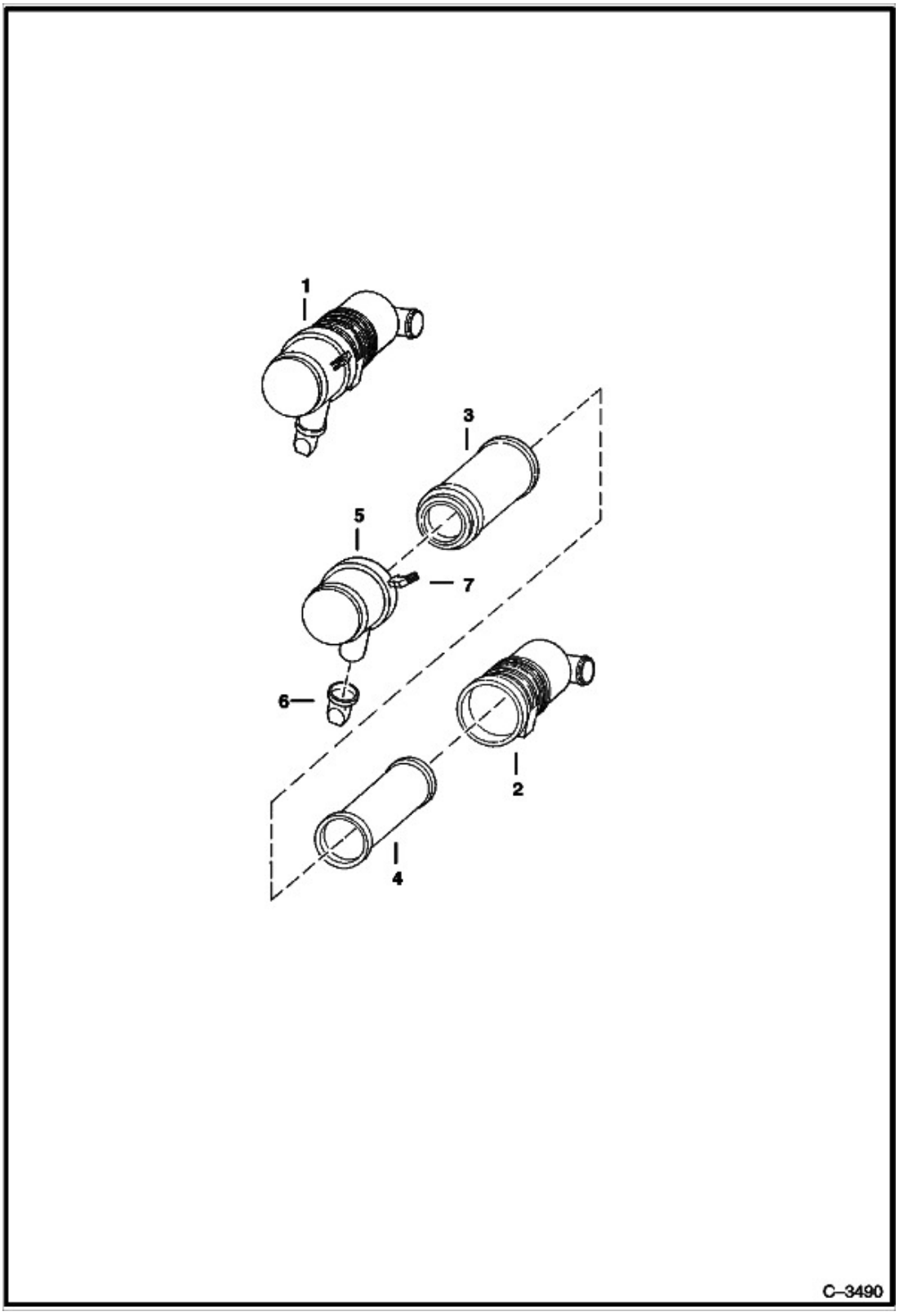

Title: Air Cleaner
Model Number: S70
Serial Number: A3W611001 & Above, A3W711001 & Above

Ref.	Part Number	Description	S/N	Qty
1	6670851	FILTER, AIR, W/Ref. 2 - 7		1
2		TANK, TANK, NLA		1
3	6672467	FILTER, AIR OUTER, outer		1
4	6672468	FILTER, AIR INNER, inner		1
5	6672469	COVER ASSEMBLY, W/Ref. 7		1
6	6655937	VALVE EVACUATOR, 2" (50,8 mm) ID 50,8 mm (2.0") ID		1
7	6670298	CLIP		3

Title: Alternator (Valeo)
Model Number: S70
Serial Number: A3W611001 & Above, A3W711001 & Above

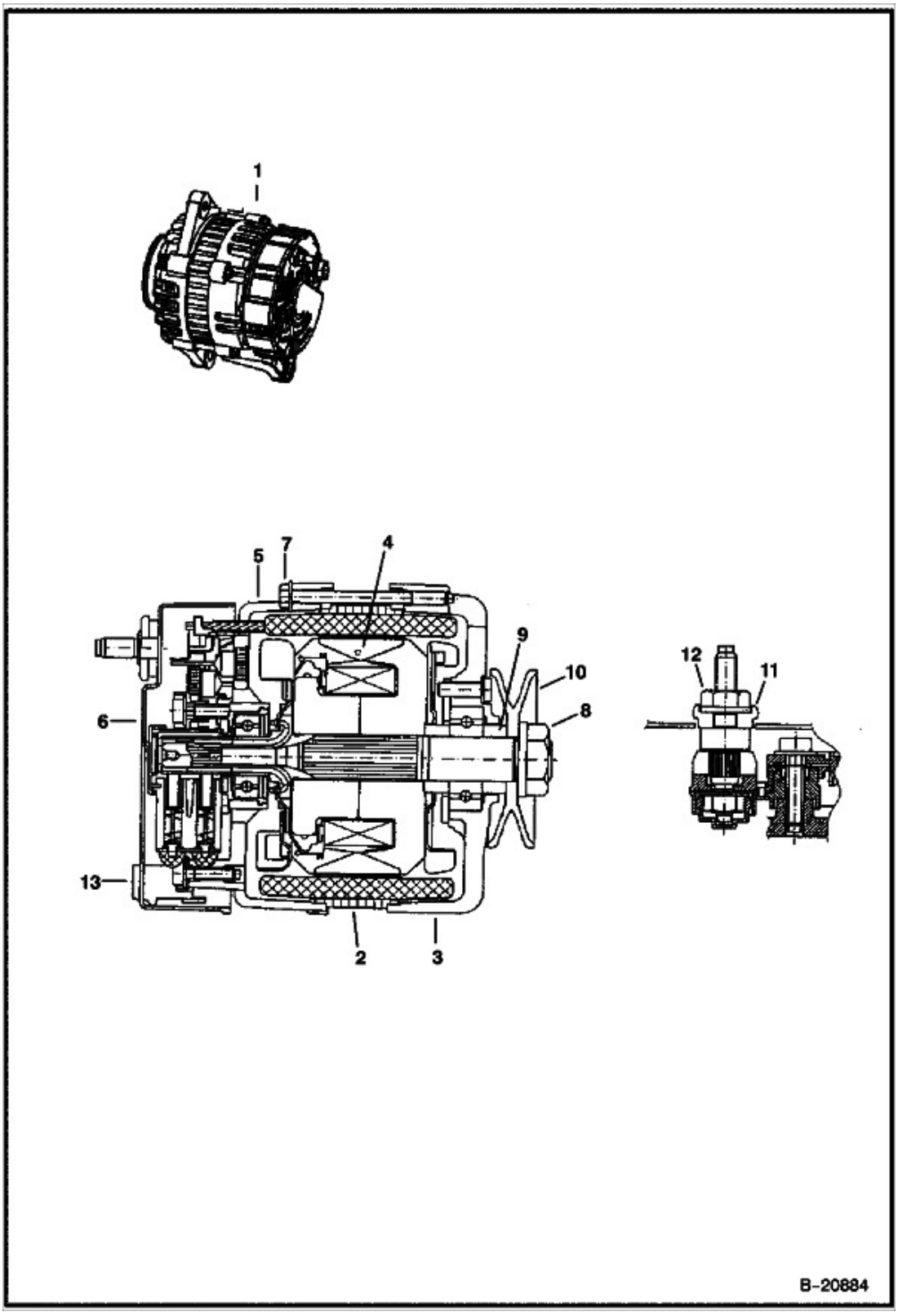

Title: Alternator (Valeo)
Model Number: S70
Serial Number: A3W611001 & Above, A3W711001 & Above

Ref.	Part Number	Description	S/N	Qty
1	6678560	ALTERNATOR 65 AMP		1
1	6678560REM	ALTERNATOR 65 AMP		1
2	6684392	STATOR ASSEMBLY		1
3	6684393	HOUSING FRONT CMPL		1
4	6684394	ROTOR ASSEMBLY		1
5	6684395	RECTIFIER ASSEMBLY		1
6	6684396	COVER		1
7	6684397	BOLT		4
8	6684398	NUT		1
9	6684399	SPACER		1
10	6684400	PULLEY		1
11	6684401	GROMMET		1
12	6684402	NUT		1
13	6684391	REGULATOR ASSEMBLY		1

Title: Attachment Control Kit
Model Number: S70
Serial Number: A3W611001 & Above, A3W711001 & Above

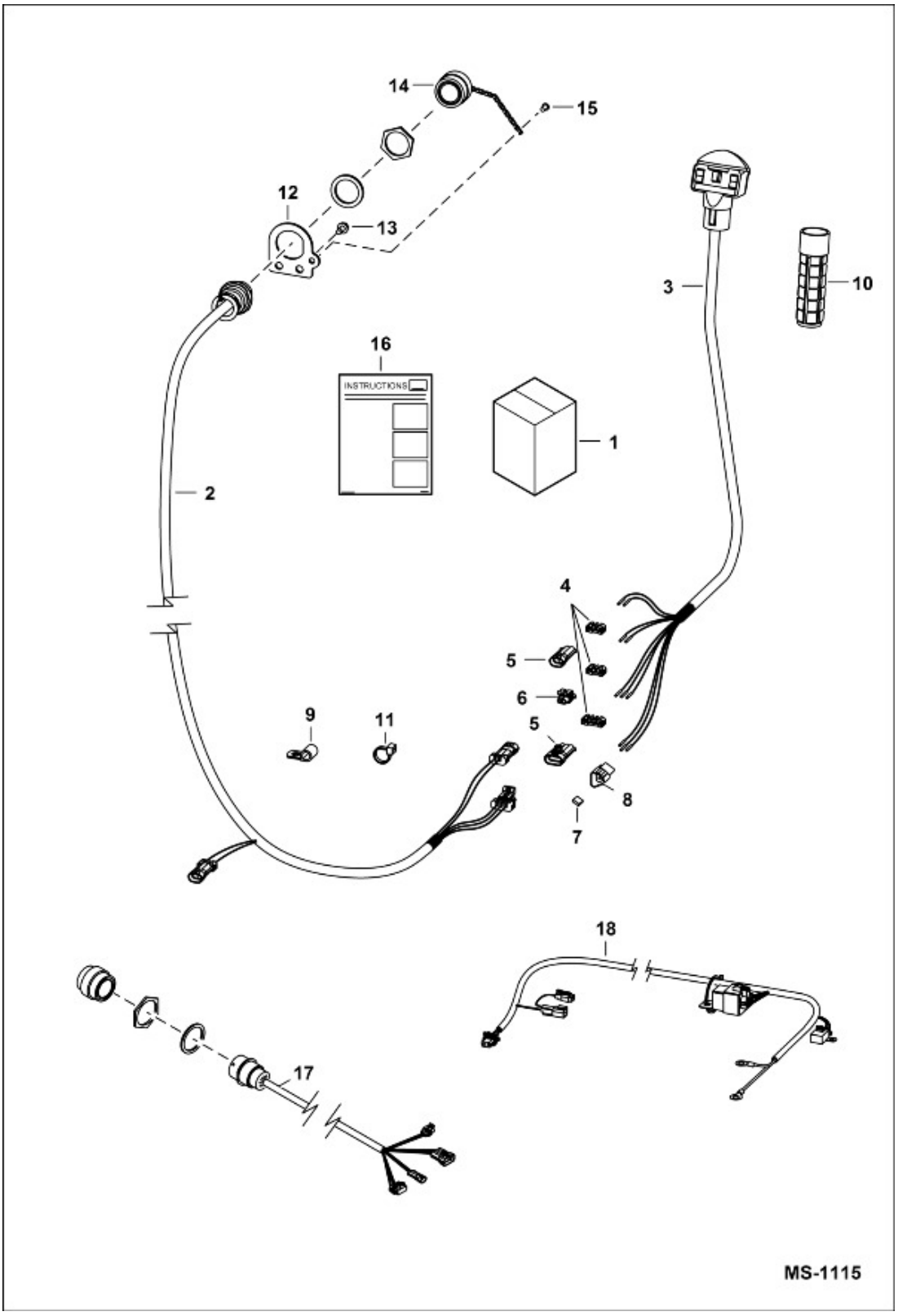

Title: Attachment Control Kit
Model Number: S70
Serial Number: A3W611001 & Above, A3W711001 & Above

Ref.	Part Number	Description	S/N	Qty
1	7374214	KIT ATTACHMENT CONTROL, attach control - Ref. 2-16 - see note on Ref. 18 - Was 6729313, A		1
2	6727870	HARN.ATT CONT		1
3	6680412	HANDLE DLX LEFT, Deluxe		1
4	6641180	LOCK METRI PACK, Use W/ 2-pin connector		2
4	6640700	LOCK METRI PACK		1
5	6641179	CONNECTOR METRI PACK, 2-pin		1
5	6640699	CONNECTOR METRI PACK		1
6	6641178	CONNECTOR METRI PACK, 2-pin		1
7	6664800	LOCK SECONDARY, 3-pin triangle		1
8	6664599	CONNECTOR 3 PIN, 3-pin triangle		1
9	30H27	CLAMP		2
10	6702621	HANDLE GRIP, Steering Lever		1
11	6624289	STRAP, TIE		10
12	6714999	MOUNT		1
13	84G3112	SCREW THD ROLLING TT		2
14	6664035	CAP		1
15	6704892	RIVET		1
16	7375350	INSTRUCTIONS, Was 6901273ENUS, A		1
17	6728614	HARNESS, 14-pin - not in kit - mounts on 1412 snowblower - For std controls only		1
17	7237140	HARNESS, 14-pin - not in kit - mounts on 1412 snowblower - For SJC & std controls		1
18	6736214	HARNESS ACC, accessory - not in kit - used when attachment control kit is installed on a loader with heater kit		1

Title: Auxiliary Hydraulics
Model Number: S70
Serial Number: A3W611001 & Above, A3W711001 & Above

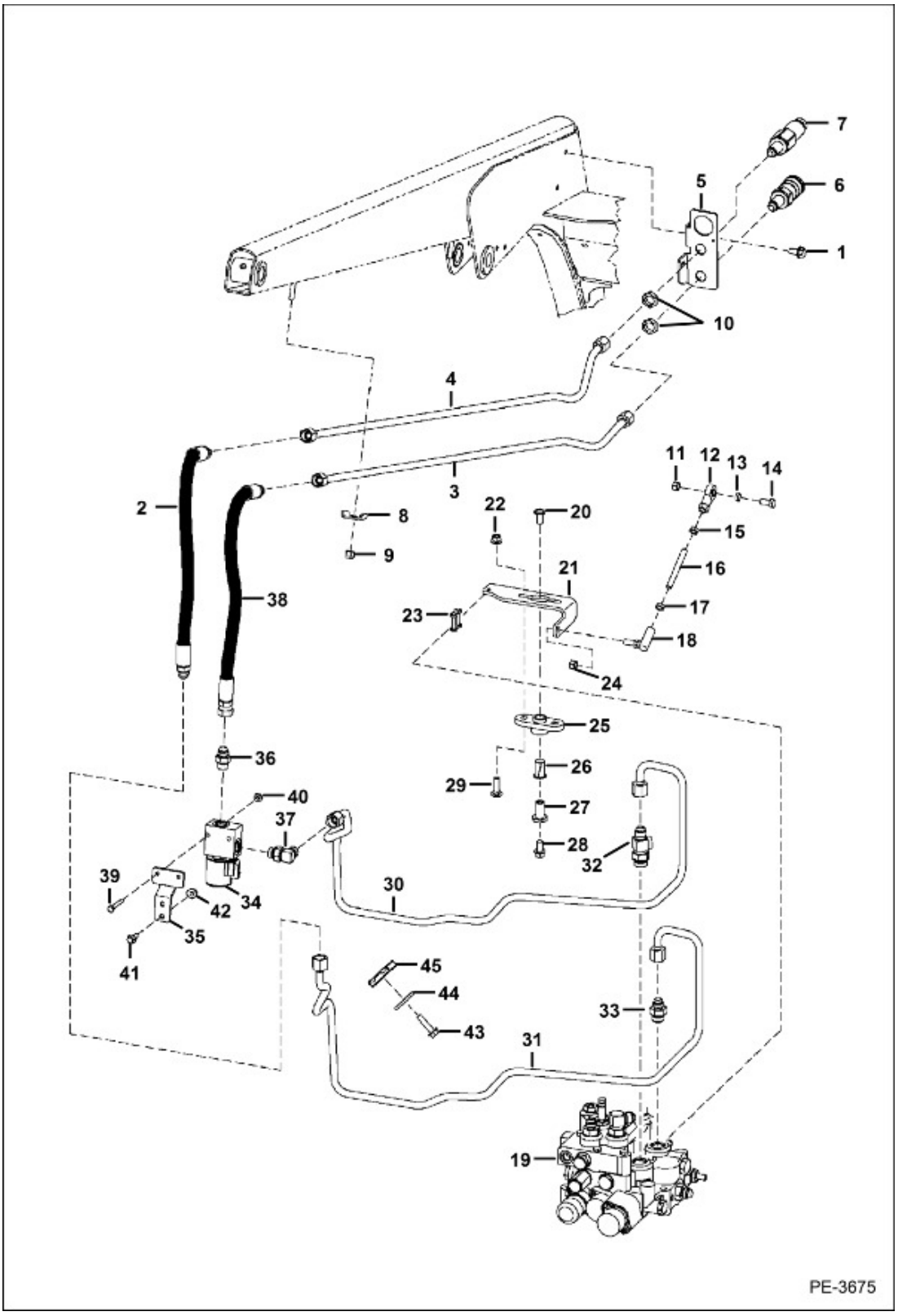

Title: Auxiliary Hydraulics
Model Number: S70
Serial Number: A3W611001 & Above, A3W711001 & Above

Ref.	Part Number	Description	S/N	Qty
1	84G3712	SCREW THD ROLLING TT		2
2	6728013	HOSE HYDRAULIC ASSY		1
3	6711637	TUBELINE		1
4	6711636	TUBELINE		1
5	7351083	BRACKET AUXILIARY HYDRAULIC, aux line - Was 6727541, A		1
6	7246792	COUPLER FF FEM 1/2, - Was 6676559, A		1
7	7246778	COUPLER FF MALE 1/2, - Was 6676560, A		1
8	6500989	TUBE CLAMP		1
9	59D6	NUT LOCK HEX PT		1
10	86F6	NUT HYDR BHD LOCK		2
11	95D6	NUT HEXAGON		1
12	6512955	CONNECTOR ROD END, LH threads		1
13	6810385	BUSHING SPACER		1
14	17C620	BOLT		1
15	13D6	NUT LH HEX JAM		1
16	6733371	ROD LINKAGE		1
17	8D6	NUT HEX JAM		1
18	6599744	BALL JOINT		1
19		VALVE ASSY, VALVE ASSY, See Illustration		1
20	6665839	SCREW FLANGED HEAD		1
21	7351295	LEVER AUX, aux lever - Was 6732295, A		1
22	83D6	NUT LOCK		2
23	6515186	CONNECTOR LINK		1
24	62D6	NUT HEX FINISHED GR5		1
25	6708043	BUSHING FLANGE, flange		1

Title: Auxiliary Hydraulics
Model Number: S70
Serial Number: A3W611001 & Above, A3W711001 & Above

Ref.	Part Number	Description	S/N	Qty
26	6512026	BUSHING FLANGED		1
27	6706104	NUT RETAINER		1
28	43C612	SCREW HEX HD GRADE 5, Was 35C612, B		1
29	37C620	BOLT CARRIAGE		2
30	7351086	TUBELINE HYDRAULIC, Was 7130118, A		1
31	7351087	TUBELINE HYDRAULIC, Was 7130119, A		1
32	6736553	TEE		1
33	15KB0810	FITTING, HYD CONNECTOR		1
34	6693244	VALVE 2-WAY, 2-way		1
34	7347218	BODY VALVE		1
34	7302406	SOLENOID, Was 7347219, A		1
35	7351093	BRACKET VALVE, Was 7147743, A		1
36	15KB0808	FTG HYD S CONNECTOR		1
37	17KB0808	FTG HYD 90 ELBOW		1
38	7147866	HOSE HYDRAULIC ASSY		1
39	1CM650	SCREW HEX CAP		2
40	51DM6	NUT HX THDLK PREAPPL		2
41	29CM820	SCREW FLNGE HEX CAP		2
42	51DM8	NUT HX THDLK PREAPPL		2
43	84G3724	SCREW THD ROLLING TT		1
44	872229	WASHER		1
45	6701892	CLAMP TUBELINE		1

Title: Axle
Model Number: S70
Serial Number: A3W611001 & Above, A3W711001 & Above

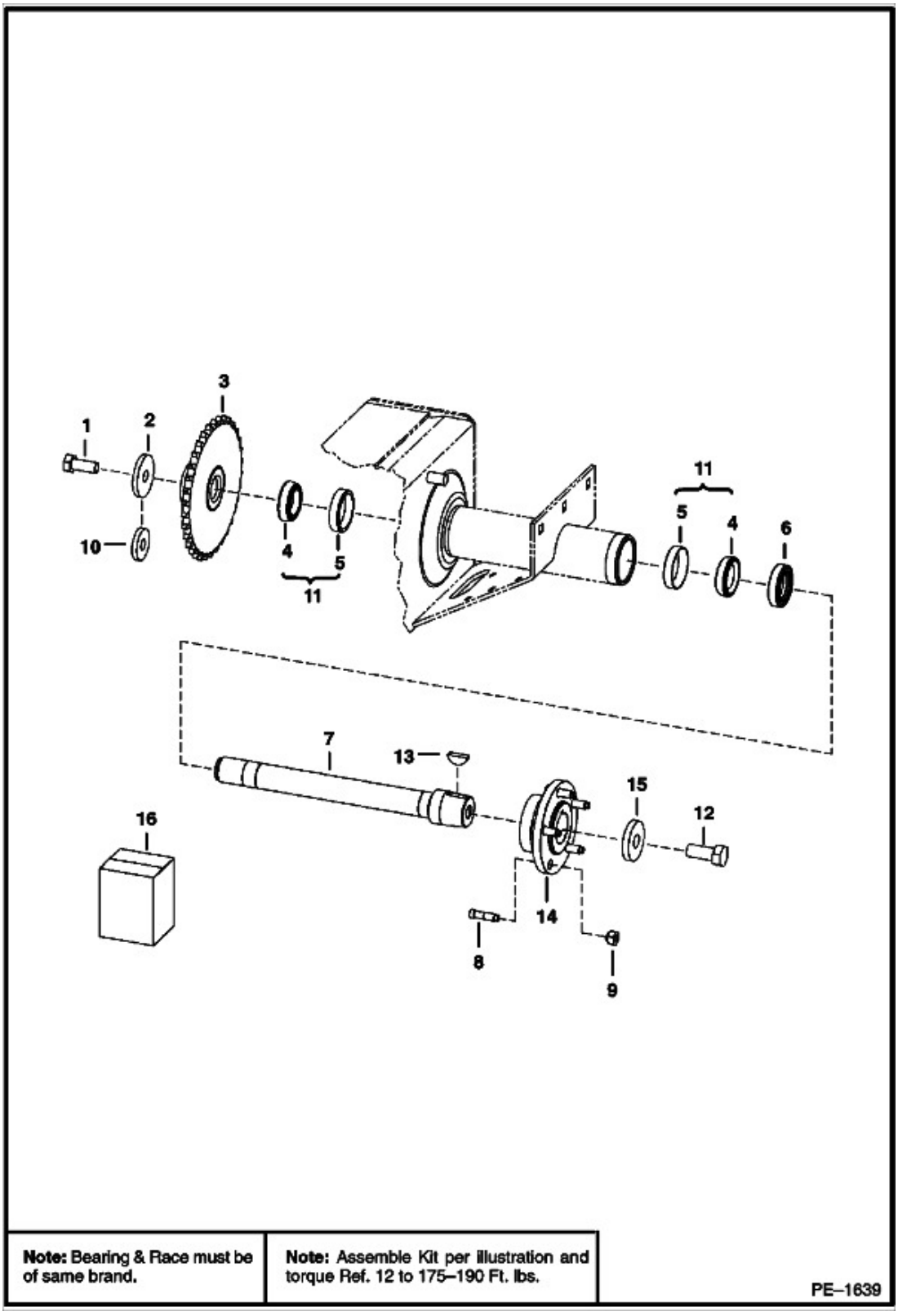

Title: Axle
Model Number: S70
Serial Number: A3W611001 & Above, A3W711001 & Above

Ref.	Part Number	Description	S/N	Qty
1	48C1024	SCREW HEX CAP, pre-applied loctite		4
2	6563795	WASHER AXLE		1
3	7134079	SPROCKET MACHINED, Was 6563798, A		1
4		BEARING, BEARING, NSS - Order Ref. 11 - See Note		2
5		RACE, RACE, NSS - Order Ref. 11 - See Note		2
6	6598829	SEAL, OIL		1
7	6706032	SHAFT AXLE		4
8	6709170	BOLT WHEEL		5
9	6564669	NUT WHEEL		5
10	6592765	WASHER, recessed - To take up end play		x
11	6633672	BEARING ROLLER, W/Race		2
12	48C1228	SCREW HEX CAP, pre-applied loctite		4
13	6J1210	KEY WOODRUFF		4
14	7145183	HUB, WHEEL, W/Ref. 8		4
15	6552871	WASHER AXLE		4
16		KIT, AXLE, KIT, AXLE, NLA - Order Ref. 7 & 12-15 - Was 6722929, B,D		4

Title: BACK-UP Alarm (S/N A3W611001 - A3W613689, A3W711001 - A3W713379)
Model Number: S70
Serial Number: A3W611001 & Above, A3W711001 & Above

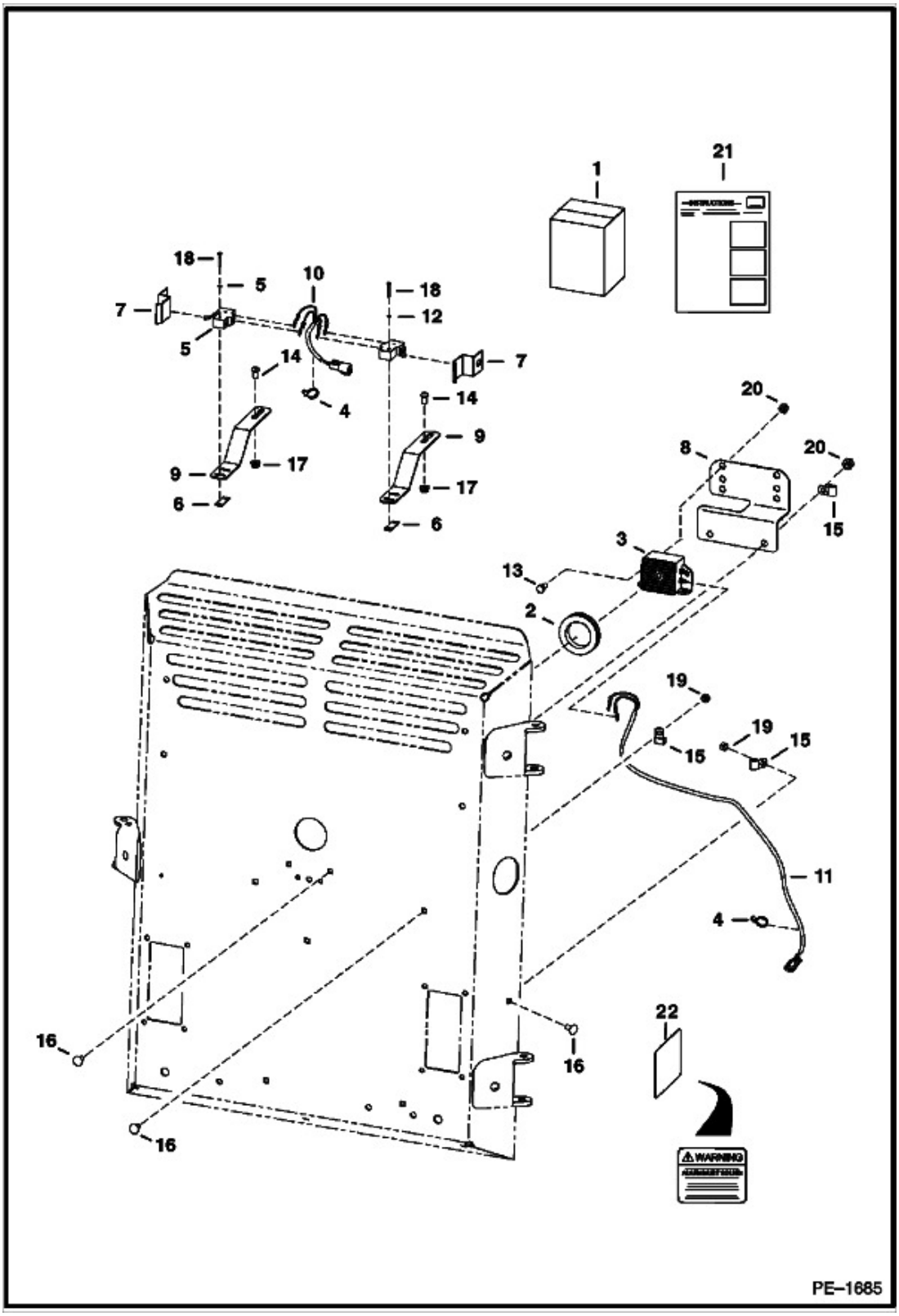

Title: BACK-UP Alarm (S/N A3W611001 - A3W613689, A3W711001 - A3W713379)
Model Number: S70
Serial Number: A3W611001 & Above, A3W711001 & Above

Ref.	Part Number	Description	S/N	Qty
1	6733638	KIT ALARM BACKUP, Ref. 3-22 - not compatible W/ 7192543 steering damper kit		1
2	6577545	GROMMET		1
3	6651512	ALARM BACKUP, Was 6599931, A		1
3	6668879	DECAL		1
4	6610510	STRAP, TIE 10, nylon		4
5	6646781	SWITCH ALARM BACKUP		2
6	6702593	SPACER, strip		2
7	6707720	GUIDE		2
8	6733970	MOUNT ALARM, alarm		1
9	6733290	BRACKET, switch		2
10	6733734	HARNESS B/U AL SW		1
11	6733735	HARN 463 B/U ALARM		1
12	17E6	WASHER 10		4
13	35C410	SCREW HEX HD W/F GR5		2
14	25G510	BOLT		4
15	30H22	CLIP INSULATED		4
16	37C512	BOLT SQ NECK RND HD		5
17	55D5	NUT		4
18	84G1320	SCREW THD ROLLING TT		4
19	85D5	NUT PRETRQ HEX LOCK		5
20	97D4	NUT HEX FLNG W/T GR5		2
21	6737189	DECAL WARNING, backup alarm		1
22	6902065ENUS	INSTRUCTIONS, Was 6902065, A		1

Title: BACK-UP Alarm (S/N A3W613690 & Above, A3W713380 & Above)
Model Number: S70
Serial Number: A3W611001 & Above, A3W711001 & Above

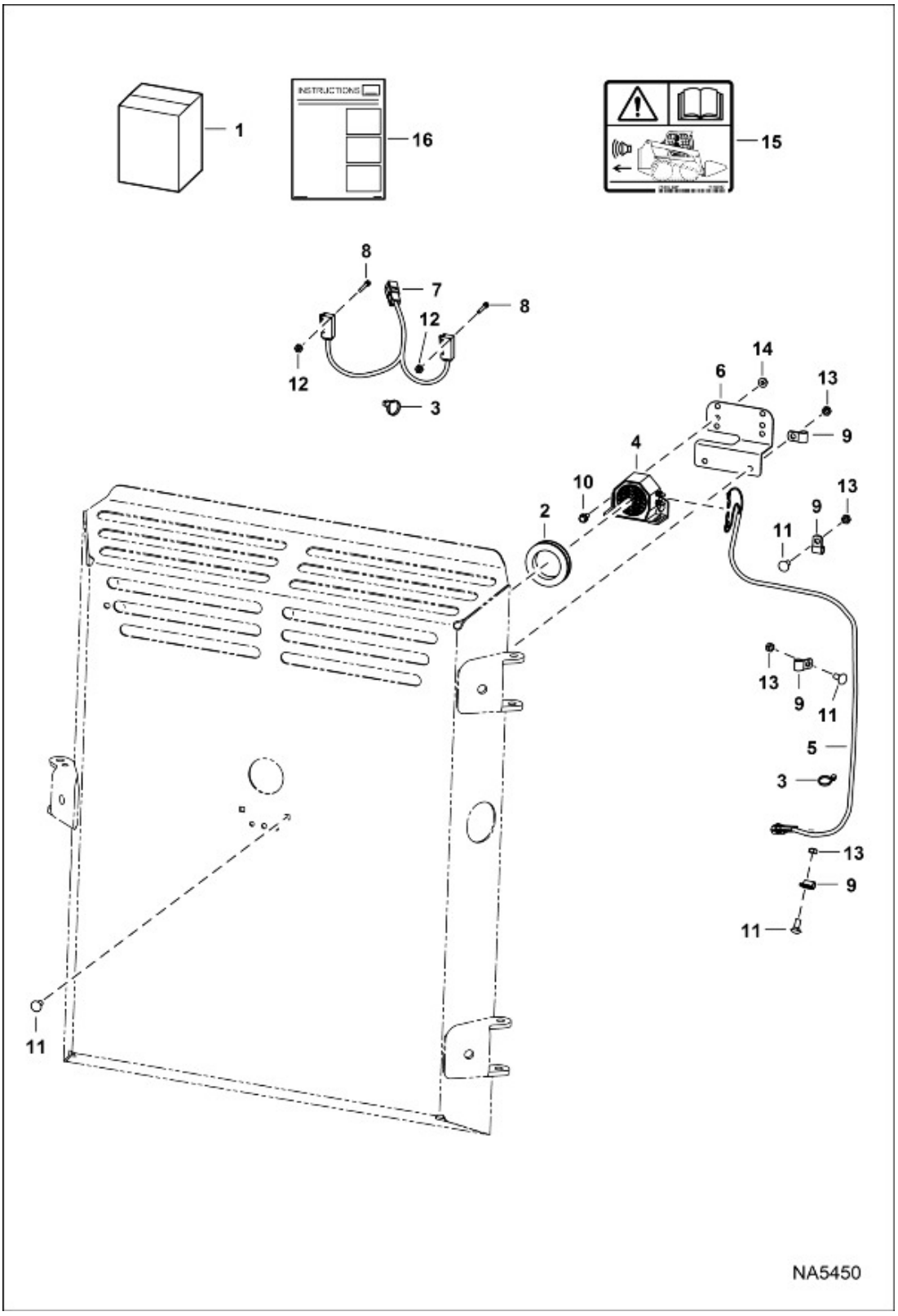

Title: BACK-UP Alarm (S/N A3W613690 & Above, A3W713380 & Above)
Model Number: S70
Serial Number: A3W611001 & Above, A3W711001 & Above

Ref.	Part Number	Description	S/N	Qty
1	7172383	KIT ALARM BACKUP, Ref. 2-16		1
2	6577545	GROMMET		1
3	6610510	STRAP, TIE 10		4
4	6651512	ALARM BACKUP		1
5	6733735	HARN 463 B/U ALARM		1
6	6733970	MOUNT ALARM		1
7	7172891	HARNESS BACKUP ALM, W/switch		1
7	7010791	SWITCH ALARM BACKUP		2
8	3GM320	SCREW HEX SOCKT 12.9		4
9	30H22	CLIP INSULATED		4
10	35C410	SCREW HEX HD W/F GR5		2
11	37C512	BOLT SQ NECK RND HD		5
12	7171265	NUT HEX LOCKING M3		4
13	85D5	NUT PRETRQ HEX LOCK		5
14	97D4	NUT HEX FLNG W/T GR5		2
15	7180087	DECAL WARNING, no-text		1
16	6989745ENUS	INSTRUCTIONS, Was 6989745, C		1

Title: Beacon Light
Model Number: S70
Serial Number: A3W611001 & Above, A3W711001 & Above

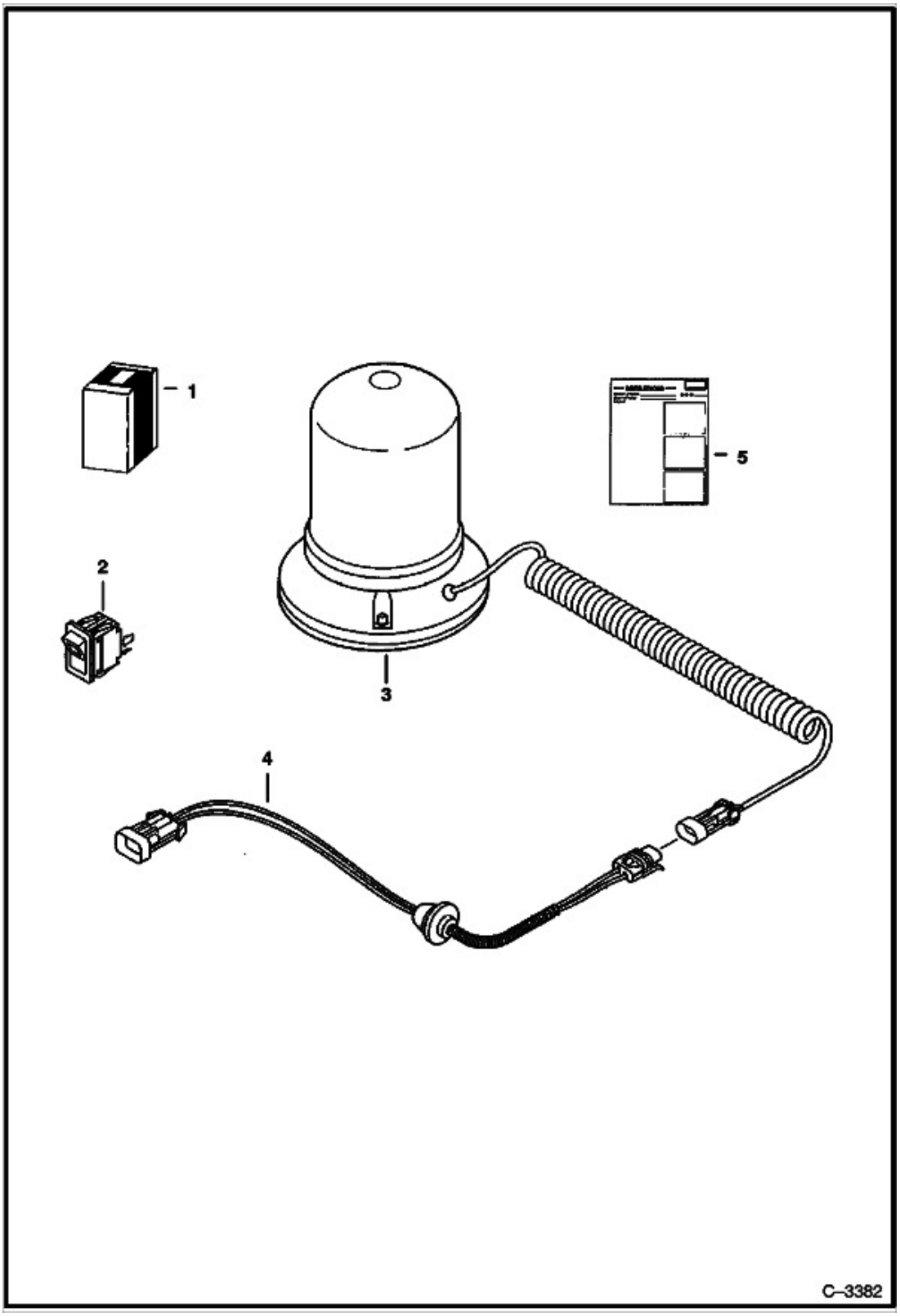

Title: Beacon Light
Model Number: S70
Serial Number: A3W611001 & Above, A3W711001 & Above

Ref.	Part Number	Description	S/N	Qty
1	6708342	KIT BEACON, Ref. 2 - 5		1
2	6665317	SWITCH		1
3	7391049	LIGHT BEACON, LED		1
3		LIGHT BEACON, LIGHT BEACON, NLA - Incandescent - Was 7341779, B		1
3		BULB, BULB, NLA - use W/ 7341779 - Was 6666571, B		1
3		LENS, LENS, NLA - use W/ 7341779 - Was 6666572, B		1
4	6708318	HARNESS		1
5	6987112ENUS	INSTRUCTIONS, Was 6987112, A		1

Title: BICS Control Valve
Model Number: S70
Serial Number: A3W611001 & Above, A3W711001 & Above

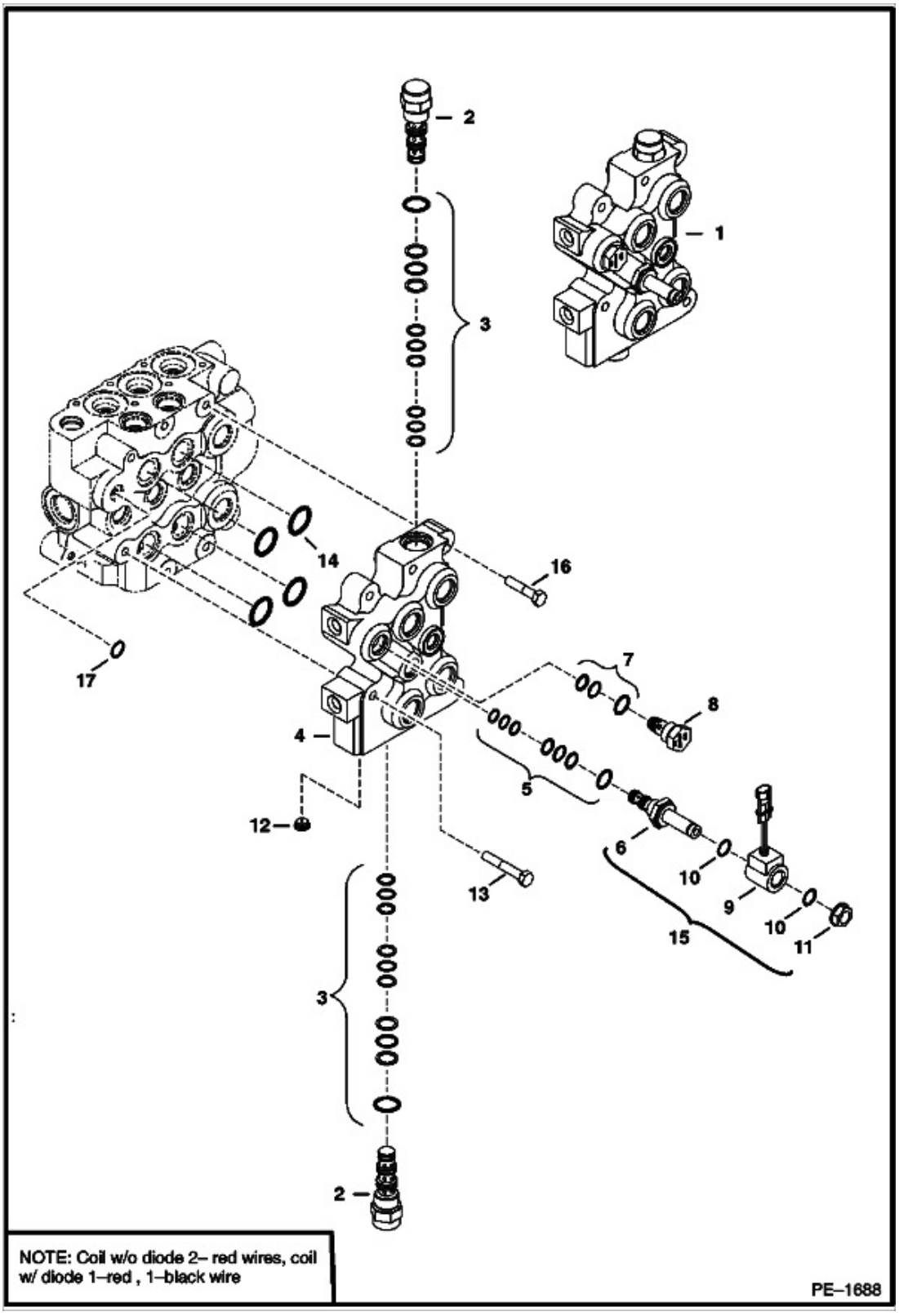

Title: BICS Control Valve
Model Number: S70
Serial Number: A3W611001 & Above, A3W711001 & Above

Ref.	Part Number	Description	S/N	Qty
1		VALVE, BICS, VALVE, BICS, NLA - D series coil compatible - Ref. 2-5, 6 (6667687 stem), 7 & 8 - Order 7297071 BICS valve & Ref. 9 (7272732 coil) - Was 6628571, A		1
1	7297071	VALVE, BICS, E series coil compatible - Ref. 2-5, 6 (7272731 stem), 7 & 8		1
2	6689739	VALVE, pilot operated - Was 6668765, A		2
3	6690431	KIT SEAL, Was 6669734, A		x
4		BODY, BODY, NSS		1
5	6669732	KIT SEAL		x
6	6667687	VALVE, STEM SOLENOID, 25,4 mm (1") across nut flat surface - D series coil compatible		1
6	7272731	VALVE, SOLENOID, .87" across nut flat surface - E series coil compatible		1
7	6669733	KIT SEAL		x
8	6669057	VALVE CHECK, filter		1
9	6671025	COIL, SOLENOID 08-12, D series - one red & one black wire - BICS		1
9	7272732	COIL SOLENOID ASSEMBLY, E series - silver case - 208 mm (8.2") lead - metri pack connector - two red wires		1
9	7301672	COIL SOLENOID, E series - silver case - integrated Deutsch connector		1
10	54K20028	O-RING, pwm		2
11	6668820	NUT, D series coil compatible		1
11	7020647	NUT, E series coil compatible		1
12	6668791	ORIFICE		1
13	43C532	BOLT		4
14	55K212	O-RING		4
15		VALVE, CARTRIDGE, VALVE, CARTRIDGE, NLA - Ref. 5, 6 (6667687 stem), 9 (6671025 coil), 10 & 11 (6668820 nut) - Was 6672471, A		1

Title: BICS Control Valve
Model Number: S70
Serial Number: A3W611001 & Above, A3W711001 & Above

Ref.	Part Number	Description	S/N	Qty
15	7304852	VALVE, CARTRIDGE, Ref. 5, 6 (7272731 stem), 9 (7272732 coil), 10 & 11 (7020647 nut)		1
15	7314079	VALVE CARTRIDGE, Ref. 5, 6 (7272731 stem), 9 (7301672 coil), 10 & 11 (7020647 nut)		1
16	43C524	BOLT		2
17	55K204	O-RING		1

Title: Block Heater (Engine)
Model Number: S70
Serial Number: A3W611001 & Above, A3W711001 & Above

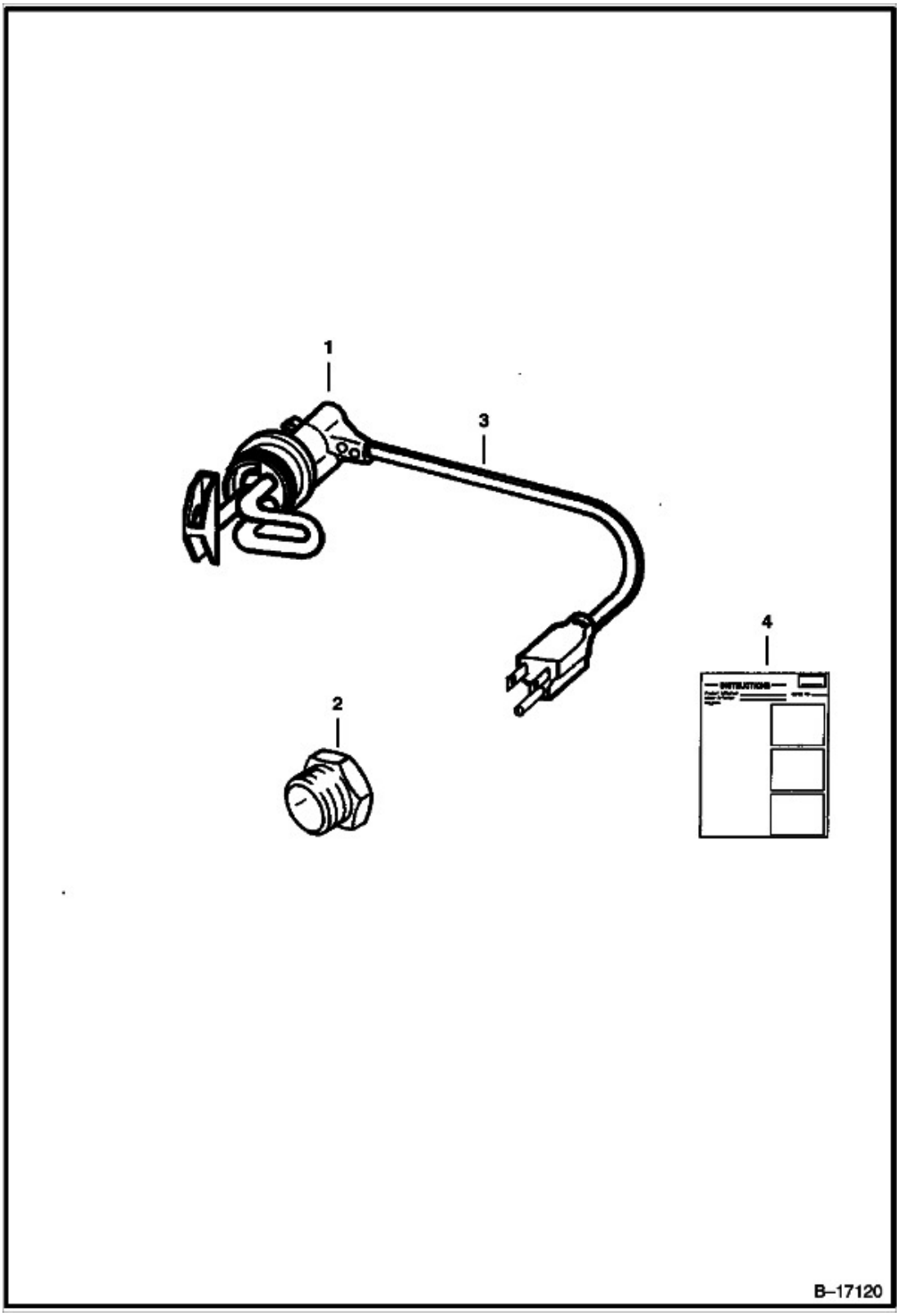

Title: Block Heater (Engine)
Model Number: S70
Serial Number: A3W611001 & Above, A3W711001 & Above

Ref.	Part Number	Description	S/N	Qty
1	6720808	KIT HEATER ENG BLOCK, Ref. 2-4		1
2	19F12	BUSHING		1
3	7021791	CORD, HEATER BLOCK ENG		1
4	6720038ENUS	INSTRUCTIONS, - Was 6720038, C		1

Torkonjestraat 23
8510 Marke
Belgium

056 / 222 111
rental@dumarent.be
www.dumarent.be

EN

Operation & Maintenance Manual
S70 Skid-Steer Loader

S/N A3W711001 & Above

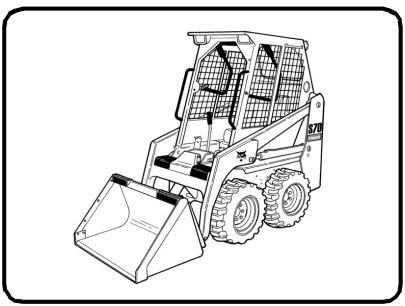

EQUIPPED WITH
BOBCAT INTERLOCK
CONTROL SYSTEM (BICS™)

6986660-EN (11-10) Revised (11-11) (6)

Printed in Belgium
Original Instructions

© Bobcat Company 2011

Torkonjestraat 23
8510 Marke
Belgium

056 / 222 111
rental@dumarent.be
www.dumarent.be

Torkonjestraat 23
8510 Marke
Belgium
056 / 222 111
rental@dumarent.be
www.dumarent.be

OPERATOR SAFETY WARNINGS

WARNING

Operator must have instructions before operating the machine. Untrained operators can cause injury or death.

W-2001-0502

Safety Alert Symbol: **This symbol with a warning statement, means: "Warning, be alert! Your safety is involved!" Carefully read the message that follows.**

CORRECT



P-90216

Never use the loader without instructions. See machine signs (decals), Operation & Maintenance Manual, and Operator's Handbook.

CORRECT



B-7403

Always use the seat bar and fasten seat belt snugly.
Always keep feet on the foot pedals or footrests when operating loader.

CORRECT



B-6582

Never use loader without operator cab with ROPS and FOPS approval. Fasten your seat belt.

WRONG



B-13418

Never use loader as man lift or elevating device for personnel.

WRONG



B-6578

Do not use loader in atmosphere with explosive dust, explosive gas, or where exhaust can contact flammable material.

WRONG



B-6585

Never carry riders.

Keep bystanders away from work area.

WRONG



B-6595

Always carry bucket or attachments as low as possible.
Do not travel or turn with lift arms up.
Load, unload, and turn on flat level ground.

WRONG

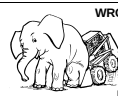

B-6587

Never exceed Rated Operating Capacity.

WRONG



B-6594

Never leave loader with engine running or with lift arms up.
To park, engage parking brake and put attachment flat on the ground.

WRONG



B-6591

Never modify equipment.

Use only attachments approved by Bobcat Company for this model loader.

SAFETY EQUIPMENT

The Bobcat Loader must be equipped with safety items necessary for each job. Ask your dealer for information on the safe use of attachments and accessories.

1. **SEAT BELT: Check belt fasteners and check for damaged webbing or buckle.**
2. **SEAT BAR: When up, it must lock the loader controls.**
3. **OPERATOR CAB (ROPS and FOPS): It must be on the loader with all fasteners tight.**
4. **OPERATOR'S HANDBOOK: Must be in the cab.**
5. **SAFETY SIGNS (DECALS): Replace if damaged.**
6. **SAFETY TREADS: Replace if damaged.**
7. **GRAB HANDLES: Replace if damaged.**
8. **LIFT ARM SUPPORT DEVICE: Replace if damaged.**
9. **PARKING BRAKE**
10. **BOBCAT INTERLOCK CONTROL SYSTEM (BICS)**

OSW03-0409

Torkonjestraat 23
8510 Marke
Belgium

056 / 222 111
rental@dumarent.be
www.dumarent.be



Bobcat®

Torkonjestraat 23
8510 Marke
Belgium

056 / 222 111
rental@dumarent.be
www.dumarent.be

CONTENTS

FOREWORD 5

SAFETY & TRAINING RESOURCES 17

OPERATING INSTRUCTIONS 29

PREVENTIVE MAINTENANCE 69

SYSTEM SETUP & ANALYSIS 113

SPECIFICATIONS 119

WARRANTY 125

ALPHABETICAL INDEX 129

REFERENCE INFORMATION

Write the correct information for YOUR Bobcat loader in the spaces below. Always use these numbers when referring to your Bobcat loader.

Loader Serial Number _____

Engine Serial Number _____

NOTES:

_____

_____

_____

_____

YOUR BOBCAT DEALER:

_____

ADDRESS:

_____

PHONE:

_____

CE

Bobcat Company
P.O. Box 128
Gwinner, ND 58040-0128
UNITED STATES OF AMERICA

Doosan Benelux SA
Drève Richelle 167
B-1410 Waterloo
BELGIUM

Torkonjestraat 23
8510 Marke
Belgium

056 / 222 111
rental@dumarent.be
www.dumarent.be



Torkonjestraat 23
8510 Marke
Belgium
056 / 222 111
rental@dumarent.be
www.dumarent.be

FOREWORD

This Operation & Maintenance Manual was written to give the owner / operator instructions on the safe operation and maintenance of the Bobcat loader. READ AND UNDERSTAND THIS OPERATION & MAINTENANCE MANUAL BEFORE OPERATING YOUR BOBCAT LOADER. If you have any questions, see your Bobcat dealer. This manual may illustrate options and accessories not installed on your loader.

DECLARATION OF CONFORMITY 7

BOBCAT COMPANY IS IS0 9001 CERTIFIED 9

REGULAR MAINTENANCE ITEMS 9

LUBRICANTS AND FLUIDS 10

SERIAL NUMBER LOCATIONS 11
Loader Serial Number 11
Engine Serial Number 11

DELIVERY REPORT 11

LOADER IDENTIFICATION 12

FEATURES, ACCESSORIES AND ATTACHMENTS 13
Standard Items 13
Options And Accessories 13
Buckets Available 14
Attachments 14
Special Applications Kit 15
Special Applications Kit Inspection And Maintenance 15

Torkonjestraat 23
8510 Marke
Belgium
056 / 222 111
rental@dumarent.be
www.dumarent.be



Bobcat®

Torkonjestraat 23
8510 Marke
Belgium

056 / 222 111
rental@dumarent.be
www.dumarent.be

DECLARATION OF CONFORMITY

Contents of EC Declaration of Conformity

This information is provided in the operators manual to comply with clause 1.7.4.2(c) of Annex I of Machinery Directive 2006/42/EC.

The official EC Declaration of Conformity is supplied in a separate document.

Manufacturer

Bobcat

Bobcat Company
World Headquarters
250 East Beaton Drive
West Fargo, ND 58078-6000
UNITED STATES OF AMERICA

Technical Documentation
Doosan Benelux SA
Drève Richelle 167
B-1410 Waterloo
BELGIUM

Directive 2000/14/EC: Noise Emission in the Environment by Equipment For Use Outdoors

Notified Body
Technical and Test Institute for Construction
Prague, Czech Republic
Notified Body Number: 1020

EC Certificate No.
1020-090-022395

Conformity Assessment Procedure(s)
2000/14/EC, Annex VIII, Full Quality Assurance

Sound Power Levels [Lw(A)]

Measured Sound Power	**96 dBA**
Guaranteed Sound Power	**101 dBA**

Description of Equipment
Type of Equipment: Wheeled Loader
Model Name: S70
Model Code: A3W7

Engine Manufacturer: Kubota
Engine Model: V1005-E3B-BC-3
Engine Power: 17,2 kW @ 3000 RPM

Equipment conforms to CE Directive(s) Listed Below
2006/42/EC: Machinery Directive
2004/108/EC: Electromagnetic Compatibility Directive

Declaration of Conformance
This equipment conforms to the requirements specified in all the EC Directives listed in this declaration.

Effective From:

29 December 2009

Torkonjestraat 23
8510 Marke
Belgium

056 / 222 111
rental@dumarent.be
www.dumarent.be



Bobcat®

Torkonjestraat 23
8510 Marke
Belgium
056 / 222 111
rental@dumarent.be
www.dumarent.be

BOBCAT COMPANY IS IS0 9001 CERTIFIED

ISO 9001 is an international standard that specifies requirements for a quality management system that controls the processes and procedures which we use to design, develop, manufacture and distribute Bobcat products.

British Standards Institute (**BSI**) is the Certified Registrar Bobcat Company chose to assess the Company's compliance with the ISO 9001 at Bobcat's manufacturing facilities in Gwinner and Bismarck, North Dakota (U.S.A.), Pontchateau (France), Dobris (Czech Republic) and the Bobcat corporate offices (Gwinner, Bismarck & West Fargo) in North Dakota. Only certified assessors, like BSI, can grant registrations.

ISO 9001 means that as a company we say what we do and do what we say. In other words, we have established procedures and policies, and we provide evidence that the procedures and policies are followed.

REGULAR MAINTENANCE ITEMS

	ENGINE OIL FILTER (6 Pack) 6657635		BREATHER CAP 6684923
	FUEL FILTER 6667352		BATTERY 6674687
 	AIR FILTER, Outer 6672467 AIR FILTER, Inner 6672468		HYDROSTATIC FILTER 6677652

NOTE: Always verify Part Numbers with your Bobcat dealer.

Torkonjestraat 23
8510 Marke
Belgium

056 / 222 111
rental@dumarent.be
www.dumarent.be

LUBRICANTS AND FLUIDS

Packaging	Linear	All Bobcat Equipment								Only for T4S, Wheeled EXC and AL		
		ENGINE / LOADER TRANSMISSION				HYDRAULIC/ HYDROSTATIC		ANTIFREEZE COOLANT			AXLE / TRANSMISSION	BRAKE FLUID
		Bobcat Engine Power SAE 0W/30	Bobcat Engine Power SAE 10W/30	Bobcat Engine Power SAE 15W/40	Bobcat Engine Power SAE 20W/50	Bobcat Superior SH Hydraulic/Hydrostatic	Bio Hydraulic Hydraulic/Hydrostatic	Bobcat PG Coolant Concentrated	Bobcat PG Coolant 4 Seasons	Bobcat EG Coolant Concentrated	Bobcat EG Coolant Premixed	Bobcat Axle / Transmission Oil SAE 85W/90	Bobcat Axle / Transmission Oil ISO 100	Bobcat Brake Fluid LHM	Bobcat Brake Fluid (Rote TLS only)
		-50°C -40°C -30°C -20°C	-40°C -30°C -20°C -10°C	-30°C -20°C -10°C 0°C	-25°C -15°C -5°C 5°C	-30°C -20°C -10°C 0°C		Protection -36°C				-12°C +12°C	-20°C +40°C		
5 L Can		6987500A	6904840A	6904841A	6987501A	6904842A	6904843A	6987646A	6904844A	6987596A	6987597A	6987602A	6904845A	6904846A	**6987567A**
25 L Container		6987500B	6904840B	6904841B	6987501B	6904842B	6904843B	6987646B	6904844B	6987596B	6987597B	6987602B	6904845B		**6987567B**
209 L Drum		6987500C	6904840C	6904841C	6987501C	6904842C	6904843C	6987646C	6904844C	6987596C	6987597C	6987602C	6904845C		**6987567C**
1000 L Tank		6987500D	6904840D	6904841D	6987501D	6904842D	6904843D	6987646D	6904844D	6987596D	6987597D	6987602D	6904845D		**6987567D**
400 gr Grease		Bobcat Multi-Purpose Grease							6903122						
		Bobcat Supreme HD Grease							6987864						
		Bobcat Extreme HP Grease							6987865						
4700300-EN (01-10)															

Torkonjestraat 23
8510 Marke
Belgium
056 / 222 111
rental@dumarent.be
www.dumarent.be

SERIAL NUMBER LOCATIONS

Always use the serial number of the loader when requesting service information or when ordering parts. Early or later models (identification made by serial number) may use different parts, or it may be necessary to use a different procedure in doing a specific service operation.

Figure 1

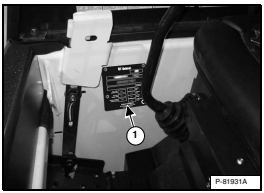

Loader Serial Number

The loader serial number plate (Item 1) **[Figure 1]** is located inside the cab on the right-hand side.

Figure 2

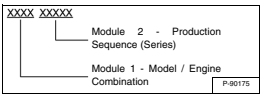

Explanation of loader Serial Number **[Figure 2]**:

1. The four digit Model / Engine Combination Module number identifies the model number and engine combination.

2. The five digit Production Sequence Number identifies the order which the loader is produced.

Engine Serial Number

Figure 3

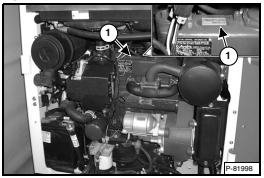

The engine serial number is located on top of the engine (Item 1) **[Figure 3]**.

DELIVERY REPORT

Figure 4

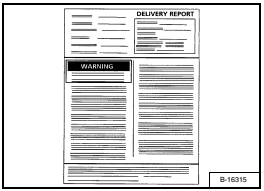

The delivery report **[Figure 4]** must be completed by the dealer and signed by the owner or operator when the Bobcat Loader is delivered. An explanation of the form must be given to the owner.

Torkonjestraat 23
8510 Marke
Belgium
056 / 222 111
rental@dumarent.be
www.dumarent.be

LOADER IDENTIFICATION

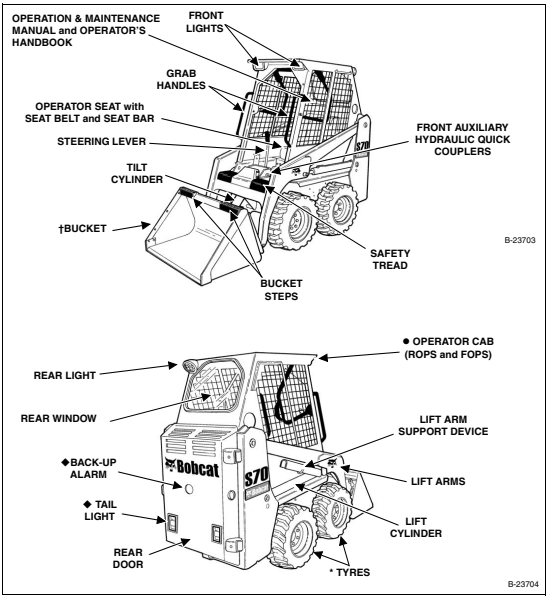

◆ OPTIONAL OR FIELD ACCESSORY (Not Standard Equipment).
* TYRES - Bobcats are base-equipped with standard tyres.
† BUCKET - Several different buckets and other attachments are available for the Bobcat Loader.
● ROPS, FOPS - Roll Over Protective Structure, per ISO 3471, and Falling Object Protective Structure per ISO 3449, Level I.

Torkonjestraat 23
8510 Marke
Belgium
056 / 222 111
rental@dumarent.be
www.dumarent.be

FEATURES, ACCESSORIES AND ATTACHMENTS

Standard Items

Model S70 Bobcat Loaders are equipped with the following standard items:

- Adjustable Suspension Seat
- Auxiliary Hydraulics, Front
- Bobcat Interlock Control System (BICS™)
- Bob-Tach™
- CE Certification
- Engine / Hydraulic Systems Shutdown
- Front Horn
- Instrumentation: Hourmeter, Engine Temperature and Warning Lights
- Lift Arm Support Device
- Lights, Front and Rear
- Operator Cab (ROPS and FOPS Approved)
- Parking Brake
- Rear Window
- Seat Bar
- Seat Belt
- Sound Reduction Kit (Reduces noise at operator ear)
- Spark Arrester Exhaust System
- Tool Container
- Tyres (Bobcat Standard Duty, 23 x 5.70 - 12, 4 Ply Rating)
- Work Lights - Rear

Options And Accessories

Below is a list of some equipment available from your Bobcat Loader dealer as Dealer and / or Factory Installed Accessories and Factory Installed Options. See your Bobcat dealer for other available options, accessories and attachments.

- Attachment Control Kit
- Back-up Alarm
- Cab Door
- Cab Enclosure
- Cab Heater
- Catalytic Exhaust Purifier
- Engine Heater
- Fire Extinguisher
- Hydraulic Bucket Positioning (Includes On/Off Selection)
- Keyless Start
- Lift Kit (For lifting entire loader)
- Locking Fuel Cap and Cover
- Rear Stabiliser Kit
- Road Kit
- Rotating Beacon
- Seat Belt - 3 in. Wide
- Special Applications Kit
- Strobe Light
- Tyres:
  Bobcat Heavy Duty, 23 x 8.50 - 12, 6 Ply Rating
- Vinyl Cab Enclosure
- Warning Lights: Four-Way Flasher (Includes Direction Signals)
- Windows
  Externally Removable Rear Window
  Polycarbonate Rear Window
  Side Windows
  Top Window

Specifications subject to change without notice and standard items may vary.

Torkonjestraat 23
8510 Marke
Belgium
056 / 222 111
rental@dumarent.be
www.dumarent.be

FEATURES, ACCESSORIES AND ATTACHMENTS (CONT'D)

These and other attachments are approved for use on this model loader. Do not use unapproved attachments. Attachments not manufactured by Bobcat may not be approved.

The versatile Bobcat Loader quickly turns into a multi-job machine with a tight-fit attachment hook-up … from bucket to grapple to pallet fork to backhoe and a variety of other attachments.

See your Bobcat dealer for information about approved attachments and attachment Operation & Maintenance Manuals.

Increase the versatility of your Bobcat Loader with a variety of bucket styles and sizes.

Buckets Available

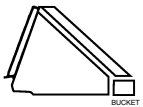

Many bucket styles, widths and different capacities are available for a variety of different applications. They include Construction & Industry, Low profile, Fertilizer and Snow, to name a few. See your Bobcat dealer for the correct bucket for your Bobcat Loader and application.

Attachments

- Angle Broom
- Auger
- Backhoe
- Blades
  - Utility Blade
  - V-Blade
- Buckets
- Combination Bucket
- Cutter Crusher
- Digger
- Dumping Hopper
- Grapple, Utility
- Hydraulic Breaker
- Landplane
- Pallet Fork
- Scraper
- Snowblower
- Soil Conditioner
- Stump Grinder
- Sweeper
- Tiller
- Trencher
- Utility Forks
- X-Change™ Frame

Torkonjestraat 23
8510 Marke
Belgium
056 / 222 111
rental@dumarent.be
www.dumarent.be

WARNING

AVOID INJURY OR DEATH

Some attachment applications can cause flying debris or objects to enter front, top or rear cab openings. Install the Special Applications Kit to provide added operator protection in these applications.

W-2737-0508

Special Applications Kit

Figure 5

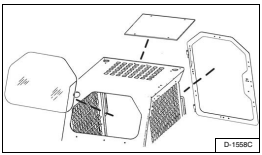

Available for special applications to restrict material from entering cab openings. Kit includes 12,7 mm (0.5 in) thick polycarbonate front door, 6,4 mm (0.25 in) thick polycarbonate top and rear windows **[Figure 5]**.

See your Bobcat dealer for availability.

Special Applications Kit Inspection And Maintenance

- Inspect for cracks or damage. Replace if required.
- Pre-rinse with water to remove gritty materials.
- Wash with a mild household detergent and warm water.
- Use a sponge or soft cloth. Rinse well with water and dry with a clean soft cloth or rubber squeegee.
- Do not use abrasive or highly alkaline cleaners.
- Do not clean with metal blades or scrapers.

Torkonjestraat 23
8510 Marke
Belgium

056 / 222 111
rental@dumarent.be
www.dumarent.be



Bobcat®

Torkonjestraat 23
8510 Marke
Belgium
056 / 222 111
rental@dumarent.be
www.dumarent.be

SAFETY & TRAINING RESOURCES

SAFETY INSTRUCTIONS 19
Before Operation 19
Safe Operation Is The Operator's Responsibility 20
Safe Operation Needs A Qualified Operator 20
Avoid Silica Dust 21

FIRE PREVENTION 21
Maintenance 21
Operation 21
Electrical 21
Hydraulic System 22
Fueling 22
Starting 22
Spark Arrester Exhaust System 22
Welding And Grinding 22
Fire Extinguishers 22

MACHINE SIGNS (DECALS) 24
No-Text Safety Signs 26

PUBLICATIONS AND TRAINING RESOURCES 27

Torkonjestraat 23
8510 Marke
Belgium

056 / 222 111
rental@dumarent.be
www.dumarent.be



Bobcat®

Torkonjestraat 23
8510 Marke
Belgium
056 / 222 111
rental@dumarent.be
www.dumarent.be

SAFETY INSTRUCTIONS

Before Operation

Carefully follow the operating and maintenance instructions in this manual.

The Bobcat loader is highly maneuverable and compact. It is rugged and useful under a wide variety of conditions. This presents an operator with hazards associated with off motorway, rough terrain applications, common with Bobcat loader usage.

The Bobcat loader has an internal combustion engine with resultant heat and exhaust. All exhaust gases can kill or cause illness so use the Loader with adequate ventilation.

The dealer explains the capabilities and restrictions of the Bobcat loader and attachment for each application. The dealer demonstrates the safe operation according to Bobcat instructional materials, which are also available to operators. The dealer can also identify unsafe modifications or use of unapproved attachments. The attachments and buckets are designed for a Rated Operating Capacity (some have restricted lift heights). They are designed for secure fastening to the Bobcat loader. The user must check with the dealer, or Bobcat literature, to determine safe loads of materials of specified densities for the machine - attachment combination.

The following publications and training materials provide information on the safe use and maintenance of the Bobcat machine and attachments:

- The Delivery Report is used to assure that complete instructions have been given to the new owner and that the machine and attachment is in safe operating condition.
- The Operation & Maintenance Manual delivered with the machine or attachment gives operating information as well as routine maintenance and service procedures. It is a part of the machine and can be stored in a container provided on the machine. Replacement Operation & Maintenance Manuals can be ordered from your Bobcat dealer.
- Machine signs (decals) instruct on the safe operation and care of your Bobcat machine or attachment. The signs and their locations are shown in the Operation & Maintenance Manual. Replacement signs are available from your Bobcat dealer.
- An Operator's Handbook is fastened to the operator cab of the loader. Its brief instructions are convenient to the operator. See your Bobcat dealer for more information on translated versions.

The dealer and owner / operator review the recommended uses of the product when delivered. If the owner / operator will be using the machine for a different application(s) he or she must ask the dealer for recommendations on the new use.

Torkonjestraat 23
8510 Marke
Belgium
056 / 222 111
rental@dumarent.be
www.dumarent.be

SAFETY INSTRUCTIONS (CONT'D)

Safe Operation Is The Operator's Responsibility

Safety Alert Symbol

This symbol with a warning statement means: "Warning, be alert! Your safety is involved!" Carefully read the message that follows.

WARNING

Operator must have instructions before operating the machine. Untrained operators can cause injury or death.

W-2001-0502

IMPORTANT

This notice identifies procedures which must be followed to avoid damage to the machine.

I-2019-0284

DANGER

The signal word DANGER on the machine and in the manuals indicates a hazardous situation which, if not avoided, will result in death or serious injury.

D-1002-1107

WARNING

The signal word WARNING on the machine and in the manuals indicates a potentially hazardous situation which, if not avoided, could result in death or serious injury.

W-2044-1107

The Bobcat loader and attachment must be in good operating condition before use.

Check all of the items on the Bobcat Service Schedule Decal under the 8-10 hour column or as shown in the Operation & Maintenance Manual.

Safe Operation Needs A Qualified Operator

For an operator to be qualified, he or she must not use drugs or alcoholic drinks which impair alertness or co-ordination while working. An operator who is taking prescription drugs must get medical advice to determine if he or she can safely operate a machine.

A Qualified Operator Must Do The Following:

Understand the Written Instructions, Rules and Regulations

- The written instructions from Bobcat Company include the Delivery Report, Operation & Maintenance Manual, Operator's Handbook and machine signs (decals).
- Check the rules and regulations at your location. The rules may include an employer's work safety requirements. For driving on public roads, the machine must be equipped as stipulated by the local regulations authorising operation on public roads in your specific country. Regulations may identify a hazard such as a utility line.

Have Training with Actual Operation

- Operator training must consist of a demonstration and verbal instruction. This training is given by your Bobcat dealer before the product is delivered.
- The new operator must start in an area without bystanders and use all the controls until he or she can operate the machine and attachment safely under all conditions of the work area. Always fasten seat belt before operating.

Know the Work Conditions

- Know the weight of the materials being handled. Avoid exceeding the Rated Operating Capacity (ROC) of the machine. Material which is very dense will be heavier than the same volume of less dense material. Reduce the size of the load if handling dense material.
- The operator must know any prohibited uses or work areas, for example, he or she needs to know about excessive slopes.
- Know the location of any underground lines.
- Wear tight fitting clothing. Always wear safety glasses when doing maintenance or service. Safety glasses, respiratory equipment, hearing protection or Special Applications Kits are required for some work. See your Bobcat dealer about Bobcat Safety Equipment for your model.

SI SSL EMEA-1009

SAFETY INSTRUCTIONS (CONT'D)

Avoid Silica Dust



Cutting or drilling concrete containing sand or rock containing quartz may result in exposure to silica dust. Use a respirator, water spray or other means to control dust.

FIRE PREVENTION



Maintenance

The machine and some attachments have components that are at high temperatures under normal operating conditions. The primary source of high temperatures is the engine and exhaust system. The electrical system, if damaged or incorrectly maintained, can be a source of arcs or sparks.

Flammable debris (leaves, straw, etc.) must be removed regularly. If flammable debris is allowed to accumulate, it can cause a fire hazard. Clean often to avoid this accumulation. Flammable debris in the engine compartment is a potential fire hazard.

The operator's area, engine compartment and engine cooling system must be inspected every day and cleaned if necessary to prevent fire hazards and overheating.

All fuels, most lubricants and some coolants mixtures are flammable. Flammable fluids that are leaking or spilled onto hot surfaces or onto electrical components can cause a fire.

Operation

Do not use the machine where exhaust, arcs, sparks or hot components can contact flammable material, explosive dust or gases.

Electrical



Check all electrical wiring and connections for damage. Keep the battery terminals clean and tight. Repair or replace any damaged part or wires that are loose or frayed.

Battery gas can explode and cause serious injury. Use the procedure in the Operation & Maintenance Manual for connecting the battery and for jump starting. Do not jump start or charge a frozen or damaged battery. Keep any open flames or sparks away from batteries. Do not smoke in battery charging area.

Torkonjestraat 23
8510 Marke
Belgium
056 / 222 111
rental@dumarent.be
www.dumarent.be

FIRE PREVENTION (CONT'D)

Hydraulic System

Check hydraulic tubes, hoses and fittings for damage and leakage. Never use open flame or bare skin to check for leaks. Hydraulic tubes and hoses must be properly routed and have adequate support and secure clamps. Tighten or replace any parts that show leakage.

Always clean fluid spills. Do not use petrol or diesel fuel for cleaning parts. Use commercial non-flammable solvents.

Fueling



Stop the engine and let it cool before adding fuel. No smoking! Do not refuel a machine near open flames or sparks. Fill the fuel tank outdoors.

Starting

Do not use ether or starting fluids on any engine that has glow plugs or air intake heater. These starting aids can cause explosion and injure you or bystanders.

Use the procedure in the Operation & Maintenance Manual for connecting the battery and for jump starting.

Spark Arrester Exhaust System

The spark arrester exhaust system is designed to control the emission of hot particles from the engine and exhaust system, but the muffler and the exhaust gases are still hot.

Check the spark arrester exhaust system regularly to make sure it is maintained and working properly. Use the procedure in the Operation & Maintenance Manual for cleaning the spark arrester muffler (if equipped).

Welding And Grinding

Always clean the machine and attachment, disconnect the battery, and disconnect the wiring from the Bobcat controllers before welding. Cover rubber hoses, battery and all other flammable parts. Keep a fire extinguisher near the machine when welding.

Have good ventilation when grinding or welding painted parts. Wear dust mask when grinding painted parts. Toxic dust or gas can be produced.

Dust generated from repairing non-metallic parts such as hoods, fenders or covers can be flammable or explosive. Repair such components in a well ventilated area away from open flames or sparks.

Fire Extinguishers



Know where fire extinguishers and first aid kits are located and how to use them. Inspect the fire extinguisher and service the fire extinguisher regularly. Obey the recommendations on the instructions plate.

Torkonjestraat 23
8510 Marke
Belgium

056 / 222 111
rental@dumarent.be
www.dumarent.be



Torkonjestraat 23
8510 Marke
Belgium
056 / 222 111
rental@dumarent.be
www.dumarent.be

MACHINE SIGNS (DECALS)

Follow the instructions on all the Machine Signs (Decals) that are on the loader. Replace any damaged machine signs and be sure they are in the correct locations. Machine signs are available from your Bobcat Loader dealer.

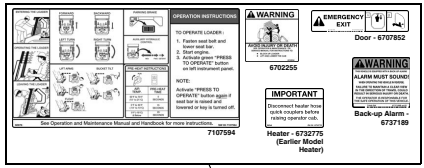

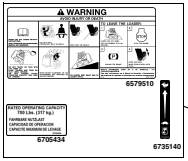


7151710



6986661










6595014


6561383 (Behind Bob-Tach)



(Behind Lift Arm Crossmember)

B-23703

Torkonjestraat 23
8510 Marke
Belgium
056 / 222 111
rental@dumarent.be
www.dumarent.be

MACHINE SIGNS (DECALS) (CONT'D)

Follow the instructions on all the Machine Signs (Decals) that are on the loader. Replace any damaged machine signs and be sure they are in the correct locations. Machine signs are available from your Bobcat Loader dealer.

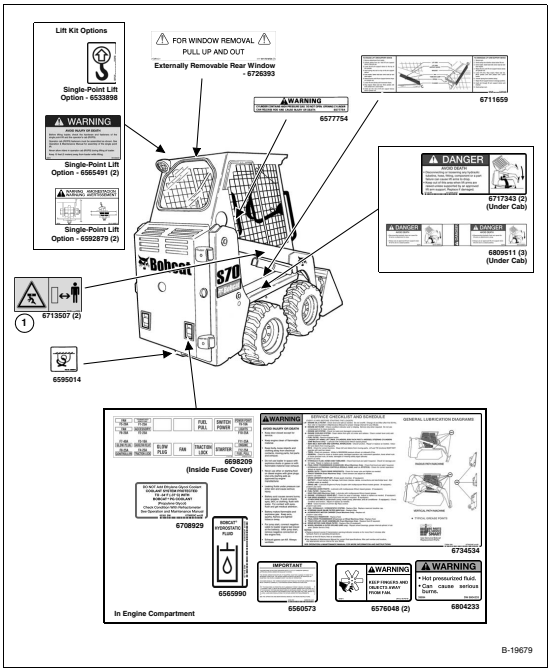

B-19679

Torkonjestraat 23
8510 Marke
Belgium
056 / 222 111
rental@dumarent.be
www.dumarent.be

MACHINE SIGNS (DECALS) (CONT'D)

No-Text Safety Signs

Safety signs are used to alert the equipment operator or maintenance person to hazards that may be encountered in the use and maintenance of the equipment. The location and description of the safety signs are detailed in this section. Please become familiarized with all safety signs installed on the machine / attachment.

Vertical Configuration

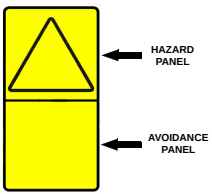

Horizontal Configuration

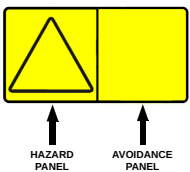

The format consists of the hazard panel(s) and the avoidance panel(s):

Hazard panels depict a potential hazard enclosed in a safety alert triangle.

Avoidance panels depict actions required to avoid the hazards.

A safety sign may contain more than one hazard panel and more than one avoidance panel.

NOTE: See the numbered MACHINE SIGNS (DECALS) on Page 24 and MACHINE SIGNS (DECALS) (CONT'D) on Page 25 for the machine location of each correspondingly numbered no-text decal.

1. Crush Hazard (6713507)

This safety sign is located on the side of each lift arm.





Keep away from the operating machine to avoid serious injury or death.

W-2520-0106

Torkonjestraat 23
8510 Marke
Belgium
056 / 222 111
rental@dumarent.be
www.dumarent.be

PUBLICATIONS AND TRAINING RESOURCES

The following publications are also available for your Bobcat loader. You can order them from your Bobcat dealer.

For the latest information on Bobcat products and the Bobcat Company, visit our web site at **www.training.bobcat.com** or **www.bobcat.com**.



OPERATION & MAINTENANCE MANUAL

6986660

Complete instructions on the correct operation and the routine maintenance of the Bobcat loader.



S70 SERVICE MANUAL

6986662

Complete maintenance instructions for your Bobcat loader.



OPERATOR'S HANDBOOK

6986661

Gives basic operation instructions and safety warnings.

Torkonjestraat 23
8510 Marke
Belgium

056 / 222 111
rental@dumarent.be
www.dumarent.be



Bobcat®

Torkonjestraat 23
8510 Marke
Belgium
056 / 222 111
rental@dumarent.be
www.dumarent.be

OPERATING INSTRUCTIONS

INSTRUMENT PANEL IDENTIFICATION 31
Left And Right Panels 31
Standard Key Panel 32
Keyless Start Panel 32
Option And Field Accessory Panel 33
Cab Heater Panel 33

CONTROL IDENTIFICATION 34
Standard Controls 34

SEAT BAR RESTRAINT SYSTEM 35
Operation 35

BOBCAT INTERLOCK CONTROL SYSTEM (BICS™) 36
Operation 36

LIFT ARM BYPASS CONTROL 37
Operation 37

PARKING BRAKE 37
Operation 37

TRACTION LOCK OVERRIDE 38
Operation 38

EMERGENCY EXIT 39
Rear Window 39
Front Door 39

BACK-UP ALARM SYSTEM 40
Description 40
Operation 40

ENGINE SPEED CONTROL 41
Operation 41

DRIVING AND STEERING THE LOADER 42
Operation 42

STOPPING THE LOADER 42
Using The Control Levers 42

HYDRAULIC CONTROLS 43
Description 43
Hydraulic Bucket Positioning 43
Auxiliary Hydraulic Control Lockout 43
Front Auxiliary Hydraulics Operation 44
Quick Couplers 45
Relieve Auxiliary Hydraulic Pressure (Loader And Attachment) 45

Torkonjestraat 23
8510 Marke
Belgium
056 / 222 111
rental@dumarent.be
www.dumarent.be

ATTACHMENT CONTROL DEVICE (ACD) 46
Description 46

DAILY INSPECTION 47
Daily Inspection And Maintenance 48

PRE-STARTING PROCEDURE 49
Entering The Loader 49
Operation & Maintenance Manual And Operator's Handbook Locations 49
Seat Adjustment 50
Seat Belt Adjustment 51
Seat Bar 51

STARTING THE ENGINE 52
Standard Key Panel 52
Keyless Start Panel 54
Cold Temperature Starting 56
Warming The Hydraulic / Hydrostatic System 56

MONITORING THE DISPLAY PANELS 56
Right Panel 56

STOPPING THE ENGINE AND LEAVING THE LOADER 57
Procedure 57

ATTACHMENTS 58
Choosing The Correct Bucket 58
Pallet Forks 58
Installing And Removing The Attachment 59

OPERATING PROCEDURE 62
Inspect The Work Area 62
Basic Operating Instructions 62
Driving On Public Roads 62
Operating With A Full Bucket 63
Operating With An Empty Bucket 63
Filling And Emptying The Bucket 64
Leveling The Ground Using Float 65
Digging And Filling A Hole 65

TOWING THE LOADER 66
Procedure 66

LIFTING THE LOADER 67
Single-Point Lift 67

TRANSPORTING THE LOADER ON A TRAILER 67
Loading And Unloading 67
Fastening 68

Torkonjestraat 23
8510 Marke
Belgium
056 / 222 111
rental@dumarent.be
www.dumarent.be

INSTRUMENT PANEL IDENTIFICATION

Left And Right Panels

Figure 6

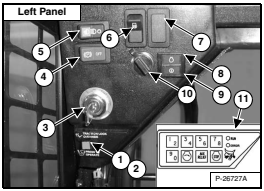

Figure 7

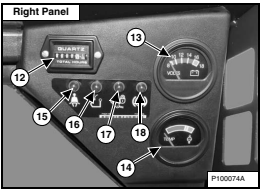

The table below shows the DESCRIPTION and FUNCTION / OPERATION for each of the instrument panel components.

REF.	DESCRIPTION	FUNCTION / OPERATION
1	TRACTION LOCK OVERRIDE BUTTON	*(Functions Only When The Seat Bar Is Raised, the Parking Brake Switch is OFF and the Engine Is Running.)* Allows you to use the steering levers to move the loader forward or backward when using the backhoe attachment. (See TRACTION LOCK OVERRIDE in this manual.) Engages auxiliary hydraulics.
2	PRESS TO OPERATE LOADER BUTTON	*(Functions Only When The Seat Bar Is Down.)* Activates BICS™ when the Seat Bar is down and operator is seated in the operating position. Engages auxiliary hydraulics.
3	KEY SWITCH	For starting and stopping the engine. (See Standard Key Panel in this manual.)
4	PARKING BRAKE	Press the left side of switch to engage; press right side to disengage.
5	LIGHT SWITCH	For FRONT work lights, "red" rear light, and REAR work light: Press the switch fully to the right to turn all lights OFF. Press the switch to the centre position to turn on the FRONT work lights and "red" rear light. Press the switch fully to the left to turn on the FRONT work lights and REAR work light.
6	PREHEAT SWITCH	Press and hold to preheat the glow plugs to aid in cold temperature starting. (Earlier Models)
7	NOT USED	- - -
8	ENGINE WARNING LIGHT	Light is ON when engine oil pressure is low or coolant temperature is high. Stop the engine if the light comes ON.
9	TRANSMISSION WARNING LIGHT	Light is ON when transmission charge pressure is low, hydraulic filter needs replacement or fluid temperature is high. Stop the engine if the light comes ON.
10	POWER PLUG	Used to power 12 volt accessories.
11	KEYLESS PANEL	Optional Keyless Panel Kit. (See Keyless Start Panel in this manual.)
12	HOURMETER	Records the total operating hours of the loader.
13	VOLTMETER	Shows the condition of the battery and the rate of charge.
14	ENGINE TEMPERATURE GAUGE	Shows the engine coolant temperature.
15	SEAT BELT INDICATOR LIGHT	Light stays on for 45 seconds to remind operator to fasten seat belt.
16	SEAT BAR LIGHT	Light is *ON* when the seat bar is raised.
17	LIFT & TILT VALVE LIGHT	Light is *ON* when the lift and tilt functions can NOT be operated. Light is *OFF* when the seat bar is down, the key switch is in the ON position and the PRESS TO OPERATE LOADER Button is pressed. The lift and tilt functions can be operated when the light is *OFF.*
18	PARKING BRAKE LIGHT	Light is *ON* when the Parking Brake is engaged.

Torkonjestraat 23
8510 Marke
Belgium
056 / 222 111
rental@dumarent.be
www.dumarent.be

INSTRUMENT PANEL IDENTIFICATION (CONT'D)

Standard Key Panel

Figure 8

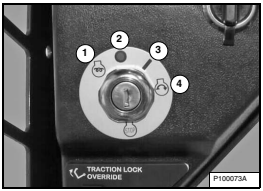

The functions of the key switch **[Figure 8]** are:

1. **ENGINE PREHEAT:** Hold the key in this position to activate the glow pugs. (Earlier model loaders have a separate preheat switch and do not have this position.) (See Left And Right Panels on Page 31.)

2. **STOP:** Stop the engine and turn the loader electrical system OFF.

3. **RUN:** Turn the loader electrical system ON.

4. **START:** Hold the key in this position to start the engine; release when engine starts.

Keyless Start Panel

Figure 9

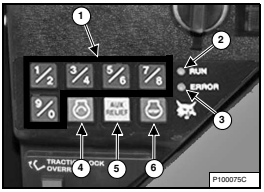

The functions of the Keyless Start Panel **[Figure 9]** are:

1. **KEYPAD (Keys 1 through 0):** Used to enter a number code (password) to allow starting the engine.

2. **RUN LIGHT:** Light will be ON after the password has been correctly entered.

3. **ERROR LIGHT:** Light will be ON when an incorrect user / master password is entered. Three consecutive incorrect passwords will cause an error condition and a delay of one minute will be required before another start sequence can be attempted.

4. **START Button:** Press the start button until the engine starts.

5. **AUX. RELIEF / PREHEAT Button:** Press and hold to activate the glow plugs after the password has been entered.

6. **STOP Button:** Used to stop the engine and shut down the loader electrical system.

NOTE: When a Keyless Start Panel Kit is installed, the kit will be supplied with an Owner Password. Change the password to one that you will easily remember to prevent unauthorised use of your loader. Keep your password in a safe place for future needs. (The instructions included with the Keyless Start Panel will describe how to change the password. Keep this instruction for future reference.)

Torkonjestraat 23
8510 Marke
Belgium
056 / 222 111
rental@dumarent.be
www.dumarent.be

Option And Field Accessory Panel

Figure 10

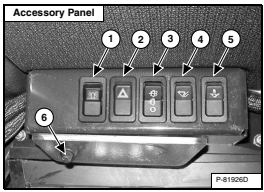

The side accessory panel is shown in **[Figure 10]**.

REF. NO.	DESCRIPTION	FUNCTION / OPERATION
1	ROTATING BEACON (Option) ***OR*** STROBE LIGHT (Option)	Press the top of the switch to turn ON; press bottom to turn OFF.
2	HAZARD LIGHTS (Option)	Press the top of the switch to turn the Hazard Lights ON; press bottom to turn OFF.
3	FRONT WINDSHIELD WIPER (Option)	Move the switch to the centre position to turn ON; press bottom to turn OFF. Press and hold the top of switch for washer fluid.
4	HYDRAULIC BUCKET POSITIONING (Option)	The Bucket Positioning function will keep the bucket in approximately the same position as the lift arms are raised. Press the top of the switch to engage the Bucket Position function; press the bottom to disengage.
5	TRAVEL LOCK	Press the top of the switch to lock the lift and tilt hydraulic functions for travel. Press the bottom of the switch to turn travel lock OFF.
6	CAB LIGHT	Press the switch to turn ON, press again to turn OFF.

Cab Heater Panel

This machine may be equipped with a Cab Heater.

Figure 11

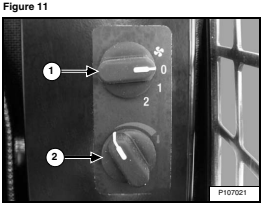

The cab heater panel is shown in **[Figure 11]**.

REF. NO.	DESCRIPTION	FUNCTION / OPERATION
1	FAN MOTOR (Option)	Turn clockwise to increase fan speed; anticlockwise to decrease. There are three positions; OFF-1-2.
2	TEMPERATURE CONTROL (Option)	Turn clockwise to increase the temperature; anticlockwise to decrease.

Torkonjestraat 23
8510 Marke
Belgium
056 / 222 111
rental@dumarent.be
www.dumarent.be

CONTROL IDENTIFICATION

Standard Controls

Figure 12

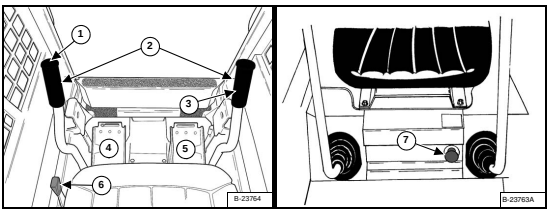

REF. NO.	DESCRIPTION	FUNCTION / OPERATION
* 1	FRONT HORN	Press the button to sound the front horn.
2	STEERING LEVERS	See DRIVING AND STEERING THE LOADER in this manual.
3	AUXILIARY HYDRAULICS CONTROL	See HYDRAULIC CONTROLS in this manual.
4	LIFT ARM PEDAL	See HYDRAULIC CONTROLS in this manual.
5	TILT PEDAL	See HYDRAULIC CONTROLS in this manual.
6	ENGINE SPEED CONTROL	See ENGINE SPEED CONTROL in this manual.
7	LIFT ARM BYPASS CONTROL	See LIFT ARM BYPASS CONTROL in this manual.

* Press the front switch to sound the front horn if equipped with deluxe hand grips.

Torkonjestraat 23
8510 Marke
Belgium
056 / 222 111
rental@dumarent.be
www.dumarent.be

SEAT BAR RESTRAINT SYSTEM

Operation

Figure 13



The seat bar restraint system has a pivoting seat bar with armrests (Item 1) **[Figure 13]**.

⚠ WARNING

AVOID INJURY OR DEATH

When operating the machine:

- **Keep the seat belt fastened snugly.**
- **The seat bar must be lowered.**
- **Keep your feet on the pedal controls and hands on steering levers.**

W-2046-0108

The operator controls the use of the seat bar. The seat bar in the down position helps to keep the operator in the seat.

When the seat bar is down, the PRESS TO OPERATE LOADER button is activated, and the parking brake is released, the lift, tilt and traction drive functions can be operated.

When the seat bar is up, the lift, tilt and traction drive functions are deactivated. Both foot pedals will be locked when returned to the neutral position.

⚠ WARNING

Before you leave the operator's seat:

- **Lower the lift arms, put the attachment flat on the ground.**
- **Stop the engine.**
- **Engage the parking brake.**
- **Raise the seat bar, move pedals until both lock.**
- **Move auxiliary hydraulic control lever out of detent position.**

W-2164-0108

Torkonjestraat 23
8510 Marke
Belgium
056 / 222 111
rental@dumarent.be
www.dumarent.be

BOBCAT INTERLOCK CONTROL SYSTEM (BICS™)

Operation

⚠ WARNING

AVOID INJURY OR DEATH

The Bobcat Interlock Control System (BICS™) must deactivate the lift, tilt and traction drive functions. If it does not, contact your dealer for service. DO NOT modify the system.

W-2151-1111

Figure 14



The Bobcat Interlock Control System (BICS™) has a pivoting seat bar with armrests (Item 1) **[Figure 14]**. The operator controls the use of the seat bar.

The BICS™ requires the operator to be seated in the operating position with the seat bar fully lowered before the lift, tilt, auxiliary hydraulics and traction functions can be operated. The seat belt must be fastened any time you operate the machine.

⚠ WARNING

AVOID INJURY OR DEATH

When operating the machine:

- **Keep the seat belt fastened snugly.**
- **The seat bar must be lowered.**
- **Keep your feet on the pedal controls and hands on steering levers.**

W-2046-0108

Figure 15

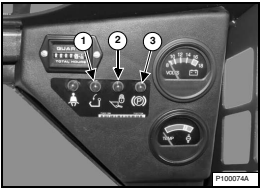

There are three display lights (Items 1, 2 and 3) **[Figure 15]** located on the right instrument panel that must be OFF to fully operate the machine.

When the seat bar is lowered, the engine is running, the PRESS TO OPERATE LOADER button is activated, and the parking brake is released, the lift, tilt, auxiliary hydraulics and traction drive functions can be operated.

When the seat bar is raised, the lift, tilt, auxiliary hydraulics and traction drive functions are deactivated.

⚠ WARNING

Before you leave the operator's seat:

- **Lower the lift arms, put the attachment flat on the ground.**
- **Stop the engine.**
- **Engage the parking brake.**
- **Raise the seat bar, move pedals until both lock.**
- **Move auxiliary hydraulic control lever out of detent position.**

W-2164-0108

Torkonjestraat 23
8510 Marke
Belgium
056 / 222 111
rental@dumarent.be
www.dumarent.be

LIFT ARM BYPASS CONTROL

Operation

Figure 16

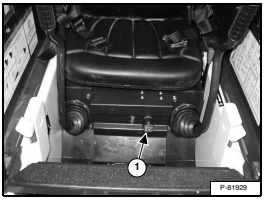

The lift arm bypass control (Item 1) **[Figure 16]** is used to lower the lift arms if the lift arms cannot be lowered during normal operations.

1. Sit in the operator seat.
2. Fasten the seat belt and lower the seat bar.
3. Turn the lift arm bypass knob (Item 1) **[Figure 16]** clockwise 1/4 turn.
4. Pull out and hold the knob until the lift arms lower.

PARKING BRAKE

Operation

Figure 17

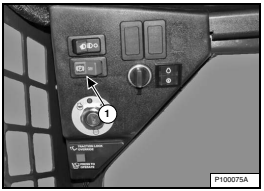

Press the left side of the switch (Item 1) **[Figure 17]** to engage the parking brake. The red light in the switch will turn on. The traction drive system will be locked.

Press the right side of the switch (Item 1) **[Figure 17]** to disengage the parking brake. The red light in the switch will turn off. The traction drive system will be unlocked.

NOTE: If the loader will not move when operator is in the operating position with the seat bar down and the parking brake disengaged and after the PRESS TO OPERATE LOADER button is pressed, move the steering levers either forward or backward a small amount to unlock the traction drive.

Figure 18

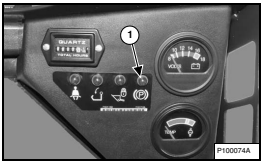

NOTE: The PARKING BRAKE LIGHT (Item 1) [Figure 18] on the right instrument panel will remain ON until the engine is started, the PRESS TO OPERATE LOADER button is pressed and the parking brake is disengaged.

Torkonjestraat 23
8510 Marke
Belgium
056 / 222 111
rental@dumarent.be
www.dumarent.be

TRACTION LOCK OVERRIDE

Operation

Figure 19

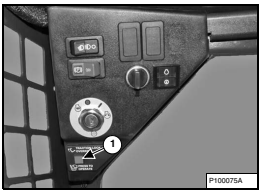

Figure 20

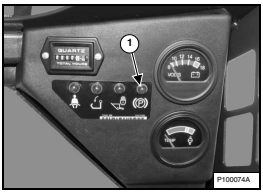

(Functions only when the seat bar is raised, the parking brake switch is OFF, and the engine is running.) There is a TRACTION LOCK OVERRIDE button (Item 1) **[Figure 19]** on the left instrument panel which will allow you to use the steering levers to move the loader forward and backward when using the backhoe attachment.

- Press the TRACTION LOCK OVERRIDE button once to unlock the brakes. The PARKING BRAKE light (Item 1) **[Figure 20]** will be OFF.

- Press the button a second time to lock the traction drive. The PARKING BRAKE light (Item 1) **[Figure 20]** will be ON.

Torkonjestraat 23
8510 Marke
Belgium
056 / 222 111
rental@dumarent.be
www.dumarent.be

EMERGENCY EXIT

The front opening on the operator cab and rear window provide exits.

Rear Window

Figure 21

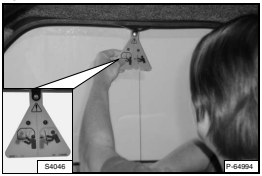

Pull the tag on the top of the rear window **[Figure 21]** to remove the rubber cord.

Push the rear window out of the rear of the operator cab.

Figure 22



Exit through the rear of the operator cab **[Figure 22]**.

Front Door

This machine may be equipped with a Front Door.

NOTE: When an Operator Cab Enclosure Kit is installed, the window of the front door can be used as an emergency exit [Figure 23].

NOTE: If the loader has a Special Application Door Kit installed, the window of the front door is NOT an emergency exit.

Figure 23

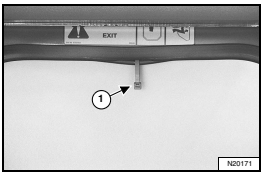

Pull the plastic loop (Item 1) **[Figure 23]** at the top of the window in the front door to remove the rubber cord.

Figure 24

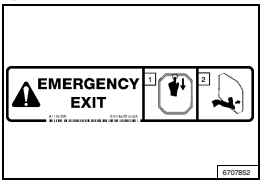

Push the window out with your foot at any corner of the window (Item 1) **[Figure 24]**.

Exit through the front door.

Torkonjestraat 23
8510 Marke
Belgium
056 / 222 111
rental@dumarent.be
www.dumarent.be

BACK-UP ALARM SYSTEM

This machine may be equipped with a Back-Up Alarm.

Description

Figure 25



The back-up alarm (Item 1) **[Figure 25]** is located on the inside of the rear door.

A back-up alarm is not a substitute for looking to the rear when operating the loader in reverse, or for keeping bystanders away from the work area. Operators **must always** look in the direction of travel, including **reverse**, and must keep bystanders away from the work area, even though the loader is equipped with a back-up alarm.

Operators must be trained to **always** look in the direction od travel, **including when operating the loader in reverse** and to keep bystanders away from the work area. Other workers should be trained to **always** keep away from the operator's work area and travel path.

Operation

WARNING

AVOID INJURY OR DEATH

- **Always keep bystanders away from the work area and travel path.**
- **The operator must always look in the direction of travel.**
- **The back-up alarm must sound when operating the machine in the reverse direction.**

W-2783-0409

The back-up alarm will sound when the operator moves both steering levers into the reverse position. Slight movement of the steering levers into the reverse position is required with hydrostatic transmissions, before the back-up alarm will sound.

If alarm does not sound or for adjustment instructions, see inspection and maintenance instructions for the back-up alarm system in the preventive maintenance section of this manual. (See BACK-UP ALARM SYSTEM on Page 83.)

Torkonjestraat 23
8510 Marke
Belgium
056 / 222 111
rental@dumarent.be
www.dumarent.be

ENGINE SPEED CONTROL

Operation

Figure 26

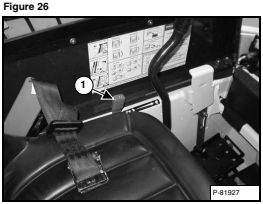

The engine speed control lever is to the left of the operator seat (Item 1) **[Figure 26]**.

Move the lever forward to increase engine speed. Move backward to decrease engine speed.

Torkonjestraat 23
8510 Marke
Belgium
056 / 222 111
rental@dumarent.be
www.dumarent.be

DRIVING AND STEERING THE LOADER

Operation

Figure 27



The control levers (Item 1) **[Figure 27]** are on the left and right side in front of the seat.

Move the levers smoothly. Avoid sudden starting and stopping.

⚠ WARNING

AVOID INJURY OR DEATH

When operating the machine:

- **Keep the seat belt fastened snugly.**
- **The seat bar must be lowered.**
- **Keep your feet on the pedal controls and hands on steering levers.**

W-2046-0108

Figure 28

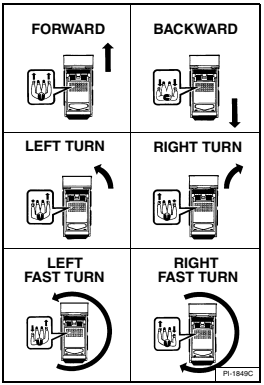

The levers control forward and backward travel and turning the loader **[Figure 28]**.

Forward Travel - Push both levers forward.

Backward Travel - Pull both levers backward.

Normal Turning - Move one lever farther forward than the other.

Fast Turning - Push one lever forward and pull the other lever backward.

STOPPING THE LOADER

Using The Control Levers

When the steering levers are moved to the neutral position, the hydrostatic transmission will act as a *service brake* to stop the loader.

Torkonjestraat 23
8510 Marke
Belgium
056 / 222 111
rental@dumarent.be
www.dumarent.be

HYDRAULIC CONTROLS

Description

Two foot pedals control the hydraulic cylinders for the lift and tilt functions.

Put your feet on the pedals and KEEP THEM THERE any time you operate the loader.

Figure 29

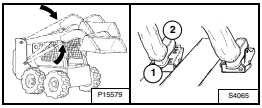

Lift Arm Operation (Left Pedal)

Push the heel (Item 1) **[Figure 29]** of the pedal to raise the lift arms.

Push the toe (Item 2) **[Figure 29]** of the pedal to lower the lift arms.

Lift Arm Float Position (Left Pedal)

Push the toe (Item 2) **[Figure 29]** of the pedal all the way forward until it locks into the float position.

Use the float position of the lift arms to level loose material while driving backward.

Raise the lift arms to disengage the float position.

Figure 30

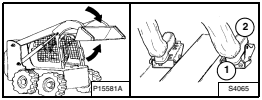

Tilt Operation - (Right Pedal)

Push the heel (Item 1) **[Figure 30]** of the pedal to tilt the bucket backward.

Push the toe (Item 2) **[Figure 30]** of the pedal to tilt the bucket forward.

Hydraulic Bucket Positioning

This machine may be equipped with Hydraulic Bucket Positioning.

The function of hydraulic bucket positioning is to keep the bucket in the same approximate position it is in before you begin raising the lift arms.

Figure 31

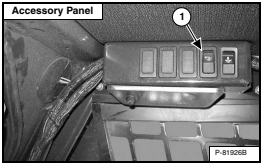

Press the top of the BUCKET POSITIONING switch (Item 1) **[Figure 31]** to engage the bucket positioning function. Press the bottom of the switch to disengage this function.

Bucket positioning functions only during upward lift cycle.

Auxiliary Hydraulic Control Lockout

Figure 32

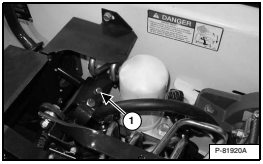

Raise the operator cab. (See OPERATOR CAB on Page 85.)

Remove the auxiliary hydraulic control lockout bolt and nut (Item 1) **[Figure 32]** before using the auxiliary control for the first time.

Lower the operator cab. (See OPERATOR CAB on Page 85.)

Torkonjestraat 23
8510 Marke
Belgium
056 / 222 111
rental@dumarent.be
www.dumarent.be

HYDRAULIC CONTROLS (CONT'D)

Front Auxiliary Hydraulics Operation

Figure 33

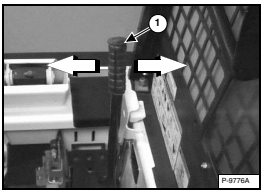

Variable Flow

Variable Flow allows for slow-to-fast movement of auxiliary hydraulic functions.

The right steering lever (Item 1) **[Figure 33]** is also the control lever for the front auxiliary hydraulics (Auxiliary Hydraulic Control Lever).

Enter the loader, lower the seat bar, fasten seat belt, engage the parking brake and start the engine. Press the PRESS TO OPERATE LOADER button which will also engage the auxiliary hydraulics.

Figure 34

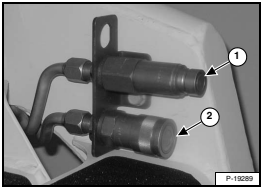

Move the Auxiliary Hydraulic Control Lever (Item 1) **[Figure 33]** to the left for auxiliary hydraulic oil flow to the front male coupler (Item 1) **[Figure 34]**. Hydraulic oil flow increases to the coupler as the lever is moved to the left.

Move the Auxiliary Hydraulic Control Lever (Item 1) **[Figure 33]** to the right for auxiliary hydraulic oil flow to the front female coupler (Item 2) **[Figure 34]**. Hydraulic oil flow increases to the coupler as the lever is moved to the right.

Continuous Flow

Continuous Flow allows for fast movement of auxiliary hydraulic functions.

Move the Auxiliary Hydraulic Control Lever fully to the right to put it into continuous flow (detent) position. This will allow continuous auxiliary hydraulic oil flow to the female coupler. Move the lever to the neutral position to stop auxiliary hydraulic oil flow

Move the lever out of the continuous flow (detent) position before leaving the operator's seat.

NOTE: When the operator is seated and raises the seat bar, the Auxiliary Hydraulic System will deactivate.

Torkonjestraat 23
8510 Marke
Belgium
056 / 222 111
rental@dumarent.be
www.dumarent.be

Quick Couplers

WARNING

AVOID BURNS

Hydraulic fluid, tubes, fittings and quick couplers can get hot when running machine and attachments. Be careful when connecting and disconnecting quick couplers.

W-2220-0396

WARNING

AVOID INJURY OR DEATH

Diesel fuel or hydraulic fluid under pressure can penetrate skin or eyes, causing serious injury or death. Fluid leaks under pressure may not be visible. Use a piece of cardboard or wood to find leaks. Do not use your bare hand. Wear safety goggles. If fluid enters skin or eyes, get immediate medical attention from a doctor familiar with this injury.

W-2072-EN-0909

Figure 35

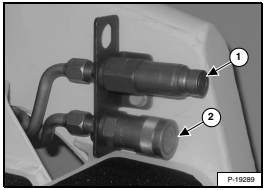

To Connect: Remove dirt or debris from the surface of both the male (Item 1) and female couplers (Item 2) **[Figure 35]**, and from the outside diameter of the male coupler. Visually check the couplers for corroding, cracking, damage or excessive wear. If any of these conditions exist, the coupler(s) must be replaced.

Install the male coupler into the female coupler. Full connection is made when the ball release sleeve slides forward on the female coupler.

To Disconnect: Hold the male coupler. Retract the sleeve on the female coupler until the couplers disconnect.

Relieve Auxiliary Hydraulic Pressure (Loader And Attachment)

Hydraulic pressure in the auxiliary hydraulic system can make it difficult to engage quick couplers to an attachment.

Loader:

1. Turn the key to the ON position or press RUN button but do not start the engine. Press the PRESS TO OPERATE LOADER Button.

Figure 36

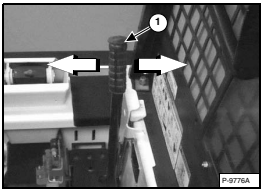

2. Move the Auxiliary Hydraulic Control Lever (Item 1) **[Figure 36]** left and right to release auxiliary hydraulic oil pressure. Turn key to OFF position or press STOP button.

Attachments:

1. Follow procedure above to release pressure in the loader.

2. Connect male coupler from attachment to female coupler of the loader then repeat procedure above. This will release pressure in the attachment.

3. Connect the female coupler from the attachment to the male coupler of the loader.

Torkonjestraat 23
8510 Marke
Belgium
056 / 222 111
rental@dumarent.be
www.dumarent.be

ATTACHMENT CONTROL DEVICE (ACD)

This machine may be equipped with an Attachment Control Device.

Description

Figure 37

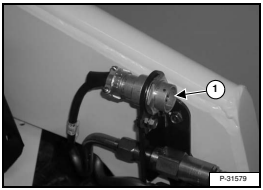

Connect the attachment electrical harness to the attachment control device (Item 1) **[Figure 37]**.

Figure 38

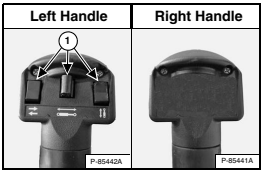

Additional switches (Item 1) **[Figure 38]** on the left steering lever handle are used to control some attachment functions through the attachment control device.

See the appropriate attachment Operation & Maintenance Manual for control details.

Torkonjestraat 23
8510 Marke
Belgium

056 / 222 111
rental@dumarent.be
www.dumarent.be

DAILY INSPECTION

Figure 39

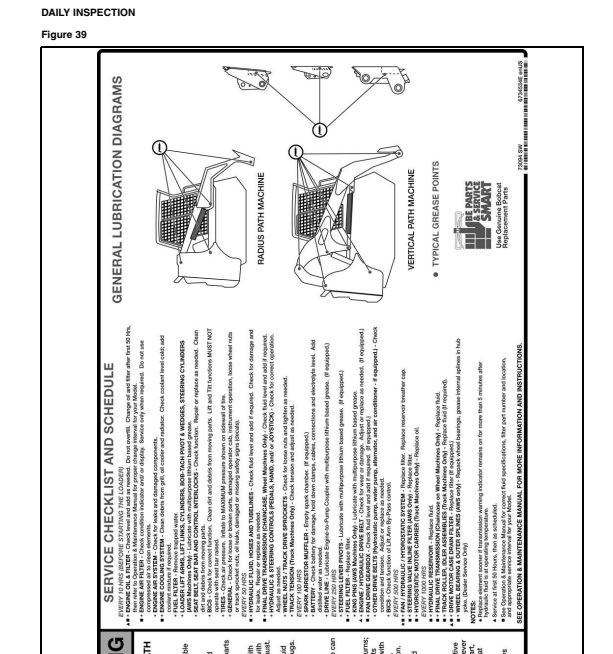

Torkonjestraat 23
8510 Marke
Belgium
056 / 222 111
rental@dumarent.be
www.dumarent.be

DAILY INSPECTION (CONT'D)

Daily Inspection And Maintenance

Maintenance work must be done at regular intervals. Failure to do so will result in excessive wear and early failures. The Service Schedule **[Figure 39]** is a guide for correct maintenance of the Bobcat Loader. It is located inside the rear door of the loader.

- Engine oil level.
- Hydraulic / hydrostatic fluid level.
- Engine Air Filter - Check Air System for Damage or Leaks.
- Engine coolant system - check system for damage or leaks.
- Operator cab and cab mounting hardware.
- Seat belt.
- Seat Bar and Control interlocks.
- Bobcat Interlock Control System (BICS™).
- Front Horn - Check for proper function.
- Grease Pivot Pins (Lift Arms, Bob-Tach, Cylinders, Bob-Tach Wedges).
- Tyres - Check for Wear, Damage, Correct Air Pressure.
- Fuel Filter - Remove Trapped Water.
- Loose or Broken Parts - Repair or Replace as Necessary.
- Safety Treads and Safety Signs (Decals) - Replace as necessary.
- Lift Arm Support Device - Replace if damaged.
- Indicators and Lights.
- Clean Foot Pedal Area.
- Monitor Instrument Panel for fuel level, coolant temperature and air cleaner condition.

⚠ WARNING

Operator must have instructions before operating the machine. Untrained operators can cause injury or death.

W-2001-0502

NOTE: Fluids such as engine oil, hydraulic fluid, coolant, etc. must be disposed of in an environmentally safe manner. Some regulations require that certain spills and leaks on the ground must be cleaned in a specific manner. See local bylaws for correct disposal.

IMPORTANT

PRESSURE WASHING DECALS

- **Never direct the stream at a low angle toward the decal that could damage the decal causing it to peel from the surface.**
- **Direct the stream at a 90 degree angle and at least 300 mm (12 in) from the decal. Wash from the centre of the decal toward the edges.**

I-2226-EN-0910

Torkonjestraat 23
8510 Marke
Belgium
056 / 222 111
rental@dumarent.be
www.dumarent.be

PRE-STARTING PROCEDURE

Entering The Loader

Figure 40



Use the bucket or attachment steps, grab handles and safety treads (on the loader lift arms and frame) to get on and off the loader **[Figure 40]**. DO NOT JUMP.

Safety treads are installed on the Bobcat Loader to provide a slip resistant surface for getting on and off the loader.

Keep the safety treads clean and replace them when damaged. Replacement treads are available from your Bobcat dealer.

Operation & Maintenance Manual And Operator's Handbook Locations

Figure 41

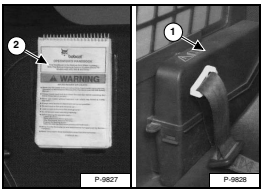

Read and understand the Operation & Maintenance Manual (Item 1) and the Operator's Handbook (Item 2) **[Figure 41]** before operating the loader.

The Operation & Maintenance Manual and other manuals can be kept in a container (Item 1) **[Figure 41]** provided on the right side of the operator seat.

⚠ WARNING

AVOID INJURY OR DEATH

Instructions are necessary before operating or servicing machine. Read and understand the Operation & Maintenance Manual, Operator's Handbook and signs (decals) on machine. Follow warnings and instructions in the manuals when making repairs, adjustments or servicing. Check for correct function after adjustments, repairs or service. Untrained operators and failure to follow instructions can cause injury or death.

W-2003-0807

Torkonjestraat 23
8510 Marke
Belgium
056 / 222 111
rental@dumarent.be
www.dumarent.be

PRE-STARTING PROCEDURE (CONT'D)

Seat Adjustment

Figure 42

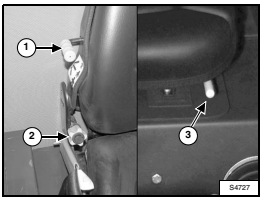

Use the lever (Item 1) and knob (Item 2) **[Figure 42]** to adjust the position of the seat for comfortable operation of the loader controls.

The lever (Item 1) sets the seat cushion for the weight of the operator. The knob (Item 2) **[Figure 42]** sets the angle of the seat back.

The lever (Item 3) **[Figure 42]** adjusts the fore / aft position of the seat.

Torkonjestraat 23
8510 Marke
Belgium
056 / 222 111
rental@dumarent.be
www.dumarent.be

Seat Belt Adjustment

WARNING

AVOID INJURY OR DEATH

When operating the machine:

- **Keep the seat belt fastened snugly.**
- **The seat bar must be lowered.**
- **Keep your feet on the pedal controls and hands on steering levers.**

W-2046-0108

Figure 43

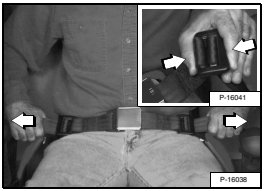

Squeeze both seat belt adjusters to release and lengthen each half of the seat belt **[Figure 43]**.

Fasten the seat belt.

Pull the ends of the belt through the belt adjusters so that the seat belt is snug and the buckle is centred between your hips **[Figure 43]**.

Seat Bar

Figure 44

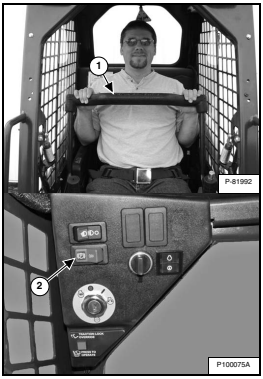

Lower the seat bar (Item 1) and engage the parking brake (Item 2) **[Figure 44]**.

Put the foot pedals and steering levers in neutral position.

NOTE: Keep your hands on the steering levers and your feet on the foot pedals while operating the loader.

WARNING

AVOID INJURY OR DEATH

When operating the machine:

- **Keep the seat belt fastened snugly.**
- **The seat bar must be lowered.**
- **Keep your feet on the pedal controls and hands on steering levers.**

W-2046-0108

Torkonjestraat 23
8510 Marke
Belgium
056 / 222 111
rental@dumarent.be
www.dumarent.be

STARTING THE ENGINE

Standard Key Panel

WARNING

AVOID INJURY OR DEATH

- **Engines can have hot parts and hot exhaust gas. Keep flammable material away.**
- **Do not use machines in atmosphere containing explosive gas.**

W-2051-1086

Perform the PRE-STARTING PROCEDURE. (See PRE-STARTING PROCEDURE on Page 49.)

Figure 45

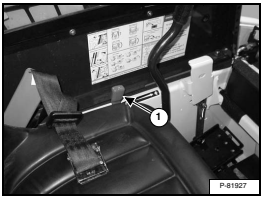

Move the engine speed control lever (Item 1) **[Figure 45]** to the mid position.

WARNING

AVOID INJURY OR DEATH

- **Fasten seat belt, start and operate only from the operator's seat.**
- **Never wear loose clothing when working near machine.**

W-2135-1108

Figure 46

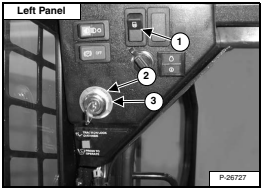

Earlier Models With Preheat Switch (Item 1)

If the temperature is cold, turn the key switch to the RUN position (Item 2) **[Figure 46]** but do not start the engine.

Press and hold the top of the preheat switch (Item 1) **[Figure 46]**. Release the switch to stop engine preheat. A decal in the operator cab and the table below show suggested preheat times.

AMBIENT AIR TEMPERATURE	PREHEAT TIME
21°C and Above (70°F and Above)	None Required
10 - 21°C (50 - 70°F)	5 Seconds
-18 - 10°C (0 - 50°F)	15 Seconds
-18°C and Below (0°F and Below)	25 Seconds

NOTE: You can hold the preheat switch for up to 25 seconds at a time while cranking.

Turn the key switch to the START position (Item 3) **[Figure 46]** and continue to crank for up to one minute or until the engine starts.

Release the key when the engine starts. It will return to the RUN position (Item 2) **[Figure 46]**.

Torkonjestraat 23
8510 Marke
Belgium
056 / 222 111
rental@dumarent.be
www.dumarent.be

STARTING THE ENGINE (CONT'D)

Standard Key Panel (Cont'd)

Figure 47

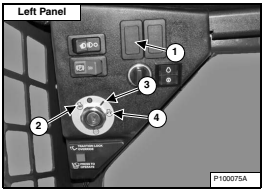

Later Models Without Preheat Switch (Item 1)

If the temperature is cold, turn the key switch to the PREHEAT position (Item 2) **[Figure 47]**.

Release the key switch to stop engine preheat. A decal in the operator cab and the table below show suggested preheat times.

AMBIENT AIR TEMPERATURE	PREHEAT TIME
21°C and Above (70°F and Above)	None Required
10 - 21°C (50 - 70°F)	5 Seconds
-18 - 10°C (0 - 50°F)	15 Seconds
-18°C and Below (0°F and Below)	25 Seconds

Turn the key switch to the START position (Item 4) **[Figure 47]** and continue to crank for up to one minute or until the engine starts.

Release the key when the engine starts. It will return to the RUN position (Item 3) **[Figure 47]**.

All Models

Figure 48

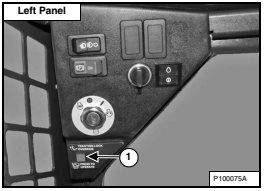

Figure 49

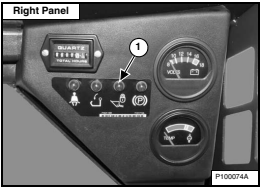

Press the PRESS TO OPERATE LOADER button (Item 1) **[Figure 48]** to activate the BICS™ and to perform hydraulic and loader functions. The Lift & Tilt Valve light (Item 1) **[Figure 49]** will be OFF when the BICS™ is active.

⚠ WARNING

AVOID INJURY OR DEATH

When an engine is running in an enclosed area, fresh air must be added to avoid concentration of exhaust fumes. If the engine is stationary, vent the exhaust outside. Exhaust fumes contain odorless, invisible gases which can kill without warning.

W-2050-0807

Torkonjestraat 23
8510 Marke
Belgium
056 / 222 111
rental@dumarent.be
www.dumarent.be

STARTING THE ENGINE (CONT'D)

Keyless Start Panel

⚠ WARNING

AVOID INJURY OR DEATH

- **Engines can have hot parts and hot exhaust gas. Keep flammable material away.**
- **Do not use machines in atmosphere containing explosive gas.**

W-2051-1086

Perform the PRE-STARTING PROCEDURE. (See PRE-STARTING PROCEDURE on Page 49.)

Figure 50

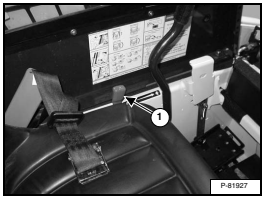

Move the engine speed control lever (Item 1) **[Figure 50]** to the mid position.

⚠ WARNING

AVOID INJURY OR DEATH

- **Fasten seat belt, start and operate only from the operator's seat.**
- **Never wear loose clothing when working near machine.**

W-2135-1108

Figure 51

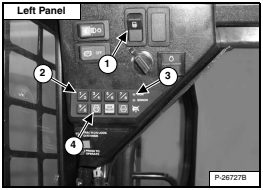

Earlier Models With Preheat Switch (Item 1)

Enter the password / user code on the keypad (Item 2), the RUN light (Item 3) **[Figure 51]** will illuminate.

If the temperature is cold, press and hold the top of the preheat switch (Item 1) **[Figure 51]**. Release the switch to stop engine preheat.

A decal in the operator cab and the table below show suggested preheat times.

AMBIENT AIR TEMPERATURE	PREHEAT TIME
21°C and Above (70°F and Above)	None Required
10 - 21°C (50 - 70°F)	5 Seconds
-18 - 10°C (0 - 50°F)	15 Seconds
-18°C and Below (0°F and Below)	25 Seconds

NOTE: You can hold the preheat switch for up to 25 seconds at a time while cranking.

Press the start button (Item 4) **[Figure 51]** and continue to crank for up to one minute or until the engine starts.

Release the start button when the engine starts.

d Torkonjestraat 23
8510 Marke
Belgium
056 / 222 111
rental@dumarent.be
www.dumarent.be

Keyless Start Panel (Cont'd)

Figure 52

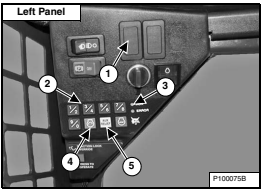

Later Models Without Preheat Switch (Item 1)

Enter the password / user code on the keypad (Item 2), the RUN light (Item 3) **[Figure 52]** will illuminate.

If the temperature is cold, press and hold the AUX. RELIEF / Preheat button (Item 5) **[Figure 52]**. Release the button to stop engine preheat.

A decal in the operator cab and the table below show suggested preheat times.

AMBIENT AIR TEMPERATURE	PREHEAT TIME
21°C and Above (70°F and Above)	None Required
10 - 21°C (50 - 70°F)	5 Seconds
-18 - 10°C (0 - 50°F)	15 Seconds
-18°C and Below (0°F and Below)	25 Seconds

NOTE: You can hold the AUX. RELIEF / Preheat button for up to 25 seconds at a time while cranking.

Press the start button (Item 4) **[Figure 52]** and continue to crank for up to one minute or until the engine starts.

Release the start button when the engine starts.

All Models

Figure 53

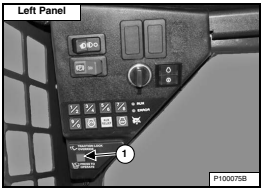

Figure 54

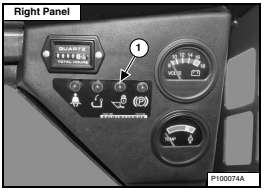

Press the PRESS TO OPERATE LOADER button (Item 1) **[Figure 53]** to activate the BICS™ and to perform hydraulic and loader functions. The Lift & Tilt Valve light (Item 1) **[Figure 54]** will be OFF when the BICS™ is active.

⚠ WARNING

AVOID INJURY OR DEATH

When an engine is running in an enclosed area, fresh air must be added to avoid concentration of exhaust fumes. If the engine is stationary, vent the exhaust outside. Exhaust fumes contain odorless, invisible gases which can kill without warning.

W-2050-0807

Torkonjestraat 23
8510 Marke
Belgium
056 / 222 111
rental@dumarent.be
www.dumarent.be

Cold Temperature Starting

⚠ WARNING

AVOID INJURY OR DEATH
Do not use ether with glow plug (preheat) systems. Explosion can result which can cause injury, death, or severe engine damage.

W-2071-0907

If the temperature is below freezing perform the following to make starting the engine easier:

- Replace the engine oil with the correct type and viscosity for the anticipated starting temperature (See Engine Oil Chart on Page 93.)
- Make sure the battery is fully charged.
- Install an engine heater, available from your local Bobcat dealer.

Warming The Hydraulic / Hydrostatic System

IMPORTANT

When the temperature is below -30°C (-20°F), hydrostatic oil must be warmed before starting. The hydrostatic system will not get enough oil at low temperatures and will be damaged. Park the machine in an area where the temperature will be above -18°C (0°F) if possible.

I-2007-0910

Let the engine run for a minimum of 5 minutes to warm the engine and hydrostatic transmission fluid before operating the loader.

Right Panel

Figure 55

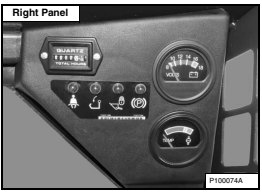

Frequently monitor the temperature gauge and BICS™ lights **[Figure 55]**. All BICS™ lights must be off to operate the loader. (See BOBCAT INTERLOCK CONTROL SYSTEM (BICS™) on Page 77.)

Torkonjestraat 23
8510 Marke
Belgium
056 / 222 111
rental@dumarent.be
www.dumarent.be

STOPPING THE ENGINE AND LEAVING THE LOADER

Procedure

Stop the Bobcat Loader on level ground.

Lower the lift arms fully and put the attachment flat on the ground.

Figure 56

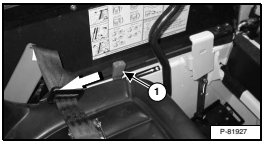

Pull the engine speed control lever (Item 1) **[Figure 56]** fully backward to decrease the engine speed.

Figure 57

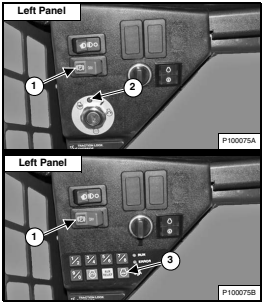

Turn the key switch to the OFF position (Item 2) or press the STOP button (Item 3) **[Figure 57]**.

Engage the parking brake by pressing the left side of the parking brake switch (Item 1) **[Figure 57]**.

Raise the seat bar and make sure the lift and tilt functions are deactivated. Move the pedals until they both lock.

Move auxiliary hydraulic control lever out of detent position.

Unbuckle the seat belt.

Remove the key from the switch to prevent operation of the loader by unauthorised personnel. (Standard Key Panel only.)

Figure 58



Exit the loader using grab handles, safety tread and steps (maintaining a 3-point contact) **[Figure 58]**.

⚠ WARNING

Before you leave the operator's seat:

- **Lower the lift arms, put the attachment flat on the ground.**
- **Stop the engine.**
- **Engage the parking brake.**
- **Raise the seat bar, move pedals until both lock.**
- **Move auxiliary hydraulic control lever out of detent position.**

W-2164-0108

Torkonjestraat 23
8510 Marke
Belgium
056 / 222 111
rental@dumarent.be
www.dumarent.be

ATTACHMENTS

Choosing The Correct Bucket

⚠ WARNING

AVOID INJURY OR DEATH

Never use attachments or buckets which are not approved by Bobcat Company. Buckets and attachments for safe loads of specified densities are approved for each model. Unapproved attachments can cause injury or death.

W-2052-0907

NOTE: Warranty is void if non-approved attachments are used on the Bobcat Loader.

The dealer can identify, for each model loader, the attachments and buckets approved by Bobcat. The buckets and attachments are approved for Rated Operating Capacity (ROC) and for secure fastening to the Bob-Tach.

The ROC for this loader is shown on a decal in the operator cab. (See Performance on Page 122.)

The ROC is determined by using a standard bucket, and material of normal density, such as dirt or dry gravel. If longer buckets are used, the load centre moves forward and reduces the ROC. If very dense material is loaded, the volume must be reduced to prevent overloading.

Figure 59

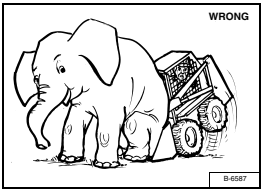

Exceeding the ROC **[Figure 59]** can cause the following problems:

- Steering the loader may be difficult.
- Tyres will wear faster.
- There will be a loss of stability.
- The life of the Bobcat Loader will be reduced.

Use the correct bucket size for the type and density of material being handled. For safe handling of materials and avoiding machine damage, the attachment (or bucket) should handle a full load without going over the ROC for the loader. Partial loads make steering more difficult.

Pallet Forks

Figure 60

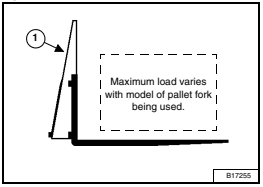

The maximum load to be carried when using a pallet fork is shown on a decal located on the pallet fork frame (Item 1) **[Figure 60]**.

See your Bobcat dealer for more information about pallet fork inspection, maintenance and replacement. See your Bobcat Loader dealer for ROC when using a pallet fork and for other available attachments.

⚠ WARNING

AVOID INJURY OR DEATH

Do not exceed Rated Operating Capacity (ROC). Excessive load can cause tipping or loss of control.

W-2053-0903

Torkonjestraat 23
8510 Marke
Belgium
056 / 222 111
rental@dumarent.be
www.dumarent.be

ATTACHMENTS (CONT'D)

Installing And Removing The Attachment

The Bob-Tach is used for fast changing of buckets and attachments. See the appropriate attachment Operation & Maintenance Manual to install other attachments.

Installing

Figure 61

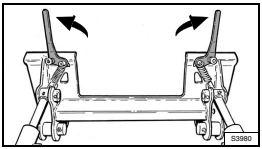

Pull the Bob-Tach levers all the way up **[Figure 61]**.

Enter the loader and perform the PRE-STARTING PROCEDURE. (See PRE-STARTING PROCEDURE on Page 49.) Start the engine.

Lower the lift arms and tilt the Bob-Tach slightly forward.

Figure 62

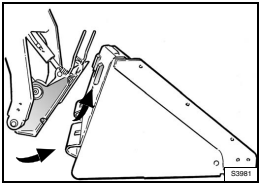

Disengage the parking brake and drive the loader forward until the top edge of the Bob-Tach is completely under the top flange of the bucket **[Figure 62]** (or other attachment).

NOTE: Make sure the Bob-Tach levers do not hit the bucket (or other attachment).

Figure 63

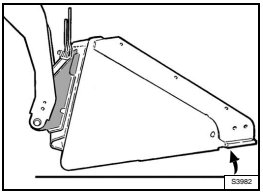

Tilt the Bob-Tach backward until the cutting edge of the bucket (or other attachment) is slightly off the ground **[Figure 63]**. This will cause the bucket frame to fit up against the front of the Bob-Tach.

⚠ WARNING

Before you leave the operator's seat:

- **Lower the lift arms, put the attachment flat on the ground.**
- **Stop the engine.**
- **Engage the parking brake.**
- **Raise the seat bar, move pedals until both lock.**
- **Move auxiliary hydraulic control lever out of detent position.**

W-2164-0108

Stop the engine, engage the parking brake, raise the seat bar, unfasten the seat belt and exit the loader.

Torkonjestraat 23
8510 Marke
Belgium
056 / 222 111
rental@dumarent.be
www.dumarent.be

Installing (Cont'd)

Figure 64

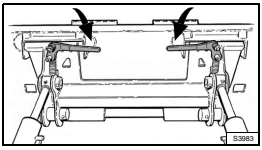

Push down on the Bob-Tach levers until they are fully engaged in the locked position **[Figure 64]**.

Figure 65

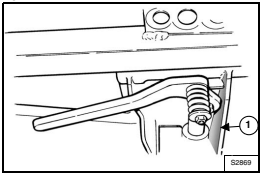

The levers must contact the frame at the shaded areas (Item 1) **[Figure 65]** (wedges fully extended).

If the levers do not engage in the locked position, contact your Bobcat dealer for maintenance.

Figure 66

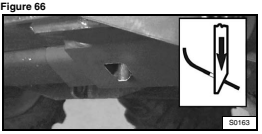

The wedges must extend through the holes in the mounting frame of the bucket (or attachment) and touch the lower edge of these holes, securely fastening the bucket to the Bob-Tach **[Figure 66]**.

⚠ WARNING

AVOID INJURY OR DEATH

The Bob-Tach wedges must extend through the holes in the attachment mounting frame. Levers must be fully down and locked. Failure to secure wedges can allow attachment to come off.

W-2715-0208

If the attachment is hydraulically controlled, connect the hydraulic hoses of the attachment to the loader (See Quick Couplers on Page 45.) You may need to release hydraulic pressure before connecting the quick couplers. (See Relieve Auxiliary Hydraulic Pressure (Loader And Attachment) on Page 45.)

Torkonjestraat 23
8510 Marke
Belgium
056 / 222 111
rental@dumarent.be
www.dumarent.be

ATTACHMENTS (CONT'D)

Installing And Removing The Attachment (Cont'd)

Removing

- Lower the lift arms, put the attachment flat on the ground and lower or close the hydraulic equipment.
- If the attachment is hydraulically controlled (Combination bucket, backhoe, etc.): stop the engine and relieve hydraulic pressure in the auxiliary circuit (See Relieve Auxiliary Hydraulic Pressure (Loader And Attachment) on Page 45.)
- Stop the engine, engage the parking brake, raise the seat bar, unfasten the seat belt and exit the loader.
- Disconnect the hydraulic hoses from the attachment.

⚠ WARNING

Before you leave the operator's seat:
- **Lower the lift arms, put the attachment flat on the ground.**
- **Stop the engine.**
- **Engage the parking brake.**
- **Raise the seat bar, move pedals until both lock.**
- **Move auxiliary hydraulic control lever out of detent position.**

W-2164-0108

Figure 67

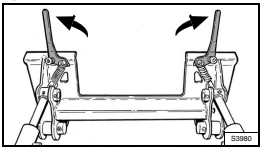

Pull the Bob-Tach levers all the way up **[Figure 67]**.

⚠ WARNING

Bob-Tach levers have spring tension. Hold lever tightly and release slowly. Failure to obey warning can cause injury.

W-2054-1285

Enter the loader and perform the PRE-STARTING PROCEDURE. (See PRE-STARTING PROCEDURE on Page 49.) Start the engine and disengage the parking brake.

Figure 68

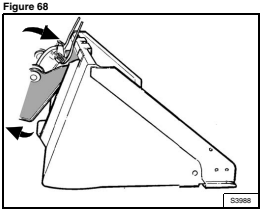

Tilt the Bob-Tach forward while backing the loader away from the bucket or attachment **[Figure 68]**.

NOTE: In muddy conditions or to prevent the attachment from freezing to the ground, put the attachment on planks or blocks before removing it from the machine.

Torkonjestraat 23
8510 Marke
Belgium
056 / 222 111
rental@dumarent.be
www.dumarent.be

OPERATING PROCEDURE

Inspect The Work Area

Before beginning operation, inspect the work area for unsafe conditions.

Look for sharp drop-offs or rough terrain. Have underground utility lines (gas, electrical, water, sewer, irrigation, etc.) located and marked.

Remove objects or other construction material that could damage the loader or cause personal injury.

Always check ground conditions before starting your work:

- Inspect for signs of instability such as cracks or settlement.
- Be aware of weather conditions that can affect ground stability.
- Check for adequate traction if working on a slope.

Basic Operating Instructions

Always warm the engine and hydrostatic system before operating the loader.

IMPORTANT

Machines warmed up with moderate engine speed and light load have longer life.

I-2015-0284

Operate the loader with engine at full speed for maximum horsepower. Move the steering levers only a small amount to operate the loader slowly.

New operators must operate the loader in an open area without bystanders. Operate the controls until the loader can be handled at an efficient and safe rate for all conditions of the work area.

Operating Near An Edge Or Water

Keep the loader as far back from the edge as possible and the loader wheels perpendicular to the edge so that if part of the edge collapses, the loader can be moved back.

Always move the loader back at any indication the edge may be unstable.

⚠ WARNING

MACHINE TIPPING OR ROLL OVER CAN CAUSE SERIOUS INJURY OR DEATH

- **Keep the lift arms as low as possible.**
- **Do not travel or turn with the lift arms up.**
- **Turn on level ground. Slow down when turning.**
- **Go up and down slopes, not across them.**
- **Keep the heavy end of the machine uphill.**
- **Do not overload the machine.**
- **Check for adequate traction.**

W-2018-1109

Driving On Public Roads

When operating on a public road or motorway, always follow local regulations. For example: Slow Moving Vehicle Sign or direction signals may be required.

NOTE: Road Option kits are available from your Bobcat dealer to equip your machine for driving on public roads in European Union (EU) countries.

Always follow local regulations. For more information, contact your local Bobcat dealer.

Torkonjestraat 23
8510 Marke
Belgium
056 / 222 111
rental@dumarent.be
www.dumarent.be

Operating With A Full Bucket

Figure 69

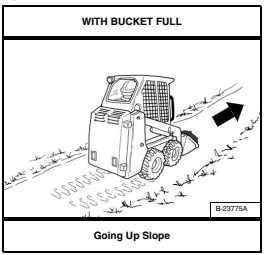

Figure 70

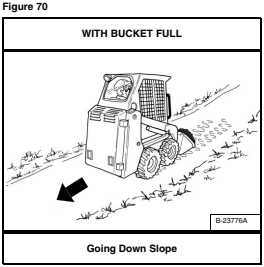

With a full bucket, go up or down the slope with the bucket (heavy end) toward the top of the slope **[Figure 69]** and **[Figure 70]**.

Operating With An Empty Bucket

Figure 71

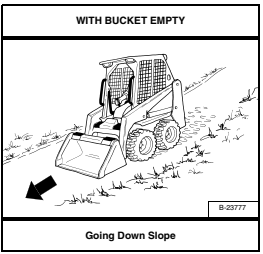

Figure 72

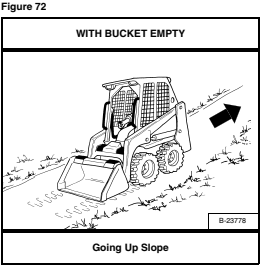

With an empty bucket, go up or down the slope with the back of the loader (heavy end) toward the top of the slope **[Figure 71]** and **[Figure 72]**.

Raise the bucket only high enough to avoid obstructions on rough ground.

Torkonjestraat 23
8510 Marke
Belgium
056 / 222 111
rental@dumarent.be
www.dumarent.be

OPERATING PROCEDURE (CONT'D)

Filling And Emptying The Bucket

Filling

Figure 73

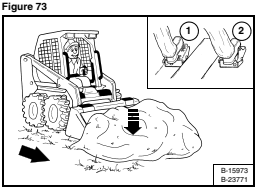

Figure 74

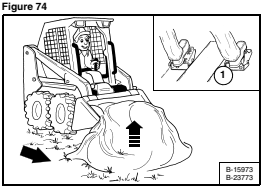

Lower the lift arms all the way by pushing the toe of the left pedal (Item 1) **[Figure 73]**. Tilt the bucket forward by pushing the toe of the right pedal (Item 2) **[Figure 73]** until the cutting edge of the bucket is on the ground.

Drive slowly forward into the material. Tilt the bucket backward all the way by pushing the heel of the right pedal (Item 1) **[Figure 74]** when the bucket is full.

Drive backward away from the material.

⚠ WARNING

Load, unload and turn on flat level ground. Do not exceed Rated Operating Capacity (ROC) shown on sign (decal) in cab. Failure to obey warnings can cause the machine to tip or roll over and cause injury or death.

W-2056-0903

Emptying

Figure 75

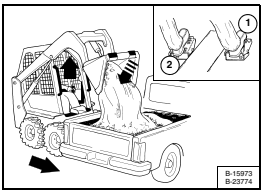

Keep the bucket low when moving to the area where you want to empty the bucket.

Level the bucket by pushing the toe of the right pedal (Item 1) while raising the lift arms to help prevent material from falling off the back of the bucket. Raise the lift arms by pushing the heel of the left pedal (Item 2) **[Figure 75]**.

Drive forward slowly until the bucket is over the top of the truck box or bin **[Figure 75]**.

Empty the bucket by pushing the toe of the right pedal (Item 1) **[Figure 75]**. If all the material is near the side of the truck or bin, use the bucket tilt to move it to the other side.

⚠ WARNING

Never dump over an obstruction, such as a post, that can enter the operator cab. The machine could tip forward and cause injury or death.

W-2057-0694

Torkonjestraat 23
8510 Marke
Belgium
056 / 222 111
rental@dumarent.be
www.dumarent.be

Leveling The Ground Using Float

Figure 76

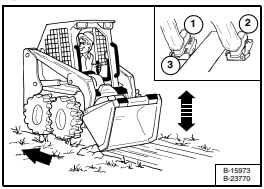

Put the lift arms in *float* position by pushing the toe of the left pedal (Item 1) **[Figure 76]** until it is locked in the forward position.

Tilt the bucket forward by pushing the toe of the right pedal (Item 2) **[Figure 76]** to change the position of the cutting edge of the bucket.

With the bucket tilted farther forward, there is more force on the cutting edge and more loose material can be moved.

Drive backward to level loose material **[Figure 76]**.

Push the heel of the left pedal (Item 3) **[Figure 76]** to unlock the float position.

IMPORTANT

Never drive forward when the hydraulic control for lift arms is in float position.

I-2005-1285

Digging And Filling A Hole

Digging

Figure 77

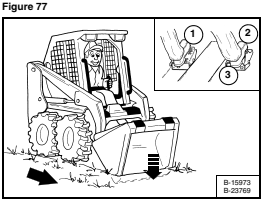

Lower the lift arms all the way by pushing the toe of the left pedal (Item 1) **[Figure 77]**. Put the cutting edge of the bucket on the ground by pushing the toe of the right pedal (Item 2) **[Figure 77]**.

Drive forward slowly and continue to tilt the bucket down (Item 2) **[Figure 77]** until it enters the ground.

Raise the cutting edge a small amount by pushing the heel of the right pedal (Item 3) **[Figure 77]** to increase traction and keep an even digging depth. Continue to drive forward until the bucket is full. When the ground is hard, raise and lower the cutting edge of the bucket (Items 2 and 3) **[Figure 77]** while driving forward slowly.

Figure 78

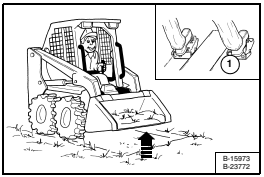

Tilt the bucket backward by pushing the heel of the right pedal (Item 1) **[Figure 78]** as far as it will go when the bucket is full.

Torkonjestraat 23
8510 Marke
Belgium
056 / 222 111
rental@dumarent.be
www.dumarent.be

Digging And Filling (Cont'd)

Filling

Figure 79

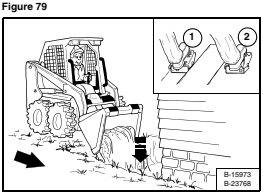

Lower the lift arms by pushing the toe of the left pedal (Item 1) **[Figure 79]**. Put the cutting edge of the bucket on the ground by pushing the toe of the right pedal (Item 2) **[Figure 79]**. Drive forward to the edge of the hole to push the material into the hole.

Tilt the bucket farther forward (Item 2) **[Figure 79]** as soon as it is past the edge of the hole.

If necessary, raise the lift arms to empty the bucket.

TOWING THE LOADER

Procedure

Because of the design of the loader, there is not a recommended towing procedure.

- The loader can be lifted onto a transport vehicle.
- The loader can be skidded a short distance to move for service (EXAMPLE: Move onto a transport vehicle.) without damage to the hydrostatic system. (The wheels will not turn.) There might be slight wear to the tyres when the loader is skidded.

The towing chain (or cable) must be rated at 1.5 times the weight of the loader. (See Performance on Page 122.)

Torkonjestraat 23
8510 Marke
Belgium
056 / 222 111
rental@dumarent.be
www.dumarent.be

LIFTING THE LOADER

Single-Point Lift

WARNING

AVOID INJURY OR DEATH

- **Before lifting, check fasteners on single point lift and operator cab.**
- **Assemble front cab fasteners as shown in this manual.**
- **Never allow riders in the cab or bystanders within 5 m (15 ft) while lifting the machine.**

W-2007-0910

The loader can be lifted with the Single-Point Lift which is available as a kit from your Bobcat Loader dealer.

The Single-Point Lift, supplied by Bobcat, is designed to lift and support the Bobcat Loader without affecting roll over and falling object protection features of the operator cab.

Figure 80

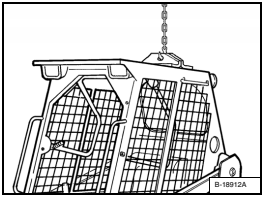

Attach lift to lift eye **[Figure 80]**.

NOTE: Be sure the lifting equipment is of adequate size and capacity for the weight of the loader. (See Performance on Page 122.)

TRANSPORTING THE LOADER ON A TRAILER

Loading And Unloading

WARNING

AVOID SERIOUS INJURY OR DEATH

Adequately designed ramps of sufficient strength are needed to support the weight of the machine when loading onto a transport vehicle. Wood ramps can break and cause personal injury.

W-2058-0807

Be sure the transport and towing vehicles are of adequate size and capacity for the weight of the loader. (See Performance on Page 122.)

Figure 81

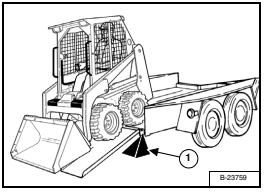

A loader with an empty bucket or no attachment must be loaded backward onto the transport vehicle **[Figure 81]**.

The rear of the trailer must be blocked or supported (Item 1) **[Figure 81]** when loading or unloading the loader to prevent the front end of the trailer from raising up.

Torkonjestraat 23
8510 Marke
Belgium
056 / 222 111
rental@dumarent.be
www.dumarent.be

TRANSPORTING THE LOADER ON A TRAILER (CONT'D)

Fastening

Figure 82

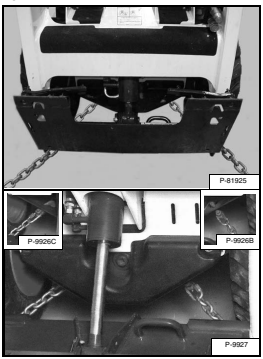

Use the following procedure to fasten the Bobcat Loader to the transport vehicle to prevent the loader from moving during sudden stops or when going up or down slopes **[Figure 82]**.

- Lower the bucket or attachment to the floor.
- Stop the engine.
- Engage the parking brake.
- Install chains at the front tie down positions **[Figure 82]**.
- Fasten each end of the chain to the transport vehicle.

Figure 83

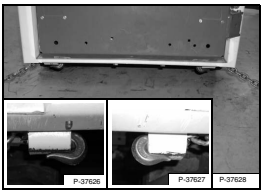

- Install chains at the rear tie down positions **[Figure 83]**.
- Fasten each end of the chain to the transport vehicle.

Torkonjestraat 23
8510 Marke
Belgium
056 / 222 111
rental@dumarent.be
www.dumarent.be

PREVENTIVE MAINTENANCE

MAINTENANCE SAFETY 73

SERVICE SCHEDULE 75
- Chart 75
- Inspection Checkbook 76

BOBCAT INTERLOCK CONTROL SYSTEM (BICS™) 77
- Inspecting The BICS™ (Engine STOPPED - Key ON) 77
- Inspecting The Seat Bar Sensor (Engine RUNNING) 77
- Inspecting The Traction Lock (Engine RUNNING) 77
- Inspecting The Lift Arm Bypass Control 77
- Inspecting Deactivation Of The Auxiliary Hydraulics System 78

SEAT BAR RESTRAINT SYSTEM 79
- Description 79
- Inspecting 79
- Maintaining 79

SEAT BELT 80
- Inspection And Maintenance 80

LIFT ARM SUPPORT DEVICE 81
- Installing 81
- Removing 82

BACK-UP ALARM SYSTEM 83
- Description 83
- Inspecting 83
- Adjusting Switch Position 84

OPERATOR CAB 85
- Description 85
- Raising 85
- Lowering 86

REAR DOOR (TAILGATE) 88
- Opening And Closing 88

AIR CLEANER SERVICE 89
- Replacing Filter Elements 89

FUEL SYSTEM 90
- Fuel Specifications 90
- Biodiesel Blend Fuel 90
- Filling The Fuel Tank 91
- Fuel Filter 92
- Removing Air From The Fuel System 92

Torkonjestraat 23
8510 Marke
Belgium
056 / 222 111
rental@dumarent.be
www.dumarent.be

ENGINE LUBRICATION SYSTEM 93
Checking And Adding Engine Oil 93
Engine Oil Chart 93
Removing And Replacing Oil And Filter 93

ENGINE COOLING SYSTEM 94
Cleaning 94
Checking Level 94
Removing And Replacing Coolant 95

ELECTRICAL SYSTEM 96
Description 96
Fuse And Relay Location / Identification 96
Battery Maintenance 97
Using A Booster Battery (Jump Starting) 97
Removing And Installing Battery 99

HYDRAULIC / HYDROSTATIC SYSTEM 100
Checking And Adding Fluid 100
Hydraulic / Hydrostatic Fluid Chart 100
Removing And Replacing Hydraulic Fluid 101
Removing And Replacing Hydraulic / Hydrostatic Filter 102
Breather Cap 102

SPARK ARRESTER MUFFLER 103
Cleaning Procedure 103

TYRE MAINTENANCE 104
Wheel Nuts 104
Rotating 104
Mounting 104

FINAL DRIVE TRANSMISSION (CHAINCASE) 105
Checking And Adding Oil 105
Removing And Replacing Oil 105

ALTERNATOR BELT 106
Belt Adjustment 106
Belt Replacement 106

DRIVE BELT 107
Belt Adjustment 107
Belt Replacement 107

LUBRICATING THE LOADER 108
Lubrication Locations 108

PIVOT PINS 110
Inspection And Maintenance 110

BOB-TACH 111
Inspection And Maintenance 111

Torkonjestraat 23
8510 Marke
Belgium
056 / 222 111
rental@dumarent.be
www.dumarent.be

LOADER STORAGE AND RETURN TO SERVICE 112
Storage 112
Return To Service 112

Torkonjestraat 23
8510 Marke
Belgium

056 / 222 111
rental@dumarent.be
www.dumarent.be



Bobcat®

Torkonjestraat 23
8510 Marke
Belgium
056 / 222 111
rental@dumarent.be
www.dumarent.be

MAINTENANCE SAFETY

WARNING

Instructions are necessary before operating or servicing machine. Read and understand the Operation & Maintenance Manual, Operator's Handbook and signs (decals) on machine. Follow warnings and instructions in the manuals when making repairs, adjustments or servicing. Check for correct function after adjustments, repairs or service. Untrained operators and failure to follow instructions can cause injury or death. W-2003-0807

Safety Alert Symbol: This symbol with a warning statement, means: "Warning, be alert! Your safety is involved!" Carefully read the message that follows.

CORRECT



P-90216

Never service the Bobcat Skid-Steer Loader without instructions.

CORRECT



B-12365

Use the correct procedure to lift or lower operator cab.

CORRECT



B-7469

Cleaning and maintenance are required daily.

WRONG



B-11799

Have good ventilation when welding or grinding painted parts.
Wear dust mask when grinding painted parts. Toxic dust and gas can be produced.
Avoid exhaust fume leaks which can kill without warning. Exhaust system must be tightly sealed.

WRONG



B-15231

Disconnecting or loosening any hydraulic tubeline, hose, fitting, component or a part failure can cause lift arms to drop. Do not go under lift arms when raised unless supported by an approved lift arm support device. Replace it if damaged.

WRONG



B-15280

Never work on loader with lift arms up unless lift arms are held by an approved lift arm support device. Replace if damaged.
Never modify equipment or add attachments not approved by Bobcat Company.

WRONG

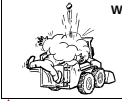

B-6590

Stop, cool and clean engine of flammable materials before checking fluids.
Never service or adjust loader with the engine running unless instructed to do so in the manual.
Avoid contact with leaking hydraulic fluid or diesel fuel under pressure. It can penetrate the skin or eyes.
Never fill fuel tank with engine running, while smoking or when near open flame.

WRONG



B-6580

Keep body, jewelry and clothing away from moving parts, electrical contact, hot parts and exhaust.
Wear eye protection to guard from battery acid, compressed springs, fluids under pressure and flying debris when engines are running or tools are used. Use eye protection approved for type of welding.
Keep rear door closed except for service. Close and latch door before operating the loader.

WRONG



B-6589

Lead-acid batteries produce flammable and explosive gases.
Keep arcs, sparks, flames and lighted tobacco away from batteries.
Batteries contain acid which burns eyes or skin on contact. Wear protective clothing. If acid contacts body, flush well with water. For eye contact flush well and get immediate medical attention.

Maintenance procedures which are given in the Operation & Maintenance Manual can be performed by the owner/operator without any specific technical training. Maintenance procedures which are **not** in the Operation & Maintenance Manual must be performed **ONLY BY QUALIFIED BOBCAT SERVICE PERSONNEL. Always use genuine Bobcat replacement parts.** The Service Safety Training Course is available from your Bobcat dealer.

MSW01-0409

Torkonjestraat 23
8510 Marke
Belgium

056 / 222 111
rental@dumarent.be
www.dumarent.be



Bobcat®

Torkonjestraat 23
8510 Marke
Belgium
056 / 222 111
rental@dumarent.be
www.dumarent.be

SERVICE SCHEDULE

Chart

Maintenance work must be done at regular intervals. Failure to do so will result in excessive wear and early failures. The service schedule is a guide for correct maintenance of the Bobcat Loader.

WARNING

Instructions are necessary before operating or servicing machine. Read and understand the Operation & Maintenance Manual, Operator's Handbook and signs (decals) on machine. Follow warnings and instructions in the manuals when making repairs, adjustments or servicing. Check for correct function after adjustments, repairs or service. Untrained operators and failure to follow instructions can cause injury or death.

W-2003-0807

SERVICE SCHEDULE		HOURS						
ITEM	**SERVICE REQUIRED**	**8-10**	**50**	**100**	**150**	**■ 250**	**■ 500**	**■ 1000**
Engine Oil	Check the oil level and add as needed. Do not overfill.							
Engine Air Filter and Air System	Check condition indicator. Service only when required. Check for leaks and damaged components.							
Engine Cooling System	Clean debris from oil cooler, radiator and grille. Check coolant level COLD and add premixed coolant as needed.							
Fuel Filter	Remove the trapped water.							
Lift Arms, Cylinders, Bob-Tach Pivot Pins and Wedges	Lubricate with multipurpose lithium based grease.							
Tyres	Check for damaged tyres and correct air pressure. Inflate to MAXIMUM pressure shown on sidewall of tyre.							
Seat Bar, Control Interlocks, Seat Belt	Check the condition of seat belt. Check the sear bar and control interlocks for correct operation. Clean dirt and debris from moving parts.							
Front Horn	Check for proper function.							
Bobcat Interlock Control Systems (BICS™)	Check for correct function. Lift and Tilt functions MUST NOT operate with seat bar raised. See details in this Manual.							
Safety Signs and Safety Treads	Check for damaged signs (decals) and safety treads. Replace any signs or safety treads that are damaged or worn.							
Operator Cab	Check the fastening bolts, washers and nuts. Check the condition of the cab.							
Indicators and Lights	Check for correct operation of all indicators and lights.							
Heater Filter (If Equipped)	Clean or replace filter as needed.							
Hydraulic Fluid, Hoses and Tubelines	Check fluid level and add as needed. Check for damage and leaks. Repair or replace as needed.							
Final Drive Trans. (Chaincase)	Check oil level and add oil as needed.							
Parking Brake, Foot Pedals and Steering Levers	Check for correct operation. Repair or adjust as needed.							
Wheel Nuts	Check for loose wheel nuts and tighten to correct torque. (See TYRE MAINTENANCE in this manual.)	❑						
Battery	Check cables, connections and electrolyte level. Add distilled water as needed.							
Spark Arrester Muffler	Empty Spark Chamber.							
Engine Oil and Filter	Replace oil and filter.		✳					
Alternator Belt	Check tension and adjust as needed.							
Fuel Filter	Replace filter element.							
Steering Shaft	Grease fittings.							
Engine / Hydro. Drive Belt	Check for wear or damage. Adjust or replace as needed.		❍					
Bobcat Interlock Control System (BICS™)	Check the function of the lift arm bypass control.							
Hydraulic Reservoir Breather Cap	Replace the reservoir breather cap.							
Hyd./Hydro. Filter	Replace the filter element.		●					
Final Drive Trans. (Chaincase)	Replace the fluid.							
Hydraulic Reservoir	Replace the fluid.							
Coolant	Replace the coolant	Every 2 years						

❑ **Check every 8-10 hours for the first 50 hours, then as scheduled.**
✳ **First oil and filter change must occur at 50 hours, then as scheduled.**
❍ **Inspect new belt after first 50 hours, then as scheduled.**
● **Replace the hydraulic / hydrostatic filter element after the first 50 hours; thereafter when the transmission warning light comes ON while operating or as scheduled.**
■ **Or every 12 months.**

NOTE: The Inspection Checkbook can be ordered for you by your local dealer. Part number 4420300.

Torkonjestraat 23
8510 Marke
Belgium
056 / 222 111
rental@dumarent.be
www.dumarent.be

SERVICE SCHEDULE (CONT'D)

Inspection Checkbook

Regularly scheduled maintenance is essential to continuous operation and operating safety. The life expectancy of your machine depends on proper and meticulous care.

The Inspection Checkbook contains the following information:

- Doosan Benelux S.A. Warranty Conditions
- Protection Plus Extended Warranty Conditions
- General Parts Policy
- General Information
- First Inspection
- Scheduled Services
- Identification
- Authorised Identification
- Lubricants and Fluids Table
- Service Parts Chart

Your local dealer can order the Inspection Checkbook. Part number: 4420300.

Torkonjestraat 23
8510 Marke
Belgium
056 / 222 111
rental@dumarent.be
www.dumarent.be

BOBCAT INTERLOCK CONTROL SYSTEM (BICS™)

Perform the procedures on flat level ground and make sure the area is clear of bystanders.

Inspecting The BICS™ (Engine STOPPED - Key ON)

Figure 84

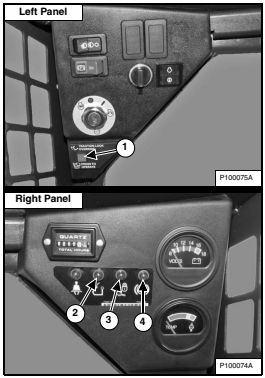

1. Sit in the operator's seat, fasten the seat belt, turn the key ON (Keyless Start Panel - enter the password / user code on the keypad), lower the seat bar and disengage the parking brake. Press the PRESS TO OPERATE LOADER button (Item 1). The three BICS™ lights (Items 2, 3 and 4) on the right instrument panel must be OFF (SEAT BAR, LIFT & TILT VALVE, and PARKING BRAKE) **[Figure 84]**.

2. Raise the seat bar fully. The three BICS™ lights (Items 2, 3 and 4) **[Figure 84]** on the right instrument panel must be ON (SEAT BAR, LIFT & TILT VALVE, and PARKING BRAKE).

NOTE: Record what lights are blinking (if any) and the number of light flashes.

Inspecting The Seat Bar Sensor (Engine RUNNING)

3. Fasten the seat belt, lower the seat bar and make sure the parking brake is engaged.

4. Start the engine and operate at low idle. Press the PRESS TO OPERATE LOADER button. While raising the lift arms, raise the seat bar fully. The lift arms must stop. Repeat using the tilt function.

Inspecting The Traction Lock (Engine RUNNING)

5. Fasten seat belt, lower the seat bar, disengage the parking brake and press the PRESS TO OPERATE LOADER button. Raise the seat bar fully and move the steering levers slowly forward and backward. The traction drive system will be locked.

6. Fasten seat belt, lower the seat bar and press the PRESS TO OPERATE LOADER button. Engage the parking brake and move the steering levers slowly forward and backward. The traction drive system will be locked.

NOTE: The PARKING BRAKE light on the left instrument panel will remain ON until the engine is started, the PRESS TO OPERATE LOADER button is pressed and the parking brake is disengaged.

Inspecting The Lift Arm Bypass Control

7. Raise the lift arms 2 m (6 ft) off the ground. Stop the engine. Turn the lift arm bypass control knob clockwise 1/4 turn. Pull out and hold the knob until the lift arms slowly lower.

⚠ WARNING

AVOID INJURY OR DEATH

The Bobcat Interlock Control System (BICS) must deactivate the lift, tilt, traction drive and front auxiliary hydraulic functions. If it does not, contact your dealer for service. DO NOT modify the system.

W-2689-1007

Torkonjestraat 23
8510 Marke
Belgium
056 / 222 111
rental@dumarent.be
www.dumarent.be

Inspecting Deactivation Of The Auxiliary Hydraulics System

Perform the procedures on flat level ground and make sure the area is clear of bystanders.

Figure 85

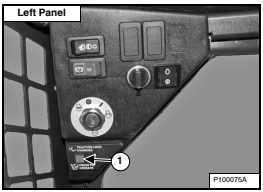

Engine Starting

8. Install an attachment with hydraulic connections. (See Installing And Removing The Attachment on Page 59.) Perform the pre-starting procedure. (See PRE-STARTING PROCEDURE on Page 49.) Fasten the seat belt, lower the seat bar and make sure the parking brake is engaged. Start the engine. Move the Auxiliary Hydraulic Control Lever to the left or the right. (See Front Auxiliary Hydraulics Operation on Page 44.). There will not be hydraulic oil flow to the attachment.

   Press the PRESS TO OPERATE LOADER button (Item 1) **[Figure 85]** and then engage the auxiliary hydraulics. The auxiliary hydraulic oil will flow to the attachment.

Engine Running

9. Install an attachment with hydraulic connections. (See Installing And Removing The Attachment on Page 59.) Perform the pre-starting procedure. (See PRE-STARTING PROCEDURE on Page 49.) Fasten the seat belt, lower the seat bar and make sure the parking brake is engaged. Start the engine. Press the PRESS TO OPERATE LOADER button (Item 1) **[Figure 85]**. Move the Auxiliary Hydraulic Control Lever to the left or the right. The auxiliary hydraulic oil will flow to the attachment. (See Front Auxiliary Hydraulics Operation on Page 44.) Raise the seat bar. The auxiliary hydraulic oil flow to the attachment will STOP.

⚠ WARNING

AVOID INJURY OR DEATH

The Bobcat Interlock Control System (BICS) must deactivate the lift, tilt, traction drive and front auxiliary hydraulic functions. If it does not, contact your dealer for service. DO NOT modify the system.

W-2689-1007

Torkonjestraat 23
8510 Marke
Belgium
056 / 222 111
rental@dumarent.be
www.dumarent.be

SEAT BAR RESTRAINT SYSTEM

Description

The seat bar restraint system has a pivoting seat bar with armrests.

The operator controls the use of the seat bar. The seat bar in the down position helps to keep the operator in the seat.

The foot pedals have mechanical interlocks for the lift and tilt functions. The mechanical interlocks require the operator to lower the seat bar in order to operate the foot pedal controls.

When the seat bar is down, the PRESS TO OPERATE LOADER button is activated and the engine is running, the lift, tilt and traction drive functions can be operated.

When the seat bar is up, the lift and tilt control pedals are locked when returned to the NEUTRAL position.

Inspecting

Sit in the seat and fasten the seat belt. Engage the parking brake. Pull the seat bar all the way down. Start the engine. Press the PRESS TO OPERATE LOADER button.

Operate the hydraulic controls to check that both the lift and tilt functions operate correctly. Raise the lift arms until the attachment is about 600 mm (2 ft) off the ground.

Raise the seat bar. Move the hydraulic controls. Pedals must be firmly locked in the NEUTRAL position. There must be no motion of the lift arms or tilt (attachment) when the controls are moved.

Lower the seat bar, press the PRESS TO OPERATE LOADER button, lower the lift arms. Operate the lift control. While the lift arms are going up, raise the seat bar. The lift arms must stop.

Lower the seat bar, press the PRESS TO OPERATE LOADER button, lower the lift arms and put the attachment flat on the ground. Stop the engine. Raise the seat bar. Operate the foot pedals to be sure they are firmly locked in the NEUTRAL position.

⚠ WARNING

The seat bar system must deactivate the lift and tilt control functions when the seat bar is up. See your Bobcat dealer for service if hydraulic controls do not deactivate.

W-2465-111

Maintaining

See the service schedule for correct service interval. (See SERVICE SCHEDULE on Page 75.)

Figure 86

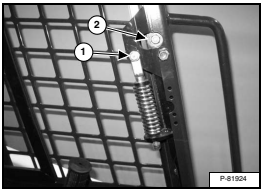

Figure 87

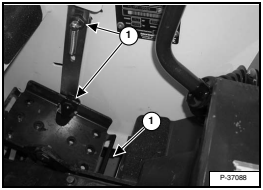

Use compressed air to clean any debris or dirt from the pivot parts (Item 1) **[Figure 86]** and **[Figure 87]**. Do not lubricate. Inspect all mounting hardware. The correct bolt torque is 34 - 38 N•m (25 - 28 ft-lb) for the seat bar pivot (Item 2) **[Figure 86]**.

If the seat bar system does not function correctly, check for free movement of each linkage part. Check for excessive wear. Adjust pedal control linkage. Replace parts that are worn or damaged. Use only genuine Bobcat replacement parts.

Torkonjestraat 23
8510 Marke
Belgium
056 / 222 111
rental@dumarent.be
www.dumarent.be

SEAT BELT

Inspection And Maintenance

⚠ WARNING

Failure to properly inspect and maintain the seat belt can cause lack of operator restraint resulting in serious injury or death.

W-2466-0703

Check the seat belt daily for correct function.

Inspect the seat belt system thoroughly yearly or more often if the machine is exposed to severe environmental conditions or applications.

The seat belt system should be repaired or replaced if it shows cuts, fraying, extreme or unusual wear, significant discolourations due to ultraviolet (UV) rays from the sun, dusty/dirty conditions, abrasion to the seat belt webbing, or damage to the buckle, latch plate, retractor (if equipped), or hardware.

The items below are referenced in **[Figure 88]**.

1. Check the seat belt webbing. If the system is equipped with a retractor, pull the webbing completely out and inspect the full length of the webbing. Look for cuts, wear, fraying, dirt and stiffness.

2. Check the buckle and latch for proper function. Make sure latch plate is not excessively worn, deformed or buckle is not damaged.

3. Check the retractor web storage device (if equipped) by extending the seat belt webbing to determine if it extends and retracts the webbing correctly.

4. Check webbing in areas exposed to ultraviolet (UV) rays from the sun or extreme dust or dirt. If the original colour of the webbing in these areas is extremely faded and / or the webbing is packed with dirt, the webbing strength may have weakened.

See your Bobcat dealer for approved seat belt system replacement parts for your machine.

Figure 88

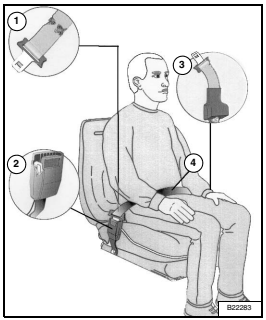

Torkonjestraat 23
8510 Marke
Belgium
056 / 222 111
rental@dumarent.be
www.dumarent.be

LIFT ARM SUPPORT DEVICE

Installing

Maintenance and service work can be done with the lift arms lowered. If the lift arms are raised, use the following procedures to engage and disengage an approved lift arm support device.

⚠ WARNING

Never work on a machine with the lift arms up unless the lift arms are secured by an approved lift arm support device. Failure to use an approved lift arm support device can allow the lift arms or attachment to fall and cause injury or death.

Service lift arm support device if damaged or if parts are missing. Using a damaged lift arm support or with missing parts can cause lift arms to drop causing injury or death.

W-2572-0407

⚠ DANGER

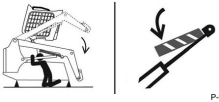

P-90328

AVOID DEATH

- **Disconnecting or loosening any hydraulic tubeline, hose, fitting, component or a part failure can cause lift arms to drop.**
- **Keep out of this area when lift arms are raised unless supported by an approved lift arm support. Replace if damaged.**

D-1009-0409

Remove the attachment from the loader. (See Installing And Removing The Attachment on Page 59.)

⚠ WARNING

Before the cab or the lift arms are raised for service, jackstands must be put under the rear corners of the frame. Failure to use jackstands can allow the machine to tip backward causing injury or death.

W-2014-0895

Figure 89

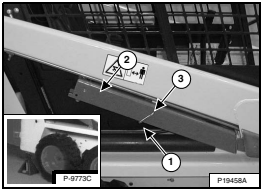

Put jackstands under the rear corners of the loader frame (Inset) **[Figure 89]**.

Disconnect the spring (Item 1) from the lift arm support device retaining pin, Support the lift arm support device (Item 2) with your hand and remove the retaining pin (Item 3) **[Figure 89]**.

Figure 90



Lower the lift arm support device to the top of the lift cylinder. Hook the free end of the spring (Item 1) **[Figure 90]** to the lift arms support device so there will be no interference with the support device engagement.

Torkonjestraat 23
8510 Marke
Belgium
056 / 222 111
rental@dumarent.be
www.dumarent.be

LIFT ARM SUPPORT DEVICE (CONT'D)

Installing (Cont'd)

With the operator in the seat, seat belt fastened and seat bar lowered, start the engine, press the PRESS TO OPERATE LOADER Button.

Figure 91

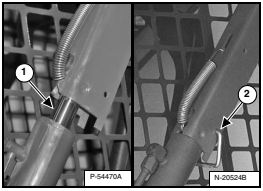

Raise the lift arms until the lift arm support device drops onto the lift cylinder rod (Item 1) **[Figure 91]**.

Lower the lift arms slowly until the support device is held between the lift arm and the lift cylinder.

Stop the engine. Raise the seat bar and move both pedals until both pedals lock.

Install pin (Item 2) **[Figure 91]** into the rear of the lift arm support device below the cylinder rod.

Removing

Figure 92

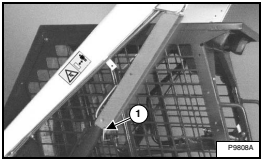

Remove the retaining pin (Item 1) **[Figure 92]** from the lift arm support device.

Figure 93

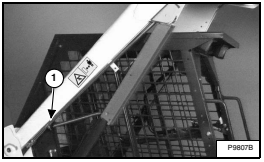

Connect the spring from the lift arm support device to the tubeline bracket (Item 1) **[Figure 93]** on the lift arms.

With the operator in the seat, seat belt fastened and seat bar lowered, start the engine, press the PRESS TO OPERATE LOADER button.

Raise the lift arms a small amount. The spring will lift the support device off the lift cylinder rod.

Lower the lift arms and stop the engine.

Raise the seat bar, disconnect the seat belt and move the pedals until both pedals lock.

Disconnect the spring from the bracket.

Figure 94

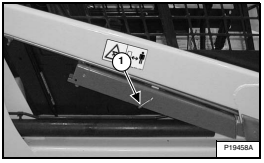

Raise the support device into storage position and insert the pin through the lift arm support device and bracket (Item 1) **[Figure 94]**.

Connect the spring to the pin **[Figure 94]**

Remove the jackstands.

Torkonjestraat 23
8510 Marke
Belgium
056 / 222 111
rental@dumarent.be
www.dumarent.be

BACK-UP ALARM SYSTEM

This machine may be equipped with a back-up alarm.

Description

The back-up alarm will sound when the operator moves both steering levers into the reverse position. Slight movement of the steering levers into the reverse position is required with hydrostatic transmissions, before the back-up alarm will sound.

Inspecting

Figure 95



Inspect for damaged or missing back-up alarm decal (Item 1) **[Figure 95]**. Replace if required.

Sit in the seat and fasten the seat belt. Engage the parking brake. Pull the seat bar all the way down. Start the engine. Press the PRESS TO OPERATE LOADER button. Disengage the parking brake.

Move both steering levers into the reverse position. The back-up alarm must sound when all wheels are moving in reverse.

The back-up alarm is located on the inside of the rear door.

Figure 96

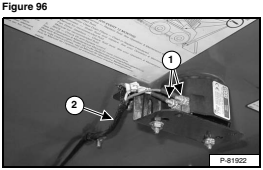

Inspect the back-up alarm electrical connections (Item 1) **[Figure 96]**, wire harness (Item 2) **[Figure 96]** and back-up alarm switches (Item 1) **[Figure 97]** or **[Figure 97]** for tightness and damage. Repair or replace any damaged components.

If the back-up alarm switches require adjustment, (See Adjusting Switch Position on Page 84.)

Torkonjestraat 23
8510 Marke
Belgium
056 / 222 111
rental@dumarent.be
www.dumarent.be

BACK-UP ALARM SYSTEM (CONT'D)

Adjusting Switch Position

Stop the engine and exit the loader. (See STOPPING THE ENGINE AND LEAVING THE LOADER on Page 57.)

Raise the operator cab. (See OPERATOR CAB on Page 85.)

Earlier Models

Place the steering levers in the neutral position.

Figure 97

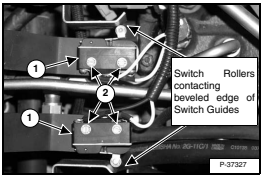

Loosen the screws (Item 2) securing the back-up alarm switches (Item 1) **[Figure 97]**.

Position the back-up alarm switch rollers so that they just make contact with the beveled edge of the switch guides without compressing the switch springs. Torque the screws (Item 2) **[Figure 97]** securing the switches to the bracket to 1,6 - 2,1 N•m (14 - 19 in-lb).

Later Models

Figure 98

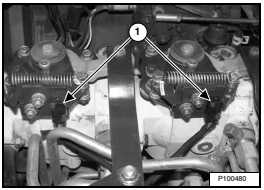

The back-up alarm switches (Item 1) **[Figure 98]** are located on the hydrostatic pump controls.

NOTE: The back-up alarm switches on later model loaders do not require adjustment. See your Bobcat dealer for service if your back-up alarm does not sound.

All Models

Lower the operator cab. (See Lowering on Page 86.)

Inspect back-up alarm system for proper function. (See Inspecting on Page 83.)

Torkonjestraat 23
8510 Marke
Belgium
056 / 222 111
rental@dumarent.be
www.dumarent.be

OPERATOR CAB

Description

The Bobcat Loader has an operator cab (ROPS and FOPS) as standard equipment to protect the operator from rollover and falling objects. The seat belt must be worn for rollover protection.

Check the ROPS / FOPS cab, mounting and hardware for damage. Never modify the ROPS / FOPS cab. Replace the cab and hardware if damaged. See your Bobcat dealer for parts.

ROPS / FOPS - Roll Over Protective Structure per ISO 3471, and Falling Object Protective Structure per ISO 3449, Level I.

Level I - Protection from falling bricks, small concrete blocks, and hand tools encountered in operations such as motorway maintenance, landscaping, and other construction sites.

⚠ WARNING

Never modify operator cab by welding, grinding, drilling holes or adding attachments unless instructed to do so by Bobcat Company. Changes to the cab can cause loss of operator protection from rollover and falling objects, and result in injury or death.

W-2069-0200

⚠ DANGER

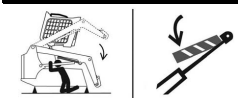

P-90328

AVOID DEATH

- **Disconnecting or loosening any hydraulic tubeline, hose, fitting, component or a part failure can cause lift arms to drop.**
- **Keep out of this area when lift arms are raised unless supported by an approved lift arm support. Replace if damaged.**

D-1009-0409

Raising

Always stop the engine before raising or lowering the cab.

Stop the loader on a level surface and lower the lift arms. If the lift arms must be up while raising the operator cab, install the lift arm support device. (See LIFT ARM SUPPORT DEVICE on Page 81.)

⚠ WARNING

Before the cab or the lift arms are raised for service, jackstands must be put under the rear corners of the frame. Failure to use jackstands can allow the machine to tip backward causing injury or death.

W-2014-0895

Torkonjestraat 23
8510 Marke
Belgium
056 / 222 111
rental@dumarent.be
www.dumarent.be

Raising (Cont'd)

Figure 99

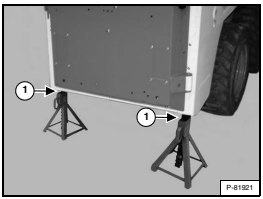

Install jackstands (Item 1) **[Figure 99]** under the rear corners of the loader frame.

Figure 100

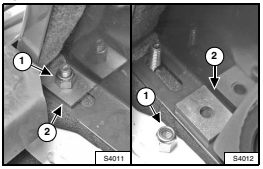

Remove the nut and plate (Items 1 and 2) **[Figure 100]** on the inside front corner of the cab (both sides).

Figure 101



Lift on the grab handle and bottom of the operator cab slowly until the cab is all the way up and the latching mechanism engages **[Figure 101]**.

Lowering

⚠ WARNING

AVOID INJURY OR DEATH

The cab must be held to prevent falling while hand is in access hole.

W-2205-1207

Always stop the engine before raising or lowering the cab.

Figure 102

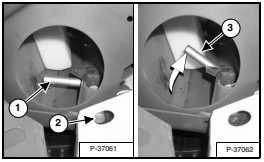

Hold the operator cab. Release the locking mechanism by pushing the lever (Item 1) in from the locked position (Item 2) and turning the lever until it stays in the unlocked position (Item 3) **[Figure 102]**.

Torkonjestraat 23
8510 Marke
Belgium
056 / 222 111
rental@dumarent.be
www.dumarent.be

OPERATOR CAB (CONT'D)

Lowering (Cont'd)

REMOVE YOUR HAND FROM THE HOLE BEFORE LOWERING THE OPERATOR CAB.

Stand on the ground and pull the cab down. Avoid slippery surfaces. Use both hands to lower the cab all the way down.

NOTE: The weight of the cab increases when equipped with options and accessories such as cab door, heater, etc. In these cases, the cab may need to be raised slightly from the latch to be able to release the latch.

NOTE: Always use the grab handles (once you can reach them) to lower the cab.

Figure 103

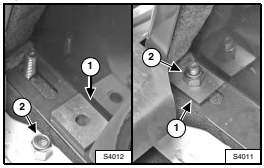

Install the plates and nuts (Items 1 and 2) **[Figure 103]** (both sides).

Tighten the nuts to 54 - 61 N•m (40 - 45 ft-lb) torque.

If equipped with a heater, do the following:

Earlier Model Heater

NOTE: The heater hose connectors will disconnect when the cab is raised. The heater hose connectors must be reconnected for the heater to work after the cab is lowered and secured.

Move the seat as far forward as needed to access the heater hose connectors that are located at the rear of the cab.

Figure 104

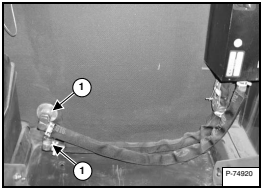

From behind the operator's seat, push the two heater quick connectors (Item 1) **[Figure 104]** into the heater couplers.

Later Model Heater

The heater hoses are routed through the rear wall of the cab behind the heater and will remain connected while raising and lowering the cab.

Torkonjestraat 23
8510 Marke
Belgium
056 / 222 111
rental@dumarent.be
www.dumarent.be

REAR DOOR (TAILGATE)

Opening And Closing

WARNING

AVOID INJURY OR DEATH
Never service or adjust the machine when the engine is running unless instructed to do so in the manual.
W-2012-0497

Figure 105

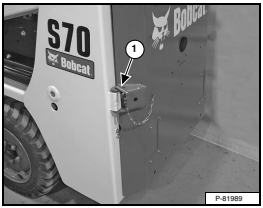

Remove the latch pin (Item 1) **[Figure 105]** and pull the rear door open.

Open the rear door for engine service.

WARNING

Keep the rear door closed when operating the machine. Failure to do so could seriously injure a bystander.
W-2020-1285

Close the rear door before operating the loader.

Torkonjestraat 23
8510 Marke
Belgium
056 / 222 111
rental@dumarent.be
www.dumarent.be

AIR CLEANER SERVICE

Replacing Filter Elements

Figure 106

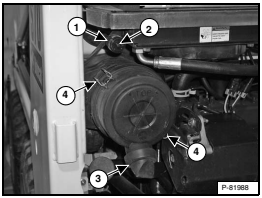

Replace the large (outer) filter element only when the red ring shows in the window of the condition indicator (Item 1) **[Figure 106]**.

NOTE: Before replacing the filter element, push the button on the condition indicator (Item 2) [Figure 106]. Start the engine. If the red ring does not show, do not replace the filter element.

Outer Filter

Open the evacuator valve (Item 3) **[Figure 106]** to get rid of large particles of dust and dirt.

Remove the dust cover by lifting the latches (Item 4) **[Figure 106]**.

Figure 107

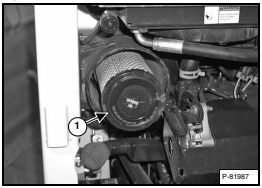

Pull the element straight out (Item 1) **[Figure 107]**.

Install a new outer element.

Install the dust cover **[Figure 106]**.

Check the air intake hose and the air cleaner housing for damage. Make sure all connections are tight.

Inner Filter

Replace the inner filter every third time the outer filter is replaced or when the red ring still shows in the indicator window after the outer filter has been replaced.

Figure 108

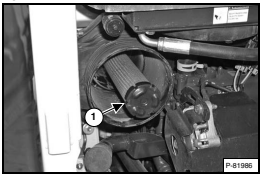

Remove the inner filter (Item 1) **[Figure 108]**.

NOTE: Make sure all sealing surfaces are free of dirt and debris.

Install a new inner element.

Install the outer element.

Install the dust cover **[Figure 106]**.

Torkonjestraat 23
8510 Marke
Belgium
056 / 222 111
rental@dumarent.be
www.dumarent.be

FUEL SYSTEM

Fuel Specifications

Use only clean, high quality diesel fuel, Grade No. 2 or Grade No. 1.

The following is one suggested blending guideline which should prevent fuel gelling during cold temperatures:

TEMPERATURE C° (F°)	NO. 2	NO. 1
-9° (+15°)	100%	0%
Down to -29° (-20°)	50%	50%
Below -29° (-20°)	0%	100%

At a minimum, low sulfur diesel fuel must be used in this machine. Low sulfur is defined as 500 mg/kg (500 ppm) sulfur maximum.

The following fuels may also be used in this machine:

- Ultra low sulfur diesel fuel. Ultra low sulfur is defined as 15 mg/kg (15 ppm) sulfur maximum.
- Biodiesel blend fuel - Must contain no more than five percent biodiesel mixed with low sulfur or ultra low sulfur petroleum based diesel. This is commonly marketed as B5 blended diesel fuel. B5 blended diesel fuel must meet ASTM D975 (US Standard) or EN590 (EU Standard) specifications.

Biodiesel Blend Fuel

Biodiesel blend fuel has unique qualities that should be considered before using in this machine:

- Cold weather conditions can lead to plugged fuel system components and hard starting.
- Biodiesel blend fuel is an excellent medium for microbial growth and contamination which can cause corrosion and plugging of fuel system components.
- Use of biodiesel blend fuel may result in premature failure of fuel system components, such as plugged fuel filters and deteriorated fuel lines.
- Shorter maintenance intervals may be required, such as cleaning the fuel system and replacing fuel filters and fuel lines.
- Using biodiesel blended fuels containing more than five percent biodiesel can affect engine life and cause deterioration of hoses, tubelines, injectors, injector pump and seals.

Apply the following guidelines if biodiesel blend fuel is used:

- Ensure the fuel tank is as full as possible at all times to prevent moisture from collecting in the fuel tank.
- Ensure that the fuel tank cap is securely tightened.
- Biodiesel blend fuel can damage painted surfaces, remove all spilled fuel from painted surfaces immediately.
- Drain all water from the fuel filter daily before operating the machine.
- Do not exceed engine oil change interval. Extended oil change intervals can cause engine damage.
- Before vehicle storage; drain the fuel tank, refill with 100% petroleum diesel fuel, add fuel stabiliser and run the engine for at least 30 minutes.

NOTE: Biodiesel blend fuel does not have long term stability and should not be stored for more than three months.

Torkonjestraat 23
8510 Marke
Belgium
056 / 222 111
rental@dumarent.be
www.dumarent.be

Filling The Fuel Tank

WARNING

AVOID INJURY OR DEATH

Stop and cool the engine before adding fuel. NO SMOKING! Failure to obey warnings can cause an explosion or fire.

W-2063-0807

Figure 109

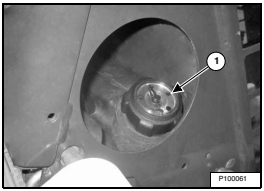

The fuel gauge (Item 1) **[Figure 109]** is located on the right side of the loader.

Figure 110

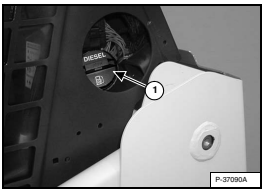

Remove the fill cap (Item 1) **[Figure 110]**.

Figure 111

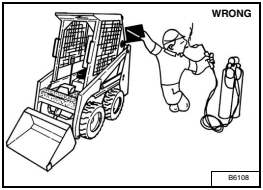

Use a clean, approved safety container to add fuel of the correct specification. Add fuel only in an area that has free movement of air and no open flames or sparks. *NO SMOKING!* **[Figure 111]**.

Install and tighten the fuel fill cap (Item 1) **[Figure 110]**.

WARNING

AVOID INJURY OR DEATH

Always clean up spilled fuel or oil. Keep heat, flames, sparks or lighted tobacco away from fuel and oil. Failure to use care around combustibles can cause explosion or fire.

W-2103-0508

Torkonjestraat 23
8510 Marke
Belgium
056 / 222 111
rental@dumarent.be
www.dumarent.be

FUEL SYSTEM (CONT'D)

Fuel Filter

For the service interval for removing water from, or replacing the fuel filter (See SERVICE SCHEDULE on Page 75.)

Removing Water

Figure 112

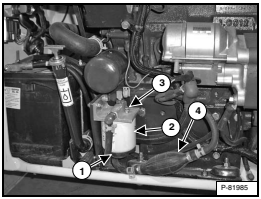

Loosen the drain (Item 1) **[Figure 112]** at the bottom of the filter element to remove water from the filter.

Replacing Element

Remove the filter element (Item 2) **[Figure 112]**.

Clean the area around the filter housing. Put clean oil on the seal of the new filter element. Install the fuel filter, and hand tighten.

Remove air from the fuel system. (See Removing Air From The Fuel System on Page 92.)

Removing Air From The Fuel System

After replacing the filter element or when the fuel tank has run out of fuel, the air must be removed from the fuel system before starting the engine.

Open the vent (Item 3) **[Figure 112]** on the fuel filter housing.

⚠ WARNING

AVOID INJURY OR DEATH

Diesel fuel or hydraulic fluid under pressure can penetrate skin or eyes, causing serious injury or death. Fluid leaks under pressure may not be visible. Use a piece of cardboard or wood to find leaks. Do not use your bare hand. Wear safety goggles. If fluid enters skin or eyes, get immediate medical attention from a doctor familiar with this injury.

W-2072-EN-0909

Squeeze the hand pump (priming bulb) (Item 4) **[Figure 112]** until there are no air bubbles exiting the vent.

Close the vent (Item 3) **[Figure 112]** on the fuel filter housing.

With the operator in the seat, seat belt fastened, seat bar lowered and parking brake engaged, start the engine.

NOTE: If the engine fails to start, remove air from the fuel injection pump as follows.

Put jackstands under rear of the frame and raise operator cab. (See Raising on Page 85.)

Figure 113

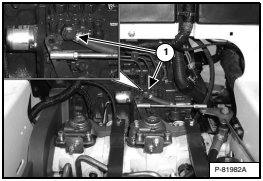

Open the valve (Item 1) **[Figure 113]** on the injector pump and squeeze the hand pump (Item 4) **[Figure 112]** several times until fuel comes from the valve.

Close the valve.

Lower the operator cab. (See Lowering on Page 86.)

Remove jackstands.

Torkonjestraat 23
8510 Marke
Belgium
056 / 222 111
rental@dumarent.be
www.dumarent.be

ENGINE LUBRICATION SYSTEM

Checking And Adding Engine Oil

Check the engine oil level every day before starting the engine for the work shift.

Figure 114

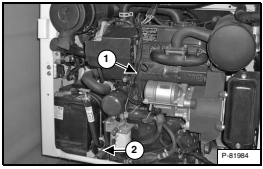

Park the machine on level ground. Open the rear door and remove the dipstick (Item 1) **[Figure 114]**. Keep the oil level between the marks on the dipstick. Do not overfill.

Engine Oil Chart

Figure 115

ENGINE OIL
RECOMMENDED SAE VISCOSITY NUMBER
(LUBRICATION OILS FOR DIESEL ENGINE CRANKCASE)

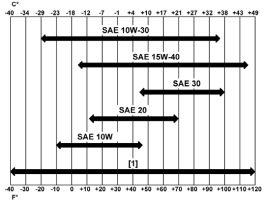

TEMPERATURE RANGE ANTICIPATED BEFORE NEXT OIL CHANGE (DIESEL ENGINES MUST USE API CLASSIFICATION CI-4 OR BETTER)

[1] Synthetic Oil - Use recommendation from Synthetic Oil Manufacturer.

Use good quality engine oil that meets API Service Classification of CI-4 or better **[Figure 115]**.

Removing And Replacing Oil And Filter

For the service interval for replacing the engine oil and filter (See SERVICE SCHEDULE on Page 75.)

Run the engine until it is at operating temperature. Stop the engine.

Open the rear door and remove the drain hose (Item 2) **[Figure 114]** from its storage position.

Figure 116

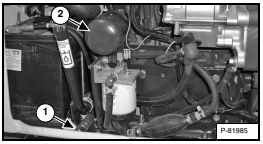

Remove the oil drain cap (Item 1) **[Figure 116]** and drain the oil into a container. Recycle or dispose of used oil in an environmentally safe manner.

Remove the oil filter (Item 2) **[Figure 116]** and clean the filter housing surface.

Use genuine Bobcat filter only. Put oil on the new filter gasket, install the filter and hand tighten.

Install and tighten the oil drain cap and return the drain hose to the stored position.

Remove the fill cap and put oil in the engine. For the correct quantity (See Capacities on Page 124.) Do not overfill.

Start the engine and let it run for several minutes. Stop the engine and check for leaks at the filter.

Add oil as needed if it is not at the top mark on the dipstick. Install the dipstick and close the rear door.

⚠ WARNING

AVOID INJURY OR DEATH

Always clean up spilled fuel or oil. Keep heat, flames, sparks or lighted tobacco away from fuel and oil. Failure to use care around combustibles can cause explosion or fire.

W-2103-0508

Torkonjestraat 23
8510 Marke
Belgium
056 / 222 111
rental@dumarent.be
www.dumarent.be

ENGINE COOLING SYSTEM

Check the cooling system every day to prevent overheating, loss of performance or engine damage.

Cleaning

Open the rear door.

Figure 117

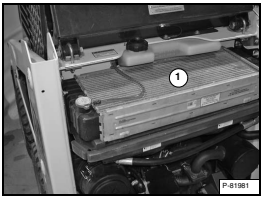

Use low air pressure or water pressure to clean the top of the radiator (Item 1) **[Figure 117]**.

Check the cooling system for leaks.

Close the rear door.

Checking Level

Open the rear door.

WARNING

AVOID INJURY OR DEATH

Wear safety glasses to prevent eye injury when any of the following conditions exist:

- **When fluids are under pressure.**
- **Flying debris or loose material is present.**
- **Engine is running.**
- **Tools are being used.**

W-2019-0907

Figure 118

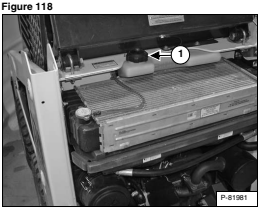

Remove the coolant fill cap (Item 1) **[Figure 118]**. Check the coolant level. The level markers are on the tank. Coolant must be at the bottom marker when the engine is cold and on the top marker when hot.

Use a refractometer to check the condition of propylene glycol in your cooling system.

Close the rear door before operating the loader.

IMPORTANT

AVOID ENGINE DAMAGE

Always use the correct ratio of water to antifreeze.

Too much antifreeze reduces cooling system efficiency and may cause serious premature engine damage.

Too little antifreeze reduces the additives which protect the internal engine components; reduces the boiling point and freeze protection of the system.

Always add a premixed solution. Adding full strength concentrated coolant can cause serious premature engine damage.

I-2124-0497

Torkonjestraat 23
8510 Marke
Belgium
056 / 222 111
rental@dumarent.be
www.dumarent.be

ENGINE COOLING SYSTEM (CONT'D)

Removing And Replacing Coolant

Open the rear door.

Figure 119

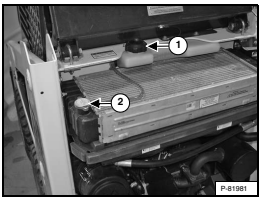

Remove the coolant fill cap (Item 1) **[Figure 119]**.

Figure 120

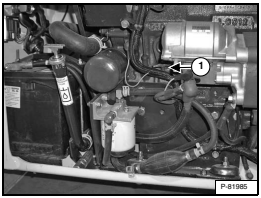

Connect a hose to the engine block drain valve (Item 1) **[Figure 120]** (located below the starter). Open the drain valve and drain the coolant into a container.

After all the coolant is removed, close the drain valve and remove the hose.

NOTE: Fluids such as engine oil, hydraulic fluid, coolant, etc. must be disposed of in an environmentally safe manner. Some regulations require that certain spills and leaks on the ground must be cleaned in a specific manner. See local bylaws for correct disposal.

Mix new coolant in a separate container. (See Capacities on Page 124.)

NOTE: The loader is factory filled with propylene glycol coolant (purple colour). DO NOT mix propylene glycol with ethylene glycol.

Remove the radiator cap (Item 2) **[Figure 119]** and fill the radiator with premixed coolant, 47% water and 53% propylene glycol. Reinstall the radiator cap.

The correct mixture of coolant to provide a -37°C (-34°F) freeze protection is 5 L propylene glycol mixed with 4,4 L of water **OR** 1 U.S. gal propylene glycol mixed with 3.5 qt of water.

Fill the recovery tank with premixed coolant until it is at the lower marker on the tank.

Use a refractometer to check the condition of propylene glycol in your cooling system and replace the coolant fill cap (Item 1) **[Figure 119]**.

Run the engine until it is at operating temperature. After stopping the engine, let it cool down and check the coolant level again. Add coolant as needed.

Close the rear door.

IMPORTANT

AVOID ENGINE DAMAGE

Always use the correct ratio of water to antifreeze.

Too much antifreeze reduces cooling system efficiency and may cause serious premature engine damage.

Too little antifreeze reduces the additives which protect the internal engine components; reduces the boiling point and freeze protection of the system.

Always add a premixed solution. Adding full strength concentrated coolant can cause serious premature engine damage.

I-2124-0497

Torkonjestraat 23
8510 Marke
Belgium
056 / 222 111
rental@dumarent.be
www.dumarent.be

ELECTRICAL SYSTEM

Description

The loader has a 12 volt, negative earth alternator charging system. The electrical system is protected by fuses located in the engine compartment. The fuses will protect the electrical system when there is an electrical overload. The reason for the overload must be found before starting the engine again.

Fuse And Relay Location / Identification

Figure 121

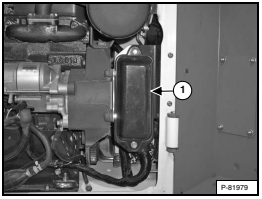

The electrical system is protected from overload by fuses and relays under the fuse panel cover (Item 1) **[Figure 121]**. A decal is inside the cover to show location and amperage ratings.

Figure 122



Remove the cover to check or replace the fuses **[Figure 122]**.

Figure 123

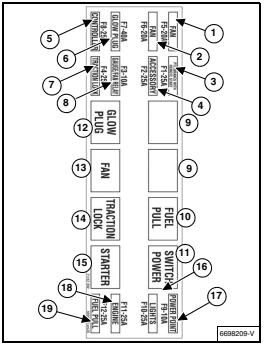

There is a decal **[Figure 123]** inside the fuse panel cover which shows location and size of fuses. Description and amperage ratings (or relays) are also shown below.

REF.	DESCRIPTION	AMPS	REF.	DESCRIPTION	AMPS
1	Fan	20	10	Fuel Solenoid	R
2	Fan	20	11	Switched Power	R
3	BICS/Brakes/ Remote Start	25	12	Glow Plug	R
4	Accessory Back-up Alarm	25	13	Fan	R
5	Controller	25	14	Traction Lock	R
6	Glow Plug	40	15	Starter	R
7	Traction Lock	25	16	Lights	25
8	Gauge/Fan Relay	10	17	Power Point	10
9	Not Used	R	18	Engine/Horn	25
			19	Fuel Solenoid	25

R = Relay

Torkonjestraat 23
8510 Marke
Belgium
056 / 222 111
rental@dumarent.be
www.dumarent.be

Battery Maintenance

Figure 124

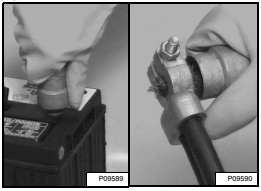

The battery cables must be clean and tight **[Figure 124]**. Check electrolyte level in the battery. Add distilled water as needed. Remove acid or corrosion from battery and cables with sodium bicarbonate (baking soda) and water solution.

Put Battery Saver (6988074) or grease on the battery terminals and cable ends to prevent corrosion.

WARNING

AVOID INJURY OR DEATH

Batteries contain acid which burns eyes and skin on contact. Wear goggles, protective clothing and rubber gloves to keep acid off body.

In case of acid contact, wash immediately with water. In case of eye contact get prompt medical attention and wash eye with clean, cool water for at least 15 minutes.

If electrolyte is taken internally drink large quantities of water or milk! DO NOT induce vomiting. Get prompt medical attention.

W-2065-0807

Using A Booster Battery (Jump Starting)

If it is necessary to use a booster battery to start the engine, BE CAREFUL! There must be one person in the operator's seat and one person to connect and disconnect the battery cables.

Figure 125

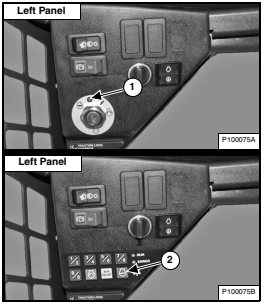

The key switch (Item 1) must be in the OFF position or the STOP button (Item 2) **[Figure 125]** must be pressed. The booster battery must be 12 volt.

WARNING

BATTERY GAS CAN EXPLODE AND CAUSE SERIOUS INJURY OR DEATH

Keep arcs, sparks, flames and lighted tobacco away from batteries. When *jumping* from booster battery make final connection (negative) at machine frame.

Do not jump start or charge a frozen or damaged battery. Warm battery to 16°C (60°F) before connecting to a charger. Unplug charger before connecting or disconnecting cables to battery. Never lean over battery while boosting, testing or charging.

W-2066-0910

Torkonjestraat 23
8510 Marke
Belgium
056 / 222 111
rental@dumarent.be
www.dumarent.be

⚠ WARNING

AVOID INJURY OR DEATH

Batteries contain acid which burns eyes and skin on contact. Wear goggles, protective clothing and rubber gloves to keep acid off body.

In case of acid contact, wash immediately with water. In case of eye contact get prompt medical attention and wash eye with clean, cool water for at least 15 minutes.

If electrolyte is taken internally drink large quantities of water or milk! DO NOT induce vomiting. Get prompt medical attention.

W-2065-0807

Figure 126

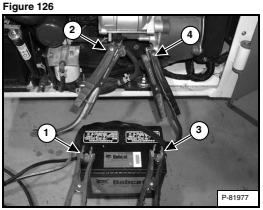

Connect the end of the first cable to the positive (+) terminal (Item 1) of the booster battery. Connect the other end of the same cable to the positive terminal (Item 2) **[Figure 126]** on the loader starter.

Connect the end of the second cable to the negative (-) terminal (Item 3) of the booster battery. Connect the other end of the same cable (Item 4) **[Figure 126]** to the engine.

NOTE: Keep cables away from moving parts.

Start the engine. (See STARTING THE ENGINE on Page 52.)

After the engine has started, remove the negative (-) cable (Item 4) **[Figure 126]** first.

Remove the cable from the positive terminal (Item 2) **[Figure 126]**.

IMPORTANT

Damage to the alternator can occur if:

- **Engine is operated with battery cables disconnected.**
- **Battery cables are connected when using a fast charger or when welding on the loader. (Remove both cables from the battery.)**
- **Extra battery cables (booster cables) are connected wrong.**

I-2023-1285

Torkonjestraat 23
8510 Marke
Belgium
056 / 222 111
rental@dumarent.be
www.dumarent.be

Removing And Installing Battery

⚠ WARNING

AVOID INJURY OR DEATH

Batteries contain acid which burns eyes and skin on contact. Wear goggles, protective clothing and rubber gloves to keep acid off body.

In case of acid contact, wash immediately with water. In case of eye contact get prompt medical attention and wash eye with clean, cool water for at least 15 minutes.

If electrolyte is taken internally drink large quantities of water or milk! DO NOT induce vomiting. Get prompt medical attention.

W-2065-0807

Open the rear door.

Figure 127

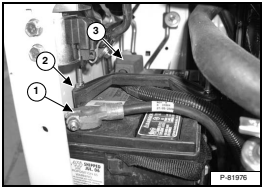

Disconnect the negative (-) battery cable (Item 1) **[Figure 127]**.

Remove the battery hold down clamp (Item 2) **[Figure 127]**.

Disconnect the positive (+) cable (Item 3) **[Figure 127]** from the battery.

Remove the battery from the loader.

NOTE: When removing or installing the battery in the loader, do not touch any metal parts with the battery terminals.

Figure 128

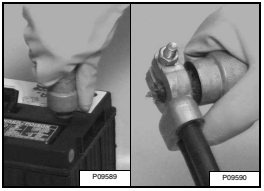

Always clean the battery terminals and cable ends when installing a new or used battery **[Figure 128]**.

NOTE: Always connect the negative (-) cable last and remove it first to prevent sparks.

Connect the positive (+) battery cable.

Install and tighten the battery hold down clamp.

Connect the negative (-) battery cable.

Close the rear door before operating the loader.

Torkonjestraat 23
8510 Marke
Belgium
056 / 222 111
rental@dumarent.be
www.dumarent.be

HYDRAULIC / HYDROSTATIC SYSTEM

Checking And Adding Fluid

Check the hydraulic / hydrostatic fluid level every day before starting the work shift.

Park the loader on a level surface.

Lower the lift arms and tilt the Bob-Tach fully back.

Stop the engine and exit the loader. (See STOPPING THE ENGINE AND LEAVING THE LOADER on Page 57.)

Figure 129

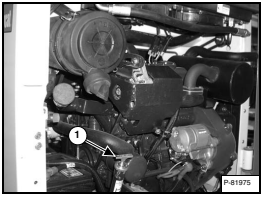

Remove the dipstick (Item 1) **[Figure 129]** and allow the oil level to stabilise for 10 - 5 seconds. Install the dipstick and remove to check the fluid level.

NOTE: Hydraulic oil level in the dipstick tube must be allowed to stabilise before it is checked or the dipstick may incorrectly indicate a low fluid condition.

If fluid is needed, add fluid through the dipstick / fill tube.

Hydraulic / Hydrostatic Fluid Chart

Figure 130

HYDRAULIC / HYDROSTATIC FLUID RECOMMENDED ISO VISCOSITY GRADE (VG) AND VISCOSITY INDEX (VI)

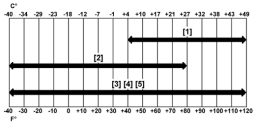

TEMPERATURE RANGE ANTICIPATED DURING MACHINE USE

[1] VG 100; Minimum VI 130
[2] VG 46; Minimum VI 150
[3] BOBCAT All-Season Fluid
[4] BOBCAT Synthetic Fluid
[5] BOBCAT Biodegradable Hydraulic / Hydrostatic Fluid (Unlike biodegradable fluids that are vegetable based, Bobcat biodegradable fluid is formulated to prevent oxidation and thermal breakdown at operating temperatures.)

Use only recommended fluid in the hydraulic system **[Figure 130]**.

Torkonjestraat 23
8510 Marke
Belgium
056 / 222 111
rental@dumarent.be
www.dumarent.be

HYDRAULIC / HYDROSTATIC SYSTEM (CONT'D)

Removing And Replacing Hydraulic Fluid

For the correct service interval (See SERVICE SCHEDULE on Page 75.)

Replace the fluid if it becomes contaminated or after major repair.

Always replace the hydraulic / hydrostatic filter whenever the hydraulic fluid is replaced. (See Removing And Replacing Hydraulic / Hydrostatic Filter on Page 102.)

Figure 131

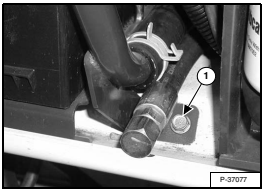

Remove the bolt (Item 1) **[Figure 131]** from the dipstick / fill tube mounting bracket.

Figure 132



Remove the dipstick from the hydraulic fill tube and rotate the tube down into a container **[Figure 132]** to drain the reservoir.

NOTE: Fluids such as engine oil, hydraulic fluid, coolant, etc. must be disposed of in an environmentally safe manner. Some regulations require that certain spills and leaks on the ground must be cleaned in a specific manner. See local bylaws for correct disposal.

After the hydraulic fluid is completely drained, rotate the hydraulic fill tube back to the original position and reinstall the bolt (Item 1) **[Figure 131]** to the fill tube mounting bracket.

Fill the hydraulic system with the correct amount and type of hydraulic fluid. (See Hydraulic / Hydrostatic Fluid Chart on Page 100.) and (See Capacities on Page 124.)

Torkonjestraat 23
8510 Marke
Belgium
056 / 222 111
rental@dumarent.be
www.dumarent.be

Removing And Replacing Hydraulic / Hydrostatic Filter

For the correct service interval (See SERVICE SCHEDULE on Page 75.)

Stop the engine and exit the loader. (See STOPPING THE ENGINE AND LEAVING THE LOADER on Page 57.)

Raise the operator cab. (See Raising on Page 85.)

Figure 133

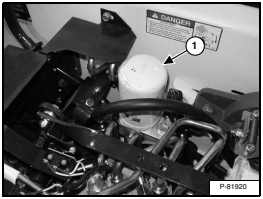

Remove the filter (Item 1) **[Figure 133]**.

Clean the surface of the filter housing where the filter seal contacts the housing.

Put clean oil on the seal of the new filter element. Install and hand tighten the filter element.

WARNING

AVOID INJURY OR DEATH

Always clean up spilled fuel or oil. Keep heat, flames, sparks or lighted tobacco away from fuel and oil. Failure to use care around combustibles can cause explosion or fire.

W-2103-0508

Lower the operator cab. (See Lowering on Page 86.)

Start the engine and operate the loader hydraulic controls.

Stop the engine and exit the loader. (See STOPPING THE ENGINE AND LEAVING THE LOADER on Page 57.)

Check for leaks at the filter.

WARNING

AVOID INJURY OR DEATH

Diesel fuel or hydraulic fluid under pressure can penetrate skin or eyes, causing serious injury or death. Fluid leaks under pressure may not be visible. Use a piece of cardboard or wood to find leaks. Do not use your bare hand. Wear safety goggles. If fluid enters skin or eyes, get immediate medical attention from a doctor familiar with this injury.

W-2072-EN-0909

Check fluid level and add as needed. (See Checking And Adding Fluid on Page 100.)

Breather Cap

Replace the breather cap at the correct service interval. (See SERVICE SCHEDULE on Page 75.)

Raise the cab. (See Raising on Page 85.)

Figure 134

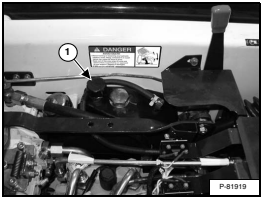

Thoroughly clean the area around the breather cap.

Remove the breather cap (Item 1) **[Figure 134]** and discard.

Install new breather cap.

Lower the cab. (See Lowering on Page 86.)

Torkonjestraat 23
8510 Marke
Belgium
056 / 222 111
rental@dumarent.be
www.dumarent.be

SPARK ARRESTER MUFFLER

Cleaning Procedure

See the SERVICE SCHEDULE for service interval for cleaning the spark arrester muffler. (See SERVICE SCHEDULE on Page 75.)

Do not operate the loader with a defective exhaust system.

IMPORTANT

This machine is factory equipped with a spark arrester exhaust system.

The spark arrester muffler, if equipped, must be cleaned to keep it in working condition. The spark arrester muffler must be serviced by dumping the spark chamber every 100 hours of operation.

On some models, the turbocharger functions as the spark arrester and must operate correctly for proper spark arrester function.

If this machine is operated on flammable forest, brush, or grass covered land, a spark arrester attached to the exhaust system may be required and must be maintained in working order. Refer to local laws and regulations for spark arrester requirements.

I-2284-EN-0909

Stop the engine and exit the loader. (See STOPPING THE ENGINE AND LEAVING THE LOADER on Page 57.)

Open the rear door.

Figure 135

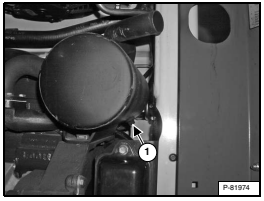

Remove the plug (Item 1) **[Figure 135]** from the bottom of the muffler.

⚠ WARNING

When the engine is running during service, the driving and steering controls must be in neutral and the parking brake engaged. Failure to do so can cause injury or death.

W-2006-1209

Start the engine and run for about 10 seconds while a second person, wearing safety goggles, holds a piece of wood over the outlet of the muffler. This will force contaminants out through the cleanout hole.

Stop the engine and exit the loader. (See STOPPING THE ENGINE AND LEAVING THE LOADER on Page 57.)

Install and tighten the plug.

Close the rear door.

⚠ WARNING

AVOID INJURY OR DEATH

When an engine is running in an enclosed area, fresh air must be added to avoid concentration of exhaust fumes. If the engine is stationary, vent the exhaust outside. Exhaust fumes contain odorless, invisible gases which can kill without warning.

W-2050-0807

⚠ WARNING

Stop engine and allow the muffler to cool before cleaning the spark chamber. Wear safety goggles. Failure to obey can cause serious injury.

W-2011-1285

⚠ WARNING

Never use machine in atmosphere with explosive dust or gases or where exhaust can contact flammable material. Failure to obey warnings can cause injury or death.

W-2068-1285

Torkonjestraat 23
8510 Marke
Belgium
056 / 222 111
rental@dumarent.be
www.dumarent.be

TYRE MAINTENANCE

Wheel Nuts

Figure 136

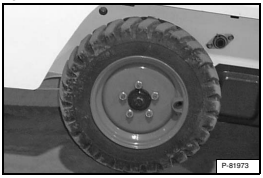

See the SERVICE SCHEDULE for the service interval to check the wheel nuts **[Figure 136]**. (See SERVICE SCHEDULE on Page 75.)

When installing wheel nuts, tighten to 217 N•m (160 ft-lb) torque.

When checking wheel nut torque, set the torque wrench to 190 N•m (140 ft-lb) to prevent over-tightening.

Rotating

Check the tyres regularly for wear, damage and pressure. Inflate tyres to the maximum pressure shown on the sidewall of the tyre.

Figure 137

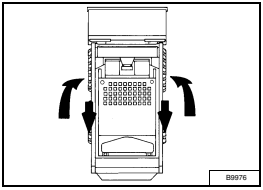

Rear tyres usually wear faster than front tyres. To keep tyre wear even, move the front tyres to the rear and rear tyres to the front **[Figure 137]**.

It is important to keep all tyres the same size. If different sizes are used, each tyre will be turning at a different rate and cause excessive wear. The tread bars of all the tyres must face the same direction.

Recommended tyre pressure must be maintained to avoid excessive tyre wear and loss of stability and handling capability. Check for the correct pressure before operating the loader.

Mounting

Tyres are to be repaired only by an authorised person using the proper procedures and safe equipment.

Tyres and rims must always be checked for correct size before mounting. Check rim and tyre bead for damage.

The rim flange must be cleaned and free of rust.

The tyre bead and rim flange must be lubricated with a rubber lubricant before mounting the tyre.

Avoid excessive pressure which can rupture the tyre and cause serious injury or death.

During inflation of the tyre, check the tyre pressure frequently to avoid over inflation.

⚠ WARNING

AVOID INJURY OR DEATH

Do not inflate tyres above specified pressure. Failure to use correct tyre mounting procedure can cause an explosion which can result in injury or death.

W-2078-EN-0909

IMPORTANT

Inflate tyres to the MAXIMUM pressure shown on the sidewall of the tyre. DO NOT mix brands of tyres used on the same machine.

I-2057-EN-1010

Torkonjestraat 23
8510 Marke
Belgium
056 / 222 111
rental@dumarent.be
www.dumarent.be

FINAL DRIVE TRANSMISSION (CHAINCASE)

Checking And Adding Oil

The chaincase contains the final drive sprockets and chains. Use the same type of oil as the hydraulic / hydrostatic system.

Park the loader on a level surface.

Stop the engine and exit the loader. (See STOPPING THE ENGINE AND LEAVING THE LOADER on Page 57.)

Install jackstands under the rear corners of the loader frame.

Enter the loader and raise the loader lift arms. Install the Lift Arm Support Device. (See LIFT ARM SUPPORT DEVICE on Page 81.)

Stop the engine and exit the loader. (See STOPPING THE ENGINE AND LEAVING THE LOADER on Page 57.)

Figure 138

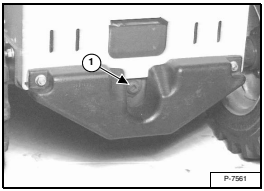

Remove the check plug (Item 1) **[Figure 138]** from the front of the chaincase housing.

If oil can be reached with the tip of your finger through the hole, the oil level is correct.

If the level is low, add lubricant through the check plug hole until the oil flows from the hole.

Install and tighten the plug.

Lower the lift arms. (See LIFT ARM SUPPORT DEVICE on Page 81.)

Remove jackstands.

Removing And Replacing Oil

Park the loader on a level surface.

Stop the engine and exit the loader. (See STOPPING THE ENGINE AND LEAVING THE LOADER on Page 57.)

Install jackstands under the rear corners of the loader frame.

Enter the loader and raise the loader lift arms. Install the Lift Arm Support Device. (See LIFT ARM SUPPORT DEVICE on Page 81.)

Stop the engine and exit the loader. (See STOPPING THE ENGINE AND LEAVING THE LOADER on Page 57.)

Remove the check plug (Item 1) **[Figure 138]** from the front of the chaincase housing.

Figure 139

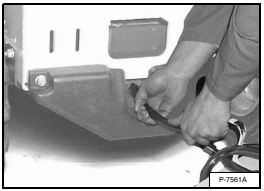

Use a pump to suction the oil from the chaincase **[Figure 139]**.

Recycle or dispose of the used oil in an environmentally safe manner.

Add new oil until the oil flows from the hole.

Install and tighten the plug.

Lower the lift arms. (See LIFT ARM SUPPORT DEVICE on Page 81.)

Remove jackstands.

Torkonjestraat 23
8510 Marke
Belgium
056 / 222 111
rental@dumarent.be
www.dumarent.be

ALTERNATOR BELT

Belt Adjustment

Stop the engine and exit the loader. (See STOPPING THE ENGINE AND LEAVING THE LOADER on Page 57.)

Open the rear door. (See REAR DOOR (TAILGATE) on Page 88.)

Figure 140

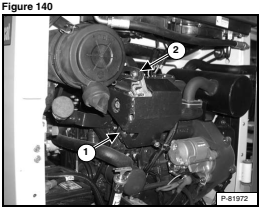

Loosen the alternator mounting bolt (Item 1) **[Figure 140]**.

Loosen the adjustment bolt (Item 2) **[Figure 140]**.

The tension is correct with 6 mm (1/4 in) belt movement at mid span when 67 N (15 lb) force is applied to the belt.

Tighten the adjustment bolt and mounting bolt.

Close the rear door.

Belt Replacement

Stop the engine and exit the loader. (See STOPPING THE ENGINE AND LEAVING THE LOADER on Page 57.)

Open the rear door. (See REAR DOOR (TAILGATE) on Page 88.)

Loosen the alternator mounting and adjustment bolts (Items 1 and 2) **[Figure 140]** and loosen the belt all the way.

Remove the belt and install a new belt.

The tension is correct with 6 mm (1/4 in) belt movement at mid span when 67 N (15 lb) force is applied to the belt.

Tighten the adjustment bolt and mounting bolt.

Close the rear door.

Torkonjestraat 23
8510 Marke
Belgium
056 / 222 111
rental@dumarent.be
www.dumarent.be

DRIVE BELT

Belt Adjustment

The drive belt does not need adjustment. The belt has a spring loaded idler which is constantly adjusted.

Belt Replacement

Stop the engine and exit the loader. (See STOPPING THE ENGINE AND LEAVING THE LOADER on Page 57.)

Open the rear door and disconnect the negative (-) cable from the battery.

Figure 141

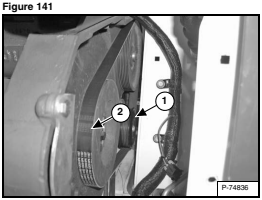

Use a socket wrench (without socket) to move the spring loaded belt tensioner (Item 1) **[Figure 141]** upward.

While holding the spring loaded belt tensioner up, you can remove the drive belt (Item 2) **[Figure 141]**.

Carefully lower the spring loaded belt tensioner to its stop.

Install a new drive belt by reversing the above procedure.

Torkonjestraat 23
8510 Marke
Belgium
056 / 222 111
rental@dumarent.be
www.dumarent.be

LUBRICATING THE LOADER

Lubrication Locations

Lubricate the loader as specified for the best performance of the loader. (See SERVICE SCHEDULE on Page 75.)

Record the operating hours each time you lubricate the Bobcat Loader.

Always use a good quality lithium based multipurpose grease when you lubricate the loader. Apply the lubricant until extra grease shows.

Lubricate the following locations on the loader:

Figure 142

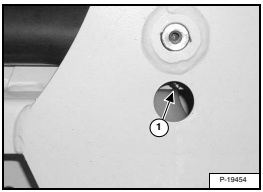

1. Base End Lift Cylinder (Both Sides) **[Figure 142]**.

Figure 143

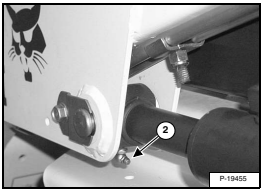

2. Rod End Lift Cylinder (Both Sides) **[Figure 143]**.

Figure 144

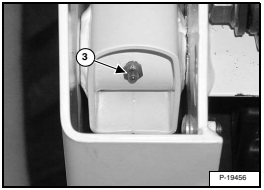

3. Lift Arm Pivot Pin (Both Sides) **[Figure 144]**.

Figure 145

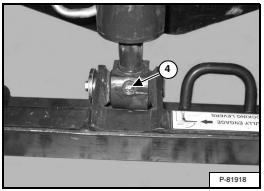

4. Rod End Tilt Cylinder **[Figure 145]**.

Torkonjestraat 23
8510 Marke
Belgium
056 / 222 111
rental@dumarent.be
www.dumarent.be

LUBRICATING THE LOADER (CONT'D)

Lubrication Locations (Cont'd)

Figure 146

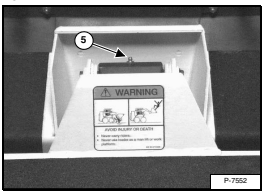

5. Base End Tilt Cylinder **[Figure 146]**.

Figure 147

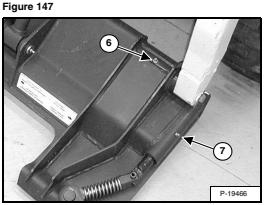

6. Bob-Tach Pivot Pin (Both Sides) **[Figure 147]**.

7. Bob-Tach Wedge (Both Sides) **[Figure 147]**.

Figure 148

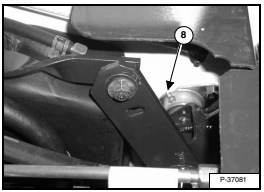

8. 250 Hours: Steering shaft pivot bearings (Both Sides) **[Figure 148]**.

Torkonjestraat 23
8510 Marke
Belgium
056 / 222 111
rental@dumarent.be
www.dumarent.be

PIVOT PINS

Inspection And Maintenance

Figure 149

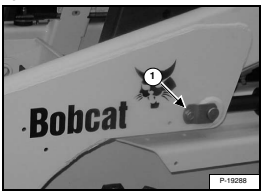

Figure 150

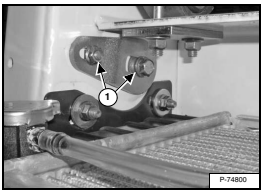

All lift arm and cylinder pivots have a large pin held in position with a retainer bolt and lock nut (Item 1) **[Figure 149]** and **[Figure 150]**.

Tighten to 24 - 27 N•m (18 - 20 ft-lb) torque.

Do not over tighten.

Figure 151

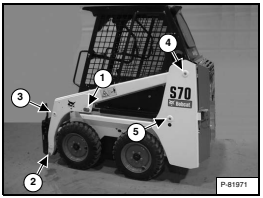

Figure 152

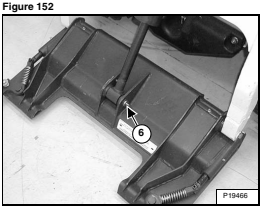

Check the following pivot pins (Items 1 - 6) **[Figure 151]** and **[Figure 152]**.

Repeat for (Items 1 - 5) **[Figure 151]** on the opposite side of the loader.

Torkonjestraat 23
8510 Marke
Belgium
056 / 222 111
rental@dumarent.be
www.dumarent.be

BOB-TACH

Inspection And Maintenance

Figure 153

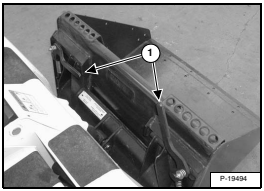

Move the Bob-Tach levers down to engage the wedges **[Figure 153]**.

The levers and wedges must move freely.

WARNING

AVOID INJURY OR DEATH

The Bob-Tach wedges must extend through the holes in the attachment mounting frame. Levers must be fully down and locked. Failure to secure wedges can allow attachment to come off.

W-2715-0208

Figure 154

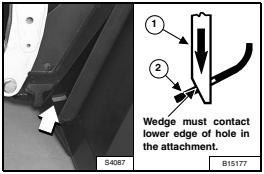

The wedges (Item 1) must extend through the holes in the attachment mounting frame (Item 2) **[Figure 154]**.

The spring loaded wedge (Item 1) **[Figure 154]** must contact the lower edge of the hole in the attachment (Item 2).

If the wedge does not contact the lower edge of the hole **[Figure 154]**, the attachment will be loose and can come off the Bob-Tach.

Figure 155

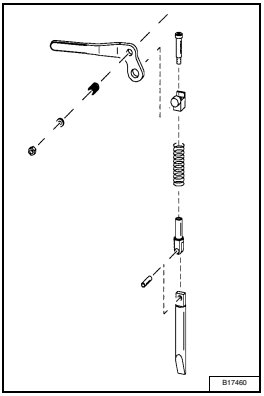

Inspect the mounting frame on the attachment and Bob-Tach, linkages and wedges for excessive wear or damage **[Figure 155]**. Replace any parts that are damaged, bent or missing. Keep all fasteners tight.

Look for cracked welds. Contact your Bobcat dealer for repair or replacement parts.

Lubricate the wedges. (See SERVICE SCHEDULE on Page 75.) and (See LUBRICATING THE LOADER on Page 108.)

Torkonjestraat 23
8510 Marke
Belgium
056 / 222 111
rental@dumarent.be
www.dumarent.be

LOADER STORAGE AND RETURN TO SERVICE

Storage

Sometimes it may be necessary to store your Bobcat Loader for an extend period of time. Below is a list of items to perform before storage.

- Thoroughly clean the loader including the engine compartment.
- Lubricate the loader.
- Replace worn or damaged parts.
- Park the loader in a dry protected shelter.
- Lower the lift arms all the way and put the bucket flat on the ground.
- Put blocks under the frame to remove weight from the tyres.
- Put grease on any exposed cylinder rods.
- Put fuel stabiliser in the fuel tank and run the engine a few minutes to circulate the stabiliser to the pump and fuel injectors.
- Drain and flush the cooling system. Refill with premixed coolant.
- Replace all fluids and filters (engine, hyd. / hydro.).
- Replace air cleaner, heater and air conditioning filters.
- Put all controls in neutral position.
- Remove the battery. Be sure the electrolyte level is correct then charge the battery. Store it in a cool dry place above freezing temperatures and charge it periodically during storage.
- Cover the exhaust pipe opening.
- Tag the machine to indicate that it is in storage condition.

Return To Service

After the Bobcat Loader has been in storage, it is necessary to follow a list of items to return the loader to service.

- Check the engine and hydraulic oil levels; check coolant level.
- Install a fully charged battery.
- Remove grease from exposed cylinder rods.
- Check all belt tensions.
- Be sure all shields and guards are in place.
- Lubricate the loader.
- Check tyre inflation and remove blocks from under frame.
- Remove cover from exhaust pipe opening.
- Start the engine and let run for a few minutes while observing the instrument panels and systems for correct operation.
- Operate machine, check for correct function.
- Stop the engine and check for leaks. Repair as needed.

Torkonjestraat 23
8510 Marke
Belgium
056 / 222 111
rental@dumarent.be
www.dumarent.be

TROUBLESHOOTING 115
Troubleshooting The Engine 115
Troubleshooting The Hydraulic System 116
Troubleshooting The Hydrostatic System 116

BOBCAT INTERLOCK CONTROL SYSTEM (BICS™) 117
Troubleshooting 117
Viewing Diagnostic Service Codes 117

Torkonjestraat 23
8510 Marke
Belgium

056 / 222 111
rental@dumarent.be
www.dumarent.be



Bobcat®

Torkonjestraat 23
8510 Marke
Belgium
056 / 222 111
rental@dumarent.be
www.dumarent.be

TROUBLESHOOTING

The following information identifies loader problems which can occur most often. Service procedures for correcting loader problems can be found in this manual on the pages indicated. Some procedures are marked DS (Dealer Service) and must be performed only by qualified Bobcat service personnel.

⚠ WARNING

AVOID INJURY OR DEATH

When operating the machine:

- **Keep the seat belt fastened snugly.**
- **The seat bar must be lowered.**
- **Keep your feet on the pedal controls or footrests and hands on the controls.**

W-2261-0909

Troubleshooting The Engine

PROBLEM	CAUSE	CORRECTION
Engine will not turn over with starter.	Battery has low charge.	Charge battery and find cause for loss of charge.
	Cables loose or dirty.	Clean and tighten battery cables.
	Damaged starter, solenoid or wiring	Check the starting circuit.
Engine turns with starter, but is difficult to start.	Wrong starting procedure.	Use correct starting procedure.
	No fuel in tank.	Add fuel.
	Dirt or water in fuel system.	Perform maintenance as needed.
	Damaged fuel pump.	Make repairs as needed.
	Fuel filter is dirty.	Install new filter.
	Hole in fuel line.	Make repairs as needed.
	Wrong oil in engine.	See Oil Specification
	Engine has lost compression.	Recondition the engine.
	Engine has overheated.	Check cooling system.
	Poor fuel quality.	Use fresh, good quality fuel.
Engine has little power or runs rough.	Dirt, water or air in fuel system.	Clean and repair as needed.
	Engine has overheated.	Check cooling system
	Governor adjustment is wrong.	Check and make adjustment if needed.
	Dirty air cleaner filter.	Check air cleaner, replace filter as needed.
	Engine has lost compression	Recondition the engine.
Engine overheats.	Cooling system is dirty. Air flow restricted.	Clean cooling system
	Engine shrouding damaged or missing.	Repair or replace.
	Engine is overloaded.	Run at full rpm

Torkonjestraat 23
8510 Marke
Belgium
056 / 222 111
rental@dumarent.be
www.dumarent.be

Troubleshooting The Hydraulic System

PROBLEM	CAUSE	CORRECTION
No hydraulic action.	No hydraulic fluid.	Check fluid level and add as needed.
	Pedals are disconnected.	Check linkage. Repair as needed.
	Relief valve is damaged.	Replace the relief valve.
	Hydraulic pump is damaged.	Check pump and replace as needed.
	Hydraulic fluid is too thick. (cold temperature)	Let engine run to warm the hydraulic fluid.
Hydraulic action is rough.	Hydraulic fluid level is low.	Check fluid level and add as needed.
Hydraulic action is slow.	Pedal is hitting floor or debris under pedal.	Check adjustment. Remove dirt.
	Cylinders leak internally.	Check condition of cylinders and repair as needed.
	Hydraulic pump is damaged.	Check pump and replace as needed.
	Control valve is damaged	Check valve and repair as needed.
	Hydraulic fluid is too thick. (cold temperature)	Let engine run to warm the hydraulic fluid.
Hydraulic cylinders leak fluid.	Damage to cylinder rods or seals.	Repair cylinders.
No hydraulic flow to the front auxiliary hydraulic couplers.	Auxiliary hydraulic interlock valve closed.	Check auxiliary hydraulic interlock valve and solenoid for proper function. Repair or replace as needed.

Troubleshooting The Hydrostatic System

PROBLEM	CAUSE	CORRECTION
No drive on both sides.	Hydraulic fluid is low.	Check fluid level. Add as needed.
	10 Micon filter is damaged.	Replace filter.
	Damaged gear pump.	Check condition of gear pump and replace if bad.
No drive on one side.	Hydrostatic system is damaged.	Check hydrostatic system.
	Control linkage is disconnected.	Repair linkage.
Machine pulls to one side.	Wrong tyre pressure.	Check all tyres
	Steering linkage interference.	Check steering linkage
	Damaged hydrostatic pump / motor.	Check system.
Machine moves when levers are in neutral.	Steering linkage out of adjustment.	Adjust steering linkage.
System is overheating.	Hydraulic fluid level is low.	Check fluid level.
	Plugged filter.	Install new filter element.
	Low charge pressure.	Check by-pass valve.
	Bobcat is overloaded.	Use correct size attachment and run engine at full rpm.
	Hydrostatic transmission damaged.	Check hydrostatic system.

Torkonjestraat 23
8510 Marke
Belgium
056 / 222 111
rental@dumarent.be
www.dumarent.be

BOBCAT INTERLOCK CONTROL SYSTEM (BICS™)

Troubleshooting

The following list shows the probable causes when the BICS™ lights are off or flashing and the associated service codes. (See TROUBLESHOOTING on Page 115.)

Indicator Light	Light ON	Light OFF	Effect on Operation of Loader when Light is ON
 1	Seat Bar is up.	Seat Bar is down.	Lift and tilt functions will not operate.
 2	Control valve cannot be used.	Control valve can be used.	Lift and tilt functions will not operate.
 3	Loader cannot be moved forward and backward.	Loader can be moved forward and backward.	Loader cannot be moved forward and backward.

Viewing Diagnostic Service Codes

The Seat Bar Light (Item 1), Valve Light (Item 2) and Parking Brake Light (Item 3) will flash to indicate SERVICE CODES. These lights may flash while the engine is running or with the engine OFF and the key ON.

NOTE: Multiple SERVICE CODES and / or abnormal symptoms can be caused by a corroded or loose earth. Check earths and both battery connections.

The list below contains SERVICE CODES. These codes help analyze monitored functions of your Bobcat loader. Some service procedures must be performed ONLY BY QUALIFIED BOBCAT SERVICE PERSONNEL.

Indicator Light	LED	Function	Failure
1	Seat Bar - 2 Flashes	Seat Sensor	Out of Range Low
		8 Volt Sensor Supply	Out of Range Low
1	Seat Bar - 3 Flashes	Seat Sensor	Out of Range High
		8 Volt Sensor Supply	Out of Range High
2	Valve - 2 Flashes	Hydraulic Lock Valve Solenoid	Short to Battery
2	Valve - 3 Flashes	Hydraulic Lock Valve Solenoid	Short to Earth
2	Valve - 4 Flashes	Hydraulic Lock Valve Solenoid	Open Circuit
3	Parking Brake - 1 Flash	Traction Lock Hold Solenoid	Open Circuit
3	Parking Brake - 2 Flashes	Traction Lock Hold Solenoid	Short to Battery
3	Parking Brake - 3 Flashes	Traction Lock Hold Solenoid	Short to Earth
3	Parking Brake - 4 Flashes	Traction Lock Pull Output	Open Circuit
3	Parking Brake - 5 Flashes	Traction Lock Pull Output	Error On
		Traction Pull Relay	Error On
3	Parking Brake - 6 Flashes	Traction Lock Pull Output	Error Off
		Traction Pull Relay	Error Off

Torkonjestraat 23
8510 Marke
Belgium

056 / 222 111
rental@dumarent.be
www.dumarent.be



Bobcat®

Torkonjestraat 23
8510 Marke
Belgium
056 / 222 111
rental@dumarent.be
www.dumarent.be

SPECIFICATIONS

(S70) LOADER SPECIFICATIONS 121
Machine Dimensions 121
Performance 122
Engine 122
Controls 122
Drive System 123
Hydraulic System 123
Electrical 124
Capacities 124
Tyres 124
Fuel Consumption 124
Environmental 124
Temperature Range 124

Torkonjestraat 23
8510 Marke
Belgium

056 / 222 111
rental@dumarent.be
www.dumarent.be



Bobcat®

Torkonjestraat 23
8510 Marke
Belgium
056 / 222 111
rental@dumarent.be
www.dumarent.be

(S70) LOADER SPECIFICATIONS

Machine Dimensions

- Dimensions are given for loader equipped with standard tyres and 36 in. dirt bucket and may vary with other bucket types. All dimensions are shown in millimeters. Respective imperial dimensions are given in inches enclosed by parentheses.
- Where applicable, specification conform to SAE or ISO standards and are subject to change without notice.

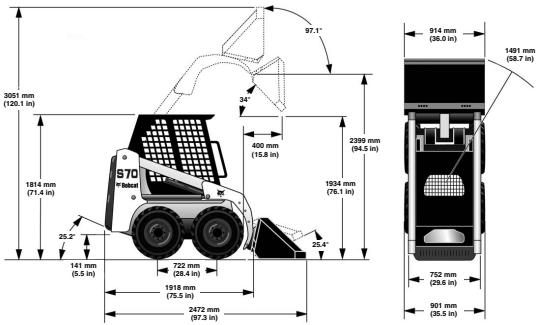

B-20824C

Changes of structure or weight distribution of the loader can cause changes in control and steering response and can cause failure of the loader parts.

(S70) LOADER SPECIFICATIONS (CONT'D)

Performance

Rated Operating Capacity (ISO)	318 kg (700 lb)
Tipping Load (ISO Rating)	686 kg (1512 lb)
Operating Weight	1268 kg (2795 lb)
SAE Breakout Force - Lift - Tilt	8607 N (1935 lb) 8674 N (1950 lb)
Travel Speed	0 - 9,8 km/h (0 - 6.1 MPH)
Push Force	9519 N (2140 lb)

Engine

Make / Model	Kubota / D1005-E3B-BC-3 Tier 4
Fuel / Cooling	Diesel / Liquid
Horsepower (SAE Net)	16,8 kW (22.5 hp) @ 3000 rpm
Torque (SAE Net)	62,8 N•m (45.6 ft-lb) @ 2200 rpm
Number of Cylinders	Three
Displacement	1,0 L (61.08 in^3)
Bore / Stroke	76,0 mm / 73,6 mm (2.99 in / 2.90 in)
Lubrication	Gear Pump Pressure System with Filter
Crankcase Ventilation	Closed Breathing
Air Cleaner	Dry replaceable paper cartridge with separate safety element
Ignition	Diesel Compression
Air Induction	Naturally Aspirated
Low Idle	1125 - 1175 rpm
High Idle	3125 - 3175 rpm

Controls

Vehicle Steering	Direction and speed controlled by two hand operated steering levers.
Loader Hydraulics - Lift and Tilt - Front Auxiliary Hydraulics (Std.)	 Controlled by separate foot pedals. Controlled by lateral movement of the right hand steering lever.
Engine	Hand lever speed control, key type start switch or optional keyless start and function error shutdown.
Starting Aid	Glow Plug - Automatically activated by Key Switch or Keyless instrumentation.
Service Brake	Two independent hydrostatic systems controlled by two hand operated steering levers.
Secondary Brake	One of the hydrostatic transmissions.
Parking Brake (Standard)	Mechanical disc, manually operated switch on front instrument panel.

Torkonjestraat 23
8510 Marke
Belgium
056 / 222 111
rental@dumarent.be
www.dumarent.be

(S70) LOADER SPECIFICATIONS (CONT'D)

Drive System

Main Drive	Hydrostatic 4 wheel drive
Transmission	Infinitely variable tandem hydrostatic piston pumps, driving two fully reversing hydrostatic motors.
Final Drive	Pre-stressed #60 HS endless roller chain (no master link) and sprockets in sealed chaincase with oil lubrication (Chains do not require periodic adjustments) Two chains per side with no idler sprocket
Total Engine to Wheel Reduction	31.25:1
Axle Size	37,6 mm (1.50 in), Heat treated
Wheel Bolts	Five - 9/16 in. Wheel bolts fixed to axle hubs

Hydraulic System

Pump Type		Engine driven gear type
Pump Capacity		33,7 L/min (8.9 U.S. gpm) @ 3150 engine rpm
Filters		Full flow replaceable, 10 micron synthetic media element
System Relief at Quick Couplers		20.7 MPa (207 bar) (3000 psi)
Hydraulic Cylinders		Double acting; Tilt cylinder has cushioning feature on dump and rollback
Bore Diameter:	Lift Cylinder (2)	50,8 mm (2.00 in)
	Tilt Cylinder (1)	76,2 mm (3.00 in)
Rod Diameter:	Lift Cylinder (2)	31,8 mm (1.25 in)
	Tilt Cylinder (1)	31,8 mm (1.25 in)
Stroke:	Lift Cylinder (2)	555,5 mm (21.87 in)
	Tilt Cylinder (1)	268,2 mm (10.56 in)
Control Valve		3-Spool, open centre type with spring detent for lift float and detent auxiliary hydraulic spool
Fluid Lines		SAE standard tubelines, hoses and fittings.
Hydraulic Function Time:		
Raise Lift Arms		3.6 Seconds
Lower Lift Arms		2.7 Seconds
Bucket Dump		2.1 Seconds
Bucket Rollback		1.7 Seconds

Torkonjestraat 23
8510 Marke
Belgium
056 / 222 111
rental@dumarent.be
www.dumarent.be

(S70) LOADER SPECIFICATIONS (CONT'D)

Electrical

Alternator	Belt driven, 65 amperes ventilated
Battery	12 volts, 600 cold cranking amperes @ -18°C (0°F) 115 minute reserve capacity at 25 amperes
Starter	12 volts, gear type, 2,7 kW (3.62 hp)
Instrumentation	**Gauges:** Hourmeter, temperature gauge, voltmeter, fuel gauge (on tank). **Warning lights:** Engine Oil Pressure, Hydrostatic Charge Pressure, Hydraulic Oil Temperature. **Other:** BICS™ Functions (on BICS™ Controller).

Capacities

Engine Cooling System	5,7 L (6.0 qt)
Fuel	24,6 L (6.5 U.S. gal)
Engine Lubrication with Filter	4,7 L (5.0 qt)
Hydraulic / Hydrostatic Reservoir	5 L (5.3 qt)
Hydraulic / Hydrostatic System	15,1 L (4.0 U.S. gal)
Chaincase Reservoir	11,4 L (3.0 U.S. gal)

Tyres

Standard Duty (Standard)	23 x 5.70 - 12, 4 Ply Rating
Heavy Duty (Option)	23 x 8.50 - 12, 6 Ply Rating
Recommended Pressure	Inflate tyres to MAXIMUM pressure shown on the side wall of the tyre. DO NOT mix brands of tyres used on the same loader.

Fuel Consumption

Engine Load	Full - 100%	High - 70%	Medium - 50%	Low - 30%
Fuel Consumption Rate Per Hour	5,56 L (1.47 U.S. gal)	3,71 L (0.98 U.S. gal)	3,03 L (0.8 U.S. gal)	2,65 L (0.7 U.S. gal)
NOTE: The engine fuel consumption chart is to be used as a guideline only. The actual results may vary.				

Environmental

	Noise / Vibration Levels	Uncertainties (If Applicable)
Noise level LpA (EU Directive 2000/14/EC)	97 dB(A)	- - -
Operator position noise level (ISO 6396)	87,6 dB(A)	- - -
Whole body vibration (ISO 2631-1) (limit 0,5 m/s2)	0,227 m/s^2	- - -
Hand-arm vibration (ISO 5349-1) (limit 2,5 m/s2)	1,426 m/s^2	- - -

Temperature Range

Operation and storage	-21 - +43°C (-5.8 - +109.4°F)

Torkonjestraat 23
8510 Marke
Belgium
056 / 222 111
rental@dumarent.be
www.dumarent.be

WARRANTY

WARRANTY 127

Torkonjestraat 23
8510 Marke
Belgium

056 / 222 111
rental@dumarent.be
www.dumarent.be



Bobcat®

Torkonjestraat 23
8510 Marke
Belgium
056 / 222 111
rental@dumarent.be
www.dumarent.be

WARRANTY

BOBCAT LOADERS

DOOSAN BENELUX S.A. warrants to its authorised dealers who in turn warrant to the end-user / owner that each new Bobcat loader will be free from proven defects in material and workmanship for twelve months from the date of delivery to the end-user / owner or 2000 hours of machine usage, whichever occurs first.

During the warranty period, the authorised selling Bobcat dealer shall repair or replace, at DOOSAN BENELUX S.A.'s option, without charge for parts, labour and travel time of mechanics, any part of the Bobcat product which fails because of defects in material and workmanship. The end-user / owner shall provide the authorised Bobcat dealer with prompt written notice of the defect and allow reasonable time for replacement or repair. DOOSAN BENELUX S.A. may, at its option, request failed parts to be returned to the factory. Transportation of the Bobcat product to the authorised Bobcat dealer for warranty work is the responsibility of the end-user / owner.

Service schedules must be adhered to, documented and genuine parts / lubricants must be used. The warranty does not cover oils and lubricants, coolant fluids, filter elements, tune-up parts, bulbs, fuses, ignition system parts (glow plugs, fuel injection pumps, injectors), alternator fan belts, drive belts and other high-wear items. Pins and bushings are considered to be normal consumable items and are not warranted.

The warranty does not apply to tyres or other trade accessories not manufactured by Bobcat. The owner shall rely solely on the warranty, if any, of the respective manufacturers thereof. The warranty does not cover damages resulting from abuse, accidents, alterations, use of the Bobcat product with any bucket or attachment not approved by Bobcat, air flow obstructions, or failure to maintain or use the Bobcat product according to the instructions applicable to it.

DOOSAN BENELUX S.A. EXCLUDES OTHER CONDITIONS, WARRANTIES OR REPRESENTATIONS OF ALL KINDS, EXPRESSED OR IMPLIED, STATUTORY OR OTHERWISE (EXCEPT THAT OF TITLE) INCLUDING ALL IMPLIED WARRANTIES AND CONDITIONS RELATING TO MERCHANTABILITY, SATISFACTORY QUALITY AND FITNESS FOR A PARTICULAR PURPOSE.

CORRECTIONS BY DOOSAN BENELUX S.A. OF NONCONFORMITIES WHETHER PATENT OR LATENT, IN THE MANNER AND FOR THE TIME PERIOD PROVIDED ABOVE, SHALL CONSTITUTE FULFILMENT OF ALL LIABILITIES OF DOOSAN BENELUX S.A. FOR SUCH NONCONFORMITIES, WHETHER BASED ON CONTRACT, WARRANTY, TORT, NEGLIGENCE, INDEMNITY, STRICT LIABILITY OR OTHERWISE WITH RESPECT TO OR ARISING OUT OF SUCH PRODUCT.

THE REMEDIES OF THE END-USER / OWNER SET FORTH UNDER THE PROVISIONS OF THE WARRANTY OUTLINED ABOVE ARE EXCLUSIVE AND THE TOTAL LIABILITY OF DOOSAN BENELUX S.A. INCLUDING ANY HOLDING, SUBSIDIARY, ASSOCIATED OR AFFILIATED COMPANY OR DISTRIBUTOR WITH RESPECT TO THIS SALE OR THE PRODUCT AND SERVICE FURNISHED HEREUNDER IN CONNECTION WITH THE PERFORMANCE OR BREACH THEREOF, OR FROM DELIVERY, INSTALLATION, REPAIR OR TECHNICAL DIRECTION COVERED BY OR FURNISHED UNDER THIS SALE, WHETHER BASED ON CONTRACT, WARRANTY, TORT, NEGLIGENCE, INDEMNITY, STRICT LIABILITY OR OTHERWISE SHALL NOT EXCEED THE PURCHASE PRICE OF THE PRODUCT UPON WHICH SUCH LIABILITY IS BASED.

DOOSAN BENELUX S.A. INCLUDING ANY HOLDING, SUBSIDIARY, ASSOCIATED OR AFFILIATED COMPANY AND DISTRIBUTOR SHALL IN NO EVENT BE LIABLE TO THE END-USER / OWNER, ANY SUCCESSORS IN INTEREST OR ANY BENEFICIARY OR ASSIGNEE RELATING TO THIS SALE FOR ANY CONSEQUENTIAL, INCIDENTAL, INDIRECT, SPECIAL OR PUNITIVE DAMAGES ARISING OUT OF THIS SALE OR BY ANY BREACH THEREOF, OR ANY DEFECT IN, OR FAILURE OF, OR MALFUNCTION OF THE PRODUCT UNDER THIS SALE, WHETHER BASED UPON LOSS OF USE, LOST PROFITS OR REVENUE, INTEREST, LOST GOODWILL, WORK STOPPAGE, IMPAIRMENT OF OTHER GOODS, LOSS BY REASON OF SHUTDOWN OR NON-OPERATION, INCREASED EXPENSES OF OPERATION OR CLAIMS OF USER OR CUSTOMERS OF THE USER FOR SERVICE INTERRUPTION WHETHER OR NOT SUCH LOSS OR DAMAGE IS BASED ON CONTRACT, WARRANTY, TORT, NEGLIGENCE, INDEMNITY, STRICT LIABILITY OR OTHERWISE.

Bobcat

4700002-EN (1-10)

Printed in Belgium

Torkonjestraat 23
8510 Marke
Belgium

056 / 222 111
rental@dumarent.be
www.dumarent.be



Bobcat®

Torkonjestraat 23
8510 Marke
Belgium

056 / 222 111
rental@dumarent.be
www.dumarent.be

ALPHABETICAL INDEX

(S70) LOADER SPECIFICATIONS 121
AIR CLEANER SERVICE 89
ALTERNATOR BELT 106
ATTACHMENT CONTROL DEVICE (ACD) . 46
ATTACHMENTS 58
BACK-UP ALARM SYSTEM 40
BACK-UP ALARM SYSTEM 83
BOBCAT COMPANY IS IS0 9001 CERTIFIED 9
BOBCAT INTERLOCK CONTROL SYSTEM (BICS™) 117
BOBCAT INTERLOCK CONTROL SYSTEM (BICS™) 36
BOBCAT INTERLOCK CONTROL SYSTEM (BICS™) 77
BOB-TACH 111
CONTROL IDENTIFICATION 34
DAILY INSPECTION 47
DECLARATION OF CONFORMITY 7
DELIVERY REPORT 11
DRIVE BELT 107
DRIVING AND STEERING THE LOADER . 42
ELECTRICAL SYSTEM 96
EMERGENCY EXIT 39
ENGINE COOLING SYSTEM 94
ENGINE LUBRICATION SYSTEM 93
ENGINE SPEED CONTROL 41
FEATURES, ACCESSORIES AND ATTACHMENTS 13
FINAL DRIVE TRANSMISSION (CHAINCASE) 105
FIRE PREVENTION 21
FUEL SYSTEM 90
HYDRAULIC CONTROLS 43
HYDRAULIC / HYDROSTATIC SYSTEM .. 100
INSTRUMENT PANEL IDENTIFICATION .. 31
LIFT ARM BYPASS CONTROL 37
LIFT ARM SUPPORT DEVICE 81
LIFTING THE LOADER 67
LOADER IDENTIFICATION 12
LOADER STORAGE AND RETURN TO SERVICE 112
LUBRICANTS AND FLUIDS 10
LUBRICATING THE LOADER 108
MACHINE SIGNS (DECALS) 24
MAINTENANCE SAFETY 73
MONITORING THE DISPLAY PANELS 56
OPERATING PROCEDURE 62
OPERATOR CAB 85
OPERATOR SAFETY WARNINGS 1
PARKING BRAKE 37
PIVOT PINS 110
PRE-STARTING PROCEDURE 49
PUBLICATIONS AND TRAINING RESOURCES 27
REAR DOOR (TAILGATE) 88
REGULAR MAINTENANCE ITEMS 9
SAFETY INSTRUCTIONS 19
SEAT BAR RESTRAINT SYSTEM 35
SEAT BAR RESTRAINT SYSTEM 79
SEAT BELT 80
SERIAL NUMBER LOCATIONS 11
SERVICE SCHEDULE 75
SPARK ARRESTER MUFFLER 103
STARTING THE ENGINE 52
STOPPING THE ENGINE AND LEAVING THE LOADER 57
STOPPING THE LOADER 42
TOWING THE LOADER 66
TRACTION LOCK OVERRIDE 38
TRANSPORTING THE LOADER ON A TRAILER 67
TROUBLESHOOTING 115
TYRE MAINTENANCE 104
WARRANTY 127

Torkonjestraat 23
8510 Marke
Belgium
056 / 222 111
rental@dumarent.be
www.dumarent.be



Torkonjestraat 23
8510 Marke
Belgium

056 / 222 111
rental@dumarent.be
www.dumarent.be

Torkonjestraat 23
8510 Marke
Belgium

056 / 222 111
rental@dumarent.be
www.dumarent.be

Torkonjestraat 23
8510 Marke
Belgium

056 / 222 111
rental@dumarent.be
www.dumarent.be

Title: BOB-TACH
Model Number: S70
Serial Number: A3W611001 & Above, A3W711001 & Above

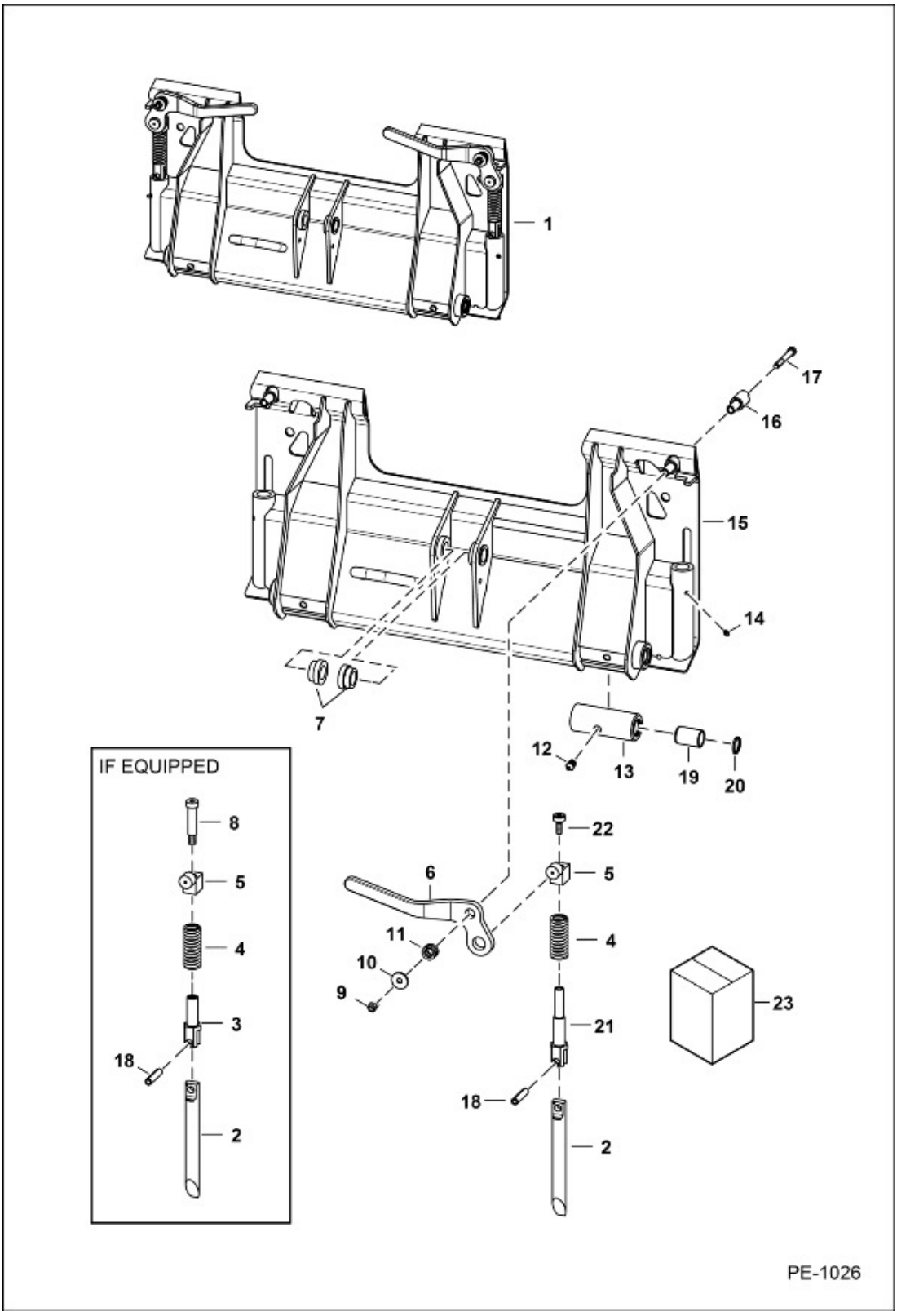

Title: BOB-TACH
Model Number: S70
Serial Number: A3W611001 & Above, A3W711001 & Above

Ref.	Part Number	Description	S/N	Qty
1	6727229	BOB-TACH, Also Order 6565367 - Was 6726597, A		1
2	6737363	WEDGE		2
3	6704248	PIVOT, WEDGE		2
4	6578253	SPRING COMPRESSION		2
5	6704240	PIVOT, WEDGE		2
6	6719501	LEVER,RH		1
6	6719502	LEVER,LH		1
7	6563830	BUSHING PIN, weld-on		2
8	6728473	BOLT, SHOULDER, 57,15 mm (2.25") shoulder - pre-applied thread locker		2
9	85D6	NUT PRETRQ HEX LOCK		2
10	619021	WASHER		2
11	6704453	SPRING COMPRESSION		2
12	743332	FITTING, GREASE 5		2
13	6726436	PIVOT BUSHNG, weld-on		2
14	10H35	FTG GREASE STRAIGHT		2
15		FRAME, FRAME, NLA		1
16	6702958	BUSHING MOUNT		2
17	17C648	SCREW HEX CAP		2
18	14J5032	PIN CSPR STRAIGHT, Was 7277777, B,D		2
19	6809825	BUSHING WEAR		2
20	1990599	GREASE SEAL		2
21	7252989	PIVOT, WEDGE, 156 mm (6.15") long		2
22	7255136	SCREW, SOCKET HEAD, 28,58 mm (1.125") long		2
23		KIT PIVOT BOB-TACH, KIT PIVOT BOB-TACH, NLA - Ref. 3, 8 & 18		1

Title: BOB-TACH
Model Number: S70
Serial Number: A3W611001 & Above, A3W711001 & Above

Ref.	Part Number	Description	S/N	Qty
		(14J5032 pin) - Order 7302293 kit - Was 7302293, B		
23	7302293	KIT PIVOT BOB-TACH, Ref. 18 (7277777 pin), 21 & 22		1

Title: BOB-TACH
Model Number: S70
Serial Number: A3W611001 & Above, A3W711001 & Above

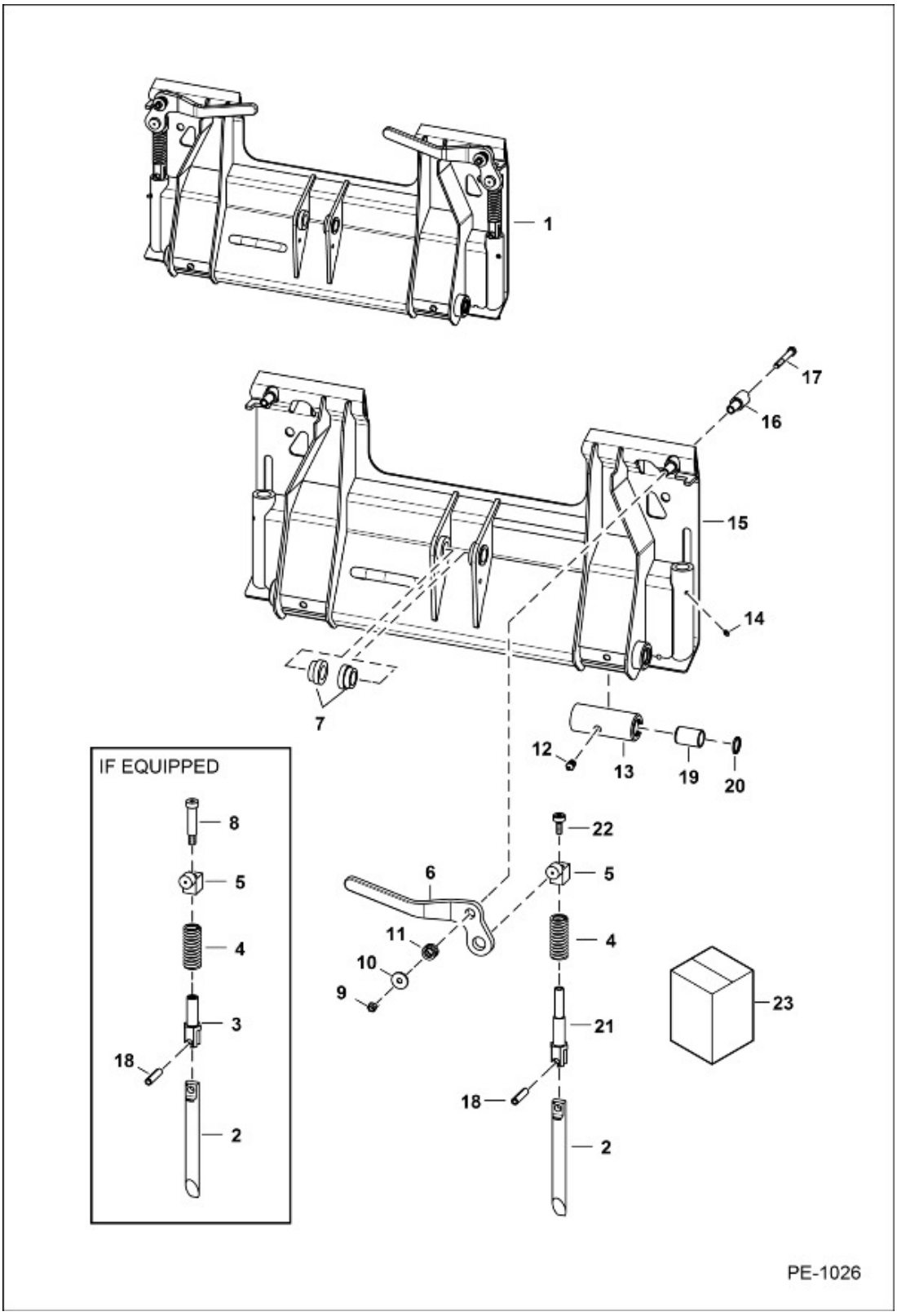

Title: BOB-TACH
Model Number: S70
Serial Number: A3W611001 & Above, A3W711001 & Above

Ref.	Part Number	Description	S/N	Qty
1	6727229	BOB-TACH, Also Order 6565367 - Was 6726597, A		1
2	6737363	WEDGE		2
3	6704248	PIVOT, WEDGE		2
4	6578253	SPRING COMPRESSION		2
5	6704240	PIVOT, WEDGE		2
6	6719501	LEVER,RH		1
6	6719502	LEVER,LH		1
7	6563830	BUSHING PIN, weld-on		2
8	6728473	BOLT, SHOULDER, 57,15 mm (2.25") shoulder - pre-applied thread locker		2
9	85D6	NUT PRETRQ HEX LOCK		2
10	619021	WASHER		2
11	6704453	SPRING COMPRESSION		2
12	743332	FITTING, GREASE 5		2
13	6726436	PIVOT BUSHNG, weld-on		2
14	10H35	FTG GREASE STRAIGHT		2
15		FRAME, FRAME, NLA		1
16	6702958	BUSHING MOUNT		2
17	17C648	SCREW HEX CAP		2
18	14J5032	PIN CSPR STRAIGHT, Was 7277777, B,D		2
19	6809825	BUSHING WEAR		2
20	1990599	GREASE SEAL		2
21	7252989	PIVOT, WEDGE, 156 mm (6.15") long		2
22	7255136	SCREW, SOCKET HEAD, 28,58 mm (1.125") long		2
23		KIT PIVOT BOB-TACH, KIT PIVOT BOB-TACH, NLA - Ref. 3, 8 & 18		1

Title: BOB-TACH
Model Number: S70
Serial Number: A3W611001 & Above, A3W711001 & Above

Ref.	Part Number	Description	S/N	Qty
		(14J5032 pin) - Order 7302293 kit - Was 7302293, B		
23	7302293	KIT PIVOT BOB-TACH, Ref. 18 (7277777 pin), 21 & 22		1

Title: Brakes
Model Number: S70
Serial Number: A3W611001 & Above, A3W711001 & Above

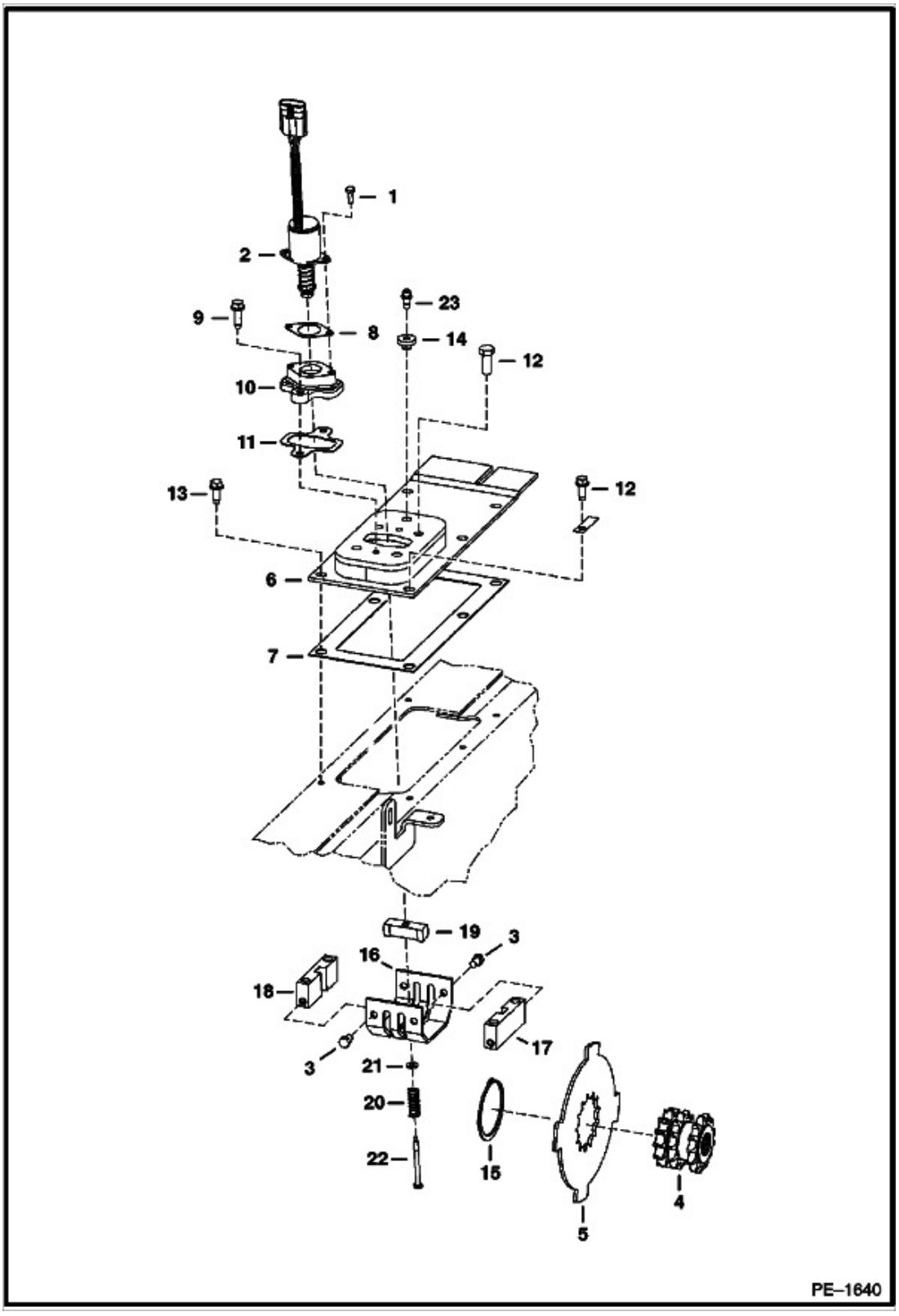

Title: Brakes
Model Number: S70
Serial Number: A3W611001 & Above, A3W711001 & Above

Ref.	Part Number	Description	S/N	Qty
1	17C412	BOLT 5		2
2	7136559	SOLENOID ASSEMBLY, Was 6681512		1
2	6690564	SPRING COMPRESSION		1
2	6690566	SPRING RETENSION CUP		1
2	6690565	SOLENOID PLUNGER		1
2	6690563	SOLENOID MOUNTING		1
3	43C610	SCREW HEX CAP, pre-applied thread locker		4
4		SPROCKET, SPROCKET, See Illustration		2
5	6706736	DISC BRAKE, disc		2
6	7351038	COVER ASSY, Was 6706684, A		1
7	6593418	GASKET		1
8	6706737	GASKET SOLENOID		1
9	84G3720	SCREW THD ROLLING TT		2
10	6706718	MOUNT SOLENOID		1
11	6708016	GASKET COVER		1
12	47C820	SCREW HEX HEAD CAP		4
13	84G3716	SCREW THD ROLLING TT		10
14	6553411	BUSHING PRESS FIT		1
15	791442	RING SNAP		2
16	7351042	GUIDE CHANNEL, Was 6708787, A		1
17	6705898	BLOCK GUIDE, guide - RH		1
18	6705897	BLOCK GUIDE, guide - LH		1
19	6705896	WEDGE TRACTION LOCK		1
20	6708018	SPRING COMPRESSION		1
21	25E13	WASHER FLAT PLAIN		1

Ref.	Part Number	Description	S/N	Qty
22	6708267	SCREW SOLENOID		2
23	6680970	VENT BREATHER		1

Title: Bucket Positioning Valve
Model Number: S70
Serial Number: A3W611001 & Above, A3W711001 & Above

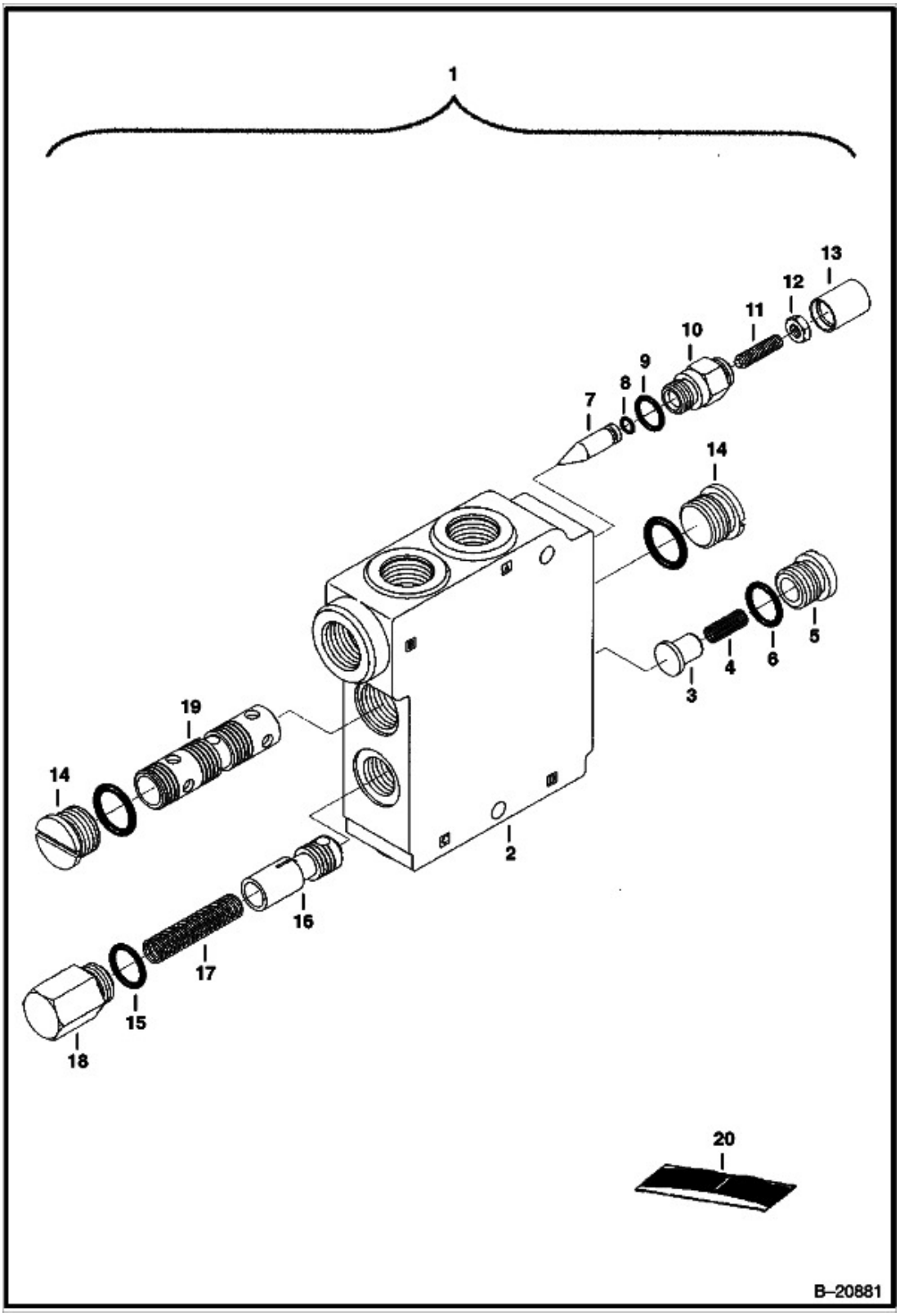

Title: Bucket Positioning Valve
Model Number: S70
Serial Number: A3W611001 & Above, A3W711001 & Above

Ref.	Part Number	Description	S/N	Qty
1	6680984	VALVE BKT POSTION, Ref. 2-19		1
1	6675780	Cartridge		1
1	6675781	Coil		1
2		BODY, BODY, NSS		1
3	6647783	LOADCHECK		1
4	6647785	SPRING, load check		1
5	6647784	PLUG, W/Ref. 6		1
6	79K10	O-RING		1
7	6647777	PIN		1
8	6647677	VALVE, SECTION		1
9	6634874	O-RING		1
10	6647778	CAP, adjustment		1
11	6648293	SCREW		1
12	8D4	NUT		1
13	6667676	COVER		1
14	6676543	PLUG		2
14	79K10	O-RING		2
15	79K10	O-RING		2
16		SPOOL, SPOOL, NSS - unloading		1
17	6648294	SPRING		1
18	6667176	PLUG, W/Ref. 15		1
19		SPOOL, SPOOL, NSS - flow divider		1
20	6647786	KIT SEAL, Ref. 6, 8, 9, 13, & 15		1

Title: Bucket Positon Kit
Model Number: S70
Serial Number: A3W611001 & Above, A3W711001 & Above

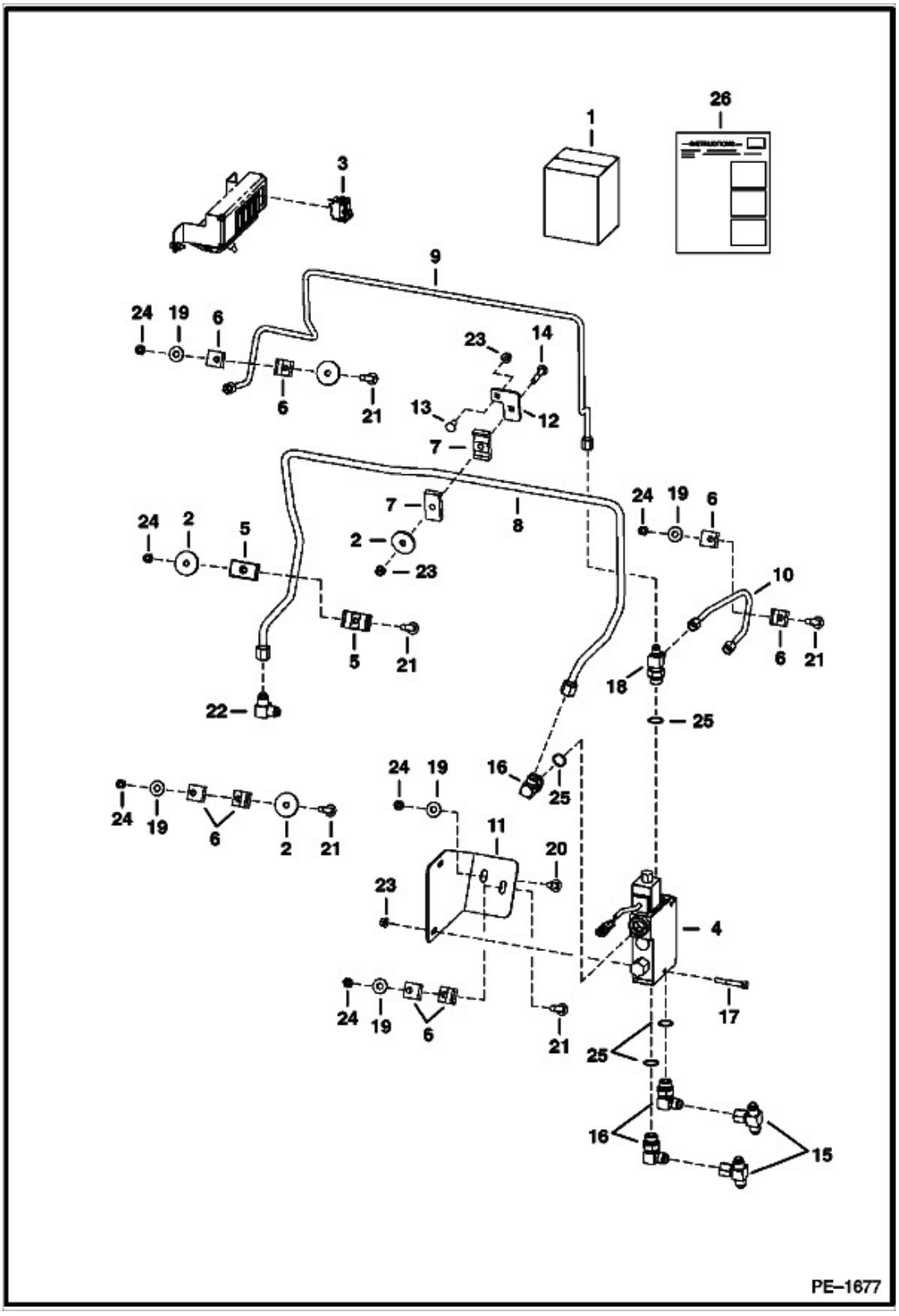

Title: Bucket Positon Kit
Model Number: S70
Serial Number: A3W611001 & Above, A3W711001 & Above

Ref.	Part Number	Description	S/N	Qty
1	7375012	KIT BUCKET POSITION, Ref. 2 - 26 - Was 7154282, A		1
2	872229	WASHER		3
3	6668814	SWITCH, bucket level		1
4	6680984	VALVE BKT POSTION, bucket position		1
4	6675780	Cartridge		1
4	6675781	Coil		1
5	6701892	CLAMP TUBELINE		2
6	6727707	CLAMP 2		8
7	6727708	CLAMP 2		2
8	7351666	TUBELINE HYDRAULIC, Was 6732764, A		1
9	7351665	TUBELINE HYDRAULIC, Was 6732773, A		1
10	7351662	TUBELINE HYDRAULIC, Was 7154322, A		1
11	7351664	BRACKET VALVE, Was 6732840, A		1
12	7351663	PLATE CLAMP, Was 6733688, A		1
13	10C512	BOLT SQ NECK RND HD		1
14	37C532	BOLT CARRIAGE GR5		1
15	14K6	FTG HYD BRANCH TEE		2
16	17KB0810	FTG HYD ELBOW 90, W/Ref. 25		3
17	1C536	SCREW HEX CAP		2
18	21KB0610	FTG HYD TUBE, W/Ref. 25		1
19	27E6	WASHER		5
20	37C620	BOLT CARRIAGE		1
21	37C632	BOLT SQ NECK RD HD		5
22	77F6	ELBOW HYDR 90 UNION		1
23	83D5	NUT LOCK		4

Title: Bucket Positon Kit
Model Number: S70
Serial Number: A3W611001 & Above, A3W711001 & Above

Ref.	Part Number	Description	S/N	Qty
24	95D6	NUT HEXAGON		6
25	79K10	O-RING		x
26	7375013	INSTRUCTIONS INSTALL, Was 6902048ENUS, A		1

Title: CAB Door (Standard)
Model Number: S70
Serial Number: A3W611001 & Above, A3W711001 & Above

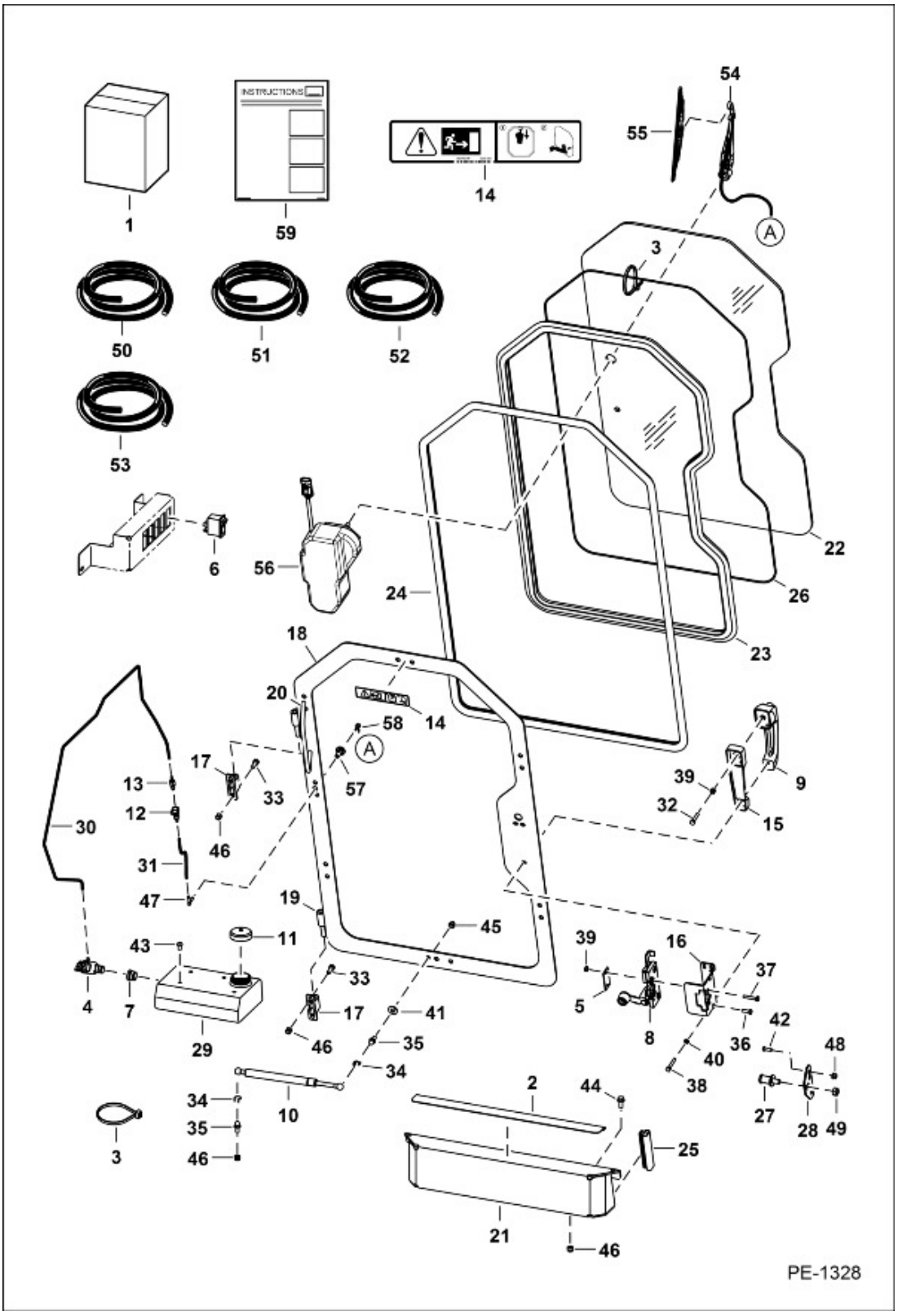

Ref.	Part Number	Description	S/N	Qty
1	7375018	KIT DOOR CAB, See Illustration, - Ref. 1-19 & 2-33, 36-39 & 41-59 on this page - Also Order Side Instrument Panel Kit # 7154283 - Was 6729392, A		1
2	6542731	TREAD SAFETY		1
3	6610510	STRAP, TIE 10		1
4		PUMP, WIPER WASHER, PUMP, WIPER WASHER, NLA - Was 6664554, A		1
4	7362203	WASHER PUMP, Also Order Ref. 7 (7378920 grommet)		1
5	7351562	COVER LATCH, latch - Was 6718520, A		1
6	6665707	SWITCH FRONT WIPER, wiper		1
7		GROMMET, GROMMET, NLA - washer - Was 6666766, A		1
7	7378920	GROMMET PUMP WSHR FLUID, washer - Also Order Ref. 4 (7362203 pump)		1
8	6674666	LATCH		1
9	6674667	HANDLE, door		1
10	6678091	SPRING GAS, W/Ref. 34 & 35		1
11	6674993	CAP, vented		1
12	6675298	COUPLER, BODY, body		1
13	6675299	COUPLER, insert		1
14	7234369	DECAL, EXIT, Was 6707852, B		1
15	6717146	SPACER, handle		1
16	7351561	BRACKET LATCH, latch - Was 6717369, A		1
17	6717593	HINGE, base		1
18	7351555	FRAME DOOR, W/Ref. 19 & 20 - Also Order Ref. 14 - Was 6729260, A		1
19	6718376	HINGE, door		2
20	6718521	HANDLE, grab		1

Title: CAB Door (Standard)
Model Number: S70
Serial Number: A3W611001 & Above, A3W711001 & Above

Ref.	Part Number	Description	S/N	Qty
21	7351554	SHIELD ASSEMBLY, enclosure - Was 6729283, A		1
22	6729284	WINDOW CAB DOOR, front - .25" thick glass		1
23		SEAL, SEAL, NLA - window - 2680 mm (105.5") long - Order Ref. 50		1
24		SEAL, SEAL, NLA - door - 3023 mm (119") long - Order Ref. 51		1
25		SEAL, SEAL, NLA - shield - 114 mm (4.5") long - Order Ref. 51		2
26		CORD, CORD, NLA - window - 2705 mm (106.5") long - Order Ref. 52 - Also Order Ref. 76 (6610510 tie)		1
27	6685233	BOLT STRIKER, striker - Was 6729413, A		1
28	7351553	MOUNT STRIKER, striker - Was 6729486, A		1
29	6729648	TANK WASHER, washer		1
30		HOSE, HOSE, NLA - washer - 2311 mm (91") long - Order Ref. 53		1
31		HOSE, HOSE, NLA - washer - 127 mm (5") long - Order Ref. 53		1
32	1CM630	SCREW HEX HD 8.8, Was 17C420, B		1
33	17C512	BOLT 5		4
34	6649245	CLIP, spring		2
35	6678548	Socket, ball		2
35	6649244	BALL STUD		2
36	4CM620	BOLT, Was 1CM620, A		2
37	4CM635	SCREW HEX HD 8.8, Was 1CM00635B, D		2
38	1CM640	SCREW HEX CAP		3
39	1DM6	NUT, Was 4DM6, A		3
40	6EM60	WASHER, not in kit		3
41	25E16	WASHER FLAT PLAIN		1
42	25G412	SCREW SKT BTN HD CAP, Was 25G000410B, B		4
43	25G508	SCREW SKT BTN HD CAP		4

Ref.	Part Number	Description	S/N	Qty
44	35C512	SCREW FLANGED HEAD CAP, Was 31C000512B, B		4
45	46D5	NUT LOW CROWN ACORN		1
46	59D5	NUT LOCK HEX PT		9
47	6676917	ELBOW INTERIOR, inside		1
48	83D4	NUT LOCK		4
49	85D7	NUT PRETRQ HEX LOCK, Was 91D000007B, B		1
50	6665568	SEAL BULK, bulk - sold per foot		x
51	7011039	SEAL, BULK/FT 34, sold per foot - Was 6675558, A		x
52	6554149	CORD, bulk - sold per foot		x
53	6708310	HOSE BULK, clear pvc - 0.154" ID - sold per foot		x
53	7439536	HOSE BULK, black EPDM - 0.154" ID - sold per foot		x
54		ARM, WIPER, ARM, WIPER, See Illustration		1
55		WIPER BLADE, WIPER BLADE, See Illustration		1
56		WIPER MOTOR, WIPER MOTOR, See Illustration		1
57	6676499	GROMMET WIPER		1
58	6676500	ELBOW EXTERIOR, outside		1
59	7375019	INSTRUCTIONS INSTALL, Was 6901254ENUS, A		1

Title: CAB Door (Wiper)
Model Number: S70
Serial Number: A3W611001 & Above, A3W711001 & Above

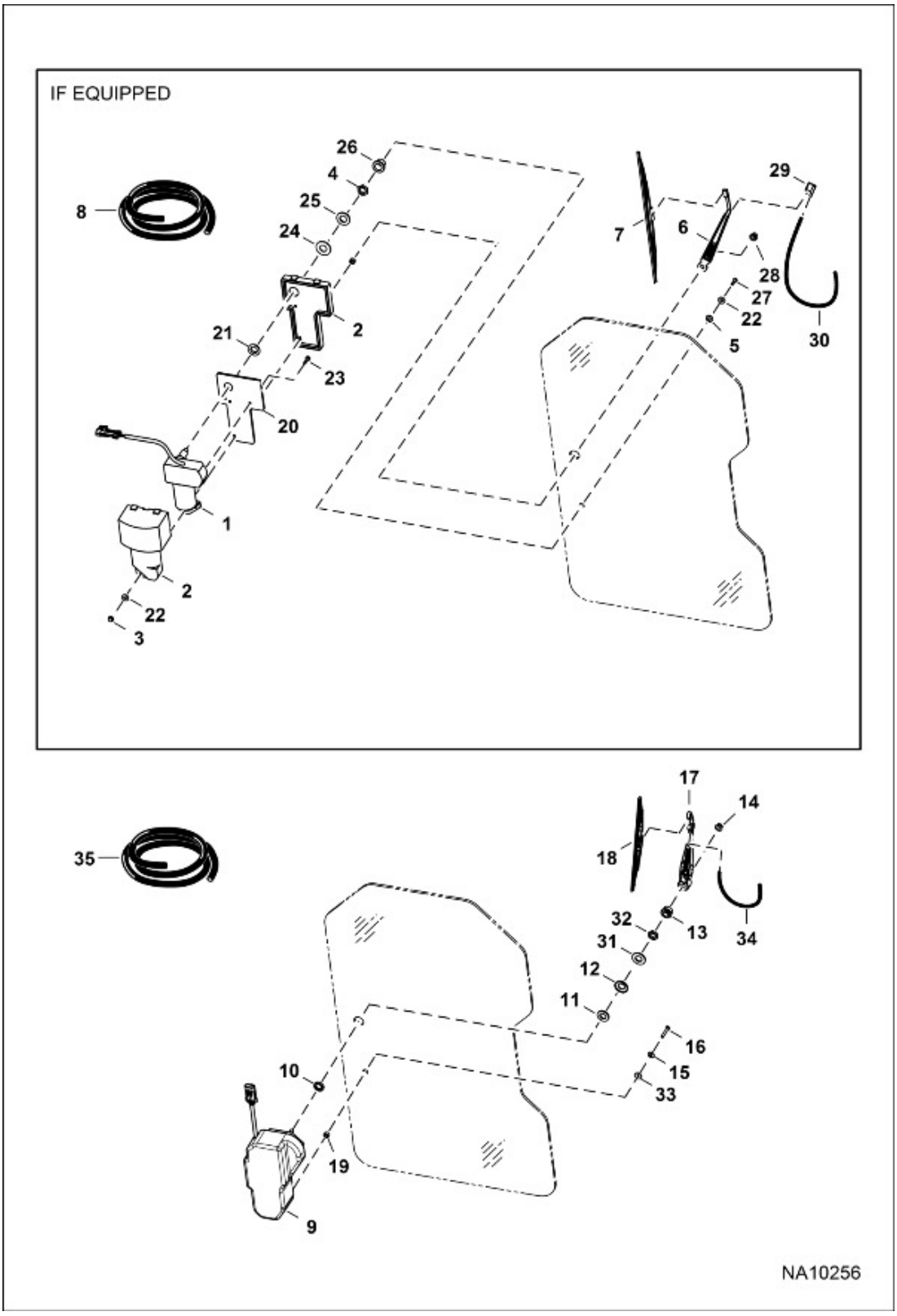

Title: CAB Door (Wiper)
Model Number: S70
Serial Number: A3W611001 & Above, A3W711001 & Above

Ref.	Part Number	Description	S/N	Qty
1	6678323	MOTOR, WIPER		1
2	6677836	COVER		1
3	6677844	NUT		1
4	43DM10	NUT FLANGED HEX		1
5	6801059	WASHER NEOPRENE		1
6	7204778	ARM WIPER		1
7	6678259	BLADE WIPER		1
8	6708310	HOSE BULK, clear pvc - 0.154" ID - sold per foot		x
8	7439536	HOSE BULK, black EPDM - 0.154" ID - sold per foot		x
9	7259305	MOTOR WIPER		1
10	7255630	GASKET WINDOW, Was 7249632, A		1
11	7259309	WASHER SEAL 16MM		1
12	7259310	WASHER CUP 16MM		1
13	7252281	BUSHING WIPER		1
14	43DM8	NUT FLANGED HEX		1
15	6678739	WASHER M5 FLAT		1
16	7259308	SCREW M5		1
17	7259306	ARM WIPER		1
18	7259307	BLADE WIPER		1
19	6664085	BUSHING NYLON		1
20	6677846	GASKET, MOTOR		1
21	6677847	GROMMET		1
22	6678739	WASHER M5 FLAT		2
23	1CM614	SCREW HEX CAP		2
24	6678324	WASHER		1

Title: CAB Door (Wiper)
Model Number: S70
Serial Number: A3W611001 & Above, A3W711001 & Above

Ref.	Part Number	Description	S/N	Qty
25	6678325	WASHER		1
26	6678326	RAIN SHIELD		1
27	6678198	BOLT		1
28	6677843	NUT		1
29	7020353	NOZZLE, WIPER		1
30		HOSE, HOSE, NLA - 305 mm (12") long - Order Ref. 8		1
31	25E25	WASHER FLAT PLAIN		1
32	7255635	NUT HEX, Was 7249625, A		1
33	6801059	WASHER NEOPRENE		1
34		HOSE, HOSE, NLA - 305 mm (12") long - Order Ref. 35		1
35	6676003	HOSE BULK, black - 0.109" ID		x

Title: CAB Electrical Circuitry
Model Number: S70
Serial Number: A3W611001 & Above, A3W711001 & Above

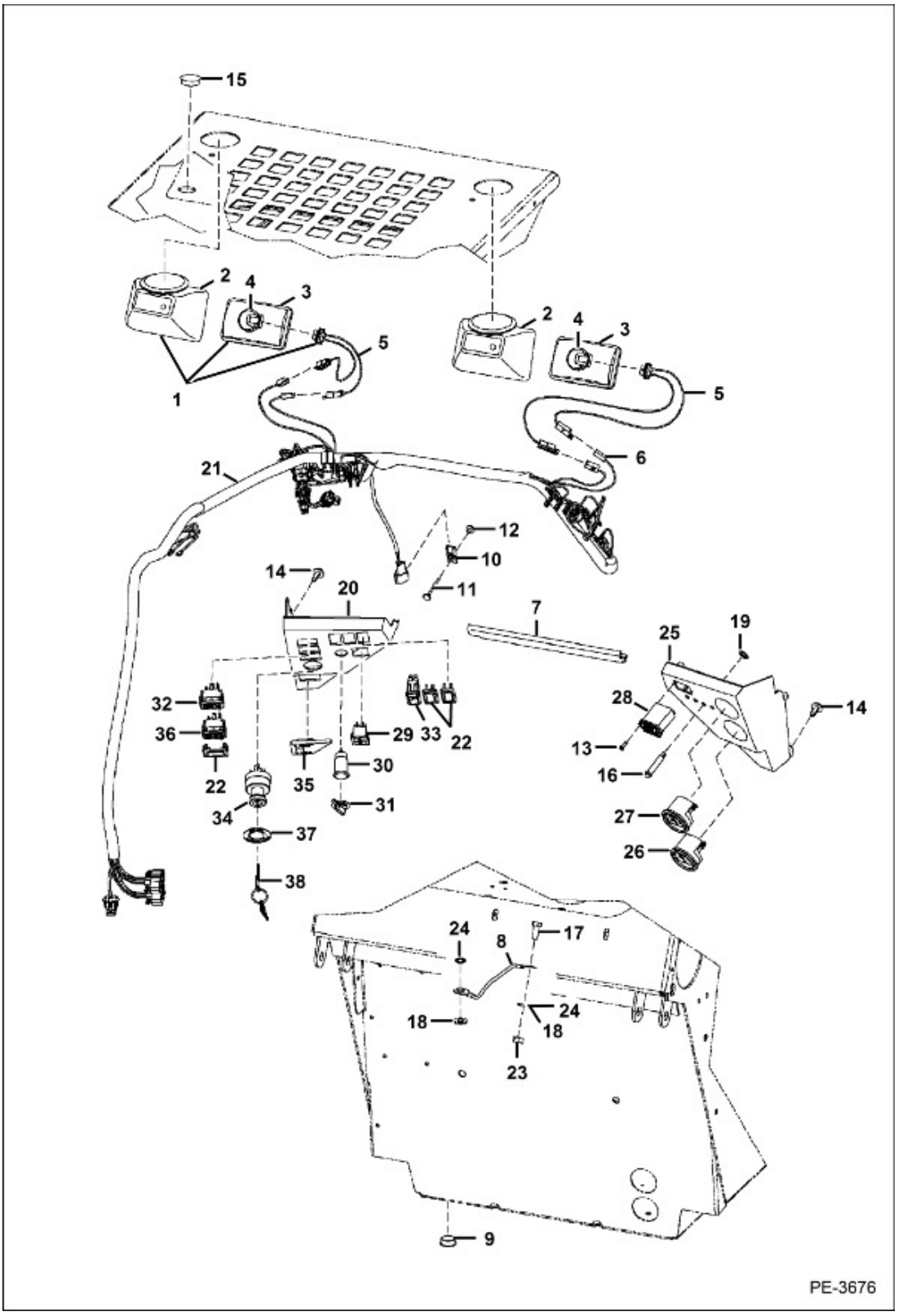

Ref.	Part Number	Description	S/N	Qty
1	6577801	LIGHT, FRONT ASSY, W/Ref. 2 - 5		2
2	6578824	HOUSING		2
3	6649478	HOUSING, LIGHT ASSY		2
4	6667934	LIGHT, BULB		2
5	6578528	HARNESS		2
6	6519548	CONN BODY		4
7	6531618	CROSSMEMBER INSTR		1
8	6594283	WIRE ASSY NEGATIVE		1
9	6648391	PLUG		1
10	6665000	BRACKET MOUNTING		1
11	6630207	RIVET POP, Was 6665321, A		1
12		RIVET PLASTIC FEMALE, RIVET PLASTIC FEMALE, NLA - Was 6665322, A		1
13	7179008	SCREW PLSTC THD RL, Was 65G608, B		2
14	6702642	SCREW WSHRD PLASTITE		6
15	6707674	PLUG HOLE		1
16	7025306	LIGHT, LED RED, Was 6698061, A		4
17	1C512	SCREW HEX CAP		1
18	25E15	WASHER FLAT PLAIN		2
19	6698369	RETAINER BOLT		4
20	6730034	PANEL 400/500 INSTR		1
21		HARNESS, CAB, HARNESS, CAB, NLA - Order 7336049(harness) W/ 7328187(ignition) - Was 7148518		1
21	7336049	HARNESS S70 CAB, Use W/ 7328187(ignition)		1
22	6665314	PLUG ROCKER SW		3

Ref.	Part Number	Description	S/N	Qty
23	61D5	NUT HEX FINISHED GR5		1
24	6E5	WASHER INTL T LOCK		2
25	7152276	PANEL, INSTRUMENT		1
26		GAUGE, GAUGE, NLA - eng temp - W/clamp - Order 6669663 gauge & 6679027 clamp - Was 6658817, A		1
26	6669663	GAUGE COOLANT TEMP		1
27		VOLTMETER, VOLTMETER, NLA - W/clamp - Order 6669664 voltmeter & 6679027 clamp - Was 6658819, A		1
27	6669664	GAUGE VOLT, W/O clamp		1
28	7423973	METER HOUR, Was 6664886, B		1
29	7407423	INDICATOR LIGHTS, Was 7386228, B		1
30	6664223	OUTLET ELECTRICAL		1
31	6664224	CAP		1
32	6665315	SWITCH HEAD LIGHT, headlight		1
33	6665318	SWITCH, glow plug	A3W6 & Below, A3W7 & Below	1
34	6691594	SWITCH IGNITION ASSY, Use W/Ref. 21 (7148518 Harness)		1
34	7328187	SWITCH IGNITION KEY, Use W/Ref. 21 (7336049 Harness)		1
35	6674220	SWITCH OVERRIDE TRACTION, push to operate		1
36	6678203	SWITCH PARK BRAKE, park brake		1
37	6709028	PLATE 10, brake start	A3W6 & Below, A3W7 & Below	1
37	6596218	PLATE, brake start	A3W6 & Above,	1

Ref.	Part Number	Description	S/N	Qty
			A3W7 & Above	
38	6693241	KEY IGNITION (2)		1

Title: CAB Enclosure (Canvas)
Model Number: S70
Serial Number: A3W611001 & Above, A3W711001 & Above

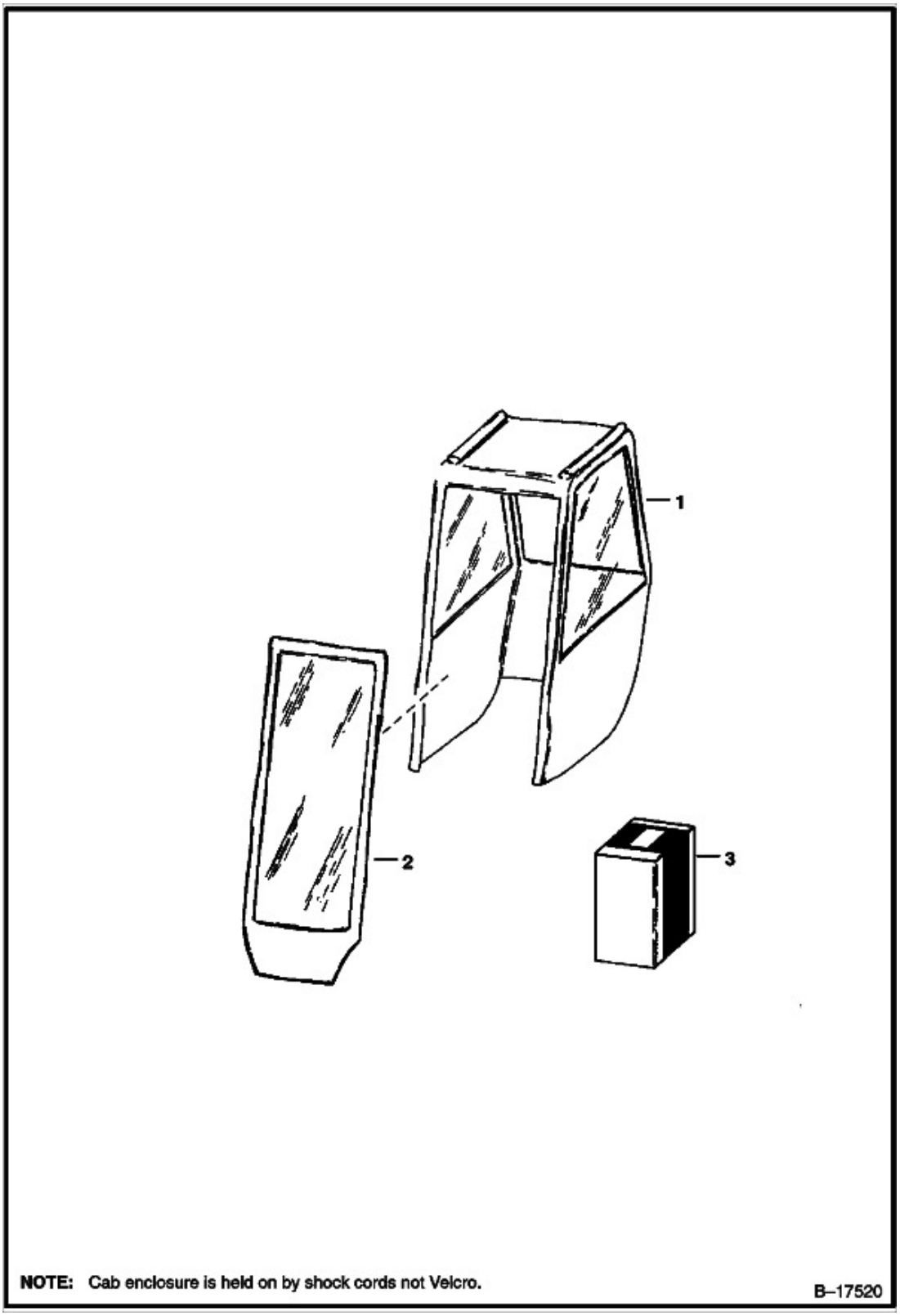

Title: CAB Enclosure (Canvas)
Model Number: S70
Serial Number: A3W611001 & Above, A3W711001 & Above

Ref.	Part Number	Description	S/N	Qty
1	6653437	ENCLOSURE, LOADER CAB VINYL, W/Ref. 2		1
2	6666913	DOOR, VINYL CAB ENCLOSURE, vinyl - w/ hinges and hardware		1
3	6662839	KIT HINGE		1

Title: CAB Enclosure (Special Applications)
Model Number: S70
Serial Number: A3W611001 & Above, A3W711001 & Above

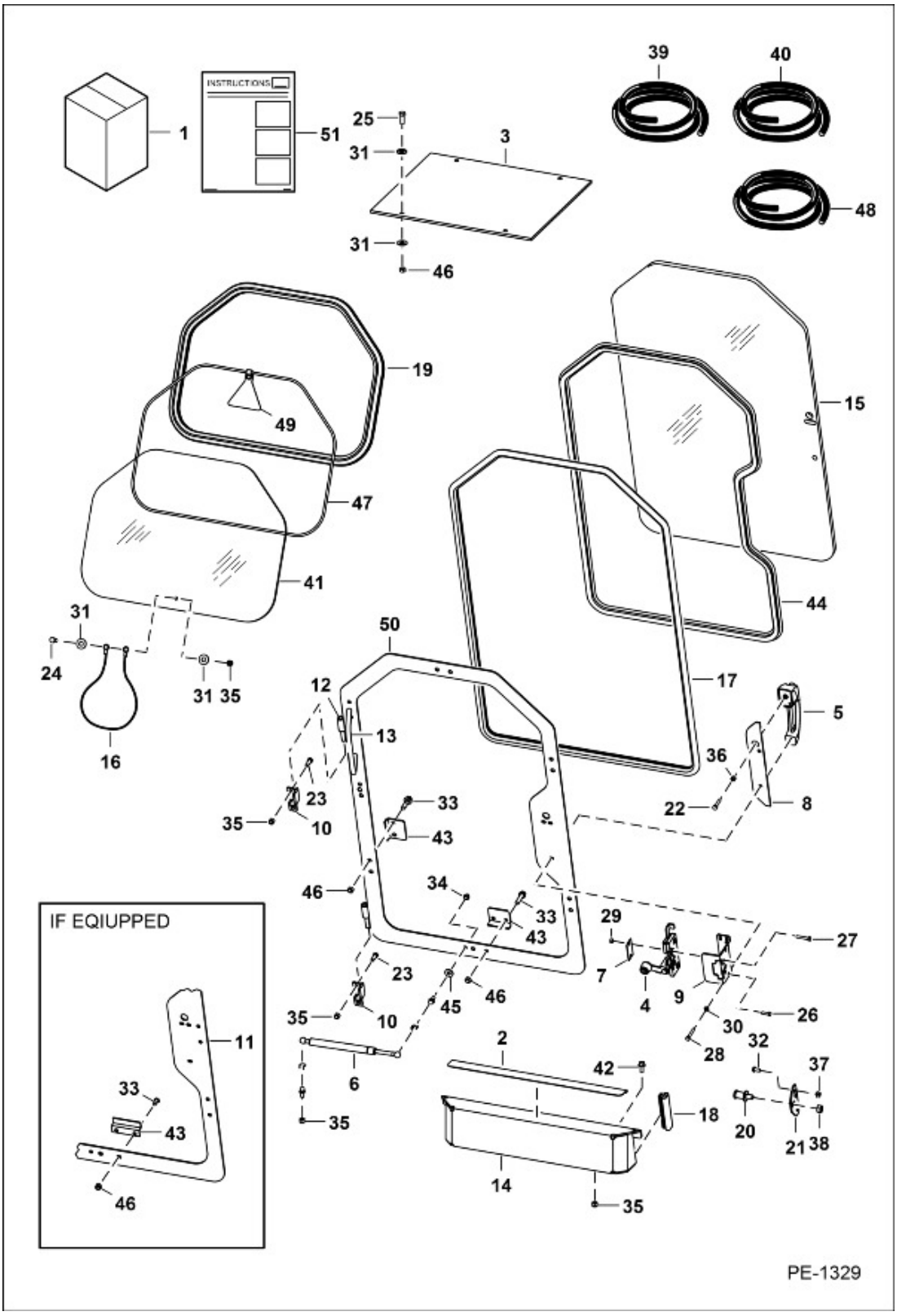

Ref.	Part Number	Description	S/N	Qty
1		KIT, KIT, NLA - Ref. 2-50 - order components - order Ref. 8(6731529 Spacer) - Was 6729391, A		1
1	7386333	KIT DOOR CAB SPECIAL APP, Ref. 2-10 & 14-50 - order Ref. 8(7385959 Spacer)		1
2	6542731	TREAD SAFETY		1
3	6593243	WINDOW, TOP, top		1
4	6674666	LATCH		1
5	6674667	HANDLE, door		1
6	6678091	SPRING GAS		1
6	6678548	Socket, ball		2
6	6649245	CLIP, spring		2
7	7351562	COVER LATCH, latch - Was 6718520, A		1
8	6731529	SPACER WINDOW, window - Use W/Ref. 1(6729391 kit)		1
8	7385959	SPACER HANDLE, Use W/Ref. 1(7386333 kit)		1
9	7351561	BRACKET LATCH, latch - Was 6717369, A		1
10	6717593	HINGE, base		1
11		DOOR, DOOR, NLA - W/Ref. 12 & 13 - Use W/Ref. 43 (8) - Order Ref. 50 - Was 6729260, B		1
12	6718376	HINGE, door - W/Ref. 11		2
13		HANDLE, HANDLE, grab - W/Ref. 11 - Was 6718521, A		1
14	7351554	SHIELD ASSEMBLY, enclosure - Was 6729283, A		1
15	6729235	WINDOW, front - 0.50" polycarbonate		1
16	6555331	WIRE ROPE		1
17		SEAL, SEAL, NLA - door - 119"(3022,6mm) long - Order Ref. 39		1
18		SEAL, SEAL, NLA - shield - 4.5"(114,3mm) long - Order Ref. 39		2
19		MOULDING, MOULDING, NLA - rear - 70"(1778mm) long - Order		1

Ref.	Part Number	Description	S/N	Qty
		Ref. 40		
20	6685233	BOLT STRIKER, striker		1
21	7351553	MOUNT STRIKER, striker - Was 6729486, A		1
22	17C420	BOLT		1
23	17C512	BOLT 5		4
24	17C516	BOLT		1
25	17C616	BOLT 5		4
26	4CM620	BOLT, Was 1CM620, A		2
27	4CM635	SCREW HEX HD 8.8		2
28	1CM640	SCREW HEX CAP		3
29	1DM6	NUT		2
30	6EM60	WASHER		3
31	25E18	WASHER FLAT PLAIN		10
32	25G410	SCREW SKT BTN HD CAP		4
33	35C620	BOLT 5		16
33	35C620	BOLT 5		14
34	46D5	NUT LOW CROWN ACORN		1
35	59D5	NUT LOCK HEX PT		10
36	61D4	NUT 5		1
37	83D4	NUT LOCK		4
38	85D7	NUT PRETRQ HEX LOCK		1
39	7011039	SEAL, BULK/FT 34, sold per foot - Was 6675558, A		x
40	6658352	MOULDING, bulk - sold per foot		x
41	6593244	WINDOW, rear		1
42	35C512	SCREW FLANGED HEAD CAP		4

Ref.	Part Number	Description	S/N	Qty
43	6725937	CLAMP, window		8
43	6725937	CLAMP		7
44		SEAL, SEAL, NLA - 105.6"(1260mm) long - Order Ref. 39		1
45	25E16	WASHER FLAT PLAIN		1
46	85D6	NUT PRETRQ HEX LOCK		20
46	85D6	NUT PRETRQ HEX LOCK		18
47		CORD, CORD, NLA - 70" (1778mm) long - Order Ref. 48 - Also Order Ref. 49 (6731478 exit tag)		1
48	6554149	CORD, bulk - sold per foot		x
49	6731478	TAG EXIT		1
50	7351555	FRAME DOOR, Use W/Ref. 43 (7) - Was 6729260, A		1
51	6901775ENUS	INSTRUCTIONS, Was 6901775, A		1

Title: CAB Enclosure (Standard)
Model Number: S70
Serial Number: A3W611001 & Above, A3W711001 & Above

NOTE: Order Standard Door Kit from Parts # 6729392.
Order Standard Window Kit from Parts # 6706993.
Order Top Window Kit from Parts # 7111126.
Also Order Side Instrument Panel Kit.

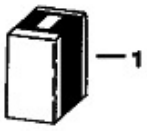

B–17509

Title: CAB Enclosure (Standard)
Model Number: S70
Serial Number: A3W611001 & Above, A3W711001 & Above

Ref.	Part Number	Description	S/N	Qty
1		KIT, KIT, See Illustration, SALES - cab enclosure- SEE NOTE - includes items from illustrations - Order from SALES #6732187		1

Title: CAB Windows (Top, Rear & Side)
Model Number: S70
Serial Number: A3W611001 & Above, A3W711001 & Above

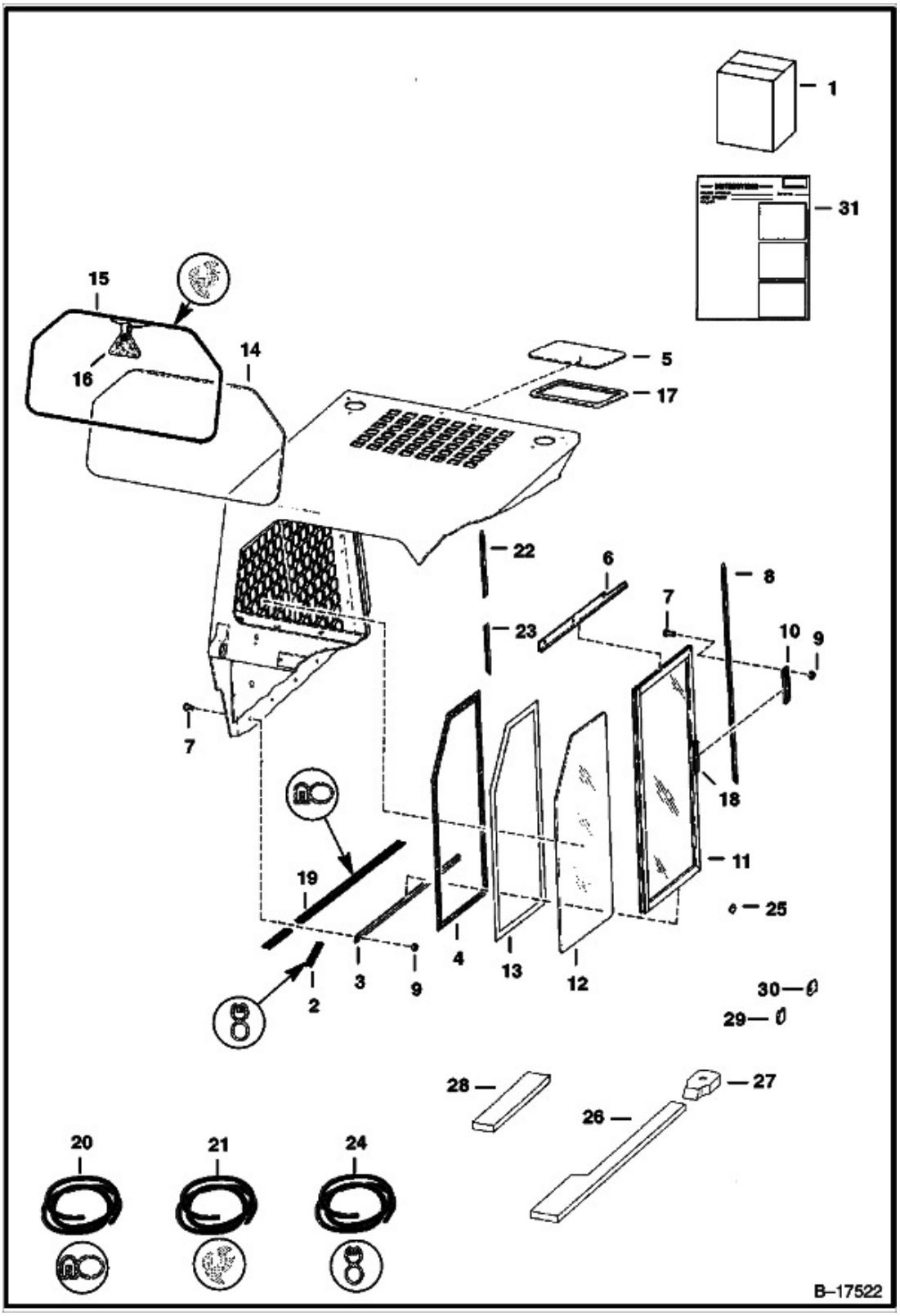

Title: CAB Windows (Top, Rear & Side)
Model Number: S70
Serial Number: A3W611001 & Above, A3W711001 & Above

Ref.	Part Number	Description	S/N	Qty
1	7111126	KIT TOP WINDOW, W/Ref. 5, 17 & 6904214 instructions		1
1	6706993	KIT WINDOW SIDE		1
1	6708688	KIT REAR WINDOW, W/ Ref. 14, 16, 21, 31		1
2		SEAL, SEAL, NLA - 8"(203,2mm) long - Order Ref. 24		x
3	6661689	TRACK WINDOW, LH		1
3	6661690	TRACK WINDOW, RH		1
4	6631549	HOOK SCOTCHMATE, scotchmate		2
5	6705735	WINDOW TOP CAB		1
6	6703160	TRACK WINDOW, LH		1
6	6703159	TRACK WINDOW, RH		1
7	35C410	SCREW HEX HD W/F GR5		24
8	6630919	TRACK, R.H.		1
9	83D4	NUT LOCK		24
10	6630924	BRACKET		2
11	6658143	WINDOW, LH - W/felt		1
11	6658142	WINDOW, RH - W/felt		1
12	6702731	WINDOW CAB		2
13	6631548	LOOP SCOTCHMATE, scotchmate		2
14	6733532	WINDOW REAR		1
15		SEAL, SEAL, NLA - 65.25" (1657 mm) long - Order Ref. 21		1
15		CORD, CORD, NLA - 65.25" (1657 mm) long - Order Ref. 21 - Also Order Ref. 16 (6731478 exit tag)		1
16	6731478	TAG EXIT		1
17	6665012	SEAL RUBBER		1
18	6659949	LATCH		2

Title: CAB Windows (Top, Rear & Side)
Model Number: S70
Serial Number: A3W611001 & Above, A3W711001 & Above

Ref.	Part Number	Description	S/N	Qty
19		SEAL, SEAL, NLA - 24.5"(622mm) long - Order Ref. 20		2
20	6555351	SEAL BULK/FT 15, bulk - sold per foot		x
21	6675387	SEAL BULK, bulk - sold per foot		x
21	6554149	CORD, bulk - sold per foot		x
22	6706744	TRACK WINDOW, LH - top half		1
23	6706745	TRACK WINDOW, LH - bottom half		1
24	6513152	SEAL, BULK/FT 25, bulk - sold per foot		x
25		PLUG, BUTTON, PLUG, BUTTON, NLA - Was 6632265, A		2
26	6729009	SEAL, right side fender - cut off 1" on 3.28" tall end		1
26	6729010	SEAL, left side fender - cut off 1" on 3.28 " tall end		1
27	6729011	SEAL, cab mount		2
28	6734241	SEAL CAB, cab		2
29	6677198	CAP VINYL, vinyl		2
30	6719063	STOP WINDOW, window		2
31	6566957ENUS	INSTRUCTIONS, Side Windows - Was 6566957, D		1
31	6724220ENUS	INSTRUCTIONS, Rear Window - Was 6724220, A		1
31	6902343ENUS	INSTRUCTIONS, top window - Was 6902343, A		1

Title: Camshaft
Model Number: S70
Serial Number: A3W611001 & Above, A3W711001 & Above

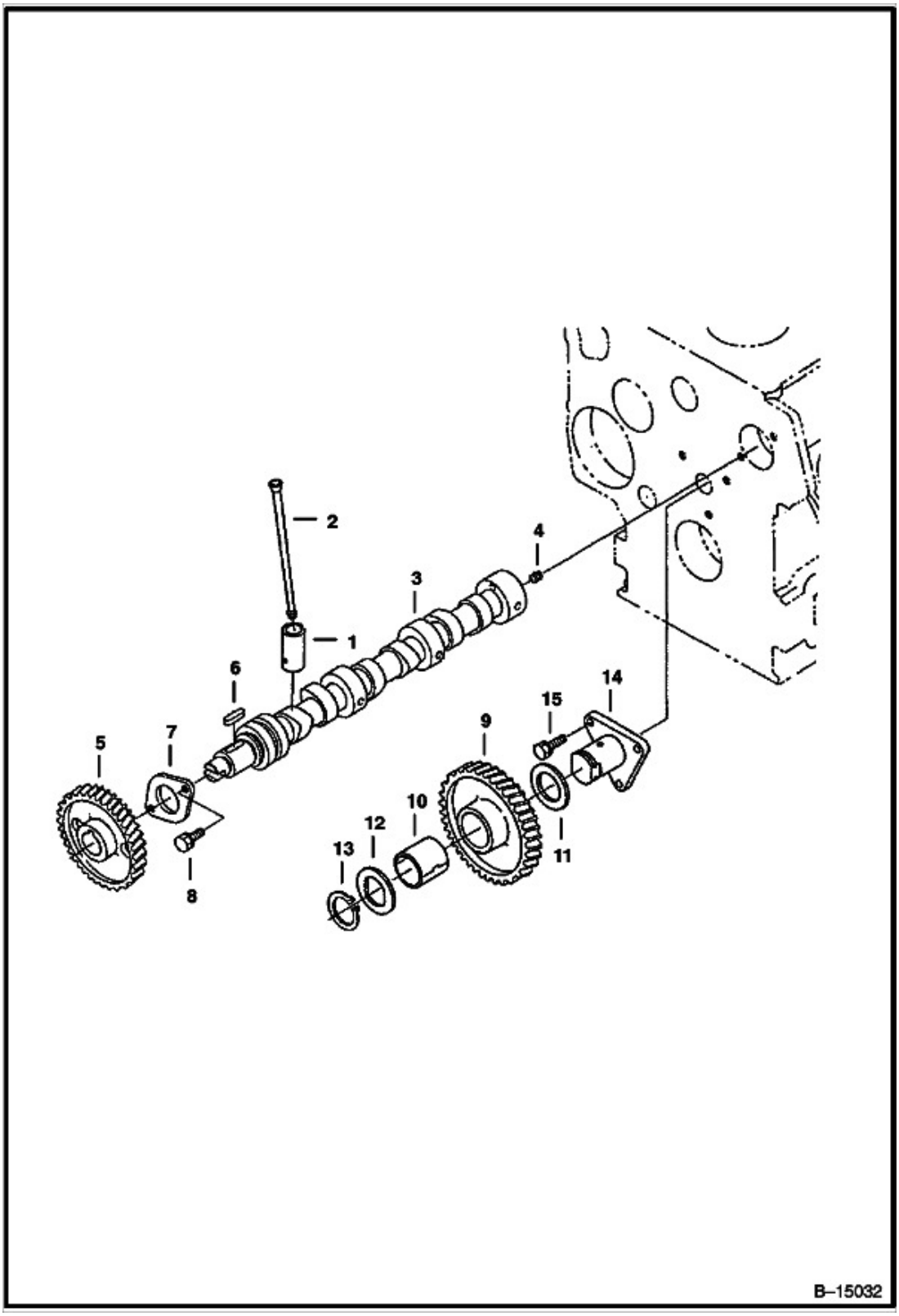

Title: Camshaft
Model Number: S70
Serial Number: A3W611001 & Above, A3W711001 & Above

Ref.	Part Number	Description	S/N	Qty
1	6691307	TAPPET		6
2	6657515	PUSH ROD		6
3	6969896	CAMSHAFT ASSEMBLY		1
4	6653839	SET SCREW		1
5	6653841	GEAR, cam		1
6	6653842	KEY		1
7	6657517	STOPPER		1
8	1CM616	SCREW HEX CAP, Was 4CM616, A		2
9	6657632	GEAR IDLER, idler - W/Ref. 10		1
10	6680618	BUSHING		1
11	6657544	HUB		1
12	6657545	HUB		1
13	6657543	RING, SNAP		1
14	6657542	SHAFT		1
15	1CM616	SCREW HEX CAP, Was 4CM616, A		3

Title: Control Pedals
Model Number: S70
Serial Number: A3W611001 & Above, A3W711001 & Above

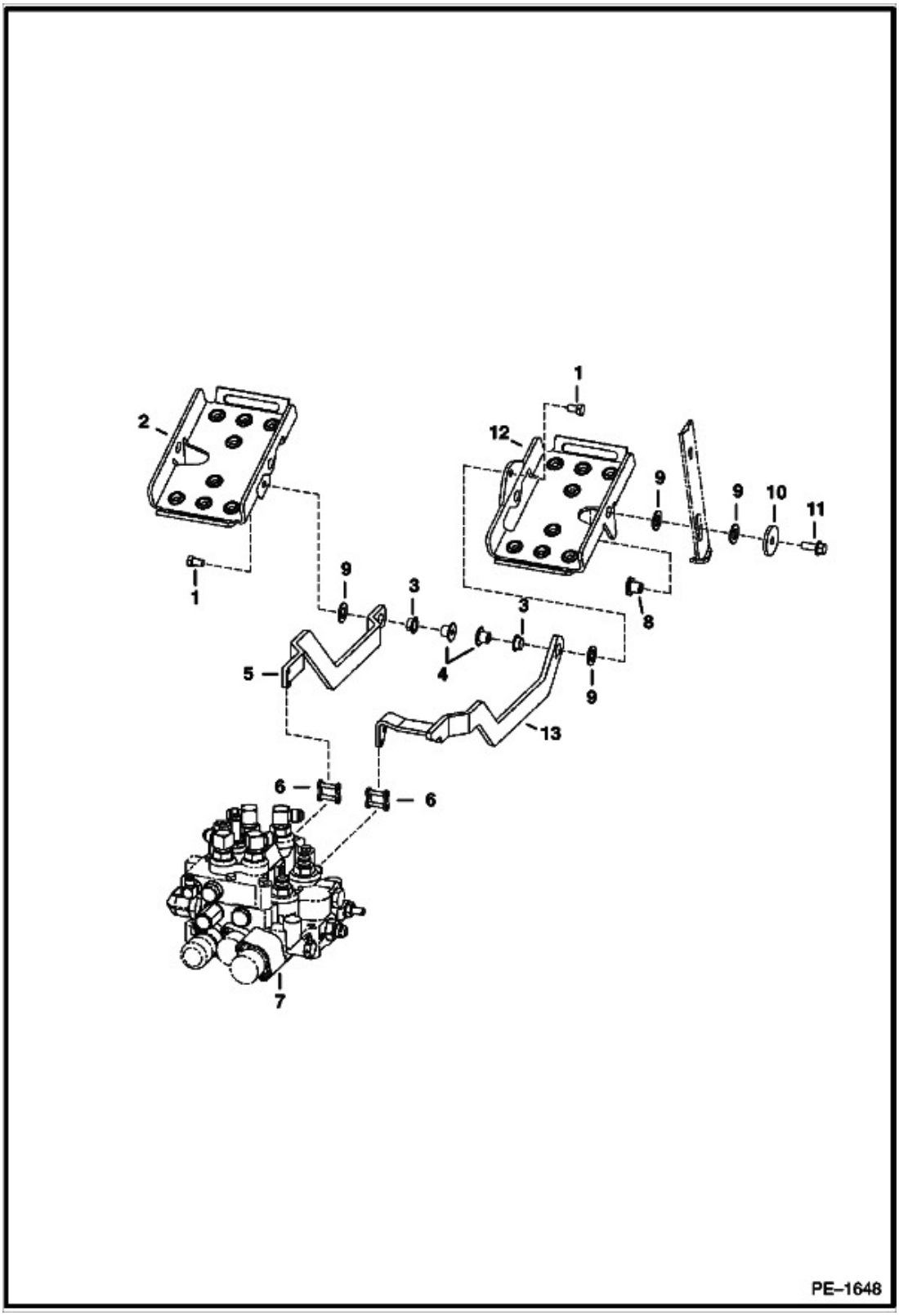

Title: Control Pedals
Model Number: S70
Serial Number: A3W611001 & Above, A3W711001 & Above

Ref.	Part Number	Description	S/N	Qty
1	43C610	SCREW HEX CAP, pre-applied thread locker - Was 17C610		2
2	7351306	PEDAL ASSEMBLY LH, Was 6707056, A		1
3	6598906	BUSHING, nylon		2
4	7209783	NUT RETAINING, Was 6729750, A		2
5	7351324	LINK PEDAL, Was 6732009, A		1
6	6515186	CONNECTOR LINK, connector		2
7		VALVE, VALVE, See Illustration		1
8	6594298	NUT RETAINING, retaining		2
9	6700170	WASHER, nylon		6
10	872229	WASHER		2
11	35C616	SCREW FLANGED HEAD CAP		2
12	7351315	PEDAL ASSEMBLY RH, Was 6732021, A		1
13	7351325	LINK PEDAL, Was 6732010, A		1

Title: Controls Electrical
Model Number: S70
Serial Number: A3W611001 & Above, A3W711001 & Above

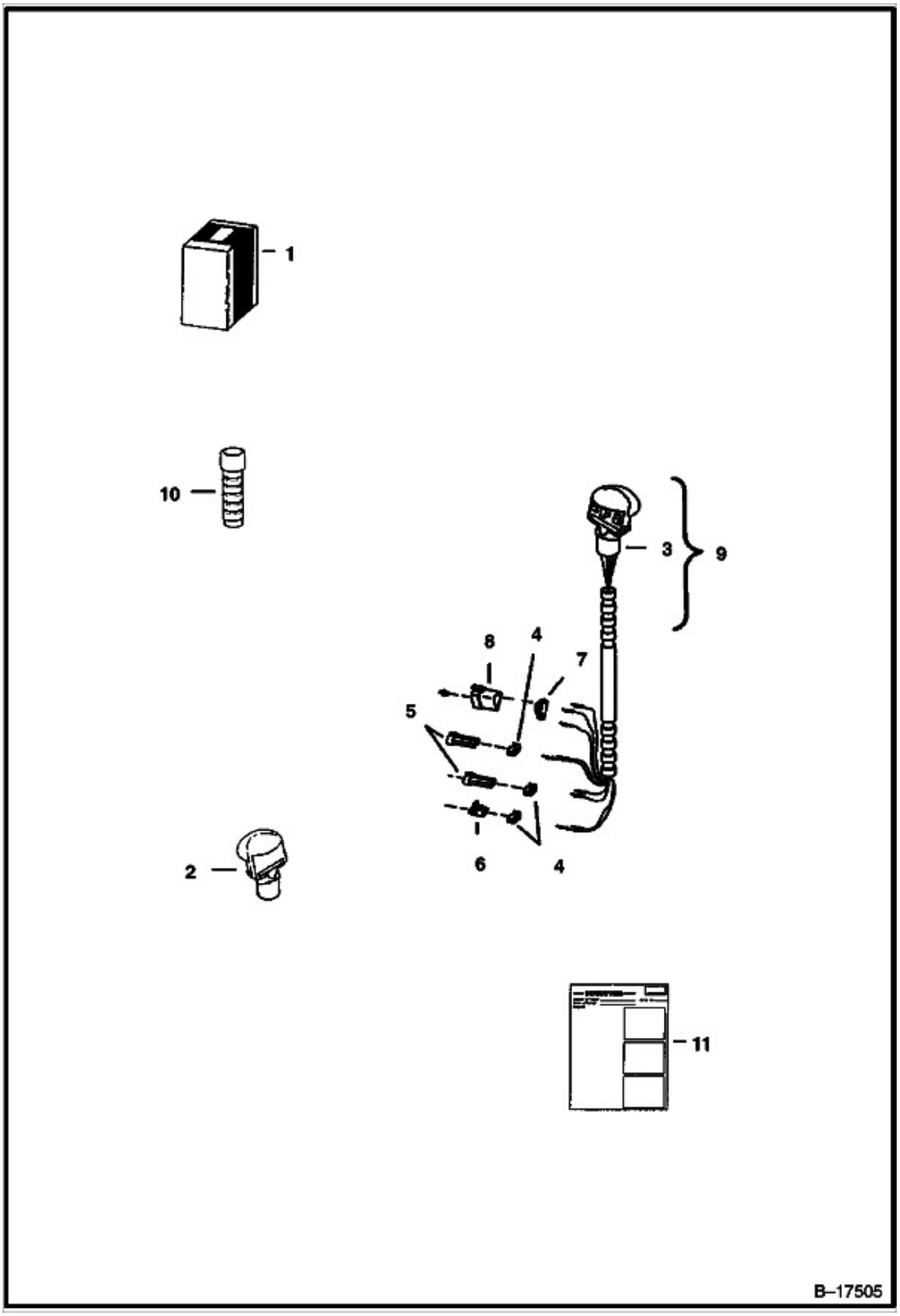

Title: Controls Electrical
Model Number: S70
Serial Number: A3W611001 & Above, A3W711001 & Above

Ref.	Part Number	Description	S/N	Qty
1	6706565	KIT HANDLE, R.H. - blank handle - Ref. 2 & 11		1
2	6680415	HANDLE BLANK, R.H. - blank		1
3	6680412	HANDLE DLX LEFT, L.H. - Ref. 4, 5 & 6 - 8		1
3	6640690	PIN		5
3	6640691	TERMINAL		2
3	6641176	SEAL		7
3	6662257	PIN		3
4	6641180	LOCK METRI PACK, Use W/ 2-pin connector		2
4	6640700	LOCK METRI PACK, 3-pin		2
5	6641179	CONNECTOR METRI PACK, 2-pin		2
5	6640699	CONNECTOR METRI PACK, 3-pin		2
6	6641178	CONNECTOR METRI PACK, 2-pin		1
7	6664800	LOCK SECONDARY, 3-pin triangle		1
8	6664599	CONNECTOR 3 PIN, 3-pin triangle		1
9	6706568	KIT HANDLE, handle - Ref. 3 - 5, 6 - 8 & 11		1
10	6702621	HANDLE GRIP		2
11	6722759	INSTRUCTIONS		1

Title: Crankcase
Model Number: S70
Serial Number: A3W611001 & Above, A3W711001 & Above

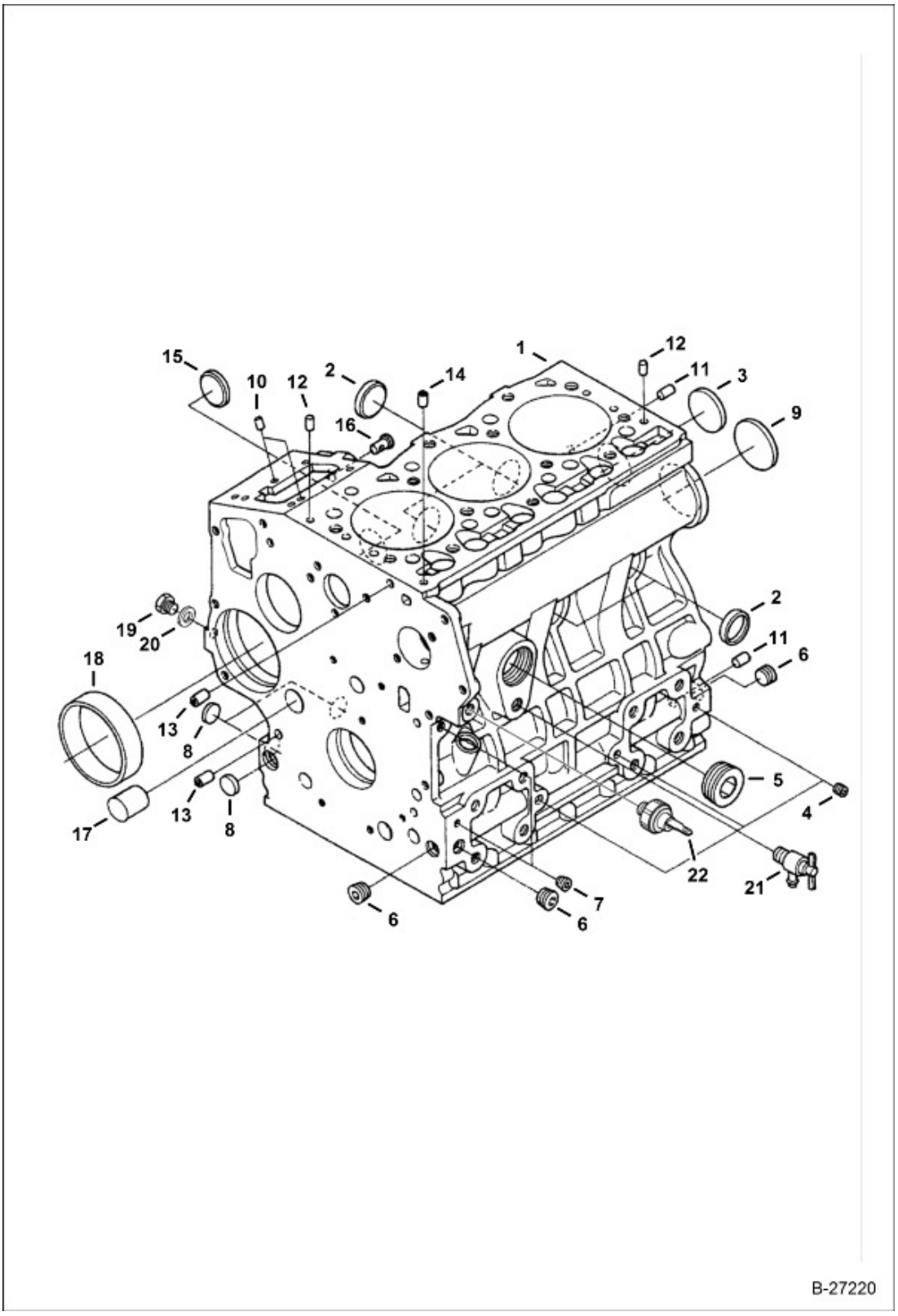

Title: Crankcase
Model Number: S70
Serial Number: A3W611001 & Above, A3W711001 & Above

Ref.	Part Number	Description	S/N	Qty
1	7000289	BLOCK ENGINE, W/Ref. 2 - 20		1
2	6657431	CAP, sealing		4
3	3974433	PLUG, sealing		1
4	6598116	PLUG		3
5	6672354	PLUG		1
6	6657600	PLUG		3
7	6652574	PLUG		2
8	6667418	PLUG, expansion		3
9	6657663	PLUG, expansion		1
10	6657423	PIN		2
11	21JM814	PIN, dowel		2
12	6657424	PIN		2
13	3974039	PIN		2
14	6657548	PIPE PIN		1
15	6657601	PLUG		1
16	6672355	PIN		1
17	6657675	PLUG		1
18	6657647	BUSHING		1
19	6655884	PLUG		1
20	3974095	GASKET, METAL		1
21	7022680	FITTING, DRAIN, Was 6657456, A		1
22	6969775	SWITCH PRESSURE OIL		1

Title: Cylinder Head
Model Number: S70
Serial Number: A3W611001 & Above, A3W711001 & Above

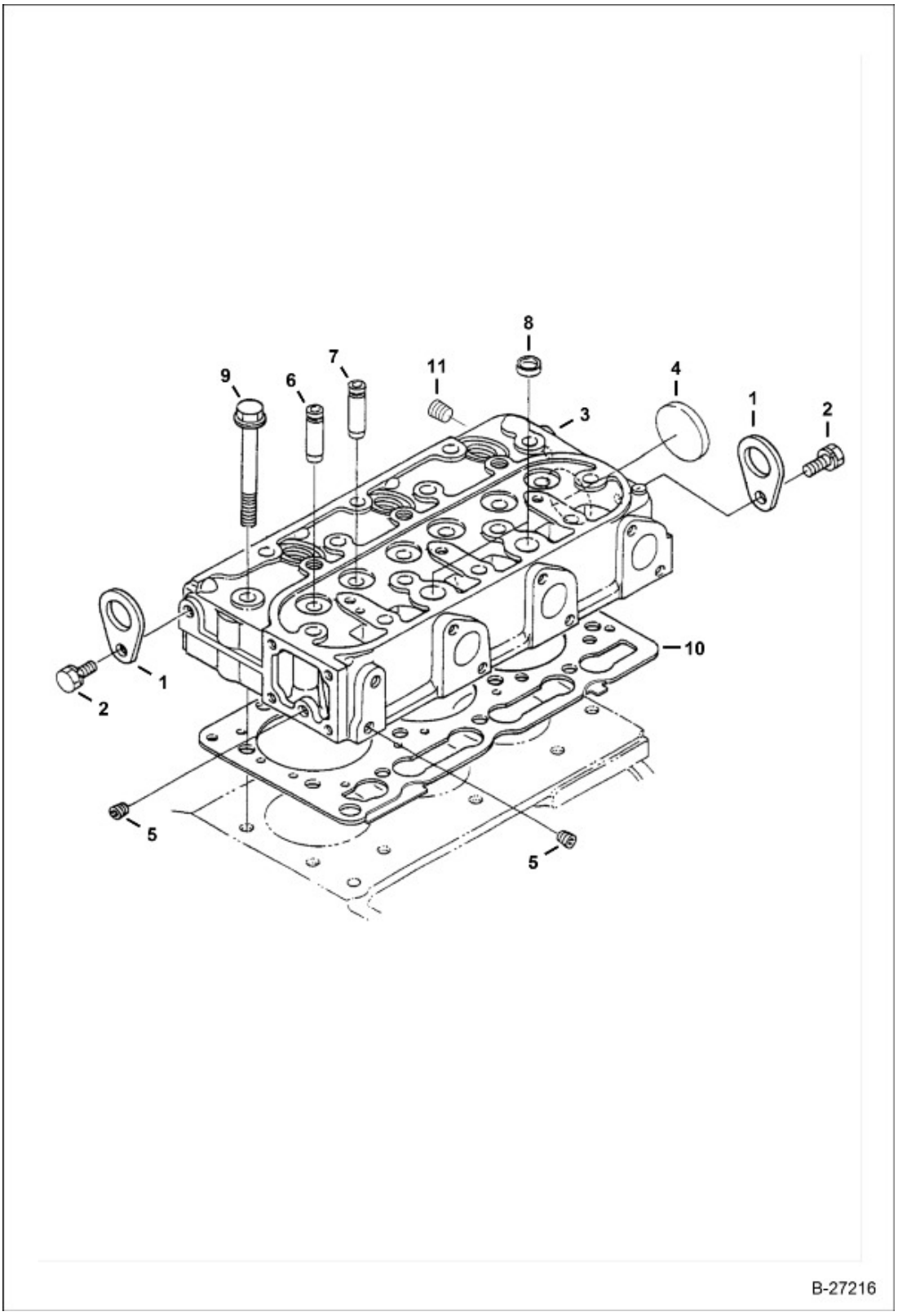

Title: Cylinder Head
Model Number: S70
Serial Number: A3W611001 & Above, A3W711001 & Above

Ref.	Part Number	Description	S/N	Qty
1	3974882	HOOK, lift		2
2	6667420	BOLT		2
3	7001438	HEAD CYLINDER ENGINE, W/Ref. 4 - 8 - Was 6687907, B,D		1
4	3974033	CAP, sealing		1
5	6598116	PLUG		2
6	6680859	GUIDE, intake valve		3
7	6685958	GUIDE, exhaust valve		3
8	3974056	CAP, sealing		2
9	6657478	BOLT		14
10	6687906	GASKET		1
11	6680667	PLUG		1

Title: Decals (Inside)
(S/N A3W716972 & Above)

Model Number: S70

Serial Number: A3W611001 & Above, A3W711001 & Above

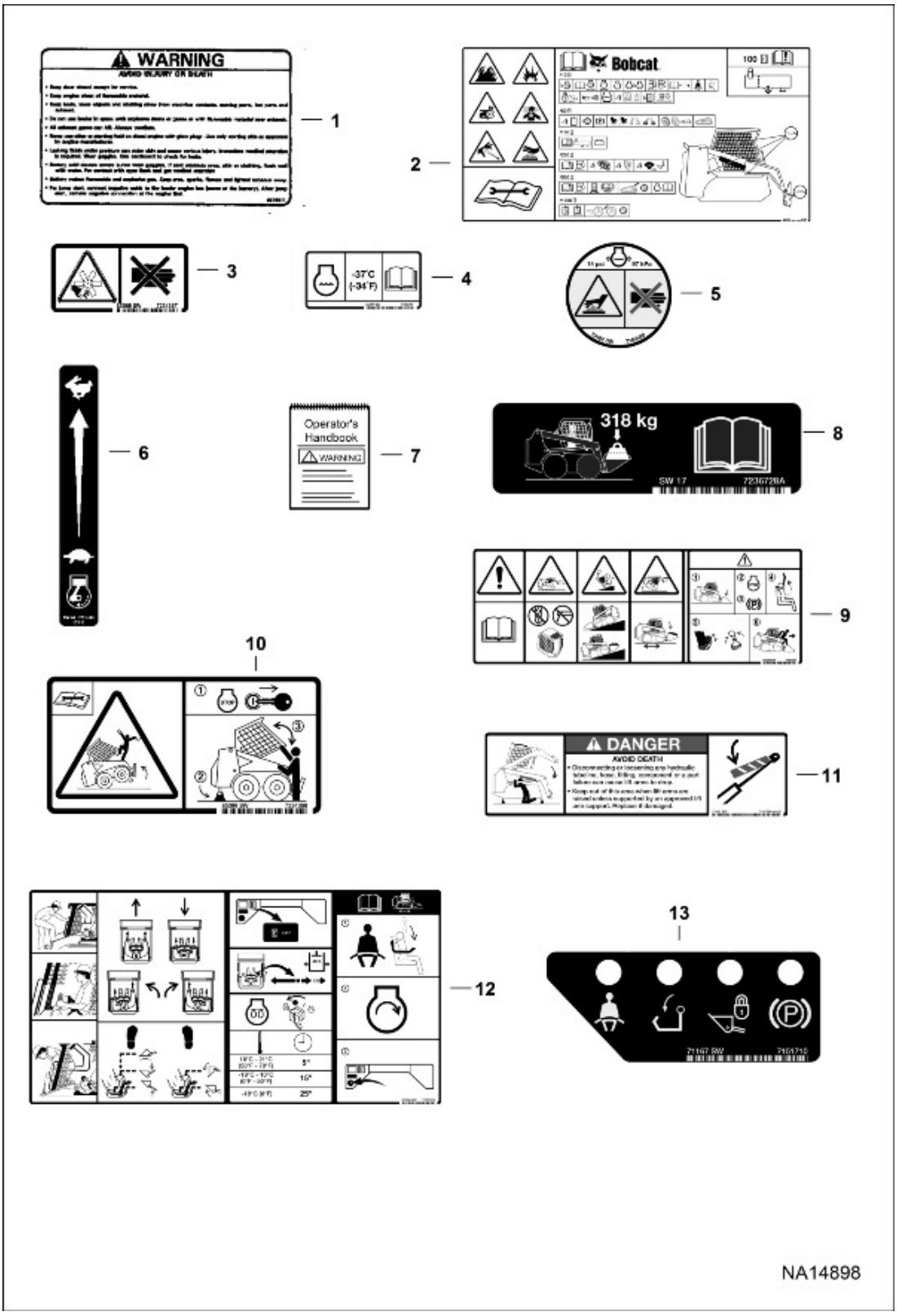

Title: Decals (Inside)
(S/N A3W716972 & Above)

Model Number: S70

Serial Number: A3W611001 & Above, A3W711001 & Above

Ref.	Part Number	Description	S/N	Qty
1	6579511	DECAL WARNING		1
2	7234366	DECAL SERVICE		1
3	7234367	DECAL, WARNING		1
4	7120573	DECAL		1
5	7169699	DECAL		1
6	6735140	DECAL THROTTLE		1
7	7151036	HANDBOOK EN OPERATOR		1
8	7236728	DECAL LIFT CAPACITY		1
9	7235524	DECAL WARNING		1
10	7234368	DECAL WARNING		1
11	7167988	DECAL DANGER		2
12	7235525	DECAL OPERATION		1
13	7151710	DECAL WARNING		1

Title: Decals (Inside)
Model Number: S70
Serial Number: A3W611001 & Above, A3W711001 & Above

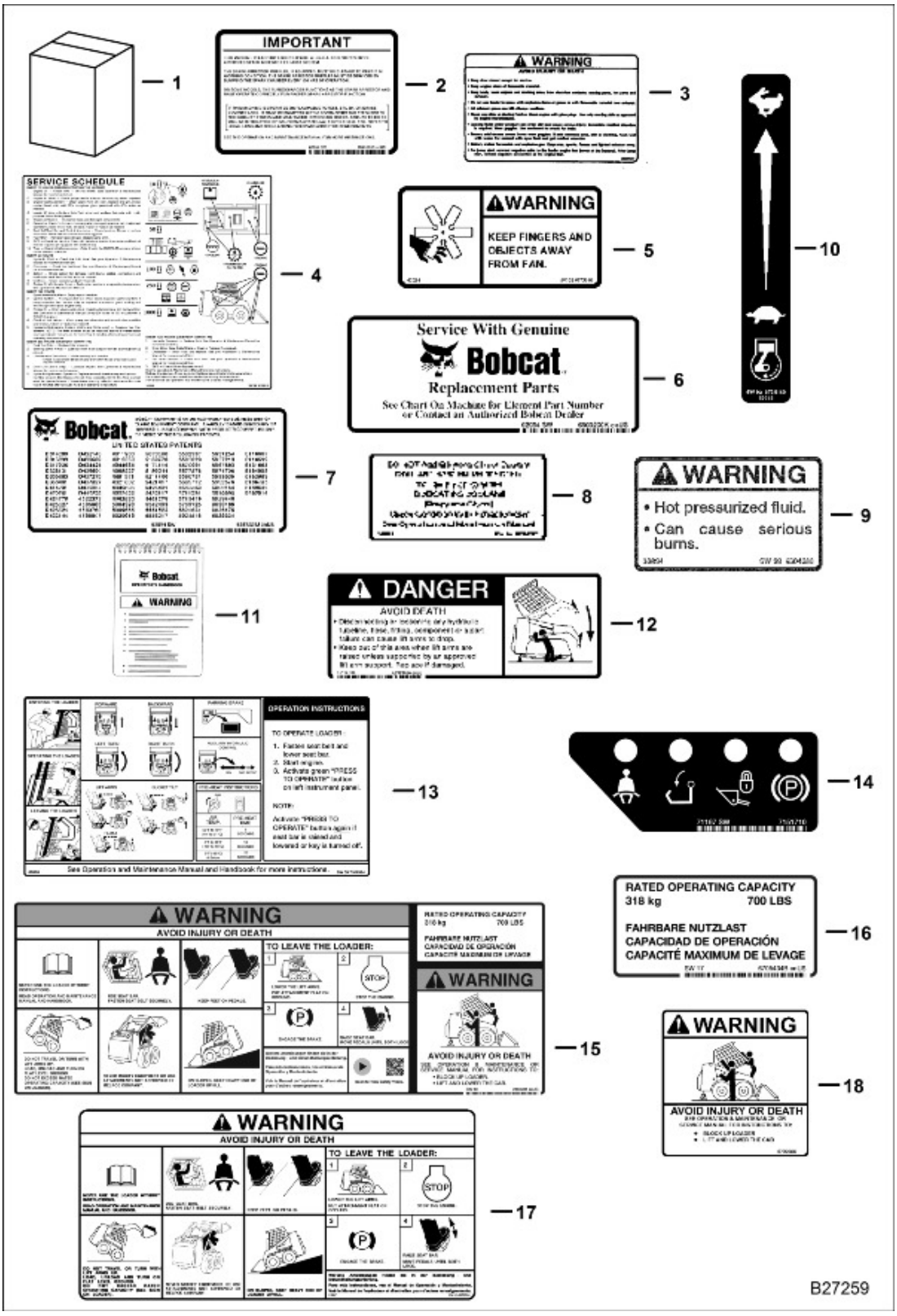

Title: Decals (Inside)
Model Number: S70
Serial Number: A3W611001 & Above, A3W711001 & Above

Ref.	Part Number	Description	S/N	Qty
1	6989722	KIT DECAL, See Illustration, Ref 2-16 & 2-15 on this page		1
1	7151216FRCA	KIT DECAL TRANSLATION		1
1	7151216AR	KIT, DECAL		1
1	7151216BR	KIT, DECAL		1
1	7151216JP	KIT, DECAL		1
1		KIT, TRANSLATION, KIT, TRANSLATION, NLA - Order Ref. 1, 11 & 6986660ENUS OM - Was 7151215AR, A		1
1		KIT, TRANSLATION, KIT, TRANSLATION, NLA - Order Ref. 1, 11 & 6986660ENUS OM - Was 7151215BR, A		1
2	6560573	DECAL SAFETY, spark arrestor		1
3	6579511	DECAL WARNING, warning		1
4	6734534	DECAL SERVICE, service - Was 6708212, B		1
5	6576048	DECAL WARNING, fan		1
6	6565200	DECAL FILTER		1
7		DECAL, DECAL, NLA - patent - Was 6557224, C		1
8	6708929	DECAL COOLANT, propylene glycol		1
9	6804233	DECAL, warning		1
10	6735140	DECAL THROTTLE		1
11	7151036	HANDBOOK EN OPERATOR, handbook - w/wire rope		1
12	6717343	DECAL DANGER, capacity		2
13	7107594	DECAL, warning		1
14	7151710	DECAL WARNING, operating		1
15	7365705	DECAL WARNING		1
16	6705434	DECAL LOAD, not in kit		1
17	6579510	DECAL WARNING, not in kit		1

Title: Decals (Inside)
Model Number: S70
Serial Number: A3W611001 & Above, A3W711001 & Above

Ref.	Part Number	Description	S/N	Qty
18	6702255	DECAL WARNING, not in kit		1

Title: Decals (Outside)
(S/N A3W716972 & Above)

Model Number: S70

Serial Number: A3W611001 & Above, A3W711001 & Above

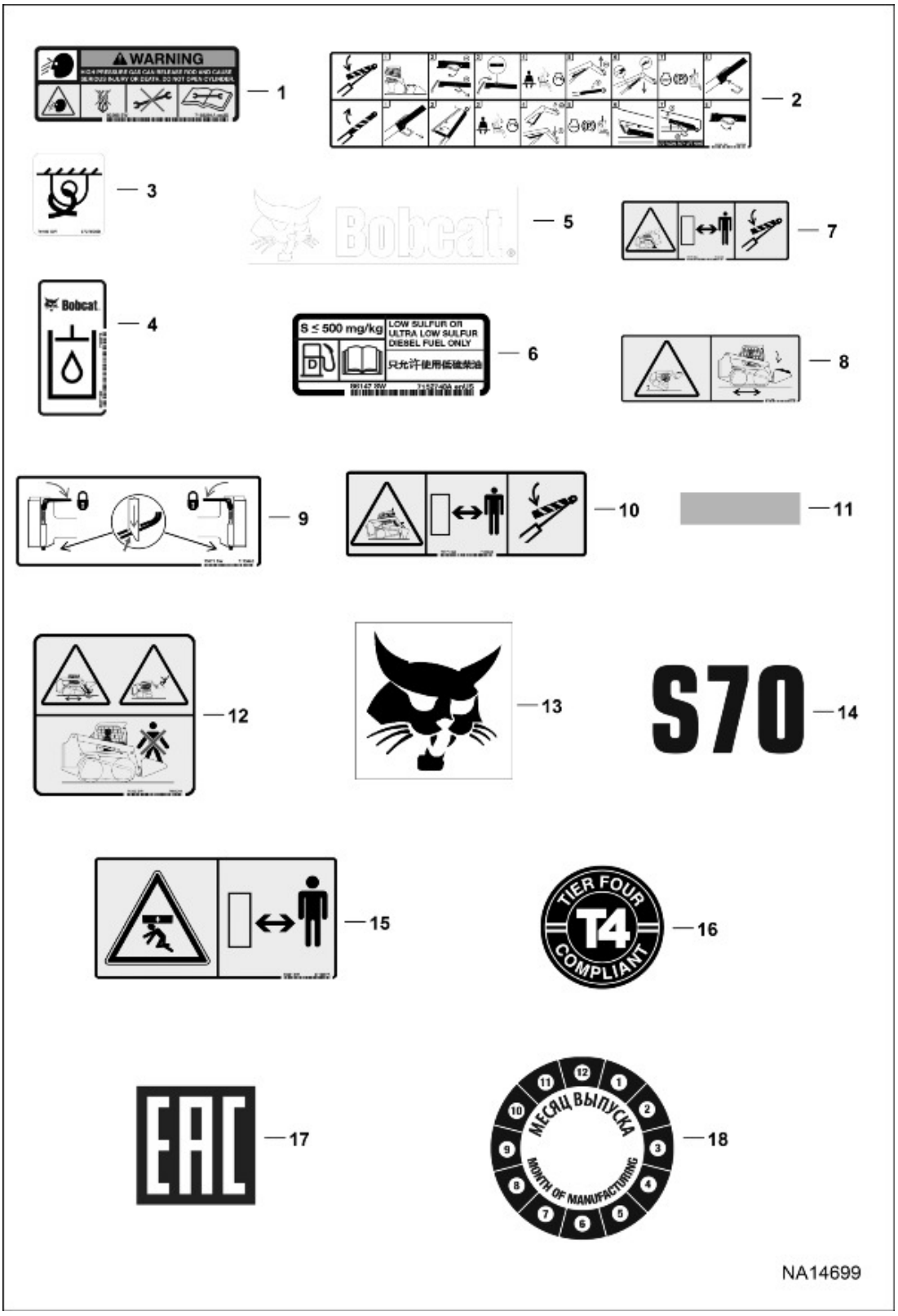

Title: Decals (Outside)
(S/N A3W716972 & Above)
Model Number: S70
Serial Number: A3W611001 & Above, A3W711001 & Above

Ref.	Part Number	Description	S/N	Qty
1	7169291	DECAL		1
2	7240018	DECAL, LIFT ARM		1
3	6727595	DECAL TIE-DOWN		2
4	7120570	DECAL		1
5	6735900	DECAL LOGO BOBCAT		1
6	7152748	DECAL LOW SULFUR		1
7	7168033	DECAL, DANGER		1
8	7168037	DECAL, WARNING, NLA - radial depiction, A		1
8	7342809	DECAL WARNING, vertical depiction		1
9	7173403	DECAL OPERATION		1
10	7168034	DECAL, DANGER		1
11	6677814	TREAD SAFETY		1
11	6540714	TREAD SAFETY		1
11	6554100	TREAD SAFETY		1
12	7168040	DECAL WARNING		1
13	6731337	DECAL LOGO BOBCAT		2
14	7130116	DECAL S70		2
15	6713507	DECAL		2
16	7204036	DECAL		1
17	7249026	DECAL		1
18	7249237	DECAL		1

Title: Decals (Outside)
Model Number: S70
Serial Number: A3W611001 & Above, A3W711001 & Above

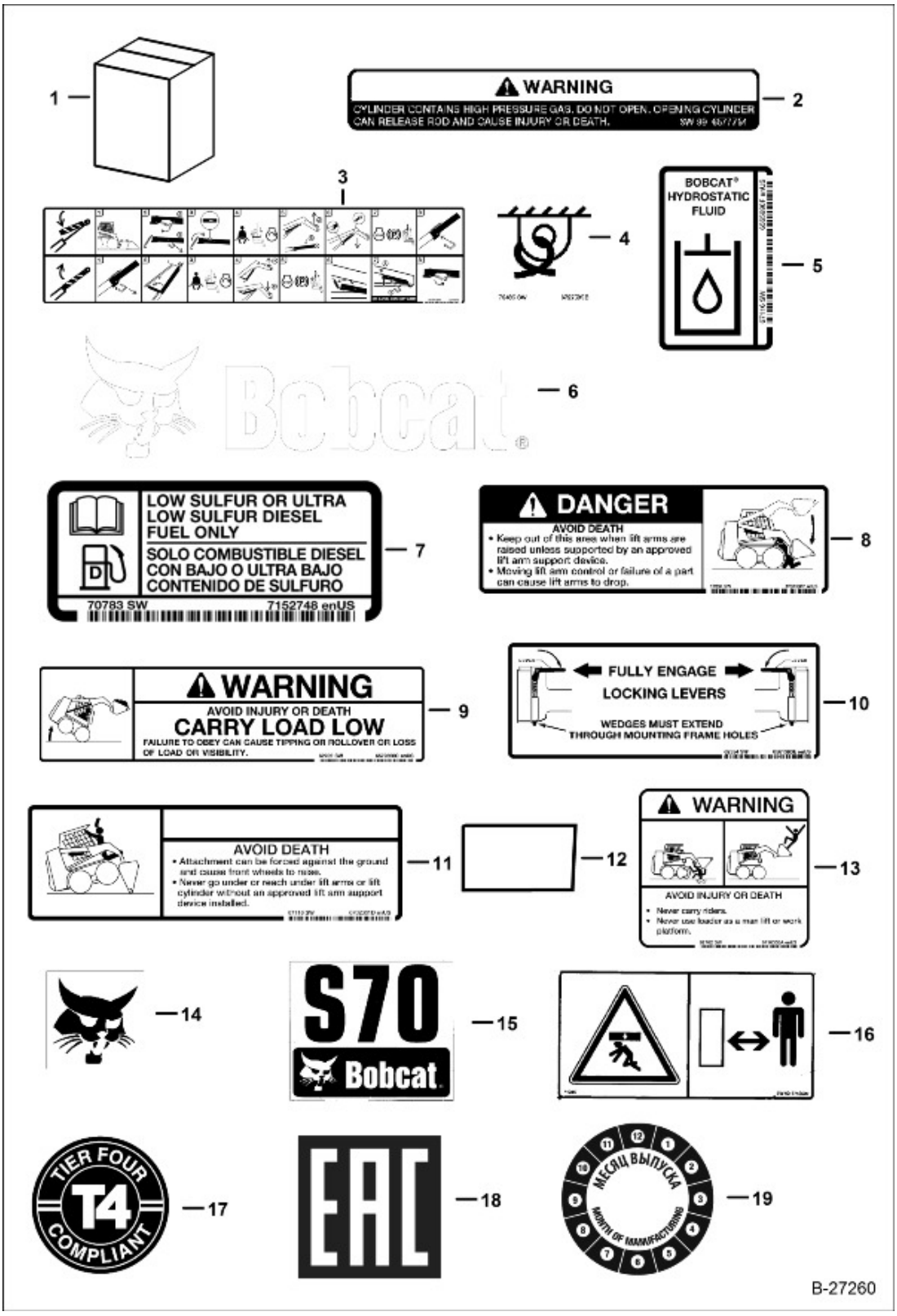

Ref.	Part Number	Description	S/N	Qty
1	6989722	KIT DECAL, See Illustration, Ref. 2-15 & 2-16 on this page		1
1	7151216FRCA	KIT DECAL TRANSLATION		1
1	7151216AR	KIT, DECAL		1
1	7151216BR	KIT, DECAL		1
1	7151216JP	KIT, DECAL		1
1		KIT, TRANSLATION, KIT, TRANSLATION, NLA - Order Ref. 1, 11 & 6986660ENUS OM - Was 7151215AR, A		1
1		KIT, TRANSLATION, KIT, TRANSLATION, NLA - Order Ref. 1, 11 & 6986660ENUS OM - Was 7151215BR, A		1
1		KIT, TRANSLATION, KIT, TRANSLATION, NLA - for domestic S70 - Was 7162240AR, D		1
1		KIT, TRANSLATION, KIT, TRANSLATION, NLA - for domestic S70 - Was 7162240BR, D		1
2	6577754	DECAL WARNING, gas spring		1
3	7240018	DECAL, LIFT ARM, liftarm stop - Was 6711659, A		1
4	6727595	DECAL TIE-DOWN		2
5	6565990	DECAL FILL LINE, hydrostatic/hydraulic fluid		1
6	6735900	DECAL LOGO BOBCAT, Bobcat head & Bobcat - tailgate		1
7	7152748	DECAL LOW SULFUR, low sulfer		1
8	7167989	DECAL DANGER, Was 6702302, A		1
9	6579528	DECAL WARNING, carry load low		1
10	6561383	DECAL OPERATION, Bob-Tach locking levers		1
11	7167990	DECAL DANGER, Was 6702301, A		1
12	6677814	TREAD SAFETY, 6" x 28" (152 mm x 711mm)		1
12	6540714	TREAD SAFETY, 5" x 11" (127 mm x 279 mm)		2
12	6554100	TREAD SAFETY, 76,2 x 152,4 mm (3 x 6")		3

Title: Decals (Outside)
Model Number: S70
Serial Number: A3W611001 & Above, A3W711001 & Above

Ref.	Part Number	Description	S/N	Qty
13	6710358	DECAL WARNING, warning		1
14	6731337	DECAL LOGO BOBCAT, bobcat head		2
15	7130116	DECAL S70, S70		2
16	6713507	DECAL, stay clear - european		2
17	7204036	DECAL, T4 compliant - not in kit		1
18	7249026	DECAL, Russian - not in kit		1
19	7249237	DECAL, Russian - not in kit		1

Title: Drive Train
Model Number: S70
Serial Number: A3W611001 & Above, A3W711001 & Above

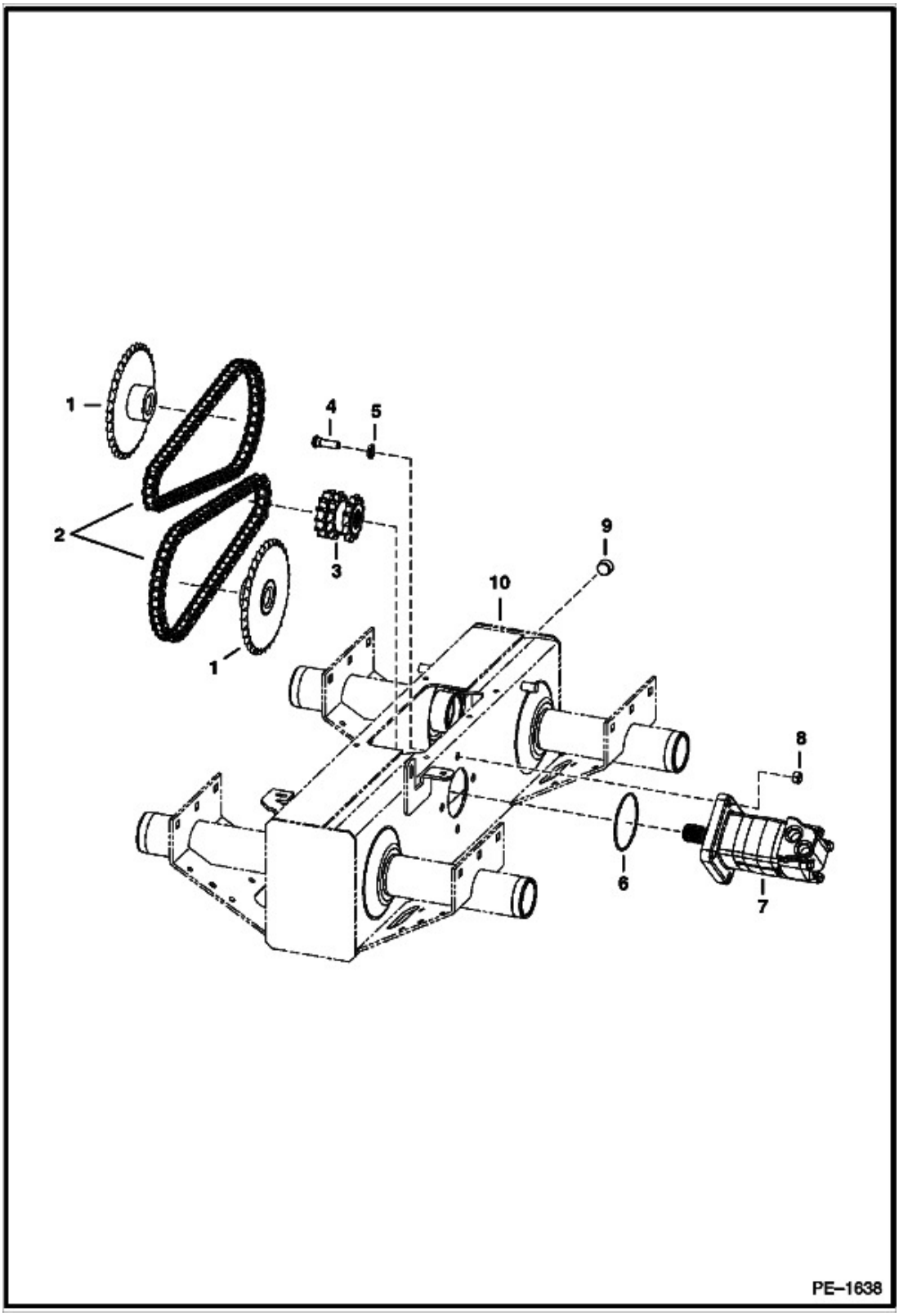

Title: Drive Train
Model Number: S70
Serial Number: A3W611001 & Above, A3W711001 & Above

Ref.	Part Number	Description	S/N	Qty
1	7134079	SPROCKET MACHINED, Was 6563798, A		4
2	7101393	CHAIN DRIVE, Tsubaki - endless - 60 HS		4
2	6690989	CHAIN, Tsubaki - W/link		4
2	6691089	LINK, connector - Tsubaki - Use W/ 6690989 chain		4
3	6708239	SPROCKET CLUSTER		2
4	6564741	BOLT WHEEL		8
5	6564740	WASHER		8
6	25K40400	O-RING		2
7		MOTOR, MOTOR, See Illustration		2
8	86D8	NUT PRETRQ HEX LOCK		8
9	6731121	PLUG RECESSED PIPE		1
10	7351019	HOUSING CHAINCASE ASSEMBLY, Was 7115670, A		1

Title: Engine & Attaching Parts (Alternator Mounting, Fuel Fill)
Model Number: S70
Serial Number: A3W611001 & Above, A3W711001 & Above

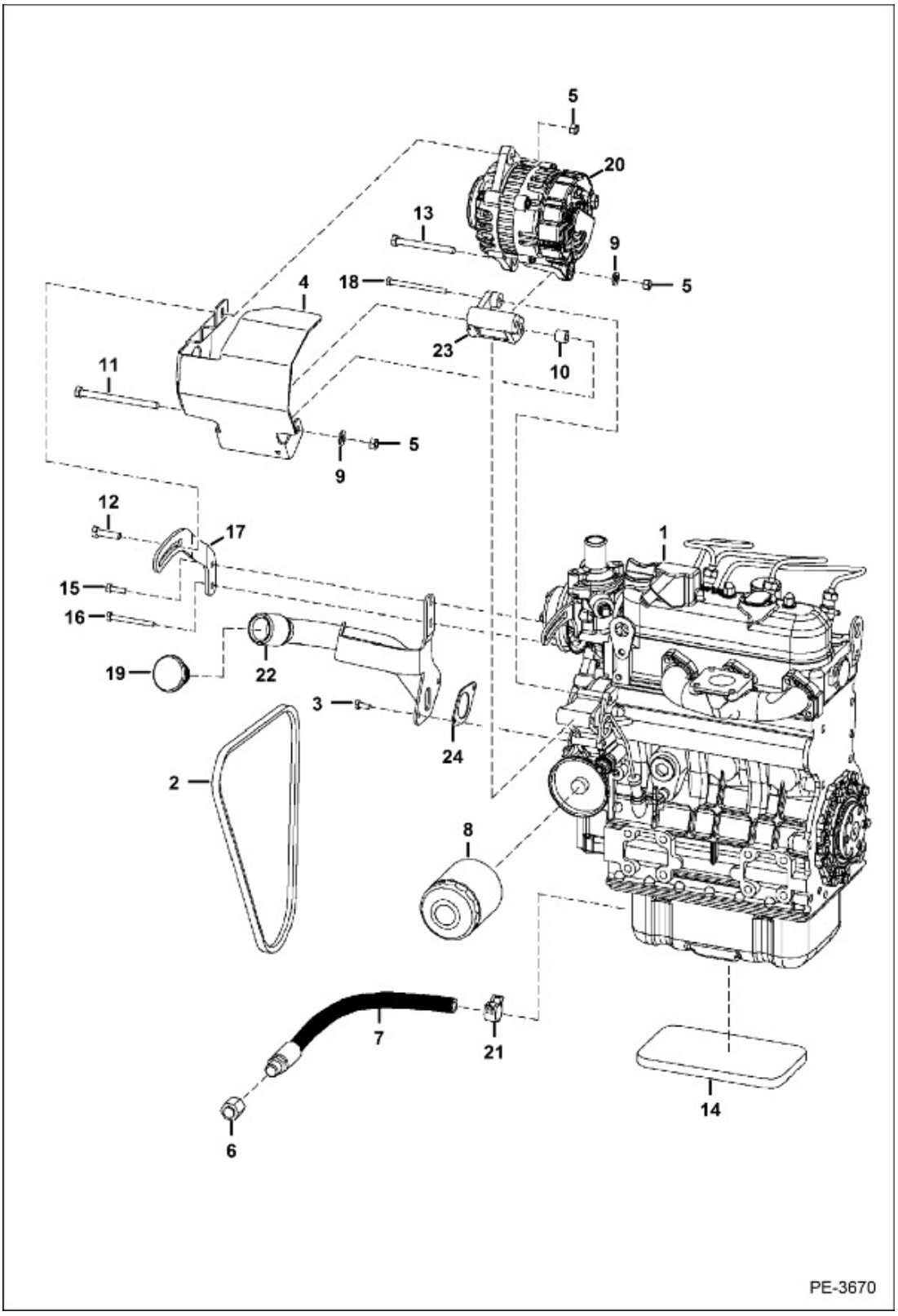

Ref.	Part Number	Description	S/N	Qty
1		ENGINE, ENGINE, See Illustration		1
2	6571857	BELT ALTERNATOR, alternator		1
3	1CM614	SCREW HEX CAP		2
4	7351059	SHIELD ALTERNATOR, belt - Was 6733018, A		1
5	53DM8	NUT HX THDLK PREAPPL		3
6	36K6	CAP HYDRAULIC		1
7	6715530	HOSE HYDRAULIC ASSY		1
8		FILTER, OIL ENG, FILTER, OIL ENG, See Illustration		1
9	6557831	WASHER		2
10	6675838	BUSHING ALTERNATOR		1
11	1CM880	SCREW HEX HD 8.8		1
12	4CM835	SCREW FL THD HEX CAP		1
13	1CM8110	SCREW HEX HD 8.8		1
14	6733154	FOAM OIL PAN, foam		1
15	4CM620	BOLT, Was 1CM620, A		1
16	1CM660	SCREW HEX CAP		1
17	6730867	MOUNT, ALT, alt.		1
18	1CM665	SCREW HEX HD 8.8		1
19	6703736	CAP OIL FILLER		1
20		ALTERNATOR, ALTERNATOR, See Illustration		1
21	5HM22	CLAMP HOSE, Was 5HM20, B		1
22	7404283	TUBE OIL INLET, oil fill - Was 7351055, A		1
23	6731765	MOUNT ALTERNATOR		1
24	6734475	GASKET OIL FILL, oil fill		1

Title: Engine & Attaching Parts (Belt Drive & Engine & Pump Mounts)
Model Number: S70
Serial Number: A3W611001 & Above, A3W711001 & Above

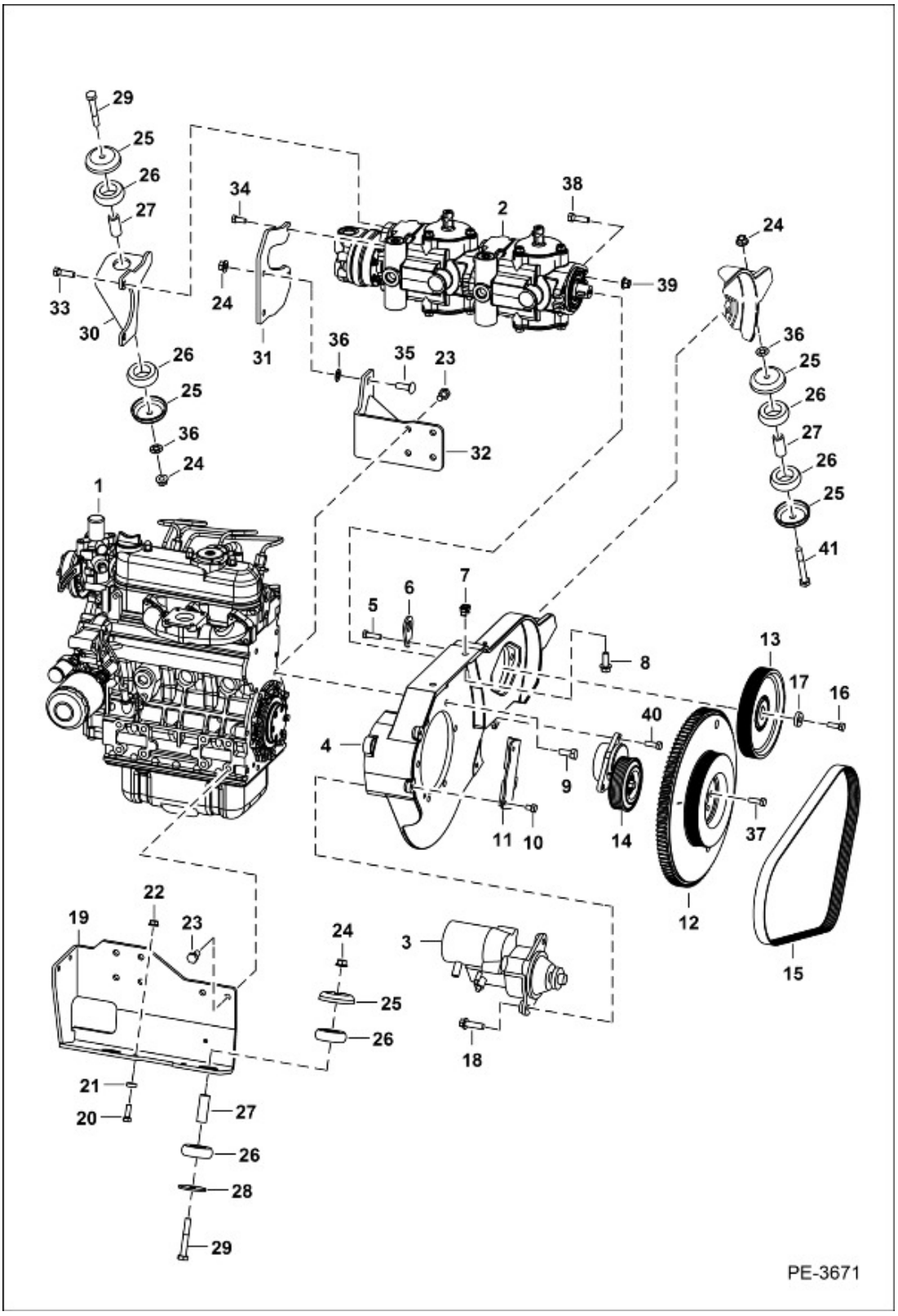

Ref.	Part Number	Description	S/N	Qty
1		ENGINE, ENGINE, See Illustration		1
2		PUMP, PUMP, See Illustration		1
3		STARTER, STARTER, See Illustration		1
4	7120904	MOUNT ENGINE		1
5	6667420	BOLT		1
6	3974882	HOOK		1
7	6678785	NUT, SELF RETAINING, retaining		2
8	35C616	SCREW FLANGED HEAD CAP		2
9	6719825	SCREW FLTHD HEX CAP		6
10	1CM812	SCREW HEX HD 8.8		2
11	7351070	BRACKET TIMING, Was 7121442, A		1
12	7121603	FLYWHEEL ENGINE ASSEMBLY, W/ring gear		1
12	6510470	GEAR RING STARTER		1
13	7115263	PULLEY DRIVEN		1
14	6690473	IDLER, BELT DRIVE ASSY		1
15	6690471	BELT DRIVE		1
16	7154424	SCREW HEX HD 10.9		1
17	7142032	WASHER, Was 616783, B		1
18	59CM1035	SCREW HEX FLG HD CAP		2
19	7145179	MOUNT, ENG, Was 7145179, A		1
20	4CM825	BOLT HEX HEAD, Was 1CM825, A		2
21	6568877	WASHER		2
22	51DM8	NUT HX THDLK PREAPPL		2
23	6733378	SCREW FL THD CAP		4
24	51DM10	NUT HX THDLK PREAPPL		4

Title: Engine & Attaching Parts (Belt Drive & Engine & Pump Mounts)
Model Number: S70
Serial Number: A3W611001 & Above, A3W711001 & Above

Ref.	Part Number	Description	S/N	Qty
25	7110825	SHIELD ENG MOUNT		6
26	6687252	MOUNT ISOLATOR		8
27	7129974	BUSHING ISOLATOR		4
28	6705232	WASHER		2
29	7CM1070	SCREW HEX HD 10.9		3
30	7112260	MOUNT ENGINE PUMP		1
31	7117339	MOUNT ENGINE PUMP		1
32	7351066	BRACKET PUMP GEAR, Was 7120701, A		1
33	17C620	BOLT		2
34	17C512	BOLT 5		2
35	28CM1030	BOLT CARRIAGE 8.8		2
36	6674264	RETAINER BOLT		4
37	6661636	BOLT, flywheel		6
38	35C624	SCREW FLANGED HEAD CAP		2
39	57D6	NUT HEX FLNG GR8		2
40	3GM820	SCREW, Was 55CM825, B		2
41	7CM1080	SCREW HEX HD 10.9		1

Title: Engine & Attaching Parts (Cooling Group)
Model Number: S70
Serial Number: A3W611001 & Above, A3W711001 & Above

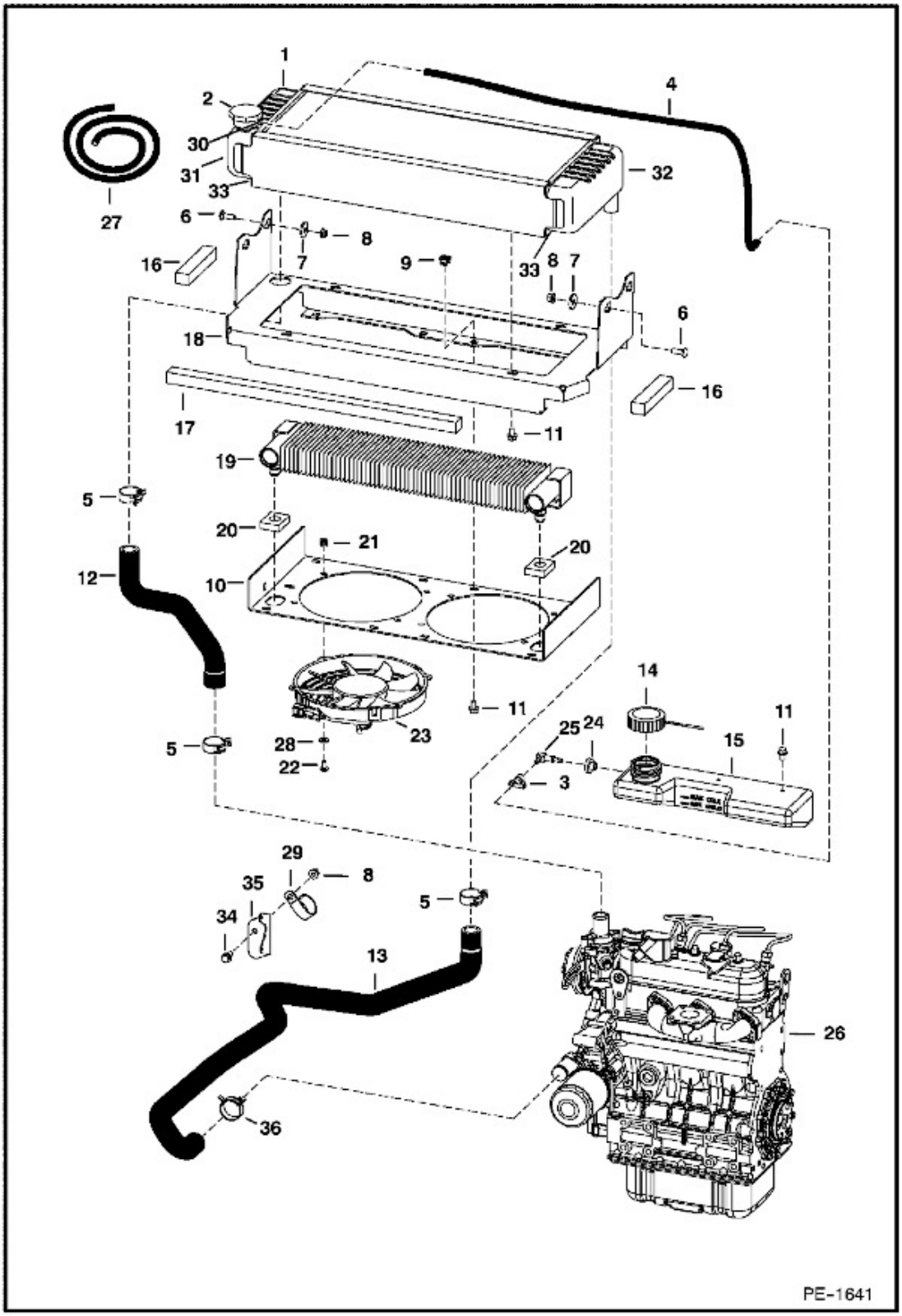

Ref.	Part Number	Description	S/N	Qty
1	7377433	EXCHANGER HEAT WTR, W/Ref. 31, 32, 2 & 30 - Was 7009566, A		1
2	6682274	RADIATOR CAP, for exchanger W/ 30,23 mm (1.19") dia cap hole		1
2	7028463	CAP, RADIATOR, for exchanger W/ 41,28 mm (1.63") dia cap hole		1
2	7402838	CAP RADIATOR, for radiator 7009566 ordered after November 8, 2019.		1
3	42HS04	CLAMP HOSE TYPE M		2
4		HOSE, HOSE, NLA - 14" (355,6 mm) - Order Ref. 27		1
5	5HM35	CLAMP HOSE		4
6	37C516	BOLT SQ NECK RND HD		4
7	6701174	WASHER FLAT		4
8	57D5	NUT HEX FLNG GR8		4
9	6678765	NUT SELF RETAINING		11
10	7351027	MOUNT FAN, fan - Was 6731466, A		1
11	31C508	BOLT, Was 35C508, A		17
12	6734745	HOSE COOLANT		1
13	6734744	HOSE COOLANT		1
14	7108309	CAP		1
15	6731696	TANK COOLANT, overflow		1
16	6733961	FOAM SEAL		2
17	6732946	TAILGATE SEAL		1
18	7351026	MOUNT EXCHANGER, water exchanger - Was 6730799, A		1
19	7301554	EXCHANGER OIL COOLER, Was 6732772, A		1
20	6731773	SEAL COOLER		2
21	6678766	NUT		8
22	6733377	SCREW BTN HD CAP		8

Ref.	Part Number	Description	S/N	Qty
23	6680160	FAN		2
24	6553411	BUSHING PRESS FIT		1
25	6598908	ELBOW BARBED		1
26		ENGINE, ENGINE, See Illustration		1
27	6577822	HOSE BULK, sold per foot		x
28	25E11	WASHER		8
29	30H60	CLIP INSULATED		1
30	6682275	TUBE OVERFLOW, overflow		1
31	6682277	TANK PLASTIC END, plastic end		1
32	6682278	TANK PLASTIC END, plastic end		1
33	6682276	GASKET, between end caps and core		2
34	35C514	SCREW FLANGED HEAD CAP		1
35	7351028	SHIELD BELT, belt - Was 6734634, A		1
36	5HM36	CLAMP HOSE TYPE CTB		1

Title: Engine & Attaching Parts (Intake & Exhaust)
Model Number: S70
Serial Number: A3W611001 & Above, A3W711001 & Above

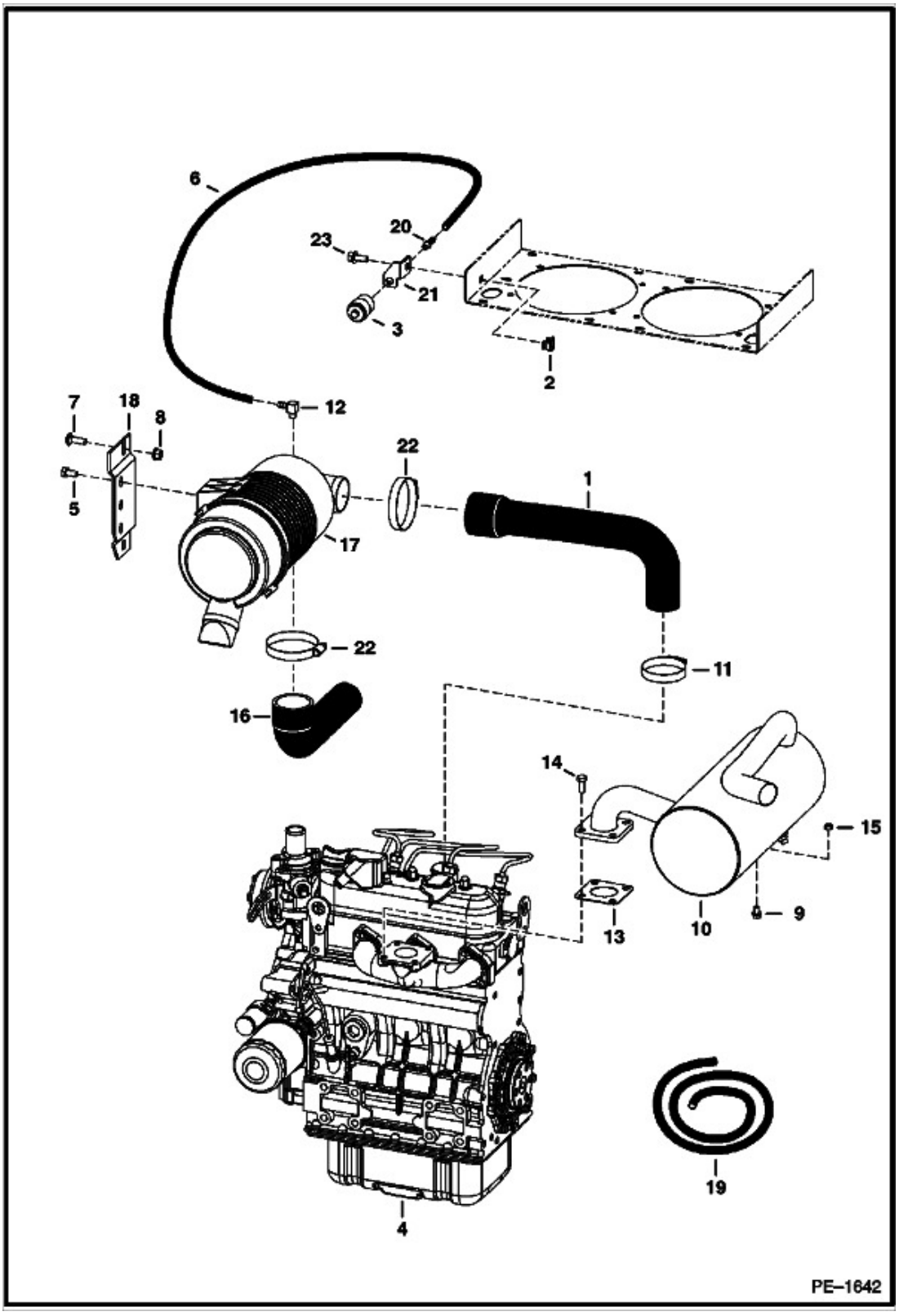

Title: Engine & Attaching Parts (Intake & Exhaust)
Model Number: S70
Serial Number: A3W611001 & Above, A3W711001 & Above

Ref.	Part Number	Description	S/N	Qty
1	6731667	HOSE AIR CLEANER		1
2	6678765	NUT SELF RETAINING		1
3	6515007	IND GAUGE AIR FILTER		1
4		ENGINE, ENGINE, See Illustration		1
5	55CM816	SCREW HEX HEAD CAP		1
6		HOSE, HOSE, NLA - 18" (457,2 mm) long - Order Ref. 19		1
7	37C516	BOLT SQ NECK RND HD		2
8	57D5	NUT HEX FLNG GR8		2
9	35C616	SCREW FLANGED HEAD CAP		2
10	6732282	MUFFLER, SPARK ARRESTOR, spark arrestor		1
11	42HL250	CLAMP		1
12	6515156	ELBOW		1
13	6727752	GASKET, muffler - Was 6575580, B		1
14	6701123	SCREW STAINLESS STL, exhaust		2
15	6678785	NUT, SELF RETAINING		2
16	6731715	HOSE AIR INLET		1
17		AIR CLEANER, AIR CLEANER, See Illustration		1
18	7351050	MOUNT FILTER AIR, Was 6731396, A		1
19	6557720	HOSE BULK, sold per foot		x
20	6505813	ADAPTER		1
21	7351044	BRACKET INDICATOR, Was 6704823, A		1
22	42HL300	CLAMP		2
23	31C508	BOLT, Was 35C508, A		1

Title: Engine & Lower Gasket Kit
Model Number: S70
Serial Number: A3W611001 & Above, A3W711001 & Above

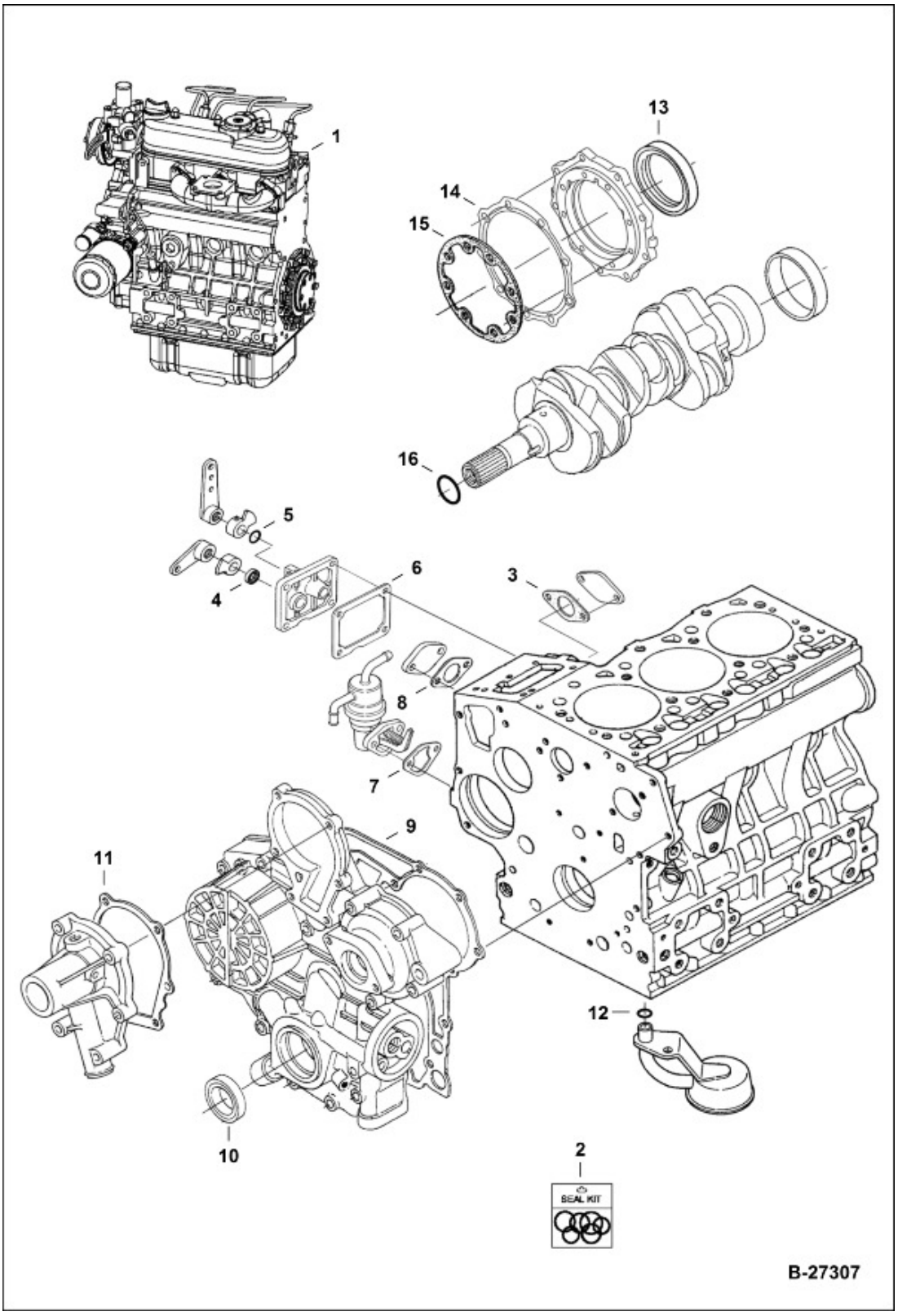

Title: Engine & Lower Gasket Kit
Model Number: S70
Serial Number: A3W611001 & Above, A3W711001 & Above

Ref.	Part Number	Description	S/N	Qty
1	6692561	ENGINE D1005 23.5 HP EPA T4 / STG IV		1
1	6692561REM	ENGINE, D1005-E3B-BC-3		1
2	6698637	KIT GASKET ENG LOWER		1
3	6672386	GASKET, See Illustration, - fuel shut off		1
4	6598703	SEAL, See Illustration, - speed control shaft		1
5	6680277	O-RING, See Illustration, - speed control shaft		1
6	6657578	GASKET, See Illustration, - speed control plate		1
7	6670782	GASKET, See Illustration, - fuel pump		1
8	6657574	GASKET, See Illustration, - governor plate		1
9	6657479	GASKET, See Illustration, - gear case		1
10	6657603	SEAL, OIL, See Illustration, - front oil		1
11	6657610	GASKET, See Illustration, - water pump		1
12	6680284	O-RING, See Illustration, - oil pick-up tube		1
13	6657481	SEAL, OIL, See Illustration, - rear crankshaft		1
14	6698617	GASKET, COVER CASE, See Illustration		1
15	6657480	GASKET, See Illustration, - bearing case		1
16	6680268	O-RING, See Illustration, - crankshaft		1

Title: Engine & Upper Gasket Kit
Model Number: S70
Serial Number: A3W611001 & Above, A3W711001 & Above

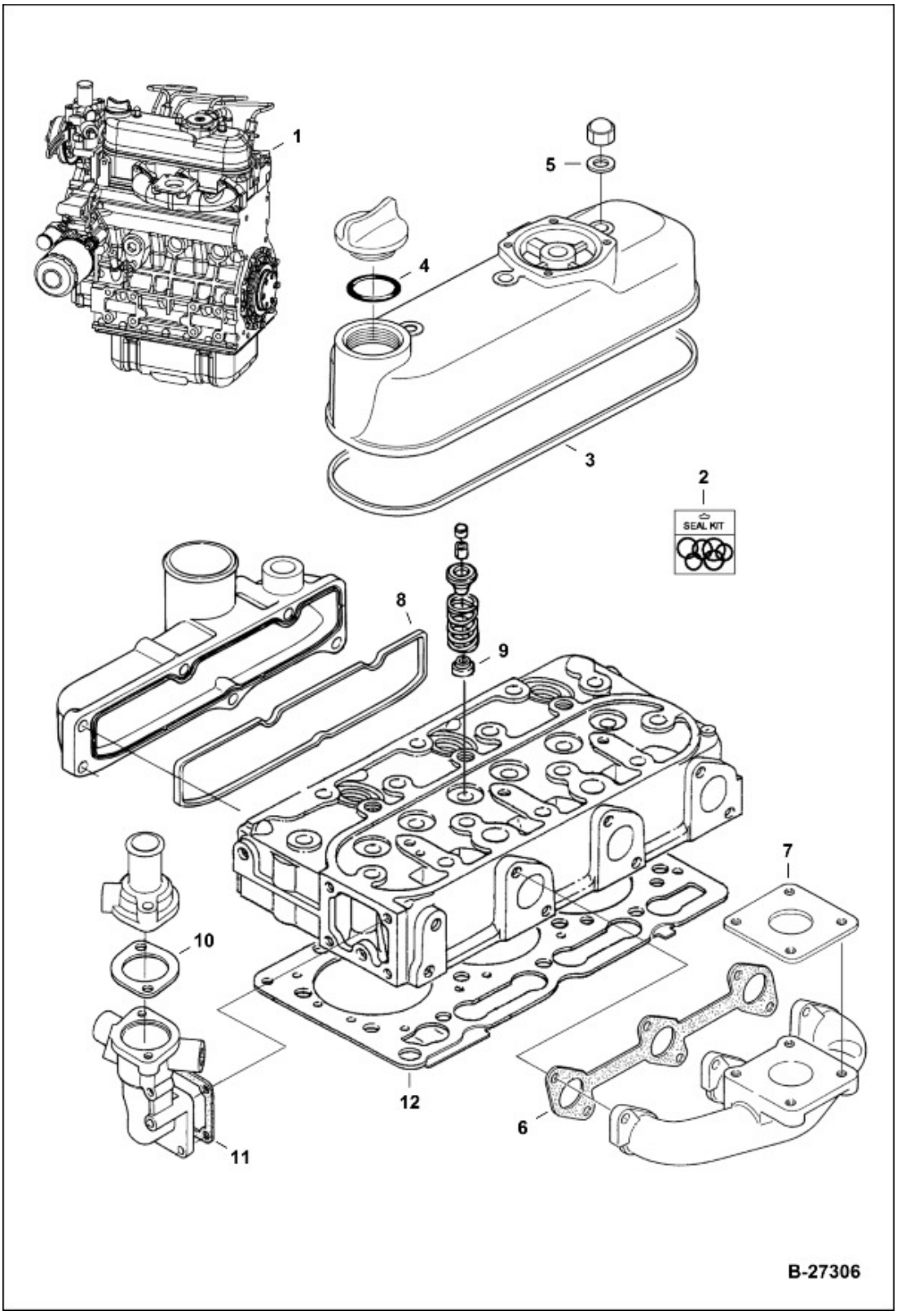

Title: Engine & Upper Gasket Kit
Model Number: S70
Serial Number: A3W611001 & Above, A3W711001 & Above

Ref.	Part Number	Description	S/N	Qty
1	6692561	ENGINE D1005 23.5 HP EPA T4 / STG IV		1
1	6692561REM	ENGINE, D1005-E3B-BC-3		1
2	7000290	KIT GASKET ENG UPPER, Ref. 3-12		1
3	6672365	GASKET, See Illustration, Was 7207541, A		1
4	6683009	O-RING, See Illustration, - oil filler cap		1
5	6599116	GASKET, See Illustration, - valve cover nut		4
6	6672441	GASKET, See Illustration, - exhaust manifold		1
7	6960259	SEAL, See Illustration, - muffler		1
8	6672443	GASKET, See Illustration, - intake manifold		1
9	6672436	SEAL, See Illustration, - valve stem		8
10	6684863	GASKET, See Illustration, - thermostat		1
11	6657583	GASKET, See Illustration, - thermostat housing		1
12	6687906	GASKET, See Illustration, - cylinder head		1

Title: Engine Electrical Circuitry
Model Number: S70
Serial Number: A3W611001 & Above, A3W711001 & Above

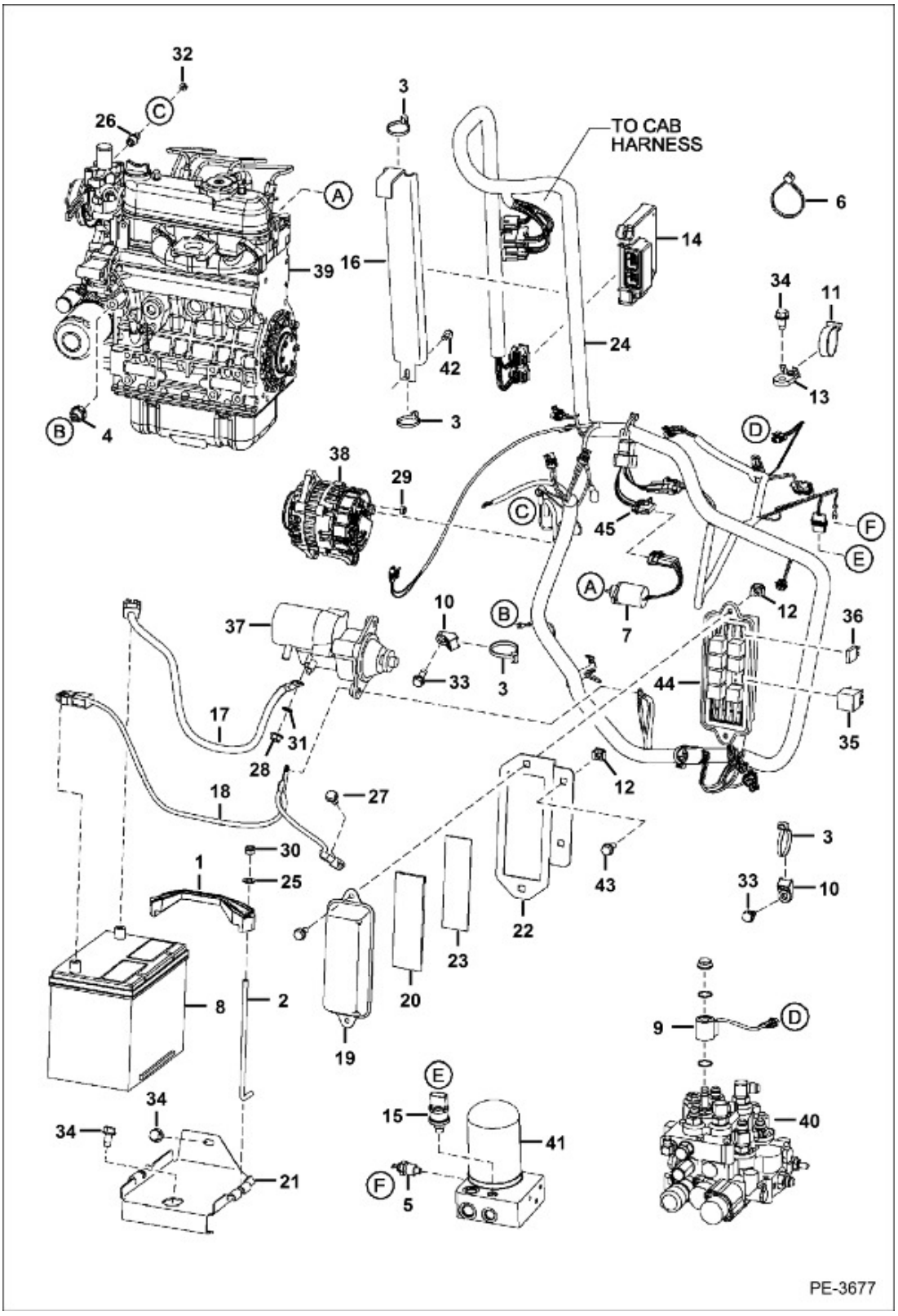

Ref.	Part Number	Description	S/N	Qty
1	6569203	CLAMP BATTERY, battery		1
2	6576280	BOLT BENT, bent		2
3	6624289	STRAP, TIE		10
4	6969775	SWITCH PRESSURE OIL, engine oil pressure		1
5	7251584	SWITCH TEMPERATURE, hyd temp - Was 6632633, A		1
6	6665527	TIE		2
7	6670602	SOLENOID SHUTOFF FUEL, fuel shutdown		1
8	7312552	BATTERY 650 CCA DRY, Was 6674687, A		1
9	6675559	COIL, See Illustration, - D series - black case - metri pack connector		1
9	7272732	COIL SOLENOID ASSEMBLY, See Illustration, - E series - silver case - 208 mm (8.2") lead - metri pack connector - two red wires		1
9	7301672	COIL SOLENOID, See Illustration, - E series - silver case - integrated Deutsch connector	A3W6 & Above	1
10	6678667	MOUNT		4
11	6678669	STRAP T250 H/D		1
12	6678765	NUT SELF RETAINING, steering lever		4
13	6679034	HARNESS MT 3/8 HOLE, deluxe		1
14	7260952	CONTROLLER, Bobcat - Was 7003486, A		1
15	6682585	SENDER SWITCH PRESSURE, hydro charge pressure		1
16	7351441	BRACKET HARNESS, Was 6707415, A		1
17	6714436	CABLE POSITIVE, positive		1
18	6714437	CABLE NEGATIVE, negative		1
19	6716621	COVER, FUSE, fusebox		1
20	6731275	INSULATION, fusebox		1

Ref.	Part Number	Description	S/N	Qty
21	7351442	PAN BATTERY, Was 6732224, A		1
22	7352345	BRACKET FUSE, fusebox - Was 6732917, A		1
23	6698209	DECAL FUSE RELAY, fuse/relay		1
24	7148125	HARNESS, MFR, engine		1
25	25E15	WASHER FLAT PLAIN		2
26	6658818	SENDER TEMP, eng temp - threaded connector		1
26	19F2	BUSHING HEX REDUCING		1
27	35C512	SCREW FLANGED HEAD CAP		2
28	43DM8	NUT FLANGED HEX		1
29	1DM6	NUT		1
30	59D5	NUT LOCK HEX PT		2
31	6E5	WASHER INTL T LOCK		2
32	14D10	NUT HEX MACH SCREW		2
33	84G3112	SCREW THD ROLLING TT		5
34	84G3712	SCREW THD ROLLING TT		3
35	6679820	SWITCH RELAY MAGNETIC		5
36	6654806	FUSE, 15A		1
36	6654805	FUSE 10A		3
36	6733838	FUSE BLADE 40 AMP, 40 amp		1
36	6702444	FUSE 25A 5		4
36	6625575	FUSE, 20A		2
37		STARTER, STARTER, See Illustration		1
38		ALTERNATOR, ALTERNATOR, See Illustration		1
39		ENGINE, ENGINE, See Illustration		1
40		VALVE ASSY, VALVE ASSY, See Illustration		1

Ref.	Part Number	Description	S/N	Qty
41		FILTER, FILTER, See Illustration, hydraulic		1
42	26GM8016	SCREW SELF TAPPING		1
43	25G510	BOLT		1
44	6673200	FUSE BLOCK		1
45	6669415	TIMER, SOLENOID		1

Title: Engine Stop Lever
Model Number: S70
Serial Number: A3W611001 & Above, A3W711001 & Above

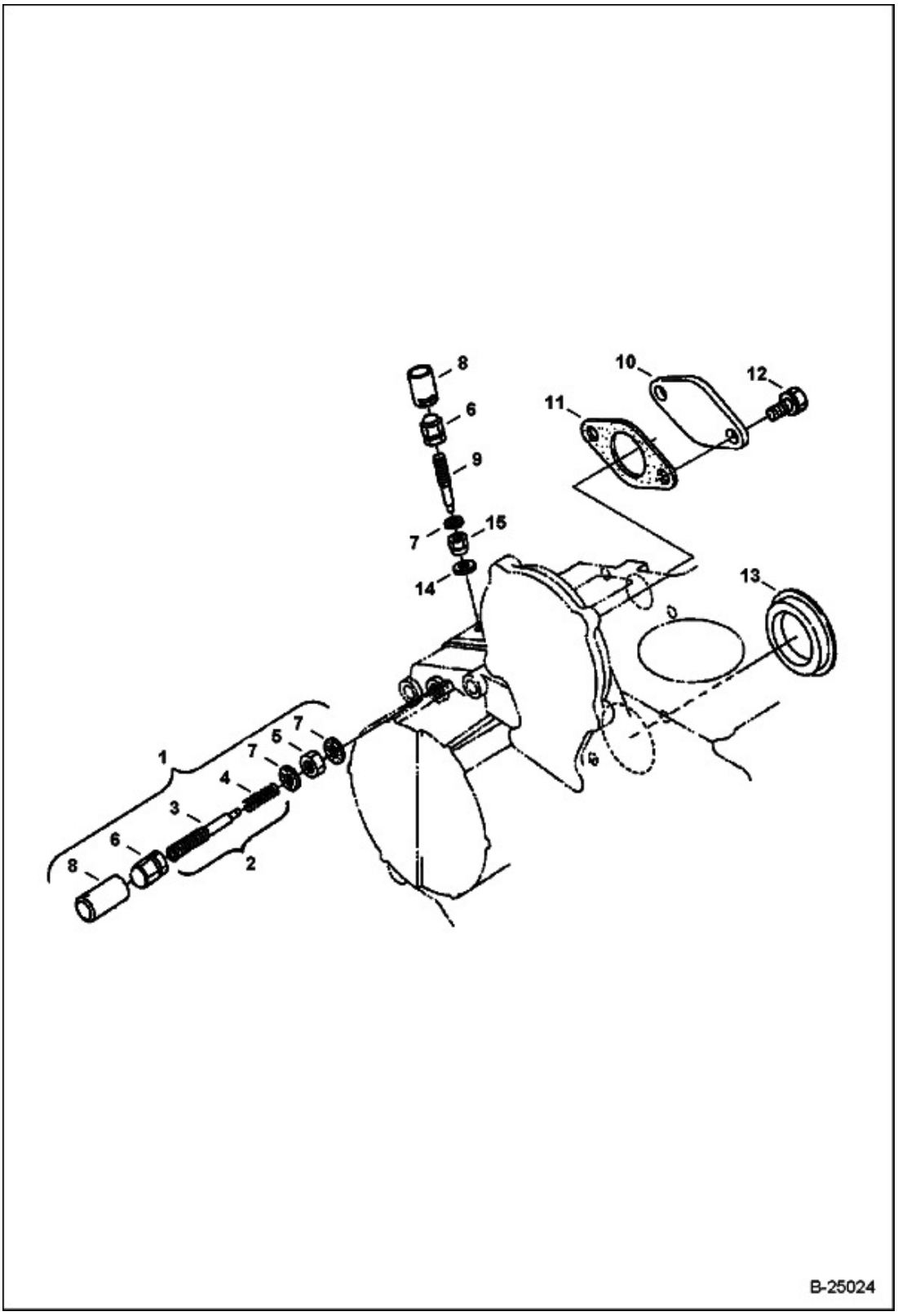

Title: Engine Stop Lever
Model Number: S70
Serial Number: A3W611001 & Above, A3W711001 & Above

Ref.	Part Number	Description	S/N	Qty
1	6672382	IDLER ASSEMBLY		1
2	7000291	BOLT ADUSTMENT ASSEMBLY, Ref. 3-5		1
3		BOLT, ADJUSTING, BOLT, ADJUSTING, NSS - Order Ref. 2		1
4		SPRING, SPRING, NSS - Order Ref. 2		1
5	6657459	NUT		2
6	6657470	NUT		2
7	3974972	GASKET		3
8	6672384	CAP		2
9	6657560	BOLT, adjusting		1
10	6672385	COVER		1
11	6672386	GASKET, fuel shut off		1
12	1CM614	SCREW HEX CAP, Was 4CM614, A		2
13	6672387	COVER, 2.125" OD		1
14	6687687	GASKET		1
15	6680272	NUT		1

Title: Engine
Model Number: S70
Serial Number: A3W611001 & Above, A3W711001 & Above

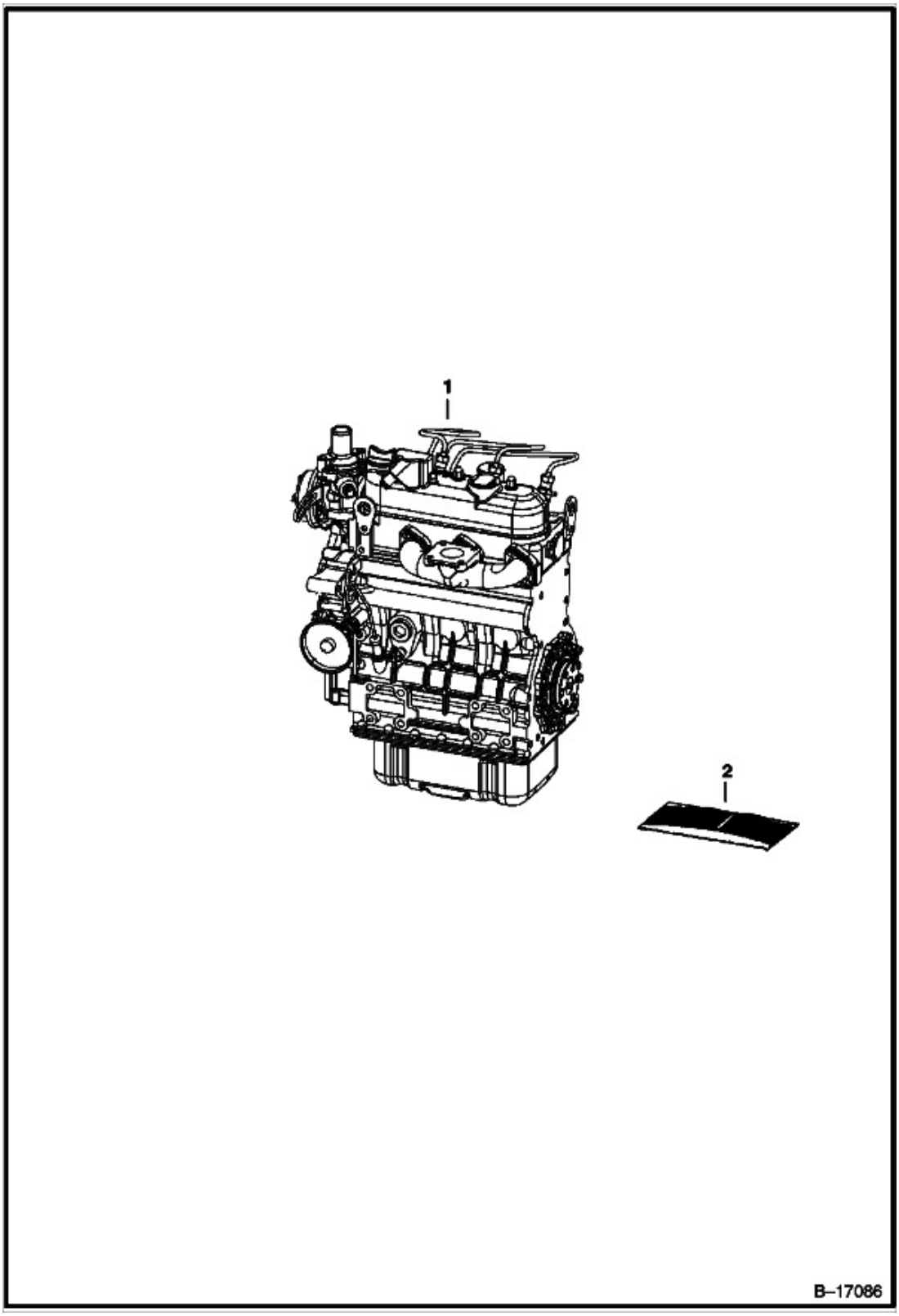

Title: Engine
Model Number: S70
Serial Number: A3W611001 & Above, A3W711001 & Above

Ref.	Part Number	Description	S/N	Qty
1	6692561	ENGINE D1005 23.5 HP EPA T4 / STG IV		1
1	6692561REM	ENGINE, D1005-E3B-BC-3		1
2	7000290	KIT GASKET ENG UPPER		1
2	6698637	KIT GASKET ENG LOWER		1

Title: European Accessories (4 Way Flashers)
Model Number: S70
Serial Number: A3W611001 & Above, A3W711001 & Above

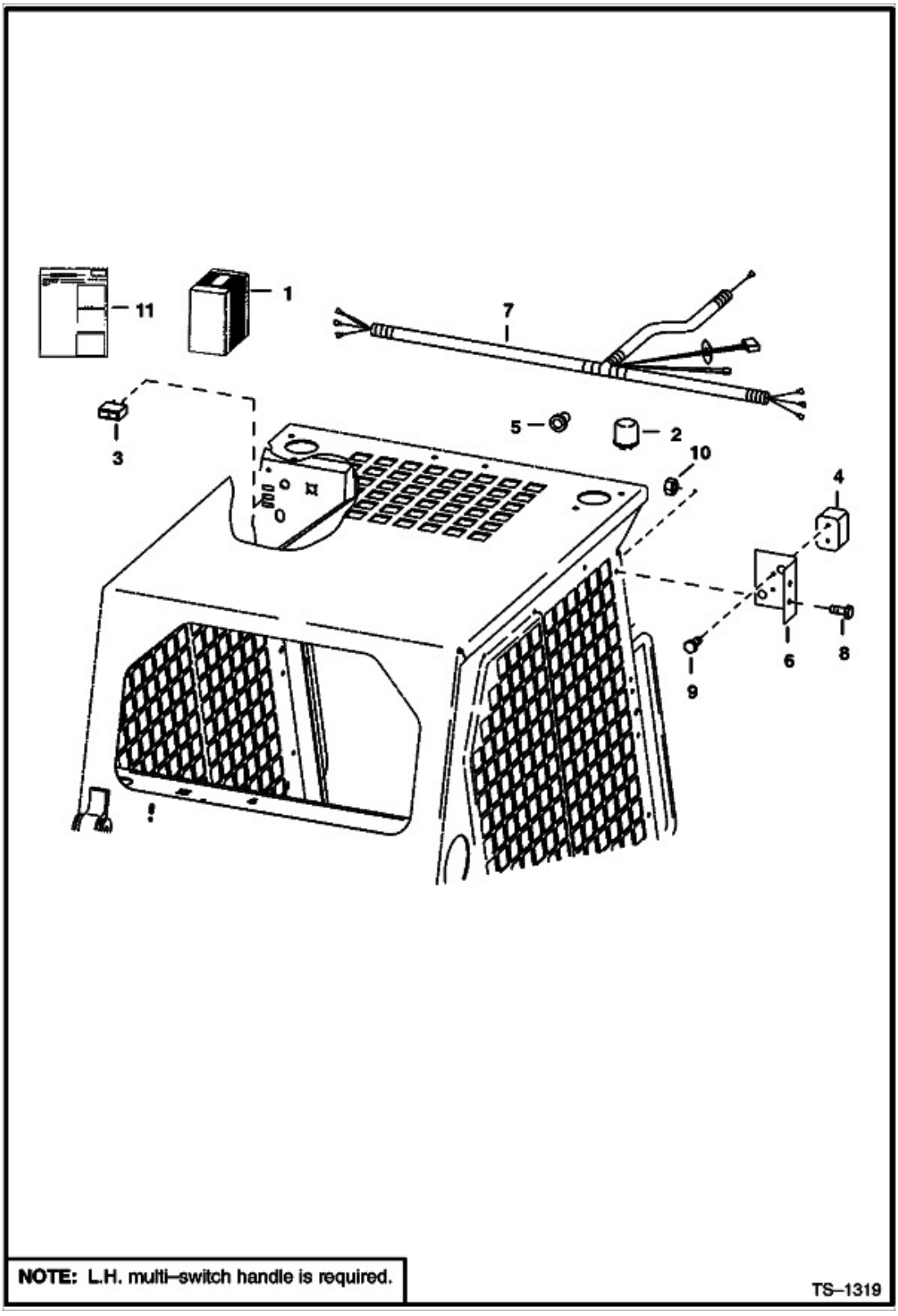

Title: European Accessories (4 Way Flashers)
Model Number: S70
Serial Number: A3W611001 & Above, A3W711001 & Above

Ref.	Part Number	Description	S/N	Qty
1		KIT, KIT, NLA - Note: To equip domestic loaders with this style flashers, order Ref. 2 - 11 as well as qty. (2) of 6707789 lights and 6707669 light harness - L.H. multi-switch handle is required - Was 6709755, A		1
2	6557904	FLASHER		1
3	6665316	SWITCH		1
4	6665727	LIGHT, TURN		2
4	7228077	LIGHT BULB 12V C5W		2
4	6666568	BULB, 21W		2
5	6665757	TURNLIGHT, indicator		2
6	7374210	MOUNT LIGHT, light - Was 6707706, A		2
7	6709530	HARNESS		1
8	35C410	SCREW HEX HD W/F GR5		2
9	58G808	SCREW		4
10	83D4	NUT LOCK		2
11	7375366ENUS	INSTRUCTIONS, Was 7375366, A		1

Title: European Accessories (Light Kit)
Model Number: S70
Serial Number: A3W611001 & Above, A3W711001 & Above

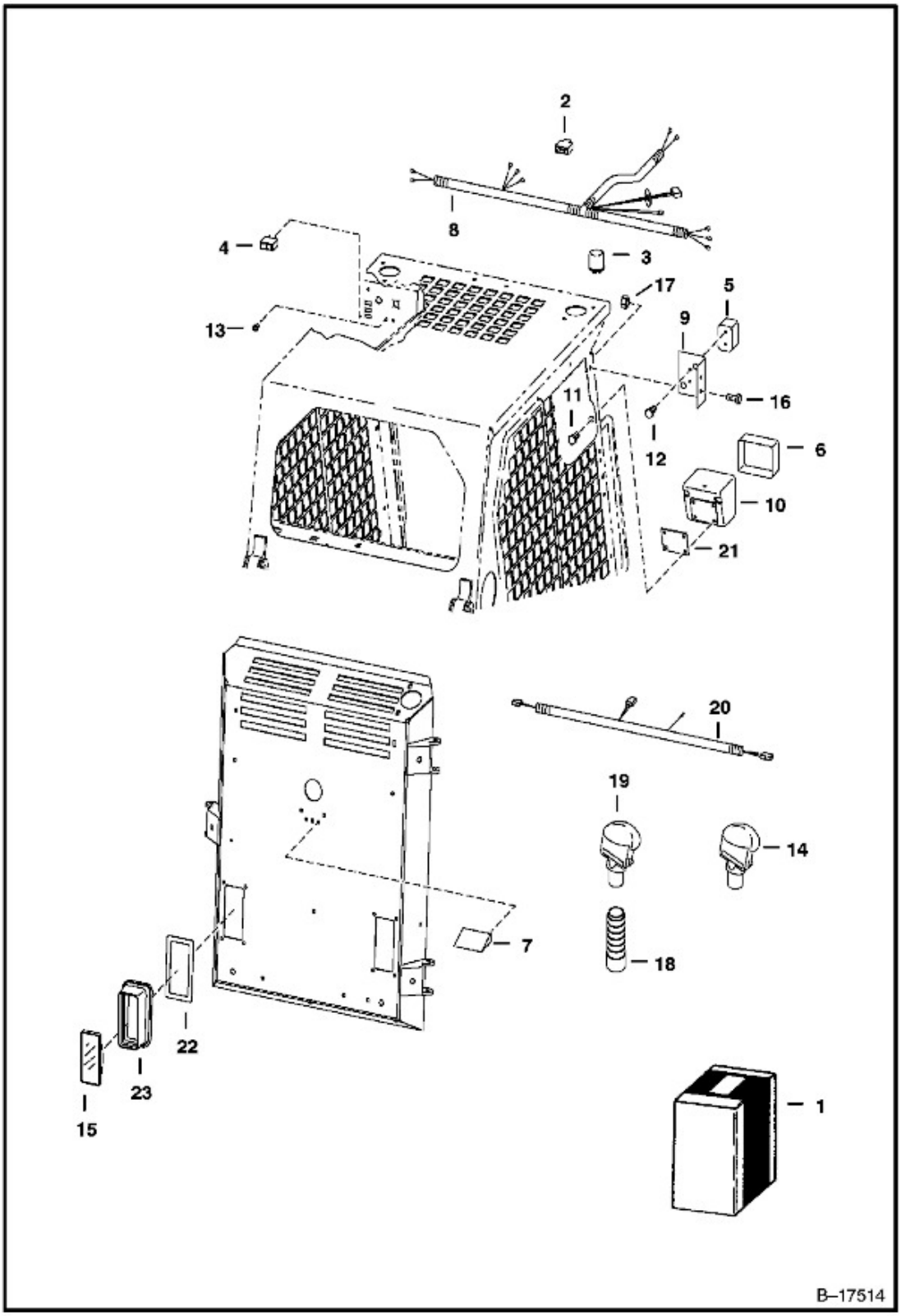

Ref.	Part Number	Description	S/N	Qty
1		, SALES - LIGHT - Ref. 2-13 & 15-17 - for electrical controls kit		1
2	6519548	CONN BODY		1
3	6557904	FLASHER		1
4	6665316	SWITCH, hazard		1
4	6665315	SWITCH HEAD LIGHT, headlight		1
5	6665727	LIGHT, TURN		2
5	7228077	LIGHT BULB 12V C5W		2
5	6666568	BULB, 21W		2
5	6666563	LENS		2
6	6665728	FRT LIGHT, front		2
6	7352849	BULB HALOGEN, Was 6666570, A		2
6	7352849	BULB HALOGEN, 40/45W		2
6	7352849	BULB HALOGEN, halogen - 12V		1
6	6666564	HOUSING		2
6	6666565	LENS		2
6	6666566	GASKET		2
7	6665729	LIC LIGHT, license plate		1
7	6666569	BULB, 5W		2
8	6707672	HARNESS		1
9	7374210	MOUNT LIGHT, light - Was 6707706, A		2
10	6707804	HOUSING LIGHT, light		2
11	17C508	BOLT		4
12	58G808	SCREW		4
13	6665757	TURNLIGHT, indicator		2
14	6680412	HANDLE DLX LEFT, deluxe switch		1

Title: European Accessories (Light Kit)
Model Number: S70
Serial Number: A3W611001 & Above, A3W711001 & Above

Ref.	Part Number	Description	S/N	Qty
15	6707789	LIGHT ASSEMBLY, rear European		2
15	6666568	BULB, 21W		2
15	6667887	BULB, 21/5W		2
16	35C410	SCREW HEX HD W/F GR5		2
17	83D4	NUT LOCK		2
18	6702621	HANDLE GRIP		2
19	6680415	HANDLE BLANK, R.H. - blank		1
20	6707509	HARNESS		1
21	6708824	MOUNT		2
22	6714005	SPACER		1
23	6705774	LIGHT MT		1

Title: European Accessories (Road Kit)
Model Number: S70
Serial Number: A3W611001 & Above, A3W711001 & Above

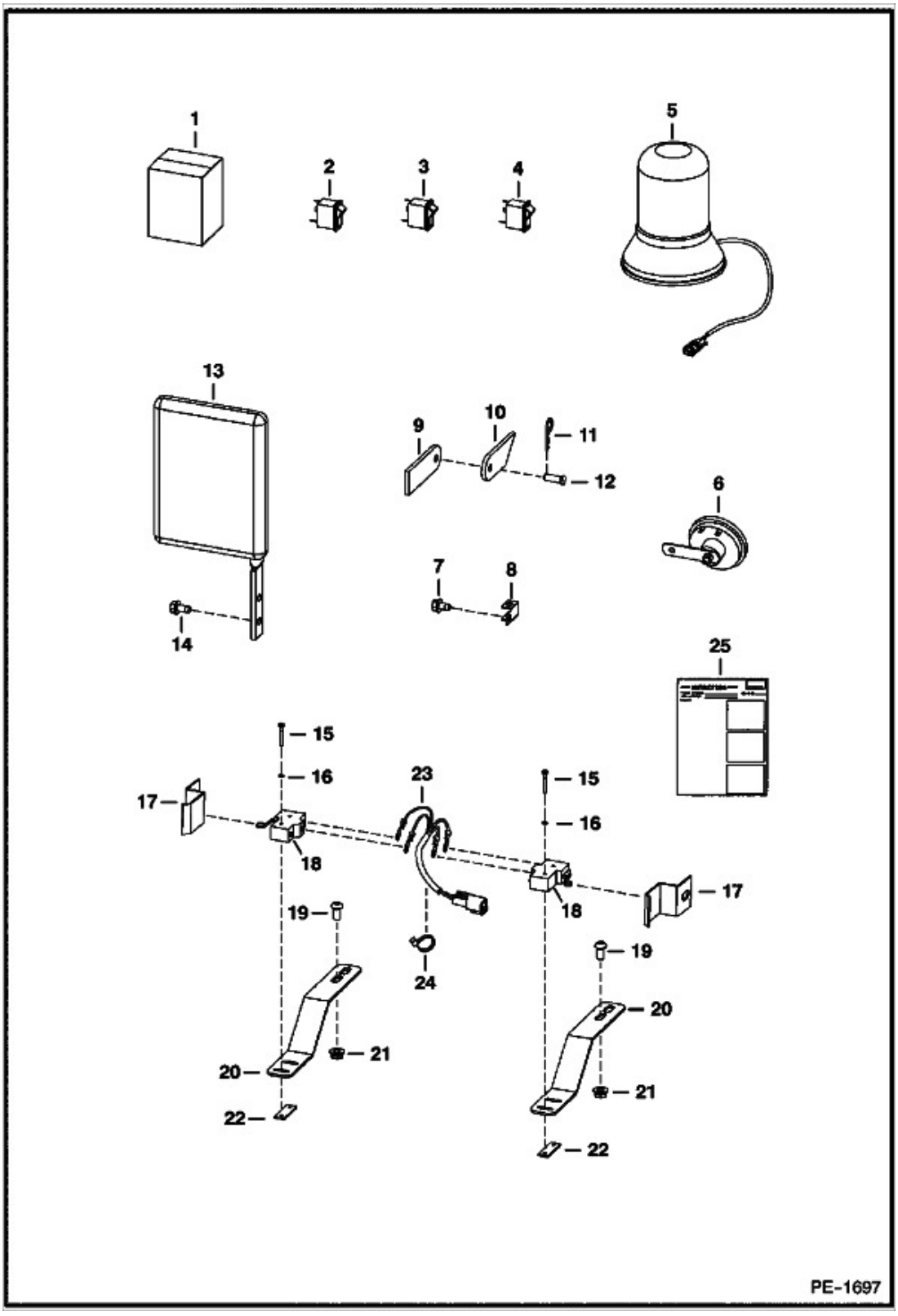

Ref.	Part Number	Description	S/N	Qty
1		KIT, KIT, See Illustration, NLA - SALES - road - Ref. 2 - 25 & Ref. 2 - 27 on Ill. PE1456 - Was 6733639, C		1
2	6668742	SWITCH TRAVEL CONTROL, travel control		1
3	6668815	SWITCH, hazard		1
4	6668816	SWITCH, beacon		1
5	7341779	LIGHT BEACON, Was 6675523, A		1
6	7221530	HORN, ALARM, Was 6671106, B		1
7		, Order 84G3712 - Was 84G3710, A		1
8		BRACKET, BRACKET, NLA - pin holder - Was 6731998, C		1
9		BRACKET, BRACKET, NLA - boom lock - Was 6731999, C		1
10		BRACKET, BRACKET, NLA - bucket lock - Was 6732000, C		1
11	1306637	PIN HAIR, Was 6512664, D		1
12	2F6106	PIN		1
13	6665860	MIRROR, assy		1
14		SCREW, SCREW, NLA		2
15	85G616	SCREW PNH SLTD MACH		4
16	17E6	WASHER 10		4
17		GUIDE SWITCH, GUIDE SWITCH, NLA - switch - Was 6734057, C		2
18	6646781	SWITCH ALARM BACKUP, roller		2
19	25G510	BOLT		4
20	6733290	BRACKET		2
21	55D5	NUT		4
22	6702593	SPACER		2
23		HARNESS BRAKE LT, HARNESS BRAKE LT, NLA - Was 6734224, C		1
24	6610510	STRAP, TIE 10		6

Ref.	Part Number	Description	S/N	Qty
25		INSTRUCTIONS, INSTRUCTIONS, NLA - Was 6901662, C		1

Title: European Accessories (Road Kit)
Model Number: S70
Serial Number: A3W611001 & Above, A3W711001 & Above

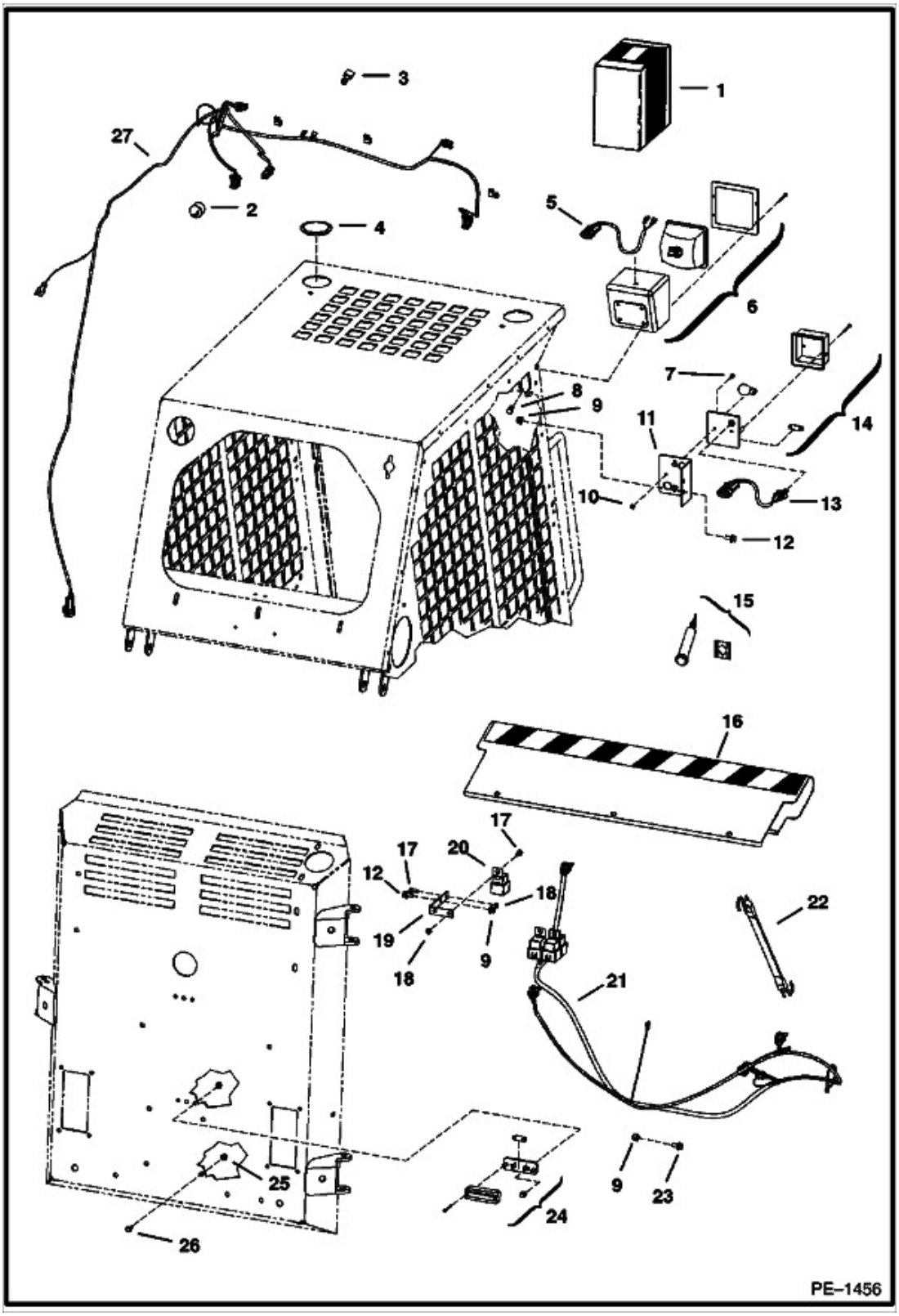

Ref.	Part Number	Description	S/N	Qty
1		ROAD KIT, ROAD KIT, See Illustration, NLA - SALES - road - Ref. 2 - 27 & Ref. 2 - 26 on Ill. PE1457 - Was 6733639, C		1
2	6557904	FLASHER		1
3	6675064	CONNECTOR		2
4	6620452	PLUG		2
5	6713994	HARNESS		2
6	6665728	FRT LIGHT		2
6	7352849	BULB HALOGEN, Was 6666570, A		2
6	7352849	BULB HALOGEN, 40/45W		2
6	7352849	BULB HALOGEN, halogen - 12V		1
6	6666564	HOUSING		2
6	6666565	LENS		2
6	6666566	GASKET		2
7	85G808	SCREW		4
8	17C508	BOLT		8
9	83D5	NUT LOCK		4
10	12D8	NUT HEX MACH SCREW		4
11	7374210	MOUNT LIGHT, light - Was 6707706, A		2
12	35C510	SCREW FLANGED HEAD CAP		3
13	6713993	ADAPTER MARKER LIGHT		2
14	6665727	LIGHT, TURN		2
14	7228077	LIGHT BULB 12V C5W		2
14	6666568	BULB, 21W		2
15	7227564	LIGHT, LED GREEN, Was 6675908, A		2
16		BRACKET, BRACKET, NLA - Was 6714836, C		1

Ref.	Part Number	Description	S/N	Qty
16		BRACKET, BRACKET, NLA - Order 6714820 shield & 6713840 decal - Was 6714835, A		1
16	6714820	SHIELD		1
16	6713840	DECAL		1
17	17C410	BOLT 10		3
18	85D4	NUT 5		3
19		MOUNT, MOUNT, NLA - Was 6731223, C		1
20	6670312	SWITCH MAGNETIC, relay		4
21		HARNESS, HARNESS, NLA - Was 6731610, C		1
22	6731819	STRAP RUBBER		3
23	37C512	BOLT SQ NECK RND HD, Was 7C512, A		1
24	6665729	LIC LIGHT, license plate		1
25	83D4	NUT LOCK		4
26	35C410	SCREW HEX HD W/F GR5		4
27		HARNESS, HARNESS, NLA - Was 6731563, C		1

Title: European Accessories (Sound Option)
Model Number: S70
Serial Number: A3W611001 & Above, A3W711001 & Above

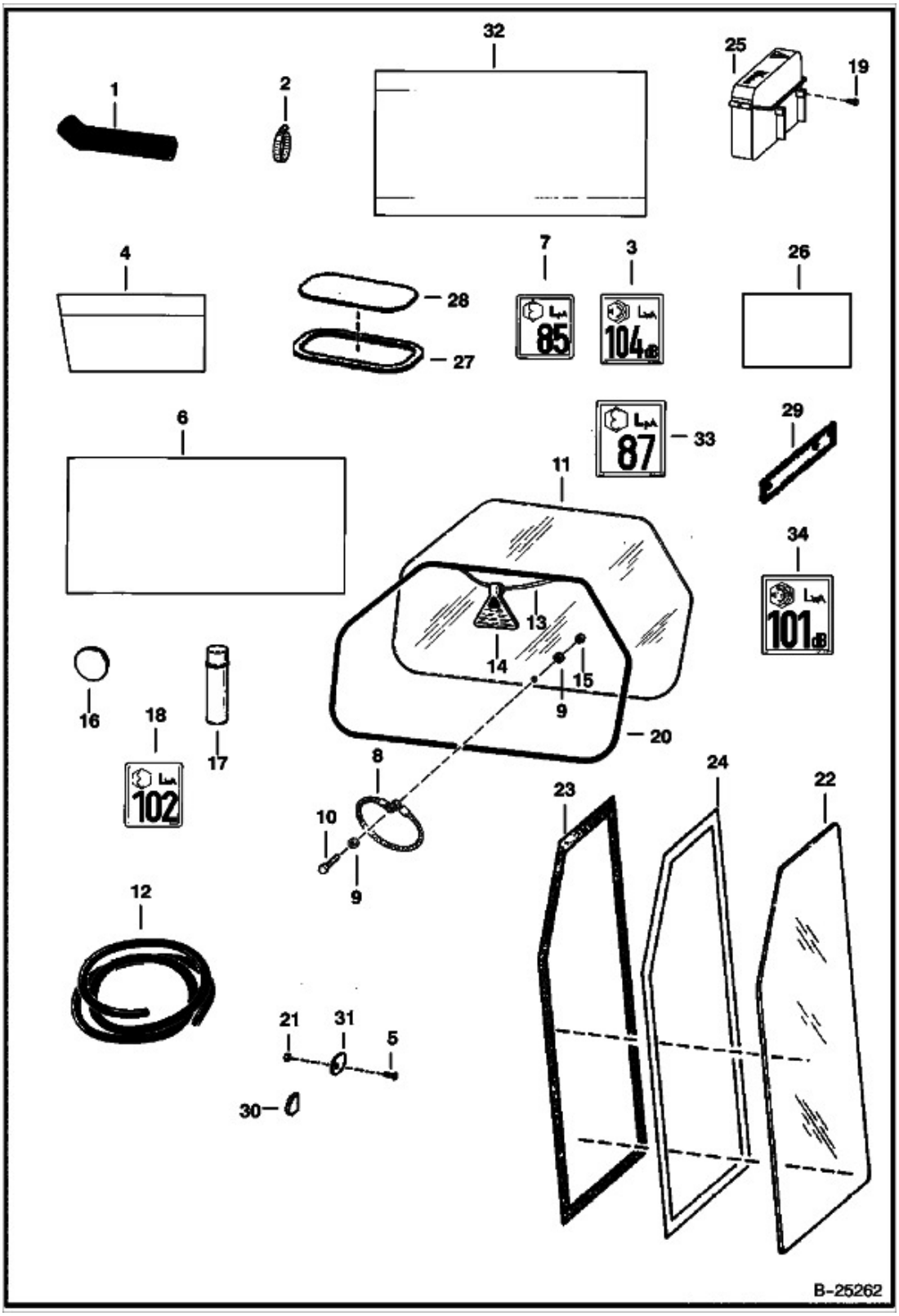

Title: European Accessories (Sound Option)
Model Number: S70
Serial Number: A3W611001 & Above, A3W711001 & Above

Ref.	Part Number	Description	S/N	Qty
1	6729040	HOSE AIR INLET, air cleaner inlet		1
2	42HC250	CLAMP, air inlet hose		1
3	6731994	DECAL SOUND POWER, noise level - 104db		1
4	6706886	INSULATION CAB, cab - lower right rear - With self adhesive back		1
5	35C410	SCREW HEX HD W/F GR5		10
6	6565524	HEADLINER		1
7	6579385	DECAL WARNING, sound level warning - 85DB		1
8	6555331	WIRE ROPE		1
9	25E15	WASHER FLAT PLAIN		2
10	17C516	BOLT		1
11	6707819	R WINDOW, rear		1
12	6665568	SEAL BULK, bulk - sold per foot		x
13	6554149	CORD, bulk - sold per foot - Also Order Ref. 14 (6731478 exit tag)		x
14	6731478	TAG EXIT		1
15	85D5	NUT PRETRQ HEX LOCK		1
16	6620452	PLUG		1
17	6632469	6652818, spray can 24 oz.		x
18	6733220	DECAL SOUND POWER, noise level - 102db - Was 6579402		1
19	6702642	SCREW WSHRD PLASTITE, BOLT		2
20		SEAL, SEAL, NLA - window - 70"(1778mm) - Order Ref. 12		1
21	83D4	NUT LOCK		10
22	6702731	WINDOW CAB		2
23	6631549	HOOK SCOTCHMATE, Scotchmate		2

Ref.	Part Number	Description	S/N	Qty
24	6631548	LOOP SCOTCHMATE, Scotchmate		2
25	6708827	CONTAINER MANUAL		1
26	7154836	INSULATION PAN SEAT, seat pan - Was 6734908, A		1
27	6664351	MOULDING, for top window		1
28	6705735	WINDOW TOP CAB, top		1
29	6700875	RETAINER WINDOW, window		4
30	6677198	CAP VINYL, vinly		2
31	6719063	STOP WINDOW, window		2
32	7151156	INSULATION CAB BACK, - Was 6708486, A		1
33	7110358	DECAL, sound level warning - 87 DB		1
34	6812569	DECAL, sound level warning - 101db - used for Tier II engines		1

Title: European Accessories (Steering Damper Option)
Model Number: S70
Serial Number: A3W611001 & Above, A3W711001 & Above

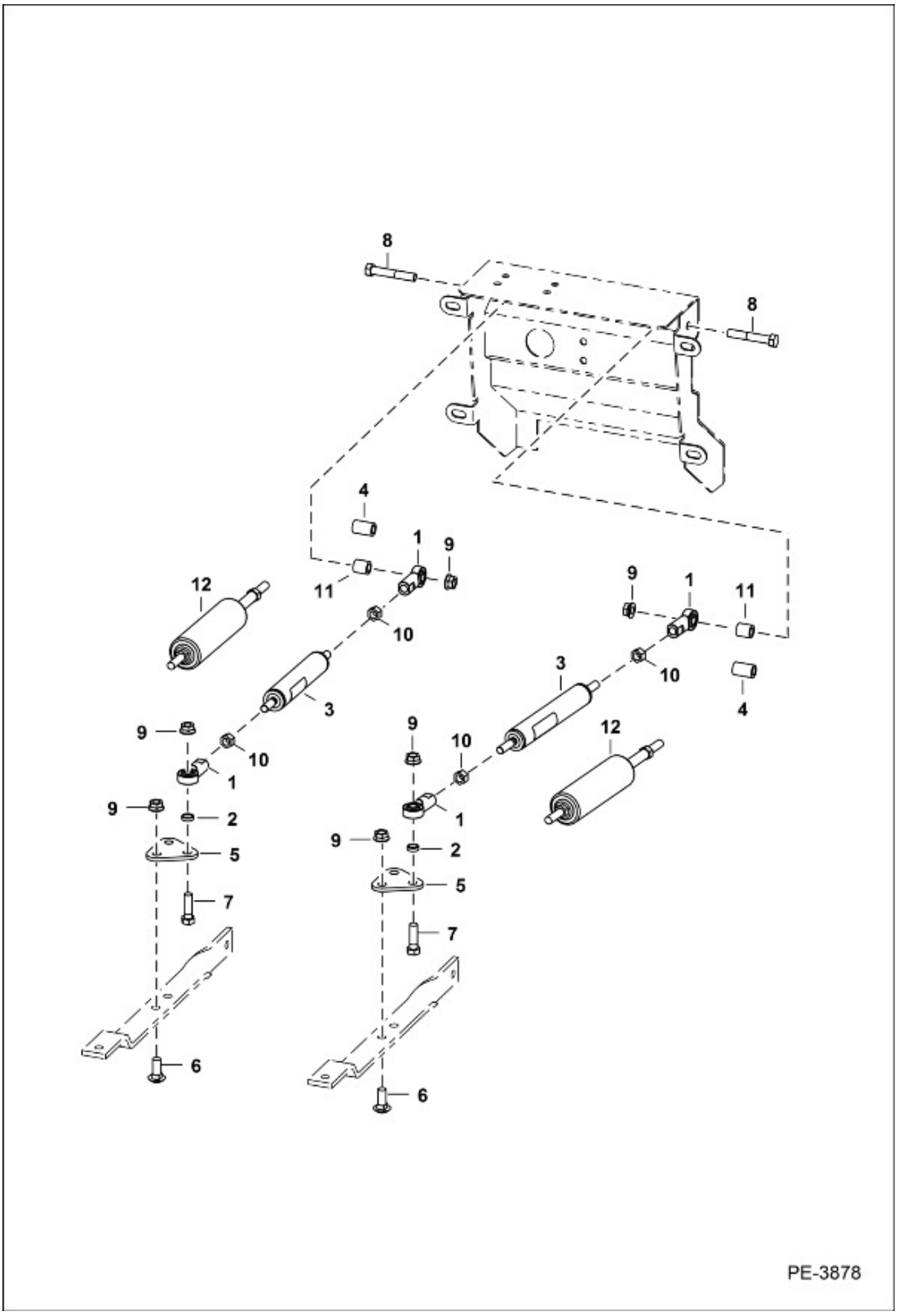

Title: European Accessories (Steering Damper Option)
Model Number: S70
Serial Number: A3W611001 & Above, A3W711001 & Above

Ref.	Part Number	Description	S/N	Qty
1	6512954	ROD END		4
2	6564535	WASHER AUX CONTROL		2
3		GAS SPRING, GAS SPRING, NLA - Japan Option - Order Ref. 12 - Was 6649551		2
4	6708314	BUSHING SPACER		2
5	7374902	MOUNT SHOCK, Was 6709396, A		2
6	10C616	BOLT SHRT SQ NK RHD 3/8-16X1 GRD 5		4
7	17C620	BOLT		2
8	17C636	BOLT		2
9	57D6	NUT HEX FLNG GR8		8
10	62D6	NUT HEX FINISHED GR5		4
11		BUSHING, BUSHING		2
12	7188108	DAMPER SHOCK		2

Title: European Accessories (Turn Signal)
Model Number: S70
Serial Number: A3W611001 & Above, A3W711001 & Above

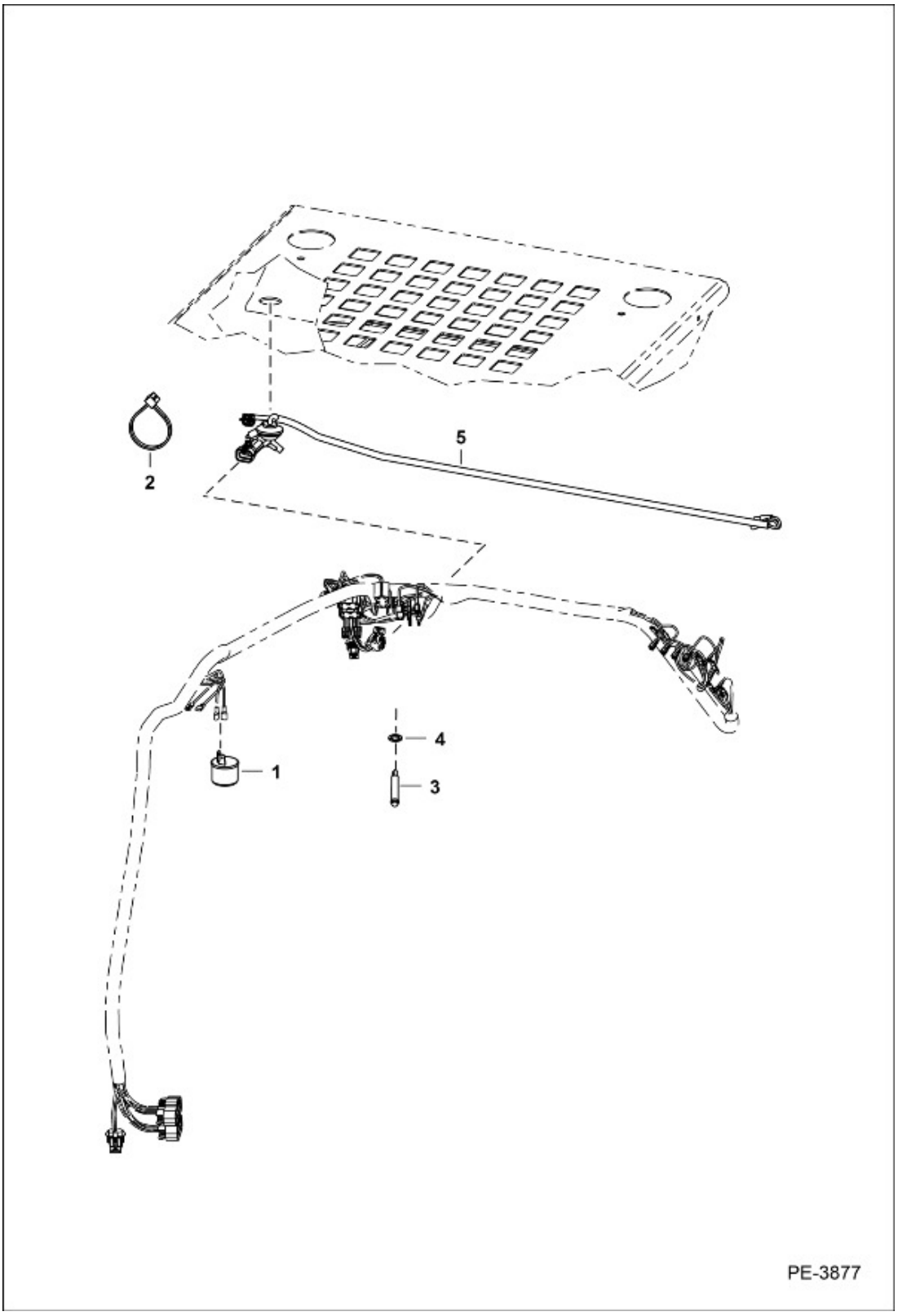

Title: European Accessories (Turn Signal)
Model Number: S70
Serial Number: A3W611001 & Above, A3W711001 & Above

Ref.	Part Number	Description	S/N	Qty
1	6557904	FLASHER		1
2	6610510	STRAP, TIE 10		1
3	7227564	LIGHT, LED GREEN, Was 6675908, A		2
4	6698369	RETAINER BOLT		2
5	6710905	HARNESS		1

Title: European Accessories
Model Number: S70
Serial Number: A3W611001 & Above, A3W711001 & Above

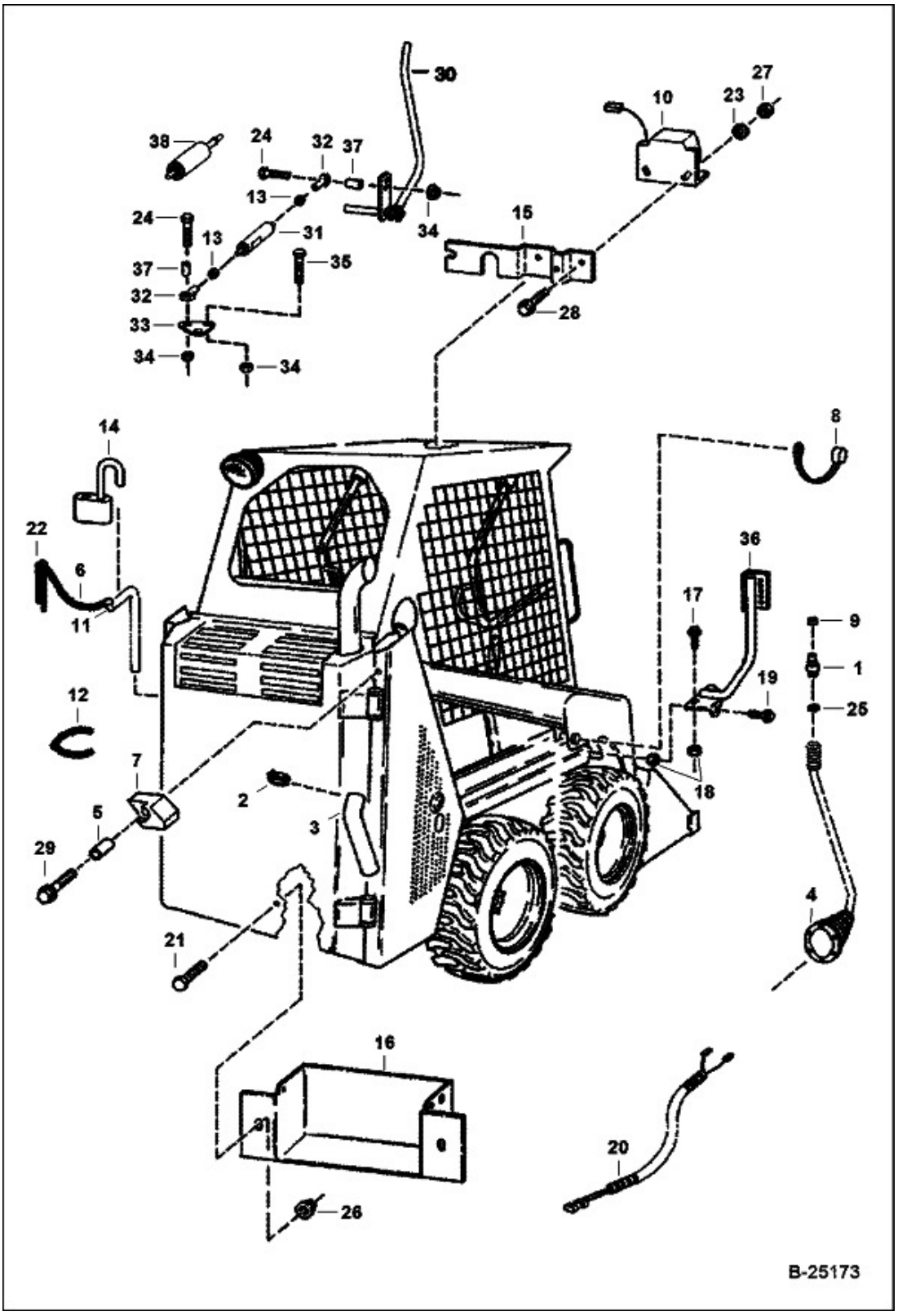

Ref.	Part Number	Description	S/N	Qty
1	6513482	SWITCH PUSH-BUTTON		1
2	42H32	HS CLAMP5		1
3	6520555	HOSE, air intake		1
4	6532127	BOOT AND PLATE ASSEMBLY		2
5	6563612	BUSHING PIVOT		1
6		CHAIN, CHAIN, NLA - 8"(203,2mm) - Order Ref. 12		x
7	6565526	STOP DOOR, door		1
8	6652943	COVER, grease fitting		10
9	6660205	SEAL SWITCH ARMORED, Switch		1
10	6660294	ALARM HORN		1
11	6661212	RING, RETAINER, retainer		1
12	6565227	CHAINLINK, bulk - sold per foot		x
13	62D6	NUT HEX FINISHED GR5		4
14	6665400	LOCK, if equipped		1
15	7351548	BRACKET HORN, horn - Was 6704641, A		1
16	7354227	CONTAINER TOOL, Was 6732848, A		1
17	35C512	SCREW FLANGED HEAD CAP, Japan		2
18	85D5	NUT PRETRQ HEX LOCK, Japan		3
19	35C516	SCREW HEX HD W/F GR5, Japan		1
20	6708506	HARNESS HORN, horn		1
21	10C512	BOLT SQ NECK RND HD		2
22	1F612	COT.PIN		1
23	25E13	WASHER FLAT PLAIN		2
24	17C620	BOLT		2
25	25E21	WASHER FLAT PLAIN		1

Ref.	Part Number	Description	S/N	Qty
26	83D5	NUT LOCK		2
27	59D4	NUT LOCK HEX PT		2
28	84G2516	SCREW THD ROLLING TT		2
29	84G3728	SCREW THD ROLLING TT		1
30	6709408	STR LEVER, for use with gas shocks		1
31		GAS SPRING, GAS SPRING, NLA - Japan Option - Order Ref. 38 - Was 6649551, A		2
32	6512954	ROD END, R.H. threads		4
33	7374902	MOUNT SHOCK, shock - Was 6709396, A		2
34	57D6	NUT HEX FLNG GR8		8
35	17C616	BOLT 5		4
36	6710526	MIRROR MT, Japan		1
37	6708314	BUSHING SPACER		2
38	7188108	DAMPER SHOCK		2

Title: External Window Removal Kit
Model Number: S70
Serial Number: A3W611001 & Above, A3W711001 & Above

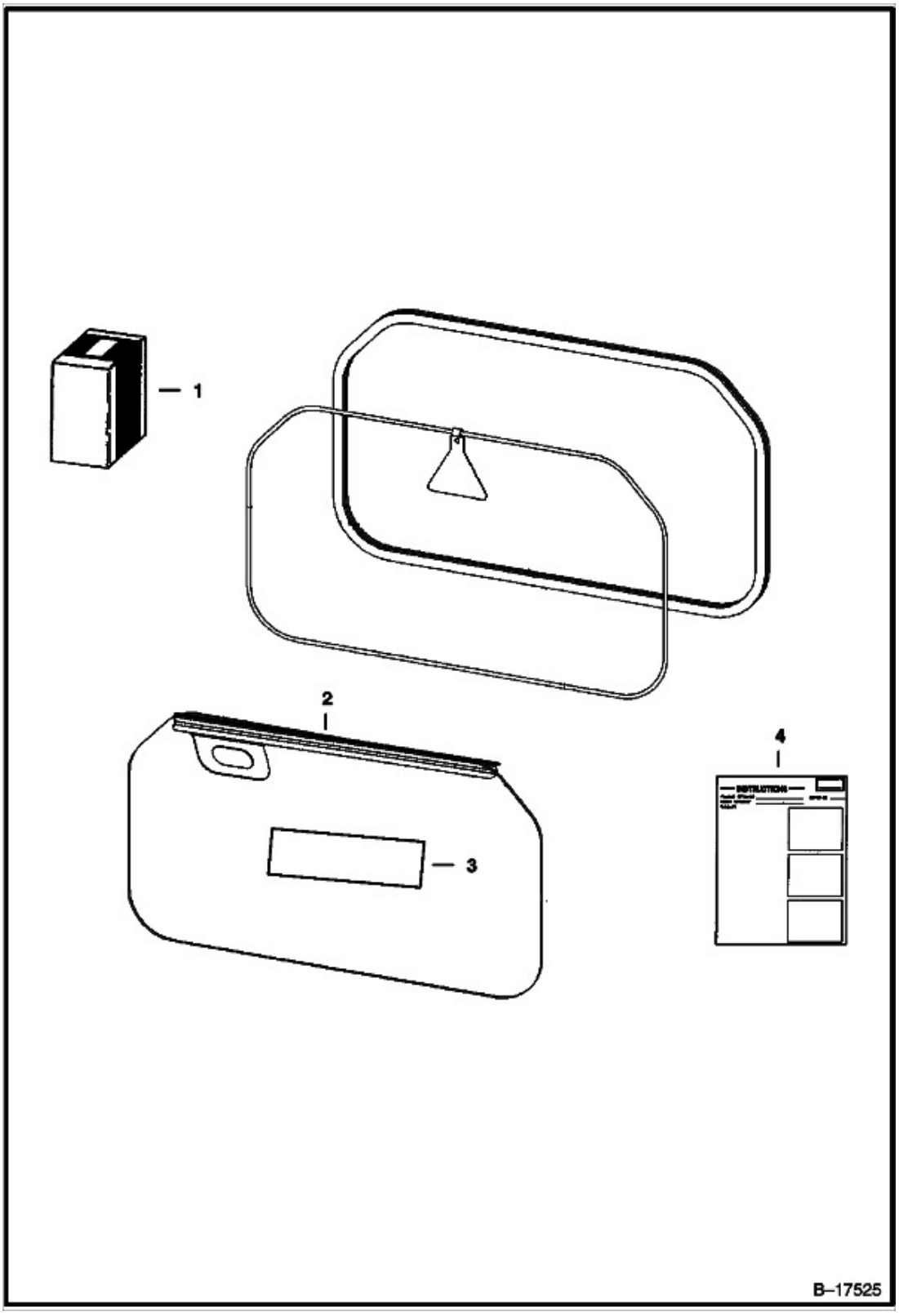

Title: External Window Removal Kit
Model Number: S70
Serial Number: A3W611001 & Above, A3W711001 & Above

Ref.	Part Number	Description	S/N	Qty
1		KIT, WINDOW REMOVAL, KIT, WINDOW REMOVAL, NLA - Ref. 2-4 - Order Components - Was 6726392, A		1
2	7374944	HANDLE PULL, Was 6726391, A		1
3	6726393	DECAL		1
4	6901029ENUS	INSTRUCTIONS, WAS 6901029, A		1

Title: Fire Extinguisher
Model Number: S70
Serial Number: A3W611001 & Above, A3W711001 & Above

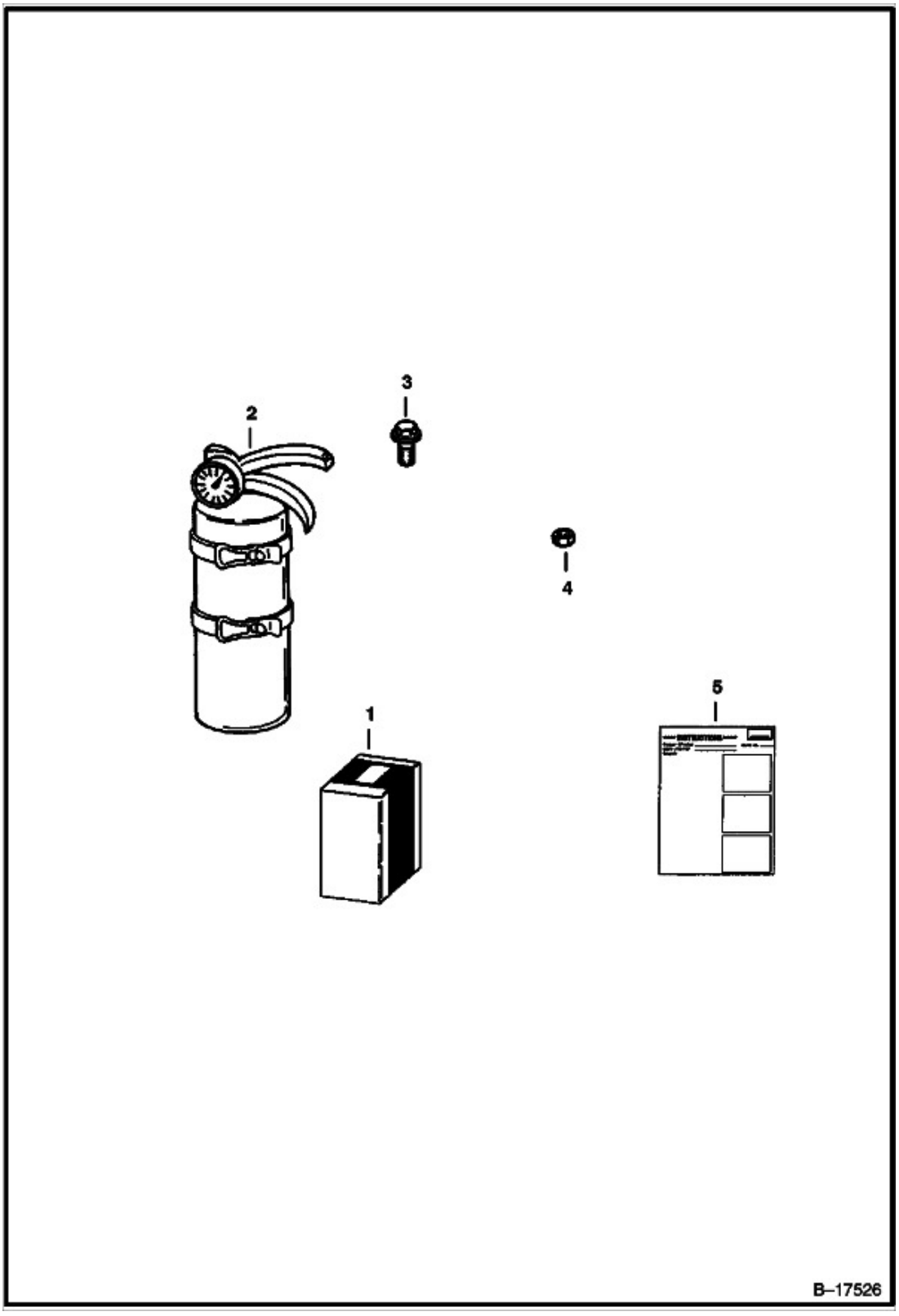

Title: Fire Extinguisher
Model Number: S70
Serial Number: A3W611001 & Above, A3W711001 & Above

Ref.	Part Number	Description	S/N	Qty
1		KIT, KIT, NLA - fire extinguisher - Ref. 2-5 - Was 6565793, A		1
2		EXTINGUISHER, EXTINGUISHER, NLA - Was 6630100, A		1
3	45G1006	BOLT		4
4	12D10	NUT		4
5	6566539ENUS	INSTRUCTIONS, Was 6566539, A		1

Title: Floor Cover Kit
Model Number: S70
Serial Number: A3W611001 & Above, A3W711001 & Above

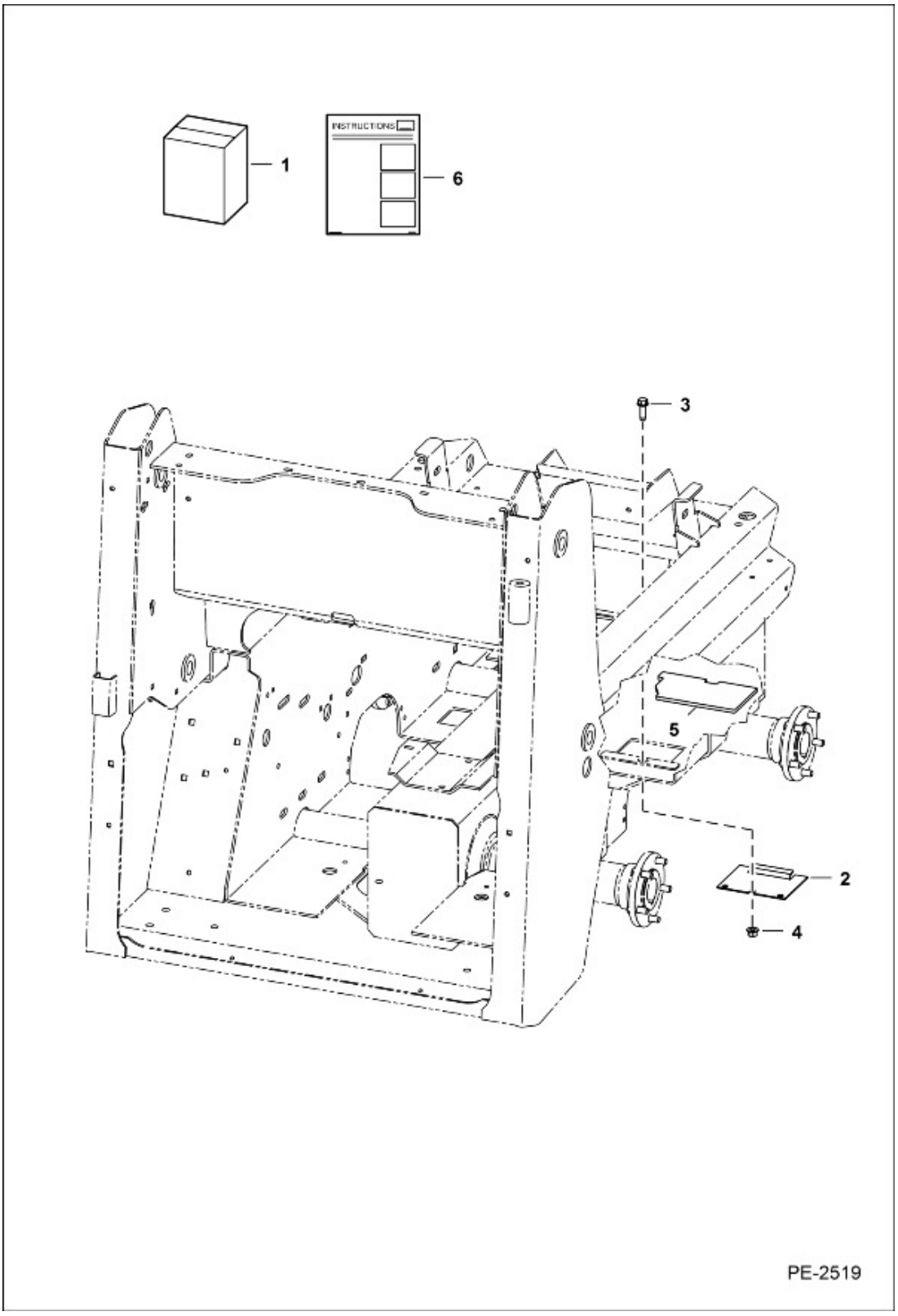

Title: Floor Cover Kit
Model Number: S70
Serial Number: A3W611001 & Above, A3W711001 & Above

Ref.	Part Number	Description	S/N	Qty
1	7375379	KIT COVER FLOOR, floor cover - W/Ref. 2-5 - Was 7110082, A		1
2	7351574	COVER FLOOR, Was 7100364, A		2
3	84G3720	SCREW THD ROLLING TT		2
4	83D6	NUT LOCK		2
5	7177958	COVER, FLOOR		2
6	7375782	INSTRUCTIONS INSTALL, Was 6903849ENUS, A		1

Title: Fuel Camshaft
Model Number: S70
Serial Number: A3W611001 & Above, A3W711001 & Above

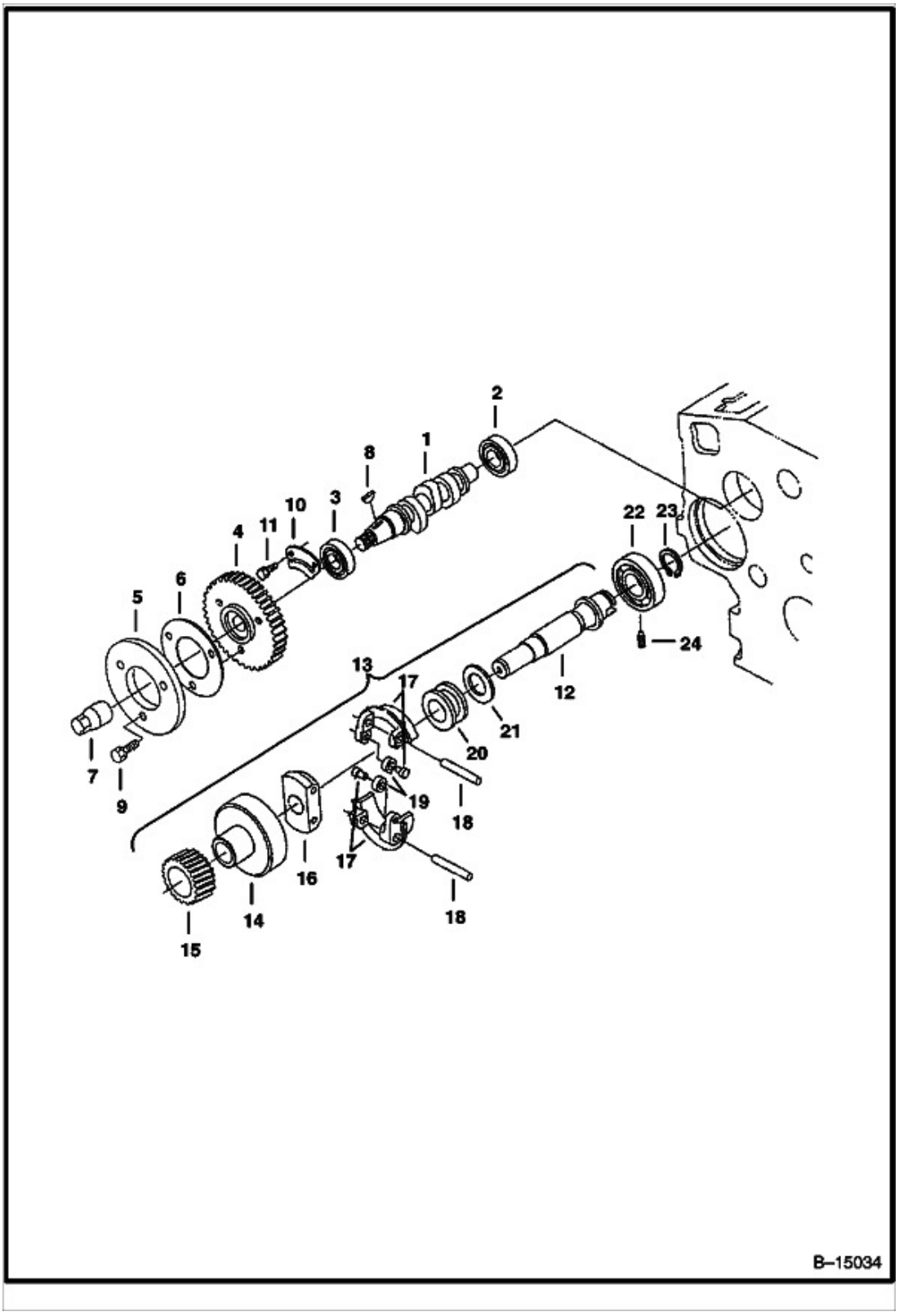

Title: Fuel Camshaft
Model Number: S70
Serial Number: A3W611001 & Above, A3W711001 & Above

Ref.	Part Number	Description	S/N	Qty
1	6672379	CAMSHAFT, fuel		1
2	6686175	BEARING		1
3	6686176	BEARING		1
4	6657664	GEAR		1
5		CAM, FUEL, CAM, FUEL, NLA - Was 6681670, A		1
6	6672380	WASHER		1
7	6657593	NUT		1
8	6657597	KEY		1
9	6652580	BOLT		3
10	6657518	STOPPER		1
11	1CM616	SCREW HEX CAP, Was 4CM616, A		2
12	6672381	SHAFT, Ref. 13-21		1
13	6698614	HOLDER GEAR GOV		1
14	6698614	HOLDER GEAR GOV		1
15	6657671	GEAR		1
16	6657564	HOLDER		1
17	6657562	WGHT GOV		2
18	6657563	SHAFT		2
19	6657690	ROLLER		2
20	6657566	SLEEVE		1
21	6698615	WASHER, THRUST		1
22	6686178	BEARING		1
23	6657648	SNAP RING		1
24	6657568	SCREW		1

Title: Gear Case
Model Number: S70
Serial Number: A3W611001 & Above, A3W711001 & Above

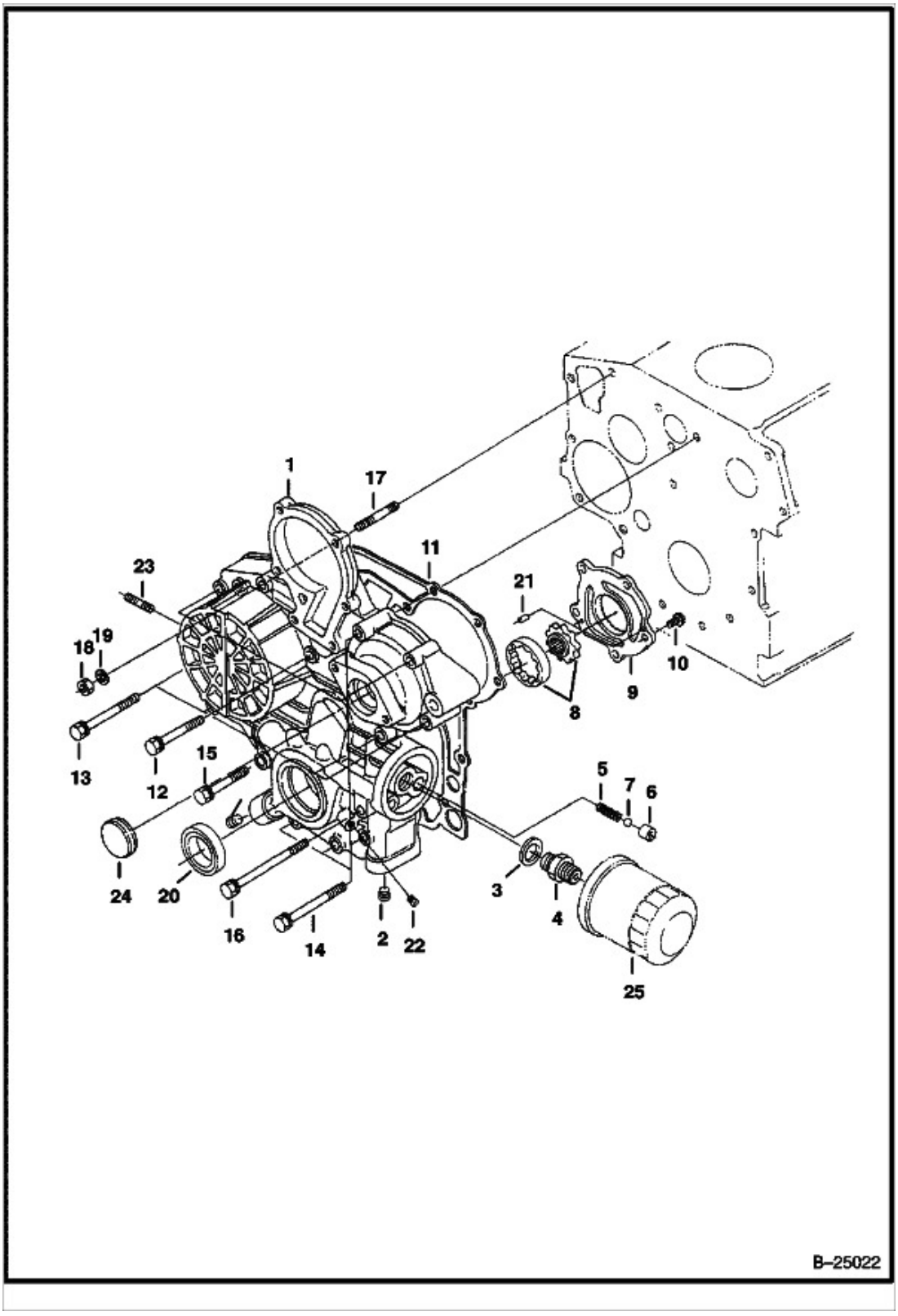

Title: Gear Case
Model Number: S70
Serial Number: A3W611001 & Above, A3W711001 & Above

Ref.	Part Number	Description	S/N	Qty
1	6691298	CASE, W/Ref. 2 - 10		1
2	6672360	PLUG		2
3	15EM180	WASHER		1
4	6652597	ADAPTER		1
5	6657554	SPRING		1
6	6657553	VALVE, SEAT		1
7	6657426	BALL		1
8	6657549	ASY ROTOR, oil pump		1
9	6686173	COVER, oil pump		1
10	6680262	BOLT		5
11	6657479	GASKET		1
12	7373724	BOLT HEX, Was 6657412, A		3
13	6670770	BOLT		6
14	6657413	BOLT		2
15	6652594	BOLT		1
16	6657589	BOLT		1
17	6680263	STUD		1
18	1DM6	NUT	Engine 7VZ999 & Below	1
18	6670533	NUT, Was 6969818, A	Engine 7W0001 & Above	1
19	6667419	WASHER	Engine 7VZ999 & Below	1
20	6657603	SEAL, OIL		1
21	6686174	PIN		2
22	6652574	PLUG		1
23	6680264	STUD		2
24	6681662	COVER, gear case		1

Title: Gear Case
Model Number: S70
Serial Number: A3W611001 & Above, A3W711001 & Above

Ref.	Part Number	Description	S/N	Qty
25	6657635	FILTER, OIL ENG		1

Title: Gear Pump
Model Number: S70
Serial Number: A3W611001 & Above, A3W711001 & Above

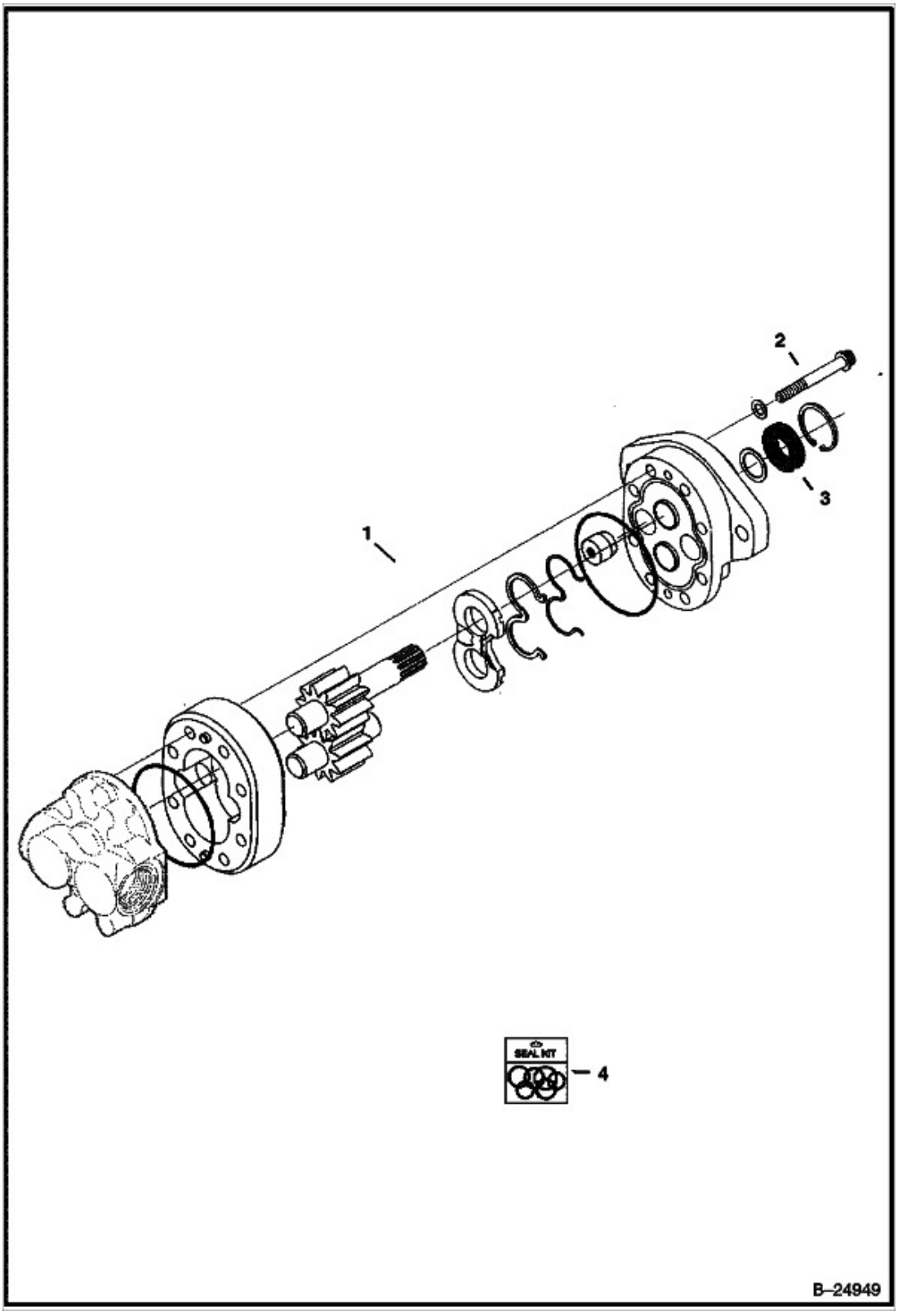

Title: Gear Pump
Model Number: S70
Serial Number: A3W611001 & Above, A3W711001 & Above

Ref.	Part Number	Description	S/N	Qty
1	7000311	PUMP GEAR, gear		1
1	7000311REM	PUMP GEAR, gear		1
2	93G536	BOLT		8
3	1571759	SEAL, shaft		1
4	6668013	KIT SEAL		1

Title: Governor
Model Number: S70
Serial Number: A3W611001 & Above, A3W711001 & Above

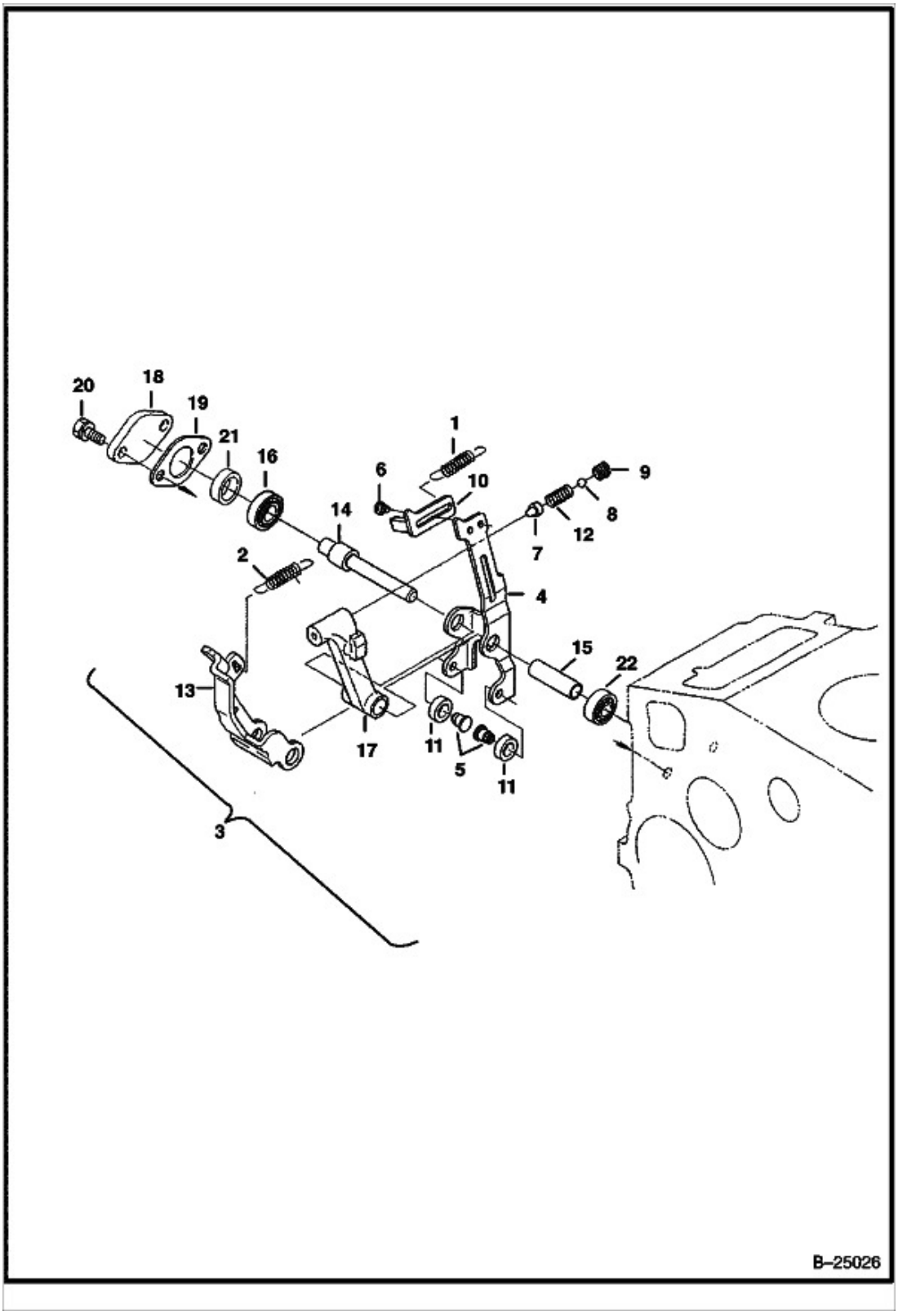

Title: Governor
Model Number: S70
Serial Number: A3W611001 & Above, A3W711001 & Above

Ref.	Part Number	Description	S/N	Qty
1	6672397	SPRING		1
2	6657685	SPRING		1
3	6686179	LEVER ASSEMBLY, W/Ref. 4 - 17		1
4		LEVER ASSY, LEVER ASSY, NSS - W/Ref. 5 - 12		1
5		PIN, PIN, NSS		2
6		BOLT, BOLT, NSS		2
7		RETAINER, RETAINER, NSS		1
8	6969817	BALL		1
9		SCREW, SCREW, NSS		1
10		BRACKET, BRACKET, NSS		1
11	6657690	ROLLER		2
12	6672400	SPRING		1
13	6686180	LEVER		1
14	6686182	SHAFT		1
15	6686181	SHAFT		1
16	6657575	BEARING BALL		1
17		WASHER, WASHER, NSS		1
18	6698616	COVER, SHAFT		1
19	6657574	GASKET		1
20	4CM612	BOLT, Was 1CM612, A		2
21	6657572	HUB		1
22	6657576	BEARING BALL		1

Title: Hand Controls (S/N A3W611001 - A3W613689, A3W711001 - A3W713379)
Model Number: S70
Serial Number: A3W611001 & Above, A3W711001 & Above

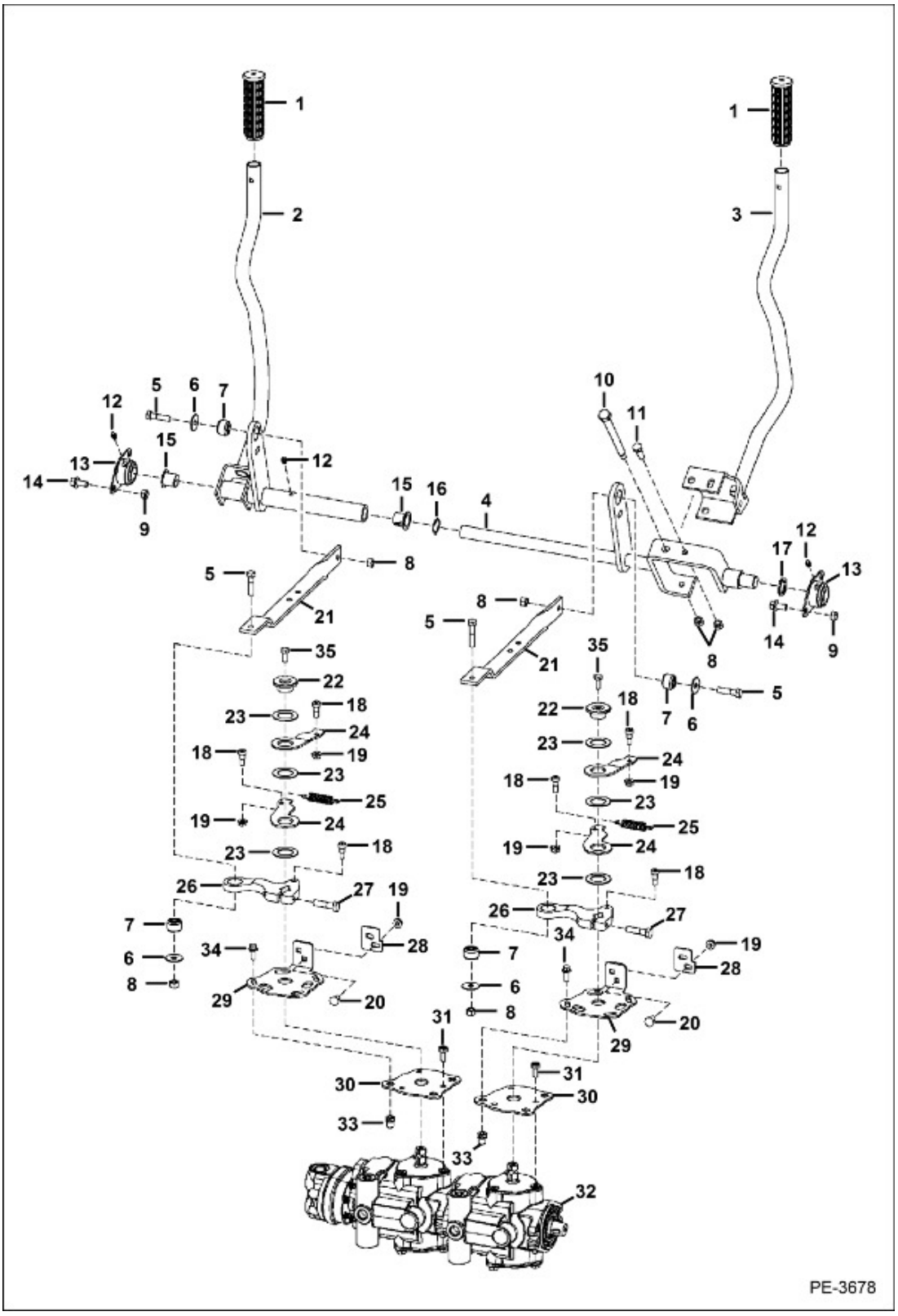

Title: Hand Controls (S/N A3W611001 - A3W613689, A3W711001 - A3W713379)
Model Number: S70
Serial Number: A3W611001 & Above, A3W711001 & Above

Ref.	Part Number	Description	S/N	Qty
1	6513963	GRIP HANDLE		2
2	7120753	LEVER, STEERING		1
3	7351454	LEVER STEERING ASSEMBLY, Was 6733306, A		1
4	7120755	SHAFT, STEERING		1
5	17C624	BOLT 5		4
6	6737388	WASHER HARDENED		4
7	6685060	BUSHING TORSION		4
8	95D6	NUT HEXAGON		6
9	85D6	NUT PRETRQ HEX LOCK		4
10	6553081	BOLT AUX PIVOT		1
11	17C620	BOLT		1
12	6518200	FITTNG, GREASE 10		3
13	6558736	BUSHING PIVOT		2
14	35C612	SCREW FLANGED HEAD CAP		4
15	6512027	BUSHING FLANGED		2
16	6599741	WASHER WAVE SPRING		1
17	7351452	WASHER FLAT, Was 6733130, A		1
18	38C606	BOLT		6
19	97D5	NUT FLGD HEX LOCK		8
20	37C512	BOLT SQ NECK RND HD		4
21	7351457	LINK STEERING, Was 7120686, A		2
22	7116772	BUSHING PIVOT		2
23	7116773	WASHER PLASTIC		6
24	7146433	LEVER, STOP		4
25	7152601	SPRING EXTENSION		2

Ref.	Part Number	Description	S/N	Qty
26	7153579	LEVER, PINTLE		2
27	55CM840	SCREW HEX W/T 10.9, Was 55CM1040, D		2
28	7148460	PLATE, SIDE		2
29	7351514	PLATE CONTROL, Was 7145181 Was 7171258, A		2
30	7156039	BRACE MOUNT PUMP		2
31	73G612	CAPSCREW		6
32		PUMP ASSY, PUMP ASSY, See Illustration, tandem		1
33	6813676	INSERT THREADED, threaded		6
34	59CM820	SCREW HX FLNG W/T8.8		6
35	55CM820	SCREW HEX CAP		2

Title: Hand Controls (S/N A3W613690 & Above, A3W713380 & Above)
Model Number: S70
Serial Number: A3W611001 & Above, A3W711001 & Above

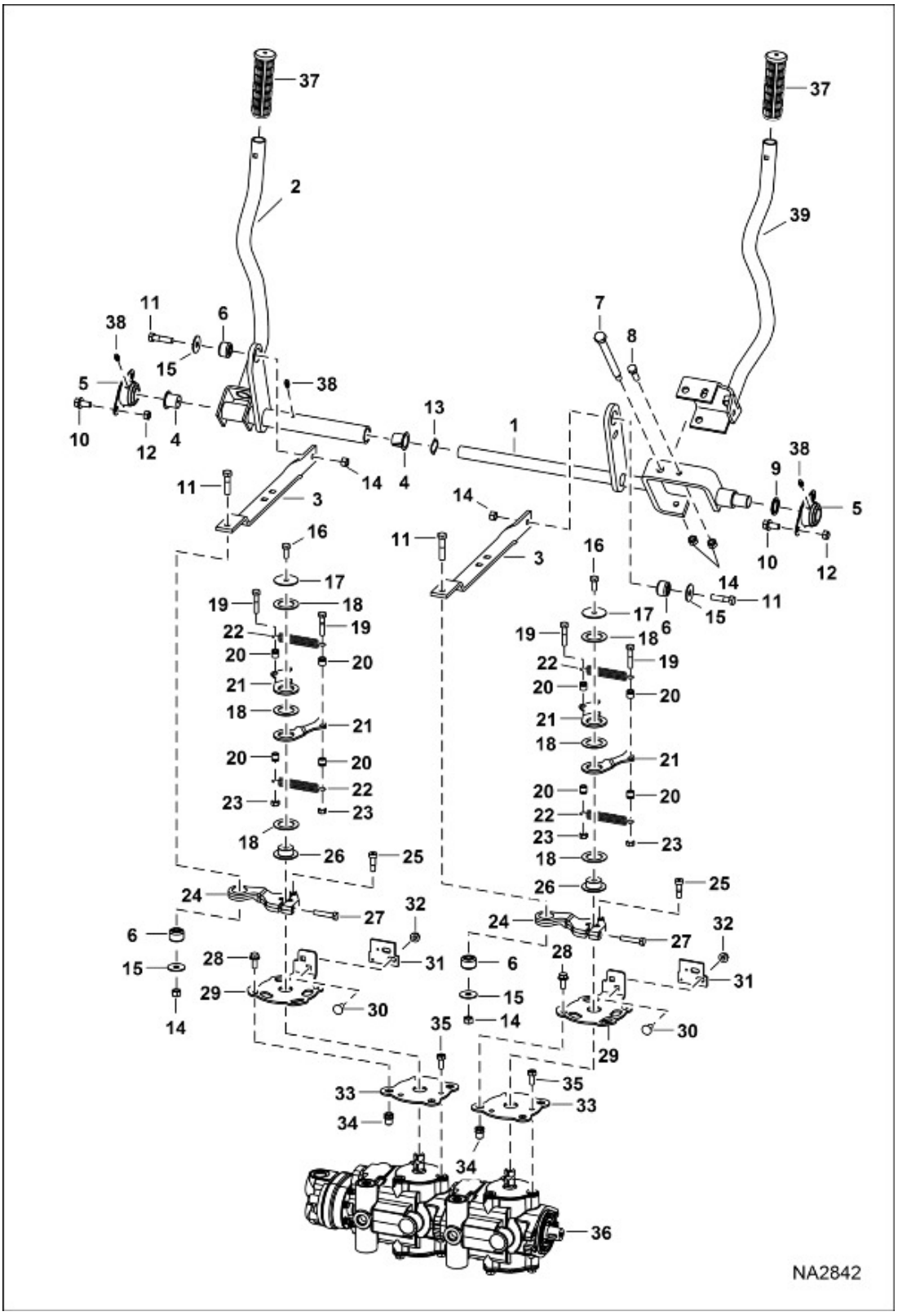

Ref.	Part Number	Description	S/N	Qty
1	7351520	SHAFT STEERING, Was 7173337, A		1
2	7351539	LEVER STEERING ASSEMBLY, Was 7173338, A		1
3	7351457	LINK STEERING, Was 7120686, A		2
4	6512027	BUSHING FLANGED		2
5	6558736	BUSHING PIVOT		2
6	6685060	BUSHING TORSION		4
7	6553081	BOLT AUX PIVOT		1
8	17C620	BOLT		2
9	7351452	WASHER FLAT, Was 6733130, A		1
10	35C612	SCREW FLANGED HEAD CAP		4
11	17C624	BOLT 5		4
12	85D6	NUT PRETRQ HEX LOCK		4
13	6599741	WASHER WAVE SPRING		1
14	95D6	NUT HEXAGON		6
15	6737388	WASHER HARDENED		4
16	55CM820	SCREW HEX CAP		2
17	7168208	WASHER		2
18	7116773	WASHER PLASTIC		6
19	17C524	BOLT		4
20	7170794	SPACER SPRING		8
21	7351458	LEVER SPRING, Was 7169565, A		4
22	7186580	SPRING EXTENSION		4
23	81D5	NUT PATCH HEX LOCK		4
24	7169714	LEVER PINTLE MACH		2
25	38C610	SCREW SHOULDER		2

Ref.	Part Number	Description	S/N	Qty
26	7168207	BUSHING PIVOT		2
27	55CM840	SCREW HEX W/T 10.9		2
28	59CM820	SCREW HX FLNG W/T8.8		6
29	7351514	PLATE CONTROL, Was 7171258, A		2
30	37C512	BOLT SQ NECK RND HD		4
31	7351513	PLATE ADJUST, Was 7171257, A		2
32	97D5	NUT FLGD HEX LOCK		4
33	7156039	BRACE MOUNT PUMP		2
34	6813676	INSERT THREADED		2
35	73G612	CAPSCREW		6
36		PUMP, PUMP, See Illustration		1
37	6513963	GRIP HANDLE		2
38	6518200	FITTNG, GREASE 10		3
39	7351454	LEVER STEERING ASSEMBLY, Was 6733306, A		1

Title: Heater - Mobile Climate Control
Model Number: S70
Serial Number: A3W611001 & Above, A3W711001 & Above

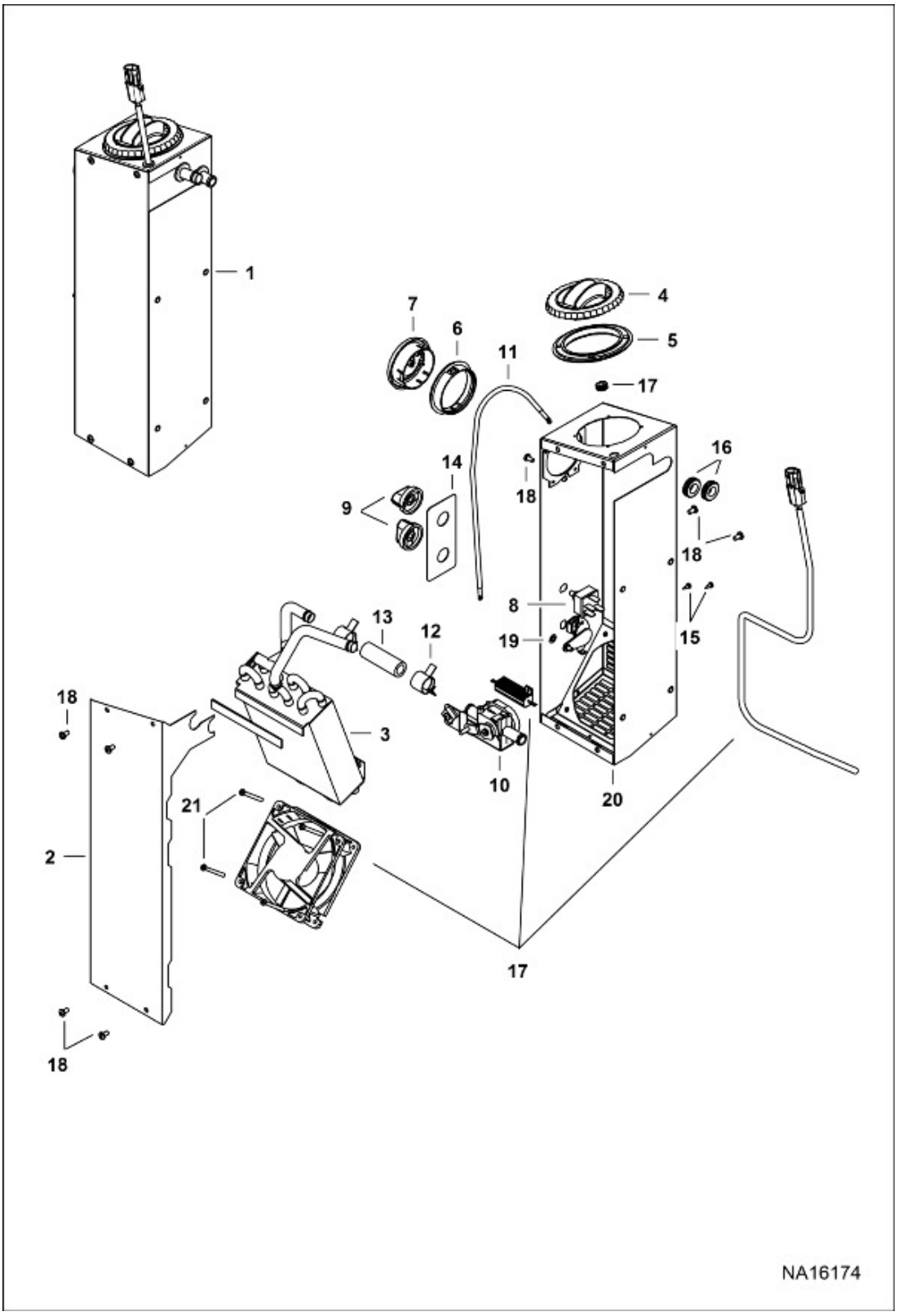

Title: Heater - Mobile Climate Control
Model Number: S70
Serial Number: A3W611001 & Above, A3W711001 & Above

Ref.	Part Number	Description	S/N	Qty
1	7012293	HEATER ASSY		1
2	7353135	COVER HEATER		1
3	7353103	COIL HEATER		1
4	6674231	VENT, HEATER CAB ROUND		1
5	6675179	FLANGE		1
6	7024725	RETAINER, HOLDER		1
7	7024726	LOUVER		1
8	6684939	SWITCH		1
9	6684940	KNOB		2
10	7353139	VALVE ASSEMBLY		1
11	7353137	CABLE BOWDEN		1
12	7003458	CLAMP, HOSE		1
13	7003457	HOSE, HEATER		1
14	7353138	DECAL CONTROL		1
15	6684951	SCREW		2
16	7003459	GROMMET		2
17	7353136	HARNESS WIRE		1
18	7011941	SCREW, MACHINE		7
19	7010692	PUSHNUT		2
20	7353104	HEATER CASE		1
21	6684953	SCREW		4

Title: Heater Kit (S/N A3W611001 - A3W613399, A3W711001 - A3W713235)
Model Number: S70
Serial Number: A3W611001 & Above, A3W711001 & Above

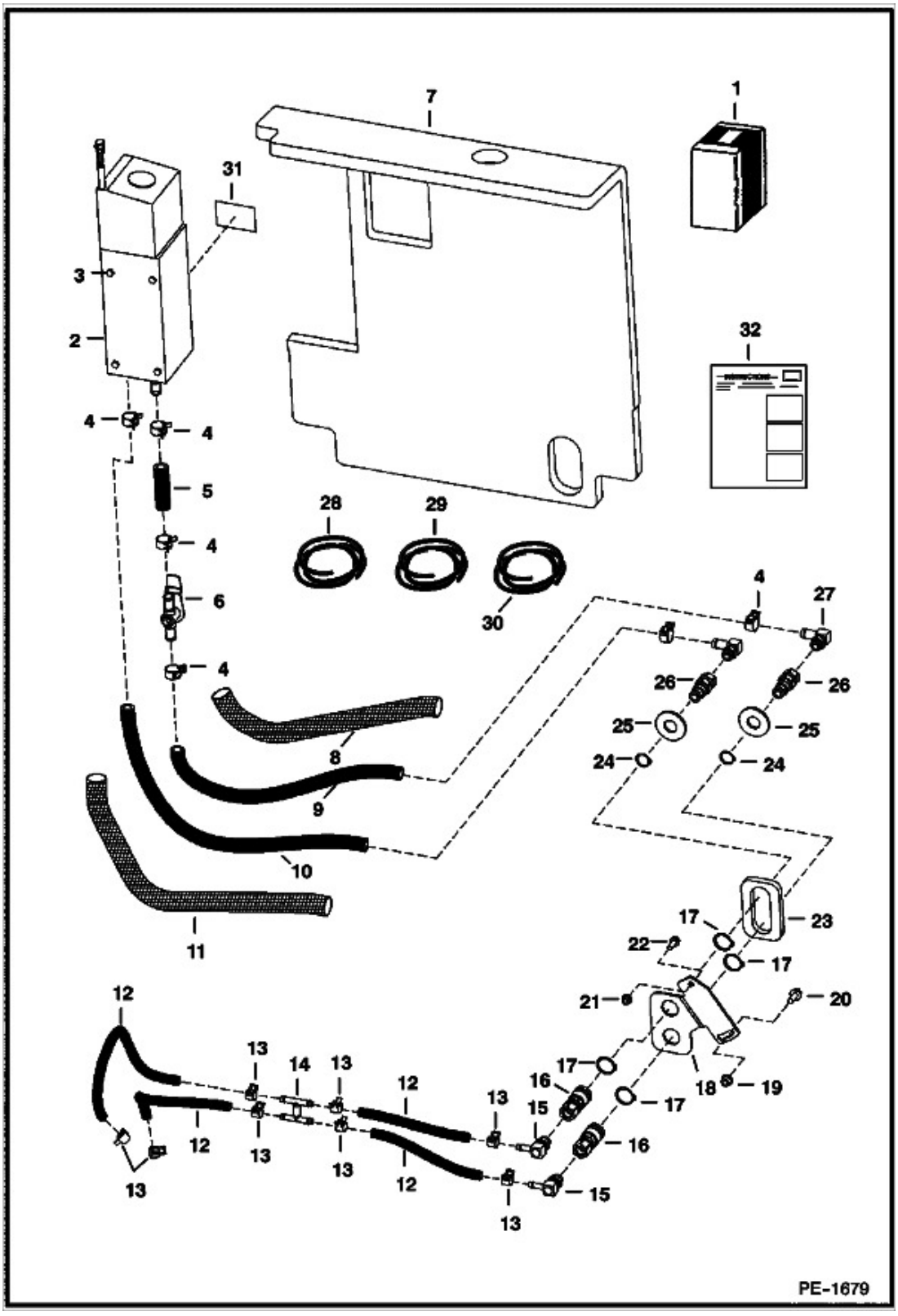

Title: Heater Kit (S/N A3W611001 - A3W613399, A3W711001 - A3W713235)
Model Number: S70
Serial Number: A3W611001 & Above, A3W711001 & Above

Ref.	Part Number	Description	S/N	Qty
1	7160319	KIT HEATER CAB, Ref. 2 - 32		1
2	7012293	HEATER ASSY, See Illustration		1
3	17C412	BOLT 5		4
4	5HM23	CLAMP HOSE		6
5		HOSE, HOSE		1
6		VALVE, VALVE, heater		1
7	7151156	INSULATION CAB BACK		1
8		HOSE COVER, HOSE COVER, NLA - 19"(483mm) long - Order Ref. 30		1
9		HOSE, HOSE, NLA - 20"(508mm) long - Order Ref. 28		1
10		HOSE, HOSE, NLA - 26"(660mm) long - Order Ref. 28		1
11		HOSE COVER, HOSE COVER, NLA - 25"(635mm) long - Order Ref. 30		1
12		HOSE, HOSE, NLA - 10"(254mm) long - Order Ref. 29		4
13	5HM15	CLAMP		8
14	6680949	FITTING H PATTERN, h pattern		1
15	6680951	FITTING 90 DEG BARB		2
16	6680917	COUPLER, FEM BRASS		2
17	5JM32	SNAP RING		4
18	6732857	BRACKET		1
19	83D6	NUT LOCK		1
20	35C614	BOLT		1
21	83D5	NUT LOCK		1
22	35C514	SCREW FLANGED HEAD CAP		1
23	6733884	SEAL, cab		1

Title: Heater Kit (S/N A3W611001 - A3W613399, A3W711001 - A3W713235)
Model Number: S70
Serial Number: A3W611001 & Above, A3W711001 & Above

Ref.	Part Number	Description	S/N	Qty
24	5JM24	RING, SNAP		2
25	6735284	WASHER		2
26	6680918	COUPLER, MAL BRASS		2
27	6680952	FITTING 90 DEG BARB		2
28	889269	HOSE BULK, bulk - sold per foot		x
29	6586251	HOSE BULK, sold per foot		x
30	6649389	HOSE,CVR BULK/FT, bulk - sold per foot		x
31	6732775	DECAL 463 HEATER		1
32	6902034ENUS	INSTRUCTIONS, Was 6902034, A		1

Title: Heater Kit (S/N A3W613400 & Above, A3W713236 & Above)
Model Number: S70
Serial Number: A3W611001 & Above, A3W711001 & Above

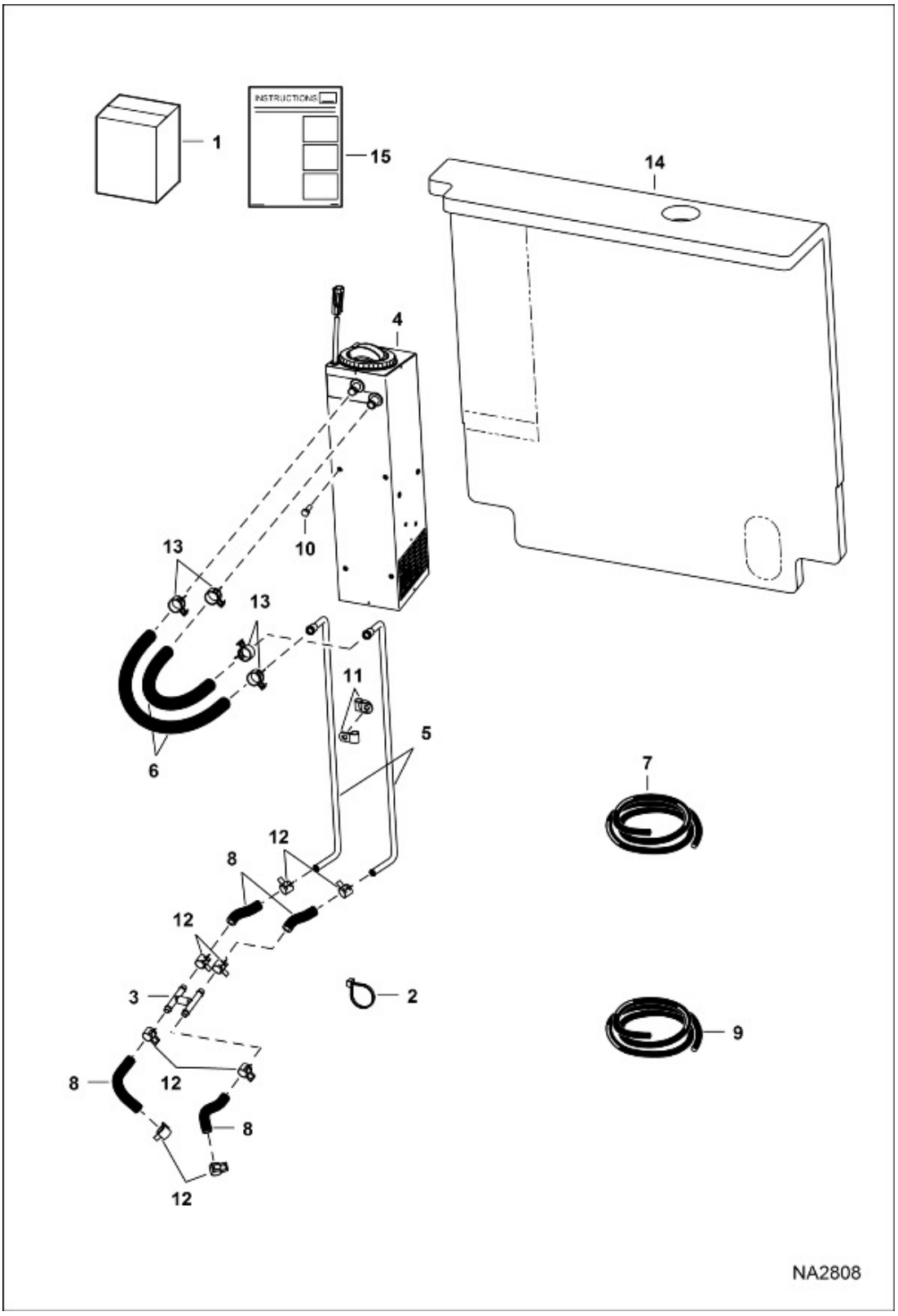

Title: Heater Kit (S/N A3W613400 & Above, A3W713236 & Above)
Model Number: S70
Serial Number: A3W611001 & Above, A3W711001 & Above

Ref.	Part Number	Description	S/N	Qty
1	7374940	KIT HEATER, Ref. 2-15 Was 7194019, A		1
2	6624289	STRAP, TIE		1
3	6680949	FITTING H PATTERN		1
4	7012293	HEATER ASSY, See Illustration		1
5	7351570	TUBELINE HYDRAULIC, Was 7183677, A		2
6		HOSE, HOSE, NSS - 12.50" (317.5 mm) - Order Ref. 7		2
7	6565977	HOSE HEATER BULK, sold per foot		x
8		HOSE, HOSE, NSS - 4" (101,6 mm) - Order Ref. 9		4
9	6709738	HOSE, bulk - sold per foot		x
10	1C412	SCREW HEX CAP		4
11	30H22	CLIP INSULATED		2
12	5HM17	CLAMP HOSE TYPE CTB, Was 5HM15, B		8
13	5HM20	CLAMP HOSE		4
14	7151156	INSULATION CAB BACK		1
15	7374941	INSTRUCTIONS, Was 6989742ENUS, A		1

Title: Horn Kit
Model Number: S70
Serial Number: A3W611001 & Above, A3W711001 & Above

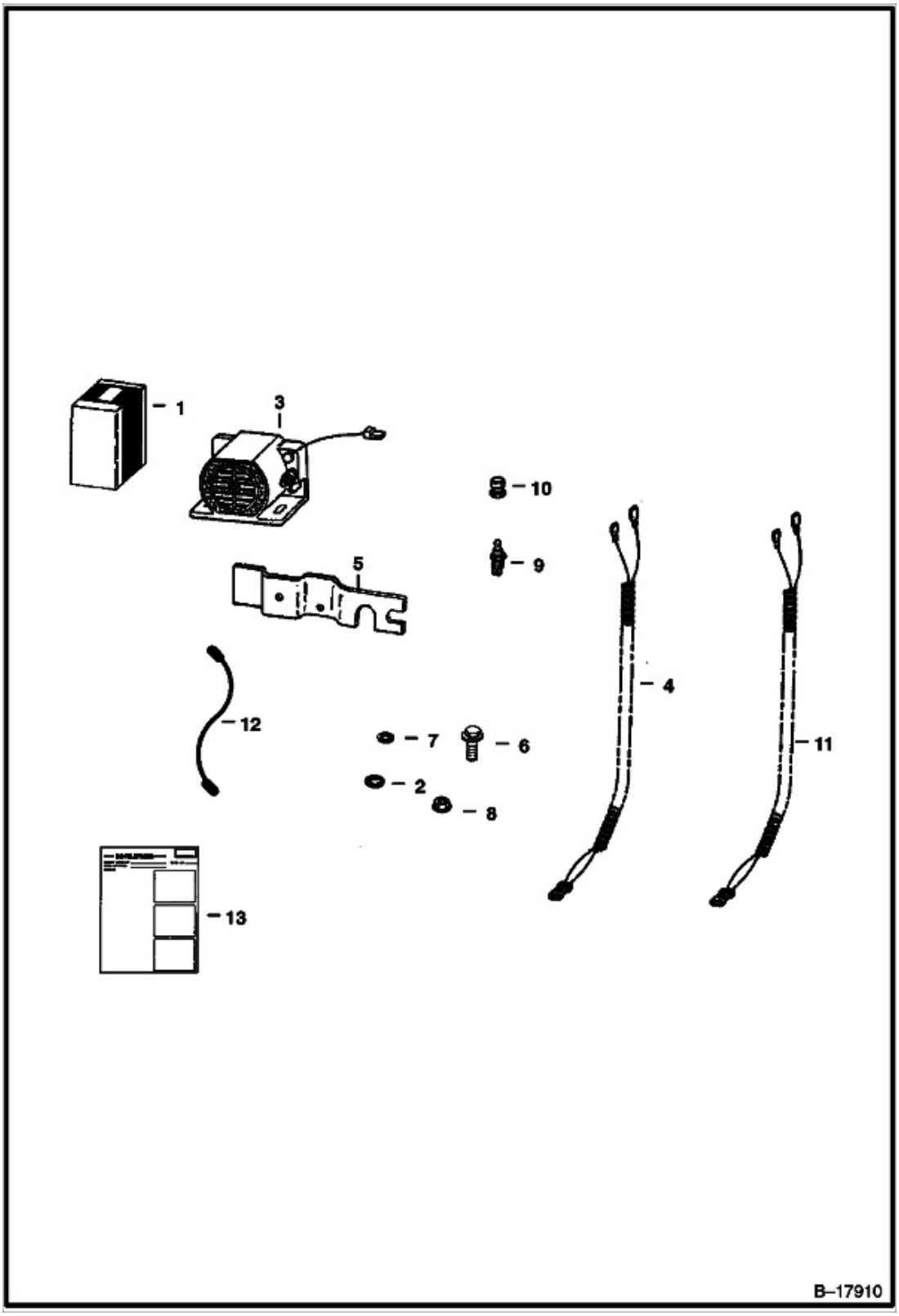

Title: Horn Kit
Model Number: S70
Serial Number: A3W611001 & Above, A3W711001 & Above

Ref.	Part Number	Description	S/N	Qty
1	7374208	KIT HORN, Ref. 2 - 13 - Was 6708548, A		1
2	25E21	WASHER FLAT PLAIN		1
3	6660294	ALARM HORN		1
4	6708506	HARNESS HORN		1
5	7351548	BRACKET HORN, Was 6704641, A		1
6	84G2516	SCREW THD ROLLING TT		1
7	25E13	WASHER FLAT PLAIN		2
8	59D4	NUT LOCK HEX PT		2
9	6513482	SWITCH PUSH-BUTTON		1
10	6660205	SEAL SWITCH ARMORED, switch		1
11	6709526	HARNESS		1
12	6714666	HARNESS, 57 inches		1
13	7375367	INSTRUCTIONS INSTALL, Was 6724162, A		1

Title: Hydraulic Circuitry (W/O Bucket Postion Valve)
Model Number: S70
Serial Number: A3W611001 & Above, A3W711001 & Above

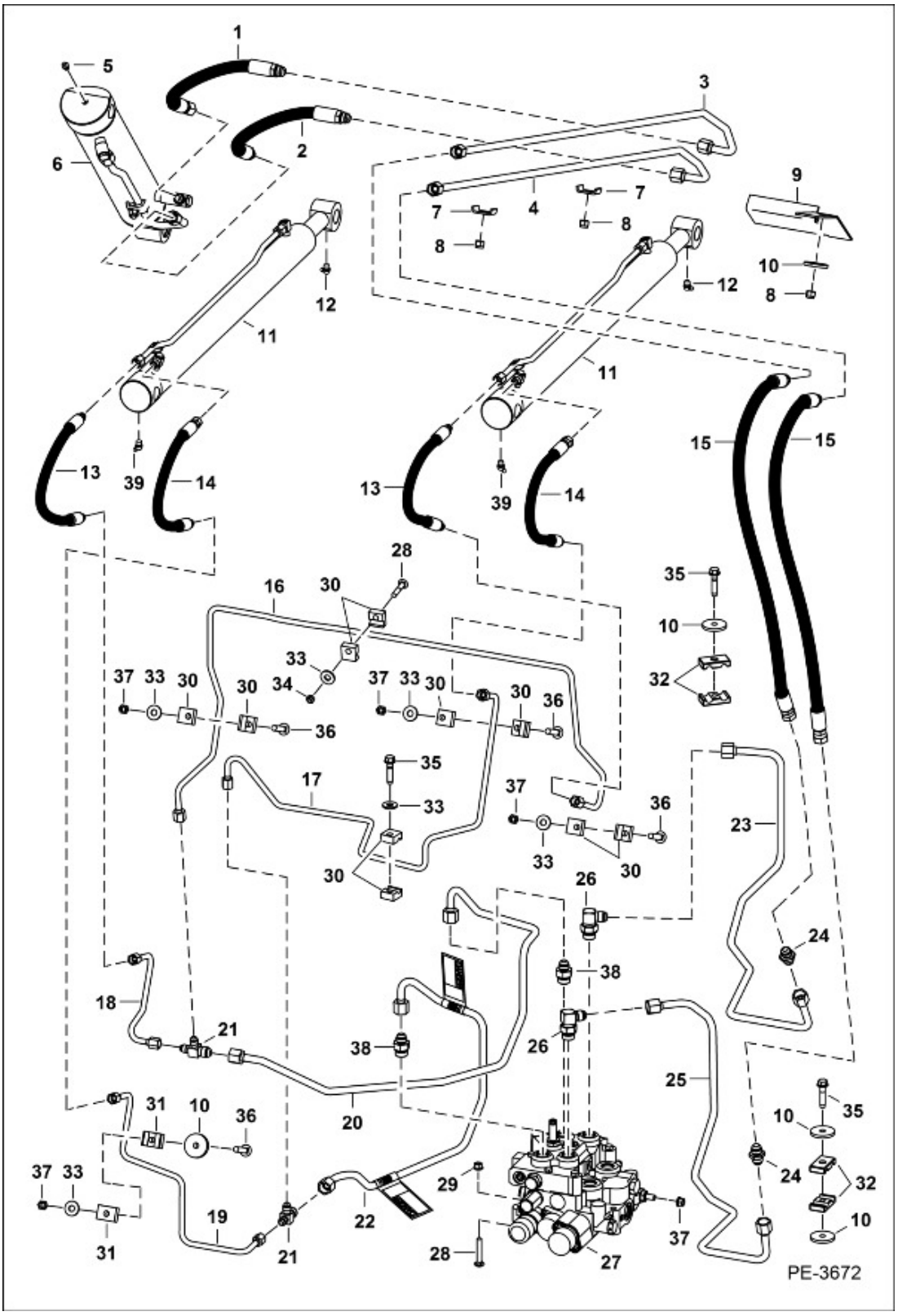

Title: Hydraulic Circuitry (W/O Bucket Postion Valve)
Model Number: S70
Serial Number: A3W611001 & Above, A3W711001 & Above

Ref.	Part Number	Description	S/N	Qty
1	6733737	HOSE HYDRAULIC ASSY		1
2	6733736	HOSE HYDRAULIC ASSY		1
3	7351082	TUBELINE HYDRAULIC, Was 6706073, A		1
4	7351081	TUBELINE HYDRAULIC, Was 6706072, A		1
5	10H25	FTG GREASE STRAIGHT		1
6		CYLINDER, CYLINDER, See Illustration, tilt		1
7	6500989	TUBE CLAMP		2
8	59D6	NUT LOCK HEX PT		3
9	7351080	COVER HOSE, Was 6553422, A		1
10	872229	WASHER		6
11		CYLINDER, CYLINDER, See Illustration, lift		2
12	12H15	FTG GREASE 90, 90 Degree Grease Zerk		2
13	7150720	HOSE LIFTARM		2
14	7150721	HOSE LIFTARM		2
15	6708501	HOSE HYDRAULIC ASSY		2
16	7351667	TUBELINE HYDRAULIC, Was 7154321, A		1
17	7351094	TUBELINE HYDRAULIC, Was 7154323, A		1
18	7351668	TUBELINE HYDRAULIC, Was 6732783, A		1
19	7351084	TUBELINE HYDRAULIC, Was 6732239, A		1
20	7351088	TUBELINE HYDRAULIC, Was 7130121, A		1
21	6719424	TEE HYDR STRTH		2
22	7351091	TUBELINE HYDRAULIC, available only as an assembly W/danger decal installed - Was 7132737, A		1
22	7170355	DECAL DANGER, Was 6809511, B		1
23	7351089	TUBELINE HYDRAULIC, Was 7130587, A		1

Title: Hydraulic Circuitry (W/O Bucket Postion Valve)
Model Number: S70
Serial Number: A3W611001 & Above, A3W711001 & Above

Ref.	Part Number	Description	S/N	Qty
24	87F6	UNION HYDR LARGE HEX		2
25	7351090	TUBELINE HYDRAULIC, Was 7130588, A		1
26	17KB0810	FTG HYD ELBOW 90		2
27		VALVE ASSY, VALVE ASSY, See Illustration		1
28	37C532	BOLT CARRIAGE GR5, carriage		2
29	83D5	NUT LOCK		1
30	6727707	CLAMP 2		10
31	7115645	CLAMP, Was 6726277, A		2
32	6701892	CLAMP TUBELINE		5
33	27E6	WASHER		5
34	85D5	NUT PRETRQ HEX LOCK		1
35	84G3732	BOLT		3
36	37C632	BOLT SQ NECK RD HD		4
37	95D6	NUT HEXAGON		5
38	15KB0810	FITTING, HYD CONNECTOR		2
39	11H15	FTG GREASE STRAIGHT, 45 Degree Grease Zerk		2

Title: Hydraulic Control Valve
Model Number: S70
Serial Number: A3W611001 & Above, A3W711001 & Above

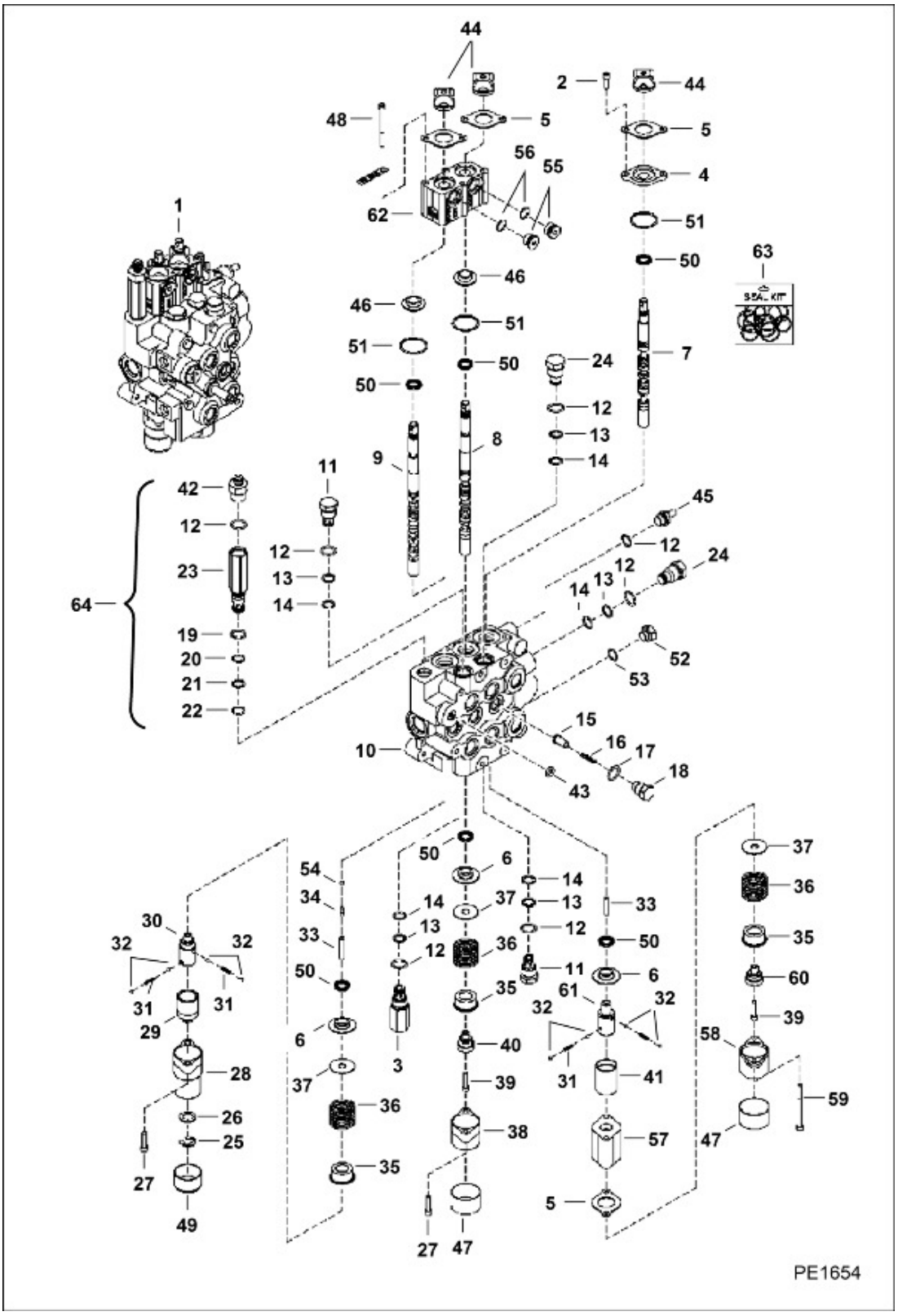

Title: Hydraulic Control Valve
Model Number: S70
Serial Number: A3W611001 & Above, A3W711001 & Above

Ref.	Part Number	Description	S/N	Qty
1		VALVE, CONTROL, VALVE, CONTROL, NLA - D series coil compatible - Ref. 2-62 - Order 7299538 control valve & 7272732 coil - Was 7133200, A		1
1	7299538	VALVE, CONTROL, E series coil compatible - Ref. 2-62		1
1		VALVE, VALVE, See Illustration, BICS		1
2	29G412	BOLT		2
3	6678552	RELIEF VLV ANTI-CAV, relief - W/Ref. 12-14		1
4	6589565	SEAL		1
5	6589564	RETAINER		4
6	6595663	BUSHING, Seal Backup		3
7	6813753	SPOOL AUX, auxiliary		1
8	6815152	SPOOL, TILT		1
9	6814511	SPOOL, LIFT		1
10		BODY, BODY, NSS		1
11	6667549	VALVE CHECK, anticav check - W/Ref. 12-14		2
12		O RING 10, O RING 10, Order Ref. 64		1
13	73K014	RING, BACK-UP 5, Was 80K14, B		1
14	58K014	O-RING, back-up washer required		1
14	6677106	O-RING, back-up washer not required		1
15	6592115	SEAT		3
16	6592117	SPRING, LOAD CHECK		3
17	79K8	O-RING		3
18	6592116	NUT		3
19		BACKUP WASHER, BACKUP WASHER, Order Ref. 64		1
20		O-RING 10, O-RING 10, Order Ref. 64		1

Ref.	Part Number	Description	S/N	Qty
21		WASHER, WASHER, Order Ref. 64		1
22		O-RING 10, O-RING 10, Order Ref. 64		1
23		VALVE, RELIEF 2 STAGE, VALVE, RELIEF 2 STAGE, NLA - W/Ref. 19-22 - Order 7013580 relief valve - Was 6683817, A		1
23		VALVE, RELIEF 2 STAGE, VALVE, RELIEF 2 STAGE, 052" orifice - Order Ref. 64		1
24	6592720	PLUG, W/Ref. 12-14		2
25	799119	RING		1
26	6592098	WASHER		1
27	29G416	BOLT		4
28	6589226	COVER, END, 0.63" flange		1
29	6531270	SLEEVE DETENT, lift		1
30	6587575	ADAPTER		1
31	6592107	SPRING, DETENT 5		4
32	6592105	BALL DETENT		8
33	6586918	SCREW, DETENT		2
34	6596807	PLUG, plastic - 0.46" long		1
35	6592100	COLLAR		3
36	6587580	SPRING		3
37	7211397	WASHER, SPRING, Was 6587523, A		3
38	7101345	BONNET, DETENT HYD VALVE		1
39	7102652	SCREW		2
40	6592109	ADAPTER		1
41	6813095	SLEEVE, auxiliary		1
42		FITTING, HYD CONNECTOR, FITTING, HYD CONNECTOR, Order Ref. 64		1

Ref.	Part Number	Description	S/N	Qty
43	55K204	O-RING		1
44	6587763	BOOT		3
45	6732357	PLUG BOLT, W/Ref. 12		1
46	7202038	BUSHING, ALIGNMENT, Also Order 82K019 alignment O-ring - Was 6805102, A		2
47	6662848	CAP		2
48	29G444	BOLT		4
49	6660644	CAP		1
50	6683274	SEAL, SPOOL 10, spool		6
51	1K127	O-RING		3
52	6816855	PLUG, W/Ref. 53		1
53	79K7	O-RING		2
54	54K20002	O-RING		1
55	90K6	PLUG, W/Ref. 56 - tapered boss face		2
55	47K6	PLUG, W/Ref. 56 - flat boss face		2
56	95K8	O-RING, tapered boss face		x
56	79K8	O-RING, flat boss face		x
57	6813097	BONNET		1
58	6813480	COVER		1
59	29G448	SCREW		2
60	6813098	ADAPTOR		1
61	6813096	ADAPTOR		1
62	7106751	BLOCK		1
63	6809425	KIT SEAL, Upper Deck - Ref. 12-14 & 17		1
63	6816252	KIT SEAL, Spool - Ref. 33, 44, 48, 50, 51 & 54		x

Title: Hydraulic Control Valve
Model Number: S70
Serial Number: A3W611001 & Above, A3W711001 & Above

Ref.	Part Number	Description	S/N	Qty
63	6661328	KIT SEAL, Main Relief - Ref. 19-22		1
63	6816253	KIT SEAL, Complete Valve - Ref. 2, 12 -14, 17, 20, 21, 27, 43, 44, 48, 50, 51 & 53 - also Order 6816252 seal kit		1
64	7013580	VALVE, RELIEF 2 STAGE, .052" orifice - W/Ref. 12, 19-23 & 42		1

Title: Hydrostatic Circuitry (Cooler)
Model Number: S70
Serial Number: A3W611001 & Above, A3W711001 & Above

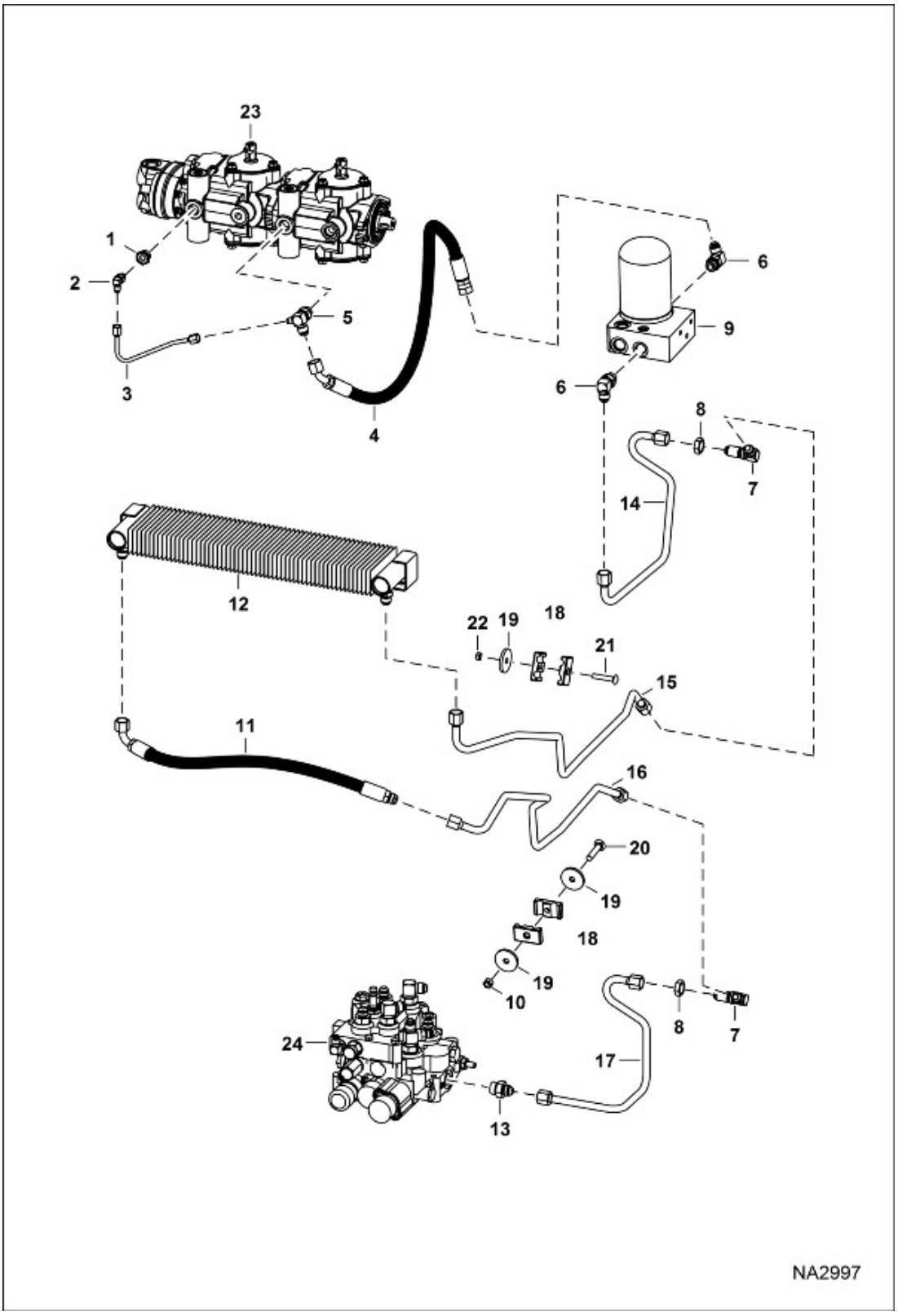

Title: Hydrostatic Circuitry (Cooler)
Model Number: S70
Serial Number: A3W611001 & Above, A3W711001 & Above

Ref.	Part Number	Description	S/N	Qty
1	7155022	FTG REDUCER		1
2	17KB0404	FTG HYD ELBOW 90		1
3	7351096	TUBELINE HYDRAULIC, Was 7155023, A		1
4	7156033	HOSE HYDRAULIC ASSY		1
5	7156069	FTG HYD TEE		1
6	17KB0808	FTG HYD 90 ELBOW		3
7	88F6	ELBOW		2
8	86F6	NUT HYDR BHD LOCK		2
9		FILTER BLOCK, FILTER BLOCK, See Illustration		1
10	95D6	NUT HEXAGON		1
11	6732330	HOSE HYDRAULIC ASSY		1
12	7301554	EXCHANGER OIL COOLER, Was 6732772, A		1
13	15KB0810	FITTING, HYD CONNECTOR		1
14	7351284	TUBELINE HYDRAULIC, Was 6734904, A		1
15	7351282	TUBELINE HYDRAULIC, Was 6732316, A		1
16	7351283	TUBELINE HYDRAULIC, Was 6732329, A		1
17	7351281	TUBELINE HYDRAULIC, Was 6732269, A		1
18	6701892	CLAMP TUBELINE		4
19	872229	WASHER		3
20	37C632	BOLT SQ NECK RD HD		1
21	37C532	BOLT CARRIAGE GR5		1
22	85D5	NUT PRETRQ HEX LOCK		1
23		PUMP, PUMP, See Illustration, tandem		1
24		VALVE, VALVE, See Illustration		1

Title: Hydrostatic Circuitry (Tank & FIlter)
Model Number: S70
Serial Number: A3W611001 & Above, A3W711001 & Above

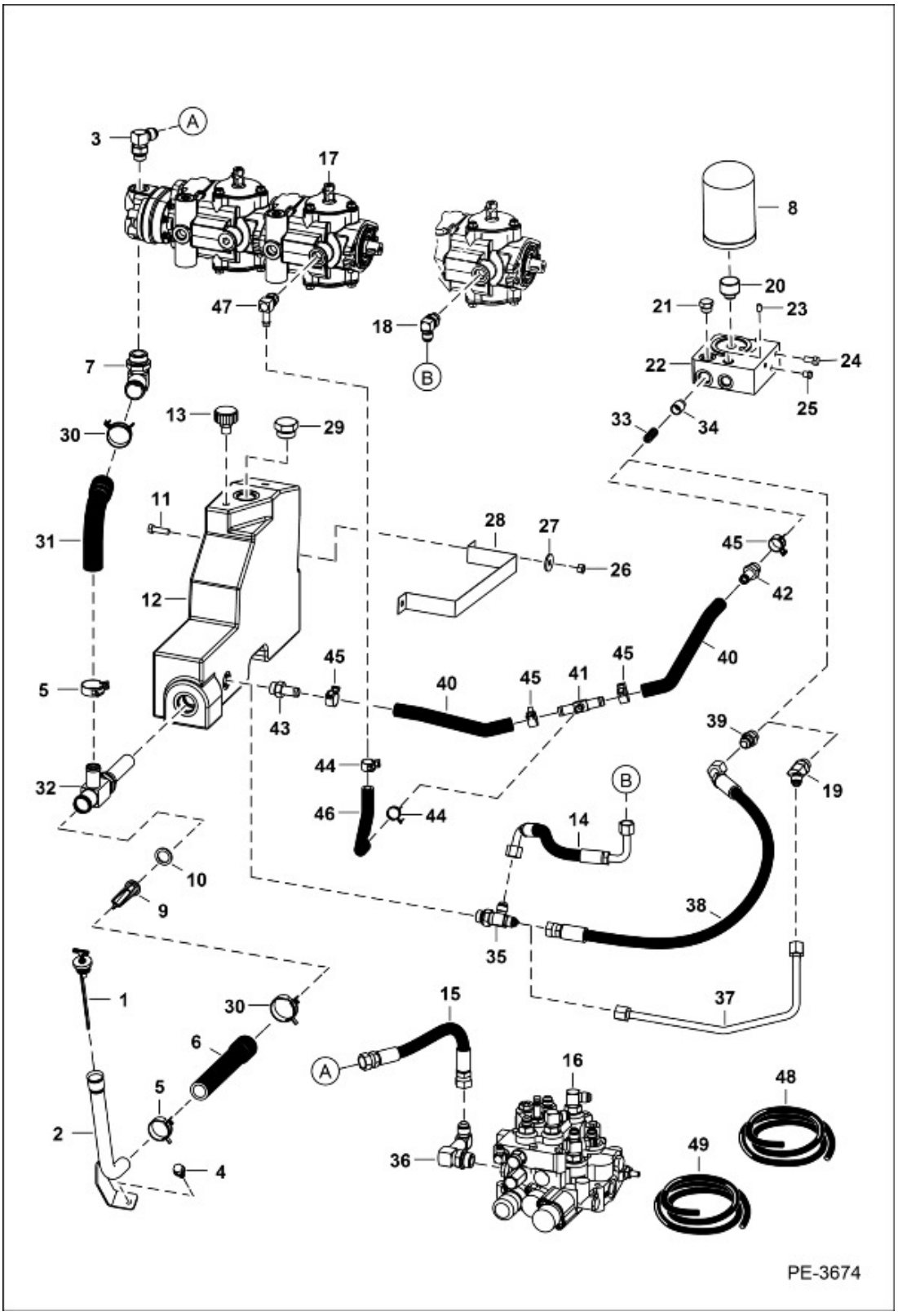

Ref.	Part Number	Description	S/N	Qty
1	6564143	DIPSTICK HYDR		1
2	7351278	TUBE FILL, Was 6732254, A		1
3	17KB1010	FTG HYD ELBOW 90		1
4	84G3112	SCREW THD ROLLING TT		1
5	5HM35	CLAMP HOSE		2
6	6714557	HOSE HYDRAULIC, hyd fill		1
7	1312337	ADAPTER ELBOW, W/Ref. 17		1
8	6677652	FILTER, OIL HYD		1
9	6732215	FILTER HYDRAULIC		1
10	6729189	SEAL HYDRA FILL		1
11	1C620	SCREW HEX CAP		2
12	6714556	TANK HYDRAULIC		1
13	7025626	VENT, BREATHER, Was 6682923, A		1
14	7156031	HOSE HYDRAULIC ASSY		1
15	6734176	HOSE HYDRAULIC ASSY		1
16		VALVE, VALVE, See Illustration		1
17		PUMP, PUMP, See Illustration, tandem		1
18	17KB0808	FTG HYD 90 ELBOW		1
19		ELBOW, ELBOW, NLA - Order Ref. 40-47 - Was 7156161, A		1
20	6563977	INSERT PORT BLOCK		1
21	24K6	PLUG HYDR ORING BOSS		1
22	6734226	PORTBLOCK FILTER		1
23	6563920	FILTER SNUBBER		1
24	17C612	SCREW HEX CAP		2
25	40K2	PLUG HEX		1

Ref.	Part Number	Description	S/N	Qty
26	95D6	NUT HEXAGON		2
27	619021	WASHER		2
28	7351276	BAND TANK, Must be formed to fit tank - Was 6564151, A		1
29	24K10	PLUG HYD O-RING BOSS		1
30	5HM42	CLAMP HOSE, Was 5HM38, B		2
31	6733666	HOSE SUCTION		1
32	6727935	TEE HYDRA FILL		1
33		SPRING, COMPRESSION, SPRING, COMPRESSION, NLA - 586 kpa (85 psi) rating - Order 7187356 spring - Was 6563978, B		1
33	7187356	SPRING COMPRESSION, 862 kpa (125 psi) rating - W/blue mark		1
34	7320430	VALVE POPPET, Was 6734350, A		1
35		TEE, TEE, NLA - Use W/tubeline - Order Ref. 40-47 - Was 21KB810, B		1
35		TEE, TEE, NLA - Order Ref. 40-47 - Was 7172537, A		1
36	6681494	FITTING HYDRAULIC		1
37		TUBELINE, HYD, TUBELINE, HYD, NLA - Order Ref. 40-47 - Was 7156032, A		1
38		HOSE, HYD, HOSE, HYD, NLA - Order Ref. 40-47 - Was 7172408, A		1
39	6562656	ADAPTOR		1
40		HOSE, HOSE, NLA - 247,6 mm (9.75") long - Order Ref. 49		2
41	7176717	FTG TEE BEAD		1
42	7181088	FTG STR BEAD		1
43	7181176	FTG STR BEAD		1
44	5HM20	CLAMP HOSE		2
45	5HM23	CLAMP HOSE		4
46		HOSE, HOSE, NLA - 247,7 mm (9.75") long - Order Ref. 48		1

Ref.	Part Number	Description	S/N	Qty
47	7183678	FTG 90 ORING BEAD		1
48	6578171	HOSE BULK, bulk - sold per foot - Was 6654057, B		x
49	6578172	HOSE BULK, sold per foot		x

Title: Hydrostatic Circuitry
Model Number: S70
Serial Number: A3W611001 & Above, A3W711001 & Above

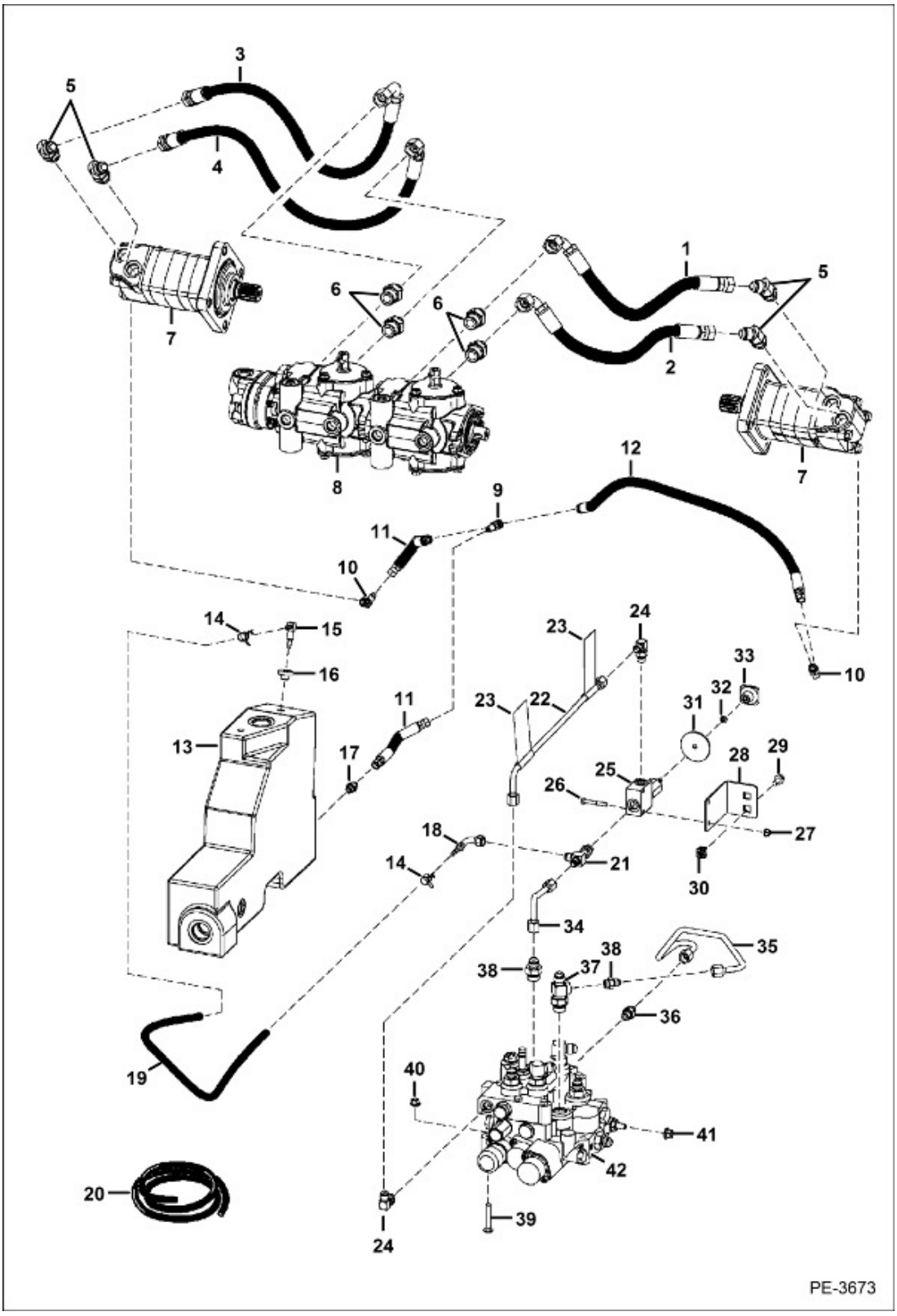

Title: Hydrostatic Circuitry
Model Number: S70
Serial Number: A3W611001 & Above, A3W711001 & Above

Ref.	Part Number	Description	S/N	Qty
1	7130347	HOSE HYDRAULIC ASSY		1
2	7130348	HOSE HYDRAULIC ASSY		1
3	7130349	HOSE HYDRAULIC ASSY		1
4	7130350	HOSE HYDRAULIC ASSY		1
5	18KB1010	FTG HYD ELBOW 45		4
6	15KB1012	FTG HYD S CONNECTOR		4
7		MOTOR, MOTOR, See Illustration		1
8		PUMP, PUMP, See Illustration		1
9	10K3	FTG HYDR UNION TEE		1
10	17KB0404	FTG HYD ELBOW 90		2
11	6728469	HOSE HYDRAULIC ASSY		2
12	6728470	HOSE HYDRAULIC ASSY		1
13	6714556	TANK HYDRAULIC		1
14	5HM13	CLAMP CT HOSE		2
15	6598908	ELBOW BARBED		1
16	6553411	BUSHING PRESS FIT		1
17	15KB0404	FTG HYD S CONNECTOR		1
17	79K4	O-RING		x
18	7351277	FITTING ELBOW, Was 6680431, A		1
19		HOSE, HOSE, 381 mm (15") long - Order Ref. 20		1
20	6577821	HOSE BULK, sold per foot		x
21	6805243	FITTING ELBOW		1
22	7351288	TUBELINE HYDRAULIC, W/Ref. 23 - available only as an assembly W/two danger decals installed - Was 6733986, A		1
23	7170355	DECAL DANGER, Was 6809511, B		2

Ref.	Part Number	Description	S/N	Qty
24	17KB0606	FTG HYD 90 ELBOW		2
25	7230495	LIFTARM BYPASS, manual lift release - Was 6667844, A		1
26	17C428	BOLT		2
27	83D4	NUT LOCK		2
28	7351287	BRACKET BYPASS, Was 6732299, A		1
29	35C512	SCREW FLANGED HEAD CAP		2
30	6678765	NUT SELF RETAINING		2
31	6707101	SEAL NEOPRENE		1
32	7D4	NUT HEX JAM		1
33	6737524	HANDLE CONTROL		1
34	7351291	TUBELINE HYDRAULIC, Was 7130546, A		1
35	7348125	TUBELINE HYDRAULIC, Was 6736035, A		1
36	15KB0610	FITTING, HYD CONNECTOR		1
37	6736553	TEE		1
38	15KB0606	FITTING, HYD CONNECTOR		2
39	37C532	BOLT CARRIAGE GR5		1
40	83D5	NUT LOCK		1
41	83D6	NUT LOCK		1
42		VALVE ASSY, VALVE ASSY, See Illustration		1

Title: Hydrostatic Motor (167-0005-001)
Model Number: S70
Serial Number: A3W611001 & Above, A3W711001 & Above

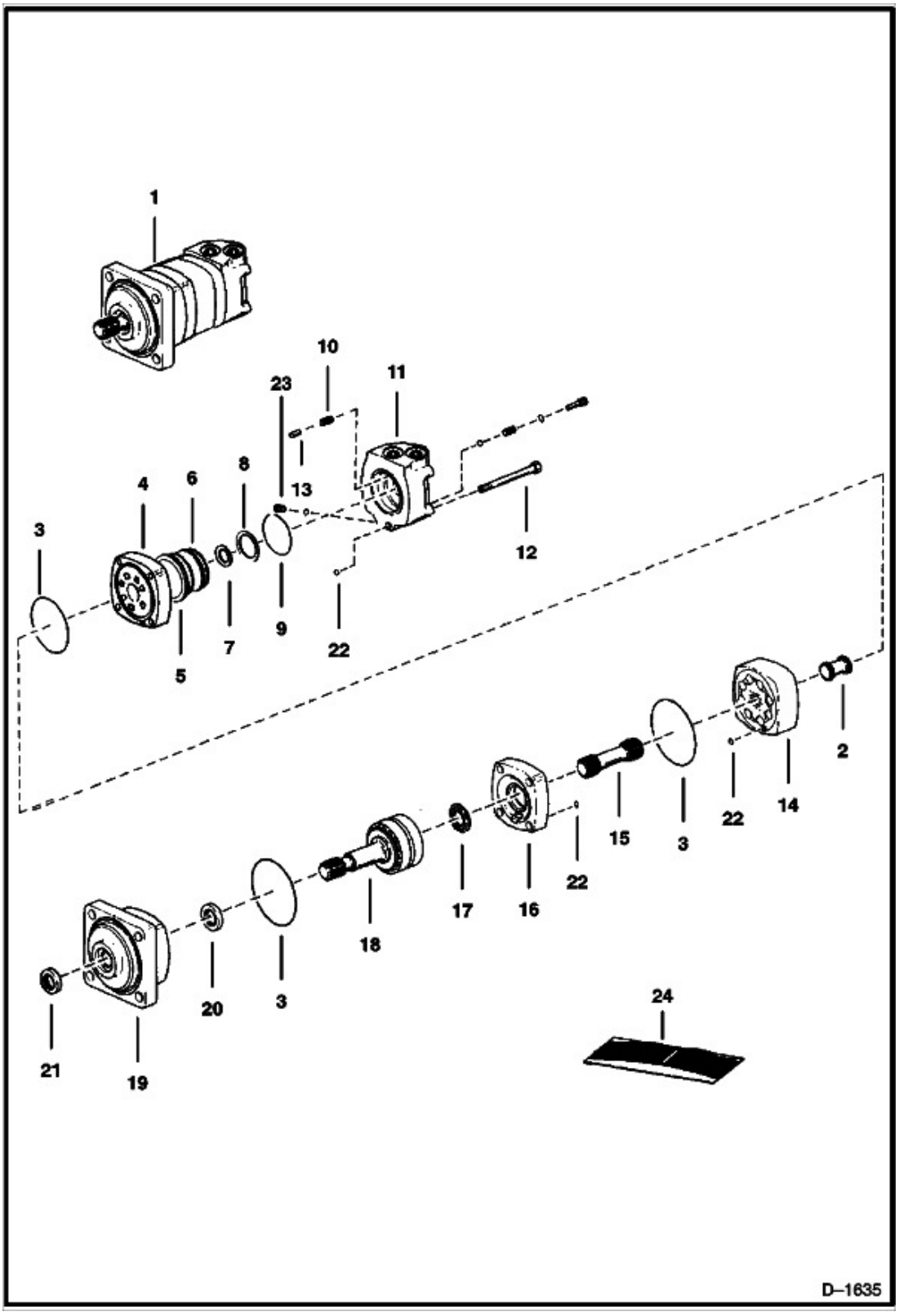

Title: Hydrostatic Motor (167-0005-001)
Model Number: S70
Serial Number: A3W611001 & Above, A3W711001 & Above

Ref.	Part Number	Description	S/N	Qty
1	6674304	MOTOR, DRIVE HYD		1
2	6674398	SHAFT		1
3		SEAL, SEAL, NSS		3
4	6674397	PLATE, valve		1
5	6632288	VALVE		1
6	6630027	PLATE		1
7		SEAL, SEAL, NSS - inner		1
8		SEAL, SEAL, NSS - outer		1
9		SEAL, SEAL, NSS		1
10	1992088	SPRING		2
11	6632348	HOUSING, W/Ref. 23 & 24		1
12	6651950	BOLT		4
13	1992102	PIN		2
14	6674396	GEROLER		1
15	6674395	SHAFT		1
16	6674394	PLATE, wear		1
17		SEAL, SEAL, NSS		1
18	6674393	BEARING A, W/Shaft		1
19	6674399	HOUSING		1
20		SEAL, SEAL, NSS		1
21		SEAL, SEAL, NSS		1
22		O-RING, O-RING, NSS		3
23	1992104	PLUG, W/O-Ring		2
24	6677775	KIT SEAL, Ref. 3, 7-9, 17 & 20-22		1

Title: Hydrostatic Pump (Gear Pump End)
Model Number: S70
Serial Number: A3W611001 & Above, A3W711001 & Above

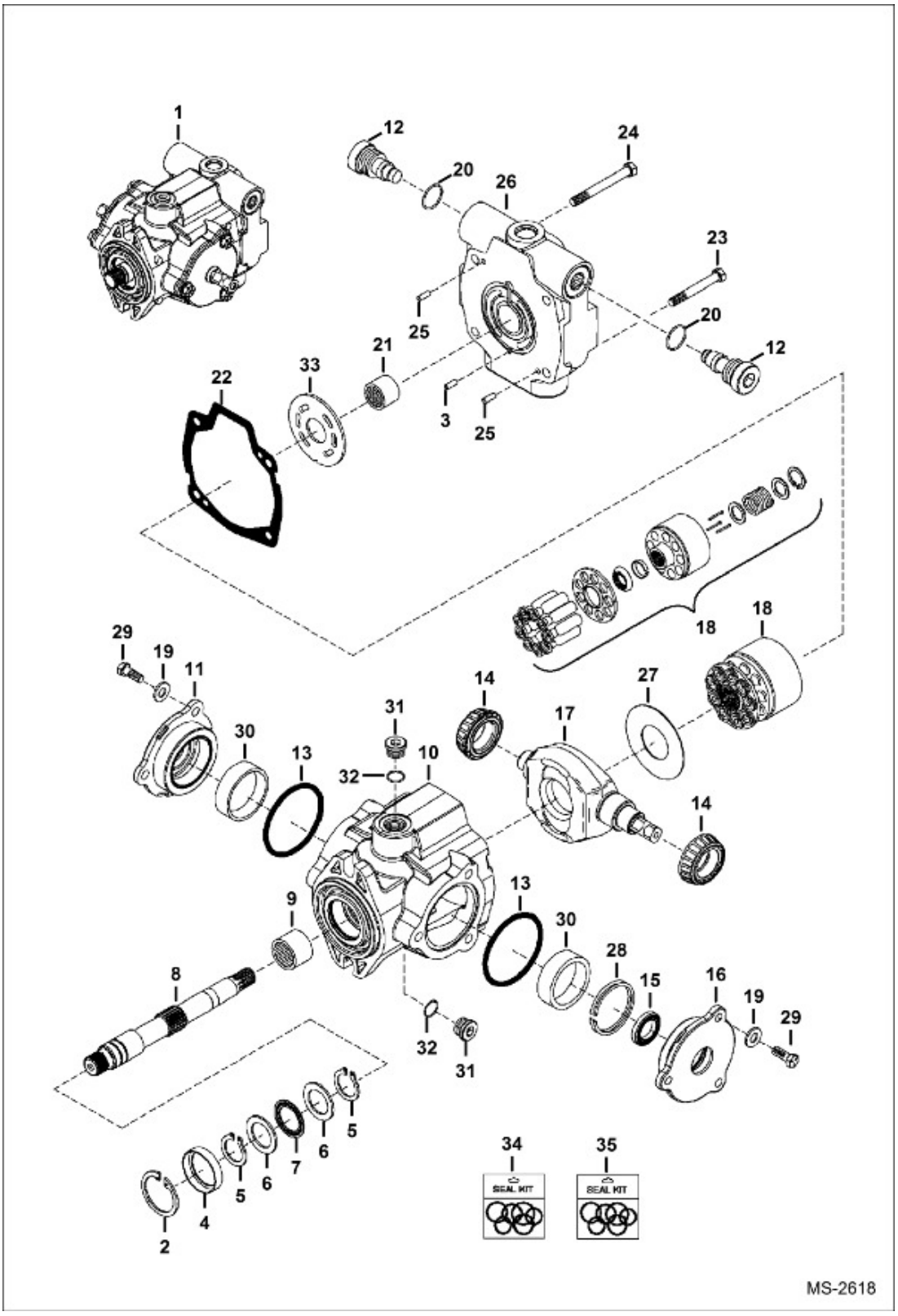

Title: Hydrostatic Pump (Gear Pump End)
Model Number: S70
Serial Number: A3W611001 & Above, A3W711001 & Above

Ref.	Part Number	Description	S/N	Qty
1	7000310	PUMP PISTON, New - 70160-LCB-03 - Gear pump end - Ref. 2-33		1
2	661415	SNAP RING		1
3	6677588	PIN		3
4	6677591	SPACER		1
5	710776	RING, RETAINER		2
6	6598878	RACE		2
7	3292657	BEARING, thrust		1
8	6692500	SHAFT, DRIVE		1
9	851239	BEARING		1
10	6677589	HOUSING, Also Order Ref. 34 - W/Ref. 9		1
11	6677600	COVER		1
12	6681916	RELIEF VALVE, W/Ref. 20		2
13	6677605	O-RING		2
14	6677598	BEARING		2
15	6656353	SHAFT SEAL		1
16	6677599	COVER, Also Order Ref. 34		1
17	6692491	SWASHPLATE, yoke - Also Order Ref. 34		1
18	6598893	KIT ROTATING		1
19	6677593	WASHER		6
20	6677596	O-RING		2
21	654386	BEARING		1
22		GASKET, GASKET, NSS - Order Ref. 35		1
23	6677601	CAP SCREW		2
24	7000315	BOLT		2
25	214028	PIN		2

Title: Hydrostatic Pump (Gear Pump End)
Model Number: S70
Serial Number: A3W611001 & Above, A3W711001 & Above

Ref.	Part Number	Description	S/N	Qty
26	6691484	HOUSING, W/Ref. 21		1
27	6677592	PLATE, THRUST, thrust		1
28		CRUSH RING, CRUSH RING, NSS - Order Ref. 34		1
29	6691485	BOLT		6
30	6677603	BEARING, bearing		2
31	6677607	PLUG, W/Ref. 32		2
32	6634874	O-RING		1
33	6692493	PLATE VALVE		1
34	6677502	KIT SHIM		1
35	6692334	KIT SEAL		1

Title: Hydrostatic Pump (Pulley End)
Model Number: S70
Serial Number: A3W611001 & Above, A3W711001 & Above

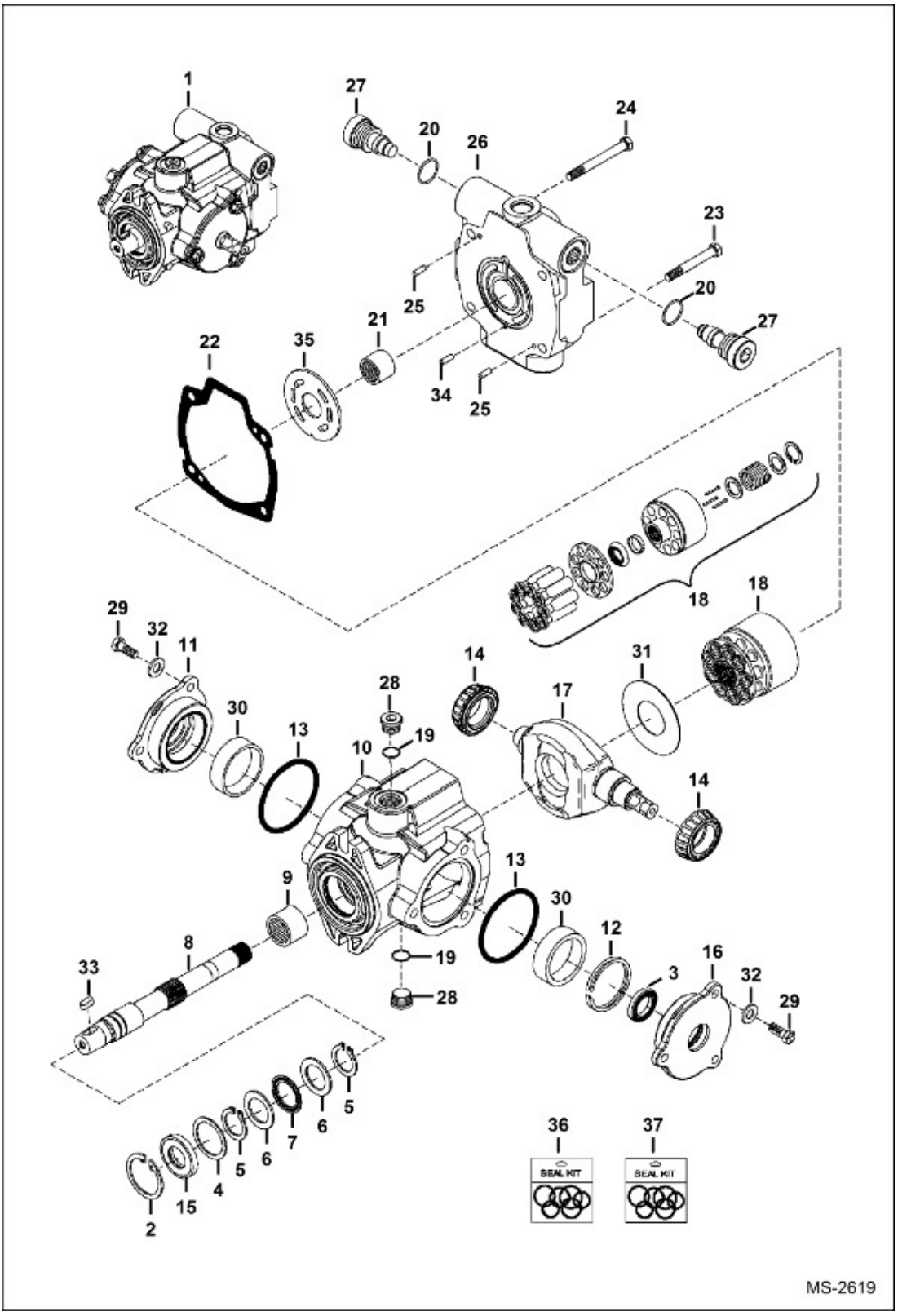

Title: Hydrostatic Pump (Pulley End)
Model Number: S70
Serial Number: A3W611001 & Above, A3W711001 & Above

Ref.	Part Number	Description	S/N	Qty
1	7000309	PUMP PISTON, New - 70160-LCA-03 - Pulley end of pump - Ref. 2 - 35		1
2	661415	SNAP RING		1
3	6656353	SHAFT SEAL		1
4	6598875	WASHER		1
5	710776	RING, RETAINER		2
6	6598878	RACE		2
7	3292657	BEARING, thrust		1
8	6691483	SHAFT, drive - tapered		1
9	851239	BEARING		1
10	6677610	HOUSING, W/Ref. 9 - Also Order Ref. 36		1
11	6677600	COVER		1
12		CRUSH RING, CRUSH RING, NSS - Order Ref. 36		1
13	6677605	O-RING		2
14	6677598	BEARING		2
15	6635527	SHAFT SEA		1
16	6677599	COVER, Also Order Ref. 36		1
17	6692491	SWASHPLATE, yoke - Also Order Ref. 36		1
18	6598893	KIT ROTATING		1
19	6634874	O-RING		2
20	6677596	O-RING		2
21	654386	BEARING		1
22		GASKET, GASKET, NSS - Order Ref. 37		1
23	6677601	CAP SCREW		2
24	6677602	CAP SCREW		2

Title: Hydrostatic Pump (Pulley End)
Model Number: S70
Serial Number: A3W611001 & Above, A3W711001 & Above

Ref.	Part Number	Description	S/N	Qty
25	214028	PIN		2
26	6691484	HOUSING, W/Ref. 21		1
27	6681916	RELIEF VALVE, W/Ref. 20		2
28	6677607	PLUG, W/Ref. 19		2
29	6691485	BOLT		6
30	6677603	BEARING, bearing		2
31	6677592	PLATE, THRUST, swash		1
32	6677593	WASHER		6
33	6598880	KEY		1
34	6677588	PIN		3
35	6692493	PLATE VALVE		1
36	6677502	KIT SHIM		1
37	6692334	KIT SEAL		1

Title: Hydrostatic Pump
Model Number: S70
Serial Number: A3W611001 & Above, A3W711001 & Above

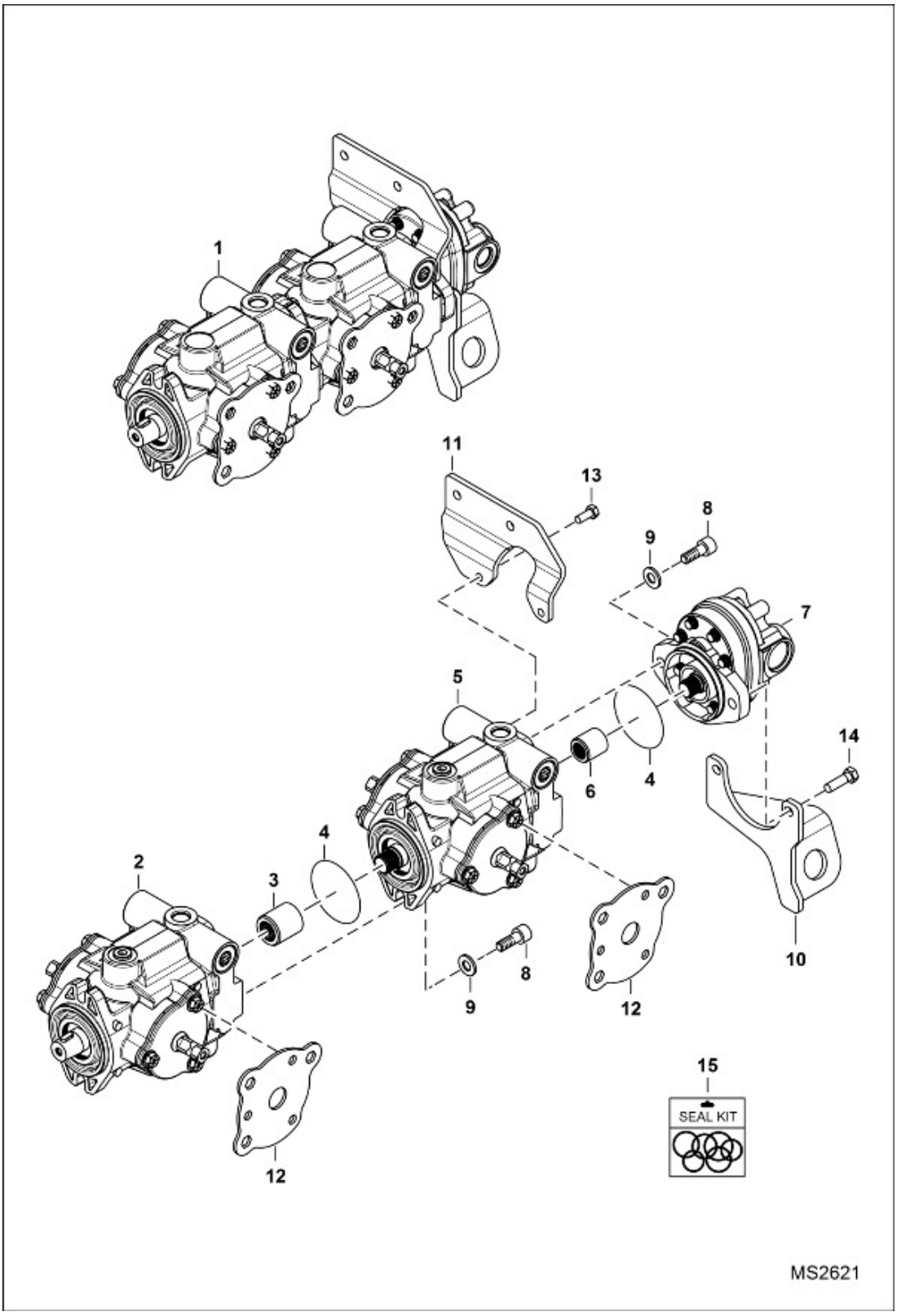

Title: Hydrostatic Pump
Model Number: S70
Serial Number: A3W611001 & Above, A3W711001 & Above

Ref.	Part Number	Description	S/N	Qty
1	7120536	PUMP ASSY HYD, New - Ref. 2-15 - tapered keyed front shaft - pumps are white in color - 78163-LAL-03 - Was 6691077, D		1
1	7120536REM	PUMP HYDRAULIC		1
2		PUMP, PUMP, See Illustration, new - tapered shaft		1
3	6598855	COUPLER		1
4	25K20308	O-RING		2
5		PUMP, PUMP, See Illustration, new		1
6	6677650	COUPLER		1
7		GEAR PUMP, GEAR PUMP, See Illustration		1
8	6692508	BOLT		4
9	6677593	WASHER		4
10	7112260	MOUNT ENGINE PUMP, See Illustration		1
11	7117339	MOUNT ENGINE PUMP, See Illustration		1
12	7156039	BRACE MOUNT PUMP, See Illustration		2
13	1C512	SCREW HEX CAP, See Illustration		2
14	1C620	SCREW HEX CAP, See Illustration		2
15	6692334	KIT SEAL, Use qty. (1) for each piston pump, Ref. 2 & 5		2

Title: Injection Pump & Fuel Pump
Model Number: S70
Serial Number: A3W611001 & Above, A3W711001 & Above

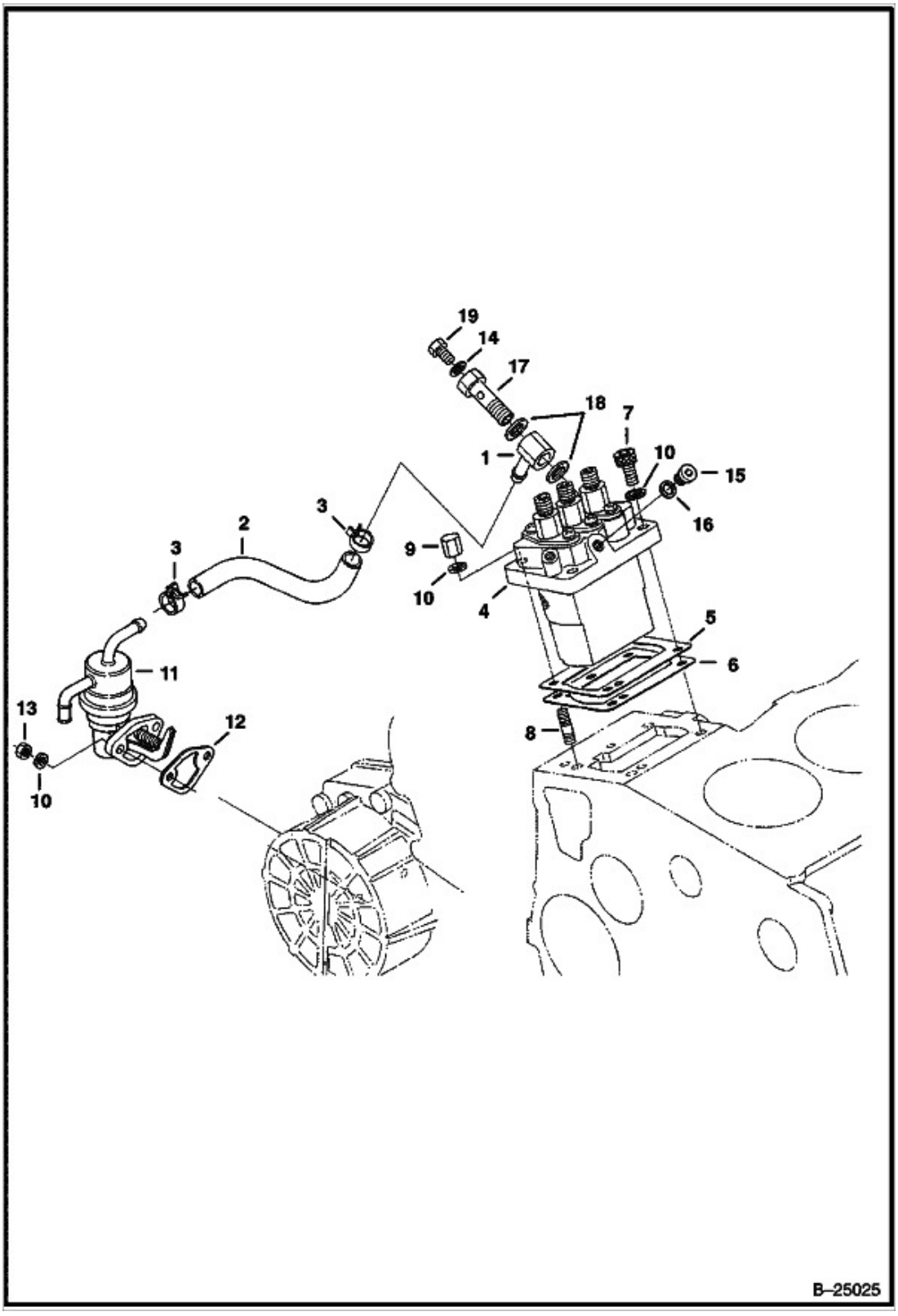

Title: Injection Pump & Fuel Pump
Model Number: S70
Serial Number: A3W611001 & Above, A3W711001 & Above

Ref.	Part Number	Description	S/N	Qty
1	6657598	JOINT		1
2	6672388	TUBE		1
3	6680274	CLAMP		2
4	6672389	PUMP FUEL INJECTION		1
4	6672389REM	PUMP, FUEL INJ. KUBOTA D1105, W/Ref. 2-28		1
5	6698160	SHIM, INJECTION PUMP, 0,175 mm		1
5	6670433	SHIM, 0,20 mm		1
5	6672391	SHIM, 0.25 mm		1
6	6670777	SHIM, 0,30 mm		1
6	6698147	SHIM, INJECTION PUMP, 0,35 mm		x
7	6657417	BOLT	Engine 8BZ999 & Below	2
7	7000503	BOLT, hex soc hd W/washer	Engine 8C0001 & Above	2
8	6657458	STUD		2
9	6657461	NUT		2
10	6667419	WASHER	Engine 7VZ999 & Below, Engine 7W0001 - 8BZ999, Engine 8C0001 & Above	6
11	6672427	FUEL PUMP		1
12	6670782	GASKET	Engine 8HZ999 & Below	1
12	7010133	GASKET, PUMP FUEL	Engine 8J0001 & Above	1
13	1DM6	NUT	Engine 7VZ999 & Below	2
13	6670533	NUT, Was 6969818, A	Engine 7W0001 & Above	2
14	6657467	GASKET		1
15	6672396	PLUG		1

Title: Injection Pump & Fuel Pump
Model Number: S70
Serial Number: A3W611001 & Above, A3W711001 & Above

Ref.	Part Number	Description	S/N	Qty
16	6670446	WASHER		1
17	6672395	BOLT		1
18	6657466	GASKET		2
19	6657445	SCREW		1

Title: Injector Nozzles
Model Number: S70
Serial Number: A3W611001 & Above, A3W711001 & Above

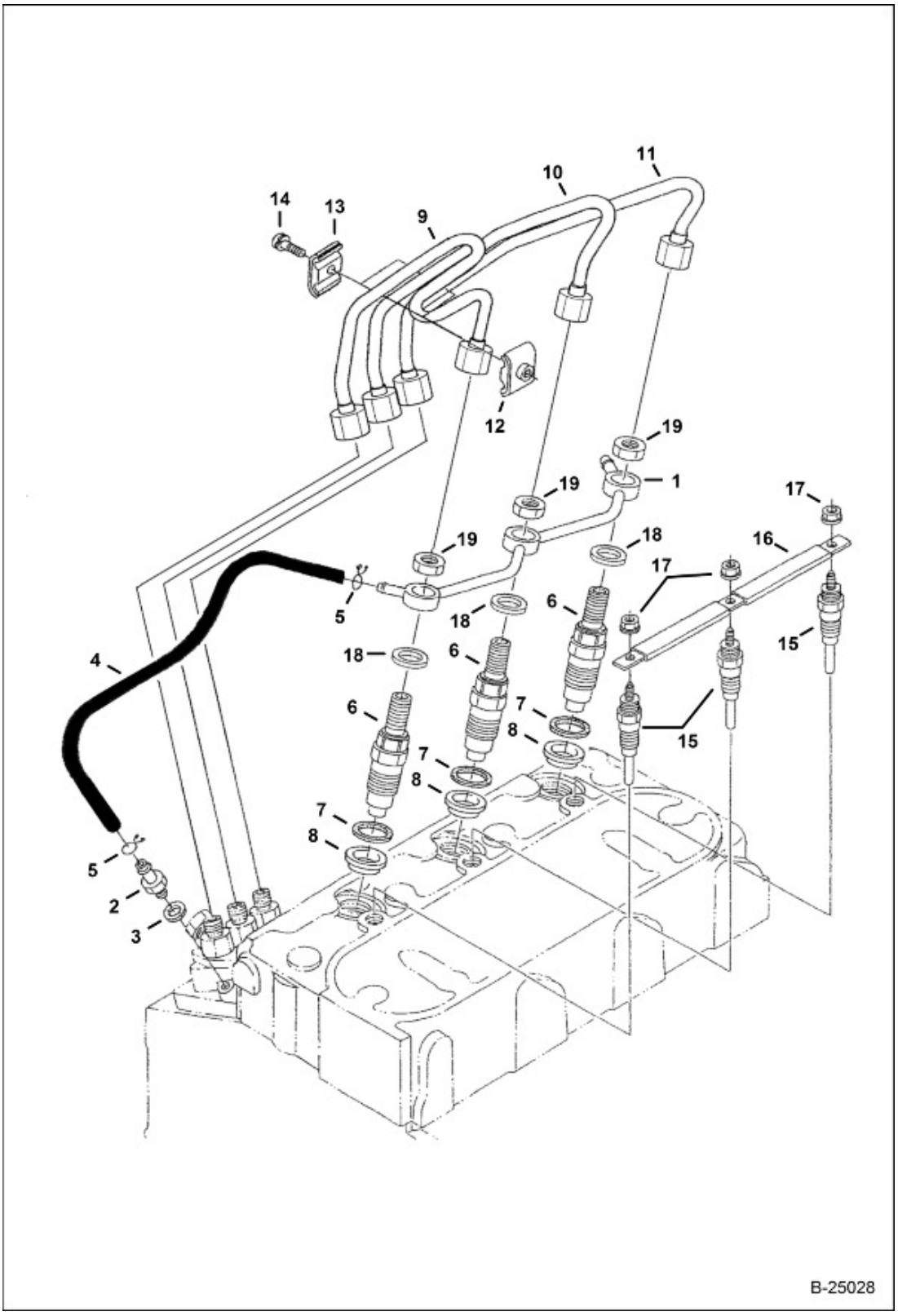

Title: Injector Nozzles
Model Number: S70
Serial Number: A3W611001 & Above, A3W711001 & Above

Ref.	Part Number	Description	S/N	Qty
1	6672404	PIPE		1
2	6657446	SCREW		1
3	3974972	GASKET		1
4	6670464	HOSE, W/Ref. 5		1
5	6654718	CLAMP 5, pipe		2
6		HOLDER, HOLDER, See Illustration, W/Ref. 18 & 19 - Was 6687911, B		3
7	6655218	GASKET		3
8	6655872	SEAL		3
9	6687910	PIPE		1
10	6657643	PIPE		1
11	6657644	PIPE		1
12	6652688	CLAMP		2
13	6652689	CLAMP		2
14	3974260	SCREW, W/washer		2
15	6698618	GLOW PLUG, W/nut		3
16	6672407	CORD		1
17	6670472	NUT		3
18	6672414	WASHER, sealing		3
19	6672408	NUT		3

Title: Intake & Exhaust Manifolds
Model Number: S70
Serial Number: A3W611001 & Above, A3W711001 & Above

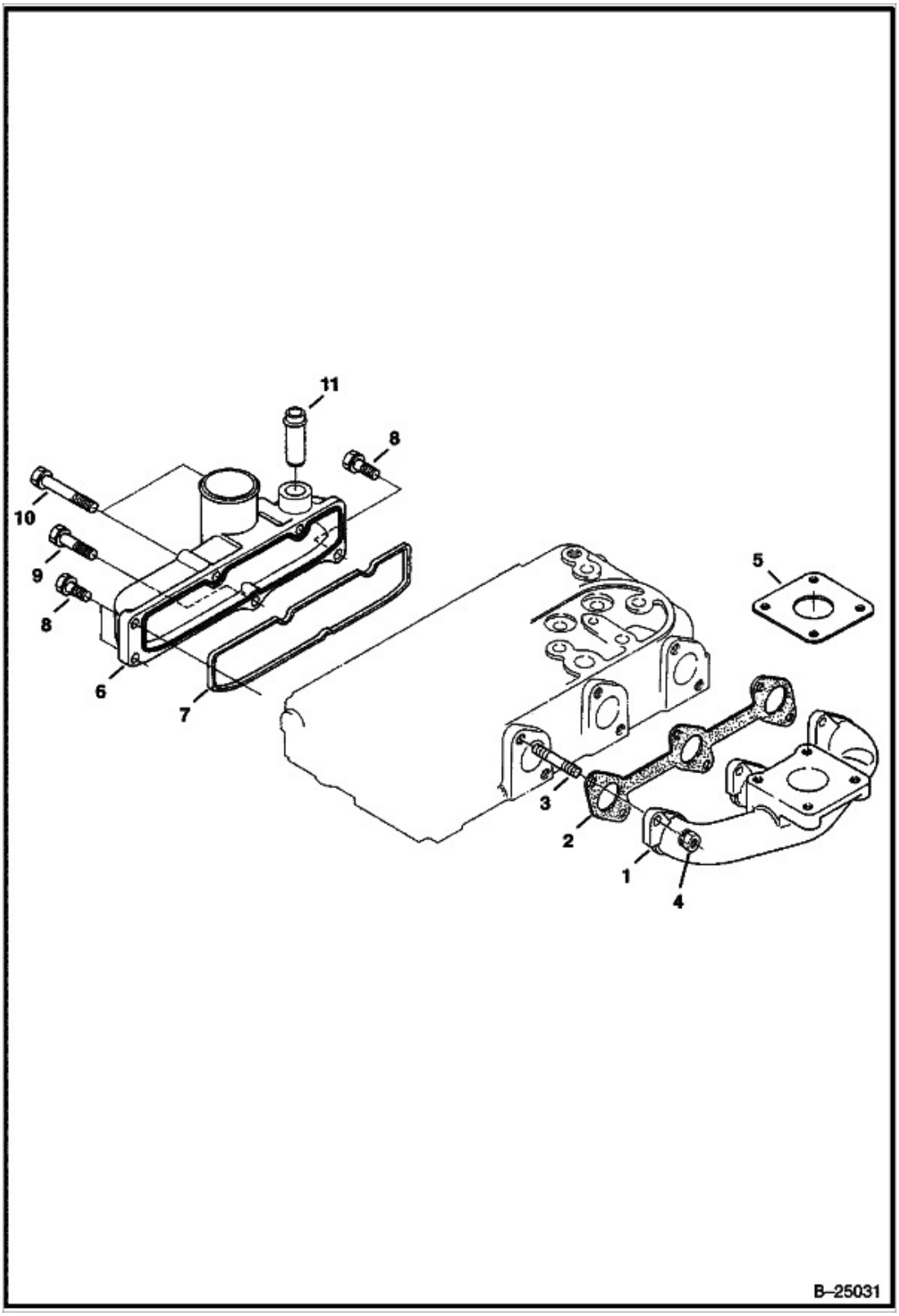

Title: Intake & Exhaust Manifolds
Model Number: S70
Serial Number: A3W611001 & Above, A3W711001 & Above

Ref.	Part Number	Description	S/N	Qty
1	6686502	MANIFOLD EXHAUST, Exhaust		1
2	6672441	GASKET		1
3	6657590	STUD		6
4	6657591	NUT		6
5	6960259	SEAL		1
6	6687912	MANIFOLD, Intake - W/Ref. 7 & 11		1
7	6672443	GASKET		1
8	6652580	BOLT		3
9	4CM630	BOLT		1
10	6670770	BOLT		2
11	6680689	ADAPTER		1

Title: Keyless Ignition
Model Number: S70
Serial Number: A3W611001 & Above, A3W711001 & Above

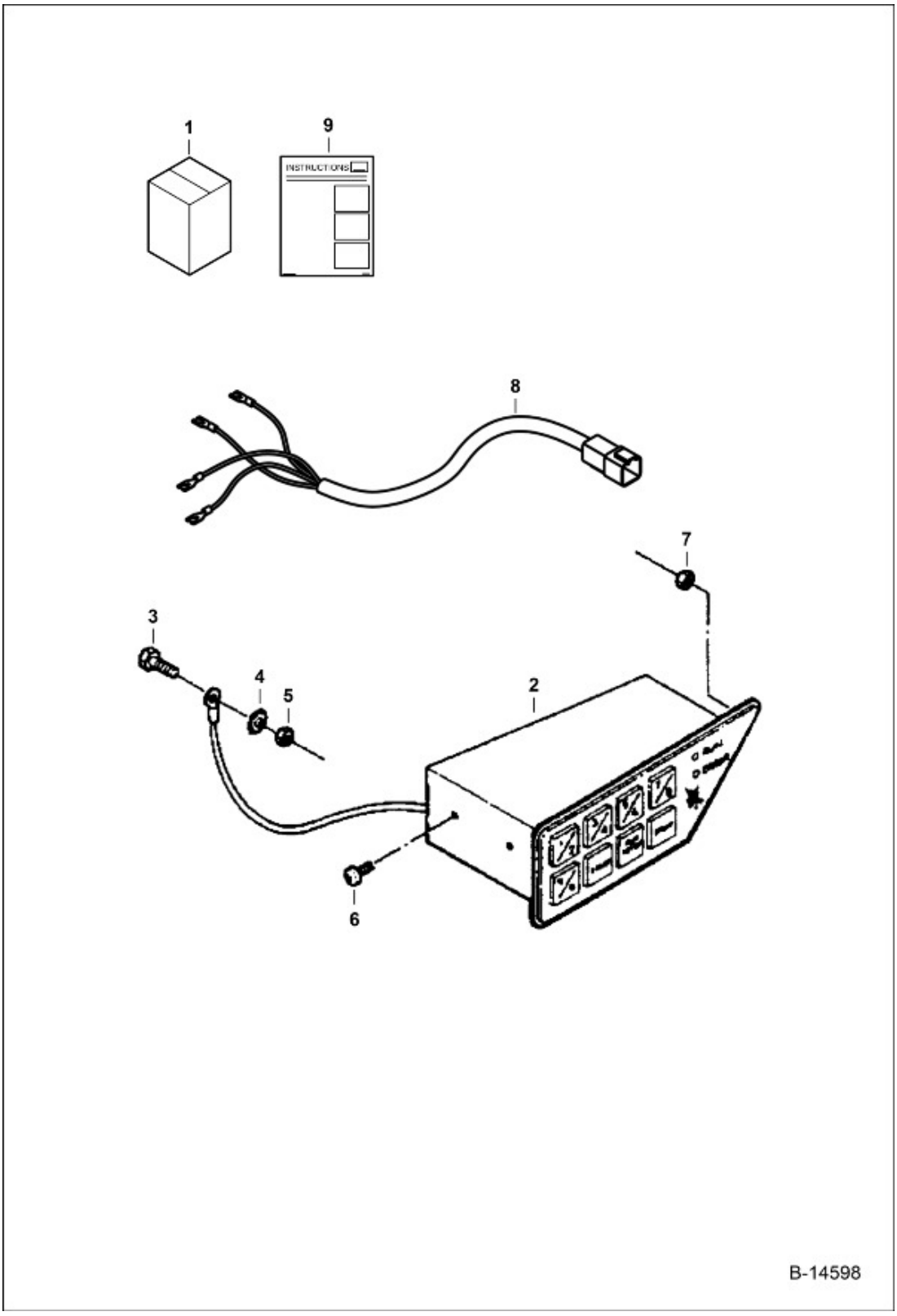

Title: Keyless Ignition
Model Number: S70
Serial Number: A3W611001 & Above, A3W711001 & Above

Ref.	Part Number	Description	S/N	Qty
1	6712972	KIT IGN KEYLESS, Keyless Ignition - W/Ref. 2-9		1
2		MODULE, MODULE, NSS - Order Ref. 1		1
3	35C410	SCREW HEX HD W/F GR5		1
4	6E4	WASHER 10, Star		1
5	83D4	NUT LOCK		1
6	87G806	SCREW		2
7	12D6	NUT HEX MACH SCREW		1
8	7338394	HARNESS SWITCH IGNITION, S70 use only		1
9	6724586ENUS	INSTRUCTIONS, Was - 6724586, A		1

Title: Lift Arms & BOB-TACH (S/N B38V11001 & Above)
Model Number: S70
Serial Number: B38V11001 & Above

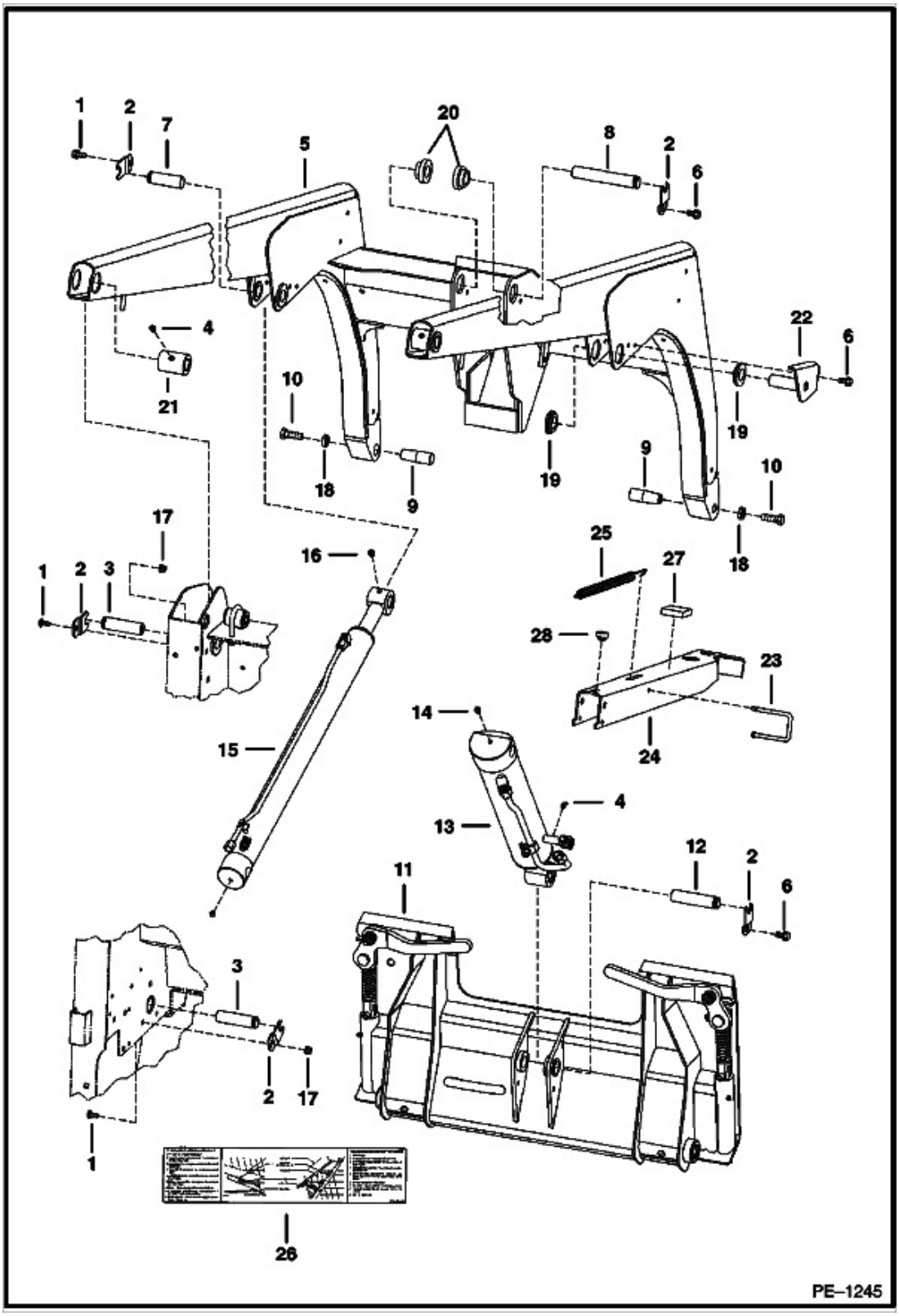

Title: Lift Arms & BOB-TACH (S/N B38V11001 & Above)
Model Number: S70
Serial Number: B38V11001 & Above

Ref.	Part Number	Description	S/N	Qty
1	10C512	BOLT SQ NECK RND HD		4
2	7252630	PIN, RETAINING, Was 6586307, A		8
3		PIN, PIVOT, PIN, PIVOT, NLA - 2 side grooves - Was 7251588, A		4
3	7272618	PIN PIVOT GROOVED, full circumference groove - Was 6563848, A		4
4	10H25	FTG GREASE STRAIGHT		3
5	7144100	LIFT ARM, Also Order 6579528 , 6569233 6727449 , 6727448		1
6	84G3712	SCREW THD ROLLING TT		4
7	6563847	PIN SHORT GROOVED		2
8	6563846	PIN LONG GROOVED		1
9	6564198	PIN TAPERED PIVOT		2
10	17C824	BOLT 5		2
10	33C824	BOLT, w/ pre-applied loctite		2
11		BOB-TACH, BOB-TACH		1
12	6731749	PIN GROOVED, rod end - grooved		1
13		CYLINDER, CYLINDER, Tilt		1
14	10H35	FTG GREASE STRAIGHT		1
15		CYLINDER, CYLINDER, Lift		2
16	11H25	FITTING10		4
17	83D5	NUT LOCK		4
18	6701097	WASHER		2
19	6563829	BUSHING PIN, weld-on		4
20	6728130	BUSHING, Weld On		2
21	6727579	PIVOT BUSHING, Weld On		2
22	6706663	PIN		1

Title: Lift Arms & BOB-TACH (S/N B38V11001 & Above)
Model Number: S70
Serial Number: B38V11001 & Above

Ref.	Part Number	Description	S/N	Qty
23	6714811	PIN, Retainer		1
24	7351445	SUPPORT LIFT ARM, Lift arm - Was 6728115, A		1
25	6579072	SPRING EXTENSION, For lift arm support		1
26	7240018	DECAL, LIFT ARM, Was 6711659, A		1
27	6704436	BUMPER RUBBER SQUARE		1
28	6519178	BUMPER		1

Title: Lift Arms & BOB-TACH
Model Number: S70
Serial Number: A3W611001 & Above, A3W711001 & Above

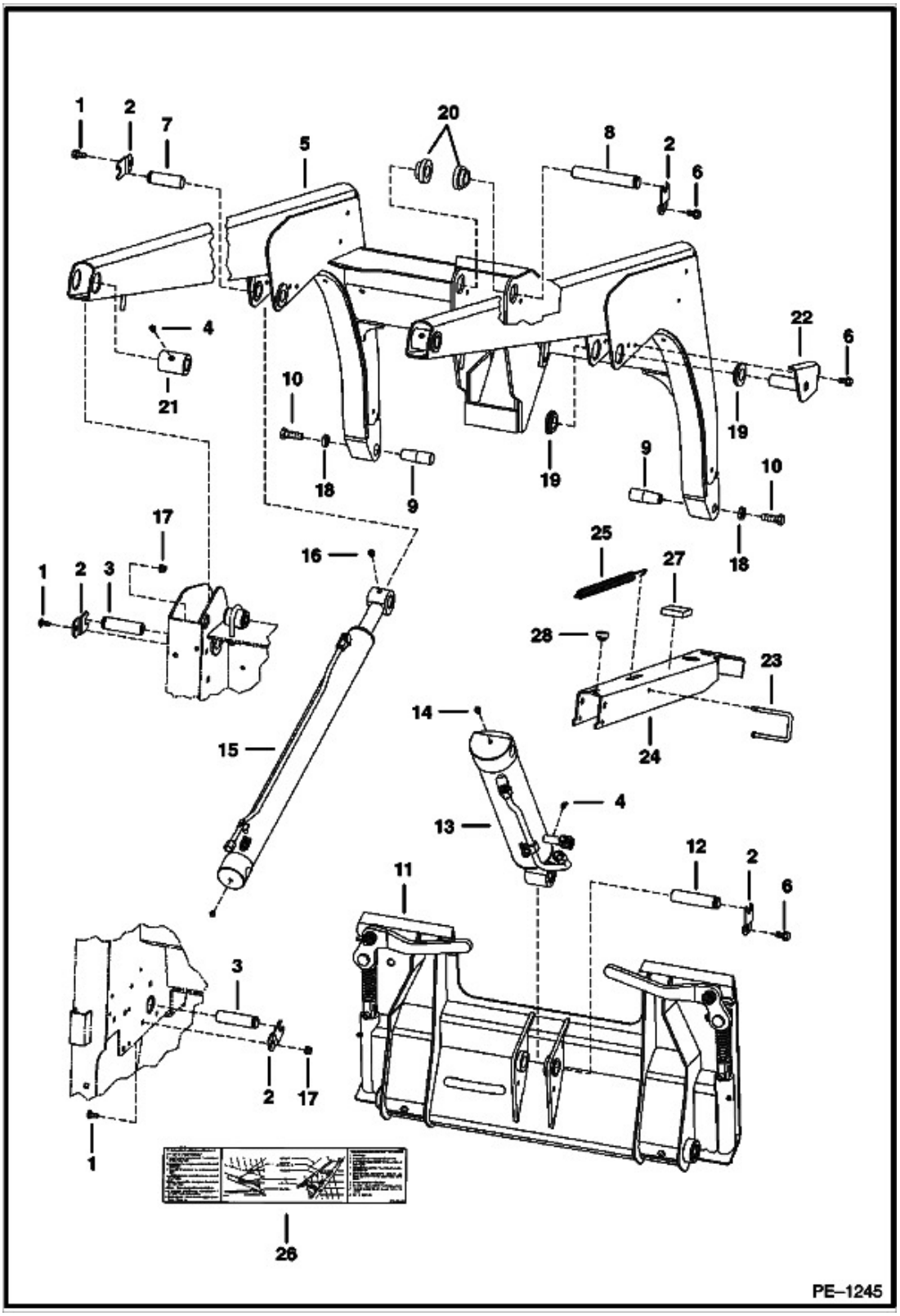

Title: Lift Arms & BOB-TACH
Model Number: S70
Serial Number: A3W611001 & Above, A3W711001 & Above

Ref.	Part Number	Description	S/N	Qty
1	10C512	BOLT SQ NECK RND HD		4
2	7252630	PIN, RETAINING, Was 6586307, A		8
3		PIN, PIVOT, PIN, PIVOT, NLA - 2 side grooves - Was 7251588, A		4
3	7272618	PIN PIVOT GROOVED, full circumference groove - Was 6563848, A		4
4	10H25	FTG GREASE STRAIGHT		3
5	7144100	LIFT ARM, Also Order 6579528 , 6569233 6727449 , 6727448		1
6	84G3712	SCREW THD ROLLING TT		4
7	6563847	PIN SHORT GROOVED		2
8	6563846	PIN LONG GROOVED		1
9	6564198	PIN TAPERED PIVOT		2
10	17C824	BOLT 5		2
10	33C824	BOLT, w/ pre-applied loctite		2
11		BOB-TACH, BOB-TACH, See Illustration		1
12	6731749	PIN GROOVED, rod end - grooved		1
13		CYLINDER, CYLINDER, TILT		1
14	10H35	FTG GREASE STRAIGHT		1
15		CYLINDER, CYLINDER, LIFT		2
16	11H25	FITTING10		4
17	83D5	NUT LOCK		4
18	6701097	WASHER		2
19	6563829	BUSHING PIN, weld-on		4
20	6728130	BUSHING, Weld On		2
21	6727579	PIVOT BUSHING, Weld On		2
22	6706663	PIN		1

Ref.	Part Number	Description	S/N	Qty
23	6714811	PIN, Retainer		1
24	7351445	SUPPORT LIFT ARM, Lift arm - Was 6728115, A		1
25	6579072	SPRING EXTENSION, For lift arm support		1
26	7240018	DECAL, LIFT ARM, Was 6711659, A		1
27	6704436	BUMPER RUBBER SQUARE		1
28	6519178	BUMPER		1

Title: Lift Cylinder
Model Number: S70
Serial Number: A3W611001 & Above, A3W711001 & Above

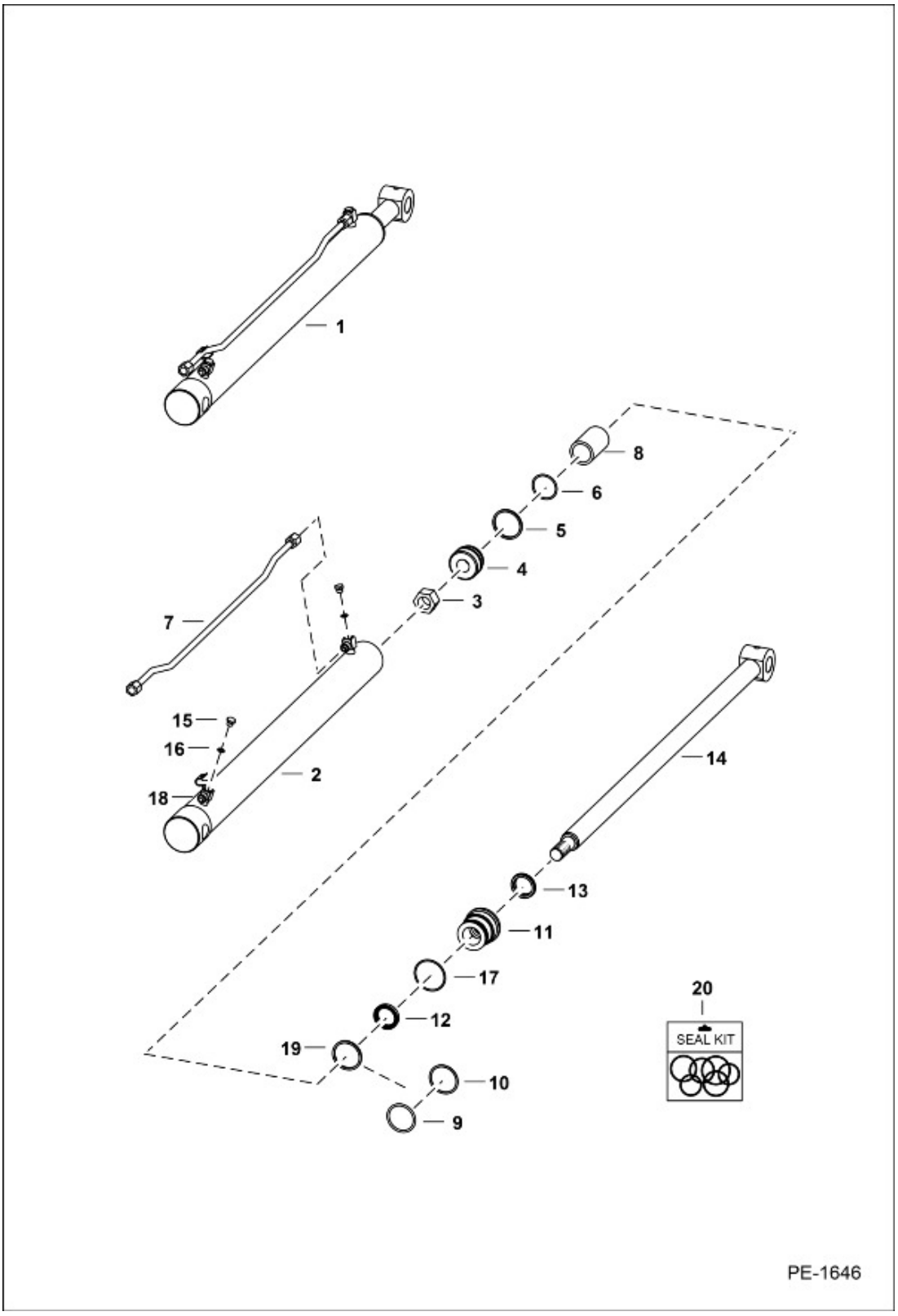

Title: Lift Cylinder
Model Number: S70
Serial Number: A3W611001 & Above, A3W711001 & Above

Ref.	Part Number	Description	S/N	Qty
1	6812771	LIFT CYLINDER, Ref. 2-18		2
2	6812773	CASE		1
3	92D14	NUT		1
4	6808338	PISTON		1
5	54K30118	O-RING		1
6	6516231	SEAL		1
7	6808626	TUBELINE		1
8	6808336	SPACER		1
9	54K40124	O-RING		1
10	73K224	O-RING		1
11	6539323	HEAD CYLINDER LIFT		1
12	6667324	SEAL		1
13	6665208	WIPER ROD CYL		1
14	6807141	ROD, chrome		1
15	6812170	PLUG, W/Ref. 16		2
16	75K3	O-RING		2
17	82K136	O-RING		1
18	6690910	CLAMP		1
19		SEAL, QUAD, SEAL, QUAD, NLA - Order Ref. 9 & 10 - Was 7008781, A		1
20	7137770	KIT, SEAL CYLINDER, Ref. 3, 5, 6, 9, 10, 12, 13 & 17		1

Title: Light Kit
Model Number: S70
Serial Number: A3W611001 & Above, A3W711001 & Above

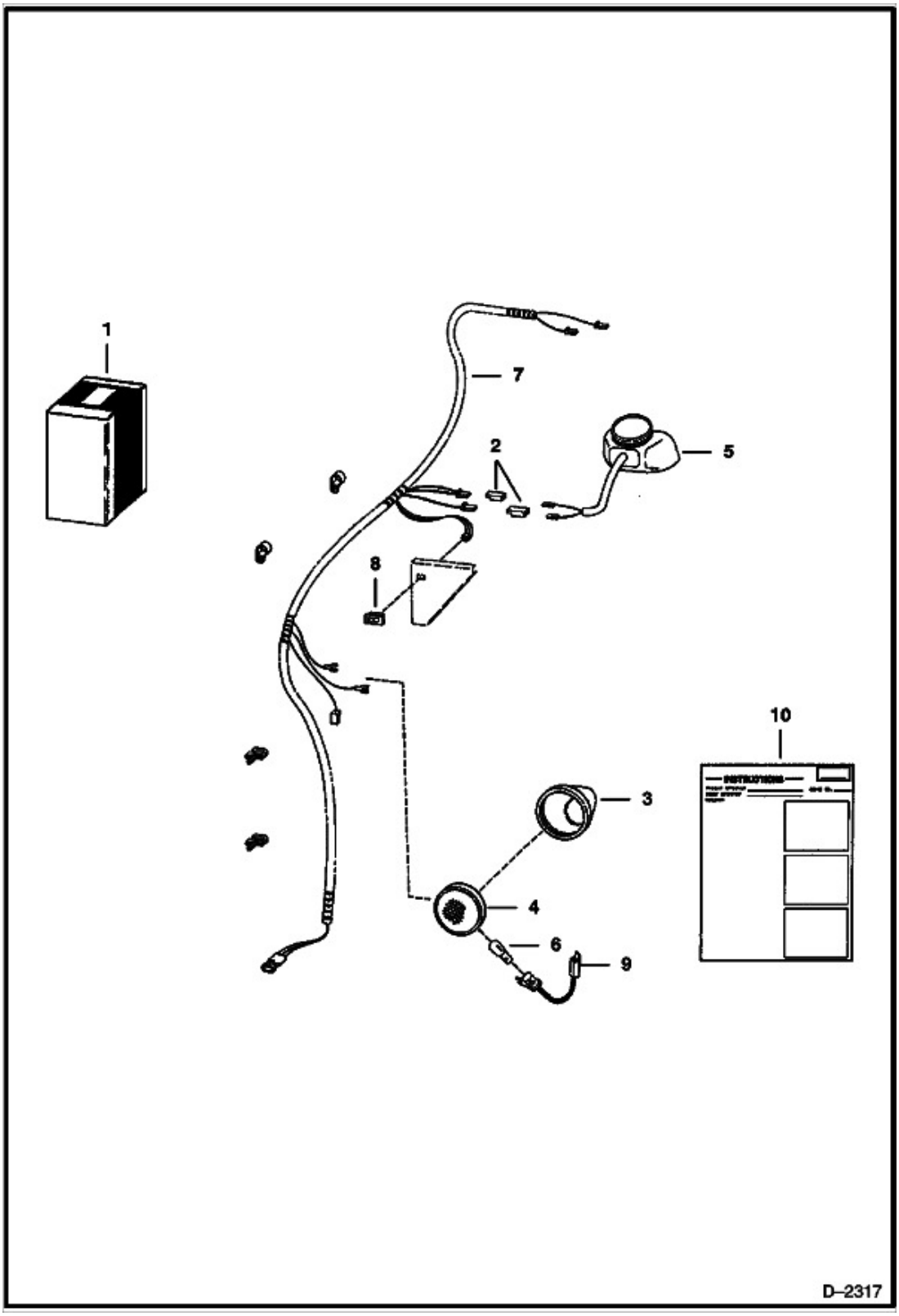

Title: Light Kit
Model Number: S70
Serial Number: A3W611001 & Above, A3W711001 & Above

Ref.	Part Number	Description	S/N	Qty
1	6708719	KIT LIGHT, Ref. 2-6, 8-10		1
2	6519548	CONN BODY		4
3	6558142	HOUSING, LAMP, rubber		1
4	6563740	LIGHT, SEALED BEAM, W/Ref. 6		1
5	6577801	LIGHT, FRONT ASSY		2
5	6667934	LIGHT, BULB		2
6	898731	LAMP		1
7	6707498	HARNESS, not in kit		1
8	6665410	SWITCH HEADLIGHT		1
9	6564907	SOCKET ASSY LAMP		2
10	6724070ENUS	INSTRUCTIONS, Was 6724070		1

Title: Main Frame
Model Number: S70
Serial Number: A3W611001 & Above, A3W711001 & Above

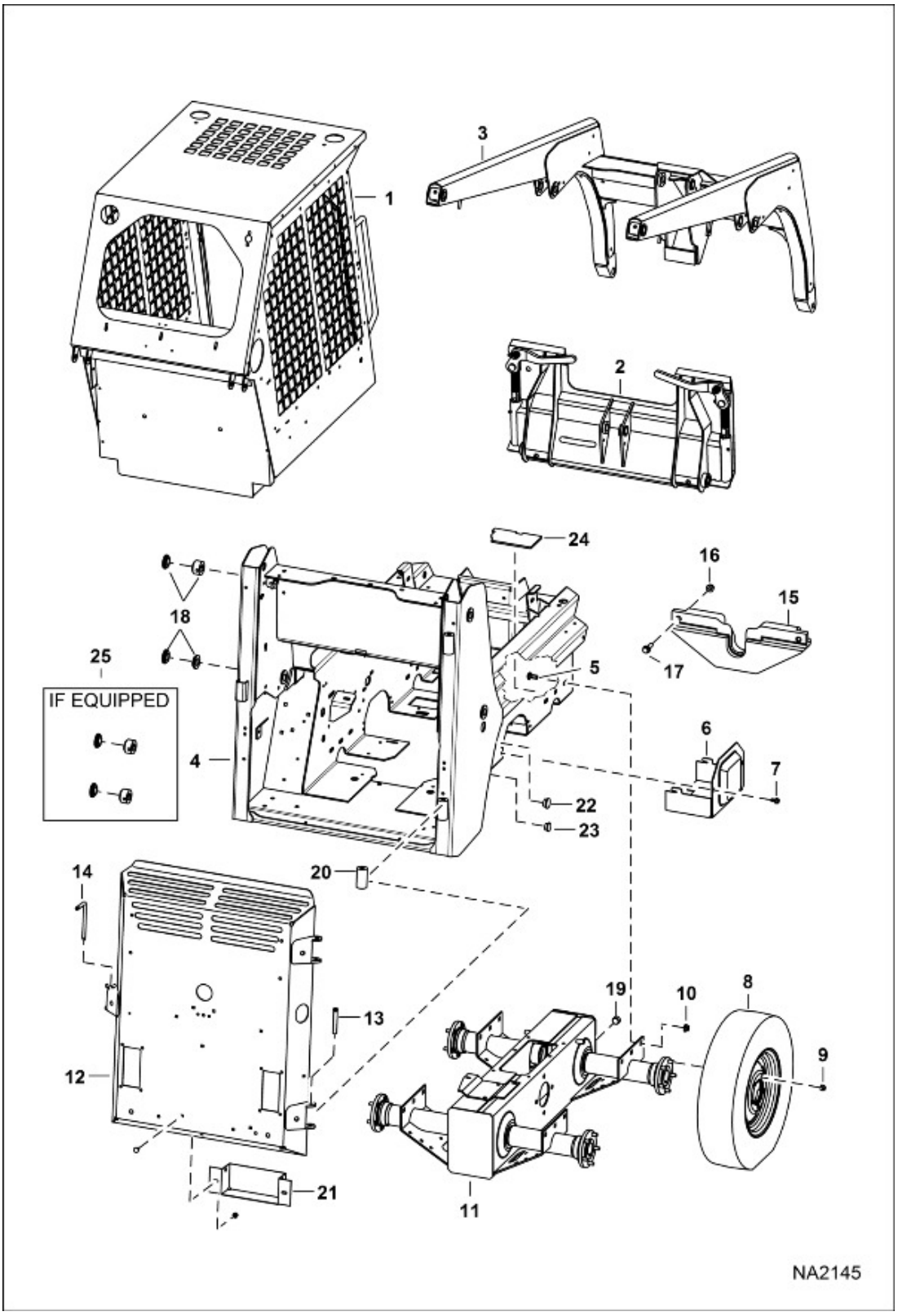

Title: Main Frame
Model Number: S70
Serial Number: A3W611001 & Above, A3W711001 & Above

Ref.	Part Number	Description	S/N	Qty
1		CAB, CAB		1
2		BOB-TACH, BOB-TACH, See Illustration		1
3		LIFT ARM, LIFT ARM, See Illustration		1
4	7347265	FRAME MAIN ASSY, Was 7134276, A		1
5	37C820	BOLT SQ NECK RND HD		12
6	7351285	COVER MOTOR, Was 6718144, A		2
7	84G3712	SCREW THD ROLLING TT		4
8		TIRES & RIMS, TIRES & RIMS, See Illustration		4
9	6564669	NUT WHEEL, Was 6561152, B,D		20
10	83D8	NUT LOCK		12
11	7351019	HOUSING CHAINCASE ASSEMBLY, See Illustration, Was 7115670, A		1
12		REAR DOOR, REAR DOOR, See Illustration		1
13	6564340	PIN HINGE		2
14	7158146	PIN ASSEMBLY, includes 6564192 pin, cable & 1F612 cotter pin		1
14	6564192	PIN LATCH		1
14	1F612	COT.PIN		1
15	6564681	COUNTERWEIGHT		1
16	57D8	NUT 10		2
17	31C832	SCREW FLANGED HEAD CAP		2
18	6563829	BUSHING PIN, wear - W/O bolt hole		6
19	6731121	PLUG RECESSED PIPE		1
20	6562224	BUSHING, Weld On		2
21	7354227	CONTAINER TOOL, Was 6732848, A		1
22	7171006	PLUG		1

Ref.	Part Number	Description	S/N	Qty
23	6697942	PLUG, NYLON		1
24	7177958	COVER, FLOOR		2
25	7347281	BUSHING WEAR, weld-on - w/bolt hole - Was 7269866, A		2

Title: Maintenance Items (Service Parts)
Model Number: S70
Serial Number: B38V11001 & Above

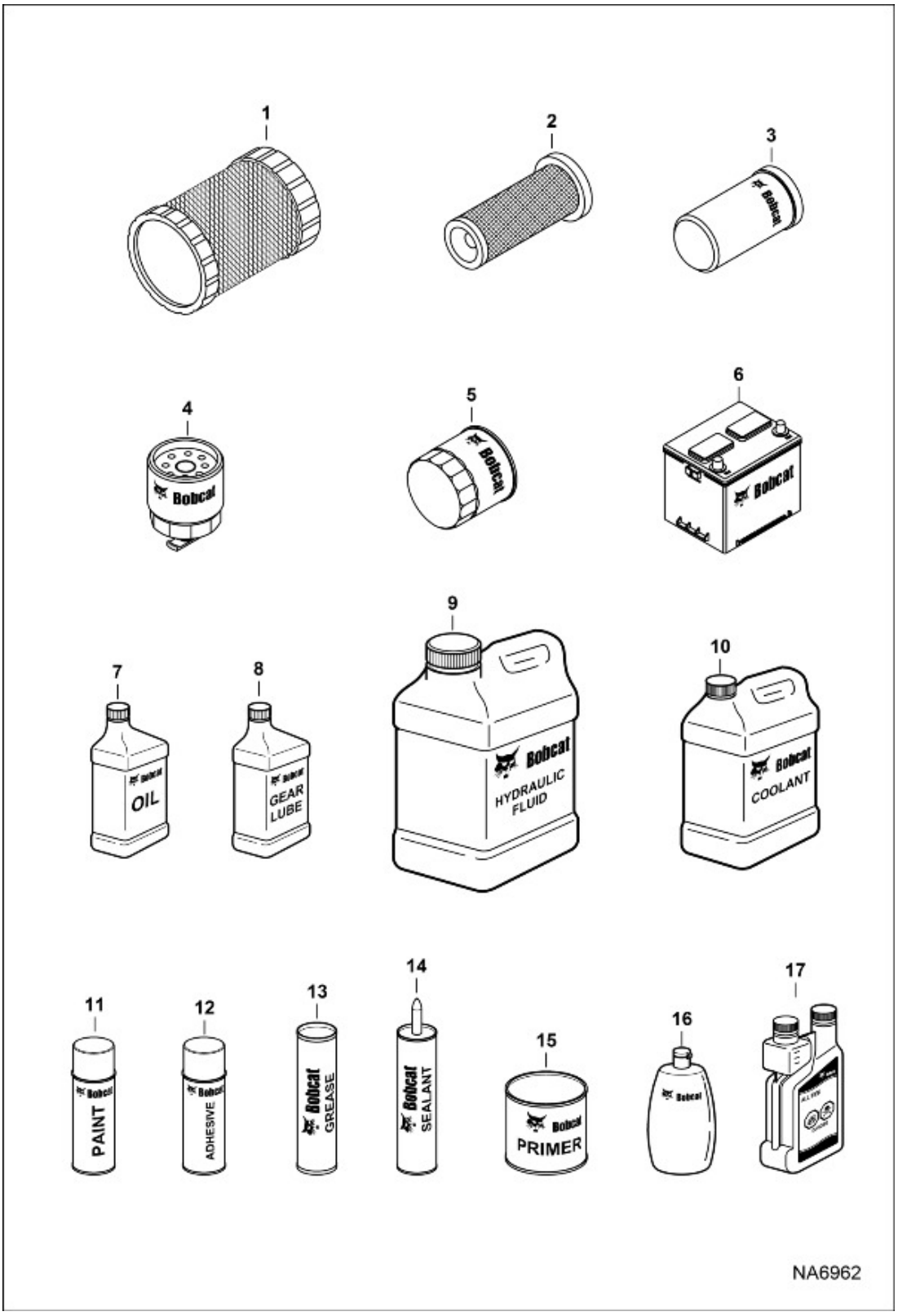

Ref.	Part Number	Description	S/N	Qty
1	6672467	FILTER, AIR OUTER, See Illustration		1
2	6672468	FILTER, AIR INNER, See Illustration		1
3	6677652	FILTER, OIL HYD, See Illustration		1
4	6667352	FILTER, FUEL W/SEPARATOR 12, See Illustration		1
5	6657635	FILTER, OIL ENG, See Illustration		1
6	7312552	BATTERY 650 CCA DRY, See Illustration, - Was 6674687, A		1
7	7354875	OIL 10W30 QT 12, Was 7023076, A		x
7	7354876	OIL 10W30 GAL 6, Was 7023077, A		x
7	7354877	OIL 10W30 2.5 GAL 2, Was 7023078, A		x
7	7354878	OIL 10W30 55 GAL DRUM, Was 7023079, A		x
7	7354880	OIL 10W30 330 GAL TOTE, Was 7326034, A		x
7	7354881	OIL 15W40 QT 12, Was 7023080, A		x
7	7354882	OIL 15W40 GAL 6, Was 7023081, A		x
7	7354883	OIL 15W40 2.5 GAL 2, Was 7023082, A		x
7	7354884	OIL 15W40 55 GAL DRUM, Was 7023083, A		x
7	7354885	OIL 15W40 265 GAL TOTE, Was 7023084, A		x
7	7354886	OIL 15W40 330 GAL TOTE, Was 7326033, A		x
7	7403513	OIL SYNTHETIC 5W40 QT, Was 6989147, A		x
7	7403514	OIL SYNTHETIC 5W40 GAL, Was 6989148, A		x
7	7403515	OIL SYNTHETIC 5W40 2.5 GAL, Was 6989149, A		x
7	7415578	OIL SYNTHETIC 5W40 55 GALLON DRUM		x
7	7403516	OIL SYNTHETIC 5W40 330 GAL TOTE		x
8	6903121	LUBRICANT GEAR PREMIUM		x
9	6904026	FLUID, OIL HYD 1 GAL		x
9	6903117	FLUID, OIL HYD 2.5 GAL 2		x

Ref.	Part Number	Description	S/N	Qty
9	6903118	FLUID, OIL HYD 5 GAL		x
9	6903119	FLUID, OIL HYD 55 GAL DRUM		x
9	6904027	FLUID OIL HYD 260 GAL TOTE, contains 260 gallons		x
9	7326032	FLUID OIL HYD 330 GAL TOTE		x
9	6988778	FLUID, OIL HYD SYNTHETIC GAL		x
9	6988779	FLUID, OIL HYD SYNTHETIC 2.5 GAL		x
9	6988439	FLUID, OIL HYD SYNTHETIC 55 GAL DRUM		x
9	6988777	FLUID, OIL HYD BIO GAL		x
9	6988437	FLUID, OIL HYD BIO 55 GAL DRUM		x
10	6983128	ANTIFREEZE/COOLANT PG 53/47 PREMIX GAL		x
10	6983130	ANTIFREEZE/COOLANT, PG 53/47 PRMX 55GAL		x
10	6988096	ANTIFREEZE/COOLANT EG PREMIX GAL		x
10	6983129	ANTIFREEZE/COOLANT PG CONCENTRATE GAL		x
10	6983127	ANTIFREEZE/COOLANT, PG CONCEN 55 GAL		x
10	6988097	ANTIFREEZE/COOLANT EG CONCENTRATE GAL		x
11	7305844	PAINT ORANGE SPRAY CAN 6, original shade - Was 6902228, A		x
11	7305844	PAINT ORANGE SPRAY CAN 6, updated shade		x
11	7305843	PAINT ORANGE .5 OZ, Was 6736644		x
11	7305843	PAINT ORANGE .5 OZ, updated shade		x
11	7305845	PAINT ORANGE QT 6, original shade - Was 6902233, A		x
11	7305845	PAINT ORANGE QT 6, updated shade		x
11	6902229	PAINT, CHARCOAL SPRAY CAN 6		x
11	6736641	PAINT, CHARCOAL .5 OZ		x
11	6902234	PAINT, CHARCOAL QT 6		x
11	6902230	PAINT, WHITE SPRAY CAN 6		x

Ref.	Part Number	Description	S/N	Qty
11	6736642	PAINT, WHITE .5 OZ		x
11	6902235	PAINT, WHITE QT 6		x
11	6736645	PAINT, RED .5 OZ		x
11	6650083	PAINT, SPRAY BLUE CAN		x
12	6675380	ADHESIVE, SPRAY 10.5 oz		x
12		ADHESIVE, ADHESIVE, NLA - Was 6650407, A		x
12	6987926	THREADLOCK, 242-MED STRENGTH BLUE -6l		x
13	6903122	GREASE, MULTI PURPOSE		x
13	6687884	GREASE, HD SUPREME 10		x
13	6687885	GREASE, HP EXTREME 10		x
13	6902177	GREASE, METALUBE		x
14	6633583	SEALANT, POLYURETHANE 300 ML		x
14	6650388	SEALANT		x
14	6599360	SEALANT, ELEC .3 OZ		x
14	6685372	SEALANT, GASKET LIQUID 10.1 OZ		x
15	6902232	PRIMER, SPRAY CAN 6		x
15	6902236	PRIMER, QT		x
16	6630188	POLISH, window - cleaner - #1 - 8 oz		x
16	6630189	POLISH, window - scratch remover - #2 - 8 oz		x
17	7295308	ADDITIVE, FUEL SUMMER 16OZ 12		x
17	7295309	ADDITIVE, FUEL SUMMER 1GAL 4		x
17	7295310	ADDITIVE FUEL WINTER 16OZ		x
17	7295311	ADDITIVE, FUEL WINTER 1GAL 4		x

Title: MUFFLER/PURIFIER Kit
Model Number: S70
Serial Number: A3W611001 & Above, A3W711001 & Above

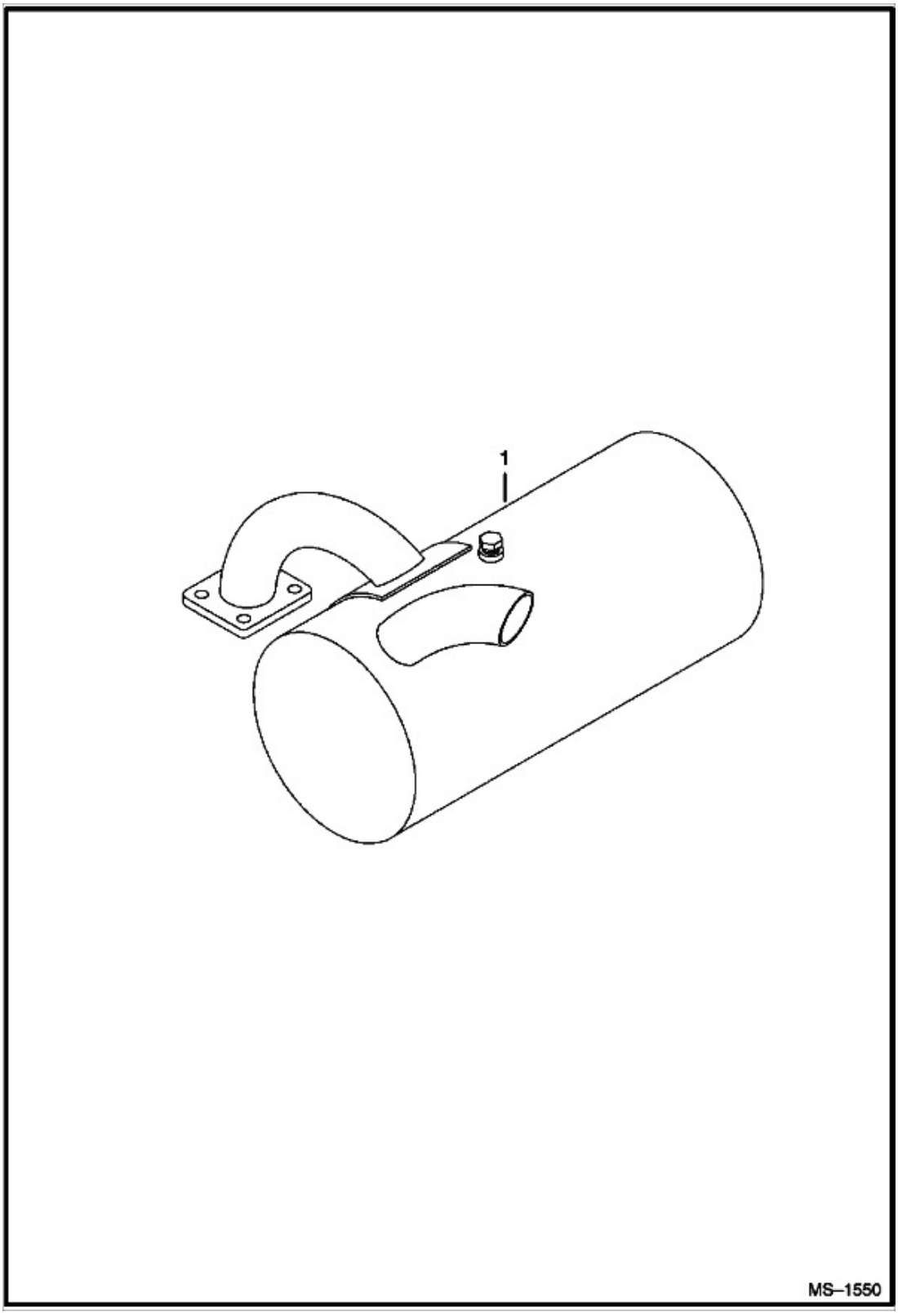

Title: MUFFLER/PURIFIER Kit
Model Number: S70
Serial Number: A3W611001 & Above, A3W711001 & Above

Ref.	Part Number	Description	S/N	Qty
1	6680999	MUFFLER, PURIFIER		1

Title: Nozzle Holder
Model Number: S70
Serial Number: A3W611001 & Above, A3W711001 & Above

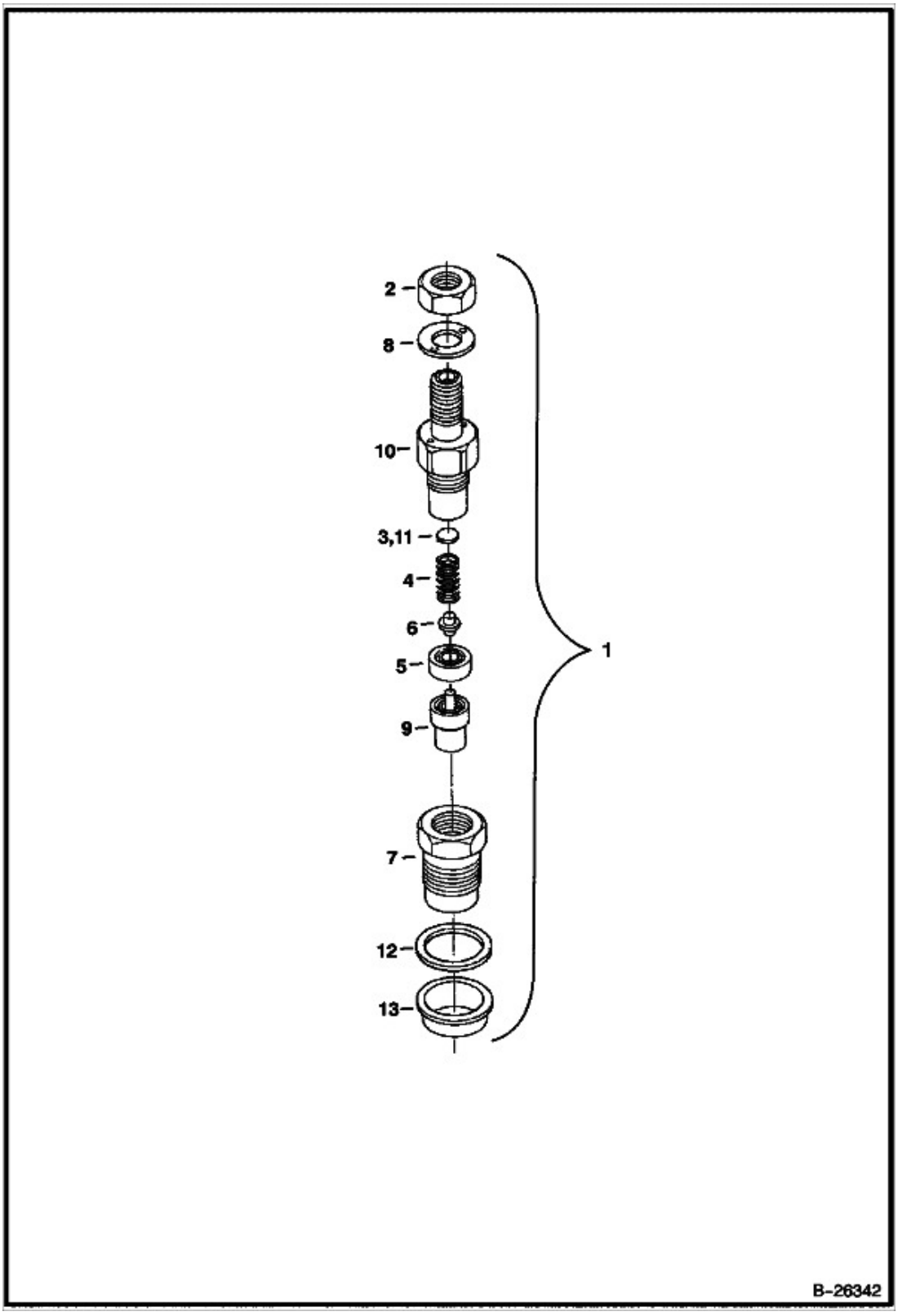

Title: Nozzle Holder
Model Number: S70
Serial Number: A3W611001 & Above, A3W711001 & Above

Ref.	Part Number	Description	S/N	Qty
1	6687911	HOLDER, Ref. 2-13		3
1		NOZZLE FUEL INJECTION, NOZZLE FUEL INJECTION, NLA - Use 6687911 - Was 6687911REM, A		3
2	6672408	NUT		3
3	6672409	WASHER		3
4	6672410	SPRING		3
5	6672411	SPACER		3
6	6672412	PUSH ROD		3
7	6672413	NUT		3
8	6672414	WASHER		3
9	6672415	NOZZLE		3
10		HOLDER, HOLDER, NSS - Order Ref. 1		3
11	6672416	KIT WASHER		3
11	6672417	WASHER, adjusting - 0.10mm		3
11	6672418	WASHER, adjusting - 0.20mm		3
11	6672419	WASHER, adjusting - 0.30mm		3
11	6672420	WASHER, adjusting - 0.40mm		3
11	6672421	WASHER, adjusting - 0.50mm		3
11	6672422	WASHER, adjusting - 0.52mm		3
11	6672423	WASHER, adjusting - 0.54mm		3
11	6672424	WASHER, adjusting - 0.56mm		3
11	6672425	WASHER, adjusting - 0.58mm		3
11	6672426	WASHER, adjusting - 0.80mm		3
12	6655218	GASKET		3
13	6655872	SEAL		3

Title: Oil Pan
Model Number: S70
Serial Number: A3W611001 & Above, A3W711001 & Above

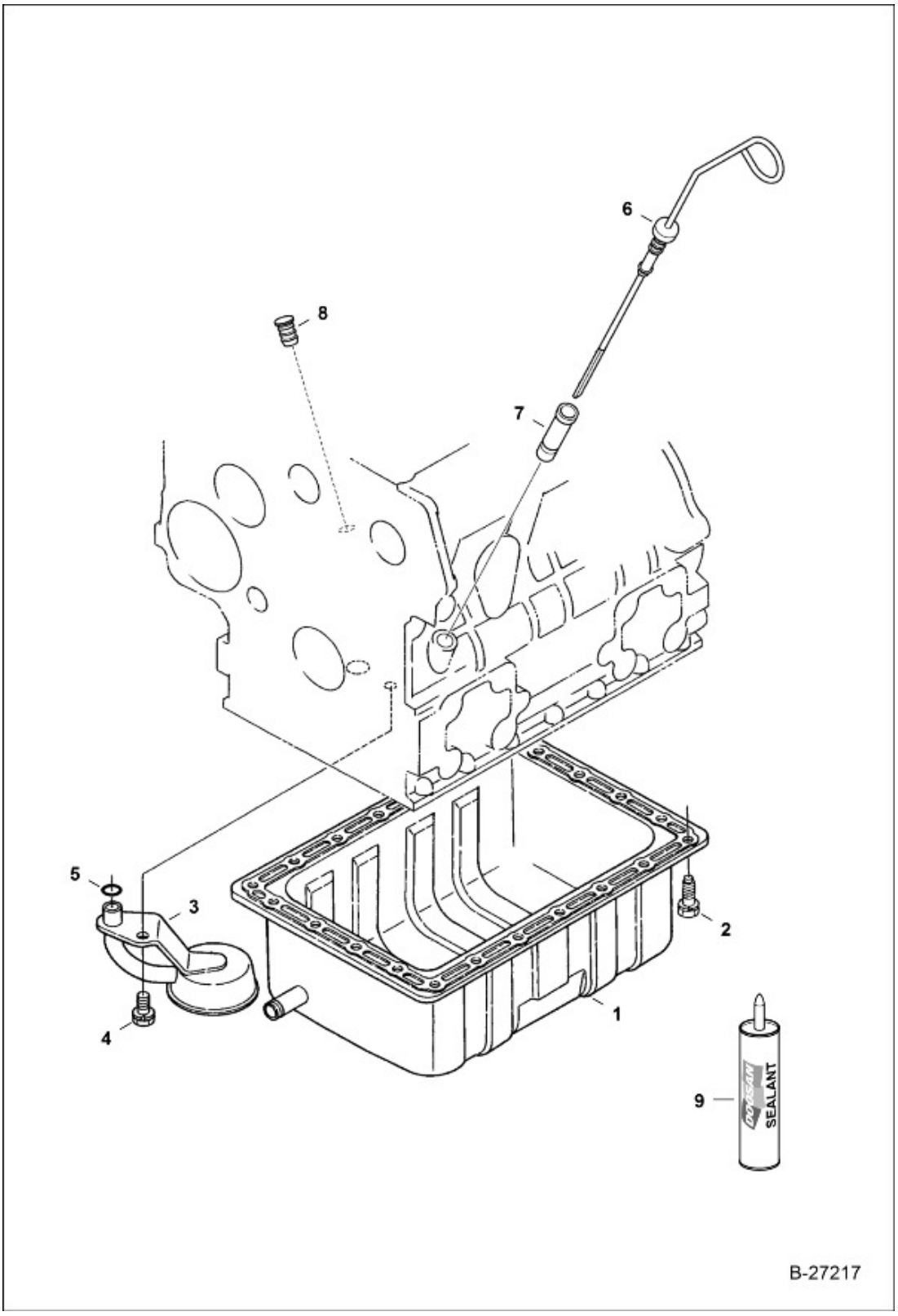

Title: Oil Pan
Model Number: S70
Serial Number: A3W611001 & Above, A3W711001 & Above

Ref.	Part Number	Description	S/N	Qty
1	6687902	OIL PAN		1
2	7000302	BOLT		22
3	6698636	SCREEN, OIL ENG, Was 6687903, A		1
4	6667421	BOLT		1
5	6680284	O-RING		1
6	6687905	DIPSTICK, 7.30"(185.4mm) long		1
7	6687904	GUIDE		1
8	6969804	PLUG,OIL GAUGE		1
9	6685372	SEALANT, GASKET LIQUID 10.1 OZ		x

Title: Operator CAB
Model Number: S70
Serial Number: A3W611001 & Above, A3W711001 & Above

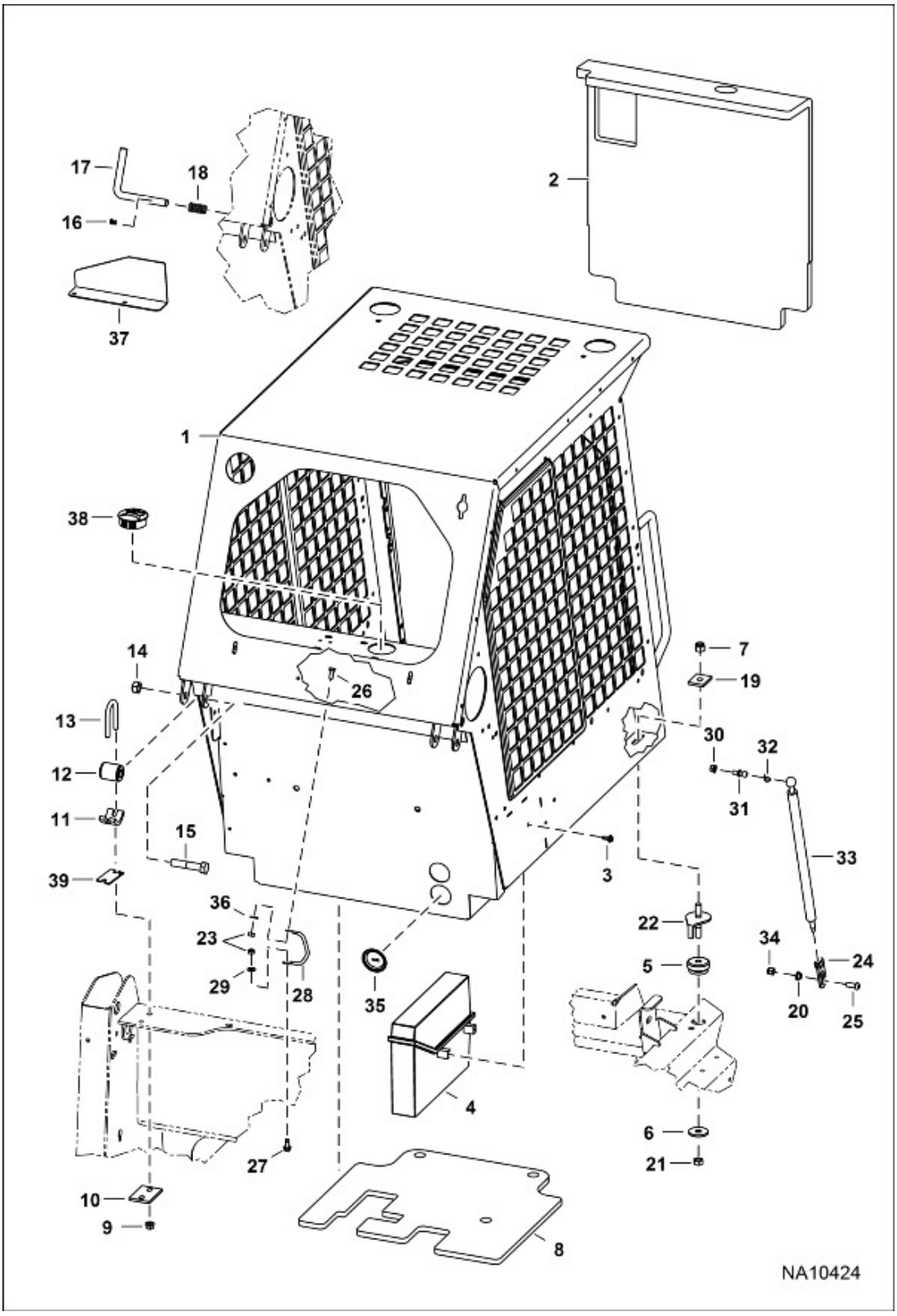

Title: Operator CAB
Model Number: S70
Serial Number: A3W611001 & Above, A3W711001 & Above

Ref.	Part Number	Description	S/N	Qty
1	7352235	CAB ASSEMBLY, Was 6734641, A		1
2	7151156	INSULATION CAB BACK, - Was 6708486, A		1
3	6702642	SCREW WSHRD PLASTITE		2
4	6708827	CONTAINER MANUAL		1
5	6560633	DAMPER, VIBRATION, rubber		2
6	6515817	WASHER		2
7	59D8	NUT LOCK HEX PT		2
8	7154836	INSULATION PAN SEAT, Was 6734908, A		1
9	83D6	NUT LOCK		4
10	7351075	WASHER CAB MOUNT, Was 6565068, A		2
11	7369467	RETAINER HOLDER, Was 6563997, A		2
12	6562602	BUSHING ISOLATOR, paint charcoal before install - Was 7233996, A		2
13	6563998	U BOLT ROUND BENT		2
14	95D10	NUT HEX W/T GR5		2
15	17C1048	BOLT		2
16	1306637	PIN HAIR		1
17	7351071	PIN LATCH, Was 6593389, A		1
18	6593390	SPRING COMPRESSION		1
19	6553709	WASHER RECTANGULAR		2
20	6706272	BUSHING FLANGE		1
21	85D8	NUT PRETRQ HEX LOCK		2
22	6702971	BOLT JOIN ASSEMBLY		2
23	61D5	NUT HEX FINISHED GR5		1
24	6706092	MOUNT ASSY SPRING, gas spring		1

Ref.	Part Number	Description	S/N	Qty
25	25G616	SCREW SKT BTN HD CAP		1
26	17C512	BOLT 5		1
27	84G3112	SCREW THD ROLLING TT		1
28	6594283	WIRE ASSY NEGATIVE		1
29	25E15	WASHER FLAT PLAIN		2
30	83D5	NUT LOCK		1
31	6706519	STUD BALL, ball		1
32	6706520	RING RETAINING, retaining		1
33	6664206	SPRING GAS		1
34	59D6	NUT LOCK HEX PT		1
35	6680961	PLUG		2
36	6E5	WASHER INTL T LOCK		2
37	7351076	BRACKET GUARD, pin reset - Was 7115973, A		1
38	6718796	PLUG		1
39	7351077	SPACER PLATE, Was 7261606, A		2

Title: Panels
Model Number: S70
Serial Number: A3W611001 & Above, A3W711001 & Above

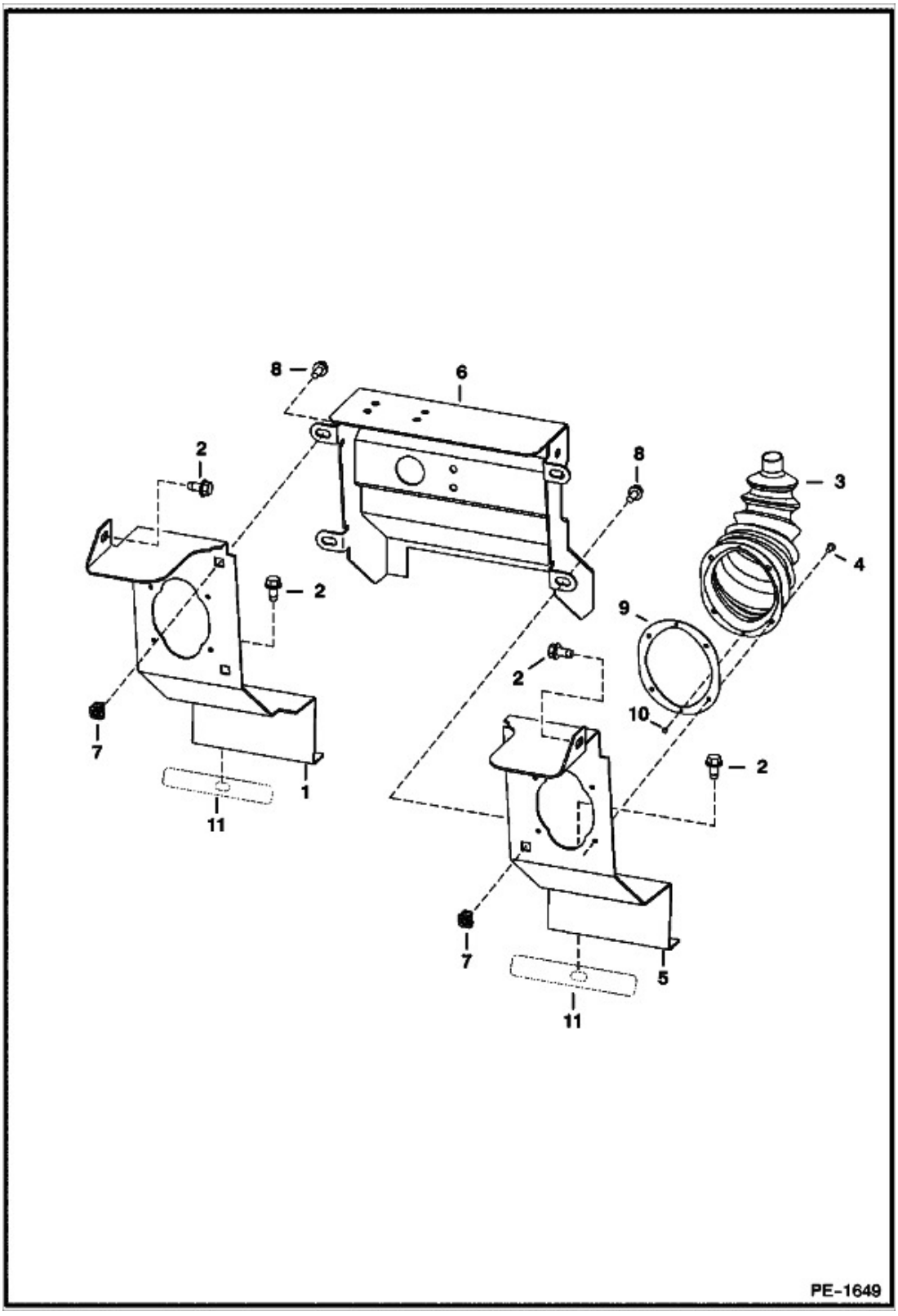

Title: Panels
Model Number: S70
Serial Number: A3W611001 & Above, A3W711001 & Above

Ref.	Part Number	Description	S/N	Qty
1	7351323	SHIELD LH, Was 6728449, A		1
2	84G3712	SCREW THD ROLLING TT		4
3	6532127	BOOT AND PLATE ASSEMBLY		2
4	6630207	RIVET POP		8
5	7351316	SHIELD RH, Was 6728343, A		1
6	7351317	SHIELD ASSEMBLY, Was 6728448, A		1
7	6678765	NUT SELF RETAINING		4
8	35C510	SCREW FLANGED HEAD CAP		4
9		PLATE, PLATE, NSS - Order Ref. 3		2
10		RIVET, RIVET, NLA - Was 7131242, A		4
11	6734637	FOAM STRIP		2

Title: Pedal Extenders
Model Number: S70
Serial Number: A3W611001 & Above, A3W711001 & Above

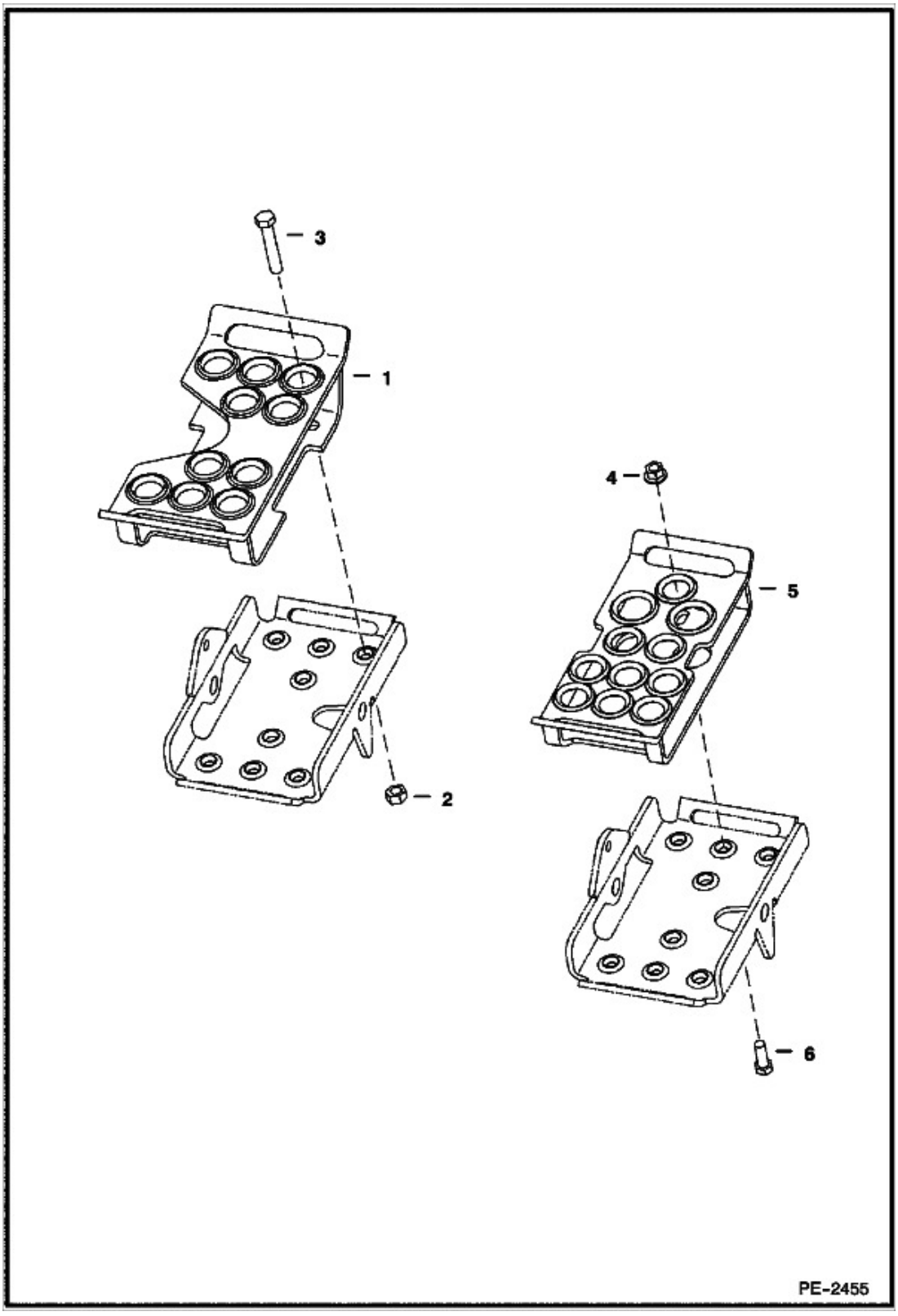

Title: Pedal Extenders
Model Number: S70
Serial Number: A3W611001 & Above, A3W711001 & Above

Ref.	Part Number	Description	S/N	Qty
1		PEDAL, PEDAL, NLA - extender - Order Ref. 5 & (2) each of Ref. 4 & 6		2
2	85D5	NUT PRETRQ HEX LOCK		4
3	17C516	BOLT		4
4	89D6	NUT		4
5	7131233	PEDAL EXTENDED W/A		2
6	17C616	BOLT 5		4

Title: Piston & Crankshaft
Model Number: S70
Serial Number: A3W611001 & Above, A3W711001 & Above

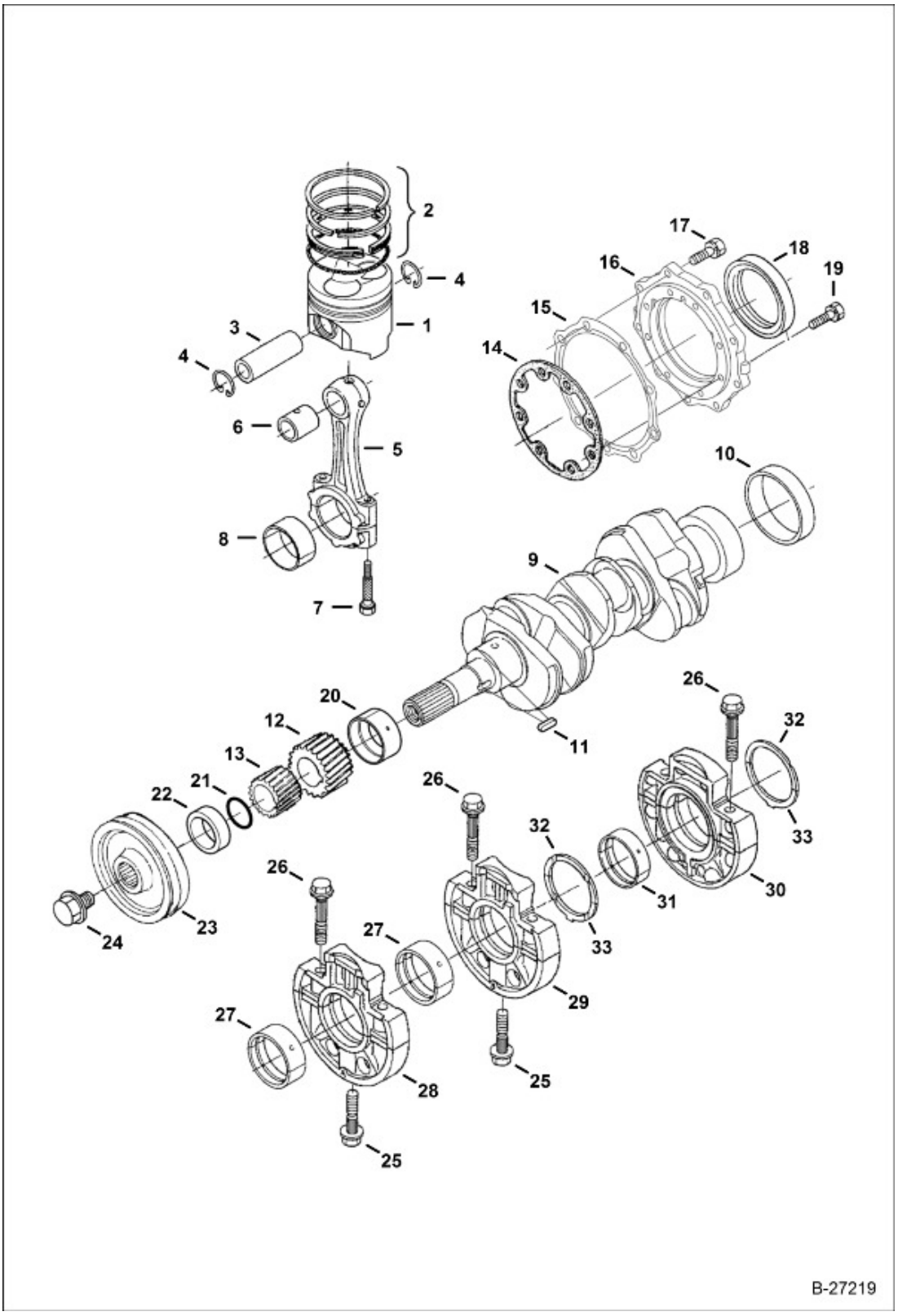

Title: Piston & Crankshaft
Model Number: S70
Serial Number: A3W611001 & Above, A3W711001 & Above

Ref.	Part Number	Description	S/N	Qty
1	6672373	PISTON, std (16050-2111)		3
1	6672374	PISTON, +.50 mm (16050-2112 OS50)		3
2	6672375	RING ASSY, standard		3
2	6672376	RING ASSY, +0.5 mm		3
3	6657521	PISTONPIN		3
4	6657522	PISTONPIN		6
5	6692542	ROD CONNECTING ASSEMBLY, W/Ref. 6-8		3
6	6698624	BUSHING PIN PISTON		3
7	6657526	BOLT		6
8	6657527	BEARING,CRANK PIN, standard		3
8	6657528	BEARING, ENG ROD CONNECTING, -0.2 mm		3
8	6657529	BEARING, PIN CRANK, -0.4 mm		3
9	6672378	CRANKSHAFT, W/Ref. 10 - 13		1
10	6657531	SLEEVE, Was 6657530, D		1
11	6657661	KEY		1
12	6657541	GEAR		1
13	6657552	GEAR, DRIVE		1
14	6657480	GASKET		1
15	6698617	GASKET, COVER CASE		1
16	6657484	COVER		1
17	4CM620	BOLT, Was 1CM620, A		9
18	6657481	SEAL, OIL		1
19	6969895	BOLT		8
20	6657532	BEARING, ENG CRANKSHAFT, standard		1
20	6657537	BEARING, CRANK, -0.2 mm		1

Title: Piston & Crankshaft
Model Number: S70
Serial Number: A3W611001 & Above, A3W711001 & Above

Ref.	Part Number	Description	S/N	Qty
20	6657538	BEARING, CRANK, -0.4 mm		1
21	6680268	O-RING		1
22	6657530	COLLAR, Was 6657531, D		1
23	6672428	PULLEY		1
24	6680540	BOLT		1
25	6657483	BOLT		2
26	6657482	BOLT		6
27	6657533	BEARING, CRANK, standard		2
27	6657539	BEARING, CRANK, -0.2 mm		2
27	7023136	BEARING, ENG CRANKSHAFT, -0,40 mm - Was 6657540, A		2
28	6691304	CASE, BEARING, main - W/Ref. 26 & 27		1
29	6657615	MAIN BRG, main - Was 6691305, A		1
30	6691302	BEARING CASE, main - W/Ref. 26 & 31		1
31	6657534	BEARING, CRANK, std		1
31	6680270	BEARING, -0.2mm, -0,20 mm		1
31	6680271	BEARING, -0.4mm, -0,40 mm		1
32	3974945	WASHER, THRUST, standard		2
32	6654715	BEARING, +0.2 mm - Was 6654715		2
32	3975022	WASHER, THRUST, +0.4 mm		2
33	6653865	WASHER, THRUST, standard		2
33	6654002	WASHER, THRUST, +0,20 mm		2
33	7023138	WASHER, THRUST, 0,4mm - WASHER THRUST - Was 6654003, A		2

Title: Rental Kit
Model Number: S70
Serial Number: A3W611001 & Above, A3W711001 & Above

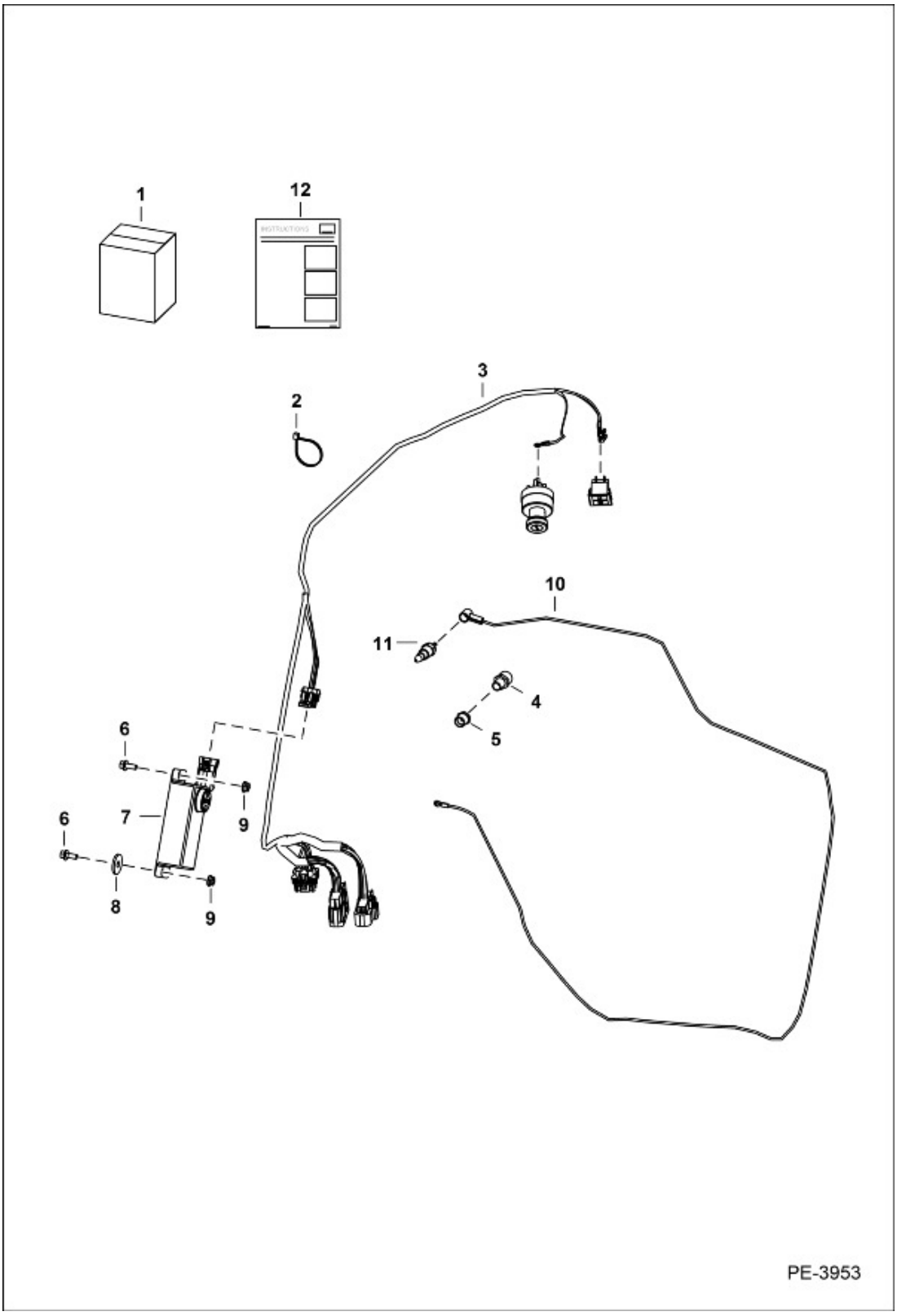

Title: Rental Kit
Model Number: S70
Serial Number: A3W611001 & Above, A3W711001 & Above

Ref.	Part Number	Description	S/N	Qty
1	7167046	KIT RENTAL, W/Ref. 2-11		1
2	6610510	STRAP, TIE 10		12
3	7167049	HARNESS, RENTAL		1
4	6630821	SWITCH, not in kit		1
5	19F3	BUSHING, not in kit		1
6	35C410	SCREW HEX HD W/F GR5		2
7	6669420	CONTROLLER		1
8	6701174	WASHER FLAT		1
9	55D4	NUT		2
10	7167047	WIRE ASSEMBLY		1
11	6671584	TEMPSWTCH		1
12	6987257ENUS	INSTRUCTIONS, Was 6987257, C		1

Title: Rocker Arm & Valves
Model Number: S70
Serial Number: A3W611001 & Above, A3W711001 & Above

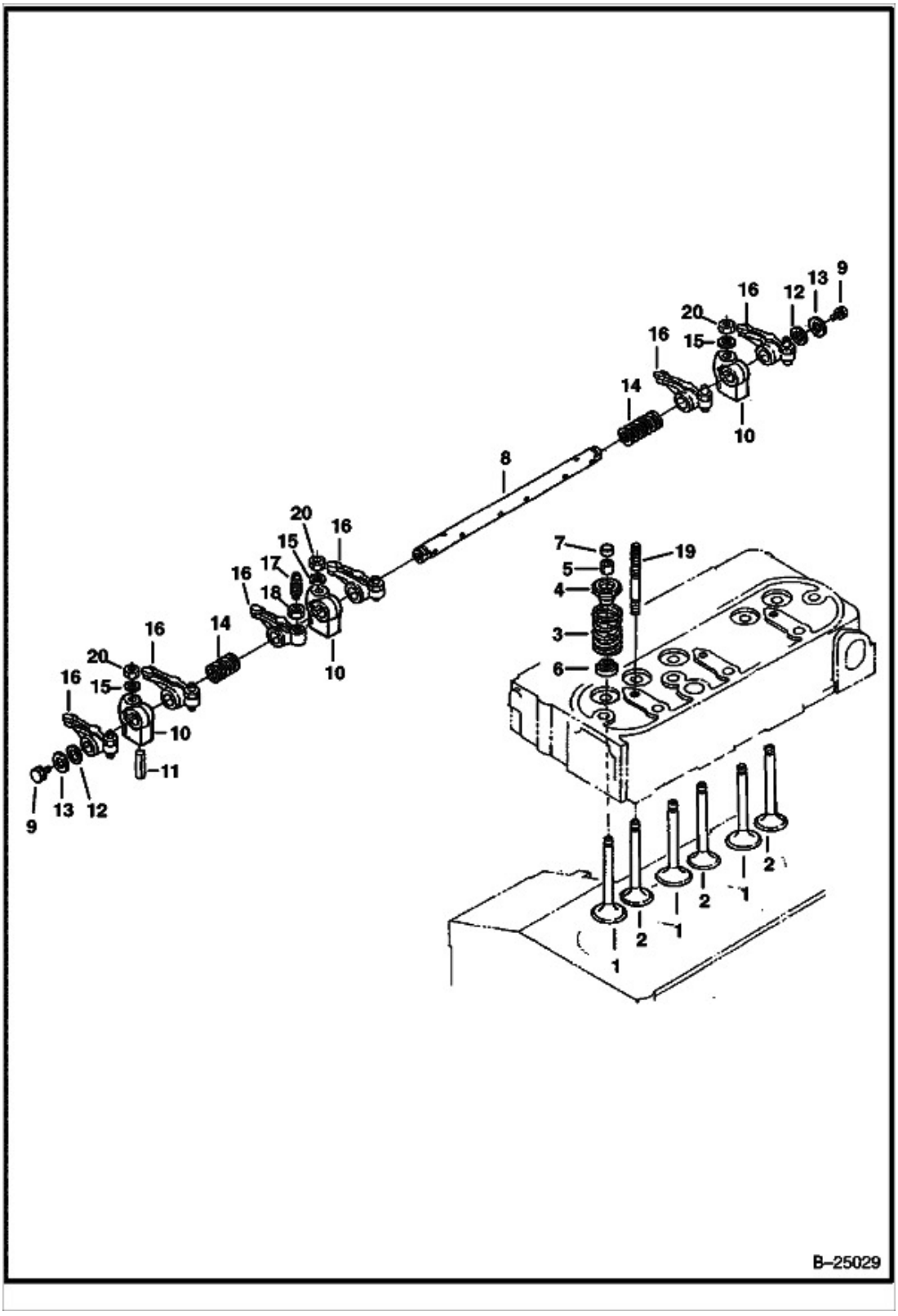

Title: Rocker Arm & Valves
Model Number: S70
Serial Number: A3W611001 & Above, A3W711001 & Above

Ref.	Part Number	Description	S/N	Qty
1	6657495	VALVE INLET, intake		3
2	6657496	VALVE, EXHAUST, exhaust		3
3	6657630	SPRING		6
4	6685959	RETAINER		6
5	7008389	RETAINER, VALVE SPRING, Was 3974161, A		6
6	6672436	SEAL, valve stem		6
7	6672437	CAP		6
8	6680255	SHAFT, W/Ref. 9		1
9	6693943	BOLT, Was 6670521, A		2
10	6657509	BRACKET		3
11	6680256	PIN, SPRING		1
12	6657511	WASHER		2
13	6670520	WASHER		2
14	6657508	SPRING		2
15	2EM7	WASHER		3
16	6657502	ARM ASSEMBLY, W/Ref. 17 & 18		6
17	6657506	SCREW		6
18	6680881	NUT		6
19	6657510	STUD		3
20	1DM7	NUT		3

Title: Rocker Arm Cover
Model Number: S70
Serial Number: A3W611001 & Above, A3W711001 & Above

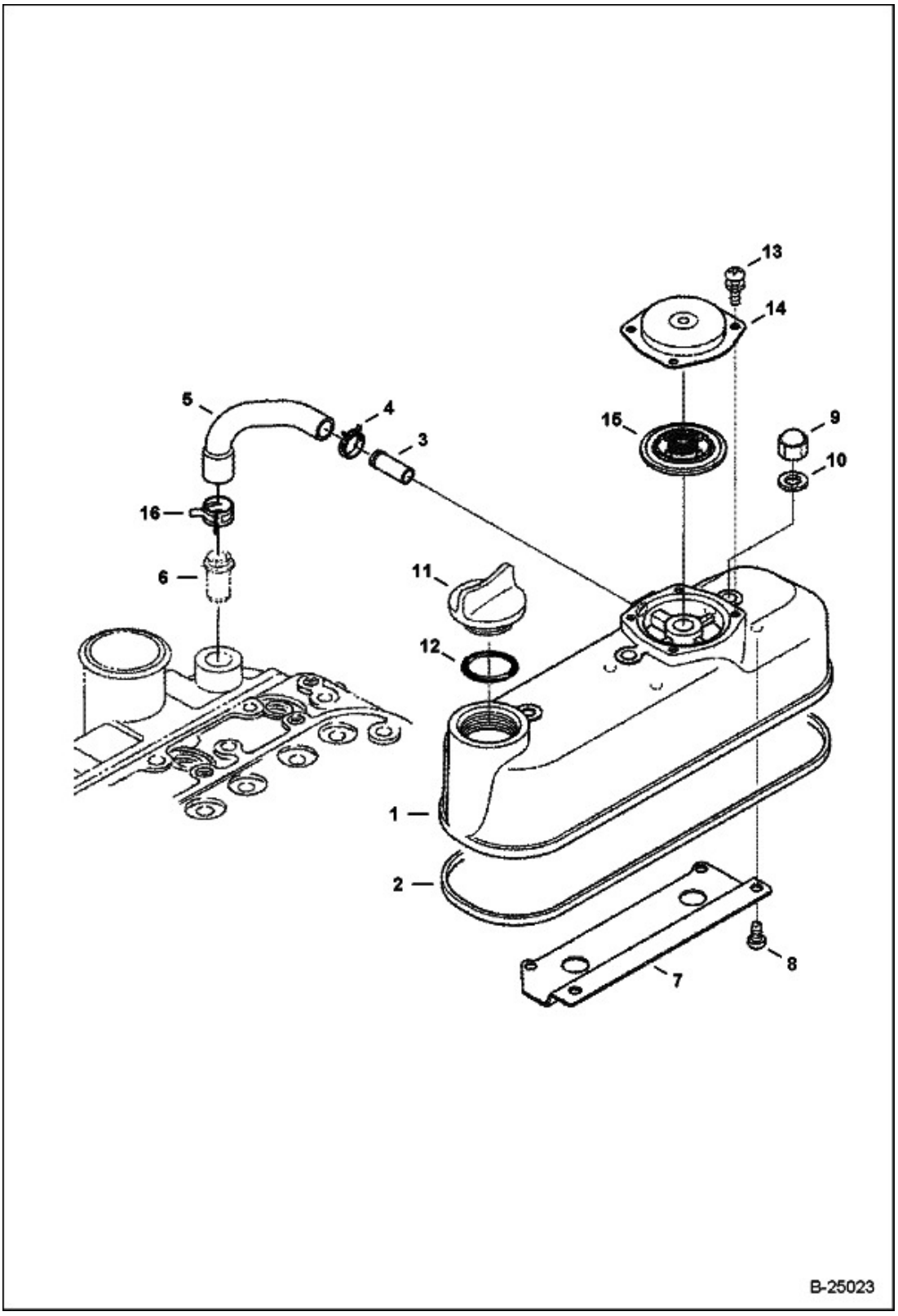

Title: Rocker Arm Cover
Model Number: S70
Serial Number: A3W611001 & Above, A3W711001 & Above

Ref.	Part Number	Description	S/N	Qty
1	6686166	COVER, W/Ref. 2-8		1
2	6672365	GASKET, Was 7207541, A		1
3	6655880	PIPE		1
4	6684776	CLAMP		1
5	6687908	TUBE		1
6	6680689	ADAPTER		1
7		SHIELD, SHIELD, NSS - Order Ref. 1		1
8		SCREW, SCREW, NSS - Order Ref. 1		4
9	6657050	CAP		3
10	6599116	GASKET		3
11	6685924	OIL FILL CAP, oil fill		1
12	6683009	O-RING		1
13	3975436	SCREW, W/washer		4
14	6969803	COVER, BREATHER		1
15	6685087	VALVE, breather		1
16	6686171	CLAMP		1

Title: Seat & Seat Bar
Model Number: S70
Serial Number: A3W611001 & Above, A3W711001 & Above

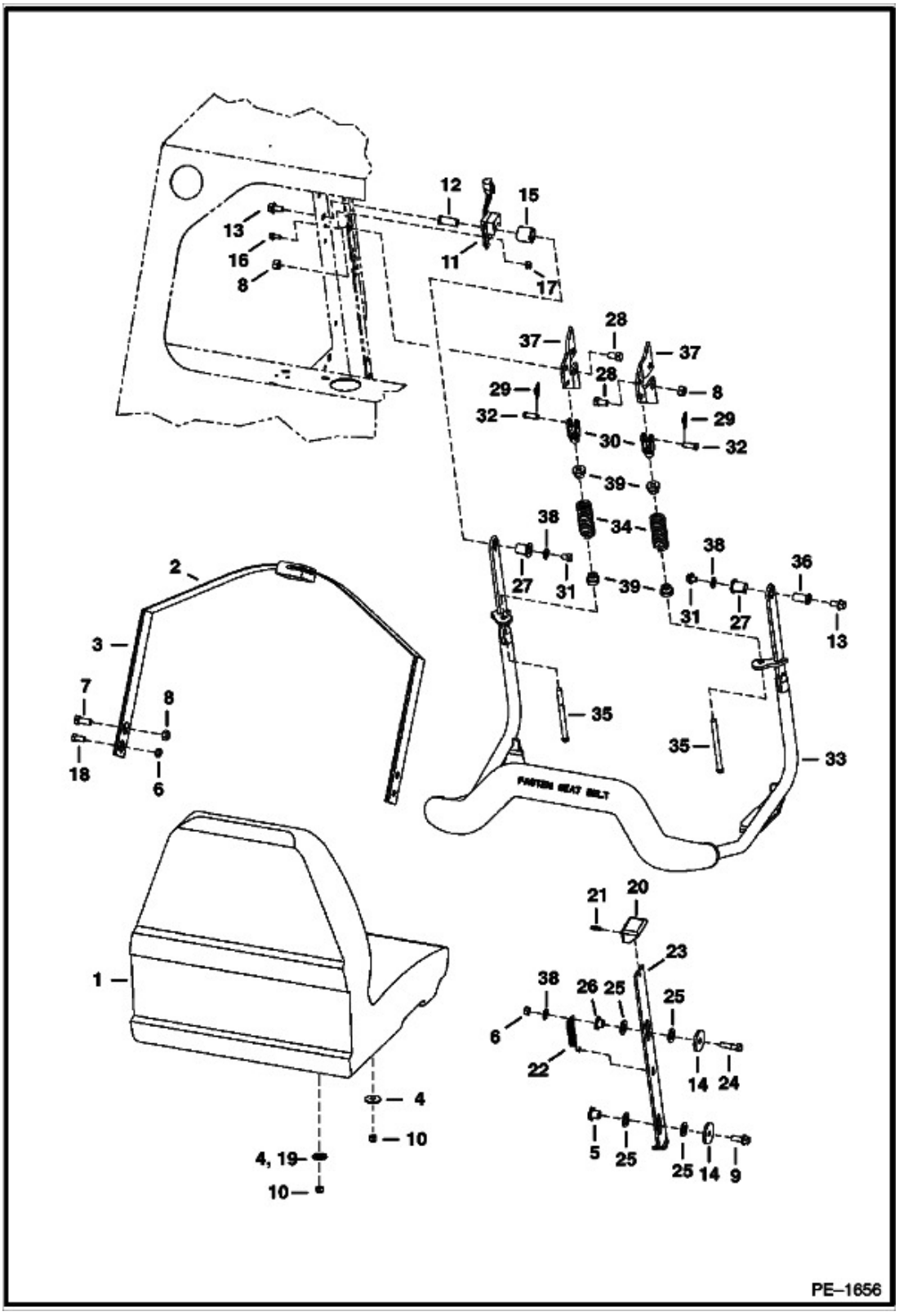

Title: Seat & Seat Bar
Model Number: S70
Serial Number: A3W611001 & Above, A3W711001 & Above

Ref.	Part Number	Description	S/N	Qty
1		SEAT, SEAT, See Illustration		1
2	6675074	SEATBELT STANDARD, W/O spring plates		1
3	6725373	SPRING BELT GUIDE		2
4	619021	WASHER		4
5	6594298	NUT RETAINING		2
6	85D7	NUT PRETRQ HEX LOCK		2
7	17C716	BOLT		2
8	85D7	NUT PRETRQ HEX LOCK		2
9	45C616	BOLT		2
10	59D5	NUT LOCK HEX PT		4
11	7105252	SENSOR, SEAT BAR POSITION, Also Order 6680523		2
11	6680523	KEY MAGNETIC, magnet bushing		1
12	6706685	BUSHING SPACER		1
13	35C612	SCREW FLANGED HEAD CAP		2
14	872229	WASHER		2
15	6680473	BUSHING MAGNET		1
16	35C410	SCREW HEX HD W/F GR5, fastens thru tab - 5/8" (15,9 mm)		2
17	83D4	NUT LOCK, fastens thru tab		2
18	17C716	BOLT		2
19	6571991	GUIDE		2
20	6702343	BLOCK		2
21	14J2512	PIN 5		2
22	6594284	SPRING TENSION		2
23	7351304	LINK ASSEMBLY, L.H. - W/Ref. 20, 21 - Was 6704559, A		1
23	7351296	LINK ASSEMBLY, R.H. - W/Ref. 20, 21 - Was 6704558, A		1

Title: Seat & Seat Bar
Model Number: S70
Serial Number: A3W611001 & Above, A3W711001 & Above

Ref.	Part Number	Description	S/N	Qty
24	35C624	SCREW FLANGED HEAD CAP		2
25	6700170	WASHER, plastic		8
26	6559479	NUT RETAINING		4
27	6680441	BUSHING KEYED, keyed		2
28	17C712	BOLT		2
29	6631418	RING RUE		2
30	6713589	CLEVIS ROD END		2
31	17C608	BOLT		2
32	4F6106	PIN HARDENED CLEVIS		2
33	6713886	ARM SEAT BAR ASSEMBLY, for Use W/ compression spring		1
34	6701535	SPRING CENTERING		2
35	6713887	SCREW SOCKET CAP		2
36	6706962	BUSHING PIVOT		1
37	6710660	MOUNT SPRING		2
38	25E17	WASHER FLAT PLAIN		4
39	6710659	BUSHING		4

Title: Seat (Michigan)
Model Number: S70
Serial Number: A3W611001 & Above, A3W711001 & Above

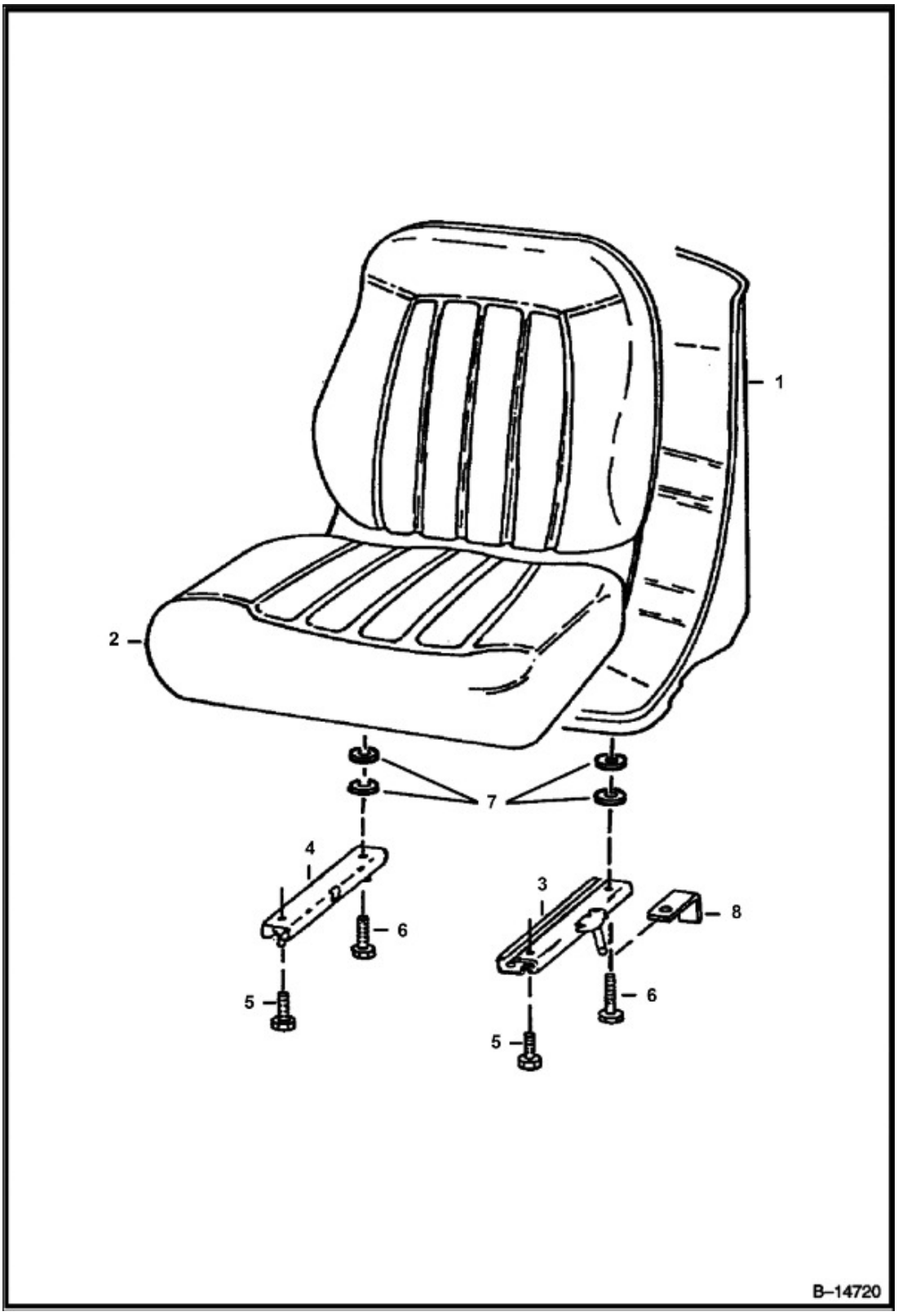

Title: Seat (Michigan)
Model Number: S70
Serial Number: A3W611001 & Above, A3W711001 & Above

Ref.	Part Number	Description	S/N	Qty
1	6669135	SEAT, OPERATOR VINYL, See Illustration, W/Ref. 2-8		1
1	6598809	SEAT OPERATOR VINYL, See Illustration, Bobcat logo		1
2	6670160	CUSHION SEAT, W/edging, clip & (2) grommets		1
2		EDGING, EDGING, NSS		1
2		CLIP, CLIP, NSS		1
3	6674013	TRACK, LH - W/ 8" (203,2 mm) latch		1
4	6669089	RH TRACK, RH - W/O latch		1
5	25G512	SCREW		2
6	25G520	SCREW		2
7	6672715	NYLNSPACR		4
8	6668953	BRACKET, See S/L Dated 16 April 1996		2

Title: Seat Belt (3" Wide)
Model Number: S70
Serial Number: A3W611001 & Above, A3W711001 & Above

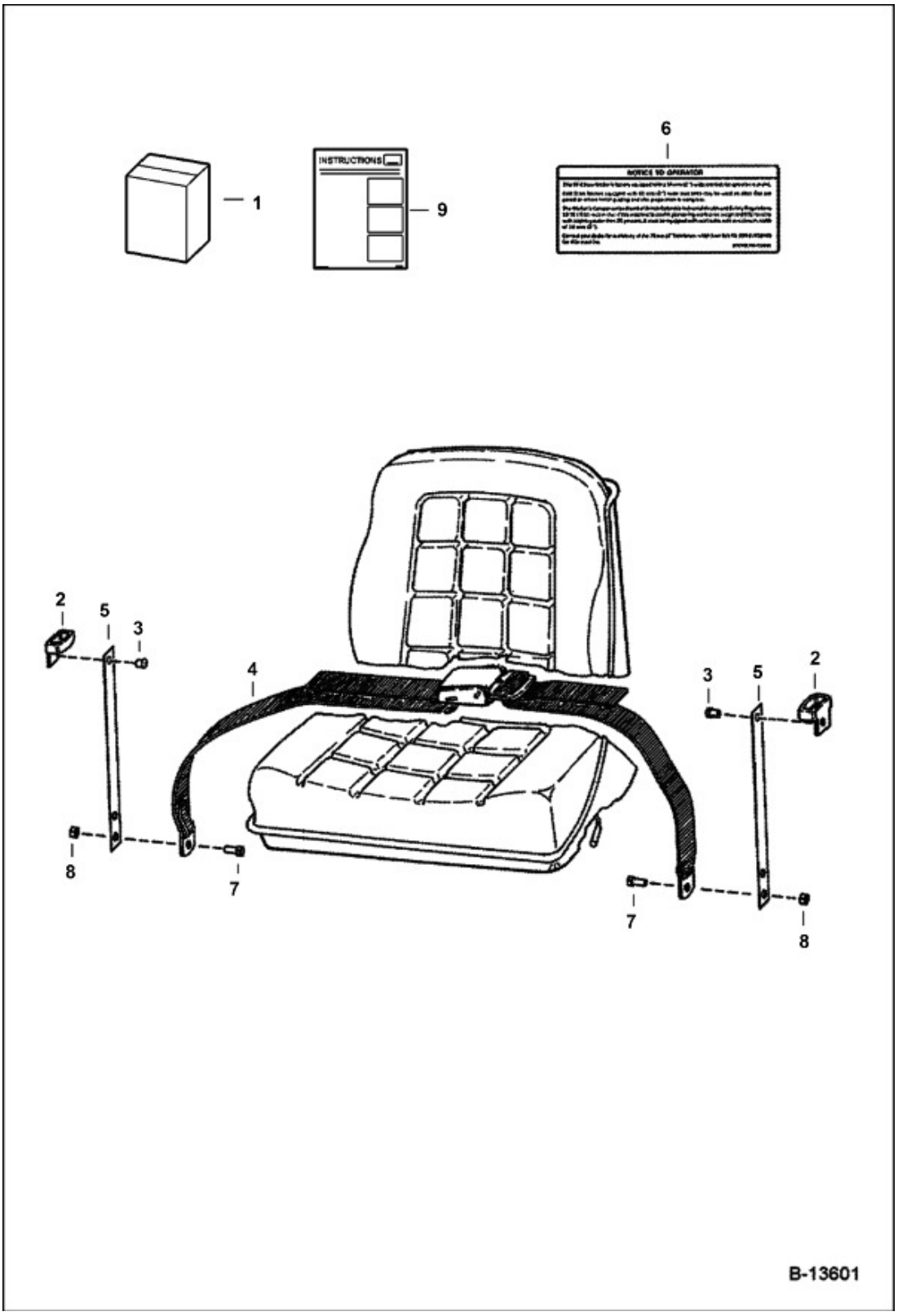

Title: Seat Belt (3" Wide)
Model Number: S70
Serial Number: A3W611001 & Above, A3W711001 & Above

Ref.	Part Number	Description	S/N	Qty
1	6703640	KIT SEAT BELT, W/Ref. 2-5 & 7-9		1
2	6703703	GUIDE, SEAT BELT		2
3	6630207	RIVET POP		4
4	6659999	BELT SEAT		1
5	6711908	SPNG PLATE		2
6	6703641	DECAL, not in kit		1
7	17C716	BOLT		4
8	85D7	NUT PRETRQ HEX LOCK		4
9	6989663ENUS	INSTRUCTIONS		1

Title: Seat Covers (Suspension Seat)
Model Number: S70
Serial Number: A3W611001 & Above, A3W711001 & Above

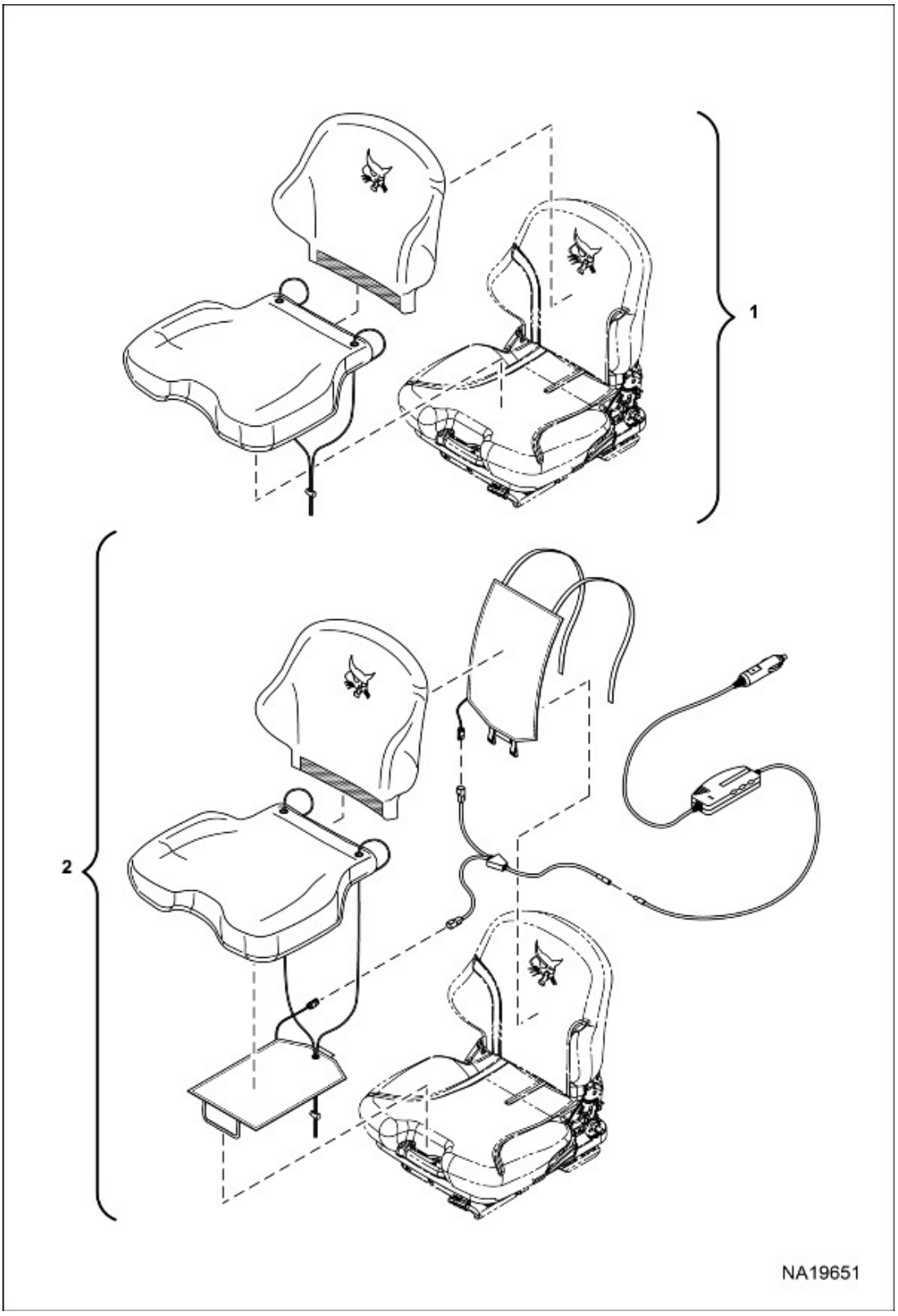

Title: Seat Covers (Suspension Seat)
Model Number: S70
Serial Number: A3W611001 & Above, A3W711001 & Above

Ref.	Part Number	Description	S/N	Qty
1	7417311	COVER SEAT, - Use W/ 6632388 seat		1
2	7417312	COVER SEAT HEATED, - Use W/ 6632388 seat		1

Title: Seat Covers (Vinyl Seat)
Model Number: S70
Serial Number: A3W611001 & Above, A3W711001 & Above

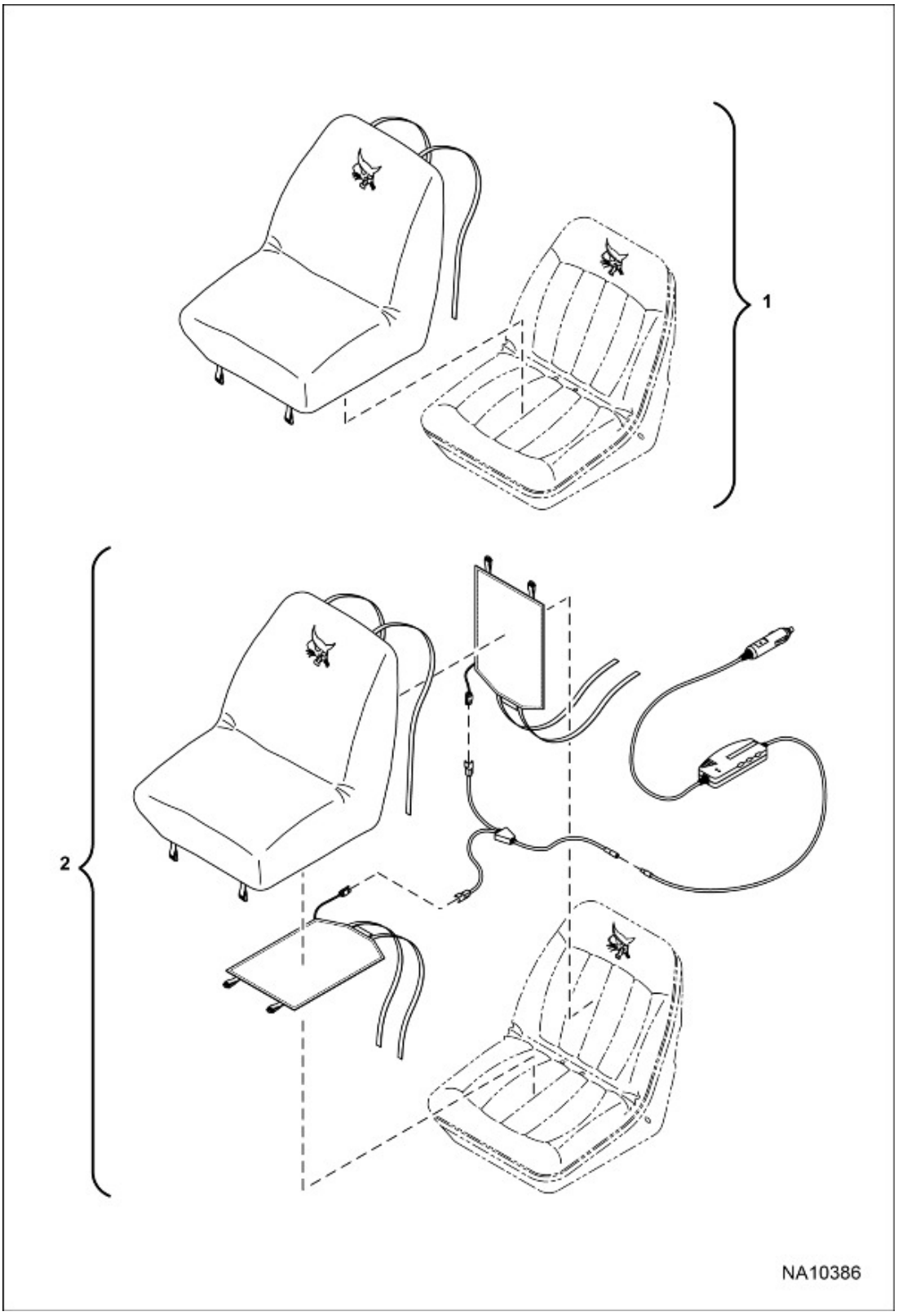

Title: Seat Covers (Vinyl Seat)
Model Number: S70
Serial Number: A3W611001 & Above, A3W711001 & Above

Ref.	Part Number	Description	S/N	Qty
1	7260106	COVER SEAT, See Illustration, - Use W/ 6669135 seat		1
2	7260107	COVER SEAT HEATED, See Illustration, - Use W/ 6669135 seat		1

Title: Side Instrument Panel Kit
Model Number: S70
Serial Number: A3W611001 & Above, A3W711001 & Above

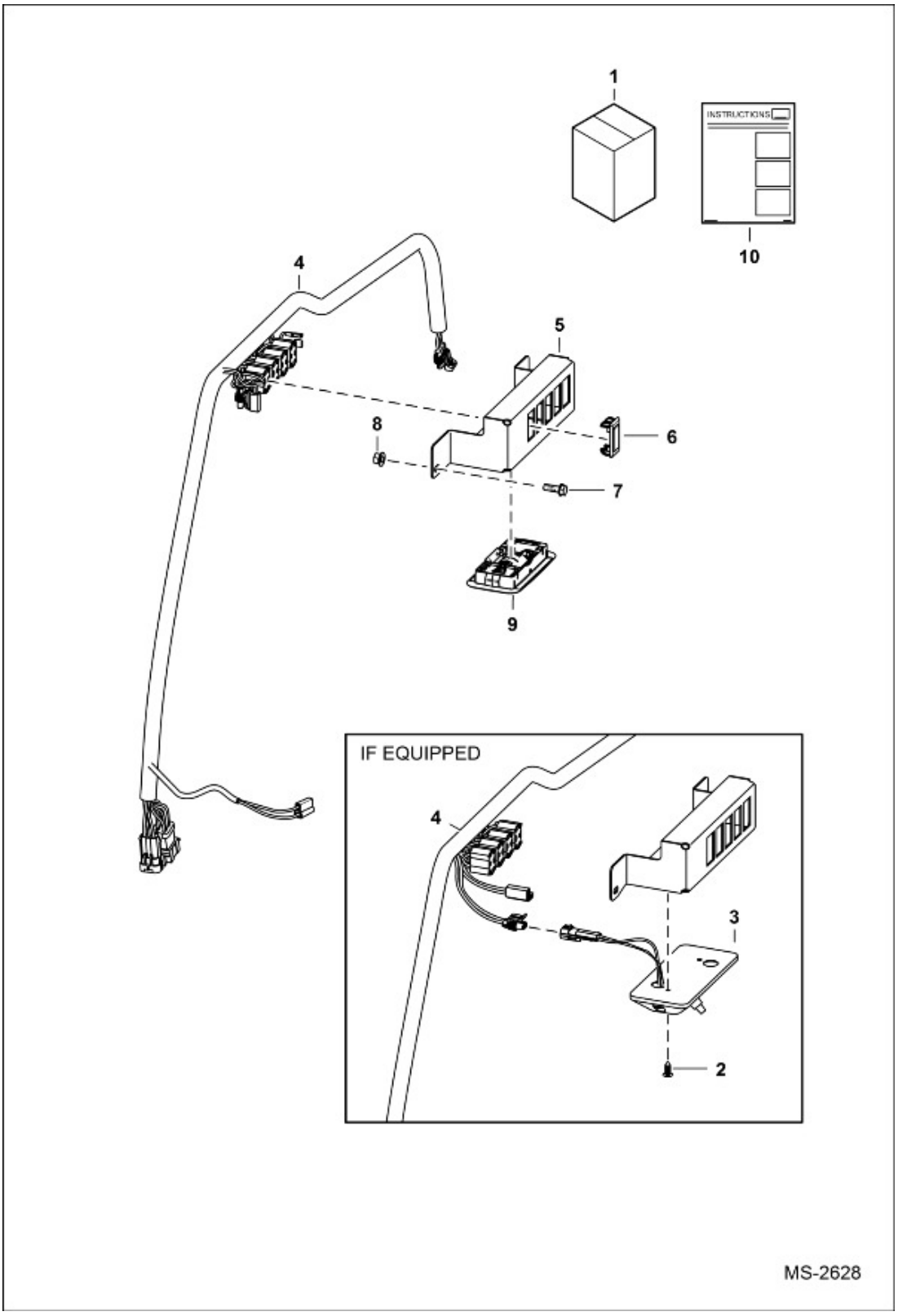

Title: Side Instrument Panel Kit
Model Number: S70
Serial Number: A3W611001 & Above, A3W711001 & Above

Ref.	Part Number	Description	S/N	Qty
1		KIT, PANEL SIDE, KIT, PANEL SIDE, NLA - side panel - Ref. 2-8 & 10 - non-LED dome light - Was 7154283, A		1
1	7154283	KIT PANEL SIDE, Ref. 2 & 4-10 - LED dome light		1
2	6664221	RETAINER		1
3		LIGHT, NON-LED DOME, LIGHT, NON-LED DOME, NLA - Order LED dome light 7249162 - Was 6680326, A		1
3	6665367	BULB, use W/(NLA6680326) non-LED dome light		1
4		HARNESS, ACCESSORY, HARNESS, ACCESSORY, NLA - used with non-LED dome light - Order accessory harness 7154343, also Order jumper harness 7244211 if equipped with non-LED dome light - Was 7154343, A		1
4	7154343	HARNESS S70 ACCESS, use with LED dome light		1
5		PANEL, SIDE, PANEL, SIDE, NLA - use with non-LED dome light - Order 7247186 side panel, also Order 7154343 accessory harness 7229539 cab headliner light - Was 6730826, A		1
5	7351565	PANEL SIDE, use with LED dome light - Was 7247186, A		1
6	6665314	PLUG ROCKER SW, switch		3
7	35C410	SCREW HEX HD W/F GR5		2
8	83D4	NUT LOCK		2
9	7229539	LIGHT, CAB HEADLINER, LED dome light		1
9	7402347	LIGHT DOME LED, LED - Was 7414609		1
10	6986792ENUS	INSTRUCTIONS, Was 6986792, A		1

Title: Single Point Lift
Model Number: S70
Serial Number: A3W611001 & Above, A3W711001 & Above

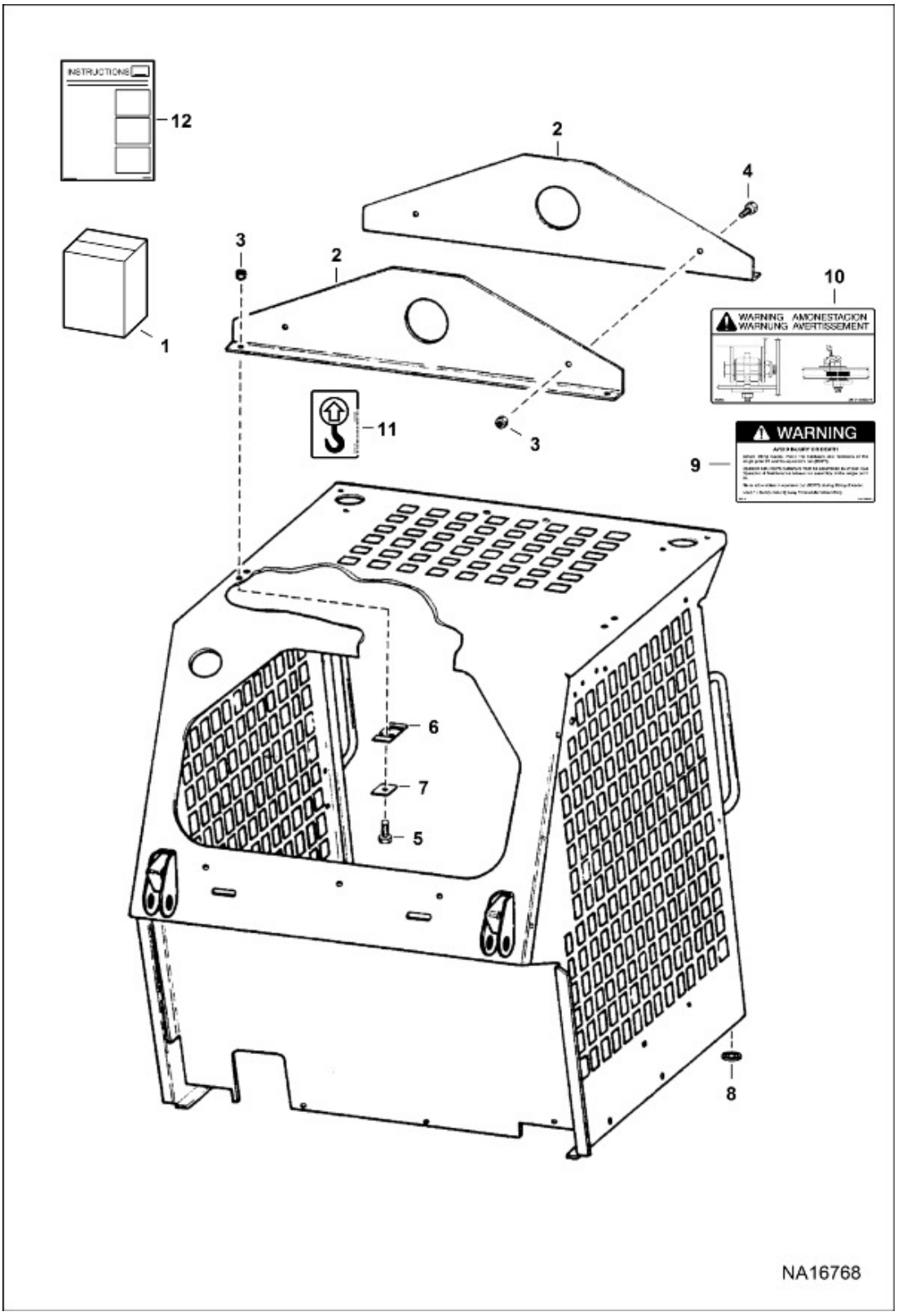

Title: Single Point Lift
Model Number: S70
Serial Number: A3W611001 & Above, A3W711001 & Above

Ref.	Part Number	Description	S/N	Qty
1	7374929	KIT LIFT SINGLE POINT, Ref. 2-12 - Was 6565785, A		1
2	7374925	PLATE SINGLE PT LIFT, Was 6565492, A		2
3	83D6	NUT LOCK, Was 85D6, B		6
4	31C614	BOLT, Was 1C612, B		2
5	17C620	BOLT, Was 1C620, B		4
6	7374926	SHIM LATCH PLATE, Was 6565493, A		4
7	6559447	WASHER		4
8	6565600	RETAINER		2
9	6565491	DECAL SAFETY, safety		2
10	6592879	DECAL WARNING		2
11	6533898	DECAL		1
12	7374927	INSTRUCTIONS, Was 6566541, A		1

Title: Speed Control Plate
Model Number: S70
Serial Number: A3W611001 & Above, A3W711001 & Above

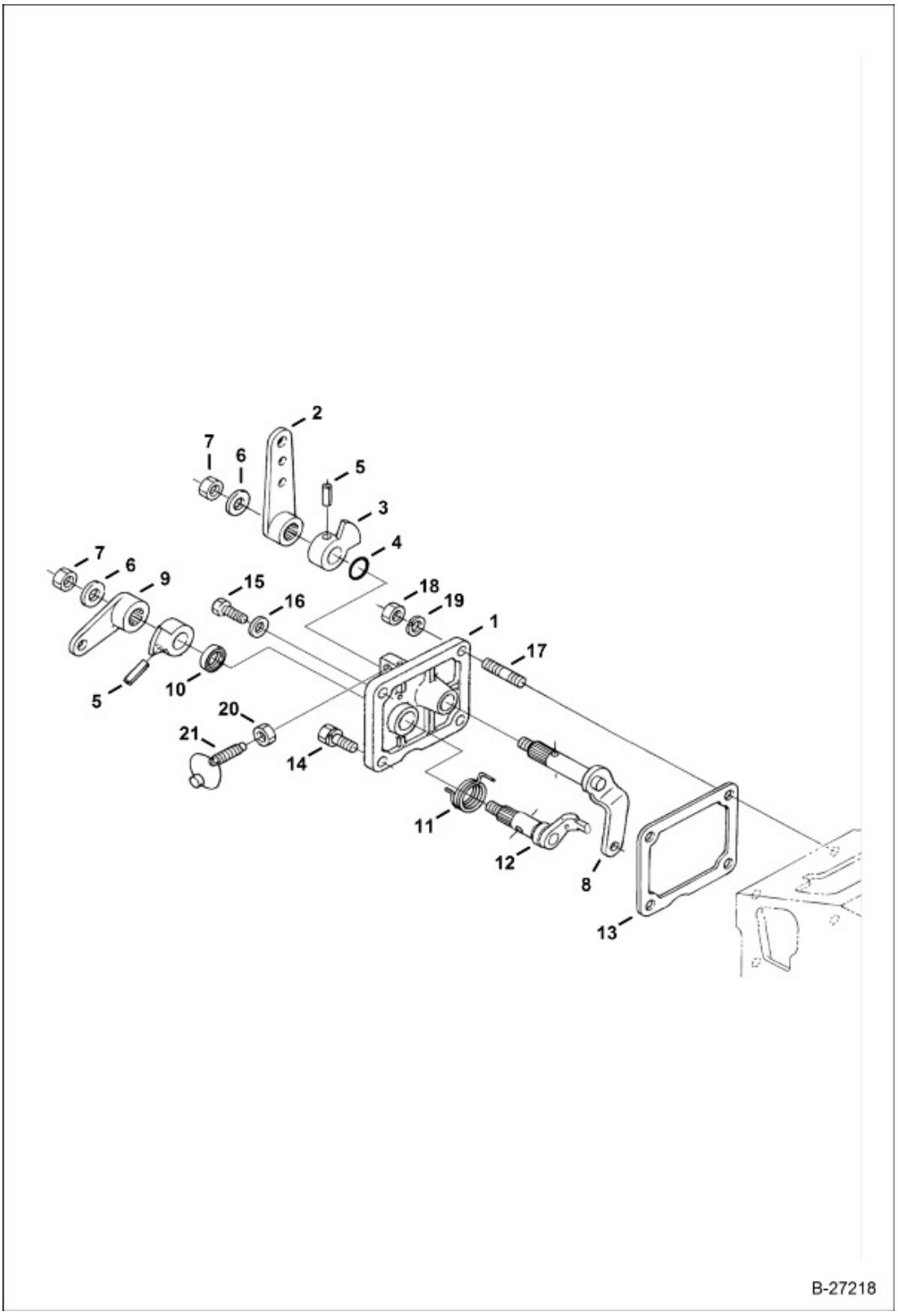

Title: Speed Control Plate
Model Number: S70
Serial Number: A3W611001 & Above, A3W711001 & Above

Ref.	Part Number	Description	S/N	Qty
1	6680501	PLATE ASSEMBLY, W/Ref. 2-12		1
2	6657655	LEVER		1
3	6657577	LEVER		2
4	6680277	O-RING		1
5	6598098	PIN		2
6	6657596	WASHER		2
7	6657592	NUT		2
8	6657649	LEVER ASSEMBLY		1
9	6657656	LEVER		1
10	6598703	SEAL		1
11	6657474	SPRING		1
12	6657657	SHAFT		1
13	6657578	GASKET		1
14	1CM616	SCREW HEX CAP, Was 4CM616, A		1
15	4CM618	BOLT		1
16	3974972	GASKET		1
17	6680264	STUD		2
18	1DM6	NUT	Engine 7VZ999 & Below	2
18	6670533	NUT, Was 6969818, A	Engine 7W0001 & Above	2
19	6667419	WASHER	Engine 7VZ999 & Below	2
20		NUT, NUT, NSS - Order Ref. 1		1
21		BOLT, ADJUSTING, BOLT, ADJUSTING, NSS - Order Ref. 1 - W/security wire		1

Title: Spring Dual Kit (Japanese Units Only)
(S/N A3W611001 - A3W613689)

Model Number: S70

Serial Number: A3W611001 & Above, A3W711001 & Above

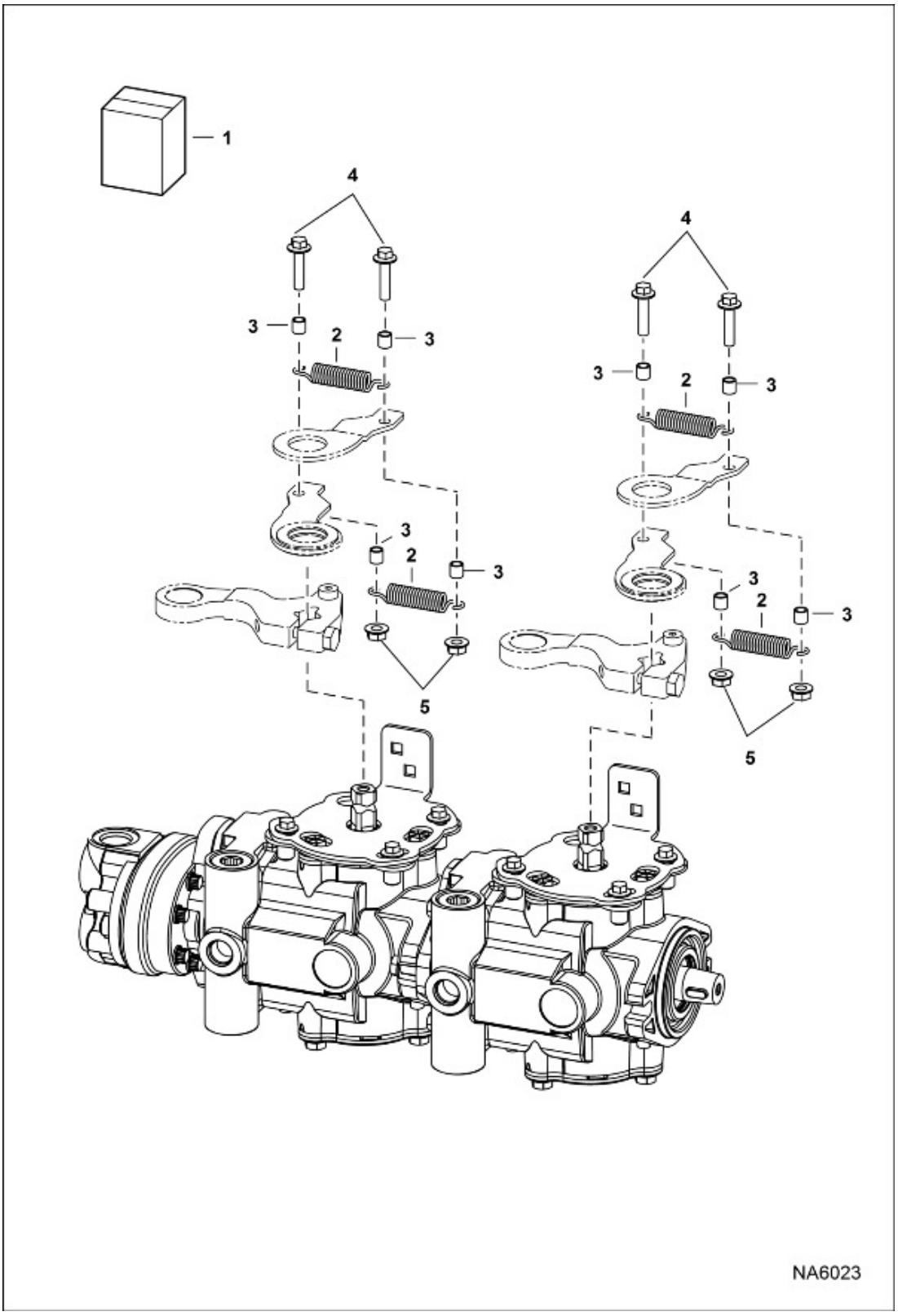

Title: Spring Dual Kit (Japanese Units Only)
(S/N A3W611001 - A3W613689)

Model Number: S70

Serial Number: A3W611001 & Above, A3W711001 & Above

Ref.	Part Number	Description	S/N	Qty
1		KIT, DAMPER STEERING, KIT, DAMPER STEERING, Ref. 2-5 - Was 7169782, A		1
2		SPRING, EXTENSION, SPRING, EXTENSION, NLA - Order Ref. 1 - Was 7165011		4
3		SPACER, SPACER, NLA - Order Ref. 1 - Was 7165075		8
4	35C520	BOLT		4
5	97D5	NUT FLGD HEX LOCK		4

Title: Starter (1.4 KW) (Nippondenso - 228000-5740)
Model Number: S70
Serial Number: A3W611001 & Above, A3W711001 & Above

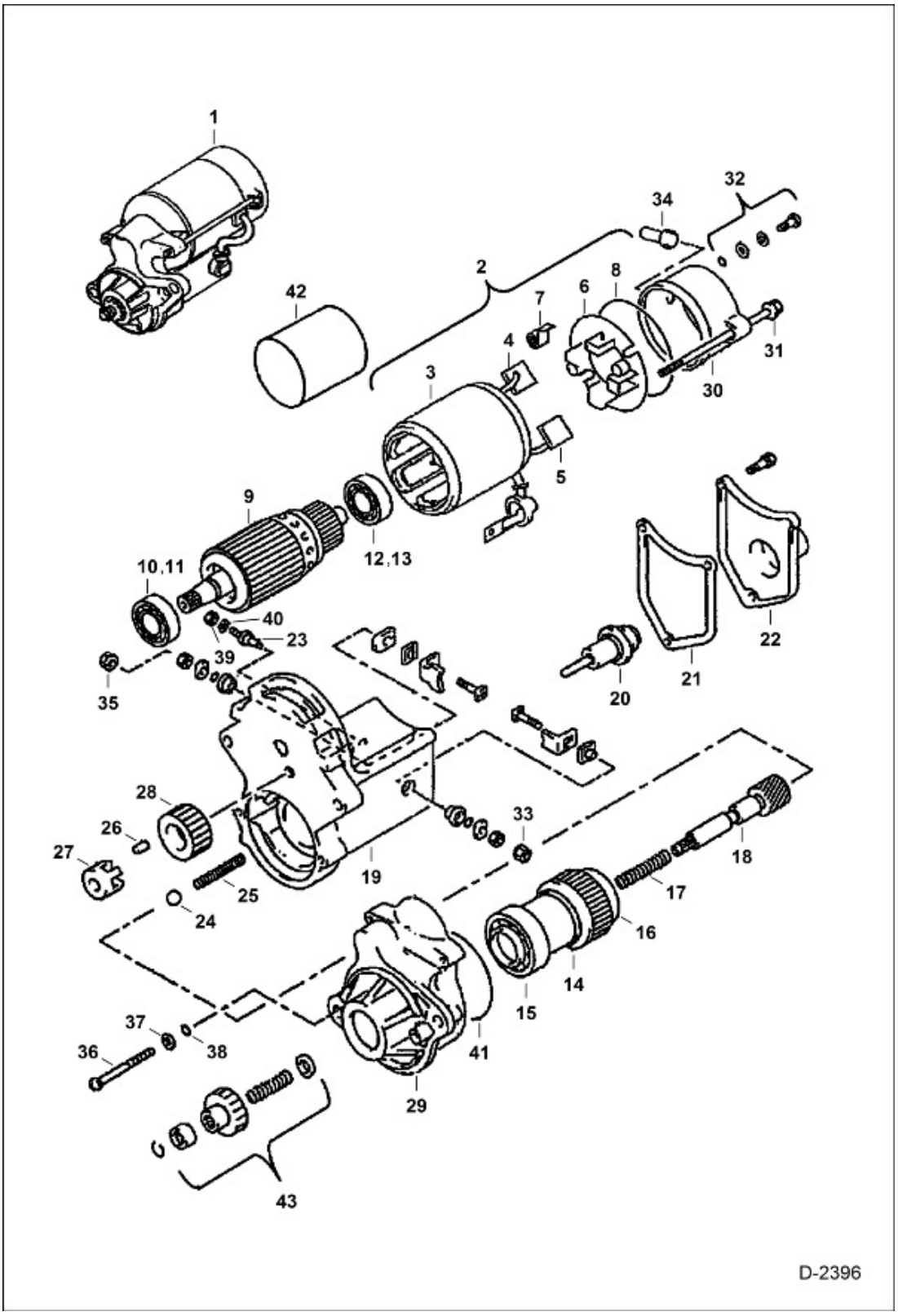

Title: Starter (1.4 KW) (Nippondenso - 228000-5740)
Model Number: S70
Serial Number: A3W611001 & Above, A3W711001 & Above

Ref.	Part Number	Description	S/N	Qty
1	6667987	STARTER		1
1	6667987REM	STARTER		1
1		STARTER, STARTER, NLA - Was 6667987EF, A		1
2	6689720	KIT STARTER, Was 6671976, B,D		2
3	6671977	YOKE, W/Ref. 2		1
4	6672174	KIT TERMINAL, Was 6671978, B,D		1
5	6672175	KIT TERMINAL, Was 6671979, B,D		1
6	6671980	HOLDER, W/Ref. 7		1
7	6671981	SPRING		4
8	6671982	O-RING		2
9	6671983	ARMATURE, W/Ref. 10-13		1
10		BEARING, BEARING, NSS - Was 6671984, A		1
11		BEARING, BEARING, NSS - Was 6671985, A		1
12	6671986	BEARING		1
13	6671987	BEARING		1
14	6671988	CLUTCH, W/Ref. 15 & 16		1
15	6671989	BEARING		1
16	6671990	BEARING		1
17	6671991	SPRING		1
18		SHAFT, SHAFT, NSS - Was 6671992, A		1
19	6671993	HOUSING		1
20	6671994	PLUNGER		1
21	6671995	GASKET		1
22	6671996	COVER		1
23	6689735	BOLT, W/WASHER, Was 6671997, B,D		3

Title: Starter (1.4 KW) (Nippondenso - 228000-5740)
Model Number: S70
Serial Number: A3W611001 & Above, A3W711001 & Above

Ref.	Part Number	Description	S/N	Qty
24	6632435	BALL		1
25	6671998	SPRING		1
26	6671999	ROLLER		5
27	6672000	RETAINER		1
28	6672001	PINION		1
29	6672002	HOUSING		1
30	6672003	FRAME		1
31	6672004	BOLT		2
32	6672005	SCREW, W/ O-rings		2
33	6672006	NUT		1
34	6672007	BUSHING		1
35	6672008	NUT		1
36	6672009	BOLT		2
37	6672010	WASHER		2
38	6666631	O-RING		2
39	6672011	NUT		1
40	6672012	WASHER		1
41	6672013	O-RING		1
42	6672205	COVER		1
43	6672172	DRIVEGEAR		1

Title: Steering Damper Kit
Model Number: S70
Serial Number: A3W611001 & Above, A3W711001 & Above

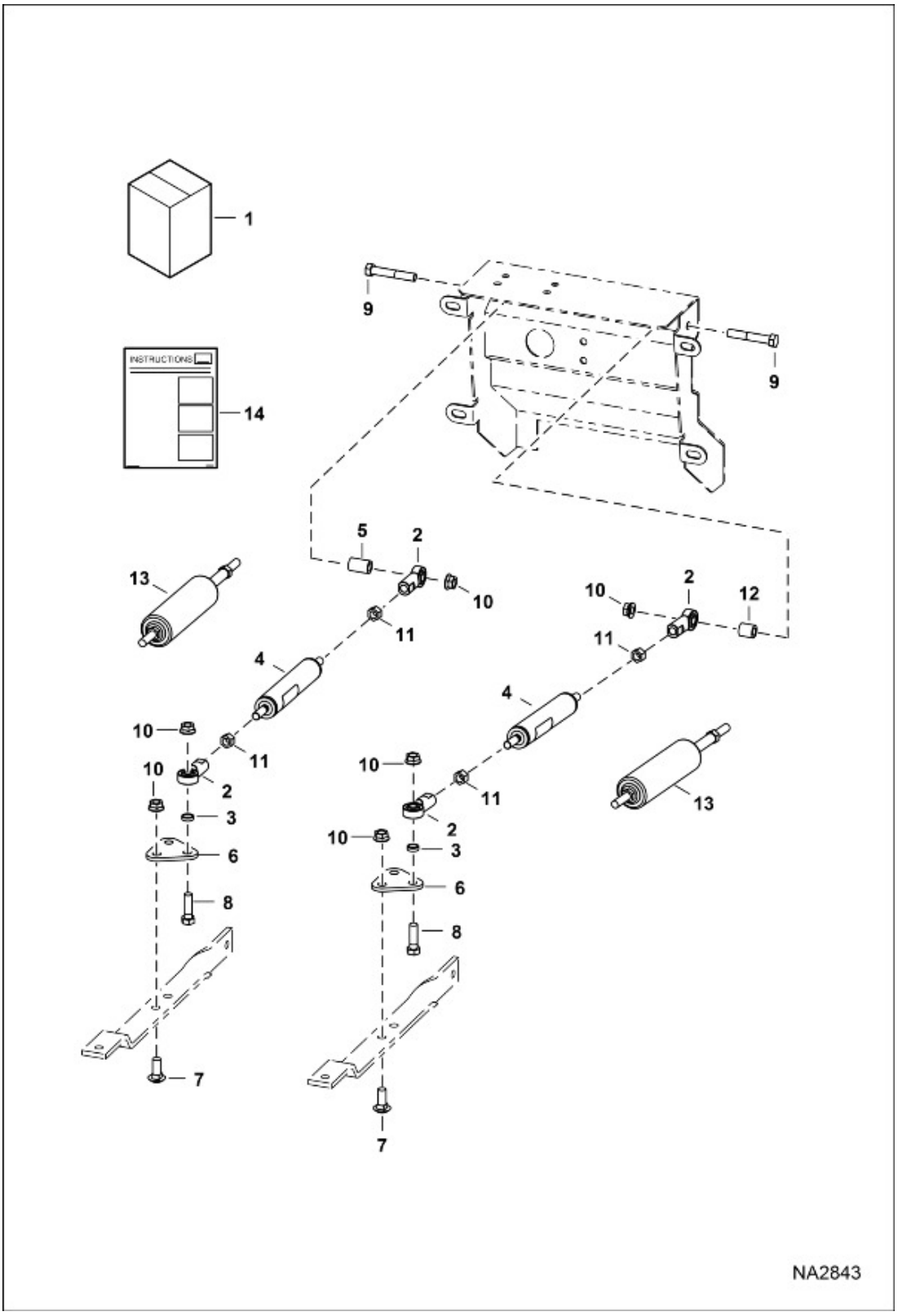

Title: Steering Damper Kit
Model Number: S70
Serial Number: A3W611001 & Above, A3W711001 & Above

Ref.	Part Number	Description	S/N	Qty
1	7192543	KIT DAMPER STEERING, Ref. 2-12 - not compatible W/ 6733638 back-up alarm kit	A3W611001 - 13689, A3W711001 - 13379	1
1	7192543	KIT DAMPER STEERING, Ref. 2-12	A3W613690 & Above, A3W713380 & Above	1
2	6512954	ROD END		4
3	6564535	WASHER AUX CONTROL		2
4		GAS SPRING, GAS SPRING, NLA - Japan Option - Order Ref. 13 - Was 6649551, A		2
5	6708314	BUSHING SPACER		1
6	7374902	MOUNT SHOCK, Was 6709396, A		2
7	10C616	BOLT SHRT SQ NK RHD 3/8-16X1 GRD 5		4
8	17C620	BOLT		2
9	17C636	BOLT		2
10	57D6	NUT HEX FLNG GR8		8
11	62D6	NUT HEX FINISHED GR5		4
12	6532347	TUBE SPACER		1
13	7188108	DAMPER SHOCK		2
14	6989709ENUS	INSTRUCTIONS, Was 6989709, C		1

Title: Strobe Light (Amber - 3414ALW)
Model Number: S70
Serial Number: A3W611001 & Above, A3W711001 & Above

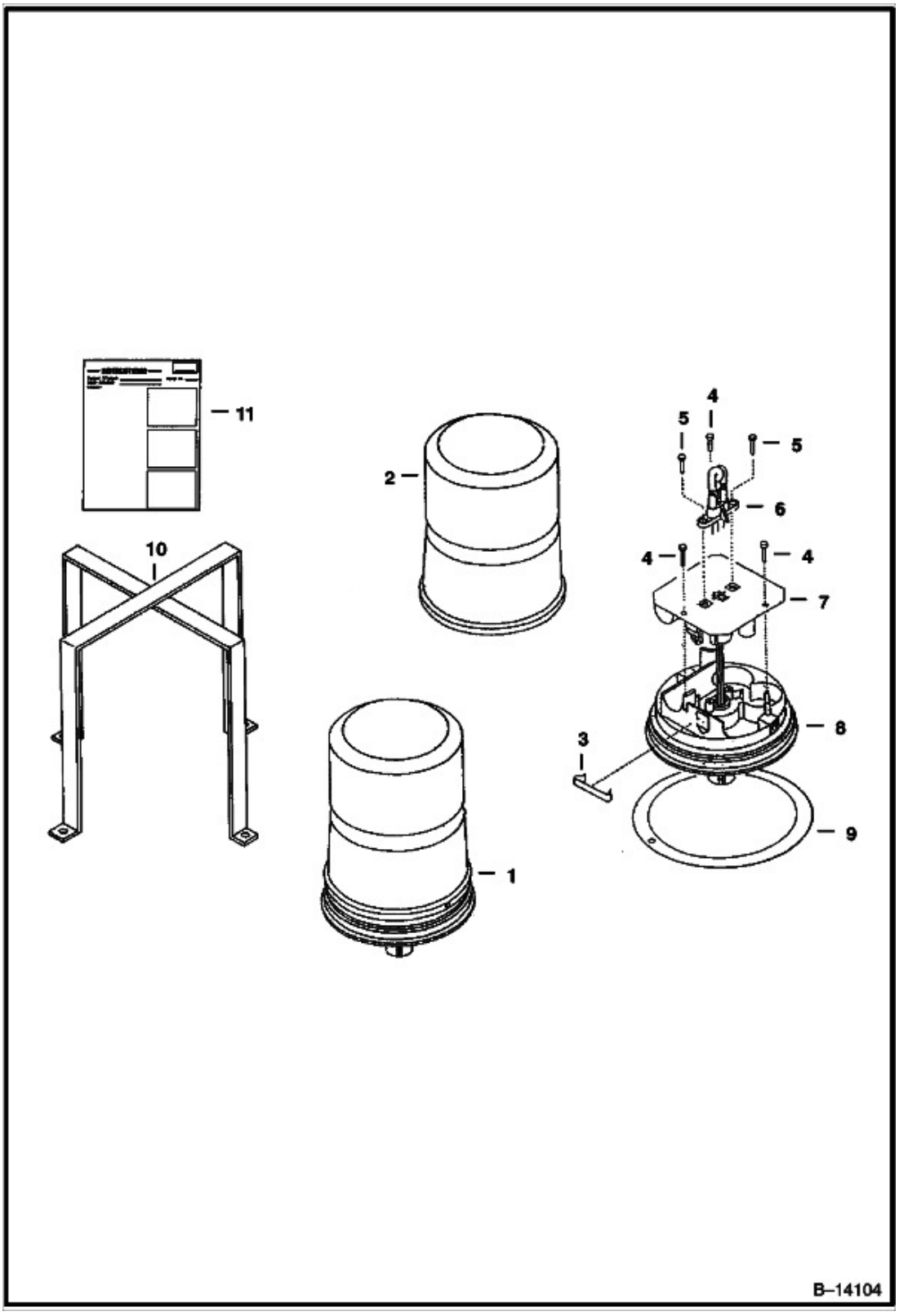

Title: Strobe Light (Amber - 3414ALW)
Model Number: S70
Serial Number: A3W611001 & Above, A3W711001 & Above

Ref.	Part Number	Description	S/N	Qty
1		KIT, KIT, NLA - strobe light - Ref. 2 - 11 - Order 6697795 kit - Was 6587526, A		1
1	6697795	STROBE KIT, Ref. 2-11 - 4200 series light - 12 jewel		1
2		AMBER LENS, AMBER LENS, NLA - Use W/Ref. 1 (NLA/ 6587526 kit) - Order 6697797 amber lens - Was 6665021, A		1
2	6697797	AMBER LENS, Use W/Ref. 1 (6697795 kit)		1
2		BLUE LENS, BLUE LENS, NLA - not in kit - Use W/Ref. 1 (NLA/ 6587526 kit) - Order 6697799 blue lens - Was 6665025, A		1
2	6697799	BLUE LENS, not in kit - Use W/Ref. 1 (6697795 kit)		1
3		RETAINER, RETAINER, NSS		1
4		SCREW, SCREW, NSS		3
5		SCREW, SCREW, NSS		1
6	6665022	FLASHTUBE, Use W/Ref. 1 (NLA/ 6587526 kit)		1
6	6697796	FLASHTUBE, Use W/Ref. 1 (6697795 kit)		1
7		POWER SUPPLY, POWER SUPPLY, NSS		1
8		BASE, BASE, NSS		1
9	6665023	GASKET		1
10		BRANCH GUARD, BRANCH GUARD, NLA - Use W/Ref. 1 (NLA/ 6587526 kit) - Order 6697798 guard - Was 6665024, A		1
10	6697798	GUARD, Use W/Ref. 1 (6697795 kit)		1
11	6720856ENUS	INSTRUCTIONS, - Was 6720856, A		1

Title: Suspension Seat (Grammer)
Model Number: S70
Serial Number: A3W611001 & Above, A3W711001 & Above

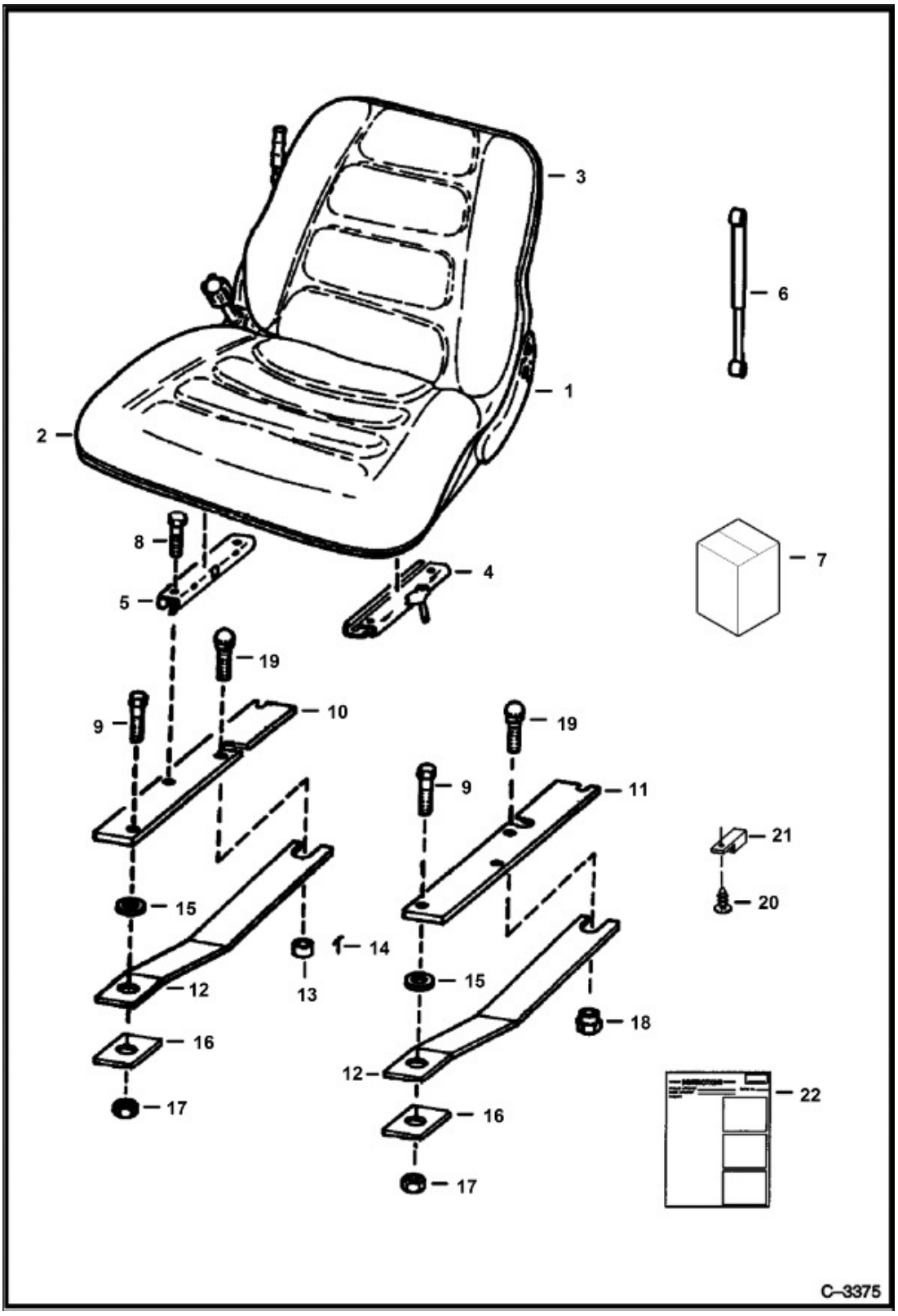

Title: Suspension Seat (Grammer)
Model Number: S70
Serial Number: A3W611001 & Above, A3W711001 & Above

Ref.	Part Number	Description	S/N	Qty
1	6632388	SEAT, OPERATOR SUSPENSION, Also Order Ref. 7 - Seat Mount Kit for first time conversions		1
2	3737010	CUSHION SEAT, seat		1
3	3737081	CUSHION SEAT BACK VINYL, backrest		1
4	6677479	SEAT RAILS, W/Adjusting Handle		1
5	3737001	ADJUSTER, W/O Adjusting Handle		1
6	6660348	SPRING GAS		1
7	6708523	KIT SEAT MOUNT, seat mount - Ref. 9 - 11, 16 & 19 - 22 - used to relocate seat sensor forward a distance of 4.6"(116,8 mm) & widens seat mount holes to 12.91"(327,9 mm)		1
8	17C512	BOLT 5		4
9	17C508	BOLT		4
10	7368681	MOUNT SEAT RH, R.H. - Was 6712183, A		1
11	7368682	MOUNT SEAT LH, L.H. - Was 6712186, A		1
12	6706966	SPRING, SEAT, plate		2
13	6710751	BUSHING, spacer		1
14	6680523	KEY MAGNETIC, magnet bushing		1
15	6706890	WASHER		2
16	6710622	WASHER		2
17	61D5	NUT HEX FINISHED GR5		2
18	6707319	SPACER, spacer		1
19	37C516	BOLT SQ NECK RND HD, carriage		2
20	6664221	RETAINER		1
21	6665000	BRACKET MOUNTING		1
22	6724161	INSTRUCTIONS		1

Title: Suspension Seat (Michigan)
Model Number: S70
Serial Number: A3W611001 & Above, A3W711001 & Above

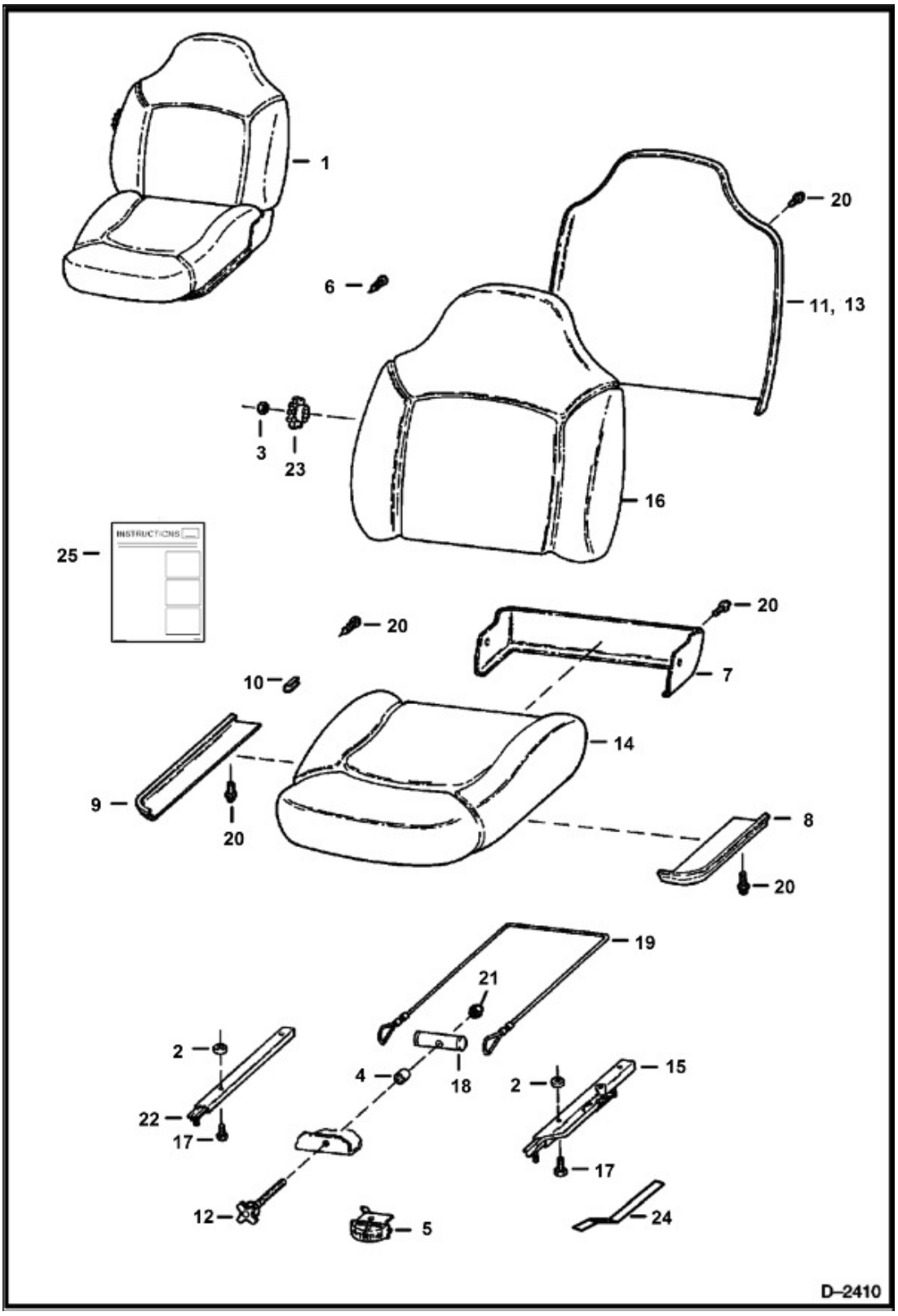

Title: Suspension Seat (Michigan)
Model Number: S70
Serial Number: A3W611001 & Above, A3W711001 & Above

Ref.	Part Number	Description	S/N	Qty
1	6674019	SEAT, OPERATOR SUSPENSION, Ref. 2 - 23- Also Order Ref. 24 & 25		1
2	6672715	NYLNSPACR		4
3	6672738	NUT		1
4	6672717	SPACER		1
5	6672718	INDICATOR		1
6	6672719	CLIP		7
7	6672720	COVER		1
8	6672721	LH FENDER, L.H.		1
9	6672722	RH FENDER, R.H.		1
10	6672723	CLIP		2
11	6672724	PANEL		1
12	6672725	KNOB		1
13	6672726	FRAME		1
14	6672727	CUSHION SEAT, seat		1
15	6674013	TRACK, LH - W/ 8" (203,2 mm) latch		1
16	6672729	CUSHION SEAT BACK VINYL, back		1
17	6672730	BOLT		4
18	6672731	BAR		1
19	6672732	CABLE		2
20	6672733	BOLT		14
21		NUT, NUT, NLA		1
22	6669089	RH TRACK		1
23	6674263	KNOB		1
23	6672736	DECAL		1

Ref.	Part Number	Description	S/N	Qty
24	6706966	SPRING, SEAT, plate		1
25	6724017	INSTRUCTIONS		1

Title: Suspension Seat Kit
Model Number: S70
Serial Number: A3W611001 & Above, A3W711001 & Above

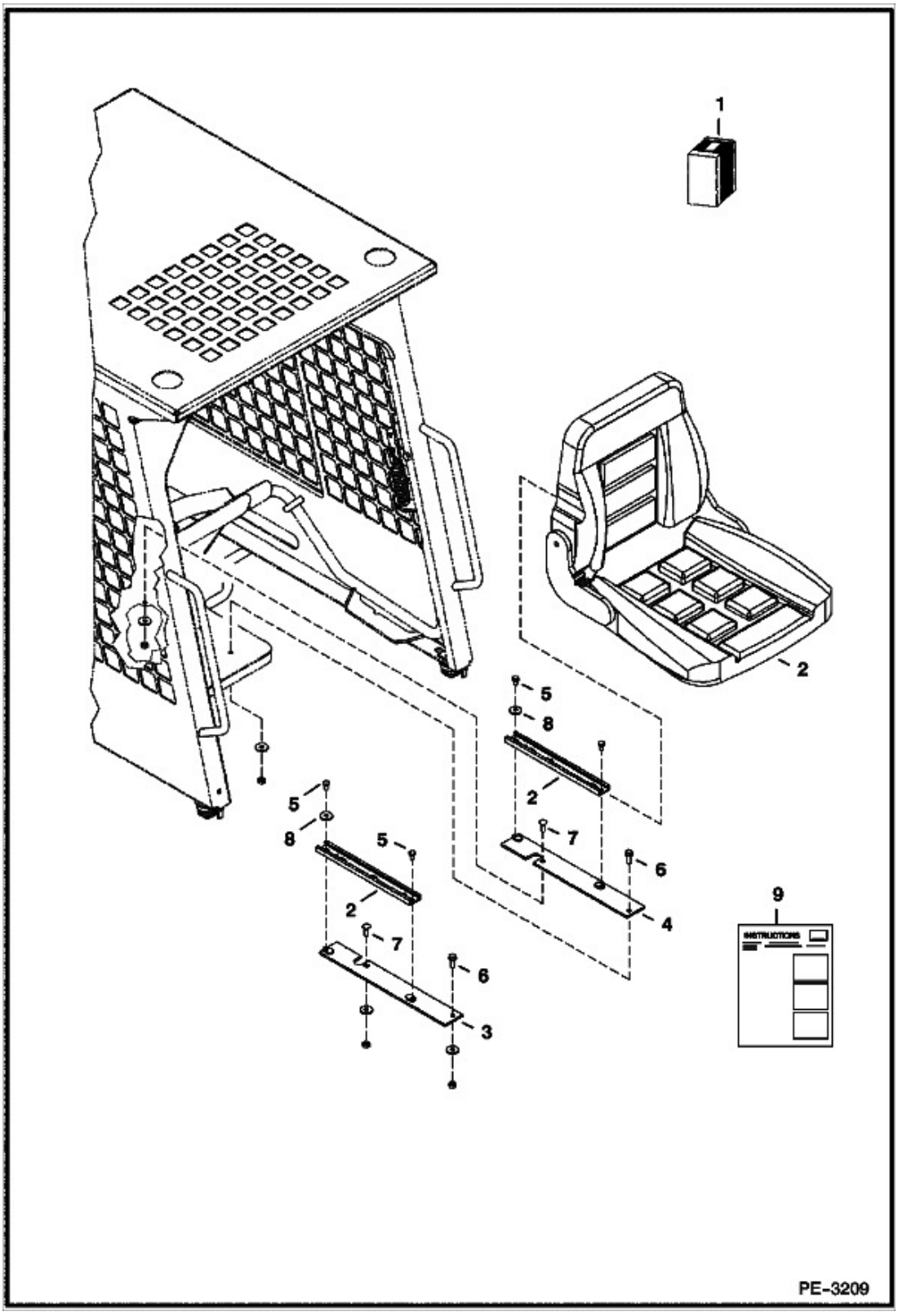

Title: Suspension Seat Kit
Model Number: S70
Serial Number: A3W611001 & Above, A3W711001 & Above

Ref.	Part Number	Description	S/N	Qty
1	6707918	KIT SEAT, W/Ref. 2-9		1
2	6632388	SEAT, OPERATOR SUSPENSION		1
3	7368681	MOUNT SEAT RH, R.H. - Was 6712183, A		1
4	7368682	MOUNT SEAT LH, L.H. - Was 6712186, A		1
5	17C508	BOLT		4
6	35C516	SCREW HEX HD W/F GR5		2
7	37C516	BOLT SQ NECK RND HD		2
8	6701174	WASHER FLAT		2
9	6904267ENUS	INSTRUCTIONS, Was 6904267, A		1

Title: Throttle
Model Number: S70
Serial Number: A3W611001 & Above, A3W711001 & Above

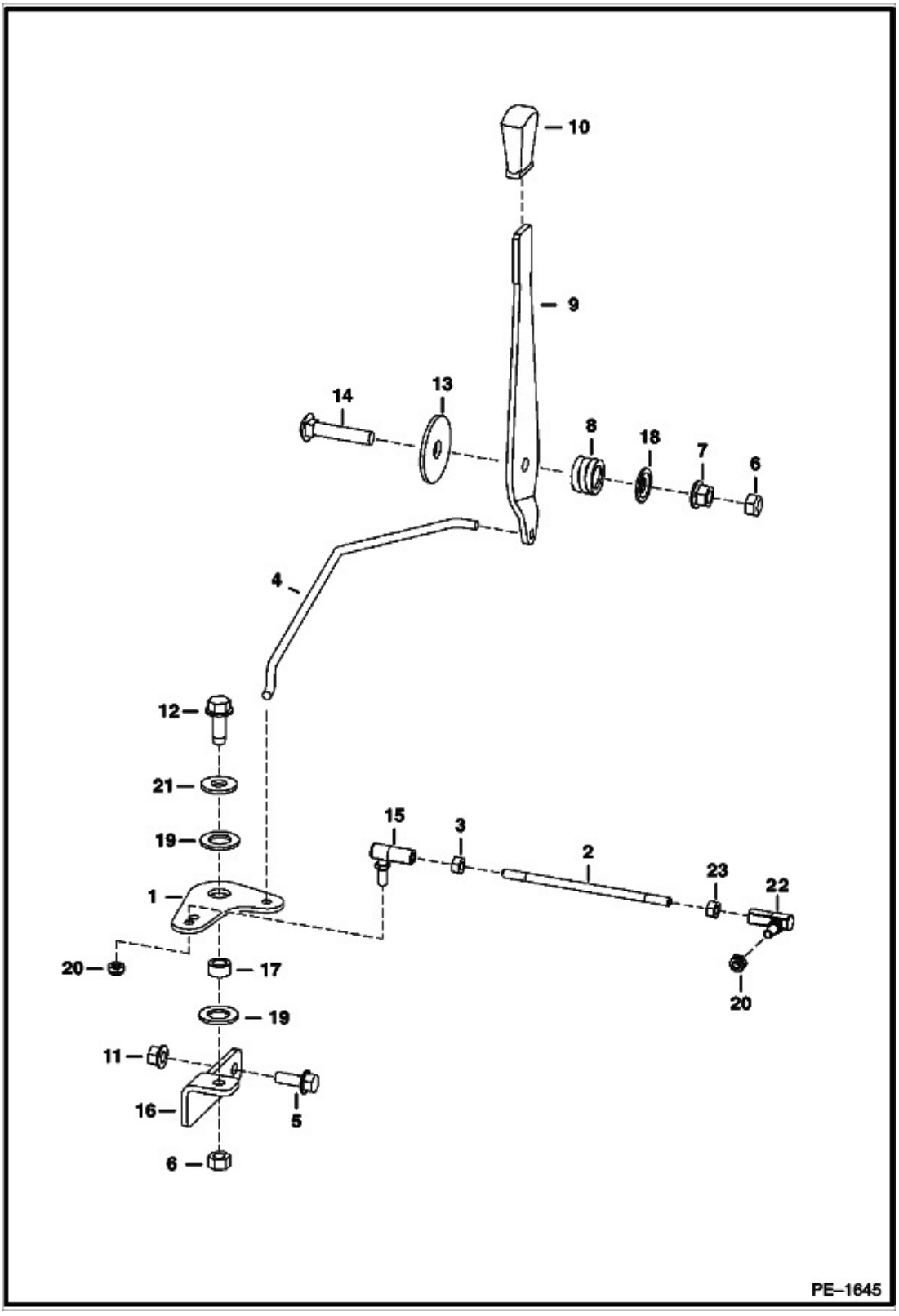

Title: Throttle
Model Number: S70
Serial Number: A3W611001 & Above, A3W711001 & Above

Ref.	Part Number	Description	S/N	Qty
1	6578268	BELLCRANK THROTTLE		1
2	7351064	ROD CONNECTING, Was 6733284, A		1
3	62D4	NUT HEX FINISHED GR5		1
4	7351063	ROD CONNECTING, Was 6733269, A		1
5	35C514	SCREW FLANGED HEAD CAP		2
6	85D6	NUT PRETRQ HEX LOCK		1
7	61D6	NUT HEX FINISHED GR5		1
8	6704453	SPRING COMPRESSION		1
9	7351049	LEVER THROTTLE, Was 6564275, A		1
10	6564452	GRIP LEVER		1
11	57D5	NUT HEX FLNG GR8		2
12	84G3716	SCREW THD ROLLING TT		1
13	6562127	WASHER		1
14	37C632	BOLT SQ NECK RD HD		1
15	6554858	BALL JOINT		1
16	7351053	BRACKET THROTTLE, Was 6732675, A		1
17	6564343	TUBE SPACER		1
18	7351048	WASHER FLAT, Was 6505623, A		1
19	6700170	WASHER		2
20	66D4	NUT HEX JAM LOCK		2
21	25E18	WASHER FLAT PLAIN		1
22	6598830	BALL JOINT		1
23	13D4	NUT LH HEX JAM, left handed		1

Title: Tilt Cylinder
Model Number: S70
Serial Number: A3W611001 & Above, A3W711001 & Above

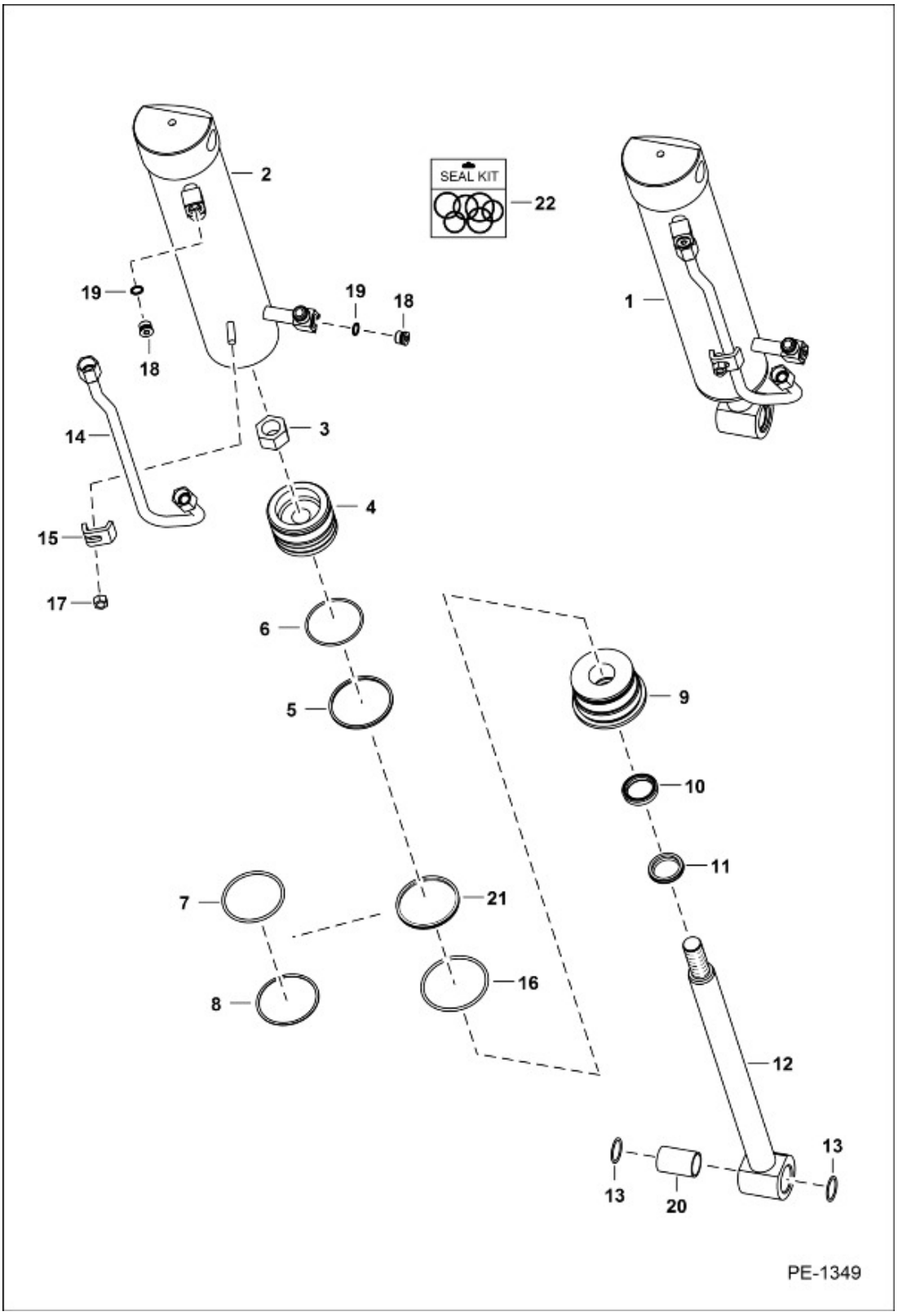

Title: Tilt Cylinder
Model Number: S70
Serial Number: A3W611001 & Above, A3W711001 & Above

Ref.	Part Number	Description	S/N	Qty
1	6815798	CYLINDER TILT, Ref. 2-13, 16 & 18-20		1
2	6808668	CASE		1
3	92D14	NUT		1
4	6807977	PISTON		1
5	947088	RING, BACK-UP		1
6	54K30218	0-RING, Was 25K30218, A		1
7	54K40224	O-RING, Was 25K40224, A		1
8	73K232	RING, BACK-UP		1
9	6808669	HEAD		1
10	6667324	SEAL		1
11	6665208	WIPER ROD CYL		1
12	6815747	ROD, chrome - W/Ref. 20		1
13	1990599	GREASE SEAL		2
14	7351085	TUBELINE HYDRAULIC, Was 6808625, A		1
15	6562266	CLAMP TUBE		1
16	54K40300	O-RING, Was 58K234, B		1
17	95D6	NUT HEXAGON		1
18	24K5	PLUG, W/Ref. 19 - Was 90KV5, A		2
19	95K6	O-RING		x
20	6812132	BUSHING WEAR, W/grease hole		1
21		SEAL, QUAD, SEAL, QUAD, NLA - Order Ref. 7 & 8 - Was 7008355, A		1
22	7137944	KIT SEAL, Ref. 3, 5-8, 10, 11 & 16		1

Title: Tires & Rims (Pneumatic Tire)
Model Number: S70
Serial Number: A3W611001 & Above, A3W711001 & Above

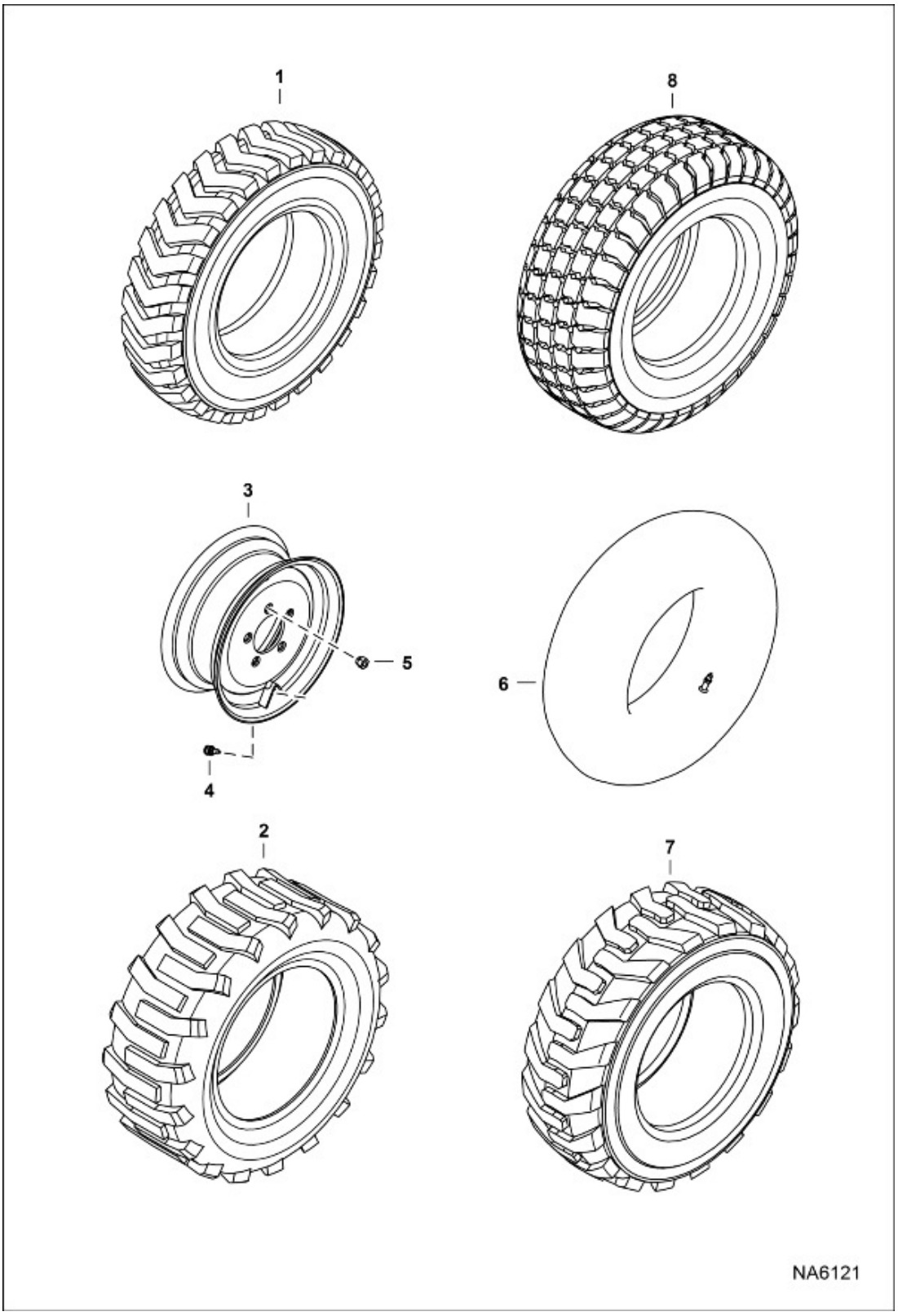

Title: Tires & Rims (Pneumatic Tire)
Model Number: S70
Serial Number: A3W611001 & Above, A3W711001 & Above

Ref.	Part Number	Description	S/N	Qty
1	6730103	TIRE, STANDARD 23X5.7X12, 4 PLY, Bobcat 23 x 5.70 x 12 - 4 ply		4
1		TIRE - 23 X 5.70 X 12 - 4 PLY, TIRE - 23 X 5.70 X 12 - 4 PLY, NLA - Carlisle - Was 7101730, A		4
1	7343581	TIRE STANDARD DUTY (23X5.7X12) 4 PLY, Was 7210943, A		4
1	7305854	TIRE HEAVY DUTY 5.7X12 4PLY, Was - 7305854EF		4
1		TIRE STANDARD DUTY 5.7X12 4PLY, TIRE STANDARD DUTY 5.7X12 4PLY, NLA - Was 7305856EF, A		4
2	6652525	TIRE 8.50X12 4 PLY, 8.50 x 12.00, 4 Ply Rating - Titan - Was 7149997, A		4
3	7225123	WHEEL RIM 12X5, Use W/Ref. 1 - Was 7144183, A		4
3	7225125	WHEEL RIM 12X7, Use W/Ref. 2 - Was 7144185, A		4
4	6500879	VALVE, STEM		4
5	6564669	NUT WHEEL		20
6	6593430	TUBE, Use W/Ref. 2		4
7	7343582	TIRE HEAVY DUTY (23X8.5X12) 6 PLY, Use W/Ref. 3(7225125 Rim 12X7) - Was 7210944, A		4
7		TIRE - 23X8.50X12 - 6 PLY, TIRE - 23X8.50X12 - 6 PLY, NLA - Carlisle - Was 7101731, A		4
7	7343582	TIRE HEAVY DUTY (23X8.5X12) 6 PLY, Use W/Ref. 3(7225125 Rim 12X7) - Was 7210944, A		4
8	7109709	TIRE, TURF 23 X 8.50 X 12, 6 PLY		4

Title: Tires & Rims (Solid Tire)
Model Number: S70
Serial Number: A3W611001 & Above, A3W711001 & Above

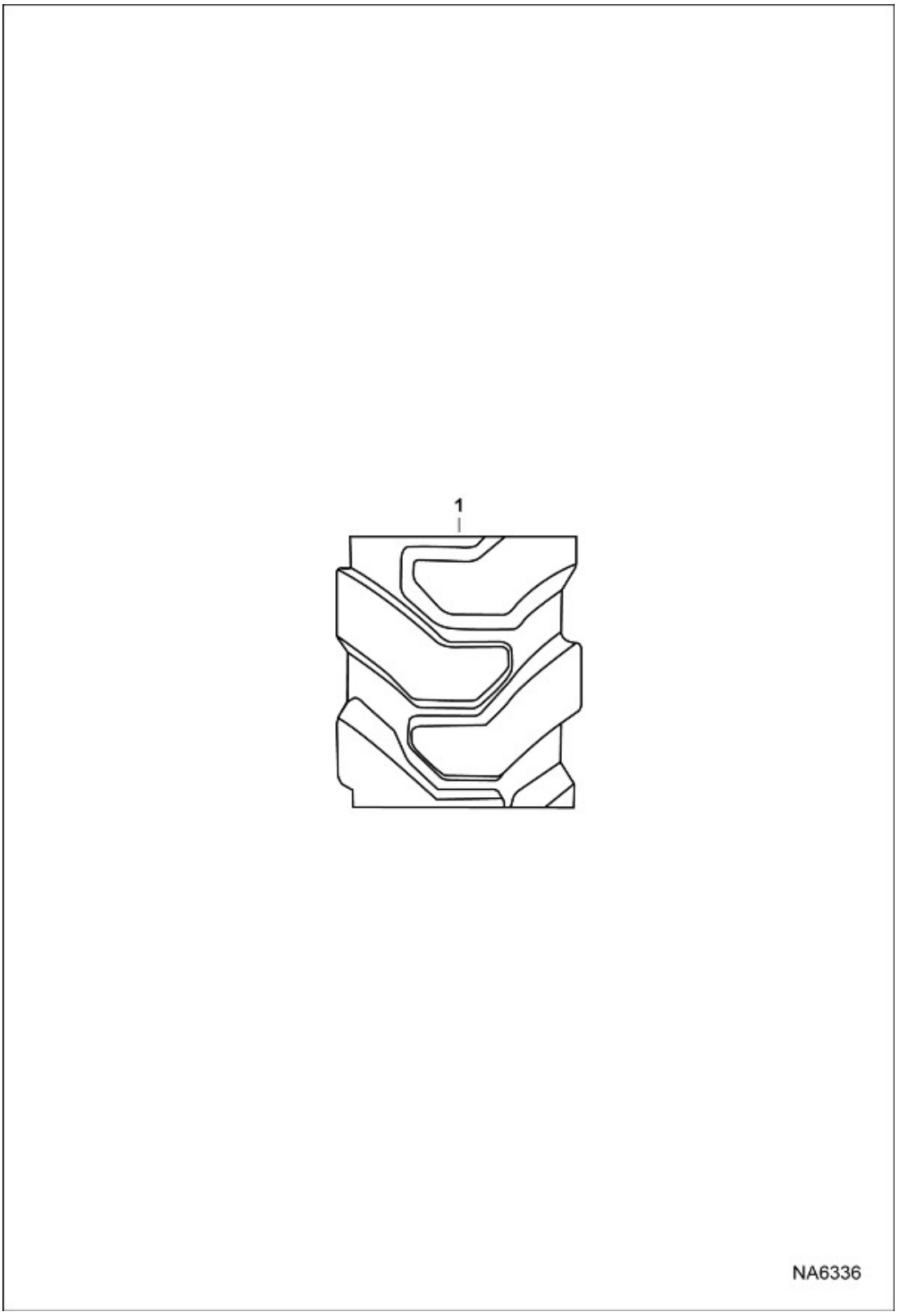

Title: Tires & Rims (Solid Tire)
Model Number: S70
Serial Number: A3W611001 & Above, A3W711001 & Above

Ref.	Part Number	Description	S/N	Qty
1		TIRE, SOLID FLEX 23 X 8.5, LH, TIRE, SOLID FLEX 23 X 8.5, LH, Was 7023560, A		2
1	7023561	TIRE SOLID FLEX 23X8.5		2
1	7023561EF	TIRE SOLID FLEX 23X8.5, LH & RH Compatable, A		2
1		TIRE, SOLID FLEX 23 X 6.5 LH, TIRE, SOLID FLEX 23 X 6.5 LH, Was 7277212EF, A		2
1	7277213	TIRE SOLID FLEX 23 X 6.5 RH		2
1	7277213EF	TIRE SOLID FLEX 23 X 6.5 RH, LH & RH Compatable, A		2
1	7365903	TIRE SOLID 23X5.7-12 RH GRAY, gray rim		2
1	7365904	TIRE SOLID 23X5.7-12 LH GRAY, gray rim		2
1	7365906	TIRE SOLID 23X5.7-12 RH ORANGE, orange rim		2
1	7365907	TIRE SOLID 23X5.7-12 LH ORANGE, orange rim		2

Title: Water Flange & Thermostat
Model Number: S70
Serial Number: A3W611001 & Above, A3W711001 & Above

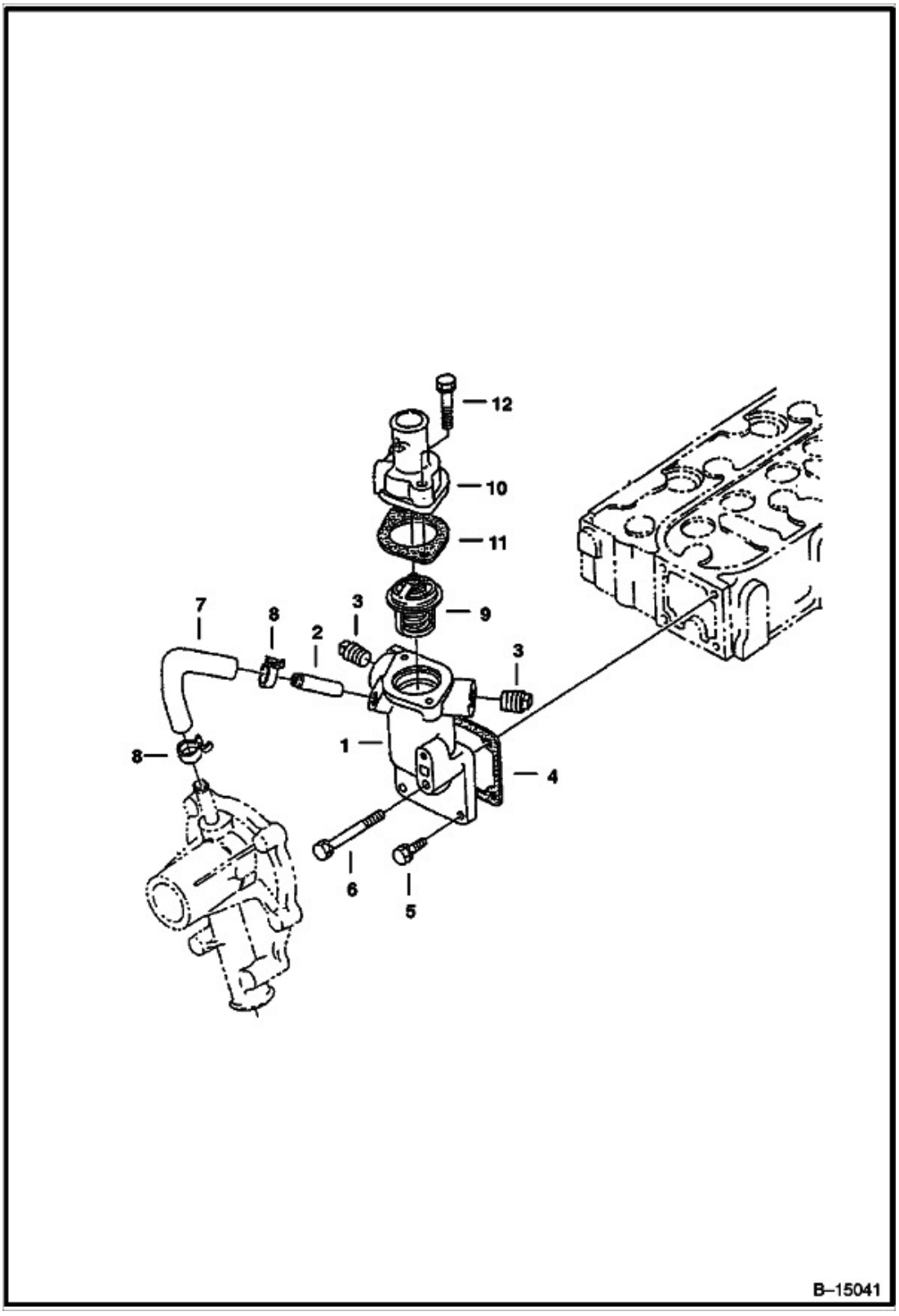

Title: Water Flange & Thermostat
Model Number: S70
Serial Number: A3W611001 & Above, A3W711001 & Above

Ref.	Part Number	Description	S/N	Qty
1	6672482	HOUSING, W/Ref. 2		1
2	6670785	ADAPTER		1
3	6684857	PLUG		2
4	6657583	GASKET		1
5	1CM616	SCREW HEX CAP, Was 4CM616, A		3
6	6657413	BOLT		1
7	6657584	PIPE		1
8	6680580	CLAMP		2
9	6674172	THERMOSTAT		1
10	6672479	COVER		1
11	6684863	GASKET		1
12	1CM835	BOLT		2

Title: Water Pump
Model Number: S70
Serial Number: A3W611001 & Above, A3W711001 & Above

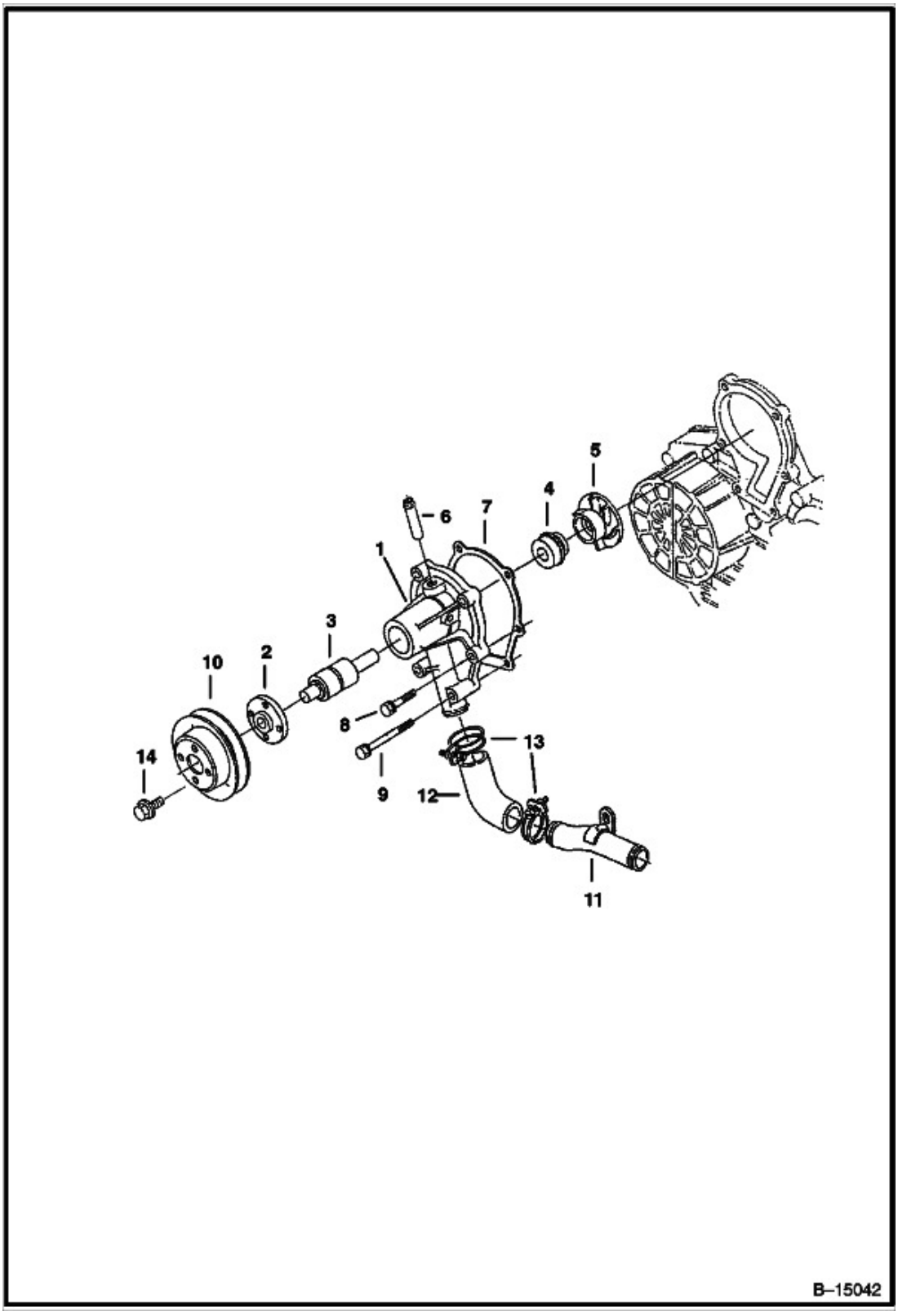

Title: Water Pump
Model Number: S70
Serial Number: A3W611001 & Above, A3W711001 & Above

Ref.	Part Number	Description	S/N	Qty
1	6680278	WATER PUMP, W/Ref. 2 - 6		1
2	6680279	FLANGE		1
3	6657612	BEARING BALL		1
4	6680280	SEAL		1
5	6657611	IMPELLER		1
6	6652745	PIPE		1
7	6657610	GASKET		1
8	4CM630	BOLT		4
9	6686034	BOLT		2
10	6657585	PULLEY FAN		1
11	6672435	PIPE		1
12	6680282	PIPE		1
13	6657691	CLAMP		2
14	29CM610	BOLT		4