RUTHZIL TRATOR COMERCIAL DE PEÇAS LTDA 11 97083-6812 ROLANDO CITRANGULO

Spare Parts Catalogue

SCA252D-4EN2

Valid from roller serial number:
***10000109**x0A000001 -*



Diesel engines:
Cummins QSB 4.5C

Published catalogue issues valid for these rollers:

Catalogue	*Issue date*	*Valid for serial numbers*
SCA252D-4EN1	*2010-04*	*Replaced by SCA252-4EN2*
SCA252D-4EN2	*2011-10*	***See above***



We reserve the right to change specifications without notice.
Printed in Sweden.

DYNAPAC
Part of the Atlas Copco Group

RESERVDELSBESTÄLLNING

Följande uppgifter ska lämnas vid beställning av reservdelar för att undvika leveransfel:

1. Maskintyp.
2. Vältens serienummer.
3. Antal av önskad reservdel.
4. Reserdelens artikelnummer.
5. Reservdelens benämning.
6. Måttuppgifter vid beställning av metervara.

ORDERING SPARE PARTS

To avoid errors in delivery, please give the following information when ordering spare parts:

1. Type of machine.
2. Roller serial number.
3. Quantity required.
4. Part number.
5. Parts denomination.
6. Dimensions when ordering per length.

ERSATZTEILBESTELLUNG

Zur Vermeidung von Fehllieferungen sind bei der Bestellung von Ersatzteilen folgende Angaben zu machen:

1. Maschinentyp.
2. Herstellungsnummer.
3. Bestellmenge. (Quantity)
4. Ersatzteilnummer. (Part Nº)
5. Ersatzteilbenennung. (Denomination)
6. Massangaben bei Bestellung von Meterware.

ORDINI DI RICAMBI

Per evitare errori nelle consegne di ricambi, Vi preghiamo di comunicarci le seguenti informazioni al momento dell 'ordinazione:

1. Tipo di macchina.
2. Numero di serie della macchina.
3. Quantità dei pezzi desiderati. (Quantity)
4. Numero di codice del pezzo. (Part Nº)
5. Descrizione del pezzo di ricambio. (Denomination)
6. Misura, in caso di ordine per metro.

PEDIDO DE RECAMBIOS

Para evitar errores en las entregas, deberán indicarse los siguientes datos al hacer un pedido de recambios:

1. Tipo de máquina.
2. Número de serie.
3. Cantidad de piezas deseadas. (Quantity)
4. Número de artículo de la pieza de recambio. (Part Nº)
5. Denominación de la pieza. (Denomination)
6. Indíquese la medida al solicitar un artículo que se expide por metros.

COMMANDE DE PIECES DE RECHANGE

Les indications suivantes doivent être fournies lors de la commande de piéces de rechange, afin d'éviter toute erreur de livraison:

1. Type de machine.
2. Numéro de série.
3. Quantité désirée de pièce de rechange. (Quantity)
4. Numéro de la piéce de rechange. (Part Nº)
5. Dénomination de la piéce de rechange. (Denomination)
6. Longueur en cas de commande au mètre.

YOUR AGENT/DEALER:

Text pages

The text pages is structured as the picture on the right.

1. This is the remarks for specific items and the descriptions of the remarks is at the bottom of the parts list.

2. Parts indicated by a dot and moved to the right are included when buying the assembled unit above.

3. Spare parts Class code for a specific part.
"A" = 3 or more units/year,
"B" = 2 or more units/year,
"C" = 1 or more units/year,
"D" = at least 1 unit/year.

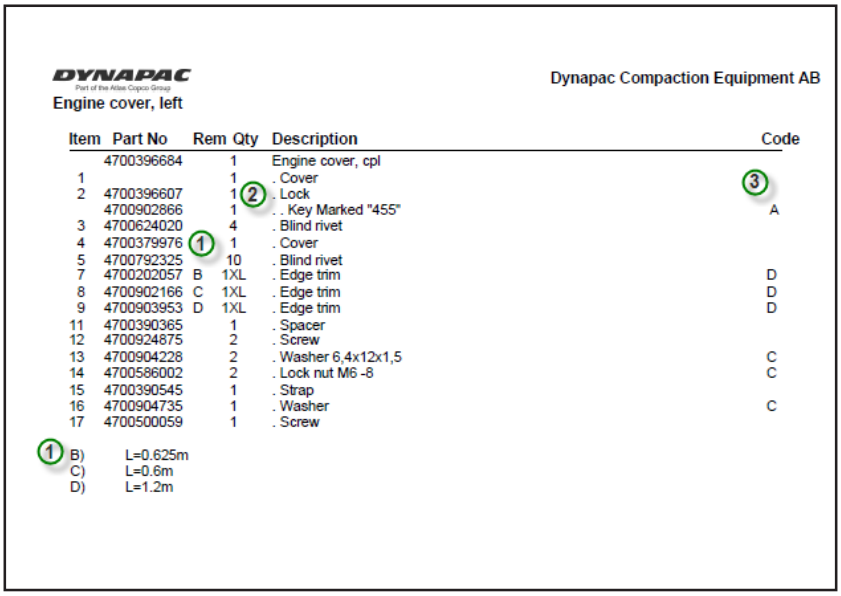

DYNAPAC
Part of the Atlas Copco Group

Dynapac Compaction Equipment AB

Engine cover, left

Item	Part No	Rem	Qty	Description	Code
	4700396684		1	Engine cover, cpl	
1			1	. Cover	3
2	4700396607		1	. Lock	
	4700902866		1	. . Key Marked "455"	A
3	4700624020		4	. Blind rivet	
4	4700379976		1	. Cover	
5	4700792325		10	. Blind rivet	
7	4700202057	B	1XL	. Edge trim	D
8	4700902166	C	1XL	. Edge trim	D
9	4700903953	D	1XL	. Edge trim	D
11	4700390365		1	. Spacer	
12	4700924875		2	. Screw	
13	4700904228		2	. Washer 6,4x12x1,5	C
14	4700586002		2	. Lock nut M6 -8	C
15	4700390545		1	. Strap	
16	4700904735		1	. Washer	C
17	4700500059		1	. Screw	

1 B) L=0.625m
C) L=0.6m
D) L=1.2m

Changes

PARTS INFO	SERVICE INFO	GROUP	PAGE	NOTES

Notes

Notes

DYNAPAC

PÄRMETIKETT

För att undvika fel vid reservdelsbeställning finns här nedan två etiketter som passar i fickorna på pärmarnas ryggar. På dessa kan man se från vilket vältnummer av aktuell maskin reservdelskatalogen gäller. Gör så här:

1. Tag denna sida ur pärmen.
2. Klipp ut etiketten till **VÄNSTER** (1) och sätt in den i fickan på **DENNA** pärmens rygg.
3. Finns det en etikett till **HÖGER** (2), kan denna användas på pärmen för **FÖREGÅENDE** utgåva av denna katalog.
4. Kasta detta papper.

BINDER LABEL

To avoid errors when ordering spare parts use the labels below to identify the catalogues on the back of the binder. The label contain the serial number range for which the catalogue is valid. Do like this:

1. Remove this page from the binder.
2. Cut out the **LEFT** label (1) and put it on **THIS** binders back.
3. If there is a label to the **RIGHT** (2), it can be used on the binder for **PRECEDING** issue of this catalogue.
4. Throw away this paper.

KATALOG-BESCHRIFTUNG

Zur Vermeidung von Fehlen bei der Ersatzteilbestellung benutzen Sie bitte die unteren Beschriftungen, um die Kataloge auf der Rückseite zu kennzeichen. Auf der Beschriftung ist angegaben, für welche Maschinennummern der jeweilige Katalog gültig ist. Ablauf:

1. Nehmen Sie dieses Blatt aus dem Katalog.
2. Schneiden Sie die **LINKE** Beschriftung (1) aus. Schieben Sie die Beschriftung in die tasche auf **DEM** Katalogrücke.
3. Sollte die Beschriftung unten **RECHTS** (2) mitgeliefert werden, kennzeichen Sie damit bitte die **ÄLTERE** Ausführung dieses Kataloges.
4. Den Rest dieses Blattes bitte vernichten.

ETICHETTA POSTA SUL RACCOGLITORE

Per evitare errori quando ordinate pezzi di ricambio, usate le etichette in calce che servono ad identificare i cataloghi sul retro del raccoglitore. L'etichetta indica il numero di matricola delle maccine prese in considerazione nel catalogo.

1. Rimuovete questa pagina dal raccoglitore.
2. Ritagliate l'etichetta posta a **SINISTRA** (1) e ponetela sul retro **DEL** raccoglitore.
3. Se trovate anche un'etichetta sulla **DESTRA** (2), ritagliatela e ponetela sul raccoglitore relativo alla **PRECEDENTE** edizione del catalogo.
4. Distruggete questo foglio.

ETIQUETA PARA LA CARPETA

Para evitar errores al pedir repuestos utilicen las etiquetas abajo descritas para identificar los catálogos en la parte trasera de la carpeta. En la etiqueta se ven los números de referencia de la serie para la cual es válido el catálogo. Instrucciones:

1. Quitar esta página de la carpeta.
2. Corta la etiqueta **IZQUIERDA** (1) y ponerla est **ESTA** carpeta en la parte trasera.
3. Si hay una etiqueta en la parte **DERECHA** (2) se puede utilizar en la carpeta para el catálogo que **PRECEDE** a esta.
4. Tirar esta hoja.

ETIQUETAGE DU CATALOGUE

Afin d'éviter des erreurs lors de commandes de pièces de rechange, nous vous conseillons d'apposer les marquages ci-dessous à l'arrière du classeur, pour identifier les catalogues. Ce marquage indique les numéros de série pour lesquels le catalogue est adapté. Il convient de procéder de la façon suivante:

1. Retirez cette page du classeur.
2. Découpez l'étiquette de **GAUCHE** (1), et apposez-la à l'arrière de **CE** catalogue.
3. Si il y a une étiquette à **DROITE** (2), vous pourrez l'apposer sur le classeur de l'edition **PRECEDENTE** du catalogue.
4. Détruire cetta feuille.

1 .



CA252D

Catalogue **SCA252D-4EN2**
Valid **from** serial number:
***10000109x0A000001*-**

TABLE OF CONTENTS

Page

CA252D SN 10000109x 0A000001 - 2

Service kits 4

4700945789 Service kit 50 h 6

4700950323 Service kit 500 h 8

4700945791 Service kit 1000 h 10

Repair kits 12

4700938558 Steering hitch kit 14

4700945657 Eccentric shaft kit 16

4700938891 Drum rotation kit 18

4812156189 Shock absorber kit, drum 20

4700940663 F/R control button kit 22

Frame 24

Frames 26

Scraper 28

Scrapers, Urethan Rubber Option 30

Scrapers, Spring Steel Option 32

Hitch 34

Structure 36

Noise suppressed hood Option 40

Noise suppression, air inlet Option 42

Drum shroud Option 44

Covers mount Option 46

Drum 48

Drum 50

Drum cartridge Vibration side 52

Drum cartridge Drive side 54

4700372987 Drum gear 56

Engine 58

Engine Cummins QSB 4.5 60

Cooling system 62

Combustion air system 66

Fuel system 68

Exhaust system 70

Transmission 72

Rear axle and wheels 74

4700383857 Rear axle Limited slip 76

Differential with limited slip 78

TABLE OF CONTENTS

Page

Differential housing and brakes ... 80
Planet gear ... 82
4700383856 Rear axle No-Spin, Option ... 84
Differential with no-spin ... 86
Differential housing and brakes ... 80
Planet gear ... 88

Hydraulic system ... 90

Propulsion system, Front ... 92
4700371509 Propulsion motor ... 94
Propulsion system, Rear ... 96
4700380830 Propulsion pump ... 98
4700373361 Propulsion motor ... 104
Vibration system ... 108
4700383958 Vibration pump ... 110
4700937167 Rotary group, cpl ... 112
4700937168 Valve block, cpl ... 114
4700380145 Hydraulic motor, vibration ... 116
Steering system ... 118
4700392002 Steering cylinder ... 120
4700372424 Pilot valve, steering ... 122
Brake system ... 124
Hydraulic oil tank ... 126
Central test panel Option ... 128
Dual speed drum drive Option ... 130

Electrical equipment ... 132

Electric system ... 134
Relay and Fuses ... 138
Instrument box ... 140
Instrument panel Main ... 142
Instrument panel Upper left ... 144
Instrument panel Upper right ... 146
Instrument panel Lower left ... 148
Instrument panel Lower right ... 150
Emergency stop panel ... 152
Emergency and Parking brake panel ... 154
Working lights Option ... 156
Driving lights Option ... 158
Rotating beacon Option ... 162
Compaction meter Option ... 164
Speedometer and frequency meter Option ... 166
Tachograph, platform Option ... 168

TABLE OF CONTENTS

Page

Tachograph , cab Option ... 170
Tachograph, simple cab Option ... 172
Back-up alarm Option ... 174
Protecting cover, Headlight Option ... 176
Field computer assembly Option ... 178
Compaction Analyzer Option From 66X10286 ... 180
Compaction Analyzer Option ... 182
Geodynamic Compaction indicator Option ... 184
GPS Option ... 186
GPS Option ... 188
Engine pre-heater, Cab Option ... 190
Engine pre-heater, Platform Option ... 192

Drivers platform ... 194

Drivers platform ... 196
Drivers platform, for cab ... 198
Drivers seat Standard platform ... 200
Drivers seat Turn-over platform ... 202
Drivers seat Turn-over in cab ... 204
Steering column ... 206
Steering system ... 208
Turning Controls ... 210
Turning Carrier ... 212
Forward and reverse control ... 214
Speed limiter Option ... 216
Rops and fops ... 218
Cab 4700383030 ... 220
Cab Interior ... 222
Cab Inside panels ... 224
Cab Screens ... 226
Cab Door ... 230
Cab Wipers front and rear ... 234
Cab Mirror, Sun curtain ... 236
Cab Electric ... 238
Cab Heater system ... 240
4700385434 Cab heater, cpl ... 242
Cab Cable harness ... 244
Cab 4700392479 ... 246
Cab Screens ... 248
Cab Door, left side ... 252
Cab Interior rear mirror ... 254
Wiper arm with blade, front ... 256
Cab Electric ... 258
Cab mounting ... 260

TABLE OF CONTENTS

Page

Cab Work lights ... 262
Cab Exterior, rear mirror ... 264
Radio and cassette/cd player Option ... 266
Cab, 12V contact ... 268
Rear mirror Option ... 270
Bracket, Steering valve vibration isolated Option ... 272

Decals ... 274

Decals ... 276
Decals ... 278

Standard equipment ... 280

Standard equipment ... 282

Optional equipment ... 284

Tool equipment ... 286
SMV-sign, First aid box ... 288
Canopy ... 290
Levelling blade, metal parts ... 292
Levelling blade, hydraulic parts ... 294
Levelling blade control ... 296
Air conditioner assembly ... 298
Air conditioner and heater, Simple cab ... 300
4700383413 Condensor, cpl ... 304
Air conditioner and heater unit ... 306
Evaporator assembly ... 308
Anti-spin CA ... 310
4700382133 Propulsion pump ... 312
4700382089 Propulsion motor ... 318
4700383856 Rear axle No-Spin, Option ... 84
Differential with no-spin ... 86
Differential housing and brakes ... 80
Planet gear ... 88
4700382088 Propulsion motor ... 322
Anti-spin CA ... 326
4700382133 Propulsion pump ... 312
4700382089 Propulsion motor ... 318
4700383856 Rear axle No-Spin, Option ... 84
Differential with no-spin ... 86
Differential housing and brakes ... 80
Planet gear ... 88
4700382088 Propulsion motor ... 322
Anti spin, Potentiometer installation ... 328
Anti spin, Hydraulic ... 330
4700382088 Propulsion motor ... 322

TABLE OF CONTENTS

Page

Roof hatch 332
Pad shell 334
Fire extinguisher assembly 336
Fire extinguisher Platform 338
Fire extinguisher Cab 340

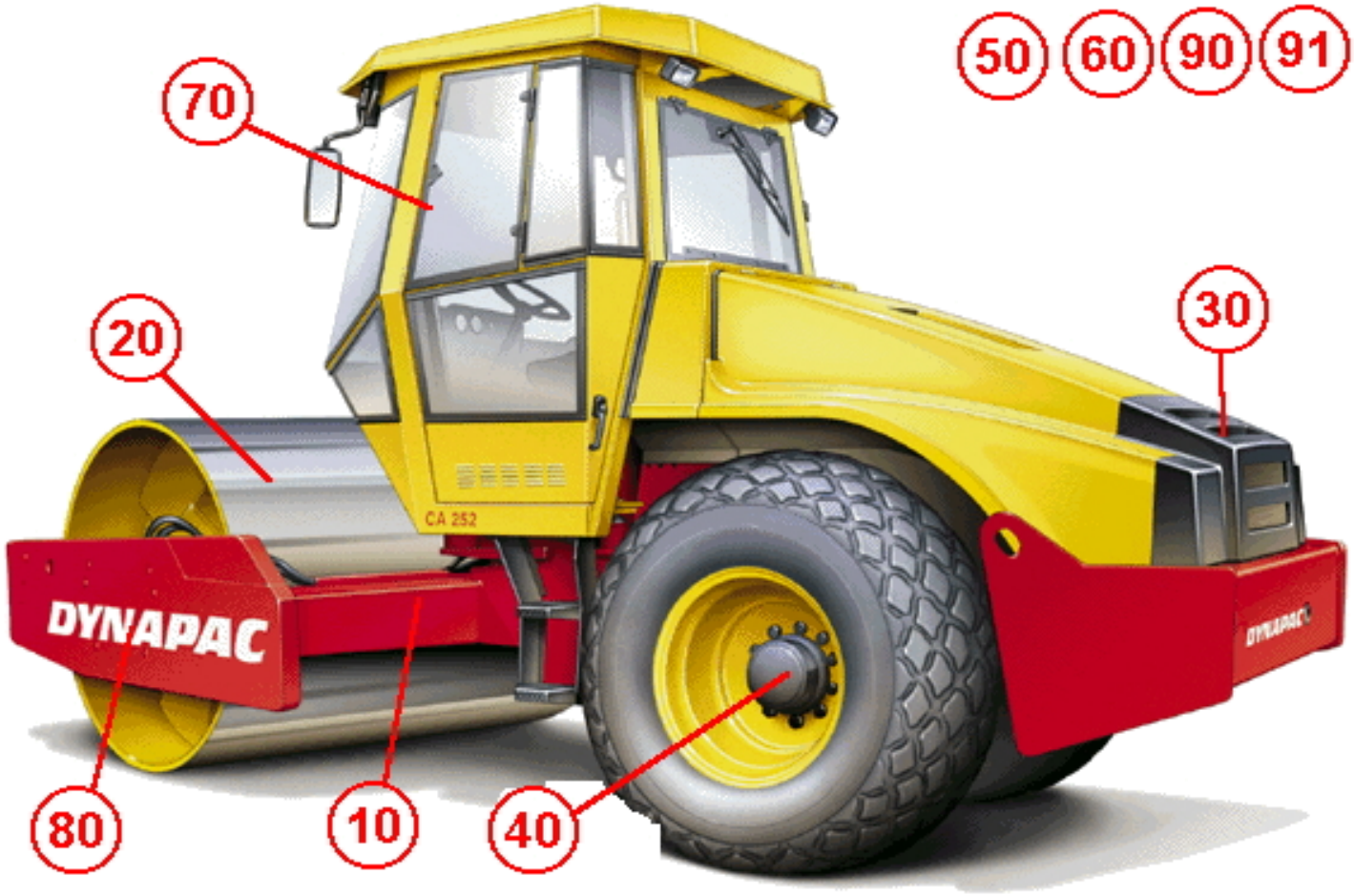
50
60
90
91
70
30
20
CA 252
DYNAPAC
80
10
40

CA252D SN 10000109x 0A000001 -

Item	Part No	Rem	Qty	Description	Code
1				**Service kits (Page 4)**	
2				**Repair kits (Page 12)**	
10				**Frame (Page 24)**	
20				**Drum (Page 48)**	
30				**Engine (Page 58)**	
40				**Transmission (Page 72)**	
50				**Hydraulic system (Page 90)**	
60				**Electrical equipment (Page 132)**	
70				**Drivers platform (Page 194)**	
80				**Decals (Page 274)**	
90				**Standard equipment (Page 280)**	
91				**Optional equipment (Page 284)**	

Service kits

Item	Part No	Rem	Qty	Description	Code
10	4700945789			**Service kit 50 h (Page 6)**	
20	4700950323			**Service kit 500 h (Page 8)**	
30	4700945791			**Service kit 1000 h (Page 10)**	

4700945789 Service kit 50 h

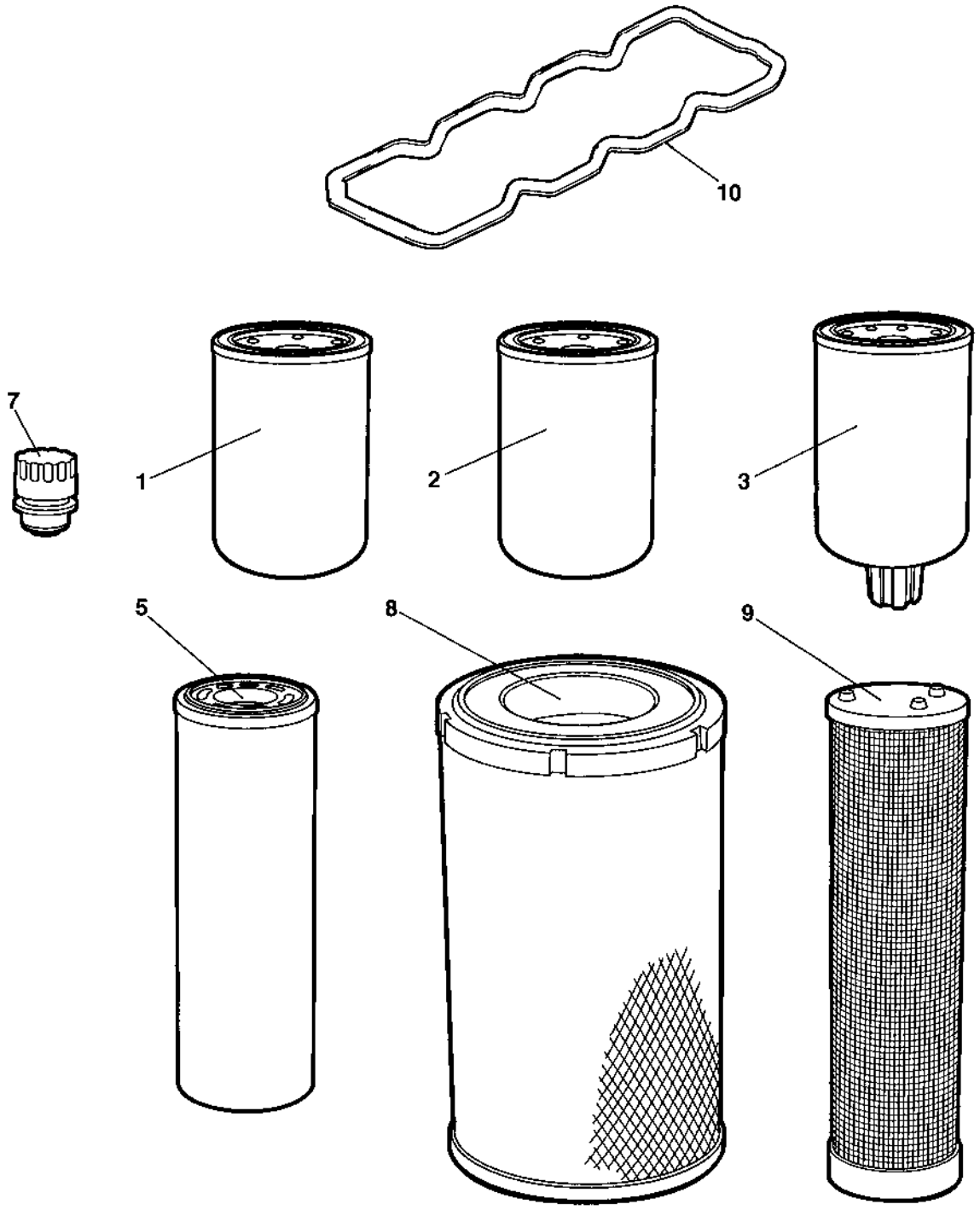

4700945789 Service kit 50 h

Item	Part No	Rem	Qty	Description	Code
	4700945789			**Service kit 50 h (Page 6)**	
1	4700945145		1	Oil filter element	A
2	4700945624		1	Fuel filter element	
3	4700945147		1	Pre-fuel filter element	
5	4700372229		2	Hydraulic oil filter element	A

4700950323 Service kit 500 h

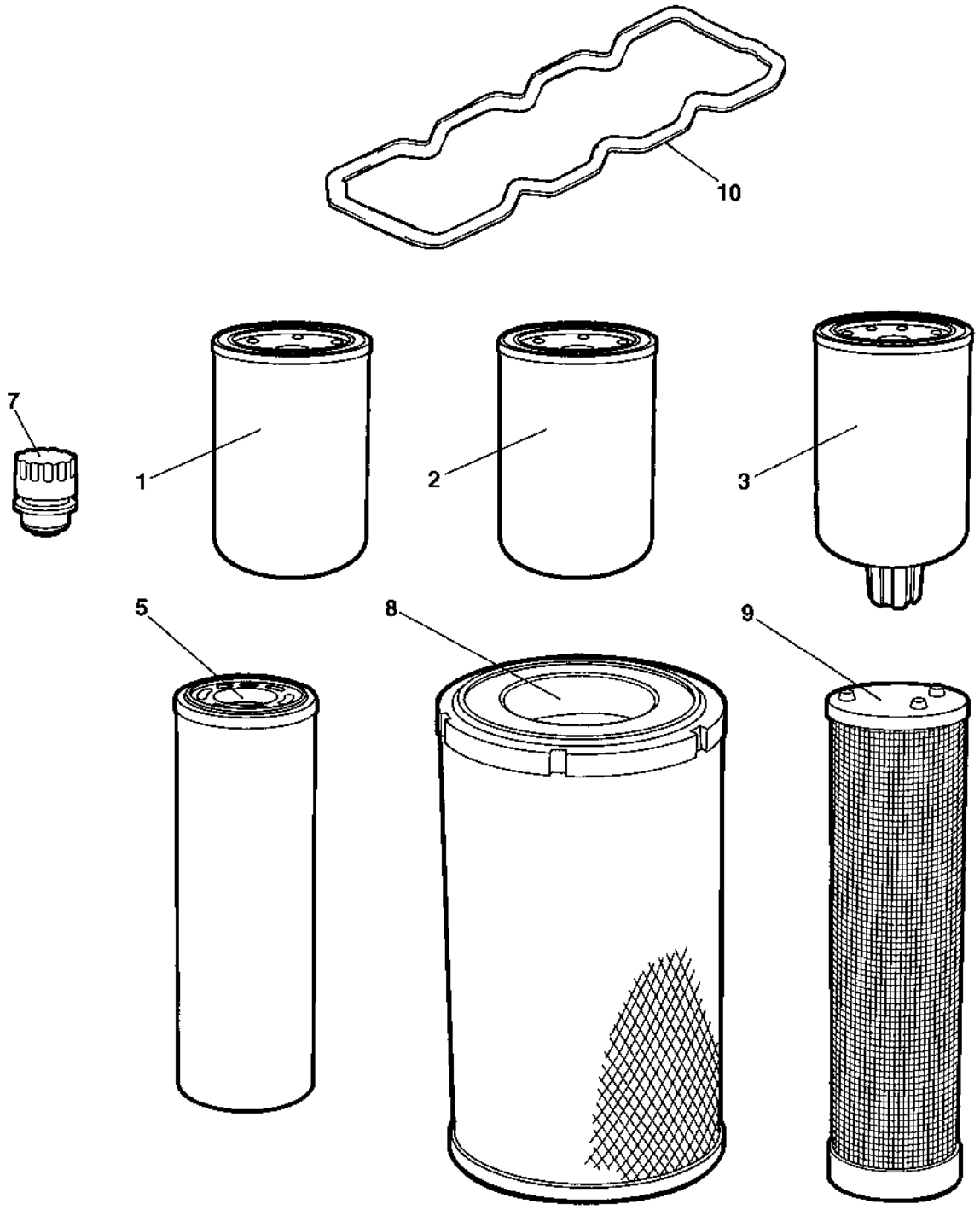

4700950323 Service kit 500 h

Item	Part No	Rem	Qty	Description	Code
	4700950323			**Service kit 500 h (Page 8)**	
1	4700945145		1	Oil filter element	A
2	4700945624		1	Fuel filter element	
3	4700945147		1	Pre-fuel filter element	
8	4700908450		1	Air filter element, Main	A

4700945791 Service kit 1000 h

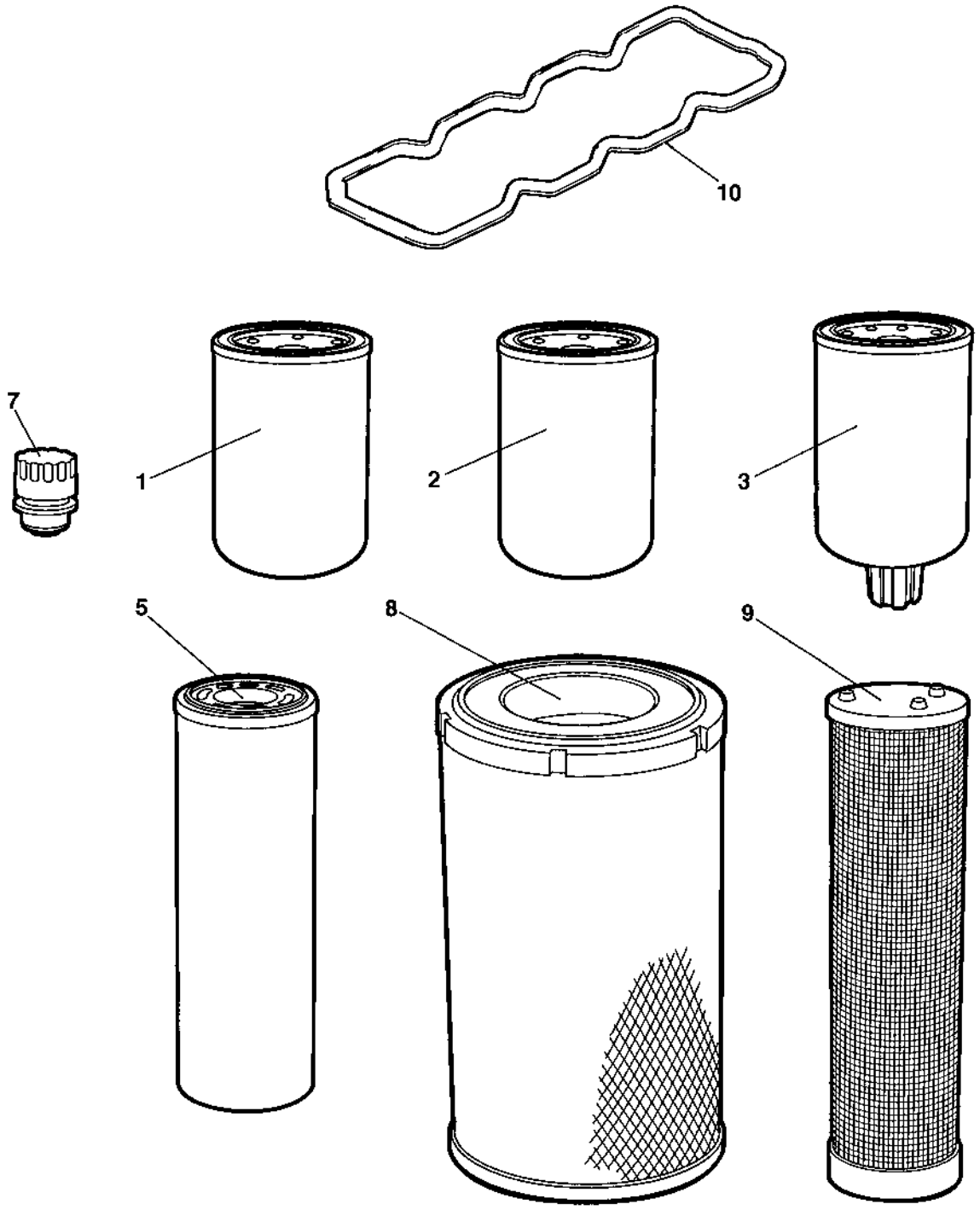

4700945791 Service kit 1000 h

Item	Part No	Rem	Qty	Description	Code
	4700945791			**Service kit 1000 h (Page 10)**	
1	4700945145		1	Oil filter element	A
2	4700945624		1	Fuel filter element	
3	4700945147		1	Pre-fuel filter element	
5	4700372229		2	Hydraulic oil filter element	A
7	4700357138	B	1	Ventilating filter	A
8	4700394686		1	Air filter element, main	A
9	4700394687		1	Air filter element, safety	A
10	4700945760		1	Valve cover gasket	

B) Ventilated oil filler cap for the hydraulic oil tank

Repair kits

Item	Part No	Rem	Qty	Description	Code
5	4700938558			**Steering hitch kit (Page 14)**	A
10	4700945657			**Eccentric shaft kit (Page 16)**	
20	4700938891			**Drum rotation kit (Page 18)**	A
30	4812156189			**Shock absorber kit, drum (Page 20)**	A
40	4700940663			**F/R control button kit (Page 22)**	

4700938558 Steering hitch kit

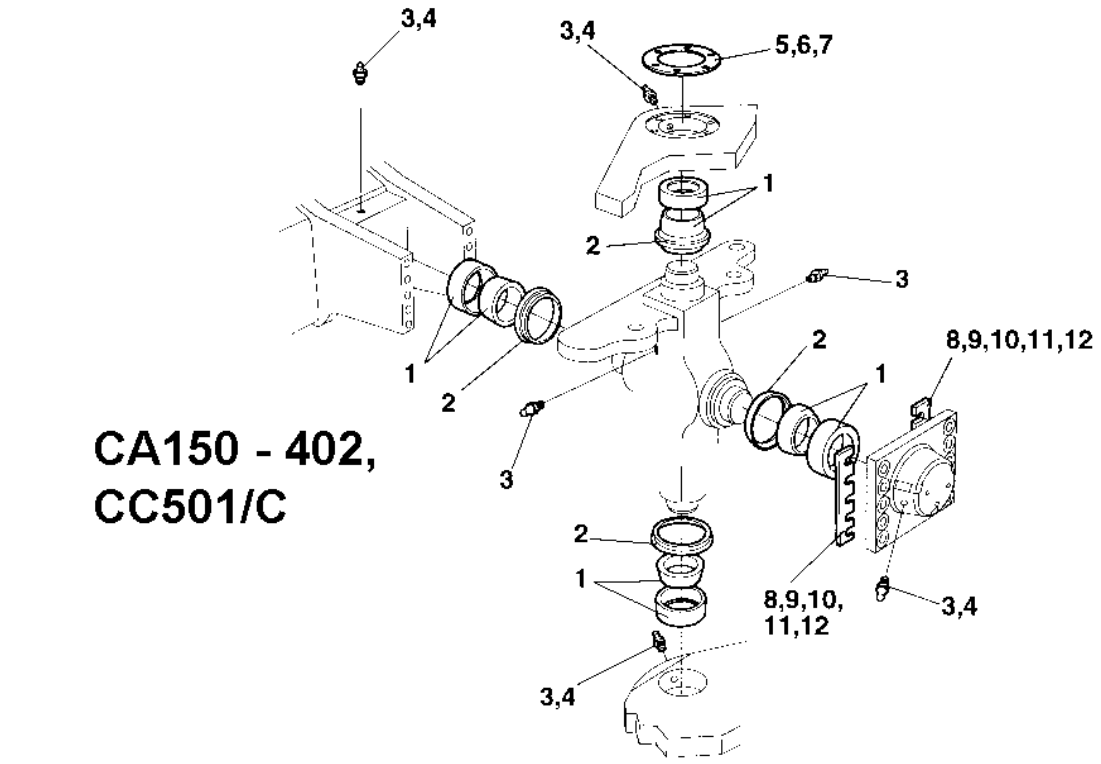

CA150 - 402,
CC501/C

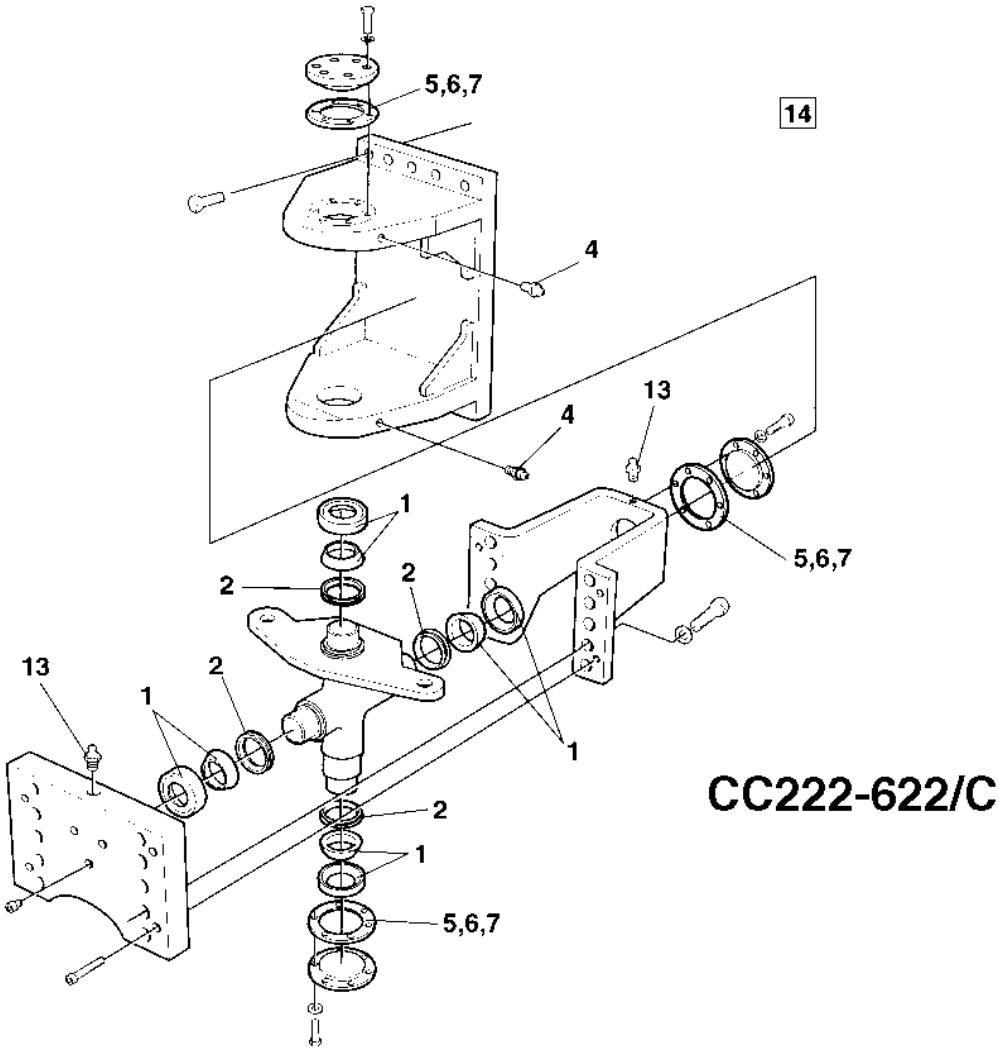

CC222-622/C

4700938558 Steering hitch kit

Item	Part No	Rem	Qty	Description		Code
	4700938558			**Steering hitch kit (Page 14)**		A
1	4700100040		4	Axial ball bearing		B
2	4700167032		4	Lip-type oil seal		C
3	4700310008	2	3	Grease nipple		C
4	4700926214		2	Grease fitting		C
5	4700337045		3	Shim	T=1,0 mm	C
6	4700345874		3	Shim	T=0,35 mm	C
7	4700345875		3	Shim	T=0,10 mm	C
8	4700345871	1	2	Shim	T=1,0 mm	C
9	4700345872	1	2	Shim	T=0,35 mm	C
10	4700345873	1	2	Shim	T=0,10 mm	C
11	4700380993	1	2	Shim	T = 2,0 mm	C
12	4700384498	1	2	Shim	T = 0,15 mm	C
13	4700929863	3	1	Grease nipple		C
14	4700904663		1	Lube grease " DYNAPAC special approved "		A
15			1	Instructions		

1) Valid for CA150-402 and CC501/C
2) Valid for CC501/C
3) Valid for CC222/232/322/422/432/522/622/C

4700945657 Eccentric shaft kit

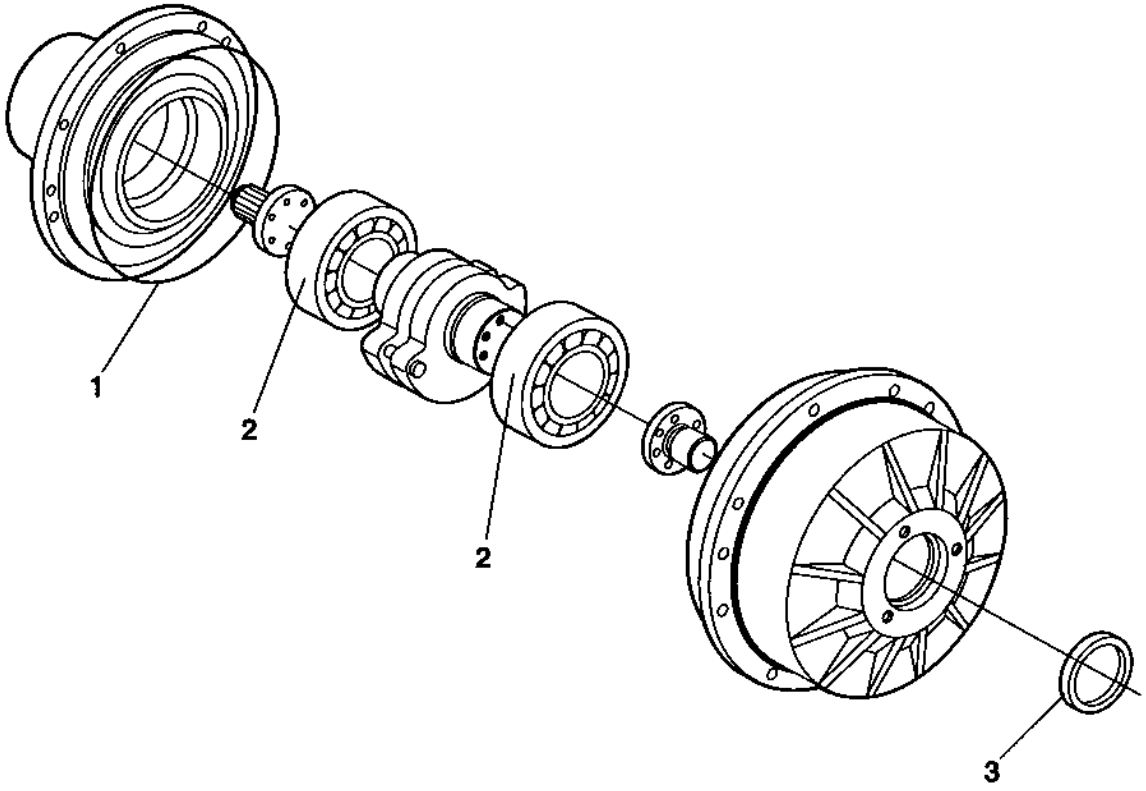

4700945657 Eccentric shaft kit

Item	Part No	Rem	Qty	Description	Code
	4700945657			**Eccentric shaft kit (Page 16)**	
1	4700900776		1	O-ring	D
2	4700390896		2	Spherical roller bearing	B
3	4700900782		1	Seal ring	D

4700938891 Drum rotation kit

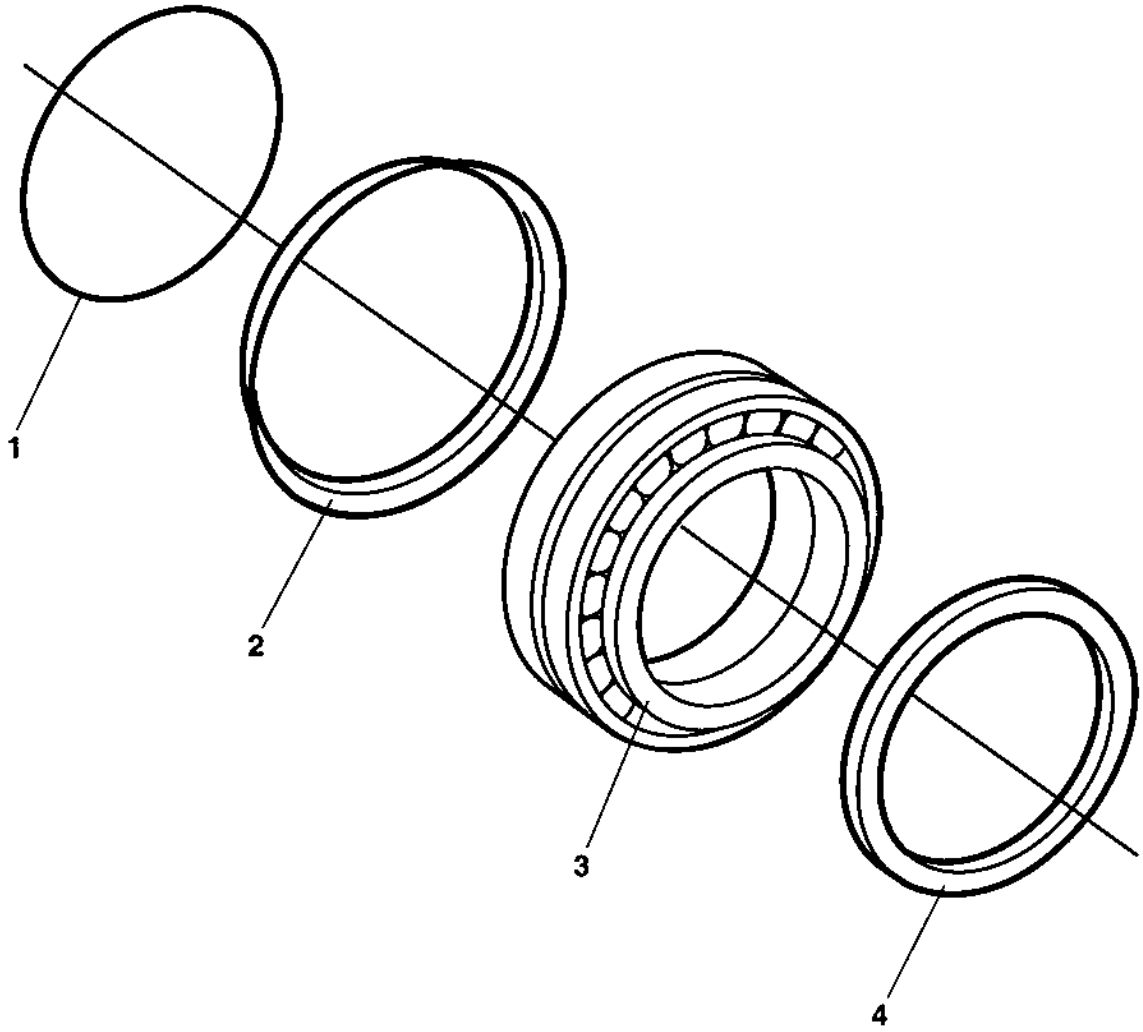

4700938891 Drum rotation kit

Item	Part No	Rem	Qty	Description	Code
	4700938891			**Drum rotation kit (Page 18)**	A
1	4700160105		1	O-ring 70	C
2	4700929447		1	V-ring	B
3	4700116041		1	Taper roller bearing	B
4	4700386272		1	Sealing	B

4812156189 Shock absorber kit, drum

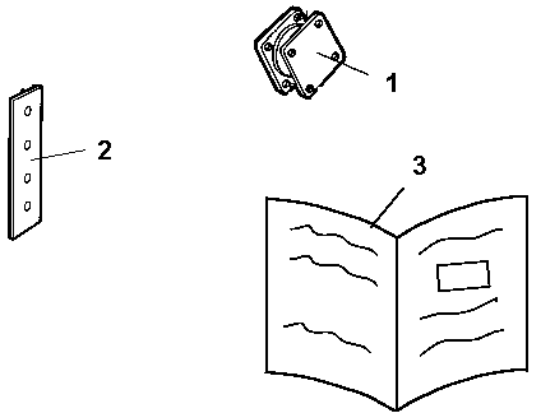

4812156189 Shock absorber kit, drum

Item	Part No	Rem	Qty	Description		Code
	4812156189			**Shock absorber kit, drum (Page 20)**		A
1	4700450122		10	Shock absorber		A
2	4700393276		4	Shim	T = 1,5 mm	D
3	4812156170		1	Instructions		

4700940663 F/R control button kit

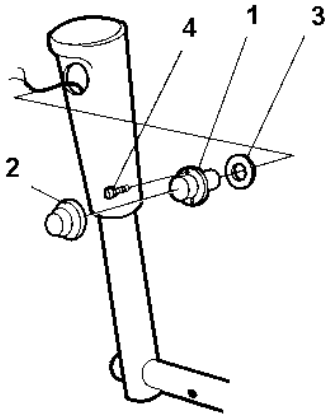

4700940663 F/R control button kit

Item	Part No	Rem	Qty	Description	Code
1	4700928497		1	Push button	B
2	4700348481		1	Cover	B
3	4700359940		1	Washer	C
4	4700371009		2	Screw	D

Frame

Frame

Item	Part No	Rem	Qty	Description	Code
10				**Frames (Page 26)**	
25				**Scraper (Page 28)**	
40				**Scrapers, Urethan Rubber Option (Page 30)**	
60				**Scrapers, Spring Steel Option (Page 32)**	
70				**Hitch (Page 34)**	
90				**Structure (Page 36)**	
110				**Noise suppressed hood Option (Page 40)**	
120				**Noise suppression, air inlet Option (Page 42)**	
130				**Drum shroud Option (Page 44)**	
140				**Covers mount Option (Page 46)**	

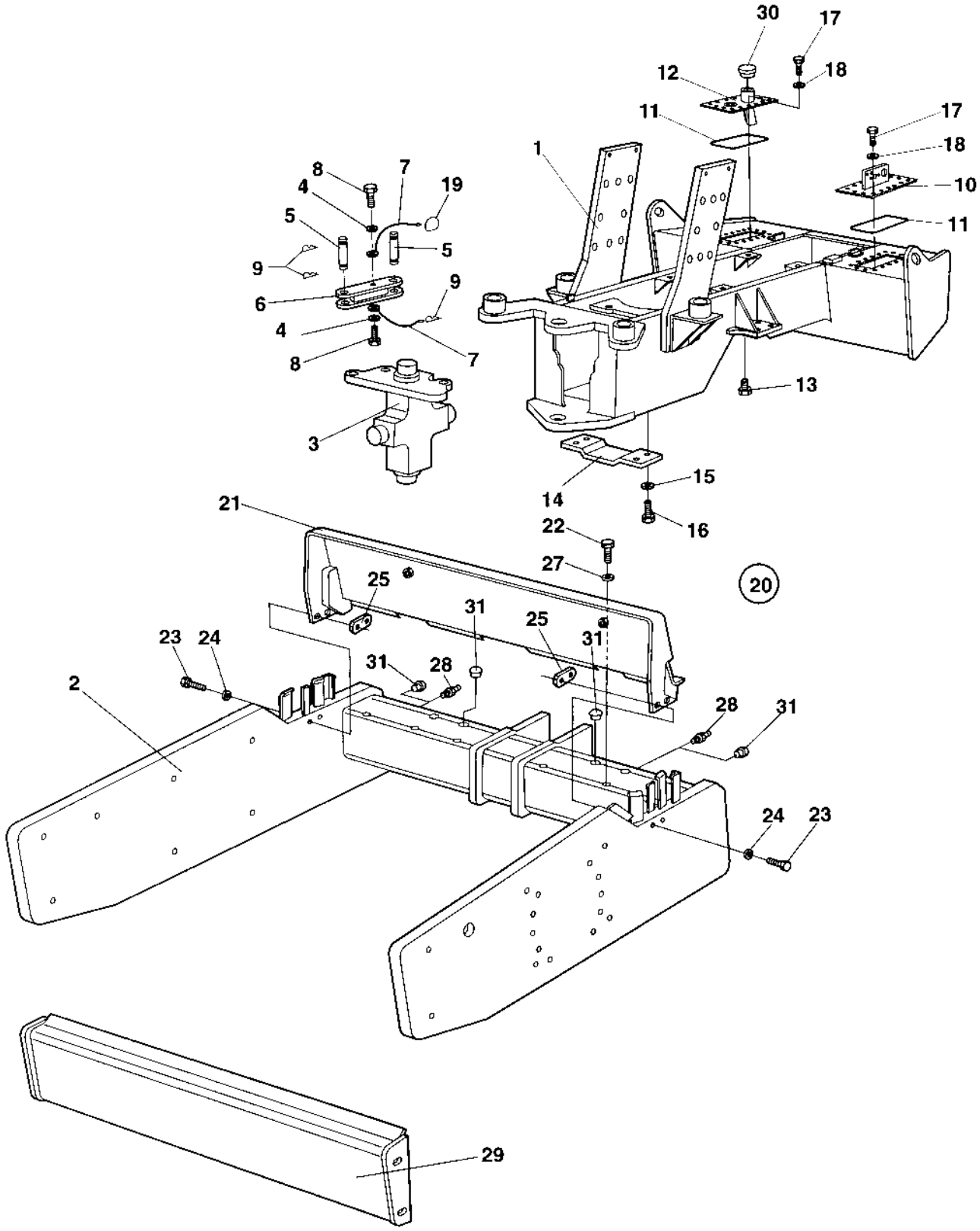
30
17
12
18
11
17
18
10
11
1
8
7
19
4
5
5
9
9
6
4
8
7
3
13
15
14
16
21
22
27
20
25
31
25
31
23
24
31
28
2
28
31
24
23
29

Frames

Item	Part No	Rem	Qty	Description	Code
1	4700393052		1	Tractor frame Up to 0A006786	D
	4812114555		1	Tractor frame From 0A006787	
2	4700376546		1	Drum frame	D
3			1	**Hitch (Page 34)**	
4	4700904230		2	Steel plain washer	C
5	4700347119		2	Shaft	C
6	4700374744		1	Safety rod	D
7	4700343775		2	Wire	D
8	4700500043		2	Screw M10x16H 8,8	D
9	4700635061		3	Hair clip	B
10	4812110986		1	Cover Up to 0A006786	D
	4812114556		1	Cover From 0A006787	
11	4700372709		2	O-ring	D
12	4700388186		1	Cover	D
13	4700813391		1	Magnetic plug	D
14	4700372087		1	Protective plate	D
15	4700904557		4	Steel plain washer	C
16	4700500029		4	Hexagon head screw	C
17	4700500188		32	Screw M8-1,25x14 8,8	D
18	4700904229		32	Steel plain washer 8,4x16x1,5	C
19	4700357488		1	Spring	D
20		A	1	Drum shroud, cpl Option	
21			1	. See section "Drum shroud option"	
22			4	. See section "Drum shroud option"	
23			4	. See section "Drum shroud option"	
24			4	. See section "Drum shroud option"	
25			2	. See section "Drum shroud option"	
27			4	. See section "Drum shroud option"	
28				Not used on this model	
29			1	Scraper beam	
30	4700373460		1	Fuel cap	D
31	4700902919		8	Plug	

A) For new Drum shroud see section "Drum shroud Option".

Scraper

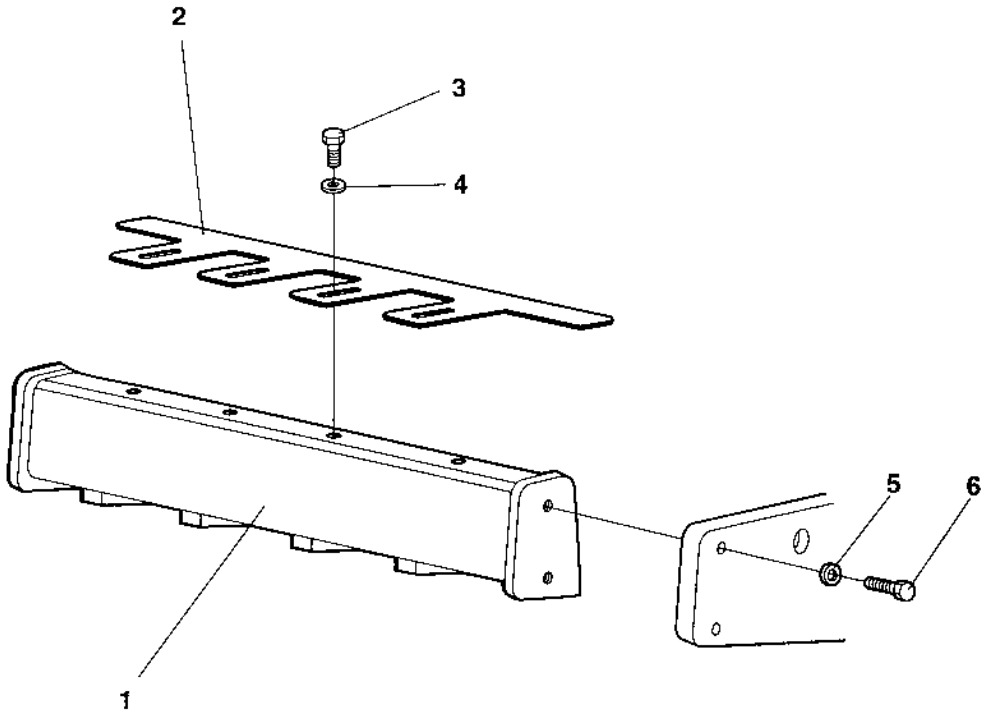

Scraper

Item	Part No	Rem	Qty	Description	Code
1	4700376667		1	Cross beam	D
2	4700384048		1	Scraper	A
3	4700500102		4	Screw M16x45	D
4	4700904558		4	Washer 17X30X6 300HV	C
5	4700904234		4	Steel plain washer	C
6	4700928230		4	Screw M24x90 10.9	C

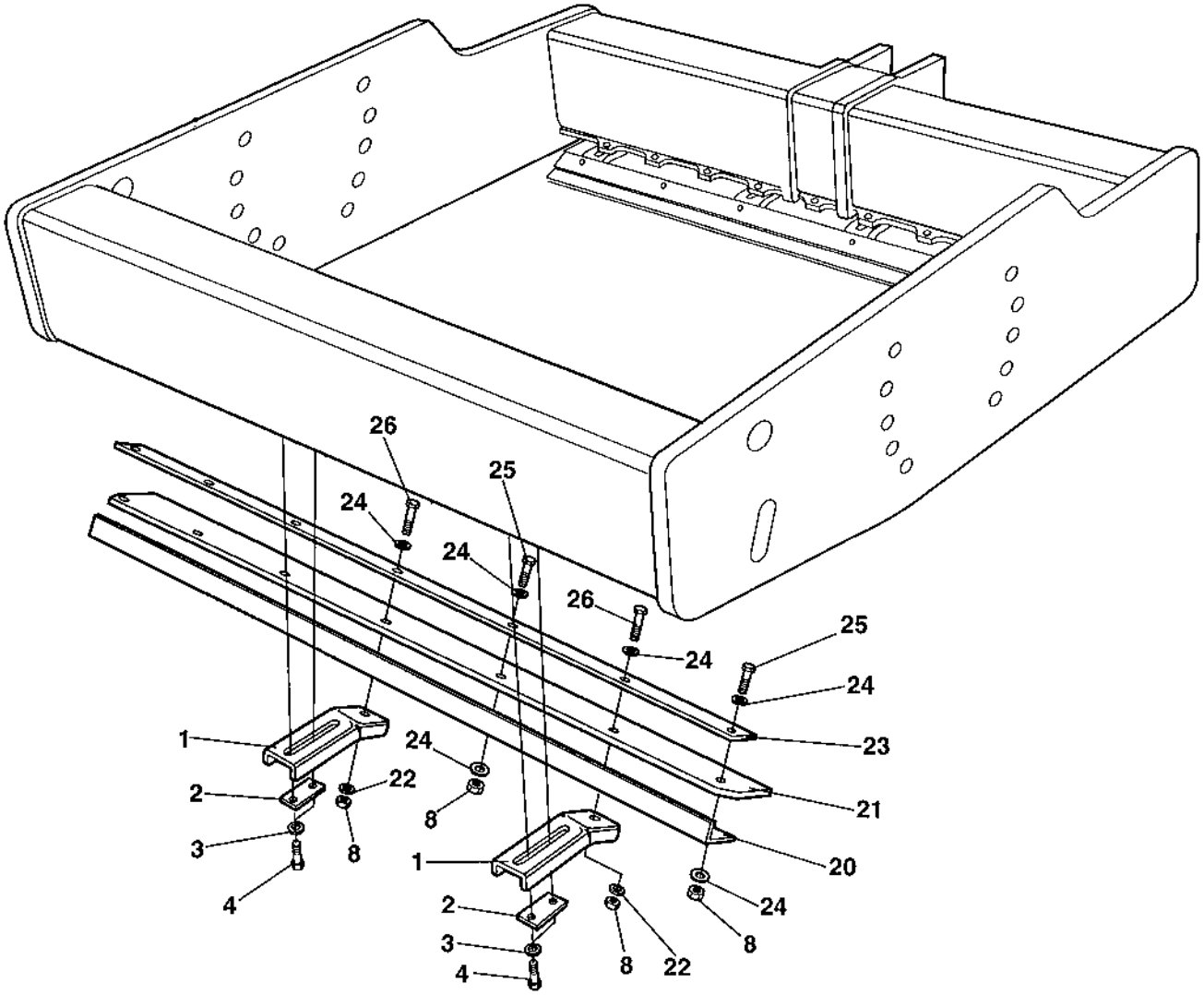
26
25
24
24
26
25
24
24
23
21
20
24
8
22
1
24
22
8
2
3
4
8
1
2
3
4
8
22

Scrapers, Urethan Rubber Option

Item	Part No	Rem	Qty	Description	Code
1	4700376819	A	8	Scraper bracket	D
2	4700376622	A	8	Holder	D
3	4700904232		16	Washer	C
4	4700500076		16	Screw M16x55	D
	4700500093		16	Screw M16x40	C
8	4700586019		18	Lock nut	C
20	4700376825	A	2	Scraper bracket	D
21	4700358033	A	2	Scraper blade	A
22	4700904213		8	Washer	C
23	4700376826	A	2	Scraper bracket	D
24	4700904231		28	Washer 13x24x2 300 HV	C
25	4700500056		10	Screw	
26	4700500049		8	Screw	C

A) Mounted on the front and rear of the drum.

Scrapers, Spring Steel Option

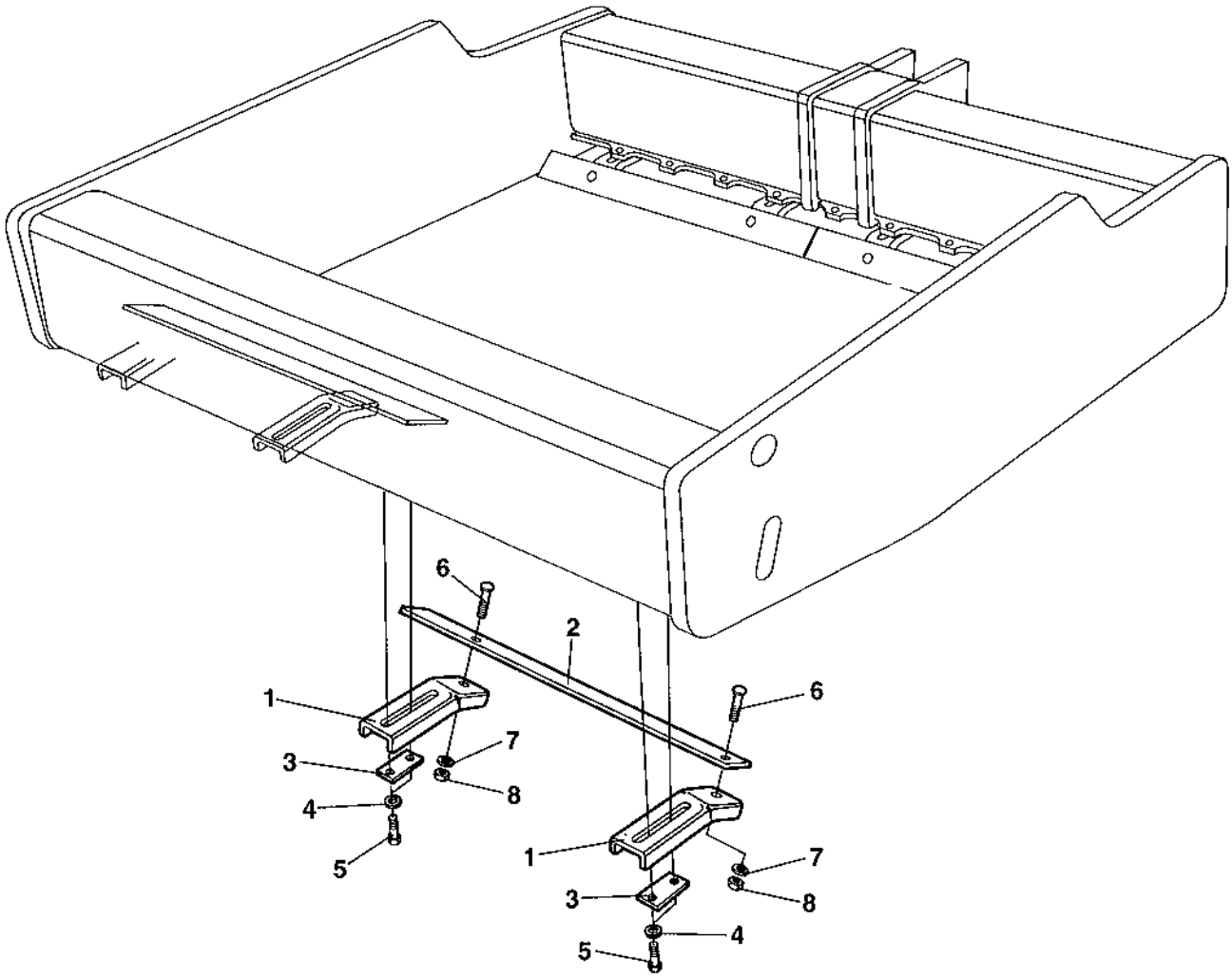

Scrapers, Spring Steel Option

Item	Part No	Rem	Qty	Description	Code
1	4700376819		8	Scraper bracket	D
2	4700376829		4	Scraper	A
3	4700376622		8	Holder	D
4	4700904232		16	Washer	C
5	4700500076		16	Screw M16x55	D
	4700500093		16	Screw M16x40	C
6	4700791948	A	8	Bolt M12x40H 8,8	D
7	4700904703		8	Washer	B
8	4700586019		8	Lock nut	C

A) Cup square neck bolt.

Hitch

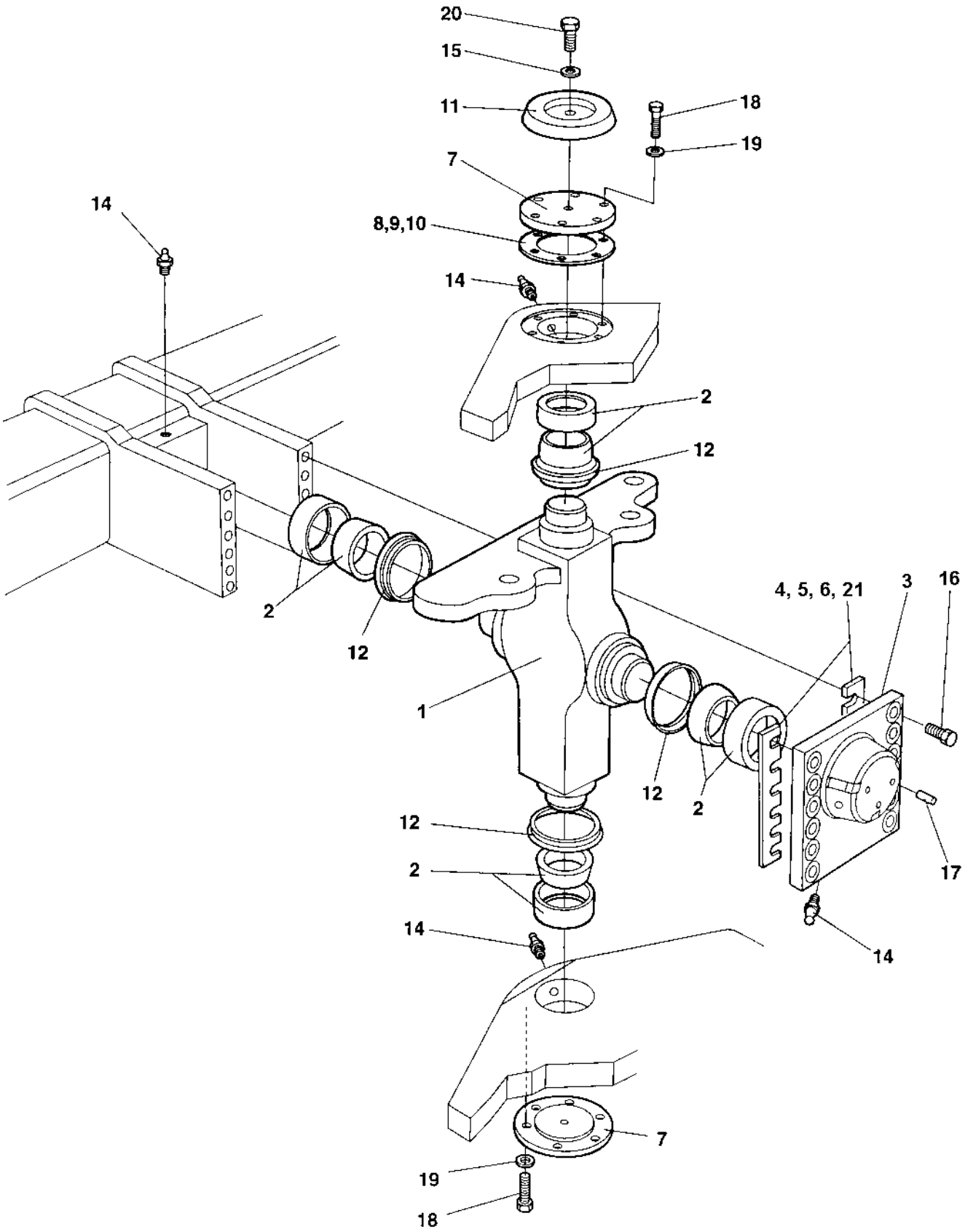
20
15
11
18
19
7
14
8,9,10
14
2
12
2
12
4, 5, 6, 21
3
16
1
12
2
12
2
14
17
14
7
19
18

Hitch

Item	Part No	Rem	Qty	Description		Code
1	4700374900		1	Hitch		D
2	4700100040		4	Axial ball bearing		B
3	4700373421		1	Bearing cover		D
4	4700345871	N		Shim	T=1,0 mm	C
5	4700345872	N		Shim	T=0,35 mm	C
6	4700345873	N		Shim	T=0,10 mm	C
7	4700337042		2	Bearing cover		D
8	4700337045	N		Shim	T=1,0 mm	C
9	4700345874	N		Shim	T=0,35 mm	C
10	4700345875	N		Shim	T=0,10 mm	C
11	4700343159		1	Cover		D
12	4700167032		4	Lip-type oil seal		C
14	4700926214		4	Grease fitting		C
15	4700904229		1	Steel plain washer 8,4x16x1,5		C
16	4700500287		12	Screw M20x80 10,9		C
	4700925208		12	Screw M20x90		D
17	4700910995		3	Stop screw		C
18	4700500037		12	Screw		C
19	4700904231		12	Washer 13x24x2 300 HV		C
20	4700500018		1	Screw M8-1,25x12 8,8		C
21	4700380993	N		Shim	T = 2,0 mm	C
	4700384498	N		Shim	T = 0,15 mm	C

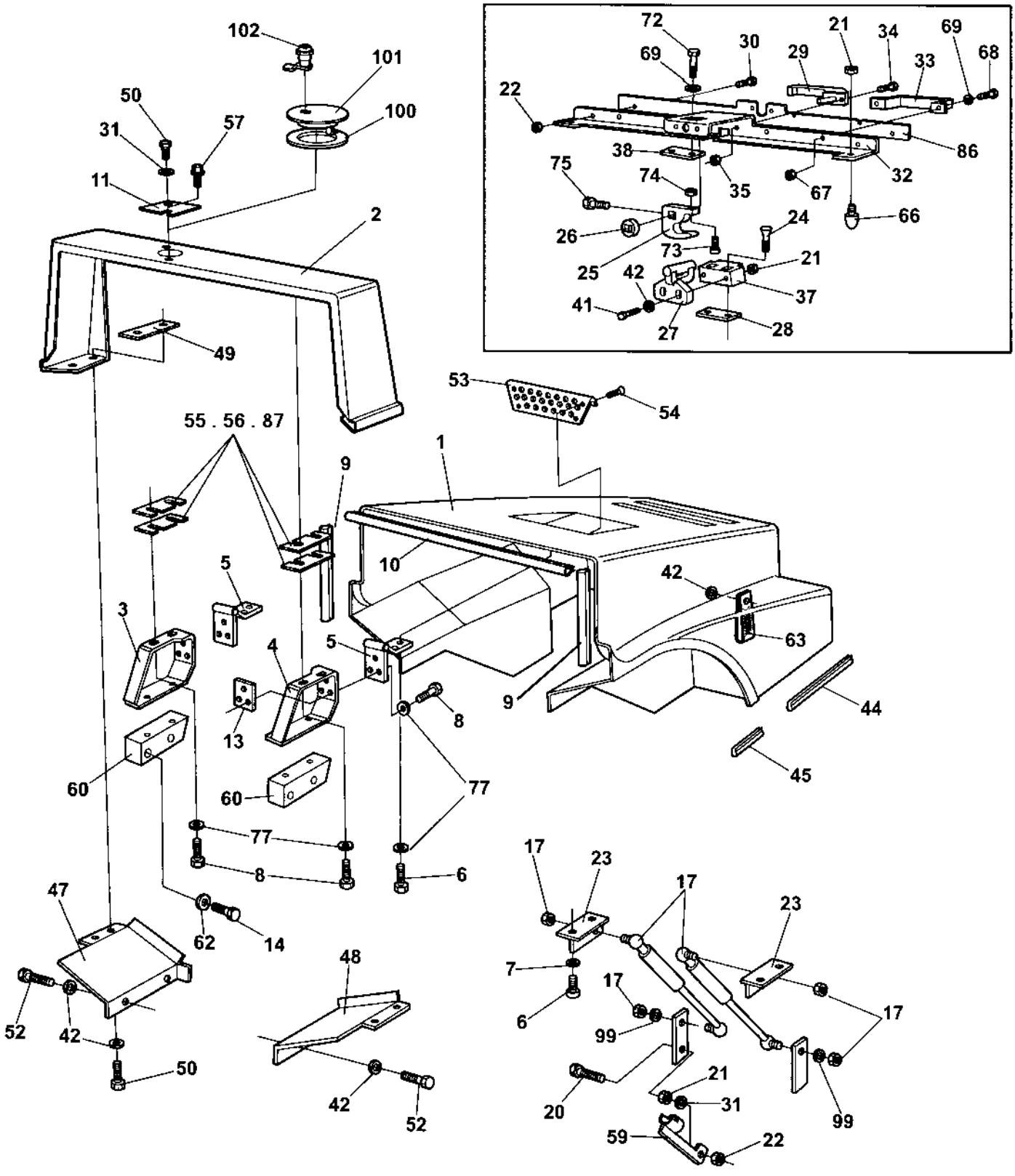
102
101
100
50
31
57
11
2
49
55 . 56 . 87
9
1
53
54
10
42
63
44
45
5
3
4
5
8
13
60
60
77
77
8
6
47
62
14
48
52
42
50
42
52
17
23
17
23
7
6
17
99
17
21
20
31
99
59
22
72
69
30
29
21
34
69
68
33
22
38
86
75
74
35
67
32
66
24
26
73
21
25
42
37
41
27
28

Structure

Item	Part No	Rem	Qty	Description	Code
1	4700945979	1	1	Engine hood, cpl	D
2	4700385152		1	Protecting cover	D
3	4700374797	A	1	Clamp	D
4	4700374798	B	1	Clamp	D
5	4700371366		2	Hinge	D
6	4700500028		10	Screw	C
7	4700904557		10	Steel plain washer	C
8	4700500030		7	Screw M10x035H 8.8 A3K	C
9	4700902166	C	2XL	Edge trim	D
10	4700902166	D	1XL	Edge trim	D
11	4700373955		1	Cover	D
13	4700374799		1	Holder plate	C
14	4700500133		4	Screw	C
17	4700382384		2	Gas spring	B
	4700382387	R	2	Gas spring	B
20	4700500047		1	Hexagon head screw	C
21	4700570005		5	Nut M8	C
22	4700902286		3	Hexagon lock nut with flange	C
23	4700372608		2	Bracket	D
24	4700903732		2	Screw	
25	4700382130		1	Hook	
26	4700382335		1	Spacer sleeve	
27	4700382131		1	Lock clamp	
28	4700380109		1	Holder	D
29	4700382165		1	Locking handle	
	4700902866		1	. Key Marked "455"	
30	4700927637		2	Hexagon socket countersunk screw	D
31	4700904556		2	Washer 8,4x16x3,0	C
32	4700382129		1	Holder plate	D
33	4700904874		1	Grab handle	D
34	4700535011		2	Screw	D
35	4700902284		2	Nut M5	C
37	4700382132		1	Holder	D
38	4700382336		1	Holder	D
41	4700500026		2	Screw M8-1,25x60 8,8	
42	4700904640		11	Washer 8,4x22x3	C
44	4700902166	G	2XL	Edge trim	D
45	4700902166	H	2XL	Edge trim	D
47	4700373204	I	1	Holder plate	D
48	4700373203	J	1	Holder plate	D
49	4700373309		2	Holder plate	D
50	4700500021		5	Screw M8-1,25x25 8.8	C
52	4700500019		4	Hexagon head screw M8x16H 8,8	C
53	4700372575		1	Grid	D
54	4700901767		4	Screw ST3,5x9,5 Black	
55	4700373956		N	Shim	C
56	4700373957		N	Shim	C
57	4700500505		1	Screw M8x20 8.8	C

1) Hood cpl. with Gas springs, Lock, Edge trims, Hinges and Grids.
A) Right
B) Left
C) L = 0.940 m
D) L = 0.630 m
G) L = 0.340 m
H) L = 0.040 m
I) Right side
J) Left side
R) With noise suppression mounted, Option

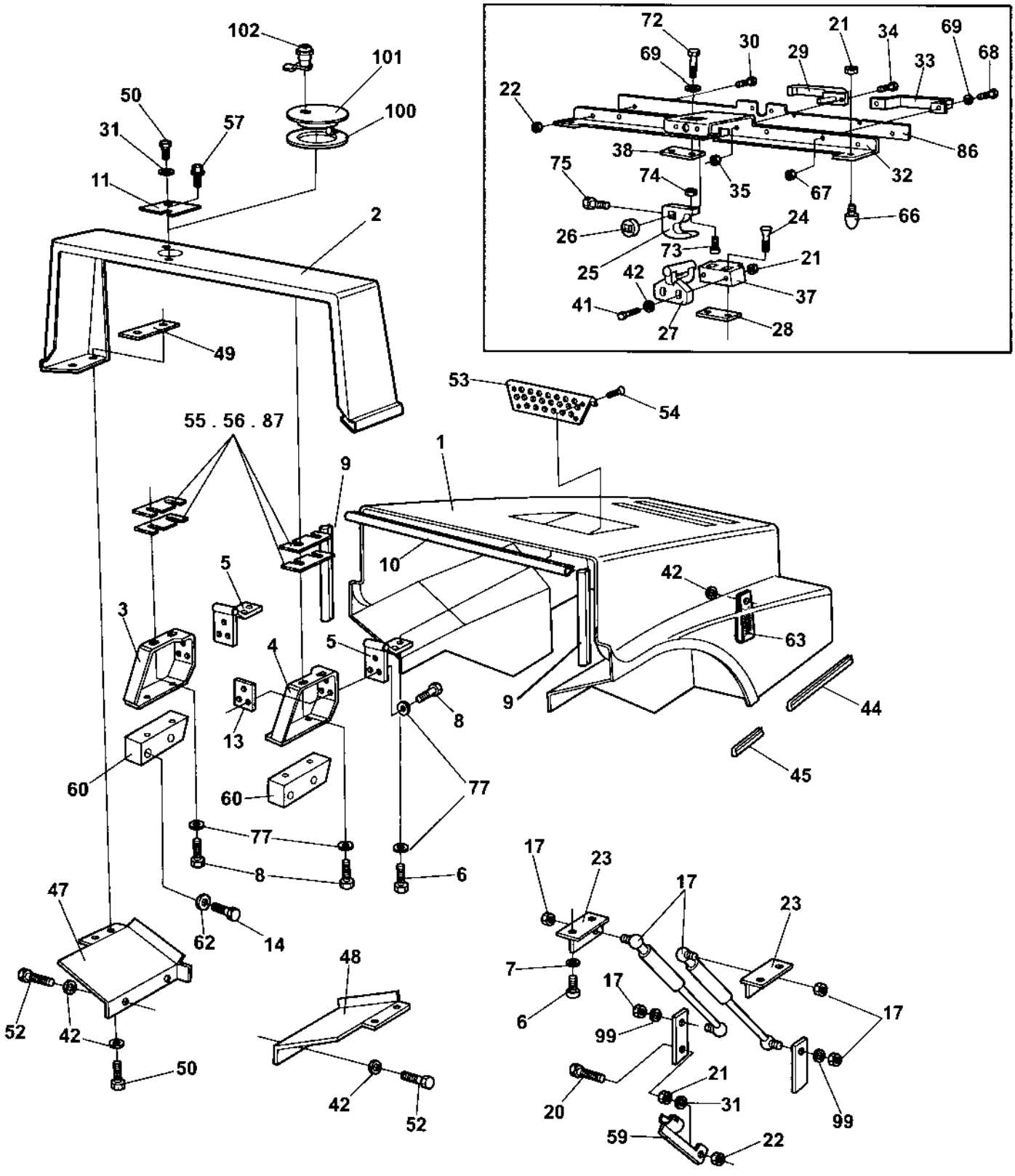
102
101
100
50
31
57
11
2
49
55 . 56 . 87
9
1
53
54
10
42
63
44
45
5
3
4
5
8
13
60
60
77
77
8
6
47
62
14
48
52
42
50
42
52
17
23
17
23
7
6
17
99
17
21
20
31
99
59
22
72
69
30
29
21
34
69
68
33
22
38
86
75
74
35
67
32
66
24
26
73
21
25
42
37
41
27
28

Structure

Item	Part No	Rem	Qty	Description	Code
59	4700382382		1	Safety rod	
60	4700381989		2	Holder	D
62	4700904231		4	Washer 13x24x2 300 HV	C
63	4700374854		1	Grab handle	D
66	4700925629		2	Shock absorber	
67	4700902285		2	Hexagon lock nut with flange	C
68	4700500088		2	Screw M6x40	
69	4700904228		4	Washer 6,4x12x1,5	C
72	4700500013		2	Screw M6-1x16 8,8	C
73	4700500040		1	Screw M6-1x20 8,8	C
74	4700570004		1	Nut M6X1,00 -8 A2K	C
75	4700500018		1	Screw M8-1,25x12 8,8	C
77	4700904567		7	Washer 10,5x28x6 HB305	C
86	4700395119		1	Spacer	D
87	4812110773		N	Shim	
99	4700904230		2	Steel plain washer	C
100	4700375681	K	1	Gasket	D
101	4700375678	K	1	Cover	D
102	4700372658	K	1	Lock	D
	4700902866		1	. Key Marked "455"	

K) Option

Noise suppressed hood Option

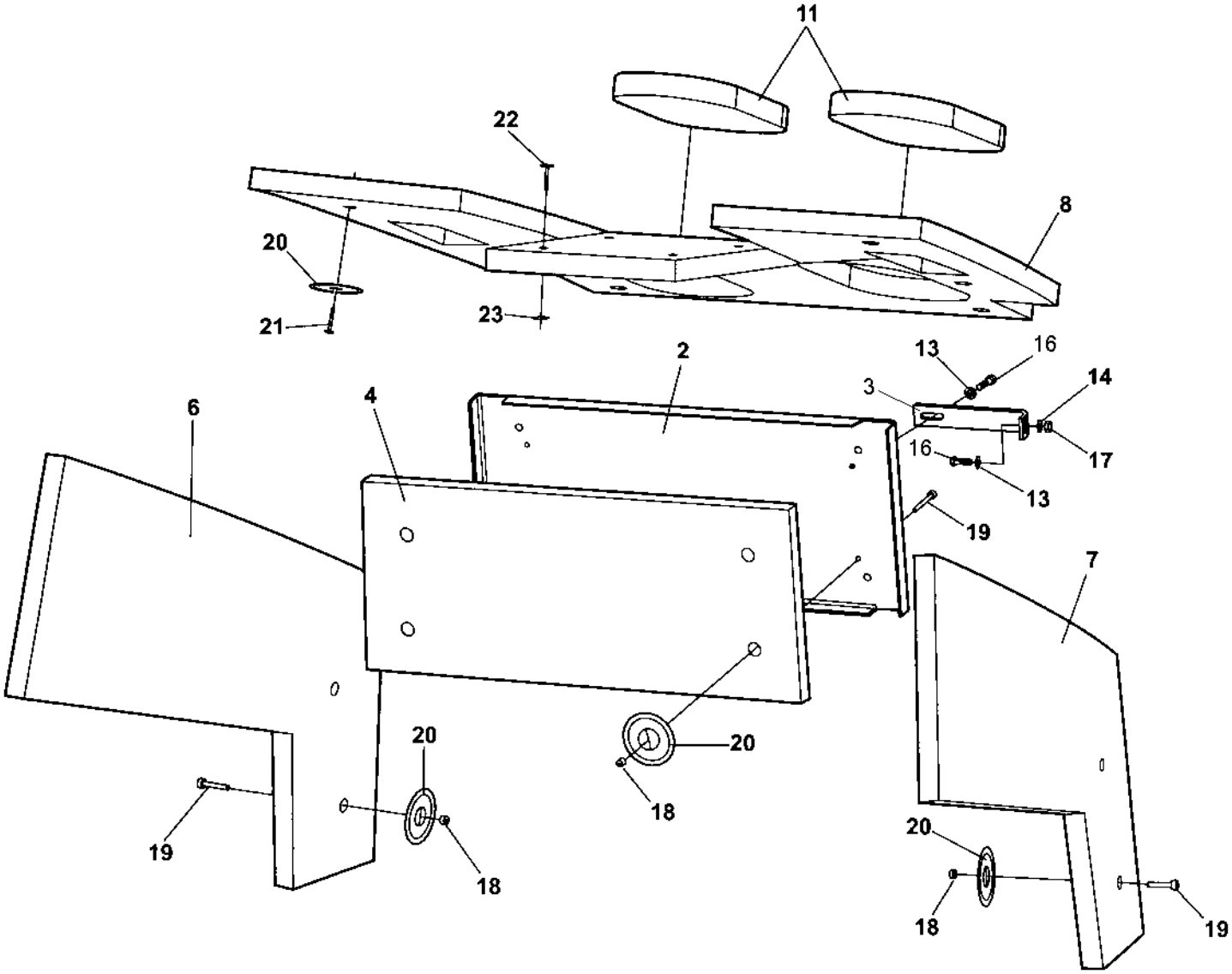

Noise suppressed hood Option

Item	Part No	Rem	Qty	Description	Code
2	4700387519		1	Noise suppression plate	D
3	4700374795		4	Holder	D
4	4700387520		1	Absorbent	D
6	4700387508		1	Absorbent	D
7	4700387507		1	Absorbent	D
8	4700387506		1	Absorbent	D
11	4700374559		2	Absorbent	D
13	4700904640		8	Washer 8,4x22x3	C
14	4700601003		4	Washer 8,4x25x2	C
16	4700500021		8	Screw M8-1,25x25 8.8	C
17	4700570005		4	Nut M8	C
18	4700586002		9	Lock nut M6 -8	C
19	4700904209		9	Screw	C
20	4700904355		16	Washer 0,7 x 80	
21	4700904356		7	Screw 5 x 38	
22	4700791233		4	Holder	D
23	4700791234		4	Insulating washer	C

Noise suppression, air inlet Option

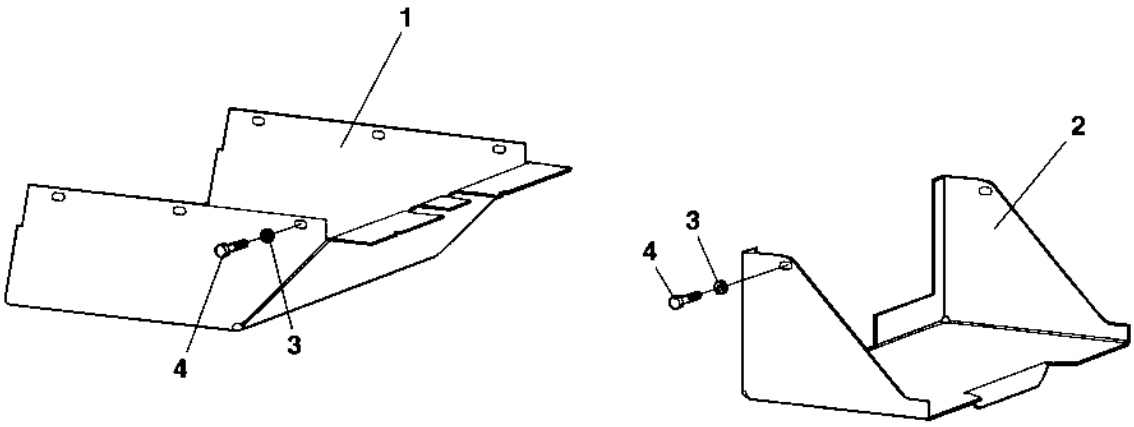

Noise suppression, air inlet Option

Item	Part No	Rem	Qty	Description	Code
1	4700374583		1	Air inlet plate	D
2	4700374567		1	Air inlet plate	D
3	4700904640		8	Washer 8,4x22x3	C
4	4700500053		8	Screw M8x20H 8.8	C

Drum shroud Option

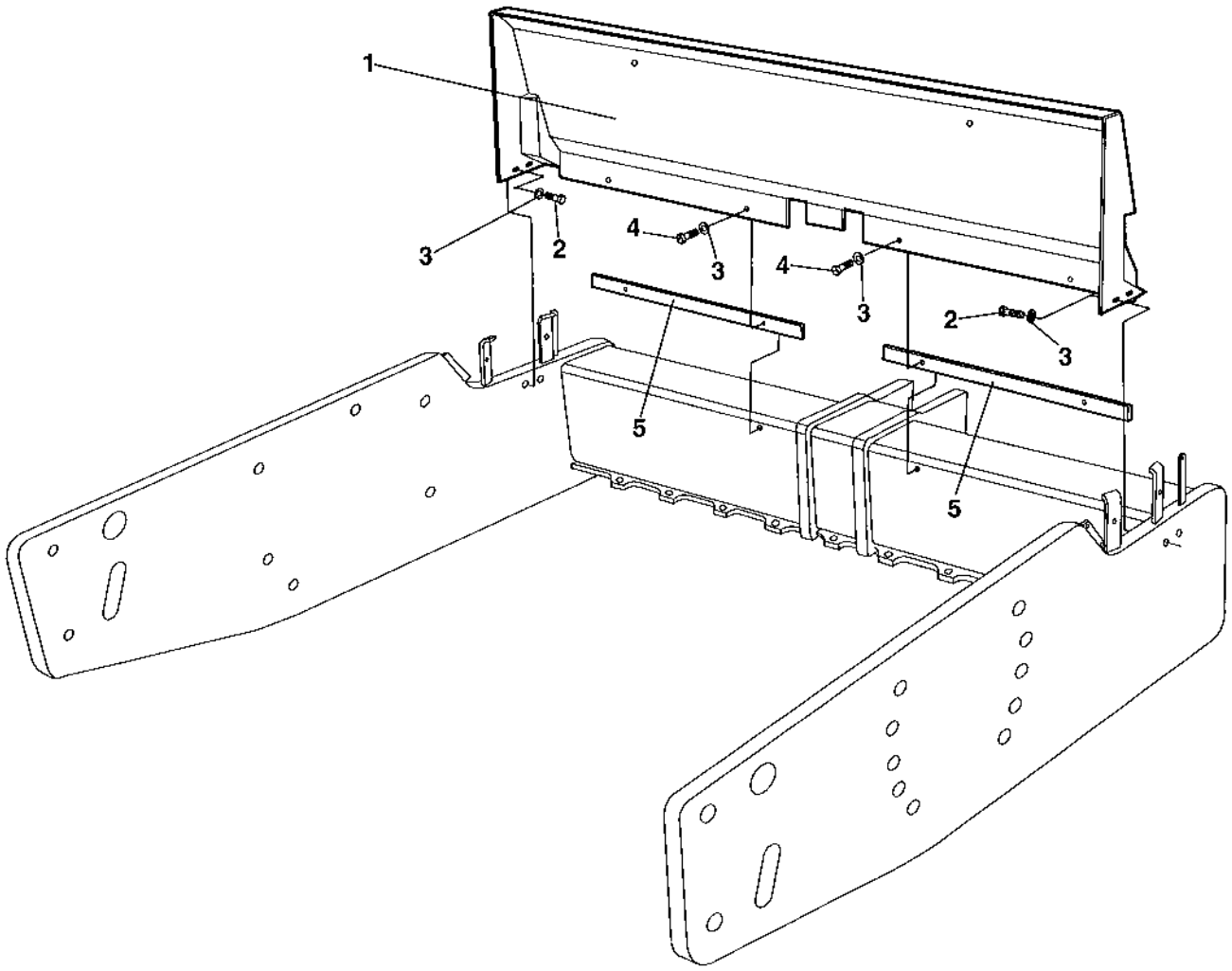

Drum shroud Option

Item	Part No	Rem	Qty	Description	Code
1	4700376945		1	Drum shroud	D
2	4700500029		4	Hexagon head screw	C
3	4700904567		8	Washer 10,5x28x6 HB305	C
4	4700500240		4	Screw M10x40H 8,8	D
5	4700376944		2	Spacer	D

Covers mount Option

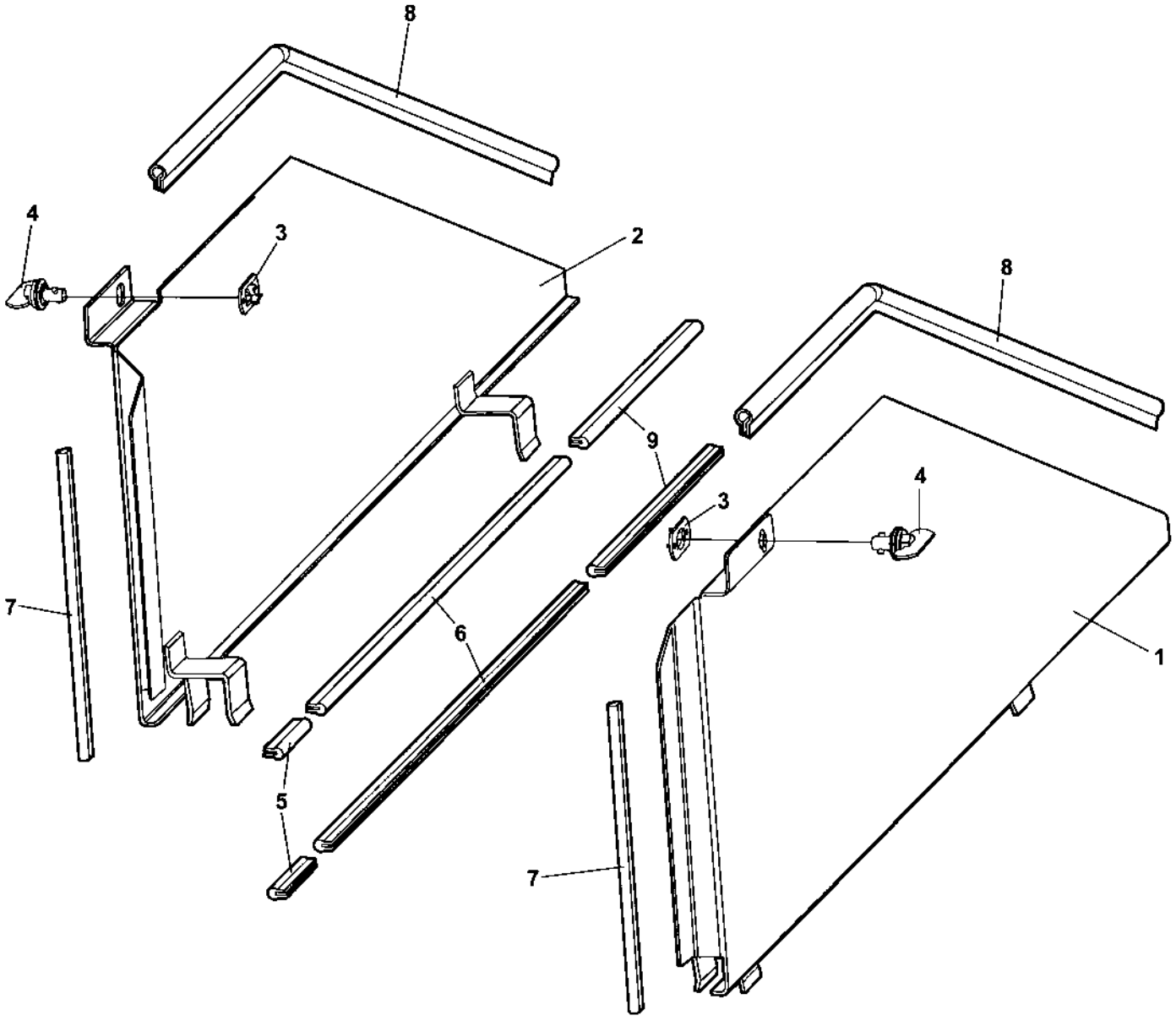

Covers mount Option

Item	Part No	Rem	Qty	Description	Code
1	4700393783		1	Cover Left side	D
2	4700393782		1	Cover Right side	D
3	4700926985		2	Quick lock washer	C
4	4700904075		2	Quick lock	
5	4700202056	A	2XL	Edge trim	D
6	4700202056	B	2XL	Edge trim	D
7	4700202056	C	2XL	Edge trim	D
8	4700202056	D	2XL	Edge trim	D
9	4700202056	E	2XL	Edge trim	D

A) L=0,140M
B) L=1,280M
C) L=0,550M
D) L=1,950M
E) L=0,610M

Drum

Item	Part No	Rem	Qty	Description	Code
10				**Drum (Page 50)**	
20				**Drum cartridge Vibration side (Page 52)**	
30				**Drum cartridge Drive side (Page 54)**	
40	4700372987			**Drum gear (Page 56)**	C

Drum

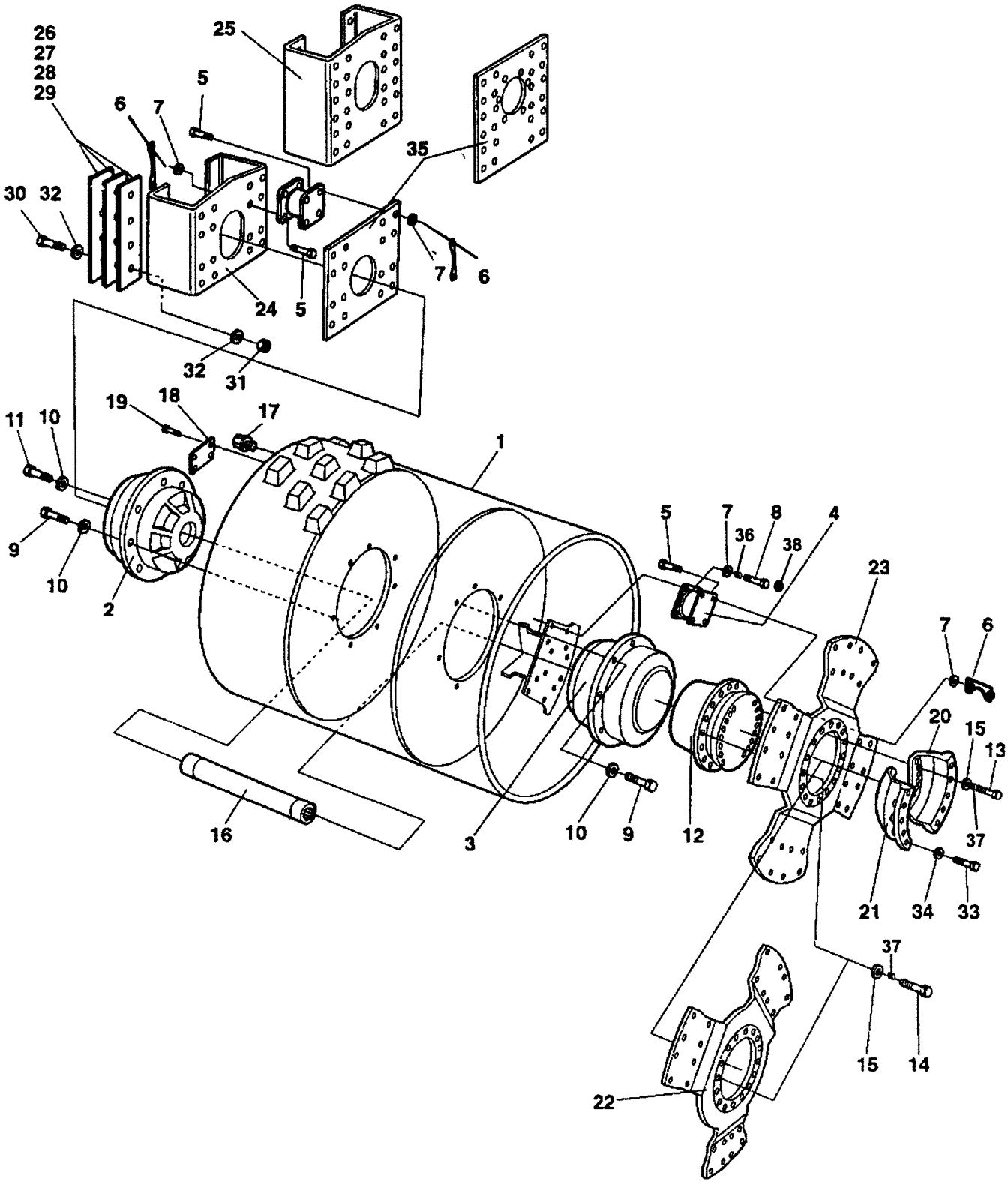
26
27
28
29
25
1
5
6
7
35
30
32
7
6
24
5
32
31
19
18
17
11
10
1
9
10
2
5
7
8
4
36
38
23
7
6
20
15
13
16
3
10
9
12
37
21
34
33
37
15
14
22

Drum

Item	Part No	Rem	Qty	Description		Code
1	4700372529		1	Drum		D
2				**Drum cartridge Vibration side (Page 52)**		
3				**Drum cartridge Drive side (Page 54)**		
4	4700450122		10	Shock absorber		A
5	4812110444		56	Hexagon head screw w Tuflok M12x40H 8.8 A3K		C
6	4700383436		28	Holder		D
7	4700904231		80	Washer 13x24x2 300 HV		C
8	4812110640		24	Hexagon socket head cap screw M12x40H 8.8 A3K		C
9	4700500082		23	Screw M16x70 8,8		D
10	4700904232		24	Washer		C
11	4700384121		1	Air breather screw		B
12	4700372987		1	**Drum gear (Page 56)**		C
13	4700903919		16	Screw		
14	4812110520		16	Screw		D
15	4700904233		32	Washer 21x36x3		C
16	4700349682		1	Drive shaft		D
17	4700232210		1	Plug		B
18	4700343801		1	Sign plate		D
19	4700527002		4	Drive screw		C
20	4700373442	A	1	Gear holder		D
21	4700373443	B	1	Gear holder		D
22	4812114420		1	Drive disc		D
23	4700396142		1	Drive disc		D
24	4700355676		1	Bracket		D
	4700396030	C	1	Bracket		D
25				Not used on this model		
26	4700345678		N	Shim	T = 1,5 mm	C
	4700393276	C	N	Shim	T = 1,5 mm	D
27	4700345679		N	Shim	T = 3 mm	C
	4700393277	C	N	Shim	T = 3 mm	D
28	4700345884		N	Shim	T = 6 mm	C
	4700393278	C	N	Shim	T = 6 mm	D
29	4700345885		N	Shim	T = 8 mm	C
	4700393279	C	N	Shim	T = 8 mm	D
30	4700925208		4	Screw M20x90		D
	4700903792		4	Screw M24x100 10.9		C
31	4700901145		4	Lock nut M20-10		
	4700792464		4	Nut M24 -10 DIN985		D
32	4700904233		8	Washer 21x36x3		C
	4700904234		8	Steel plain washer		C
33	4700928231		10	Screw M24X80 10.9		D
34	4700904234		10	Steel plain washer		C
35	4700343322		1	Holder plate		D
36	4812110346		24	Spacer		C
37	4812110366		32	Spacer		
38	4811000127		24	Cover cap		B

A) Right
B) Left
C) Used together with P/N 4700903792 M24, item 30.

Drum cartridge Vibration side

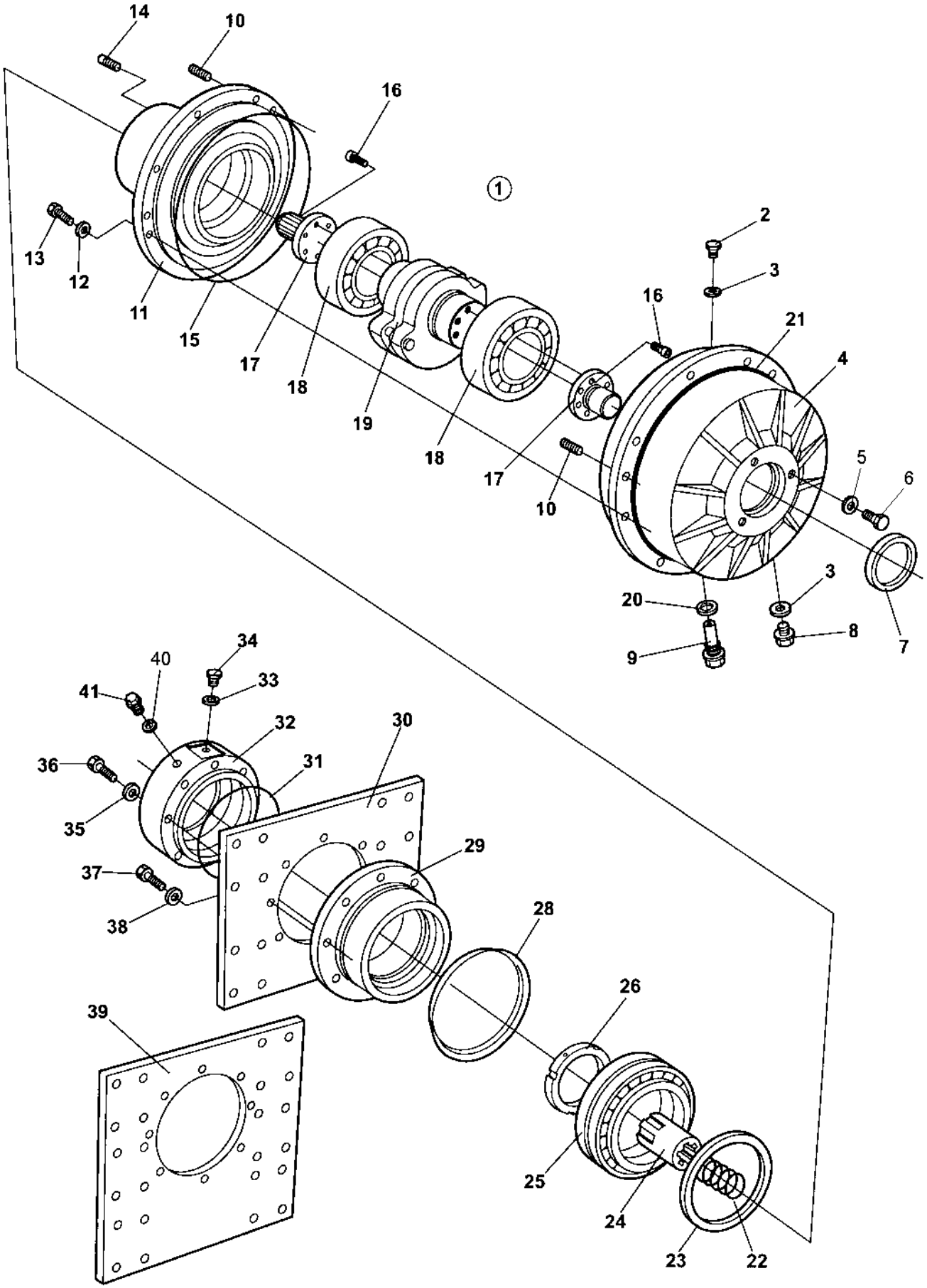

Drum cartridge Vibration side

Item	Part No	Rem	Qty	Description	Code
1	4700945588		1	Drum cartridge	D
2	4700343744		1	. Magnetic plug	C
3	4700162017		2	. Seal ring	B
4	4700379880		1	. Bearing housing inner	D
5	4700162027		3	. Sealing	B
6	4700500163		3	. Screw M12x16	D
7	4700900782		1	. Seal ring	D
8	4700232210		1	. Plug	B
9	4700381634		1	. Plug	C
10	4700900775		6	. Plug	C
11	4700379878		1	. Bearing housing outer	D
12	4700904232		12	. Washer	C
13	4700500082		12	. Screw M16x70 8,8	D
14	4700903189		3	. Stop screw	
15	4700900776		1	. O-ring	D
16	4700791156		16	. Screw M10-1,5x55 12,9	D
17	4700380018		2	. Splined shaft	D
18	4700390896		2	. Spherical roller bearing	B
19	4812112747		1	. Eccentric shaft	
20	4700162011		1	. Washer, sealing	D
21	4700904737		1	O-ring	D
22	4700349715		1	Spring	D
23	4700167023		1	Seal ring	B
24	4700381027		1	Splined sleeve	D
25	4700116041		1	Taper roller bearing	B
26	4812112413		1	Shaft nut	C
28	4700929447		1	V-ring	B
29	4700343318		1	Bearing housing	D
30	4700343322		1	Holder plate	D
31	4700160105		1	O-ring 70	C
32	4812110860		1	Motor adapter	
33	4700162018		1	Sealing	B
34	4700370231		1	Plug	C
35	4700904231		4	Washer 13x24x2 300 HV	C
36	4700500196		4	Screw M12-1,75x80 8.8	D
37	4700500082		8	Screw M16x70 8,8	D
38	4700384114		8	Spacer	A
39				Not used on this model	
40	4700162024		1	Washer, sealing	D
41	4700903190		1	Steel plug	

Drum cartridge Drive side

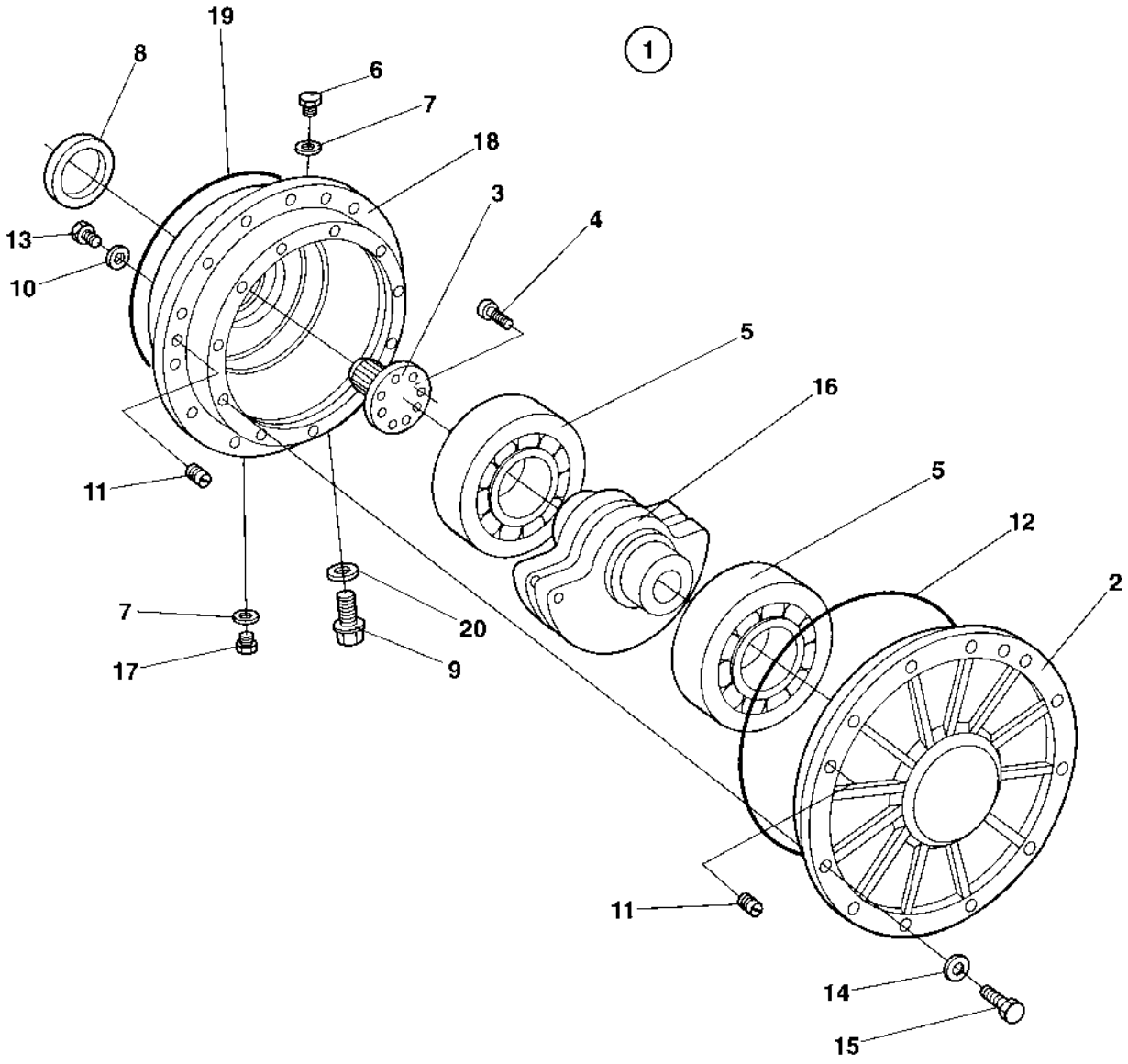

Drum cartridge Drive side

Item	Part No	Rem	Qty	Description	Code
1	4700945584		1	Drum cartridge	D
2	4700379876		1	. Bearing housing outer	D
3	4700380018		1	. Splined shaft	D
4	4700791156		8	. Screw M10-1,5x55 12,9	D
5	4700390896		2	. Spherical roller bearing	B
6	4700343744		1	. Magnetic plug	C
7	4700162017		2	. Seal ring	B
8	4700900782		1	. Seal ring	D
9	4700381634		1	. Plug	C
10	4700162027		3	. Sealing	B
11	4700900775		6	. Plug	C
12	4700900776		1	. O-ring	D
13	4700500163		3	. Screw M12x16	D
14	4700904232		12	. Washer	C
15	4700500082		12	. Screw M16x70 8,8	D
16	4812112747		1	. Eccentric shaft	
17	4700232210		1	. Plug	B
18	4700379880		1	. Bearing housing inner	D
19	4700904737		1	. O-ring	D
20	4700162011		1	. Washer, sealing	D

4700372987 Drum gear

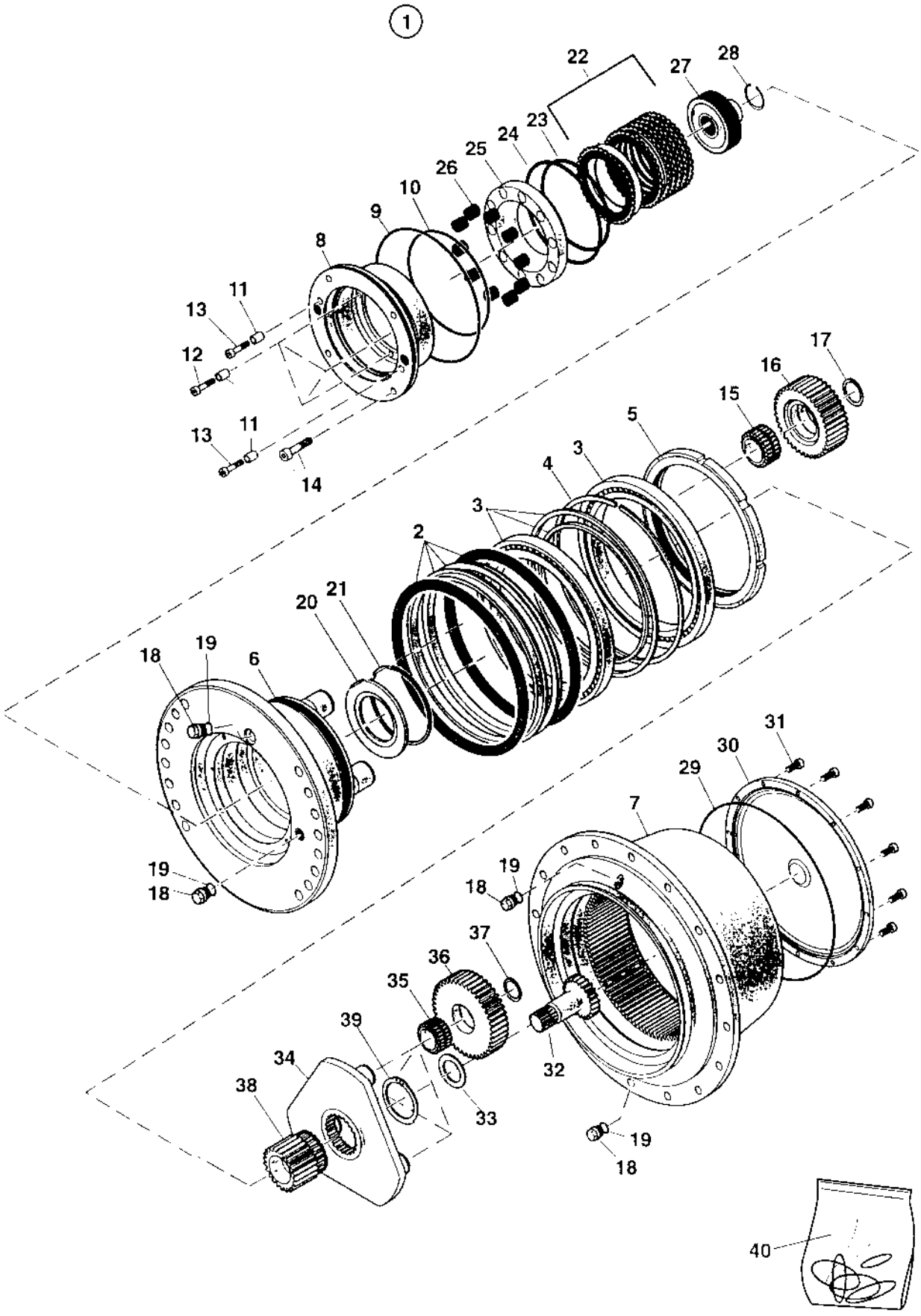

4700372987 Drum gear

Item	Part No	Rem	Qty	Description	Code
1			1	Drum gear, cpl	
2	4700935859		1	. Seal	
3	4700935860		1	. Roller bearing	
4	4700935861		1	. Spring ring	
5	4700935862		1	. Nut	
6	4700935863		1	. Hub	
7	4700935864		1	. Hollow wheel	
8	4700935865		1	. Adapter	
9	4700935866	A	1	. O-ring	
10	4700935867	A	1	. O-ring	
11	4700935868		5	. Bushing	
12	4700935869		3	. Screw	
13	4700935870		2	. Screw	
14	4700935871	C	4	. Screw	
15	4700935872		4	. Roller bearing	
16	4700935873		4	. Planet gear	
17	4700935421		4	. Retaining ring	
18	4700935394		4	. Plug	
19	4700935395	A	4	. Seal ring	
20	4700935398		1	. Plate	
21	4700935399		1	. Spring ring	
22	4700935400		1	. Brake disc kit	
23	4700935401	A	1	. O-ring	
24	4700935402	A	1	. O-ring	
25	4700935403		1	. Piston	
26	4700935404		10	. Spring	
27	4700935874		1	. Coupling	
28	4700935875	B	1	. Retaining ring	
29	4700935413	A	1	. O-ring	
30	4700935414		1	. Cover	
31	4700935415		12	. Screw	
32	4700935876		1	. Sun wheel	
33	4700935877		1	. Spacer	
34	4700935878		1	. Planet carrier	
35	4700935879		3	. Roller bearing	
36	4700935880		3	. Planet gear	
37	4700935881		3	. Retaining ring	
38	4700935882		1	. Sun wheel	
39	4700935883		1	. Retaining ring	
40	4700935380		1	Seal kit	

A) Incl. in item 40
B) Only used with Single speed Propulsion motor.
C) For Brake release

Engine

Item	Part No	Rem	Qty	Description	Code
10				**Engine Cummins QSB 4.5 (Page 60)**	
20				**Cooling system (Page 62)**	
30				**Combustion air system (Page 66)**	
40				**Fuel system (Page 68)**	
50				**Exhaust system (Page 70)**	

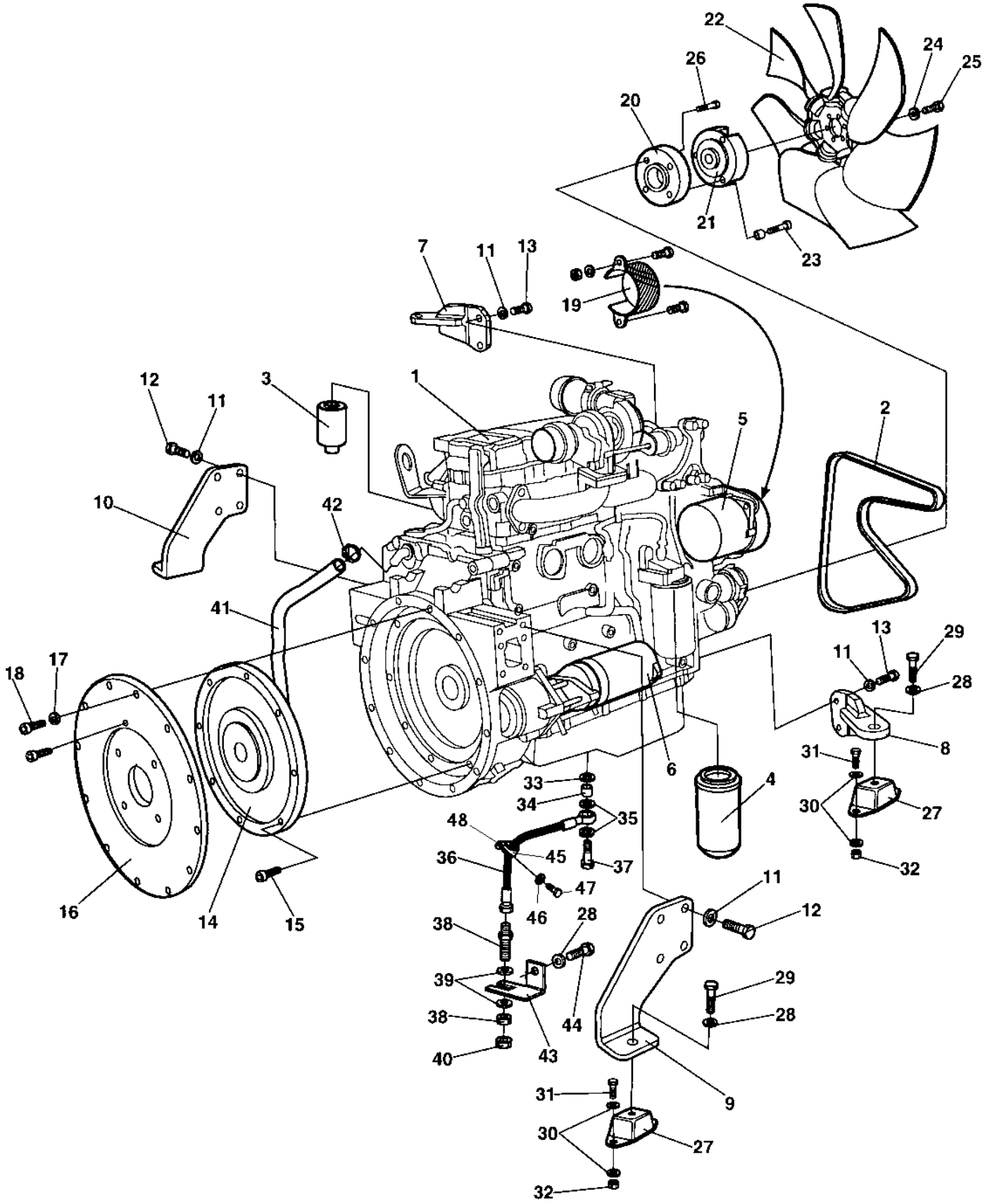
22
24
25
26
20
21
23
7
11
13
19
12
11
3
1
2
5
10
42
41
18
17
16
14
15
13
29
11
28
8
31
30
27
32
6
4
33
34
35
48
45
36
37
47
46
28
38
39
44
43
40
11
12
29
28
9
31
30
27
32

Engine Cummins QSB 4.5

Item	Part No	Rem	Qty	Description	Code
1	4700391664		1	Diesel engine Cummins QSB 4,5	D
2	4700945731		1	. V-belt	A
	4700945313	A	1	. V-belt	A
3	4700945624		1	. Fuel filter element	
4	4700945145		1	. Oil filter element	A
5	4700945140		1	. Alternator	C
6	4700945730		1	. Starter	C
7	4700392283		1	Engine bracket, Right	
8	4700392284		1	Engine bracket, Left	
9	4700393022		1	Engine bracket, Left	
10	4700393021		1	Engine bracket, Right	
11	4700904638		12	Washer 12x22x2	C
12	4700508079		8	Screw M12-1,75x35H 8,8	
13	4700500194		4	Screw	C
14	4700370229		1	Coupling, cpl	D
15	4700509025		8	Screw 3/8-16UNCx32 8,8	
16	4700372772		1	Bracket	C
17	4700904637		12	Washer	C
18	4700508029		12	Screw M10-1,5x30H 8,8	C
19	4700379163		1	V-belt cover	
20	4700393096		1	Connector	C
21	4700382393		1	Fan hub	D
22	4700379164		1	Fan	D
23	4700792081		3	Socket head cap screw M12x50 10,9	D
24	4700904556		6	Washer 8,4x16x3,0	C
25	4700500047		6	Hexagon head screw	C
26	4700792275		4	Socket head cap screw 7/16-20UNFX32 12.9	D
27	4700387129		4	Shock absorber	D
28	4700904232		5	Washer	C
29	4700500070		4	Screw M16x50	C
30	4700904703		16	Washer	B
31	4700500194		8	Screw	C
32	4700586019		8	Lock nut	C
33	4700330333		1	Copper washer	D
34	4700379480		1	Reducer	
35	4700330331		2	Washer 18,2x23,9x1,5	C
36	4700379621		1	Hydraulic hose	D
37	4700904292		1	Hollow screw	
38	4700230515		1	Connector	C
39	4700904233		2	Washer 21x36x3	C
40	4700330383		1	Cap hydraulic	
41	4700791468		1	Hydraulic hose	D
42	4700313035		1	Hose clamp	D
43	4700388855		1	Bracket	D
44	4700500154		1	Screw M16-2,0x25 8,8	
45	4700921028		1	Clamp	C
46	4700904228		1	Washer 6,4x12x1,5	C
47	4700192812		1	Screw M6x1x20 10.9	D
48	4700902285		1	Hexagon lock nut with flange	C

A) To be used with engine mounted AC-compressor.

Cooling system

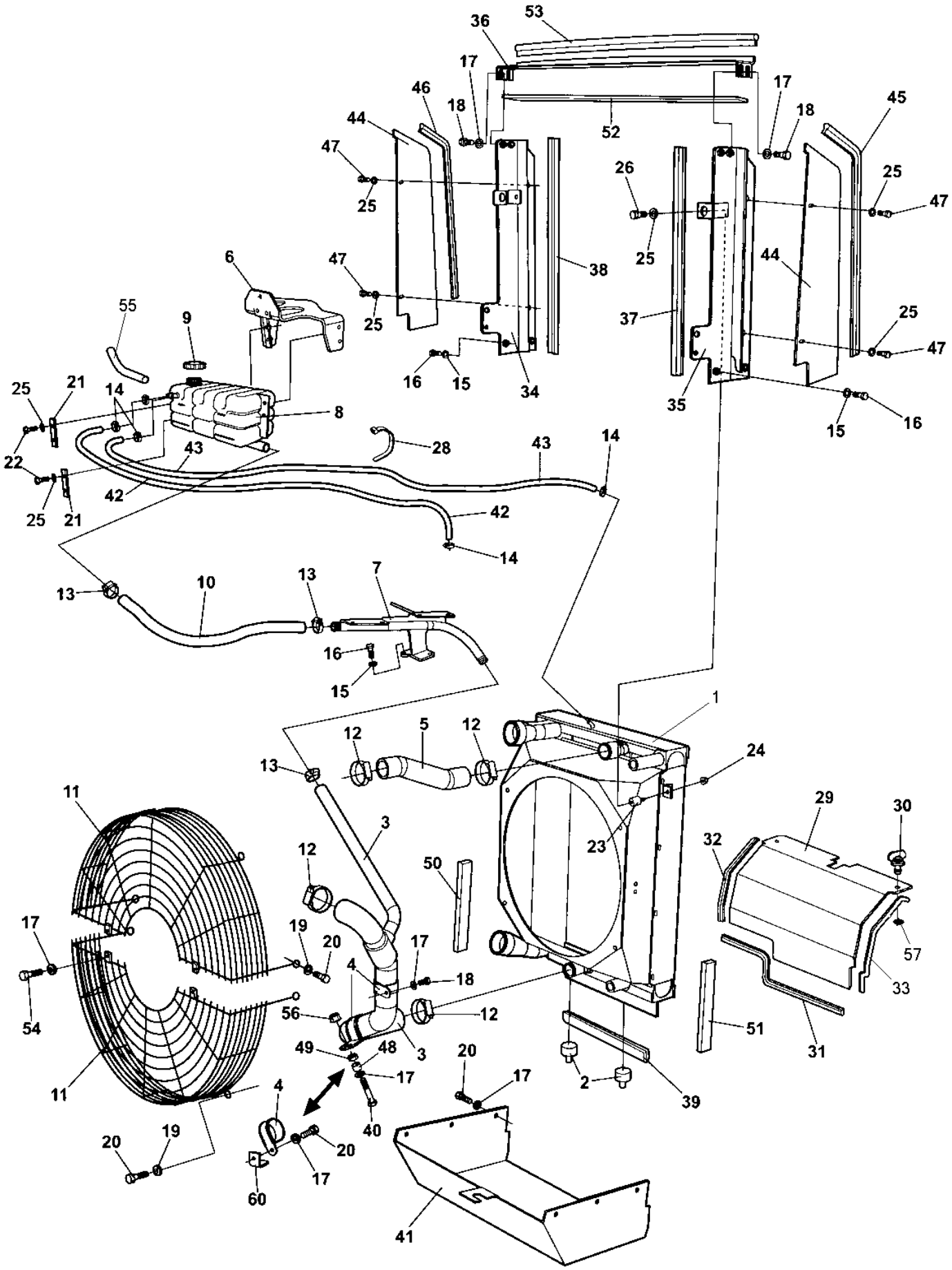

Cooling system

Item	Part No	Rem	Qty	Description	Code
1	4700392220	1	1	Radiator	D
	4812155659		1	. Charge air cooler	D
	4812155660		1	. Water radiator	C
	4812155661		1	. Oil cooler	D
	4812112388		1	Radiator	D
	4812156258		1	. Charge air cooler	D
	4812156256		1	. Water radiator	C
	4812156257		1	. Oil cooler	D
2	4700904551		2	Shock absorber	
3	4700393081		1	Coolant hose	D
4	4700904352		2	Clamp	
5	4700392297		1	Coolant hose	D
6	4700392170		1	Holder	D
7	4700393062		1	Holder	D
8	4700392313		1	Expansion tank	
9	4700903714		1	Cap	
10	4700205027	A	1XL	Coolant hose	D
11	4700387085		2	Fan guard	D
12	4700313010		4	Hose clamp	C
13	4700313006		3	Hose clamp	D
14	4700313001		4	Hose clamp	C
15	4700904230		7	Steel plain washer	C
16	4700500028		7	Screw	C
17	4700904229		16	Steel plain washer 8,4x16x1,5	C
18	4700500019		5	Hexagon head screw M8x16H 8,8	C
19	4700904640		8	Washer 8,4x22x3	C
20	4700500053		15	Screw M8x20H 8.8	C
21	4700381413		2	Washer	
22	4700500075		4	Screw M6-1,0x25 8.8	C
23	4700371774		2	Shock absorber	D
24	4700902285		2	Hexagon lock nut with flange	C
25	4700904228		10	Washer 6,4x12x1,5	C
26	4700500012		2	Screw M6x12	C
28	4700313102		N	Cable ties	
29	4700386853		1	Air inlet plate	D
30	4700904486		2	Quick lock	
31	4700902166	B	1XL	Edge trim	D
32	4700902166	C	1XL	Edge trim	D
33	4700902166	D	1XL	Edge trim	D
34	4700392714		1	Cooler frame, right	D
35	4700392715		1	Cooler frame, left	D
36	4700393361		1	Cooler frame, top	D
37	4700904076	E	1XL	Edge trim	D
38	4700904076	F	1XL	Edge trim	D

1) Replaced by Radiator P/N 4812112388 as spare part.
A) L=0,600M
B) L=0,690M
C) L=0,330M
D) L=0,450M
E) L=0,500M
F) L=0,500M

Cooling system

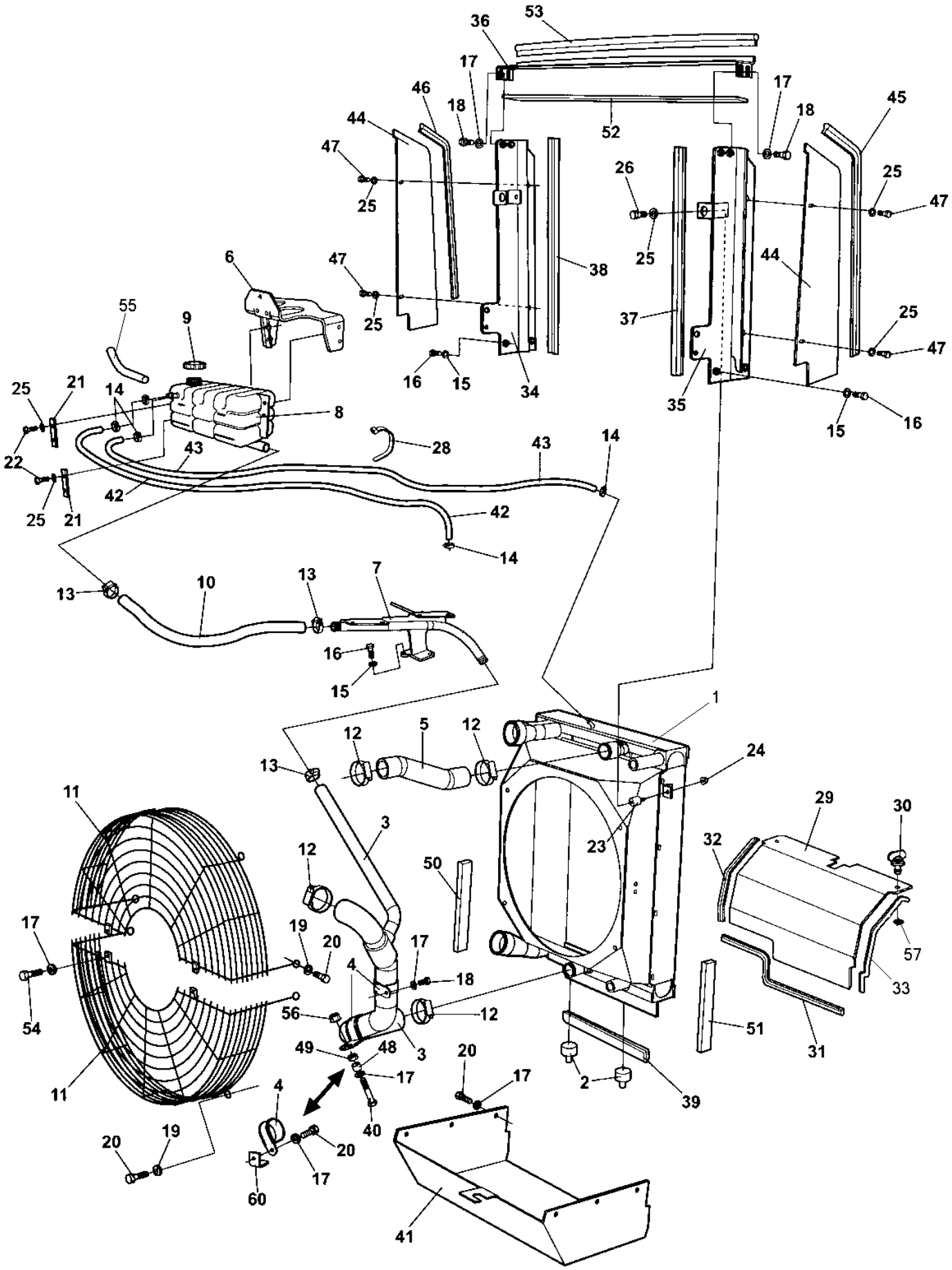

Cooling system

Item	Part No	Rem	Qty	Description	Code
39	4700902166	G	1XL	Edge trim	D
40	4700500025		1	Screw M8-1,25x50 8,8	D
41	4700386943		1	Air leading plate	D
42	4700246069	H	1XL	Fuel hose 3/8"	C
43	4700246069	I	1XL	Fuel hose 3/8"	C
44	4700393362		2	Air inlet	D
45	4700902166	J	1XL	Edge trim	D
46	4700902166	K	1XL	Edge trim	D
47	4700500040		4	Screw M6-1x20 8,8	C
48	4700371767		1	Spacer	D
49	4700570005		1	Nut M8	C
50	4700791597	L	1XL	Rubber strip	
51	4700791597	L	1XL	Rubber strip	
52	4700791597	M	1XL	Rubber strip	
53	4700902166	M	1XL	Edge trim	D
54	4700500018		2	Screw M8-1,25x12 8,8	C
55	4700904623	N	1	Hose guard	D
56	4700902286		1	Hexagon lock nut with flange	C
57	4700926985		2	Quick lock washer	C
60	4700908136		1	Bracket	D

G) L=0,470M
H) L=1,500M
I) L=1,780M
J) L=0,610M
K) L=0,610M
L) L=0,310M
M) L=0,730M
N) L=0,200M

Combustion air system

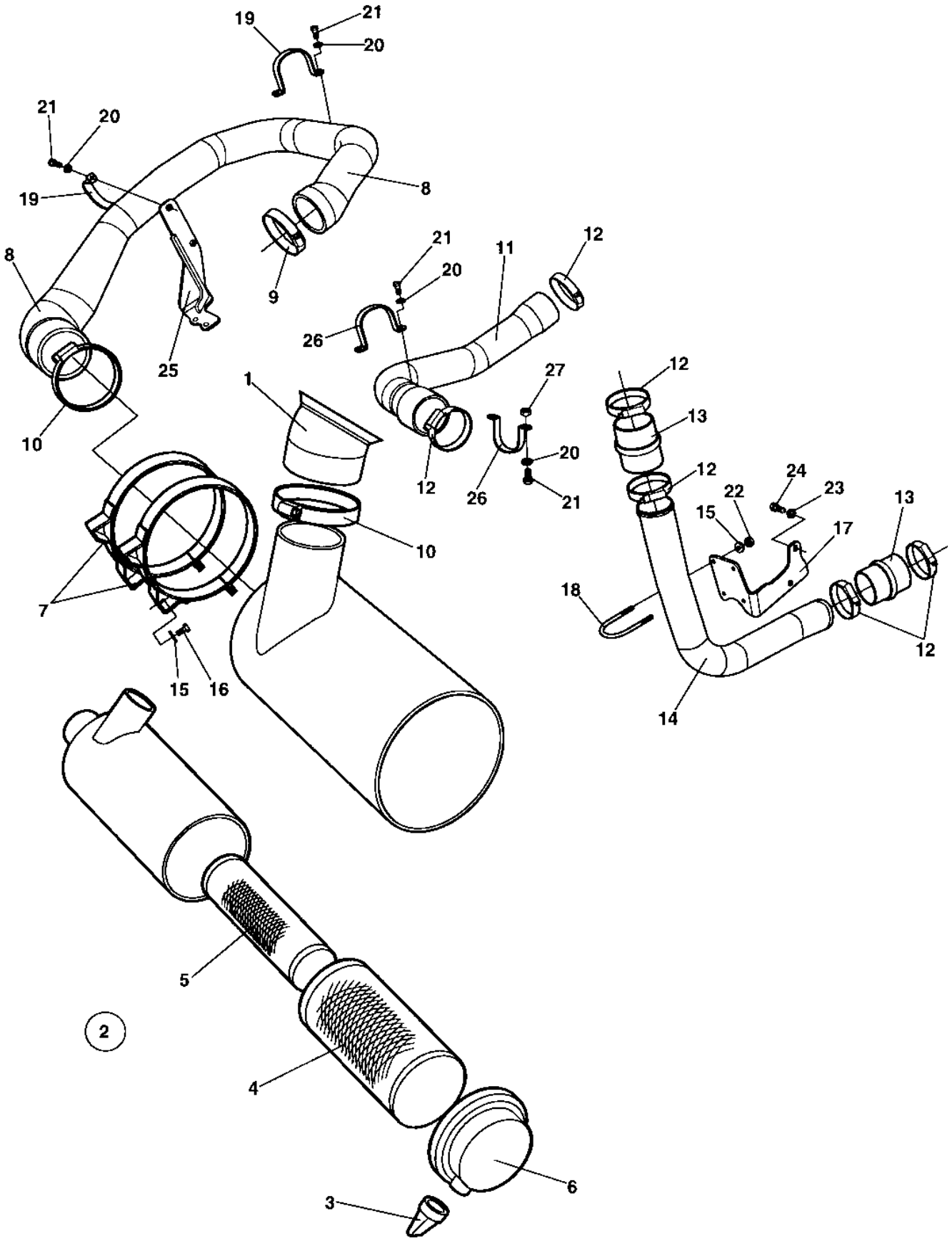

Combustion air system

Item	Part No	Rem	Qty	Description	Code
1	4700393089		1	Air inlet hose	D
2	4700394680		1	Air cleaner Cpl	D
3	4700908399		1	. Vacuator valve	A
4	4700394686		1	. Air filter element, main	A
5	4700394687		1	. Air filter element, safety	A
6	4700908452		1	. Cover	D
7	4700813791		2	Mounting band	D
8	4700393086		1	Air inlet hose	D
9	4700392810		1	Hose clamp	D
10	4700389600		2	Hose clamp	D
11	4700393045		1	Charge air hose	D
12	4700386966		6	Hose clamp 2.3/4"-3.5/8"	B
13	4700385691		2	Air intake hose	D
14	4700393058		1	Charge air tube	D
15	4700904229		8	Steel plain washer 8,4x16x1,5	C
16	4700500019		4	Hexagon head screw M8x16H 8,8	C
17	4700393059		1	Holder	D
18	4700313093		2	Pipe clamp	D
19	4700392742		2	Clamp	D
20	4700904228		8	Washer 6,4x12x1,5	C
21	4700500040		8	Screw M6-1x20 8,8	C
22	4700586003		4	Lock nut M8	C
23	4700904231		2	Washer 13x24x2 300 HV	C
24	4700500046		2	Screw M12x025H	C
25	4700392741		1	Holder	D
26	4700393097		2	Clamp	D
27	4700902285		2	Hexagon lock nut with flange	C

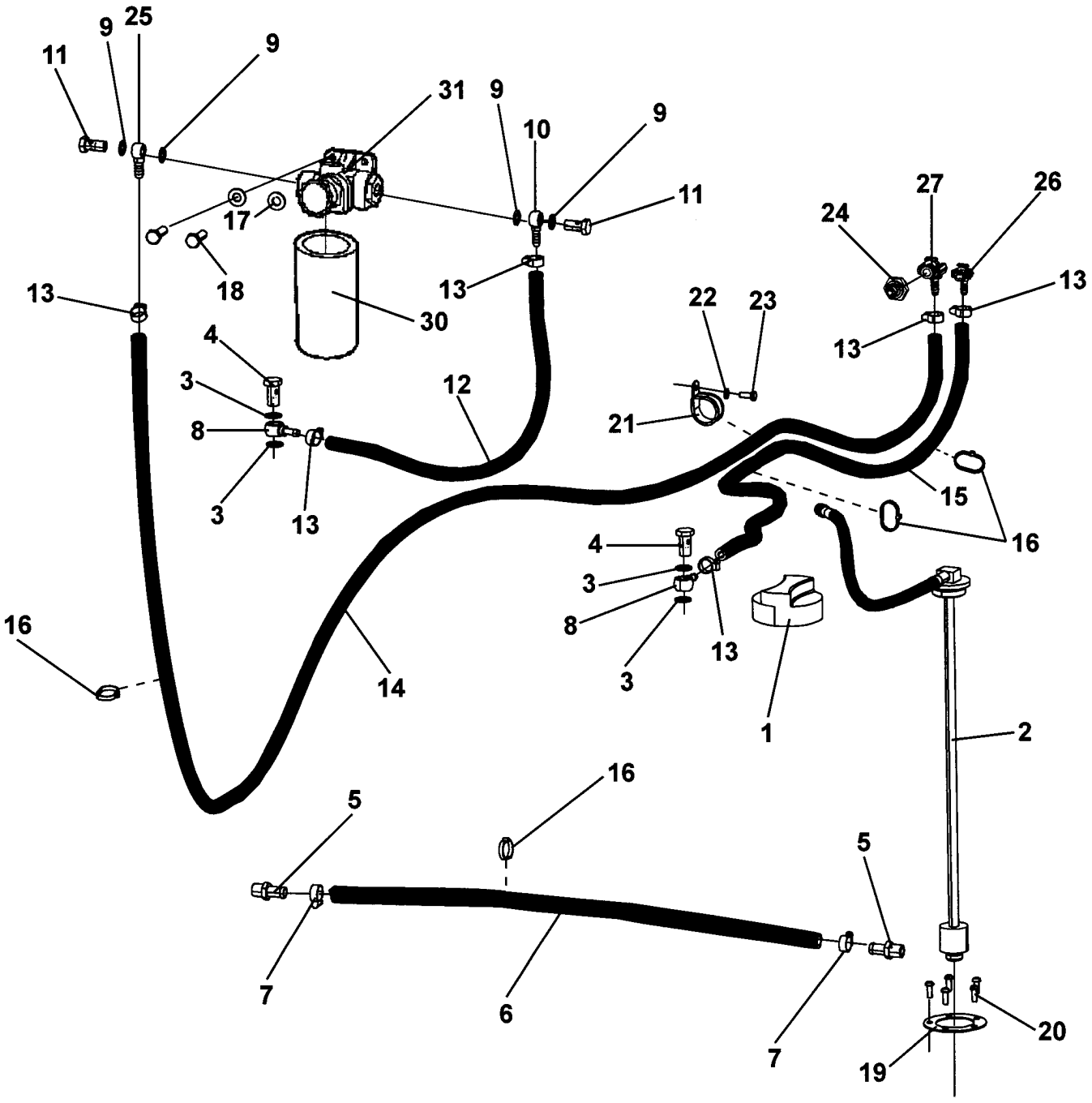
9
25
11
9
31
9
10
9
11
17
18
13
13
30
27
26
24
13
22
23
13
4
3
8
12
21
3
13
15
16
4
3
8
3
13
16
14
1
2
16
5
5
7
6
7
20
19

Fuel system

Item	Part No	Rem	Qty	Description	Code
1	4700373460		1	Fuel cap	D
2	4700387112		1	Fuel sender	C
3	4700747282		4	Copper washer	C
4	4700330171		2	Hollow screw	C
5	4700373574		2	Hose connection	D
6	4700244054	A	1XL	Hose reinforced	C
7	4700313002		2	Hose clamp 13-20 mm	
8	4700901121		2	Banjo fitting 14x6 Hose 8	D
9	4700230277		4	Copper washer 12,2x17,9x1,5	D
10	4700792251		1	Banjo coupling M12 Hose 8	D
11	4700234919		2	Screw M12-1,5-24-3	
12	4700904984	B	LXN	Fuel hose	C
13	4700313001		6	Hose clamp	C
14	4700904985	C	1XL	Fuel hose	C
15	4700904984	D	1XL	Fuel hose	C
16	4700313041		N	Cable ties	B
17	4700904230		2	Steel plain washer	C
18	4700500029		2	Hexagon head screw	C
19	4700372718		1	Lid	D
20	4700904206		5	Screw	C
21	4700921084		1	Pipe clamp	
22	4700904228		1	Washer 6,4x12x1,5	C
23	4700500013		1	Screw M6-1x16 8,8	C
24	4700792814		1	Quick connect coupling	D
25	4700792808		1	Banjo coupling	D
26	4700792526		1	Quick connect coupling	
27	4700792547		1	Quick connect coupling	D
30	4700945147		1	Pre-fuel filter element	
31	4700945538		1	Fuel filter head with hand pump	A

A) L = 0,66 m
B) Lenght as required.
C) L = 2,35 m
D) L = 1,30 m

Exhaust system

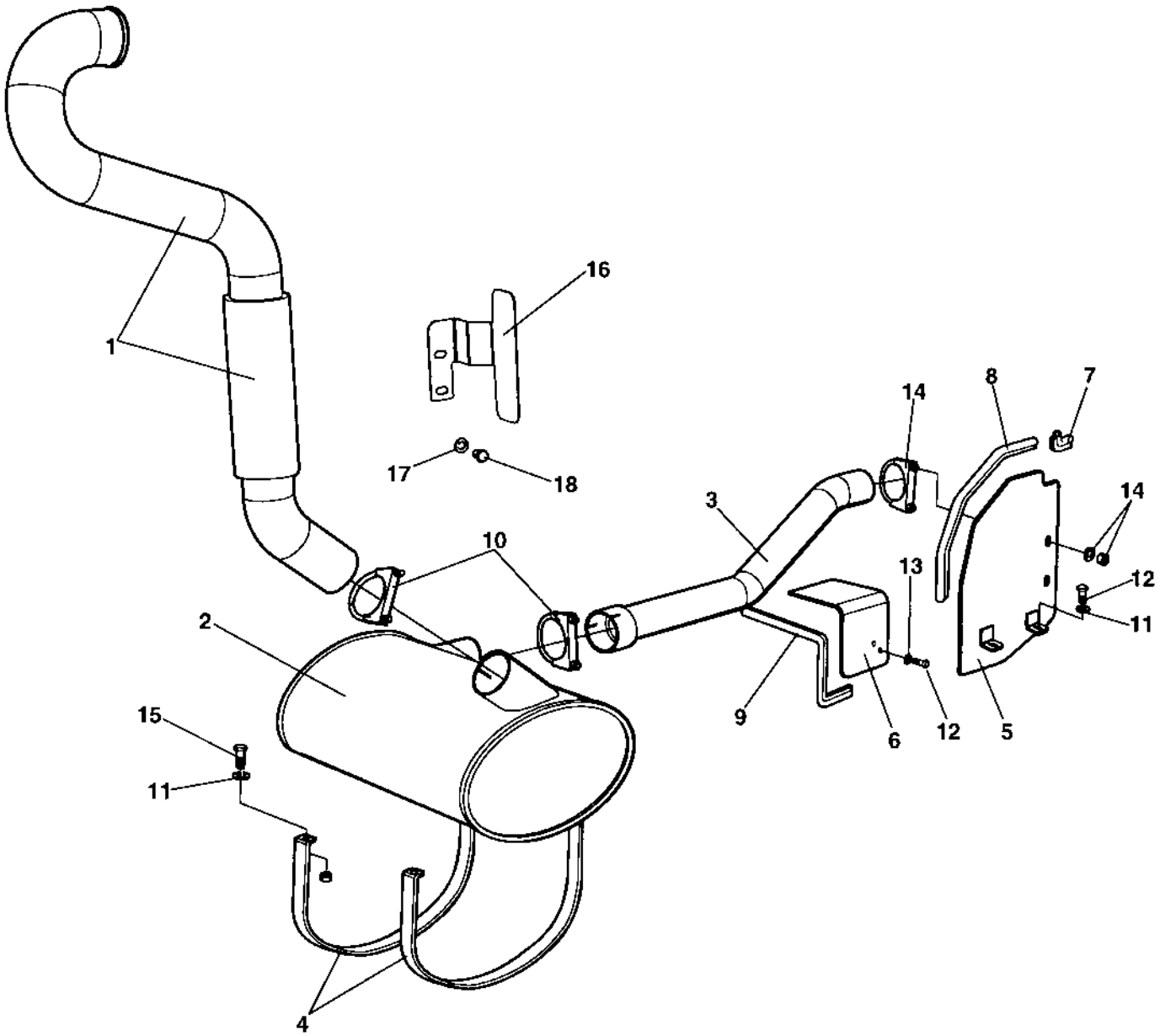

Exhaust system

Item	Part No	Rem	Qty	Description	Code
1	4700392294	1	1	Exhaust pipe	D
	4812110507		1	Exhaust pipe	
2	4700392295		1	Muffler	D
3	4700392296		1	Exhaust pipe	D
4	4700386789		2	Clamp	D
5	4700377098		1	Thermal guard	D
6	4812112782		1	Thermal guard	
7	4700902166	A	1XL	Edge trim	D
8	4700904076	B	1XL	Edge trim	D
9	4700904076	C	1XL	Edge trim	D
10	4700313094		2	Pipe clamp	C
11	4700904640		6	Washer 8,4x22x3	C
12	4700500053		4	Screw M8x20H 8.8	C
13	4700904229		4	Steel plain washer 8,4x16x1,5	C
14	4700313093		1	Pipe clamp	D
15	4700500022		4	Screw M8x30H 8.8 A2K	C
16	4812110656	2	1	Thermal guard	
	4812110645	3	1	Thermal guard	
17	4700904231		2	Washer 13x24x2 300 HV	C
18	4700500163		2	Screw M12x16	D

1) Is replaced by item 1: P/N 4812110507 together with item 16: P/N 4812110645 as spare part.
2) Is used together with item 1: P/N 4700392294.
3) Is used together with item 1: P/N 4812110507.
A) L=0.080M
B) L=0,410M
C) L=0,410M

Transmission

Item	Part No	Rem	Qty	Description	Code
10				**Rear axle and wheels (Page 74)**	
20	4700383857			**Rear axle Limited slip (Page 76)**	
70	4700383856			**Rear axle No-Spin, Option (Page 84)**	

Rear axle and wheels

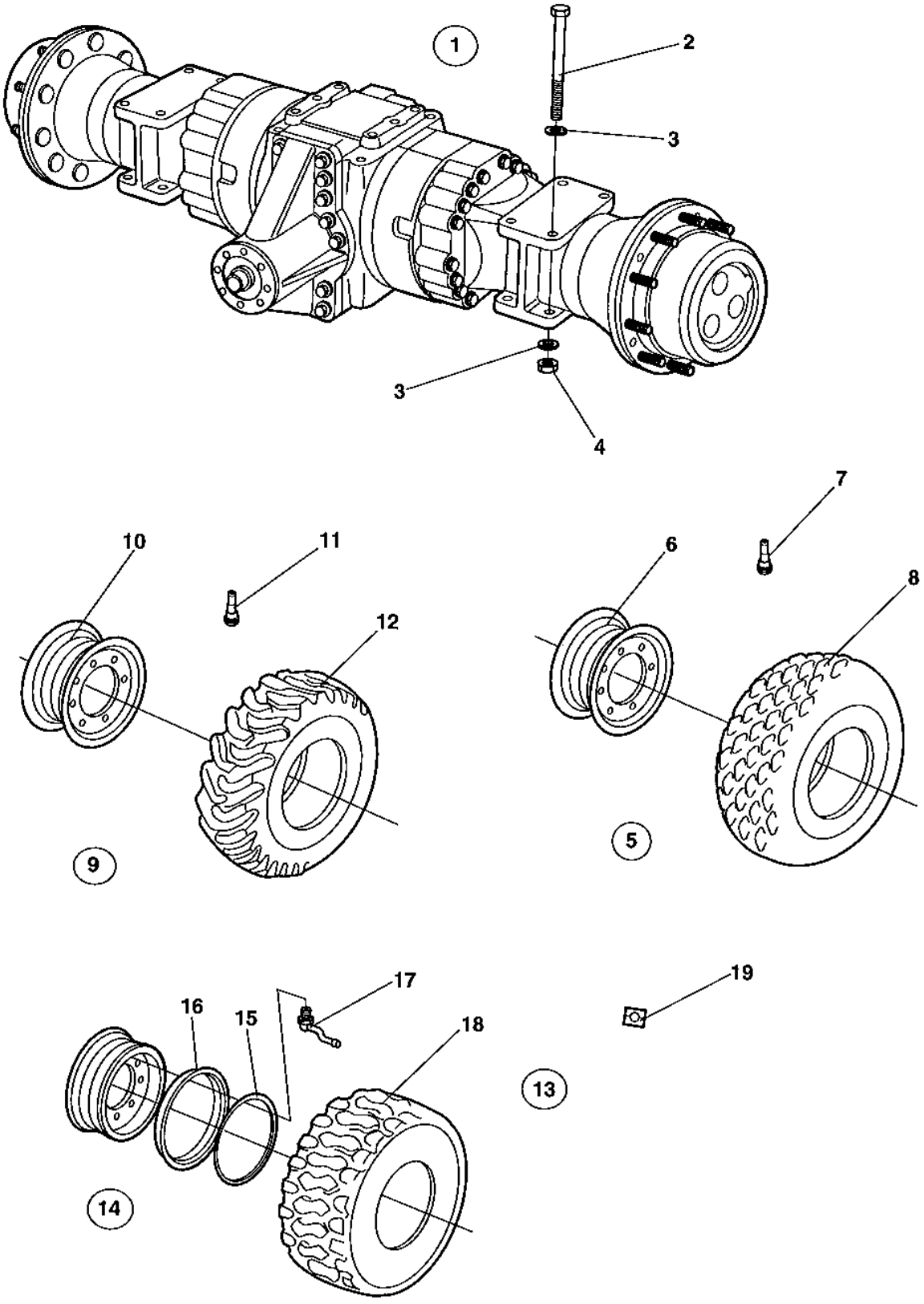

Rear axle and wheels

Item	Part No	Rem	Qty	Description	Code
1	4700383857		1	**Rear axle Limited slip (Page 76)**	
2	4700929217		8	Screw	D
3	4700904233		16	Washer 21x36x3	C
4	4700901145		8	Lock nut M20-10	
5	4700379631		2	Wheel, cpl	D
	4700379691	A	2	Wheel, cpl	D
	4700388145	A,G	1	Wheel, cpl	D
	4700388146	G	1	Wheel, cpl	D
6	4700383933		1	. Rim	D
7	4700792261		1	. Air charging valve Straight	B
8	4700379632		1	. Tyre	D
	4700791573	J,G	1	. Tyre	D
9	4700390588	B	1	Tractor wheel, cpl	D
	4700390587	C	1	Tractor wheel, cpl	D
	4700390759	D	1	Tractor wheel, cpl	D
	4700390760	E	1	Tractor wheel, cpl	D
10	4700383933		1	. Rim	D
11	4700792261		1	. Air charging valve Straight	B
12	4700390589		1	. Tyre	D
13	4700383974	F	2	Wheel, tubeless, cpl	D
	4700383975	K	2	Wheel, tubeless, cpl	D
14	4700383955		1	. Rim cpl	D
15	4700901443		1	. . Snap ring	
16	4700901444		1	. . Side ring	
17	4700791175		1	. Air charging valve	B
	4700791176		1	. Valve foot	D
18	4700901218		1	. Tyre	D
19	4700355983	H	2	Decal "TYRE PRESSURE" 200kPa/29psi	D
	4700903985	I	2	Decal "SAFETY", "TYRE IN BALLAST"	

A) Liquidfilled, option.
B) Left, option.
C) Right, option.
D) Liquidfilled tyre, right, option.
E) Liquidfilled tyre, left, option.
F) Option, Michelin branded.
G) For Chinese market only.
H) Used with item 13, 4700383974. 4700383975.
I) Used with Liqued filled tyres.
J) Used together with 4700388145 and 4700388146.
K) Liquidfilled, option, Michelin branded.

4700383857 Rear axle Limited slip

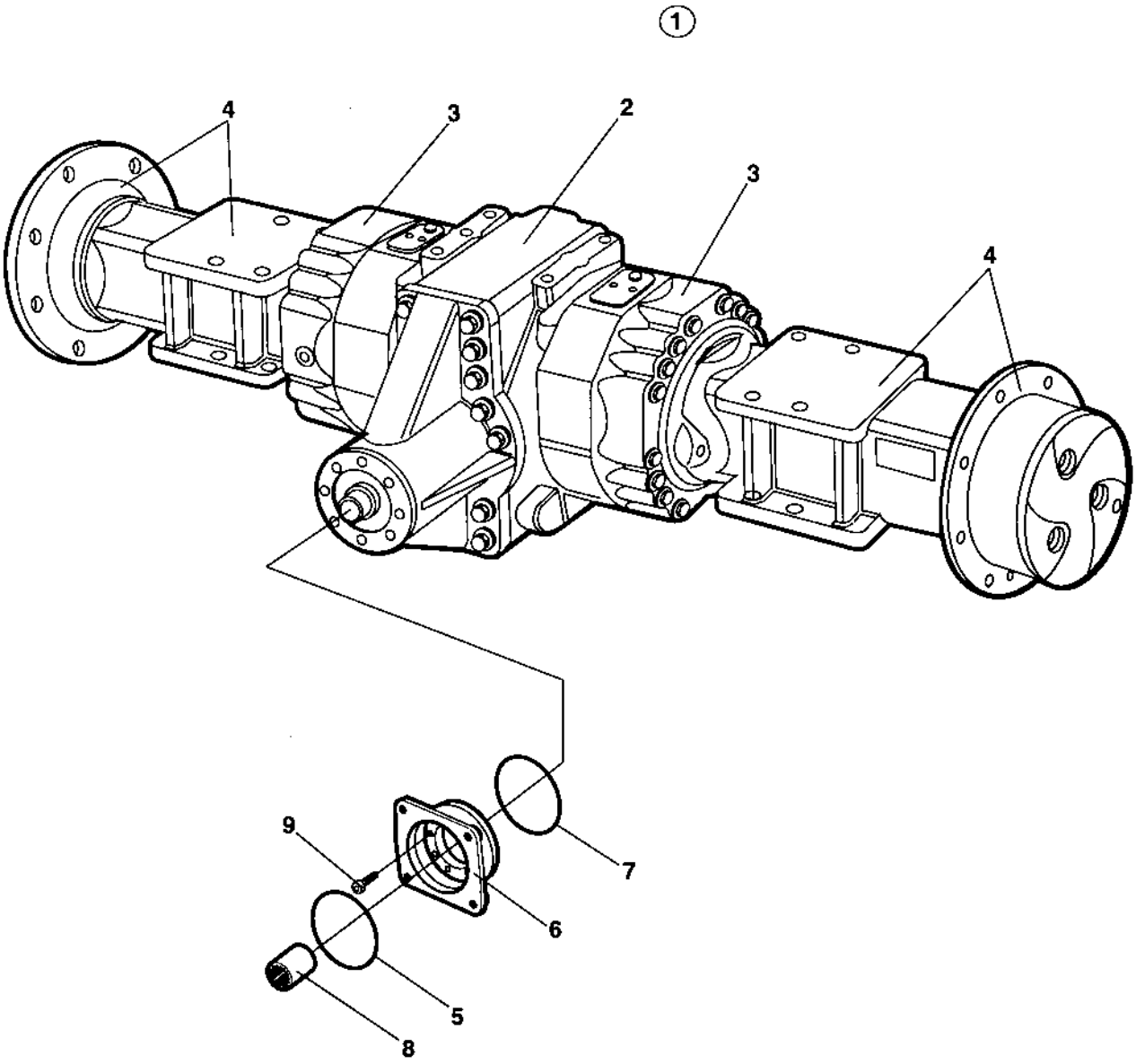

4700383857 Rear axle Limited slip

Item	Part No	Rem	Qty	Description	Code
1			1	Rear axle	
2			1	**. Differential with limited slip (Page 78)**	
3			2	**. Differential housing and brakes (Page 80)**	
4			2	**. Planet gear (Page 82)**	
5	4700909584		1	O-ring	D
6	4700900255		1	Flange	D
7	4700929648		1	O-ring	D
8	4700901834		1	Splined sleeve	
9	4700909582		8	Screw	

Differential with limited slip

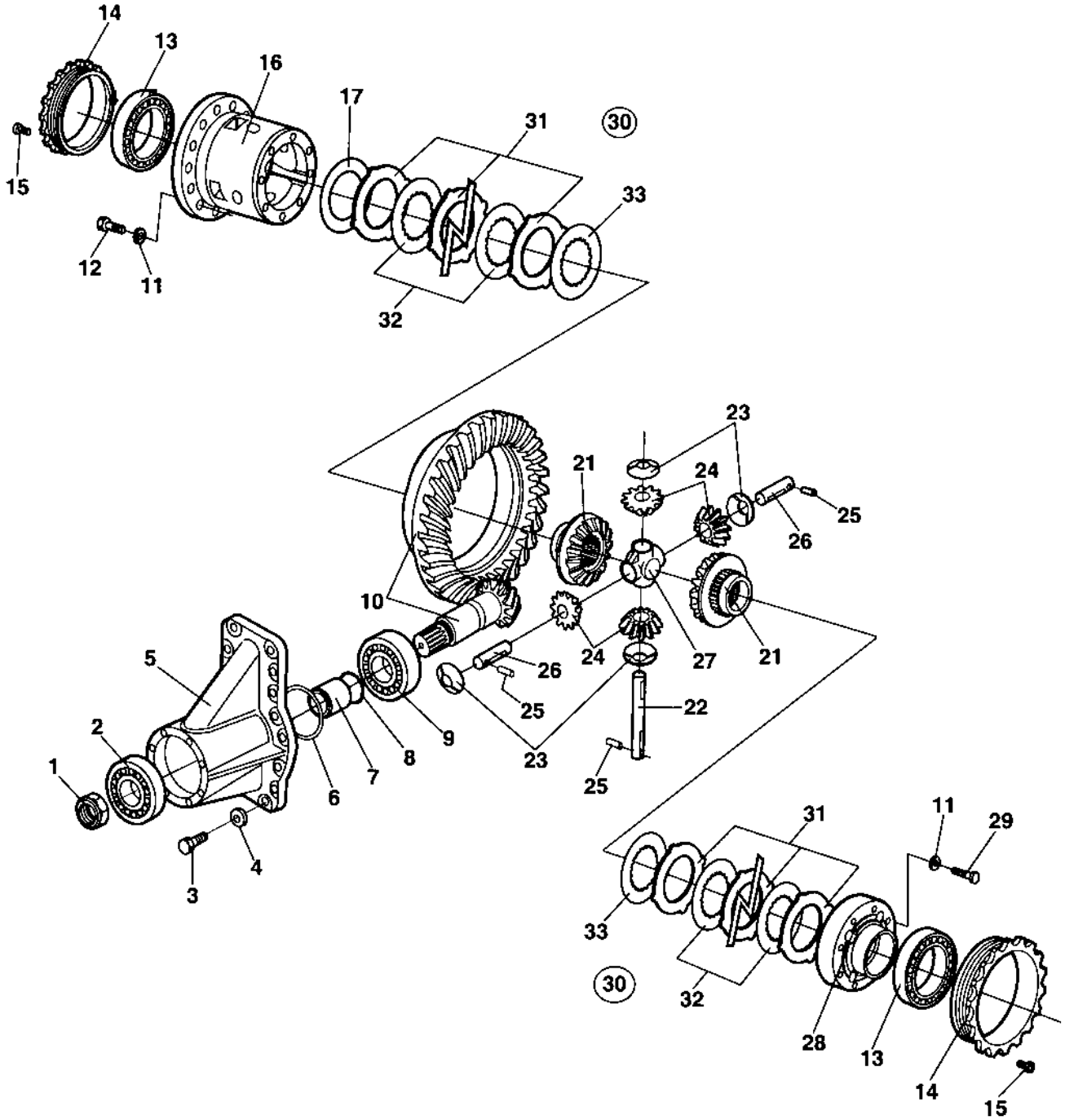

Differential with limited slip

Item	Part No	Rem	Qty	Description		Code
1	4700929638		1	Nut		D
2	4700909574		1	Tapper roller bearing		
3	4700939257		16	Bolt		
4	4700909572		16	Spring washer		
5	4700908485		1	Housing		D
6	4700909568		1	Shim	0,10mm	
	4700909569		1	Shim	0,20mm	
	4700909570		1	Shim	0,50mm	
	4700939258		1	Shim	0,15mm	
7	4700909567		1	Spacer		
8	4700939259		1	Shim	0,15mm	
	4700909580		1	Shim	0,20mm	
	4700909576		1	Shim	0,30mm	
	4700929644		1	Shim	0,40mm	
	4700939260		1	Shim	0,50mm	
9	4700909581		1	Tapper roller bearing		
10	4700212553		1	Bevel gear set		
11	4700929628		16	Washer		C
12	4700929629		16	Screw		D
13	4700923342		1	Tapper roller bearing		
14	4700939261		2	Ring nut		
15	4700938989		2	Bolt		
16	4700909550		1	Differential carrier		D
17	4700909551		1	Shim	0,30mm	
	4700909552		1	Shim	0,40mm	
	4700909553		1	Shim	0,10mm	
21	4700909558		2	Differential side gear		
22	4700909566		1	Shaft		
23	4700909559		4	Friction washer		
24	4700939262		4	Differential pinion		
25	4700909561		3	Roll pin		
26	4700909560		2	Shaft		
27	4700909565		1	Shaft retainer		
28	4700909562		1	Differential carrier cover		
29	4700909563		8	Screw		
30	4700935644		2	Disc kit		D
31			10	. Limited slip disc		
32			8	. Limited slip disc		
33			2	. Limited slip disc		

Differential housing and brakes

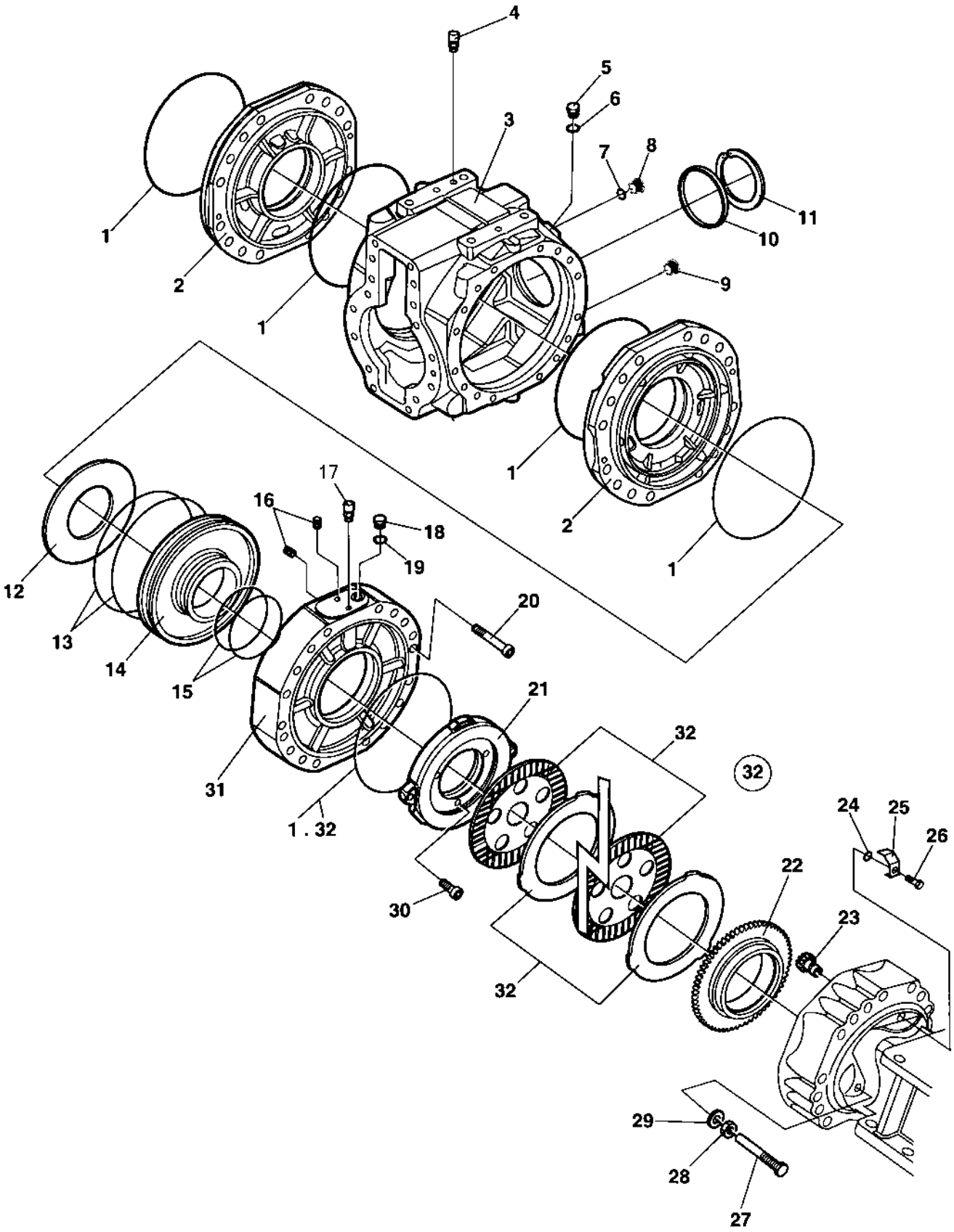

Differential housing and brakes

Item	Part No	Rem	Qty	Description	Code
1	4700909609		6	O-ring	D
2	4700939255		2	Cover	D
3	4700939256		1	Housing	D
4	4700938984		1	Vent nipple	
5	4700909544		2	Screw	
6	4700938983		2	Sealing washer	
7	4700330333		1	Copper washer	D
8	4700909596		1	Plug	C
9	4700926810		1	Magnetic plug	
10	4700938296		1	Plug	
11	4700929617		1	Lock ring	D
12	4700909616		2	Spring	
13	4700909618		4	O-ring	D
14	4700939280		2	Piston	C
15	4700909619		4	O-ring	D
16	4700939281		4	Bolt	C
17	4700938984		2	Vent nipple	
18	4700939282		2	Bolt	
19	4700939036		2	Sealing washer	C
20	4700939035		4	Screw	C
21	4700939283		2	Disc	C
22	4700939285		2	Ring	D
23	4700909622		2	Pinion	D
24	4700900966		2	O-ring	D
25	4700939286		2	Lock plate	D
26	4700909624		2	Screw	C
27	4700909626		4	Bolt	
28	4700900957		4	Nut	D
29	4700926847		4	Sealing washer	
30	4700939026		6	Screw	C
31	4700939287		2	Cover	C
32	4700939284		2	Brake disc kit	C
			12	. Brake disc	
			12	. Brake disc	
	4700909609		2	. O-ring	D

Planet gear

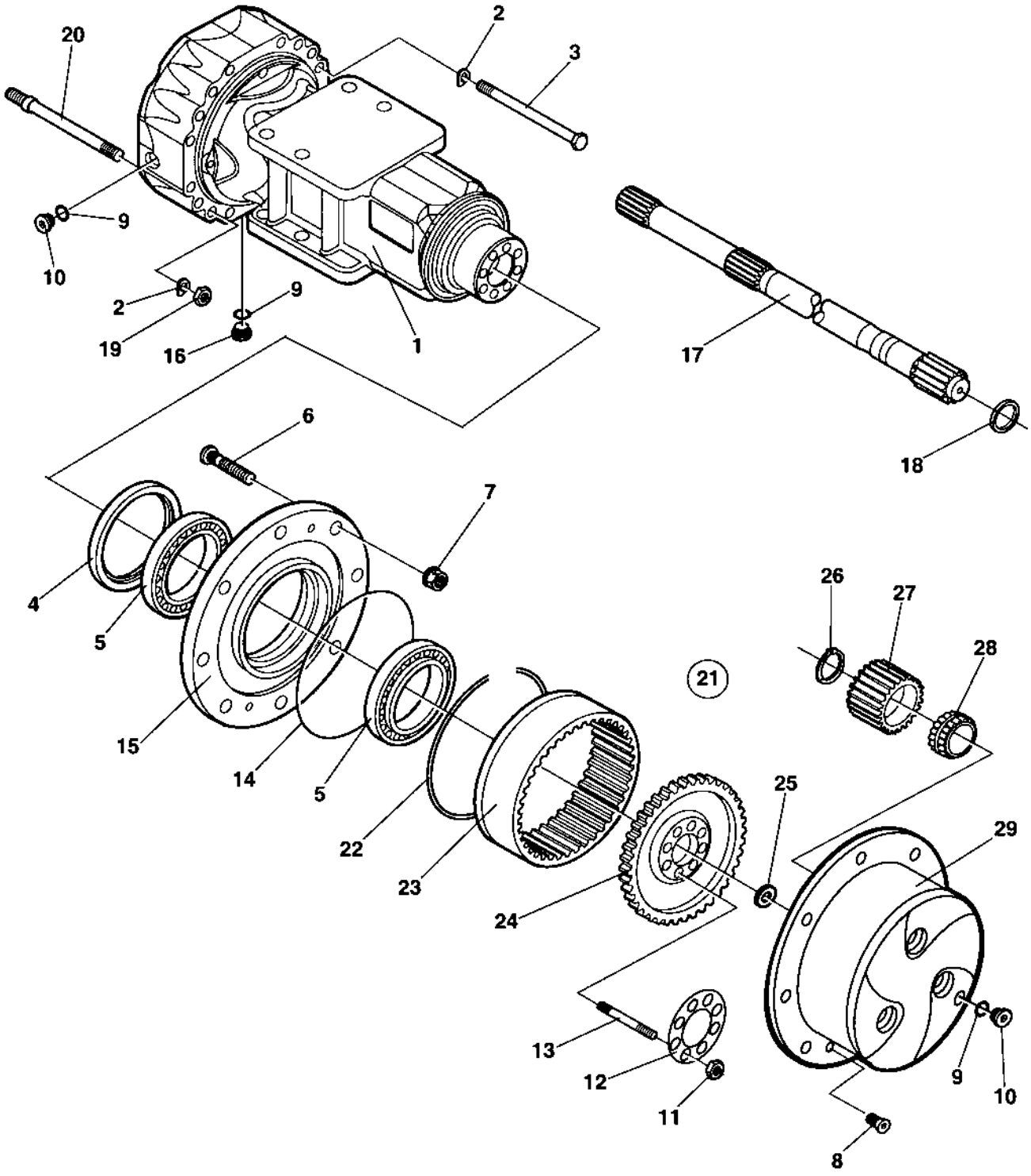
20
2
3
9
10
2
9
19
16
1
17
18
6
7
4
5
15
14
5
22
23
24
21
26
27
28
25
29
13
12
11
9
10
8

Planet gear

Item	Part No	Rem	Qty	Description	Code
1	4700939263		2	Axle case	D
2	4700939003		32	Spring washer	C
3	4700939264		24	Bolt	C
4	4700939265		2	Seal	
5	4700939266		4	Bearing	
6	4700926781		20	Wheel screw	
7	4700901987		20	Wheel nut	
8	4700939015		4	Screw	
9	4700330333		6	Copper washer	D
10	4700909596		4	Plug	C
11	4700939016		20	Nut	D
12	4700939275		2	Lock plate	
13	4700939017		20	Stud	D
14	4700909609		2	O-ring	D
15	4700939276		2	Wheel hub	
16	4700939350		2	Magnetic plug	
17	4700939277		2	Half shaft	D
18	4700909586		2	Seal	D
19	4700939019		8	Nut	D
20	4700939278		8	Stud	D
21	4700939279		2	Planet gear carrier Cpl.	
22	4700939267		2	. Circlip	
23	4700939268		2	. Ring gear	D
24	4700939269		2	. Ring gear support	
25	4700939270		2	. Washer	
26	4700939271		6	. Seal	
27	4700939272		6	. Planet gear	
28	4700939273		6	. Bearing	
29	4700939274		2	. Planet gear carrier	

4700383856 Rear axle No-Spin, Option

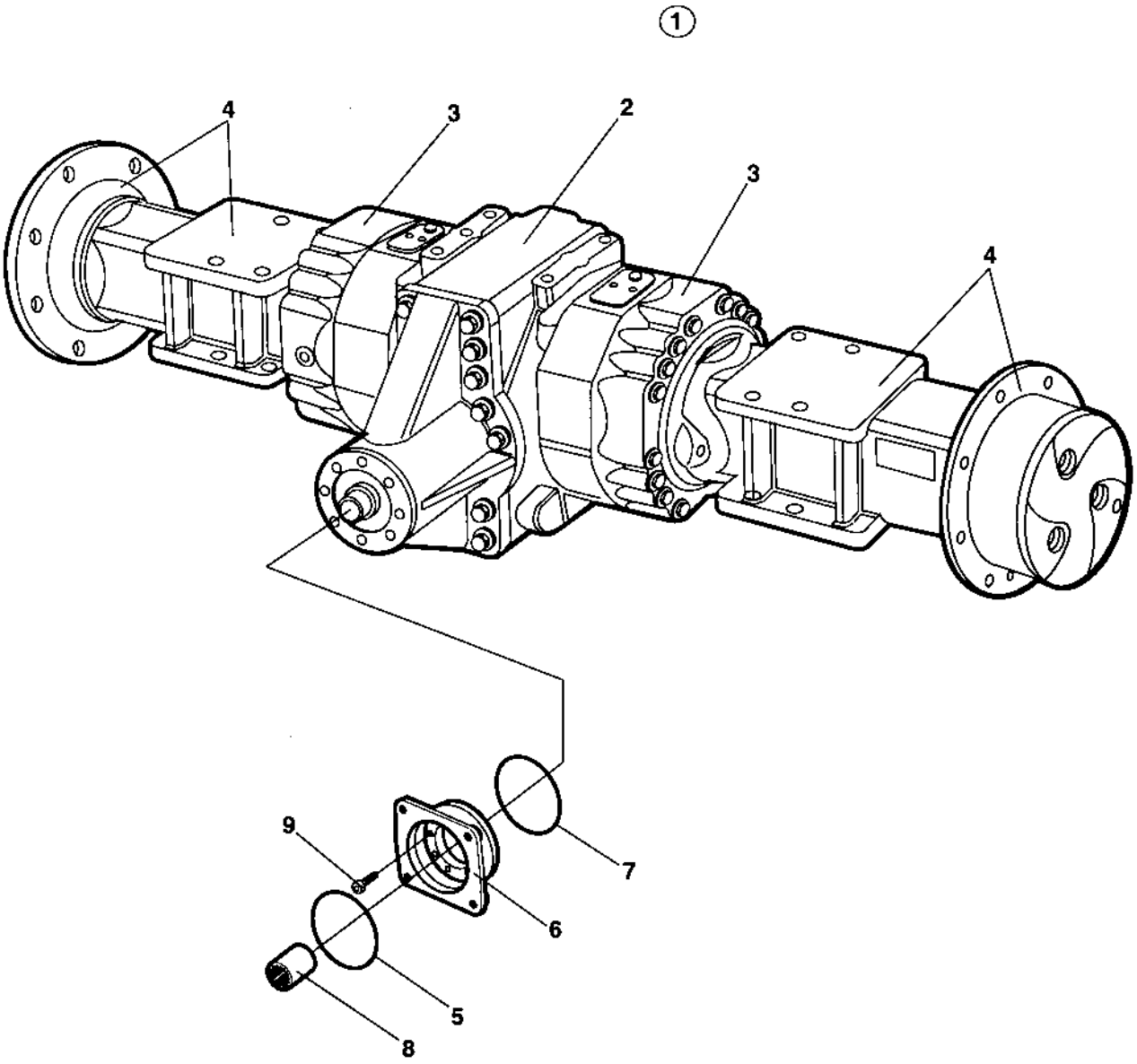

4700383856 Rear axle No-Spin, Option

Item	Part No	Rem	Qty	Description	Code
1			1	Rear axle	
2			1	**. Differential with no-spin (Page 86)**	
3			2	**. Differential housing and brakes (Page 80)**	
4			2	**. Planet gear (Page 88)**	
5	4700909584		1	O-ring	D
6	4700900255		1	Flange	D
7	4700929648		1	O-ring	D
8	4700901834		1	Splined sleeve	
9	4700909582		8	Screw	

Differential with no-spin

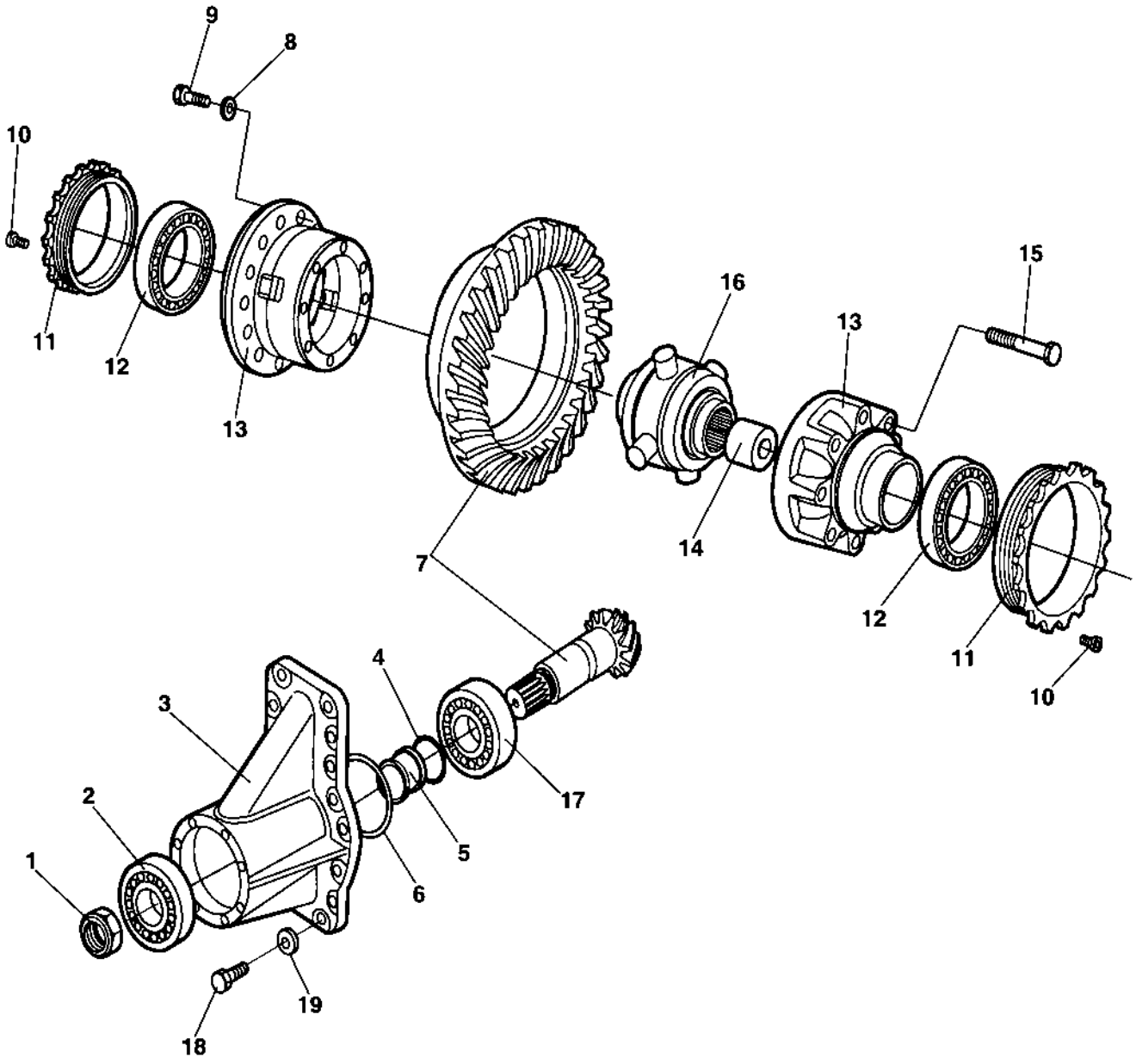

Differential with no-spin

Item	Part No	Rem	Qty	Description		Code
1	4700929638		1	Nut		D
2	4700909574		1	Tapper roller bearing		
3	4700908485		1	Housing		D
4	4700939259		1	Shim	0,15mm	
	4700909580		1	Shim	0,20mm	
	4700909576		1	Shim	0,30mm	
	4700929644		1	Shim	0,40mm	
	4700939260		1	Shim	0,50mm	
5	4700909567		1	Spacer		
6	4700909568		1	Shim	0,10mm	
	4700909569		1	Shim	0,20mm	
	4700909570		1	Shim	0,50mm	
	4700939258		1	Shim	0,15mm	
7	4700212553		1	Bevel gear set		
9	4700938991		16	Bolt		D
10	4700938989		2	Bolt		
11	4700939261		2	Ring nut		
12	4700923342		1	Tapper roller bearing		
13	4700929630		1	Differential case		D
14	4700929631		1	Spacer		D
15	4812156885		8	Screw		C
16	4700929626		1	Non-spin unit		D
17	4700909581		1	Tapper roller bearing		
18	4812156886		16	Bolt		
19	4700909572		16	Spring washer		

Planet gear

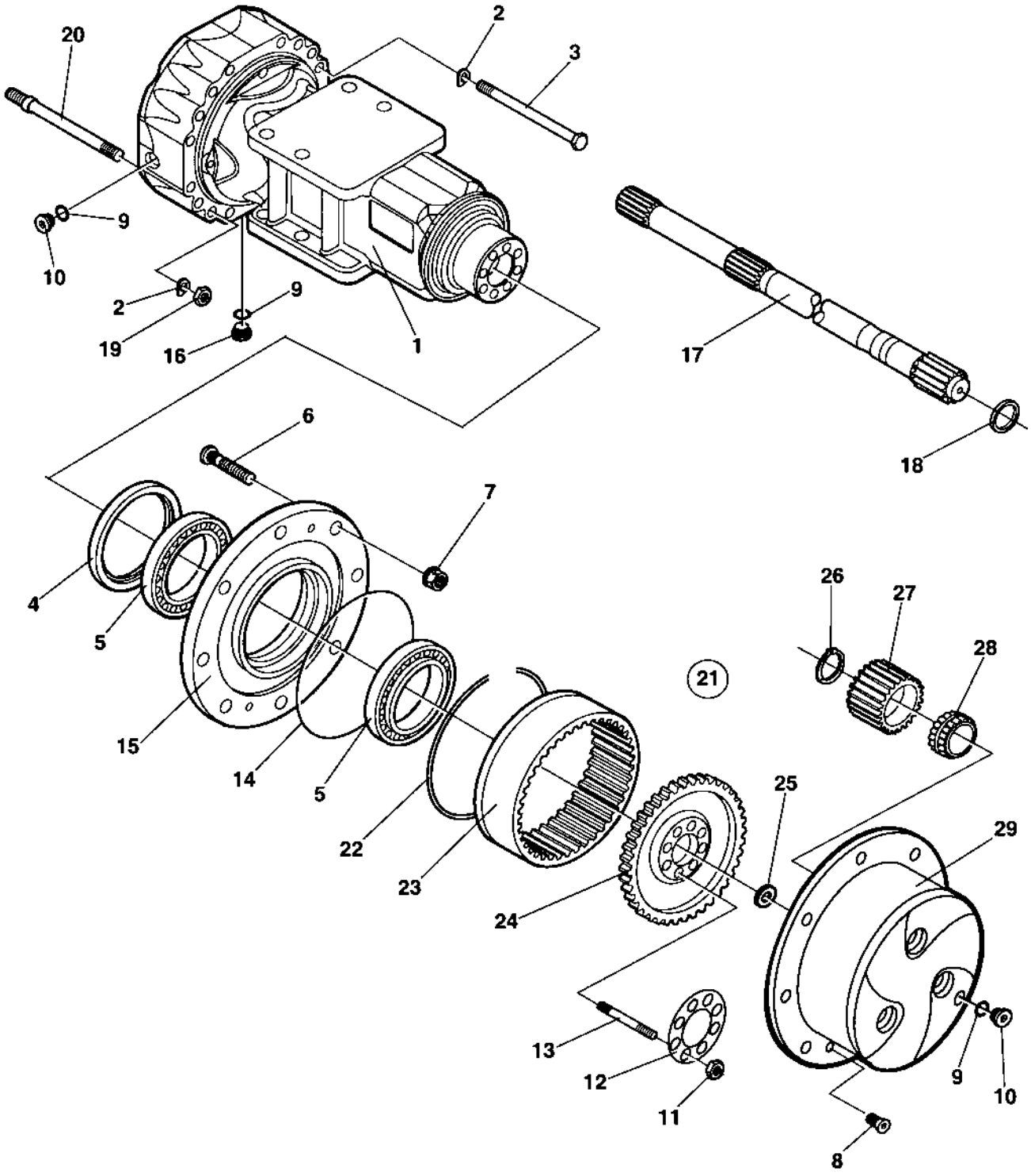
20
2
3
9
10
2
9
19
16
1
17
18
6
7
4
5
15
14
5
22
23
24
21
26
27
28
25
29
13
12
11
9
10
8

Planet gear

Item	Part No	Rem	Qty	Description	Code
1	4700939263		2	Axle case	D
2	4700939003		32	Spring washer	C
3	4700939264		24	Bolt	C
4	4700939265		2	Seal	
5	4700939266		4	Bearing	
6	4700926781		20	Wheel screw	
7	4700901987		20	Wheel nut	
8	4700939015		4	Screw	
9	4700330333		6	Copper washer	D
10	4700909596		4	Plug	C
11	4700939016		20	Nut	D
12	4700939275		2	Lock plate	
13	4700939017		20	Stud	D
14	4700909609		2	O-ring	D
15	4700939276		2	Wheel hub	
16	4700939350		2	Magnetic plug	
17	4700939277		2	Half shaft	D
18	4700909586		2	Seal	D
19	4700939019		8	Nut	D
20	4700939278		8	Stud	D
21	4700939351		2	Planet gear carrier Cpl.	D
22	4700939267		2	. Circlip	
23	4700939268		2	. Ring gear	D
24	4700939269		2	. Ring gear support	
25	4700939270		2	. Washer	
26	4700939271		8	. Seal	
27	4700939272		8	. Planet gear	
28	4700939273		8	. Bearing	
29	4700939349		2	. Planet gear carrier Cpl.	

Hydraulic system

Item	Part No	Rem	Qty	Description	Code
10				**Propulsion system, Front (Page 92)**	
13	4700371509			**Propulsion motor (Page 94)**	C
15				**Propulsion system, Rear (Page 96)**	
18	4700373361			**Propulsion motor (Page 104)**	C
20				**Vibration system (Page 108)**	
23	4700380145			**Hydraulic motor, vibration (Page 116)**	C
30				**Steering system (Page 118)**	
37	4700372424			**Pilot valve, steering (Page 122)**	C
40				**Brake system (Page 124)**	
45				**Hydraulic oil tank (Page 126)**	
50				**Central test panel Option (Page 128)**	
60				**Dual speed drum drive Option (Page 130)**	

Propulsion system, Front

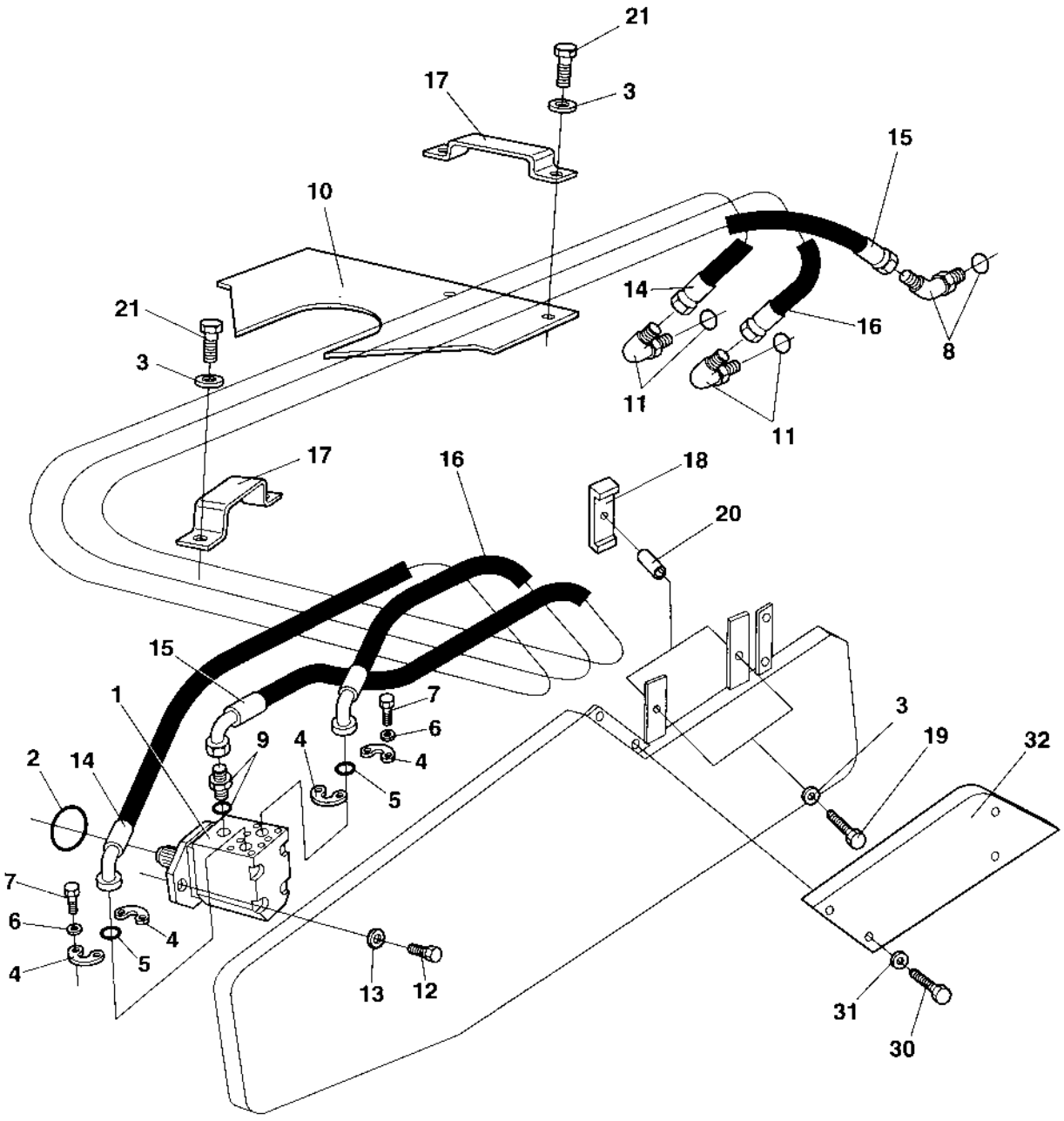

Propulsion system, Front

Item	Part No	Rem	Qty	Description	Code
1	4700371509		1	**Propulsion motor (Page 94)**	C
2	4700904058		1	O-ring	
3	4700904230		6	Steel plain washer	C
4	4700923384		4	Flange half	C
5	4700904005		2	O-ring	B
6	4700904638		8	Washer 12x22x2	C
7	4700502132		8	Screw UNC 7/16" x 22	D
8	4700334132		1	Elbow 45, O-ring	C
9	4700334138		1	Adapter	C
10	4700372235		1	Hose guard	D
11	4700791231		2	Elbow 90	D
12	4700500101		2	Screw M20x50	C
13	4700903290		2	Washer 21x36x6	C
14	4700483996		1	Hydraulic hose	D
15	4700483190		1	Hydraulic hose	D
16	4700483995		1	Hydraulic hose	D
17	4700373016		2	Hose clamp	D
18	4700373270		2	Hose clamp	D
19	4700500032		2	Screw M10 x 55	D
20	4700373423		2	Spacer	D
21	4700500029		4	Hexagon head screw	C
30	4700500188		4	Screw M8-1,25x14 8,8	D
31	4700904229		4	Steel plain washer 8,4x16x1,5	C
32	4700373136		1	Cover	D

4700371509 Propulsion motor

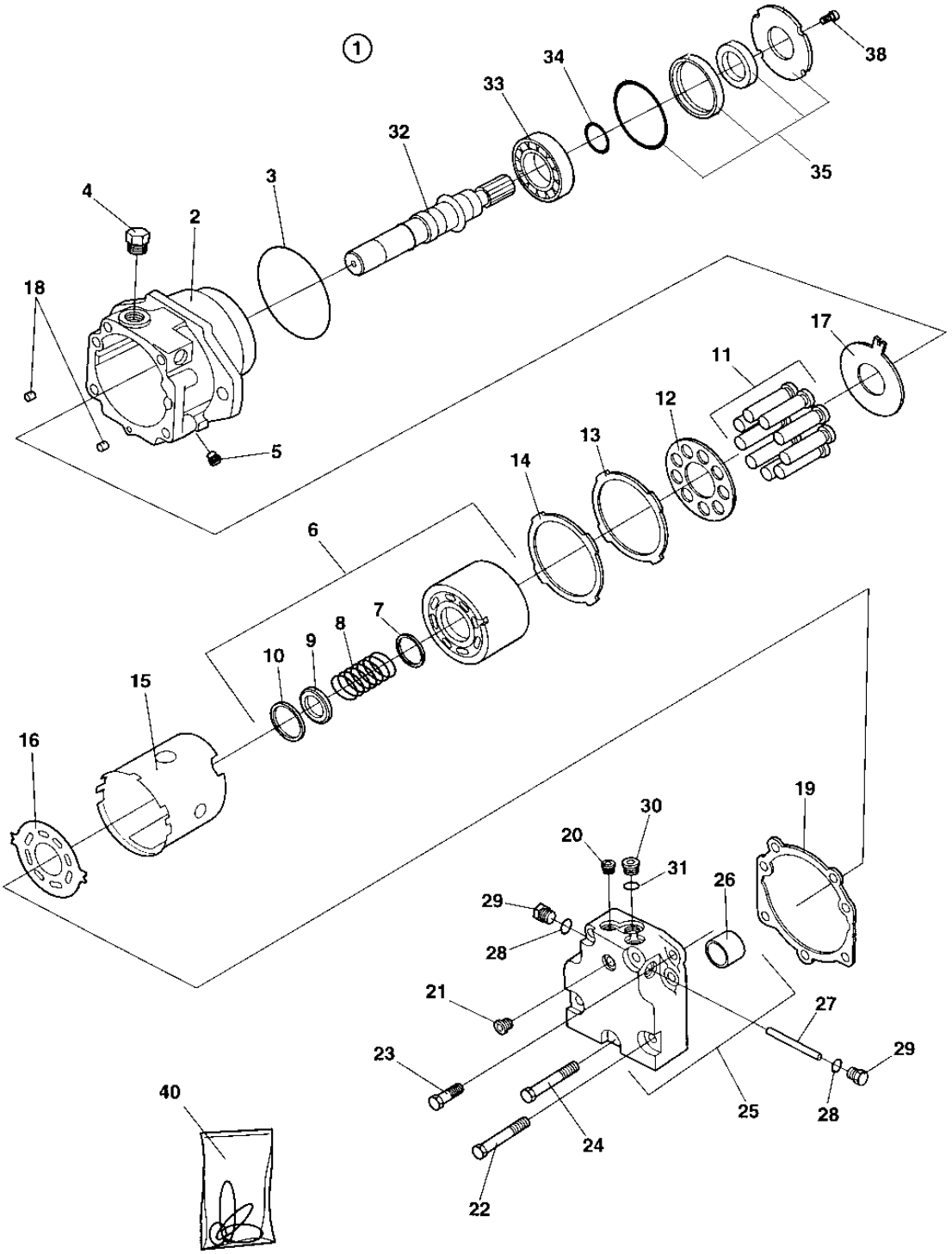

4700371509 Propulsion motor

Item	Part No	Rem	Qty	Description	Code
1			1	Hydraulic motor, Cpl	
2	4700937274		1	. Housing	
3	4700937275	1	1	. O-ring	
4	4700902928		2	. Plug	C
	4700901453	1	2	. . O-ring	C
5	4700908432		1	. Plug	C
6	4700937277		1	. Cylinder block, cpl	
7	4700935619		1	. . Spacer	
8	4700937278		1	. . Spring	
9	4700935621		1	. . Spring retainer	
10	4700935622		1	. . Ring retainer	
11	4700903570		9	. Piston	D
12	4700903571		1	. Pressure plate	D
13	4700935623		1	. Retainer guide	
14	4700935624		1	. Shim	
15	4700935625		1	. Holder	
16	4700935626		1	. Valve plate	
17	4700937279		1	. Thrust plate	
18	4700813822		2	. Pin	D
19	4700935629	1	1	. Gasket	D
20	4700358388		2	. Plug	C
21	4700908432		1	. Plug	C
22	4700909252		4	. Screw	
23	4700909253		2	. Screw	
24	4700935630		1	. Screw	
25	4700937280		1	. End cap, cpl	
26	4700903053		1	. . Bushing	
27	4700909255		1	. Spool	
28	4700923087	1	2	. O-ring	C
29	4700358388		2	. Plug	C
30	4700935853		1	. Plug	
31	4700926658	1	1	. O-ring	C
32	4700935631		1	. Shaft	
33	4700901465		1	. Bearing	
34	4700901467		1	. Ring	
35	4700950368		1	. Shaft seal kit	D
38	4700908773		3	. Screw	D
40	4700937283		1	Seal kit	

1) Includes in item 40, Seal kit

Propulsion system, Rear

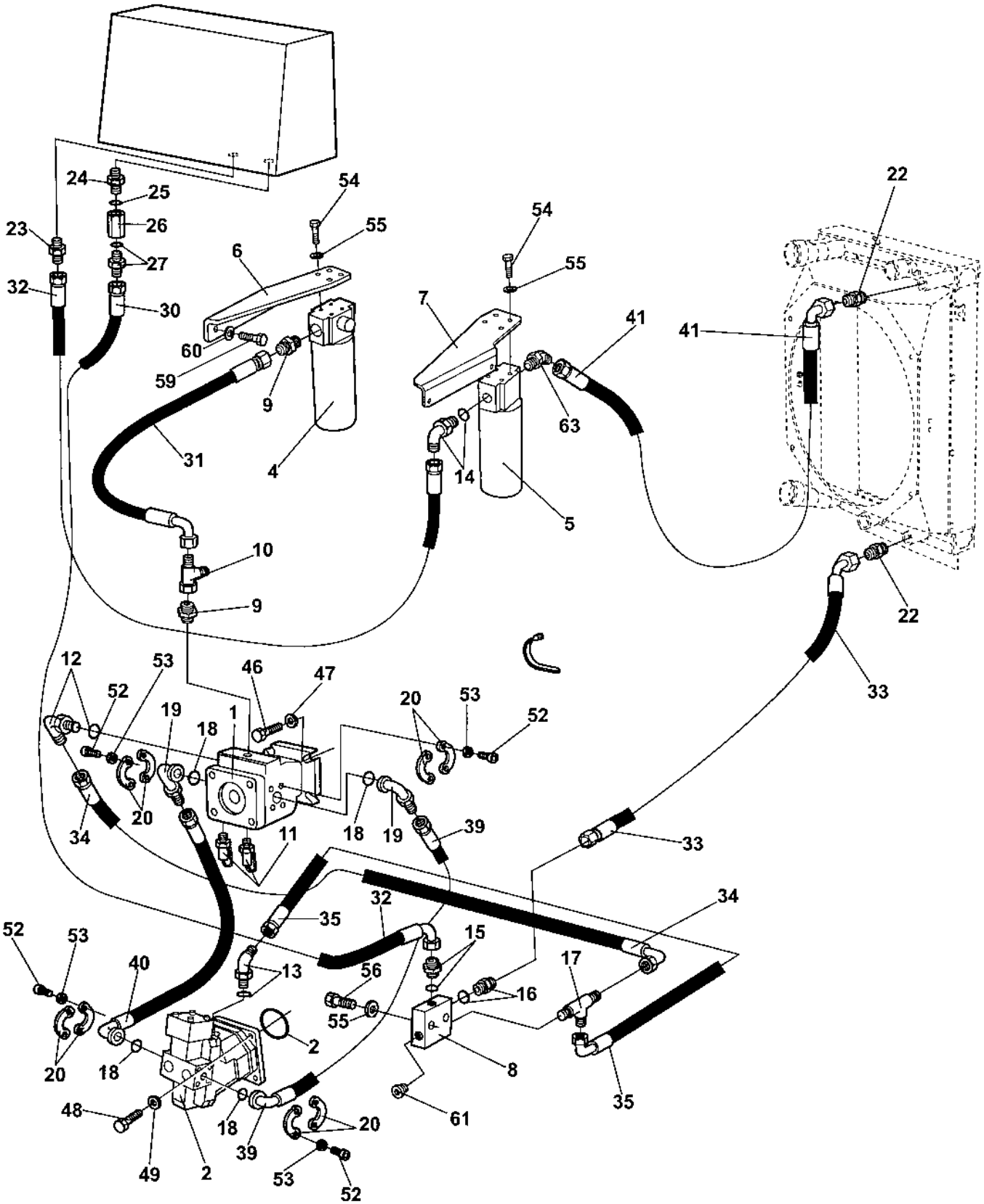

Propulsion system, Rear

Item	Part No	Rem	Qty	Description	Code
1	4700380830		1	**Propulsion pump (Page 98)**	C
	4700939489		1	. Control valve gasket	
2	4700373361		1	**Propulsion motor (Page 104)**	C
4	4700359550	A	1	Hydraulic oil filter, cpl	A
	4700359551		1	. Filter head	A
	4700359552		1	. Cleaning filter element Maximum 50 hours use	A
	4700372229	B	1	Hydraulic oil filter element	A
5	4700372435	C	1	Hydraulic oil filter, cpl	A
	4700372436		1	. Filter head	D
	4700359552		1	. Cleaning filter element Maximum 50 hours use	A
	4700372229	B	1	. Hydraulic oil filter element	A
6	4700379482		1	Filter bracket	D
7	4700380490		1	Filter bracket	D
8	4700345243		1	Connection block	
9	4700334468		2	Adapter	C
10	4700234243		1	T-connector	C
11	4700900229		2	Measuring nipple	C
12	4700813499		1	Elbow 90, O-ring	D
13	4700334132		1	Elbow 45, O-ring	C
14	4700334163		1	Adapter	
15	4700334138		1	Adapter	C
16	4700334140		1	Straight conector	
17	4700234875		1	Tee-connector o-ring	
18	4700904005		4	O-ring	B
19	4700791213		2	Flange fitting 90	D
20	4700923384		8	Flange half	C
22	4700234958		2	Connector	
23	4700234909		1	Straight connector	
24	4700904282		1	Adapter	
25	4700162008		1	Seal washer	B
26	4700374059		1	Check valve	C
27	4700923371		1	Adapter	C
30	4700482182		1	Hydraulic hose	D
31	4700482041		1	Hydraulic hose	D
32	4700482379		1	Hydraulic hose	D
33	4700483610		1	Hydraulic hose	D
34	4700482391		1	Hydraulic hose	D
35	4700482391		1	Hydraulic hose	D
39	4700483558		1	Hydraulic hose	D
40	4700483558		1	Hydraulic hose	D
41	4700482259		1	Hydraulic hose	D
46	4700500046		4	Screw M12x025H	C
47	4700904213		4	Washer	C
48	4700500263		4	Screw M18x60	D
49	4700604012		4	Washer 19,3x31,3x4	D
52	4700502132		16	Screw UNC 7/16" x 22	D
53	4700904638		16	Washer 12x22x2	C
54	4700500028		8	Screw	C
55	4700904230		10	Steel plain washer	C
56	4700500109		2	Screw M10-1,5x65 8,8	D
59	4700500021		4	Screw M8-1,25x25 8.8	C
60	4700904229		4	Steel plain washer 8,4x16x1,5	C
61				Not used on this model	
63	4700234354		1	Adapter with O-ring	

A) Suction
B) Spare part for ordinary service
C) Return

4700380830 Propulsion pump

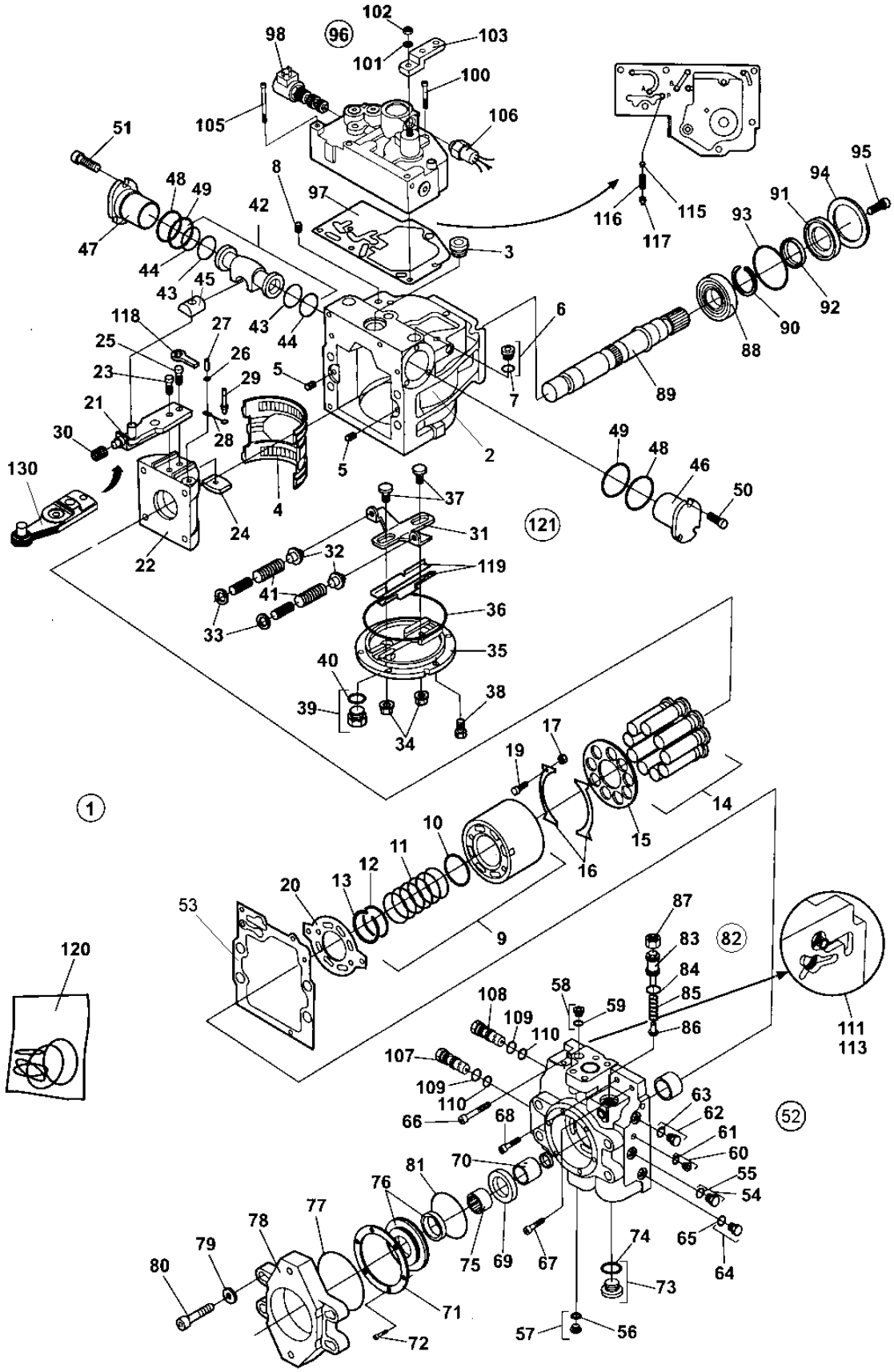

4700380830 Propulsion pump

Item	Part No	Rem	Qty	Description	Code
1	4700380830		1	**Propulsion pump (Page 98)**	C
2	4700936546		1	. Housing	
	4812156652	2	1	. Housing	
3	4700902928		1	. Plug	C
4	4700901452		1	. Bearing	
		2	1	. Bearing	
5	4700813822		2	. Pin	D
6	4700908432		2	. Plug	C
7	4700923087	1	2	. . O-ring	C
8	4700901454		3	. Filter element	D
9	4700901455		1	. Cylinder block, cpl	
10			1	. . Spacer	
11			1	. . Spring	
12			1	. . Spring retainer	
13			1	. . Ring retainer	
14	4700903570		9	. Piston	D
15	4700903571		1	. Pressure plate	D
16	4700901458		2	. Retainer guide	D
17	4700935856		4	. Spacer	
19	4700909382		4	. Screw	C
20	4700936547		1	. Valve plate	
21	4700909727		1	. Servo arm, cpl	
22			1	. Swash plate	
		2	1	. Swash plate	
23	4700909386		1	. Screw	C
		2	1	. Screw	
24	4700909387		1	. Guide	
25	4700909388		1	. Screw	C
26	4700909389		1	. Washer	C
27	4700909390		1	. Pin	C
28	4700909391		1	. Link	C
29	4700909392		1	. Pin	C
30	4700909393		1	. Spring	C
31			1	. Lever	
32			2	. Spring support	
33			2	. Washer	
34	4700909398	1	2	. Seal lock nut	B
35			1	. Cover	
		2	1	. Cover	
36	4700936551	1	1	. O-ring	
37			2	. Guide post	
38	4700936553		6	. Screw	C
39	4700902928		1	. Plug	C
40	4700901453	1	1	. . O-ring	C
41	4700908352		2	. Spring	D
42	4700936582		1	. Piston, cpl	
43		1	2	. . O-ring	
44		1	2	. . Seal ring	
45			1	. . Guide	
46	4700903580		1	. Servo	
47	4700903580		1	. Servo	
48	4700936557	1	2	. O-ring	
49	4700936558	1	2	. O-ring	
50	4700936559		3	. Screw	
51	4700936559		3	. Screw	
52	4700936560		1	. End cap, cpl	
53	4700936561	1	1	. Gasket	
54	4700358388		1	. Plug	C

1) Included in item 120, Seal kit
2) Valid with item 130

4700380830 Propulsion pump

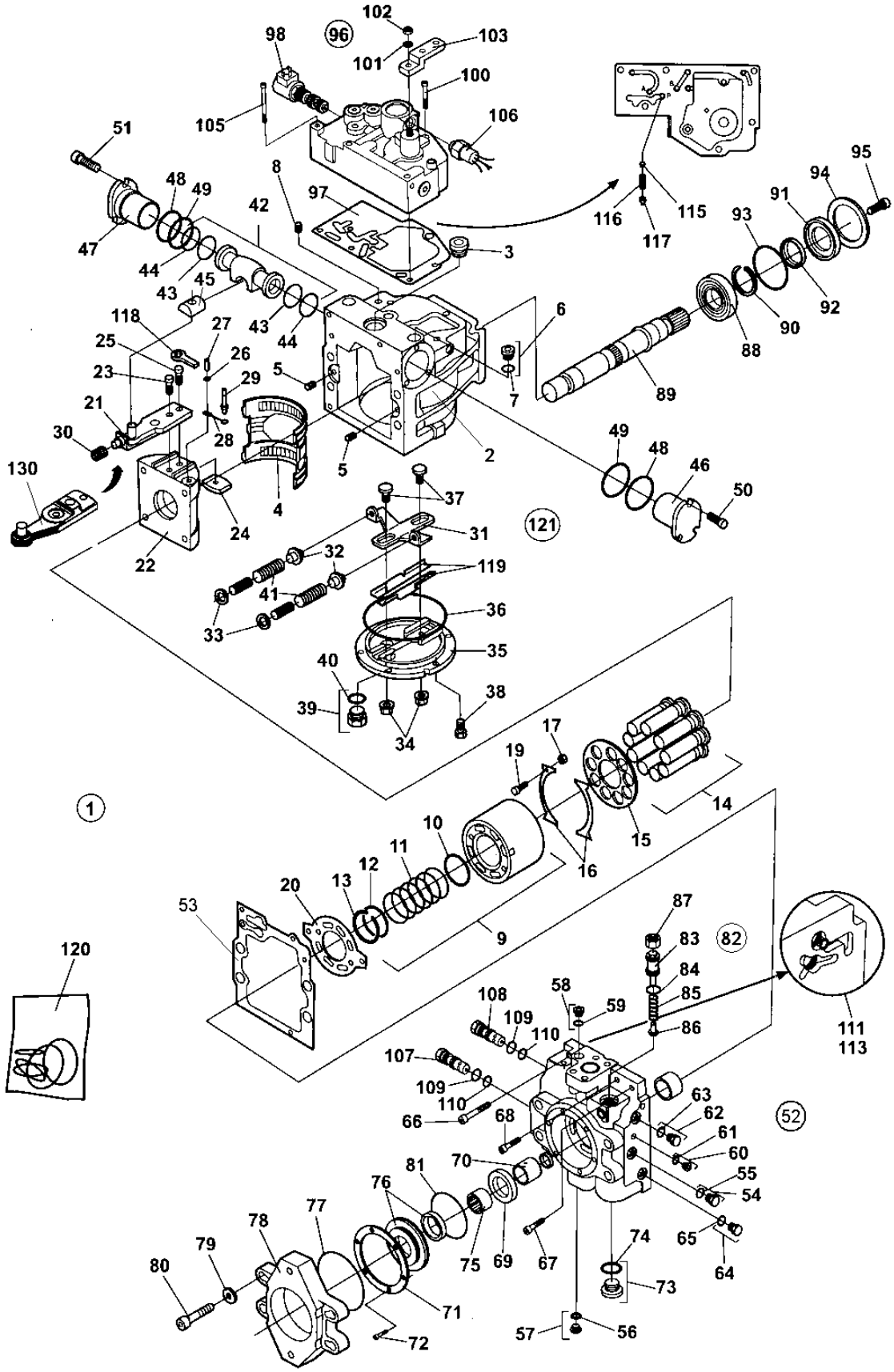

4700380830 Propulsion pump

Item	Part No	Rem	Qty	Description	Code
55	4700923087	1	1	. . O-ring	C
56	4700908432		1	. Plug	C
57	4700923087	1	1	. . O-ring	C
58	4700908432		1	. Plug	C
59	4700923087	1	1	. . O-ring	C
60	4700908432		1	. Plug	C
61	4700923087	1	1	. . O-ring	C
62	4700358388		1	. Plug	C
63	4700923087	1	1	. . O-ring	C
64	4700358388		1	. Plug	C
65	4700923087	1	1	. . O-ring	C
66	4700936562		1	. Screw	
67	4700936563		1	. Screw	
68	4700936564		1	. Screw	
69	4700950283		1	. Spacer	D
70	4700950284		1	. Spacer	D
71	4700935857		1	. Retaining plate	
72	4700936566		6	. Screw	
73	4700936567		1	. Plug, cpl	
74	4700936568	1	1	. . O-ring	
75	4812156072		1	. Coupling sleeve	
76			1	. Not used on this model	
77	4700909399	1	1	. O-ring	C
78	4700936570		1	. Adapter	
79	4700936571		4	. Washer	
			4	.	
81	4700937150		1	. O-ring	D
82	4700936583		1	. Pressure relief valve, cpl	
83			1	. . Screw	
84		1	1	. . O-ring	
85			1	. . Spring	
86			1	. . Valve cone	
87			1	. . Nut	
88	4700901465		1	. Bearing	
89	4700901466		1	. Shaft	
90	4700901467		1	. Ring	
91			1	. Pressure plate	
92		1	1	. Seal	
		2	1	. Seal	
93		1	1	. O-ring	
94			1	. Retaining plate	
95			3	. Screw	
96	4700938170		1	. Control valve, cpl	
97	4700939489	1	1	. . Control valve gasket	
98	4700938252		1	. . Solenoid valve	
100			1	. . Screw	
101	4700909428		1	. . Washer	C
102	4700909429		1	. . O-ring	C
103	4700909432		1	. . Control lever	D
105	4700937857		5	. . Screw	D
106	4700938253		1	. . Neutral start switch	
107	4700212339		1	. Valve	C
108	4700212339		1	. Valve	C
109		1	2	. . O-ring	
110		1	2	. . O-ring	
111	4700901475		2	. Valve	D
113	4700901476		2	. Plug	D
115	4700909435		1	. Orifice	C

1) Included in item 120, Seal kit
2) Valid with item 130

4700380830 Propulsion pump

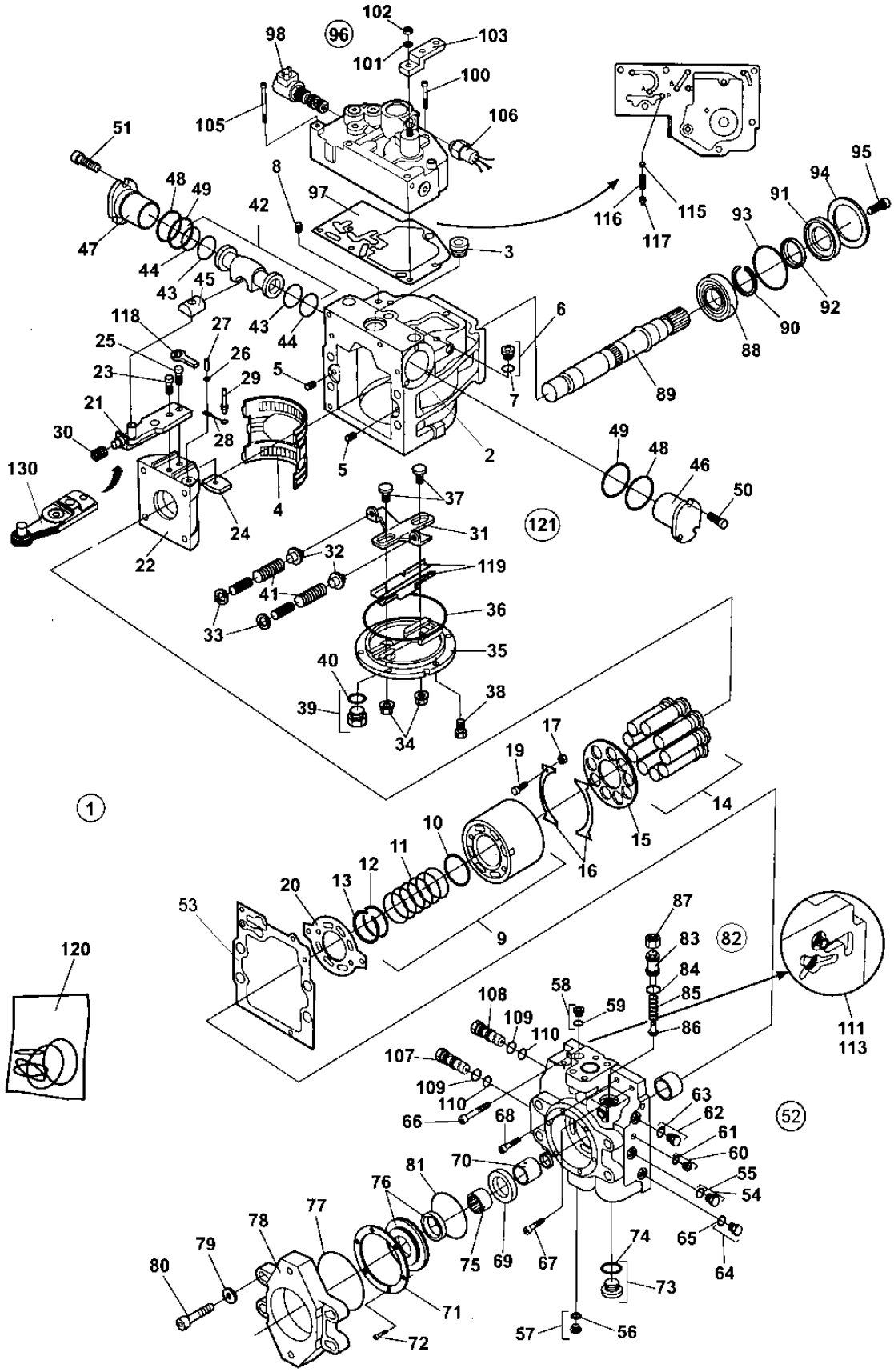

4700380830 Propulsion pump

Item	Part No	Rem	Qty	Description	Code
116	4700909436		1	. Spring	C
117	4700908448		1	. Spring retainer	C
118			1	. Link	
119			1	. Guide assy, 1pair	
120	4700901328		1	. Seal kit	D
121	4700936548		1	. Cover assembly	
130			1	. Servo arm	

4700373361 Propulsion motor

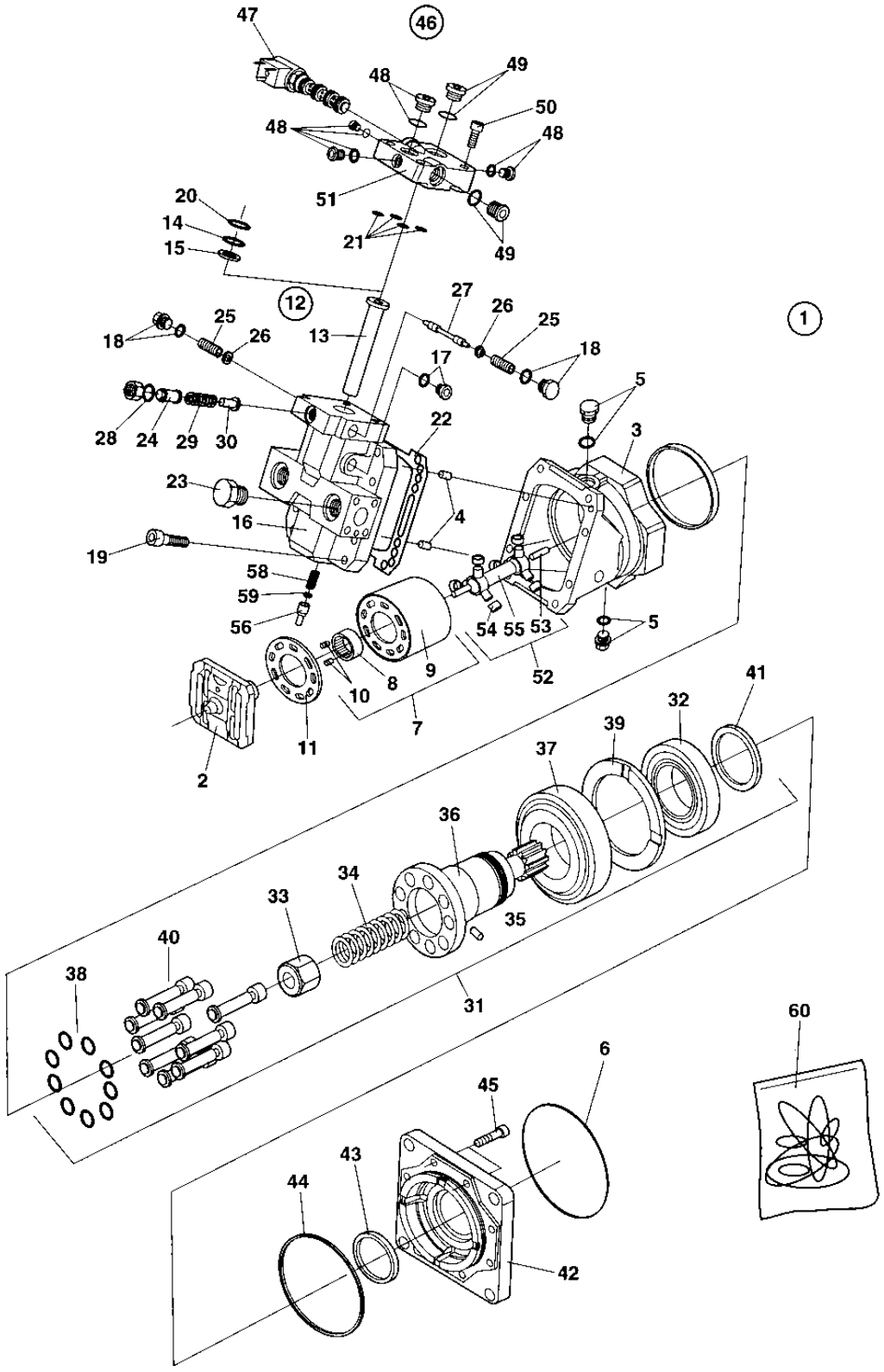

4700373361 Propulsion motor

Item	Part No	Rem	Qty	Description	Code
1			1	Hydraulic motor, Cpl	
2	4700935521		1	. Valve segment	
3	4700908422		1	. Housing	D
4	4700813822		2	. Pin	D
5	4700902928		2	. Plug	C
	4700901453	1	2	. . O-ring	C
6	4700902581	1	1	. O-ring	D
7	4700902929		1	. Cylinder block	
8			1	. . Bush	
9			1	. . Cylinder block	
10			2	. . Pin	
11	4700902930		1	. Bearing plate	
12	4700935527		1	. Piston assembly	
13	4700935526		1	. . Piston	
14	4700935525	1	1	. . O-ring	D
15	4700935524	1	1	. . Seal plug	D
16	4700935530		1	. End cap	
17	4700908432		1	. Plug	C
18	4700935741		2	. Plug, cpl	
19	4700902944		8	. Screw	
20	4700935531	1	1	. O-ring	D
21	4700908443	1	5	. Rect. seal	D
22	4700908427	1	1	. Gasket	D
23	4700902928		2	. Plug	C
	4700901453	1	2	. . O-ring	C
24			1	. Adapter	
25	4700935749		2	. Spring	
26	4700935750		2	. Spring retainer	
27	4700935533		1	. Spool	
28	4700813618	1	1	. O-ring	C
29			1	. Spring	
30			1	. Valve cone	
31	4700902960		1	. Shaft, cpl	
32			1	. . Roller bearing	
33			1	. . Spring guide	
34			1	. . Spring	
35			1	. . Pin	
36			1	. . Shaft	
37			1	. . Roller bearing	
38			9	. . Piston ring	
39			1	. . Spacer	
40			9	. . Piston	
41			1	. . Nut	
42	4700902961		1	. Flange	
43	4700935536		1	. Shaft seal 55x75x12	D
	4700945757	1	1	. Shaft seal 55x70x7	
44	4700935664	1	1	. O-ring	D
45	4700902962		8	. Screw	
46	4700935543		1	. Electric hydraulic control	
47	4700908435		1	. . Solenoid valve assy	C
48	4700908426		4	. . Plug, cpl	D
49	4700908432		2	. . Plug	C
50	4700935544		4	. . Screw	
51	4700935545		1	. . Valve housing	
52	4700902984		1	. Shaft, cpl	
53			2	. . Pin	
54			6	. . Roller	
55			1	. . Shaft	
56	4700902996		1	. Plastic cap, green	

1) Included in seal kit item 60

4700373361 Propulsion motor

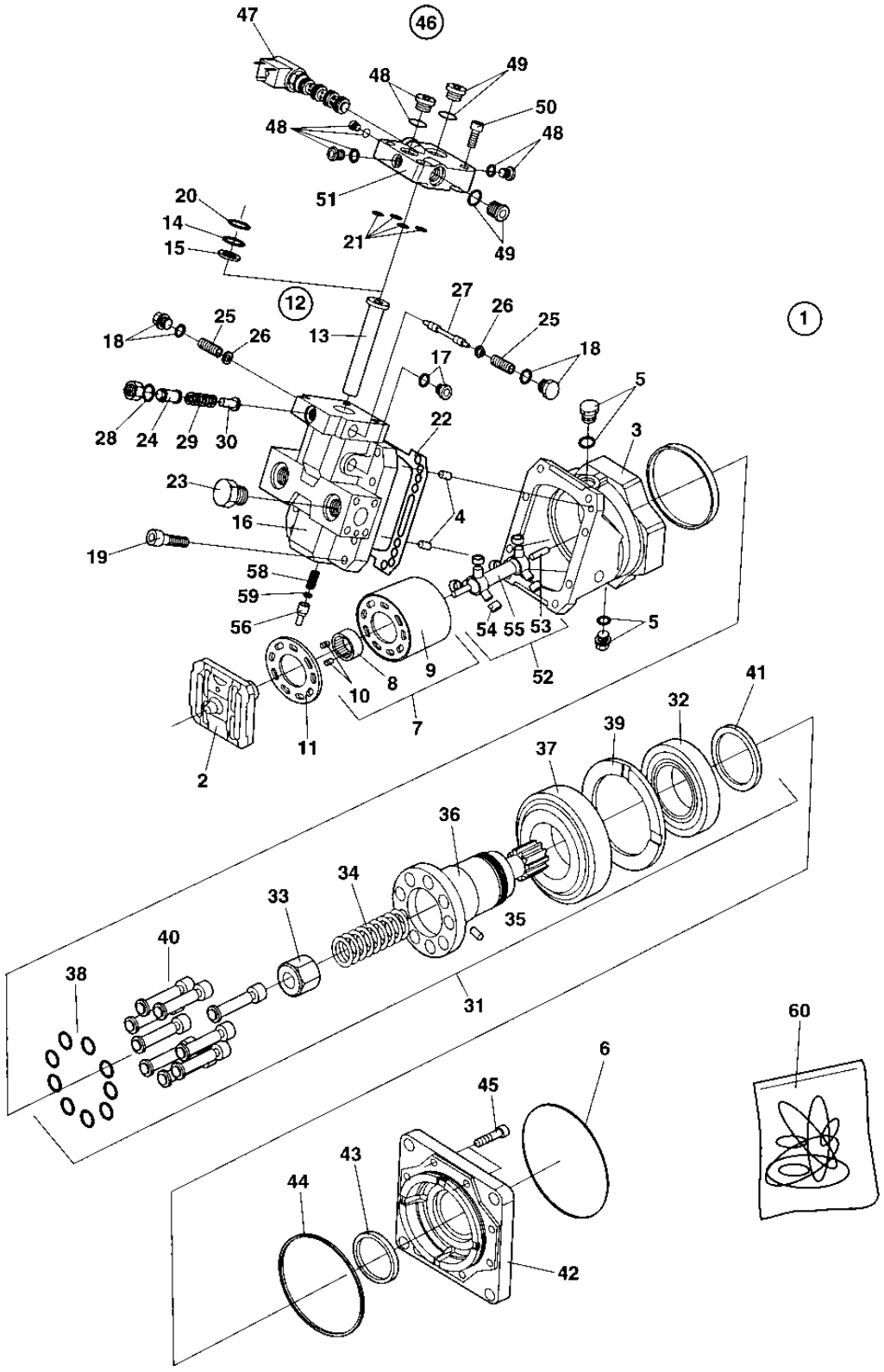

4700373361 Propulsion motor

Item	Part No	Rem	Qty	Description	Code
57	4700936593		2	. Orifice	
58	4700937363		1	. Shaft	
59	4700909525	1	1	. Seal nut	
60	4700935520		1	Seal kit	D

1) Included in seal kit item 60

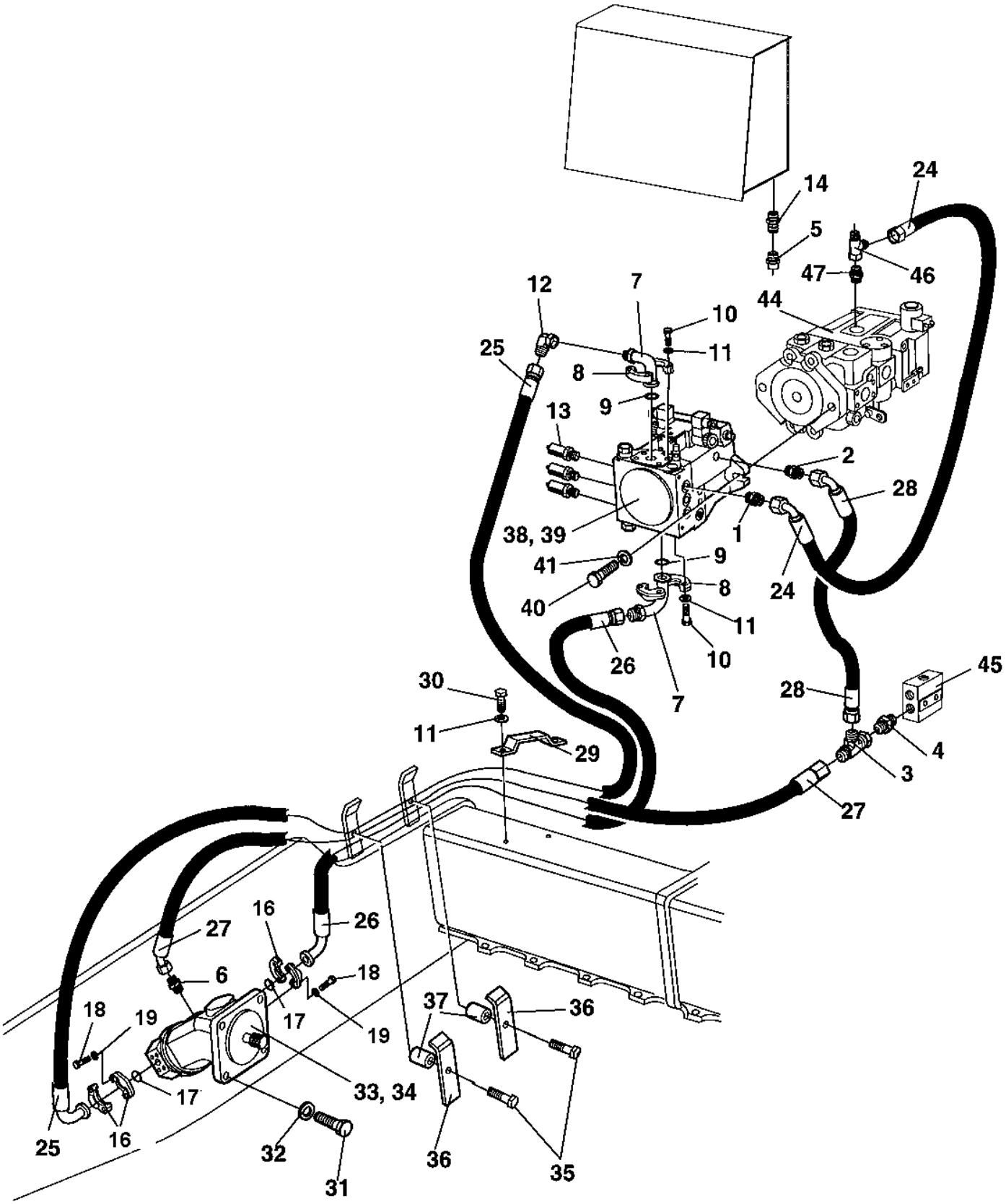
14
24
5
47
46
12
7
44
10
25
11
8
9
13
2
28
38, 39
1
41
9
8
24
40
11
26
10
7
30
28
45
11
29
4
3
27
16
26
27
6
18
18
19
17
19
37
36
33, 34
17
25
16
32
36
35
31

Vibration system

Item	Part No	Rem	Qty	Description	Code
1	4700234382		1	Adapter	
2	4700901155		1	Connector	C
3	4700334135		1	Tee-connector	C
4	4700334122		1	Adapter	D
5	4700330383		1	Cap hydraulic	
6	4700334121		1	Straight connector	C
7	4700904767		2	Flange adapter	C
8	4700929226		4	Flange half	C
9	4700904773		2	O-ring	D
10	4700500030		8	Screw M10x035H 8.8 A3K	C
11	4700904230		14	Steel plain washer	C
12	4700904781		1	Adapter	C
13	4700901157		3	Measuring nipple	C
14	4700334205		1	Straight connector	D
16	4700900430		4	Flange half	C
17	4700904774		2	O-ring	D
18	4700502019		8	Screw	C
19	4700904229		8	Steel plain washer 8,4x16x1,5	C
24	4700483286		1	Hydraulic hose	D
25	4700483910		1	Hydraulic hose	D
26	4700483911		1	Hydraulic hose	D
27	4700483031		1	Hydraulic hose	D
28	4700483397		1	Hydraulic hose	D
29	4700373017		2	Hose clamp	D
30	4700500028		4	Screw	C
31	4700500194		4	Screw	C
32	4700904231		4	Washer 13x24x2 300 HV	C
33	4700380145		1	**Hydraulic motor, vibration (Page 116)**	C
34	4700160132		1	O-ring 124, 50x3, 00	B
35	4700500032		2	Screw M10 x 55	D
36	4700373270		2	Hose clamp	D
37	4700373424		2	Spacer	D
38	4700383958		1	**Vibration pump (Page 110)**	C
39	4700903877		1	O-ring 126,72x1,78	
	4700160231		1	O-ring 120,32x2,62	D
40	4700502078		2	Screw	D
41	4700904232		2	Washer	C
44		A	1	Hydraulic pump	
45		A	1	Connection block	
46		A	1	Tee-connector	
47		A	1	Straight connector	

A) See section "Hydraulic propulsion"

4700383958 Vibration pump

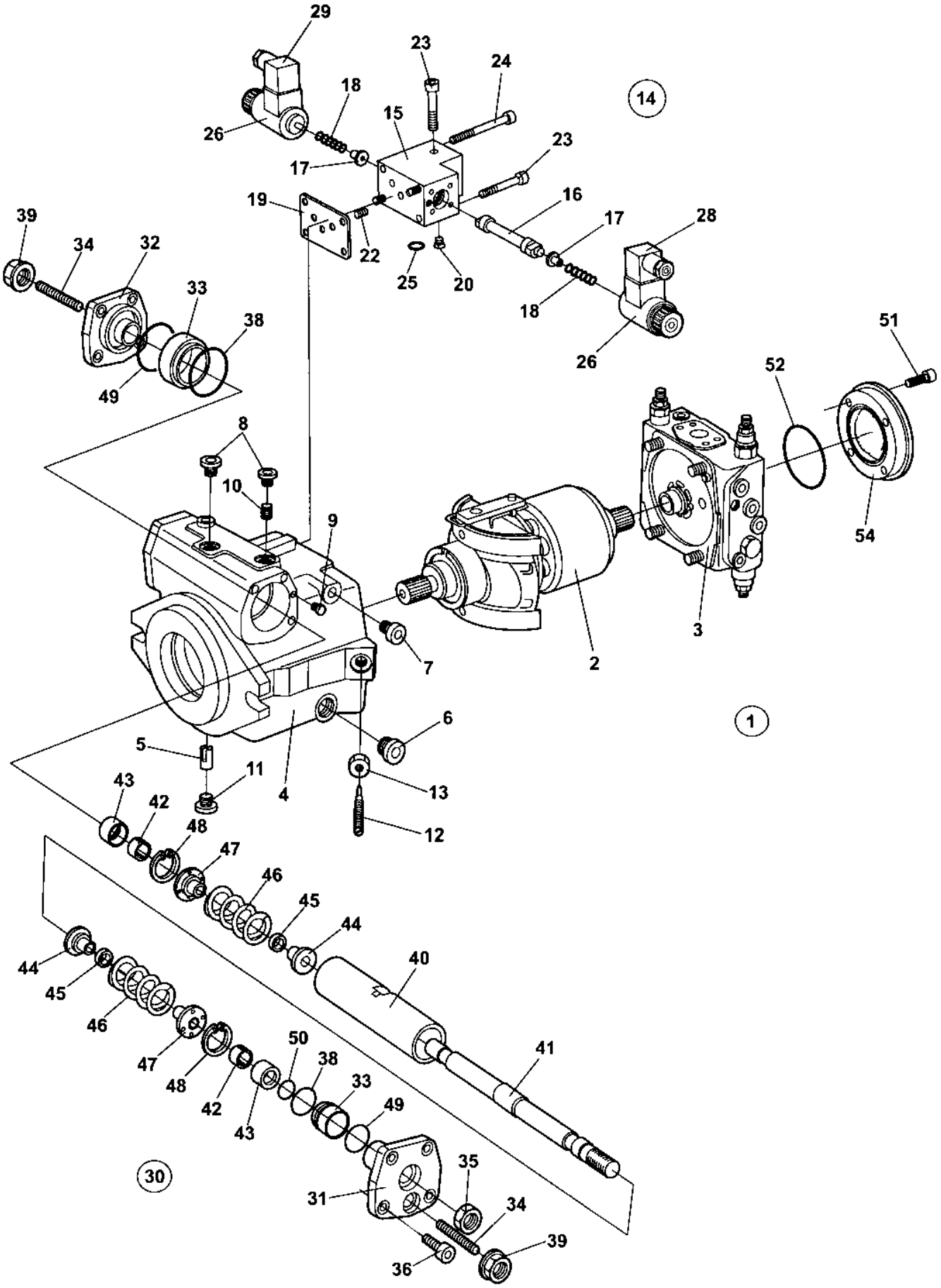

4700383958 Vibration pump

Item	Part No	Rem	Qty	Description	Code
1			1	Vibration pump	
	4700940675		1	. Seal kit	B
2	4700937167		1	**. Rotary group, cpl (Page 112)**	
3	4700937168		1	**. Valve block, cpl (Page 114)**	
4	4700937986		1	. Housing	
5	4700935158		1	. Pin	
6	4700935219		1	. Plug	
7	4700902724		1	. Plug	
8	4700902625		5	. Plug	
9	4700909514		2	. Double break-off pin	
10	4700936308		2	. Orifice	
11	4700902624		1	. Screw	
12	4700902687		1	. Pin	
13	4700902695		1	. Nut	
14	4700940507		1	. Control valve, cpl	C
15			1	. . Housing	
16	4700945775		1	. . Piston	D
17	4700945776		2	. . Spring collar	D
18	4700936686		2	. . Spring	
19			1	. . Gasket	
20			2	. . Pin	
22	4700909514		1	. . Double break-off pin	
23	4700927358		3	. . Screw	D
24	4700908383		2	. . Screw	D
25			1	. . O-ring	
26	4700940505		2	. . Solenoid	B
28			1	. . Socket	
29			1	. . Socket	
30	4700937985		1	. Hydraulic control	
31	4700937998		1	. . Cover	
32	4700937999		1	. . Cover	
33	4700938003		2	. . Guide ring	
34	4700937195		2	. . Pin	
35	4700936340		1	. . Nut	
36	4700902856		8	. . Screw	
38	4700938004		2	. . O-ring	
39	4700936393		2	. . Seal lock nut	
40	4700938005		1	. . Piston	
41	4700937198		1	. . Rod	
42			2	. . Ring	
43	4700938014		2	. . Sleeve	
44	4700937199		2	. . Spring collar	
45	4700936648		2	. . Spacer ring	
46	4700937531		2	. . Spring, outer	
	4700937200		2	. . Spring, inner	
47	4700937201		2	. . Spring collar	
48	4700939167		2	. . Retaining ring	
49	4700938001		2	. . O-ring	
50	4700909469		1	. . O-ring	
51	4700939173		4	. Screw	
52	4700935192		1	. O-ring	
54			1	. Cover	

4700937167 Rotary group, cpl

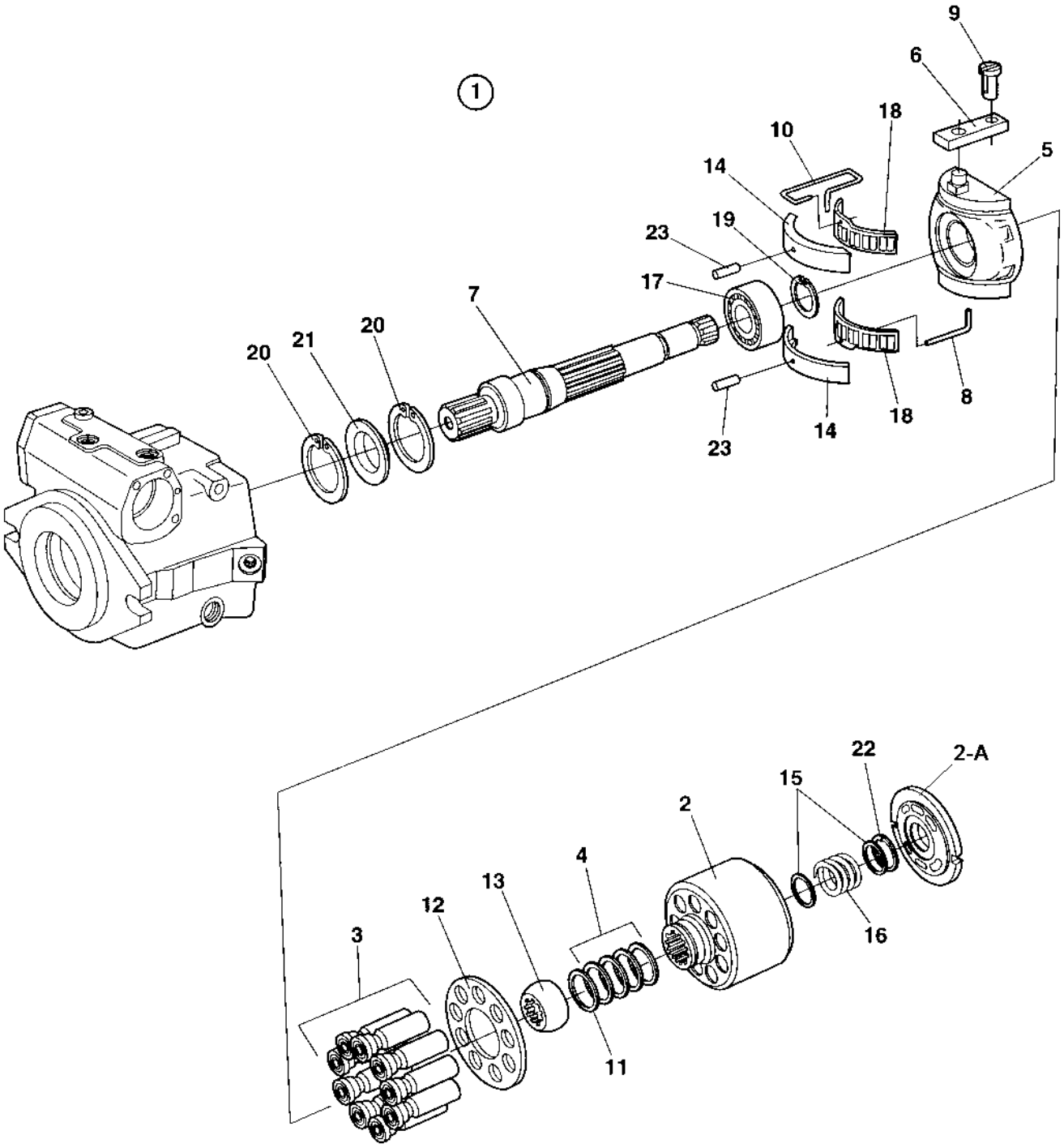

4700937167 Rotary group, cpl

Item	Part No	Rem	Qty	Description	Code
1			1	Rotary group, cpl	
2	4700937170		1	. Cylinder with control plate	
2-A	4700940308		1	. . Control plate	D
3	4700937171		9	. Piston	
4	4700937172		1	. Cup springs, cpl	
5	4700937173		1	. Cradle	
6	4700937174		1	. Slide ring	
7	4700908367		1	. Shaft	D
8	4700936621		1	. Wire	
9	4700935164		1	. Pin	
10	4700937175		1	. Wire	
11	4700937176		1	. Shim	
12	4700937180		1	. Retaining plate	
13	4700937181		1	. Retaining ball	
14	4700937182		1	. Bearing liner, 1 pair	
15	4700937183		2	. Washer	
16	4700937184		1	. Spring	
17	4700937185		1	. Bearing	
18	4700937186		1	. Cradle bearing assembly, 1 set	
19	4700937187		1	. Retaining ring	
20	4700937188		2	. V-ring	
21	4700937189		1	. Seal ring	
22	4700937190		1	. Retaining ring	
23	4700902792		2	. Pin	

4700937168 Valve block, cpl

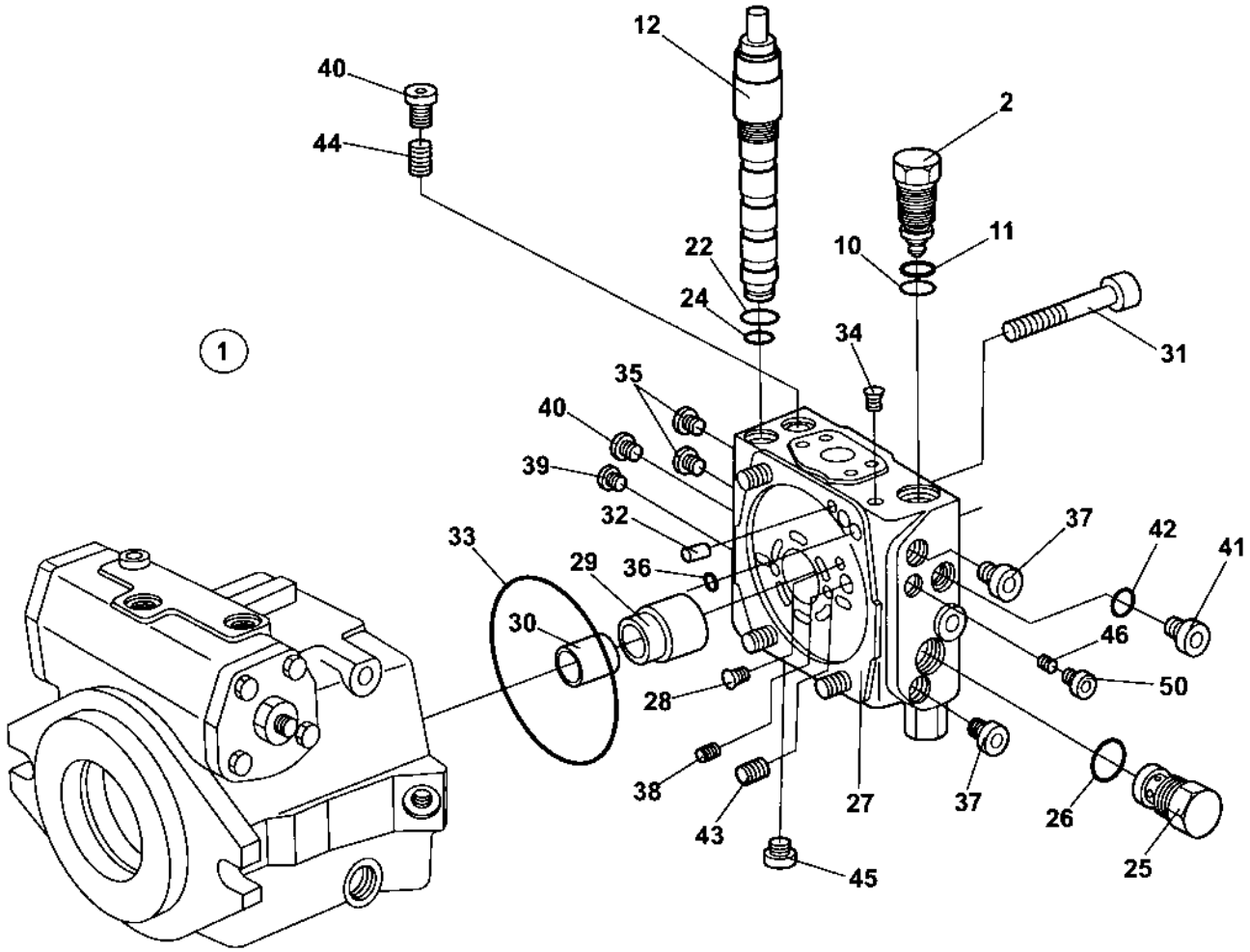

4700937168 Valve block, cpl

Item	Part No	Rem	Qty	Description	Code
1			1	Valve block, cpl	
2			2	. Relief valve 310 bar	
	4700935172		2	. Pressure relief valve 350 bar	D
			2	. Relief valve 380 bar	
	4700937240		2	. Pressure relief valve 440 bar	
10	4700927278		1	. . O-ring	D
11	4700936673		1	. . Back-up ring	
12	4700908375		1	. Valve	D
22	4700902783		1	. . O-ring	
24	4700936394		1	. . O-ring	
25	4700936674		1	. Pin	
26	4700927278		1	. O-ring	D
27	4700937202	B	1	. Port plate	
	4812155765		1	. Port plate	D
28	4700902735		1	. Pin	
29	4700937203		1	. Bush	
30	4700937204		1	. Bearing bushing	
31	4700937205		4	. Screw	
32	4700908384		2	. Pin	D
33	4700937206		1	. O-ring	
34	4700909514		3	. Double break-off pin	
35	4700936370		2	. Locking screw	
36	4700909469		2	. O-ring	
37	4700902625		2	. Plug	
38	4700901742		1	. Pin	D
39	4700902723		1	. Plug	
40	4700902811		3	. Plug	D
41	4700902693		1	. Screw	
42	4700927278		1	. O-ring	D
43	4700902697		1	. Screw	
44	4700936613		1	. Locking screw	
45	4700936614		1	. Plug	
46	4700936313		1	. Orifice	
50	4700936370		1	. Locking screw	
	4700935212	A	1	. Pin	

A) Used with Item 27; P/N 4812155765.
B) Replaced by P/N 4812155765.

4700380145 Hydraulic motor, vibration

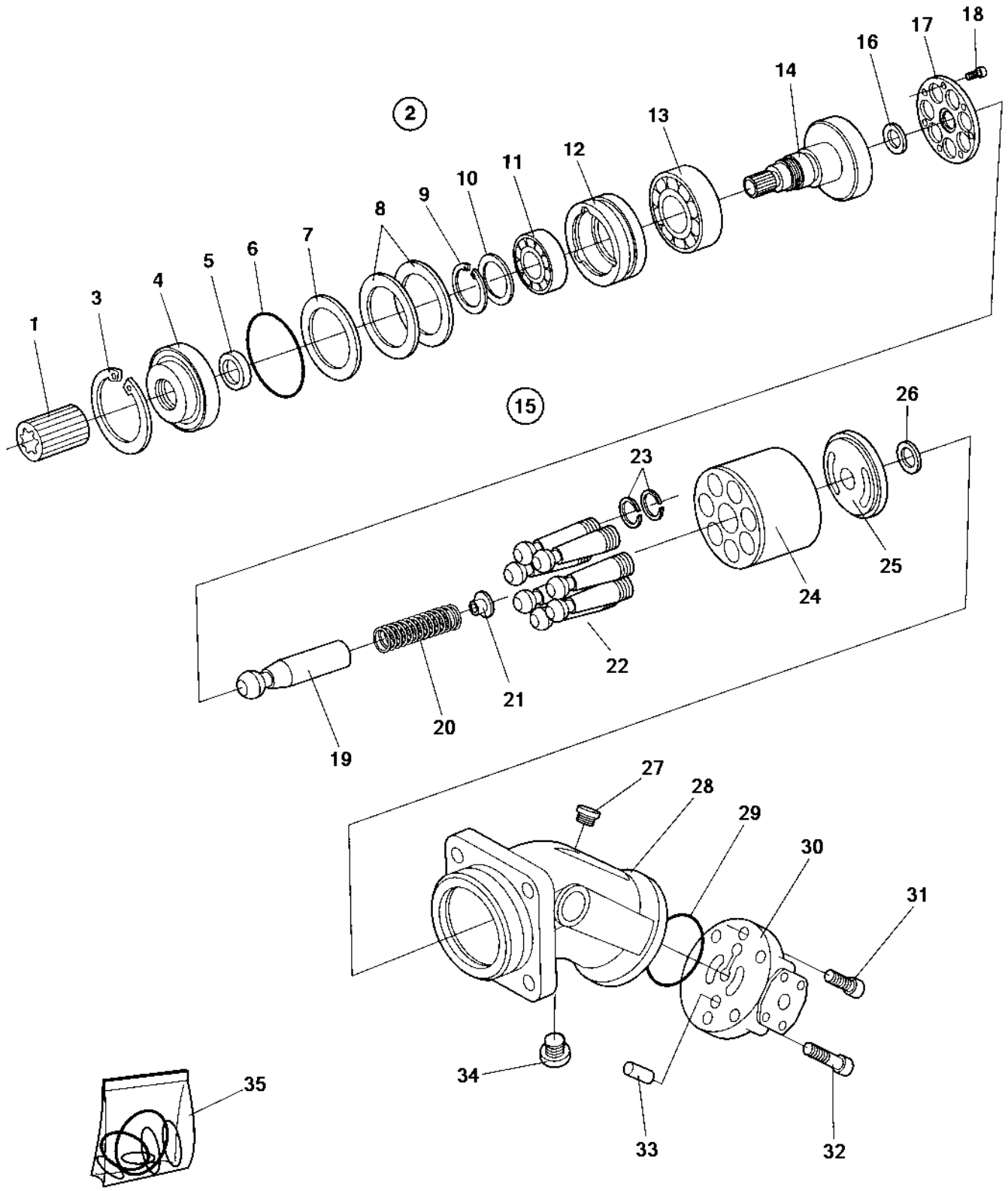

4700380145 Hydraulic motor, vibration

Item	Part No	Rem	Qty	Description		Code
			1	Hydraulic motor, vibration		
1	4700340863		1	. Splined sleeve		D
2	4700380078		1	. Hydraulic motor, vibration		C
3	4700901387		1	. . Snap ring		D
4	4700937261		1	. . Cover		
5	4700937264	1	1	. . Seal ring		
6	4700937265	1	1	. . O-ring		
7	4700901390		1	. . Shim	T=0,3 mm	D
8	4700901389		2	. . Shim	T=0,1 mm	D
9	4700938042		1	. . Retaining ring		
10	4700938041		1	. . Back-up plate		
11	4700901386		1	. . Bearing		D
12	4700937260		1	. . Bearing ring		
13	4700901385		1	. . Bearing		D
14	4700938040		1	. . Shaft		
15			1	. Rotary group, hydr.section		
16			1	. . Washer		
17			1	. . Retaining plate		
18			7	. . Screw		
19			1	. . Pin		
20			1	. . Spring		
21			1	. . Spring collar		
22			7	. . Piston		
			1	. . . Piston		
23			2	. . . Sealing ring		
24			1	. . Cylinder		
25			1	. . Pressure plate		
26			1	. . Washer		
27	4700937995		1	. . Screw		
28	4700937256		1	. . Housing		
29	4700937258	1	1	. . O-ring		
30	4700937257		1	. . Plate		
31	4700902655		2	. . Screw		
32	4700927350		4	. . Screw		D
33	4700937993		1	. . Pin		
34	4700937259	1	1	. . Screw		
35	4700937674		1	. Seal kit		

1) Included in seal kit, item 35

Steering system

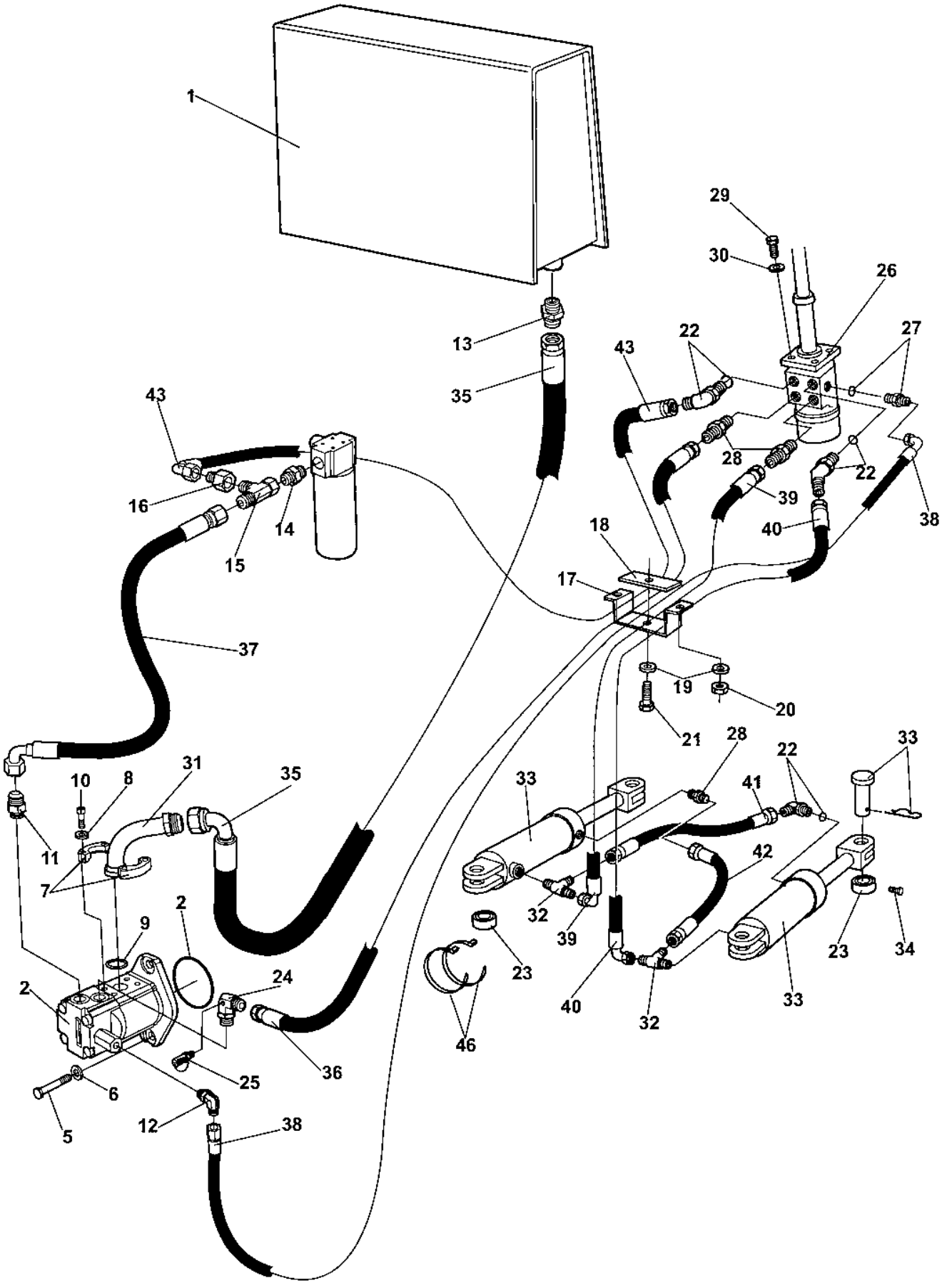

Steering system

Item	Part No	Rem	Qty	Description	Code
1			1	**Hydraulic oil tank (Page 126)**	
2	4700394904		1	Steering pump	D
	4700950580		1	Seal kit	D
5	4700500046		2	Screw M12x025H	C
6	4700904231		2	Washer 13x24x2 300 HV	C
7	4700232097		2	Flange half	C
8	4700904637		4	Washer	C
9	4700904005		1	O-ring	B
10	4700508029		4	Screw M10-1,5x30H 8,8	C
11	4700334158		1	Adapter	D
12	4700334203		1	Elbow 90, O-ring	C
13	4700234626		1	Adapter	C
14	4700334468		1	Adapter	C
15	4700234243		1	T-connector	C
16	4700234667		1	Reducer	
17	4700372513		1	Hose clamp	D
18	4700372514		1	Hose clamp	D
19	4700904229		3	Steel plain washer 8,4x16x1,5	C
20	4700586003		2	Lock nut M8	C
21	4700500023		1	Screw M8-1,25x40 8,8	C
22	4700813500		3	Elbow 45, O-ring	C
23	4700379630		4	Radial spherical plain bearing	D
24	4700392934		1	Adapter	D
25	4700910161		1	Measuring nipple	C
26	4700372424		1	**Pilot valve, steering (Page 122)**	C
27	4700334143		1	Straight connector	C
28	4700334121		3	Straight connector	C
29	4700502034		4	Screw UNC 3/8 - 16	D
30	4700904230		4	Steel plain washer	C
31	4700379481		1	Connector	D
32	4700234218		2	Tee-connector	C
33	4700392002		2	**Steering cylinder (Page 120)**	C
34	4700500044		2	Screw M6x8	C
35	4700483049		1	Hydraulic hose	D
36	4700482863		1	Hydraulic hose	D
37	4700483999		1	Hydraulic hose	D
38	4700482457		1	Hydraulic hose	D
39	4700483026		1	Hydraulic hose	D
40	4700483026		1	Hydraulic hose	D
41	4700483109		1	Hydraulic hose	D
42	4700483109		1	Hydraulic hose	D
43	4700482937		1	Hydraulic hose	D
46	4700313102		N	Cable ties	

4700392002 Steering cylinder

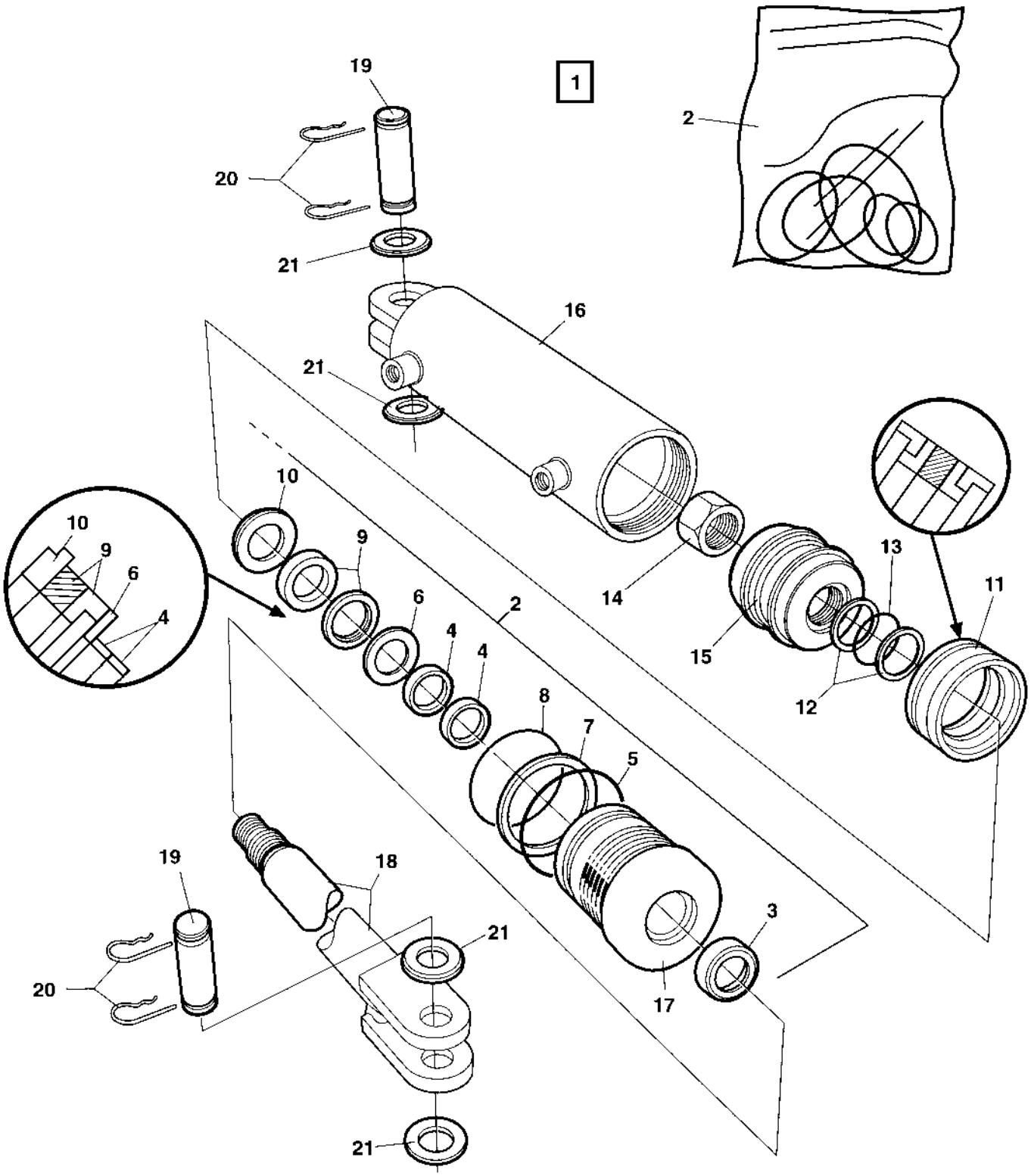

4700392002 Steering cylinder

Item	Part No	Rem	Qty	Description	Code
1	4700392002		1	**Steering cylinder (Page 120)**	C
2	4700392100		1	. Seal kit	B
3			1	. . Seal	
4			2	. . Seal	
5			1	. . O-ring	
6			1	. . Back-up ring	
7			1	. . Back-up ring	
8			1	. . O-ring	
9			1	. . Seal	
10			1	. . Retaining ring	
11			1	. . Seal	
12			2	. . Back-up ring	
13			1	. . O-ring	
14	4700392104		1	. Lock nut	
15			1	. Piston block	
16			1	. Cylinder	
17			1	. Steering	
18	4700392105		1	. Piston rod	D
19	4700392103		2	. Shaft	C
20	4700635061		4	. Hair clip	B
21	4700600016		4	. Washer 26x45x4	B

4700372424 Pilot valve, steering

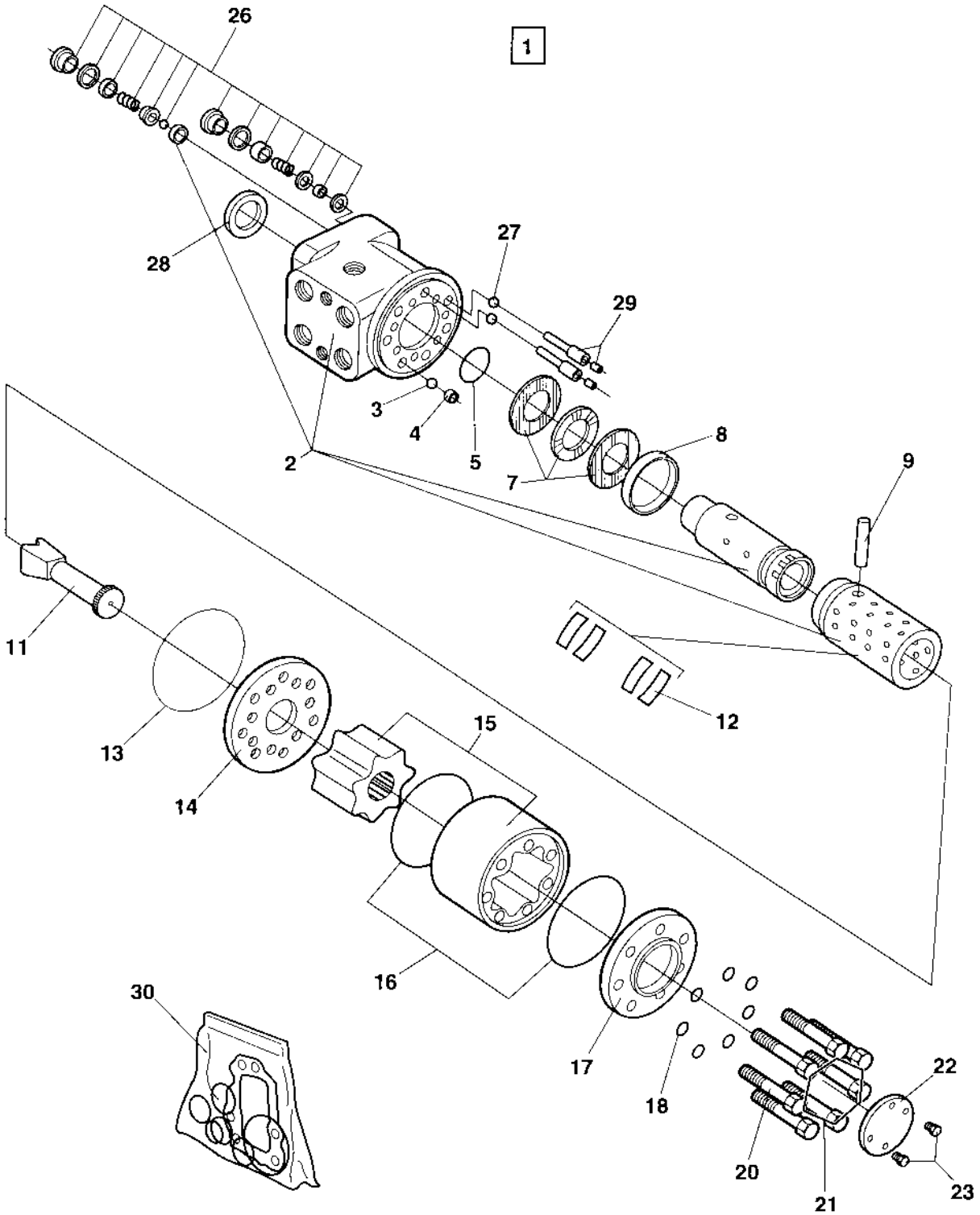

4700372424 Pilot valve, steering

Item	Part No	Rem	Qty	Description	Code
1	4700372424		1	**Pilot valve, steering (Page 122)**	C
2			1	. Housing , spool and sleeve , cpl	
3	4700480468		1	. Ball	D
4	4700480446		1	. Threaded bushing	D
5		1	1	. O-ring	
7	4700911620		1	. Bearing	B
8	4700480449		1	. Ring	D
9	4700480447		1	. Cross pin	C
11	4700902861		1	. Cardan shaft	C
12	4700909211		1	. Set of springs	C
13		1	1	. O-ring	
14	4700902862		1	. Valve plate	C
15	4700903457		1	. Gear wheel set	D
16		1	2	. O-ring	
17	4700480450		1	. End cap	D
18		1	7	. Washer	
20	4700480456		1	. Screw with hole	D
21	4700935428		6	. Screw	
22			1	. Name plate	
23			2	. Screw	
26	4700929012		2	. Shock valve 22,5-24,0 MPa	C
27	4700929013		2	. Ball	D
28		1	1	. Seal ring	
29	4700929014		2	. Rolled pin	D
30	4700935429		1	. Seal kit	

1) Included in seal kit item 30

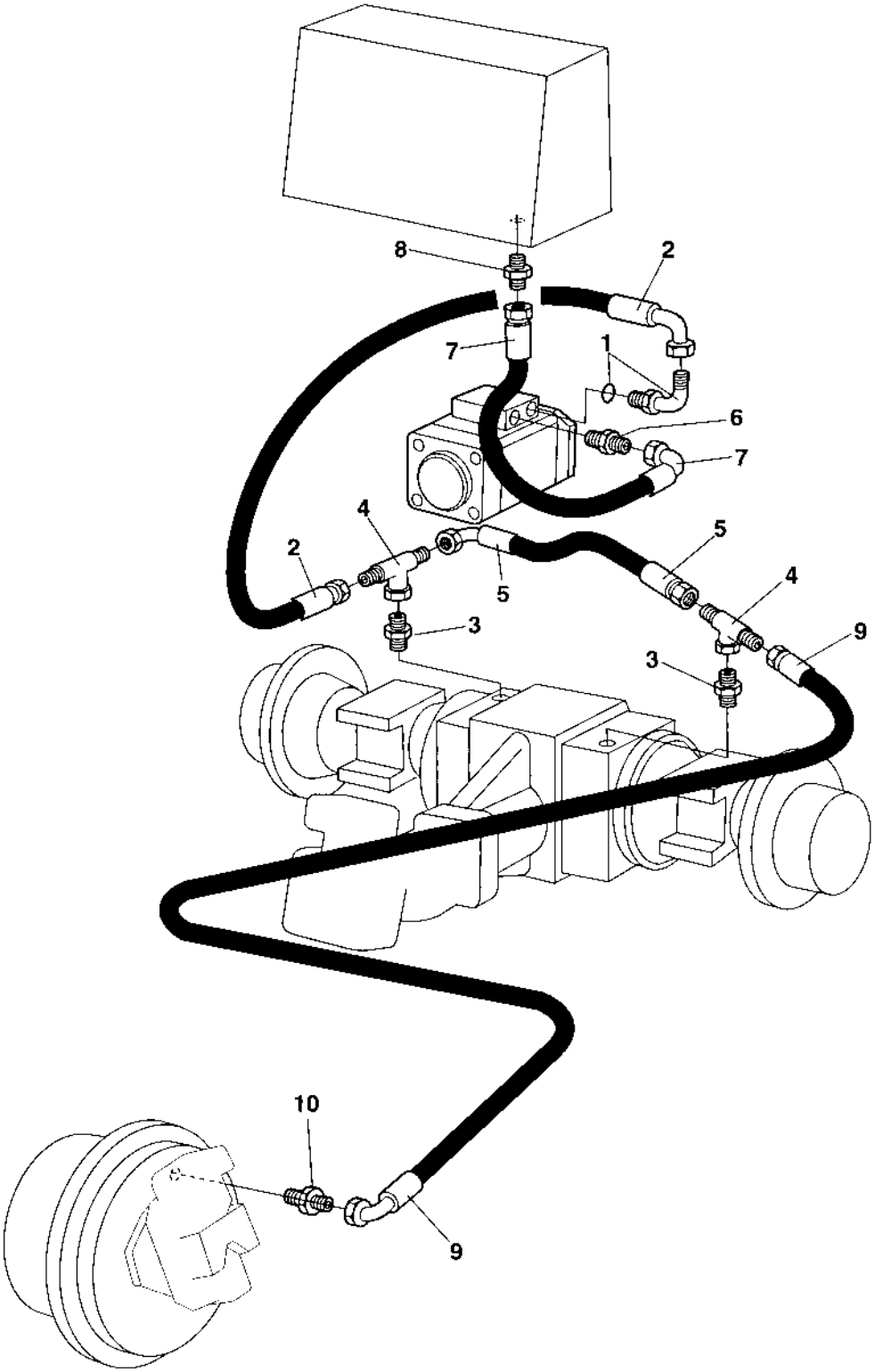
8
2
7
1
6
7
4
2
5
5
4
3
9
3
10
9

Brake system

Item	Part No	Rem	Qty	Description	Code
1	4700334389	A	1	Connector	D
2	4700482056		1	Hydraulic hose	D
3	4700900552		2	Adapter	C
4	4700234888		2	Tee-connector	D
5	4700482399		1	Hydraulic hose	D
6	4700234843	B	1	Adapter	
7	4700482516		1	Hydraulic hose	D
8	4700334205		1	Straight connector	D
9	4700483122		1	Hydraulic hose	D
10	4700925723		1	Connector	C

A) Port X7 on pump
B) Port L4 on pump

Hydraulic oil tank

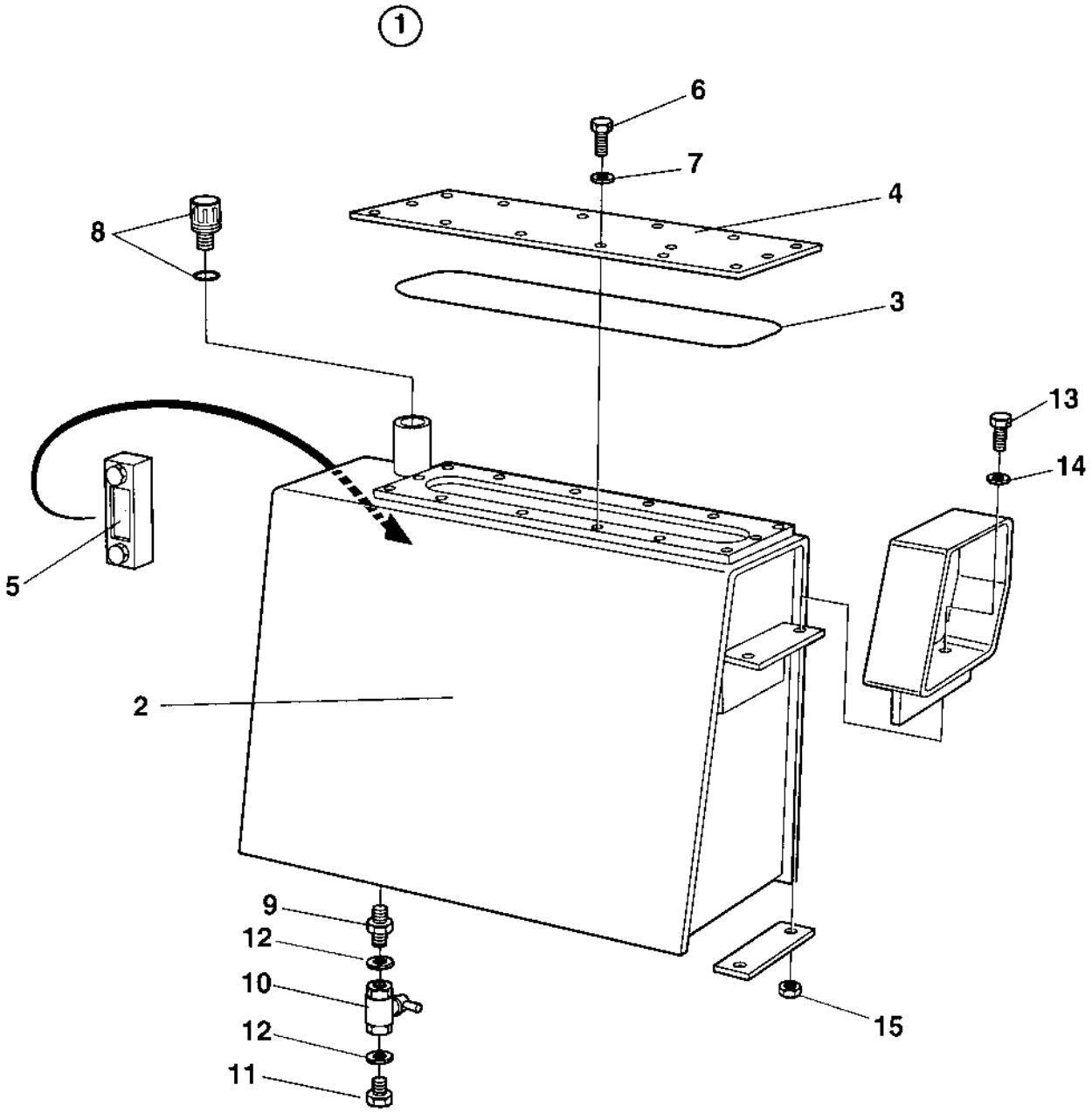

Hydraulic oil tank

Item	Part No	Rem	Qty	Description	Code
1	4700392981		1	Hydraulic oil tank, cpl	D
2	4700392986		1	. Hydraulic oil tank	D
3	4700349880		1	. O-ring	C
4	4700349879		1	. Cover	D
5	4700989151		1	. Oil level glass	C
6	4700500019		14	. Hexagon head screw M8x16H 8,8	C
7	4700904229		14	. Steel plain washer 8,4x16x1,5	C
8	4700357138		1	. Ventilating filter	A
9	4700791119		1	. Adapter G3/4	D
10	4700233304		1	. Ball valve	C
11	4700232039		1	. Plug G3/4	C
12	4700791120		2	. Sealing washer	
13	4700500030		4	Screw M10x035H 8.8 A3K	C
14	4700904567		4	Washer 10,5x28x6 HB305	C

Central test panel Option

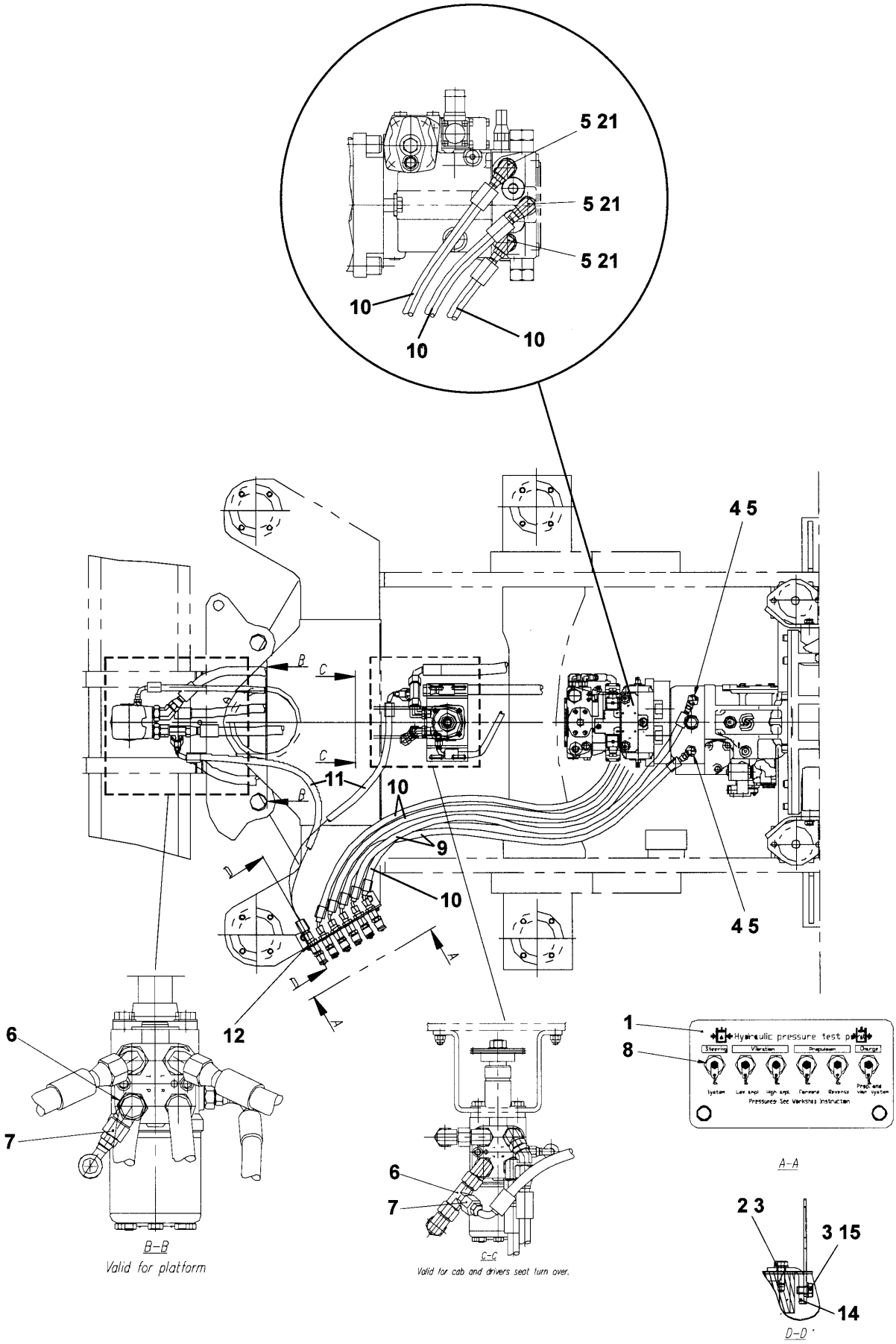

Central test panel Option

Item	Part No	Rem	Qty	Description	Code
1	4812113146		1	Test panel	D
2	4700600006		2	Washer	C
3	4700500053		2	Screw M8x20H 8.8	C
4	4700791914		2	Straight connector orfs	D
5	4812113110		5	Elbow 90	D
6	4700334135		1	Tee-connector	C
7	4811000332		1	Reducer	D
8	4812110422		6	Measuring nipple	C
9	4811000329		2	Hydraulic hose	
10	4811000328		3	Hydraulic hose	
11	4811000363		1	Hydraulic hose	
12	4700792450		6	Nut	D
13	4700313102		5	Cable ties	
14	4700908136		2	Bracket	D
15	4700500018		2	Screw M8-1,25x12 8,8	C
21	4700791538		3	Straight connector	C

Dual speed drum drive Option

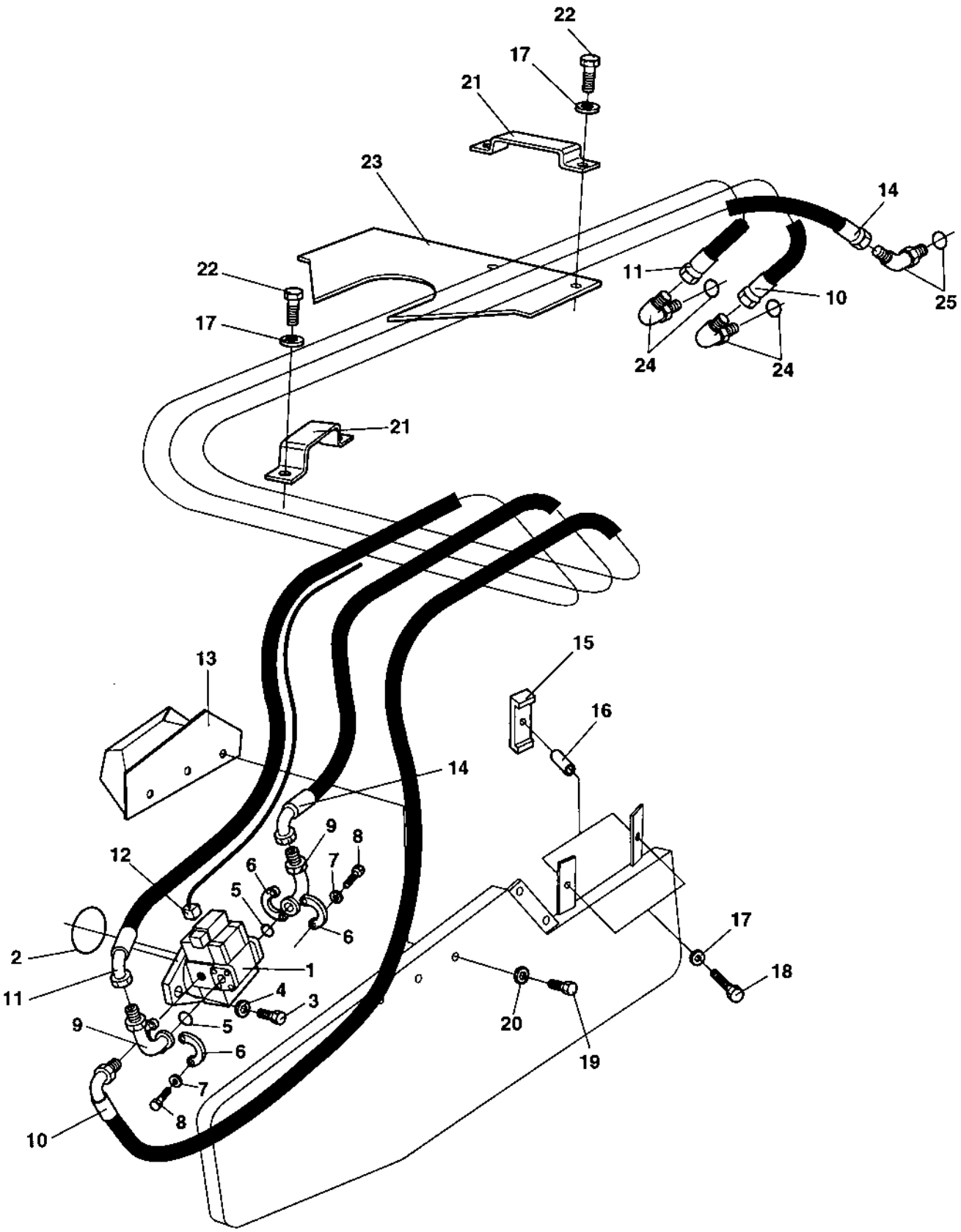

Dual speed drum drive Option

Item	Part No	Rem	Qty	Description	Code
1	4700389565		1	Hydraulic motor, dual speed	C
2	4700904058		1	O-ring	
3	4700500101		2	Screw M20x50	C
4	4700903290		2	Washer 21x36x6	C
5	4700904005		2	O-ring	B
6	4700923384		4	Flange half	C
7	4700604008		8	Washer	D
8	4700502132		8	Screw UNC 7/16" x 22	D
9	4700903750		2	Elbow	
10	4700483114		1	Hydraulic hose	D
11	4700483115		1	Hydraulic hose	D
12	4700372206		1	Cable harness	D
13	4700374251		1	Protecting cover	D
14	4700483116		1	Hydraulic hose	D
15	4700373270		2	Hose clamp	D
16	4700373423		2	Spacer	D
17	4700904229		6	Steel plain washer 8,4x16x1,5	C
18	4700500032		2	Screw M10 x 55	D
19	4700500077		3	Screw	D
20	4700904230		3	Steel plain washer	C
21	4700373016		2	Hose clamp	D
22	4700500029		4	Hexagon head screw	C
23	4700372235		1	Hose guard	D
24	4700813499		2	Elbow 90, O-ring	D
25	4700334132		1	Elbow 45, O-ring	C

Electrical equipment

Item	Part No	Rem	Qty	Description	Code
100				Electric system (Page 134)	
150				Relay and Fuses (Page 138)	
200				Instrument box (Page 140)	
310				Instrument panel Main (Page 142)	
325				Instrument panel Upper left (Page 144)	
350				Instrument panel Upper right (Page 146)	
375				Instrument panel Lower left (Page 148)	
400				Instrument panel Lower right (Page 150)	
520				Emergency stop panel (Page 152)	
522				Emergency and Parking brake panel (Page 154)	
525				Working lights Option (Page 156)	
555				Driving lights Option (Page 158)	
570				Rotating beacon Option (Page 162)	
581				Compaction meter Option (Page 164)	
595				Speedometer and frequency meter Option (Page 166)	
605				Tachograph, platform Option (Page 168)	
607				Tachograph , cab Option (Page 170)	
608				Tachograph, simple cab Option (Page 172)	
615				Back-up alarm Option (Page 174)	
620				Protecting cover, Headlight Option (Page 176)	
630				Field computer assembly Option (Page 178)	
640				Compaction Analyzer Option From 66X10286 (Page 180)	
645				Compaction Analyzer Option (Page 182)	
650				Geodynamic Compaction indicator Option (Page 184)	
660				GPS Option (Page 186)	
				GPS Option (Page 188)	
670				Engine pre-heater, Cab Option (Page 190)	
671				Engine pre-heater, Platform Option (Page 192)	

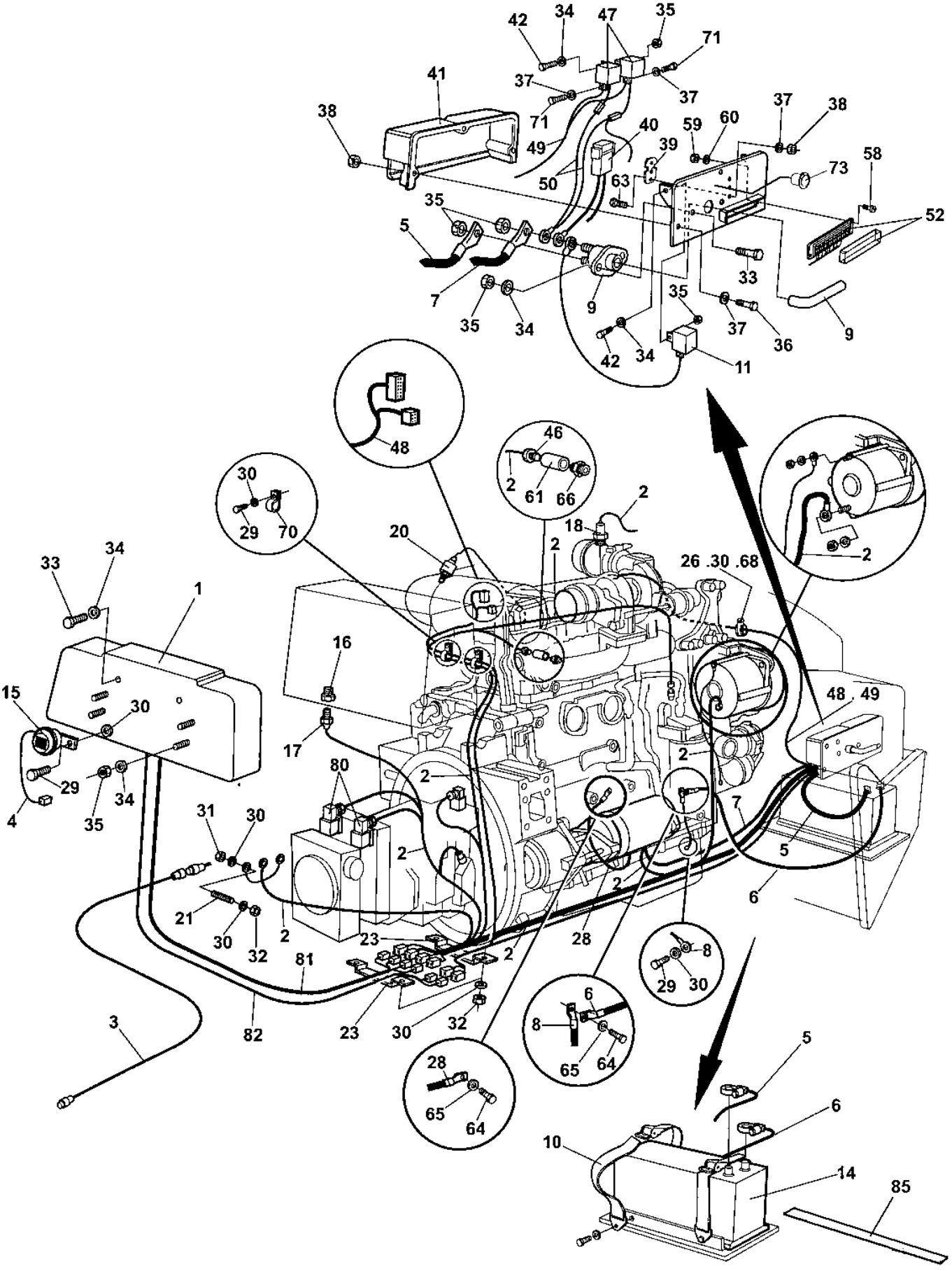
42
34
47
35
71
37
41
37
38
71
37
38
40
59
60
49
39
58
73
50
63
52
35
5
33
7
35
34
9
35
37
36
9
42
34
11
48
46
2
61
66
30
29
70
20
2
18
2
26 .30 .68
2
33
34
1
16
15
30
48 . 49
17
80
2
2
29
34
4
35
31
30
7
2
5
21
30
32
2
23
2
28
6
81
8
29
30
3
82
23
30
32
6
8
65
64
28
65
64
5
6
10
14
85

Electric system

Item	Part No	Rem	Qty	Description	Code
1			1	Control panel	
2	4700392923		1	Cable harness	D
3				Not used on this model	
4	4700372997		1	Cable harness	D
5	4700348347		1	Battery cable	C
6	4700904020		1	Battery cable	
7	4700791509		1	Connection cable, coarse	D
8	4700903760		1	Connection cable, coarse	
9	4700930150	1	1	Battery switch	B
	4700928021	2	1	. Key	A
	4700903640	3	1	Battery switch	D
	4700903641	4	1	. Key	D
10	4700389662		2	Strap	
11	4700791183	B	1	Relay	A
14	4700950339		1	Battery	D
15	4700999027		1	Horn	C
16	4700813434		1	Reducer	C
17	4700903631		1	Temperature sensor Hydraulic oil	B
18	4700903632		1	Temperature sensor Engine	
20	4700929023		1	Indicator	B
21	4700903768		3	Threaded stud	C
23	4700372649		2	Cable holder	D
25	4700901080		1	Clamp	
26	4700500067		2	Screw M8-1,25x55 8,8	C
28	4700335607		1	Connection cable, coarse	B
29	4700500053		6	Screw M8x20H 8.8	C
30	4700904229		14	Steel plain washer 8,4x16x1,5	C
31	4700570005		4	Nut M8	C
32	4700586003		3	Lock nut M8	C
33	4700500040		4	Screw M6-1x20 8,8	C
34	4700904639		12	Washer 6,7x14x1,5	C
35	4700586002		10	Lock nut M6 -8	C
36	4700500184		3	Screw M5-0,8x14 8,8	D
37	4700904281		12	Washer 5,3x10x1 300HV	C
38	4700586001		5	Lock nut	C
39	4700904036		1	Fuse holder	D
40	4700904037		1	Fuse 30A	A
41	4700373891		1	Cover	D
42	4700500075		4	Screw M6-1,0x25 8.8	C
46	4700813462		1	Oil pressure sender	B
47	4700791183		2	Relay	A
48	4700393614		1	Cable harness	D
49	4700392937		1	Cable harness	D
50	4700390377		1	Cable harness	D
	4700791477		2	. Fuse holder	D
	4700792268		2	. Fuse, Natural 80A	A
52	4700791185		1	Fuse box	
	4700791186		1	Fuse box cover	D
	4700901225		2	Fuse 5A	A
	4700901230		1	Fuse 30A	A
	4700901227		1	Fuse 10A	A
	4700791211		1	Contact bridge	C
58	4700533010		2	Screw	D
59	4700923976		2	Nut	C

1) With round shaped Key.
2) Used with battery switch P/N 4700930150.
3) With flat shaped key.
4) Used with battery switch P/N 4700903640.
B) Replaces P/N 4700904448 as Start relay from January 2009.

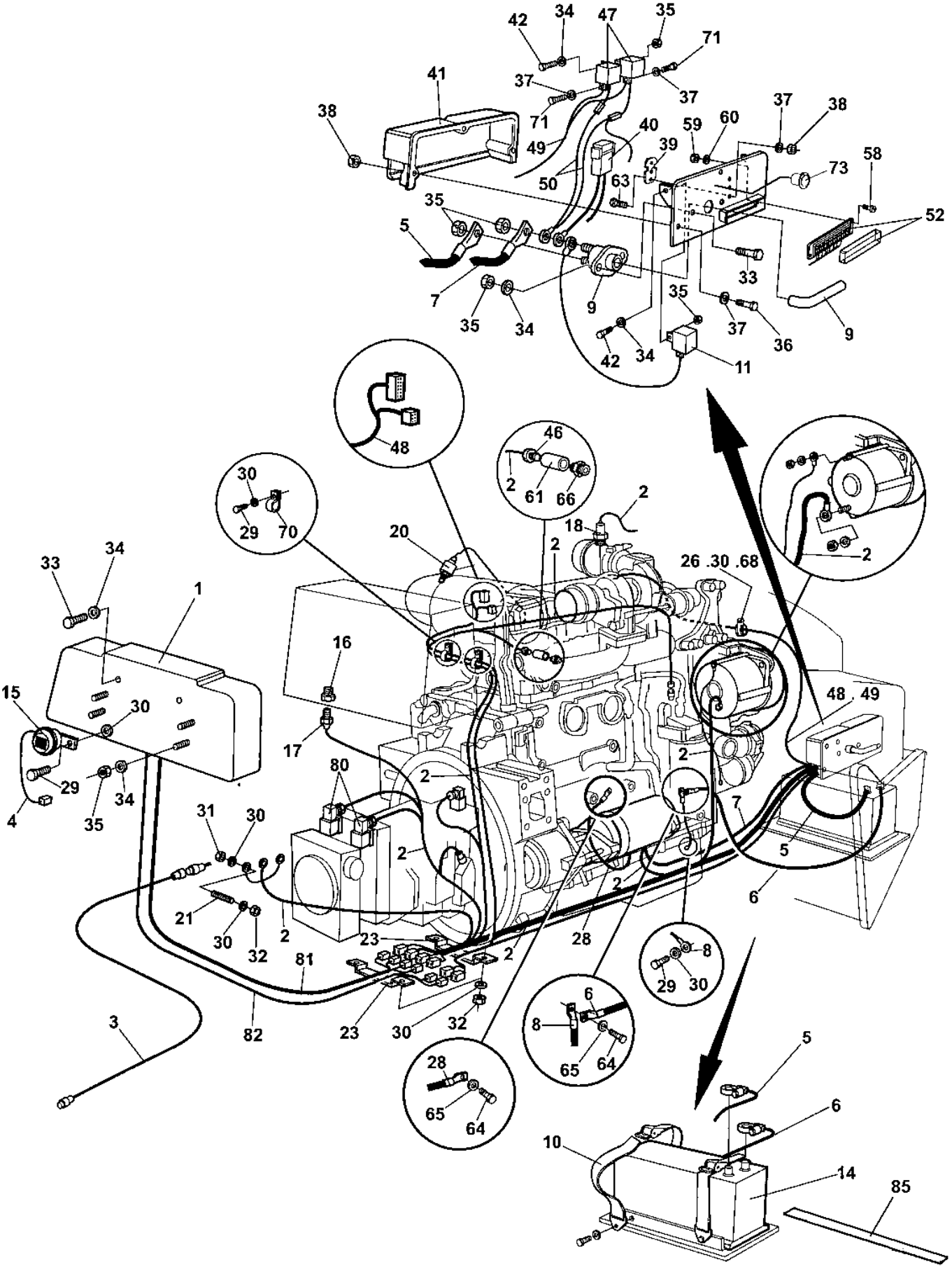
42
34
47
35
71
37
41
37
38
71
37
38
40
59
60
49
39
58
73
50
63
52
35
5
33
7
35
34
9
35
37
36
9
42
34
11
48
46
2
61
66
30
29
70
20
2
18
2
26 .30 .68
2
33
34
1
16
15
30
48 . 49
17
80
2
2
29
34
4
35
31
30
7
2
5
21
30
32
2
23
2
28
6
81
8
29
30
3
82
23
30
32
6
8
65
64
28
65
64
5
6
10
14
85

Electric system

Item	Part No	Rem	Qty	Description	Code
60	4700904698		2	Washer 4,3x8x0,8	C
61	4700338304		1	Connector	C
63	4700500006		2	Screw M5x16	C
64	4700500051		2	Screw M12x25H 8.8 A3K	C
65	4700904231		2	Washer 13x24x2 300 HV	C
66	4700902468		1	Connector	
68	4700960727		1	Clamp	
70	4700904346		2	Clamp	D
71	4700500004		4	Screw M5 0,8x12 8,8	C
73	4812110560		1	Power socket 12V	D
80	4700960796		2	Connector black, MPM 182 09 ND	C
81	4812110866		1	Cable harness	D
82	4812110867		1	Cable harness	D
85	4812110818		2	Rubber cloth	

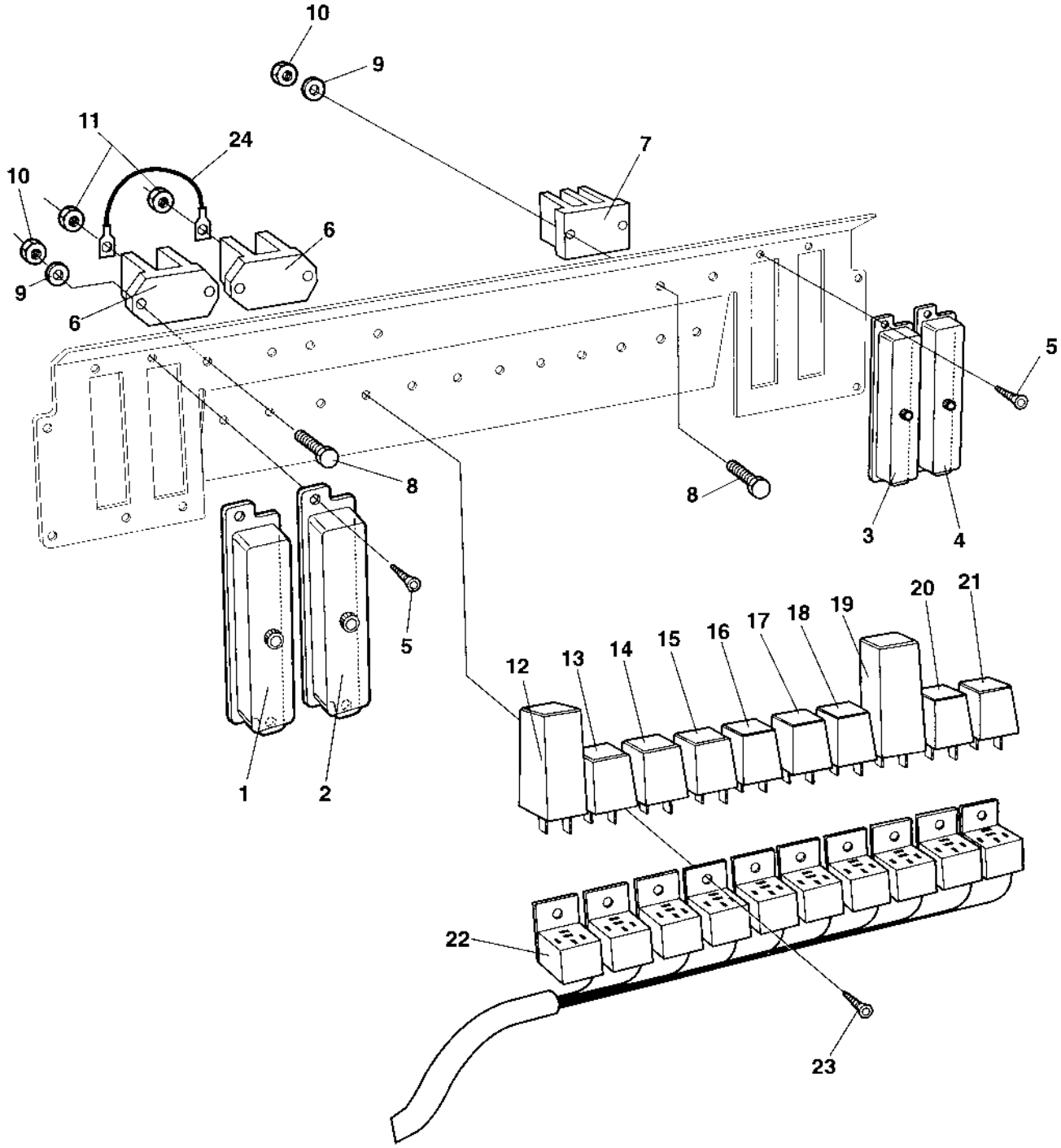
10
9
11
24
7
10
6
9
6
8
8
5
5
3
4
12
13
14
15
16
17
18
19
20
21
1
2
22
23

Relay and Fuses

Item	Part No	Rem	Qty	Description	Code
1	4700901256		1	Fuse box	D
	4700908110		1	. Cover	D
	4700901224		N	Fuse 3A	A
	4700901225		N	Fuse 5A	A
	4700901226		N	Fuse 7,5A	
	4700901227		N	Fuse 10A	A
	4700903741		N	Fuse 20A Yellow Medium	A
2	4700901256		1	Fuse box	D
	4700901240		1	Connector	B
3	4700901256		1	Fuse box	D
4	4700901256		1	Fuse box	D
5	4700901767		8	Screw ST3,5x9,5 Black	
6	4700392930		2	Junction box	D
7	4700903625		1	Junction block	C
8	4700533013		6	Screw M4x20	D
9	4700904698		6	Washer 4,3x8x0,8	C
10	4700923976		6	Nut	C
11	4700570004		2	Nut M6X1,00 -8 A2K	C
12	4700382782		1	Relay, VBS	A
13	4700791138	A	1	Relay	A
14	4700903956	B	1	Relay	A
16	4700903956	D	1	Relay	A
17	4700903956	E	1	Relay	A
18	4700903956	F	1	Relay	A
19	4700904989		1	Flash relay Option	A
20	4700791138	G	1	Relay	A
21	4700287598	H	1	Relay 12V-30A	A
22	4700357562		10	Relay holder	D
23	4700902223		9	Screw	D
24	4700903970		1	Cable	B

A) Main relay
B) Horn relay
D) Fuel level relay
E) Back-up alarm relay
F) Light relay
G) Brake relay
H) Air Condition relay

Instrument box

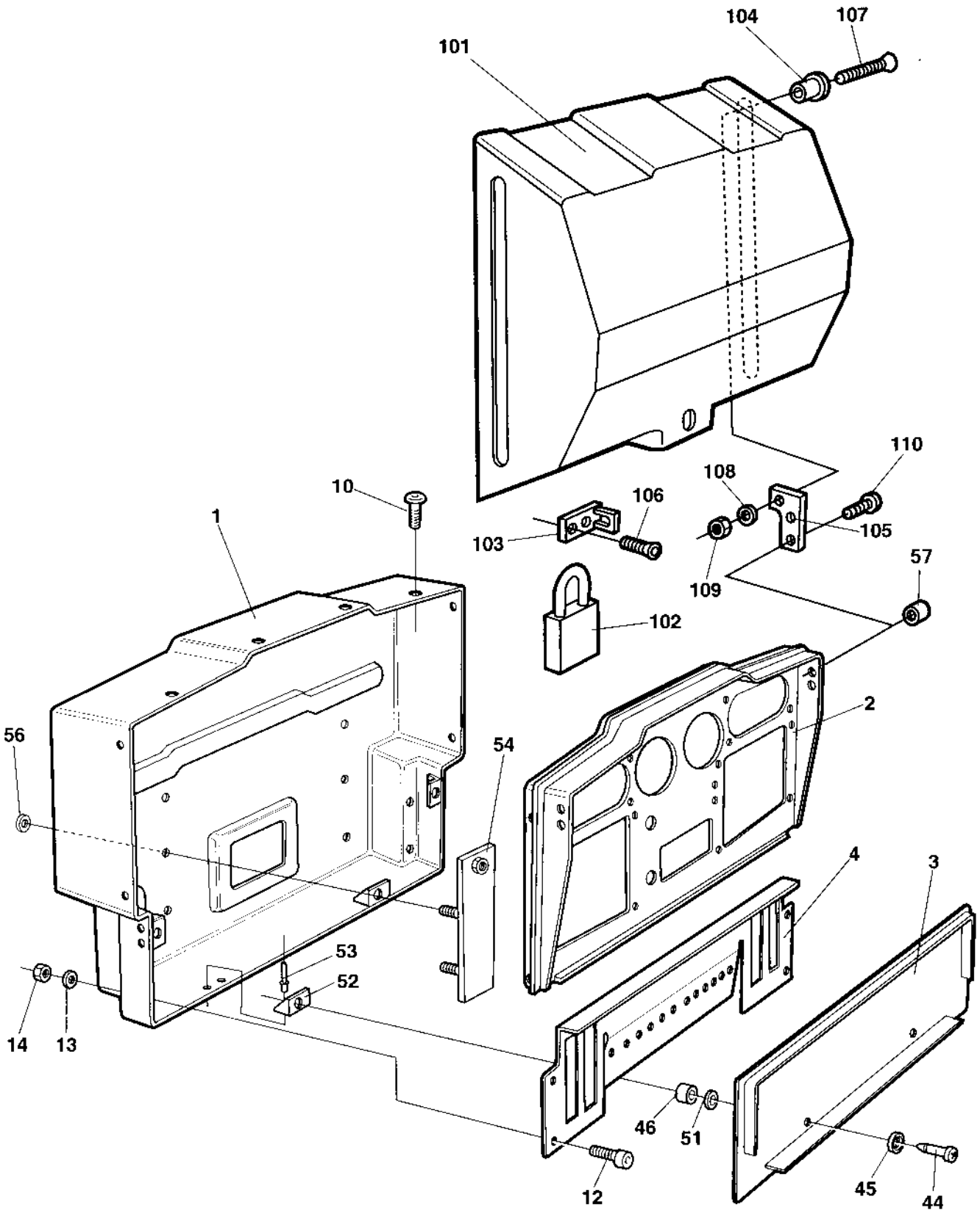

Instrument box

Item	Part No	Rem	Qty	Description	Code
1	4700374098		1	Instrument box	D
2	4700374379		1	Control panel	D
3	4700359845		1	Cover	D
4	4700370165		1	Relay bracket	D
10	4700903658		8	Screw M5x10	C
12	4700500040		4	Screw M6-1x20 8,8	C
13	4700904228		4	Washer 6,4x12x1,5	C
14	4700902285		4	Hexagon lock nut with flange	C
44	4700903599		4	Trunnion	D
45	4700903600		4	Rubber washer	C
46	4700903601		4	Washer	C
51	4700903678		4	Rubber washer	C
52	4700903602		4	Locking device	D
53	4700903436		8	Blind rivet	D
54	4700374099		2	Bracket	D
56	4700903961		4	Washer	C
57	4700903653		4	Plug	C
100		A	1	Control panel cover	
101	4700372103		1	Cover	D
102	4700358881		1	Pad lock	D
103	4700372104		1	Eyelet	C
104	4700357855		2	Bushing	C
105	4700372105		2	Bracket	D
106	4700904207		2	Screw	C
107	4700904208		2	Screw	C
108	4700904228		2	Washer 6,4x12x1,5	C
109	4700586002		2	Lock nut M6 -8	C
110	4700903658		4	Screw M5x10	C

A) Option

Instrument panel Main

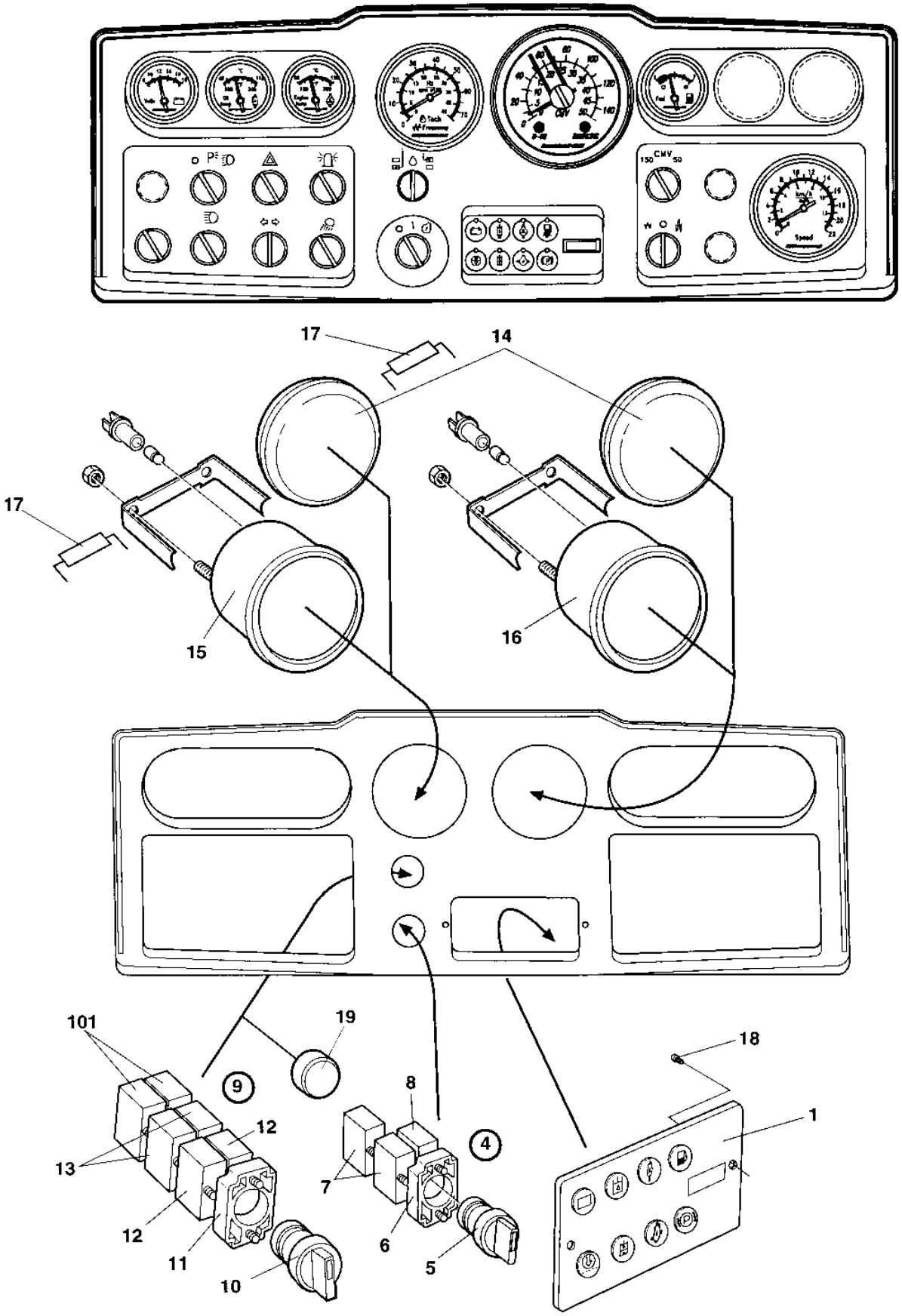

Instrument panel Main

Item	Part No	Rem	Qty	Description	Code
1	4700380660		1	Display	D
4		B	1	Switch	
5	4700932050		1	. Switch	B
6	4700903876		1	. Connector	C
7	4700930154		2	. Contact piece, NC	B
8	4700930163		1	. Contact piece, NO	B
9			1	. Frequency/tacho selector	
10	4700932058		1	. Switch	B
11	4700903876		1	. Connector	C
12	4700930163		2	. Contact piece, NO	B
13	4700930154		2	. Contact piece, NC	B
14	4700345139		2	Hole plug	C
15	4700371275		1	Tachometer and frequency meter	B
			1	Bulb	
16	4700372663		1	Speedometer	B
			1	Bulb	
17	4700357526		2	Resistor	D
18	4700903657		2	Screw	C
19	4700911456		1	Hole plug	C
101	4700930163	C	2	Contact piece, NO	B

B) Start
C) Option tachograph

Instrument panel Upper left

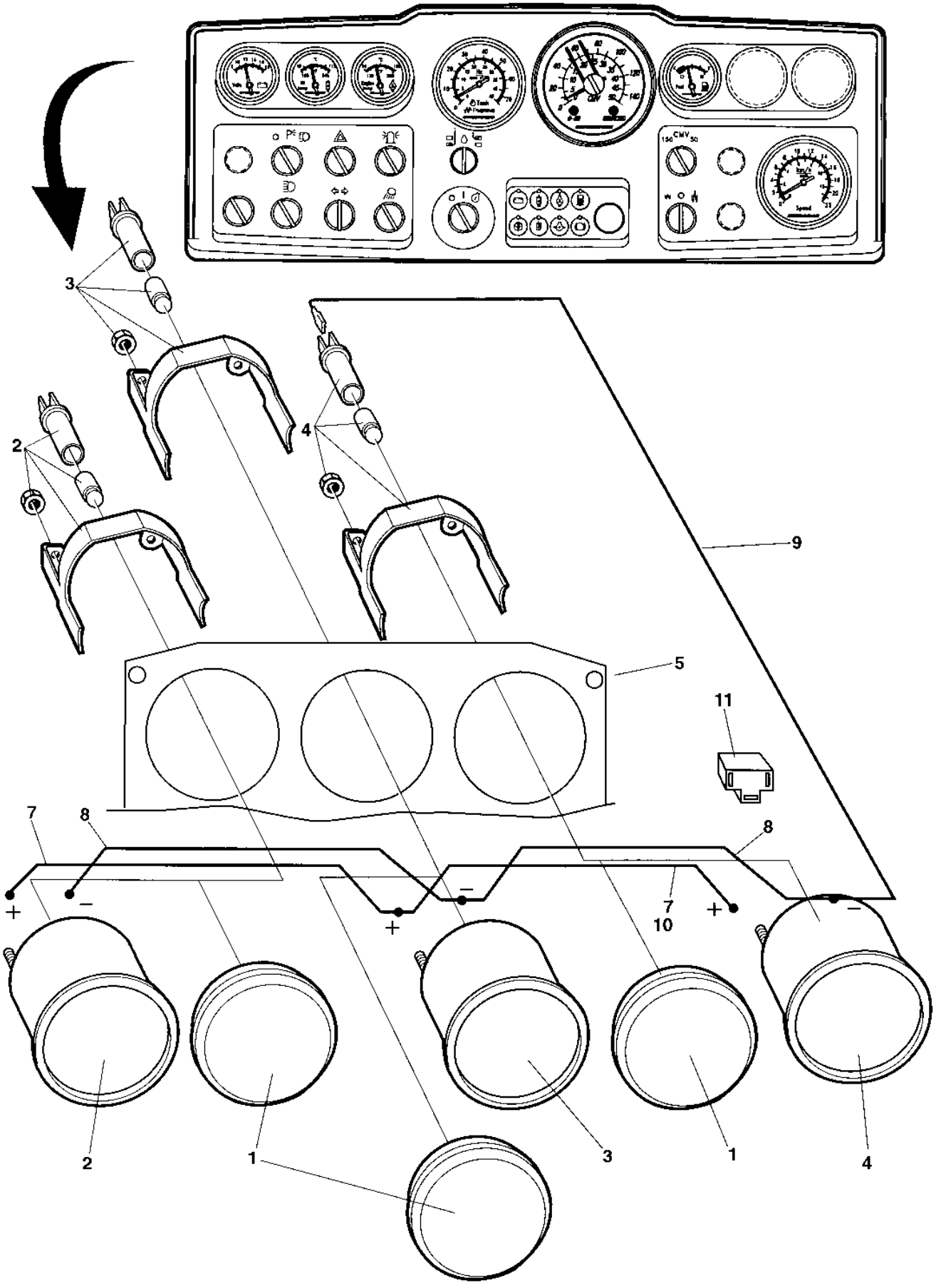

Instrument panel Upper left

Item	Part No	Rem	Qty	Description	Code
1	4700345870		3	Plug	C
2	4700359340		1	Volt meter	B
	4700355258		1	. Lamp holder	D
	4700985012		1	. Bulb	B
3	4700359341		1	Temperature meter, hydraulic oil	B
	4700355258		1	. Lamp holder	D
	4700985012		1	. Bulb	B
4	4700381874		1	Water temperature gauge	D
	4700904890		1	. Lamp holder	D
	4700904889		1	. Bulb	D
5			1	Control panel plate	
7	4700343550		1	Connection cable	B
8	4700903927		2	Cable	B
9	4700904016		3	Cable	B
10	4700343551		1	Cable	B
11	4700904819		1	Contact	D
			1		

Instrument panel Upper right

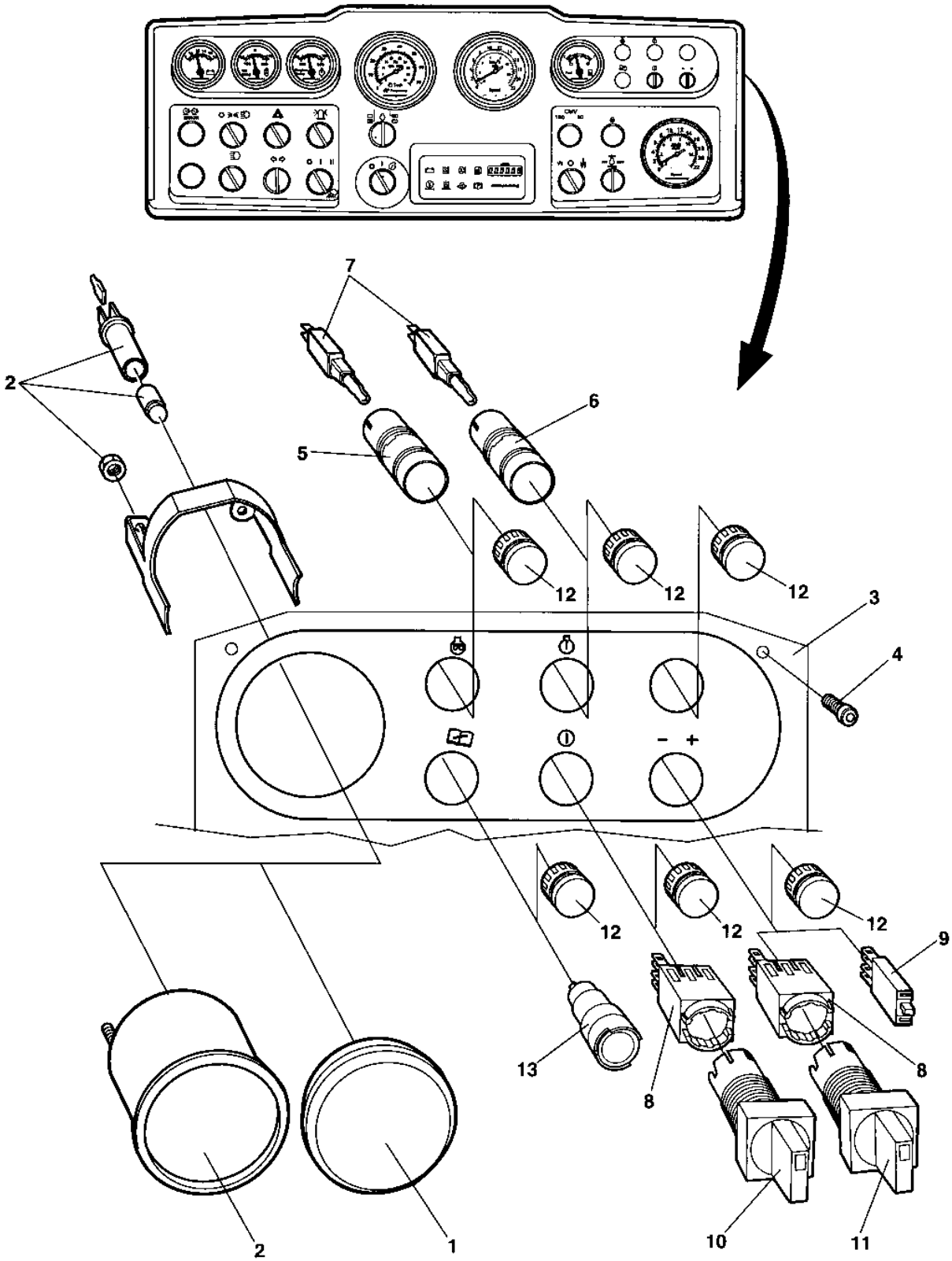

Instrument panel Upper right

Item	Part No	Rem	Qty	Description	Code
1	4700345870		1	Plug	C
2	4700359343		1	Fuel gauge	B
	4700355258		1	. Lamp holder	D
	4700985012		1	. Bulb	B
3	4700386189		1	Control panel plate	D
4	4700903657		6	Screw	C
5	4700792319	A	1	Pilot lamp Yellow	D
6	4700792319	B	1	Pilot lamp Yellow	D
7	4700792315		2	Illuminated block yellow	D
8	4700792314		2	Connector	C
9	4700792313		1	Connector	D
10	4700792317	D	1	Switch	D
11	4700792318	E	1	Switch	D
12	4700792320		6	Plug	D
13				Not used on this model	

A) Pre-heater lamp.
B) Fault alarm lamp.
D) Diagnostic "ON".
E) Error code scroll switch.

Instrument panel Lower left

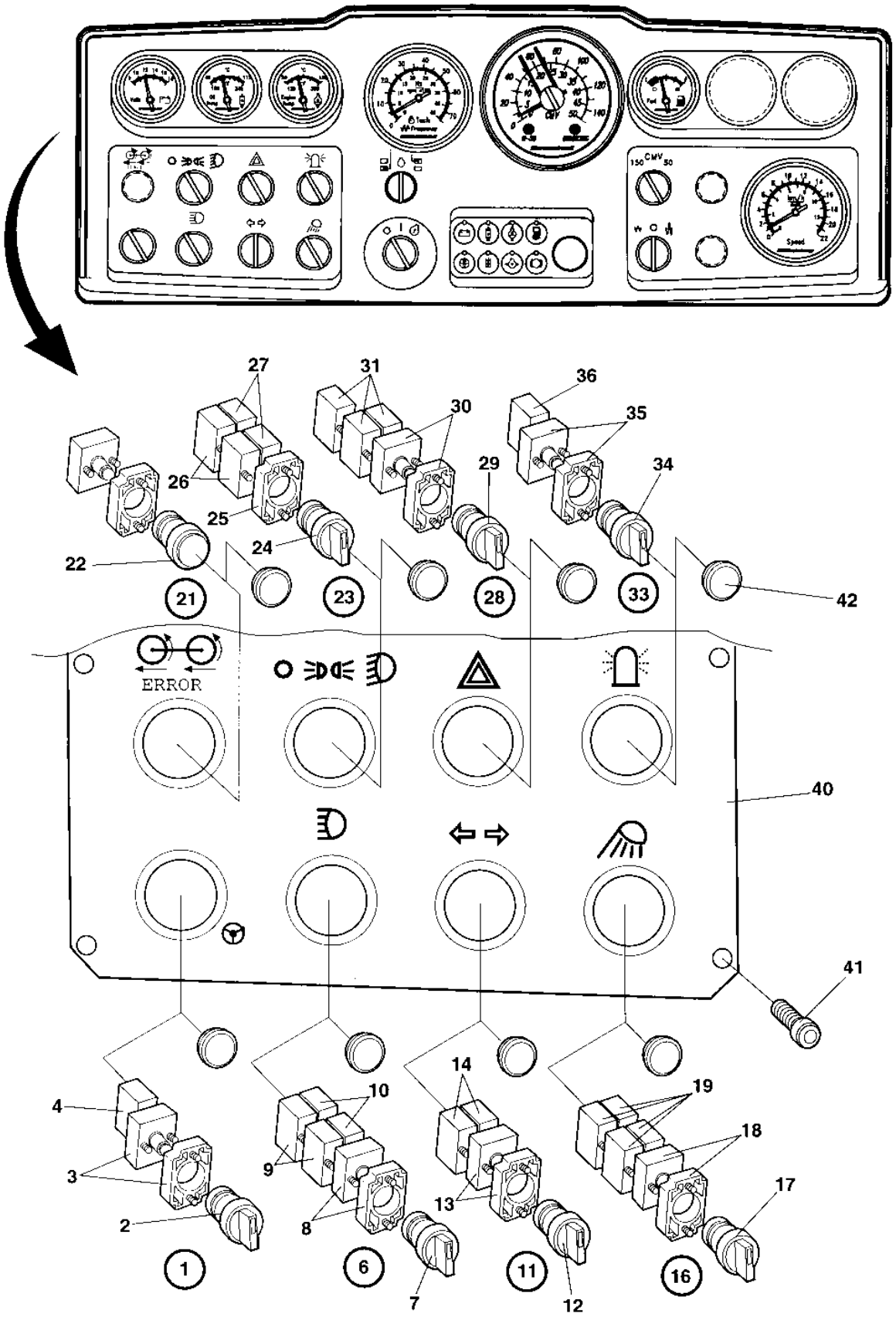

Instrument panel Lower left

Item	Part No	Rem	Qty	Description	Code
6		C	1	Switch, cpl	
7	4700932057	M	1	Switch	B
8	4700903875		1	. Flange with light	C
	4700985012		1	Bulb	B
9	4700930154		2	. Contact piece, NC	B
10	4700930163		2	. Contact piece, NO	B
11		D	1	Switch, cpl	
12	4700930161	E	1	. Switch	B
13	4700903875		1	. Flange with light	C
	4700985012		1	Bulb	B
14	4700930163		2	. Contact piece, NO	B
16		F	1	Switch, cpl	
17	4700930166	B	1	. Switch	B
18	4700903875		1	. Flange with light	C
	4700985012		1	Bulb	B
19	4700930163		4	. Contact piece, NO	B
21	4700985146	A	1	Pilot lamp cpl Red	B
	4700985012		1	Bulb	B
22	4700932034	G	1	. Lamp glass, Red	
23		H	1	Switch, cpl	
24	4700932058	I	1	. Switch	B
25	4700903876		1	. Connector	C
26	4700930154		2	. Contact piece, NC	B
27	4700930163		2	. Contact piece, NO	B
28		J	1	Switch, cpl	
29	4700932056	G	1	. Switch	B
30	4700903875		1	. Flange with light	C
	4700985012		1	Bulb	B
31	4700930163		3	. Contact piece, NO	B
33		L	1	. Switch, cpl	
34	4700930166	B	1	. Switch	B
35	4700903875		1	. Flange with light	C
	4700985012		1	Bulb	B
36	4700930163		1	. Contact piece, NO	B
40	4700372665		1	Control panel plate	D
41	4700903657		6	Screw	C
42	4700911456	K	-	Hole plug	C

A) Anti spin
B) Yellow
C) Main beam
D) Direction indicator
E) Green
F) Working light
G) Red
H) Parking/dipped beam
I) Black
J) Hazard flasher
K) Quantity as required
L) Rotating beacon
M) Blue

Instrument panel Lower right

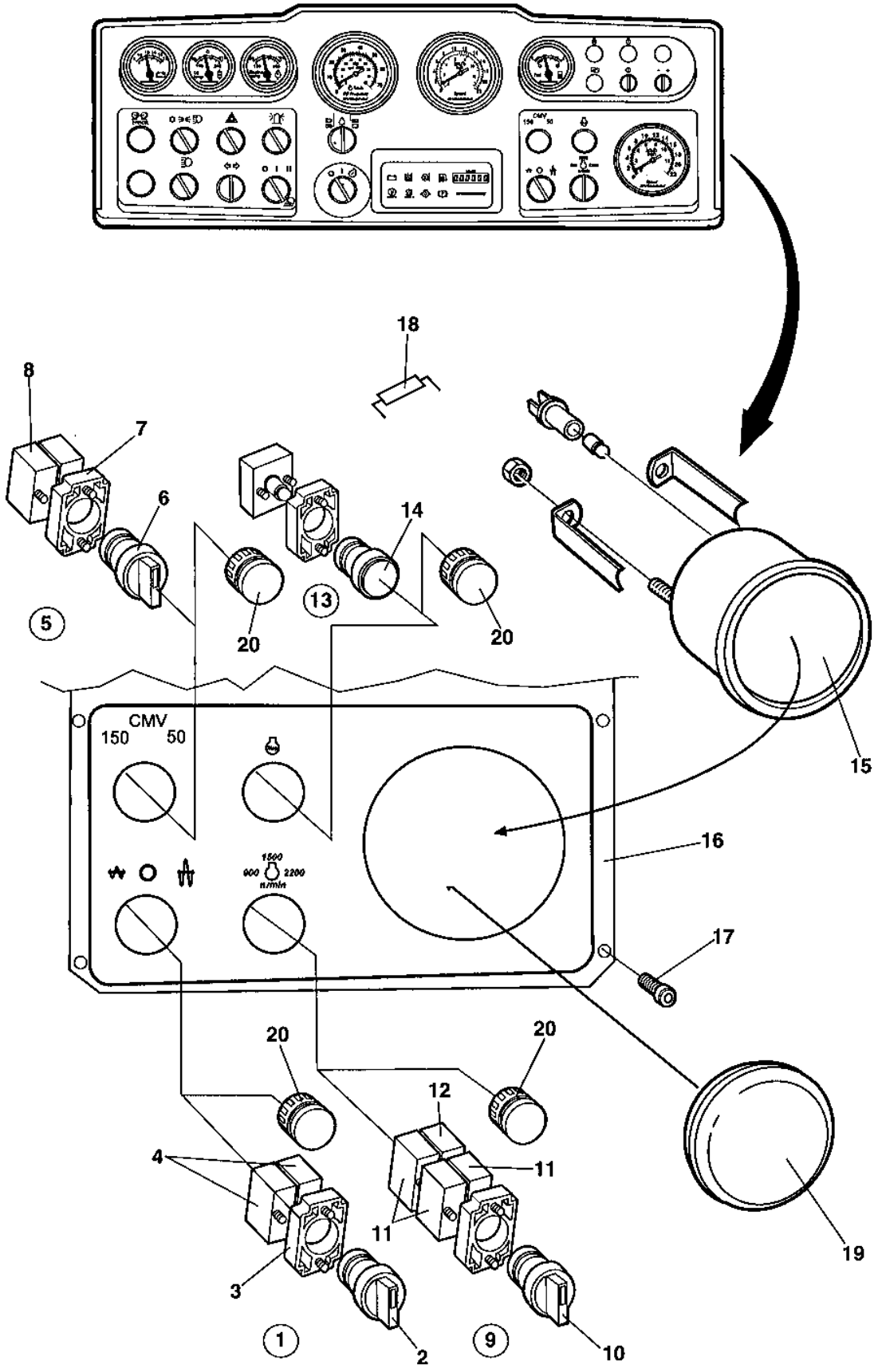

Instrument panel Lower right

Item	Part No	Rem	Qty	Description	Code
1		A	1	Switch, cpl	
2	4700932058	B	1	. Switch	B
3	4700903876		1	. Connector	C
4	4700930163		2	. Contact piece, NO	B
5		C	1	Switch, cpl	
6	4700930192	B	1	. Switch	B
7	4700903876		1	. Connector	C
8	4700930163		1	. Contact piece, NO	B
9		D	1	Switch, cpl	
10	4700930153	B	1	. Switch	D
11	4700930163		3	. Contact piece, NO	B
12	4700930154		1	. Contact piece, NC	B
13	4700985146		1	Pilot lamp cpl Red	B
	4700985012		1	Bulb	B
14	4700932034		1	Lamp glass, Red	
15	4700372663		1	Speedometer	B
			1	Bulb	
16	4700386189		1	Control panel plate	D
17	4700903657		6	Screw	C
18	4700357526		1	Resistor	D
19	4700345139		1	Hole plug	C
20	4700911456		4	Hole plug	C

A) Amplitude selector
B) Black
C) Cmv selector
D) Rev selector.

Emergency stop panel

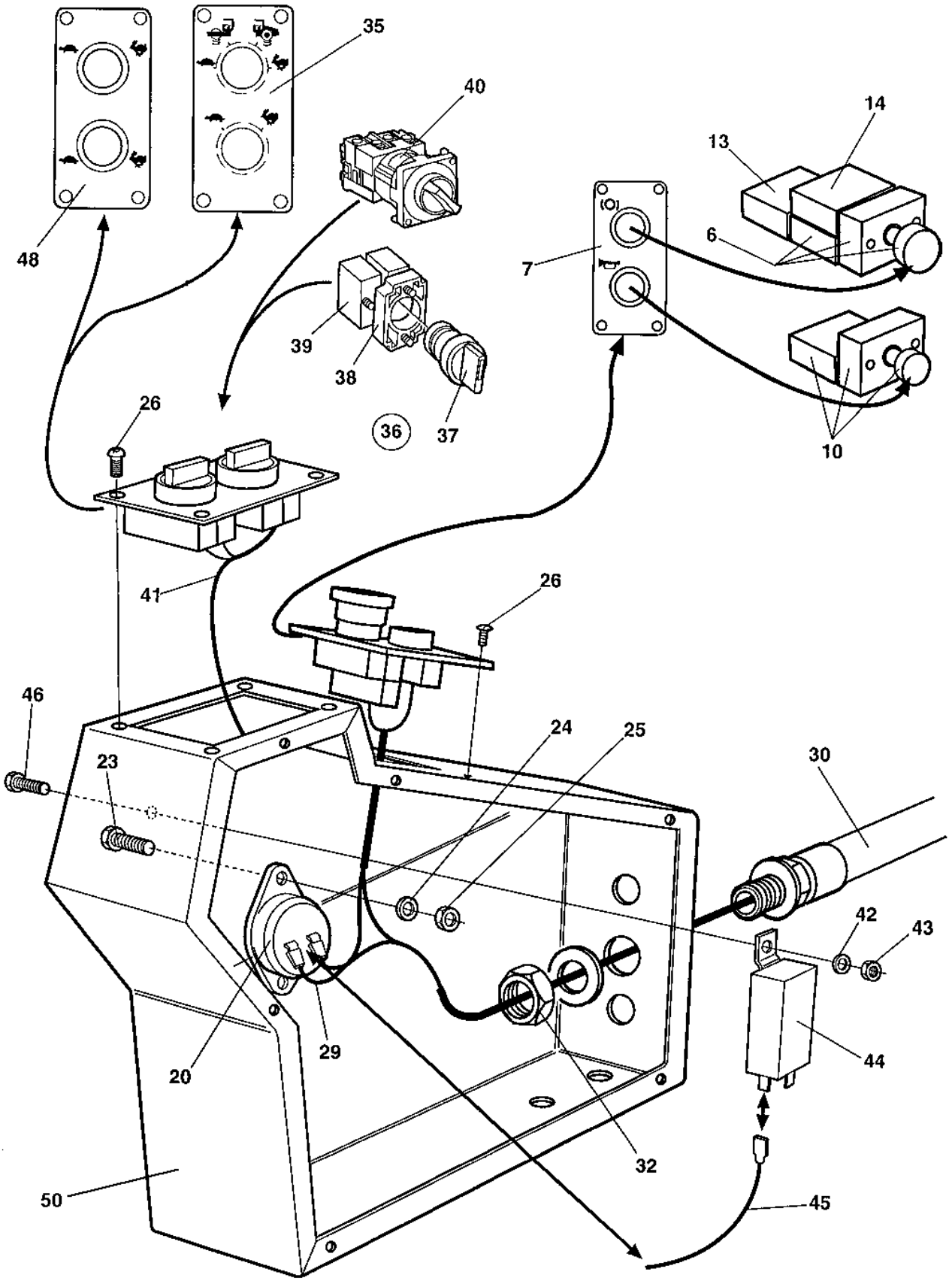

Emergency stop panel

Item	Part No	Rem	Qty	Description	Code
		A			
		A			
		A			
		A			
		A			
20	4700355301		1	Buzzer	B
23	4700500086		1	Screw	D
24	4700904698		1	Washer 4,3x8x0,8	C
25	4700570002		1	Nut M4	C
26	4700904206		8	Screw	C
	4700903658		8	Screw M5x10	C
29	4700960792		1	Cable	B
30	4812110865		1	Cable harness	C
32	4700791253		1	Nut	D
35	4700389075		1	Control panel plate	D
36		F	2	Switch, cpl	
37	4700930192	C	1	. Switch	B
38	4700903876		1	. Connector	C
39	4700930163		1	. Contact piece, NO	B
40	4700389119	B	1	Switch	D
41	4700343550	E	1	Connection cable	B
42	4700904228		1	Washer 6,4x12x1,5	C
43	4700586002		1	Lock nut M6 -8	C
44	4700792548	D	1	Delay relay	A
45				Not valid for this model	
46	4700904206		1	Screw	C
48	4700372749	E	1	Control panel plate	D
50	4812110972		1	Control cover	D

A) Se section: "Emergency and Parking brake panel".
B) Option. Traction control, 4-way switch.
C) Black
D) Interlock
E) Option.
F) One switch is option and used together with item 48.

Emergency and Parking brake panel

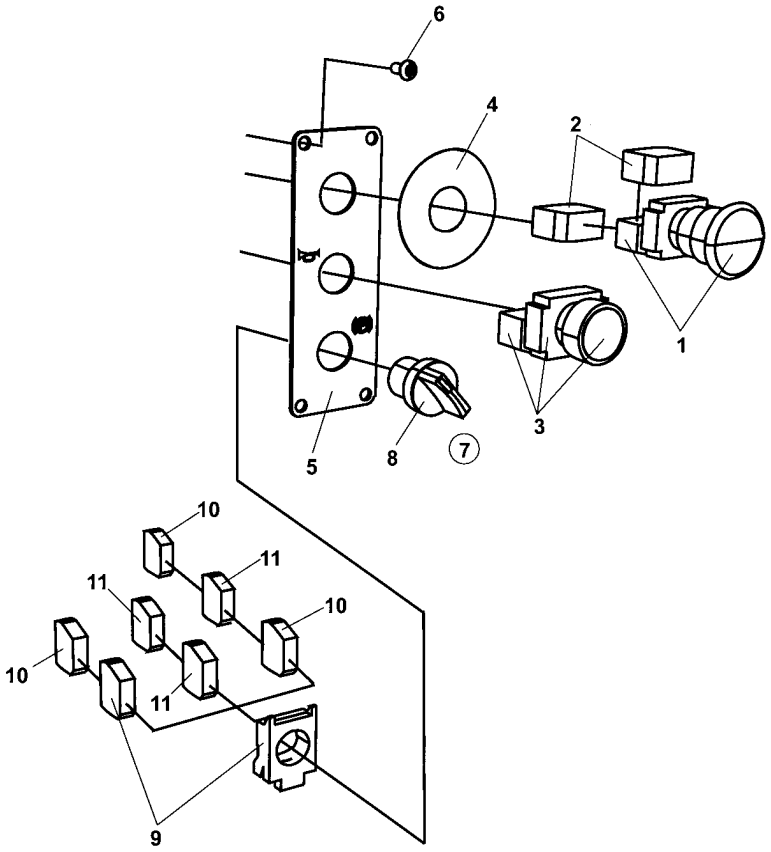

Emergency and Parking brake panel

Item	Part No	Rem	Qty	Description	Code
1	4700930200		1	Emergency stop	B
	4700930154		1	. Contact piece, NC	B
2	4700930154		2	Contact piece, NC	B
3	4700932032	A	1	Push button	B
	4700930163		1	. Contact piece, NO	B
4	4812110967	B	1	Decal	D
5	4812110960		1	Control panel plate	D
6	4700903658		4	Screw M5x10	C
7			1	Parking brake switch Cpl.	
8	4700791722		1	. Switch, black	D
9	4700389840		1	. Connector w. Fixing collar N/C	C
10	4700791736		3	. Connector N/O	C
11	4700791723		3	. Connector N/C	B

A) Horn
B) Yellow

Working lights Option

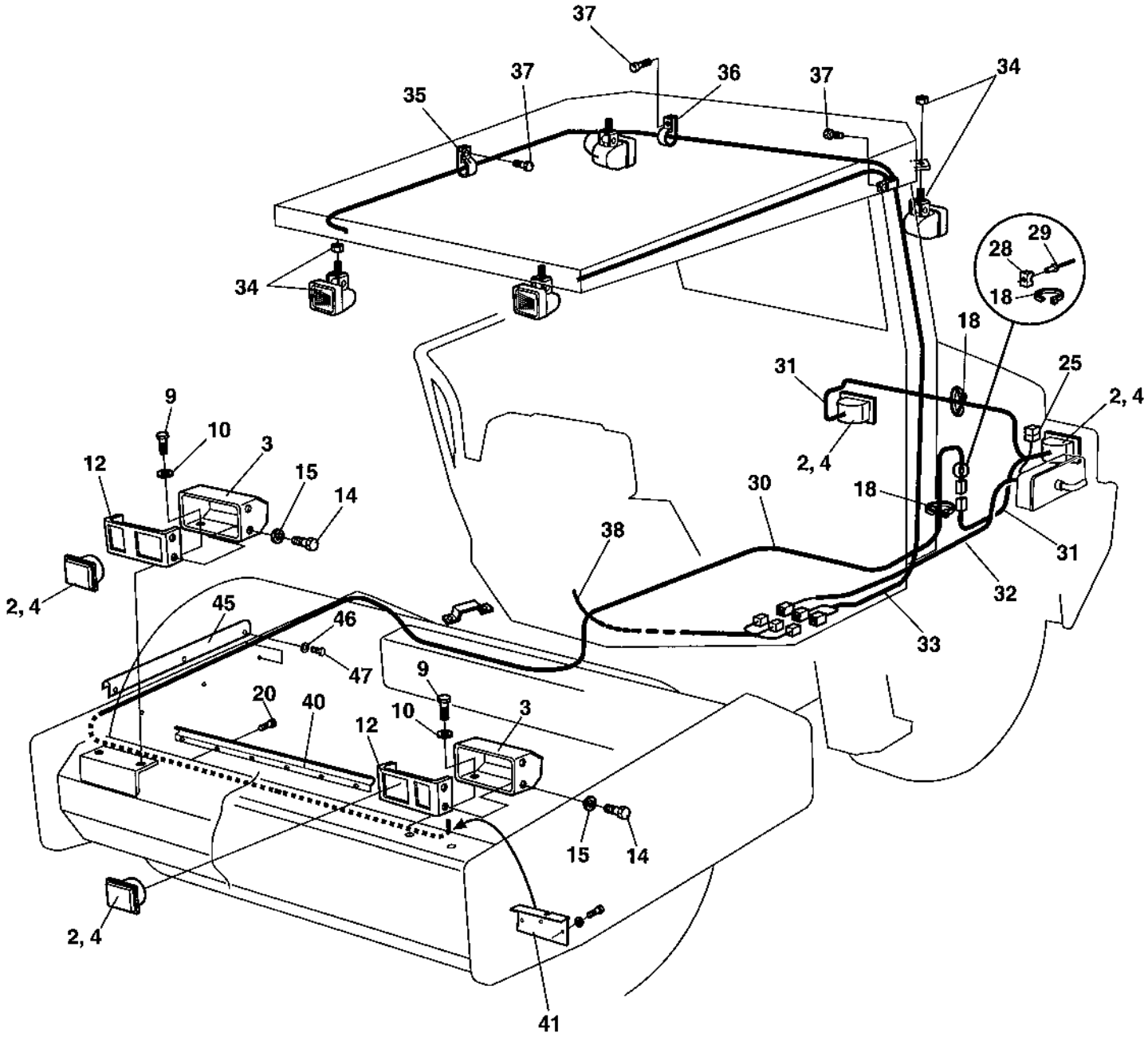

Working lights Option

Item	Part No	Rem	Qty	Description	Code
2	4700902227		4	Work light	B
3	4700374029		2	Lamp shield	D
4	4700901369		4	Bulb 55w H3	B
9	4700500043		6	Screw M10x16H 8,8	D
10	4700904230		6	Steel plain washer	C
12	4700374030		2	Bracket	D
14	4700500040		8	Screw M6-1x20 8,8	C
15	4700904228		9	Washer 6,4x12x1,5	C
18	4700925802		9	Cable ties L=142 mm	C
20	4700500012		3	Screw M6x12	C
25	4700904038		1	Fuse 40A	A
28	4700904543		3	Cable tie holder	
29	4700903852		3	Screw ST4,2x13	C
30	4700373359		1	Cable harness	D
31	4700373360		1	Cable harness	D
32	4700373184		1	Cable harness	D
33	4700372758		1	Cable harness	D
34	4812110216		4	Work lamp	C
	4700904230		4	Steel plain washer	C
	4700586018		4	Hexagon lock nut	C
35	4700921039		10	Pipe clamp	
36	4700921031		3	Clamp	C
37	4700541702		13	Screw M6x12	C
38	4700372759		1	Cable harness	D
40	4700384162		1	Cable holder	D
41	4700384163		2	Protection	D
42	4700904228		3	Washer 6,4x12x1,5	C
45	4700388466		1	Cable holder	D
46	4700904229		3	Steel plain washer 8,4x16x1,5	C
47	4700500019		3	Hexagon head screw M8x16H 8,8	C

Driving lights Option

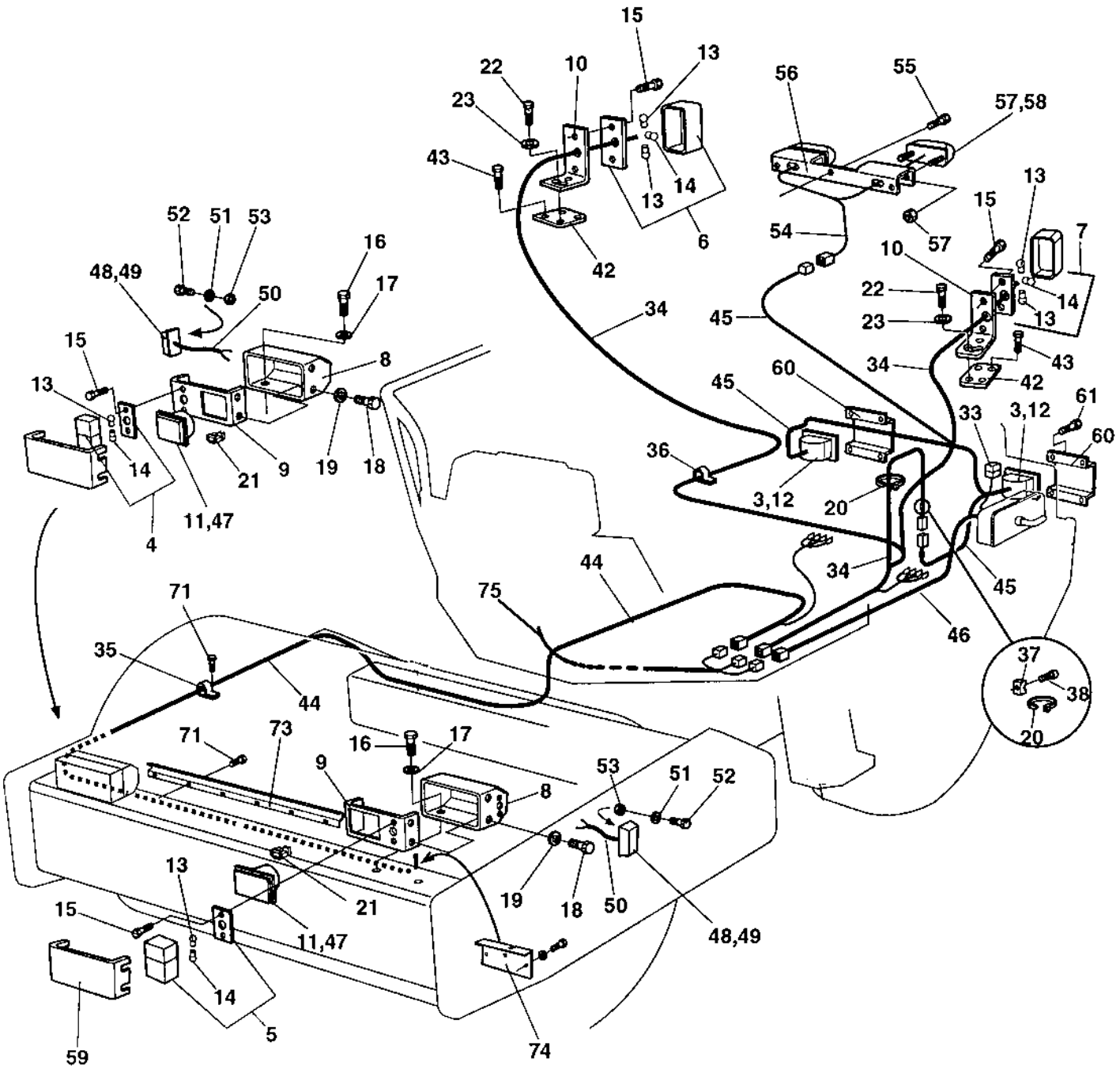

Driving lights Option

Item	Part No	Rem	Qty	Description	Code
3	4700902227		2	Work light	B
4	4700904316	A	1	Direction lamp Right	B
	4700937107		1	. Lamp glass	B
5	4700904315	B	1	Direction lamp Left	B
	4700937106		1	. Lamp glass	B
6	4700904318	C	1	Direction lamp Right	B
	4700937109		1	. Lamp glass	B
7	4700904317	D	1	Direction lamp Left	B
	4700937108		1	. Lamp glass	B
8	4700374029		2	Lamp shield	D
9	4700374030		2	Bracket	D
10	4700374089		2	Bracket	D
11	4700900790		2	Bulb 60/55w H4	B
12	4700901369		2	Bulb 55w H3	B
13	4700928502		6	Bulb 21w	B
14	4700985014		4	Bulb 5w	B
15	4700533010		8	Screw	D
16	4700500043		6	Screw M10x16H 8,8	D
17	4700904230		6	Steel plain washer	C
18	4700500040		8	Screw M6-1x20 8,8	C
19	4700904228		8	Washer 6,4x12x1,5	C
20	4700925802		11	Cable ties L=142 mm	C
21	4700903899		2	Connector	
22	4700500019		4	Hexagon head screw M8x16H 8,8	C
23	4700904229		4	Steel plain washer 8,4x16x1,5	C
27	4700541703		14	Screw M6x16	D
28	4700313041		N	Cable ties	B
33	4700904038		1	Fuse 40A	A
34	4700374168		1	Cable harness	D
35	4700921028		6	Clamp	C
36	4700921028		6	Clamp	C
37	4700904543		3	Cable tie holder	
38	4700903852		3	Screw ST4,2x13	C
42	4700374088		2	Holder plate	D
43	4700513009		4	Screw	D
44	4700374194		1	Cable harness	D
45	4700374195		1	Cable harness	D
46	4700373184		1	Cable harness	D
47	4700902066		2	Headlight	B
	4700904313	E	2	Headlight	B
48	4700902064		2	Direction lights	B
49	4700985013		2	Bulb 12V,5W	B
50	4700374526		2	Cable harness	D
51	4700904281		4	Washer 5,3x10x1 300HV	C
52	4700926611		4	Screw	C
53	4700586001		4	Lock nut	C
54	4700374196		1	Cable harness	D
55	4700903969		3	Screw ST4,8x19 Black	C
56	4700374184		1	Licence plate light bracket	D
57	4700929455		2	Licence plate light	D
58	4700985013		2	Bulb 12V,5W	B
59	4700374120		2	Protecting cover	D
60	4700374327		2	Protecting cover	D
61	4700903969		8	Screw ST4,8x19 Black	C
71	4700500012		9	Screw M6x12	C

A) Front right
B) Front left
C) Rear right
D) Rear left
E) Left hand asymmet.

Driving lights Option

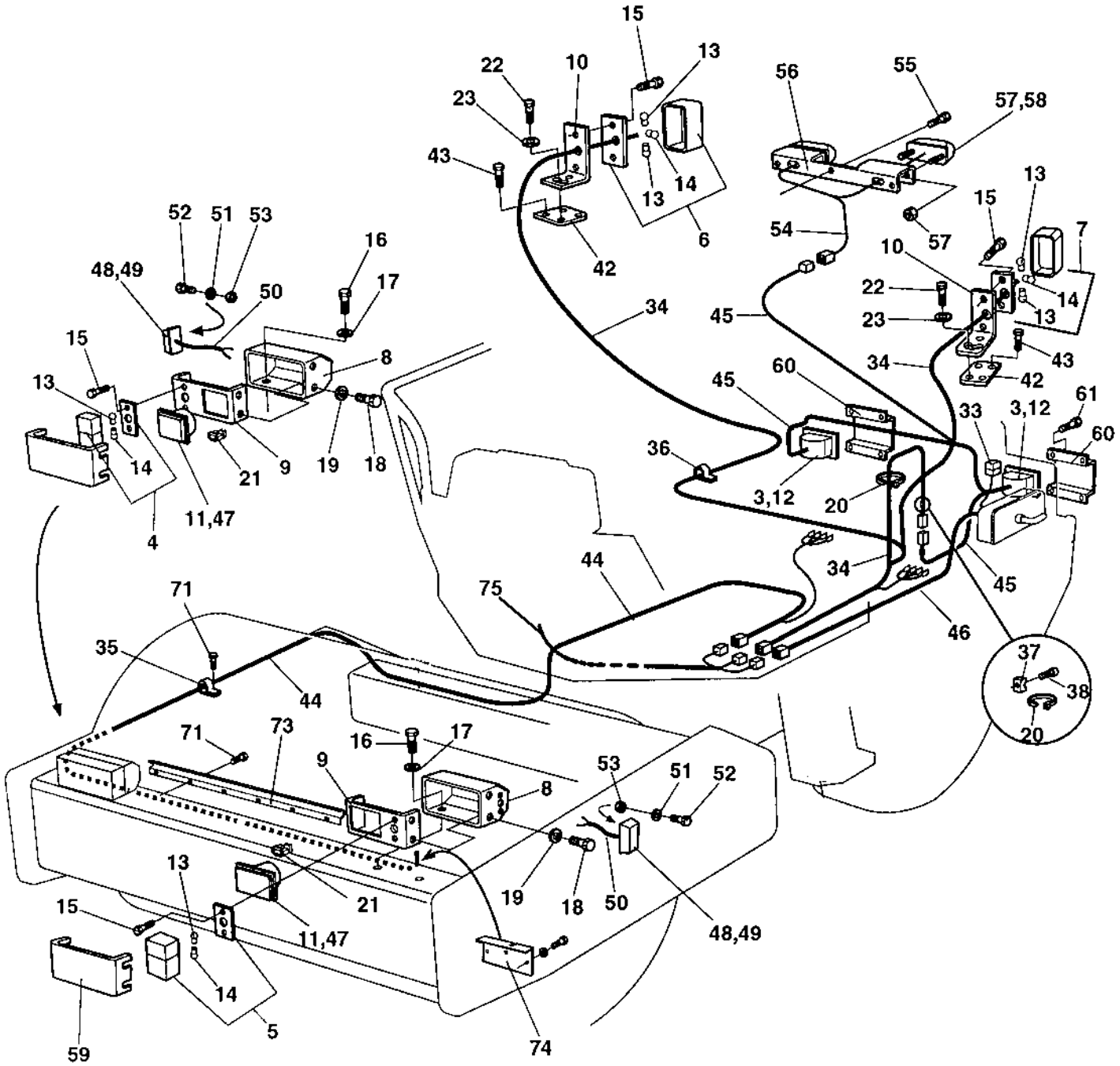

Driving lights Option

Item	Part No	Rem	Qty	Description	Code
73	4700384162		1	Cable holder	D
74	4700384163		2	Protection	D
75	4700385263		1	Cable harness	D

Rotating beacon Option

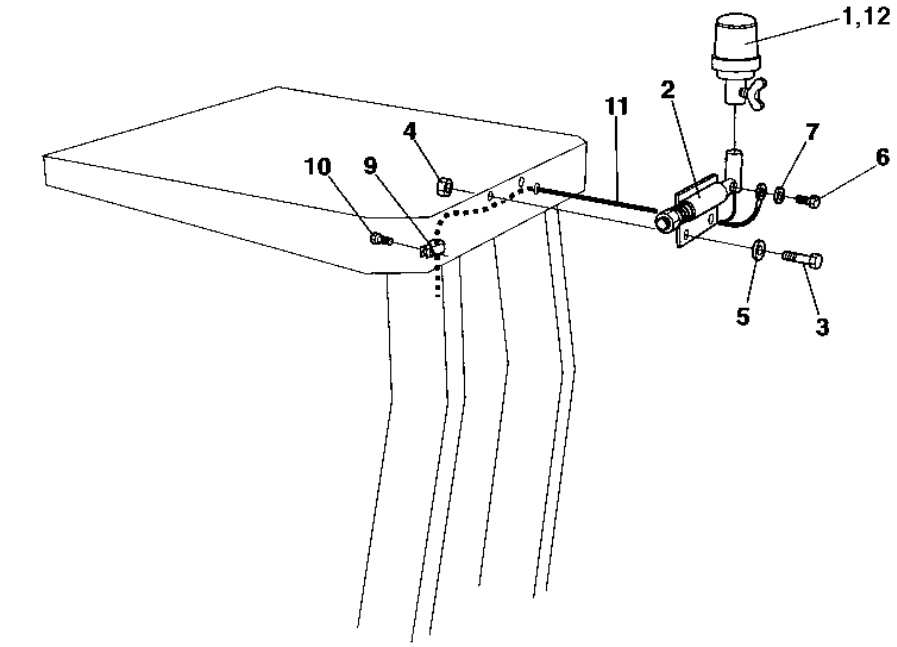

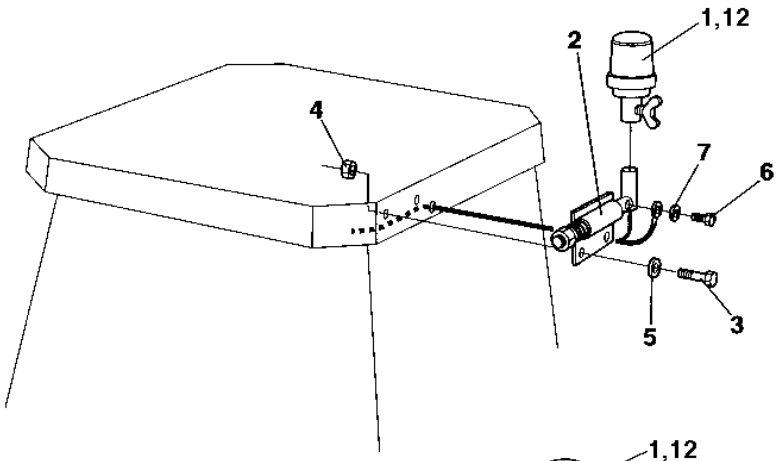

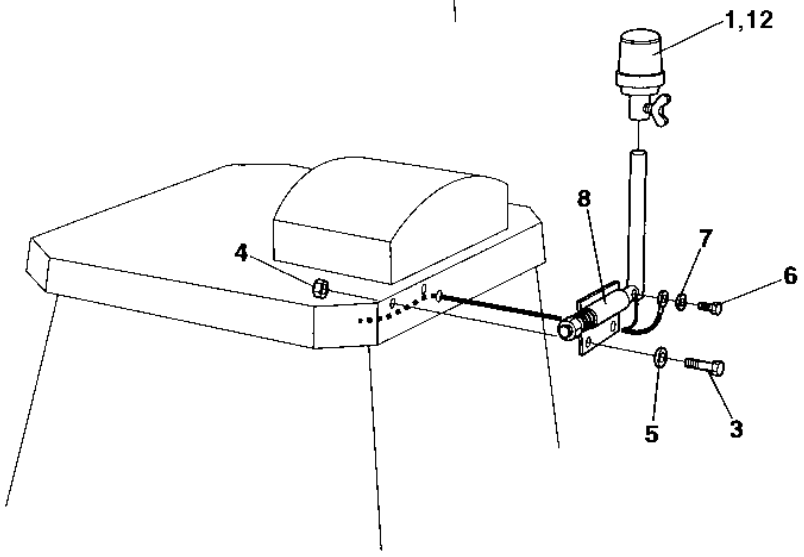

Rotating beacon Option

Item	Part No	Rem	Qty	Description	Code
1	4700999011	1	1	Rotating beacon	B
2	4700358452		1	Lamp holder	D
3	4700500021		2	Screw M8-1,25x25 8.8	C
4	4700586003		2	Lock nut M8	C
5	4700904229		2	Steel plain washer 8,4x16x1,5	C
6	4700500013		1	Screw M6-1x16 8,8	C
7	4700904228		1	Washer 6,4x12x1,5	C
8	4700371364		1	Lamp holder	D
9	4700921039		1	Pipe clamp	
10	4700541702		1	Screw M6x12	C
11	4700374398		1	Cable harness	D
12	4700389577	2	1	Rotating beacon 12V	B

1) Replaced by item 12, P/N 4700389577
2) Replaces item 1, P/N 4700999011.

Compaction meter Option

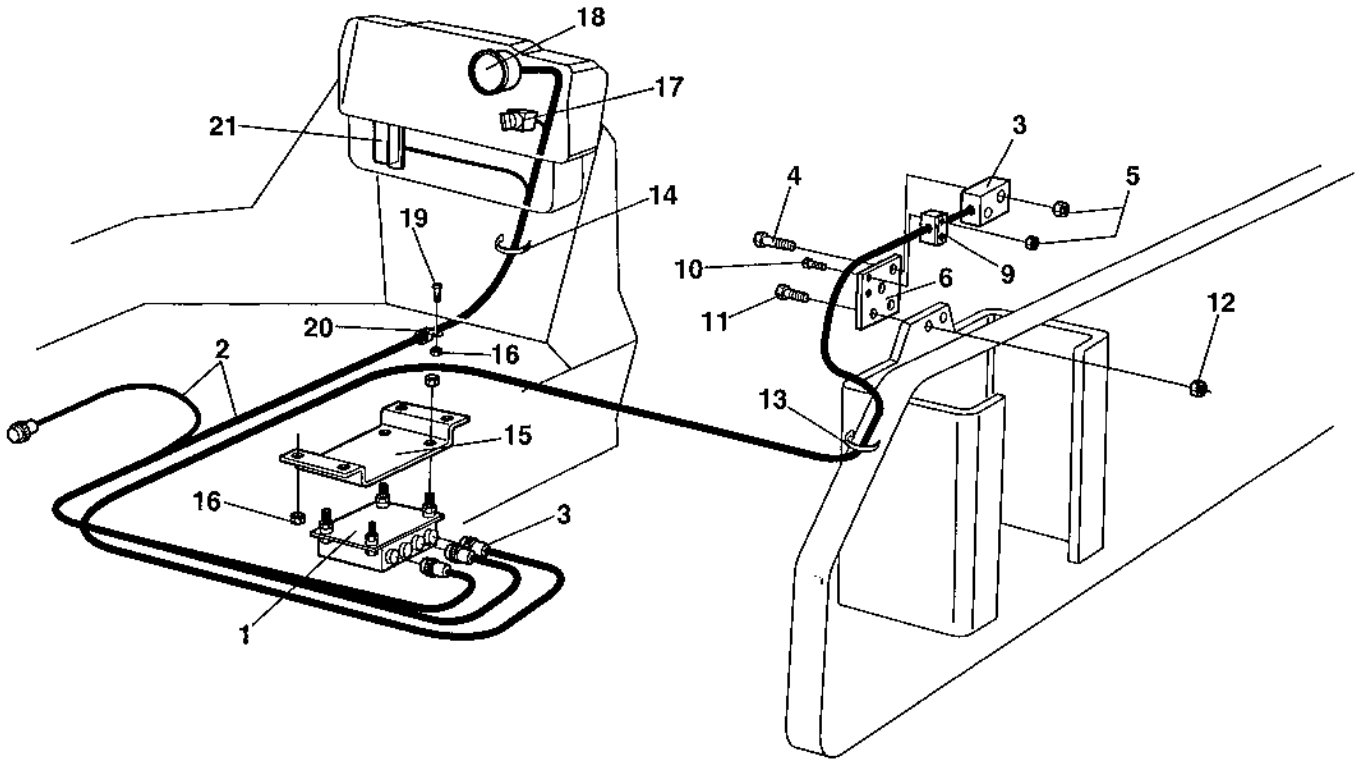

Compaction meter Option

Item	Part No	Rem Qty	Description	Code
1	4700388210	1	Processor comp.meter	D
2	4700388211	1	Cable harness	D
3	4700348213	1	Sensor, cpl	C
4	4700500079	2	Screw M6-1x50 8,8	C
5	4700902285	4	Hexagon lock nut with flange	C
6	4700373140	1	Bracket	D
9	4700902496	1	Clamp	D
10	4700500079	2	Screw M6-1x50 8,8	C
11	4700500194	2	Screw	C
12	4700902288	2	Nut M12	D
13	4700313102	15	Cable ties	
14	4700313041	15	Cable ties	B
15	4700372836	1	Bracket	D
16	4700902286	5	Hexagon lock nut with flange	C
17	4700930151	1	Switch	B
18	4700383452	1	Compaction meter	D
	4700904890	2	. Lamp holder	D
	4700904889	2	. Bulb	D
19	4700500047	1	Hexagon head screw	C
20	4700921072	1	Clamp	
21	4700901224	1	Fuse 3A	A

Speedometer and frequency meter Option

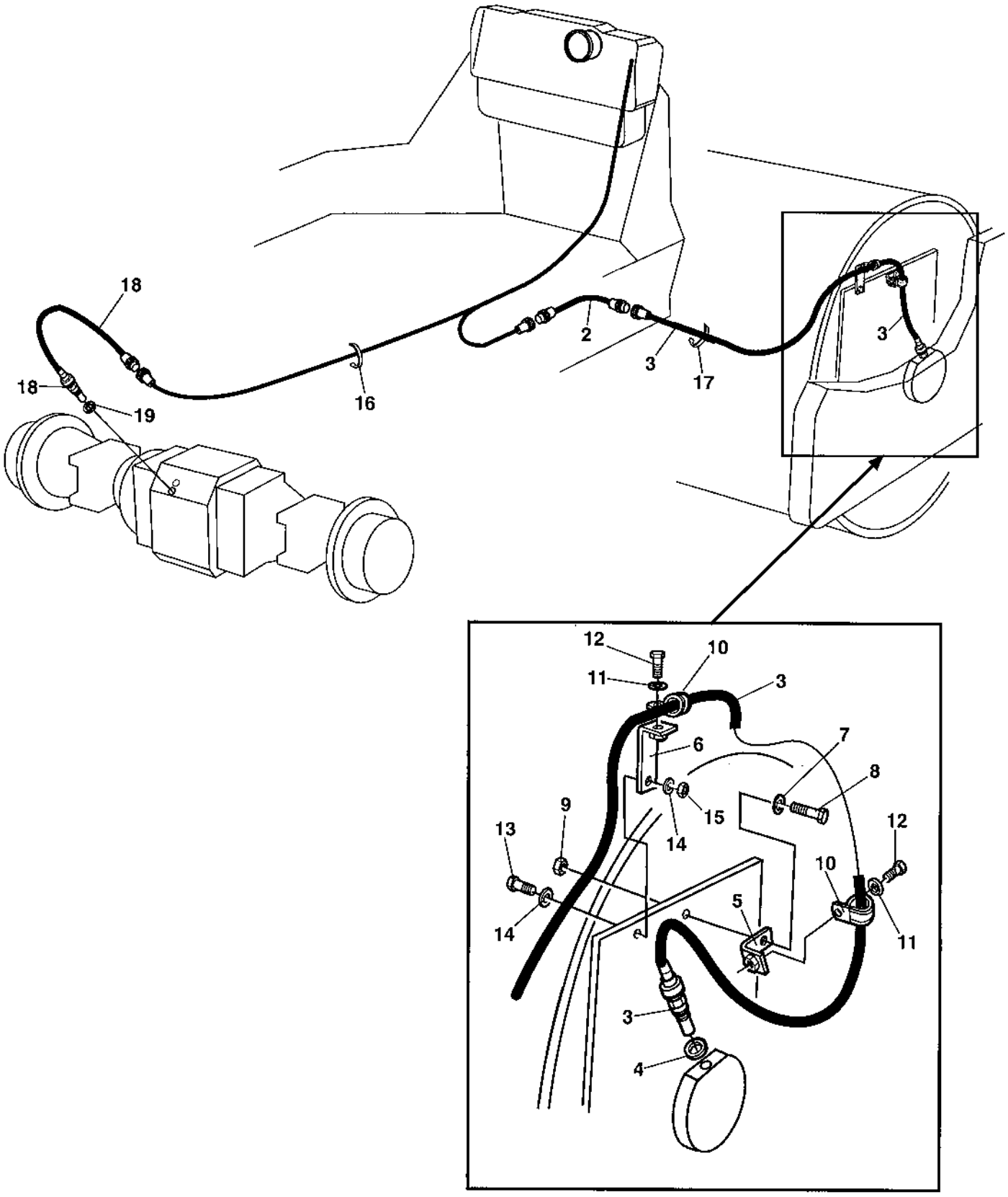

Speedometer and frequency meter Option

Item	Part No	Rem	Qty	Description	Code
2	4700376937		1	Cable harness	D
3	4700376935	A	1	Sensor	B
4	4700801669		1	. Thru-seal nut	D
5	4700376936		1	Holder	D
6	4700376938		1	Holder	D
7	4700904231		1	Washer 13x24x2 300 HV	C
8	4700500056		1	Screw	
9	4700586019		1	Lock nut	C
10	4700921078		2	Clamp	
11	4700904228		2	Washer 6,4x12x1,5	C
12	4700500013		2	Screw M6-1x16 8,8	C
13	4700500103		1	Screw M12x60H 8,8	
	4812111053		1	Screw M12x55 8.8 A3K	
14	4700904213		2	Washer	C
15	4700570007		1	Hexagon nut M12	C
16	4700313041		N	Cable ties	B
17	4700313102		N	Cable ties	
18	4700384069	B	1	Sensor	B
19	4700903769		1	. Sealing	B

A) Tacho/Frequency meter
B) Speedometer

Tachograph, platform Option

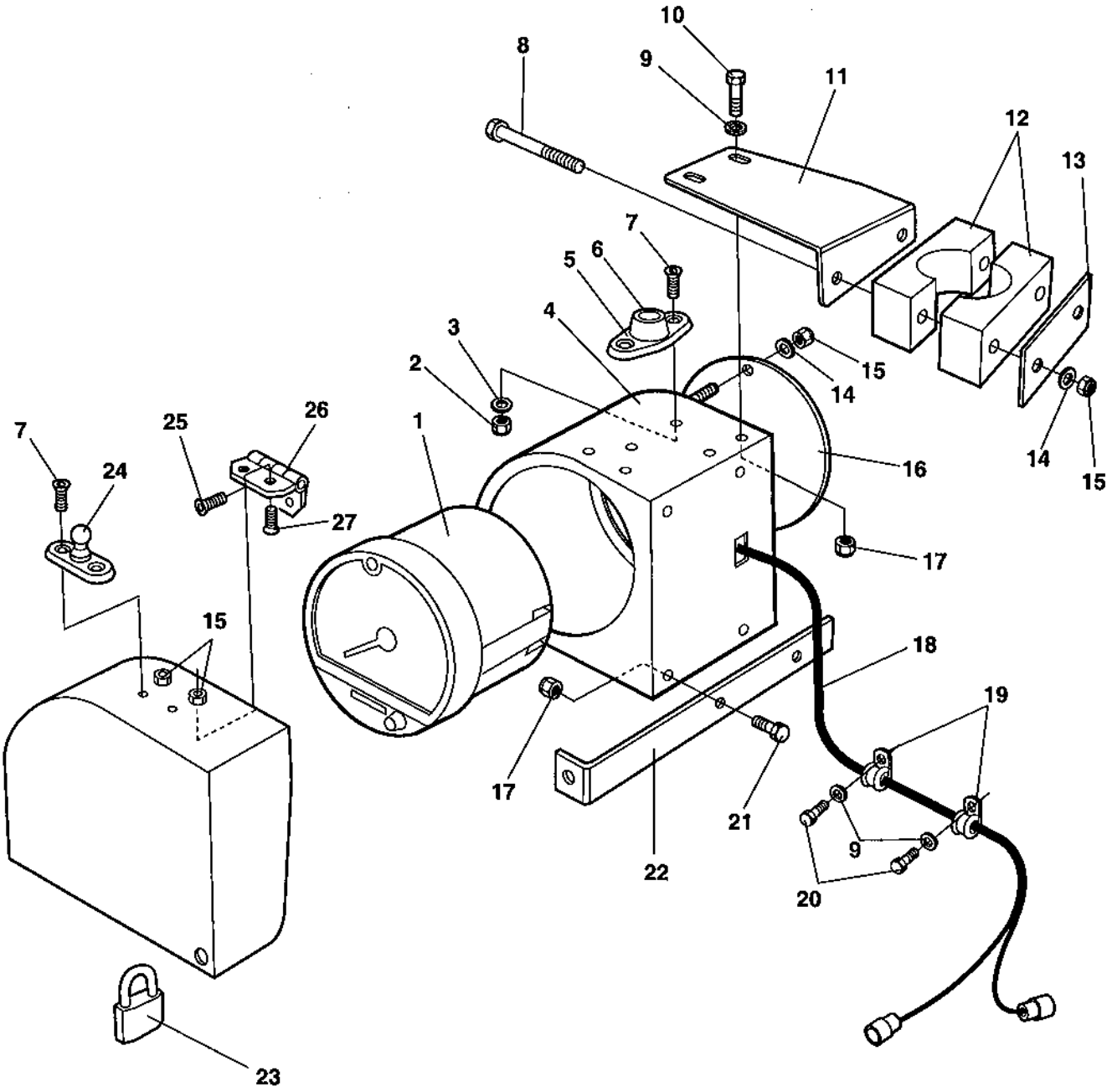

Tachograph, platform Option

Item	Part No	Rem	Qty	Description	Code
1	4700901209		1	Tachograph	B
2	4700923976		4	Nut	C
3	4700904698		4	Washer 4,3x8x0,8	C
4	4700355132		1	Tachograph box	D
5	4700904907		1	Door bumper	D
6	4700904908		1	Rubber part	D
7	4700535004		4	Screw M4x16	D
8	4700500292		2	Screw M6x75	D
9	4700904281		12	Washer 5,3x10x1 300HV	C
10	4700500006		2	Screw M5x16	C
11	4700382549		1	Bracket	D
12	4700904340		1	Pipe clamp	
13	4700924791		1	Cover plate	
14	4700904228		8	Washer 6,4x12x1,5	C
15	4700586002		6	Lock nut M6 -8	C
16	4700355135		1	Tachograph cover	D
17	4700586001		6	Lock nut	C
18	4700372497		1	Cable harness	D
19	4700921031		3	Clamp	C
20	4700500006		3	Screw M5x16	C
21	4700500060		1	Screw M5-0,8x20 8.8	C
22	4700385551		1	Holder plate	D
23	4700358881		1	Pad lock	D
24	4700904909		1	Door bumper	D
25	4700535014		2	Screw	D
26	4700903907		1	Hinge	C
27	4700535013		2	Screw	D

Tachograph , cab Option

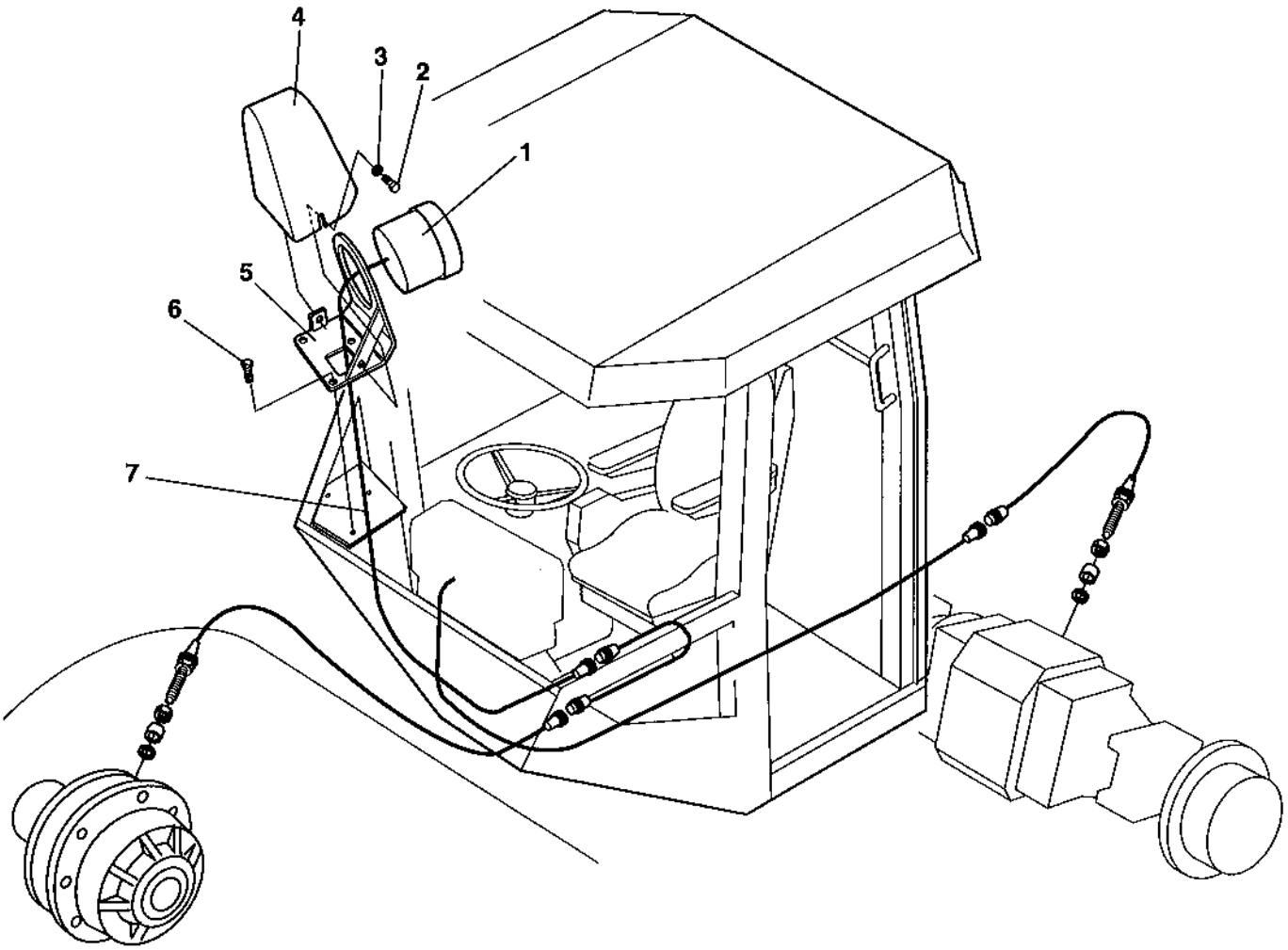

Tachograph , cab Option

Item	Part No	Rem	Qty	Description	Code
1	4700901209		1	Tachograph	B
2	4700500004		2	Screw M5 0,8x12 8,8	C
3	4700904281		2	Washer 5,3x10x1 300HV	C
4	4700385527		1	Cover	D
5	4700385526		1	Holder plate	D
6	4700541704		3	Screw	D
7	4700385542		1	Cable harness	D

Tachograph, simple cab Option

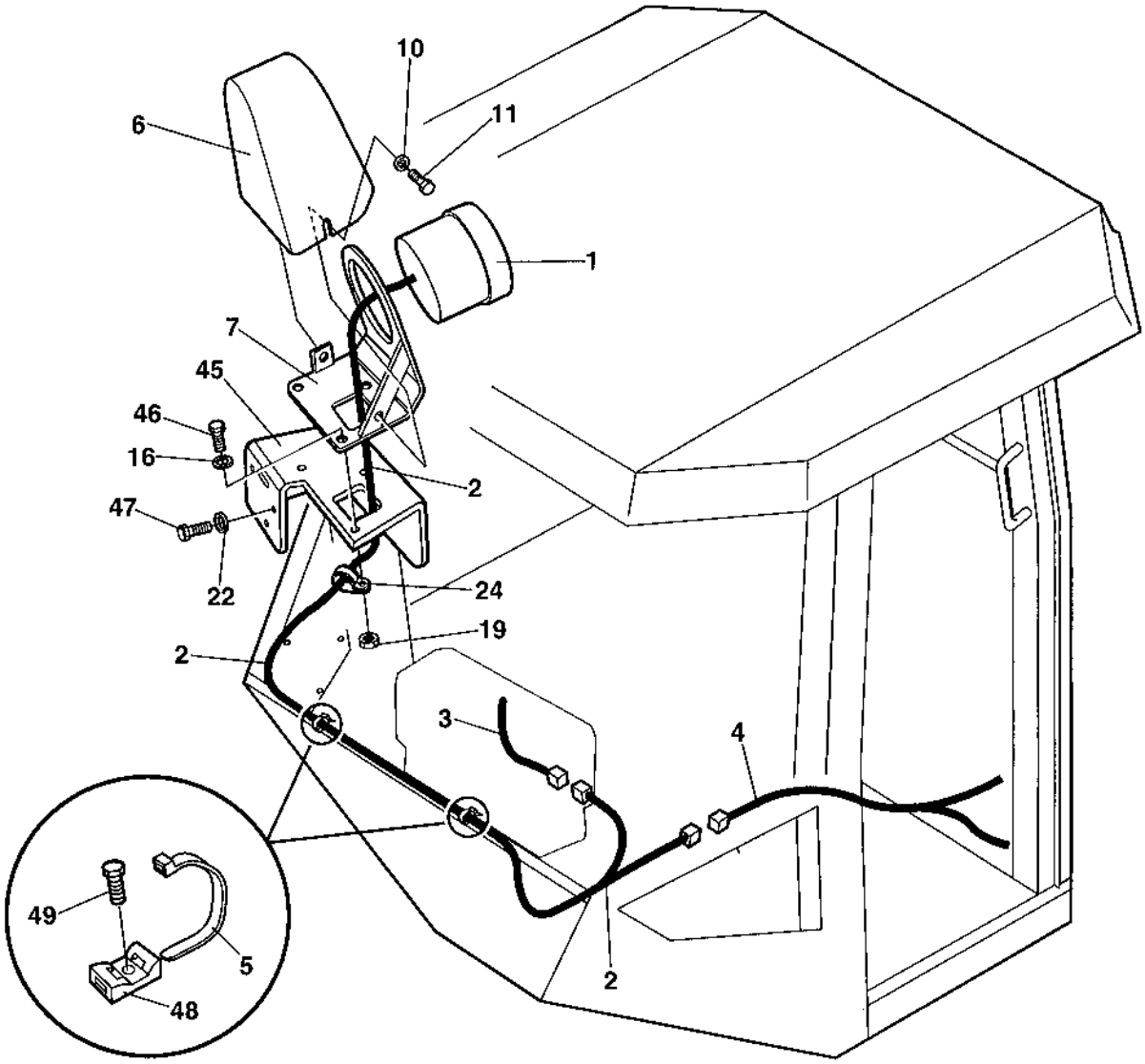

Tachograph, simple cab Option

Item	Part No	Rem	Qty	Description	Code
1	4700901209		1	Tachograph	B
2	4700372497		1	Cable harness	D
	4700908496		1	. Grommet	D
	4700903717		1	. Resistor 470 ohm, 0.5w	
3	4700372496		1	Cable harness	D
4	4700372495		1	Cable harness	D
	4700904015		1	. Fuse holder	D
	4700904140		1	. Fuse 0.5A	A
5	4700313041		N	Cable ties	B
6	4700385527		1	Cover	D
7	4700385526		1	Holder plate	D
10	4700904281		2	Washer 5,3x10x1 300HV	C
11	4700500004		2	Screw M5 0,8x12 8,8	C
16	4700904228		3	Washer 6,4x12x1,5	C
19	4700586002		1	Lock nut M6 -8	C
22	4700904229		3	Steel plain washer 8,4x16x1,5	C
24	4700921031		1	Clamp	C
45	4700378110		1	Bracket	D
46	4700500075		3	Screw M6-1,0x25 8.8	C
47	4700500053		3	Screw M8x20H 8.8	C
48	4700904543		2	Cable tie holder	
49	4700903852		2	Screw ST4,2x13	C

Back-up alarm Option

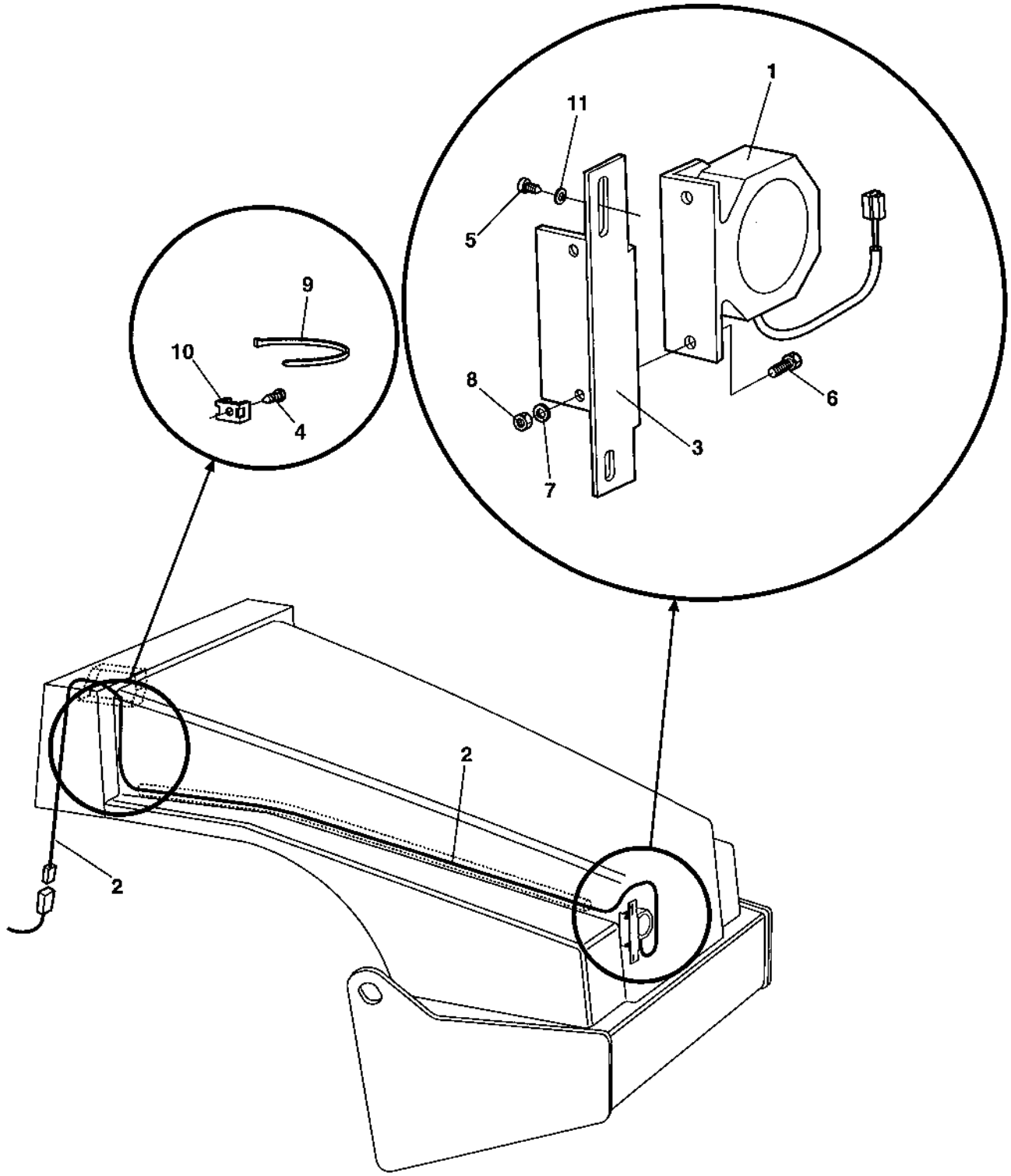

Back-up alarm Option

Item	Part No	Rem	Qty	Description	Code
1	4700904910		1	Back-up alarm	B
2	4700373286	A	1	Cable harness	D
3	4700376896		1	Bracket	D
4	4700903852		3	Screw ST4,2x13	C
5	4812110748		2	Screw KX-PT K50X18 A2K	
6	4700500013		2	Screw M6-1x16 8,8	C
7	4700904228		2	Washer 6,4x12x1,5	C
8	4700586002		2	Lock nut M6 -8	C
9	4700925802		N	Cable ties L=142 mm	C
10	4700904543		3	Cable tie holder	
11		B		Existing washer	

A) Not valid for machines equiped with working/driving lights.
B) Use existing washers on grid.

Protecting cover, Headlight Option

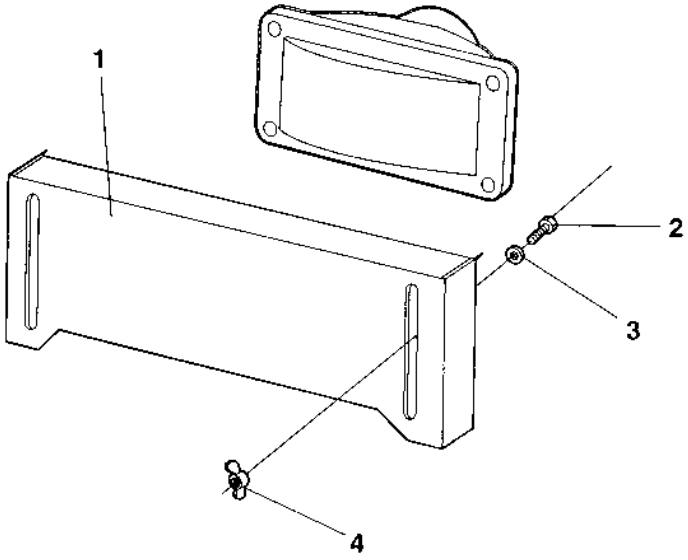

Protecting cover, Headlight Option

Item	Part No	Rem	Qty	Description	Code
1	4700376068		1	Protecting plate	D
2	4700500013		2	Screw M6-1x16 8,8	C
3	4700904228		2	Washer 6,4x12x1,5	C
4	4700582006		2	Wing nut	D

Field computer assembly Option

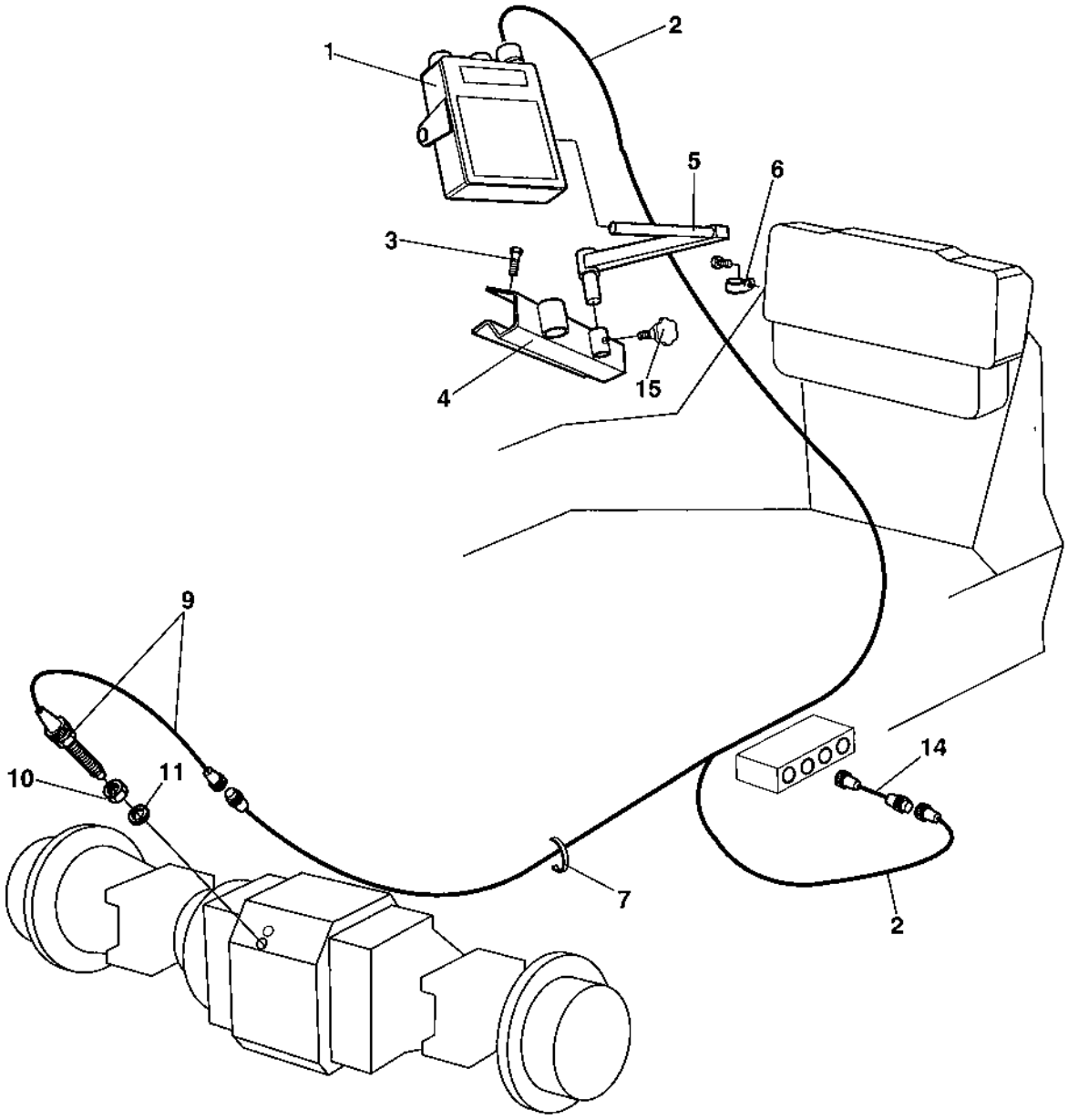

Field computer assembly Option

Item	Part No	Rem	Qty	Description	Code
1	4700373860		1	Field computer	D
2	4700384070		1	Cable harness	D
3	4700541703		5	Screw M6x16	D
4	4700373979		1	Bracket	D
5	4700373980		1	Lever	D
6	4700921065		2	Clamp	C
7	4700313041		N	Cable ties	B
9		A	1	Sensor	
10			1	. Nut	
11			1	. Sealing	
14	4700389786		1	Cable harness	D
15	4700499162		1	Hand knob	D

A) See section "Speedometer and Frequency meter".

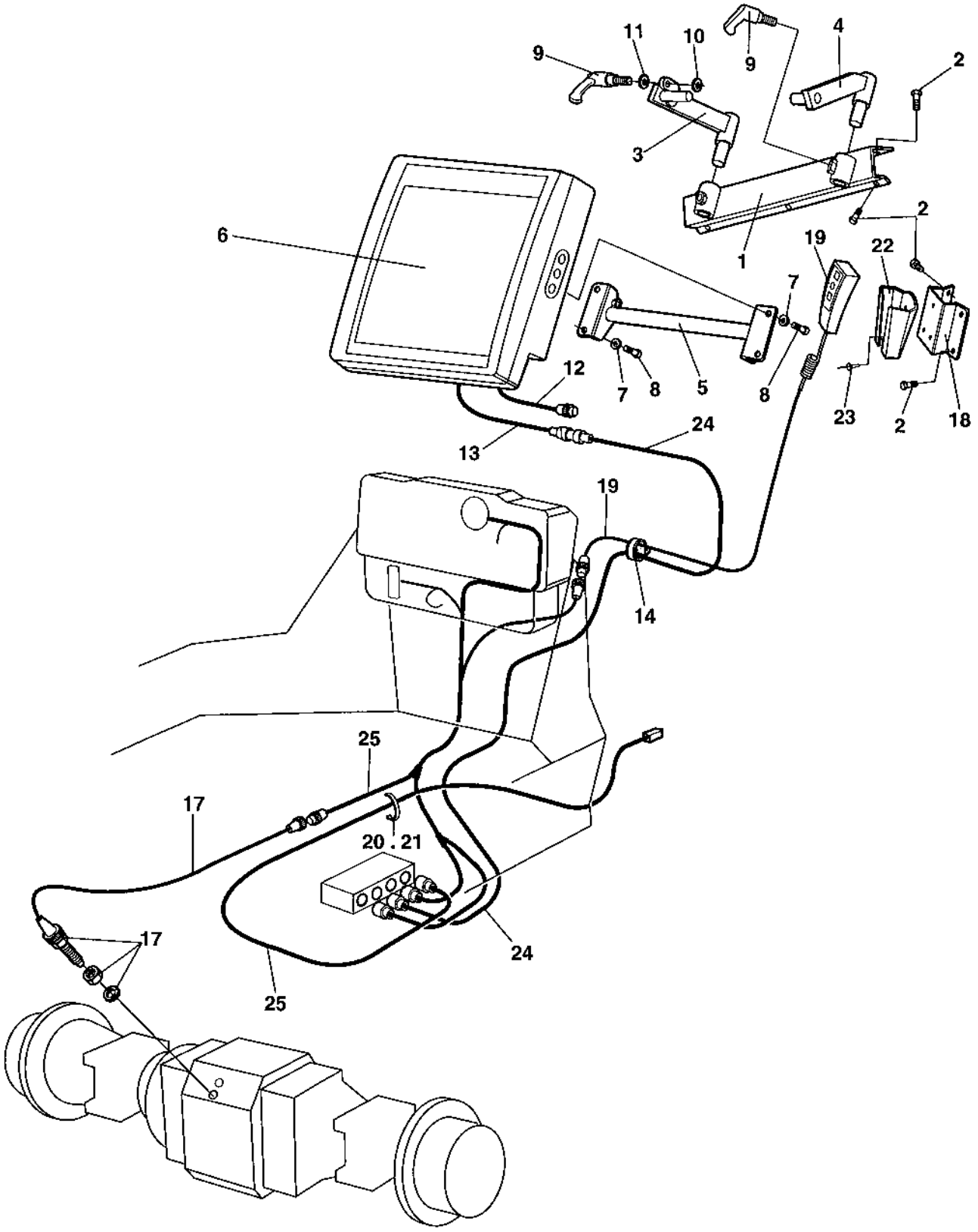
11
10
9
4
2
9
3
2
6
1
19
22
7
12
7
8
5
8
23
2
18
24
13
19
14
25
17
20 . 21
17
24
25

Compaction Analyzer Option

Item	Part No	Rem	Qty	Description	Code
1	4700387968		1	Holder	D
2	4700938686		10	Screw	
3	4700387969		1	Lever	D
4	4700388189		1	Lever	D
5	4700387571		1	Computer holder	D
6	4700388209		1	Computer	D
7	4700904228		4	Washer 6,4x12x1,5	C
8	4700500013		4	Screw M6-1x16 8,8	C
9	4700791452		3	Lock handle	D
10	4700904640		1	Washer 8,4x22x3	C
11	4700904229		1	Steel plain washer 8,4x16x1,5	C
12	4700390962	A	1	Cable harness	D
13	4700388213		1	Cable harness	D
14	4700921046		5	Clamp	
17		B		Sensor	
18	4700389591		1	Bracket	D
19	4700388212		1	Control box	D
20	4700313041		N	Cable ties	B
21	4700313102		N	Cable ties	
22	4700387941		1	Control box holder	D
23	4700624021		3	Pop rivet	D
24	4700389570		1	Cable harness	D
25		C		Cable harness	

A) Connected to 12V contact on Cab.
B) See section " Speedometer and Frequency meter".
C) See section "Compaction meter".

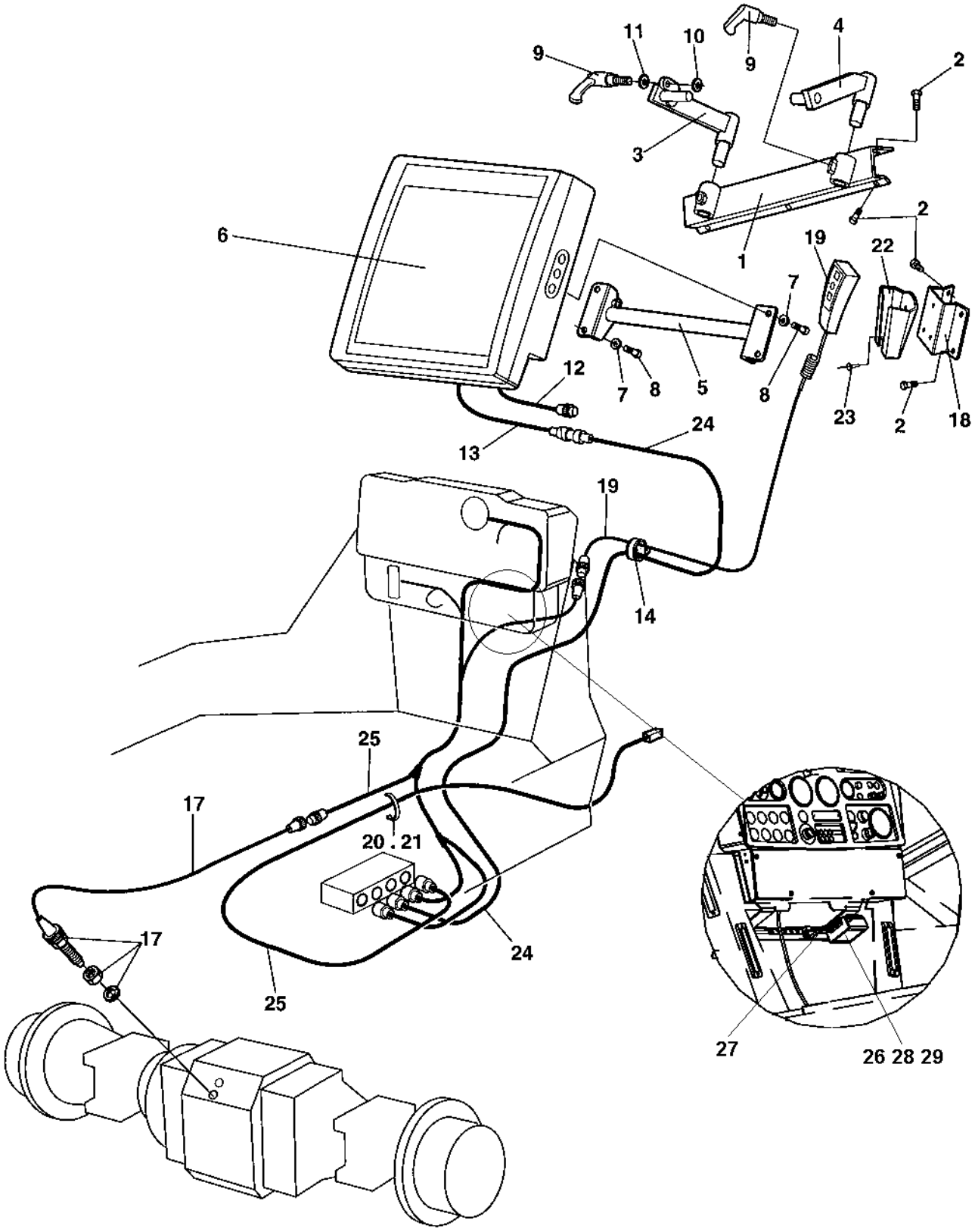
11
10
9
4
9
2
3
2
6
1
19
22
7
12
7
8
5
8
23
2
18
24
13
19
14
25
17
20 . 21
17
24
25
27
26 28 29

Compaction Analyzer Option

Item	Part No	Rem	Qty	Description	Code
1	4700387968		1	Holder	D
2	4700938686		10	Screw	
3	4700387969		1	Lever	D
4	4700388189		1	Lever	D
5	4700387571		1	Computer holder	D
6	4700388209		1	Computer	D
7	4700904228		4	Washer 6,4x12x1,5	C
8	4700500013		4	Screw M6-1x16 8,8	C
9	4700791452		3	Lock handle	D
10	4700904640		1	Washer 8,4x22x3	C
11	4700904229		1	Steel plain washer 8,4x16x1,5	C
12	4700390962	A	1	Cable harness	D
13	4700388213		1	Cable harness	D
14	4700921046		5	Clamp	
17		B		Sensor	
18	4700389591		1	Bracket	D
19	4700388212		1	Control box	D
20	4700313041		N	Cable ties	B
21	4700313102		N	Cable ties	
22	4700387941		1	Control box holder	D
23	4700624021		3	Pop rivet	D
24	4700389570		1	Cable harness	D
25		C		Cable harness	
26	4811000244		1	Power converter	
27	4812112481		1	Cable harness	
28	4700904653		3	Screw M5x16 A2-70	C
29	4700586001		3	Lock nut	C

A) Connected to 12V contact on Cab.
B) See section " Speedometer and Frequency meter".
C) See section "Compaction meter".

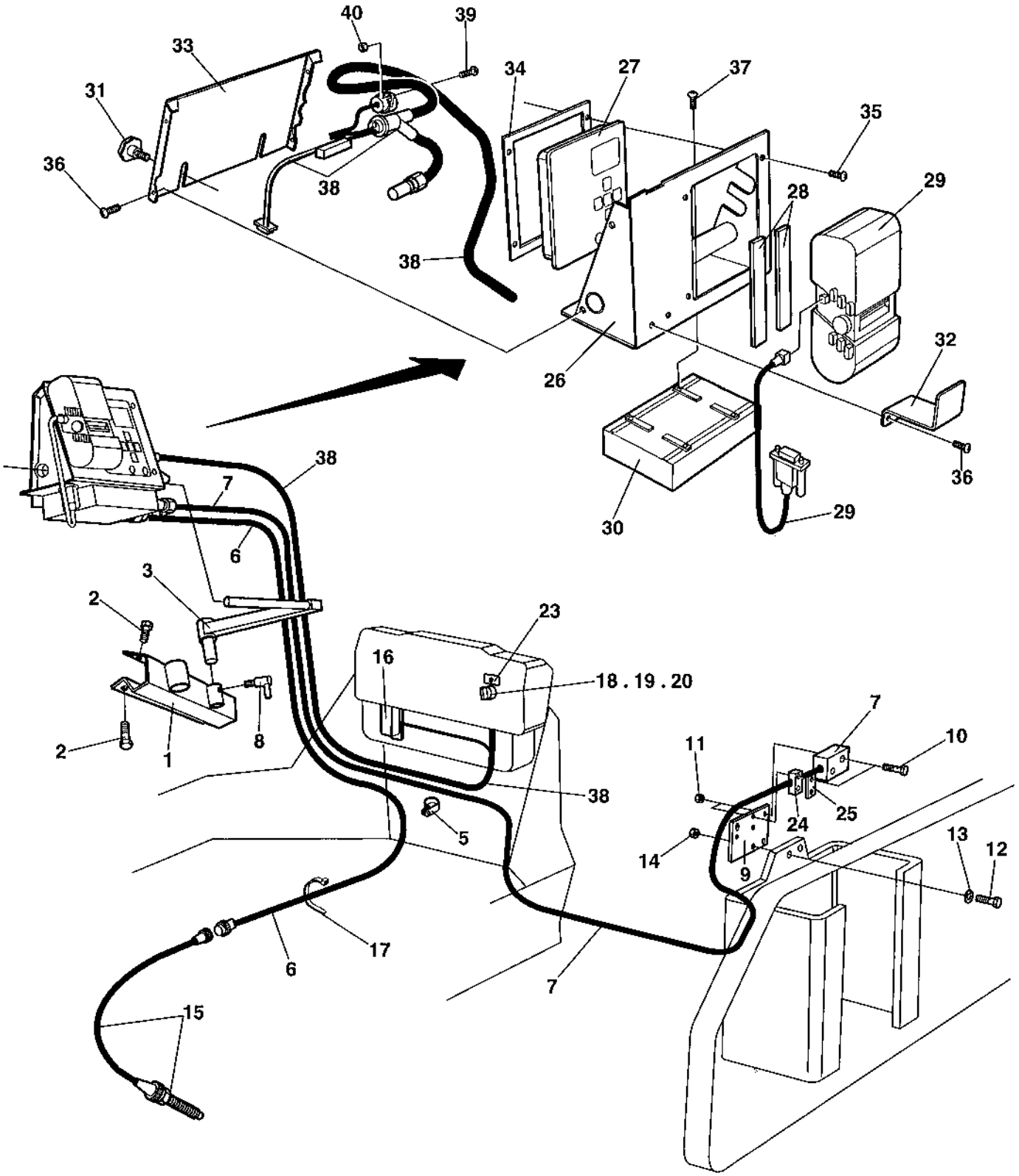
40
39
33
34
27
37
31
35
36
38
29
28
38
32
26
36
30
29
38
7
6
3
2
23
16
18 . 19 . 20
2
1
8
7
11
10
38
25
24
5
14
9
13
12
17
6
7
15

Geodynamic Compaction indicator Option

Item	Part No	Rem	Qty	Description	Code
1	4700373979		1	Bracket	D
2	4700541703		5	Screw M6x16	D
3	4700373980		1	Lever	D
5	4700921046		3	Clamp	
6	4700386645		1	Cable harness	D
7	4700386646		1	Cable harness with sensor	D
8	4700791452		1	Lock handle	D
9	4700373140		1	Bracket	D
10	4700500016		4	Screw M6x55 8.8 A2K	C
11	4700902285		4	Hexagon lock nut with flange	C
12	4700500194		2	Screw	C
13	4700904231		2	Washer 13x24x2 300 HV	C
14	4700902288		2	Nut M12	D
15		A	1	Sensor	
16	4700901224		1	Fuse 3A	A
17	4700313041		N	Cable ties	B
18	4700932056		1	Switch	B
19	4700930165		1	Contact block	B
20	4700985012		1	Bulb	B
23	4700387283		1	Decal	D
24	4700791453		1	Pipe clamp block	
25	4700791454		1	Cover plate	
26	4700386298		1	Holder	D
27	4700387280		1	Display unit	D
28	4700926911	B	2XL	Rubber strip	D
29	4700387282		1	Printer	D
			1	. Printer cable	
30	4700387281		1	Processor	D
31	4700499162		1	Hand knob	D
32	4700386300		1	Holder	D
33	4700386301		1	Cover plate	D
34	4700386299		1	Display holder	D
35	4700791171		4	Screw	D
36	4700904206		6	Screw	C
37	4700904289		4	Screw	C
38	4700386647	C	1	Cable harness	D
39	4700900528		2	Screw	D
40	4700928927		2	Lock nut	D

A) See section "Speedometer and Frequencymeter".
B) L=0,240MM
C) C1-cable

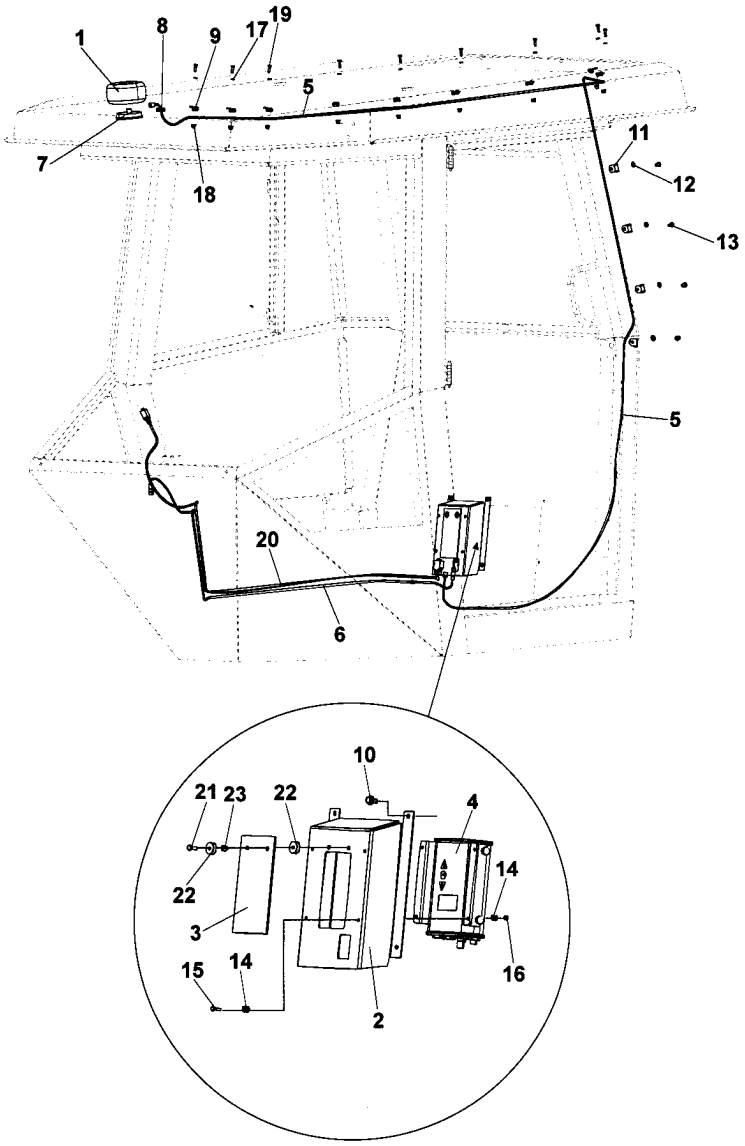
1
8
9
17
19
5
7
18
11
12
13
5
20
6
10
21
23
22
4
14
22
3
15
14
16
2

GPS Option

Item	Part No	Rem	Qty	Description	Code
1	4812113058		1	Antenna	
2	4812113556		1	Bracket	
3	4812113564		1	Rubber cloth	
4	4812113157		1	Reciever	
5	4812113158		1	Antenna lead	
6	4812113159		1	Cable Communication	
7	4812113160		1	Bracket	
8	4700791475		1	Grommet	D
9	4700791388		9	Clamp	D
10	4700541705		5	Screw	D
11	4700904780		4	Hose clamp	D
12	4700904229		4	Steel plain washer 8,4x16x1,5	C
13	4700500042		4	Screw	
14	4700904698		8	Washer 4,3x8x0,8	C
15	4700500086		4	Screw	D
16	4700570002		4	Nut M4	C
17	4700904228		9	Washer 6,4x12x1,5	C
18	4700902285		9	Hexagon lock nut with flange	C
19	4700500040		1	Screw M6-1x20 8,8	C
20	4812113171		1	Cable Power	
21	4700500004		2	Screw M5 0,8x12 8,8	C
22	4700927974		4	Washer	C
23	4700586001		2	Lock nut	C

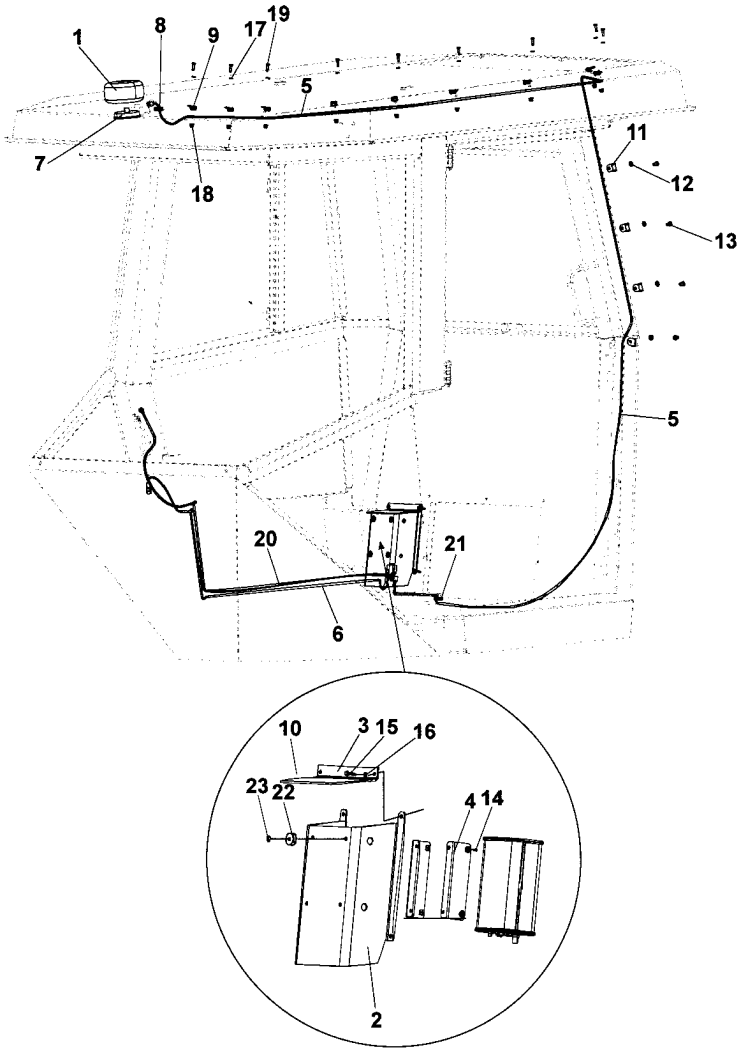
1
8
9
17
19
5
7
18
11
12
13
5
20
21
6
10
3
15
16
23
22
4
14
2

GPS Option

Item	Part No	Rem	Qty	Description	Code
1	4812113058		1	Antenna	
2	4812114185		1	Bracket	
3	4812114190		1	Rubber cloth	
4	4812114146		1	Reciever	
5	4812113158		1	Antenna lead	
6	4812113159		1	Cable Communication	
7	4812113160		1	Bracket	
8	4700791475		1	Grommet	D
9	4700791388		9	Clamp	D
10	4811000395		1	Bracket	D
11	4700904780		4	Hose clamp	D
12	4700904229		4	Steel plain washer 8,4x16x1,5	C
13	4700500042		4	Screw	
14	4700533008		4	Screw M8x10H 4,8 A2K	D
15	4811000457		4	Thread rolling screw	D
16	4700601001		2	Washer	C
17	4700904228		9	Washer 6,4x12x1,5	C
18	4700902285		9	Hexagon lock nut with flange	C
19	4700500040		1	Screw M6-1x20 8,8	C
20	4812114184		1	Cable Power	
21	4700909130		1	Grommet	C
22	4700927974		4	Washer	C
23	4700923253		4	Rivet	C

Engine pre-heater, Cab Option

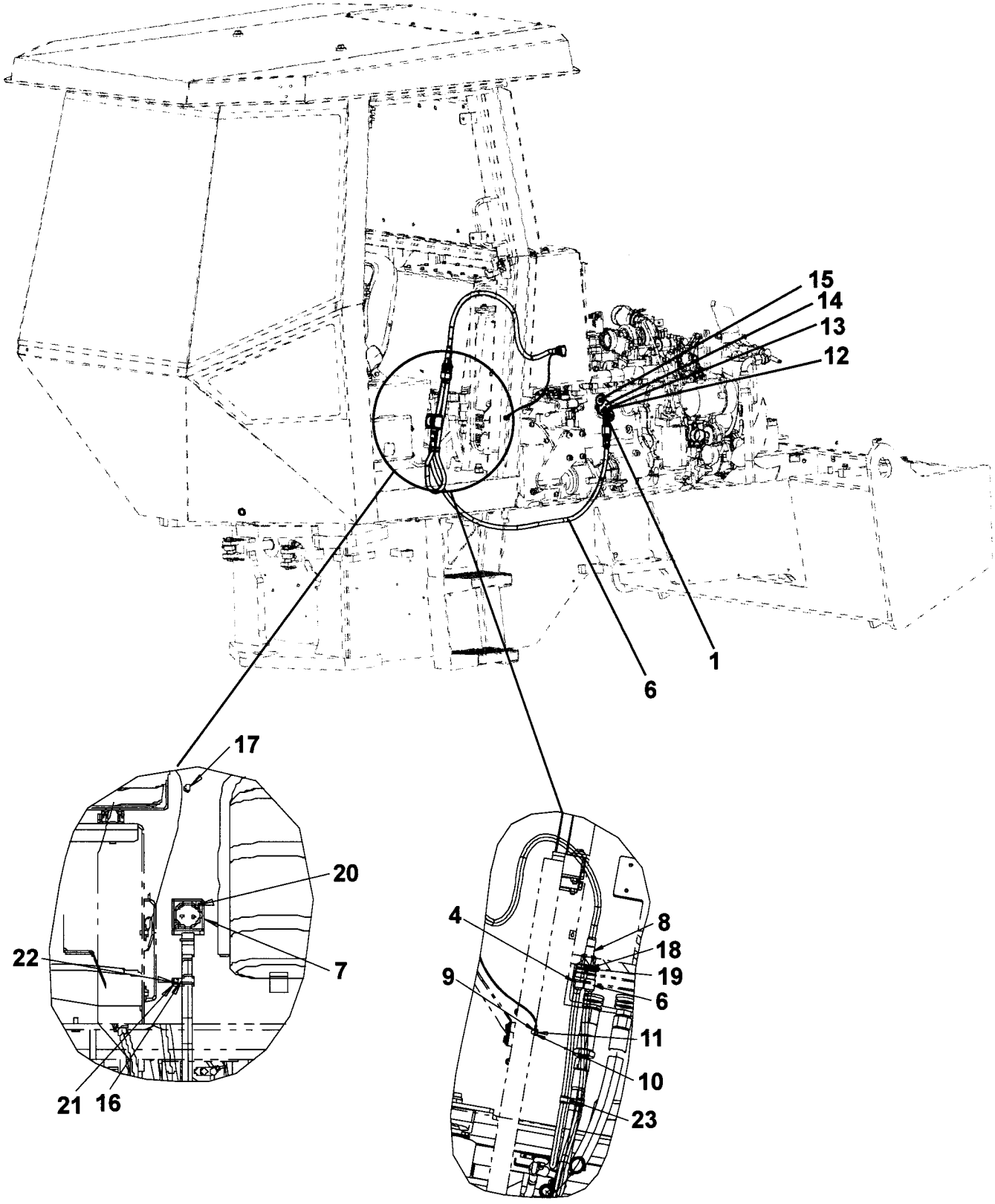

Engine pre-heater, Cab Option

Item	Part No	Rem	Qty	Description	Code
1	4700396041		1	Heater	
3	4700396045		1	Cable	
4	4700396046		1	Cable	
5	4700396048		1	Cable	
6	4700396047		1	Cable	
7	4700396044		1	Connector	
8	4700396043		1	Branching	
9	4700960051		1	Connector	
10	4700904229		1	Steel plain washer 8,4x16x1,5	C
11	4700500042		1	Screw	
12	4700500006		1	Screw M5x16	C
13	4700791304		2	Washer	C
14	4700901688		2	Washer	
15	4700500053		2	Screw M8x20H 8.8	C
16	4700921046		3	Clamp	
17	4700928346		1	Screw M6x40H 8.8	C
18	4700904228		1	Washer 6,4x12x1,5	C
19	4700586002		1	Lock nut M6 -8	C
20	4700533016		2	Screw	D
21	4700904281		2	Washer 5,3x10x1 300HV	C
22	4700500060		1	Screw M5-0,8x20 8.8	C
23	4700586001		1	Lock nut	C

Engine pre-heater, Platform Option

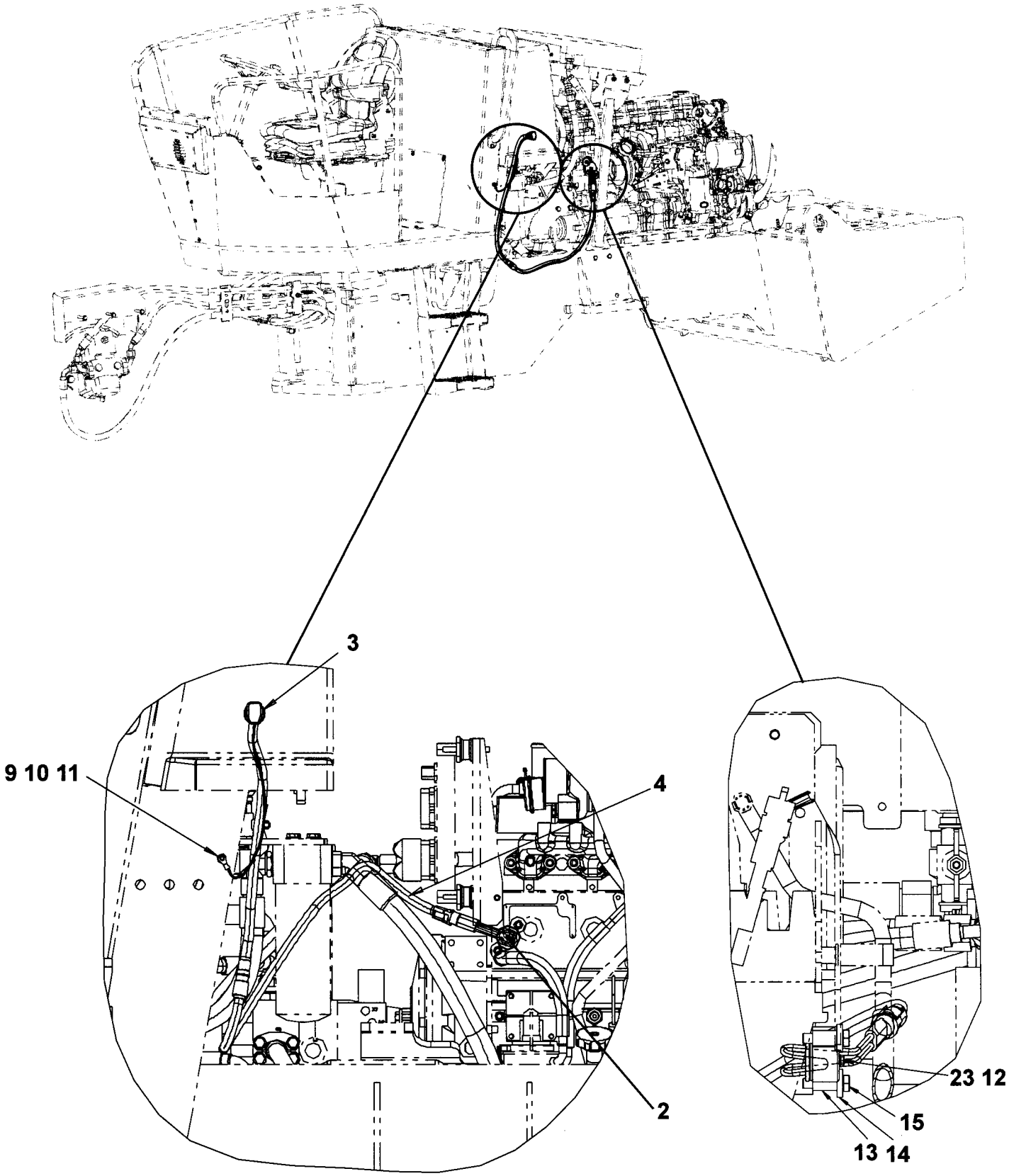

Engine pre-heater, Platform Option

Item	Part No	Rem	Qty	Description	Code
2	4700396041		1	Heater	
3	4700396045		1	Cable	
4	4700396046		1	Cable	
5	4700396048		1	Cable	
9	4700960051		1	Connector	
10	4700904229		1	Steel plain washer 8,4x16x1,5	C
11	4700500042		1	Screw	
12	4700500006		1	Screw M5x16	C
13	4700791304		2	Washer	C
14	4700901688		2	Washer	
15	4700500053		2	Screw M8x20H 8.8	C
23	4700586001		1	Lock nut	C

Drivers platform

Item	Part No	Rem	Qty	Description	Code
10				Drivers platform (Page 196)	
16				Drivers platform, for cab (Page 198)	
17				Drivers seat Standard platform (Page 200)	
21				Drivers seat Turn-over platform (Page 202)	
26				Drivers seat Turn-over in cab (Page 204)	
27				Steering column (Page 206)	D
29				Steering system (Page 208)	
30				Turning Controls (Page 210)	
40				Turning Carrier (Page 212)	
50				Forward and reverse control (Page 214)	
57				Speed limiter Option (Page 216)	
90				Rops and fops (Page 218)	
96				Cab 4700383030 (Page 220)	
100				Cab 4700392479 (Page 246)	
120				Cab mounting (Page 260)	
240				Cab Work lights (Page 262)	
250				Cab Exterior, rear mirror (Page 264)	
260				Radio and cassette/cd player Option (Page 266)	
265				Cab, 12V contact (Page 268)	
270				Rear mirror Option (Page 270)	
280				Bracket, Steering valve vibration isolated Option (Page 272)	

Drivers platform

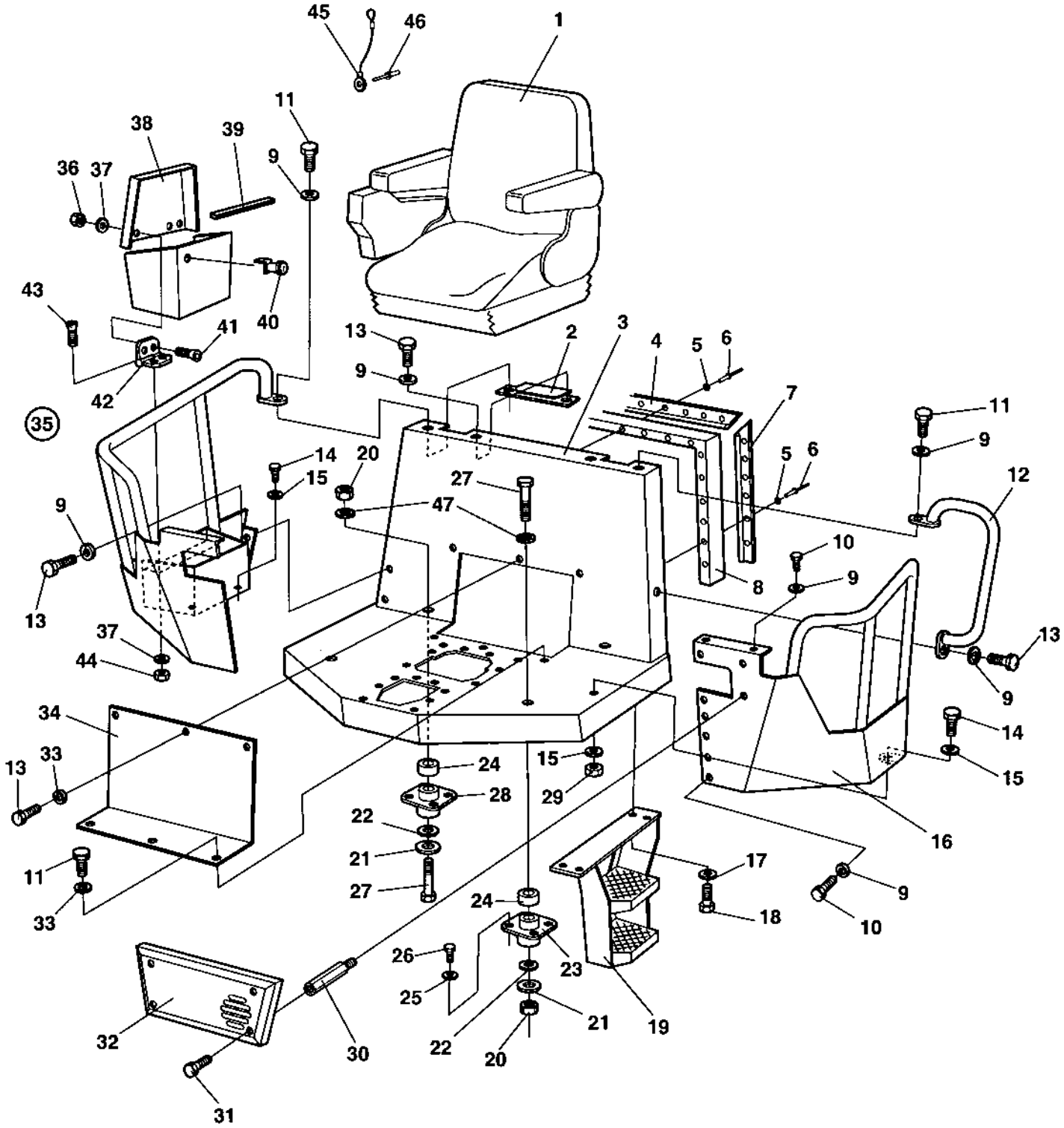

Drivers platform

Item	Part No	Rem	Qty	Description	Code
1			1	**Drivers seat Standard platform (Page 200)**	
			1	**Drivers seat Turn-over platform (Page 202)**	
			1	**Forward and reverse control (Page 214)**	
2	4700380727		2	Cover	D
3	4700371100		1	Platform	
4	4700372785		1	List	D
5	4700927974		13	Washer	C
6	4700904433		13	Blind rivet	
7	4700372786		2	List	D
8	4700372494	A	1	Rubber strip	D
9	4700904229		22	Steel plain washer 8,4x16x1,5	C
10	4700500019		7	Hexagon head screw M8x16H 8,8	C
11	4700500021		7	Screw M8-1,25x25 8.8	C
12	4700371202	B	1	Hand rail	D
13	4700500053		10	Screw M8x20H 8.8	C
14	4700500031		5	Screw M10x040 8.8	C
15	4700904557		10	Steel plain washer	C
16	4700371967	B	1	Operator protection	D
17	4700904230		6	Steel plain washer	C
18	4700500029		9	Hexagon head screw	C
19	4700376252		1	Step	D
20	4700586022		4	Lock nut M20-8	C
21	4700347512		4	Washer	D
22	4700903290		4	Washer 21x36x6	C
23	4700370255	C	2	Shock absorber	A
24	4700374471		4	Spacer	D
25	4700904231		16	Washer 13x24x2 300 HV	C
26	4700500195		16	Screw	C
27	4700500226		4	Screw M20-2.5x180 8,8	D
28	4700372757	D	2	Shock absorber	D
29	4700570006		5	Nut	B
30	4700904941		4	Spacer screw	D
31	4700904206		4	Screw	C
32	4700382849		1	Protecting cover	D
33	4700904640		18	Washer 8,4x22x3	C
34	4700372053		1	Cover	D
35	4700371966	E	1	Operator protection	D
36	4700581018		4	. Nut	D
37	4700904228		8	. Washer 6,4x12x1,5	C
38	4700376079		1	. Cover	D
39	4700202028	F	1	. Edge trim	D
40	4700376118		1	. Lock	D
	4700902866		2	. . Key Marked "455"	
41	4700535013		4	. Screw	D
42	4700903907		2	. Hinge	C
43	4700535015		4	. Screw	D
44	4700586002		4	. Lock nut M6 -8	C
45	4700384584		1	Wire	
46	4700904855		1	Blind rivet	D
47	4700904233		4	Washer 21x36x3	C

A) L = 2.400 m
B) Left
C) Front
D) Rear
E) Right
F) L=0,736 m

Drivers platform, for cab

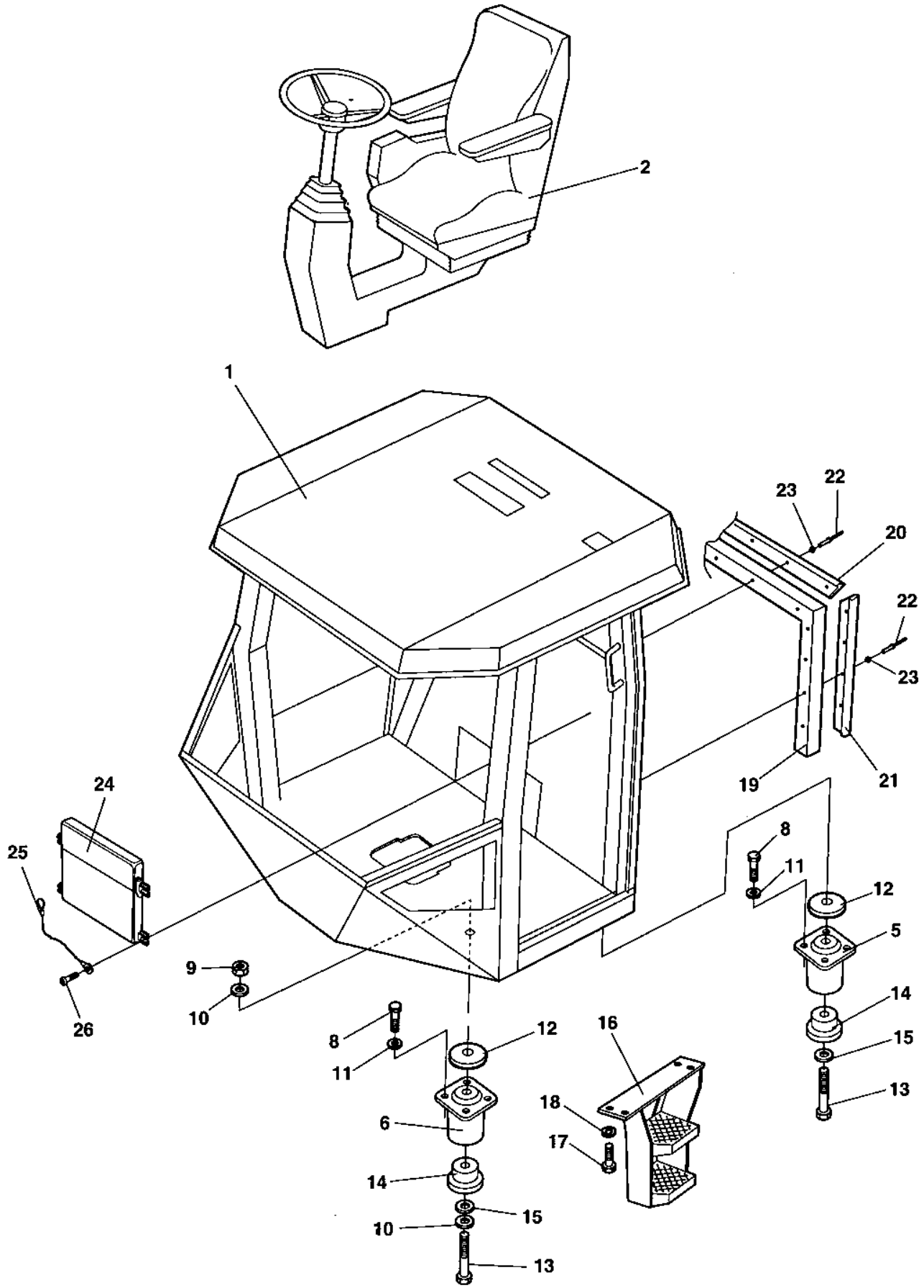

Drivers platform, for cab

Item	Part No	Rem	Qty	Description	Code
1			1	**Cab 4700383030 (Page 220)**	
2				**Drivers seat Turn-over in cab (Page 204)** **Forward and reverse control (Page 214)**	
5	4700374606		2	Shock absorber Green	D
6	4700374607		2	Shock absorber Yellow	D
8	4700500195		16	Screw	C
9	4700901145		4	Lock nut M20-10	
10	4700904233		6	Washer 21x36x3	C
11	4700904231		16	Washer 13x24x2 300 HV	C
12	4700384759		4	Spacer	D
13	4700791218		4	Screw M20x200	D
14	4700372457		4	Back-up ring	C
15	4700903290		4	Washer 21x36x6	C
16	4700376252		1	Step	D
17	4700500029		6	Hexagon head screw	C
18	4700904230		6	Steel plain washer	C
19	4700372494	A	1XL	Rubber strip	D
20	4700372785		1	List	D
21	4700372786		2	List	D
22	4700904433		13	Blind rivet	
23	4700927974		13	Washer	C
24	4700383705		1	Instruction book holder	D
25	4700357643		1	Wire	D
26	4700791226		4	Screw	C

A) L = 2,400 m

Drivers seat Standard platform

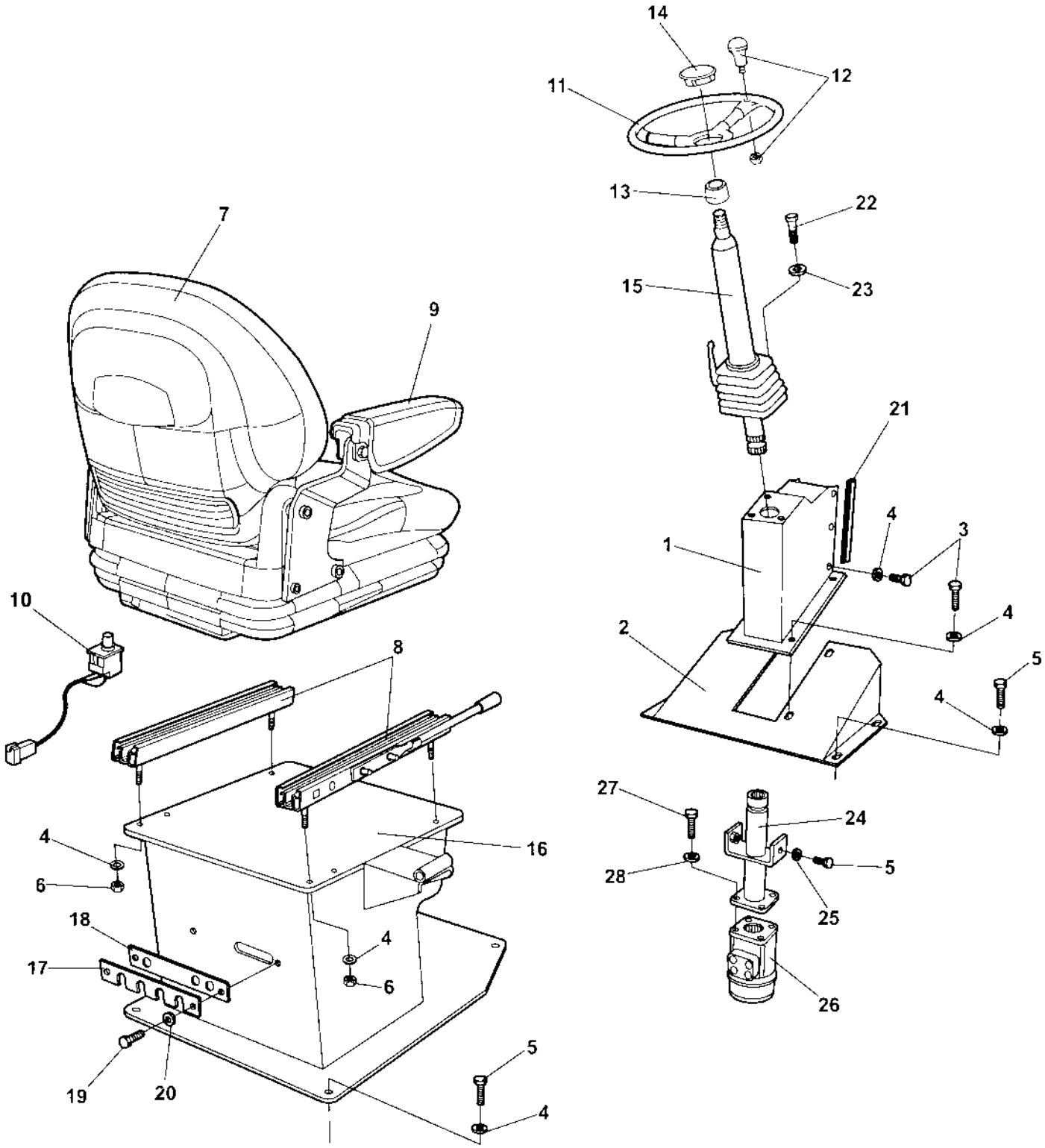

Drivers seat Standard platform

Item	Part No	Rem	Qty	Description	Code
1	4700371968		1	Steering console	D
2	4700371213		1	Foot rest	D
3	4700500053		10	Screw M8x20H 8.8	C
4	4700904229		18	Steel plain washer 8,4x16x1,5	C
5	4700500021		10	Screw M8-1,25x25 8.8	C
6	4700570005		6	Nut M8	C
7	4700377518		1	Drivers seat, cpl	D
8	4700945661	C	1	. Adjuster kit	D
9	4700390963	A	1	. Arm rest kit	D
10	4700945622		1	. Seat switch	B
11	4700372964		1	Steering wheel, cpl	D
			1	. Steering wheel	
12	4700935614		1	. Turning knob	D
13			1	. Insert adapter	
14	4700935613		1	. Cover	D
15			1	**Steering column (Page 206)**	D
16	4700391179		1	Seat frame	D
17	4700359914		1	Cover	D
18	4700359915		1	Grommet	D
19	4700500075		2	Screw M6-1,0x25 8.8	C
20	4700904228		2	Washer 6,4x12x1,5	C
21	4700202028	B	2XL	Edge trim	D
22	4700500029		3	Hexagon head screw	C
23	4700904557		3	Steel plain washer	C
24	4700370977		1	Linkage shaft	D
25	4700904640		2	Washer 8,4x22x3	C
26			1	Steering valve	
27	4700502034		4	Screw UNC 3/8 - 16	D
28	4700904230		4	Steel plain washer	C

A) One pair
B) L = 0.290 m
C) Left and right sliding rail.

Drivers seat Turn-over platform

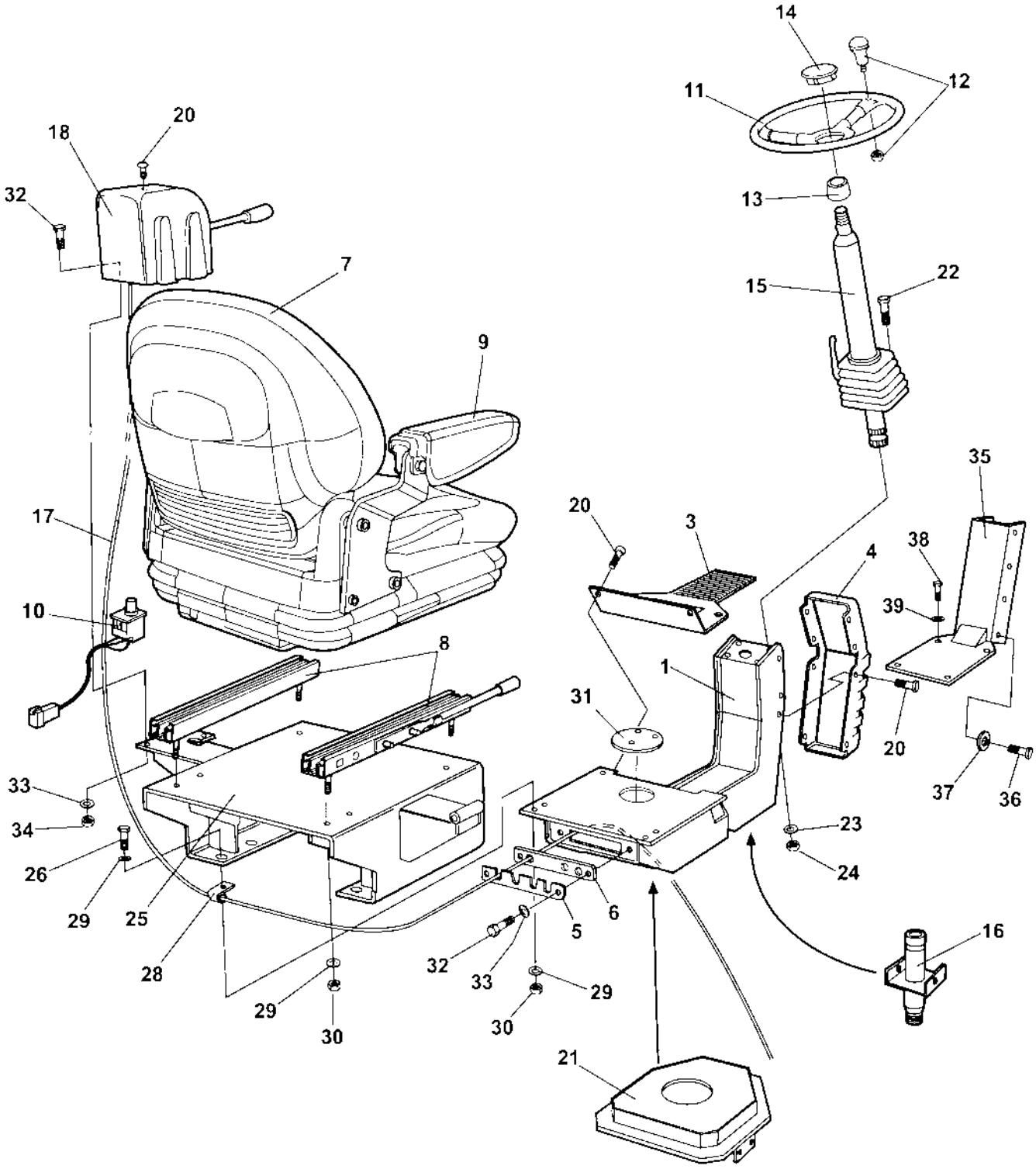

Drivers seat Turn-over platform

Item	Part No	Rem	Qty	Description	Code
1	4700359900		1	Seat frame	D
3	4700381400		1	Bearing cover	D
4	4700359574		1	Cover	D
5	4700359914		1	Cover	D
6	4700359915		1	Grommet	D
7	4700377518		1	Drivers seat, cpl	D
8	4700945661	B	1	. Adjuster kit	D
9	4700390963	A	1	. Arm rest kit	D
10	4700945622		1	. Seat switch	B
11	4700372964		1	Steering wheel, cpl	D
			1	. Steering wheel	
12	4700935614		1	. Turning knob	D
13			1	. Insert adapter	
14	4700935613		1	. Cover	D
15			1	**Steering column (Page 206)**	D
16			0	**Steering system (Page 208)**	
17			0	**Turning Controls**	
18	4700359419		1	Control cover	D
20	4700904206		16	Screw	C
21			0	**Turning Carrier**	
22	4700500028		3	Screw	C
23	4700904557		3	Steel plain washer	C
24	4700570006		3	Nut	B
25	4700391346		1	Seat frame	D
26	4700500021		6	Screw M8-1,25x25 8.8	C
27	4700603019		6	Washer	D
28	4700921104		1	Clamp	C
29	4700904229		16	Steel plain washer 8,4x16x1,5	C
30	4700570005		12	Nut M8	C
31	4700359920		1	Plug	C
32	4700500040		6	Screw M6-1x20 8,8	C
33	4700904228		6	Washer 6,4x12x1,5	C
34	4700586002		4	Lock nut M6 -8	C
35	4700371407		1	Cover	D
36	4700500019		8	Hexagon head screw M8x16H 8,8	C
37	4700904229		12	Steel plain washer 8,4x16x1,5	C
38	4700500021		4	Screw M8-1,25x25 8.8	C
39	4700904229		1	Steel plain washer 8,4x16x1,5	C
100	4700348331		1	Seat cover	D

A) One pair
B) Left and right sliding rail.

Drivers seat Turn-over in cab

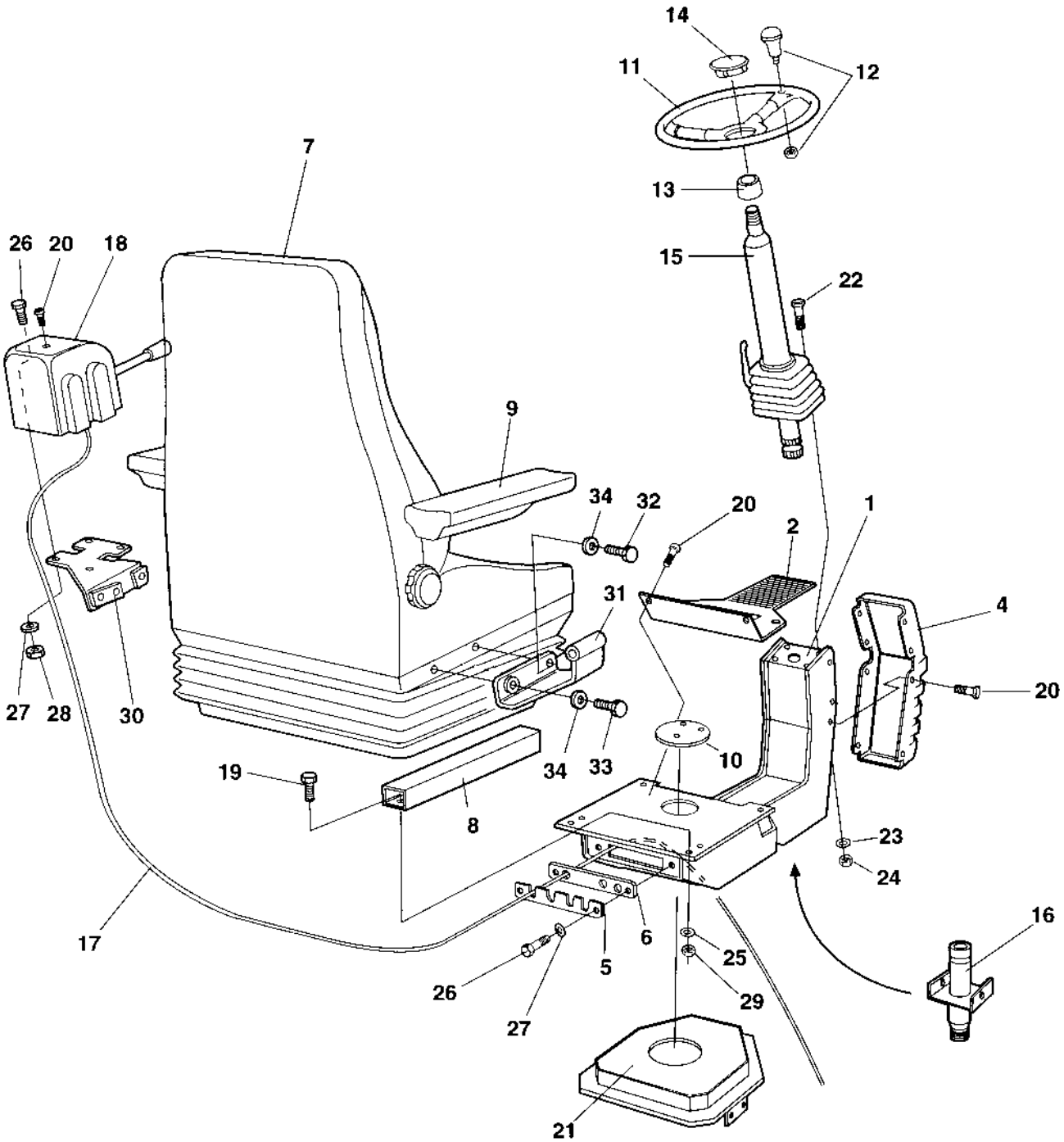

Drivers seat Turn-over in cab

Item	Part No	Rem	Qty	Description	Code
1	4700359900		1	Seat frame	D
2	4700381400		1	Bearing cover	D
4	4700359574		1	Cover	D
5	4700359914		1	Cover	D
6	4700359915		1	Grommet	D
7	4700359917		1	Drivers seat	D
	4700937892		1	. Seat switch	B
8	4700938047	A	1	Slide rail	
9	4700937621		1	Arm rest, left	D
	4700937620		1	Arm rest, right	D
10	4700359920		1	Plug	C
11	4700372964		1	Steering wheel, cpl	D
			1	. Steering wheel	
12	4700935614		1	. Turning knob	D
13			1	. Insert adapter	
14	4700935613		1	. Cover	D
15	4700359918		1	**Steering column**	D
16			1	**Steering system (Page 208)**	
17			1	**Turning Controls (Page 210)**	
18	4700359419		1	Control cover	D
19	4700500053		6	Screw M8x20H 8.8	C
20	4700904206		14	Screw	C
21			1	**Turning Carrier (Page 212)**	
22	4700500028		3	Screw	C
23	4700904557		3	Steel plain washer	C
24	4700570006		3	Nut	B
25	4700904229		6	Steel plain washer 8,4x16x1,5	C
26	4700500040		6	Screw M6-1x20 8,8	C
27	4700904228		6	Washer 6,4x12x1,5	C
28	4700586002		4	Lock nut M6 -8	C
29	4700570005		6	Nut M8	C
30	4700359972		1	Control cable holder	D
31	4700359971		1	Control cable holder	D
32	4700500031		2	Screw M10x040 8.8	C
33	4700903914		2	Screw	C
34	4700904230		4	Steel plain washer	C

A) One pair

Steering column

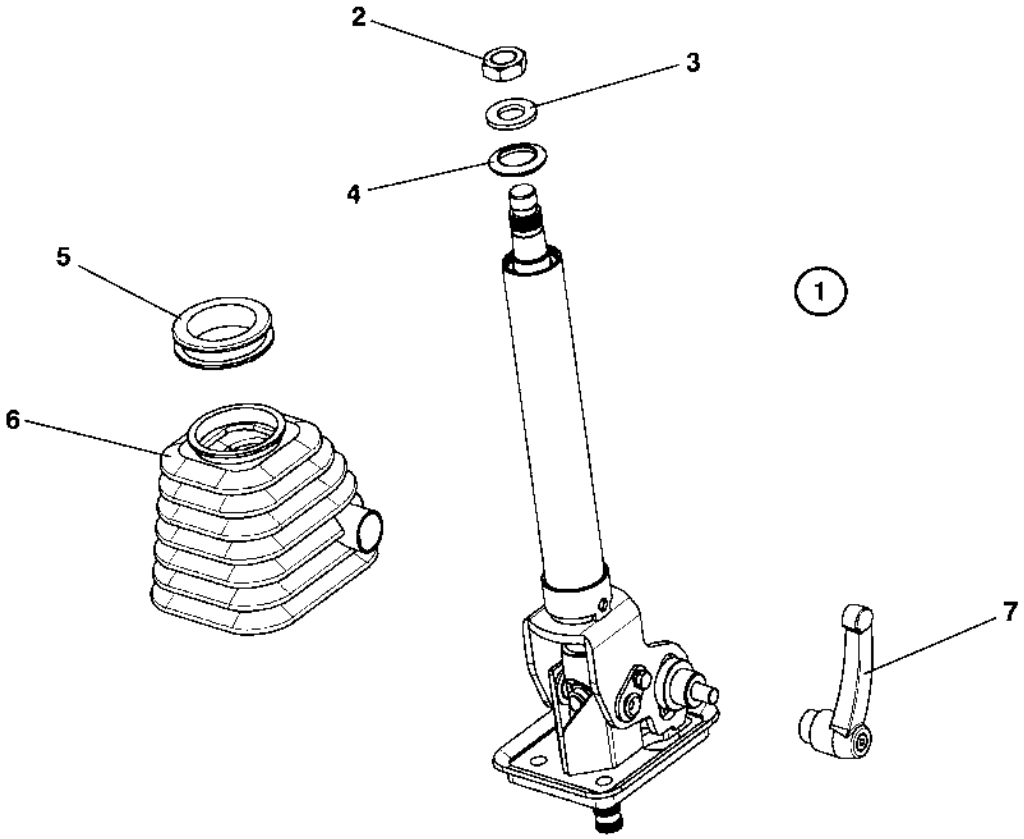

Steering column

Item	Part No	Rem	Qty	Description	Code
1				Steering column	D
2	4700945632		1	. Nut	C
3	4700945633		1	. Washer	C
4	4700945634		1	. Rubber cap	C
5	4700945635		1	. Bellows ring	C
6	4700945636		1	. Bellows	C
7	4700945637		1	. Locking handle	D

Steering system

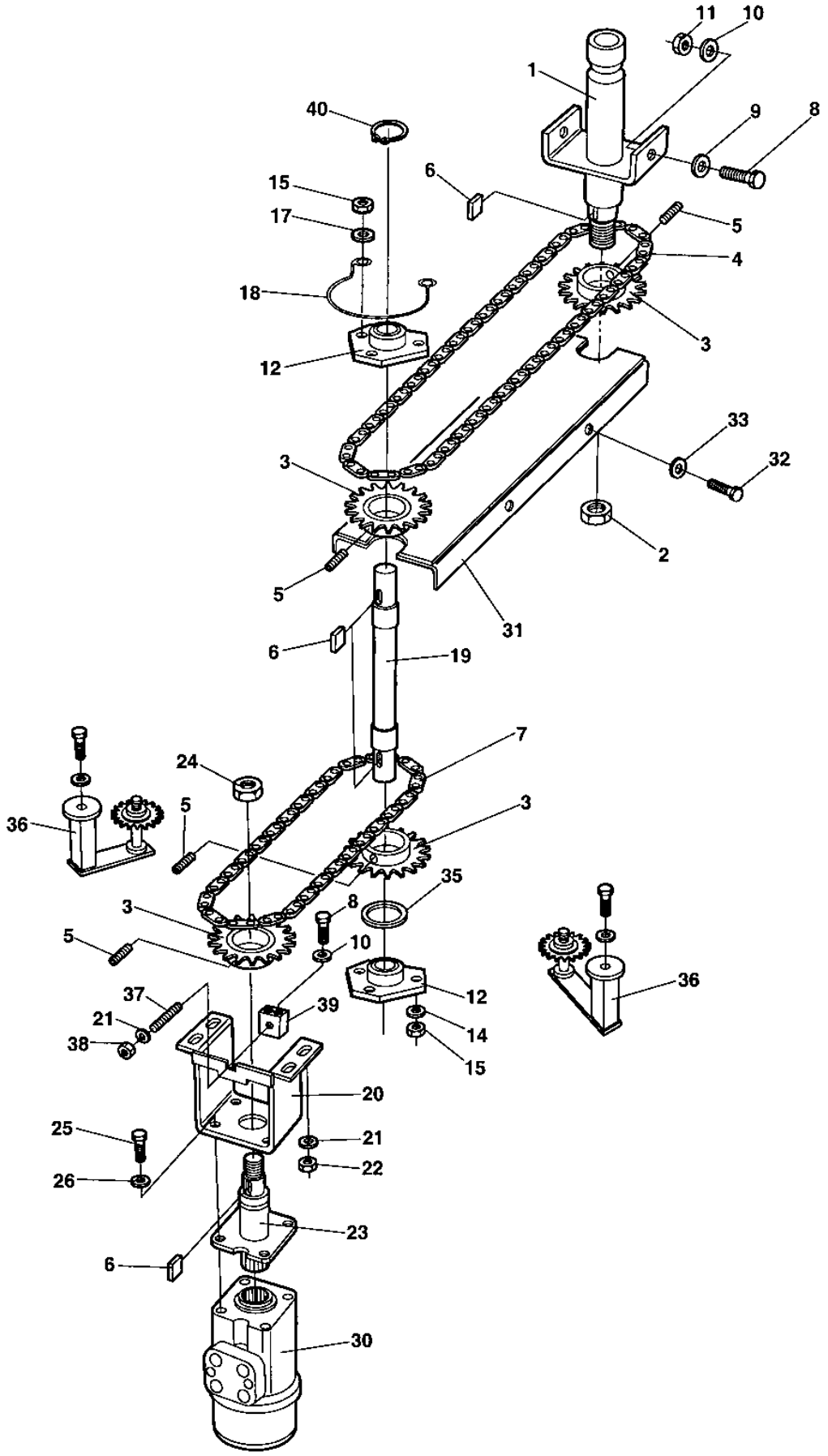

Steering system

Item	Part No	Rem	Qty	Description	Code
1	4700359919		1	Shaft	C
2			1	. Nut	
3	4700359916		4	Chain wheel	D
4	4700359921		1	Chain	D
5	4700516051		4	Set screw	C
6	4700350009		4	Flat key	C
7	4700372653	A	1	Chain	D
	4700372654	B	1	Chain	D
8	4700500021		3	Screw M8-1,25x25 8.8	C
9	4700904734		2	Steel plain washer	
10	4700904229		3	Steel plain washer 8,4x16x1,5	C
11	4700586003		2	Lock nut M8	C
12	4700903917	C	2	Bearing outer	B
	4700903918	D	2	Bearing inner	B
14	4700904228		4	Washer 6,4x12x1,5	C
15	4700586002		6	Lock nut M6 -8	C
17	4700603001		2	Washer	C
18	4700372672		1	Chain guard	D
19	4700374933	A	1	Shaft	C
	4700374934	B	1	Shaft	D
20	4700381567	E	1	Bracket	D
21	4700904640		5	Washer 8,4x22x3	C
22	4700586003		4	Lock nut M8	C
23	4700370978		1	Linkage shaft	D
24			1	. Nut	
25	4700502036		4	Screw 3/8"-16UNCx11/4"8.8	C
26	4700904230		4	Steel plain washer	C
30			1	Steering valve	
31	4700381403		1	Chain supporter	D
32	4700500040		4	Screw M6-1x20 8,8	C
33	4700904735		4	Washer	C
35	4700904214		1	Washer 15x30x4 300 HV	C
36	4700904739		2	Chain tensioner	D
37	4700904802		1	Threaded stud	D
38	4700586003		1	Lock nut M8	C
39	4700381571		1	Bracket	D
40	4700150004		1	Retaining ring	D

A) For cab
B) For platform
C) Outer
D) Inner
E) Steering valve

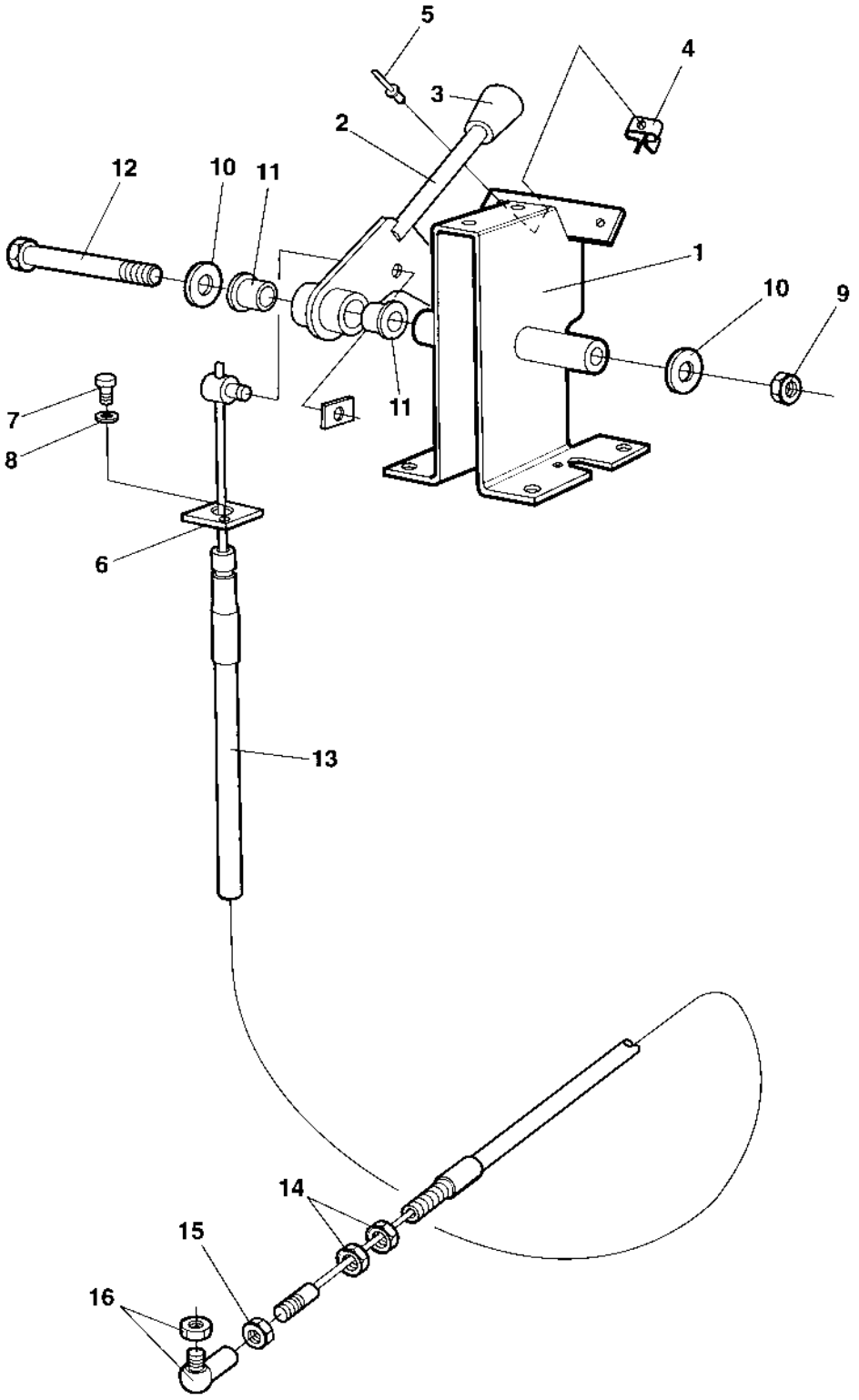
5
4
3
2
12
10
11
1
10
9
11
7
8
6
13
14
15
16

Turning Controls

Item	Part No	Rem	Qty	Description	Code
1	4700935771		1	Framing	D
2	4700909745		1	Lever	D
3	4700908190		1	Ball knob	D
4	4700908189		1	Lever lock	D
5	4700624016		1	Blind rivet	D
6	4700908188		1	Cable holder	D
7	4700533024		1	Screw	D
8	4700615041		1	Washer 5,3x11	C
9	4700586002		1	Lock nut M6 -8	C
10	4700928381		2	Washer 6,4x18x1,6	C
11	4700908187		2	Plain bearing	B
12	4700500169		1	Screw	C
13	4700935774	A	1	Cable, cpl	D
14	4700927233		2	. Nut	C
15	4700570004		1	. Nut M6X1,00 -8 A2K	C
16	4700416034		1	Ball joint	C

A) Turning

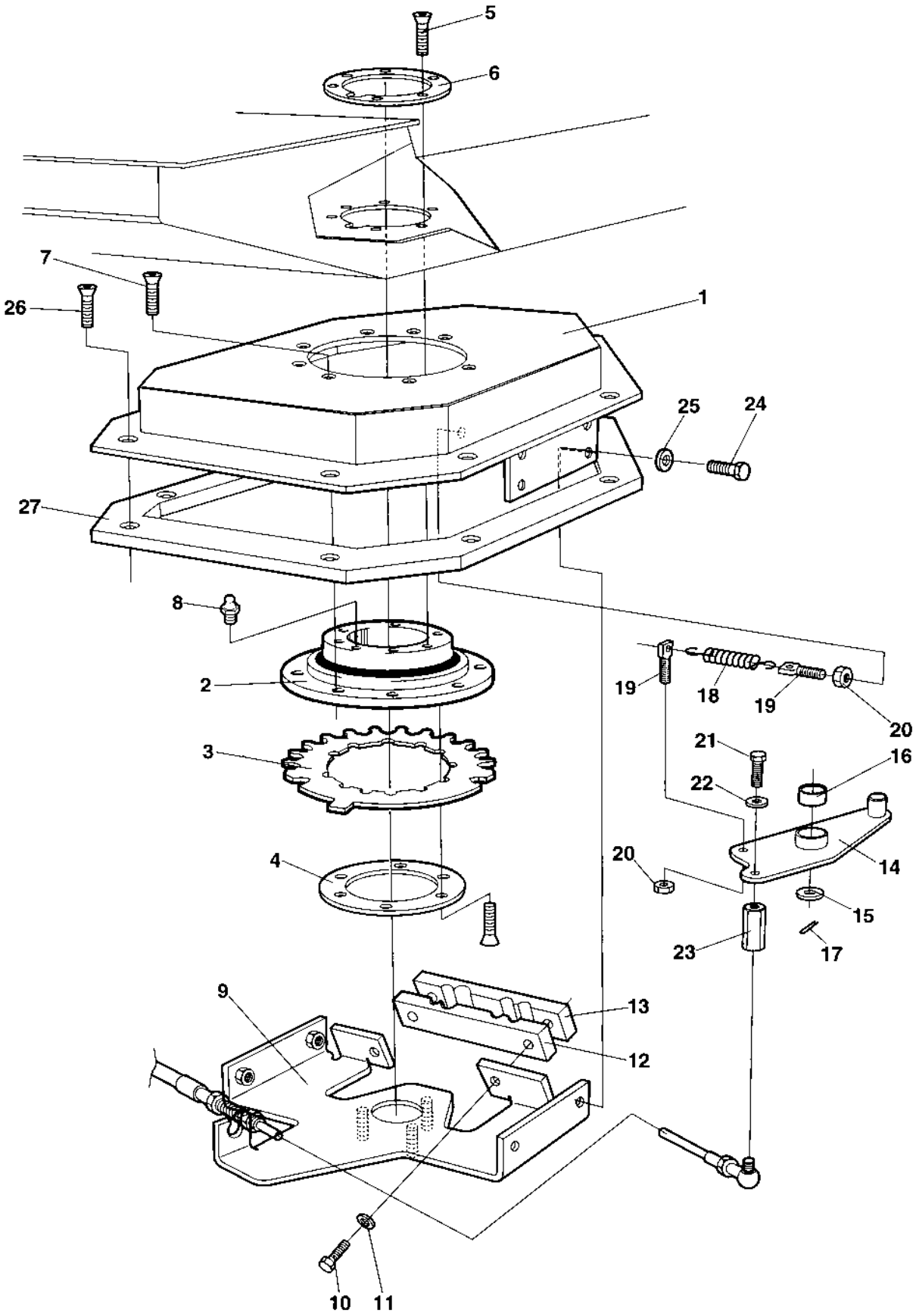
5
6
7
26
1
25
24
27
8
2
19
18
19
20
21
16
22
3
20
14
4
15
23
17
9
13
12
10
11

Turning Carrier

Item	Part No	Rem	Qty	Description	Code
1	4700371374		1	Bearing housing	D
2	4700359125		1	Ball bearing	B
3	4700370955		1	Locking disc	D
4	4700372966	A	1	Lock ring	C
5	4700902520		12	Screw	C
6	4700372965	B	1	Lock ring	C
7	4700513003		8	Screw	C
8	4700926214		1	Grease fitting	C
9	4700371418		1	Bracket	D
10	4700508056		2	Screw M8x40	D
11	4700904229		2	Steel plain washer 8,4x16x1,5	C
12	4700372961		1	Clamp	D
13	4700372671		1	Clamp	D
14	4700374417	C	1	Coupling link	C
15	4700904231		1	Washer 13x24x2 300 HV	C
16	4700359820		1	Bushing	D
17	4700630035		1	Split pin	C
18	4700359043		1	Spring	D
19	4700359818		2	Spring collar	D
20	4700573008		2	Nut M8	C
21	4700500013		1	Screw M6-1x16 8,8	C
22	4700904228		1	Washer 6,4x12x1,5	C
23	4700373547	D	1	Spacer	D
	4700372459	E	1	Spacer	D
24	4700500021		4	Screw M8-1,25x25 8.8	C
25	4700904556		4	Washer 8,4x16x3,0	C
26	4700513013	D	8	Screw	D
	4700903644	E	8	Screw	C
27	4700372083	F	1	Spacer	D

A) Lower
B) Upper
C) For turning
D) Platform
E) Cab
F) Only for cab

Forward and reverse control

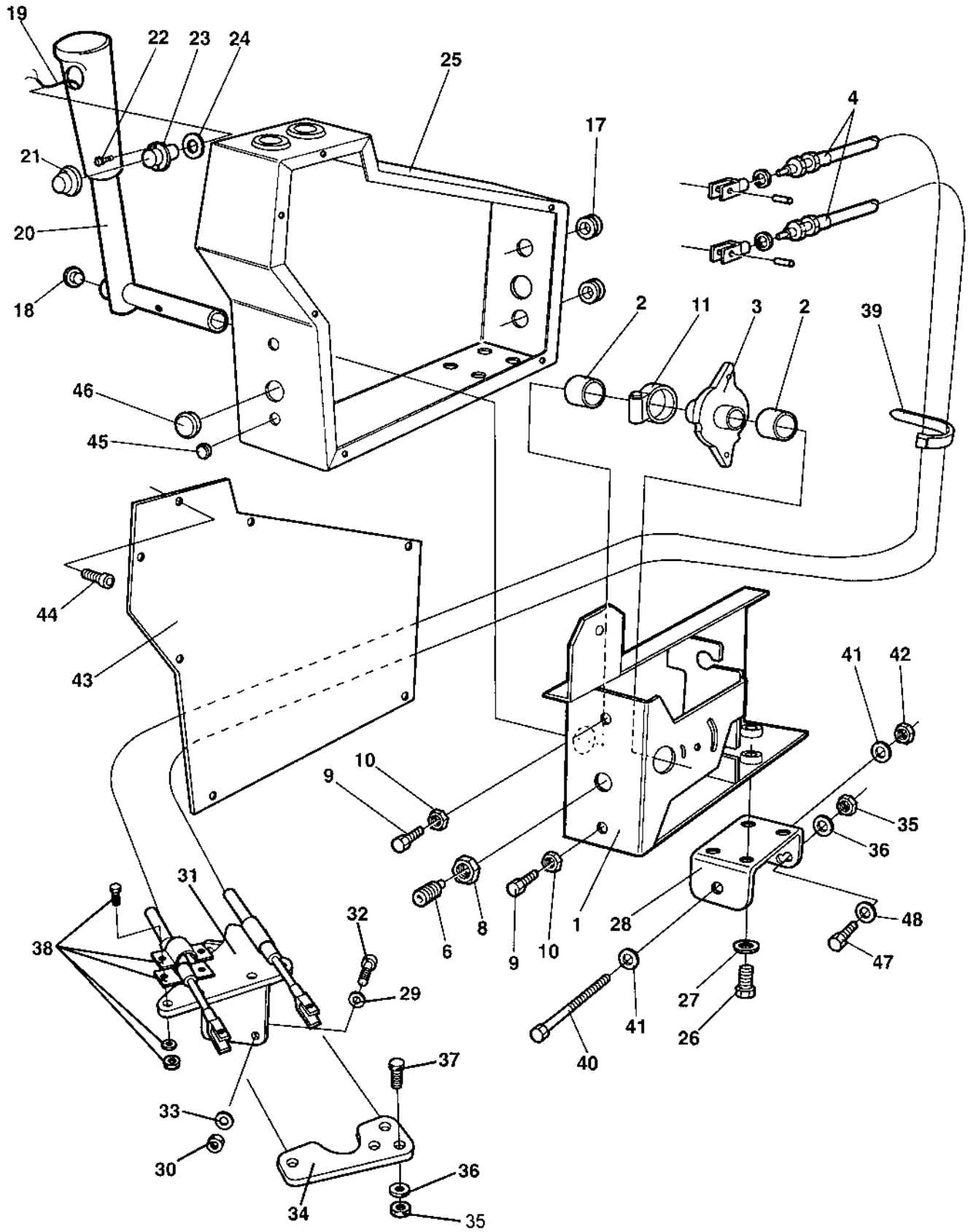

Forward and reverse control

Item	Part No	Rem	Qty	Description	Code
1	4700909747		1	Framing	D
2	4700908200		2	Bearing	B
3	4700909748		1	Cam disc	C
4	4700935225	A	2	Cable	
	4700573004		4	. Nut	C
	4700908193		2	. Fork	D
6	4700922325		1	Spring ball plunger	C
8	4700573004		1	Nut	C
9	4700533038		2	Screw	D
10	4700570004		2	Nut M6X1,00 -8 A2K	C
11	4700313147		1	Hose clip	C
17	4700909122		2	Grommet	C
18	4700902203		1	Plug	C
19	4700372782		1	Cable harness	D
20	4700359575		1	Control lever	D
21	4700348481		1	Cover	B
22	4700371009		2	Screw	D
23	4700928497		1	Push button	B
24	4700395325		1	Washer	D
25	4700372322		1	Control cover	D
26	4700500053		2	Screw M8x20H 8.8	C
27	4700904229		2	Steel plain washer 8,4x16x1,5	C
28	4700381676	B	1	Bracket	D
29	4700904229		3	Steel plain washer 8,4x16x1,5	C
30	4700904556		3	Washer 8,4x16x3,0	C
31	4700382884		1	Control bracket	D
32	4700947680		3	Screw M8-1,25x25 10.9	D
33	4700904229		3	Steel plain washer 8,4x16x1,5	C
34	4700372568		1	Control bracket	D
35	4700586003		3	Lock nut M8	C
36	4700904229		3	Steel plain washer 8,4x16x1,5	C
37	4700500021		2	Screw M8-1,25x25 8.8	C
38	4700465013		2	Clamp	C
39	4700313041		N	Cable ties	B
40	4700500267		1	Screw M12x120 8,8 FZB	D
41	4700904231		2	Washer 13x24x2 300 HV	C
42	4700586019		1	Lock nut	C
43	4700372321		1	Cover	D
44	4700903658		7	Screw M5x10	C
45	4700900986		2	Plug	D
46	4700287373		1	Plug	
47	4700508092		1	Screw	C
48	4700904229	C	1	Steel plain washer 8,4x16x1,5	C

A) Forward/reverse
B) Regarding "double hole". Upper hole for standard seat. Lower hole for accessorie seat.
C) Only in use on standard seat

Speed limiter Option

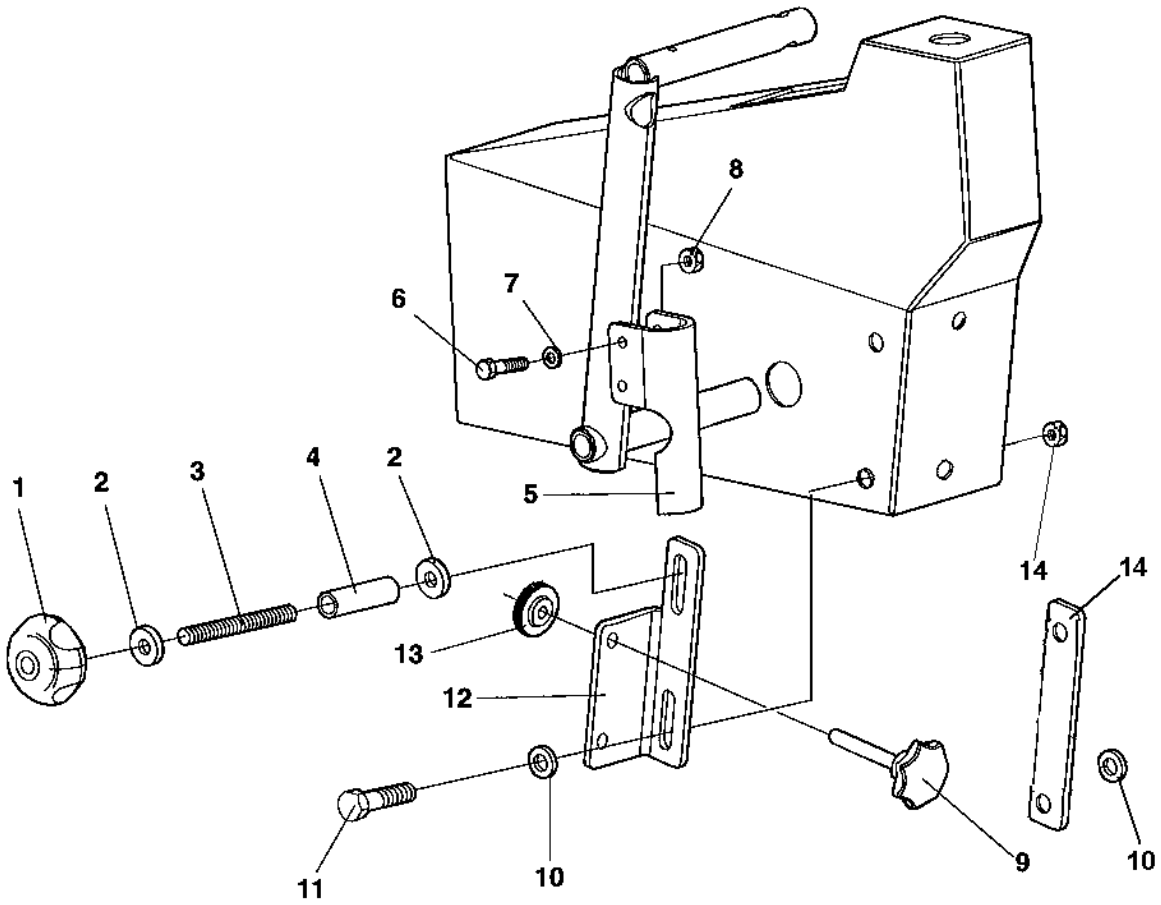

Speed limiter Option

Item	Part No	Rem	Qty	Description	Code
1	4700904290		1	Hand knob	D
2	4700904640		2	Washer 8,4x22x3	C
3	4700791313		1	Threaded stud M8x85	D
4	4700386003		1	Spacer sleeve	C
5	4700386002		1	Lever holder	D
6	4700500186		2	Screw	C
7	4700904228		4	Washer 6,4x12x1,5	C
8	4700586002		2	Lock nut M6 -8	C
9	4700791314		1	Handle knob	D
10	4700904556		2	Washer 8,4x16x3,0	C
11	4700500022		1	Screw M8x30H 8.8 A2K	C
12	4700385994		1	Bracket	D
13	4700791312		2	Letter nut	D
14	4700586003		2	Lock nut M8	C
	4812116352		1	Bracket	

Rops and fops

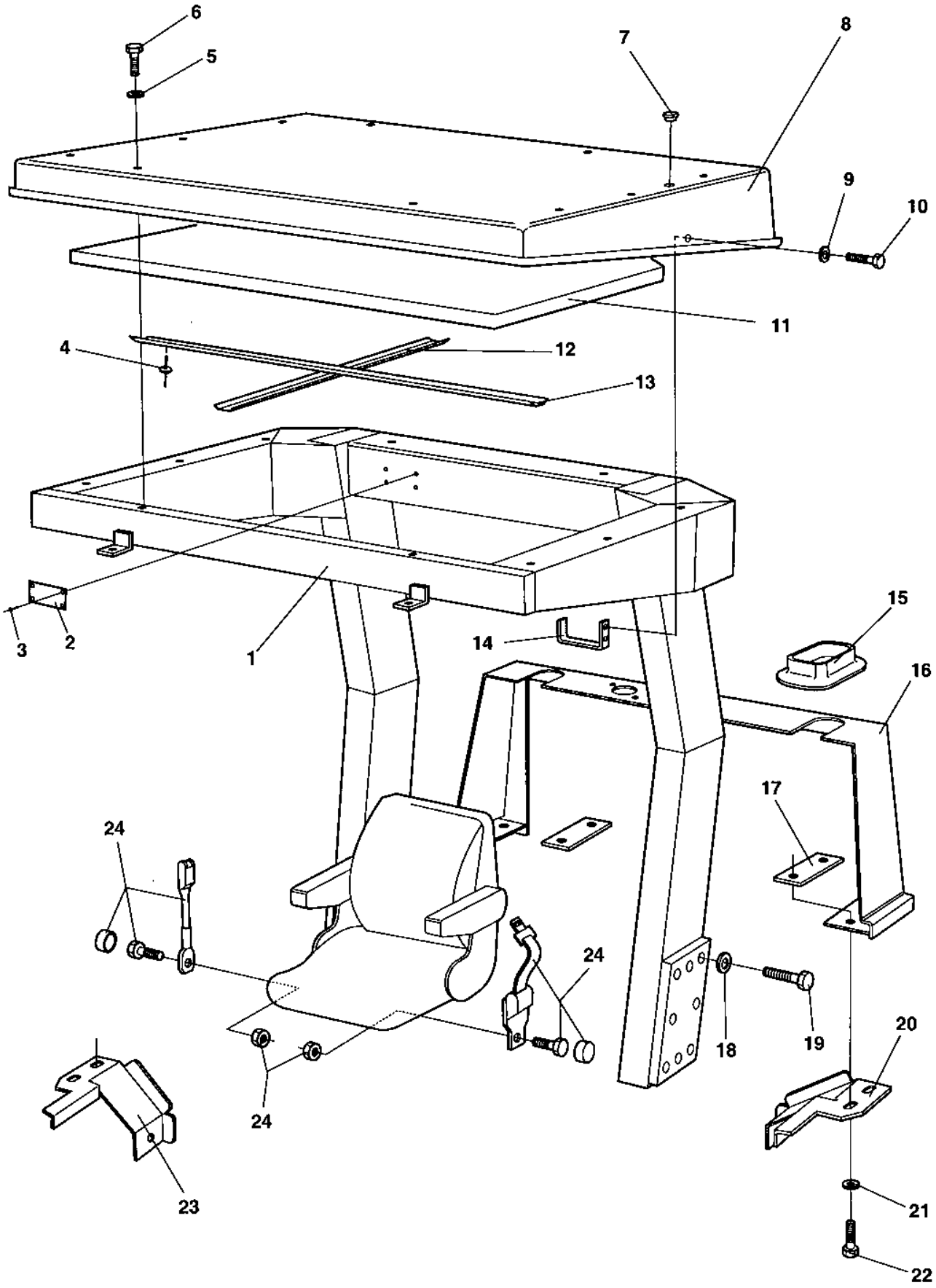

Rops and fops

Item	Part No	Rem	Qty	Description	Code
1	4700372743		1	Rops	D
2	4700370803		1	. Sign, rops	D
3	4700624016		4	. Blind rivet	D
4	4700904619		12	Blind rivet	C
5	4700904734		23	Steel plain washer	
6	4700500239		19	Screw M8x50H 8,8	C
7	4700904180		8	Plug	C
8	4700372745		1	Fops roof	D
9	4700904734		4	Steel plain washer	
10	4700500100		4	Screw	C
11	4700372678		1	Absorbent	D
12	4700376489		1	Absorbent holder	D
13	4700376488		1	Absorbent holder	D
14	4700383225		2	Hook	D
15	4700372489		2	Rubber seal	D
16	4700373799		1	Protecting cover	D
17			2	Holder plate	
18	4700904234		12	Steel plain washer	C
19	4700904562		12	Screw M24x160 10.9	
20	4700373854		1	Holder plate	D
21	4700904640		4	Washer 8,4x22x3	C
22	4700500021		4	Screw M8-1,25x25 8.8	C
23	4700373855		1	Holder plate	D
24	4700396633		1	Seat belt 2"	
	4700383200	A	1	Seat belt 3"	B

A) Option 3"

Cab 4700383030

Item	Part No	Rem	Qty	Description	Code
300				**Cab Interior (Page 222)**	
310				**Cab Inside panels (Page 224)**	
320				**Cab Screens (Page 226)**	
330				**Cab Door (Page 230)**	
340				**Cab Wipers front and rear (Page 234)**	
350				**Cab Mirror, Sun curtain (Page 236)**	
360				**Cab Electric (Page 238)**	
370				**Cab Heater system (Page 240)**	
380	4700385434			**Cab heater, cpl (Page 242)**	
390				**Cab Cable harness (Page 244)**	

Cab Interior

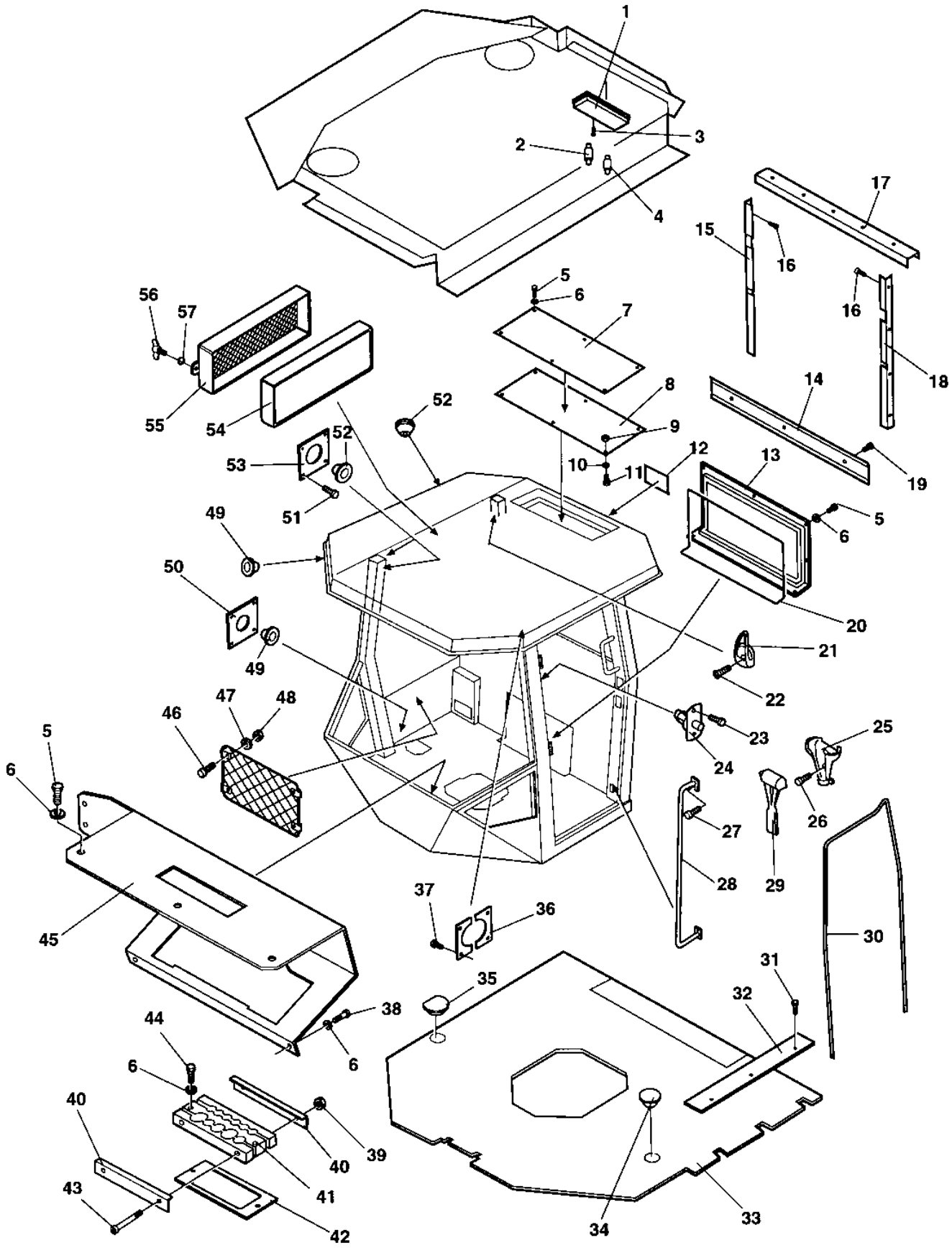

Cab Interior

Item	Part No	Rem	Qty	Description	Code
1	4700908515		1	Inner light	D
2	4700985013		1	Bulb 12V,5W	B
3	4700541535		2	Screw	D
4	4700985051		1	Bulb 12V,10W	B
5	4700500053		22	Screw M8x20H 8.8	C
6	4700904229		31	Steel plain washer 8,4x16x1,5	C
7	4700938678		1	Cover	D
8	4700938679		1	Cover	D
9	4700586003		18	Lock nut M8	C
10	4700904229		31	Steel plain washer 8,4x16x1,5	C
11	4700500053		22	Screw M8x20H 8.8	C
12	4700935589		1	Decal	D
13	4700935590		1	Cover plate	
14	4700938675		1	List	
15	4700938672		1	List	
16	4700938671		4	Screw	
17	4700938674		1	List	
18	4700938673		1	List	
19	4700938671		3	Screw	
20	4700908587	A	2	Edge trim	D
21	4700908505		1	Hook	D
22	4700938676		2	Screw	C
23	4700925784		2	Screw	
24	4700908500		1	Door switch	B
25	4700908506		1	Emergency hammer	D
26	4700938670		2	Screw	
27	4700938677		2	Screw	C
28	4700935591		1	Handle	
29	4700908507		1	Holder	D
30	4700908499	B	1	Rubber list	D
31	4700535007		9	Screw M5x16	D
32	4700935578		1	Edge trim	
33	4700935577		1	Floor material	
34	4700908512		1	Cover	D
35	4700935579		1	Cover	
36	4700935580		2	Bracket	
37	4700500004		16	Screw M5 0,8x12 8,8	C
38	4700500018		6	Screw M8-1,25x12 8,8	C
39	4700586003		10	Lock nut M8	C
40	4700935583		2	Holder plate	
41	4700935582		1	Grommet kit	
42	4700935581		1	Metal gasket	
43	4700500115		2	Screw M8-1,25x90 8.8	C
44	4700500047		2	Hexagon head screw	C
45	4700935584		1	Panel plate	
46	4700535007		4	Screw M5x16	D
47	4700904281		4	Washer 5,3x10x1 300HV	C
48	4700586001		4	Lock nut	C
49	4700909510		9	Grommet	C
50	4700935585		1	Bracket	
51	4700500004		16	Screw M5 0,8x12 8,8	C
52	4700908496		5	Grommet	D
53	4700935586		2	Bracket	
54	4700908502		1	Filter	A
55	4700908501		1	Filter frame	D
56	4700908504		2	Handle	D
57	4700908503		2	O-ring	D

A) L=2 M
B) L=5,0 M

Cab Inside panels

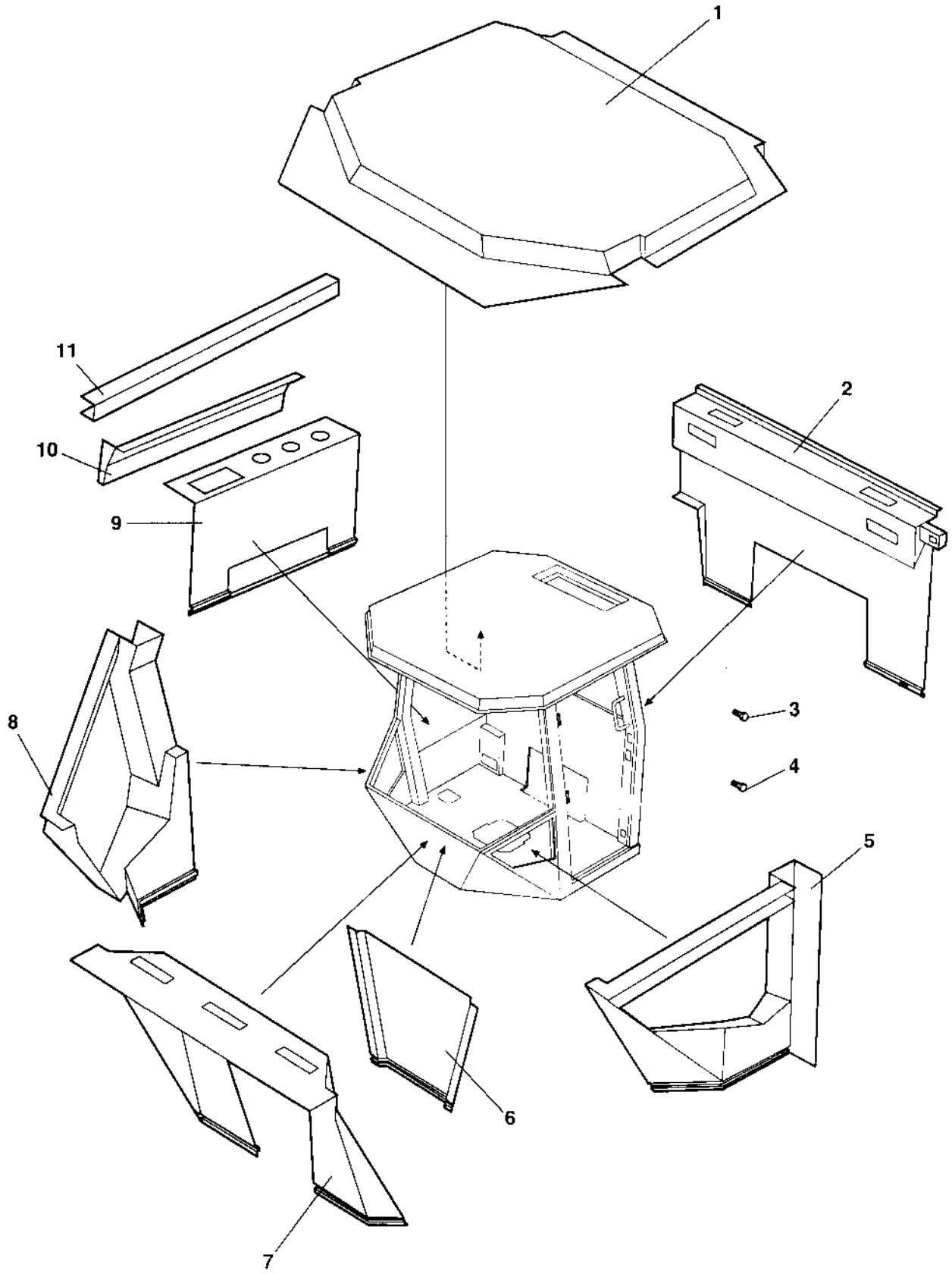

Cab Inside panels

Item	Part No	Rem	Qty	Description	Code
1	4700938681		1	Panel	
2	4700938685		1	Panel	
3	4700938677		50	Screw	C
4	4700937932			Screw	D
5	4700935600		1	Panel	
6	4700935599		1	Panel	
7	4700935598		1	Panel	
8	4700938684		1	Panel	
9	4700938683		1	Panel	
10	4700938682		1	Panel	
11	4700935594		1	Panel	

Cab Screens

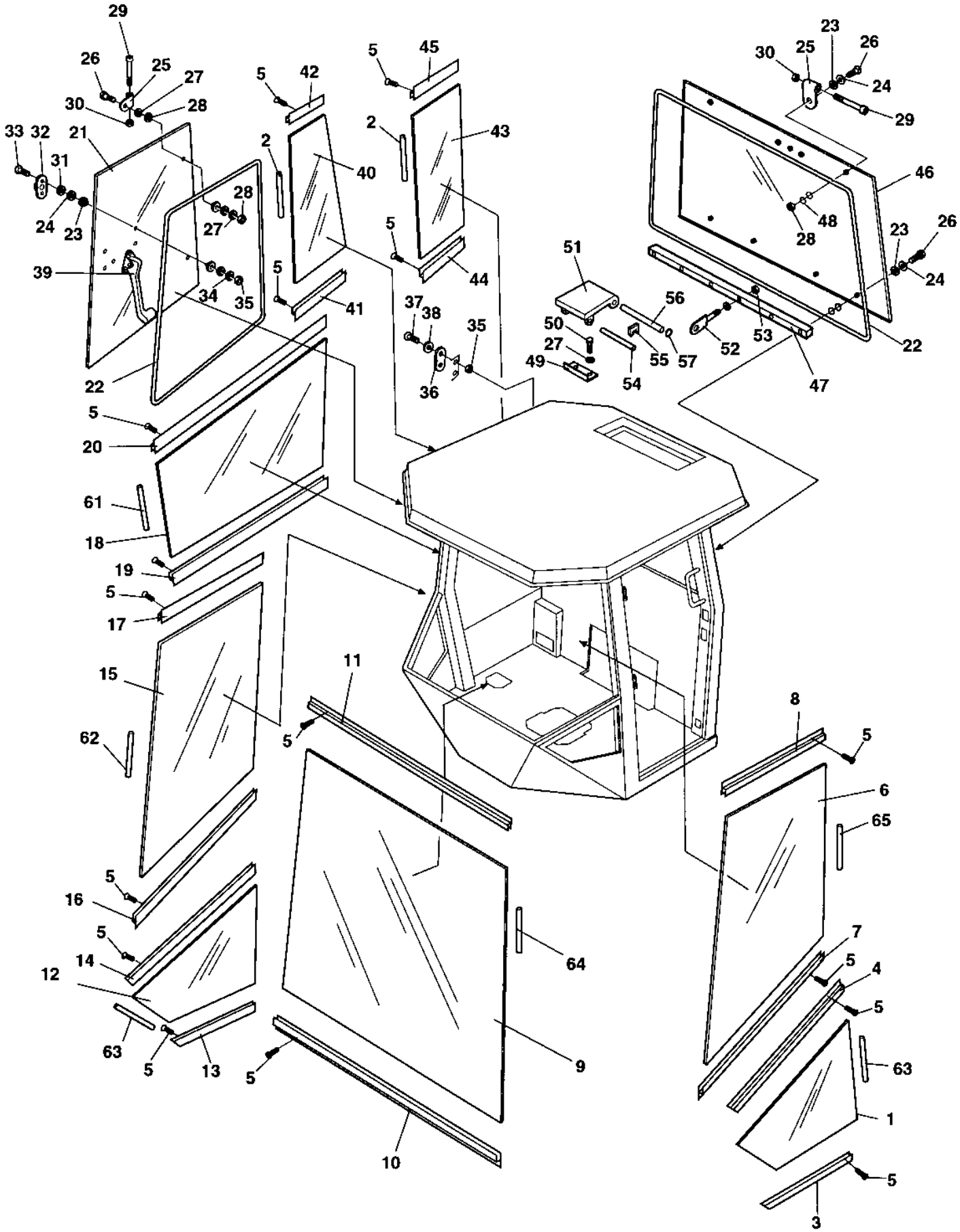
29
26
25
27
30
28
33
32
21
31
24
23
39
34
35
28
27
5
42
2
40
41
5
45
2
43
5
44
37
38
35
36
51
50
27
49
56
55
57
54
52
53
23
26
30
25
24
29
46
48
28
23
26
24
22
47
22
5
20
61
18
19
5
17
15
62
11
5
8
5
6
65
5
16
5
14
12
63
5
13
5
64
9
10
7
5
4
5
63
1
5
3

Cab Screens

Item	Part No	Rem	Qty	Description	Code
1	4700937380		1	Screen	
2	4700908545	A	2	Seal list	B
3	4700935278		1	List	
4	4700935279		1	List	
5	4700937932		80	Screw	D
6	4700937381		1	Screen, left	
7	4700935280		1	List	
8	4700935281		1	List	
9	4700937382		1	Screen	
10	4700935282		1	List	
11	4700935283		1	List	
12	4700937383		1	Screen	
13	4700935284		1	List	
14	4700935285		1	List	
15	4700937384		1	Screen	
16	4700935286		1	List	
17	4700935287		1	List	
18	4700937385		1	Screen	
19	4700935288		1	List	
20	4700935289		1	List	
21	4700938290		1	Screen	
22	4700908499	B	1	Rubber list	D
23	4700935271		20	Washer, Flexible rubber	
24	4700935272		20	Washer, Black	
25	4709335273		4	Hinge	
26	4700935274		8	Screw	
27	4700936277		4	Washer	C
28	4700586003		18	Lock nut M8	C
29	4700936934		4	Screw M10x100	
30	4700936935		4	Nut M10	
31	4700935275		2	Rubber washer	
32	4700935276		2	Bracket	
33	4700936600		2	Screw	
34	4700936601		2	Washer	
35	4700936602		4	Nut M5	
36	4700935277		2	Lock pin	
37	4700535007		9	Screw M5x16	D
38	4700904281		6	Washer 5,3x10x1 300HV	C
39	4700935290		1	Window lock, right	
40	4700938291		1	Screen	
41	4700935291		1	List	
42	4700938658		1	List	
43	4700938292		1	Screen	
44	4700935293		1	List	
45	4700938659		1	List	
46	4700937389		1	Screen	
47	4700935295		1	Screen holder	
48	4700935296		2	Washer	
49	4700935297		1	Bracket	
50	4700500019		7	Hexagon head screw M8x16H 8,8	C
51	4700935298		2	Bracket	
52	4700935299		2	Bolt	
53	4700570004		4	Nut M6X1,00 -8 A2K	C

A) L=1,4 m
B) L=2,7 m

Cab Screens

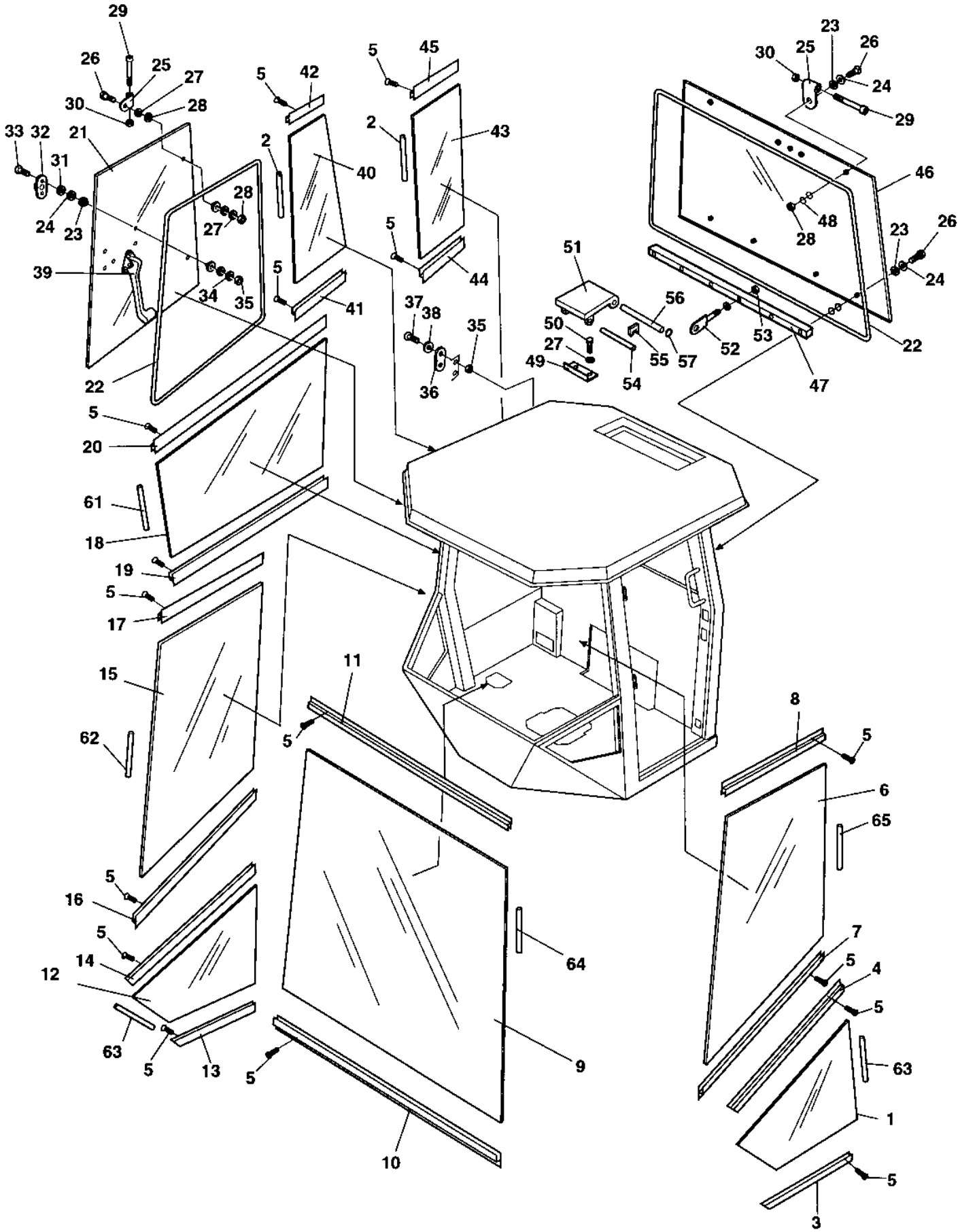
29
26
25
27
30
28
33
32
21
31
24
23
39
34
35
28
27
5
42
2
40
5
41
5
45
2
43
5
44
37
38
35
36
51
50
27
49
56
55
57
54
52
53
23
30
25
26
24
29
46
48
28
23
26
24
22
47
22
5
20
61
18
19
5
17
15
62
11
5
8
5
6
65
5
16
5
14
12
63
5
13
5
64
9
10
7
5
4
5
63
1
5
3

Cab Screens

Item	Part No	Rem	Qty	Description	Code
54	4700935300		1	Shaft	
55	4700935301		2	Lock	
56	4700935302		1	Rod	
57	4700935303		1	Ring	
61	4700908545	C	1	Seal list	B
62	4700908545	D	1	Seal list	B
63	4700908545	E	2	Seal list	B
64	4700908545	F	1	Seal list	B
65	4700908545	G	1	Seal list	B

C) L=1,1 M
D) L=1,9 M
E) L=0,8 M
F) L=2,1 M
G) L=0,9 M

Cab Door

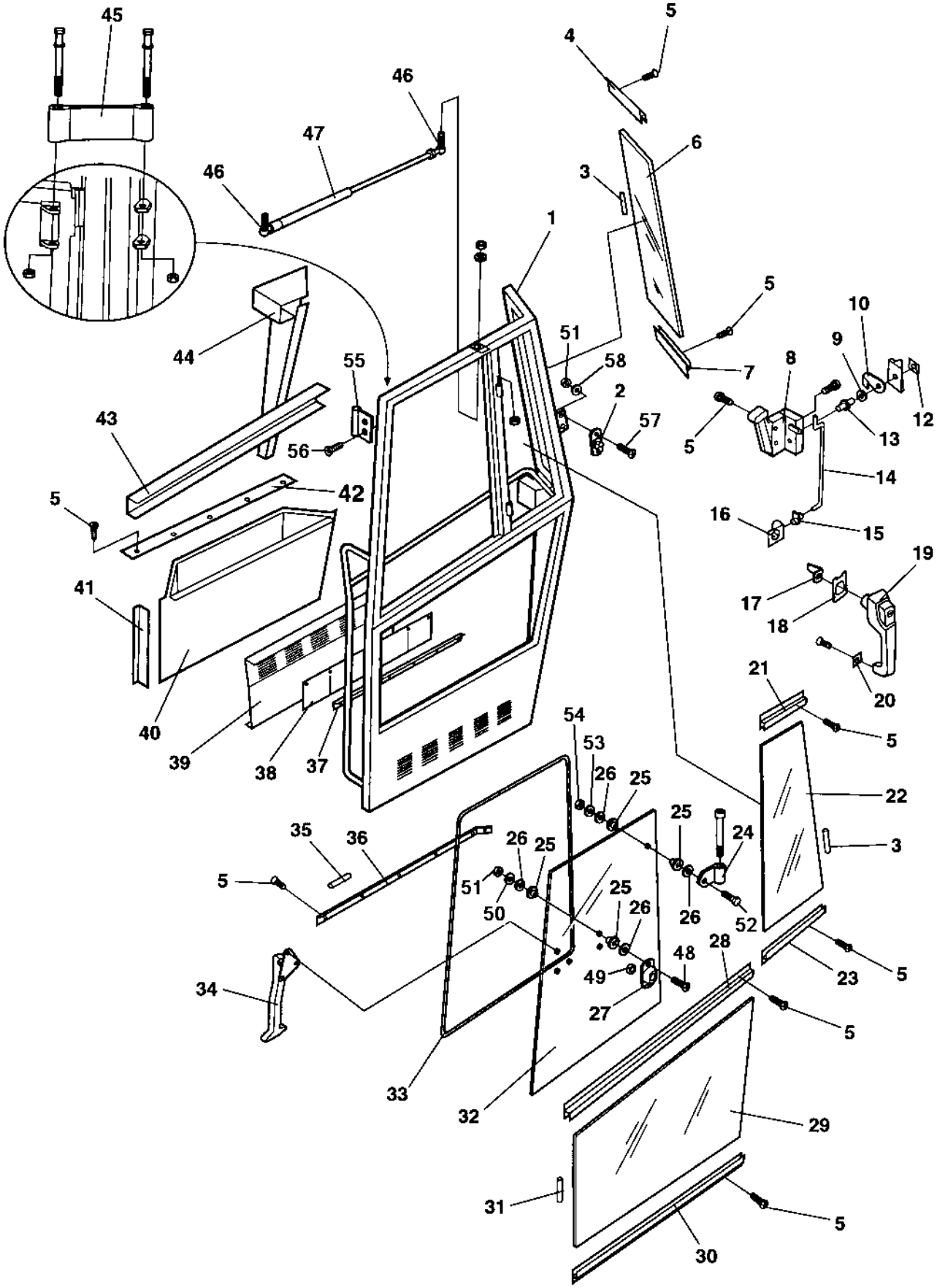
45
46
47
46
44
43
56
55
42
5
41
40
39
38
37
1
4
5
6
3
5
7
8
9
10
12
13
14
15
16
17
18
19
20
21
5
22
3
5
23
28
5
29
5
30
31
33
32
34
35
36
5
51
26
25
50
54
53
26
25
25
24
26
52
25
26
48
49
27
51
58
2
57
5

Cab Door

Item	Part No	Rem	Qty	Description	Code
	4700938224		1	Door, cpl	
1	4700938016		1	. Door frame	
2	4700935277		2	. Lock pin	
3	4700908545	A	2	. Seal list	B
4	4700935268		1	. List	
5	4700937932		80	. Screw	D
6	4700937391		1	. Screen	
7	4700935267		1	. List	
8	4700938017		1	. Lock	
9	4700908581		1	. Washer	C
10	4700908582		1	. Cover	D
12	4700908583		1	. Bracket	D
13	4700908580		1	. Lock pin	C
14	4700935250		1	. Rod	
15	4700935249		1	. Retainer	
16	4700935248		1	. Turning mechanism	
17	4700935247		1	. Leader	
18	4700935246		1	. Seal	
19	4700935244		1	. Door handle with key	D
20	4700935245		1	. Seal	
21	4700935270		1	. List	
22	4700937392		1	. Screen	
23	4700935269		1	. List	
24	4700935273		2	. Hinge	
25	4700935271		4	. Washer, Flexible rubber	
26	4700935272		4	. Washer, Black	
27	4700935276		1	. Bracket	
28	4700935266		1	. List	
29	4700937390		1	. Screen	
30	4700935265		1	. List	
31	4700908545	B	1	. Seal list	B
32	4700937393		1	. Screen	
33	4700908499		1	. Rubber list	D
34	4700935253		1	. Lock	
35	4700908987	C	1	. Seal	B
36	4700935255		1	. List	
37	4700935256		1	. List	
38	4700935257		1	. Ventilating grill	
39	4700935258		1	. Panel plate	
40	4700935260		1	. Panel	
41	4700935261		1	. Panel	
42	4700935262		1	. Support list	
43	4700935263		1	. Panel	
44	4700938043		1	. Panel	
45	4700938024		1	. Door stop	
46	4700937121		2	. Ball joint	D
47	4700938018		1	. Gas spring	
48	4700936600		2	. Screw	
49	4700935275		1	. Rubber washer	
50	4700936601		2	. Washer	
51	4700936602		4	. Nut M5	
52	4700935274		2	. Screw	
53	4700600006		2	. Washer	C
54	4700586003		2	. Lock nut M8	C
55	4700937056		1	. Hinge, cpl	D
	4700937057		1	. . Pin	D
56	4700513025		4	. Screw	D

A) L=1,4 M
B) L=1,1 M
C) L=0,75 M

Cab Door

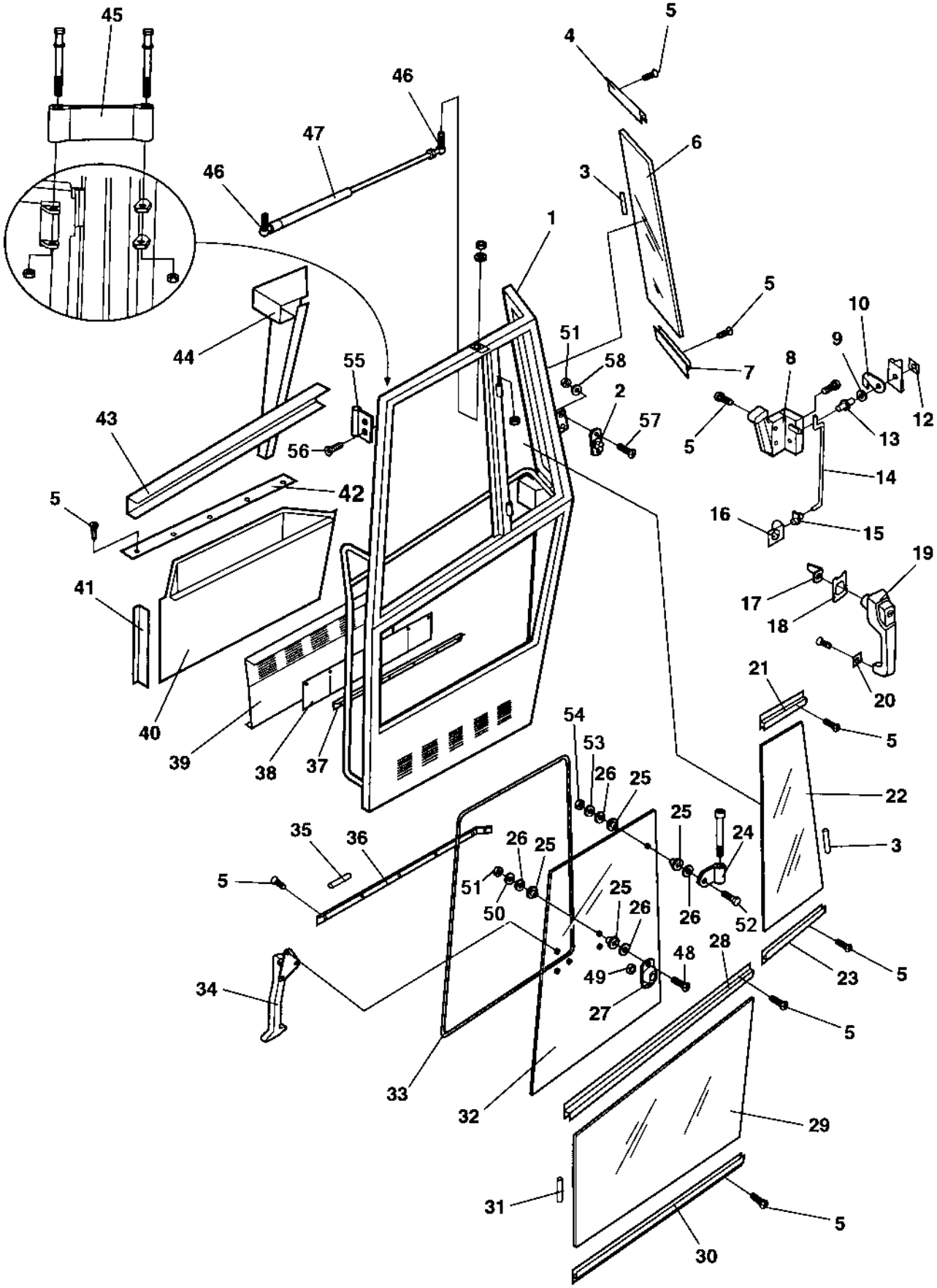
45
46
47
46
44
43
56
55
42
5
41
40
39
38
37
1
4
5
6
3
5
7
8
9
10
12
13
14
15
16
19
17
18
20
21
5
22
3
23
5
5
28
48
49
27
24
25
26
52
54
53
26
25
25
26
51
50
25
26
35
36
5
34
33
32
29
31
30
5
5
51
58
2
57
5

Cab Door

Item	Part No	Rem	Qty	Description	Code
57	4700938318		2	. Screw	
58	4700938319		2	. Washer	

Cab Wipers front and rear

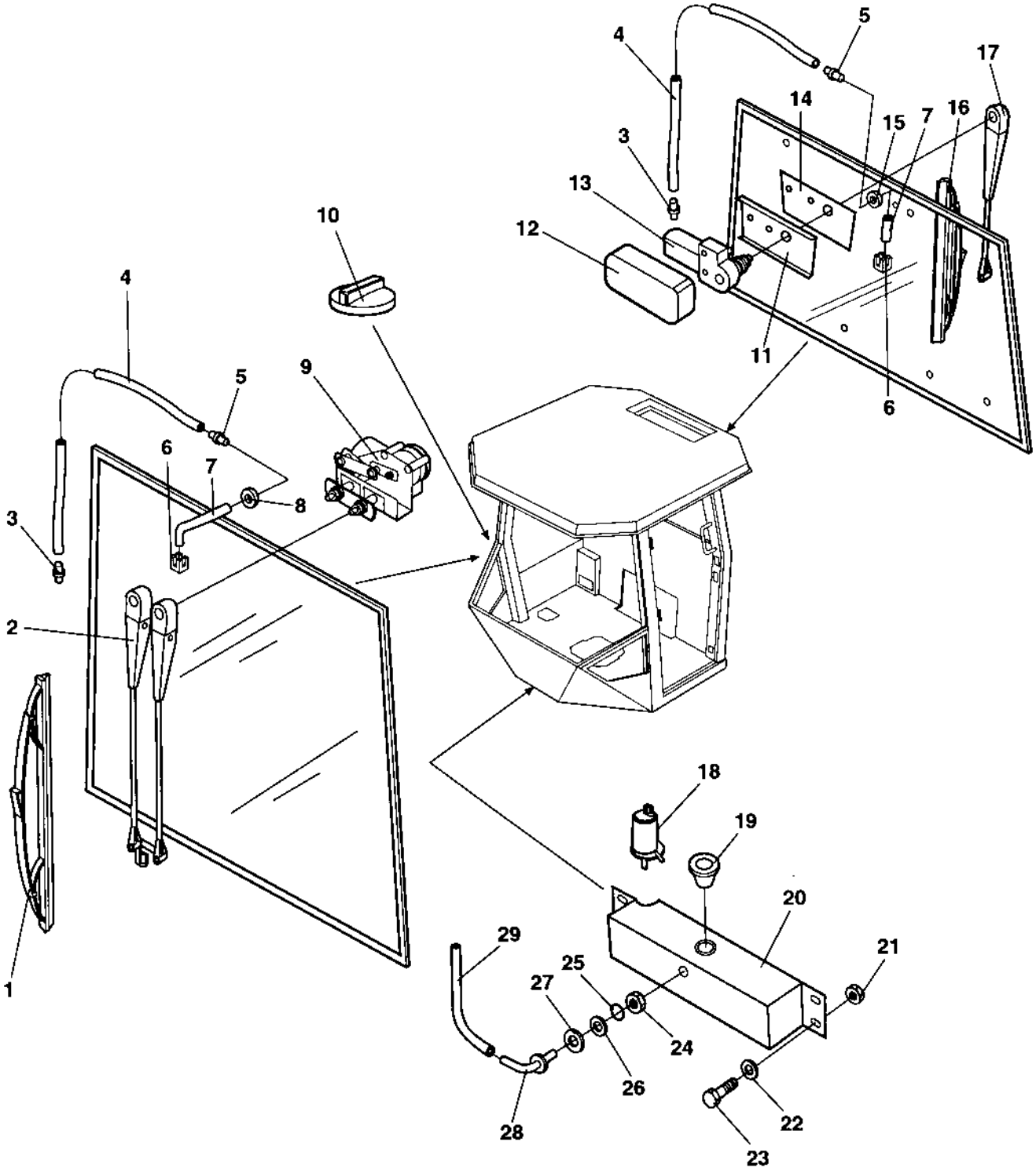

Cab Wipers front and rear

Item	Part No	Rem	Qty	Description	Code
1	4700905306		1	Wiper blade	B
2	4700905305		1	Wiper arm	C
3	4700908564		2	Check valve	C
4	4700908563	A	2	Plastic hose	D
5	4700938136		2	Elbow adapter 90	
6	4700908559		2	Nozzle	A
7	4700908560	B	2	Rubber hose	D
8	4700909510		1	Grommet	C
9	4700905304		1	Wiper motor	C
10	4700904114		1	Fuel cap	D
11	4700905309		1	Holder plate	D
12	4700905308		1	Protecting cover	D
13	4700905307		1	Wiper motor	C
14	4700905310		1	Shim	C
15	4700908497		1	Grommet	D
16	4700905312		1	Wiper blade	B
17	4700905311		1	Wiper arm	C
18	4700935335		1	Pump	
19	4700938660		1	Grommet	C
20	4700935334		1	Water reservoir	
21	4700586002		4	Lock nut M6 -8	C
22	4700904228		4	Washer 6,4x12x1,5	C
23	4700500075		4	Screw M6-1,0x25 8.8	C
24	4700938661		1	Nut	
25	4700938662		1	O-ring	
26	4700938664		1	Washer	
27	4700938663		1	Washer	
28	4700938665		1	Adapter	
29	4700938666		1	Hose	

A) L=5,0 M
B) L=1.0 M

Cab Mirror, Sun curtain

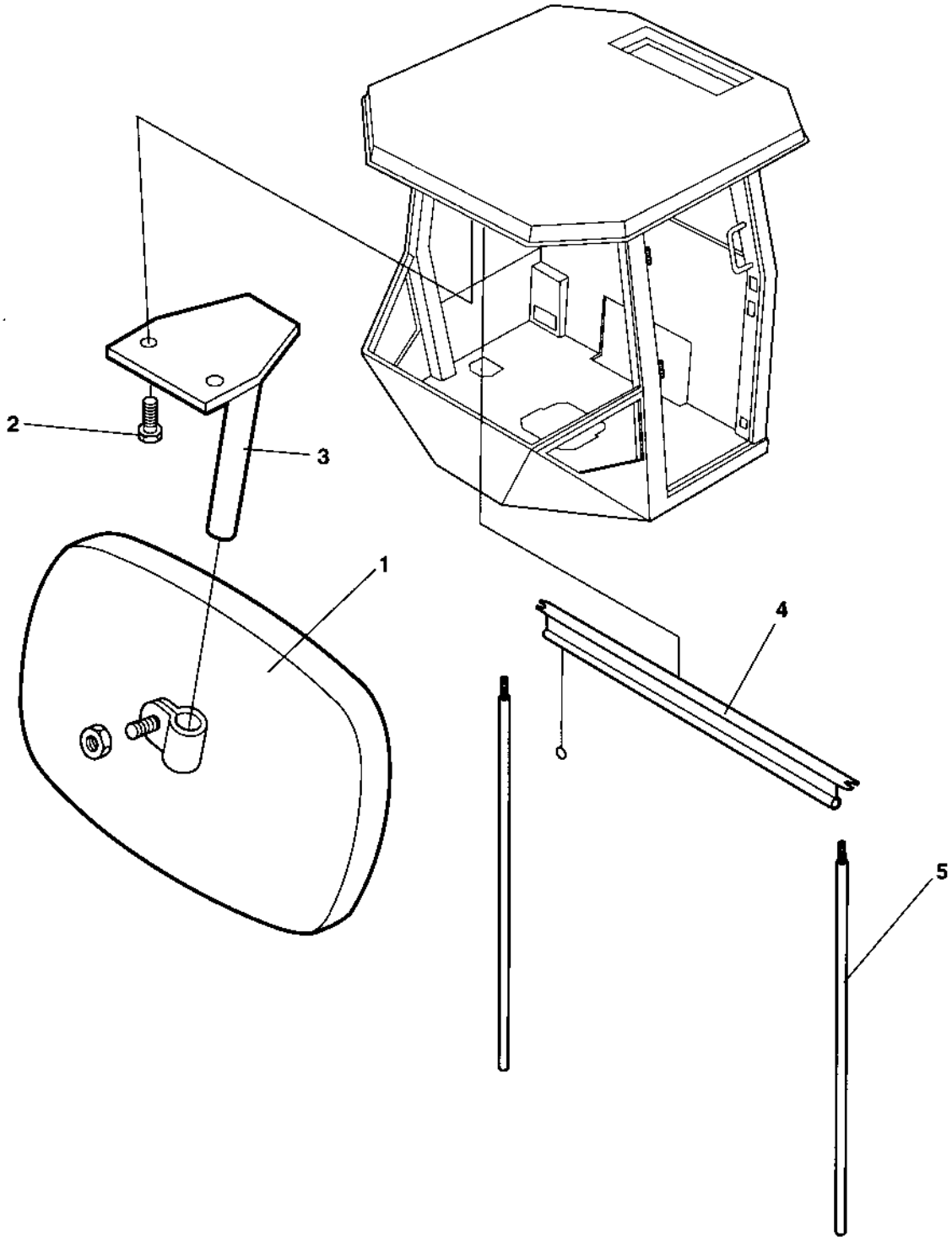

Cab Mirror, Sun curtain

Item	Part No	Rem	Qty	Description	Code
1	4700908624		1	Rear mirror	D
2	4700500006		2	Screw M5x16	C
3	4700908623		1	Bracket	D
4	4700938667		1	Sun curtain	
5	4700938668		1	Sun curtain, bar kit	

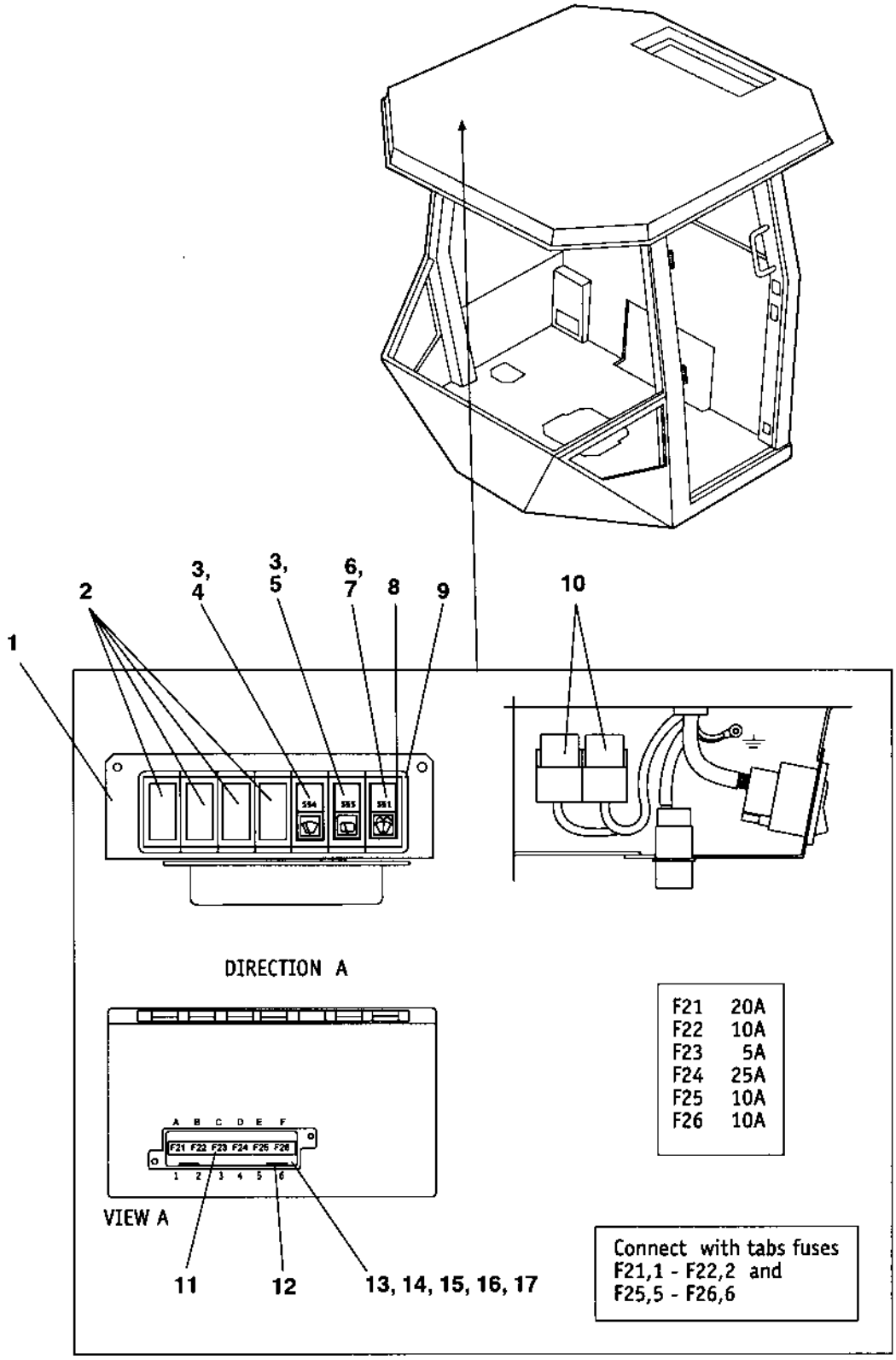
1
2
3, 4
3, 5
6, 7
8
9
10
DIRECTION A
VIEW A
A B C D E F
F21 F22 F23 F24 F25 F26
1 2 3 4 5 6
11
12
13, 14, 15, 16, 17
F21 20A
F22 10A
F23 5A
F24 25A
F25 10A
F26 10A
Connect with tabs fuses
F21,1 - F22,2 and
F25,5 - F26,6

Cab Electric

Item	Part No	Rem	Qty	Description	Code
1	4700908611		1	Bracket	D
2	4700908607		4	Cover	D
3	4700908617		2	Switch	B
4	4700908605		1	Symbol, wiper	D
5	4700938687		1	Symbol, wiper	D
6	4700908618		1	Symbol, washer	D
7	4700908603		1	Switch	B
8	4700908610		2	Modular panel	D
9	4700908606		5	Modular panel	D
10	4700938022		1	Relay	
11	4700938688		1	Decal	
12	4700901240		2	Connector	B
13	4700908613		1	Fuse box	D
14	4700901225		1	Fuse 5A	A
15	4700903741		1	Fuse 20A Yellow Medium	A
16	4700901229		1	Fuse 25A	A
17	4700901227		3	Fuse 10A	A

Cab Heater system

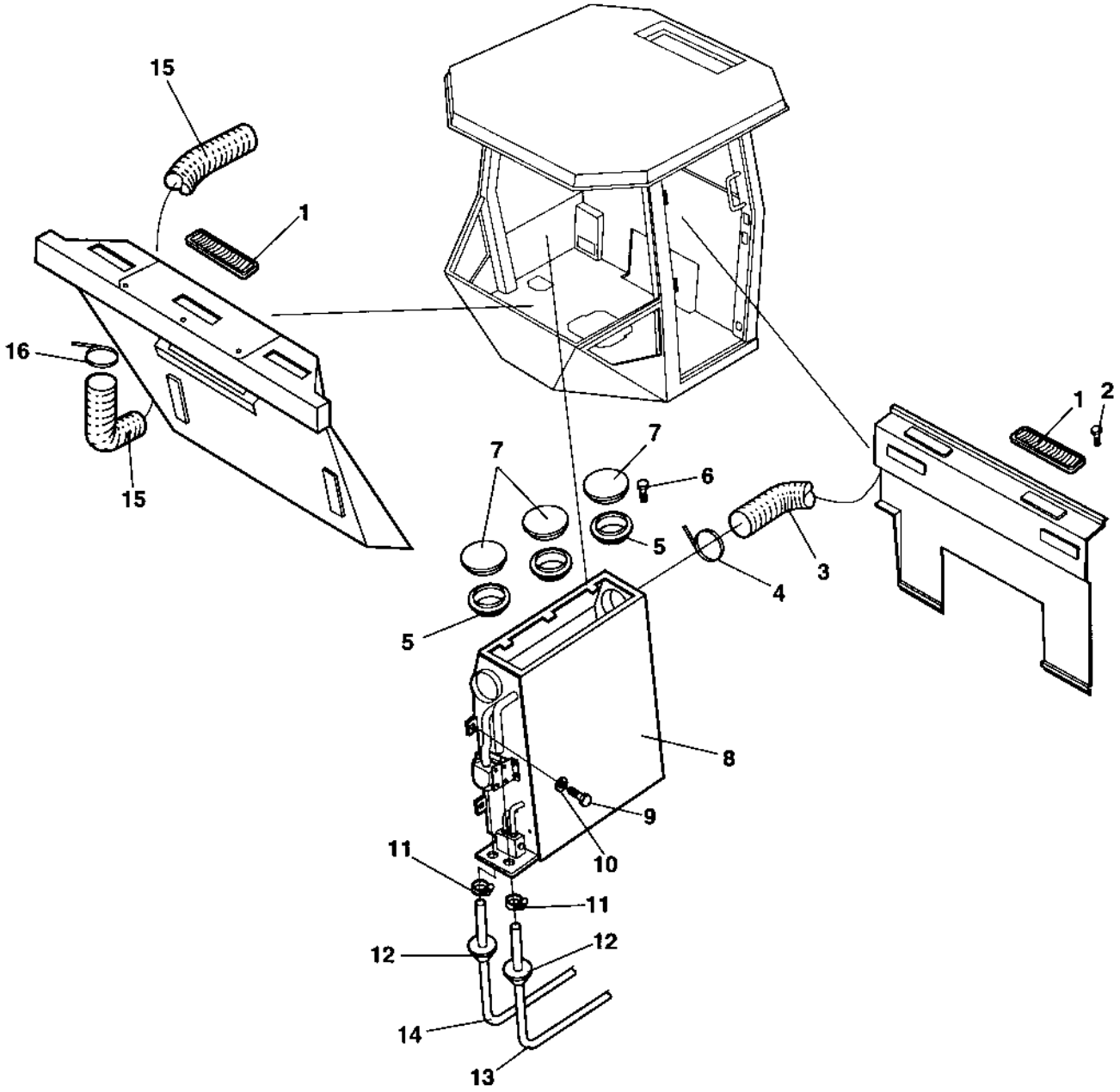

Cab Heater system

Item	Part No	Rem	Qty	Description	Code
1	4700908598		11	Nozzle	A
2	4700938680		22	Screw	
3	4700935572		1	Hose	
4	4700935570		1	Clamp	
5	4700385443		3	Ring	D
6	4700938691		9	Screw	C
7	4700385442		3	Air nozzle	D
8	4700385434		1	**Cab heater, cpl (Page 242)**	
9	4700500015		7	Screw M6X30 8.8	C
10	4700904229		7	Steel plain washer 8,4x16x1,5	C
11	4700313003		2	Hose clamp	D
12	4700908496		5	Grommet	D
13	4700937737	A	1	Hose	
14	4700937737	B	1	Hose	
15	4700908599		1	Hose	C
16	4700908600		2	Clamp	D

A) L=3,6 M
B) L=2,8 M

4700385434 Cab heater, cpl

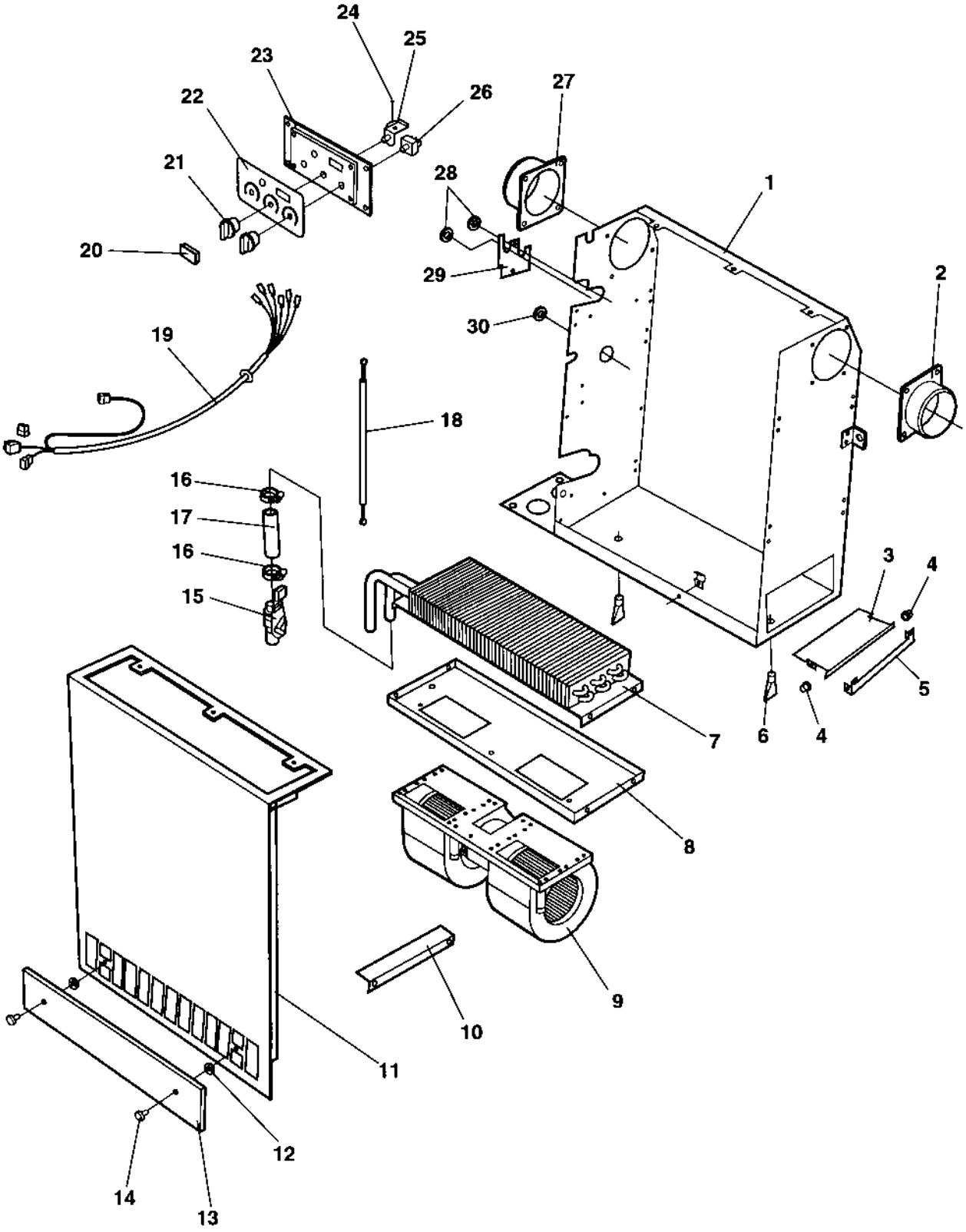

4700385434 Cab heater, cpl

Item	Part No	Rem	Qty	Description	Code
1	4700938625		1	Casing	
2	4700938633		1	Hose adapter	
3	4700938629		1	Cover	
4	4700938635		2	Sleeve	
5	4700938630		1	Bracket	
6	4700938636		2	Drain valve	C
7	4700938639		1	Heater coil	
8	4700938627		1	Fan bracket	
9	4700938638		1	Fan	C
10	4700938641		1	Coil bracket	
11	4700938626		1	Cover	
12	4700938643		1	Plug	C
13	4700938640		1	Cover	
14	4700938634		2	Knob	D
15	4700939693	A	1	Heater control valve	
16	4700313003		2	Hose clamp	D
17	4700384881		1	Hose	D
18	4700938645		1	Bowden cable	
19	4700938647		1	Cable harness	C
20	4700938643		1	Plug	C
21	4700938620		2	Knob	D
22	4700938618		1	Decal	D
23	4700938617		1	Control panel	D
24	4700385134		1	Lock washer	D
25	4700938621		1	Rotary control	
26	4700938622		1	Switch	B
27	4700938632		1	Hose adapter	C
28	4700384927		2	Grommet	D
29	4700938628		1	Cover	
30	4700938644		1	Cap	C

A) Replaces Heater control valve P/N 4700938642.

Cab Cable harness

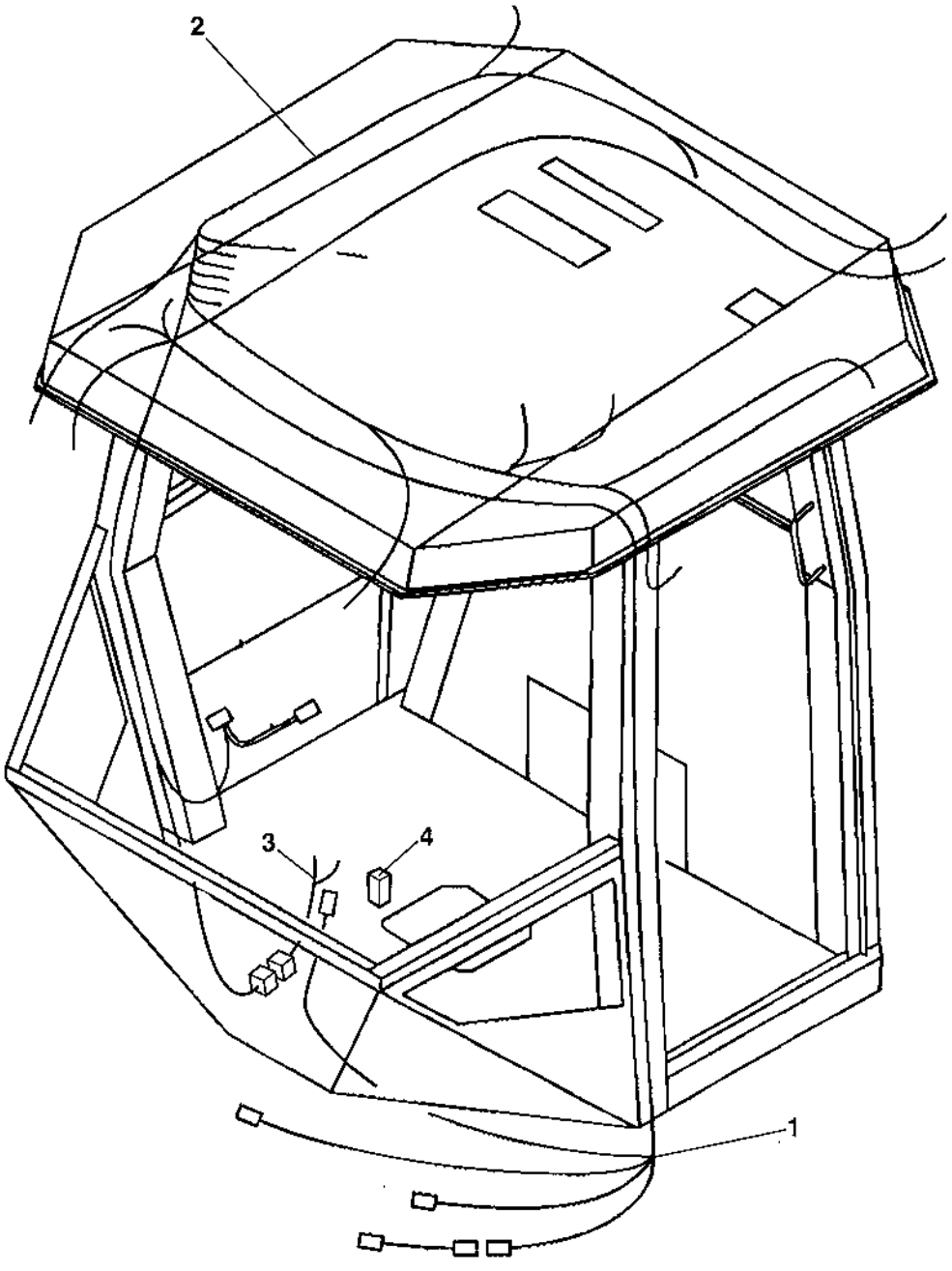

Cab Cable harness

Item	Part No	Rem	Qty	Description	Code
1	4700938689		1	Cable harness	
2	4700938690		1	Cable harness	
3	4700388981	A	1	Cable harness	D
4	4700901227	A	1	Fuse 10A	A

A) Used together with 12V contact.

Cab 4700392479

Item	Part No	Rem	Qty	Description	Code
130				**Cab Screens (Page 248)**	
140				**Cab Door, left side (Page 252)**	
150				**Cab Interior rear mirror (Page 254)**	
170				**Wiper arm with blade, front (Page 256)**	
180				**Cab Electric (Page 258)**	

Cab Screens

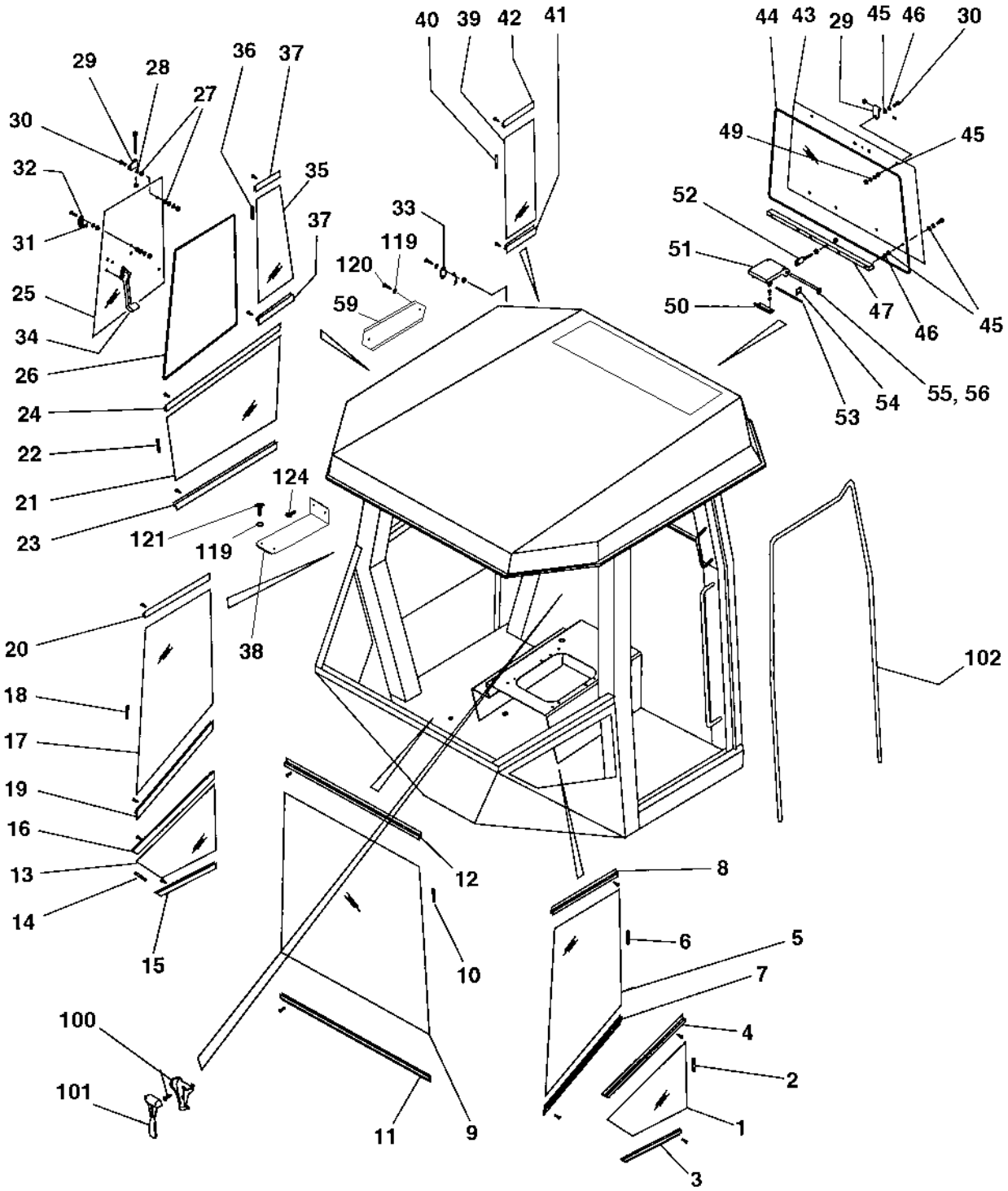
40
39
42
41
44
43
29
45
46
30
29
28
27
36
37
30
32
31
25
34
26
24
22
21
23
35
37
33
119
120
59
49
45
52
51
50
47
46
45
53
54
55, 56
124
121
119
38
20
18
17
19
16
13
14
15
12
10
8
6
5
7
4
2
1
3
102
100
101
11
9

Cab Screens

Item	Part No	Rem	Qty	Description	Code
1	4700937380		1	Screen	
2	4700908545		XL	Seal list	B
3	4700935278		1	List	
4	4700935279		1	List	
5	4700937381		1	Screen, left	
6	4700908545		XL	Seal list	B
7	4700935280		1	List	
8	4700935281		1	List	
9	4700937382		1	Screen	
10	4700908545	D	1	Seal list	B
11	4700935282		1	List	
12	4700935283		1	List	
13	4700937383		1	Screen	
14	4700908545		XL	Seal list	B
15	4700935284		1	List	
16	4700935285		1	List	
17	4700937384		1	Screen	
18	4700908545	C	1	Seal list	B
19	4700935286		1	List	
20	4700935287		1	List	
21	4700937385		1	Screen	
22	4700908545	A	1	Seal list	B
23	4700935288		1	List	
24	4700935289		1	List	
25	4700938290		1	Screen	
26	4700908499	E	1	Rubber list	D
27	4700935271		8	Washer, Flexible rubber	
28	4700935272		8	Washer, Black	
29	4700935273		4	Hinge	
30	4700935274		4	Screw	
31	4700935275		1	Rubber washer	
32	4700935276		1	Bracket	
33	4700935277		1	Lock pin	
34	4700935290		1	Window lock, right	
35	4700938291		1	Screen	
36	4700908545	B	1	Seal list	B
37	4700935291		1	List	
38	4700379608		1	Cover	D
39	4700938292		1	Screen	
40	4700908545	B	1	Seal list	B
41	4700935293		1	List	
42	4700938659		1	List	
43	4700937389		1	Screen	
44	4700908499	F	1	Rubber list	D
45	4700935271		12	Washer, Flexible rubber	
46	4700935272		12	Washer, Black	
47	4700935295		1	Screen holder	
49	4700935296		2	Washer	
50	4700935297		1	Bracket	
51	4700935298		2	Bracket	
52	4700935299		1	Bolt	
53	4700935300		1	Shaft	
54	4700935301		2	Lock	

A) L=1100 mm
B) L=1400 mm
C) L=1900 mm
D) L=2100 mm
E) L=2700 mm
F) L=3300 mm

Cab Screens

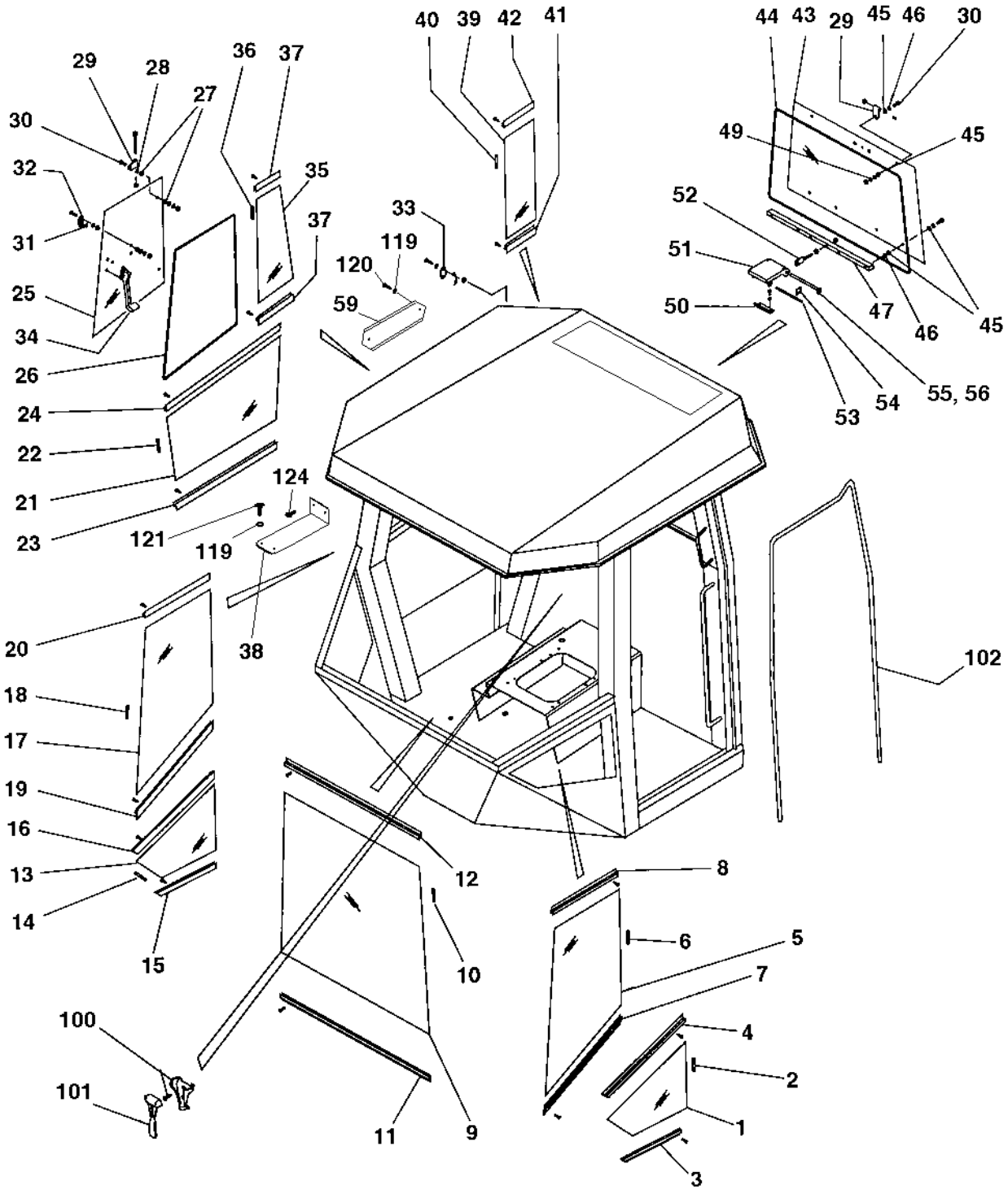
40 39 42 41
44 43 29 45 46 30
29 28 27
36 37
30
32
31
25
34
26
24
22
21
23
35
37
33
119
120
59
49
45
52
51
50
47
46
45
53
54
55, 56
124
121
119
38
20
18
17
19
16
13
14
15
12
10
8
6
5
7
4
2
1
3
100
101
11
9
102

Cab Screens

Item	Part No	Rem	Qty	Description	Code
55	4700935302		1	Rod	
56	4700935303		1	Ring	
59	4700379236		1	Cover	D
100	4700908506		1	Emergency hammer	D
101	4700908507		1	Holder	D
102	4700908499	G	1	Rubber list	D
119	4700904229		16	Steel plain washer 8,4x16x1,5	C
120	4700500019		14	Hexagon head screw M8x16H 8,8	C
121	4700500053		2	Screw M8x20H 8.8	C
124	4700903782		2	Screw M5x12	C

G) L=5 m

Cab Door, left side

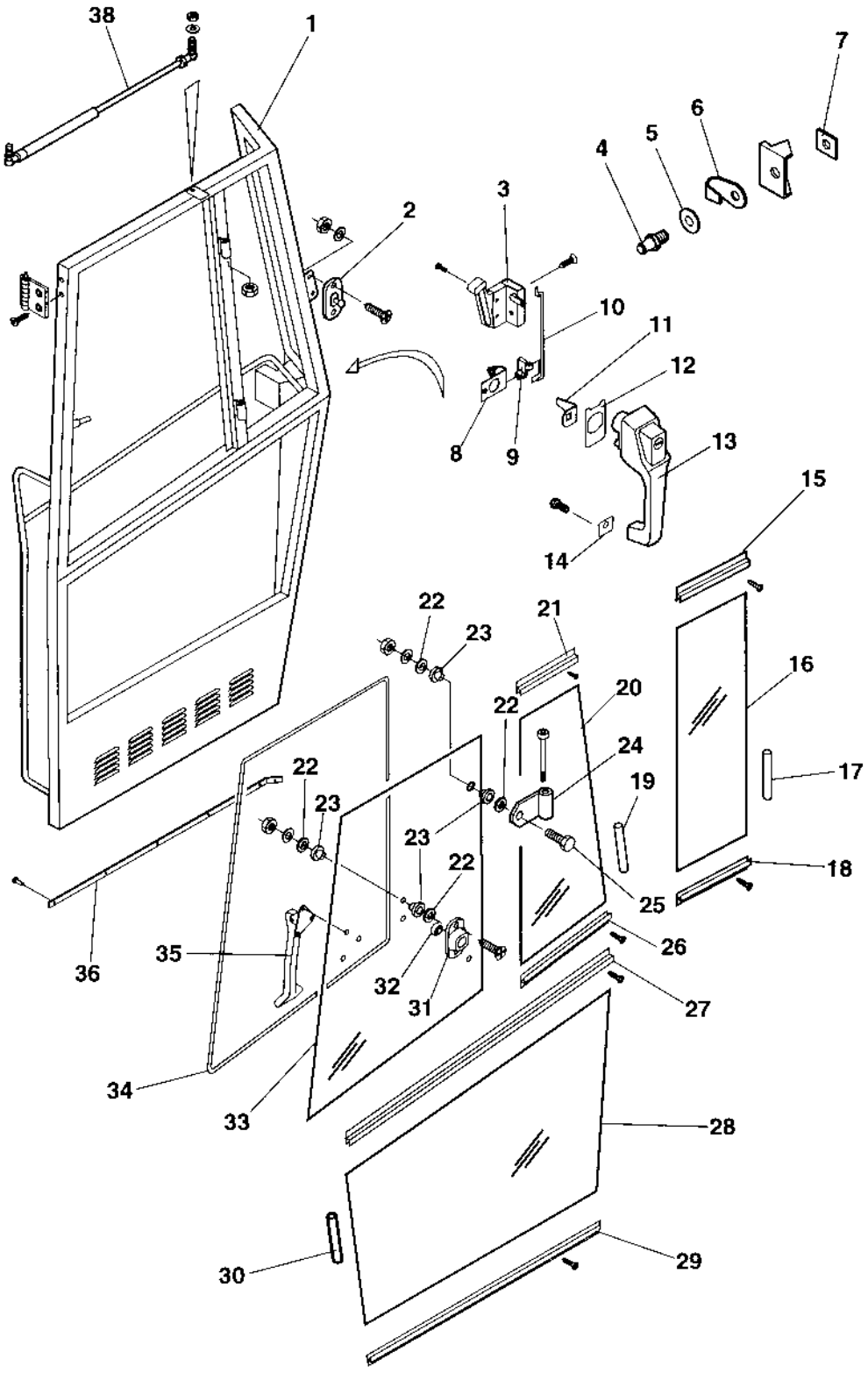

Cab Door, left side

Item	Part No	Rem	Qty	Description	Code
	4700940678		1	Door, cpl	D
1	4700390927		1	. Door frame	D
2	4700935277		1	. Lock pin	
3	4700938017		1	. Lock	
4	4700908580		1	. Lock pin	C
5	4700908581		1	. Washer	C
6	4700908582		1	. Cover	D
7	4700908583		1	. Bracket	D
8	4700935248		1	. Turning mechanism	
9	4700935249		1	. Retainer	
10	4700935250		1	. Rod	
11	4700935247		1	. Leader	
12	4700935246		1	. Seal	
13	4700935244		1	. Door handle with key	D
14	4700935245		1	. Seal	
15	4700935268		1	. List	
16	4700937391		1	. Screen	
17	4700908545	A	1	. Seal list	B
18	4700935267		1	. List	
19	4700908545	A	1	. Seal list	B
20	4700937392		1	. Screen	
21	4700935270		1	. List	
22	4700935272		8	. Washer, Black	
23	4700935271		8	. Washer, Flexible rubber	
24	4700935273		2	. Hinge	
25	4700935274		2	. Screw	
26	4700935269		1	. List	
27	4700935266		1	. List	
28	4700937390		1	. Screen	
29	4700935265		1	. List	
30	4700908545	B	1	. Seal list	B
31	4700935276		1	. Bracket	
32	4700935275		1	. Rubber washer	
33	4700937393		1	. Screen	
34	4700908499	C	1	. Rubber list	D
35	4700935253		1	. Lock	
36	4700938101		XL	. Brush profile	
38	4700938018		1	. Gas spring	

A) L=1400 mm
B) L=1100 mm
C) L=2700 mm

Cab Interior rear mirror

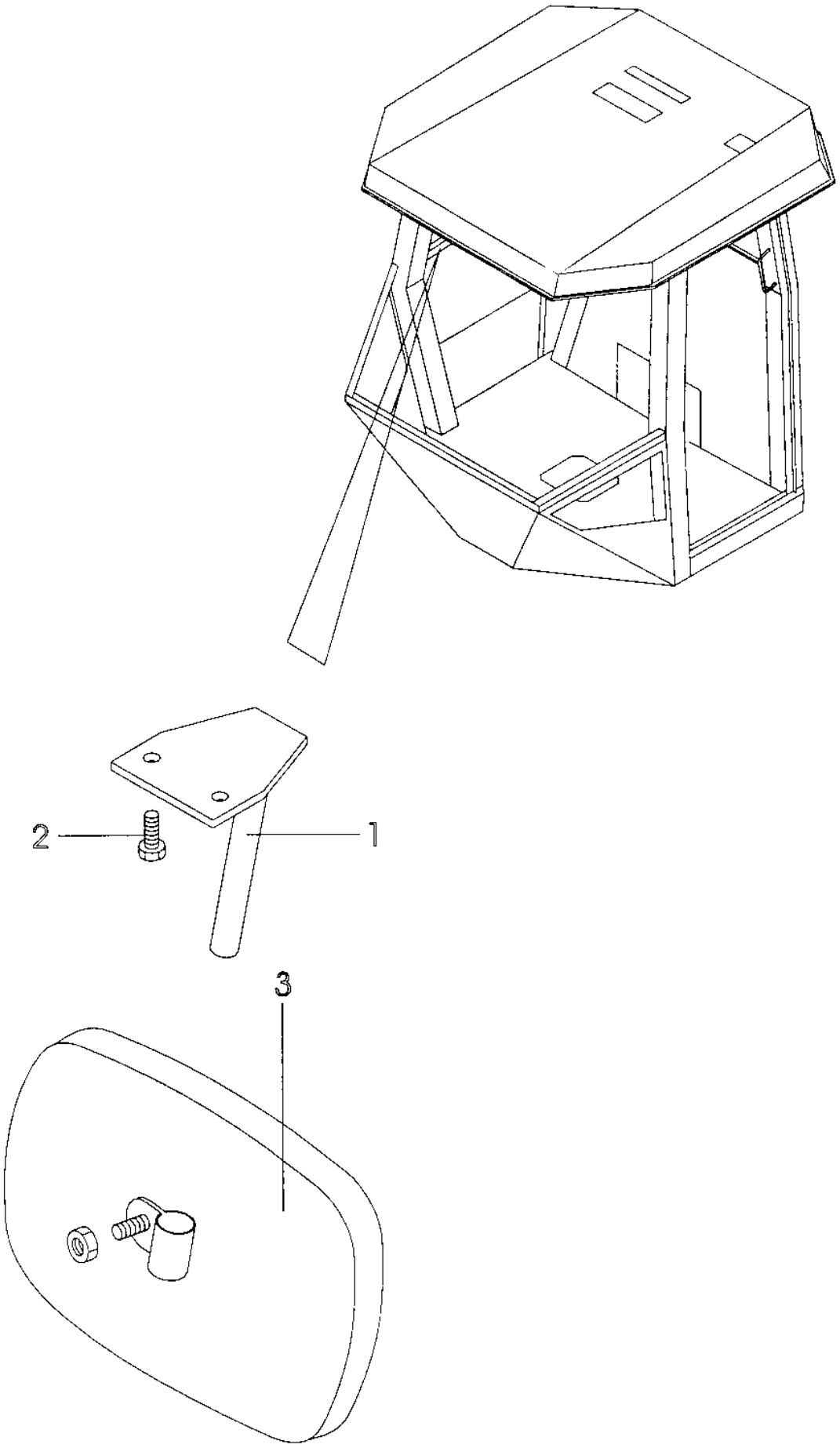

Cab Interior rear mirror

Item	Part No	Rem	Qty	Description	Code
1	4700908623		1	Bracket	D
2	4700535005		2	Screw M5x12	D
3	4700908624		1	Rear mirror	D

Wiper arm with blade, front

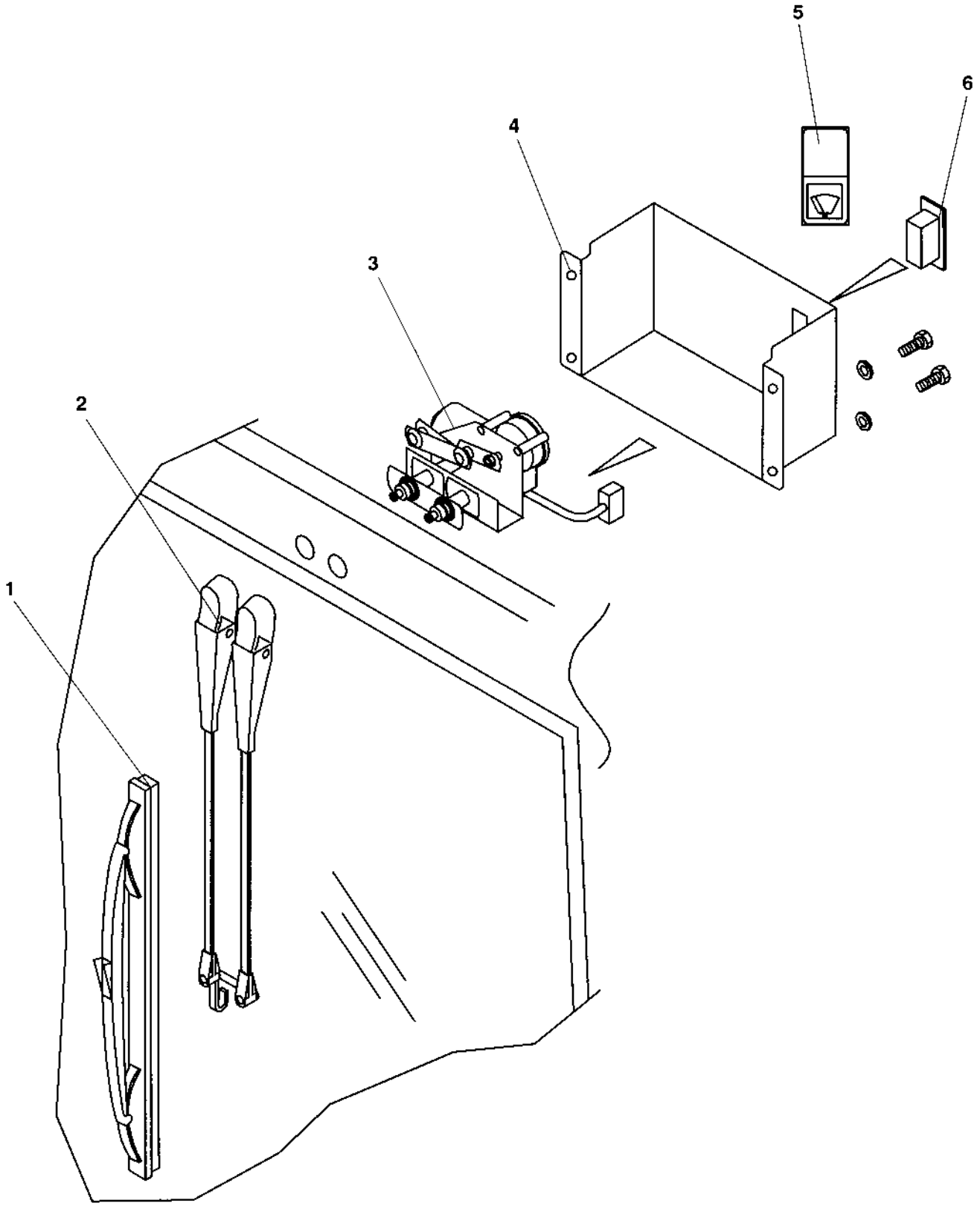

Wiper arm with blade, front

Item	Part No	Rem	Qty	Description	Code
1	4700905306		1	Wiper blade	B
2	4700905305		1	Wiper arm	C
3	4700905304		1	Wiper motor	C
4	4700937871		1	Cover	D
5	4700908605		1	Symbol, wiper	D
6	4700908617		1	Switch	B

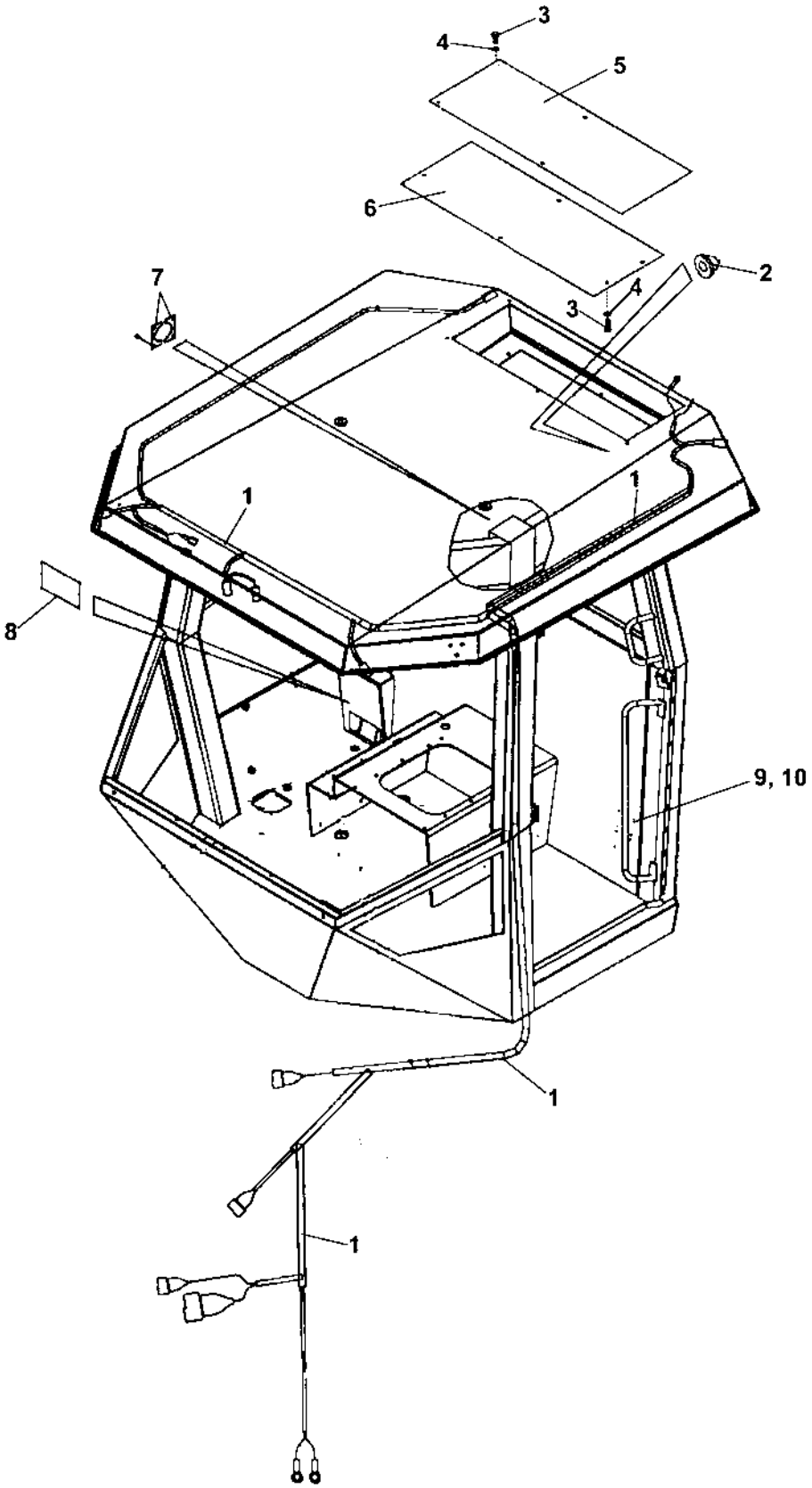
3
4
5
6
2
7
4
3
1
1
8
9, 10
1
1

Cab Electric

Item	Part No	Rem	Qty	Description	Code
1	4700937870		1	Cable harness	D
2	4700791378		2	Grommet	D
3	4700500019		12	Hexagon head screw M8x16H 8,8	C
4	4700904229		12	Steel plain washer 8,4x16x1,5	C
5	4700938678		1	Cover	D
6	4700938679		1	Cover	D
7	4700935580		2	Bracket	
8	4700391219		1	Gasket	D
9			1	Sign, rops	
10			1	Sign, fops	

Cab mounting

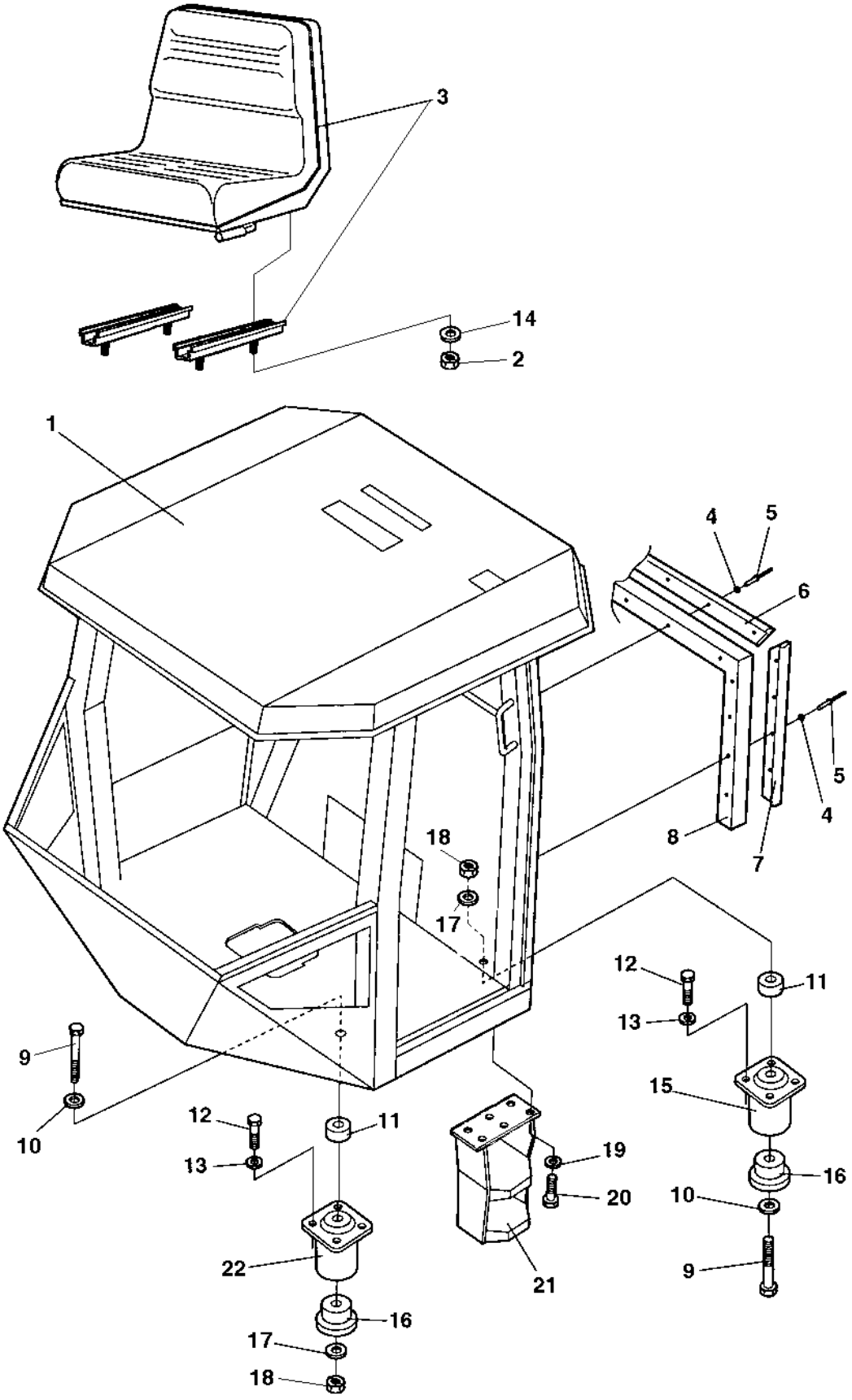

Cab mounting

Item	Part No	Rem	Qty	Description	Code
1				**Cab 4700392479 (Page 246)**	
2	4700570005		4	Nut M8	C
3	4700377556		1	Drivers seat, cpl	D
	4700377518	D	1	Drivers seat, cpl	D
4	4700927974		13	Washer	C
5	4700904433		13	Blind rivet	
6	4700372785		1	List	D
7	4700382582		2	List	D
8	4700372494	A	N	Rubber strip	D
9	4700791218		4	Screw M20x200	D
10	4700904233		4	Washer 21x36x3	C
11	4700384759		4	Spacer	D
12	4700500195		16	Screw	C
13	4700904231		16	Washer 13x24x2 300 HV	C
14	4700904229		4	Steel plain washer 8,4x16x1,5	C
15	4700374606	B	2	Shock absorber Green	D
16	4700372457		4	Back-up ring	C
17	4700903290		4	Washer 21x36x6	C
18	4700901145		4	Lock nut M20-10	
19	4700904230		6	Steel plain washer	C
20	4700500029		6	Hexagon head screw	C
21	4700376255		1	Step	D
22	4700374607	C	2	Shock absorber Yellow	D
23	4700382397		2	Spacer	D

A) L=2400 mm
B) Rear
C) Front
D) Option

Cab Work lights

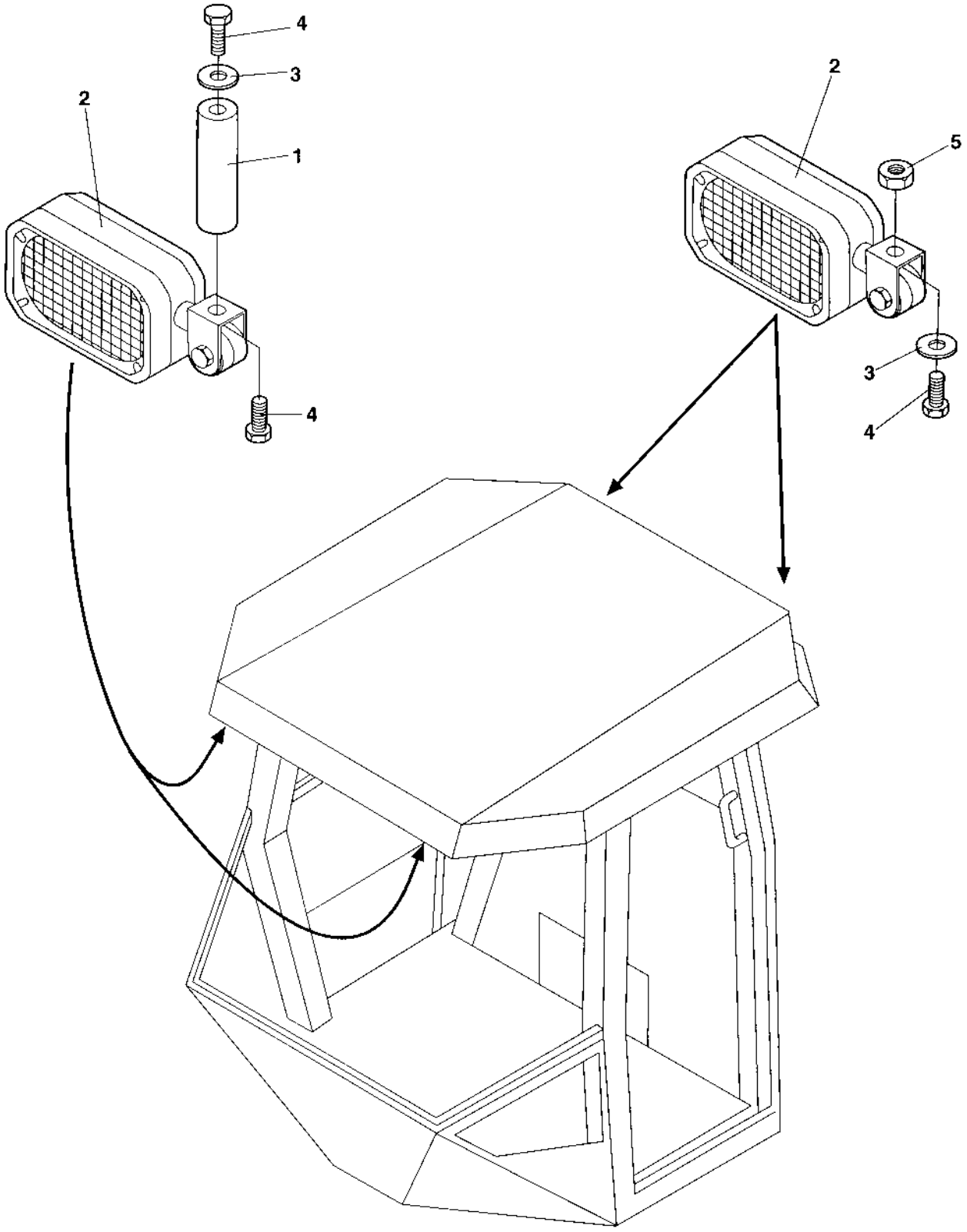

Cab Work lights

Item	Part No	Rem	Qty	Description	Code
1	4700908359		2	Distance	D
2	4700908267		4	Working light	B
3	4700904229		4	Steel plain washer 8,4x16x1,5	C
4	4700500019		6	Hexagon head screw M8x16H 8,8	C
5	4700586003		2	Lock nut M8	C

Cab Exterior, rear mirror

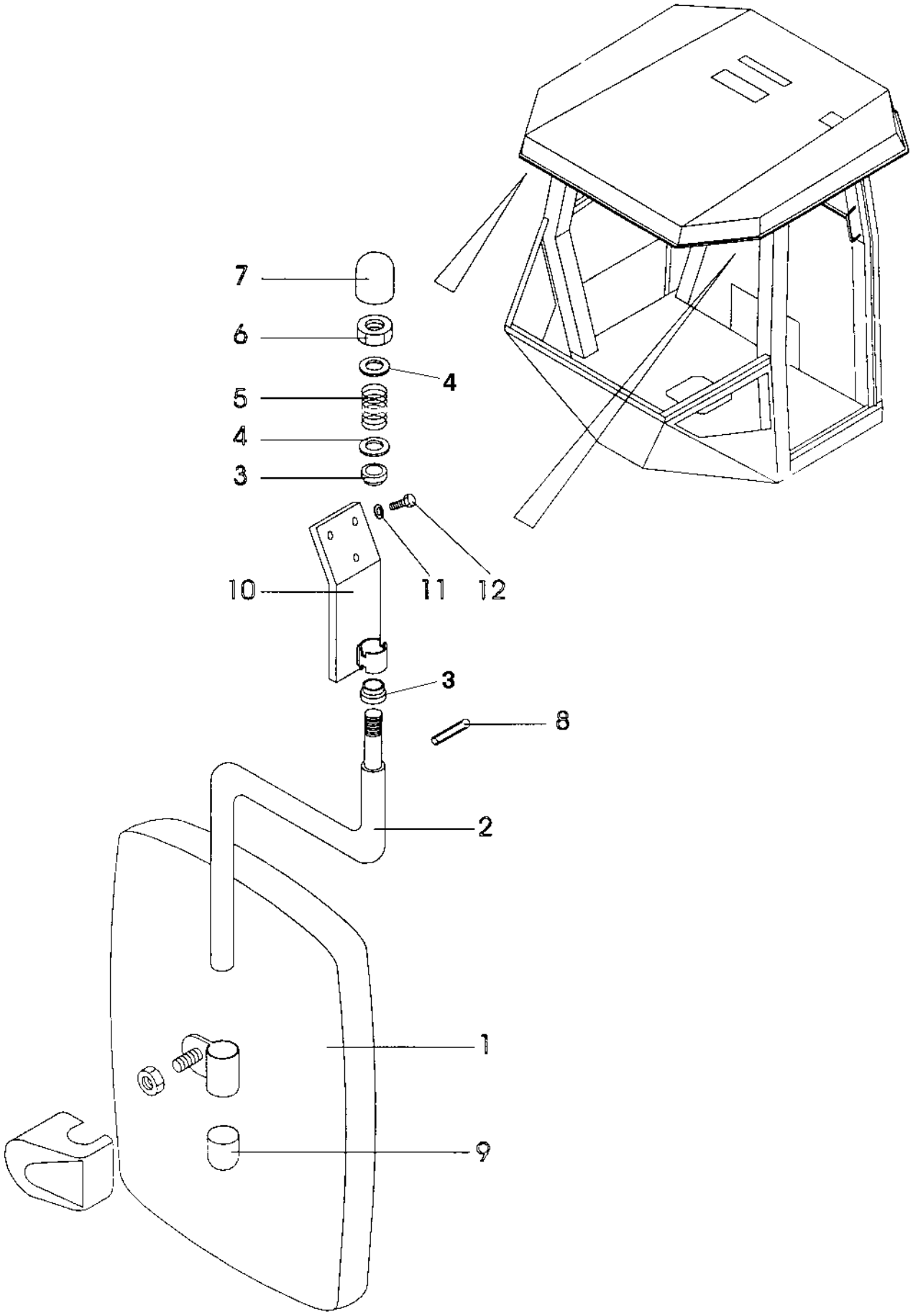

Cab Exterior, rear mirror

Item	Part No	Rem	Qty	Description	Code
1	4700371730	A	2	Rear view mirror, cpl	D
	4700908265		1	. Rear view mirror	D
2	4700908355		1	. Arm	D
3	4700908625		2	. Sleeve	C
4	4700904232		2	. Washer	C
5	4700908626		1	. Spring	D
6	4700586021		1	. Nut M16	
7	4700908627		1	. Cap	C
8	4700629066		1	. Spirol pin	D
9	4700908628		1	. Cap	C
10	4700908361		1	. Bracket	D
11	4700904229		6	Steel plain washer 8,4x16x1,5	C
12	4700500019		6	Hexagon head screw M8x16H 8,8	C

A) Option

Radio and cassette/cd player Option

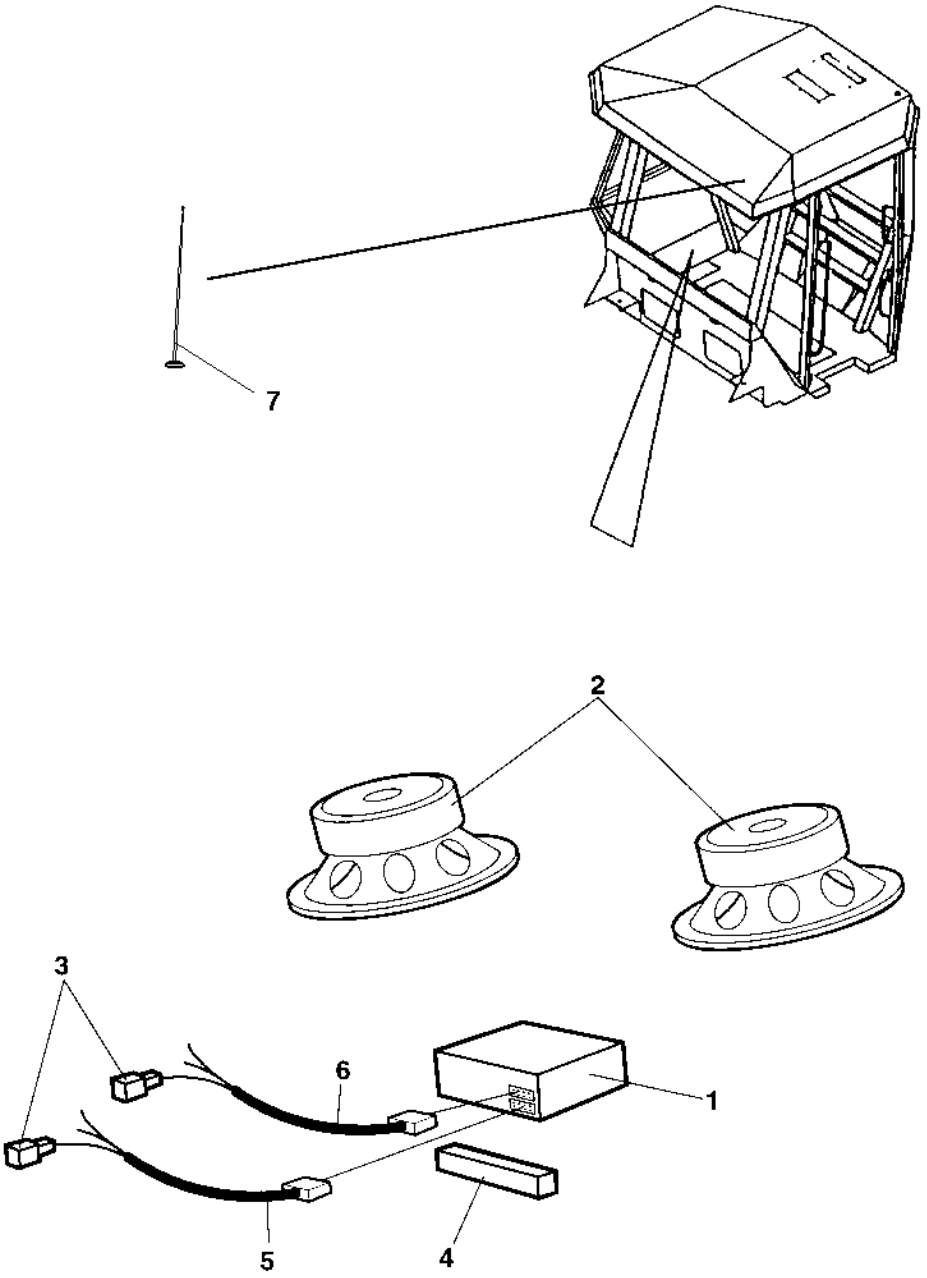

Radio and cassette/cd player Option

Item	Part No	Rem	Qty	Description	Code
1	4700904939		1	Radio and cassette player	D
	4700791967		1	Radio and cd player	D
2	4700791968	A	1	Loud speakers	
3	4700927403	B	7	Terminal	D
4	4700202043	C	1XL	Rubber strip	D
5	4700904969		1	Power connection	D
6	4700904970		1	Speaker connection	D
7	4700937165		1	Antenna	D

A) 2 pcs
B) Female
C) L=0.2 m

Cab, 12V contact

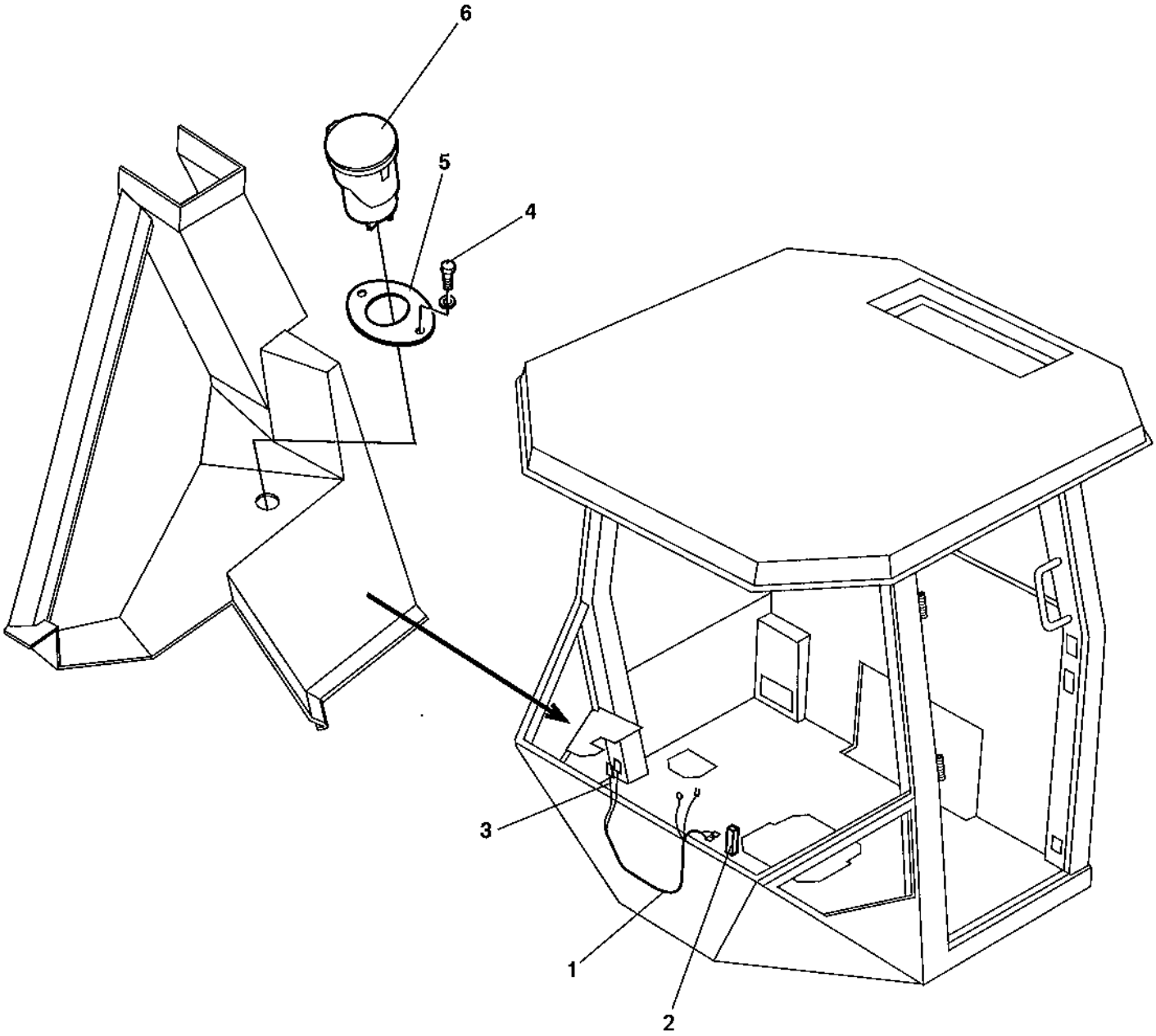

Cab, 12V contact

Item	Part No	Rem	Qty	Description	Code
1	4700388981		1	Cable harness	D
2	4700901227		1	Fuse 10A	A
3	4700939603		1	Cable harness	
4	4700938691		2	Screw	C
5	4700939521		1	Sign 12V	
6	4700939522		1	Contact 12V	

Rear mirror Option

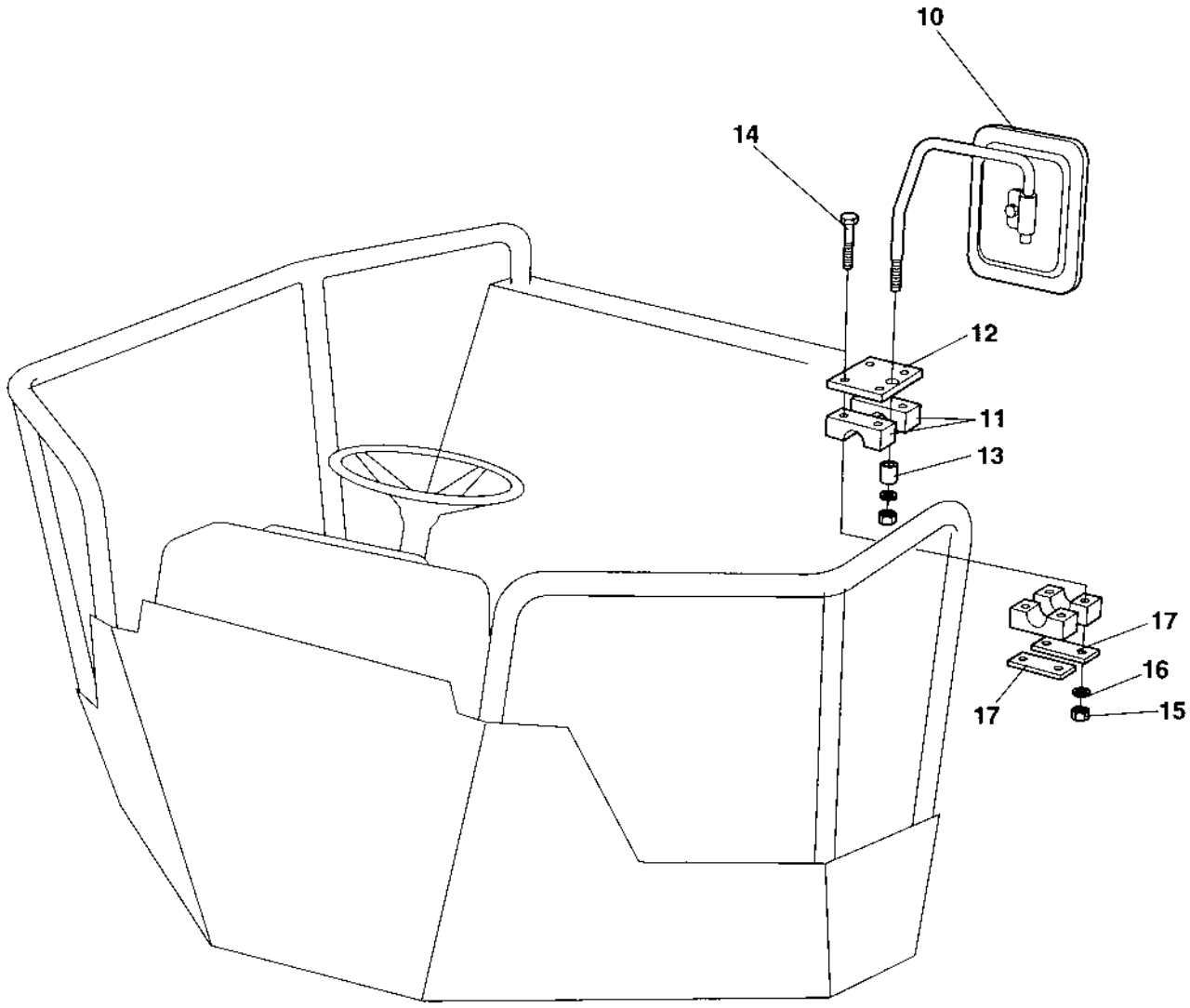

Rear mirror Option

Item	Part No	Rem	Qty	Description	Code
10	4700355705		2	Rear mirror	D
11	4700904340		4	Pipe clamp	
12	4700374577		2	Holder plate	D
13	4700343748		2	Spacer sleeve	C
14	4700500292		8	Screw M6x75	D
15	4700586002		8	Lock nut M6 -8	C
16	4700904228		8	Washer 6,4x12x1,5	C
17	4700924791		4	Cover plate	

Bracket, Steering valve vibration isolated Option

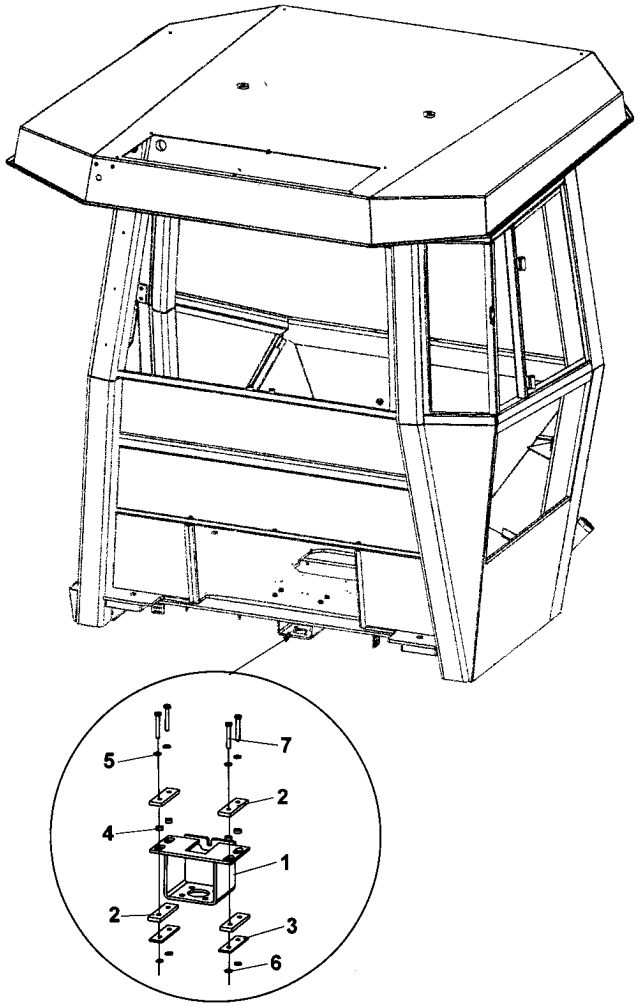

Bracket, Steering valve vibration isolated Option

Item	Part No	Rem	Qty	Description	Code
1	4812114277		1	Bracket	
2	4812114369		4	Rubber cloth	
3	4812114371		2	Flat bar	
4	4700904984	A	4	Fuel hose	C
5	4700904229		8	Steel plain washer 8,4x16x1,5	C
6	4700586003		4	Lock nut M8	C
7	4700500067		4	Screw M8-1,25x55 8,8	C

A) L = 0,3 m

Decals

Decals

Item	Part No	Rem	Qty	Description	Code
10				**Decals (Page 276)**	
20				**Decals (Page 278)**	

Decals

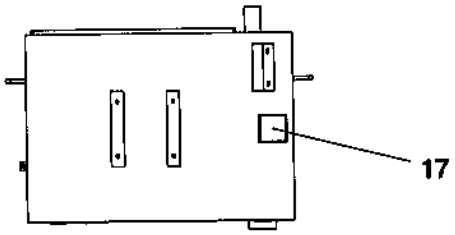
17

A - A

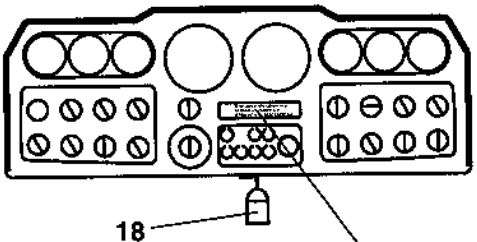
18
19

B - B

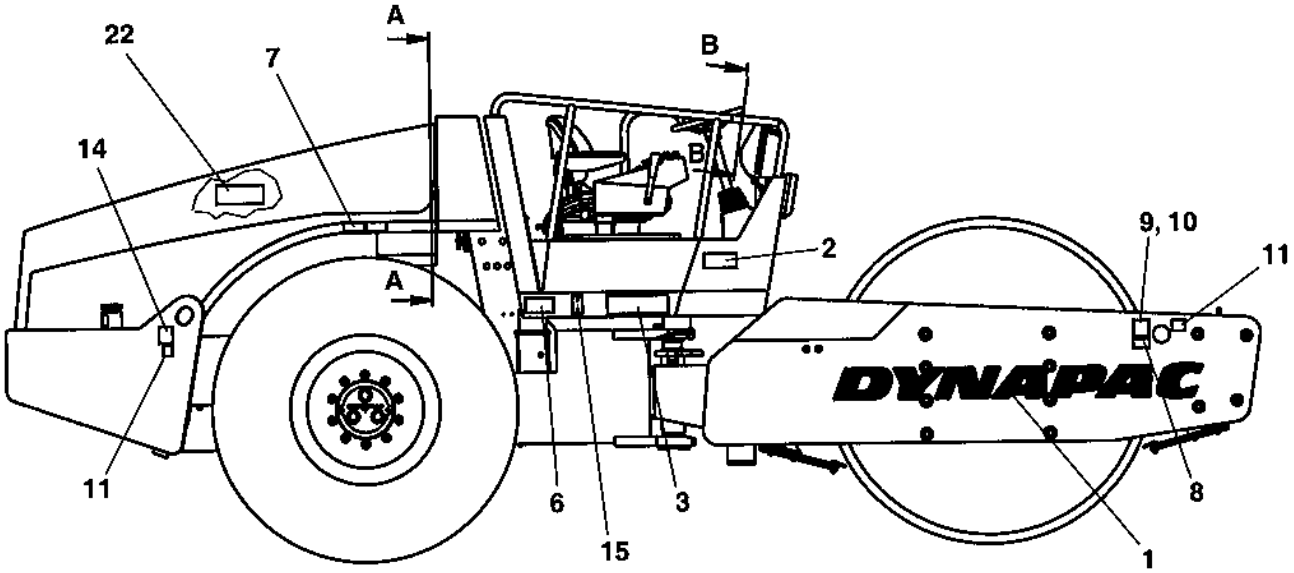
A
B
22
7
14
B
2
9, 10
11
A
DYNAPAC
11
6
3
8
15
1

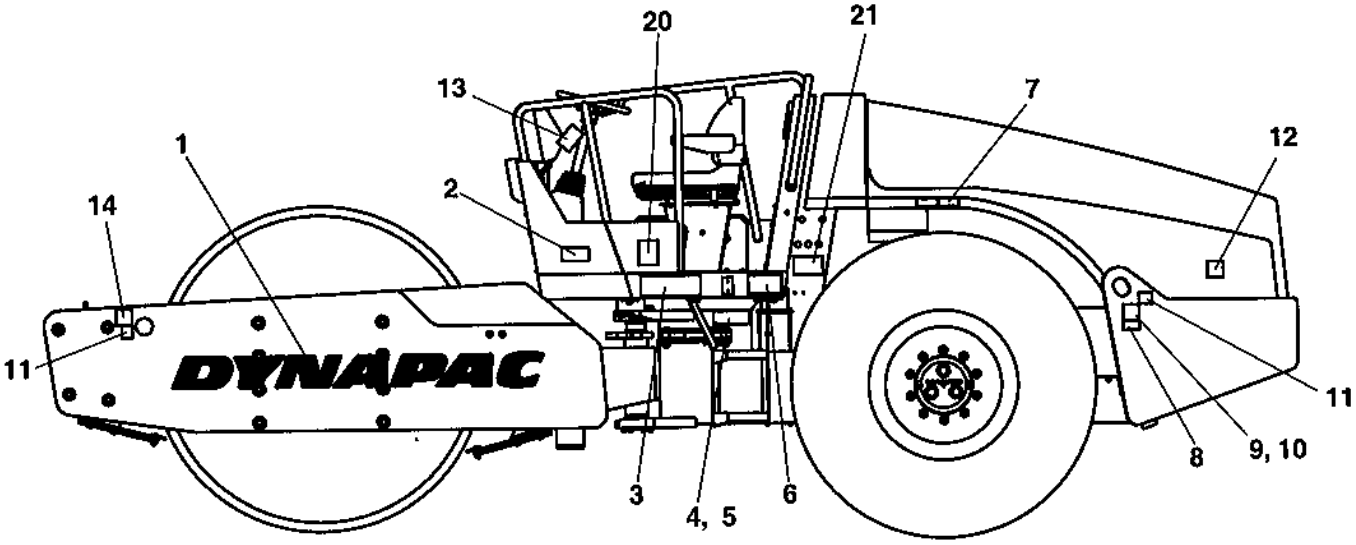
20
21
13
7
1
12
2
14
DYNAPAC
11
11
8
9, 10
3
4, 5
6

Decals

Item	Part No	Rem	Qty	Description	Code
1	4700904068		2	Decal "DYNAPAC" L=1770 mm	
2	4700903422		2	Decal "SAFETY"	D
3	4700904236		2	Decal "MODEL CODE" White	D
	4700904322		2	Decal "MODEL CODE" Red	D
4		E	1	Product identification plate	
		A,E	1	Product identification plate CE	
5	4700624005		4	Blind rivet 3,2x6,1	C
6	4700903459		2	Decal "SAFETY"	D
7	4700349220		2	Decal "TYRE PRESSURE"	D
8	4700908229		2	Safety decal	D
9	4700904870		2	Lifting sign	D
10	4700624005		8	Blind rivet 3,2x6,1	C
11	4700382751		4	Decal "TIE DOWN POINT"	D
12	4700904835		1	Decal "BATTERY POWER"	D
13	4700384160		1	Loading/Unloading instruction	D
14	4700588176		2	Decal "LIFT POINT"	D
15	4700377744		2	Reflector, yellow	D
17	4700272373		1	Decal "HYDRAULIC OIL"	D
18	4700358881		1	Pad lock	D
19	47349248SE		1	Decal "WARNING" Swedish	
	47349248EN		1	Decal "WARNING" English	
	47349248DE		1	Decal "WARNING" German	
	47349248IT		1	Decal "WARNING" Italian	
	47349248ES		1	Decal "WARNING" Spanish	
	47349248FR		1	Decal "WARNING" French	
	47349248NO		1	Decal "WARNING" Norwegian	
	47349248DK		1	Decal "WARNING" Danish	
	47349248FI		1	Decal "WARNING" Finnish	
	47349248PT		1	Decal "WARNING" Portuguese	
	47349248NL		1	Decal "WARNING" Dutch	
	47349248GR		1	Decal "WARNING" Greek	
	47349248IS		1	Decal "WARNING" Icelandic	
	47349248CN		1	Decal "WARNING" Chinese	
20	4700791276		1	Decal "Sound power level" 106dB	D
	4700791278		1	Decal "Sound power level" 108dB	D
	4700791275		1	Decal "Sound power level" 105dB	D
	4700791277		1	Decal "Sound power level" 107dB	D
21	4700791094		1	Decal "RUS 127 approved" Option	D
22	4700791642		1	Decal "WARNING" Use of starting fluid prohib.	D

A) With CE-Mark
E) Not available as sparepart

Decals

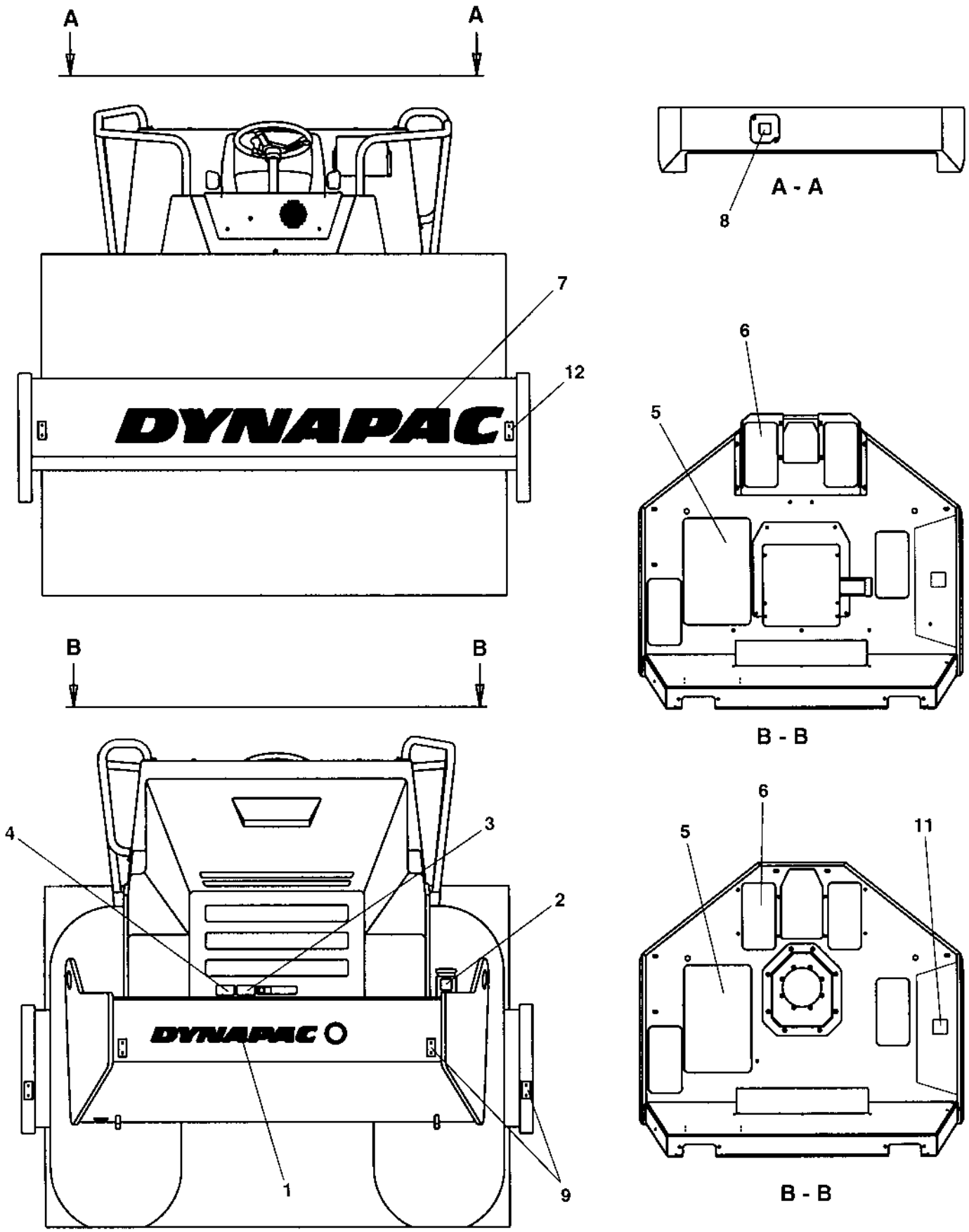

Decals

Item	Part No	Rem	Qty	Description	Code
1	4700904069		1	Decal "DYNAPAC" L=760 mm	D
2	4700991658		1	Decal "FUEL"	D
3	4700903423		1	Decal "SAFETY"	D
4	4700903424		1	Decal "HOT SURFACE"	D
5	4700373364		1	Slip protection	D
6	4700373363		4	Slip protection	
7	4700904068		1	Decal "DYNAPAC" L=1770 mm	
8	4700272372		1	Decal "HYDRAULIC OIL"	D
	4700904601		1	Decal "BIO HYDRAULIC OIL"	D
	4700792772		1	Decal "BIO HYDRAULIC OIL" PANOLIN	D
9	4700377742		4	Reflector, red	D
11	4700903425		1	Decal "SAFETY MANUAL"	D
12	4700377743		2	Reflector, white	D

Standard equipment

Item	Part No	Rem	Qty	Description	Code
100				**Standard equipment (Page 282)**	

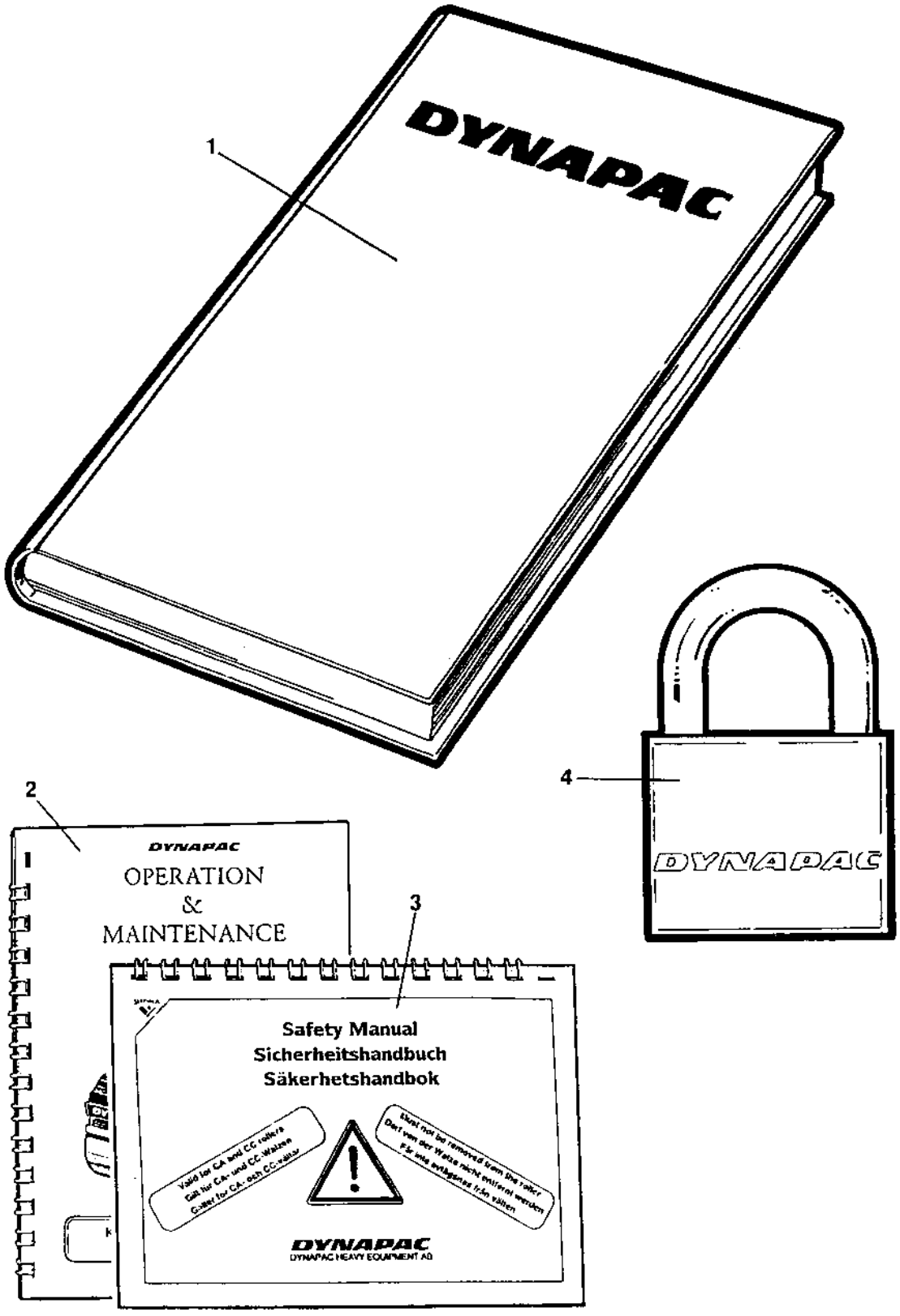
1
DYNAPAC
2
DYNAPAC
OPERATION
&
MAINTENANCE
3
Safety Manual
Sicherheitshandbuch
Säkerhetshandbok
DYNAPAC
DYNAPAC HEAVY EQUIPMENT AB
4
DYNAPAC

Standard equipment

Item	Part No	Rem	Qty	Description	Code
1			1	Documentation ISCA252D	
			1	. Warranty registration card	
			1	. Spare parts catalogue SCA252D	
			1	. Instruction manual Cummins QSB 4.5	
2			1	. Operation / maintenance instruction ICA252	
3			1	. Safety manual RSAFE	
4	4700358881		1	Pad lock	D

Optional equipment

Item	Part No	Rem	Qty	Description	Code
10				**Tool equipment (Page 286)**	
20				**SMV-sign, First aid box (Page 288)**	
30				**Canopy (Page 290)**	
40				**Levelling blade, metal parts (Page 292)**	
50				**Levelling blade, hydraulic parts (Page 294)**	
60				**Levelling blade control (Page 296)**	
80				**Air conditioner assembly (Page 298)**	
85				**Air conditioner and heater, Simple cab (Page 300)**	
90	4700383413			**Condensor, cpl (Page 304)**	
95				**Air conditioner and heater unit (Page 306)**	
110				**Evaporator assembly (Page 308)**	
126				**Anti-spin CA (Page 310)**	
				Anti-spin CA (Page 326)	
130				**Anti spin, Potentiometer installation (Page 328)**	
140				**Anti spin, Hydraulic (Page 330)**	
150				**Roof hatch (Page 332)**	
160				**Pad shell (Page 334)**	
180				**Fire extinguisher assembly (Page 336)**	
181				**Fire extinguisher Platform (Page 338)**	
182				**Fire extinguisher Cab (Page 340)**	

Tool equipment

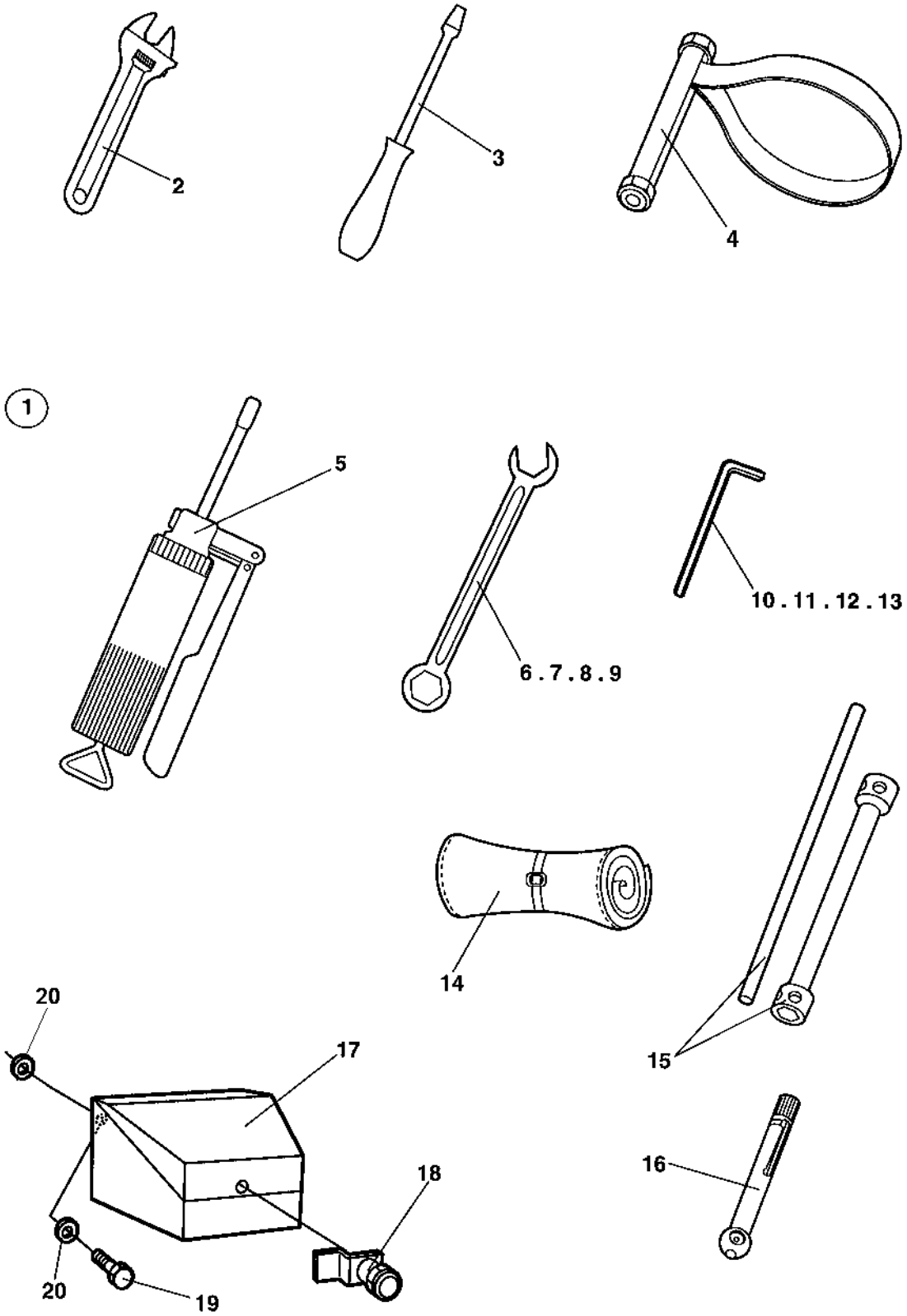

Tool equipment

Item	Part No	Rem	Qty	Description	Code
1	4700355890		1	Tool set Cpl	D
2			1	. Adjustable wrench	
3			1	. Screw driver	
4	4700902610		1	. Belt pliers	D
5	4700311016		1	. Grease gun	D
6			1	. Open end spanner 10mm	
7			1	. Open end spanner 13mm	
8			1	. Open end spanner 16mm	
9			1	. Open end spanner 18mm	
10			1	. Allen wrench 10mm	
11			1	. Allen wrench 12mm	
12			1	. Allen wrench 6mm	
13			1	. Allen wrench 8mm	
14			1	. Tool bag	
15			1	. Wheel nut key 30/32mm	
16	4700901220		1	. Pressure gauge	B
17	4700372837		1	Tool box	D
18	4700372658		1	. Lock	D
19	4700500021		3	Screw M8-1,25x25 8.8	C
20	4700904640		6	Washer 8,4x22x3	C

SMV-sign, First aid box

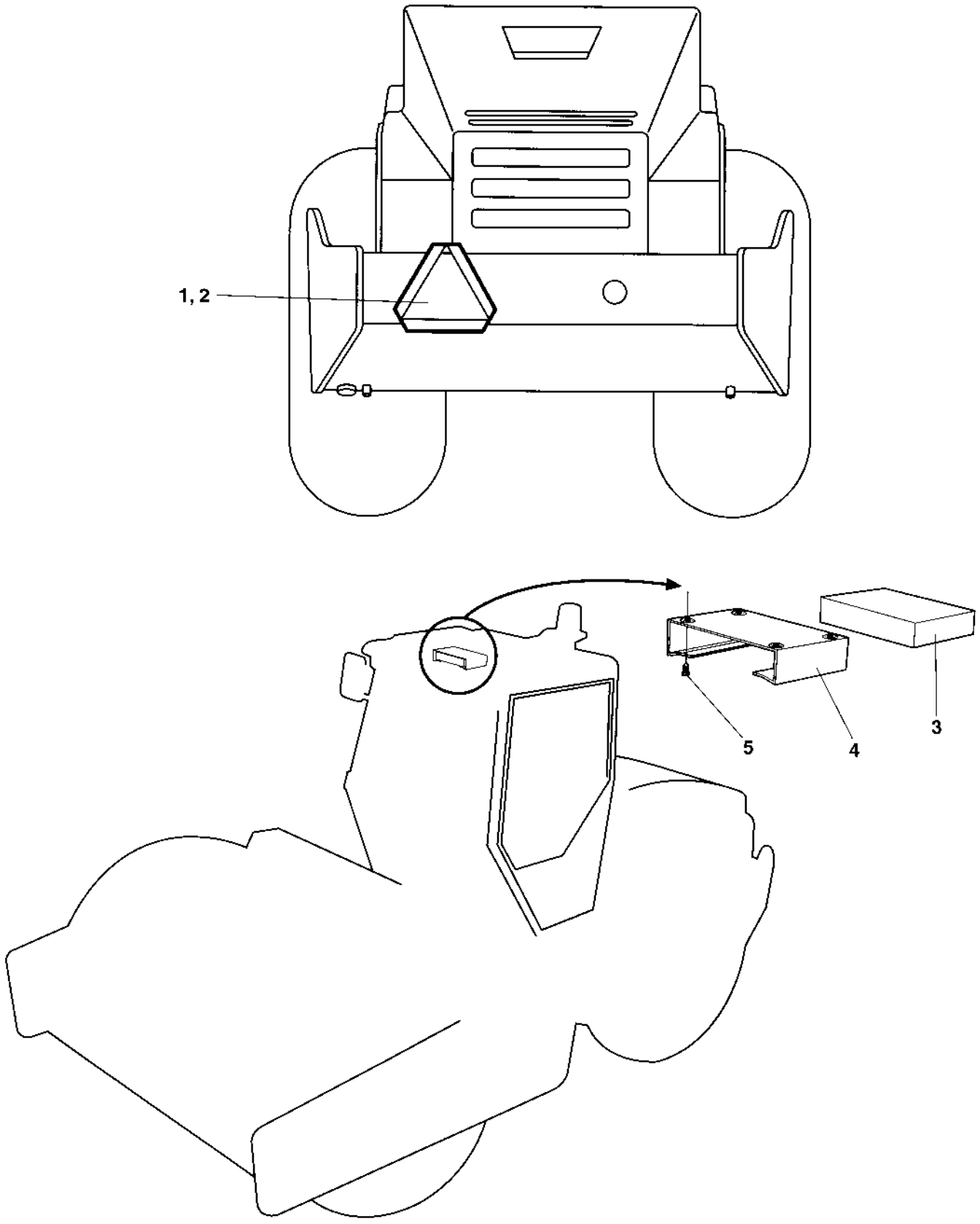

SMV-sign, First aid box

Item	Part No	Rem	Qty	Description	Code
1	4700476019		1	SMV-sign	D
2	4700624005		6	Blind rivet 3,2x6,1	C
3	4700902508		1	First aid kit	D
4	4700371837		1	Holder	D
5	4700903969		4	Screw ST4,8x19 Black	C

Canopy

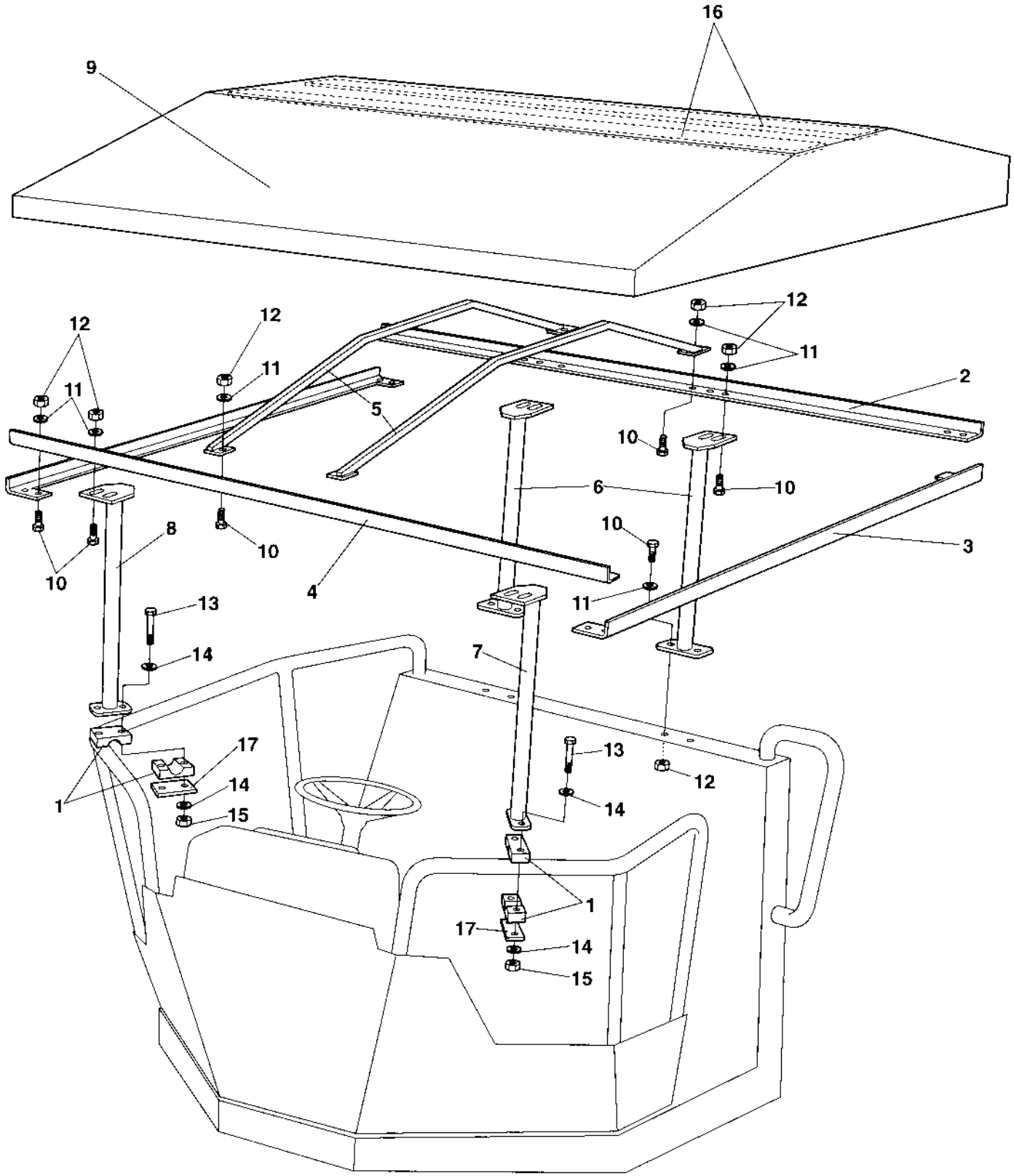
16
9
12
12
11
11
12
11
2
5
10
6
10
10
8
10
10
3
4
11
13
14
7
17
14
15
1
13
12
14
1
17
14
15

Canopy

Item	Part No	Rem	Qty	Description	Code
1	4700904340		2	Pipe clamp	
2	4700373746		1	Canopy profile	D
3	4700373747		2	Canopy profile	D
4	4700373748		1	Canopy profile	D
5	4700373749		4	Canopy rib	D
6	4700373750		2	Canopy anchor	D
7	4700373752		1	Canopy anchor	D
8	4700373756		1	Canopy anchor	D
9	4700373906		1	Roof	D
10	4700500021		24	Screw M8-1,25x25 8.8	C
11	4700904229		44	Steel plain washer 8,4x16x1,5	C
12	4700586003		20	Lock nut M8	C
13	4700500153		4	Screw	C
14	4700904228		8	Washer 6,4x12x1,5	C
15	4700586002		4	Lock nut M6 -8	C
16	4700373907		2	Lath	D
17	4700924791		2	Cover plate	

Levelling blade, metal parts

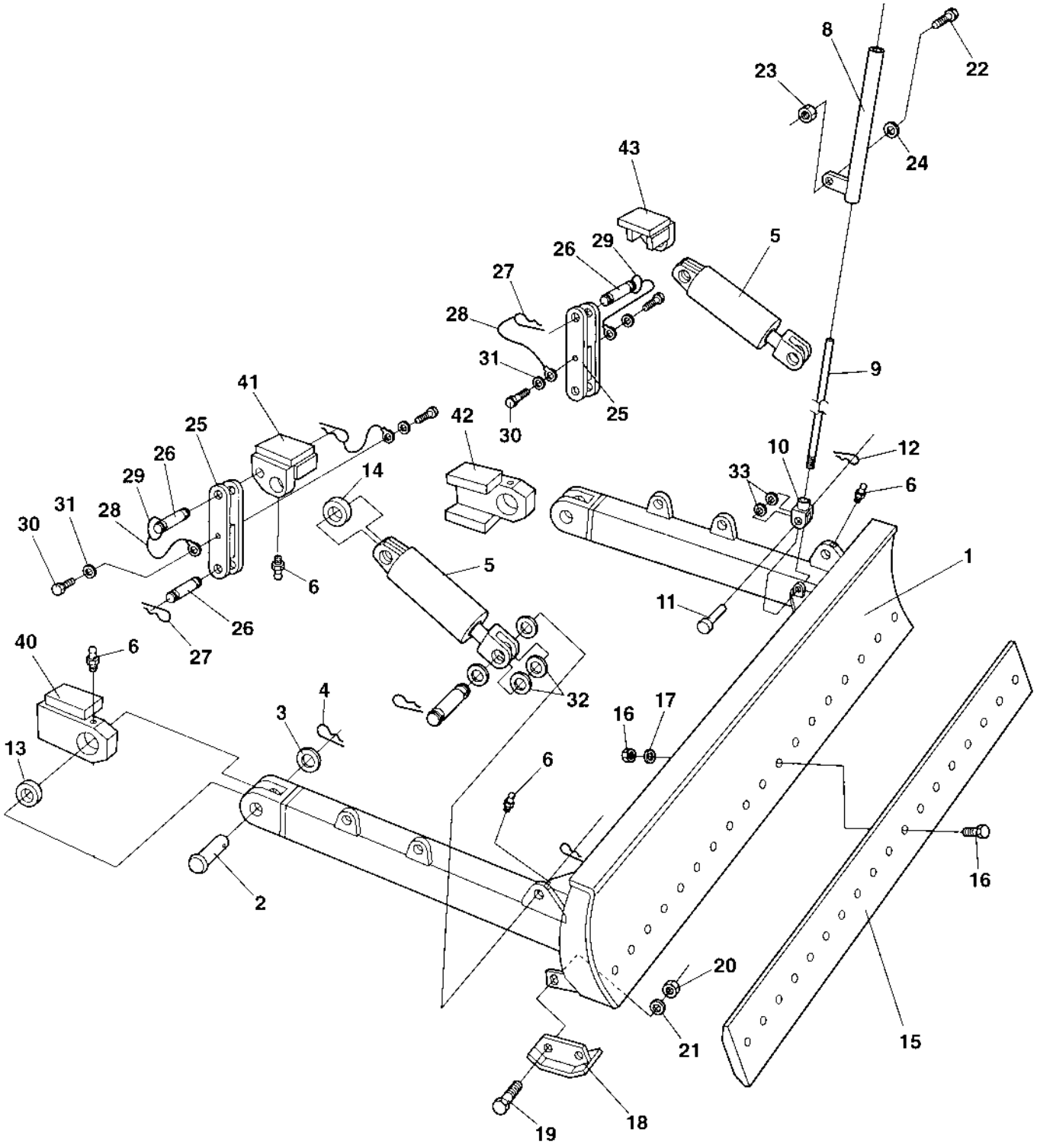

Levelling blade, metal parts

Item	Part No	Rem	Qty	Description	Code
1	4700374306		1	Levelling blade	D
2	4700346214		2	Clevis pin	D
3	4700600019		2	Washer	C
4	4700630007		2	Split pin	D
5	4700392002		2	**Steering cylinder (Page 120)**	C
6	4700926214		6	Grease fitting	C
8	4700346215		1	Indicating pipe	D
9	4700346216		1	Indicator	B
10	4700415193		1	Yoke	D
11	4700550038		1	Clevis pin	D
12	4700630008		1	Pin	D
13	4700100071		2	Radial spherical plain bearing	D
14	4700813316		4	Ball bushing	C
15	4700801259		1	Blade	D
16	4700801251		19	Screw with nut	D
17	4700904233		19	Washer 21x36x3	C
18	4700346217		2	Shoe	D
19	4700500195		4	Screw	C
20	4700902288		4	Nut M12	D
21	4700904213		4	Washer	C
22	4700500194		1	Screw	C
23	4700586019		1	Lock nut	C
24	4700904231		1	Washer 13x24x2 300 HV	C
25	4700372938		2	Safety rod	D
26	4700347119		4	Shaft	C
27	4700635061		6	Hair clip	B
28	4700343775		4	Wire	D
29	4700357488		2	Spring	D
30	4700500191		4	Screw M10x14	D
31	4700904230		4	Steel plain washer	C
32	4700600016		8	Washer 26x45x4	B
33	4700904231		2	Washer 13x24x2 300 HV	C
40	4700384968		1	Bracket	D
41	4700384970		1	Cylinder bracket	D
42	4700384969		1	Bracket	D
43	4700384971		1	Cylinder bracket	D

Levelling blade, hydraulic parts

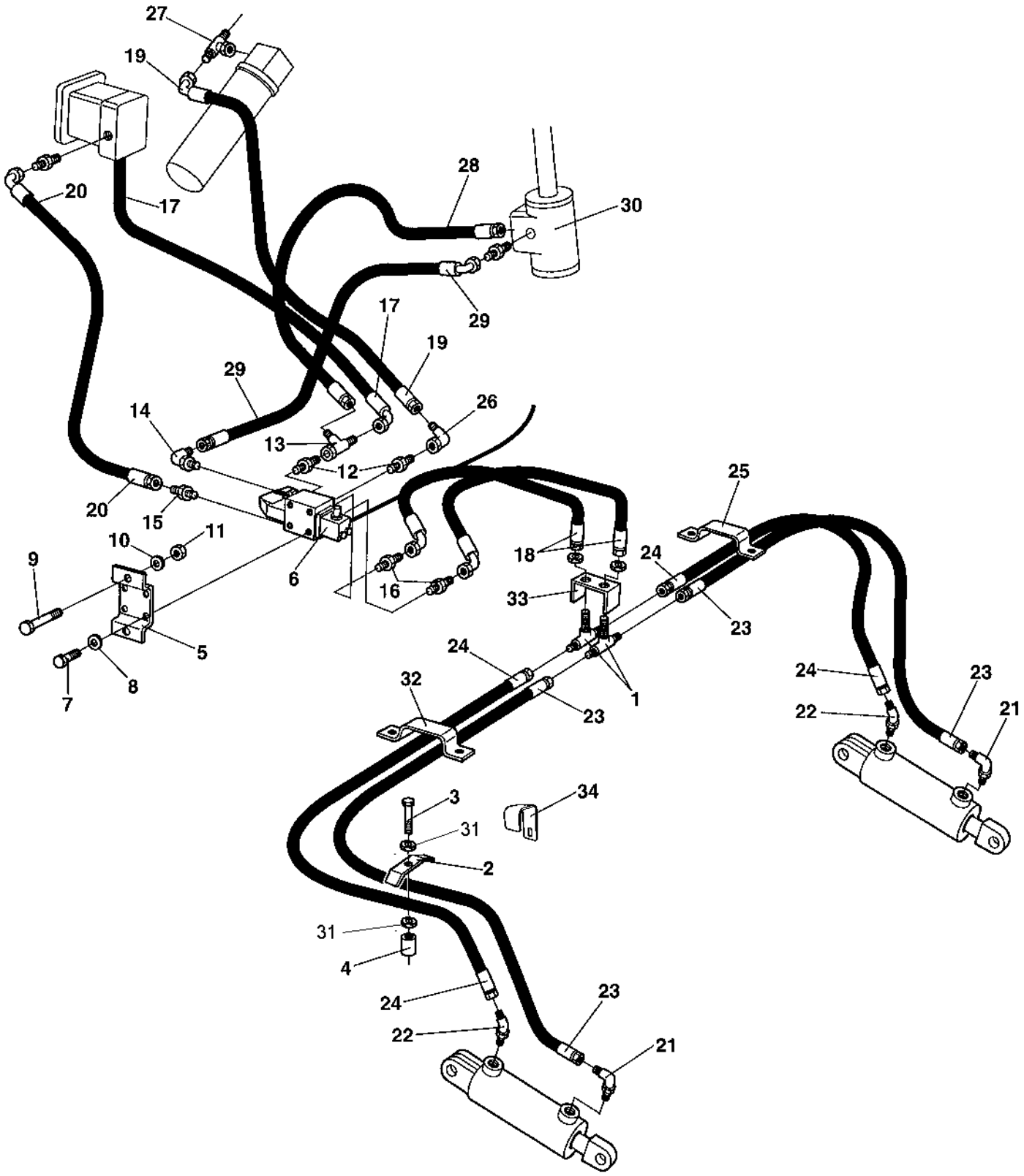

Levelling blade, hydraulic parts

Item	Part No	Rem	Qty	Description	Code
1	4700801199		2	Adapter	D
2	4700346230		4	Clamp	D
3	4700500022		4	Screw M8x30H 8.8 A2K	C
4	4700356273		4	Spacer sleeve	D
5	4700374813		1	Bracket	D
6	4700375000		1	Hydraulic valve	D
7	4700500019		4	Hexagon head screw M8x16H 8,8	C
8	4700904229		4	Steel plain washer 8,4x16x1,5	C
9	4700500033		2	Screw M10-1,5x60 8,8	D
10	4700904230		2	Steel plain washer	C
11	4700902287		2	Nut	C
12	4700334190		2	Connector	D
13	4700334135		1	Tee-connector	C
14	4700234481		1	Connector	C
15	4700234219		1	Connector	
16	4700334116		2	Straight o-ring connector	C
17	4700482434		1	Hydraulic hose	D
18	4700482525		2	Hydraulic hose	D
19	4700482734		1	Hydraulic hose	D
20	D381010103		1	Hydraulic hose	
21	4700813444		2	Elbow 90, O-ring	C
22	4700813500		2	Elbow 45, O-ring	C
23	4700483250		2	Hydraulic hose	D
24	4700483251		2	Hydraulic hose	D
25	4700373015		1	Clamp	D
26	4700334197		1	Elbow 90	C
27	4700234953		1	Tee-connector	C
28	4700483618	A	1	Hydraulic hose	D
	4700483510	B	1	Hydraulic hose	D
29	4700482588	A	1	Hydraulic hose	D
	4700482728	B	1	Hydraulic hose	D
30	4700376109		1	Pilot valve	D
31	4700904229		2	Steel plain washer 8,4x16x1,5	C
32	4700373016		1	Hose clamp	D
33	4700374817		1	Holder	D
34	4700377582		2	Holder	D

A) Used on the standard platform model.
B) Used on the drivers seat-turnover model.

Levelling blade control

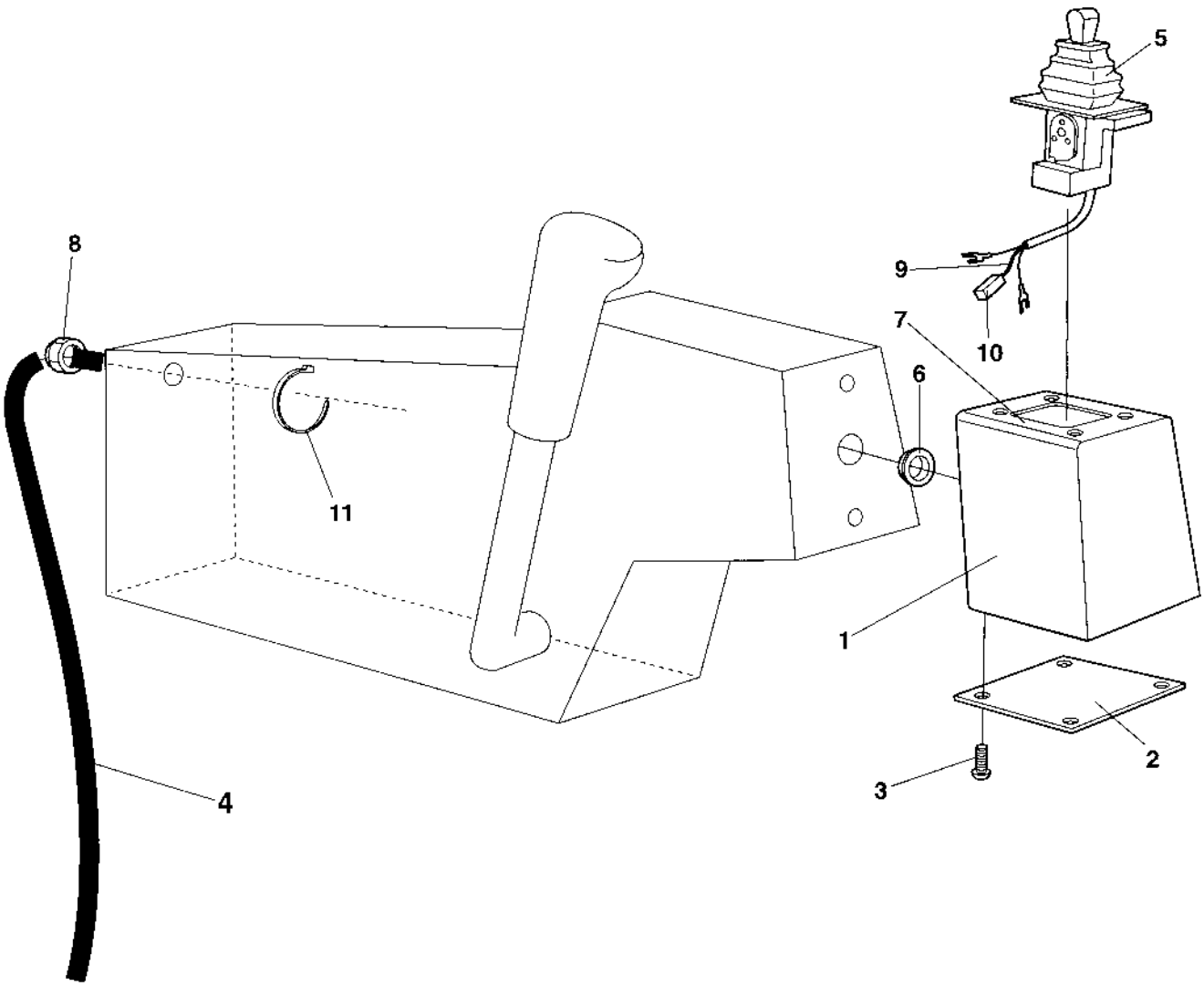

Levelling blade control

Item	Part No	Rem	Qty	Description	Code
1	4700374816		1	Cover	D
2	4700375105		1	Cover plate	D
3	4700903658		10	Screw M5x10	C
4	4700374842		1	Cable harness	D
5	4700375205		1	Control	D
	4700904865		1	. Rubber bellows	D
	4700938207		1	. Knob	
6	4700909152		1	Rubber grommet	C
7	4700374838		1	Decal	D
8	4700904302		1	Lock nut	
9	4700343552		1	Connection wire	D
10	4700930154		1	Contact piece, NC	B
11	4700313068		5	Cable ties L=92 mm	

Air conditioner assembly

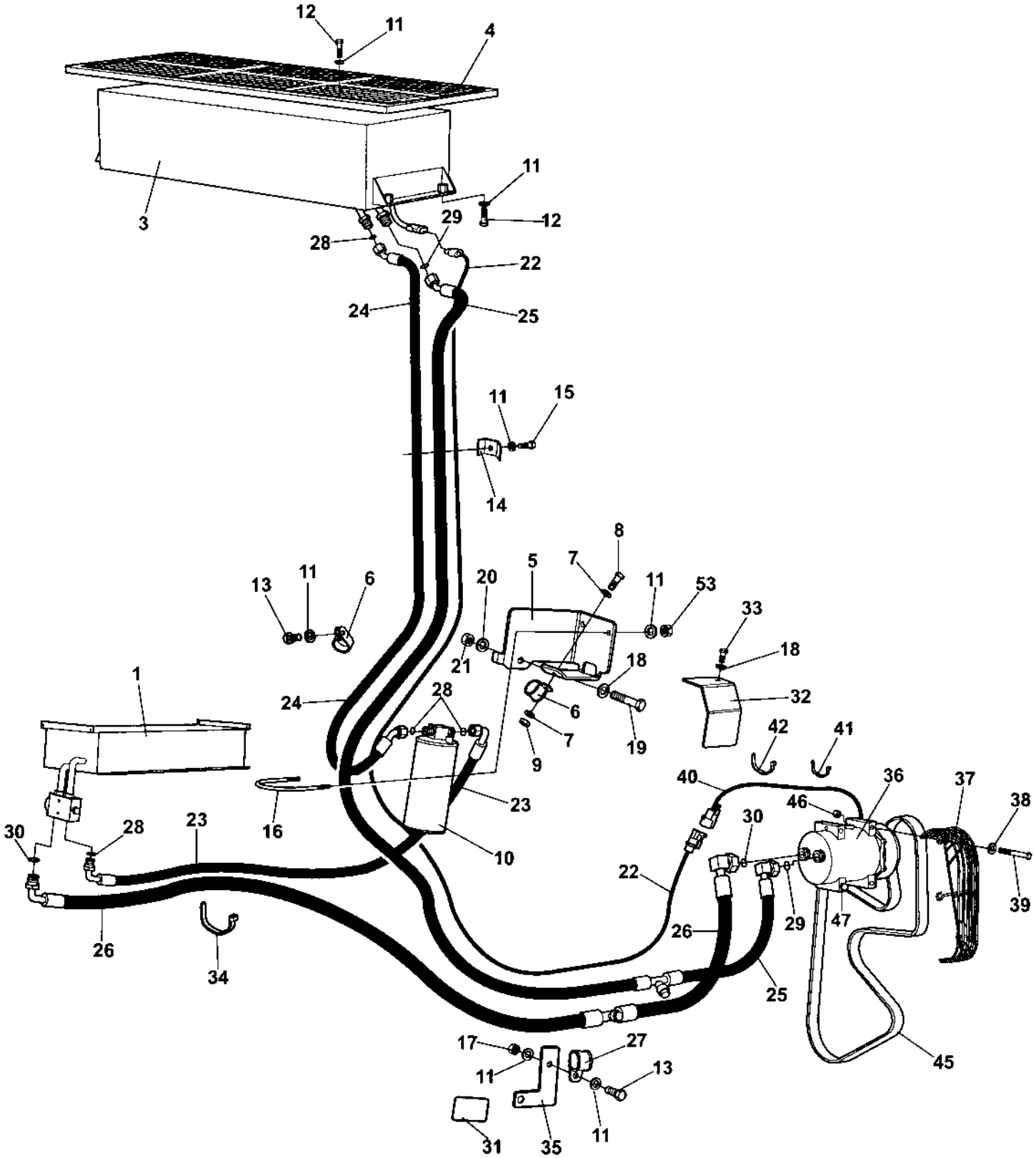

Air conditioner assembly

Item	Part No	Rem	Qty	Description	Code
1				**Evaporator assembly (Page 308)**	
3	4700383413			**Condensor, cpl (Page 304)**	
4	4700384589		1	Cover	D
5	4700393954		1	Holder	D
6	4700921056		2	Clamp	C
7	4700904228		2	Washer 6,4x12x1,5	C
8	4700500013		1	Screw M6-1x16 8,8	C
9	4700570004		1	Nut M6X1,00 -8 A2K	C
10	4700393955		1	Drying filter	D
11	4700904229		18	Steel plain washer 8,4x16x1,5	C
12	4700500022		10	Screw M8x30H 8.8 A2K	C
13	4700500053		2	Screw M8x20H 8.8	C
14	4700346230		3	Clamp	D
15	4700500023		3	Screw M8-1,25x40 8,8	C
16	4700313093		1	Pipe clamp	D
17	4700570005		3	Nut M8	C
18	4700904230		2	Steel plain washer	C
19	4700500192		1	Screw M10x80	C
20	4700904567		1	Washer 10,5x28x6 HB305	C
21	4700570006		1	Nut	B
22	4700390824		1	Cable harness	D
23	4700384875		1	Hose	C
24	4700384876		1	Hose	C
25	4700393405		1	Hose	C
26	4700393406		1	Hose	D
27	4700921044		1	Clamp	C
28	4700384877		4	O-ring Size 6	C
29	4700384878		1	O-ring Size 8	C
30	4700384879		3	O-ring Size 10	C
31	4700904165		1	Safety decal Toxic gases	D
32	4700393408		1	Heat protection	D
33	4700500048		1	Screw M10-1,5x20 8,8	C
34	4700313102			Cable ties	
35	4700393647		1	Holder	D
36	4700390821		1	Compressor unit	D
37	4812113010		1	Belt guard	
38	4700904734		2	Steel plain washer	
39	4700500180		2	Screw	C
40	4700792015		1	Conduit	
41	4700313068		1	Cable ties L=92 mm	
42	4700925802		1	Cable ties L=142 mm	C
45		A	1	V-belt	
46	4700945314		2	Guide ring	
47	4700945315		3	Screw M8X100	D
53	4700586003		2	Lock nut M8	C

A) See section "Engine installation".

Air conditioner and heater, Simple cab

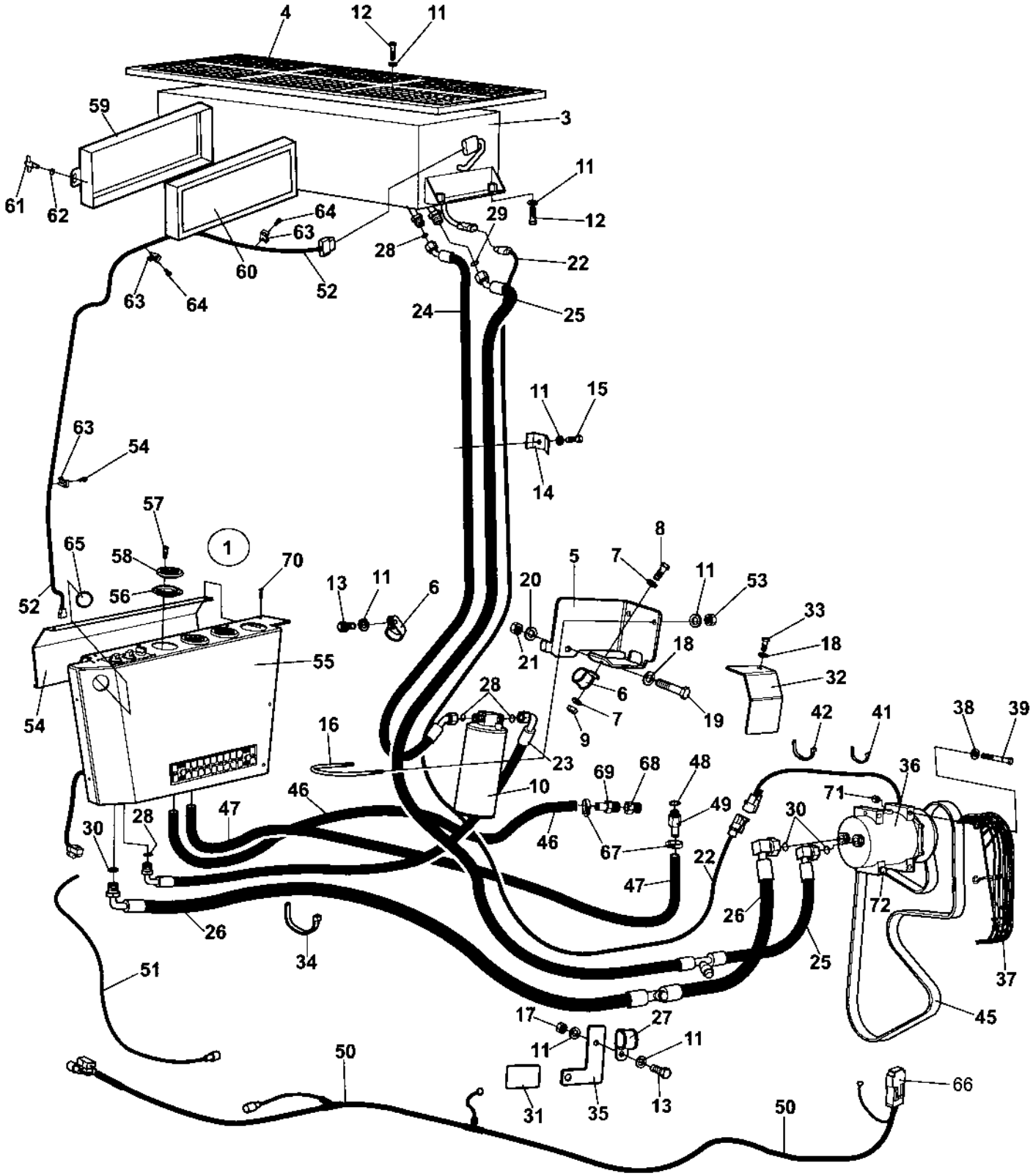

Air conditioner and heater, Simple cab

Item	Part No	Rem	Qty	Description	Code
1				**Evaporator assembly (Page 308)**	
3	4700383413			**Condensor, cpl (Page 304)**	
4	4700384589		1	Cover	D
5	4700393954		1	Holder	D
6	4700921056		2	Clamp	C
7	4700904228		2	Washer 6,4x12x1,5	C
8	4700500013		1	Screw M6-1x16 8,8	C
9	4700570004		1	Nut M6X1,00 -8 A2K	C
10	4700393955		1	Drying filter	D
11	4700904229		18	Steel plain washer 8,4x16x1,5	C
12	4700500022		10	Screw M8x30H 8.8 A2K	C
13	4700500053		2	Screw M8x20H 8.8	C
14	4700346230		3	Clamp	D
15	4700500023		3	Screw M8-1,25x40 8,8	C
16	4700313093		1	Pipe clamp	D
17	4700570005		3	Nut M8	C
18	4700904230		2	Steel plain washer	C
19	4700500192		1	Screw M10x80	C
20	4700904567		1	Washer 10,5x28x6 HB305	C
21	4700570006		1	Nut	B
22	4700390824		1	Cable harness	D
23	4700384875		1	Hose	C
24	4700384876		1	Hose	C
25	4700393405		1	Hose	C
26	4700393406		1	Hose	D
27	4700921044		1	Clamp	C
28	4700384877		4	O-ring Size 6	C
29	4700384878		1	O-ring Size 8	C
30	4700384879		3	O-ring Size 10	C
31	4700904165		1	Safety decal Toxic gases	D
32	4700393408		1	Heat protection	D
33	4700500048		1	Screw M10-1,5x20 8,8	C
34	4700313102			Cable ties	
35	4700393647		1	Holder	D
36	4700390823		1	Compressor	D
37	4812113010		1	Belt guard	
38	4700904734		2	Steel plain washer	
39	4700500180		2	Screw	C
40	4700792015		1	Conduit	
41	4700313068		1	Cable ties L=92 mm	
42	4700925802		1	Cable ties L=142 mm	C
45		A	1	V-belt	
46	4700937737	B	1XL	Hose	
47	4700937737	B	1XL	Hose	
48	4700330330		1	Copper washer	
49	4700391303		1	Hose connection	
50	4700387466		1	Cable harness	D
51	4700387467		1	Cable harness	D
52	4700379275		1	Cable harness	D
53	4700586003		2	Lock nut M8	C
54	4700379285		1	Panel	D
55	4700379286		1	Panel	D
56	4700385443		3	Ring	D
57	4700938691		12	Screw	C
58	4700385442		3	Air nozzle	D
59	4700908501		1	Filter frame	D
60	4700908502		1	Filter	A
61	4700908504		2	Handle	D

A) See section "Engine installation".
B) L=3,600M

Air conditioner and heater, Simple cab

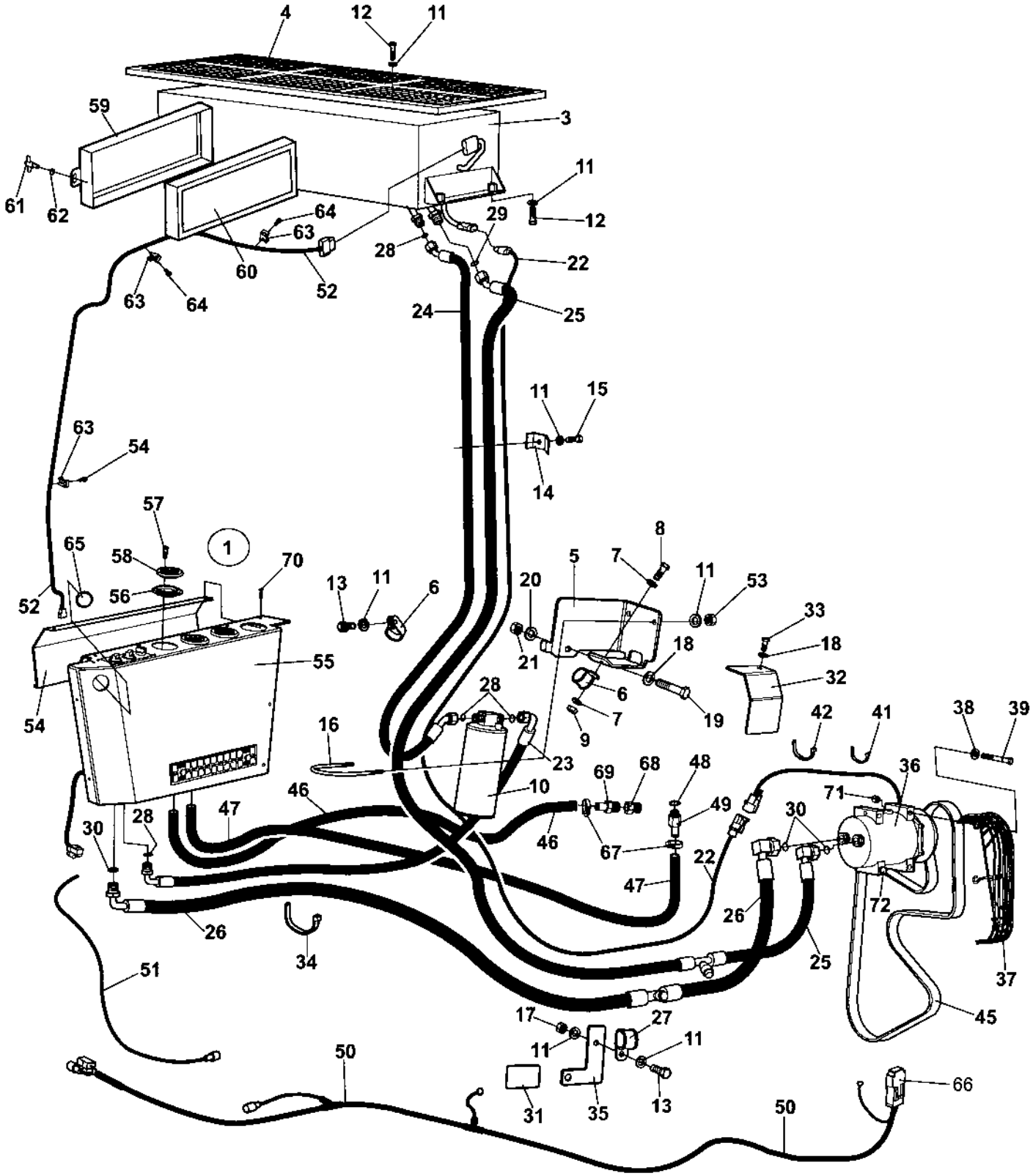

Air conditioner and heater, Simple cab

Item	Part No	Rem	Qty	Description	Code
62	4700908503		2	O-ring	D
63	4700904543		10	Cable tie holder	
64	4700903852		10	Screw ST4,2x13	C
65	4700345870		1	Plug	C
66	4700904039		1	Fuse 50A Red High	A
67	4700313004		2	Hose clamp	D
68	4700813434		1	Reducer	C
69	4700387638		1	Hose connection	
70	4700792248		5	Screw 4,2 X25	D
71	4700945314		2	Guide ring	
72	4700945315		3	Screw M8X100	D

4700383413 Condensor, cpl

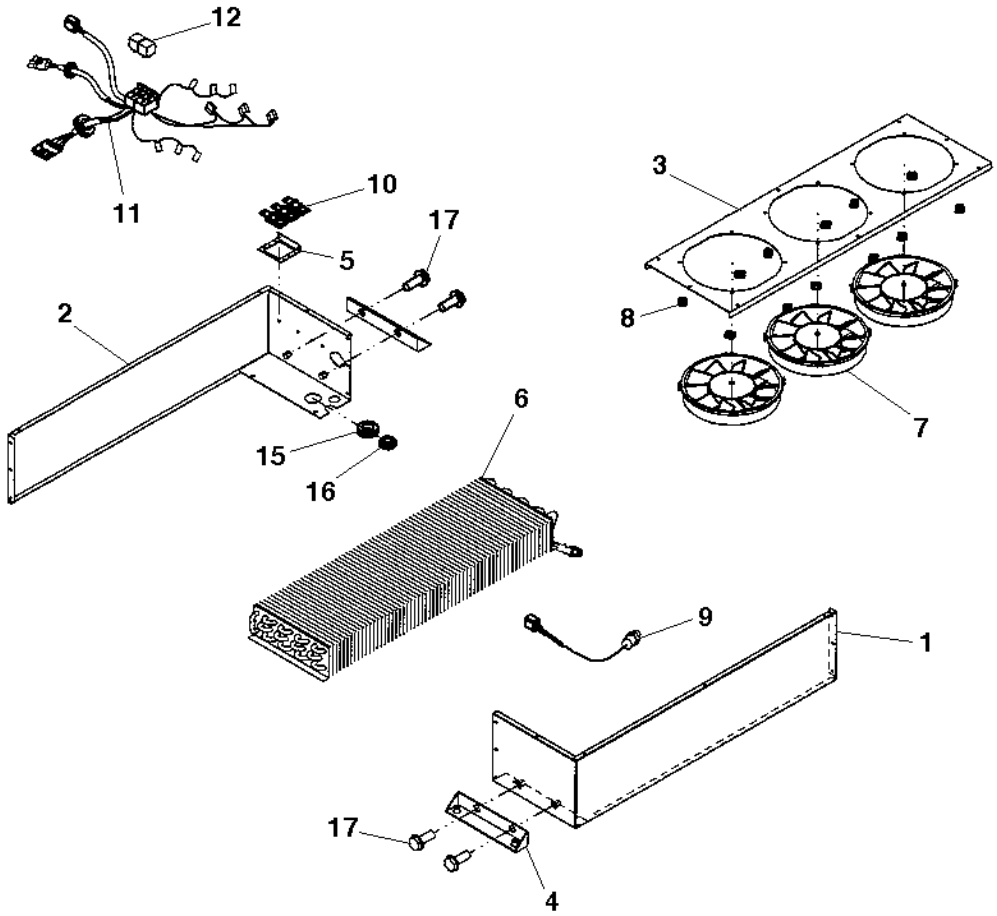

4700383413 Condensor, cpl

Item	Part No	Rem	Qty	Description	Code
1	4700938597		1	Cover	D
2	4700938598		1	Cover	D
3	4700938599		1	Fan bracket	D
4	4700938600		2	Condensor bracket	D
5	4700938601		1	Resistor bracket	D
6	4700938602		1	Condensor Coil	B
7	4700938603		3	Fan	C
8	4700938604		12	Clip	D
9	4700938605		1	Pressure switch	B
10	4700938606		3	Resistor	B
11	4700938607	A	1	Cable harness	D
	4812155890	B	1	Cable harness	
12	4700287598		2	Relay 12V-30A	A
	4700287598	C	3	Relay 12V-30A	A
15	4700938608		1	Grommet	D
16	4700938609		1	Grommet	
17	4700901832		4	Screw	C

A) Replaced by Cable harness P/N 4812155890.
B) Cable harness withh 3 Relays, replaces Cable harness P/N 4700938607.
C) Used with Cable harness 4812155890.

Air conditioner and heater unit

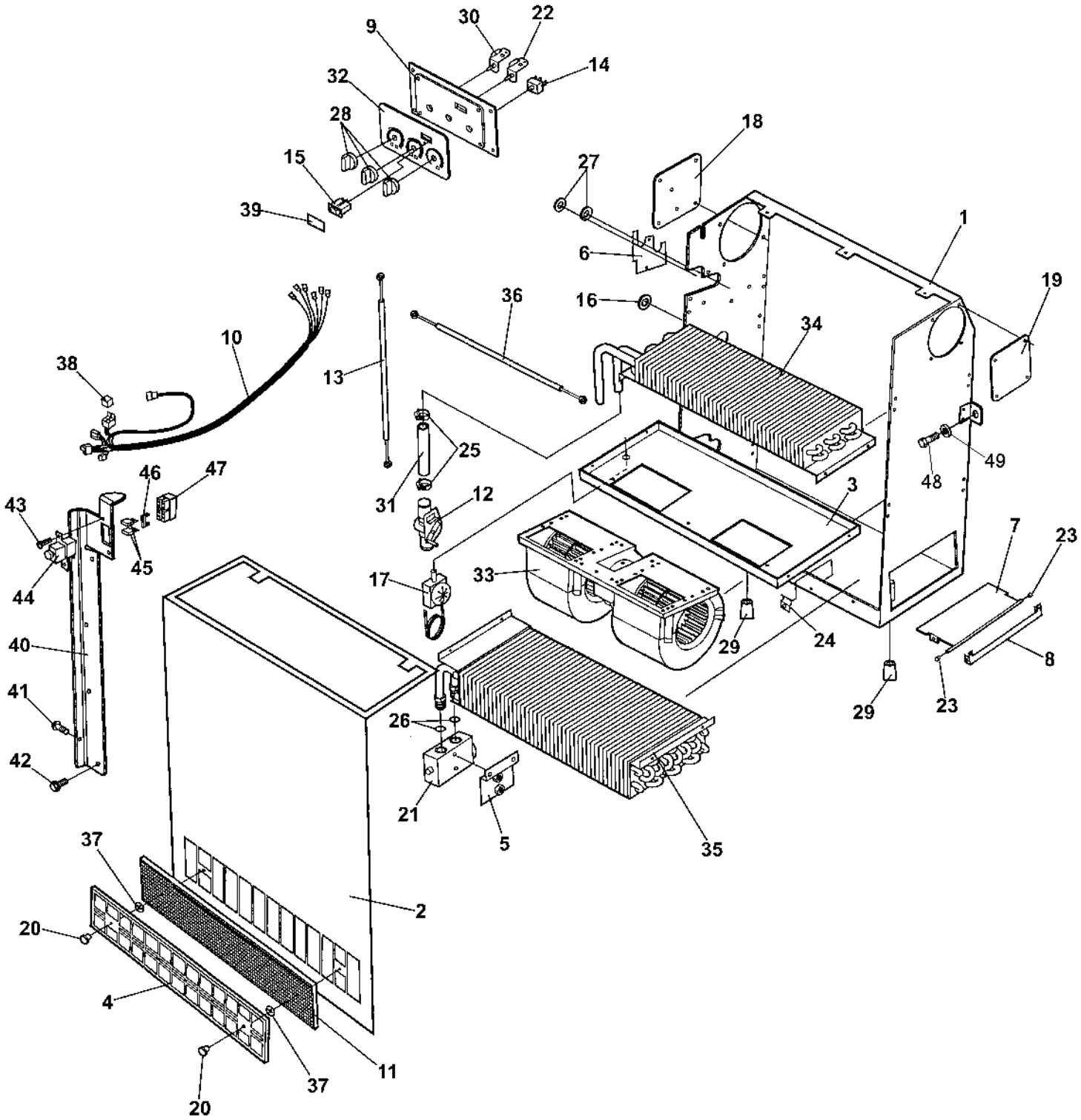

Air conditioner and heater unit

Item	Part No	Rem	Qty	Description	Code
1	4700938625		1	Casing	
2	4700938626		1	Cover	
3	4700938627		1	Fan bracket	
4	4700384760		1	Filter grill	D
5	4700384177		1	Holder	D
6	4700938628		1	Cover	
7	4700938629		1	Cover	
8	4700938630		1	Bracket	
9	4700945174		1	Panel	D
10	4700945175		1	Cable harness	D
11	4700384761		1	Air filter element	A
12	4700939693		1	Heater control valve	
13	4700938645		1	Bowden cable	
14	4700938622		1	Switch	B
15	4700938619		1	Switch	B
16	4700938644		1	Cap	C
17	4700384897		1	Thermostat	B
18	4700945176		1	Cover plate	D
19	4700945177		1	Cover plate	D
20	4700938634		2	Knob	D
21	4700384176		1	Expansion valve	C
22	4700938621		2	Rotary control	
23	4700938635		2	Sleeve	
24	4700384880		1	Wire clamp	D
25	4700313003		2	Hose clamp	D
26	4700384878		2	O-ring Size 8	C
27	4700384927		2	Grommet	D
28	4700938620		3	Knob	D
29	4700938636		2	Drain valve	C
30	4700385134		2	Lock washer	D
31	4700384881		1	Hose	D
32	4700945178		1	Panel overlay	D
33	4700938638		1	Fan	C
34	4700938639		1	Heater coil	
35	4700383414		1	Evaporator	D
36	4700384762		1	Wire	D
37	4700939413		2	Star lock	
38	4700287597		1	Relay	D
39	4700938643		1	Plug	C
40	4700379332	A	1	Holder	D
41	4700792187	A	2	Screw M5x14	
42	4700541703	A	4	Screw M6x16	D
43	4700901767	A	2	Screw ST3,5x9,5 Black	
44	4700792091	A	1	Fuse holder	C
45	4700903741	A	2	Fuse 20A Yellow Medium	A
46	4700901240	A	1	Connector	B
47	4700901699	A	1	Connector	D
48	4700500019		5	Hexagon head screw M8x16H 8,8	C
49	4700904229		5	Steel plain washer 8,4x16x1,5	C

A) Only valid for simple cab

Evaporator assembly

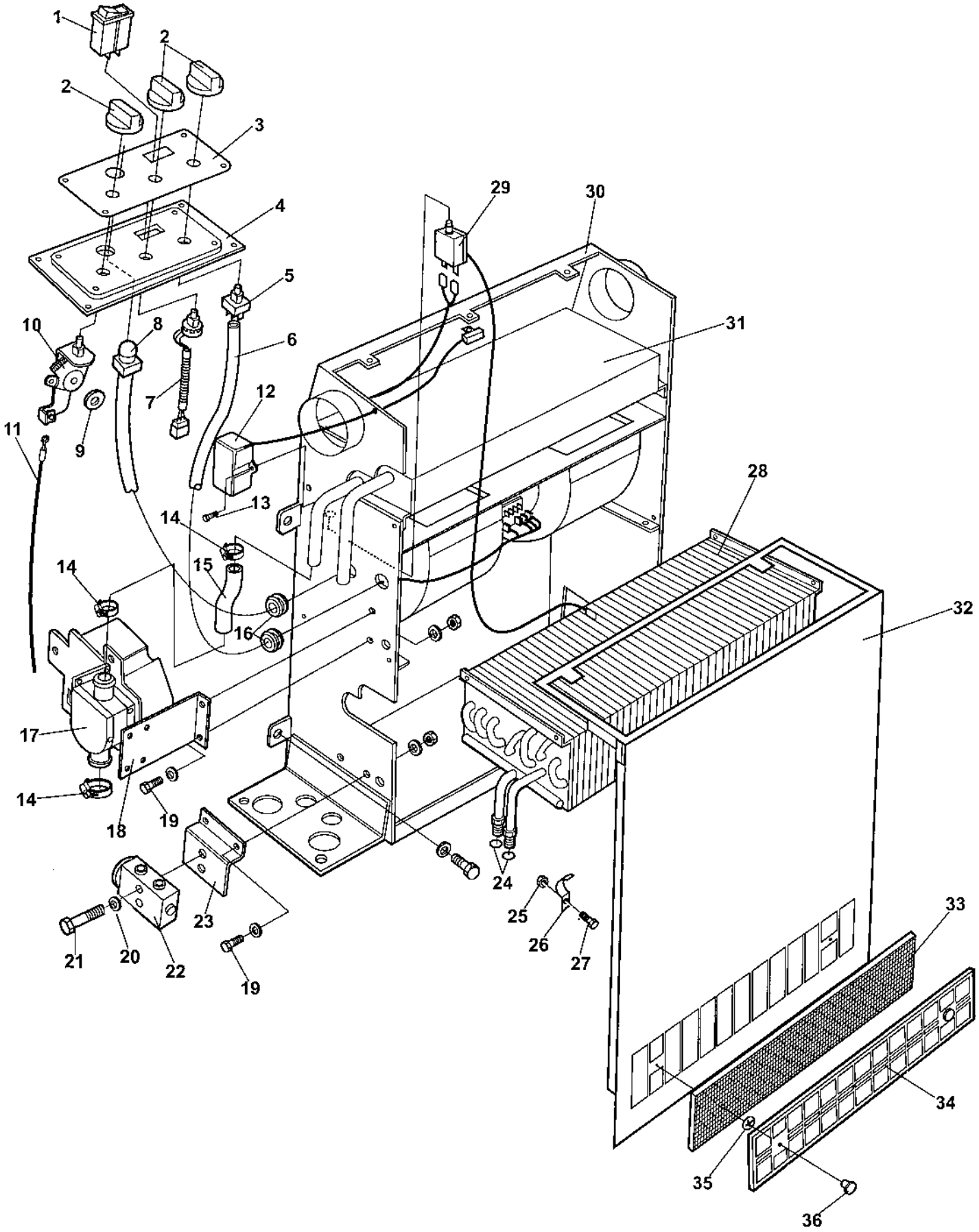

Evaporator assembly

Item	Part No	Rem	Qty	Description	Code
1	4700938619		1	Switch	B
2	4700938620		3	Knob	D
3	4700938618		1	Decal	D
4	4700938617		1	Control panel	D
5	4700938622		1	Switch	B
6	4700938631		1	Cable harness	C
7	4700938623		1	Potentiometer	B
8	4700938624		1	Sensor	B
9	4700385134		1	Lock washer	D
10	4700938621		1	Rotary control	
11	4700384762		1	Wire	D
12	4700384187		1	Ecc-Box	D
13	4700791144		6	Screw	D
14	4700313003		3	Hose clamp	D
15	4700384881		1	Hose	D
16	4700384927		1	Grommet	D
17	4700383425		1	Electronic valve	D
18	4700384174		1	Holder	D
19	4700903782		4	Screw M5x12	C
20	4700904228		2	Washer 6,4x12x1,5	C
21	4700500061		2	Screw M6-1X35 8,8	C
22	4700384176		1	Expansion valve	C
23	4700384177		1	Holder	D
24	4700384878		2	O-ring Size 8	C
25	4700923976		1	Nut	C
26	4700384880		1	Wire clamp	D
27	4700500086		1	Screw	D
28	4700383414		1	Evaporator	D
29	4700384897		1	Thermostat	B
30	4700938625		1	Casing	
31	4700938639		1	Heater coil	
32	4700938626		1	Cover	
33	4700384761		1	Air filter element	A
34	4700384760		1	Filter grill	D
35	4700939413		2	Star lock	
36	4700938634		2	Knob	D

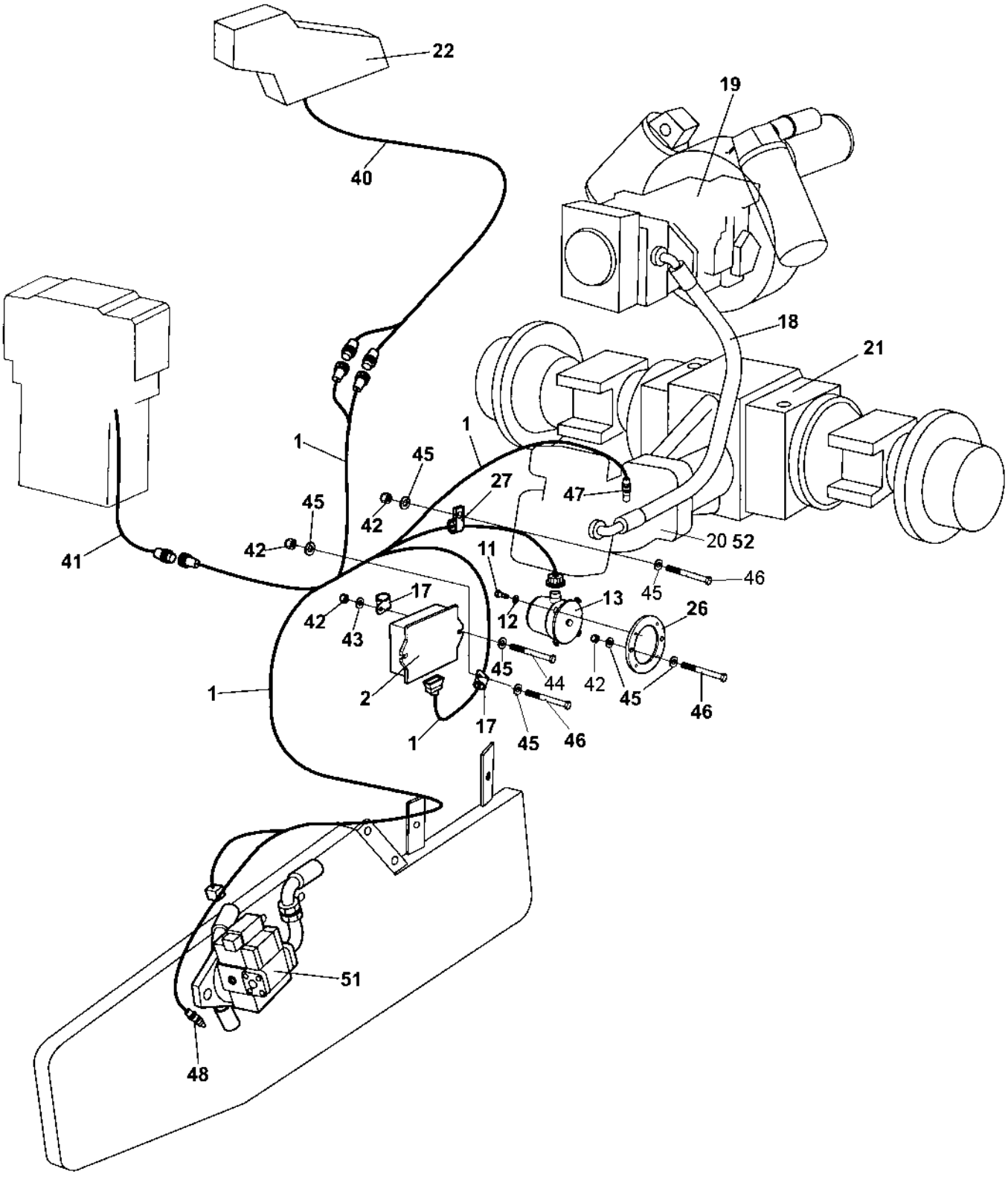
22
40
19
18
21
1
45
27
47
42
45
42
41
20 52
11
46
17
42
43
12
13
45
26
1
2
45
44
42
45
46
1
17
45
46
51
48

Anti-spin CA

Item	Part No	Rem	Qty	Description	Code
1	4700378131		1	Cable harness	D
2	4700382098		1	Control unit	D
11	4700500006		4	Screw M5x16	C
12	4700904281		4	Washer 5,3x10x1 300HV	C
13	4700373902		1	Sensor	B
17	4700960727		2	Clamp	
18			2	Not used on this model	
19	4700382133		1	**Propulsion pump (Page 312)**	C
20	4700382089		1	**Propulsion motor (Page 318)**	C
21	4700383856		1	**Rear axle No-Spin, Option (Page 84)**	
22				**Anti spin, Potentiometer installation (Page 328)**	
26	4700394670		1	Spacer ring	D
27	4700921072		1	Clamp	
40	4700378132		1	Cable harness	D
41	4700378133		1	Cable harness	D
42	4700586003		6	Lock nut M8	C
43	4700904640		2	Washer 8,4x22x3	C
44	4700500090		2	Screw	C
45	4700904229		10	Steel plain washer 8,4x16x1,5	C
46	4700500026		4	Screw M8-1,25x60 8,8	
47	4700904216		1	Sensor	
48	4700904217		1	Sensor	
51	4700382088		1	**Propulsion motor (Page 322)**	
52	4700395084	A	1	Propulsion motor	

A) High climp, Option

4700382133 Propulsion pump

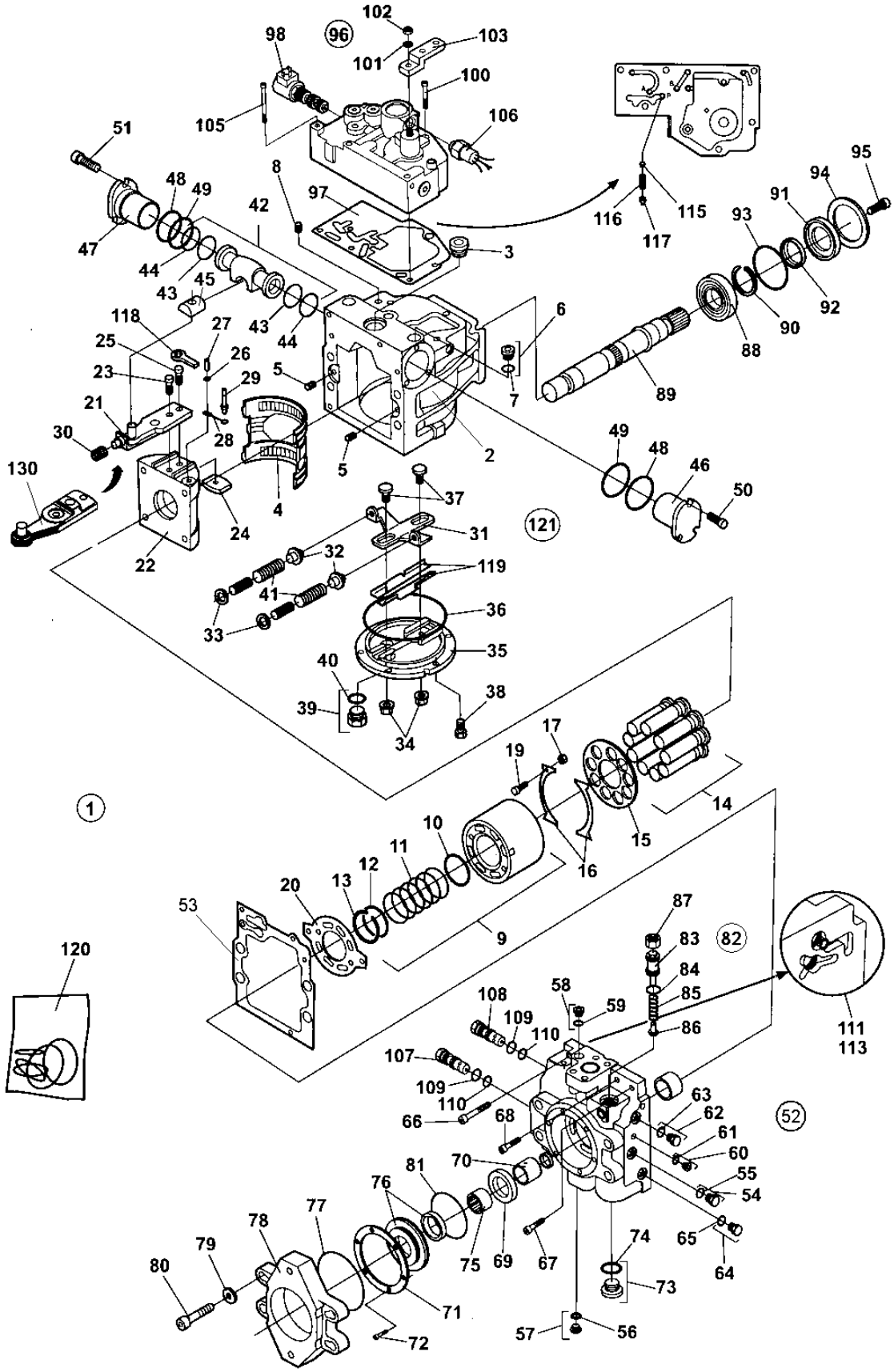

4700382133 Propulsion pump

Item	Part No	Rem	Qty	Description	Code
1			1	Hydraulic pump, Cpl	
2	4700936546		1	. Housing	
		2	1	. Housing	
3	4700902928		1	. Plug	C
4	4700901452		1	. Bearing	
		2	1	. Bearing	
5	4700813822		2	. Pin	D
6	4700908432		2	. Plug	C
7	4700923087	1	2	. . O-ring	C
8	4700901454		3	. Filter element	D
9	4700901455		1	. Cylinder block, cpl	
10			1	. . Spacer	
11			1	. . Spring	
12			1	. . Spring retainer	
13			1	. . Ring retainer	
14	4700903570		9	. Piston	D
15	4700903571		1	. Pressure plate	D
16	4700901458		2	. Retainer guide	D
17	4700935856		4	. Spacer	
19	4700909382		4	. Screw	C
20	4700936547		1	. Valve plate	
21	4700909727		1	. Servo arm, cpl	
22			1	. Swash plate	
		2	1	. Swash plate	
23	4700909386		1	. Screw	C
		2	1	. Screw	
24	4700909387		1	. Guide	
25	4700909388		1	. Screw	C
26	4700909389		1	. Washer	C
27	4700909390		1	. Pin	C
28	4700909391		1	. Link	C
29	4700909392		1	. Pin	C
30	4700909393		1	. Spring	C
31			1	. Lever	
32			2	. Spring support	
33			2	. Washer	
34	4700909398	1	2	. Seal lock nut	B
35			1	. Cover	
		2	1	. Cover	
36	4700936551	1	1	. O-ring	
37			2	. Guide post	
38	4700936553		6	. Screw	C
39	4700902928		1	. Plug	C
40	4700901453	1	1	. . O-ring	C
41	4700908352		2	. Spring	D
42	4700936582		1	. Piston, cpl	
43		1	2	. . O-ring	
44		1	2	. . Seal ring	
45			1	. . Guide	
46	4700903580		1	. Servo	
47	4700903580		1	. Servo	
48	4700936557	1	2	. O-ring	
49	4700936558	1	2	. O-ring	
50	4700936559		3	. Screw	
51	4700936559		3	. Screw	
52	4700936560		1	. End cap, cpl	
53	4700936561	1	1	. Gasket	
54	4700358388		1	. Plug	C

1) Included in item 120, Seal kit
2) Valid with item 130

4700382133 Propulsion pump

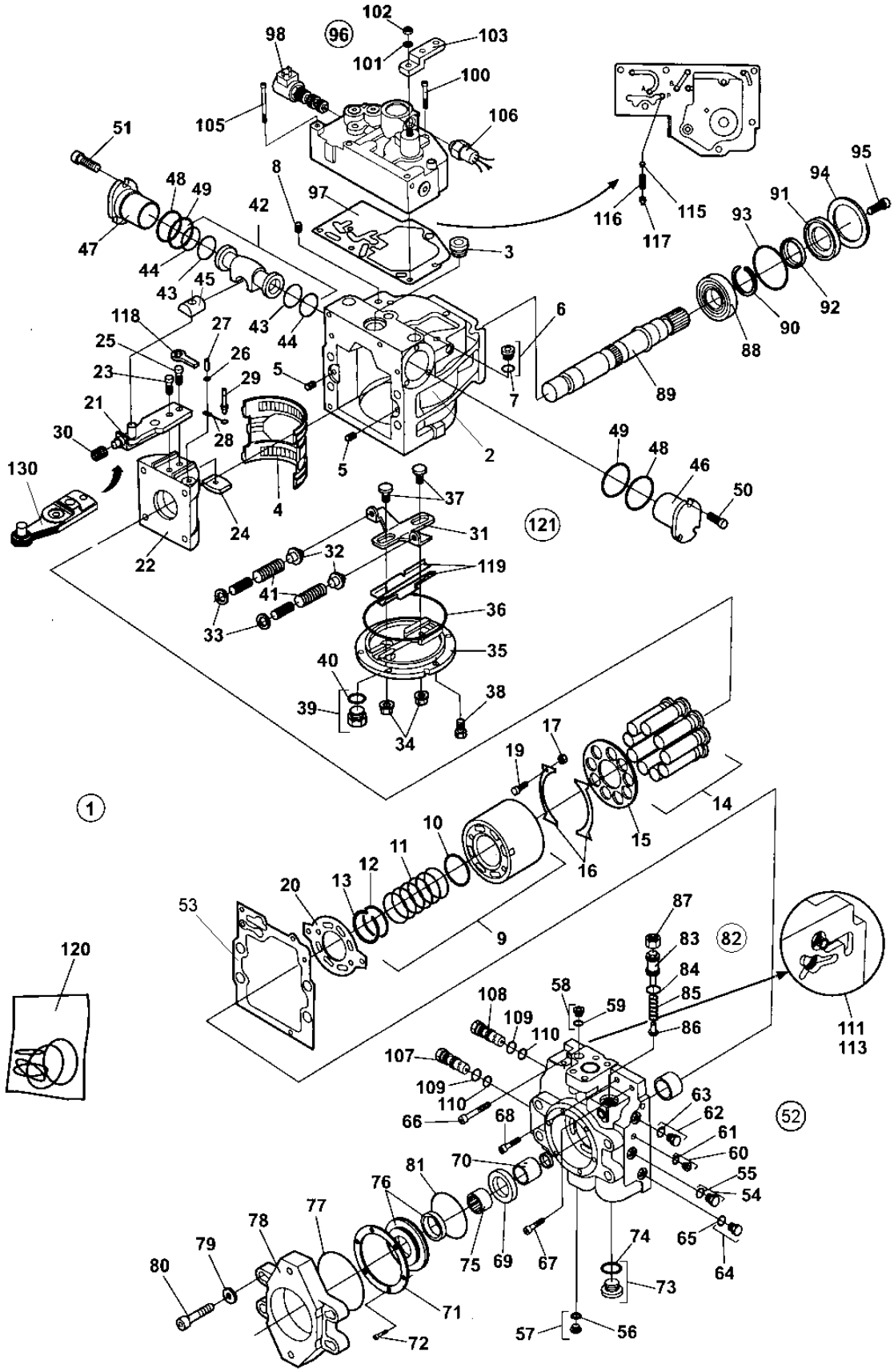

4700382133 Propulsion pump

Item	Part No	Rem	Qty	Description	Code
55	4700923087	1	1	. . O-ring	C
56	4700908432		1	. Plug	C
57	4700923087	1	1	. . O-ring	C
58	4700908432		1	. Plug	C
59	4700923087	1	1	. . O-ring	C
60	4700908432		1	. Plug	C
61	4700923087	1	1	. . O-ring	C
62	4700358388		1	. Plug	C
63	4700923087	1	1	. . O-ring	C
64	4700358388		1	. Plug	C
65	4700923087	1	1	. . O-ring	C
66	4700936562		1	. Screw	
67	4700936563		1	. Screw	
68	4700936564		1	. Screw	
69	4700950283		1	. Spacer	D
70	4700950284		1	. Spacer	D
71	4700935857		1	. Retaining plate	
72	4700936566		6	. Screw	
73	4700936567		1	. Plug, cpl	
74	4700936568	1	1	. . O-ring	
75			1	. Coupling sleeve	
76			1	. Cover assembly	
77	4700909399	1	1	. O-ring	C
78	4700936570		1	. Adapter	
79	4700936571		4	. Washer	
			4	.	
81	4700937150		1	. O-ring	D
82	4700936583		1	. Pressure relief valve, cpl	
83			1	. . Screw	
84		1	1	. . O-ring	
85			1	. . Spring	
86			1	. . Valve cone	
87			1	. . Nut	
88	4700901465		1	. Bearing	
89	4700901466		1	. Shaft	
90	4700901467		1	. Ring	
91			1	. Pressure plate	
92		1	1	. Seal	
		2	1	. Seal	
93		1	1	. O-ring	
94			1	. Retaining plate	
95			3	. Screw	
96	4700938170		1	. Control valve, cpl	
97	4700939489	1	1	. . Control valve gasket	
98	4700938252		1	. . Solenoid valve	
100			1	. . Screw	
101	4700909428		1	. . Washer	C
102	4700909429		1	. . O-ring	C
103	4700909432		1	. . Control lever	D
105	4700937857		5	. . Screw	D
106	4700938253		1	. . Neutral start switch	
107			1	. Valve	
108			1	. Valve	
109		1	2	. . O-ring	
110		1	2	. . O-ring	
111	4700901475		2	. Valve	D
113	4700901476		2	. Plug	D
115	4700909435		1	. Orifice	C

1) Included in item 120, Seal kit
2) Valid with item 130

4700382133 Propulsion pump

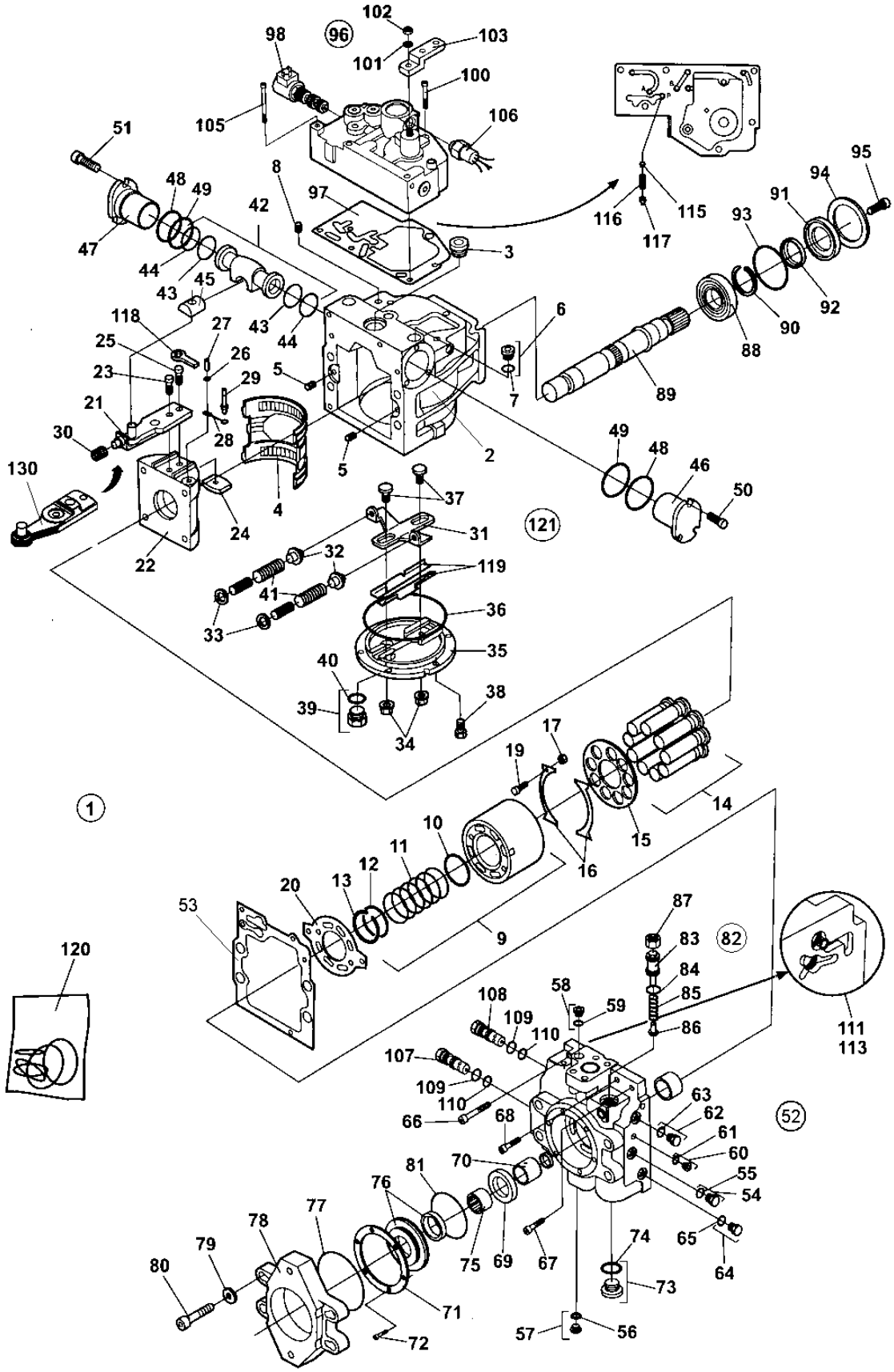

4700382133 Propulsion pump

Item	Part No	Rem	Qty	Description	Code
116	4700909436		1	. Spring	C
117	4700908448		1	. Spring retainer	C
118			1	. Link	
119			1	. Guide assy, 1pair	
120	4700901328		1	. Seal kit	D
121	4700936548		1	. Cover assembly	
130			1	. Servo arm	

4700382089 Propulsion motor

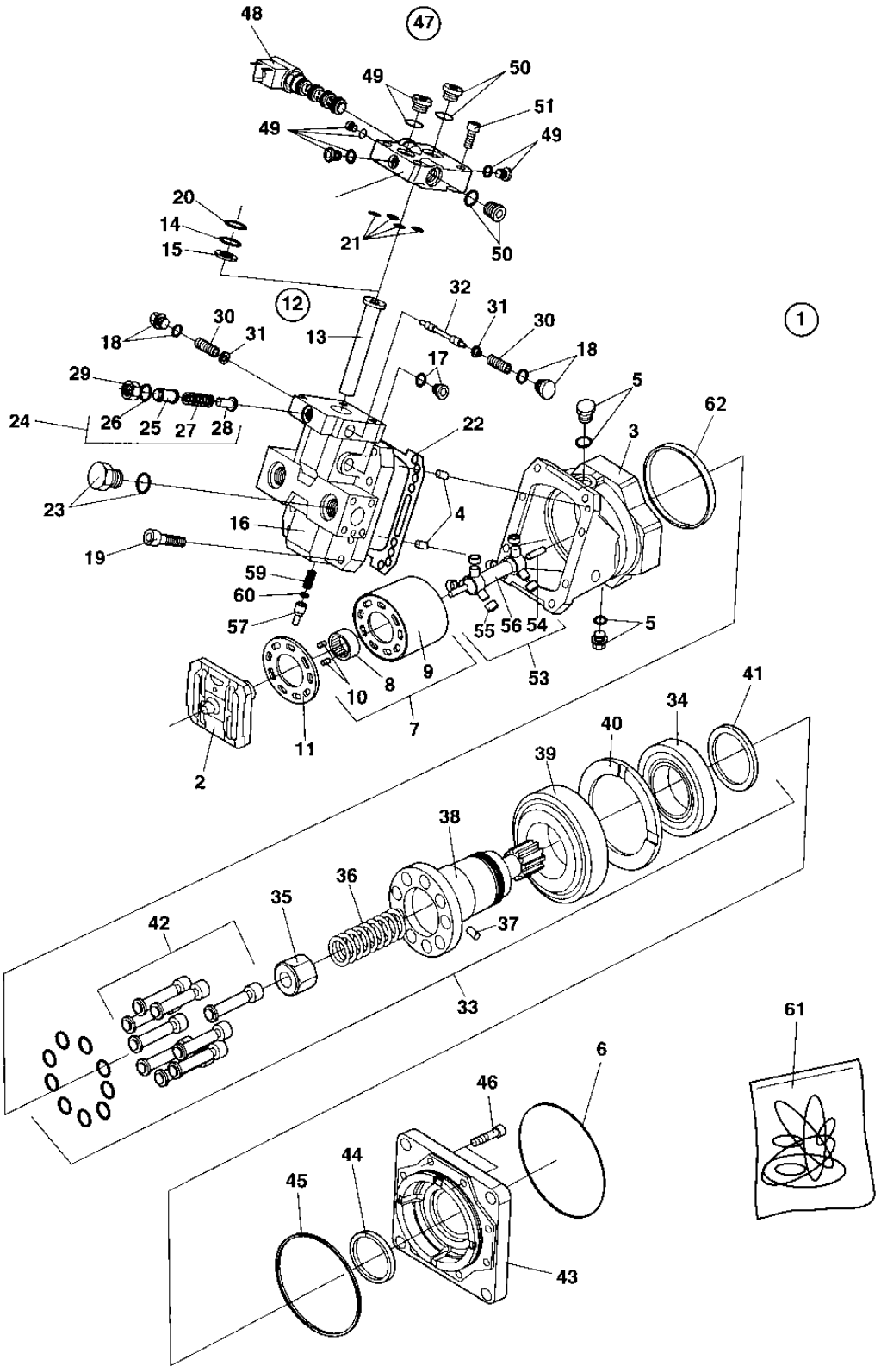

4700382089 Propulsion motor

Item	Part No	Rem	Qty	Description	Code
1			1	Hydraulic motor, Cpl	
2	4700935521		1	. Valve segment	
3			1	. Housing	
4	4700813822		2	. Pin	D
5	4700902928		2	. Plug	C
	4700901453	1	2	. . O-ring	C
6	4700902581	1	1	. O-ring	D
7	4700902929		1	. Cylinder block	
8			1	. . Bush	
9			1	. . Cylinder block	
10			2	. . Pin	
11			1	. Bearing plate	
12	4700935527		1	. Piston assembly	
13	4700935526		1	. . Piston	
14	4700935525	1	1	. . O-ring	D
15	4700935524	1	1	. . Seal plug	D
16	4700935530		1	. End cap	
17	4700908432		1	. Plug	C
18	4700935741		2	. Plug, cpl	
19	4700902944		8	. Screw	
20	4700935531	1	1	. O-ring	D
21	4700908443	1	5	. Rect. seal	D
22	4700908427	1	1	. Gasket	D
23	4700902928		2	. Plug	C
	4700901453	1	2	. . O-ring	C
24	4700936589		1	. Loop Flushing assy.	
25			1	. . Adjusting screw	
26	4700926658	1	1	. . O-ring	C
27			1	. . Spring	
28			1	. . Valve cone	
29			1	. . Nut	
30	4700935749		2	. Spring	
31	4700935750		2	. Spring retainer	
32	4700935533		1	. Spool	
33	4700902960		1	. Shaft, cpl	
34			1	. . Bearing	
35			1	. . Spring guide	
36			1	. . Spring	
37			1	. . Pin	
38			1	. . Shaft	
39			1	. . Bearing	
40			1	. . Spacer	
41			1	. . Nut	
42			9	. . Piston assembly	
43	4700902961		1	. Flange	
44	4700935536		1	. Shaft seal 55x75x12	D
45	4700935664	1	1	. O-ring	D
46	4700936591		8	. Screw	
47			1	. Electric hydraulic control	
48	4700908435		1	. . Solenoid valve assy	C
49	4700908426		4	. . Plug, cpl	D
50	4700908432		2	. . Plug	C
51	4700935544		4	. . Screw	
52			1	. . Valve housing	
53	4700902984		1	. Shaft, cpl	
54			2	. . Pin	
55			6	. . Roller	
56			1	. . Shaft	
57	4700902996		1	. Plastic cap, green	

1) Includes in Seal kit item 61

4700382089 Propulsion motor

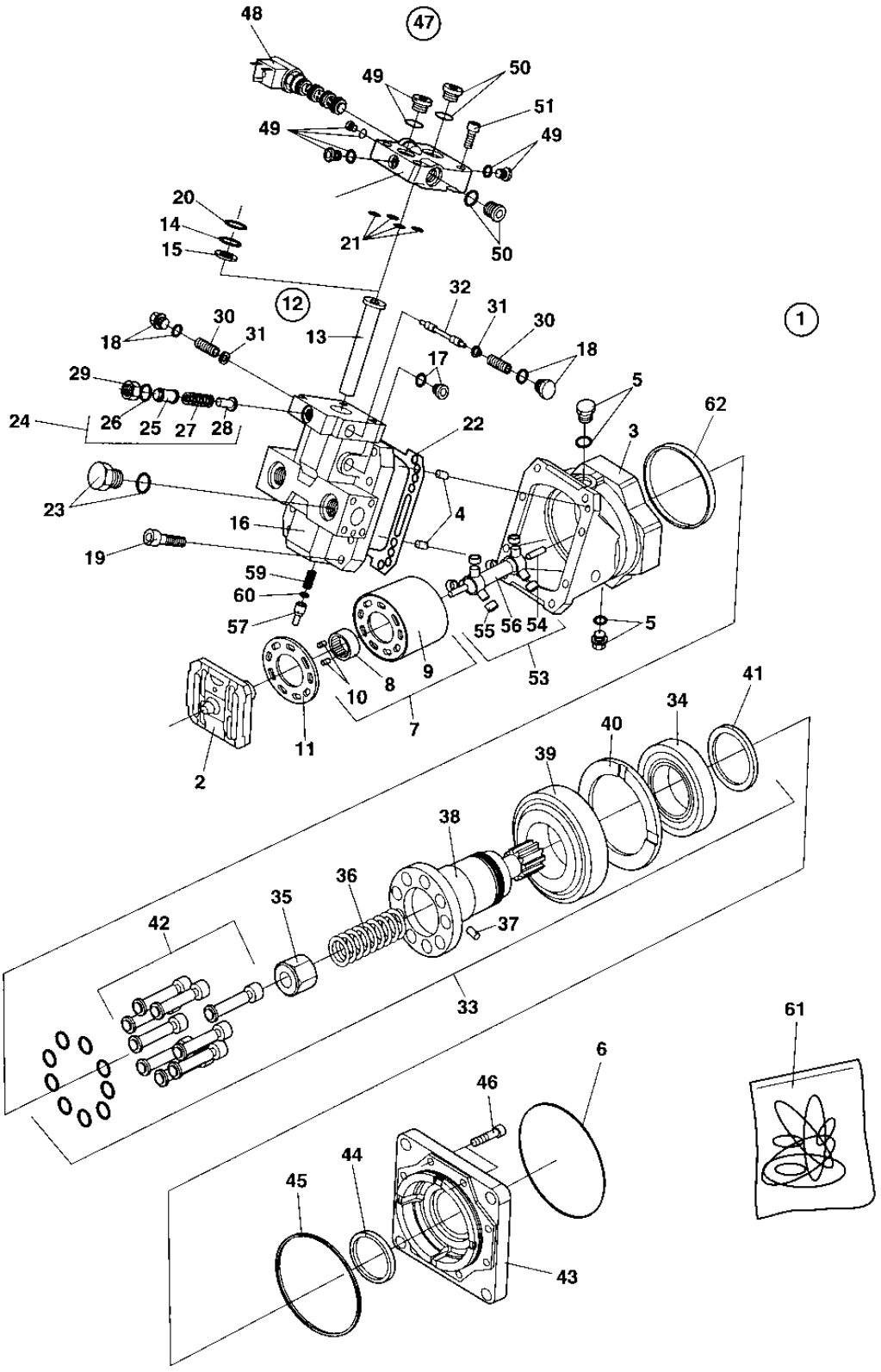

4700382089 Propulsion motor

Item	Part No	Rem	Qty	Description	Code
58	4700936593		2	. Orifice	
59	4700397336		1	. Screw	D
60	4700909525	1	1	. Seal nut	
61	4700935520		1	Seal kit	D
62	4700935546		1	Magnetic ring	

1) Includes in Seal kit item 61

4700382088 Propulsion motor

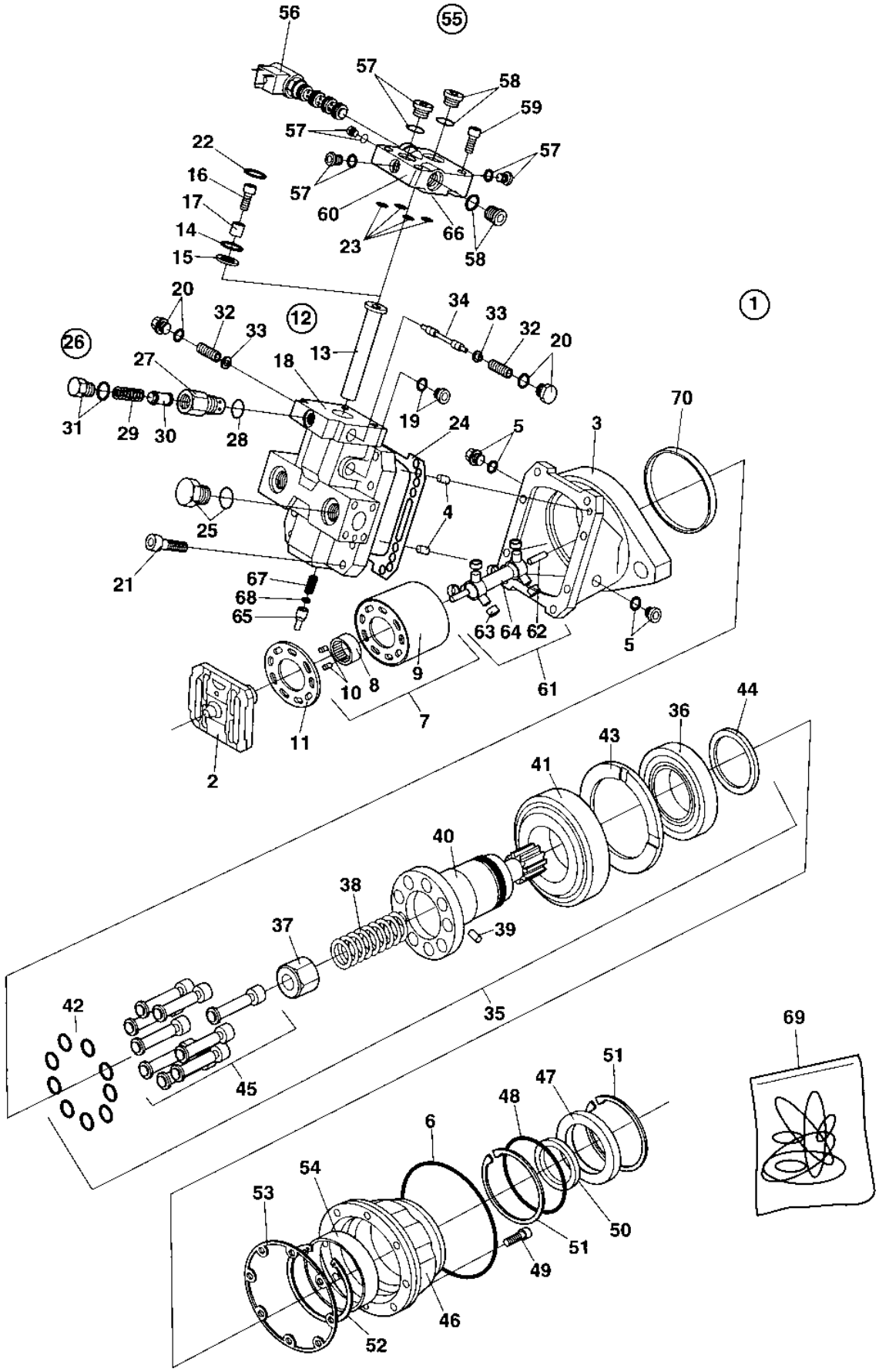

4700382088 Propulsion motor

Item	Part No	Rem	Qty	Description	Code
1			1	Propulsion motor, Cpl	
2	4700935521		1	. Valve segment	
3			1	. Housing	
4	4700813822		2	. Pin	D
5	4700902928		2	. Plug	C
	4700901453	1	2	. . O-ring	C
6	4700935523	1	1	. O-ring	
7	4700902929		1	. Cylinder block	
8			1	. . Bush	
9			1	. . Cylinder block	
10			2	. . Pin	
11	4700902930		1	. Bearing plate	
12	4700935527		1	. Piston assembly	
13	4700935526		1	. . Piston	
14	4700935525	1	1	. . O-ring	D
15	4700935524	1	1	. . Seal plug	D
16			1	. Not used on this model	
17			1	. Not used on this model	
18	4700935530		1	. End cap	
19	4700908432		1	. Plug	C
20	4700935741		2	. Plug, cpl	
21	4700902944		8	. Screw	
22	4700935531	1	1	. O-ring	D
23	4700908443	1	5	. Rect. seal	D
24	4700908427	1	1	. Gasket	D
25	4700902928		2	. Plug	C
	4700901453	1	2	. . O-ring	C
26	4700936590		1	. Loop Flushing assy.	
27			1	. . Adjusting screw kit	
28	4700926658	1	1	. . O-ring	C
29			1	. . Spring	
30			1	. . Valve cone	
31			1	. . Plug assy.	
32	4700935749		2	. Spring	
33	4700935750		2	. Spring retainer	
34	4700935533		1	. Spool	
35			1	. Shaft, cpl	
36			1	. . Bearing	
37			1	. . Spring guide	
38			1	. . Spring	
39			1	. . Pin	
40			1	. . Shaft	
41			1	. . Bearing	
42	4700902985		9	. . Piston ring cpl	
43			1	. . Spacer	
44			1	. . Nut	
45			9	. . Piston	
46	4700935535		1	. Housing	
47	4700935536		1	. Shaft seal 55x75x12	D
	4700945757	1	1	. Shaft seal 55x70x7	
48	4700935537	1	1	. O-ring	
49	4700902940		8	. Screw	C
50	4700935538		1	. Seal	
51	4700935539		2	. Retaining ring	
52	4700935540		1	. Retaining ring	
53	4700935541	1	1	. Gasket	
54	4700935542		1	. Spacer	
55			1	. Electric hydraulic control	
56	4700908435		1	. . Solenoid valve assy	C

1) Included in seal kit, item 69

4700382088 Propulsion motor

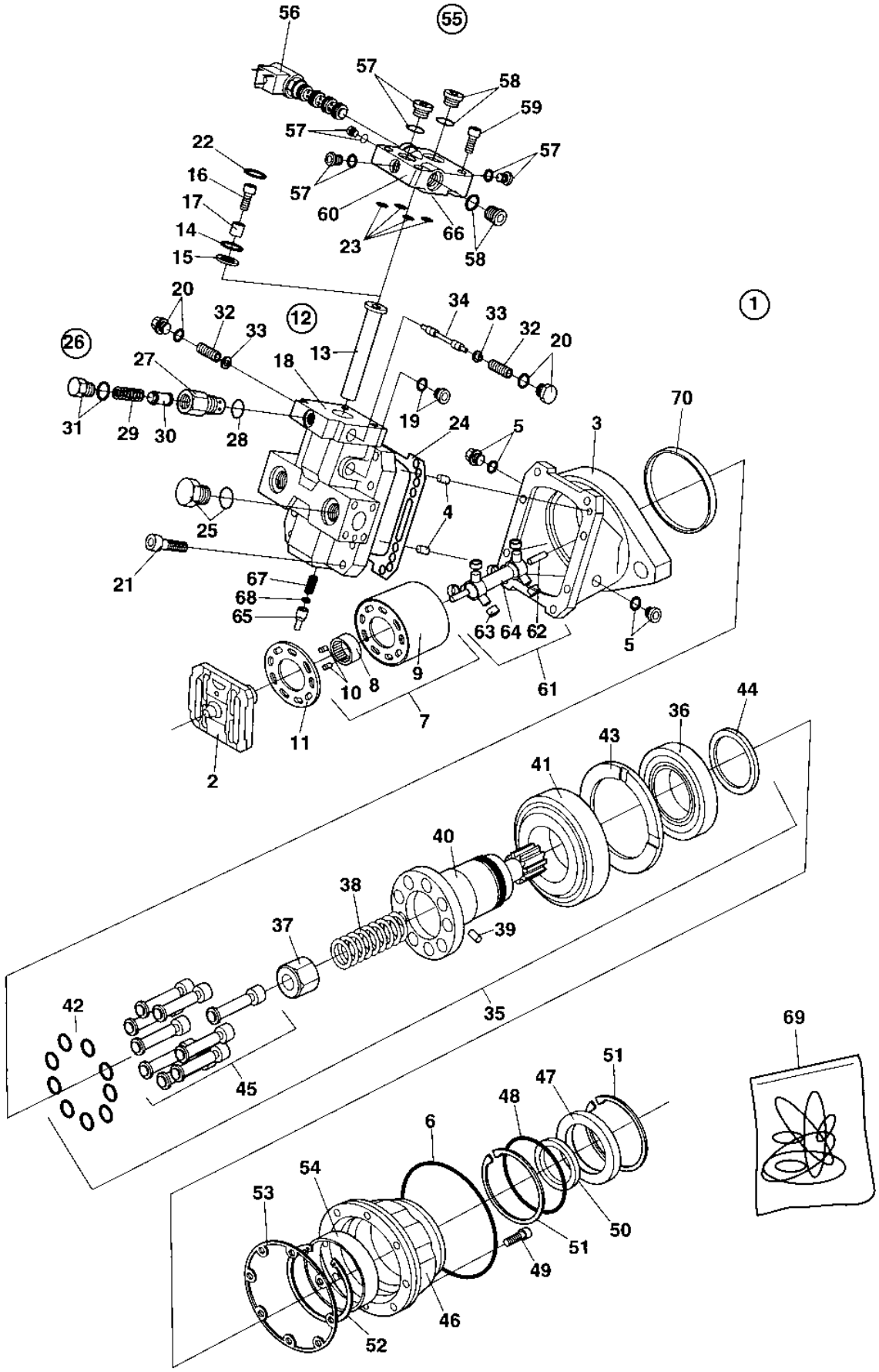

4700382088 Propulsion motor

Item	Part No	Rem	Qty	Description	Code
57	4700908426		4	. . Plug, cpl	D
58	4700908432		2	. . Plug	C
59	4700935544		4	. . Screw	
60			1	. . Valve housing	
61	4700902984		1	. Shaft, cpl	
62			2	. . Pin	
63			6	. . Roller	
64			1	. . Shaft	
65	4700902996		1	. Plastic cap, green	
66			2	. Orifice	
67	4700902995		1	. Headless screw	
68	4700909525	1	1	. Seal nut	
69	4700935520		1	Seal kit	D
70	4700935546		1	Magnetic ring	

1) Included in seal kit, item 69

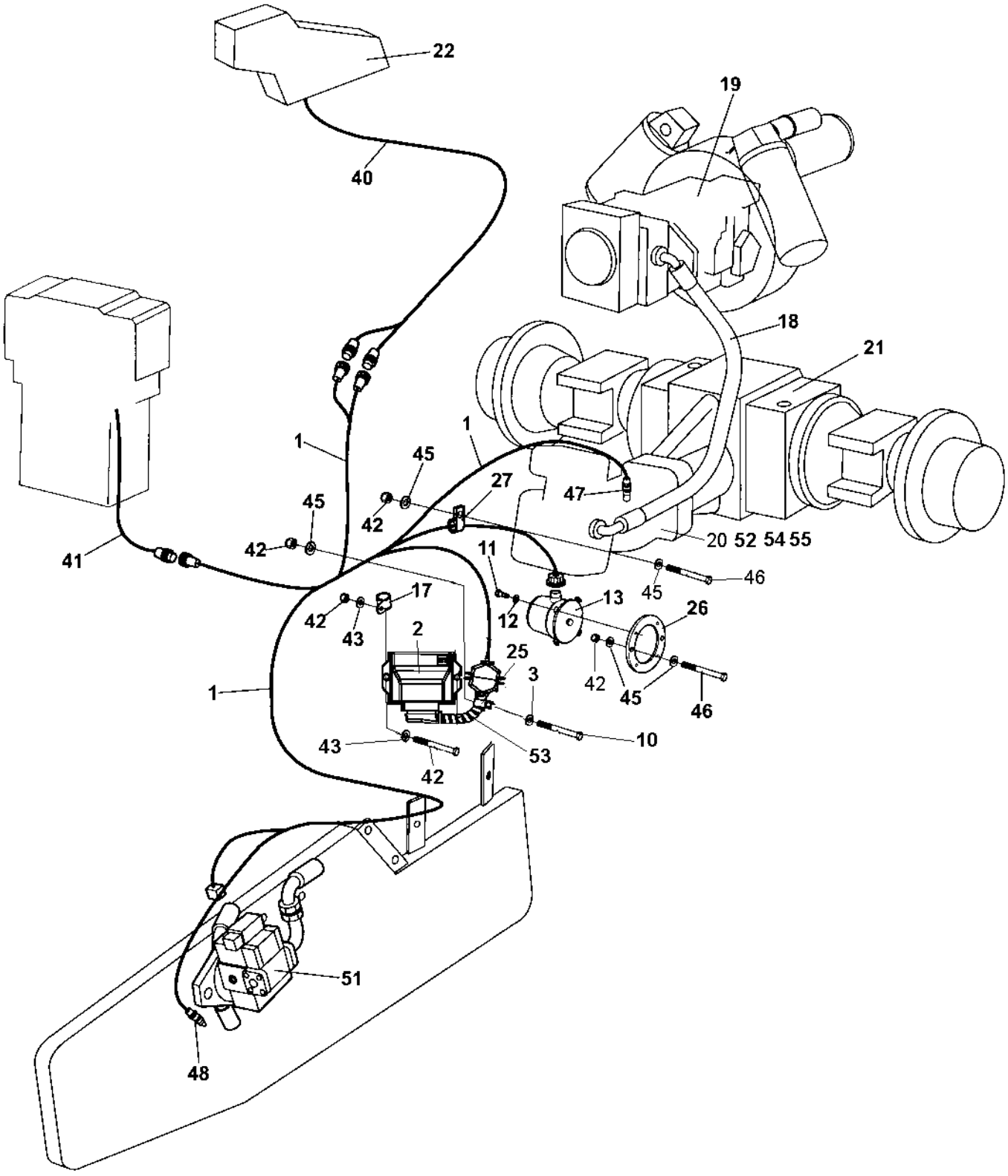
22
19
40
18
21
1
45
27
47
45
42
42
41
20 52 54 55
11
46
17
13
45
42
43
12
26
2
25
3
42
45
46
1
43
10
53
42
51
48

Anti-spin CA

Item	Part No	Rem	Qty	Description	Code
1	4700378131		1	Cable harness	D
2	4812112415		1	Control unit	
3	4700370222		1	Spacer sleeve	D
10	4700500190		1	Screw	
11	4700500006		4	Screw M5x16	C
12	4700904281		4	Washer 5,3x10x1 300HV	C
13	4700373902		1	Sensor	B
17	4700960727		1	Clamp	
18			2	Not used on this model	
19	4700382133		1	**Propulsion pump (Page 312)**	C
20	4700382089		1	**Propulsion motor (Page 318)**	C
21	4700383856		1	**Rear axle No-Spin, Option (Page 84)**	
22				**Anti spin, Potentiometer installation (Page 328)**	
25	4700902558		1	Clamp	D
26	4700394670		1	Spacer ring	D
27	4700921072		1	Clamp	
40	4700378132		1	Cable harness	D
41	4700378133		1	Cable harness	D
42	4700586003		7	Lock nut M8	C
43	4700904640		2	Washer 8,4x22x3	C
44	4700500115		2	Screw M8-1,25x90 8.8	C
45	4700904229		12	Steel plain washer 8,4x16x1,5	C
46	4700500026		4	Screw M8-1,25x60 8,8	
47	4700904216		1	Sensor	
48	4700904217		1	Sensor	
51	4700382088		1	**Propulsion motor (Page 322)**	
52	4700395084	A	1	Propulsion motor	
53	4812112785		1	Cable harness	
54	4700334468	A	1	Adapter	C
55	4700334248	A	1	Elbow 45, O-ring	C

A) High climp, Option

Anti spin, Potentiometer installation

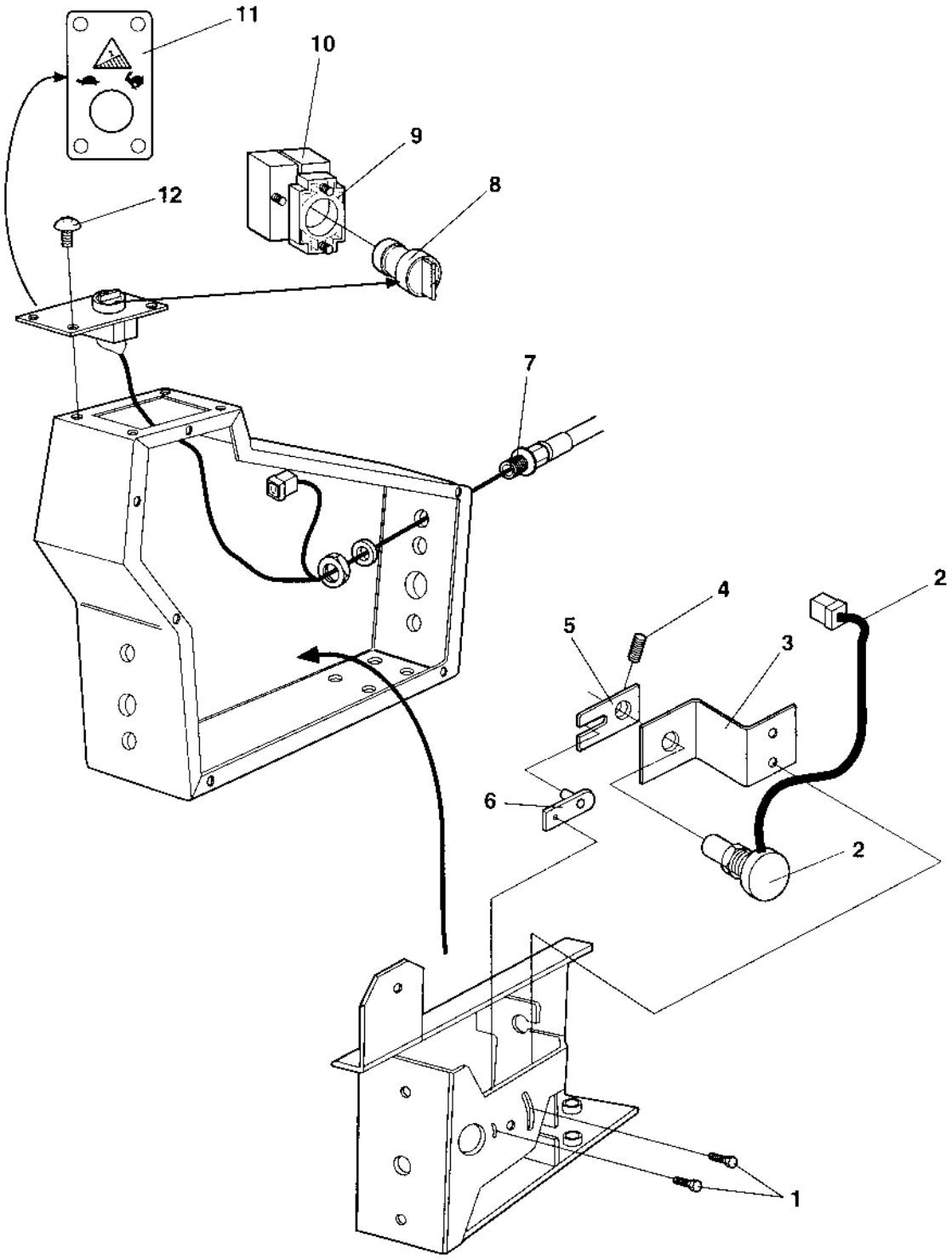

Anti spin, Potentiometer installation

Item	Part No	Rem	Qty	Description	Code
1	4700533008		3	Screw M8x10H 4,8 A2K	D
2	4700374190		1	Potentiometer	B
3	4700373901	A	1	Bracket	D
4	4700904227	A	1	Set screw M3 x 4	
5	4700373903	A	1	Clevis	D
6	4700373905		1	Plate	D
7	4700382070		1	Cable harness	D
8	4700932058		1	Switch	B
9	4700903876		1	Connector	C
10	4700932060		1	Contact block	
11	4700382071		1	Control panel plate	D
12	4700904206		4	Screw	C

A) Removes with new part: 4700374190.

Anti spin, Hydraulic

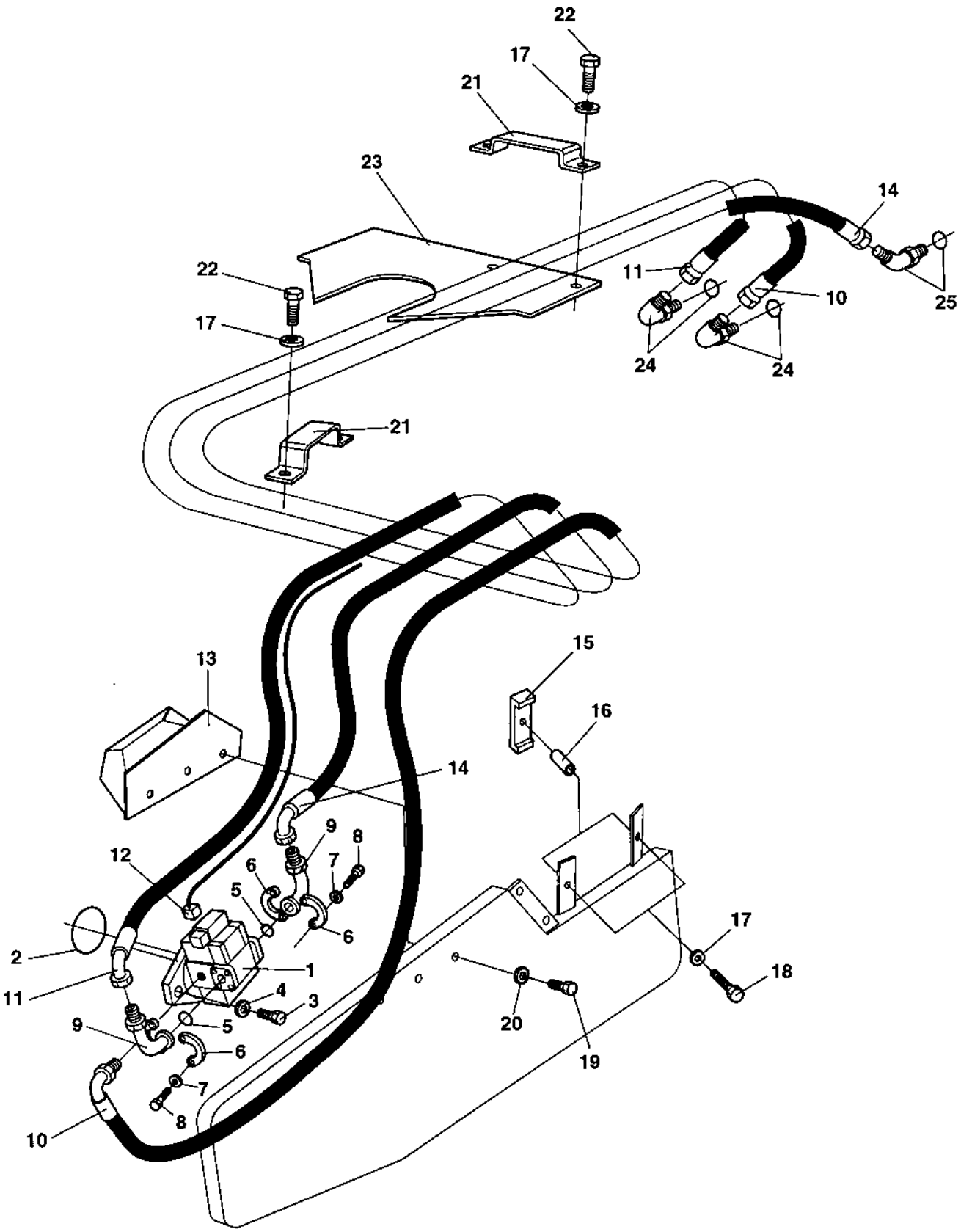

Anti spin, Hydraulic

Item	Part No	Rem	Qty	Description	Code
1	4700382088		1	**Propulsion motor (Page 322)**	
	4700371511		1	Drum gear, dual speed Option	D
2	4700904058		1	O-ring	
3	4700500101		2	Screw M20x50	C
4	4700903290		2	Washer 21x36x6	C
5	4700904005		2	O-ring	B
6	4700923384		4	Flange half	C
7	4700604008		8	Washer	D
8	4700502132		8	Screw UNC 7/16" x 22	D
9	4700904615		2	Connector	
10	4700483114		1	Hydraulic hose	D
11	4700484001		1	Hydraulic hose	D
12		A	1	Cable harness	
13	4700374251		1	Protecting cover	D
14	4700484000		1	Hydraulic hose	D
15	4700373270		2	Hose clamp	D
16	4700373423		2	Spacer	D
17	4700904229		6	Steel plain washer 8,4x16x1,5	C
18	4700500032		2	Screw M10 x 55	D
19	4700500077		3	Screw	D
20	4700904230		3	Steel plain washer	C
21	4700373016		2	Hose clamp	D
22	4700500029		4	Hexagon head screw	C
23	4700372235		1	Hose guard	D
24	4700813499		2	Elbow 90, O-ring	D
25	4700334132		1	Elbow 45, O-ring	C

A) See section "Anti spin CA".

Roof hatch

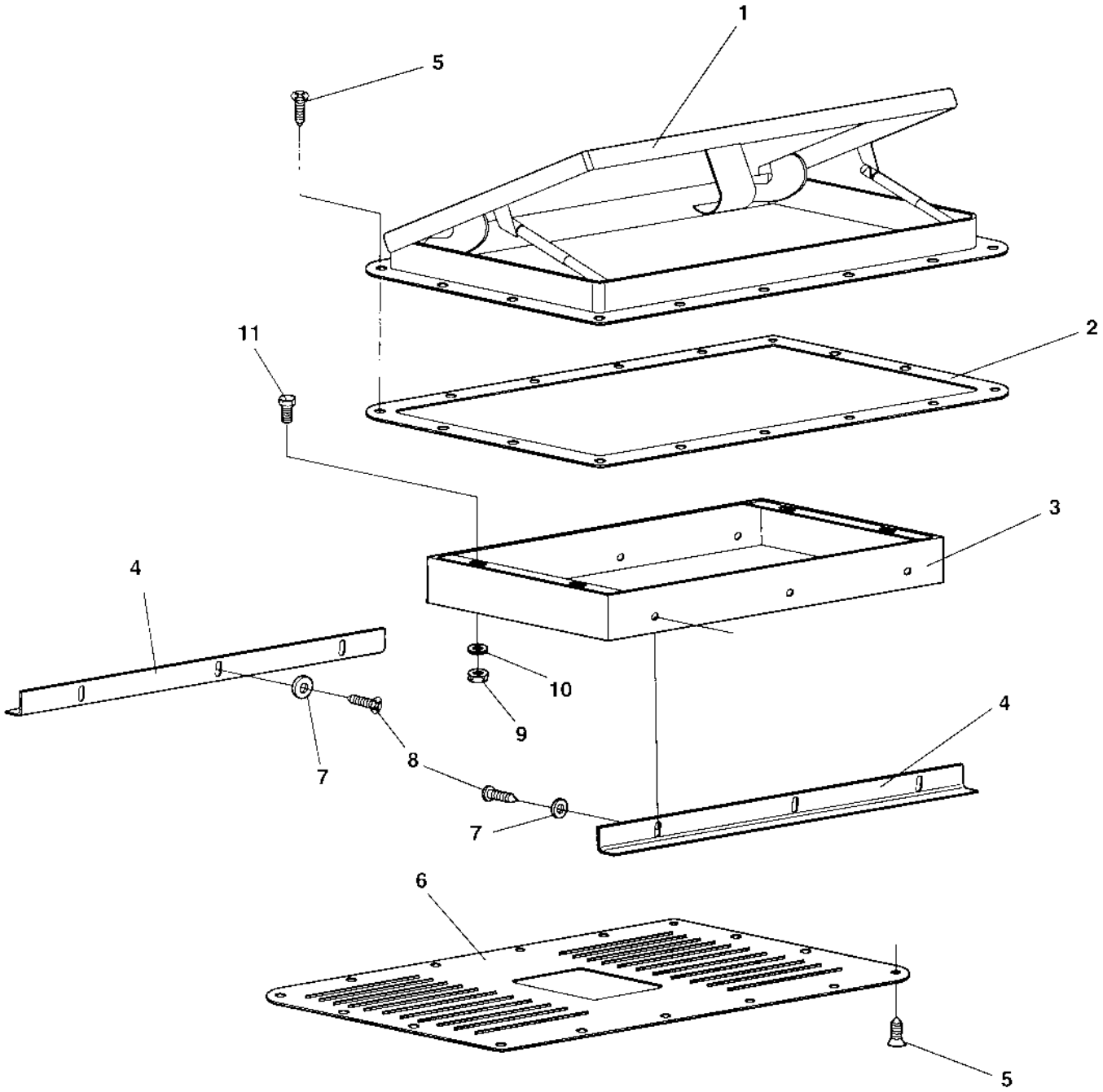

Roof hatch

Item	Part No	Rem	Qty	Description	Code
1	4700384958		1	Roof hatch	D
2	4700384954		1	Support plate	D
3	4700382699		1	Inner roof insert	D
4	4700383002		2	Inner roof holder	D
5	4700904906		32	Screw	D
6	4700382700		1	Inner cover	D
7	4700601001		6	Washer	C
8	4700903852		6	Screw ST4,2x13	C
9	4700570004		4	Nut M6X1,00 -8 A2K	C
10	4700904228		4	Washer 6,4x12x1,5	C
11	4700500040		4	Screw M6-1x20 8,8	C

Pad shell

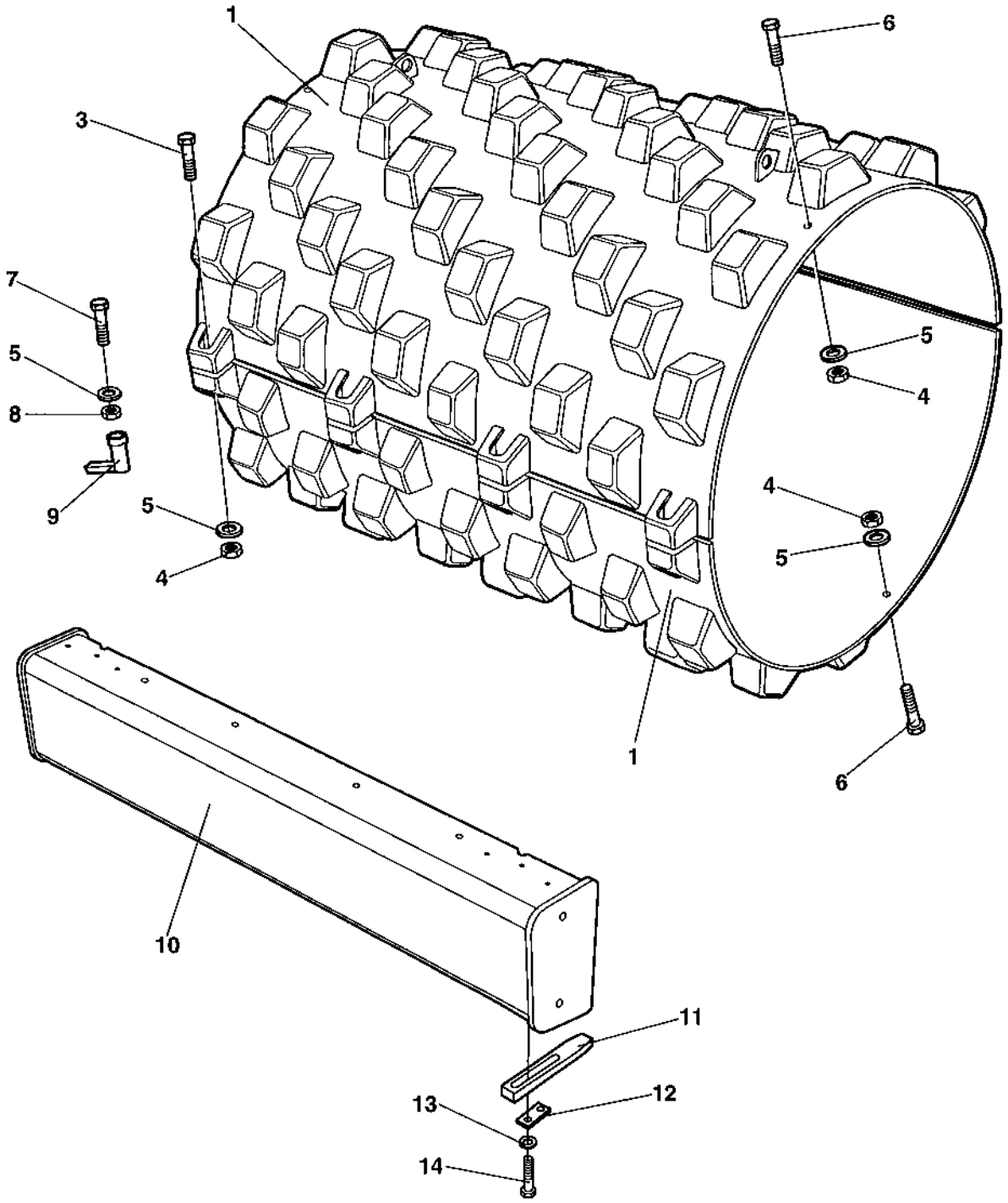

Pad shell

Item	Part No	Rem	Qty	Description	Code
1	4700382139		2	Pad shell	D
3	4700500286		8	Screw M20-2,5x140 8.8	D
4	4700586022		12	Lock nut M20-8	C
5	4700904233		16	Washer 21x36x3	C
6	4700500206		4	Screw M20X60	C
7	4700382572		4	Mounting screw	D
8	4700570015		4	Nut M20	D
9	4700382571		1	Hexagon sleeve	D
10	4700389907		1	Cross beam	D
11	4700376551		18	Scraper tooth	B
12	4700376622		18	Holder	D
13	4700904232		36	Washer	C
14	4700500165		36	Screw M16-2,0x75 8,8	D

Fire extinguisher assembly

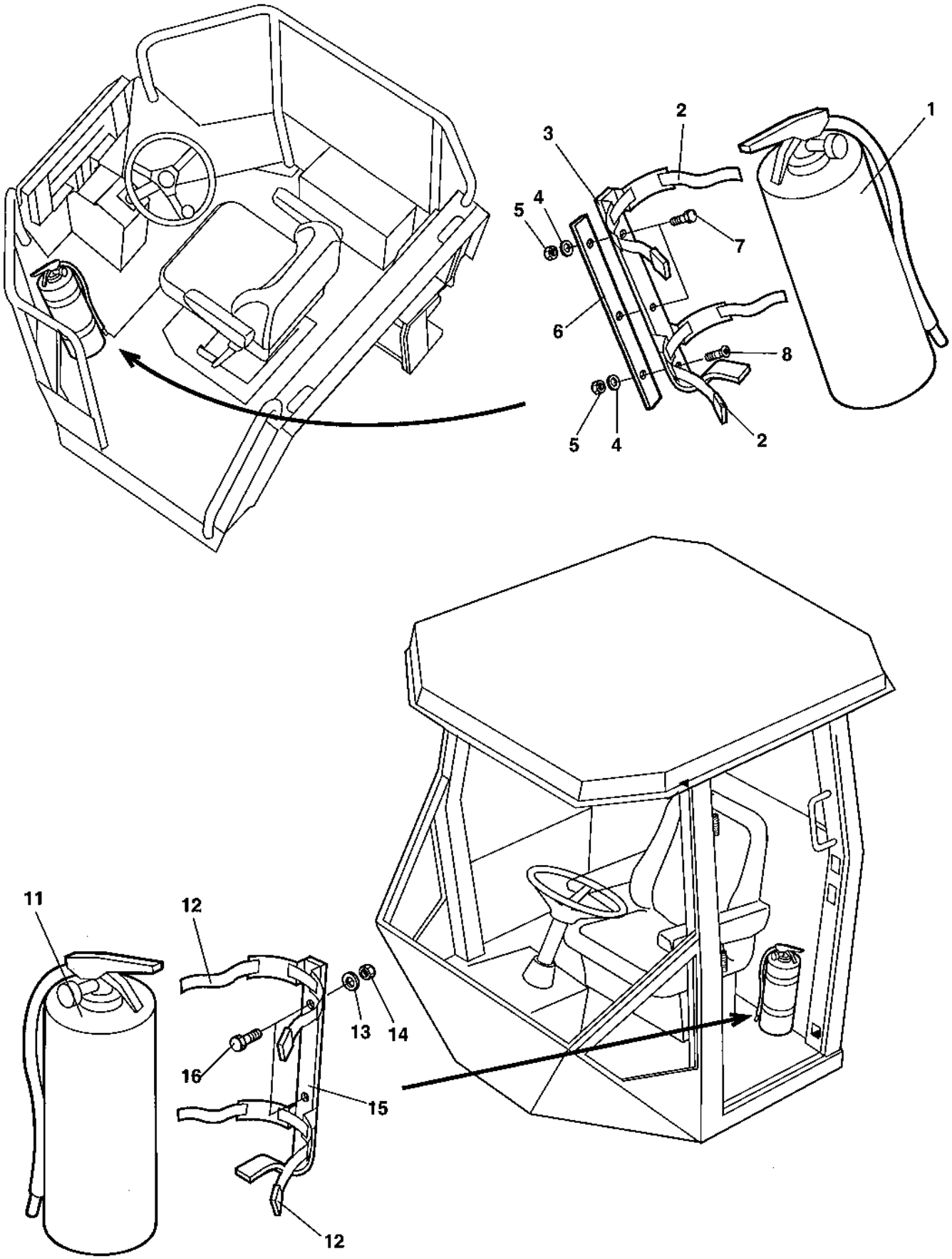

Fire extinguisher assembly

Item	Part No	Rem Qty	Description	Code
1		NA	Fire extinguisher 4 Kg	
2	4700791102	2	Toggle fastener belt	D
3	4700904994	1	Bracket	D
4	4700904230	5	Steel plain washer	C
5	4700570006	3	Nut	B
6	4700383932	1	Bracket	D
7	4700500029	2	Hexagon head screw	C
8	4700513025	1	Screw	D
11		NA	Fire extinguisher 4 Kg	
12	4700791102	2	Toggle fastener belt	D
13	4700904230	4	Steel plain washer	C
14	4700570006	2	Nut	B
15	4700904994	1	Bracket	D
16	4700500028	2	Screw	C

Fire extinguisher Platform

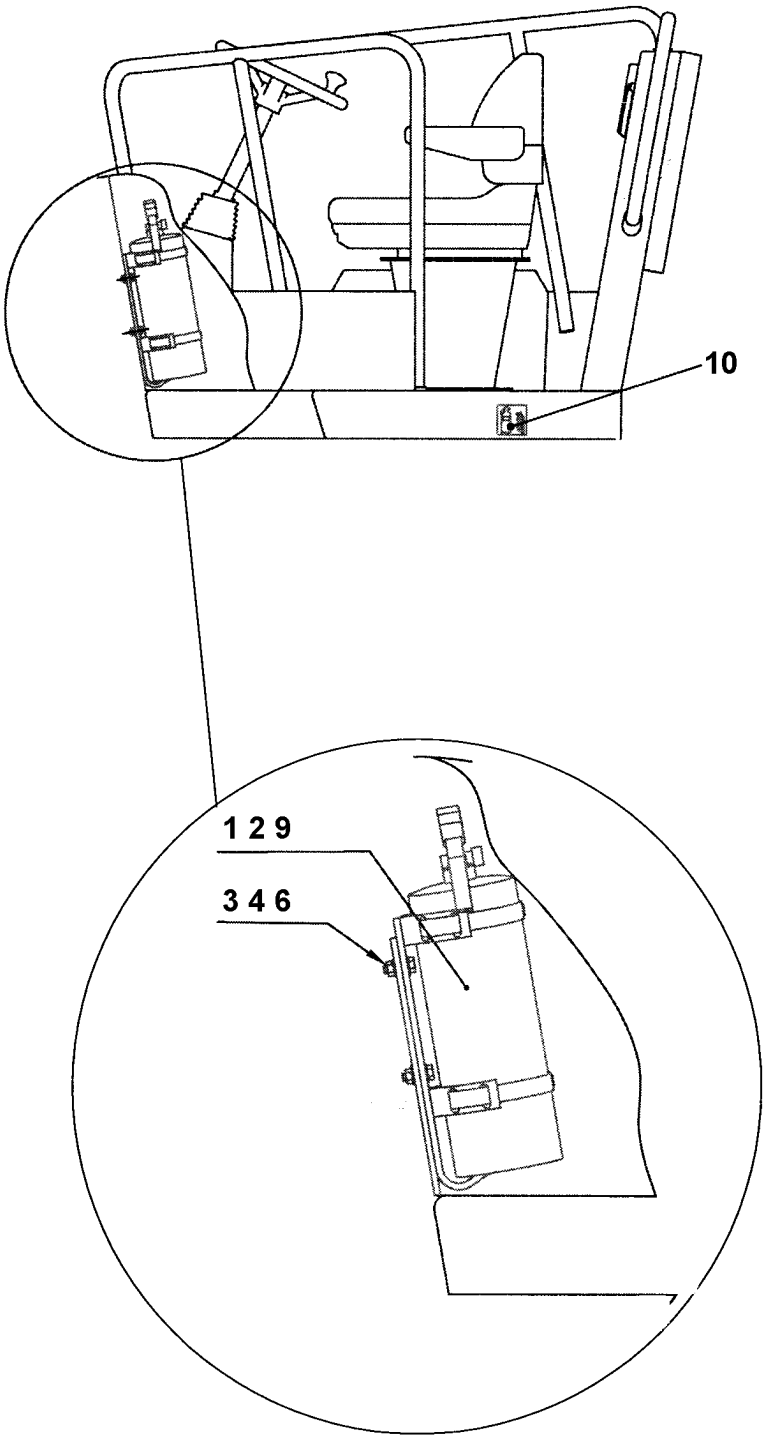

Fire extinguisher Platform

Item	Part No	Rem	Qty	Description	Code
1			1	Fire extinguisher	
2	4700378860		1	Holder	D
3	4700570005		2	Nut M8	C
4	4700904229		4	Steel plain washer 8,4x16x1,5	C
6	4700500022		2	Screw M8x30H 8.8 A2K	C
9	4700378861		2	Strap	D
10	4700792634		1	Decal fire extinguisher	D

Fire extinguisher Cab

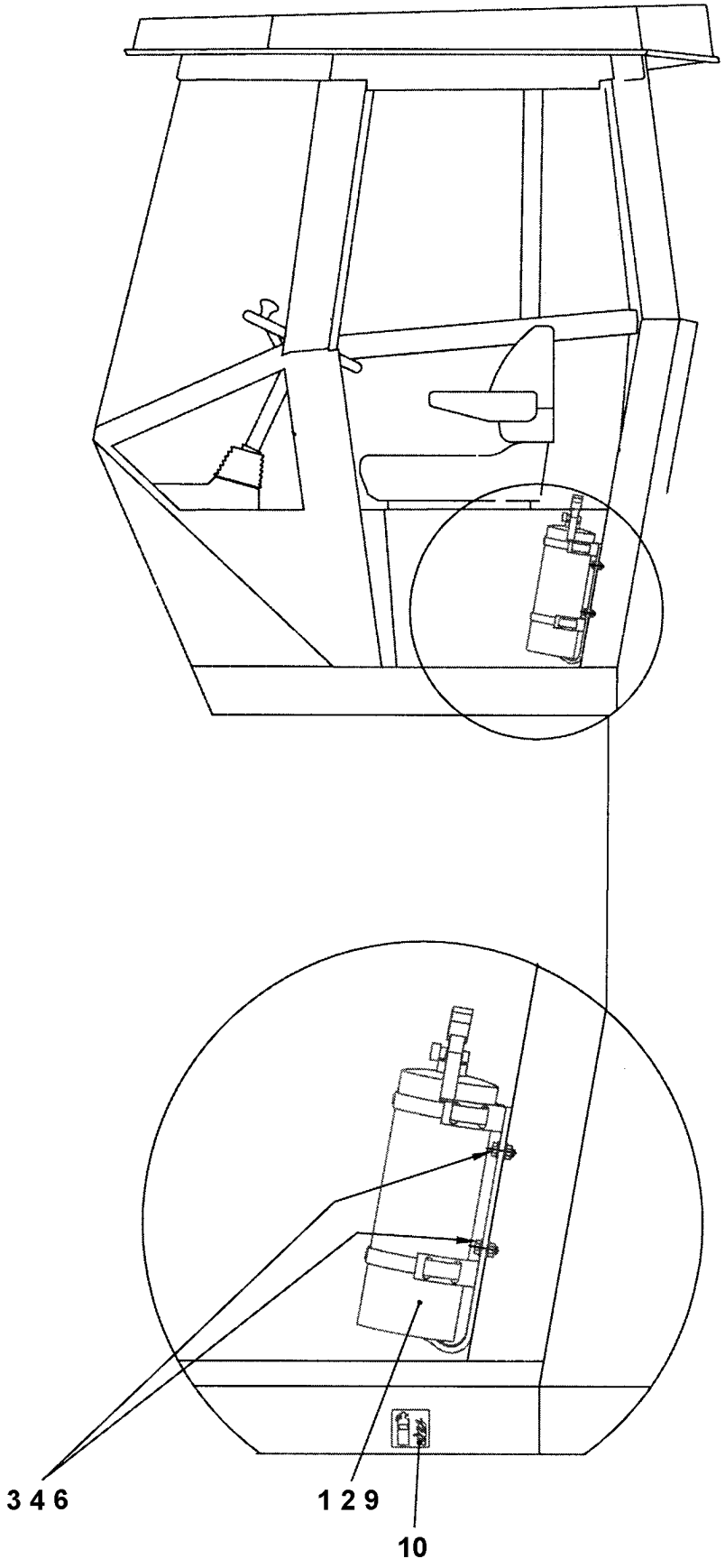

Fire extinguisher Cab

Item	Part No	Rem	Qty	Description	Code
1			1	Fire extinguisher	
2	4700378860		1	Holder	D
3	4700570005		2	Nut M8	C
4	4700904229		4	Steel plain washer 8,4x16x1,5	C
6	4700500022		2	Screw M8x30H 8.8 A2K	C
9	4700378861		2	Strap	D
10	4700792634		1	Decal fire extinguisher	D

NUMERICAL INDEX

Part Number	Page
4700100040	15,35
4700100071	293
4700116041	19,53
4700150004	209
4700160105	19,53
4700160132	109
4700160231	109
4700162008	97
4700162011	53,55
4700162017	53,55
4700162018	53
4700162024	53
4700162027	53,55
4700167023	53
4700167032	15,35
4700192812	61
4700202028	197,201
4700202043	267
4700202056	47
4700205027	63
4700212339	101
4700212553	79,87
4700230277	69
4700230515	61
4700232039	127
4700232097	119
4700232210	51,53,55
4700233304	127
4700234218	119
4700234219	295
4700234243	97,119
4700234354	97
4700234382	109
4700234481	295
4700234626	119
4700234667	119
4700234843	125
4700234875	97
4700234888	125
4700234909	97
4700234919	69
4700234953	295
4700234958	97
4700244054	69
4700246069	65
4700272372	279
4700272373	277
4700287373	215
4700287597	307
4700287598	139,305
4700310008	15
4700311016	287
4700313001	63,69
4700313002	69
4700313003	241,243,307,309
4700313004	303
4700313006	63
4700313010	63
4700313035	61
4700313041	69,159,165,167
	173,179,181,183
	185,215
4700313068	297,299,301
4700313093	67,71,299,301
4700313094	71
4700313102	63,119,129,165
	167,181,183,299
	301
4700313147	215
4700330171	69
4700330330	301
4700330331	61
4700330333	61,81,83,89
4700330383	61,109
4700334116	295
4700334121	109,119
4700334122	109
4700334132	93,97,131,331
4700334135	109,129,295
4700334138	93,97
4700334140	97
4700334143	119
4700334158	119
4700334163	97
4700334190	295
4700334197	295
4700334203	119
4700334205	109,125
4700334248	327
4700334389	125
4700334468	97,119,327
4700335607	135
4700337042	35
4700337045	15,35
4700338304	137
4700340863	117
4700343159	35
4700343318	53
4700343322	51,53
4700343550	145,153
4700343551	145
4700343552	297
4700343744	53,55
4700343748	271
4700343775	27,293
4700343801	51
4700345139	143,151
4700345243	97
4700345678	51
4700345679	51
4700345870	145,147,303
4700345871	15,35
4700345872	15,35
4700345873	15,35
4700345874	15,35
4700345875	15,35
4700345884	51
4700345885	51
4700346214	293
4700346215	293
4700346216	293
4700346217	293
4700346230	295,299,301
4700347119	27,293
4700347512	197
4700348213	165
4700348331	203
4700348347	135
4700348481	23,215
4700349220	277
4700349682	51
4700349715	53
4700349879	127
4700349880	127
4700350009	209
4700355132	169
4700355135	169
4700355258	145,147
4700355301	153
4700355676	51
4700355705	271
4700355890	287
4700355983	75
4700356273	295
4700357138	11,127
4700357488	27,293
4700357526	143,151
4700357562	139
4700357643	199
4700357855	141
4700358033	31
4700358388	95,99,101,313
	315
4700358452	163
4700358881	141,169,277,283
4700359043	213
4700359125	213
4700359340	145
4700359341	145
4700359343	147
4700359419	203,205
4700359550	97
4700359551	97
4700359552	97
4700359574	203,205
4700359575	215
4700359818	213
4700359820	213
4700359845	141
4700359900	203,205
4700359914	201,203,205
4700359915	201,203,205
4700359916	209
4700359917	205
4700359918	205
4700359919	209
4700359920	203,205
4700359921	209
4700359940	23
4700359971	205
4700359972	205
4700370165	141
4700370222	327
4700370229	61
4700370231	53
4700370255	197

NUMERICAL INDEX

Part Number	Page	Part Number	Page	Part Number	Page
4700370803	219	4700372745	219	4700373957	37
4700370955	213	4700372749	153	4700373979	179,185
4700370977	201	4700372757	197	4700373980	179,185
4700370978	209	4700372758	157	4700374029	157,159
4700371009	23,215	4700372759	157	4700374030	157,159
4700371100	197	4700372772	61	4700374059	97
4700371202	197	4700372782	215	4700374088	159
4700371213	201	4700372785	197,199,261	4700374089	159
4700371275	143	4700372786	197,199	4700374098	141
4700371364	163	4700372836	165	4700374099	141
4700371366	37	4700372837	287	4700374120	159
4700371374	213	4700372938	293	4700374168	159
4700371407	203	4700372961	213	4700374184	159
4700371418	213	4700372964	201,203,205	4700374190	329
4700371509	91,93,95	4700372965	213	4700374194	159
4700371511	331	4700372966	213	4700374195	159
4700371730	265	4700372987	49,51,57	4700374196	159
4700371767	65	4700372997	135	4700374251	131,331
4700371774	63	4700373015	295	4700374306	293
4700371837	289	4700373016	93,131,295,331	4700374327	159
4700371966	197	4700373017	109	4700374379	141
4700371967	197	4700373136	93	4700374398	163
4700371968	201	4700373140	165,185	4700374417	213
4700372053	197	4700373184	157,159	4700374471	197
4700372083	213	4700373203	37	4700374526	159
4700372087	27	4700373204	37	4700374559	41
4700372103	141	4700373270	93,109,131,331	4700374567	43
4700372104	141	4700373286	175	4700374577	271
4700372105	141	4700373309	37	4700374583	43
4700372206	131	4700373359	157	4700374606	199,261
4700372229	7,11,97	4700373360	157	4700374607	199,261
4700372235	93,131,331	4700373361	91,97,105,107	4700374744	27
4700372321	215	4700373363	279	4700374795	41
4700372322	215	4700373364	279	4700374797	37
4700372424	91,119,123	4700373421	35	4700374798	37
4700372435	97	4700373423	93,131,331	4700374799	37
4700372436	97	4700373424	109	4700374813	295
4700372457	199,261	4700373442	51	4700374816	297
4700372459	213	4700373443	51	4700374817	295
4700372489	219	4700373460	27,69	4700374838	297
4700372494	197,199,261	4700373547	213	4700374842	297
4700372495	173	4700373574	69	4700374854	39
4700372496	173	4700373746	291	4700374900	35
4700372497	169,173	4700373747	291	4700374933	209
4700372513	119	4700373748	291	4700374934	209
4700372514	119	4700373749	291	4700375000	295
4700372529	51	4700373750	291	4700375105	297
4700372568	215	4700373752	291	4700375205	297
4700372575	37	4700373756	291	4700375678	39
4700372608	37	4700373799	219	4700375681	39
4700372649	135	4700373854	219	4700376068	177
4700372653	209	4700373855	219	4700376079	197
4700372654	209	4700373860	179	4700376109	295
4700372658	39,287	4700373891	135	4700376118	197
4700372663	143,151	4700373901	329	4700376252	197,199
4700372665	149	4700373902	311,327	4700376255	261
4700372671	213	4700373903	329	4700376488	219
4700372672	209	4700373905	329	4700376489	219
4700372678	219	4700373906	291	4700376546	27
4700372709	27	4700373907	291	4700376551	335
4700372718	69	4700373955	37	4700376622	31,33,335
4700372743	219	4700373956	37	4700376667	29

NUMERICAL INDEX

Part Number	Page	Part Number	Page	Part Number	Page
4700376819	31,33	4700382070	329	4700384589	299,301
4700376825	31	4700382071	329	4700384759	199,261
4700376826	31	4700382088	311,323,325,327	4700384760	307,309
4700376829	33		331	4700384761	307,309
4700376896	175	4700382089	311,319,321,327	4700384762	307,309
4700376935	167	4700382098	311	4700384875	299,301
4700376936	167	4700382129	37	4700384876	299,301
4700376937	167	4700382130	37	4700384877	299,301
4700376938	167	4700382131	37	4700384878	299,301,307,309
4700376944	45	4700382132	37	4700384879	299,301
4700376945	45	4700382133	311,313,315,317	4700384880	307,309
4700377098	71		327	4700384881	243,307,309
4700377518	201,203,261	4700382139	335	4700384897	307,309
4700377556	261	4700382165	37	4700384927	243,307,309
4700377582	295	4700382335	37	4700384954	333
4700377742	279	4700382336	37	4700384958	333
4700377743	279	4700382382	37	4700384968	293
4700377744	277	4700382384	37	4700384969	293
4700378110	173	4700382387	37	4700384970	293
4700378131	311,327	4700382393	61	4700384971	293
4700378132	311,327	4700382397	261	4700385134	243,307,309
4700378133	311,327	4700382549	169	4700385152	37
4700378860	339,341	4700382571	335	4700385263	161
4700378861	339,341	4700382572	335	4700385434	221,241,243
4700379163	61	4700382582	261	4700385442	241,301
4700379164	61	4700382699	333	4700385443	241,301
4700379236	251	4700382700	333	4700385526	171,173
4700379275	301	4700382751	277	4700385527	171,173
4700379285	301	4700382782	139	4700385542	171
4700379286	301	4700382849	197	4700385551	169
4700379332	307	4700382884	215	4700385691	67
4700379480	61	4700383002	333	4700385994	217
4700379481	119	4700383200	219	4700386002	217
4700379482	97	4700383225	219	4700386003	217
4700379608	249	4700383413	285,299,301,305	4700386189	147,151
4700379621	61	4700383414	307,309	4700386272	19
4700379630	119	4700383425	309	4700386298	185
4700379631	75	4700383436	51	4700386299	185
4700379632	75	4700383452	165	4700386300	185
4700379691	75	4700383705	199	4700386301	185
4700379876	55	4700383856	73,85,311,327	4700386645	185
4700379878	53	4700383857	73,75,77	4700386646	185
4700379880	53,55	4700383932	337	4700386647	185
4700380018	53,55	4700383933	75	4700386789	71
4700380078	117	4700383955	75	4700386853	63
4700380109	37	4700383958	109,111	4700386943	65
4700380145	91,109,117	4700383974	75	4700386966	67
4700380490	97	4700383975	75	4700387085	63
4700380660	143	4700384048	29	4700387112	69
4700380727	197	4700384069	167	4700387129	61
4700380830	97,99,101,103	4700384070	179	4700387280	185
4700380993	15,35	4700384114	53	4700387281	185
4700381027	53	4700384121	51	4700387282	185
4700381400	203,205	4700384160	277	4700387283	185
4700381403	209	4700384162	157,159	4700387466	301
4700381413	63	4700384163	157,161	4700387467	301
4700381567	209	4700384174	309	4700387506	41
4700381571	209	4700384176	307,309	4700387507	41
4700381634	53,55	4700384177	307,309	4700387508	41
4700381676	215	4700384187	309	4700387519	41
4700381874	145	4700384498	15,35	4700387520	41
4700381989	39	4700384584	197	4700387571	181,183

NUMERICAL INDEX

Part Number	Page	Part Number	Page	Part Number	Page
4700387638	303	4700392742	67	4700480450	123
4700387941	181,183	4700392810	67	4700480456	123
4700387968	181,183	4700392923	135	4700480468	123
4700387969	181,183	4700392930	139	4700482041	97
4700388145	75	4700392934	119	4700482056	125
4700388146	75	4700392937	135	4700482182	97
4700388186	27	4700392981	127	4700482259	97
4700388189	181,183	4700392986	127	4700482379	97
4700388209	181,183	4700393021	61	4700482391	97
4700388210	165	4700393022	61	4700482399	125
4700388211	165	4700393045	67	4700482434	295
4700388212	181,183	4700393052	27	4700482457	119
4700388213	181,183	4700393058	67	4700482516	125
4700388466	157	4700393059	67	4700482525	295
4700388855	61	4700393062	63	4700482588	295
4700388981	245,269	4700393081	63	4700482728	295
4700389075	153	4700393086	67	4700482734	295
4700389119	153	4700393089	67	4700482863	119
4700389565	131	4700393096	61	4700482937	119
4700389570	181,183	4700393097	67	4700483026	119
4700389577	163	4700393276	21,51	4700483031	109
4700389591	181,183	4700393277	51	4700483049	119
4700389600	67	4700393278	51	4700483109	119
4700389662	135	4700393279	51	4700483114	131,331
4700389786	179	4700393361	63	4700483115	131
4700389840	155	4700393362	65	4700483116	131
4700389907	335	4700393405	299,301	4700483122	125
4700390377	135	4700393406	299,301	4700483190	93
4700390587	75	4700393408	299,301	4700483250	295
4700390588	75	4700393614	135	4700483251	295
4700390589	75	4700393647	299,301	4700483286	109
4700390759	75	4700393782	47	4700483397	109
4700390760	75	4700393783	47	4700483510	295
4700390821	299	4700393954	299,301	4700483558	97
4700390823	301	4700393955	299,301	4700483610	97
4700390824	299,301	4700394670	311,327	4700483618	295
4700390896	17,53,55	4700394680	67	4700483910	109
4700390927	253	4700394686	11,67	4700483911	109
4700390962	181,183	4700394687	11,67	4700483995	93
4700390963	201,203	4700394904	119	4700483996	93
4700391179	201	4700395084	311,327	4700483999	119
4700391219	259	4700395119	39	4700484000	331
4700391303	301	4700395325	215	4700484001	331
4700391346	203	4700396030	51	4700499162	179,185
4700391664	61	4700396041	191,193	4700500004	137,171,173,187
4700392002	119,121,293	4700396043	191		223
4700392100	121	4700396044	191	4700500006	137,169,191,193
4700392103	121	4700396045	191,193		237,311,327
4700392104	121	4700396046	191,193	4700500012	63,157,159
4700392105	121	4700396047	191	4700500013	39,69,163,167
4700392170	63	4700396048	191,193		175,177,181,183
4700392220	63	4700396142	51		213,299,301
4700392283	61	4700396633	219	4700500015	241
4700392284	61	4700397336	321	4700500016	185
4700392294	71	4700415193	293	4700500018	35,39,65,129,223
4700392295	71	4700416034	211	4700500019	37,63,67,127,157
4700392296	71	4700450122	21,51		159,197,203,227
4700392297	63	4700465013	215		251,259,263,265
4700392313	63	4700476019	289		295,307
4700392714	63	4700480446	123	4700500021	37,41,97,163,197
4700392715	63	4700480447	123		201,203,209,213
4700392741	67	4700480449	123		215,219,287,291

NUMERICAL INDEX

Part Number	Page	Part Number	Page	Part Number	Page
4700500022	71,217,295,299	4700500191	293	4700573008	213
	301,339,341	4700500192	299,301	4700581018	197
4700500023	119,299,301	4700500194	61,109,165,185	4700582006	177
4700500025	65		293	4700586001	135,159,169,183
4700500026	37,311,327	4700500195	197,199,261,293		187,191,193,223
4700500028	37,63,97,109,203	4700500196	53	4700586002	41,135,141,153
	205,337	4700500206	335		169,173,175,191
4700500029	27,45,69,93,131	4700500226	197		197,203,205,209
	197,199,201,261	4700500239	219		211,217,235,271
	331,337	4700500240	45		291
4700500030	37,109,127	4700500263	97	4700586003	67,119,135,163
4700500031	197,205	4700500267	215		209,215,217,223
4700500032	93,109,131,331	4700500286	335		227,231,263,273
4700500033	295	4700500287	35		291,299,301,311
4700500037	35	4700500292	169,271		327
4700500040	39,65,67,135,141	4700500505	37	4700586018	157
	157,159,187,189	4700502019	109	4700586019	31,33,61,167,215
	203,205,209,333	4700502034	119,201		293
4700500042	187,189,191,193	4700502036	209	4700586021	265
4700500043	27,157,159	4700502078	109	4700586022	197,335
4700500044	119	4700502132	93,97,131,331	4700588176	277
4700500046	67,97,119	4700508029	61,119	4700600006	129,231
4700500047	37,61,165,223	4700508056	213	4700600016	121,293
4700500048	299,301	4700508079	61	4700600019	293
4700500049	31	4700508092	215	4700601001	189,333
4700500051	137	4700509025	61	4700601003	41
4700500053	43,63,71,129,135	4700513003	213	4700603001	209
	173,191,193,197	4700513009	159	4700603019	203
	201,205,215,223	4700513013	213	4700604008	131,331
	251,299,301	4700513025	231,337	4700604012	97
4700500056	31,167	4700516051	209	4700615041	211
4700500060	169,191	4700527002	51	4700624005	277,289
4700500061	309	4700533008	189,329	4700624016	211,219
4700500067	135,273	4700533010	135,159	4700624021	181,183
4700500070	61	4700533013	139	4700629066	265
4700500075	63,135,173,201	4700533016	191	4700630007	293
	235	4700533024	211	4700630008	293
4700500076	31,33	4700533038	215	4700630035	213
4700500077	131,331	4700535004	169	4700635061	27,121,293
4700500079	165	4700535005	255	4700747282	69
4700500082	51,53,55	4700535007	223,227	4700791094	277
4700500086	153,187,309	4700535011	37	4700791102	337
4700500088	39	4700535013	169,197	4700791119	127
4700500090	311	4700535014	169	4700791120	127
4700500093	31,33	4700535015	197	4700791138	139
4700500100	219	4700541535	223	4700791144	309
4700500101	93,131,331	4700541702	157,163	4700791156	53,55
4700500102	29	4700541703	159,179,185,307	4700791171	185
4700500103	167	4700541704	171	4700791175	75
4700500109	97	4700541705	187	4700791176	75
4700500115	223,327	4700550038	293	4700791183	135
4700500133	37	4700570002	153,187	4700791185	135
4700500153	291	4700570004	39,139,211,215	4700791186	135
4700500154	61		227,299,301,333	4700791211	135
4700500163	53,55,71	4700570005	37,41,65,135,201	4700791213	97
4700500165	335		203,205,261,299	4700791218	199,261
4700500169	211		301,339,341	4700791226	199
4700500180	299,301	4700570006	197,203,205,299	4700791231	93
4700500184	135		301,337	4700791233	41
4700500186	217	4700570007	167	4700791234	41
4700500188	27,93	4700570015	335	4700791253	153
4700500190	327	4700573004	215	4700791275	277

NUMERICAL INDEX

Part Number	Page	Part Number	Page	Part Number	Page
4700791276	277	4700813500	119,295	4700902066	159
4700791277	277	4700813618	105	4700902166	37,63,65,71
4700791278	277	4700813791	67	4700902203	215
4700791304	191,193	4700813822	95,99,105,313	4700902223	139
4700791312	217		319,323	4700902227	157,159
4700791313	217	4700900229	97	4700902284	37
4700791314	217	4700900255	77,85	4700902285	39,61,63,67,141
4700791378	259	4700900430	109		165,185,187,189
4700791388	187,189	4700900528	185	4700902286	37,65,165
4700791452	181,183,185	4700900552	125	4700902287	295
4700791453	185	4700900775	53,55	4700902288	165,185,293
4700791454	185	4700900776	17,53,55	4700902468	137
4700791468	61	4700900782	17,53,55	4700902496	165
4700791475	187,189	4700900790	159	4700902508	289
4700791477	135	4700900957	81	4700902520	213
4700791509	135	4700900966	81	4700902558	327
4700791538	129	4700900986	215	4700902581	105,319
4700791573	75	4700901080	135	4700902610	287
4700791597	65	4700901121	69	4700902624	111
4700791642	277	4700901145	51,75,199,261	4700902625	111,115
4700791722	155	4700901155	109	4700902655	117
4700791723	155	4700901157	109	4700902687	111
4700791736	155	4700901209	169,171,173	4700902693	115
4700791914	129	4700901218	75	4700902695	111
4700791948	33	4700901220	287	4700902697	115
4700791967	267	4700901224	139,165,185	4700902723	115
4700791968	267	4700901225	135,139,239	4700902724	111
4700792015	299,301	4700901226	139	4700902735	115
4700792081	61	4700901227	135,139,239,245	4700902783	115
4700792091	307		269	4700902792	113
4700792187	307	4700901229	239	4700902811	115
4700792248	303	4700901230	135	4700902856	111
4700792251	69	4700901240	139,239,307	4700902861	123
4700792261	75	4700901256	139	4700902862	123
4700792268	135	4700901328	103,317	4700902866	37,39,197
4700792275	61	4700901369	157,159	4700902919	27
4700792313	147	4700901385	117	4700902928	95,99,105,313
4700792314	147	4700901386	117		319,323
4700792315	147	4700901387	117	4700902929	105,319,323
4700792317	147	4700901389	117	4700902930	105,323
4700792318	147	4700901390	117	4700902940	323
4700792319	147	4700901443	75	4700902944	105,319,323
4700792320	147	4700901444	75	4700902960	105,319
4700792450	129	4700901452	99,313	4700902961	105,319
4700792464	51	4700901453	95,99,105,313	4700902962	105
4700792526	69		319,323	4700902984	105,319,325
4700792547	69	4700901454	99,313	4700902985	323
4700792548	153	4700901455	99,313	4700902995	325
4700792634	339,341	4700901458	99,313	4700902996	105,319,325
4700792772	279	4700901465	95,101,315	4700903053	95
4700792808	69	4700901466	101,315	4700903189	53
4700792814	69	4700901467	95,101,315	4700903190	53
4700801199	295	4700901475	101,315	4700903290	93,131,197,199
4700801251	293	4700901476	101,315		261,331
4700801259	293	4700901688	191,193	4700903422	277
4700801669	167	4700901699	307	4700903423	279
4700813316	293	4700901742	115	4700903424	279
4700813391	27	4700901767	37,139,307	4700903425	279
4700813434	135,303	4700901832	305	4700903436	141
4700813444	295	4700901834	77,85	4700903457	123
4700813462	135	4700901987	83,89	4700903459	277
4700813499	97,131,331	4700902064	159	4700903570	95,99,313

NUMERICAL INDEX

Part Number	Page
4700903571	95,99,313
4700903580	99,313
4700903599	141
4700903600	141
4700903601	141
4700903602	141
4700903625	139
4700903631	135
4700903632	135
4700903640	135
4700903641	135
4700903644	213
4700903653	141
4700903657	143,147,149,151
4700903658	141,153,155,215
	297
4700903678	141
4700903714	63
4700903717	173
4700903732	37
4700903741	139,239,307
4700903750	131
4700903760	135
4700903768	135
4700903769	167
4700903782	251,309
4700903792	51
4700903852	157,159,173,175
	303,333
4700903875	149
4700903876	143,149,151,153
	329
4700903877	109
4700903899	159
4700903907	169,197
4700903914	205
4700903917	209
4700903918	209
4700903919	51
4700903927	145
4700903956	139
4700903961	141
4700903969	159,289
4700903970	139
4700903985	75
4700904005	93,97,119,131
	331
4700904015	173
4700904016	145
4700904020	135
4700904036	135
4700904037	135
4700904038	157,159
4700904039	303
4700904058	93,131,331
4700904068	277,279
4700904069	279
4700904075	47
4700904076	63,71
4700904114	235
4700904140	173
4700904165	299,301
4700904180	219
4700904206	69,153,185,197
	203,205,329
4700904207	141
4700904208	141
4700904209	41
4700904213	31,97,167,293
4700904214	209
4700904216	311,327
4700904217	311,327
4700904227	329
4700904228	39,61,63,67,69
	141,153,157,159
	163,167,169,173
	175,177,181,183
	187,189,191,197
	201,203,205,209
	213,217,235,271
	291,299,301,309
	333
4700904229	27,35,63,67,71
	93,97,109,119
	127,131,135,157
	159,163,173,181
	183,187,189,191
	193,197,201,203
	205,209,213,215
	223,241,251,259
	261,263,265,273
	291,295,299,301
	307,311,327,331
	339,341
4700904230	27,39,63,69,93
	97,109,119,131
	157,159,197,199
	201,205,209,261
	293,295,299,301
	331,337
4700904231	31,35,39,51,53
	67,71,109,119
	137,167,185,197
	199,213,215,261
	293
4700904232	31,33,51,53,55
	61,109,265,335
4700904233	51,61,75,197,199
	261,293,335
4700904234	29,51,219
4700904236	277
4700904281	135,159,169,171
	173,191,223,227
	311,327
4700904282	97
4700904289	185
4700904290	217
4700904292	61
4700904302	297
4700904313	159
4700904315	159
4700904316	159
4700904317	159
4700904318	159
4700904322	277
4700904340	169,271,291
4700904346	137
4700904352	63
4700904355	41
4700904356	41
4700904433	197,199,261
4700904486	63
4700904543	157,159,173,175
	303
4700904551	63
4700904556	37,61,213,215
	217
4700904557	27,37,197,201
	203,205
4700904558	29
4700904562	219
4700904567	39,45,127,299
	301
4700904601	279
4700904615	331
4700904619	219
4700904623	65
4700904637	61,119
4700904638	61,93,97
4700904639	135
4700904640	37,41,43,63,71
	181,183,197,201
	209,217,219,287
	311,327
4700904653	183
4700904663	15
4700904698	135,139,153,169
	187
4700904703	33,61
4700904734	209,219,299,301
4700904735	209
4700904737	53,55
4700904739	209
4700904767	109
4700904773	109
4700904774	109
4700904780	187,189
4700904781	109
4700904802	209
4700904819	145
4700904835	277
4700904855	197
4700904865	297
4700904870	277
4700904874	37
4700904889	145,165
4700904890	145,165
4700904906	333
4700904907	169
4700904908	169
4700904909	169
4700904910	175
4700904939	267
4700904941	197
4700904969	267
4700904970	267

NUMERICAL INDEX

Part Number	Page	Part Number	Page	Part Number	Page
4700904984	69,273	4700908560	235	4700909560	79
4700904985	69	4700908563	235	4700909561	79
4700904989	139	4700908564	235	4700909562	79
4700904994	337	4700908580	231,253	4700909563	79
4700905304	235,257	4700908581	231,253	4700909565	79
4700905305	235,257	4700908582	231,253	4700909566	79
4700905306	235,257	4700908583	231,253	4700909567	79,87
4700905307	235	4700908587	223	4700909568	79,87
4700905308	235	4700908598	241	4700909569	79,87
4700905309	235	4700908599	241	4700909570	79,87
4700905310	235	4700908600	241	4700909572	79,87
4700905311	235	4700908603	239	4700909574	79,87
4700905312	235	4700908605	239,257	4700909576	79,87
4700908110	139	4700908606	239	4700909580	79,87
4700908136	65,129	4700908607	239	4700909581	79,87
4700908187	211	4700908610	239	4700909582	77,85
4700908188	211	4700908611	239	4700909584	77,85
4700908189	211	4700908613	239	4700909586	83,89
4700908190	211	4700908617	239,257	4700909596	81,83,89
4700908193	215	4700908618	239	4700909609	81,83,89
4700908200	215	4700908623	237,255	4700909616	81
4700908229	277	4700908624	237,255	4700909618	81
4700908265	265	4700908625	265	4700909619	81
4700908267	263	4700908626	265	4700909622	81
4700908352	99,313	4700908627	265	4700909624	81
4700908355	265	4700908628	265	4700909626	81
4700908359	263	4700908773	95	4700909727	99,313
4700908361	265	4700908987	231	4700909745	211
4700908367	113	4700909122	215	4700909747	215
4700908375	115	4700909130	189	4700909748	215
4700908383	111	4700909152	297	4700910161	119
4700908384	115	4700909211	123	4700910995	35
4700908399	67	4700909252	95	4700911456	143,149,151
4700908422	105	4700909253	95	4700911620	123
4700908426	105,319,323	4700909255	95	4700921028	61,159
4700908427	105,319,323	4700909382	99,313	4700921031	157,169,173
4700908432	95,99,101,105	4700909386	99,313	4700921039	157,163
	313,315,319,323	4700909387	99,313	4700921044	299,301
	325	4700909388	99,313	4700921046	181,183,185,191
4700908435	105,319,323	4700909389	99,313	4700921056	299,301
4700908443	105,319,323	4700909390	99,313	4700921065	179
4700908448	101,315	4700909391	99,313	4700921072	165,311,327
4700908450	9	4700909392	99,313	4700921078	167
4700908452	67	4700909393	99,313	4700921084	69
4700908485	79,87	4700909398	99,313	4700921104	203
4700908496	173,223,241	4700909399	101,315	4700922325	215
4700908497	235	4700909428	101,315	4700923087	95,99,101,313
4700908499	223,227,231,249	4700909429	101,315		315
	251,253	4700909432	101,315	4700923253	189
4700908500	223	4700909435	101,315	4700923342	79,87
4700908501	223,301	4700909436	101,315	4700923371	97
4700908502	223,301	4700909469	111,115	4700923384	93,97,131,331
4700908503	223,301	4700909510	223,235	4700923976	135,139,169,309
4700908504	223,301	4700909514	111,115	4700924791	169,271,291
4700908505	223	4700909525	107,321,325	4700925208	35,51
4700908506	223,251	4700909544	81	4700925629	39
4700908507	223,251	4700909550	79	4700925723	125
4700908512	223	4700909551	79	4700925784	223
4700908515	223	4700909552	79	4700925802	157,159,175,299
4700908545	227,229,231,249	4700909553	79		301
	253	4700909558	79	4700926214	15,35,213,293
4700908559	235	4700909559	79	4700926611	159

NUMERICAL INDEX

Part Number	Page	Part Number	Page	Part Number	Page
4700926658	95,319,323	4700935192	111	4700935398	57
4700926781	83,89	4700935212	115	4700935399	57
4700926810	81	4700935219	111	4700935400	57
4700926847	81	4700935225	215	4700935401	57
4700926911	185	4700935244	231,253	4700935402	57
4700926985	47,65	4700935245	231,253	4700935403	57
4700927233	211	4700935246	231,253	4700935404	57
4700927278	115	4700935247	231,253	4700935413	57
4700927350	117	4700935248	231,253	4700935414	57
4700927358	111	4700935249	231,253	4700935415	57
4700927403	267	4700935250	231,253	4700935421	57
4700927637	37	4700935253	231,253	4700935428	123
4700927974	187,189,197,199	4700935255	231	4700935429	123
	261	4700935256	231	4700935520	107,321,325
4700928021	135	4700935257	231	4700935521	105,319,323
4700928230	29	4700935258	231	4700935523	323
4700928231	51	4700935260	231	4700935524	105,319,323
4700928346	191	4700935261	231	4700935525	105,319,323
4700928381	211	4700935262	231	4700935526	105,319,323
4700928497	23,215	4700935263	231	4700935527	105,319,323
4700928502	159	4700935265	231,253	4700935530	105,319,323
4700928927	185	4700935266	231,253	4700935531	105,319,323
4700929012	123	4700935267	231,253	4700935533	105,319,323
4700929013	123	4700935268	231,253	4700935535	323
4700929014	123	4700935269	231,253	4700935536	105,319,323
4700929023	135	4700935270	231,253	4700935537	323
4700929217	75	4700935271	227,231,249,253	4700935538	323
4700929226	109	4700935272	227,231,249,253	4700935539	323
4700929447	19,53	4700935273	231,249,253	4700935540	323
4700929455	159	4700935274	227,231,249,253	4700935541	323
4700929617	81	4700935275	227,231,249,253	4700935542	323
4700929626	87	4700935276	227,231,249,253	4700935543	105
4700929628	79	4700935277	227,231,249,253	4700935544	105,319,325
4700929629	79	4700935278	227,249	4700935545	105
4700929630	87	4700935279	227,249	4700935546	321,325
4700929631	87	4700935280	227,249	4700935570	241
4700929638	79,87	4700935281	227,249	4700935572	241
4700929644	79,87	4700935282	227,249	4700935577	223
4700929648	77,85	4700935283	227,249	4700935578	223
4700929863	15	4700935284	227,249	4700935579	223
4700930150	135	4700935285	227,249	4700935580	223,259
4700930151	165	4700935286	227,249	4700935581	223
4700930153	151	4700935287	227,249	4700935582	223
4700930154	143,149,151,155	4700935288	227,249	4700935583	223
	297	4700935289	227,249	4700935584	223
4700930161	149	4700935290	227,249	4700935585	223
4700930163	143,149,151,153	4700935291	227,249	4700935586	223
	155	4700935293	227,249	4700935589	223
4700930165	185	4700935295	227,249	4700935590	223
4700930166	149	4700935296	227,249	4700935591	223
4700930192	151,153	4700935297	227,249	4700935594	225
4700930200	155	4700935298	227,249	4700935598	225
4700932032	155	4700935299	227,249	4700935599	225
4700932034	149,151	4700935300	227,249	4700935600	225
4700932050	143	4700935301	229,249	4700935613	201,203,205
4700932056	149,185	4700935302	229,249	4700935614	201,203,205
4700932057	149	4700935303	229,251	4700935619	95
4700932058	143,149,151,329	4700935334	235	4700935621	95
4700932060	329	4700935335	235	4700935622	95
4700935158	111	4700935380	57	4700935623	95
4700935164	113	4700935394	57	4700935624	95
4700935172	115	4700935395	57	4700935625	95

NUMERICAL INDEX

Part Number	Page	Part Number	Page	Part Number	Page
4700935626	95	4700936570	101,315	4700937258	117
4700935629	95	4700936571	101,315	4700937259	117
4700935630	95	4700936582	99,313	4700937260	117
4700935631	95	4700936583	101,315	4700937261	117
4700935644	79	4700936589	319	4700937264	117
4700935664	105,319	4700936590	323	4700937265	117
4700935741	105,319,323	4700936591	319	4700937274	95
4700935749	105,319,323	4700936593	105,319	4700937275	95
4700935750	105,319,323	4700936600	227,231	4700937277	95
4700935771	211	4700936601	227,231	4700937278	95
4700935774	211	4700936602	227,231	4700937279	95
4700935853	95	4700936613	115	4700937280	95
4700935856	99,313	4700936614	115	4700937283	95
4700935857	101,315	4700936621	113	4700937363	107
4700935859	57	4700936648	111	4700937380	227,249
4700935860	57	4700936673	115	4700937381	227,249
4700935861	57	4700936674	115	4700937382	227,249
4700935862	57	4700936686	111	4700937383	227,249
4700935863	57	4700936934	227	4700937384	227,249
4700935864	57	4700936935	227	4700937385	227,249
4700935865	57	4700937056	231	4700937389	227,249
4700935866	57	4700937057	231	4700937390	231,253
4700935867	57	4700937106	159	4700937391	231,253
4700935868	57	4700937107	159	4700937392	231,253
4700935869	57	4700937108	159	4700937393	231,253
4700935870	57	4700937109	159	4700937531	111
4700935871	57	4700937121	231	4700937620	205
4700935872	57	4700937150	101,315	4700937621	205
4700935873	57	4700937165	267	4700937674	117
4700935874	57	4700937167	111,113	4700937737	241,301
4700935875	57	4700937168	111,115	4700937857	101,315
4700935876	57	4700937170	113	4700937870	259
4700935877	57	4700937171	113	4700937871	257
4700935878	57	4700937172	113	4700937892	205
4700935879	57	4700937173	113	4700937932	225,227,231
4700935880	57	4700937174	113	4700937985	111
4700935881	57	4700937175	113	4700937986	111
4700935882	57	4700937176	113	4700937993	117
4700935883	57	4700937180	113	4700937995	117
4700936277	227	4700937181	113	4700937998	111
4700936308	111	4700937182	113	4700937999	111
4700936313	115	4700937183	113	4700938001	111
4700936340	111	4700937184	113	4700938003	111
4700936370	115	4700937185	113	4700938004	111
4700936393	111	4700937186	113	4700938005	111
4700936394	115	4700937187	113	4700938014	111
4700936546	99,313	4700937188	113	4700938016	231
4700936547	99,313	4700937189	113	4700938017	231,253
4700936548	103,317	4700937190	113	4700938018	231,253
4700936551	99,313	4700937195	111	4700938022	239
4700936553	99,313	4700937198	111	4700938024	231
4700936557	99,313	4700937199	111	4700938040	117
4700936558	99,313	4700937200	111	4700938041	117
4700936559	99,313	4700937201	111	4700938042	117
4700936560	99,313	4700937202	115	4700938043	231
4700936561	99,313	4700937203	115	4700938047	205
4700936562	101,315	4700937204	115	4700938101	253
4700936563	101,315	4700937205	115	4700938136	235
4700936564	101,315	4700937206	115	4700938170	101,315
4700936566	101,315	4700937240	115	4700938207	297
4700936567	101,315	4700937256	117	4700938224	231
4700936568	101,315	4700937257	117	4700938252	101,315

NUMERICAL INDEX

Part Number	Page	Part Number	Page	Part Number	Page
4700938253	101,315	4700938672	223	4700939282	81
4700938290	227,249	4700938673	223	4700939283	81
4700938291	227,249	4700938674	223	4700939284	81
4700938292	227,249	4700938675	223	4700939285	81
4700938296	81	4700938676	223	4700939286	81
4700938318	231	4700938677	223,225	4700939287	81
4700938319	233	4700938678	223,259	4700939349	89
4700938558	13,15	4700938679	223,259	4700939350	83,89
4700938597	305	4700938680	241	4700939351	89
4700938598	305	4700938681	225	4700939413	307,309
4700938599	305	4700938682	225	4700939489	97,101,315
4700938600	305	4700938683	225	4700939521	269
4700938601	305	4700938684	225	4700939522	269
4700938602	305	4700938685	225	4700939603	269
4700938603	305	4700938686	181,183	4700939693	243,307
4700938604	305	4700938687	239	4700940308	113
4700938605	305	4700938688	239	4700940505	111
4700938606	305	4700938689	245	4700940507	111
4700938607	305	4700938690	245	4700940663	13,23
4700938608	305	4700938691	241,269,301	4700940675	111
4700938609	305	4700938891	13,19	4700940678	253
4700938617	243,309	4700938983	81	4700945140	61
4700938618	243,309	4700938984	81	4700945145	7,9,11,61
4700938619	307,309	4700938989	79,87	4700945147	7,9,11,69
4700938620	243,307,309	4700938991	87	4700945174	307
4700938621	243,307,309	4700939003	83,89	4700945175	307
4700938622	243,307,309	4700939015	83,89	4700945176	307
4700938623	309	4700939016	83,89	4700945177	307
4700938624	309	4700939017	83,89	4700945178	307
4700938625	243,307,309	4700939019	83,89	4700945313	61
4700938626	243,307,309	4700939026	81	4700945314	299,303
4700938627	243,307	4700939035	81	4700945315	299,303
4700938628	243,307	4700939036	81	4700945538	69
4700938629	243,307	4700939167	111	4700945584	55
4700938630	243,307	4700939173	111	4700945588	53
4700938631	309	4700939255	81	4700945622	201,203
4700938632	243	4700939256	81	4700945624	7,9,11,61
4700938633	243	4700939257	79	4700945632	207
4700938634	243,307,309	4700939258	79,87	4700945633	207
4700938635	243,307	4700939259	79,87	4700945634	207
4700938636	243,307	4700939260	79,87	4700945635	207
4700938638	243,307	4700939261	79,87	4700945636	207
4700938639	243,307,309	4700939262	79	4700945637	207
4700938640	243	4700939263	83,89	4700945657	13,17
4700938641	243	4700939264	83,89	4700945661	201,203
4700938643	243,307	4700939265	83,89	4700945730	61
4700938644	243,307	4700939266	83,89	4700945731	61
4700938645	243,307	4700939267	83,89	4700945757	105,323
4700938647	243	4700939268	83,89	4700945760	11
4700938658	227	4700939269	83,89	4700945775	111
4700938659	227,249	4700939270	83,89	4700945776	111
4700938660	235	4700939271	83,89	4700945789	5,7
4700938661	235	4700939272	83,89	4700945791	5,11
4700938662	235	4700939273	83,89	4700945979	37
4700938663	235	4700939274	83	4700947680	215
4700938664	235	4700939275	83,89	4700950283	101,315
4700938665	235	4700939276	83,89	4700950284	101,315
4700938666	235	4700939277	83,89	4700950323	5,9
4700938667	237	4700939278	83,89	4700950339	135
4700938668	237	4700939279	83	4700950368	95
4700938670	223	4700939280	81	4700950580	119
4700938671	223	4700939281	81	4700960051	191,193

NUMERICAL INDEX

Part Number	Page
4700960727	137,311,327
4700960792	153
4700960796	137
4700985012	145,147,149,151
	185
4700985013	159,223
4700985014	159
4700985051	223
4700985146	149,151
4700989151	127
4700991658	279
4700999011	163
4700999027	135
4709335273	227
47349248CN	277
47349248DE	277
47349248DK	277
47349248EN	277
47349248ES	277
47349248FI	277
47349248FR	277
47349248GR	277
47349248IS	277
47349248IT	277
47349248NL	277
47349248NO	277
47349248PT	277
47349248SE	277
4811000127	51
4811000244	183
4811000328	129
4811000329	129
4811000332	129
4811000363	129
4811000395	189
4811000457	189
4812110216	157
4812110346	51
4812110366	51
4812110422	129
4812110444	51
4812110507	71
4812110520	51
4812110560	137
4812110640	51
4812110645	71
4812110656	71
4812110748	175
4812110773	39
4812110818	137
4812110860	53
4812110865	153
4812110866	137
4812110867	137
4812110960	155
4812110967	155
4812110972	153
4812110986	27
4812111053	167
4812112388	63
4812112413	53
4812112415	327
4812112481	183
4812112747	53,55
4812112782	71
4812112785	327
4812113010	299,301
4812113058	187,189
4812113110	129
4812113146	129
4812113157	187
4812113158	187,189
4812113159	187,189
4812113160	187,189
4812113171	187
4812113556	187
4812113564	187
4812114146	189
4812114184	189
4812114185	189
4812114190	189
4812114277	273
4812114369	273
4812114371	273
4812114420	51
4812114555	27
4812114556	27
4812116352	217
4812155659	63
4812155660	63
4812155661	63
4812155765	115
4812155890	305
4812156072	101
4812156170	21
4812156189	13,21
4812156256	63
4812156257	63
4812156258	63
4812156652	99
4812156885	87
4812156886	87
D381010103	295