RUTHZIL TRATOR COMERCIAL DE PEÇAS LTDA 11 97083-6812 ROLANDO CITRANGULO

Spare Parts Catalogue

SCC102-4EN1

Valid from roller serial number:
***10000305**x0A000001 -*



Diesel engine:
DEUTZ D2011 L02

Published catalogue issues valid for these rollers:

Catalogue	*Issue date*	*Valid for serial numbers*
SCC102-4EN1	*2010 - 02*	***10000305**x0A000001 -*



We reserve the right to change specifications without notice.
Printed in Sweden.

DYNAPAC
Part of the Atlas Copco Group

RESERVDELSBESTÄLLNING

Följande uppgifter ska lämnas vid beställning av reservdelar för att undvika leveransfel:

1. Maskintyp.
2. Vältens serienummer.
3. Antal av önskad reservdel.
4. Reserdelens artikelnummer.
5. Reservdelens benämning.
6. Måttuppgifter vid beställning av metervara.

ORDERING SPARE PARTS

To avoid errors in delivery, please give the following information when ordering spare parts:

1. Type of machine.
2. Roller serial number.
3. Quantity required.
4. Part number.
5. Parts denomination.
6. Dimensions when ordering per length.

ERSATZTEILBESTELLUNG

Zur Vermeidung von Fehllieferungen sind bei der Bestellung von Ersatzteilen folgende Angaben zu machen:

1. Maschinentyp.
2. Herstellungsnummer.
3. Bestellmenge. (Quantity)
4. Ersatzteilnummer. (Part Nº)
5. Ersatzteilbenennung. (Denomination)
6. Massangaben bei Bestellung von Meterware.

ORDINI DI RICAMBI

Per evitare errori nelle consegne di ricambi, Vi preghiamo di comunicarci le seguenti informazioni al momento dell 'ordinazione:

1. Tipo di macchina.
2. Numero di serie della macchina.
3. Quantità dei pezzi desiderati. (Quantity)
4. Numero di codice del pezzo. (Part Nº)
5. Descrizione del pezzo di ricambio. (Denomination)
6. Misura, in caso di ordine per metro.

PEDIDO DE RECAMBIOS

Para evitar errores en las entregas, deberán indicarse los siguientes datos al hacer un pedido de recambios:

1. Tipo de máquina.
2. Número de serie.
3. Cantidad de piezas deseadas. (Quantity)
4. Número de artículo de la pieza de recambio. (Part Nº)
5. Denominación de la pieza. (Denomination)
6. Indíquese la medida al solicitar un artículo que se expide por metros.

COMMANDE DE PIECES DE RECHANGE

Les indications suivantes doivent être fournies lors de la commande de piéces de rechange, afin d'éviter toute erreur de livraison:

1. Type de machine.
2. Numéro de série.
3. Quantité désirée de pièce de rechange. (Quantity)
4. Numéro de la piéce de rechange. (Part Nº)
5. Dénomination de la piéce de rechange. (Denomination)
6. Longueur en cas de commande au mètre.

YOUR AGENT/DEALER:

Text pages

The text pages is structured as the picture on the right.

1. This is the remarks for specific items and the descriptions of the remarks is at the bottom of the parts list.

2. Parts indicated by a dot and moved to the right are included when buying the assembled unit above.

3. Spare parts and service code for a specific part, mainly for internal use at Dynapac. "A" = Service part, "B" = Fast moving part, "C" = Suggested exchanged part and "D" = Regular spare part.

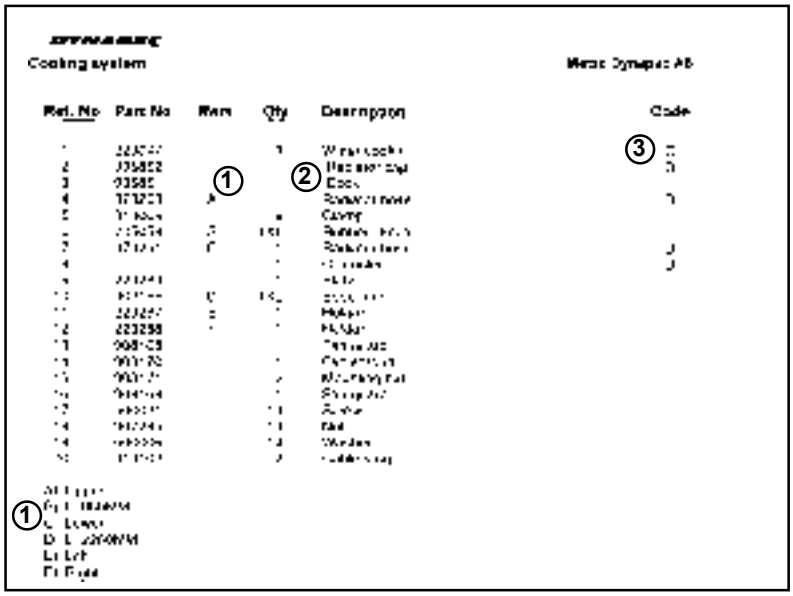

Changes

PARTS INFO	SERVICE INFO	GROUP	PAGE	NOTES

Notes

Notes

DYNAPAC

PÄRMETIKETT

För att undvika fel vid reservdelsbeställning finns här nedan två etiketter som passar i fickorna på pärmarnas ryggar. På dessa kan man se från vilket vältnummer av aktuell maskin reservdelskatalogen gäller. Gör så här:

1. Tag denna sida ur pärmen.
2. Klipp ut etiketten till **VÄNSTER** (1) och sätt in den i fickan på **DENNA** pärmens rygg.
3. Finns det en etikett till **HÖGER** (2), kan denna användas på pärmen för **FÖREGÅENDE** utgåva av denna katalog.
4. Kasta detta papper.

BINDER LABEL

To avoid errors when ordering spare parts use the labels below to identify the catalogues on the back of the binder. The label contain the serial number range for which the catalogue is valid. Do like this:

1. Remove this page from the binder.
2. Cut out the **LEFT** label (1) and put it on **THIS** binders back.
3. If there is a label to the **RIGHT** (2), it can be used on the binder for **PRECEDING** issue of this catalogue.
4. Throw away this paper.

KATALOG-BESCHRIFTUNG

Zur Vermeidung von Fehlen bei der Ersatzteilbestellung benutzen Sie bitte die unteren Beschriftungen, um die Kataloge auf der Rückseite zu kennzeichen. Auf der Beschriftung ist angegaben, für welche Maschinennummern der jeweilige Katalog gültig ist. Ablauf:

1. Nehmen Sie dieses Blatt aus dem Katalog.
2. Schneiden Sie die **LINKE** Beschriftung (1) aus. Schieben Sie die Beschriftung in die tasche auf **DEM** Katalogrücke.
3. Sollte die Beschriftung unten **RECHTS** (2) mitgeliefert werden, kennzeichen Sie damit bitte die **ÄLTERE** Ausführung dieses Kataloges.
4. Den Rest dieses Blattes bitte vernichten.

ETICHETTA POSTA SUL RACCOGLITORE

Per evitare errori quando ordinate pezzi di ricambio, usate le etichette in calce che servono ad identificare i cataloghi sul retro del raccoglitore. L'etichetta indica il numero di matricola delle maccine prese in considerazione nel catalogo.

1. Rimuovete questa pagina dal raccoglitore.
2. Ritagliate l'etichetta posta a **SINISTRA** (1) e ponetela sul retro **DEL** raccoglitore.
3. Se trovate anche un'etichetta sulla **DESTRA** (2), ritagliatela e ponetela sul raccoglitore relativo alla **PRECEDENTE** edizione del catalogo.
4. Distruggete questo foglio.

ETIQUETA PARA LA CARPETA

Para evitar errores al pedir repuestos utilicen las etiquetas abajo descritas para identificar los catálogos en la parte trasera de la carpeta. En la etiqueta se ven los números de referencia de la serie para la cual es válido el catálogo. Instrucciones:

1. Quitar esta página de la carpeta.
2. Corta la etiqueta **IZQUIERDA** (1) y ponerla est **ESTA** carpeta en la parte trasera.
3. Si hay una etiqueta en la parte **DERECHA** (2) se puede utilizar en la carpeta para el catálogo que **PRECEDE** a esta.
4. Tirar esta hoja.

ETIQUETAGE DU CATALOGUE

Afin d'éviter des erreurs lors de commandes de pièces de rechange, nous vous conseillons d'apposer les marquages ci-dessous à l'arrière du classeur, pour identifier les catalogues. Ce marquage indique les numéros de série pour lesquels le catalogue est adapté. Il convient de procéder de la façon suivante:

1. Retirez cette page du classeur.
2. Découpez l'étiquette de **GAUCHE** (1), et apposez-la à l'arrière de **CE** catalogue.
3. Si il y a une étiquette à **DROITE** (2), vous pourrez l'apposer sur le classeur de l'edition **PRECEDENTE** du catalogue.
4. Détruire cetta feuille.

1 .



CC102

Catalogue **SCC102-4EN1**
Valid **from** serial number:
***10000305x0A000001* -**

TABLE OF CONTENTS

Page

CC102 S/N 10000305x 0A000001 - 2

Service kits 4

4700938542 Service kit, Deutz 50 h 6
4700938543 Service kit, Deutz 500 h 8
4700938544 Service kit, Deutz 1000 h 10

Repair kits 12

4700938908 Eccentric shaft kit 14
4700938892 Drum rotation kit 16
4700938913 Scraper kit CC102 - (12 mm) 18
4700938885 Shock absorber kit, drum 20
4700938575 Steering hitch kit 22
4700940662 F/R control button kit 24

Frame 26

Frames 28
Scrapers, STD 30
Scrapers, spring loaded 32
Steering hitch 34
Structure DEUTZ 36
Sprinkler system Front tank 40
Sprinkler front/rear 44

Drum 46

Drum 48

Engine 50

Engine DEUTZ D2011 L02 I 52
Intake system DEUTZ 56
Fuel system DEUTZ 58
Exhaust system DEUTZ 60

Hydraulic system 62

Hydraulic diagram 64
Propulsion system 66
4700390742 Hydraulic motor, propulsion, drum 70
4700372352 Hydraulic pump, propulsion 72
Rotating group, valves, charge pump 74
Control unit, cpl 76
4700375631 Hydraulic motor, propulsion, drum 78
4812110281 Junction block 80
Vibration system DEUTZ 82
4700359524 Hydraulic pump, vibration DEUTZ 86
Steering system 88
4700902099 Steering valve 90
4700374603 Steering cylinder 92
Brake system 94

Electrical equipment 96

Electrical equipment 98
Control panel 102
Control panel 102
Electric battery switch DEUTZ 106
Interlock 108
Interlock Loxam 110
Sprinkler timer 112
Driving & side direction lights 114
Working lights 118
Licence plate light, parking lights 120
Rotating beacon 122

Drivers platform 124

TABLE OF CONTENTS

Page

Drivers platform 126
Seat 128
Control panel 130
Arm rests, seat belt, laterally adjusting 132
Comfort drivers seat, laterally adjusting and seat belt 134
Engine and forward/reverse controls DEUTZ 136
F/r controls dual, control panel mounted 138
F/r control dual left side, platform mounted 140
Rops and fops 142

Decals 144

Plates and decals, ce-marking approved 146

Standard equipment 150

Standard equipment 152

Optional equipment 154

Canopy 156
SMV-sign placed on platform 158
Tool equipment 160
Noise suppression DEUTZ , 78 dB 162
Noise suppression Deutz 164
Back-up alarm 166
Rear mirror 168
Combination water supply 170
Combination water supply 2 rear sprinkler pipes 172
Towing valve 174
Flow divider 176
Vibration shut-off, front drum DEUTZ 178
Vibration shut-off, rear drum DEUTZ 180
Automatic vibration control 182
Service brake 184
Driving, restriction 186
Bio-hydraulic oil lock Old design 188
High torque drum drive " Long" 190
4700372118 Hydraulic motor high torque 192
High torque drum drive " Short" 194
4700380594 Hydraulic motor, propulsion, drum 196
Brake release, propulsion motor 4700372118 198
Brake release, propulsion motor Poclain 200

CC102 S/N 10000305x 0A000001 - CC102100



CC102 S/N 10000305x 0A000001 -

Item	Part No	Rem	Qty	Description	Code
				Service kits (Page 4)	
				Repair kits (Page 12)	
10				**Frame (Page 26)**	
20				**Drum (Page 46)**	
30				**Engine (Page 50)**	
50				**Hydraulic system (Page 62)**	
60				**Electrical equipment (Page 96)**	
70				**Drivers platform (Page 124)**	
80				**Decals (Page 144)**	
90				**Standard equipment (Page 150)**	
91				**Optional equipment (Page 154)**	

Service kits

Item	Part No	Rem	Qty	Description	Code
1	4700938542	A		**Service kit, Deutz 50 h (Page 6)**	
2	4700938543	A		**Service kit, Deutz 500 h (Page 8)**	
3	4700938544	A		**Service kit, Deutz 1000 h (Page 10)**	

A) Deutz F2L 1011F/2011, F3L 2011, D2011 L02 I/L03 I

4700938542 Service kit, Deutz 50 h

17423

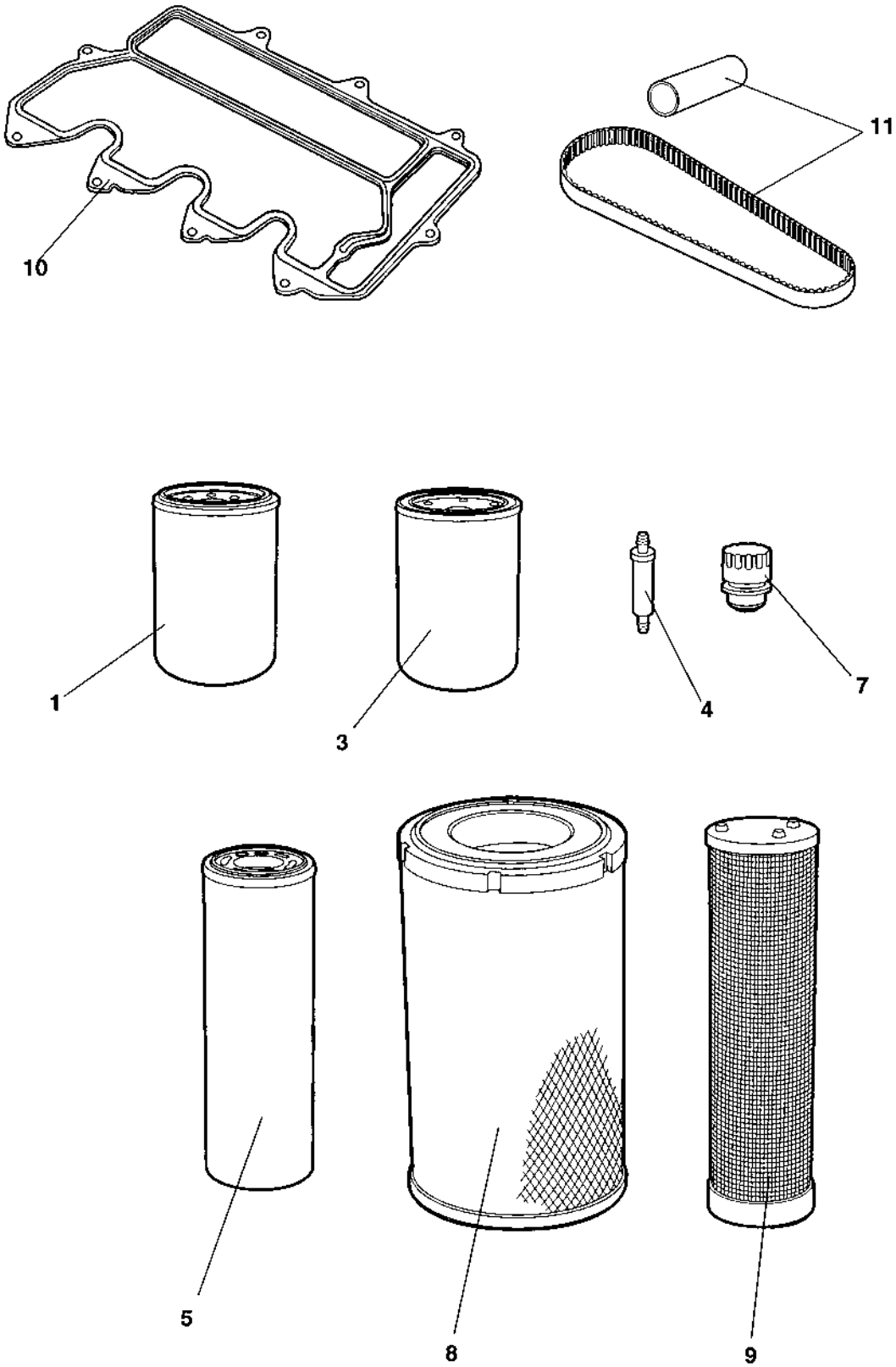

4700938542 Service kit, Deutz 50 h

Item	Part No	Rem	Qty	Description	Code
	4700938542			**Service kit, Deutz 50 h (Page 6)**	
1	4700939515		1	Oil filter	A
3	4700903938		1	Fuel filter	A
4	4700929322		1	Fuel strainer	B
5	4700903247		1	Filter element	A

4700938543 Service kit, Deutz 500 h

17423

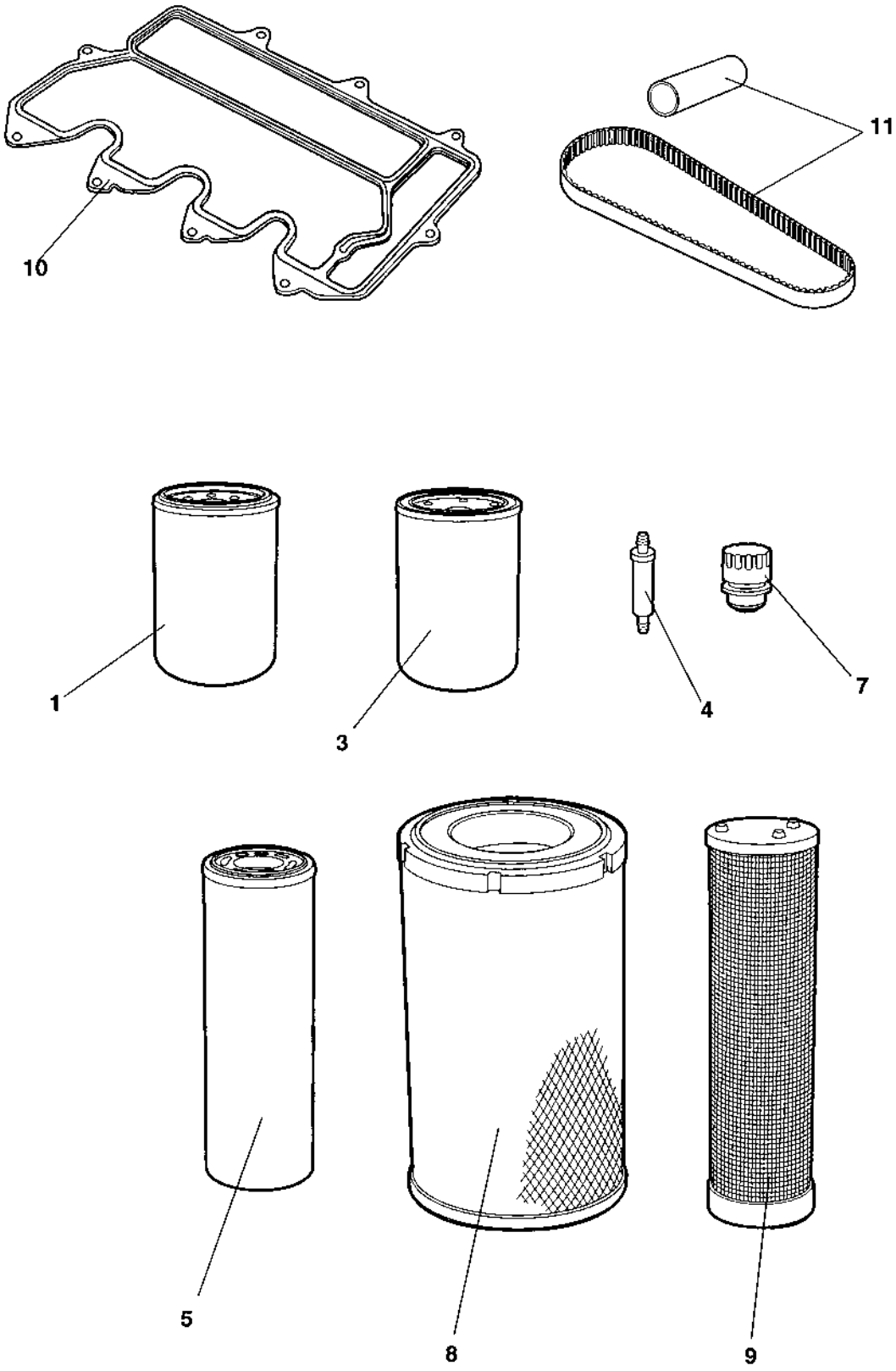

4700938543 Service kit, Deutz 500 h

Item	Part No	Rem	Qty	Description	Code
	4700938543			**Service kit, Deutz 500 h (Page 8)**	
1	4700939515		1	Oil filter	A

4700938544 Service kit, Deutz 1000 h

17423

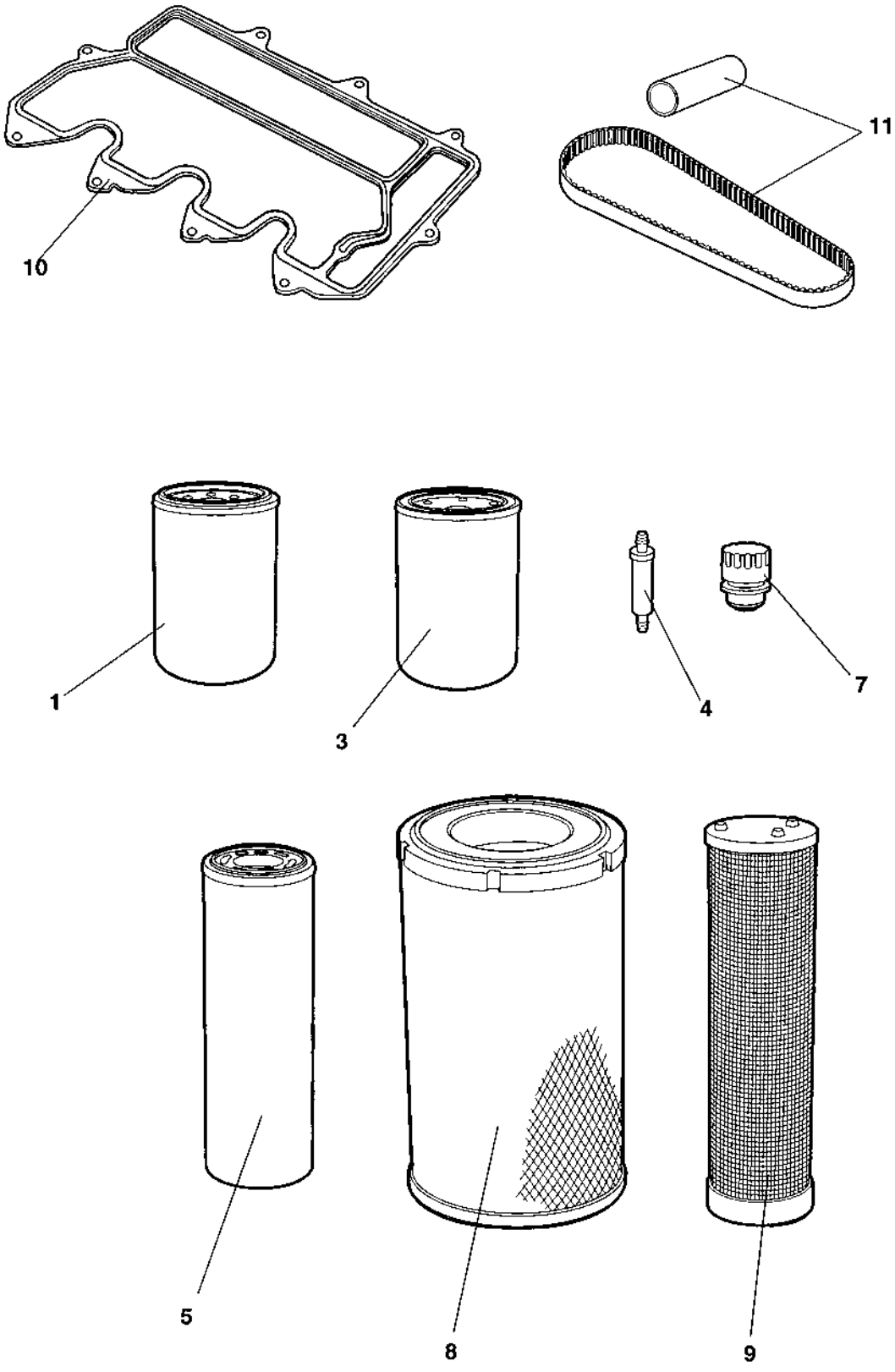

4700938544 Service kit, Deutz 1000 h

Item	Part No	Rem	Qty	Description	Code
	4700938544			**Service kit, Deutz 1000 h (Page 10)**	
1	4700939515		1	Oil filter	A
3	4700903938		1	Fuel filter	A
4	4700929322		1	Fuel strainer	B
5	4700903247		1	Filter element	A
7	4700357138		1	Ventilating filter	A
8	4700380295		1	Main filter	A
9	4700380294		1	Safety filter	A
10	4700938584		1	Valve cover gasket	

Repair kits

Repair kits

Item	Part No	Rem	Qty	Description	Code
1	4700938908		2	**Eccentric shaft kit (Page 14)**	
2	4700938892		2	**Drum rotation kit (Page 16)**	
3	4700938913			**Scraper kit CC102 - (12 mm) (Page 18)**	
4	4700938885		2	**Shock absorber kit, drum (Page 20)**	
5	4700938575			**Steering hitch kit (Page 22)**	
6	4700940662			**F/R control button kit (Page 24)**	

4700938908 Eccentric shaft kit

938908

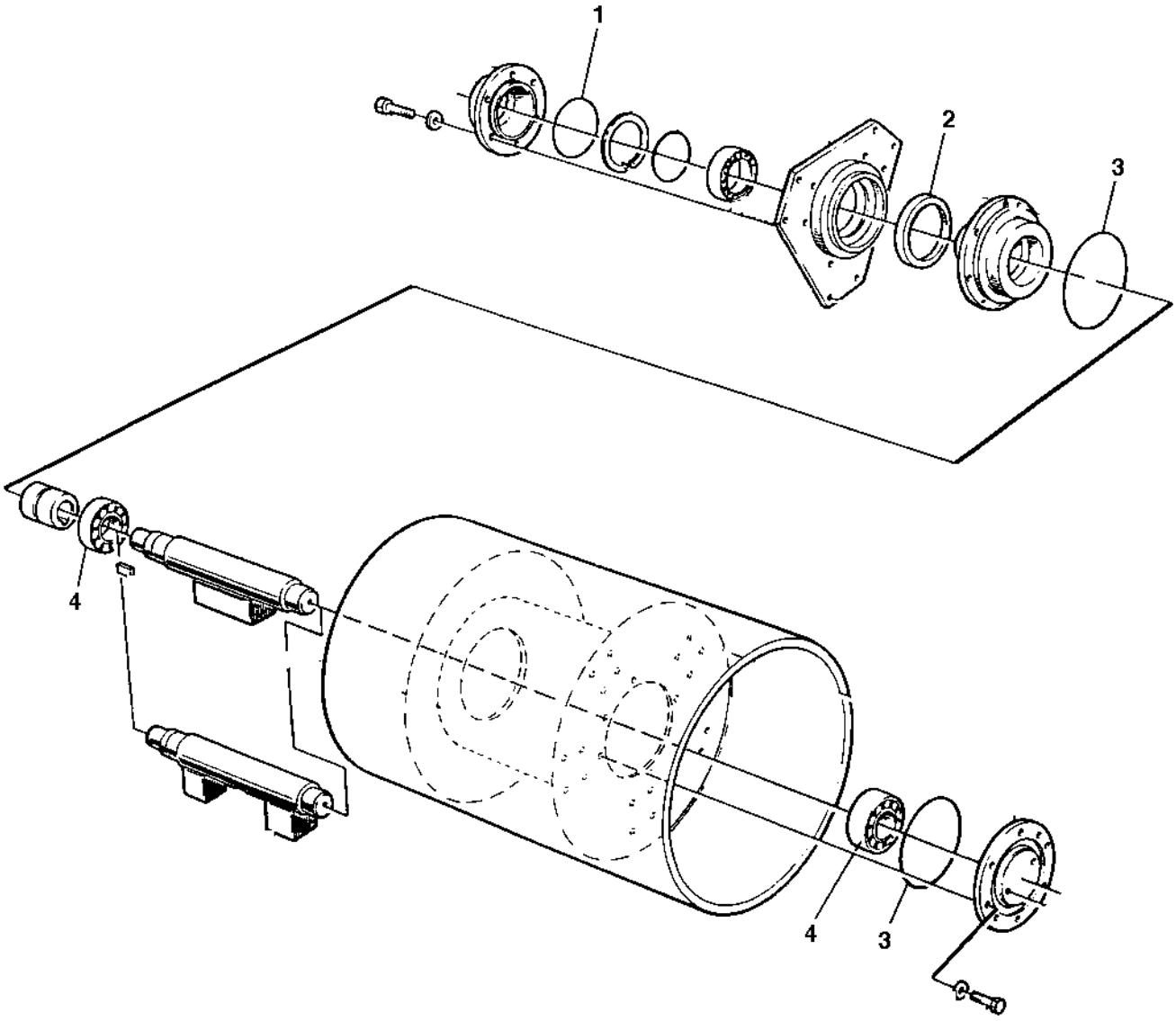

4700938908 Eccentric shaft kit

Item	Part No	Rem	Qty	Description	Code
	4700938908			**Eccentric shaft kit (Page 14)**	
1	4700160132		1	O-ring 124, 50x3, 00	D
2	4700163049		1	Sealing	D
3	4700923951		2	O-ring	D
4	4700904258		2	Spherical roller bearing	D

4700938892 Drum rotation kit

938892

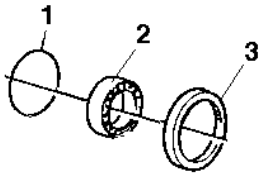

4700938892 Drum rotation kit

Item	Part No	Rem	Qty	Description	Code
	4700938892			**Drum rotation kit (Page 16)**	
1	4700160132		1	O-ring 124, 50x3, 00	D
2	4700111018		1	Ball bearing	D
3	4700163049		1	Sealing	D

4700938913 Scraper kit CC102 - (12 mm)

SCRAPER

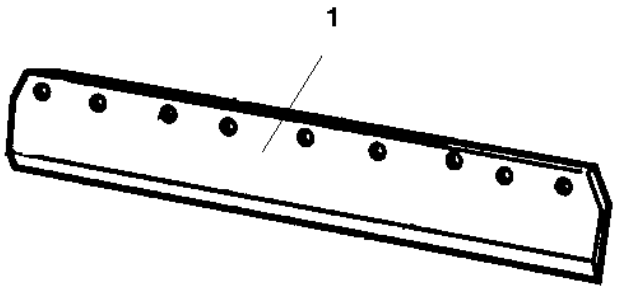

4700938913 Scraper kit CC102 - (12 mm)

Item	Part No	Rem	Qty	Description	Code
	4700938913			**Scraper kit CC102 - (12 mm) (Page 18)**	
1	4700385216		4	Scraper	B

4700938885 Shock absorber kit, drum

SHOCK ABSORB.

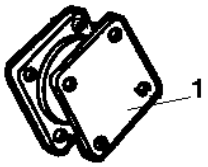

4700938885 Shock absorber kit, drum

Item	Part No	Rem	Qty	Description	Code
	4700938885			**Shock absorber kit, drum (Page 20)**	
1	4700345215		8	Shock absorber	B

4700938575 Steering hitch kit

938575

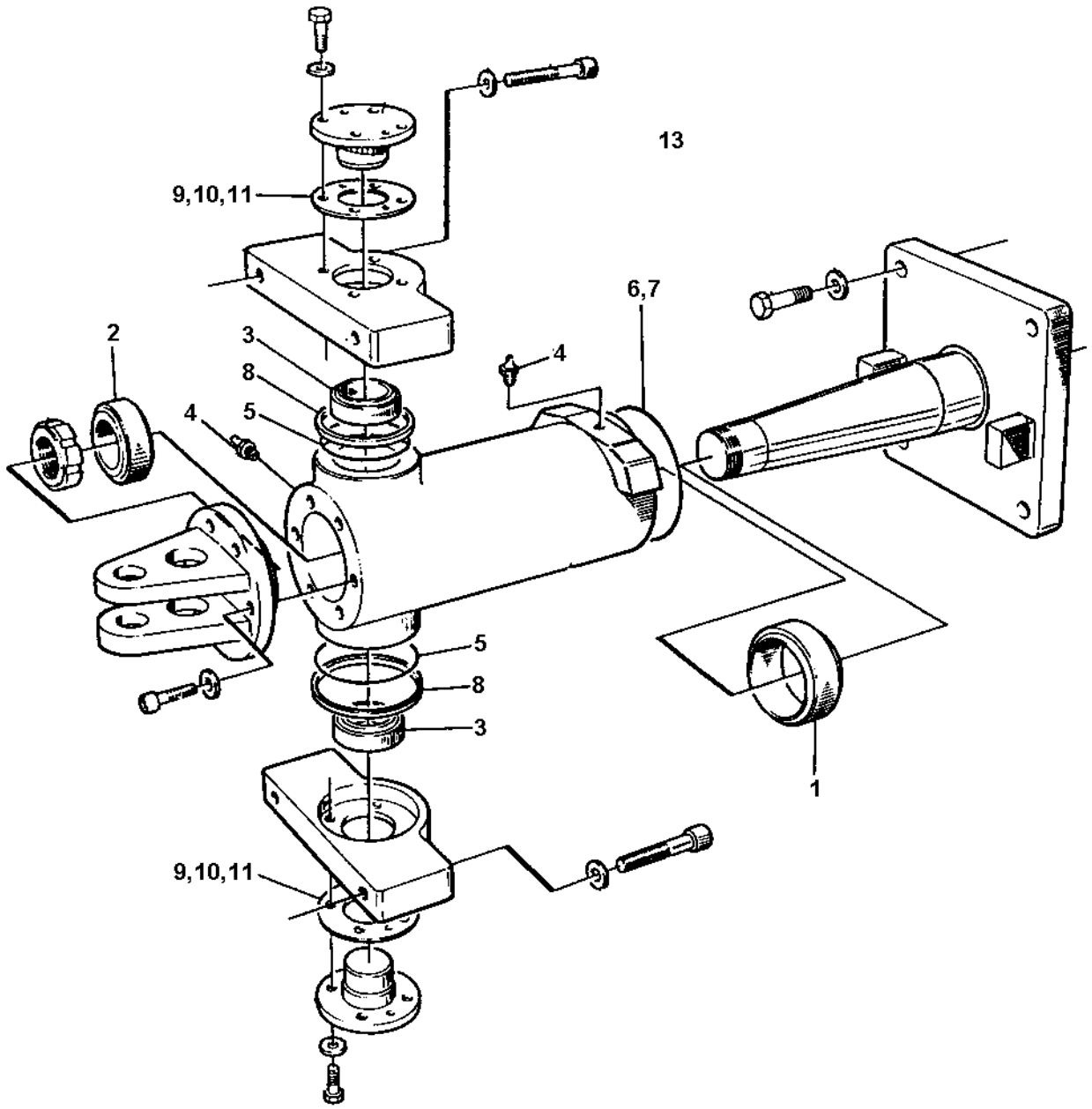

4700938575 Steering hitch kit

Item	Part No	Rem	Qty	Description	Code
	4700938575			**Steering hitch kit (Page 22)**	
1	4700902063		1	Bushing	D
2	4700902062		1	Bushing	D
3	4700902061		2	Bushing	D
4	4700926214		1	Grease fitting	C
5	4700167044	A	2	V-ring	D
6	4700160112		1	O-ring	D
7	4700892179		1	O-ring	D
8	4700357418		2	Sealing	D
9	4700347153		2	Shim T=0,2 mm	
10	4700347154		2	Shim T=0,4 mm	
11	4700347155		2	Shim T=0,8 mm	
13	4700938534		1	Lube grease	
14			1	Workshop manual W1048***	

A) For improved function this replaces earlier used 4700160032

4700940662 F/R control button kit

940662

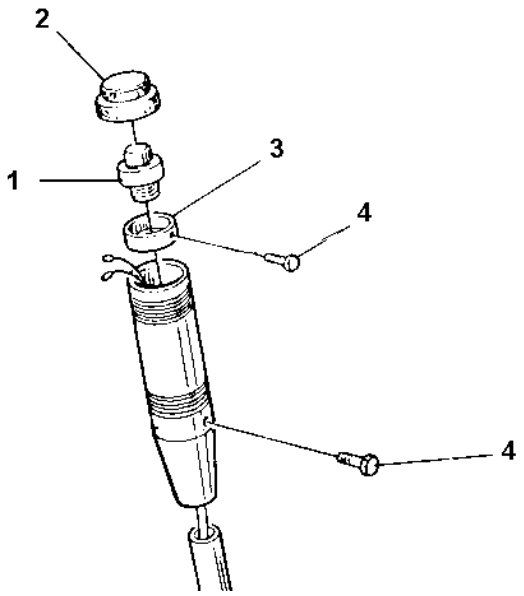

4700940662 F/R control button kit

Item	Part No	Rem	Qty	Description	Code
1	4700928497		1	Push button	D
2	4700348481		1	Cover	B
3	4700285911		1	Bushing	D
4	4700533001		3	Screw	

Frame

Frame

Item	Part No	Rem	Qty	Description	Code
105				**Frames (Page 28)**	
230				**Scrapers, STD (Page 30)**	
280				**Scrapers, spring loaded (Page 32)**	
300				**Steering hitch (Page 34)**	
430				**Structure DEUTZ (Page 36)**	
510				**Sprinkler system Front tank (Page 40)**	
530				**Sprinkler front/rear (Page 44)**	

Frames

18359-2

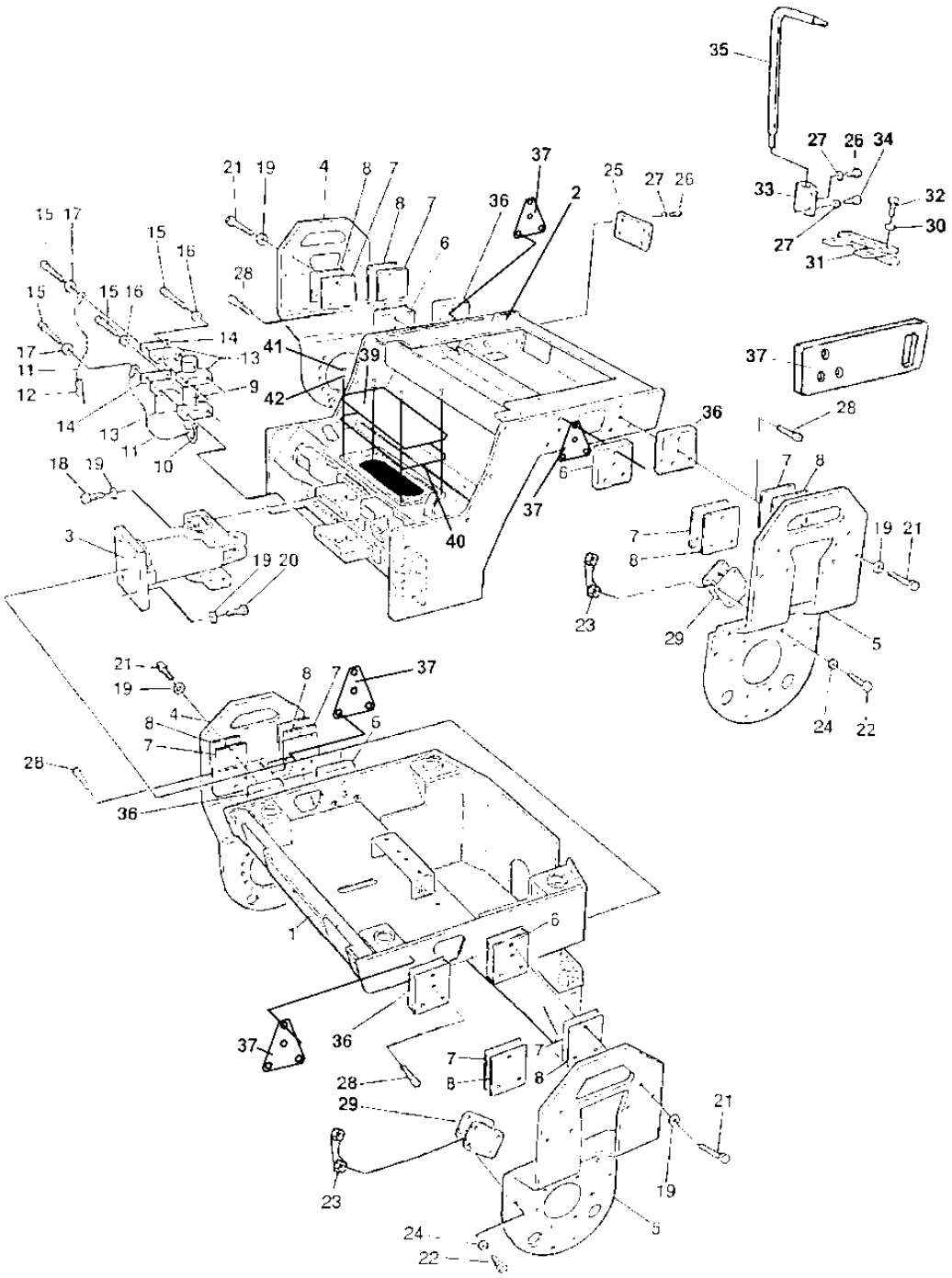

Frames

Item	Part No	Rem	Qty	Description	Code
1	4700378361		1	Frame, rear	
2	4700378359		1	Frame, front	
3			1	**Steering hitch (Page 34)**	
4	4700357235		2	Fork	
5	4700357236		2	Fork	
6	4700357218		4	Spacer block	
7	4700357222		N	Shim T=1 mm	
8	4700357221		N	Shim T=3 mm	
9	4700357486		1	Shaft	
10	4700357488		1	Spring	C
11	4700343775		2	Wire	D
12	4700357483		1	Hair pin	
13	4700902171	A	2	Clamp	
14	4700902172		2	Cover plate	
15	4700500016		4	Screw M6x55 8.8 A2K	C
16	4700600004		2	Washer	C
17	4700615076		2	Washer 7,0x25x1,5	C
18	4700902100		4	Screw	
19	4700904232		32	Washer	C
20	4700927396		4	Screw	
21	4700500094		24	Screw	
22	4700500030		24	Hexagon head screw	C
23	4700379179	G	12	Holder	
24	4700904230		24	Steel plain washer	C
25	4700378868		4	Cover	
26	4700792187		16	Screw M5x14	
27	4700904281		16	Washer 5,3x10x1 300HV	C
28	4700508065		8	Screw	
29			16	Shock absorber See group 20	
30	4700904231		6	Washer 13x24x2 300 HV	C
31	4700358743	D	1	Towing device	
32	4700947687	E	6	Screw M12-1,75x30 10,9	
33	4700358861	E	1	Mirror bracket	
34	4700500188	E	1	Screw M8-1,25x14 8,8	
35	4700373999	E	1	Rod	
36	4700357218		4	Spacer block	
37	4700387429	D	4	Tie down eyelet	
38	4700393540		8	Threaded plate	
39	4700349879		1	Cover	
40	4700349880		1	O-ring	C
41	4700500019		14	Screw M8x16H 8.8 A2K	C
42	4700904229		14	Washer 8,4x16x1,5	C

A) 2 pcs
D) Option, front/rear
E) Option
G) Replaces earlier used Lock nut 4700586018; each holder has two nuts

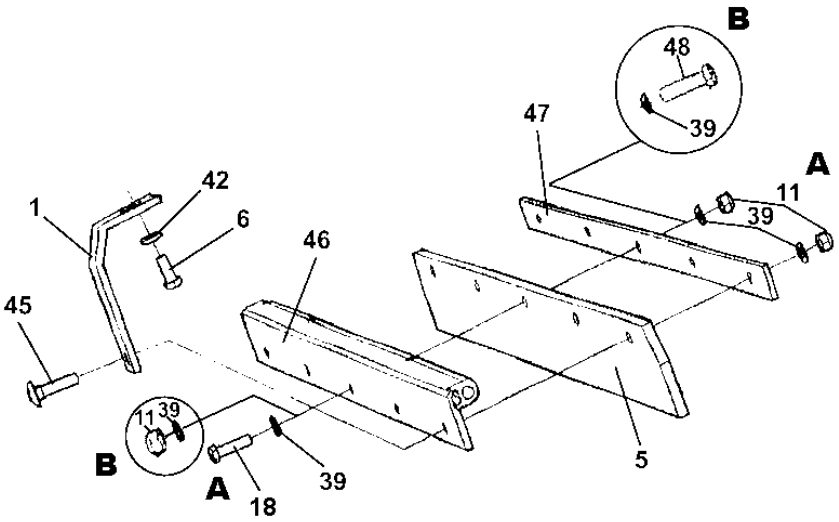
B
48
39
47
A
11
39
42
1
6
46
45
11
39
B
A
18
39
5

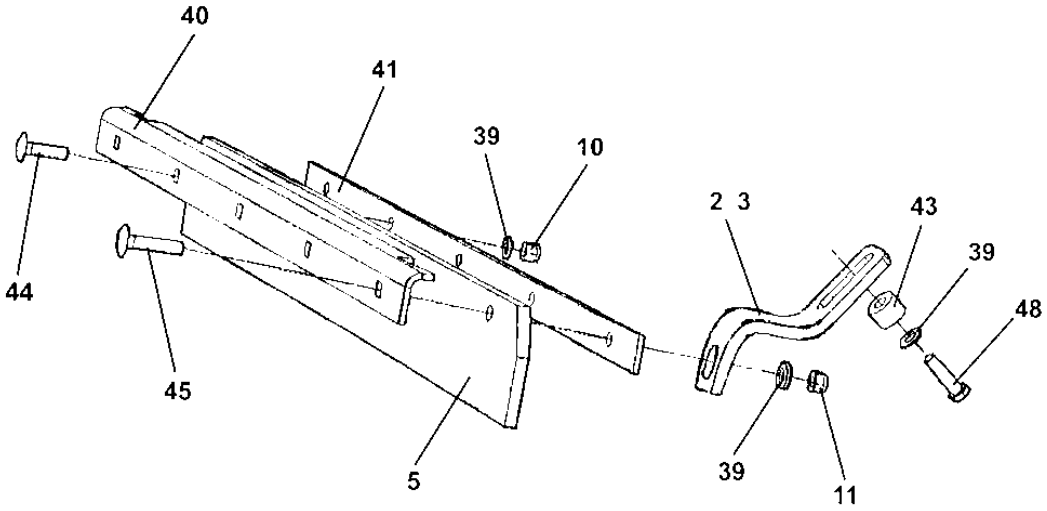
40
41
39
10
2
3
43
39
48
44
45
5
39
11

Scrapers, STD

Item	Part No	Rem	Qty	Description	Code
1	4700376624	C	4	Scraper bracket	
2	4700358588	A	2	Scraper bracket	
3	4700358589	B	2	Scraper bracket	
5	4700385216		4	Scraper	B
6	4700500046		4	Screw M12x025H	C
10	4700586019		6	Lock nut	C
11	4700791963		14	Lock nut M12	C
18	4700500056	D	10	Screw	C
	4700500056	E	6	Screw	C
39	4700904231		30	Washer 13x24x2 300 HV	C
40	4700385671		2	Scraper bracket	
41	4700383996		2	Scraper bracket	
42	4700904703		4	Washer	C
43	4700384493		4	Spacer sleeve	
44	4700904342		6	Screw M12x45	
45	4700904424		8	Screw M12x55	
46	4700389147		2	Sprinkler pipe/bracket	
47	4700377794		2	Scraper bracket	
48	4812110229	E	4	Screw M12x50	

A) Front lower
B) Rear lower
C) Improved design has only one square mounting hole
D) Used together with alternative "A" in drawing
E) Used together with alternative "B" in drawing

Scrapers, spring loaded

18111

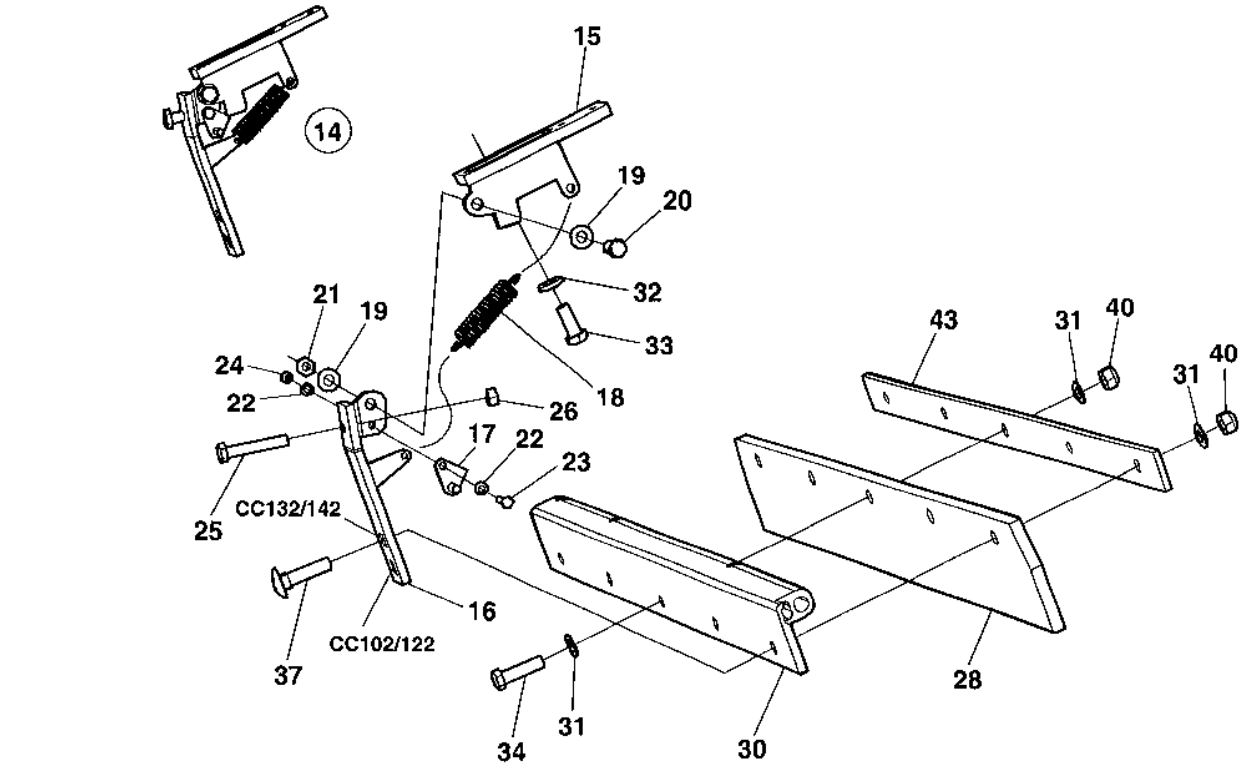

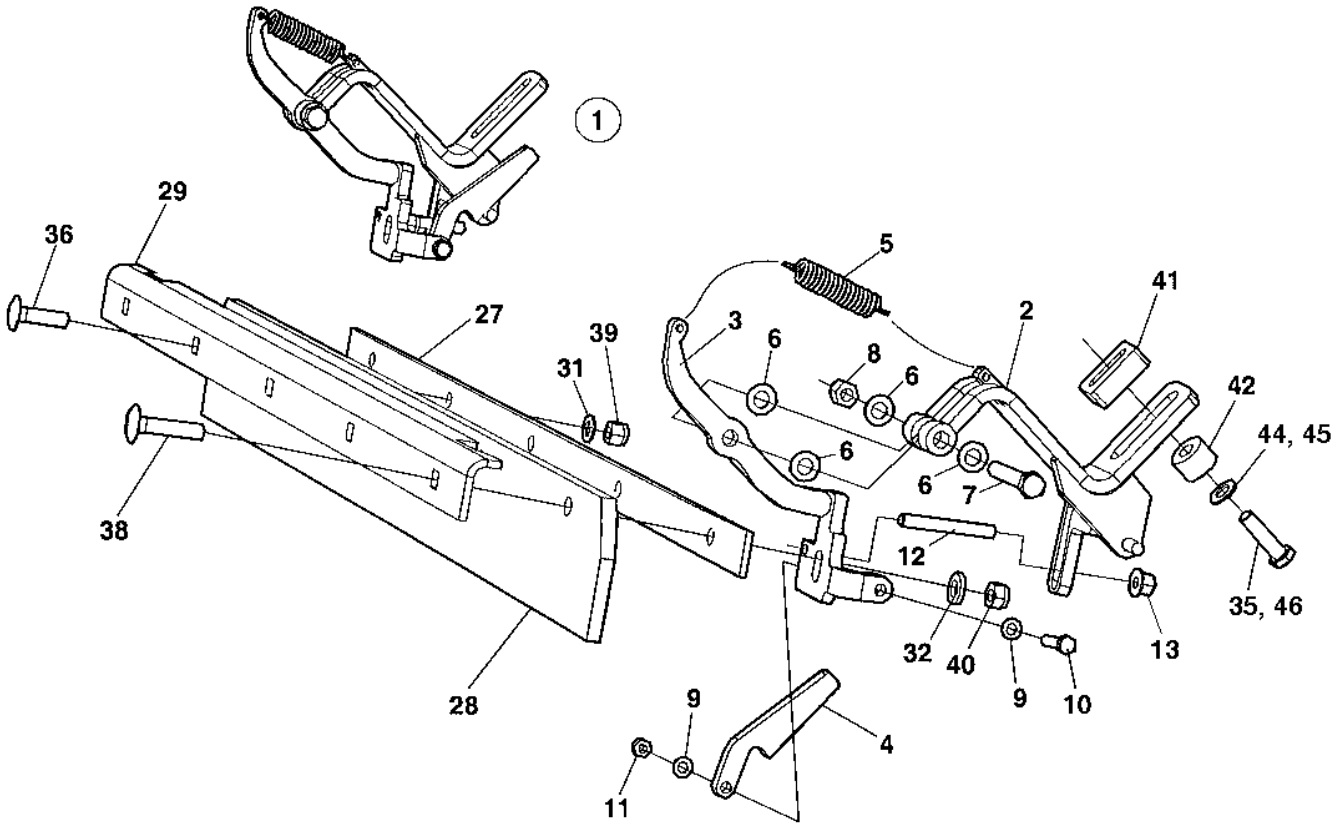

Scrapers, spring loaded

Item	Part No	Rem	Qty	Description	Code
1	4700389999		4	Scraper bracket	
2		D	1	.Bracket	
3		D	1	.Bracket	
4	4700385613	D	1	.Hook	
5	4700358876		1	.Spring	
6	4700904231		4	.Washer 13x24x2 300 HV	C
7	4700500133		1	.Screw	C
8	4700586019		1	.Lock nut	C
9	4700904229		2	.Washer 8,4x16x1,5	C
10	4700500047		1	.Hexagon head screw	C
11	4700791182		1	.Lock nut M8	
12		D	1	.Stud	
13	4700902287		1	.Nut	C
14	4700389998		4	Scraper bracket	
15		D	1	.Bracket	
16		D,C	1	.Bracket	
17		D	1	.Stop	
18	4700358876		1	.Spring	
19	4700904230		2	.Steel plain washer	C
20	4700380255		1	.Screw	
21	4700586018		1	.Lock nut	C
22	4700904228		3	.Washer 6,4x12x1,5	C
23	4700500015		1	.Screw M6-1x30 8,8	C
24	4700586002		1	.Lock nut M6 -8	C
25	4700791082		1	.Screw	
26	4700570006		1	.Nut	C
27	4700383996		2	Scraper bracket	
28	4700385216		4	Scraper	B
29	4700385671		2	Scraper bracket	
30	4700389147		2	Sprinkler pipe/bracket	
31	4700904231		22	Washer 13x24x2 300 HV	C
32	4700904703		8	Washer	C
33	4700500046		4	Screw M12x025H	C
34	4700500056		6	Screw	C
35	4700500049	A	2	Screw	C
36	4700904342		6	Screw M12x45	
37	4700901330		4	Screw M12x50	
38	4700904424		4	Screw M12x55	
39	4700586019		6	Lock nut	C
40	4700791963		14	Lock nut M12	C
41	4700385628	A	2	Spacer	
42	4700384493	B	2	Spacer sleeve	
43	4700377794		2	Scraper bracket	
44	4700904231	B	2	Washer 13x24x2 300 HV	C
45	4700904703	A	2	Washer	C
46	4700500056	B	2	Screw	C

A) In use at rear lower scraper
B) In use at front lower scraper
C) Mounting hole to be used for item 37 depending on model
D) Not sold separately

Steering hitch

15465-1

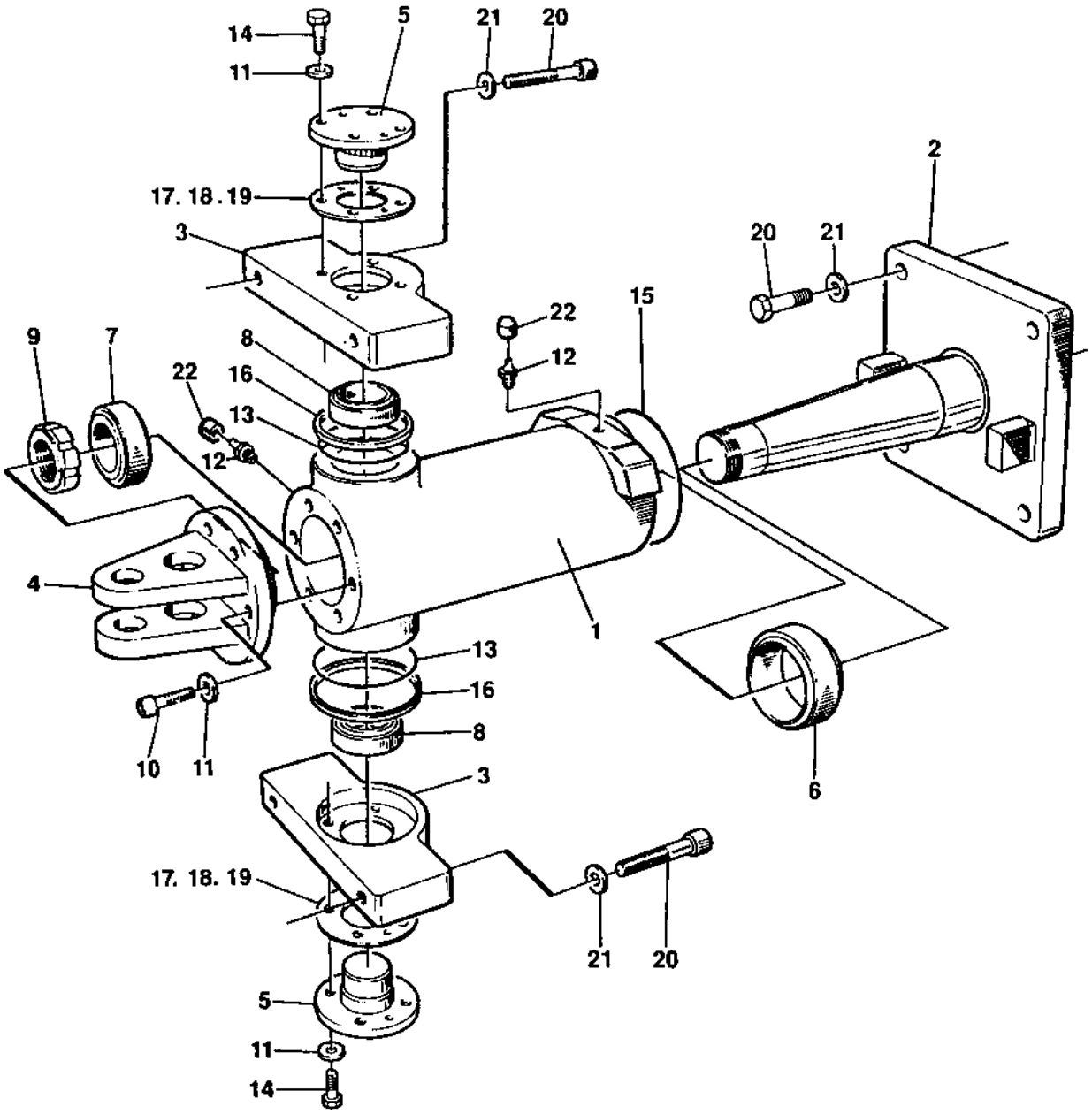

Steering hitch

Item	Part No	Rem	Qty	Description	Code
1	4700358976		1	Bearing housing	
2	4700358978		1	Hitch shaft	
3	4700357031		2	Bracket	
4	4700357038		1	Bracket	
5	4700357039		2	Shaft	
6	4700902063		1	Bushing	D
7	4700902062		1	Bushing	D
8	4700902061		2	Bushing	D
9	4700902060		1	Lock nut	
10	4700902059		6	Screw	
11	4700600008		14	Washer	C
12	4700926214		2	Grease fitting	C
13	4700167044	A	2	V-ring	D
14	4700500028		8	Screw	C
15	4700892179		1	O-ring	D
16	4700357418		2	Sealing	D
17	4700347153		N	Shim T=0,2 mm	
18	4700347154		N	Shim T=0,4 mm	
19	4700347155		N	Shim T=0,8 mm	
20			8	Screw	
21			8	Washer	
22	4700902576		2	Cover	

A) For improved function this replaces earlier used 4700160032

Structure DEUTZ

18808

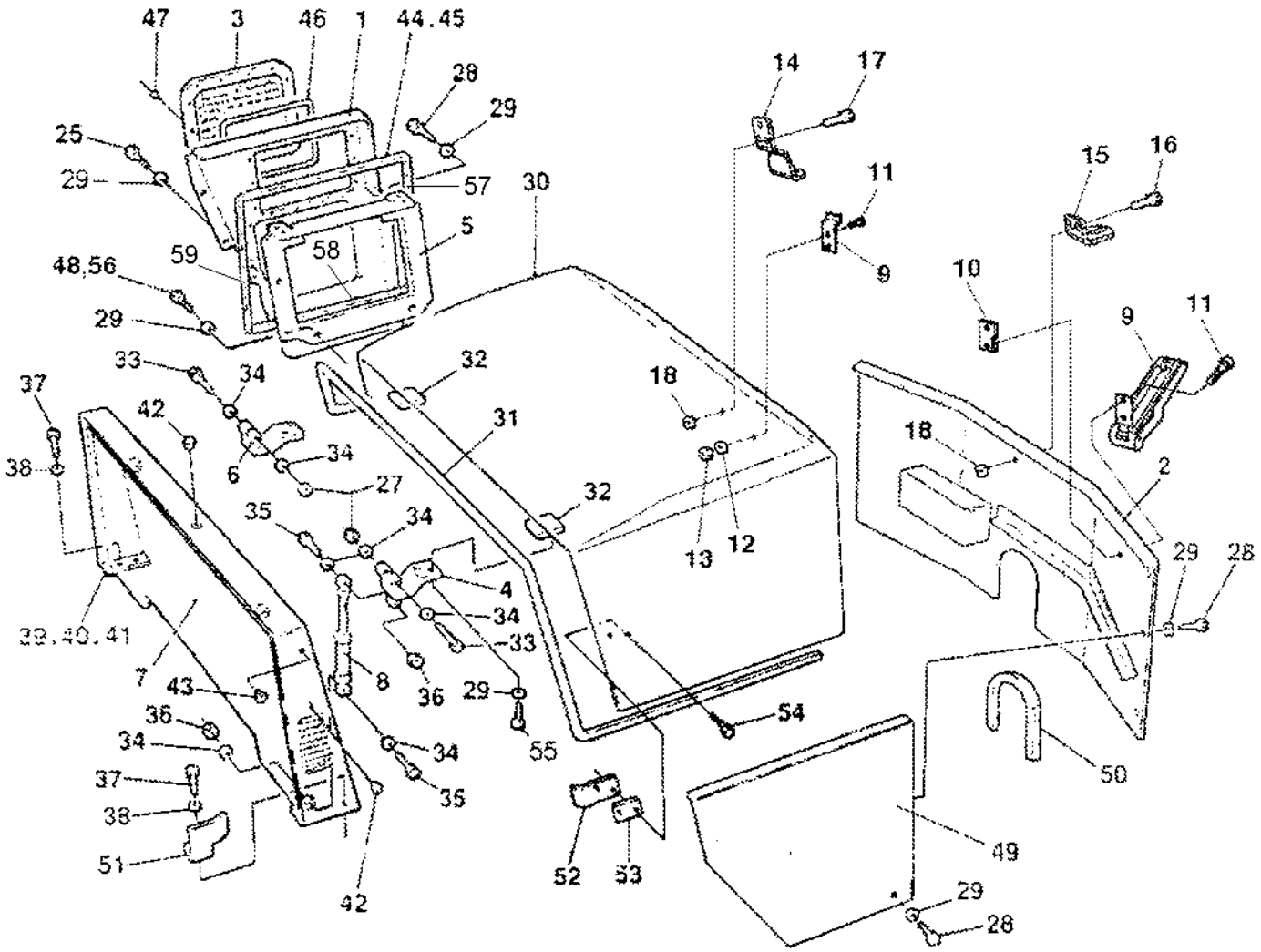

Structure DEUTZ

Item	Part No	Rem	Qty	Description	Code
1	4700391121	A	1	Cover, cpl	
	4700391119		1	.Noise reducing plate	
	4700904206	K,J	4	.Screw	C
	4700373476	K,J	4	.Insulating washer	C
	4700391120		1	.Insulating material	
2	4700382565		1	Cover	
3	4700391118	L	1	Grid	
4	4700357276		1	Hinge	
5	4700374625		1	Cooler frame	
6	4700357280		1	Hinge	
7	4700357248		1	Hood frame	
8	4700902256		1	Gas spring	D
9	4700388846		2	Latch	
10	4700387956		2	Stop plate	
11	4700508022		8	Screw M4x16	
12	4700904698		4	Washer	C
13	4700923976		4	Nut	C
14	4700377061		1	Lock plate	
15	4700388852		1	Lock plate	
16	4700791754		2	Blind rivet	
17	4700792180		3	Blind rivet	
18	4700904228		5	Washer 6,4x12x1,5	C
25	4700500021		2	Screw M8-1,25x25 8.8	C
27	4700586003		2	Lock nut M8	C
28	4700500053		16	Screw M8x20H 8.8	C
29	4700904640		20	Washer 8,4x22x3	C
30	4700377952		1	Engine hood	
31	4700902166	C	1XL	.Edge trim	D
32	4700357863		N	Shim T=2 mm	
33	4700500249		2	Screw	
34	4700904229		7	Washer 8,4x16x1,5	C
35	4700508027		2	Screw	
36	4700570005		2	Nut M8	C
37	4700500031		4	Screw	C
38	4700359434		4	Spacer sleeve	C
39	4700371994		N	Shim T=2 mm	
40	4700792708		1	Washer	
41	4700792709		1	Washer	
42	4700902203		3	Plug	C
43	4700902804		4	Plug	
44	4700792796	D	1XL	Rubber strip 25x20	
45	4700202046	E	1XL	Rubber strip 25x10	
46	4700904076	F	1XL	Edge trim	D
47	4700792210		10	Screw torx	
48	4700500047		2	Hexagon head screw	C
49	4700376866	G	1	Cover	
50	4700202028	H	1XL	Edge trim	D

A) Right
C) L=3,680 m
D) L=0,350 m
E) L=0,850 m
F) L=0,998 m
G) Left
H) L=0,457 m
J) Not illustrated
K) For absorbent
L) Included in 4700391121, item 1

Structure DEUTZ

18808

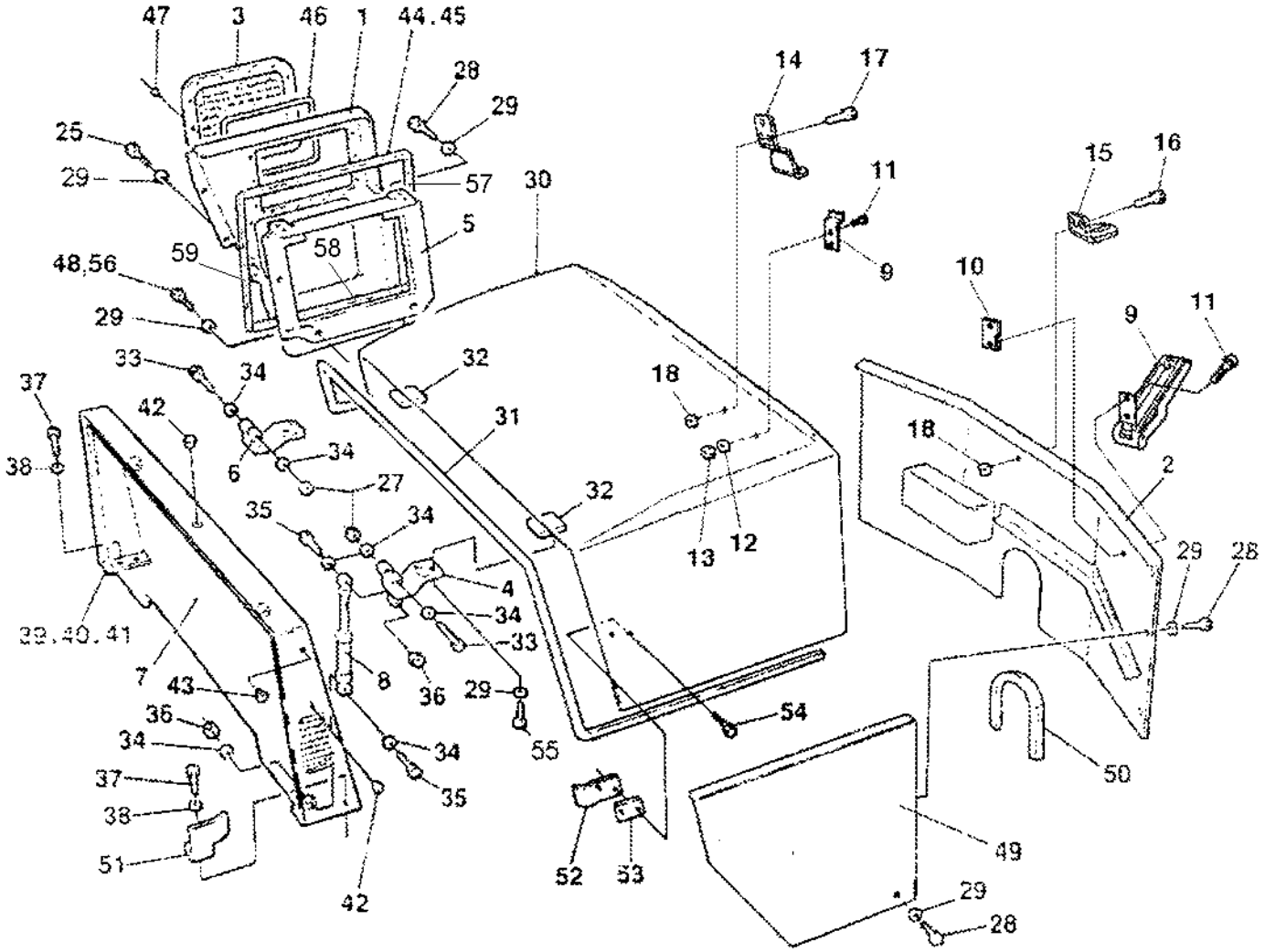

Structure DEUTZ

Item	Part No	Rem	Qty	Description	Code
51	4700357866		1	Stop	
52	4700375594		1	Holder	
53	4700375595		1	Spacer	
54	4700904206		2	Screw	C
55	4700500020		4	Screw M8-1,25x22 8,8	C
56	4700500022		1	Screw M8x30H 8.8 A2K	C
57	4700792796	M	1XL	Rubber strip 25x20	
58	4700792796	N	1XL	Rubber strip 25x20	
59	4700792796	O	1XL	Rubber strip 25x20	

M) L=0,380 m
N) L=0,240 m
O) L=0,200 m

Sprinkler system Front tank

18406

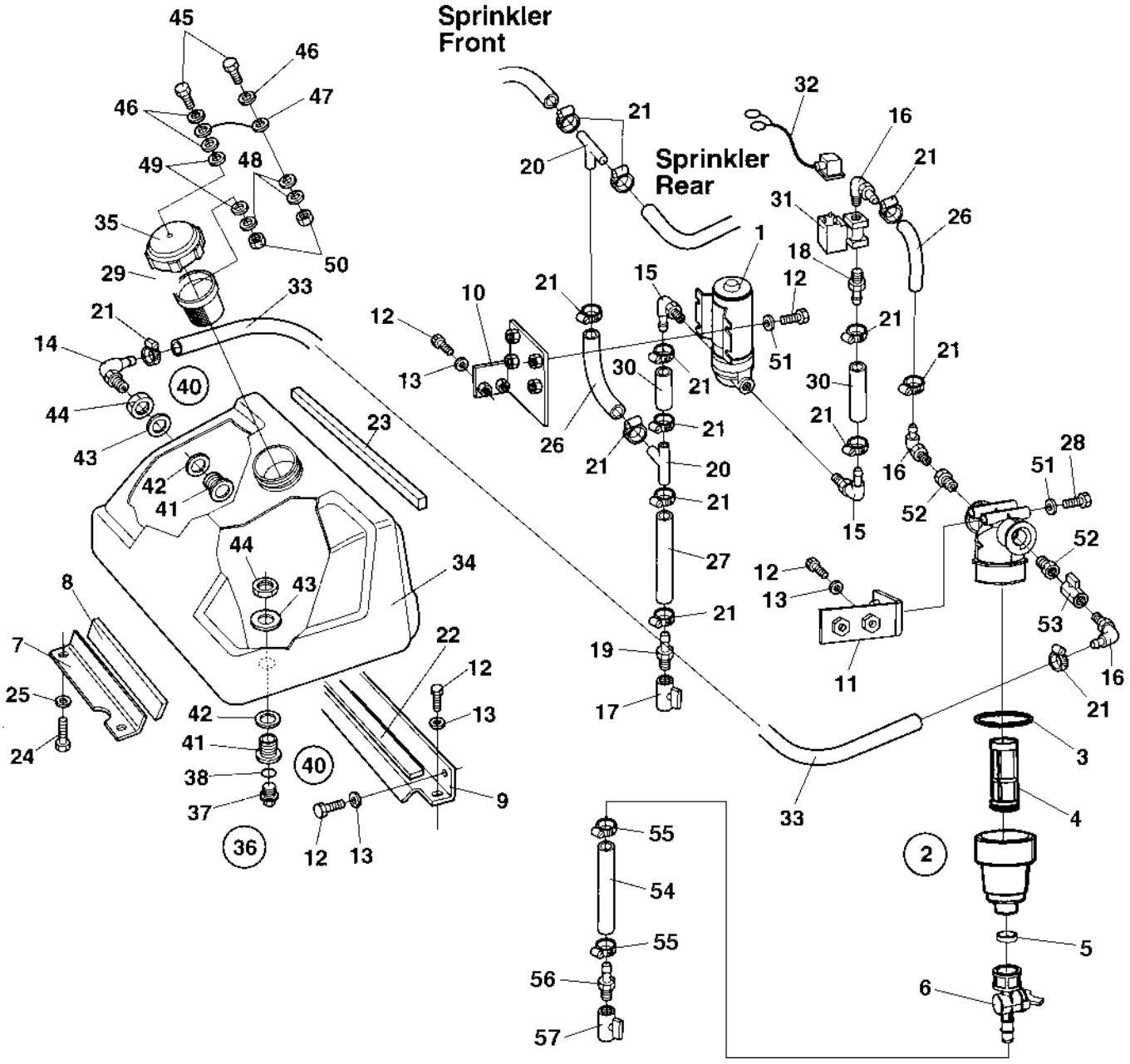

Sprinkler system Front tank

Item	Part No	Rem	Qty	Description	Code
1	4700383697		1	Water pump	C
2	4700791950		1	Water strainer, cpl	
3	4700791959		1	.O-ring	C
4	4700791949		1	.Filter element	A
5	4700791568		1	.Gasket	
6	4700379009		1	.Valve	
7	4700357395		1	Holder plate	
8	4700926911	A	1XL	Rubber strip	
9	4700357142		1	Holder plate	
10	4700382181		1	Holder plate	
11	4700390840		1	Filter bracket	
12	4700500053		13	Screw M8x20H 8.8	C
13	4700904229		13	Washer 8,4x16x1,5	C
14	4700901431		1	Hose connection	C
15	4700923734		2	Hose connection	C
16	4700924996		3	Hose connection	C
17	4700925599		1	Valve	C
18	4700901432		1	Hose connection	
19	4700924544		1	Hose connection	C
20	4700923735		2	Hose connection	C
21	4700313002	J	14	Hose clamp 13-20 mm	
	4700313001		14	Hose clamp	C
22	4700903478	B	1XL	Absorbent	
23	4700202042	C	1XL	Rubber strip	
24	4700500028		2	Screw	C
25	4700904230		2	Steel plain washer	C
26	4700904878	D	2XL	Plastic hose	C
27	4700904878	D	1XL	Plastic hose	C
28	4700500190		2	Screw	
29	4700358846		1	Strainer	A
30	4700904878	E	3XL	Plastic hose	C
31	4700287713		1	Solenoid valve	C
32	4700358809		1	Cable harness	
33	4700904878	C	1XL	Plastic hose	C
34	4700373797		1	Sprinkling tank	
35	4700359003		1	.Cap	C
36	4700937053		1	.Plug, cpl	
37			1	..Plug	
38			1	..Gasket	
40	4700902916		2	.Adapter kit	C
41			1	..Pipe fitting	C
42			1	..Sealing	C
43			1	..Washer	C
44			1	..Nut	C
45	4700500040		2	Screw M6-1x20 8,8	C
46	4700904228		3	Washer 6,4x12x1,5	C
47	4700357643		1	Wire	D
48	4700615042		3	Conical spring washer	
49	4700615076		2	Washer 7,0x25x1,5	C
50	4700586002		2	Lock nut M6 -8	C
51	4700904640		6	Washer 8,4x22x3	C

A) L=0,430 m
B) L=0,670 m
C) Length as required
D) L=0,300 m
E) L=0,070 m
J) In use together with transparent hose; old design of 4700904878

Sprinkler system Front tank

18406

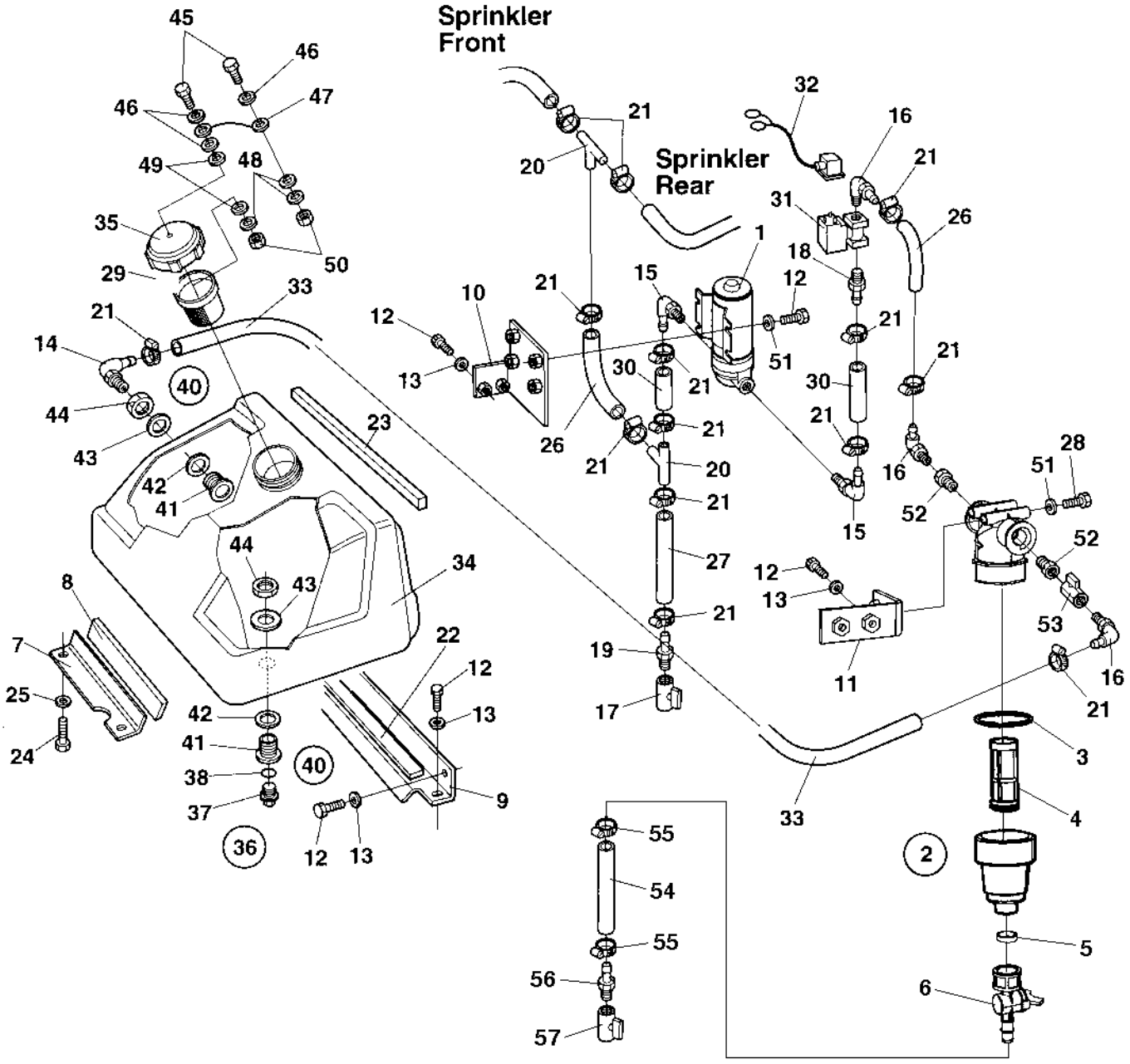

Sprinkler system Front tank

Item	Part No	Rem	Qty	Description	Code
52	4700903886		2	Adapter	C
53	4700924986		1	Valve	C
54	4700904878	E,H	1	Plastic hose	C
55	4700313001	H	2	Hose clamp	C
56	4700924544	H	1	Hose connection	C
57	4700925599	H	1	Valve	C

E) L=0,070 m
H) In use together with option: Noise suppression; See section for Optional equipment

Sprinkler front/rear

18152

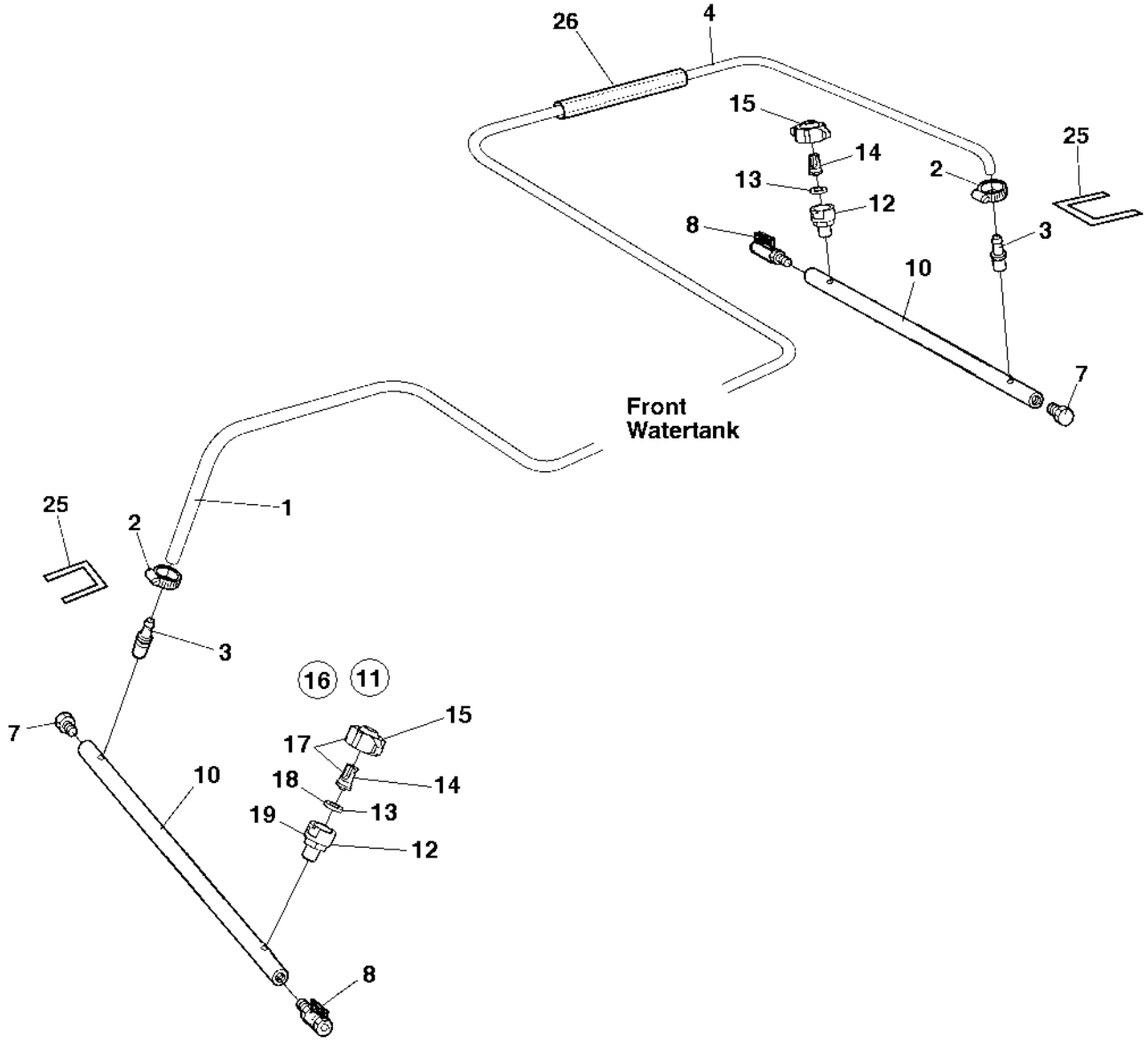

Sprinkler front/rear

Item	Part No	Rem	Qty	Description	Code
1	4700904878	B	1XL	Plastic hose	C
2	4700313002	D	2	Hose clamp 13-20 mm	
	4700313001		2	Hose clamp	C
3	4700791977		2	Hose connection	C
4	4700904878	C	1XL	Plastic hose	C
7	4700791974		2	Plug threaded	C
8	4700233215		2	Ball valve	
10		A	2	Sprinkler pipe/bracket	
11	4700376873	F	4	Spraying nozzle, cpl	A
12	4700376874	F	1	.Housing	D
13	4700376876	F	1	.Gasket	B
14	4700376877	F	1	.Nozzle and strainer, yellow 0,8	A
15	4700376875	F	1	.Retainer	B
16	4700392011	E	4	Spraying nozzle, cpl	A
17	4700392509	E	1	.Retainer, nozzle, strainer, yellow 0.8	D
18	4700392510	E	1	.Gasket	B
19	4700392508	E	1	.Housing	D
25	4700902379		2XL	Edge trim	
26	4700901191		1XL	Protective hose	C

A) For correct view and PN; see scraper assembly for same SN.
B) L=1,4 m
C) L=2,1 m
D) In use together with transparent hose; old design of 4700904878
E) Improved design
F) Recommendation: Replace with improved design item 16; interchangeable as a cpl. unit

Drum

Item	Part No	Rem	Qty	Description	Code
100				**Drum (Page 48)**	

Drum

15468-3

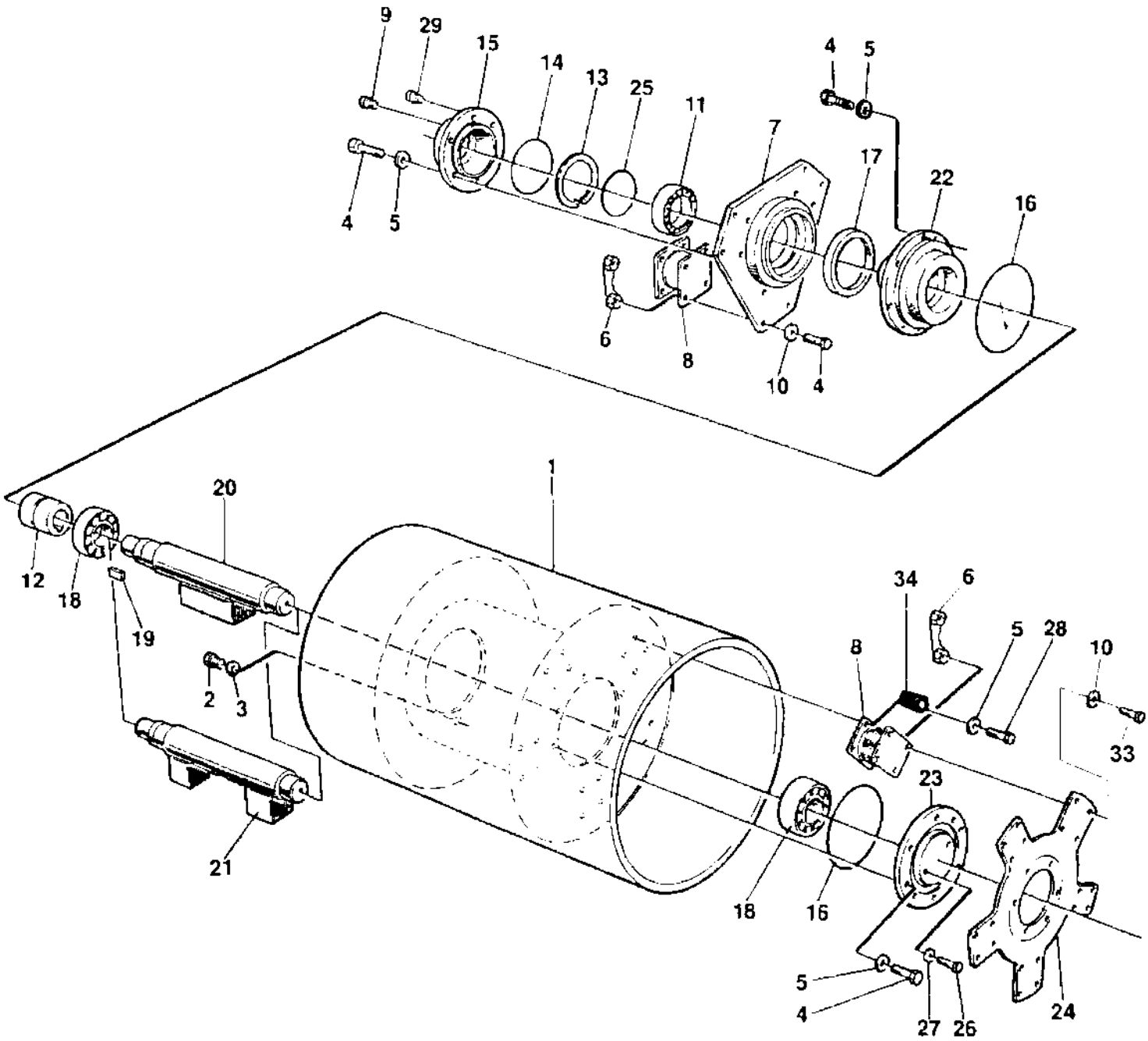
9
29
15
14
13
25
11
7
4
5
17
22
16
4
5
6
8
10
4
1
20
12
18
19
2
3
21
34
6
8
5
28
10
33
23
18
16
5
4
27
26
24

Drum

Item	Part No	Rem	Qty	Description	Code
1	4700357049		1	Drum	
2	4700343744		1	Magnetic plug	C
3	4700162017		1	Seal ring	B
4	4700500029		18	Hexagon head screw	C
5	4700904230		38	Steel plain washer	C
6	4700379179	B	16	Holder	
7	4700346505		1	Mounting plate	
8	4700345215		8	Shock absorber	B
9	4700343490		1	Air breather	D
10	4700904230		32	Steel plain washer	C
11	4700111018		1	Ball bearing	D
12	4700349202	A	1	Coupling	D
	4700212160		1	.Rubber cross Replaced by 4700391929	D
13	4700903154		1	Retaining ring	
14	4700160132		1	O-ring 124, 50x3, 00	D
15	4700358666		1	Adapter	
16	4700923951		2	O-ring	D
17	4700163049		1	Sealing	D
18	4700904258		2	Spherical roller bearing	D
19	4700350029		1	Key	
20	4700357054		1	Eccentric shaft	
21				Not used on this model	
22	4700358587		1	Bearing housing	
23	4700357020		1	Bearing housing	
24	4700357055		1	Drive disc	
25	4700358689		1	Spacer ring	
26	4700500044		2	Screw M6x8	C
27	4700904228		2	Washer 6,4x12x1,5	C
28	4812110639		20	Hexagon socket head cap screw M10x030H 8.8	
29	4700903287		7	Plug	
33	4812110620		32	Hexagon head screw M10x30H 8.8 A3K	
34	4812110673		20	Spacer	

A) CPL
B) Replaces earlier used Lock nut 4700586018; each holder has two nuts

Engine

Item	Part No	Rem	Qty	Description	Code
135				**Engine DEUTZ D2011 L02 I (Page 52)**	
305				**Intake system DEUTZ (Page 56)**	
410				**Fuel system DEUTZ (Page 58)**	
530				**Exhaust system DEUTZ (Page 60)**	

Engine DEUTZ D2011 L02 I

15833-2

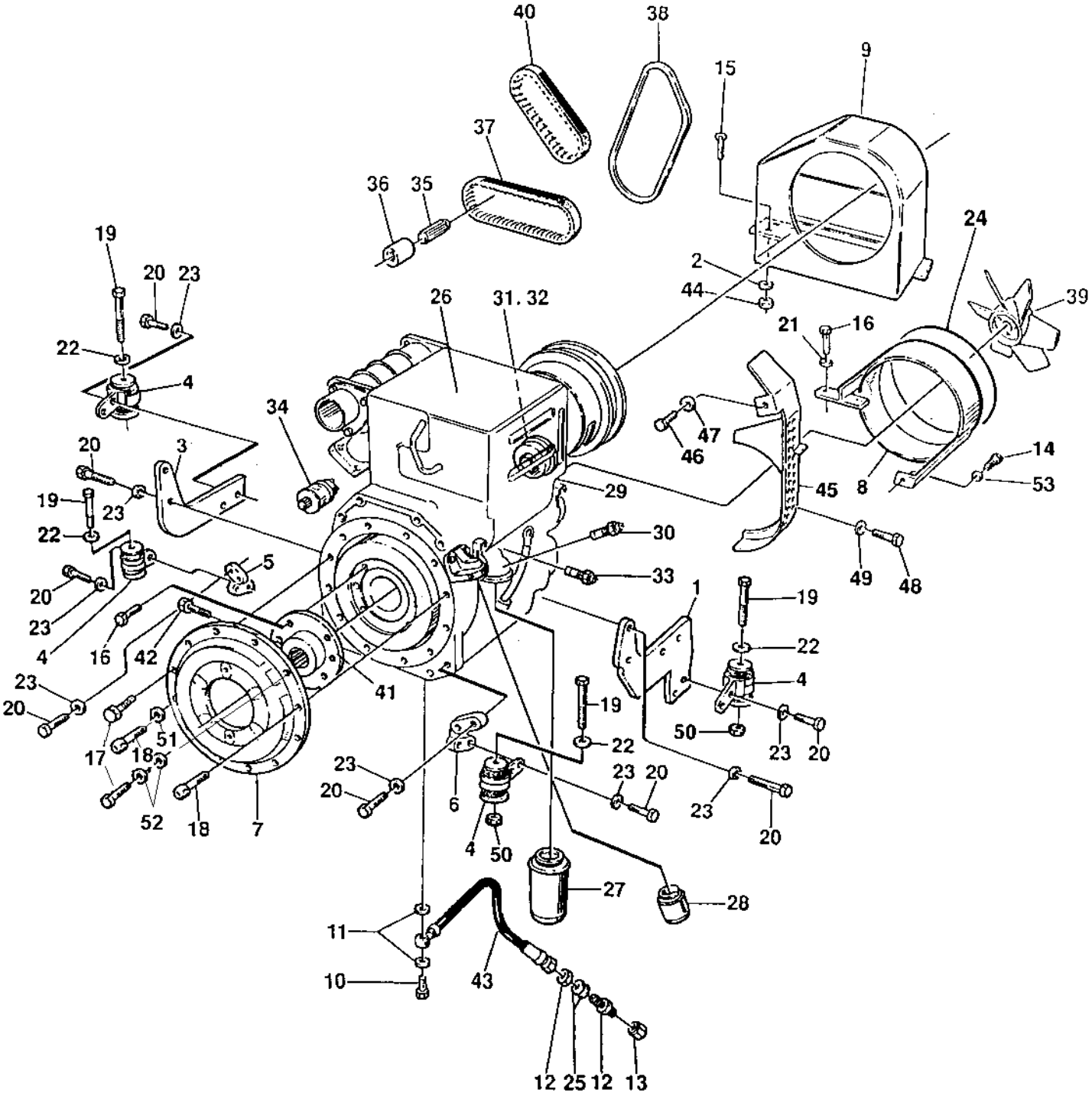

Engine DEUTZ D2011 L02 I

Item	Part No	Rem	Qty	Description	Code
1	4700358370		1	Engine bracket	
2	4700904640		2	Washer 8,4x22x3	C
3	4700358371		1	Engine bracket	
4	4700902902	A	4	Shock absorber	D
5	4700357165		1	Engine bracket	
6	4700357166		1	Engine bracket	
7	4700357005		1	Pump bracket	
8	4700387491		1	Cover	
9	4700370355		1	Cover	
10	4700904292		1	Hollow screw	
11	4700330331		2	Washer 18,2x23,9x1,5	C
12	4700230515		1	Connector	C
13	4700330383		1	Cap hydraulic	
14	4700500053		1	Screw M8x20H 8.8	C
15	4700500047		2	Hexagon head screw	C
16	4700500021		8	Screw M8-1,25x25 8.8	C
17	4700508096		6	Screw	C
	4700508029		3	Screw M10-1,5x30H 8,8	C
18	4700508053		2	Screw	
19	4700500122		4	Screw	C
20	4700500050		16	Screw	C
21	4700904640		5	Washer 8,4x22x3	C
22	4700904231		4	Washer 13x24x2 300 HV	C
23	4700600017		16	Washer	
24	4700288129		1XL	Edge trim	
25	4700904233		2	Washer 21x36x3	C
26	4700393290		1	Diesel engine	
27	4700939515		1	.Oil filter	A
28	4700903938		1	.Fuel filter	A
29	4700909369	D	1	.Solenoid	B
30			1	.Oil temp guard	B
31	4700909370		1	.Alternator	C
32	4700939478		1	..Charging regulator	B
33	4700945955		1	.Oil pressure switch	
34	4700939593		1	.Starter	
35		E,J	1	.Splined shaft	
36	4700945442	E	1	.Splined sleeve	
37	4700939976	E	1	.Toothed belt	A
38	4700902521		1	.V-belt	B
39	4700902548		1	.Fan	
40	4700939840	F	1	.Toothed belt kit	A
41	4700357003		1	Coupling	D
42	4700508095		1	.Screw	C
43	4700386133		1	Hydraulic hose	
44	4700586003		2	Lock nut M8	C
45	4700390722	H	1	Belt guard	
46	4700508025		1	Screw M6x20	
47	4700904228		1	Washer 6,4x12x1,5	C
48	4700500185		2	Screw M6-1x14 8,8	
49	4700904228		2	Washer 6,4x12x1,5	C
50	4700586019		2	Lock nut	C

A) Included in item 26
D) Engine shut-off
E) For vibration pump drive
F) Belt and roller
H) Replaces earlier used 4700359869
J) Not sold separately. If damaged; the housing cpl with gear has to be exchanged: PN 4700945443 and sleeve 4700945442. The sleeve has to be lubricated with graphite grease before assembly !

Engine DEUTZ D2011 L02 I

15833-2

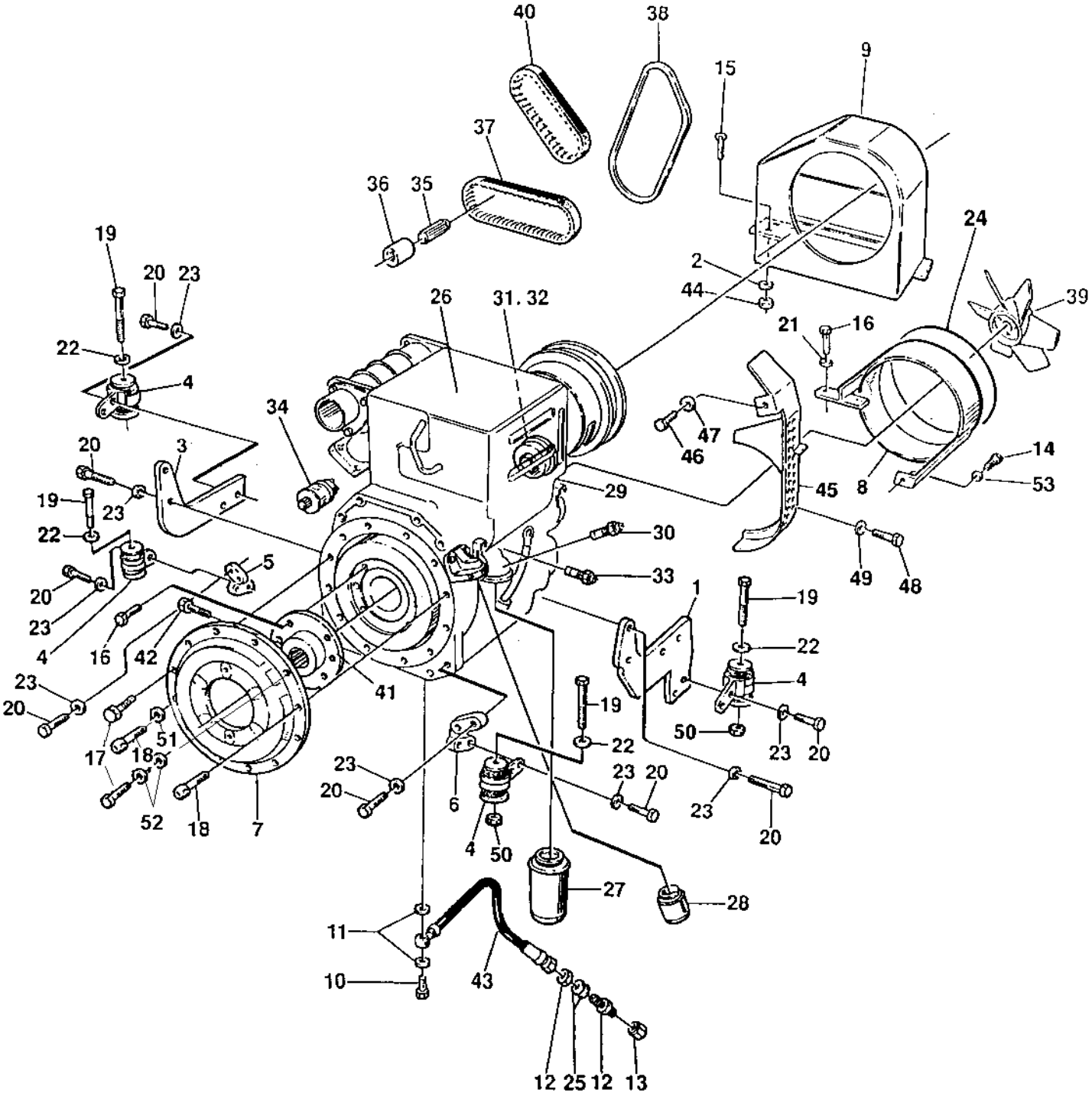

Engine DEUTZ D2011 L02 I

Item	Part No	Rem	Qty	Description	Code
51	4700904557		2	Steel plain washer	C
52	4700904230		2	Steel plain washer	C
53	4700904229		1	Washer 8,4x16x1,5	C

Intake system DEUTZ

16930

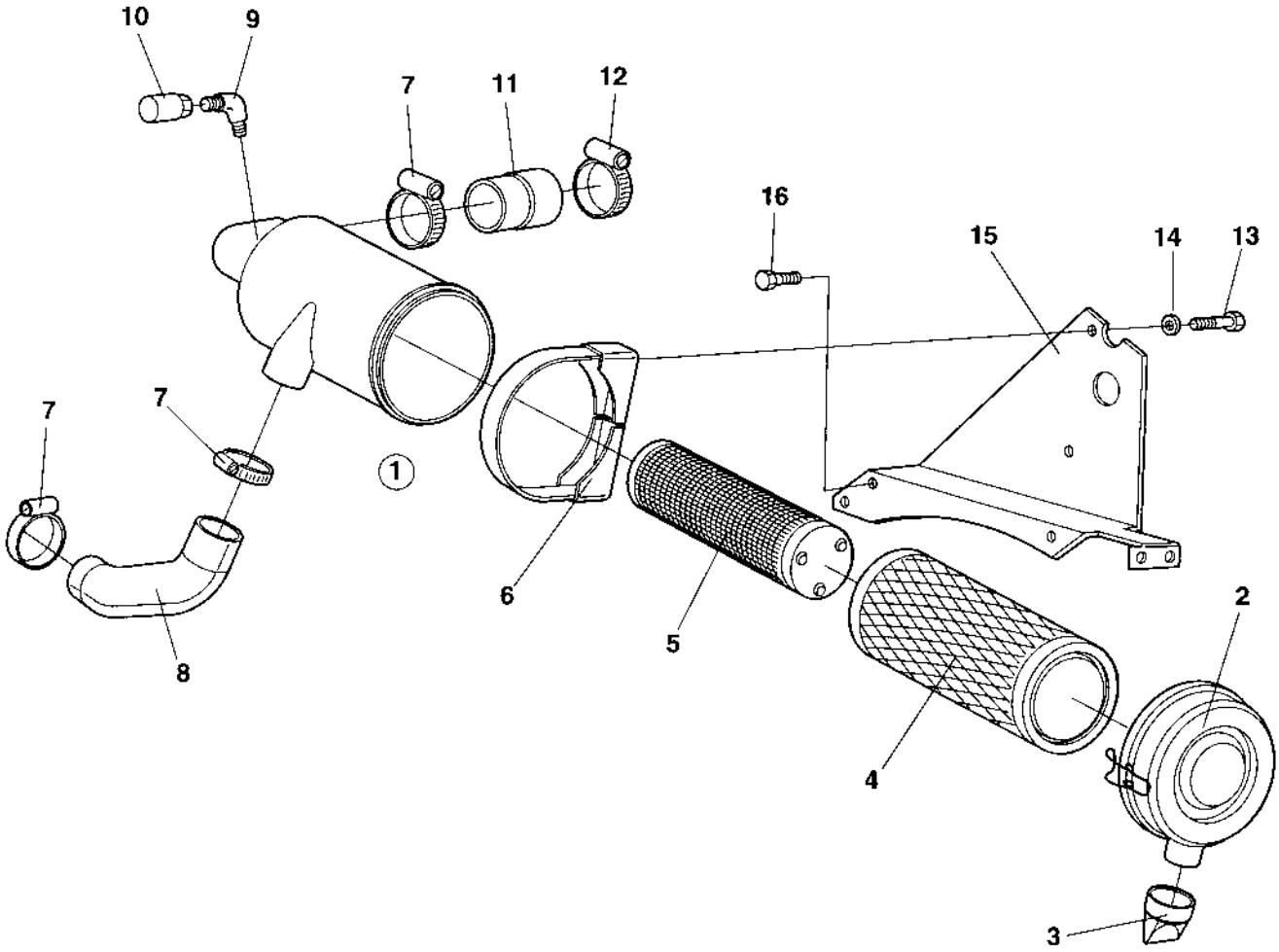

Intake system DEUTZ

Item	Part No	Rem	Qty	Description	Code
1	4700385712		1	Air cleaner, cpl	
2	4700385713		1	.Service cover	
3	4700380293		1	.Vacuator valve	D
4	4700380295		1	.Main filter	A
5	4700380294		1	.Safety filter	A
6	4700380296		1	Holder	
7	4700313023		3	Hose clamp	
8	4700380297		1	Air inlet hose	D
9				Not used on this model	D
10	4700902168		1	Indicator	D
11	4700380299		1	Air inlet hose	
12	4700313023		1	Hose clamp	
13	4700500022		2	Screw M8x30H 8.8 A2K	C
14	4700904640		2	Washer 8,4x22x3	C
15	4700380300		1	Bracket	
16	4700500509		3	Screw	

Fuel system DEUTZ

15471-5

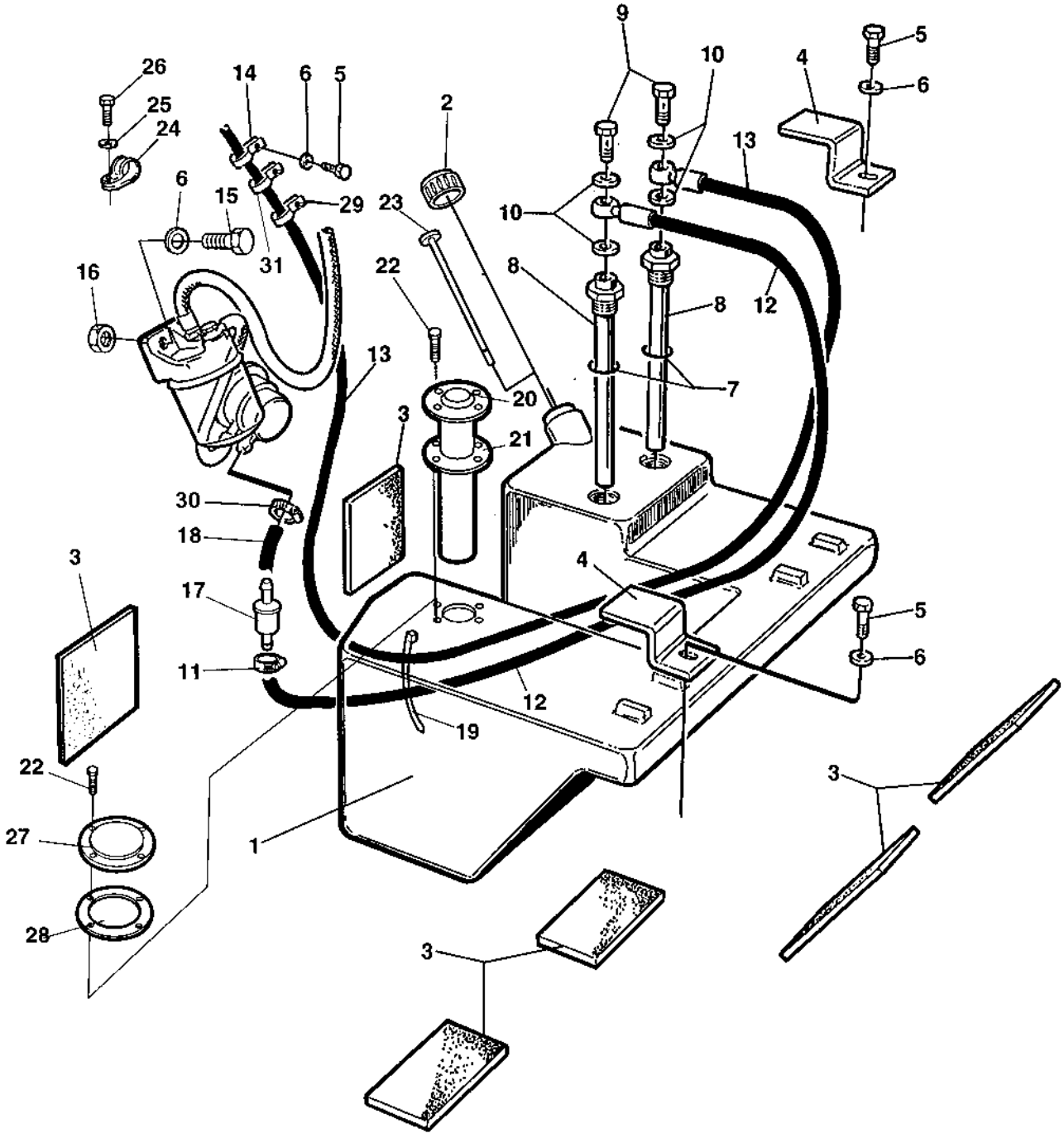

Fuel system DEUTZ

Item	Part No	Rem	Qty	Description	Code
1	4700384726		1	Fuel tank, cpl	
2	4700373461		1	Cap	D
	4700902866		1	.Key Marked "455"	A
	4700380459	F	1	Cap	
3	4700357459		6	Rubber cloth	C
4	4700357466		2	Holder plate	
5	4700500053		3	Screw M8x20H 8.8	C
6	4700904640		5	Washer 8,4x22x3	C
7	4700160012		2	O-ring	D
8	4700357468		2	Fuel pipe	
9	4700330171		2	Hollow screw	C
10	4700747282		4	Copper washer	
11	4700313001		3	Hose clamp	C
12	4700902893		1	Fuel hose	
13	4700357470		1	Fuel hose	
14	4700921072		1	Clamp	
15	4700500021		2	Screw M8-1,25x25 8.8	C
16	4700570005		2	Nut M8	C
17	4700929322		1	Fuel strainer	B
18	4700904984	C	1XL	Fuel hose	C
19	4700925802		N	Cable ties L=142 mm	C
20	4700348923	E	1	Level sender	D
21	4700348924	E	1	.Gasket	D
	4700945777	E	1	.Gasket	
22	4700903236	1	5	Screw, Thread rolling K40x20	
23	4700358355	E	1	Dipstick	
27	4700372627	1	1	Cover	
28	4700348924	1	1	Gasket	D
29	4700313075		1	Hose clamp	C
30	4700313108		1	Hose clamp	
31	4700792147		1	Hose clamp	

1) Included in Fuel tank, cpl PN 4700384726.
C) L=200 mm
E) Option
F) Italy market

Exhaust system DEUTZ

18355-1

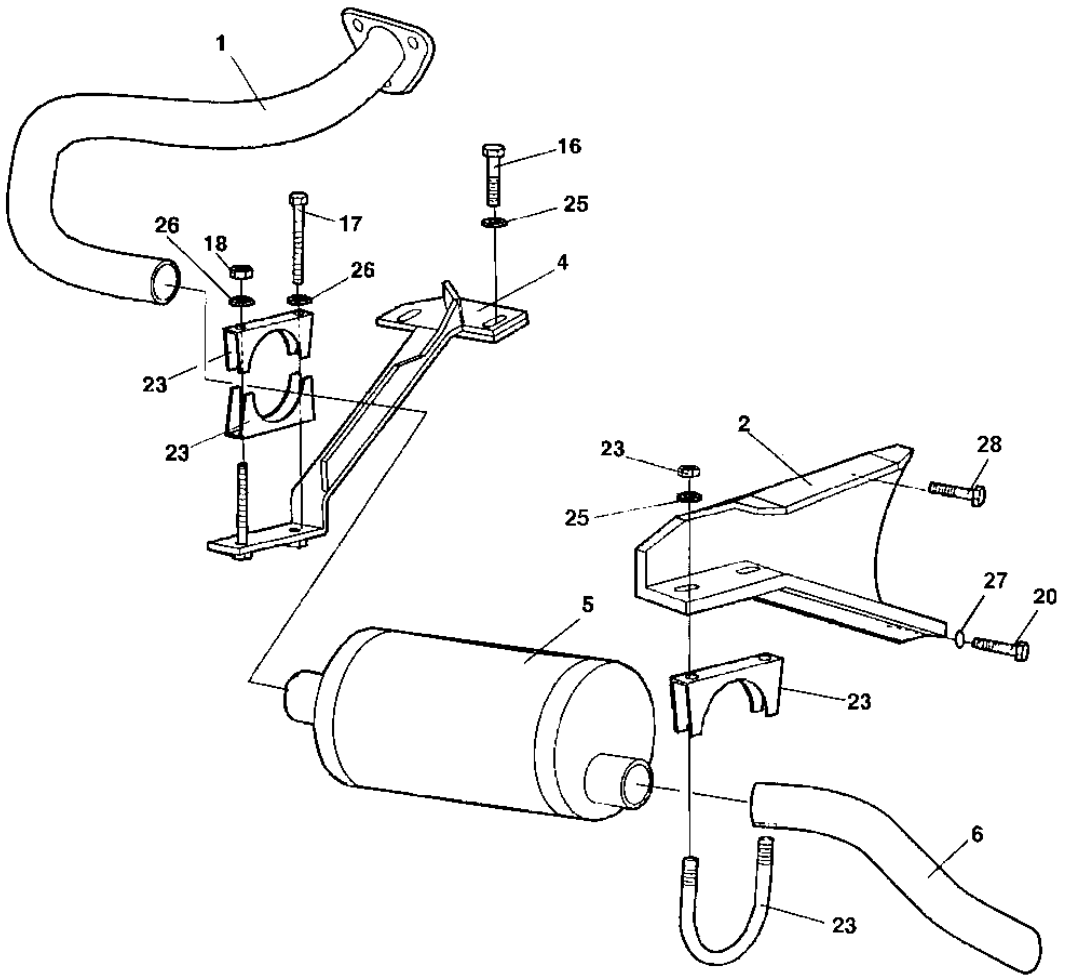

Exhaust system DEUTZ

Item	Part No	Rem	Qty	Description	Code
1	4700359161		1	Exhaust pipe	
2	4700395728		1	Bracket	
4	4700395732		1	Holder	
5	4700359163		1	Muffler	D
6	4700376941		1	Exhaust pipe	
16	4700500022		3	Screw M8x30H 8.8 A2K	C
17	4700500115		1	Screw M8-1,25x90 8.8	
18	4700570005		1	Nut M8	C
20	4700508080		1	Screw	
23	4700313086		3	Clamp	C
25	4700904640		5	Washer 8,4x22x3	C
26	4700904229		2	Washer 8,4x16x1,5	C
27	4700904557		1	Steel plain washer	C
28	4700508053		1	Screw	

Hydraulic system

Item	Part No	Rem	Qty	Description	Code
100				**Hydraulic diagram (Page 64)**	
240				**Propulsion system (Page 66)**	
315	4700372352			**Hydraulic pump, propulsion (Page 72)**	
316				**Rotating group, valves, charge pump (Page 74)**	
317				**Control unit, cpl (Page 76)**	
350	4700375631			**Hydraulic motor, propulsion, drum (Page 78)**	
360	4812110281			**Junction block (Page 80)**	
430				**Vibration system DEUTZ (Page 82)**	
510	4700359524			**Hydraulic pump, vibration DEUTZ (Page 86)**	
613				**Steering system (Page 88)**	
650	4700902099			**Steering valve (Page 90)**	
710	4700374603			**Steering cylinder (Page 92)**	
865				**Brake system (Page 94)**	

Hydraulic diagram

15473-1

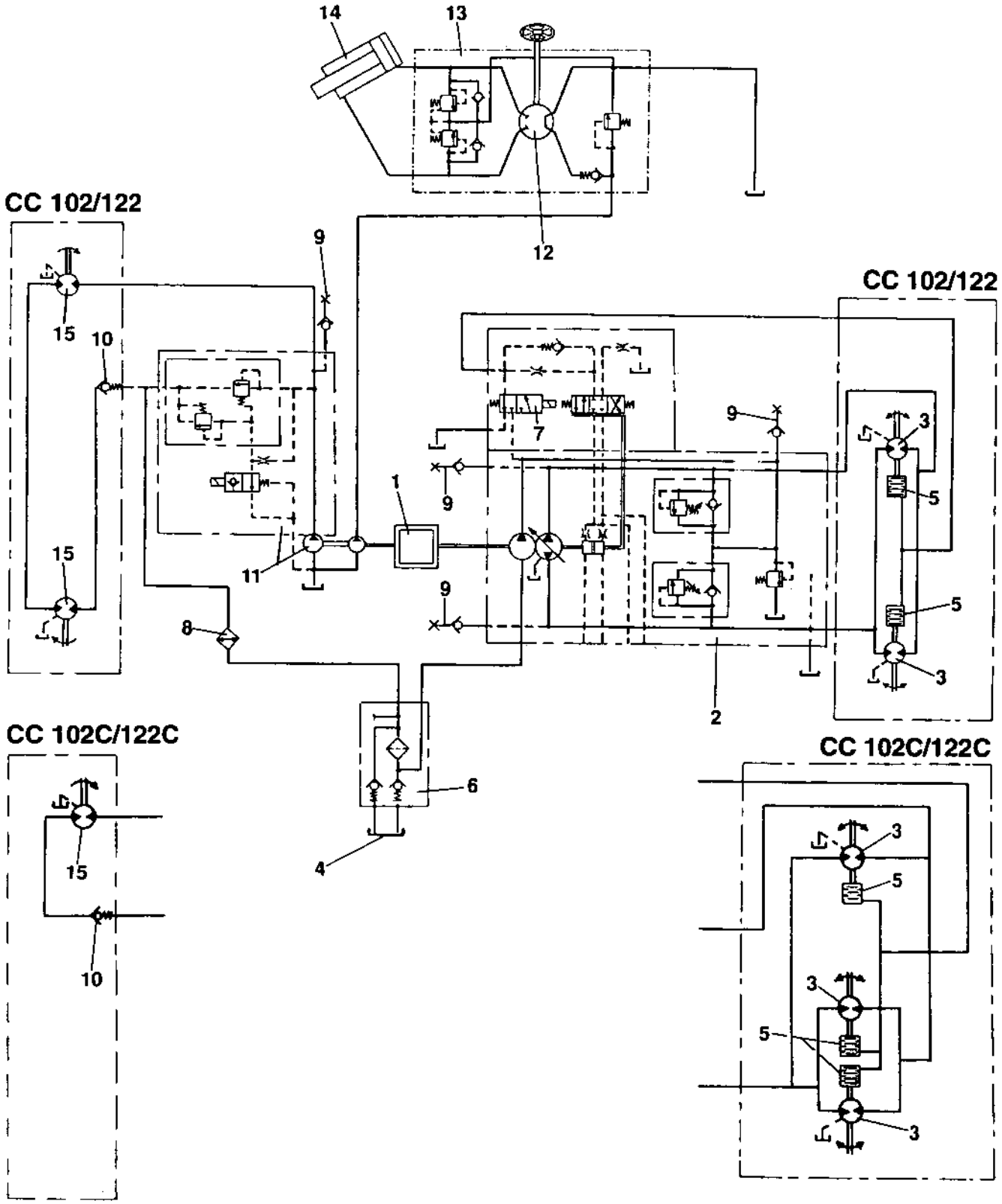

Hydraulic diagram

Item	Part No	Rem	Qty	Description	Code
1			1	Diesel engine	
2			1	Propulsion pump	
3			2	Propulsion motor	
4			1	Hydraulic oil tank	
5			2	Brake	
6			1	Filter	
7			1	Brake valve	
8			1	Oil cooler	
9			4	Measuring nipple	
10			1	Check valve	
11		A	1	Vibration pump	
12			1	Steering valve	
13			1	Valve block	
14			1	Steering cylinder	
15			2	Steering cylinder	

A) Incl. steering pump

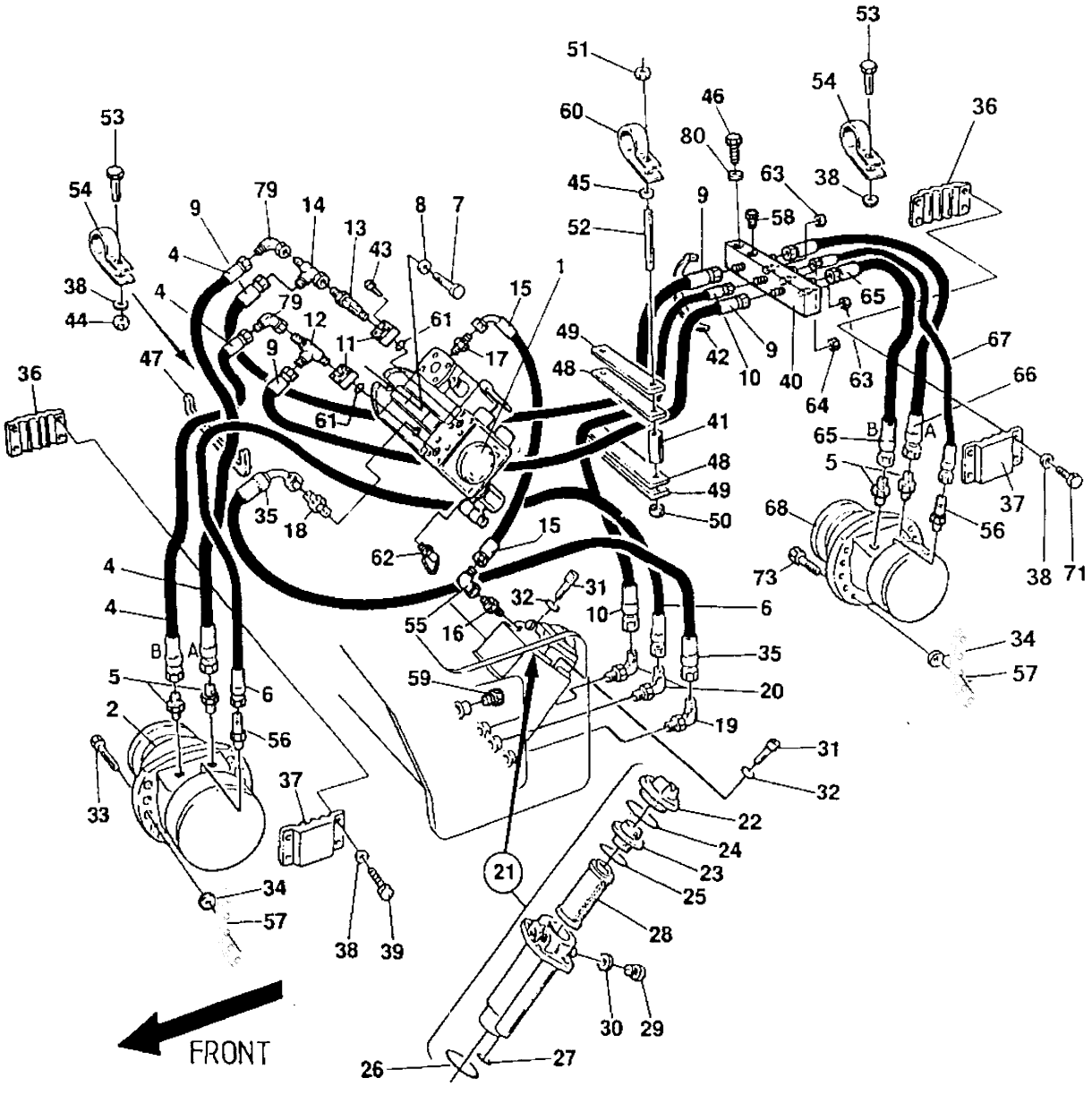
FRONT

Item	Part No	Rem	Qty	Description	Code
1	4700372352		1	**Hydraulic pump, propulsion (Page 72)**	
2	4700390742		1	**Hydraulic motor, propulsion, drum (Page 70)**	
4	4700482998		2	Hydraulic hose	
5	4700334134		4	Connector	
6	4700482830		1	Hydraulic hose	
7	4700500037		2	Screw	C
8	4700904703		2	Washer	C
9	4700482898		2	Hydraulic hose	
10	4700482452		1	Hydraulic hose	
11	4700373402		2	Flange	
12	4700234218		1	Tee-connector	C
13	4700813444		1	Elbow 90, O-ring	
14	4700334135		1	Tee-connector	C
15	4700483118		1	Hydraulic hose	
16	4700334156		1	Adapter	C
17	4700901156		1	Connector	
18	4700903925		1	Connector	
19	4700334238		1	Elbow 90 o-ring	
20	4700334235		2	Elbow 90	
21	4700371183		1	Hydraulic oil filter	
22	4700902377		1	.Cover	D
23	4700902378		1	.Insert	
24	4700902229		1	.Sealing	D
25	4700902230		1	.O-ring	D
26	4700902231		1	.O-ring	D
27	4700902232		1	.O-ring	D
28	4700903247		1	.Filter element	A
29	4700901313		1	.Plug	
30	4700230277		1	.Copper washer 12,2x17,9x1,5	
31	4700508029		2	Screw M10-1,5x30H 8,8	C
32	4700615044		2	Washer	D
33	4700500269		10	Screw	C
34	4700904231		20	Washer 13x24x2 300 HV	C
35	4700482553		1	Hydraulic hose	
36	4700371313		2	Hose clamp	
37	4700371314		2	Hose clamp	
38	4700904229		10	Washer 8,4x16x1,5	C
39	4700500020		4	Screw M8-1,25x22 8,8	C
40	4700380736		1	**Junction block**	
41	4700357113		2	Spacer sleeve	
42	4700313102		N	Cable ties	
43	4700508096		8	Screw	C
44	4700586003		1	Lock nut M8	C
45	4700904230		4	Steel plain washer	C
46	4700500068		2	Screw M08x65	C
47	4700902379	A	1XL	Edge trim	
48	4700357111		2	Rubber cloth	
49	4700357112		2	Cover plate	
50	4700355869		2	Spacer sleeve	
51	4700586018		4	Lock nut	C
52	4700902233		2	Threaded stud	
53	4700513013		1	Screw	C
54	4700921119		2	Pipe clamp	C
55	4700334155		1	Elbow 90	C
56	4700924731		2	Connector	
57	4812110490		2	Holder	
58	4700232070		3	Plug	
59	4700892446		1	Plug	C
60	4700921099		1	Clamp	

A) L=0,185 m

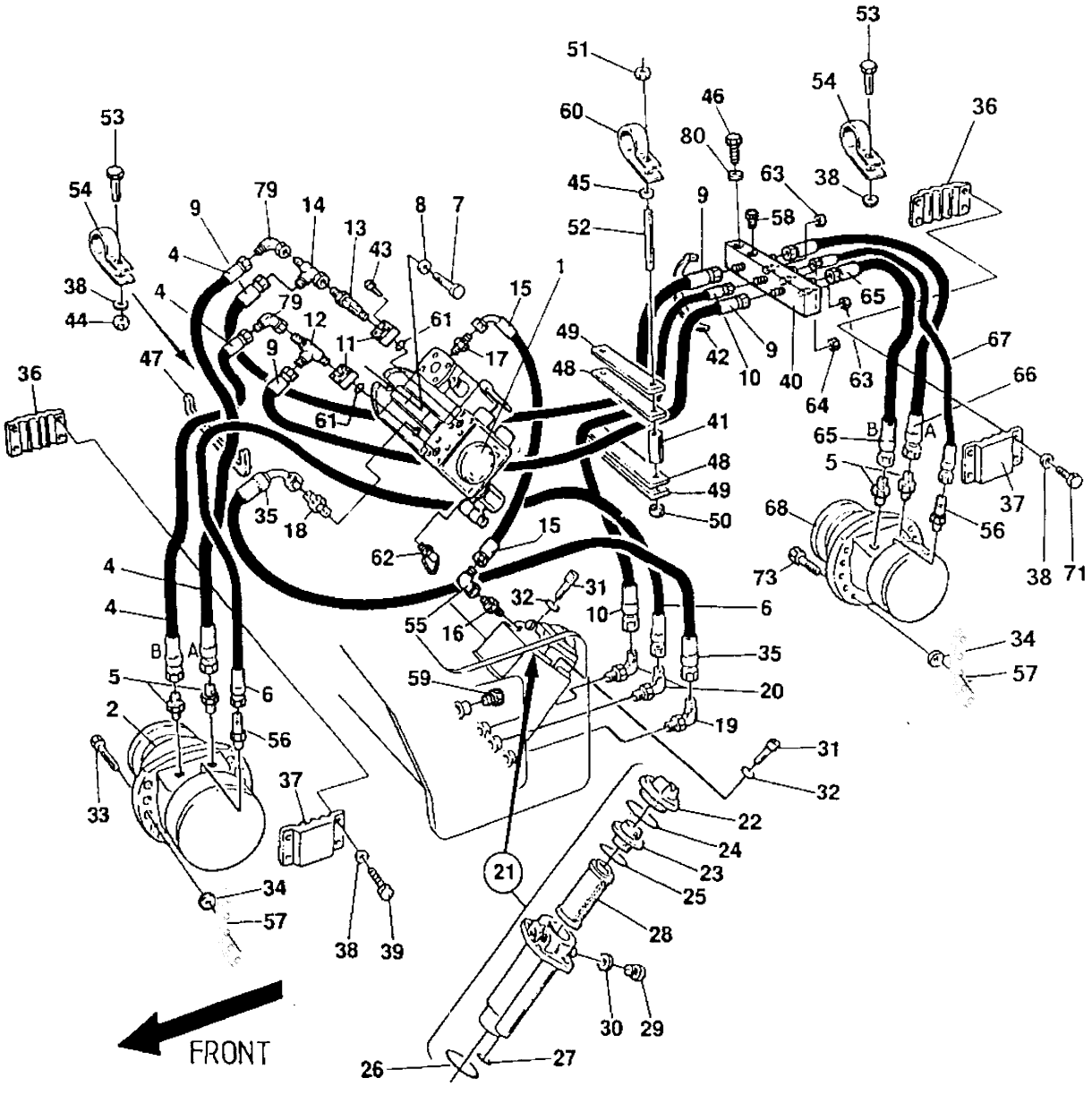
FRONT

Propulsion system

Item	Part No	Rem	Qty	Description	Code
61	4700813443		2	O-ring	C
62	4700901157		2	Measuring nipple	C
63	4700330383		2	Cap hydraulic	
64	4700230400		1	Cap	D
65	4700482998		1	Hydraulic hose	
66	4700483164		1	Hydraulic hose	
67	4700483069		1	Hydraulic hose	
68	4700390742		1	**Hydraulic motor, propulsion, drum (Page 70)**	
71	4700500053		5	Screw M8x20H 8.8	C
73	4700500056		10	Screw	C
79	4700334197		2	Elbow 90	C
80	4700904640		2	Washer 8,4x22x3	C

4700390742 Hydraulic motor, propulsion, drum

18823

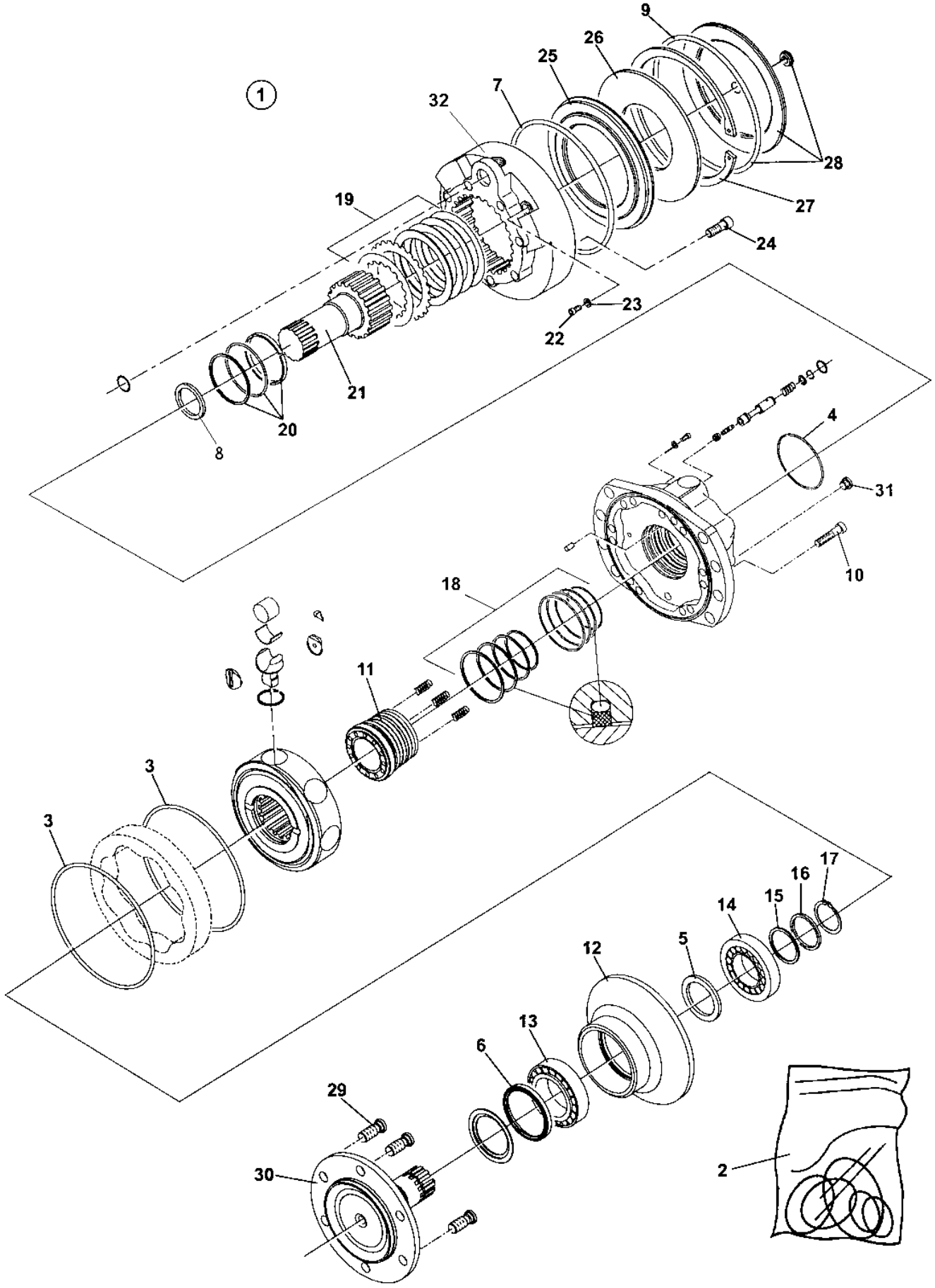

4700390742 Hydraulic motor, propulsion, drum

Item	Part No	Rem	Qty	Description	Code
1	4700390742		1	**Hydraulic motor, propulsion, drum (Page 70)**	
2	4700950414		1	.Seal kit	
3			2	..O-ring	
4			1	..O-ring	
5			1	..Seal kit	
6			1	..Seal	
7	4700950293		1	..O-ring	
8			1	..Seal	
9			1	..O-ring	
10			12	.Screw	
11			1	.Distributor	
12			1	.Bearing support	
13			1	.Bearing	
14			1	.Bearing	
15			1	.Shim kit	
16			1	.Supporting plate	
17			1	.Snap ring	
18	4700950416		1	.Seal kit	
19	4700950415		1	.Brake disc kit	
20			1	.Seal kit	
21			1	.Shaft	
22			1	.Screw	
23			1	.Bonded seal	
24			8	.Screw	
25			1	.Brake piston	
26			1	.Spring washer	
27			1	.Snap ring	
28	4700950226		1	.End cap kit	
29			1	.Set of studs	
30			1	.Shaft	
31			1	.Plug	
32	4812155168		1	.Brake housing	

4700372352 Hydraulic pump, propulsion

16514

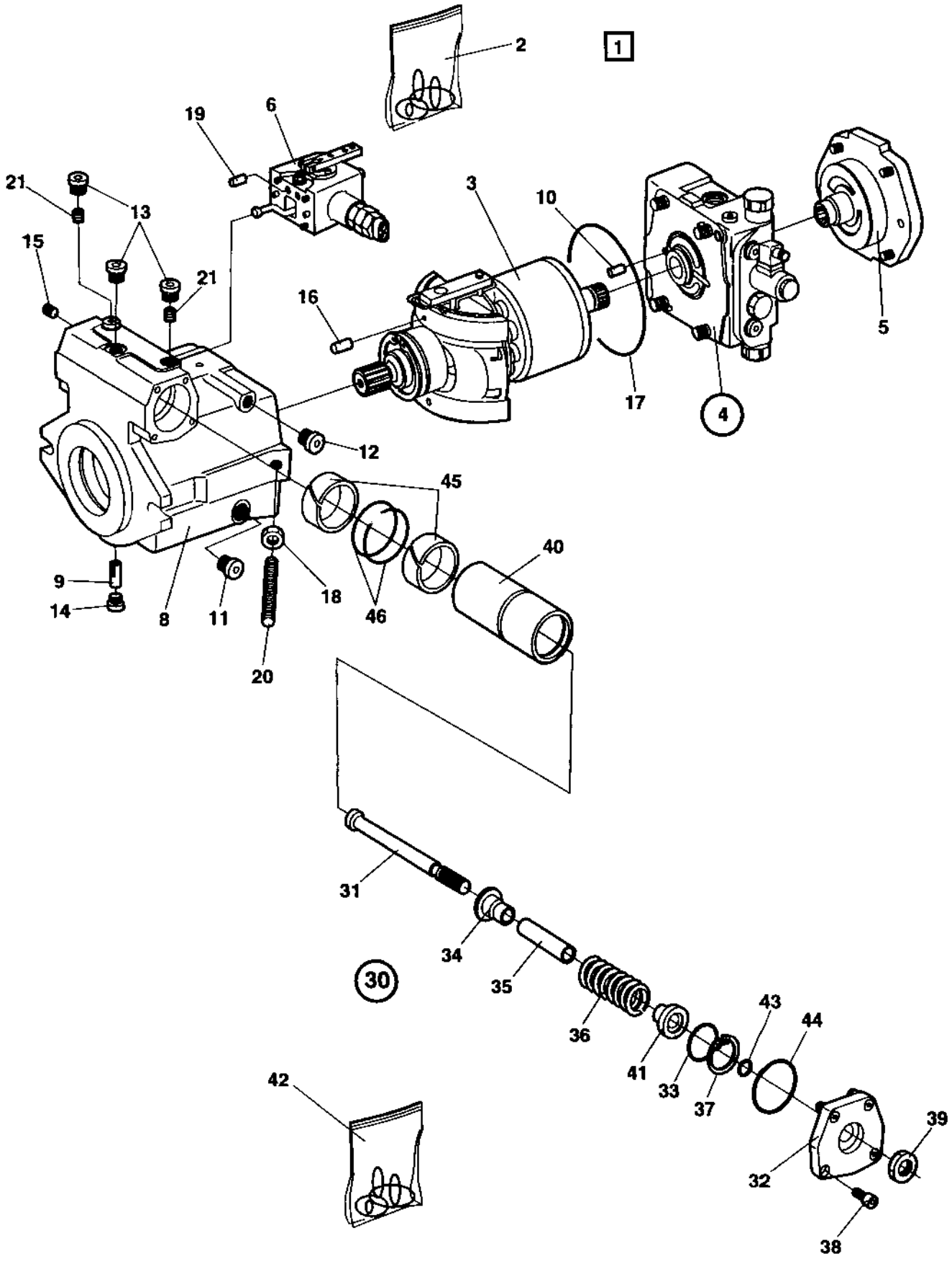

4700372352 Hydraulic pump, propulsion

Item	Part No	Rem	Qty	Description	Code
1		A	1	Hydraulic pump	
2	4700936690	1	1	.Seal kit	
3		2	1	.Rotating group, cpl	
4		2	1	.Valve block, cpl	
5		2	1	.Charge pump, cpl	
6			1	**.Control unit, cpl (Page 76)**	
8			1	.Housing	
9	4700935158		1	.Pin	
10	4700902670		1	.Pin	
11	4700935219		1	.Plug	
12	4700902724		1	.Plug	
13	4700902625		3	.Screw	
14	4700902624		1	.Screw	
15	4700909514		1	.Pin	
16	4700902792		1	.Pin	
17	4700935159		1	.O-ring	
18	4700902695		1	.Nut	
19	4700935160		1	.Orifice	
20	4700902687		1	.Pin	
21	4700902696		2	.Orifice 0,8	
30	4700909757		1	.Control valve	
31			1	..Rod	
32			1	..Cover	
33			1	..Ring	
34			1	..Spring collar	
35			1	..Spacer	
36			1	..Spring	
37			1	..Snap ring	
38			4	..Screw	
39			1	..Nut	
40			1	..Piston	
41			1	..Spring collar	
42	4700909758		1	..Seal kit	D
43			1	...O-ring	D
44			1	...O-ring	D
45			2	...Seal ring	D
46			2	...Seal ring	D

1) Includes all gaskets and o-rings for the hydraulic pump
2) Exploded in section "Rotating group, valves, charge pump
A) CPL

Rotating group, valves, charge pump

15940

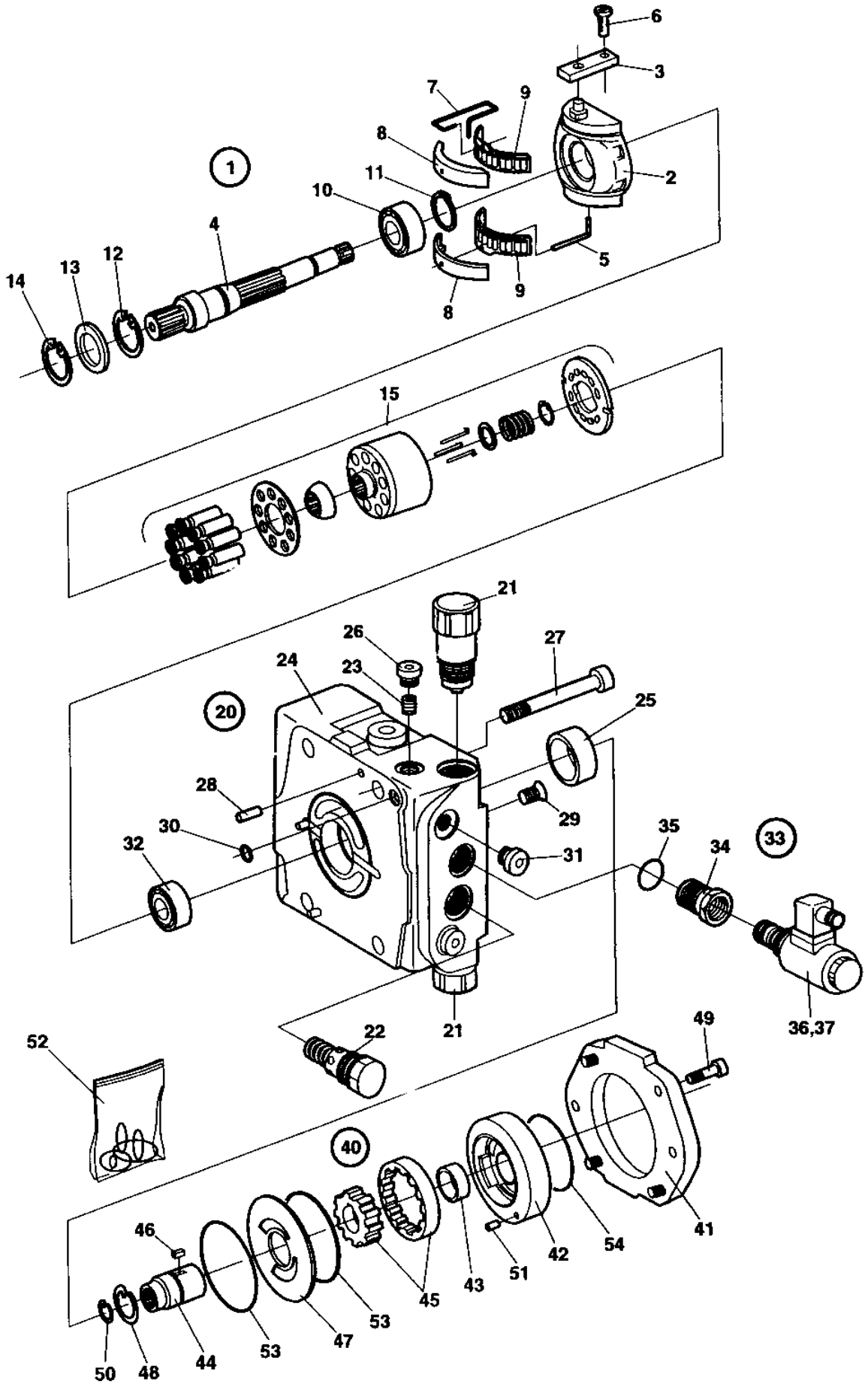

Rotating group, valves, charge pump

Item	Part No	Rem	Qty	Description	Code
1	4700935161		1	Rotating group	
2	4700935171		1	.Cradle	
3	4700935162		1	.Ring	
4	4700935163		1	.Shaft	
5	4700902644		1	.Wire pin	
6	4700935164		1	.Pin	
7	4700935165		1	.Wire pin	
8	4700935166	A	1	.Bearing liner	
9	4700902620		1	.Bearing	D
10	4700902619		1	.Roller bearing	D
11	4700901750		1	.Retaining ring	
12	4700935170		1	.Retaining ring	
13	4700936691		1	.Seal ring	
14	4700935170		1	.Retaining ring	
15	4700935167		1	.Cylinder with pistons, cpl	
20			1	Valve block	
21	4700935172		2	.Pressure relief valve 350 bar	D
22	4700903471		1	.Relief valve	D
23	4700936692		1	.Check valve	D
24	4700936693		1	.Valve block	
25	4700903557		1	.Bearing bushing	
26	4700935176		1	.Plug	
27	4700935177		4	.Screw	
28	4700908384		2	.Pin	
29	4700909514		2	.Pin	
30	4700902641		2	.O-ring	
31	4700902625		2	.Screw	
32	4700901744		1	.Roller bearing	D
33		B	1	.Solenoid valve	D
34	4700935178		1	..Adapter	
35	4700927278		1	..O-ring	D
36	4700935179		1	..Valve, cpl	D
37	4700935180		1	...Solenoid	D
40	4700935181		1	Charge pump	
41	4700935182		1	.Cover	
42	4700935183		1	.Housing	
43	4700903557		1	.Bearing bushing	
44	4700935184		1	.Shaft	
45	4700936706		1	.Wheel set	D
46	4700935186		1	.Key	
47	4700935187		1	.Wear plate	
48	4700902654		1	.Retaining ring	
49	4700935188		4	.Screw	
50	4700935189		1	.Retaining ring	
51	4700935190		1	.Cylindrical pin	
52	4700935191		1	.Seal kit	D
53			2	..Seal	D
54			1	..O-ring	D

A) One pair
B) CPL

Control unit, cpl

15941

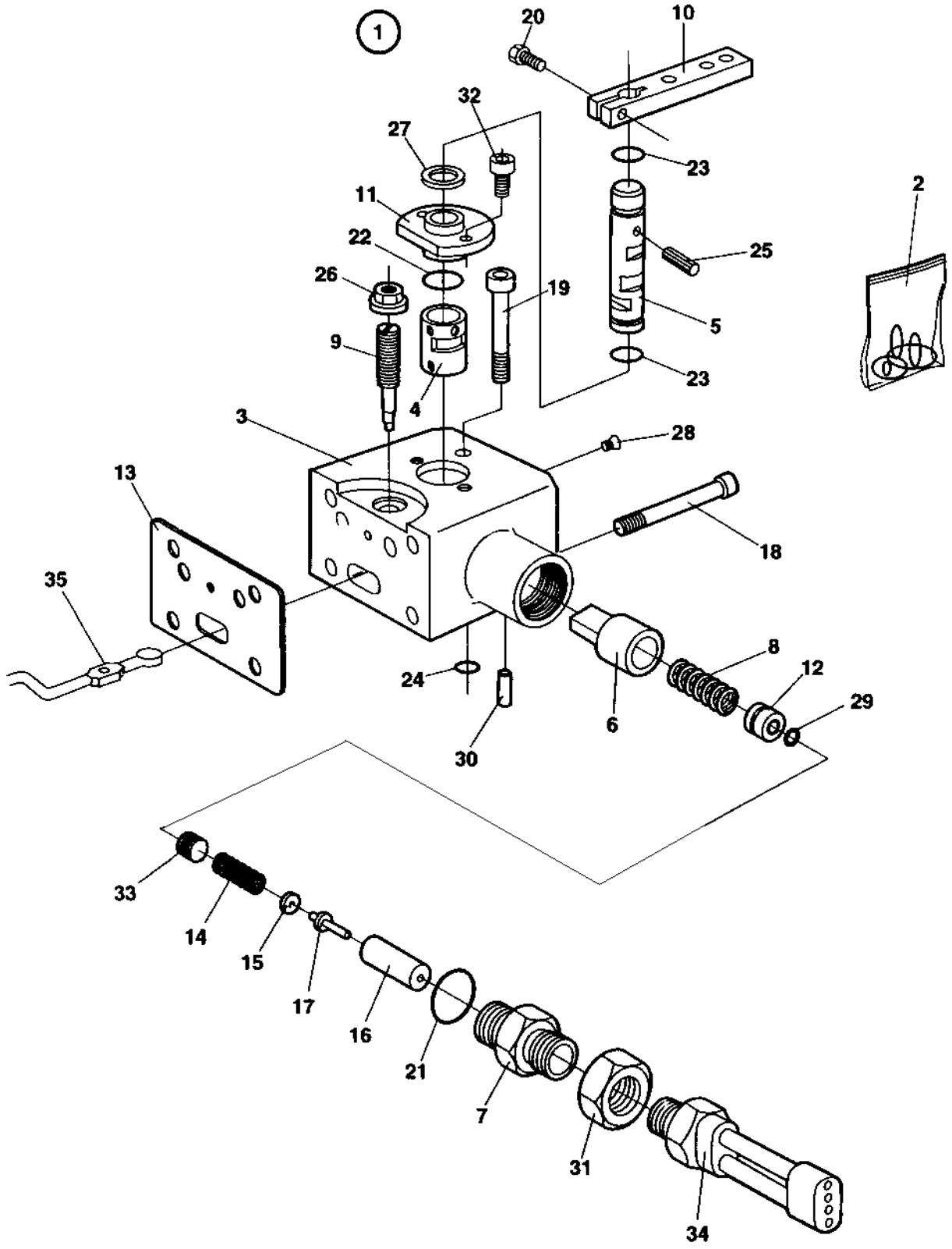

Control unit, cpl

Item	Part No	Rem	Qty	Description	Code
1	4700935194	A	1	Control unit	
2	4700935195		1	.Seal kit	D
3	4700935196		1	.Housing	
4	4700935197		1	.Bushing	
5	4700935198		1	.Shaft	
6	4700935199		1	.Spring bush	
7	4700935201		1	.Adapter	
8	4700935202		1	.Pressure spring	
9	4700935203		1	.Eccentric pin	
10			1	.Lever	
11	4700935204		1	.Cover	
12	4700935205		1	.Bushing	
13	4700935218	B	1	.Gasket	
14	4700935206		1	.Spring	
15	4700935207		1	.Spring collar	
16	4700935208		1	.Spring cage	
17	4700935209		1	.Pin	
18	4700935210		4	.Screw	
19	4700935211		1	.Screw	
20	4700902770		1	.Screw	
21		B	1	.O-ring	
22		B	1	.O-ring	
23		B	3	.O-ring	
24		B	1	.O-ring	
25	4700902767		1	.Needle roller	
26		B	1	.Nut	
27	4700902773		1	.Shim	
28	4700935212		1	.Pin	
29		B	1	.O-ring	
30	4700935190		1	.Cylindrical pin	
31	4700935214		1	.Nut	
32	4700902771		2	.Screw	
33	4700935215		1	.Plug	
34	4700935200		1	.Neutral start switch Cpl.	D
35	4700935216		1	Lever	

A) CPL
B) Incl. in item 2

4700375631 Hydraulic motor, propulsion, drum

16591

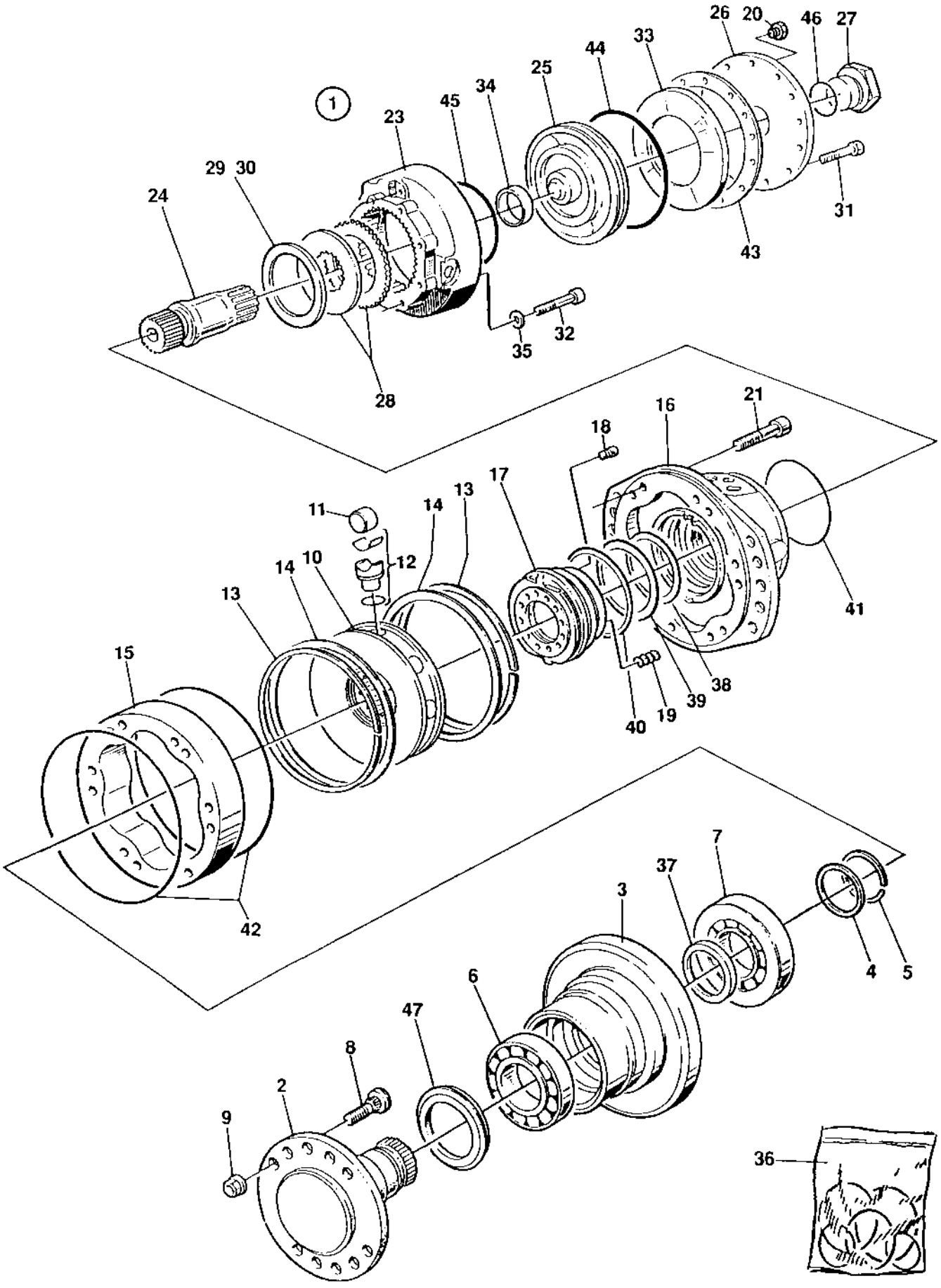

4700375631 Hydraulic motor, propulsion, drum

Item	Part No	Rem	Qty	Description	Code
1	4700375631		1	**Hydraulic motor, propulsion, drum (Page 78)**	
2	4700908788		1	.Shaft	
3	4700903292		1	.Housing	
4	4700902387		1	.Washer T=2,0 mm	
5	4700902388		1	.Split ring	
6	4700902389		1	.Bearing	D
7	4700902390		1	.Bearing	D
8	4700902391		5	.Wheel stud	
9	4700902392		5	.Wheel nut	D
10	4700908795		1	.Cylinder block	
11	4700903453		8	.Roller	
12	4700937091		8	.Piston	
13	4700937092		2	.Circlip	
14	4700908798		2	.Ring	
15	4700902394		1	.Piston cam	
16	4700937093		1	.Housing	
17	4700937094		1	.Distributor ring	
18	4700902397		1	.Pin	
19	4700902398		9	.Spring	
20	4700902399	A	1	.Plug	
21	4700902799		6	.Screw	
23	4700908790		1	.Brake housing	
24	4700908791		1	.Shaft	
25	4700908792		1	.Piston	
26	4700908328	A	1	.End cover	
27	4700903295		1	.Plug	
28	4700908800	B	1	.Disc kit	D
29	4700902410		N	.Shim T=0,1 mm	
30	4700902411		N	.Shim T=0,3 mm	
31	4700902412		12	.Screw	
32	4700902413		8	.Screw	
33	4700902416		1	.Spring	
34	4700908794		1	.Nylon buch	
35	4700903450		8	.Washer	
36	4700937089		1	.Seal kit	D
37	4700903324		1	..Shaft seal	
38			1	..Sealing	
39			1	..Sealing	
40			1	..Sealing	
41			1	..O-ring	
42			1	..O-ring	
43	4700902800		1	..Gasket	
44	4700903455		1	..Quad ring	D
45			1	..Sealing	D
46	4700903327		1	..O-ring	
47	4700937090		1	..Face seal	

A) CPL
B) 15+13 pcs

4812110281 Junction block

18997

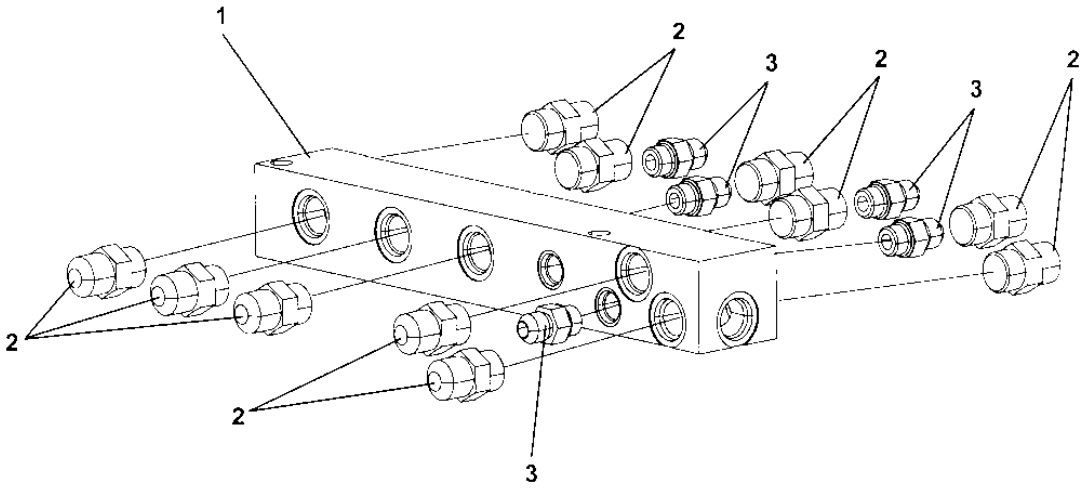

4812110281 Junction block

Item	Part No	Rem	Qty	Description	Code
1	4812110282		1	Junction block	
2	4700334121		11	Straight connector	C
3	4700234233		5	Adapter	C

Vibration system DEUTZ

17785-2

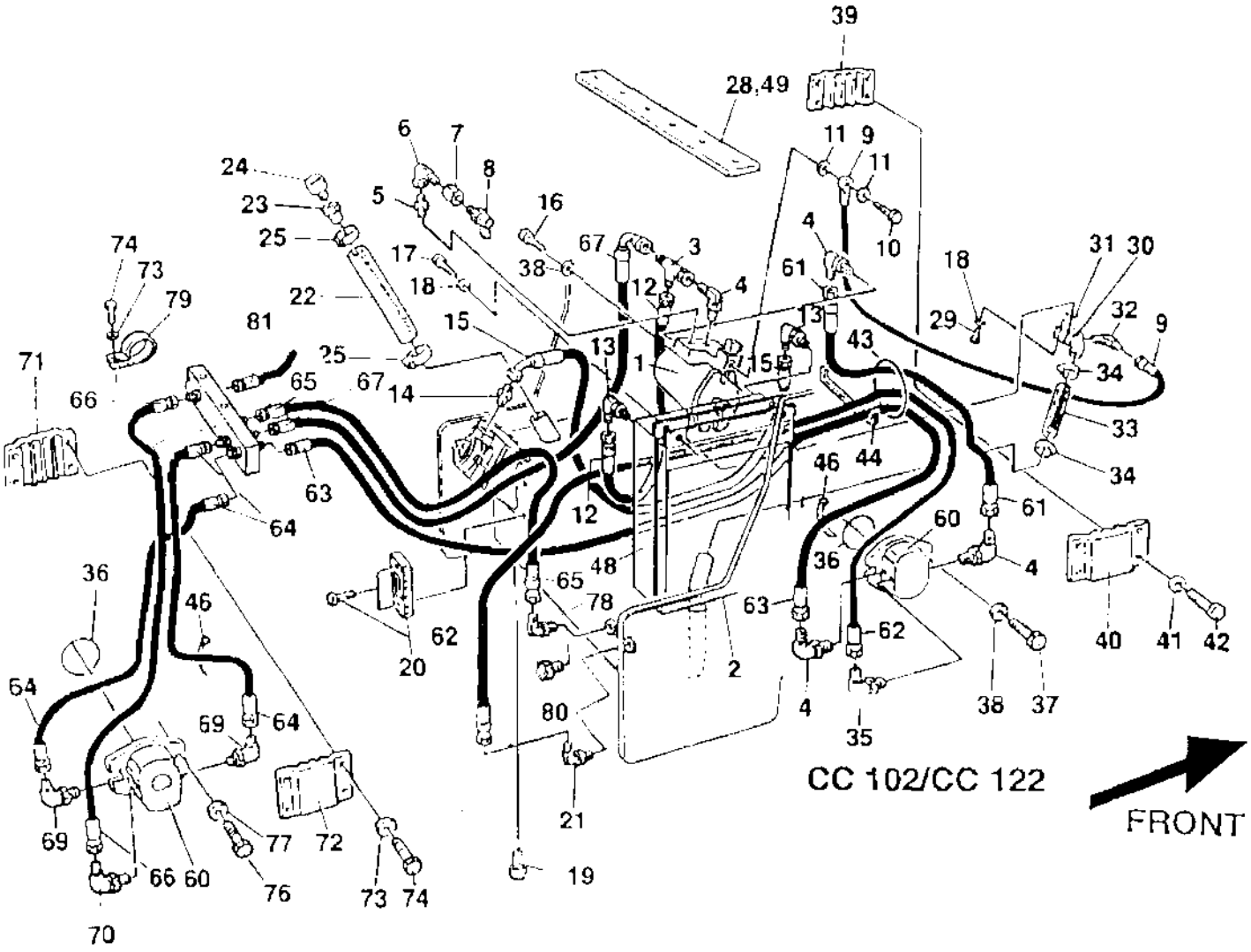

Vibration system DEUTZ

Item	Part No	Rem	Qty	Description	Code
1	4700359524		1	**Hydraulic pump, vibration DEUTZ (Page 86)**	
2	4700357373		1	Radiator	C
3	4700334135		1	Tee-connector	C
4	4700334238		4	Elbow 90 o-ring	
5	4700234390		1	Connector	
6	4700334524		1	Connector	C
7	D433830401		1	Connector	C
8	4700910161		1	Measuring nipple	C
9	4700386134		1	Hydraulic hose	
10	4700901692		1	Screw	
11	4700480124		2	Washer	
12	4700482606		1	Hydraulic hose	
13	4700234993		2	Elbow	
14	4700334156		1	Adapter	C
15	4700483281		1	Hydraulic hose	
16	4700508096		2	Screw	C
17	4700500019		2	Screw M8x16H 8.8 A2K	C
18	4700904556		8	Steel plain washer	C
19	4700232122		1	Plug 3/4NPTF	C
20	4700989151		1	Oil level glass	C
21	4700334235		1	Elbow 90	
22	4700373478		1	Rubber hose	
23	4700357139		1	Connector	C
24	4700357138		1	Ventilating filter	A
25	4700313008		2	Hose clamp	C
28	4700358486		1	Rubber strip	
29	4700500067		4	Screw M8-1,25x55 8,8	
30	4700359834		1	Flange	
31	4700160016		1	O-ring	D
32	4700234341		1	Elbow 45	
33	4700358504	A	1XL	Rubber hose	
34	4700902295		2	Clamp	
35	4700234481		1	Connector	
36	4700160031		2	O-ring	D
37	4700508029		2	Screw M10-1,5x30H 8,8	C
38	4700904557		4	Steel plain washer	C
39	4700371313		1	Hose clamp	
40	4700371314		1	Hose clamp	
41	4700904229		4	Washer 8,4x16x1,5	C
42	4700500021		4	Screw M8-1,25x25 8.8	C
43	4700902379	B	1XL	Edge trim	
44	4700902379	C	1XL	Edge trim	
46	4700313102		N	Cable ties	
48	4700374626		1	Cooling air cover	
49	4700904901	D	1XL	Tape	D
60	4700391270		2	Hydraulic motor	
61	4700482242		1	Hydraulic hose	
62	4700482892		1	Hydraulic hose	C
63	4700483155		1	Hydraulic hose	
64	4700483157		2	Hydraulic hose	
66	4700483162	F	1	Hydraulic hose	
67	4700483282		1	Hydraulic hose	
69	4700334238		2	Elbow 90 o-ring	
70	4700234481		1	Connector	

A) L=0,260 m
B) L=0,305 m
C) L=0,150 m
D) L=2,0 m
F) Moved to new port

Vibration system DEUTZ

17785-2

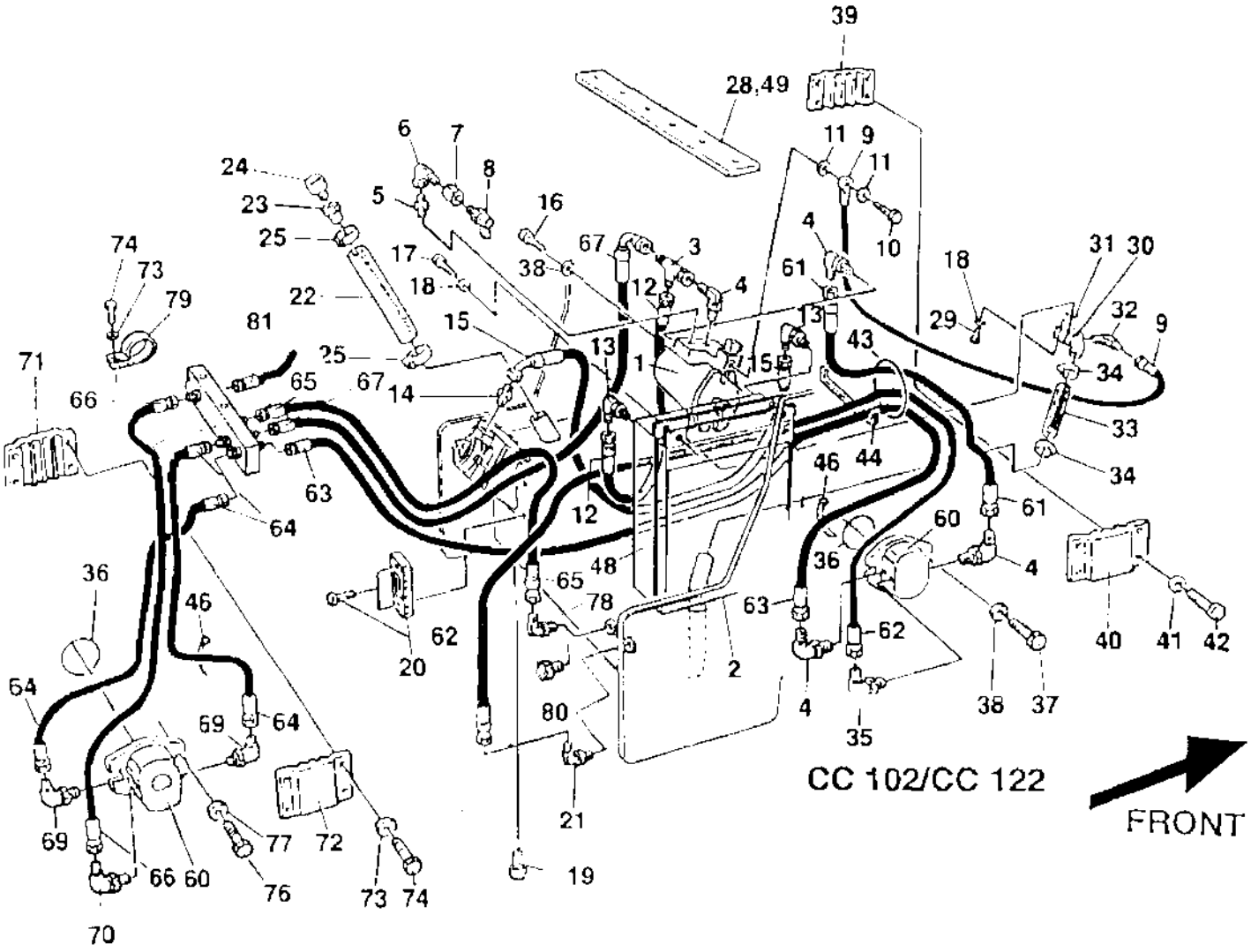

Vibration system DEUTZ

Item	Part No	Rem	Qty	Description	Code
71	4700371313		1	Hose clamp	
72	4700371314		1	Hose clamp	
73	4700904229		5	Washer 8,4x16x1,5	C
74	4700500053		5	Screw M8x20H 8.8	C
76	4700508029		2	Screw M10-1,5x30H 8,8	C
77	4700603018		2	Washer 10x18x4	
79	4700921119		1	Pipe clamp	C
81		H	1	Hydraulic hose	C

H) See section "Propulsion system"

4700359524 Hydraulic pump, vibration DEUTZ

15818

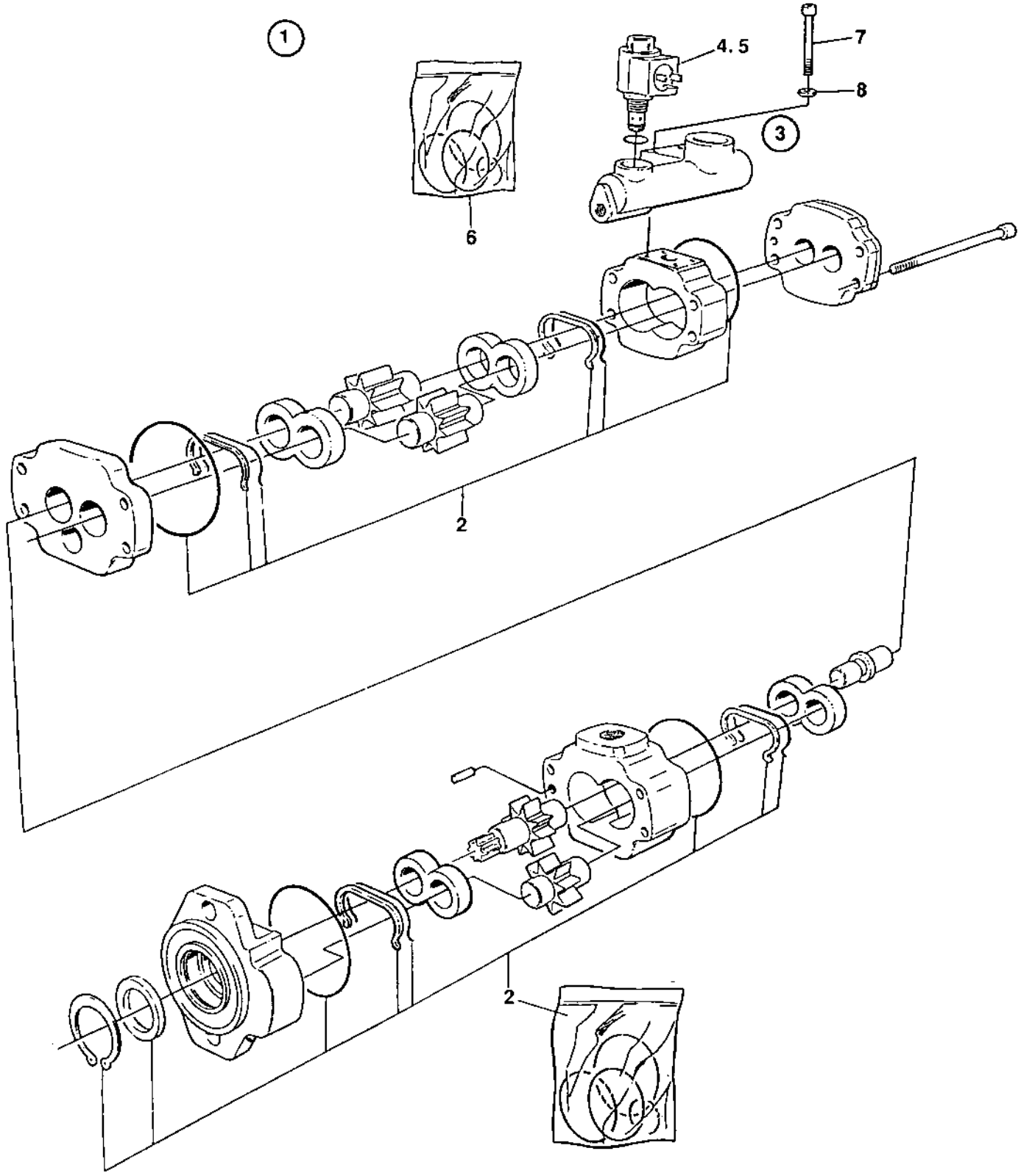

4700359524 Hydraulic pump, vibration DEUTZ

Item	Part No	Rem	Qty	Description	Code
1		A	1	Hydraulic pump	C
			1	.Pump	C
2	4700903430		1	..Seal kit	D
3	4700903637	A,B	1	.Valve	D
4	4700903330		1	..Solenoid valve	D
5	4700908804		1	...Solenoid	D
6	4700902810		1	..Seal kit	D
7	4700909483		4	.Screw	
8	4700909484		4	.Washer	

A) CPL
B) Included in cpl pump, item 1

Steering system

18086

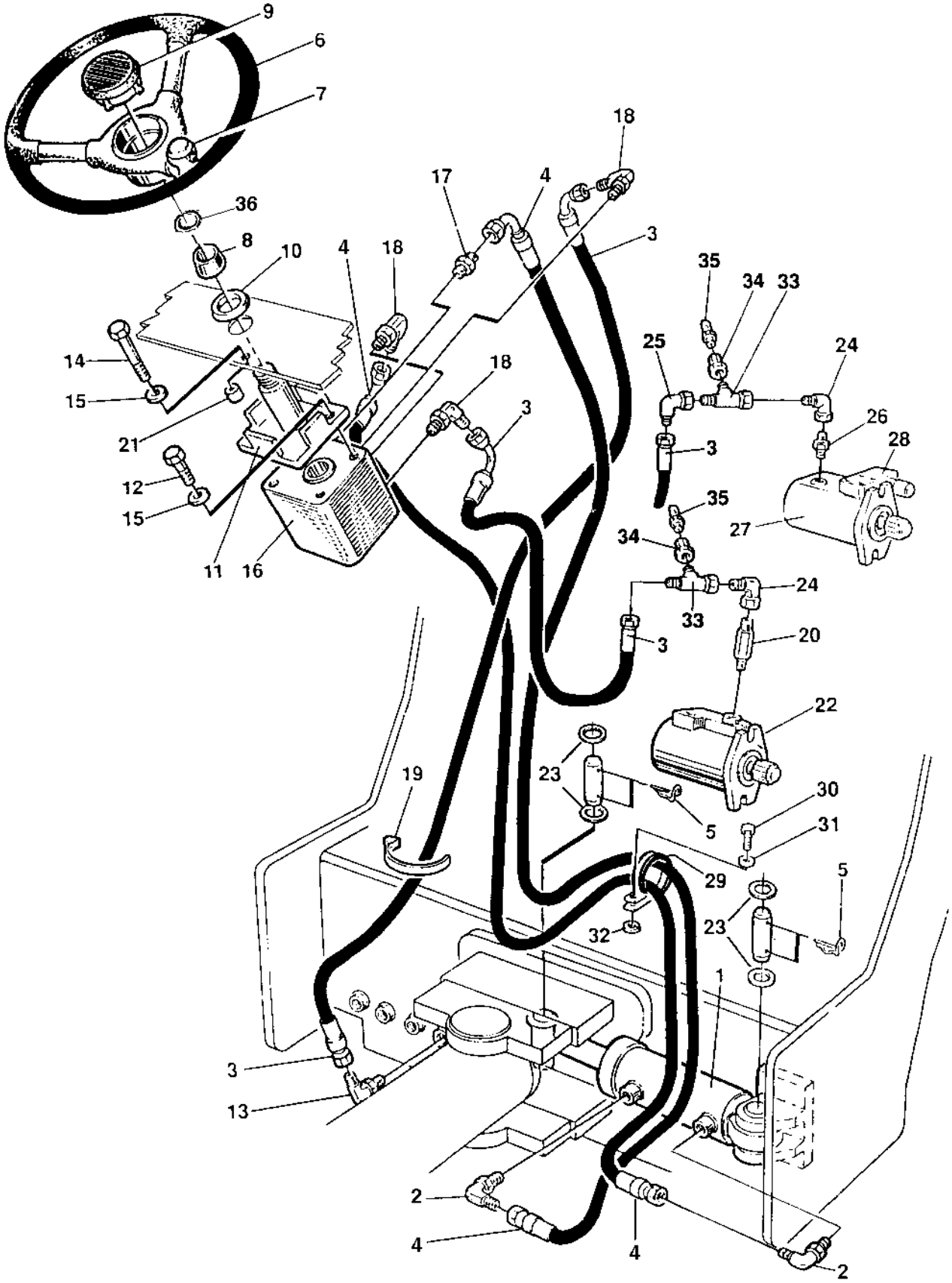

Steering system

Item	Part No	Rem	Qty	Description	Code
1	4700374603		1	**Steering cylinder (Page 92)**	
2	4700334235		2	Elbow 90	
3	4700831179		2	Hydraulic hose	
4	4700482398		2	Hydraulic hose	
5	4700630019		4	Cotter pin	C
6	4700372964		1	Steering wheel, cpl	D
7	4700935614		1	.Turning knob	D
9	4700935613		1	.Cover	
10	4700928830		1	Rubber washer	
11	4700902123		1	Steering column	
12	4700500048		2	Hexagon head screw	C
13	4700334235		1	Elbow 90	
14	4700500030		2	Hexagon head screw	C
15	4700904230		4	Steel plain washer	C
16	4700902099		1	**Steering valve (Page 90)**	
17	4700234390		1	Connector	
18	4700903003		3	Connector	
19	4700313102		N	Cable ties	
20	4700357377		1	Connector	
21	4700355869		2	Spacer sleeve	
22	4700359524		1	**Hydraulic pump, vibration DEUTZ (Page 86)**	
23	4700600016		4	Washer 26x45x4	C
24	4700334524		1	Connector	C
25	4700334524		1	Connector	C
26	4700334236		1	Adapter	C
33	4700334234		1	Tee-connector	C
34	D433830401		1	Connector	C
35	4700910161		1	Measuring nipple	C

4700902099 Steering valve

15480-1

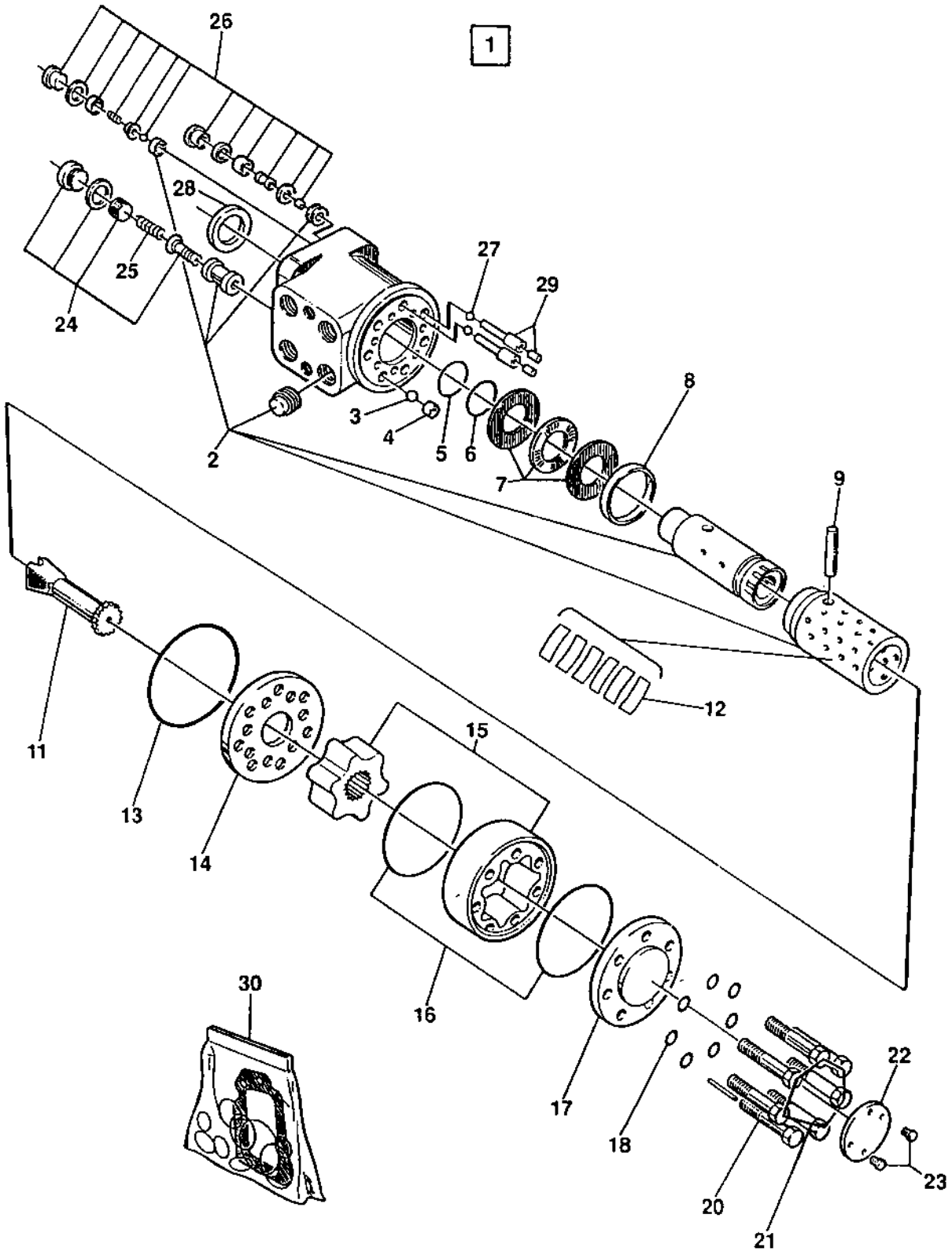

4700902099 Steering valve

Item	Part No	Rem	Qty	Description	Code
1		A	1	Steering valve	C
2			1	.Spool and sleeve	C
3	4700480468		1	.Ball	D
4	4700480446		1	.Threaded bushing	C
5		B	1	.O-ring	C
6		B	1	.Ring	C
7	4700911620		1	.Bearing	B
8	4700480449		1	.Ring	C
9	4700480447		1	.Cross pin	C
11	4700902861		1	.Cardan shaft	C
12	4700903521		1	.Spring kit	D
13		B	1	.O-ring	D
14	4700902862		1	.Valve plate	C
15	4700902863		1	.Gear kit	D
16		B	1	.O-ring	D
17	4700480450		1	.End cap	C
18		B	1	.Washer	C
20	4700929008		1	.Screw with bore	
21	4700929009		6	.Screw	
22	4700481303		1	.Name plate	
23	4700480464		2	.Drive screw	
24	4700929010	A	1	.Relief valve 17,0-17,5MPa	
25			1	.Spring	
26	4700929012		2	.Shock valve 22,5-24,0 MPa	C
27	4700929013		2	.Ball	D
28		B	1	.Seal ring	D
29	4700929014		2	.Rolled pin	C
30	4700480457		1	Spare parts kit	C

A) CPL
B) Included in item 30

4700374603 Steering cylinder

16513

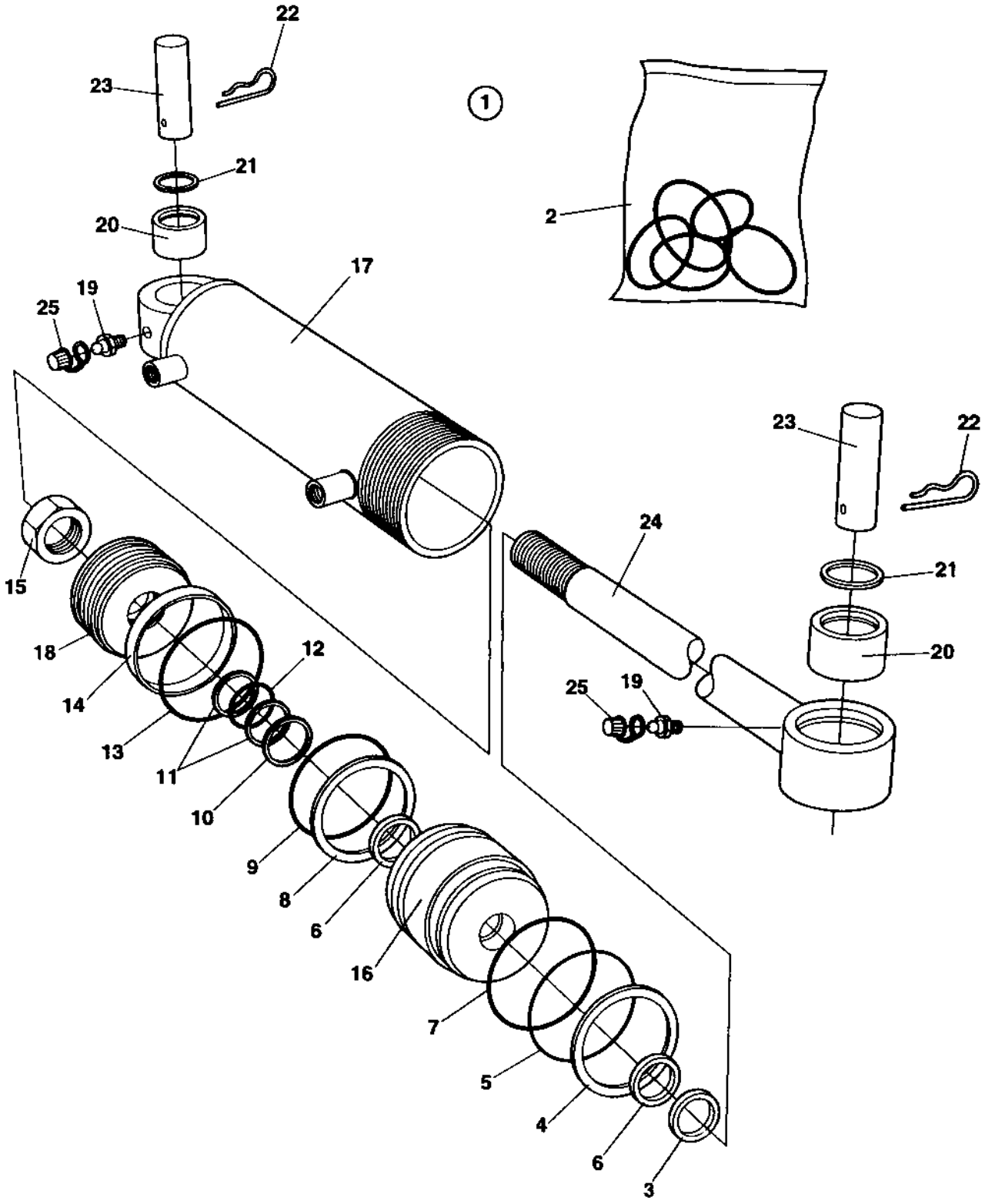

4700374603 Steering cylinder

Item	Part No	Rem	Qty	Description	Code
1		A	1	Steering cylinder	C
2	4700909760		1	.Seal kit	D
3			1	..Scraper ring	D
4			1	..Retaining ring	D
5			1	..O-ring	D
6			2	..Guide ring	D
7			1	..Lock ring	D
8			1	..Sealing	D
9	4700160025		1	..O-ring	
10			1	..Sealing	
11			2	..Back-up ring	
12			1	..O-ring	
13			1	..Sealing	
14			1	..Guide ring	
15			1	..Nut	
16	4700909766		1	.Guide	
17	4700909765		1	.Cylinder tube	
18	4700909764		1	.Piston block	
19	4700926214		2	.Grease fitting	C
20	4700238272		2	.Slide bearing	B
21	4700151012		2	.Retaining ring	C
22	4700635061		4	.Hair clip	C
23	4700909761		2	.Shaft	
24	4700909759		1	.Piston rod	
25	4700902576		2	.Cover	

A) CPL

Brake system

16498S

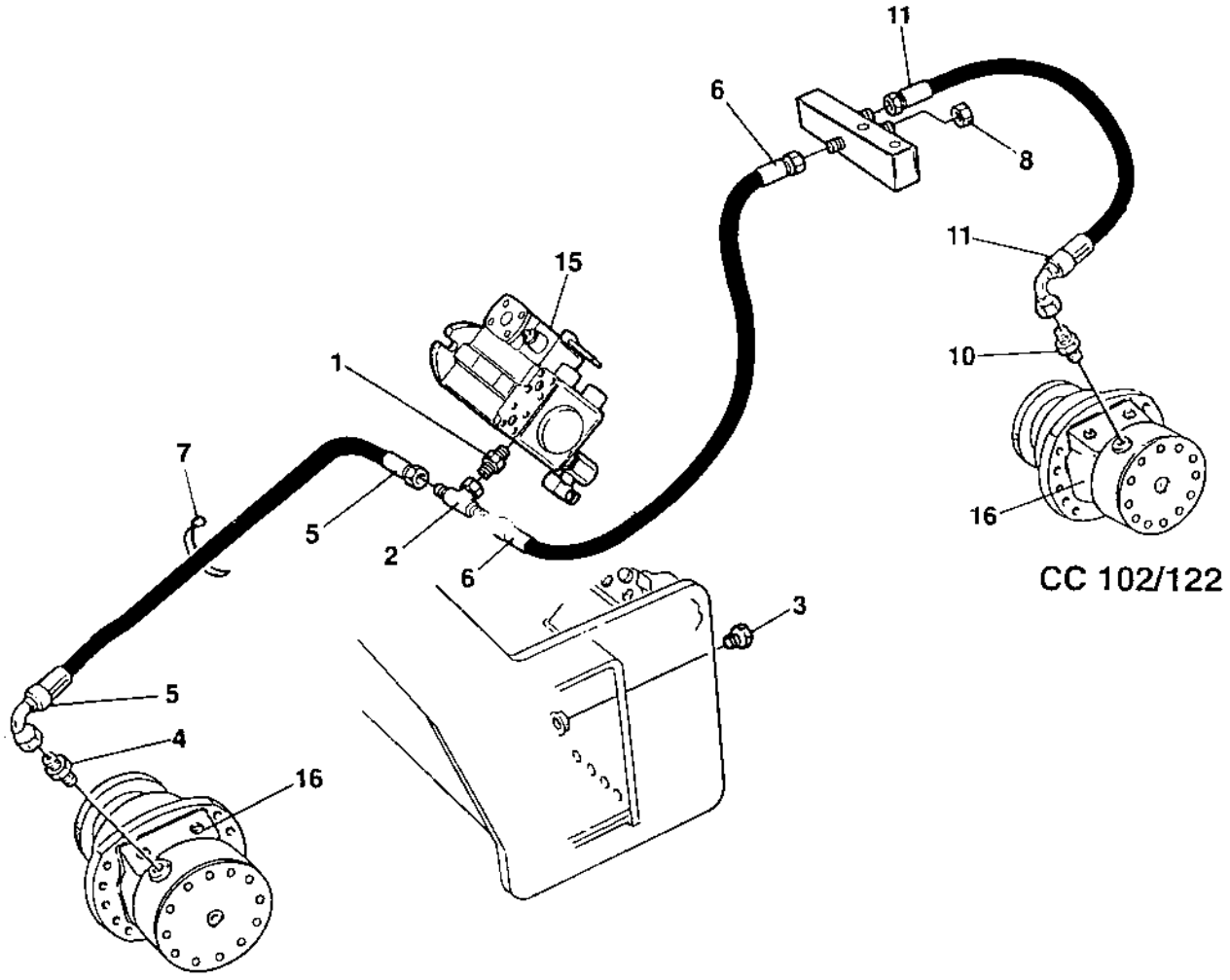

Brake system

Item	Part No	Rem	Qty	Description	Code
1	4700334463		1	Connector	C
2	4700234888		1	Tee-connector	
4	4700234233		1	Adapter	C
5	4700483419		1	Hydraulic hose	
6	4700482865		1	Hydraulic hose	C
7	4700313102		N	Cable ties	
8	4700230400		1	Cap	D
10	4700234233		1	Adapter	C
11	4700482483		1	Hydraulic hose	
15			1	Hydraulic pump, propulsion	
16			2	Hydraulic motor, propulsion	

Electrical equipment

Item	Part No	Rem	Qty	Description	Code
135				**Electrical equipment (Page 98)**	
215				**Control panel (Page 102)**	
240				**Electric battery switch DEUTZ (Page 106)**	
245				**Interlock (Page 108)**	
265				**Interlock Loxam (Page 110)**	
300				**Sprinkler timer (Page 112)**	
353				**Driving & side direction lights (Page 114)**	
355				**Working lights (Page 118)**	
358				**Licence plate light, parking lights (Page 120)**	
390				**Rotating beacon (Page 122)**	

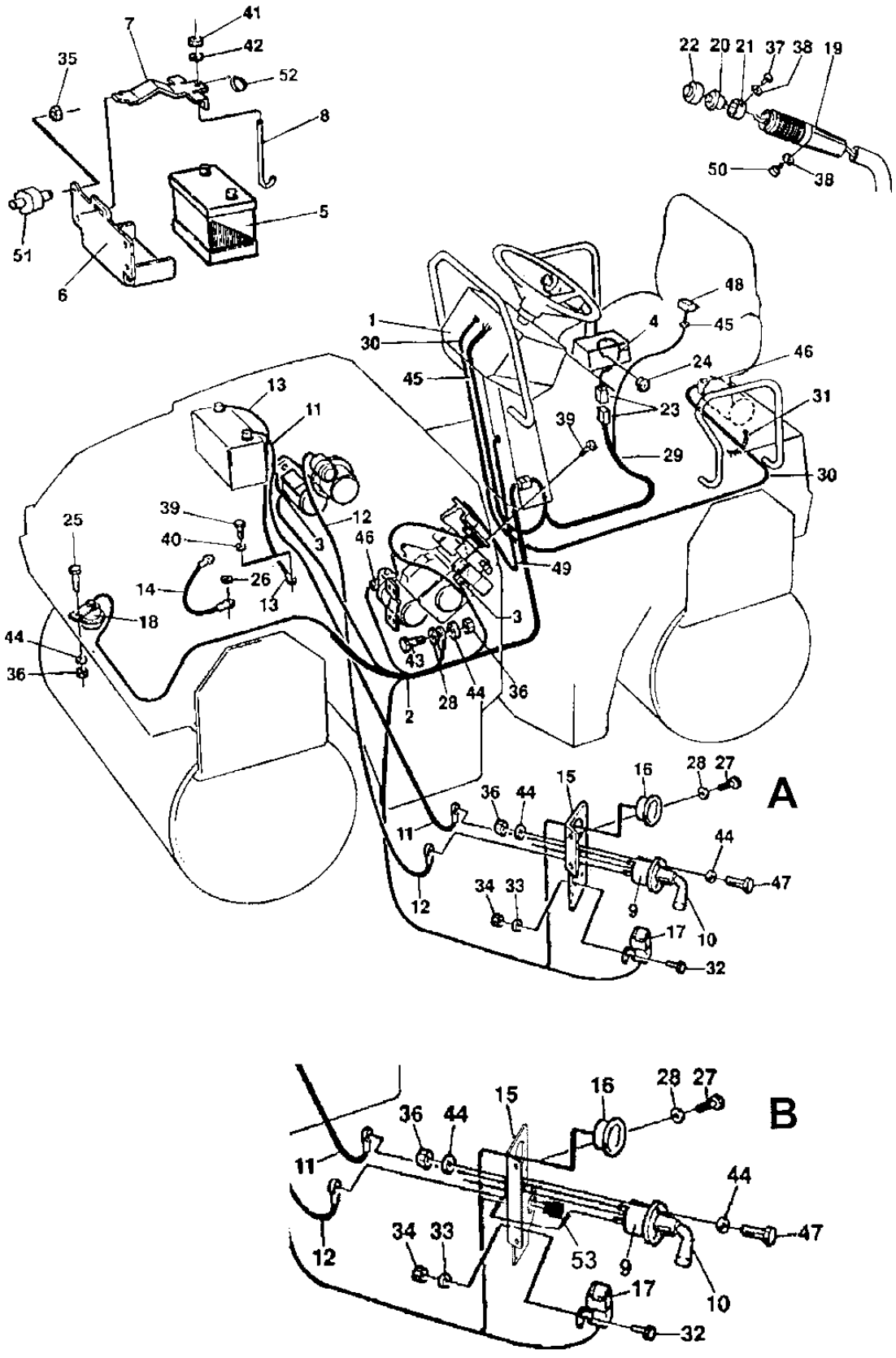
A
B

Electrical equipment

Item	Part No	Rem	Qty	Description	Code
1			1	**Control panel (Page 102)**	
2	4812110855	O	1	Cable harness	
3	4700960796		2	.Connector black, MPM 182 09 ND	D
4	4700357583	C	1	Cable harness	
5		M	1	Battery	
6	4700396108		1	Battery shelf	
7	4700378370		1	Battery holder	
8	4700903372		1	Battery screw	
9	4700357567		1	Battery switch, cpl	D
10	4700902560		1	.Handle	D
11	4700378743		1	Battery cable (+)	
12	4700791472		1	Connection cable, coarse	
13	4700904277		1	Ground cable	B
14	4700345728		1	Ground cable	B
15	4812110856	O	1	Bracket	
16	4700801567		1	Hour meter	D
17	4700287597	G	1	Relay	D
18	4700999027		1	Horn	B
19	4700285909		1	Grab handle	D
20	4700928497	H	1	Push button	D
21	4700285911		1	Bushing	D
22	4700348481		1	Cover	B
23	4700925958		2	Connection	C
24	4700902203		1	Plug	C
25	4700500020		1	Screw M8-1,25x22 8,8	C
26	4700904557		1	Steel plain washer	C
27	4700500019		2	Screw M8x16H 8.8 A2K	C
28	4700904229		4	Washer 8,4x16x1,5	C
29		2	1	Cable harness	C
30				Not used on this model	C
31				Not used on this model	C
32	4700508020		1	Screw	C
33	4700904281		1	Washer 5,3x10x1 300HV	C
34	4700586001		1	Lock nut	C
35	4700791182		4	Lock nut M8	
36	4700586003		4	Lock nut M8	C
37	4700533001		3	Screw	
38	4700904697		5	Washer 3,2x6x0,5	
39	4700500053		1	Screw M8x20H 8.8	C
40	4700904640		1	Washer 8,4x22x3	C
41	4700586003		1	Lock nut M8	C
42	4700904229		1	Washer 8,4x16x1,5	C
43	4700500047		2	Hexagon head screw	C
44	4700904229		7	Washer 8,4x16x1,5	C
45	4700909107		1	Grommet	
46	4700901766		1	Connector 2-POL	C
47	4700500021		2	Screw M8-1,25x25 8.8	C
48		3	1	Seat switch	C
49	4700385580		1	Cable harness	
50	4700901767		1	Screw ST3,5x9,5 Black	
51	4700376796		4	Shock absorber	

2) See section " Control panel "
3) See section " Drivers platform "
C) F/R control
G) Start
H) Vibration
M) Used together with item 6 Battery shelf P/N 4700396108. Varta/Tudor 12V/74Ah, Size = 278x175x190 mm
O) Used together with illustration "B" only.

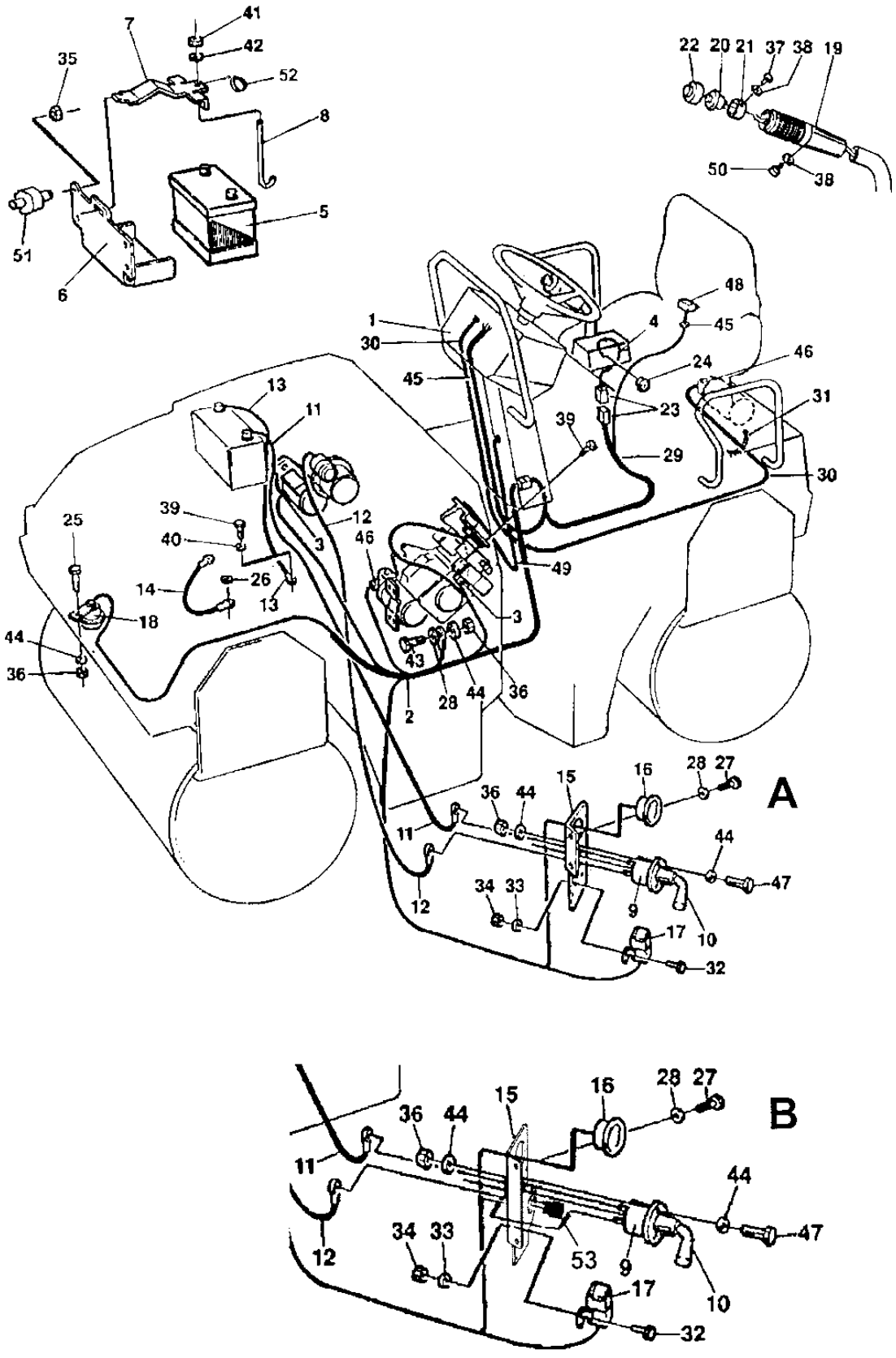
A
B

Electrical equipment

Item	Part No	Rem	Qty	Description	Code
52	4700921104		1	Clamp	C
53	4812110560		1	Power socket 12V	

Control panel

16517-1

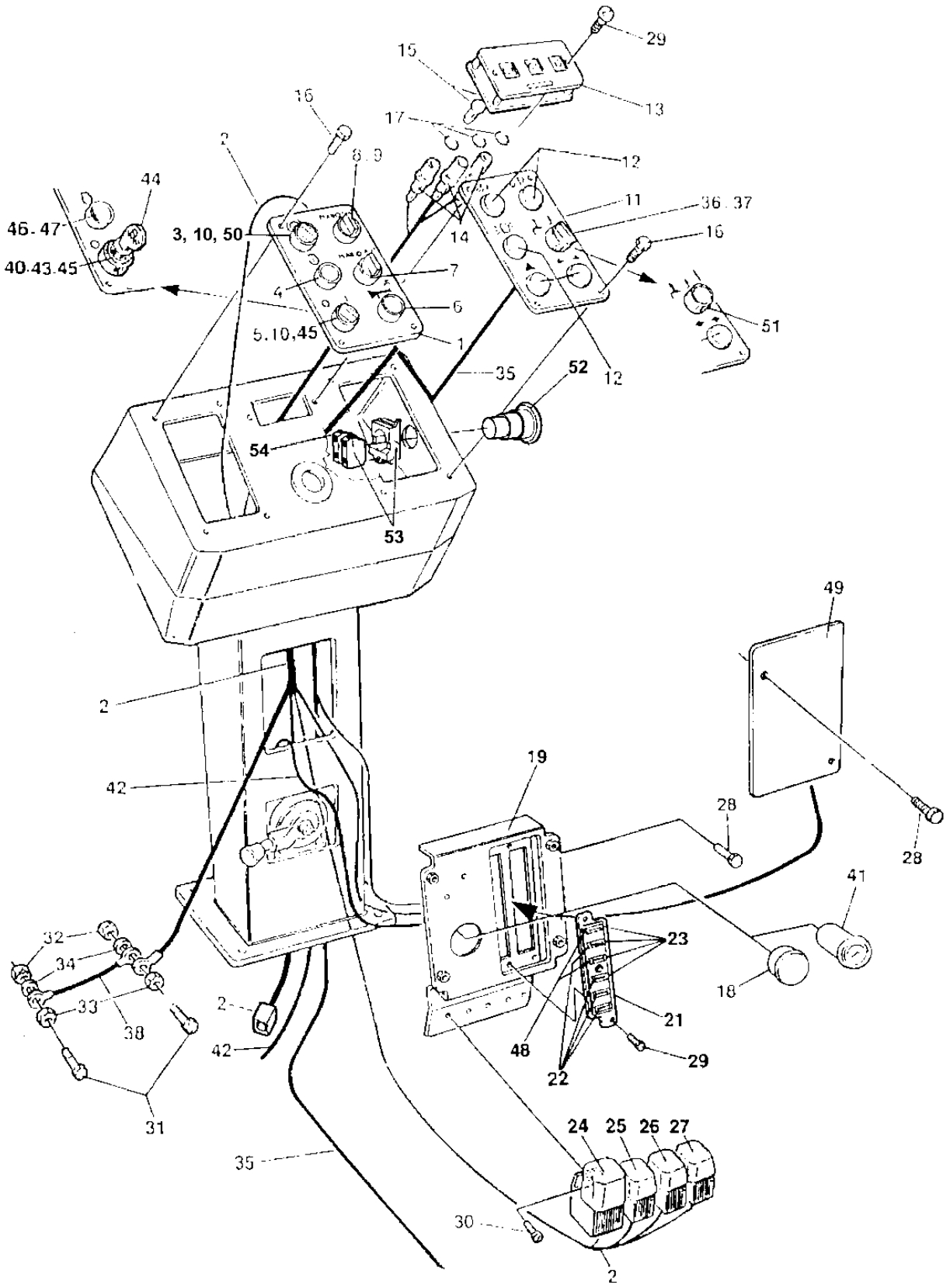

Control panel

Item	Part No	Rem	Qty	Description	Code
1	4812110723		1	Control panel Left	
2	4812110717		1	Cable harness	
3	4700791722	P	1	Switch, black	B
4	4700928928	B	1	Push button	D
5	4700930151	C	1	Switch	B
	4700930153	H,M	1	Switch	D
	4700385644		1	Decal Electrical battery switch	
6	4700932032	D	1	Push button	B
7	4700930153	E	1	Switch	D
8	4700932058	F	1	Switch	B
9	4700930155		1	Connector	
10	4700930163		1	Contact piece, NO	B
11	4700357574		1	Control panel plate	
12	4700911456		6	Hole plug	C
13	4700357585		1	Display panel	
14	4700902225		3	Lamp socket 2-POL	
15	4700985125		3	Bulb 12V	B
16	4700902224		8	Screw M6x10	
17	4700160269		3	O-ring	
18	4700345870		1	Plug	C
19	4700371326		1	Distribution control plate	
21	4700903820		1	Fuse box	D
	4700909527		1	.Cover	
22	4700901226	G	4	Fuse 7.5A	A
23	4700901240		3	Connector	B
24	4700382782		1	Relay, VBS	A
25	4700287597	I	1	Relay	D
26	4700287597		1	Relay	D
27	4700287597		1	Relay	D
28	4700541702		6	Screw M6x12	C
29	4700901767		4	Screw ST3,5x9,5 Black	
30	4700902223		4	Screw	C
31	4700500075		2	Screw M6-1,0x25 8.8	C
32	4700586002		2	Lock nut M6 -8	C
33	4700570004		2	Nut M6X1,00 -8 A2K	C
34	4700904228		2	Washer 6,4x12x1,5	C
35				Not used on this model	C
36				Not used on this model	C
37				Not used on this model	C
38	4700903063		1	Ground cable	
40	4700930182	J	1	Contact block	
41	4700355468	J	1	Fuel gauge	D
	4700355258	J	1	.Lamp holder	D
	4700985012	J	1	.Bulb	B
42	4700358418	K	1	Cable harness	
43	4700903239	L	1	Switch	D

B) Starter
C) Ignition
D) Horn
E) Sprinkler
F) Vibration
G) Other fuses, options
H) Ignition, electrical battery switch
I) Hour meter
J) Option
K) Option, fuel gauge
L) Option, key starter
M) Three fixed positions.
P) Parking brake

Control panel

16517-1

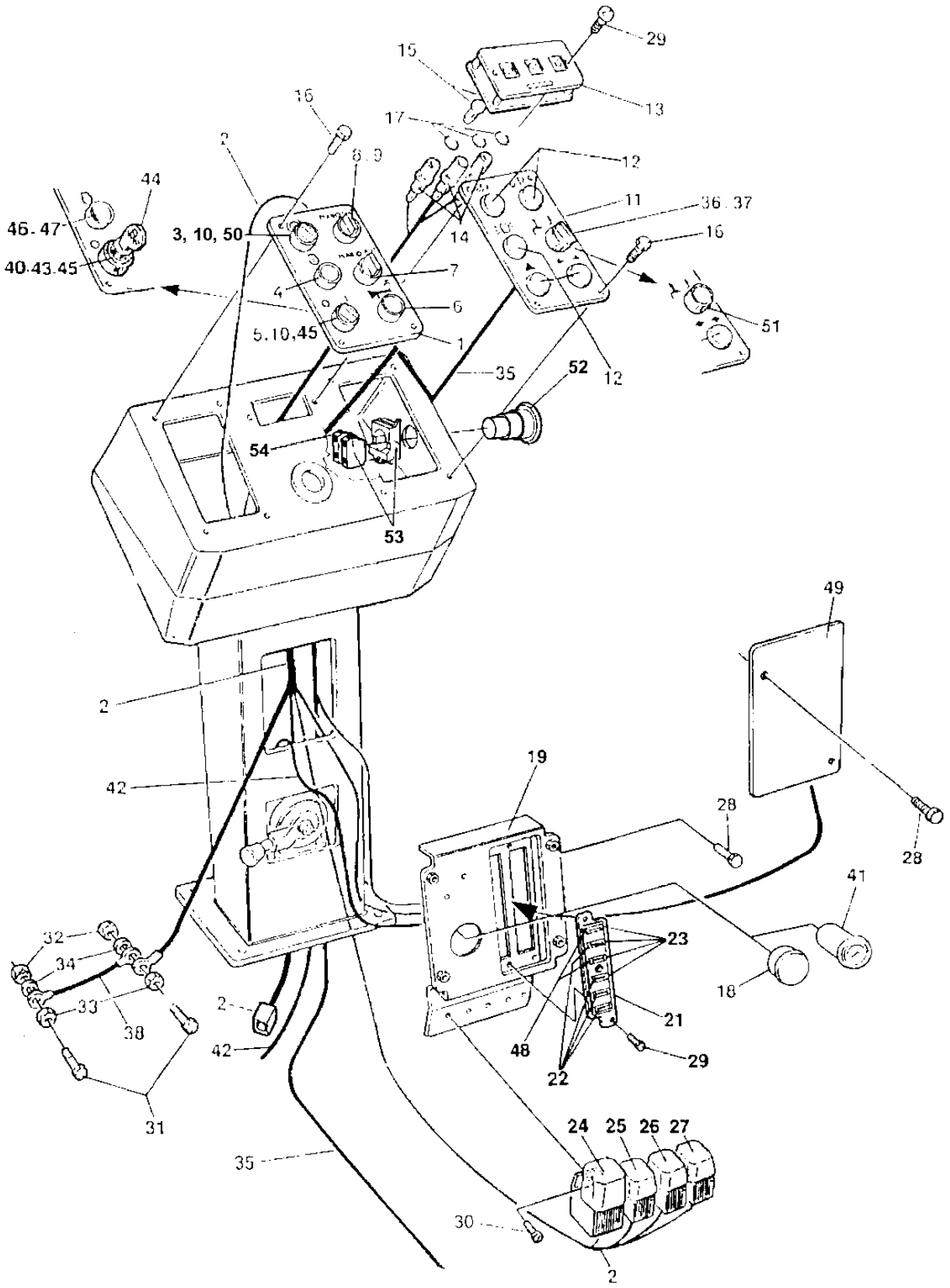

Control panel

Item	Part No	Rem	Qty	Description	Code
44	4700902866		1	.Key Marked "455"	A
45	4700930154	H	4	Contact piece, NC	B
46	4700932059	J	1	Pilot lamp cpl Yellow	B
47	4700985012	J	1	Bulb	B
48	4700901227	N	2	Fuse 10A	A
49	4700371344		1	Cover	
50	4700930154		3	Contact piece, NC	B
51				Not used on this model	B
52	4700791739		1	Emergency stop	
53	4700389840		1	Connector	
54	4700791723		2	Connector	

H) Ignition, electrical battery switch
J) Option
N) Other fuses, options

Electric battery switch DEUTZ

17433

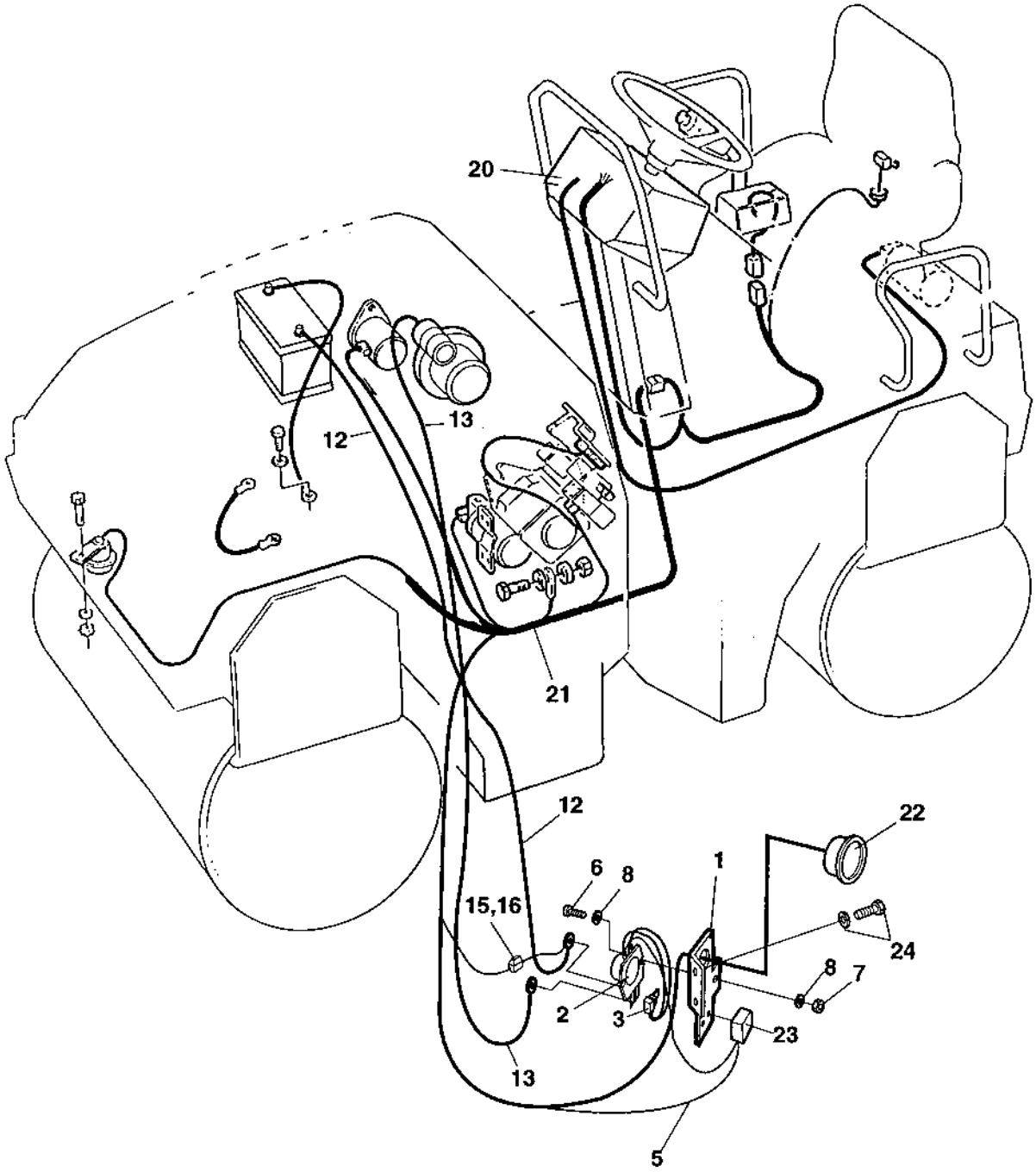

Electric battery switch DEUTZ

Item	Part No	Rem	Qty	Description	Code
1	4700384083		1	Holder plate	
2	4700791078		1	Electric battery switch	D
3	4700791079	2	1	Diode	D
5	4700384191		1	Cable harness	
6	4700500022		2	Screw M8x30H 8.8 A2K	C
7	4700570005		2	Nut M8	C
8	4700904229		4	Washer 8,4x16x1,5	C
12	4700378742		1	Battery cable	
13	4700791472		1	Connection cable, coarse	
15	4700904015		1	Fuse holder	D
16	4700901225		1	Fuse 5A	A
20				Control panel	A
21		1		Cable harness	A
22		1		Hour meter	A
23		1		Starter relay	A
24		1		Fastener	A

1) See section " Electrical equipment ".
2) Delivered with Cable harness PN 4700384191.

Interlock

17258

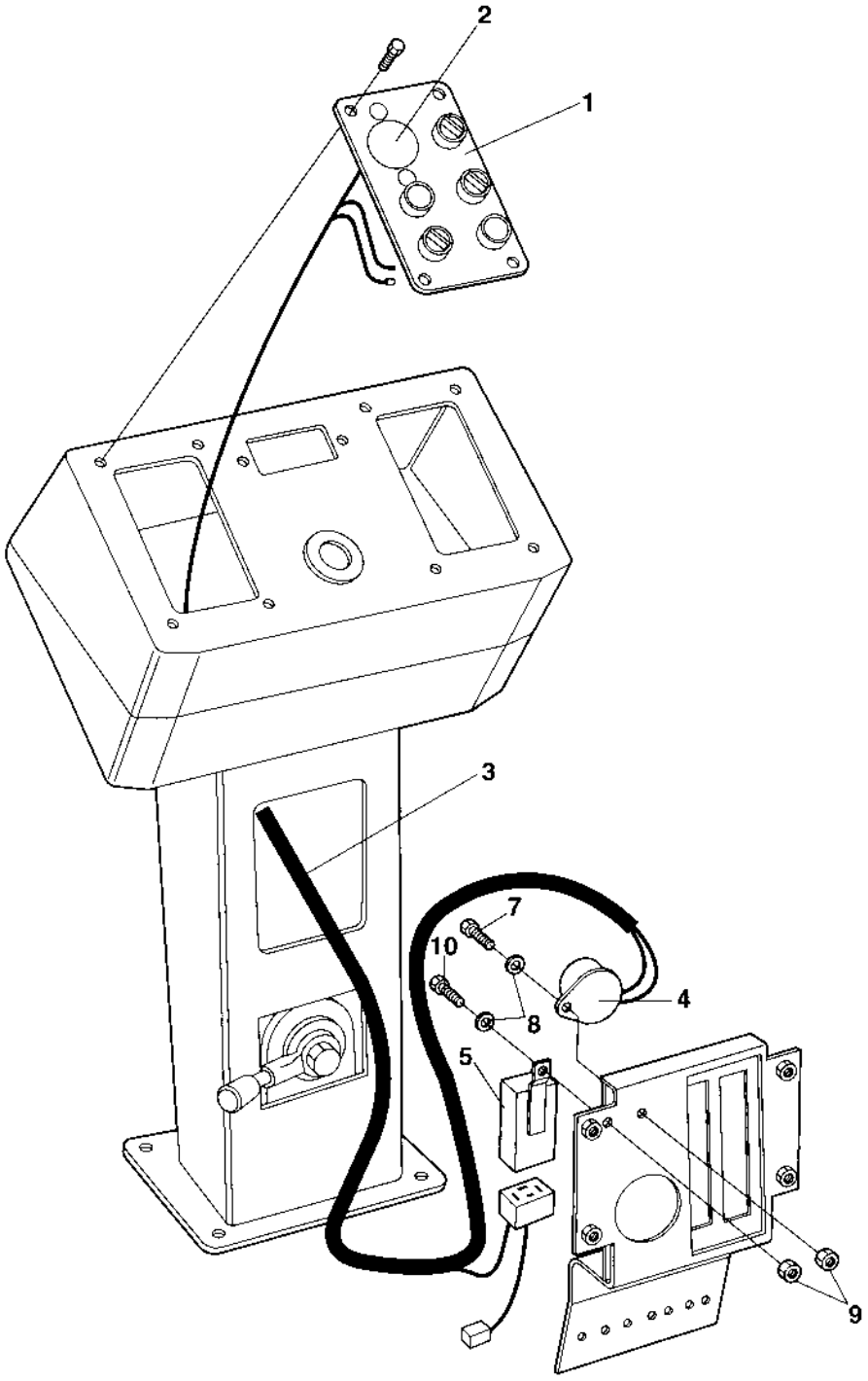

Interlock

Item	Part No	Rem	Qty	Description	Code
1		A	1	Control panel plate	A
2			1	Emergency stop	A
3	4700381994		1	Cable harness	
4	4700355301		1	Buzzer	B
5	4700904846		1	Delay relay	
7	4700533070		1	Screw	
8	4700904281		2	Washer 5,3x10x1 300HV	C
9	4700586001		2	Lock nut	C
10	4700533025		1	Screw M5x12	

A) Left

Interlock Loxam

18766

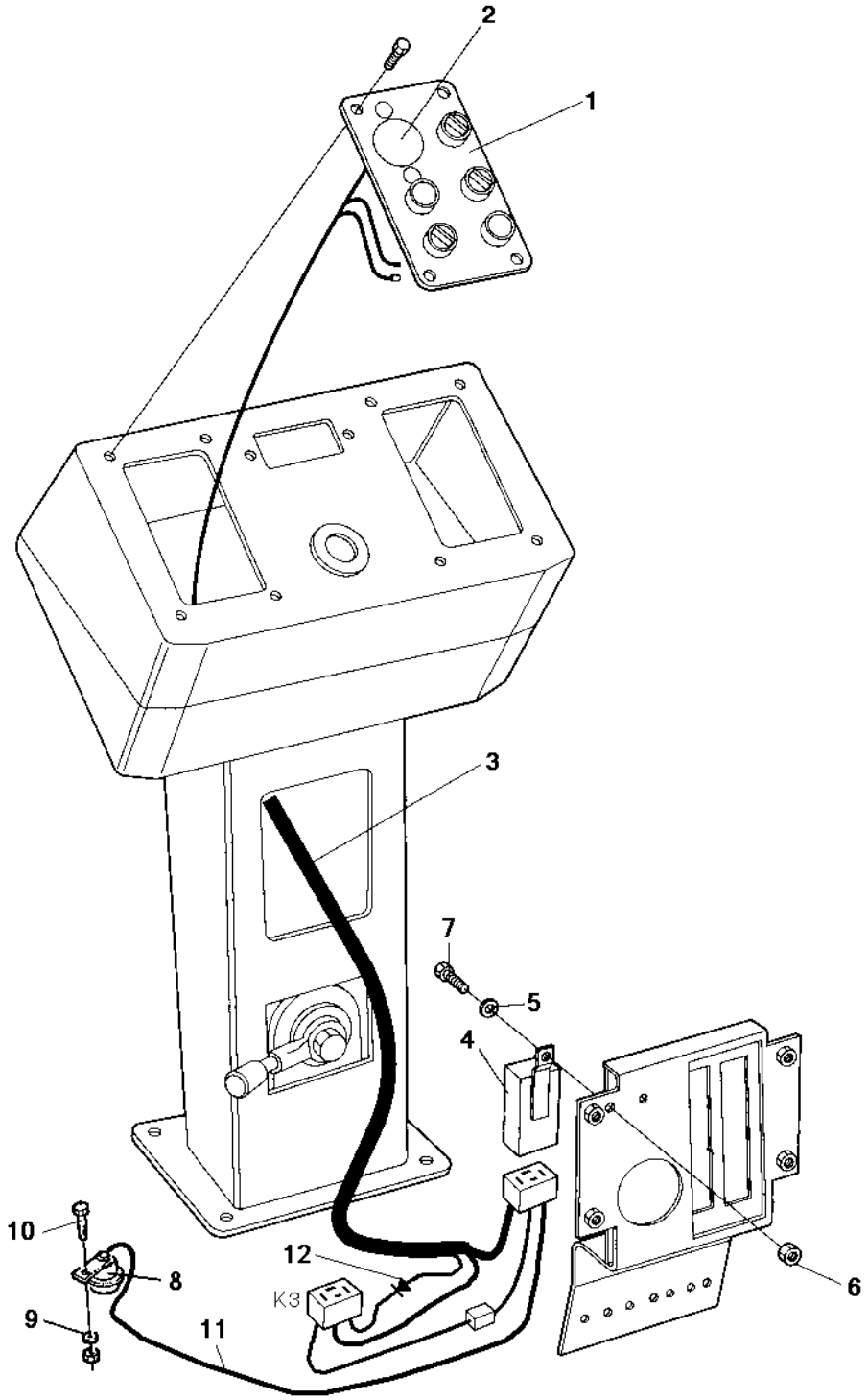

Interlock Loxam

Item	Part No	Rem	Qty	Description	Code
1		A	1	Control panel plate	
2			1	Emergency stop	
3	4700393808		1	Cable harness	
4	4700792548		1	Delay relay	
5	4700904281		1	Washer 5,3x10x1 300HV	C
6	4700586001		1	Lock nut	C
7	4700533025		1	Screw M5x12	
8	4700999027		1	Horn	B
9	4700904734		1	Washer 8,4x26x4	
10	4700500022		1	Screw M8x30H 8.8 A2K	C
11	4700377697		1	Cable harness	
12	4700903593		1	Diode	

A) Left

Sprinkler timer

17434

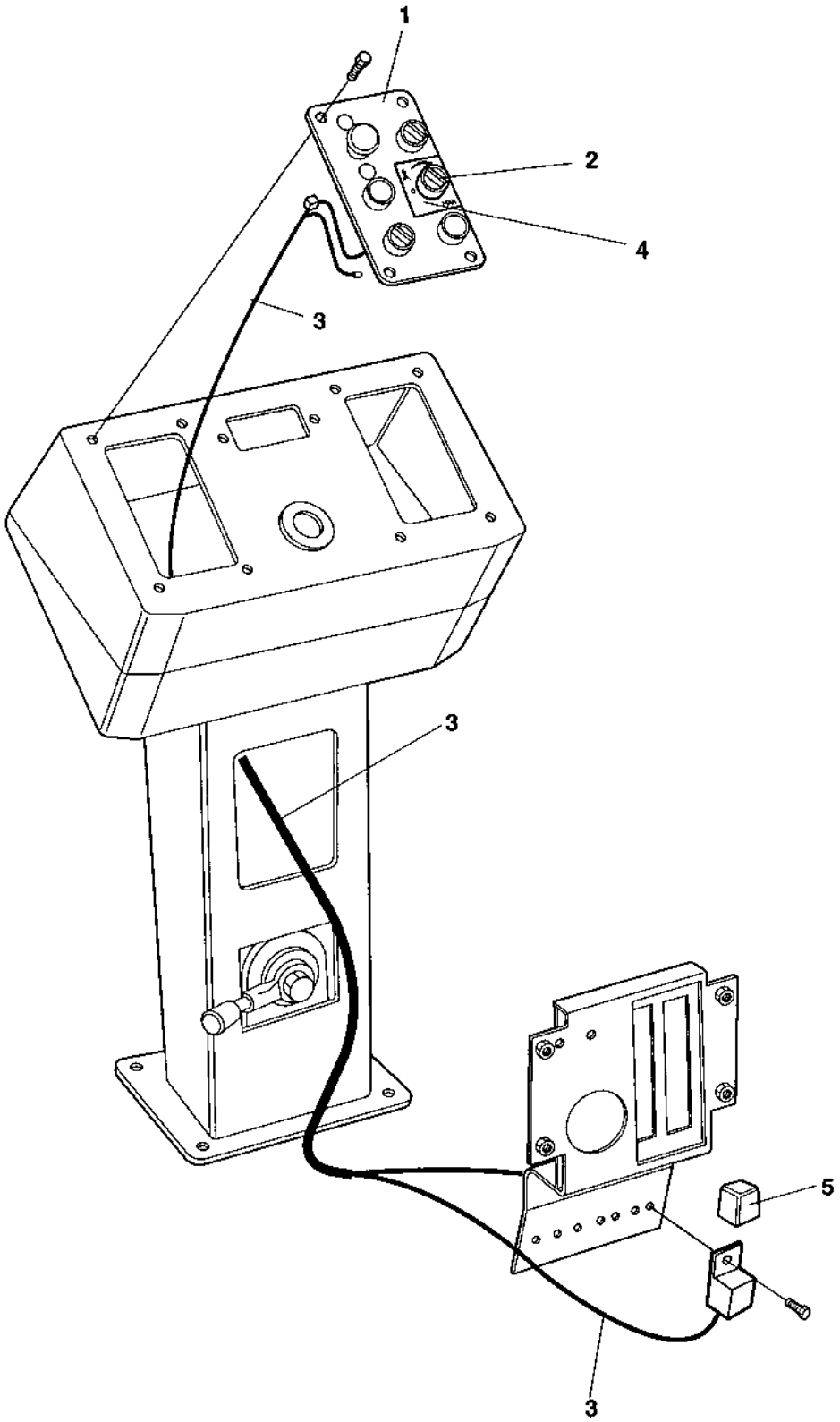

Sprinkler timer

Item	Part No	Rem	Qty	Description	Code
1			1	Control panel plate	
2	4700383960		1	Switch, cpl	
3	4700383967		1	Cable harness	
	4700357562		1	.Relay holder	D
4	4700384359		1	Decal	
5	4700374213		1	Time relay	A

Driving & side direction lights

18097

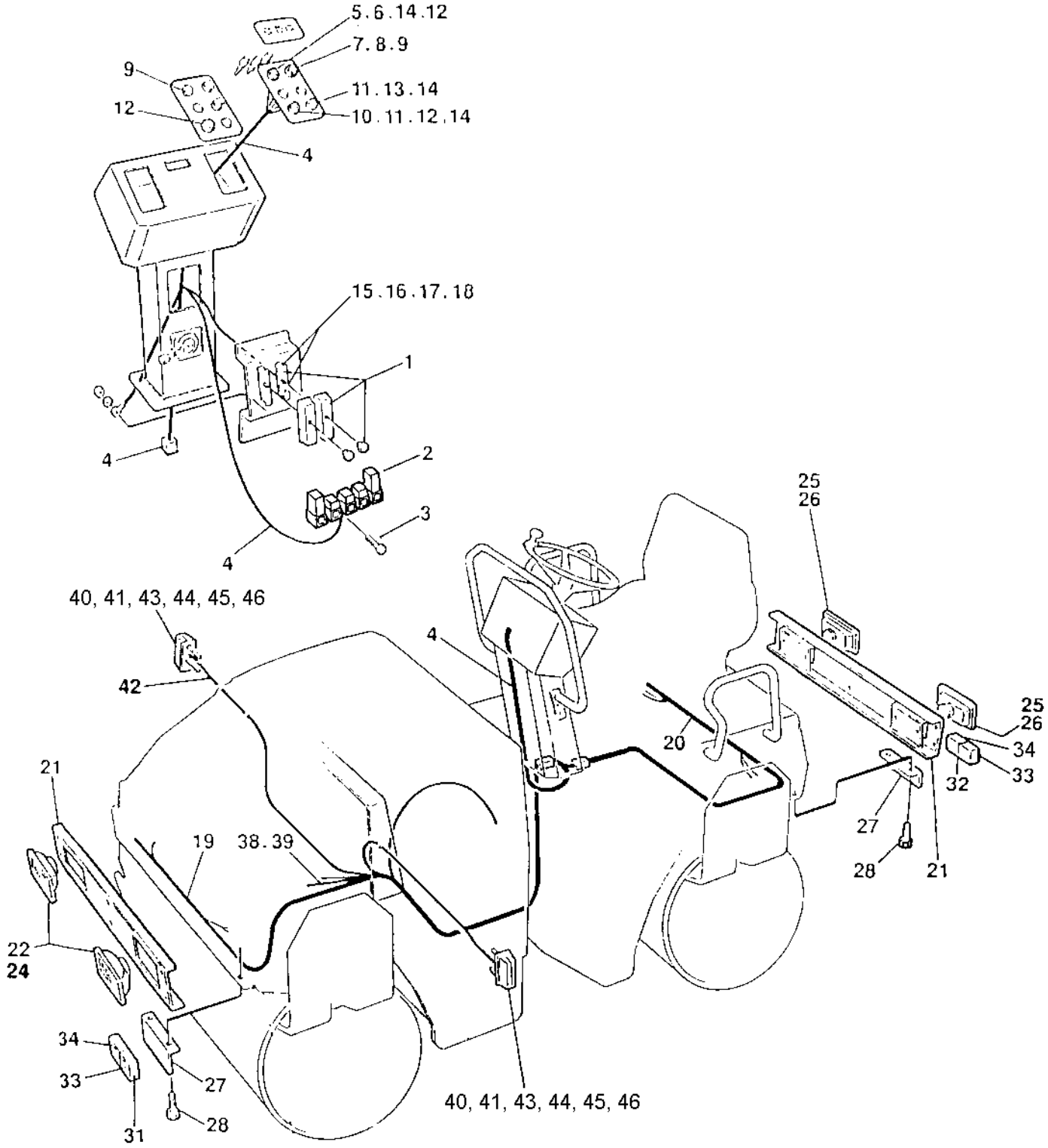

Driving & side direction lights

Item	Part No	Rem	Qty	Description	Code
1	4700903820		1	Fuse box	D
2	4700904989		1	Flash relay Option	A
3	4700902223		1	Screw	C
4	4700373493	A	1	Cable harness	
5	4700932055	B	1	Switch	D
6	4700930165		1	Contact block	B
7	4700932058	C	1	Switch	B
8	4700930182		1	Contact block	
9	4700930154	D	2	Contact piece, NC	B
10	4700932056	E	1	Switch	B
11	4700930162		2	Connector	B
12	4700930163	D	3	Contact piece, NO	B
13	4700930161	F	1	Switch	B
14	4700985012	G	3	Bulb	B
15	4700901240		1	Connector	B
16	4700901225		2	Fuse 5A	A
17	4700901227		1	Fuse 10A	A
18	4700901228		2	Fuse 15A	A
19	4700373490	H	1	Cable harness	
20	4700357812	I	1	Cable harness	
21	4700371561	J	2	Lights bracket	
	4700380192	K	2	Lights bracket	
22	4700902066	L	2	Headlight	B
	4700904313	M	2	Headlight	B
24	4700900790	N	2	Bulb 60/55w H4	B
25	4700902227	O	2	Work light	B
26	4700901369	P	2	Bulb 55w H3	B
27	4700389631		4	Holder plate	
28	4700500006		8	Screw M5x16	C
	4700904281	R	8	Washer 5,3x10x1 300HV	C
31	4700904315	U	1	Direction lamp	B
	4700904316	V	1	Direction lamp	B
32	4700904317	X	1	Direction lamp	B
	4700904318	Y	1	Direction lamp	B
33	4700928502	F	6	Bulb 21w	B

A) Driving lights
B) Head light
C) Lights
D) Small
E) Hazard
F) Turn signal/stop light
G) Switch
H) Front
I) Rear
J) Red
K) Yellow
L) Right asym, H4, front
M) Left asym, H4, front
N) H4, head light, front
O) H3, rear
P) H3, rear light
R) Not illustrated
U) Front left
V) Front right
X) Rear left
Y) Rear right

Driving & side direction lights

18097

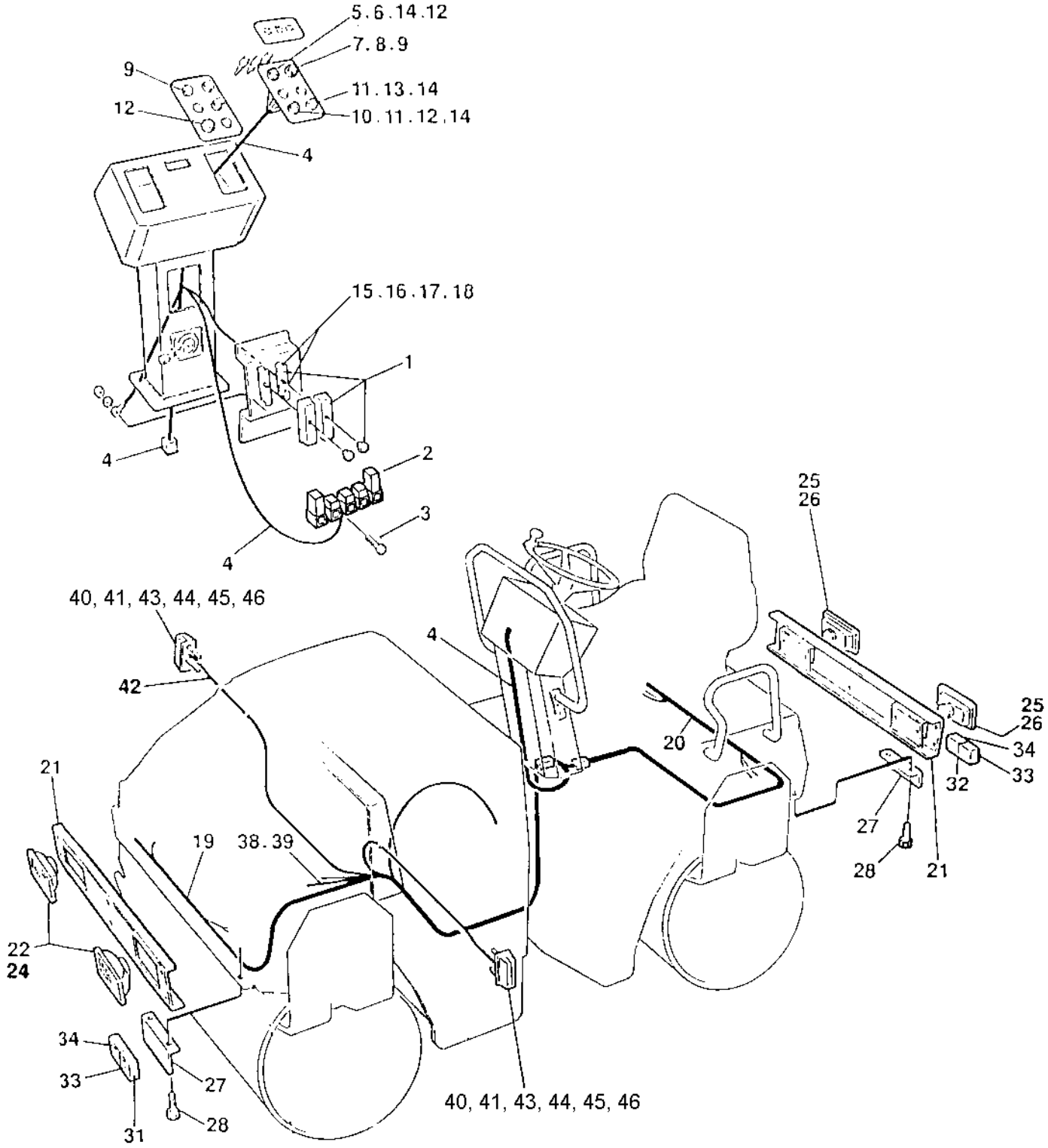

Driving & side direction lights

Item	Part No	Rem	Qty	Description	Code
34	4700985014	Q	4	Bulb 5w	B
38	4700904229		1	Washer 8,4x16x1,5	C
39	4700586003		1	Lock nut M8	C
40	4700902064		2	Direction lights	B
41	4700985013		2	Bulb 12V,5W	B
42	4700358000	S	1	Cable harness	
43	4700600002	T	4	Washer	C
44	4700923976	T	4	Nut	C
45	4700508020	T	4	Screw	C
46	4700508075		4	Screw M5x12	

Q) Parking light
S) Direction lights
T) This item is not used in new design; where the holes in the hood frame are threaded.

Working lights

16666-1

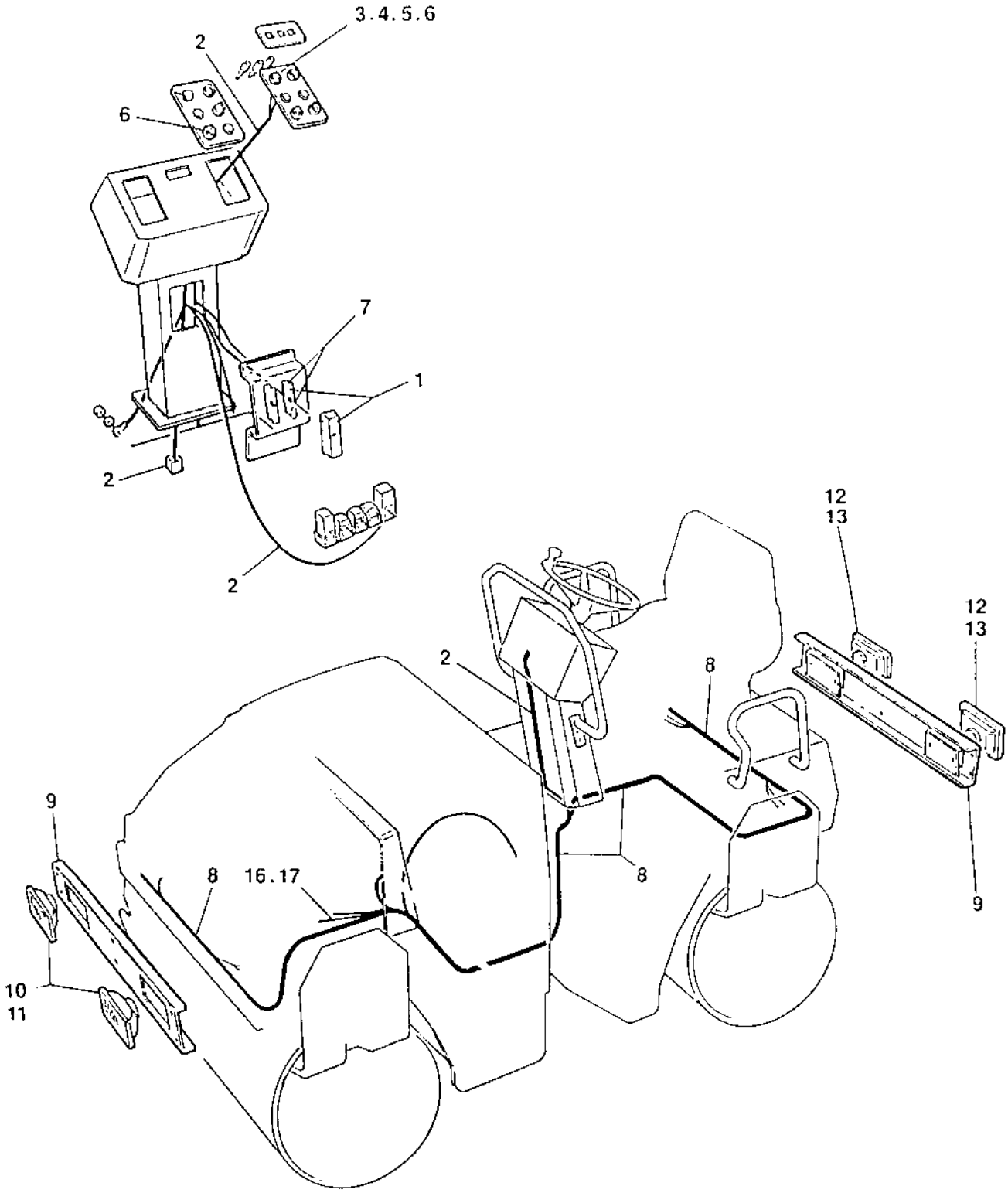

Working lights

Item	Part No	Rem	Qty	Description	Code
1	4700903820		1	Fuse box	D
2	4700358102	A	1	Cable harness	
3	4700932055	A	1	Switch	D
4	4700930165		1	Contact block	B
5	4700985012	B	1	Bulb	B
6	4700930163	C	3	Contact piece, NO	B
7	4700901227		2	Fuse 10A	A
8	4700376113	A	1	Cable harness	
9	4700371561	4	2	Lights bracket	
10	4700902227	E	2	Work light	B
11	4700901369	F	2	Bulb 55w H3	B
12	4700902227	G	2	Work light	B
13	4700901369	H	2	Bulb 55w H3	B
16	4700904229		1	Washer 8,4x16x1,5	C
17	4700586003		1	Lock nut M8	C

4) Right asym., including machines originally delivered to France
A) Work lights
B) Switch
C) Small
E) H3, front
F) H3, head light, front
G) H3, rear
H) H3, rear light

Licence plate light, parking lights

16667

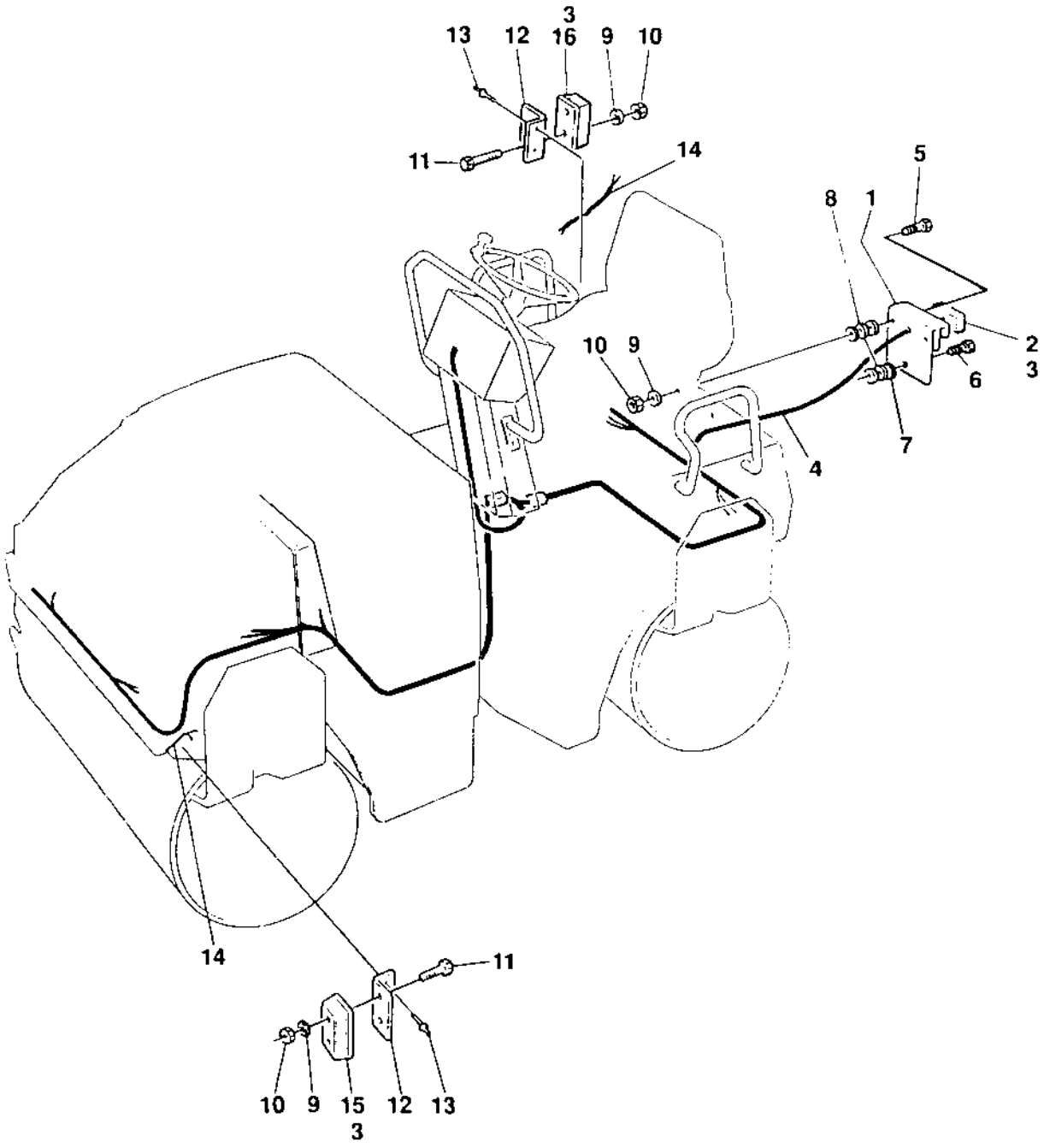

Licence plate light, parking lights

Item	Part No	Rem	Qty	Description	Code
1	4700355797		1	Licence plate holder	
2	4700929455		1	Licence plate light	D
3	4700985013	A	5	Bulb 12V,5W	B
4	4700355829	B	1	Cable harness	
5	4700533032		3	Screw	
6	4700535010		1	Screw	
7	4700615042		1	Conical spring washer	
8	4700570003		3	Nut M5	C
9	4700600003		23	Washer	
10	4700586001		11	Lock nut	C
11	4700508020		8	Screw	C
12	4700358563		4	Lamp socket	
13	4700624027		8	Rivet	
14	4700903081	C	4	Cable	
	4700909152		4	.Rubber grommet	C
15	4700903078	D	2	Position light	
16	4700903079	E	2	Position light	

A) Turn/position light
B) Licence plate light
C) Position light
D) Front
E) Rear

Rotating beacon

18806

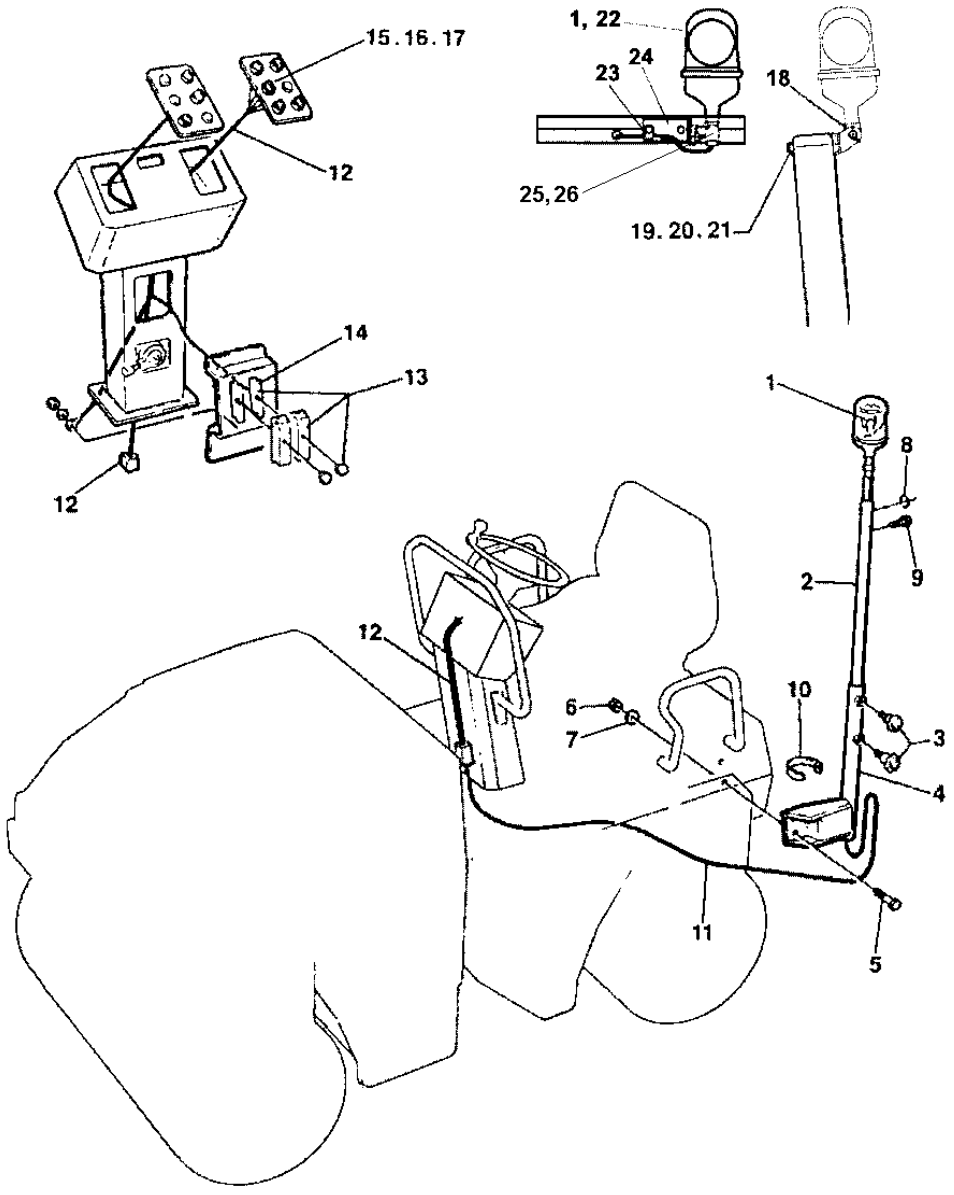

Rotating beacon

Item	Part No	Rem	Qty	Description	Code
1				Not used on this model	
2	4700357663	1	1	Lamp holder	
3	4700499162	1	2	Hand knob	
4	4700357679	1	1	Lamp holder	
5	4700500028	1	2	Screw	C
6	4700586018	1	2	Lock nut	C
7	4700904230	1	2	Steel plain washer	C
8	4700909152	1	1	Rubber grommet	C
9	4700500044		1	Screw M6x8	C
10	4700313041		N	Cable ties	
11	4700396557		1	Cable harness	
12	4700357668	2	1	Cable harness	
13	4700903820	2	1	Fuse box	D
14	4700901227		1	Fuse 10A	A
15	4700930166	C	1	Switch	B
16	4700985012	E	1	Bulb	B
17	4700930165		1	Contact block	B
18	4700358452	3	1	Lamp holder	D
19	4700500143	3	2	Screw	
20	4700586003	3	2	Lock nut M8	C
21	4700904229	3	2	Washer 8,4x16x1,5	C
22	4700389577	5	1	Rotating beacon	D
23	4700921072		1	Clamp	
24	4700389561		1	Bracket	
25	4700791980		1	Rubber protection	
26	4700791981		1	Connector plug	

1) Not valid for rollers with rops
2) Existing on rollers with driving lights
3) Valid only for rollers with rops
5) Replaces PN 4700999011.
C) Rot. beacon
E) Switch

Drivers platform

Item	Part No	Rem	Qty	Description	Code
130				**Drivers platform (Page 126)**	
150				**Control panel (Page 130)**	
175				**Arm rests, seat belt, laterally adjusting (Page 132)**	
185				**Comfort drivers seat, laterally adjusting and seat belt (Page 134)**	
220				**Engine and forward/reverse controls DEUTZ (Page 136)**	
300				**F/r controls dual, control panel mounted (Page 138)**	
350				**F/r control dual left side, platform mounted (Page 140)**	
400				**Rops and fops (Page 142)**	

Drivers platform

18392

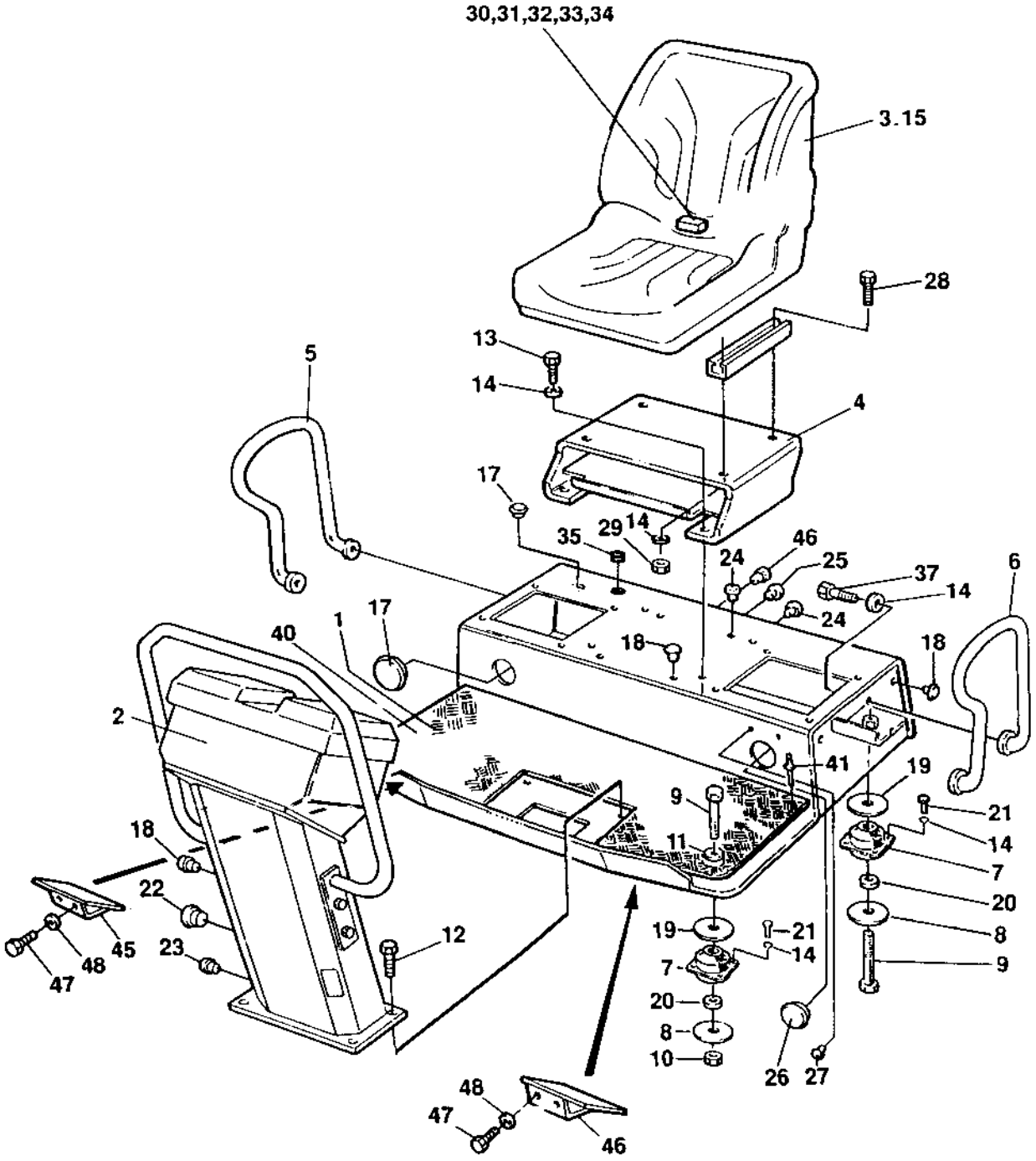

Drivers platform

Item	Part No	Rem	Qty	Description	Code
1	4700358213		1	Platform	
2			1	**Control panel**	
3			1	**Seat (Page 128)**	
4	4700372523		1	Seat frame	
5	4700357407	B	1	Hand rail	D
6	4700357408	C	1	Hand rail	D
7	4700902797	1	4	Shock absorber	D
8	4700358232		4	Washer	
9	4700500117		4	Screw M12x80H 8,8	C
10	4700586019		2	Lock nut	C
11	4700904231		4	Washer 13x24x2 300 HV	C
12	4700500509		4	Screw	
13	4700500020		4	Screw M8-1,25x22 8,8	C
14	4700904229		28	Washer 8,4x16x1,5	C
15	4700348331		1	Seat cover	D
17	4700923844		2	Plug	
18	4700902919		8	Plug	
19	4700615096		N	Washer	
	4700904703		2	Washer	C
20	4700902892		4	Washer	
21	4700500019		16	Screw M8x16H 8.8 A2K	C
22	4700902890		1	Plug	
23	4700900986		2	Plug	
24	4700926215		7	Protective plug	
25	4700902804		2	Plug	
26	4700904131		1	Plug	
27	4700901274		2	Plug	
29	4700586003		4	Lock nut M8	C
35	4700903192		1	Grommet	
36	4700904225		1	Plug	
37	4700500020		4	Screw M8-1,25x22 8,8	C
40	4700358089	D	1	Floor mat	D
41	4700902569	E	4	Rivet	
45	4700374132	F	1	Step	
46	4700374133	G	1	Step	
47	4700500053	D	4	Screw M8x20H 8.8	C
48	4700600006	D	4	Washer	C

1) For rollers with cab see " Optional equipment"
B) Left
C) Right
D) Option
E) To floor mat
F) Option, right
G) Option, left

Seat

18391

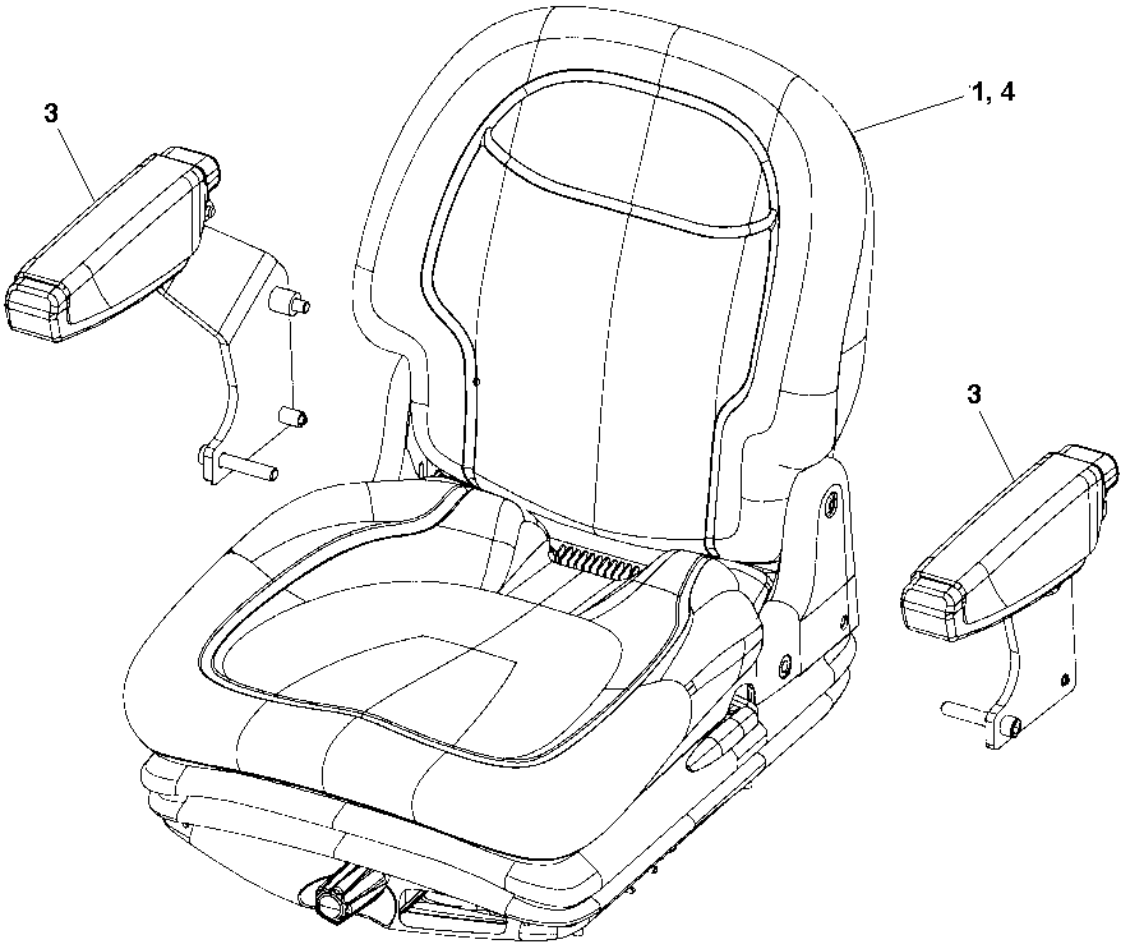

Seat

Item	Part No	Rem	Qty	Description	Code
1	4700377518	A	1	Drivers seat, cpl	D
3	4700390963	B	2	.Arm rest kit	D
4	4700945622		1	.Seat switch	B

A) Black vinyl
B) Valid for seat 4700377518 only.

Control panel

17697-1

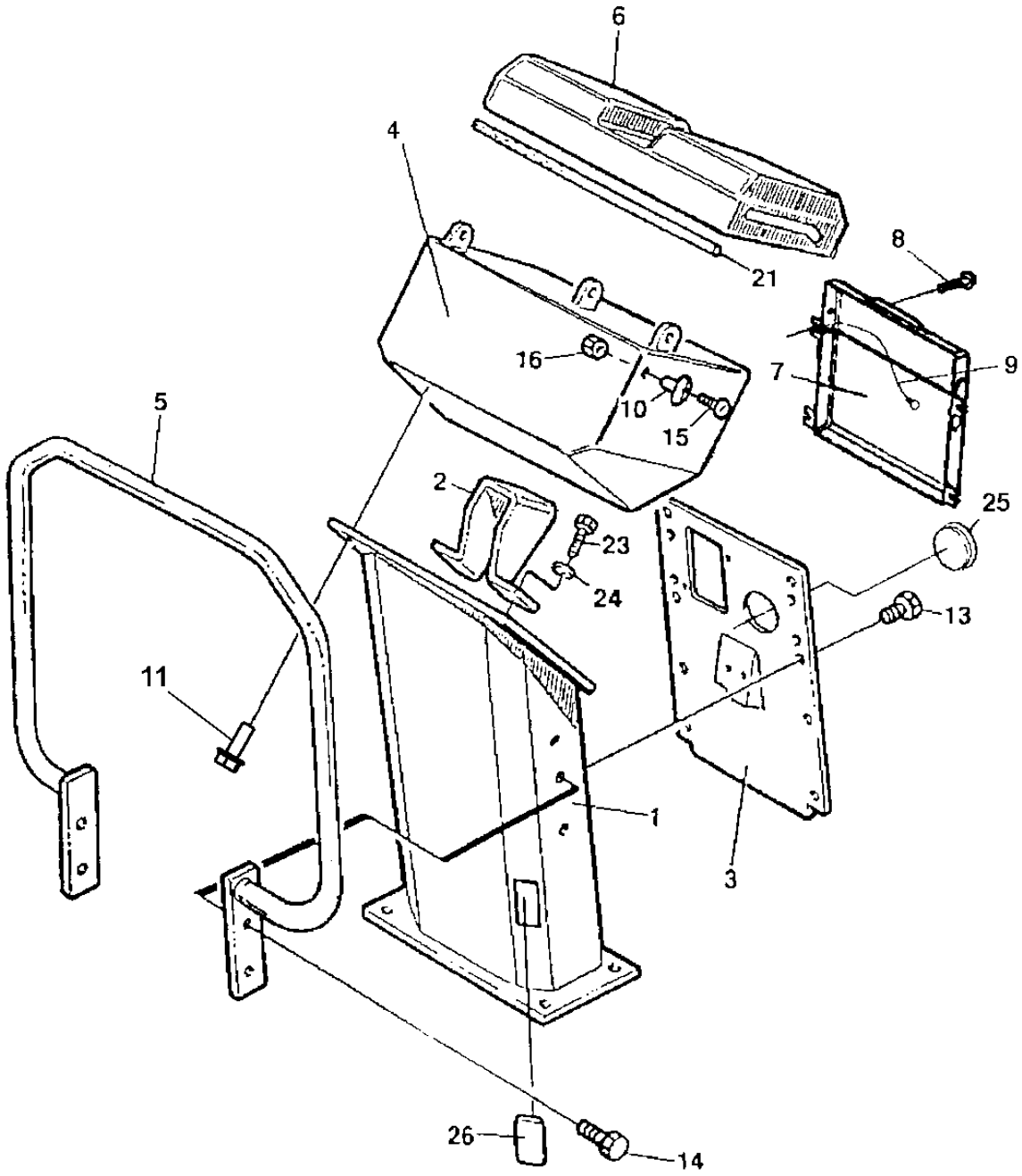

Control panel

Item	Part No	Rem	Qty	Description	Code
1	4700358142		1	Control panel	
2	4700357316		1	Bracket	
3	4700358143		1	Cover	
4	4812110857		1	Instrument box	
5	4700357330	A	1	Hand rail	D
6	4700357424		1	Cover	
7	4700383705		1	Instruction book holder	D
8	4700791226		4	Screw	C
9	4700357643		1	Wire	D
10	4700357855		2	Bushing	C
11	4700541703		4	Screw M6x16	C
13	4700541702		8	Screw M6x12	C
14	4700500509		4	Screw	
15	4700924875		2	Screw	
16	4700586002		2	Lock nut M6 -8	C
21	4700902379	D	1XL	Edge trim	
23	4700500021		4	Screw M8-1,25x25 8.8	C
24	4700904640		4	Washer 8,4x22x3	C
25	4700345870		1	Plug	C
26	4700903727		1	Plug	

A) Front
D) L=0,350 m

Arm rests, seat belt, laterally adjusting

16672

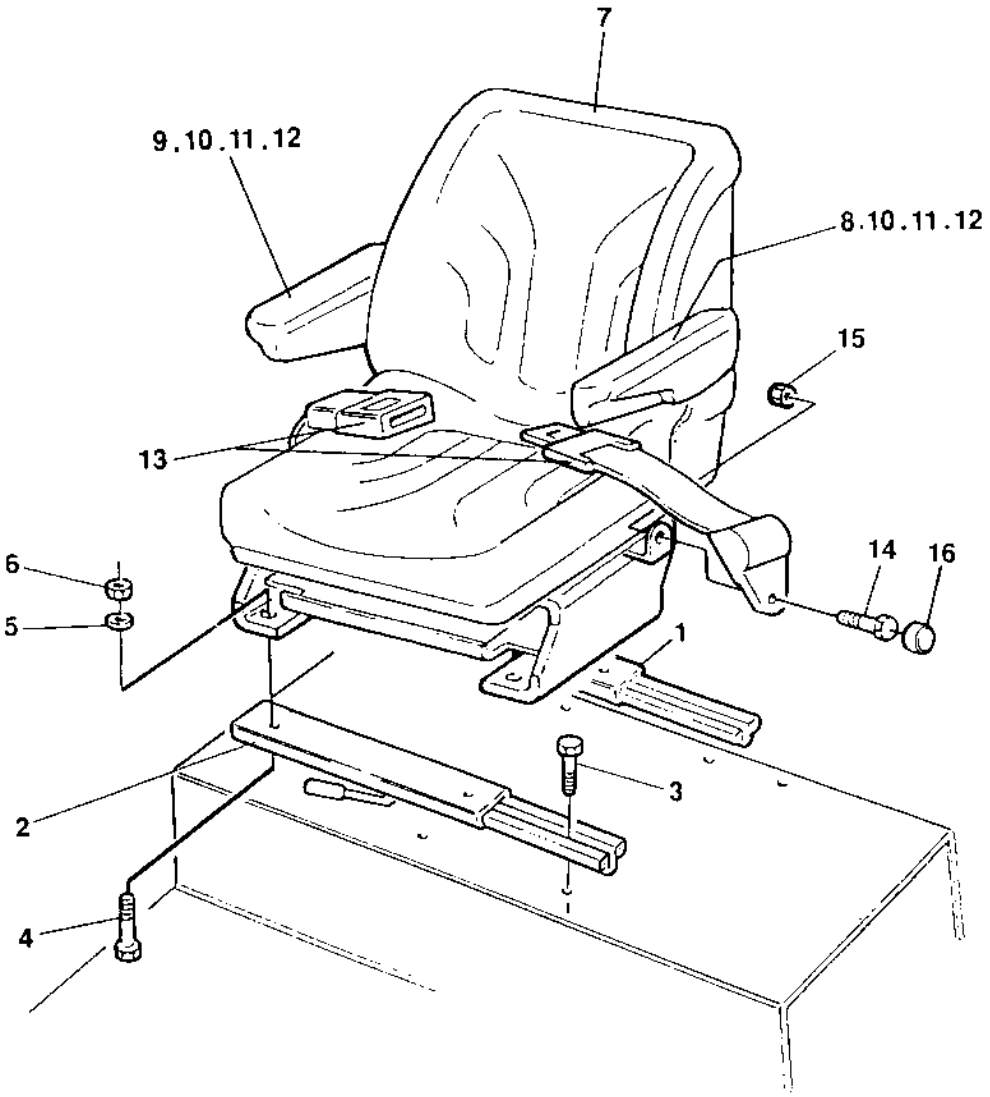

Arm rests, seat belt, laterally adjusting

Item	Part No	Rem	Qty	Description	Code
1	4700909536	A	1	Sliding rail Right	D
2	4700909535	B	1	Sliding rail Left	D
3	4700508092		4	Screw	C
4	4700500020		4	Screw M8-1,25x22 8,8	C
5	4700904229		4	Washer 8,4x16x1,5	C
6	4700586003		4	Lock nut M8	C
7	4700372570		1	Seat	
8	4700372696	C	1	Arm rest	D
9	4700372697	D	1	Arm rest	D
10	4700513013	E	4	Screw	C
11	4700570005	E	4	Nut M8	C
12		E	4	Nut protection	C
13	4700377677	F	1	Seat belt 2"	B
	4700379637	G	1	Seat belt 3"	B
14			2	.Screw	B
15			2	.Nut	B
16			2	.Protection cap	B

A) Rear
B) Front
C) Left
D) Right
E) Incl in armrests
F) CPL
G) Option, 3 "

Comfort drivers seat, laterally adjusting and seat belt

18091

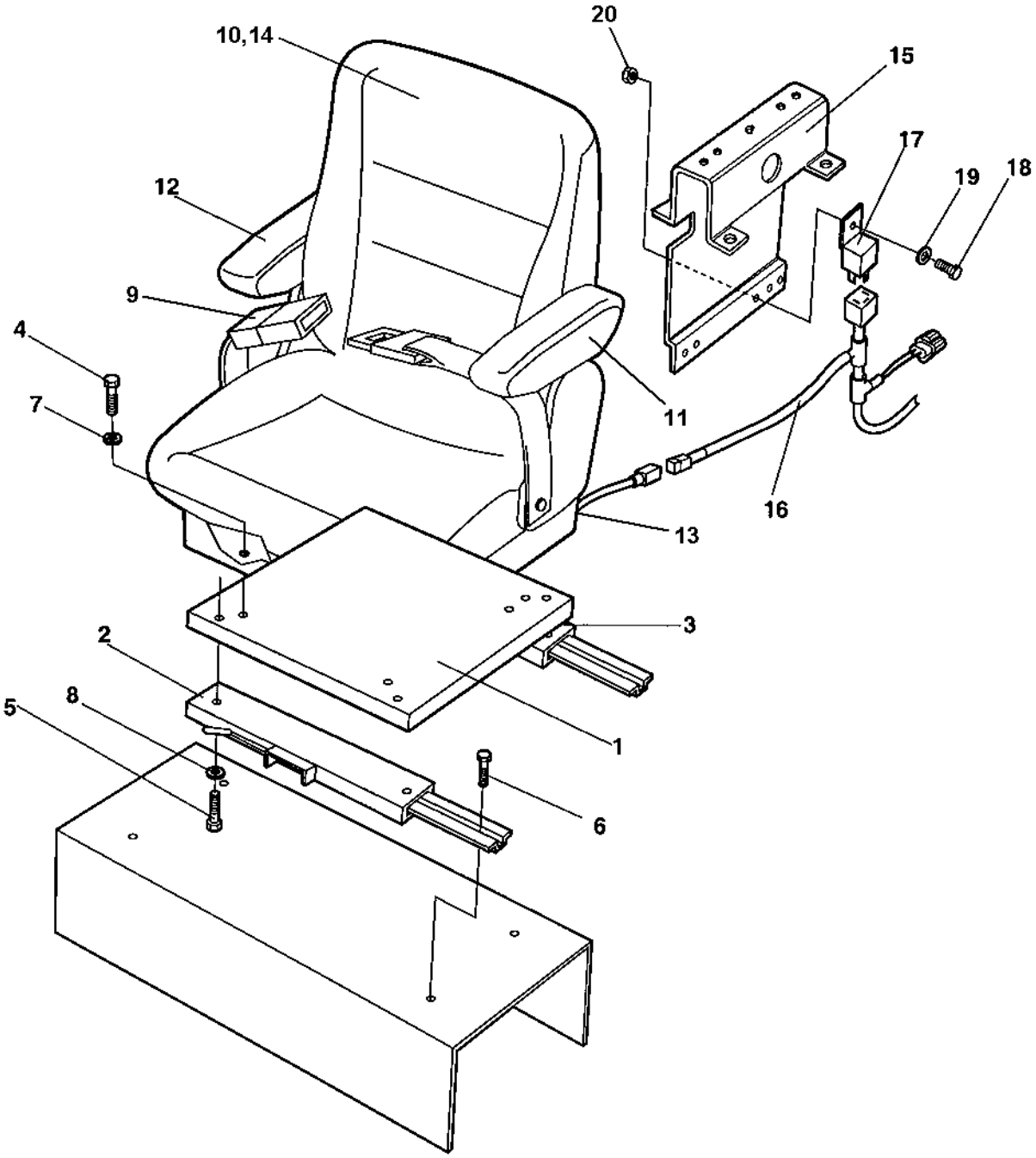

Comfort drivers seat, laterally adjusting and seat belt

Item	Part No	Rem	Qty	Description	Code
1	4700382237		1	Bracket	
2	4700909535	A	1	Sliding rail Left	D
3	4700909536		1	Sliding rail Right	D
4	4700508005		6	Screw	
5	4700508005		4	Screw	
6	4700508092		4	Screw	C
7	4700904556		6	Steel plain washer	C
8	4700904556		4	Steel plain washer	C
9	4700377677		1	Seat belt 2"	B
	4700379637	B	1	Seat belt 3"	B
10	4700381750		1	Drivers seat	
11	4700938738		1	.Arm rest, left	
12	4700938739		1	.Arm rest, right	
13	4700938740		1	.Seat switch	
14	4700386075		1	Seat protection	
15		C	1	Framing	
16	4700384532		1	Cable harness	
17	4700975077		1	Relay	
18	4700500006		1	Screw M5x16	C
19	4700904281		1	Washer 5,3x10x1 300HV	C
20	4700570003		1	Nut M5	C

A) With handle
B) Option, 3 "
C) See section "F/r controls dual, control panel mounted"

Engine and forward/reverse controls DEUTZ

16520

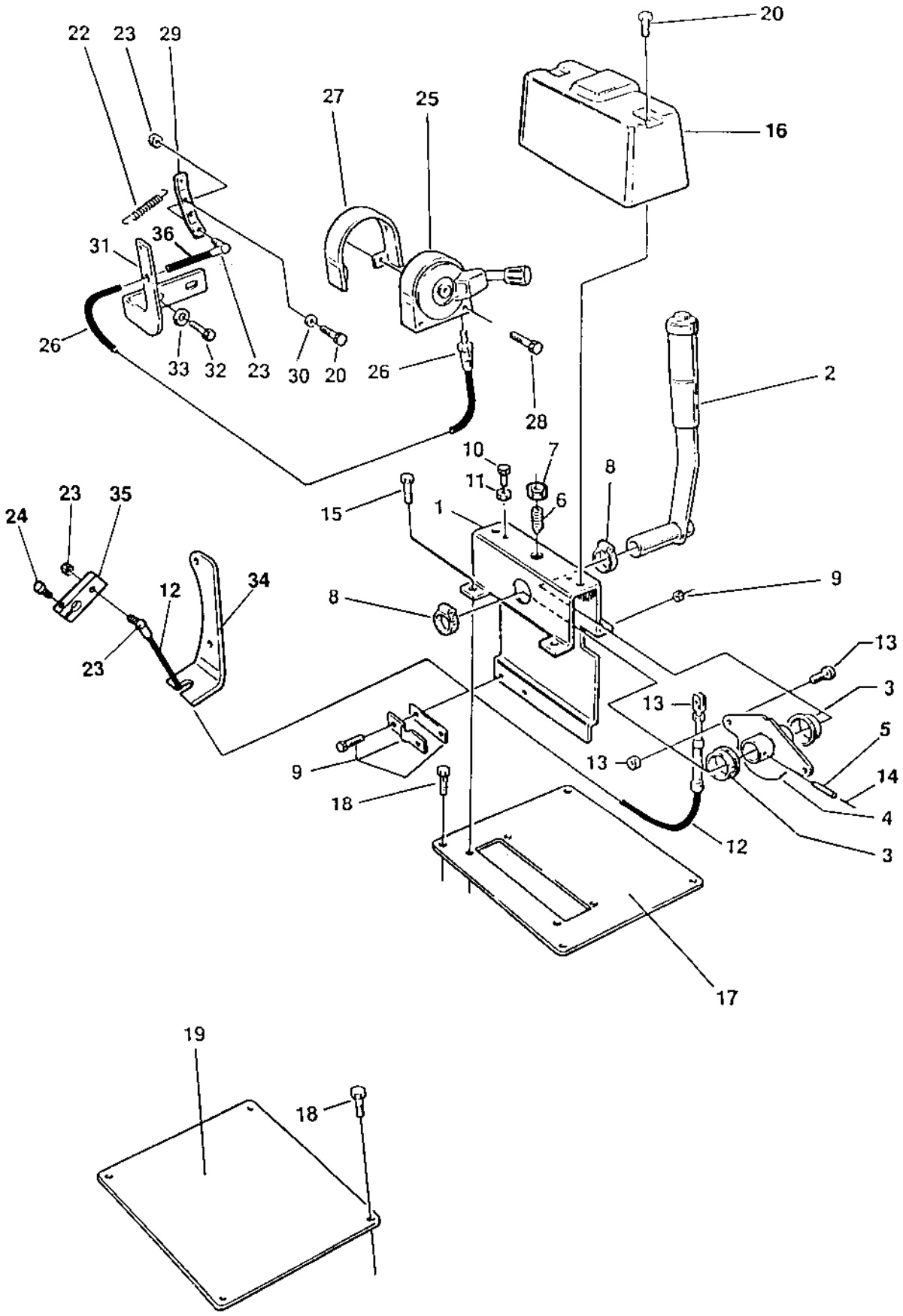

Engine and forward/reverse controls DEUTZ

Item	Part No	Rem	Qty	Description	Code
1	4700902896		1	Framing	
2	4700357501	A	1	Control lever	
3	4700902187		2	Bearing	
4	4700902895		1	Cam disc	
5	4700629016		2	Expanding	C
6	4700922325		1	Spring ball plunger	C
7	4700573004		1	Nut	C
8	4700313035		2	Hose clamp	
9	4700902189		1	Bracket	
10	4700533038		2	Screw	C
11	4700570004		2	Nut M6X1,00 -8 A2K	C
12	4700902191	B	1	Control cable	D
13	4700416004		1	Fork	C
14	4700903395		2	Spirol pin	C
15	4700541703		4	Screw M6x16	C
16	4700357494		1	Cover	
17	4700357495	C	1	Control bracket	
18	4700500501		8	Screw M6x20	
19	4700357496	D	1	Cover plate	
20	4700541703		4	Screw M6x16	C
22	4700357500		1	Spring	C
23	4700416034		2	Ball joint	C
24	4700508020		1	Screw	C
25	4700396215		1	Control	
26	4700389176		1	Control cable	
27	4700389177	G	1	Snap plate	D
28	4700904545		2	Screw	
29	4700357498		1	Control lever	D
30	4700615042		2	Conical spring washer	
31	4700357499		1	Control bracket	
32	4700500021		2	Screw M8-1,25x25 8.8	C
33	4700904556		2	Steel plain washer	C
34	4700390810		1	Control bracket	
35	4700372705		1	Control lever	
36	4700382349		1	Bellows	C

A) Right, for electrical equipment see section " Electrical equipment "
B) F/R control
C) Right
D) Left
G) Not designed as illustrated

F/r controls dual, control panel mounted

15745-1

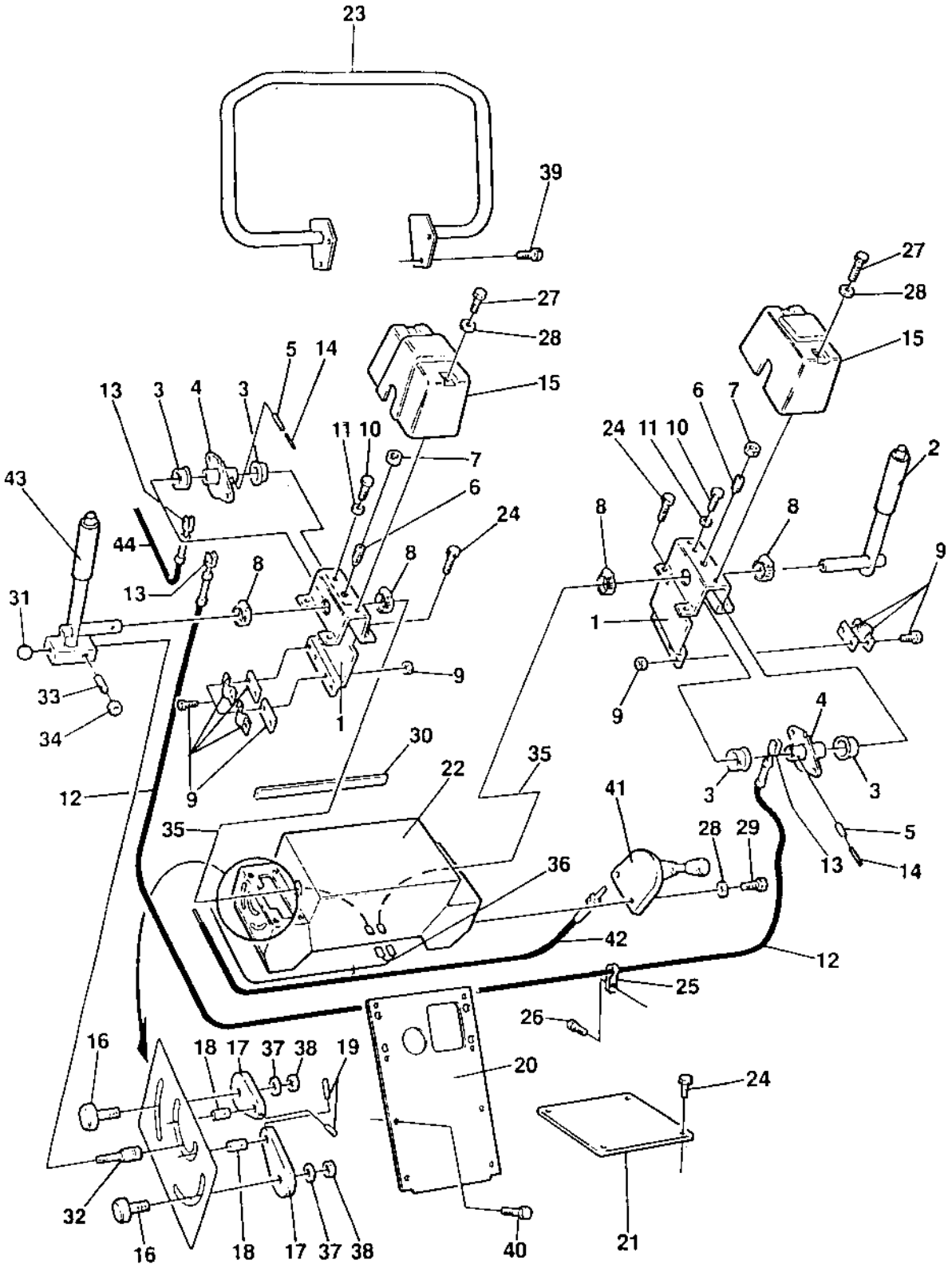

F/r controls dual, control panel mounted

Item	Part No	Rem	Qty	Description	Code
1	4700902896		2	Framing	
2	4700370263	A	1	Control lever	
3	4700902187		4	Bearing	
4	4700902895		2	Cam disc	
5	4700629016		4	Expanding	C
6	4700922325		2	Spring ball plunger	C
7	4700573004		2	Nut	C
8	4700313035		4	Hose clamp	
9	4700902189		3	Bracket	
10	4700533038		4	Screw	C
11	4700570004		4	Nut M6X1,00 -8 A2K	C
12	4700903675		1	Control cable	D
13	4700416004		3	Fork	C
14	4700903395		4	Spirol pin	C
15	4700370241		2	Cover	
16	4700370242		2	Knob	
17	4700370273		1	Plate	
18	4700370272		1	Shaft	
19	4700516010		1	Screw	
20	4700370244		1	Cover	
21	4700357496		1	Cover plate	
22	4700370174		1	Instrument box	
23	4700371088		1	Hand rail	
24	4700541702		12	Screw M6x12	C
25	4700921070		1	Clamp	
26	4700541705		1	Screw	
27	4700500013		4	Screw M6-1x16 8,8	C
28	4700600004		6	Washer	C
29	4700500061		2	Screw M6-1X35 8,8	C
30	4700202028	B	1XL	Edge trim	D
31	4700312001		1	Handle grip	
32	4700346431		1	Bolt	
33	4700923900		1	Spring loaded pin	
34	4700570005		1	Nut M8	C
35	4700357583		1	Cable harness	
36	4700370274		1	Cable harness	
37	4700600006		2	Washer	C
38	4700586003		2	Lock nut M8	C
39	4700500509		4	Screw	
40	4700541702		8	Screw M6x12	C
41	4700396215	C	1	Control	
42	4700389176		1	Control cable	
43	4700370266	D	1	Control lever	
44	4700903676	E	1	Control cable	D

A) Right, for electrical equipment see section " Electrical equipment "
B) L=0,225 m
C) Throttle
D) Left, for electrical equipment see section " Electrical equipment "
E) F/R control

F/r control dual left side, platform mounted

17969

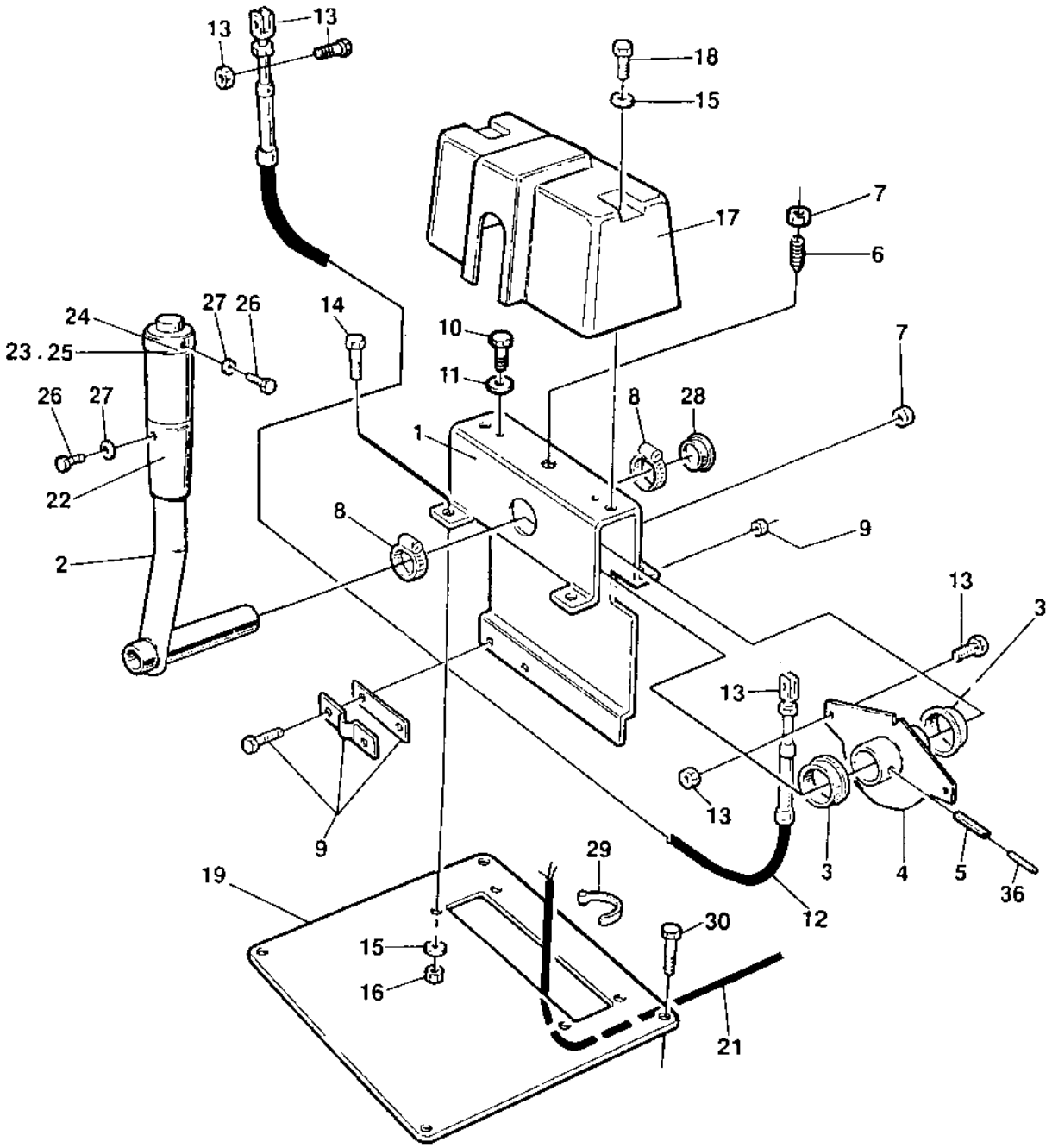

F/r control dual left side, platform mounted

Item	Part No	Rem	Qty	Description	Code
1	4700902896		1	Framing	
2	4700357502	A	1	Control lever	
3	4700902187		2	Bearing	
4	4700902895		1	Cam disc	
5	4700629016		2	Expanding	C
6	4700922325		1	Spring ball plunger	C
7	4700573004		1	Nut	C
8	4700313035		2	Hose clamp	
9	4700902189		2	Bracket	
10	4700533038		2	Screw	C
11	4700570004		2	Nut M6X1,00 -8 A2K	C
12	4700908484		1	Control cable	D
13	4700416004		2	Fork	C
14	4700500040		4	Screw M6-1x20 8,8	C
15	4700904228		6	Washer 6,4x12x1,5	C
16	4700586002		4	Lock nut M6 -8	C
17	4700357494		1	Cover	
18	4700500013		2	Screw M6-1x16 8,8	C
19	4700357495	A	1	Control bracket	
21	4700357896		1	Cable harness	
22	4700285909		1	Grab handle	D
23	4700928497	C	1	Push button	D
24	4700285911		1	Bushing	D
25	4700348481		1	Cover	B
26	4700533001		3	Screw	
27	4700904697		5	Washer 3,2x6x0,5	
28	4700902203		1	Plug	C
29	4700313068		2	Cable ties L=92 mm	
30			4	Screw	
36	4700903395		2	Spirol pin	C

A) Left
C) Vibration

Rops and fops

15580-3

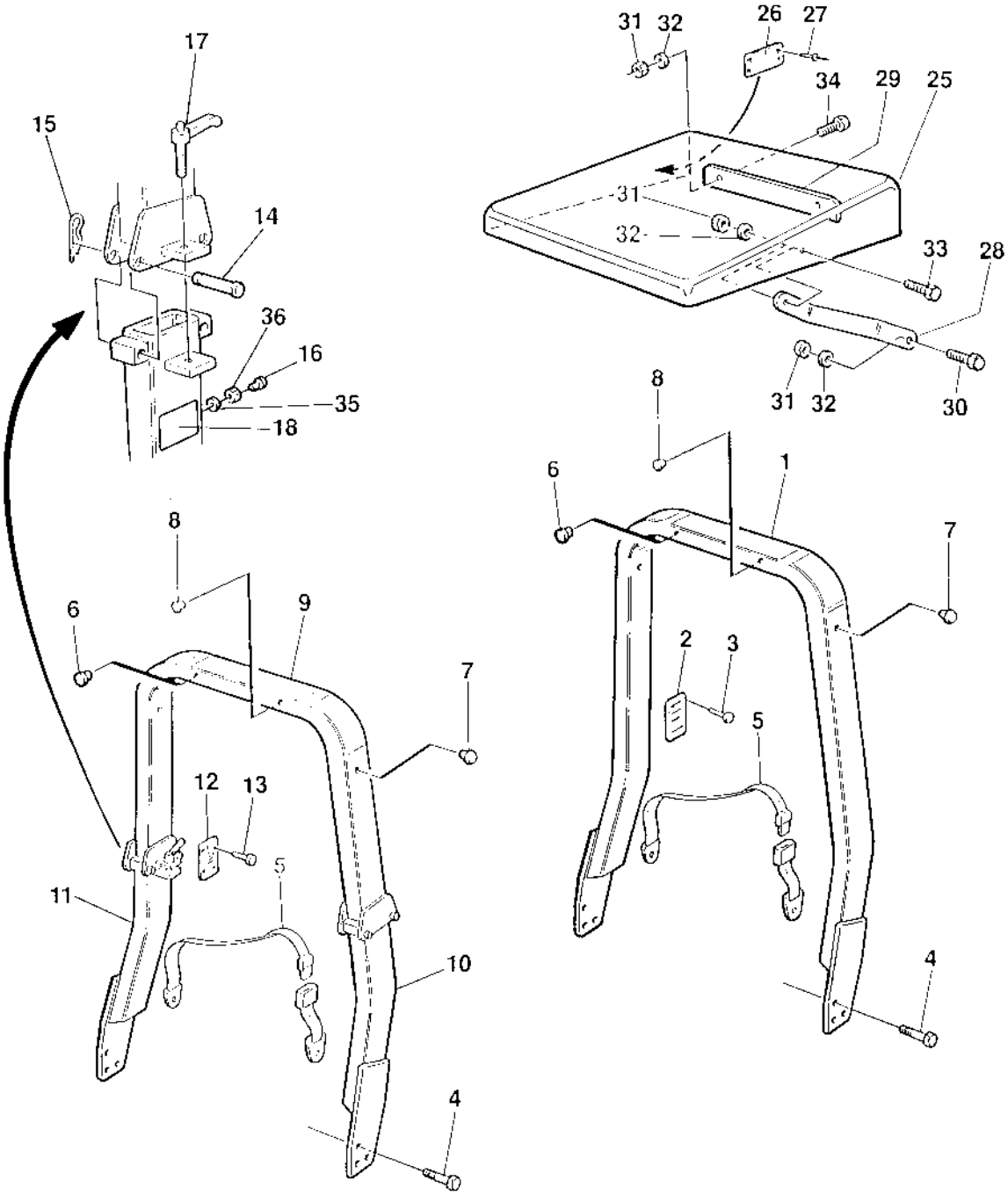

Rops and fops

Item	Part No	Rem	Qty	Description	Code
1		A,B	1	Rops	C
2	4700370803		1	.Sign, rops	
3	4700902093		4	.Screw	
4	4700902889		6	Screw	
5		D	1	Seat belt	
6	4700900986		4	Plug	
7	4700902203		5	Plug	C
	4700902203	C	3	Plug	C
8	4700903378		8	Plug	
9		A,B	1	Rops, upper part	
10		A,B	1	Rops, lower part	
11		A,B	1	Rops, lower part	
12	4700370803		1	Sign, rops	
13	4700902093		4	Screw	
14	4700374009		4	Shaft	
15	4700635061		4	Hair clip	C
16	4700288357	E	2	Shock absorber	
17	4700904429		2	Lock handle	
18	4700908229		2	Safety decal	D
25	4700359074		1	Roof	
26			1	Sign, fops	
27	4700624016		4	Blind rivet	C
28	4700359063		2	Support bar	
29	4700359062		1	Holder plate	
30	4700500094		2	Screw	
31	4700586021		6	Nut M16	C
32	4700904232		12	Washer	C
33	4700500070		2	Screw M16x50	C
34	4700500164		2	Screw M16-2,0x150 8,8	
35	4700904229		2	Washer 8,4x16x1,5	C
36	4700570005		2	Nut M8	C

A) Not sold separately due to safety regulations
B) Only available as a complete ROPS kit; please check the machine SN, and contact Dynapac for valid PN
C) Foldable rops
D) See section for Drivers seat
E) Needs hole: threaded M8; 190 mm from the top of Rops, lower part, rear in the middle.

Decals

Decals

Item	Part No	Rem	Qty	Description	Code
100				**Plates and decals, ce-marking approved (Page 146)**	

Plates and decals, ce-marking approved

18093

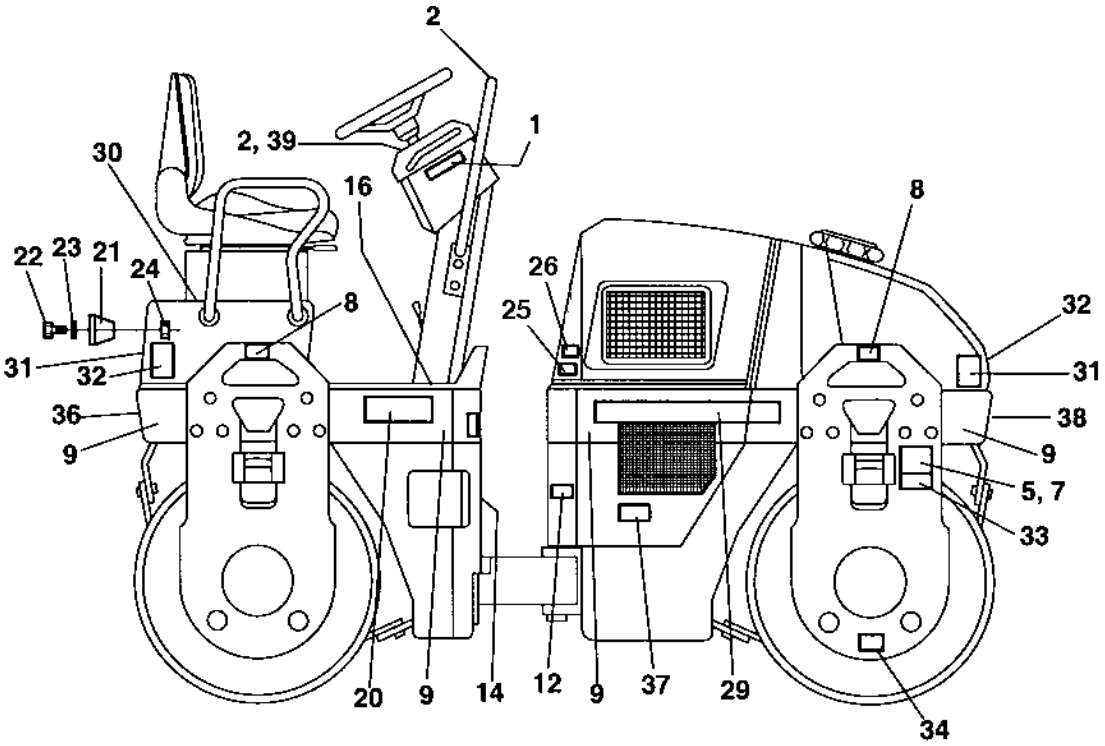

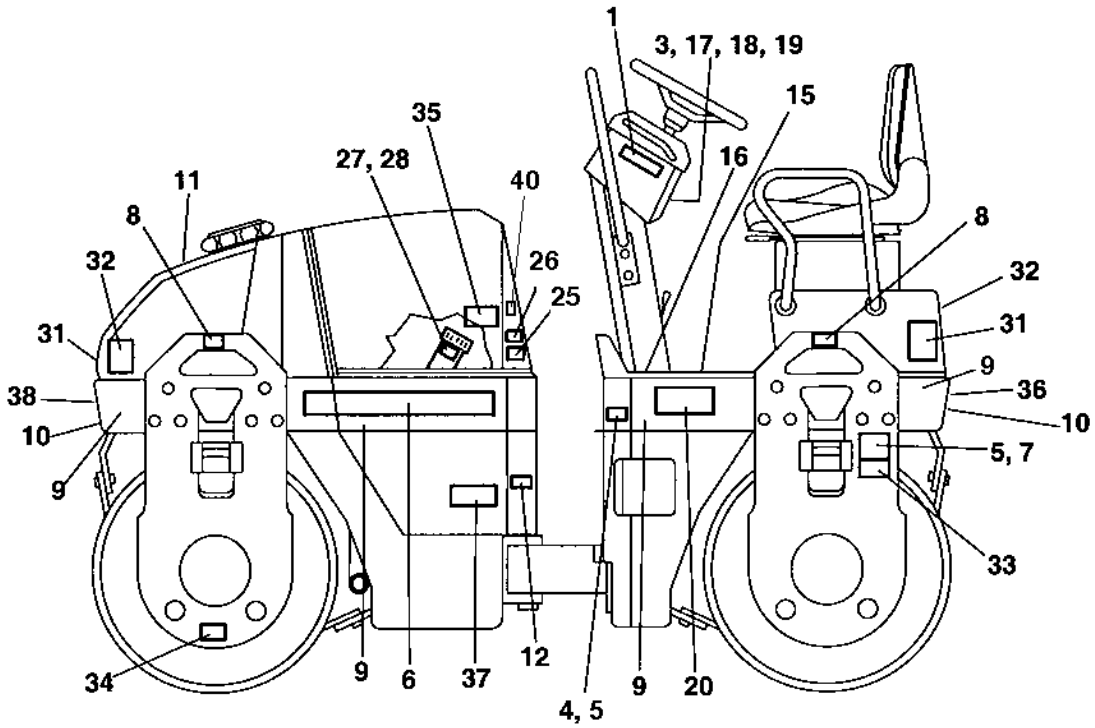

Plates and decals, ce-marking approved

Item	Part No	Rem	Qty	Description	Code
1	4700903459	A	2	Decal "SAFETY"	D
2	47386084SE		1	Warning plate Swedish	
	47386084EN		1	Warning plate English	
	47386084DE		1	Warning plate German	
	47386084IT		1	Warning plate Italian	
	47386084ES		1	Warning plate Spanish	
	47386084FR		1	Warning plate French	
	47386084NO		1	Warning plate Norwegian	
	47386084DK		1	Warning plate Danish	
	47386084FI		1	Warning plate Finnish	
	47386084PT		1	Warning plate Portuguese	
	47386084NL		1	Warning plate Dutch	
	47386084GR		1	Warning plate Greek	
	47386084IS		1	Warning plate Icelandic	
	47386084CN		1	Warning plate Chinese	
3	4700903425		1	Decal "SAFETY MANUAL"	D
4			1	Product identification plate	D
			1	Product identification plate CE	D
	4700357130	J	1	Plate cert. appr.	
	4700371173	K	1	Product plate	
5	4700624005	Z	12	Blind rivet 3,2x6,1	C
6	4700904096		1	Decal "DYNAPAC" L=420 mm	
7	4700904870		2	Lifting sign	D
8	4700357587		2	Decal "LIFT POINT"	D
9	4700357592	M	NXL	Decal "RED" W=148 mm	D
10	4700904097		2	Decal "DYNAPAC" L=290 mm	
	4700379982	M	NXL	Decal "RED" W=120 mm	
11	4700991657		1	Decal "WATER"	D
12	4700903422	P	2	Decal "SAFETY"	D
14	4700991658		1	Decal "FUEL"	D
15	4700357604	Q	1	Protection	
16	4700357605	R	2	Protection	
17	4700357643		1	Wire	D
18	4700904697		1	Washer 3,2x6x0,5	
19	4700358254		1	Key-ring	
20	4700902217		2	Decal "MODEL CODE" CC102	
	4700371169	S	2	Decal "MODEL CODE" CC102 II	
21	4700900684	X	1	Name plate "DYNAPAC"	
22	4700535008		2	Screw M5x20	C
23	4700600003		2	Washer	
24	4700586001		2	Lock nut	C
25	4700903423	U	2	Decal "SAFETY"	D
26	4700903424	V	2	Decal "HOT SURFACE"	D
27	4700370127		1	Decal "HYDRAULIC OIL"	
	4700380343		1	Sign "BIO HYDRAULIC OIL"	
	4700792773		1	Sign "BIO HYDRAULIC OIL" PANOLIN	
28	4700925802		2	Cable ties L=142 mm	C
29	4700904097		1	Decal "DYNAPAC" L=290 mm	

A) Read instr manual
J) Italy only
K) Japan only
M) Length as required
P) Hazardous area
Q) Rear
R) Front
S) Japan
U) Engine fan
V) Hot surface
X) Option
Z) Replaces earlier used 4700624015

Plates and decals, ce-marking approved

18093

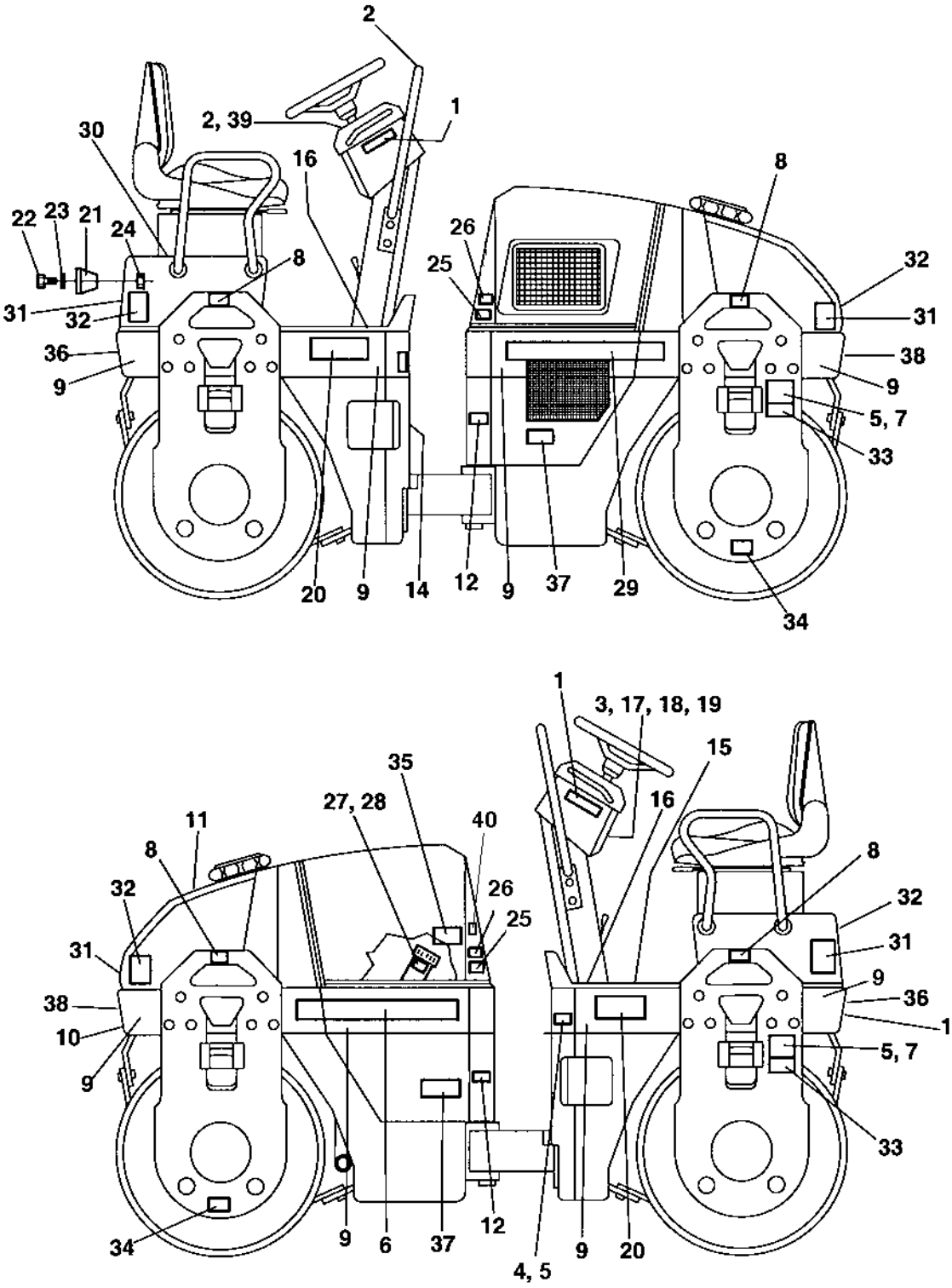

Plates and decals, ce-marking approved

Item	Part No	Rem	Qty	Description	Code
30				Not used on this model	
31	4700904403		4	Decal "Risk location"	
32	4700904404		4	Decal "Risk location"	
33	4700908229		2	Safety decal	D
34	4700382751		2	Decal "TIE DOWN POINT"	D
35	4700904835		1	Decal "BATTERY POWER"	D
36	4700377742		2	Reflector, red	D
37	4700377744		2	Reflector, yellow	D
38	4700377743		2	Reflector, white	D
39	4700624017		2	Blind rivet	C
40	4700791262		1	Decal "Sound power level" 100dB, Option	
	4700791272		1	Decal "Sound power level" 102dB, Option	
	4700791275		1	Decal "Sound power level" 105dB	

Standard equipment

Item	Part No	Rem	Qty	Description	Code
100				**Standard equipment (Page 152)**	

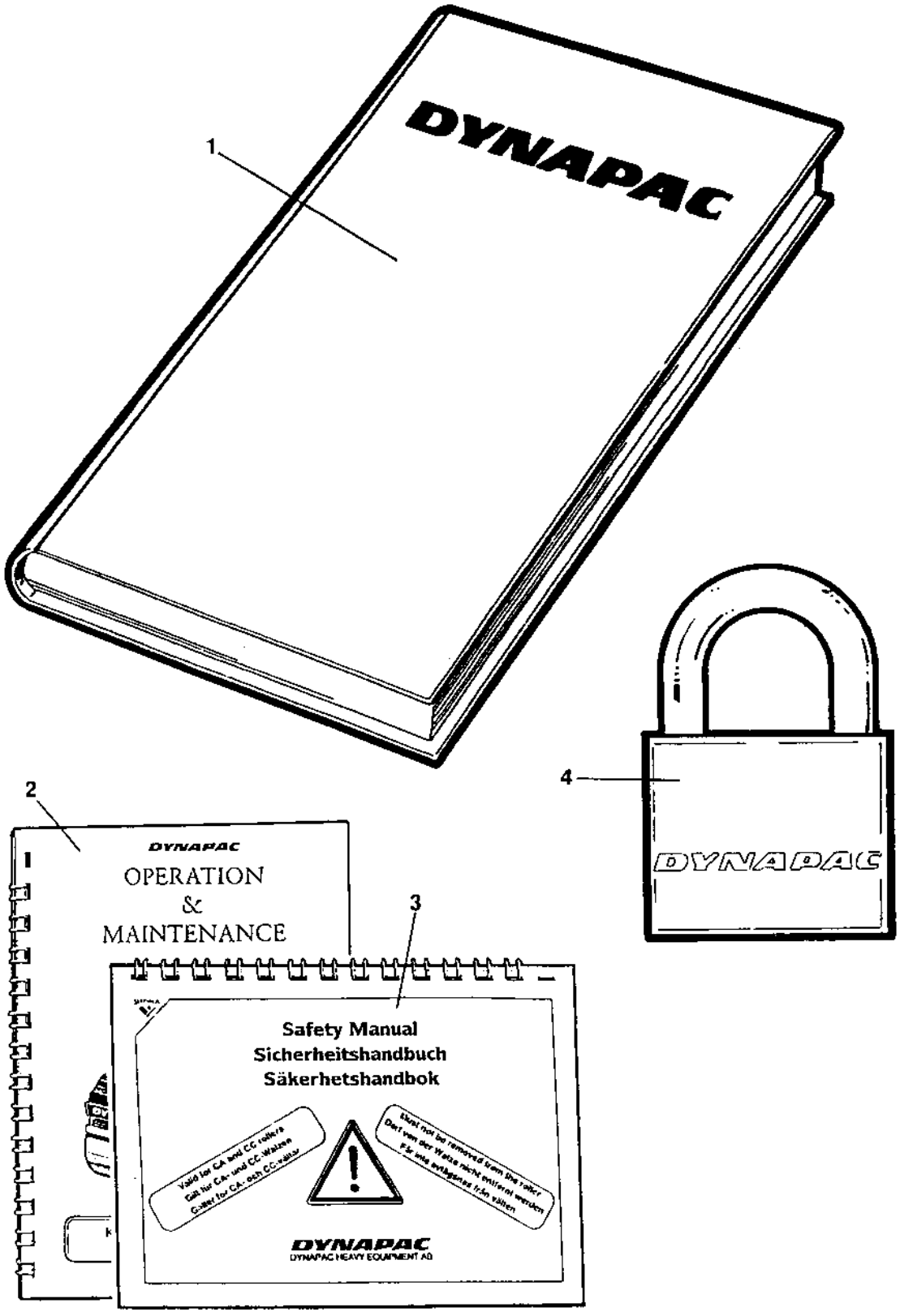
1
DYNAPAC
2
DYNAPAC
OPERATION
&
MAINTENANCE
3
Safety Manual
Sicherheitshandbuch
Säkerhetshandbok
DYNAPAC
DYNAPAC HEAVY EQUIPMENT AB
4
DYNAPAC

Standard equipment

Item	Part No	Rem	Qty	Description	Code
1			1	Documentation ISCC102	
			1	.Warranty conditions	
			1	.Warranty registration certificate	
			1	.Spare parts catalogue SCC102	
			1	.Warranty registration card	
			1	.Instruction manual DEUTZ	
2			1	.Operating / maintenance instruction ICC102	
3			1	.Safety manual RSAFE	
4	4700358881		1	Pad lock	D

Optional equipment

Item	Part No	Rem	Qty	Description	Code
41				Canopy (Page 156)	
70				SMV-sign placed on platform (Page 158)	
90				Tool equipment (Page 160)	
101				Noise suppression DEUTZ , 78 dB (Page 162)	
108				Noise suppression Deutz (Page 164)	
115				Back-up alarm (Page 166)	
125				Rear mirror (Page 168)	
180				Combination water supply (Page 170)	
185				Combination water supply 2 rear sprinkler pipes (Page 172)	
310				Towing valve (Page 174)	
400				Flow divider (Page 176)	
432				Vibration shut-off, front drum DEUTZ (Page 178)	
436				Vibration shut-off, rear drum DEUTZ (Page 180)	
440				Automatic vibration control (Page 182)	
460				Service brake (Page 184)	
480				Driving, restriction (Page 186)	
500				Bio-hydraulic oil lock Old design (Page 188)	
520				High torque drum drive " Long" (Page 190)	
540				High torque drum drive " Short" (Page 194)	
555				Brake release, propulsion motor 4700372118 (Page 198)	
565				Brake release, propulsion motor Poclain (Page 200)	

Canopy

16647

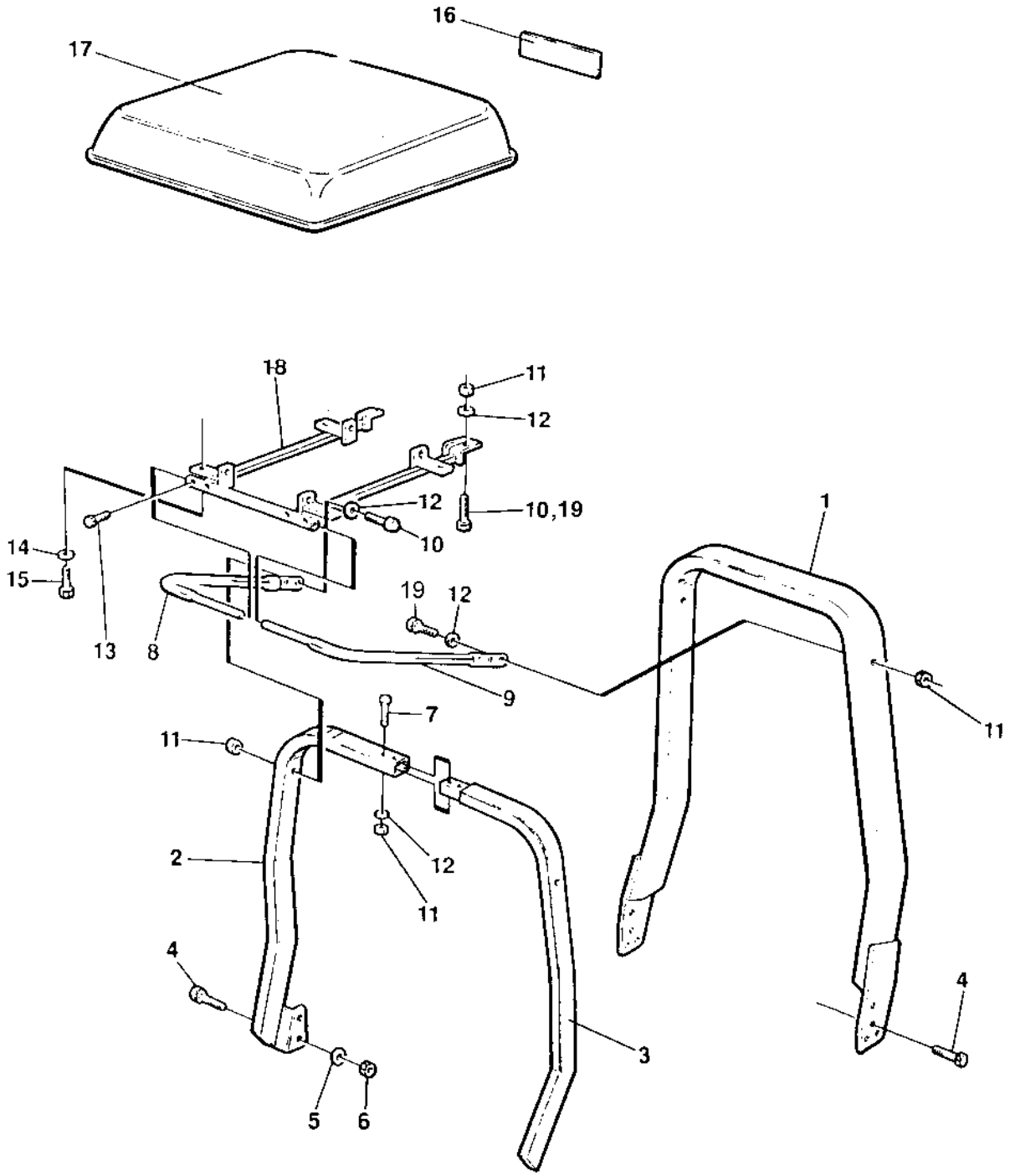

Canopy

Item	Part No	Rem	Qty	Description	Code
1		1		Rops	
2	4700358801	A	1	Frame	
3	4700358802	B	1	Frame	
4	4700500030		4	Hexagon head screw	C
5	4700600008		6	Washer	C
6	4700586018		2	Lock nut	C
7	4700500195		2	Screw	C
8	4700358789	A	1	Frame	
9	4700358790	B	1	Frame	
10	4700500111		2	Screw M12x55 8,8	C
	4700500133		2	Screw	C
11	4700586019		6	Lock nut	C
	4700586019	2	4	Lock nut	C
12	4700904231		12	Washer 13x24x2 300 HV	C
	4700904231	2	8	Washer 13x24x2 300 HV	C
13	4700516042		4	Stop screw	
14	4700904229		4	Washer 8,4x16x1,5	C
15	4700500021		4	Screw M8-1,25x25 8.8	C
16	4700904094		1	Decal "DYNAPAC" L=670 mm	
17	4700358782		1	Canopy	
18	4700358783		1	Frame	
19	4700500071	2	4	Screw M12-1,75x75 8,8	C

1) Rops, see section " Rops "
2) Canopy for rops
A) Right
B) Left

SMV-sign placed on platform

18805

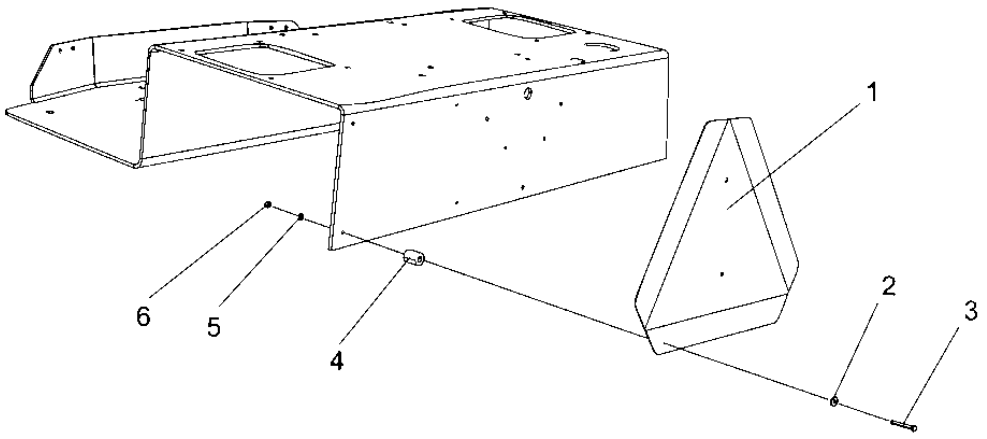

SMV-sign placed on platform

Item	Part No	Rem	Qty	Description	Code
1	4700476019		1	SMV-sign	D
2	4700601001		4	Washer	C
3	4700500080		4	Screw	
4	4700355704		4	Spacer sleeve	
5	4700904281		4	Washer 5,3x10x1 300HV	C
6	4700586001		4	Lock nut	C

Tool equipment

15581

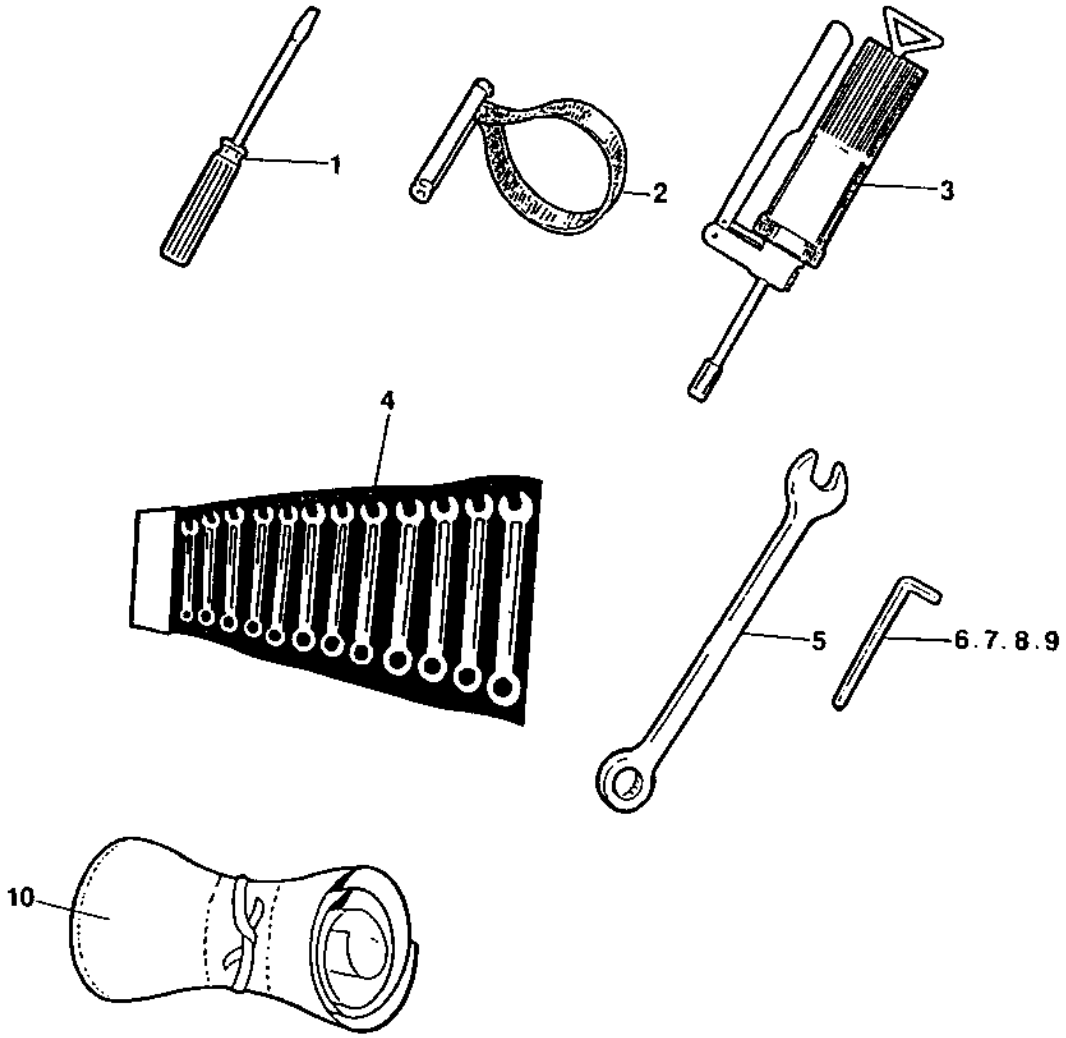

Tool equipment

Item	Part No	Rem	Qty	Description	Code
1	4700485019		1	Screw driver	
2	4700902610		1	Belt pliers	D
3	4700311016		1	Grease gun	D
4	4700901212	A	1	Open end spanner	
5	4700902578		1	Open end spanner 22 mm	
6	4700485005		1	Allen wrench 1/4"	
7	4700485037		1	Allen wrench 3/8"	
8	4700485388		1	Allen wrench 6MM	
9	4700485006		1	Allen wrench 8MM	
10	4700277992		1	Tool bag	

A) Kit

Noise suppression DEUTZ , 78 dB

18365

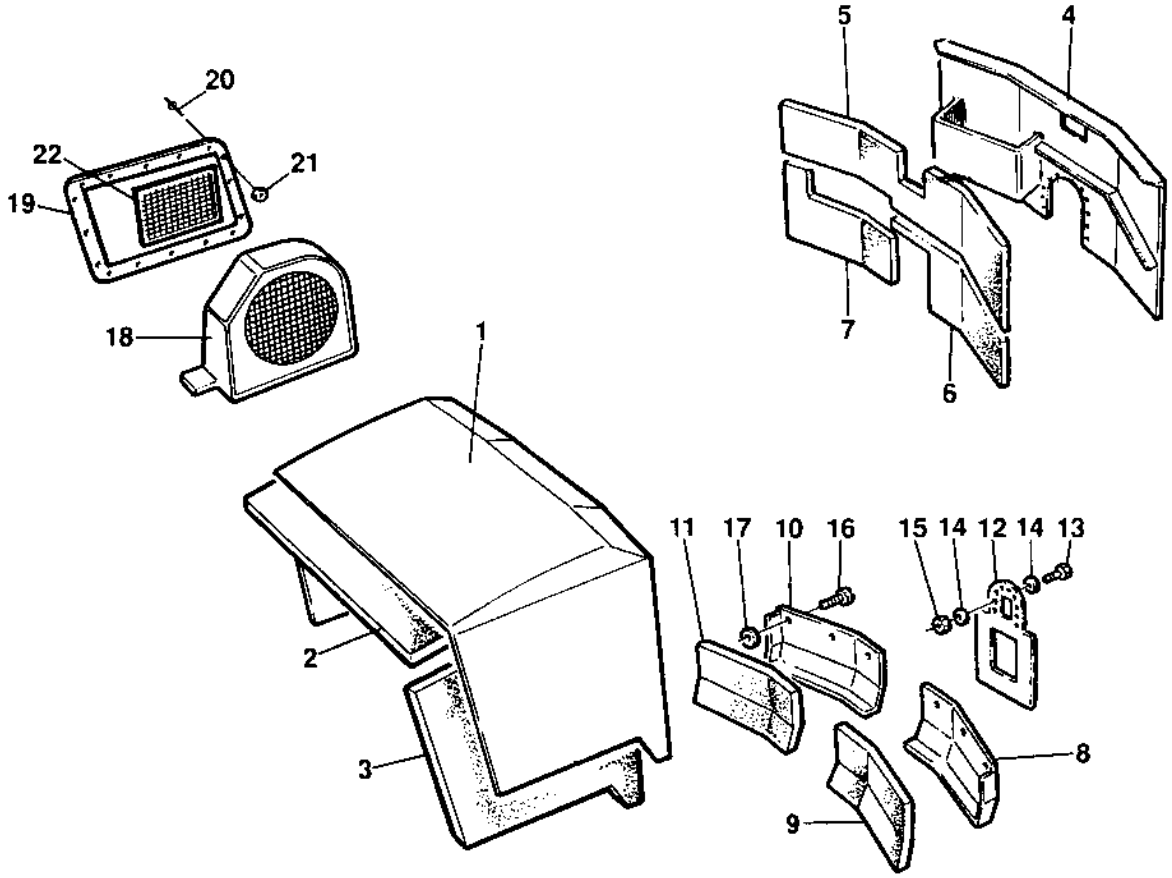

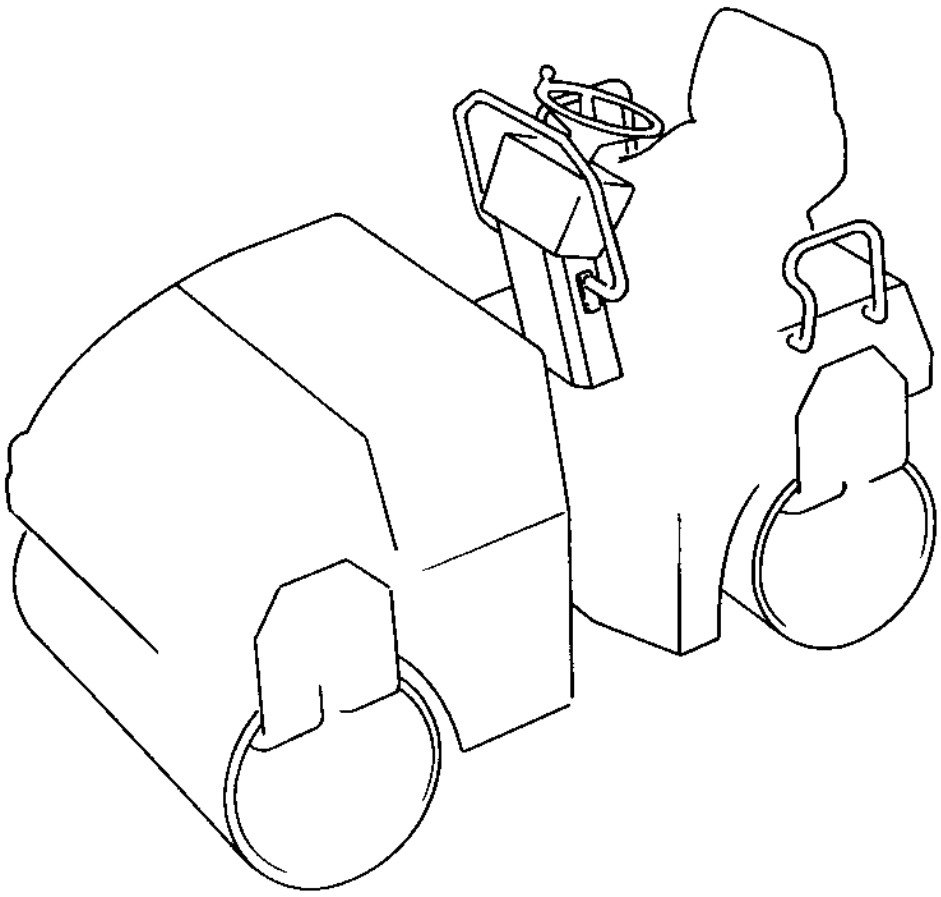

Noise suppression DEUTZ , 78 dB

Item	Part No	Rem	Qty	Description	Code
1		1	1	Hood	
2	4700358324		1	Absorbent	
3	4700358325		1	Absorbent	
4	4700382563		1	Cover	
5	4700358333		1	Absorbent	
6	4700358332		1	Absorbent	
7	4700382568		1	Absorbent	
8	4700358338		1	Cover	
9	4700358339		1	Absorbent	
10	4700358335		1	Cover	
11	4700358336		1	Absorbent	
12	4700358342		1	Rubber cloth	
13	4700500040		9	Screw M6-1x20 8,8	C
14	4700615065		18	Steel plain washer	
15	4700586002		9	Lock nut M6 -8	C
16	4700922875		6	Lock pin	
17	4700926985		6	Quick lock washer	C
18	4700374087		1	Cover	
	4700358558		1	.Absorbent	
	4700358561		1	.Absorbent	
19	4700358551		1	Cover	
20	4700903369		20	Rivet	
21	4700902111		20	Washer	
22	4700902166	A	1XL	Edge trim	D

1) See section " Structure "
A) Length as required

Noise suppression Deutz

18764

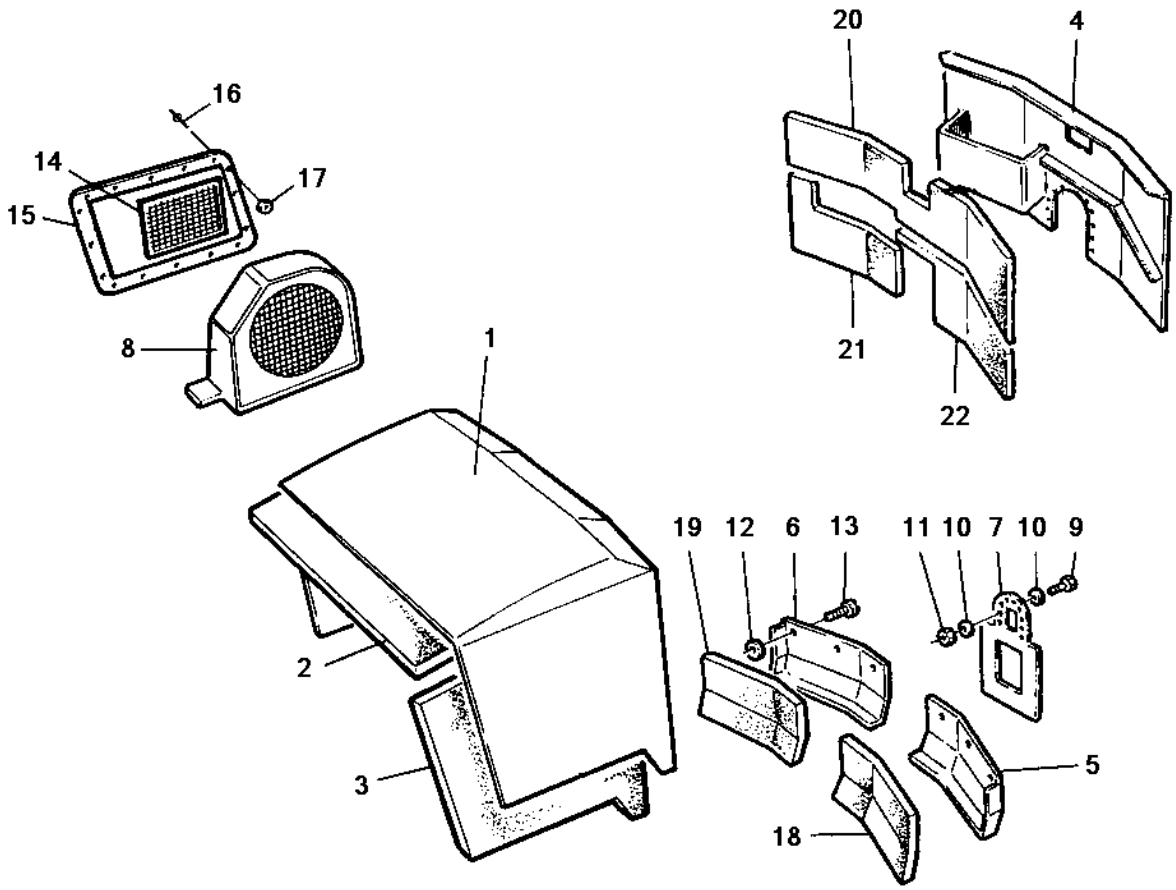

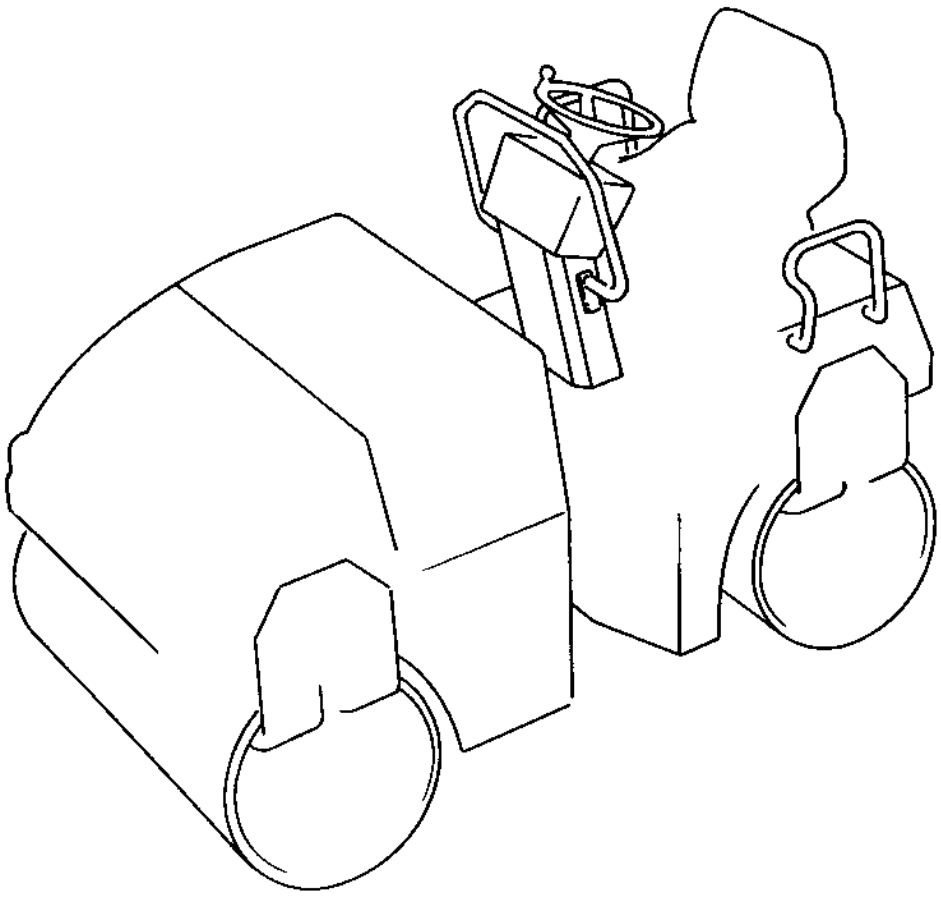

Noise suppression Deutz

Item	Part No	Rem	Qty	Description	Code
1	4700358323		1	Hood	
2	4700358324		1	Absorbent	
3	4700358341		1	Absorbent	
4	4700382564		1	Cover	
5	4700358337		1	Cover	
6	4700358334		1	Cover	
7	4700358342		1	Rubber cloth	
8	4700374087		1	Cover	
	4700358558		1	Absorbent	
	4700358561		1	Absorbent	
9	4700500040		1	Screw M6-1x20 8,8	C
10	4700615065		1	Steel plain washer	
11	4700586002		1	Lock nut M6 -8	C
12	4700926985		1	Quick lock washer	C
13	4700922875		1	Lock pin	
14	4700902166		1	Edge trim	D
15	4700358551		1	Cover	
16	4700903369		1	Rivet	
17	4700902111		1	Washer	
18	4700358339		1	Absorbent	
19	4700358336		1	Absorbent	
20	4700358333		1	Absorbent	
21	4700382568		1	Absorbent	
22	4700358332		1	Absorbent	

Back-up alarm

15490-3

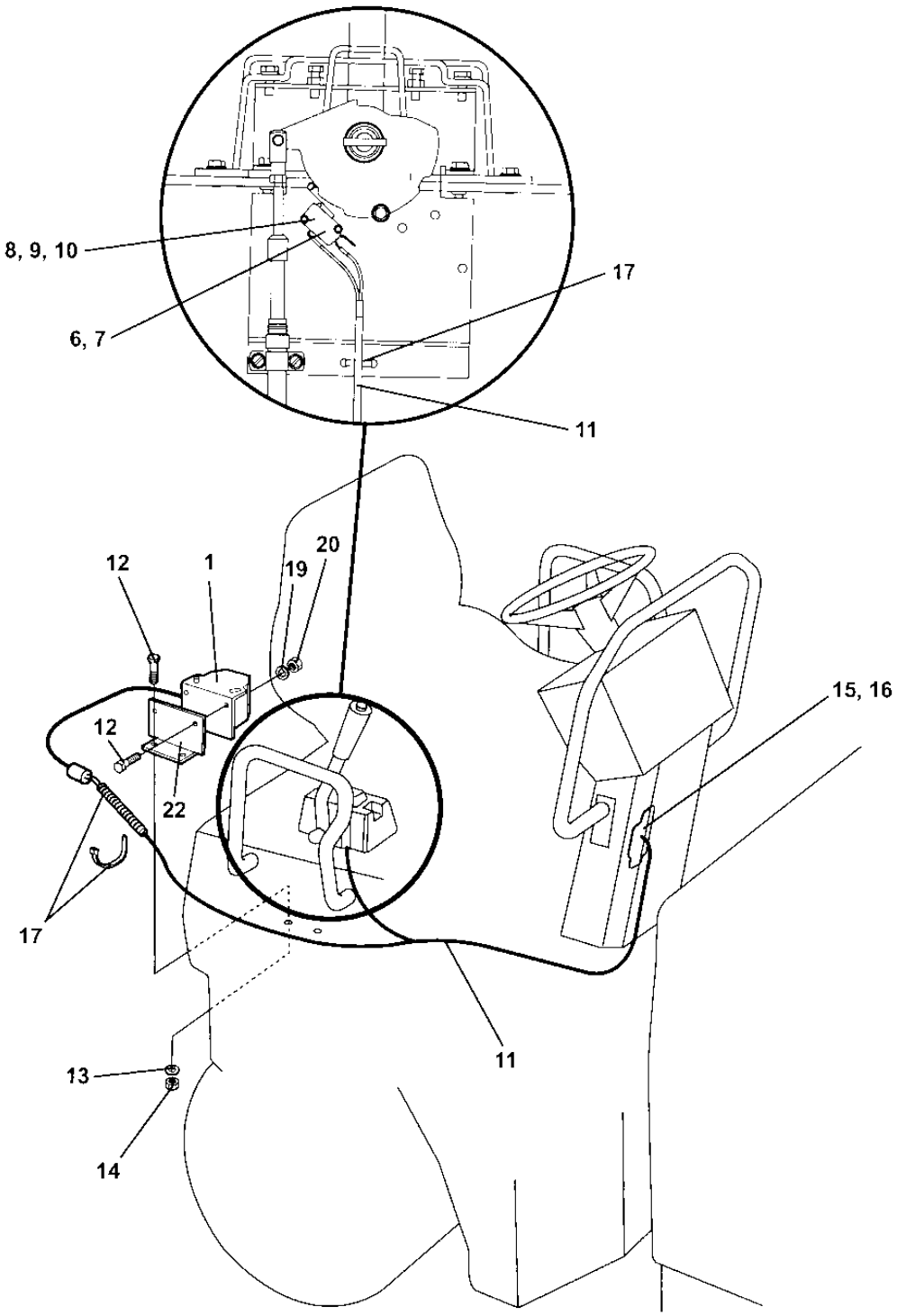

Back-up alarm

Item	Part No	Rem	Qty	Description	Code
1	4700904911		1	Back-up alarm 97 dB	
6	4700357994		1	Spacer nut	
7	4700902528		1	Micro switch	B
8	4700900243		2	Screw M3 x 30	
9	4700929602		2	Washer	
10	4700928927		2	Lock nut	
11	4812110276		1	Cable harness	
12	4700500040		4	Screw M6-1x20 8,8	C
13	4700600004		2	Washer	C
14	4700586002		2	Lock nut M6 -8	C
15	4700901240		2	Connector	B
16	4700901226		1	Fuse 7.5A	A
17	4700313068		N	Cable ties L=92 mm	
19	4700904228		4	Washer 6,4x12x1,5	C
20	4700570004		2	Nut M6X1,00 -8 A2K	C
22	4812110725		1	Bracket	

Rear mirror

15491-3

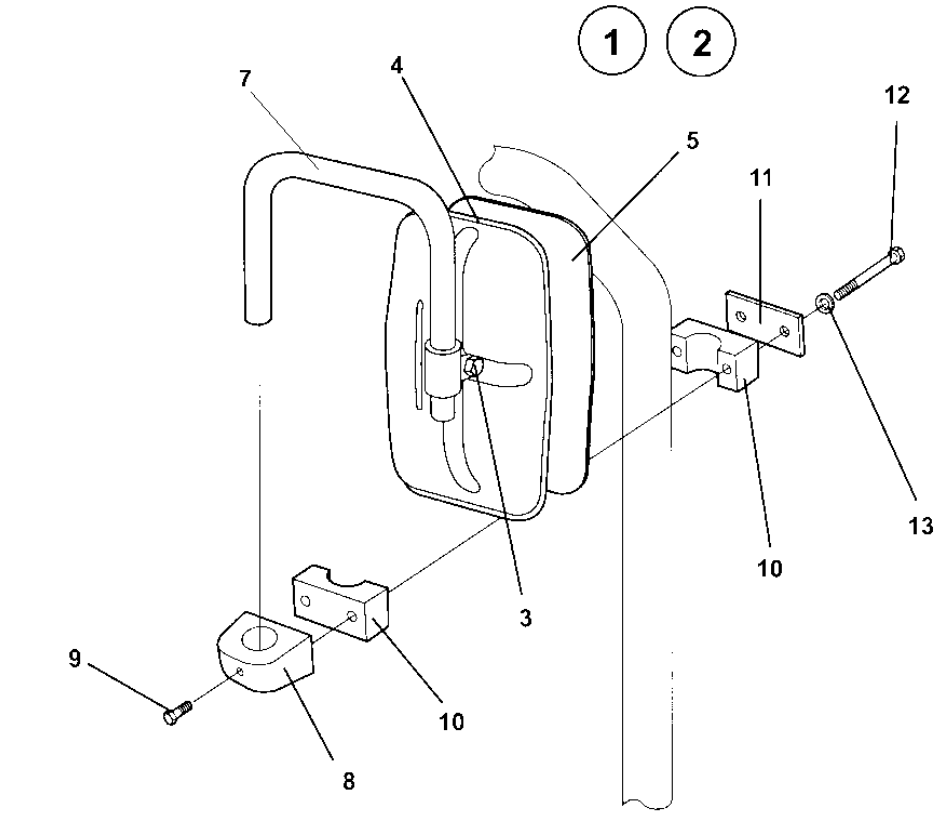

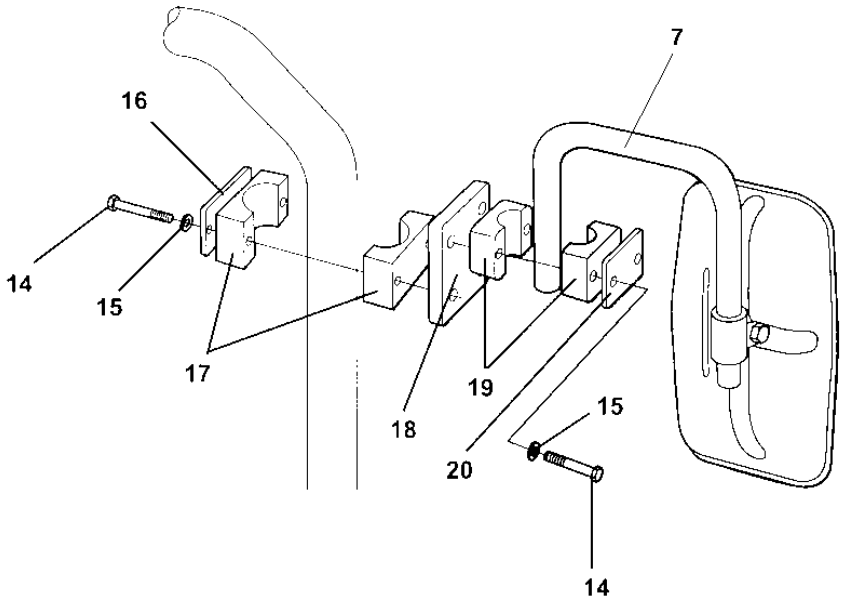

Rear mirror

Item	Part No	Rem	Qty	Description	Code
1	4700393204	A	1	Rear mirror	
2	4700393205		1	.Mirror	
3	4700904203		1	..Nut protection	
4	4700393206		1	..Edge trim	
5	4700903722	B	1	..Mirror glass	D
7	4700359661		1	.Arm	
	4700900519		2	..Plug	
8	4700359660		1	Mirror bracket	
9	4700516043		1	Set screw	
10	4700902496	C	1	Clamp	
11	4700923859		1	Cover plate	
12	4700500079		2	Screw M6-1x50 8,8	
13	4700904228		2	Washer 6,4x12x1,5	C
14	4700500079		4	Screw M6-1x50 8,8	
15	4700904228		4	Washer 6,4x12x1,5	C
16	4700923859		1	Cover plate	
17	4700902496	C	1	Clamp	
18	4812110283		1	Bracket	
19	4700791453	C	1	Pipe clamp block	
20	4700791454		1	Cover plate	

A) CPL
B) W. tape
C) 2 pcs

Combination water supply

15584-1

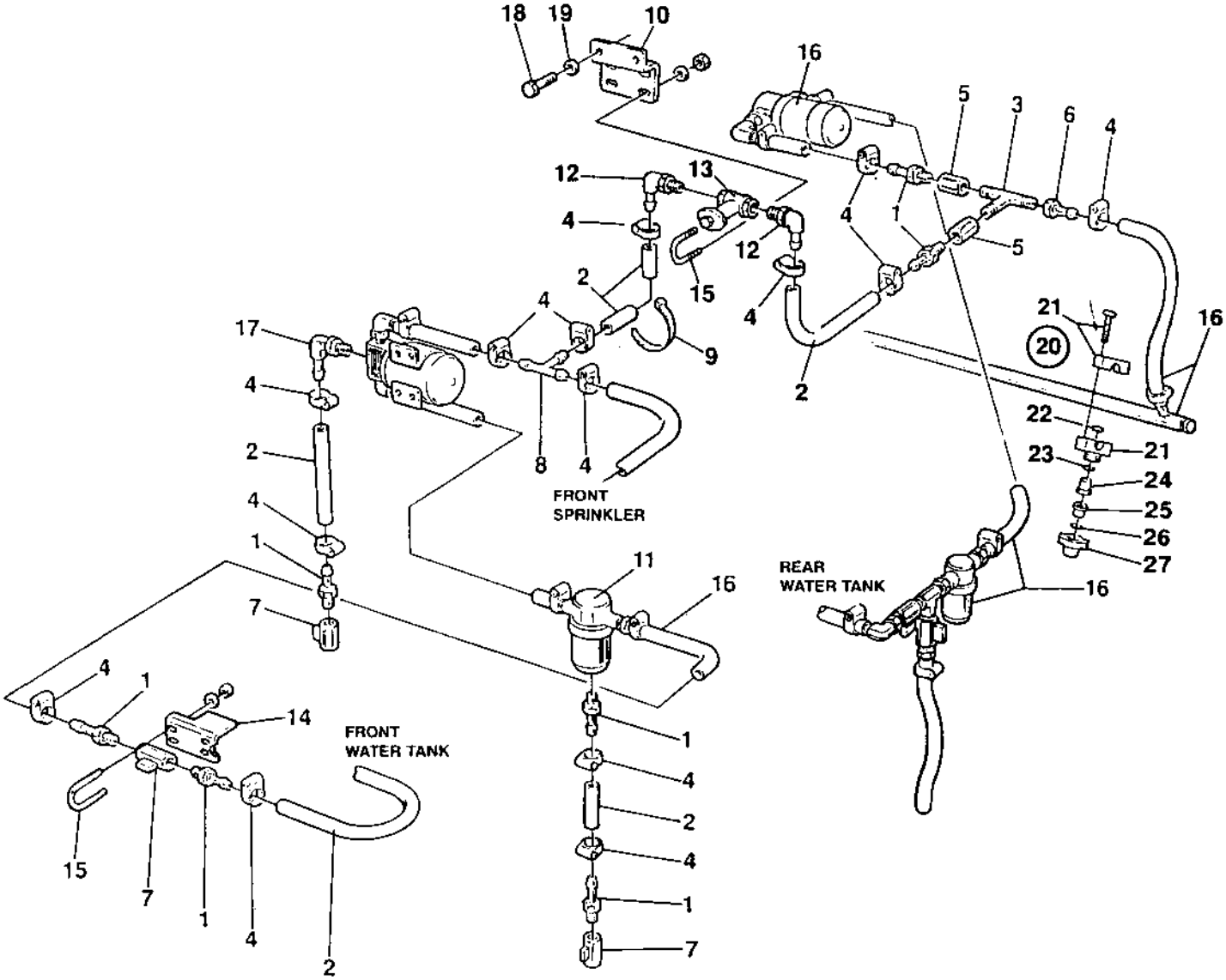

Combination water supply

Item	Part No	Rem	Qty	Description	Code
1	4700924544		7	Hose connection	C
2	4700244054	A	5XL	Hose reinforced	C
3	4700902105		1	Connector	
4	4700313002		14	Hose clamp 13-20 mm	
5	4700358507		2	Check valve	
6	4700901300		1	Hose connection	C
7	4700925599		3	Valve	C
	4700379753	D	8	Gasket	
8	4700923735		1	Hose connection	C
9	4700313102		N	Cable ties	
10	4700370600		1	Holder plate	
11	4700358736	C	1	Strainer	
	4700921423		1	.Gasket	B
	4700921424		1	.Strainer	D
12	4700924996		2	Hose connection	C
13	4700904364		1	Valve	
14	4700358845		1	Holder plate	
15	4700313107		4	Clamp	
16			N	Existing	
17	4700901431		1	Hose connection	C
18	4700500021		2	Screw M8-1,25x25 8.8	C
19	4700600006		4	Washer	C
20	4700902874		4	Sprinkler, cpl	C
21	4700923680		1	.Nozzle clamp	A
22	4700903962		1	..Blind rivet	
23	4700903010		1	.Gasket	B
24	4700902869		1	.Strainer	A
25	4700923679		1	.Nozzle	
26	4700904116		1	.Gasket	B
27	4700902868		1	.Coupling, red	

A) Length as required
C) CPL
D) Not illustrated

Combination water supply 2 rear sprinkler pipes

15767-1

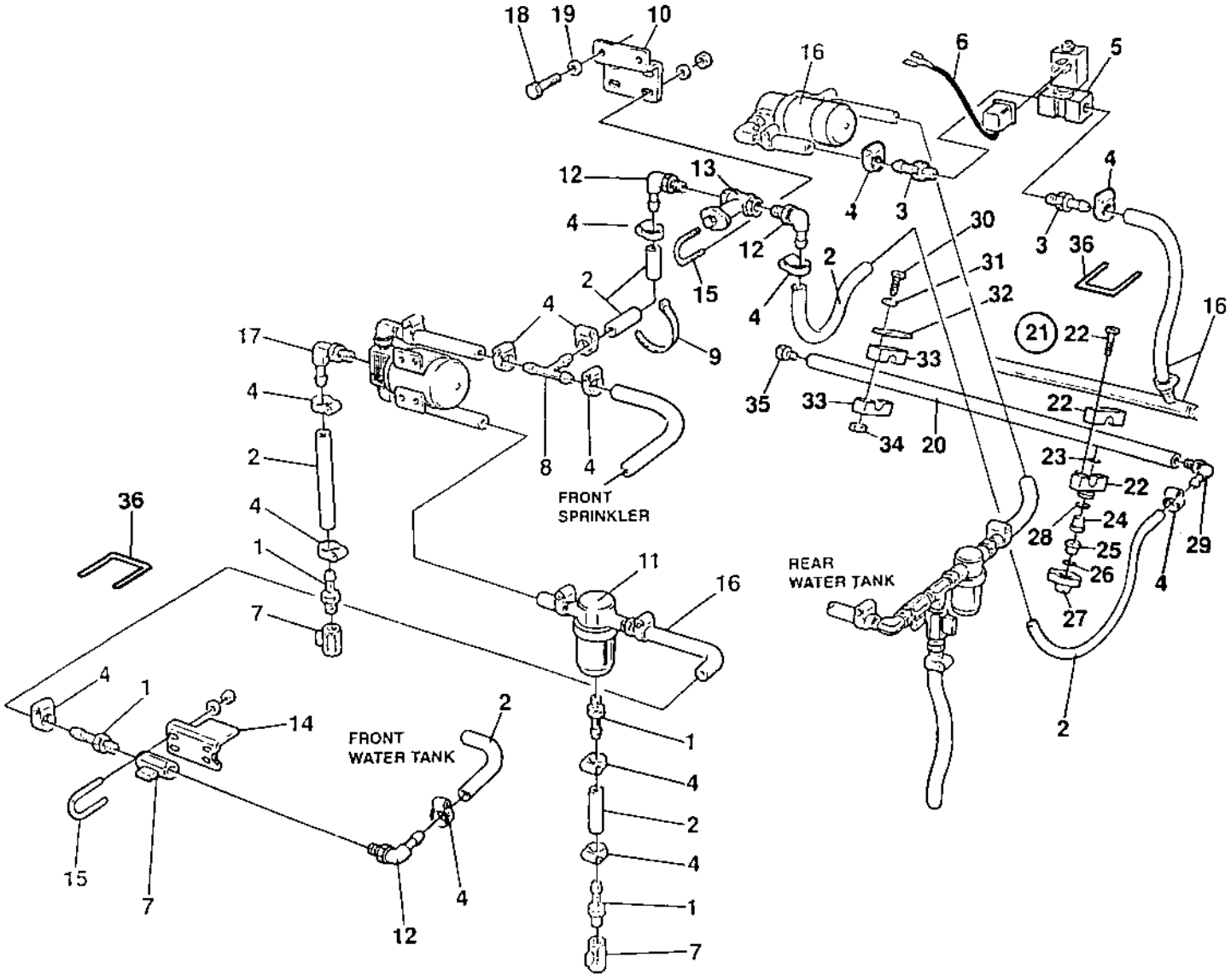

Combination water supply 2 rear sprinkler pipes

Item	Part No	Rem	Qty	Description	Code
1	4700924544		4	Hose connection	C
2	4700244054	A	5XL	Hose reinforced	C
3	4700901432		2	Hose connection	
4	4700313002		14	Hose clamp 13-20 mm	
5	4700287713		1	Solenoid valve	C
6	4700358809		1	Cable harness	
7	4700925599		3	Valve	C
	4700379753	E	8	Gasket	
8	4700923735		1	Hose connection	C
9	4700313102		N	Cable ties	
10	4700370600		1	Holder plate	
11	4700358736	B	1	Strainer	
	4700921423		1	.Gasket	B
	4700921424		1	.Strainer	D
12	4700924996		3	Hose connection	C
13	4700904364		1	Valve	
14	4700358845		1	Holder plate	
15	4700313107		4	Clamp	
16			N	Existing	
17	4700901431		1	Hose connection	C
18	4700500021		2	Screw M8-1,25x25 8.8	C
19	4700600006		4	Washer	C
20				Not used on this model	C
21	4700902874		4	Sprinkler, cpl	C
22	4700923680		1	.Nozzle clamp	A
23	4700923962		1	..O-ring	C
24	4700902869		1	.Strainer	A
25	4700923679		1	.Nozzle	
26	4700904116		1	.Gasket	B
27	4700902868		1	.Coupling, red	
28	4700903010		1	.Gasket	B
29	4700923684		1	Hose connection	
30	4700500016		4	Screw M6x55 8.8 A2K	C
31	4700600004		4	Washer	C
32	4700923859		2	Cover plate	
33	4700923876	C	2	Clamp	C
34	4700586002		4	Lock nut M6 -8	C
35	4700923683		1	Plug	C
36	4700902379	D	2XL	Edge trim	

A) Length as required
B) CPL
C) 2 pcs
D) L=0,18 m
E) Not illustrated

Towing valve

16570

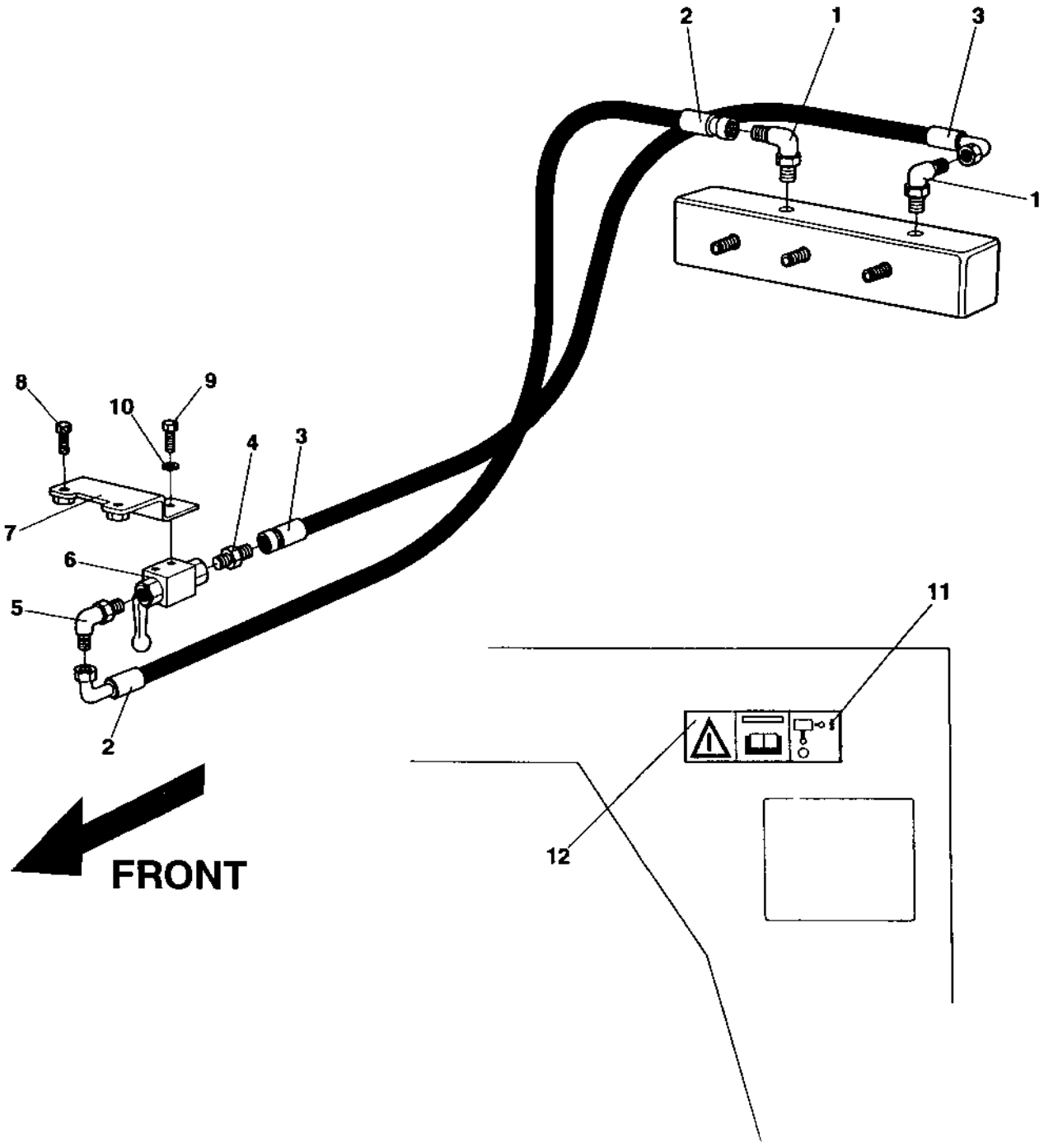

Towing valve

Item	Part No	Rem	Qty	Description	Code
1	4700813444		2	Elbow 90, O-ring	
2	4700831150		1	Hydraulic hose	
3	4700831150		1	Hydraulic hose	
4	4700334117		1	Adapter	
5	4700813435		1	Elbow 90	
6	4700344138		1	Ball valve	C
7	4700358586		1	Holder plate	
8	4700500022		2	Screw M8x30H 8.8 A2K	C
9	4700500184		2	Screw M5-0,8x14 8,8	
10	4700615041		2	Washer 5,3x11	C
11	4700374101		1	Decal "SHUT-OFF VALVE"	D
12	4700903459		1	Decal "SAFETY"	D

Flow divider

16677

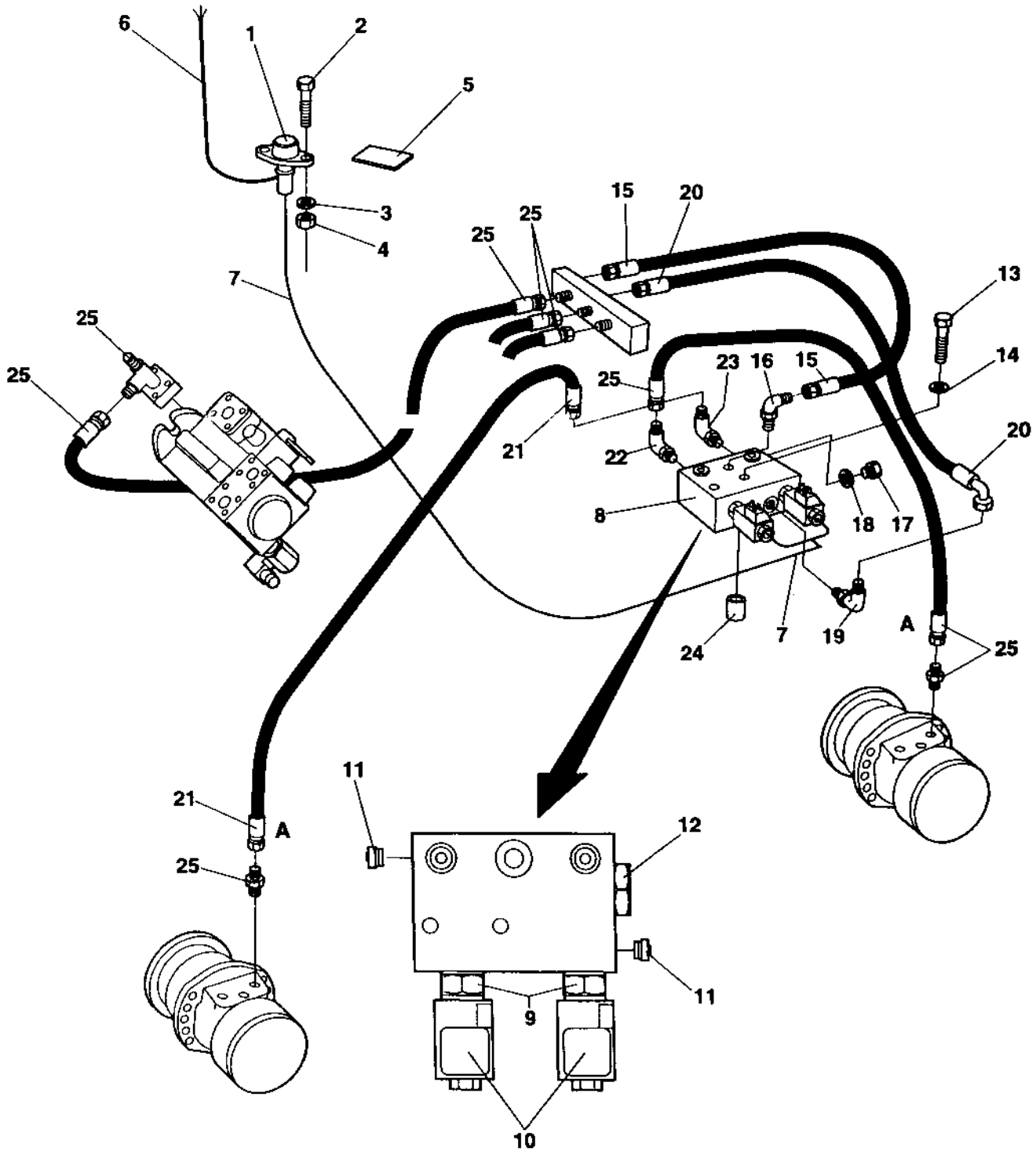

Flow divider

Item	Part No	Rem	Qty	Description	Code
1	4700358239		1	Contact	D
2	4700533016		2	Screw	
3	4700600002		2	Washer	C
4	4700923976		2	Nut	C
5	4700355981		1	Decal	
6	4700358614		1	Cable harness	
7	4700358615		1	Cable harness	
8	4700358003		1	Flow divider	C
9	4700903141		2	.Valve	D
10	4700903142		2	.Coil	D
11	4700903144		2	.Check valve	D
12	4700903143		1	.Valve	D
13	4700500034		2	Screw M10-1,5x100 8,8	
14	4700904230		2	Steel plain washer	C
15	4700482773		1	Hydraulic hose	
16	4700334235		1	Elbow 90	
17	4700332038		2	Plug	C
18	4700162004		2	Sealing	B
19	4700923407		1	Adapter	
20	4700482208		1	Hydraulic hose	
21	4700482214		1	Hydraulic hose	
22	4700904175		1	Connector	
23	4700923407		1	Adapter	
24	4700355869		2	Spacer sleeve	
25			N	Hydraulic details	

Vibration shut-off, front drum DEUTZ

16684-2

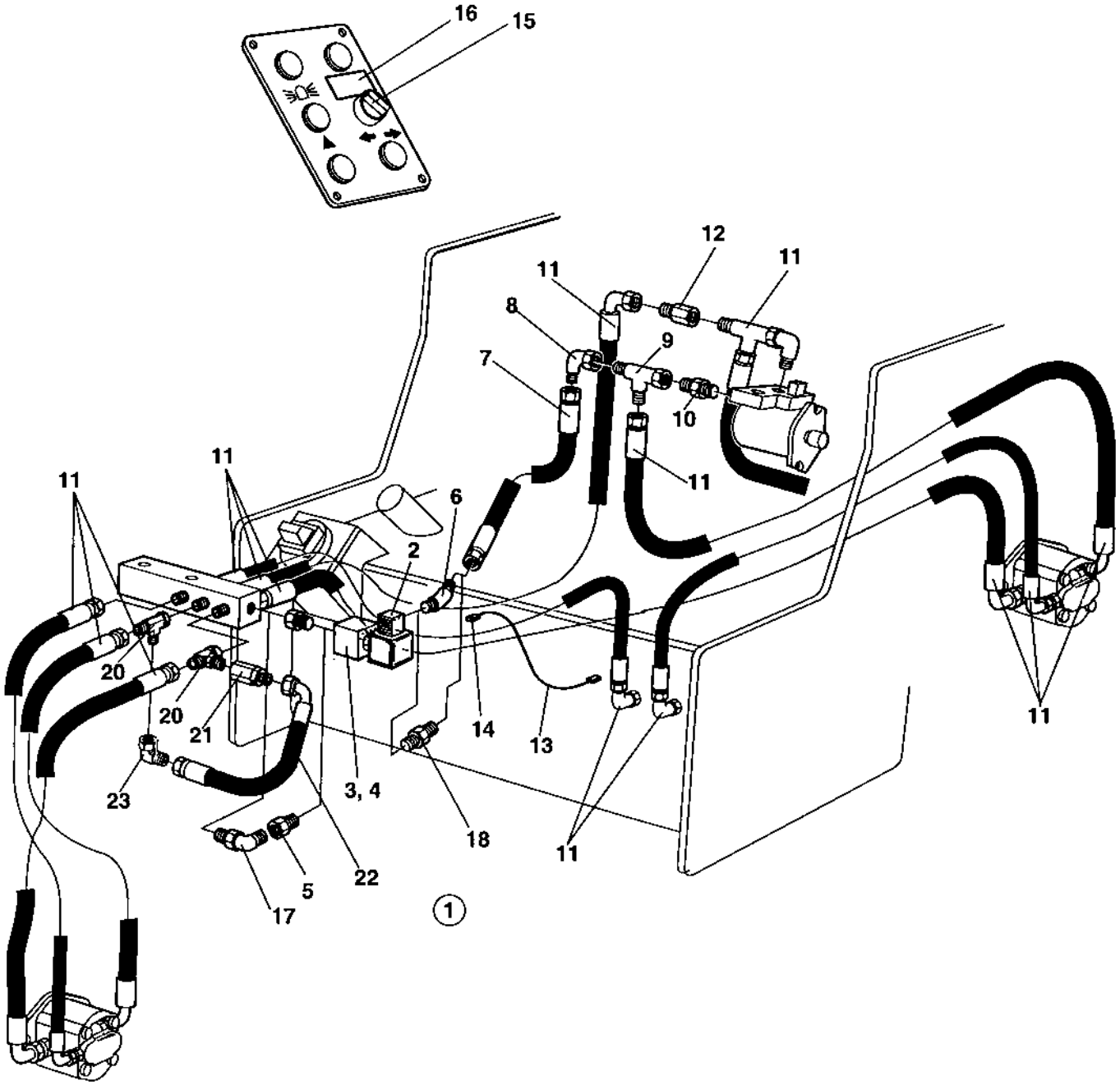

Vibration shut-off, front drum DEUTZ

Item	Part No	Rem	Qty	Description	Code
1	4700357934		1	Solenoid valve	
2	4700902535		1	.Coil	D
3	4700902536		1	.Valve	D
4	4700902537		1	.Housing	
5	4700923406		1	Connector	
6	4700904175		1	Connector	
7	4700482889		1	Hydraulic hose	
8	4700334197		1	Elbow 90	C
9	4700334135		1	Tee-connector	C
10	4700334116		1	Straight o-ring connector	C
11			N	Hydraulic details	C
12	4700357543		1	Valve	D
13	4700373849		1	Cable harness	
14	4700960796		1	.Connector black, MPM 182 09 ND	D
15	4700930151		1	Switch	B
16	4700904224	B	1	Decal	
17	4700813500		1	Elbow 45, O-ring	C
18	4700334165		1	Adapter	
20	4700334135	C	2	Tee-connector	C
21	4700357543	C	1	Valve	D
22	4700483585	C	1	Hydraulic hose	
23	4700334197	C	1	Elbow 90	C

B) Vibr. shut-off front
C) Used in new machines

Vibration shut-off, rear drum DEUTZ

16686-2

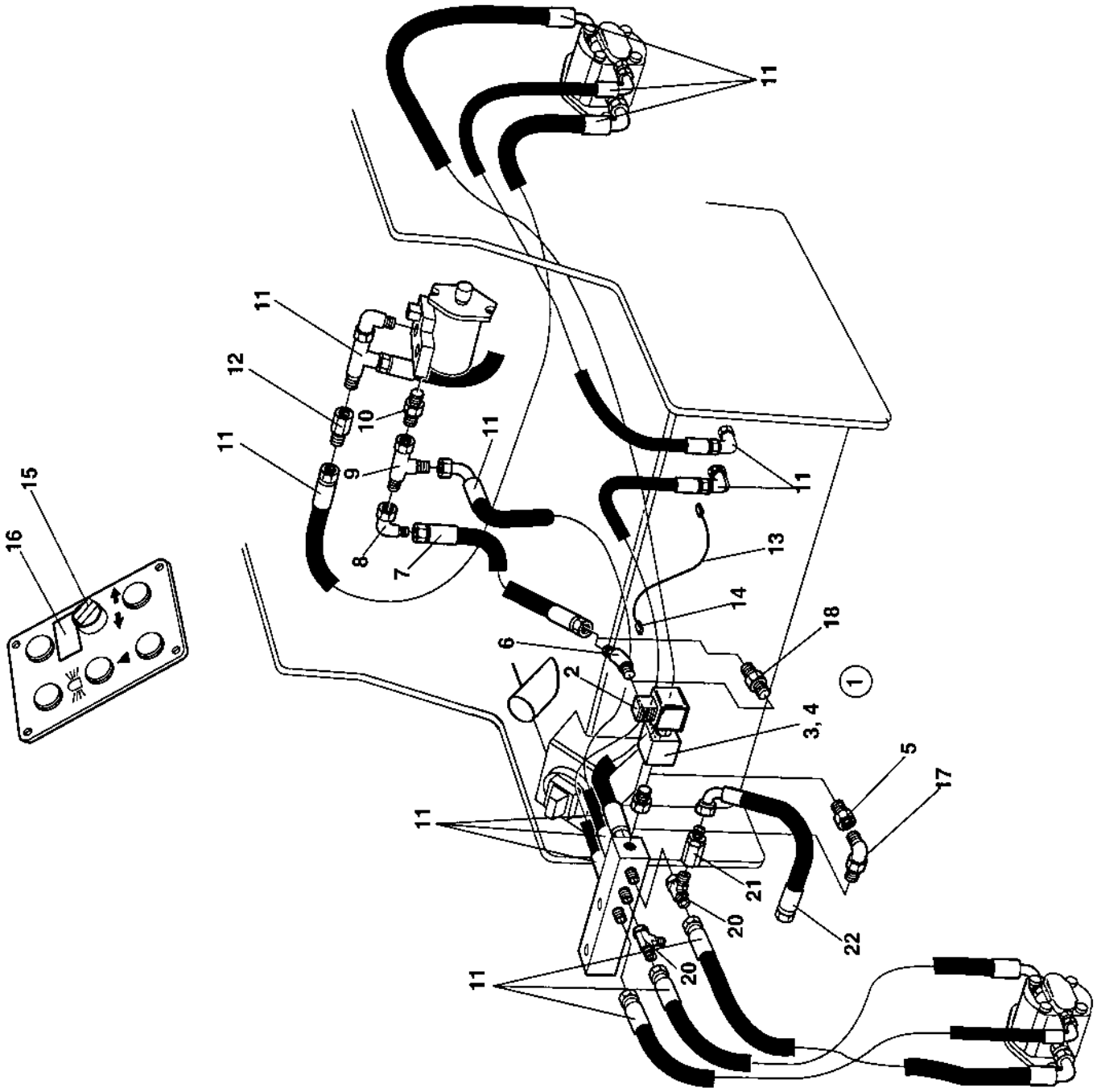

Vibration shut-off, rear drum DEUTZ

Item	Part No	Rem	Qty	Description	Code
1	4700357934		1	Solenoid valve	
2	4700902535		1	.Coil	D
3	4700902536		1	.Valve	D
4	4700902537		1	.Housing	
5	4700923406		1	Connector	
6	4700904175		1	Connector	
7	4700482889		1	Hydraulic hose	
8	4700334197		1	Elbow 90	C
9	4700334135		1	Tee-connector	C
10	4700334116		1	Straight o-ring connector	C
11			N	Hydraulic details	C
12	4700357543		1	Valve	D
13	4700373849		1	Cable harness	
14	4700960796		1	.Connector black, MPM 182 09 ND	D
15	4700930151		1	Switch	B
16	4700904223	B	1	Decal	
17	4700813500		1	Elbow 45, O-ring	C
18	4700334165		1	Adapter	
20	4700334135	C	2	Tee-connector	C
21	4700357543	C	1	Valve	D
22	4700483585	C	1	Hydraulic hose	

B) Vibr. shut-off rear
C) Used in new machines

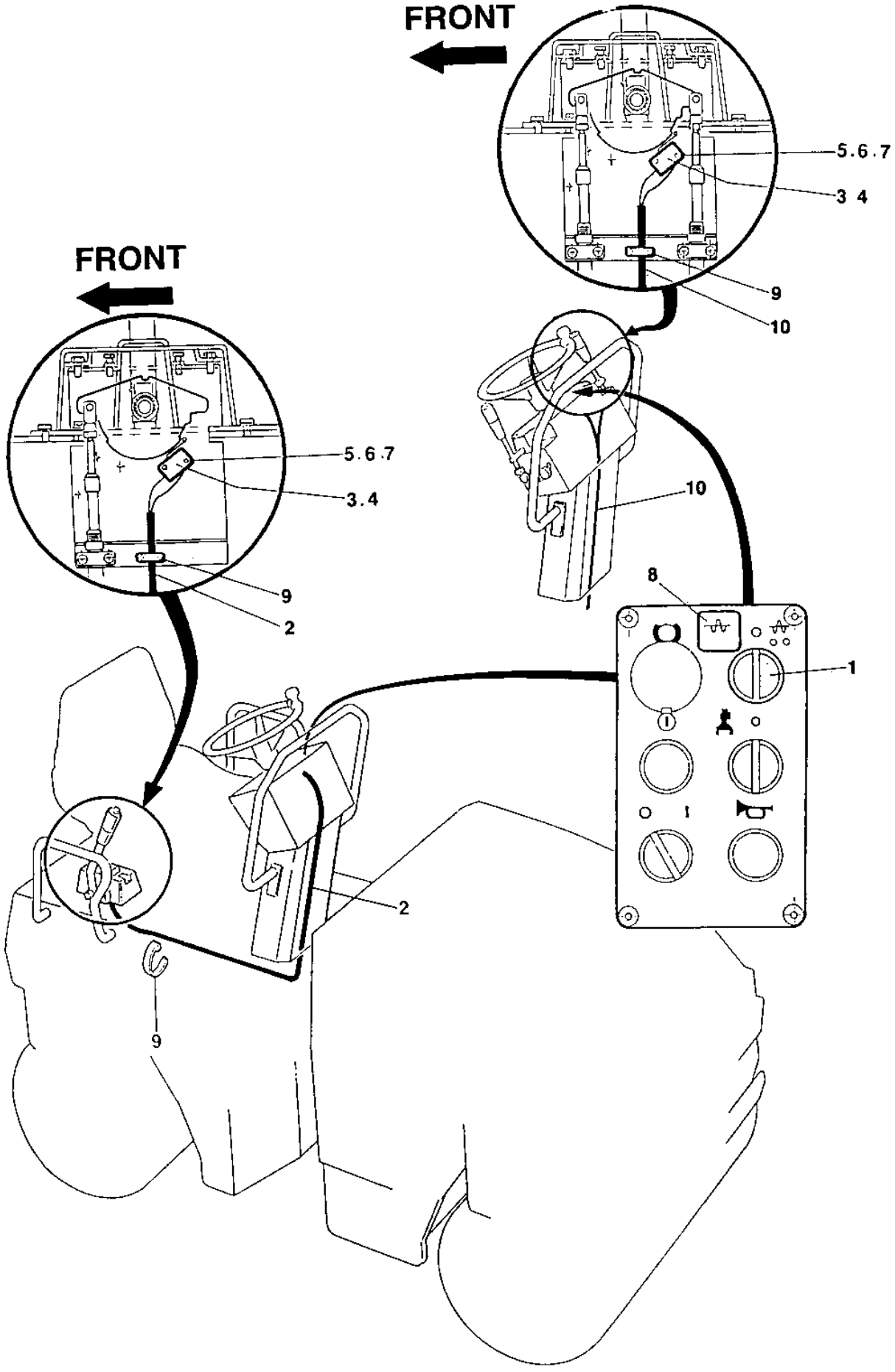
FRONT
5.6.7
3 4
9
10
FRONT
5.6.7
3.4
9
2
10
8
1
2
9

Automatic vibration control

Item	Part No	Rem	Qty	Description	Code
1	4700930163		1	Contact piece, NO	B
2	4700374483		1	Cable harness	
3	4700902528		1	Micro switch	B
4	4700357994		1	Spacer nut	
5	4700533057		2	Screw	
6	4700929602		2	Washer	
7	4700375892		2	Spacer nut	
8	4700359136	A	1	Decal	
9	4700313068		N	Cable ties L=92 mm	
10	4700370660		1	Cable harness	

A) Vib. auto

Service brake

15583-1

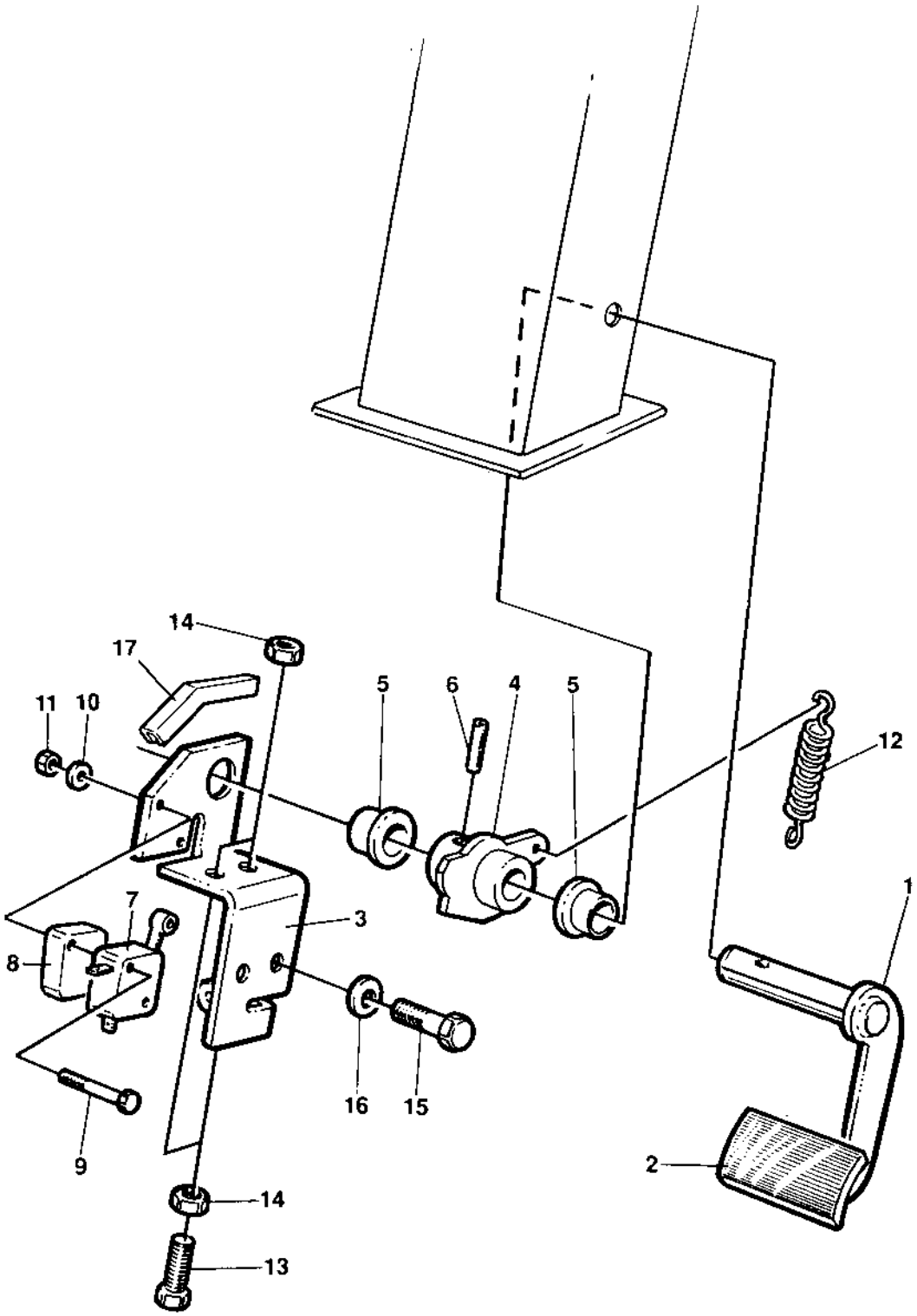

Service brake

Item	Part No	Rem	Qty	Description	Code
1	4700358299		1	Brake pedal	
2	4700345800		1	Pedal rubber	D
3	4700358302		1	Bracket	
4	4700358303		1	Camshaft	
5	4700349492		2	Bushing	
6	4700629024		1	Pin	
7	4700902528	2	1	Micro switch	B
	4700382396	1	1	Micro switch	
8	4700357994		1	Spacer nut	
9	4700533057		2	Screw	
10	4700929602		2	Washer	
11	4700570001		2	Nut	
12	4700358306		1	Spring	
13	4700500022	B	1	Screw M8x30H 8.8 A2K	C
14	4700570005	B	1	Nut M8	C
15	4700500053		2	Screw M8x20H 8.8	C
16	4700904229		2	Washer 8,4x16x1,5	C
17	4700900904	A	1XL	Grommet	C

1) Can replace 4700902528
2) Can be replaced by 4700382396
A) L=0,06 m
B) Not valid for 4700382396

Driving, restriction

15819

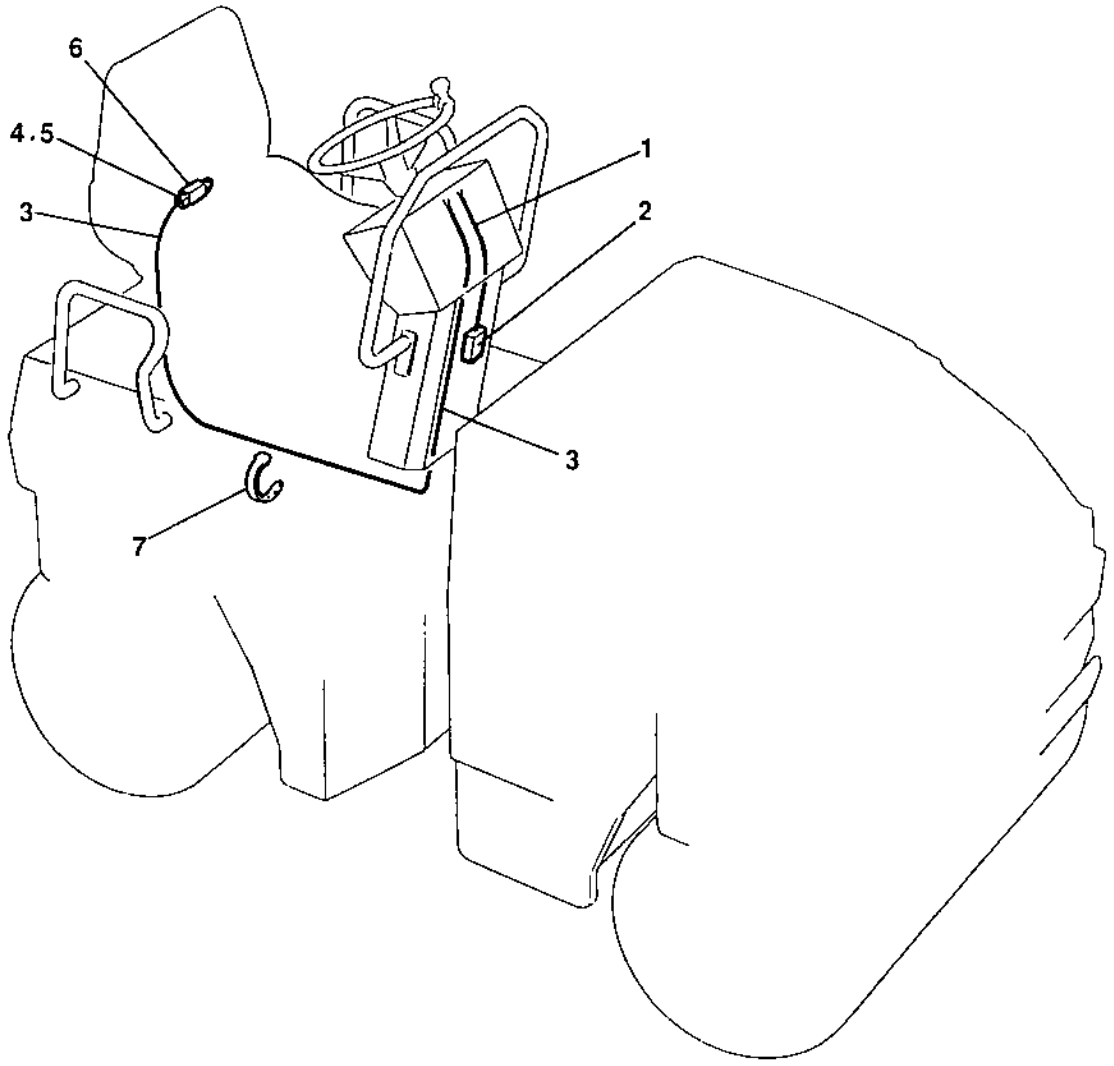

Driving, restriction

Item	Part No	Rem	Qty	Description	Code
1	4700371908		1	Cable harness	
2	4700287597		1	.Relay	D
3		1	1	Cable harness	D
4	4700903823		1	Connector	
5	4700960274		4	Terminal	
6			1	Seat switch	
7	4700925802		N	Cable ties L=142 mm	C

1) See section " Electrical equipment "

Bio-hydraulic oil lock Old design

16689-1

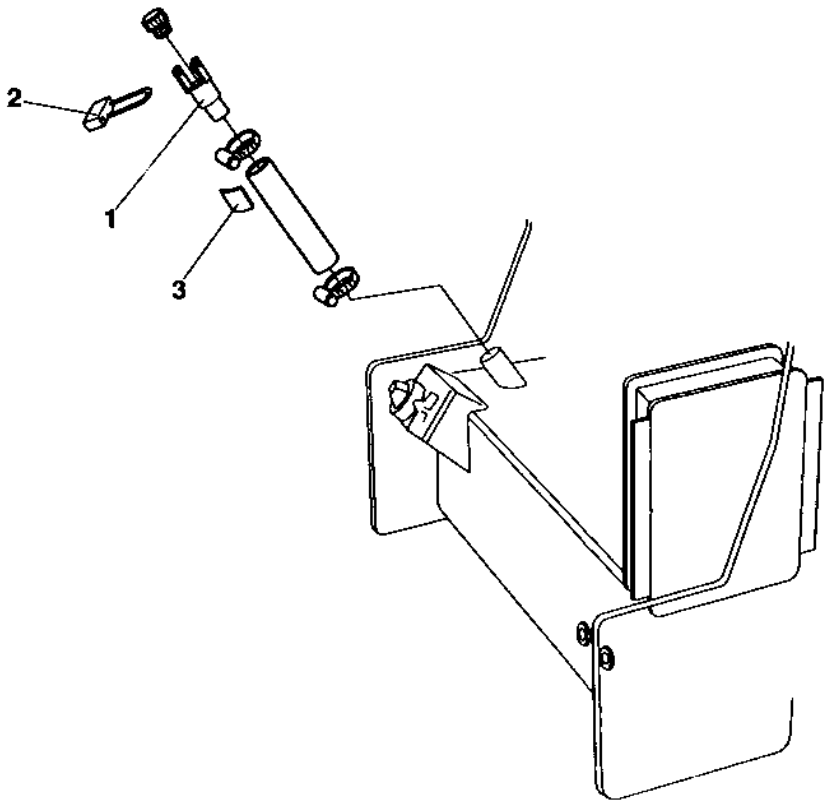

Bio-hydraulic oil lock Old design

Item	Part No	Rem	Qty	Description	Code
1	4700376449	B,C	1	Connector	
2	4700904603	B	1	Pad lock	
	4700904711	B	2	.Key	
3	4700380343	A	1	Sign "BIO HYDRAULIC OIL"	
	4700792773		1	Sign "BIO HYDRAULIC OIL" PANOLIN	

A) Bio-hydr.
B) Not used in new design
C) In new design; replaced by 4700357139, which is the same STD part as used in the unlocked version; See "Vibration system" in Hydraulic section.

High torque drum drive " Long"

16690

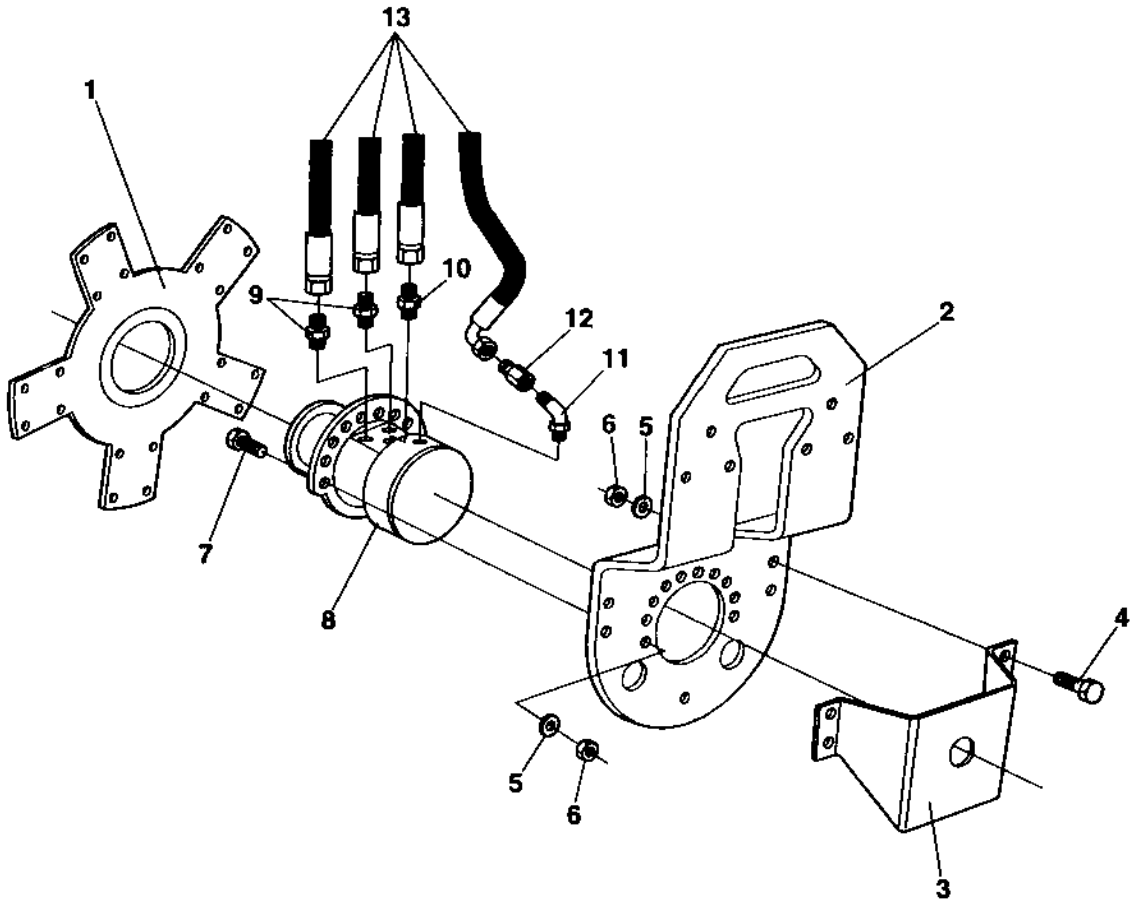

High torque drum drive " Long"

Item	Part No	Rem	Qty	Description	Code
1	4700371916		1	Drive disc	
2	4700371085		1	Fork	
3	4700371124		1	Protecting cover	
4	4700500070		4	Screw M16x50	C
5	4700904232		14	Washer	C
6	4700586021		14	Nut M16	C
7	4700500134		10	Screw	C
8	4700372118		1	**Hydraulic motor high torque (Page 192)**	
9	4700334190		2	Connector	
10	4700334236		1	Adapter	C
11	4700234992		1	Adapter	
12	4700334523		1	Reducing	
13			N	Hydraulic details	

4700372118 Hydraulic motor high torque

16691

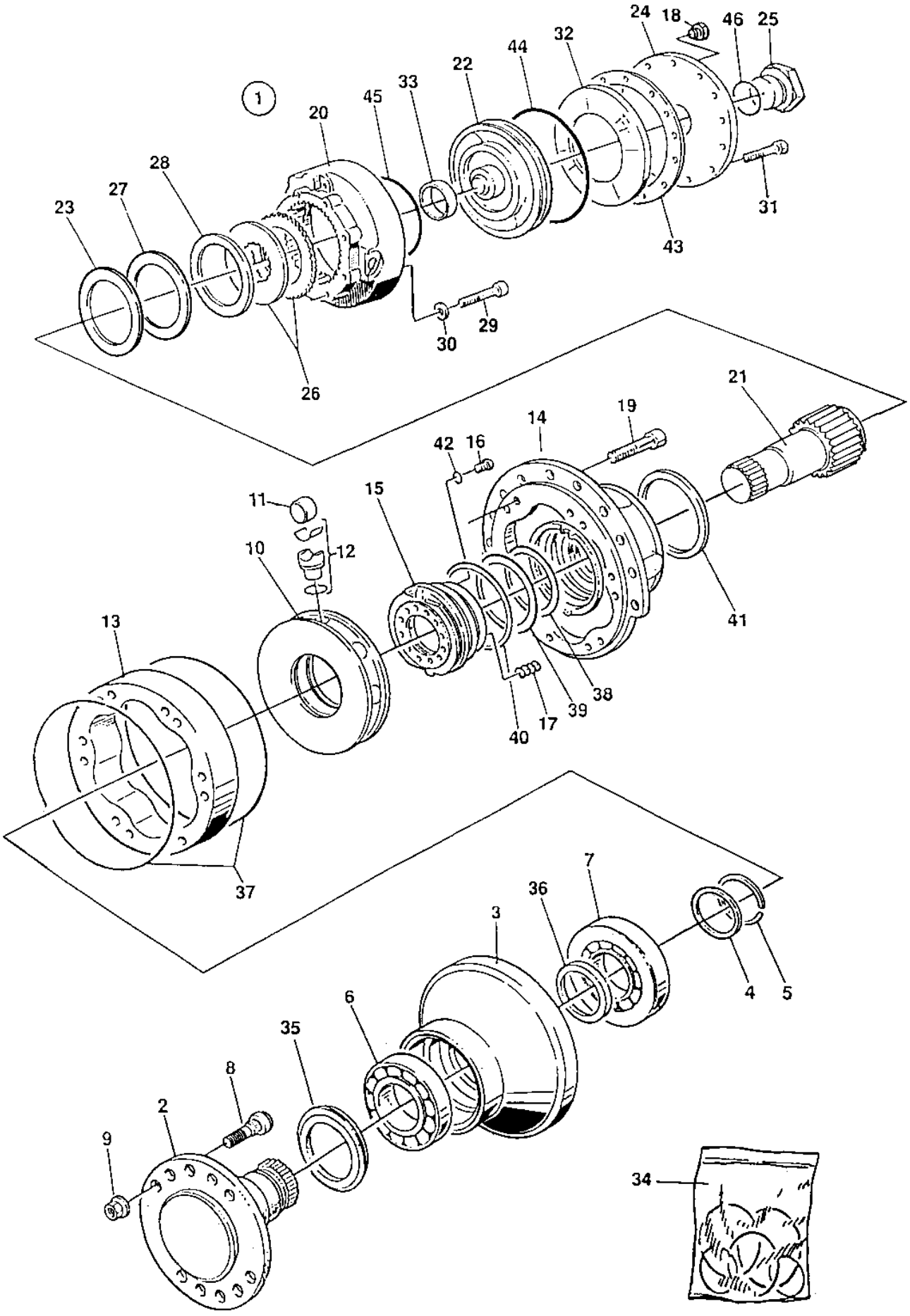

4700372118 Hydraulic motor high torque

Item	Part No	Rem	Qty	Description	Code
1		A	1	Hydraulic motor	
2	4700937363		1	.Shaft	
3	4700909658		1	.Housing	
4	4700909659		1	.Washer	
5	4700909662		1	.Split ring	
6	4700935977		1	.Bearing	
7	4700909661		1	.Bearing	
8	4700902391		5	.Wheel stud	
9	4700902392		5	.Wheel nut	D
10	4700935981		1	.Cylinder block	
11	4700909666		8	.Roller	
12	4700937364		8	.Piston	
13	4700909668		1	.Piston cam	
14	4700909670		1	.Housing	
15	4700937365		1	.Distributor ring	
16	4700909672		1	.Pin	
17	4700902398		9	.Spring	
18	4700909674	A	1	.Plug	
19	4700909682		12	.Screw	
20	4700937367		1	.Brake housing	
21	4700937368		1	.Shaft	
22	4700937369		1	.Piston	
23	4700937370		1	.Washer	
24	4700937372	A	1	.End cover	
25	4700903295		1	.Plug	
26	4700937374	B	1	.Disc kit	D
27	4700909700		1	.Shim T=0,1 mm	
28	4700909701		1	.Shim T=0,3 mm	
29	4700909708		8	.Screw	
30	4700903450		8	.Washer	
31	4700909709		24	.Screw	
32	4700909711		1	.Spring	
33	4700937375		1	.Bush	
34	4700937376		1	.Seal kit	D
35			1	..Shaft seal	D
36	4700903324		1	..Shaft seal	
37			2	..O-ring	
38			1	..Sealing	
39			1	..Sealing	
40			1	..Sealing	
41	4700937366		1	..Quad ring	
42			1	..O-ring	
43	4700937373		1	..Gasket	
44	4700909703		1	..Quad ring	D
45			1	..Sealing	D
46	4700903327		1	..O-ring	

A) CPL
B) 16+14 pcs

High torque drum drive " Short"

17485

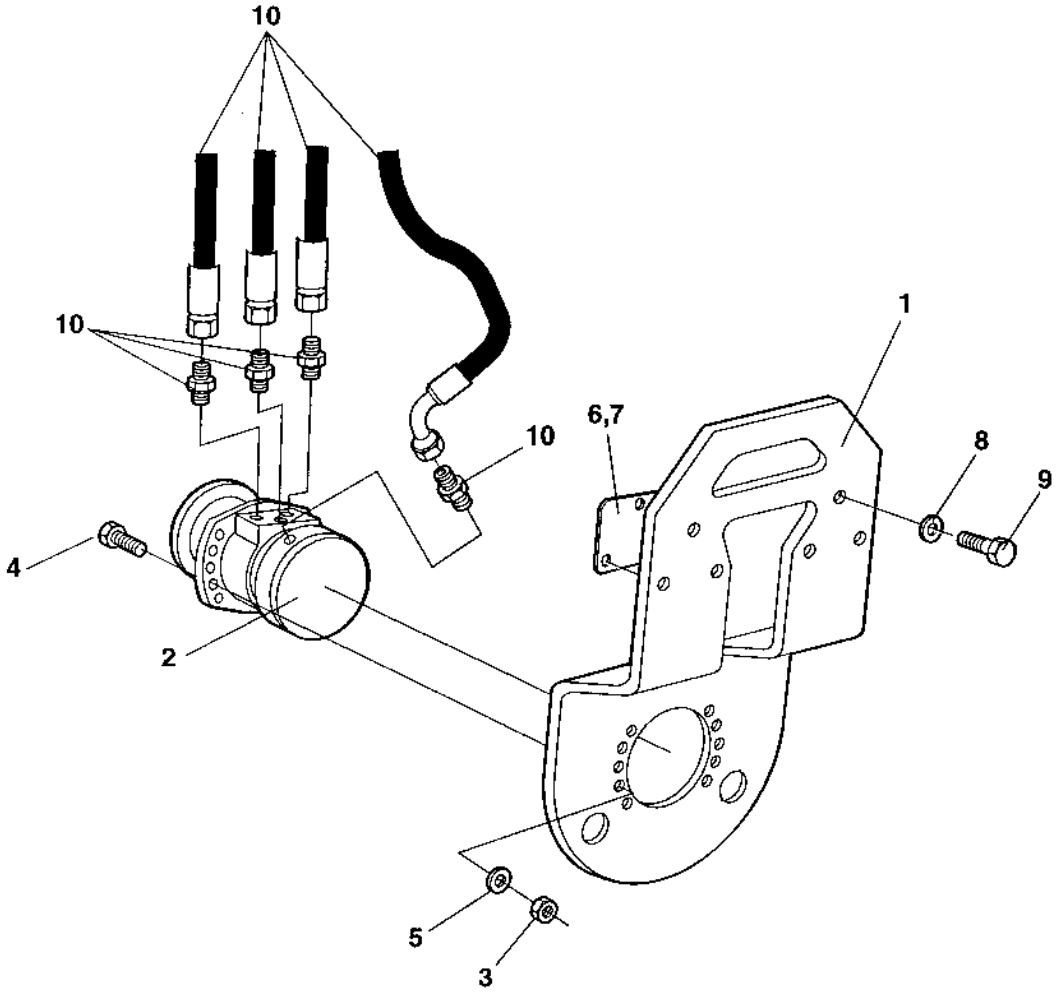

High torque drum drive " Short"

Item	Part No	Rem	Qty	Description	Code
1	4700381370		1	Fork	
2	4700380594		1	**Hydraulic motor, propulsion, drum (Page 196)**	
3	4700586019		10	Lock nut	C
4	4700500056		10	Screw	C
5	4700904231		14	Washer 13x24x2 300 HV	C
6	4700357222		2	Shim T=1 mm	
7	4700357221		2	Shim T=3 mm	
8	4700904232		6	Washer	C
9	4700500094		6	Screw	
10			N	Hydraulic details	

4700380594 Hydraulic motor, propulsion, drum

16591

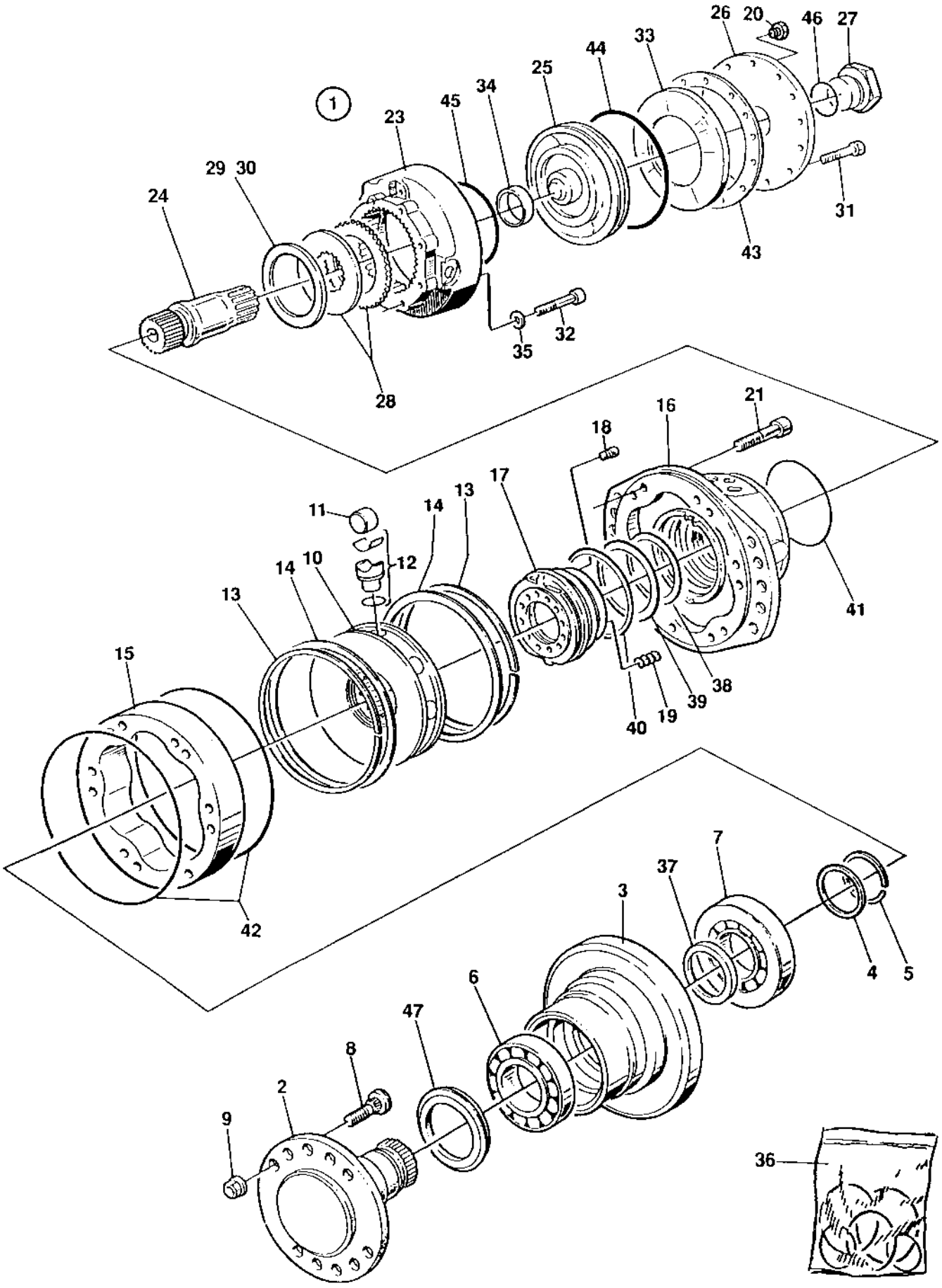

4700380594 Hydraulic motor, propulsion, drum

Item	Part No	Rem	Qty	Description	Code
1		A	1	Hydraulic motor	
2	4700908788		1	.Shaft	
3	4700937875		1	.Housing	
4	4700902387		1	.Washer T=2,0 mm	
5	4700902388		1	.Split ring	
6	4700902389		1	.Bearing	D
7	4700902390		1	.Bearing	D
8	4700902391		5	.Wheel stud	
9	4700902392		5	.Wheel nut	D
10	4700937876		1	.Cylinder block	
11	4700903453		8	.Roller	
12	4700937091		8	.Piston	
13	4700937092		2	.Circlip	
14	4700937877		2	.Retaining ring	
15	4700937878		1	.Piston cam	
16	4700937879		1	.Housing	
17	4700937880		1	.Distributor ring	
18	4700902397		1	.Pin	
19	4700902398		9	.Spring	
20	4700902399	A	1	.Plug	
21	4700937881		10	.Screw	
23	4700937882		1	.Brake housing	
24	4700908791		1	.Shaft	
25	4700908792		1	.Piston	
26	4700908328	A	1	.End cover	
27	4700903295		1	.Plug	
28	4700908800	B	1	.Disc kit	D
29	4700902410		N	.Shim T=0,1 mm	
30	4700902411		N	.Shim T=0,3 mm	
31	4700902412		12	.Screw	
32	4700902413		8	.Screw	
33	4700902416		1	.Spring	
34	4700908794		1	.Nylon buch	
35	4700903450		8	.Washer	
36	4700937089		1	.Seal kit	D
37	4700903324		1	..Shaft seal	
38			1	..Sealing	
39			1	..Sealing	
40			1	..Sealing	
41			1	..O-ring	
42			1	..O-ring	
43	4700902800		1	..Gasket	
44	4700903455		1	..Quad ring	D
45	4700937812		1	..Sealing	
46	4700903327		1	..O-ring	
47	4700937090		1	..Face seal	

A) CPL
B) 15+13 pcs

Brake release, propulsion motor 4700372118

15492

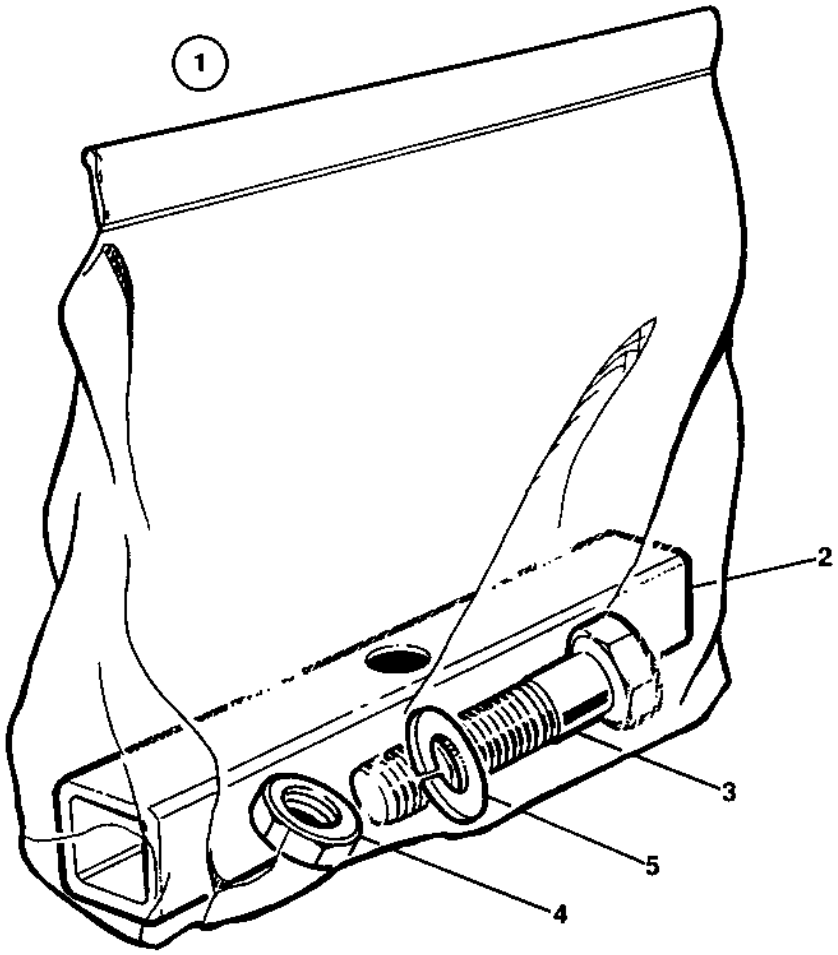

Brake release, propulsion motor 4700372118

Item	Part No	Rem	Qty	Description	Code
1	4700376210		2	Brake release kit	
2	4700357892		1	.Stirrup	
3	4700904564		1	.Screw	
4	4700570008		1	.Nut M16 -8	C
5	4700904232		1	.Washer	C

Brake release, propulsion motor Poclain

15492

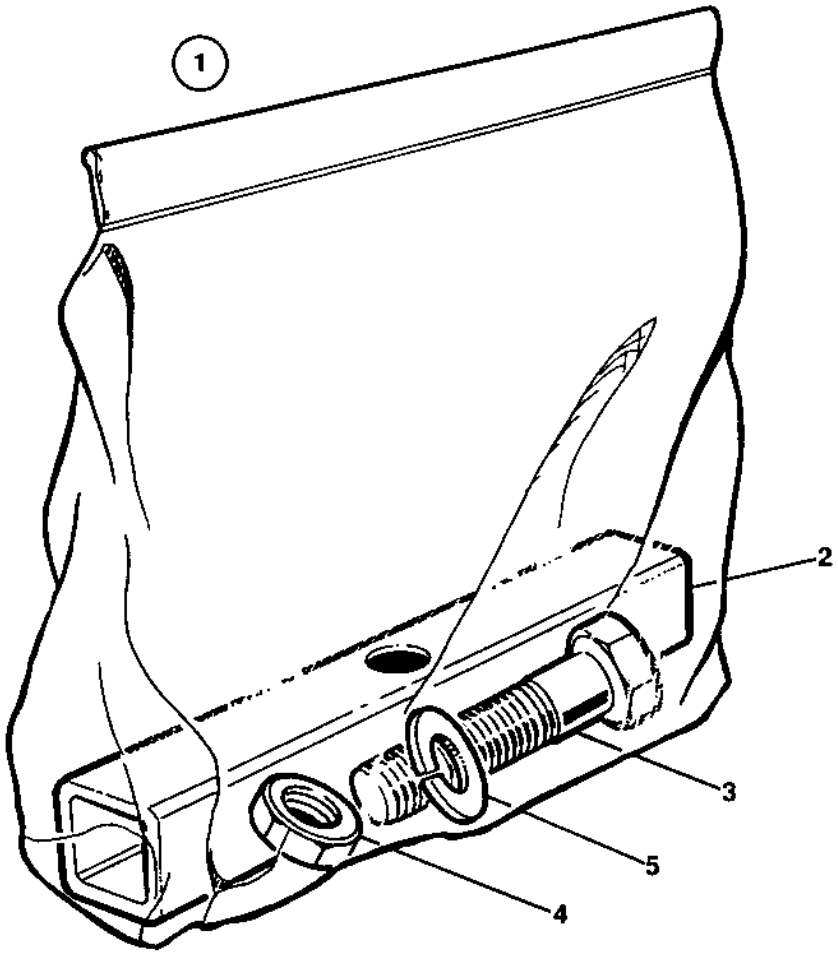

Brake release, propulsion motor Poclain

Item	Part No	Rem	Qty	Description	Code
1	4700392070		1	Brake release kit	
2	4700357892		2	.Stirrup	
3	4700792550		2	.Screw M12x100 10.9	
4	4700928849		2	.Nut M12-1,75	C
5	4700904213		4	.Washer	C

NUMERICAL INDEX

Part Number	Page	Part Number	Page	Part Number	Page
4700111018	17,49	4700334134	67	4700357218	29
4700151012	93	4700334135	67,83,179,181	4700357221	29,195
4700160012	59	4700334155	67	4700357222	29,195
4700160016	83	4700334156	67,83	4700357235	29
4700160025	93	4700334165	179,181	4700357236	29
4700160031	83	4700334190	191	4700357248	37
4700160112	23	4700334197	69,179,181	4700357276	37
4700160132	15,17,49	4700334234	89	4700357280	37
4700160269	103	4700334235	67,83,89,177	4700357316	131
4700162004	177	4700334236	89,191	4700357330	131
4700162017	49	4700334238	67,83	4700357373	83
4700163049	15,17,49	4700334463	95	4700357377	89
4700167044	23,35	4700334523	191	4700357395	41
4700202028	37,139	4700334524	83,89	4700357407	127
4700202042	41	4700343490	49	4700357408	127
4700202046	37	4700343744	49	4700357418	23,35
4700212160	49	4700343775	29	4700357424	131
4700230277	67	4700344138	175	4700357459	59
4700230400	69,95	4700345215	21,49	4700357466	59
4700230515	53	4700345728	99	4700357468	59
4700232070	67	4700345800	185	4700357470	59
4700232122	83	4700345870	103,131	4700357483	29
4700233215	45	4700346431	139	4700357486	29
4700234218	67	4700346505	49	4700357488	29
4700234233	81,95	4700347153	23,35	4700357494	137,141
4700234341	83	4700347154	23,35	4700357495	137,141
4700234390	83,89	4700347155	23,35	4700357496	137,139
4700234481	83	4700348331	127	4700357498	137
4700234888	95	4700348481	25,99,141	4700357499	137
4700234992	191	4700348923	59	4700357500	137
4700234993	83	4700348924	59	4700357501	137
4700238272	93	4700349202	49	4700357502	141
4700244054	171,173	4700349492	185	4700357543	179,181
4700277992	161	4700349879	29	4700357562	113
4700285909	99,141	4700349880	29	4700357567	99
4700285911	25,99,141	4700350029	49	4700357574	103
4700287597	99,103,187	4700355258	103	4700357583	99,139
4700287713	41,173	4700355301	109	4700357585	103
4700288129	53	4700355468	103	4700357587	147
4700288357	143	4700355704	159	4700357592	147
4700311016	161	4700355797	121	4700357604	147
4700312001	139	4700355829	121	4700357605	147
4700313001	41,43,45,59	4700355869	67,89,177	4700357643	41,131,147
4700313002	41,45,171,173	4700355981	177	4700357663	123
4700313008	83	4700357003	53	4700357668	123
4700313023	57	4700357005	53	4700357679	123
4700313035	137,139,141	4700357020	49	4700357812	115
4700313041	123	4700357031	35	4700357855	131
4700313068	141,167,183	4700357038	35	4700357863	37
4700313075	59	4700357039	35	4700357866	37
4700313086	61	4700357049	49	4700357892	199,201
4700313102	67,83,89,95,171	4700357054	49	4700357896	141
	173	4700357055	49	4700357934	179,181
4700313107	171,173	4700357111	67	4700357994	167,183,185
4700313108	59	4700357112	67	4700358000	117
4700330171	59	4700357113	67	4700358003	177
4700330331	53	4700357130	147	4700358089	127
4700330383	53,69	4700357138	11,83	4700358102	119
4700332038	177	4700357139	83	4700358142	131
4700334116	179,181	4700357142	41	4700358143	131
4700334117	175	4700357165	53	4700358213	127
4700334121	81	4700357166	53	4700358232	127

NUMERICAL INDEX

Part Number	Page	Part Number	Page	Part Number	Page
4700358239	177	4700359434	37	4700375595	39
4700358254	147	4700359524	63,83,87,89	4700375631	63,79
4700358299	185	4700359660	169	4700375892	183
4700358302	185	4700359661	169	4700376113	119
4700358303	185	4700359834	83	4700376210	199
4700358306	185	4700370127	147	4700376449	189
4700358323	165	4700370174	139	4700376624	31
4700358324	163,165	4700370241	139	4700376796	99
4700358325	163	4700370242	139	4700376866	37
4700358332	163,165	4700370244	139	4700376873	45
4700358333	163,165	4700370263	139	4700376874	45
4700358334	165	4700370266	139	4700376875	45
4700358335	163	4700370272	139	4700376876	45
4700358336	163,165	4700370273	139	4700376877	45
4700358337	165	4700370274	139	4700376941	61
4700358338	163	4700370355	53	4700377061	37
4700358339	163,165	4700370600	171,173	4700377518	129
4700358341	165	4700370660	183	4700377677	133,135
4700358342	163,165	4700370803	143	4700377697	111
4700358355	59	4700371085	191	4700377742	149
4700358370	53	4700371088	139	4700377743	149
4700358371	53	4700371124	191	4700377744	149
4700358418	103	4700371169	147	4700377794	31,33
4700358452	123	4700371173	147	4700377952	37
4700358486	83	4700371183	67	4700378359	29
4700358504	83	4700371313	67,83	4700378361	29
4700358507	171	4700371314	67,83,85	4700378370	99
4700358551	163,165	4700371326	103	4700378742	107
4700358558	163,165	4700371344	105	4700378743	99
4700358561	163,165	4700371561	115,119	4700378868	29
4700358563	121	4700371908	187	4700379009	41
4700358586	175	4700371916	191	4700379179	29,49
4700358587	49	4700371994	37	4700379637	133,135
4700358588	31	4700372118	191,193	4700379753	171,173
4700358589	31	4700372352	63,67,73	4700379982	147
4700358614	177	4700372523	127	4700380192	115
4700358615	177	4700372570	133	4700380255	33
4700358666	49	4700372627	59	4700380293	57
4700358689	49	4700372696	133	4700380294	11,57
4700358736	171,173	4700372697	133	4700380295	11,57
4700358743	29	4700372705	137	4700380296	57
4700358782	157	4700372964	89	4700380297	57
4700358783	157	4700373402	67	4700380299	57
4700358789	157	4700373461	59	4700380300	57
4700358790	157	4700373476	37	4700380343	147,189
4700358801	157	4700373478	83	4700380459	59
4700358802	157	4700373490	115	4700380594	195,197
4700358809	41,173	4700373493	115	4700380736	67
4700358845	171,173	4700373797	41	4700381370	195
4700358846	41	4700373849	179,181	4700381750	135
4700358861	29	4700373999	29	4700381994	109
4700358876	33	4700374009	143	4700382181	41
4700358881	153	4700374087	163,165	4700382237	135
4700358976	35	4700374101	175	4700382349	137
4700358978	35	4700374132	127	4700382396	185
4700359003	41	4700374133	127	4700382563	163
4700359062	143	4700374213	113	4700382564	165
4700359063	143	4700374483	183	4700382565	37
4700359074	143	4700374603	63,89,93	4700382568	163,165
4700359136	183	4700374625	37	4700382751	149
4700359161	61	4700374626	83	4700382782	103
4700359163	61	4700375594	39	4700383697	41

NUMERICAL INDEX

Part Number	Page	Part Number	Page	Part Number	Page
4700383705	131	4700416034	137	4700500046	31,33
4700383960	113	4700476019	159	4700500047	33,37,53,99
4700383967	113	4700480124	83	4700500048	89
4700383996	31,33	4700480446	91	4700500049	33
4700384083	107	4700480447	91	4700500050	53
4700384191	107	4700480449	91	4700500053	37,41,53,59,69
4700384359	113	4700480450	91		85,99,127,185
4700384493	31,33	4700480457	91	4700500056	31,33,69,195
4700384532	135	4700480464	91	4700500061	139
4700384726	59	4700480468	91	4700500067	83
4700385216	19,31,33	4700481303	91	4700500068	67
4700385580	99	4700482208	177	4700500070	143,191
4700385613	33	4700482214	177	4700500071	157
4700385628	33	4700482242	83	4700500075	103
4700385644	103	4700482398	89	4700500079	169
4700385671	31,33	4700482452	67	4700500080	159
4700385712	57	4700482483	95	4700500094	29,143,195
4700385713	57	4700482553	67	4700500111	157
4700386075	135	4700482606	83	4700500115	61
4700386133	53	4700482773	177	4700500117	127
4700386134	83	4700482830	67	4700500122	53
4700387429	29	4700482865	95	4700500133	33,157
4700387491	53	4700482889	179,181	4700500134	191
4700387956	37	4700482892	83	4700500143	123
4700388846	37	4700482898	67	4700500164	143
4700388852	37	4700482998	67,69	4700500184	175
4700389147	31,33	4700483069	69	4700500185	53
4700389176	137,139	4700483118	67	4700500188	29
4700389177	137	4700483155	83	4700500190	41
4700389561	123	4700483157	83	4700500195	157
4700389577	123	4700483162	83	4700500249	37
4700389631	115	4700483164	69	4700500269	67
4700389840	105	4700483281	83	4700500501	137
4700389998	33	4700483282	83	4700500509	57,127,131,139
4700389999	33	4700483419	95	4700508005	135
4700390722	53	4700483585	179,181	4700508020	99,117,121,137
4700390742	67,69,71	4700485005	161	4700508022	37
4700390810	137	4700485006	161	4700508025	53
4700390840	41	4700485019	161	4700508027	37
4700390963	129	4700485037	161	4700508029	53,67,83,85
4700391118	37	4700485388	161	4700508053	53,61
4700391119	37	4700499162	123	4700508065	29
4700391120	37	4700500006	115,135	4700508075	117
4700391121	37	4700500013	139,141	4700508080	61
4700391270	83	4700500015	33	4700508092	133,135
4700392011	45	4700500016	29,173	4700508095	53
4700392070	201	4700500019	29,83,99,127	4700508096	53,67,83
4700392508	45	4700500020	39,67,99,127,133	4700513013	67,133
4700392509	45	4700500021	37,53,59,83,99	4700516010	139
4700392510	45		131,137,157,171	4700516042	157
4700393204	169		173	4700516043	169
4700393205	169	4700500022	39,57,61,107,111	4700533001	25,99,141
4700393206	169		175,185	4700533016	177
4700393290	53	4700500028	35,41,123	4700533025	109,111
4700393540	29	4700500029	49	4700533032	121
4700393808	111	4700500030	29,89,157	4700533038	137,139,141
4700395728	61	4700500031	37	4700533057	183,185
4700395732	61	4700500034	177	4700533070	109
4700396108	99	4700500037	67	4700535008	147
4700396215	137,139	4700500040	41,141,163,165	4700535010	121
4700396557	123		167	4700541702	103,131,139
4700416004	137,139,141	4700500044	49,123	4700541703	131,137

NUMERICAL INDEX

Part Number	Page	Part Number	Page	Part Number	Page
4700541705	139	4700791949	41	4700902099	63,89,91
4700570001	185	4700791950	41	4700902100	29
4700570003	121,135	4700791959	41	4700902105	171
4700570004	103,137,139,141	4700791963	31,33	4700902111	163,165
	167	4700791974	45	4700902123	89
4700570005	37,59,61,107,133	4700791977	45	4700902166	37,163,165
	139,143,185	4700791980	123	4700902168	57
4700570006	33	4700791981	123	4700902171	29
4700570008	199	4700792147	59	4700902172	29
4700573004	137,139,141	4700792180	37	4700902187	137,139,141
4700586001	99,109,111,121	4700792187	29	4700902189	137,139,141
	147,159	4700792210	37	4700902191	137
4700586002	33,41,103,131	4700792548	111	4700902203	37,99,141,143
	141,163,165,167	4700792550	201	4700902217	147
	173	4700792708	37	4700902223	103,115
4700586003	37,53,67,99,117	4700792709	37	4700902224	103
	119,123,127,133	4700792773	147,189	4700902225	103
	139	4700792796	37,39	4700902227	115,119
4700586018	33,67,123,157	4700801567	99	4700902229	67
4700586019	31,33,53,127,157	4700813435	175	4700902230	67
	195	4700813443	67	4700902231	67
4700586021	143,191	4700813444	67,175	4700902232	67
4700600002	117,177	4700813500	179,181	4700902233	67
4700600003	121,147	4700831150	175	4700902256	37
4700600004	29,139,167,173	4700831179	89	4700902287	33
4700600006	127,139,171,173	4700892179	23,35	4700902295	83
4700600008	35,157	4700892446	67	4700902377	67
4700600016	89	4700900243	167	4700902378	67
4700600017	53	4700900519	169	4700902379	45,67,83,131,173
4700601001	159	4700900684	147	4700902387	79,197
4700603018	85	4700900790	115	4700902388	79,197
4700615041	175	4700900904	185	4700902389	79,197
4700615042	41,121,137	4700900986	127,143	4700902390	79,197
4700615044	67	4700901156	67	4700902391	79,193,197
4700615065	163,165	4700901157	69	4700902392	79,193,197
4700615076	29,41	4700901191	45	4700902394	79
4700615096	127	4700901212	161	4700902397	79,197
4700624005	147	4700901225	107,115	4700902398	79,193,197
4700624016	143	4700901226	103,167	4700902399	79,197
4700624017	149	4700901227	105,115,119,123	4700902410	79,197
4700624027	121	4700901228	115	4700902411	79,197
4700629016	137,139,141	4700901240	103,115,167	4700902412	79,197
4700629024	185	4700901274	127	4700902413	79,197
4700630019	89	4700901300	171	4700902416	79,197
4700635061	93,143	4700901313	67	4700902496	169
4700747282	59	4700901330	33	4700902521	53
4700791078	107	4700901369	115,119	4700902528	167,183,185
4700791079	107	4700901431	41,171,173	4700902535	179,181
4700791082	33	4700901432	41,173	4700902536	179,181
4700791182	33,99	4700901692	83	4700902537	179,181
4700791226	131	4700901744	75	4700902548	53
4700791262	149	4700901750	75	4700902560	99
4700791272	149	4700901766	99	4700902569	127
4700791275	149	4700901767	99,103	4700902576	35,93
4700791453	169	4700902059	35	4700902578	161
4700791454	169	4700902060	35	4700902610	161
4700791472	99,107	4700902061	23,35	4700902619	75
4700791568	41	4700902062	23,35	4700902620	75
4700791722	103	4700902063	23,35	4700902624	73
4700791723	105	4700902064	117	4700902625	73,75
4700791739	105	4700902066	115	4700902641	75
4700791754	37	4700902093	143	4700902644	75

NUMERICAL INDEX

Part Number	Page	Part Number	Page	Part Number	Page
4700902654	75	4700903450	79,193,197	4700904424	31,33
4700902670	73	4700903453	79,197	4700904429	143
4700902687	73	4700903455	79,197	4700904545	137
4700902695	73	4700903459	147,175	4700904556	83,135,137
4700902696	73	4700903471	75	4700904557	53,61,83,99
4700902724	73	4700903478	41	4700904564	199
4700902767	77	4700903521	91	4700904603	189
4700902770	77	4700903557	75	4700904640	37,41,53,57,59
4700902771	77	4700903593	111		61,69,99,131
4700902773	77	4700903637	87	4700904697	99,141,147
4700902792	73	4700903675	139	4700904698	37
4700902797	127	4700903676	139	4700904703	31,33,67,127
4700902799	79	4700903722	169	4700904711	189
4700902800	79,197	4700903727	131	4700904734	111
4700902804	37,127	4700903820	103,115,119,123	4700904835	149
4700902810	87	4700903823	187	4700904846	109
4700902861	91	4700903886	41	4700904870	147
4700902862	91	4700903925	67	4700904878	41,43,45
4700902863	91	4700903938	7,11,53	4700904901	83
4700902866	59,103	4700903962	171	4700904911	167
4700902868	171,173	4700904015	107	4700904984	59
4700902869	171,173	4700904076	37	4700904989	115
4700902874	171,173	4700904094	157	4700908229	143,149
4700902889	143	4700904096	147	4700908328	79,197
4700902890	127	4700904097	147	4700908384	75
4700902892	127	4700904116	171,173	4700908484	141
4700902893	59	4700904131	127	4700908788	79,197
4700902895	137,139,141	4700904175	177,179,181	4700908790	79
4700902896	137,139,141	4700904203	169	4700908791	79,197
4700902902	53	4700904206	37,39	4700908792	79,197
4700902916	41	4700904213	201	4700908794	79,197
4700902919	127	4700904223	181	4700908795	79
4700903003	89	4700904224	179	4700908798	79
4700903010	171,173	4700904225	127	4700908800	79,197
4700903063	103	4700904228	33,37,41,49,53	4700908804	87
4700903078	121		103,141,167,169	4700909107	99
4700903079	121	4700904229	29,33,37,41,55	4700909152	121,123
4700903081	121		61,67,83,85,99	4700909369	53
4700903141	177		107,117,119,123	4700909370	53
4700903142	177		127,133,143,157	4700909483	87
4700903143	177		185	4700909484	87
4700903144	177	4700904230	29,33,41,49,55	4700909514	73,75
4700903154	49		67,89,123,177	4700909527	103
4700903192	127	4700904231	29,31,33,53,67	4700909535	133,135
4700903236	59		127,157,195	4700909536	133,135
4700903239	103	4700904232	29,143,191,195	4700909658	193
4700903247	7,11,67		199	4700909659	193
4700903287	49	4700904233	53	4700909661	193
4700903292	79	4700904258	15,49	4700909662	193
4700903295	79,193,197	4700904277	99	4700909666	193
4700903324	79,193,197	4700904281	29,99,109,111	4700909668	193
4700903327	79,193,197		115,135,159	4700909670	193
4700903330	87	4700904292	53	4700909672	193
4700903369	163,165	4700904313	115	4700909674	193
4700903372	99	4700904315	115	4700909682	193
4700903378	143	4700904316	115	4700909700	193
4700903395	137,139,141	4700904317	115	4700909701	193
4700903422	147	4700904318	115	4700909703	193
4700903423	147	4700904342	31,33	4700909708	193
4700903424	147	4700904364	171,173	4700909709	193
4700903425	147	4700904403	149	4700909711	193
4700903430	87	4700904404	149	4700909757	73

NUMERICAL INDEX

Part Number	Page	Part Number	Page	Part Number	Page
4700909758	73	4700929602	167,183,185	4700935212	77
4700909759	93	4700930151	103,179,181	4700935214	77
4700909760	93	4700930153	103	4700935215	77
4700909761	93	4700930154	105,115	4700935216	77
4700909764	93	4700930155	103	4700935218	77
4700909765	93	4700930161	115	4700935219	73
4700909766	93	4700930162	115	4700935613	89
4700910161	83,89	4700930163	103,115,119,183	4700935614	89
4700911456	103	4700930165	115,119,123	4700935977	193
4700911620	91	4700930166	123	4700935981	193
4700921070	139	4700930182	103,115	4700936690	73
4700921072	59,123	4700932032	103	4700936691	75
4700921099	67	4700932055	115,119	4700936692	75
4700921104	99	4700932056	115	4700936693	75
4700921119	67,85	4700932058	103,115	4700936706	75
4700921423	171,173	4700932059	105	4700937053	41
4700921424	171,173	4700935158	73	4700937089	79,197
4700922325	137,139,141	4700935159	73	4700937090	79,197
4700922875	163,165	4700935160	73	4700937091	79,197
4700923406	179,181	4700935161	75	4700937092	79,197
4700923407	177	4700935162	75	4700937093	79
4700923679	171,173	4700935163	75	4700937094	79
4700923680	171,173	4700935164	75	4700937363	193
4700923683	173	4700935165	75	4700937364	193
4700923684	173	4700935166	75	4700937365	193
4700923734	41	4700935167	75	4700937366	193
4700923735	41,171,173	4700935170	75	4700937367	193
4700923844	127	4700935171	75	4700937368	193
4700923859	169,173	4700935172	75	4700937369	193
4700923876	173	4700935176	75	4700937370	193
4700923900	139	4700935177	75	4700937372	193
4700923951	15,49	4700935178	75	4700937373	193
4700923962	173	4700935179	75	4700937374	193
4700923976	37,117,177	4700935180	75	4700937375	193
4700924544	41,43,171,173	4700935181	75	4700937376	193
4700924731	67	4700935182	75	4700937812	197
4700924875	131	4700935183	75	4700937875	197
4700924986	43	4700935184	75	4700937876	197
4700924996	41,171,173	4700935186	75	4700937877	197
4700925599	41,43,171,173	4700935187	75	4700937878	197
4700925802	59,147,187	4700935188	75	4700937879	197
4700925958	99	4700935189	75	4700937880	197
4700926214	23,35,93	4700935190	75,77	4700937881	197
4700926215	127	4700935191	75	4700937882	197
4700926911	41	4700935194	77	4700938534	23
4700926985	163,165	4700935195	77	4700938542	5,7
4700927278	75	4700935196	77	4700938543	5,9
4700927396	29	4700935197	77	4700938544	5,11
4700928497	25,99,141	4700935198	77	4700938575	13,23
4700928502	115	4700935199	77	4700938584	11
4700928830	89	4700935200	77	4700938738	135
4700928849	201	4700935201	77	4700938739	135
4700928927	167	4700935202	77	4700938740	135
4700928928	103	4700935203	77	4700938885	13,21
4700929008	91	4700935204	77	4700938892	13,17
4700929009	91	4700935205	77	4700938908	13,15
4700929010	91	4700935206	77	4700938913	13,19
4700929012	91	4700935207	77	4700939478	53
4700929013	91	4700935208	77	4700939515	7,9,11,53
4700929014	91	4700935209	77	4700939593	53
4700929322	7,11,59	4700935210	77	4700939840	53
4700929455	121	4700935211	77	4700939976	53

NUMERICAL INDEX

Part Number	Page	Part Number	Page	Part Number	Page
4700940662	13,25				
4700945442	53				
4700945622	129				
4700945777	59				
4700945955	53				
4700947687	29				
4700950226	71				
4700950293	71				
4700950414	71				
4700950415	71				
4700950416	71				
4700960274	187				
4700960796	99,179,181				
4700975077	135				
4700985012	103,105,115,119				
	123				
4700985013	117,121				
4700985014	115				
4700985125	103				
4700989151	83				
4700991657	147				
4700991658	147				
4700999027	99,111				
47386084CN	147				
47386084DE	147				
47386084DK	147				
47386084EN	147				
47386084ES	147				
47386084FI	147				
47386084FR	147				
47386084GR	147				
47386084IS	147				
47386084IT	147				
47386084NL	147				
47386084NO	147				
47386084PT	147				
47386084SE	147				
4812110229	31				
4812110276	167				
4812110281	63,81				
4812110282	81				
4812110283	169				
4812110490	67				
4812110560	101				
4812110620	49				
4812110639	49				
4812110673	49				
4812110717	103				
4812110723	103				
4812110725	167				
4812110855	99				
4812110856	99				
4812110857	131				
4812155168	71				
D433830401	83,89				