RUTHZIL TRATOR COMERCIAL DE PEÇAS LTDA 11 97083-6812 ROLANDO CITRANGULO

DYNAPAC
CC522C
SPARE PARTS
CATALOGUE
SCC522C-2EN2

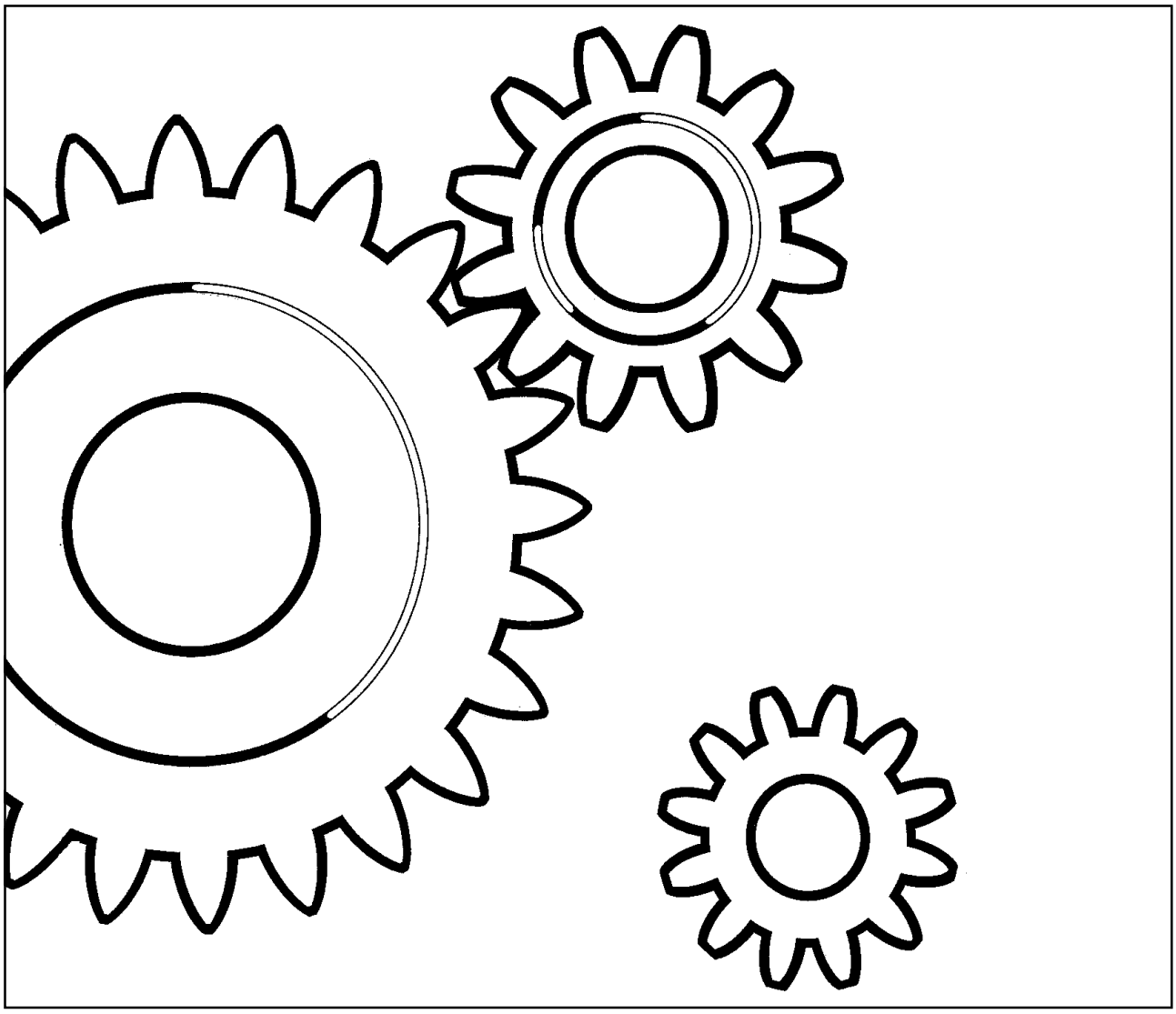

DYNAPAC

Box 504, SE-371 23 Karlskrona, Sweden
Phone: +46 455 30 60 00, Fax: +46 455 30 60 10
www.dynapac.com

DYNAPAC

Vibratory Combination Roller
CC522C

Spare Parts Catalogue
SCC522C-2EN2

Valid from roller serial number:

**43020527* -*

Diesel engines:

CUMMINS 4B 3.9 TAA

Published catalogue issues valid for these rollers:

Catalogue	*Issue date*	*Valid for serial numbers*
SCC522C-2EN1	*2003-05*	*Replaced by SCC522C-2EN2*
SCC522C-2EN2	*2004-12*	*See above*



We reserve the right to change specifications without notice.
Printed in Sweden.

DYNAPAC

RESERVDELSBESTÄLLNING

Följande uppgifter ska lämnas vid beställning av reservdelar för att undvika leveransfel:

1. Maskintyp.
2. Vältens serienummer.
3. Antal av önskad reservdel.
4. Reserdelens artikelnummer.
5. Reservdelens benämning.
6. Måttuppgifter vid beställning av metervara.

ORDERING SPARE PARTS

To avoid errors in delivery, please give the following information when ordering spare parts:

1. Type of machine.
2. Roller serial number.
3. Quantity required.
4. Part number.
5. Parts denomination.
6. Dimensions when ordering per length.

ERSATZTEILBESTELLUNG

Zur Vermeidung von Fehllieferungen sind bei der Bestellung von Ersatzteilen folgende Angaben zu machen:

1. Maschinentyp.
2. Herstellungsnummer.
3. Bestellmenge. (Quantity)
4. Ersatzteilnummer. (Part Nº)
5. Ersatzteilbenennung. (Denomination)
6. Massangaben bei Bestellung von Meterware.

ORDINI DI RICAMBI

Per evitare errori nelle consegne di ricambi, Vi preghiamo di comunicarci le seguenti informazioni al momento dell 'ordinazione:

1. Tipo di macchina.
2. Numero di serie della macchina.
3. Quantità dei pezzi desiderati. (Quantity)
4. Numero di codice del pezzo. (Part Nº)
5. Descrizione del pezzo di ricambio. (Denomination)
6. Misura, in caso di ordine per metro.

PEDIDO DE RECAMBIOS

Para evitar errores en las entregas, deberán indicarse los siguientes datos al hacer un pedido de recambios:

1. Tipo de máquina.
2. Número de serie.
3. Cantidad de piezas deseadas. (Quantity)
4. Número de artículo de la pieza de recambio. (Part Nº)
5. Denominación de la pieza. (Denomination)
6. Indíquese la medida al solicitar un artículo que se expide por metros.

COMMANDE DE PIECES DE RECHANGE

Les indications suivantes doivent être fournies lors de la commande de piéces de rechange, afin d'éviter toute erreur de livraison:

1. Type de machine.
2. Numéro de série.
3. Quantité désirée de pièce de rechange. (Quantity)
4. Numéro de la piéce de rechange. (Part Nº)
5. Dénomination de la piéce de rechange. (Denomination)
6. Longueur en cas de commande au mètre.

YOUR AGENT/DEALER:

DYNAPAC

Text pages

The text pages is structured as the picture on the right.

1. This is the remarks for specific items and the descriptions of the remarks is at the bottom of the parts list.
2. Parts indicated by a dot and moved to the right are included when buying the assembled unit above.
3. Spare parts and service code for a specific part, mainly for internal use at Dynapac. "A" = Service part, "B" = Fast moving part, "C" = Suggested exchanged part and "D" = Regular spare part.

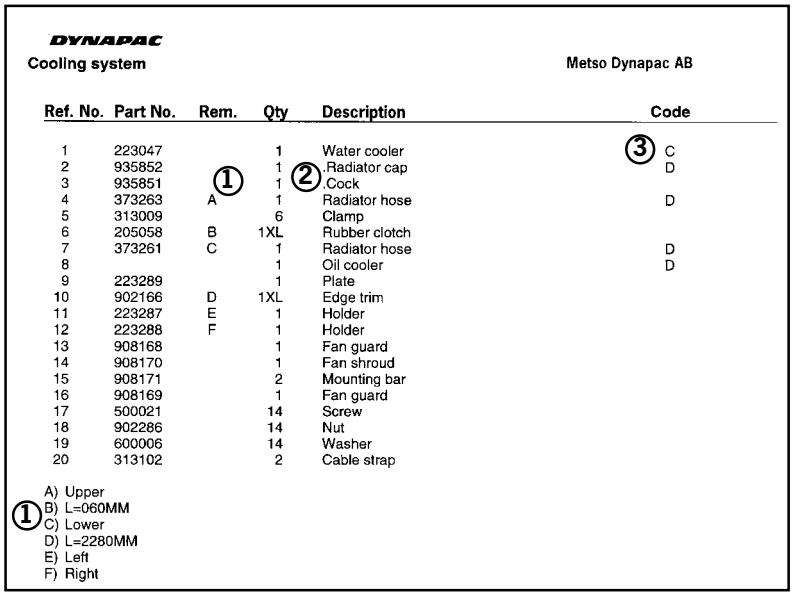

DYNAPAC

Cooling system — Metso Dynapac AB

Ref. No.	Part No.	Rem.	Qty	Description	Code
1	223047		1	Water cooler	③ C
2	935852		1	Radiator cap	D
3	935851	①	1	② Cock	
4	373263	A	1	Radiator hose	D
5	313009		6	Clamp	
6	205058	B	1XL	Rubber clotch	
7	373261	C	1	Radiator hose	D
8			1	Oil cooler	D
9	223289		1	Plate	
10	902166	D	1XL	Edge trim	
11	223287	E	1	Holder	
12	223288	F	1	Holder	
13	908168		1	Fan guard	
14	908170		1	Fan shroud	
15	908171		2	Mounting bar	
16	908169		1	Fan guard	
17	500021		14	Screw	
18	902286		14	Nut	
19	600006		14	Washer	
20	313102		2	Cable strap	

① A) Upper
B) L=060MM
C) Lower
D) L=2280MM
E) Left
F) Right

Changes

PARTS INFO	SERVICE INFO	GROUP	PAGE	NOTES

Notes

Notes

DYNAPAC

PÄRMETIKETT

För att undvika fel vid reservdelsbeställning finns här nedan två etiketter som passar i fickorna på pärmarnas ryggar. På dessa kan man se från vilket vältnummer av aktuell maskin reservdelskatalogen gäller. Gör så här:

1. Tag denna sida ur pärmen.
2. Klipp ut etiketten till **VÄNSTER** (1) och sätt in den i fickan på **DENNA** pärmens rygg.
3. Finns det en etikett till **HÖGER** (2), kan denna användas på pärmen för **FÖREGÅENDE** utgåva av denna katalog.
4. Kasta detta papper.

BINDER LABEL

To avoid errors when ordering spare parts use the labels below to identify the catalogues on the back of the binder. The label contain the serial number range for which the catalogue is valid. Do like this:

1. Remove this page from the binder.
2. Cut out the **LEFT** label (1) and put it on **THIS** binders back.
3. If there is a label to the **RIGHT** (2), it can be used on the binder for **PRECEDING** issue of this catalogue.
4. Throw away this paper.

KATALOG-BESCHRIFTUNG

Zur Vermeidung von Fehlen bei der Ersatzteilbestellung benutzen Sie bitte die unteren Beschriftungen, um die Kataloge auf der Rückseite zu kennzeichen. Auf der Beschriftung ist angegaben, für welche Maschinennummern der jeweilige Katalog gültig ist. Ablauf:

1. Nehmen Sie dieses Blatt aus dem Katalog.
2. Schneiden Sie die **LINKE** Beschriftung (1) aus. Schieben Sie die Beschriftung in die tasche auf **DEM** Katalogrücke.
3. Sollte die Beschriftung unten **RECHTS** (2) mitgeliefert werden, kennzeichen Sie damit bitte die **ÄLTERE** Ausführung dieses Kataloges.
4. Den Rest dieses Blattes bitte vernichten.

ETICHETTA POSTA SUL RACCOGLITORE

Per evitare errori quando ordinate pezzi di ricambio, usate le etichette in calce che servono ad identificare i cataloghi sul retro del raccoglitore. L'etichetta indica il numero di matricola delle maccine prese in considerazione nel catalogo.

1. Rimuovete questa pagina dal raccoglitore.
2. Ritagliate l'etichetta posta a **SINISTRA** (1) e ponetela sul retro **DEL** raccoglitore.
3. Se trovate anche un'etichetta sulla **DESTRA** (2), ritagliatela e ponetela sul raccoglitore relativo alla **PRECEDENTE** edizione del catalogo.
4. Distruggete questo foglio.

ETIQUETA PARA LA CARPETA

Para evitar errores al pedir repuestos utilicen las etiquetas abajo descritas para identificar los catálogos en la parte trasera de la carpeta. En la etiqueta se ven los números de referencia de la serie para la cual es válido el catálogo. Instrucciones:

1. Quitar esta página de la carpeta.
2. Corta la etiqueta **IZQUIERDA** (1) y ponerla est **ESTA** carpeta en la parte trasera.
3. Si hay una etiqueta en la parte **DERECHA** (2) se puede utilizar en la carpeta para el catálogo que **PRECEDE** a esta.
4. Tirar esta hoja.

ETIQUETAGE DU CATALOGUE

Afin d'éviter des erreurs lors de commandes de pièces de rechange, nous vous conseillons d'apposer les marquages ci-dessous à l'arrière du classeur, pour identifier les catalogues. Ce marquage indique les numéros de série pour lesquels le catalogue est adapté. Il convient de procéder de la façon suivante:

1. Retirez cette page du classeur.
2. Découpez l'étiquette de **GAUCHE** (1), et apposez-la à l'arrière de **CE** catalogue.
3. Si il y a une étiquette à **DROITE** (2), vous pourrez l'apposer sur le classeur de l'edition **PRECEDENTE** du catalogue.
4. Détruire cetta feuille.

1.



CC522C

Catalogue **SCC522C-2EN2**
Valid **from** serial number:
43020527 **-**

TABLE OF CONTENTS

Page

CC522C SN 43020527 - 2

Service kits 4

939563 Service kit 50 h 6
939564 Service kit 500 h 8
939565 Service kit 1000 h 10

Frames 12

Frames 14
Covers, ladders 16
Scrapers, standard, front drum 20
Scrapers, wheels 22
Articulated link 24
Structure 26
Noise suppression 30
Noise reduction hood 32
Sprinkler systems, tanks 34
Sprinkler system, front 38
Sprinkler system, rear 42

Drum 46

Drum, standard 48
Wheels, rear 52

Engine 54

Diesel engine Cummins 4B3.9 TAA 56
Cooling system 58
Intake system 60
Fuel system 62
Exhaust system 64
Pumpdrive and coupling 66
373354 Gear box 68

Hydraulic system 70

Propulsion system, pump 72
Propulsion system, motors 74
Vibration system, pump 76
Vibration system, motor 78
370260 Hydraulic motor, vibration 80
Steering system 82
359145 Steering valve 86
375031 Hydraulic cylinder 88
Hydraulic oil tank 90
Brake system 92

Electrical equipment 94

Electrical equipment 96
Electrical battery switch 100
Instrument box 102
Instrument panel, main 104
Speed and frequency, sensors 106
Instrument panel, upper left 108
Instrument panel, upper right 110
Instrument panel, lower left 112
Instrument panel, lower right 114

Instrument panel, relay, fuses 116
Emergency stop panel 118
Driving lights Direction & licenseplate light 120
Working lights with/without Rops 122
Working lights, cab 124
Protection cover, Head light Option 126
Rotating beacon 128
Tachograph 130

Drivers platform 132

Drivers platform 134
Drivers platform, for cab 136
Drivers seat, turn-over 138
Drivers seat Turn-over in cab 140
359918 Steering column 142
Cross sliding Controls 144
Cross sliding Carrier 146
Forward and reverse control 148
Speed limiter Option 150
Engine control 152
Rear mirror 154
Rops / fops 156
Cab, asymmetric 158
Cab, interior 160
Cab, screens 162
Cab, inside panels 164
Cab, wipers, right side 166
Cab, wipers, front and rear 168
Cab, door, left side 170
Cab, heater and, fan system 172
385770 Heater unit 174
Cab, roof mounted, electrical switches 176
Cab, symmetric 178
Cab Interior 180
Cab Screens 182
Cab Inside panels 184
Cab, wipers, front and rear 168
Cab, door, left side 170
Cab, heater and, fan system 172
385770 Heater unit 174
Cab, roof mounted, electrical switches 176
Cab, water tank wipers 196
Cab, sun curtain, first aid kit, int mirror 198
Exterior rear mirrors 200
Radio and cassette/cd player 202

Decals 204

Plates and decals 206

Standard equipment 210

Standard equipment 212

Optional equipment 214

Compaction meter 216
Edge cutter cpl 218
Edge cutter 220
Edge cutter Hydraulics without offset 222
Edge cutter Hydraulics with offset 224

Edge cutter Sprinkler system ---- 226
Eyelet ---- 228
SMV sign ---- 230
Tool equipment ---- 232
Air conditioner assembly ---- 234
Condensor assembly ---- 236
385587 Heater/AC unit ---- 238
Compressor assembly ---- 240
Roof hatch ---- 242
Asphalt temperature meter ---- 244

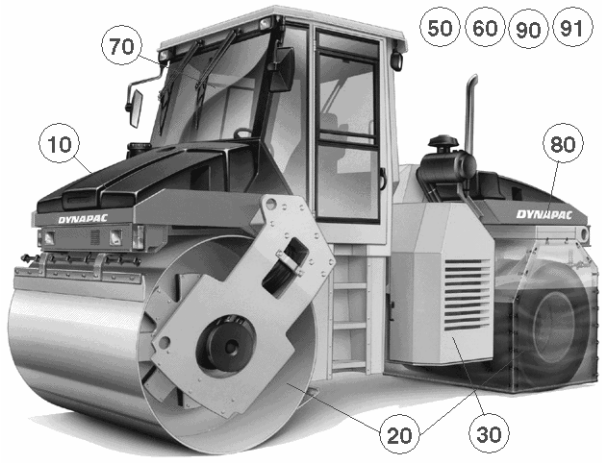
70
50
60
90
91
10
80
20
30

Ref. No.	Part No.	Rem.	Qty	Description	Code
				Service kits (Page 4)	
10				Frames (Page 12)	
20				Drum (Page 46)	
30				Engine (Page 54)	
50				Hydraulic system (Page 70)	
60				Electrical equipment (Page 94)	
70				Drivers platform (Page 132)	
80				Decals (Page 204)	
90				Standard equipment (Page 210)	
91				Optional equipment (Page 214)	

Service kits

Ref. No.	Part No.	Rem.	Qty	Description	Code
1	939563			Service kit 50 h (Page 6)	
3	939564			Service kit 500 h (Page 8)	
4	939565			Service kit 1000 h (Page 10)	

939563 Service kit 50 h

17827

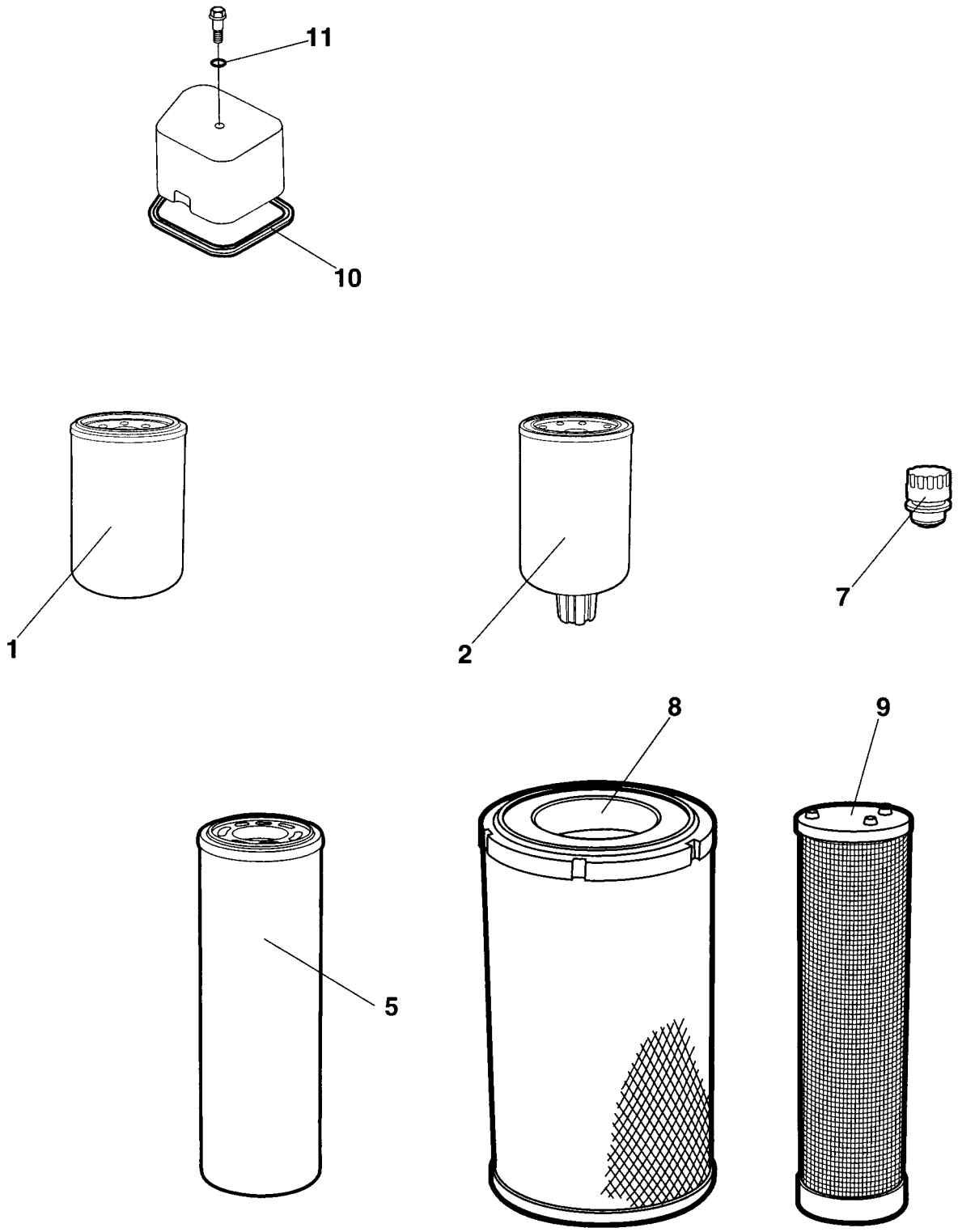

939563 Service kit 50 h

Ref. No.	Part No.	Rem.	Qty	Description	Code
1	939480		1	Oil filter element	A
2	939372		1	Fuel filter element	A
5	372229		1	Filter element Hydraulic	A

939564 Service kit 500 h

17827

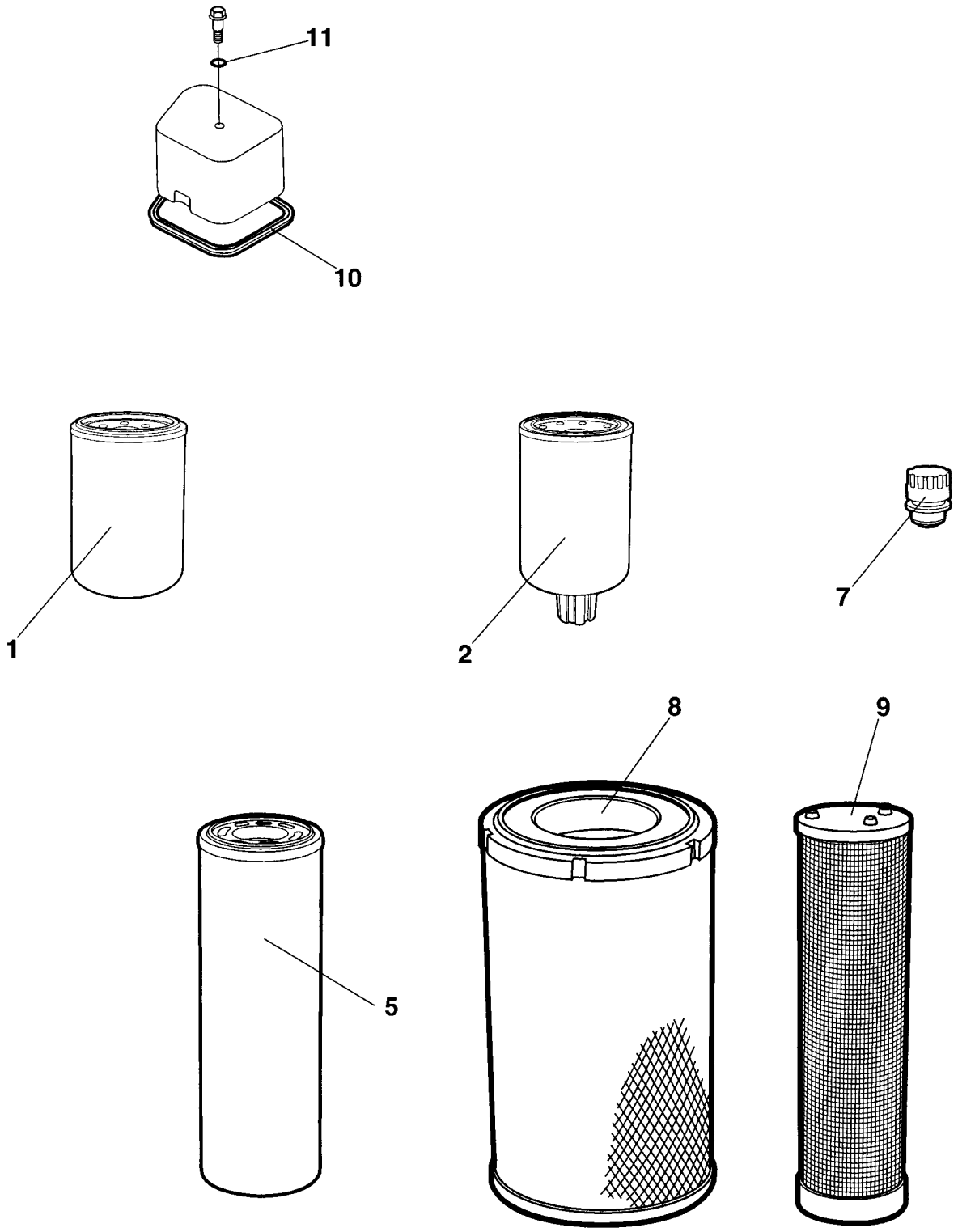

939564 Service kit 500 h

Ref. No.	Part No.	Rem.	Qty	Description	Code
1	939480		1	Oil filter element	A
2	939372		1	Fuel filter element	A

939565 Service kit 1000 h

17827

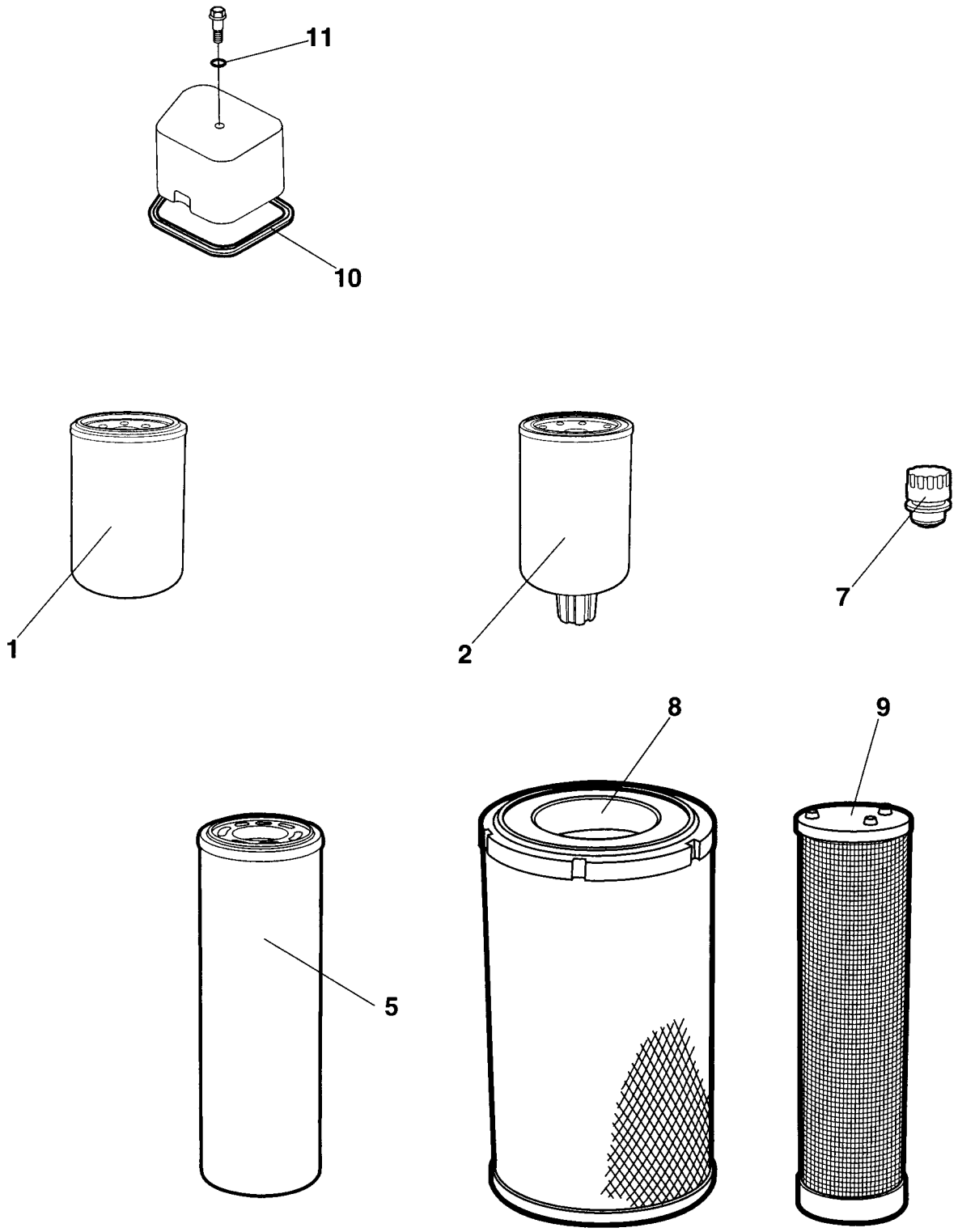

939565 Service kit 1000 h

Ref. No.	Part No.	Rem.	Qty	Description	Code
1	939480		1	Oil filter element	A
2	939372		1	Fuel filter element	A
5	372229		1	Filter element Hydraulic	A
7	357138		1	Ventilating filter	B
8	908450	1	1	Air filter	A
9	908451	2	1	Air filter	A
10	938514		4	Valve cover gasket	
11	938516		4	Gasket	

1) Main
2) Safety

Ref. No.	Part No.	Rem.	Qty	Description	Code
100				Frames (Page 14)	
150				Covers, ladders (Page 16)	
200				Scrapers, standard, front drum (Page 20)	
250				Scrapers, wheels (Page 22)	
300				Articulated link (Page 24)	
500				Structure (Page 26)	
550				Noise suppression (Page 30)	
551				Noise reduction hood (Page 32)	
600				Sprinkler systems, tanks (Page 34)	
620				Sprinkler system, front (Page 38)	
625				Sprinkler system, rear (Page 42)	

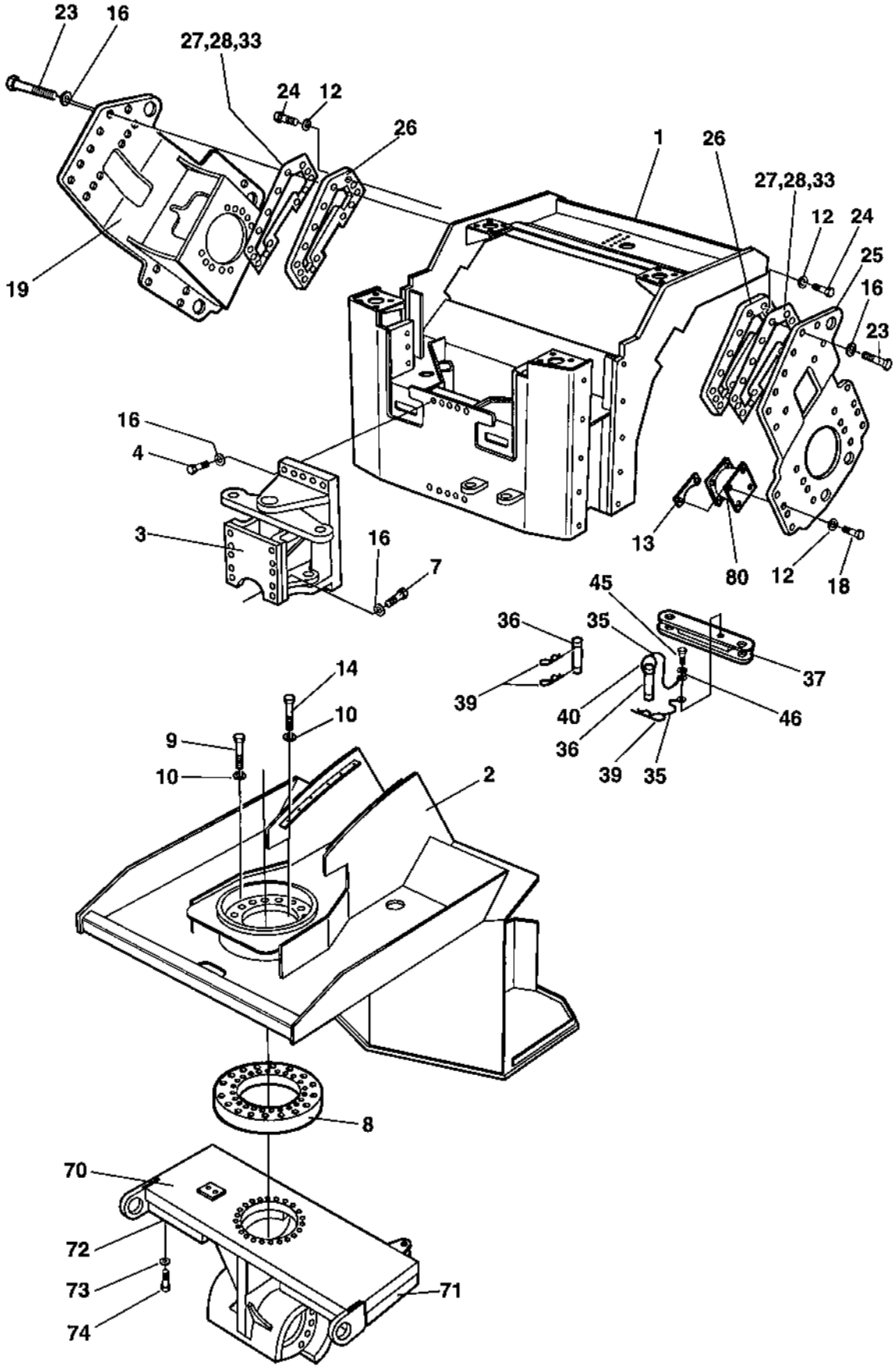
23
16
27,28,33
24
12
26
19
1
26
27,28,33
12
24
25
16
23
16
4
3
16
7
13
80
12
18
45
36
35
37
39
40
46
36
39
35
14
10
9
10
2
8
70
72
73
74
71

Ref. No.	Part No.	Rem.	Qty	Description	Code
1	370601		1	Front frame	
2	387035		1	Rear frame	
3			1	Articulated link (Page 24)	
4	925208		10	Screw	
7	928850		10	Screw M20-2,5x120 10,9	
8	359314		1	Spacer ring	
9	500269		24	Screw M12-1,75x50 10,9	
10	904231		52	Washer 13x24x2	
12	904231		20	Washer 13x24x2	
13	383436		8	Holder	
14	903735		28	Screw M12x70 10,9	
16	904233		44	Washer 21x36x3	
18	500049		16	Screw M12-1,75x60 8.8	
19	370874		1	Fork Front LH	
23	929217		24	Screw	
24	925227		4	Screw	
25	370872		1	Fork Front RH	
26	380030		2	Spacer block	
27	359965		N	Shim T=5 mm	
28	359966		N	Shim T=3 mm	
33	359967		N	Shim T=1 mm	
35	343775		2	Wire	
36	370771		2	Shaft	
37	387965		1	Safety rod	
39	635057		3	Hair pin	
40	357488		1	Spring	
45	500043		2	Screw M10x16H 8,8	
46	904230		2	Washer 10,5x22x2	
70	374319		1	Yoke	
71	374324		1	Ballast Right	
72	374325		1	Ballast Left	
73	904231		8	Washer 13x24x2	
74	500122		8	Screw	
80			12	Shock absorber	

Covers, ladders

17708

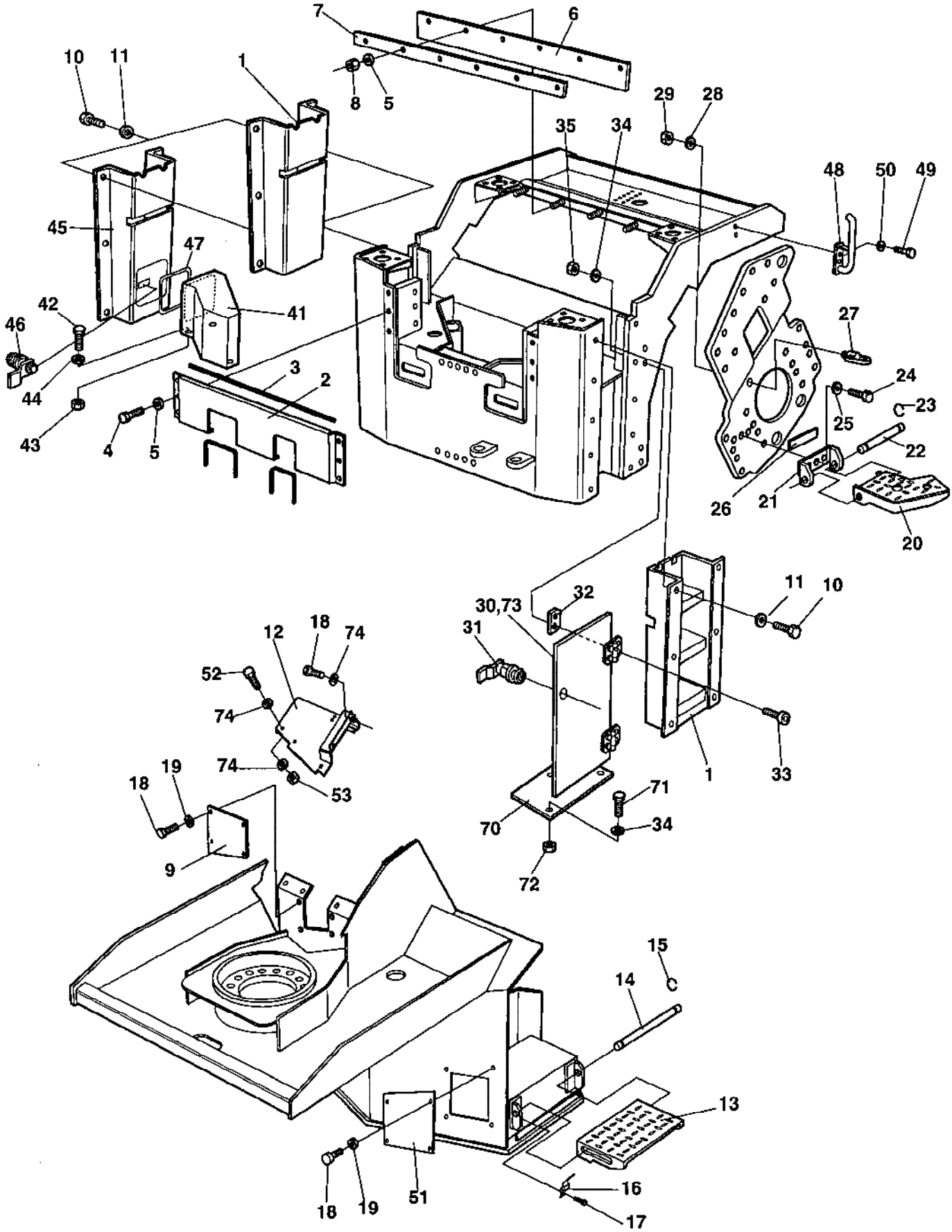

Covers, ladders

Ref. No.	Part No.	Rem.	Qty	Description	Code
1	359583		2	Ladder	
2	384906		1	Cover	
3	902166	G	1XL	Edge trim	
4	500075		6	Screw M6-1x25 8,8	
5	904735		6	Washer	
6	373036		1	Rubber protection	
7	373035		1	Holder plate	
8	586002		6	Lock nut M6	
9	388011		1	Cover	
10	500053		12	Screw M8-1,25x20 8,8	
11	904640		12	Washer 8,4x22x3	
12	386692		1	Cover	
13	371093		1	Step	
14	371098		1	Shaft	
15	150003		2	Retaining ring	
16	371130		2	Spring	
17	533006		4	Screw	
18	500053		9	Screw M8-1,25x20 8,8	
19	904556		8	Washer 8,4x16x3,0	
20	380313	A	1	Step	
21	380314		1	Bracket	
22	370685		1	Shaft	
23	150003		2	Retaining ring	
24	513025		3	Screw	
25	603023		3	Washer M10	
26	370820		1	Rubber cloth	
27	475064		1	Lock	
28	600009		1	Washer	
29	927233		1	Nut	
30	372700		1	Door	
	386036		1	Door with storage	
31	383626		1	Lock	
	902866		1	.Key Marked "455"	D
32	372699		2	Spacer	
33	513028		4	Screw	
34	600004		4	Washer	
35	586002		4	Lock nut M6	
41	370688	C	1	Tool box	
42	500015		3	Screw M6-1x30 8,8	
43	586002		3	Lock nut M6	
44	615076		3	Washer 7,0x25x1,5	
45	373152		1	Ladder	
46	372658		1	Lock	
	902866		1	.Key Marked "455"	D
47	202028	D	1XL	Edge trim	
48	370806	A	1	Grab handle	
49	500021		2	Screw M8-1,25x25 8,8	
50	603019		2	Washer	
51	388011		1	Cover	
52	500047		3	Screw M8-1,25x35 8,8	
53	586003		3	Lock nut M8	
70	372832		1	Cover	
71	500040		3	Screw M6-1x20 8,8	
72	570004		3	Nut M6	
73	202028	F	1XL	Edge trim	
74	904640		8	Washer 8,4x22x3	

A) Only with cab
C) Option
D) L=1,0 m
F) L=1,8 m
G) Length as required

Covers, ladders

17708

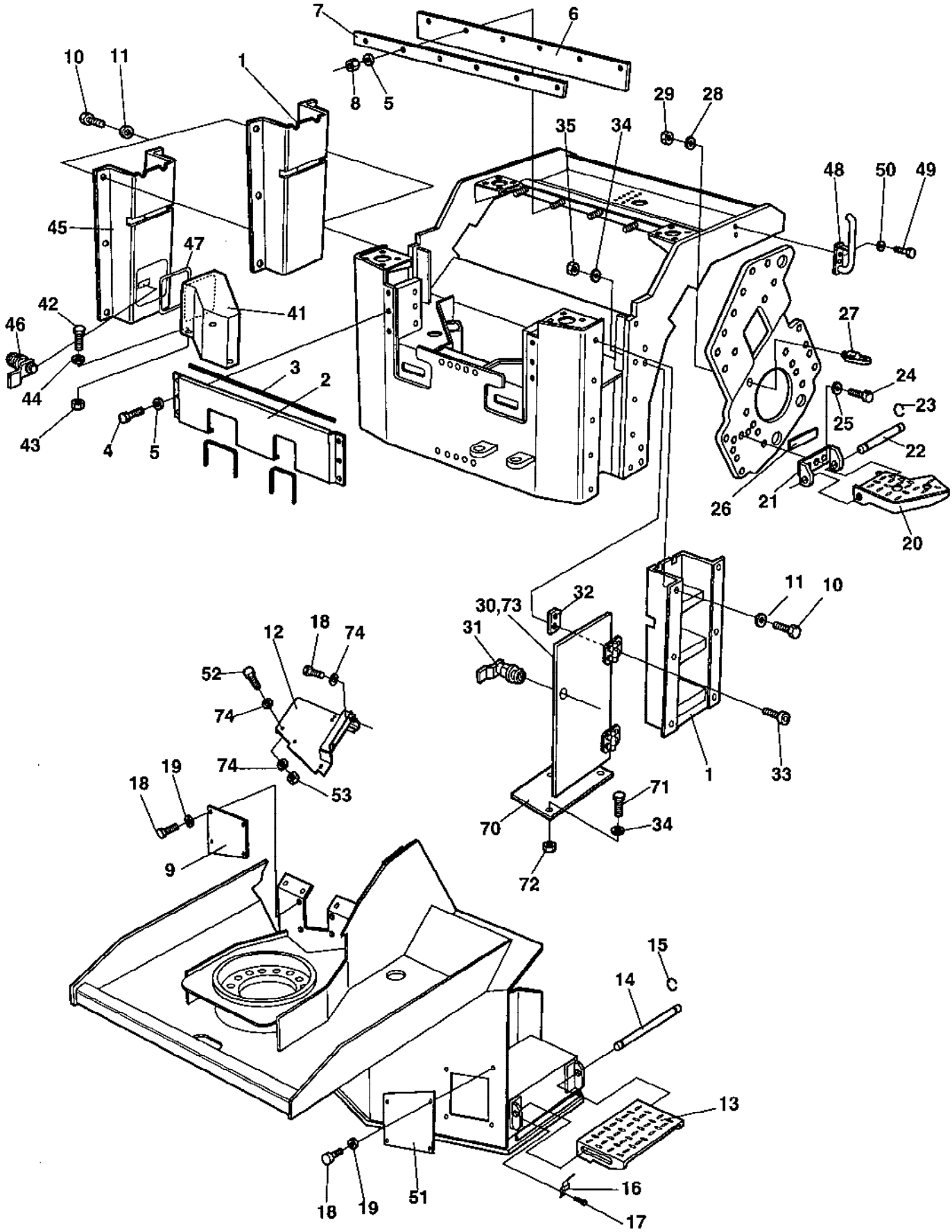

Ref. No.	Part No.	Rem.	Qty	Description	Code
75	904228		6	Washer 6,4x12x1,5	

FRONT DRUM

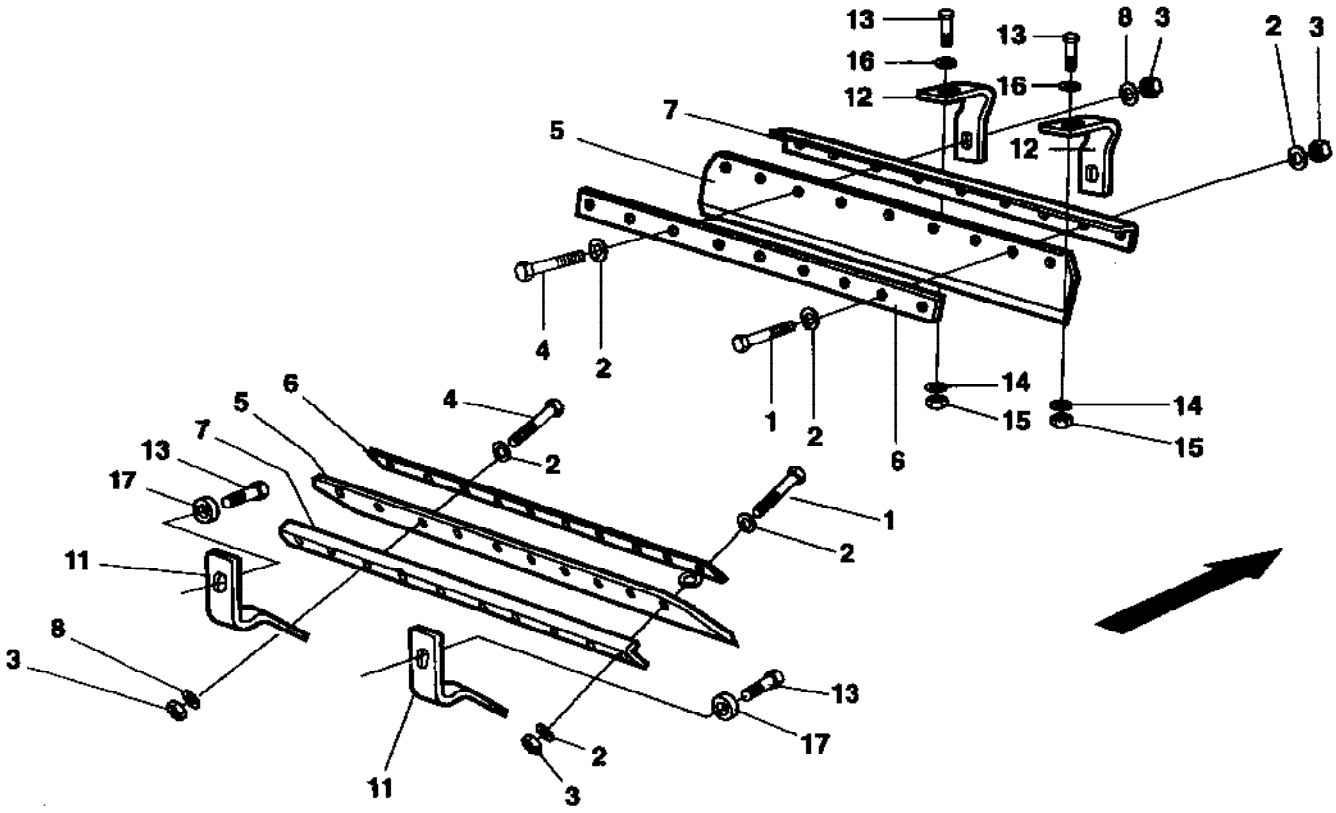
13
16
12
13
16
12
8
3
2
3
7
5
4
2
1
2
6
14
15
14
15
6
5
4
2
7
13
17
1
2
11
8
3
13
17
2
3
11

Ref. No.	Part No.	Rem.	Qty	Description	Code
1	500056		14	Screw M12x45 8,8	
2	904231		32	Washer 13x24x2	
3	586019		18	Lock nut M12	
4	500049		4	Screw M12-1,75x60 8.8	
5	372589		2	Scraper	B
6	370409		2	Scraper bracket	
7	370408		2	Scraper bracket	
8	904703		4	Washer 13x24x4	
11	370406		2	Scraper bracket	
12	370405		2	Scraper bracket	
13	500031		8	Screw M10-1,5x40 8,8	
14	904557		4	Washer 10,5x22x4	
15	570006		4	Nut M10	
16	904230		4	Washer 10,5x22x2	
17	359434		4	Spacer sleeve	

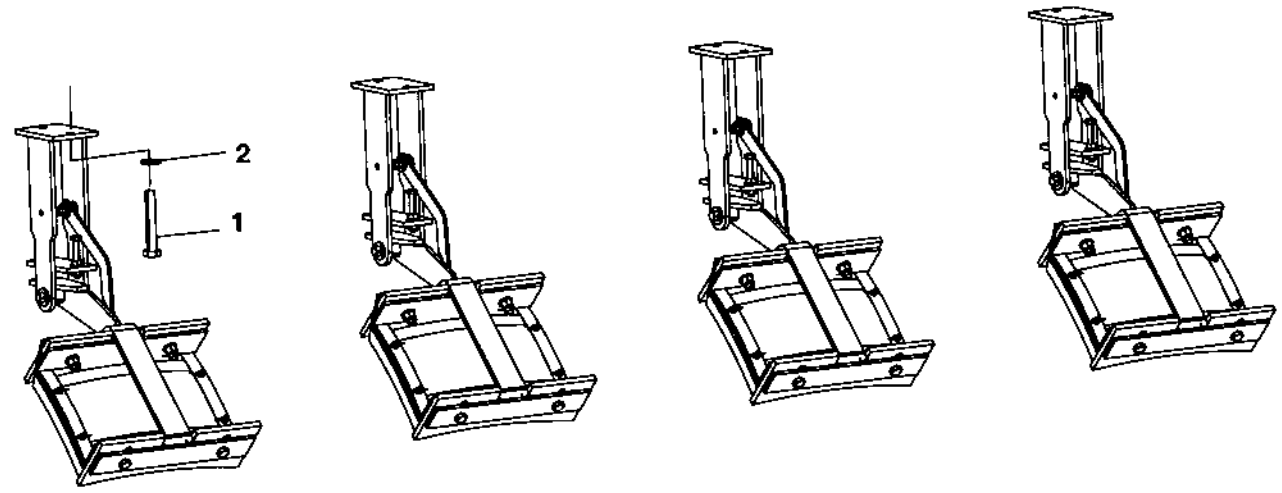
2
1

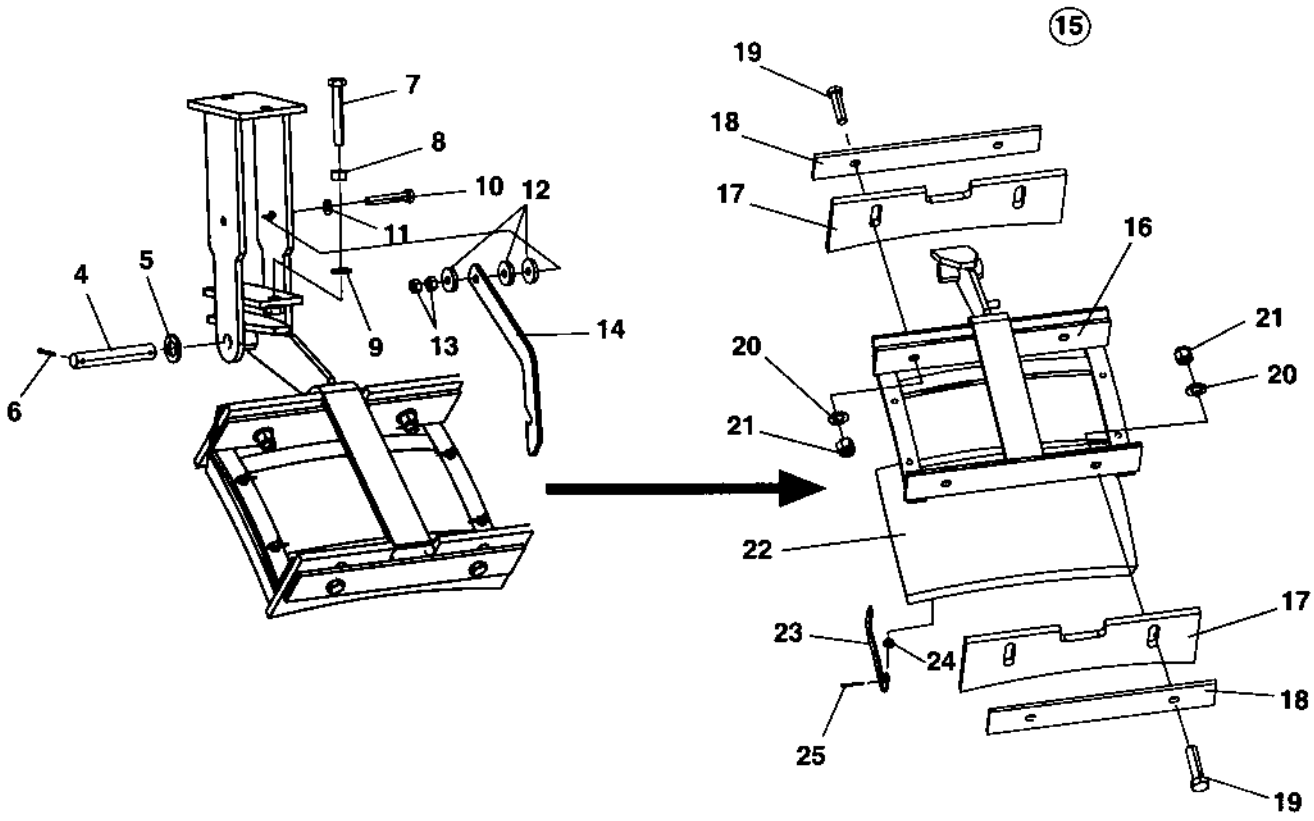
15
19
18
17
16
21
20
20
21
22
17
23
24
18
25
19
7
8
10
12
11
4
5
9
13
14
6

Ref. No.	Part No.	Rem.	Qty	Description	Code
1	500046		8	Screw M12x30H 8,8 FZB	
2	904231		8	Washer 13x24x2	
3	383866		4	Holder	
4	251729		4	Shaft	
5	904232		8	Washer 17x30x3	
6	630008		8	Pin	D
7	500296		4	Screw	
8	570006		4	Nut M10	
9	904230		4	Washer 10,5x22x2	
10	500025		4	Screw M8-1,25x50 8,8	
11	904229		4	Washer 8,4x16x1,5	
12	603009		12	Washer	
13	570005		8	Nut M8	
14	383852		4	Stop	
15			4	Scraper, cpl	
16	383389		1	.Scraper holder	
17	383390		1	.Scraper	
18	383391		1	.Bracket	
19	500056		4	.Screw M12x45 8,8	
20	904231		4	.Washer 13x24x2	
21	586019		4	.Lock nut M12	
22	263772		1	.Mat	B
23	267791		2	.Mat holder	D
24	904228		4	.Washer 6,4x12x1,5	
25	630035		4	.Split pin	D

Articulated link

15868

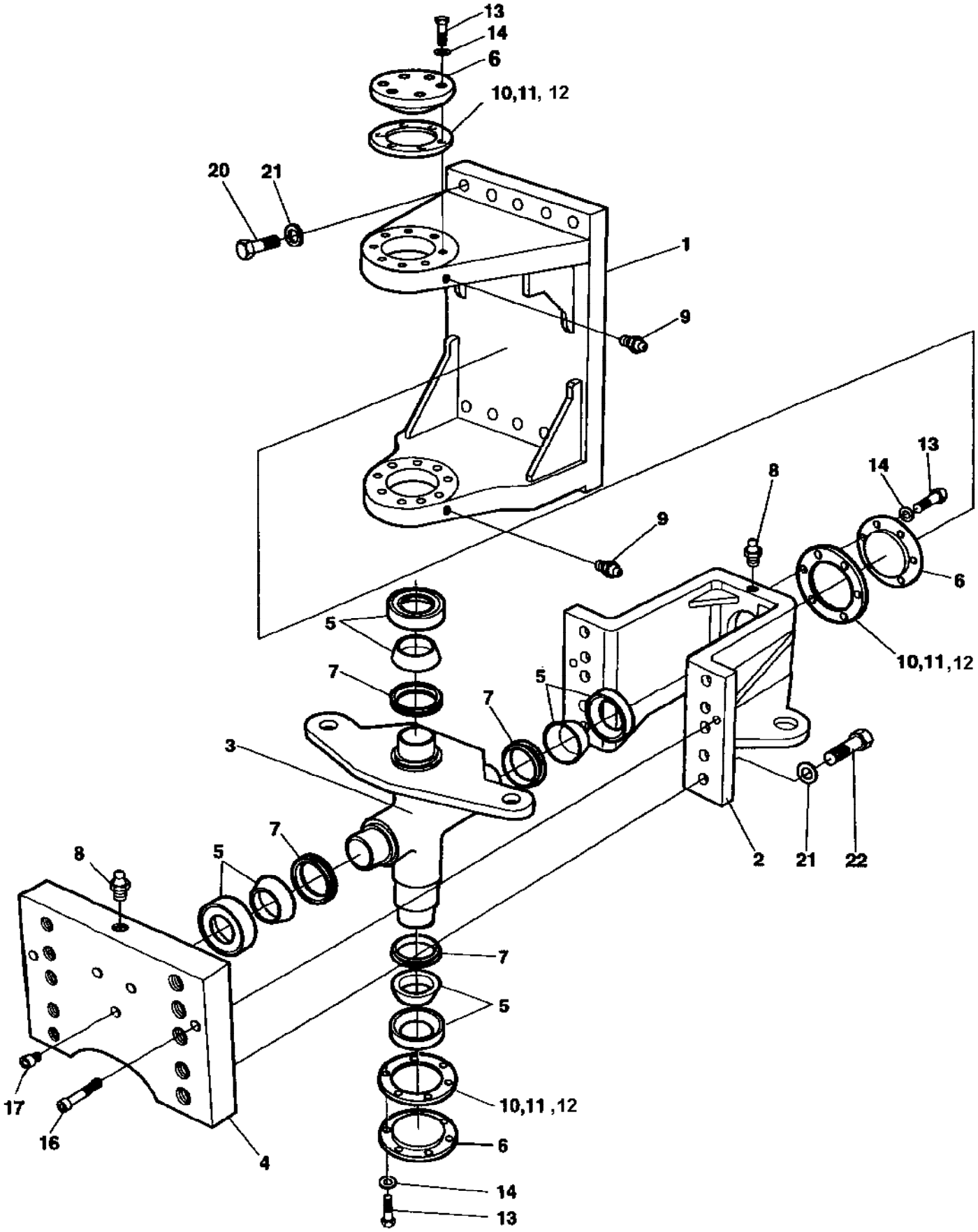

Articulated link

Ref. No.	Part No.	Rem.	Qty	Description	Code
1	375663		1	Hitch link	
2	359148		1	Hitch link	
3	370398		1	Hitch	
4	375665		1	Bracket	
5	100040		4	Axial ball bearing	D
6	337042		3	Bearing cover	
7	167032		4	Lip-type oil seal	D
8	929863		2	Grease nipple	D
9	926214		2	Grease fitting	D
10	337045		N	Shim T=1,0 mm	D
11	345874		N	Shim T=0,35 mm	D
12	345875		N	Shim T=0,10 mm	D
13	500037		18	Screw M12-1,75x35 8,8	
14	904231		18	Washer 13x24x2	
16	508042		2	Screw	
17	910995		3	Stop screw	
20		1	10	Screw	
21		1	20	Washer	
22		1	10	Screw	

1) See section " Frames ".

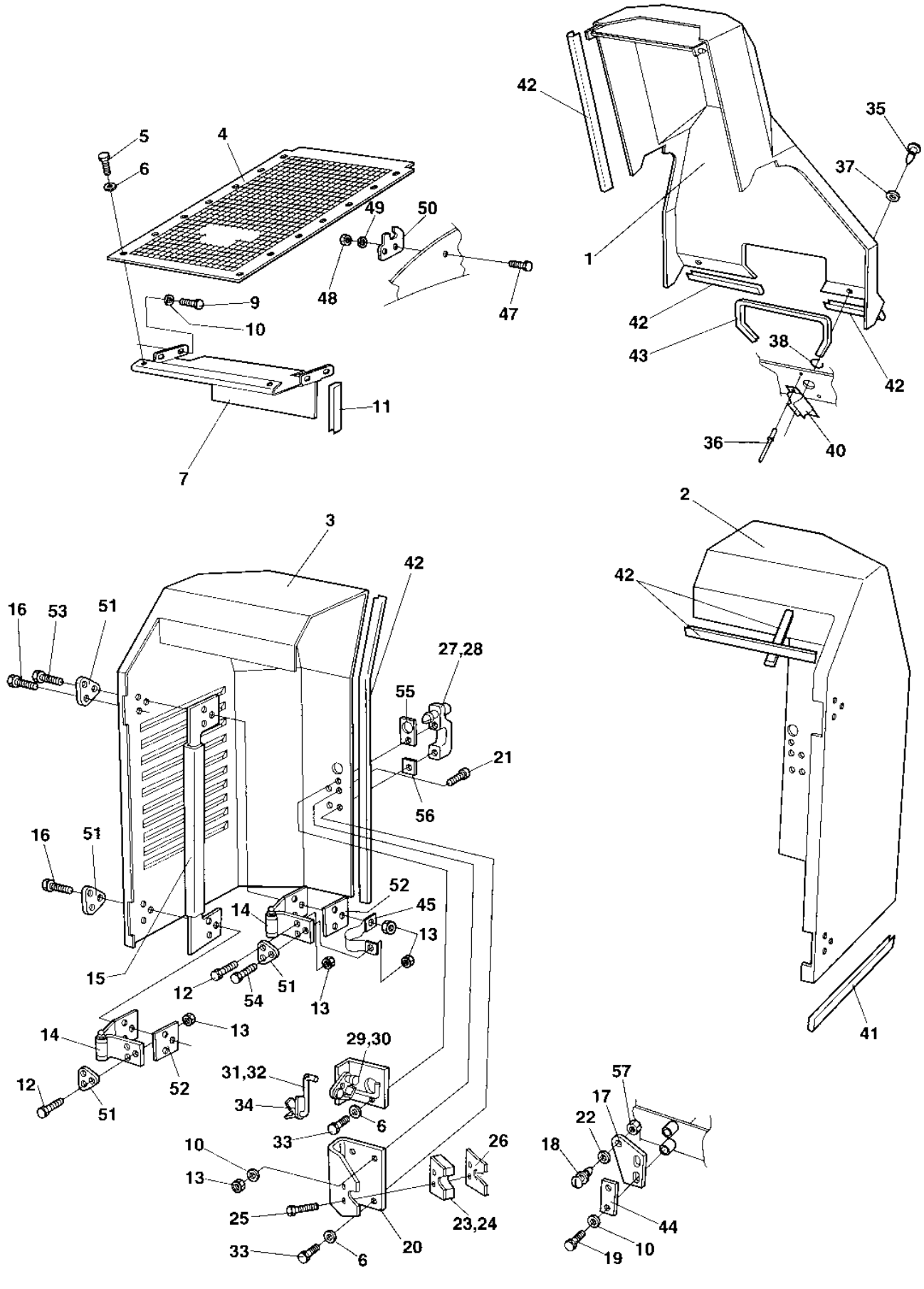
42
35
37
1
42
43
38
42
36
40
5
6
4
49
50
48
47
9
10
11
7
2
42
41
3
42
16
53
51
27,28
55
21
56
16
51
52
45
14
13
15
12
54
51
13
14
13
52
12
51
29,30
31,32
34
33
6
10
13
25
33
6
20
26
23,24
57
17
22
18
44
10
19

Ref. No.	Part No.	Rem.	Qty	Description	Code
1	377089		1	Cover	
2	939767		1	Engine hood, cpl	
3	939766		1	Engine hood, cpl	
4	375604		1	Grid	
5	500013		14	Screw M6-1x16 8,8	
6	904228		16	Washer 6,4x12x1,5	
7	375253		1	Cover plate	
9	500018		4	Screw M8-1,25x12 8,8	
10	904556		26	Washer 8,4x16x3,0	
11	902166	A	1XL	Edge trim	
12	500022		8	Screw M8-1,25x30 8,8	
13	586003		26	Lock nut M8	
14	381675		4	Hinge	
15	372958		1	Reinforcement	
16	500047		8	Screw M8-1,25x35 8,8	
17	371323		2	Bracket	
18	387487		2	Locking pin	
19	500053		4	Screw M8-1,25x20 8,8	
20	371321		2	Bracket	
21	902520		6	Screw	
22	904231		2	Washer 13x24x2	
23	371380	G	1	Lock	
24	371381	H	1	Lock	D
25	535053		4	Screw	
26	388026		2	Guide	
27	371389	G	1	Grab handle	
	902866		1	Key Marked "455"	D
28	371390	H	1	Grab handle	
	902866		1	Key Marked "455"	D
29	371449	H	1	Lock device	
30	371450	G	1	Lock device	
31	371451	G	1	Coupling link	
32	371452	H	1	Coupling link	
33	500075		4	Screw M6-1x25 8,8	
34	371569		2	Lock device	
35	903340		2	Trunnion	
36	923253		4	Rivet	
37	903341		2	Washer	
38	903857		2	Washer	
40	903344		2	Lock	
41	902166	B	1XL	Edge trim	
42	202057	C	1XL	Edge trim	D
43	902166	D	1XL	Edge trim	
44	371523		2	Bracket	
45	373422		4	Metal strapping	
47	903856		4	Bolt M06x30	
48	586002		4	Lock nut M6	
49	603020		4	Washer	
50	372126		2	Cover holder	
51	372675		8	Washer	
52	372566		4	Bracket	
53	500024		4	Screw M8x45	
54	500024		4	Screw M8x45	
55	903937		2	Rubber gasket	
56	903936		2	Rubber gasket	

A) L=0,7 m
B) L=4,0 m
C) L=5,0 m
D) L=0,75 m
G) Right hood
H) Left hood

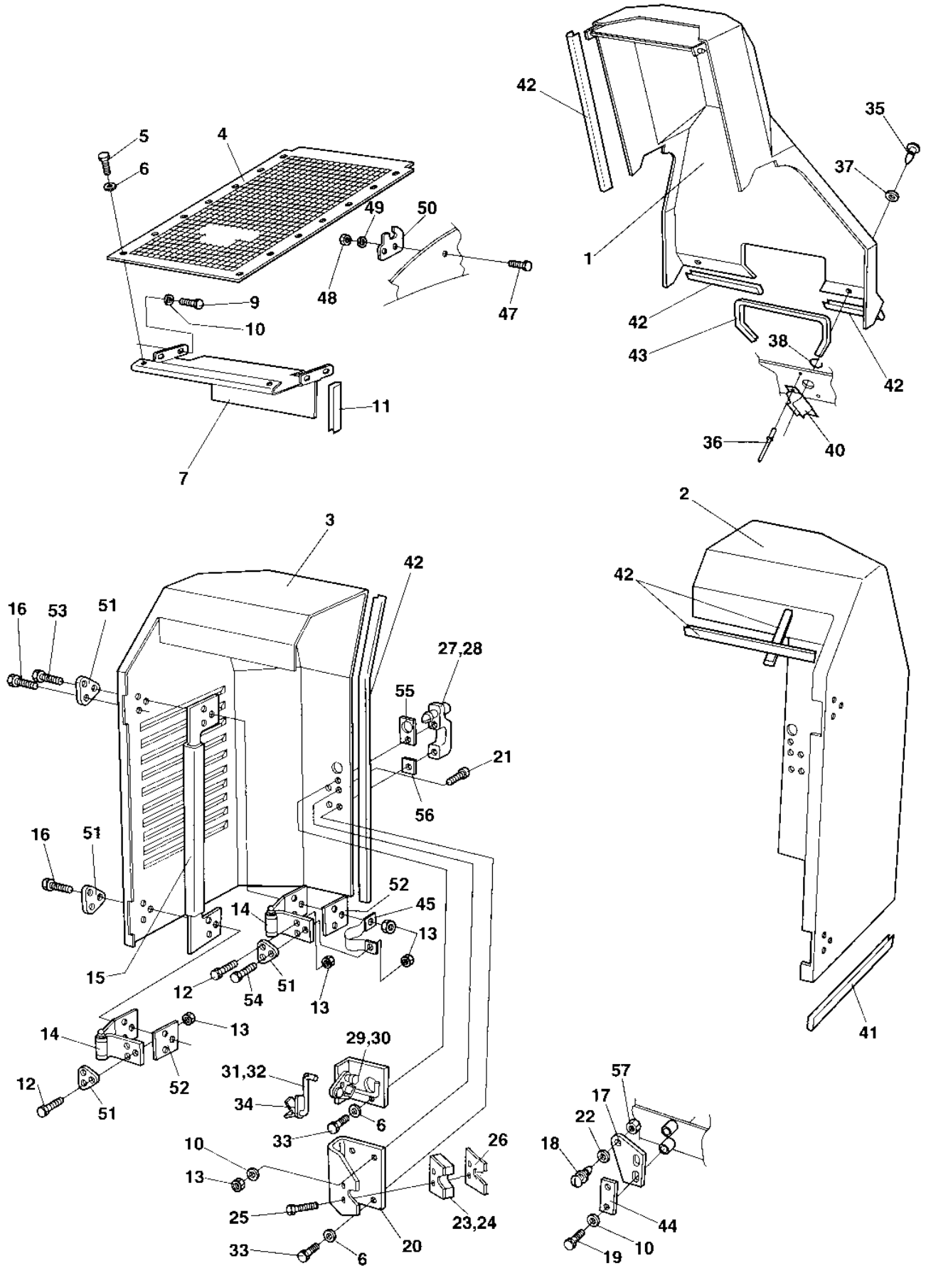
42
35
37
1
42
43
38
42
36
40
5
6
4
49
50
48
47
9
10
11
7
2
42
41
3
42
16
53
51
27,28
55
21
56
16
51
52
45
14
13
15
12
54
51
13
14
13
52
12
51
29,30
31,32
34
33
6
10
13
25
33
6
20
26
23,24
57
17
22
18
44
10
19

Ref. No.	Part No.	Rem.	Qty	Description	Code
57	904639		2	Washer 6,7x14x1,5	

Noise suppression

17922

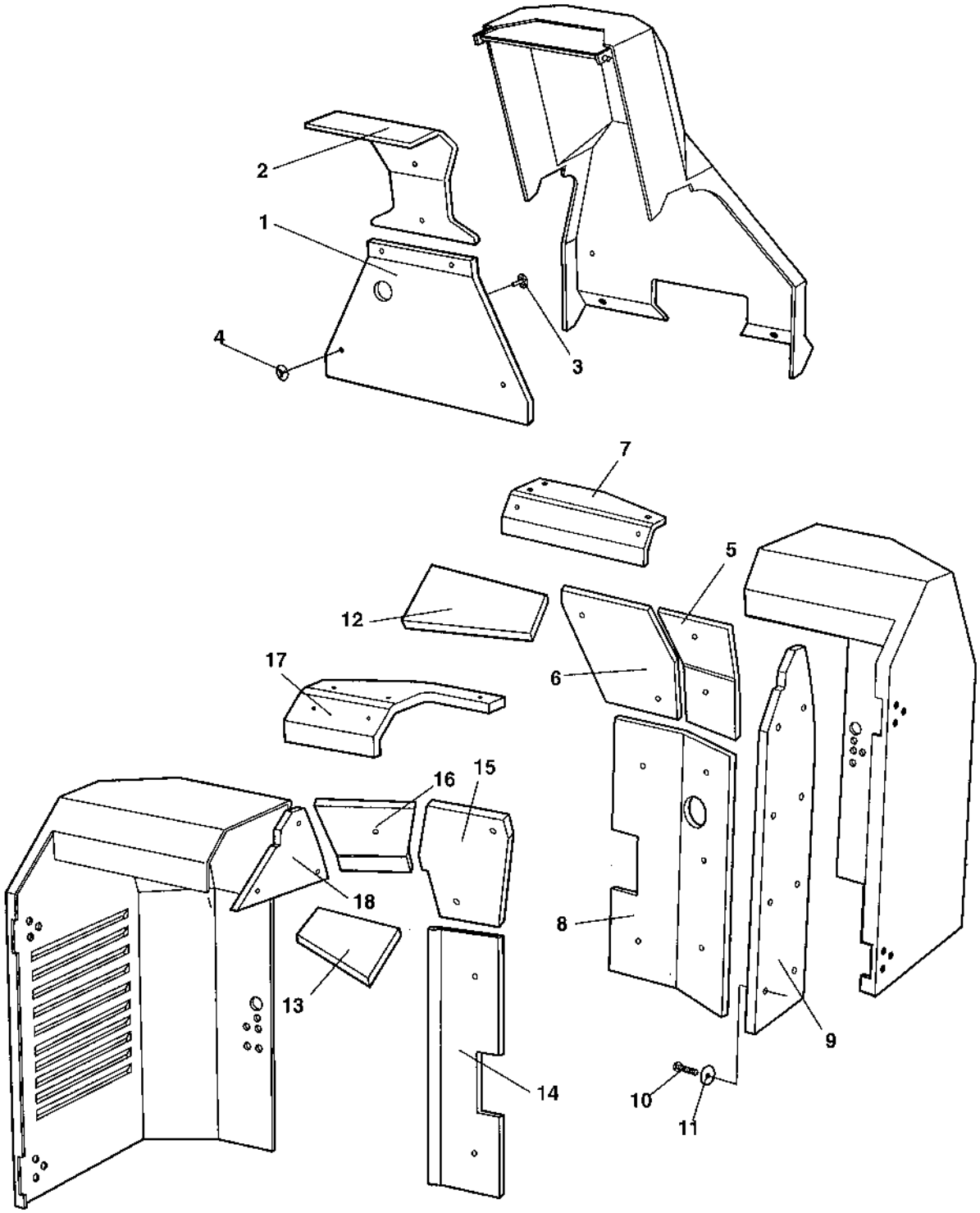

Ref. No.	Part No.	Rem.	Qty	Description	Code
1	387816		1	c90	
2	387815		1	c90	
3	791233		17	Holder	
4	791234		17	Insulating washer	
5	387818		1	Absorbent, right hood	
6	387819		1	Absorbent, right hood	
7	387821		1	Absorbent, right hood	
8	387817		1	Absorbent, right hood	
9	387820		1	Absorbent, right hood	
10	904356		25	Screw 5 x 38	
11	904355		25	Washer 0,7 x 80	
12	373585		1	c90	
13	373586		1	c90	
14	387876		1	Absorbent, left hood	
15	387877		1	Absorbent, left hood	
16	387878		1	Absorbent, left hood	
17	387879		1	Absorbent, left hood	
18	387880		1	Absorbent, left hood	

Noise reduction hood

17870

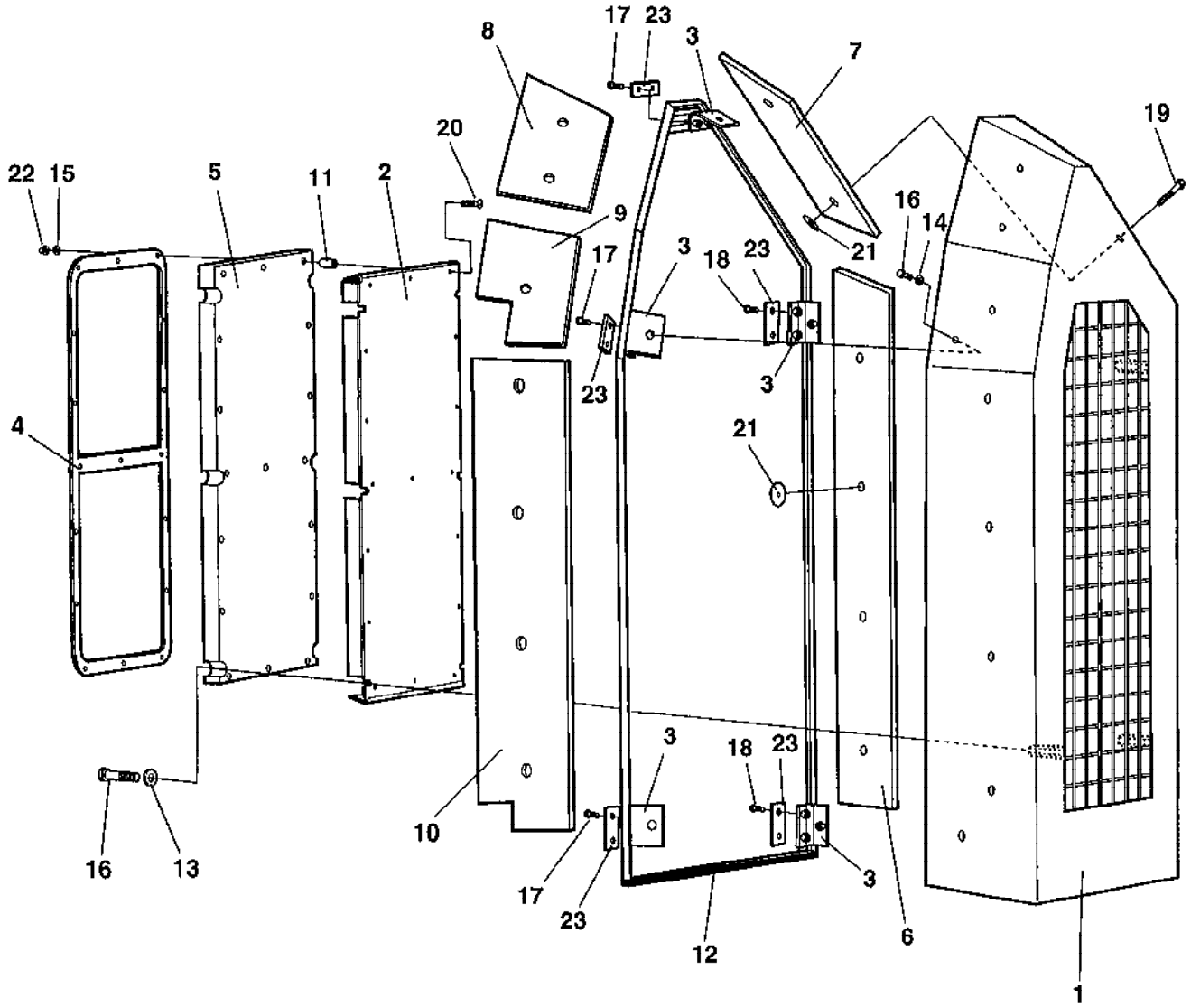

Noise reduction hood

Ref. No.	Part No.	Rem.	Qty	Description	Code
1	388639		1	Noise reducing hood	
2	388672		1	Noise reducing plate	
3	388673		5	Fastener	
4	388842		1	Frame	
5	388729		1	Noise suppression	
6	388757		1	Noise suppression	
7	388758		1	Noise suppression	
8	388759		1	Noise suppression	
9	388760		1	Noise suppression	
10	388761		1	Noise suppression	
11	791667		17	Spacer sleeve, plastic	
12	202028	A	1XL	Edge trim	
13	904556		6	Washer 8,4x16x3,0	
14	904229		5	Washer 8,4x16x1,5	
15	904228		17	Washer 6,4x12x1,5	
16	500053		11	Screw M8-1,25x20 8,8	
17	500025		6	Screw M8-1,25x50 8,8	
18	500047		4	Screw M8-1,25x35 8,8	
19	904206		13	Screw	
20	904209		17	Screw	
21	373476		13	Washer	
22	586002		17	Lock nut M6	
23	371523		5	Bracket	

A) L= 3,7 m

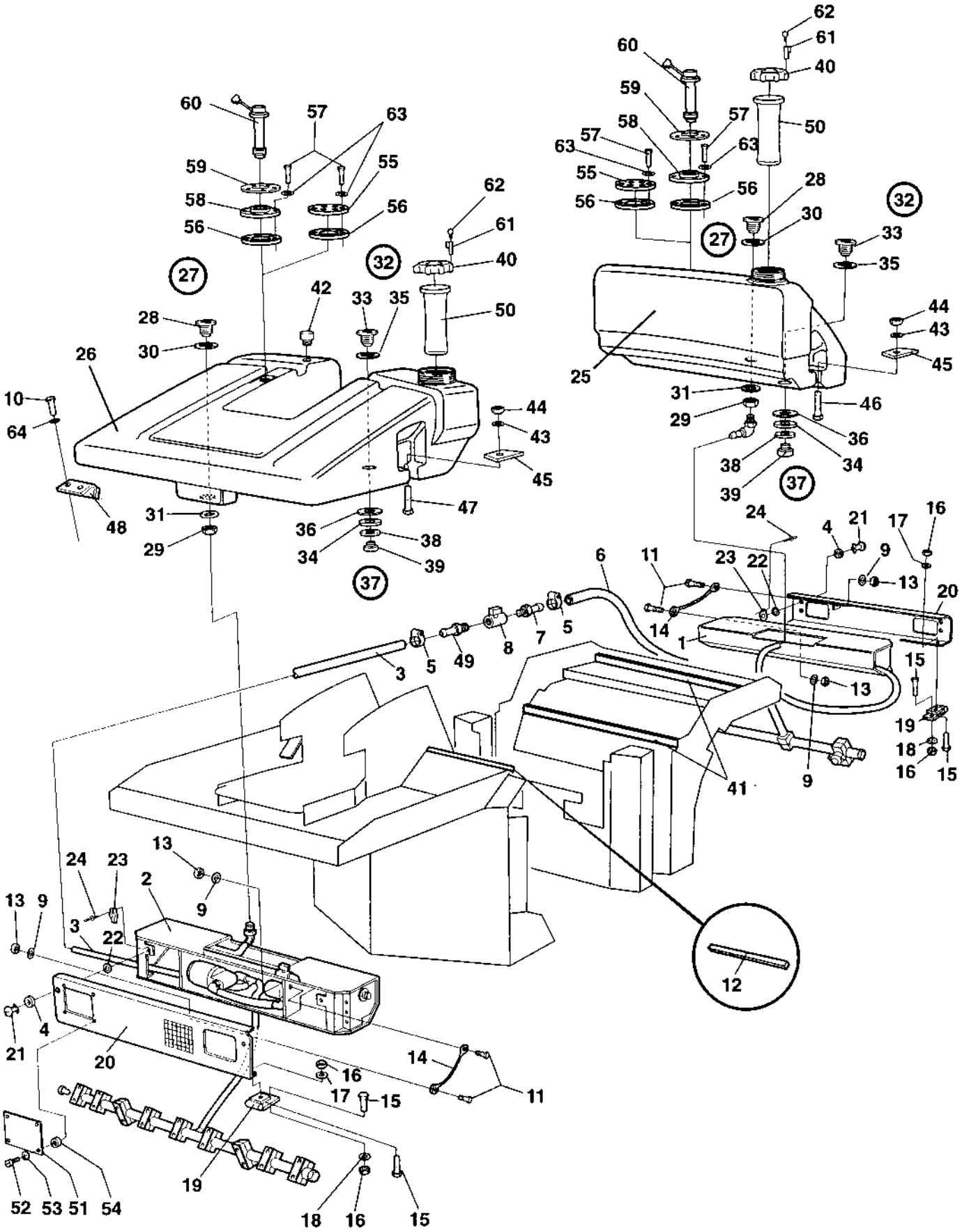
62
61
60
40
59
57
58
50
57
63
63
55
28
56
56
32
30
27
33
35
44
43
45
25
31
46
29
36
38
34
39
37
24
4
21
17
16
6
11
23
22
9
13
20
14
1
15
13
19
18
16
15
41
9
60
57
63
59
55
62
58
56
61
56
40
27
32
42
33
35
50
28
30
26
10
64
44
43
45
48
31
47
29
36
38
34
39
37
3
5
49
8
7
5
13
9
24
23
2
13
9
3
22
4
21
20
14
16
17
15
11
19
52
53
51
54
18
16
15
12

Ref. No.	Part No.	Rem.	Qty	Description	Code
1			1	Sprinkler system, front (Page 38)	
2			1	Sprinkler system, rear (Page 42)	
3	904878	C	1XL	Hose reinforced	
4	904913		4	Washer Neopren	
5	313002		2	Hose clamp	
6	904878	A	1XL	Hose reinforced	
7	924544		1	Hose connection	
8	925599		1	Valve	
9	904229		8	Washer 8,4x16x1,5	
10	500022		4	Screw M8-1,25x30 8,8	
11	500053		4	Screw M8-1,25x20 8,8	
12	202041	D	2XL	Rubber strip	
13	586003		4	Lock nut M8	
14	381619		2	Wire	
15	513012		20	Screw	
16	586002		20	Lock nut M6	
17	928467		8	Washer	
18	904228		12	Washer 6,4x12x1,5	
19	928041		4	Hinge	D
20	385341		2	Cover	
21	904914		4	Tap	
22	903342		4	Retaining ring	
23	903344		4	Lock	
24	923253		8	Rivet	
25	359047		1	Sprinkling tank, front	
26	359048		1	Sprinkling tank, rear	
27	902916	1		.Adapter kit	
28				..Connector	
29				..Nut	
30				..Sealing	
31				..Washer	
32	902917	1		.Adapter kit	
33				..Connector	
34				..Nut	
35				..Sealing	
36				..Washer	
37	902918	1		.Plug kit	
38				..Gasket	
39				..Plug	
40	359003	1		.Cap	D
41	202041	E	2XL	Rubber strip	
42	384959		1	Ventilating filter	B
43	904232		4	Washer 17x30x3	
44	570008		4	Nut	
45	359444		4	Holder, cpl	
46	904405		2	Screw	
47	903523		2	Screw	
48	359446		2	Holder	
49	924544		1	Hose connection	
50	358846		2	Strainer	D
51	374545		4	Cover	
52	902223		16	Screw	
53				Not used on this model	
54				Not used on this model	

1) Included in both sprinkling tanks
A) L=4,1 m
C) Length as required
D) L=570 mm
E) L=1,47 m

Sprinkler systems, tanks

17180-1

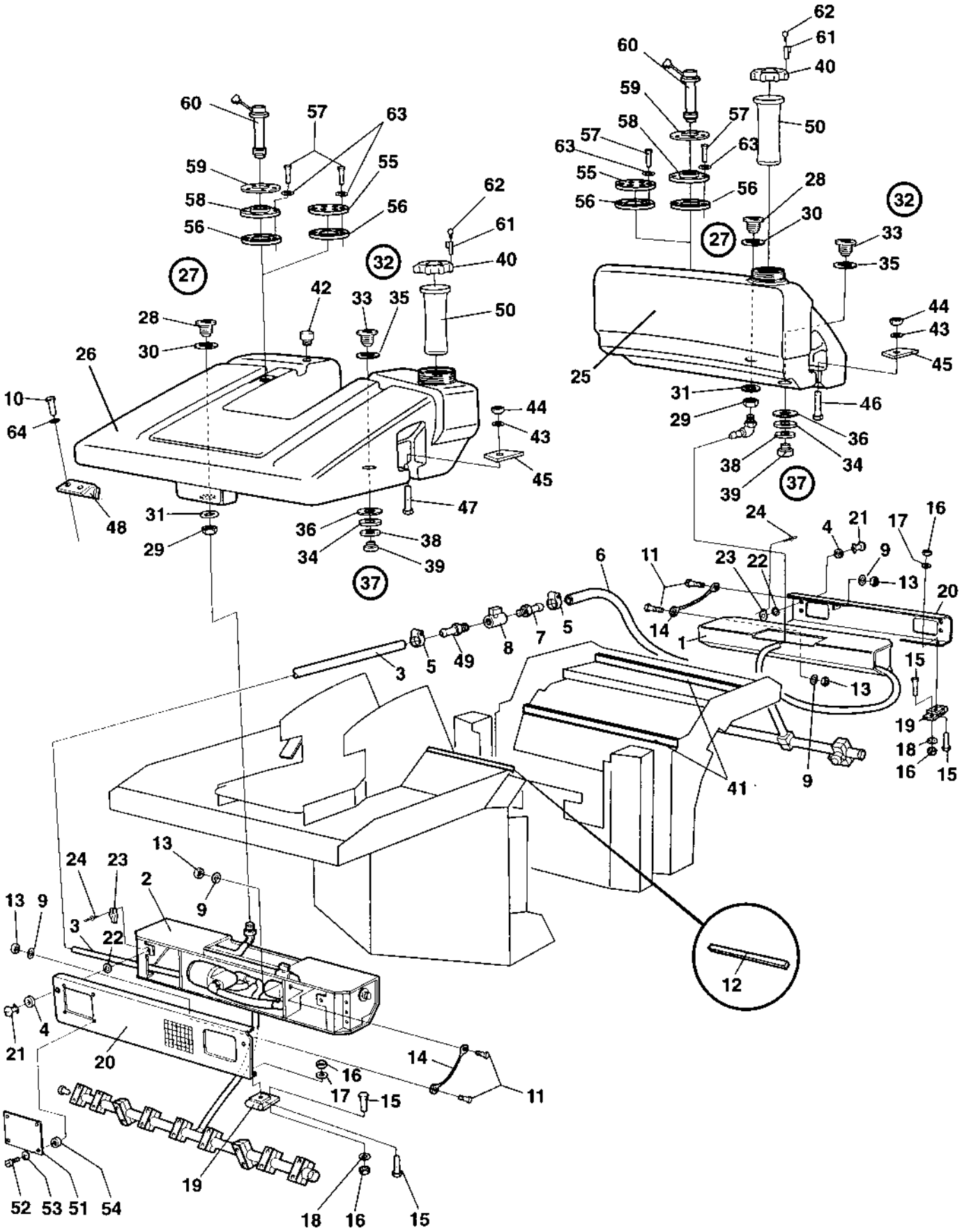

Ref. No.	Part No.	Rem.	Qty	Description	Code
55	370747		2	Cover	
56	370746		2	Gasket	
57	904206		10	Screw	
58	370745	B	2	Flange	
59	372718	B	2	Washer	
60	382157		2	Level sender	
61	370699	B	2	Lock	
62	370794	B	1	.Key	
63	904228		10	Washer 6,4x12x1,5	
64	904556		4	Washer 8,4x16x3,0	

B) Option

Sprinkler system, front

17529

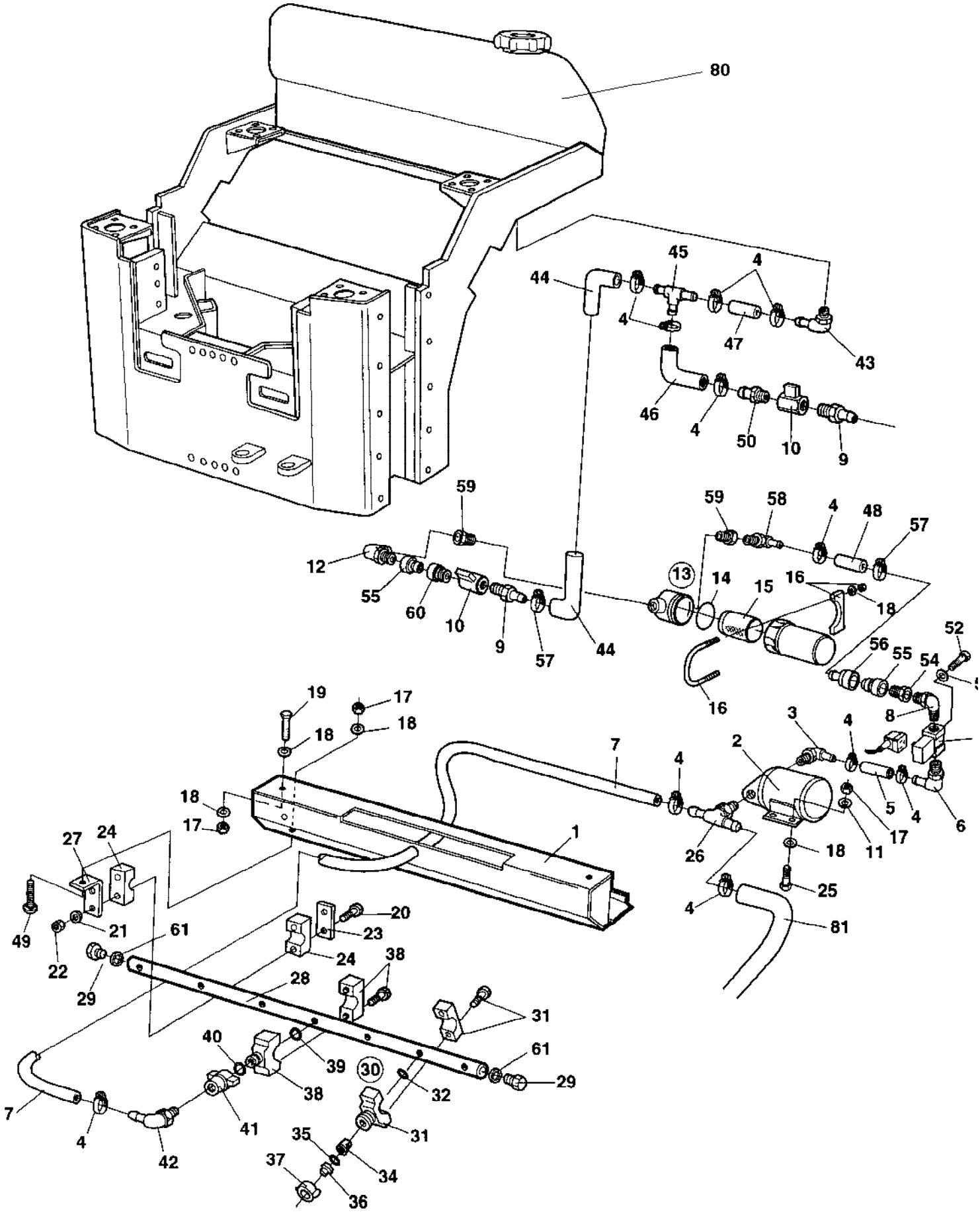

Sprinkler system, front

Ref. No.	Part No.	Rem.	Qty	Description	Code
1	382639		1	Sprinkler box	
2	383697	3	1	Water pump	
3	923734		1	Hose connection	
4	313002		11	Hose clamp	
5	904878	B	1XL	Hose reinforced	
6	901431		1	Hose connection	
7	904878	A	1XL	Hose reinforced	
8	791134		1	Elbow 90	
9	924544		2	Hose connection	
10	925599		2	Valve	
11	904556		4	Washer 8,4x16x3,0	
12	901298		1	Connector	
13	791130		1	Strainer cpl	
14	938307		1	.O-ring	
15	938306		1	.Strainer	
16	313036		1	Clamp	D
17	570005		12	Nut M8	
18	904229		13	Washer 8,4x16x1,5	
19	500022		6	Screw M8-1,25x30 8,8	
20	500016		6	Screw M6-1,0x55 8,8	
21	904228		6	Washer 6,4x12x1,5	
22	586002		6	Lock nut M6	
23	923859		3	Cover plate	
24	923876		3	Clamp	
25	500053		4	Screw M8-1,25x20 8,8	
26	903626		1	Connector	
27	372574		3	Bracket	
28	381888		1	Sprinkler pipe	
29	384775		2	Plug	
30	382586		8	Sprinkler, cpl	D
31	923680		1	.Nozzle clamp	D
32	923962		1	..O-ring	D
34	499444		1	.Strainer	D
35	904116		1	.Gasket	D
36	903540		1	.Nozzle body Green	D
37	923681		1	.Quick coupling, black	D
38	923680		1	Nozzle clamp	D
39	923962		1	.O-ring	D
40	904116		1	Gasket	D
41	929419		1	Coupling	
42	901431		1	Hose connection	
43	924996		1	Hose connection	D
	924544	4	1	Hose connection	
44	904878	E	1XL	Hose reinforced	
	904878	J,4	1XL	Hose reinforced	
45	923735		1	Hose connection	
46	904878	F	1XL	Hose reinforced	
47	904878	G	1XL	Hose reinforced	

3) New version with Cannon connection
4) Valid for rollers with eyelet.
A) L=0,42 m
B) L=0,22 m
E) L=0,06 m
F) L=1,15 m
G) L=0,25 m
J) L=0,80 m

Sprinkler system, front

17529

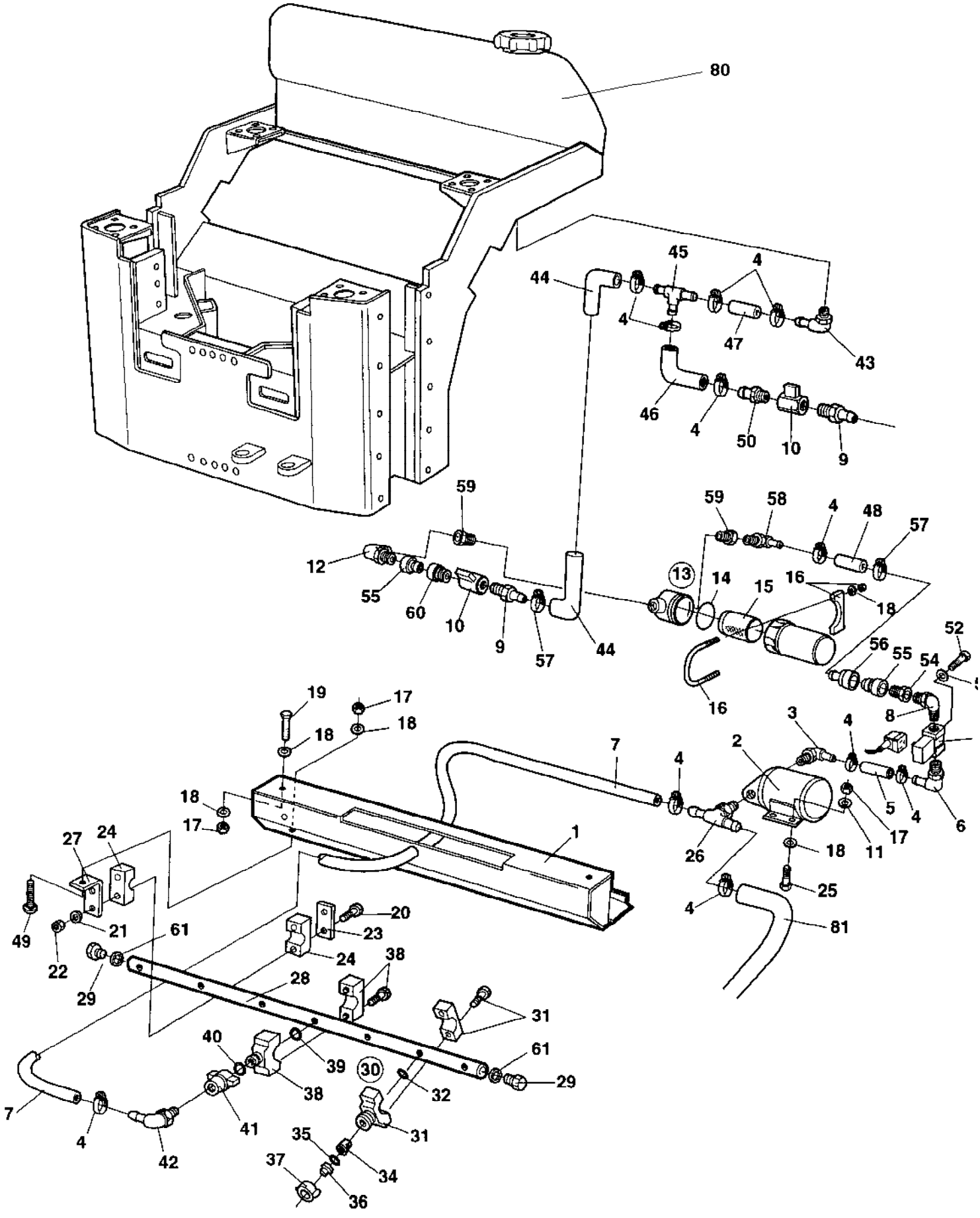

Sprinkler system, front

Ref. No.	Part No.	Rem.	Qty	Description	Code
47	904878	K,4	1XL	Hose reinforced	
48	904878	H	1XL	Hose reinforced	
	904878	L,4	1XL	Hose reinforced	
49	929191		3	Bolt	
50	924544		1	Hose connection	
51	287713		1	Solenoid valve	
52	500002		2	Screw M4-0,7x12H 8.8	
53	904698		2	Washer 4,3x8x0,8	
54	791135		1	Connector	
55	791128		2	Quick coupling	
56	791126		1	Quick coupling	
57	814071		2	Hose clamp	
58	924996		1	Hose connection	D
59	903886		2	Adapter	
60	791125		1	Quick coupling	
61	903769		2	Sealing	
80		I	1	Sprinkling tank, front	
81		I	1	Plastic hose	

4) Valid for rollers with eyelet.
H) L=0,63 m
I) See sprinkler systems, tanks
K) L=0,12 m
L) L=0,60 m

Sprinkler system, rear

17530

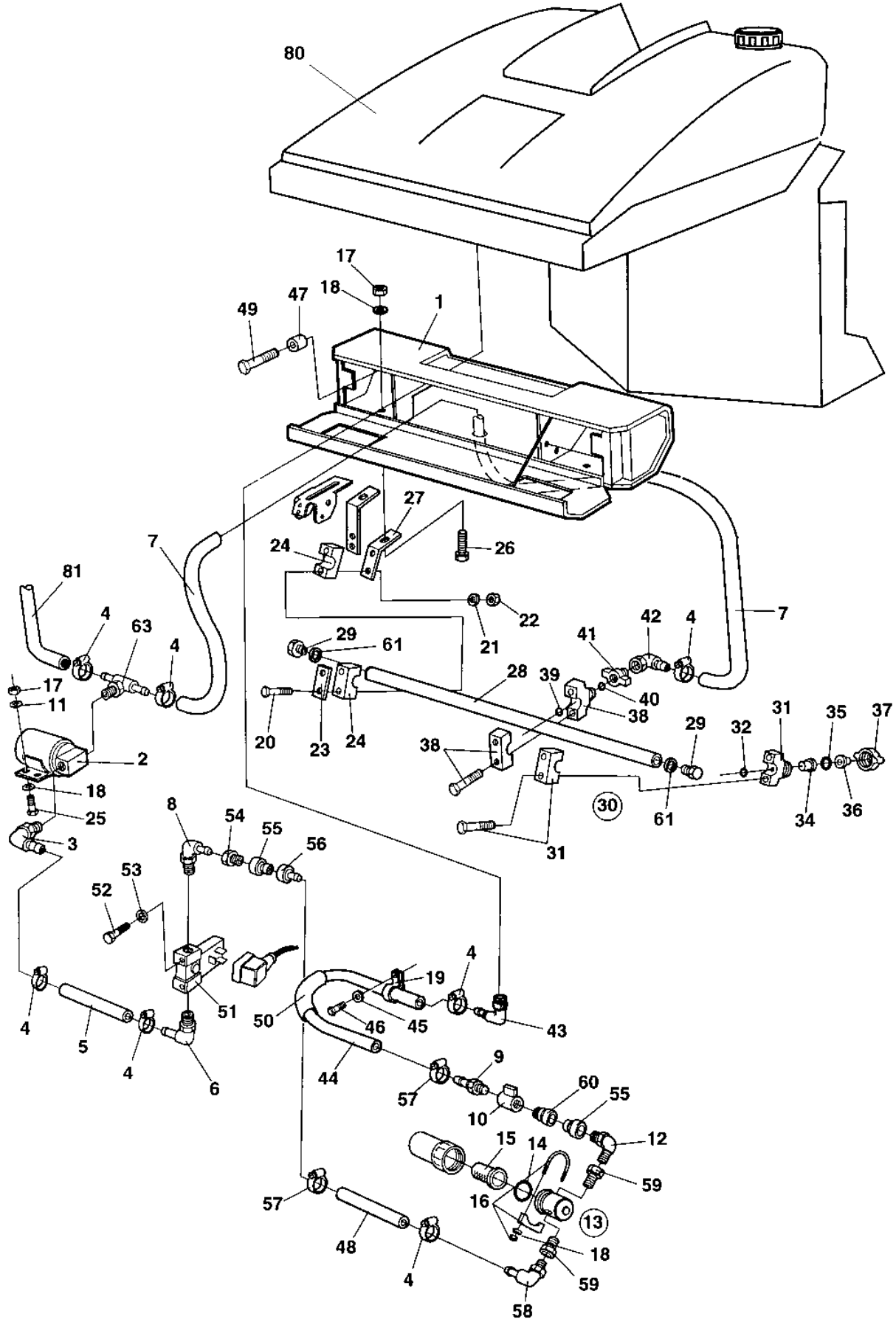

Sprinkler system, rear

Ref. No.	Part No.	Rem.	Qty	Description	Code
1	382639			Sprinkler box	
2	383697	3	1	Water pump	
3	923734		1	Hose connection	
4	313002		8	Hose clamp	
5	904878	B	1XL	Hose reinforced	
6	901431		1	Hose connection	
7	904878	A	1XL	Hose reinforced	
8	791134		1	Elbow 90	
9	924544		1	Hose connection	
10	925599		1	Valve	
11	904556		4	Washer 8,4x16x3,0	
12	901298		1	Connector	
13	791130		1	Strainer cpl	
14	938307		1	.O-ring	
15	938306		1	.Strainer	
16	313036		1	Clamp	D
17	570005		9	Nut M8	
18	904229		8	Washer 8,4x16x1,5	
19	921047		1	Clamp	
20	500016		4	Screw M6-1,0x55 8,8	
	500187	1	4	Screw	
21	904228		4	Washer 6,4x12x1,5	
22	586002		4	Lock nut M6	
23	923859		2	Cover plate	
24	923876		2	Clamp	
25	500053		4	Screw M8-1,25x20 8,8	
26	929191		3	Bolt	
27	373631		2	Bracket	
28	381887		1	Sprinkler pipe	
29	384775		2	Plug	
30	382586		4	Sprinkler, cpl	D
31	923680		1	.Nozzle clamp	D
32	923962		1	..O-ring	D
34	499444		1	.Strainer	D
35	904116		1	.Gasket	D
36	903540		1	.Nozzle body Green	D
37	923681		1	.Quick coupling, black	D
38	923680		1	Nozzle clamp	D
39	923962		1	.O-ring	D
40	904116		1	Gasket	D
41	929419		1	Coupling	
42	901431		1	Hose connection	
43	924996		1	Hose connection	D
44	904878	D	1XL	Hose reinforced	
45	904281		1	Washer 5,3x10x1	
46	500041		1	Screw	
47	359434		8	Spacer sleeve	
48	904878	E	1XL	Hose reinforced	
49	500031		8	Screw M10-1,5x40 8,8	
50	901191	F	1XL	Protective hose	
51	287713		1	Solenoid valve	

1) Valid for rollers with spring loaded scrapers, foldable.
3) New version with Cannon connection
A) L=0,35 m
B) L=0,21 m
D) L=0,85 m
E) L=0,62 m
F) L=0,80 m

Sprinkler system, rear

17530

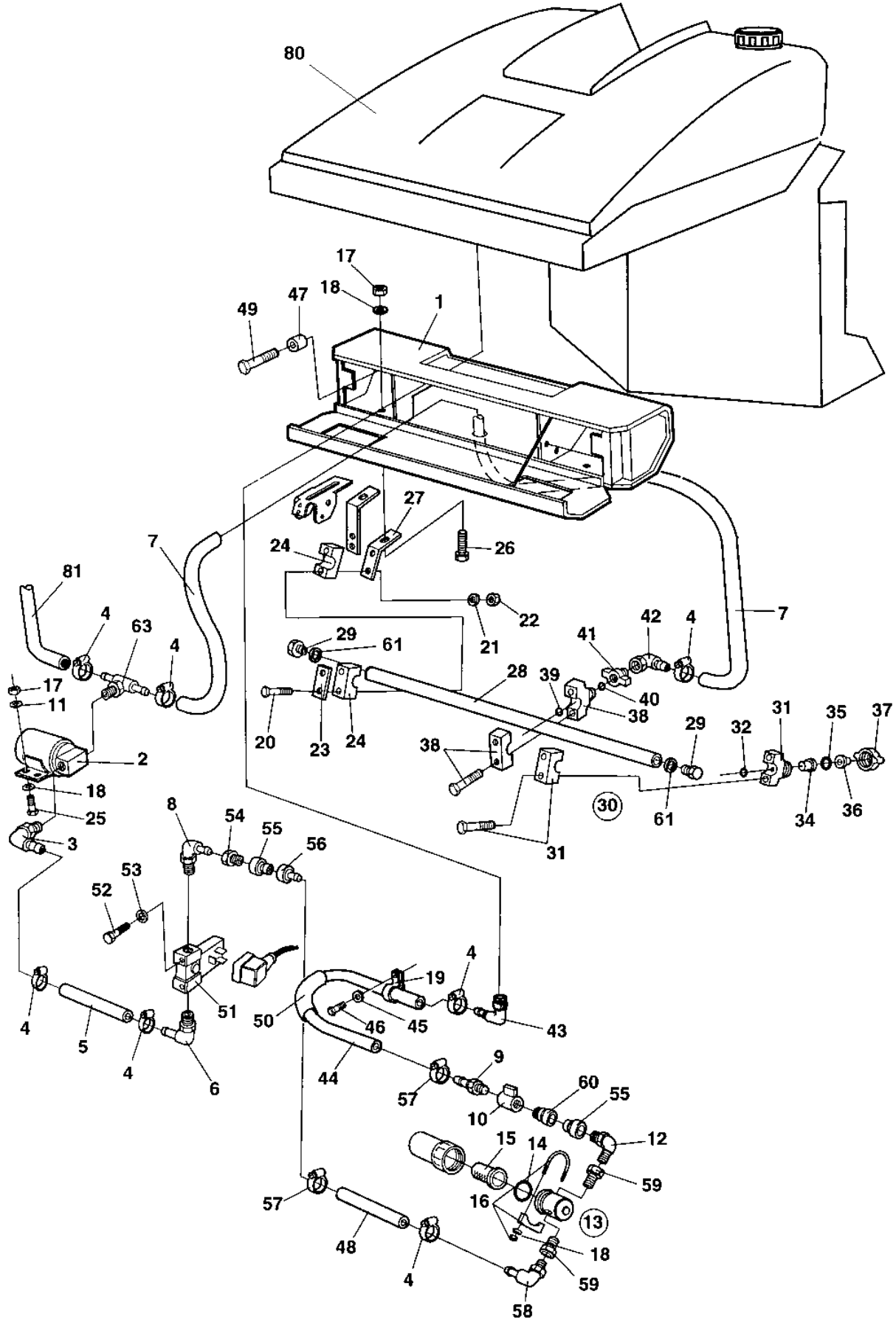

Sprinkler system, rear

Ref. No.	Part No.	Rem.	Qty	Description	Code
52	500002		2	Screw M4-0,7x12H 8.8	
53	904698		2	Washer 4,3x8x0,8	
54	791135		1	Connector	
55	791128		2	Quick coupling	
56	791126		1	Quick coupling	
57	814071		2	Hose clamp	
58	924996		1	Hose connection	D
59	903886		2	Adapter	
60	791125		1	Quick coupling	
61	903769		2	Sealing	
63	903626		1	Connector	
80		H	1	Sprinkling tank, rear	
81		H	1	Plastic hose	

H) See Sprinkler systems, tanks

Ref. No.	Part No.	Rem.	Qty	Description	Code
100			1	Drum, standard (Page 48)	
300				Wheels, rear (Page 52)	

Drum, standard

15878-2

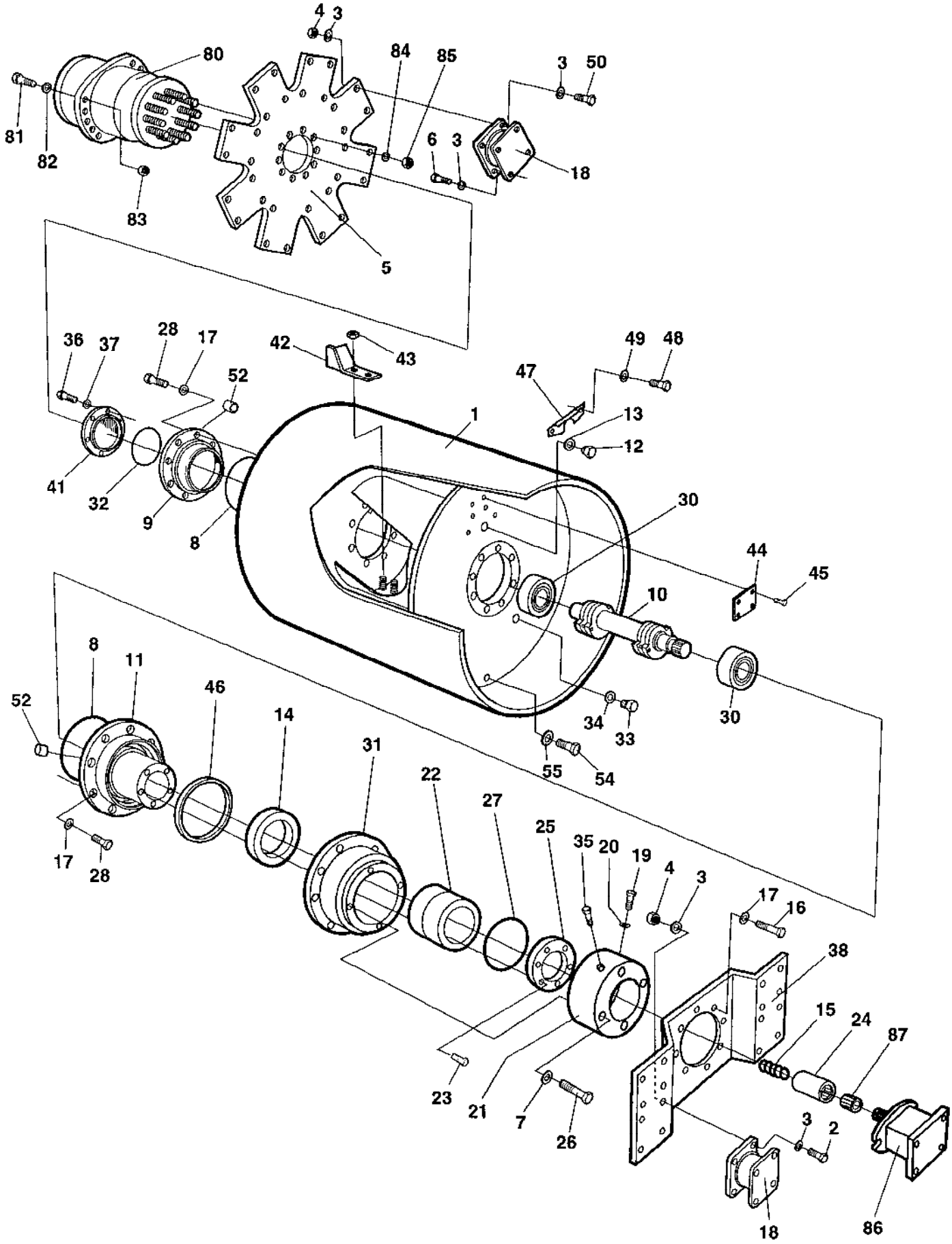

Ref. No.	Part No.	Rem.	Qty	Description	Code
		1		The quantity is valid for one (1) drum	
1	370865		1	Drum	
2	500195		16	Screw M12-1,75x50 8.8	
3	904231		128	Washer 13x24x2	
4	586019		48	Lock nut M12	
5	359950		1	Drive disc	
6	508084		32	Screw	
7	904231		4	Washer 13x24x2	
8	160344		2	O-ring	D
9	374840		1	Bearing housing	
10	371642		1	Eccentric shaft	
11	374837		1	Bearing housing	
12	343744		1	Magnetic plug M30	D
13	162017		1	Seal ring M30	D
14	386272		1	Sealing	D
15	349715		1	Spring	
16	500076		8	Screw M16x55	
17	904231		24	Washer 13x24x2	
18	450122		12	Shock absorber	B
19	370231		1	Plug	
20	162018		1	Sealing	D
21	384397		1	Connector	
22	116041		1	Taper roller bearing	D
23	791933		8	Screw M8x40	
24	381027		1	Splined sleeve	
25	381028		1	Bearing cover	
26	500133		4	Screw M12x70	
27	160105		1	O-ring	D
28	500070		16	Screw M16x50	
30	114060		2	Spherical roller bearing	
31	343318		1	Bearing housing	D
32	160105		1	O-ring	D
33	344196		1	Plug M12	D
34	162027		1	Sealing M12	D
35	926736		1	Breather M14	B
36	500028		6	Screw M10-1,5x25 8,8	
37	904230		6	Washer 10,5x22x2	
38	359956		1	Mounting plate	
41	343321		1	Bearing cover	
42		2	N/A	Blade	
43			12	Nut	
44	343801		1	Sign plate	
45	527002		4	Drive screw	
46	929447		1	V-ring	D
47	359955		1	Drop plate	
48	500019		2	Screw M8-1,25x16 8,8	
49	904229		2	Washer 8,4x16x1,5	
50	500195		32	Screw M12-1,75x50 8.8	
52	900775		5	Plug	
53	904232		16	Washer 17x30x3	
54	500163		1	Screw M12x16	
55	904231		1	Washer 13x24x2	
80		A	1	Hydraulic motor, propulsion	
81	500208		10	Screw	
82	904233		10	Washer 21x36x3	
83	586002		10	Lock nut M6	
84	904260		10	Washer	

1) The quantity is valid for one (1) drum
2) Now welded into drumshell.
A) See group 50

Drum, standard

15878-2

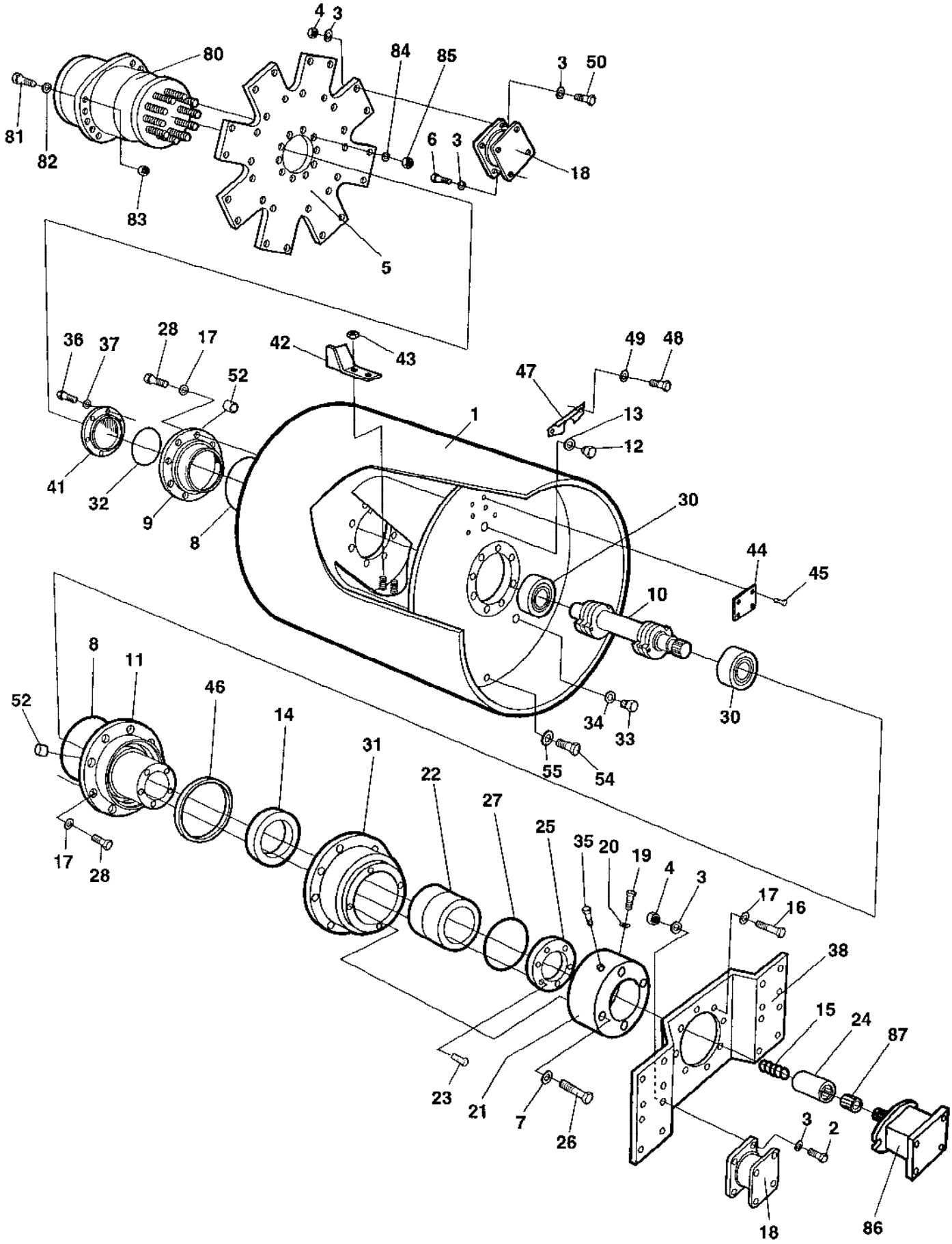

Ref. No.	Part No.	Rem.	Qty	Description	Code
85	903725		10	Nut	
86		A	1	Hydraulic motor, vibration	
87		A	1	Splined sleeve	

A) See group 50

Wheels, rear

16487

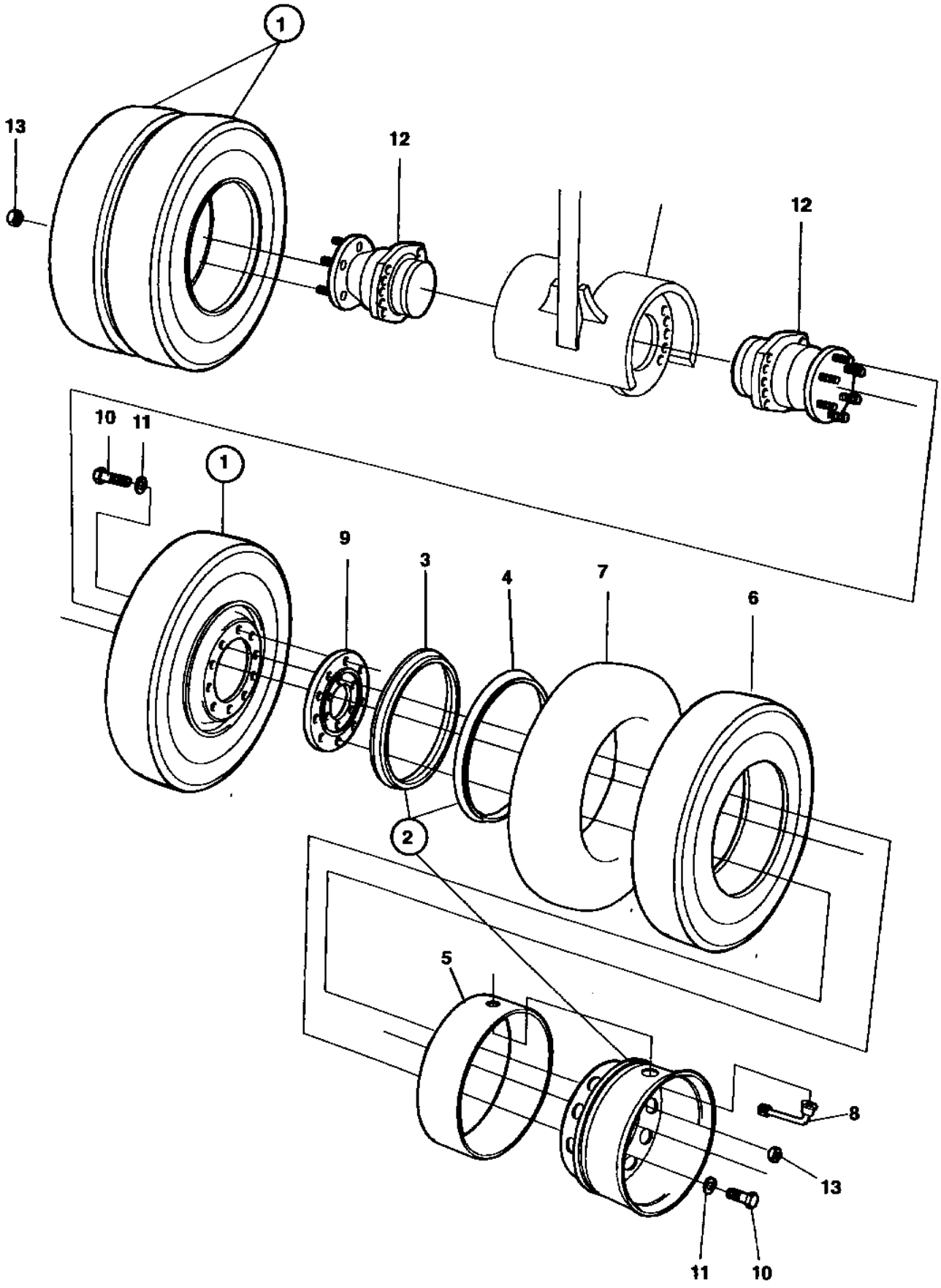

Wheels, rear

Ref. No.	Part No.	Rem.	Qty	Description	Code
1	356072		4	Wheel, cpl	
2	901329		1	.Rim cpl	
3	901636		1	..Lock ring	
4	901637		1	..Side ring	
5	901332		1	.Rim liner	D
6	901317		1	.Tyre	B
7	901334		1	.Tyre tube	B
8	901335		1	.Valve	B
9	374326		2	Spacer	
10	500265		20	Screw M20x55	
11	902252		20	Washer	
12		A	2	Hydraulic motor	
13		A	12	Nut	

A) See group 50

Ref. No.	Part No.	Rem.	Qty	Description	Code
10				Diesel engine Cummins 4B3.9 TAA (Page 56)	
20				Cooling system (Page 58)	
40				Intake system (Page 60)	
50				Fuel system (Page 62)	
60				Exhaust system (Page 64)	
70				Pumpdrive and coupling (Page 66)	
75	373354			Gear box (Page 68)	

Diesel engine Cummins 4B3.9 TAA

17740-1

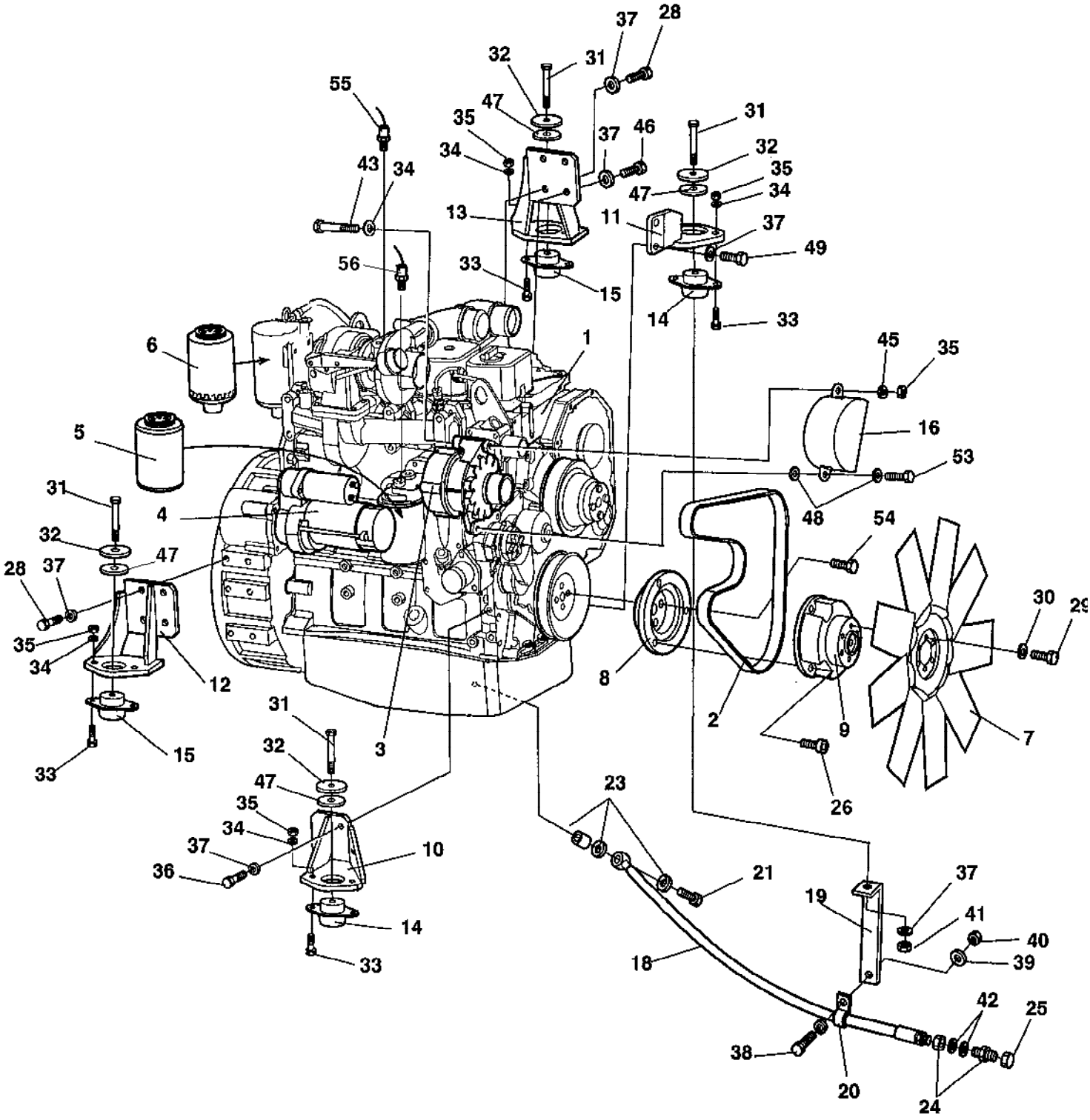

Diesel engine Cummins 4B3.9 TAA

Ref. No.	Part No.	Rem.	Qty	Description	Code
1	386458		1	Diesel engine, cpl Cummins 4B3.9 TAA	
2	939373		1	.Belt	B
3	935950		1	.Alternator	C
4	939504		1	.Starter	C
5	939480		1	.Oil filter element	A
6	939372		1	.Fuel filter element	A
7	388021		1	Fan	
8	382390		1	Connector	
9	382393		1	Fan hub	
10	387384		1	Engine bracket	
11	387565		1	Engine bracket	
12	387382		1	Engine bracket	
13	387383		1	Engine bracket	
14	388113		2	Shock absorber Blue marked	
15	388114		2	Shock absorber Grey marked	
16	386688		1	Protection cover	
18	372819		1	Hydraulic hose	
19	372792		1	Bracket	
20	921028		1	Clamp	
21	747691		1	Hollow screw	
22	371727		1	Sleeve	
23	330331		3	Washer 18,2x23,9x1,5	
24	230515		1	Connector	
25	330383		1	Cap hydraulic	
26	792080		3	Screw	
28	508079		6	Screw M12-1,75x35H 8,8	
29	500047		6	Screw M8-1,25x35 8,8	
30	904229		8	Washer 8,4x16x1,5	
31	500196		4	Screw M12-1,75x80 8.8	
32	791473		4	Steel spacer	
33	500029		6	Screw M10-1,5x30 8,8	
34	904230		9	Washer 10,5x22x2	
35	586018		9	Lock nut M10	
36	947688		2	Screw	
37	904231		13	Washer 13x24x2	
38	500013		1	Screw M6-1x16 8,8	
39	904228		1	Washer 6,4x12x1,5	
40	570004		1	Nut M6	
41	927233		1	Nut	
42	904233		2	Washer 21x36x3	
43	904379		1	Screw M10x110H 8,8	
45	904557		1	Washer 10,5x22x4	
46	508063		2	Screw	
47	924543		8	Washer	
48	904640		2	Washer 8,4x22x3	
49	500269		2	Screw M12-1,75x50 10,9	
53	500022		1	Screw M8-1,25x30 8,8	
55	903632		1	Temperature sensor Engine	D

Cooling system

17719-1

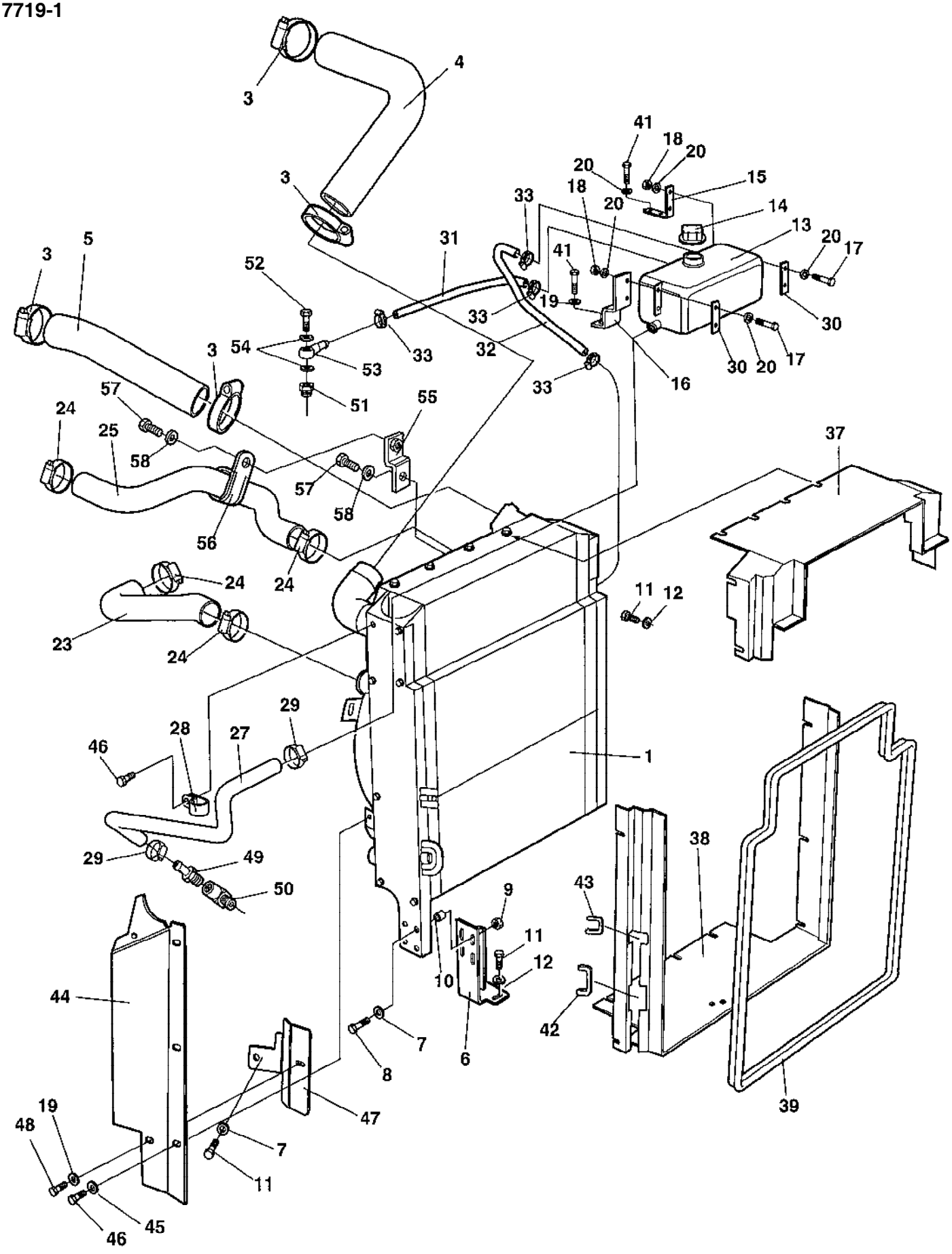

Cooling system

Ref. No.	Part No.	Rem.	Qty	Description	Code
1	387409		1	Radiator, cpl	
	939501		1	.Termo bypass	
	937394		1	.Drain cock	
3	386966		4	Clamp	
4	386974		1	Charge air hose	
5	386975		1	Charge air hose	
6	387600		1	Bracket	
7	904230		5	Washer 10,5x22x2	
8	500031		4	Screw M10-1,5x40 8,8	
9	570006		4	Nut M10	
10	359434		4	Spacer sleeve	
11	500028		5	Screw M10-1,5x25 8,8	
12	904557		4	Washer 10,5x22x4	
13	387533		1	Expansion tank	
14	903714		1	Cap	D
15	380337		1	Bracket	
16	386708		1	Bracket	
17	500022		4	Screw M8-1,25x30 8,8	
18	586003		4	Lock nut M8	
19	904640		2	Washer 8,4x22x3	
20	904229		10	Washer 8,4x16x1,5	
23	387353		1	Coolant hose	
24	313010		4	Hose clamp	
25	387354		1	Coolant hose	
27	386778		1	Coolant hose	
28	921050		2	Clamp	
29	313035		2	Hose clamp	
30	381413		2	Washer	
31	381462		0,5	Rubber hose	
32	381462		0,5	Rubber hose	
33	313108		4	Hose clamp	
37	387681		1	Air inlet frame	
38	387684		1	Air inlet frame	
39	902212	A	1XL	Edge trim	
41	500021		2	Screw M8-1,25x25 8,8	
42	902212	B	1XL	Edge trim	
43	902212	B	1XL	Edge trim	
44	388201		1	Fan safety plate	
45	904556		3	Washer 8,4x16x3,0	
46	500019		4	Screw M8-1,25x16 8,8	
47	388202		1	Bracket	
48	500023		1	Screw M8-1,25x40 8,8	
49	927084		1	Elbow 90	
50	370840		1	Hose connection	
51	372544		1	Connector	
52	903915		1	Hollow screw	
53	903916		1	Banjo coupling	
54	330328		2	Washer 10x14x1	
55	389541		1	Bracket	
56	904352		1	Clamp	
57	500053		2	Screw M8-1,25x20 8,8	
58	904229		2	Washer 8,4x16x1,5	

A) L= 2,8 m
B) L= 0,2 m

Intake system

17759

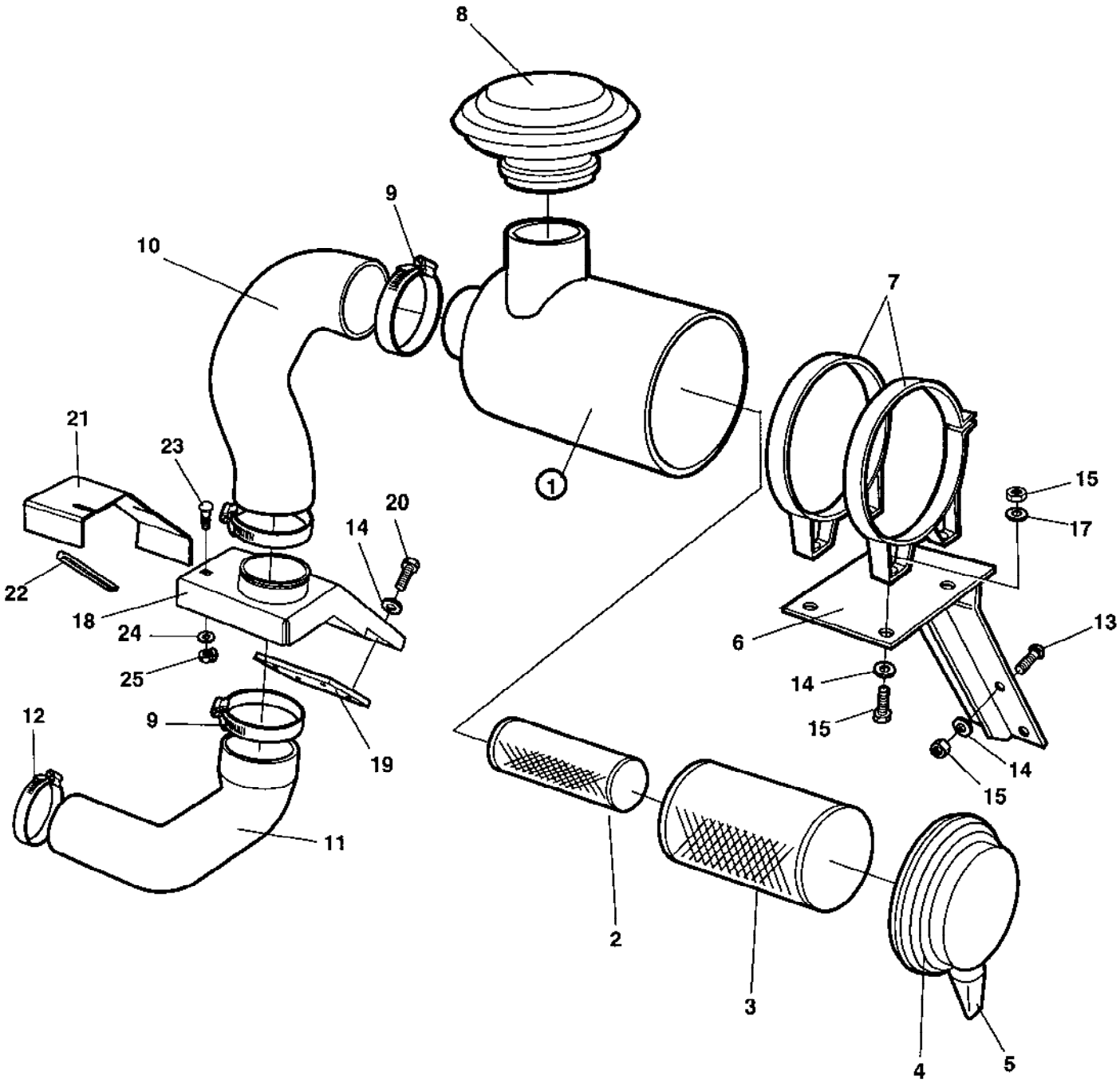

Intake system

Ref. No.	Part No.	Rem.	Qty	Description	Code
1	370953		1	Air cleaner	
2	908451	A	1	.Air filter	A
3	908450	B	1	.Air filter	A
4	908452		1	.Cover	
5	908399		1	.Vacuator valve	D
6	373890		1	Bracket	
7	813791		2	Mounting band	
8	499266		1	Protection cover	
9	904060		3	Hose clamp	
10	385788		1	Air inlet hose	
11	386783		1	Rubber hose	
12	904059		1	Hose clamp	
13	904271		4	Bolt	
14	904230		8	Washer 10,5x22x2	
15	586018		8	Lock nut M10	
16	500029		4	Screw M10-1,5x30 8,8	
17	904557		4	Washer 10,5x22x4	
18	385789		1	Bracket	
	791597	D	1XL	Rubber strip	
19	386782		1	Threaded plate	
20	500028		4	Screw M10-1,5x25 8,8	
21	387590		1	Adjusting plate	
22	902166	C	1XL	Edge trim	
23	929191		2	Bolt	
24	904640		2	Washer 8,4x22x3	
25	791182		2	Lock nut M8	

A) SAFETY
B) MAIN
C) L= 0,34 m
D) L= 0,12 m

Fuel system

17721

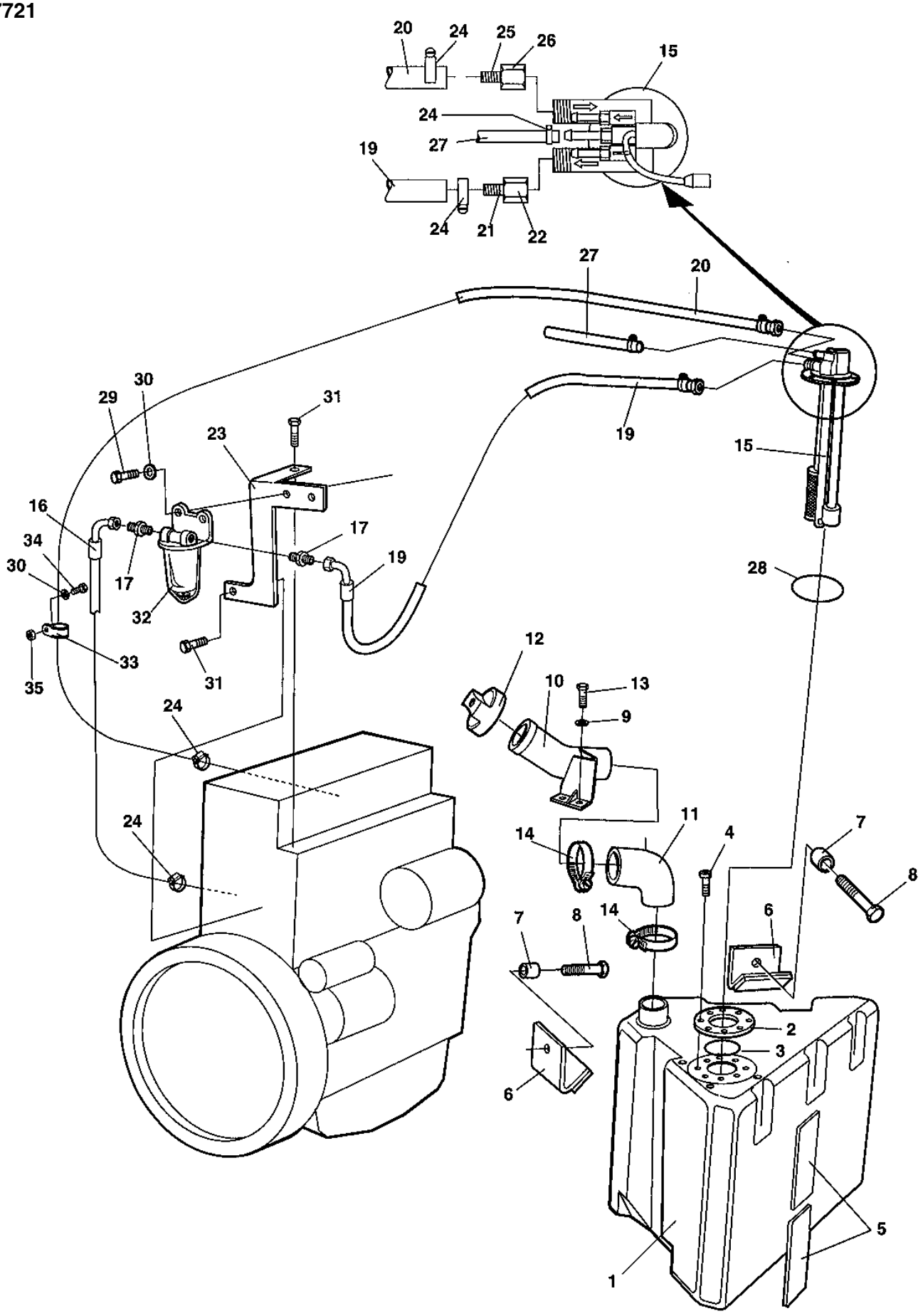

Fuel system

Ref. No.	Part No.	Rem.	Qty	Description	Code
1	370520		1	Fuel tank	
2	380447		1	Flange 2 mm	
3	160058		1	O-ring	D
4	533038		8	Screw	
5	357459		15	Rubber cloth	
6	359618		2	Holder	
7	359434		2	Spacer sleeve	
8	500030		2	Screw M10-1,5x35H 8,8	
9	904230		2	Washer 10,5x22x2	
10	373302		1	Filling pipe	
11	359720		1	Rubber hose	
12	373304		1	Cap	D
	902866		1	.Key Marked "455"	D
13	500048		2	Screw M10-1,5x20 8,8	
14	313038		2	Hose clamp	
15	386058		1	Level sender	D
16	385435		1	Fuel hose	D
17	900249		2	Straight connector	
19	371113	B	1	Fuel hose	
20	904984	C	1XL	Fuel hose	D
21	903683		1	Hose connection	
22	903685		1	Hose connection socket	
23	387631		1	Bracket Fuel filter	
24	313001		5	Hose clamp	
25	904211		1	Hose connection	
26	903684		1	Hose connection socket	
27	371254	D	1	Plastic hose	
28	904707		1	O-ring	D
29	500012		2	Screw M6x12	
30	904228		3	Washer 6,4x12x1,5	
31			2	Existing on engine	
32	900247	A	1	Fuel pre-filter	A
33	921031		1	Clamp	
34	500013		1	Screw M6-1x16 8,8	
35	586002		1	Lock nut M6	

A) Delivered with engine.
B) L=2360 mm Suction
C) L=3200 mm Return
D) L=450 mm Breather

Exhaust system

17722

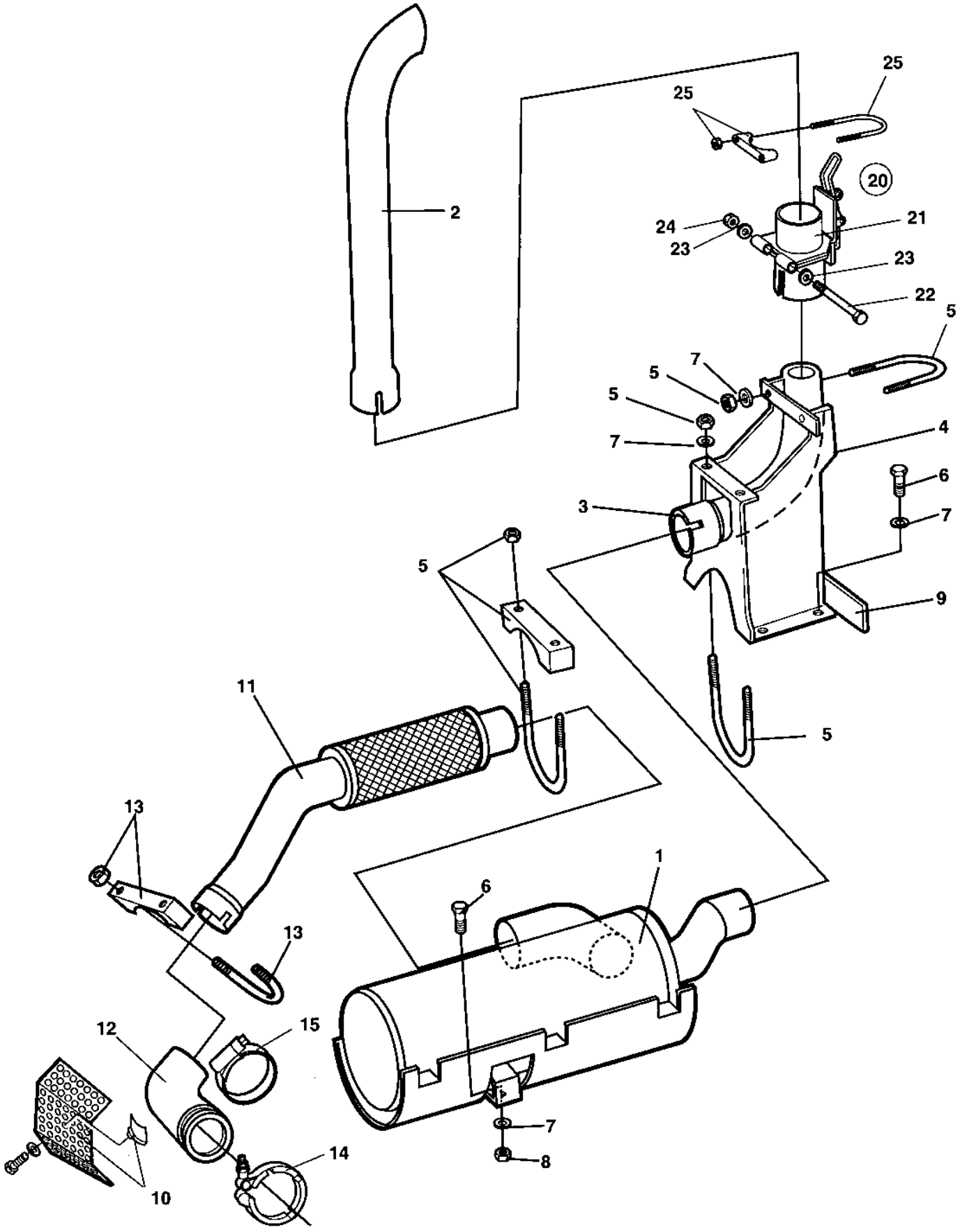

Exhaust system

Ref. No.	Part No.	Rem.	Qty	Description	Code
1	382179		1	Muffler	D
2	370491		1	Exhaust pipe	
3	370618		1	Exhaust pipe	D
4	370492		1	Bracket	
5	313094		3	Pipe clamp	
6	500022		6	Screw M8-1,25x30 8,8	
7	904556		12	Washer 8,4x16x3,0	
8	586003		2	Lock nut M8	
9	902166	A	1XL	Edge trim	
10	387776		1	Heat protection	
11	382537		1	Exhaust pipe	D
12	372491			Exhaust pipe	
13	313094		1	Pipe clamp	
14	929185		1	Clamp	D
15	313022		1	Hose clamp	
20	373694	B	1	Hinged exhaust pipe, cpl	
21			1	.Hinged exhaust pipe	
22	500267		1	.Screw	
23	600009		2	.Washer	
24	586019		1	.Lock nut M12	
25	313094		1	Pipe clamp	

A) L=0,78 M
B) Option

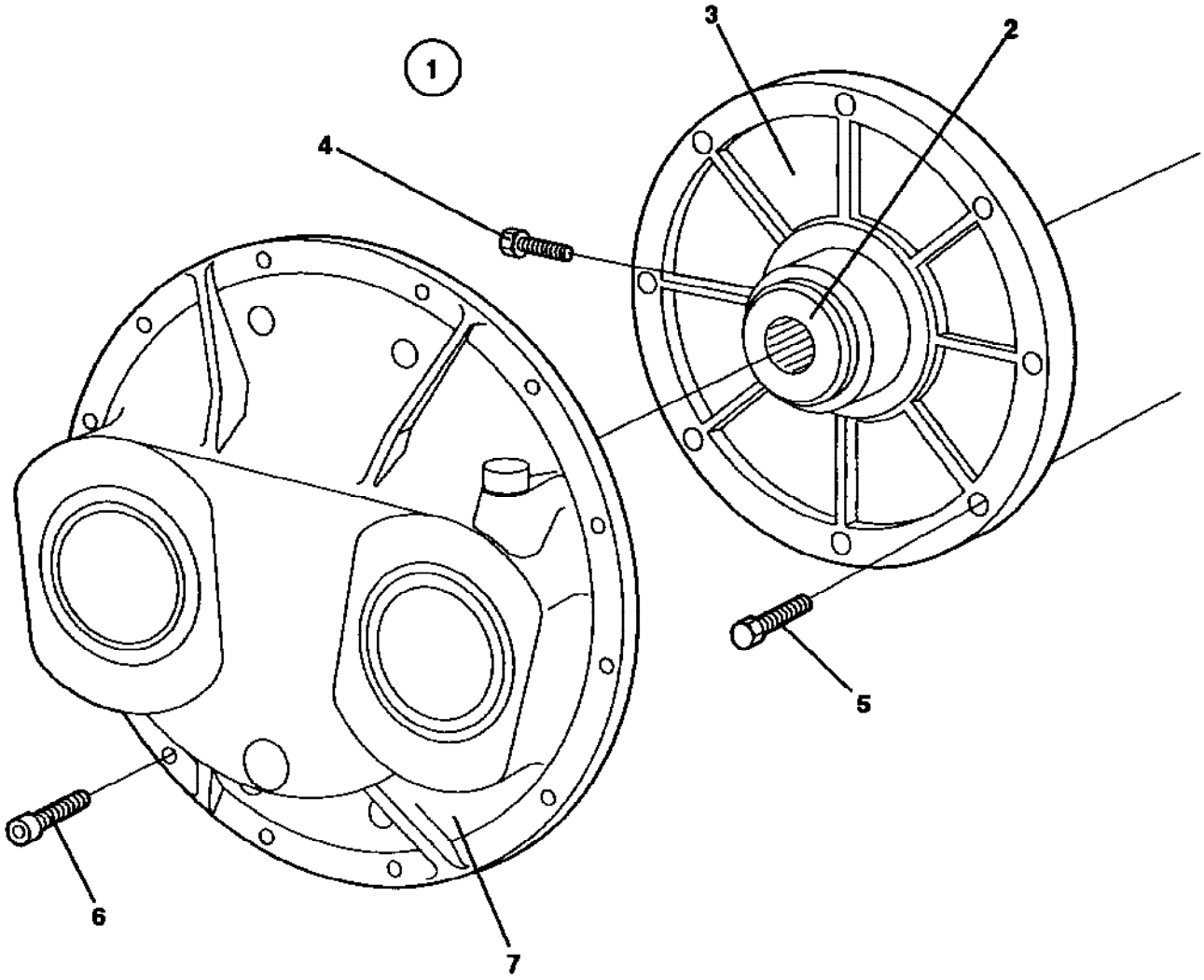
1
2
3
4
5
6
7

Pumpdrive and coupling

Ref. No.	Part No.	Rem.	Qty	Description	Code
1			1	Coupling, cpl	
2	370230		1	.Hub	
3	370232		1	.Flange	D
4	904176		1	.Screw	
5	509025		8	Screw 3/8-16UNCx32 8,8	
6	508053		12	Screw M10-1,5x35H 8,8	
7	373354		1	Gear box (Page 68)	

373354 Gear box

16754

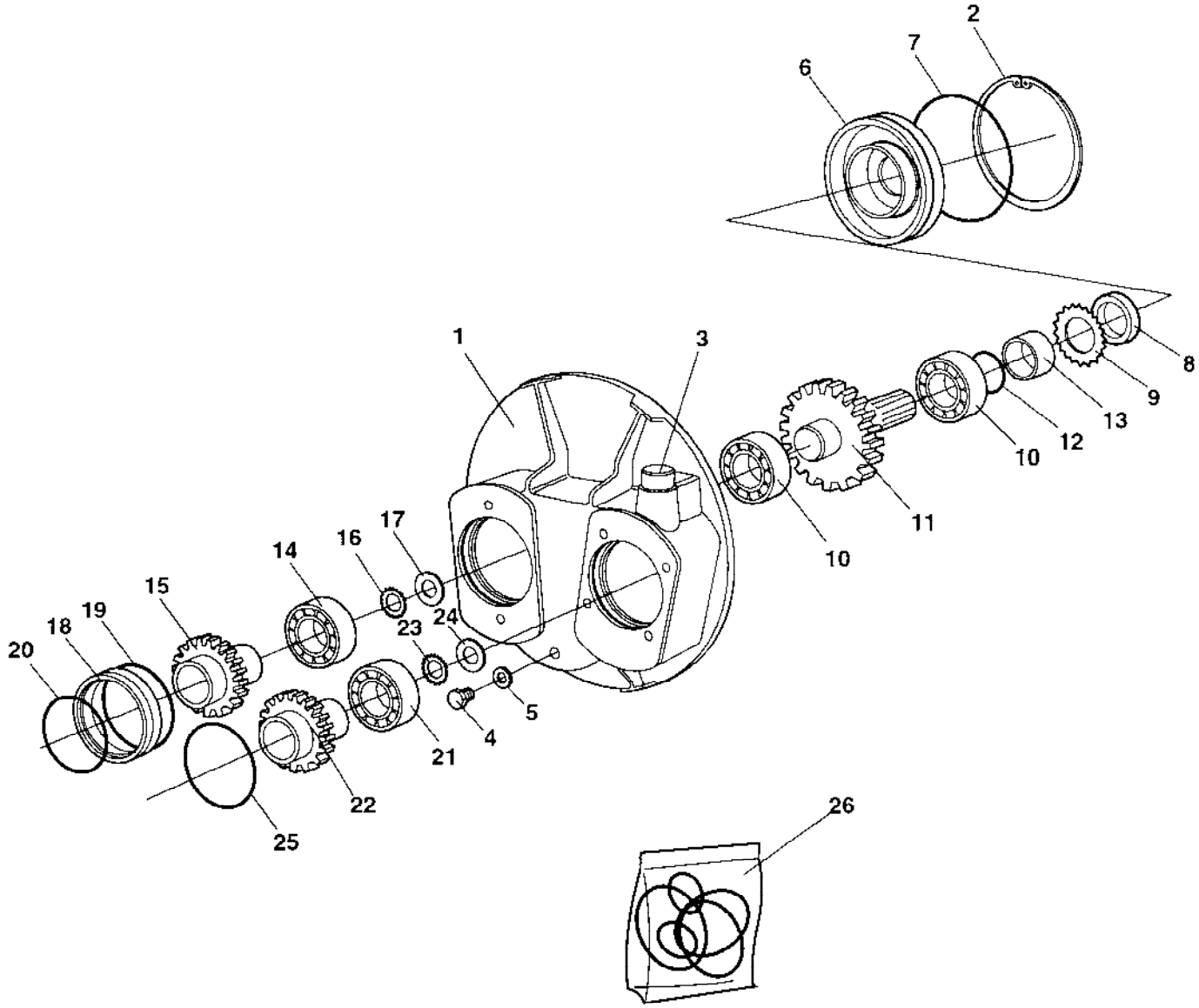

373354 Gear box

Ref. No.	Part No.	Rem.	Qty	Description	Code
			1	Gear box, cpl	
1	935667		1	.Housing	
2	935399		1	.Spring ring	
3	935668		1	.Oil dipstick	
4	935669		1	.Plug	
5		A	1	.Sealing ring	
6	935671		1	.Bearing cover	
7		A	1	.O-ring	
8		A	1	.Shaft seal	
9	935674		1	.Spring washer	
10	935675		2	.Bearing	
11	937730		1	.Drive wheel	
12		A	1	.O-ring	
13	935678		1	.Wear sleeve	
14	935679		1	.Ball bearing	
15	937731		1	.Output gear	
16	935681		2	.Spring washer	
17	935733		1	.Retaining ring	
18	935682		1	.Centering ring	
19		A	1	.O-ring	
20		A	1	.O-ring	
21	935679		1	.Ball bearing	
22	937732		1	.Output gear	
23	935681		2	.Spring washer	
24	935733		1	.Retaining ring	
25		A	1	.O-ring	
26	935686		1	Seal kit	

A) Included in seal kit

Ref. No.	Part No.	Rem.	Qty	Description	Code
10				Propulsion system, pump (Page 72)	
20				Propulsion system, motors (Page 74)	
40				Vibration system, pump (Page 76)	
45				Vibration system, motor (Page 78)	
60				Steering system (Page 82)	
80				Brake system (Page 92)	

Propulsion system, pump

17816

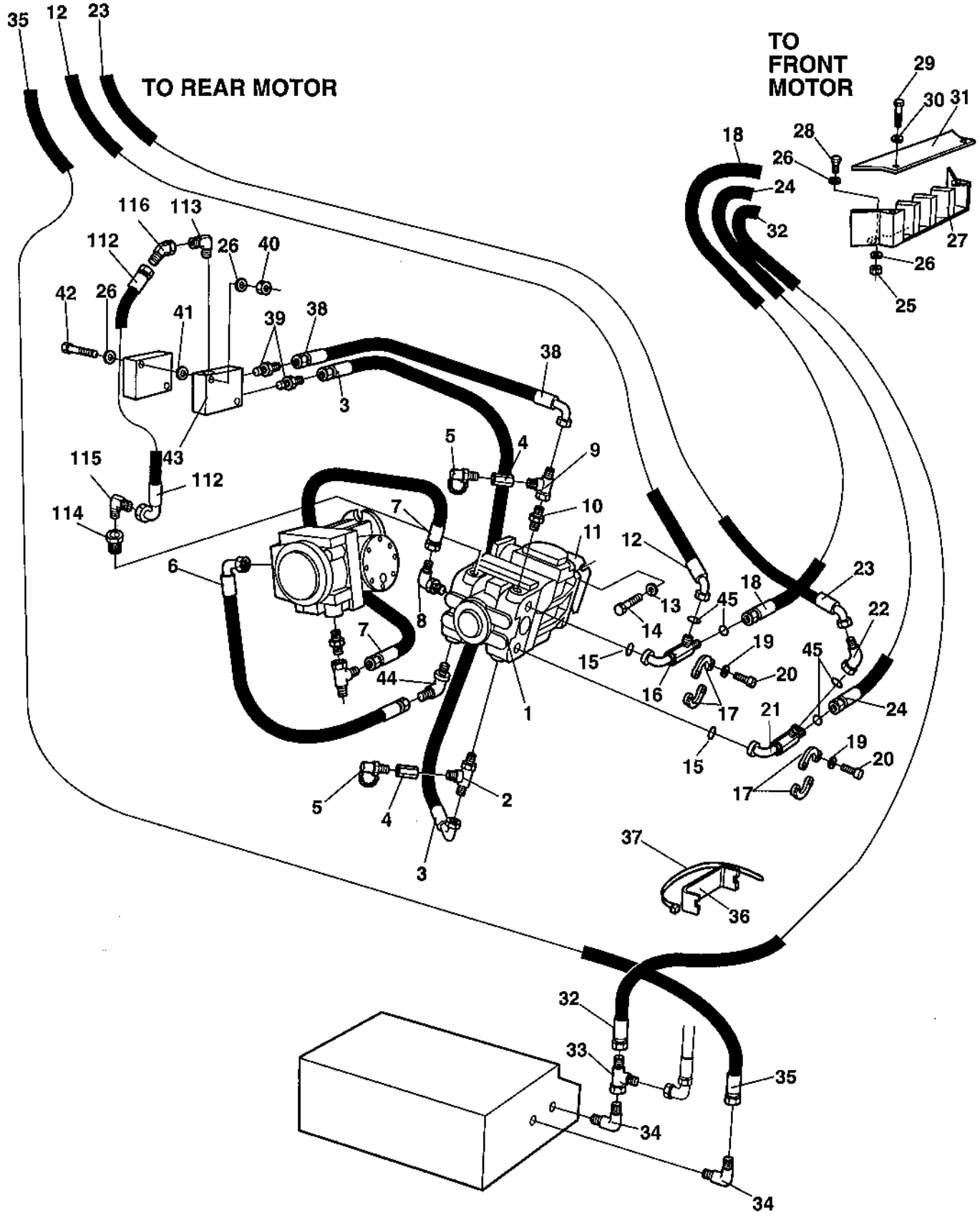

Propulsion system, pump

Ref. No.	Part No.	Rem.	Qty	Description	Code
1	386295		1	Hydraulic pump, propulsion	C
2	234746		1	Connector	
3	482968		1	Hydraulic hose	
4	433830401		2	Connector	
5	910161		2	Measuring nipple	D
6	482470		1	Hydraulic hose	
7	483520		1	Hydraulic hose	
8	234810		1	Elbow 90, O-ring	
9	334234		1	Tee-connector	
10	234233		1	Adapter	
11	908488	A	1	O-ring	
12	483343		1	Hydraulic hose	
13	904214		4	Washer	
14	500039		4	Screw	
15	904005		2	O-ring	
16	375273		1	Connector	
17	923384		4	Flange half	
18	483347		1	Hydraulic hose	
19	904638		8	Washer 12x22x2	
20	502132		8	Screw UNC 7/16" x 22	
21	375274		1	Connector	
22	904586		1	Adapter	
23	483343		1	Hydraulic hose	
24	483346		1	Hydraulic hose	
25	570006		2	Nut M10	
26	904230		8	Washer 10,5x22x2	
27	375264		1	Hose clamp	
28	500028		4	Screw M10-1,5x25 8,8	
29	500019		2	Screw M8-1,25x16 8,8	
30	904229		2	Washer 8,4x16x1,5	
31	375265		1	Cover	
32	482716		1	Hydraulic hose	
33	334135		1	T-connector	
34	801198		2	Elbow 90	
35	373954		1	Hydraulic hose	
36	359648		N	Hose clamp	
37	313102		N	Cable ties	
38	482987		1	Hydraulic hose	
39	234233		2	Adapter	
40	570006		2	Nut M10	
41	904557		4	Washer 10,5x22x4	
42	500078		2	Screw	
43	370049		1	Flushing valve	
44	334132		1	Elbow 45, O-ring	
45	904010		4	O-ring	
112	482993		1	Hydraulic hose	
113	334389		1	Connector	
114	383858		1	Connector	
115	234619		1	Adapter	
116	801781		1	Connector	

A) Suppl. with gear box

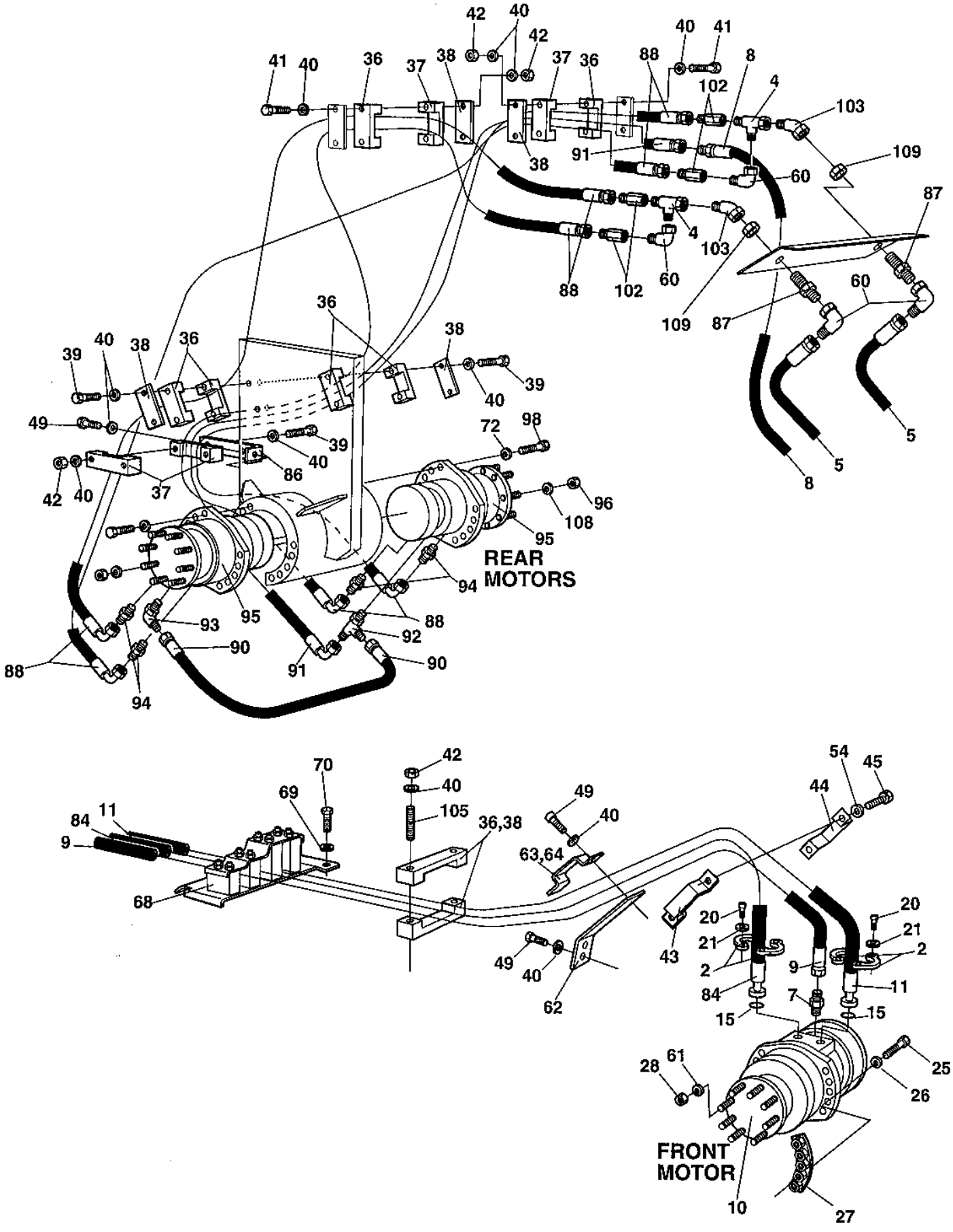
REAR
MOTORS
FRONT
MOTOR

Ref. No.	Part No.	Rem.	Qty	Description	Code
2	923384		4	Flange half	
4	904496		2	Connector	
5		A	2	Hydraulic hose	
7	334121		1	Straight connector	
8		A	1	Hydraulic hose	
9		A	1	Hydraulic hose	
10	387485		1	Hydraulic motor, propulsion, front	C
	381867			Hydraulic motor, propulsion, front	C
11		A	1	Hydraulic hose	C
15	904005		2	O-ring	
20	502132		8	Screw UNC 7/16" x 22	
21	904638		8	Washer 12x22x2	
25	500208		10	Screw	
26	904233		10	Washer 21x36x3	
27	380202		2	Nut	
28	791481		10	Flat collar nut	
36	343872		13	Hose clamp	D
37	343732		3	Hose clamp	
38	335914		8	Cover plate	
39	500192		10	Screw M10x80	
40	904230		20	Washer 10,5x22x2	
41	903524		4	Bolt	
42	570006		8	Nut M10	
43	383462		1	Hose clamp	
44	383461		1	Hose clamp	
45	500030		2	Screw M10-1,5x35H 8,8	
49	500028		6	Screw M10-1,5x25 8,8	
54	904557		2	Washer 10,5x22x4	
60	904584		4	Connector	
61	904260		10	Washer	
62	372112		1	Holder plate	
63	349430		1	Hose clamp	
64	349435		1	Rubber part	
68	376270		1	Bracket	
69	904230		2	Washer 10,5x22x2	
70	500028		2	Screw M10-1,5x25 8,8	
72	904232		20	Washer 17x30x3	
84		A	1	Hydraulic hose	
86	359733		1	Bracket	
87	904580		2	Bulkhead union	
88	381129		4	Hydraulic hose	
90	482933		1	Hydraulic hose	
91	482732		1	Hydraulic hose	
92	234218		1	Tee connector	
93	813444		1	Elbow 90, O-ring	
94	904578		4	Connector	
95	381870		2	Hydraulic motor, propulsion, rear	C
96	929236		12	Nut	
98	500070		20	Screw M16x50	
102	904585		4	Reducer	
103	904586		2	Adapter	
105	904056		2	Stud	
108	904793		12	Washer 19x34x3	
109	904581		2	Lock nut 3/16"-12 UNF	

A) See section " Propulsion system, pump ".

Vibration system, pump

17817

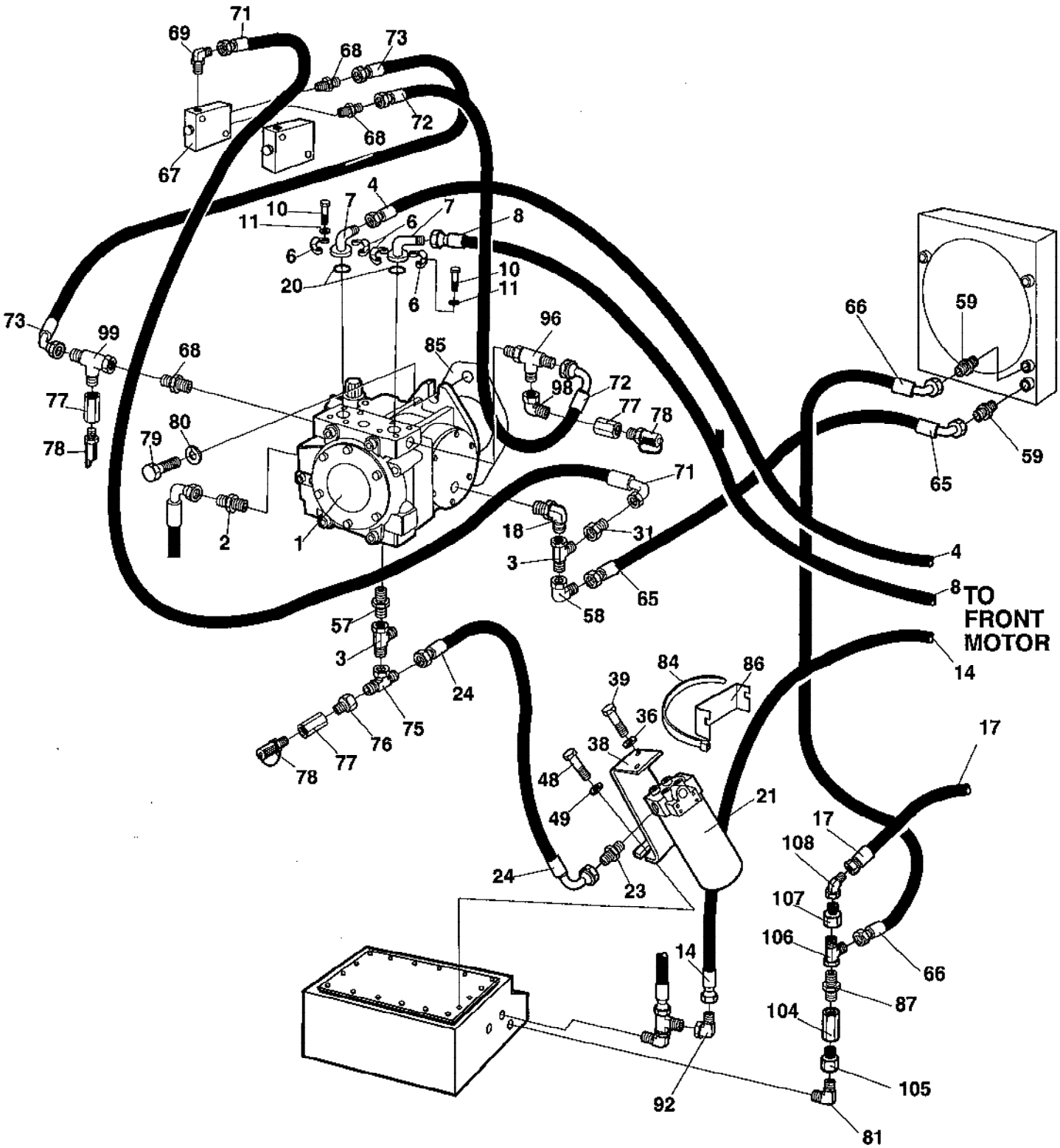

Vibration system, pump

Ref. No.	Part No.	Rem.	Qty	Description	Code
1	380572		1	Hydraulic pump, vibration	C
2	334158		1	Adapter	
3	234243		2	T-connector	
4	483007		1	Hydraulic hose	
6	929226		4	Flange half	
7	903553		2	Connector	
8	483009		1	Hydraulic hose	
10	502047		8	Screw	
11	904637		8	Washer 10x18x2	
14	483067		1	Hydraulic hose	
17	483455		1	Hydraulic hose	D
18	334604		1	Connector	
20	904004		2	O-ring	D
21			1	Hydraulic oil filter	D
	359551		1	.Filter head	
	372229	A	1	.Filter element Hydraulic	A
	359552	B	1	.Filter element Hydraulic, maximum 50 hours	
23	334468		1	Adapter	
24	483071		1	Hydraulic hose	
31	929122		1	Reducing	
36	904230		2	Washer 10,5x22x2	
38	359557		1	Holder plate	
39	500028		2	Screw M10-1,5x25 8,8	
48	500021		2	Screw M8-1,25x25 8,8	
49	904640		2	Washer 8,4x22x3	
57	334138		1	Adapter	
58	334155		1	Connector	
59	334532		2	Straight connector	
65	483608		1	Hydraulic hose	
66	483123		1	Hydraulic hose	
67	370049		1	Flushing valve	
68	234233		3	Adapter	
69	334389		1	Connector	
71	482056		1	Hydraulic hose	
72	482968		1	Hydraulic hose	
73	482972		1	Hydraulic hose	
75	234900		1	T-connector	
76	929122		1	Reducing	
77	433830401		3	Connector	
78	910161		3	Measuring nipple	D
79	500111		2	Screw M12x55 8,8	
80	924543		2	Washer	
81	334589		1	Connector	
84	313102		N	Cable ties	
85	908487	C	1	O-ring	
86	359647		N	Hose clamp	
87	234958		1	Connector	
92	334197		2	Elbow 90	
96	234746		1	Connector	
98	334524		1	Connector	
99	334234		1	Tee-connector	
104	903774		1	Check valve	
105	904992		1	Connector	
106	334504		1	Adapter	
107	334142		1	Connector	
108				Not used on this model	

A) Replacement
B) Cleaning
C) Supplied with gear box

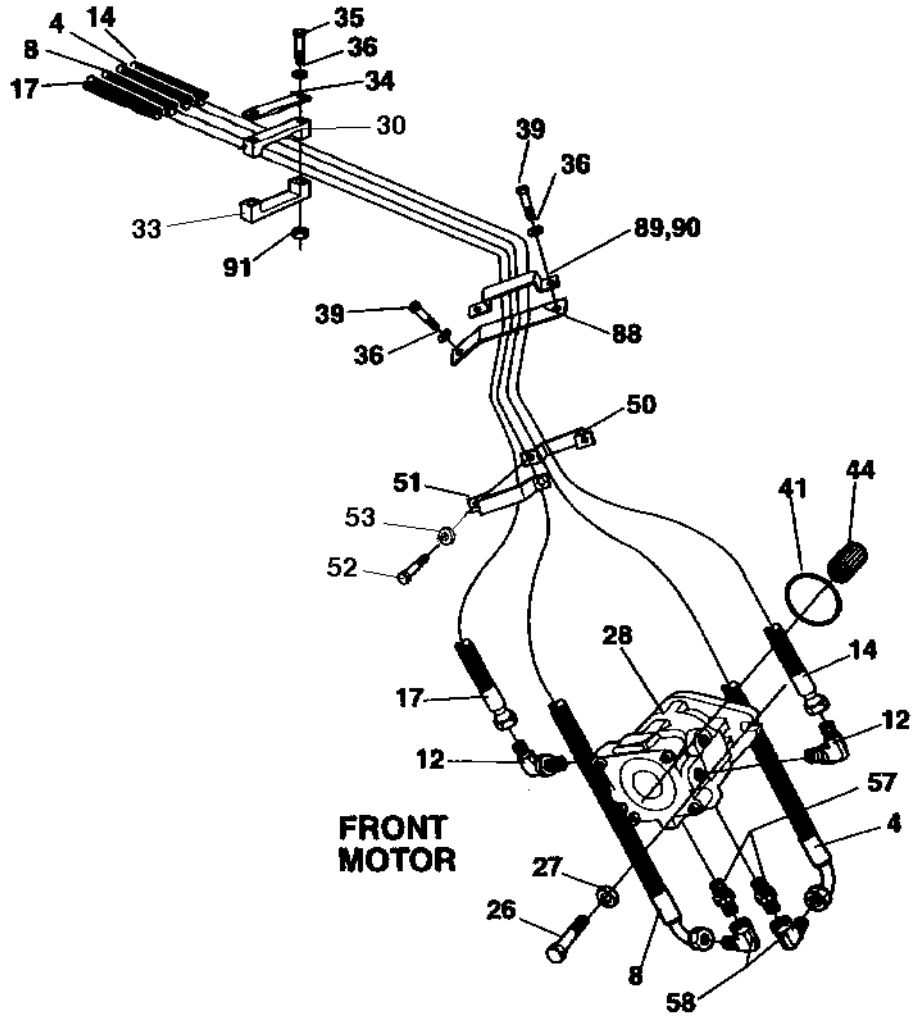
4
14
8
17
35
36
34
30
39
36
89,90
33
91
39
36
88
50
51
53
52
41
44
28
14
17
12
12
57
4
FRONT
MOTOR
27
26
8
58

Vibration system, motor

Ref. No.	Part No.	Rem.	Qty	Description	Code
4		A	1	Hydraulic hose	
8		A	1	Hydraulic hose	
12	334558		2	Connector	
14		A	1	Hydraulic hose	
17		A	1	Hydraulic hose	
26	500037		2	Screw M12-1,75x35 8,8	
27	904213		2	Washer 13x30x4	
28	370260		1	Hydraulic motor, vibration (Page 80)	C
30	343872		1	Hose clamp	D
33	343732		2	Hose clamp	
34	335914		1	Cover plate	
35	904056		2	Stud	
36	904230		8	Washer 10,5x22x2	
39	500028		4	Screw M10-1,5x25 8,8	
41	160279		1	O-ring	
44	340862		1	Splined sleeve	
50	383462		1	Hose clamp	
51	383461		1	Hose clamp	
52	500030		2	Screw M10-1,5x35H 8,8	
53	904557		2	Washer 10,5x22x4	
57	334138		2	Adapter	
58	334155		2	Connector	
88	372112		1	Holder plate	
89	349430		1	Hose clamp	
90	349435		1	Rubber part	
91	570006		2	Nut M10	

A) See section " Vibration system, pump ".

370260 Hydraulic motor, vibration

16586

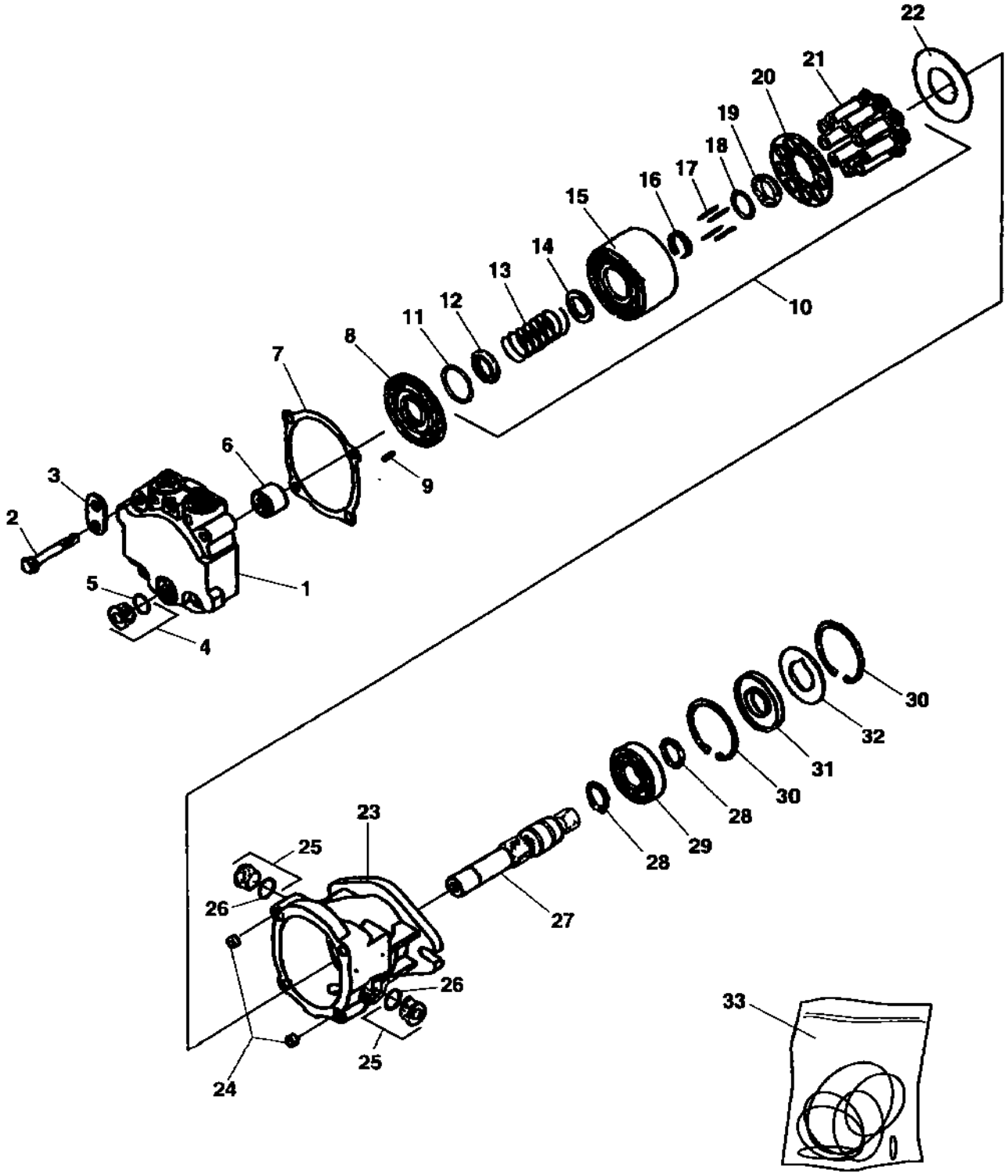

370260 Hydraulic motor, vibration

Ref. No.	Part No.	Rem.	Qty	Description	Code
1	937079		1	.End cap	
2	937080		4	.Screw	
3			1	.Lifting bracket	
4	909243		1	.Plug	
5		A	1	..O-ring	
6	937081		1	.Needle bearing	
7	937075	A	1	.Gasket	
8	937085		1	.Valve plate	
9	937086		1	.Pin	
10	937083		1	.Cylinder block, cpl	
11	937069		1	..Retaining ring	
12	937068		1	..Spring retainer	
13	937067		1	..Spring	
14	937066		1	..Washer	
15			1	..Cylinder block	
16	937071		1	..Retaining ring	
17	937070		4	..Pin	
18	937077		1	..Washer	
19	937072		1	..Retainer guide	
20			1	..Retainer	
21			9	..Piston	
22	937065		1	.Thrust plate	
23	937084		1	.Housing	
24	909346		2	.Pin	
25	909243		2	.Plug	
26		A	1	..O-ring	
27	937078		1	.Shaft	
28	901727		2	.Snap ring	D
29	937063		1	.Ball bearing	
30	937064		2	.Retaining ring	D
31	937061	A	1	.Seal	D
32	937062		1	.Support washer	D
33	937087		1	Seal kit	

A) Included in seal kit

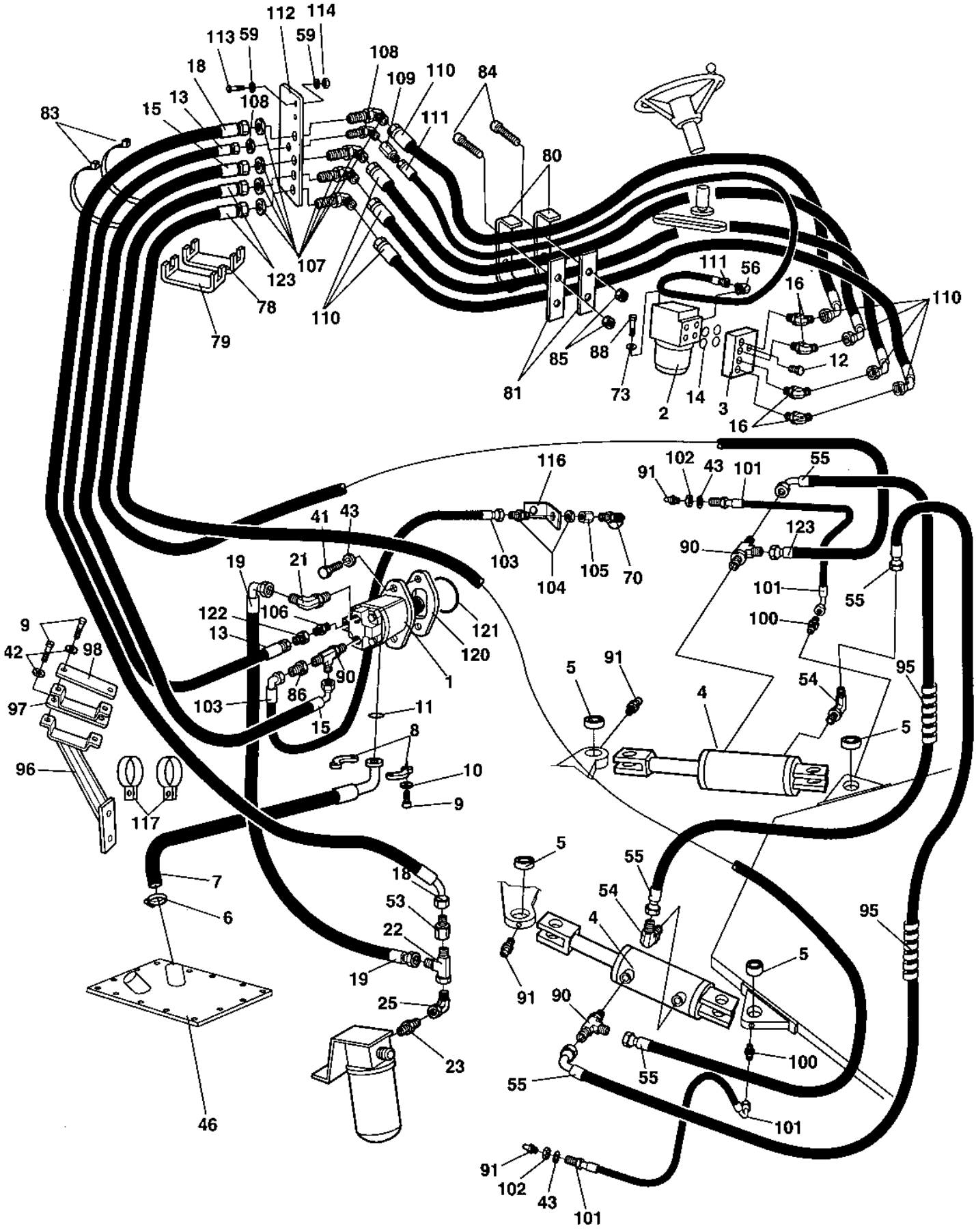
112
114
113
59
59
108
18
109
110
84
13
108
15
111
83
80
107
123
78
110
79
111
56
16
110
85
88
12
81
73
14
2
3
16
116
102
43
101
55
91
41
43
123
90
103
104
105
70
19
21
101
55
122
106
100
13
121
120
9
42
98
1
5
91
95
54
97
90
86
4
103
11
15
8
5
96
10
9
117
5
55
7
18
54
6
53
4
95
22
5
19
91
90
25
55
55
100
23
101
46
91
102
43
101

Ref. No.	Part No.	Rem.	Qty	Description	Code
1	387538		1	Steering pump, cpl	C
2	359145		1	Steering valve (Page 86)	C
3	370155		1	Valve block	
4	375031		2	Hydraulic cylinder (Page 88)	C
5	813316		4	Ball bushing	D
6	923378		1	Hose clamp	
7	388052		1	Hydraulic hose	
8	232097		2	Flange half	D
9	500029		8	Screw M10-1,5x30 8,8	
10	904637		4	Washer 10x18x2	
11	813429		1	O-ring	
12	903773		2	Screw	
13	483099		1	Hydraulic hose	
14	160287		4	O-ring	D
15	483412		1	Hydraulic hose	
16	813500		4	Elbow 45, O-ring	
18	483086		1	Hydraulic hose	
19	482354		1	Hydraulic hose	
21	334604		1	Connector	
22	234243		1	T-connector	
23	334468		1	Adapter	
25	334155		1	Connector	
41	500133		2	Screw M12x70	
42	904230		4	Washer 10,5x22x2	
43	904231		4	Washer 13x24x2	
46			1	Hydraulic oil tank (Page 90)	
53	234667		1	Reducer	
54	813444		2	Elbow 90, O-ring	
55	483016		2	Hydraulic hose	
56	334203		1	Elbow 90, O-ring	
59	904229		4	Washer 8,4x16x1,5	
70	910161		1	Measuring nipple	D
73	904567		4	Washer 10,5x28x6	
78	359647		N	Hose clamp	
79	359564		N	Hose clamp	
80	359649		2	Hose clamp	
81	359650		2	Hose clamp	
83	313102		N	Cable ties	
84	500061		4	Screw M6-1X35 8,8	
85	902285		4	Lock nut M6	
86	334264		1	Reducing	
88	502036		4	Screw	
90	234218		3	Tee connector	
91	926214		4	Grease fitting	D
95	903082	B	1XL	Hose shield	
96	371473		1	Hose clamp	
97	371199		1	Hose clamp	
98	371200		1	Hose clamp	
100	371669		2	Straight connector	
101	903812		2	Hydraulic hose	
102	903831		2	Nut M12	
103	482860		1	Hydraulic hose	
104	330435		1	Connector	
105	338304		1	Connector	
106	334232		1	Adapter	
107	234512		4	Bulkhead union	
108	904115		1	Bulkhead elbow	D
109	334523		1	Reducing	

B) L=1,4 m

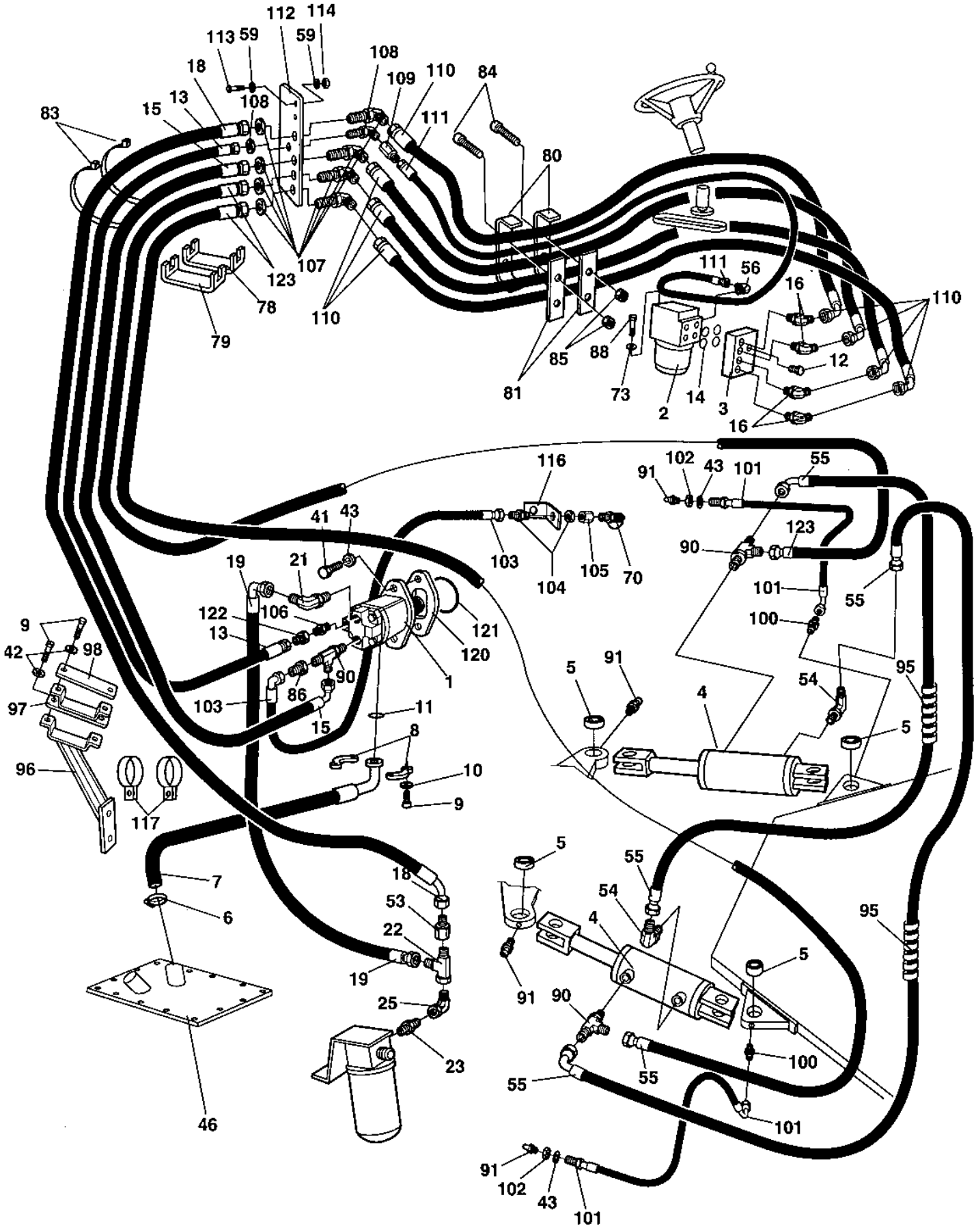
112
114
113
59
59
108
18
109
110
84
108
15
13
111
83
80
107
123
78
110
79
111
56
16
110
85
88
12
81
73
14
2
3
16
116
102
43
101
55
91
41
43
123
90
103
104
105
70
19
21
101
55
122
106
100
13
121
120
9
42
98
1
5
91
95
54
97
90
86
4
103
11
15
8
5
96
10
9
117
5
55
7
18
54
6
53
4
95
22
5
19
91
90
25
55
55
100
23
101
46
91
102
43
101

Ref. No.	Part No.	Rem.	Qty	Description	Code
110	482672		4	Hydraulic hose	
111	483087		1	Hydraulic hose	
112	383397		1	Holder plate	
113	500021		2	Screw M8-1,25x25 8,8	
114	902286		2	Lock nut M8	
116	347802		1	Holder plate	
117	900734		2	Clamp	
120	909743	C	1	Gasket	
121	937055	D	1	O-ring	
122	348182		1	Adapter	
123	482213		2	Hydraulic hose	

C) Supplied with engine
D) Supplied with pump

359145 Steering valve

15981

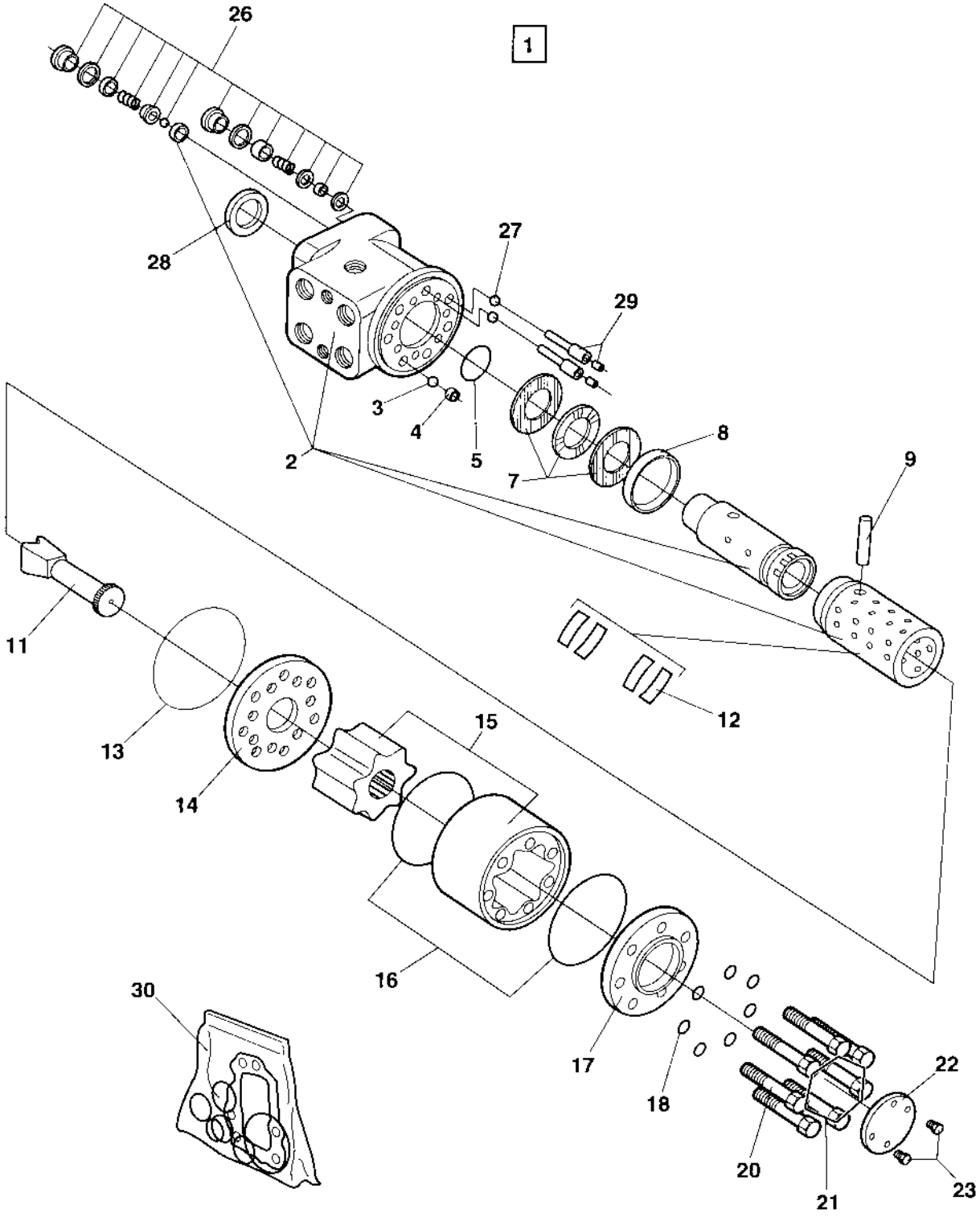

359145 Steering valve

Ref. No.	Part No.	Rem.	Qty	Description	Code
1			1	Valve, cpl	
2			1	.Spool and sleeve	
3	480468		1	.Ball	
4	480446		1	.Threaded bushing	D
5		A	1	.O-ring	D
7	911620		1	.Bearing	D
8	480449		1	.Ring	
9	480447		1	.Cross pin	
11	902861		1	.Cardan shaft	
12	909211		1	.Set of springs	
13		A	1	.O-ring	
14	902869		1	.Strainer	
15	935547		1	.Gear kit	
16		A	2	.O-ring	
17	480450		1	.End cap	
18		A	7	.Washer	
20	935548		1	.Screw	
21	935549		6	.Screw	
22			1	.Name plate	
23			2	.Screw	
26	929012		2	.Shock valve 22,5-24,0 MPa	
27	929013		2	.Ball	
28		A	1	.Seal ring	
29	929014		2	.Rolled pin	
30	908783		1	Seal kit	D

A) Included in item 30

375031 Hydraulic cylinder

16490

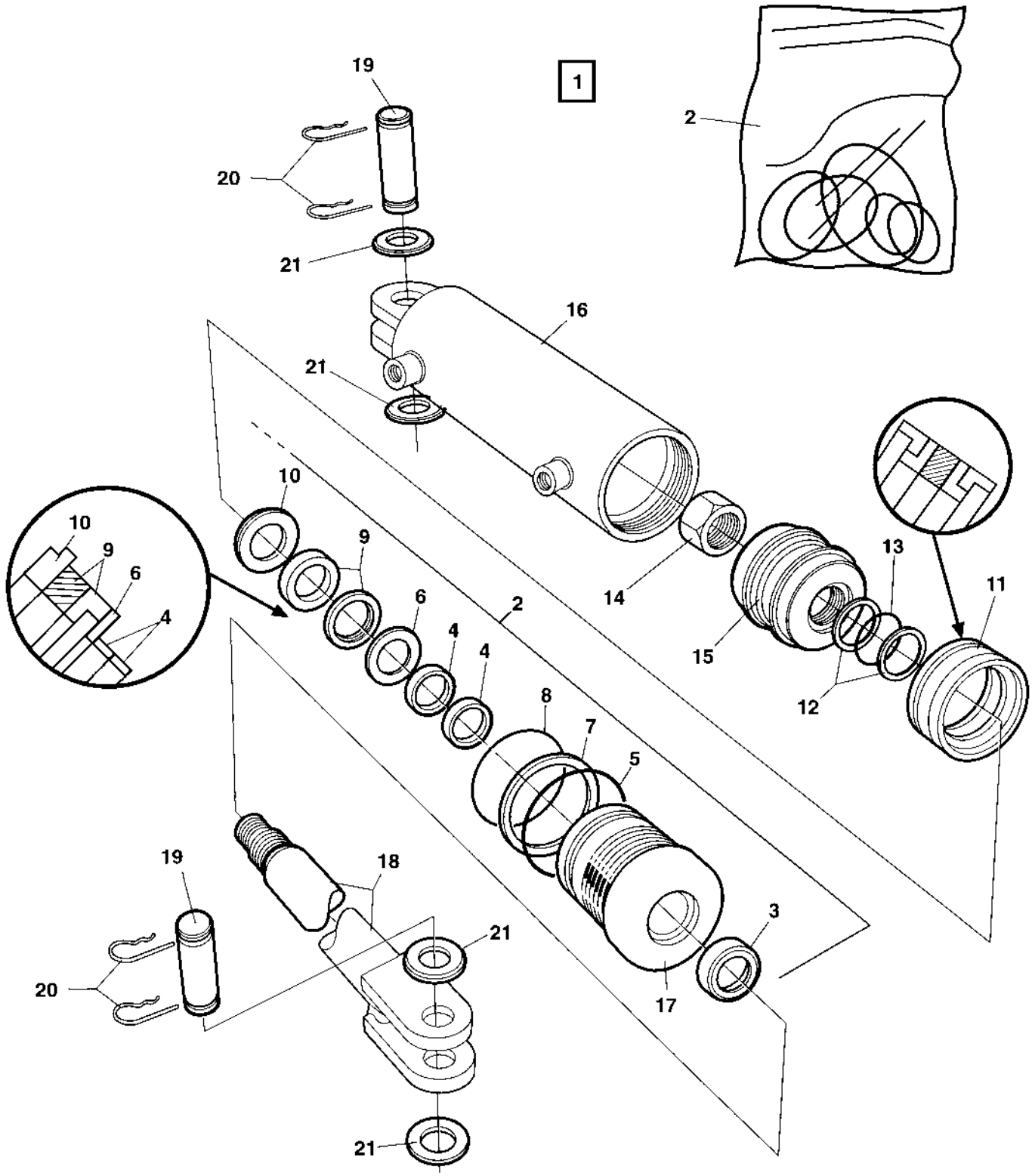

375031 Hydraulic cylinder

Ref. No.	Part No.	Rem.	Qty	Description	Code
1			1	Steering cylinder, cpl	D
2	904145		1	.Seal kit	D
3			1	..Seal	D
4			2	..Seal	D
5			1	..O-ring	D
6			1	..Back-up ring	D
7			1	..Back-up ring	D
8			1	..O-ring	D
9			1	..Seal	D
10			1	..Retaining ring	D
11			1	..Seal	D
12			2	..Back-up ring	D
13			1	..O-ring	D
14			1	..Lock nut	D
15	904143		1	.Piston block	
16	936267		1	.Cylinder	
17	903619		1	.Steering	
18	936268		1	.Piston rod	
19	347119		2	.Shaft	D
20	635061		4	.Hair clip	D
21	600016		4	.Washer 26x45x4	

Hydraulic oil tank

17049

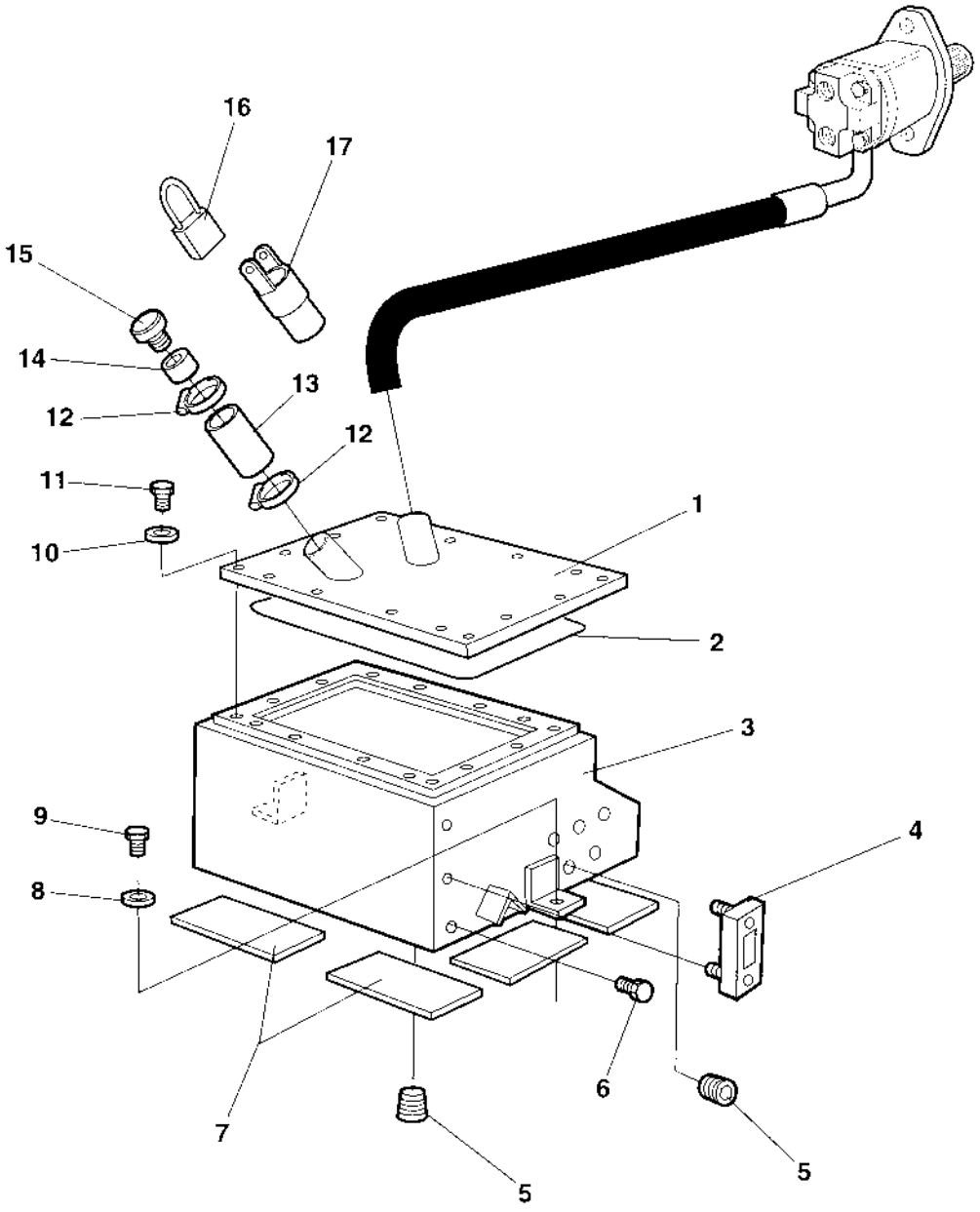

Hydraulic oil tank

Ref. No.	Part No.	Rem.	Qty	Description	Code
1	370776		1	Cover	
2	357141		1	O-ring	
3	371707		1	Hydraulic oil tank	
4	989151		1	Oil level gauge	D
5	892446		2	Plug	
6	232122		1	Plug 3/4NPTF	
7	357459		6	Rubber cloth	
8	904567		2	Washer 10,5x28x6	
9	500028		2	Screw M10-1,5x25 8,8	
10	904734		14	Washer 8,4x26x4	
11	500053		14	Screw M8-1,25x20 8,8	
12	313008		2	Hose clamp	D
13	205067	A	1XL	Rubber hose	
14	357139		1	Connector	
15	357138		1	Ventilating filter	B
16	904603	B	1	Padlock	
17	376449	B	1	Connector	

A) L=220 mm
B) With Bio-oil, Option

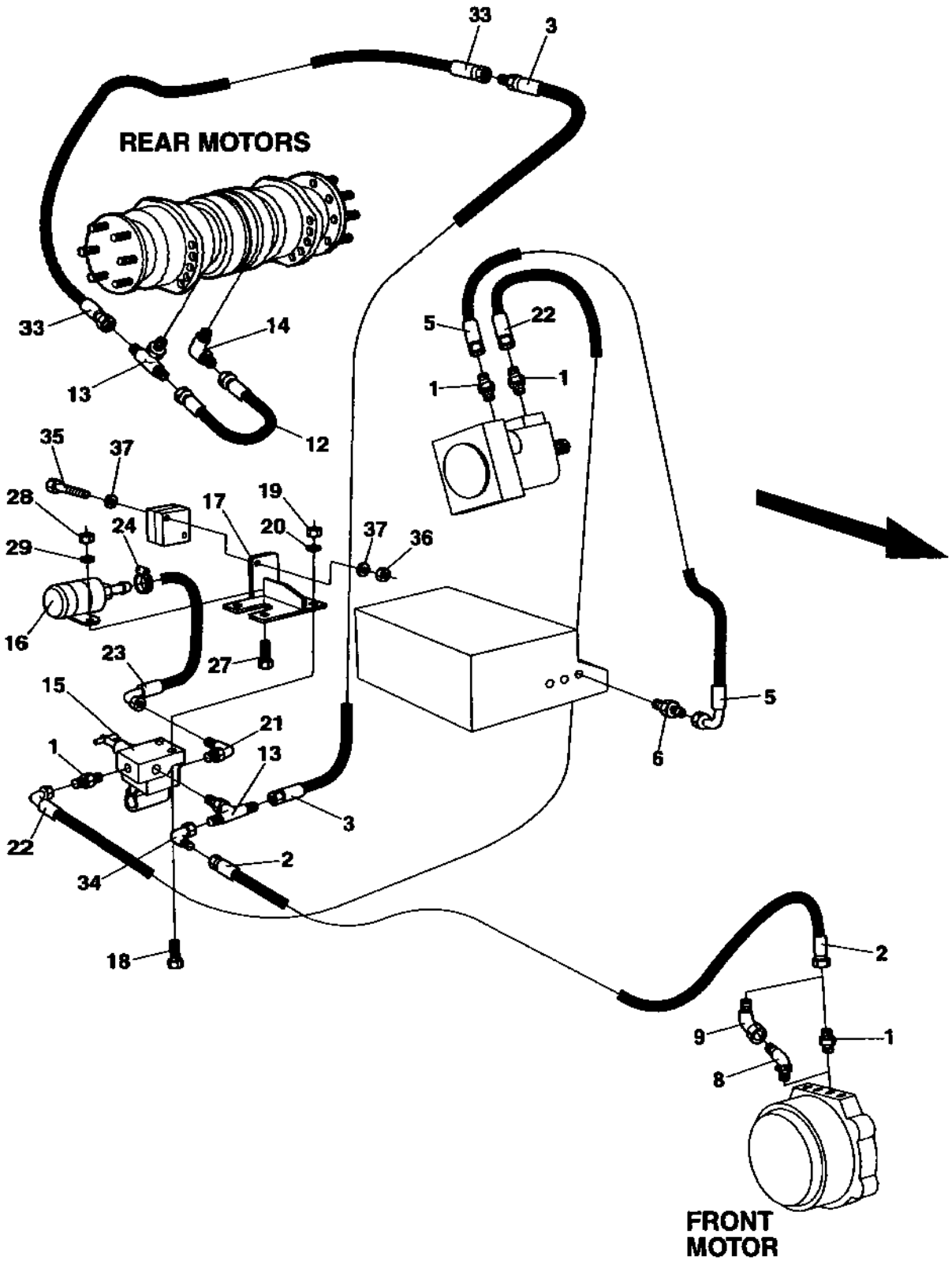
REAR MOTORS
FRONT MOTOR
33
3
14
13
12
5
22
1
1
35
37
28
24
29
16
17
19
20
37
36
23
27
15
21
1
13
3
22
34
2
18
5
6
2
9
1
8

Ref. No.	Part No.	Rem.	Qty	Description	Code
1	234233		4	Adapter	
2	483355		1	Hydraulic hose	
3	372922		1	Hydraulic hose	
5	483069		1	Hydraulic hose	
6	813321		1	Elbow 90	
8	234687		1	Adapter	
9	801781		1	Connector	
12	482936		1	Hydraulic hose	
13	234869		2	T-connector	
14	334389		1	Connector	
15	415329		1	Hand pump	
	922060		1	.Seal kit	D
16	903787		1	Brake fluid reservoir	
	939769		1	.Cap incl. gasket	
17	373405		1	Pump bracket	
18	500022		3	Screw M8-1,25x30 8,8	
19	570005		3	Nut M8	
20	904229		3	Washer 8,4x16x1,5	
21	234806		1	Elbow 90, O-ring	
22	483178		1	Hydraulic hose	
23	371281		1	Hydraulic hose	
24	313002		1	Hose clamp	
27	500013		2	Screw M6-1x16 8,8	
28	570004		2	Nut M6	
29	904228		2	Washer 6,4x12x1,5	
33	483356		1	Hydraulic hose	
34	334524		1	Connector	
35	500078		2	Screw	
36	570006		2	Nut M10	
37	904230		4	Washer 10,5x22x2	

Ref. No.	Part No.	Rem.	Qty	Description	Code
100				Electrical equipment (Page 96)	
175				Electrical battery switch (Page 100)	
200				Instrument box (Page 102)	
300				Instrument panel, main (Page 104)	
305				Speed and frequency, sensors (Page 106)	
325				Instrument panel, upper left (Page 108)	
350				Instrument panel, upper right (Page 110)	
375				Instrument panel, lower left (Page 112)	
400				Instrument panel, lower right (Page 114)	
450				Instrument panel, relay, fuses (Page 116)	
500				Emergency stop panel (Page 118)	
635				Driving lights Direction & licenseplate light (Page 120)	
675				Working lights with/without Rops (Page 122)	
750				Working lights, cab (Page 124)	
770				Protection cover, Head light Option (Page 126)	
800				Rotating beacon (Page 128)	
835				Tachograph (Page 130)	

Electrical equipment

17767

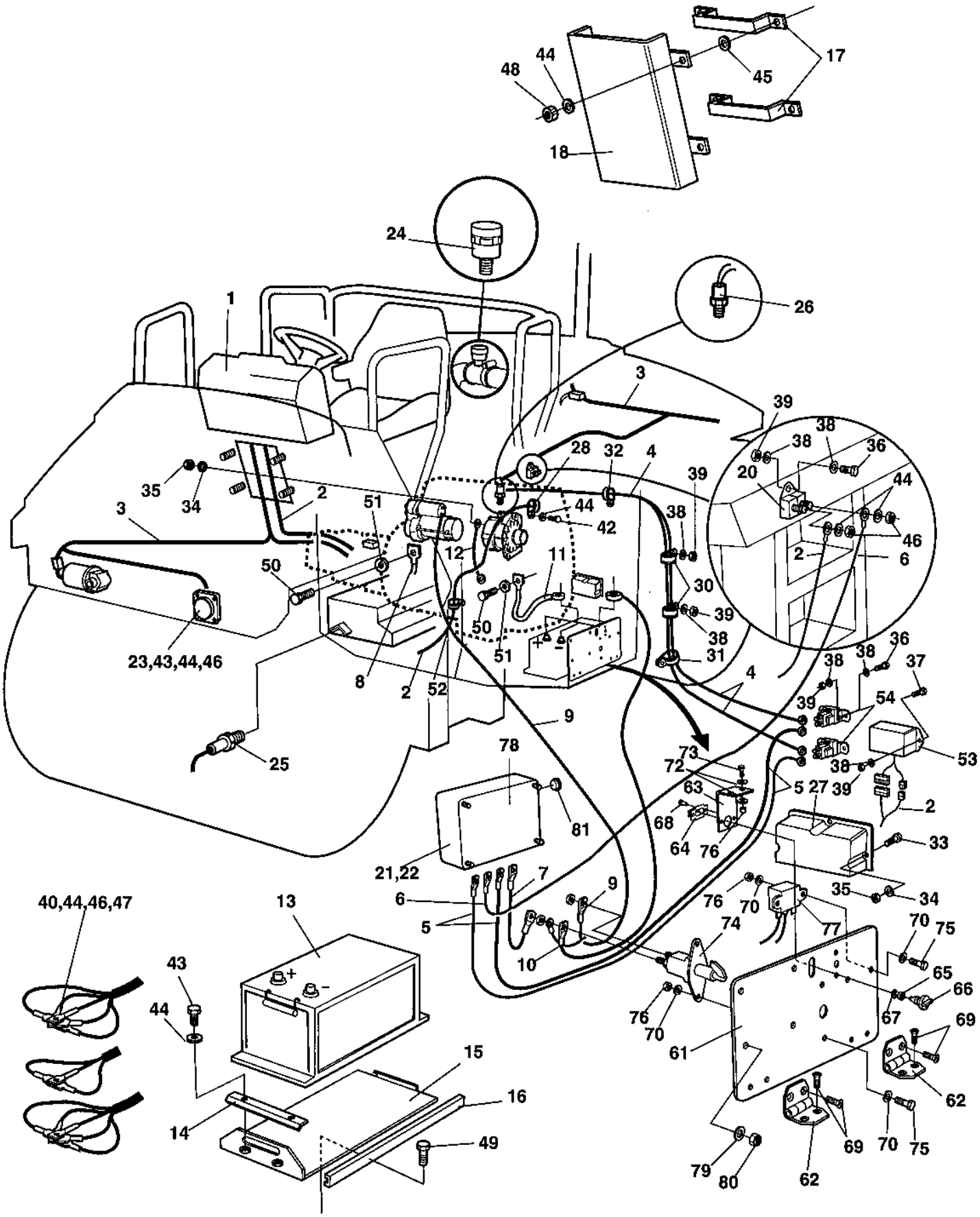

Ref. No.	Part No.	Rem.	Qty	Description	Code
1			1	Control panel	
2	387331		1	Cable harness	
3	384101		1	Cable harness	
4	387723		1	Cable harness Pre-heater	
5	791518		2	Connection cable, coarse	
6	791519		1	Connection cable, coarse	
7	791520		1	Connection cable, coarse	
8	903760		1	Connection cable	
9	901851		1	Connection cable	
10	348347		1	Battery cable	
11	903758		1	Battery cable	
12	791512		1	Connection cable	
13	470021		1	Battery	
14	371122		1	Battery holder	
15	376287		1	Battery holder	
16	371121		1	Slide rail	
17	372775		1	Cable holder	
18	372774		1	Casing	
20	791551		1	Junction block	
21	791556		1	Fuse 100A, yellow	
22	791557		2	Fuse 125A, green	
23	999027		2	Horn	D
24	929023		1	Indicator	D
25	903631		1	Temperature sensor Hydraulic oil	D
26	903632		1	Temperature sensor Engine	D
27	387722		1	Protection cover	
28	921072		1	Clamp	
29	921031		1	Clamp	
30	921028		2	Clamp	
31	960727		1	Clamp	
32	921132		1	Clamp	
33	500008		3	Screw M5-0,8x30 8,8	
34	904281		8	Washer 5,3x10x1	
35	586001		4	Lock nut M5	
36	500015		5	Screw M6-1x30 8,8	
37	500061		2	Screw M6-1X35 8,8	
38	904228		16	Washer 6,4x12x1,5	
39	586002		9	Lock nut M6	
40	903768		6	Threaded stud	
42	500053		1	Screw M8-1,25x20 8,8	
43	500021		4	Screw M8-1,25x25 8,8	
44	904229		21	Washer 8,4x16x1,5	
45	904044		4	Washer	
46	586003		10	Lock nut M8	
47	570005		6	Nut M8	
48	902286		4	Lock nut M8	
49	500043		1	Screw M10x16H 8,8	
50	500051		2	Screw M12-1,75x25 8,8	
51	904231		2	Washer 13x24x2	
52	904346		1	Clamp	
53	939408		1	Heater control module	
54	939409		2	Pree heater relay	
61	387329		1	Holder plate	
62	903907		2	Hinge	
63	387422		1	Bracket	
64	903344		1	Lock	
65	791487		1	Washer	
66	904914		1	Tap	
67	903342		1	Retaining ring	
68	923253		2	Rivet	
69	513008		8	Screw	

Electrical equipment

17767

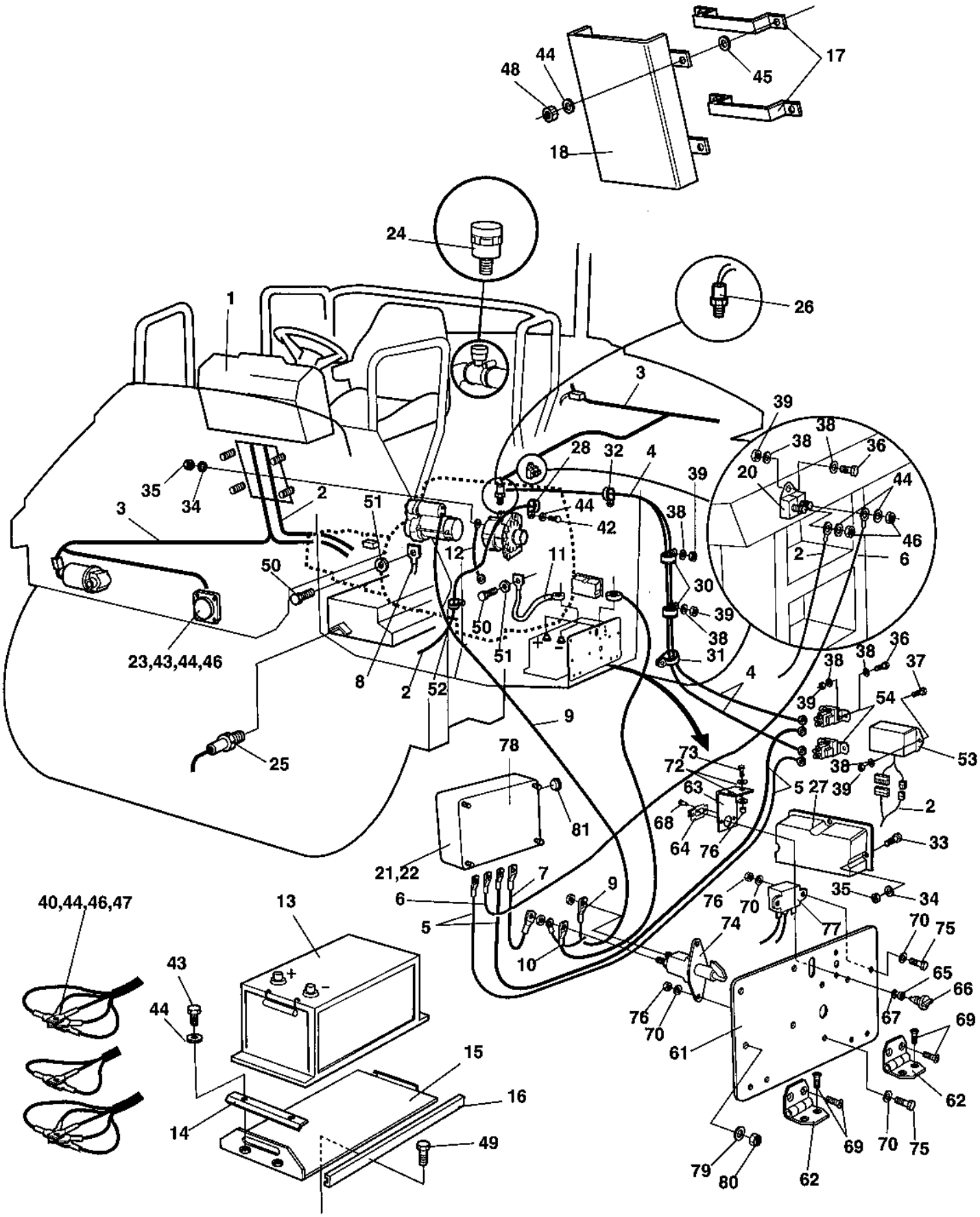

Ref. No.	Part No.	Rem.	Qty	Description	Code
70	904228		12	Washer 6,4x12x1,5	
71	904563		4	Lock nut	
72	928467		4	Washer	
73	500013		2	Screw M6-1x16 8,8	
74	903640		1	Battery switch	D
75	500040		4	Screw M6-1x20 8,8	
76	586002		6	Lock nut M6	
77	904448		1	Relay	D
78	791532		1	Fuse box	
79	904229		4	Washer 8,4x16x1,5	
80	791182		4	Lock nut M8	
81	891539		1	Plug unthreaded	

Electrical battery switch

17360

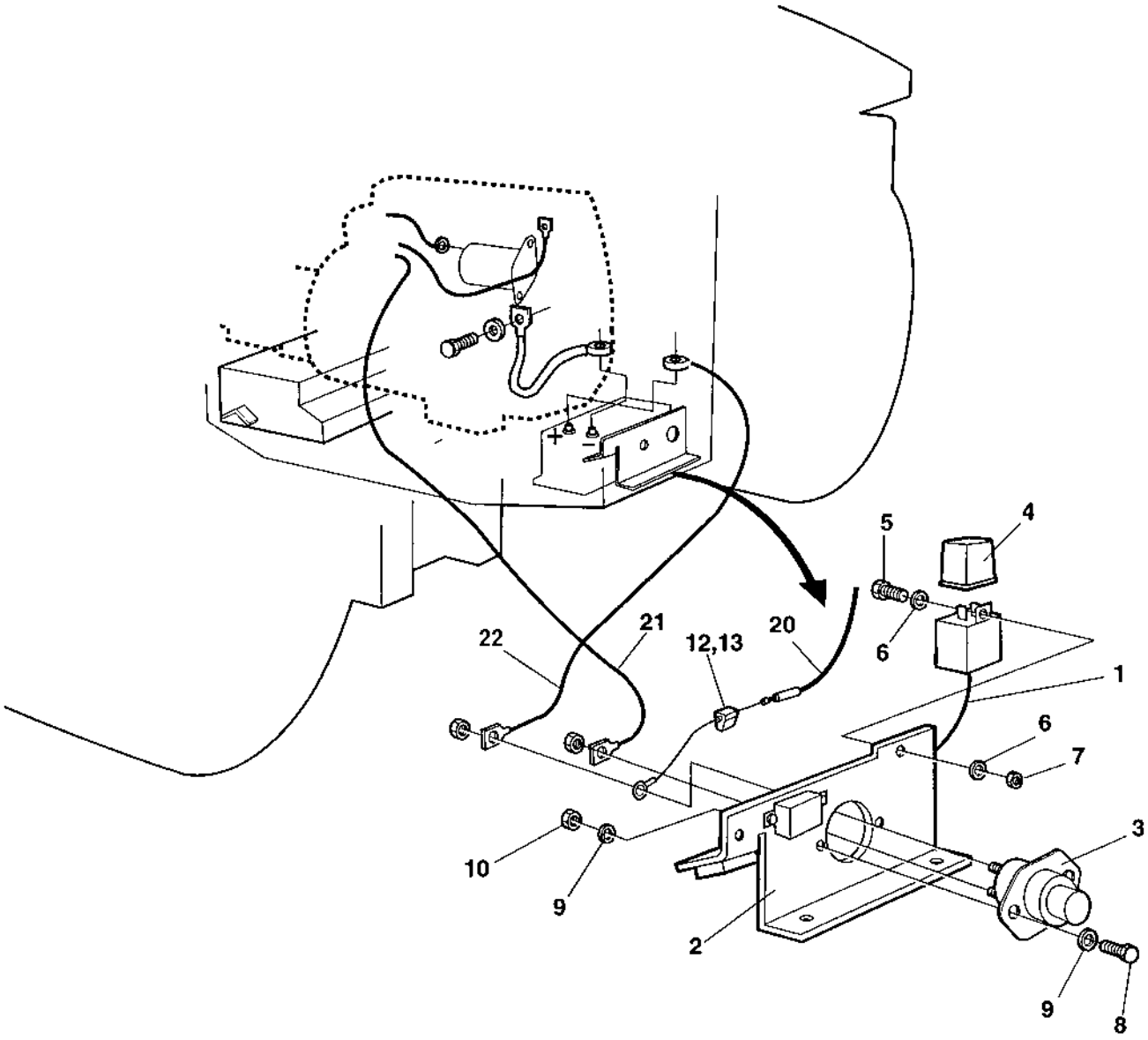

Electrical battery switch

Ref. No.	Part No.	Rem.	Qty	Description	Code
1	384038		1	Cable harness	
	357562		1	Relay holder	
2	384056		1	Holder plate	
3	791077		1	Electrical battery switch	
4	287597		1	Relay	D
5	508020		1	Screw M5x20	
6	904281		2	Washer 5,3x10x1	
7	586001		1	Lock nut M5	
8	500021		2	Screw M8-1,25x25 8,8	
9	904229		4	Washer 8,4x16x1,5	
10	570005		2	Nut M8	
12	904015		1	Fuse holder	
13	901226		1	Fuse 7.5A	D
20		1	1	Cable harness	D
21		1	1	Battery cable	D
22		1	1	Battery cable	D

1) See section " Electrical equipment ".

Instrument box

15672-3

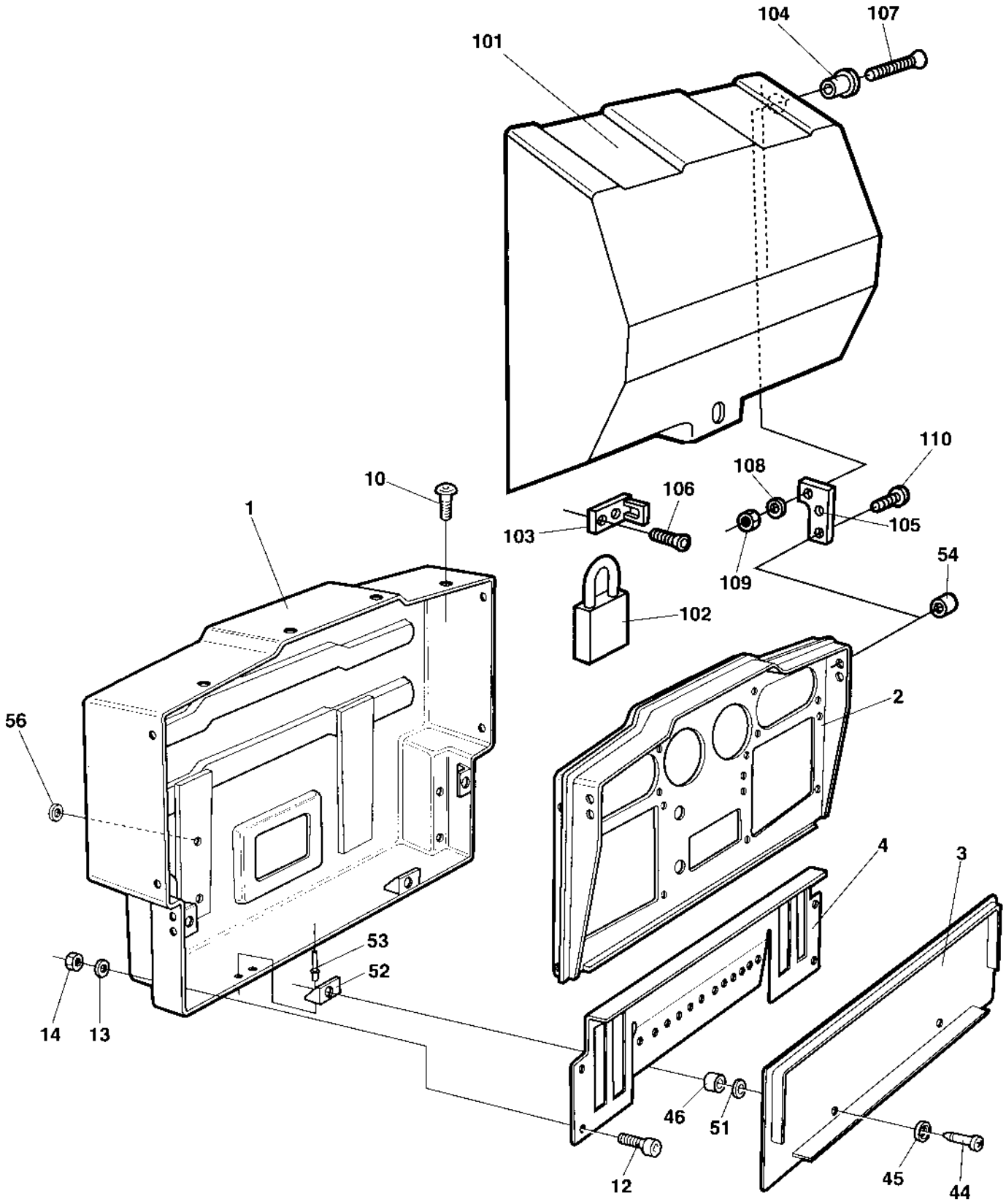

Instrument box

Ref. No.	Part No.	Rem.	Qty	Description	Code
1	374105		1	Instrument box	
2	374379		1	Control panel	
3	359845		1	Cover	
4	370165		1	Relay bracket	
10	903658		8	Screw M5x10	
12	500040		4	Screw M6-1x20 8,8	
13	904228		4	Washer 6,4x12x1,5	
14	902285		4	Lock nut M6	
44	903599		4	Trunnion	
45	903600		4	Rubber washer	
46	903601		4	Washer	
51	903678		4	Rubber washer	
52	903602	1	4	Lock device	
53	903436	1	8	Blind rivet	
54	903653		4	Plug	
56	903961		4	Washer	
100			1	Control panel cover Option	
101	372103		1	.Cover	
102	358881		1	.Pad lock	
103	372104		1	.Eyelet	
104	357855		2	.Bushing	
105	372105		2	.Bracket	
106	904207		2	.Screw	
107	904208		2	.Screw	
108	904228		2	.Washer 6,4x12x1,5	
109	586002		2	.Lock nut M6	
110	903658		4	.Screw M5x10	

1) Included in cpl. Instrument box, item 1.

Instrument panel, main

17782

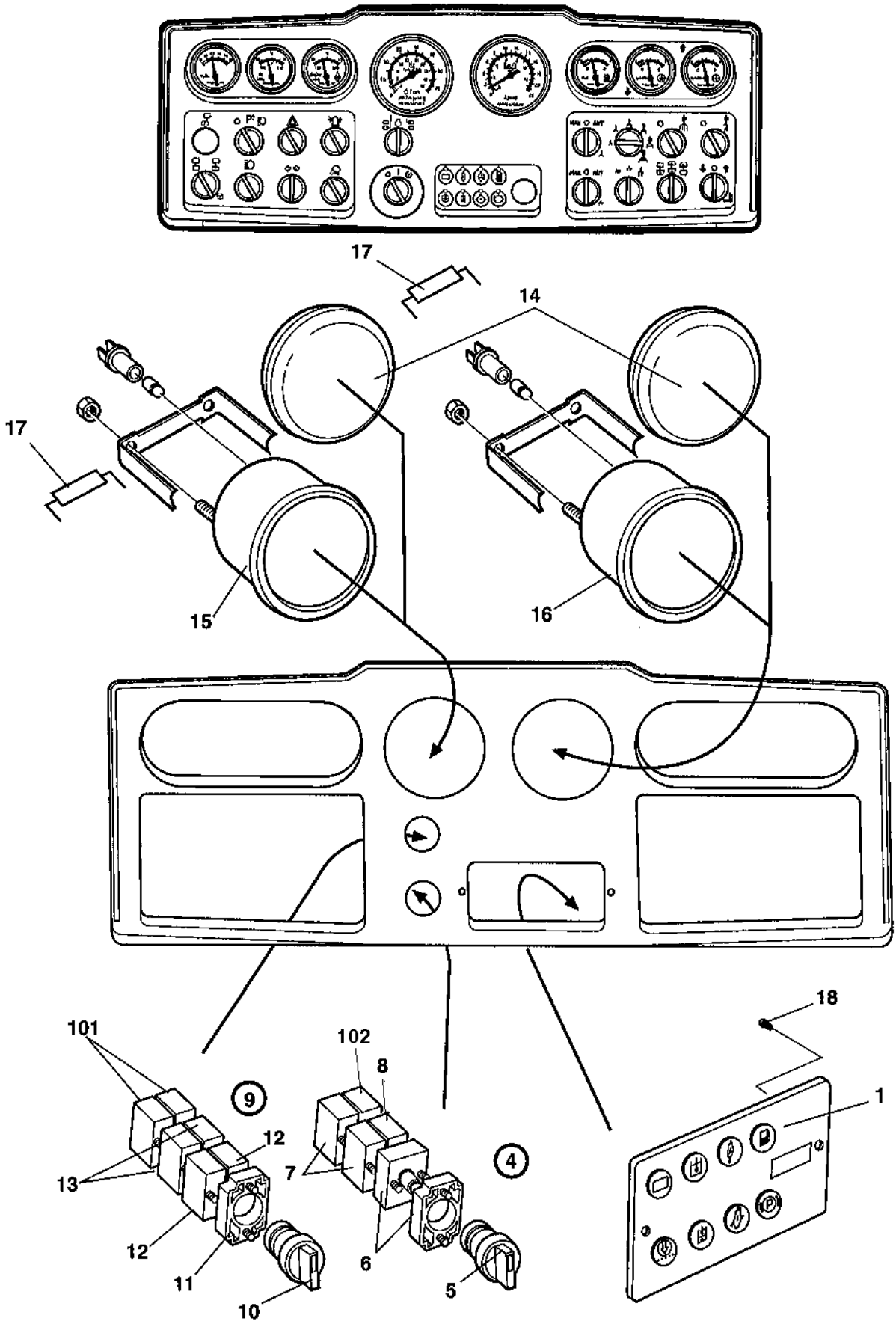

Instrument panel, main

Ref. No.	Part No.	Rem.	Qty	Description	Code
1	380660		1	Display	D
4		B	1	Switch, cpl	D
5	791489		1	.Switch	
6	903875		1	.Flange with light	
	985012		1	Bulb	D
7	930154		2	.Contact piece	
8	930163		1	.Contact piece	D
9		C	1	Switch, cpl	D
10	932058		1	.Switch	D
11	903876		1	.Connector	
12	930163		2	.Contact piece	D
13	930154		2	.Contact piece	
14	345139		2	Hole plug	
15	371275		1	Tachometer and frequency meter	
			1	Bulb	
		D	1	Sensor	
16	359347		1	Speedometer	
			1	Bulb	
		D	1	Sensor	
17	357526		3	Resistor	
18	903657		2	Screw	
101	930163	E	2	Contact piece	D
102	930154	F	1	Contact piece	

B) Start
C) Freq/tacho selector
D) See speed and frequency sensors
E) Option tachograph
F) Electrical battery switch.

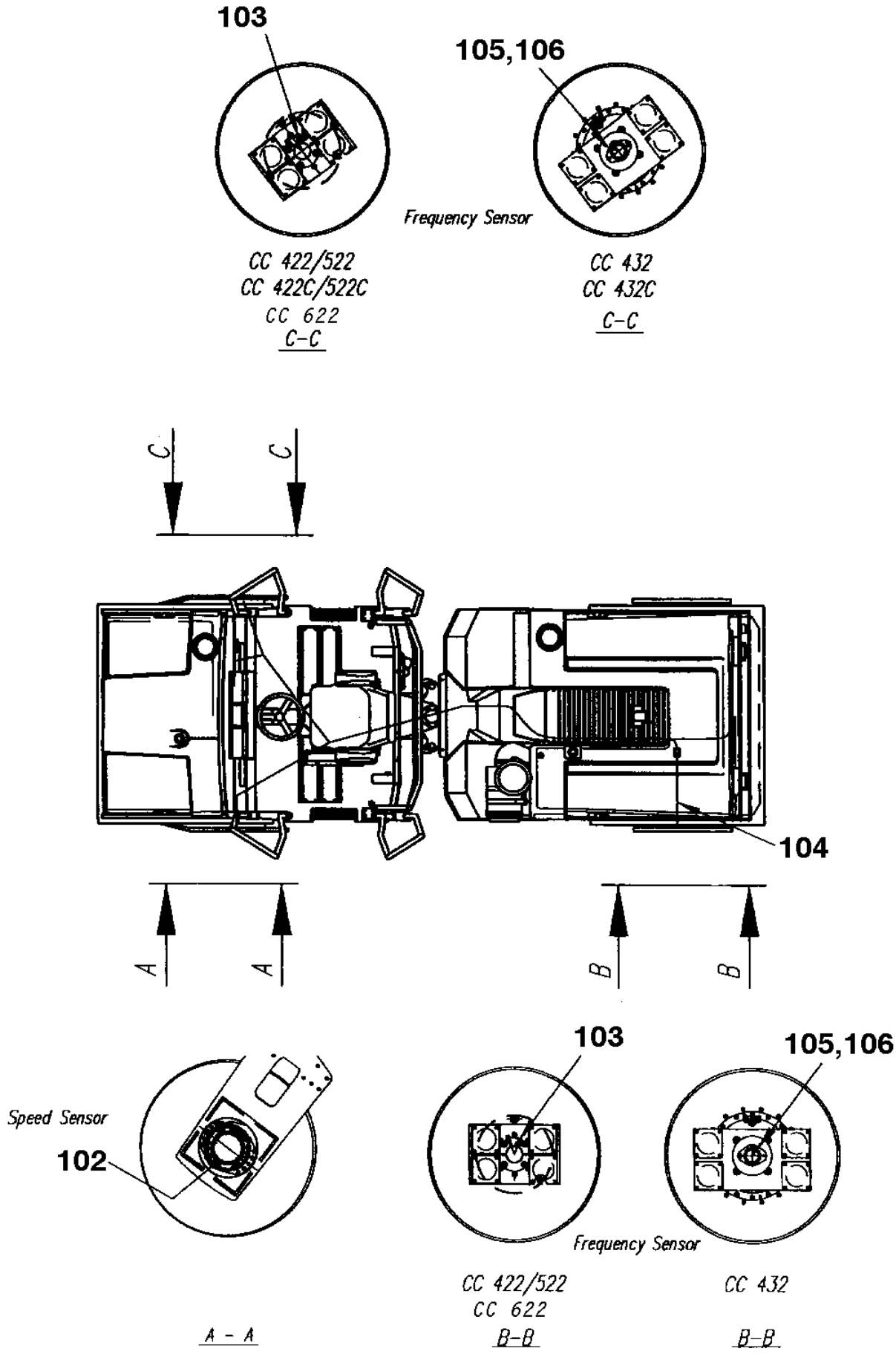
103
105,106
Frequency Sensor
CC 422/522
CC 422C/522C
CC 622
C-C
CC 432
CC 432C
C-C
C
C
104
A
A
B
B
Speed Sensor
102
103
105,106
Frequency Sensor
CC 422/522
CC 622
B-B
CC 432
B-B
A - A

Ref. No.	Part No.	Rem.	Qty	Description	Code
102	372576	A	1	Sensor M12-1	
103	372618	B	2	Sensor 3/4-16	
104	376177		1	Cable harness	

A) Read workshop manual for adj. of sensors. Item 102 is used both as speed and frequency sensor

B) Read your workshop manual for adjustment of teh sensors

Instrument panel, upper left

15708-2

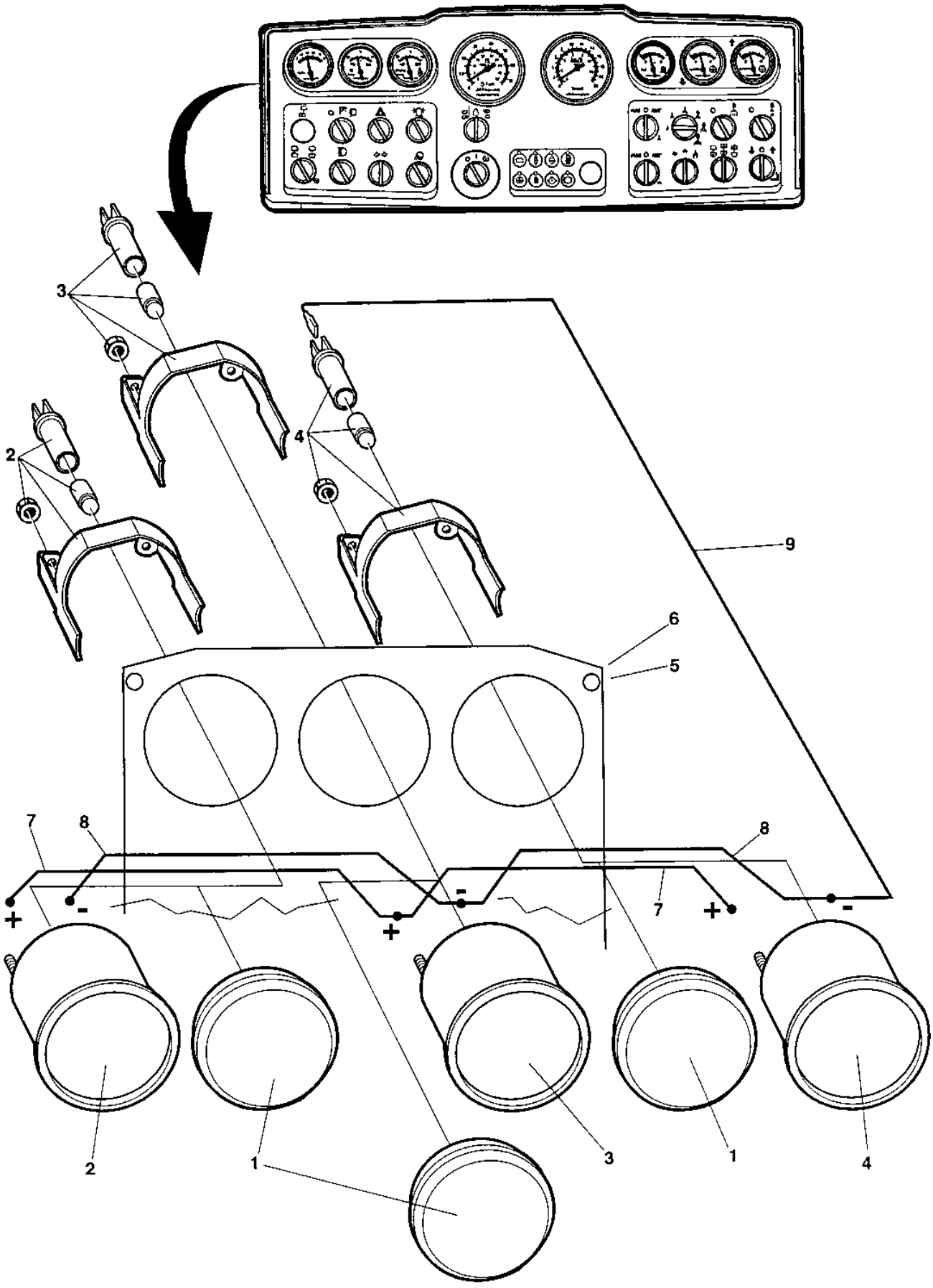

Instrument panel, upper left

Ref. No.	Part No.	Rem.	Qty	Description	Code
1	345870		3	Plug	
2	359340		1	Volt meter	D
	355258		1	.Lamp holder	
	985012		1	.Bulb	D
3	359341	A	1	Temperature meter hydraulic oil Option	D
	355258		1	.Lamp holder	
	985012		1	.Bulb	D
		1	1	Temperature sender	D
4	381874		1	Water temperature gauge Option	
	904890		1	.Lamp holder	
	904889		1	.Bulb	
		2	1	Temperature sender	
5		3	1	Control panel plate	
6		3	6	Screw	
7	343550		2	Connection cable	
8	903927		2	Cable	
9	904016		2	Cable	

1) See section " Electrical equipment "
2) See section " Engine "
3) See section " Instrument panel, lower left "
A) Hydraulic oil

Instrument panel, upper right

15709-2

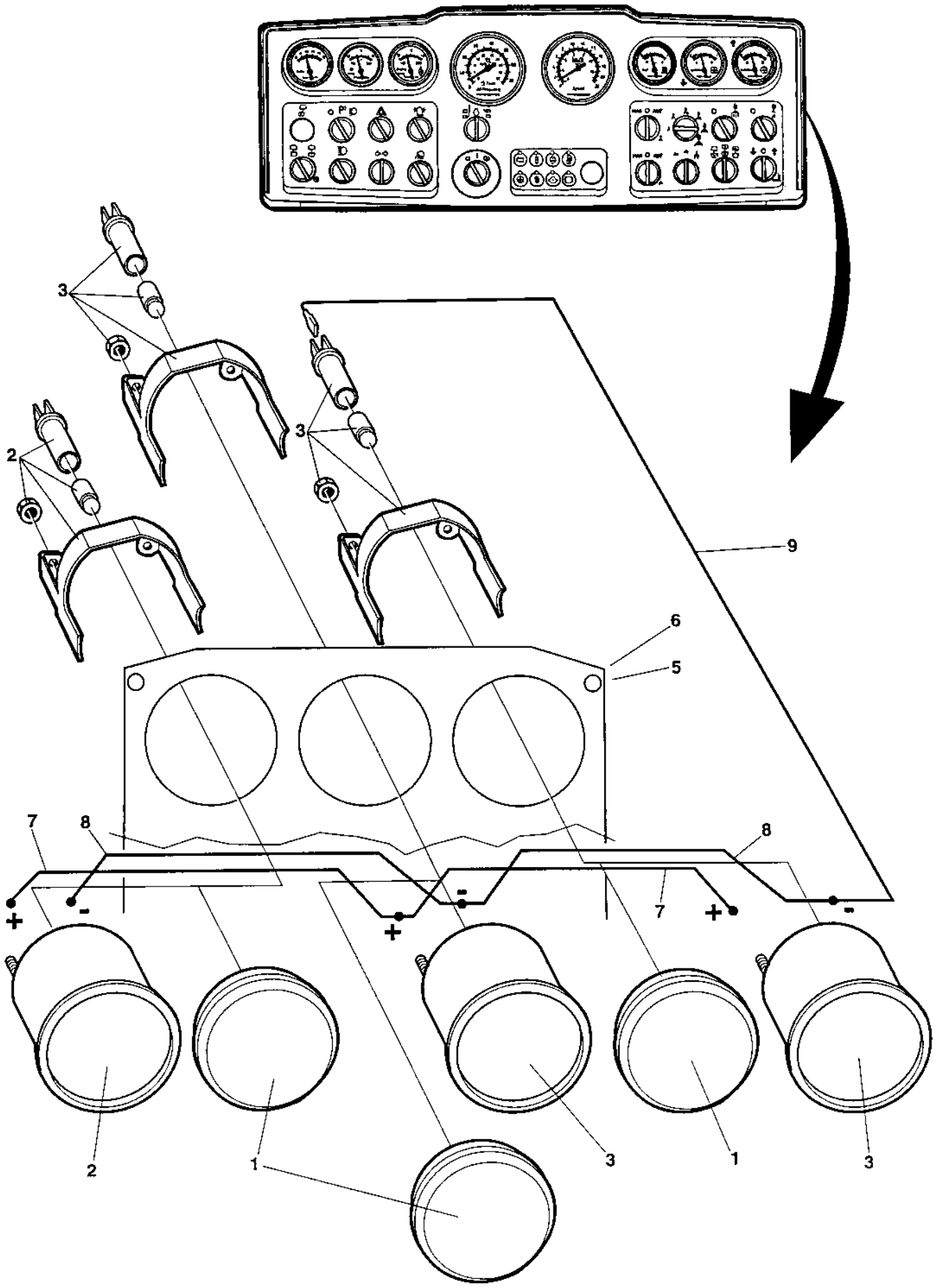

Instrument panel, upper right

Ref. No.	Part No.	Rem.	Qty	Description	Code
1	345870		3	Plug	
2	359343		1	Fuel gauge	D
	355258		1	.Lamp holder	
	985012		1	.Bulb	D
		1	1	Fuel level sender	D
3	359344	A	2	Water gauge	D
	355258		1	.Lamp holder	
	985012		1	.Bulb	D
		2	2	Water level sender	D
5		3	1	Control panel plate	D
6		3	6	Screw	D
7	343550		2	Connection cable	
8	903927		2	Cable	
9	904016		3	Cable	

1) See section " Fuel system "
2) See section " Sprinkler system, tanks "
3) See section " Instrument panel, lower right "
A) Sprinkler tanks

Instrument panel, lower left

17476

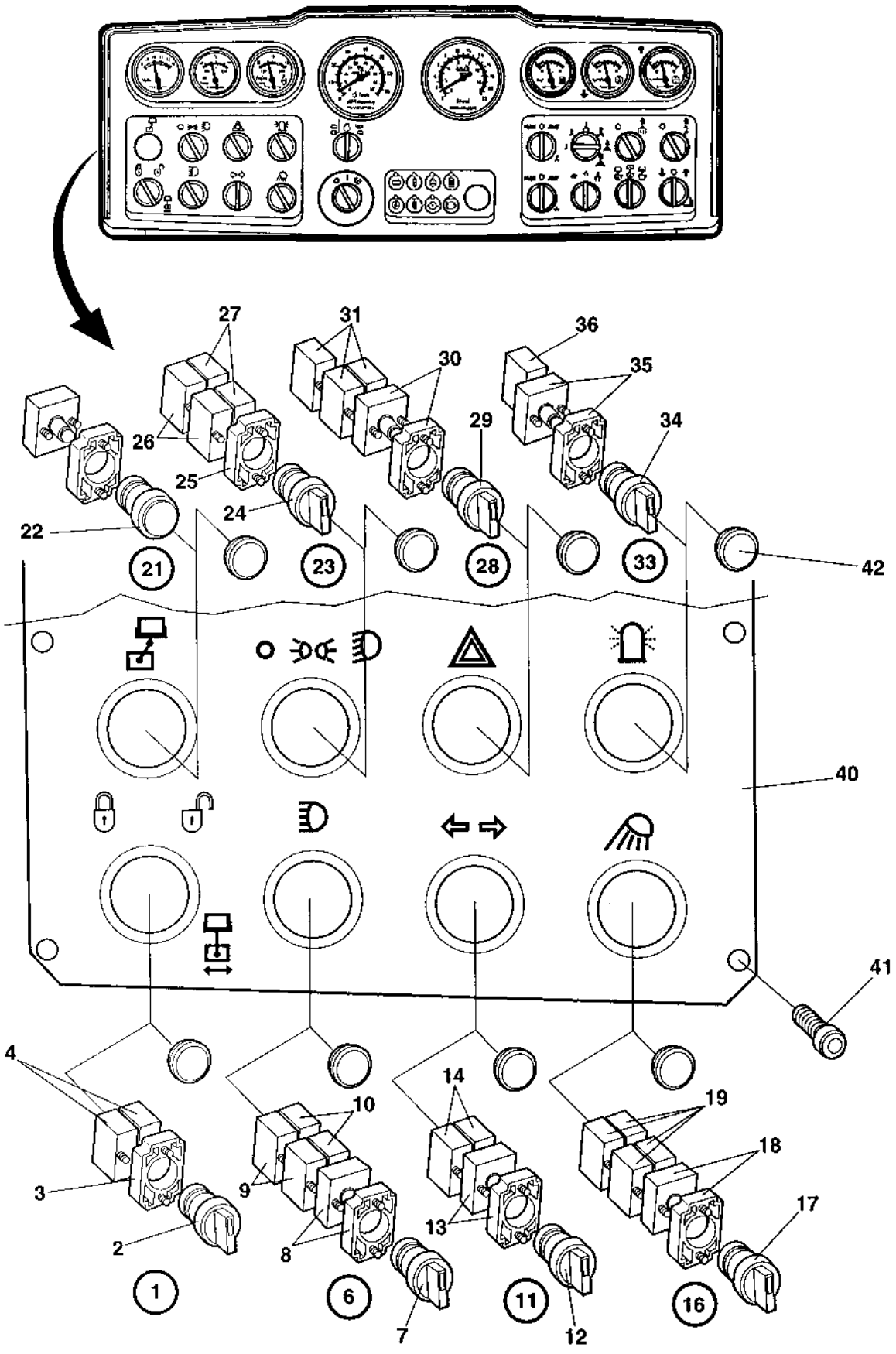

Instrument panel, lower left

Ref. No.	Part No.	Rem.	Qty	Description	Code
1			1	Switch, cpl Artic/Pivot steering	
2	930192	1	1	.Switch	D
3	903876		1	.Connector	
4	930163		2	.Contact piece	D
6			1	Switch, cpl Main beam	D
7	932057	C	1	Switch	
8	903875		1	.Flange with light	
	985012		1	Bulb	D
9	930154		2	.Contact piece	
10	930163		2	.Contact piece	D
11			1	Switch, cpl Direction indicator	D
12	930161	E	1	.Switch	D
13	903875		1	.Flange with light	
	985012		1	Bulb	D
14	930163		2	.Contact piece	D
16			1	Switch, cpl Working light	D
17	930166	O	1	.Switch	D
18	903875		1	.Flange with light	
	985012		1	Bulb	D
19	930163		4	.Contact piece	D
21	932059	G	1	Pilot lamp cpl Yellow	
	985012		1	Bulb	D
22	903716		1	.Lamp glass Yellow	
23			1	Switch, cpl Parking / dipped beam	
24	932058	I	1	.Switch	D
25	903876		1	.Connector	
26	930154		2	.Contact piece	
27	930163		2	.Contact piece	D
28			1	Switch, cpl Hazard flasher	D
29	932056	K	1	.Switch	D
30	903875		1	.Flange with light	
	985012		1	Bulb	D
31	930163		3	.Contact piece	D
33			1	Switch, cpl Rotating beacon	D
34	930166	O	1	.Switch	D
35	903875		1	.Flange with light	
	985012		1	Bulb	D
36	930163		1	.Contact piece	D
40	381561	M	1	Control panel plate	
41	903657		6	Screw	
42	911456	N	-	Hole plug	

1) Two fixed positions
C) Blue
E) Green
G) Drum position
I) Black
K) Red
M) Switches instrument
N) Quantity as required
O) Yellow

Instrument panel, lower right

15707-1

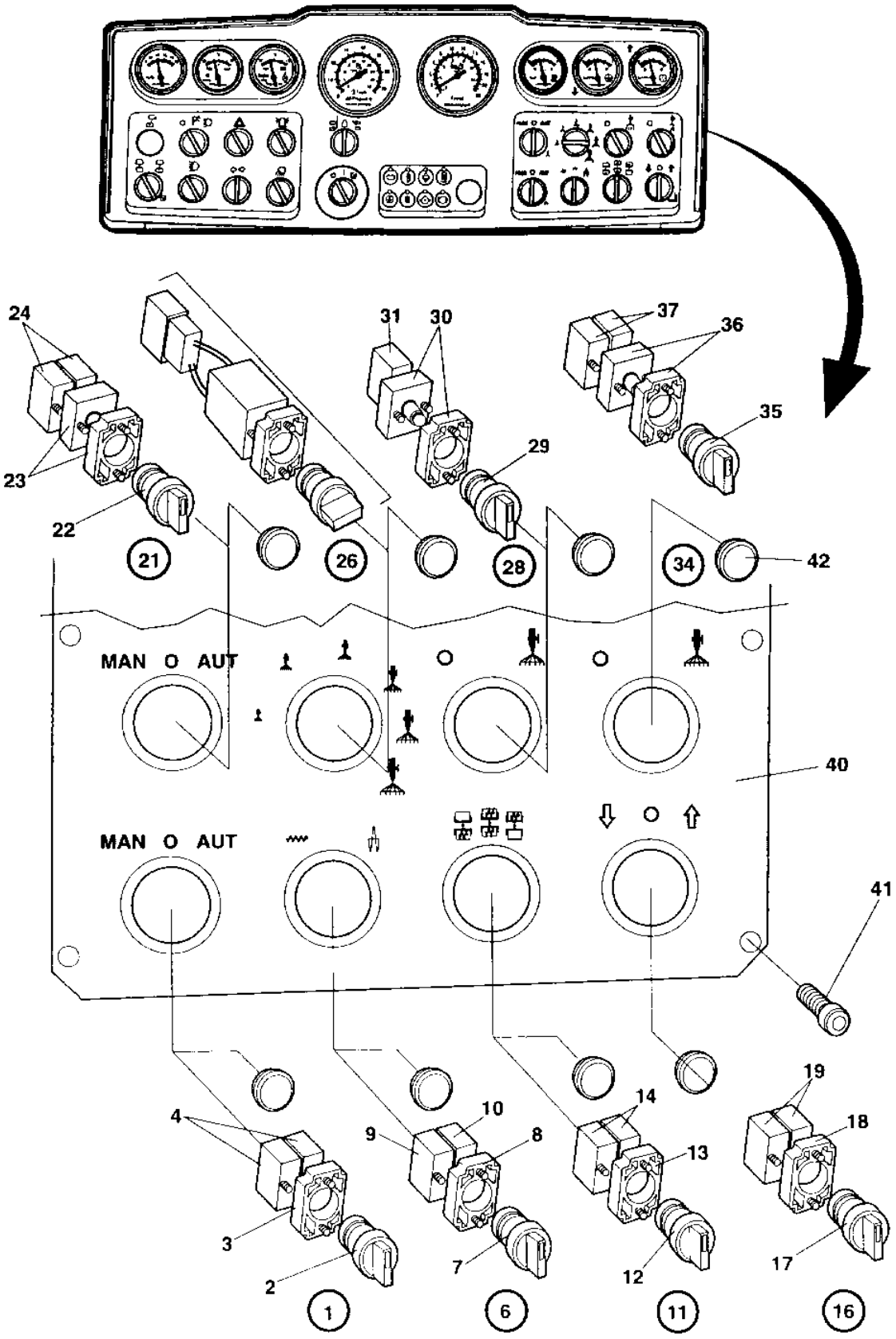

Instrument panel, lower right

Ref. No.	Part No.	Rem.	Qty	Description	Code
1			1	Switch Vibration man/aut	
2	932058	B	1	.Switch	D
3	903876		1	.Connector	
4	930163		2	.Contact piece	D
6			1	Switch Amplitud selector	D
7	930192	B	1	.Switch	D
8	903876		1	.Connector	
9	930163		1	.Contact piece	D
10	930154		1	.Contact piece	
11			1	Switch Vibration selector	
12	932058	B	1	.Switch	D
13	903876		1	.Connector	
14	930163		2	.Contact piece	D
16			1	Switch Edge cutter up-down	D
17	925713	B	1	.Knob	
18	903876		1	.Connector	
19	930163		2	.Contact piece	D
21			1	Switch Sprinkler man/aut	D
22	926989	G	1	.Switch	
23	903875		1	.Flange with light	
	985012		1	.Bulb	D
24	930163		2	.Contact piece	D
26	370644	H	1	Switch, cpl	
28		I	1	Switch	
29	932057	G	1	.Switch	
30	903875		1	.Flange with light	
	985012		1	.Bulb	D
31	930163		1	.Contact piece	D
34			1	Switch Sprinkler edge cutter	D
35	932057	G	1	.Switch	
36	903875		1	.Flange with light	
	985012		1	.Bulb	D
37	930163		2	.Contact piece	D
40	373582		1	Control panel plate	
41	903657		6	Screw	
42	911456	K	-	Hole plug	

B) Black
G) Blue
H) Sprinkler timer, used togheter with relay 374213
I) Sprinkler tyres
K) Quantily as required

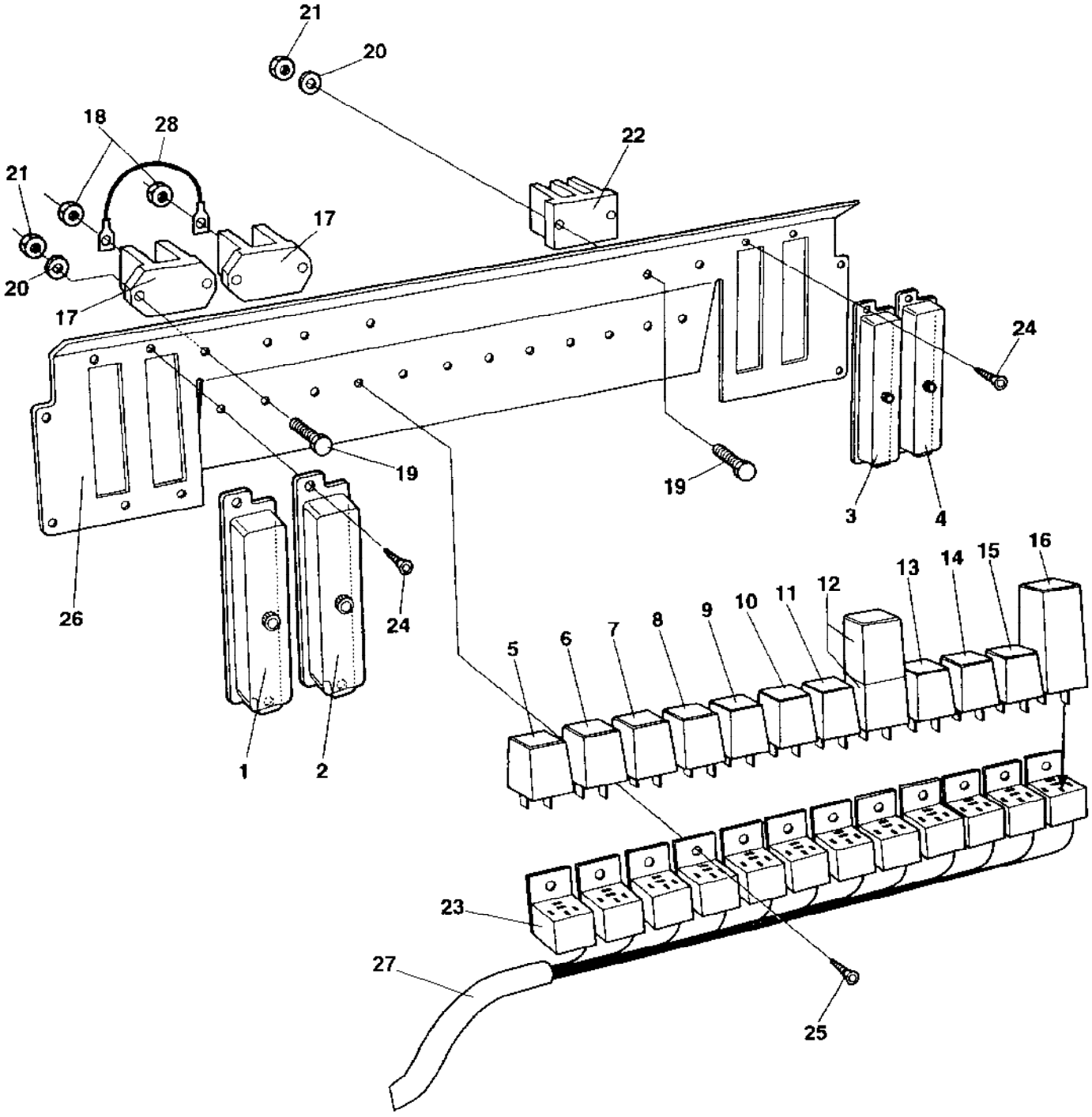
21
20
18
28
22
21
17
20
17
24
19
19
3
4
26
24
1
2
5
6
7
8
9
10
11
12
13
14
15
16
23
27
25

Instrument panel, relay, fuses

Ref. No.	Part No.	Rem.	Qty	Description	Code
1	901256	A	1	Fuse box	
	908110		1	.Cover	
	901240		N	Connector	
	901224		N	Fuse 3A	D
	901225	B	N	Fuse 5A	D
	901226		N	Fuse 7.5A	D
	901227		N	Fuse 10A	D
	901228		N	Fuse 15A	B
	903741		N	Fuse 20A	D
	901229		N	Fuse 25A	B
2	901256		1	Fuse box	
3	901256		1	Fuse box	
4	901256		1	Fuse box	
5	287597	G	1	Relay	D
6	287597	E	1	Relay	D
7	904989	D	1	Flash relay Option	D
8	287597	C	1	Relay	D
9	287597	G	1	Relay	D
10	287597	H	1	Relay	D
11	287598	I	1	Relay	D
12	287597	J	1	Relay	D
	374213	K	1	Time relay	D
13	287598	L	1	Relay	D
14	287597	M	1	Relay	D
15	287597	N	1	Relay	D
16	382782		1	Relay, VBS	D
17	903627		2	Junction block	
18	570004		2	Nut M6	
19	533013		6	Screw M4x20	
20	904698		6	Washer 4,3x8x0,8	
21	923976		6	Nut	
22	903625		1	Junction block	
23		P	12	Relay holder	
24	901767		8	Screw	
25	902223		9	Screw	
26	370165		1	Relay bracket	
27	387751		1	Cable harness	
28	903970		1	Cable	

A) Without fuses
B) As required
C) Main, lights
D) Direction indicator
E) Brake light
G) Fuel level
H) Hour meter
I) Horn
J) Sprinkler
K) Sprinkler, timer, used together with timer switch 370644
L) Main
M) AVC
N) Neutral start
P) Incl in cable harness

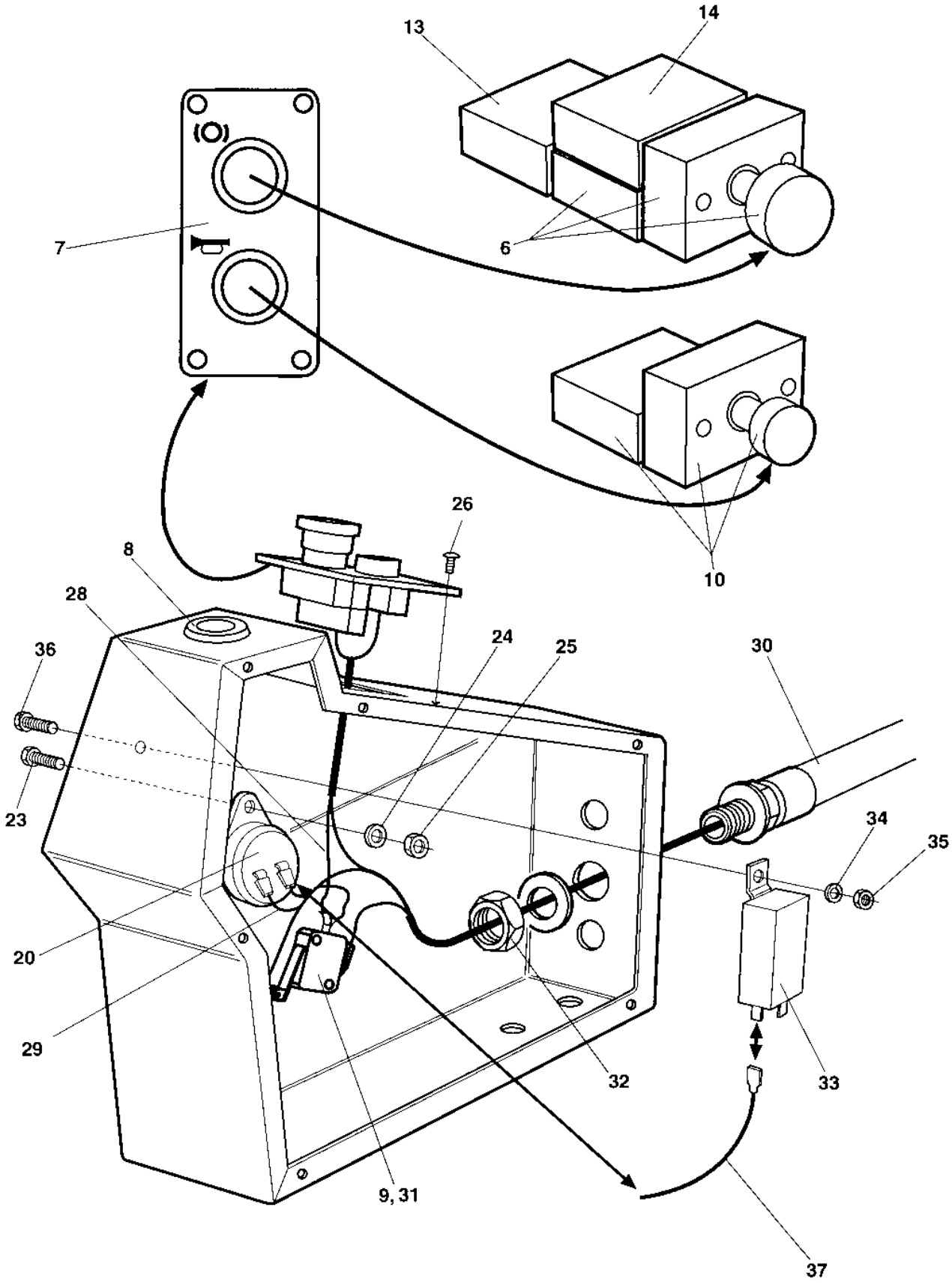
13
14
7
6
10
26
8
28
24
25
30
36
23
34
35
20
29
32
33
9, 31
37

Emergency stop panel

Ref. No.	Part No.	Rem.	Qty	Description	Code
6	930200		1	Emergency stop	D
	930154		1	.Contact piece	
7	359941		1	Control panel plate	
8	911456		1	Hole plug	
9	902528		1	Micro switch	
10	932032	A	1	Push button	D
	930163		1	.Contact piece	D
13	930154		1	Contact piece	
14	930163		1	Contact piece	D
20	355301		1	Buzzer	D
23	500086		1	Screw	
24	904698		1	Washer 4,3x8x0,8	
25	570002		1	Nut M4	
26	904206		4	Screw	
28	904597		1	Cable	
29	960792		1	Cable	
30	376395		1	Cable harness	
31	900528		2	Screw	
32	791253		1	Nut	
33	904704	B	1	Relay	
34	904228	B	1	Washer 6,4x12x1,5	
35	586002	B	1	Lock nut M6	
36	904206	B	1	Screw	
37	380708	B	1	Cable harness	

A) Horn
B) Interlock, Option

Driving lights Direction & licenseplate light

17044

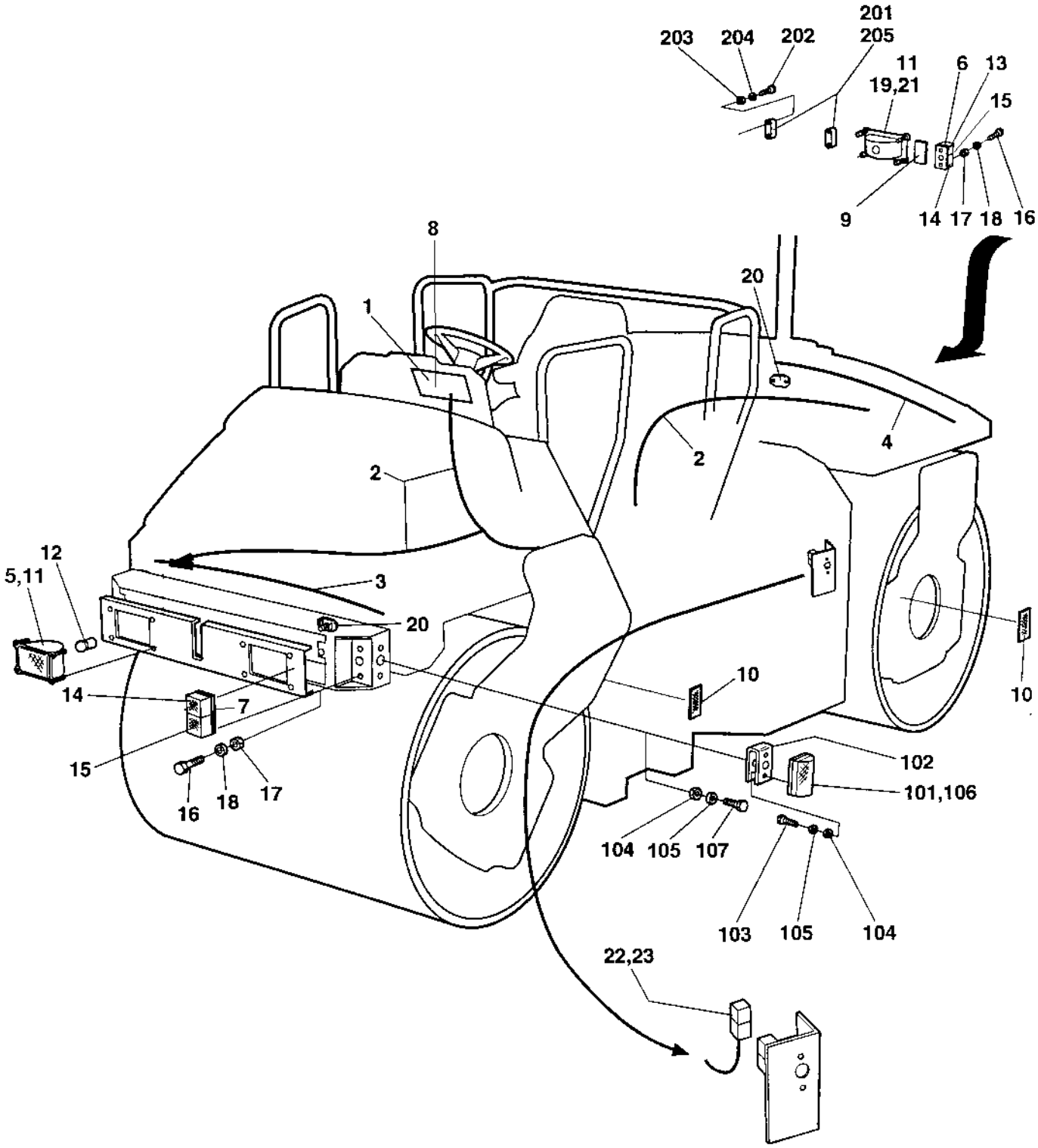

Driving lights Direction & licenseplate light

Ref. No.	Part No.	Rem.	Qty	Description	Code
			1	Driving lights	
1			1	Instrument panel, lower left	
2	376194		1	Cable harness	
3	376195		1	Cable harness	
4	376196		1	Cable harness	
5	902066	A	2	Head light	
	904313	B	2	Head light	
6	904317	C,F	1	Direction lamp	
	937108		1	.Lamp glass	
	904318	C,G	1	Direction lamp	
	937109		1	.Lamp glass	
7	904315	D,H	1	Direction lamp	
	937106		1	.Lamp glass	
	904316	D,I	1	Direction lamp	
	937107		1	.Lamp glass	
8	385264		1	Cable harness	
9	901182		2	Reflector, red	B
10	901183		4	Reflector, yellow	B
11	791389		8	Drive screw	
12	900790		2	Bulb 60/55w H4	B
13	928502		2	Bulb 21w	B
14	928502		4	Bulb 21w	B
15	985014		4	Bulb 5w	B
16	533030		8	Screw	
17	586001		8	Lock nut M5	
18	601001		8	Washer	
19	902227		2	Work light	
20	903627		2	Junction block	
21	901369		2	Bulb 55w H3	B
22	904032	E	1	Fuse holder	
23	904039		1	Fuse 50A	D
101	902064		2	Direction lights	
102	372097		2	Bracket	
103	533031		8	Screw	
104	586001		8	Lock nut M5	
105	904281		8	Washer 5,3x10x1	
106	985013		2	Bulb 12V,5W	B
107	500006		4	Screw M5x16	
201	929455		2	Licence plate light	
202	533038		4	Screw	
203	586002		4	Lock nut M6	
204	904228		4	Washer 6,4x12x1,5	
205	985013		2	Bulb 12V,5W	B

A) Right asym
B) Left asym
C) Yellow/red
D) Yellow/white
E) Incl in item 2
F) Rear, left
G) Rear, right
H) Front, left
I) Front, right

Working lights with/without Rops

17457

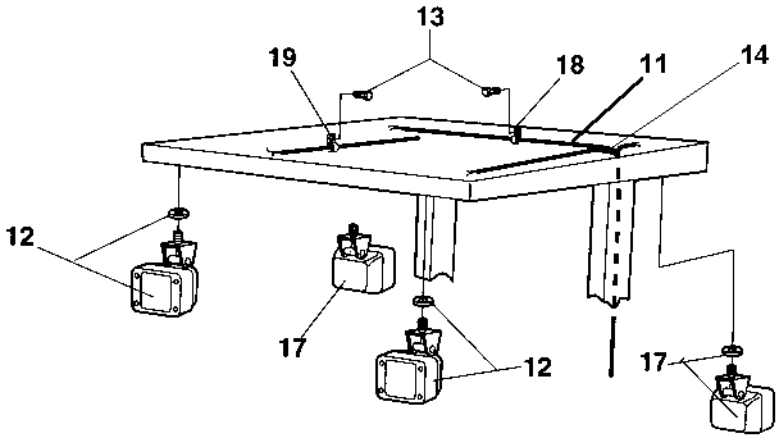

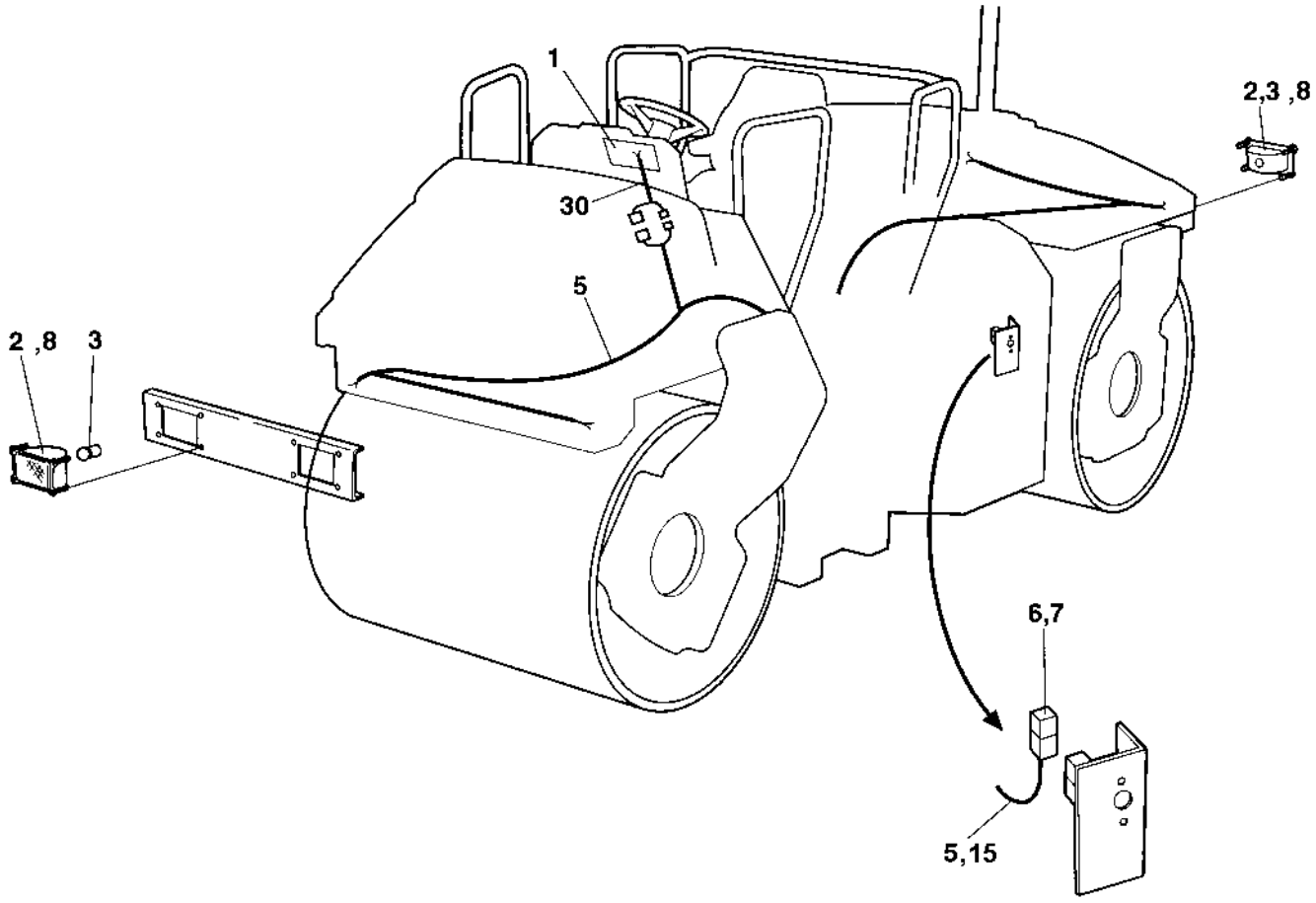

Working lights with/without Rops

Ref. No.	Part No.	Rem.	Qty	Description	Code
				Working light	B
1			1	.Control panel	B
2	902227		4	.Work light	
3	901369		4	.Bulb 55w H3	B
5	376197		1	.Cable harness	
6	904032		1	..Fuse holder	
7	904038		1	.Fuse 40A	D
8	791389		8	.Drive screw	
				Working light, rops	
11	376199		1	.Cable harness	
12	904314		2	.Work lamp	
13	541702		13	.Screw M6x12	
14	921028		1	.Clamp	
15	376245		1	.Cable harness	
17	904314		2	.Work lamp	
18	921031		4	.Clamp	
19	921039		8	.Pipe clamp	
30	385264		1	Cable harness	

Working lights, cab

17642

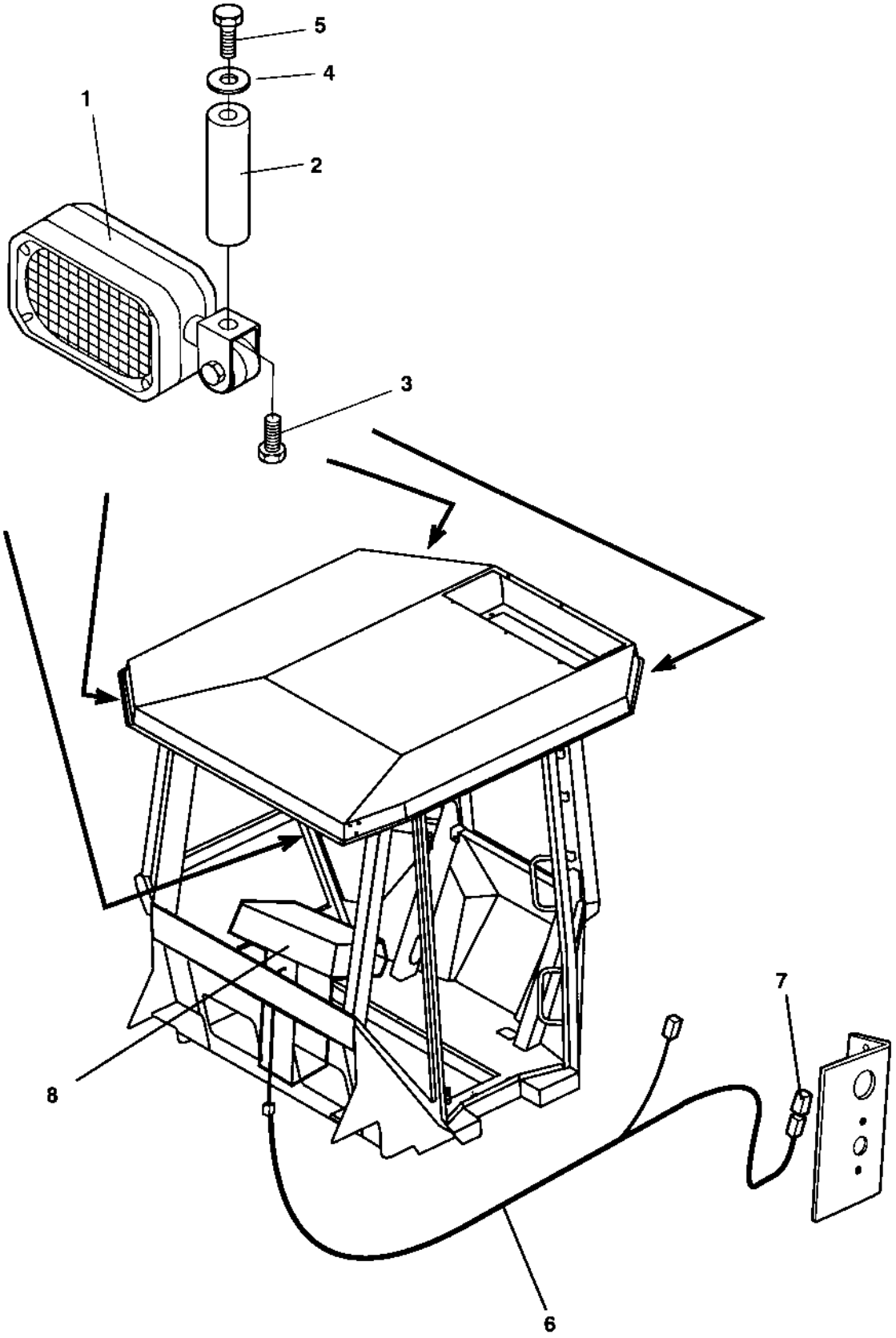

Working lights, cab

Ref. No.	Part No.	Rem.	Qty	Description	Code
1	908267		4	Working light	D
2	908359		4	Distance	
3	500019		4	Screw M8-1,25x16 8,8	
4	904229		4	Washer 8,4x16x1,5	
5	500019		4	Screw M8-1,25x16 8,8	
6	376175	1	1	Cable harness	
7	904037	1	1	Fuse 30A	D
8				Control panel	D

1) When no driving lights.

Protection cover, Head light Option

17080

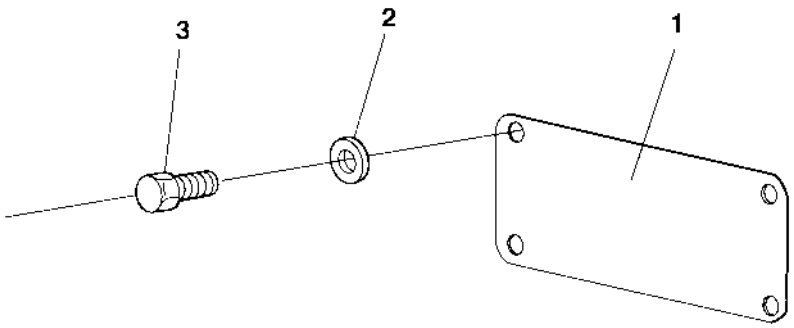

Protection cover, Head light Option

Ref. No.	Part No.	Rem.	Qty	Description	Code
1	374756		1	Protection cover	
2	904281		4	Washer 5,3x10x1	
3	791916		4	Screw	

Rotating beacon

15827

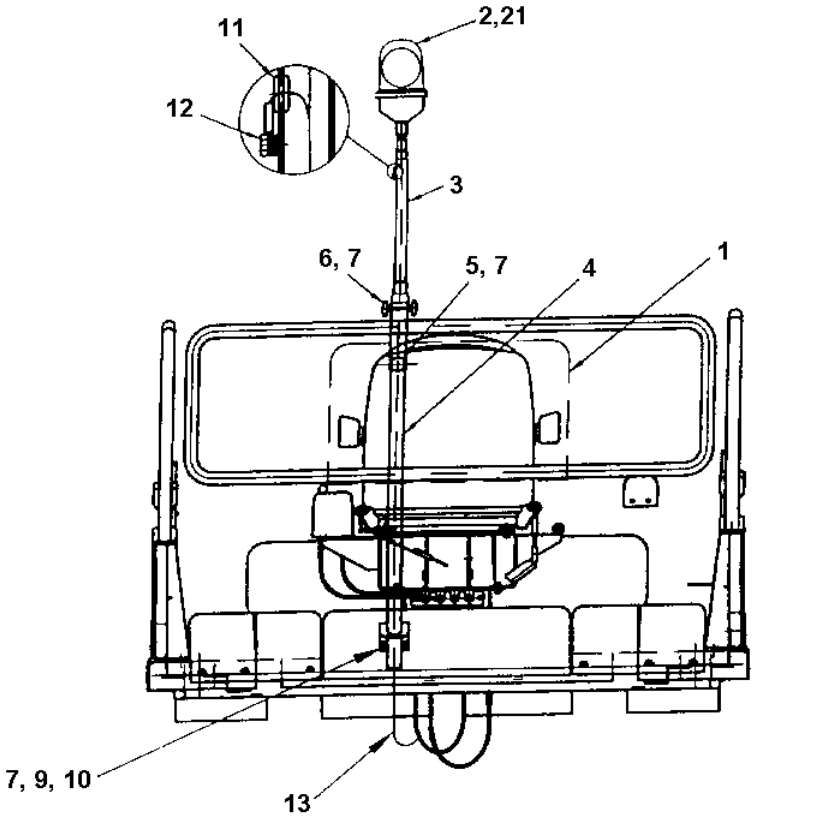

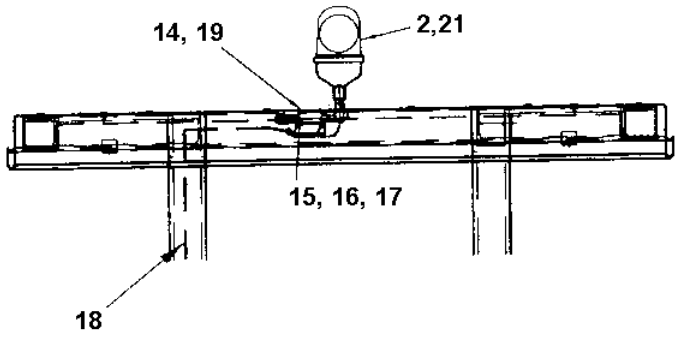

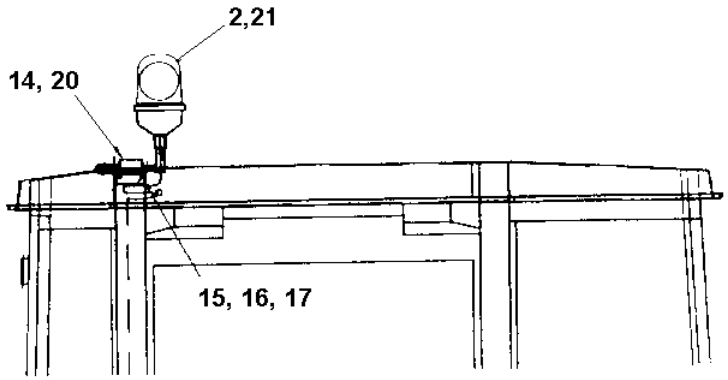

Ref. No.	Part No.	Rem.	Qty	Description	Code
				Std, rops, cab, cab with AC	
1		A	1	Control panel	
2	999011	1	1	Rotating beacon	D
	985126		1	.Bulb	B
	902803		1	.Lens Orange	B
3	371017	D	1	Lamp holder Model STD	
4	371016	E	1	Lamp holder Model STD	
5	371058		1	Nut Model STD	
6	371665		2	Hand knob Model STD	
7	904229		7	Washer 8,4x16x1,5 Model STD	
9	500021		4	Screw M8-1,25x25 8,8 Model STD	
10	570005		4	Nut M8 Model STD	
11	909152		1	Rubber grommet Model STD	
12	500044		1	Screw M6x8 Model STD	
13	376184		1	Cable harness	
14	358452		1	Lamp holder Model ROPS/CAB	
15	500021		2	Screw M8-1,25x25 8,8 Model ROPS/CAB/CAB w AC	
16	586003		2	Lock nut M8 Model ROPS/CAB/CAB w AC	
17	904229		2	Washer 8,4x16x1,5 Model ROPS/CAB/CAB w AC	
18	376184		1	Cable harness Model ROPS	
19	372674		1	Spacer Model ROPS	
20	371364		1	Lamp holder Model CAB w AC	
21	389577	2	1	Rotating beacon	D

1) Replaced by PN 389577.
2) Replaces PN 999011.
A) Lower left
D) Upper
E) Lower

Tachograph

17589

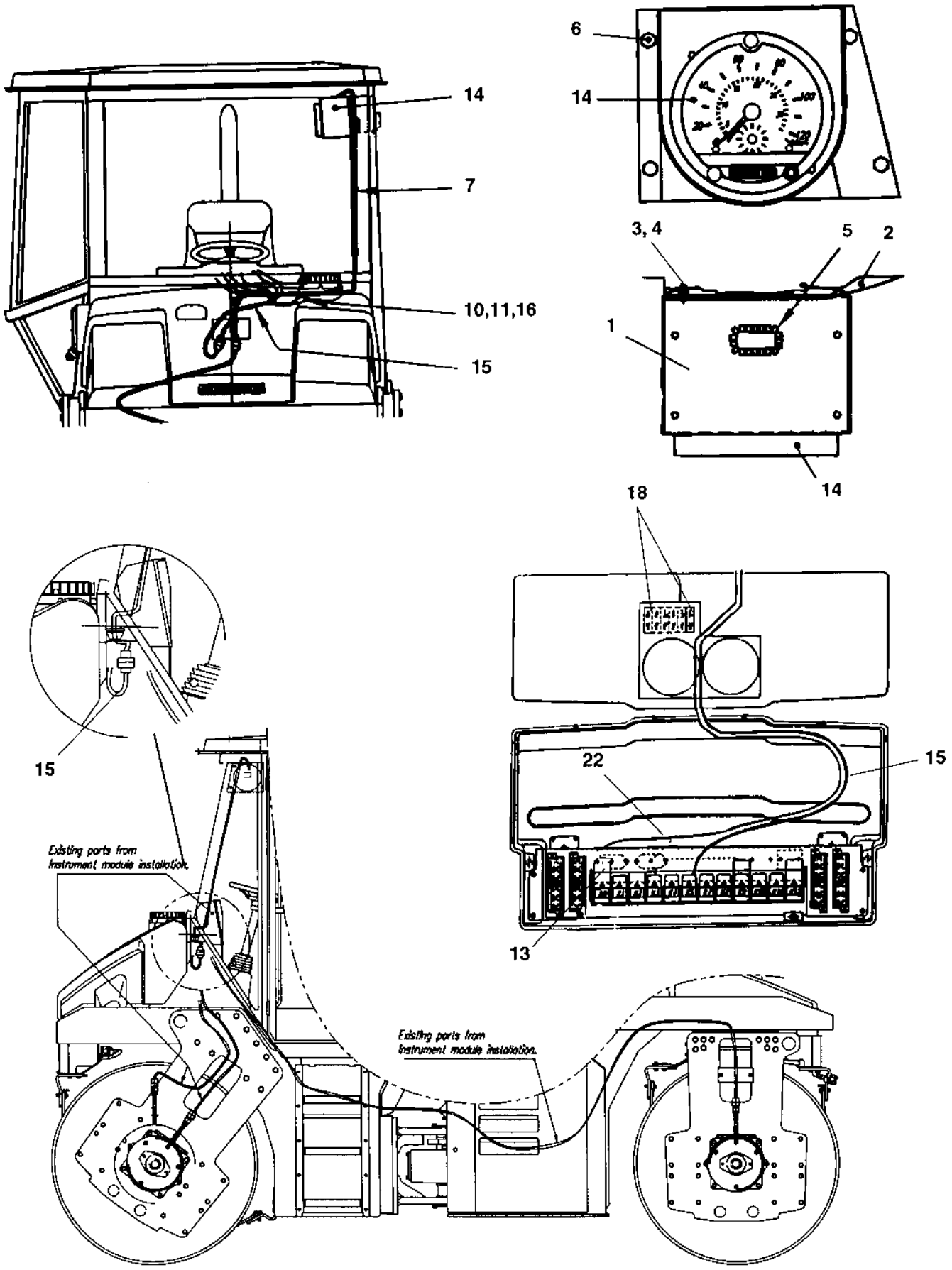

Ref. No.	Part No.	Rem.	Qty	Description	Code
1	371885		1	Instrument box	
2	370425		1	Support	
3	586002		2	Lock nut M6	
4	928381		2	Washer 6,4x18x1,6	
5	900904	A	1XL	Grommet	
6	541703		4	Screw M6x16	
7	385406		1	Cable harness	
10	901765		1	Connector 2-POL	D
11	901766		1	Connector 2-POL	D
13	791166		1	Frequency converter	
14	901209		1	Tachograph	
15	387498		1	Cable harness	
16	903824		1	Terminal	
18	930163		2	Contact piece	D
22	387497		1	Cable harness	

A) L=200 mm

Ref. No.	Part No.	Rem.	Qty	Description	Code
10				Drivers platform (Page 134)	
15				Drivers platform, for cab (Page 136)	
20				Drivers seat, turn-over (Page 138)	
25				Drivers seat Turn-over in cab (Page 140)	
27	359918			Steering column (Page 142)	C
35				Cross sliding Controls (Page 144)	
40				Cross sliding Carrier (Page 146)	
55				Forward and reverse control (Page 148)	
57				Speed limiter Option (Page 150)	
60				Engine control (Page 152)	
80				Rear mirror (Page 154)	
90				Rops / fops (Page 156)	
100				Cab, asymmetric (Page 158)	
101				Cab, symmetric (Page 178)	
120				Cab, water tank wipers (Page 196)	
140				Cab, sun curtain, first aid kit, int mirror (Page 198)	
160				Exterior rear mirrors (Page 200)	
170				Radio and cassette/cd player (Page 202)	

Drivers platform

17742

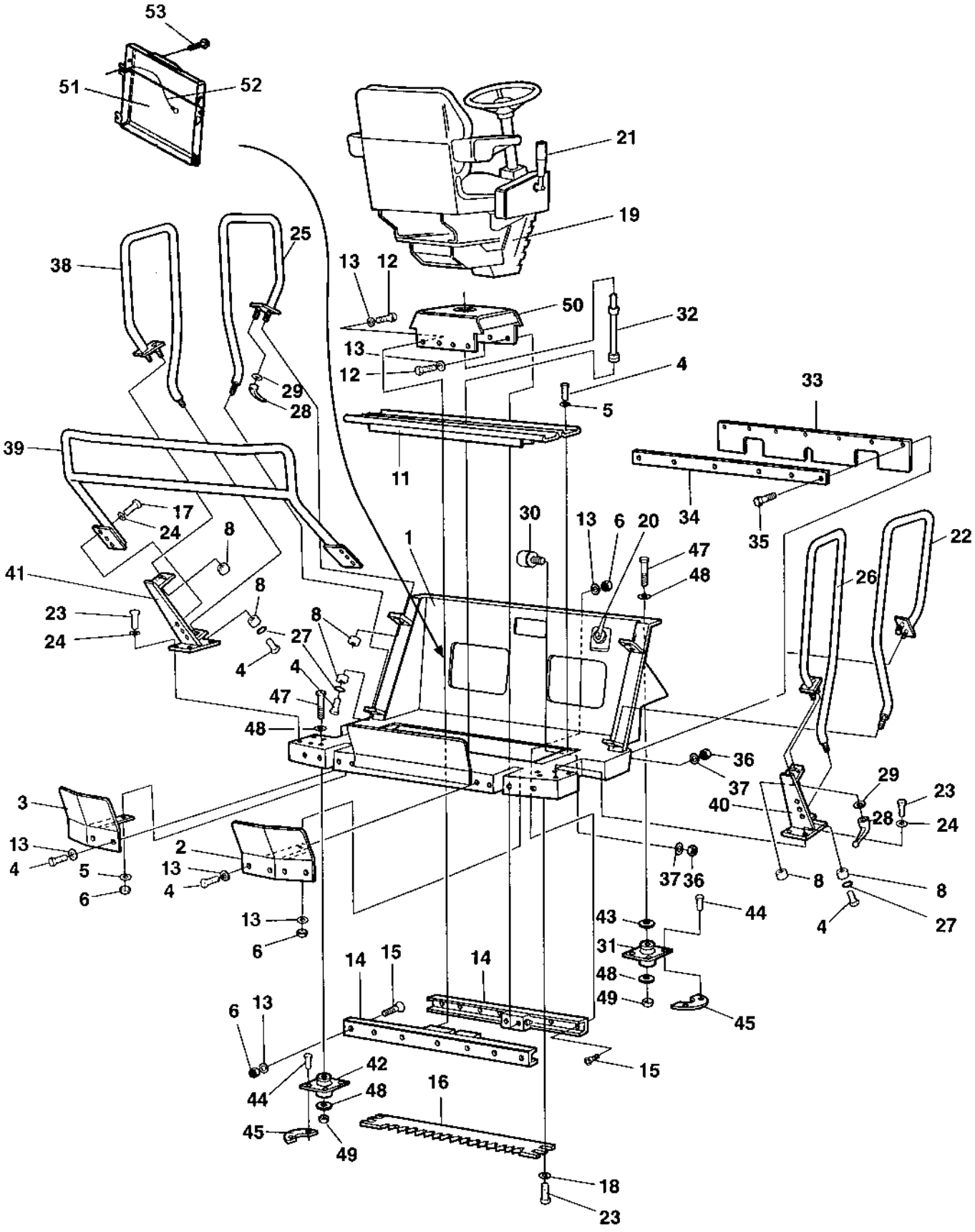

Ref. No.	Part No.	Rem.	Qty	Description	Code
1	371018		1	Platform	
2	371043		1	Protection, right	
3	371046		1	Protection, left	
4	500019		18	Screw M8-1,25x16 8,8	
5	904229		8	Washer 8,4x16x1,5	
6	570005		19	Nut M8	
8	370375		8	Bushing	
11	371053		2	Cover	
12	500021		6	Screw M8-1,25x25 8,8	
13	904556		31	Washer 8,4x16x3,0	
14	370364	A	1	Linear bearing	
15	513013		17	Screw	
16	371052		1	Locking rail	
17	500028		6	Screw M10-1,5x25 8,8	
18	904557		4	Washer 10,5x22x4	
19			1	Drivers seat, turn-over (Page 138)	
20			1	Engine control (Page 152)	
21			1	Forward and reverse control (Page 148)	
22	372091	B	1	Hand rail, right	
23	500029		12	Screw M10-1,5x30 8,8	
24	904230		14	Washer 10,5x22x2	
25	372092	C	1	Hand rail, left	
26	372093	D	1	Hand rail, right	
27	603009		4	Washer	
28	370160		4	Locking lever	
29	370286		4	Washer	
30	359887	E	2	Shock absorber	
31	373400	F	2	Shock absorber	D
32	370287		1	Shaft	
33	371056		1	Rubber protection	
34	371057		1	Holder plate	
35	500075		7	Screw M6-1x25 8,8	
36	570004		9	Nut M6	
37	904228		9	Washer 6,4x12x1,5	
38	372094	G	1	Hand rail, left	
39	370817	H	1	Hand rail	
40	370294	I	1	Holder	
41	370298	J	1	Holder	
42	373399	H	2	Shock absorber	D
43	370258		2	Spacer washer	
44	500037		16	Screw M12-1,75x35 8,8	
45	372704		8	Holder	
47	500228		4	Screw M20-2,5x120 8,8	
48	904233		8	Washer 21x36x3	
49	586022		4	Lock nut M20-8	
50			1	Cross sliding Carrier (Page 146)	
51	383705		1	Instruction book holder	
52	357643		1	Wire	
53	791226		4	Screw	

A) One pair
B) Right, front
C) Left, front
D) Right, rear
E) For carrier
F) Front
G) Left, rear
H) Rear
I) Right
J) Left

Drivers platform, for cab

17641

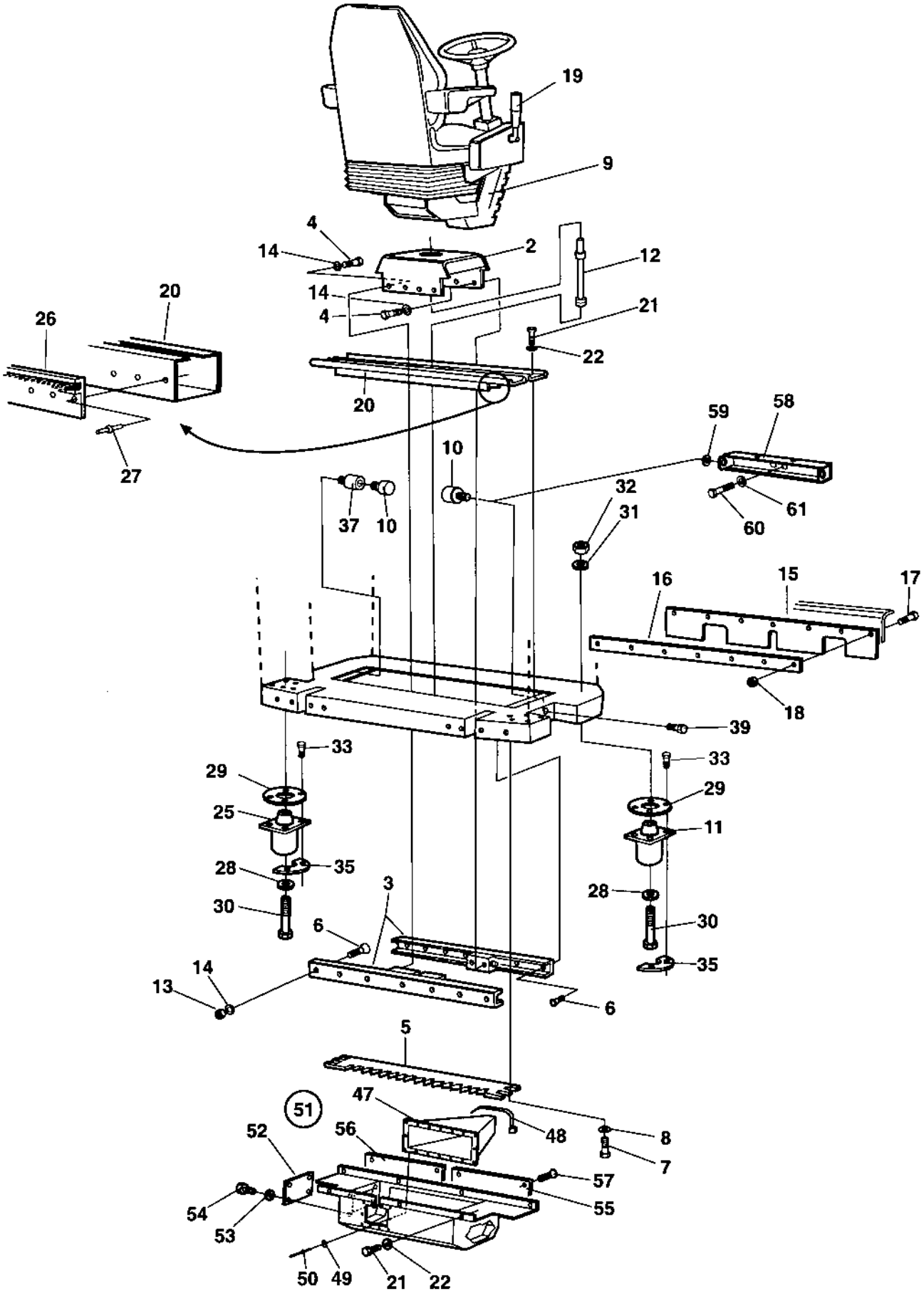

Drivers platform, for cab

Ref. No.	Part No.	Rem.	Qty	Description	Code
1				Cab, interior	
2			1	Cross sliding Carrier (Page 146)	
3	370364		1	Linear bearing	
4	500021		8	Screw M8-1,25x25 8,8	
5	371052		1	Locking rail	
6	513013		17	Screw	
7	500029		4	Screw M10-1,5x30 8,8	
8	904557		4	Washer 10,5x22x4	
9			1	Drivers seat Turn-over in cab (Page 140)	
10	359887		2	Shock absorber	
11	373397		2	Shock absorber	D
12	359889		1	Shaft	
13	570005		17	Nut M8	
14	904556		25	Washer 8,4x16x3,0	
15	371056		1	Rubber protection	
16	371057		1	Holder plate	
17	500075		7	Screw M6-1x25 8,8	
18	902285		7	Lock nut M6	
19			1	Forward and reverse control (Page 148)	
20	371069		2	Cover	
21	500019		20	Screw M8-1,25x16 8,8	
22	904229		20	Washer 8,4x16x1,5	
25	373398		2	Shock absorber	D
26	371070		6	Brush profile	
27	903731		50	Blind rivet	
28	928466		4	Washer	
29	359998		4	Back-up ring	
30	928447		4	Screw M20x140 12,9	
31	904233		4	Washer 21x36x3	
32	901145		4	Lock nut M20-10	
33	500194		16	Screw M12x40	
34	904231		16	Washer 13x24x2	
35	372704		8	Holder	
37	370662		1	Spacer	
39	500040		1	Screw M6-1x20 8,8	
47	936274		1	Bellows	
48	313041		5	Cable ties L=186 mm	
49	904281		14	Washer 5,3x10x1	
50	624021		14	Pop rivet	
51	936273		1	Noise suppression box, cpl	
52			1	Cover	
53			6	Washer	
54			6	Screw	
55			1	Cover	
56			1	Cover	
57	936276		12	Screw	
58	385932	A	1	Spacer bracket	
59	904228	A	1	Washer 6,4x12x1,5	
60	500021	A	1	Screw M8-1,25x25 8,8	
61	904556	A	1	Washer 8,4x16x3,0	

A) For symmetric Cab.

Drivers seat, turn-over

17142

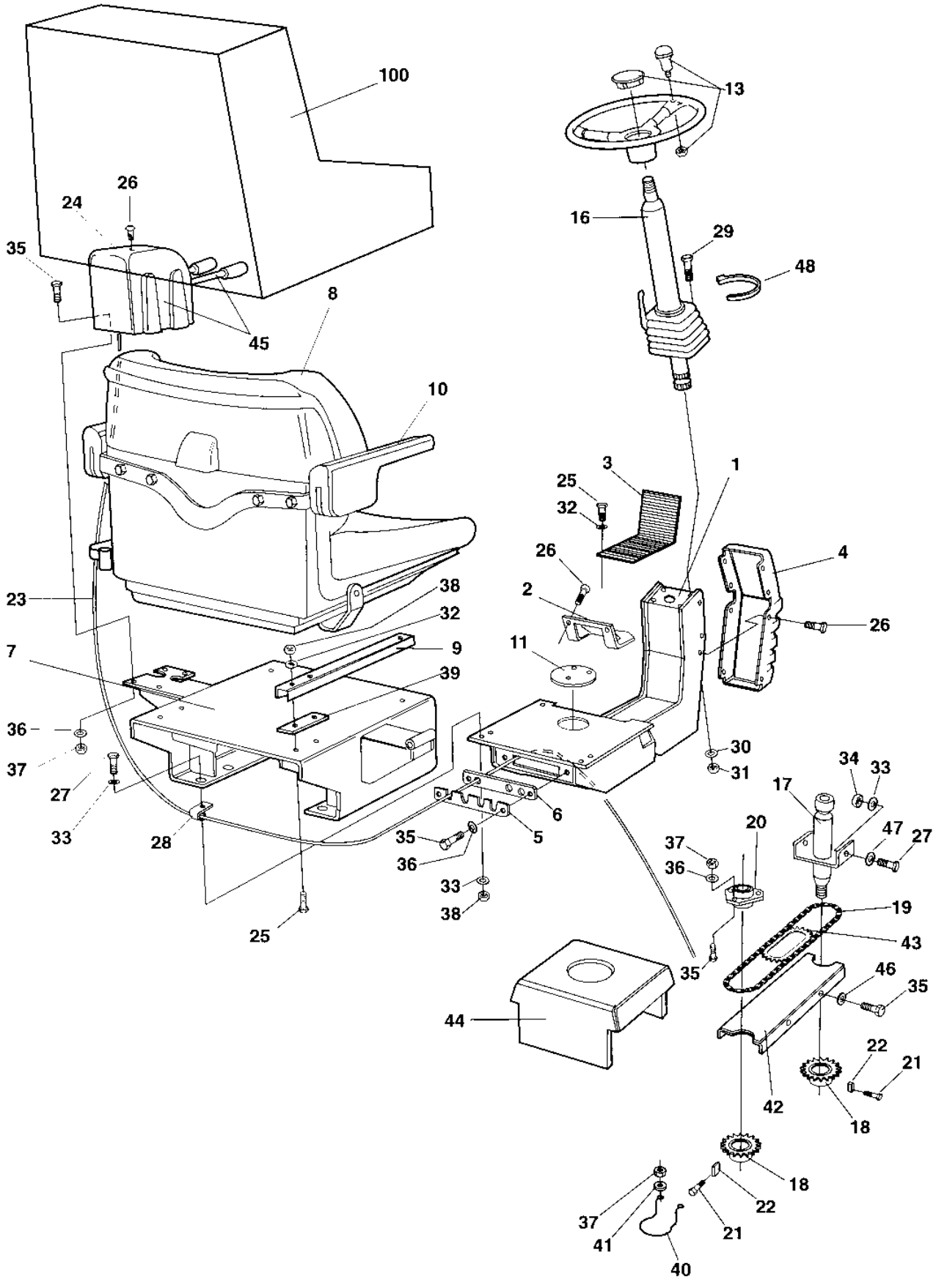

Drivers seat, turn-over

Ref. No.	Part No.	Rem.	Qty	Description	Code
1	359900		1	Seat frame	
2	381400		1	Bearing cover	
3				Not used on this model	
4	359574		1	Cover	
5	359914		1	Cover	
6	359915		1	Grommet	
7	370211		1	Seat frame	
8	370234		1	Drivers seat	
	936283		1	.Seat switch	D
9	909535	B,C	1	.Sliding rail	D
	909536	D	1	.Sliding rail	D
10	372696	C	1	Arm rest	
	372697	D	1	Arm rest	
11	359920		1	Plug	
13	372964		1	Steering wheel, cpl	
	935615		1	.Steering wheel knob	
	935614		1	.Turning knob	D
	935613		1	.Cover	
16	359918		1	Steering column (Page 142)	C
17	359919		1	Shaft	
18	359916		2	Chain wheel	D
19	359921		1	Chain	D
20	903917		1	Bearing outer	
	903918		1	Bearing inner	
21	516051		2	Set screw	
22	350009		2	Flat key	D
23			1	Cross sliding Controls (Page 144)	
24	359419		1	Control cover	
25	500053		6	Screw M8-1,25x20 8,8	
26	904206		16	Screw	
27	500021		8	Screw M8-1,25x25 8,8	
28	921104		2	Clamp	
29	500028		3	Screw M10-1,5x25 8,8	
30	904557		3	Washer 10,5x22x4	
31	570006		3	Nut M10	
32	904556		6	Washer 8,4x16x3,0	
33	904229		14	Washer 8,4x16x1,5	
34	586003		2	Lock nut M8	
35	500040		10	Screw M6-1x20 8,8	
36	904228		7	Washer 6,4x12x1,5	
37	586002		7	Lock nut M6	
38	570005		10	Nut M8	
39	370235		2	Holder plate	
40	372672		1	Chain guard	
41	603001		2	Washer	
42	381403		1	Chain supporter	
43				Not used on this model	
44			1	Cross sliding Carrier (Page 146)	
45			1	Cross sliding Controls (Page 144)	
46	904735		4	Washer	
47	904231		2	Washer 13x24x2	
48	313041		1	Cable ties L=186 mm	
100	348331	A	1	Seat cover	D

A) Option
B) With handle
C) Left
D) Right

Drivers seat Turn-over in cab

17627-1

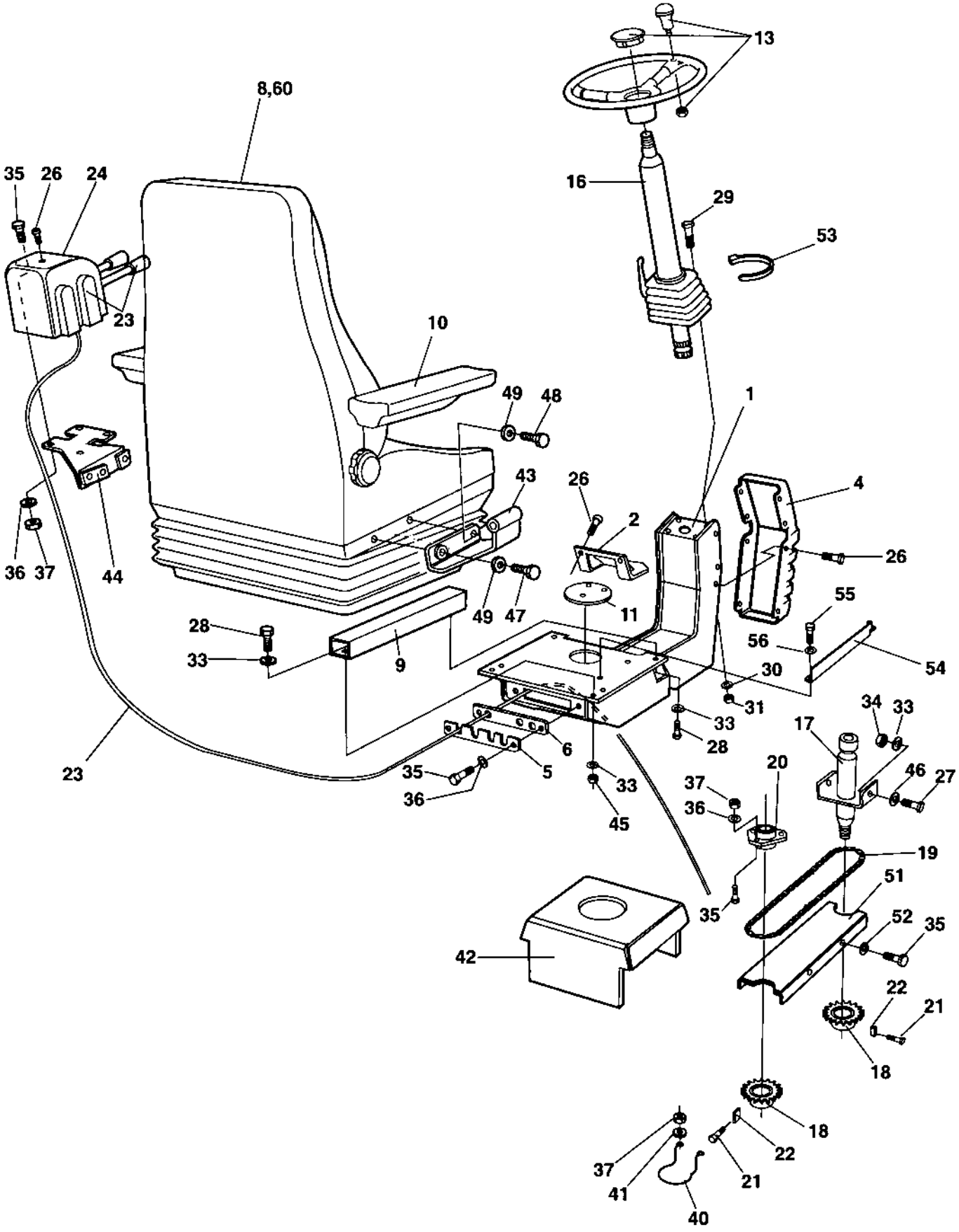

Drivers seat Turn-over in cab

Ref. No.	Part No.	Rem.	Qty	Description	Code
1	359900		1	Seat frame	
2	381400		1	Bearing cover	
4	359574		1	Cover	
5	359914		1	Cover	
6	359915		1	Grommet	
8	359917	A	1	Drivers seat	
	937892		1	.Seat switch	
9		B	1	.Slide rail	
10	937620		1	.Arm rest, right	
	937621		1	.Arm rest, left	
11	359920		1	Plug	
13			1	Steering wheel, cpl	
	935615		1	.Steering wheel knob	
	935614		1	..Turning knob	D
	935613		1	.Cover	
16	359918		1	Steering column (Page 142)	C
17	359919		1	Shaft	
18	359916		2	Chain wheel	D
19	359921		1	Chain	D
20	903917		1	Bearing outer	
	903918		1	Bearing inner	
21	516051		2	Set screw	
22	350009		2	Flat key	D
23			1	Cross sliding Controls (Page 144)	
24	359419		1	Control cover	
26	904206		16	Screw	
27	500021		2	Screw M8-1,25x25 8,8	
28	500053		6	Screw M8-1,25x20 8,8	
29	500028		3	Screw M10-1,5x25 8,8	
30	904557		3	Washer 10,5x22x4	
31	570006		3	Nut M10	
33	904229		8	Washer 8,4x16x1,5	
34	586003		2	Lock nut M8	
35	500040		10	Screw M6-1x20 8,8	
36	904228		7	Washer 6,4x12x1,5	
37	586002		7	Lock nut M6	
40	372672		1	Chain guard	
41	603001		2	Washer	
42			1	Cross sliding Carrier (Page 146)	
43	359971		1	Control cable holder	
44	359972		1	Control cable holder	
45	570005		4	Nut M8	
46	904734		2	Washer 8,4x26x4	
47	903914		2	Screw	
48	500031		2	Screw M10-1,5x40 8,8	
49	904230		4	Washer 10,5x22x2	
51	381403		1	Chain supporter	
52	904735		4	Washer	
53	313041		1	Cable ties L=186 mm	
54	386128		1	Stop	
55	541703		2	Screw M6x16	
56	904228		4	Washer 6,4x12x1,5	
60	383200	C	1	Safety belt 3"	

A) With seat belt
B) One pair
C) Option, 3"

359918 Steering column

15944

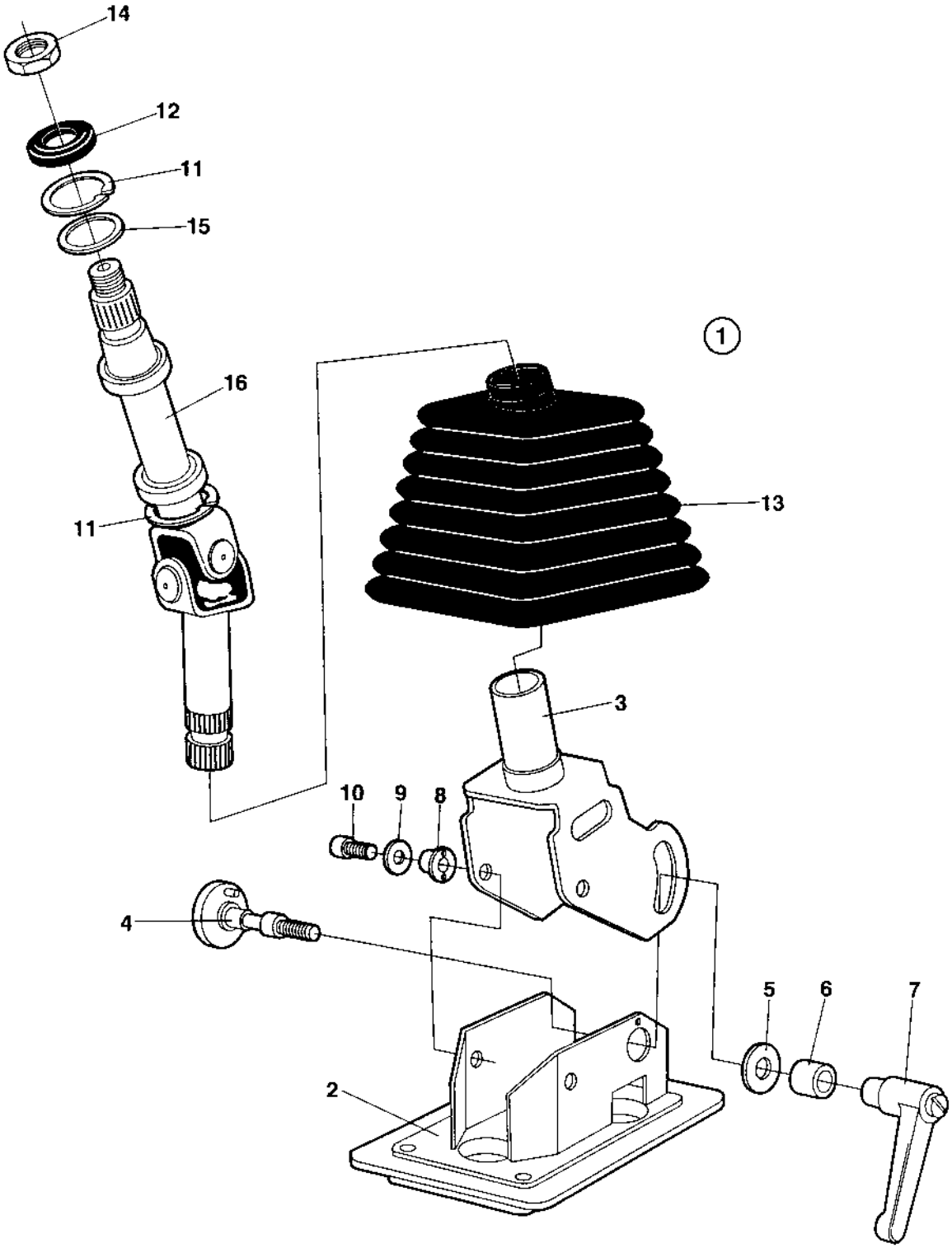

359918 Steering column

Ref. No.	Part No.	Rem.	Qty	Description	Code
1			1	Steering column, cpl	
2	935229	A	1	.Frame	
3	935230	B	1	.Frame	
4	935231		1	.Screw	
5	935232		1	.Washer	
6	935233		1	.Sleeve	
7	935234		1	.Lever	
8	935235		2	.Washer	
9	935236		2	.Washer	
10	935237		2	.Screw	
11	935238		2	.Retainer ring	
12	935239		1	.Seal	
13	935240		1	.Bellows	
14	935241		1	.Nut	
15	935242		1	.Washer	
16	935243		1	.Cardan shaft	

A) Lower
B) Upper

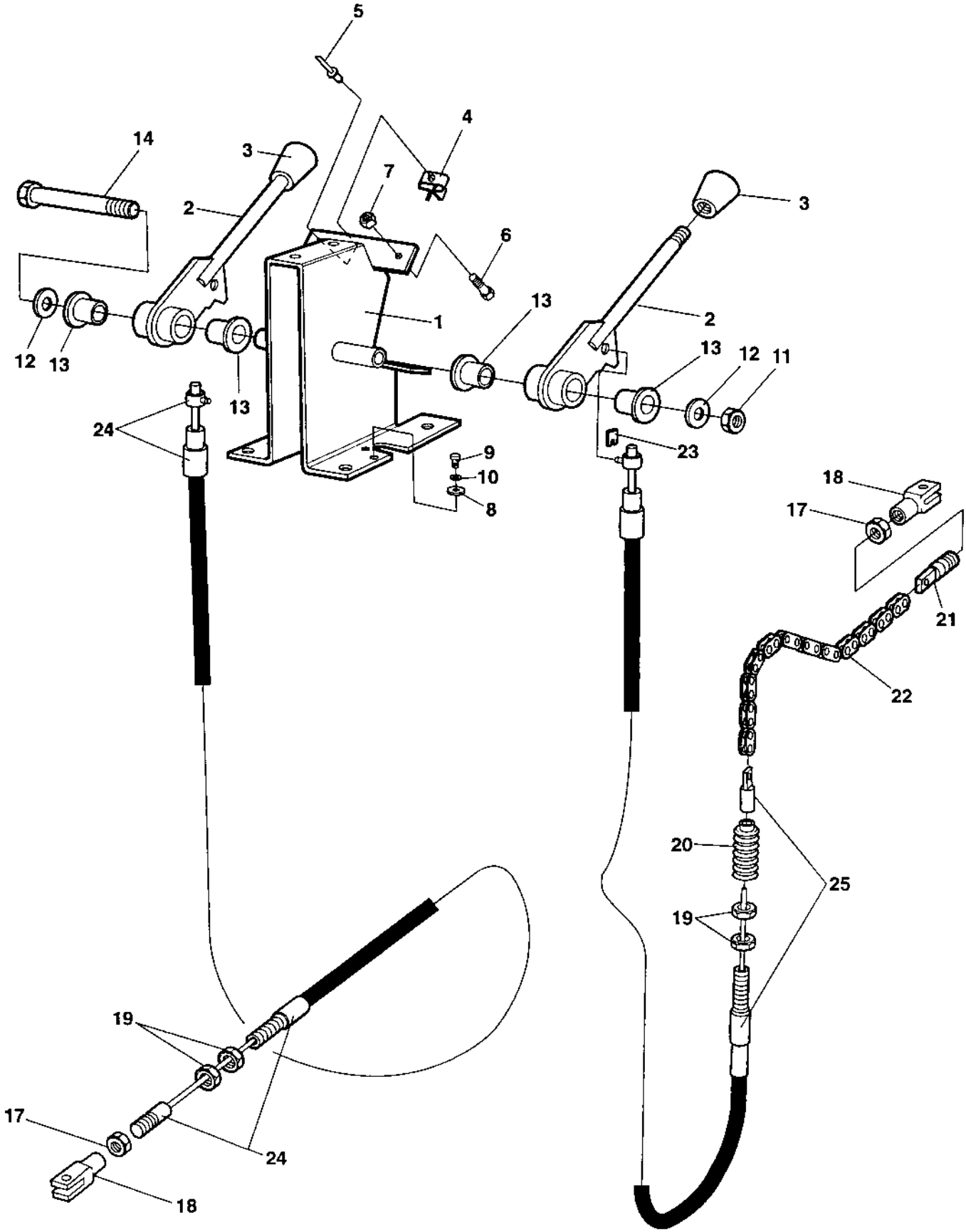
5
4
14
3
7
2
6
3
1
13
2
12
13
13
12
11
13
24
9
10
8
23
18
17
21
22
20
25
19
19
17
24
18

Ref. No.	Part No.	Rem.	Qty	Description	Code
1	935771		1	Framing	
2	909745		2	Lever	
3	908190		2	Ball knob	
4	908189		1	Lever lock	
5			1	Rivet	
6	500001		1	Screw	
7	923976		1	Nut	
8	909746		2	Washer	
9	533024		2	Screw	
10	615041		2	Washer 5,3x11	
11	586002		1	Lock nut M6	
12	928381		2	Washer 6,4x18x1,6	
13	908187		4	Plain bearing	
14	500169		1	Screw	
17	570004	A	2	Nut M6	
18	416004	A	2	Fork	
19	927233	B	4	Nut	
20	908184	C	1	Protection bellow	
21	359822		1	Spring holder	
22	359924		1	Chain with links	
23	937958	B	1	Clips	
24	935773	D	1	Cable, cpl	
25	935772	E	1	Cable, cpl	

A) Incl in item 24
B) Incl in item 24,25
C) Incl in item 25
D) Sliding
E) Turning

Cross sliding Carrier

17245

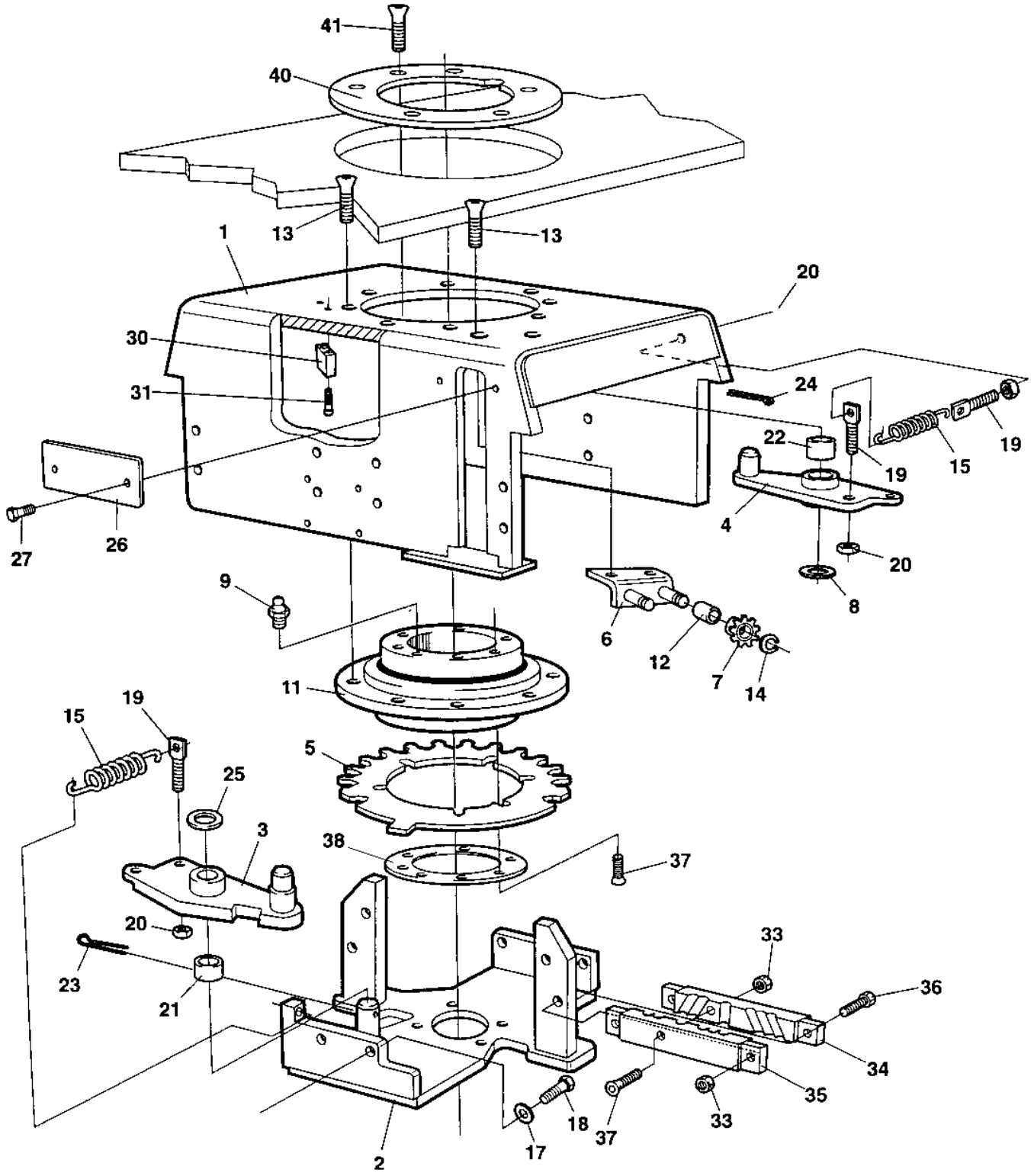

Cross sliding Carrier

Ref. No.	Part No.	Rem.	Qty	Description	Code
1	359788		1	Carrier	
2	359733		1	Bracket	
3	371101	A	1	Coupling link	
4	374417	B	1	Coupling link	
5	370955		1	Locking disc	
6	359810		1	Control bracket	
7	359813		2	Chain wheel	
8	904231		1	Washer 13x24x2	
9	926214		1	Grease fitting	D
11	359125		1	Ball bearing	
12	359816		2	Bushing	
13	513003		10	Screw	
14	359817		2	Retaining ring	
15	359043		2	Spring	D
17	904556		10	Washer 8,4x16x3,0	
18	500021		4	Screw M8-1,25x25 8,8	
19	359818		3	Spring collar	
20	573008		3	Nut M8	
21	359819		1	Bushing	
22	359820		1	Bushing	
23	630008	A	1	Pin	D
24	630035	B	1	Split pin	D
25	904232		1	Washer 17x30x3	
26	359815		1	Cover	
27	926220		2	Screw	
30	359893	C	1	Stop	
31	508056	C	2	Screw M8x40	
33	570005		5	Nut M8	
34	372960		1	Clamp	
35	372959		1	Clamp	
36	500022		4	Screw M8-1,25x30 8,8	
37	902520		7	Screw	
38	372966		1	Lock ring	
40	372965		1	Lock ring	
41	902520		6	Screw	

A) For sliding
B) For turning
C) Only cab

Forward and reverse control

16126-1

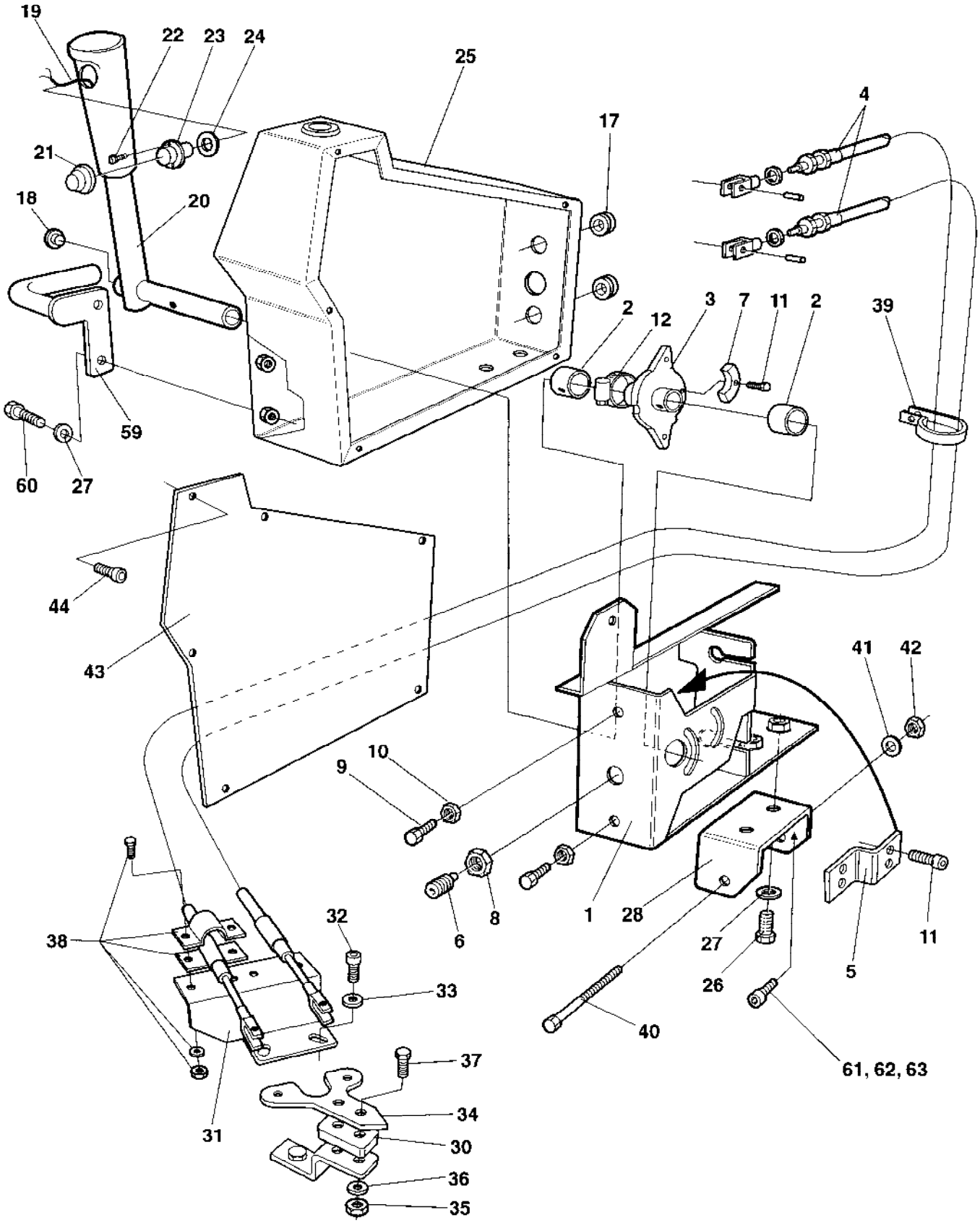

Forward and reverse control

Ref. No.	Part No.	Rem.	Qty	Description	Code
1	909747		1	Framing	
2	908200		2	Bearing	
3	909748		1	Cam disc	
4	909749	A	2	Cable	
	570004		1	.Nut M6	
	908193		1	.Fork	
5	909751		1	Bracket	
6	922325		1	Spring ball plunger	D
7	909750		1	Cam	
8	573004		1	Nut	
9	533038		2	Screw	
10	573004		2	Nut	
11	503010		1	Screw	
12	313147		1	Hose clip	
17	909122		2	Grommet	
18	902203		1	Plug	
19	376396		1	Cable harness	
20	359575		1	Control lever	
21	348481		1	Cover	D
22	371009		2	Screw	
23	928497		1	Push button	D
24	359940		1	Washer	
25	359928		1	Control cover	
26	500053		2	Screw M8-1,25x20 8,8	
27	904229		4	Washer 8,4x16x1,5	
28	381676		1	Bracket	
30			1	Not used on this model	
31	359932		1	Control bracket	
32	903799		3	Screw M6 x 70	
33	904228		3	Washer 6,4x12x1,5	
34	359931		1	Control bracket	
35	586003		2	Lock nut M8	
36	904229		2	Washer 8,4x16x1,5	
37	500021		2	Screw M8-1,25x25 8,8	
38	465013		2	Clamp	D
39	921104		1	Clamp	
40	500198		1	Screw	
41	904231		1	Washer 13x24x2	
42	586019		1	Lock nut M12	
43	359929		1	Cover	
44	903658		6	Screw M5x10	
59	373177	B	1	Yoke	
60	500019	B	2	Screw M8-1,25x16 8,8	
61	508092		1	Screw M8-1,25x20H 8,8	
62	904229		2	Washer 8,4x16x1,5	
63	586003		1	Lock nut M8	

A) Forward and reverse
B) Not for cab

Speed limiter Option

17657

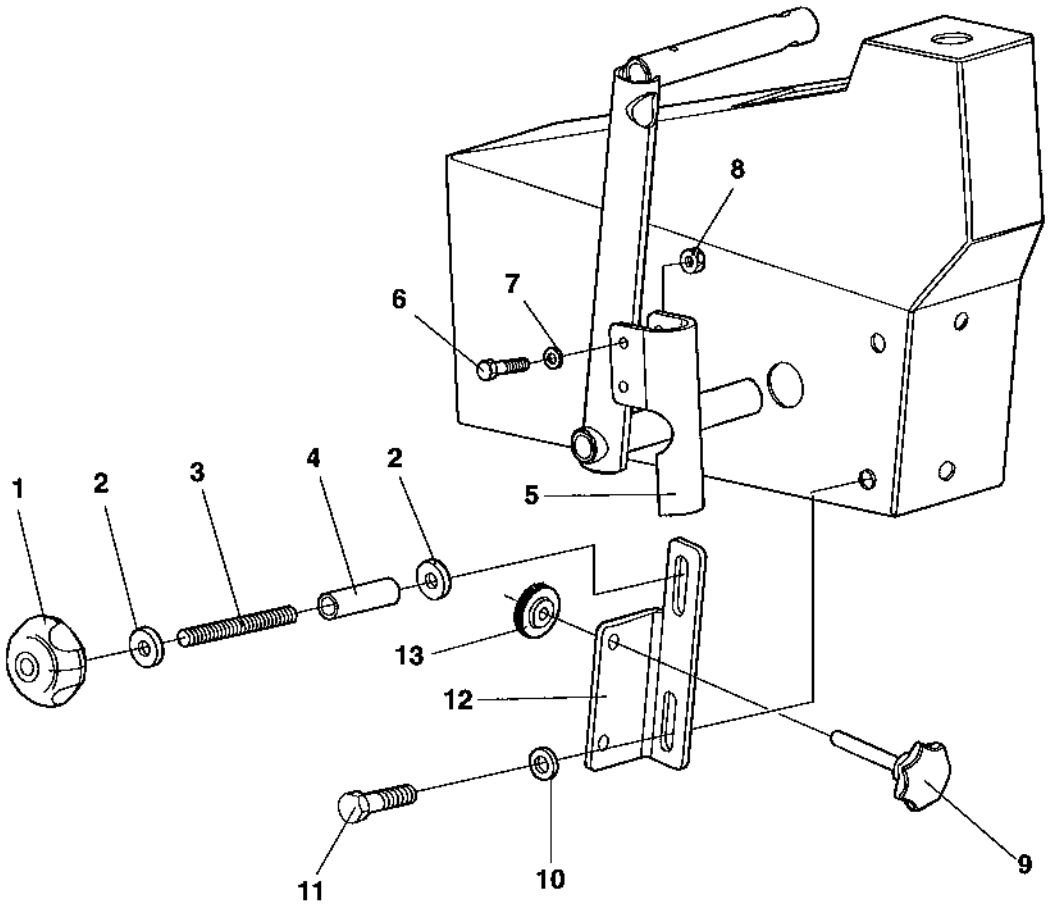

Speed limiter Option

Ref. No.	Part No.	Rem.	Qty	Description	Code
1	904290		1	Hand knob	
2	904640		2	Washer 8,4x22x3	
3	791313		1	Threaded stud M8x85	
4	386003		1	Spacer sleeve	
5	386002		1	Lever holder	
6	500186		2	Screw M6-1x45 8,8	
7	904228		4	Washer 6,4x12x1,5	
8	586002		2	Lock nut M6	
9	791314		1	Handle knob	
10	904556		1	Washer 8,4x16x3,0	
11	500053		1	Screw M8-1,25x20 8,8	
12	385994		1	Bracket	
13	791312		2	Letter nut	

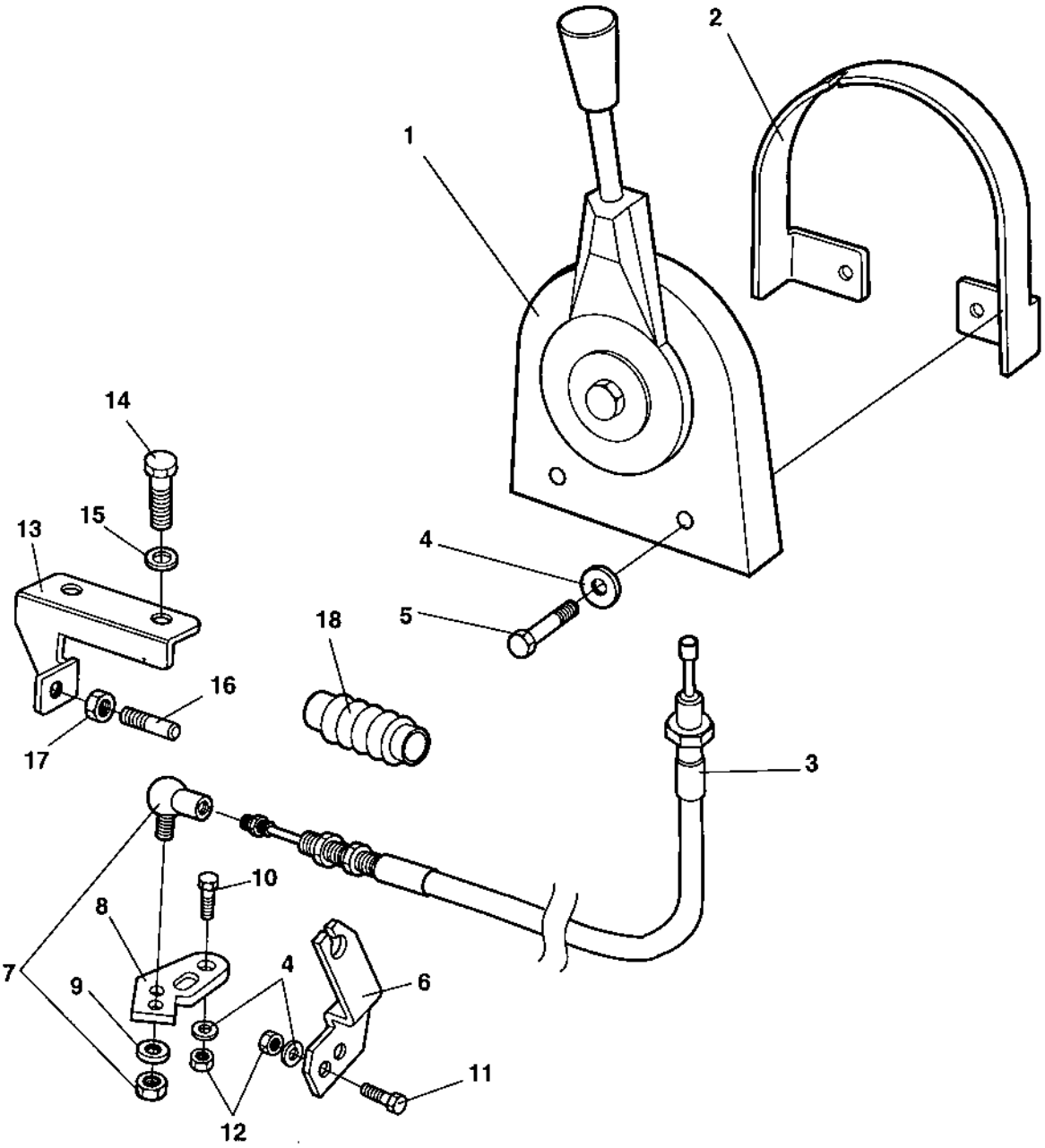
1
2
3
4
5
6
7
8
9
10
11
12
13
14
15
16
17
18

Ref. No.	Part No.	Rem.	Qty	Description	Code
1	382213		1	Control	
2	382225		1	Yoke	
3	386876		1	Cable	
4	904228		6	Washer 6,4x12x1,5	
5	500015		2	Screw M6-1x30 8,8	
6	387634		1	Control bracket	
7	416034		1	Ball joint	D
8	387633		1	Control lever	
9	904228		1	Washer 6,4x12x1,5	
10	508002		2	Screw	
11	500040		2	Screw M6-1x20 8,8	
12	586002		4	Lock nut M6	
13	387674		1	Bracket Control limit	
14	500048		2	Screw M10-1,5x20 8,8	
15	500013		2	Screw M6-1x16 8,8	
16	923874		1	Screw M8x25	
17	570005		1	Nut M8	
18	382349		1	Bellows	

Rear mirror

15889

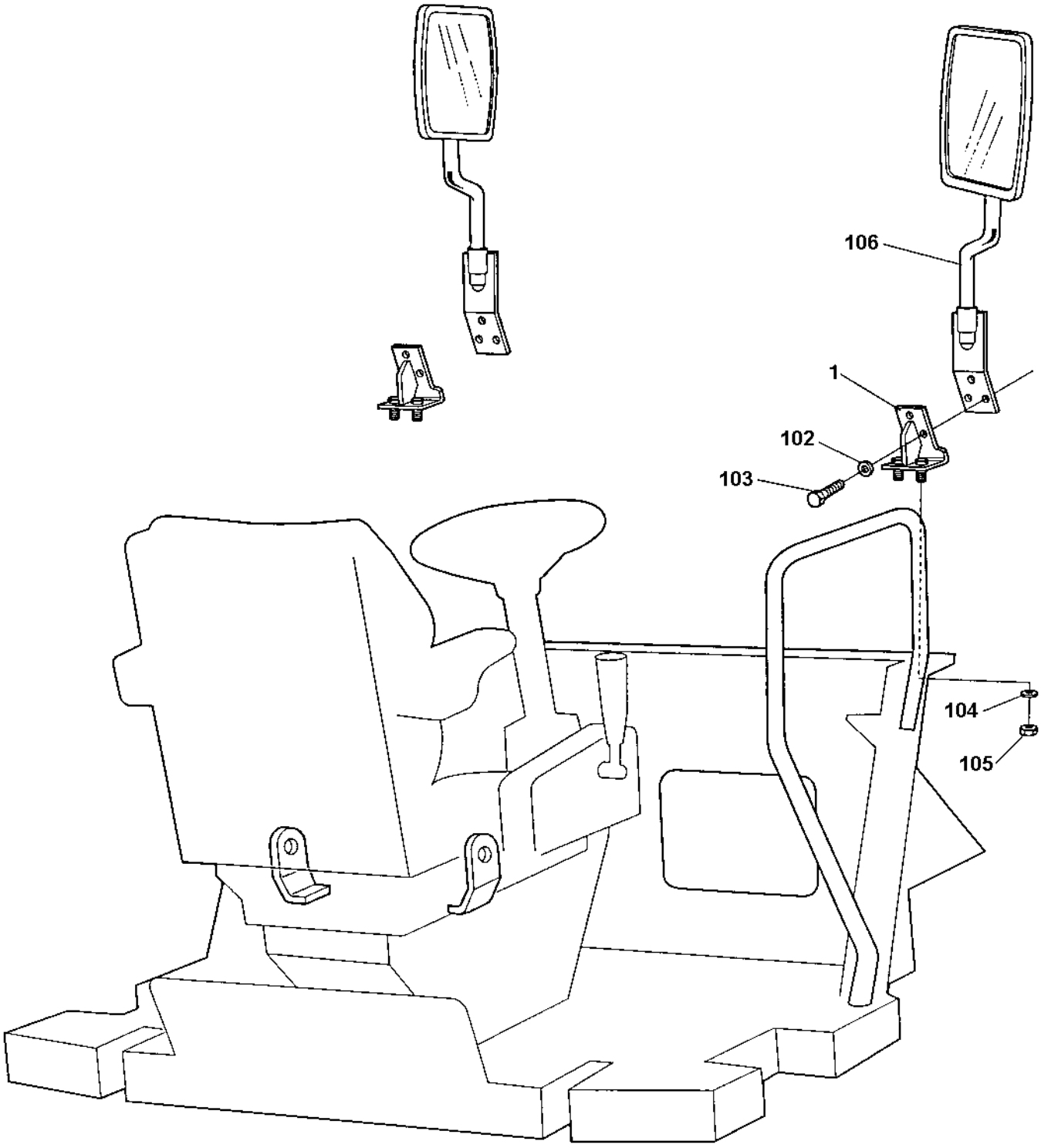

Rear mirror

Ref. No.	Part No.	Rem.	Qty	Description	Code
			1	Rear mirror Option	
1	371819		2	.Bracket	
102	600006		6	.Washer	
103	500053		6	.Screw M8-1,25x20 8,8	
104	600008		4	.Washer	
105	586018		4	.Lock nut M10	
106			2	.Exterior rear mirrors (Page 200)	

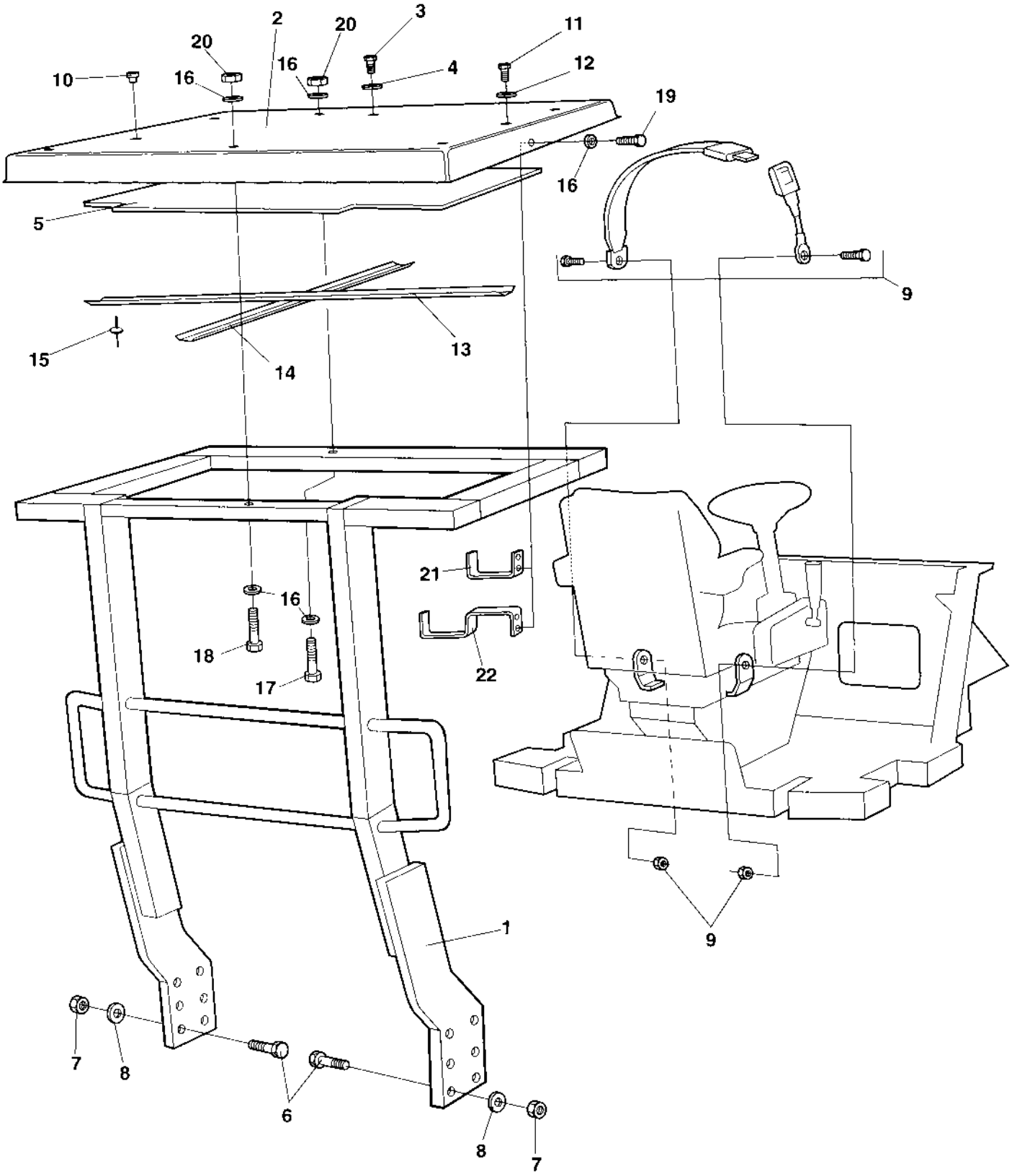
2
20
20
3
11
10
16
16
4
12
19
16
5
9
15
14
13
21
16
18
17
22
1
9
7
8
6
8
7

Ref. No.	Part No.	Rem.	Qty	Description	Code
1	371710		1	Rops	
2	371847		1	Rops roof	
	371845		1	Fops roof	
3			4	Not used on this model	
4			4	Not used on this model	
5	372590		1	c90	
6	903792		12	Screw	
7	903736		12	Nut	
8	904234		24	Washer 25x45x4	
9	370766		1	Safety belt	
	383200	A	1	Safety belt 3"	
10	904180		2	Plug	
11	500047		8	Screw M8-1,25x35 8,8	
12	904734		8	Washer 8,4x26x4	
13	380178		1	Absorbent holder	
14	380177		1	Absorbent holder	
15	904619		12	Blind rivet	
16	904734		12	Washer 8,4x26x4	
17	500170		2	Screw	
18	500170		2	Screw	
19	500100		4	Screw	
20	586003		4	Lock nut M8	
21	383225	B	2	Hook	
22	383870	C	2	Hook	

A) Option 3"
B) Valid for Rops.
C) Valid for Fops.

Cab, asymmetric

Ref. No.	Part No.	Rem.	Qty	Description	Code
1				Cab, interior (Page 160)	
2				Cab, screens (Page 162)	
3				Cab, inside panels (Page 164)	
4				Cab, wipers, right side (Page 166)	
5				Cab, wipers, front and rear (Page 168)	
6				Cab, door, left side (Page 170)	
7				Cab, heater and, fan system (Page 172)	
8				Cab, roof mounted, electrical switches (Page 176)	

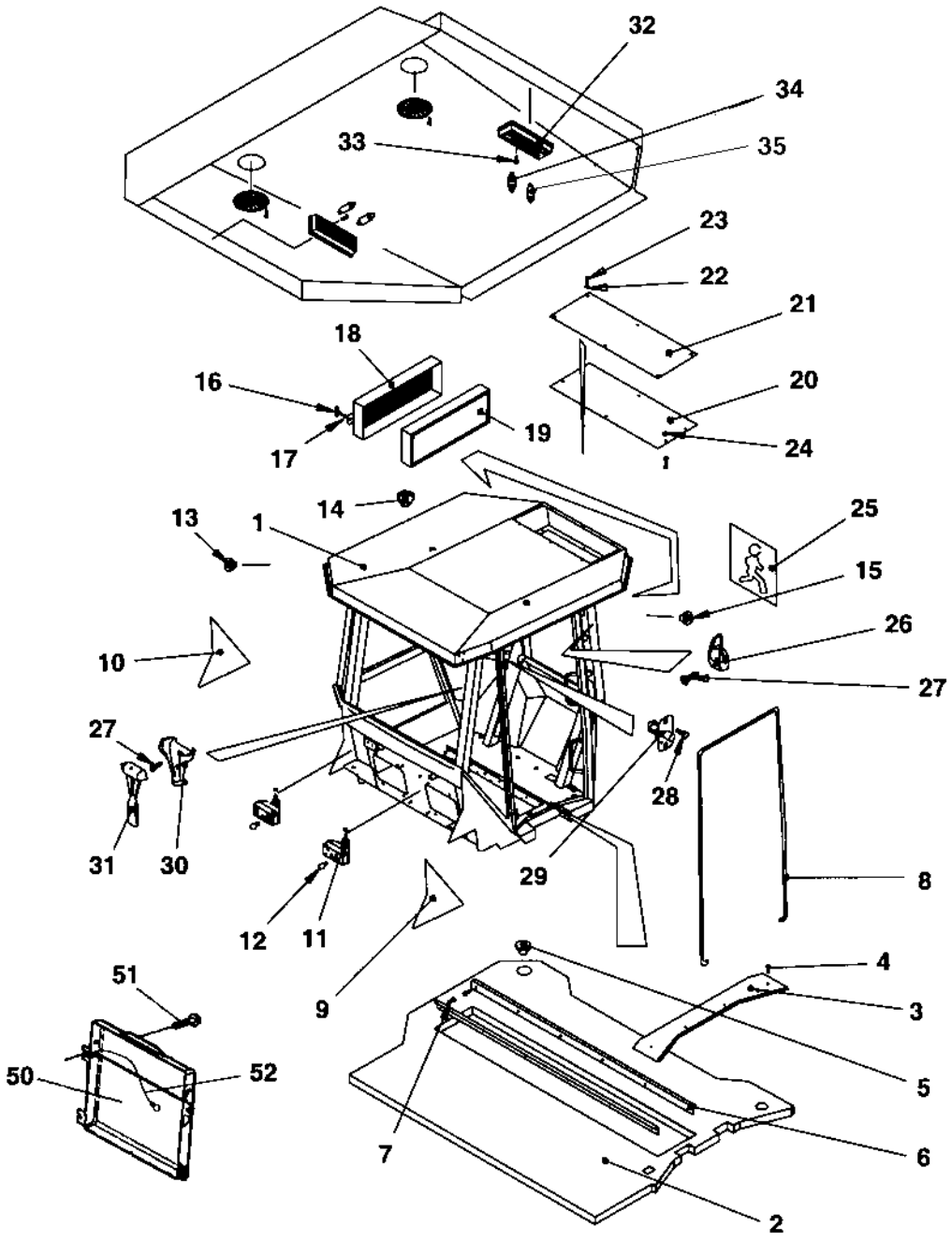
32
34
33
35
23
22
21
18
16
20
19
17
24
14
13
1
25
15
10
26
27
27
28
31
30
29
8
12
11
9
4
51
3
50
52
5
7
6
2

Cab, interior

Ref. No.	Part No.	Rem.	Qty	Description	Code
1	385737		1	Cab, cpl	
2	908747		1	.Carpet	
3	908511		1	.List left	
4	903808		4	.Screw	
5	908512		1	.Cover	
6	908510		2	.List	
7	535005		12	.Screw M5x12	
8	938842	A	1XL	.Sealing strip	
9	938843		1	.Black sticker	
10	938844		1	.Black sticker	
11	908268		2	.Work light	
12	938845		2	.Bulb 10W 12V	
13	938660		8	.Grommet	
14	908497		12	.Grommet	
15	909510		3	.Grommet	
16	908504		4	.Handle	
17	908503		4	.O-ring	
18	938846		2	.Filter housing	
19	938847		2	.Air filter	
20	938678		1	.Cover	
21	938679		1	.Cover	
22	936277		12	.Washer	
23	500053		12	.Screw M8-1,25x20 8,8	
24	586003		8	.Lock nut M8	
25	935589		1	.Decal	
26	908505		1	.Hook	
27	938676		4	.Screw	
28	901315		2	.Screw	
29	908500		1	.Door switch	
30	908506		1	.Holder	
31	908507		1	.Emergency hammer	
32	908515		2	.Inner light	
33	541535		4	.Screw	
34	985051		4	.Bulb 12V,10W	B
35	985013		2	.Bulb 12V,5W	B
50	383705		1	Instruction book holder	
51	791226		4	Screw	
52	357643		1	Wire	

A) L=5,0 m

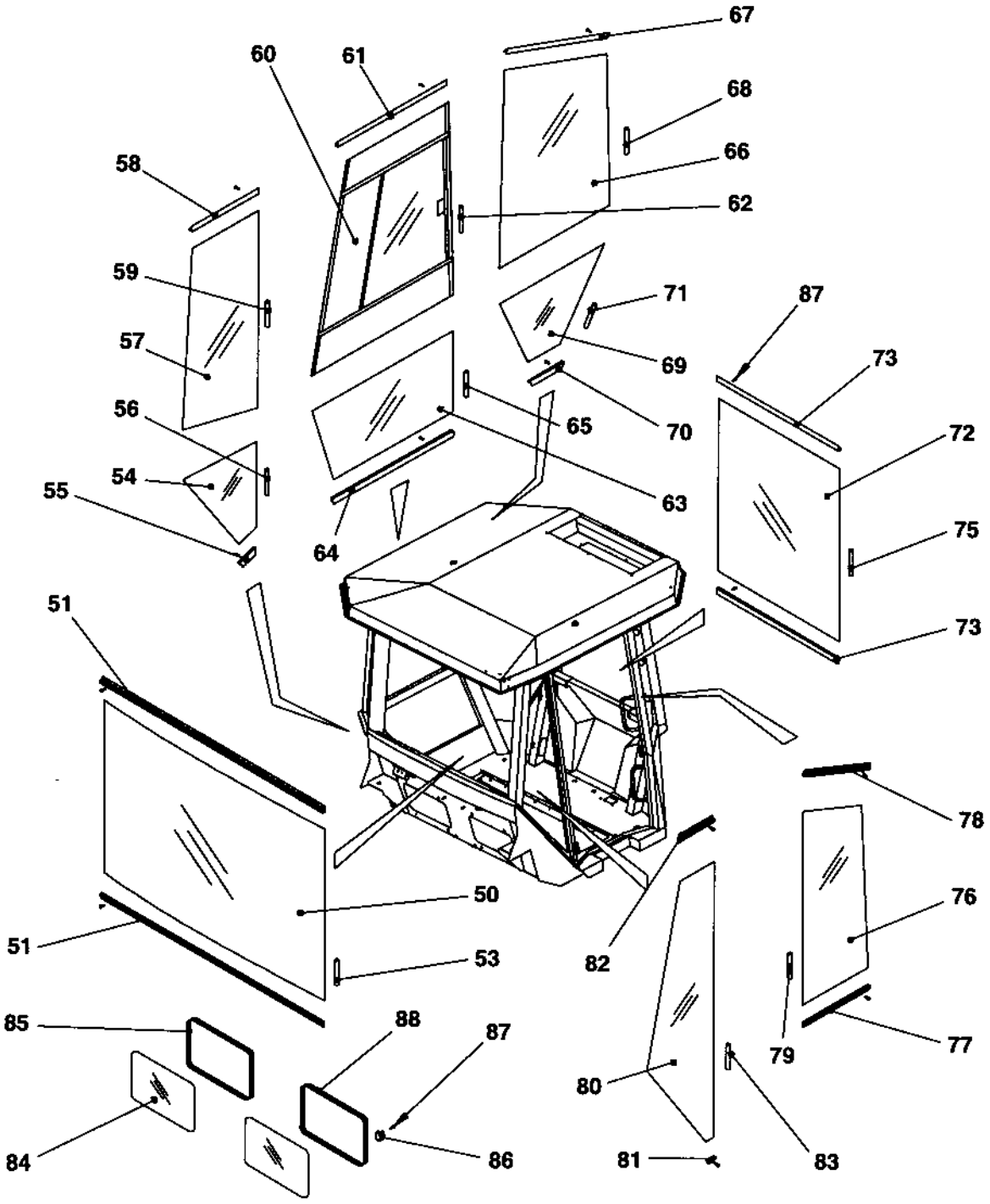
67
60
61
68
66
58
62
59
71
87
57
69
73
56
65
70
72
54
63
55
64
75
51
73
78
50
76
51
53
82
85
88
87
79
77
80
84
86
81
83

Ref. No.	Part No.	Rem.	Qty	Description	Code
				Cab, cpl	
50	937412		1	.Screen Green	
51	908758		1	.List	
53	938834	A	1XL	.Sealing strip	
54	937398		1	.Screen Green	
55	908549		1	.List	
56	938834	B	1XL	.Sealing strip	
57	937397		1	.Screen Green	
58	908548		1	.List	
59	938834	C	1XL	.Sealing strip	
60	937399		1	.Screen sliding Green	
61	908550		1	.List	
62	938834	D	1XL	.Sealing strip	
63	937400		1	.Screen Green	
64	908551		1	.List	
65	938834	A	1XL	.Sealing strip	
66	938565		1	.Screen	
67	938835		1	.List	
68	938834	E	1XL	.Sealing strip	
69	937410		1	.Screen Green	
70	908762		1	.List	
71	938834	B	1XL	.Sealing strip	
72	937411		1	.Screen Green	
73	908764		2	.List	
75	938834	A	1XL	.Sealing strip	
76	938566		1	.Screen Green	
77	908556		1	.List	
78	938836		1	.List	
79	938834	F	1XL	.Sealing strip	
80	937405		1	.Screen Green	
81	908993		1	.List	
82	908557		1	.List	
83	938834	G	1XL	.Sealing strip	
84	938568		1	.Screen Green	
85	938837	H	1XL	.Sealing strip	
86	938838		8	.List	
87	937932		57	.Screw	
88	938837	H	1XL	.Sealing strip	

A) L=1,8 m
B) L=1,6 m
C) L=2,4 m
D) L=2,9 m
E) L=2,5 m
F) L=2,1 m
G) L=3,0 m
H) L=1,3 m

Cab, inside panels

17622

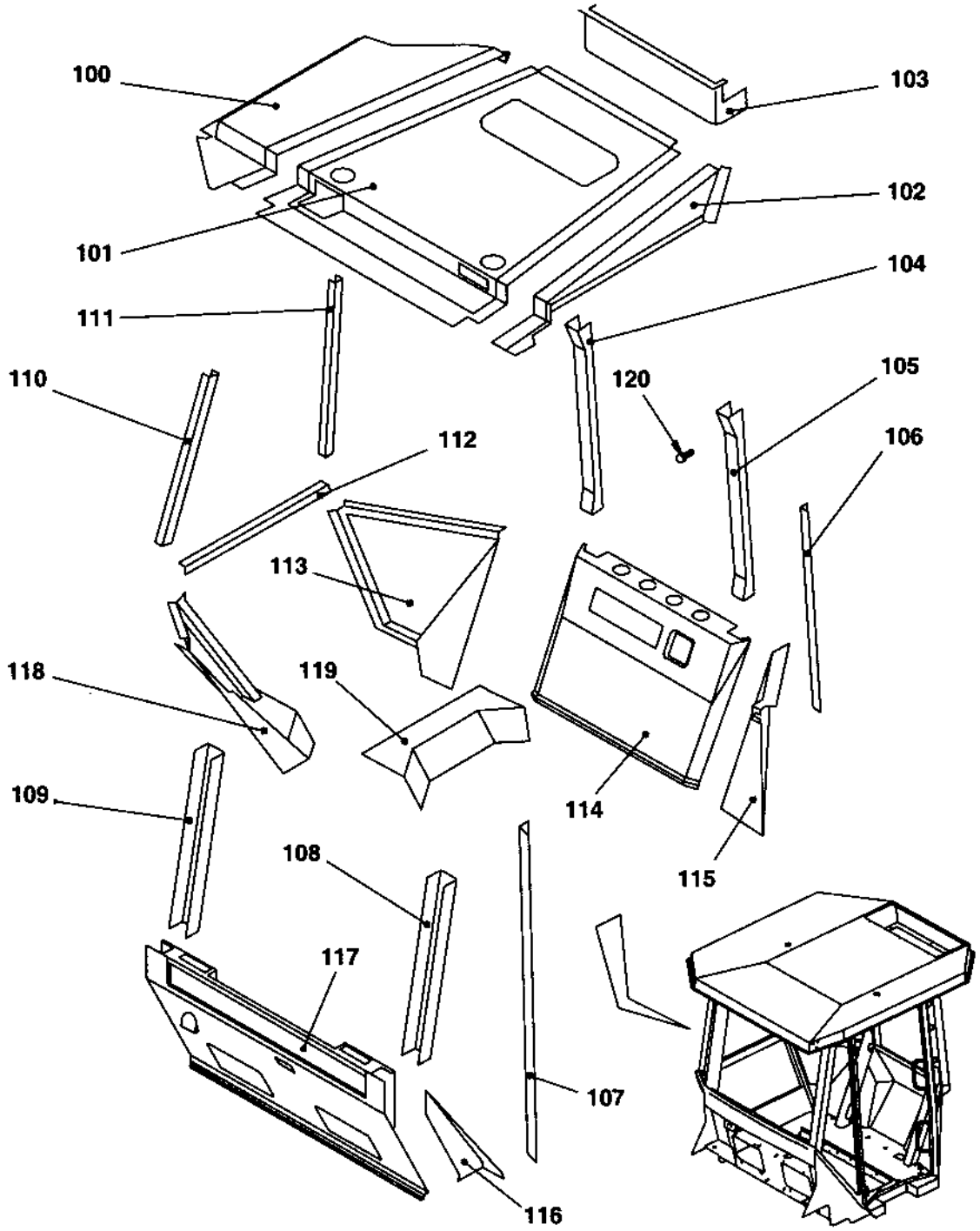

Cab, inside panels

Ref. No.	Part No.	Rem.	Qty	Description	Code
				Cab, cpl	
100	938806		2	.Panel	
101	938819		1	.Panel	
102	938808		1	.Panel	
103	938820		1	.Panel	
104	938810		1	.Panel	
105	938811		1	.Panel	
106	908535		1	.Panel	
107	908536		1	.Panel	
108	908529		1	.Panel	
109	908530		1	.Panel	
110	908531		1	.Panel	
111	908532		1	.Panel	
112	908540		1	.Panel	
113	908754		1	.Panel	
114	938821		1	.Panel	
115	908756		1	.Panel	
116	938822		1	.Panel	
117	938823		1	.Panel	
118	938824		1	.Panel	
119	908541		1	.Panel	
120	938677		50	.Screw	

Cab, wipers, right side

17623

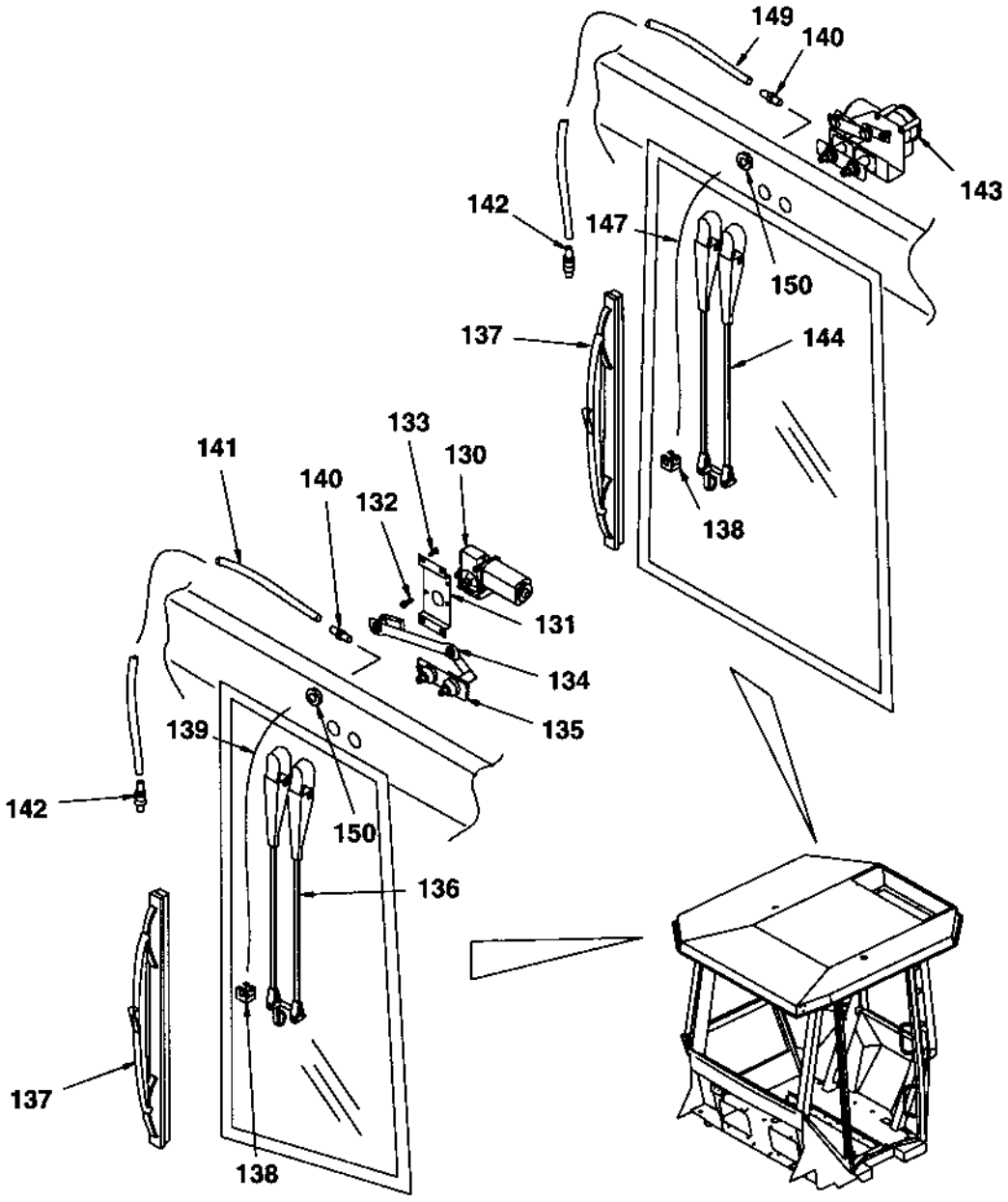

Cab, wipers, right side

Ref. No.	Part No.	Rem.	Qty	Description	Code
				Cab, cpl	
130	908269		1	.Wiper motor	
131	908565		1	.Bracket	
132	500012		3	.Screw M6x12	
133	541702		4	.Screw M6x12	
134	908363		1	.Transmission	
135	908364		1	.Intermediate shaft	
136	908270		1	.Wiper arm	
137	908271		2	.Wiper blade	
138	908559		2	.Nozzle	
139	908560	A	1XL	.Rubber hose	
140	908561		2	.Grommet	
141	908563	B	1XL	.Plastic hose	
142	908564		2	.Check valve	
143	908281		1	.Wiper motor	
144	908282		1	.Wiper arm	
147	908560	A	1XL	.Rubber hose	
149	908563	B	1XL	.Plastic hose	
150	908496		4	.Grommet	

A) L=1,0 m
B) L=6,0 m

Cab, wipers, front and rear

17615

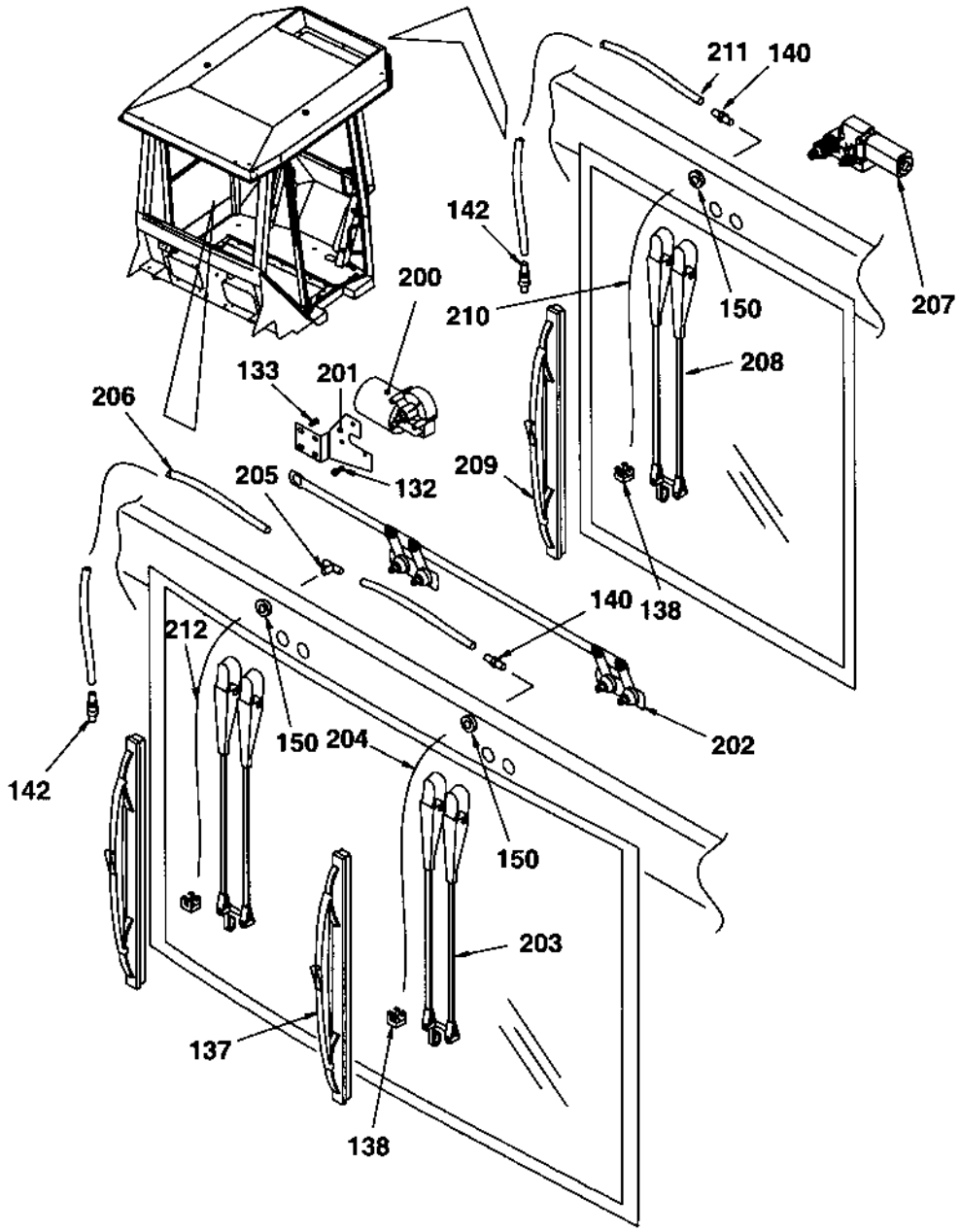

Cab, wipers, front and rear

Ref. No.	Part No.	Rem.	Qty	Description	Code
			1	Cab, cpl	
132	500012		3	.Screw M6x12	
133	541702		4	.Screw M6x12	
137	908271		2	.Wiper blade	
138	908559		3	.Nozzle	
140	908561		2	.Grommet	
142	908564		2	.Check valve	
150	908496		3	.Grommet	
200	908272		1	.Wiper motor	
201	908558		1	.Bracket	
202	908362		1	.Transmission	
203	908273		2	.Wiper arm	
204	908560	A	1XL	.Rubber hose	
205	908562		1	.T-connection	
206	908563	B	1XL	.Plastic hose	
207	908278		1	.Wiper motor	
208	908279		1	.Wiper arm	
209	908280		1	.Wiper blade	
210	908560	A	1XL	.Rubber hose	
211	908563	B	1XL	.Plastic hose	
212	908560	A	1XL	.Rubber hose	

A) L=1,0 m
B) L=6,0 m

Cab, door, left side

17616

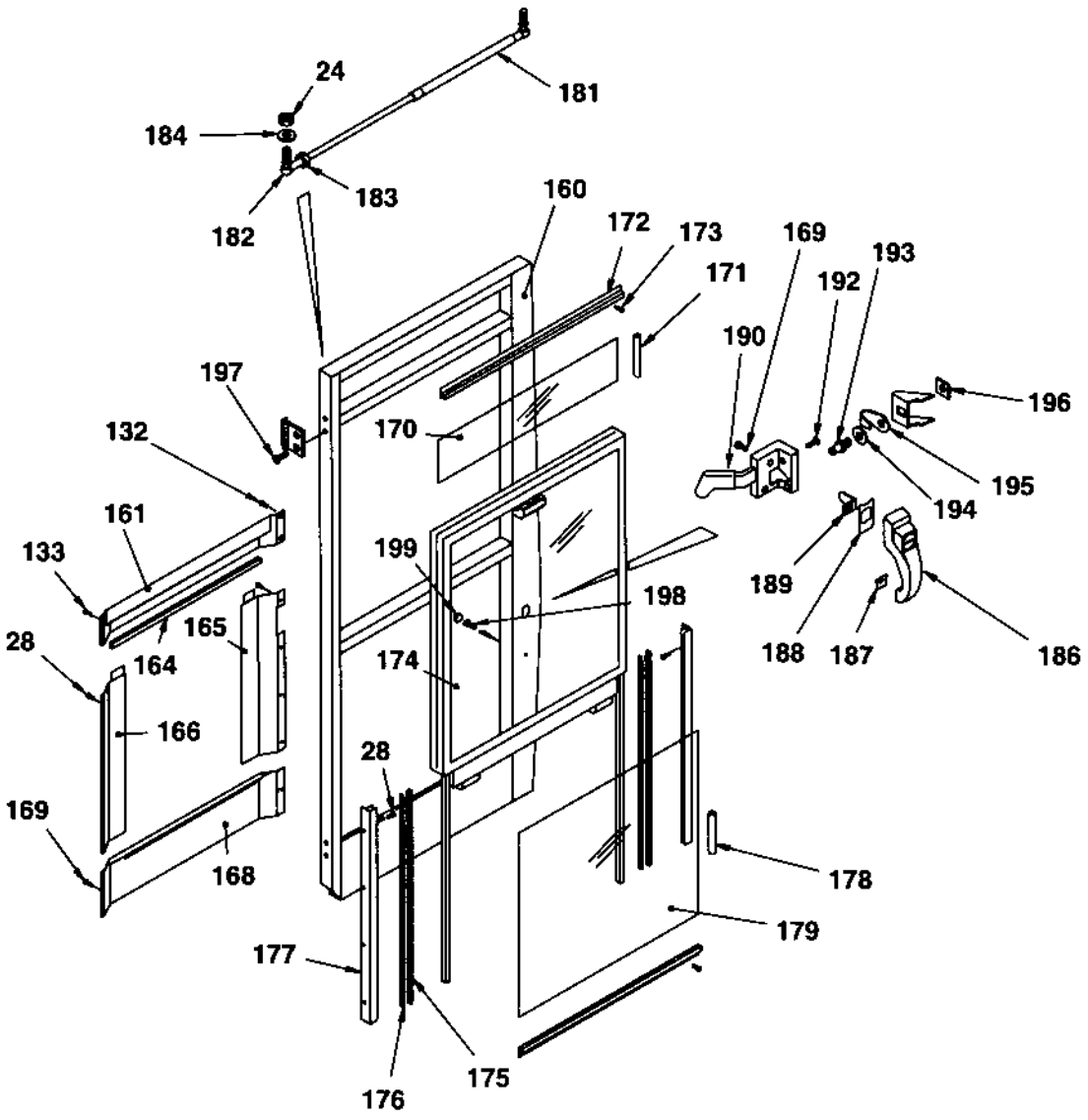

Cab, door, left side

Ref. No.	Part No.	Rem.	Qty	Description	Code
			1	Cab, cpl	
24	586003		2	.Lock nut M8	
28	901315		16	.Screw	
132	500012		2	.Screw M6x12	
133	541702		2	.Screw M6x12	
160	908566		1	.Door frame, left	
161	908567		1	.Cover	
164	908568	A	1XL	.Edge trim	
165	908569		1	.Cover	
166	908570		1	.Cover	
168	908571		1	.Cover	
169	903805		8	.Screw	
170	937406		1	.Screen Green	
171	908545	B	1XL	.Seal list	
172	908572		1	.List	
173	903782		10	.Screw	
174	937407	E	1	.Screen Green	
175	908573	C	1XL	.Sealing	
176	908574	C	1XL	.Sealing	
177	908575		2	.Slide bar	
178	908545	D	1XL	.Seal list	
179	937408		1	.Screen Green	
181	908284		1	.Gas spring	
	908354	1	1	.Mounting kit	
182	908576		1	.Ball joint	
183	570005		1	.Nut M8	
184	904229		2	.Washer 8,4x16x1,5	
186	935244		1	.Door handle with key	
	902866		1	..Key Marked "455"	D
187	908577		1	.Washer	
188	908578		1	.Washer	
189	908579		1	.Leader	
190	908287		1	.Lock	
192	903802		2	.Screw	
193	908580		1	.Lock pin	
194	908581		1	.Washer	
195	908582		1	.Cover	
196	908583		1	.Bracket	
197	513025		4	.Screw	
198	508001		1	.Screw	
199	908584		1	.Rubber seal	

1) Inculdes item 24, 182,183 and 184.
A) L=0,7 m
B) L=1,0 m
C) L=1,4 m
D) L=1,8 m
E) Up-down

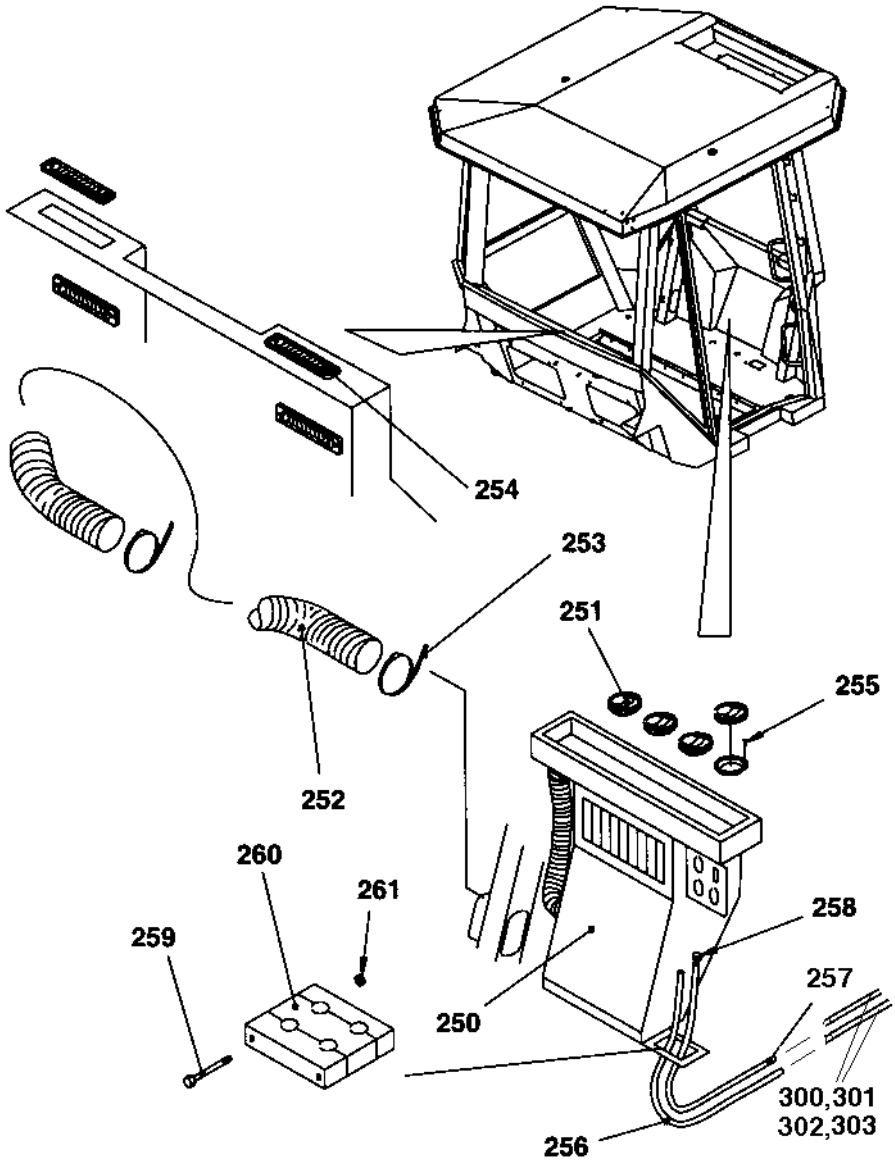
254
253
251
255
252
260
261
259
258
257
250
300,301
302,303
256

Cab, heater and, fan system

Ref. No.	Part No.	Rem.	Qty	Description	Code
			1	Cab, cpl	
250	385770		1	.Heater unit (Page 174)	
251	385442		4	.Air nozzle	
252	908599	A	1XL	.Hose	
253	908600		2	.Clamp	
254	908598		4	.Nozzle	
255	938691		16	.Screw	
256	938872	B	1XL	.Hose	
257	938873	C	1XL	.Hose	
258	938874		2	.Clamp	
259	500153		2	.Screw	
260	938871		1	.Hose clamp	
261	570004		2	.Nut M6	
300	234365		2	Elbow 90	
301	387638		2	Hose connection	
302				Not used on this model	
303	313004		2	Hose clamp	

A) L=1,50 m
B) L=2,75 m
C) L=2,90 m

385770 Heater unit

17652

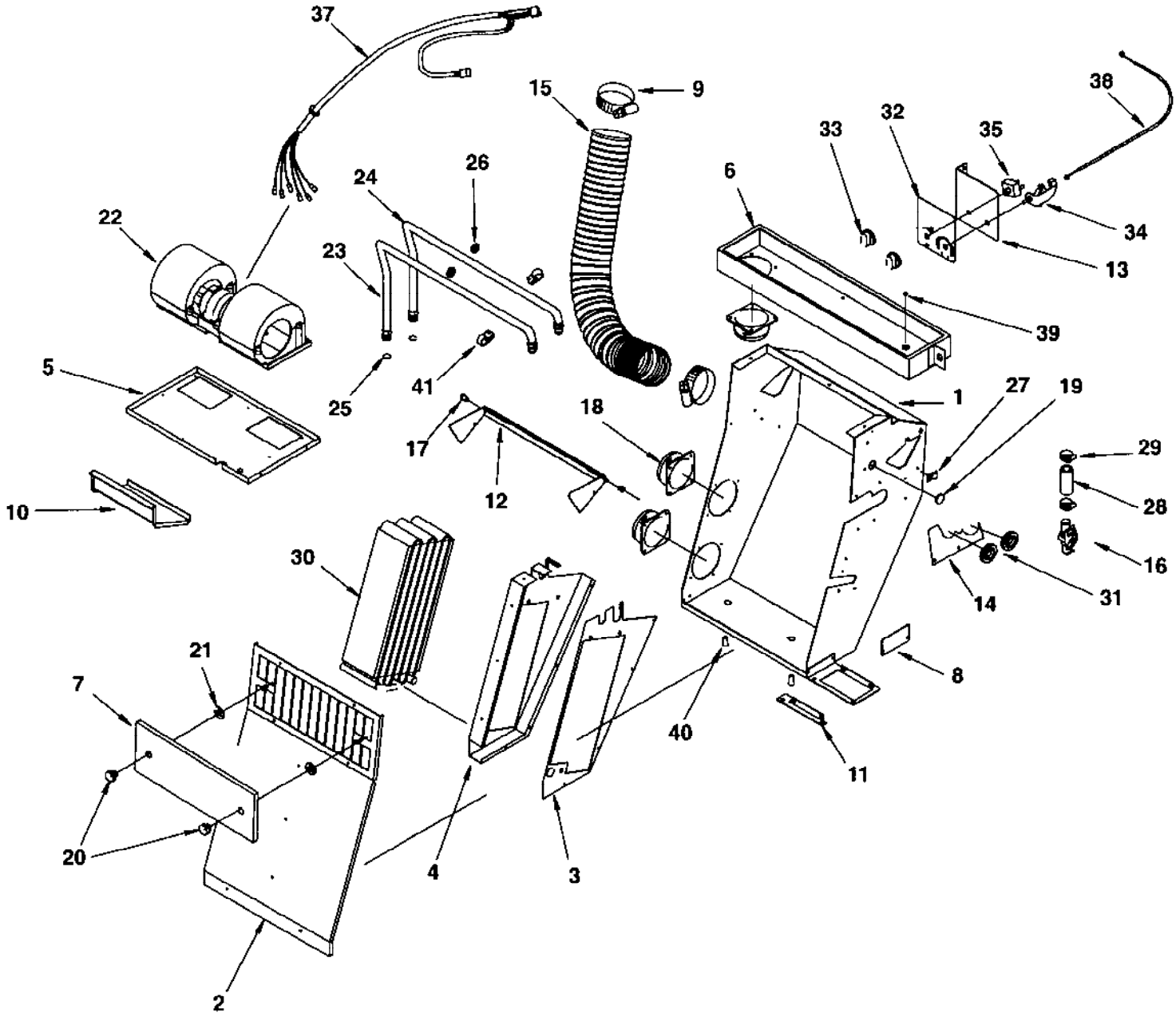

385770 Heater unit

Ref. No.	Part No.	Rem.	Qty	Description	Code
1	938772		1	Casing	
2	938773		1	Cover	
3	938774		1	Coil bracket	
4	938775		1	Coil bracket	
5	938776		1	Blower bracket	
6	938777		1	Air distributor	
7	938864		1	Recirculation cover	
8	938865		1	Block valve cover	
9	938789		2	Clamp	
10	938778		1	Air channel	
11	938779		1	Hose bracket	
12	938780		1	Flapper	
13	938781		1	Control panel	
14	938782		1	Cover plate	
15	938783		1	Air duct	
16	939699		1	Heater valve	
17	938784		2	Bushing	
18	938632		3	Hose adapter	
19	938644		1	Cap	
20	938634		2	Knob	
21	938611		2	Star lock	
22	938638		1	Fan	
23	938785		1	Copper tube	
24	938786		1	Copper tube	
25	384878		2	O-ring	
26	384927		2	Grommet	
27	384880		1	Wire clamp	
28	384881		1	Hose	
29	303003		2	Clamp	
30	384133		1	Coil	
31	938608		1	Grommet	
32	938955		1	Overlay	
33	938620		2	Knob	
34	938788		1	Rotary control	
35	938622		1	Switch	
37	938647		1	Cable harness	
38	938645		1	Bowden cable	
39	938867		1	Hole plug	
40	938636		2	Drain valve	
41	938790		2	Clamp	

Cab, roof mounted, electrical switches

17617

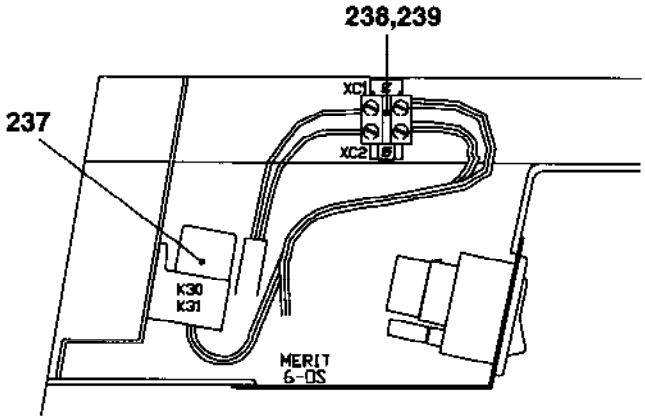

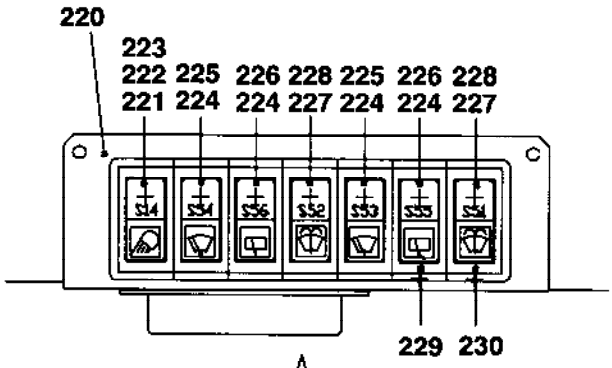

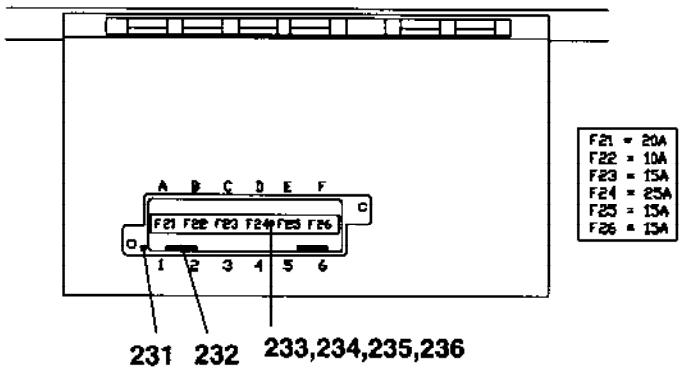

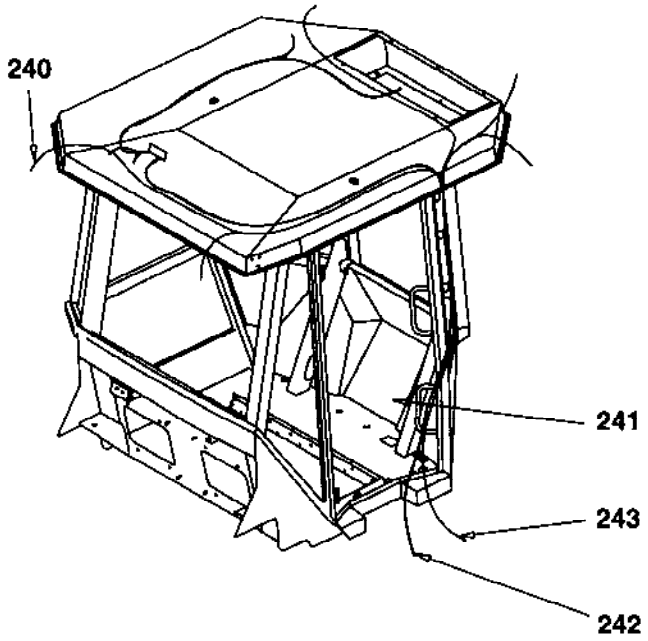

Cab, roof mounted, electrical switches

Ref. No.	Part No.	Rem.	Qty	Description	Code
			1	Cab, cpl	
220	908611		1	.Bracket	
221	908602		1	.Switch	
222	908604		1	.Symbol work lights	
223	908608		1	.Socket with bulb	
224	908617		4	.Switch	
225	908605		2	.Symbol wiper	
226	938687		2	.Symbol wiper	
227	908603		2	.Switch	
228	908618		2	.Symbol washer	
229	908606		5	.Modular panel	
230	908610		2	.Modular panel	
231	908613		1	.Fuse box	
232	901240		2	.Connector	
233	901228		3	.Fuse 15A	B
234	903741		1	.Fuse 20A	D
235	901227		1	.Fuse 10A	D
236	901229		1	.Fuse 25A	B
237	287597		2	.Relay	D
238	908614		1	.Terminal block	
239	938853		2	.End latch	
240	938029		1	.Cable harness	
241	938854		1	.Cable harness Roof	
242	938855		1	.Cable harness Feed	
243	938856		1	.Cable harness Work light	

Cab, symmetric

Ref. No.	Part No.	Rem.	Qty	Description	Code
1				Cab Interior (Page 180)	
2				Cab Screens (Page 182)	
3				Cab Inside panels (Page 184)	
4				Cab, wipers, front and rear (Page 168)	
6				Cab, door, left side (Page 170)	
7				Cab, heater and, fan system (Page 172)	
8				Cab, roof mounted, electrical switches (Page 176)	

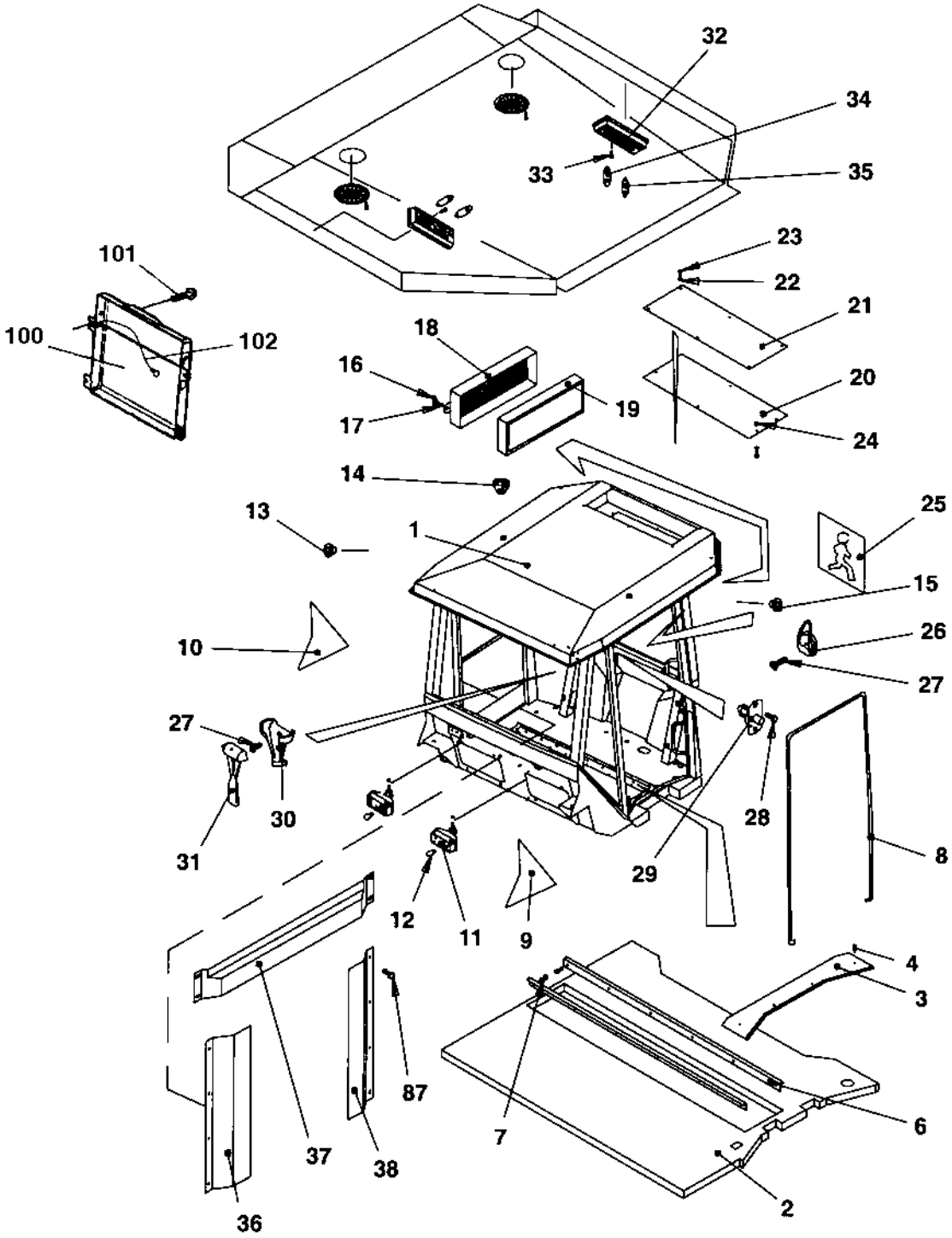
32
34
33
35
101
23
22
21
100
102
18
16
20
19
17
24
14
13
1
25
15
10
26
27
27
30
31
28
29
8
12
11
9
4
3
87
7
6
37
38
36
2

Cab Interior

Ref. No.	Part No.	Rem.	Qty	Description	Code
1	385738		1	Cab, cpl	
2	938849		1	.Floor mat	
3	908511		1	.List left	
4	903808		4	.Screw	
6	908510		2	.List	
7	535005		12	.Screw M5x12	
8	938842	A	1XL	.Sealing strip	
9	938843		1	.Black sticker	
10	938844		1	.Black sticker	
11	908268		2	.Work light	
12	938845		2	.Bulb 10W 12V	
13	938660		8	.Grommet	
14	908497		12	.Grommet	
15	909510		3	.Grommet	
16	908504		4	.Handle	
17	908503		4	.O-ring	
18	938846		2	.Filter housing	
19	938847		2	.Air filter	
20	938678		1	.Cover	
21	938679		1	.Cover	
22	936277		12	.Washer	
23	500053		12	.Screw M8-1,25x20 8,8	
24	586003		6	.Lock nut M8	
25	935589		1	.Decal	
26	908505		1	.Hook	
27	938676		4	.Screw	
28	901315		2	.Screw	
29	908500		1	.Door switch	
30	908506		1	.Holder	
31	908507		1	.Emergency hammer	
32	908515		2	.Inner light	
33	541535		4	.Screw	
34	985051		4	.Bulb 12V,10W	B
35	985013		2	.Bulb 12V,5W	B
36	938850		1	.Cover plate	
37	938851		1	.Cover plate	
38	938852		1	.Cover plate	
87	937932		12	.Screw	
100	383705		1	Instruction book holder	
101	791226		4	Screw	
102	357643		1	Wire	

A) L=5,0 m

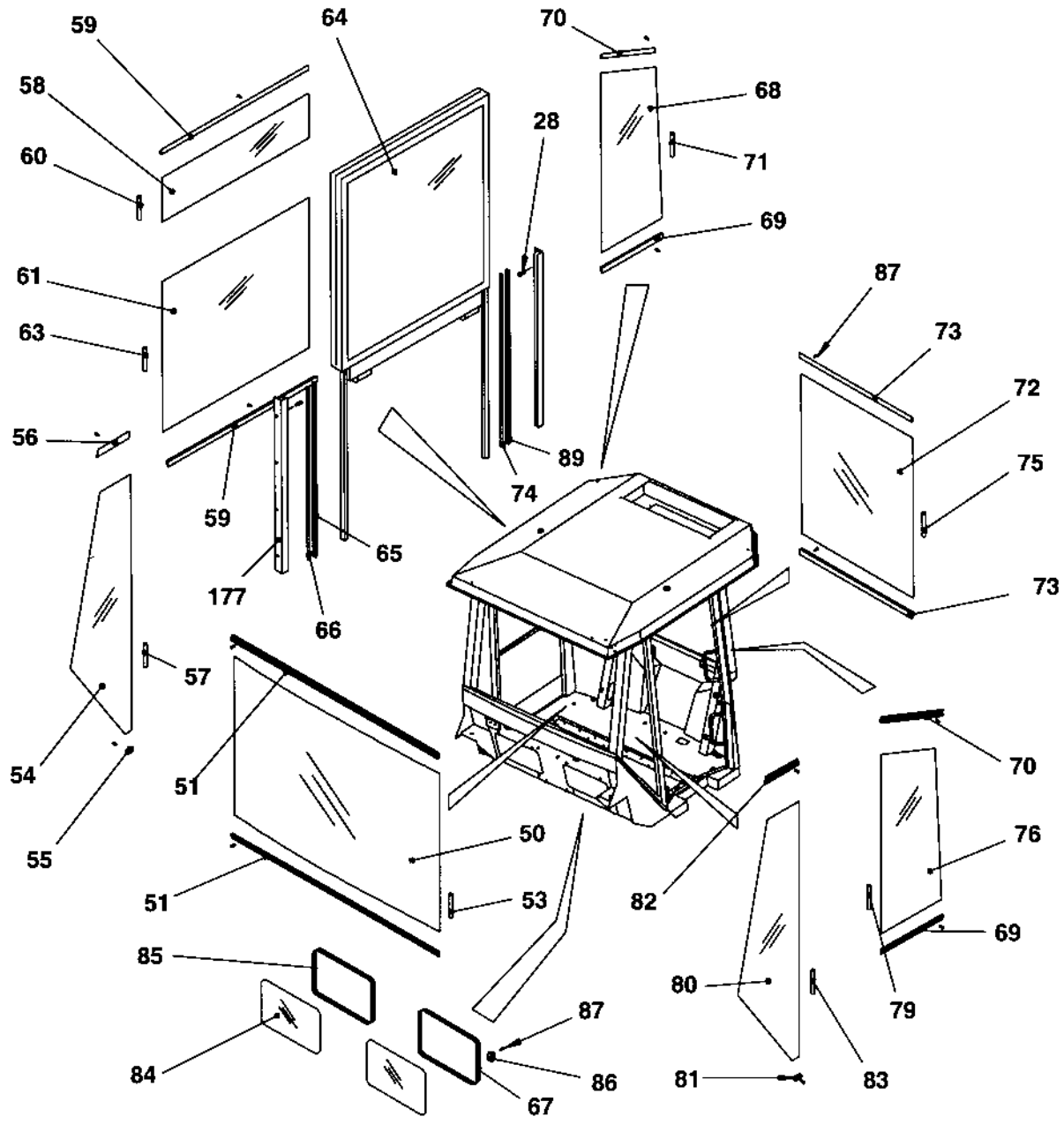
59
64
70
58
68
28
60
71
69
61
87
63
73
72
56
89
75
74
59
65
73
177
66
57
54
51
55
50
51
53
82
70
76
85
69
80
79
87
84
86
81
83
67

Ref. No.	Part No.	Rem.	Qty	Description	Code
			1	Cab, cpl	
28	901315		8	.Screw	
50	937412		1	.Screen Green	
51	908758		2	.List	
53	938834	A	1XL	.Sealing strip	
54	938616		1	.Screen Green	
55	938839		1	.List	
56	938840		1	.List	
57	938834	B	1XL	.Sealing strip	
58	938614		1	.Screen Green	
59	938841		2	.List	
60	938834	C	1XL	.Sealing strip	
61	938613		1	.Screen Green	
63	938834	A	1XL	.Sealing strip	
64	938612		1	.Screen Green	
65	908573	D	1XL	.Sealing	
66	908574	D	1XL	.Sealing	
67	938837	E	1XL	.Sealing strip	
68	938615		1	.Screen Green	
69	908556		2	.List	
70	938836		2	.List	
71	938834	F	1XL	.Sealing strip	
72	937411		1	.Screen Green	
73	908764		2	.List	
74	908573	D	1XL	.Sealing	
75	938834	A	1XL	.Sealing strip	
76	938566		1	.Screen Green	
79	938834	G	1XL	.Sealing strip	
80	937405		1	.Screen Green	
81	908993		1	.List	
82	908557		1	.List	
83	938834	B	1XL	.Sealing strip	
84	938568		2	.Screen Green	
85	938837	E	1XL	.Sealing strip	
86	938838		8	.List	
87	937932		48	.Screw	
89	908574	D	1XL	.Sealing	
177	908575		2	.Slide bar	

A) L=1,8 m
B) L=3,0 m
C) L=1,0 m
D) L=1,4 m
E) L=1,3 m
F) L=2,5 m
G) L=2,1 m

Cab Inside panels

17614

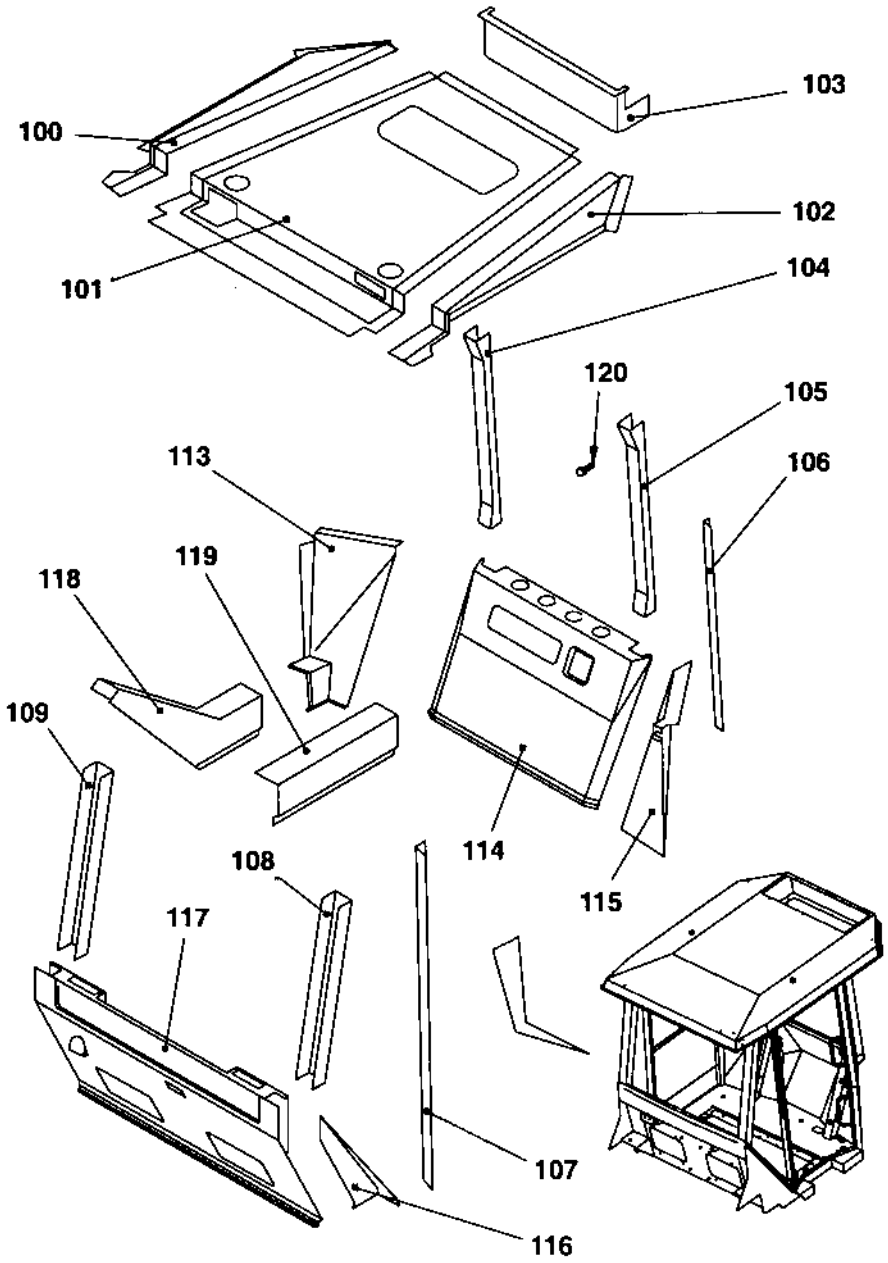

Cab Inside panels

Ref. No.	Part No.	Rem.	Qty	Description	Code
			1	Cab, cpl	
100	938814		1	.Panel	
101	938819		1	.Panel	
102	938808		1	.Panel	
103	938820		1	.Panel	
104	938810		1	.Panel	
105	938811		1	.Panel	
106	908535		1	.Panel	
107	908536		1	.Panel	
108	908529		1	.Panel	
109	938815		1	.Panel	
113	938825		1	.Panel	
114	938821		1	.Panel	
115	908756		1	.Panel	
116	938822		1	.Panel	
117	938823		1	.Panel	
118	938826		1	.Panel	
119	938818		1	.Panel	
120	938677		50	.Screw	

Cab, wipers, front and rear

17615

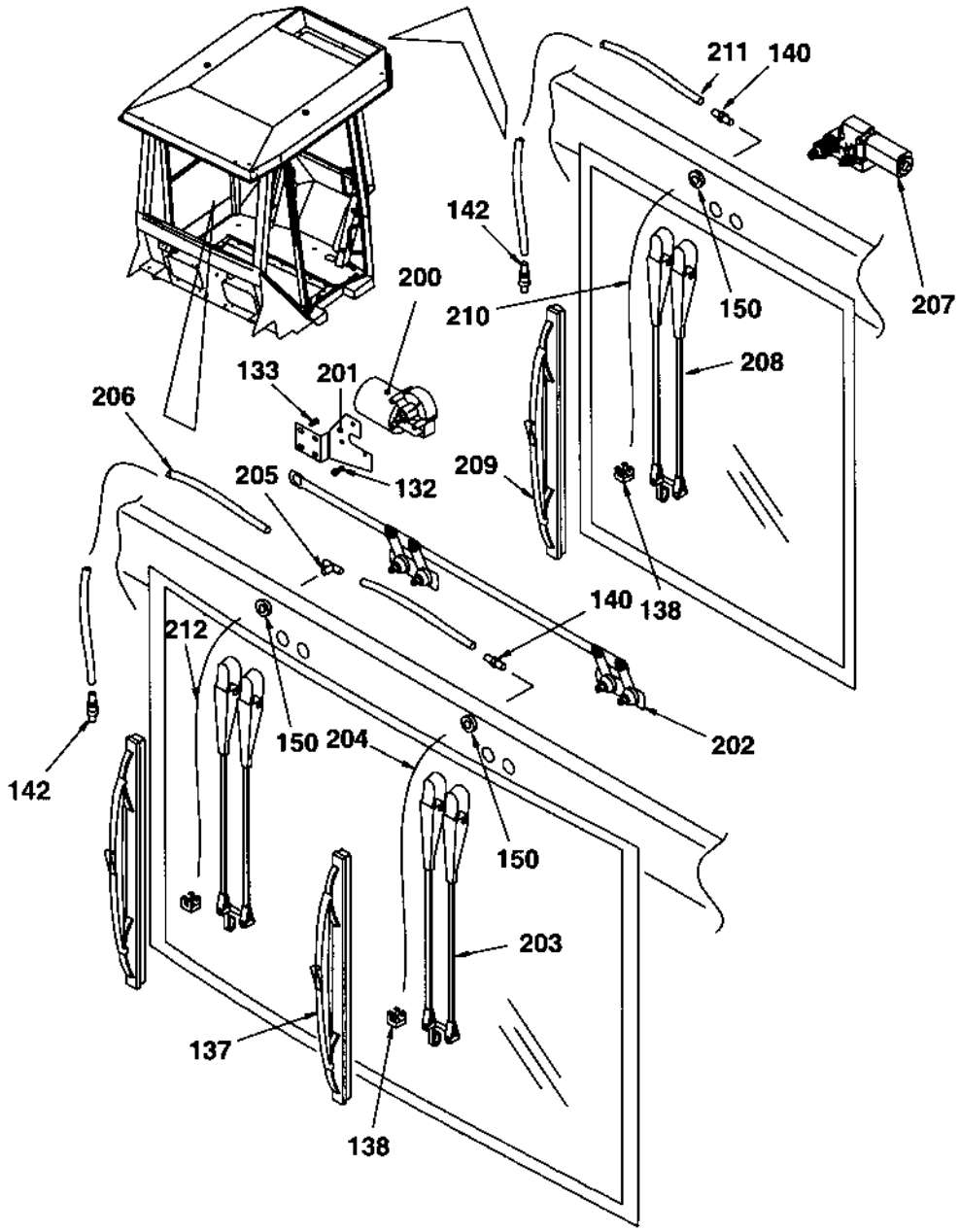

Cab, wipers, front and rear

Ref. No.	Part No.	Rem.	Qty	Description	Code
			1	Cab, cpl	
132	500012		3	.Screw M6x12	
133	541702		4	.Screw M6x12	
137	908271		2	.Wiper blade	
138	908559		3	.Nozzle	
140	908561		2	.Grommet	
142	908564		2	.Check valve	
150	908496		3	.Grommet	
200	908272		1	.Wiper motor	
201	908558		1	.Bracket	
202	908362		1	.Transmission	
203	908273		2	.Wiper arm	
204	908560	A	1XL	.Rubber hose	
205	908562		1	.T-connection	
206	908563	B	1XL	.Plastic hose	
207	908278		1	.Wiper motor	
208	908279		1	.Wiper arm	
209	908280		1	.Wiper blade	
210	908560	A	1XL	.Rubber hose	
211	908563	B	1XL	.Plastic hose	
212	908560	A	1XL	.Rubber hose	

A) L=1,0 m
B) L=6,0 m

Cab, door, left side

17616

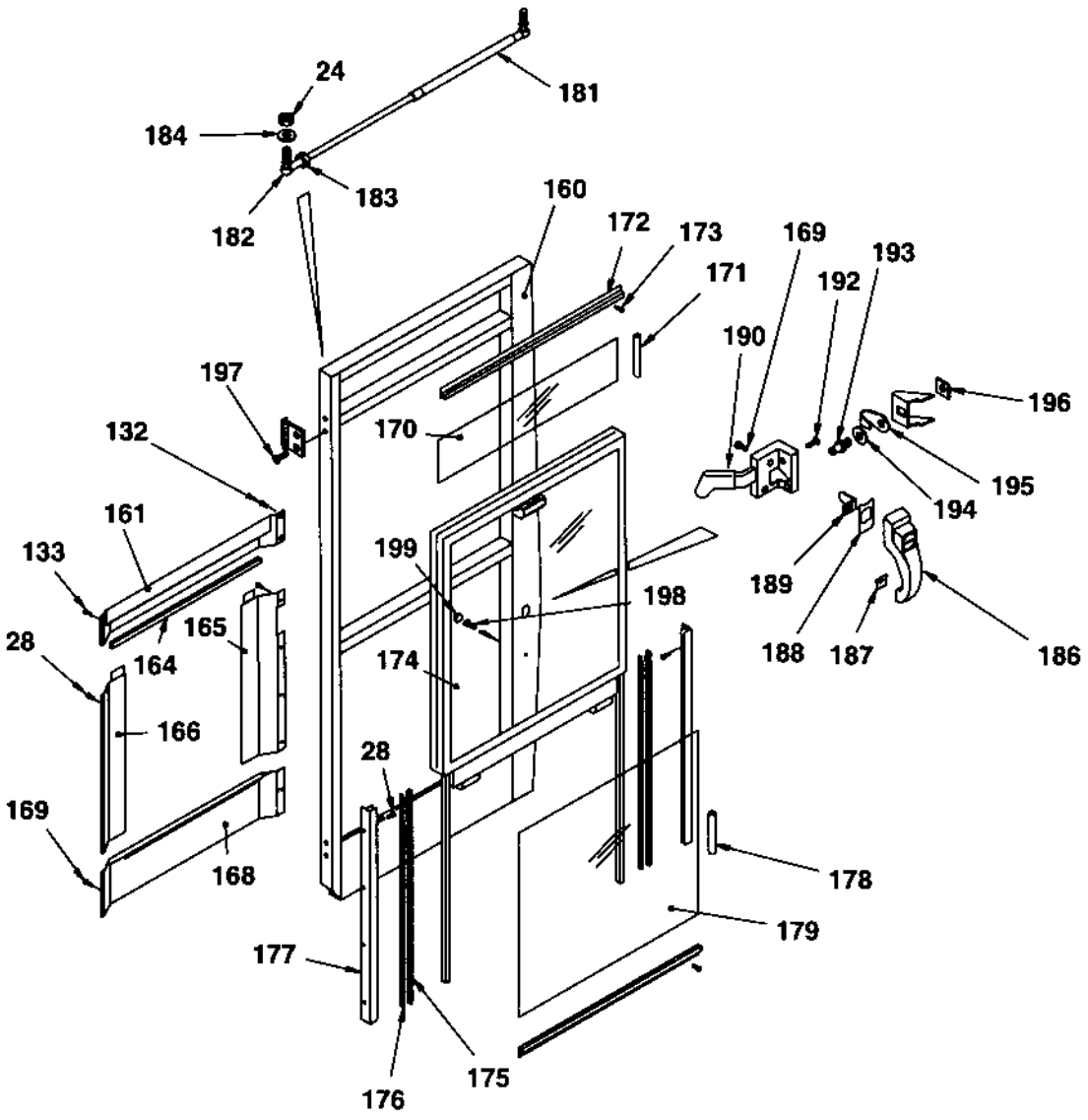

Cab, door, left side

Ref. No.	Part No.	Rem.	Qty	Description	Code
			1	Cab, cpl	
24	586003		2	.Lock nut M8	
28	901315		16	.Screw	
132	500012		2	.Screw M6x12	
133	541702		2	.Screw M6x12	
160	908566		1	.Door frame, left	
161	908567		1	.Cover	
164	908568	A	1XL	.Edge trim	
165	908569		1	.Cover	
166	908570		1	.Cover	
168	908571		1	.Cover	
169	903805		8	.Screw	
170	937406		1	.Screen Green	
171	908545	B	1XL	.Seal list	
172	908572		1	.List	
173	903782		10	.Screw	
174	937407	E	1	.Screen Green	
175	908573	C	1XL	.Sealing	
176	908574	C	1XL	.Sealing	
177	908575		2	.Slide bar	
178	908545	D	1XL	.Seal list	
179	937408		1	.Screen Green	
181	908284		1	.Gas spring	
	908354	1	1	.Mounting kit	
182	908576		1	.Ball joint	
183	570005		1	.Nut M8	
184	904229		2	.Washer 8,4x16x1,5	
186	935244		1	.Door handle with key	
	902866		1	..Key Marked "455"	D
187	908577		1	.Washer	
188	908578		1	.Washer	
189	908579		1	.Leader	
190	908287		1	.Lock	
192	903802		2	.Screw	
193	908580		1	.Lock pin	
194	908581		1	.Washer	
195	908582		1	.Cover	
196	908583		1	.Bracket	
197	513025		4	.Screw	
198	508001		1	.Screw	
199	908584		1	.Rubber seal	

1) Inculdes item 24, 182,183 and 184.
A) L=0,7 m
B) L=1,0 m
C) L=1,4 m
D) L=1,8 m
E) Up-down

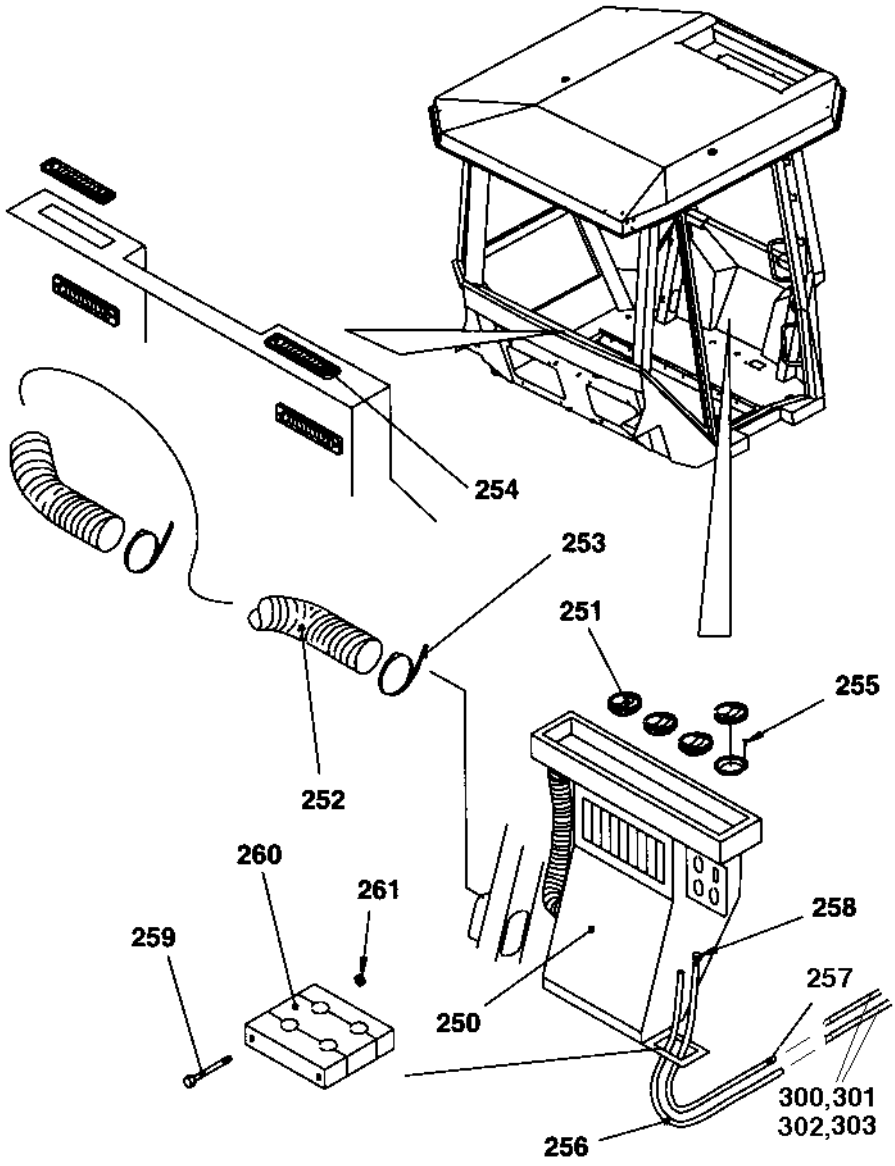
254
253
251
255
252
260
261
259
258
257
250
300,301
302,303
256

Cab, heater and, fan system

Ref. No.	Part No.	Rem.	Qty	Description	Code
			1	Cab, cpl	
250	385770		1	.Heater unit (Page 174)	
251	385442		4	.Air nozzle	
252	908599	A	1XL	.Hose	
253	908600		2	.Clamp	
254	908598		4	.Nozzle	
255	938691		16	.Screw	
256	938872	B	1XL	.Hose	
257	938873	C	1XL	.Hose	
258	938874		2	.Clamp	
259	500153		2	.Screw	
260	938871		1	.Hose clamp	
261	570004		2	.Nut M6	
300	234365		2	Elbow 90	
301	387638		2	Hose connection	
302				Not used on this model	
303	313004		2	Hose clamp	

A) L=1,50 m
B) L=2,75 m
C) L=2,90 m

385770 Heater unit

17652

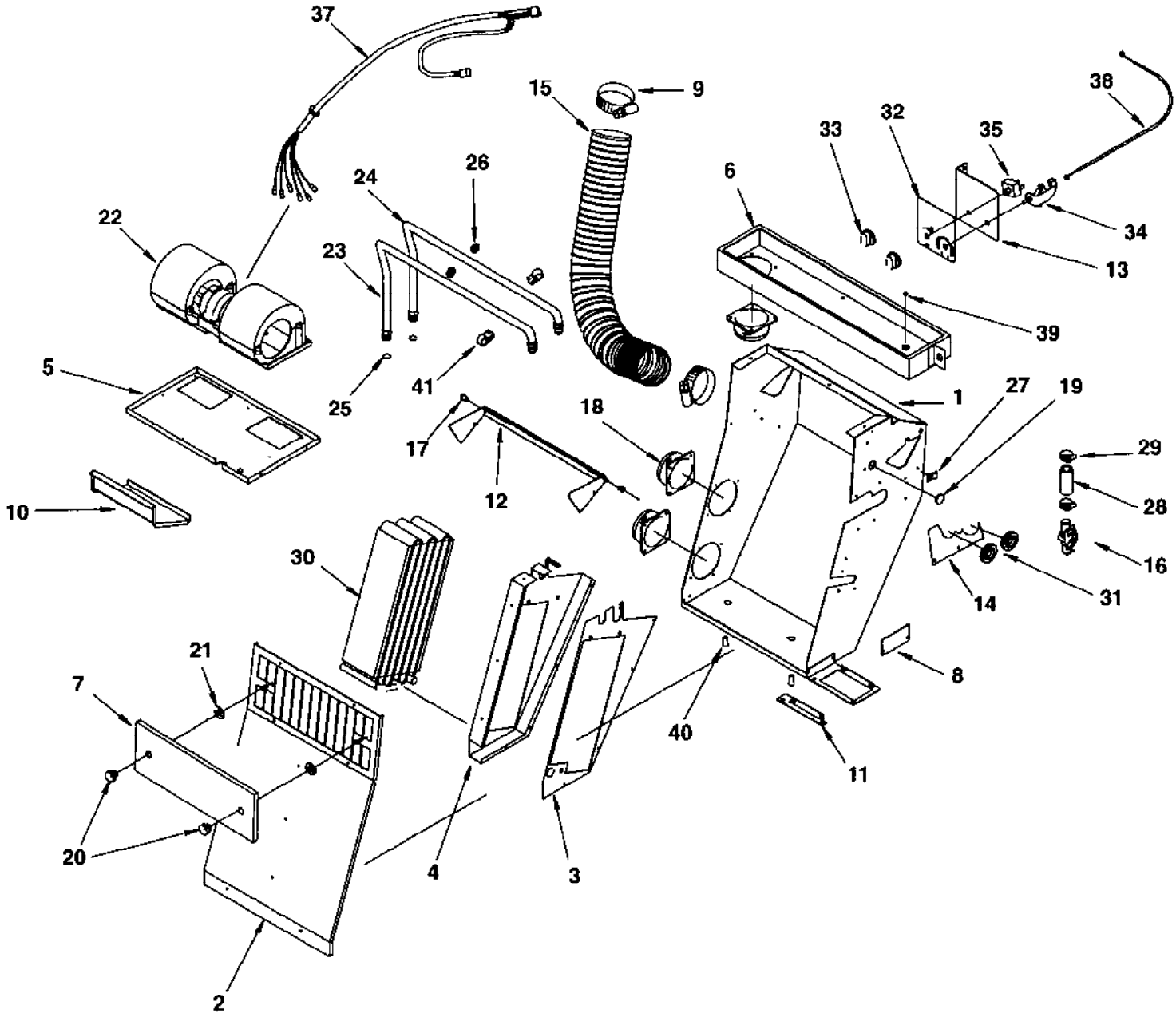

385770 Heater unit

Ref. No.	Part No.	Rem.	Qty	Description	Code
1	938772		1	Casing	
2	938773		1	Cover	
3	938774		1	Coil bracket	
4	938775		1	Coil bracket	
5	938776		1	Blower bracket	
6	938777		1	Air distributor	
7	938864		1	Recirculation cover	
8	938865		1	Block valve cover	
9	938789		2	Clamp	
10	938778		1	Air channel	
11	938779		1	Hose bracket	
12	938780		1	Flapper	
13	938781		1	Control panel	
14	938782		1	Cover plate	
15	938783		1	Air duct	
16	939699		1	Heater valve	
17	938784		2	Bushing	
18	938632		3	Hose adapter	
19	938644		1	Cap	
20	938634		2	Knob	
21	938611		2	Star lock	
22	938638		1	Fan	
23	938785		1	Copper tube	
24	938786		1	Copper tube	
25	384878		2	O-ring	
26	384927		2	Grommet	
27	384880		1	Wire clamp	
28	384881		1	Hose	
29	303003		2	Clamp	
30	384133		1	Coil	
31	938608		1	Grommet	
32	938955		1	Overlay	
33	938620		2	Knob	
34	938788		1	Rotary control	
35	938622		1	Switch	
37	938647		1	Cable harness	
38	938645		1	Bowden cable	
39	938867		1	Hole plug	
40	938636		2	Drain valve	
41	938790		2	Clamp	

Cab, roof mounted, electrical switches

17617

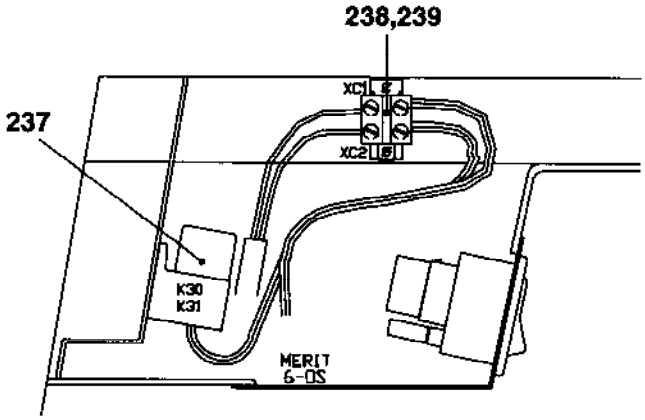

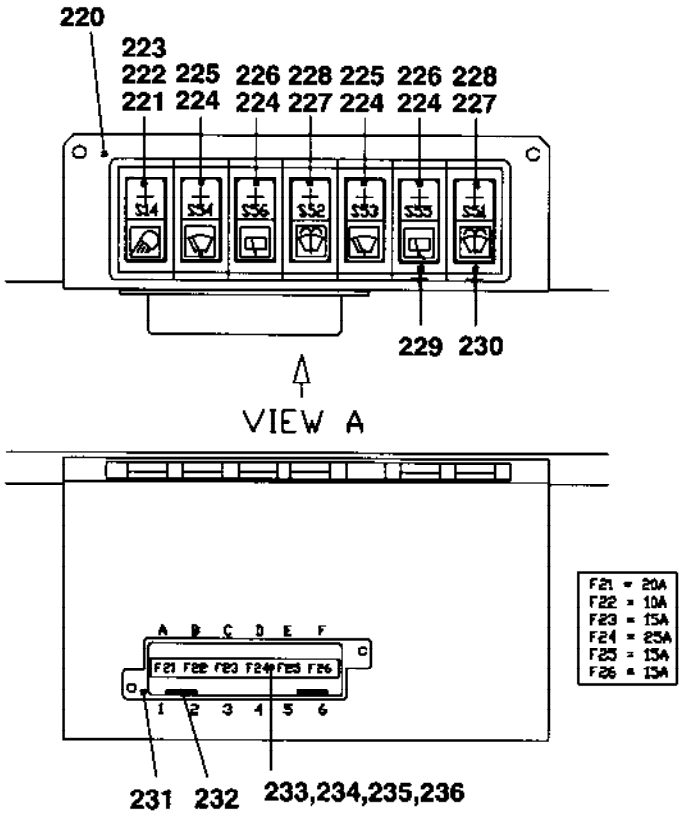

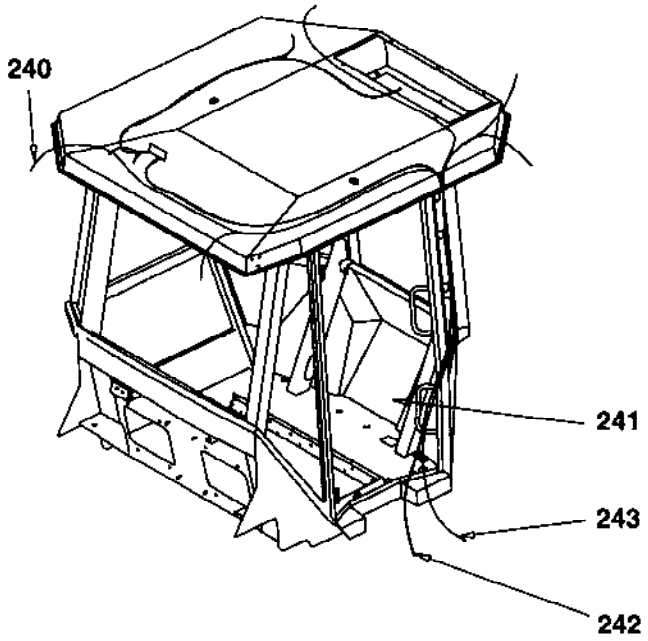

Cab, roof mounted, electrical switches

Ref. No.	Part No.	Rem.	Qty	Description	Code
			1	Cab, cpl	
220	908611		1	.Bracket	
221	908602		1	.Switch	
222	908604		1	.Symbol work lights	
223	908608		1	.Socket with bulb	
224	908617		4	.Switch	
225	908605		2	.Symbol wiper	
226	938687		2	.Symbol wiper	
227	908603		2	.Switch	
228	908618		2	.Symbol washer	
229	908606		5	.Modular panel	
230	908610		2	.Modular panel	
231	908613		1	.Fuse box	
232	901240		2	.Connector	
233	901228		3	.Fuse 15A	B
234	903741		1	.Fuse 20A	D
235	901227		1	.Fuse 10A	D
236	901229		1	.Fuse 25A	B
237	287597		2	.Relay	D
238	908614		1	.Terminal block	
239	938853		2	.End latch	
240	938029		1	.Cable harness	
241	938854		1	.Cable harness Roof	
242	938855		1	.Cable harness Feed	
243	938856		1	.Cable harness Work light	

Cab, water tank wipers

15870

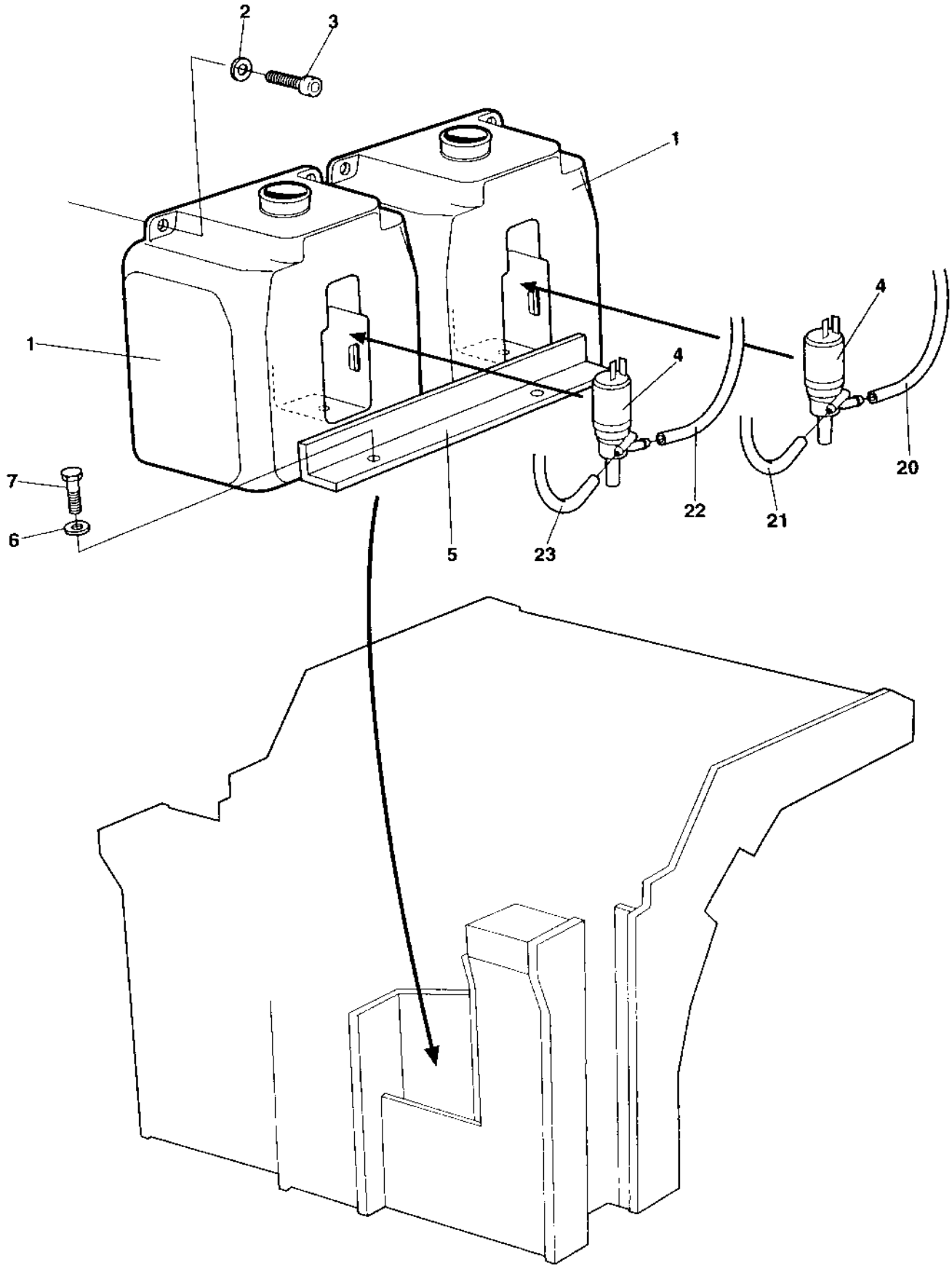

Cab, water tank wipers

Ref. No.	Part No.	Rem.	Qty	Description	Code
1	900998	A,1	2	Water reservoir	
	900998	A,2	1	Water reservoir	
2	904228	1	4	Washer 6,4x12x1,5	
	904228	2	2	Washer 6,4x12x1,5	
3	500075	1	4	Screw M6-1x25 8,8	
	500075	2	2	Screw M6-1x25 8,8	
4	900999	1	2	Pump	
	900999	2	1	Pump	
5	371960		1	Bracket	
6	904228		2	Washer 6,4x12x1,5	
7	500013		2	Screw M6-1x16 8,8	
20		B	1	Hose	
21		C	1	Hose	
22		D	1	Hose	
23		E	1	Hose	

1) Valid for asymmetric cab.
2) Valid for symmetric cab.
A) Windshield washer
B) Forward center
C) Rear center
D) Forward right
E) Rear right

Cab, sun curtain, first aid kit, int mirror

17619

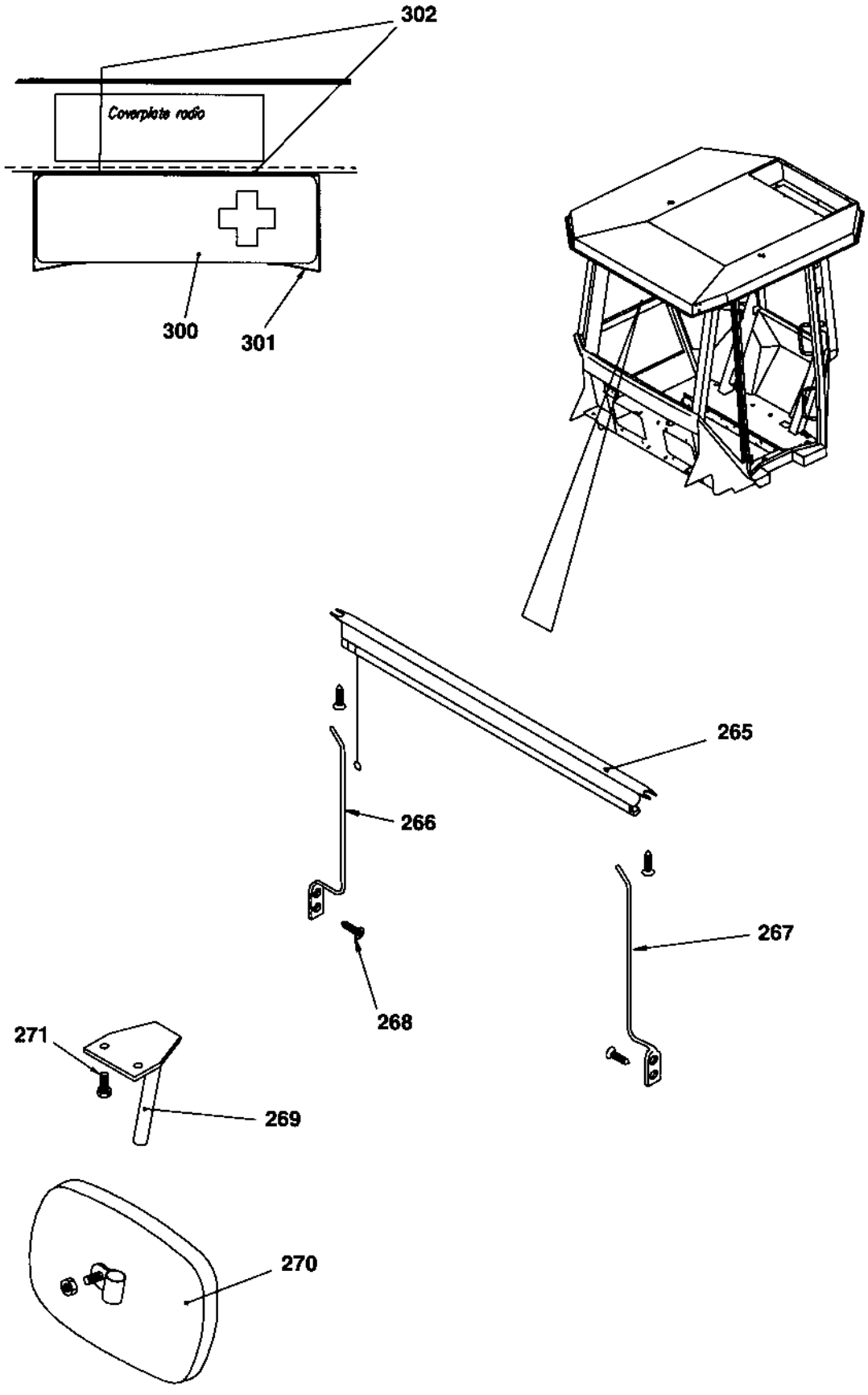

Cab, sun curtain, first aid kit, int mirror

Ref. No.	Part No.	Rem.	Qty	Description	Code
				Cab, cpl	
265	908356		1	.Sun curtain	
266	908358		1	.Bar	
267	908357		1	.Bar	
268	903803		4	.Screw	
269	908623		1	.Bracket	
270	908624		1	.Rear mirror	
271	513008		1	.Screw	
300	902508		1	First aid kit	
301	371837		1	Holder	
302	903969		4	Screw ST4,8x19 Black	

Exterior rear mirrors

15777

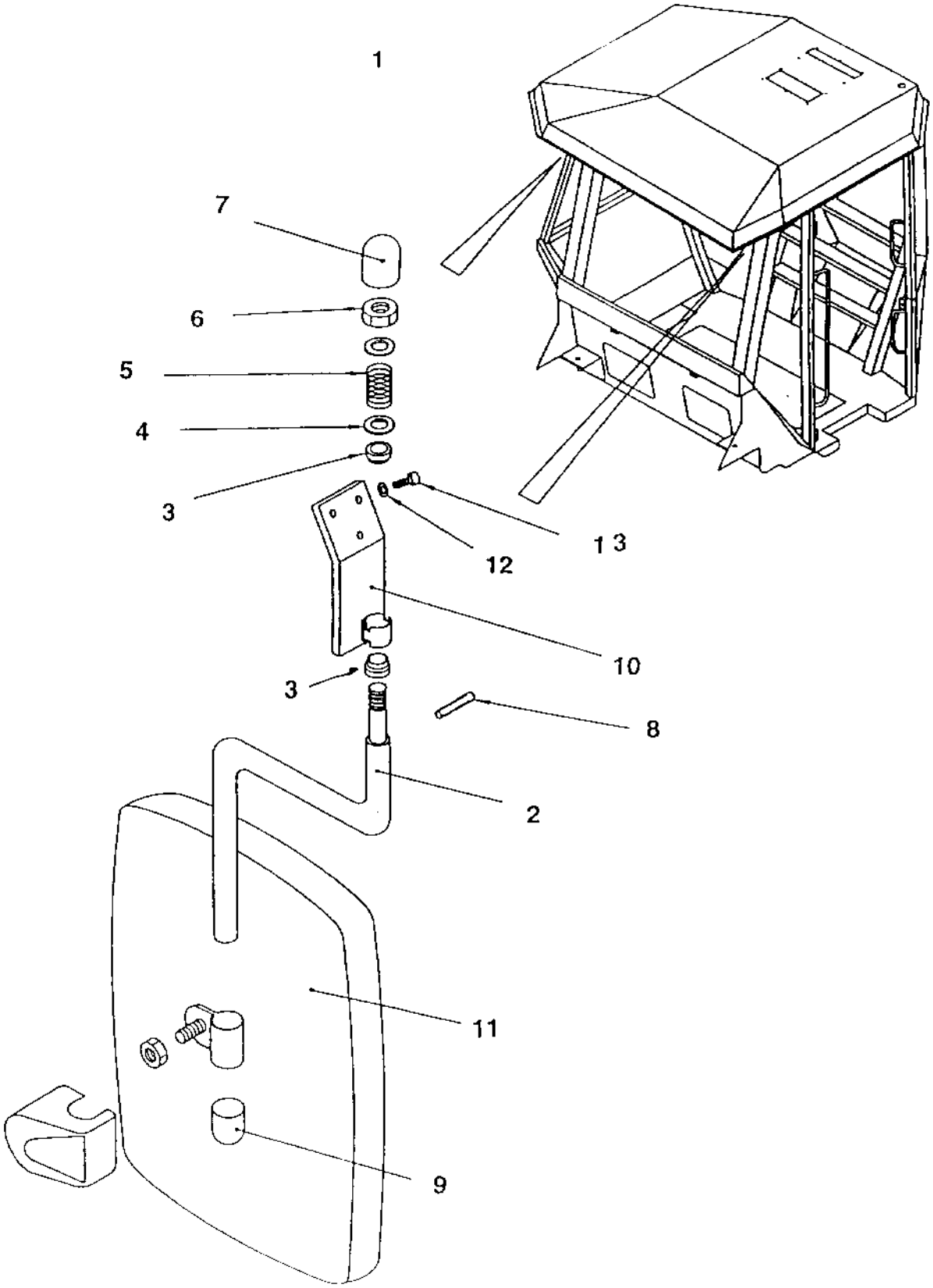

Exterior rear mirrors

Ref. No.	Part No.	Rem.	Qty	Description	Code
1	371730	A	1	Rear mirror	
2	908355		1	.Arm	
3	908625		2	.Sleeve	
4	904232		2	.Washer 17x30x3	
5	908626		1	.Spring	
6	586021		1	.Nut M16	
7	908627		1	.Cap	
8	629066		1	.Spirol pin	
9	908623		1	.Bracket	
10	908361		1	.Bracket	
11	908265		1	.Rear mirror	
12	904229		6	Washer 8,4x16x1,5	
13	500019		6	Screw M8-1,25x16 8,8	

A) Option

Radio and cassette/cd player

17972

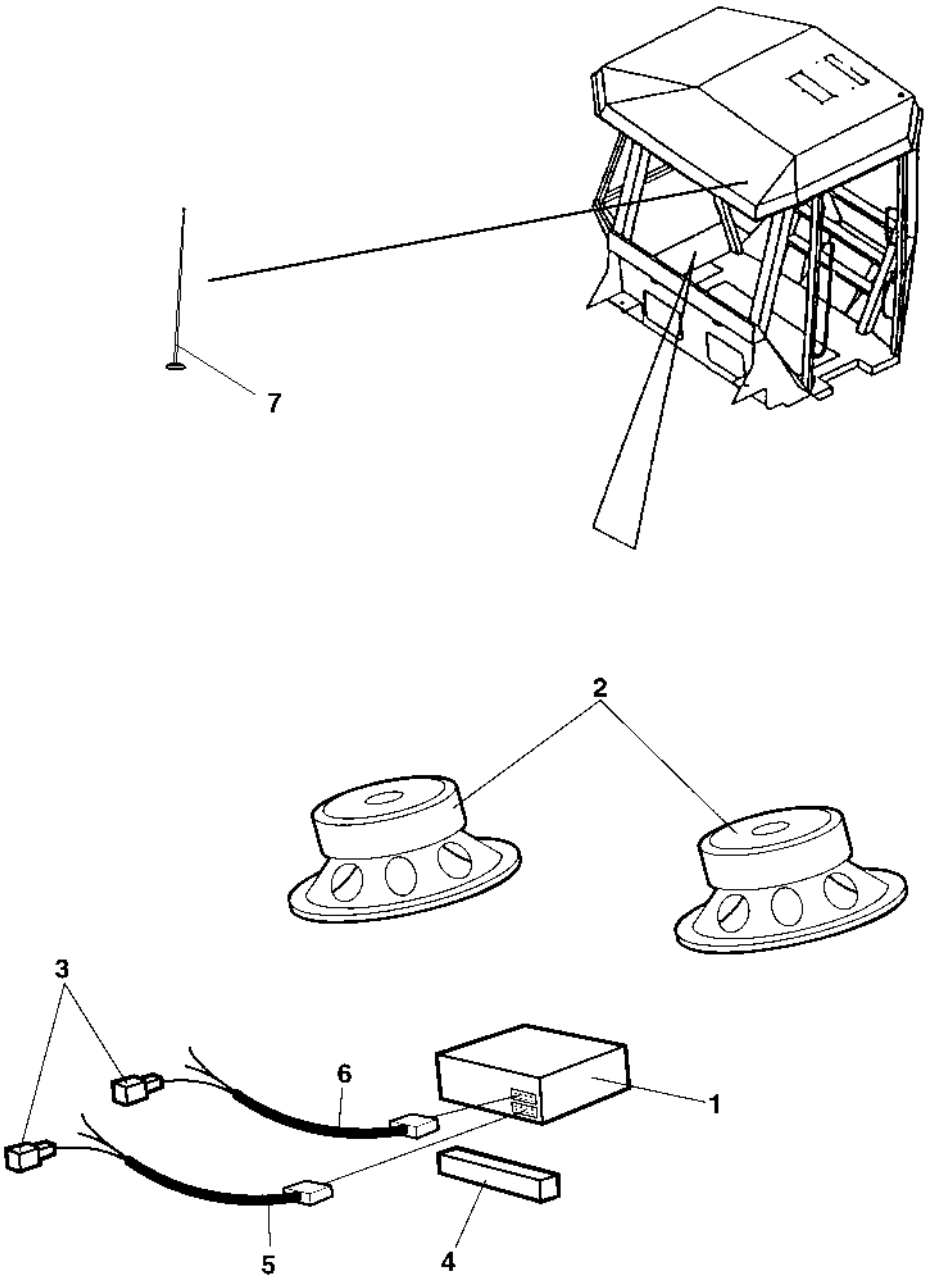

Radio and cassette/cd player

Ref. No.	Part No.	Rem.	Qty	Description	Code
1	904939		1	Radio and cassette player	
	791967		1	Radio and cd player	
2	791968	A	1	Loud speakers	
4	202043	C	1XL	Rubber strip	
7	937165	1	1	Antenna	

1) Included in cab.
A) 2 pcs
C) L=0,2 m

Ref. No.	Part No.	Rem.	Qty	Description	Code
10				Plates and decals (Page 206)	

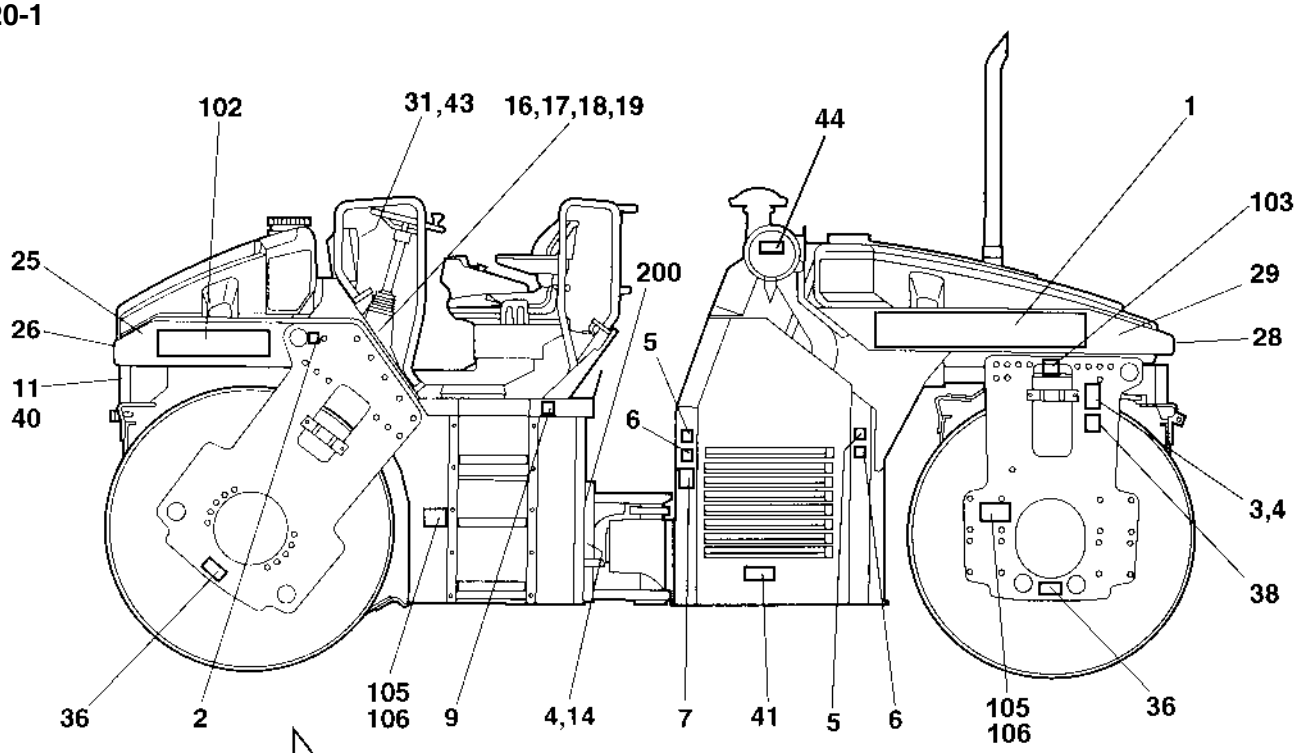
102
31,43
16,17,18,19
44
1
103
25
200
29
26
5
28
11
40
6
3,4
38
36
2
105
106
9
4,14
7
41
5
6
105
106
36

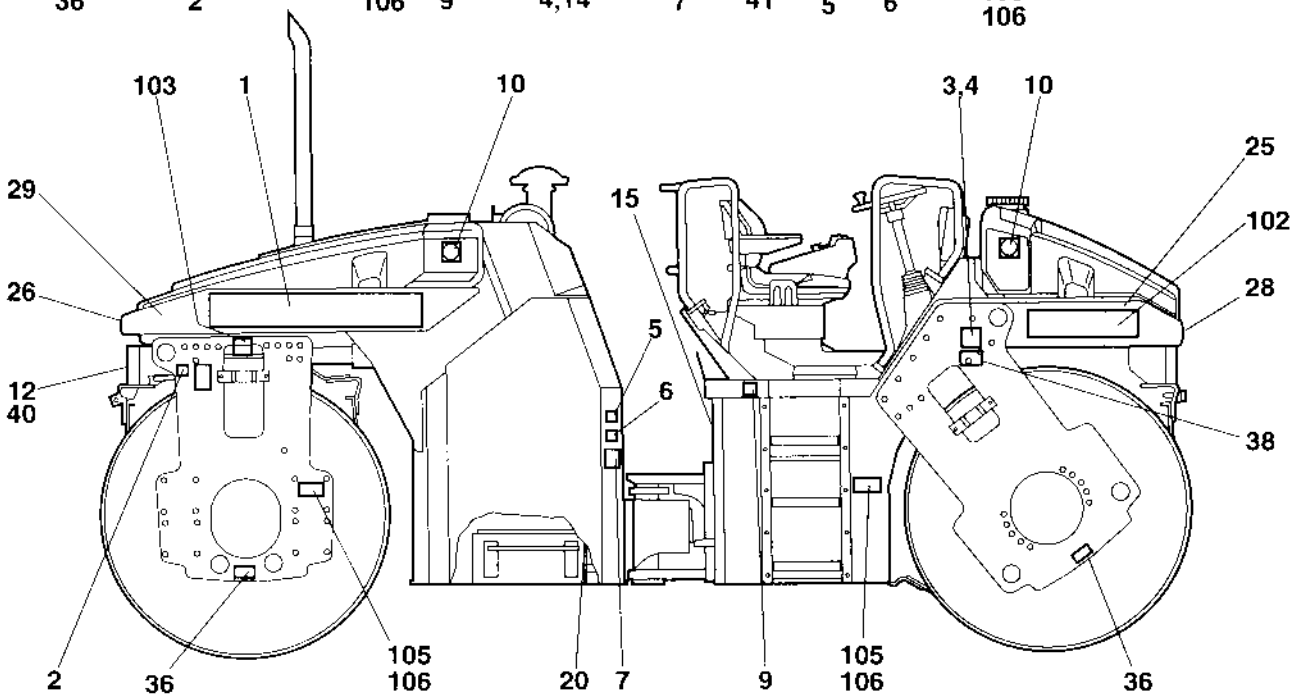
103
1
10
3,4
10
29
15
25
102
26
5
28
12
40
6
38
2
36
105
106
20
7
9
105
106
36

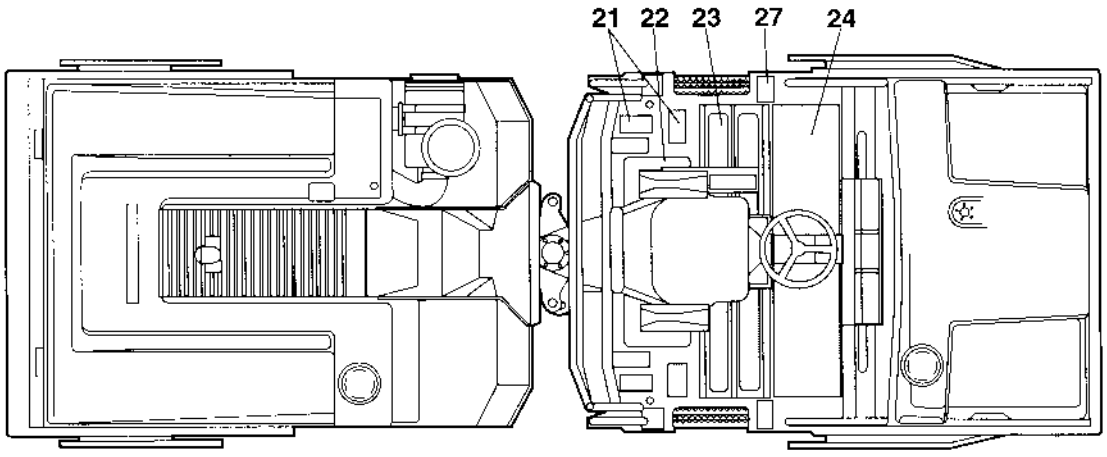
21
22
23
27
24

Ref. No.	Part No.	Rem.	Qty	Description	Code
1	904095		2	Decal "DYNAPAC" L=880 mm	
2	357587		2	Decal "LIFT POINT"	
3	904870		2	Lifting sign	
4	624005		12	Blind rivet 3,2x6,1	
5	903424	A	3	Decal "HOT SURFACE"	
6	903423	B	3	Decal "SAFETY"	
7	903422	C	2	Decal "SAFETY"	
9	903459	D	2	Decal "SAFETY"	
10	991657		2	Decal "WATER"	
11	377743		2	Reflector, white	B
12	377742		2	Reflector, red	B
14			1	Product identification plate	B
			1	Product identification plate CE	B
15	991658		1	Decal "FUEL"	
16	903425		1	Decal "SAFETY MANUAL"	
17	357643		1	Wire	
18	904697		1	Washer 3,2x6x0,5	
19	358254		1	Key-ring	
20	272373		1	Decal "HYDRAULIC OIL"	
21	370058	H	4	Protection	
22	372124	I	1	Protection	
23	372121	J	2	Protection	
24	372122	K	1	Protection	
25	372161	L	2XL	Decal "RED" W=230 mm	
26	370084	L	2XL	Decal "RED" W=140 mm	
27	372123	N	2	Protection	
28	904092		2	Decal "DYNAPAC" L=590 mm	
29	370085	L	2XL	Decal "RED" W=200 mm	
31	386084SE	2	1	Warning plate Swedish	
	386084EN	2	1	Warning plate English	
	386084DE	2	1	Warning plate German	
	386084IT	2	1	Warning plate Italian	
	386084ES	2	1	Warning plate Spanish	
	386084FR	2	1	Warning plate French	
	386084NO	2	1	Warning plate Norwegian	
	386084DK	2	1	Warning plate Danish	
	386084FI	2	1	Warning plate Finnish	
	386084PT	2	1	Warning plate Portuguese	
	386084NL	2	1	Warning plate Dutch	
	386084GR	2	1	Warning plate Greek	
	386084IS	2	1	Warning plate Icelandic	
	386084CN	2	1	Warning plate Chinese	
	386084BR	2	1	Warning plate Brazil	
36	382751		4	Decal "TIE DOWN POINT"	
38	908229		2	Safety decal	
40				Not used on this model	
41	904835		1	Decal "BATTERY POWER"	

2) Include the land code when ordering plate.
A) Hot surface
B) Engine fan
C) Hazardous area
D) Read instr. manual
H) Small, rear
I) Rear
J) Middle
K) Front
L) Lenght as required
N) Small, front

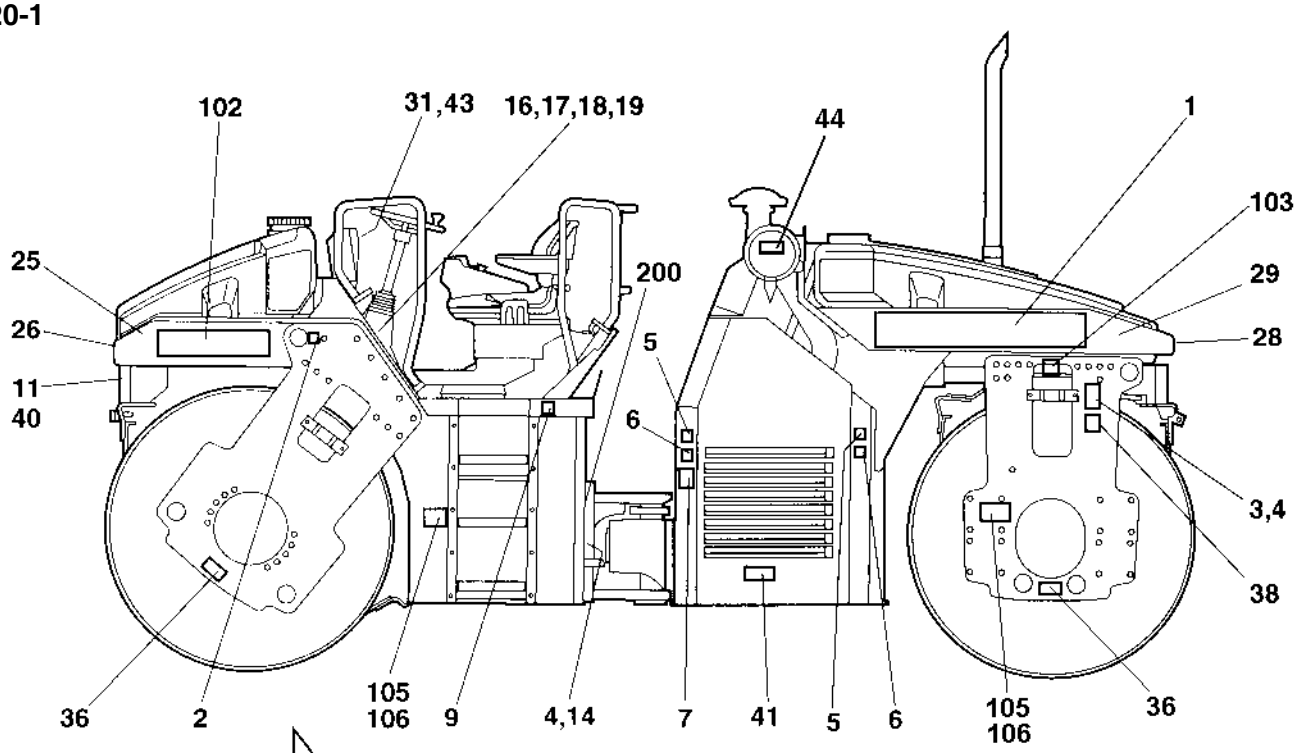
102
31,43
16,17,18,19
44
1
103
25
200
29
26
5
28
11
40
6
3,4
38
36
2
105
106
9
4,14
7
41
5
6
105
106
36

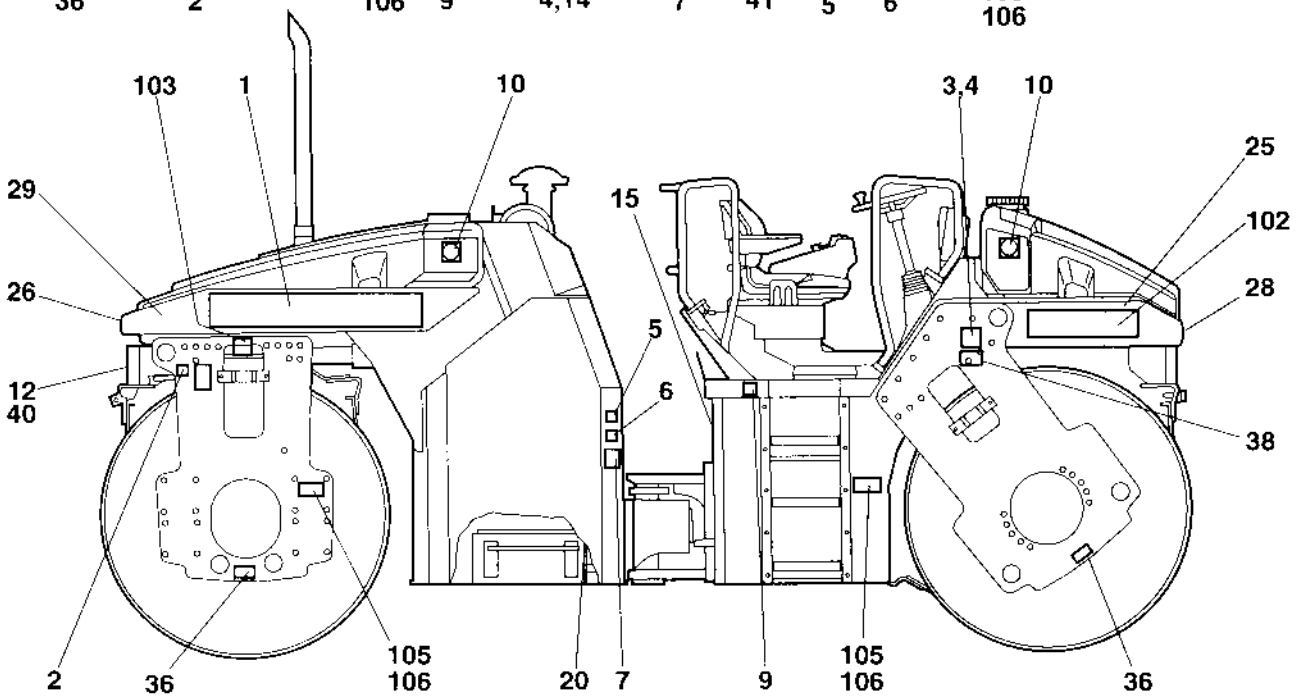
103
1
10
3,4
10
29
15
25
102
26
5
28
12
40
6
38
2
36
105
106
20
7
9
105
106
36

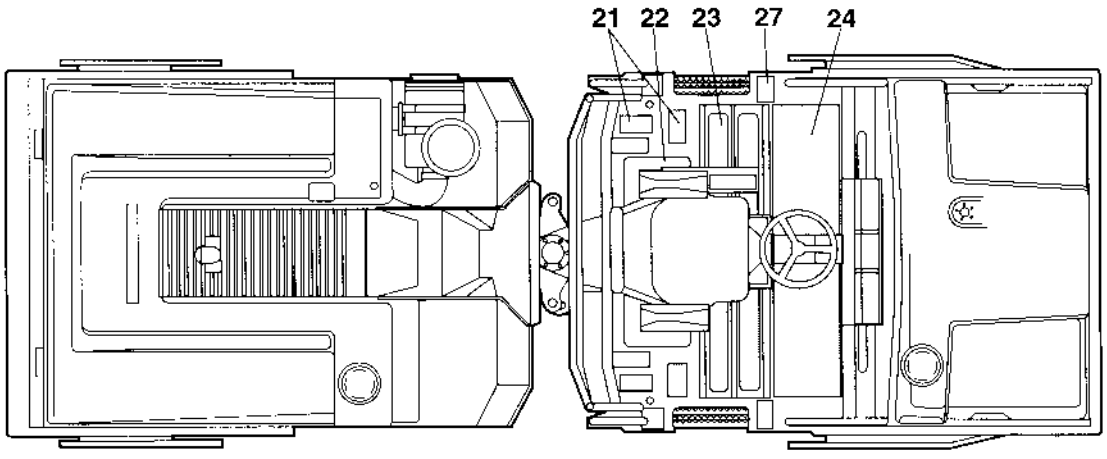
21
22
23
27
24

Ref. No.	Part No.	Rem.	Qty	Description	Code
43	624017	3	2	Blind rivet	
44	791642		1	Decal "WARNING" Use of starting fluid prohib.	
102	903611		2	Decal "MODEL CODE" CC522	
103	355983	S	2	Decal "TYRE PRESSURE"	
105	377744		4	Reflector, yellow	B
106				Not used on this model	B
200	791281		1	Decal Sound Power Level 111dB	

3) For the warning plate.
S) Combi only

Ref. No.	Part No.	Rem.	Qty	Description	Code
10				Standard equipment (Page 212)	

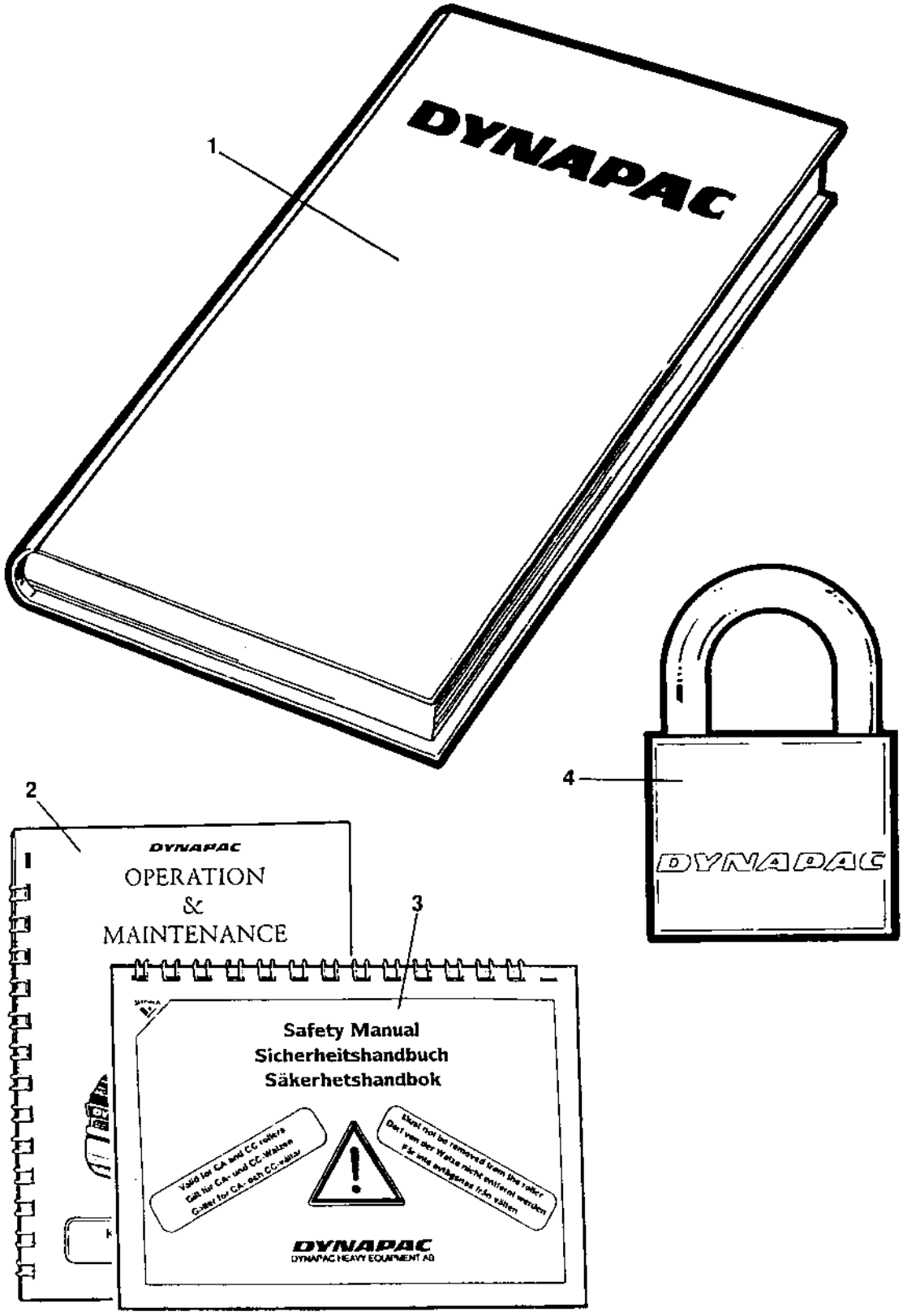
1
DYNAPAC
2
DYNAPAC
OPERATION
&
MAINTENANCE
3
Safety Manual
Sicherheitshandbuch
Säkerhetshandbok
DYNAPAC
DYNAPAC HEAVY EQUIPMENT AB
4
DYNAPAC

Standard equipment

Ref. No.	Part No.	Rem.	Qty	Description	Code
1			1	Documentation K522C	
			1	.Warranty registration card	
			1	.Operating instruction O422	
			1	.Maintenance instruction M422	
			1	.Spare parts catalogue SCC522C	
			1	.Instruction manual Cummins 4B3.9 TAA	
2			1	Operating / maintenance instruction OM422	
3			1	Safety manual RSAFE	
4	358881		1	Pad lock	

Ref. No.	Part No.	Rem.	Qty	Description	Code
10				Compaction meter (Page 216)	
20				Edge cutter cpl (Page 218)	
100				Eyelet (Page 228)	
110				SMV sign (Page 230)	
120				Tool equipment (Page 232)	
210				Air conditioner assembly (Page 234)	
220				Roof hatch (Page 242)	
300				Asphalt temperature meter (Page 244)	

Compaction meter

17050

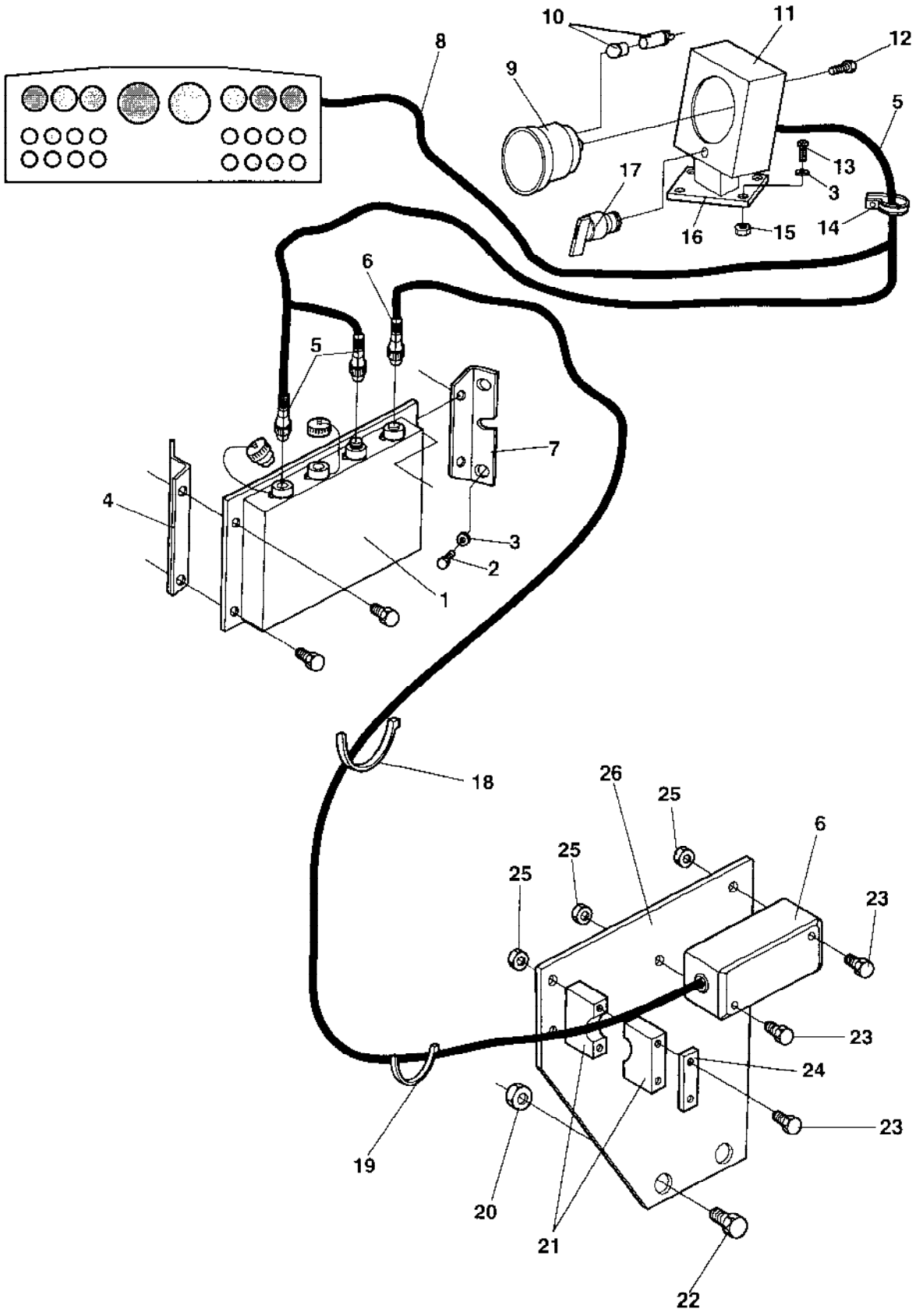

Ref. No.	Part No.	Rem.	Qty	Description	Code
1	372008		1	Processor comp.meter	
2	500053		4	Screw M8-1,25x20 8,8	
3	904229		6	Washer 8,4x16x1,5	
4	374272		1	Bracket	
5	376200		1	Cable harness	
6	348213		1	Sensor, cpl	
7	374271		1	Bracket	
8	376201		1	Cable harness	
9	383452		1	Compaction meter	
10	904890		2	.Lamp holder	
	904889		2	.Bulb	
11	373096		1	Instrument box	
12	541526		4	Screw	
13	500022		2	Screw M8-1,25x30 8,8	
14	921072		1	Clamp	
15	570005		2	Nut M8	
16	374225		1	Bracket	
17	930151		1	Switch	D
18	313102		10	Cable ties	
19	313041		10	Cable ties L=186 mm	
20	902288		2	Nut	
21	902496		1	Clamp	
22	500194		2	Screw M12x40	
23	500079		4	Screw M6-1x50 8,8	
24	923859		1	Cover plate	
25	902285		4	Lock nut M6	
26	374293		1	Bracket	

Edge cutter cpl

15810

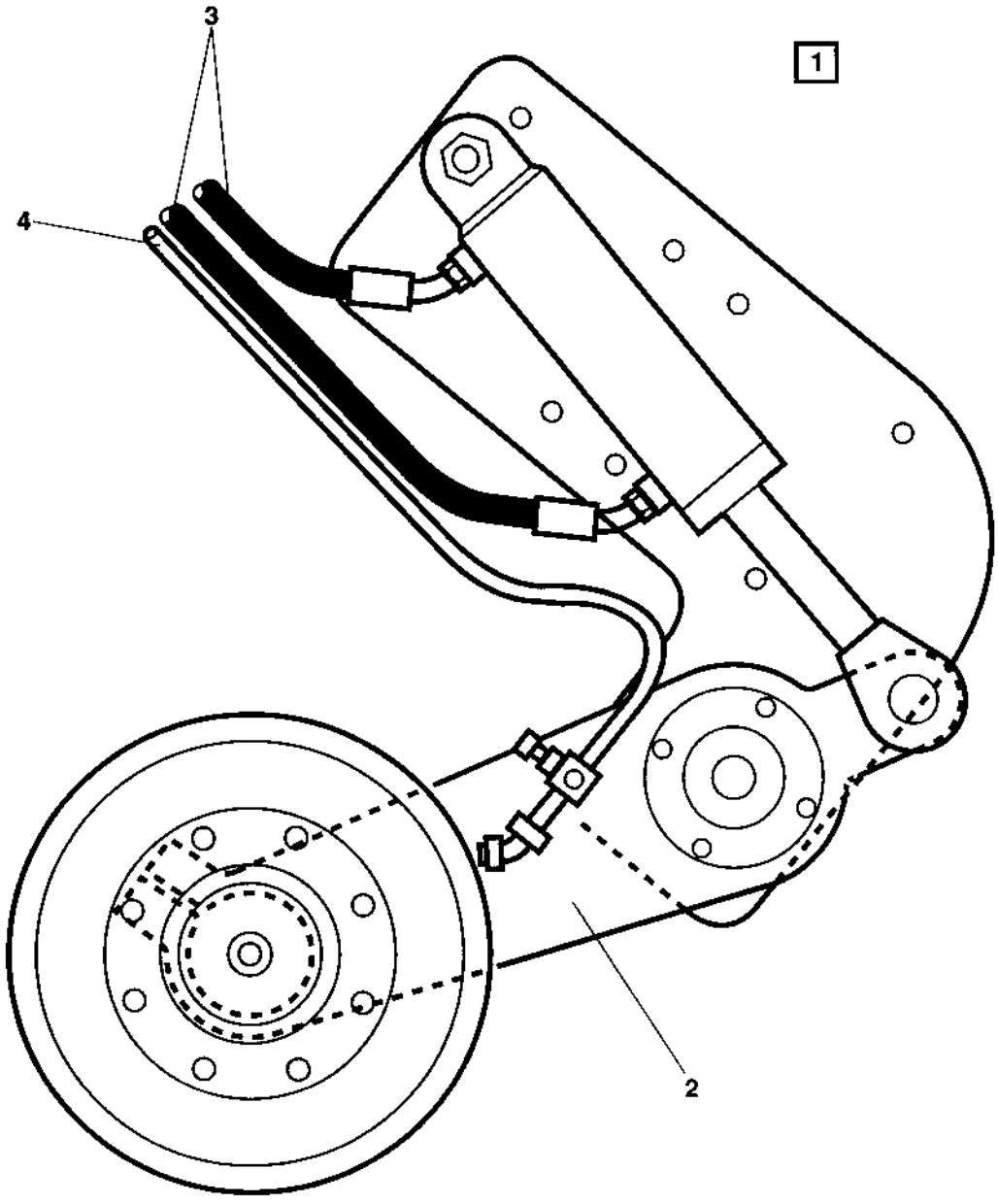

Edge cutter cpl

Ref. No.	Part No.	Rem.	Qty	Description	Code
1			1	Edge cutter	
			1	Edge cutter offset	
2			1	Edge cutter (Page 220)	
3			1	Edge cutter Hydraulics without offset (Page 222)	
			1	Edge cutter Hydraulics with offset (Page 224)	
4			1	Edge cutter Sprinkler system (Page 226)	

Edge cutter

17069

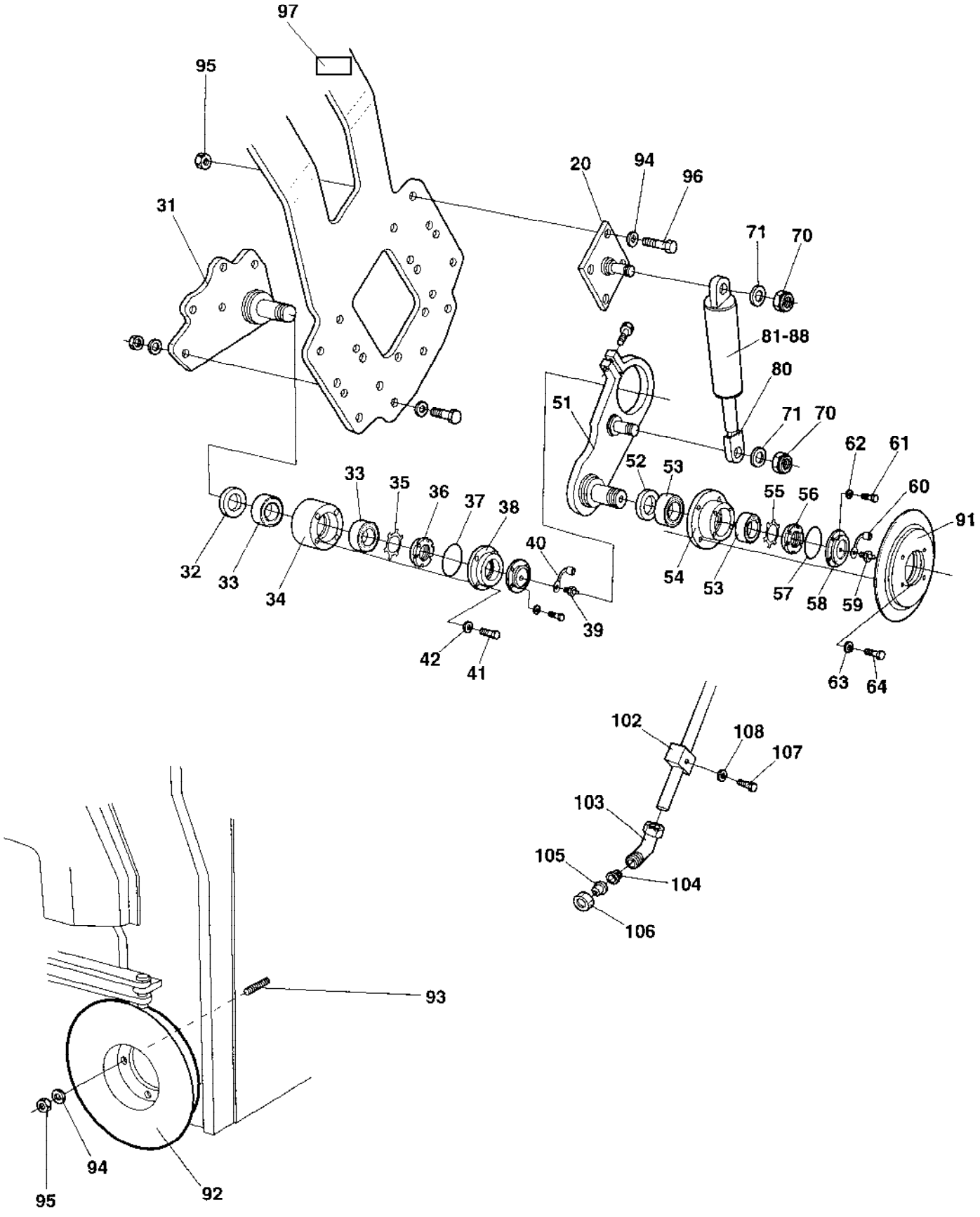

Edge cutter

Ref. No.	Part No.	Rem.	Qty	Description	Code
1	374345		1	Edge cutter cpl	
20	935648	B	1	.Holder plate	
31	935650	A	1	.Holder plate	
32	909301		1	.Seal	
33	909302		2	.Bearing	
34	938125		1	.Housing	
35	909304		1	.Washer	
36	909305		1	.Nut	
37	909306		1	.O-ring	
38	938126		1	.Cover	
39	909308		1	.Grease nipple	
40	909309		1	.Protection	
41	936006		4	.Screw	
42	909311		4	.Retainer washer	
51	935649		1	.Lever	
52	909301		1	.Seal	
53	909302		2	.Bearing	
54	909303		1	.Tool holder	
55	909304		1	.Washer	
56	909305		1	.Nut	
57	909306		1	.O-ring	
58	909307		1	.Cover	
59	909308		1	.Grease nipple	
60	909309		1	.Protection	
61	909310		4	.Screw	
62	909311		4	.Retainer washer	
63	909312		4	.Retainer ring	
64	909313		4	.Screw	
70	909288		2	.Nut	
71	909289		2	.Washer	
80	909291		1	.Cylinder end	
81	909290		1	.Cylinder	
82	909292		2	..Bearing	
83	909293		4	..Retainer ring	
84	909294		2	..Screw	
86	909299		1	..Seal kit	
88	909298		2	..Grease nipple	
91	909236		1	.Cutting disc	
92	909237		1	.Edge roller	
93	904329		2	.Threaded stud	
94	904231		10	.Washer 13x24x2	
95	586019		6	.Lock nut M12	
96	500197		4	.Screw 12x90 8.8	
97	904083		1	.Safety decal, Edge cutter	
101	909274		1	.Sprinkler pipe	
102	909275		1	.Bracket	
103	909276		1	.Connector	
104	909277		1	.Strainer	
105	909278		1	.Nozzle	
106	909279		1	.Nut	
107	909280		1	.Screw	
108	909281		1	.Nut	

A) Lower
B) Upper

Edge cutter Hydraulics without offset

17062

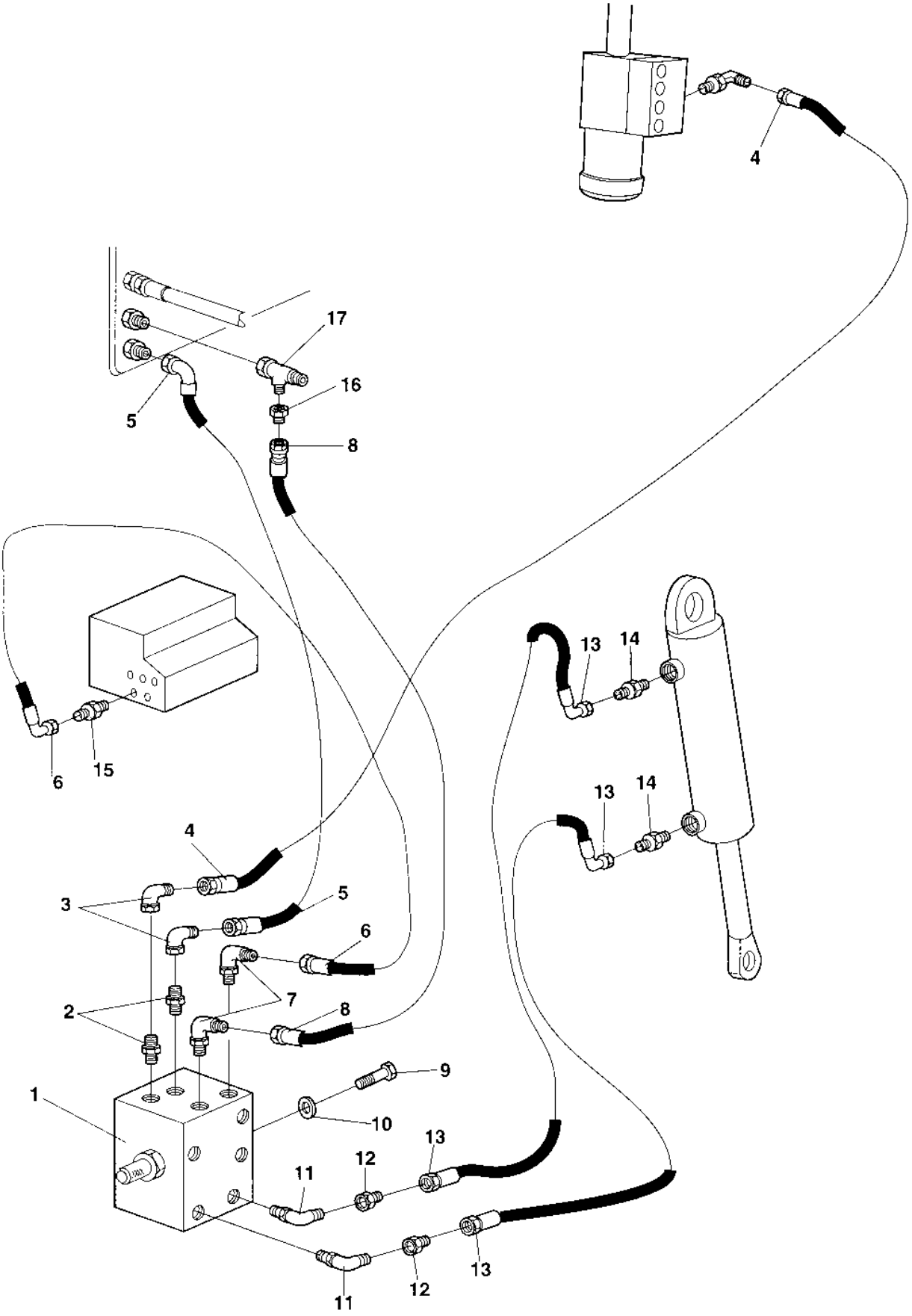

Edge cutter Hydraulics without offset

Ref. No.	Part No.	Rem.	Qty	Description	Code
1	372266		1	Valve	
2	234388		2	Connector	
3	334196		2	Elbow 90	
4	483210		1	Hydraulic hose	
5	483045		1	Hydraulic hose	
6	483208		1	Hydraulic hose	
7	334420		2	Elbow 90	
8	483209		1	Hydraulic hose	
9	500023		3	Screw M8-1,25x40 8,8	
10	904229		3	Washer 8,4x16x1,5	
11	813500		2	Elbow 45, O-ring	
12	334264		2	Reducing	
13	483204		2	Hydraulic hose	
14	334199		2	Straight o-ring connector	
15	334199		1	Straight o-ring connector	
16	334461		1	Reducing	
17	334135		1	T-connector	

Edge cutter Hydraulics with offset

17218

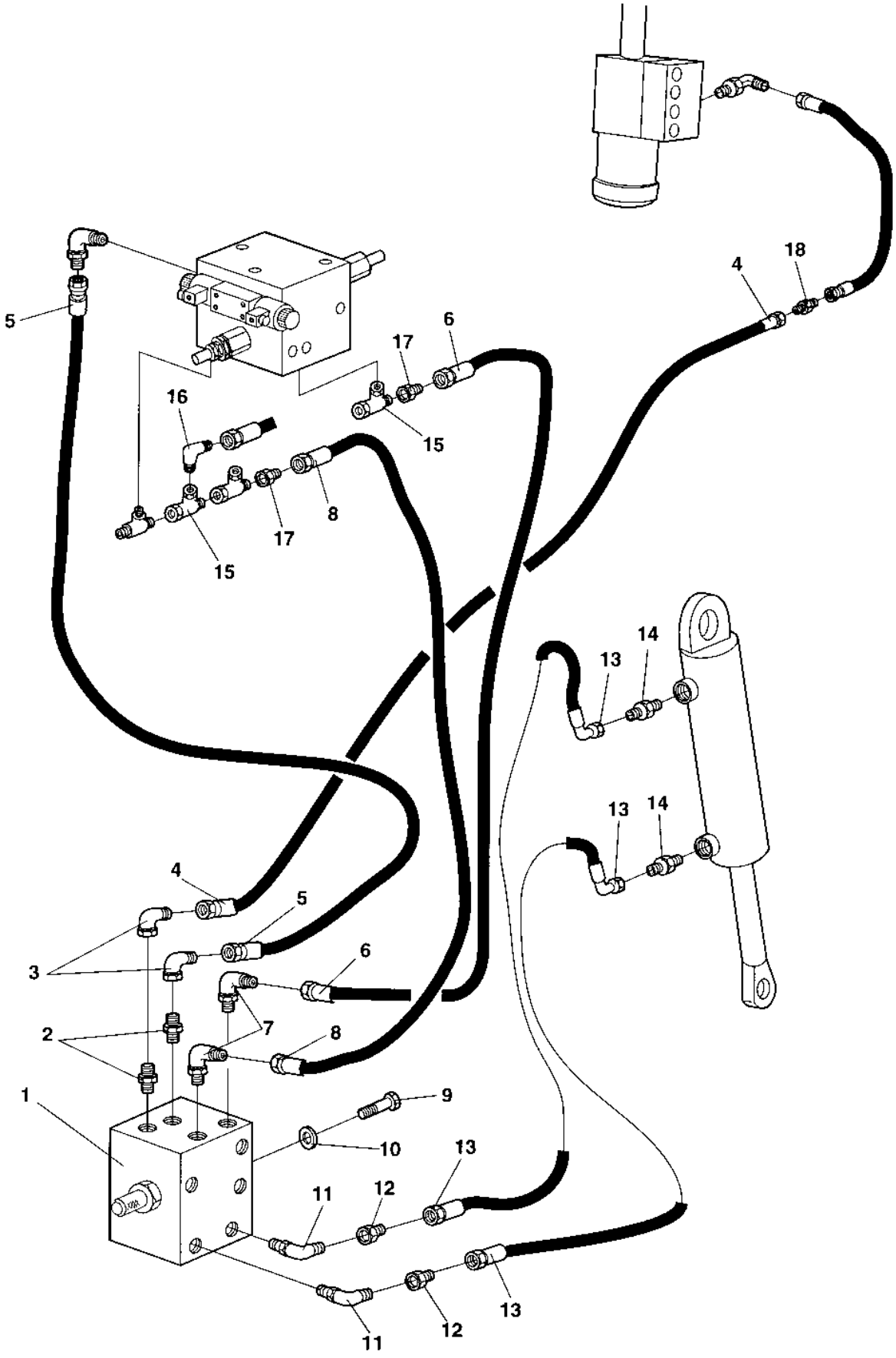

Edge cutter Hydraulics with offset

Ref. No.	Part No.	Rem.	Qty	Description	Code
1	372266		1	Valve	
2	234388		2	Connector	
3	334196		2	Elbow 90	
4	381010103		1	Hydraulic hose	
5	333784901		1	Hydraulic hose	
6	483349		1	Hydraulic hose	
7	334420		2	Elbow 90	
8	483450		1	Hydraulic hose	
9	500023		3	Screw M8-1,25x40 8,8	
10	904229		3	Washer 8,4x16x1,5	
11	813500		2	Elbow 45, O-ring	
12	334264		2	Reducing	
13	483204		2	Hydraulic hose	
14	334199		2	Straight o-ring connector	
15	334135		2	T-connector	
16	334197		1	Elbow 90	
17	334461		2	Reducing	
18	928483		1	Adapter	

Edge cutter Sprinkler system

15842

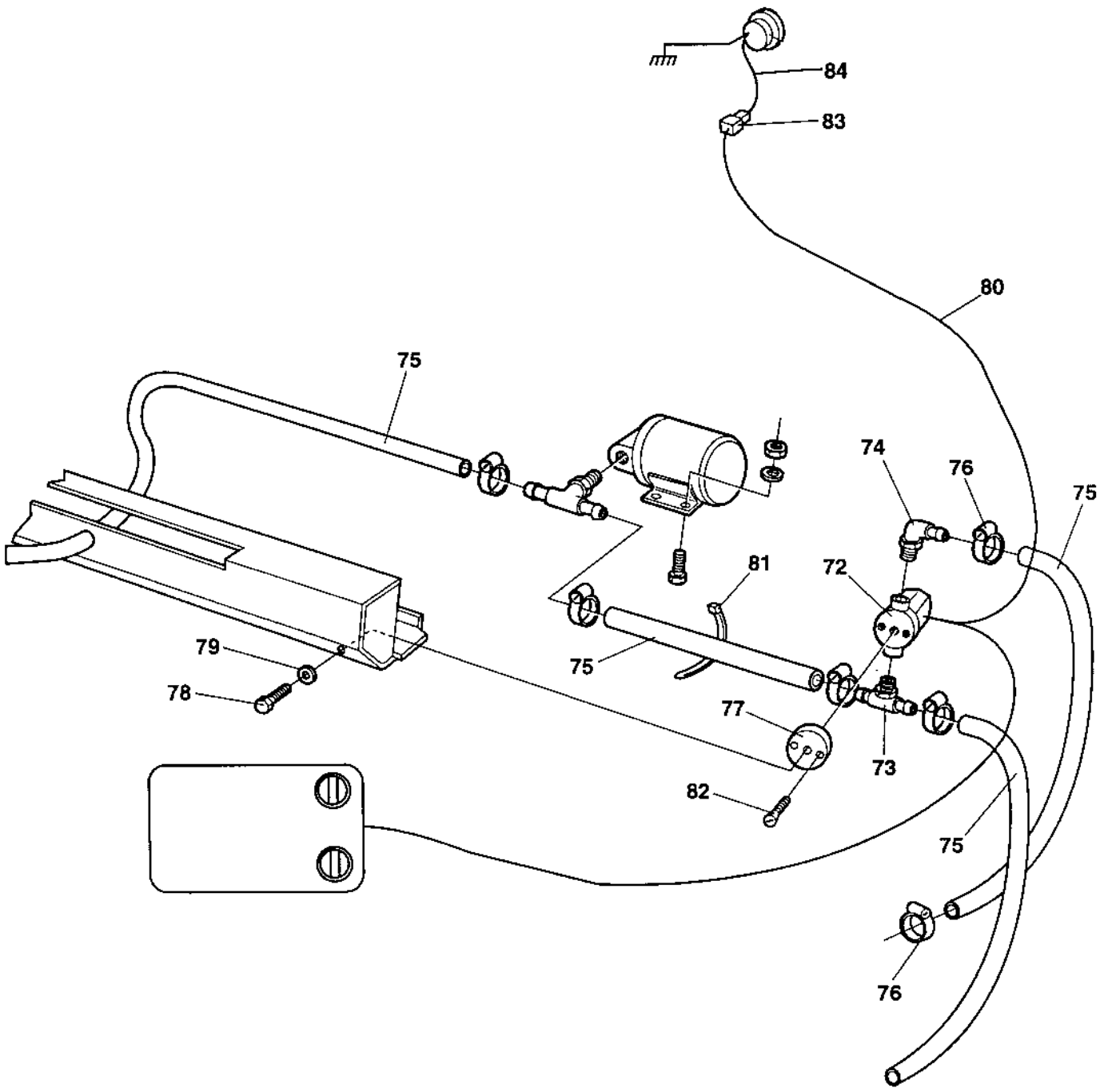

Edge cutter Sprinkler system

Ref. No.	Part No.	Rem.	Qty	Description	Code
72	287713		1	Solenoid valve	
73	903879		1	Connector	
74	901431		1	Hose connection	
75	904878	A	1XL	Hose reinforced	
76	313002		4	Hose clamp	
77	372315		1	Bracket	
78	500013		1	Screw M6-1x16 8,8	
79	904228		1	Washer 6,4x12x1,5	
80	376191		1	Ground cable	
81	313041		15	Cable ties L=186 mm	
82	535003		2	Screw	
83	925958		1	Connection	
84	904588		1	Cable harness	

A) L=2.8 m

Eyelet

15714-1

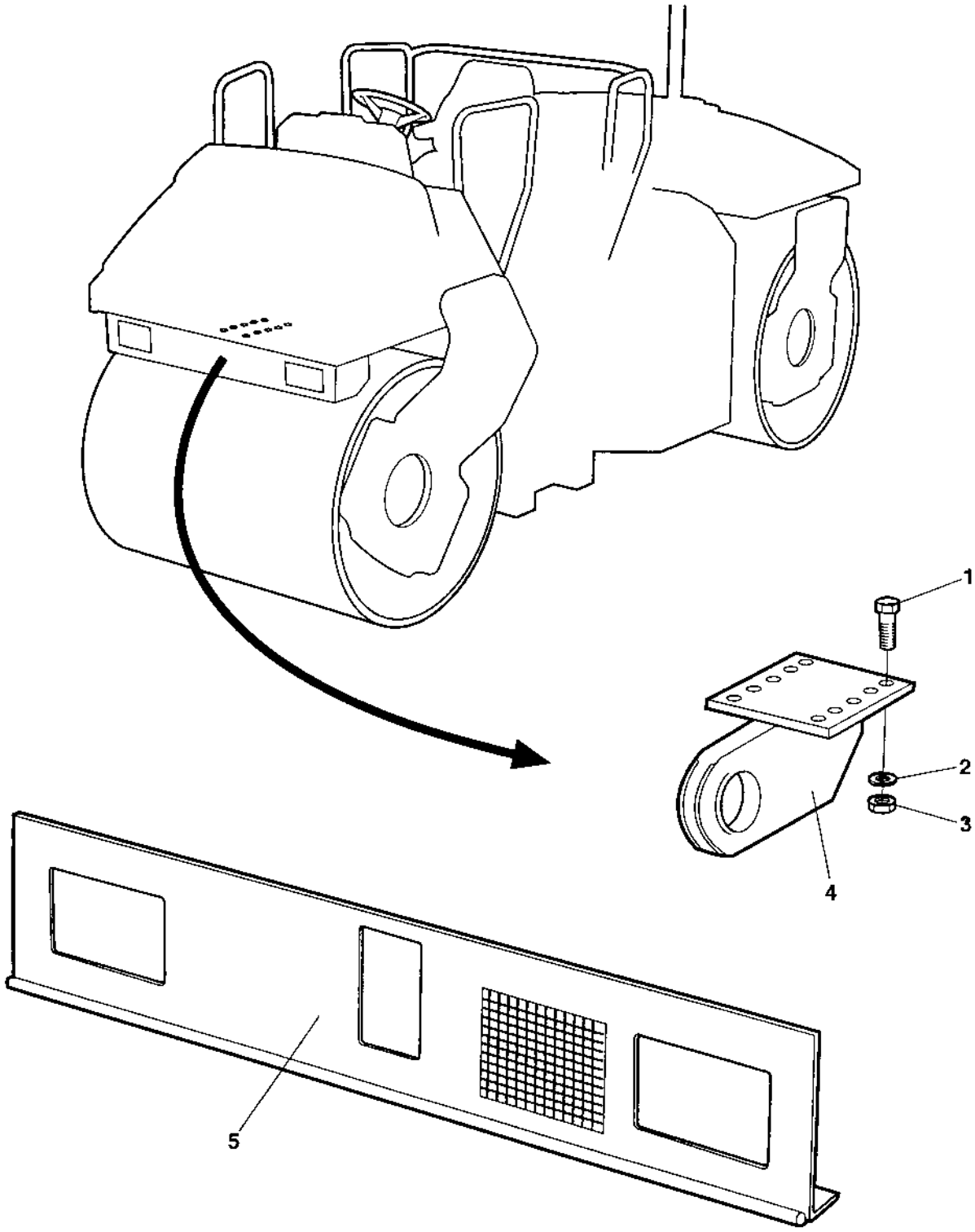

Eyelet

Ref. No.	Part No.	Rem.	Qty	Description	Code
1	947689		10	Screw	
2	904231		10	Washer 13x24x2	
3	928849		10	Nut	
4	371221		1	Eyelet	
5	385342		1	Cover	

SMV sign

15872

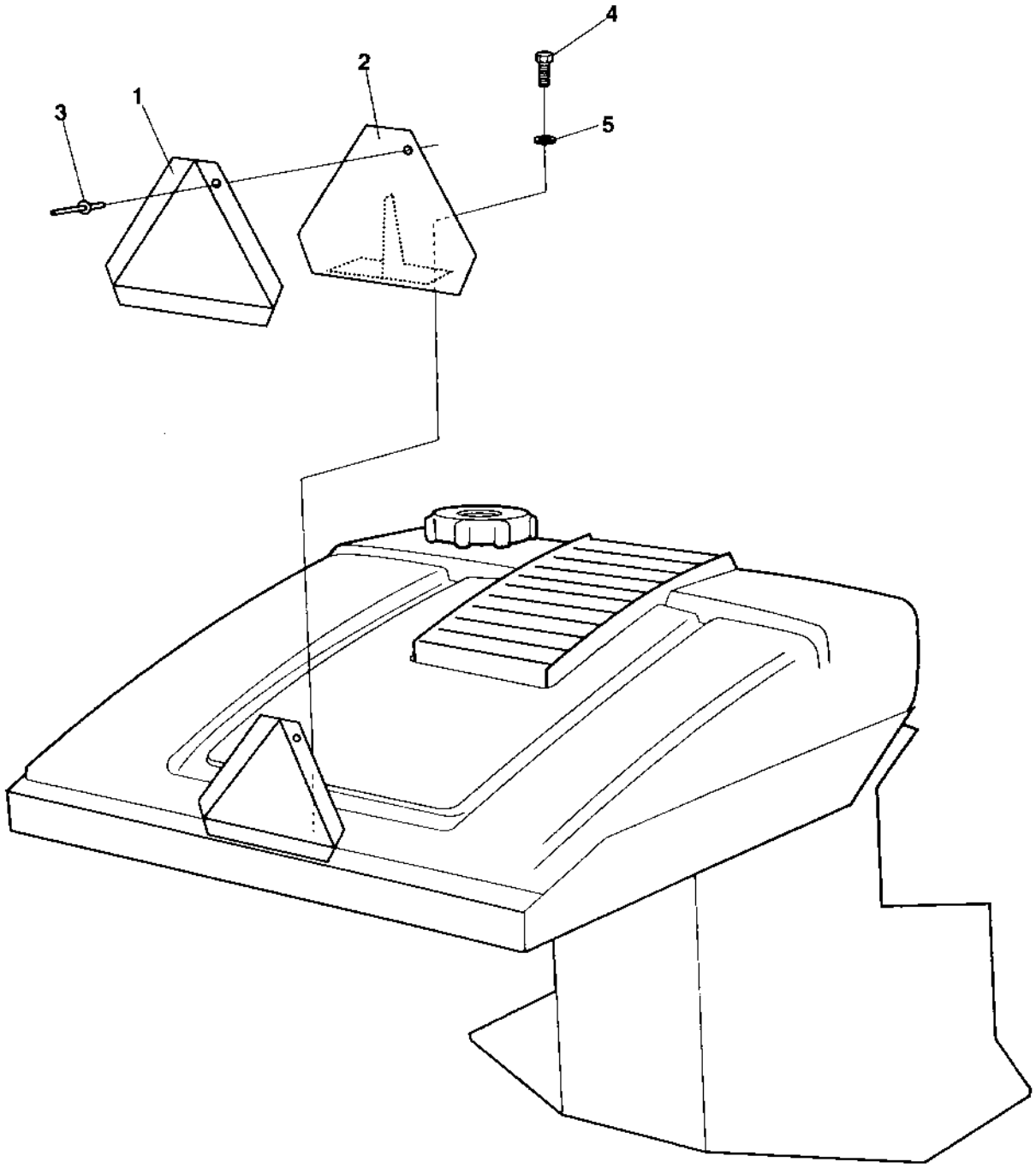

SMV sign

Ref. No.	Part No.	Rem.	Qty	Description	Code
1	476019		1	SMV sign	D
2	370835		1	Sign holder	
3	624011		6	Pop rivet	
4	500019		2	Screw M8-1,25x16 8,8	
5	904229		2	Washer 8,4x16x1,5	

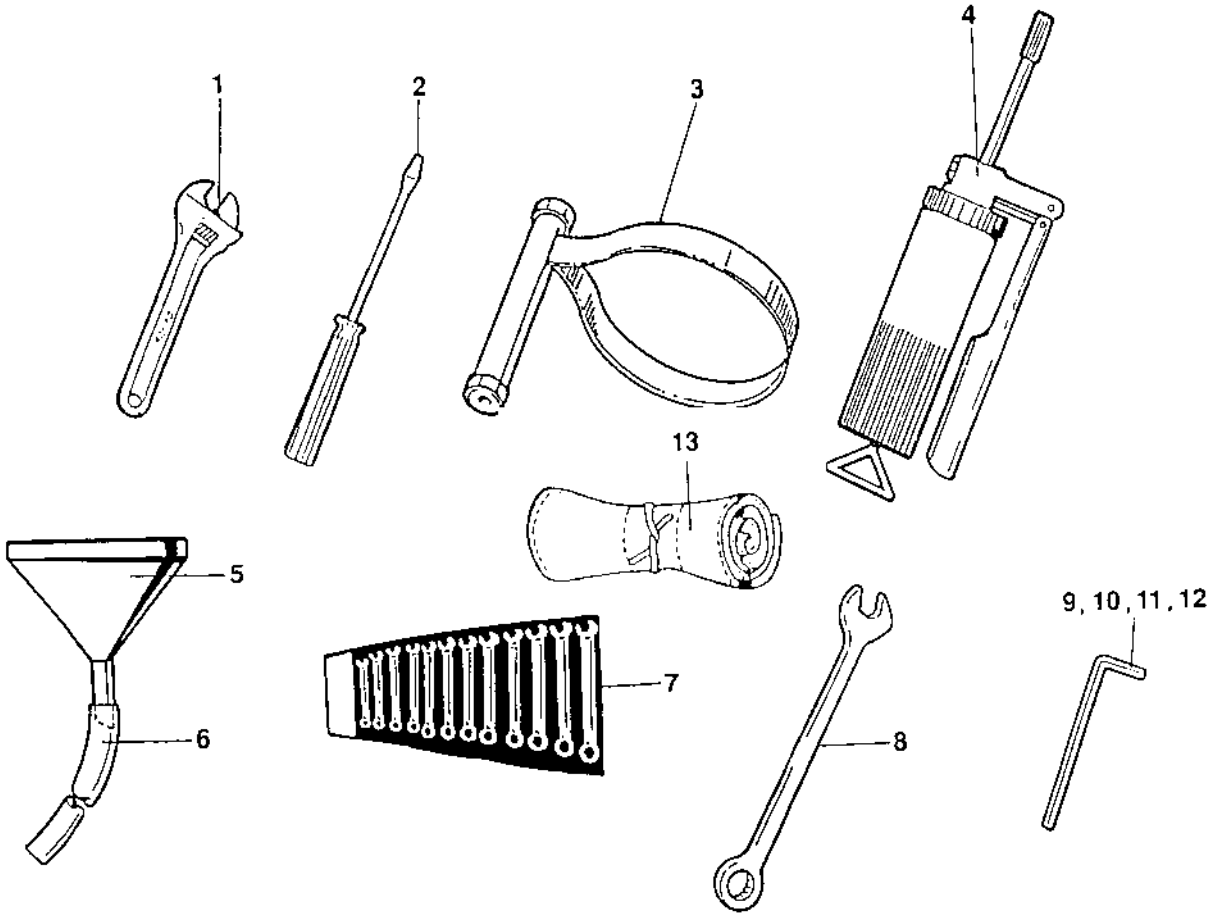
1
2
3
4
13
5
6
7
8
9, 10, 11, 12

Ref. No.	Part No.	Rem.	Qty	Description	Code
1	485011		1	Adjustable wrench	
2	485019		1	Screw driver	
3	902610		1	Belt pliers	
4	311016		1	Grease gun	
5	485040		1	Filling funnel	
6	244026	A	1XL	Plastic hose	
7	901212	B	1	Open end spanner	
8	902578		1	Open end spanner 22 mm	
	901213		1	Open end spanner 24 mm	
9	485005		1	Allen wrench 1/4"	
10	485037		1	Allen wrench 3/8"	
11	485388		1	Allen wrench 6 mm	
12	485006		1	Allen wrench 8 mm	
13	277992		1	Tool bag	

A) L=0,4 m
B) Kit

Air conditioner assembly

17716

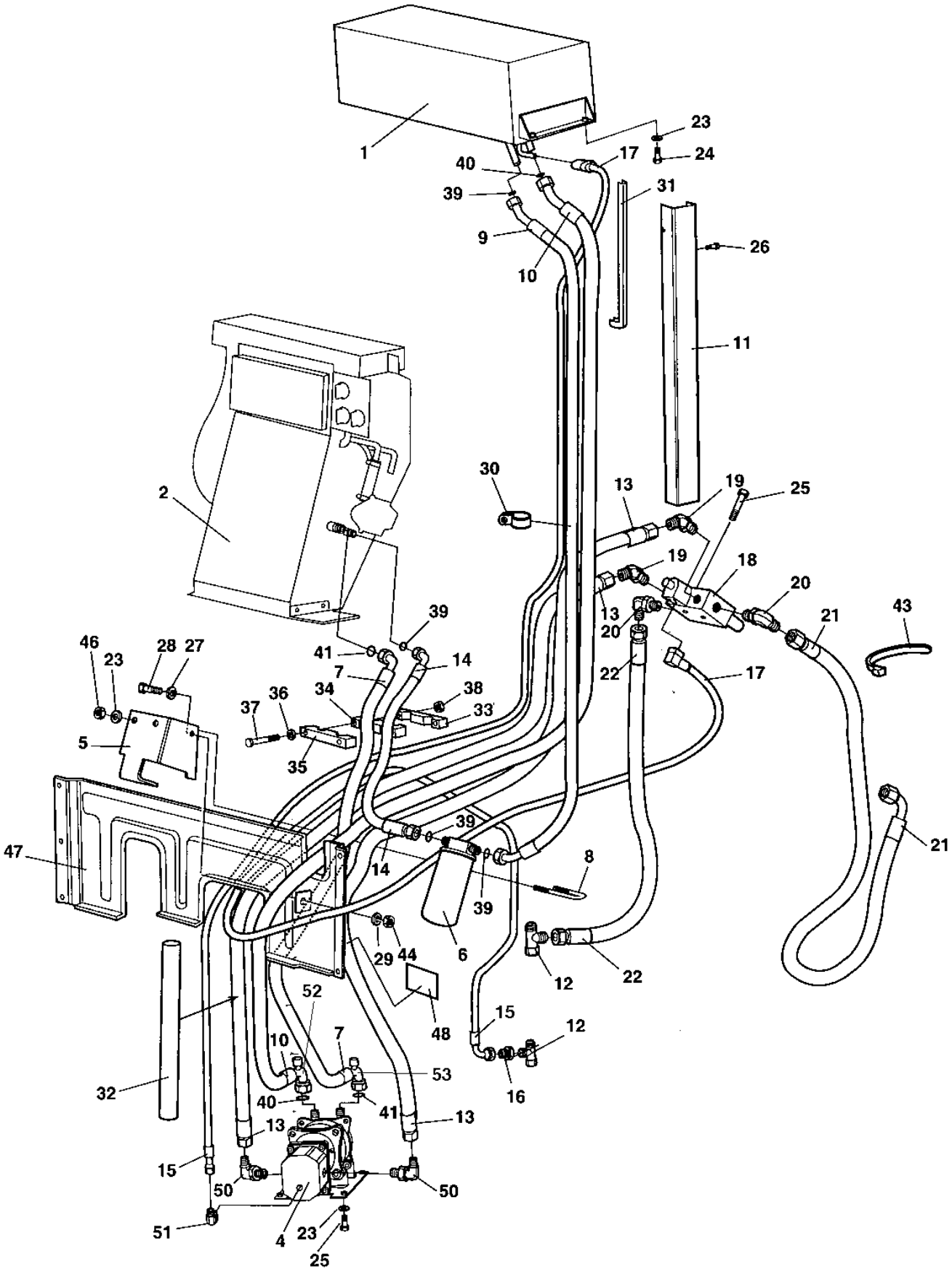

Air conditioner assembly

Ref. No.	Part No.	Rem.	Qty	Description	Code
1			1	Condensor assembly (Page 236)	
2	385587		1	Heater/AC unit (Page 238)	
4			1	Compressor assembly (Page 240)	
5	384145		1	Holder	
6	383424		1	Drying filter	
7	385572	1	1	Refrigerant hose	
	389160		1	Refrigerant hose	
8	313093		1	Pipe clamp	
9	385575		1	Refrigerant hose	
10	385573	1	1	Refrigerant hose	
	389162		1	Refrigerant hose	
11	385163		1	Hose protection	
12	334135		2	T-connector	
13	483556		2	Hydraulic hose	
14	385574		1	Refrigerant hose	
15	483557		1	Hydraulic hose	
16	334461		1	Reducing	
17	385578		1	Cable harness	
18	370720		1	Direction control valve	
19	234131		2	Elbow 45, O-ring	
20	334604		2	Connector	
21				Existing	
22	482966		1	Hydraulic hose	
23	904229		12	Washer 8,4x16x1,5	
24	500022		4	Screw M8-1,25x30 8,8	
25	500053		6	Screw M8-1,25x20 8,8	
26	541703		7	Screw M6x16	
27	904231		2	Washer 13x24x2	
28	500049		1	Screw M12-1,75x60 8.8	
29	357206		1	Washer	
30	921036		3	Clamp	
31	288128		1XL	Ledge	
32	904623		2XL	Hose guard	
33	384672		1	Hose holder	
34	384673		1	Hose holder	
35	384674		1	Hose holder	
36	904228		2	Washer 6,4x12x1,5	
37	500292		2	Screw	
38	904563		2	Lock nut	
39	384877		4	O-ring	
40	384878		3	O-ring	
41	384879		3	O-ring	
43	313102		N	Cable ties	
44	586019		1	Lock nut M12	
46	586003		2	Lock nut M8	
47	386054		1	Cover	
48	904165		1	Safety decal	
50	234990		2	Elbow 90	
51	334563		1	Adapter	
52	389122		1	Refrigerant fitting 90°	
53	389123		1	Refrigerant fitting 90°	

1) Replace with 389160, o-ring 385809 and item 53, 389123.

Condensor assembly

17676

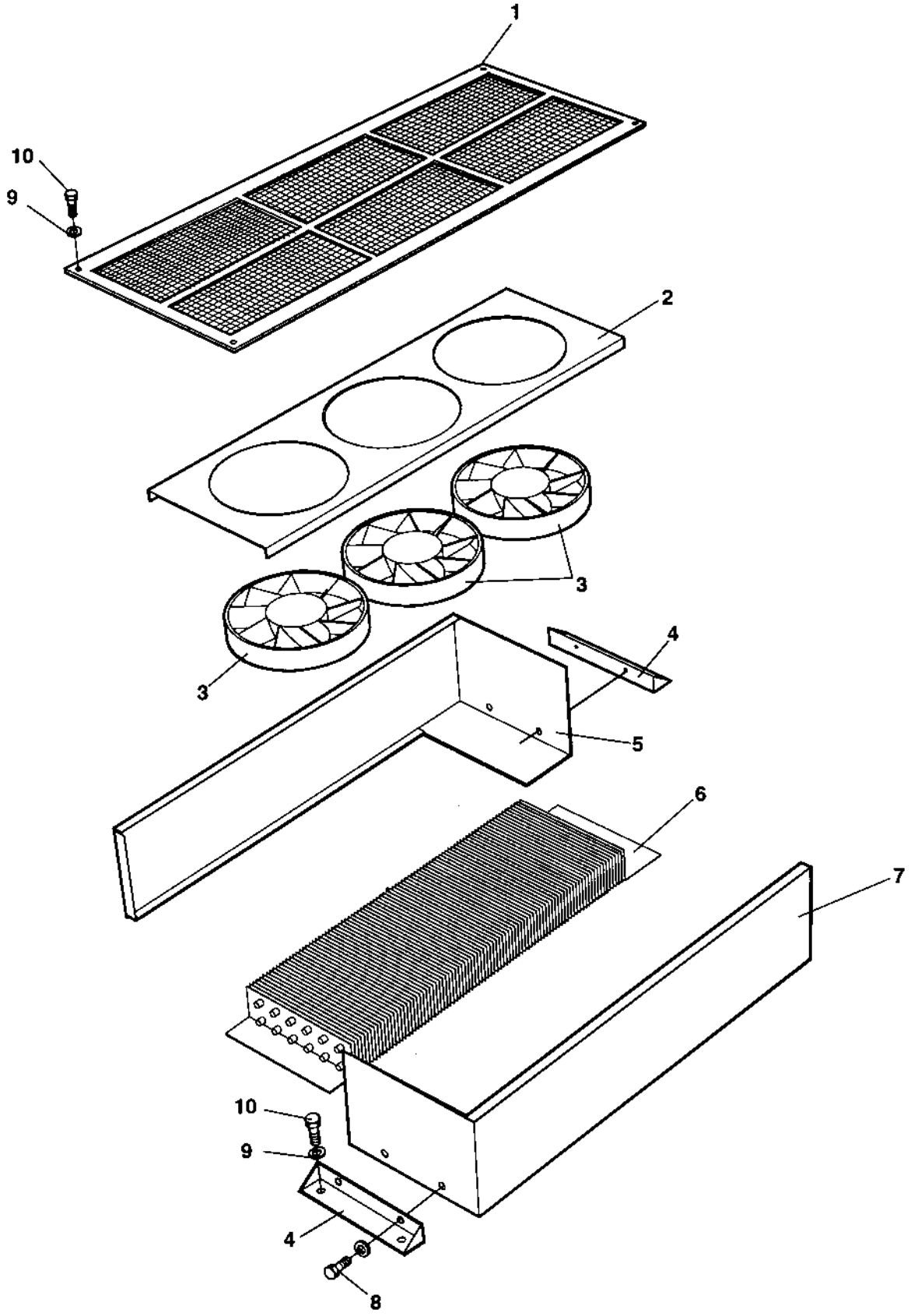

Condensor assembly

Ref. No.	Part No.	Rem.	Qty	Description	Code
1	384589		1	Cover	
2	938599		1	Fan bracket	
3	938603		3	Fan	
4	938600		2	Condensor bracket	
5	938598		1	Cover	
6	938602		1	Condensor Coil	
7	938597		1	Cover	
8	901832		4	Screw	
9	500022		6	Screw M8-1,25x30 8,8	
10	904229		6	Washer 8,4x16x1,5	

385587 Heater/AC unit

17706

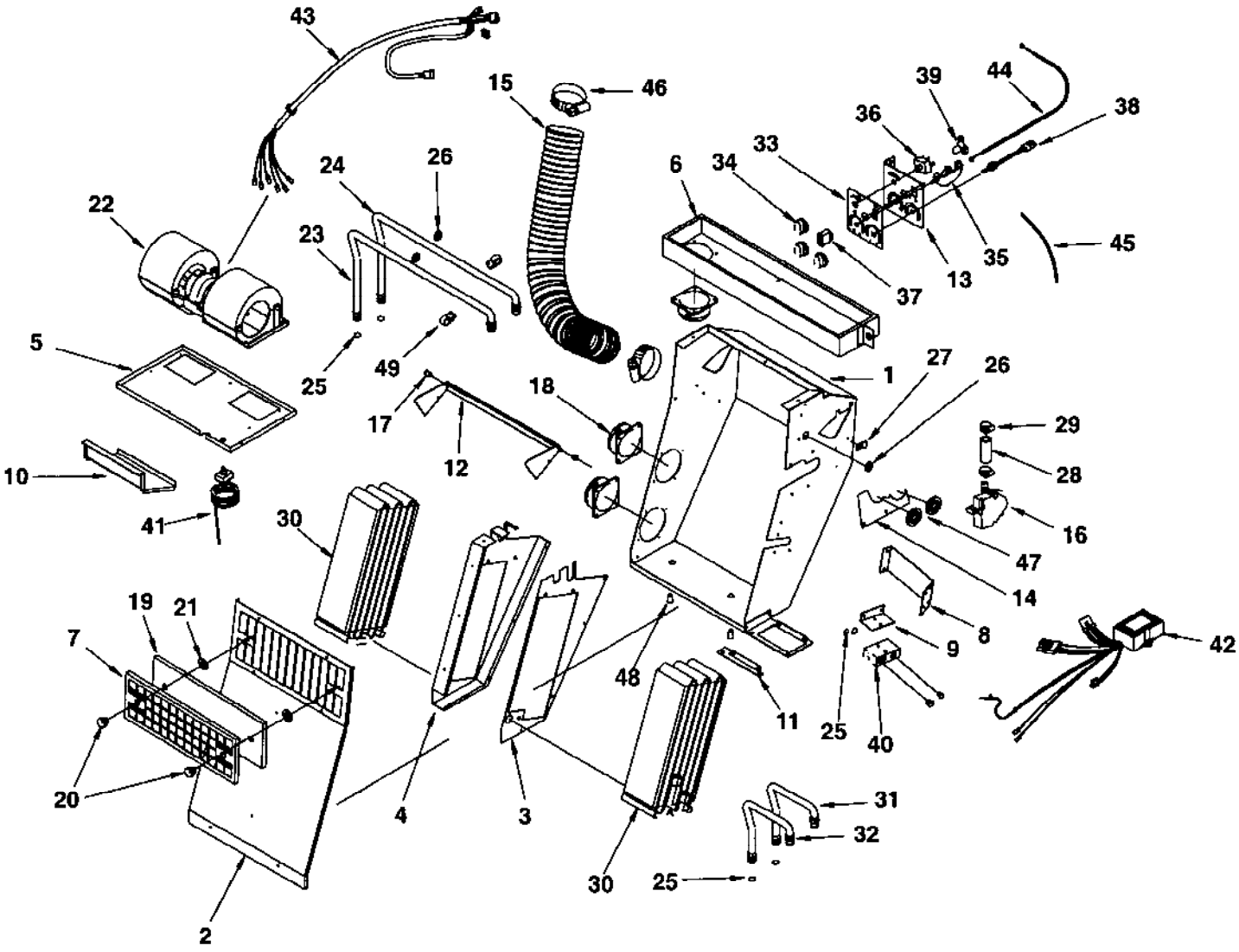

385587 Heater/AC unit

Ref. No.	Part No.	Rem.	Qty	Description	Code
1	938772		1	Casing	
2	938773		1	Cover	
3	938774		1	Coil bracket	
4	938775		1	Coil bracket	
5	938776		1	Blower bracket	
6	938777		1	Air distributor	
7	385590		1	Filter grill	
8	384836		1	Heater valve bracket	
9	384835		1	Bracket	
10	938778		1	Air channel	
11	938779		1	Hose bracket	
12	938780		1	Flapper	
13	938781		1	Control panel	
14	938782		1	Cover plate	
15	938783		1	Air duct	
16	383425		1	Electronic valve	
17	938784		2	Bushing	
18	938632		3	Hose adapter	
19	385589		1	Recirculation filter	
20	938643		2	Plug	
21	938611		2	Star lock	
22	938638		1	Fan	
23	938785		1	Copper tube	
24	938786		1	Copper tube	
25	384878		6	O-ring	
26	384927		5	Grommet	
27	384880		1	Wire clamp	
28	384881		1	Hose	
29	303003		2	Clamp	
30	384133		2	Coil	
31	385576		1	Copper tube	
32	385577		1	Copper tube	
33	938787		1	Overlay	
34	938620		3	Knob	
35	938788		1	Rotary control	
36	938622		1	Switch	
37	938619		1	Switch	
38	938623		1	Potentiometer	
39	938624		1	Sensor	
40	384176		1	Valve	
41	384897		1	Thermostat	
42	384187		1	Ecc-Box	
43	938631		1	Cable harness	
44	385588		1	Bowden cable	
45	938637		1	Hose	
46	938789		2	Clamp	
47	938608		2	Grommet	
48	938636		2	Drain valve	
49	938790		2	Clamp	

Compressor assembly

17717

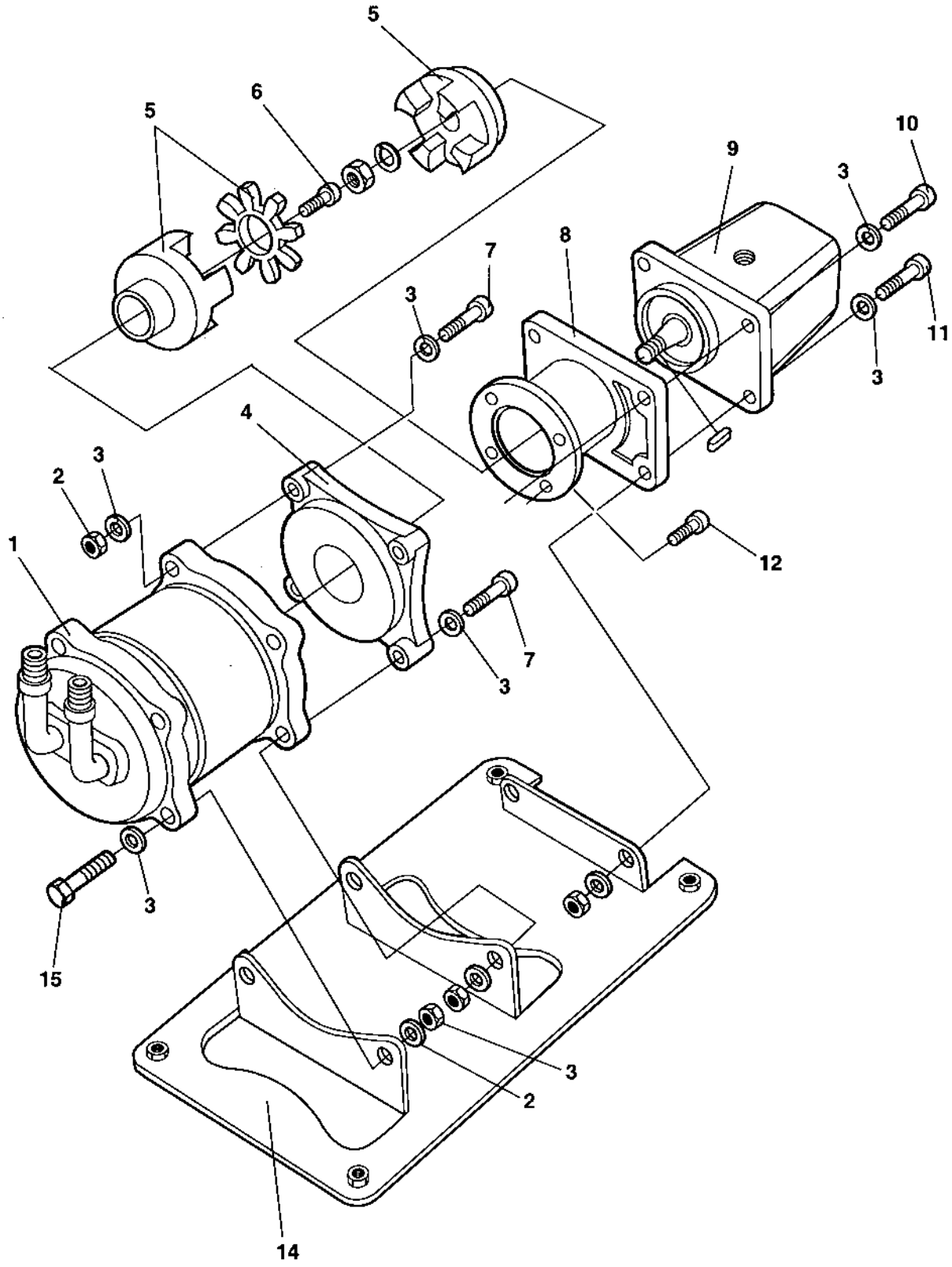

Compressor assembly

Ref. No.	Part No.	Rem.	Qty	Description	Code
1	383417		1	Compressor	
2	570005		8	Nut M8	
3	904229		18	Washer 8,4x16x1,5	
4	383419		1	Connector	
5	383422		1	Coupling	
6	508001		1	Screw	
7	500026		4	Screw M8-1,25x60 8,8	
8	383418		1	Connector	
9	383420		1	Hydraulic motor	
10	508027		2	Screw	
11	508057		2	Screw	
12	508092		4	Screw M8-1,25x20H 8,8	
14	384135		1	Bracket	
15	500022		2	Screw M8-1,25x30 8,8	

Roof hatch

17374

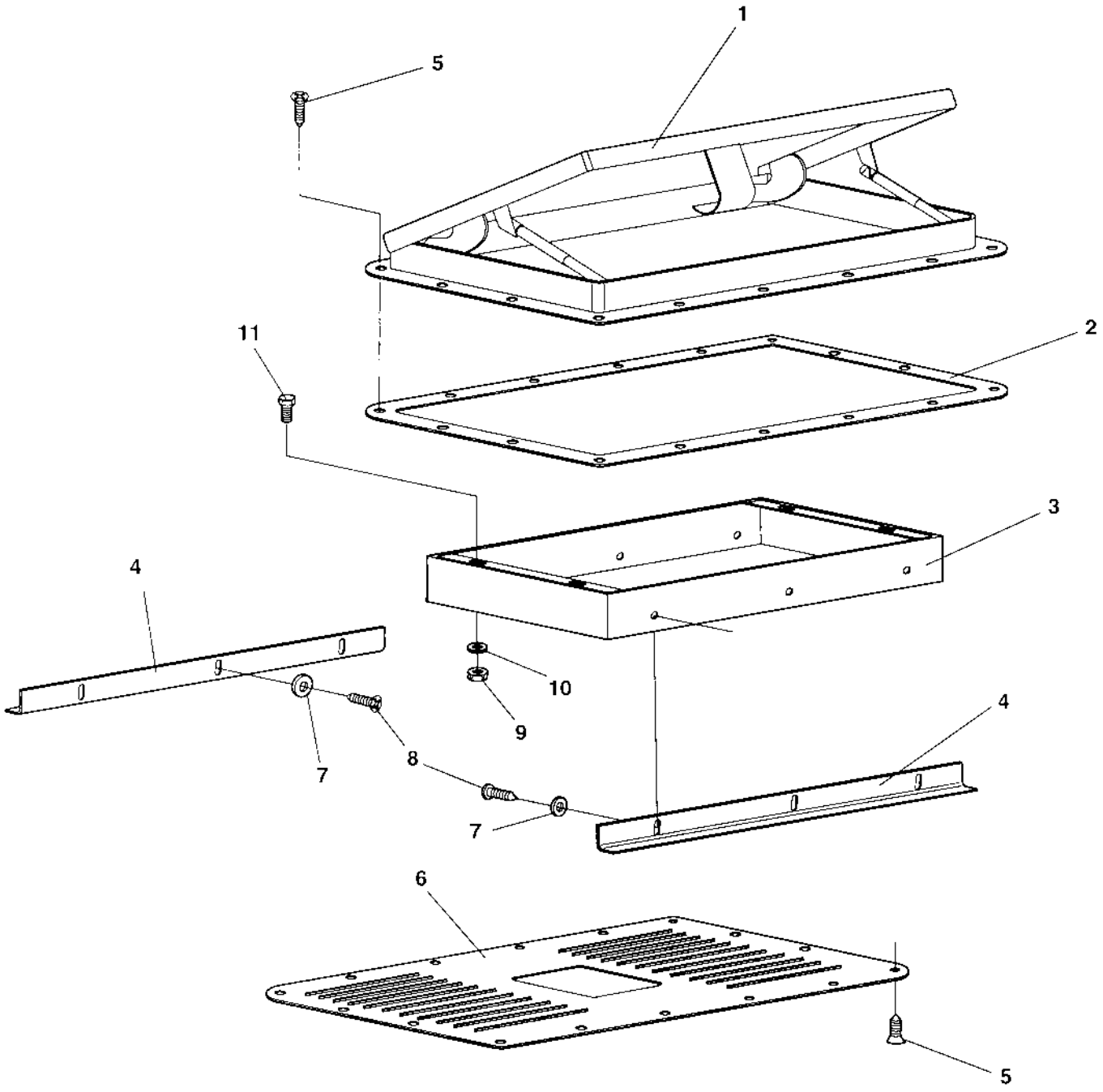

Roof hatch

Ref. No.	Part No.	Rem.	Qty	Description	Code
1	382702		1	Roof hatch	
	384958		1	Roof hatch	
2	382701		1	Gasket	
	384954		1	Support plate	
3	382699		1	Inner roof insert	
4	383002		2	Inner roof holder	
5	904906		32	Screw	
6	382700		1	Inner cover	
7	601001		6	Washer	
8	903852		6	Screw ST4,2x13	
9	570004		4	Nut M6	
10	904228		4	Washer 6,4x12x1,5	
11	500040		4	Screw M6-1x20 8,8	

Asphalt temperature meter

17869

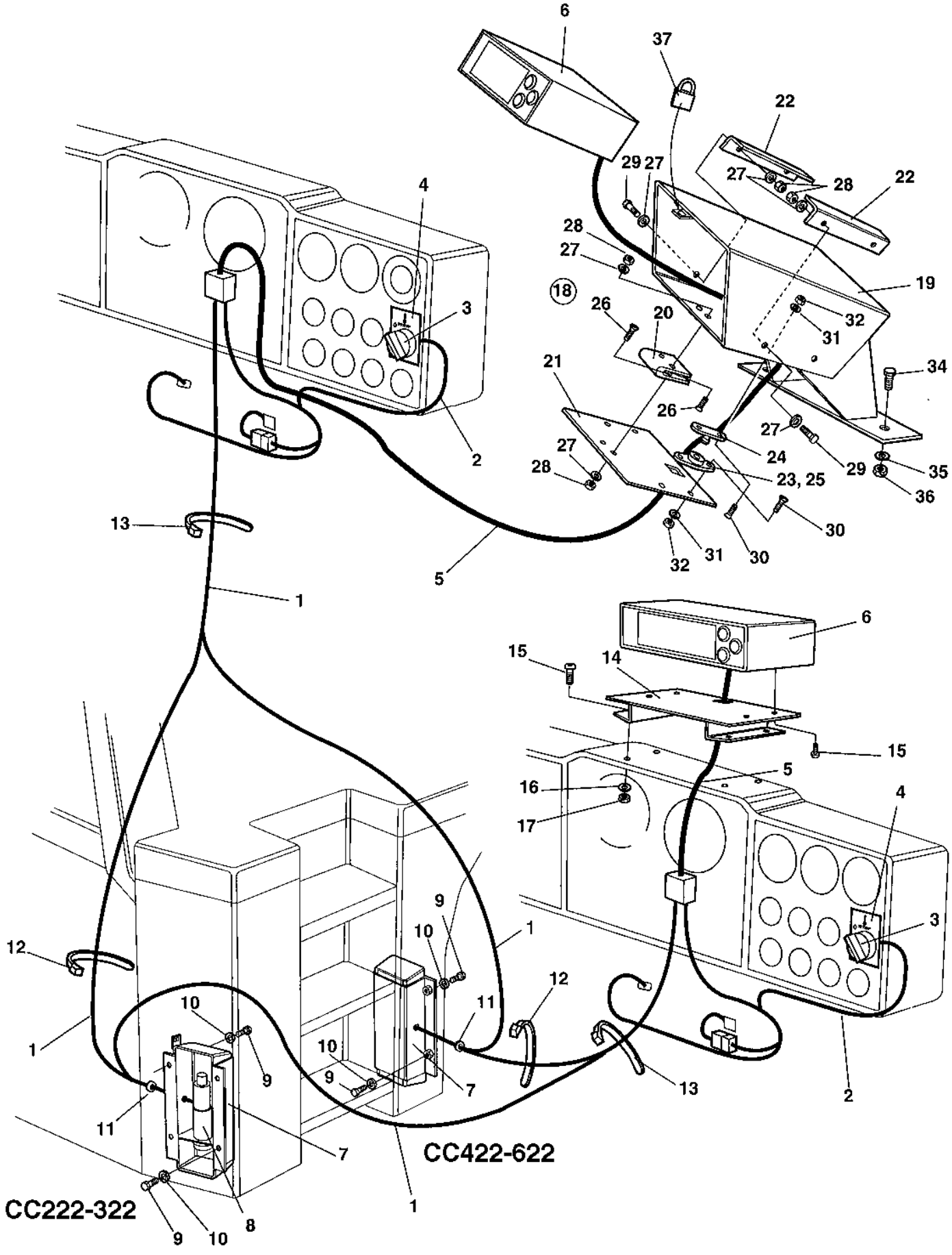

Asphalt temperature meter

Ref. No.	Part No.	Rem.	Qty	Description	Code
1	388522		1	Cable harness	
2	388523		1	Cable harness	
3	930151		1	Switch	D
4	388561		1	Sign	
5	388524		1	Cable harness	
6	388775		1	Temperature meter	
7	387981		1	Box	
8	387982		1	Temperature sender	
9	500053		4	Screw M8-1,25x20 8,8	
10	904229		4	Washer 8,4x16x1,5	
11	791594		1	Grommet	
12	925802		N	Cable ties L=142 mm	
13	313068		N	Cable ties L=92 mm	
14	387988	1	1	Bracket	
15	904653	1	8	Screw	
16	904281	1	4	Washer 5,3x10x1	
17	586001	1	4	Lock nut M5	
18	389004	2	1	Temperature meter box, cpl	
19	389109	2	1	.Box	
20	928041	2	1	.Hinge	D
21	389110	2	1	.Cover	
22	389111	2	1	.Holder	
23	904909	2	2	.Door bumper	
24	904907	2	2	.Door bumper	
25	904908	2	2	.Rubber part	
26	513008	2	5	.Screw	
27	904228	2	13	.Washer 6,4x12x1,5	
28	904563	2	9	.Lock nut	
29	500013	2	4	.Screw M6-1x16 8,8	
30	513027	2	8	.Screw	
31	904698	2	8	.Washer 4,3x8x0,8	
32	923976	2	8	.Nut	
33	902566	A,2	4XL	.Rubber strip	
34	500022	2	2	Screw M8-1,25x30 8,8	
35	570005	2	2	Nut M8	
36	904229	2	2	Washer 8,4x16x1,5	
37	358881	2	1	Pad lock	

1) Valid for machines with cab.
2) Valid for platform machines.
A) L= 0,1 m

NUMERICAL INDEX

Part Number	Page
100040	25
114060	49
116041	49
150003	17
160058	63
160105	49
160279	79
160287	83
160344	49
162017	49
162018	49
162027	49
167032	25
202028	17,33
202041	35
202043	203
202057	27
205067	91
230515	57
232097	83
232122	91
234131	235
234218	75
234233	73,77
	93
234243	77
234365	173,191
234388	223,225
234512	83
234619	73
234667	83
234687	93
234746	73
234806	93
234810	73
234869	93
234900	77
234958	77
234990	235
244026	233
251729	23
263772	23
267791	23
272373	207
277992	233
287597	101,117
	177,195
287598	117
287713	41,43
	227
288128	235
303003	175,193
	239
311016	233
313001	63
313002	35,39
313004	173
313008	91
313010	59
313022	65
313035	59
313036	39
313038	63
313041	137,139
	141,217
313068	245
313093	235
313094	65
313102	73
313108	59
313147	149
330328	59
330331	57
330383	57
330435	83
333784901	225
334121	75
334132	73
334135	73
334138	77
334142	77
334155	77
334158	77
334196	223
334197	77
334199	223
334203	83
334232	83
334234	73
334264	83
334389	73
334420	223
334461	223
334468	77
334504	77
334523	83
334524	77
334532	77
334558	79
334563	235
334589	77
334604	77
335914	75
337042	25
337045	25
338304	83
340862	79
343318	49
343321	49
343550	109,111
343732	75
343744	49
343775	15
343801	49
343872	75
344196	49
345139	105
345870	109
345874	25
345875	25
347119	89
347802	85
348182	85
348213	217
348331	139
348347	97
348481	149
349430	75
349435	75
349715	49
350009	139
355258	109
355301	119
355983	209
356072	53
357138	11
357139	91
357141	91
357206	235
357459	63
357488	15
357526	105
357562	101
357587	207
357643	135,161
	181
357855	103
358254	207
358452	129
358846	35
358881	103,213
359003	35
359043	147
359047	35
359048	35
359125	147
359145	83,87
359148	25
359314	15
359340	109
359341	109
359343	111
359344	111
359347	105
359419	139
359434	21
359444	35
359446	35
359551	77
359552	77
359557	77
359564	83
359574	139
359575	149
359583	17
359618	63
359647	77
359648	73
359649	83
359650	83
359720	63
359733	75
359788	147
359810	147
359813	147
359815	147
359816	147
359817	147
359818	147
359819	147
359820	147
359822	145
359845	103
359887	135
359889	137
359893	147
359900	139
359914	139
359915	139
359916	139
359917	141
359918	133,143
359919	139
359920	139
359921	139
359924	145
359928	149
359929	149
359931	149
359932	149
359940	149
359941	119
359950	49
359955	49
359956	49
359965	15
359966	15
359967	15
359971	141
359972	141
359998	137
370049	73
370058	207
370084	207
370085	207
370155	83
370160	135
370165	103

NUMERICAL INDEX

Part Number	Page	Part Number	Page	Part Number	Page
370211	139	371380	27	373177	149
370230	67	371381	27	373302	63
370231	49	371389	27	373304	63
370232	67	371390	27	373354	55,69
370234	139	371449	27	373397	137
370235	139	371450	27	373398	137
370258	135	371451	27	373399	135
370260	79,81	371452	27	373400	135
370286	135	371473	83	373405	93
370287	135	371523	27	373422	27
370294	135	371569	27	373476	33
370298	135	371642	49	373582	115
370364	135	371665	129	373585	31
370375	135	371669	83	373586	31
370398	25	371707	91	373631	43
370405	21	371710	157	373694	65
370406	21	371727	57	373890	61
370408	21	371730	201	373954	73
370409	21	371819	155	374105	103
370425	131	371837	199	374213	117
370491	65	371845	157	374225	217
370492	65	371847	157	374271	217
370520	63	371885	131	374272	217
370601	15	371960	197	374293	217
370618	65	372008	217	374319	15
370644	115	372091	135	374324	15
370662	137	372092	135	374325	15
370685	17	372093	135	374326	53
370688	17	372094	135	374345	221
370699	37	372097	121	374379	103
370720	235	372103	103	374417	147
370745	37	372104	103	374545	35
370746	37	372105	103	374756	127
370747	35	372112	75	374837	49
370766	157	372121	207	374840	49
370771	15	372122	207	375031	83
370776	91	372123	207	375253	27
370794	37	372124	207	375264	73
370806	17	372126	27	375265	73
370817	135	372161	207	375273	73
370820	17	372229	7	375274	73
370835	231	372266	223	375604	27
370840	59	372315	227	375663	25
370865	49	372491	65	375665	25
370872	15	372544	59	376175	125
370874	15	372566	27	376177	107
370953	61	372574	39	376184	129
370955	147	372576	107	376191	227
371009	149	372589	21	376194	121
371016	129	372590	157	376195	121
371017	129	372618	107	376196	121
371018	135	372658	17	376197	123
371043	135	372672	139	376199	123
371046	135	372674	129	376200	217
371052	135	372675	27	376201	217
371053	135	372696	139	376245	123
371056	135	372697	139	376270	75
371057	135	372699	17	376287	97
371058	129	372700	17	376395	119
371069	137	372704	135	376396	149
371070	137	372718	37	376449	91
371093	17	372774	97	377089	27
371098	17	372775	97	377742	207
371101	147	372792	57	377743	207
371113	63	372819	57	377744	209
371121	97	372832	17	380030	15
371122	97	372922	93	380177	157
371130	17	372958	27	380178	157
371199	83	372959	147	380202	75
371200	83	372960	147	380313	17
371221	229	372964	139	380314	17
371254	63	372965	147	380337	59
371275	105	372966	147	380447	63
371281	93	373035	17	380572	77
371321	27	373036	17	380660	105
371323	27	373096	217	380708	119
371364	129	373152	17	381010103	225

NUMERICAL INDEX

Part Number	Page	Part Number	Page	Part Number	Page
381027	49	384881	175	387487	27
381028	49	384897	239	387497	131
381129	75	384906	17	387498	131
381400	139	384927	175	387533	59
381403	139	384954	243	387538	83
381413	59	384958	243	387565	57
381462	59	384959	35	387590	61
381561	113	385163	235	387600	59
381619	35	385264	121	387631	63
381675	27	385341	35	387633	153
381676	149	385342	229	387634	153
381867	75	385406	131	387638	173
381870	75	385435	63	387674	153
381874	109	385442	173	387681	59
381887	43	385572	235	387684	59
381888	39	385573	235	387722	97
382157	37	385574	235	387723	97
382179	65	385575	235	387751	117
382213	153	385576	239	387776	65
382225	153	385577	239	387815	31
382349	153	385578	235	387816	31
382390	57	385587	235	387817	31
382393	57	385588	239	387818	31
382537	65	385589	239	387819	31
382586	39	385590	239	387820	31
382639	39	385737	161	387821	31
382699	243	385738	181	387876	31
382700	243	385770	173	387877	31
382701	243	385788	61	387878	31
382702	243	385789	61	387879	31
382751	207	385932	137	387880	31
382782	117	385994	151	387965	15
383002	243	386002	151	387981	245
383200	141	386003	151	387982	245
383225	157	386036	17	387988	245
383389	23	386054	235	388011	17
383390	23	386058	63	388021	57
383391	23	386084BR	207	388026	27
383397	85	386084CN	207	388052	83
383417	241	386084DE	207	388113	57
383418	241	386084DK	207	388114	57
383419	241	386084EN	207	388201	59
383420	241	386084ES	207	388202	59
383422	241	386084FI	207	388522	245
383424	235	386084FR	207	388523	245
383425	239	386084GR	207	388524	245
383436	15	386084IS	207	388561	245
383452	217	386084IT	207	388639	33
383461	75	386084NL	207	388672	33
383462	75	386084NO	207	388673	33
383626	17	386084PT	207	388729	33
383697	39	386084SE	207	388757	33
383705	135	386128	141	388758	33
383852	23	386272	49	388759	33
383858	73	386295	73	388760	33
383866	23	386458	57	388761	33
383870	157	386688	57	388775	245
384038	101	386692	17	388842	33
384056	101	386708	59	389004	245
384101	97	386778	59	389109	245
384133	175	386782	61	389110	245
384135	241	386783	61	389111	245
384145	235	386876	153	389122	235
384176	239	386966	59	389123	235
384187	239	386974	59	389160	235
384397	49	386975	59	389162	235
384589	237	387035	15	389541	59
384672	235	387329	97	389577	129
384673	235	387331	97	415329	93
384674	235	387353	59	416004	145
384775	39	387354	59	416034	153
384835	239	387382	57	433830401	73
384836	239	387383	57	450122	49
384877	235	387384	57	465013	149
384878	175	387409	59	470021	97
384879	235	387422	97	475064	17
384880	175	387485	75	476019	231

NUMERICAL INDEX

Part Number	Page	Part Number	Page	Part Number	Page
480446	87	500028	49	533031	121
480447	87	500029	57	533038	63
480449	87	500030	63	535003	227
480450	87	500031	21	535005	161
480468	87	500037	25	535053	27
482056	77	500039	73	541526	217
482213	85	500040	17	541535	161
482354	83	500041	43	541702	123
482470	73	500043	15	541703	131
482672	83	500044	129	570002	119
482716	73	500046	23	570004	17
482732	75	500047	17	570005	23
482860	83	500048	63	570006	21
482933	75	500049	15	570008	35
482936	93	500051	97	573004	149
482966	235	500053	17	573008	147
482968	73	500056	21	586001	97
482972	77	500061	83	586002	17
482987	73	500070	49	586003	17
482993	73	500075	17	586018	57
483007	77	500076	49	586019	21
483009	77	500078	73	586021	201
483016	83	500079	217	586022	135
483045	223	500086	119	600004	17
483067	77	500100	157	600006	155
483069	93	500111	77	600008	155
483071	77	500122	15	600009	17
483086	83	500133	49	600016	89
483087	85	500153	173	601001	121
483099	83	500163	49	603001	139
483123	77	500169	145	603009	23
483178	93	500170	157	603019	17
483204	223	500186	151	603020	27
483208	223	500187	43	603023	17
483209	223	500192	75	615041	145
483210	223	500194	137	615076	17
483343	73	500195	49	624005	207
483346	73	500196	57	624011	231
483347	73	500197	221	624017	207
483349	225	500198	149	624021	137
483355	93	500208	49	629066	201
483356	93	500228	135	630008	23
483412	83	500265	53	630035	23
483450	225	500267	65	635057	15
483455	77	500269	15	635061	89
483520	73	500292	235	747691	57
483556	235	500296	23	791077	101
483557	235	502036	83	791125	41,45
483608	77	502047	77	791126	41
485005	233	502132	73	791128	41
485006	233	503010	149	791130	39
485011	233	508001	171	791134	39
485019	233	508002	153	791135	41
485037	233	508020	101	791166	131
485040	233	508027	241	791182	61
485388	233	508042	25	791226	135
499266	61	508053	67	791233	31
499444	39	508056	147	791234	31
500001	145	508057	241	791253	119
500002	41	508063	57	791281	209
500006	121	508079	57	791312	151
500008	97	508084	49	791313	151
500012	63,167	508092	149	791314	151
	169,171	509025	67	791389	121
	187,189	513003	147	791473	57
500013	27,99	513008	97	791481	75
		513012	35	791487	97
500015	17	513013	135	791489	105
500016	39	513025	17	791512	97
500018	27	513027	245	791518	97
500019	49	513028	17	791519	97
500021	17	516051	139	791520	97
500022	27	527002	49	791532	99
500023	59	533006	17	791551	97
500024	27	533013	117	791556	97
500025	23	533024	145	791557	97
500026	241	533030	121	791594	245

NUMERICAL INDEX

Part Number	Page	Part Number	Page	Part Number	Page
791597	61	902578	233	903916	59
791642	209	902610	233	903917	139
791667	33	902803	129	903918	139
791916	127	902861	87	903927	109
791933	49	902866	17	903936	27
791967	203	902869	87	903937	27
791968	203	902916	35	903961	103
792080	57	902917	35	903969	199
801198	73	902918	35	903970	117
801781	73	903082	83	904004	77
813316	83	903340	27	904005	73
813321	93	903341	27	904010	73
813429	83	903342	35	904015	101
813444	75	903344	27	904016	109
813500	83	903422	207	904032	121
813791	61	903423	207	904037	125
814071	41	903424	207	904038	123
891539	99	903425	207	904039	121
892446	91	903436	103	904044	97
900247	63	903459	207	904056	75
900249	63	903523	35	904059	61
900528	119	903524	75	904060	61
900734	85	903540	39	904083	221
900775	49	903553	77	904092	207
900790	121	903599	103	904095	207
900904	131	903600	103	904115	83
900998	197	903601	103	904116	39
900999	197	903602	103	904143	89
901145	137	903611	209	904145	89
901182	121	903619	89	904165	235
901183	121	903625	117	904176	67
901191	43	903626	39	904180	157
901209	131	903627	117	904206	33
901212	233	903631	97	904207	103
901213	233	903632	57	904208	103
901224	117	903640	99	904209	33
901225	117	903653	103	904211	63
901226	101	903657	105	904213	79
901227	117	903658	103	904214	73
901228	117	903678	103	904228	17,19
901229	117	903683	63		
901240	117	903684	63	904229	23
901256	117	903685	63	904230	15
901298	39	903714	59	904231	15
901315	161,183	903716	113	904232	23
		903725	49	904233	15
901317	53	903731	137	904234	157
901329	53	903735	15	904260	49
901332	53	903736	157	904271	61
901334	53	903741	117	904281	43
901335	53	903758	97	904290	151
901369	121	903760	97	904313	121
901431	39	903768	97	904314	123
901636	53	903769	41	904315	121
901637	53	903773	83	904316	121
901727	81	903774	77	904317	121
901765	131	903782	171	904318	121
901766	131	903787	93	904329	221
901767	117	903792	157	904346	97
901832	237	903799	149	904352	59
901851	97	903802	171	904355	31
902064	121	903803	199	904356	31
902066	121	903805	171	904379	57
902166	17	903808	161	904405	35
902203	149	903812	83	904448	99
902212	59	903824	131	904496	75
902223	35	903831	83	904556	17
902227	121	903852	243	904557	21
902252	53	903856	27	904563	99
902285	83	903857	27	904567	83
902286	85	903875	105	904578	75
902288	217	903876	105	904580	75
902496	217	903879	227	904581	75
902508	199	903886	41	904584	75
902520	27	903907	97	904585	75
902528	119	903914	141	904586	73
902566	245	903915	59	904588	227

NUMERICAL INDEX

Part Number	Page	Part Number	Page	Part Number	Page
904597	119	908506	161	909152	129
904603	91	908507	161	909211	87
904619	157	908510	161	909236	221
904623	235	908511	161	909237	221
904637	77	908512	161	909243	81
904638	73	908515	161	909274	221
904639	27,29	908529	165,185	909275	221
904640	17	908530	165	909276	221
904653	245	908531	165	909277	221
904697	207	908532	165	909278	221
904698	41	908535	165	909279	221
904703	21	908536	165	909280	221
904704	119	908540	165	909281	221
904707	63	908541	165	909288	221
904734	91	908545	171	909289	221
904735	17	908548	163	909290	221
904793	75	908549	163	909291	221
904835	207	908550	163	909292	221
904870	207	908551	163	909293	221
904878	35	908556	163	909294	221
904889	109	908557	163	909298	221
904890	109	908558	169	909299	221
904906	243	908559	167	909301	221
904907	245	908560	167	909302	221
904908	245	908561	167	909303	221
904909	245	908562	169	909304	221
904913	35	908563	167	909305	221
904914	35	908564	167	909306	221
904939	203	908565	167	909307	221
904984	63	908566	171	909308	221
904989	117	908567	171	909309	221
904992	77	908568	171	909310	221
908110	117	908569	171	909311	221
908184	145	908570	171	909312	221
908187	145	908571	171	909313	221
908189	145	908572	171	909346	81
908190	145	908573	171	909510	161
908193	149	908574	171	909535	139
908200	149	908575	171	909536	139
908229	207	908576	171	909743	85
908265	201	908577	171	909745	145
908267	125	908578	171	909746	145
908268	161	908579	171	909747	149
908269	167	908580	171	909748	149
908270	167	908581	171	909749	149
908271	167	908582	171	909750	149
908272	169	908583	171	909751	149
908273	169	908584	171	910161	73
908278	169	908598	173	910995	25
908279	169	908599	173	911456	113
908280	169	908600	173	911620	87
908281	167	908602	177	921028	57
908282	167	908603	177	921031	63
908284	171	908604	177	921036	235
908287	171	908605	177	921039	123
908354	171	908606	177	921047	43
908355	201	908608	177	921050	59
908356	199	908610	177	921072	97
908357	199	908611	177	921104	139
908358	199	908613	177	921132	97
908359	125	908614	177	922060	93
908361	201	908617	177	922325	149
908362	169	908618	177	923253	27
908363	167	908623	199	923378	83
908364	167	908624	199	923384	73
908399	61	908625	201	923680	39
908450	11	908626	201	923681	39
908451	11	908627	201	923734	39
908452	61	908747	161	923735	39
908487	77	908754	165	923859	39
908488	73	908756	165	923874	153
908496	167	908758	163	923876	39
908497	161	908762	163	923962	39
908500	161	908764	163	923976	117
908503	161	908783	87	924543	57
908504	161	908993	163	924544	35
908505	161	909122	149	924996	39

NUMERICAL INDEX

Part Number	Page	Part Number	Page	Part Number	Page
925208	15	935669	69	938516	11
925227	15	935671	69	938565	163
925599	35	935674	69	938566	163
925713	115	935675	69	938568	163
925802	245	935678	69	938597	237
925958	227	935679	69	938598	237
926214	25	935681	69	938599	237
926220	147	935682	69	938600	237
926736	49	935686	69	938602	237
926989	115	935733	69	938603	237
927084	59	935771	145	938608	175
927233	17	935772	145	938611	175
928041	35	935773	145	938612	183
928381	131	935950	57	938613	183
928447	137	936006	221	938614	183
928466	137	936267	89	938615	183
928467	35	936268	89	938616	183
928483	225	936273	137	938619	239
928497	149	936274	137	938620	175
928502	121	936276	137	938622	175
928849	229	936277	161	938623	239
928850	15	936283	139	938624	239
929012	87	937055	85	938631	239
929013	87	937061	81	938632	175
929014	87	937062	81	938634	175
929023	97	937063	81	938636	175
929122	77	937064	81	938637	239
929185	65	937065	81	938638	175
929191	41	937066	81	938643	239
929217	15	937067	81	938644	175
929226	77	937068	81	938645	175
929236	75	937069	81	938647	175
929419	39	937070	81	938660	161
929447	49	937071	81	938676	161
929455	121	937072	81	938677	165
929863	25	937075	81	938678	161
930151	217	937077	81	938679	161
930154	105	937078	81	938687	177
930161	113	937079	81	938691	173
930163	105	937080	81	938772	175
930166	113	937081	81	938773	175
930192	113	937083	81	938774	175
930200	119	937084	81	938775	175
932032	119	937085	81	938776	175
932056	113	937086	81	938777	175
932057	113	937087	81	938778	175
932058	105	937106	121	938779	175
932059	113	937107	121	938780	175
935229	143	937108	121	938781	175
935230	143	937109	121	938782	175
935231	143	937165	203	938783	175
935232	143	937394	59	938784	175
935233	143	937397	163	938785	175
935234	143	937398	163	938786	175
935235	143	937399	163	938787	239
935236	143	937400	163	938788	175
935237	143	937405	163	938789	175
935238	143	937406	171	938790	175
935239	143	937407	171	938806	165
935240	143	937408	171	938808	165
935241	143	937410	163	938810	165
935242	143	937411	163	938811	165
935243	143	937412	163	938814	185
935244	171	937620	141	938815	185
935399	69	937621	141	938818	185
935547	87	937730	69	938819	165
935548	87	937731	69	938820	165
935549	87	937732	69	938821	165
935589	161	937892	141	938822	165
935613	139	937932	163	938823	165
935614	139	937958	145	938824	165
935615	139	938029	177	938825	185
935648	221	938125	221	938826	185
935649	221	938126	221	938834	163
935650	221	938306	39	938835	163
935667	69	938307	39	938836	163
935668	69	938514	11	938837	163

NUMERICAL INDEX

Part Number	Page	Part Number	Page	Part Number	Page
938838	163				
938839	183				
938840	183				
938841	183				
938842	161				
938843	161				
938844	161				
938845	161				
938846	161				
938847	161				
938849	181				
938850	181				
938851	181				
938852	181				
938853	177				
938854	177				
938855	177				
938856	177				
938864	175				
938865	175				
938867	175				
938871	173				
938872	173				
938873	173				
938874	173				
938955	175				
939372	7,9				
939373	57				
939408	97				
939409	97				
939480	7				
939501	59				
939504	57				
939563	5				
939564	5				
939565	5				
939699	175				
939766	27				
939767	27				
939769	93				
947688	57				
947689	229				
960727	97				
960792	119				
985012	105				
985013	121				
985014	121				
985051	161				
985126	129				
989151	91				
991657	207				
991658	207				
999011	129				
999027	97				