RUTHZIL TRATOR COMERCIAL DE PEÇAS LTDA 11 97083-6812 ROLANDO CITRANGULO

VOLVO CONSTRUCTION EQUIPMENT

PARTS CATALOG

SD-100F

S/N 200013

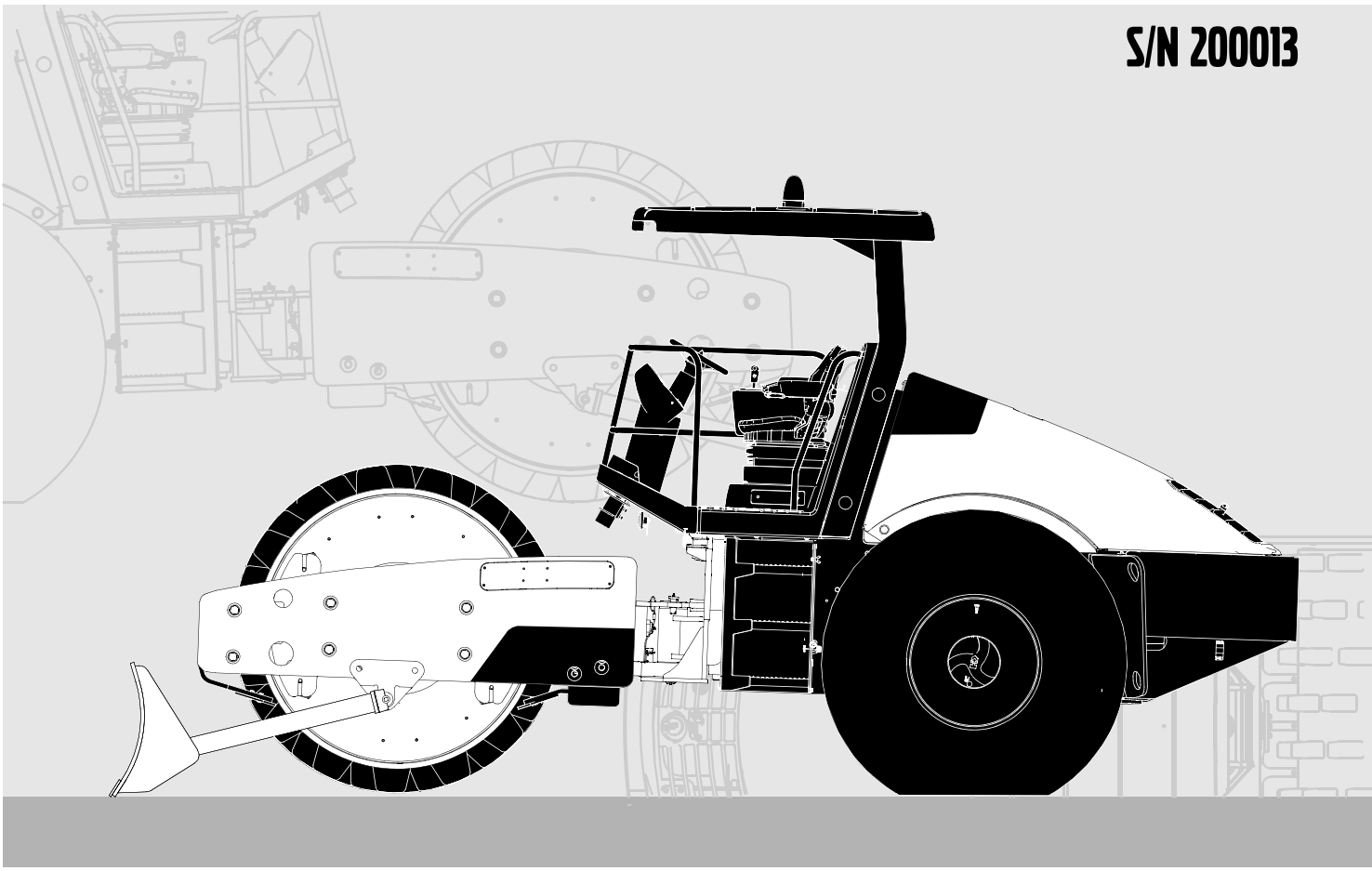

MORE CARE. BUILT IN.

HOW TO USE THIS MANUAL

This Parts Manual applies to all SD-100F Series VIBRATORY COMPACTOR

When the Comm. # is not Known - Use the Word Index:

- Volvo's Word Index will make this item easy to locate. The Word Index is found in the very back of the book. The items listed are in alphabetical order and may be repeated several times depending on their functional descriptions.

- Let's assume you need to replace the PRIMARY AIR CLEANER FILTER ELEMENT.

Use any of the functional words in the item description to locate the desired item. Example: The first listing for the Primary Air Cleaner Filter Element in the **Word Index** is: Air Cleaner Primary Filter Element. The index shows the component will be found on page C.4.3 that is the **Parts List** page number for the Air Cleaner Assembly.

A
Air Cleaner Primary Filter Element _____ C.4.3
Air Cleaner Safety Filter Element _____ C.4.3
Air Cleaner _____ C.4.3
Air Valve _____ A.2.3
Alarm, Backup _____ B.5.3
Alternator Belt Guard _____ C.2.5
Alternator _____ C.2.3
Arch ROPS _____ A.5.3
Articulation Pin _____ B.1.3
Audible Alarm Wiring Harness _____ E.6.3
Axle Drive Motor _____ A.1.3

- The item is also listed as:

Element, Air Cleaner Primary Filter
Filter Element, Air Cleaner Primary
Primary Filter Element, Air Cleaner

Using the Parts Identification Pages:

- The **PARTS IDENTIFICATION PAGES** consist of the **PARTS ILLUSTRATION** (even numbered pages) and the **PARTS LIST** (odd numbered pages).

- The **Parts Illustration** shows the assembly with its component parts identified by I**tem Numbers.**

- On the **Parts List**, the components are listed in **Item Number** order as found in the **ITEM** column. Other information provided by the **Parts List** is the **Comm. Number** which will be required to order Genuine VolvoVolvo Replacement Parts, a **functional description**, the **quantity** required to assemble one complete assembly, and any additional **notes/ dimensions** required to help place your parts order.

- **For the example: The Air Cleaner** Primary Filter Element is listed under the Air Cleaner (Item 1), Comm. Number 13277983, Quantity of 1.

When the Comm. # is <u>not</u> known - Use the Table of Contents:

- Turn to the **TABLE OF CONTENTS** pages in the front of this manual. These pages show the major systems of the machine divided into **FUNCTIONAL GROUPS** (identified by capital letters).
- Find the **Functional Group** that best describes the area of the machine you are interested in. For example: Air Cleaner Assembly
- See the sample **Table of Contents** shown below:

ENGINE

C

Engine Installation C.1.2
Engine Assembly C.2.2
Pump Stack Assembly.....C.3.2
Air Cleaner Assembly C.4.2
Exhaust Assembly.....C.5.2
Remote Oil Drain Assembly C.6.2

Listed under the **Functional Group** of Engine are **SECTIONS** (identified by numbers that describe major repairable components of that group. Find the listing that refers to the Engine Assembly.

- Since the Air Cleaner **Primary Filter Element** is what needs to be replaced, refer to the parts listing for the Air Cleaner Assembly. The Air Cleaner used on your machine is found in **Functional Group C.; Section 4,** this makes up the first part of the page number. Turn to that section of the parts manual and find the parts listing on page **C.4.3** for the Air Cleaner **(13277983)**.

When the Comm. # <u>is</u> Known - Use the Numerical Index:

- If you already know the **Comm. Number** (part number) for the item required, a **NUMERICAL INDEX** is provided in the back of the manual to assist you. Look up the **Comm. Number** desired and the **Numerical Index** will show the **Functional Group, Section, and Page Number** where the item can be found.

For our Primary Air Cleaner Filter Element Example: The **Comm. Number** 13255443 is found in the **Numerical Index**, it shows that component will be found on pages C.4.3 that is the Parts List page for the Engine Assembly.

TABLE OF CONTENTS
SD-100F

TITLE **PAGE**

Section A - AXLE AND MAIN FRAME

AXLE INSTALLATION A-2
AXLE MOTOR. A-4
LUG TIRES WITH BALLAST INSTALLATION. A-6
FRONT FRAME INSTALLATION - SHEET 1 OF 2 . . . . . A-8
FRONT FRAME INSTALLATION - SHEET 2 OF 2 . . . . . A-10
REAR FRAME INSTALLATION - SHEET 1 OF 2 . . . . . A-12
REAR FRAME INSTALLATION - SHEET 2 OF 2 . . . . . A-14
HYDRAULIC TANK ASSEMBLY A-16
FUEL TANK INSTALLATION A-18
FUEL TANK ASSEMBLY A-20
BRAKE SHUNT VALVE ASSEMBLY A-22
THERMAL BYPASS VALVE INSTALLATION A-24
HOOD INSTALLATION - SHEET 1 OF 3. . . . . A-26
HOOD INSTALLATION - SHEET 2 OF 3. . . . . A-28
HOOD INSTALLATION - SHEET 3 OF 3. . . . . A-30
HOOD ASSEMBLY - SHEET 1 OF 2 . . . . . A-32
HOOD ASSEMBLY - SHEET 2 OF 2 . . . . . A-34
PROPULSION PIN BLOCK ASSEMBLY A-36
NO ROPS/HOOD LATCH DRAW INSTALLATION A-38
SOUND KIT W/ PRE-CLEANER INSTALLATION. A-40
HOOD, FOAM AND PRE-CLEANER ASSEMBLY A-42
HOOD ASSEMBLY - SHEET 1 OF 2 . . . . . A-44
HOOD ASSEMBLY - SHEET 2 OF 2 . . . . . A-46
ROPS/FOPS INSTALLATION - OPTION. A-48
SEAT BELT INSTALLATION A-50
ROPS/HOOD DRAW LATCH INSTALLATION. A-52
GRILL SUPPORT INSTALLATION A-54
SPRING ISOLATION FOAM INSTALLATION A-56
SHIP ROPS LOOSE INSTALLATION - OPTION. A-58

Section B - DRUM

DRUM ASSEMBLY B-2
BEARING HOUSING ASSEMBLY B-4
ECCENTRIC SHAFT ASSEMBLY B-6
CARRIER ASSEMBLY B-8
DRIVE MOTOR ASSEMBLY B-10
PREMIUM SCRAPER INSTALLATION B-12

Section C - ENGINE

ENGINE INSTALLATION. C-2
ENGINE ASSEMBLY C-4
PUMP STACK ASSEMBLY - SHEET 1 OF 2 . . . . . C-6
PUMP STACK ASSEMBLY - SHEET 2 OF 2 . . . . . C-8
AIR CLEANER INSTALLATION. C-10
INSULATED STUD ASSEMBLY C-12
FUEL LINE INSTALLATION C-14
RADIATOR/OIL COOLER INSTALLATION. C-16
RADIATOR/OIL COOLER ASSEMBLY C-18
RECOVERY BOTTLE INSTALLATION C-20
LOW EXIT EXHAUST INSTALLATION C-22

TABLE OF CONTENTS
SD-100F

TITLE **PAGE**

Section D - OPERATORS COMPARTMENT

OPERATORS PLATFORM INSTALLATION - SHEET 1 OF 2 . . . . . D-2
OPERATORS PLATFORM INSTALLATION - SHEET 2 OF 2 . . . . . D-4
CONTROL CONSOLE ASSEMBLY D-6
EMERGENCY STOP ASSEMBLY D-8
FUSE COVER ASSEMBLY D-10
UNIQUE NO ROPS OPERATORS PLATFORM INSTALLATION D-12
STRAIGHT PEDESTAL ASSEMBLY D-14
GAUGE PANEL ASSEMBLY D-16
SEAT ASSEMBLY D-18
FIRE EXTINGUISHER MOUNTING PLATE INSTALLATION D-20
FIRST AID MOUNTING ASSEMBLY D-22
SEAT BELT INSTALLATION D-24

Section E - ELECTRICAL

ELECTRICAL INSTALLATION - SHEET 1 OF 14 . . . . . E-2
ELECTRICAL INSTALLATION - SHEET 2 OF 14 . . . . . E-4
ELECTRICAL INSTALLATION - SHEET 3 OF 14 . . . . . E-6
ELECTRICAL INSTALLATION - SHEET 4 OF 14 . . . . . E-8
ELECTRICAL INSTALLATION - SHEET 5 OF 14 . . . . . E-10
ELECTRICAL INSTALLATION - SHEET 6 OF 14 . . . . . E-12
ELECTRICAL INSTALLATION - SHEET 7 OF 14 . . . . . E-14
ELECTRICAL INSTALLATION - SHEET 8 OF 14 . . . . . E-16
ELECTRICAL INSTALLATION - SHEET 9 OF 14 . . . . . E-18
ELECTRICAL INSTALLATION - SHEET 10 OF 14 . . . . . E-20
ELECTRICAL INSTALLATION - SHEET 11 OF 14 . . . . . E-22
ELECTRICAL INSTALLATION - SHEET 12 OF 14 . . . . . E-24
ELECTRICAL INSTALLATION - SHEET 13 OF 14 . . . . . E-26
ELECTRICAL INSTALLATION - SHEET 14 OF 14 . . . . . E-28
FUSE BLOCK ASSEMBLY E-30
BATTERY INSTALLATION E-32
WORKLIGHTS INSTALLATION - SHEET 1 OF 2 . . . . . E-34
WORKLIGHTS INSTALLATION - SHEET 2 OF 2 . . . . . E-36

Section F - DECALS AND PAINT

DECAL INSTALLATION - SHEET 1 OF 2 . . . . . F-2
DECAL INSTALLATION - SHEET 2 OF 2 . . . . . F-4
EU DECAL INSTALLATION - SHEET 1 OF 2 . . . . . F-6
EU DECAL INSTALLATION - SHEET 2 OF 2 . . . . . F-8

Section G - HYDRAULICS

REAR FRAME HOSING INSTALLATION - SHEET 1 OF 6. . . . . G-2
REAR FRAME HOSING INSTALLATION - SHEET 2 OF 6. . . . . G-4
REAR FRAME HOSING INSTALLATION - SHEET 3 OF 6. . . . . G-6
REAR FRAME HOSING INSTALLATION - SHEET 4 OF 6. . . . . G-8
REAR FRAME HOSING INSTALLATION - SHEET 5 OF 6. . . . . G-10
REAR FRAME HOSING INSTALLATION - SHEET 6 OF 6. . . . . G-12
FILTER INSTALLATION G-14
TOW VALVE INSTALLATION - OPTION. G-16
BRAKE/SHUNT VALVE ASSEMBLY G-18

TABLE OF CONTENTS
SD-100F

TITLE **PAGE**

Section I - SCHEMATICS

Electrical Schematic I-3
Hydraulic Schematic I-6

TABLE OF CONTENTS
SD-100F

TITLE **PAGE**

STANDARD ABBREVIATIONS

AC	Alternating Current
A/R	As Required
ARC	Authorized Rebuilt Component
Assy	Assembly
BHCS	Button Head Cap Screw
Cu Yd	Cubic Yard
Cyl	Cylinder
DC	Direct Current
Dia	Diameter
Eff	Effective
FHCS	Flat Head Cap Screw
F-N-R	Forward-Neutral-Reverse
FOPS	Falling Object Protection System
F/P	Fork Positioning
Gr	Grade
HHCS	Hex Head Cap Screw
HHMS	Hex Head Machine Screw
HSBHCS	Hex Socket Button Head Cap Screw
HSCHCS	Hex Socket Countersunk Head Cap Screw
ID	Inside Diameter
LH	Left Hand
M	Metric
MIK	Maintenance Interval Kit
mm	Millimeter
Nat Asp	Naturally Aspirated
Neg	Negative
NI	Not Ilustrated
NSS	Not Sold Separately
NSVA	Non Serviceable Assembly
OD	Outside Diameter
Pos	Positive
PSI	Pounds per Square Inch
Q/A	Quick-Attach
Ref	Reference
RH	Right Hand
RHSS	Round Head SelfTapping Screw
ROPS	Roll-Over Protection System
RPM	Revolutions Per Minute
SAE	Society of Automotive Engineers
Sec	Section
SFH	Slotted Fillister Head
SHCS	Socket Head Cap Screw
SMV	Slow Moving Vehicle
S/N	Serial Number
SPST	Single Pole/Single Throw
S.T.	Self-Tapping
Std	Standard
Str	Straight
Sw	Swivel
Tach	Tachometer
Temp	Temperature
Thd	Thread
Thk	Thick
Typ	Typical
UNC	Unified Coarse
UNF	Unified Fine
Univ	Universal
Var	Variable
V	Volt
VPM	Vibrations Per Minute
Wgt	Weight
w/	With
w/o	Without
Wp	Weatherproof

Recommended Service Parts

Description	Yr 1 QTY	Yr 2 QTY	Yr 3 QTY	CPN
RADIATOR/OIL COOLER INSTALLATION				
CAP	0	1	0	59154807
LOWER	0	0	1	13279666
RECOVERY BOTTLE	0	0	1	58802851
FRONT FRAME INSTALLATION				
GREASE FITTING CAP	0	0	6	50270248
CABLE	0	0	1	59607861
CABLE	0	0	1	59436741
HITCH PIN	0	0	1	59299545
ROLL PIN	2	2	0	95098679
BUSHING	0	2	0	59450528
FERRULE	0	0	2	59607853
PIVOT PIN	2	2	0	59190975
REAR FRAME INSTALLATION				
SIGHT GAUGE	0	1	0	59277772
BREATHER, FILTERED VENT	1	1	0	59093351
SWITCH, PRESSURE	0	0	1	59110312
GASKET	0	0	1	13305099
ROLL PIN	2	2	0	95098679
INSULATION GROMMET	0	1	0	54494638
MAGNETIC PLUG	0	0	1	59144428
GREASE FITTING CAP	0	0	2	50270248
PIVOT PIN	2	2	0	59190975
BATTERY INSTALLATION				
COVER PLATE	0	0	2	59583450
BATTERY	2	2	0	54635859
SWITCH, BATTERY MASTER	0	0	1	13209648
OPERATORS PLATFORM INSTALLATION				
CLEVIS	0	1	0	59929059
SCREW	0	1	0	95860052
SEAL KIT	0	0	1	54747340
DUST BOOT	0	1	0	59108605
HORN	1	1	1	13469010
NUT	0	1	0	95943346
DUST BOOT	0	1	0	59108100
LOW EXIT EXHAUST INSTALLATION				
CLAMP	0	0	1	59495028
CLAMP	0	2	0	59534313
EXHAUST	0	0	1	59179218
CLAMP SEAL	0	0	1	13093075

+Designates parts that are to be replaced within the specified time intervals as stated in the maintenance schedule.

Description	Yr 1 QTY	Yr 2 QTY	Yr 3 QTY	CPN
AXLE INSTALLATION				
O-RING	2	2	0	59993881
SEAL	0	0	1	59941203
O-RING KIT	0	0	1	59972877
O-RING	1	1	1	50278019
ELECTRICAL INSTALLATION				
SEAL	0	0	35	59854877
CONNECTOR	0	0	5	59434209
FUSE BLOCK	0	3	0	59434290
BACKUP ALARM	0	0	1	13236203
RELAY	4	4	4	59436923
WEDGE	0	0	1	59436873
NUT	0	8	0	95943346
CONTACT PIN	0	0	6	59436840
ELECTRICAL CONNECTOR	0	0	4	59436865
FUSE	1	1	1	58893249
NO ROPS/HOOD LATCH DRAW INSTALLATION				
LATCH	0	2	0	59162149
PREMIUM SCRAPER INSTALLATION				
SCRAPER TOOTH	7	7	0	59175661
UNIQUE NO ROPS OPERATORS PLATFORM INSTAL-LATION				
CONNECTOR	0	0	1	59434209
SEAL	0	0	7	59854877
SWITCH, HI/LOW AMPLITUDE	0	0	1	54666060
SWITCH, HI/LOW TRAVEL	0	0	1	54666086
SWITCH, PARK BRAKE TEST	0	0	1	54666102
SWITCH, HI/LOW RPM	0	0	1	54666078
COVER	0	1	0	58892902
NUT	0	1	0	59126961
HORN BUTTON	1	1	0	59159558
DUAL SWITCH SEAT KIT	0	0	1	13167945
SWITCH, PARK BRAKE	0	1	0	54666094
STEERING WHEEL	0	1	0	13158647
DUAL SWITCH SEAT KIT	0	0	1	13198270
DRUM ASSEMBLY				
SIGHT GAUGE	0	1	0	59277772
O-RING	5	5	5	50278019
SEAL	0	0	1	59941203
OIL SEAL	0	0	1	59277764

+Designates parts that are to be replaced within the specified time intervals as stated in the maintenance schedule.

Description	Yr 1 QTY	Yr 2 QTY	Yr 3 QTY	CPN
PIPE PLUG	2	2	0	59600593
SHOCK MOUNT	0	16	0	13304787
WEAR SLEEVE	0	0	1	59277756
MAGNETIC PLUG	0	0	2	59144428
COUPLING	1	1	0	59613612
V-RING SEAL	0	0	1	13167390
LUG TIRES WITH BALLAST INSTALLATION				
NUT	0	20	0	59163758
VALVE	0	2	0	59524447
VALVE CAP	2	2	2	59929711
ENGINE INSTALLATION				
O-RING	2	2	0	59993881
CENTER BONDED MOUNT	0	0	2	59127720
VALVE ASSEMBLY	0	0	2	58921495
CHARGE RELIEF KIT	0	0	1	59446138
O-RING	1	1	1	50278019
OVERHAUL GASKET/SEAL KIT	0	0	1	58813791
SWITCH	0	0	1	58905803
SEAL KIT	0	0	1	58898677
O-RING KIT	0	0	1	59972877
COUPLING	0	1	0	59286336
ENGINE OIL FILTER	1	1	1	13284617
WORKLIGHTS INSTALLATION				
WORKLIGHTS	0	0	4	13406764
BULB	0	4	0	13468137
LAMP	0	2	0	13321443
SWITCH, F/R WORKLIGHTS	0	0	1	13197108
TOW VALVE INSTALLATION - OPTION				
MANIFOLD	0	0	1	13304878
SWITCH, PRESSURE	0	0	1	59110312
SOUND KIT W/ PRE-CLEANER INSTALLATION				
AIR PRE-CLEANER	1	1	0	59081323
ROPS/FOPS INSTALLATION - OPTION				
LATCH	0	2	0	59162149

+Designates parts that are to be replaced within the specified time intervals as stated in the maintenance schedule.

Section A - AXLE AND MAIN FRAME

AXLE INSTALLATION

13166335 REV 0G

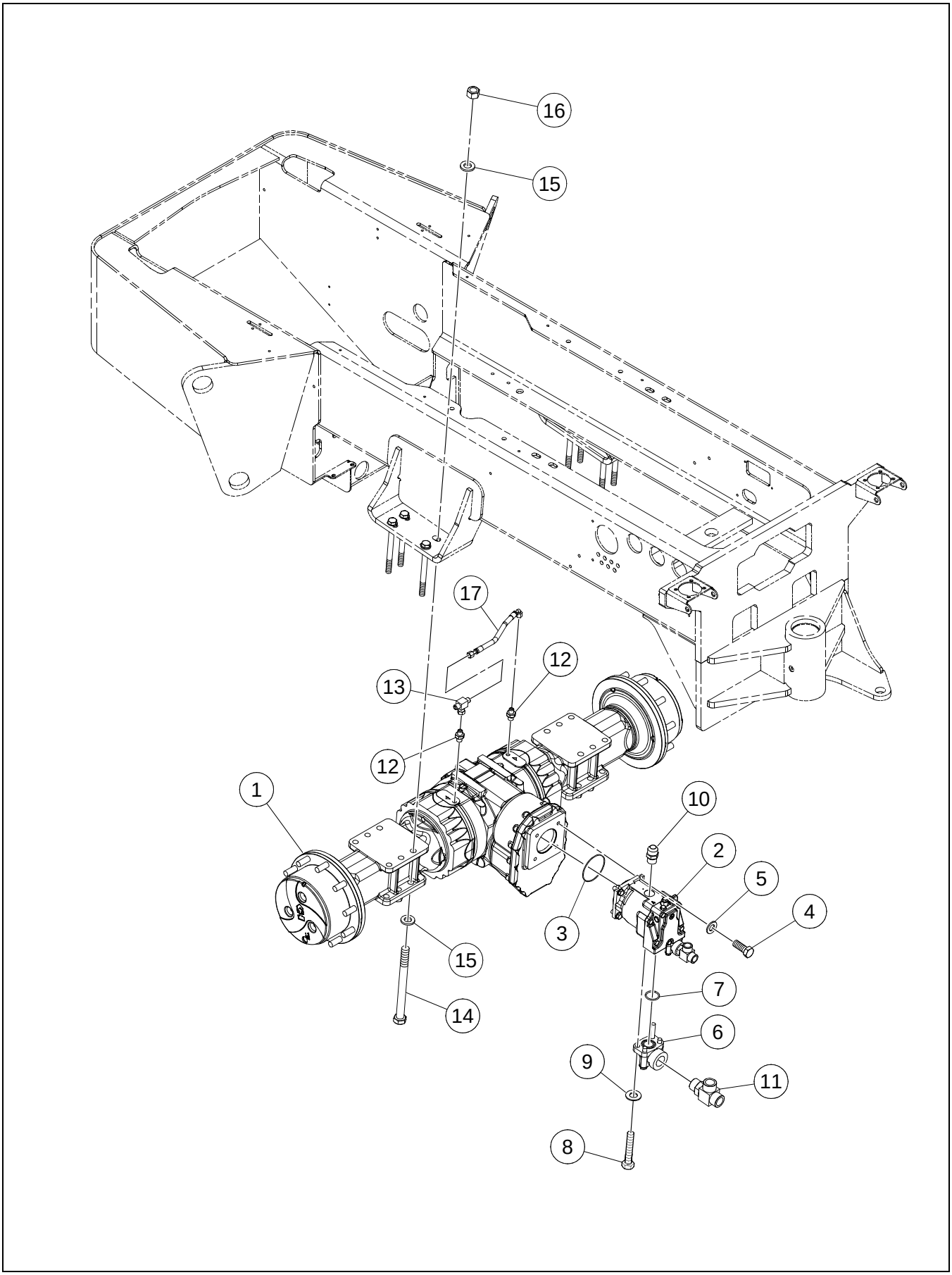

AXLE INSTALLATION

****Only Offered Parts Listed****

BOM 13329743

ITEM	COMM. NO.	DESCRIPTION	QTY	DIMENSIONS/NOTES
1	43840297	AXLE	1	
2	**NSVA**	**AXLE MOTOR**	**1**	**See Page A - 4.**
3	90502592	O-RING	1	
4	96702329	HHCS CL 8.8,YEL ZN	4	M12-1.75X35
5	96712237	FLATWASHER	4	
6	58979964	ELBOW	2	
7	59993881	O-RING	2	
8	95931614	HHCS	8	7/16-14X2.5
9	96738596	FLATWASHER	8	
10	95356960	ADAPTER	1	
11	59923102	ADAPTER	2	
12	58954694	STRAIGHT ADAPTER	2	
13	95480117	TEE	1	
14	96702733	HHCS CL 10.9,YEL ZN HR	8	M20-2.5X240
15	59565051	FLATWASHER	16	
16	96703665	NUT,HEX CL 10,YEL ZN HR	8	M20-2.5
17	13507496	HOSE ASSEMBLY	1	

13244793 REV 01

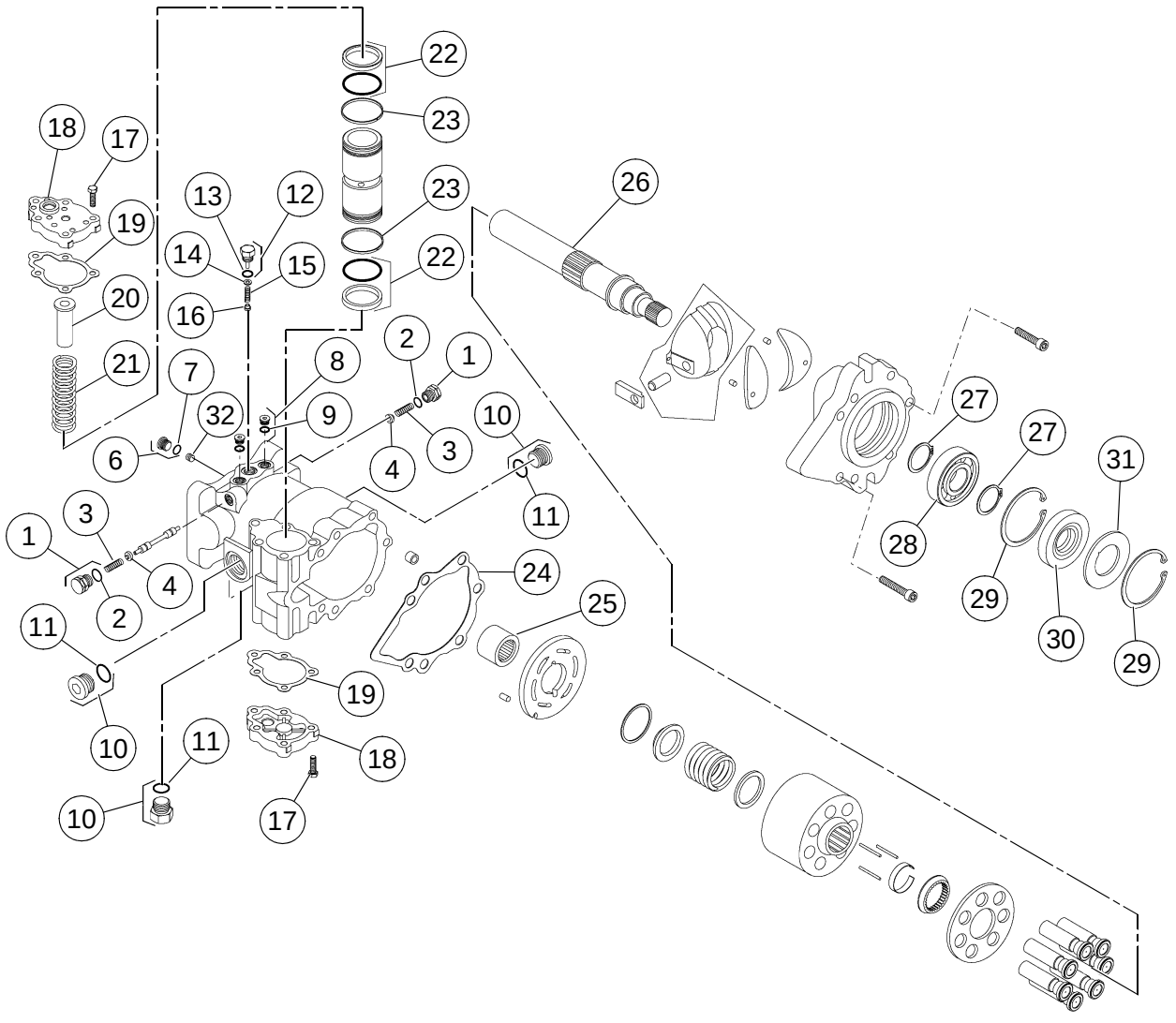

AXLE MOTOR

****Only Offered Parts Listed****

BOM 43844422

ITEM	COMM. NO.	DESCRIPTION	QTY	DIMENSIONS/NOTES
1	13263843	PLUG	2	
2	59698811	O-RING	2	
3	13263850	SPRING	2	
4	58799750	SPRING GUIDE	2	
5	58799743	SHUTTLE	1	
6	59933622	PLUG	1	
7	59698811	O-RING	1	
8	59359836	PLUG	2	
-	59888214	- O-RING	2	
9	50278894	O-RING	2	
10	59949461	PLUG	2	
11	58220567	O-RING	2	
12	59146043	CHARGE RELIEF PLUG ASSEMBLY	1	
13	50278019	O-RING	1	
14	59121426	CHARGE RELIEF SHIM KIT	1	
15	13263868	SPRING	1	
16	59051656	CHARGE RELIEF POPPET	1	
17	58785346	SCREW	10	
18	59888271	COVER	2	
19	59938373	GASKET	1	
20	13263884	STOP	1	
21	59336818	SPRING	1	
22	59972877	O-RING KIT	1	
23	59422907	PISTON RING	2	
24	59949511	GASKET	1	
25	59785303	BEARING	1	
26	59336842	SHAFT	1	
27	59785519	RING	2	
28	95200648	BALL BEARING	1	
29	59861872	RING	2	
30	59941203	SEAL	1	
31	59245209	WASHER	1	
32	13263876	ORIFICE PLUG	1	
33	59888271	COVER	1	
98	19291327	REMANUFACTURED MOTOR	1	

43954916 REV 00

No Drawing Required

LUG TIRES WITH BALLAST INSTALLATION

****Only Offered Parts Listed****

BOM 43954916

ITEM	COMM. NO.	DESCRIPTION	QTY	DIMENSIONS/NOTES
1	43954940	LUG TIRE ASS'Y-RH	1	
-	13157847	- WHEEL	1	
-	59929711	- VALVE CAP	1	
-	59524447	- VALVE	1	
-	59814889	- TIRE	1	
2	59163758	NUT	20	M22X1.5
3	59869008	30% LIQUID CALC	128	
4	43954932	LUG TIRE ASS'Y-LH	1	
-	13157847	- WHEEL	1	
-	59929711	- VALVE CAP	1	
-	59524447	- VALVE	1	
-	59814889	- TIRE	1	

FRONT FRAME INSTALLATION - SHEET 1 OF 2

43899574 REV 0A

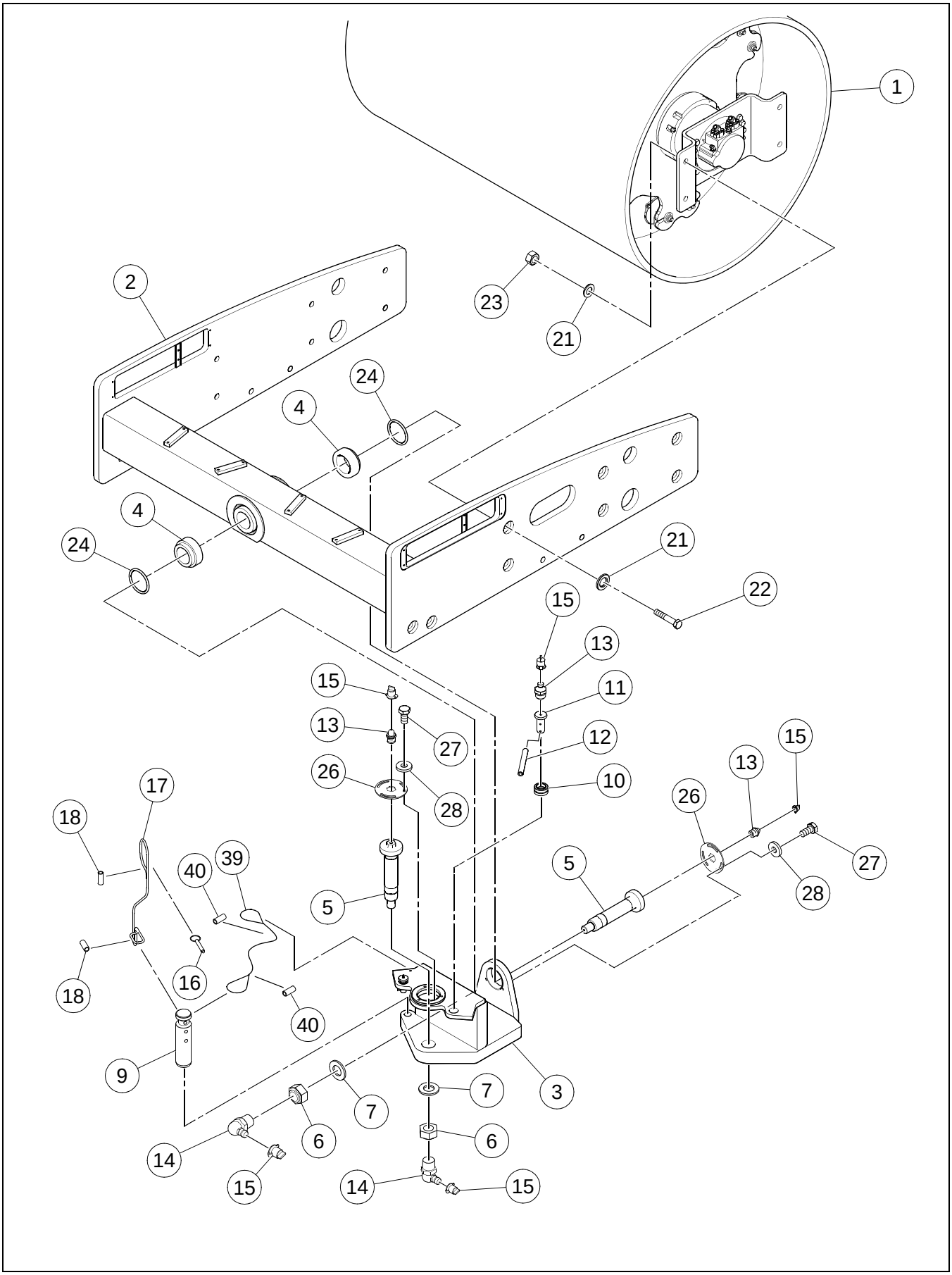

FRONT FRAME INSTALLATION - SHEET 1 OF 2

****Only Offered Parts Listed****

BOM 43899566

ITEM	COMM. NO.	DESCRIPTION	QTY	DIMENSIONS/NOTES
1	UNIQUE	THIS PART IN UNIQUE PARTS GROUP	1	
2	43890755	FRAME	1	
3	43855303	SWIVEL	1	
4	43897362	BEARING	2	
5	43855071	PIN, ART/OSC	2	
6	59003442	ELASTIC STOP NUT	2	
7	59299768	WASHER	2	
9	59298208	ARTICULATION PIN	1	
10	59450528	BUSHING	2	
11	59190975	PIVOT PIN	2	
12	95098679	ROLL PIN	2	
13	95201547	GREASE FITTING	4	
14	95208971	FITTING	2	
15	50270248	GREASE FITTING CAP	6	
16	59299545	HITCH PIN	1	
17	59607861	CABLE	1	
18	59607853	FERRULE	2	
19	59298935	SHIM	8	
20	59298927	SHIM	6	
21	96701578	WASHER	24	
22	96742408	HHCS CL 8.8,YEL ZN	8	M30-3.5X90
23	96703699	NUT,HEX CL 10,YEL ZN HR	12	M30-3.5
24	43890714	SEAL	2	
26	13413802	LOCKPLATE	2	
27	96702808	HHCS CL 10.9,YEL ZN HR	6	M12-1.75X30
28	96712237	FLATWASHER	6	
29	13209168	SPACER BAR	4	
30	13209200	HOSE CLAMP	2	
31	13280318	HOSE COVER PLATE	1	
32	13280326	HOSE COVER PLATE	1	
33	96726898	FHCS CL 10.9,YEL ZN HR	8	M6-1.0X12
34	96742648	FHCS CL 10.9,YEL ZN HR	4	M6-1.0X45
35	13239967	HOSE CLAMP	8	
36	58880501	CLAMP PLATE	4	
37	96714399	FLATWASHER,140,YEL ZN	8	
38	96704739	HHCS CL 8.8,YEL ZN	8	M10-1.5X90
39	59436741	CABLE	1	
40	59214775	SLEEVE	2	
42	96728654	HHCS CL 10.9,YEL ZN HR	4	M30-3.5X80

FRONT FRAME INSTALLATION - SHEET 2 OF 2

43899574 REV 0A

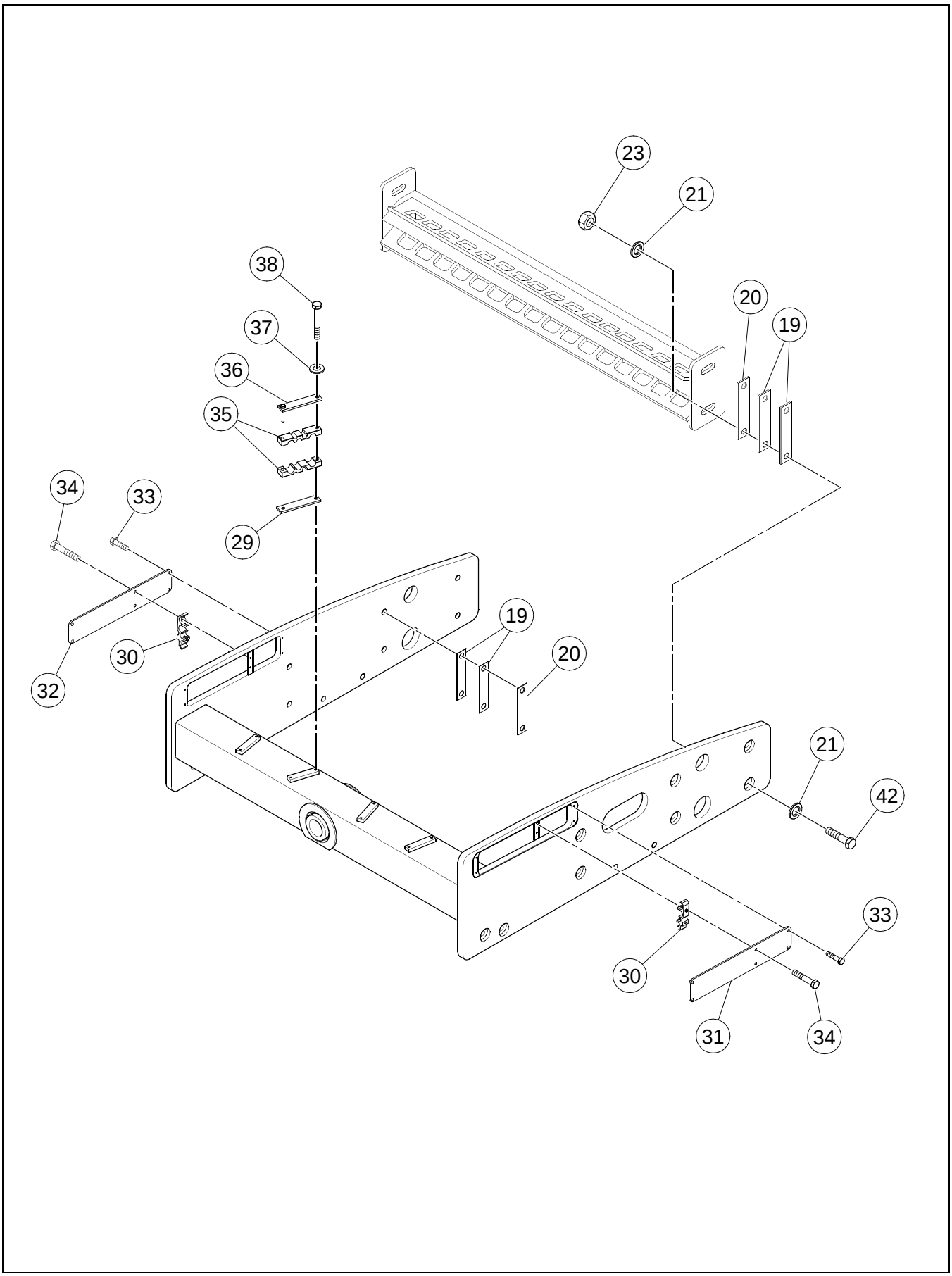

FRONT FRAME INSTALLATION - SHEET 2 OF 2

****Only Offered Parts Listed****

BOM 43899566

ITEM	COMM. NO.	DESCRIPTION	QTY	DIMENSIONS/NOTES
1	UNIQUE	THIS PART IN UNIQUE PARTS GROUP	1	
2	43890755	FRAME	1	
3	43855303	SWIVEL	1	
4	43897362	BEARING	2	
5	43855071	PIN, ART/OSC	2	
6	59003442	ELASTIC STOP NUT	2	
7	59299768	WASHER	2	
9	59298208	ARTICULATION PIN	1	
10	59450528	BUSHING	2	
11	59190975	PIVOT PIN	2	
12	95098679	ROLL PIN	2	
13	95201547	GREASE FITTING	4	
14	95208971	FITTING	2	
15	50270248	GREASE FITTING CAP	6	
16	59299545	HITCH PIN	1	
17	59607861	CABLE	1	
18	59607853	FERRULE	2	
19	59298935	SHIM	8	
20	59298927	SHIM	6	
21	96701578	WASHER	24	
22	96742408	HHCS CL 8.8,YEL ZN	8	M30-3.5X90
23	96703699	NUT,HEX CL 10,YEL ZN HR	12	M30-3.5
24	43890714	SEAL	2	
26	13413802	LOCKPLATE	2	
27	96702808	HHCS CL 10.9,YEL ZN HR	6	M12-1.75X30
28	96712237	FLATWASHER	6	
29	13209168	SPACER BAR	4	
30	13209200	HOSE CLAMP	2	
31	13280318	HOSE COVER PLATE	1	
32	13280326	HOSE COVER PLATE	1	
33	96726898	FHCS CL 10.9,YEL ZN HR	8	M6-1.0X12
34	96742648	FHCS CL 10.9,YEL ZN HR	4	M6-1.0X45
35	13239967	HOSE CLAMP	8	
36	58880501	CLAMP PLATE	4	
37	96714399	FLATWASHER,140,YEL ZN	8	
38	96704739	HHCS CL 8.8,YEL ZN	8	M10-1.5X90
39	59436741	CABLE	1	
40	59214775	SLEEVE	2	
42	96728654	HHCS CL 10.9,YEL ZN HR	4	M30-3.5X80

REAR FRAME INSTALLATION - SHEET 1 OF 2

13303847 REV 0D

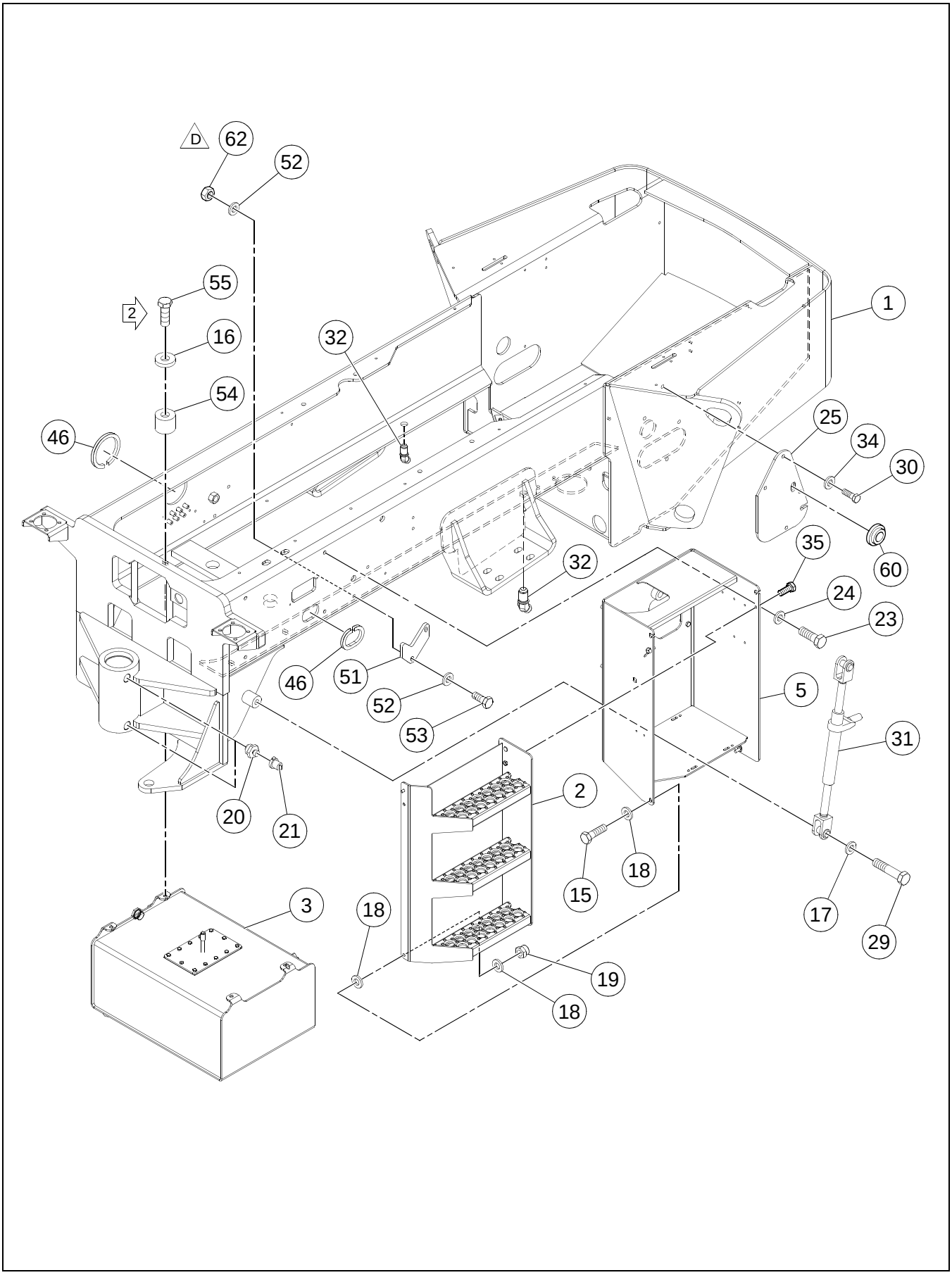

REAR FRAME INSTALLATION - SHEET 1 OF 2

****Only Offered Parts Listed****

BOM 43899582

ITEM	COMM. NO.	DESCRIPTION	QTY	DIMENSIONS/NOTES
1	43896497	MAIN FRAME	1	
2	19280049	STEP	1	
3	**NSVA**	**HYDRAULIC TANK ASSEMBLY**	**1**	**See Page A - 16.**
4	**NSVA**	**FUEL TANK INSTALLATION**	**1**	**See Page A - 18.**
5	13501853	BATTERY BOX	1	
6	43922517	CYLINDER	2	
7	43897362	BEARING	2	
8	13209903	BEARING	2	
9	43890714	SEAL	2	
11	59190975	PIVOT PIN	2	
12	95098679	ROLL PIN	2	
13	95488250	TEE	2	
14	95303368	ADAPTER	2	
15	96704309	HHCS CL 8.8,YEL ZN	2	M10-1.5X35
16	96712237	FLATWASHER	4	
17	96738646	FLATWASHER	1	
18	96741046	FLATWASHER, CL 200,YEL ZN	14	
19	96704614	NUT	4	M10X1.5
20	95201547	GREASE FITTING	2	
21	50270248	GREASE FITTING CAP	2	
22	**NSVA**	**BRAKE SHUNT VALVE ASSEMBLY**	**1**	**See Page A - 22.**
23	96702329	HHCS CL 8.8,YEL ZN	4	M12-1.75X35
24	96738596	FLATWASHER	4	
25	13297536	RADIATOR ACCESS PANEL	2	
26	95049359	PLUG	2	
27	**NSVA**	**THERMAL BYPASS VALVE INSTALLATION**	**1**	**See Page A - 24.**
28	96705272	HHCS CL 8.8,YEL ZN	2	M10-1.5X80
29	96712724	HHCS CL 8.8,YEL ZN	1	M24-3.0X110
30	96702816	HHCS CL 8.8,YEL ZN	8	M8-1.25X16
31	13209663	RATCHET JACK ASSEMBLY	1	
-	13247978	- RACKET JACK	1	
-	13247937	- LEVER	1	
-	13247945	- COARIALER PIN	1	
-	13247952	- GROOVED HEADLESS PIN	2	
-	13247960	- HAIR PIN CLIP	4	
32	95329876	ADAPTER	2	
33	96718978	HHCS CL 8.8,YEL ZN	2	M8-1.25X80
34	96741038	WASHER, FLAT CL 200,YEL ZN	10	ID-8.4,OD-16.0X1.6THK
35	96702287	HHCS CL 8.8,YEL ZN	3	M10-1.5X25
36	NOT-USED	THIS ITEM NOT USED W/THIS BOM	1	
37	NOT-USED	THIS ITEM NOT USED W/THIS BOM	1	
38	NOT-USED	THIS ITEM NOT USED W/THIS BOM	1	

REAR FRAME INSTALLATION - SHEET 2 OF 2

13303847 REV 0D

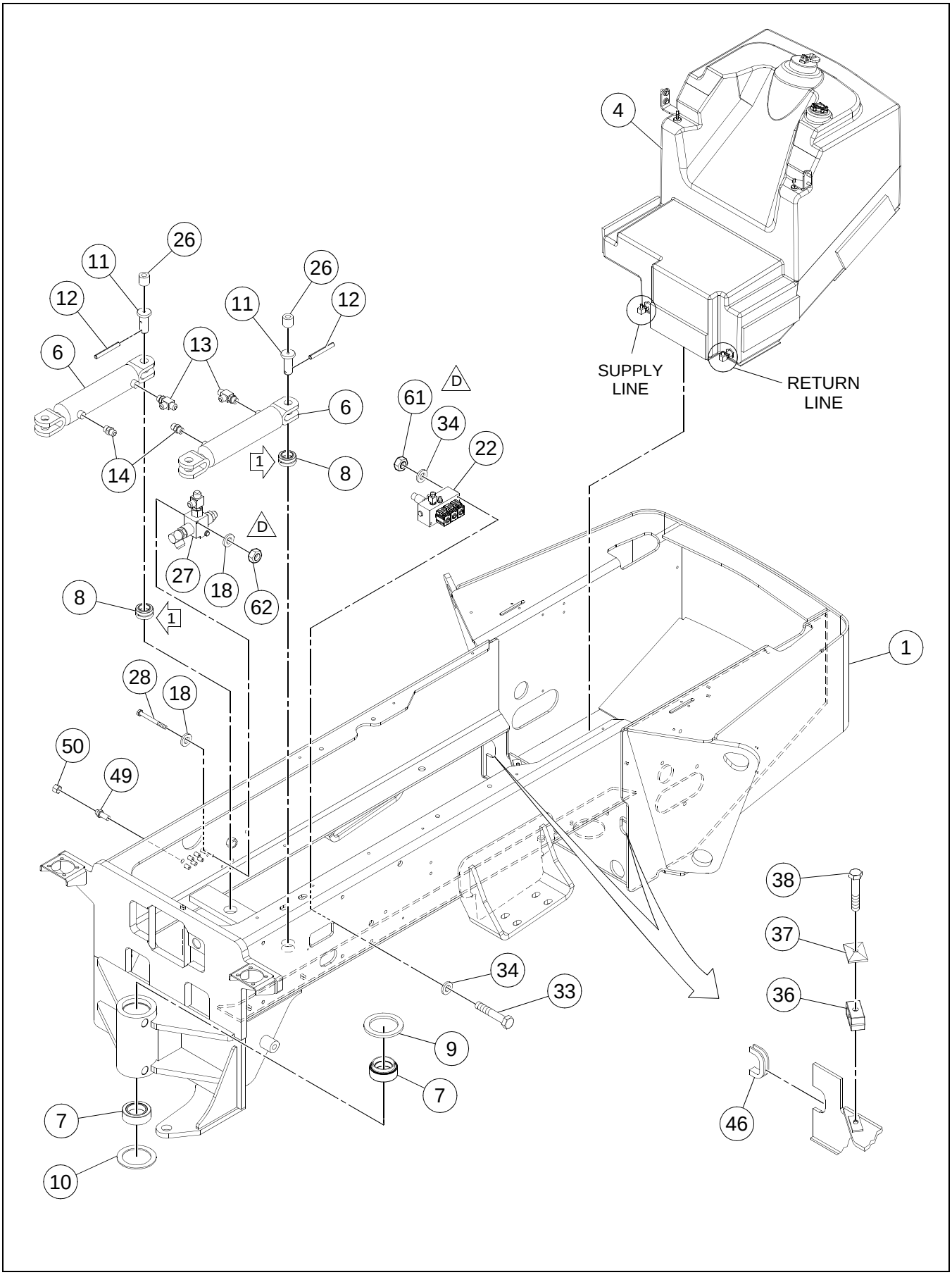

REAR FRAME INSTALLATION - SHEET 2 OF 2

****Only Offered Parts Listed****

BOM 43899582

ITEM	COMM. NO.	DESCRIPTION	QTY	DIMENSIONS/NOTES
46	50829647	TRIM	3	
49	59961821	ADAPTER	7	
50	59924043	CAP	7	
51	13275953	V-BLOCK	2	
52	96711833	WASHER	6	M10
53	96702774	HHCS CL 10.9,YEL ZN HR	4	M10-1.5X25
54	13396007	SPACER	4	
55	96714910	HHCS CL 10.9,YEL ZN HR	4	M12-1.75X60
56	19280080	RUBBER TIE DOWN 19"	1	
57	19280098	SLEEVE, HANDLE STORAGE	1	
58	95457586	CLAMP	2	
59	96701917	HHCS CL 8.8,YEL ZN	1	M10-1.5X30
60	54494638	INSULATION GROMMET	1	

HYDRAULIC TANK ASSEMBLY

13166285 REV 010

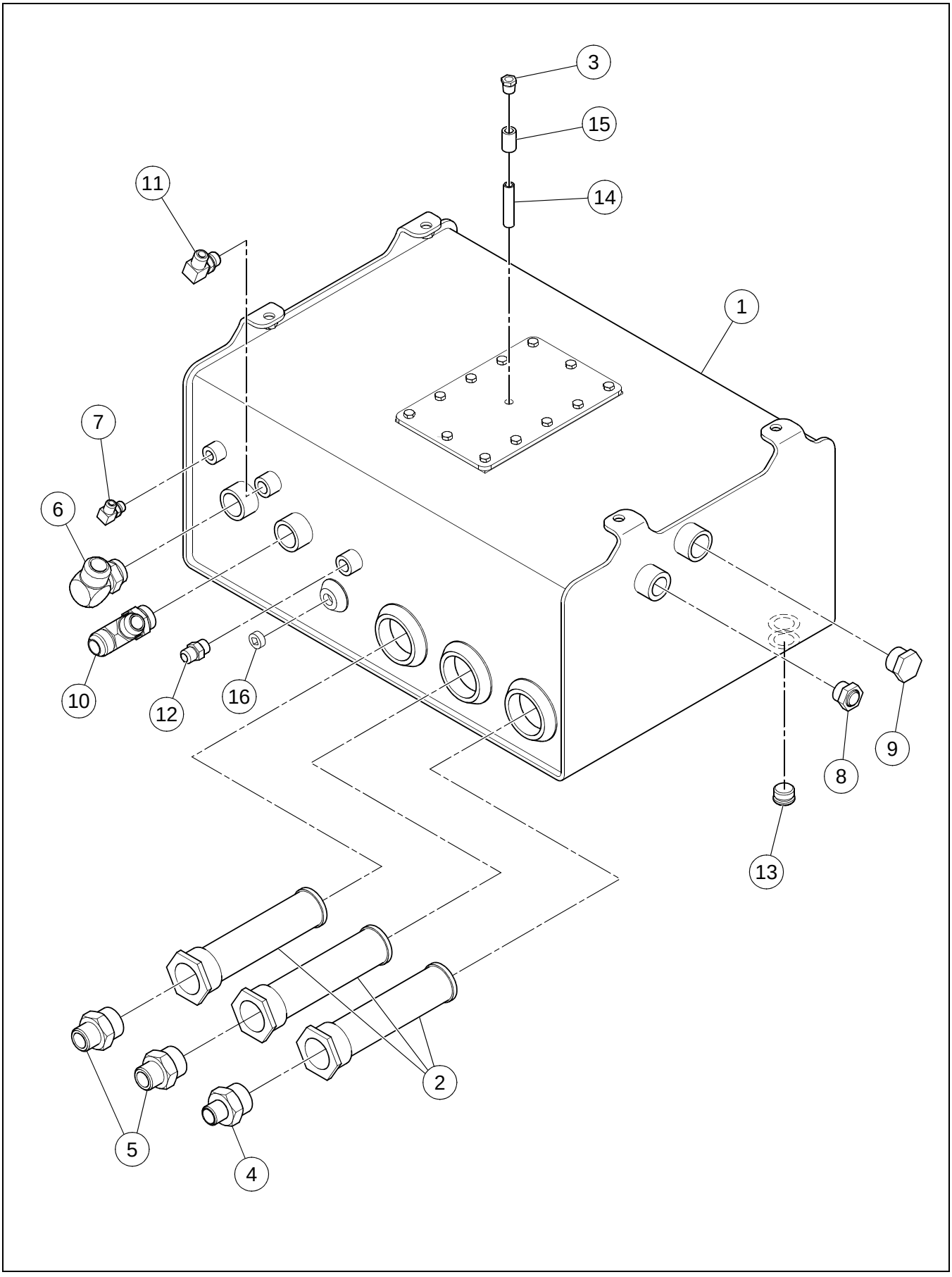

HYDRAULIC TANK ASSEMBLY

****Only Offered Parts Listed****

BOM 43850379

ITEM	COMM. NO.	DESCRIPTION	QTY	DIMENSIONS/NOTES
1	43850346	HYDRAULIC TANK	1	
-	13305099	- GASKET	1	
-	13185384	- CLEAN OUT LID	1	
-	96702824	- HHCS CL 8.8,YEL ZN	12	M8-1.25X20
-	43850320	- PLUG	1	
2	43913821	TANK FILTER	3	
3	59093351	BREATHER, FILTERED VENT	1	
4	95279337	ADAPTER	1	
5	95316956	ADAPTER	2	
6	95280194	ADAPTER	1	
7	95329975	ADAPTER	1	
8	59277772	SIGHT GAUGE	1	
9	95326955	PLUG	1	
10	95488110	ADAPTER	1	
11	95303335	ADAPTER	1	
12	95303368	ADAPTER	1	
14	95048393	NIPPLE	1	
15	95011060	COUPLING PIPE	1	
16	95043238	PIPE PLUG	1	

FUEL TANK INSTALLATION

13184205 REV 03

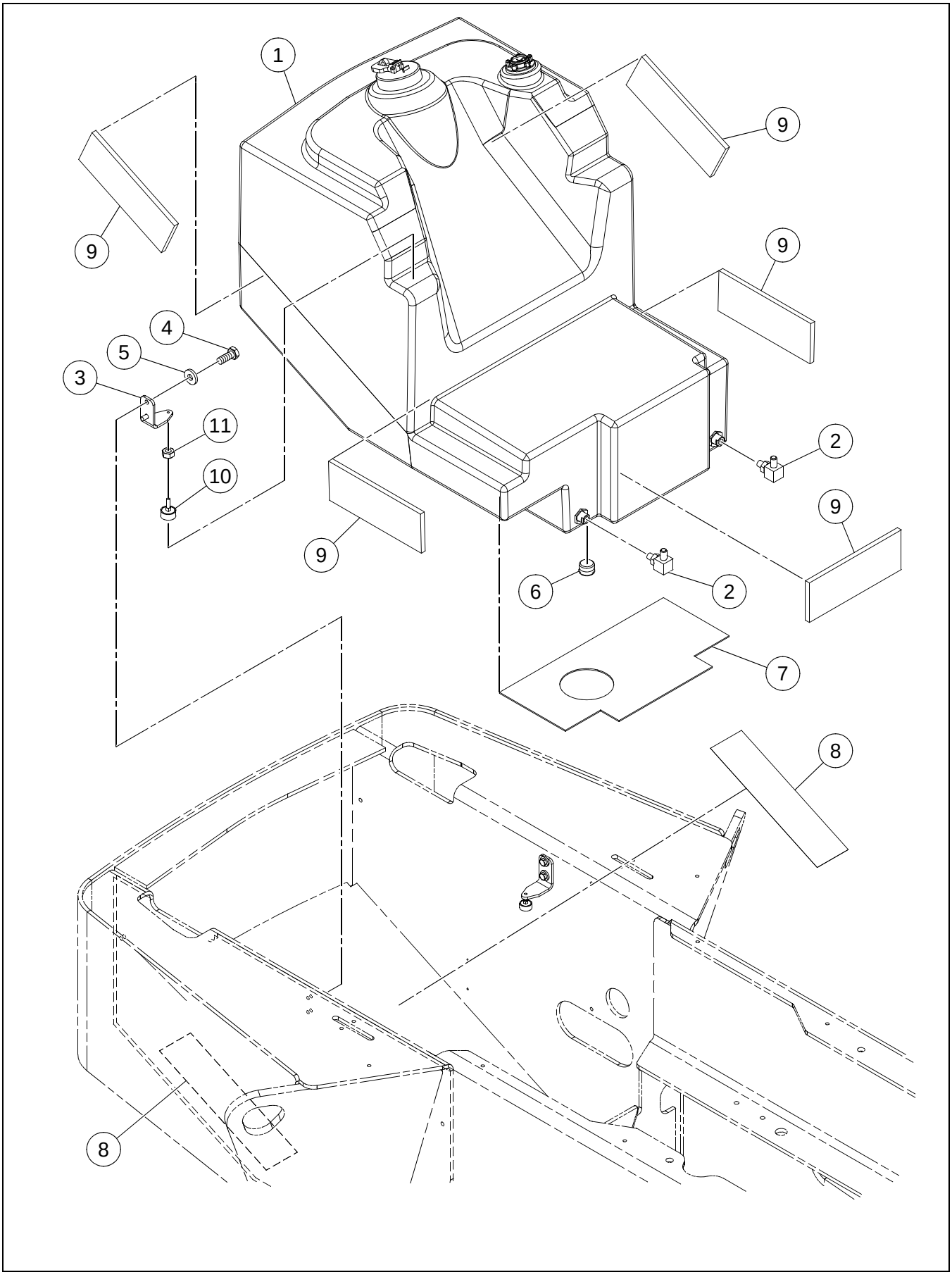

FUEL TANK INSTALLATION

****Only Offered Parts Listed****

BOM 13166301

ITEM	COMM. NO.	DESCRIPTION	QTY	DIMENSIONS/NOTES
1	**NSVA**	**FUEL TANK ASSEMBLY**	**1**	**See Page A - 20.**
2	95329975	ADAPTER	2	
3	13418215	BRACKET FUEL TANK	2	
4	96702287	HHCS CL 8.8,YEL ZN	4	M10-1.5X25
5	96711833	WASHER	4	M10
6	59144428	MAGNETIC PLUG	1	
7	19331032	TANK BASE GUARD	1	
8	59290726	TAPE	2	
9	13184932	TANK GUARD	5	
10	13418132	ELEVATOR BOLT	2	3/8-16X1.75
11	95922894	HEX NUT	2	3/8-16

FUEL TANK ASSEMBLY

43845858 REV 000

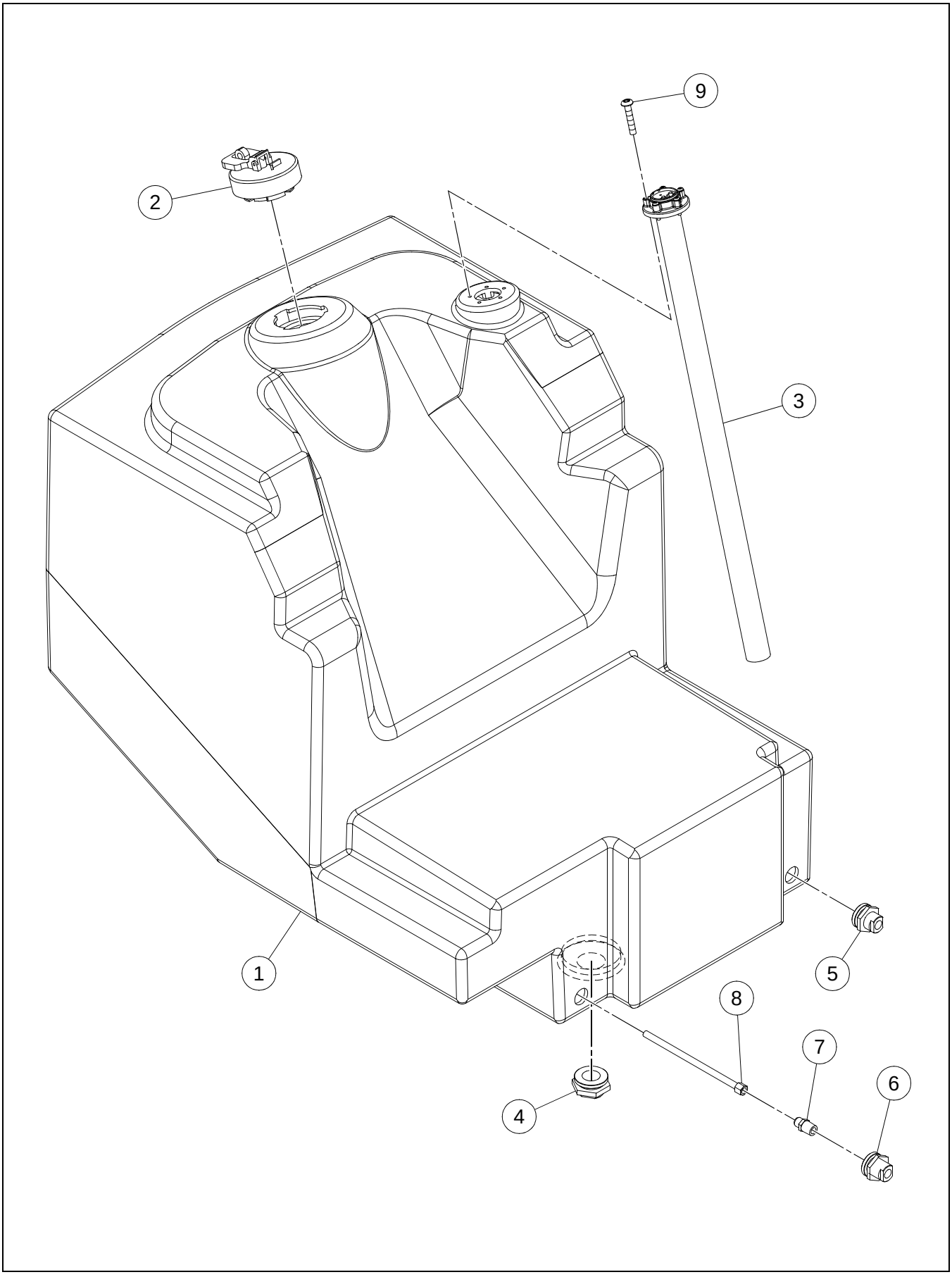

FUEL TANK ASSEMBLY

****Only Offered Parts Listed****

BOM 43845858

ITEM	COMM. NO.	DESCRIPTION	QTY	DIMENSIONS/NOTES
1	43906296	FUEL TANK	1	
2	43843622	FUEL CAP	1	
3	13213582	FUEL SENDER	1	
4	13213624	DRAIN PORT	1	
5	13213632	RETURN PORT	1	
6	13213681	SUPPLY PORT	1	
7	95219713	ADAPTER	1	
8	13213699	TUBE ASSEMBLY	1	
9	59266726	CAPSCREW	5	

BRAKE SHUNT VALVE ASSEMBLY

13209291 REV 04

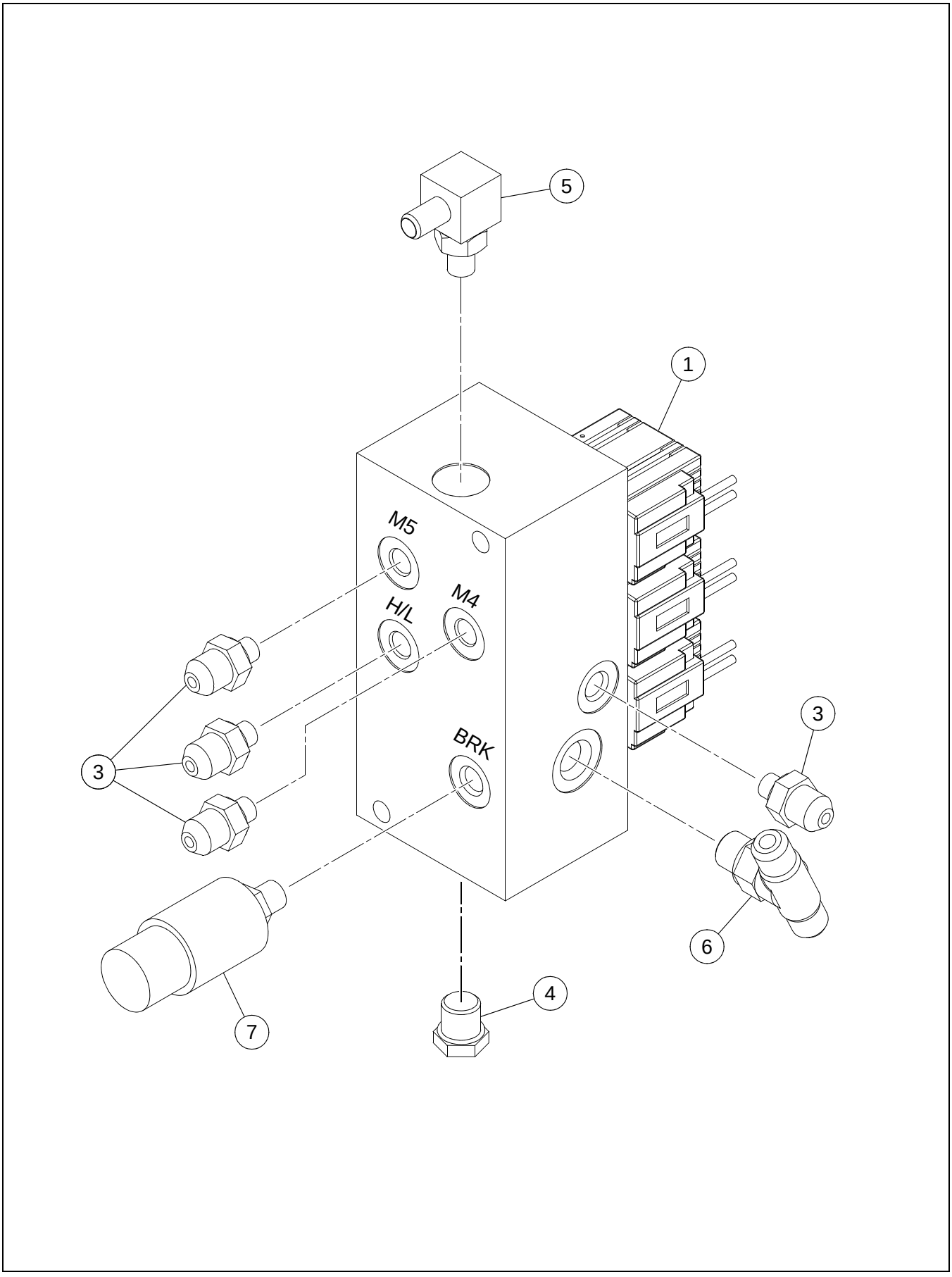

BRAKE SHUNT VALVE ASSEMBLY

****Only Offered Parts Listed****

BOM 13187984

ITEM	COMM. NO.	DESCRIPTION	QTY	DIMENSIONS/NOTES
1	19287036	BRAKE SHUNT 2 SPEED MANIFOLD	1	
-	19287051	- VALVE	1	
-	19287093	- VALVE	2	
-	19287101	- COIL	3	
3	95402806	ADAPTER	4	
4	95343596	PLUG	1	
5	95329975	ADAPTER	1	
6	95431284	CROSS, PRESSURE	1	
7	59110312	SWITCH, PRESSURE	1	

THERMAL BYPASS VALVE INSTALLATION

13185855 REV 03

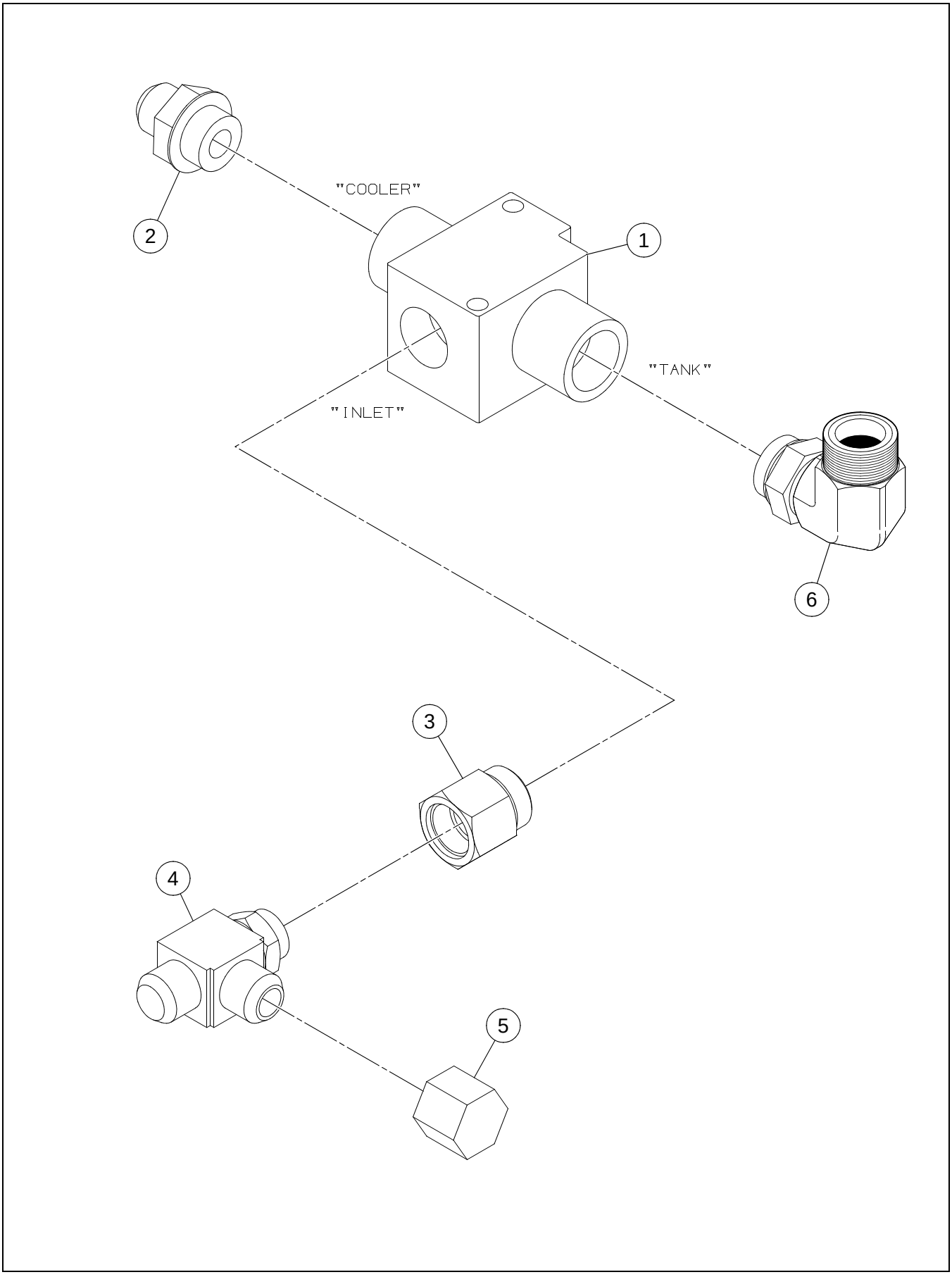

THERMAL BYPASS VALVE INSTALLATION

****Only Offered Parts Listed****

BOM 13162656

ITEM	COMM. NO.	DESCRIPTION	QTY	DIMENSIONS/NOTES
1	13205364	THERMAL BYPASS VALVE	1	
2	95356978	ADAPTER	1	
3	59924472	ADAPTER	1	
4	95829263	TEE	1	
5	95387890	CAP	1	
6	95280194	ADAPTER	1	

43853274 REV 000

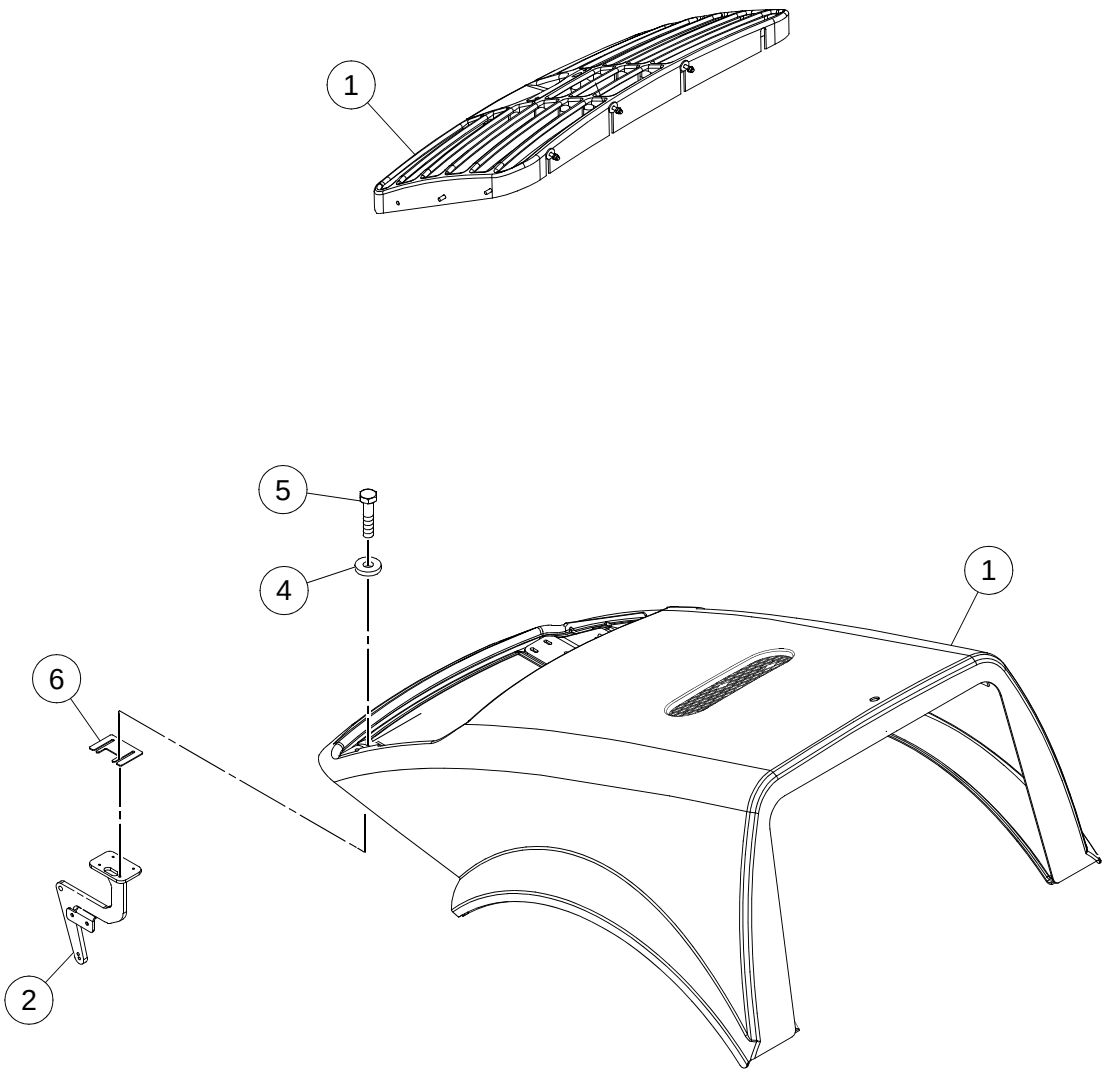

HOOD INSTALLATION - SHEET 1 OF 3

****Only Offered Parts Listed****

BOM 43949106

ITEM	COMM. NO.	DESCRIPTION	QTY	DIMENSIONS/NOTES
1	**NSVA**	**HOOD ASSEMBLY**	**1**	**See Page A - 32.**
2	43853340	RH HINGE MACH.	1	
3	43853357	LH HINGE MACH.	1	
4	96712674	FLATWASHER	8	
5	96702261	HHCS CL 8.8,YEL ZN	8	M8-1.25X35
6	13238803	HOOD SHIM	2	
7	96703657	NUT,HEX CL 10,YEL ZN HR	2	M16-2
8	**NSVA**	**PROPULSION PIN BLOCK ASSEMBLY**	**1**	**See Page A - 36.**
9	13236468	FENDER SUPPORT	1	
10	13234844	FENDER SUPPORT	1	
11	96711833	WASHER	4	M10
12	96702287	HHCS CL 8.8,YEL ZN	4	M10-1.5X25
13	13234877	BRACKET	2	
14	13883814	HOOD COWLING ***	1	
15	13217450	SLEEVE	2	
16	96740188	WASHER	6	M8X3
17	96702824	HHCS CL 8.8,YEL ZN	4	M8-1.25X20
18	13184700	HOOD SPRING ANGLE	2	
19	13184742	SPRING PIVOT	2	
20	13239090	EYE BOLT	2	
21	96738596	FLATWASHER	2	
22	95923348	LOCKNUT	2	
23	13236377	SPRING PIN	2	
24	96705595	HHCS CL 8.8,YEL ZN	2	M12-1.75X50
25	13888870	FENDER RH SD100-200	1	
26	13888888	FENDER LH SD100-200	1	
27	96702659	HHCS CL 8.8,YEL ZN	8	M8-1.25X25
28	13185889	SEAL TRIM	1	
29	13239082	FENDER SHIMS	2	
31	96704606	ESNA NUT	4	M8
32	96701917	HHCS CL 8.8,YEL ZN	6	M10-1.5X30
33	96741046	FLATWASHER, CL 200,YEL ZN	2	
34	96704556	HHCS CL 8.8,YEL ZN	2	M10-1.5X40
36	96741038	WASHER, FLAT CL 200,YEL ZN	10	ID-8.4,OD-16.0X1.6THK
37	13460365	SPRING	2	
38	96734553	HHCS CL 10.9,YEL ZN HR	2	M16-2.0X65
39	96738646	FLATWASHER	4	

HOOD INSTALLATION - SHEET 2 OF 3

43853274 REV 000

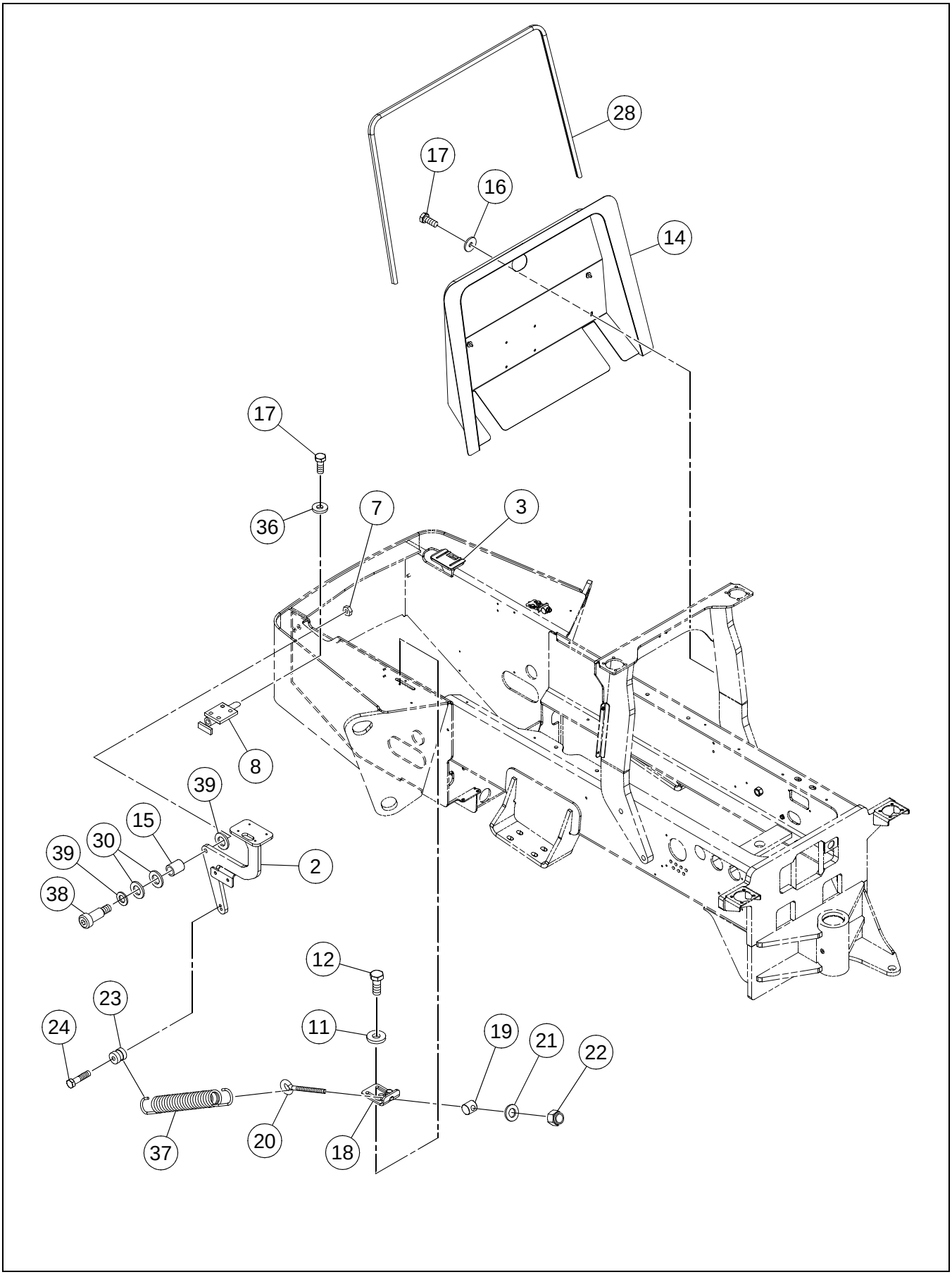

****Only Offered Parts Listed****

BOM 43949106

ITEM	COMM. NO.	DESCRIPTION	QTY	DIMENSIONS/NOTES
1	**NSVA**	**HOOD ASSEMBLY**	**1**	**See Page A - 32.**
2	43853340	RH HINGE MACH.	1	
3	43853357	LH HINGE MACH.	1	
4	96712674	FLATWASHER	8	
5	96702261	HHCS CL 8.8,YEL ZN	8	M8-1.25X35
6	13238803	HOOD SHIM	2	
7	96703657	NUT,HEX CL 10,YEL ZN HR	2	M16-2
8	**NSVA**	**PROPULSION PIN BLOCK ASSEMBLY**	**1**	**See Page A - 36.**
9	13236468	FENDER SUPPORT	1	
10	13234844	FENDER SUPPORT	1	
11	96711833	WASHER	4	M10
12	96702287	HHCS CL 8.8,YEL ZN	4	M10-1.5X25
13	13234877	BRACKET	2	
14	13883814	HOOD COWLING ***	1	
15	13217450	SLEEVE	2	
16	96740188	WASHER	6	M8X3
17	96702824	HHCS CL 8.8,YEL ZN	4	M8-1.25X20
18	13184700	HOOD SPRING ANGLE	2	
19	13184742	SPRING PIVOT	2	
20	13239090	EYE BOLT	2	
21	96738596	FLATWASHER	2	
22	95923348	LOCKNUT	2	
23	13236377	SPRING PIN	2	
24	96705595	HHCS CL 8.8,YEL ZN	2	M12-1.75X50
25	13888870	FENDER RH SD100-200	1	
26	13888888	FENDER LH SD100-200	1	
27	96702659	HHCS CL 8.8,YEL ZN	8	M8-1.25X25
28	13185889	SEAL TRIM	1	
29	13239082	FENDER SHIMS	2	
31	96704606	ESNA NUT	4	M8
32	96701917	HHCS CL 8.8,YEL ZN	6	M10-1.5X30
33	96741046	FLATWASHER, CL 200,YEL ZN	2	
34	96704556	HHCS CL 8.8,YEL ZN	2	M10-1.5X40
36	96741038	WASHER, FLAT CL 200,YEL ZN	10	ID-8.4,OD-16.0X1.6THK
37	13460365	SPRING	2	
38	96734553	HHCS CL 10.9,YEL ZN HR	2	M16-2.0X65
39	96738646	FLATWASHER	4	

HOOD INSTALLATION - SHEET 3 OF 3

43853274 REV 000

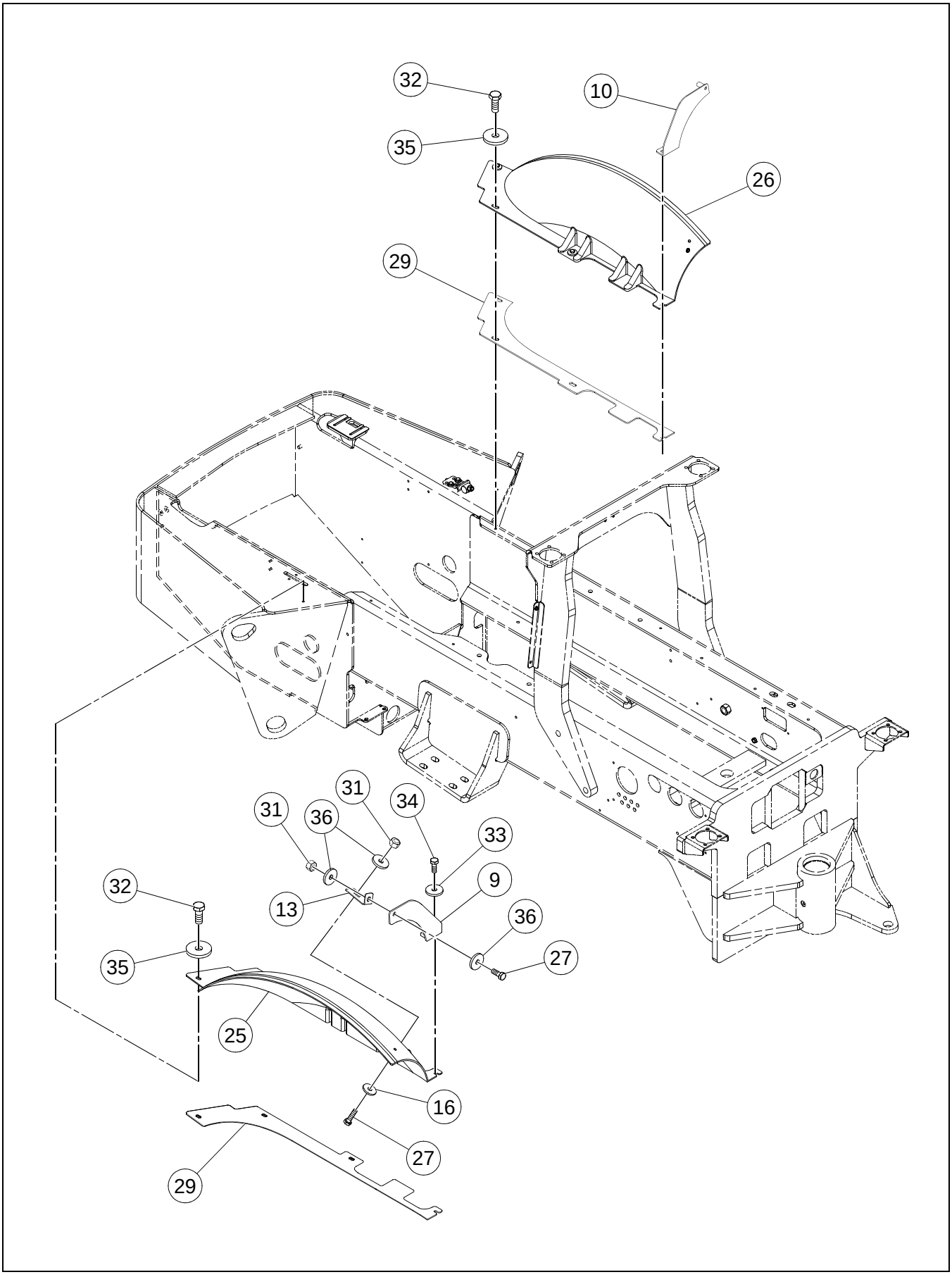

****Only Offered Parts Listed****

BOM 43949106

ITEM	COMM. NO.	DESCRIPTION	QTY	DIMENSIONS/NOTES
1	**NSVA**	**HOOD ASSEMBLY**	**1**	**See Page A - 32.**
2	43853340	RH HINGE MACH.	1	
3	43853357	LH HINGE MACH.	1	
4	96712674	FLATWASHER	8	
5	96702261	HHCS CL 8.8,YEL ZN	8	M8-1.25X35
6	13238803	HOOD SHIM	2	
7	96703657	NUT,HEX CL 10,YEL ZN HR	2	M16-2
8	**NSVA**	**PROPULSION PIN BLOCK ASSEMBLY**	**1**	**See Page A - 36.**
9	13236468	FENDER SUPPORT	1	
10	13234844	FENDER SUPPORT	1	
11	96711833	WASHER	4	M10
12	96702287	HHCS CL 8.8,YEL ZN	4	M10-1.5X25
13	13234877	BRACKET	2	
14	13883814	HOOD COWLING ***	1	
15	13217450	SLEEVE	2	
16	96740188	WASHER	6	M8X3
17	96702824	HHCS CL 8.8,YEL ZN	4	M8-1.25X20
18	13184700	HOOD SPRING ANGLE	2	
19	13184742	SPRING PIVOT	2	
20	13239090	EYE BOLT	2	
21	96738596	FLATWASHER	2	
22	95923348	LOCKNUT	2	
23	13236377	SPRING PIN	2	
24	96705595	HHCS CL 8.8,YEL ZN	2	M12-1.75X50
25	13888870	FENDER RH SD100-200	1	
26	13888888	FENDER LH SD100-200	1	
27	96702659	HHCS CL 8.8,YEL ZN	8	M8-1.25X25
28	13185889	SEAL TRIM	1	
29	13239082	FENDER SHIMS	2	
31	96704606	ESNA NUT	4	M8
32	96701917	HHCS CL 8.8,YEL ZN	6	M10-1.5X30
33	96741046	FLATWASHER, CL 200,YEL ZN	2	
34	96704556	HHCS CL 8.8,YEL ZN	2	M10-1.5X40
36	96741038	WASHER, FLAT CL 200,YEL ZN	10	ID-8.4,OD-16.0X1.6THK
37	13460365	SPRING	2	
38	96734553	HHCS CL 10.9,YEL ZN HR	2	M16-2.0X65
39	96738646	FLATWASHER	4	

HOOD ASSEMBLY - SHEET 1 OF 2

43922798 REV 00

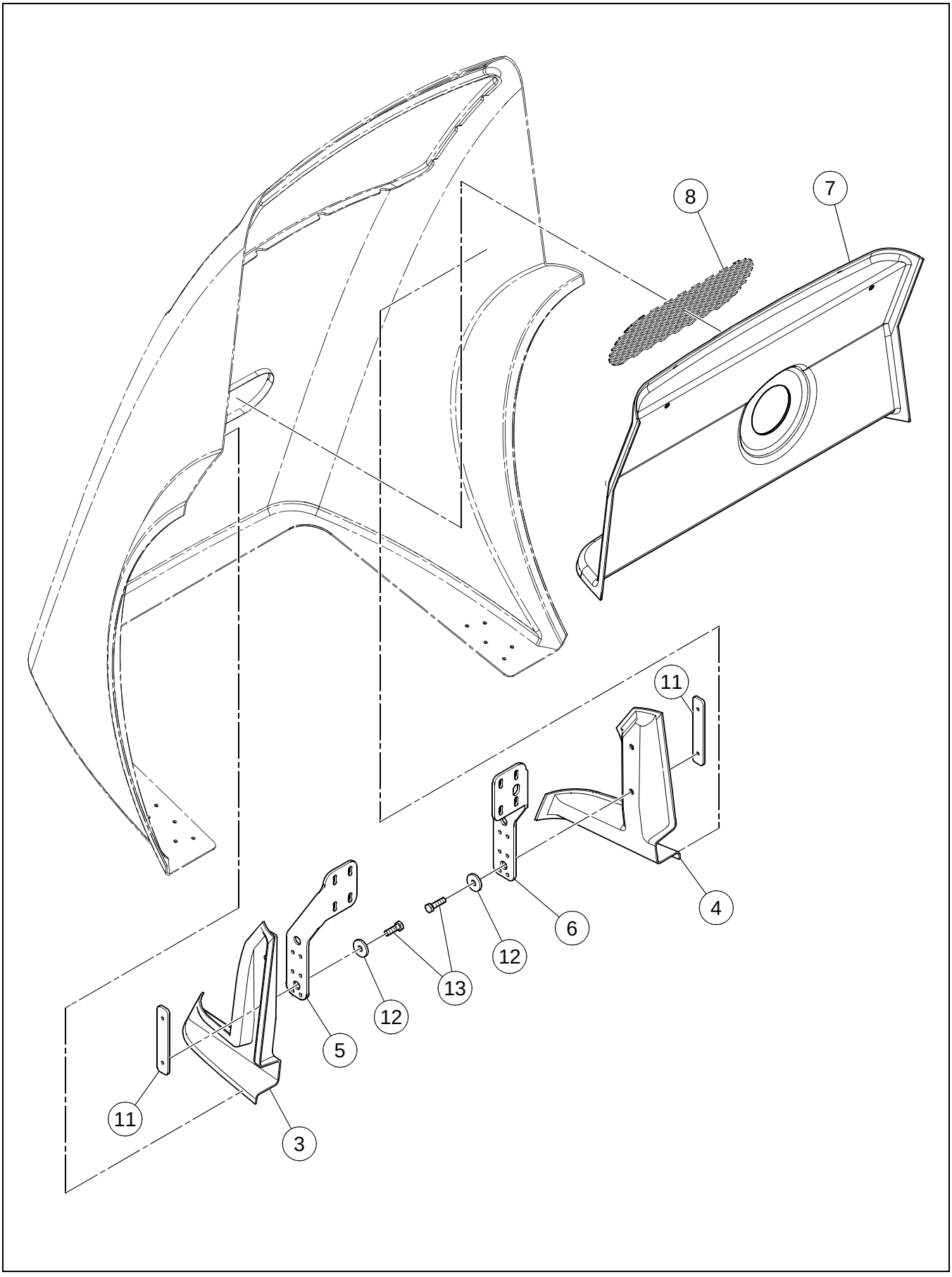

HOOD ASSEMBLY - SHEET 1 OF 2

****Only Offered Parts Listed****

BOM 43922798

ITEM	COMM. NO.	DESCRIPTION	QTY	DIMENSIONS/NOTES
5	13238878	HINGE SUPPORT	1	
6	13238860	HINGE SUPPORT	1	
8	43920644	AIRSCREEN	1	
9	13889472	GRILL SUPPORT BAR	2	
11	13238035	BACKING PLATE	2	
13	96701917	HHCS CL 8.8,YEL ZN	4	M10-1.5X30
14	43920438	GRILL	1	
15	96702659	HHCS CL 8.8,YEL ZN	6	M8-1.25X25
16	96704606	ESNA NUT	4	M8
17	96740188	WASHER	22	M8X3
18	96705587	HHCS CL 8.8,YEL ZN	14	M8-1.25X30
19	18009514	RUBBER EDGE TRIM	1	
21	13883756	SEAL TRIM	1	
22	13883418	HOOD HANDLE	1	
23	96702816	HHCS CL 8.8,YEL ZN	2	M8-1.25X16
24	18007674	STRIP, RUBBER	2	
25	96741038	WASHER, FLAT CL 200,YEL ZN	10	ID-8.4,OD-16.0X1.6THK
26	96701370	NUT,HEX CL 8 ,YEL ZN	10	M8-1.25

HOOD ASSEMBLY - SHEET 2 OF 2

43922798 REV 00

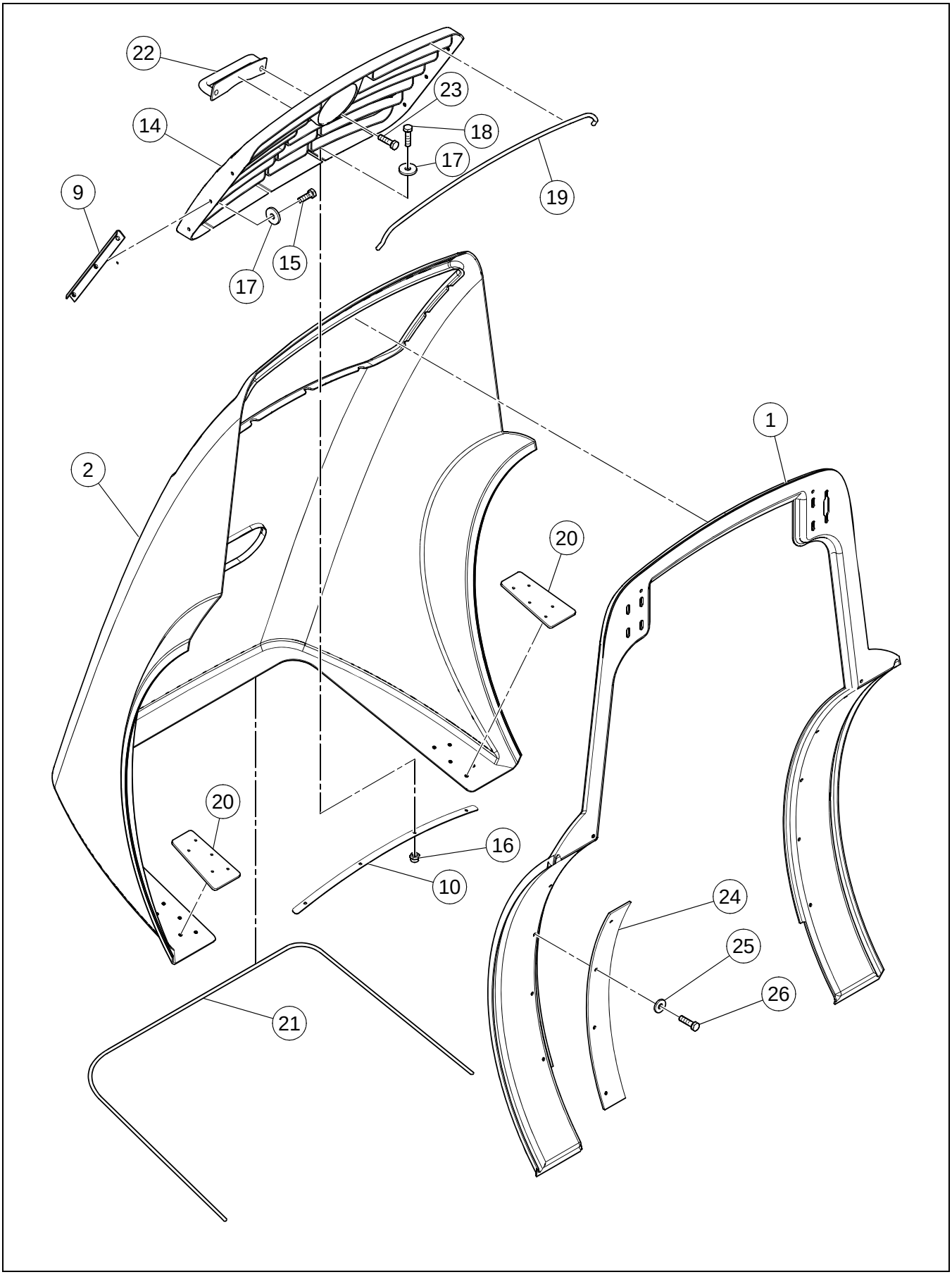

HOOD ASSEMBLY - SHEET 2 OF 2

****Only Offered Parts Listed****

BOM 43922798

ITEM	COMM. NO.	DESCRIPTION	QTY	DIMENSIONS/NOTES
5	13238878	HINGE SUPPORT	1	
6	13238860	HINGE SUPPORT	1	
8	43920644	AIRSCREEN	1	
9	13889472	GRILL SUPPORT BAR	2	
11	13238035	BACKING PLATE	2	
13	96701917	HHCS CL 8.8,YEL ZN	4	M10-1.5X30
14	43920438	GRILL	1	
15	96702659	HHCS CL 8.8,YEL ZN	6	M8-1.25X25
16	96704606	ESNA NUT	4	M8
17	96740188	WASHER	22	M8X3
18	96705587	HHCS CL 8.8,YEL ZN	14	M8-1.25X30
19	18009514	RUBBER EDGE TRIM	1	
21	13883756	SEAL TRIM	1	
22	13883418	HOOD HANDLE	1	
23	96702816	HHCS CL 8.8,YEL ZN	2	M8-1.25X16
24	18007674	STRIP, RUBBER	2	
25	96741038	WASHER, FLAT CL 200,YEL ZN	10	ID-8.4,OD-16.0X1.6THK
26	96701370	NUT,HEX CL 8 ,YEL ZN	10	M8-1.25

PROPULSION PIN BLOCK ASSEMBLY

13459367 REV 01

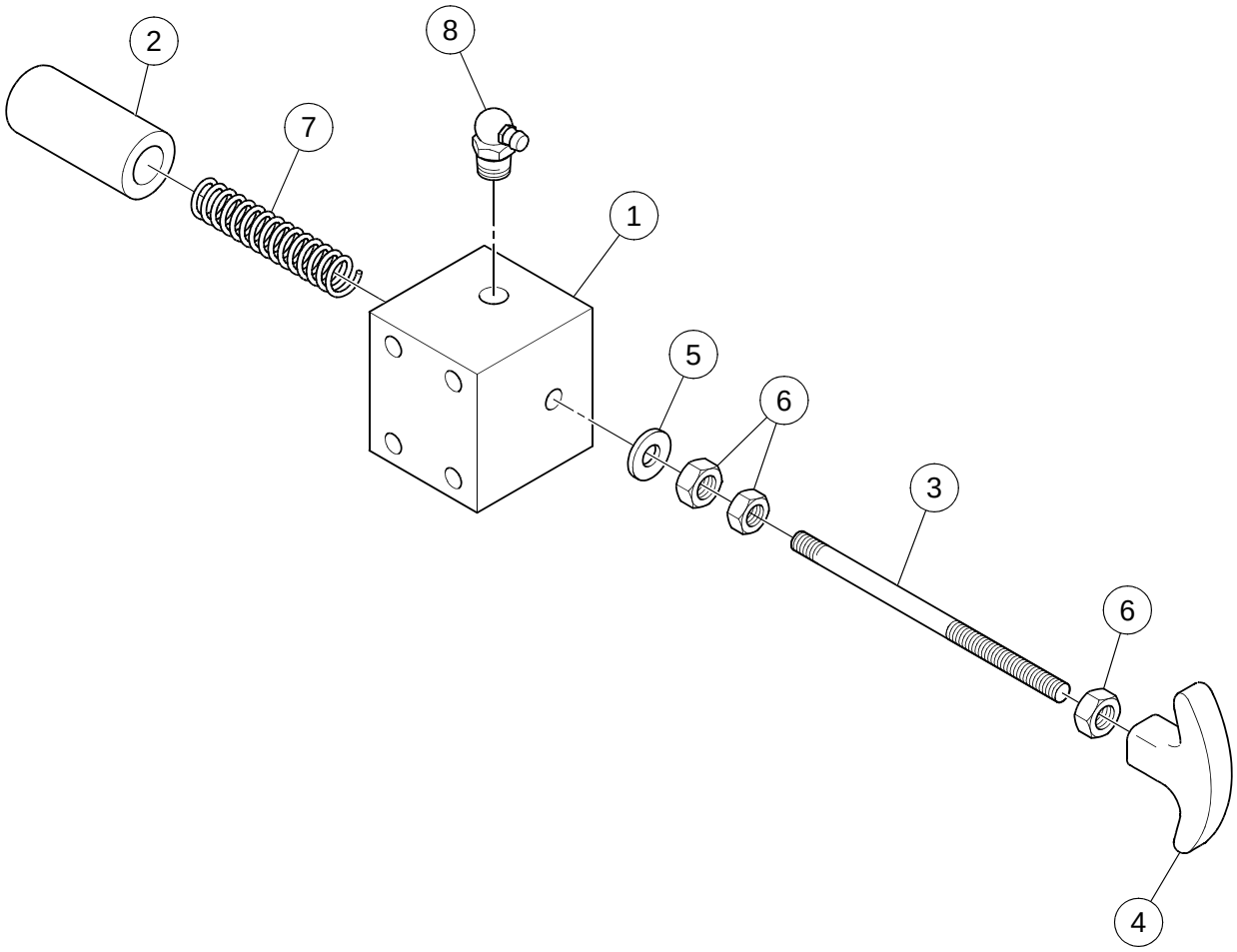

PROPULSION PIN BLOCK ASSEMBLY

****Only Offered Parts Listed****

BOM 13459367

ITEM	COMM. NO.	DESCRIPTION	QTY	DIMENSIONS/NOTES
1	13459375	PROP BLOCK	1	
2	13459383	PIN	1	
3	13459391	ROD	1	
5	95922324	FLATWASHER	1	
6	95931564	HEX NUT	3	1/4-20
7	13459409	SPRING	1	
8	95208971	FITTING	1	

NO ROPS/HOOD LATCH DRAW INSTALLATION

13883434 REV 002

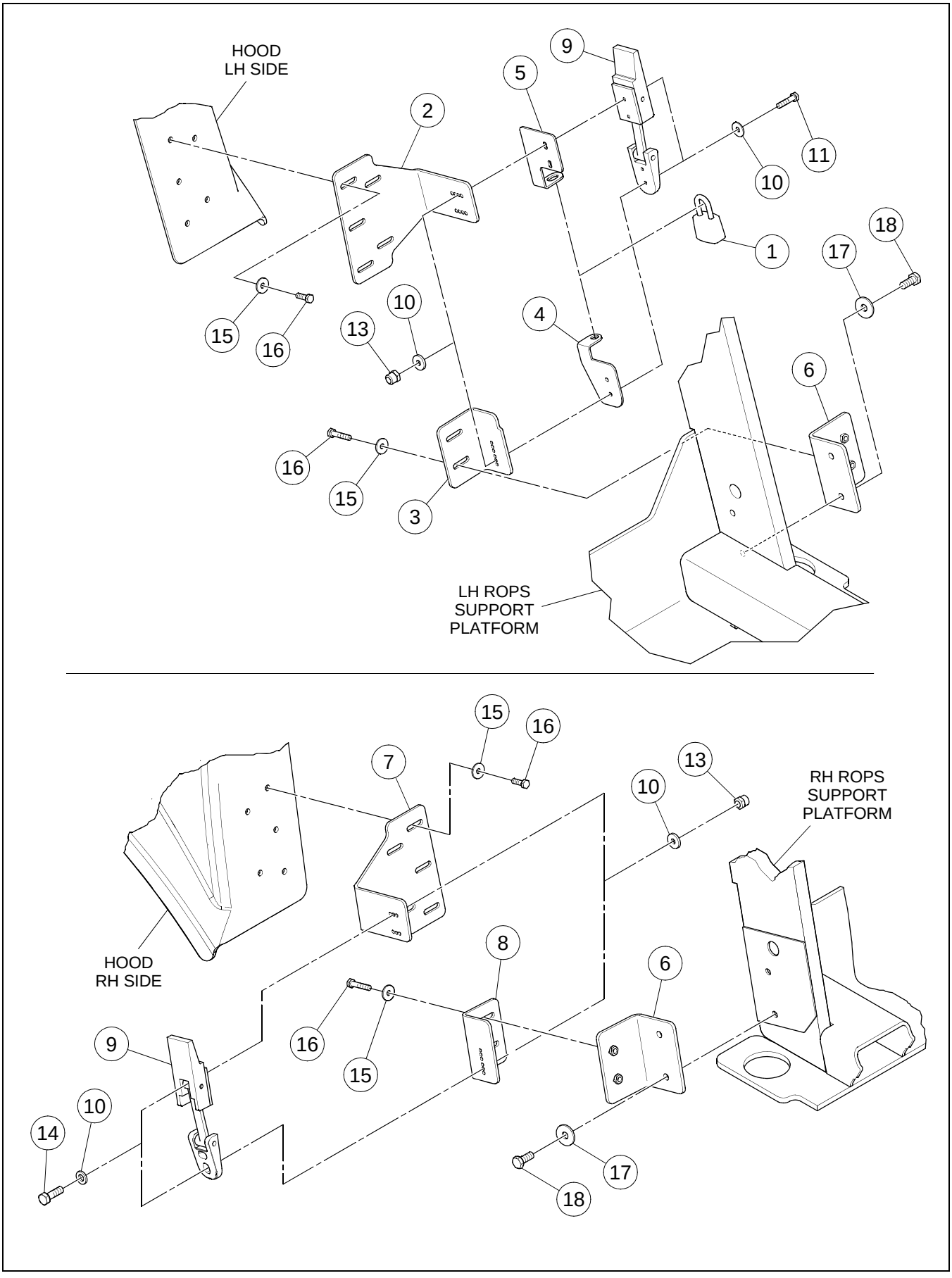

NO ROPS/HOOD LATCH DRAW INSTALLATION

****Only Offered Parts Listed****

BOM 13883434

ITEM	COMM. NO.	DESCRIPTION	QTY	DIMENSIONS/NOTES
1	43907906	LOCK	1	
2	13889365	BRACKET LH, HOOD LATCH	1	
3	13881198	BRACKET LH , ROPS LATCH	1	
4	13885355	RH LOCK TAB	1	
5	59163238	RH LOCK TAB	1	
6	13881396	BRACKET, NO ROPS LATCH MOUNTING	2	
7	13889373	BRACKET RH, HOOD LATCH	1	
8	13881222	BRACKET, RH ROPS LATCH	1	
9	59162149	LATCH	2	
10	95922332	FLATWASHER	16	
11	96705736	HHCS CL 8.8,YEL ZN	4	M5-0.8X20
13	96704580	LOCKNUT	8	M5
14	96705728	HHCS CL 8.8,YEL ZN	4	M5-0.8X16
16	96702659	HHCS CL 8.8,YEL ZN	14	M8-1.25X25
17	96741046	FLATWASHER, CL 200,YEL ZN	4	
18	96702287	HHCS CL 8.8,YEL ZN	4	M10-1.5X25

SOUND KIT W/ PRE-CLEANER INSTALLATION

43892447 REV 00

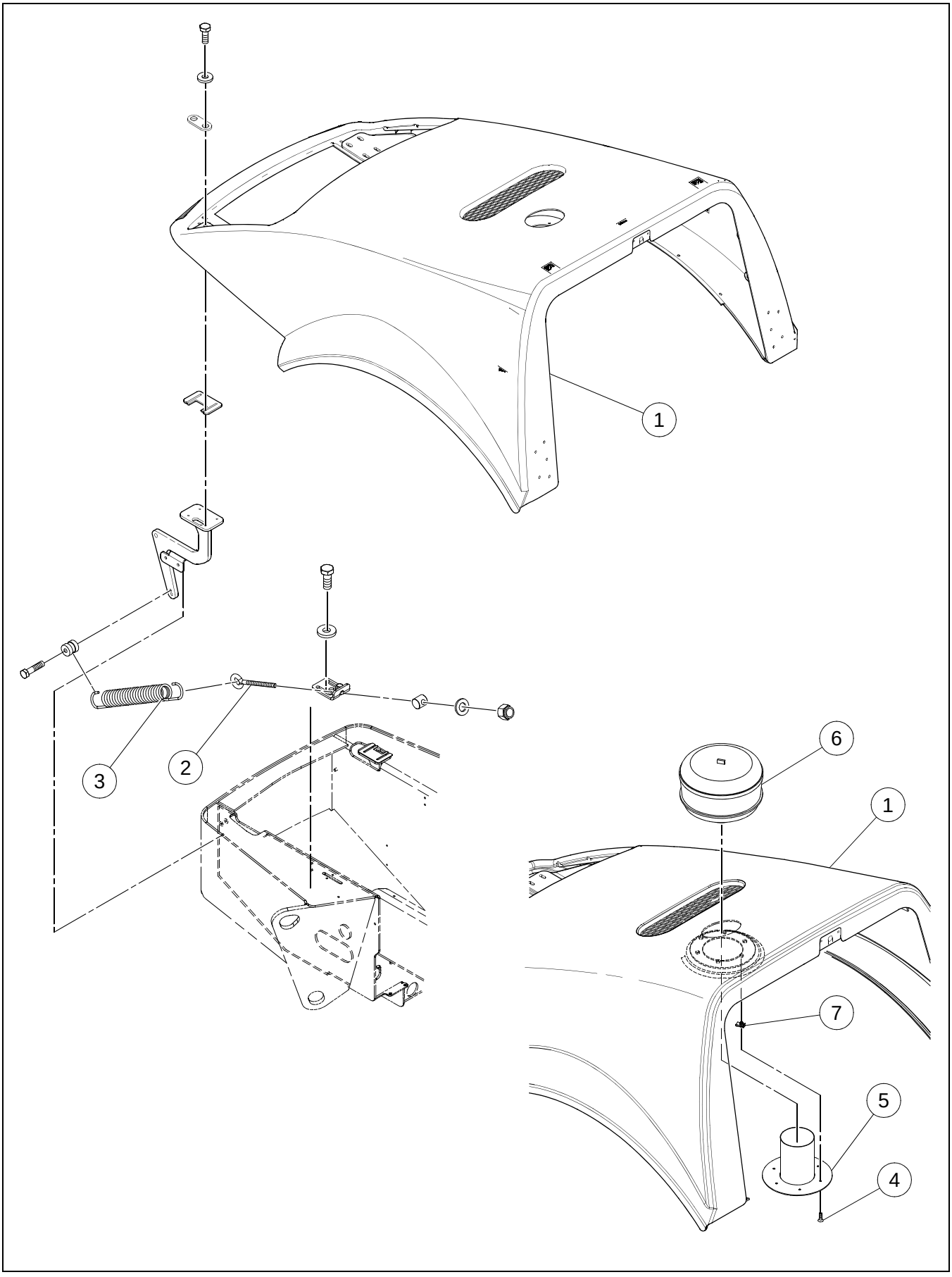

SOUND KIT W/ PRE-CLEANER INSTALLATION

****Only Offered Parts Listed****

BOM 43892454

ITEM	COMM. NO.	DESCRIPTION	QTY	DIMENSIONS/NOTES
1	**NSVA**	**HOOD, FOAM AND PRE-CLEANER ASSEMBLY**	**1**	**See Page A - 42.**
2	13184833	EYE BOLT	2	
3	13460381	SPRING	2	
4	96728506	FHCS CL 8.8,YEL ZN	6	M6-1.0X20
5	13273339	AIR PRE-CLEANER STACK	1	
6	59081323	AIR PRE-CLEANER	1	
-	59103259	- COVER ASSEMBLY	1	
-	58938275	- BOWL	1	
-	59103267	- SLEEVE ASSEMBLY	1	
-	59103275	- CLAMP	1	
7	13186598	U-NUT	6	

HOOD, FOAM AND PRE-CLEANER ASSEMBLY

43923242 REV 00

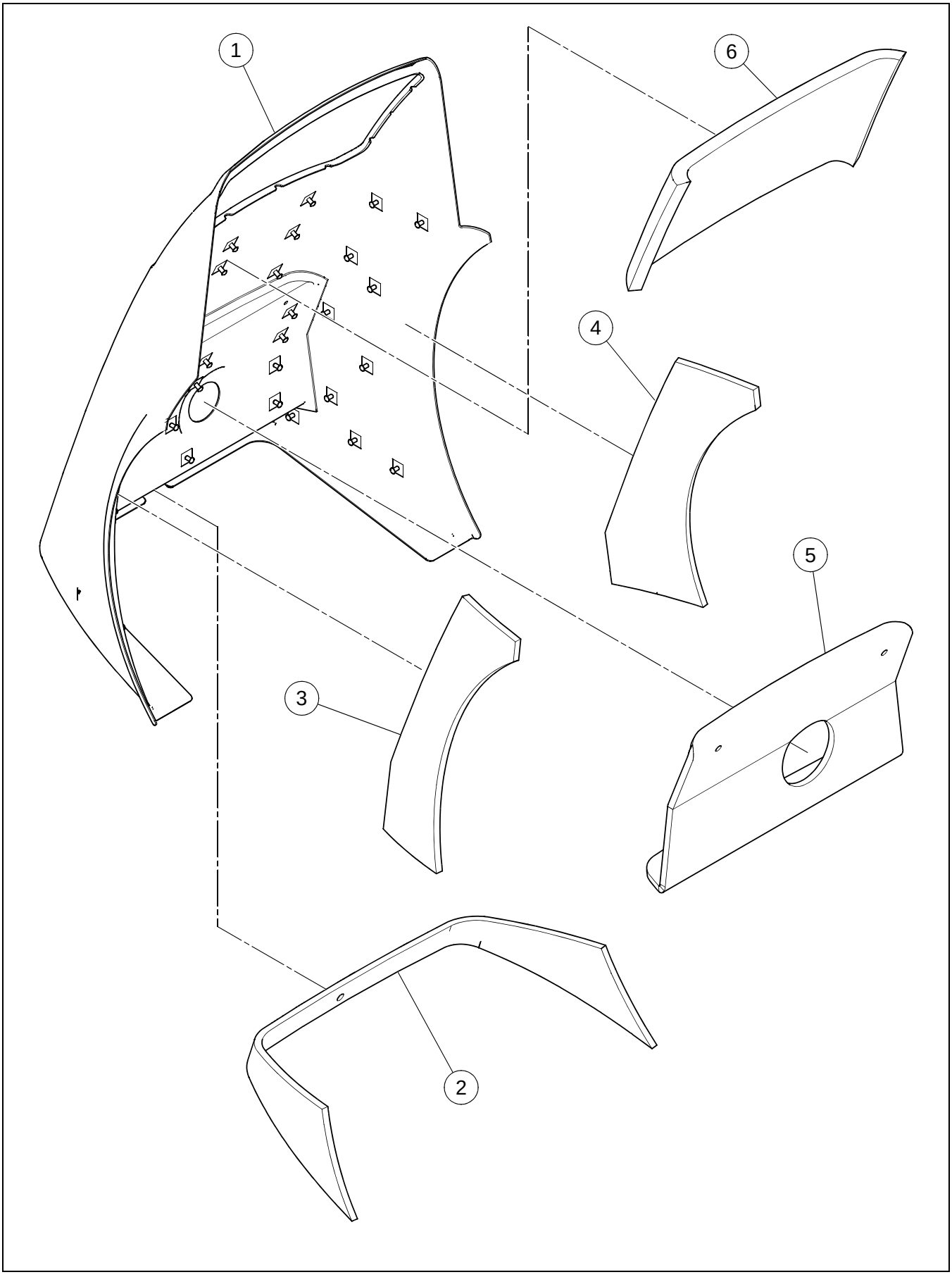

HOOD, FOAM AND PRE-CLEANER ASSEMBLY

****Only Offered Parts Listed****

BOM 43923242

ITEM	COMM. NO.	DESCRIPTION	QTY	DIMENSIONS/NOTES
1	43923234	HOOD,SPIKE & PRE-CLNR MTG ABG	1	
-	43923127	- HOOD W/PRE-CLEANER	1	
-	**NSVA**	- HOOD ASSEMBLY	**1**	**See Page A - 44.**
-	59268854	- HANGER KIT	47	
2	13218276	FOAM PAD	1	
3	13218292	FOAM PAD	1	
4	13218300	FOAM PAD	1	
4	13218284	FOAM PAD	1	
6	13218318	FOAM PAD	1	

HOOD ASSEMBLY - SHEET 1 OF 2

43922798 REV 00

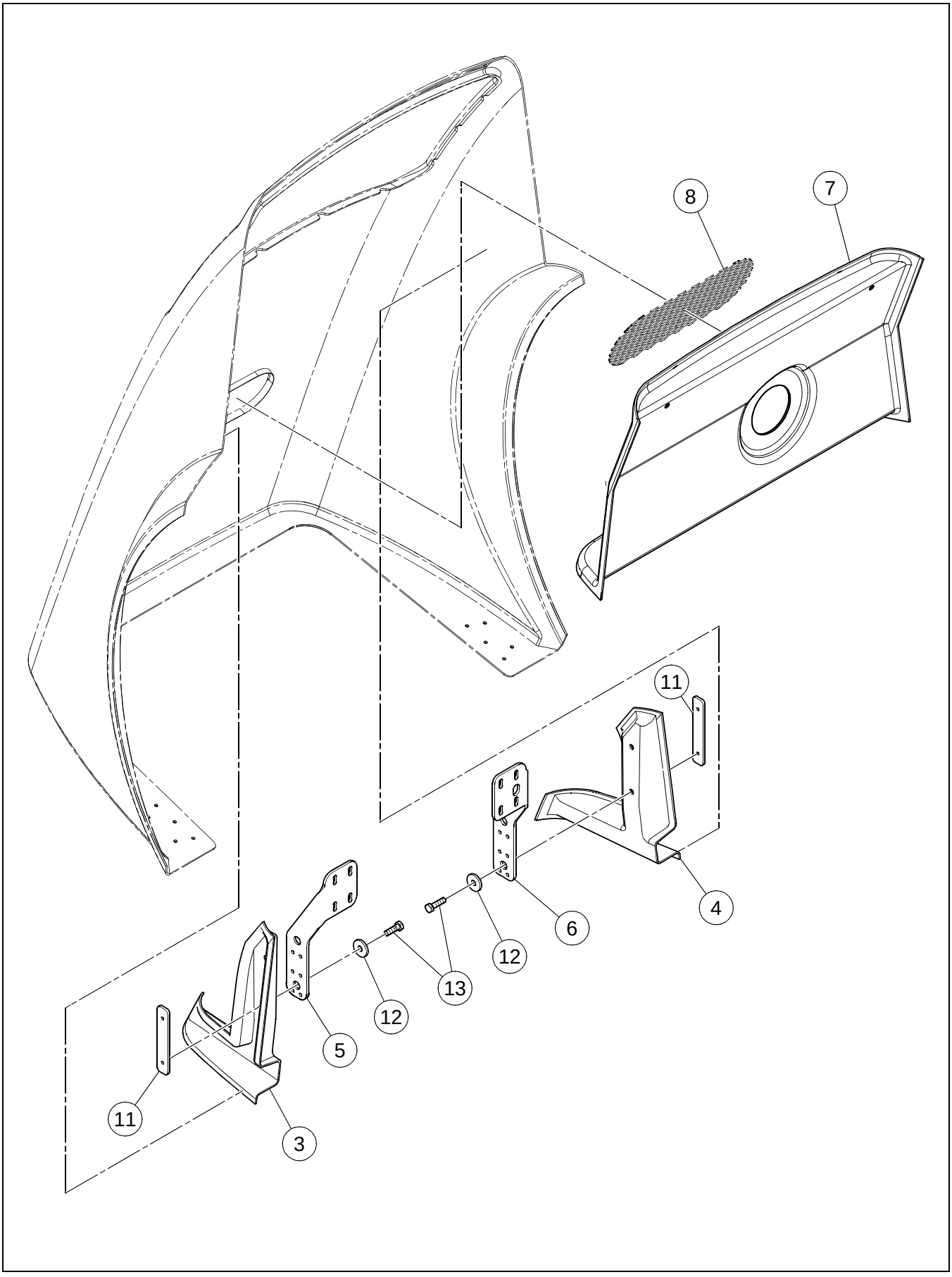

HOOD ASSEMBLY - SHEET 1 OF 2

****Only Offered Parts Listed****

BOM 43922798

ITEM	COMM. NO.	DESCRIPTION	QTY	DIMENSIONS/NOTES
5	13238878	HINGE SUPPORT	1	
6	13238860	HINGE SUPPORT	1	
8	43920644	AIRSCREEN	1	
9	13889472	GRILL SUPPORT BAR	2	
11	13238035	BACKING PLATE	2	
13	96701917	HHCS CL 8.8,YEL ZN	4	M10-1.5X30
14	43920438	GRILL	1	
15	96702659	HHCS CL 8.8,YEL ZN	6	M8-1.25X25
16	96704606	ESNA NUT	4	M8
17	96740188	WASHER	22	M8X3
18	96705587	HHCS CL 8.8,YEL ZN	14	M8-1.25X30
19	18009514	RUBBER EDGE TRIM	1	
21	13883756	SEAL TRIM	1	
22	13883418	HOOD HANDLE	1	
23	96702816	HHCS CL 8.8,YEL ZN	2	M8-1.25X16
24	18007674	STRIP, RUBBER	2	
25	96741038	WASHER, FLAT CL 200,YEL ZN	10	ID-8.4,OD-16.0X1.6THK
26	96701370	NUT,HEX CL 8 ,YEL ZN	10	M8-1.25

HOOD ASSEMBLY - SHEET 2 OF 2

43922798 REV 00

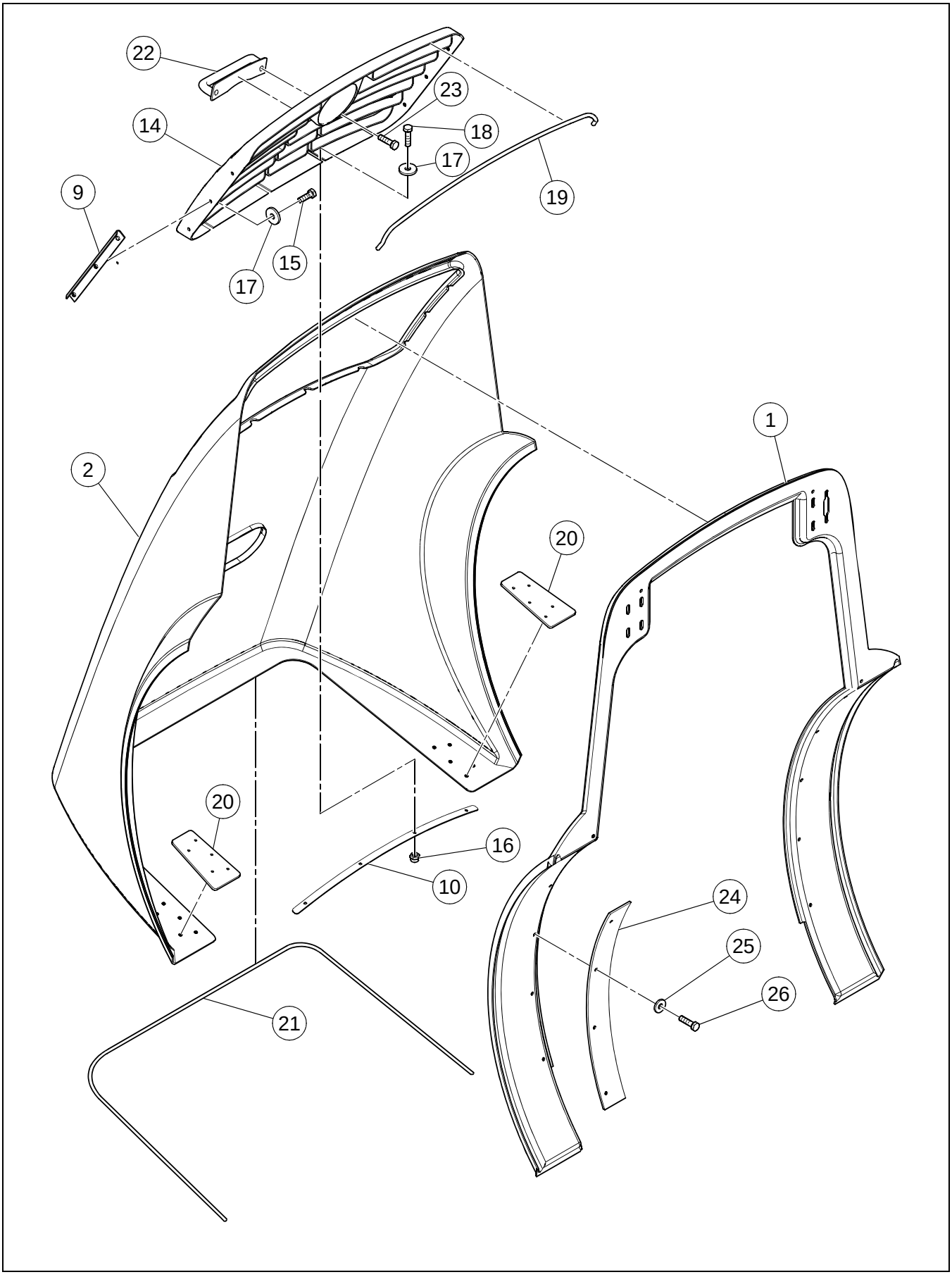

HOOD ASSEMBLY - SHEET 2 OF 2

****Only Offered Parts Listed****

BOM 43922798

ITEM	COMM. NO.	DESCRIPTION	QTY	DIMENSIONS/NOTES
5	13238878	HINGE SUPPORT	1	
6	13238860	HINGE SUPPORT	1	
8	43920644	AIRSCREEN	1	
9	13889472	GRILL SUPPORT BAR	2	
11	13238035	BACKING PLATE	2	
13	96701917	HHCS CL 8.8,YEL ZN	4	M10-1.5X30
14	43920438	GRILL	1	
15	96702659	HHCS CL 8.8,YEL ZN	6	M8-1.25X25
16	96704606	ESNA NUT	4	M8
17	96740188	WASHER	22	M8X3
18	96705587	HHCS CL 8.8,YEL ZN	14	M8-1.25X30
19	18009514	RUBBER EDGE TRIM	1	
21	13883756	SEAL TRIM	1	
22	13883418	HOOD HANDLE	1	
23	96702816	HHCS CL 8.8,YEL ZN	2	M8-1.25X16
24	18007674	STRIP, RUBBER	2	
25	96741038	WASHER, FLAT CL 200,YEL ZN	10	ID-8.4,OD-16.0X1.6THK
26	96701370	NUT,HEX CL 8 ,YEL ZN	10	M8-1.25

13169842 REV 0M

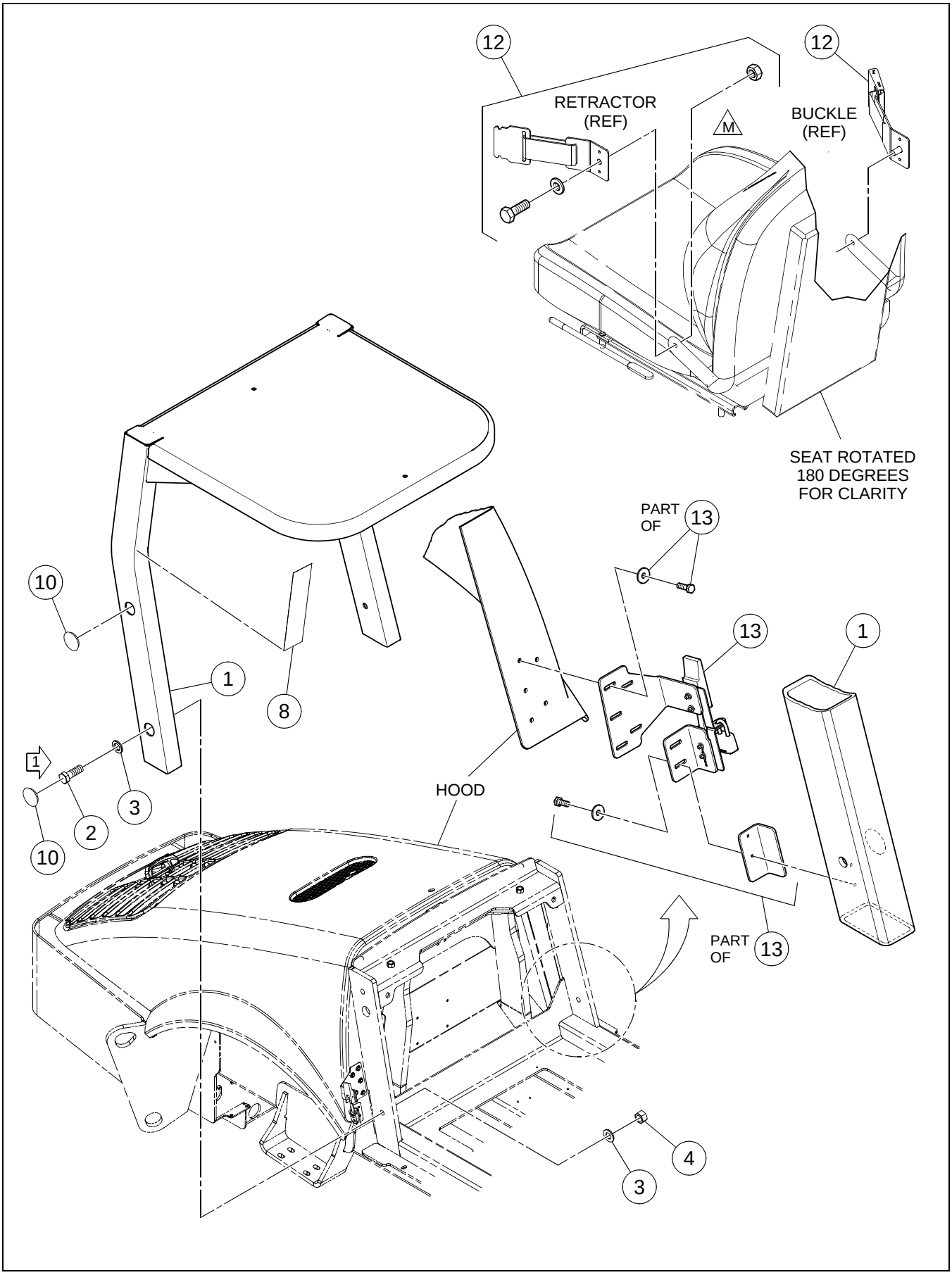

****Only Offered Parts Listed****

BOM 13883236

ITEM	COMM. NO.	DESCRIPTION	QTY	DIMENSIONS/NOTES
1	19298009	ROPS/FOPS ***	1	
2	96746235	HHCS CL 10.9,YEL ZN HR	4	M24-3X70
3	96702642	WASHER	8	M24
8	13197306	DECAL: CHECKLIST	1	
10	13309877	PLASTIC PLUG	4	
12	**NSVA**	**SEAT BELT INSTALLATION**	**1**	**See Page A - 50.**
13	**NSVA**	**ROPS/HOOD DRAW LATCH INSTALLATION**	**1**	**See Page A - 52.**

43908656 REV 0A

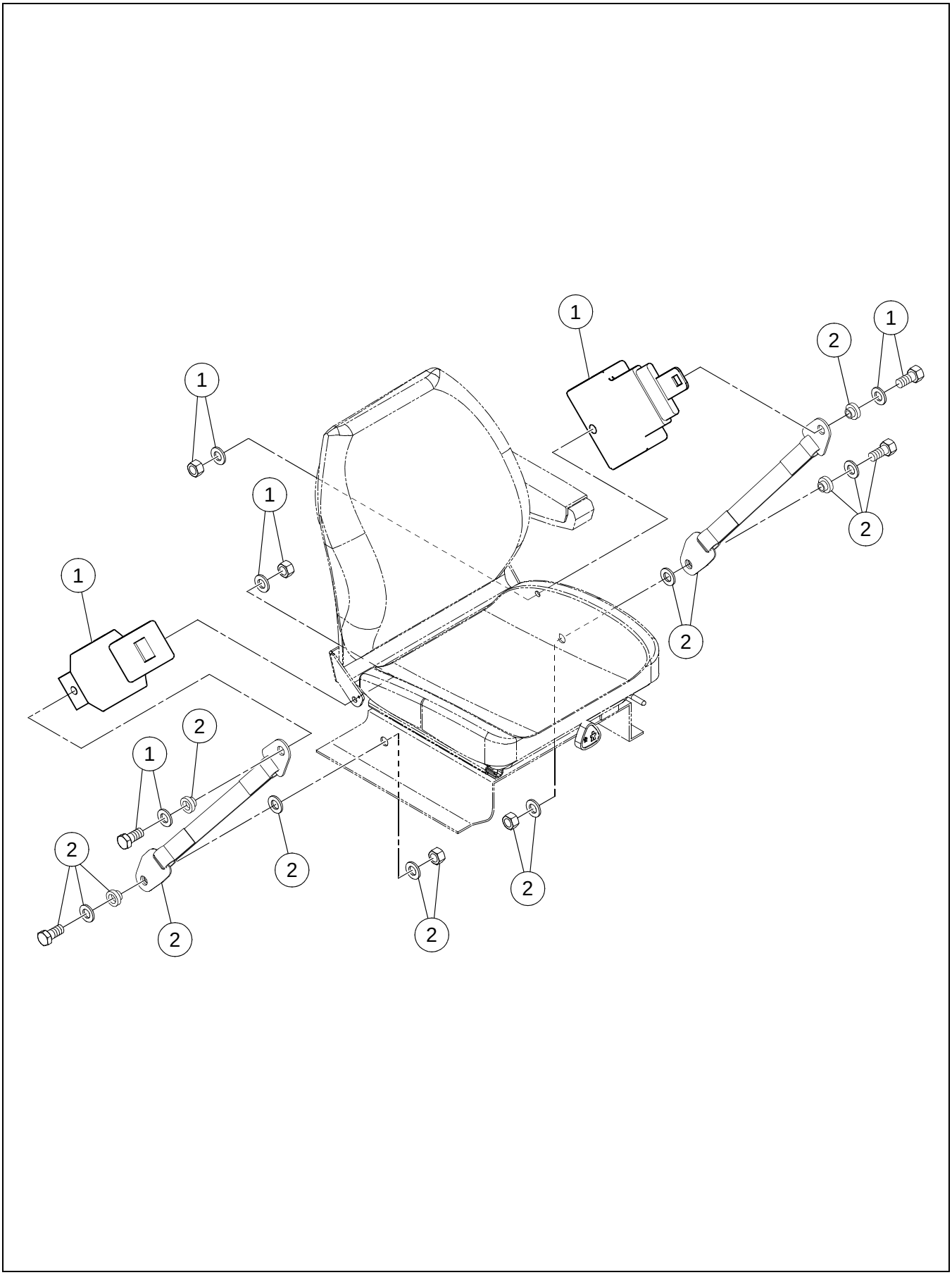

SEAT BELT INSTALLATION

****Only Offered Parts Listed****

BOM 43908656

ITEM	COMM. NO.	DESCRIPTION	QTY	DIMENSIONS/NOTES
1	43916394	SEATBELT	1	
2	43922384	SEAT BELT TETHER	1	

ROPS/HOOD DRAW LATCH INSTALLATION

13883673 REV 02

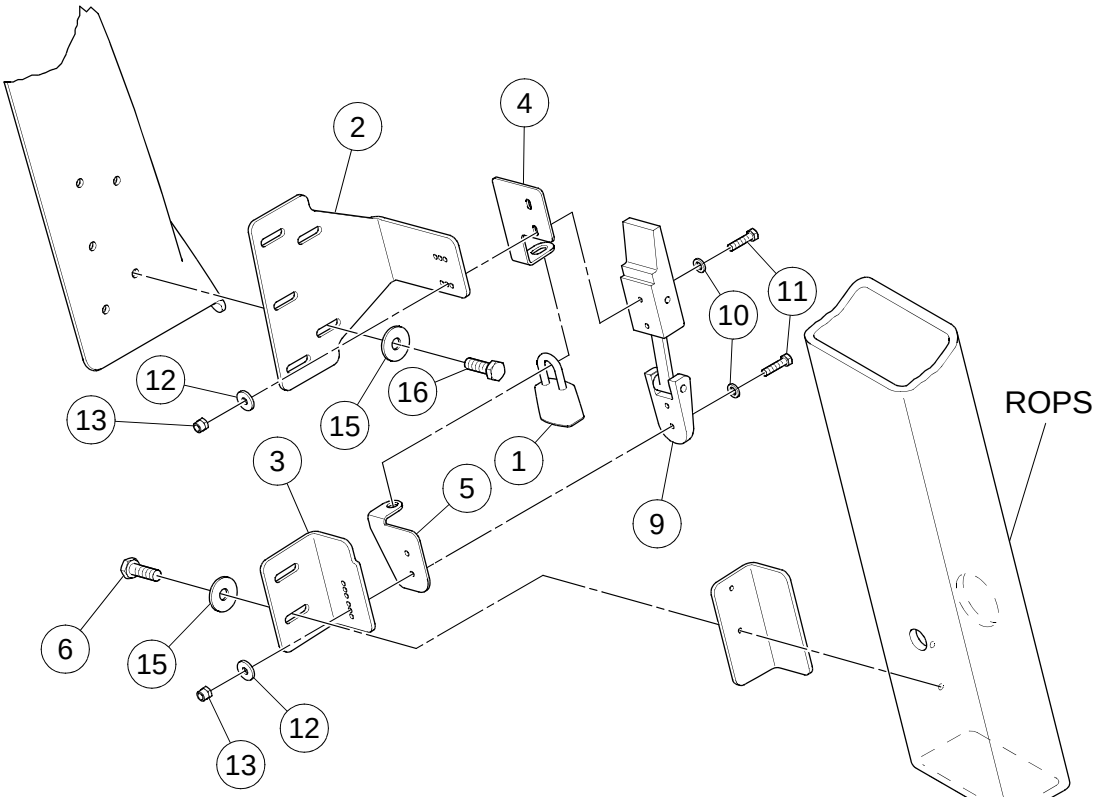

LH SIDE

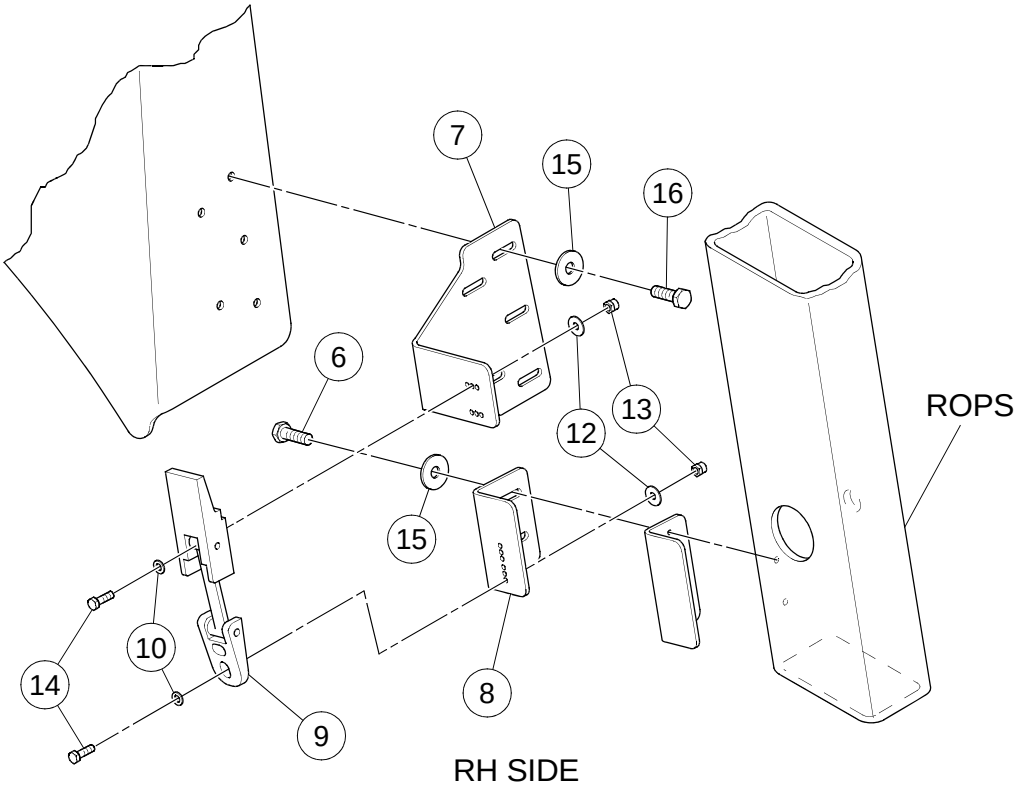

RH SIDE

ROPS/HOOD DRAW LATCH INSTALLATION

****Only Offered Parts Listed****

BOM 13883673

ITEM	COMM. NO.	DESCRIPTION	QTY	DIMENSIONS/NOTES
1	43907906	LOCK	1	
2	13889365	BRACKET LH, HOOD LATCH	1	
3	13881198	BRACKET LH , ROPS LATCH	1	
4	13885355	RH LOCK TAB	1	
5	59163238	RH LOCK TAB	1	
6	96702659	HHCS CL 8.8,YEL ZN	14	M8-1.25X25
7	13889373	BRACKET RH, HOOD LATCH	1	
8	13881222	BRACKET, RH ROPS LATCH	1	
9	59162149	LATCH	2	
10	95922332	FLATWASHER	16	
11	96705736	HHCS CL 8.8,YEL ZN	4	M5-0.8X20
13	96704580	LOCKNUT	8	M5
14	96705728	HHCS CL 8.8,YEL ZN	4	M5-0.8X16

GRILL SUPPORT INSTALLATION

13885660 REV 00

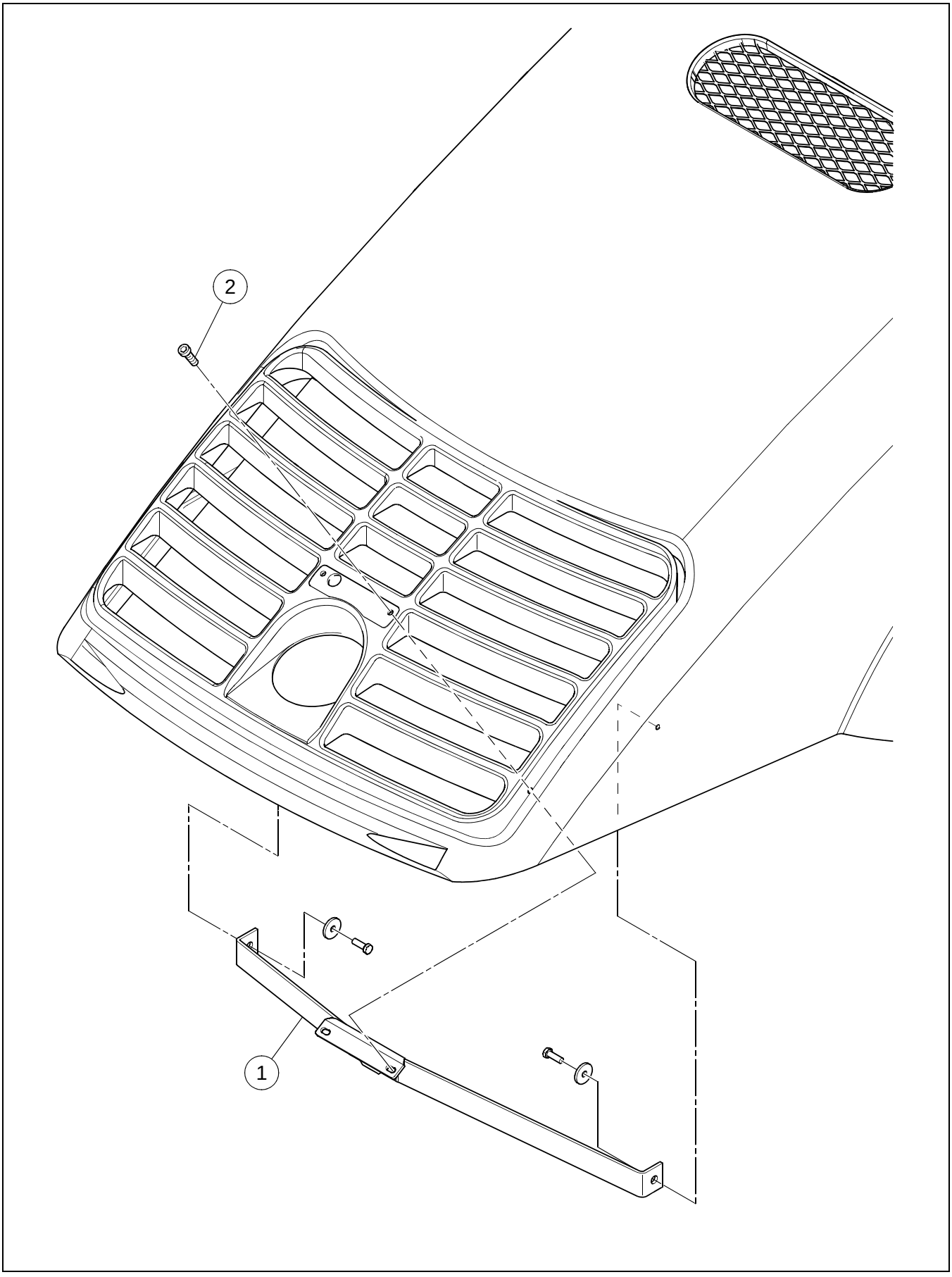

GRILL SUPPORT INSTALLATION

****Only Offered Parts Listed****

BOM 13885660

ITEM	COMM. NO.	DESCRIPTION	QTY	DIMENSIONS/NOTES
1	13885256	GRILL SUPPORT WELDMENT	1	
2	96702824	HHCS CL 8.8,YEL ZN	2	M8-1.25X20

SPRING ISOLATION FOAM INSTALLATION

19297118 REV 000

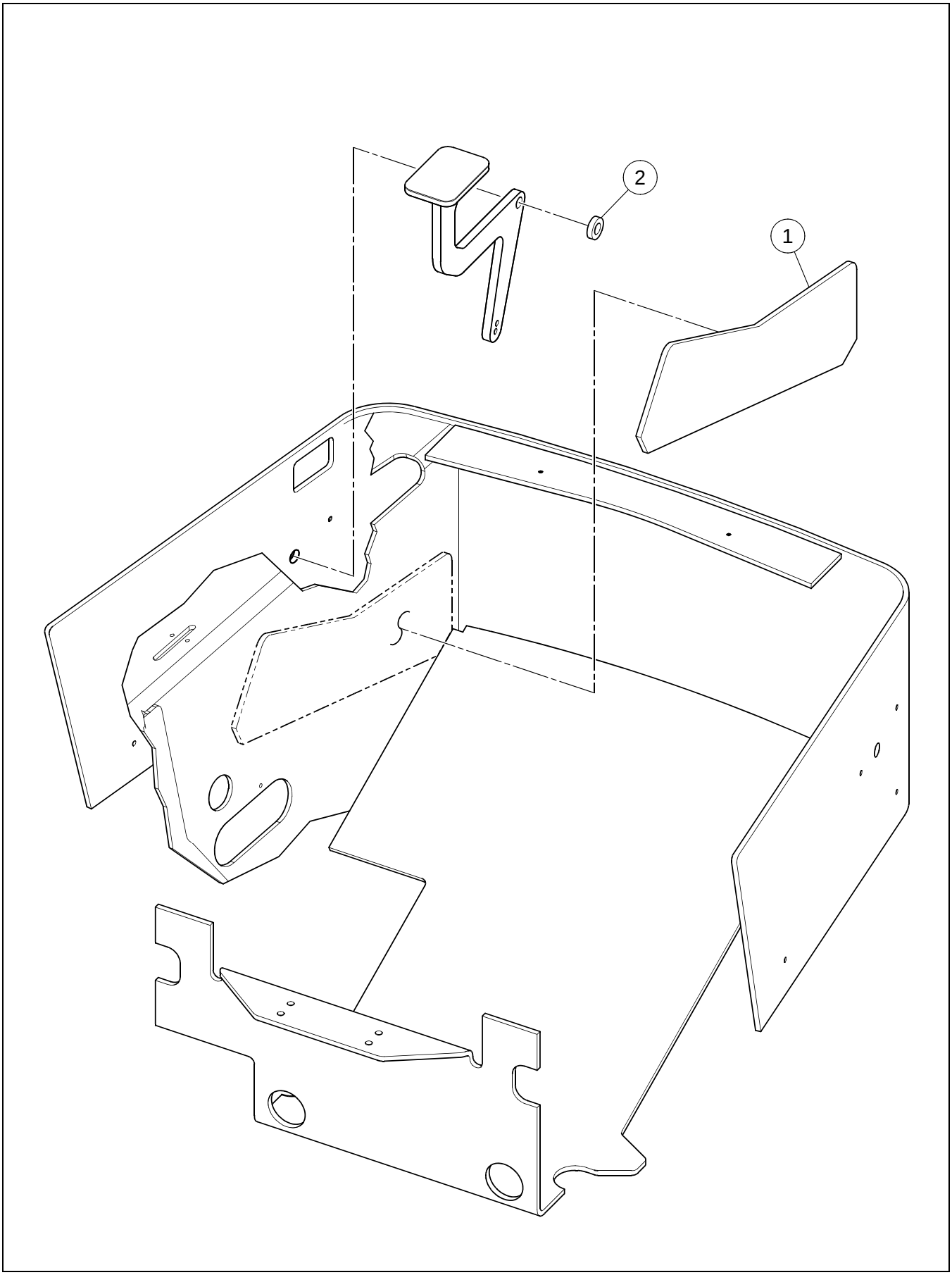

SPRING ISOLATION FOAM INSTALLATION

****Only Offered Parts Listed****

BOM 19297118

ITEM	COMM. NO.	DESCRIPTION	QTY	DIMENSIONS/NOTES
1	19294198	ISOLATION PAD SPRING	2	
2	96738646	FLATWASHER	2	

SHIP ROPS LOOSE INSTALLATION - OPTION

13883426 REV 00

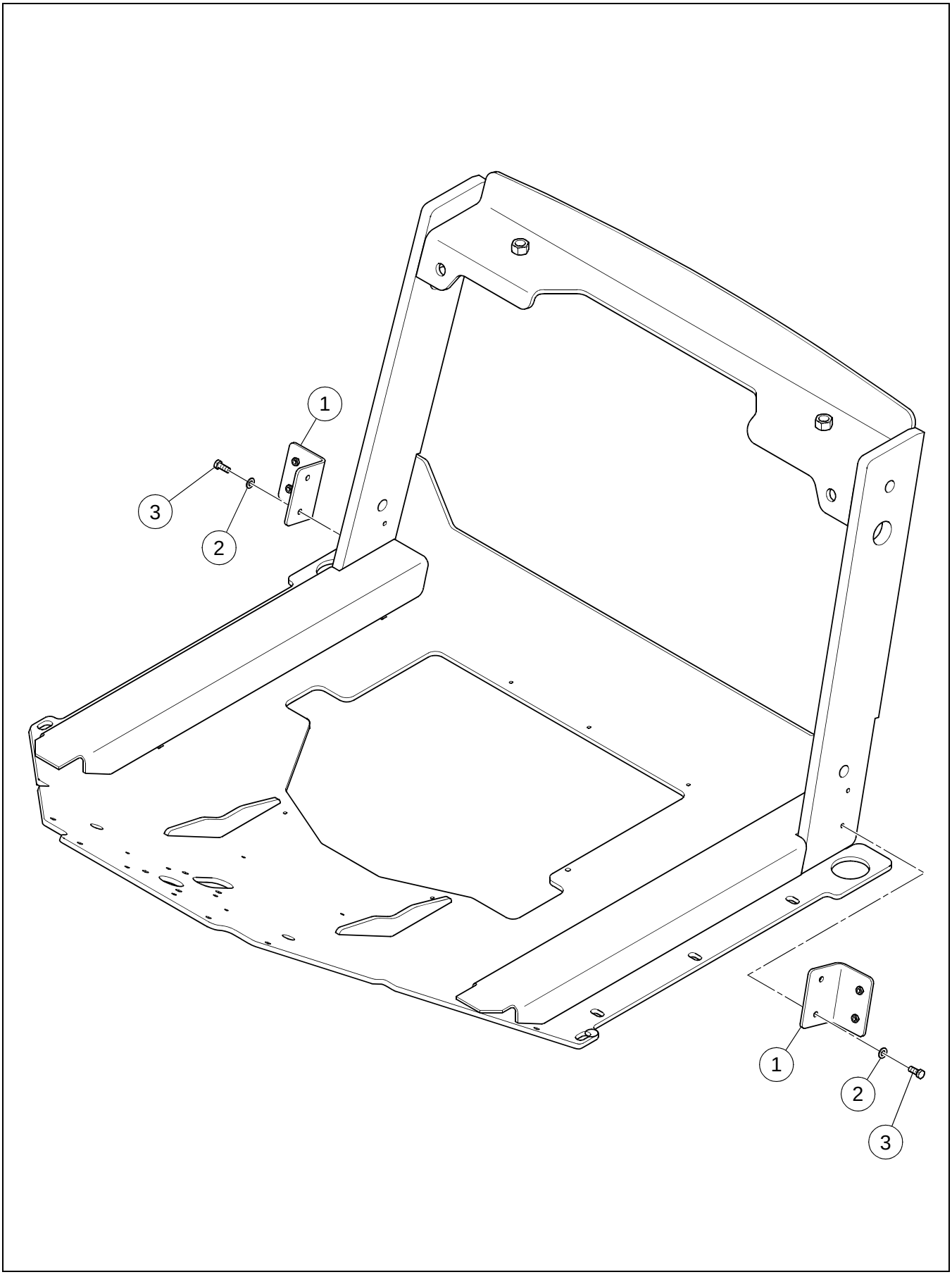

SHIP ROPS LOOSE INSTALLATION - OPTION

****Only Offered Parts Listed****

BOM 13883426

ITEM	COMM. NO.	DESCRIPTION	QTY	DIMENSIONS/NOTES
1	13881396	BRACKET, NO ROPS LATCH MOUNTING	2	
2	96741046	FLATWASHER, CL 200,YEL ZN	4	
3	96702287	HHCS CL 8.8,YEL ZN	4	M10-1.5X25

Section B - DRUM

DRUM ASSEMBLY

43866532 REV 00

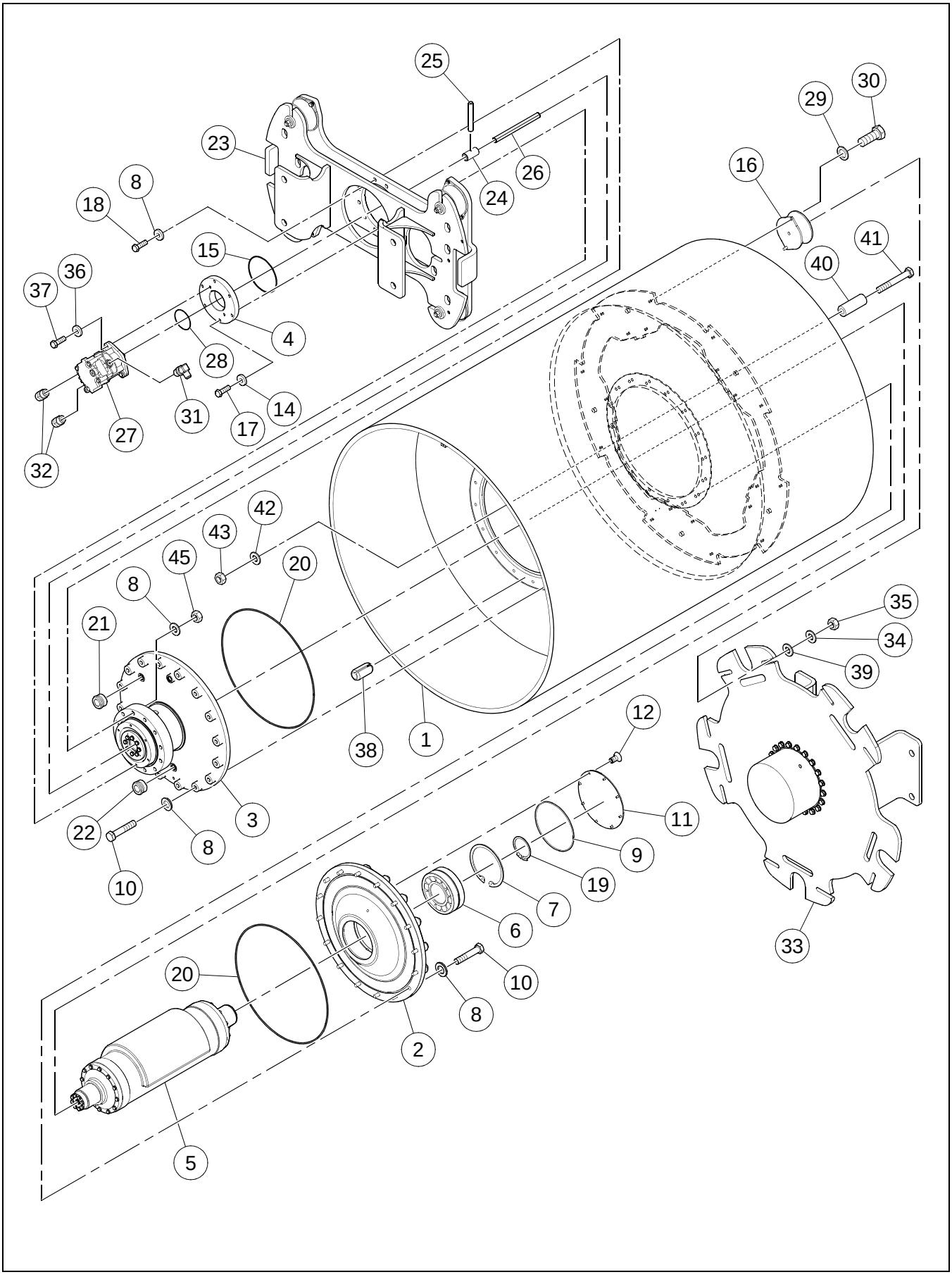

DRUM ASSEMBLY

****Only Offered Parts Listed****

BOM 43866581

ITEM	COMM. NO.	DESCRIPTION	QTY	DIMENSIONS/NOTES
1	13375738	DRUM	1	
2	13329206	BEARING HOUSING DRIVE	1	
3	**NSVA**	**BEARING HOUSING ASSEMBLY**	**1**	**See Page B - 4.**
4	13502034	END PLATE	1	
5	**NSVA**	**ECCENTRIC SHAFT ASSEMBLY**	**1**	**See Page B - 6.**
6	58951690	BEARING	1	
7	96711031	CLIP RING	1	
8	96738612	FLATWASHER	56	
9	95643383	O-RING	1	
10	96739990	HHCS CL 10.9,YEL ZN HR	32	M16-2.0X90
11	13325048	COVER	1	
12	96743851	FHCS CL 8.8,YEL ZN	8	M8-1.25X16
14	96741046	FLATWASHER, CL 200,YEL ZN	6	
15	13502240	O RING SEAL	1	
16	13304787	SHOCK MOUNT	10	
17	96704549	HHCS CL 10.9,YEL ZN HR	6	M10-1.5X45
18	96705504	HHCS CL 8.8,YEL ZN	12	M16-2.0X110
19	96711478	RETAINER RING	1	
20	95603163	O-RING	2	
21	59144428	MAGNETIC PLUG	2	
22	59277772	SIGHT GAUGE	1	
23	**NSVA**	**CARRIER ASSEMBLY**	**1**	**See Page B - 8.**
24	59613612	COUPLING	1	
25	96736822	ROLL PIN	1	
26	13183215	SPLINE SHAFT	1	
28	95988739	O-RING	1	
29	96738596	FLATWASHER	20	
30	96702790	HHCS CL 10.9,YEL ZN HR	20	M12-1.75X25
31	95303350	ELBOW	1	
32	59922591	ADAPTER	2	
33	**NSVA**	**DRIVE MOTOR ASSEMBLY**	**1**	**See Page B - 10.**
34	59565044	FLATWASHER, HARDENED	10	
35	96703657	NUT,HEX CL 10,YEL ZN HR	10	M16-2
36	96712237	FLATWASHER	2	
37	96702329	HHCS CL 8.8,YEL ZN	2	M12-1.75X35
38	96737069	ROLL PIN	2	
39	13351408	WASHER	10	
40	NOT-USED	THIS ITEM NOT USED W/THIS BOM	1	
41	NOT-USED	THIS ITEM NOT USED W/THIS BOM	1	
42	NOT-USED	THIS ITEM NOT USED W/THIS BOM	1	
43	NOT-USED	THIS ITEM NOT USED W/THIS BOM	1	
45	96711882	NUT,HEX CL 8 ,YEL ZN	12	M16-2

BEARING HOUSING ASSEMBLY

43866490 REV 00

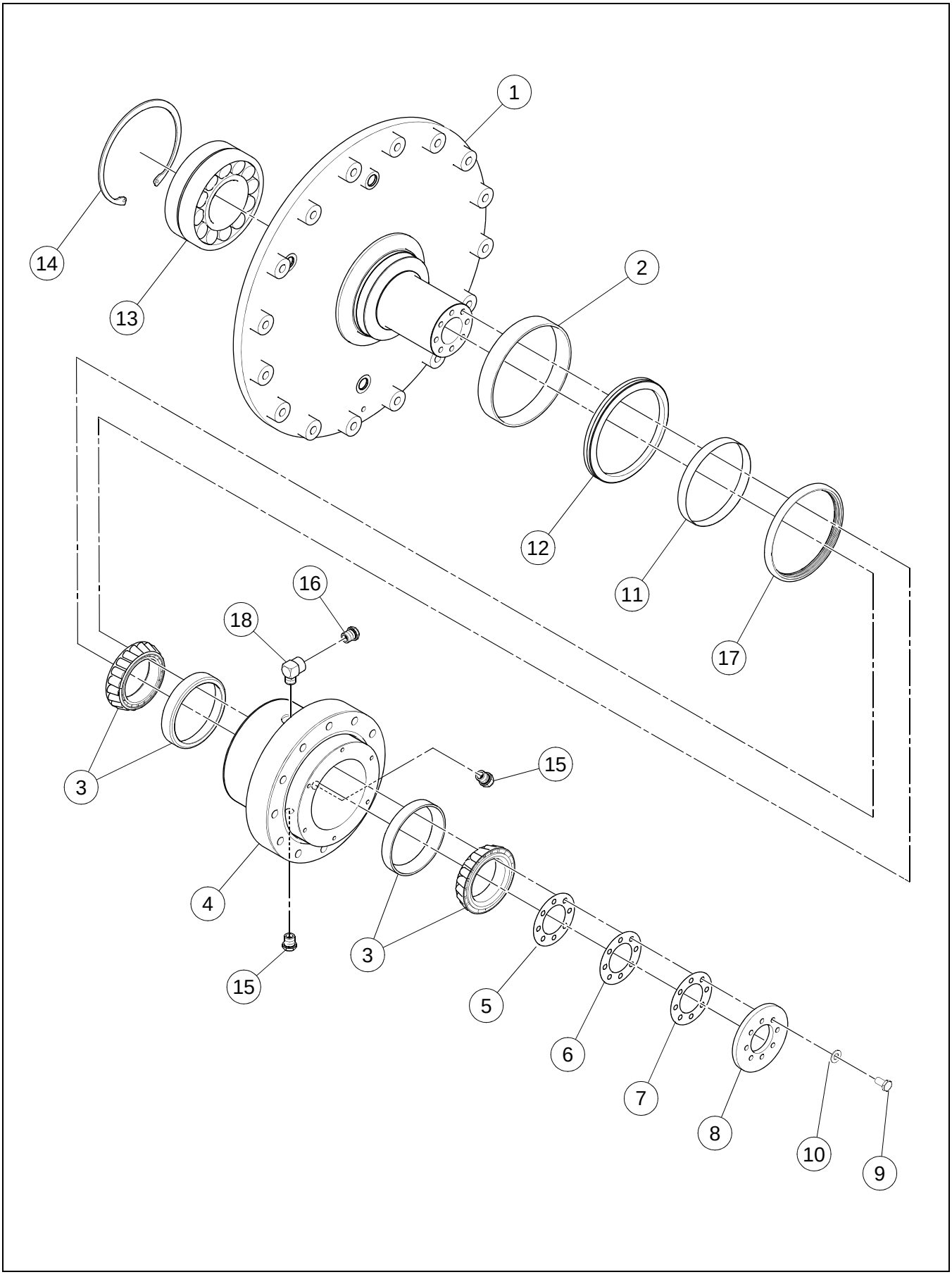

BEARING HOUSING ASSEMBLY

****Only Offered Parts Listed****

BOM 43866615

ITEM	COMM. NO.	DESCRIPTION	QTY	DIMENSIONS/NOTES
1	13501994	BEARING HSG SPINDLE	1	
2	13502257	DUST BAND ***	1	
3	13414743	BEARING TAPER ROLLER	2	
4	43814250	CARRIER HOUSING	1	
5	13502141	SHIM	2	.005"
6	13502133	SHIM	2	.007"
7	13502125	SHIM	3	.020"
8	13502166	PRELOAD PLATE	1	
9	96704549	HHCS CL 10.9,YEL ZN HR	8	M10-1.5X45
10	96741046	FLATWASHER, CL 200,YEL ZN	8	
11	59277756	WEAR SLEEVE	1	
12	13167390	V-RING SEAL	1	
13	58951690	BEARING	1	
14	96711031	CLIP RING	1	
15	59600593	PIPE PLUG	2	
16	54584776	BREATHER, FILTERED VENT	1	
17	59277764	OIL SEAL	1	
18	95264891	ADAPTER	1	

ECCENTRIC SHAFT ASSEMBLY

43866508 REV 00

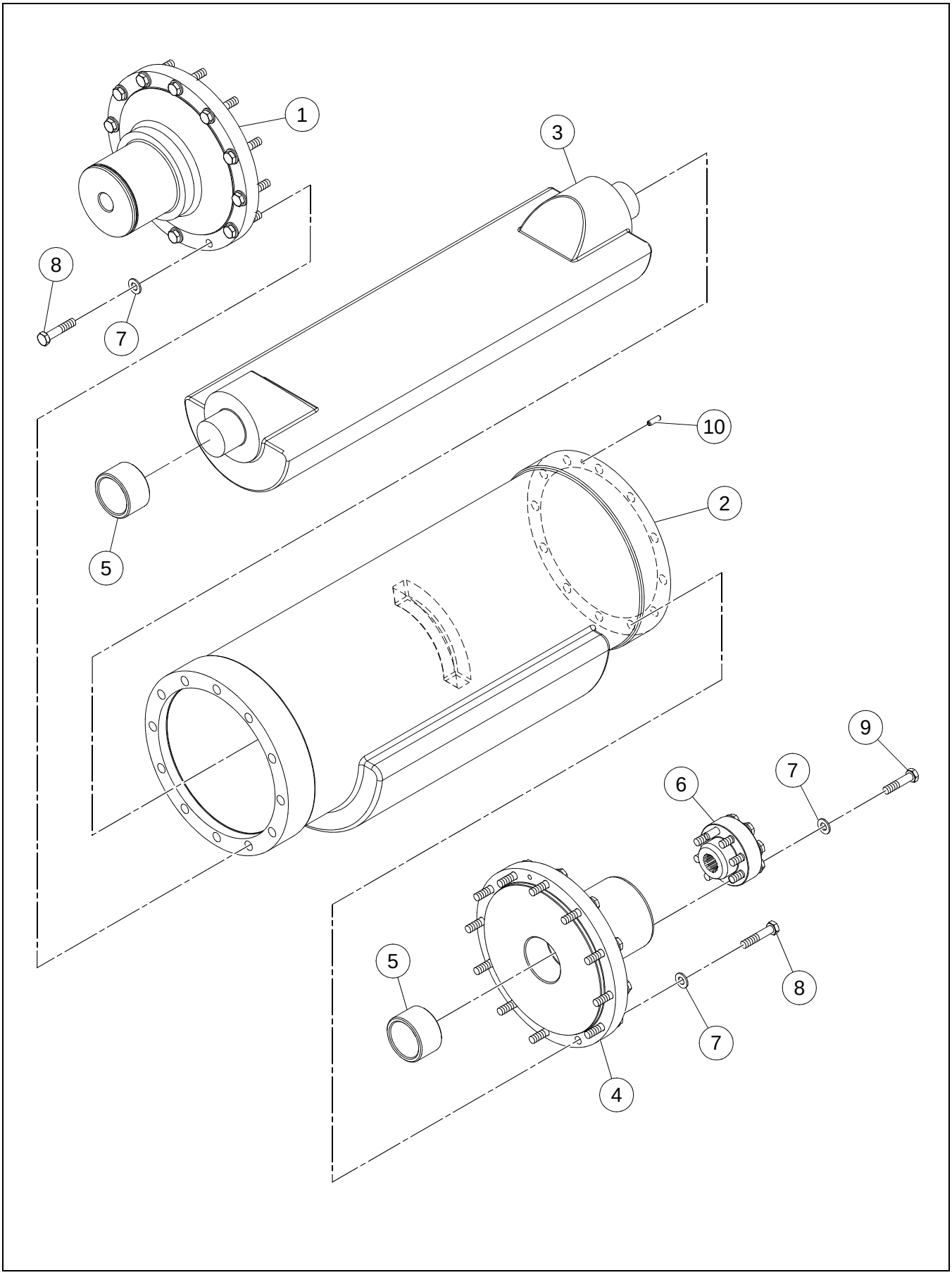

ECCENTRIC SHAFT ASSEMBLY

****Only Offered Parts Listed****

BOM 59257857

ITEM	COMM. NO.	DESCRIPTION	QTY	DIMENSIONS/NOTES
1	59298323	DRIVE SIDE JOURNAL	1	
2	13218052	ECCENTRIC SHAFT	1	
3	59298042	ECCENTRIC SHAFT	1	
4	13217922	NON DRIVE SIDE JOURNAL	1	
5	59296632	OILITE BEARING	2	
6	59277723	SPLINE COUPLING	1	
7	96741046	FLATWASHER, CL 200,YEL ZN	32	
8	96702436	HHCS CL 10.9,YEL ZN HR	24	M10-1.5X50
9	96702428	HHCS CL 8.8,YEL ZN	8	M10-1.5X45
10	96720990	ROLL PIN	1	M6X20

CARRIER ASSEMBLY

43866516 REV 00

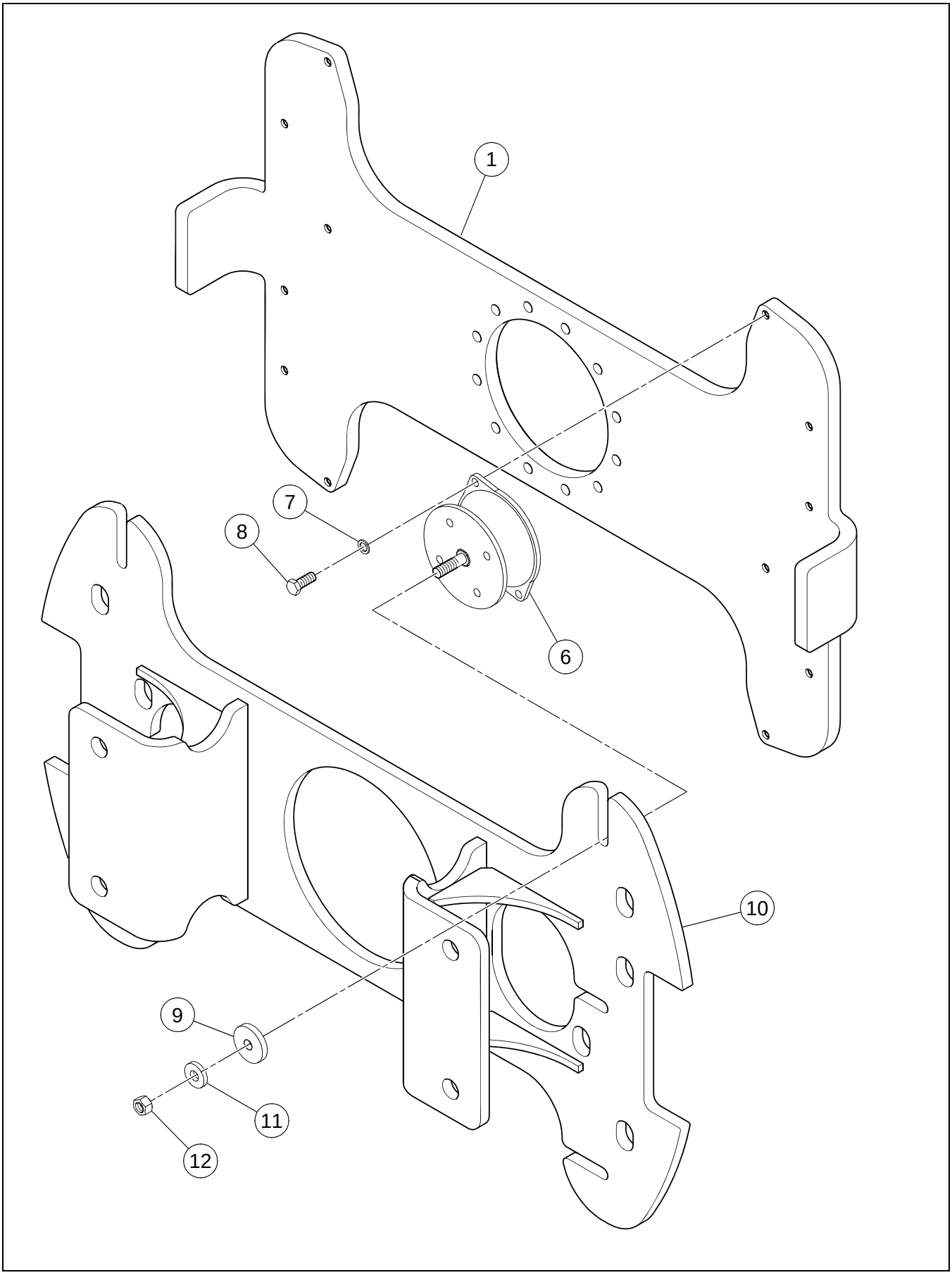

CARRIER ASSEMBLY

****Only Offered Parts Listed****

BOM 43866607

ITEM	COMM. NO.	DESCRIPTION	QTY	DIMENSIONS/NOTES
1	43814300	CARRIER PLATE	1	
6	13304787	SHOCK MOUNT	6	
7	96738596	FLATWASHER	12	
8	96703111	HHCS CL 10.9,YEL ZN HR	12	M12-1.75X35
9	13351408	WASHER	6	
10	43814359	SHOCK MOUNT PLATE MACHINING	1	
11	59565044	FLATWASHER, HARDENED	6	
12	96703657	NUT,HEX CL 10,YEL ZN HR	6	M16-2

DRIVE MOTOR ASSEMBLY

43856772 REV 00

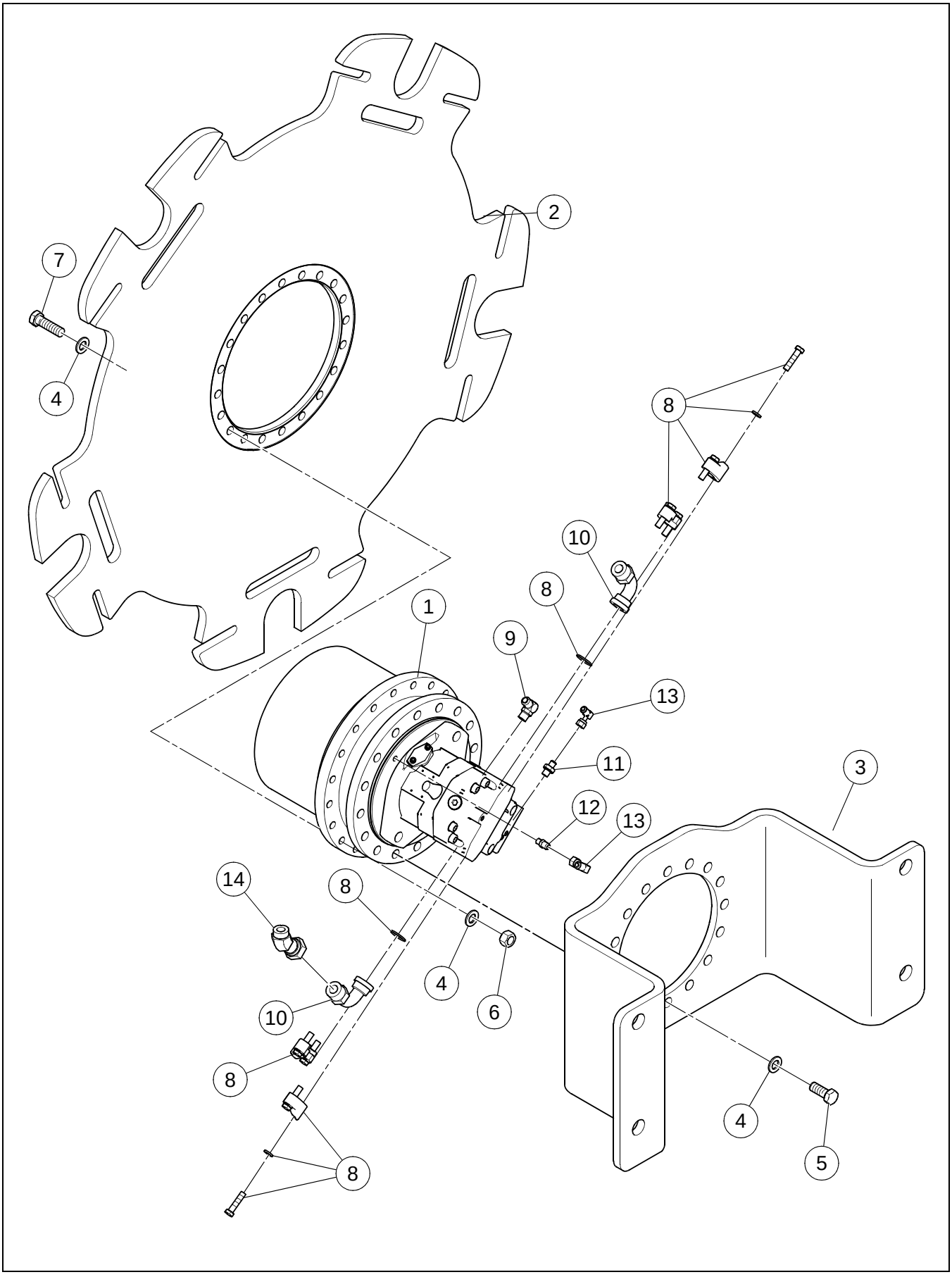

DRIVE MOTOR ASSEMBLY

****Only Offered Parts Listed****

BOM 43856772

ITEM	COMM. NO.	DESCRIPTION	QTY	DIMENSIONS/NOTES
1	43908326	MOTOR, DRUM DRIVE	1	R916573795
2	13413950	DRIVE PLATE MACHINING	1	
3	13328695	DRIVE MOUNTING PLATE	1	
4	96738620	FLATWASHER	16	
5	96704481	HHCS CL 8.8,YEL ZN	16	M20-2.5X50
6	96738612	FLATWASHER	20	
7	96745419	HHCS CL 8.8,YEL ZN	20	M16-X1.5X50
8	13184445	SPLIT CLAMP	2	
-	58896952	- SPLIT FLANGE CLAMP	4	
-	96704556	- HHCS CL 8.8,YEL ZN	8	M10-1.5X40
-	59510065	- LOCKWASHER	8	
-	59990010	- O-RING	2	
9	58896580	ELBOW	1	
10	59027060	ADAPTER	2	
11	59787879	ADAPTER	1	
12	13351671	ADAPTER	1	
13	95326930	ADAPTER	2	
14	59328492	ADAPTER	1	

13158530 REV 02

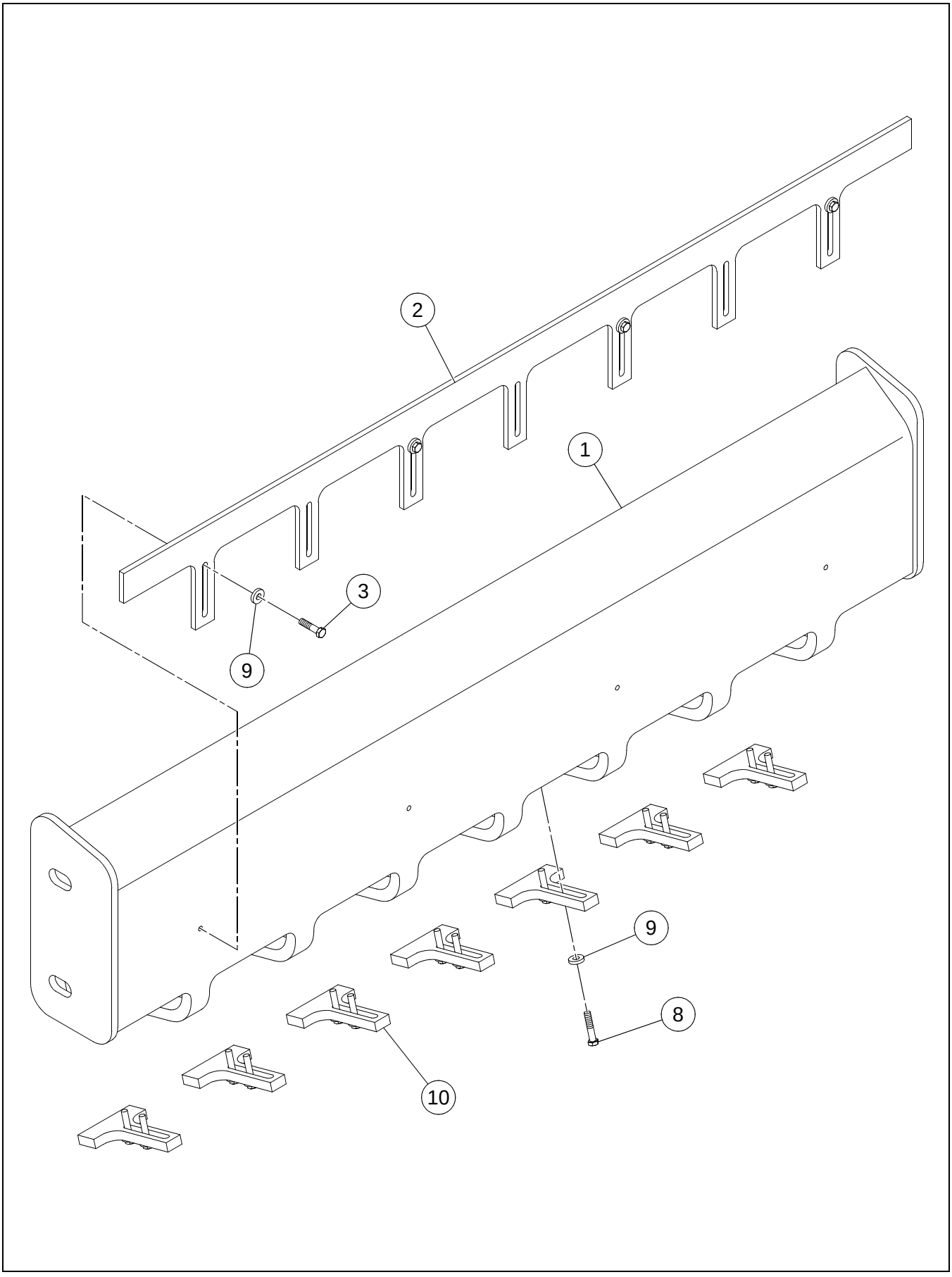

PREMIUM SCRAPER INSTALLATION

****Only Offered Parts Listed****

BOM 59290213

ITEM	COMM. NO.	DESCRIPTION	QTY	DIMENSIONS/NOTES
1	13410436	PREMIUM SCRAPER	1	
2	NOT-USED	THIS ITEM NOT USED W/THIS BOM	1	
3	NOT-USED	THIS ITEM NOT USED W/THIS BOM	1	
8	96705066	HHCS CL 8.8,YEL ZN	14	M12-1.75X60
9	96712237	FLATWASHER	14	
10	59175661	SCRAPER TOOTH	7	

Section C - ENGINE

43809854 REV 000

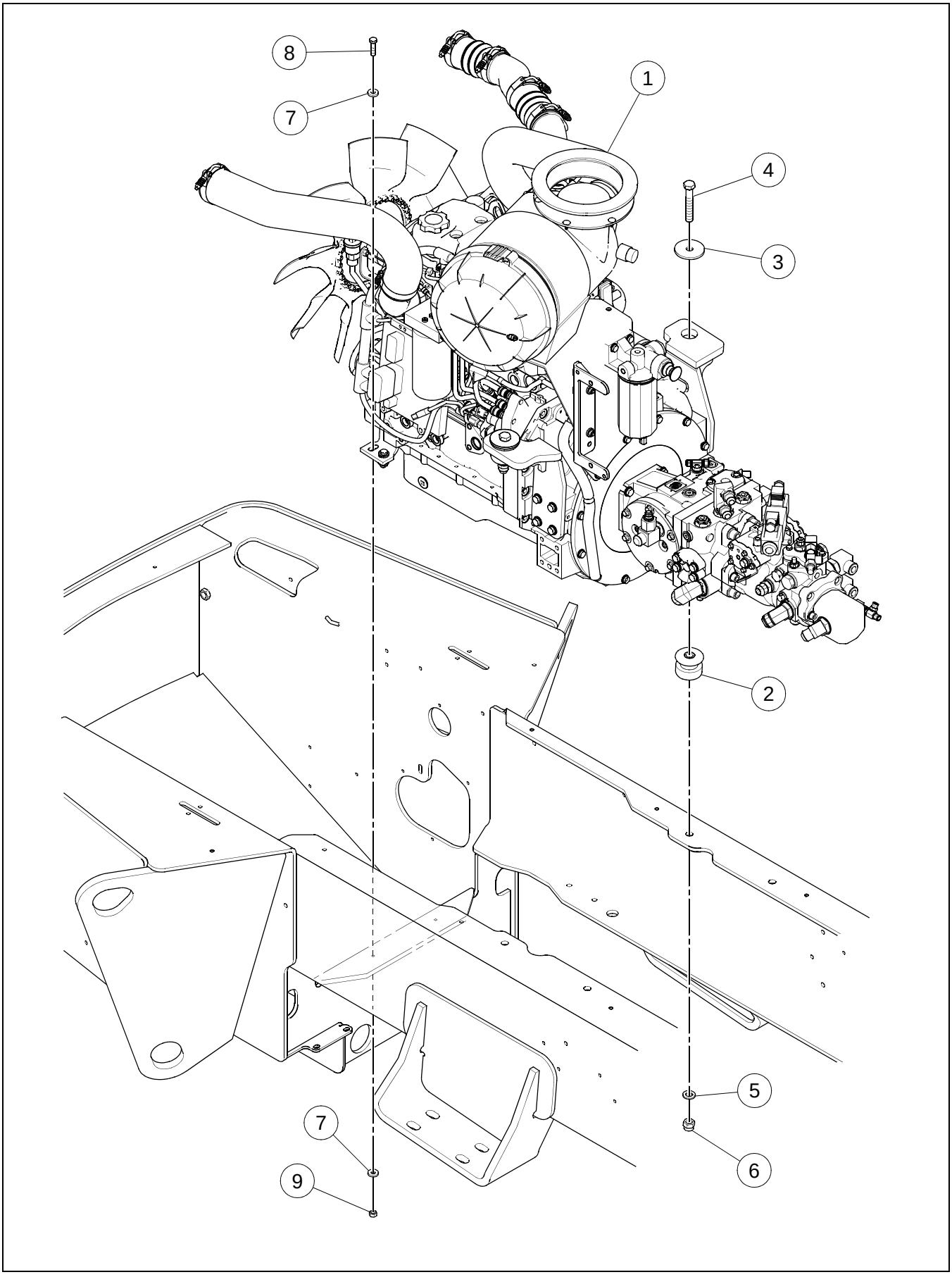

****Only Offered Parts Listed****

BOM 13886551

ITEM	COMM. NO.	DESCRIPTION	QTY	DIMENSIONS/NOTES
1	**NSVA**	**ENGINE ASSEMBLY**	**1**	**See Page C - 4.**
2	59127720	CENTER BONDED MOUNT	2	
3	58879768	SNUBBING WASHER	2	
4	96739982	HHCS CL 10.9,YEL ZN HR	2	M16-2.0X100
5	96738612	FLATWASHER	2	
6	96704630	STOP NUT	2	
7	96711833	WASHER	8	M10
8	96704556	HHCS CL 8.8,YEL ZN	4	M10-1.5X40
9	96704812	HEX NUT CL 8 ,YEL ZN	4	M10-1.5
10	**NSVA**	**FUEL LINE INSTALLATION**	**1**	**See Page C - 14.**

43809748 REV 0C

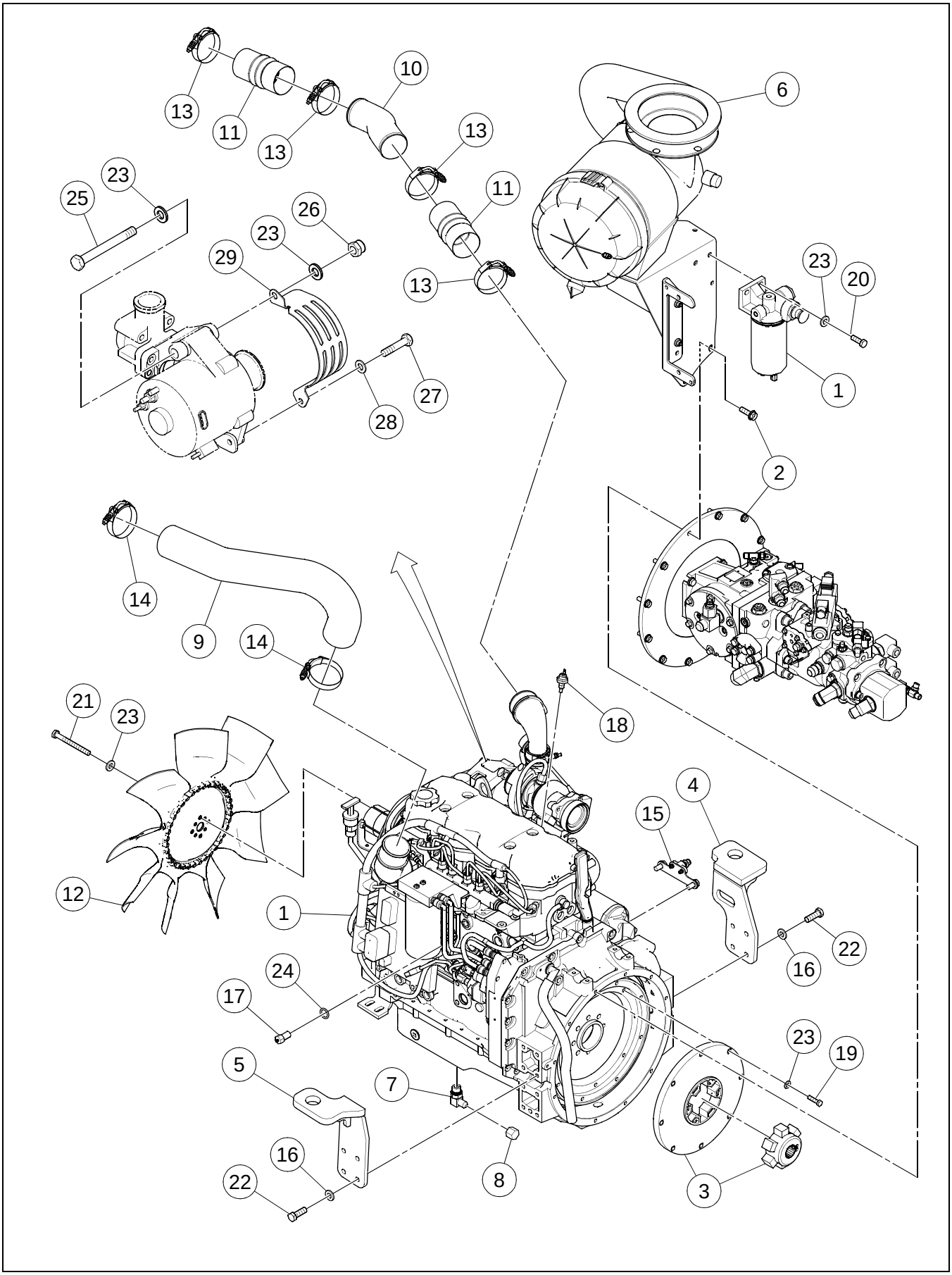

ENGINE ASSEMBLY

****Only Offered Parts Listed****

BOM 13886569

ITEM	COMM. NO.	DESCRIPTION	QTY	DIMENSIONS/NOTES
1	13886452	ENGINE	1	
-	13852256	- ALTERNATOR	1	
-	19295872	- FUEL FILTER	1	3 MICRON
-	43802263	- 25 MICRON FILTER	1	
-	13284617	- ENGINE OIL FILTER	1	
-	43821180	- FAN BELT	1	
-	19295856	- STARTER	1	
2	**NSVA**	**PUMP STACK ASSEMBLY**	**1**	**See Page C - 6.**
3	59286336	COUPLING	1	
4	13886890	ENGINE MOUNT, LEFT REAR	1	
5	13886924	ENGINE MOUNT, RIGHT REAR	1	
6	**NSVA**	**AIR CLEANER INSTALLATION**	**1**	**See Page C - 10.**
7	96719976	ELBOW	1	
8	95448940	CAP NUT	1	
9	13887260	CAC HOSE, COLD SIDE	1	
10	13887252	CAC HOSE, TURBO SIDE	1	
11	13232202	CONNECTOR	2	
12	13217500	SUCTION FAN	1	
13	54680079	CLAMP	4	
14	54680087	CLAMP	2	
15	**NSVA**	**INSULATED STUD ASSEMBLY**	**1**	**See Page C - 12.**
16	96738596	FLATWASHER	8	
17	19285584	SENDER, TEMPERATURE	1	02067-00
18	13491691	SWITCH, OIL PRESSURE	1	
19	95919254	HHCS	8	3/8-16X1.50
20	96701917	HHCS CL 8.8,YEL ZN	2	M10-1.5X30
21	96720594	HHCS CL 8.8,YEL ZN	4	M10-1.5X100
22	96702329	HHCS CL 8.8,YEL ZN	8	M12-1.75X35
23	96741046	FLATWASHER, CL 200,YEL ZN	16	
24	95018065	O-RING	1	RR-68104-113
25	96715602	HHCS CL 8.8,YEL ZN	1	M10-1.5X110
26	96704614	NUT	1	M10X1.5
27	96705587	HHCS CL 8.8,YEL ZN	1	M8-1.25X30
28	96741038	WASHER, FLAT CL 200,YEL ZN	1	ID-8.4,OD-16.0X1.6THK
29	43855626	GUARD, ALTERNATOR	1	

PUMP STACK ASSEMBLY - SHEET 1 OF 2

13188636 REV 00M

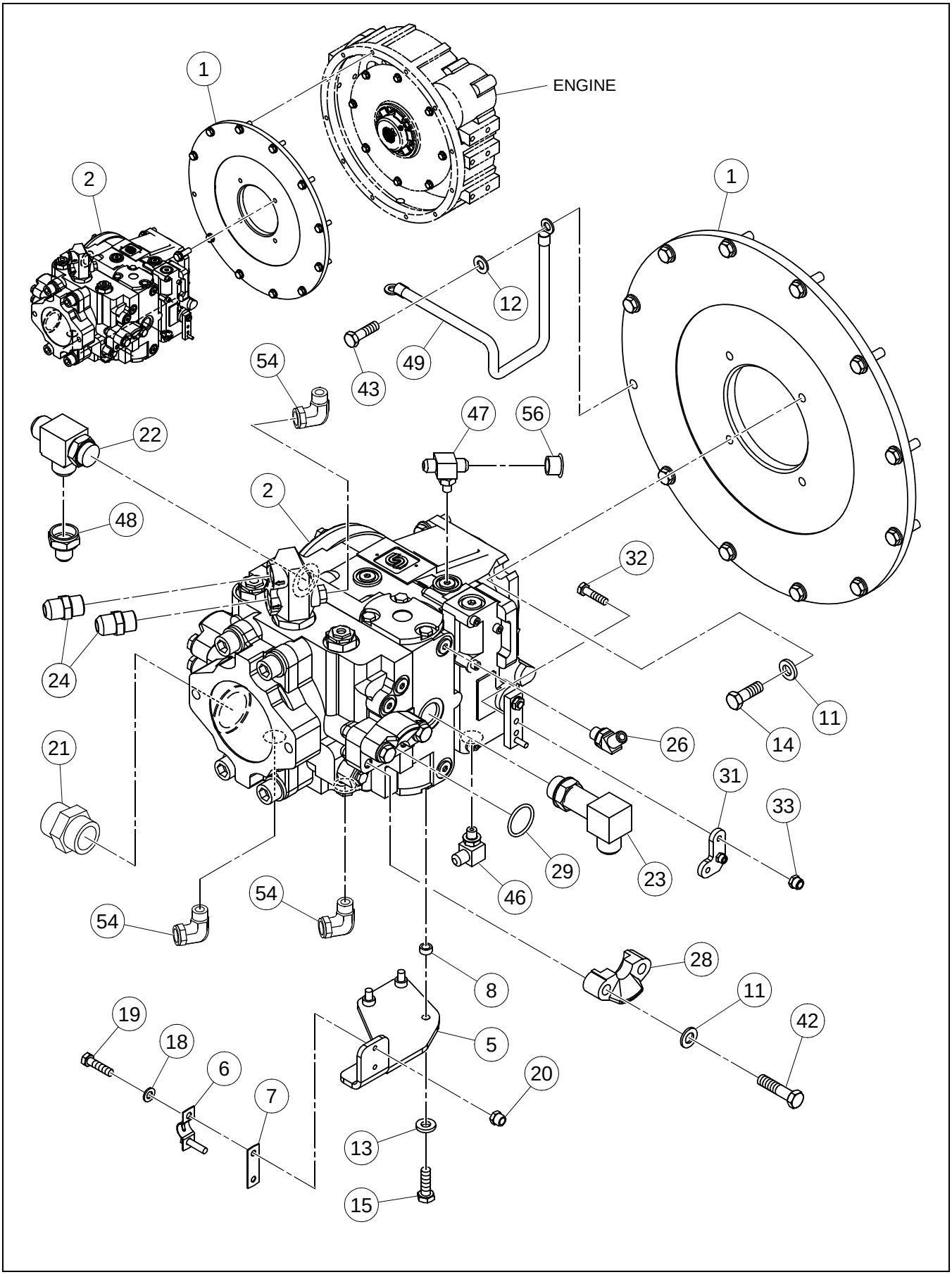

PUMP STACK ASSEMBLY - SHEET 1 OF 2

****Only Offered Parts Listed****

BOM 13270434

ITEM	COMM. NO.	DESCRIPTION	QTY	DIMENSIONS/NOTES
1	58966086	PLATE, PUMP MOUNTING	1	
5	59109041	PROPULSION CABLE MOUNT	1	
6	59580571	CLAMP	1	
7	59617985	SHIM	1	
8	13213111	SPACER	3	
9	95988804	"O"RING	1	
10	95988796	O-RING	1	
11	96738596	FLATWASHER	14	
12	96741046	FLATWASHER, CL 200,YEL ZN	14	
13	96741038	WASHER, FLAT CL 200,YEL ZN	3	ID-8.4,OD-16.0X1.6THK
14	96702329	HHCS CL 8.8,YEL ZN	4	M12-1.75X35
15	96705587	HHCS CL 8.8,YEL ZN	3	M8-1.25X30
16	96708300	SHCS CL 8.8	2	M12-1.75X45
17	96702162	SHCS CL 8.8	2	M10-1.5X30
18	96738554	FLATWASHER	2	
19	96705736	HHCS CL 8.8,YEL ZN	2	M5-0.8X20
20	96704580	LOCKNUT	2	M5
21	95376133	ELBOW	1	
22	95829263	TEE	1	
23	59847798	ADAPTER	1	
24	95303384	ADAPTER	2	
25	95285946	ADAPTER	1	
26	95866687	ADAPTER	1	
27	59922906	ADAPTER	1	
28	58901653	SPLIT FLANGE CLAMP	4	
29	59993881	O-RING	2	
30	59923961	ADAPTER	1	
31	13187372	PUMP LEVER	1	
32	96701461	HHCS CL 8.8,YEL ZN	2	M6-1X25
33	96704598	ESNA NUT	2	M6
34	95469128	ADAPTER	1	
35	59922989	ADAPTER	2	
36	95356960	ADAPTER	1	
37	59923797	ADAPTER	1	
38	95303350	ELBOW	1	
42	96705595	HHCS CL 8.8,YEL ZN	8	M12-1.75X50
43	96704309	HHCS CL 8.8,YEL ZN	12	M10-1.5X35
46	95653614	ADAPTER	1	
47	95431284	CROSS, PRESSURE	1	
48	59672709	REDUCER	1	
52	59929182	ADAPTER	1	
53	13208004	ADAPTER	1	

PUMP STACK ASSEMBLY - SHEET 2 OF 2

13188636 REV 00M

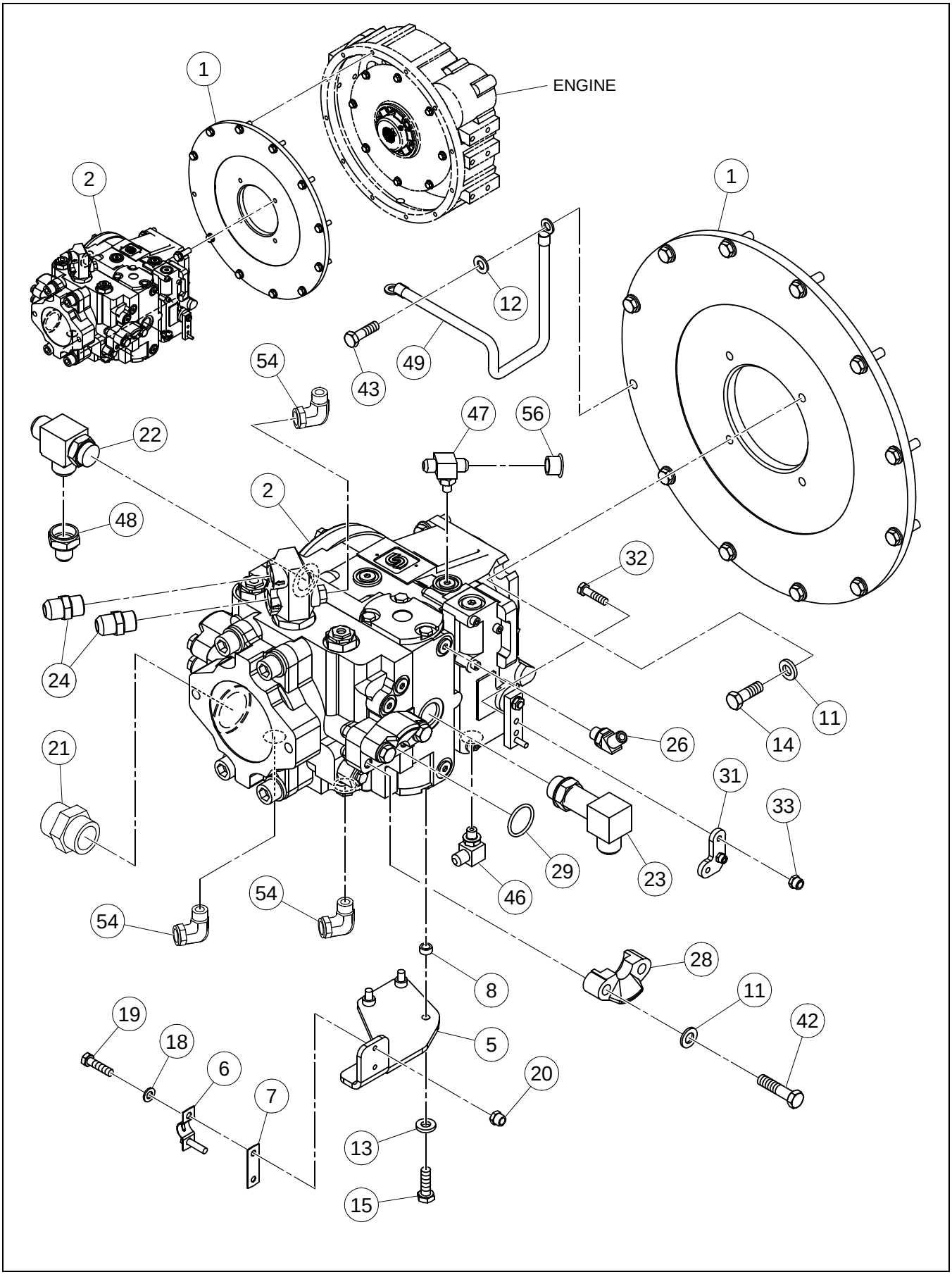

PUMP STACK ASSEMBLY - SHEET 2 OF 2

****Only Offered Parts Listed****

BOM 13270434

ITEM	COMM. NO.	DESCRIPTION	QTY	DIMENSIONS/NOTES
54	59922823	ADAPTER	3	
55	59922419	ADAPTER	2	
56	95257341	CAP	1	
57	95359410	ADAPTER	1	

AIR CLEANER INSTALLATION

43810183 REV 0B

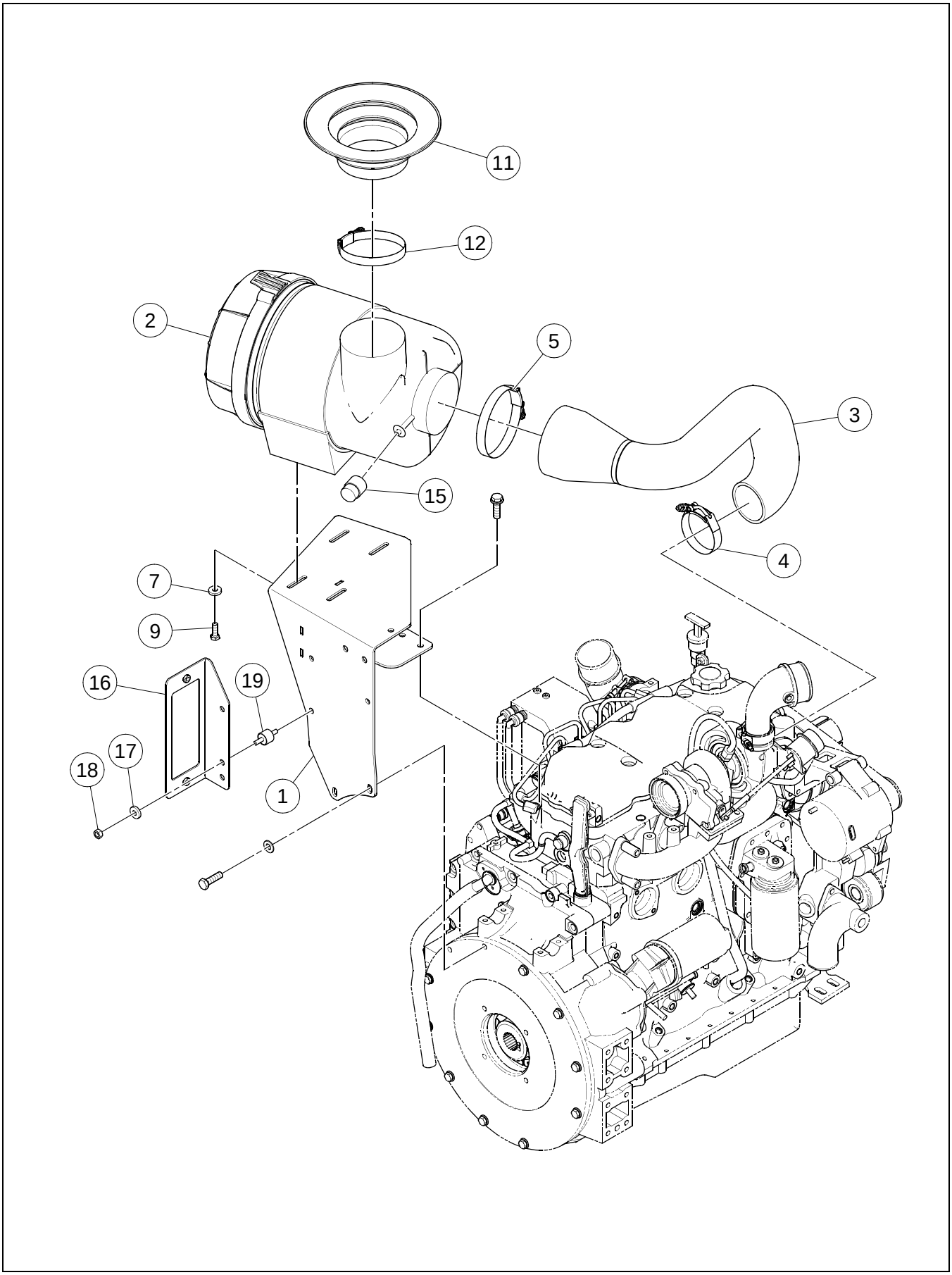

AIR CLEANER INSTALLATION

****Only Offered Parts Listed****

BOM 43810142

ITEM	COMM. NO.	DESCRIPTION	QTY	DIMENSIONS/NOTES
1	43851112	AIR CLEANER BRACKET WELD	1	
2	43902444	AIR CLEANER	1	
-	43904168	- PRIMARY ELEMENT	1	
-	43904176	- SAFETY ELEMENT	A/R	
3	43851310	AIR INTAKE HOSE	1	
4	54680103	BAND CLAMP	1	
5	19288604	CLAMP	1	
7	96712674	FLATWASHER	4	
9	96702659	HHCS CL 8.8,YEL ZN	4	M8-1.25X25
11	13880216	BELLOW-MOLAR	1	
12	20936001	CLAMP	1	
15	58905803	SWITCH	1	
16	43881978	BRACKET CHASSIS HARNESS	1	
17	96713979	HARD WASHER	2	
18	96701370	NUT,HEX CL 8 ,YEL ZN	2	M8-1.25
19	13885991	ISOLATOR, SMALL SANDWICH MOUNT	2	J-4624-446

INSULATED STUD ASSEMBLY

13322821 REV 00

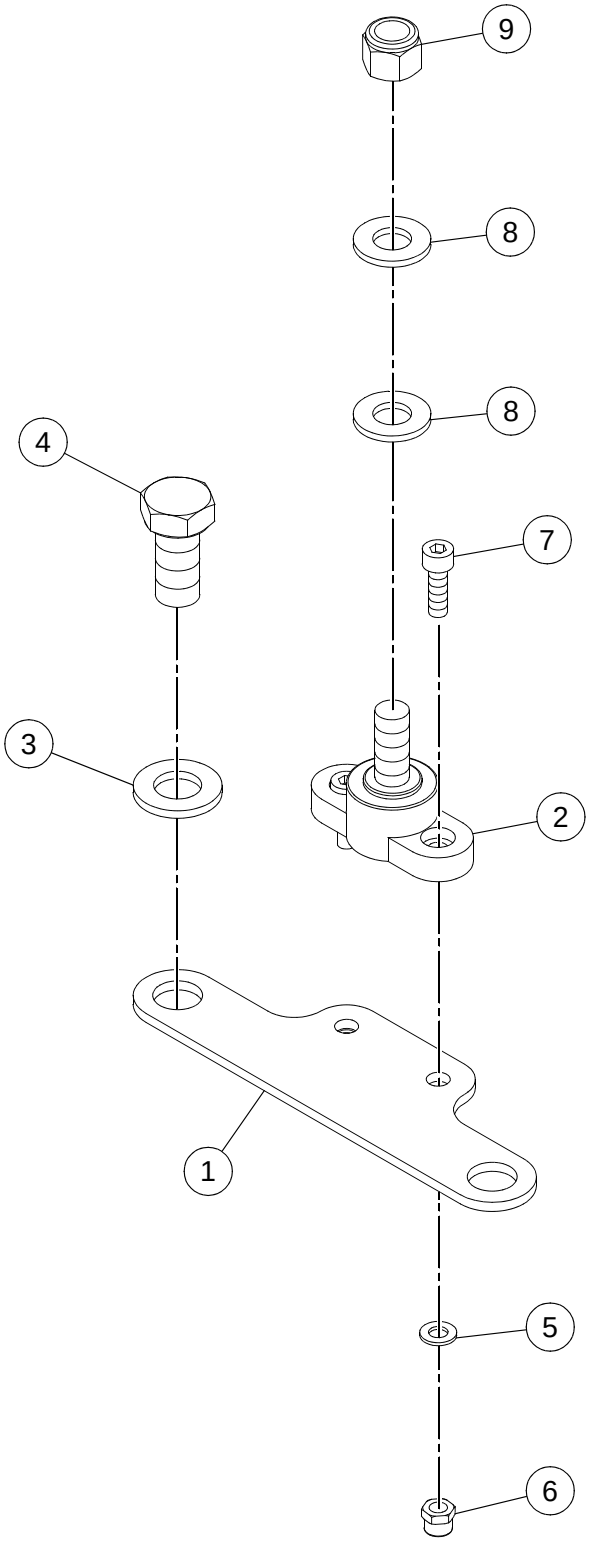

INSULATED STUD ASSEMBLY

****Only Offered Parts Listed****

BOM 13321963

ITEM	COMM. NO.	DESCRIPTION	QTY	DIMENSIONS/NOTES
1	13321955	INSULATED STUD BRACKET	1	
2	13321864	INSULATED STUD	1	
3	96738596	FLATWASHER	2	
4	96701495	HHCS CL 8.8,YEL ZN	2	M12-1.75X25
5	96738554	FLATWASHER	2	
6	96704580	LOCKNUT	2	M5
7	96720115	SHCS CL 8.8,YEL ZN	2	M5-0.8X16
8	96741046	FLATWASHER, CL 200,YEL ZN	2	
9	95923322	LOCKNUT	1	3/8-16

FUEL LINE INSTALLATION

43851989 REV 01

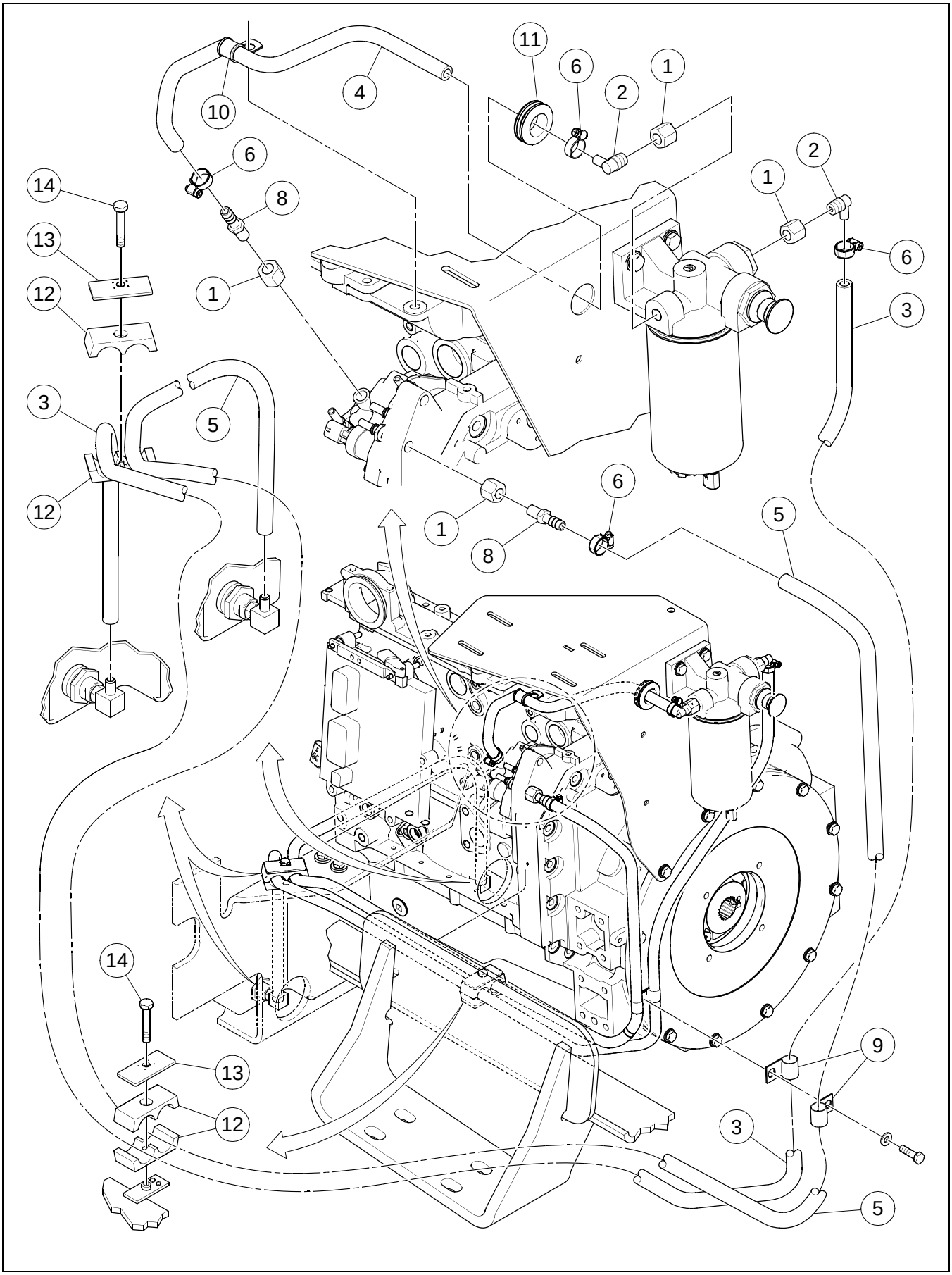

FUEL LINE INSTALLATION

****Only Offered Parts Listed****

BOM 43851997

ITEM	COMM. NO.	DESCRIPTION	QTY	DIMENSIONS/NOTES
1	58943747	ADAPTER	4	
2	21956545	ADAPTER	2	
3	43830355	HOSE ASSEMBLY	1	
4	43888049	FUEL LINE	1	
5	18006833	HOSE ASSEMBLY	1	
6	50274299	HOSE CLAMP	4	
8	59331934	ADAPTER	2	
9	59117333	CLAMP	2	
10	59151001	CLAMP	1	
11	58947987	GROMMET	1	
12	59891002	CLAMP INSERT	4	
13	59583500	COVER PLATE	2	
14	96705553	HHCS CL 8.8,YEL ZN	2	M8-1.25X45

13299763 REV 0A

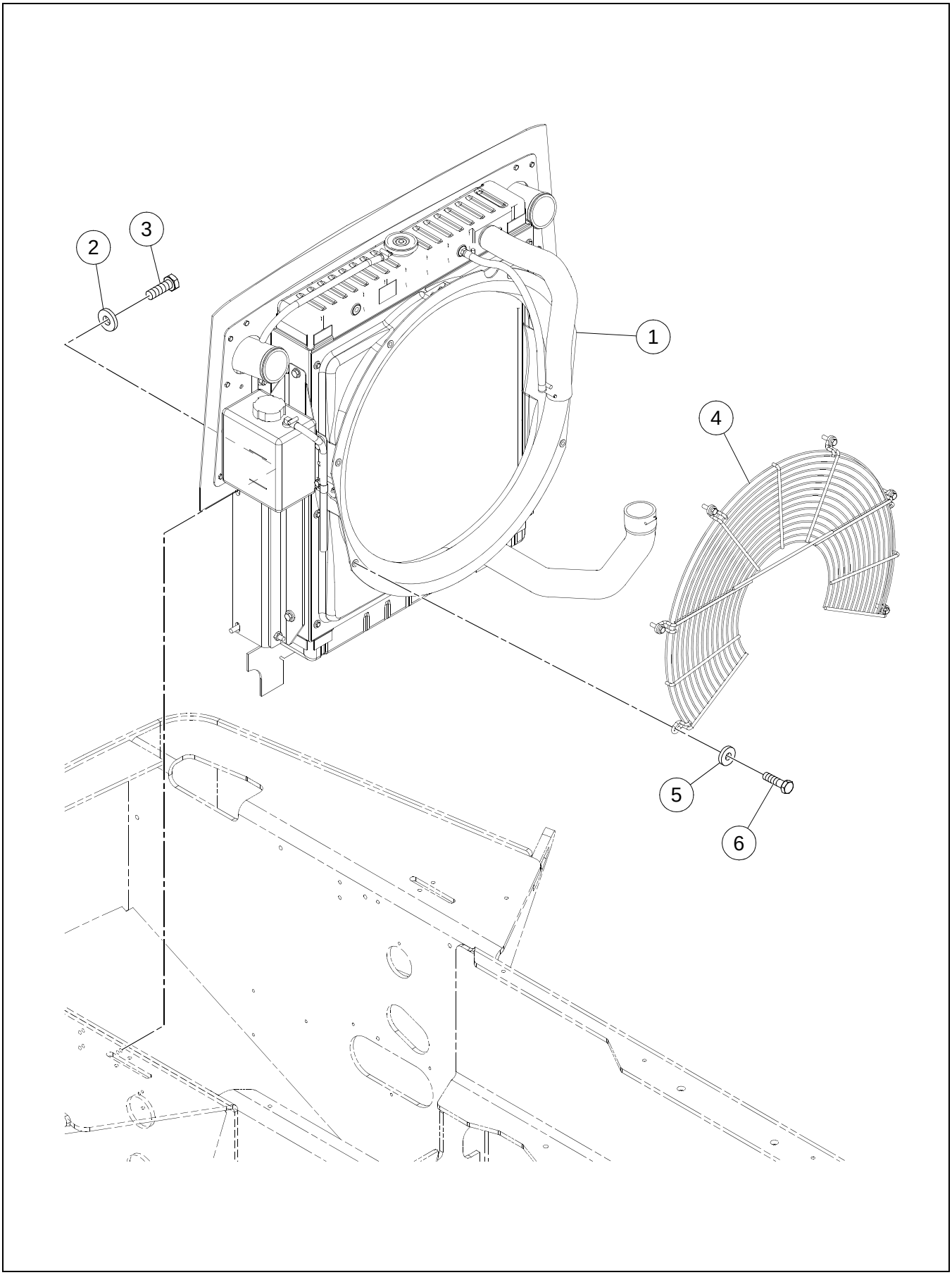

RADIATOR/OIL COOLER INSTALLATION

****Only Offered Parts Listed****

BOM 43810191

ITEM	COMM. NO.	DESCRIPTION	QTY	DIMENSIONS/NOTES
1	**NSVA**	**RADIATOR/OIL COOLER ASSEMBLY**	**1**	**See Page C - 18.**
2	96711833	WASHER	4	M10
3	96701917	HHCS CL 8.8,YEL ZN	4	M10-1.5X30
4	43856319	FAN GUARD 24"	1	
5	96712674	FLATWASHER	6	
6	96705587	HHCS CL 8.8,YEL ZN	6	M8-1.25X30

RADIATOR/OIL COOLER ASSEMBLY

13299177 REV 0D

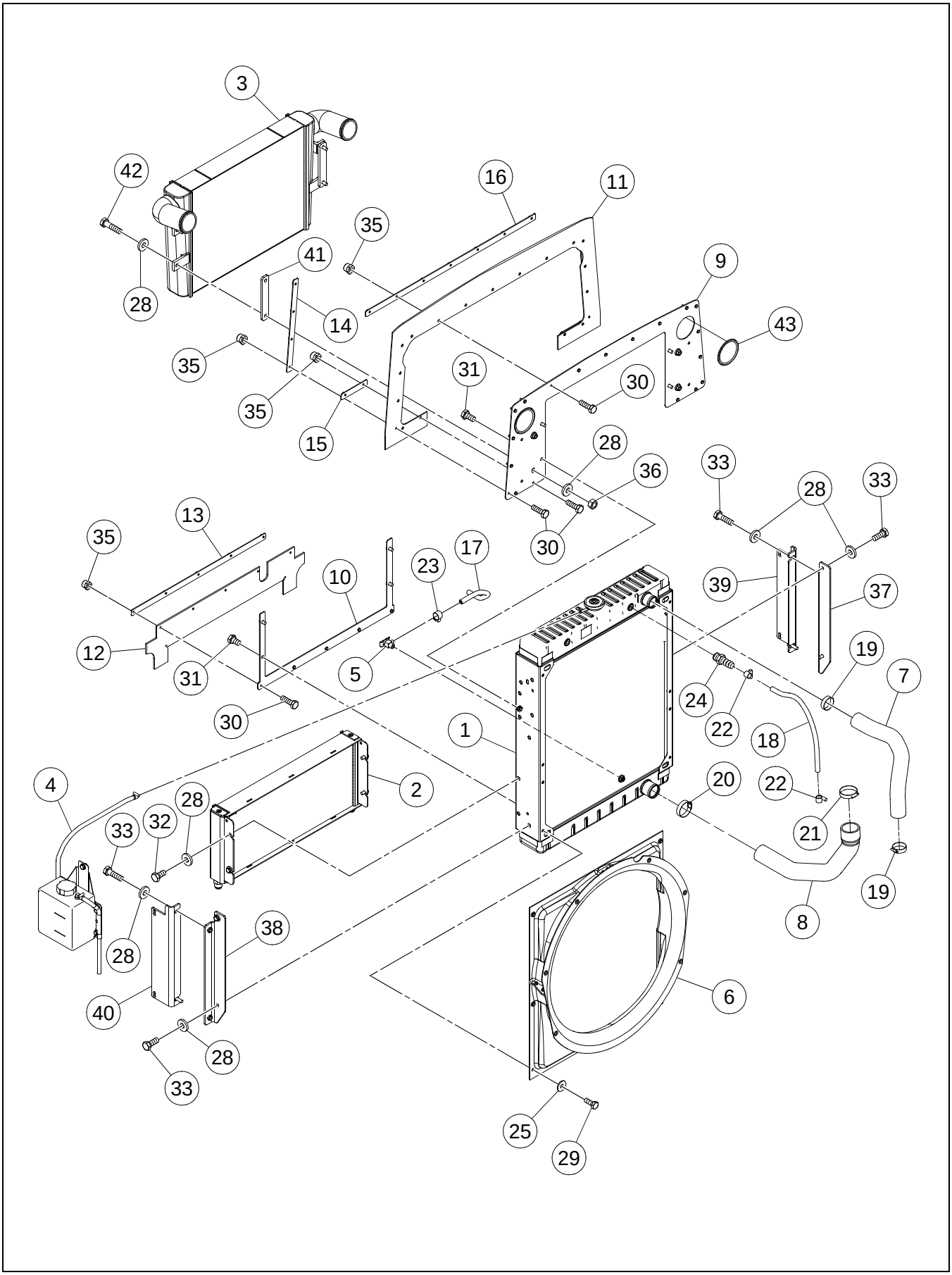

RADIATOR/OIL COOLER ASSEMBLY

****Only Offered Parts Listed****

BOM 13887278

ITEM	COMM. NO.	DESCRIPTION	QTY	DIMENSIONS/NOTES
1	43840180	RADIATOR	1	
2	43840198	OIL COOLER	1	
3	43840206	CHARGE AIR COOLER	1	
4	**NSVA**	**RECOVERY BOTTLE INSTALLATION**	**1**	**See Page C - 20.**
5	58848920	DRAIN ASSEMBLY	1	
6	13272547	FAN SHROUD	1	
7	13417894	RADIATOR HOSE, TOP	1	
8	13279666	LOWER	1	
9	13279278	BAFFLE	1	
10	13887286	LOWER BAFFLE PLATE	1	
11	13292545	RUBBER BAFFLE	1	
12	13321047	LOWER BAFFLE PLATE	1	
13	13216577	BACKING PLATE	1	
14	13209341	BACKING PLATE	2	
15	13209424	BACKING PLATE	2	
16	13216460	BACKING PLATE	1	
17	59321687	HOSE	1	
18	59873935	HOSE ASSEMBLY	1	
19	95220893	CLAMP	2	
20	95278008	CLAMP	1	
21	95286266	CLAMP	1	
22	50274299	HOSE CLAMP	2	
23	50274299	HOSE CLAMP	1	
24	59331934	ADAPTER	1	
25	96704663	FLATWASHER	6	M6
28	96711833	WASHER	20	M10
29	96701958	HHCS CL 8.8,YEL ZN	6	M6-1X16
30	96704564	HHCS CL 8.8,YEL ZN	24	M6-1X20
31	96701479	HHCS CL 8.8,YEL ZN	8	M10-1.5X16
32	96702279	HHCS CL 8.8,YEL ZN	4	M10-1.5X20
33	96702287	HHCS CL 8.8,YEL ZN	8	M10-1.5X25
35	96704598	ESNA NUT	24	M6
36	96704812	HEX NUT CL 8 ,YEL ZN	4	M10-1.5
37	13237268	BRACKET	1	
38	13237276	RADIATOR BRACKET	1	
39	13320833	RADIATOR FRAME BRACKET	1	
40	13320429	RADIATOR FRAME BRACKET	1	
41	13297866	SPACER BLOCK	2	
42	96704309	HHCS CL 8.8,YEL ZN	4	M10-1.5X35
43	43919638	TRIM-LOCK	2	

RECOVERY BOTTLE INSTALLATION

13299698 REV 00

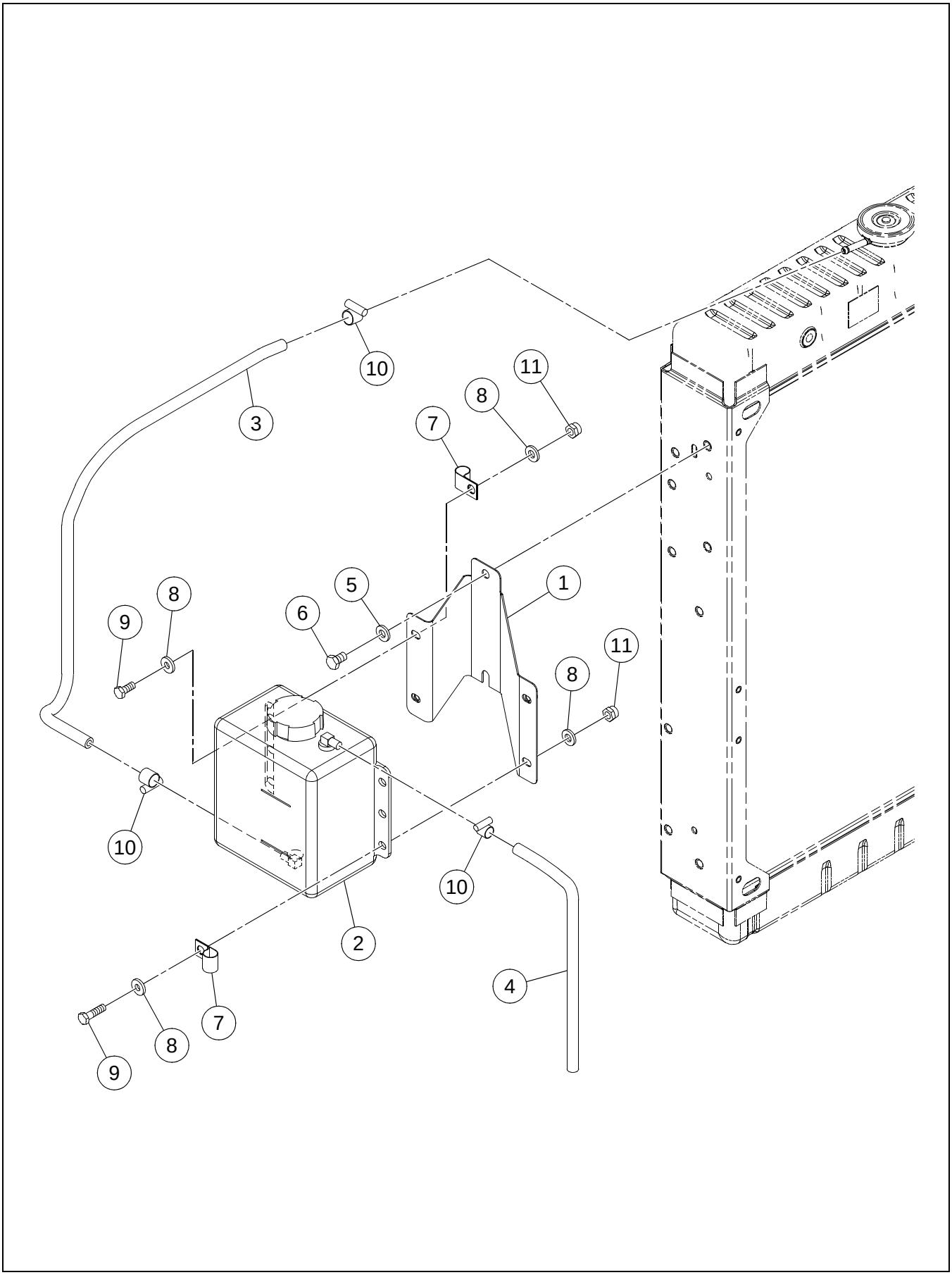

RECOVERY BOTTLE INSTALLATION

****Only Offered Parts Listed****

BOM 13292479

ITEM	COMM. NO.	DESCRIPTION	QTY	DIMENSIONS/NOTES
1	43897420	BRACKET, COOLANT RECOVERY	1	
2	58802851	RECOVERY BOTTLE	1	
-	59154807	- CAP	1	
3	13216734	HOSE ASSEMBLY	1	
4	59242263	HOSE ASSEMBLY	1	
5	96741046	FLATWASHER, CL 200,YEL ZN	2	
6	96702279	HHCS CL 8.8,YEL ZN	2	M10-1.5X20
7	59103598	CLAMP	2	
8	96741038	WASHER, FLAT CL 200,YEL ZN	8	ID-8.4,OD-16.0X1.6THK
9	96702659	HHCS CL 8.8,YEL ZN	4	M8-1.25X25
10	50274299	HOSE CLAMP	3	
11	96704606	ESNA NUT	4	M8

LOW EXIT EXHAUST INSTALLATION

43809615 REV 00

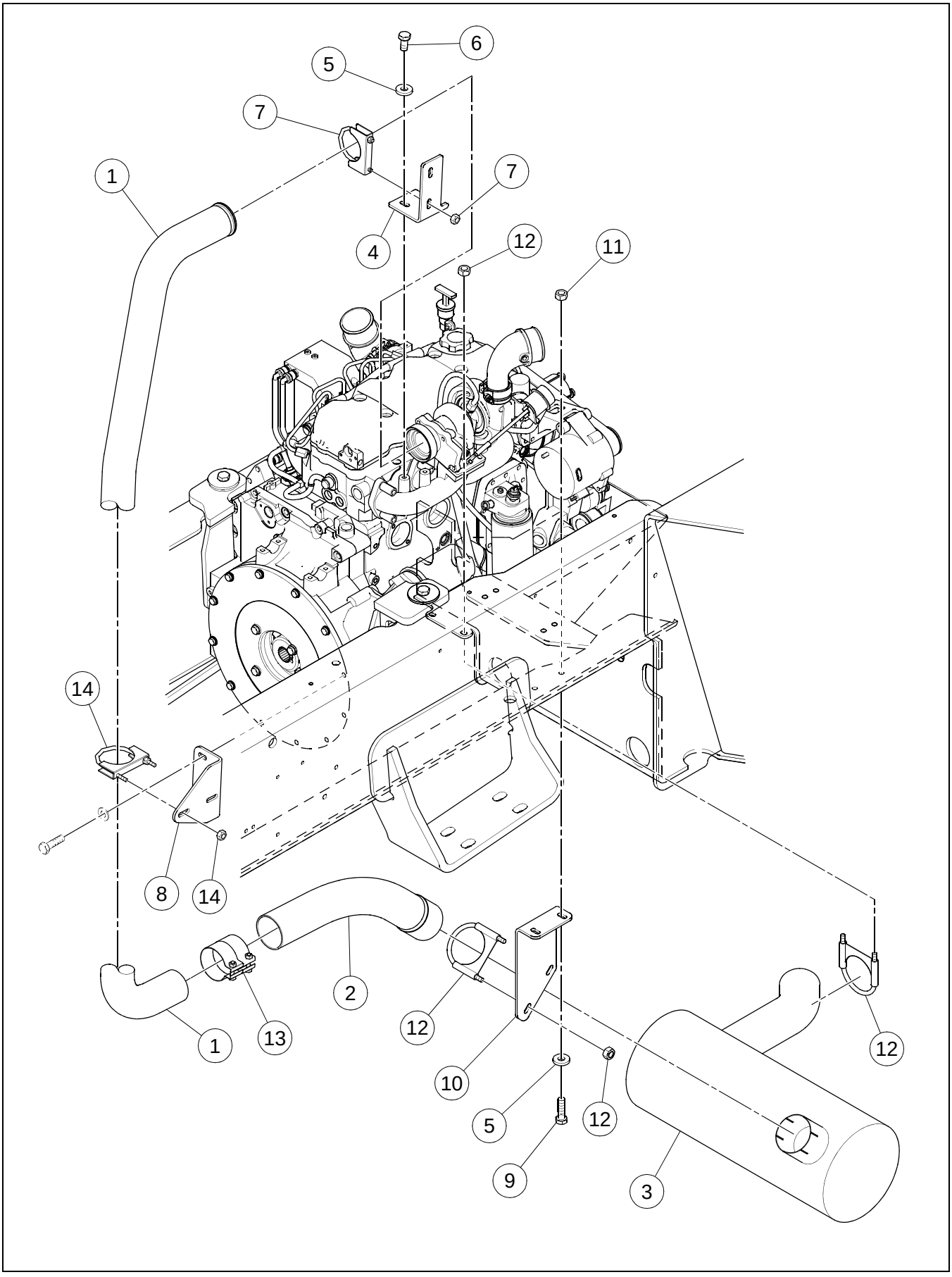

LOW EXIT EXHAUST INSTALLATION

****Only Offered Parts Listed****

BOM 13887476

ITEM	COMM. NO.	DESCRIPTION	QTY	DIMENSIONS/NOTES
1	13887583	EXHAUST PIPE	1	
2	13887658	EXHAUST PIPE	1	
3	43936046	MUFFLER	1	
4	13887575	SUPPORT BRACKET	1	
5	96711833	WASHER	4	M10
6	96702279	HHCS CL 8.8,YEL ZN	2	M10-1.5X20
7	59495028	CLAMP	1	
8	13239900	EXHAUST BRACKET	1	
9	96704309	HHCS CL 8.8,YEL ZN	4	M10-1.5X35
10	13169362	SUPPORT BRACKET	1	
11	96704812	HEX NUT CL 8 ,YEL ZN	2	M10-1.5
12	59534313	CLAMP	2	
13	13093075	CLAMP SEAL	1	
14	59179218	EXHAUST	1	

Section D - OPERATORS COMPARTMENT

OPERATORS PLATFORM INSTALLATION - SHEET 1 OF 2

13169198 REV 0AC

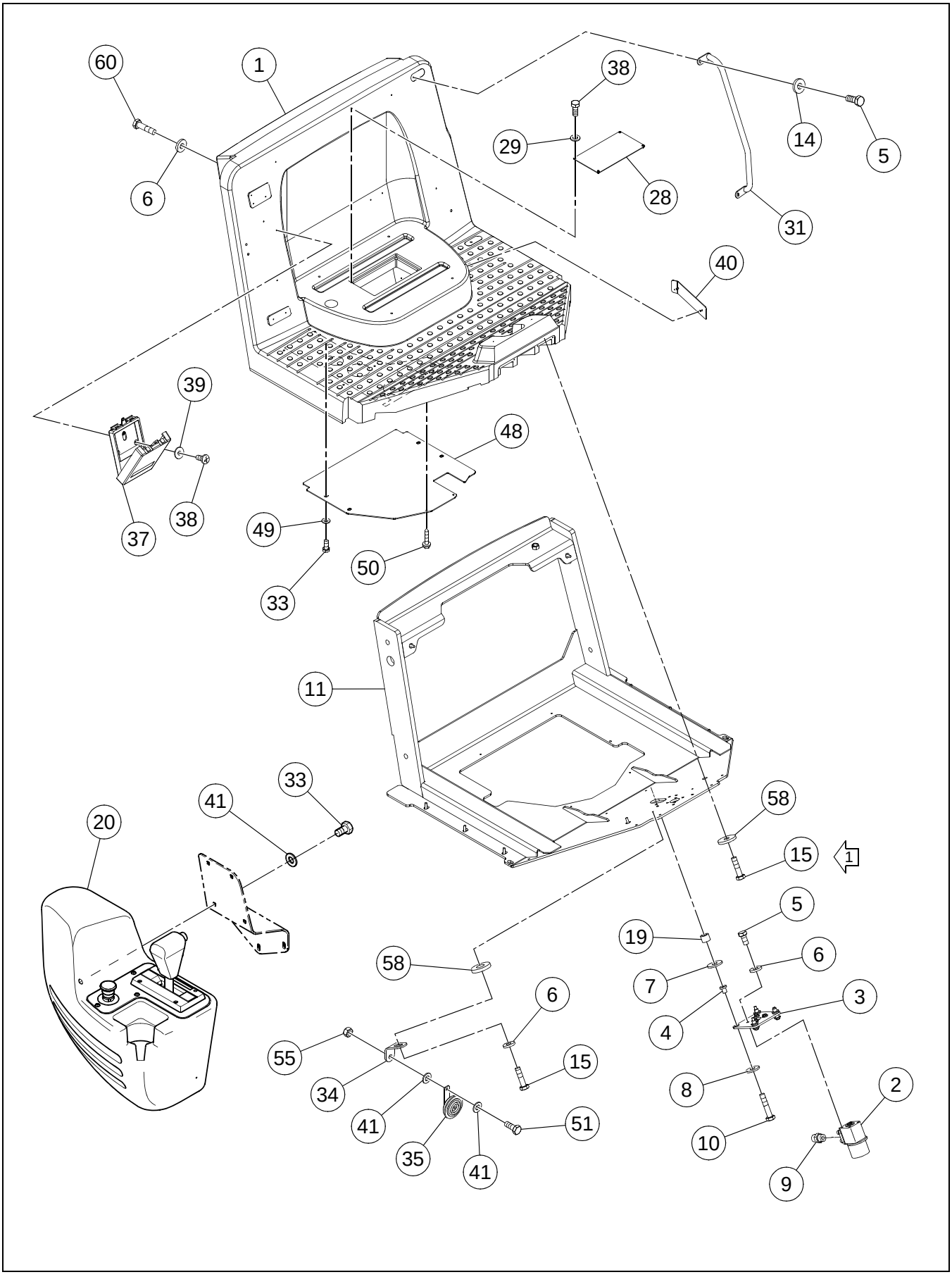

OPERATORS PLATFORM INSTALLATION - SHEET 1 OF 2

****Only Offered Parts Listed**** **BOM 13321393**

ITEM	COMM. NO.	DESCRIPTION	QTY	DIMENSIONS/NOTES
1	43845767	PLATFORM, OPERATORS	1	
3	13167721	MOUNTING PLATE	1	
4	59424309	SHOCK MOUNT	4	
5	96702279	HHCS CL 8.8,YEL ZN	7	M10-1.5X20
6	96741046	FLATWASHER, CL 200,YEL ZN	5	
7	59437079	HEAD WASHER	4	
8	59437087	WASHER	4	
9	95303368	ADAPTER	4	
10	96704549	HHCS CL 10.9,YEL ZN HR	4	M10-1.5X45
11	43919265	ROPS SUPPORT PLATFORM	1	
12	13239157	ROPS SUPPORT	1	
13	96738646	FLATWASHER	4	
14	96711833	WASHER	4	M10
15	96704309	HHCS CL 8.8,YEL ZN	6	M10-1.5X35
16	96715123	HHCS CL 10.9,YEL ZN HR	4	M24-3X80
17	59565044	FLATWASHER, HARDENED	2	
18	96703665	NUT,HEX CL 10,YEL ZN HR	2	M20-2.5
19	13167812	SPACER	4	
20	**NSVA**	**CONTROL CONSOLE ASSEMBLY**	**1**	**See Page D - 6.**
21	13412648	SPACER	4	
23	13214804	EYEBOLT	2	
24	13217450	SLEEVE	2	
25	13413158	RAILING	1	
26	96712237	FLATWASHER	6	
27	96702808	HHCS CL 10.9,YEL ZN HR	8	M12-1.75X30
28	43869262	COVER PLATE	1	
29	96738554	FLATWASHER	4	
31	13233309	HAND RAIL	1	
33	96702824	HHCS CL 8.8,YEL ZN	13	M8-1.25X20
34	13237490	HORN BRACKET	1	
35	13469010	HORN	1	
37	59185074	MANUAL BOX	1	
38	96728548	SELF TAPPING SCREW	7	
39	96704663	FLATWASHER	3	M6
40	**NSVA**	**FUSE COVER ASSEMBLY**	**1**	**See Page D - 10.**
41	96741038	WASHER, FLAT CL 200,YEL ZN	8	ID-8.4,OD-16.0X1.6THK
42	96705041	HHCS CL 8.8,YEL ZN	2	M8-1.25X12
43	95301834	CLAMP	2	
44	13225339	WASHER	2	
45	96738208	HHCS CL 10.9,YEL ZN HR	2	M16-2.0X70
46	96711882	NUT,HEX CL 8 ,YEL ZN	2	M16-2
47	96701594	SPRING PIN	1	

OPERATORS PLATFORM INSTALLATION - SHEET 2 OF 2

13169198 REV 0AC

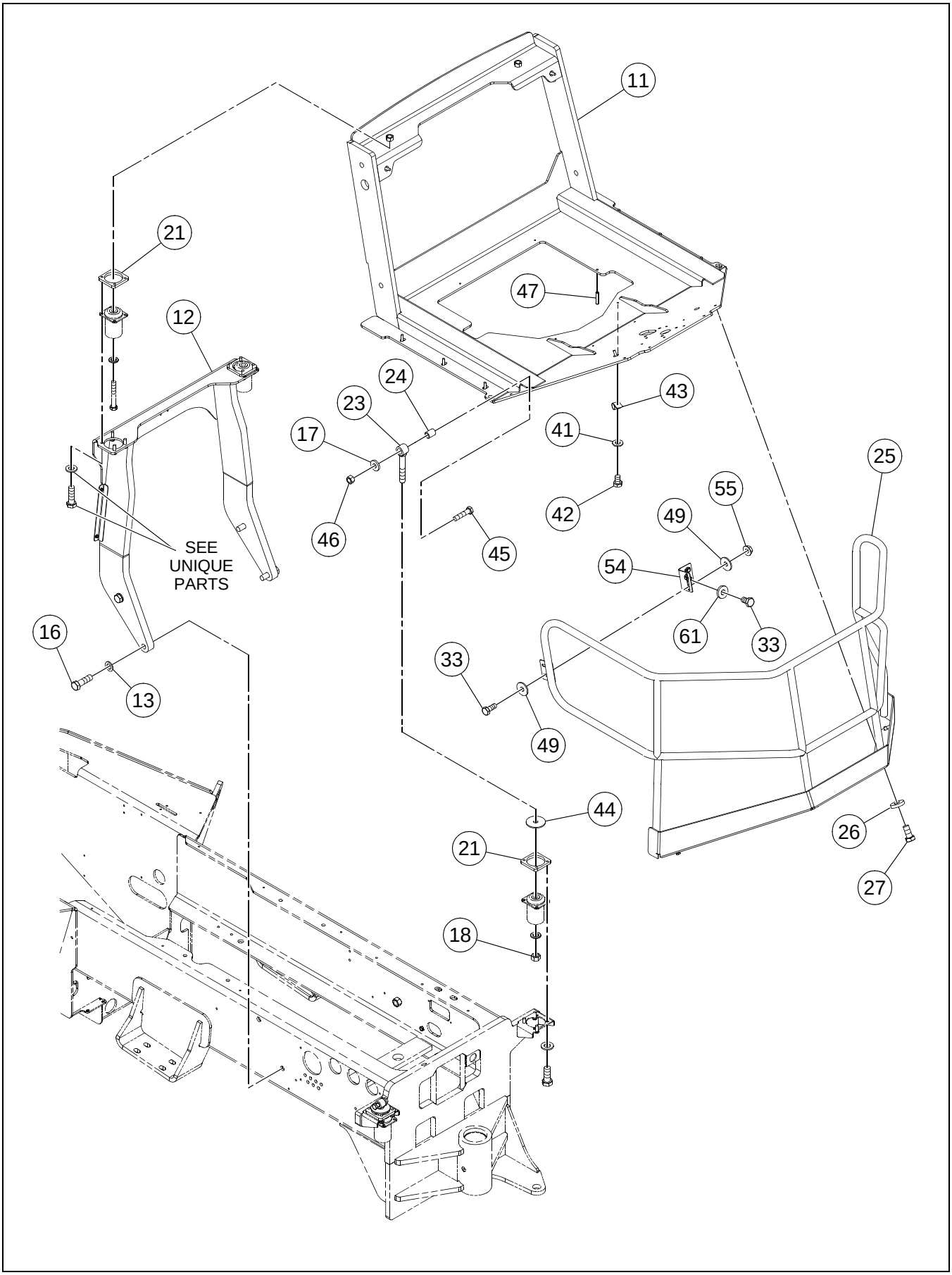

OPERATORS PLATFORM INSTALLATION - SHEET 2 OF 2

****Only Offered Parts Listed****

BOM 13321393

ITEM	COMM. NO.	DESCRIPTION	QTY	DIMENSIONS/NOTES
48	43851203	COVER PLATE	1	
50	96728548	SELF TAPPING SCREW	2	
51	96702659	HHCS CL 8.8,YEL ZN	1	M8-1.25X25
54	13231394	SUPPORT BRACKET	1	
55	96704606	ESNA NUT	3	M8
60	96705124	HHCS CL 8.8,YEL ZN	2	M10-1.5X45
61	96740188	WASHER	2	M8X3

CONTROL CONSOLE ASSEMBLY

13169743 REV 0F

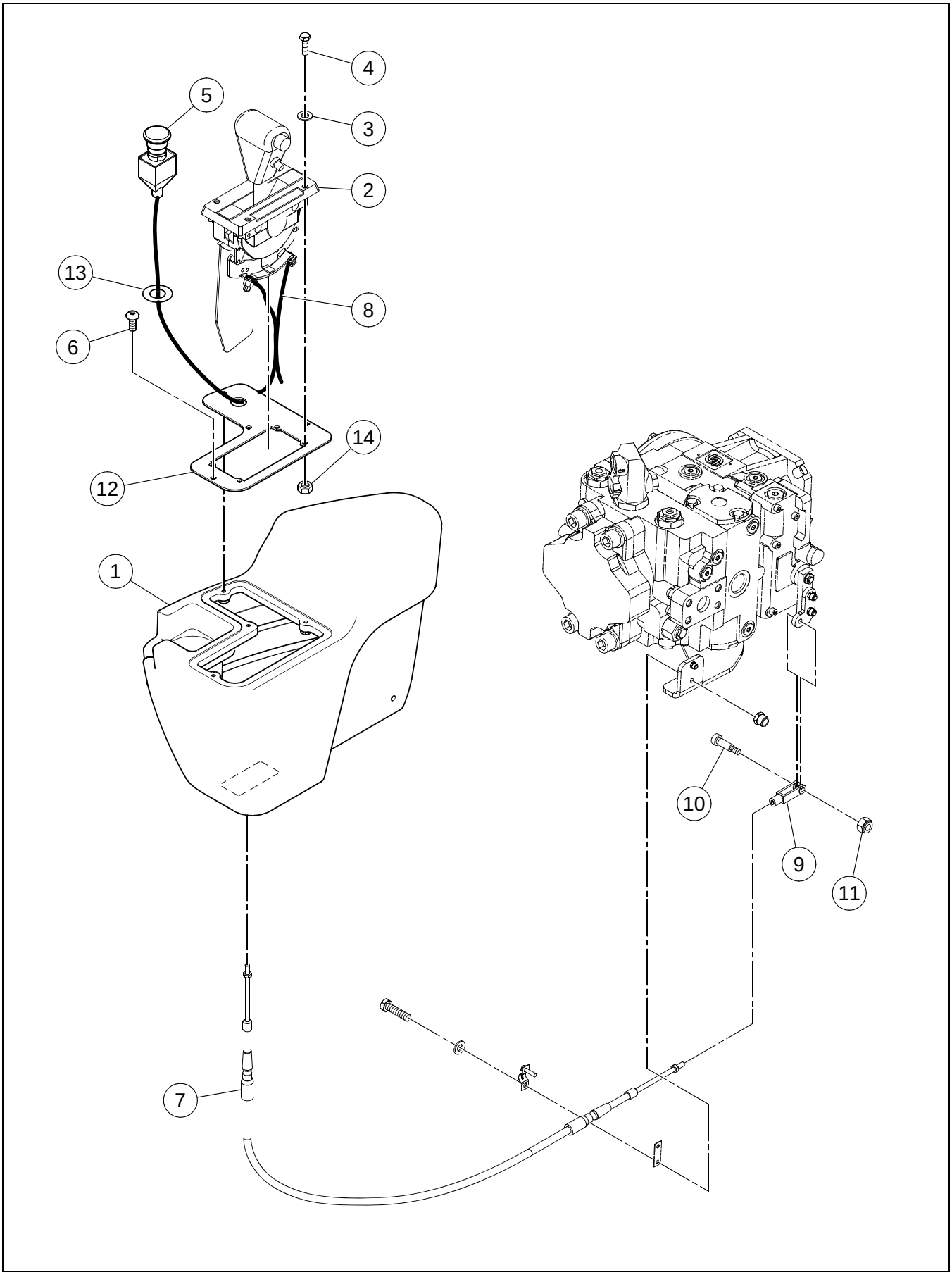

CONTROL CONSOLE ASSEMBLY

****Only Offered Parts Listed****

BOM 13321401

ITEM	COMM. NO.	DESCRIPTION	QTY	DIMENSIONS/NOTES
1	43908573	FSR CONTROL BOX	1	
2	43843556	F STOP R CONTROL	1	
3	96738554	FLATWASHER	4	
4	96702386	HHCS CL 8.8,YEL ZN	4	M5-0.8X12
5	**NSVA**	**EMERGENCY STOP ASSEMBLY**	**1**	**See Page D - 8.**
6	59148569	BHCS	4	
7	13304902	F-STOP	1	
8	13304944	HARNESS, SIDE CONSOLE	1	
9	59929059	CLEVIS	1	
10	95860052	SCREW	1	
11	95943346	NUT	1	
12	13884408	PANEL SIDE CONSOLE	1	
13	59239897	DECAL: STOP	1	
14	96704580	LOCKNUT	4	M5

EMERGENCY STOP ASSEMBLY

13169735 REV 0A

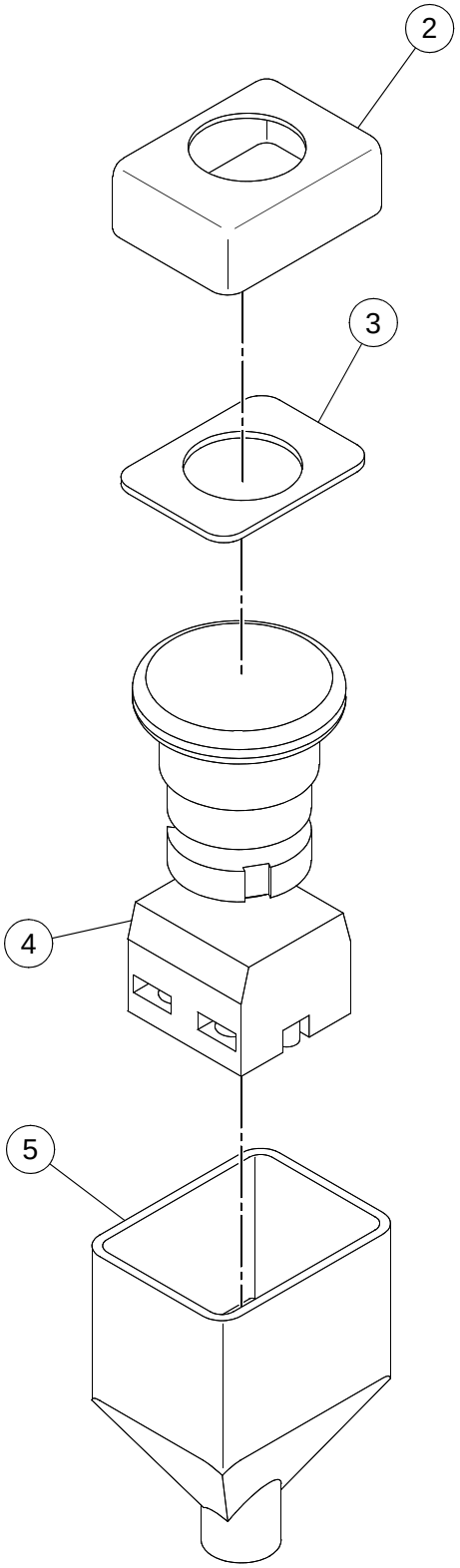

EMERGENCY STOP ASSEMBLY

****Only Offered Parts Listed****

BOM 13166087

ITEM	COMM. NO.	DESCRIPTION	QTY	DIMENSIONS/NOTES
2	59108100	DUST BOOT	1	
3	43910587	WASHER	1	
4	43910579	STOP SWITCH EMERGENCY	1	
5	59108605	DUST BOOT	1	

FUSE COVER ASSEMBLY

13215207 REV 00

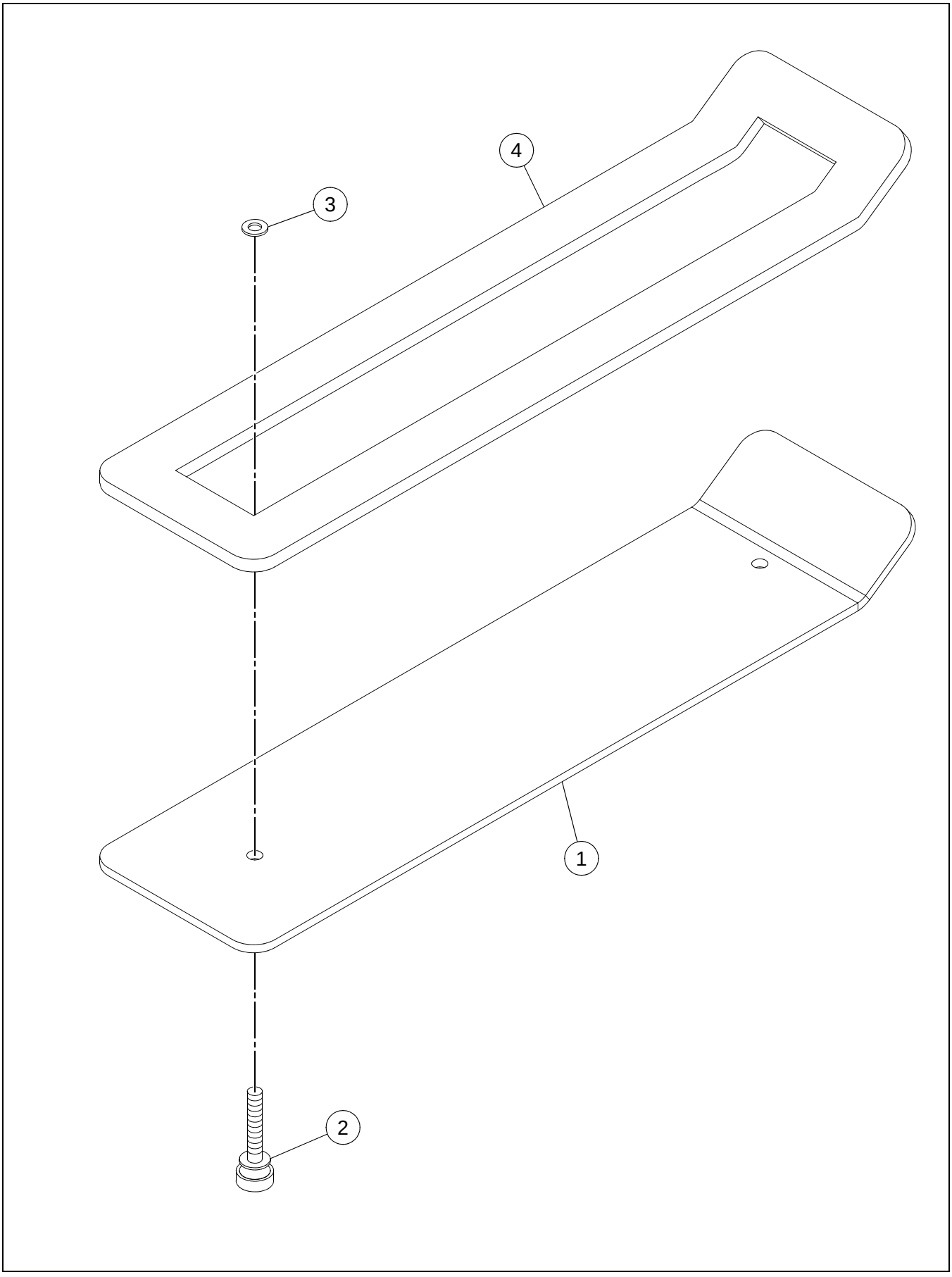

FUSE COVER ASSEMBLY

****Only Offered Parts Listed****

BOM 13214325

ITEM	COMM. NO.	DESCRIPTION	QTY	DIMENSIONS/NOTES
1	13214259	FUSE COVER	1	
2	13214317	KNURLED HEAD SCREW	2	
3	13214333	SPLIT WASHER	2	

UNIQUE NO ROPS OPERATORS PLATFORM INSTALLATION

13239041 REV 00E

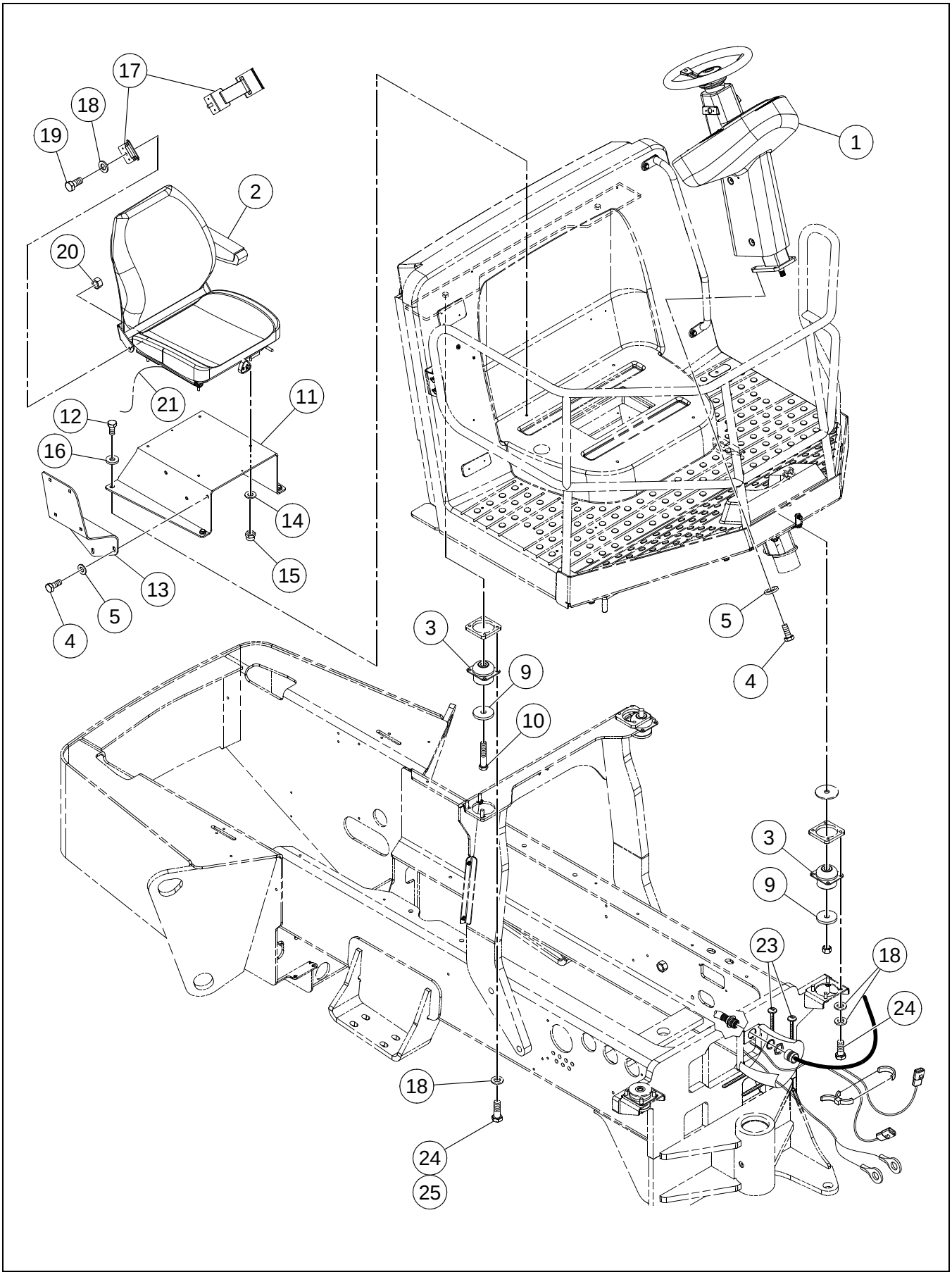

UNIQUE NO ROPS OPERATORS PLATFORM INSTALLATION

****Only Offered Parts Listed****

BOM 43927060

ITEM	COMM. NO.	DESCRIPTION	QTY	DIMENSIONS/NOTES
1	**NSVA**	**STRAIGHT PEDESTAL ASSEMBLY**	**1**	**See Page D - 14.**
2	**NSVA**	**SEAT ASSEMBLY**	**1**	**See Page D - 18.**
3	59299164	ISOLATOR	4	
4	96702287	HHCS CL 8.8,YEL ZN	7	M10-1.5X25
5	96741046	FLATWASHER, CL 200,YEL ZN	7	
9	13225347	WASHER	4	
10	96700927	HHCS CL 8.8,YEL ZN	2	M20-2.5X110
11	43916725	SEAT BASE	1	
12	96702287	HHCS CL 8.8,YEL ZN	4	M10-1.5X25
13	13886981	SIDE CONSOLE SUPPORT	1	
14	96741038	WASHER, FLAT CL 200,YEL ZN	4	ID-8.4,OD-16.0X1.6THK
15	96704606	ESNA NUT	4	M8
16	96711833	WASHER	4	M10
17	NOT-USED	THIS ITEM NOT USED W/THIS BOM	1	
18	96738596	FLATWASHER	24	
19	NOT-USED	THIS ITEM NOT USED W/THIS BOM	1	
20	NOT-USED	THIS ITEM NOT USED W/THIS BOM	1	
21	43957646	SEAT SWITCH HARNESS	1	
24	96702808	HHCS CL 10.9,YEL ZN HR	16	M12-1.75X30
25	NOT-USED	THIS ITEM NOT USED W/THIS BOM	1	
26	59117333	CLAMP	1	

STRAIGHT PEDESTAL ASSEMBLY

43818871 REV 0A

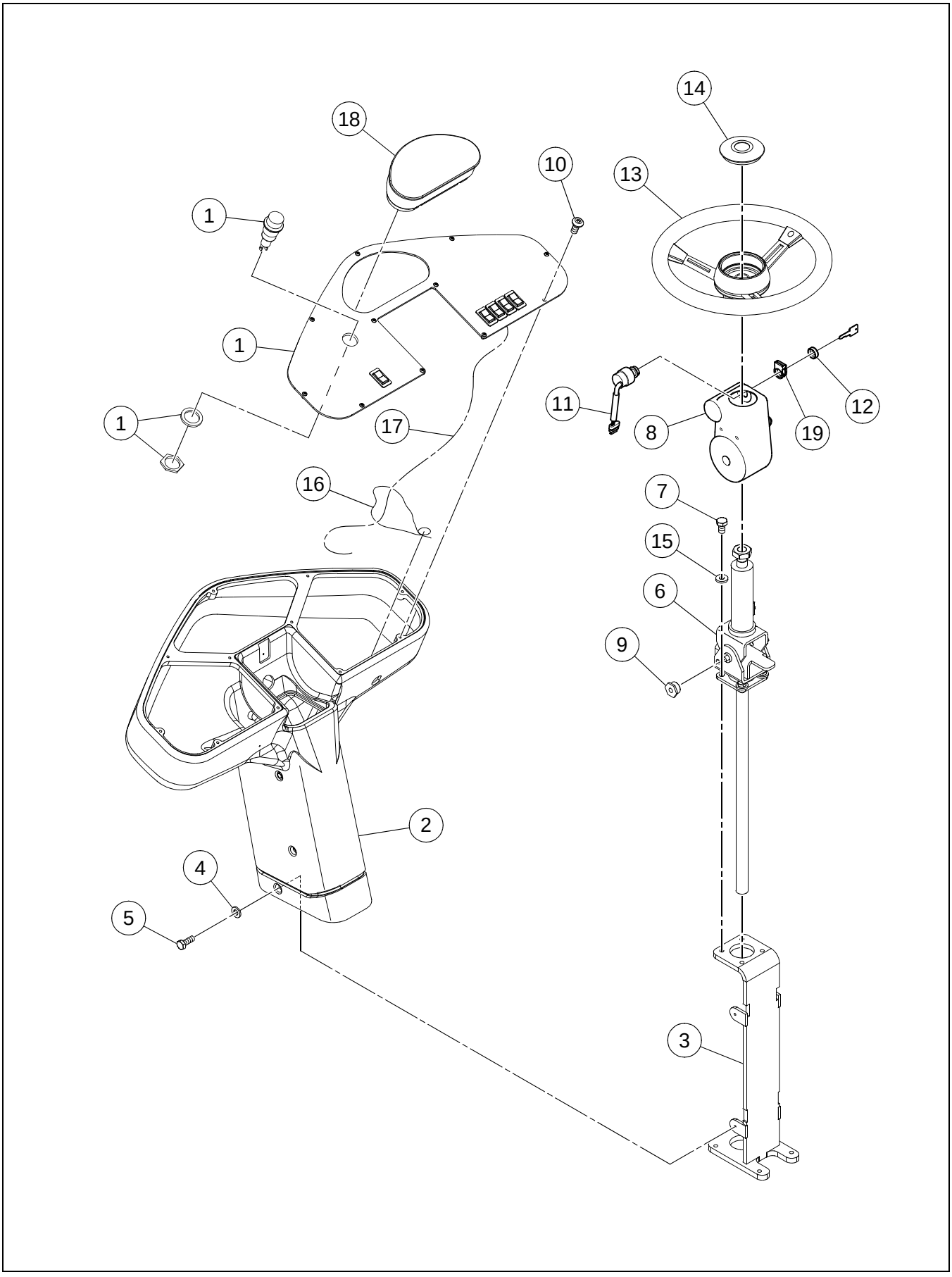

STRAIGHT PEDESTAL ASSEMBLY

****Only Offered Parts Listed****

BOM 43927052

ITEM	COMM. NO.	DESCRIPTION	QTY	DIMENSIONS/NOTES
1	**NSVA**	**GAUGE PANEL ASSEMBLY**	**1**	**See Page D - 16.**
2	43845874	PEDESTAL COVER	1	
3	13880612	PEDESTAL	1	
4	96741053	FLATWASHER, CL 200,YEL ZN	4	
5	96701958	HHCS CL 8.8,YEL ZN	4	M6-1X16
6	43844604	STEERING COLUMN, STRAIGHT	1	
7	96701479	HHCS CL 8.8,YEL ZN	4	M10-1.5X16
8	43845890	COVER COLUMN FIXED NO SIDE LTS	1	
9	13236872	NUT	2	
10	59148569	BHCS	11	
11	13459474	IGNITION SWITCH;NON RE-START	1	
12	59126961	NUT	1	
13	13158647	STEERING WHEEL	1	
14	59159558	HORN BUTTON	1	
15	96711833	WASHER	4	M10
16	58820168	WIRE TIE	2	
17	43902162	PEDESTAL HARNESS	1	
18	43871102	INSTRUMENT CLUSTER	1	
19	58892902	COVER	1	

GAUGE PANEL ASSEMBLY

43908185 REV 00

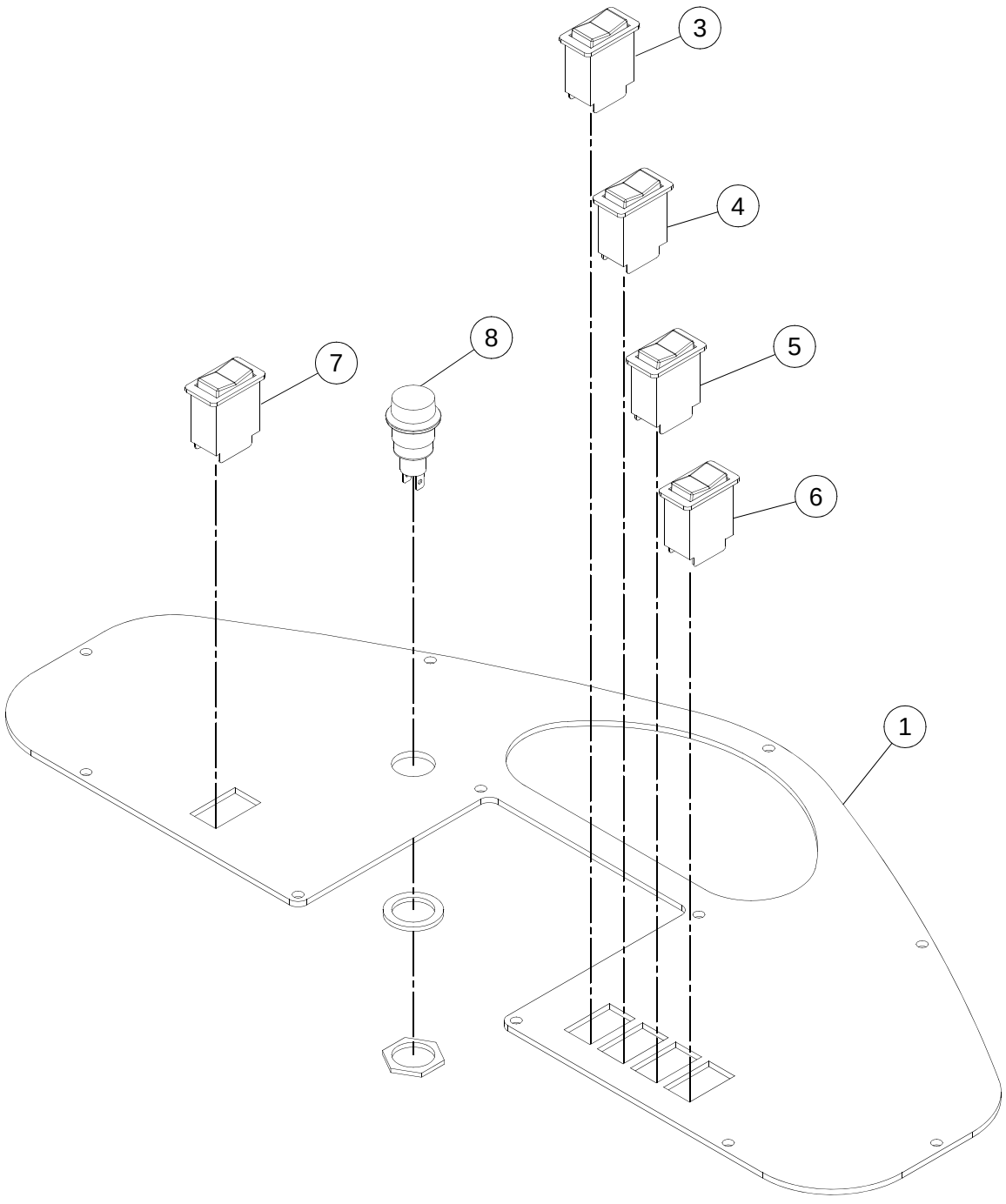

GAUGE PANEL ASSEMBLY

****Only Offered Parts Listed****

BOM 43908185

ITEM	COMM. NO.	DESCRIPTION	QTY	DIMENSIONS/NOTES
1	43905827	INSTRUMENT PANEL	1	
3	54666102	SWITCH, PARK BRAKE TEST	1	
4	54666094	SWITCH, PARK BRAKE	1	
5	54666086	SWITCH, HI/LOW TRAVEL	1	
6	54666078	SWITCH, HI/LOW RPM	1	
7	54666060	SWITCH, HI/LOW AMPLITUDE	1	
8	43876176	INDICATOR LAMP SEAT BELT	1	

SEAT ASSEMBLY

43922392 REV 00

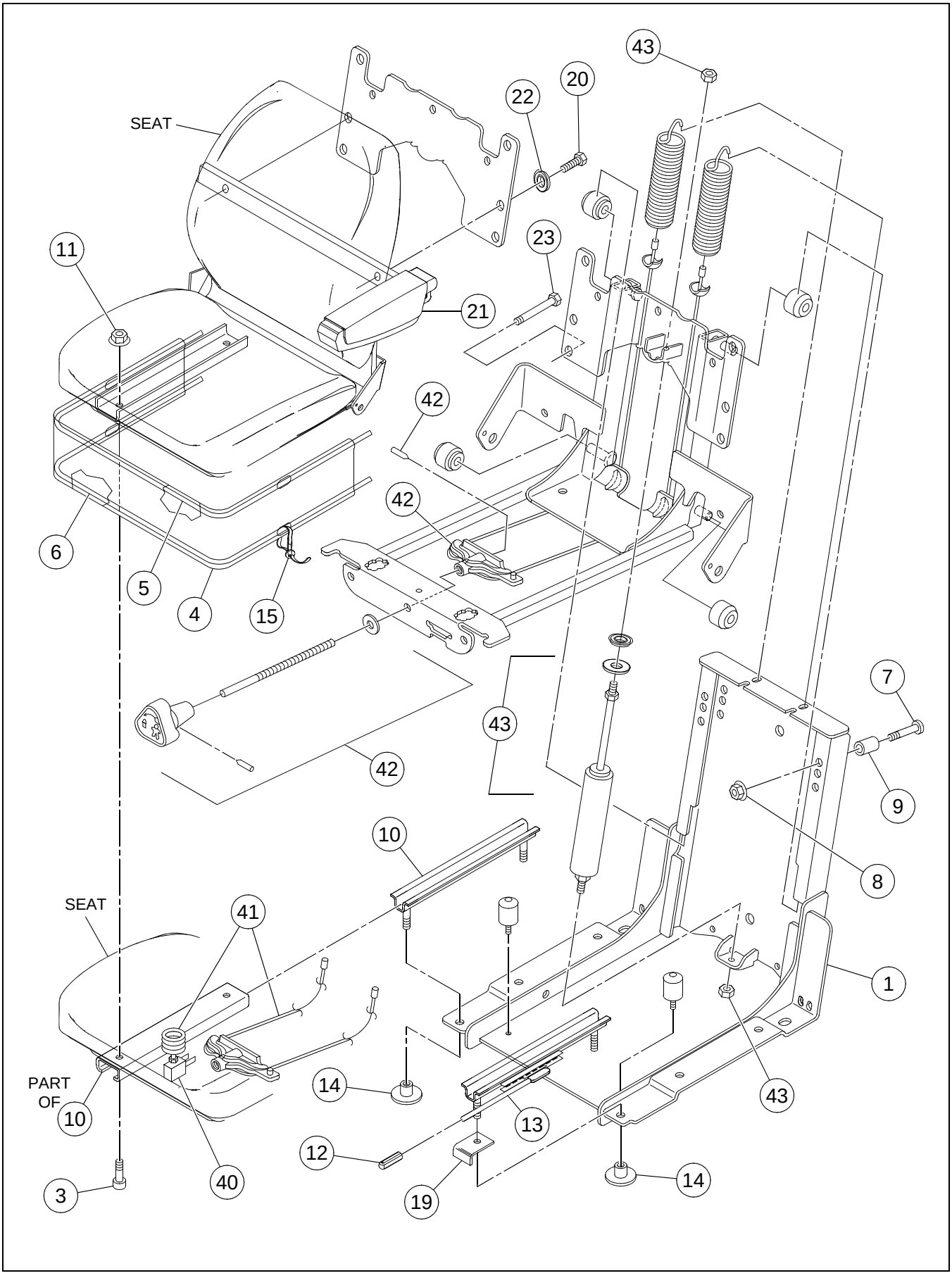

SEAT ASSEMBLY

****Only Offered Parts Listed****

BOM 43922392

ITEM	COMM. NO.	DESCRIPTION	QTY	DIMENSIONS/NOTES
1	59154450	SUSPENSION	1	
3	13228820	CAP SCREW	4	
4	13228838	SEWN BOOT	1	
5	59154492	WIRE FORM	1	
6	59154500	WIRE FORM	2	
7	59154518	CLEVIS PIN	2	
8	59154526	NUT	2	
9	13228846	SPACER	2	
10	13247473	ADJUSTER	1	
11	59154542	FLANGE LOCK NUT	3	
12	13228853	TIP	1	
13	13247481	ADJUSTER	1	
14	13228861	STUD PROTECTOR	4	
15	59145821	TIE WRAP	2	
19	59154393	BRACKET	1	
20	13247549	SCREW	2	
21	54531629	ARM W/TUBE	1	
22	13247556	WASHER	2	
23	43827625	TAPPING SCREW	4	
40	13167945	DUAL SWITCH SEAT KIT	1	
-	13281332	- SEAT PAN AND CUSHION	1	
-	13198270	- DUAL SWITCH SEAT KIT	1	
-	13281365	- COMPRESSION SWITCH	1	
-	13281373	- SCREW	1	
41	13258934	SPRING CABLE KIT	1	
42	54496385	KNOB KIT	1	
43	54496377	DAMPER KIT	1	

FIRE EXTINGUISHER MOUNTING PLATE INSTALLATION

13233689 REV 00

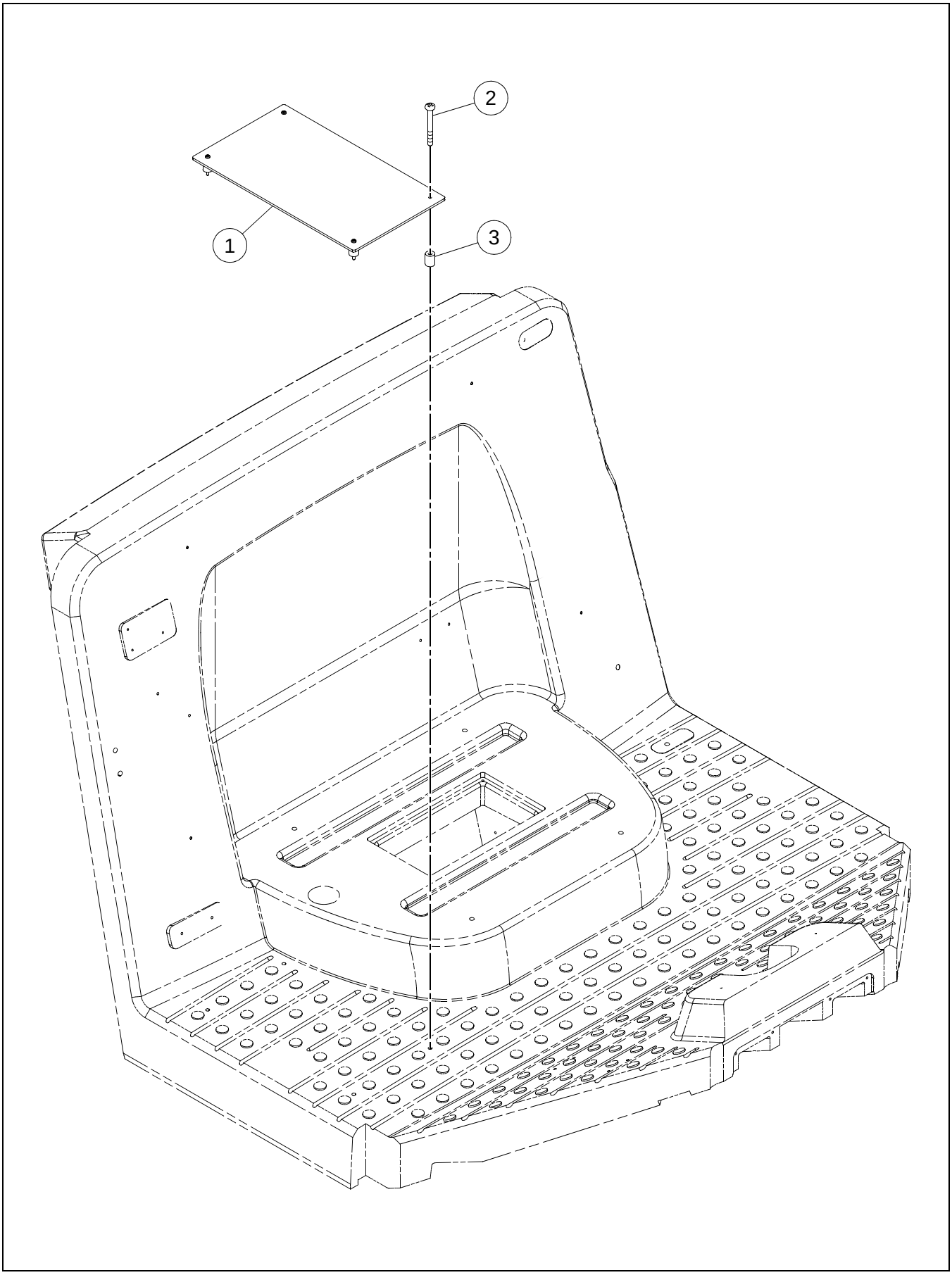

FIRE EXTINGUISHER MOUNTING PLATE INSTALLATION

****Only Offered Parts Listed****

BOM 13156898

ITEM	COMM. NO.	DESCRIPTION	QTY	DIMENSIONS/NOTES
1	13292982	MOUNTING PLATE	1	
2	96715180	SELF-TAPPING SCREW	4	
3	13157961	SPACER	4	

FIRST AID MOUNTING ASSEMBLY

13233697 REV 01

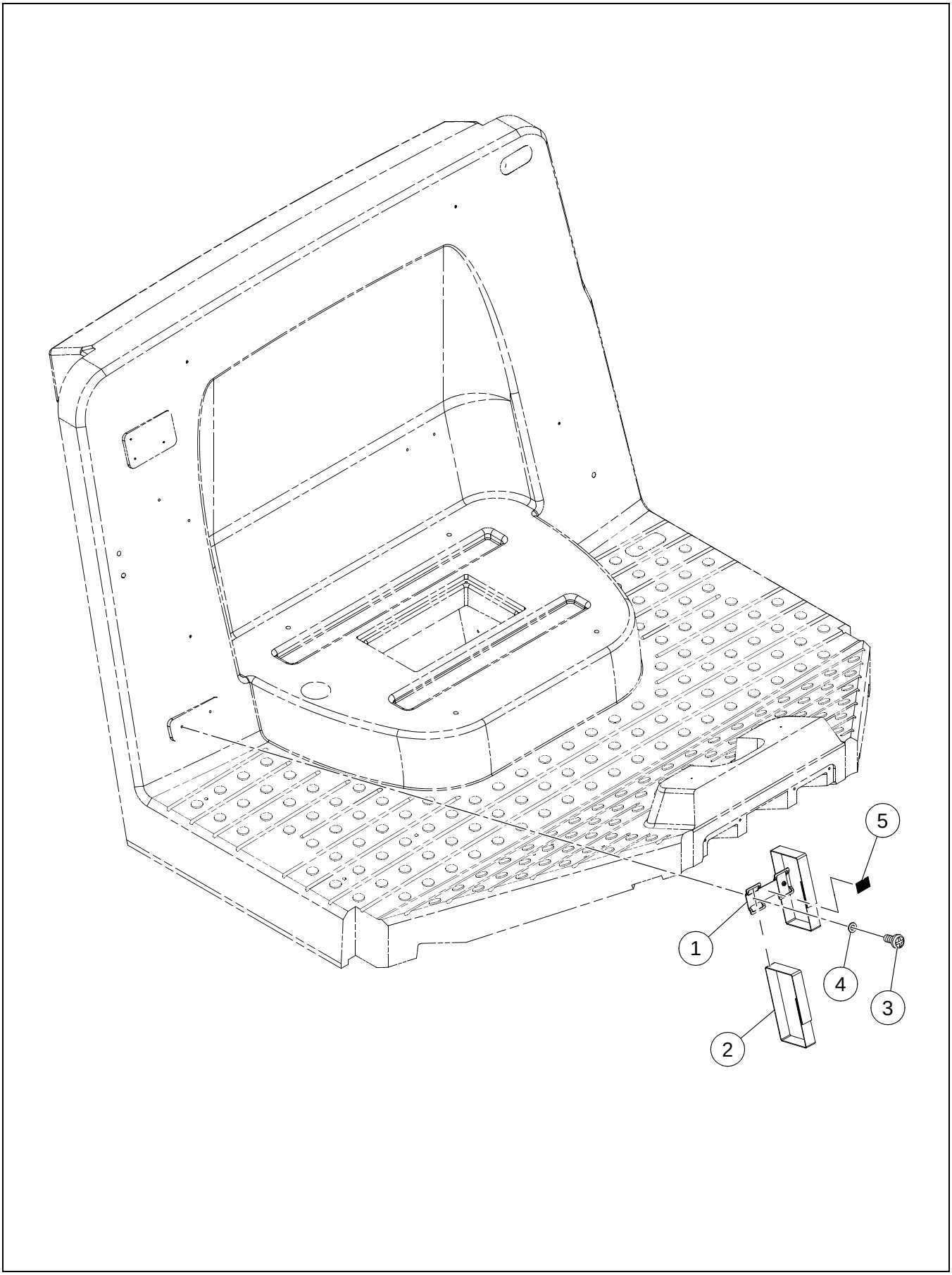

FIRST AID MOUNTING ASSEMBLY

****Only Offered Parts Listed****

BOM 13223995

ITEM	COMM. NO.	DESCRIPTION	QTY	DIMENSIONS/NOTES
1	59275917	MOUNTING BRACKET	1	
2	59275990	FIRST AID STRAP	2	
3	96740444	SCREW	2	
4	96738554	FLATWASHER	2	
5	59289025	DECAL: FIRST AID	1	

43908656 REV 0A

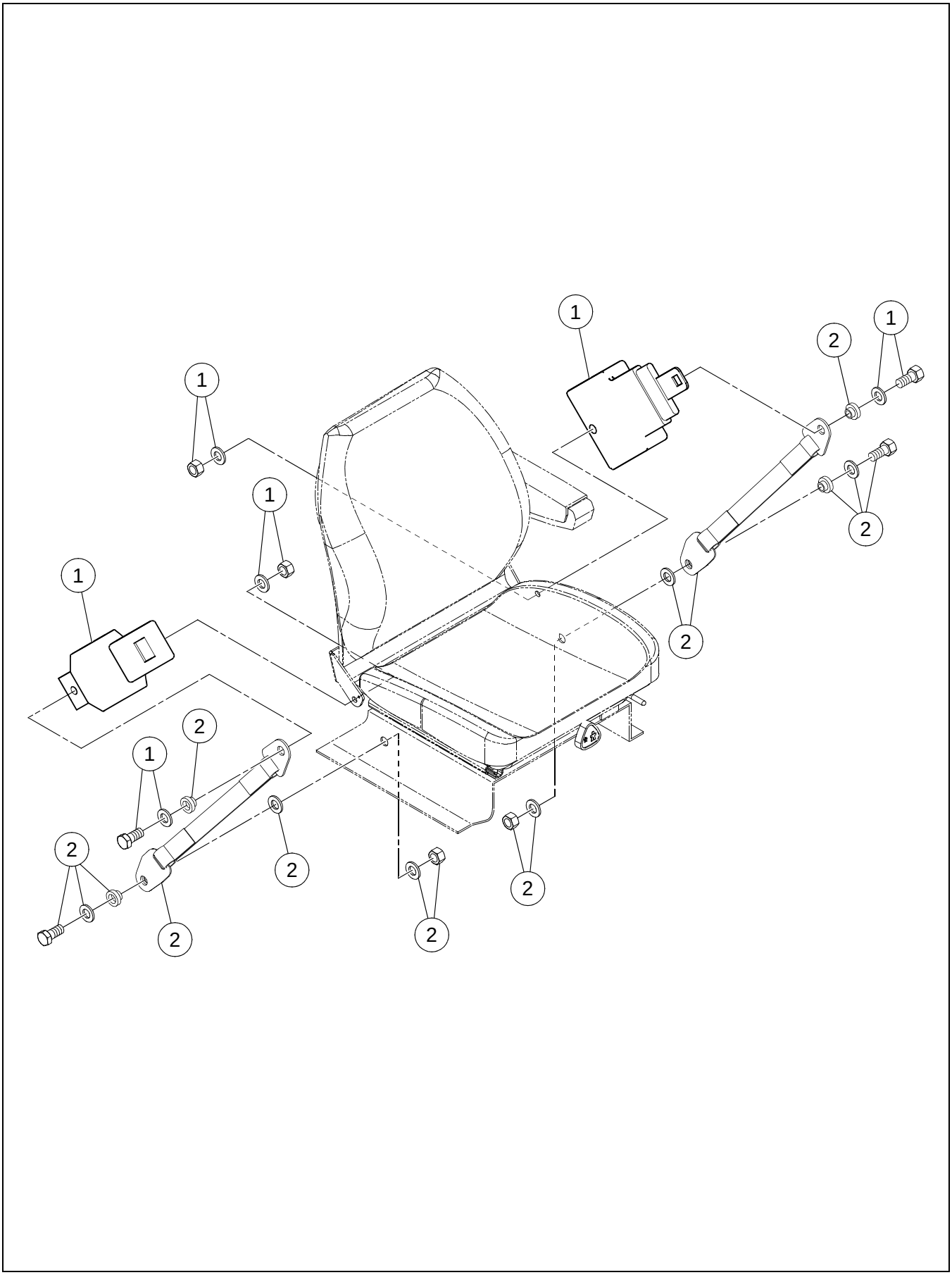

SEAT BELT INSTALLATION

****Only Offered Parts Listed****

BOM 43908656

ITEM	COMM. NO.	DESCRIPTION	QTY	DIMENSIONS/NOTES
1	43916394	SEATBELT	1	
2	43922384	SEAT BELT TETHER	1	

Section E - ELECTRICAL

43891340 REV 00D

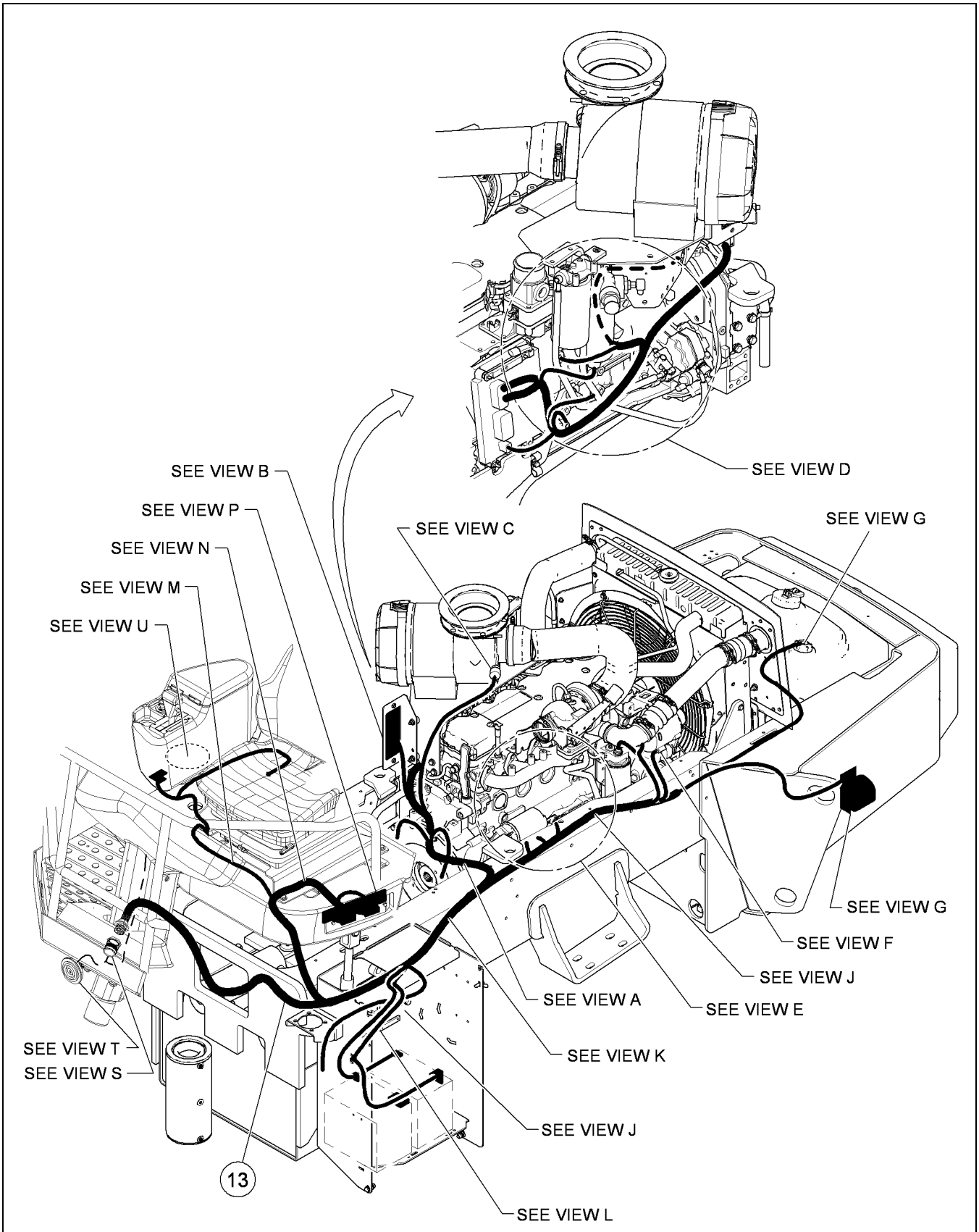

SD-116, SD-160, SD-190, SD-200

****Only Offered Parts Listed****

BOM 43924539

ITEM	COMM. NO.	DESCRIPTION	QTY	DIMENSIONS/NOTES
1	**NSVA**	**FUSE BLOCK ASSEMBLY**	**1**	**See Page E - 30.**
2	59148569	BHCS	2	
3	58820168	WIRE TIE	2	
5	96705173	HHCS CL 8.8,YEL ZN	2	M4-0.7X16
7	59117317	CLAMP	3	
9	13236203	BACKUP ALARM	1	
-	59436865	- ELECTRICAL CONNECTOR	1	
10	96702824	HHCS CL 8.8,YEL ZN	3	M8-1.25X20
11	96712674	FLATWASHER	3	
13	43902147	CHASSIS HARNESS	1	
-	13864954	- FUSE BLOCK COVER ASSEMBLY	1	
-	13264858	- COVER	1	
-	13864806	- FOAM PAD	1	
-	59229492	- HSBHCS	4	
-	59137448	- LOCKNUT	4	
-	59436865	- ELECTRICAL CONNECTOR	1	
-	59436873	- WEDGE	1	
-	59934166	- CHAFE GUARD	1	
15	95424586	TYRAP	1	
16	59048868	CLIP CONNECTOR	1	
17	13493499	HARNESS, 2 SPEED VIBRATION SELECTOR	1	
20	96745518	SCREW	2	
22	13322060	TERMINAL BLOCK	1	
25	96741053	FLATWASHER, CL 200,YEL ZN	4	
26	96701461	HHCS CL 8.8,YEL ZN	2	M6-1X25
28	59117309	CLAMP	1	
29	59465641	CLAMP	6	
30	59661413	CLAMP	4	
31	96705165	FLATWASHER, CL 140,YEL ZN	2	
32	96741046	FLATWASHER, CL 200,YEL ZN	11	
35	59121855	CLAMP	5	
38	59103598	CLAMP	5	
39	96728548	SELF TAPPING SCREW	7	
40	96704663	FLATWASHER	8	M6
43	96701917	HHCS CL 8.8,YEL ZN	8	M10-1.5X30
44	96704614	NUT	11	M10X1.5
49	96704564	HHCS CL 8.8,YEL ZN	1	M6-1X20
50	96741053	FLATWASHER, CL 200,YEL ZN	1	
51	96704598	ESNA NUT	1	M6
52	96702394	HHCS CL 8.8,YEL ZN	2	M6-1X12
53	43813724	BRACKET	1	
55	43927680	MOUNT BRACKET	1	

43891340 REV 00D

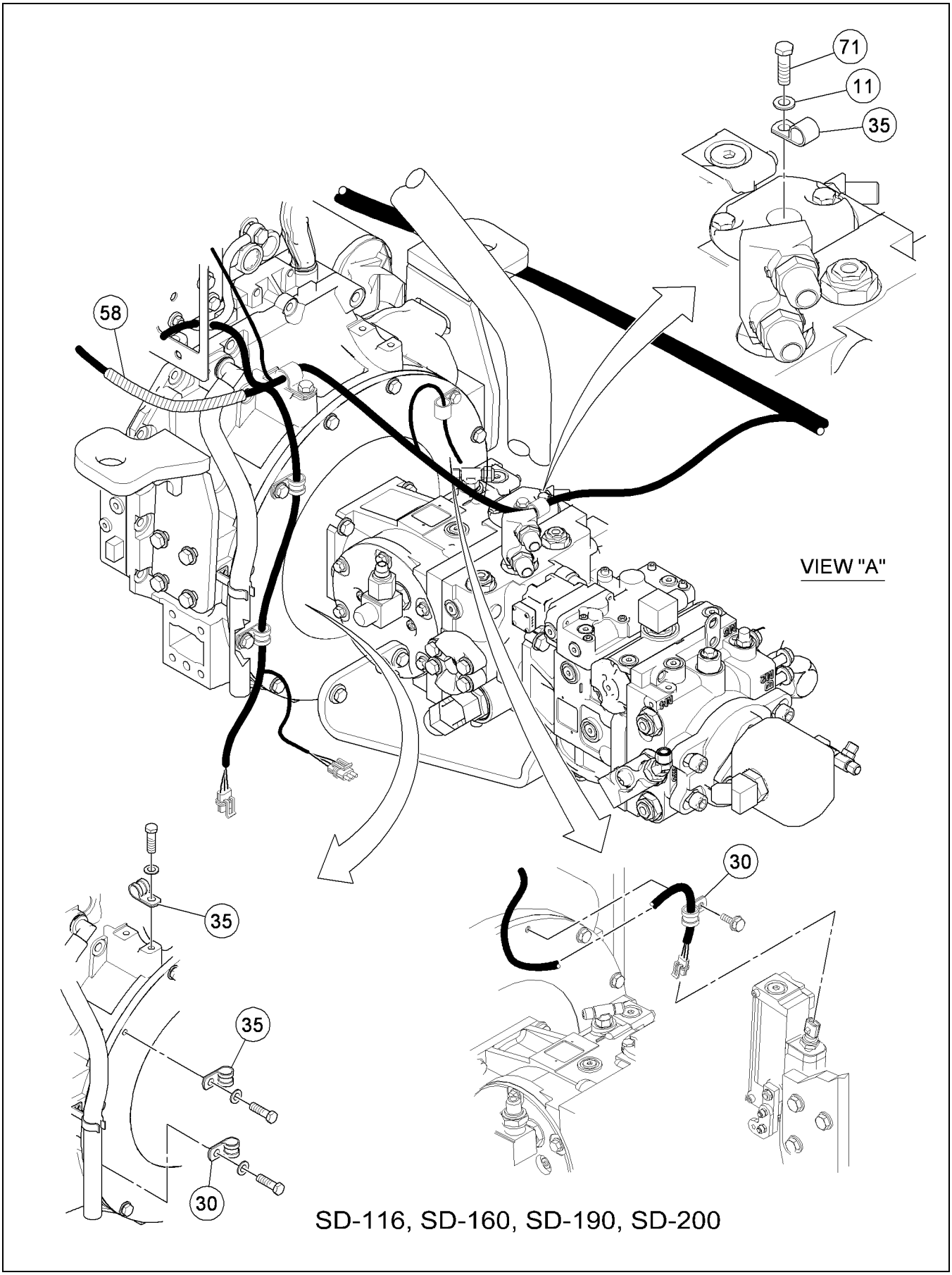

SD-116, SD-160, SD-190, SD-200

****Only Offered Parts Listed****

BOM 43924539

ITEM	COMM. NO.	DESCRIPTION	QTY	DIMENSIONS/NOTES
56	96704606	ESNA NUT	1	M8
58	59934166	CHAFE GUARD	2	
61	13214028	BRACKET	1	
62	96704234	HEX NUT CL 8 ,YEL ZN	2	M6-1
63	96714472	HHCS CL 10.9,YEL ZN HR	2	M6-1X20
64	96741053	FLATWASHER, CL 200,YEL ZN	4	
65	43870203	DUAL FUNCTION ALARM	1	
67	43916410	SCREW	4	
68	59397059	CLAMP	1	
69	96702287	HHCS CL 8.8,YEL ZN	2	M10-1.5X25
70	96741046	FLATWASHER, CL 200,YEL ZN	2	
71	96702816	HHCS CL 8.8,YEL ZN	1	M8-1.25X16
72	59995126	HARDENED WASHER	1	
73	96701495	HHCS CL 8.8,YEL ZN	1	M12-1.75X25
75	96704580	LOCKNUT	4	M5
76	96738554	FLATWASHER	4	
78	59117333	CLAMP	1	
79	96705041	HHCS CL 8.8,YEL ZN	1	M8-1.25X12
80	96741038	WASHER, FLAT CL 200,YEL ZN	3	ID-8.4,OD-16.0X1.6THK
81	59465674	CLAMP	2	
83	96704598	ESNA NUT	2	M6

43891340 REV 00D

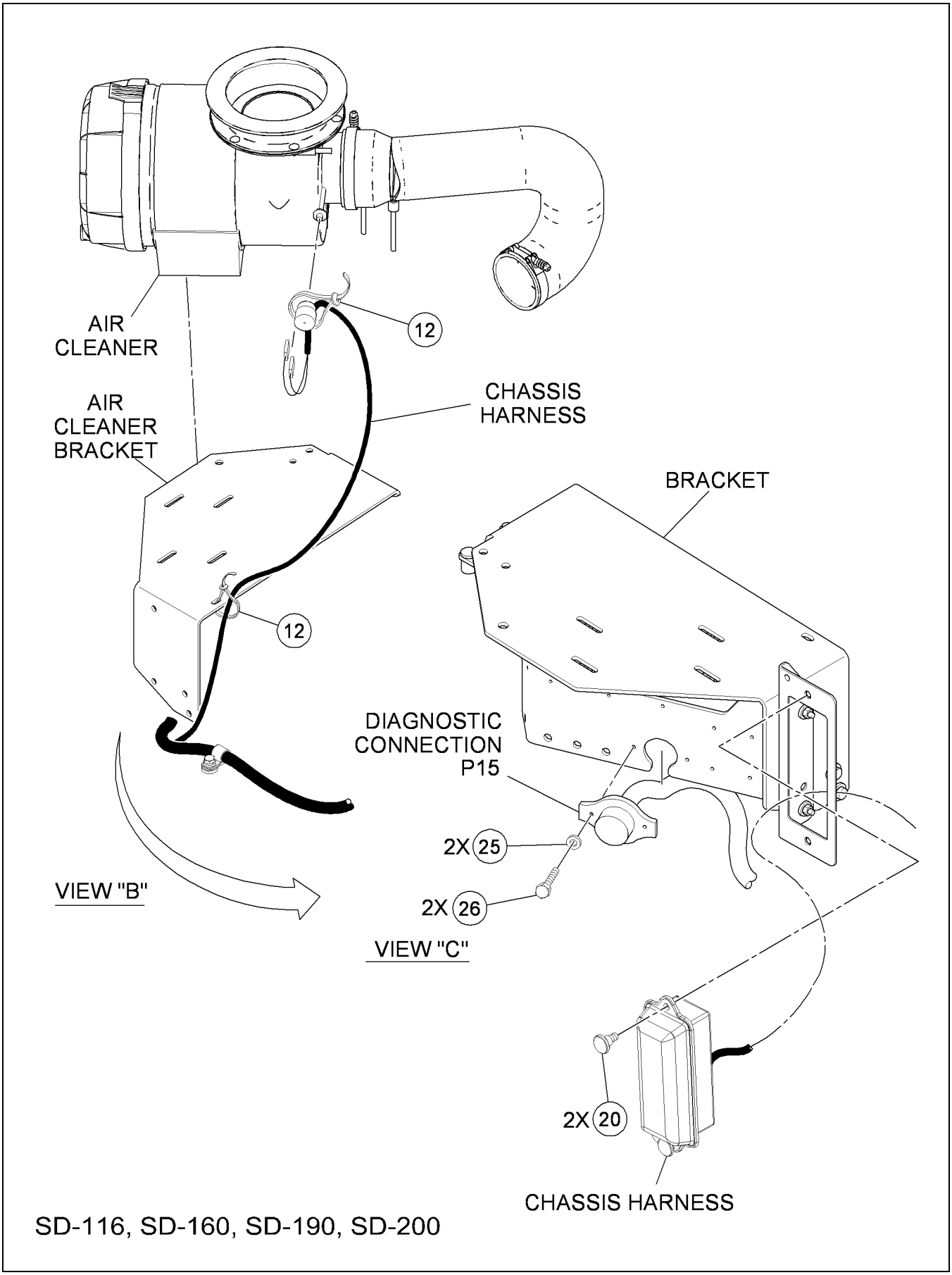

****Only Offered Parts Listed****

BOM 43924539

ITEM	COMM. NO.	DESCRIPTION	QTY	DIMENSIONS/NOTES
56	96704606	ESNA NUT	1	M8
58	59934166	CHAFE GUARD	2	
61	13214028	BRACKET	1	
62	96704234	HEX NUT CL 8 ,YEL ZN	2	M6-1
63	96714472	HHCS CL 10.9,YEL ZN HR	2	M6-1X20
64	96741053	FLATWASHER, CL 200,YEL ZN	4	
65	43870203	DUAL FUNCTION ALARM	1	
67	43916410	SCREW	4	
68	59397059	CLAMP	1	
69	96702287	HHCS CL 8.8,YEL ZN	2	M10-1.5X25
70	96741046	FLATWASHER, CL 200,YEL ZN	2	
71	96702816	HHCS CL 8.8,YEL ZN	1	M8-1.25X16
72	59995126	HARDENED WASHER	1	
73	96701495	HHCS CL 8.8,YEL ZN	1	M12-1.75X25
75	96704580	LOCKNUT	4	M5
76	96738554	FLATWASHER	4	
78	59117333	CLAMP	1	
79	96705041	HHCS CL 8.8,YEL ZN	1	M8-1.25X12
80	96741038	WASHER, FLAT CL 200,YEL ZN	3	ID-8.4,OD-16.0X1.6THK
81	59465674	CLAMP	2	
83	96704598	ESNA NUT	2	M6

43891340 REV 00D

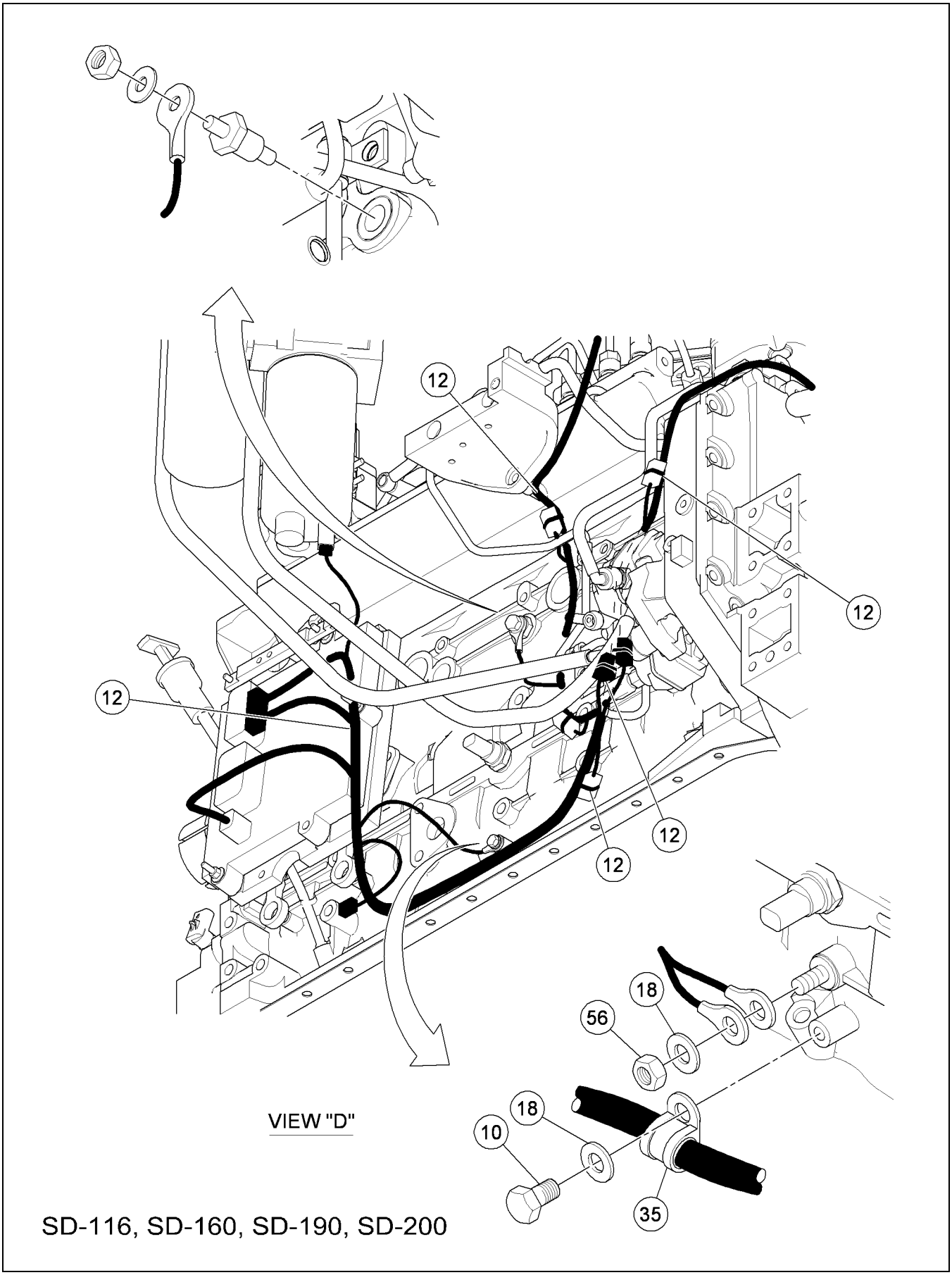

****Only Offered Parts Listed****

BOM 43924539

ITEM	COMM. NO.	DESCRIPTION	QTY	DIMENSIONS/NOTES
56	96704606	ESNA NUT	1	M8
58	59934166	CHAFE GUARD	2	
61	13214028	BRACKET	1	
62	96704234	HEX NUT CL 8 ,YEL ZN	2	M6-1
63	96714472	HHCS CL 10.9,YEL ZN HR	2	M6-1X20
64	96741053	FLATWASHER, CL 200,YEL ZN	4	
65	43870203	DUAL FUNCTION ALARM	1	
67	43916410	SCREW	4	
68	59397059	CLAMP	1	
69	96702287	HHCS CL 8.8,YEL ZN	2	M10-1.5X25
70	96741046	FLATWASHER, CL 200,YEL ZN	2	
71	96702816	HHCS CL 8.8,YEL ZN	1	M8-1.25X16
72	59995126	HARDENED WASHER	1	
73	96701495	HHCS CL 8.8,YEL ZN	1	M12-1.75X25
75	96704580	LOCKNUT	4	M5
76	96738554	FLATWASHER	4	
78	59117333	CLAMP	1	
79	96705041	HHCS CL 8.8,YEL ZN	1	M8-1.25X12
80	96741038	WASHER, FLAT CL 200,YEL ZN	3	ID-8.4,OD-16.0X1.6THK
81	59465674	CLAMP	2	
83	96704598	ESNA NUT	2	M6

43891340 REV 00D

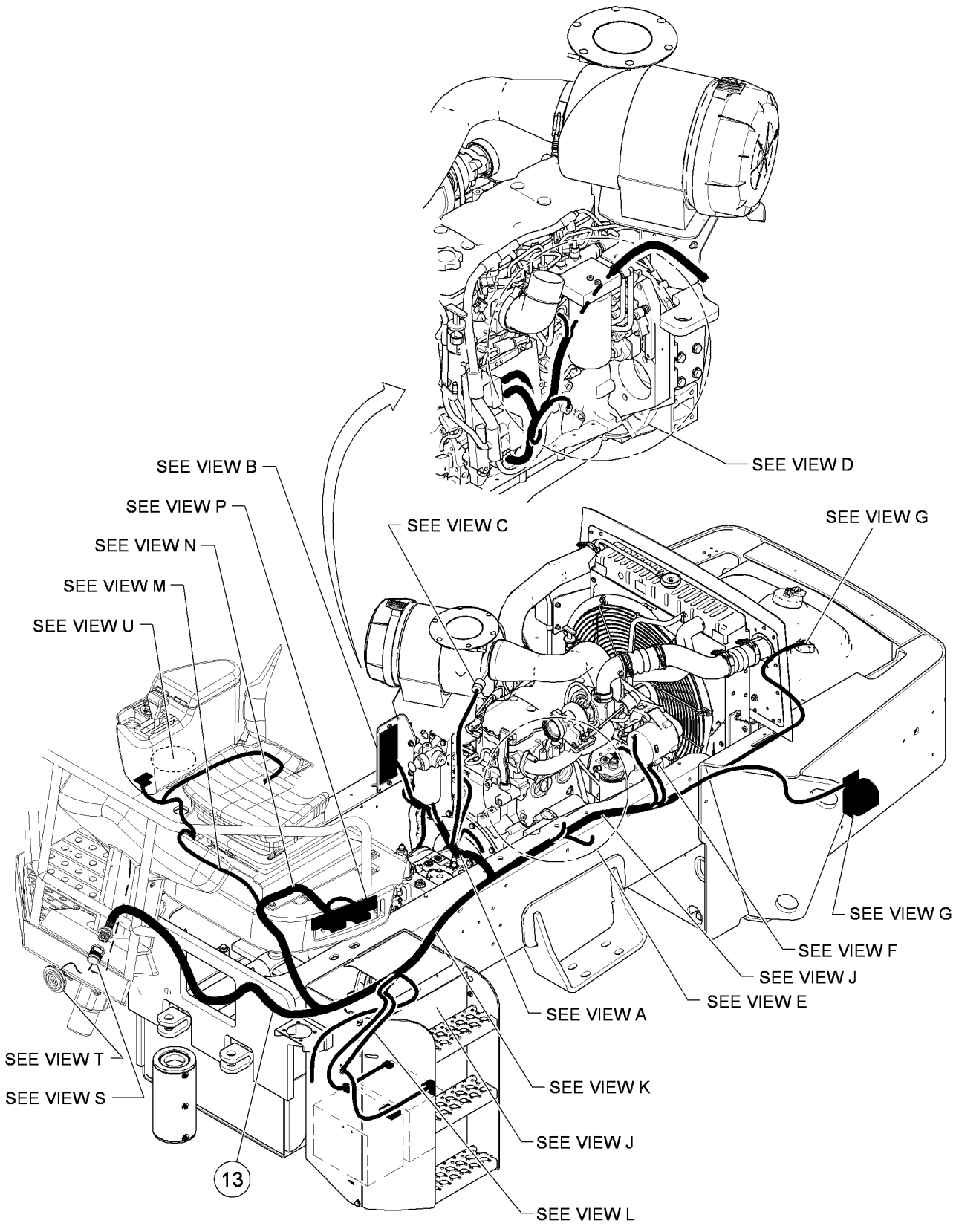

SD-100, SD-105, SD-122

****Only Offered Parts Listed****

BOM 43924539

ITEM	COMM. NO.	DESCRIPTION	QTY	DIMENSIONS/NOTES
56	96704606	ESNA NUT	1	M8
58	59934166	CHAFE GUARD	2	
61	13214028	BRACKET	1	
62	96704234	HEX NUT CL 8 ,YEL ZN	2	M6-1
63	96714472	HHCS CL 10.9,YEL ZN HR	2	M6-1X20
64	96741053	FLATWASHER, CL 200,YEL ZN	4	
65	43870203	DUAL FUNCTION ALARM	1	
67	43916410	SCREW	4	
68	59397059	CLAMP	1	
69	96702287	HHCS CL 8.8,YEL ZN	2	M10-1.5X25
70	96741046	FLATWASHER, CL 200,YEL ZN	2	
71	96702816	HHCS CL 8.8,YEL ZN	1	M8-1.25X16
72	59995126	HARDENED WASHER	1	
73	96701495	HHCS CL 8.8,YEL ZN	1	M12-1.75X25
75	96704580	LOCKNUT	4	M5
76	96738554	FLATWASHER	4	
78	59117333	CLAMP	1	
79	96705041	HHCS CL 8.8,YEL ZN	1	M8-1.25X12
80	96741038	WASHER, FLAT CL 200,YEL ZN	3	ID-8.4,OD-16.0X1.6THK
81	59465674	CLAMP	2	
83	96704598	ESNA NUT	2	M6

43891340 REV 00D

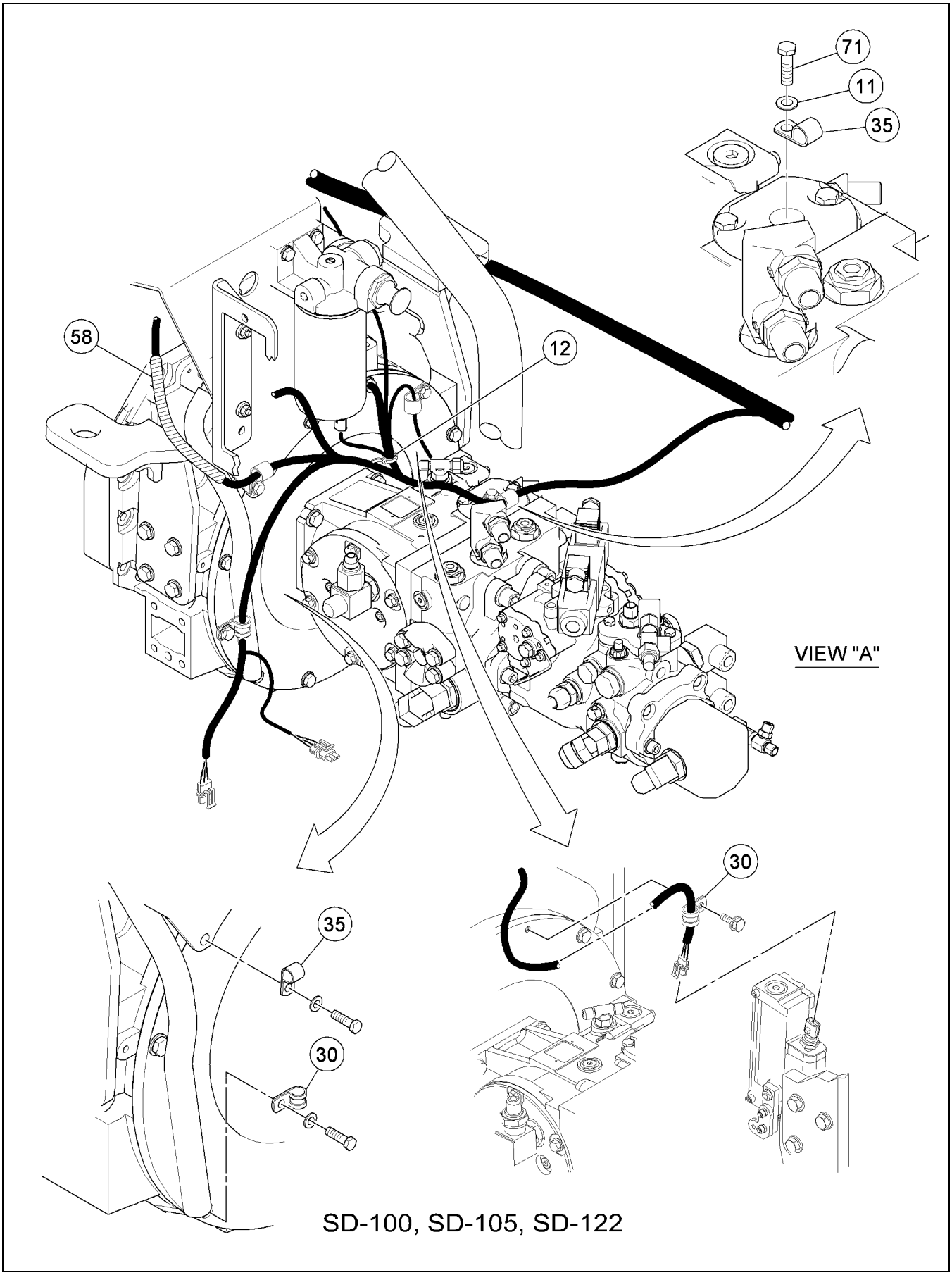

****Only Offered Parts Listed****

BOM 43924539

ITEM	COMM. NO.	DESCRIPTION	QTY	DIMENSIONS/NOTES
56	96704606	ESNA NUT	1	M8
58	59934166	CHAFE GUARD	2	
61	13214028	BRACKET	1	
62	96704234	HEX NUT CL 8 ,YEL ZN	2	M6-1
63	96714472	HHCS CL 10.9,YEL ZN HR	2	M6-1X20
64	96741053	FLATWASHER, CL 200,YEL ZN	4	
65	43870203	DUAL FUNCTION ALARM	1	
67	43916410	SCREW	4	
68	59397059	CLAMP	1	
69	96702287	HHCS CL 8.8,YEL ZN	2	M10-1.5X25
70	96741046	FLATWASHER, CL 200,YEL ZN	2	
71	96702816	HHCS CL 8.8,YEL ZN	1	M8-1.25X16
72	59995126	HARDENED WASHER	1	
73	96701495	HHCS CL 8.8,YEL ZN	1	M12-1.75X25
75	96704580	LOCKNUT	4	M5
76	96738554	FLATWASHER	4	
78	59117333	CLAMP	1	
79	96705041	HHCS CL 8.8,YEL ZN	1	M8-1.25X12
80	96741038	WASHER, FLAT CL 200,YEL ZN	3	ID-8.4,OD-16.0X1.6THK
81	59465674	CLAMP	2	
83	96704598	ESNA NUT	2	M6

43891340 REV 00D

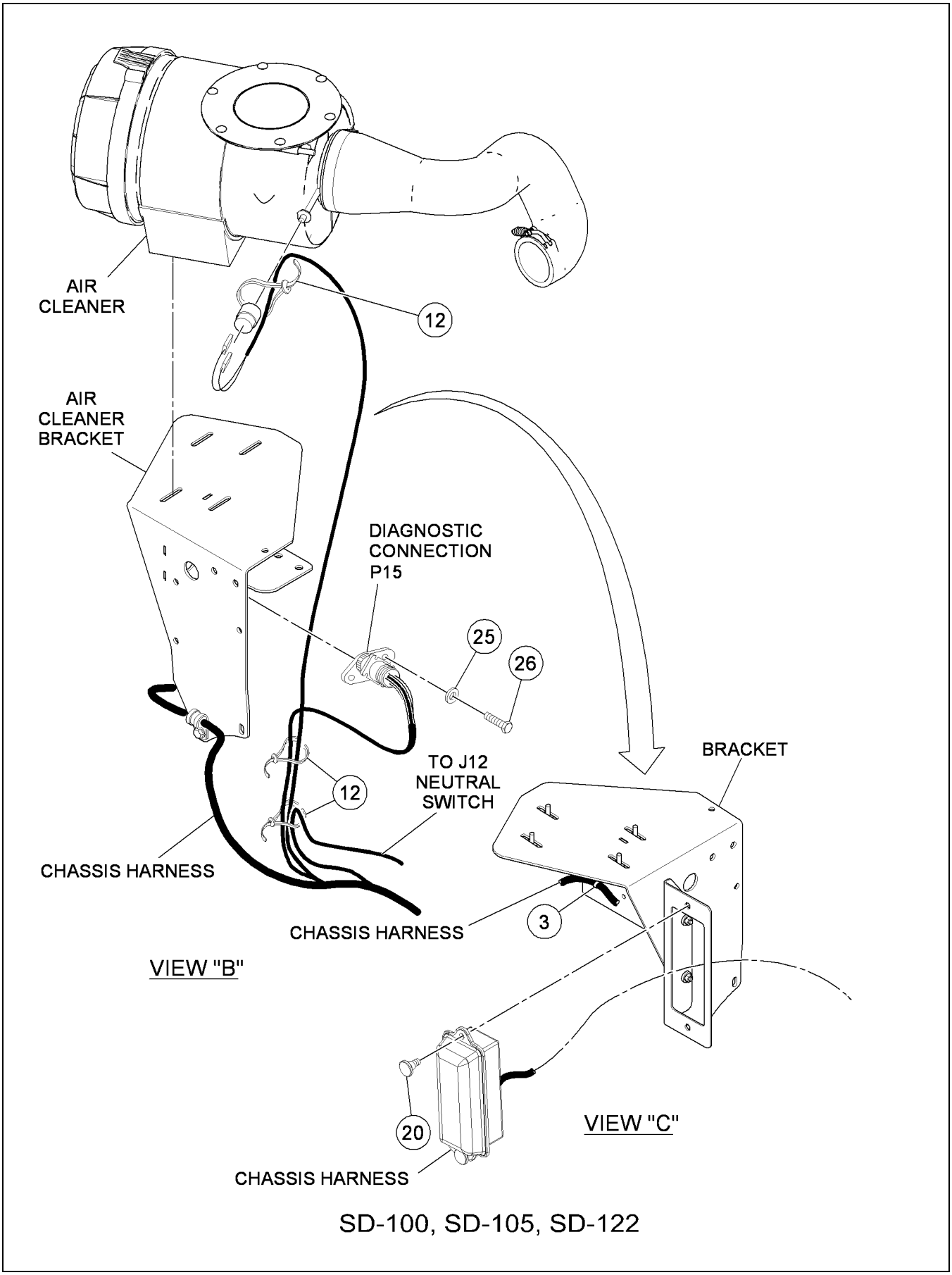

SD-100, SD-105, SD-122

****Only Offered Parts Listed****

BOM 43924539

ITEM	COMM. NO.	DESCRIPTION	QTY	DIMENSIONS/NOTES
56	96704606	ESNA NUT	1	M8
58	59934166	CHAFE GUARD	2	
61	13214028	BRACKET	1	
62	96704234	HEX NUT CL 8 ,YEL ZN	2	M6-1
63	96714472	HHCS CL 10.9,YEL ZN HR	2	M6-1X20
64	96741053	FLATWASHER, CL 200,YEL ZN	4	
65	43870203	DUAL FUNCTION ALARM	1	
67	43916410	SCREW	4	
68	59397059	CLAMP	1	
69	96702287	HHCS CL 8.8,YEL ZN	2	M10-1.5X25
70	96741046	FLATWASHER, CL 200,YEL ZN	2	
71	96702816	HHCS CL 8.8,YEL ZN	1	M8-1.25X16
72	59995126	HARDENED WASHER	1	
73	96701495	HHCS CL 8.8,YEL ZN	1	M12-1.75X25
75	96704580	LOCKNUT	4	M5
76	96738554	FLATWASHER	4	
78	59117333	CLAMP	1	
79	96705041	HHCS CL 8.8,YEL ZN	1	M8-1.25X12
80	96741038	WASHER, FLAT CL 200,YEL ZN	3	ID-8.4,OD-16.0X1.6THK
81	59465674	CLAMP	2	
83	96704598	ESNA NUT	2	M6

43891340 REV 00D

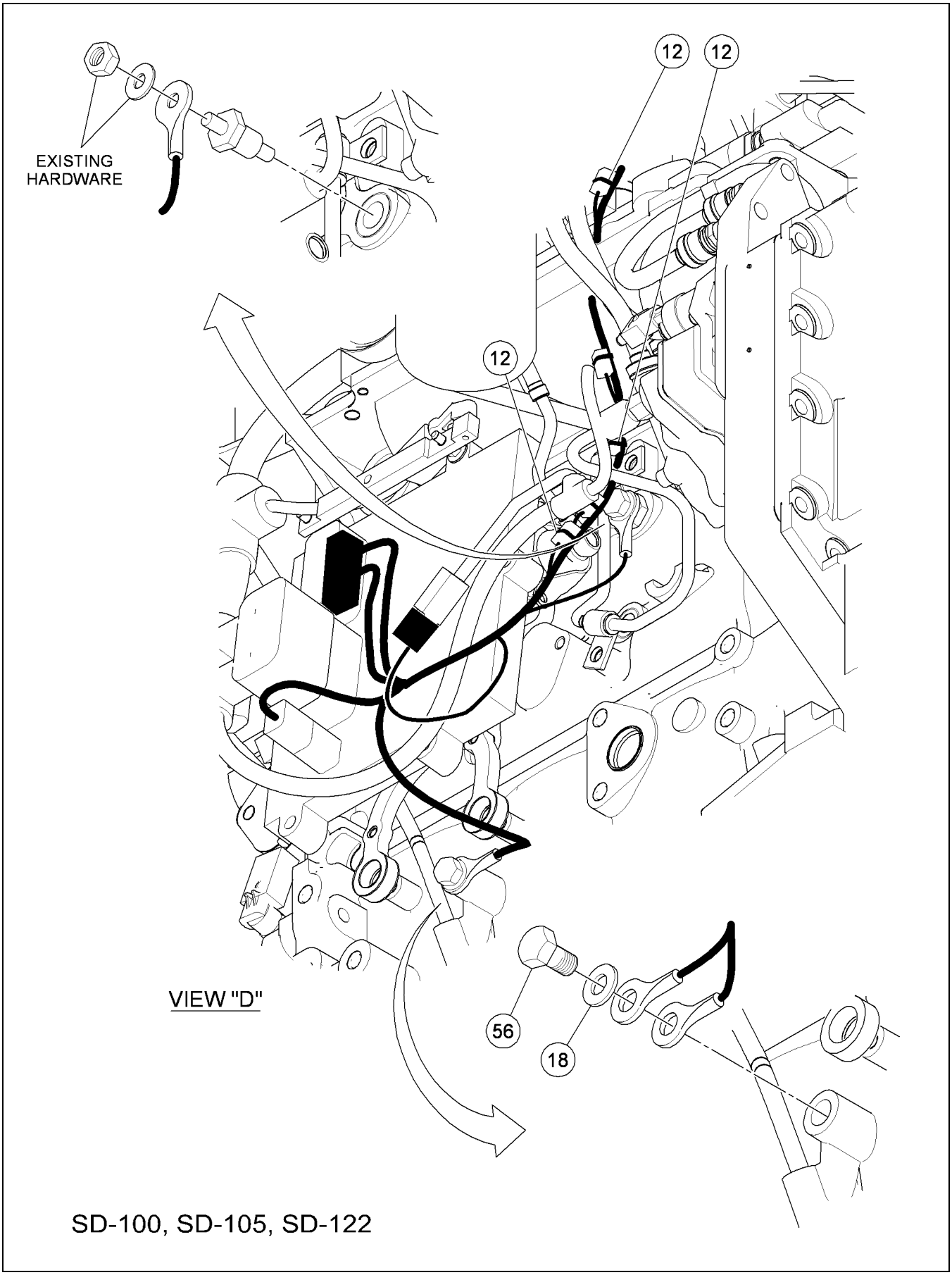

****Only Offered Parts Listed****

BOM 43924539

ITEM	COMM. NO.	DESCRIPTION	QTY	DIMENSIONS/NOTES
56	96704606	ESNA NUT	1	M8
58	59934166	CHAFE GUARD	2	
61	13214028	BRACKET	1	
62	96704234	HEX NUT CL 8 ,YEL ZN	2	M6-1
63	96714472	HHCS CL 10.9,YEL ZN HR	2	M6-1X20
64	96741053	FLATWASHER, CL 200,YEL ZN	4	
65	43870203	DUAL FUNCTION ALARM	1	
67	43916410	SCREW	4	
68	59397059	CLAMP	1	
69	96702287	HHCS CL 8.8,YEL ZN	2	M10-1.5X25
70	96741046	FLATWASHER, CL 200,YEL ZN	2	
71	96702816	HHCS CL 8.8,YEL ZN	1	M8-1.25X16
72	59995126	HARDENED WASHER	1	
73	96701495	HHCS CL 8.8,YEL ZN	1	M12-1.75X25
75	96704580	LOCKNUT	4	M5
76	96738554	FLATWASHER	4	
78	59117333	CLAMP	1	
79	96705041	HHCS CL 8.8,YEL ZN	1	M8-1.25X12
80	96741038	WASHER, FLAT CL 200,YEL ZN	3	ID-8.4,OD-16.0X1.6THK
81	59465674	CLAMP	2	
83	96704598	ESNA NUT	2	M6

43891340 REV 00D

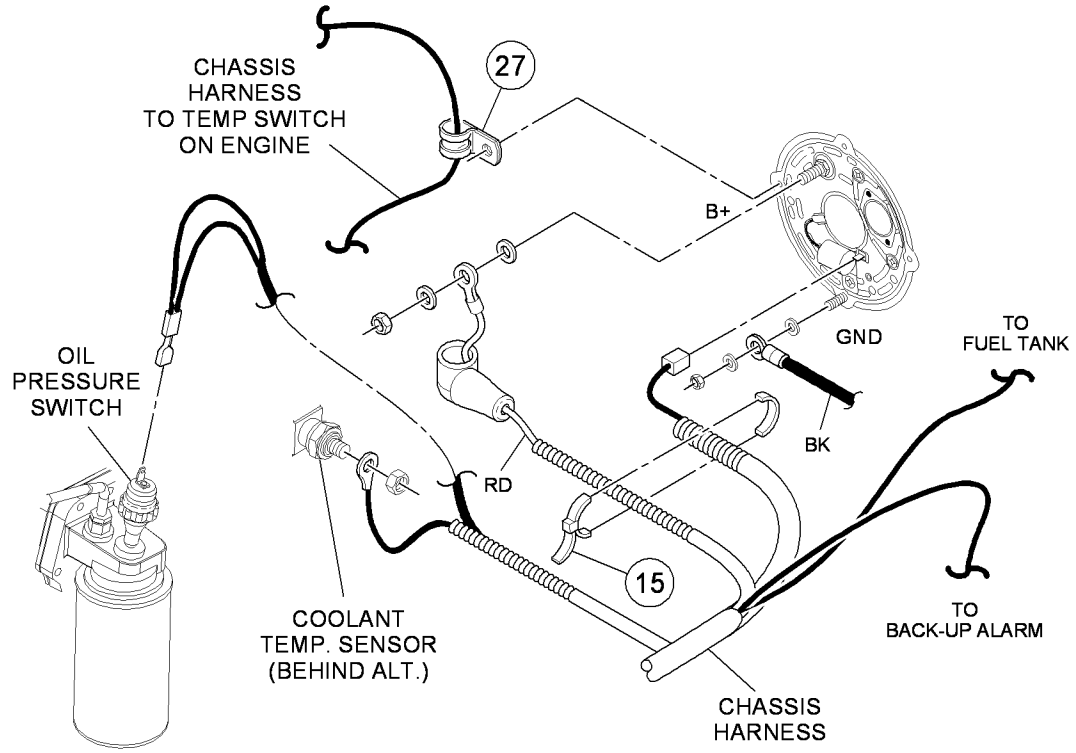

VIEW "F"

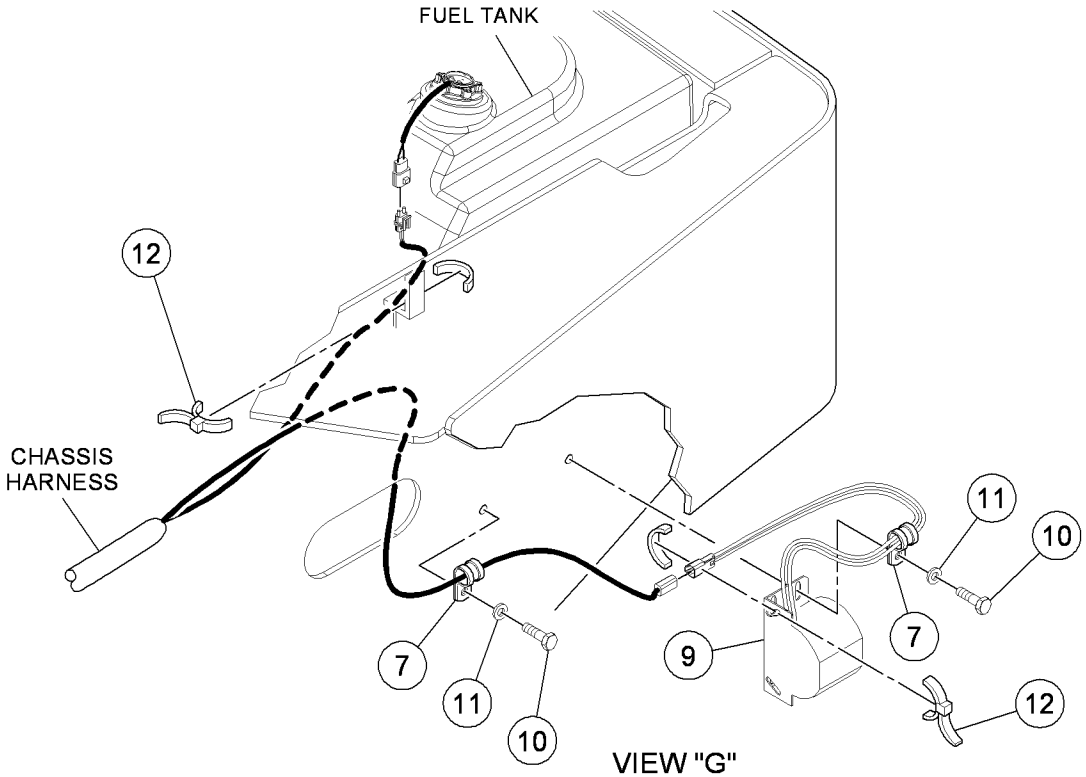

VIEW "G"

****Only Offered Parts Listed****

BOM 43924539

ITEM	COMM. NO.	DESCRIPTION	QTY	DIMENSIONS/NOTES
56	96704606	ESNA NUT	1	M8
58	59934166	CHAFE GUARD	2	
61	13214028	BRACKET	1	
62	96704234	HEX NUT CL 8 ,YEL ZN	2	M6-1
63	96714472	HHCS CL 10.9,YEL ZN HR	2	M6-1X20
64	96741053	FLATWASHER, CL 200,YEL ZN	4	
65	43870203	DUAL FUNCTION ALARM	1	
67	43916410	SCREW	4	
68	59397059	CLAMP	1	
69	96702287	HHCS CL 8.8,YEL ZN	2	M10-1.5X25
70	96741046	FLATWASHER, CL 200,YEL ZN	2	
71	96702816	HHCS CL 8.8,YEL ZN	1	M8-1.25X16
72	59995126	HARDENED WASHER	1	
73	96701495	HHCS CL 8.8,YEL ZN	1	M12-1.75X25
75	96704580	LOCKNUT	4	M5
76	96738554	FLATWASHER	4	
78	59117333	CLAMP	1	
79	96705041	HHCS CL 8.8,YEL ZN	1	M8-1.25X12
80	96741038	WASHER, FLAT CL 200,YEL ZN	3	ID-8.4,OD-16.0X1.6THK
81	59465674	CLAMP	2	
83	96704598	ESNA NUT	2	M6

43891340 REV 00D

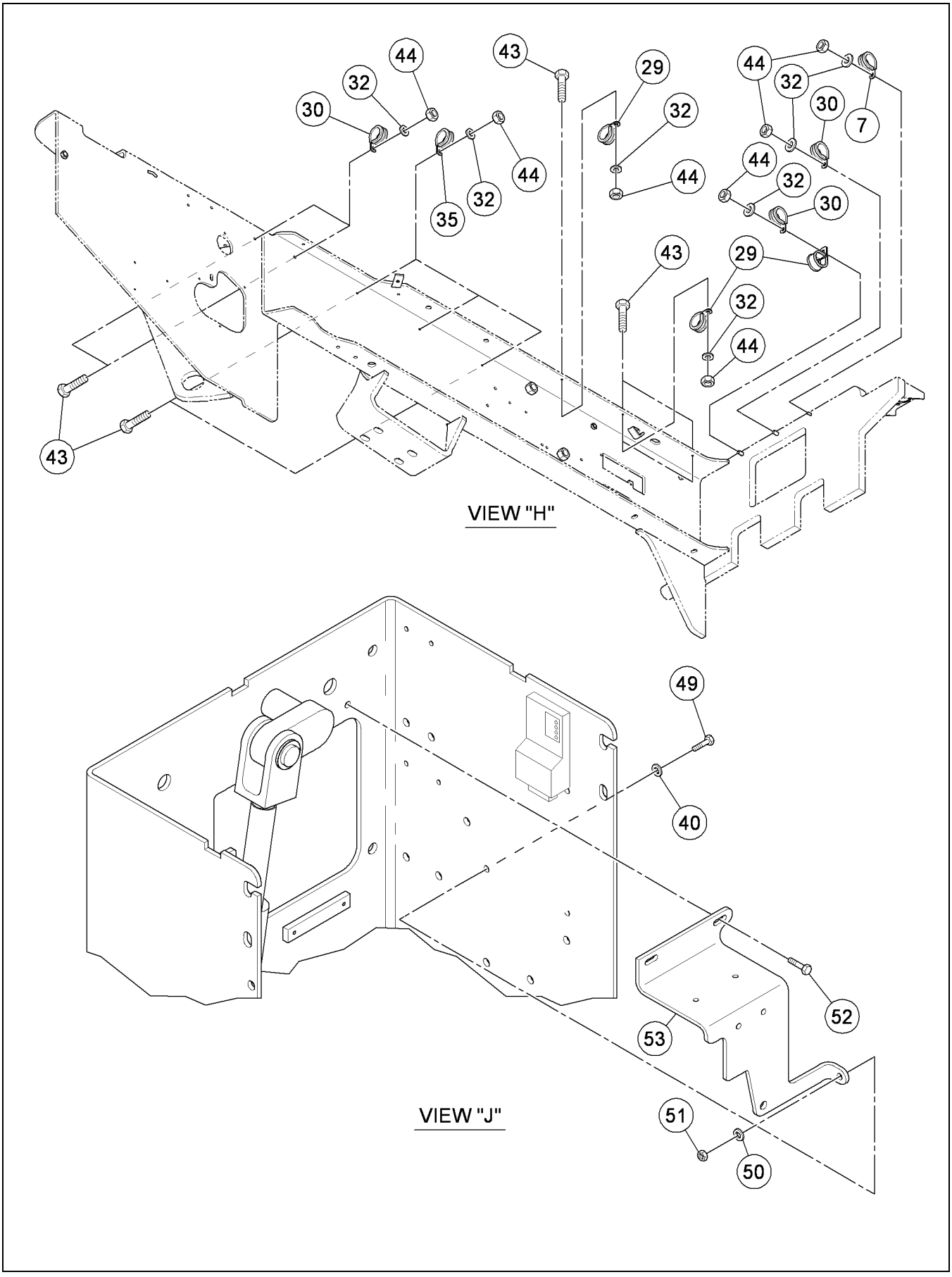

****Only Offered Parts Listed****

BOM 43924539

ITEM	COMM. NO.	DESCRIPTION	QTY	DIMENSIONS/NOTES
56	96704606	ESNA NUT	1	M8
58	59934166	CHAFE GUARD	2	
61	13214028	BRACKET	1	
62	96704234	HEX NUT CL 8 ,YEL ZN	2	M6-1
63	96714472	HHCS CL 10.9,YEL ZN HR	2	M6-1X20
64	96741053	FLATWASHER, CL 200,YEL ZN	4	
65	43870203	DUAL FUNCTION ALARM	1	
67	43916410	SCREW	4	
68	59397059	CLAMP	1	
69	96702287	HHCS CL 8.8,YEL ZN	2	M10-1.5X25
70	96741046	FLATWASHER, CL 200,YEL ZN	2	
71	96702816	HHCS CL 8.8,YEL ZN	1	M8-1.25X16
72	59995126	HARDENED WASHER	1	
73	96701495	HHCS CL 8.8,YEL ZN	1	M12-1.75X25
75	96704580	LOCKNUT	4	M5
76	96738554	FLATWASHER	4	
78	59117333	CLAMP	1	
79	96705041	HHCS CL 8.8,YEL ZN	1	M8-1.25X12
80	96741038	WASHER, FLAT CL 200,YEL ZN	3	ID-8.4,OD-16.0X1.6THK
81	59465674	CLAMP	2	
83	96704598	ESNA NUT	2	M6

43891340 REV 00D

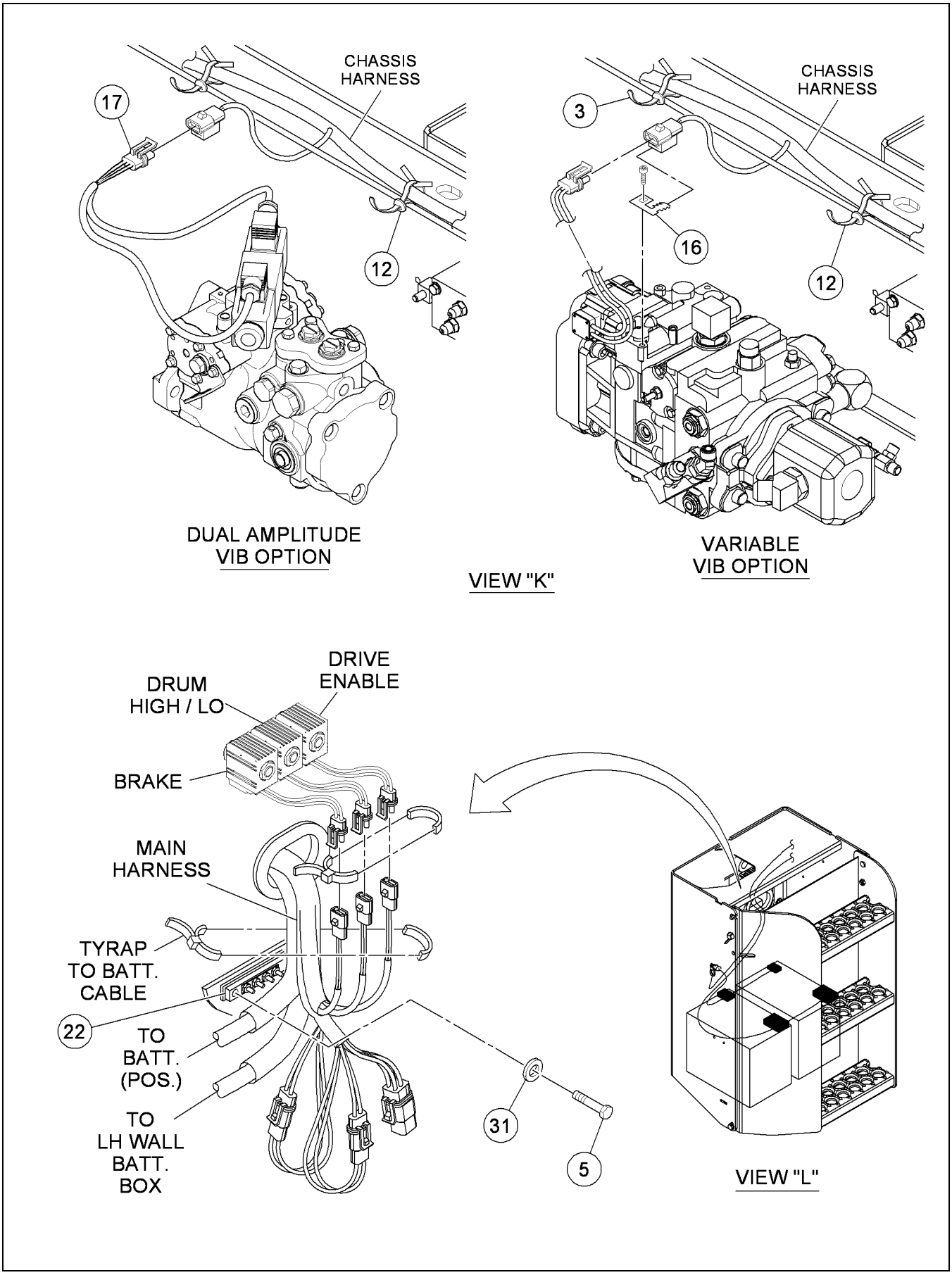

****Only Offered Parts Listed****

BOM 43924539

ITEM	COMM. NO.	DESCRIPTION	QTY	DIMENSIONS/NOTES
56	96704606	ESNA NUT	1	M8
58	59934166	CHAFE GUARD	2	
61	13214028	BRACKET	1	
62	96704234	HEX NUT CL 8 ,YEL ZN	2	M6-1
63	96714472	HHCS CL 10.9,YEL ZN HR	2	M6-1X20
64	96741053	FLATWASHER, CL 200,YEL ZN	4	
65	43870203	DUAL FUNCTION ALARM	1	
67	43916410	SCREW	4	
68	59397059	CLAMP	1	
69	96702287	HHCS CL 8.8,YEL ZN	2	M10-1.5X25
70	96741046	FLATWASHER, CL 200,YEL ZN	2	
71	96702816	HHCS CL 8.8,YEL ZN	1	M8-1.25X16
72	59995126	HARDENED WASHER	1	
73	96701495	HHCS CL 8.8,YEL ZN	1	M12-1.75X25
75	96704580	LOCKNUT	4	M5
76	96738554	FLATWASHER	4	
78	59117333	CLAMP	1	
79	96705041	HHCS CL 8.8,YEL ZN	1	M8-1.25X12
80	96741038	WASHER, FLAT CL 200,YEL ZN	3	ID-8.4,OD-16.0X1.6THK
81	59465674	CLAMP	2	
83	96704598	ESNA NUT	2	M6

43891340 REV 00D

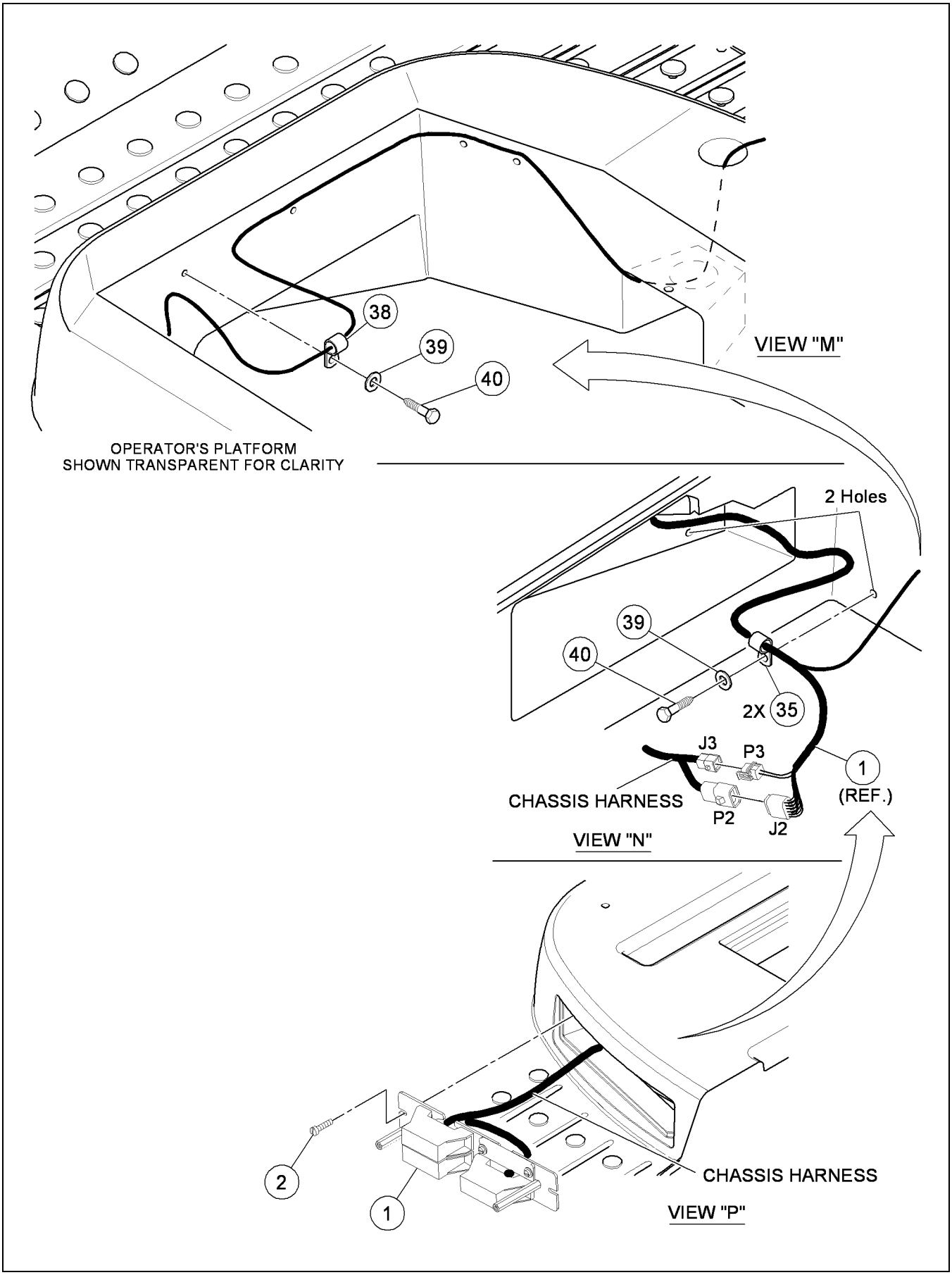

****Only Offered Parts Listed****

BOM 43924539

ITEM	COMM. NO.	DESCRIPTION	QTY	DIMENSIONS/NOTES
56	96704606	ESNA NUT	1	M8
58	59934166	CHAFE GUARD	2	
61	13214028	BRACKET	1	
62	96704234	HEX NUT CL 8 ,YEL ZN	2	M6-1
63	96714472	HHCS CL 10.9,YEL ZN HR	2	M6-1X20
64	96741053	FLATWASHER, CL 200,YEL ZN	4	
65	43870203	DUAL FUNCTION ALARM	1	
67	43916410	SCREW	4	
68	59397059	CLAMP	1	
69	96702287	HHCS CL 8.8,YEL ZN	2	M10-1.5X25
70	96741046	FLATWASHER, CL 200,YEL ZN	2	
71	96702816	HHCS CL 8.8,YEL ZN	1	M8-1.25X16
72	59995126	HARDENED WASHER	1	
73	96701495	HHCS CL 8.8,YEL ZN	1	M12-1.75X25
75	96704580	LOCKNUT	4	M5
76	96738554	FLATWASHER	4	
78	59117333	CLAMP	1	
79	96705041	HHCS CL 8.8,YEL ZN	1	M8-1.25X12
80	96741038	WASHER, FLAT CL 200,YEL ZN	3	ID-8.4,OD-16.0X1.6THK
81	59465674	CLAMP	2	
83	96704598	ESNA NUT	2	M6

43891340 REV 00D

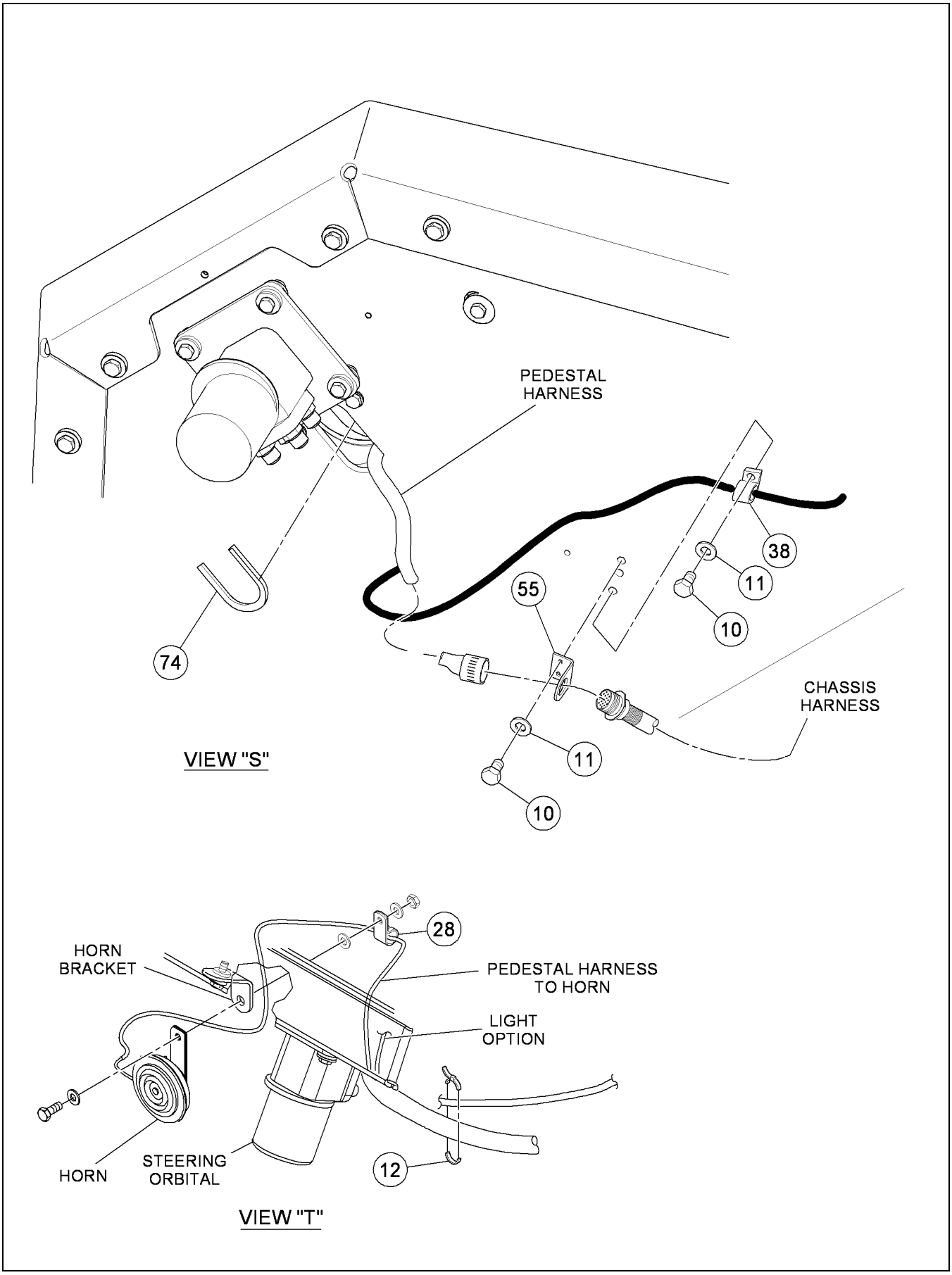

****Only Offered Parts Listed****

BOM 43924539

ITEM	COMM. NO.	DESCRIPTION	QTY	DIMENSIONS/NOTES
56	96704606	ESNA NUT	1	M8
58	59934166	CHAFE GUARD	2	
61	13214028	BRACKET	1	
62	96704234	HEX NUT CL 8 ,YEL ZN	2	M6-1
63	96714472	HHCS CL 10.9,YEL ZN HR	2	M6-1X20
64	96741053	FLATWASHER, CL 200,YEL ZN	4	
65	43870203	DUAL FUNCTION ALARM	1	
67	43916410	SCREW	4	
68	59397059	CLAMP	1	
69	96702287	HHCS CL 8.8,YEL ZN	2	M10-1.5X25
70	96741046	FLATWASHER, CL 200,YEL ZN	2	
71	96702816	HHCS CL 8.8,YEL ZN	1	M8-1.25X16
72	59995126	HARDENED WASHER	1	
73	96701495	HHCS CL 8.8,YEL ZN	1	M12-1.75X25
75	96704580	LOCKNUT	4	M5
76	96738554	FLATWASHER	4	
78	59117333	CLAMP	1	
79	96705041	HHCS CL 8.8,YEL ZN	1	M8-1.25X12
80	96741038	WASHER, FLAT CL 200,YEL ZN	3	ID-8.4,OD-16.0X1.6THK
81	59465674	CLAMP	2	
83	96704598	ESNA NUT	2	M6

43891340 REV 00D

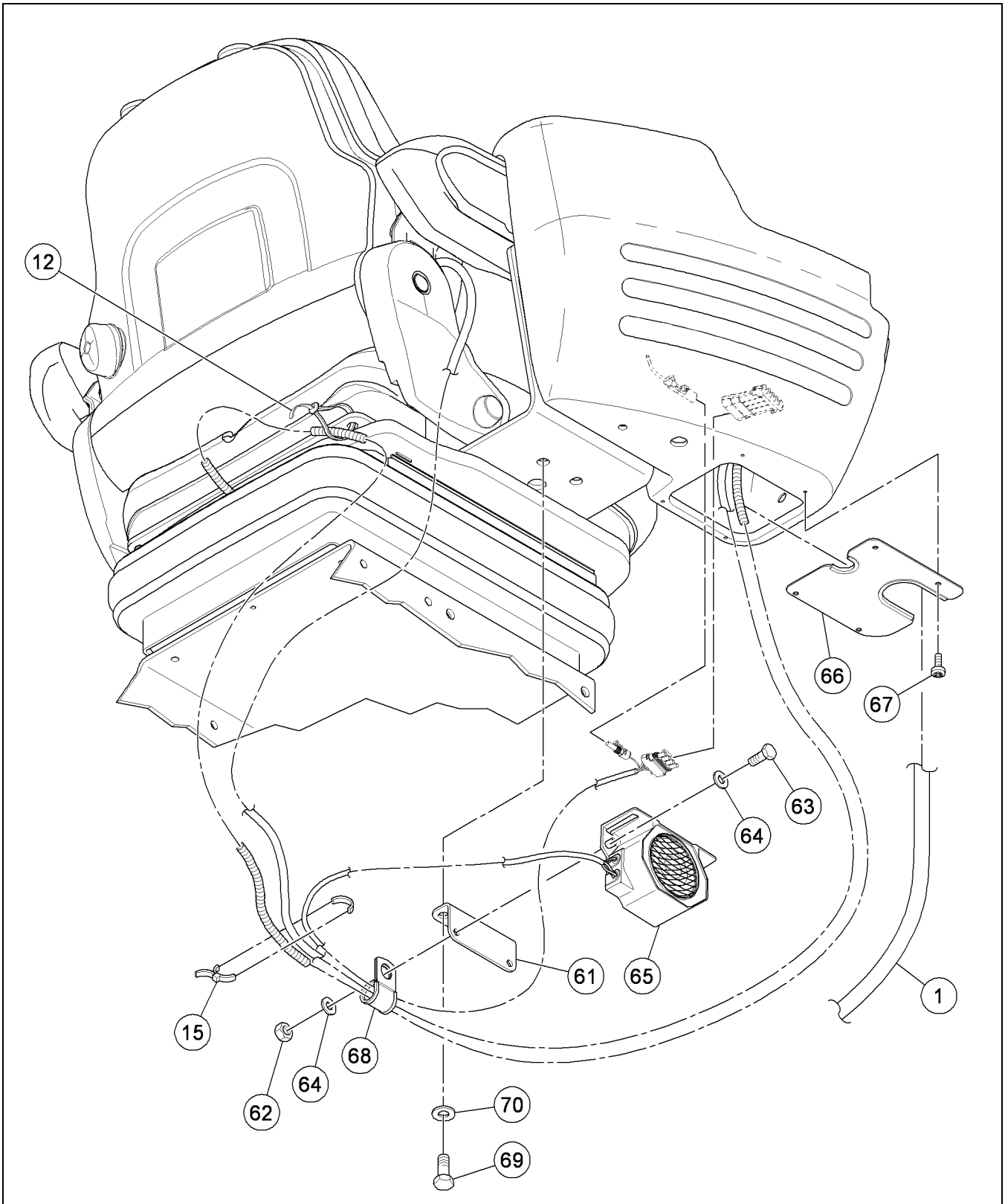

VIEW "U"

TYPICAL SEAT ARRANGEMENT

****Only Offered Parts Listed****

BOM 43924539

ITEM	COMM. NO.	DESCRIPTION	QTY	DIMENSIONS/NOTES
56	96704606	ESNA NUT	1	M8
58	59934166	CHAFE GUARD	2	
61	13214028	BRACKET	1	
62	96704234	HEX NUT CL 8 ,YEL ZN	2	M6-1
63	96714472	HHCS CL 10.9,YEL ZN HR	2	M6-1X20
64	96741053	FLATWASHER, CL 200,YEL ZN	4	
65	43870203	DUAL FUNCTION ALARM	1	
67	43916410	SCREW	4	
68	59397059	CLAMP	1	
69	96702287	HHCS CL 8.8,YEL ZN	2	M10-1.5X25
70	96741046	FLATWASHER, CL 200,YEL ZN	2	
71	96702816	HHCS CL 8.8,YEL ZN	1	M8-1.25X16
72	59995126	HARDENED WASHER	1	
73	96701495	HHCS CL 8.8,YEL ZN	1	M12-1.75X25
75	96704580	LOCKNUT	4	M5
76	96738554	FLATWASHER	4	
78	59117333	CLAMP	1	
79	96705041	HHCS CL 8.8,YEL ZN	1	M8-1.25X12
80	96741038	WASHER, FLAT CL 200,YEL ZN	3	ID-8.4,OD-16.0X1.6THK
81	59465674	CLAMP	2	
83	96704598	ESNA NUT	2	M6

FUSE BLOCK ASSEMBLY

43922277 REV 0A

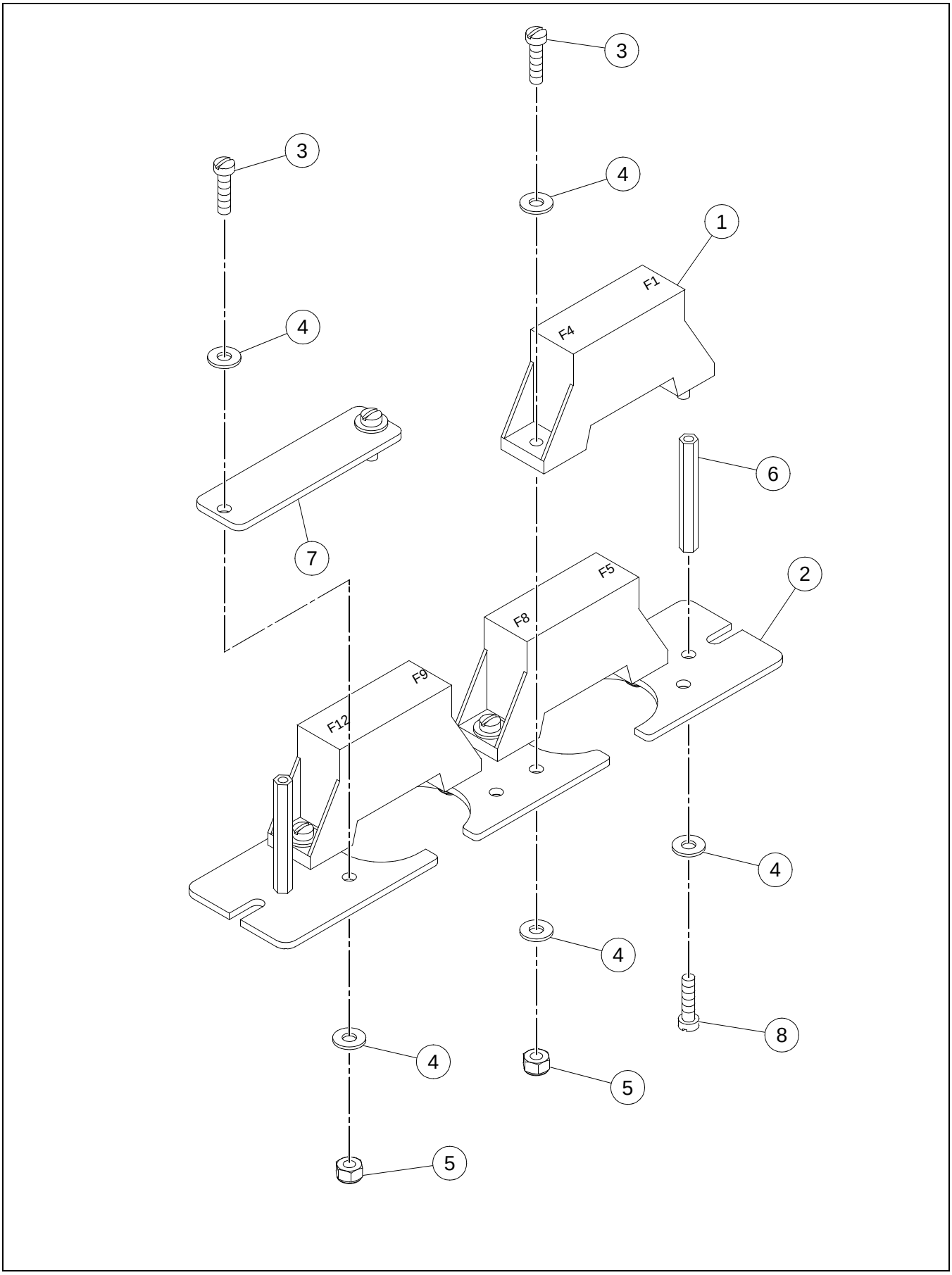

FUSE BLOCK ASSEMBLY

****Only Offered Parts Listed****

BOM 43922277

ITEM	COMM. NO.	DESCRIPTION	QTY	DIMENSIONS/NOTES
1	43902154	FUSE HARNESS	1	
-	59436865	- ELECTRICAL CONNECTOR	2	
2	13233440	FUSE MOUNTING PLATE	1	
3	95922134	SCREW	8	
4	95922332	FLATWASHER	18	
5	95943346	NUT	8	
6	13214267	STANDOFF	2	
7	13209135	FUSE COVER PLATE	1	
8	95932141	SCREW	2	10-32X.75

43809474 REV 00A

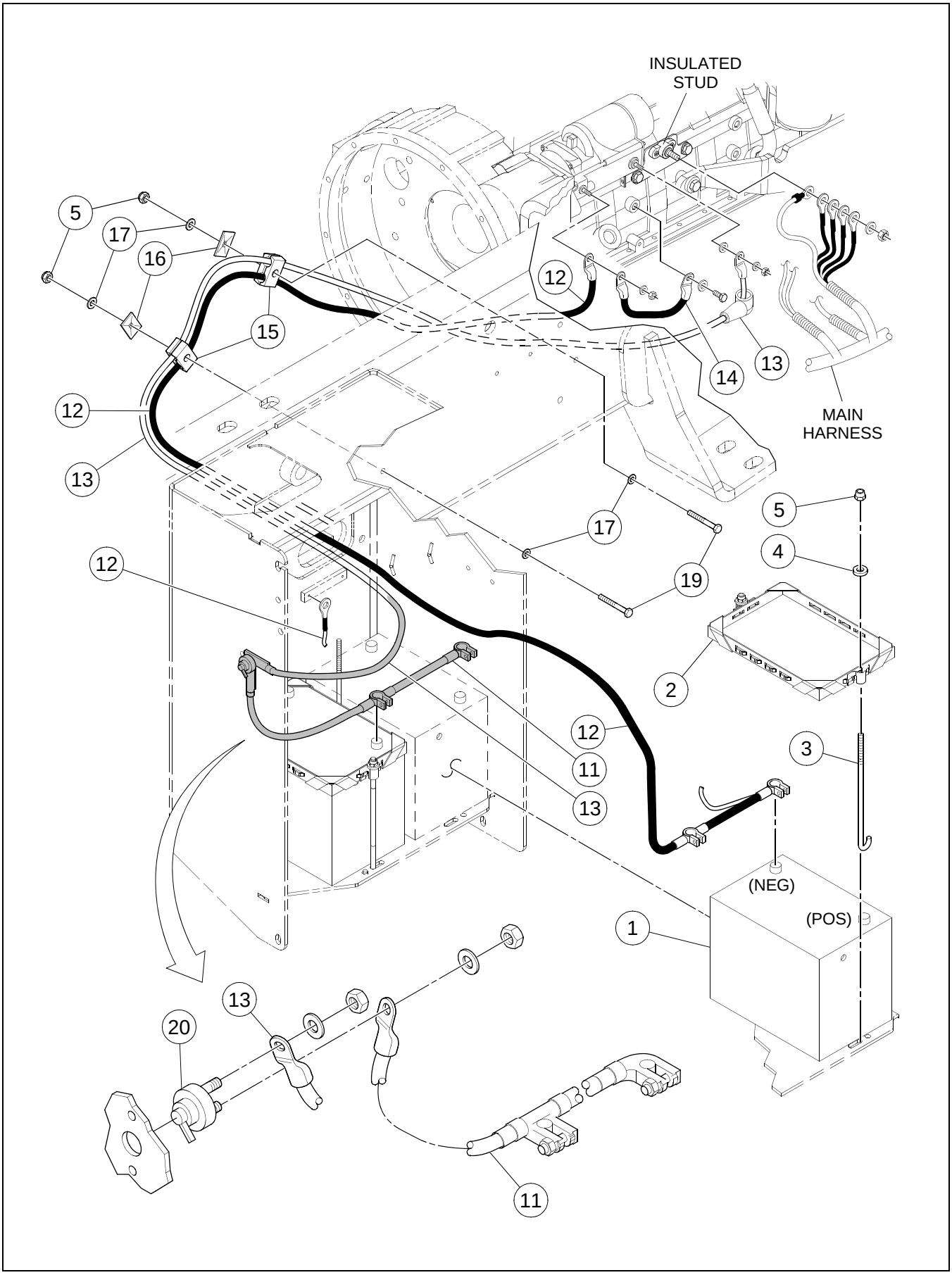

BATTERY INSTALLATION

****Only Offered Parts Listed****

BOM 43809474

ITEM	COMM. NO.	DESCRIPTION	QTY	DIMENSIONS/NOTES
1	54635859	BATTERY	2	
2	19295492	BATTERY HOLD DOWN	2	
3	59211805	J-HOOK	4	
4	96712674	FLATWASHER	4	
5	96704606	ESNA NUT	6	M8
6	96701495	HHCS CL 8.8,YEL ZN	1	M12-1.75X25
7	59995126	HARDENED WASHER	1	
11	43838218	CABLE,BATTERY POSITIVE	1	
12	43885672	CABLE, BATTERY NEGATIVE	1	
13	43896612	CABLE, STARTER POSITIVE	1	
14	13306519	GROUND CABLE JUMPER	1	
15	59583468	CLAMP INSERT	4	
16	59583450	COVER PLATE	2	
17	96741038	WASHER, FLAT CL 200,YEL ZN	4	ID-8.4,OD-16.0X1.6THK
19	96712252	HHCS CL 8.8,YEL ZN	2	M8-1.25X60
20	13209648	SWITCH, BATTERY MASTER	1	

WORKLIGHTS INSTALLATION - SHEET 1 OF 2

43819622 REV 0A

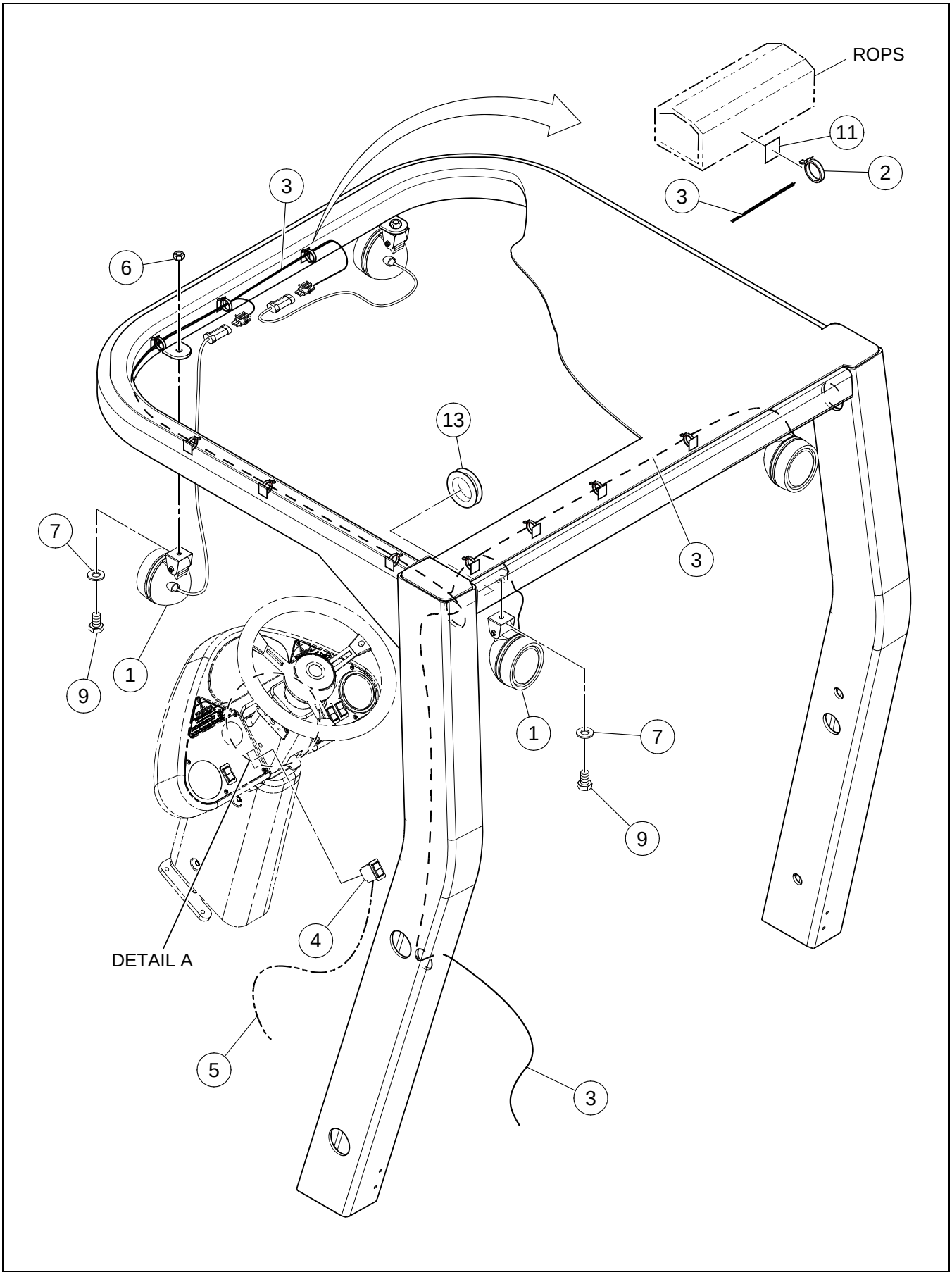

WORKLIGHTS INSTALLATION - SHEET 1 OF 2

****Only Offered Parts Listed****

BOM 43819622

ITEM	COMM. NO.	DESCRIPTION	QTY	DIMENSIONS/NOTES
1	13359815	WORKLIGHT ASSEMBLY	4	
-	13406764	- WORKLIGHTS	4	
-	13468137	- BULB	4	
-	13230735	- CONNECTOR	4	
-	13230776	- SECONDARY LOCK	4	
-	58965427	- TERMINAL	8	
-	13855200	- LIGHT BRACKET	4	
-	95924239	- LOCKWASHER	8	5/16
-	96728522	- HHCS CL 8.8,YEL ZN	4	M8-1.25X60
-	96704606	- ESNA NUT	4	M8
3	13492665	WORKLIGHT HARNESS	1	
4	13197108	SWITCH, F/R WORKLIGHTS	1	
5	43818848	HARNESS: WORK LIGHTS SEL	1	
6	96704812	HEX NUT CL 8 ,YEL ZN	2	M10-1.5
7	96741046	FLATWASHER, CL 200,YEL ZN	4	
9	96702279	HHCS CL 8.8,YEL ZN	4	M10-1.5X20
11	43850692	TYRAP BASE	10	
12	13322102	PANEL LIGHT ASSEMBLY	2	
-	13321443	- LAMP	2	
13	59896613	GROMMET	1	
14	96738554	FLATWASHER	4	
15	96704580	LOCKNUT	2	M5
16	96705728	HHCS CL 8.8,YEL ZN	2	M5-0.8X16
17	95301842	CLAMP	1	
18	96745492	SCREW	4	
19	96738547	FLATWASHER	4	
20	13236906	LOCKNUT	4	
21	43846070	COVER COLUMN FIXED	1	

43819622 REV 0A

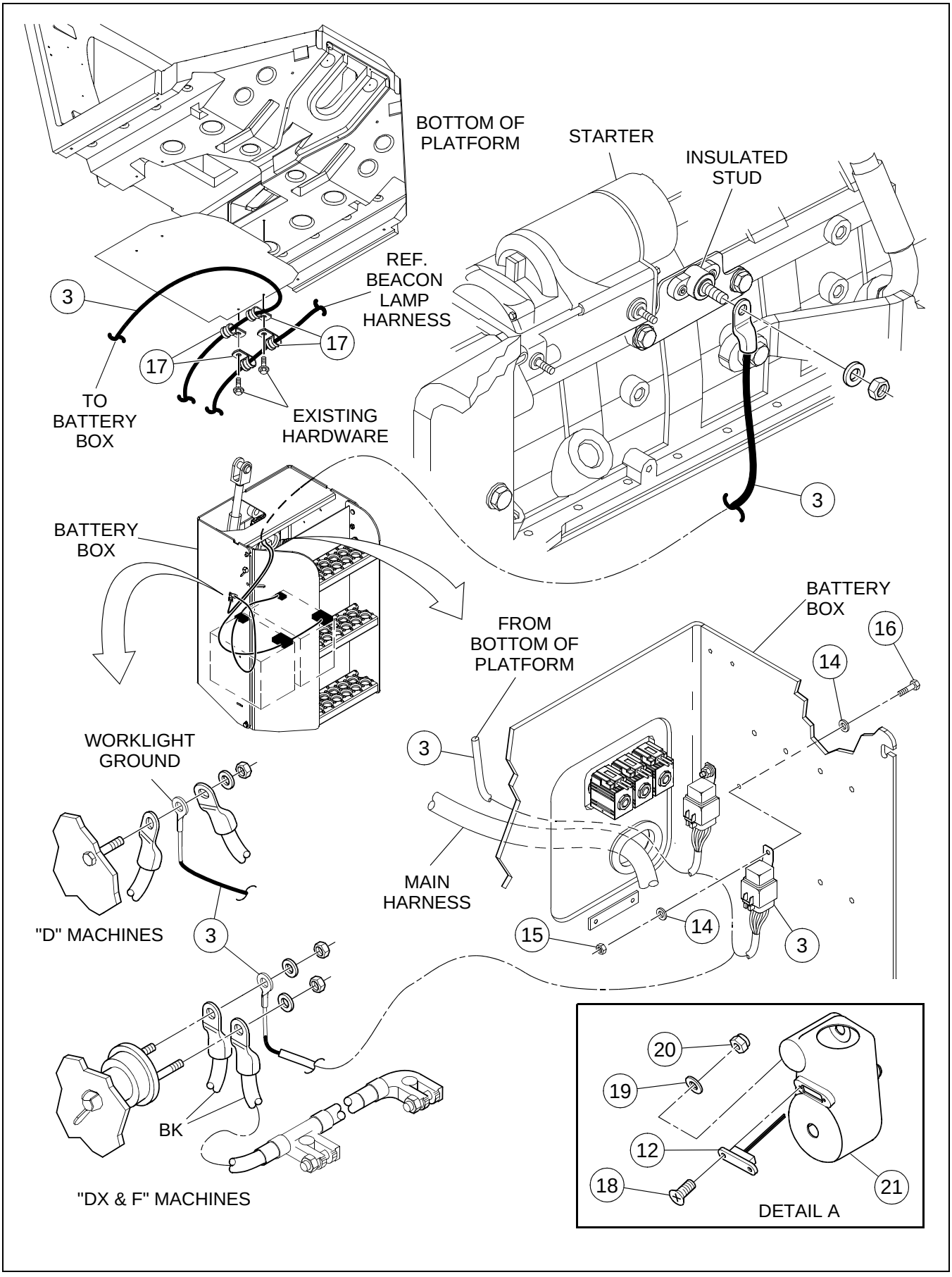

WORKLIGHTS INSTALLATION - SHEET 2 OF 2

****Only Offered Parts Listed****

BOM 43819622

ITEM	COMM. NO.	DESCRIPTION	QTY	DIMENSIONS/NOTES
1	13359815	WORKLIGHT ASSEMBLY	4	
-	13406764	- WORKLIGHTS	4	
-	13468137	- BULB	4	
-	13230735	- CONNECTOR	4	
-	13230776	- SECONDARY LOCK	4	
-	58965427	- TERMINAL	8	
-	13855200	- LIGHT BRACKET	4	
-	95924239	- LOCKWASHER	8	5/16
-	96728522	- HHCS CL 8.8,YEL ZN	4	M8-1.25X60
-	96704606	- ESNA NUT	4	M8
3	13492665	WORKLIGHT HARNESS	1	
4	13197108	SWITCH, F/R WORKLIGHTS	1	
5	43818848	HARNESS: WORK LIGHTS SEL	1	
6	96704812	HEX NUT CL 8 ,YEL ZN	2	M10-1.5
7	96741046	FLATWASHER, CL 200,YEL ZN	4	
9	96702279	HHCS CL 8.8,YEL ZN	4	M10-1.5X20
11	43850692	TYRAP BASE	10	
12	13322102	PANEL LIGHT ASSEMBLY	2	
-	13321443	- LAMP	2	
13	59896613	GROMMET	1	
14	96738554	FLATWASHER	4	
15	96704580	LOCKNUT	2	M5
16	96705728	HHCS CL 8.8,YEL ZN	2	M5-0.8X16
17	95301842	CLAMP	1	
18	96745492	SCREW	4	
19	96738547	FLATWASHER	4	
20	13236906	LOCKNUT	4	
21	43846070	COVER COLUMN FIXED	1	

Section F - DECALS AND PAINT

DECAL INSTALLATION - SHEET 1 OF 2

43914621 REV 0B

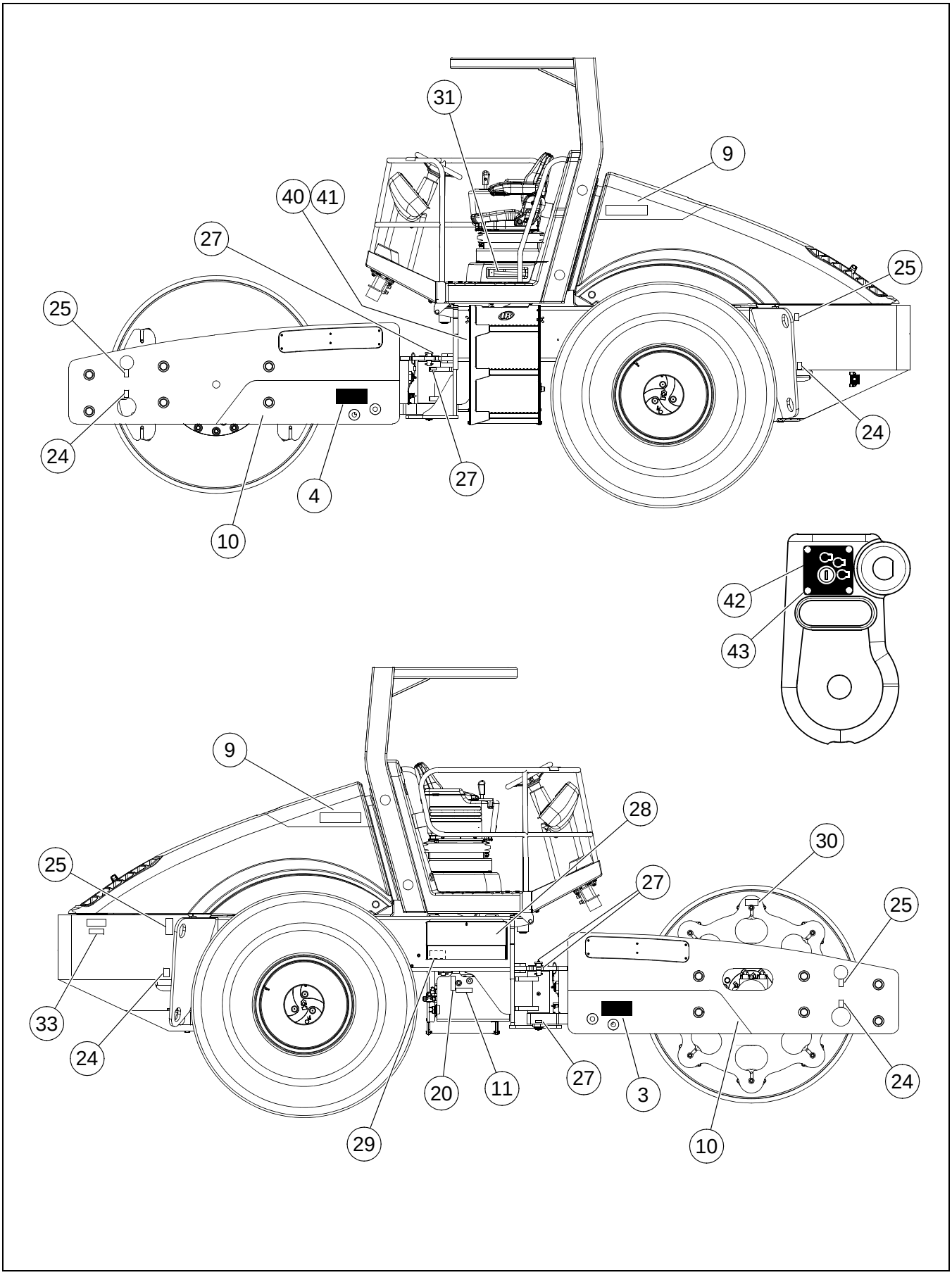

DECAL INSTALLATION - SHEET 1 OF 2

****Only Offered Parts Listed****

BOM 43914571

ITEM	COMM. NO.	DESCRIPTION	QTY	DIMENSIONS/NOTES
2	58965542	DECAL: CRUSH AREA	2	
3	43916907	DECAL: SD100F	2	
5	59020040	DECAL: WARNING - PRESSURE HAZARD	2	
7	43912013	DECAL, VOLVO SIGNATURE; 750MM	1	
8	43911239	DECAL, VOLVO SIGNATURE; 550MM	1	
9	43911171	DECAL, VOLVO SIGNATURE; 380MM	1	
10	43857671	DECAL,STRIPE	2	
11	13199344	DECAL: HYDRAULIC OIL	1	
14	59667287	DECAL: WARNING DO NOT SIT ON RAIL	2	
19	59051151	DECAL: WARNING	2	
20	58978255	DECAL: HYDRAULIC OIL LEVEL	1	
21	43921683	DECAL: FIELD	1	
22	43921691	DECAL: FIELD	1	
23	43921709	DECAL: FIELD	1	
24	59246603	DECAL: TIE DOWN	4	
25	59246611	DECAL: LIFT POINT	4	
26	59087999	DECAL: RADIATOR FILL	1	
27	59605915	DECAL: GREASE	8	
28	43843432	DECAL:LUBE CHART SD100/105/122	1	
29	59290858	DECAL: HYDRAULIC PRESSURE TEST	1	
30	13208038	DECAL: MISSING SHOCK	1	
31	13480116	DECAL: FUSE CHART	1	
33	43924802	DECAL: HOOD,LOWER	1	
37	43949221	DECAL:FUSE BLOCK	1	
38	13855671	DECAL: WARNING-HOOD CRUSH AREA	1	
40	43936681	DECAL:MASTER DISCONNECT	1	
41	NOT-USED	THIS ITEM NOT USED W/THIS BOM	1	
42	43925775	DECAL: IGNITION	1	
43	59211474	SCREW	4	

43914621 REV 0B

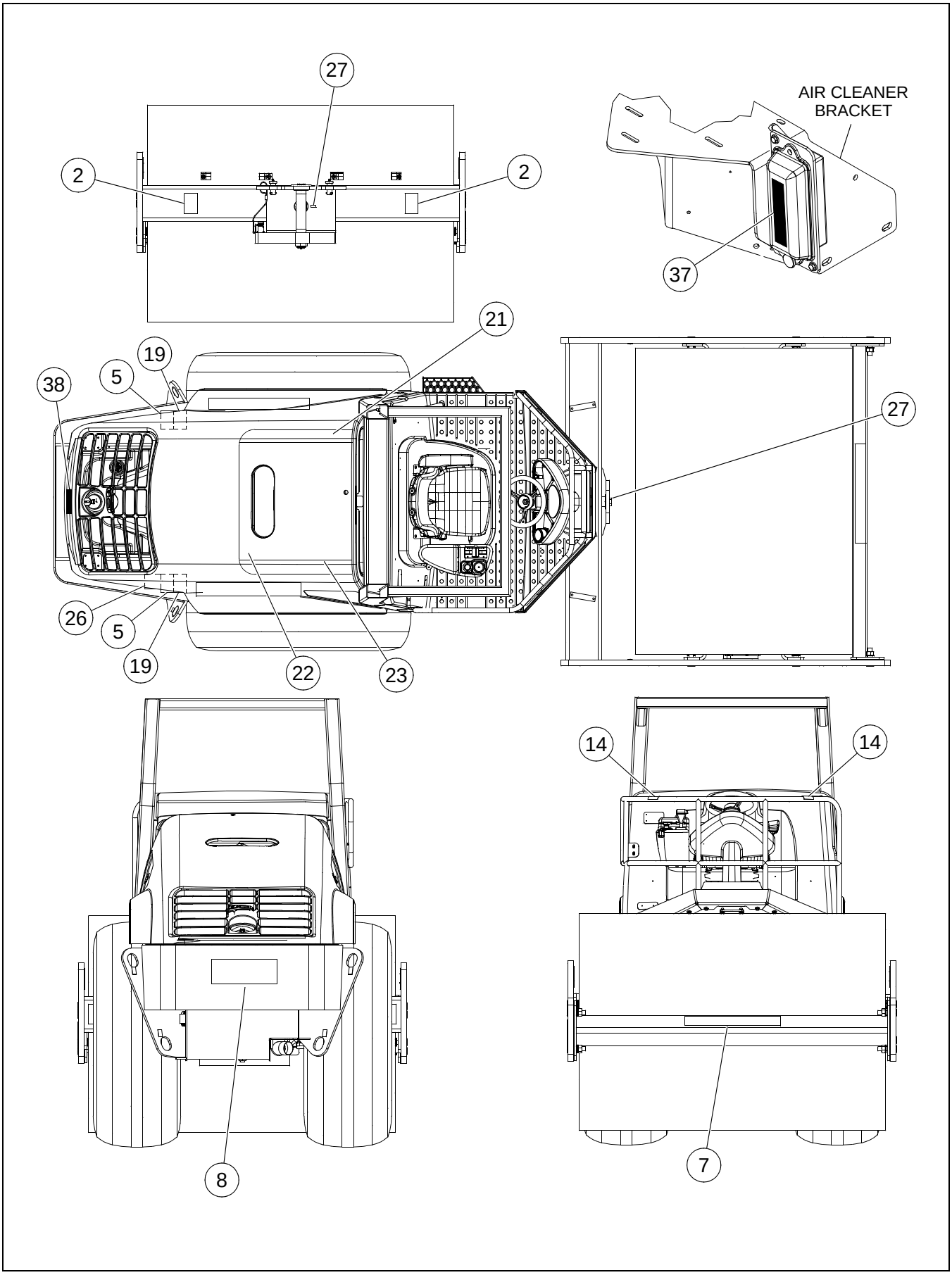

DECAL INSTALLATION - SHEET 2 OF 2

****Only Offered Parts Listed****

BOM 43914571

ITEM	COMM. NO.	DESCRIPTION	QTY	DIMENSIONS/NOTES
2	58965542	DECAL: CRUSH AREA	2	
3	43916907	DECAL: SD100F	2	
5	59020040	DECAL: WARNING - PRESSURE HAZARD	2	
7	43912013	DECAL, VOLVO SIGNATURE; 750MM	1	
8	43911239	DECAL, VOLVO SIGNATURE; 550MM	1	
9	43911171	DECAL, VOLVO SIGNATURE; 380MM	1	
10	43857671	DECAL,STRIPE	2	
11	13199344	DECAL: HYDRAULIC OIL	1	
14	59667287	DECAL: WARNING DO NOT SIT ON RAIL	2	
19	59051151	DECAL: WARNING	2	
20	58978255	DECAL: HYDRAULIC OIL LEVEL	1	
21	43921683	DECAL: FIELD	1	
22	43921691	DECAL: FIELD	1	
23	43921709	DECAL: FIELD	1	
24	59246603	DECAL: TIE DOWN	4	
25	59246611	DECAL: LIFT POINT	4	
26	59087999	DECAL: RADIATOR FILL	1	
27	59605915	DECAL: GREASE	8	
28	43843432	DECAL:LUBE CHART SD100/105/122	1	
29	59290858	DECAL: HYDRAULIC PRESSURE TEST	1	
30	13208038	DECAL: MISSING SHOCK	1	
31	13480116	DECAL: FUSE CHART	1	
33	43924802	DECAL: HOOD,LOWER	1	
37	43949221	DECAL:FUSE BLOCK	1	
38	13855671	DECAL: WARNING-HOOD CRUSH AREA	1	
40	43936681	DECAL:MASTER DISCONNECT	1	
41	NOT-USED	THIS ITEM NOT USED W/THIS BOM	1	
42	43925775	DECAL: IGNITION	1	
43	59211474	SCREW	4	

43918754 REV 0C

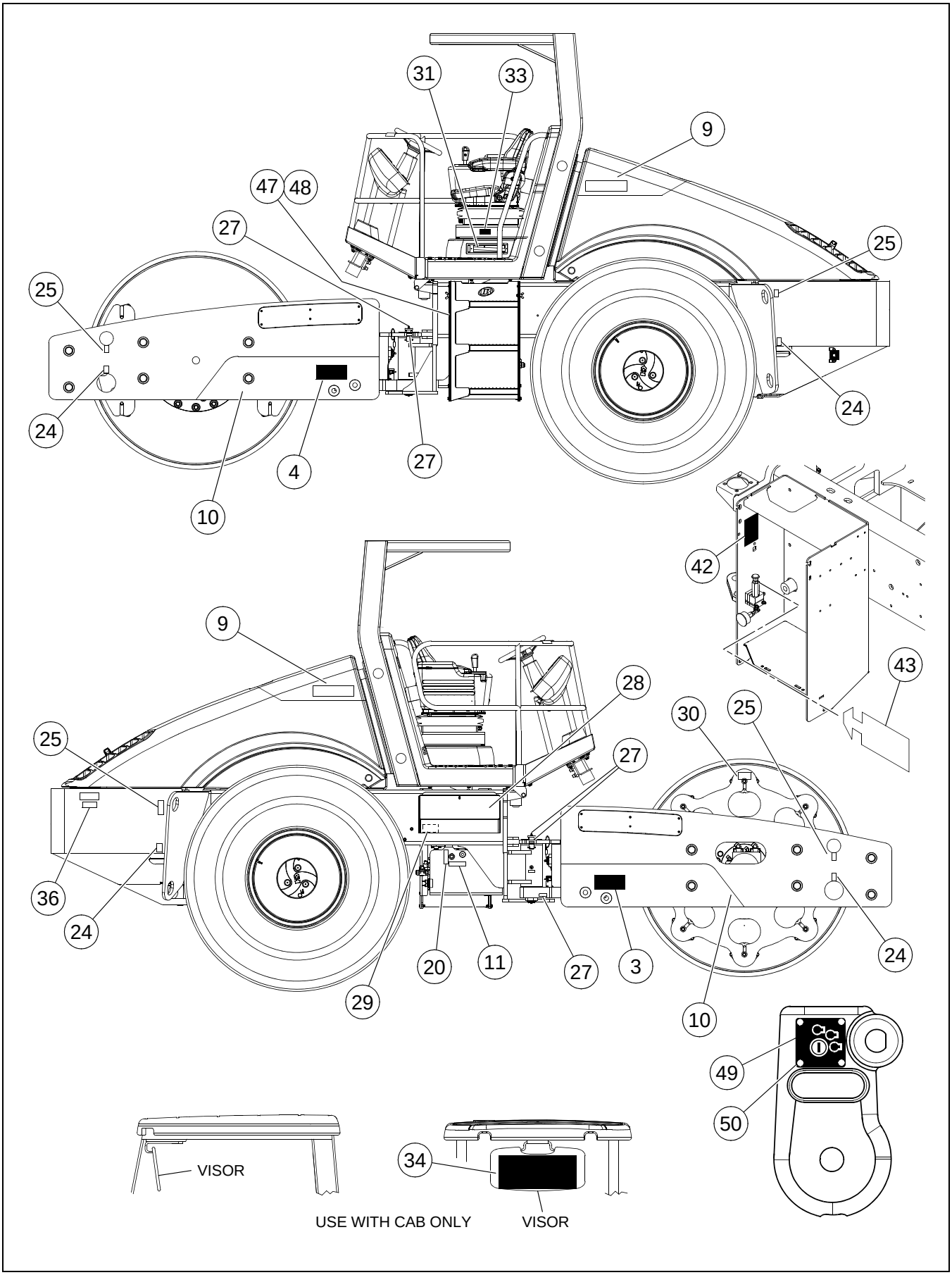

EU DECAL INSTALLATION - SHEET 1 OF 2

****Only Offered Parts Listed****

BOM 43934660

ITEM	COMM. NO.	DESCRIPTION	QTY	DIMENSIONS/NOTES
2	58918947	DECAL: WARNING CRUSHING DANGER	2	
3	43916907	DECAL: SD100F	2	
5	59050948	DECAL: PRESSURIZED COOLANT	2	
7	43912013	DECAL, VOLVO SIGNATURE; 750MM	1	
8	43911239	DECAL, VOLVO SIGNATURE; 550MM	1	
9	43911171	DECAL, VOLVO SIGNATURE; 380MM	1	
10	43857671	DECAL,STRIPE	2	
11	58978222	DECAL: HYDRAULIC FUEL	1	
14	58978248	DECAL: DO NOT SITE ON WARNING RAILING	2	
19	58978198	DECAL: ROTATING FAN	2	
20	58978255	DECAL: HYDRAULIC OIL LEVEL	1	
21	43921683	DECAL: FIELD	1	
22	43921691	DECAL: FIELD	1	
23	43921709	DECAL: FIELD	1	
24	59246603	DECAL: TIE DOWN	4	
25	59246611	DECAL: LIFT POINT	4	
26	NOT-USED	THIS ITEM NOT USED W/THIS BOM	1	
27	59605915	DECAL: GREASE	8	
28	NOT-USED	THIS ITEM NOT USED W/THIS BOM	1	
29	59290858	DECAL: HYDRAULIC PRESSURE TEST	1	
30	NOT-USED	THIS ITEM NOT USED W/THIS BOM	1	
31	NOT-USED	THIS ITEM NOT USED W/THIS BOM	1	
33	NOT-USED	THIS ITEM NOT USED W/THIS BOM	1	
34	NOT-USED	THIS ITEM NOT USED W/THIS BOM	1	
35	13394531	DECAL: SOUND POWER 108 DB	1	
36	43924802	DECAL: HOOD,LOWER	1	
44	NOT-USED	THIS ITEM NOT USED W/THIS BOM	1	
47	43936681	DECAL:MASTER DISCONNECT	1	
49	43925775	DECAL: IGNITION	1	
50	59211474	SCREW	4	
51	43913789	DECAL:WARNING-HOOD CRUSH AREA	1	

EU DECAL INSTALLATION - SHEET 2 OF 2

43918754 REV 0C

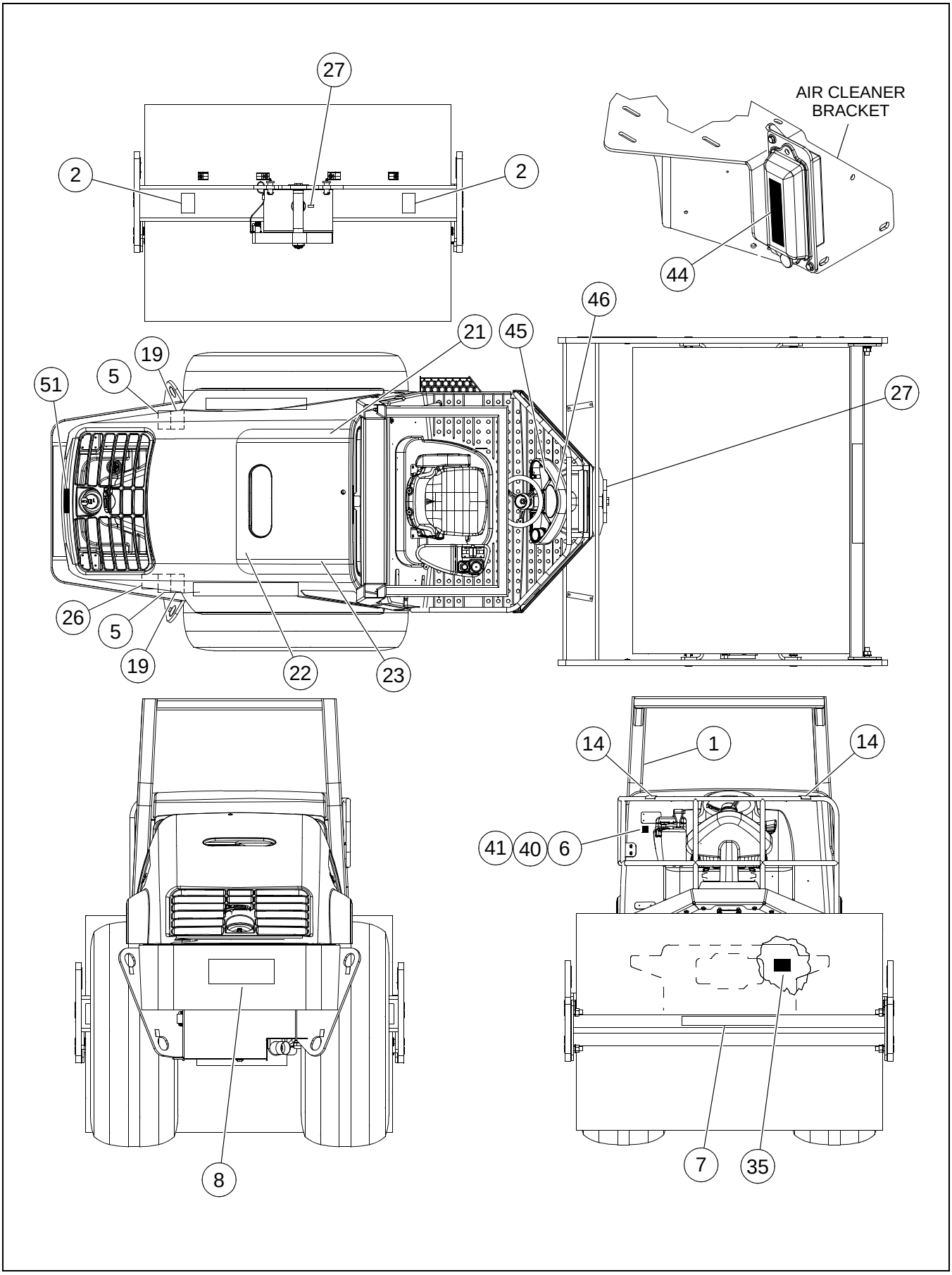

EU DECAL INSTALLATION - SHEET 2 OF 2

****Only Offered Parts Listed****

BOM 43934660

ITEM	COMM. NO.	DESCRIPTION	QTY	DIMENSIONS/NOTES
2	58918947	DECAL: WARNING CRUSHING DANGER	2	
3	43916907	DECAL: SD100F	2	
5	59050948	DECAL: PRESSURIZED COOLANT	2	
7	43912013	DECAL, VOLVO SIGNATURE; 750MM	1	
8	43911239	DECAL, VOLVO SIGNATURE; 550MM	1	
9	43911171	DECAL, VOLVO SIGNATURE; 380MM	1	
10	43857671	DECAL,STRIPE	2	
11	58978222	DECAL: HYDRAULIC FUEL	1	
14	58978248	DECAL: DO NOT SITE ON WARNING RAILING	2	
19	58978198	DECAL: ROTATING FAN	2	
20	58978255	DECAL: HYDRAULIC OIL LEVEL	1	
21	43921683	DECAL: FIELD	1	
22	43921691	DECAL: FIELD	1	
23	43921709	DECAL: FIELD	1	
24	59246603	DECAL: TIE DOWN	4	
25	59246611	DECAL: LIFT POINT	4	
26	NOT-USED	THIS ITEM NOT USED W/THIS BOM	1	
27	59605915	DECAL: GREASE	8	
28	NOT-USED	THIS ITEM NOT USED W/THIS BOM	1	
29	59290858	DECAL: HYDRAULIC PRESSURE TEST	1	
30	NOT-USED	THIS ITEM NOT USED W/THIS BOM	1	
31	NOT-USED	THIS ITEM NOT USED W/THIS BOM	1	
33	NOT-USED	THIS ITEM NOT USED W/THIS BOM	1	
34	NOT-USED	THIS ITEM NOT USED W/THIS BOM	1	
35	13394531	DECAL: SOUND POWER 108 DB	1	
36	43924802	DECAL: HOOD,LOWER	1	
44	NOT-USED	THIS ITEM NOT USED W/THIS BOM	1	
47	43936681	DECAL:MASTER DISCONNECT	1	
49	43925775	DECAL: IGNITION	1	
50	59211474	SCREW	4	
51	43913789	DECAL:WARNING-HOOD CRUSH AREA	1	

Section G - HYDRAULICS

REAR FRAME HOSING INSTALLATION - SHEET 1 OF 6

13375639 REV 0G

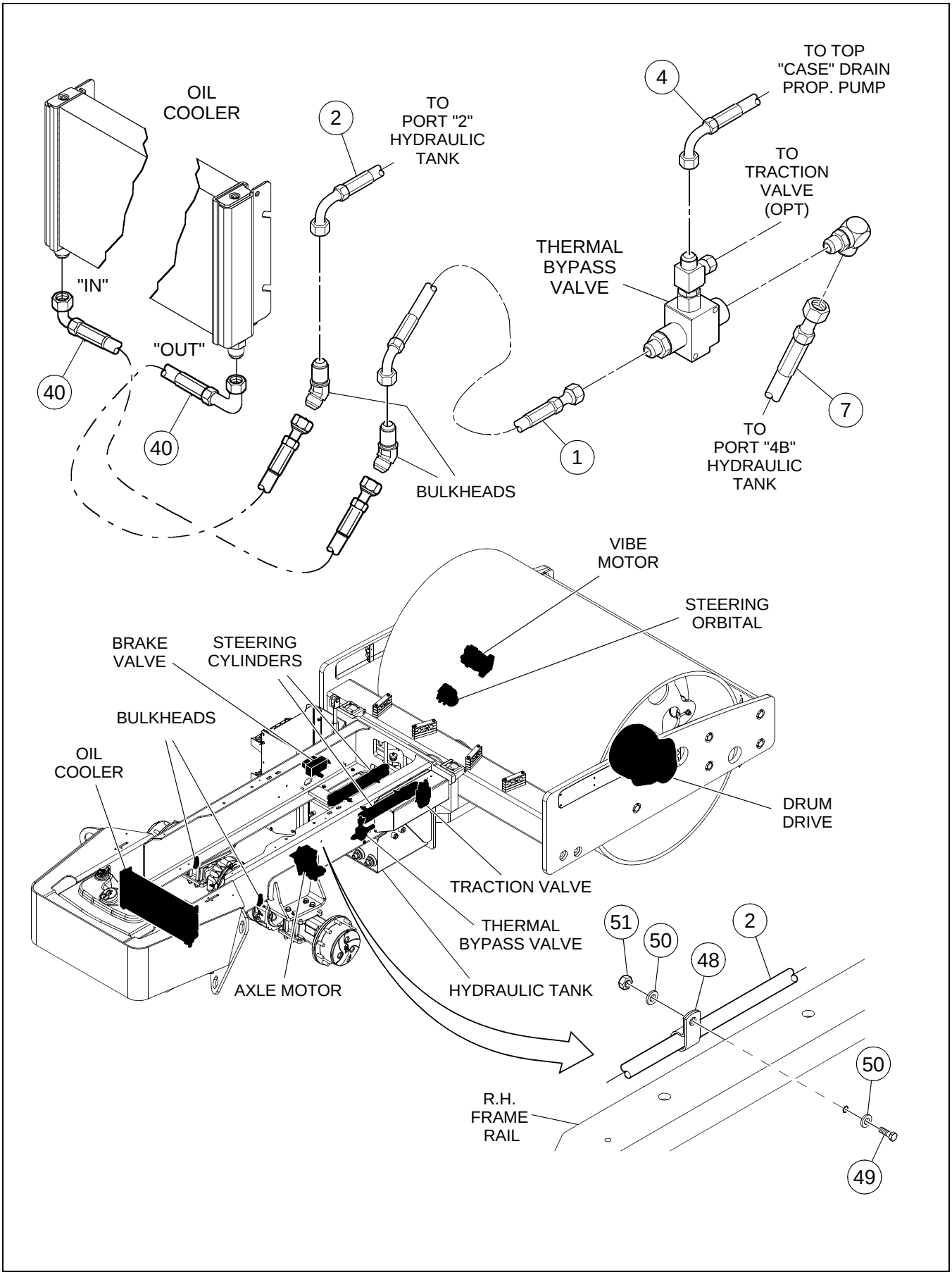

REAR FRAME HOSING INSTALLATION - SHEET 1 OF 6

****Only Offered Parts Listed****

BOM 43840123

ITEM	COMM. NO.	DESCRIPTION	QTY	DIMENSIONS/NOTES
1	13225073	HOSE ASSEMBLY	1	
2	13204425	HOSE ASSEMBLY	1	
3	59586792	HOSE ASSEMBLY	1	
4	13204565	HOSE ASSEMBLY	1	
6	13204441	HOSE ASSEMBLY	1	
7	59203406	HOSE ASSEMBLY	1	
8	59106757	HOSE ASSEMBLY	1	
9	13204334	HOSE ASSEMBLY	2	
10	13207535	HOSE ASSEMBLY	1	
12	18004093	HOSE ASSEMBLY	1	148.5
13	58896036	HOSE ASSEMBLY	1	
14	43840107	HOSE ASSEMBLY	1	
15	59219618	HOSE	1	
16	43923804	HOSE ASSEMBLY	1	
17	13315569	HOSE ASSEMBLY	1	
18	13315569	HOSE ASSEMBLY	1	
19	13364815	HOSE ASSEMBLY	1	
21	13199112	HOSE ASSEMBLY	1	
22	13199120	HOSE	1	
26	13204359	HOSE ASSEMBLY	1	
27	13204359	HOSE ASSEMBLY	1	
28	13199062	HOSE ASSEMBLY	2	
29	13199104	HOSE ASSEMBLY	1	
30	13106489	HOSE ASSEMBLY	1	
32	13106489	HOSE ASSEMBLY	1	
33	13106497	HOSE ASSEMBLY	1	
37	59706960	HOSE ASSEMBLY	1	
38	59667717	HOSE ASSEMBLY	1	
39	13204755	HOSE	1	
40	13313952	HOSE ASSEMBLY	2	
41	13204599	HOSE ASSEMBLY	1	
42	59195479	HOSE ASSEMBLY	1	
43	43878479	HOSE	1	
45	13364823	HOSE ASSEMBLY	1	
46	59672733	HOSE GUARD	1	
47	95424586	TYRAP	8	
48	95457586	CLAMP	1	
49	96714829	HHCS CL 10.9,YEL ZN HR	1	M12-1.75X20
50	96738596	FLATWASHER	1	
51	43878487	HOSE 27"	1	
52	43878495	HOSE	1	
53	43878503	HOSE	1	

REAR FRAME HOSING INSTALLATION - SHEET 2 OF 6

13375639 REV 0G

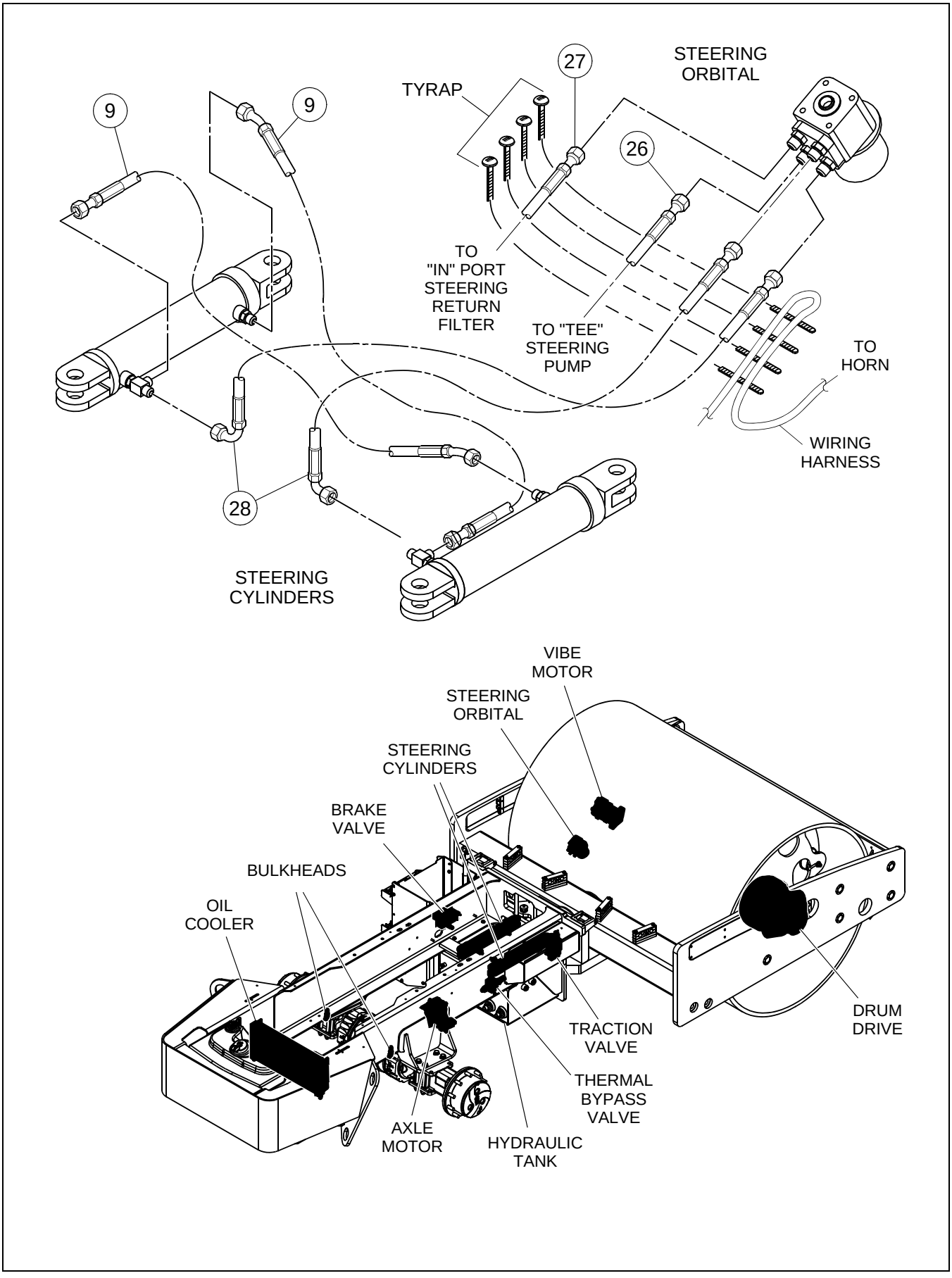

****Only Offered Parts Listed****

BOM 43840123

ITEM	COMM. NO.	DESCRIPTION	QTY	DIMENSIONS/NOTES
54	43878511	HOSE	1	
55	43878529	HOSE	1	
56	59138396	HOSE ASSEMBLY	1	

13375639 REV 0G

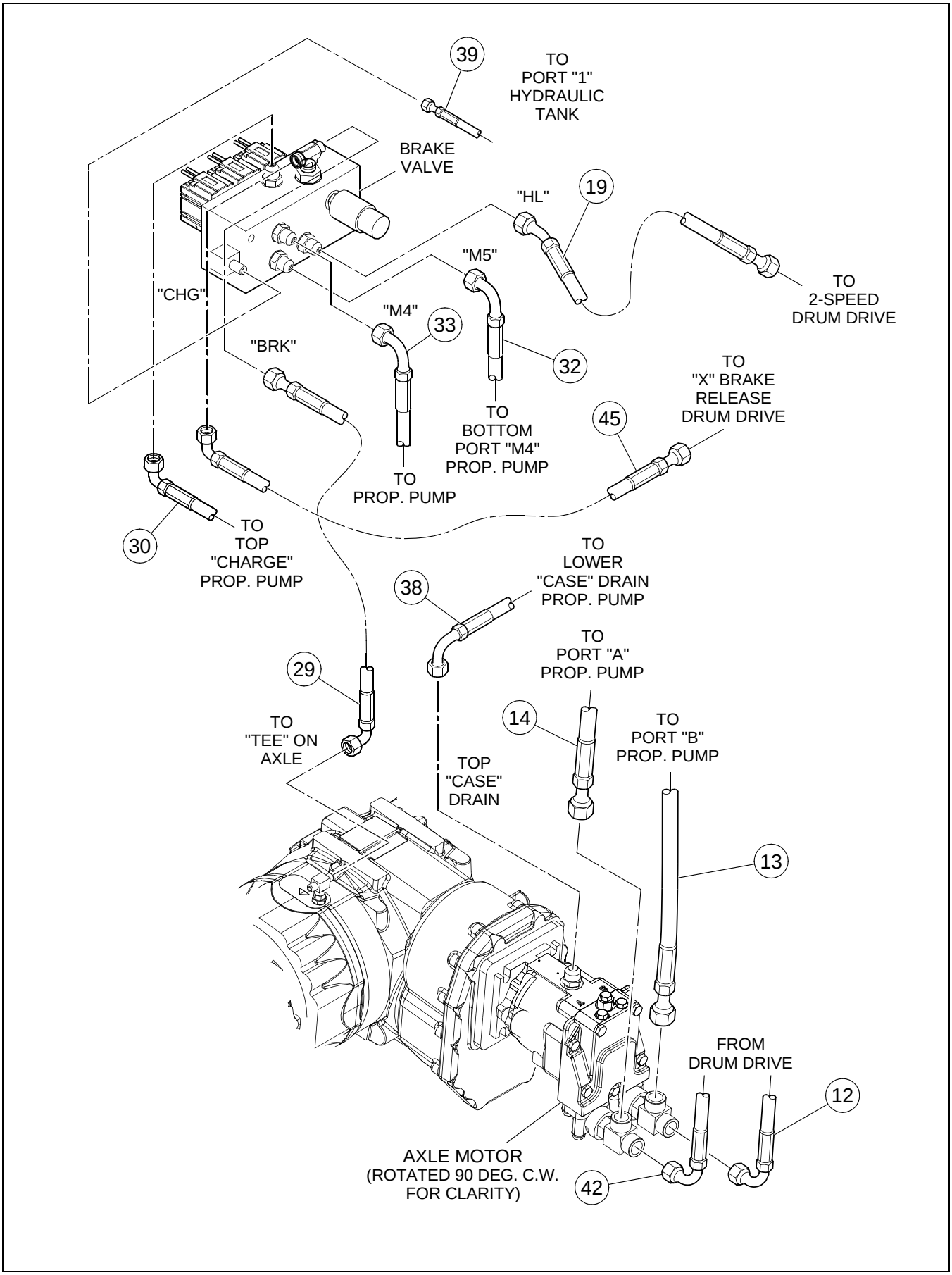

****Only Offered Parts Listed****

BOM 43840123

ITEM	COMM. NO.	DESCRIPTION	QTY	DIMENSIONS/NOTES
54	43878511	HOSE	1	
55	43878529	HOSE	1	
56	59138396	HOSE ASSEMBLY	1	

13375639 REV 0G

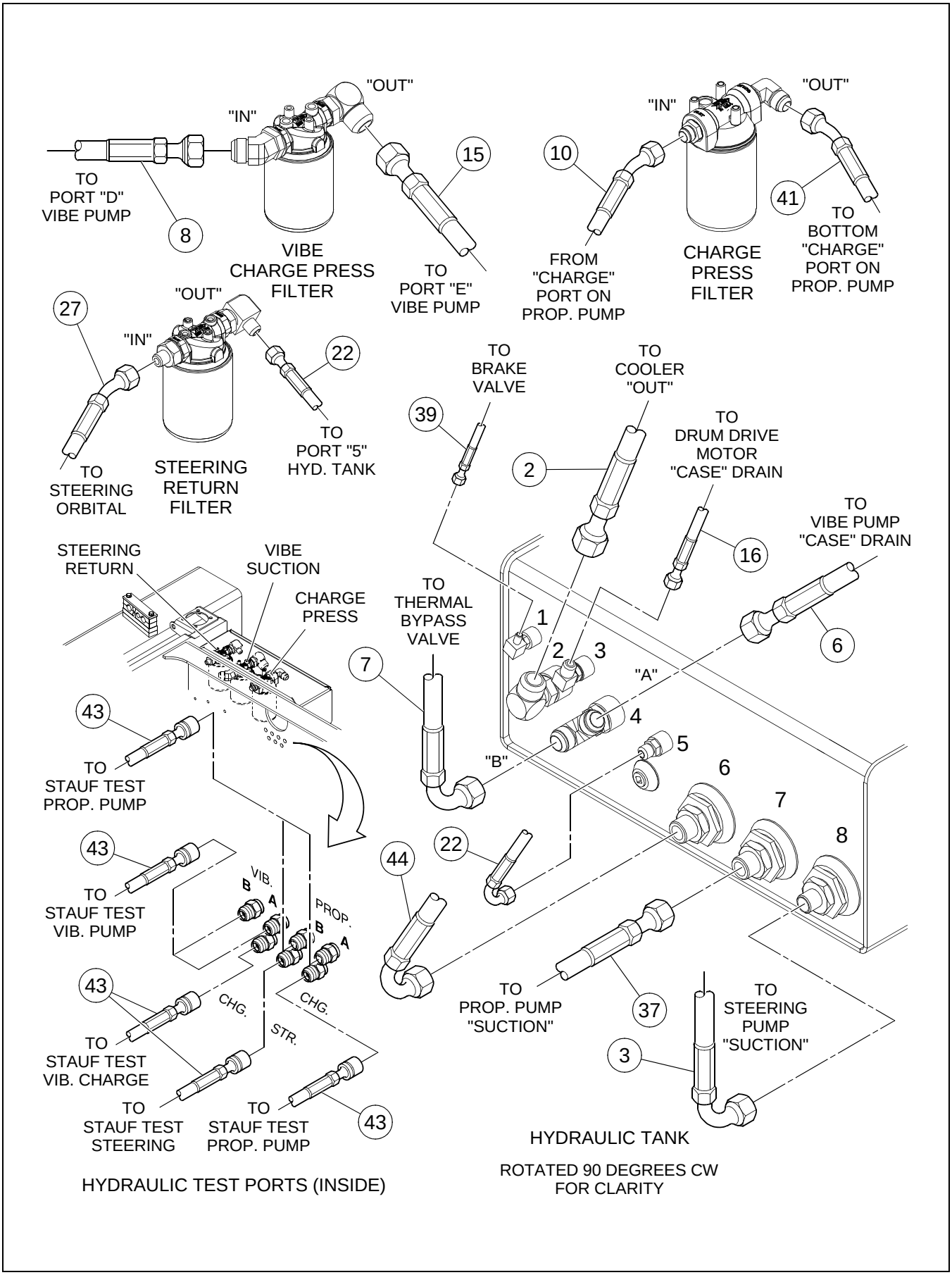

****Only Offered Parts Listed****

BOM 43840123

ITEM	COMM. NO.	DESCRIPTION	QTY	DIMENSIONS/NOTES
54	43878511	HOSE	1	
55	43878529	HOSE	1	
56	59138396	HOSE ASSEMBLY	1	

13375639 REV 0G

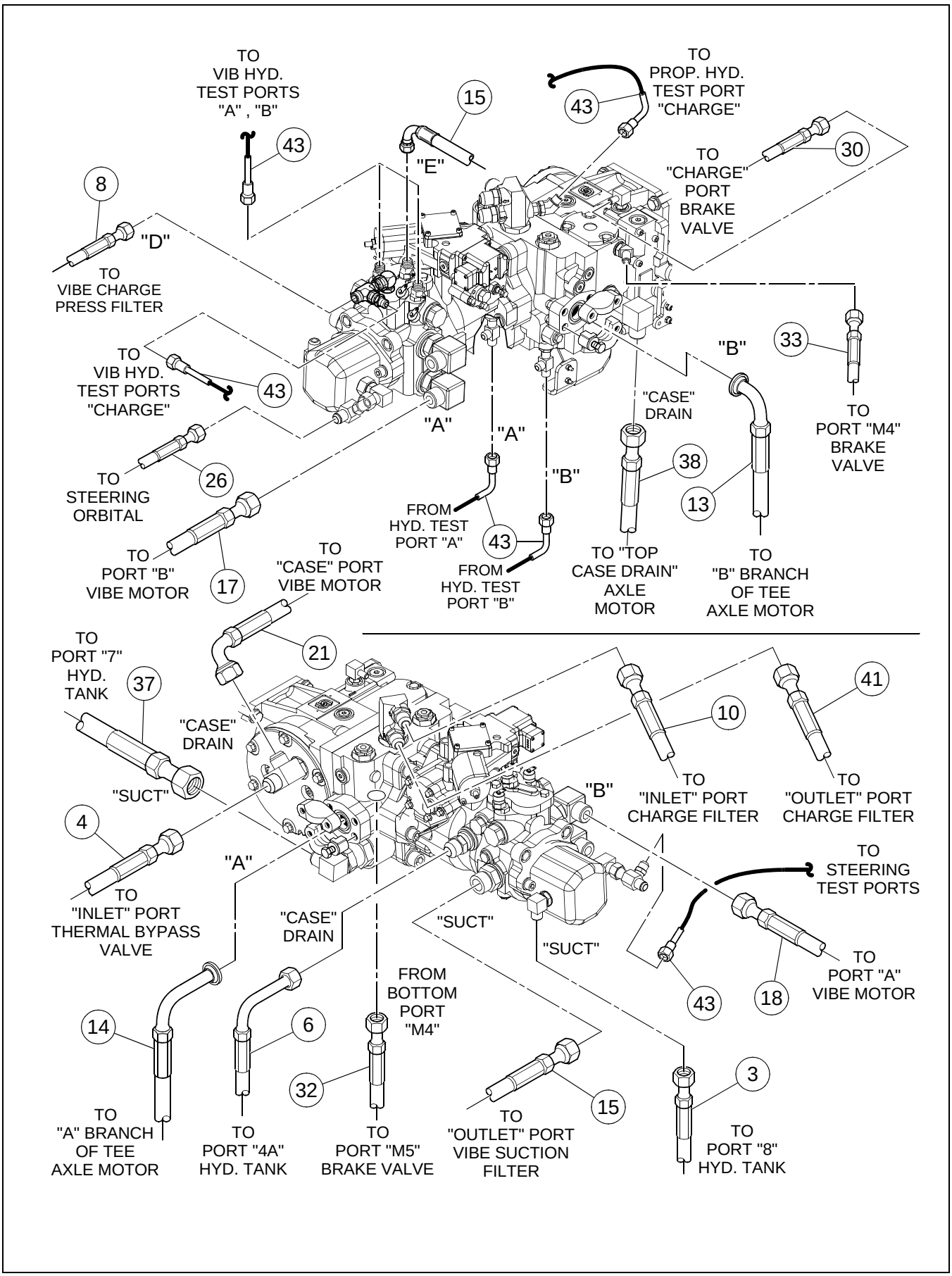

****Only Offered Parts Listed****

BOM 43840123

ITEM	COMM. NO.	DESCRIPTION	QTY	DIMENSIONS/NOTES
54	43878511	HOSE	1	
55	43878529	HOSE	1	
56	59138396	HOSE ASSEMBLY	1	

13375639 REV 0G

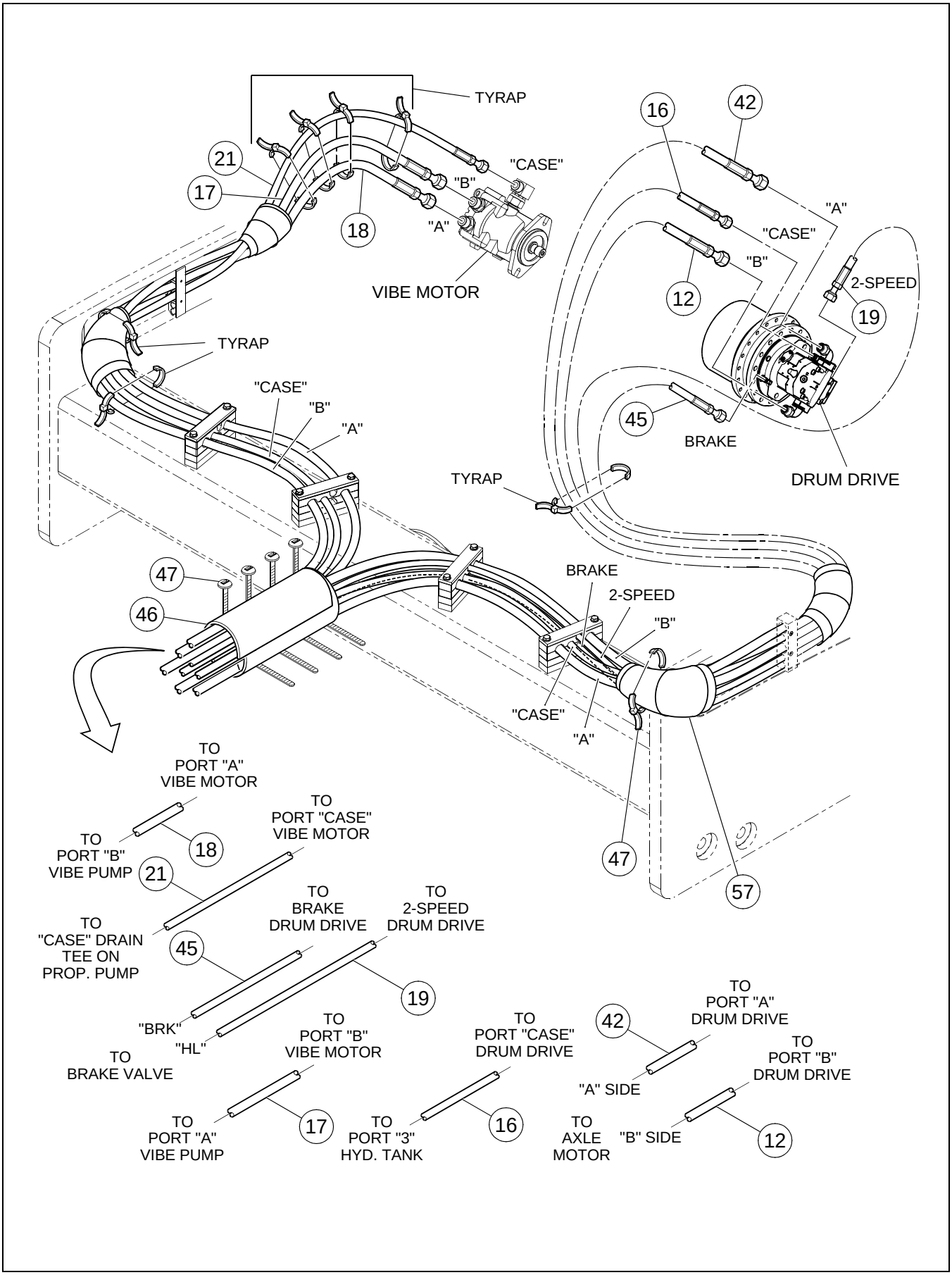

****Only Offered Parts Listed****

BOM 43840123

ITEM	COMM. NO.	DESCRIPTION	QTY	DIMENSIONS/NOTES
54	43878511	HOSE	1	
55	43878529	HOSE	1	
56	59138396	HOSE ASSEMBLY	1	

FILTER INSTALLATION

13185723 REV 05

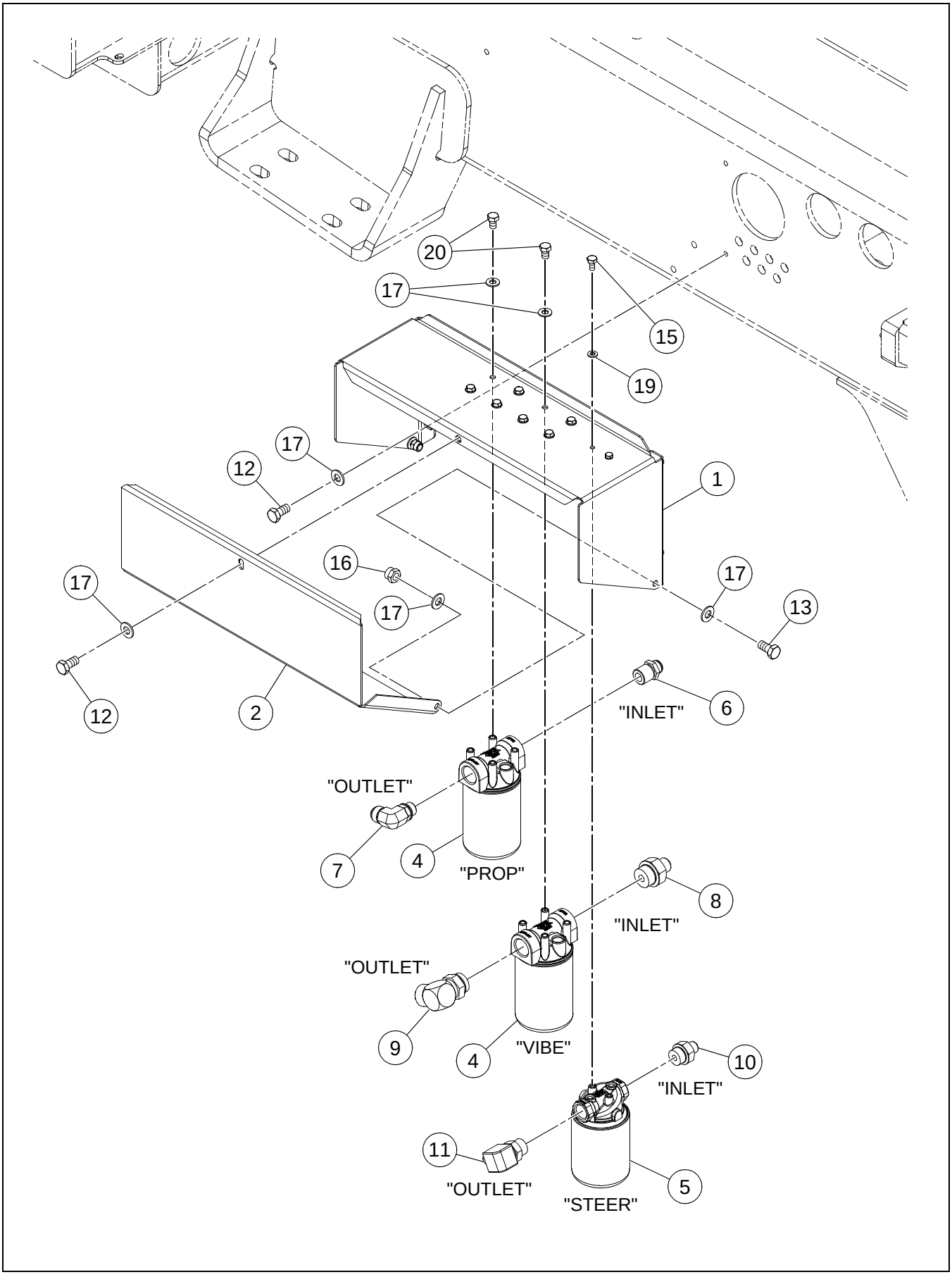

FILTER INSTALLATION

****Only Offered Parts Listed****

BOM 59292664

ITEM	COMM. NO.	DESCRIPTION	QTY	DIMENSIONS/NOTES
1	13295639	FILTER BRACKET	1	
2	13215405	FILTER DOOR	1	
4	43846054	HYDRAULIC PRESSURE FILTER	2	
-	43846062	- FILTER, ELEMENT	2	
5	43907989	RETURN FILTER	1	
-	43919976	- FILTER ELEMENT HYDRAULIC	1	
6	95416277	FITTING	1	
7	13303805	ADAPTER	1	
8	59922526	ADAPTER	1	
9	95341673	ADAPTER	1	
10	95357570	ADAPTER	1	
11	95330692	ELBOW	1	
12	96702279	HHCS CL 8.8,YEL ZN	5	M10-1.5X20
13	96702287	HHCS CL 8.8,YEL ZN	2	M10-1.5X25
15	95919528	HHCS	2	1/4-20X.625
16	96704614	NUT	2	M10X1.5
17	96741046	FLATWASHER, CL 200,YEL ZN	17	
19	96741053	FLATWASHER, CL 200,YEL ZN	2	
20	96701479	HHCS CL 8.8,YEL ZN	8	M10-1.5X16

TOW VALVE INSTALLATION - OPTION

13233838 REV 0E

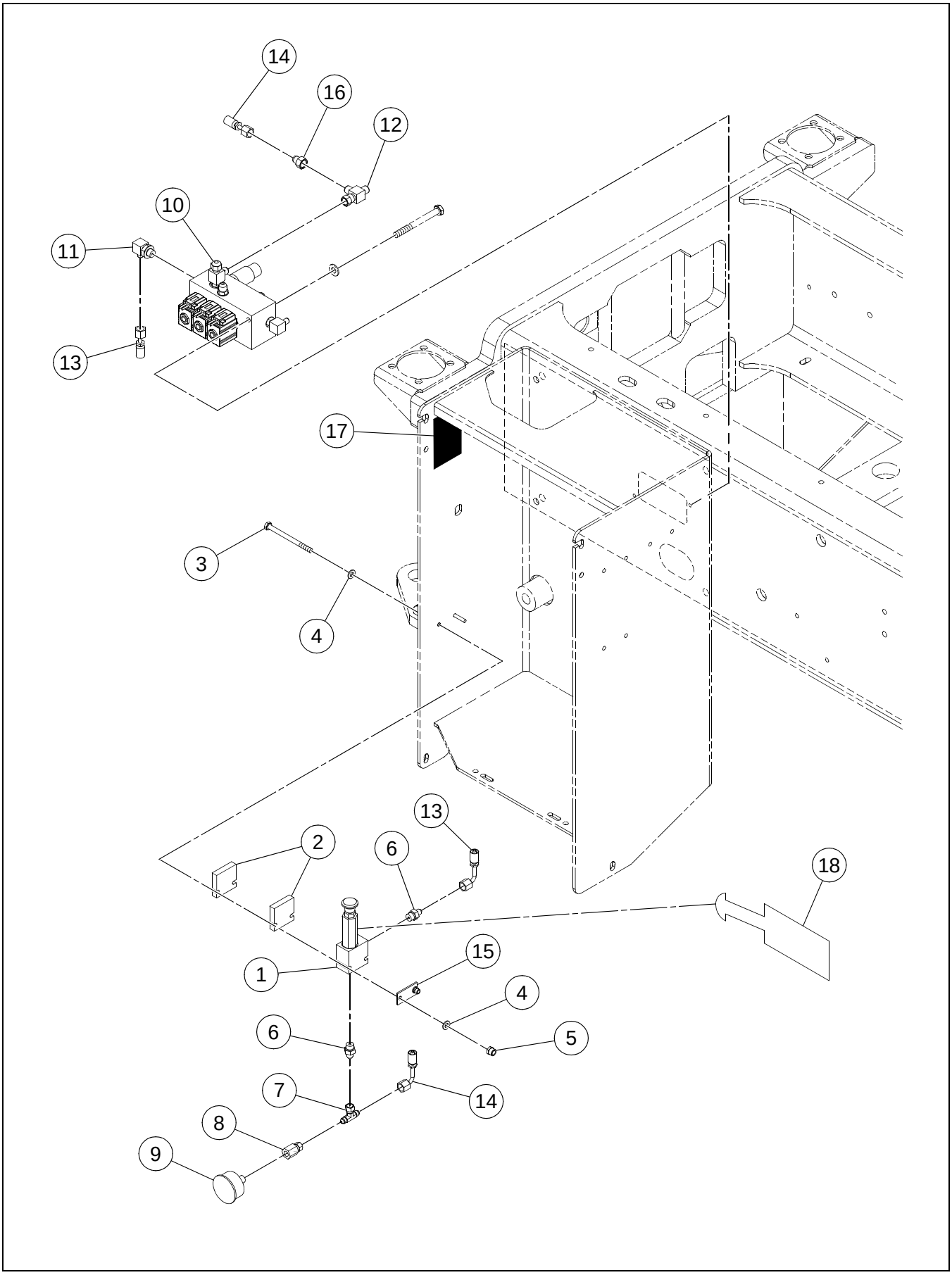

TOW VALVE INSTALLATION - OPTION

****Only Offered Parts Listed****

BOM 59287359

ITEM	COMM. NO.	DESCRIPTION	QTY	DIMENSIONS/NOTES
1	13205513	HAND PUMP	1	
2	13214812	SPACER BLOCK	2	
3	96720156	HHCS CL 8.8,YEL ZN	2	M6-1.0X80
4	96741053	FLATWASHER, CL 200,YEL ZN	4	
5	96704598	ESNA NUT	2	M6
6	95371258	ADAPTER	2	
7	95649844	TEE	1	
8	59665877	ADAPTER	1	
9	59197012	GAUGE, DIAL PRESSURE	1	
10	**NSVA**	**BRAKE/SHUNT VALVE ASSEMBLY**	**1**	**See Page G - 18.**
11	95365094	ADAPTER	1	
12	95415667	TEE	1	
13	59959080	HOSE ASSEMBLY	1	
14	13225529	HOSE ASSEMBLY	1	
15	13235320	RETAINING PLATE	1	
16	59742890	REDUCING BUSHING	1	
17	13366075	DECAL: WARNING-RUNAWAY	1	
18	13366067	DECAL: TOW TAG	3	

BRAKE/SHUNT VALVE ASSEMBLY

13217559 REV 04

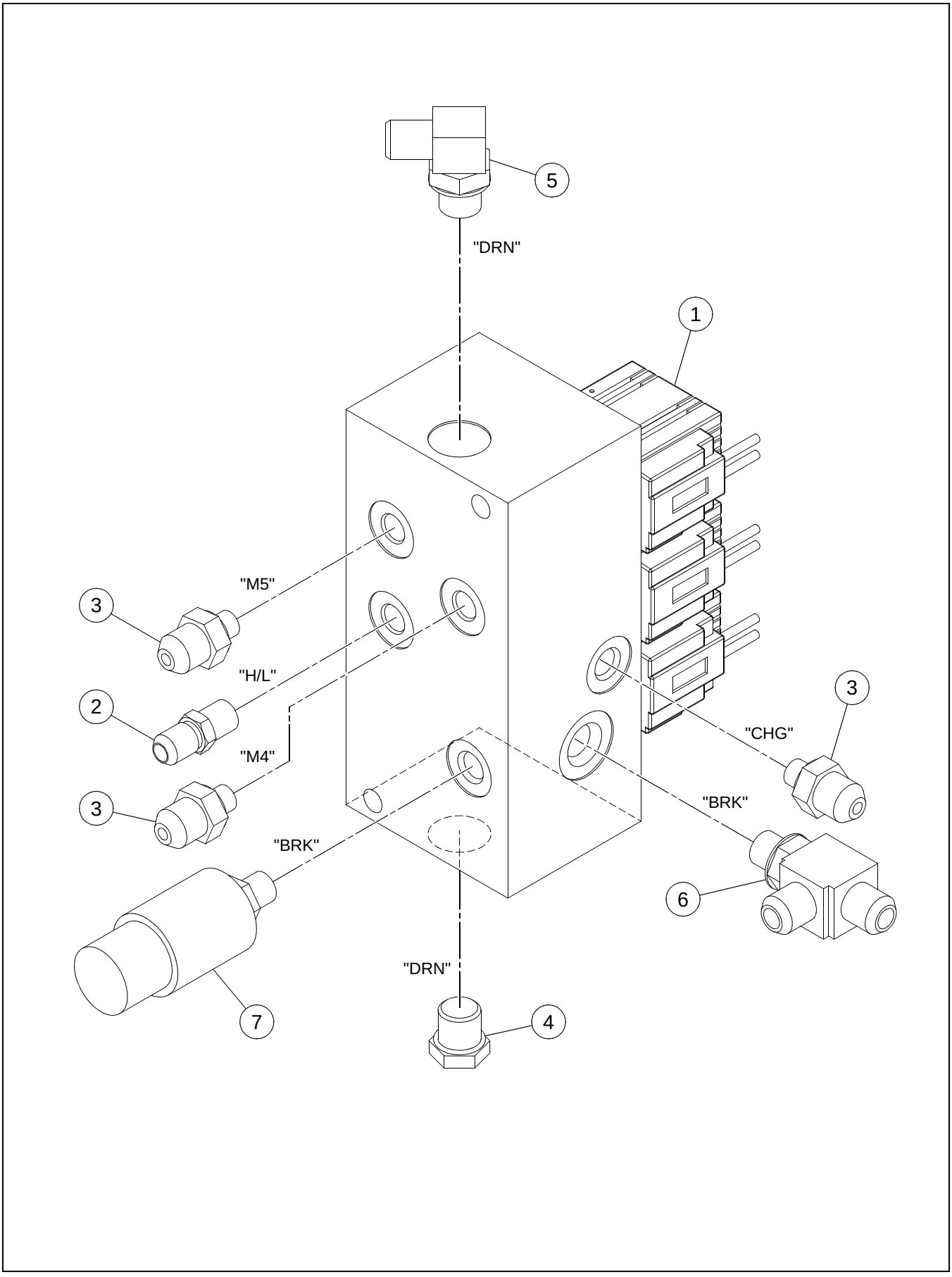

BRAKE/SHUNT VALVE ASSEMBLY

****Only Offered Parts Listed****

BOM 80817992

ITEM	COMM. NO.	DESCRIPTION	QTY	DIMENSIONS/NOTES
1	13304878	MANIFOLD	1	
-	13258603	- VALVE	1	
-	13258611	- SOLENOID VALVE	1	
-	13269436	- SEAL KIT	1	
-	13429782	- SOLENOID VALVE	1	
-	13258629	- 12 VDC COIL W/DIODE	3	
2	95323366	PLUG	1	
3	95402806	ADAPTER	3	
4	95343596	PLUG	1	
5	95329975	ADAPTER	1	
6	95188710	TEE	1	
7	59110312	SWITCH, PRESSURE	1	

Section I - SCHEMATICS

SCHEMATICS

GENERAL INFORMATION

Hydraulic and electrical schematics are included here for the convenience of the owner/operator. Additional copies of the schematics are available by contacting the Volvo Road Machinery. See your authorized Volvo dealer for assistance if required.

For ultimate machine life and maximum performance, we recommend the use of genuine Volvo brand parts.

The electrical and hydraulic schematics included herein are applicable to the SD-100F VIBRATORY COMPACTOR

Electrical Schematics

- Electrical Schematic - Drawing No. 13375704

Hydraulic Schematics

- Hydraulic Schematic - Drawing No. 13462213

Electrical Schematic

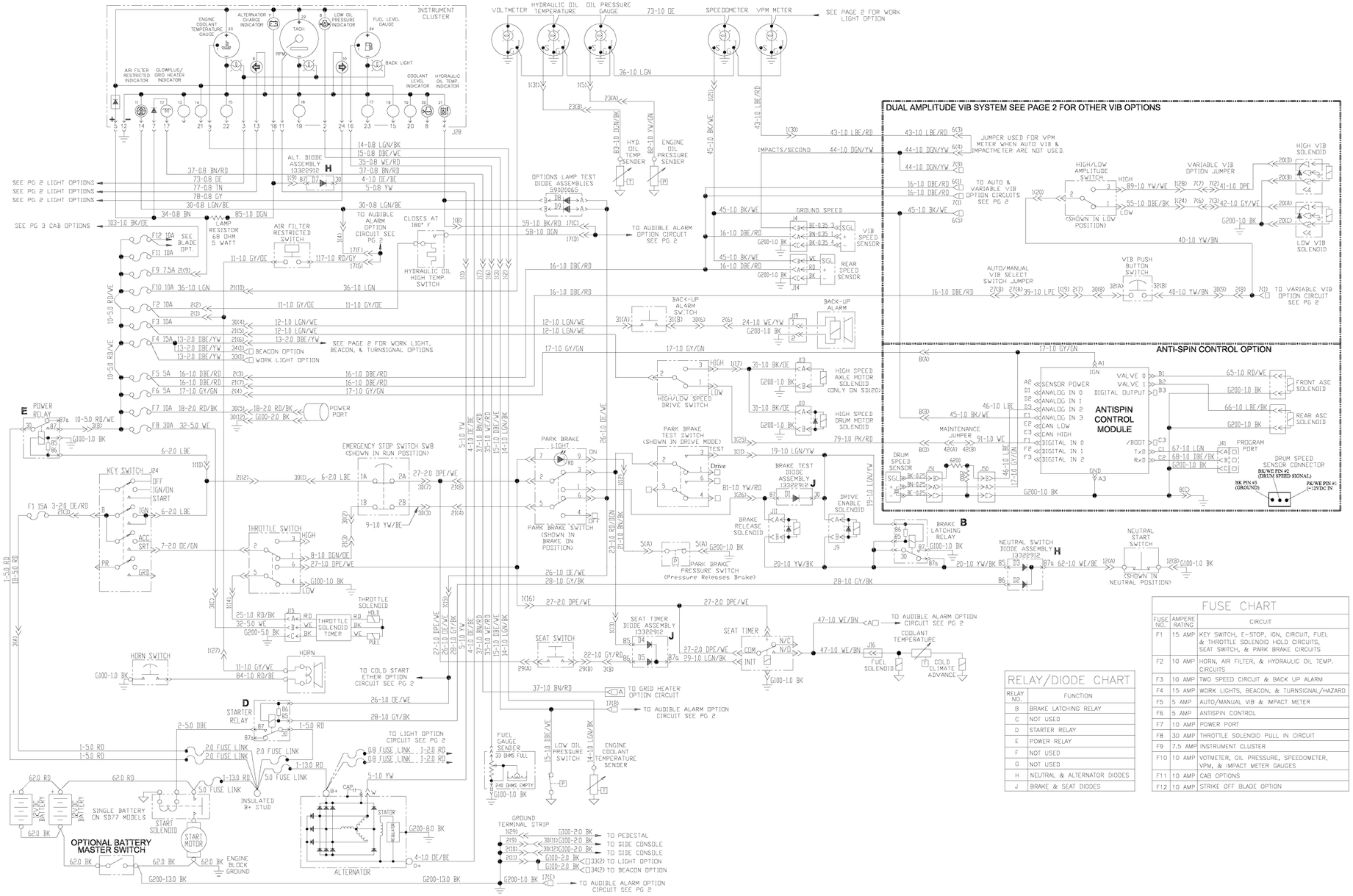

FUSE CHART

FUSE NO.	AMPERE RATING	CIRCUIT
F1	15 AMP	KEY SWITCH, E-STOP, IGN, CIRCUIT, FUEL & THROTTLE SOLENOID HOLD CIRCUITS, SEAT SWITCH, & PARK BRAKE CIRCUITS
F2	10 AMP	HORN, AIR FILTER, & HYDRAULIC OIL TEMP. CIRCUITS
F3	10 AMP	TWO SPEED CIRCUIT & BACK UP ALARM
F4	15 AMP	WORK LIGHTS, BEACON, & TURNSIGNAL/HAZARD
F5	5 AMP	AUTO/MANUAL VIB & IMPACT METER
F6	5 AMP	ANTISPIN CONTROL
F7	10 AMP	POWER PORT
F8	30 AMP	THROTTLE SOLENOID PULL IN CIRCUIT
F9	7.5 AMP	INSTRUMENT CLUSTER
F10	10 AMP	VOLTMETER, OIL PRESSURE, SPEEDOMETER, VPM, & IMPACT METER GAUGES
F11	10 AMP	CAB OPTIONS
F12	10 AMP	STRIKE OFF BLADE OPTION

RELAY/DIODE CHART

RELAY NO.	FUNCTION
B	BRAKE LATCHING RELAY
C	NOT USED
D	STARTER RELAY
E	POWER RELAY
F	NOT USED
G	NOT USED
H	NEUTRAL & ALTERNATOR DIODES
J	BRAKE & SEAT DIODES

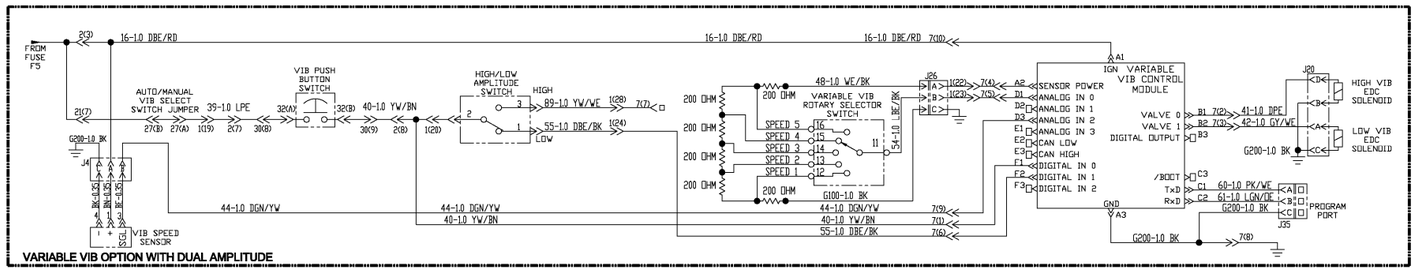

VARIABLE VIB OPTION WITH DUAL AMPLITUDE

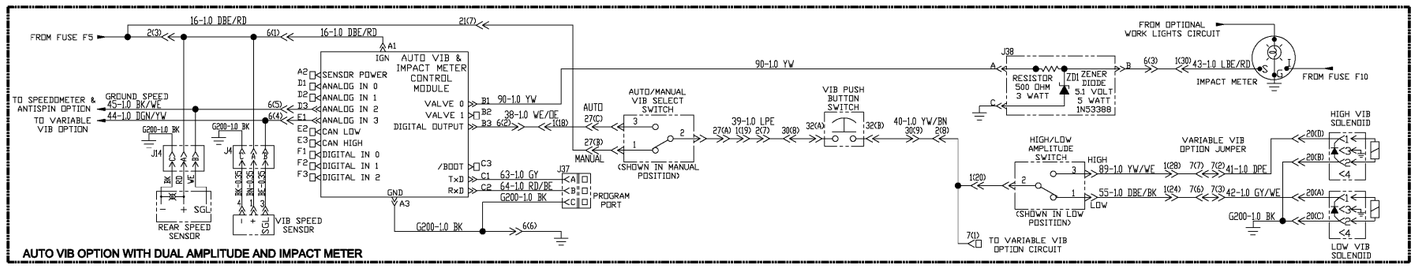

AUTO VIB OPTION WITH DUAL AMPLITUDE AND IMPACT METER

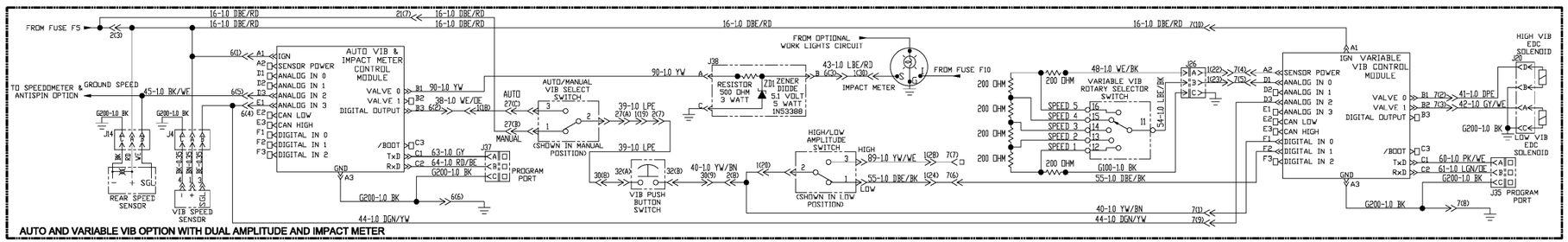

AUTO AND VARIABLE VIB OPTION WITH DUAL AMPLITUDE AND IMPACT METER

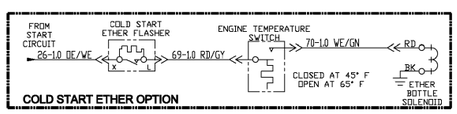

COLD START ETHER OPTION

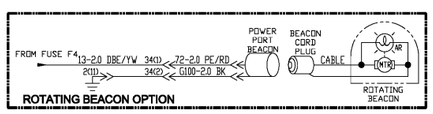

ROTATING BEACON OPTION

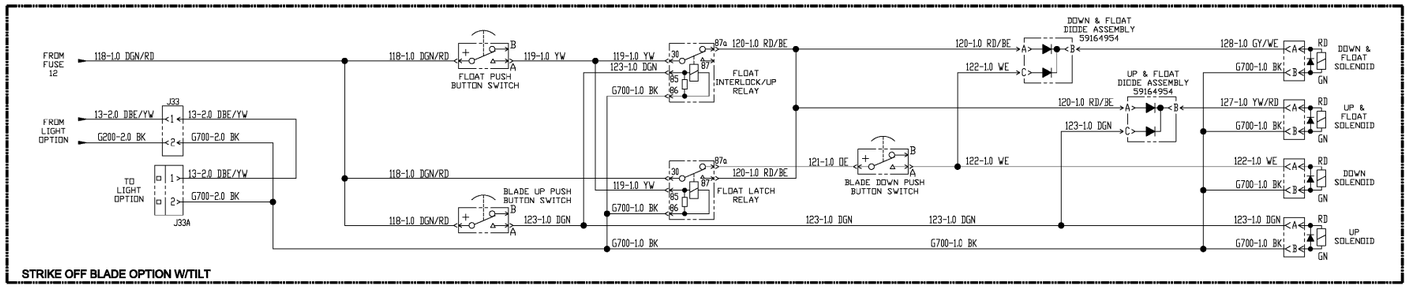

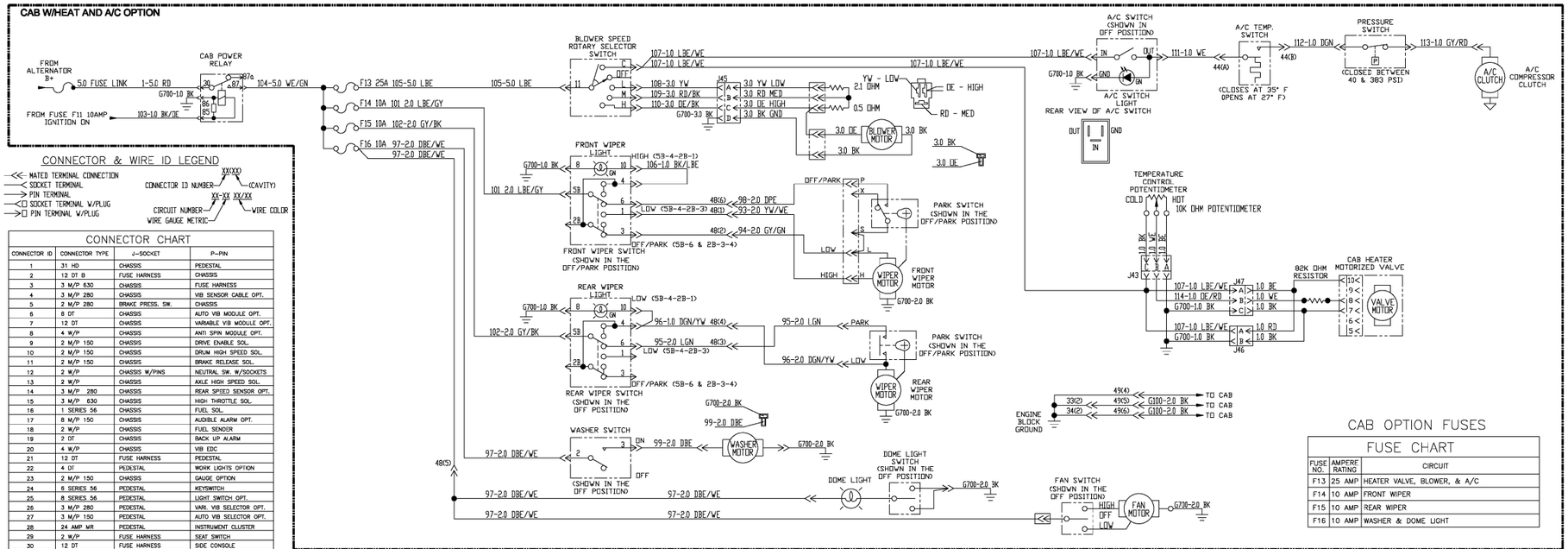

CONNECTOR CHART

CONNECTOR ID	CONNECTOR TYPE	J-SOCKET	P-PIN
1	31 HD	CHASSIS	PEDESTAL
2	12 DT B	FUSE HARNESS	CHASSIS
3	3 M/P 630	CHASSIS	FUSE HARNESS
4	3 M/P 280	CHASSIS	VIB SENSOR CABLE OPT.
5	2 M/P 280	BRAKE PRESS. SW.	CHASSIS
6	6 DT	CHASSIS	AUTO VIB MODULE OPT.
7	12 DT	CHASSIS	VARIABLE VIB MODULE OPT.
8	4 W/P	CHASSIS	ANTI SPIN MODULE OPT.
9	2 M/P 150	CHASSIS	DRIVE ENABLE SOL.
10	2 M/P 150	CHASSIS	DRUM HIGH SPEED SOL.
11	2 M/P 150	CHASSIS	BRAKE RELEASE SOL.
12	2 W/P	CHASSIS W/PINS	NEUTRAL SW. W/SOCKETS
13	2 W/P	CHASSIS	AXLE HIGH SPEED SOL.
14	3 M/P 280	CHASSIS	REAR SPEED SENSOR OPT.
15	3 M/P 630	CHASSIS	HIGH THROTTLE SOL.
16	1 SERIES 56	CHASSIS	FUEL SOL.
17	8 M/P 150	CHASSIS	AUDIBLE ALARM OPT.
18	2 W/P	CHASSIS	FUEL SENDER
19	2 DT	CHASSIS	BACK UP ALARM
20	4 W/P	CHASSIS	VIB EDC
21	12 DT	FUSE HARNESS	PEDESTAL
22	4 DT	PEDESTAL	WORK LIGHTS OPTION
23	2 M/P 150	CHASSIS	GAUGE OPTION
24	6 SERIES 56	PEDESTAL	KEYSWITCH
25	8 SERIES 56	PEDESTAL	LIGHT SWITCH OPT.
26	3 M/P 280	PEDESTAL	VARI. VIB SELECTOR OPT.
27	3 M/P 150	PEDESTAL	AUTO VIB SELECTOR OPT.
28	24 AMP MR	PEDESTAL	INSTRUMENT CLUSTER
29	2 W/P	FUSE HARNESS	SEAT SWITCH
30	12 DT	FUSE HARNESS	SIDE CONSOLE
31	2 W/P	SIDE CONSOLE W/PINS	FSR BACK UP SW. W/SOC
32	2 M/P 150	SIDE CONSOLE	FSR VIB SWITCH
33	2 DT	FUSE HARNESS	WORK LIGHT OPT.
34	2 DT	FUSE HARNESS	BEACON OPT.
35	3 W/P	VARI. VIB MODULE OPT.	PROGRAM PORT
36	2 M/P 280	AUDIBLE ALARM OPT.	AUDIBLE ALARM DECK OPT.
37	3 W/P	AUTO/IMPACTMETER OPT.	PROGRAM PORT
38	3 M/P 150	AUTO/IMPACTMETER OPT.	IMPACT METER DIODE
39	2 DT	COLUMN LIGHT OPT.	WORK LIGHT SELECTOR OPT.
40	2 DT	COLUMN LIGHT OPT.	WORK LIGHT SELECTOR OPT.
41	3 W/P	ANTI SPIN CONTROL OPT.	PROGRAM PORT
42	2 M/P 150	ANTI SPIN CONTROL OPT.	MAINTENANCE CONNECTOR
43	3 M/P 150	CAB HARNESS OPT.	TEMPERATURE CONTROL
44	2 W/P	CAB HARNESS OPT.	AC TEMPERATURE SWITCH
45	4 W/P	CAB HARNESS OPT.	FAN MOTOR
46	2 W/P	CAB HARNESS OPT.	HEATER VALVE
47	3 W/P	HEATER VALVE	CAB HARNESS OPT.
48	6 DT	CAB HARNESS OPT.	CAB
49	6 DT	CAB HARNESS OPT.	CAB
50	3 M/P 280	ANTI SPIN CONTROL OPT.	RESISTOR
51	3 M/P 150	RESISTOR	DRUM SPEED SENSOR

CAB OPTION FUSES

FUSE CHART

FUSE NO.	AMPERE RATING	CIRCUIT
F13	25 AMP	HEATER VALVE, BLOWER, & A/C
F14	10 AMP	FRONT WIPER
F15	10 AMP	REAR WIPER
F16	10 AMP	WASHER & DOME LIGHT

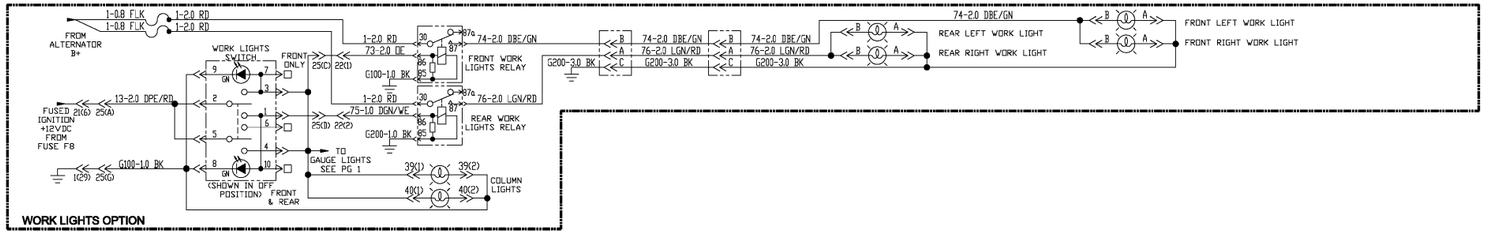

Hydraulic Schematic

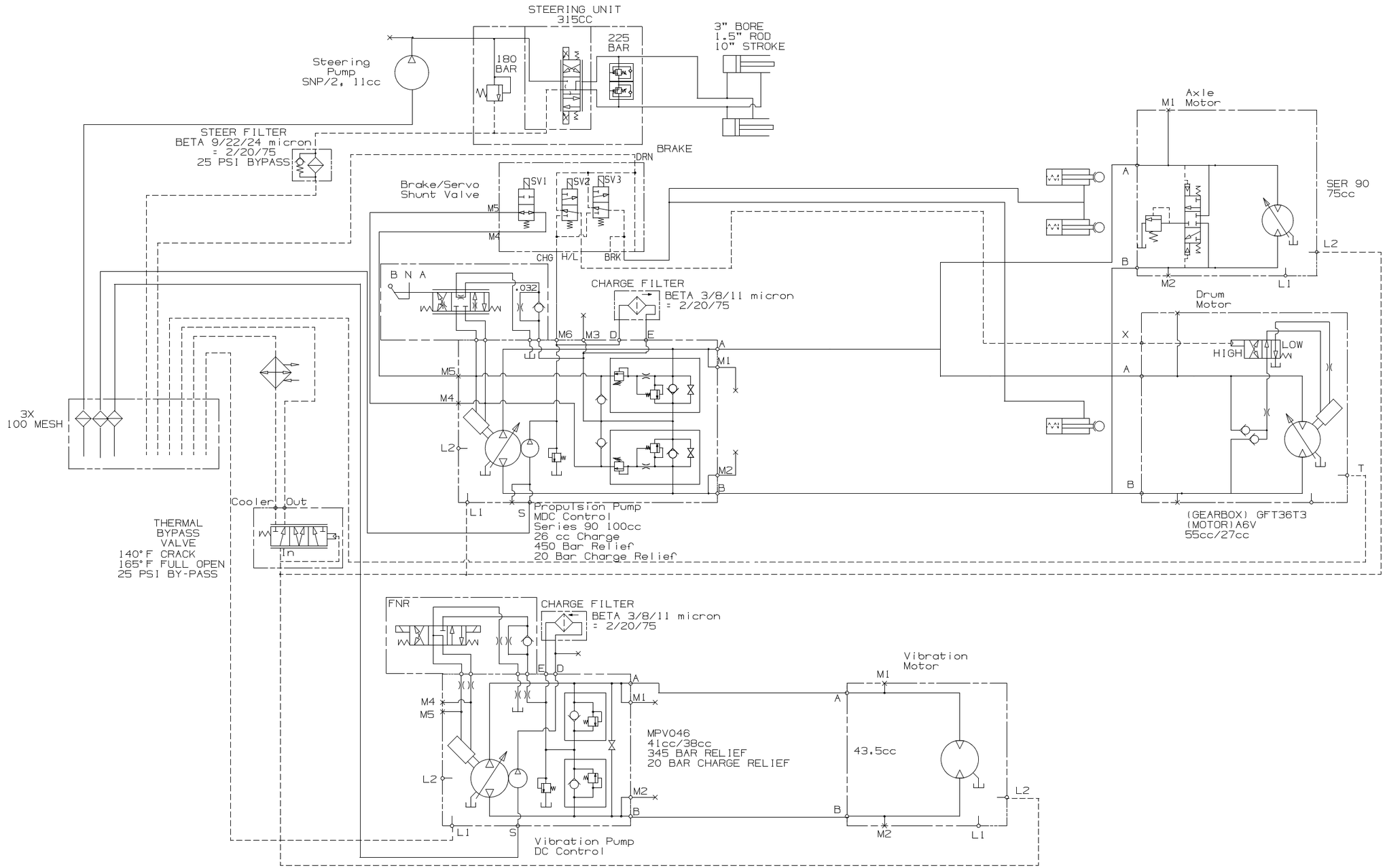

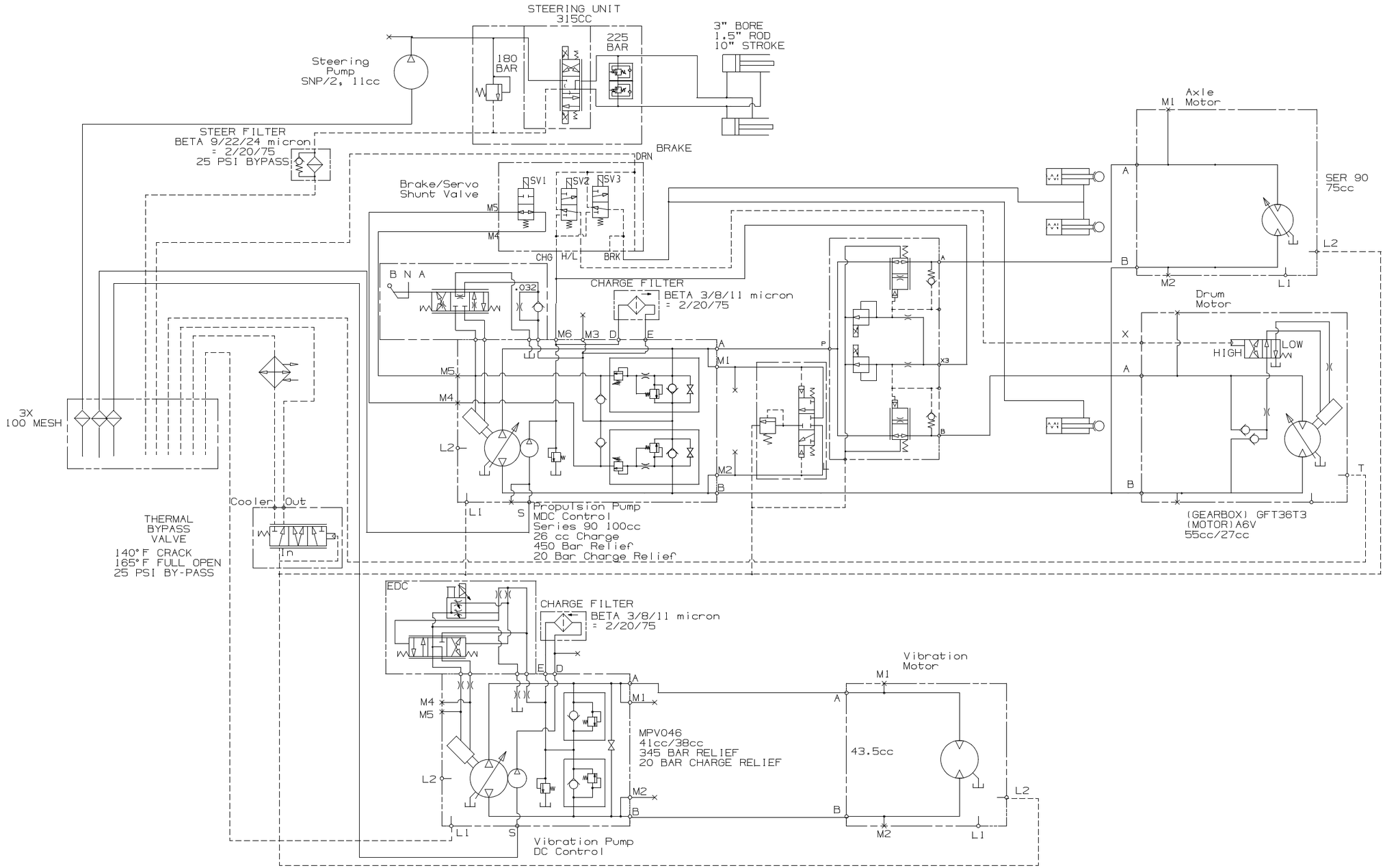
STEERING UNIT
315CC
Steering
Pump
SNP/2, 11cc
180
BAR
225
BAR
3" BORE
1.5" ROD
10" STROKE
STEER FILTER
BETA 9/22/24 micron
= 2/20/75
25 PSI BYPASS
BRAKE
DRN
Brake/Servo
Shunt Valve
SV1
SV2
SV3
M5
M4
CHG
H/L
BRK
B N A
.032
CHARGE FILTER
BETA 3/8/11 micron
= 2/20/75
M6
M3
D
E
A
P
M1
X3
B
M2
L2
L1
S
3X
100 MESH
Cooler
Out
In
THERMAL
BYPASS
VALVE
140° F CRACK
165° F FULL OPEN
25 PSI BY-PASS
Propulsion Pump
MDC Control
Series 90 100cc
26 cc Charge
450 Bar Relief
20 Bar Charge Relief
Axle
M1 Motor
SER 90
75cc
Drum
Motor
X
HIGH
LOW
T
(GEARBOX) GFT36T3
(MOTOR)A6V
55cc/27cc
EDC
CHARGE FILTER
BETA 3/8/11 micron
= 2/20/75
MPV046
41cc/38cc
345 BAR RELIEF
20 BAR CHARGE RELIEF
Vibration
Motor
43.5cc
Vibration Pump
DC Control

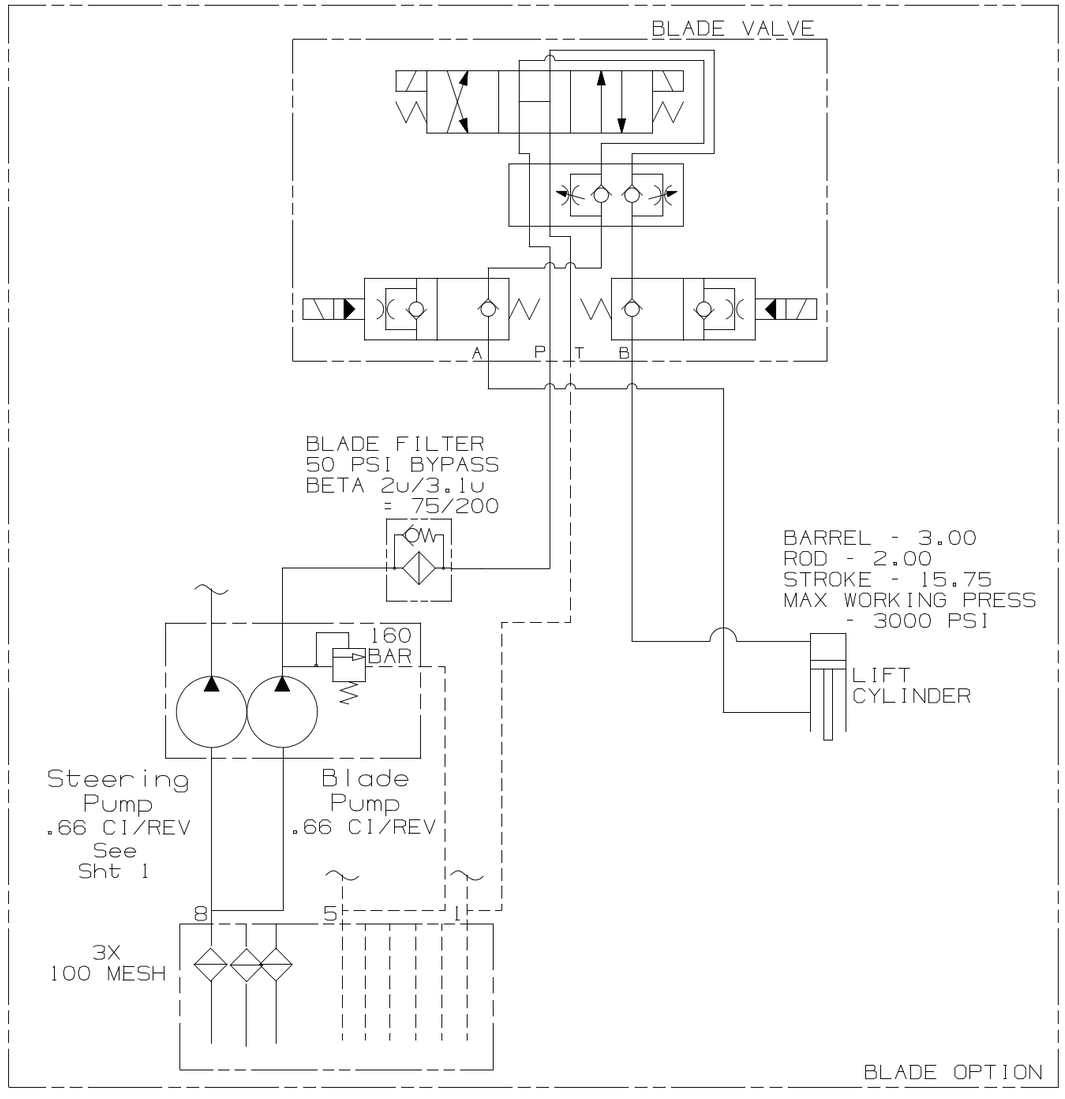

OPERATION:

1. PULL OUT AND LOCK TO TOW.
2. PUSH IN AND LOCK TO TOW.
3. PRESSURIZE BRAKE CIRCUIT TO 285 PSI TO RELEASE BRAKES.

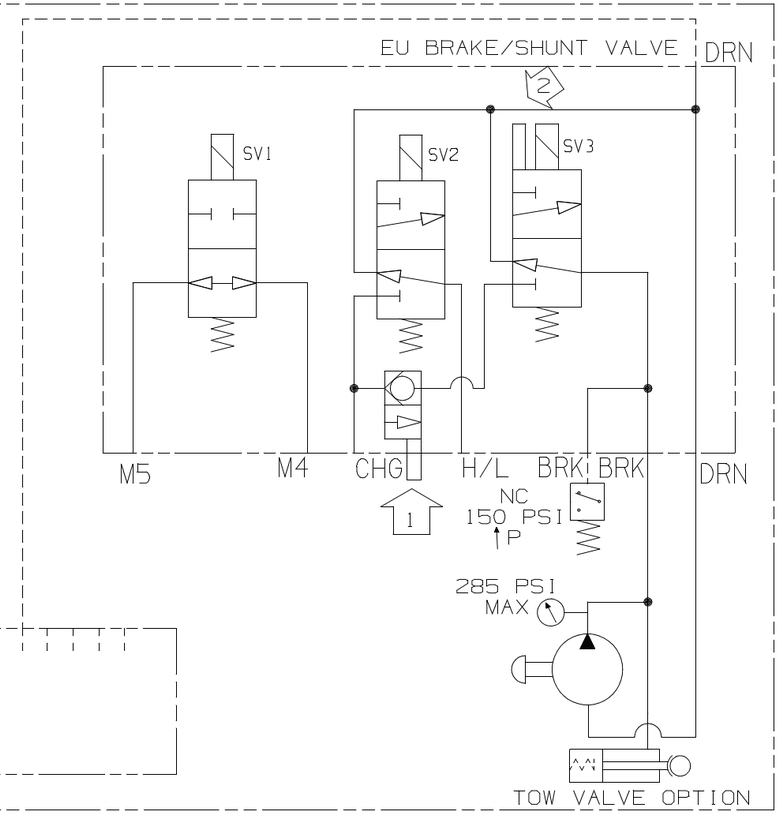

WORD INDEX

CPN

25 MICRON FILTER C-5
30% LIQUID CALC A-7
380MM F-3, F-5, F-7, F-9
550MM F-3, F-5, F-7, F-9
750MM F-3, F-5, F-7, F-9

A

ADJUSTER D-19
AIR CLEANER C-11
AIR CLEANER INSTALLATION C-5
AIR PRE-CLEANER A-41
AIR PRE-CLEANER STACK A-41
AIRSCREEN A-33, A-35, A-45, A-47
ALTERNATOR C-5
ARM W/TUBE D-19
AXLE A-3
AXLE MOTOR A-3

B

BACKUP ALARM E-3
BAFFLE C-19
BATTERY E-33
BATTERY BOX A-13
BATTERY HOLD DOWN E-33
BELLOW-MOLAR C-11
BOWL A-41
BRAKE SHUNT 2 SPEED MANIFOLD A-23
BREATHER
FILTERED VENT A-17, B-5
BULB E-35, E-37

C

CABLE A-9, A-11
BATTERY NEGATIVE E-33
BATTERY POSITIVE E-33
STARTER POSITIVE E-33
CARRIER ASSEMBLY B-3
CARRIER HOUSING B-5
CHARGE AIR COOLER C-19
CHARGE RELIEF POPPET A-5
CHASSIS HARNESS E-3
CLEAN OUT LID A-17
COMPRESSION SWITCH D-19
CROSS
PRESSURE A-23, C-7
CYLINDER A-13

D

DAMPER KIT D-19
DECAL
STRIPE F-3, F-5, F-7, F-9
VOLVO SIGNATURE F-3, F-5, F-7, F-9
DECAL CHECKLIST A-49
DECAL CRUSH AREA F-3, F-5
DECAL DO NOT SITE ON WARNING RAILING F-7, F-9
DECAL FIELD F-3, F-5, F-7, F-9
DECAL FIRST AID D-23
DECAL FUSE BLOCK F-3, F-5
DECAL FUSE CHART F-3, F-5
DECAL GREASE F-3, F-5, F-7, F-9
DECAL HOOD
LOWER F-3, F-5, F-7, F-9
DECAL HYDRAULIC FUEL F-7, F-9
DECAL HYDRAULIC OIL F-3, F-5
DECAL HYDRAULIC OIL LEVEL . F-3, F-5, F-7, F-9
DECAL HYDRAULIC PRESSURE TEST . . F-3, F-5, F-7, F-9
DECAL IGNITION F-3, F-5, F-7, F-9
DECAL LIFT POINT F-3, F-5, F-7, F-9
DECAL LUBE CHART SD100/105/122 . . . . . F-3, F-5
DECAL MASTER DISCONNECT . F-3, F-5, F-7, F-9
DECAL MISSING SHOCK F-3, F-5
DECAL PRESSURIZED COOLANT F-7, F-9
DECAL RADIATOR FILL F-3, F-5
DECAL ROTATING FAN F-7, F-9
DECAL SD100F F-3, F-5, F-7, F-9
DECAL SOUND POWER 108 DB F-7, F-9
DECAL STOP D-7
DECAL TIE DOWN F-3, F-5, F-7, F-9
DECAL TOW TAG G-17
DECAL WARNING F-3, F-5
DECAL WARNING - PRESSURE HAZARD . F-3, F-5
DECAL WARNING CRUSHING DANGER . . F-7, F-9
DECAL WARNING DO NOT SIT ON RAIL . . F-3, F-5
DECAL WARNING-HOOD CRUSH AREA . F-3, F-5, F-7, F-9
DECAL WARNING-RUNAWAY G-17
DRAIN ASSEMBLY C-19
DRAIN PORT A-21
DRIVE MOTOR ASSEMBLY B-3
DRIVE SIDE JOURNAL B-7
DRUM B-3
DUAL FUNCTION ALARM E-5, E-7, E-9, E-11, E-13, E-15, E-17, E-19, E-21, E-23, E-25, E-27, E-29
DUAL SWITCH SEAT KIT D-19
DUST BOOT D-9

E

EMERGENCY STOP ASSEMBLY D-7
ENGINE C-5
ENGINE ASSEMBLY C-3
ENGINE OIL FILTER C-5
EXHAUST C-23
EXHAUST PIPE C-23

F

FAN BELT C-5
FAN SHROUD C-19
FENDER LH SD100-200 . . . . . A-27, A-29, A-31
FENDER RH SD100-200 . . . . . A-27, A-29, A-31

FENDER SHIMS A-27, A-29, A-31
FENDER SUPPORT A-27, A-29, A-31
FERRULE A-9, A-11
FILTER
ELEMENT G-15
FILTER DOOR G-15
FILTER ELEMENT HYDRAULIC G-15
FOAM PAD A-43, E-3
FRAME A-9, A-11
F-STOP D-7
FUEL FILTER C-5
FUEL LINE C-15
FUEL LINE INSTALLATION C-3
FUEL SENDER A-21
FUEL TANK A-21
FUEL TANK ASSEMBLY A-19
FUEL TANK INSTALLATION A-13
FUSE BLOCK ASSEMBLY E-3
FUSE HARNESS E-31

G

GAUGE
DIAL PRESSURE G-17
GRILL A-33, A-35, A-45, A-47
GRILL SUPPORT BAR A-33, A-35, A-45, A-47
GRILL SUPPORT WELDMENT A-55
GROUND CABLE JUMPER E-33

H

HAND PUMP G-17
HAND RAIL D-3
HANGER KIT A-43
HARNESS
2 SPEED VIBRATION SELECTOR E-3
SIDE CONSOLE D-7
HARNESS WORK LIGHTS SEL E-35, E-37
HINGE SUPPORT A-33, A-35, A-45, A-47
HOOD
FOAM AND PRE-CLEANER ASSEMBLY . . A-41
SPIKE & PRE-CLNR MTG ABG A-43
HOOD ASSEMBLY A-27, A-29, A-31, A-43
HOOD COWLING *** A-27, A-29, A-31
HOOD HANDLE A-33, A-35, A-45, A-47
HOOD SPRING ANGLE A-27, A-29, A-31
HOOD W/PRE-CLEANER A-43
HORN D-3
HORN BUTTON D-15
HYDRAULIC PRESSURE FILTER G-15
HYDRAULIC TANK A-17
HYDRAULIC TANK ASSEMBLY A-13

I

IGNITION SWITCH D-15
INDICATOR LAMP SEAT BELT D-17
INSTRUMENT CLUSTER D-15
INSULATED STUD C-13
INSULATED STUD ASSEMBLY C-5
ISOLATION PAD SPRING A-57
ISOLATOR D-13

J

J-HOOK E-33

K

KNOB KIT D-19

L

LAMP E-35, E-37
LATCH A-39, A-53
LEVER A-13
LH HINGE MACH. A-27, A-29, A-31
LOCK A-39, A-53
LOCKNUT A-27, A-29, A-31, A-39, A-53, C-7, C-13, D-7, E-3, E-5, E-7, E-9, E-11, E-13, E-15, E-17, E-19, E-21, E-23, E-25, E-27, E-29, E-35, E-37
LOCKPLATE A-9, A-11
LOCKWASHER B-11, E-35, E-37
LOWER C-19
LUG TIRE ASS'Y-LH A-7
LUG TIRE ASS'Y-RH A-7

M

MAIN FRAME A-13
MANIFOLD G-19
MANUAL BOX D-3
MOTOR
DRUM DRIVE B-11
MUFFLER C-23

N

NON DRIVE SIDE JOURNAL B-7
NON RE-START D-15

O

OIL COOLER C-19

P

PEDESTAL D-15
PEDESTAL HARNESS D-15
PLATFORM
OPERATORS D-3
PREMIUM SCRAPER B-13
PRIMARY ELEMENT C-11
PROP BLOCK A-37
PUMP LEVER C-7
PUMP STACK ASSEMBLY C-5

R

RACKET JACK A-13
RADIATOR C-19
RADIATOR/OIL COOLER ASSEMBLY C-17

RAILING D-3
RECOVERY BOTTLE C-21
RECOVERY BOTTLE INSTALLATION C-19
REMANUFACTURED MOTOR A-5
RETURN FILTER G-15
RETURN PORT A-21
RH HINGE MACH. A-27, A-29, A-31
RH LOCK TAB A-39, A-53
ROD A-37
ROPS SUPPORT D-3
ROPS SUPPORT PLATFORM D-3
ROPS/FOPS *** A-49
ROPS/HOOD DRAW LATCH INSTALLATION . . A-49
RUBBER BAFFLE C-19
RUBBER TIE DOWN 19" A-15

S

SAFETY ELEMENT C-11
SCRAPER TOOTH B-13
SEAT ASSEMBLY D-13
SEAT BASE D-13
SEAT BELT INSTALLATION A-49
SEAT BELT TETHER A-51, D-25
SEAT PAN AND CUSHION D-19
SEAT SWITCH HARNESS D-13
SEATBELT A-51, D-25
SECONDARY LOCK E-35, E-37
SENDER
TEMPERATURE C-5
SEWN BOOT D-19
SHUTTLE A-5
SIDE CONSOLE SUPPORT D-13
SIGHT GAUGE A-17, B-3
SLEEVE A-9, A-11, A-27, A-29, A-31, D-3
HANDLE STORAGE A-15
SLEEVE ASSEMBLY A-41
SPRING A-5, A-27, A-29, A-31, A-37, A-41
SPRING CABLE KIT D-19
SPRING GUIDE A-5
SPRING PIVOT A-27, A-29, A-31
STANDOFF E-31
STARTER C-5
STEERING COLUMN
STRAIGHT D-15
STEERING WHEEL D-15
STEP A-13
STOP A-5
STOP SWITCH EMERGENCY D-9
STRAIGHT PEDESTAL ASSEMBLY D-13
STUD PROTECTOR D-19
SUCTION FAN C-5
SUPPLY PORT A-21
SUSPENSION D-19
SWITCH C-11
BATTERY MASTER E-33
F/R WORKLIGHTS E-35, E-37
HI/LOW AMPLITUDE D-17
HI/LOW RPM D-17
HI/LOW TRAVEL D-17
OIL PRESSURE C-5
PARK BRAKE D-17
PARK BRAKE TEST D-17
PRESSURE A-23, G-19
SWIVEL A-9, A-11

T

TANK FILTER A-17
TERMINAL E-35, E-37
TERMINAL BLOCK E-3
THIS ITEM NOT USED W/THIS BOM . . . A-13, B-3, B-13, D-13, F-3, F-5, F-7, F-9
TIE WRAP D-19
TIP D-19
TIRE A-7
TUBE ASSEMBLY A-21
TYRAP E-3, G-3
TYRAP BASE E-35, E-37

V

V-BLOCK A-15

W

WEDGE E-3
WHEEL A-7
WIRE FORM D-19
WORKLIGHT ASSEMBLY E-35, E-37
WORKLIGHT HARNESS E-35, E-37
WORKLIGHTS E-35, E-37

NUMERICAL INDEX

COMM.NO.	PAGE
13093075	C-23
13106489	G-3
13106497	G-3
13157847	A-7
13157961	D-21
13158647	D-15
13167390	B-5
13167721	D-3
13167812	D-3
13167945	D-19
13169362	C-23
13183215	B-3
13184445	B-11
13184700	A-27
	A-29
	A-31
13184742	A-27
	A-29
	A-31
13184833	A-41
13184932	A-19
13185384	A-17
13185889	A-27
	A-29
	A-31
13186598	A-41
13187372	C-7
13197108	E-35
	E-37
13197306	A-49
13198270	D-19
13199062	G-3
13199104	G-3
13199112	G-3
13199120	G-3
13199344	F-3
	F-5
13204334	G-3
13204359	G-3
13204425	G-3
13204441	G-3
13204565	G-3
13204599	G-3
13204755	G-3
13205364	A-25
13205513	G-17
13207535	G-3
13208004	C-7
13208038	F-3
	F-5
13209135	E-31
13209168	A-9
	A-11
13209200	A-9
	A-11
13209341	C-19
13209424	C-19
13209648	E-33
13209663	A-13
13209903	A-13
13213111	C-7
13213582	A-21
13213624	A-21
13213632	A-21
13213681	A-21
13213699	A-21
13214028	E-5
	E-7
	E-9
	E-11
	E-13
	E-15
	E-17
	E-19
	E-21
	E-23
	E-25
	E-27
	E-29
13214259	D-11
13214267	E-31
13214317	D-11
13214333	D-11
13214804	D-3
13214812	G-17
13215405	G-15
13216460	C-19
13216577	C-19
13216734	C-21
13217450	A-27
	A-29
	A-31
	D-3
13217500	C-5
13217922	B-7
13218052	B-7
13218276	A-43
13218284	A-43
13218292	A-43
13218300	A-43
13218318	A-43
13225073	G-3
13225339	D-3
13225347	D-13
13225529	G-17
13228820	D-19
13228838	D-19
13228846	D-19
13228853	D-19
13228861	D-19
13230735	E-35
	E-37
13230776	E-35
	E-37
13231394	D-5
13232202	C-5
13233309	D-3
13233440	E-31
13234844	A-27
	A-29
	A-31
13234877	A-27
	A-29
	A-31
13235320	G-17
13236203	E-3
13236377	A-27
	A-29
	A-31
13236468	A-27
	A-29
	A-31
13236872	D-15
13236906	E-35
	E-37
13237268	C-19
13237276	C-19
13237490	D-3
13238035	A-33
	A-35
	A-45
	A-47
13238803	A-27
	A-29
	A-31
13238860	A-33
	A-35
	A-45
	A-47
13238878	A-33
	A-35
	A-45
	A-47
13239082	A-27
	A-29
	A-31
13239090	A-27
	A-29
	A-31
13239157	D-3
13239900	C-23
13239967	A-9
	A-11
13247473	D-19
13247481	D-19
13247549	D-19
13247556	D-19
13247937	A-13
13247945	A-13
13247952	A-13
13247960	A-13
13247978	A-13
13258603	G-19
13258611	G-19
13258629	G-19
13258934	D-19
13263843	A-5
13263850	A-5
13263868	A-5
13263876	A-5
13263884	A-5
13264858	E-3
13269436	G-19
13272547	C-19
13273339	A-41
13275953	A-15
13279278	C-19
13279666	C-19
13280318	A-9
	A-11
13280326	A-9
	A-11
13281332	D-19
13281365	D-19
13281373	D-19
13284617	C-5
13292545	C-19
13292982	D-21
13295639	G-15
13297536	A-13
13297866	C-19
13303805	G-15
13304787	B-3
	B-9
13304878	G-19
13304902	D-7
13304944	D-7
13305099	A-17
13306519	E-33
13309877	A-49
13313952	G-3
13315569	G-3
13320429	C-19
13320833	C-19
13321047	C-19
13321443	E-35
	E-37
13321864	C-13
13321955	C-13
13322060	E-3
13322102	E-35
	E-37
13325048	B-3
13328695	B-11

NUMERICAL INDEX

COMM.NO. PAGE	COMM.NO. PAGE	COMM.NO. PAGE	COMM.NO. PAGE
13329206 .....B-3	13855200 .....E-35	18007674 .....A-33	43850692 .....E-35
13351408 .....B-3	..... E-37	.....A-35	..... E-37
.....B-9	13855671 ..... F-3	.....A-45	43851112 .....C-11
13351671 .....B-11	..... F-5	.....A-47	43851203 .....D-5
13359815 .....E-35	13864806 .....E-3	18009514 .....A-33	43851310 .....C-11
.....E-37	13864954 .....E-3	.....A-35	43853340 .....A-27
13364815 ..... G-3	13880216 .....C-11	.....A-45	.....A-29
13364823 ..... G-3	13880612 ..... D-15	.....A-47	.....A-31
13366067 ..... G-17	13881198 ..... A-39	19280049 .....A-13	43853357 .....A-27
13366075 ..... G-17	..... A-53	19280080 .....A-15	.....A-29
13375738 .....B-3	13881222 ..... A-39	19280098 .....A-15	.....A-31
13394531 ..... F-7	..... A-53	19285584 .....C-5	43855071 .....A-9
..... F-9	13881396 ..... A-39	19287036 .....A-23	.....A-11
13396007 ..... A-15	..... A-59	19287051 .....A-23	43855303 .....A-9
13406764 .....E-35	13883418 ..... A-33	19287093 .....A-23	.....A-11
.....E-37	..... A-35	19287101 .....A-23	43855626 .....C-5
13410436 .....B-13	..... A-45	19288604 .....C-11	43856319 .....C-17
13412648 ..... D-3	..... A-47	19291327 .....A-5	43857671 ..... F-3
13413158 ..... D-3	13883756 ..... A-33	19294198 .....A-57	..... F-5
13413802 ..... A-9	..... A-35	19295492 .....E-33	..... F-7
..... A-11	..... A-45	19295856 .....C-5	..... F-9
13413950 .....B-11	..... A-47	19295872 .....C-5	43869262 .....D-3
13414743 .....B-5	13883814 ..... A-27	19298009 .....A-49	43870203 .....E-5
13417894 .....C-19	..... A-29	19331032 .....A-19	.....E-7
13418132 ..... A-19	..... A-31	20936001 .....C-11	.....E-9
13418215 ..... A-19	13884408 ..... D-7	21956545 .....C-15	.....E-11
13429782 ..... G-19	13885256 ..... A-55	43802263 .....C-5	.....E-13
13459375 ..... A-37	13885355 ..... A-39	43813724 .....E-3	.....E-15
13459383 ..... A-37	..... A-53	43814250 .....B-5	.....E-17
13459391 ..... A-37	13885991 .....C-11	43814300 .....B-9	.....E-19
13459409 ..... A-37	13886452 .....C-5	43814359 .....B-9	.....E-21
13459474 ..... D-15	13886890 .....C-5	43818848 .....E-35	.....E-23
13460365 ..... A-27	13886924 .....C-5	.....E-37	.....E-25
..... A-29	13886981 ..... D-13	43821180 .....C-5	.....E-27
..... A-31	13887252 .....C-5	43827625 .....D-19	.....E-29
13460381 ..... A-41	13887260 .....C-5	43830355 .....C-15	43871102 .....D-15
13468137 .....E-35	13887286 .....C-19	43838218 .....E-33	43876176 .....D-17
.....E-37	13887575 .....C-23	43840107 .....G-3	43878479 .....G-3
13469010 ..... D-3	13887583 .....C-23	43840180 .....C-19	43878487 .....G-3
13480116 ..... F-3	13887658 .....C-23	43840198 .....C-19	43878495 .....G-3
..... F-5	13888870 ..... A-27	43840206 .....C-19	43878503 .....G-3
13491691 .....C-5	..... A-29	43840297 .....A-3	43878511 .....G-5
13492665 .....E-35	..... A-31	43843432 ..... F-3	.....G-7
.....E-37	13888888 ..... A-27	..... F-5	.....G-9
13493499 .....E-3	..... A-29	43843556 .....D-7	.....G-11
13501853 ..... A-13	..... A-31	43843622 .....A-21	.....G-13
13501994 .....B-5	13889365 ..... A-39	43844604 .....D-15	43878529 .....G-5
13502034 .....B-3	..... A-53	43845767 .....D-3	.....G-7
13502125 .....B-5	13889373 ..... A-39	43845874 .....D-15	.....G-9
13502133 .....B-5	..... A-53	43845890 .....D-15	.....G-11
13502141 .....B-5	13889472 ..... A-33	43846054 .....G-15	.....G-13
13502166 .....B-5	..... A-35	43846062 .....G-15	43881978 .....C-11
13502240 .....B-3	..... A-45	43846070 .....E-35	43885672 .....E-33
13502257 .....B-5	..... A-47	.....E-37	43888049 .....C-15
13507496 ..... A-3	18004093 ..... G-3	43850320 .....A-17	
13852256 .....C-5	18006833 .....C-15	43850346 .....A-17	

NUMERICAL INDEX

COMM.NO.	PAGE
43890714	A-9
	A-11
	A-13
43890755	A-9
	A-11
43896497	A-13
43896612	E-33
43897362	A-9
	A-11
	A-13
43897420	C-21
43902147	E-3
43902154	E-31
43902162	D-15
43902444	C-11
43904168	C-11
43904176	C-11
43905827	D-17
43906296	A-21
43907906	A-39
	A-53
43907989	G-15
43908326	B-11
43908573	D-7
43910579	D-9
43910587	D-9
43911171	F-3
	F-5
	F-7
	F-9
43911239	F-3
	F-5
	F-7
	F-9
43912013	F-3
	F-5
	F-7
	F-9
43913789	F-7
	F-9
43913821	A-17
43916394	A-51
	D-25
43916410	E-5
	E-7
	E-9
	E-11
	E-13
	E-15
	E-17
	E-19
	E-21
	E-23
	E-25
	E-27
	E-29
43916725	D-13
43916907	F-3
	F-5
	F-7
	F-9
43919265	D-3
43919638	C-19
43919976	G-15
43920438	A-33
	A-35
	A-45
	A-47
43920644	A-33
	A-35
	A-45
	A-47
43921683	F-3
	F-5
	F-7
	F-9
43921691	F-3
	F-5
	F-7
	F-9
43921709	F-3
	F-5
	F-7
	F-9
43922384	A-51
	D-25
43922517	A-13
43923127	A-43
43923234	A-43
43923804	G-3
43924802	F-3
	F-5
	F-7
	F-9
43925775	F-3
	F-5
	F-7
	F-9
43927680	E-3
43936046	C-23
43936681	F-3
	F-5
	F-7
	F-9
43949221	F-3
	F-5
43954932	A-7
43954940	A-7
43957646	D-13
50270248	A-9
	A-11
	A-13
50274299	C-15
	C-19
	C-21
50278019	A-5
50278894	A-5
50829647	A-15
54494638	A-15
54496377	D-19
54496385	D-19
54531629	D-19
54584776	B-5
54635859	E-33
54666060	D-17
54666078	D-17
54666086	D-17
54666094	D-17
54666102	D-17
54680079	C-5
54680087	C-5
54680103	C-11
58220567	A-5
58785346	A-5
58799743	A-5
58799750	A-5
58802851	C-21
58820168	D-15
	E-3
58848920	C-19
58879768	C-3
58880501	A-9
	A-11
58892902	D-15
58896036	G-3
58896580	B-11
58896952	B-11
58901653	C-7
58905803	C-11
58918947	F-7
	F-9
58938275	A-41
58943747	C-15
58947987	C-15
58951690	B-3
	B-5
58954694	A-3
58965427	E-35
	E-37
58965542	F-3
	F-5
58966086	C-7
58978198	F-7
	F-9
58978222	F-7
	F-9
58978248	F-7
	F-9
58978255	F-3
	F-5
	F-7
	F-9
58979964	A-3
59003442	A-9
	A-11
59020040	F-3
	F-5
59027060	B-11
59048868	E-3
59050948	F-7
	F-9
59051151	F-3
	F-5
59051656	A-5
59081323	A-41
59087999	F-3
	F-5
59093351	A-17
59103259	A-41
59103267	A-41
59103275	A-41
59103598	C-21
	E-3
59106757	G-3
59108100	D-9
59108605	D-9
59109041	C-7
59110312	A-23
	G-19
59117309	E-3
59117317	E-3
59117333	C-15
	D-13
	E-5
	E-7
	E-9
	E-11
	E-13
	E-15
	E-17
	E-19
	E-21
	E-23
	E-25
	E-27
	E-29
59121426	A-5
59121855	E-3
59126961	D-15
59127720	C-3
59137448	E-3

NUMERICAL INDEX

COMM.NO.	PAGE
59138396	G-5
	G-7
	G-9
	G-11
	G-13
59144428	A-19
	B-3
59145821	D-19
59146043	A-5
59148569	D-7
	D-15
	E-3
59151001	C-15
59154393	D-19
59154450	D-19
59154492	D-19
59154500	D-19
59154518	D-19
59154526	D-19
59154542	D-19
59154807	C-21
59159558	D-15
59162149	A-39
	A-53
59163238	A-39
	A-53
59163758	A-7
59175661	B-13
59179218	C-23
59185074	D-3
59190975	A-9
	A-11
	A-13
59195479	G-3
59197012	G-17
59203406	G-3
59211474	F-3
	F-5
	F-7
	F-9
59211805	E-33
59214775	A-9
	A-11
59219618	G-3
59229492	E-3
59239897	D-7
59242263	C-21
59245209	A-5
59246603	F-3
	F-5
	F-7
	F-9
59246611	F-3
	F-5
	F-7
	F-9
59266726	A-21
59268854	A-43
59275917	D-23
59275990	D-23
59277723	B-7
59277756	B-5
59277764	B-5
59277772	A-17
	B-3
59286336	C-5
59289025	D-23
59290726	A-19
59290858	F-3
	F-5
	F-7
	F-9
59296632	B-7
59298042	B-7
59298208	A-9
	A-11
59298323	B-7
59298927	A-9
	A-11
59298935	A-9
	A-11
59299164	D-13
59299545	A-9
	A-11
59299768	A-9
	A-11
59321687	C-19
59328492	B-11
59331934	C-15
	C-19
59336818	A-5
59336842	A-5
59359836	A-5
59397059	E-5
	E-7
	E-9
	E-11
	E-13
	E-15
	E-17
	E-19
	E-21
	E-23
	E-25
	E-27
	E-29
59422907	A-5
59424309	D-3
59436741	A-9
	A-11
59436865	E-3
	E-31
59436873	E-3
59437079	D-3
59437087	D-3
59450528	A-9
	A-11
59465641	E-3
59465674	E-5
	E-7
	E-9
	E-11
	E-13
	E-15
	E-17
	E-19
	E-21
	E-23
	E-25
	E-27
	E-29
59495028	C-23
59510065	B-11
59524447	A-7
59534313	C-23
59565044	B-3
	B-9
	D-3
59565051	A-3
59580571	C-7
59583450	E-33
59583468	E-33
59583500	C-15
59586792	G-3
59600593	B-5
59605915	F-3
	F-5
	F-7
	F-9
59607853	A-9
	A-11
59607861	A-9
	A-11
59613612	B-3
59617985	C-7
59661413	E-3
59665877	G-17
59667287	F-3
	F-5
59667717	G-3
59672709	C-7
59672733	G-3
59698811	A-5
59706960	G-3
59742890	G-17
59785303	A-5
59785519	A-5
59787879	B-11
59814889	A-7
59847798	C-7
59861872	A-5
59869008	A-7
59873935	C-19
59888214	A-5
59888271	A-5
59891002	C-15
59896613	E-35
	E-37
59922419	C-9
59922526	G-15
59922591	B-3
59922823	C-9
59922906	C-7
59922989	C-7
59923102	A-3
59923797	C-7
59923961	C-7
59924043	A-15
59924472	A-25
59929059	D-7
59929182	C-7
59929711	A-7
59933622	A-5
59934166	E-3
	E-5
	E-7
	E-9
	E-11
	E-13
	E-15
	E-17
	E-19
	E-21
	E-23
	E-25
	E-27
	E-29
59938373	A-5
59941203	A-5
59949461	A-5
59949511	A-5
59959080	G-17
59961821	A-15
59972877	A-5
59990010	B-11
59993881	A-3
	C-7

NUMERICAL INDEX

COMM.NO.	PAGE
59995126	E-5
	E-7
	E-9
	E-11
	E-13
	E-15
	E-17
	E-19
	E-21
	E-23
	E-25
	E-27
	E-29
	E-33
90502592	A-3
95011060	A-17
95018065	C-5
95043238	A-17
95048393	A-17
95049359	A-13
95098679	A-9
	A-11
	A-13
95188710	G-19
95200648	A-5
95201547	A-9
	A-11
	A-13
95208971	A-9
	A-11
	A-37
95219713	A-21
95220893	C-19
95257341	C-9
95264891	B-5
95278008	C-19
95279337	A-17
95280194	A-17
	A-25
95285946	C-7
95286266	C-19
95301834	D-3
95301842	E-35
	E-37
95303335	A-17
95303350	B-3
	C-7
95303368	A-13
	A-17
	D-3
95303384	C-7
95316956	A-17
95323366	G-19
95326930	B-11
95326955	A-17
95329876	A-13
95329975	A-17
	A-19
	A-23
	G-19
95330692	G-15
95341673	G-15
95343596	A-23
	G-19
95356960	A-3
	C-7
95356978	A-25
95357570	G-15
95359410	C-9
95365094	G-17
95371258	G-17
95376133	C-7
95387890	A-25
95402806	A-23
	G-19
95415667	G-17
95416277	G-15
95424586	E-3
	G-3
95431284	A-23
	C-7
95448940	C-5
95457586	A-15
	G-3
95469128	C-7
95480117	A-3
95488110	A-17
95488250	A-13
95603163	B-3
95643383	B-3
95649844	G-17
95653614	C-7
95829263	A-25
	C-7
95860052	D-7
95866687	C-7
95919254	C-5
95919528	G-15
95922134	E-31
95922324	A-37
95922332	A-39
	A-53
	E-31
95922894	A-19
95923322	C-13
95923348	A-27
	A-29
	A-31
95924239	E-35
	E-37
95931564	A-37
95931614	A-3
95932141	E-31
95943346	D-7
	E-31
95988739	B-3
95988796	C-7
95988804	C-7
96700927	D-13
96701370	A-33
	A-35
	A-45
	A-47
	C-11
96701461	C-7
	E-3
96701479	C-19
	D-15
	G-15
96701495	C-13
	E-5
	E-7
	E-9
	E-11
	E-13
	E-15
	E-17
	E-19
	E-21
	E-23
	E-25
	E-27
	E-29
	E-33
96701578	A-9
	A-11
96701594	D-3
96701917	A-15
	A-27
	A-29
	A-31
	A-33
	A-35
	A-45
	A-47
	C-5
	C-17
	E-3
96701958	C-19
	D-15
96702162	C-7
96702261	A-27
	A-29
	A-31
96702279	C-19
	C-21
	C-23
	D-3
	E-35
	E-37
	G-15
96702287	A-13
	A-19
	A-27
	A-29
	A-31
	A-39
	A-59
	C-19
	D-13
	E-5
	E-7
	E-9
	E-11
	E-13
	E-15
	E-17
	E-19
	E-21
	E-23
	E-25
	E-27
	E-29
	G-15
96702329	A-3
	A-13
	B-3
	C-5
	C-7
96702386	D-7
96702394	E-3
96702428	B-7
96702436	B-7
96702642	A-49
96702659	A-27
	A-29
	A-31
	A-33
	A-35
	A-39
	A-45
	A-47
	A-53
	C-11
	C-21
	D-5
96702733	A-3
96702774	A-15
96702790	B-3

NUMERICAL INDEX

COMM.NO. PAGE	COMM.NO. PAGE	COMM.NO. PAGE	COMM.NO. PAGE
96702808 ..... A-9	96704309 ..... A-13	96704606 .....A-27	96705124 .....D-5
..... A-11	.....C-7	.....A-29	96705165 .....E-3
..... D-3	.....C-19	.....A-31	96705173 .....E-3
..... D-13	.....C-23	.....A-33	96705272 .....A-13
96702816 ..... A-13	..... D-3	.....A-35	96705504 .....B-3
..... A-33	96704481 .....B-11	.....A-45	96705553 .....C-15
..... A-35	96704549 .....B-3	.....A-47	96705587 .....A-33
..... A-45	.....B-5	.....C-21	.....A-35
..... A-47	..... D-3	.....D-5	.....A-45
.....E-5	96704556 ..... A-27	.....D-13	.....A-47
.....E-7	..... A-29	.....E-5	.....C-5
.....E-9	..... A-31	.....E-7	.....C-7
.....E-11	.....B-11	.....E-9	.....C-17
.....E-13	.....C-3	.....E-11	96705595 .....A-27
.....E-15	96704564 .....C-19	.....E-13	.....A-29
.....E-17	.....E-3	.....E-15	.....A-31
.....E-19	96704580 ..... A-39	.....E-17	.....C-7
.....E-21	..... A-53	.....E-19	96705728 .....A-39
.....E-23	.....C-7	.....E-21	.....A-53
.....E-25	.....C-13	.....E-23	.....E-35
.....E-27	..... D-7	.....E-25	.....E-37
.....E-29	.....E-5	.....E-27	96705736 .....A-39
96702824 ..... A-17	.....E-7	.....E-29	.....A-53
..... A-27	.....E-9	.....E-33	.....C-7
..... A-29	.....E-11	.....E-35	96708300 .....C-7
..... A-31	.....E-13	.....E-37	96711031 .....B-3
..... A-55	.....E-15	96704614 .....A-13	.....B-5
..... D-3	.....E-17	.....C-5	96711478 .....B-3
.....E-3	.....E-19	.....E-3	96711833 .....A-15
96703111 .....B-9	.....E-21	.....G-15	.....A-19
96703657 ..... A-27	.....E-23	96704630 .....C-3	.....A-27
..... A-29	.....E-25	96704663 .....C-19	.....A-29
..... A-31	.....E-27	.....D-3	.....A-31
.....B-3	.....E-29	.....E-3	.....C-3
.....B-9	.....E-35	96704739 .....A-9	.....C-17
96703665 ..... A-3	.....E-37	.....A-11	.....C-19
..... D-3	96704598 .....C-7	96704812 .....C-3	.....C-23
96703699 ..... A-9	.....C-19	.....C-19	.....D-3
..... A-11	.....E-3	.....C-23	.....D-13
96704234 .....E-5	.....E-5	.....E-35	.....D-15
.....E-7	.....E-7	.....E-37	96711882 .....B-3
.....E-9	.....E-9	96705041 .....D-3	.....D-3
.....E-11	.....E-11	.....E-5	96712237 .....A-3
.....E-13	.....E-13	.....E-7	.....A-9
.....E-15	.....E-15	.....E-9	.....A-11
.....E-17	.....E-17	.....E-11	.....A-13
.....E-19	.....E-19	.....E-13	.....B-3
.....E-21	.....E-21	.....E-15	.....B-13
.....E-23	.....E-23	.....E-17	.....D-3
.....E-25	.....E-25	.....E-19	96712252 .....E-33
.....E-27	.....E-27	.....E-21	
.....E-29	.....E-29	.....E-23	
	..... G-17	.....E-25	
		.....E-27	
		.....E-29	
		96705066 .....B-13	

NUMERICAL INDEX

COMM.NO. PAGE	COMM.NO. PAGE	COMM.NO. PAGE	COMM.NO. PAGE
96712674 ..... A-27	96738554 .....C-7	96741038 .....A-13	96741046 .....A-13
..... A-29	.....C-13	.....A-27	.....A-27
..... A-31	..... D-3	.....A-29	.....A-29
.....C-11	..... D-7	.....A-31	.....A-31
.....C-17	..... D-23	.....A-33	.....A-39
.....E-3	.....E-5	.....A-35	.....A-59
.....E-33	.....E-7	.....A-45	.....B-3
96712724 ..... A-13	.....E-9	.....A-47	.....B-5
96713979 .....C-11	.....E-11	.....C-5	.....B-7
96714399 ..... A-9	.....E-13	.....C-7	.....C-5
..... A-11	.....E-15	.....C-21	.....C-7
96714472 .....E-5	.....E-17	.....D-3	.....C-13
.....E-7	.....E-19	.....D-13	.....C-21
.....E-9	.....E-21	.....E-5	.....D-3
.....E-11	.....E-23	.....E-7	.....D-13
.....E-13	.....E-25	.....E-9	.....E-3
.....E-15	.....E-27	.....E-11	.....E-5
.....E-17	.....E-29	.....E-13	.....E-7
.....E-19	.....E-35	.....E-15	.....E-9
.....E-21	.....E-37	.....E-17	.....E-11
.....E-23	96738596 ..... A-3	.....E-19	.....E-13
.....E-25	..... A-13	.....E-21	.....E-15
.....E-27	..... A-27	.....E-23	.....E-17
.....E-29	..... A-29	.....E-25	.....E-19
96714829 ..... G-3	..... A-31	.....E-27	.....E-21
96714910 ..... A-15	.....B-3	.....E-29	.....E-23
96715123 ..... D-3	.....B-9	.....E-33	.....E-25
96715180 ..... D-21	.....C-5		.....E-27
96715602 .....C-5	.....C-7		.....E-29
96718978 ..... A-13	.....C-13		.....E-35
96719976 .....C-5	..... D-13		.....E-37
96720115 .....C-13	..... G-3		.....G-15
96720156 ..... G-17	96738612 .....B-3		96741053 .....D-15
96720594 .....C-5	.....B-11		.....E-3
96720990 .....B-7	.....C-3		.....E-5
96726898 ..... A-9	96738620 .....B-11		.....E-7
..... A-11	96738646 ..... A-13		.....E-9
96728506 ..... A-41	..... A-27		.....E-11
96728522 .....E-35	..... A-29		.....E-13
.....E-37	..... A-31		.....E-15
96728548 ..... D-3	..... A-57		.....E-17
..... D-5	..... D-3		.....E-19
.....E-3	96739982 .....C-3		.....E-21
96728654 ..... A-9	96739990 .....B-3		.....E-23
..... A-11	96740188 ..... A-27		.....E-25
96734553 ..... A-27	..... A-29		.....E-27
..... A-29	..... A-31		.....E-29
..... A-31	..... A-33		.....G-15
96736822 .....B-3	..... A-35		.....G-17
96737069 .....B-3	..... A-45		96742408 .....A-9
96738208 ..... D-3	..... A-47		.....A-11
96738547 .....E-35	..... D-5		96742648 .....A-9
.....E-37	96740444 ..... D-23		.....A-11
			96743851 .....B-3
			96745419 .....B-11

COMM.NO. PAGE	COMM.NO. PAGE	COMM.NO. PAGE	COMM.NO. PAGE
96745492 .....E-35 .....E-37 96745518 .....E-3 96746235 ..... A-49 NOT-USED ..... A-13 .....B-3 .....B-13 ..... D-13 ..... F-3 ..... F-5 ..... F-7 ..... F-9 UNIQUE ..... A-9 ..... A-11			

The warranty statement is provided within the manual kit shipped with the machine.

VOLVO

Volvo Construction Equipment
www.volvo.com

13525761 English

Printed in USA August 8, 2008 CST
Volvo, Shippensburg