RUTHZIL TRATOR COMERCIAL DE PEÇAS LTDA 11 97083-6812 ROLANDO

VOLVO CONSTRUCTION EQUIPMENT

PARTS CATALOG

SD110 C

SERIAL NO. VCE0S110H00051710-

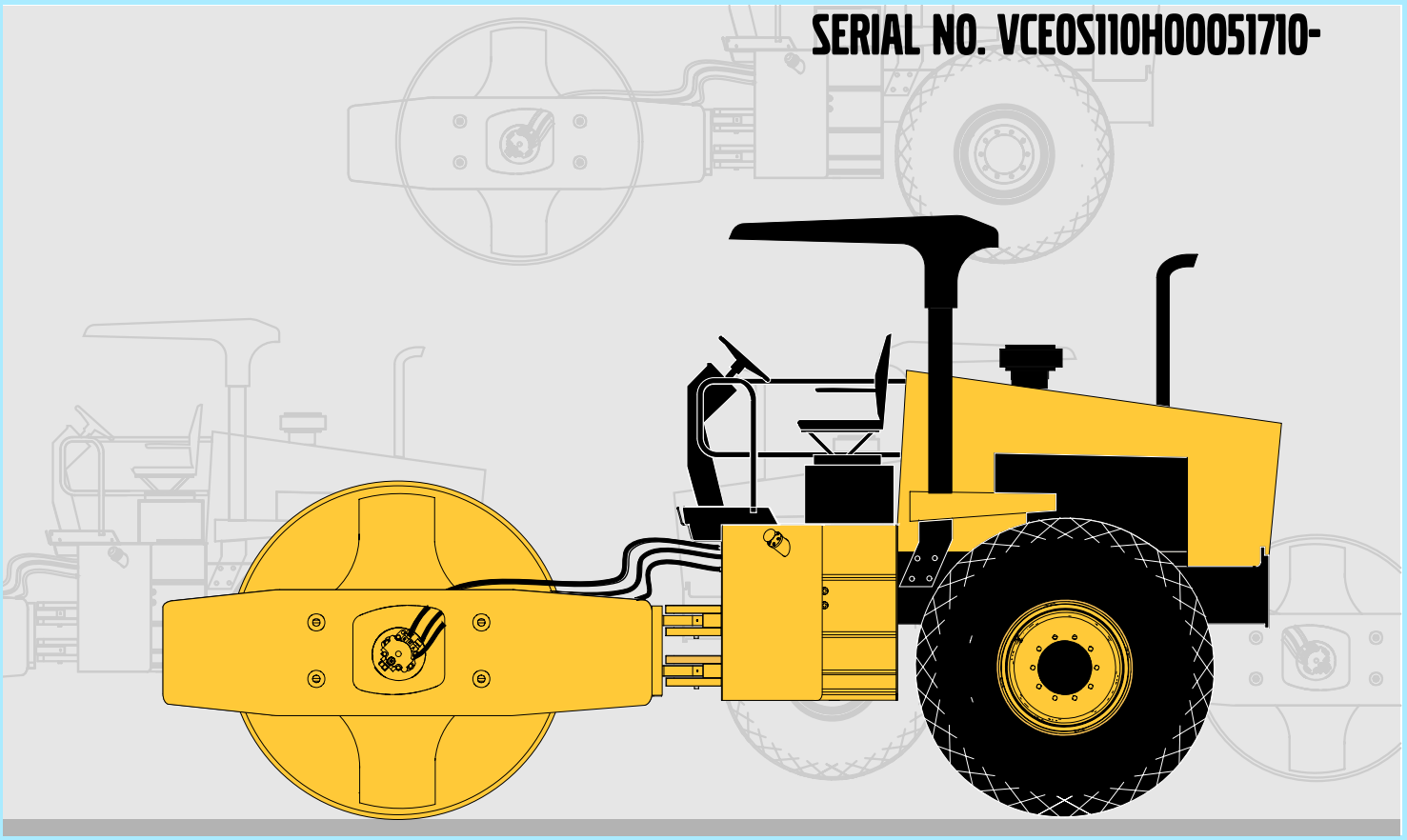

MORE CARE. BUILT IN.

TABLE OF CONTENTS
SD110 “C” SERIES

TITLE **PAGE**

Section A - MAIN FRAME ASSEMBLY

FRAME INSTALLATION SHEET 1 of 2 . . . . . A-2
FRAME INSTALLATION SHEET 2 of 2 . . . . . A-4
HYDRAULIC TANK INSTALLATION A-6
HYDRAULIC TANK ASSEMBLY A-8
HYDRAULIC CYLINDER A-10
HYDRAULIC CYLINDER A-12
FUEL TANK INSTALLATION A-14
FUEL TANK ASSEMBLY A-16
OPERATORS PLATFORM INSTALLATION A-18
DECAL INSTALLATION A-20
SUNSHADE INSTALLATION A-22
SUNSHADE ASSEMBLY A-24
RAILING INSTALLATION A-26
RAILING ASSEMBLY A-28

Section B - AXLE ASSEMBLY

AXLE INSTALLATION - SD110 . . . . . B-2
AXLE INSTALLATION - SD110D & D/F B-4
AXLE ASSEMBLY - Sheet 1 of 5 . . . . . B-6
AXLE ASSEMBLY - Sheet 2 of 5 . . . . . B-8
AXLE ASSEMBLY - Sheet 3 of 5 . . . . . B-10
AXLE ASSEMBLY - Sheet 4 of 5 . . . . . B-12
AXLE ASSEMBLY - Sheet 5 of 5 . . . . . B-14
AXLE DRIVE MOTOR - SD110 . . . . . B-16
AXLE DRIVE MOTOR - SD110D/SD110F B-18
WHEEL INSTALLATION B-20
TYRE AND WHEEL ASSEMBLY B-22

Section C - ENGINE INSTALLATION

COWLING AND FENDER INSTALLATION Sheet 1 of 2 . . . . . C-2
COWLING AND FENDER INSTALLATION Sheet 2 of 2 . . . . . C-4
ENGINE INSTALLATION ASSEMBLY C-6
ENGINE ASSEMBLY SHEET 1 of 2 . . . . . C-8
ENGINE ASSEMBLY SHEET 2 of 2 . . . . . C-10
PROPULSION PUMP ASSEMBLY - SD110 . . . . . C-12
PROPULSION PUMP ASSEMBLY - SD110D & D/F C-14
VIBRATION PUMP ASSEMBLY C-16
STEERING PUMP ASSEMBLY C-18
PROPULSION PUMP - SD110 Sheet 1 of 4 . . . . . C-20
PROPULSION PUMP - SD110 Sheet 2 of 4 . . . . . C-22
PROPULSION PUMP - SD110 Sheet 3 of 4 . . . . . C-24
PROPULSION PUMP - SD110 Sheet 4 of 4 . . . . . C-26
PROPULSION PUMP - SD110D & F Sheet 1 of 4 . . . . . C-28
PROPULSION PUMP - SD110D & F Sheet 2 of 4 . . . . . C-30
PROPULSION PUMP - SD110D & F Sheet 3 of 4 . . . . . C-32
PROPULSION PUMP - SD110D & F Sheet 4 of 4 . . . . . C-34
VIBRATION PUMP - Sheet 1 of 5 . . . . . C-36

TABLE OF CONTENTS
SD110 “C” SERIES

TITLE **PAGE**

Section C - ENGINE INSTALLATION

VIBRATION PUMP - Sheet 2 of 5 . . . . . C-38
VIBRATION PUMP - Sheet 3 of 5 . . . . . C-40
VIBRATION PUMP - Sheet 4 of 5 . . . . . C-42
VIBRATION PUMP - Sheet 5 of 5 . . . . . C-44
STEERING PUMP C-46
EXHAUST SILENCER MOUNTING ASSEMBLY C-48
THROTTLE INSTALLATION ASSEMBLY C-50
AIR CLEANER INSTALLATION C-52

Section D - CONSOLE ASSEMBLY

OPERATORS PLATFORM ASSEMBLY D-2
SEAT INSTALLATION D-4
CONTROL LEVER D-6

Section E - DRUM ASSEMBLY

DRUM INSTALLATION E-2
DRUM ASSEMBLY E-4
VIBRATION MOTOR E-6
CARRIER ASSEMBLY E-8
BEARING HOUSING ASSEMBLY E-10
ECCENTRIC SHAFT ASSEMBLY E-12
DRUM DRIVE ASSEMBLY - SD110 . . . . . E-14
DRUM DRIVE ASSEMBLY - SD110D & SD110F E-16
DRUM DRIVE MOTOR - SD110D & SD110F E-18
TORQUE HUB - SD110 . . . . . E-20
BOLT-ON PADFOOT SHELL INSTALLATION E-22

Section F - HYDRAULIC PIPING

HYDRAULIC PIPING - SD110 . . . . . F-2
HYDRAULIC PIPING -SD110D & D/F F-4

Section G - ELECTRICALS

ELECTRICALS G-2

Word Index

Word Index W-1

Numerical Index

Numerical Index X-1

RECOMMENDED SERVICE PARTS

Recommended Service Parts

Assembly	Description	1000 Hrs	2000 Hrs	3000 Hrs	CPN	Remarks
Engine	*Engine Oil filter	4			70098645	
	*Fuel filter, Primary	4			70082177	
	*Fuel filter, Secondary	4			70082185	
	Propulsion Pump SD110			1	43947126	
	Propulsion Pump SD110D/F			1	43923317	
	Propulsion Pump Seal Kit SD110			1	59399253	
	Propulsion Pump Seal Kit SD110D/F			1	59360834	
	Vibration Pump			1	43956903	
	Vibration Pump Seal Kit			1	70819172	
	Steering Pump			1	43844760	
	Steering Pump Seal Kit			1	58898677	
	*Air cleaner primary Element	2			70543905	
	*Air cleaner Secondary Element	2			70543913	
	Throttle Cable		1		70186572	
	Throttle Control		1		70577614	
	Coupling		1		59286344	
	Battery Cable Positive		1		70861463	
	Battery Cable Negative		1		70861471	

Assembly	Description	1000 Hrs	2000 Hrs	3000 Hrs	CPN	Remarks
	Shock Mount (Engine)		8		59546812	
Main Frame	Fuel Lid	1			70566583	
	Cylinder Steering			1	70811179	
	Cylinder Steering - Seal Kit		1		70813852	Check the Steering Cylinder CPN (70811179) before Ordering
	Cylinder Steering			1	70576020	
	Cylinder Steering- Seal Kit		1		70576038	Check the Steering Cylinder CPN (70576020) before Ordering
	Brake valve		1	1	13289699	
	Axle Drive Motor-SD110			1	43844430	
	Axle Drive Motor-SD110D/F			1	43844455	
	Axle Drive Motor-Lip Seal			1	59941203	
Operator’s Platform	Propulsion and Vibration Cable	1			70186580	
	Engine shut down cable	1			70615034	
	M.C.B	1			70611975	
	Pressure Switch	1			59070326	
	Tachometer Gauge		1		70086830	
	Hour Meter		1		70899463	
	Brake Switch		1		59121756	

Assembly	Description	1000 Hrs	2000 Hrs	3000 Hrs	CPN	Remarks
	Steering Valve	1		1	70915111	
	Propulsion Control Lever	1			70067335	
	Propulsion Lever Knob	1			59899641	
	Vibration Lever Knob	1			59648394	
	Spring Tension Knob	1			58059601	
Electrical	Ignition Switch	1	1		70098603	
	Electric Horn			1	70098983	
	Indicator Lamp-Red			1	70563408	
	Indicator Lamp-Blue			1	70838602	
	Indicator Lamp-Green			1	70838610	
	Toggle Switch				70540281	
	Toggle Switch SPST ON/OFF				70140058	
	Automotive Relay				70851399	
	Dual Coil Relay Lights				70852496	
Drum	Minor Seal kit Drum drive-Motor SD110D	1			13262670	
	Major Seal kit Drum drive-Motor SD110D	1			13263421	
	Shock Mount		6		13304787	
	O-Ring Seal	1			13502240	
	Oil Seal	1			59277764	
	Torque Hub			1	13222658	

Assembly	Description	1000 Hrs	2000 Hrs	3000 Hrs	CPN	Remarks
	Vibration Motor			1	43844554	
	Vibration Motor,Seal			1	59941203	

* Designates part that are to be replaced within the specified time intervals as stated in the maintenance schedule.

LUBRICANTS, FILTERS AND MANUALS

LUBRICANTS,FILTERS AND MANUALS

	Description	CPN	Unit Of Measurement	Quantity
Lubricants	Oil Power Compact	70619077	BL	210 Liters
			CN	20 Liters
	Oil Power Drive	70619101	BL	210 Liters
			CN	20 Liters

Note: Oil Supplied in BL Consist of 210 Liters, CN Consist of 20 Liters.

	Description	CPN	Quantity
Filters	Engine Oil filter	70098645	1
	Cartridge, Lube oil filter	70149125	1
	Fuel filter, Primary	70082177	1
	Fuel filter, Secondary	70082185	1
	Air cleaner primary Element	70543905	1
	Air cleaner secondary Element	70543913	1
	Hydraulic Filter	43911650	2
	Hydraulic Filter Element	43921394	1

	Description	CPN	Quantity
Service Filter	Kit Filters 250 Hrs	70549233	1
	Kit Filters 500 Hrs	70924493	1

	Description	VOE Ref. Number	CPN
Manuals	Parts Manual	21A9920201	70917406
	Operation /Maintenance Manual	21A1004271	70917414

STANDARD ABBREVIATIONS

AC	Alternating Current
A/R	As Required
ARC	Authorized Rebuilt Component
Assy	Assembly
BHCS	Button Head Cap Screw
Cu Yd	Cubic Yard
Cyl	Cylinder
DC	Direct Current
Dia	Diameter
Deg	Degree
Eff	Effective
El	Elbow
FHCS	Flat Head Cap Screw
F-N-R	Forward-Neutral-Reverse
F/P	Fork Positioning
Gr	Grade / Gear
Hex	Hexagonal
Hd	Head
HHCS	Hex Head Cap Screw
HHMS	Hex Head Machine Screw
HSBHCS	Hex Socket Button Head Cap Screw
Hrs	Hours
Hyd	Hydraulics
ID	Inside Diameter
incl	Includes
LH	Left Hand
Lg / LG	Long
M	Metric
MIK	Maintenance Interval Kit
mm	Millimeter
Nat Asp	Naturally Aspirated
Neg	Negative
NSS	Not Sold Separately
NSVA	Non Serviceable Assembly
OD	Outside Diameter
Pos	Positive
PSI	Pounds per Square Inch
Q/A	Quick-Attach
Ref	Reference
RH	Right Hand
RHSS	Round Head SelfTapping Screw
RPM	Revolutions Per Minute
SAE	Society of Automotive Engineers
Sec	Section
SFH	Slotted Fillister Head
SHCS	Socket Head Cap Screw
Sl	Serial
SMV	Slow Moving Vehicle
S/N	Serial Number
Spec	Speficiation
SPST	Single Pole/Single Throw
S.T.	Self-Tapping
Std	Standard
St / Str	Straight
Sw	Swivel
Tach	Tachometer
Temp	Temperature
Thd	Thread
Thk	Thick
Typ	Typical
Univ	Universal
Var	Variable
V	Volt
VPM	Vibrations Per Minute
Wgt	Weight
w/	With
w/o	Without
Wp	Weatherproof
CN	Can
BL	Barrel

Section A - MAIN FRAME ASSEMBLY

Dwg 70860267

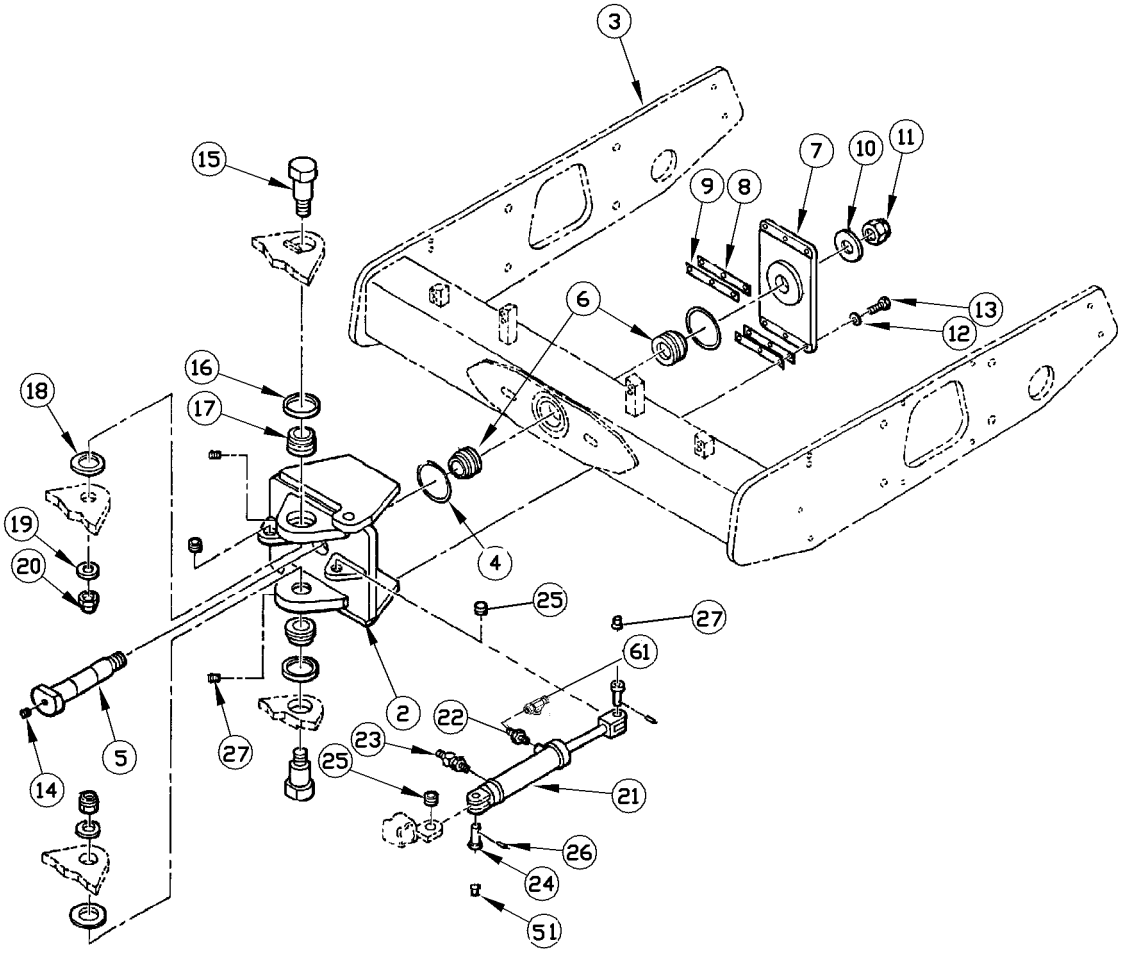

B.O.M 70860267

ITEM	COMM. NO.	DESCRIPTION	QTY	DIMENSIONS/NOTES
2	70059696	Swivel Frame	1	
3	70709506	Frame Drum	1	
4	59103804	Swivel Frame Seal	2	
5	58977711	Connecting Pin	1	
6	50268259	Thrust Bearing	2	
7	70059795	Backplate	1	
8	70087747	Shim	2	0.558thk
9	70087754	Shim	2	1.60thk
10	95922217	Plain Washer	1	
11	59003434	Nylock Nut	1	
14	95208971	Fitting Allemite	1	
12	96701560	Washer	6	
13	96726658	Hex Hd Screw	6	
15	58977703	Articulation Pin	2	
16	50268861	Dust Seal	2	
17	50268242	Thrust Bearing	2	
18	50268879	Dust Seal	2	
19	95922175	Flat Washer	2	
20	59003442	Nylock Nut	2	
21	70576020	Hydraulic Cylinder	2	**See Page A - 10.**
-	70811179	Hydraulic Cylinder	2	**See Page A - 12.**
21	70811179	Steering Cylinder	1	
22	70130034	Adapter	2	
23	97113740	Adapter	2	
24	70058912	Cyl.pivot Pin	4	
25	50268127	Bearing	4	
26	70010053	Spring Dowel Pin	4	
27	94042413	Grease Fitting	4	
61	97122402	Adapter	2	

FRAME INSTALLATION SHEET 2 of 2

Dwg 70860267

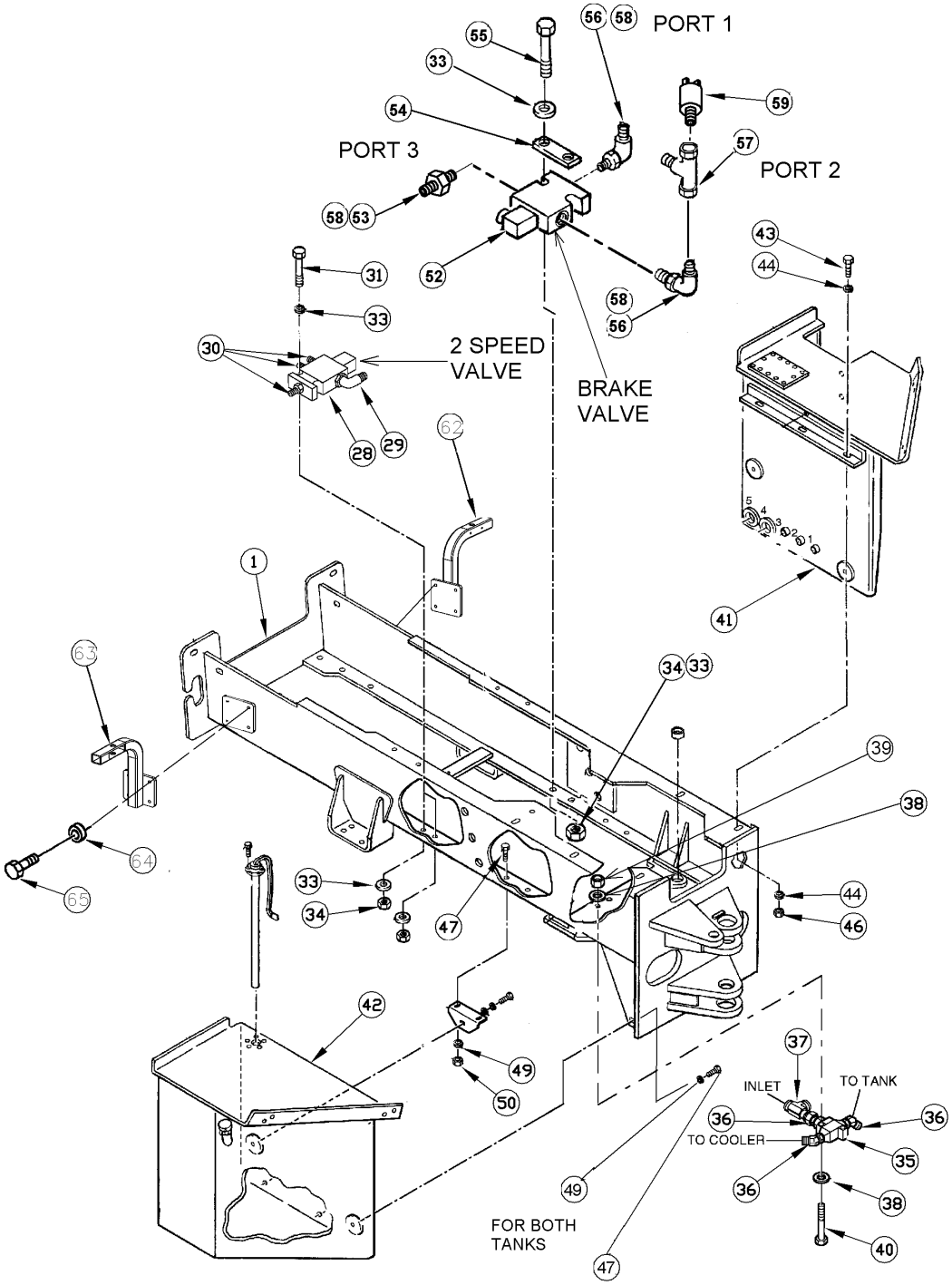

B.O.M 70860267

ITEM	COMM. NO.	DESCRIPTION	QTY	DIMENSIONS/NOTES
1	70564257	Main Frame	1	
28	54445010	Solenoide Valve	1	
29	95653614	Elbow	1	
30	95402806	Connector	3	
31	96718721	Hex Hd Bolt	2	
33	96719729	Plain Washer	8	
34	96704598	Nylock Nut	2	
35	59186346	Thermal Bypass Valve	1	
36	95356978	Adapter O Ring	3	
37	97113682	Adapter	1	
38	96741046	Flat Washer	4	
39	96704614	Nylock Nut	2	
40	96713482	Hex Hd Bolt	2	
41	70645007	Hydraulic Tank Sub Assembly	1	
42	70645015	Fuel Tank Sub Assembly	1	
43	96722368	Hex. Head Screw	6	
44	96701560	Washer	12	
46	96720925	Hex. Nut	6	
47	96702444	Hex Hd Screw	6	
49	96701545	Washer	6	
50	96719174	Hex. Nut	4	
52	13289699	Solenoid Valve	1	
53	95365078	Connector	1	
54	59306522	Cover Plate	1	
55	96714134	Hex Hd Bolt	2	
56	95329975	Adapter	2	
57	70836176	Tee Special	1	
58	95266425	O Ring	3	
59	59070326	Pressure Switch	1	
62	70921937	Weldment Light Mtg. Rear Rh	1	
63	70921903	Weldment Light Mtg. Rear Lh	1	
64	96741038	Flat Washer	8	
65	96702659	Hex Hd Screw	8	

HYDRAULIC TANK INSTALLATION

Dwg 70645007

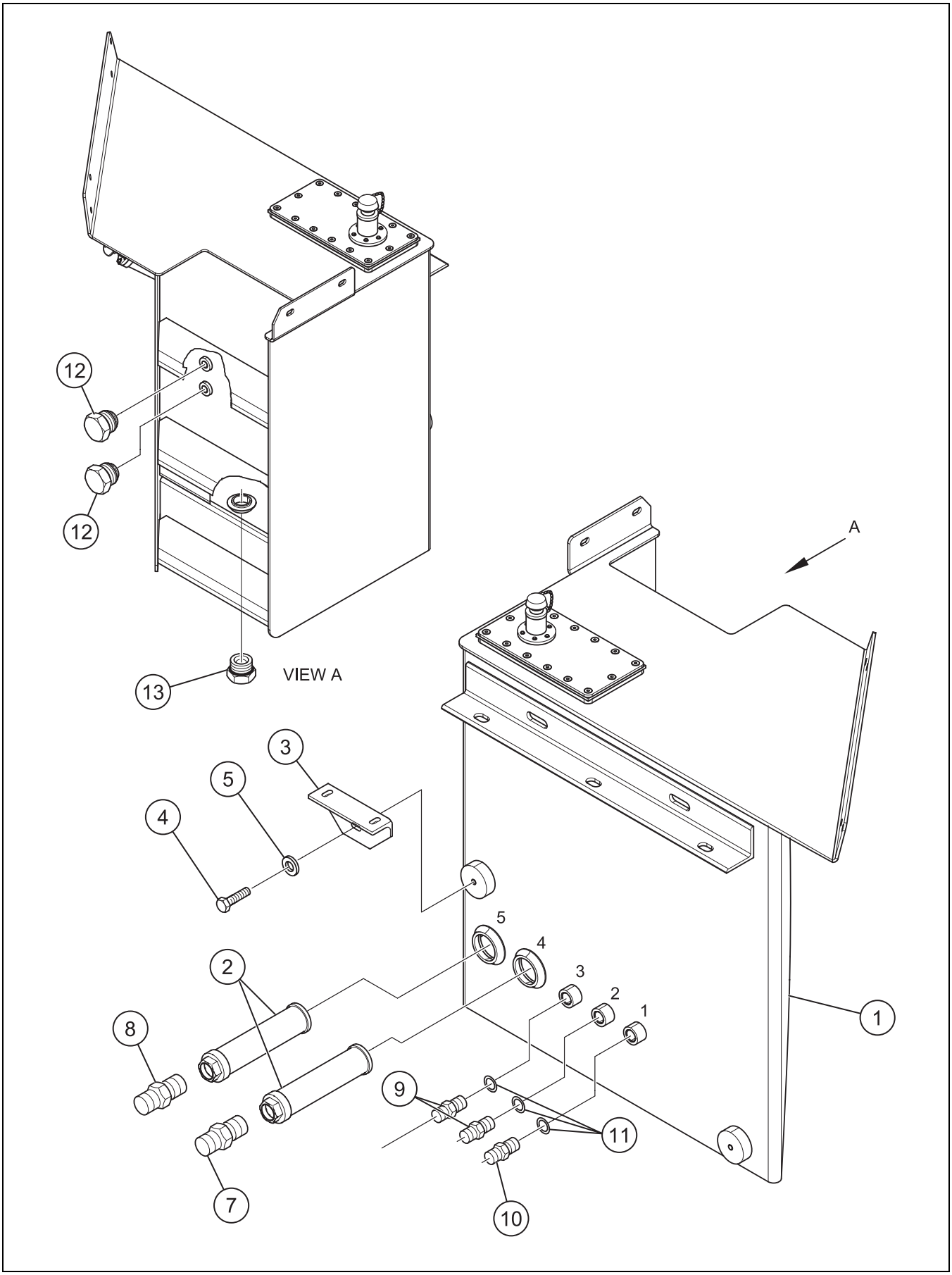

HYDRAULIC TANK INSTALLATION

B.O.M 70645007

ITEM	COMM. NO.	DESCRIPTION	QTY	DIMENSIONS/NOTES
1	**70566021**	**Hydraulic Tank Assembly**	**1**	**See Page A - 8.**
2	70606165	Hydraulic Tank Strainer	2	
3	70567342	Tank Mounting	1	
4	96718903	Hex. Head Screw	1	
5	96719604	Plain Washer	1	
7	81270746	Adapter	1	
8	81268211	Adapter	1	
9	94037298	Adapter	2	
10	94194594	Adapter	1	
11	95303756	O Ring	3	
12	94141009	Oil Level Plug	2	
13	94065307	Pipe Plug	1	

HYDRAULIC TANK ASSEMBLY

Dwg 70566021

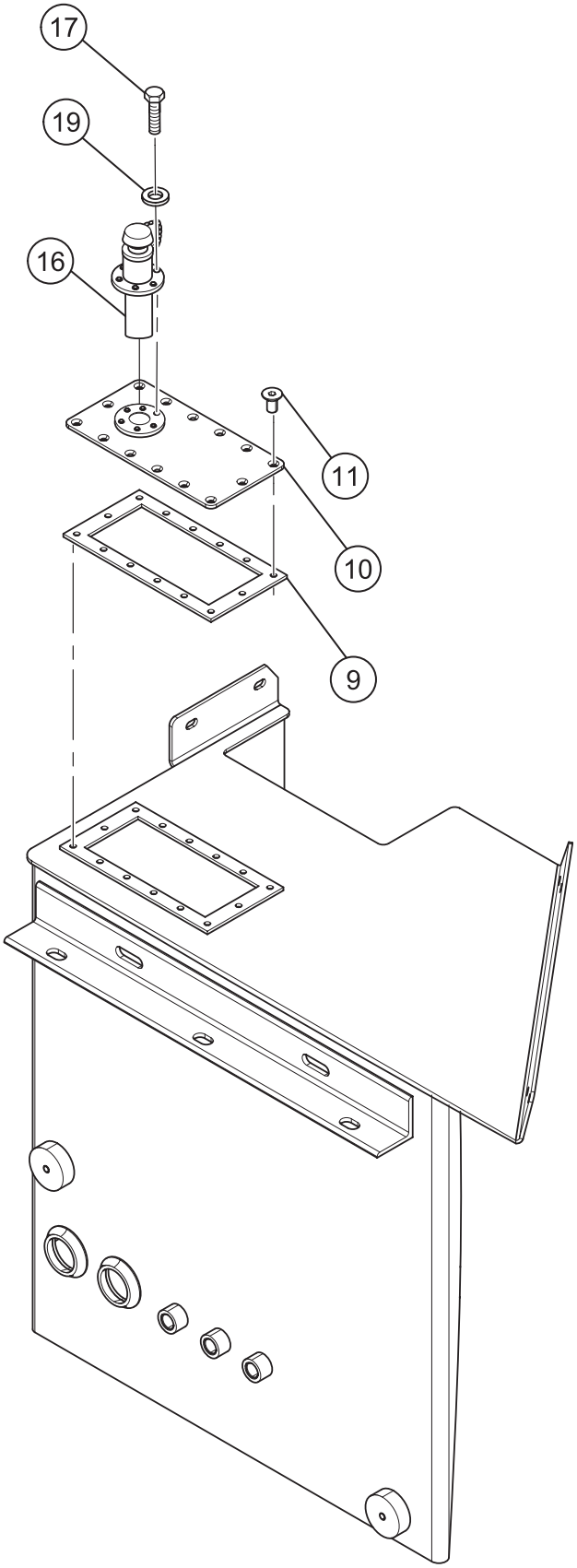

HYDRAULIC TANK ASSEMBLY

B.O.M 70566021

ITEM	COMM. NO.	DESCRIPTION	QTY	DIMENSIONS/NOTES
9	70566088	Tank Cover Gasket	1	
10	70847108	Lid	6	
11	70131602	Hex Head Cap Screw	14	
16	70701412	Breather Filter With Splash Guard	1	
17	96702386	Hex Head Cap Screw	6	
19	96742788	Washer	6	

HYDRAULIC CYLINDER

Dwg 70576020

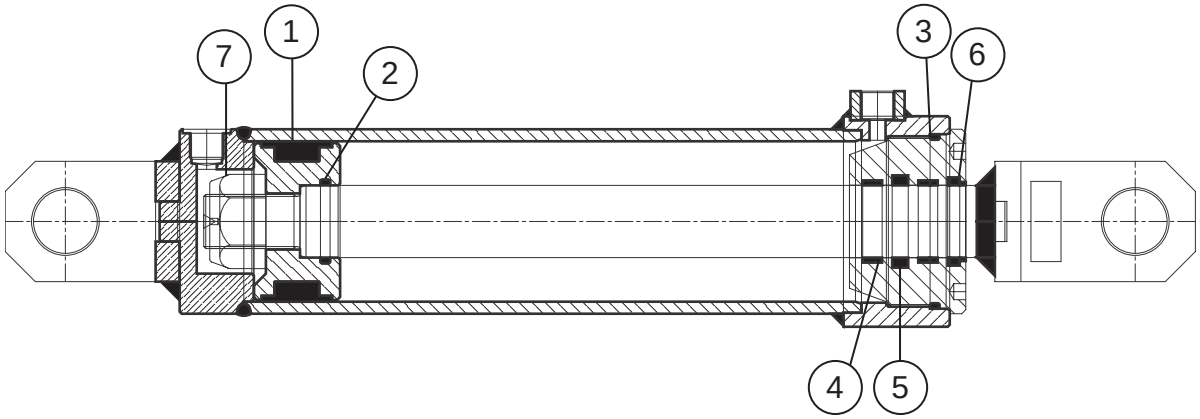

B.O.M 70576020

ITEM	COMM. NO.	DESCRIPTION	QTY	DIMENSIONS/NOTES
	70576038	Seal Kit	1	
1*	NSS	Piston Seal	1	
2*	NSS	O Ring	1	
3*	NSS	O Ring	1	
4*	NSS	Slyd Ring	2	
5*	NSS	Gland Seal	1	
6*	NSS	Wiper Seal	1	
7*	NSS	Nylock Nut	1	
		* Part Of Seal Kit		
		Note : Check The Cylinder CPN Punched On The Cylinder Before Ordering The Seal Kit		

Dwg 70811179

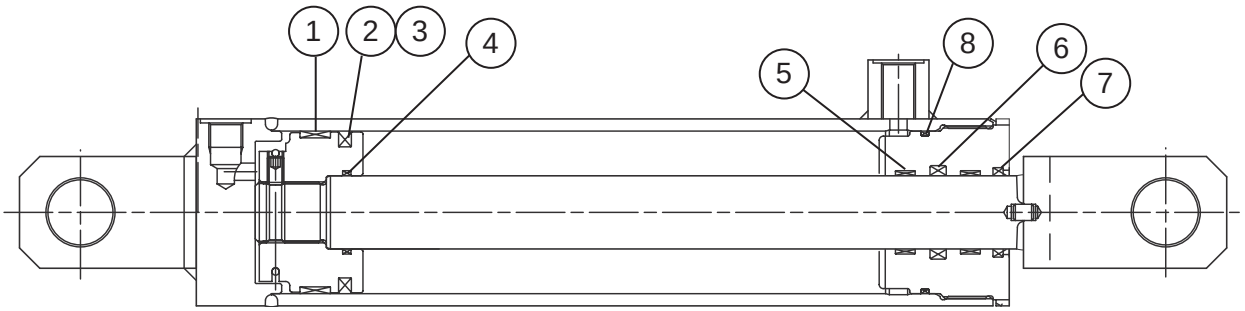

B.O.M 70811179

ITEM	COMM. NO.	DESCRIPTION	QTY	DIMENSIONS/NOTES
	70813852	Seal Kit	1	
1*	NSS	Piston Brg	1	
2*	NSS	Piston Seal	1	
3*	NSS	O Ring	1	
4*	NSS	O Ring	1	
5*	NSS	Rod Brg	2	
6*	NSS	Rod Seal	1	
7*	NSS	Wiper	1	
8*	NSS	O Ring	1	
		* Part Of Seal Kit Note: Check The Cylinder CPN Punched On The Cylinder Before Ordering The Seal Kit		

FUEL TANK INSTALLATION

Dwg 70645015

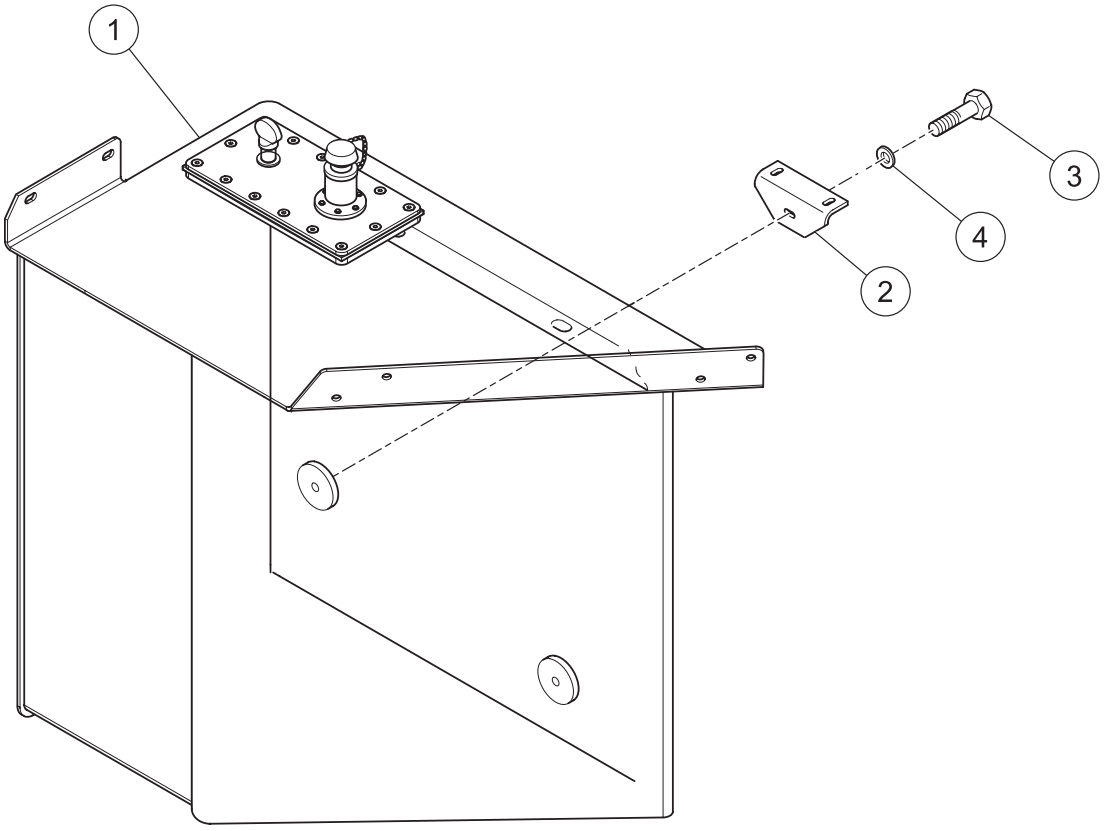

B.O.M 70645015

ITEM	COMM. NO.	DESCRIPTION	QTY	DIMENSIONS/NOTES
1	**70566526**	**Fuel Tank Assembly**	**1**	**See Page A - 16.**
2	70567342	Tank Mounting	1	
3	96718903	Hex. Head Screw	1	
4	96712237	Plain Washer	1	

FUEL TANK ASSEMBLY

Dwg 70566526

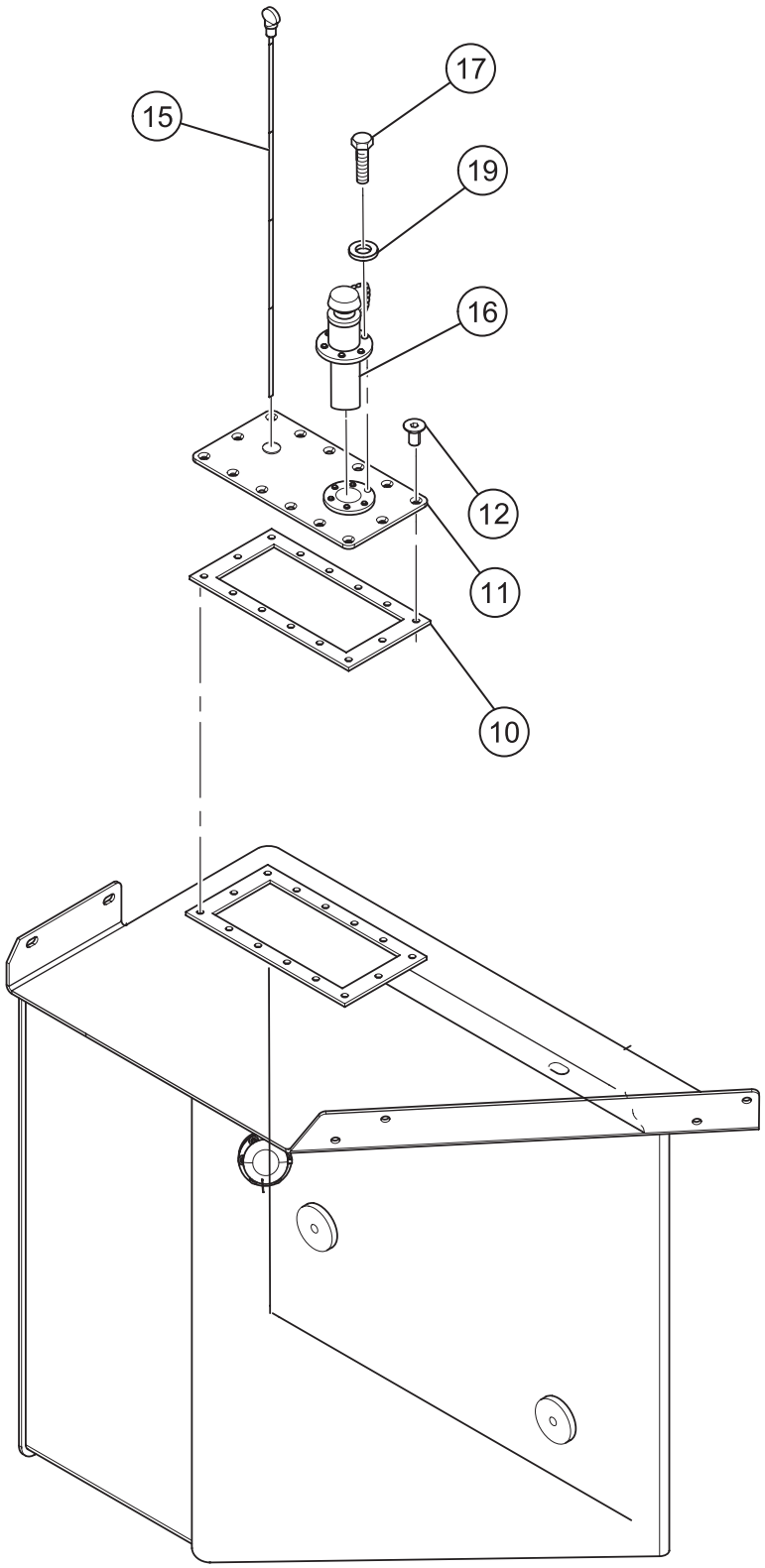

FUEL TANK ASSEMBLY

B.O.M 70566526

ITEM	COMM. NO.	DESCRIPTION	QTY	DIMENSIONS/NOTES
10	70566088	Tank Gasket Cover	1	
11	70566583	Lid	1	
12	70131602	Hex Head Cap Screw	14	
16	70701412	Breather Filter With Splash Guard	1	
17	96702386	Hex Head Cap Screw	6	
19	96742788	Washer	6	
15	70863261	Dipstick	1	

OPERATORS PLATFORM INSTALLATION

Dwg 70574520

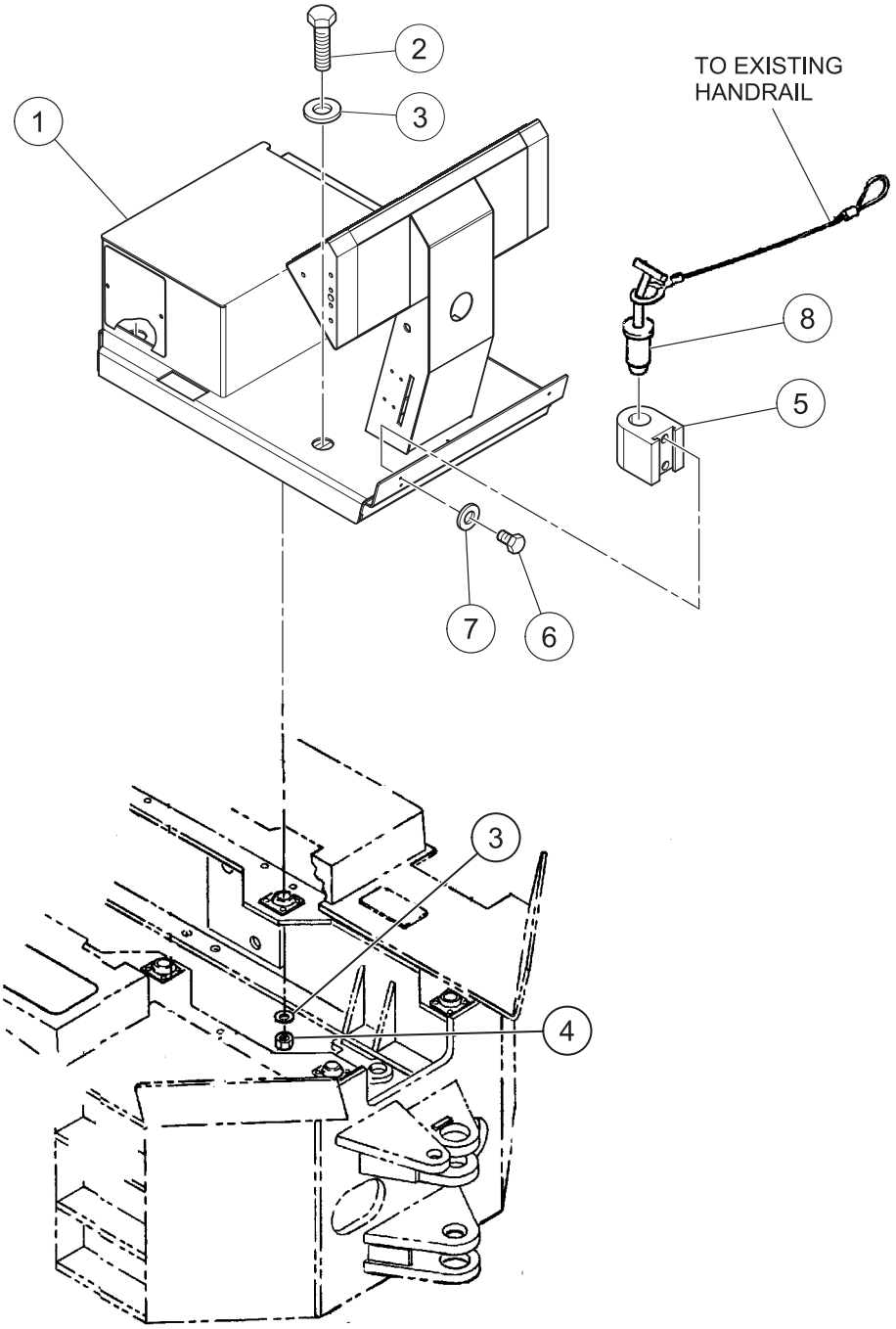

OPERATORS PLATFORM INSTALLATION

B.O.M 70574520

ITEM	COMM. NO.	DESCRIPTION	QTY	DIMENSIONS/NOTES
1	70860242	Operator Platform Assembly	1	
2	96721501	Hex Head Bolt	4	
3	97116537	Spacer	8	
4	14083463	Hex Nylock Nut	4	
5	70080742	Lock Pin Holder	1	
6	96713193	Hex Head Screw	2	
7	96741038	Flat Washer	2	
8	70066493	Lock Pin	1	

DECAL INSTALLATION

Dwg 70843198

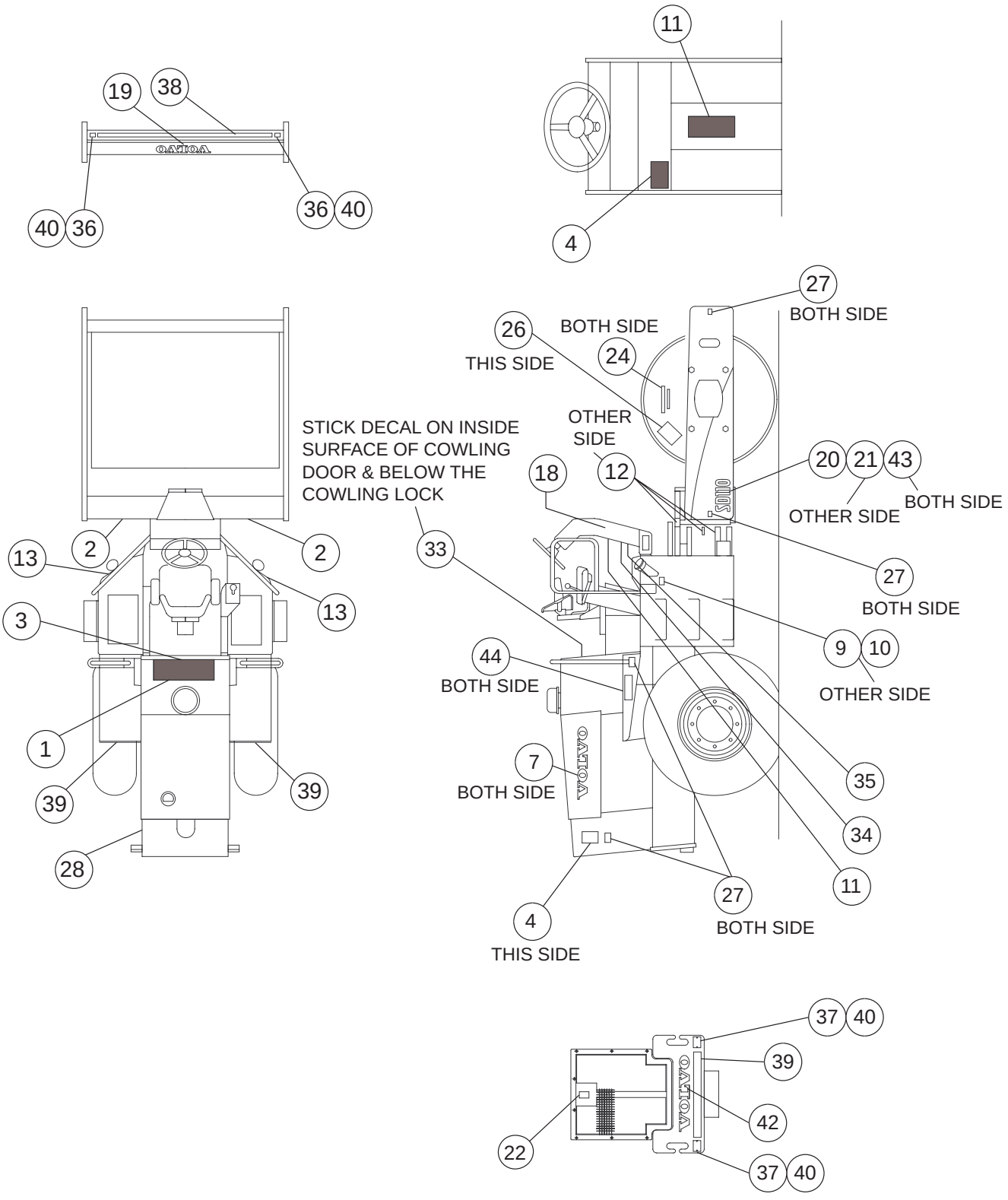

DECAL INSTALLATION

B.O.M 70843198

ITEM	COMM. NO.	DESCRIPTION	QTY	DIMENSIONS/NOTES
1*	NSS	Decal Checklist	1	
2*	NSS	Decal Crush Area	2	
3*	NSS	Decal Throttle	1	
4*	NSS	Decal Operation Maintenance Safety	2	
7*	NSS	Decal Signature	2	
9*	NSS	Decal Hydraulic Oil	1	
10*	NSS	Decal Diesel Fuel	1	
11*	NSS	Decal Roll Over Hazard Warning	1	
12*	NSS	Decal Grease 50 Hrs	5	
13*	NSS	Decal Sit On Rail Warning	2	
18*	NSS	Decal Ignition Switch	1	
19*	NSS	Decal Signature	1	
20*	NSS	Decal Saddle Drum Frame Rh	1	
21*	NSS	Decal Saddle Drum Frame Lh	1	
22*	NSS	Decal Warning	1	
24*	NSS	Decal - Lube Eccentric	2	
26*	NSS	Lube. Torque Hub	1	
27	70812755	Reflector Amber	8	
28*	NSS	Decal Lube Chart	1	
33*	NSS	Decal Caution Filter Element Change	1	
34*	NSS	Brake Parking	1	
35*	NSS	Decal - Engine Stop	1	
36	70812748	Reflector White	2	
37	70812763	Reflector Red	2	
38	70829411	Tape Retro Reflective	1	
39	70829429	Tape Retro Reflective Red	2	
40	96738810	Hex Head Screw	24	
41	50393529	Support Strap Tie (Hose)	30	
42*	NSS	Decal Signature	1	
43*	NSS	Decal Sd110	2	
44*	NSS	Decal Tyre Pressure	2	
100	70915822	Kit Decal SD110	1	
		Note: * Marked Items are included in kit (70915822)		
		Note:NSS - Not Sold Seperately.		

SUNSHADE INSTALLATION

Dwg 70907688

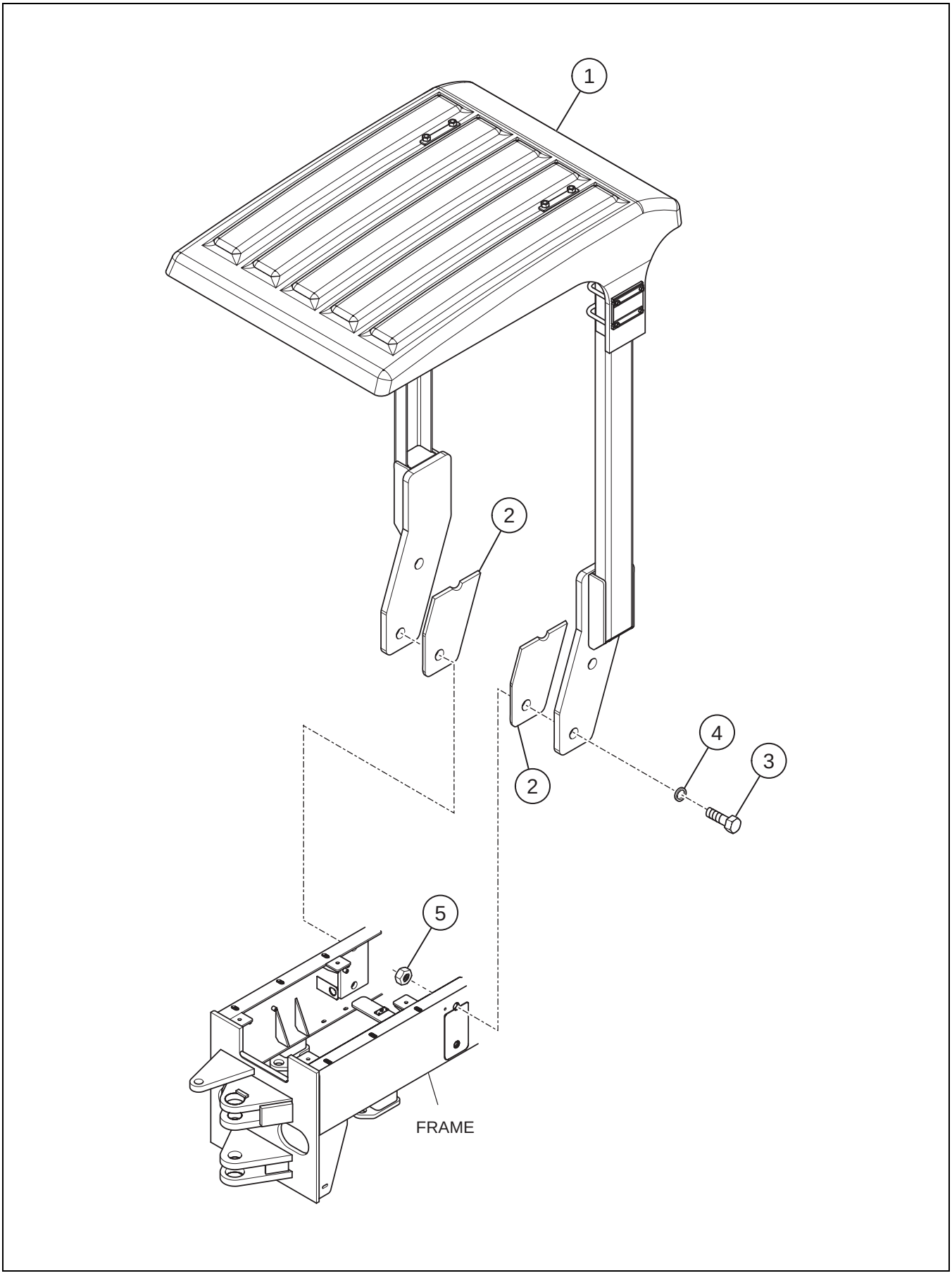

B.O.M 70907688

ITEM	COMM. NO.	DESCRIPTION	QTY	DIMENSIONS/NOTES
1	**70871355**	**Sunshade Assembly**	**1**	**See Page A - 24.**
2	70663539	Shim	2	
3	96714084	Hex Head Bolt	4	
4	96734314	Washer	4	
5	96703707	Hex. Nut	4	

SUNSHADE ASSEMBLY

Dwg 70871355

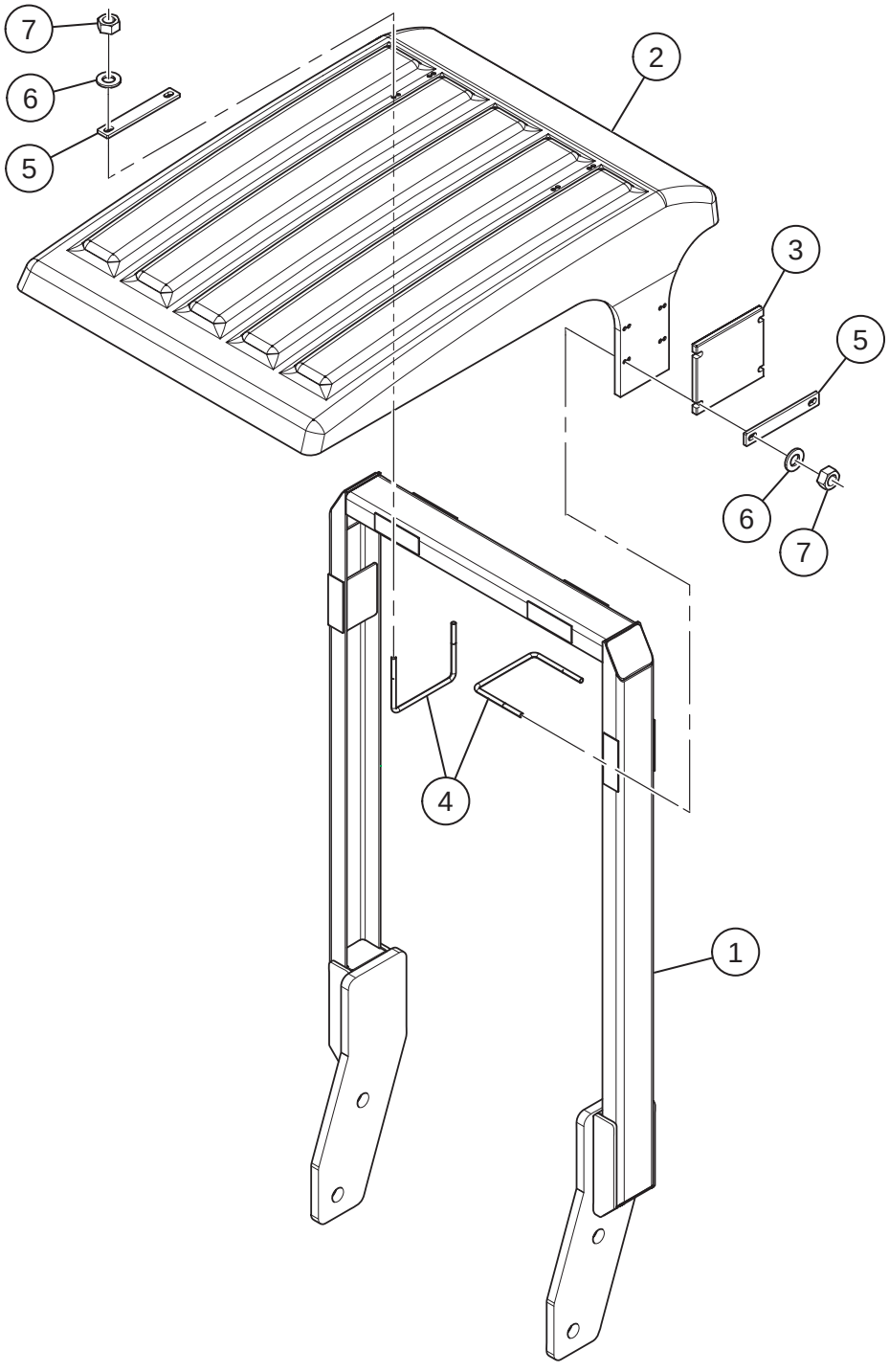

SUNSHADE ASSEMBLY

B.O.M 70871355

ITEM	COMM. NO.	DESCRIPTION	QTY	DIMENSIONS/NOTES
1	70872601	Sunshade	1	
2	70872668	Canopy Sunshade	1	
3	70878061	Support Plate	2	
4	70872585	Sunshade Canopy- U Bolt	6	
5	70872650	Plate Support U Clamp	6	
6	96741038	Flatwasher	12	
7	96705009	Lock Nut	12	

Dwg 70837521

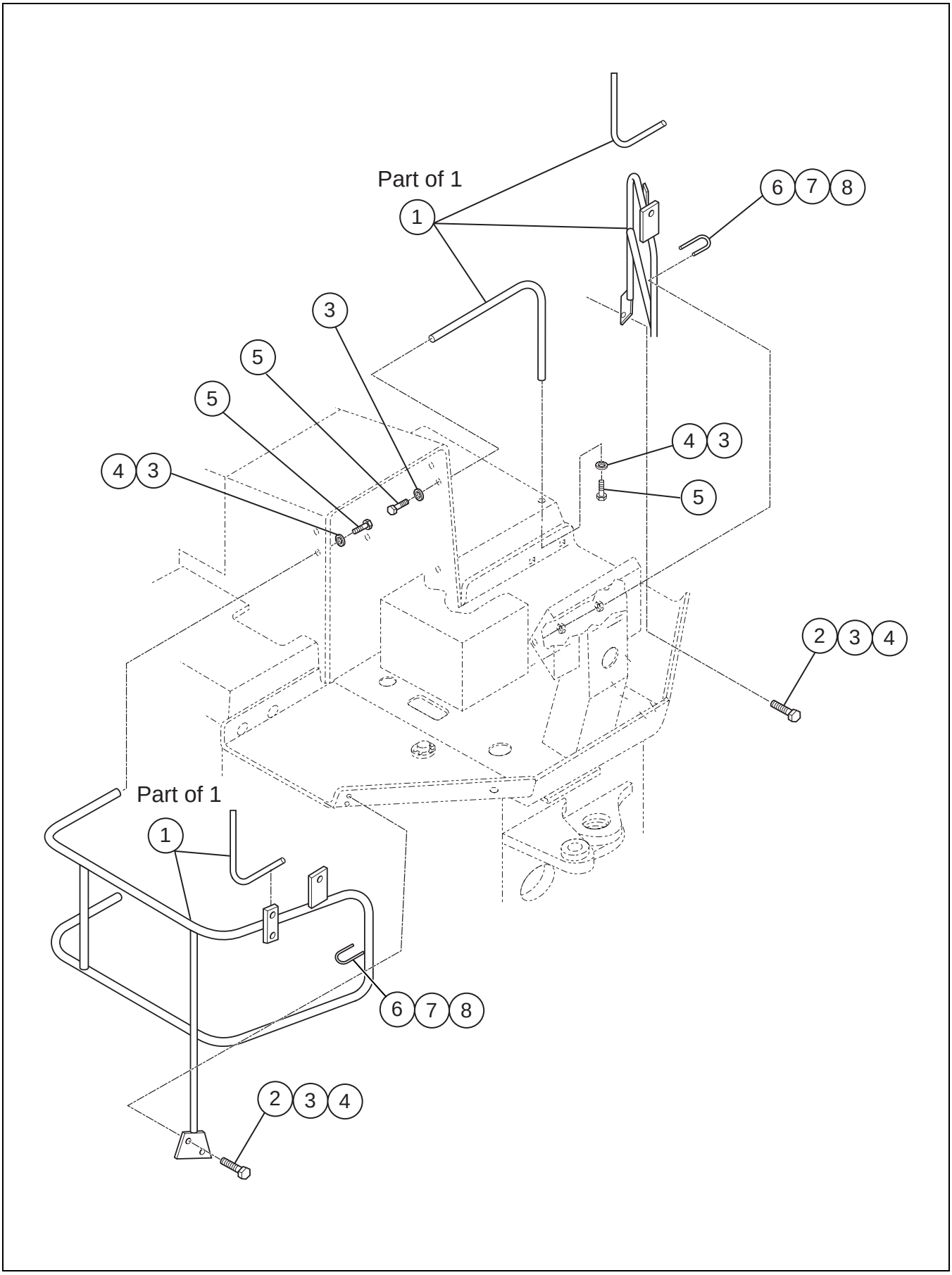

B.O.M 70837521

ITEM	COMM. NO.	DESCRIPTION	QTY	DIMENSIONS/NOTES
1	**70837513**	**Railing Assembly**	**1**	**See Page A - 28.**
2	96718895	Hex Head Screw	4	
3	96701545	Spring Washer	8	
5	96718887	Screw	4	
6	70190053	U Clamp	2	
7	96704812	Hex Nut	4	
8	96741046	Flat Washer	4	

RAILING ASSEMBLY

Dwg 70837513

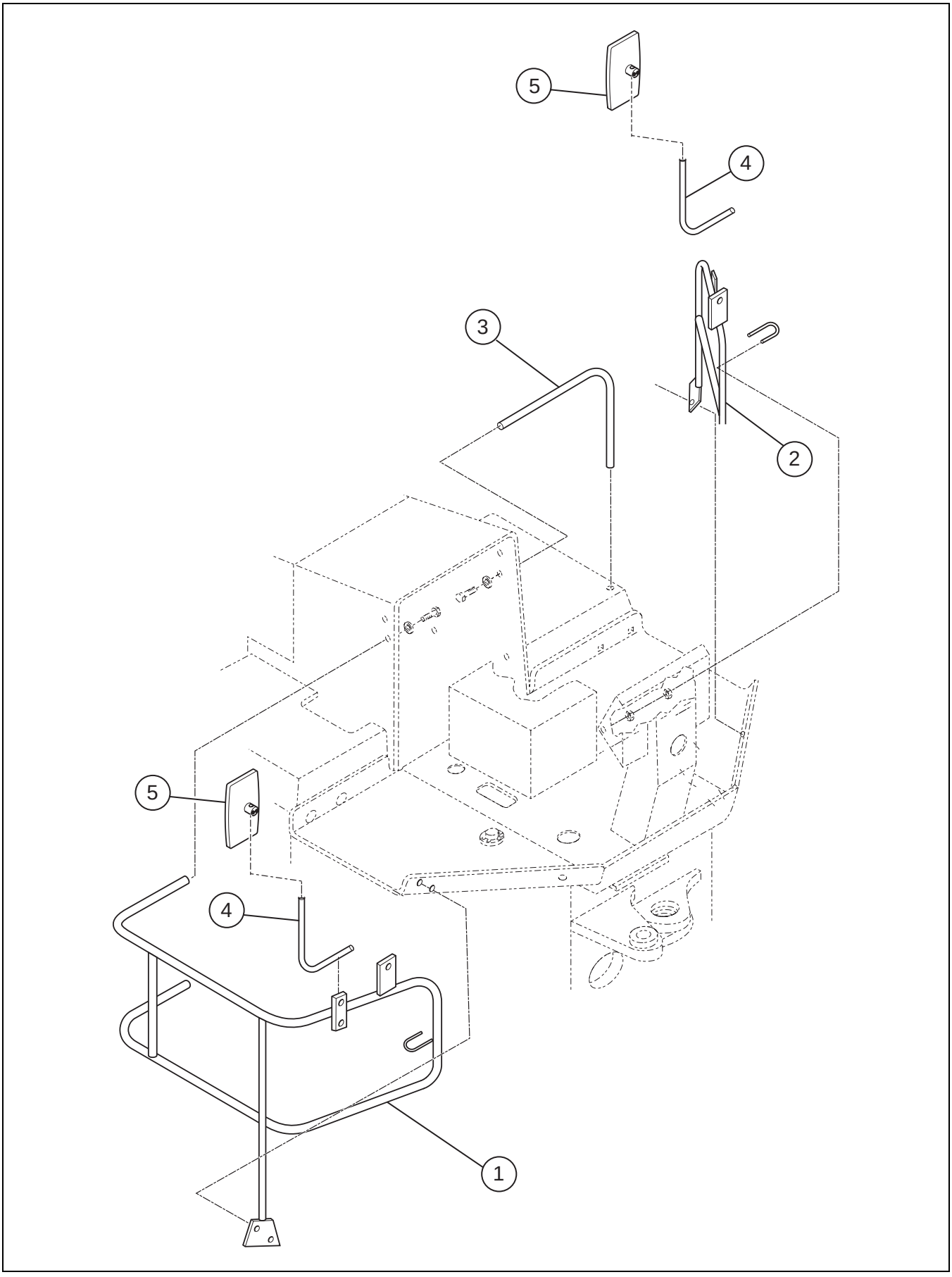

RAILING ASSEMBLY

B.O.M 70837513

ITEM	COMM. NO.	DESCRIPTION	QTY	DIMENSIONS/NOTES
1	70837505	Railing Grab RH	1	
2	70837497	Railing Grab LH	1	
3	70579222	Rail Rhs	1	
4	70829908	Mirror Mounting Rod	2	
5	70818885	Mirror		Not a part of 70837513

Section B - AXLE ASSEMBLY

AXLE INSTALLATION - SD110

Dwg 70635412

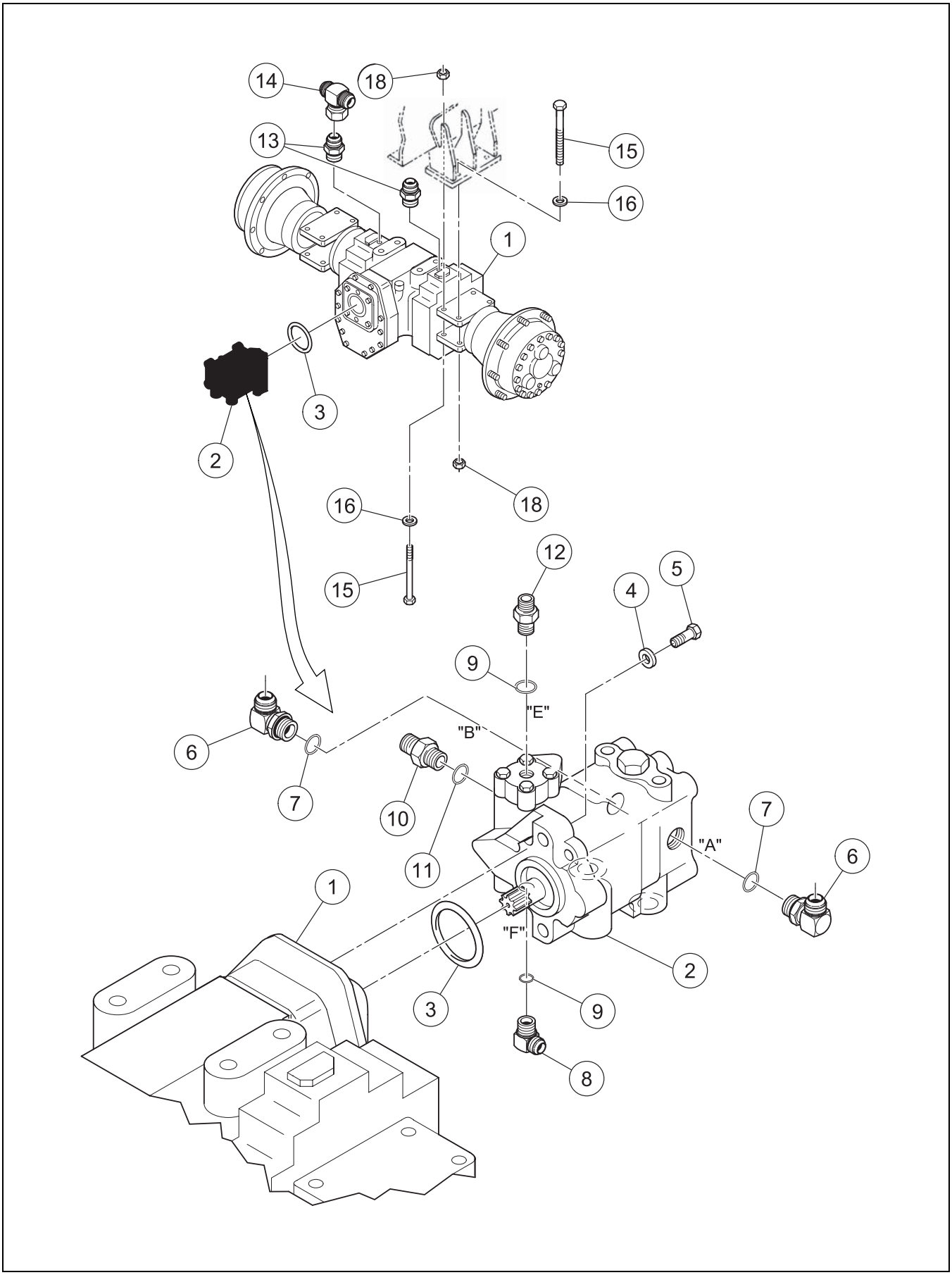

AXLE INSTALLATION - SD110

B.O.M 70635412

ITEM	COMM. NO.	DESCRIPTION	QTY	DIMENSIONS/NOTES
1	43840321	Axle	1	
2	43844430	Motor	1	
3	95988721	O-ring	1	
4	96738596	Flat Hard Washer	2	
5	96708300	Hex Socket Head Screw	2	
6	59923003	Adapter	2	
7	95266433	O Ring	1	
8	95329975	Adapter	1	
9	95266425	O Ring	2	
10	95356960	Connector	1	
11	95303756	O-ring	1	
12	95365078	Connector	1	
13	58954694	Adapter	2	
14	95480117	Adapter	1	
15	96702733	Hex Hd Bolt	8	
16	96701560	Washer	16	
18	96703665	Hex Nut	8	

AXLE INSTALLATION - SD110D & D/F

Dwg 70633383

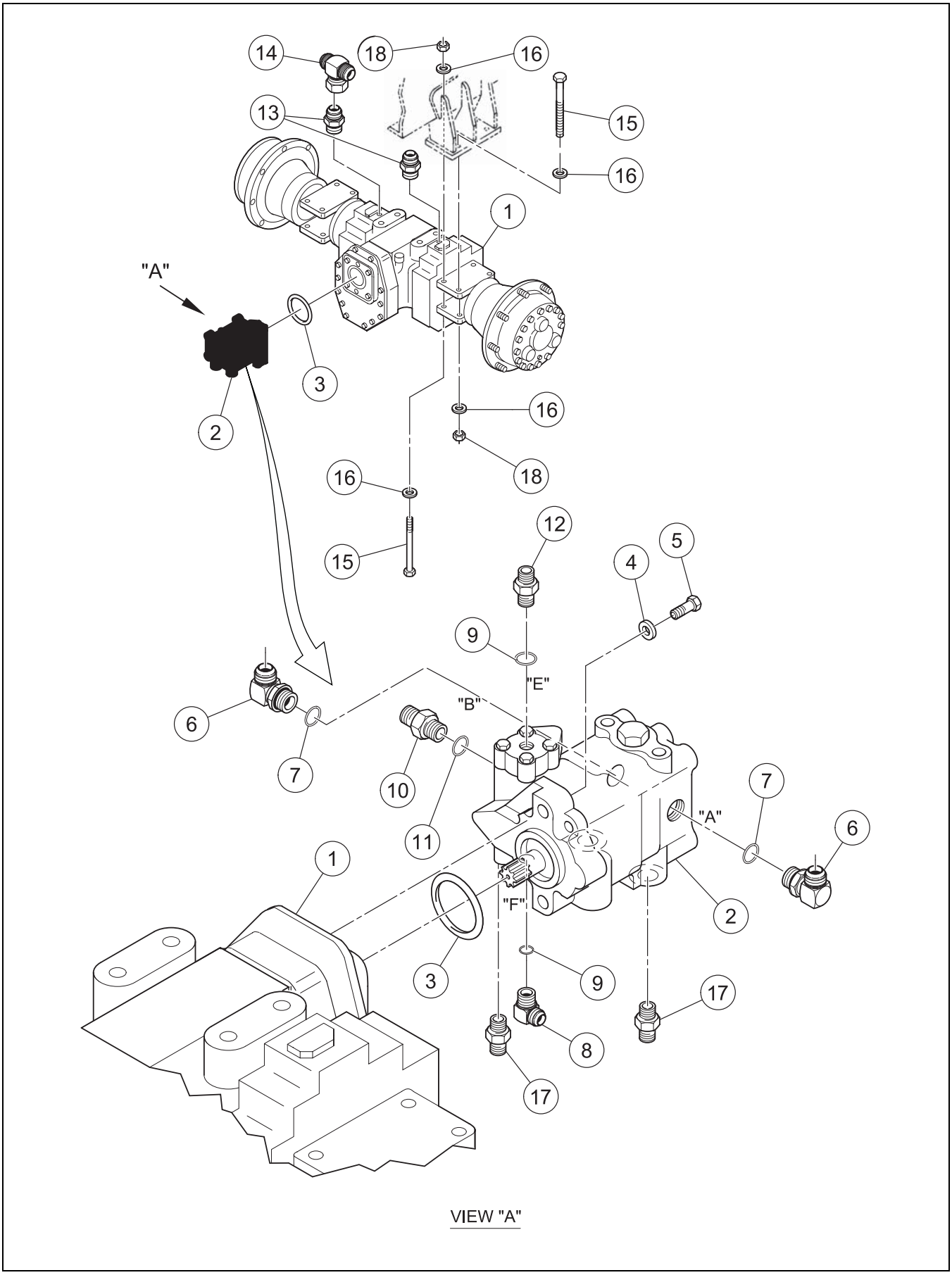

VIEW "A"

B.O.M 70633383

ITEM	COMM. NO.	DESCRIPTION	QTY	DIMENSIONS/NOTES
1	**43840321**	**Axle Assembly**	**1**	**See Page B - 6.**
2	**43844455**	**Axle Drive Motor**	**1**	**See Page B - 18.**
3	95988721	O-Ring	1	
4	96738596	Plain Washer	2	
5	96708300	Hex Head Screw	2	
6	59923003	Adapter	2	
7	95266433	O Ring	1	
8	94080850	Adapter	1	
9	95266425	O Ring	2	
10	94037298	Adapter	1	
11	95303756	O Ring	1	
12	95866687	Adapter	1	
13	94037330	Adapter	2	
14	97114250	Adapter	1	
15	96702733	Hex Head Bolt	8	
16	70508437	Hard Flatwasher	16	
17	59922591	Adapter	2	
18	96703665	Hex Nut	8	

Dwg 43840321

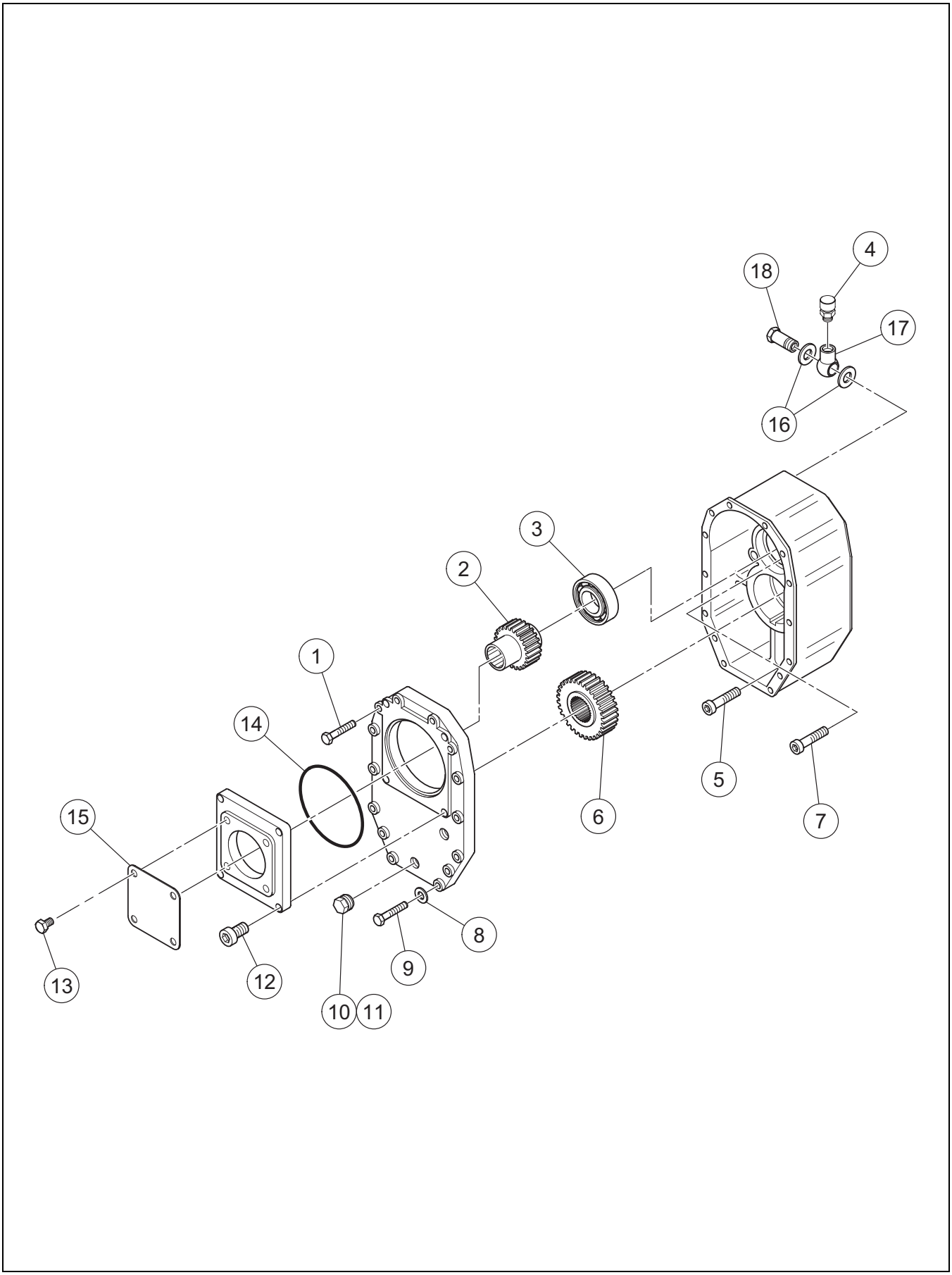

B.O.M 43840321

ITEM	COMM. NO.	DESCRIPTION	QTY	DIMENSIONS/NOTES
1	59218172	Cylinder Bolt	4	
2	13268362	Gear	1	
3	59218198	Ball Bearing	1	
4	59904532	Vent	1	
5	59218214	Cylinder Bolt	10	
6	13268370	Gear	1	
7	59218230	Bolt,cylinder	1	
8	59790600	Ring	10	
9	59218248	Hex Bolt	10	
10	59078899	Magnet Plug	1	
11	10486116	Plug	1	
12	59218255	Cylinder Bolt	4	
13	59218263	Hex Bolt	4	
14	59243030	O-ring	1	
15	13268388	Sheet	1	
16	13228762	Washer	2	
17	13228770	Adapter	1	
18	13228788	Adapter	1	

Dwg 43840321

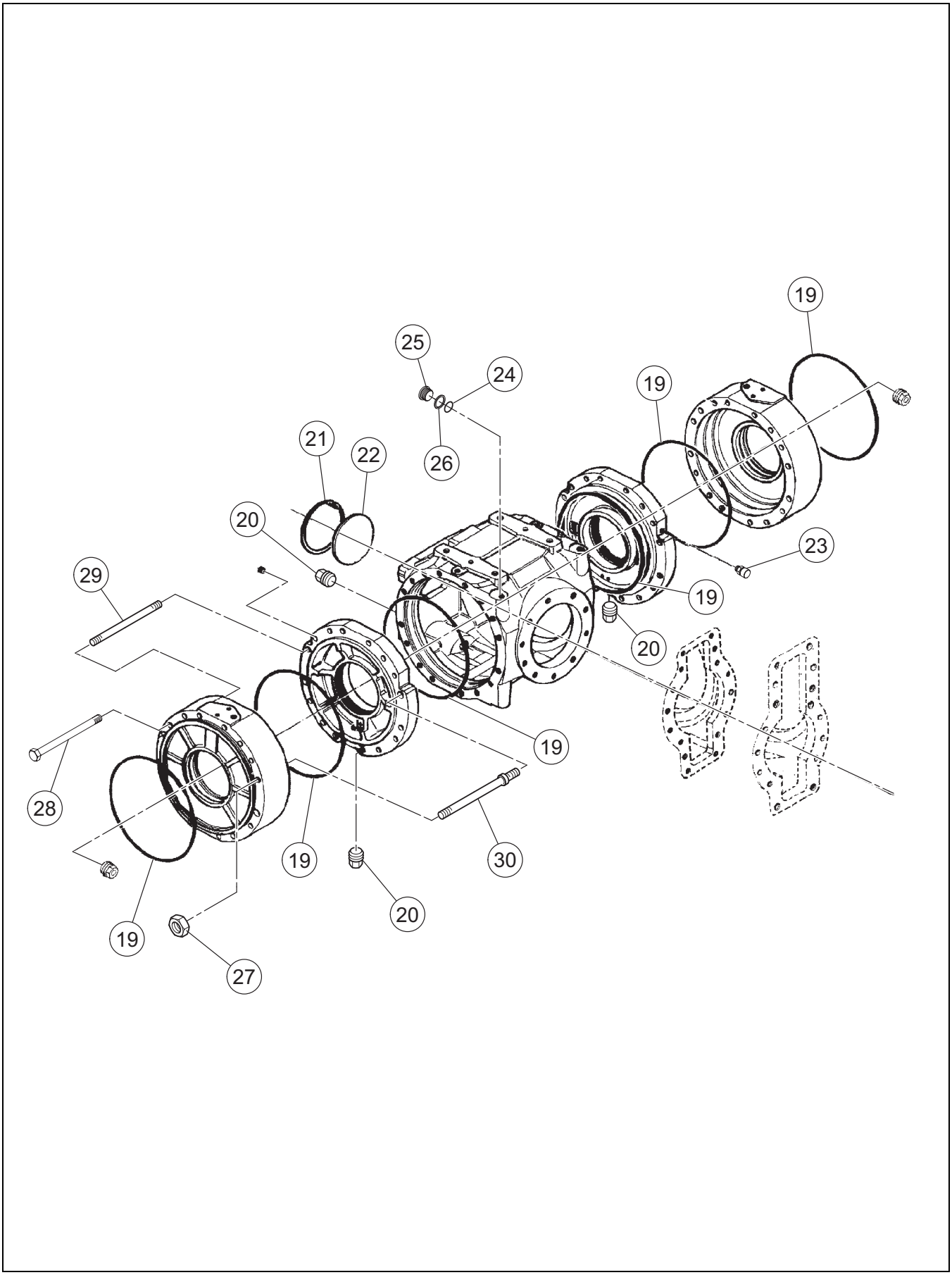

B.O.M 43840321

ITEM	COMM. NO.	DESCRIPTION	QTY	DIMENSIONS/NOTES
19	58974155	O-ring	6	
20	59078899	Magnet Plug	3	
21	58916578	Snap Ring	1	
22	59251009	Plug	1	
23	59793588	Vent	1	
24	58916610	O-ring	1	
25	58916545	Plug	1	
26	58916537	Washer Seal	1	
27	13104161	Nut	12	
28	59218313	Bolt	20	
29	59218305	Stud	8	
30	59218297	Stud	4	

Dwg 43840321

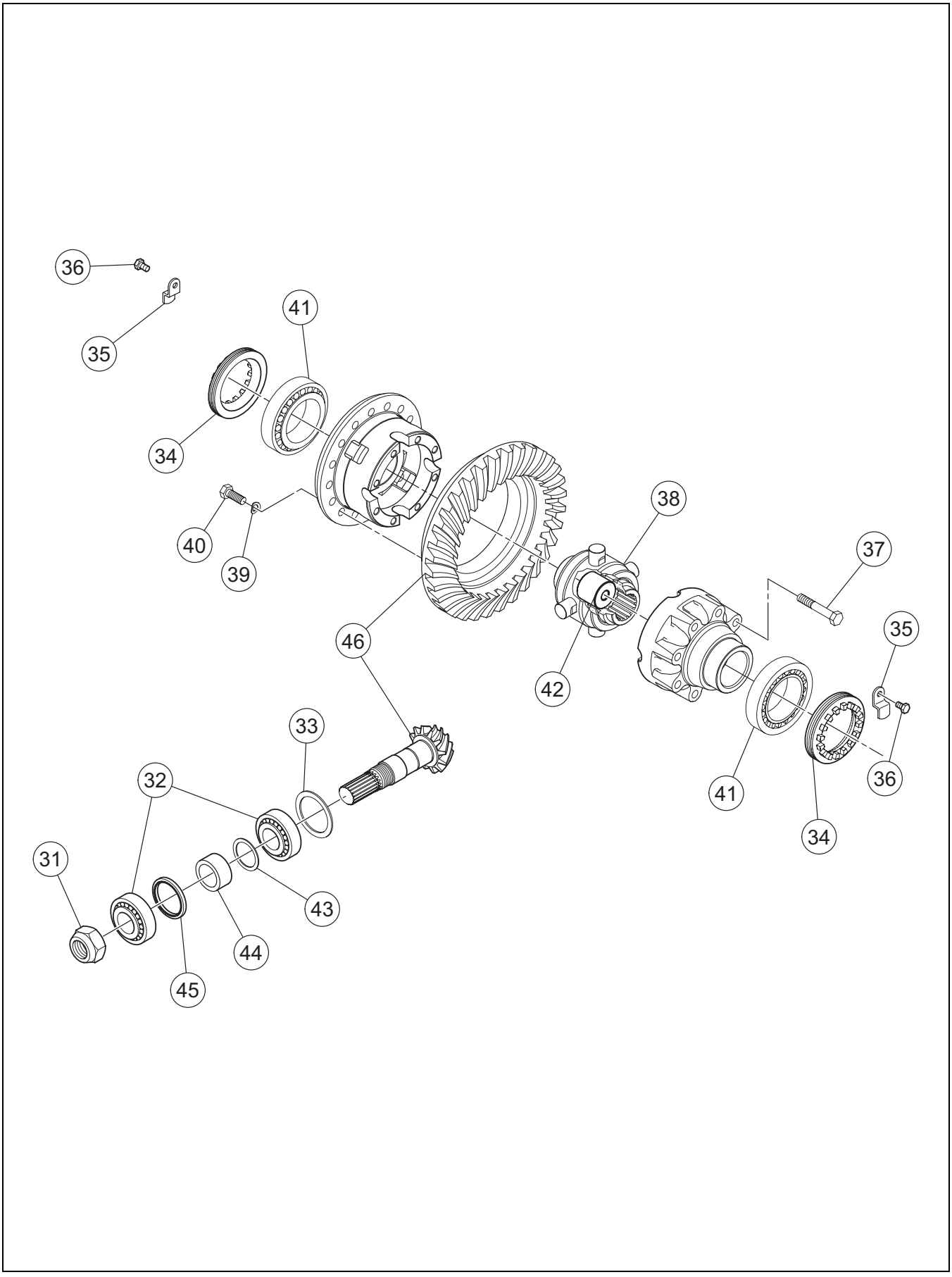

B.O.M 43840321

ITEM	COMM. NO.	DESCRIPTION	QTY	DIMENSIONS/NOTES
31	59218321	Ring Nut	1	
32	58917436	Tapered Rolling bearing	2	
33	59791483	Shim	1	
34	54632773	Ring Nut	2	
35	59218339	Locking Plate	2	
36	59793752	Bolt	2	
37	58917295	Hex Bolt	8	
38	58917303	No-spin Differential	1	
39	59769356	Spring washer	1	
40	90502915	Bolt	16	
41	59778332	Bearing	2	
42	58917345	Spacer	1	
43	54632898	Shim	1	.40mm
44	59218388	Spacer	1	
45	59218396	Seal	1	
46	59218404	Bevel Gear Set	1	

Dwg 43840321

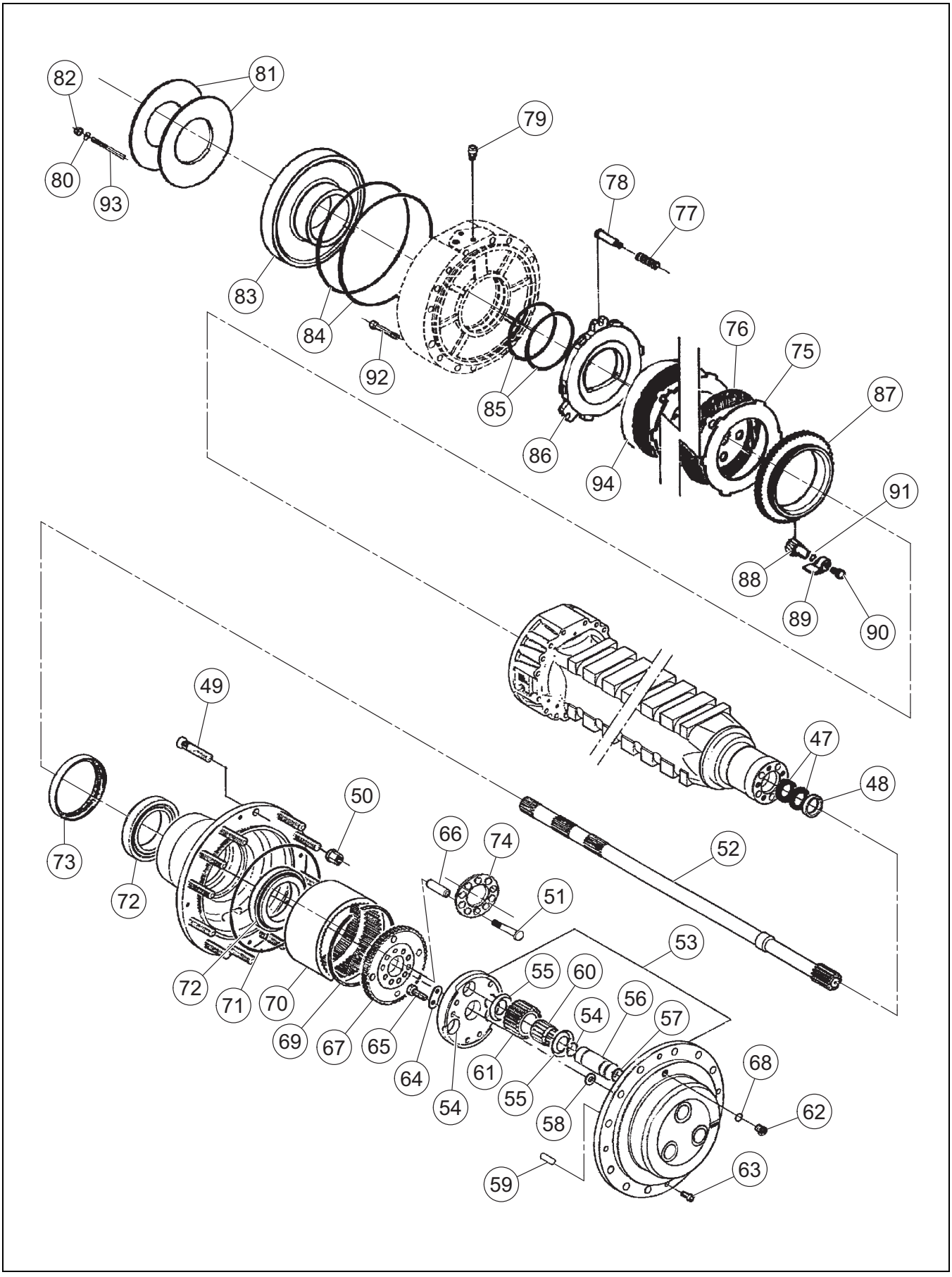

B.O.M 43840321

ITEM	COMM. NO.	DESCRIPTION	QTY	DIMENSIONS/NOTES
47	58916685	Seal	2	
48	58916693	Centering Spring	2	
49	54633185	Stud,wheel	20	
50	58916727	Wheel Nut	20	
51	59079772	Bolt	20	
52	59218420	Half Shaft	2	
53	59218438	Planet Gear Carrier	2	
54	58916750	Snap Ring	12	
55	58916768	Friction Washer	12	
56	58916776	Pin	6	
57	58916784	O-ring	6	
58	59917682	Spacer	2	
59	58916818	Dowel	6	
60	58916826	Needle Bearing	6	
61	58916834	Planet Gear	6	
62	59794115	Plug	2	
63	58804337	Cylinder Bolt	4	
64	58916842	Locking Plate	6	
65	58916859	Hex Bolt	12	
66	13228713	Reduction Bushing	20	
67	59218446	Ring Gear Support	2	
68	59794123	Washer	2	
69	58916891	Snap Ring	2	
70	58916909	Ring Gear	2	
71	58974155	O-ring	2	
72	58916925	Tapered Roll	4	
73	58916933	Seal	2	
74	13228705	Locking Plate	2	
75	59803635	Brake Disc	10	
76	13493986	Brake Disc	10	
77	58917055	Spring	6	
78	58917063	Steering Adj	6	
79	59218453	Plug	4	
80	90502816	Washer	4	
81	59218461	Spring	4	
82	58917014	Nut	4	
83	59218487	Piston	2	
84	59218495	O-ring	4	
85	59778266	O-ring	4	
86	59218503	Intermediate Brake Disc	2	
87	59251074	Ring	2	
88	58917113	Pinion	2	
89	58917105	Locking Plat	2	
90	58917097	Hex Bolt	2	
91	58917147	O-ring	2	
92	58804337	Cylinder Bolt	4	

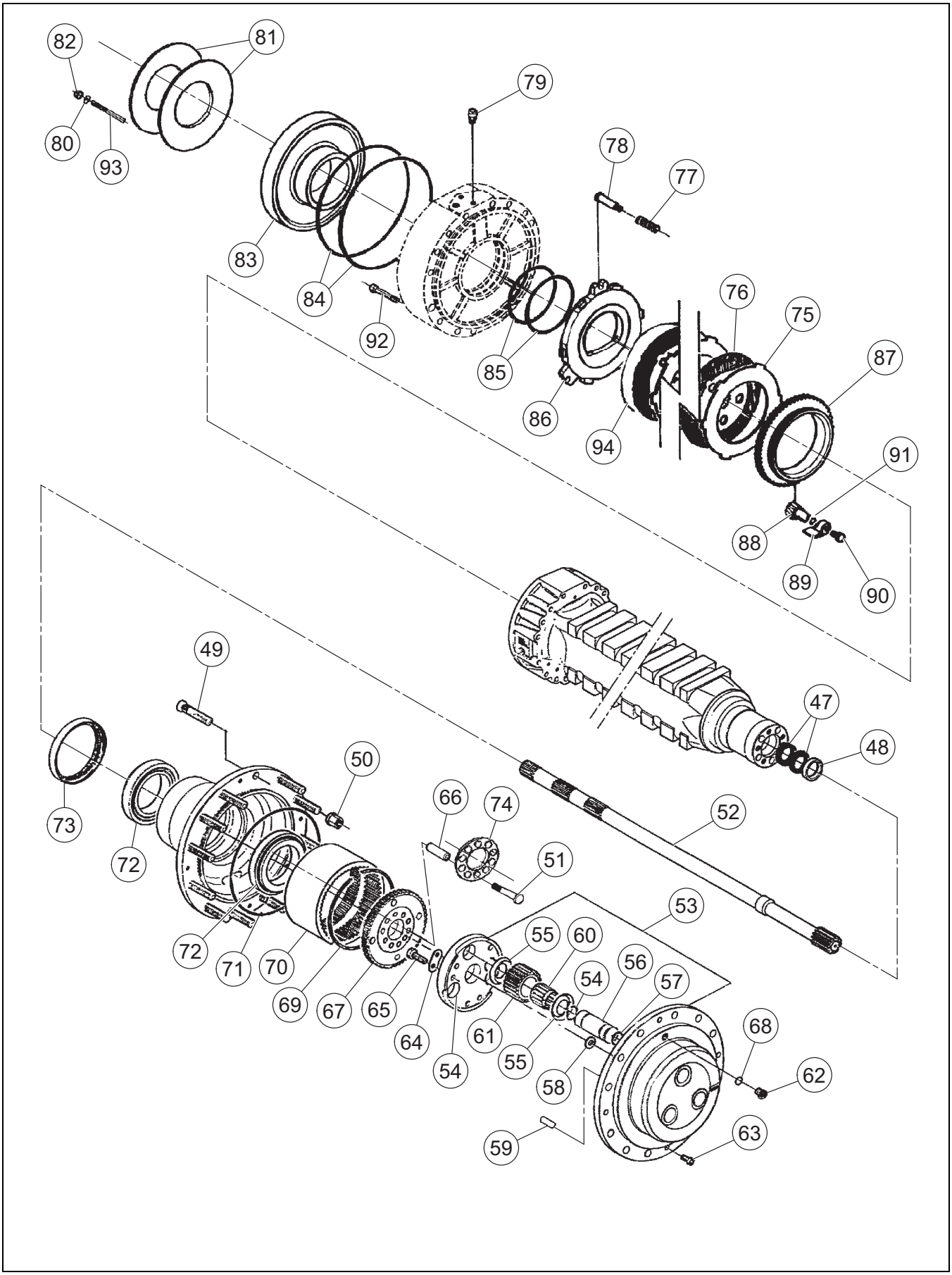
82
81
80
93
79
78
77
83
84
92
85
86
94
76
75
87
91
88
89
90
49
47
48
50
73
72
66
74
52
51
72
71
70
69
67
65
64
54
53
55
60
56
54
57
61
55
58
68
62
59
63

ITEM	COMM. NO.	DESCRIPTION	QTY	DIMENSIONS/NOTES
93	59218511	Bolt	4	
94	59218529	Spacer	2	

Dwg 43844430

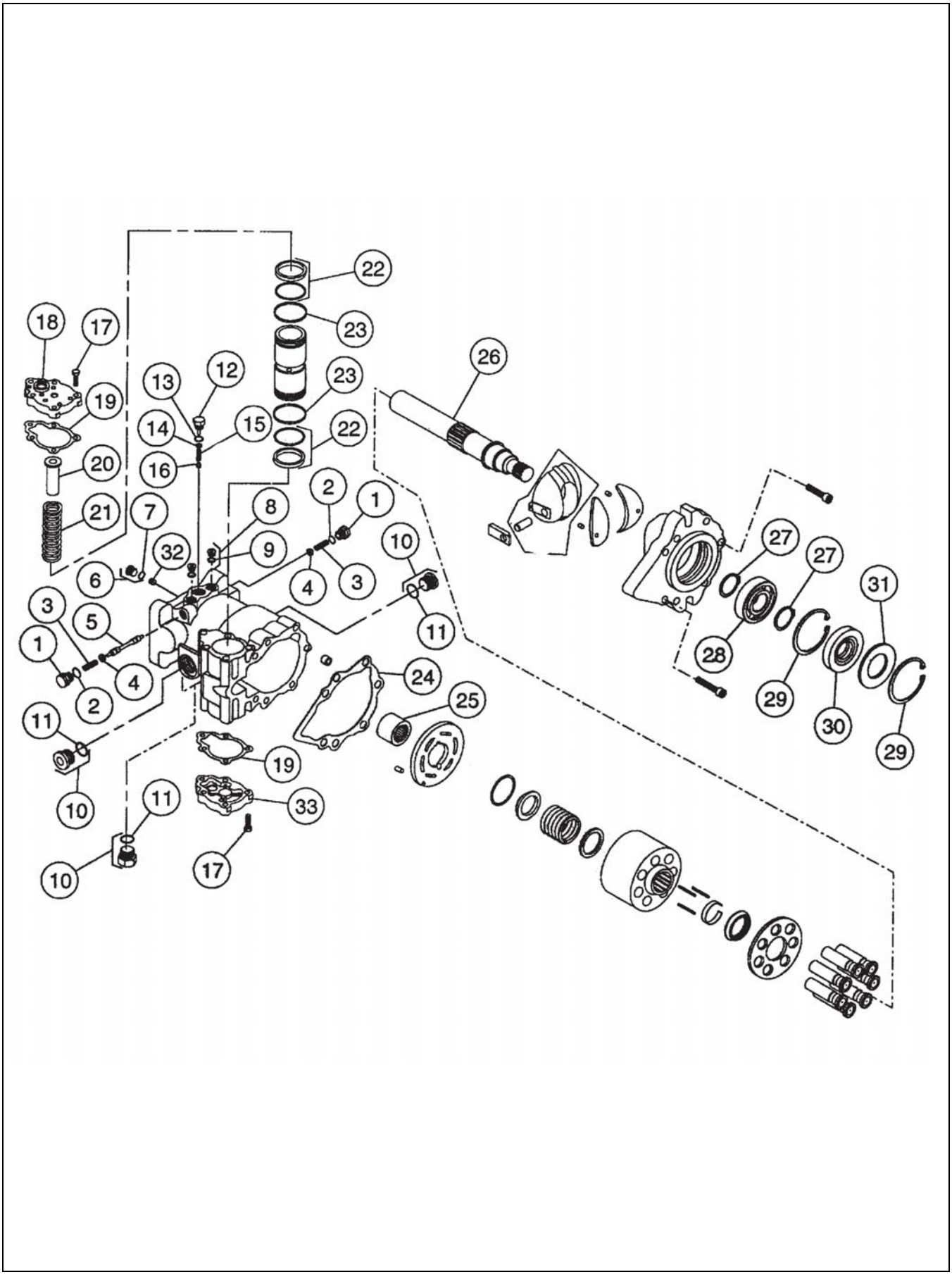

AXLE DRIVE MOTOR - SD110

B.O.M 43844430

ITEM	COMM. NO.	DESCRIPTION	QTY	DIMENSIONS/NOTES
1	13263846	Plug	2	
2	58884863	O - Ring	2	
3	13263850	Spring	2	
4	58799750	Spring Guide	2	
5	58799743	Shuttle Spool	1	
6	59933622	Plug	1	
7	58881863	O Ring	1	
8	59359836	Plug	2	
9	59888214	O Ring	2	
10	59949461	Plug	2	
11	59986463	O Ring	2	
12	59146043	Plug Assembly	1	
13	59360610	O Ring	1	
14	59121426	Shim Kit	1	
15	12363668	Spring	1	
16	59051656	Charge Relief Poppet	1	
17	58785346	Screw	10	
18	59888271	Cover	2	
19	59938373	Server Gasket	1	
20	13203884	Stop	1	
21	59336818	Spring	1	
22	59972877	Piston O Ring Kit	1	
23	59422907	Ring	2	
24	59949511	Gasket	1	
25	59785303	Bearing	1	
26	59336842	Shaft	1	
27	59785519	Ring	2	
28	95200648	Ball Bearing	1	
29	59785493	Ring	2	
30	59941203	Seal	1	
31	59245209	Washer	1	
32	13263876	Orifice Plug	1	
33	59888271	Cover	1	

Dwg 43844455

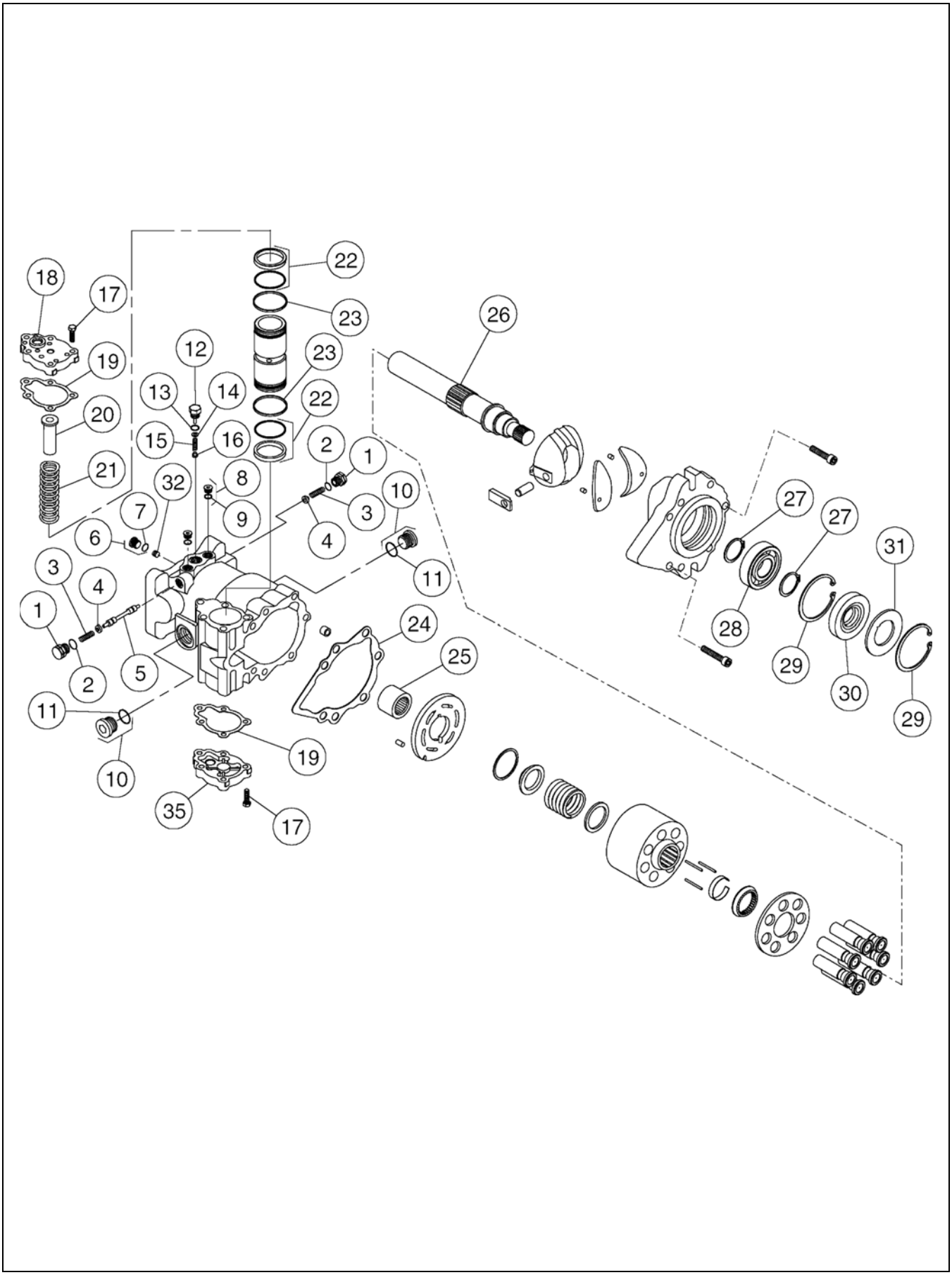

B.O.M 43844455

ITEM	COMM. NO.	DESCRIPTION	QTY	DIMENSIONS/NOTES
1	13263846	Plug	2	
2	58881863	O-ring	2	
3	13263850	Spring	2	
4	58799750	Spring Guide	2	
5	58799743	Shuttle Spool	1	
6	59933622	Plug	1	
7	58881863	O-ring	1	
8	59359836	Plug	2	
9	59888214	O-ring	2	
10	59949461	Plug	2	
11	59986463	O-ring	2	
12	59146043	Plug Assembly	2	
13	59360610	O-ring	1	
14	59121426	Shim Kit	1	
15	12363868	Spring	1	
16	59051656	Charge Relief Poppet	1	
17	58785346	Screw	10	
18	59888271	Cover	2	
19	59938373	Gasket	1	
20	59336859	Stop	1	
21	59336818	Spring	1	
22	59972877	Piston O-ring Kit	1	
23	59422907	Ring	2	
24	59949511	Gasket	1	
25	59785303	Bearing	1	
26	59336842	Shaft	1	
27	59785519	Ring	1	
28	95200648	Ball Bearing	1	
29	59785493	Ring	1	
30	59941203	Seal	1	
31	59245209	Washer	1	
32	13263876	Orifice Plug	1	
35	59888271	Cover	1	

Dwg 70829965

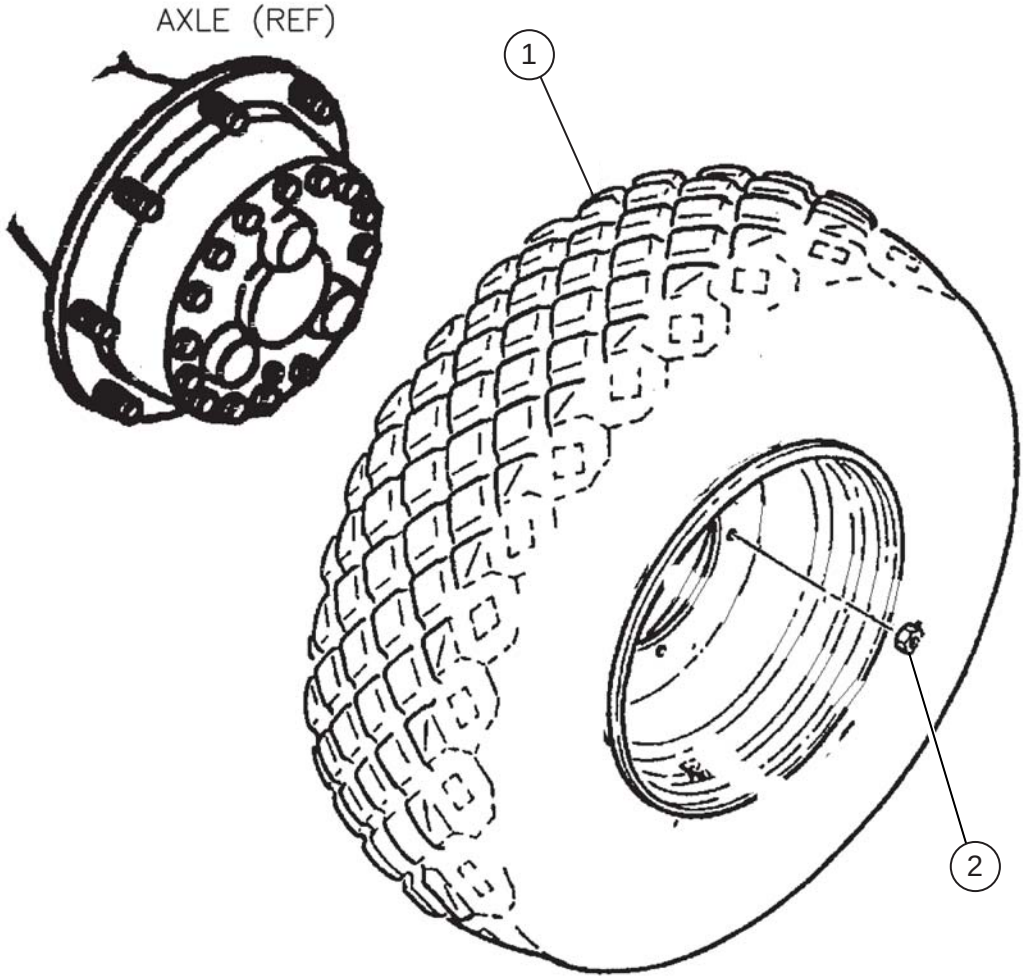

B.O.M 70829965

ITEM	COMM. NO.	DESCRIPTION	QTY	DIMENSIONS/NOTES
1	**70635305**	**Tyre And Wheel Assembly**	**1**	**See Page B - 22.**
2	59163758	Wheel Nut NOTE: For Assembly 70829965, Quantity Is 2 Per Machine.	10	

TYRE AND WHEEL ASSEMBLY

Dwg 70635305

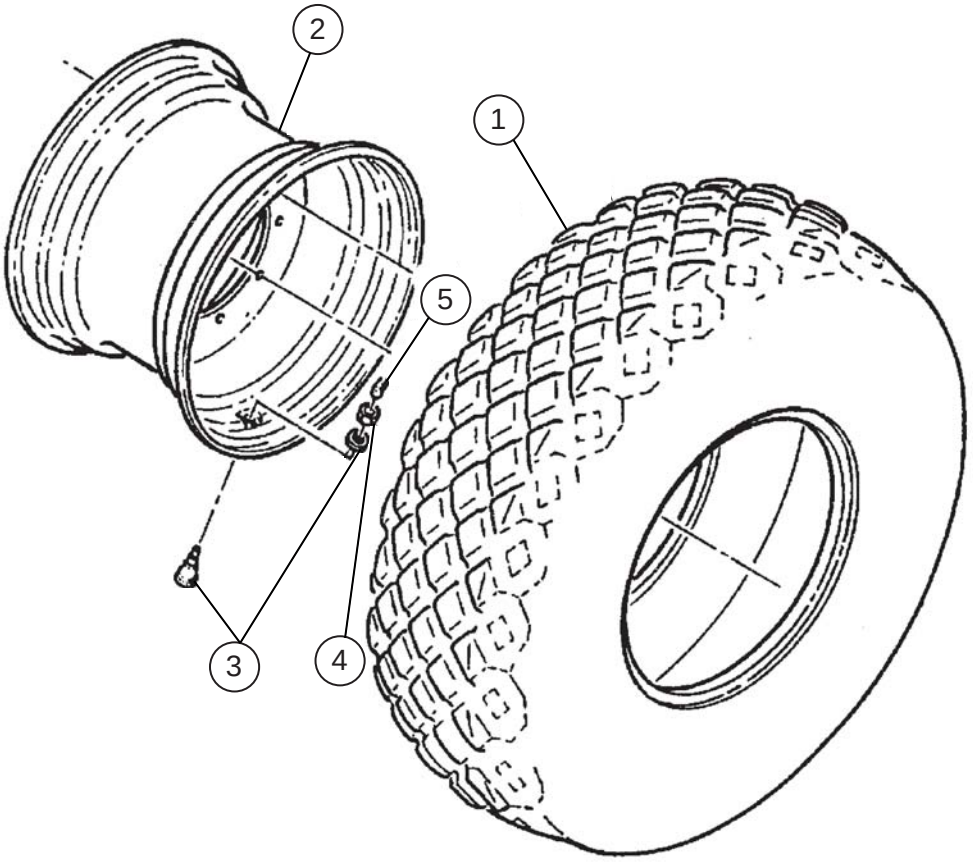

B.O.M 70635305

ITEM	COMM. NO.	DESCRIPTION	QTY	DIMENSIONS/NOTES
1	70916663	Tyre	1	
2	59166595	Wheel	1	
3	59524447	Valve Air	1	
4	59929711	Cap Valve Tyre	1	
5	54521216	Plug Tyre-rim	1	
6		Water	500 Litres	Not Shown
		NOTE : Ballast Tyre With 500 Litres Of Water Torque Item (5) To 405 Lb-ft		

Section C - ENGINE INSTALLATION

Dwg 70837539

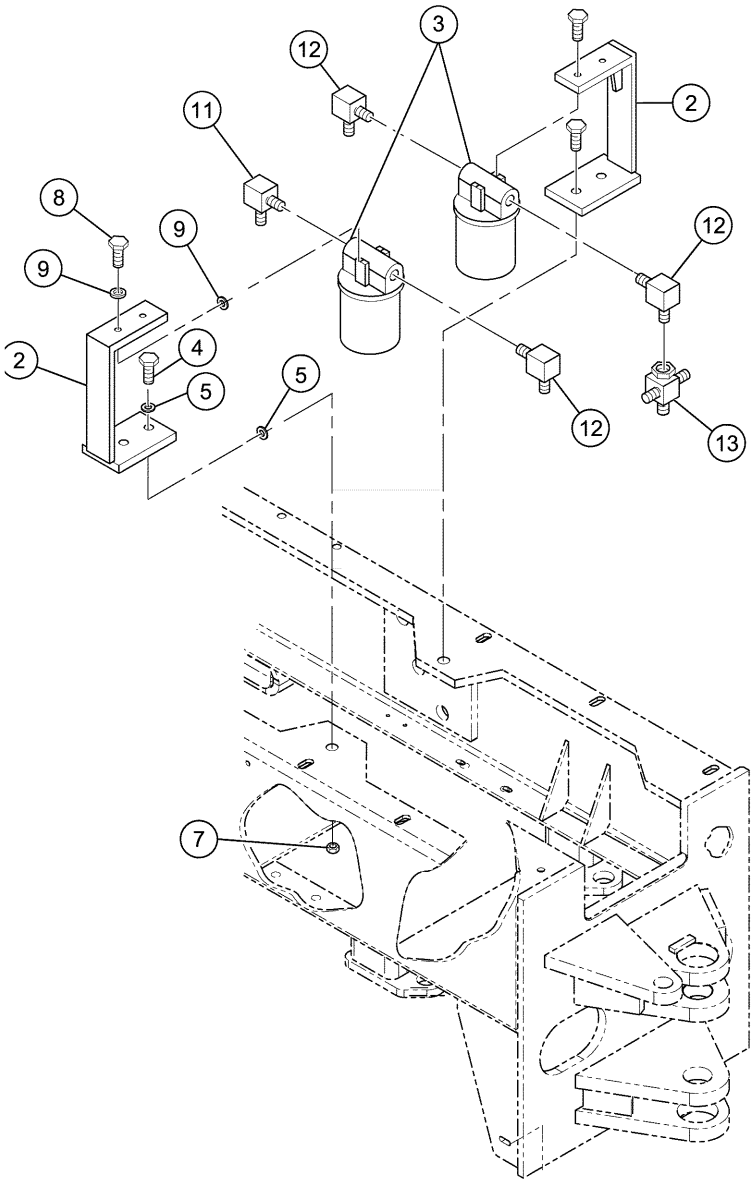

B.O.M 70837539

ITEM	COMM. NO.	DESCRIPTION	QTY	DIMENSIONS/NOTES
2	70689260	Hydraulic Filter Mounting Bracket	2	
3	43911650	Suction Filter	2	
-	43921394	Hydraulic Filter Element	1	
4	96718911	Hex Hd Screw	4	
5	96719604	Plain Washer	8	
7	96719174	Hex. Nut	4	
8	95920443	Hex Hd Screw	4	
9	95922225	Plain Washer	8	
11	95357604	Adapter	1	
12	95376133	Adapter	3	
13	70633854	Cross Special	1	

Dwg 70837539

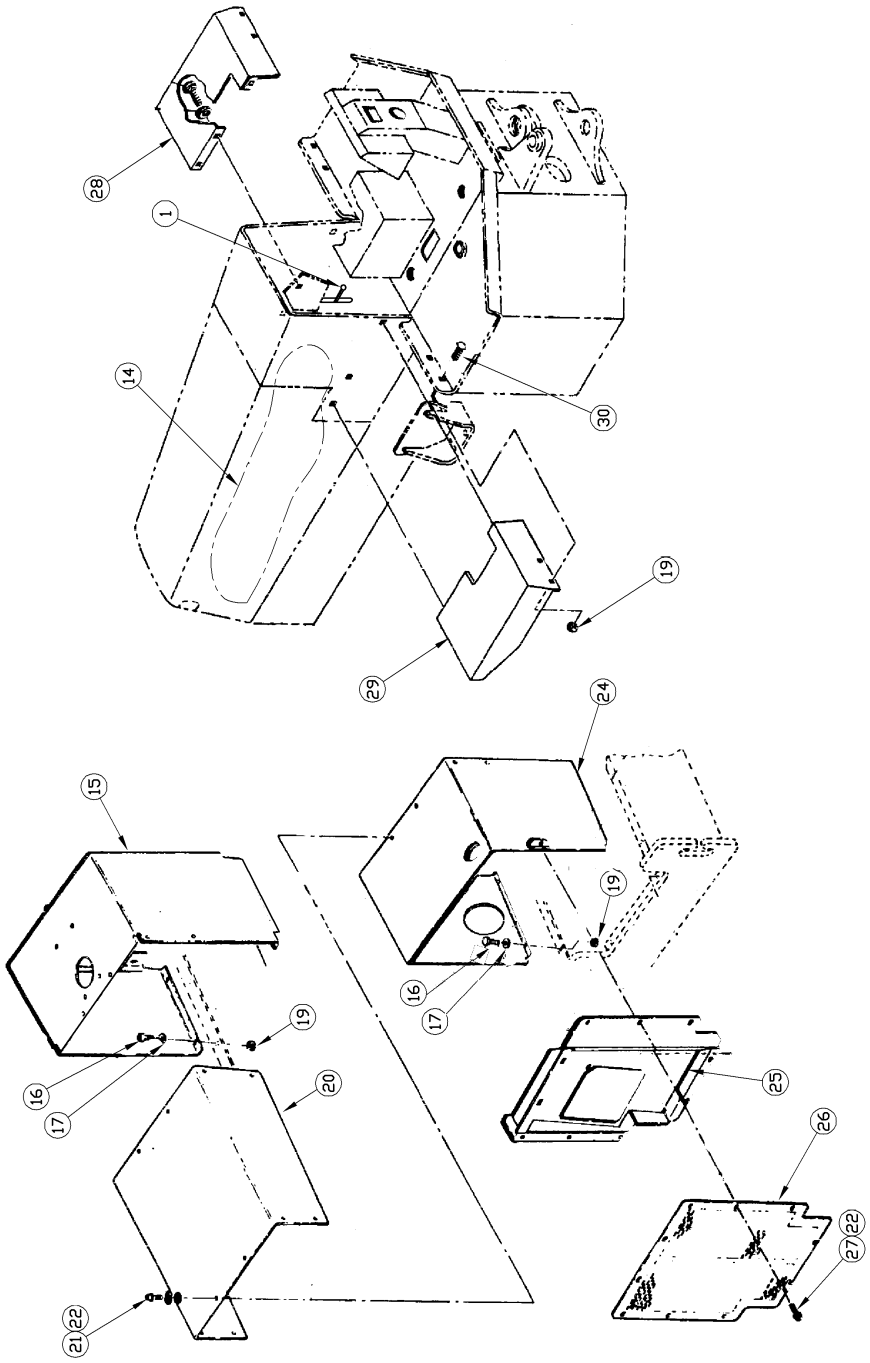

B.O.M 70837539

ITEM	COMM. NO.	DESCRIPTION	QTY	DIMENSIONS/NOTES
1	**70146105**	**Throttle Control Installation**	**1**	**See Page C - 48.**
14	**70146113**	**Air Cleaner Installation**	**1**	**See Page C - 50.**
15	70613153	Hood & Fendor Support Assembly	1	
16	96718911	Hex Hd Screw	8	
17	97116537	Spacer	16	
19	96719174	Hex. Nut	16	
20	70613104	Hood Cowling	1	
21	96713326	Hex Head Screw	12	
22	96719646	Plain Washer	12	
24	70837489	Cowling	1	
25	70075320	Air Duct	1	
26	70076609	Grille	1	
27	96713342	Hex Hd Screw	10	
28	70567904	Fender L.h	1	
29	70567896	Fender R.h	1	
30	96718887	Screw	8	

Dwg 70574538

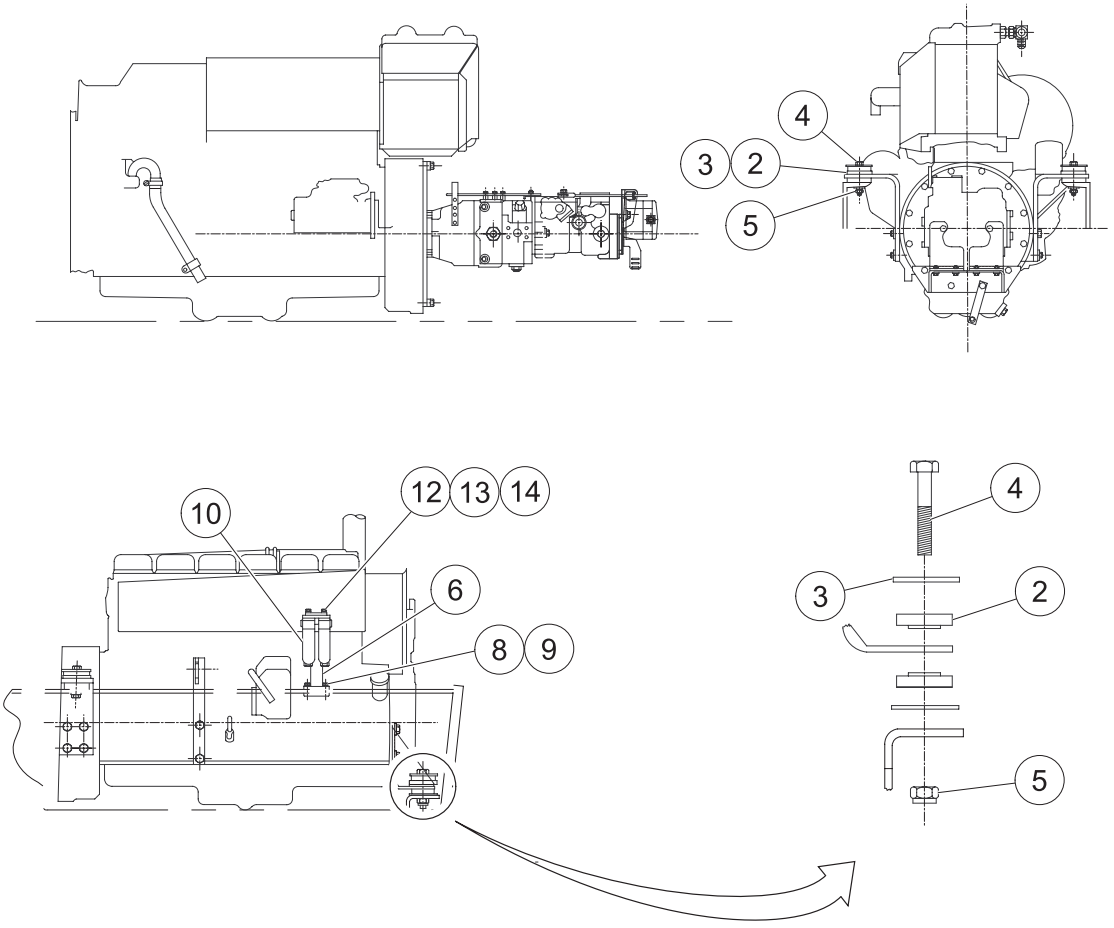

ENGINE INSTALLATION ASSEMBLY

B.O.M 70574538

ITEM	COMM. NO.	DESCRIPTION	QTY	DIMENSIONS/NOTES
2	59546812	Mount Shock	8	
3	94071909	Plate Washer	8	
4	70154612	Hex Head Bolt	4	
5	10641355	Hex Nylock Nut	4	
6	70087721	Fuel Filter Mounting Bracket	1	
8	96719604	Plain Washer	2	
9	94042256	Hex Head Bolt	2	
10*	70098637	Fuel Filter	1	
-	70082177	Primary Fuel Filter Element	1	
-	70082185	Fuel Filter Element	1	
12	96719604	Washer Plain	2	
13	96720206	Hex Head Bolt	2	
14	96719174	Hex. Nut	2	
		* Part Of Engine.		

Dwg 70914981

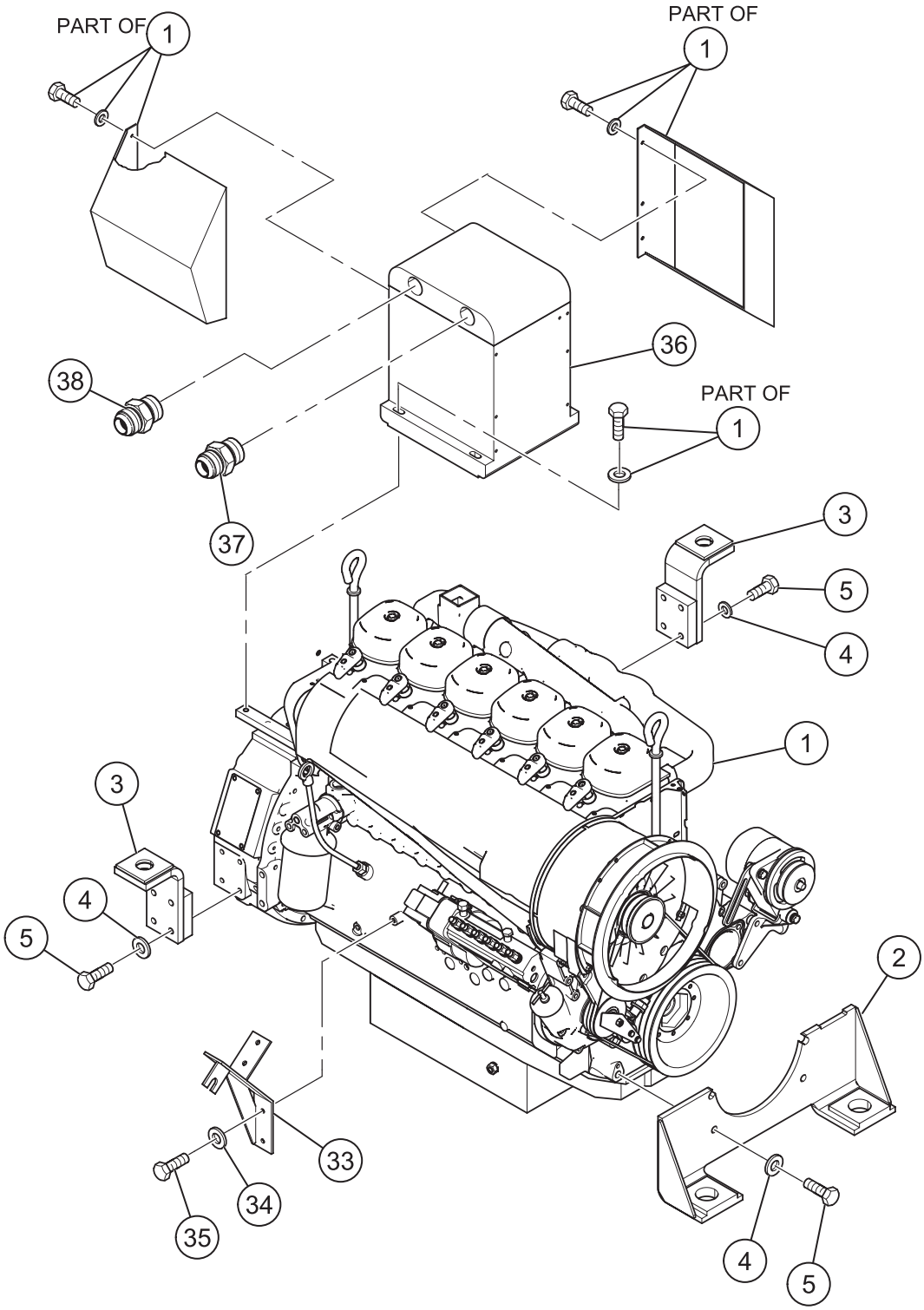

B.O.M 70914981

ITEM	COMM. NO.	DESCRIPTION	QTY	DIMENSIONS/NOTES
1	70913058	Engine	1	
-	70098645	Engine lube oil filter	1	
-	70149125	Lube oil filter element	1	
2	70138615	Front Engine Mounting	1	
3	70072723	Rear Engine Mounting	2	
4	96738596	Flat Hard Washer	8	
5	96720750	Hex Hd Bolt	8	
16	96702329	Hex Hd Screw	4	
33	70076955	hrottle Mounting Bracket	1	
34	96719745	Plain Washer	2	
35	96718820	Hex. Head Screw	2	
36	70075718	Hydraulic Oil Cooler	1	
37	70074380	Adapter	1	
38	70577432	Adapter	1	
39	94024320	Bonded Seal	2	

Dwg 70914981

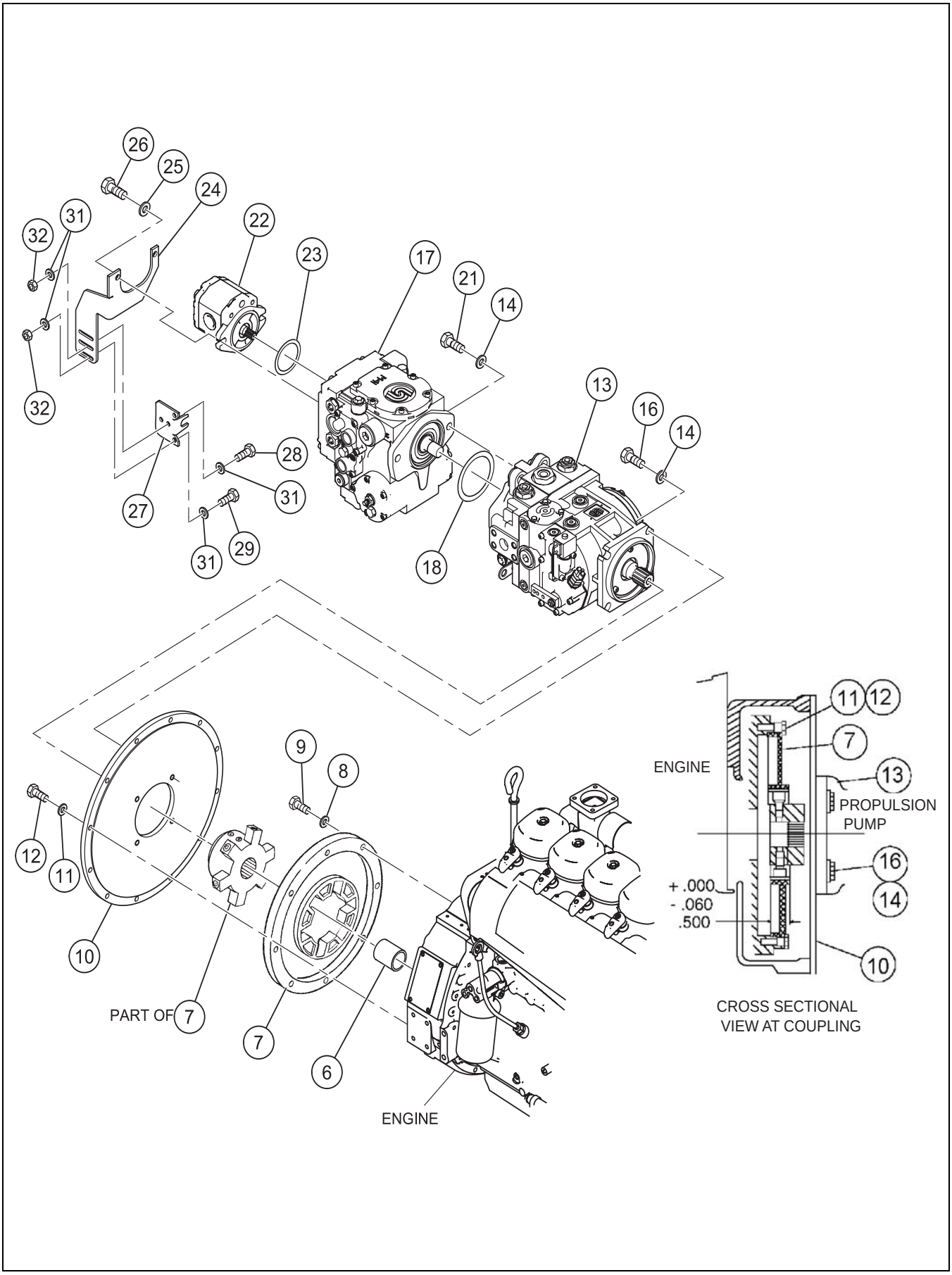

B.O.M 70914981

ITEM	COMM. NO.	DESCRIPTION	QTY	DIMENSIONS/NOTES
7	59286344	Coupling	1	
8	96741046	Flat Washer	8	
9	96713342	Hex Hd Screw	8	
10	58966086	Pump Mounting Plate	1	
11	96741046	Flat Washer	12	
12	96713326	Hex Head Screw	12	
13	**70635396**	**Propulsion Pump Assembly**	**1**	**See Page C - 12.**
14	70155700	Hard Washer	6	
16	96702329	Hex Hd Screw	4	
17	**70829841**	**Vibration Pump Assembly**	**1**	**See Page C - 16.**
18	95988804	O-ring	1	
21	95309829	Ferry Cap Screw	2	
22	**70829858**	**Steering Pump Assembly**	**1**	**See Page C - 18.**
23	95988796	O-ring	1	
24	70635354	Vibration Cable Bracket	1	
25	59731380	Hard Washer	2	
26	95921268	Hex Socket Head Screw Cap	2	
27	70095674	Mounting Cable Clamp	2	
28	96714241	Hex Hd Screw	2	
29	96714266	Hex Hd Screw	4	
31	96719729	Plain Washer	10	
32	96712781	Hex Nut	10	
33	70076955	Mounting Throttle Bracket	1	
34	96719745	Plain Washer	2	

PROPULSION PUMP ASSEMBLY - SD110

Dwg 70635396

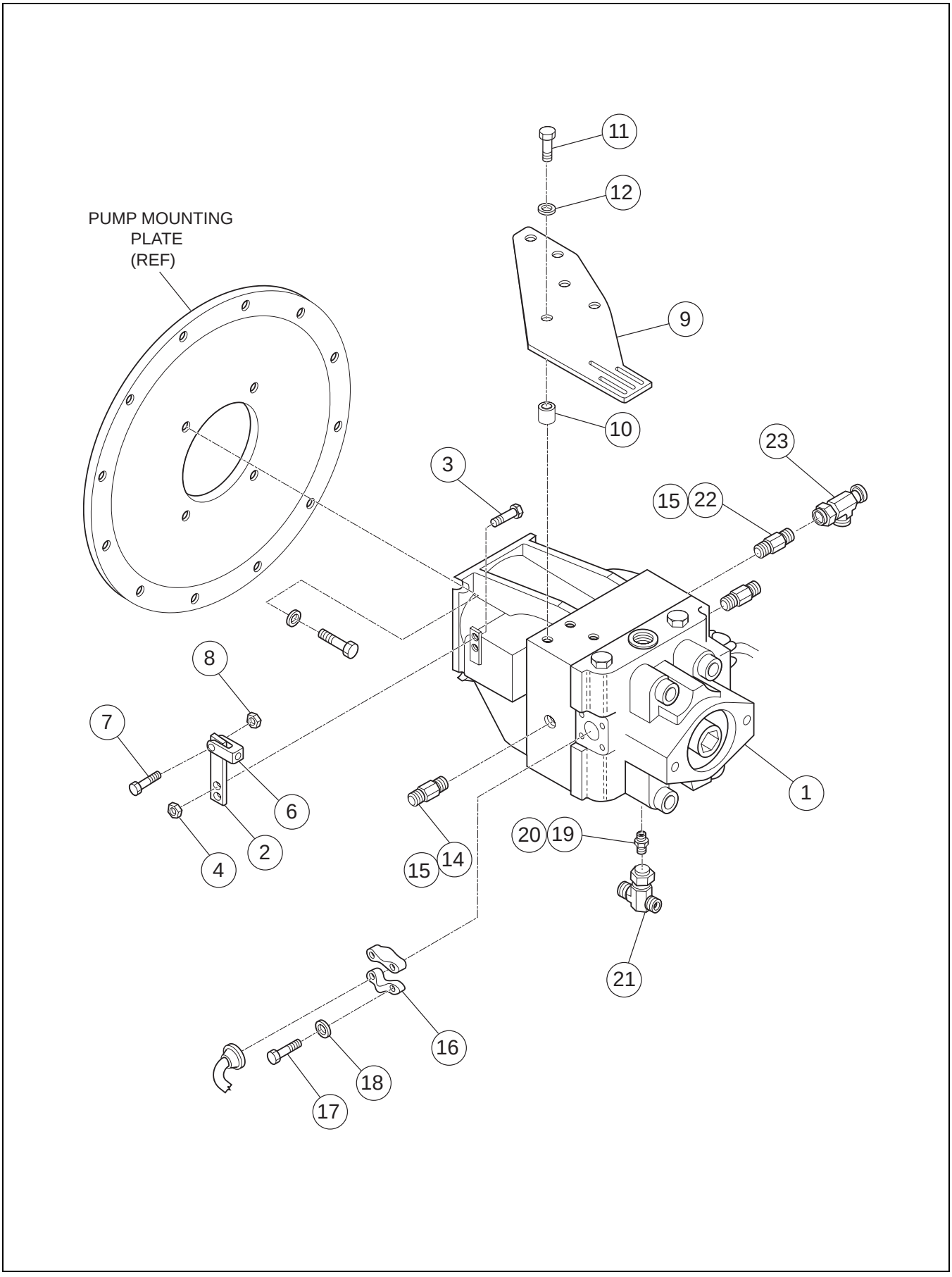

PROPULSION PUMP ASSEMBLY - SD110

B.O.M 70635396

ITEM	COMM. NO.	DESCRIPTION	QTY	DIMENSIONS/NOTES
1	**43947126**	**Variable Piston Pump**	**1**	**See Page C - 20.**
2	70067335	Propulsion Control Lever	1	
3	96714258	Hex Head Cap Screw	2	
4	96712781	Hex Nut	2	
5	96741053	Flat Washer	2	
6	70084496	Clevis	1	
7	96714266	Hex Hd Screw	1	
8	14083448	Nyloc Nut	1	
9	70098272	Prop Cable Bracket	1	
10	70098223	Spacer	3	
11	96713219	Hex. Head Screw	3	
12	96719745	Plain Washer	3	
14	59328575	Adapter	1	
15	95303756	O-ring	2	
16	94227485	Adapter Flange Split	4	
17	95919460	Hex Hd Bolt	8	
18	59995126	Hard Washer	8	
19	95365078	Connector	1	
20	95266425	O Ring	1	
21	95480117	Adapter	1	
22	95356960	Connector	2	
23	95415774	Adapter	1	

PROPULSION PUMP ASSEMBLY - SD110D & D/F

Dwg 59279695

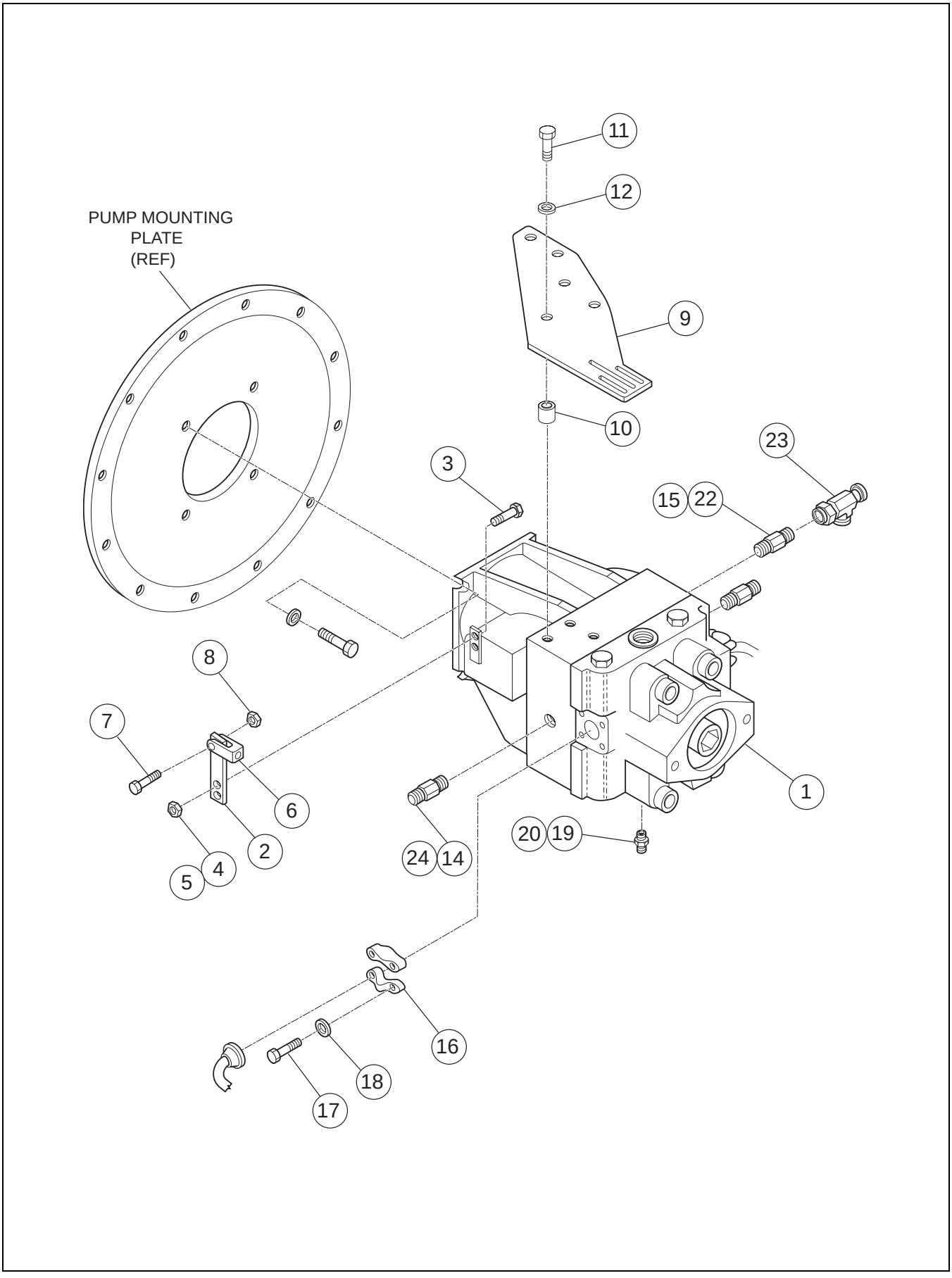

PROPULSION PUMP ASSEMBLY - SD110D & D/F

B.O.M 59279695

ITEM	COMM. NO.	DESCRIPTION	QTY	DIMENSIONS/NOTES
1	43923317	Propulsion Pump	1	
2	70067335	Propulsion Control Lever	1	
3	96714258	Hex Head Cap Screw	2	
4	14083448	Nyloc Nut	2	
5	96741053	Flat Washer	2	
6	70084496	Clevis	1	
7	96714266	Hex Hd Screw	1	
8	14083448	Nyloc Nut	1	
9	70067343	Cable Bracket	1	
10	70098223	Spacer	3	
11	96713219	Hex. Head Screw	3	
12	96719745	Plain Washer	3	
14	95402830	Connector	1	
15	95303756	O-ring	2	
16	94227485	Adapter Flange Split	4	
17	95919460	Hex Hd Bolt	8	
18	96738596	Flat Hard Washer	8	
19	95365078	Connector	1	
20	95266425	O Ring	1	
21	95480117	Adapter	1	
22	95356960	Connector	2	
23	95415774	Adapter	1	
24	95343737	O-ring	1	

VIBRATION PUMP ASSEMBLY

Dwg 70829841

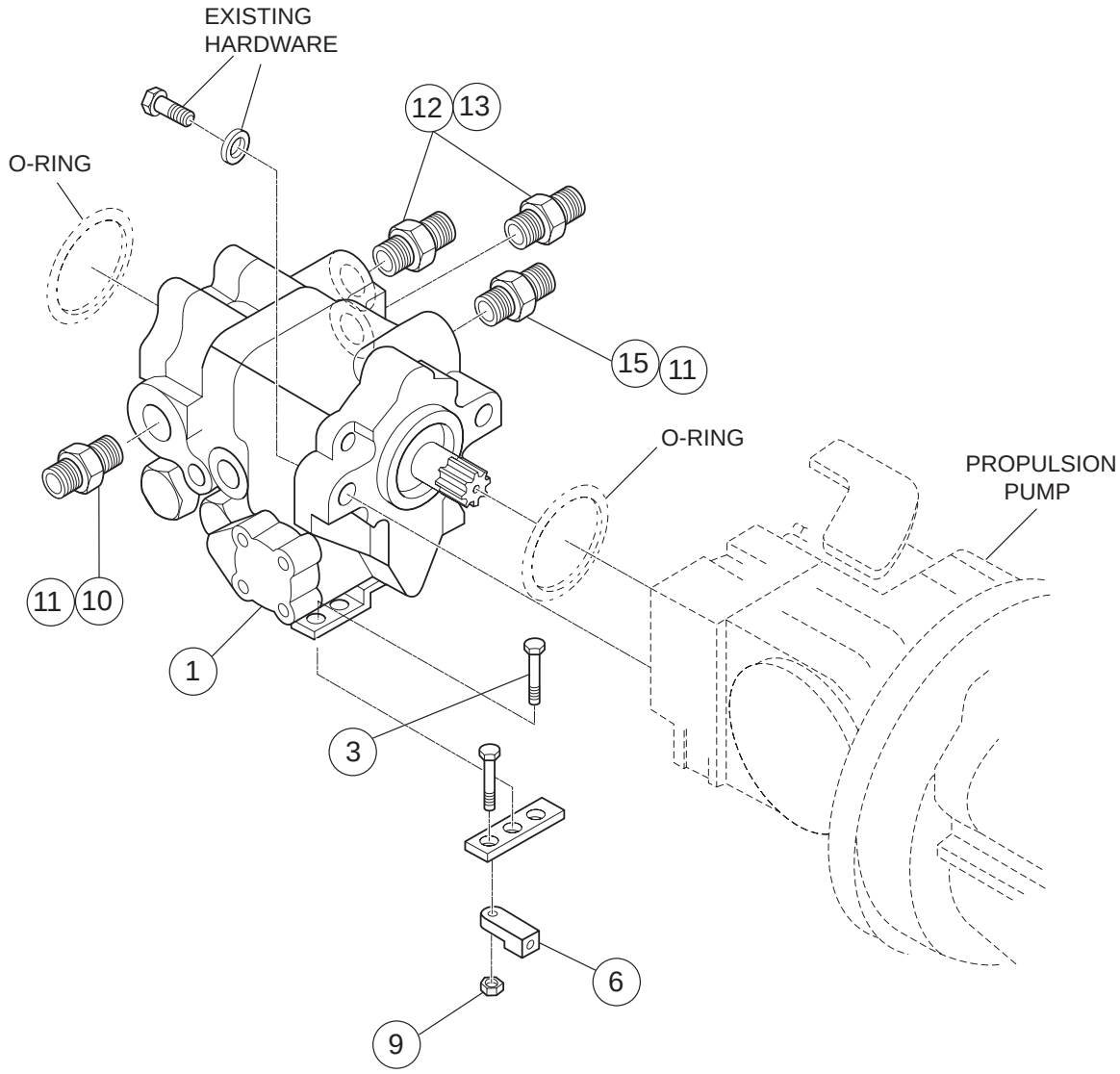

VIBRATION PUMP ASSEMBLY

B.O.M 70829841

ITEM	COMM. NO.	DESCRIPTION	QTY	DIMENSIONS/NOTES
1	**43956903**	**Vibration Pump**	**1**	**See Page C - 34.**
3	96702816	Hex Head Screw	2	
6	70084496	Clevis	1	
9	96705009	Hex. NyLock Nut	1	
10	95934394	Adapter	1	
11	95266433	O Ring	2	
12	59922591	Adapter	2	
13	95303756	O Ring	2	
15	95356978	Adapter	1	

STEERING PUMP ASSEMBLY

Dwg 70829858

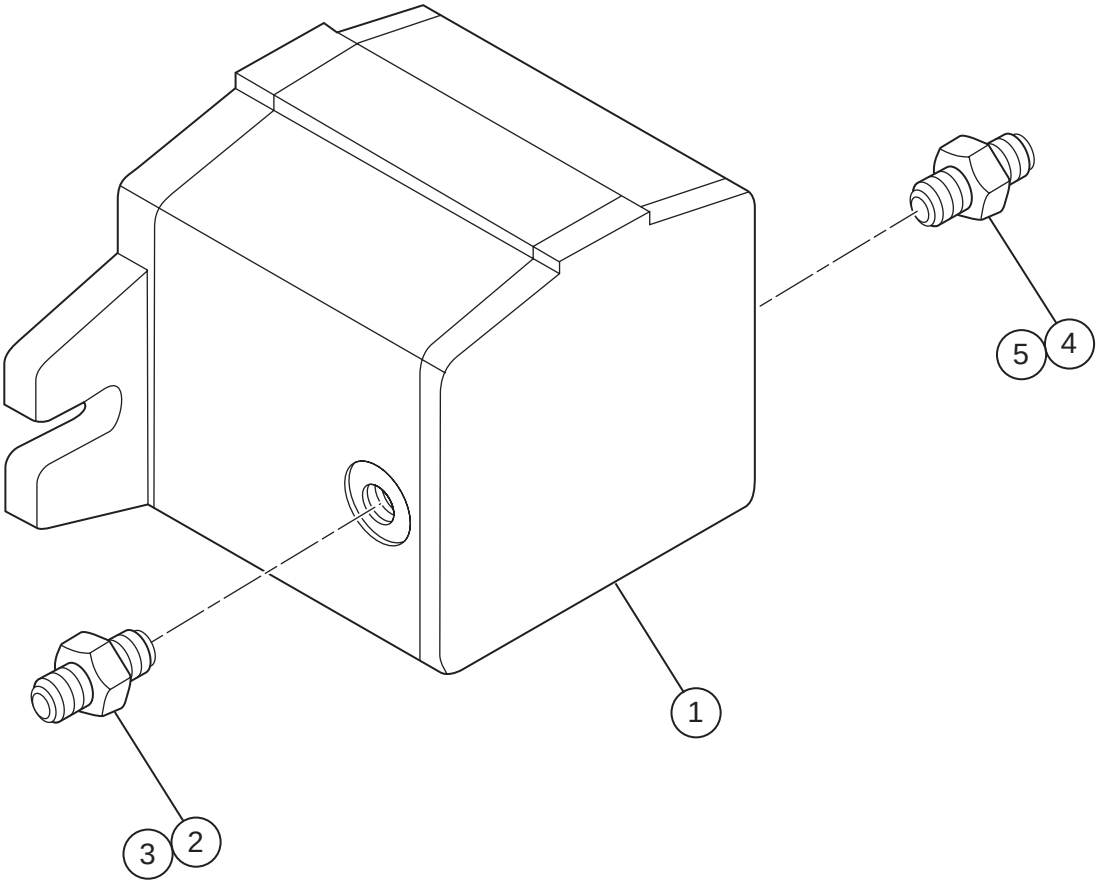

STEERING PUMP ASSEMBLY

B.O.M 70829858

ITEM	COMM. NO.	DESCRIPTION	QTY	DIMENSIONS/NOTES
1	**43844760**	**Hydraulic Gear Pump**	**1**	**See Page C - 44.**
2	95303756	O-ring	1	
3	95371217	Adapter	1	
4	95209888	O-ring	1	
5	95987582	Adapter	1	

PROPULSION PUMP - SD110 Sheet 1 of 3

Dwg 43947126

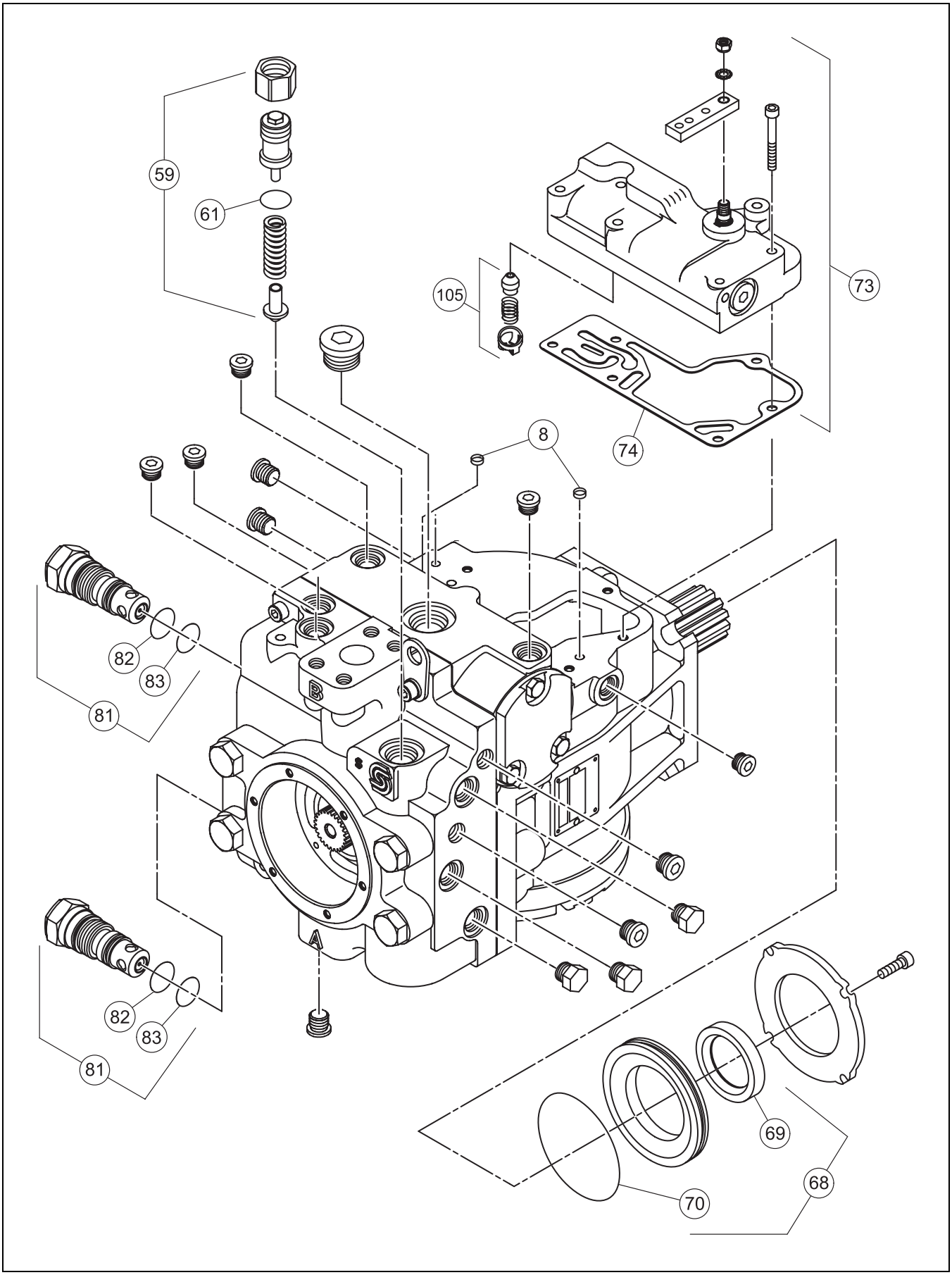

B.O.M 43947126

ITEM	COMM. NO.	DESCRIPTION	QTY	DIMENSIONS/NOTES
8	NSS	Filter Screen	3	
59	NSS	Charge Relief Valve Kit	1	
61	NSS	O-ring	1	
68	NSS	Shaft Seal Assy	1	
69	NSS	Lip Seal	1	
70	NSS	O-ring	1	
73	NSS	Control Valve Kit	1	
74	59395996	Control Gasket	1	
81	NSS	Multi-Function Valve Kit	2	
82	NSS	O-ring	2	
83	NSS	O-ring	2	
105	NSS	Control Orifice Kit	1	.032
-	59399253	Seal Kit	1	

Dwg 43947126

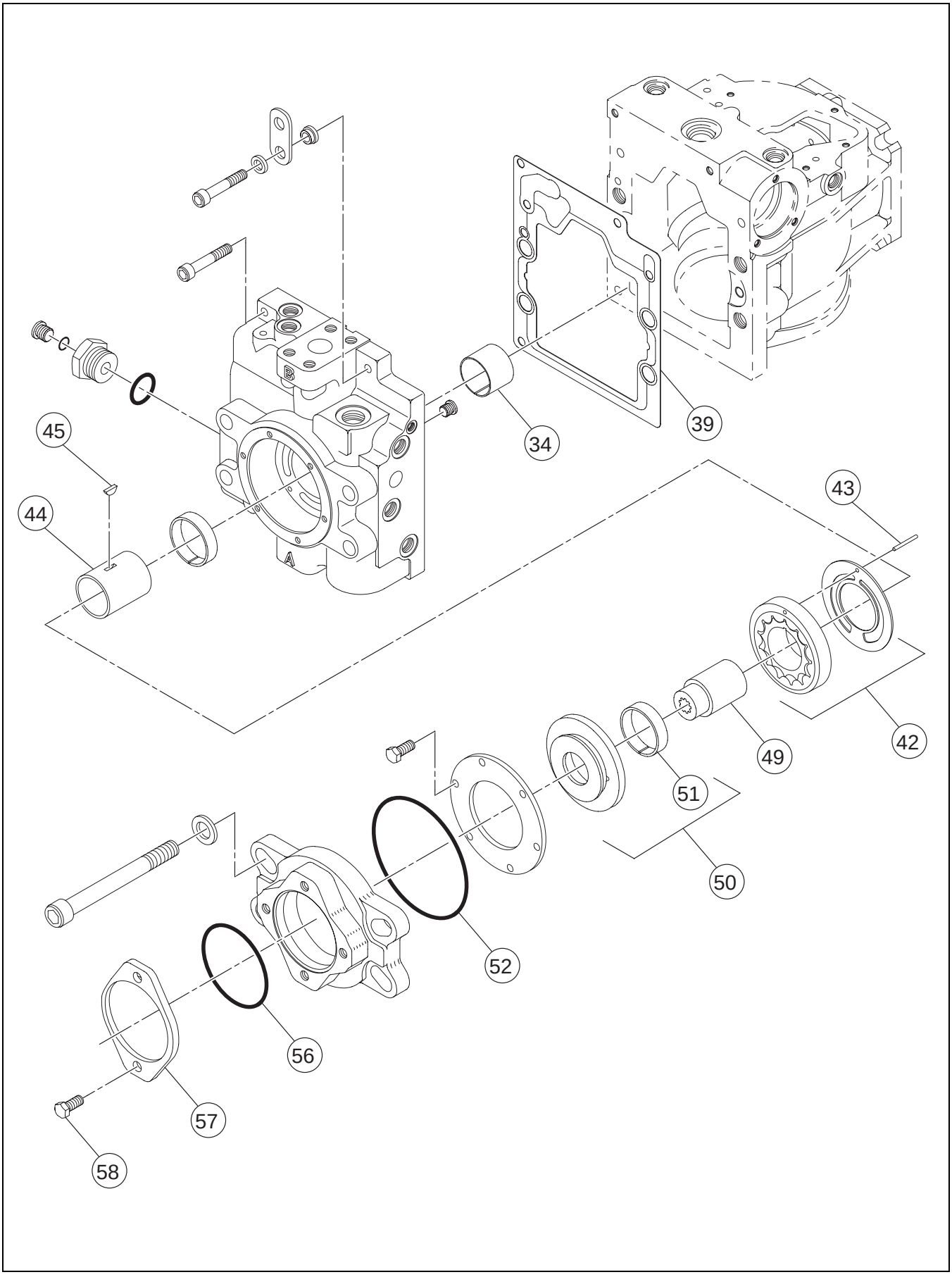

B.O.M 43947126

ITEM	COMM. NO.	DESCRIPTION	QTY	DIMENSIONS/NOTES
34	59368886	Journal Bearing	1	
39	58891979	End Cap Gasket	1	
42	59399162	Charge Pump Set	1	
43	59384784	Pin	1	
44	58772617	Charge Pump Shaft	1	
45	59360487	Key	1	
46	59360495	Retaining Plate	1	
49	59044966	Coupling	1	13 Tooth
50	59386201	Charge Pump Cover Assembly - RH	1	
51	59360354	Bushing	1	
52	59360552	O-ring	1	
56	59218693	O-ring	1	
57	59899021	Flange Cover	1	
58	59360594	Screw	4	
79	59034470	Special Plug	1	

Dwg 43947126

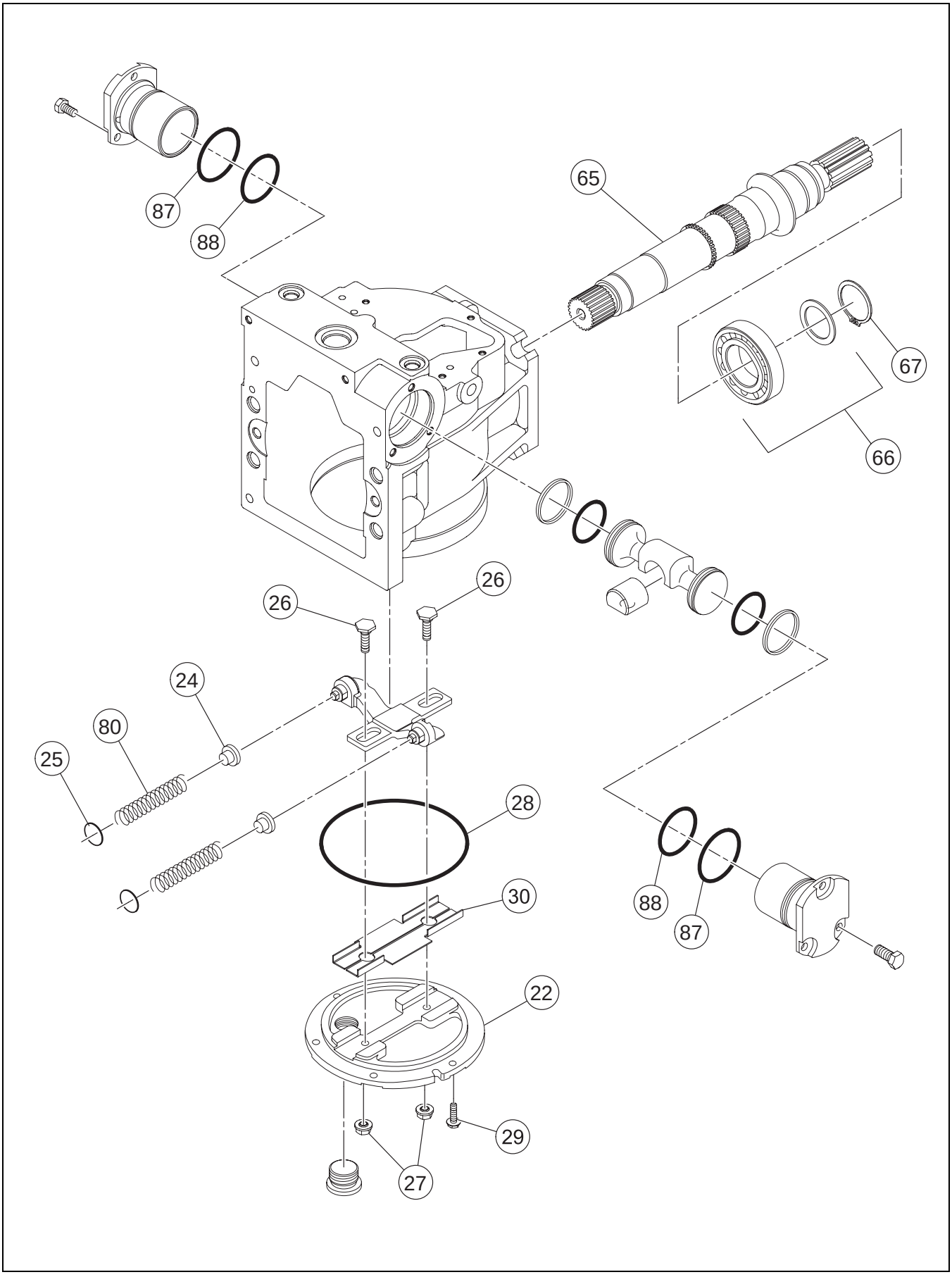

B.O.M 43947126

ITEM	COMM. NO.	DESCRIPTION	QTY	DIMENSIONS/NOTES
22	59218677	Side Cover	1	
23	58891938	Lever Assembly	1	
24	58891946	Spring Seat	2	
25	58763475	Shim	2	
26	59218685	Guide Post	2	
27	59360115	Nut	2	
28	59360552	O-ring	1	
29	59034447	Screw	6	
30	59067520	Side Cover Assembly	1	
65	58892019	Shaft	1	23 Tooth Spline
66	59067538	Roller Bearing	1	
67	59785519	Retaining Ring	1	
80	59395970	Helical Compression Spring	2	
86	59029637	Servo Cylinder Kit	2	
87	58891953	O-ring	2	
88	59384669	O-ring	2	

Dwg 43923317

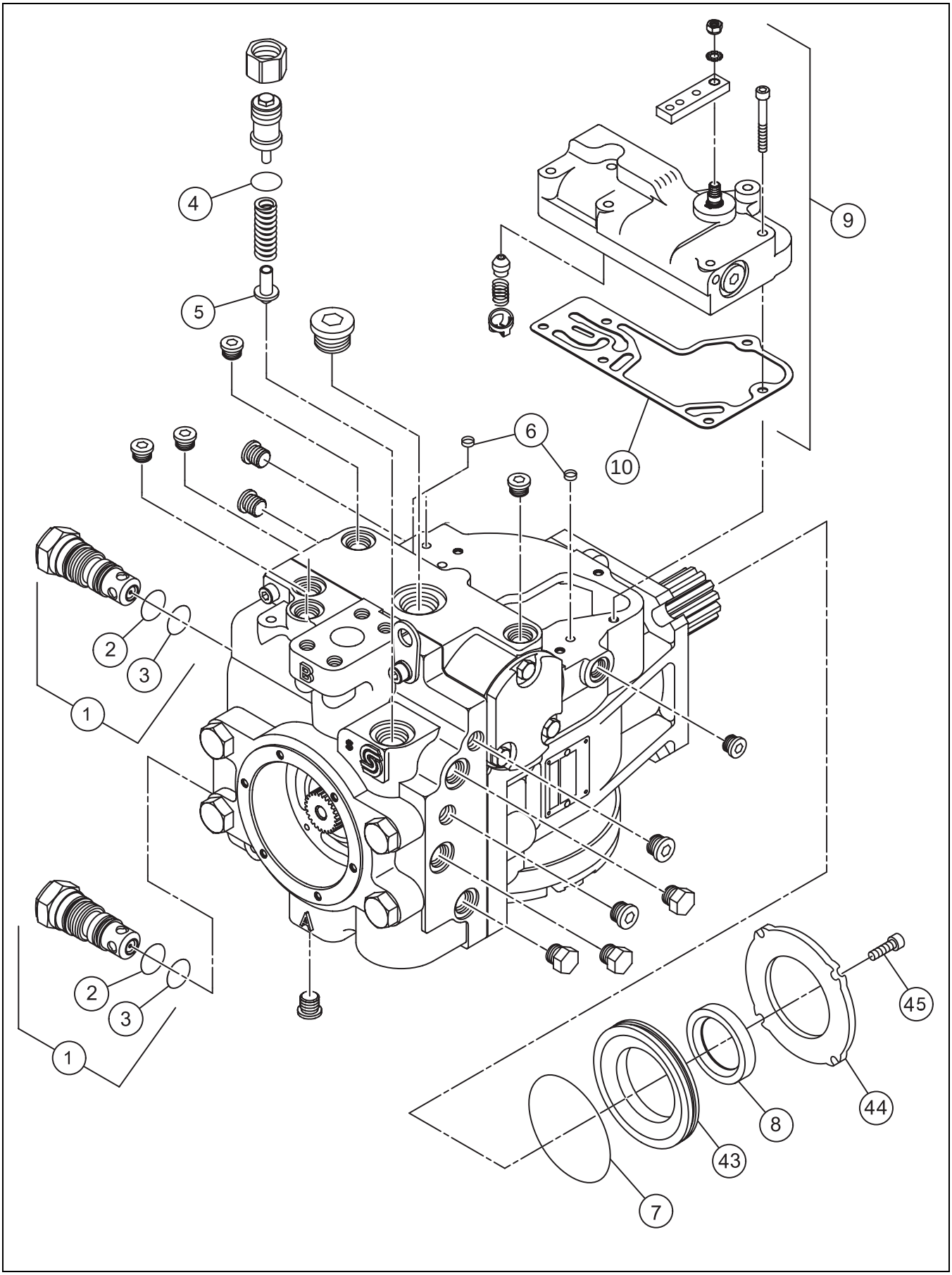

B.O.M 43923317

ITEM	COMM. NO.	DESCRIPTION	QTY	DIMENSIONS/NOTES
1	58921495	Multi-function Valve Kit (Includes Items 2 & 3)	1	
2	95210258	O-ring	1	
3	59360735	O-ring	1	
4	59360610	O-ring	1	
5	59399295	Charge Relief Poppet	1	
6	58795766	Control Filter Screen	3	
7	59343251	O-ring	1	
8	59343236	Lip Seal	1	
9	59360651	MDC Kit (Includes Item 10)	1	
10	59095075	-Control Gasket	1	
43	59343244	CarrierSeal	1	
44	59343228	Retaining Plate	1	
45	58815564	Screw	1	

Dwg 43923317

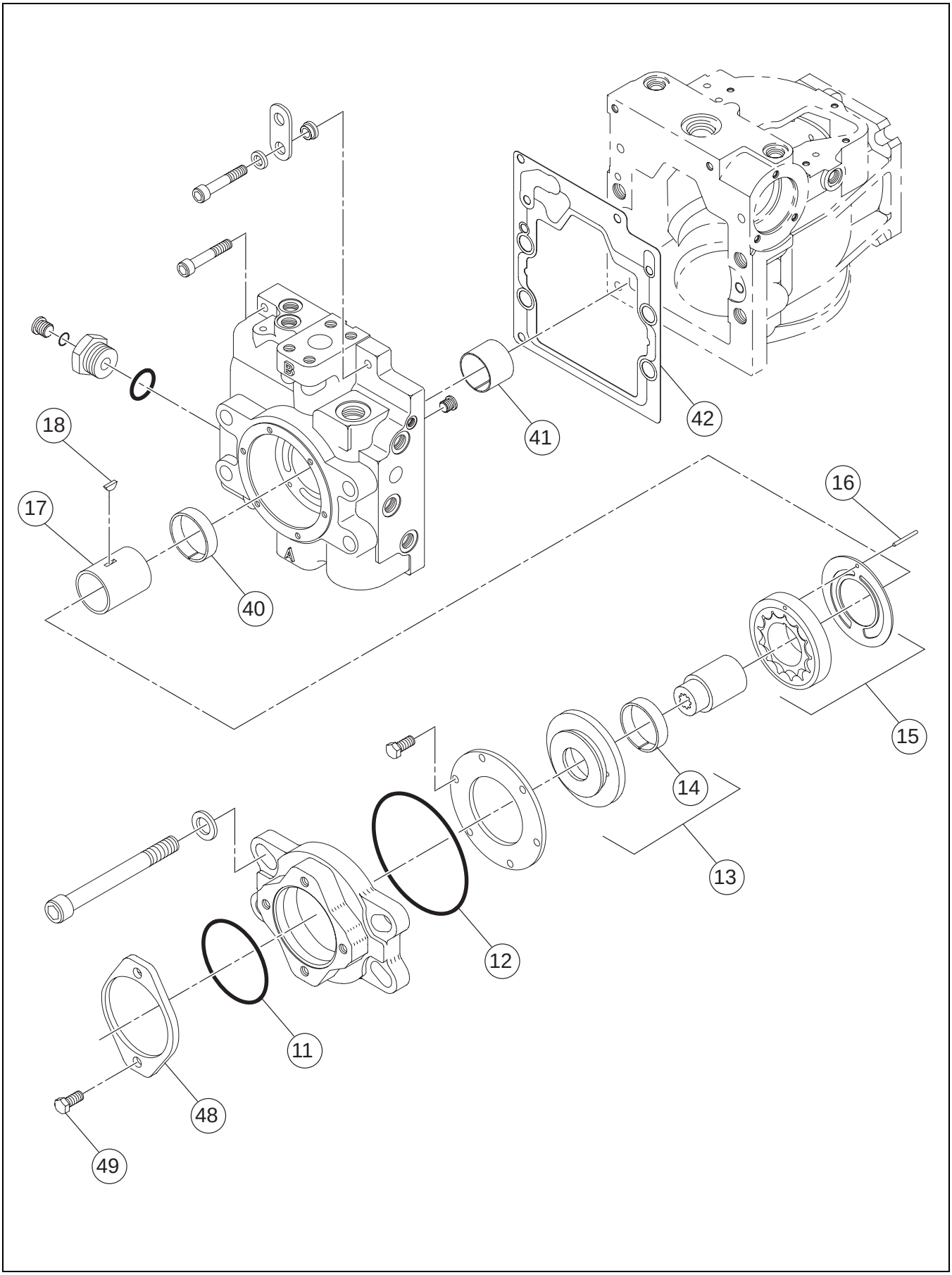

B.O.M 43923317

ITEM	COMM. NO.	DESCRIPTION	QTY	DIMENSIONS/NOTES
11	59360545	O-ring	1	
12	59360552	O-ring	1	
13	58918590	Charge Pump Cover Assembly, RH (Includes Item 14)	1	
14	59360354	-bushing	1	
15	58918558	Charge Pump Set	1	
16	59360461	Pin	1	
17	58918566	Charge Pump Shaft	1	
18	59360487	Key	1	
40	59360354	Bushing	1	
41	59360347	Journal Bearing	1	
42	58891441	End Cap Gasket	1	
48	59899021	Flange Cover		
49	59360594	Screw		

Dwg 43923317

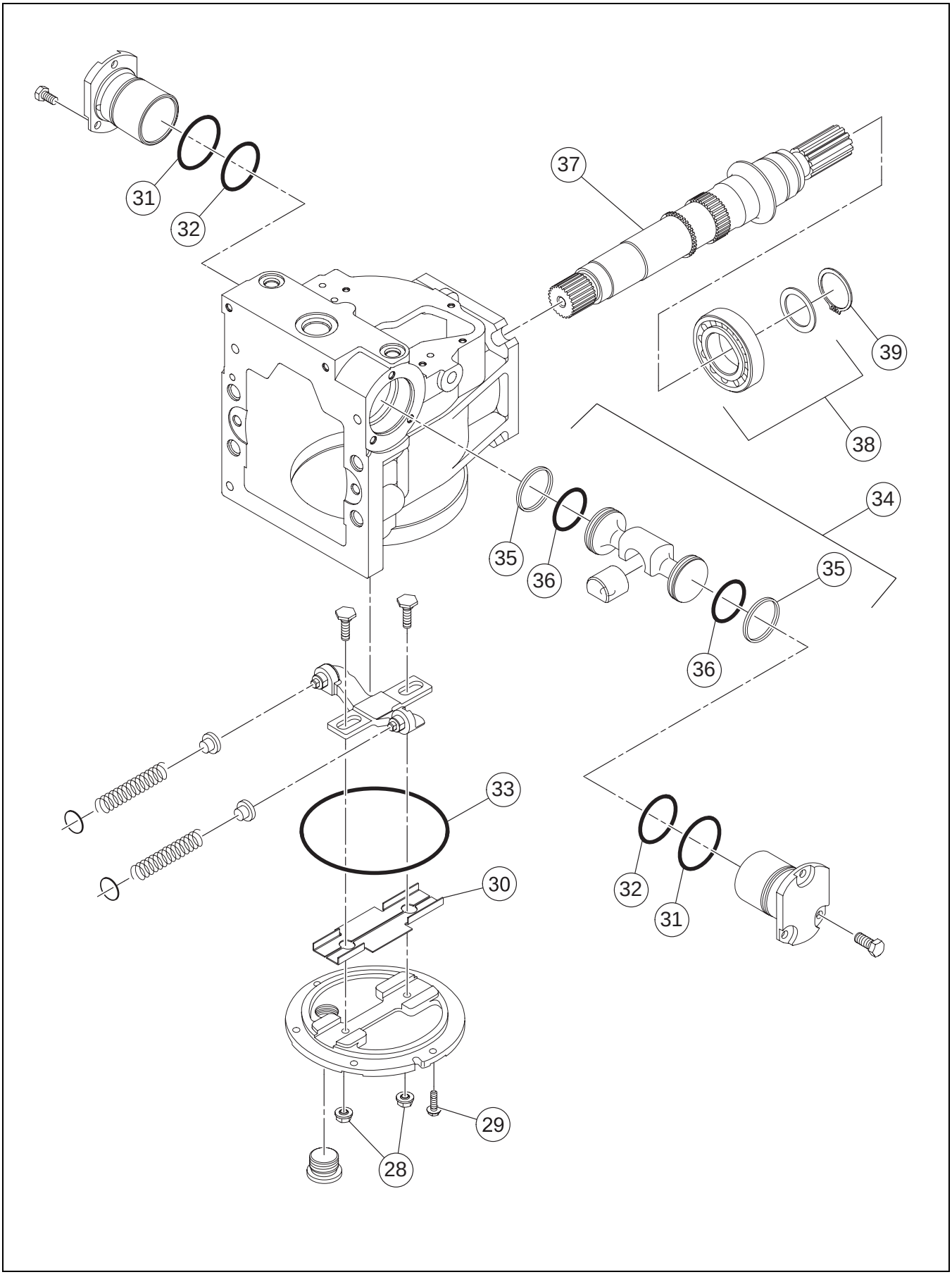

B.O.M 43923317

ITEM	COMM. NO.	DESCRIPTION	QTY	DIMENSIONS/NOTES
28	59360115	Nut	2	
29	59034447	Screw	6	
30	59095059	Side Cover Insert Assembly	1	
31	59360305	O-ring	2	
32	59360313	O-ring	2	
33	59360123	O-ring	1	
37	59384347	Spline Shaft	1	
38	59095067	Roller Bearing	1	
39	59343269	Retaining Ring	1	

Dwg 43923317

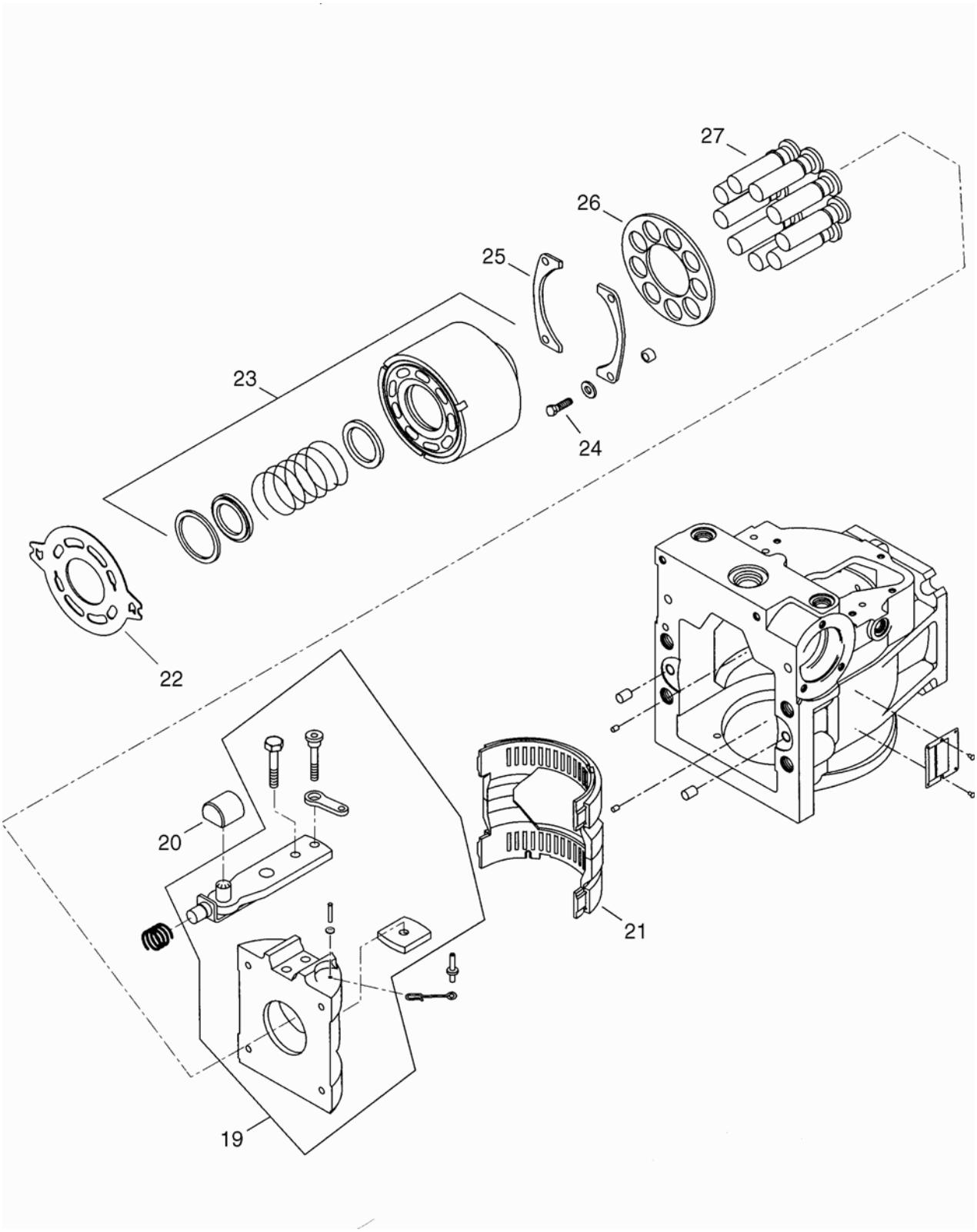

B.O.M 43923317

ITEM	COMM. NO.	DESCRIPTION	QTY	DIMENSIONS/NOTES
		Repair of this assembly is recommended only to the level of component parts listed. If your unit requires further repair, an Manufacturer's Authorized Rebuilt Component (ARC) may be available and is listed below.		
**	59140657	Pump (Arc)	1	

Dwg 43956903

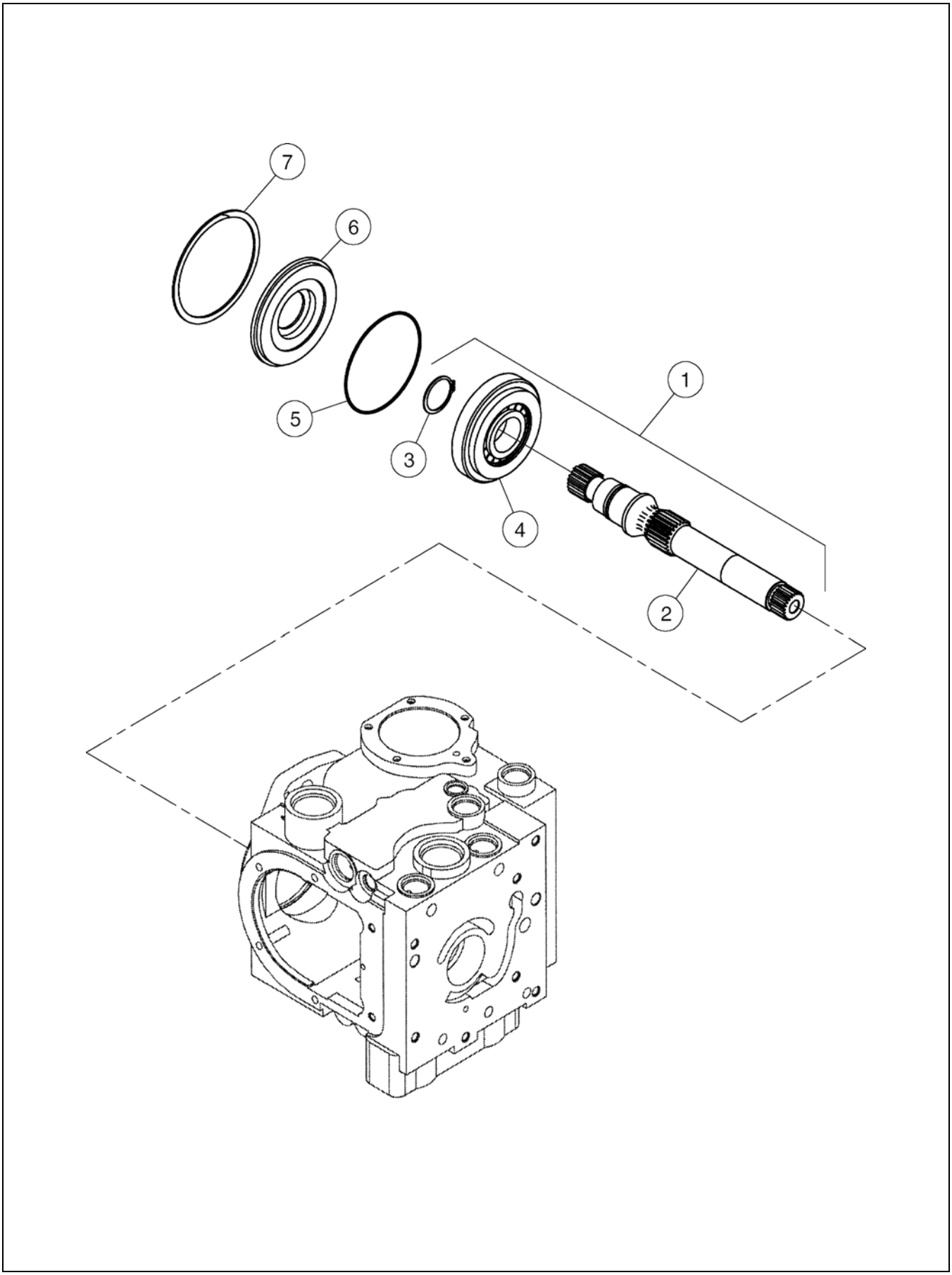

B.O.M 43956903

ITEM	COMM. NO.	DESCRIPTION	QTY	DIMENSIONS/NOTES
1	13263678	Shaft Assembly	1	
2	13263686	-shaft	1	
3	59145896	-retaining Ring	1	
4	59145904	-roller Bearing	1	
5	59145888	O-ring	1	
6	59145870	Seal Carrier Shaft	1	
7	59145862	Ring	1	
-	70819172	Seal Kit	1	

Dwg 43956903

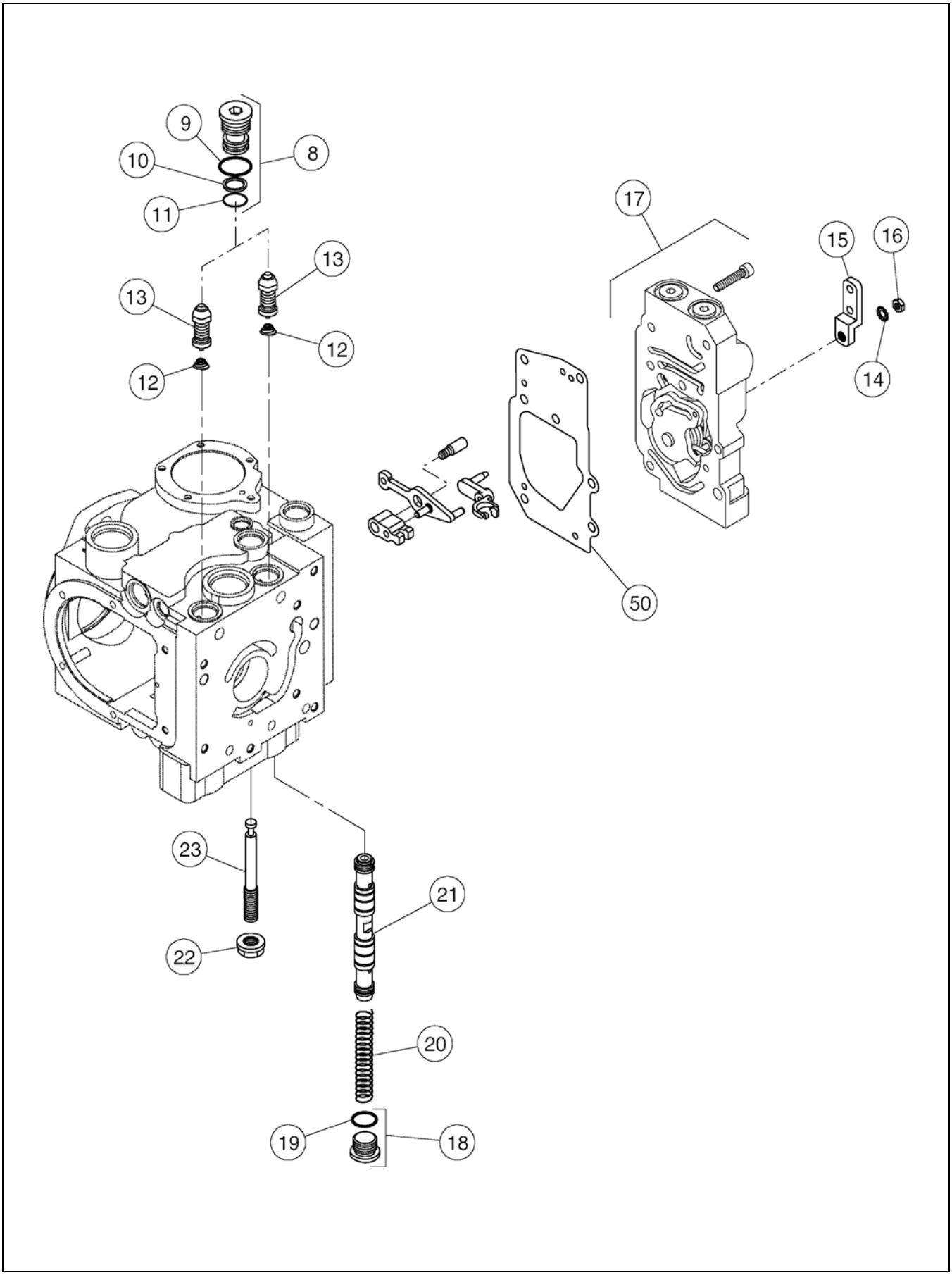

B.O.M 43956903

ITEM	COMM. NO.	DESCRIPTION	QTY	DIMENSIONS/NOTES
8	13263694	Bypass Valve Assembly	2	
9	59360610	-O-ring	2	
10	59986448	Back Up Ring	2	
11	59051680	-O-ring	2	
12	13263702	Spring	2	
13	13066329	Scr Valve	2	
14	59360669	Washer	1	
15	59194035	Handle,control	1	
16	59360677	Nut	1	
17	59051474	Control Assembly	1	
18	58950734	Plug	1	
19	59986455	-O-ring	1	
20	13263827	Spring	1	
21	59034348	Charge Valve Spring	1	
22	59051466	Seal Nut	1	
23	13263710	Adjust Screw	1	
50	59051524	Control Gasket	1	

Dwg 43956903

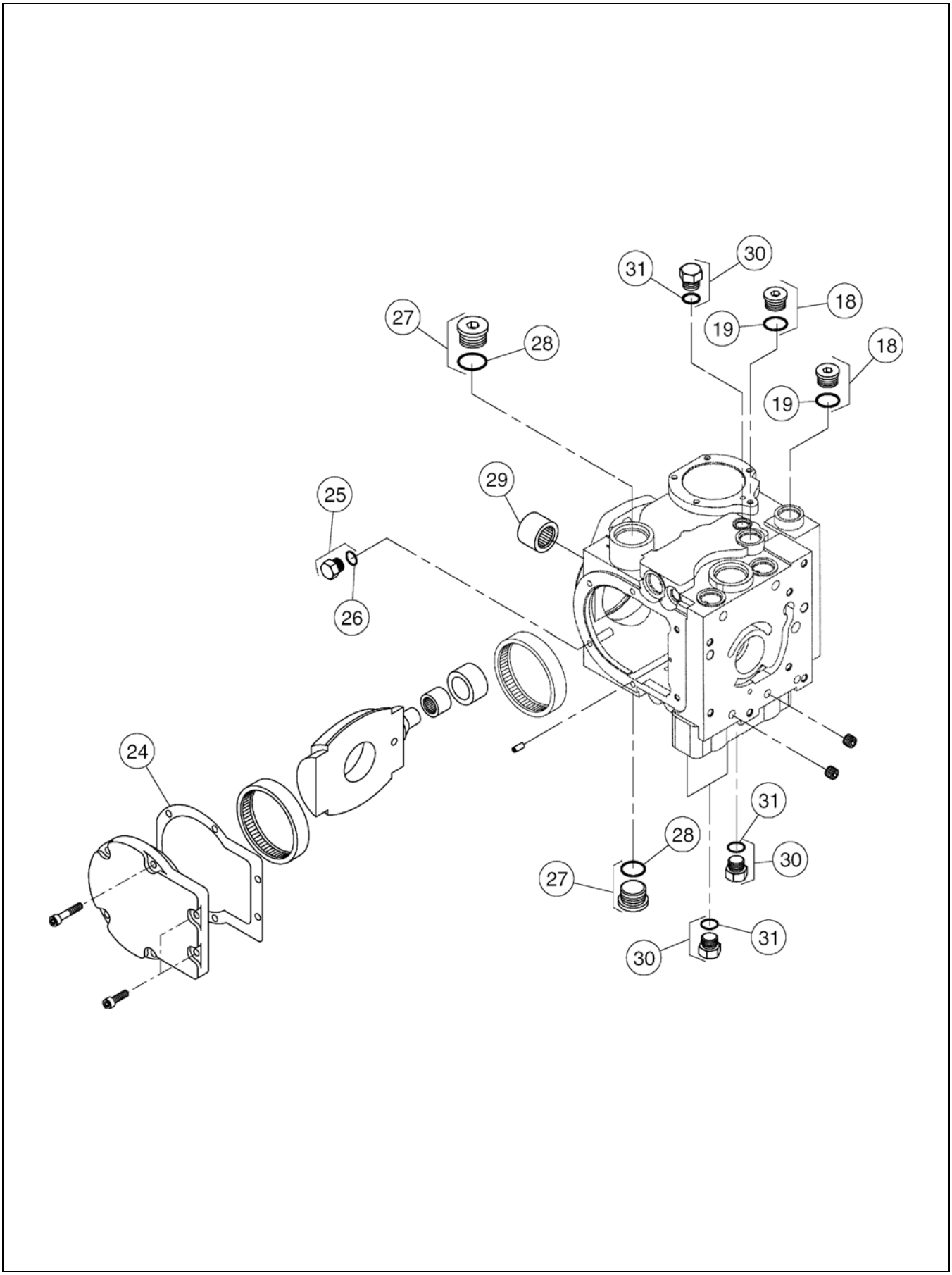

B.O.M 43956903

ITEM	COMM. NO.	DESCRIPTION	QTY	DIMENSIONS/NOTES
18	58950734	Plug	2	
19	59986455	-O-ring	2	
24	59110775	Control Sleeve	1	
25	13263728	Plug	1	
26	59051573	-O-ring	1	
27	59949487	Plug	2	
28	59360941	-O-ring	2	
29	59387605	Needle Bearing	1	
30	59933622	Plug	3	
31	58881863	-O-ring	3	

Dwg 43956903

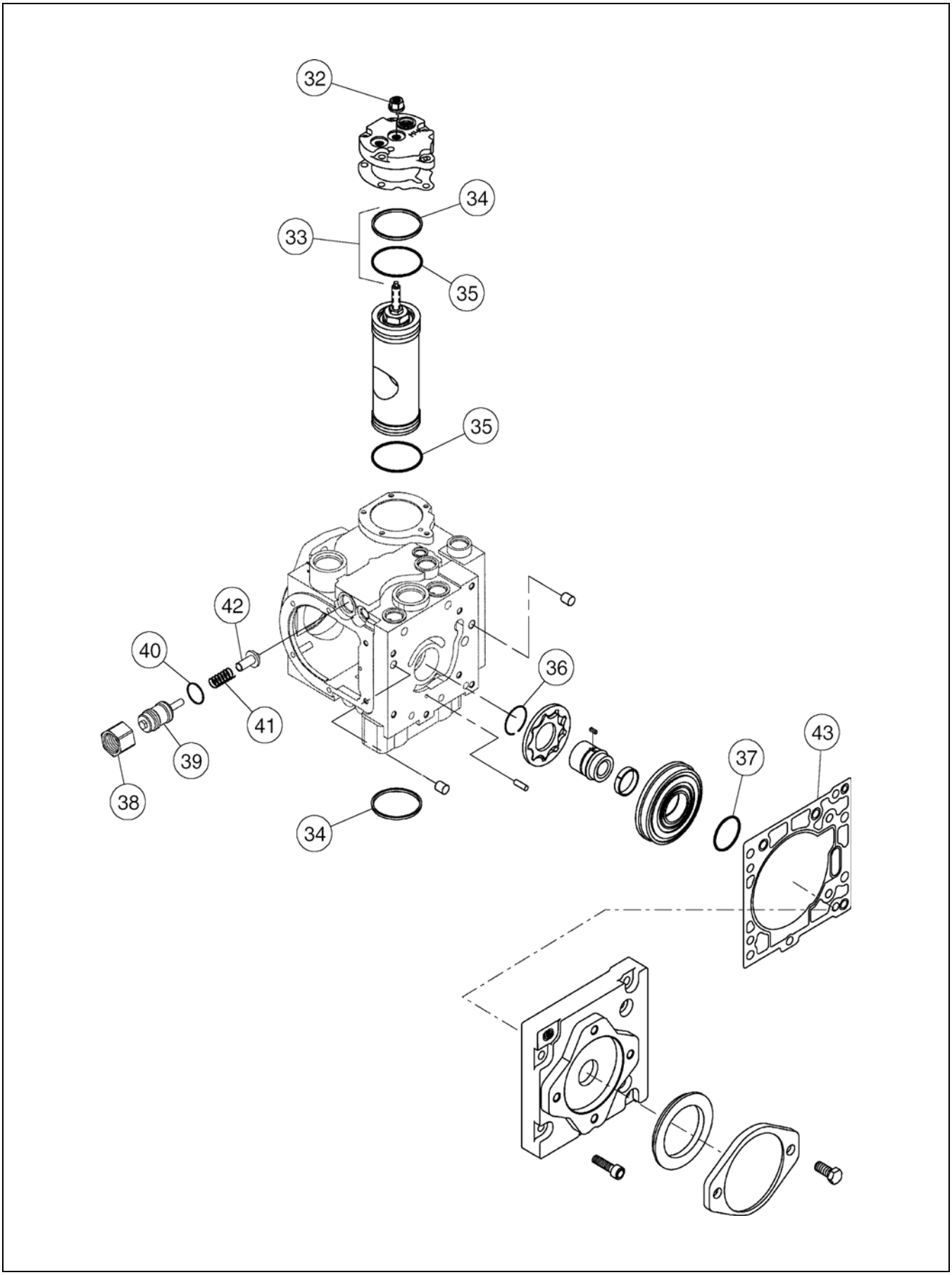

B.O.M 43956903

ITEM	COMM. NO.	DESCRIPTION	QTY	DIMENSIONS/NOTES
32	59051466	Seal	1	
33	13263736	Servo Piston Ring Kit	1	
34	59145904	-roller Bearing	2	
35	59330936	-O-ring	2	
36	59194043	Retaining Ring	1	
37	54492608	O-ring	1	
38	59399303	Nut	1	
39	59249300	Charge Relief Adjuster	1	
40	59155176	O-ring	1	
41	58891896	Spring	1	
42	59399295	Poppet	1	
43	13263744	Charge Pump Gasket	1	

Dwg 43956903

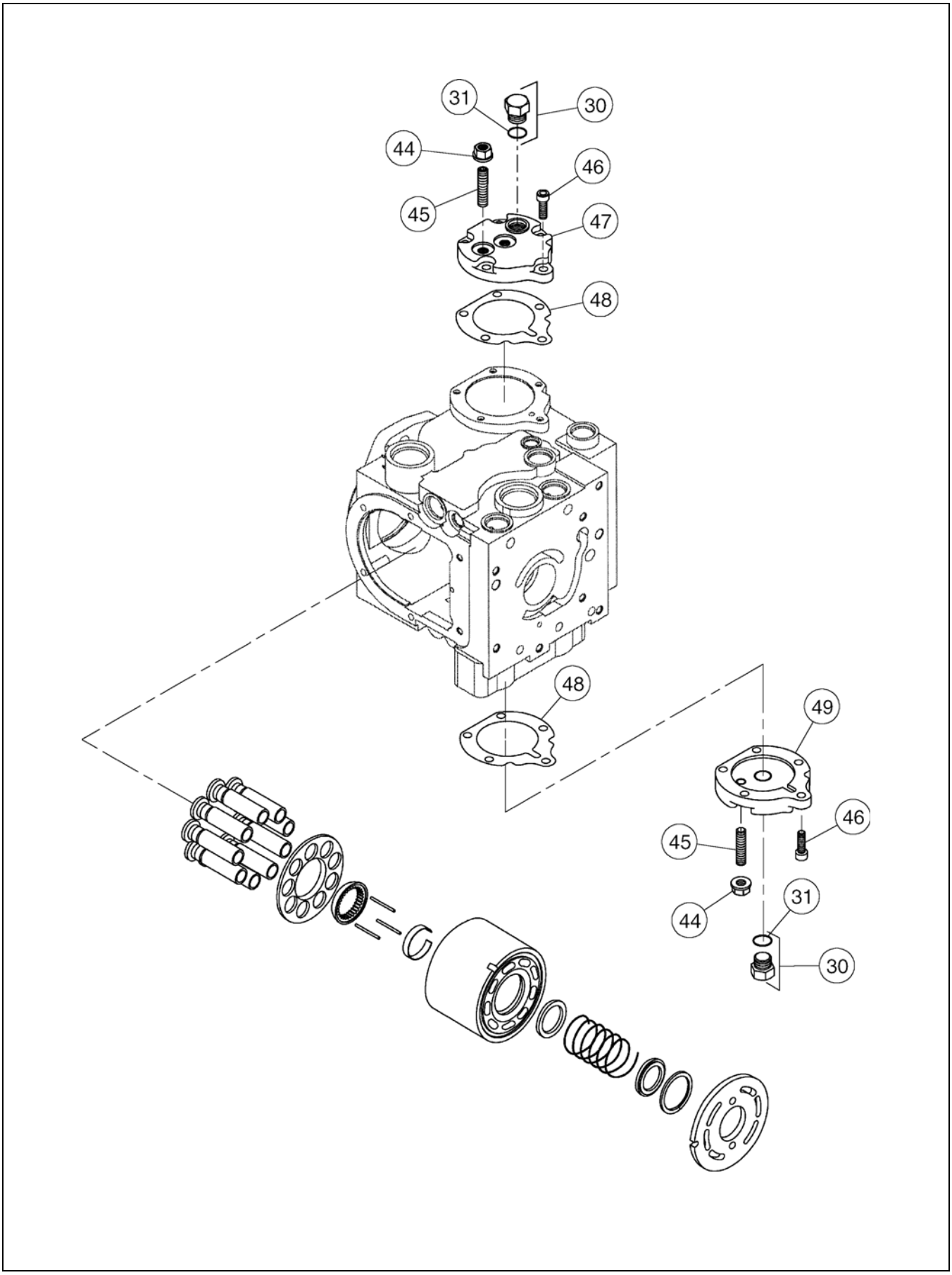

B.O.M 43956903

ITEM	COMM. NO.	DESCRIPTION	QTY	DIMENSIONS/NOTES
30	59933622	Plug	2	
31	58881863	O-ring	2	
44	59146035	Nut	2	
45	13263751	Set Screw	2	
46	59194027	Screw	10	
47	13263769	Servo Cover	1	
48	13263777	Servo Cover Gasket	1	
49	13263785	Servo Cover	1	

Dwg 43844760

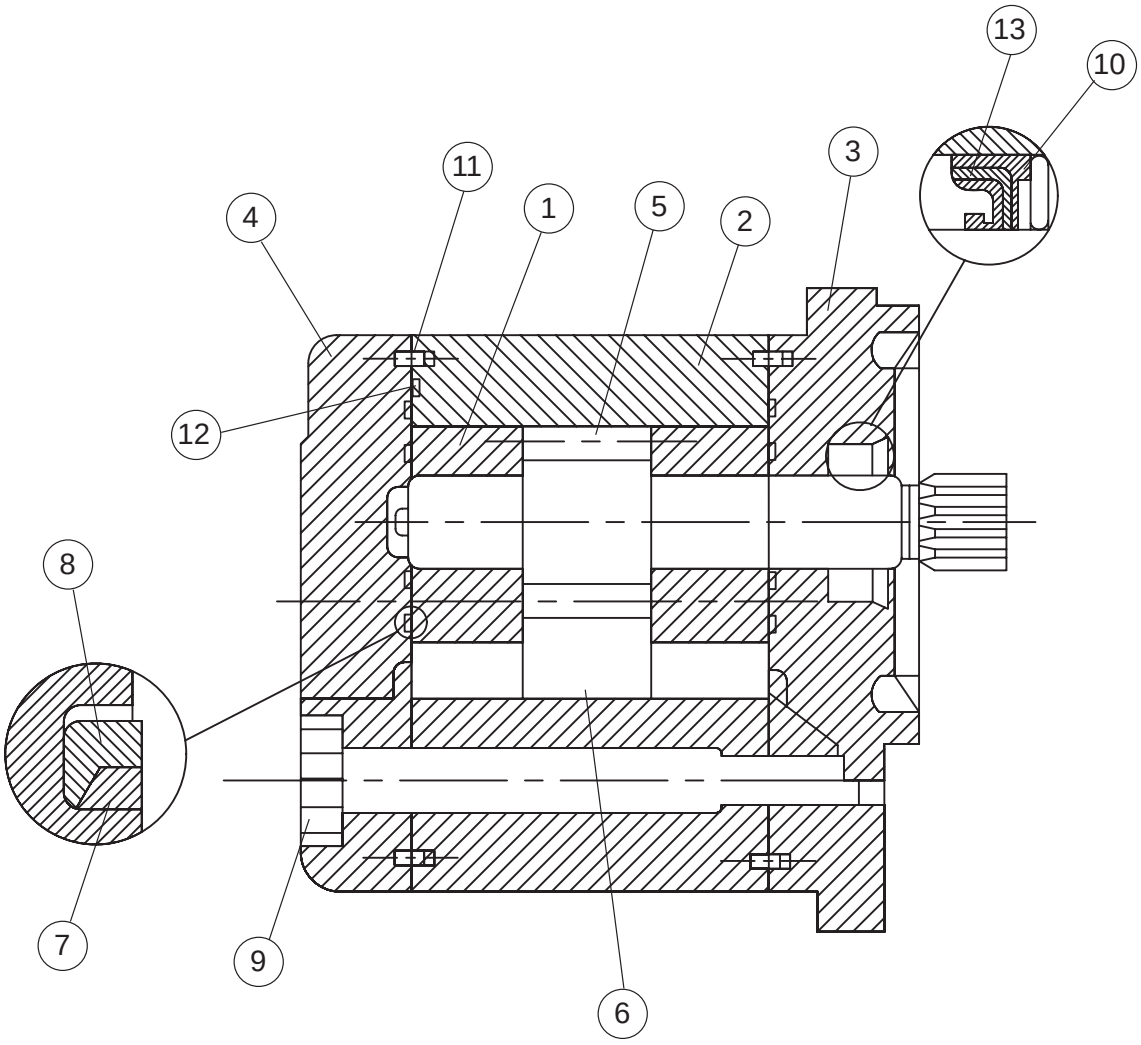

B.O.M 43844760

ITEM	COMM. NO.	DESCRIPTION	QTY	DIMENSIONS/NOTES
1	58898669	Bearing	2	
2	NSS	Housing	2	
3	NSS	Flange	1	
4	NSS	Rear Cover	1	
5	NSS	Drive Gear	1	
6	NSS	Idler Gear	1	
7*	NSS	Anti-extrusion Ring	2	
8*	NSS	Pressure Seal	2	
9	NSS	Screw	4	
10	NSS	Snap Ring	1	
11	NSS	Dowel Pin	4	
12*	NSS	O Ring	2	
13*	NSS	Shaft Seal	1	
*	58898677	Seal Kit (Includes Items 7,8,12 & 13)		

EXHAUST SILENCER MOUNTING ASSEMBLY

Dwg 70611405

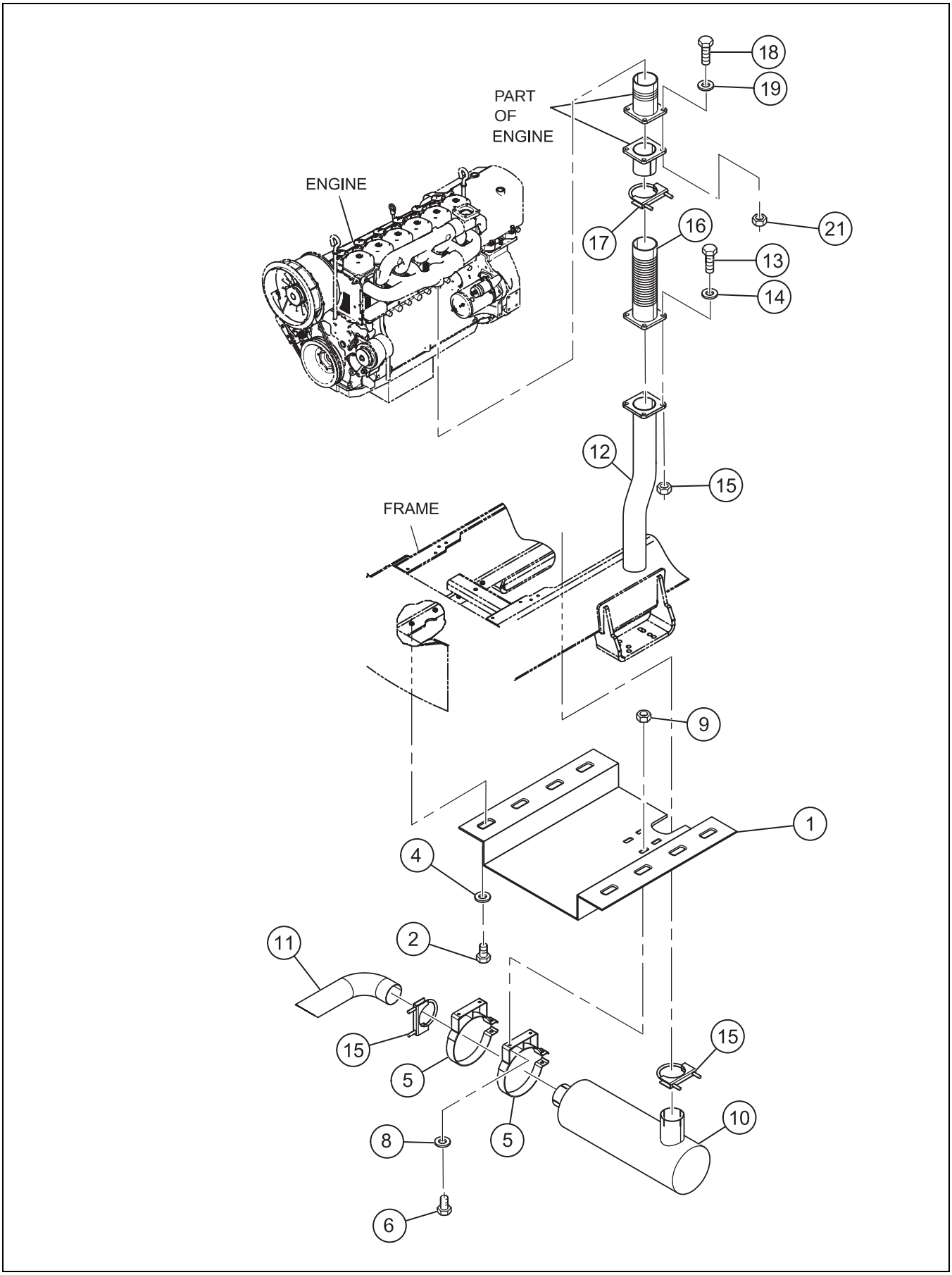

EXHAUST SILENCER MOUNTING ASSEMBLY

B.O.M 70611405

ITEM	COMM. NO.	DESCRIPTION	QTY	DIMENSIONS/NOTES
1	70838941	Hot Air Cover Plate	1	
2	96718887	Hex Head Screw	8	
4	96719604	Plain Washer	8	
5	70000807	Silencer Mtg Clamp	2	
6	96713318	Hex Head Screw	4	
8	96719646	Plain Washer	4	
9	96704812	Nut Hex	4	
10	70126628	Exhaust Silencer	1	
11	70647672	Stack Exhaust	1	
12	70838958	Adapter Exhaust Silencer	1	
13	96713375	Hex Head Screw	4	
14	96719646	Washer Plain	4	
15	96704812	Nut Hex	4	
16	70605647	Exhaust Piping Assembly	1	
17	70086723	U Clamp	3	
18	96713466	Hex Head Bolt	4	
19	96719604	Plain Washer	4	
21	94114469	Hex Nut	4	

THROTTLE INSTALLATION ASSEMBLY

Dwg 70146105

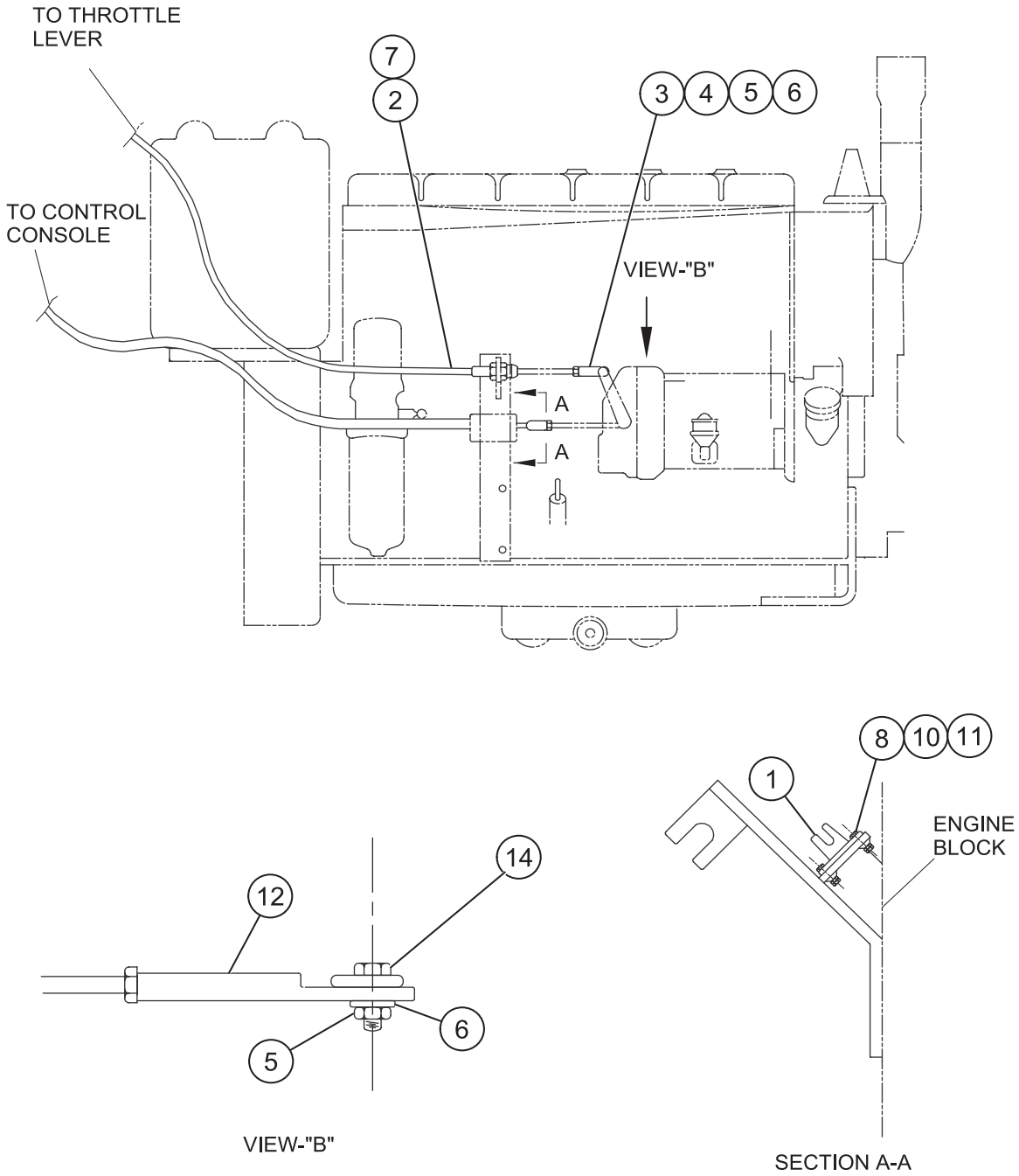

THROTTLE INSTALLATION ASSEMBLY

B.O.M 70146105

ITEM	COMM. NO.	DESCRIPTION	QTY	DIMENSIONS/NOTES
1	70577614	Control Throttle With Cable Mount	1	
2	70186572	Throttle Cable	1	
3	70081302	Clevis Series	1	
4	96714266	Hex Head Screw	1	
5	70036470	Hex Lock Nut	2	
6	96719729	Plain Washer	4	
7	70037494	Push-pull Cable Clamp	1	
8	96714258	Screw Hex Head	4	
10	96719729	Plain Washer	4	
11	96712781	Hex Nut	4	
12	70541016	Clevis Series	1	
14	96714241	Hex Head Screw	1	

AIR CLEANER INSTALLATION

Dwg 70146113

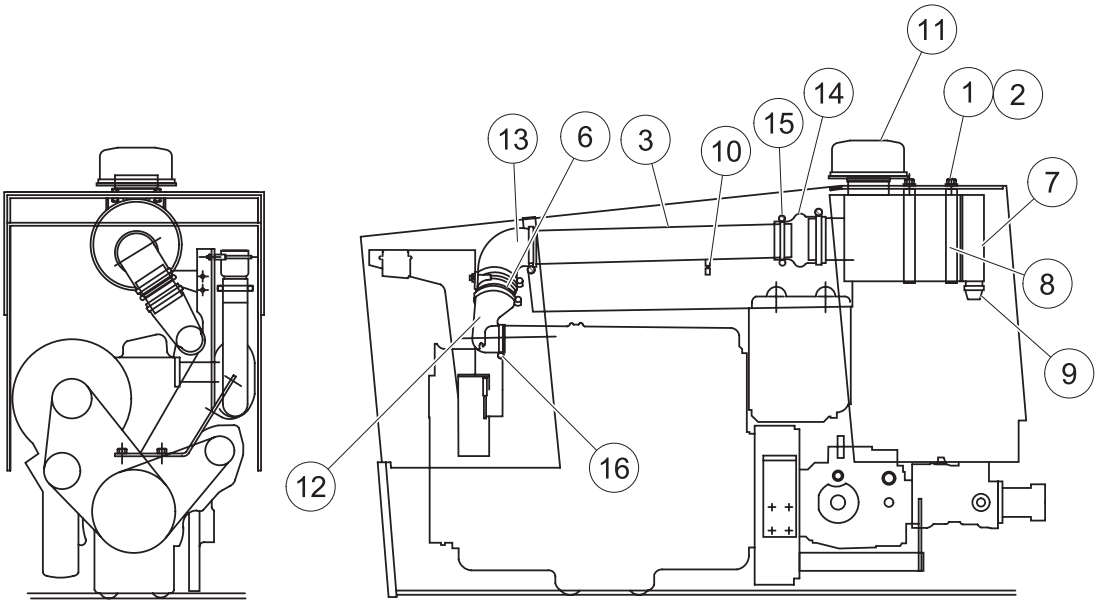

B.O.M 70146113

ITEM	COMM. NO.	DESCRIPTION	QTY	DIMENSIONS/NOTES
1	96713326	Hex Head Screw	4	
2	58838384	Hex Nylock Nut	4	
3	70077060	Inlet Pipe	1	
6	70079579	Connecting Pipe	1	
7	70079546	Air Filter	1	
-	70543905	Outer Air Filter Element	1	
-	70543913	Inner Air Filter Element	1	
8	70079561	Air Cleaner Clamp	2	
9	70098538	Vaccuator Valve	1	
10	70079520	Indicator Service	1	
11	70079553	Air Pre Cleaner	1	
12	70079496	Air Cleaner Hose	1	
13	70079504	Air Cleaner Hose	1	
14	70079512	Air Cleaner Hose	1	
15	70099601	Clip Hose	5	
16	70099593	Clip Hose	1	

Section D - CONSOLE ASSEMBLY

OPERATORS PLATFORM ASSEMBLY

Dwg 70860242

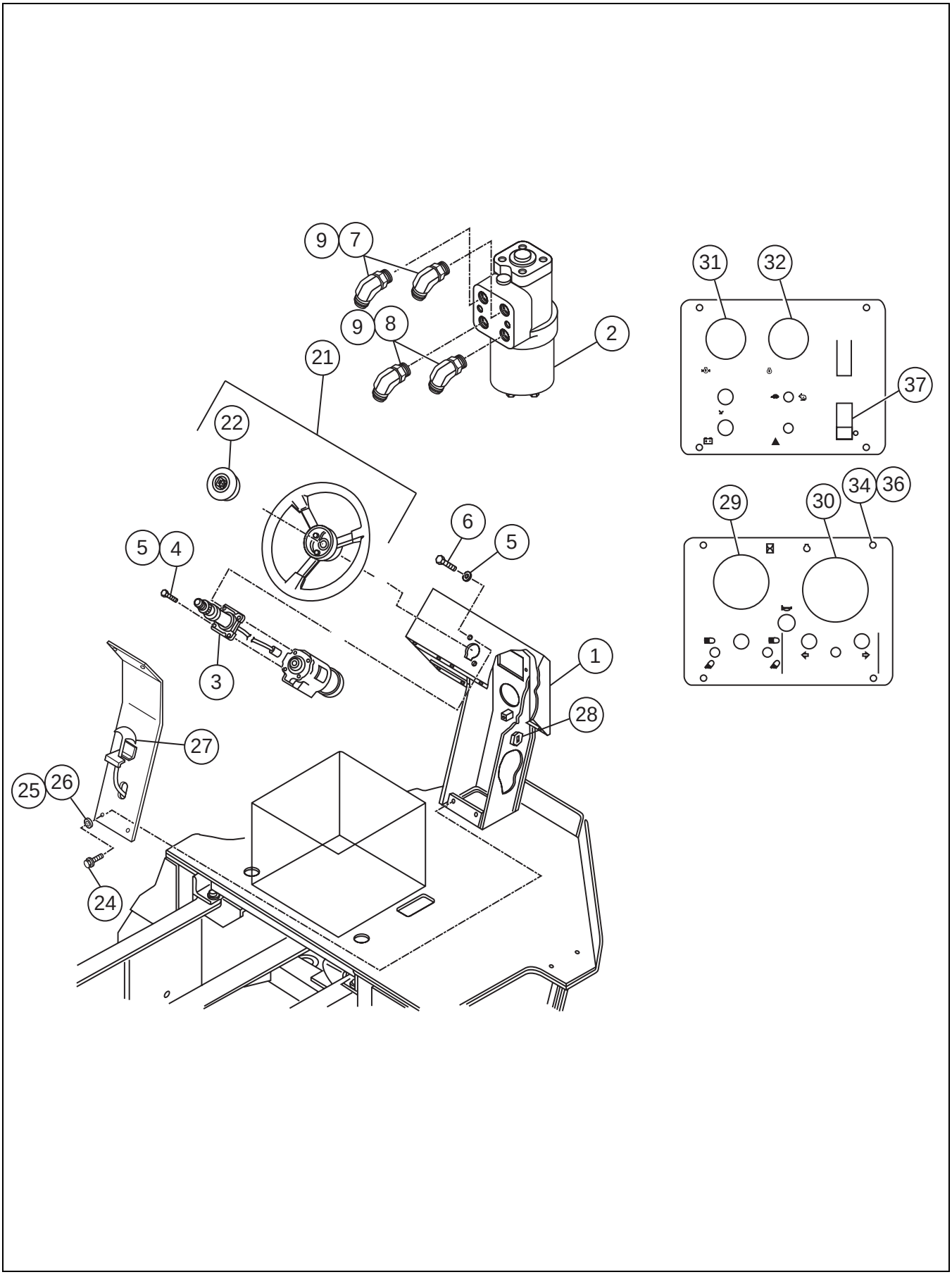

OPERATORS PLATFORM ASSEMBLY

B.O.M 70860242

ITEM	COMM. NO.	DESCRIPTION	QTY	DIMENSIONS/NOTES
1	70615141	Platform	1	
2	70915111	Steering Valve	1	
3	70535356	Steering Column	1	
4	96718838	Hex. Head Screw	2	
5	96741046	Flat Washer	4	
6	96713334	Hex. Head Screw	2	
7	59824862	Adapter	2	
8	94034345	Adapter	2	
9	95209870	O Ring	4	
21	70682638	Wheel Steering & Cap Assembly	1	
22	70682711	Wheel Cap	1	
24	96718838	Hex. Head Screw	4	
25	96719646	Plain Washer	4	
26	96741046	Flat Washer	4	
27	70615034	Stop Cable	1	
28	70098603	3 Way Key Starter	1	
29	70899463	Hour Meter	1	
30	70086830	Electric Tachometer	1	
31	70086822	Pressure Lube Oil Gauge	1	
32	70086814	Temperature Lube Oil Gauge	1	
34	96714233	Hex. Head Screw	8	
36	96719729	Plain Washer	8	
37	59121756	Brake Switch	1	

SEAT INSTALLATION

Dwg 70574561

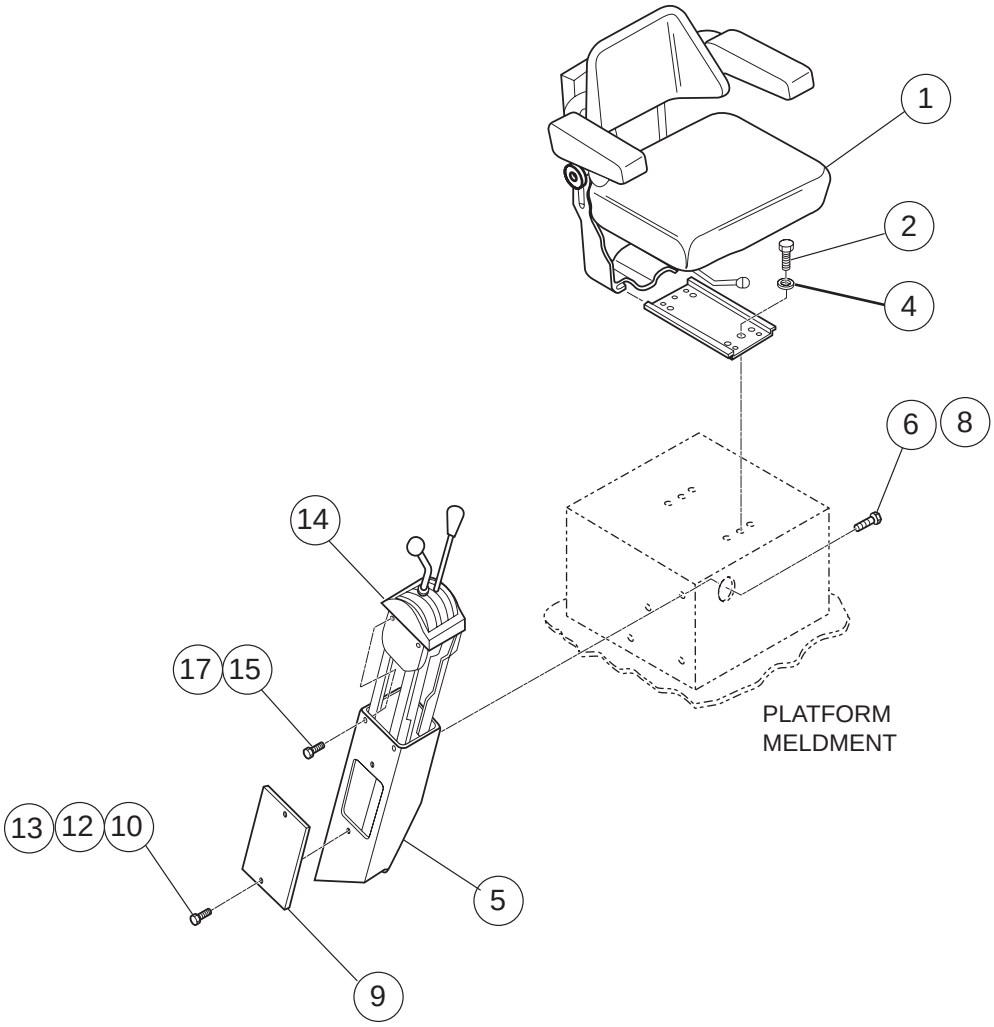

SEAT INSTALLATION

B.O.M 70574561

ITEM	COMM. NO.	DESCRIPTION	QTY	DIMENSIONS/NOTES
1	70914924	Seat Complete	1	
2	96713318	Hex Head Screw	2	
4	96719646	Plain Washer	2	
5	70066683	Box	1	
6	96718861	Hex Head Screw	4	
8	96719604	Plain Washer	4	
9	70066741	Cover Plate	1	
10	96714258	Hex Head Screw	2	
12	14083448	Hex Nylock Nut	2	
13	96719729	Plain Washer	2	
14	70829890	Control Group Assembly	1	
15	96714258	Hex Head Screw	4	
17	96719729	Plain Washer	4	

CONTROL LEVER

Dwg 59815449

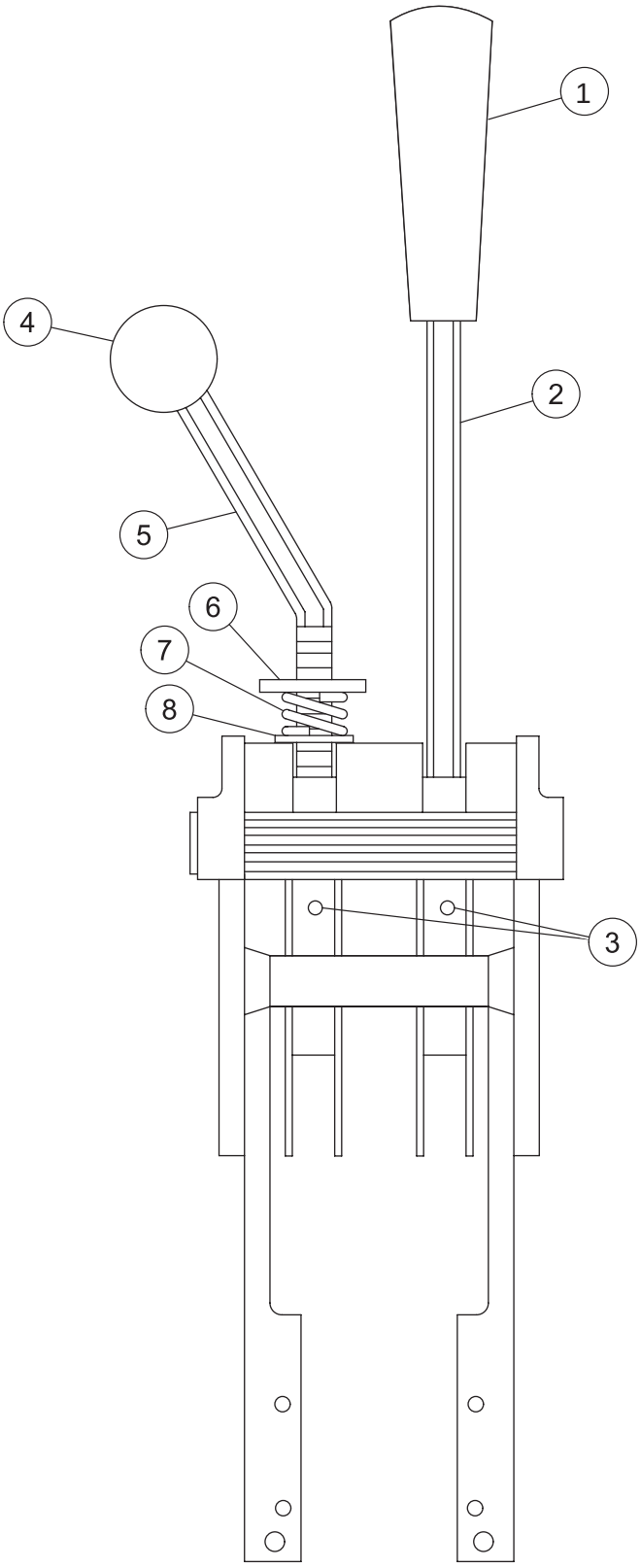

CONTROL LEVER

B.O.M 59815449

ITEM	COMM. NO.	DESCRIPTION	QTY	DIMENSIONS/NOTES
1	59899641	Propulsion Lever Knob	1	
2	59652067	Propulsion Lever	1	
3	50849751	Spring Pin	2	
4	59648394	Vibration Lever Knob	1	
5	59652065	Vibration Lever	1	
6	58059601	Spring Tension Knob	1	
7	58059619	Compression Spring	1	
8	58059627	Brake Shoe	1	

Section E - DRUM ASSEMBLY

DRUM INSTALLATION

Dwg 70916440

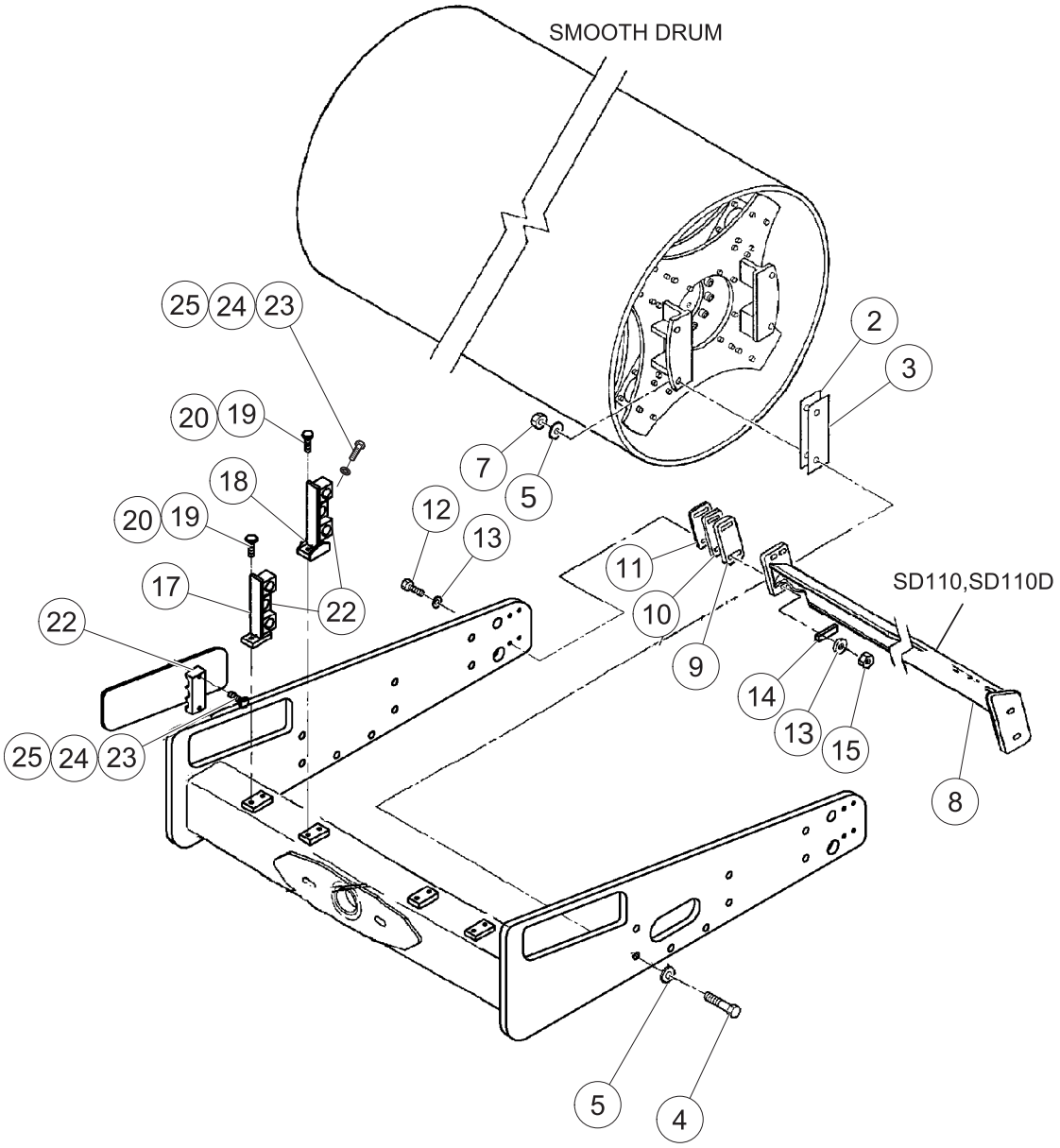

B.O.M 70916440

ITEM	COMM. NO.	DESCRIPTION	QTY	DIMENSIONS/NOTES
2	70081690	Shim	2	
3	70081708	Shim	2	
4	96728803	Hex Hd Bolt	8	
5	96701578	Hardened And Plated Washer	16	
7	96703699	Hex Nut	8	
8	70059662	Scraper Bar (SD110 & SD110D)	1	
-	70115498	Scraper Bar (SD110 D/F)	1	
9	70633490	Shim	2	6MM THK
10	70633474	Shim	2	2.64 THK
11	70633482	Shim	2	1.625THK
12	96718671	Hex Head Bolt	8	
13	96738620	Flat Washer	16	
14	70110598	Scraper Spacer	4	
15	96703665	Hex Nut	8	
17	70916341	Hose Support Bracket	1	
18	70916358	Hose Support Bracket	1	
19	96705272	Hex Head Screw	4	
20	96741046	Flat Washer	4	
22	70891478	Rubber Clamp Hose	3	
23	96715131	Hex Head Screw	6	
24	96741038	Flat Washer	6	
25	96701370	Hex Nut	6	

Dwg 70899208

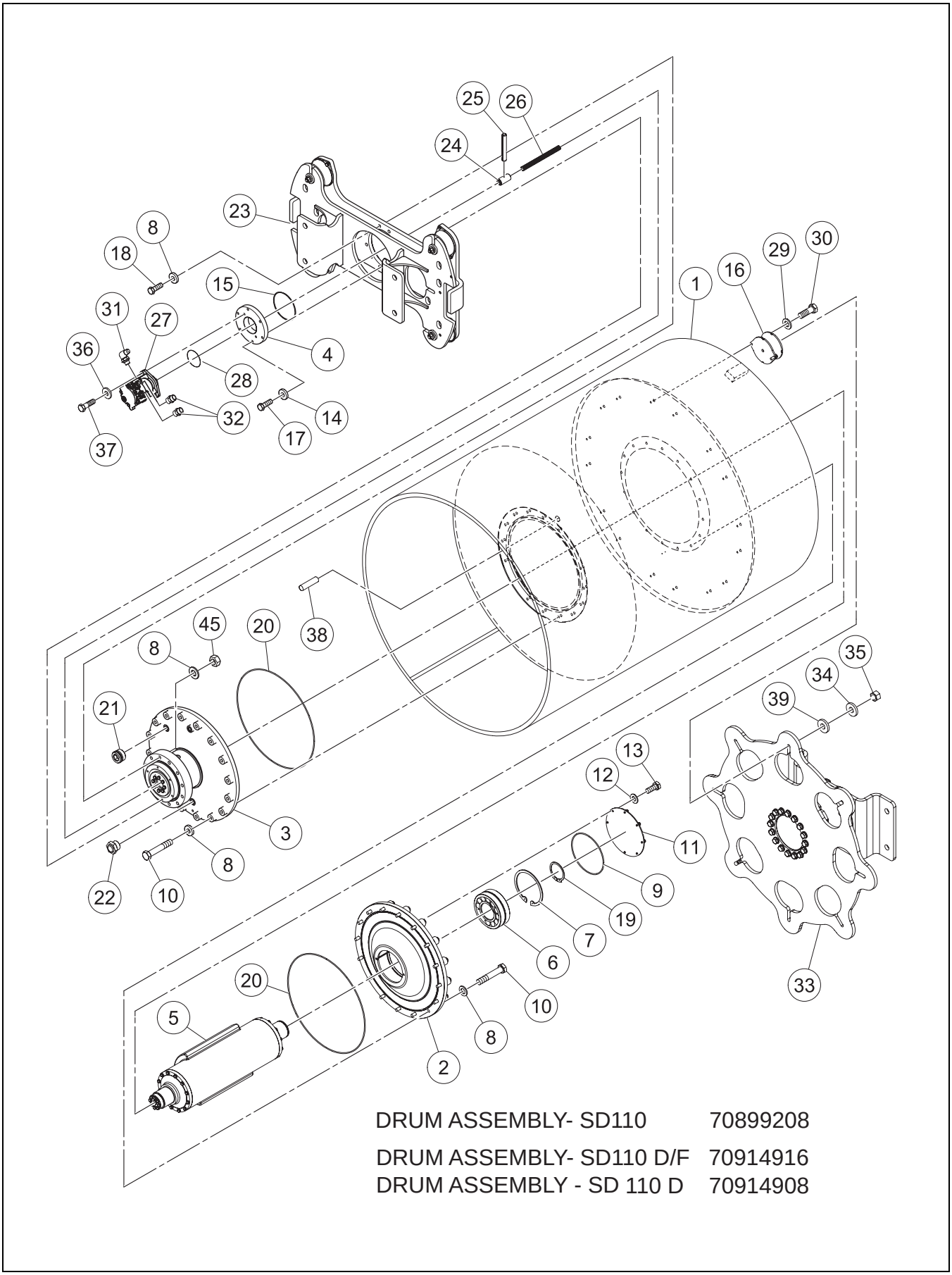

DRUM ASSEMBLY- SD110	70899208
DRUM ASSEMBLY- SD110 D/F	70914916
DRUM ASSEMBLY - SD 110 D	70914908

DRUM ASSEMBLY

B.O.M 70899208

ITEM	COMM. NO.	DESCRIPTION	QTY	DIMENSIONS/NOTES
1	13280383	Drum	1	
2	13329206	Bearing Drive Housing	1	
3	**43866615**	**Bearing Housing Assembly**	**1**	**See Page E10.**
4	13502034	End Plate	1	
5	**59257857**	**Eccentric Shaft Assembly**	**1**	**See Page E12.**
6	58951690	Spherical Bearing	1	
7	96711031	Clip Ring	1	
8	96738612	Metric Washer	56	M16
9	95643383	O-Ring	1	
10	96727656	Hex Head Bolt	16	M16 X 80(Drive Side)
10	96739990	Hex Head Bolt	16	M16 X 90
11	59258319	Cover	1	
12	96741038	Flat Washer	8	M8
13	96702824	Hex Hd Screw	8	M8 X 20 Lg.
14	96741046	Flat Washer	6	M10
15	13502240	O-Ring Seal	1	
16	13304787	Shock Mount	6	
17	96704549	Hex Screw	6	M10X1.5X45 Cl 10.9
18	96705504	Hex Screw	12	M16X2X110 Lg. Cl 8.
19	96711478	Retaining Ring	1	
20	95603163	O-Ring	2	
21	59144428	Magnetic Plug	2	
22	59277772	Sight Gauge	1	
23	**43866805**	**Carrier Assembly**	**1**	**See Page E8.**
24	59613612	Spline Coupling	1	
25	96736822	Roll Pin	1	
26	13183215	Splined Shaft	1	
27	**43844554**	**Vibration Motor**	**1**	**See Page E6.**
28	95988739	O Ring	1	
29	96738596	Flat Washer	12	M12-Hardened
30	96702808	Hex Head Screw	12	M12 X 30
31	95303350	Adapter	1	7/8Unf X 3/4J Ic
32	59922591	Adapter	2	1.1/16Unf X 1 .3/1
33	**70635388**	**Drum Drive Assembly (For SD110)**	**1**	**See Page E14.**
-	**13160650**	**Drum Drive Assembly (For D & D/F)**		**See Page E16.**
34	59565044	Hard Flat Washer	6	5/8 Unc
35	96703657	Nut	6	M16
36	96712237	Plain Washer	2	M12
37	96702329	Hex Hd Screw	2	M12X35 8.8C Plated
38	96737069	Pin Roll	1	
39	13351408	Washer	6	
45	96711882	Hex Nut	12	M16 Plated
50	**70633995**	**Bolt on Shell (For D/F)**	**1**	**See Page E22.**

VIBRATION MOTOR

Dwg 43844554

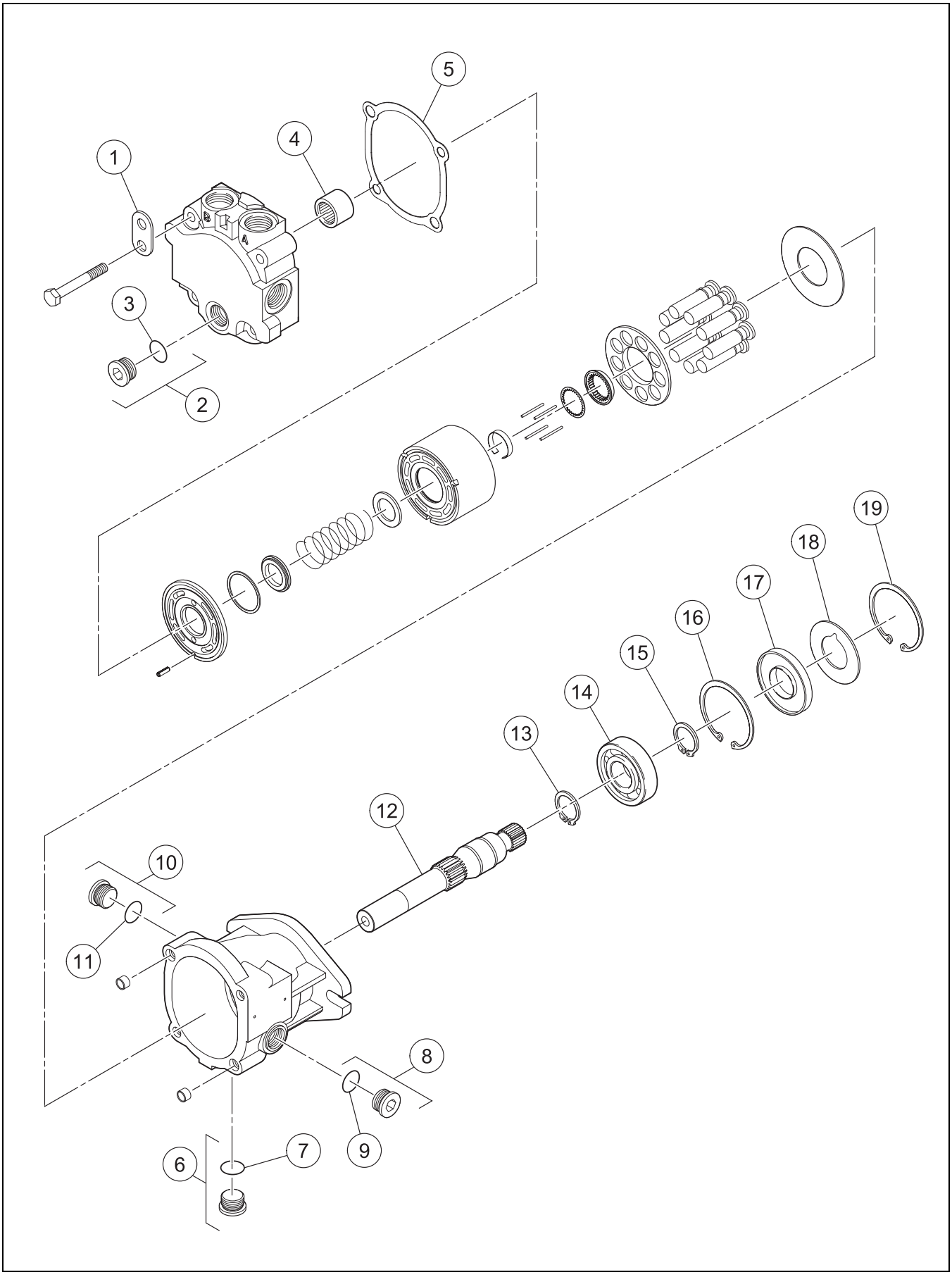

VIBRATION MOTOR

B.O.M 43844554

ITEM	COMM. NO.	DESCRIPTION	QTY	DIMENSIONS/NOTES
1	59360966	Lifting Bracket	1	
2	58891540	Socket Head Plug	1	
3	50278019	O-ring	1	
4	59387605	Needle Bearing	1	
5	59387498	End Cap Gasket	1	
6	56998610	Socket Head Plug	1	
7	50278019	O-ring	1	
8	58891540	Socket Head Plug	1	
9	50278019	O-ring	1	
10	58891540	Socket Head Plug	1	
11	50278019	O-ring	1	
12	13228200	Shaft	1	
13	59785519	Retaining Ring	1	
14	95200648	Ball Bearing	1	
15	59785519	Retaining Ring	1	
16	59861872	Retaining Ring	1	
17	59941203	Lip Seal	1	
18	59245209	Retaining Ring	1	
19	59861872	Retaining Ring	1	

CARRIER ASSEMBLY

Dwg 43866805

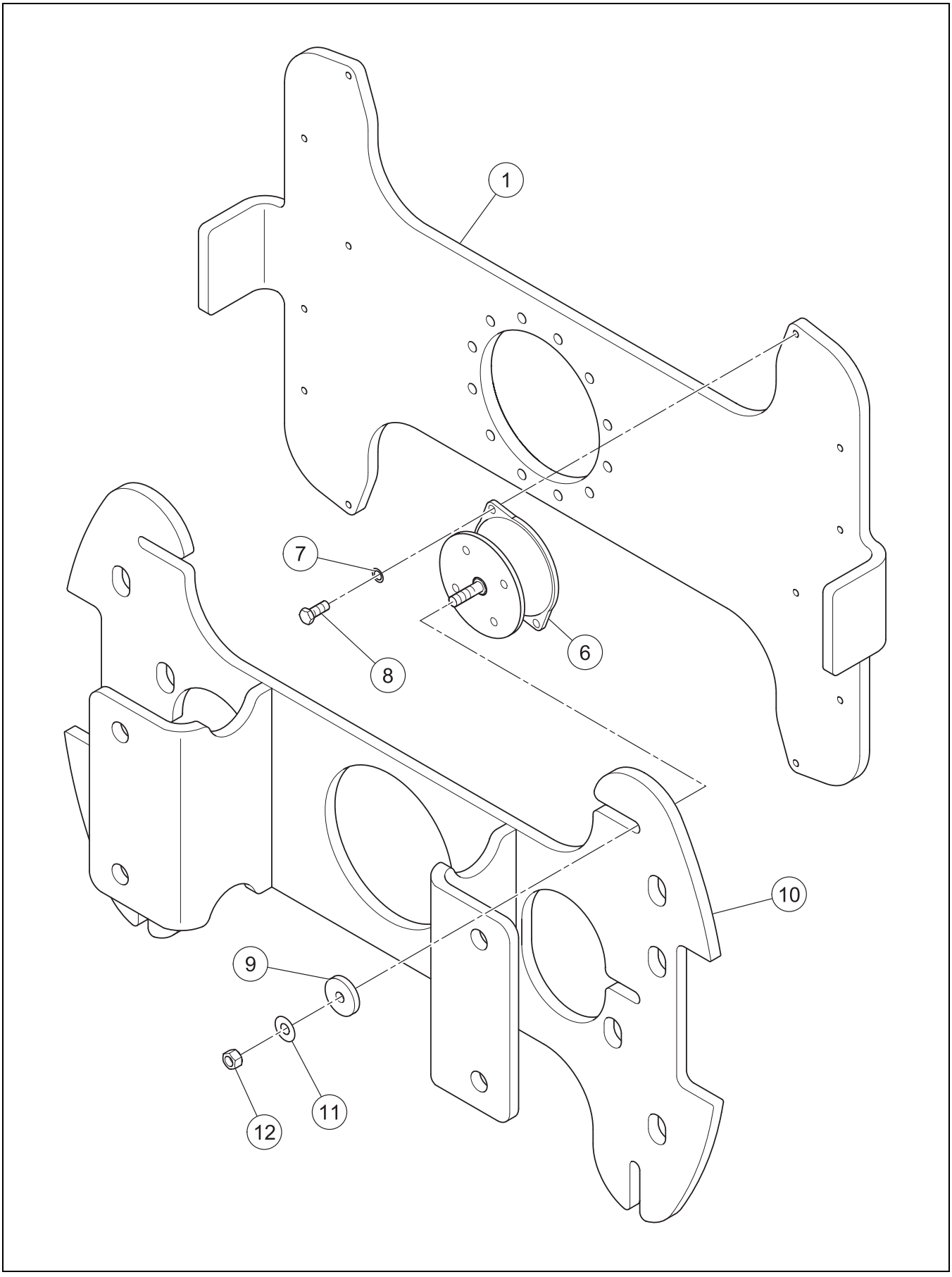

CARRIER ASSEMBLY

B.O.M 43866805

ITEM	COMM. NO.	DESCRIPTION	QTY	DIMENSIONS/NOTES
1	43814300	Carrier Plate	1	
6	13304787	Shock Mount	4	
7	96738596	Flat Washer	8	M12-Hardened
8	96703111	Hex Hd Screw	8	
9	13351408	Washer	4	
10	43818707	Shock Mount Plate	1	
11	59565044	Hard Flat Washer	4	5/8 Unc
12	96703657	Nut	4	M16

BEARING HOUSING ASSEMBLY

Dwg 43866615

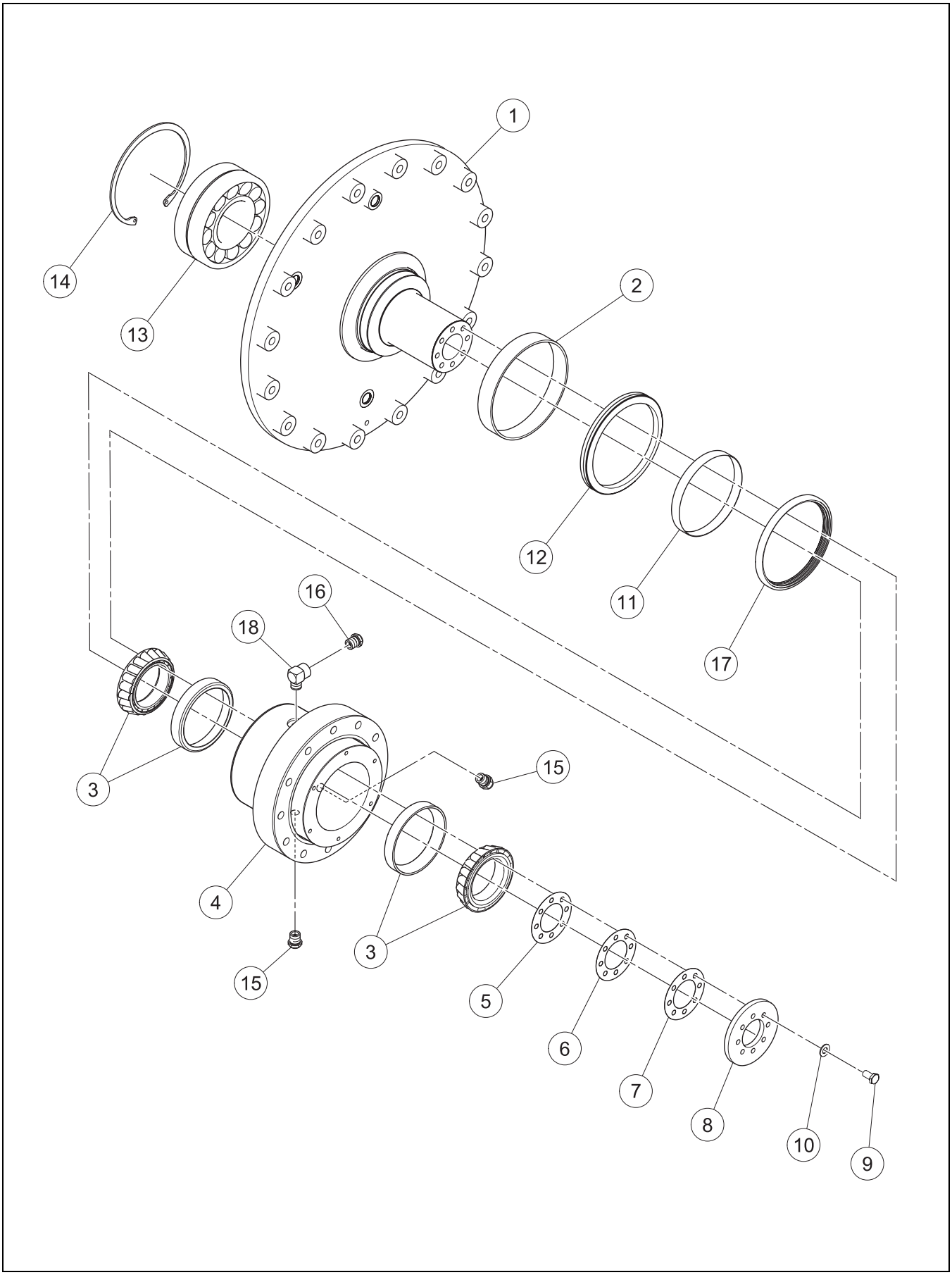

BEARING HOUSING ASSEMBLY

B.O.M 43866615

ITEM	COMM. NO.	DESCRIPTION	QTY	DIMENSIONS/NOTES
1	13501994	Bearing Housing Spindle	1	
2	13502257	Dust Band	1	
3	13414743	Taper Roller Bearing	2	
4	43814250	Carrier Housing	1	
5	13502141	Shim	2	0.005"
6	13502133	Shim	2	0.007"
7	13502125	Shim	3	0.020"
8	13502166	Preload Plate	1	
9	96704549	Hex Screw	8	M10X1.5X45 Cl
10	96741046	Flat Washer	8	M10
11	59277756	Wear Sleeve	1	
12	13167390	V Ring Seal	1	
13	58951690	Spherical Bearing	1	
14	96711031	Clip Ring	1	
15	59600593	Plug Pipe	2	
16	54584776	Filtered Vent Breather	1	
17	59277764	Oil Seal	1	
18	95264891	Elbow	1	

ECCENTRIC SHAFT ASSEMBLY

Dwg 59257857

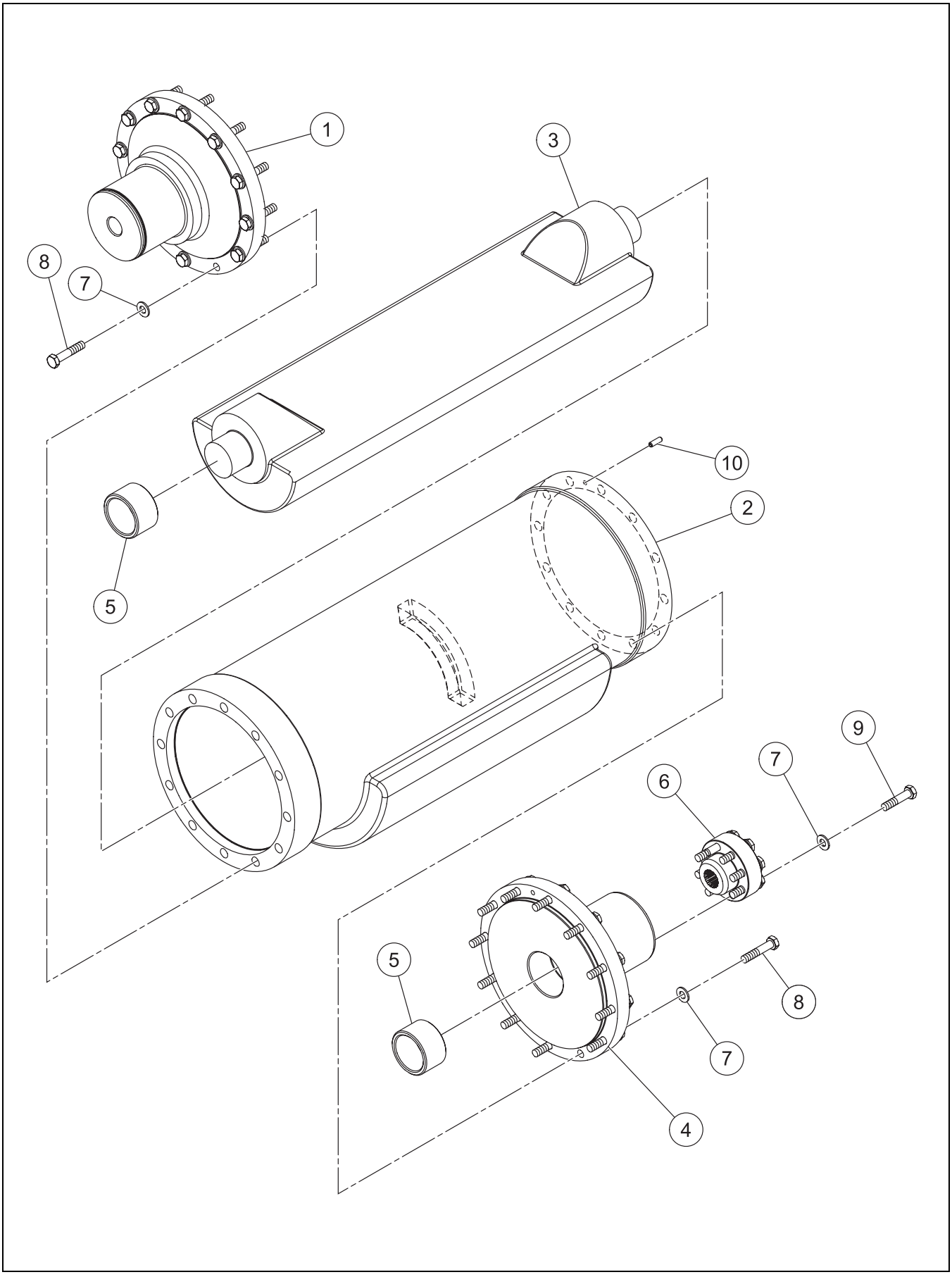

ECCENTRIC SHAFT ASSEMBLY

B.O.M 59257857

ITEM	COMM. NO.	DESCRIPTION	QTY	DIMENSIONS/NOTES
1	59298323	Journal	1	
2	13218052	Eccentric Shaft	1	
3	59298042	Eccentric Shaft	1	
4	13217922	Nondrive Side Journal	1	
5	59296632	Bearing	2	
6	59277723	Splinecoupling	1	
7	96741046	Flatwasher	32	
8	96719265	Hex Head Screw	24	
9	96702428	Hex Head Screw	8	
10	96736822	Roll Pin	1	

DRUM DRIVE ASSEMBLY - SD110

Dwg 70635388

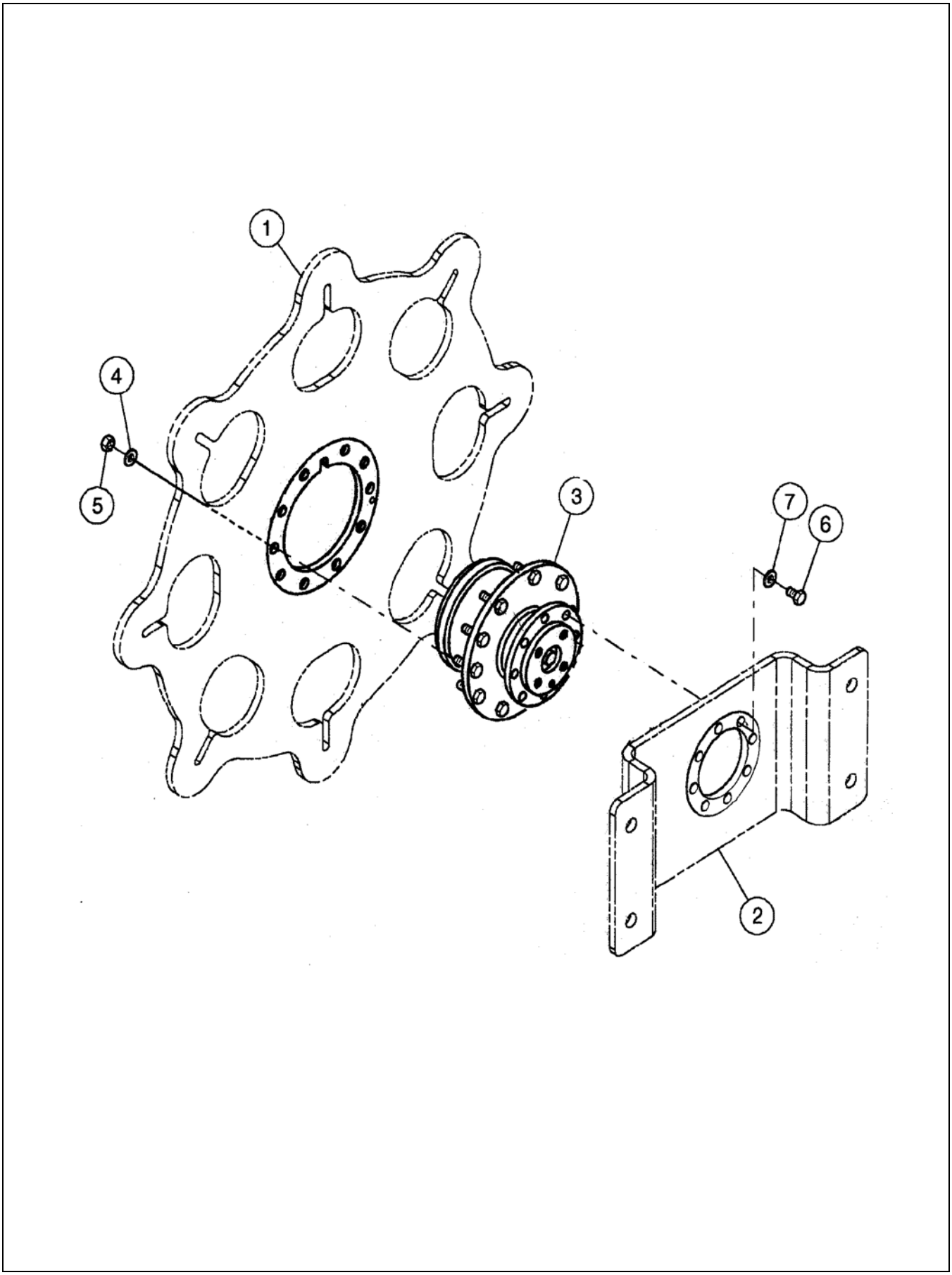

DRUM DRIVE ASSEMBLY - SD110

B.O.M 70635388

ITEM	COMM. NO.	DESCRIPTION	QTY	DIMENSIONS/NOTES
1	13207261	Drive Plate	1	
2	13206164	Motor Mounting Bracket	1	
3	**13222658**	**Torque Hub**	**1**	**See Page E20.**
4	59544213	Flat washer	10	
5	95971743	Hex Nut	10	
6	94051638	Hex Head Bolt	8	
7	59565044	Plain Washer	8	

DRUM DRIVE ASSEMBLY - SD110D & SD110F

Dwg 13160650

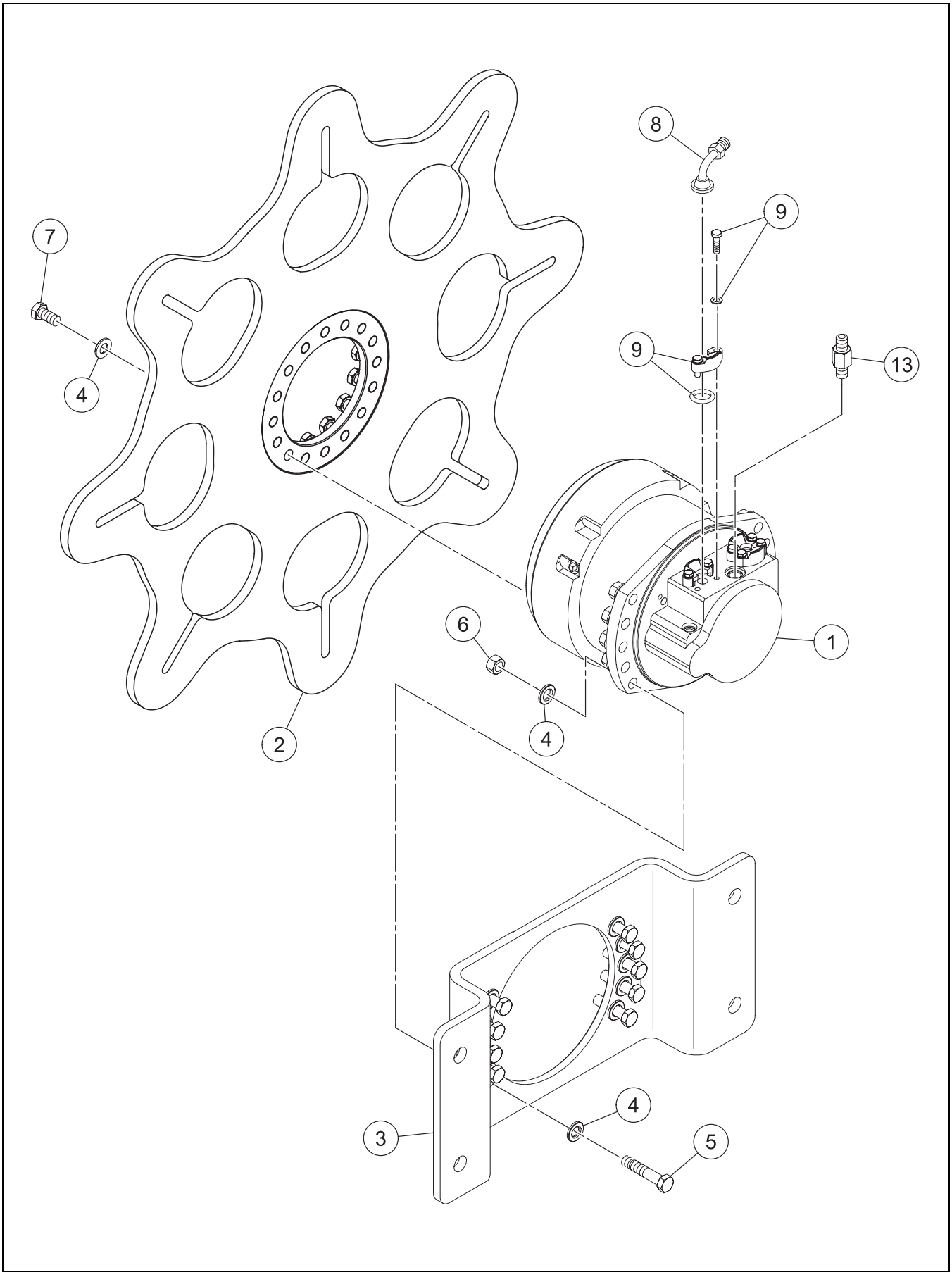

DRUM DRIVE ASSEMBLY - SD110D & SD110F

B.O.M 13160650

ITEM	COMM. NO.	DESCRIPTION	QTY	DIMENSIONS/NOTES
1	**13160650**	**Drum Drive Motor**	**1**	**See Page E18.**
2	13237383	Drive Plate	1	
3	59258681	Drive Motor Mtg Bracket	1	
4	96701560	Metric Washer	36	
5	96718671	Hex Head Bolt	10	M20 X 80
6	96703665	Hex Nut	10	M20 Class 10
7	96734066	Hex Hd Screw	16	M20 X 1.5P X 40 Long
8	59177915	Split Flange	2	
9	13184445	Split Flange Kit	2	
13	95285946	Adapter	1	

DRUM DRIVE MOTOR - SD110D & SD110F

Dwg 13160676

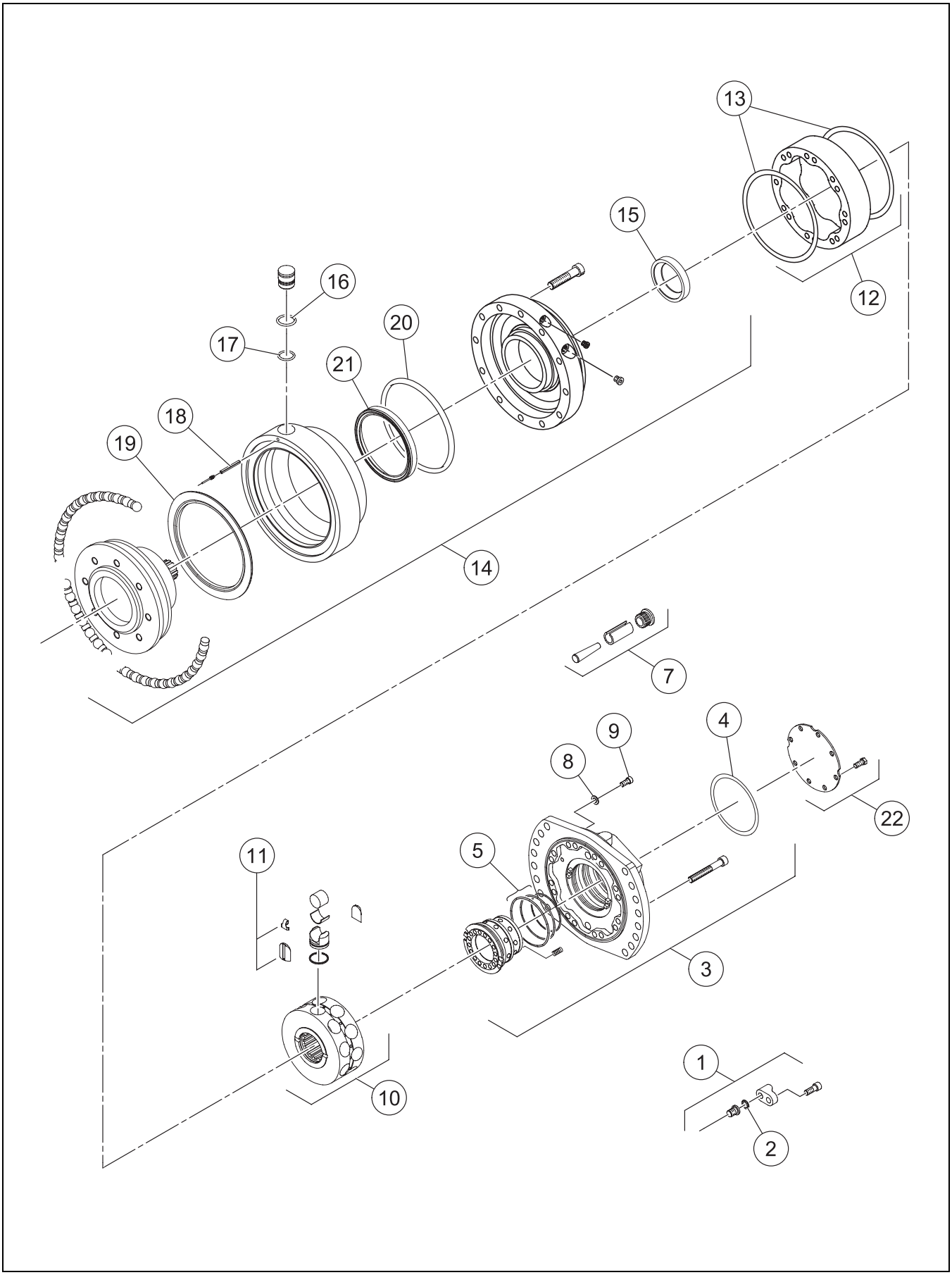

B.O.M 13160676

ITEM	COMM. NO.	DESCRIPTION	QTY	DIMENSIONS/NOTES
1	NSS	Holder	1	
2	NSS	-washer	1	
3	NSS	Complete Valving Cover	1	
4	NSS	-O-ring	1	
5	NSS	-seal Kit	1	
7	NSS	-split Pin	1	
8	NSS	-seal	2	
9	NSS	-bleed Screw	2	
10	NSS	Cylinder Block	1	
11	59193847	-repair Kit	1	Supplied for Complete Cylinder Block
12	NSS	Cam	1	
13	NSS	-O-ring	2	
14	NSS	Bearing Support	1	
15	NSS	-thrust Ring	1	
16	NSS	-O-ring	1	
17	NSS	-O-ring	1	
18	NSS	-split Pin	1	
19	NSS	-ring	1	
20	NSS	-O-ring	1	
21	NSS	-seal	1	
22		Plate and Screws	1	
-	13262670	Seal Kit Minor (Includes Items 4,13,16,17,20)	1	
-	13263421	Seal Kit Major (Includes Items 5,8,21)	1	

TORQUE HUB - SD110

Dwg 13222658

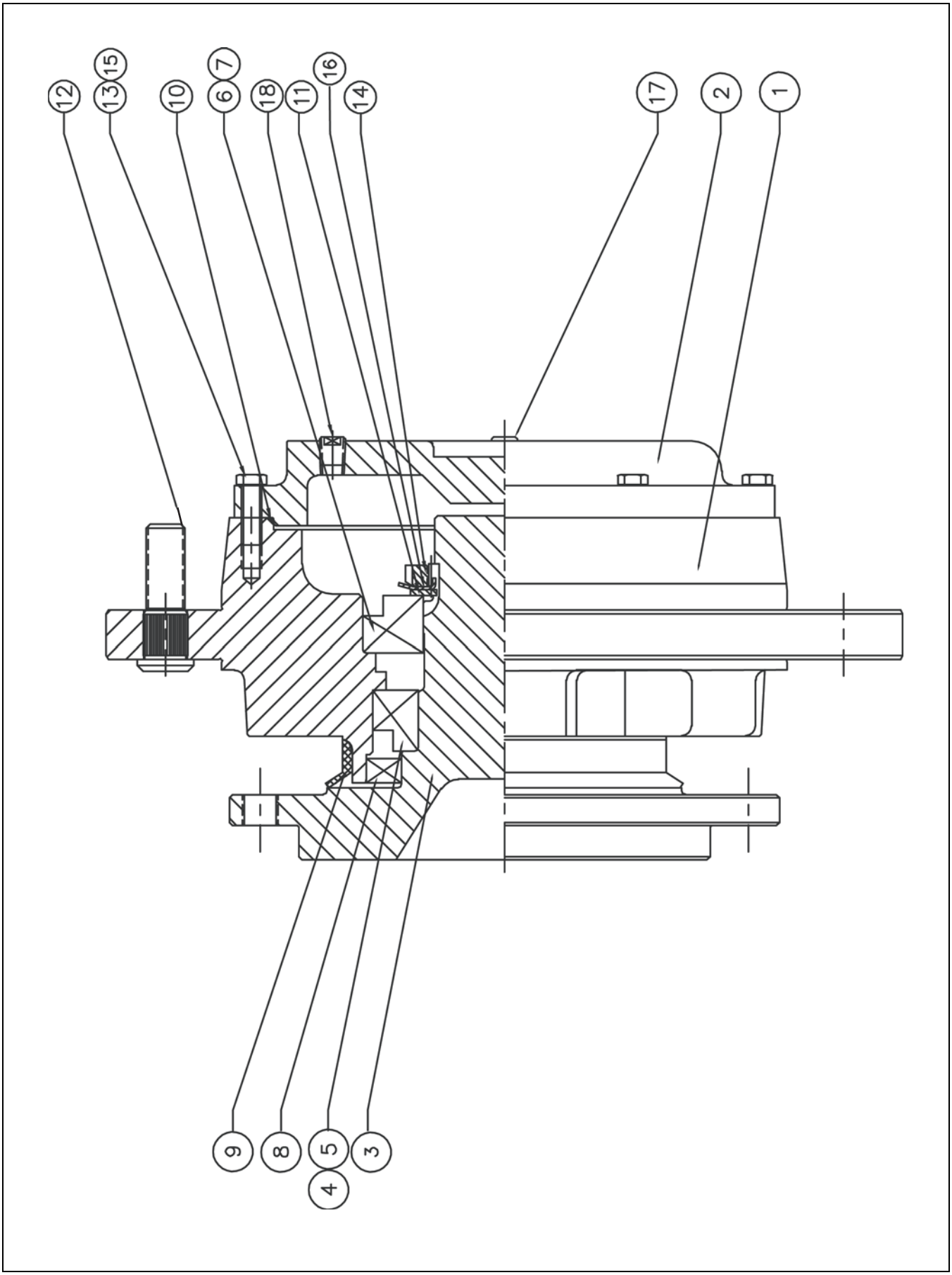

TORQUE HUB - SD110

B.O.M 13222658

ITEM	COMM. NO.	DESCRIPTION	QTY	DIMENSIONS/NOTES
1	NSS	Housing - With Pipe Plug Holes	1	
2	NSS	Cap End	1	
3	NSS	F1 Spindle	1	
4	NSS	Bearing Cup	1	
5	NSS	Bearing Cone	1	
6	NSS	Bearing Cup	1	
7	NSS	Bearing Cone	1	
8	NSS	Oil Seal	1	
9	NSS	Protector Seal	1	
10	NSS	O Ring	1	
11	NSS	Spacer, Flat Tongued	1	
12	NSS	Stud	1	
13	NSS	Hex Head Capscrew	6	
14	NSS	Locknut	1	
15	NSS	Lockwasher	6	
16	NSS	Locknutwasher	1	
17	NSS	Pipe Plug	1	
18	NSS	Plug Pipe	3	
	70836358	Seal Kit (Includes Item Number 8,9,10)		
	70836366	Bearing Kit (Includes item number 5,6,7,8,9,10,14)		

BOLT-ON PADFOOT SHELL INSTALLATION

Dwg 70633995

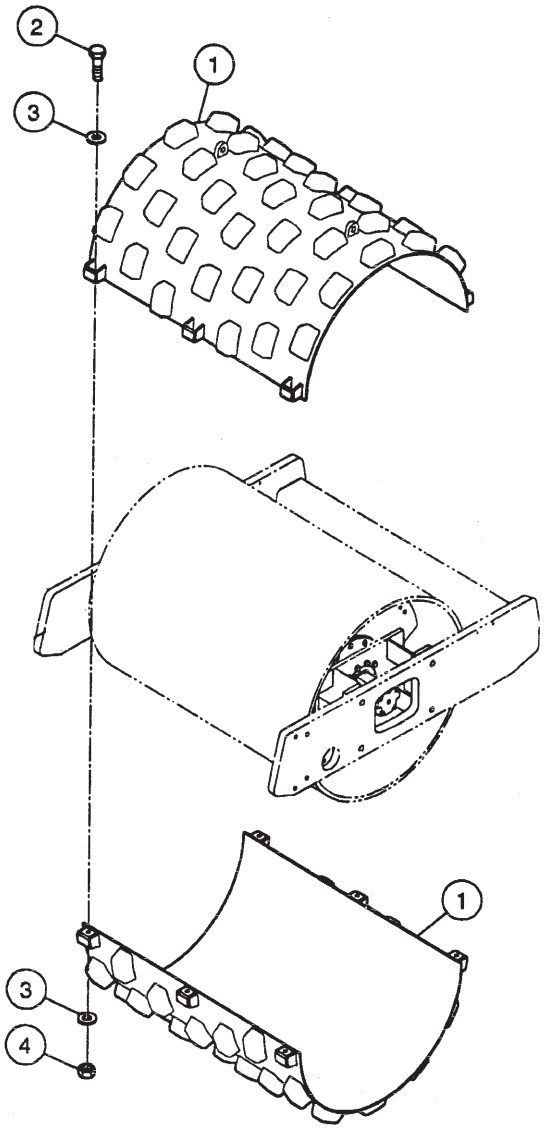

BOLT-ON PADFOOT SHELL INSTALLATION

B.O.M 70633995

ITEM	COMM. NO.	DESCRIPTION	QTY	DIMENSIONS/NOTES
1	58858846	Bolt-on pad-foot drum shell	1	
2	94204245	Hex Head Capscrew	8	
3	70155692	Flatwasher	16	
4	96720933	Nut	8	

Section F - HYDRAULIC PIPING

Dwg 70916424

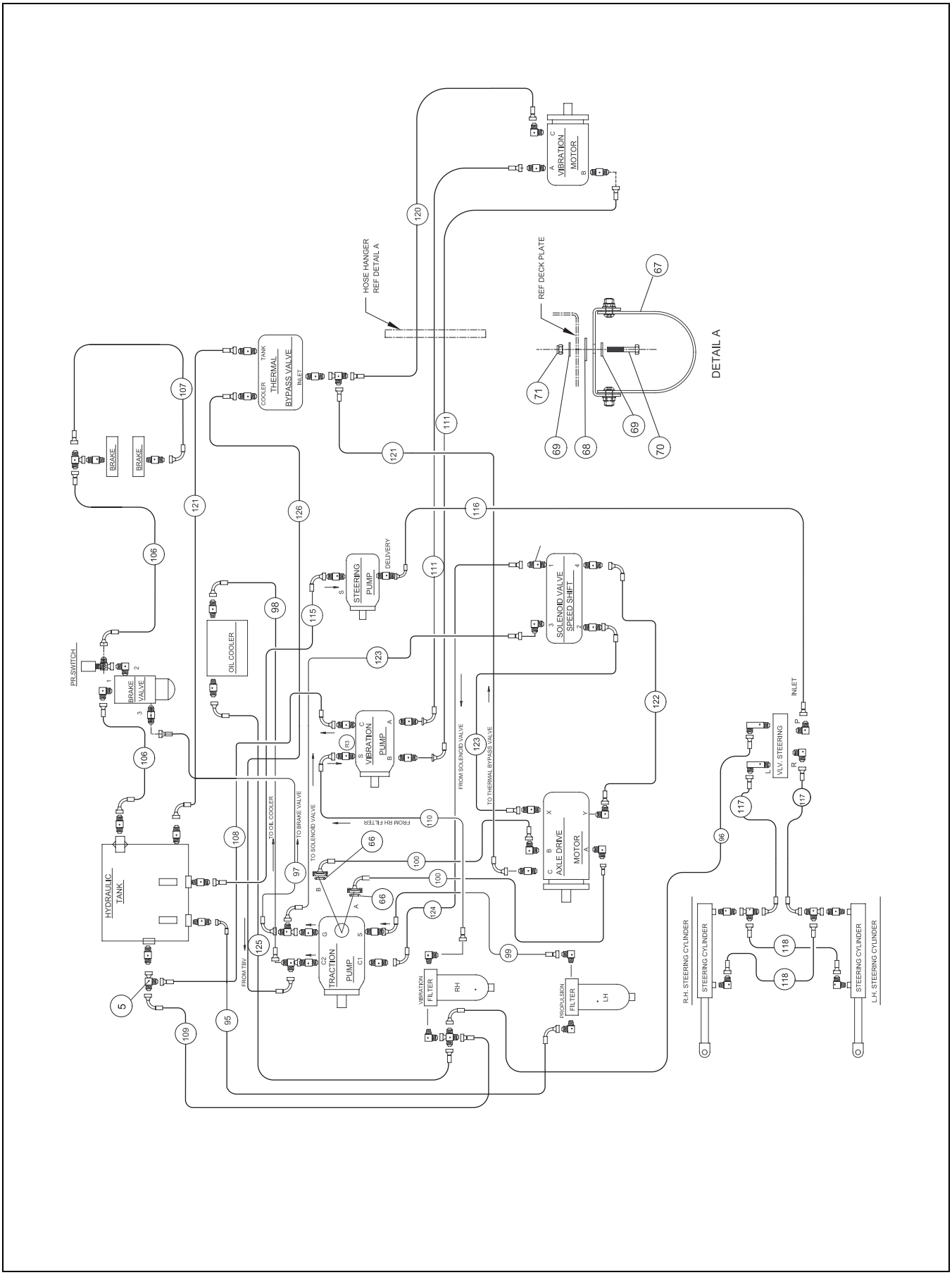

B.O.M 70916424

ITEM	COMM. NO.	DESCRIPTION	QTY	DIMENSIONS/NOTES
5	97116065	Adapter Tee	1	
66	59993881	O-ring	2	
67	13275862	Hanger Mount Assembly	1	
-	13275854	Hanger Strap	1	
-	13275870	Strap	1	
-	96728431	Hex Nut	2	
-	96741038	Flat Washer	2	
-	96743984	Cap Screw	2	
68	96711833	Hard Washer	1	
69	96741046	Flat Washer	2	
70	96704309	Hex. Head Cap Screw	1	
71	96702881	Nut Hex	1	
95	70074257	Hose	1	
96	94373339	Hose	1	
97	97114557	Hose	1	
98	97114573	Hose	1	
99	70610852	Hose	1	
100	70635289	Hose	2	
106	97120588	Hose	2	
107	97114557	Hose	1	
108	70068861	Hose	1	
109	70158506	Hose	1	
110	81268120	Hose	1	
111	43861145	Hose	2	
115	70089644	Hose	1	
116	94146933	Hose	1	
117	94146925	Hose	2	
118	97126189	Hose	2	
120	43861152	Hose	1	
121	97135008	Hose	2	
122	70186150	Hose	1	
123	97114557	Hose	2	
124	97113484	Hose	1	
125	70605233	Hose	1	
126	97114524	Hose	1	

Dwg 70918743

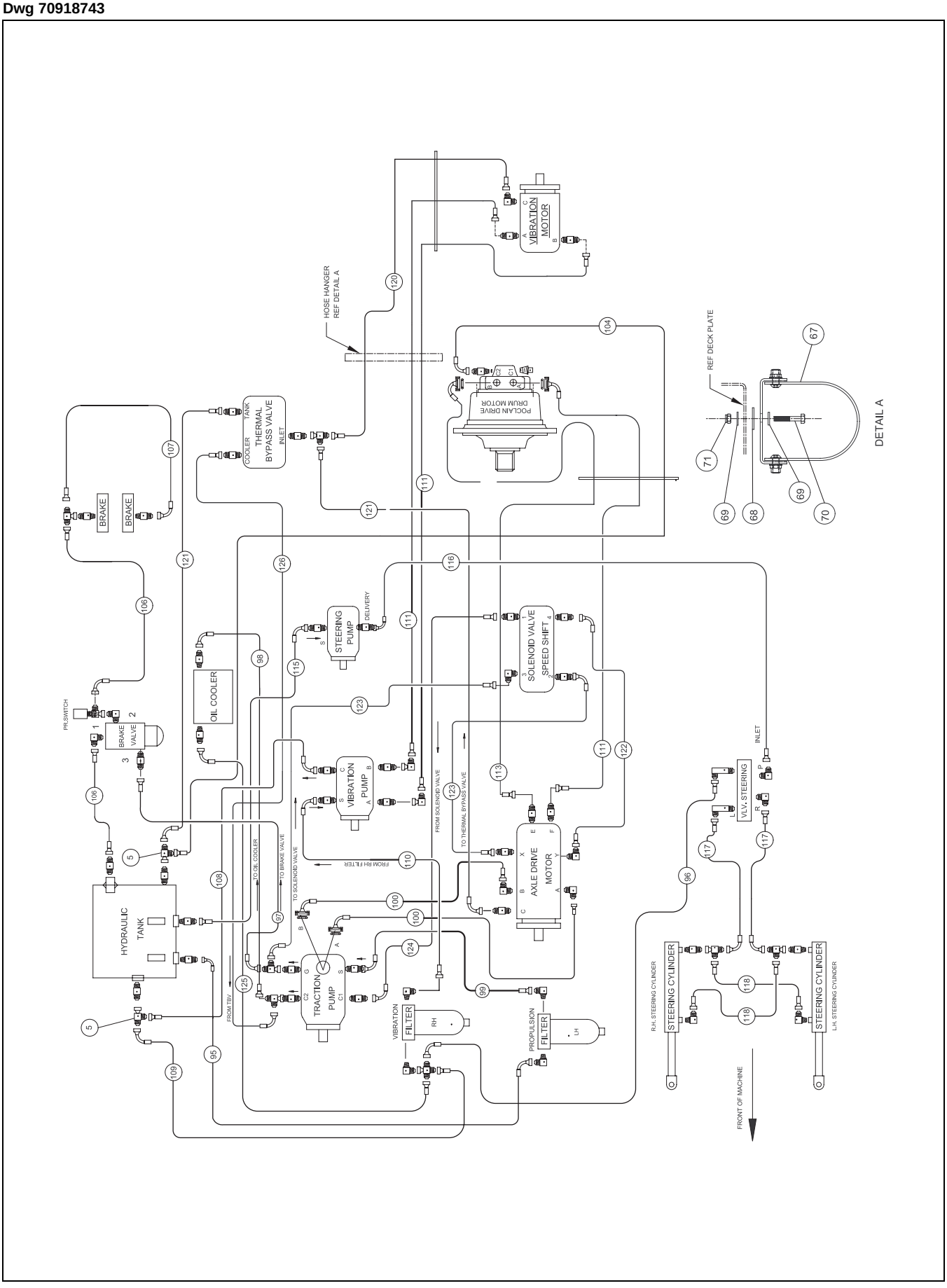

B.O.M 70918776

ITEM	COMM. NO.	DESCRIPTION	QTY	DIMENSIONS/NOTES
5	97116065	Adapter	2	
67	13275862	Hanger Mount Assembly	1	
-	13275854	Hanger Strap	1	
-	13275870	Strap	1	
-	96728431	Hex Nut	2	
-	96741038	Flat Washer	2	
-	96743984	Cap Screw	2	
68	96711833	Hard Washer	1	
69	96741046	Flat Washer	2	
70	96704309	Hex. Head Cap Screw	1	
71	96702881	Hex Nut	1	
95	70074257	Hose	1	
96	94373339	Hose	1	
97	97114557	Hose	1	
98	97114573	Hose	1	
99	70610852	Hose	1	
100	70635289	Hose	2	
104	43903228	Hose	1	
106	97120588	Hose	2	
107	97114557	Hose	1	
108	70068861	Hose	1	
109	70158506	Hose	1	
110	81268120	Hose	1	
111	43861145	Hose	3	
113	13180500	Hose	1	
115	70089644	Hose	1	
116	94146933	Hose	1	
117	94146925	Hose	2	
118	97126189	Hose	2	
120	43861152	Hose	1	
121	97135008	Hose	2	
122	70186150	Hose	1	
123	97114557	Hose	2	
124	97113484	Hose	1	
125	70605233	Hose	1	
126	97114524	Hose	1	

Section G - ELECTRICALS

Dwg 70868591

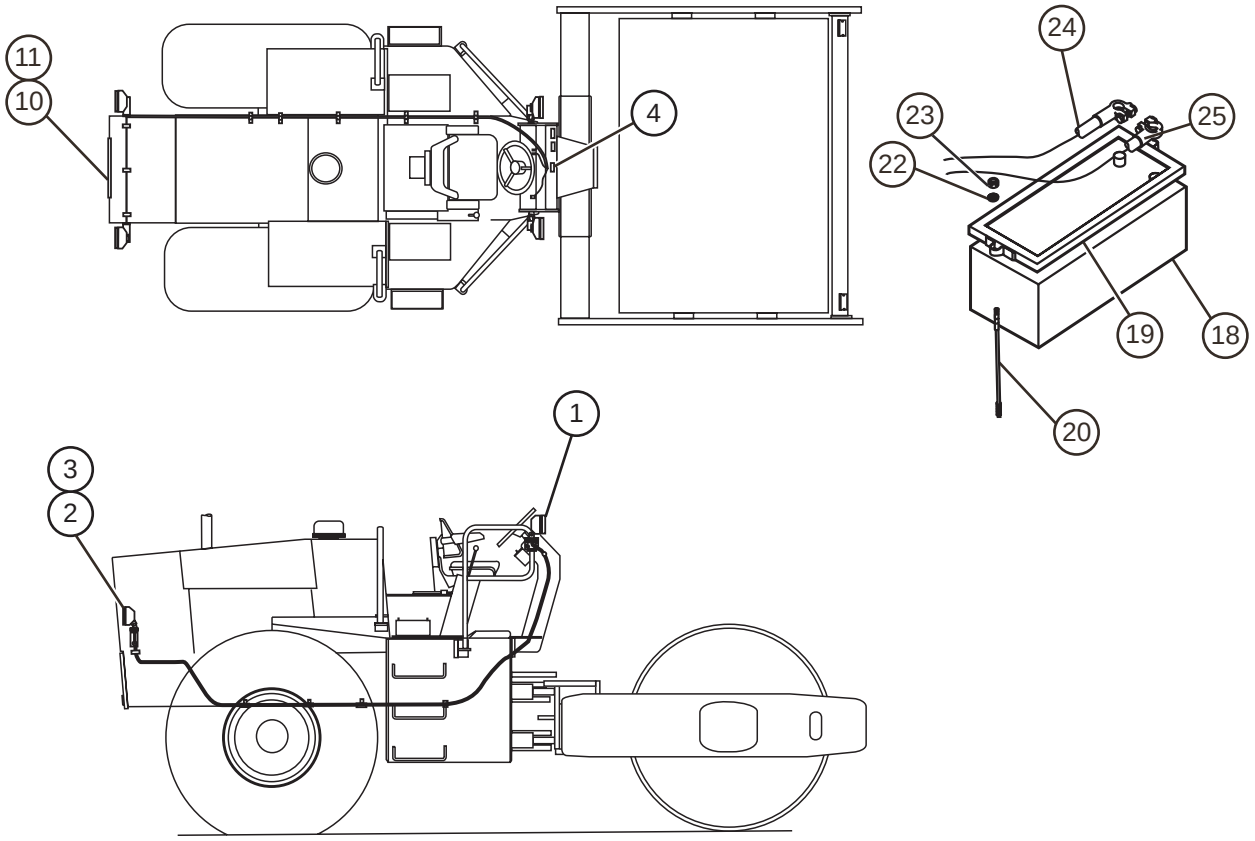

B.O.M 70868591

ITEM	COMM. NO.	DESCRIPTION	QTY	DIMENSIONS/NOTES
1	70872510	Head Lamp Assembly	2	
2	70889134	Tail Lamp Cable Assembly	1	
2	70889175	Tail Lamp Assembly RHS	1	
3	70889225	Work Lamp Assembly	2	
-	70836945	Bulb	1	
4	70098983	Electric Horn	1	
10	70837455	Light Registratation Plate	1	
11	70836929	Bulb	2	
16	70861448	Harness Wire, Main Console	1	Not Shown
17	70862099	Kit Loose Electrical Items	1	Not Shown
-	70562798	Terminal -battery(Positive)	1	
-	70184593	Terminal -battery(Negative)	1	
-	70627096	Pushbutton Assembly	1	
-	70563408	Lamp Indicating	2	
-	70838602	Blue Lamp Indicating	1	
-	70838610	Green Lamp Indicating	2	
-	70540281	Toggle Switch	3	
-	70140058	Toggle Switch	2	
-	13236203	Reverse Alarm	1	
-	70611975	Breaker Circuit Miniatur	1	
-	70852496	Dual Coil Relay Lights	2	
-	70851399	Automotive Relay	4	
-	70852488	Electronic Unit Flasher	1	
-	54651237	Plug	1	
-	59434001	Socket	2	
-	59434217	Wedge	1	
-	70627146	Shroud Pushbutton	1	
-	70852736	Boot Protective, Battery Terminals	1	
18	70550843	Battery	1	
19	70553896	Battery Frame	1	
20	94114774	Stud	2	
22	96719745	Plain Washer	2	
23	96712799	Hex Nut	2	
24	70861463	Battery Cable Positive	1	
25	70861471	Battery Cable Negative	1	
26	70861422	Harness Wire, LHS Console	1	Not Shown
27	70861430	Harness Wire, RHS Console	1	Not Shown
28	70931191	Engine Harness Wire	1	Not Shown
-	54651237	Plug	2	
-	59434001	Socket	4	
-	59434217	Wedge	2	
29	70561733	Cap Rubber For Toggle Switch	2	Not Shown

WORD INDEX

A

Adapter Exhaust Silencer C-49
Adaptor B-7
Adjust Screw C-39
Air Cleaner Clamp C-53
Air Cleaner Hose C-53
Air Cleaner Installation C-5
Air Duct C-5
Air Filter C-53
Air Pre Cleaner C-53
Anti-extrusion Ring C-47
Articulation Pin A-3
Axle Assembly B-3, B-5
Axle Drive Motor B-3, B-5

B

Back Up Ring C-39
Backplate
isd10 0 . . . . . A-3
Ball Bearing B-7, B-17, B-19, E-7
Ballast Tyre With 500 Litres Of Water B-23
Bearing Drive Housing E-5
Bearing Housing Assembly E-5
Bearing Housing Spindle E-11
Bearing Kit E-21
Bearing Support E-19
Bevel Gear Set B-11
bleed Screw E-19
Bolt on Shell (For D/F) E-5
Bolt-on pad-foot drum shell E-23
Box D-5
Bracket Cable C-15
Bracket Mounting Throttle C-9
Brake Parking A-21
Brake Shoe D-7
Brake Switch D-3
Breather Filter With Splash Guard A-9, A-17
Bypass Valve Assembly C-39

C

Cable Throttle C-51
Cam E-19
Canopy Sunshade A-25
Cap End E-21
Cap Ferry Screw C-11
Cap Screw Hex. Head M10 X 35 Lg. F-5
Cap Valve Tyre B-23
Carrier Assembly E-5
Carrier Housing E-11
Carrier Plate E-9
CarrierSeal C-29
Centering Spring B-13
Charge Pump Cover Assembly
Rh C-31
Charge Pump Cover Assembly - RH C-23
Charge Pump Gasket C-43
Charge Pump Set C-23, C-31
Charge Pump Shaft C-23, C-31
Charge Relief Adjuster C-43
Charge Relief Poppet B-17, B-19, C-29
Charge Relief Valve Kit C-21
Charge Valve Spring C-39
Clamp Mounting Cable C-11
Clevis Series C-51
Clip Hose C-53
Clip Ring E-5, E-11
Complete Valving Cover E-19
Compression Sp ring D-7
Connecting Pin A-3
Connecting Pipe C-53
Control Assembly C-39
Control Filter Screen C-29
Control Gasket C-21, C-29, C-39
Control Group Assembly D-5
Control Orifice Kit C-21
Control Sleeve C-41
Control Throttle With Cable Mount C-51
Control Valve Kit C-21
Cowling C-5
Cowling Hood C-5
Cross Special C-3
Cylinder Block E-19
Cylinder Bolt B-7, B-13

D

Decal - Engine Stop A-21
Decal - Lube Eccentric A-21
Decal Caution Filter Element Change A-21
Decal Checklist A-21
Decal Crush Area A-21
Decal Diesel Fuel A-21
Decal Grease 50 Hrs A-21
Decal Hydraulic Oil A-21
Decal Ignition Switch A-21
Decal Lube Chart A-21
Decal Operation Maintenance Safety A-21
Decal Roll Over Hazard Warning A-21
Decal Saddle Drum Frame Lh A-21
Decal Saddle Drum Frame Rh A-21
Decal Sd110 . . . . . A-21
Decal Signature A-21
Decal Sit On Rail Warning A-21
Decal Throttle A-21
Decal Tyre Pressure A-21
Decal Warning A-21
Dipstick A-17
Disc Brake B-13
dowel B-13
Dowel Pin C-47
Dowel Pin Spring A-3
Drive Gear C-47
Drive Motor Mtg Bracket E-17
Drum E-5
Drum Drive Assembly (For D & D/F) E-5

Drum Drive Assembly (For SD110) E-5
Drum Drive Motor E-17
Drum Frame A-3
Dust Seal A-3

E

Eccentric Shaft E-13
Eccentric Shaft Assembly E-5
Electric Tachometer D-3
Element inner Air Filter C-53
Element Outer Air Filter C-53
End Cap Gasket C-23, C-31, E-7
End Plate E-5
Engine C-9
Engine lube oil filter C-9
Exhaust Piping Assembly C-49
Exhaust Silencer C-49

F

F1 Spindle E-21
Fender L.h C-5
Fender R.h C-5
Filter Screen C-21
Flange C-47
Flange Cover C-23, C-31
Frame A-5
frictionwasher B-13
Front Engine Mounting C-9
Fuel Filter C-7
Fuel Filter Mounting Bracket C-7
Fuel Tank Assembly A-15
Fuel Tank Installation A-5

G

Gear B-7
Gland Seal A-11
Grille C-5
Guide Post C-25

H

Handle
control C-39
Hanger Strap F-5
Helical Compression Spring C-25
Holder E-19
Hood & Fendor Support Assembly C-5
Hose Hyd
r1 1/2id 3/4j 9 0d 2.5m Lg F-5
r1 3/4id 1.1/16 J 90d 0.75m F-5
r1 3/8id 9/16j 90d 0.5m Lg F-5
Hot Air Cover Plate C-49
Hour Meter D-3
Housing C-47
Housing - With Pipe Plug Holes E-21
Hydraulic Cylinder A-3
Hydraulic Filter Element C-3
Hydraulic filter element C-9
Hydraulic Filter Mounting Bracket C-3
Hydraulic Gear Pump C-19
Hydraulic Oil Cooler C-9
Hydraulic Tank Assembly A-7
Hydraulic Tank Installation A-5
Hydraulic Tank Strainer A-7

I

Idler Gear C-47
Indicator Service C-53
Inlet Pipe C-53
Intermediate Brake Disc B-13

J

Journal E-13
Journal Bearing C-23, C-31

K

Key C-23, C-31
Kit Decal Sd110 . . . . . A-21

L

Lever Assembly C-25
Lid A-9, A-17
Lifting Bracket E-7
Lip Seal C-21, C-29, E-7
Lock Pin A-19
Lock Pin Holder A-19
Locking Plate B-11, B-13
Lube. Torque Hub A-21

M

Magnet Plug B-7, B-9
MDC Kit (Includes Item 10) C-29
Metric Washer A-5, E-5, E-17
Mirror A-29
Mirror Mounting Rod A-29
Motor Mounting Bracket E-15
Mount Shock C-7
Multi-Function Valve Kit C-21
Multi-function Valve Kit (Includes Items 2 & 3) . C-29

N

Needle Bearing C-41, E-7
needle Bearing B-13
Nondrive Side Journal E-13
No-spin Differential B-11

O

Oil Level Plug A-7
Operator Platform Assembly A-19
Orifice Plug B-17, B-19
O-Ring Seal E-5

P

Pin C-23, C-31
pin B-13
Pin Roll E-5
Pinion B-13
Piston B-13
Piston Brg A-13
Piston O Ring Kit B-17
Piston O-ring Kit B-19
Piston Seal A-11, A-13
Pivot Pin Cylinder A-3
planet Gear B-13
Planet Gear Carrier B-13
Plate And Screws E-19
Plate Support U Clamp A-25
Plate Washer C-7
Platform D-3
Plug Assembly B-17, B-19
Plug Pipe E-11, E-21
Plug Tyre-rim B-23
Poppet C-43
Preload Plate E-11
Pressure Lube Oil Gauge D-3
Pressure Seal C-47
Pressure Switch A-5
Propulsion Cable Bracket C-13
Propulsion Control Lever C-13, C-15
Propulsion Lever D-7
Propulsion Lever Knob D-7
Propulsion Pump C-13, C-15
Propulsion Pump Assembly C-11
Protector Seal E-21
Pump Mounting Plate C-11
Push-pull Cable Clamp C-51

R

Rail Rhs A-29
Railing Assembly A-27
Railing Grab Weld Lh A-29
Railing Grab Weld Rh A-29
Rear Cover C-47
Rear Engine Mounting C-9
Rear Light Mtg Bracket
Lh C-5
Rh C-5
Reduction Bushing B-13
Reflector Amber A-21
Reflector Red A-21
Reflector White A-21
repair Kit E-19
Retaining Plate C-23, C-29
Ring Gear B-13
Ring Gear Support B-13
Ring Nut B-11
Rod Brg A-13
Rod Seal A-13
Roller Bearing C-25, C-33
roller Bearing C-37, C-43

S

Scr Valve C-39
Seal Carrier Shaft C-37
Seal Frame Swivel A-3
Seal Kit (Includes Items 7
8
12 & 13) C-47
Seat Complete D-5
Server Gasket B-17
Servo Cover C-45
Servo Cover Gasket C-45
Servo Cylinder Kit C-25
Servo Piston Ring Kit C-43
Set Screw C-45
Shaft Assembly C-37
Shaft Seal C-47
Shaft Seal Assy C-21
Sheet B-7
Shim Kit B-17, B-19
Shock Mount E-5, E-9
Shock Mount Plate E-9
Shuttle Spool B-17, B-19
Side Cover C-25
Side Cover Assembly C-25
Side Cover Insert Assembly C-33
Sight Gauge E-5
Silencer Mtg Clamp C-49
Slyd Ring A-11
Snap Ring B-9, B-13, C-47
snap Ring B-13
Socket Head Plug E-7
Solenoid Valve A-5
Solenoide Valve A-5
Spacer
Flat Tongued E-21
Spacer Bracket Mtg Prop Cable C-15
Special Plug C-23
Spin On Suction Filter C-3
Spline Coupling E-5
Spline Shaft C-33
Splinecoupling E-13
Splined Shaft E-5
Split Flange E-17
Split Flange Kit E-17
split Pin E-19
Spring Guide B-17, B-19
Spring Pin D-7
Spring Seat C-25
Spring Tension Knob D-7
Stack Exhaust C-49
Steering Adjusting Bolt B-13
Steering Column D-3
Steering Pump Assembly C-11
Steering Valve D-3
Stop B-17, B-19

Stop Cable D-3
Stud B-9, E-21
Sunshade A-25
Sunshade Assembly A-23
Sunshade Canopy- U Bolt A-25
Support Plate A-25
Support Strap Tie (Hose) A-21
Swivel Frame A-3

T

Tank Cover Gasket A-9
Tank Gasket Cover A-17
Tank Mounting A-7, A-15
Tape Retro Reflective A-21
Tape Retro Reflective Red A-21
Taper Roller Bearing E-11
Tapered Roller Bearing B-13
Tee Special A-5
Temperature Lube Oil Gauge D-3
Thermal Bypass Valve A-5
Throttle Installation Assembly C-5
Thrust Bearing A-3
thrust Ring E-19
Torque Hub E-15
Torque Item (5) To 405 Lb-ft B-23
Tyre B-23
Tyre And Wheel Assembly B-21

U

U Clamp A-27, C-49

V

V Ring Seal E-11
Vaccuator Valve C-53
Valve Air B-23
Vent B-7, B-9
Vibration Cable Bracket C-11
Vibration Lever D-7
Vibration Lever Knob D-7
Vibration Motor E-5
Vibration Pump C-17
Vibration Pump Assembly C-11

W

Water B-23
Wheel B-23
Wheel Cap D-3
Wheel Steering & Cap Assembly D-3
Wheel Stud B-13
Wiper A-13
Wiper Seal A-11

NUMERICAL INDEX

COMM.NO.	PAGE
10486116	B-7
10641355	C-7
12363668	B-17
12363868	B-19
13066329	C-39
13104161	B-9
13160650	E-5
	E-17
13167390	E-11
13183215	E-5
13184445	E-17
13203884	B-17
13206164	E-15
13207261	E-15
13217922	E-13
13218052	E-13
13222658	E-15
13228200	E-7
13228705	B-13
13228713	B-13
13228762	B-7
13228770	B-7
13228788	B-7
13237383	E-17
13262670	E-19
13263678	C-37
13263686	C-37
13263694	C-39
13263702	C-39
13263710	C-39
13263728	C-41
13263736	C-43
13263744	C-43
13263751	C-45
13263769	C-45
13263777	C-45
13263785	C-45
13263827	C-39
13263846	B-17
	B-19
13263850	B-17
	B-19
13263876	B-17
	B-19
13268362	B-7
13268370	B-7
13268388	B-7
13275854	F-5
13275870	F-5
13280383	E-5
13289699	A-5
13304787	E-5
	E-9
13329206	E-5
13351408	E-5
	E-9
13414743	E-11
13501994	E-11
13502034	E-5
13502125	E-11
13502133	E-11
13502141	E-11
13502166	E-11
13502240	E-5
13502257	E-11
14083448	A-5
	C-13
	C-15
	D-5
14083463	A-19
43814250	E-11
43814300	E-9
43818707	E-9
43840321	B-3
	B-5
43844430	B-3
43844455	B-5
43844463	C-17
43844505	C-13
43844554	E-5
43844760	C-19
43861145	F-5
43861152	F-5
43866615	E-5
43866805	E-5
43903228	F-5
43923317	C-15
50268127	A-3
50268242	A-3
50268259	A-3
50268861	A-3
50268879	A-3
50278019	E-7
50849751	D-7
54445010	A-5
54492608	C-43
54521216	B-23
54584776	E-11
54632773	B-11
54632898	B-11
54633185	B-13
56998610	E-7
58059601	D-7
58059619	D-7
58059627	D-7
58763475	C-25
58772617	C-23
58785346	B-17
	B-19
58795766	C-29
58799743	B-17
	B-19
58799750	B-17
	B-19
58804337	B-13
58815564	C-29
58838384	C-53
58858846	E-23
58881863	B-17
	B-19
	C-41
	C-45
58884863	B-17
58891441	C-31
58891540	E-7
58891896	C-43
58891938	C-25
58891946	C-25
58891953	C-25
58891979	C-23
58892019	C-25
58898669	C-47
58898677	C-47
58916537	B-9
58916545	B-9
58916578	B-9
58916610	B-9
58916685	B-13
58916693	B-13
58916727	B-13
58916750	B-13
58916768	B-13
58916776	B-13
58916784	B-13
58916818	B-13
58916826	B-13
58916834	B-13
58916842	B-13
58916859	B-13
58916891	B-13
58916909	B-13
58916925	B-13
58916933	B-13
58917014	B-13
58917055	B-13
58917063	B-13
58917097	B-13
58917105	B-13
58917113	B-13
58917147	B-13
58917295	B-11
58917303	B-11
58917345	B-11
58917451	B-11
58917527	B-11
589185581	C-31
589185661	C-31
58918590	C-31

NUMERICAL INDEX

COMM.NO.	PAGE
58921495	C-29
58950734	C-39
	C-41
58951690	E-5
	E-11
58966086	C-11
58974155	B-9
	B-13
58977703	A-3
58977711	A-3
59003434	A-3
59003442	A-3
59029637	C-25
59034348	C-39
59034447	C-25
	C-33
59034470	C-23
59044966	C-23
59051466	C-39
	C-43
59051474	C-39
59051524	C-39
59051573	C-41
59051656	B-17
	B-19
59051680	C-39
59067520	C-25
59067538	C-25
59070326	A-5
59078899	B-7
	B-9
59079772	B-13
59095059	C-33
59095067	C-33
59095075	C-29
59103804	A-3
59110775	C-41
59121426	B-17
	B-19
59121756	D-3
59144428	E-5
59145862	C-37
59145870	C-37
59145888	C-37
59145896	C-37
59145904	C-37
	C-43
59146035	C-45
59146043	B-17
	B-19
59155176	C-43
59163758	B-21
59166595	B-23
59177915	E-17
59186346	A-5
59193847	E-19
59194027	C-45
59194035	C-39
59194043	C-43
59218172	B-7
59218198	B-7
59218214	B-7
59218230	B-7
59218248	B-7
59218255	B-7
59218263	B-7
59218297	B-9
59218305	B-9
59218313	B-9
	B-11
59218321	B-11
59218339	B-11
59218347	B-11
59218354	B-11
59218362	B-11
59218370	B-11
59218388	B-11
59218396	B-11
59218404	B-11
59218438	B-13
59218446	B-13
59218453	B-13
59218461	B-13
59218487	B-13
59218503	B-13
59218511	B-15
59218529	B-15
59218677	C-25
59218685	C-25
59218693	C-23
59243030	B-7
59245209	B-17
	B-19
	E-7
59249300	C-43
59251009	B-9
59251074	B-13
59257857	E-5
59258319	E-5
59258681	E-17
59277723	E-13
59277756	E-11
59277764	E-11
59277772	E-5
59286344	C-11
59296632	E-13
59298042	E-13
59298323	E-13
59306522	A-5
59330936	C-43
59336818	B-17
	B-19
59336842	B-17
	B-19
59336859	B-19
59343228	C-29
59343236	C-29
59343244	C-29
59343251	C-29
59343269	C-33
59359836	B-17
	B-19
59360115	C-25
	C-33
59360123	C-33
59360305	C-33
59360313	C-33
59360347	C-31
59360354	C-23
	C-31
593603541	C-31
593604611	C-31
59360487	C-23
593604871	C-31
59360495	C-23
59360545	C-31
59360552	C-23
	C-25
	C-31
59360594	C-23
593605942	C-31
59360610	B-17
	B-19
	C-29
	C-39
59360651	C-29
59360669	C-39
59360677	C-39
59360735	C-29
59360941	C-41
59360966	E-7
59368886	C-23
59384347	C-33
59384669	C-25
59384784	C-23
59386201	C-23
59387498	E-7
59387605	C-41
	E-7
59395970	C-25
59395996	C-21
59399162	C-23
59399295	C-29
	C-43
59399303	C-43
59422907	B-17
	B-19
59524447	B-23

NUMERICAL INDEX

COMM.NO.	PAGE
59546812	C-7
59565044	E-5
	E-9
59587196	C-3
	C-9
59600593	E-11
59613612	E-5
59648394	D-7
59652065	D-7
59652067	D-7
59769356	B-11
59778332	B-11
59785303	B-17
	B-19
59785493	B-17
	B-19
59785519	B-17
	B-19
	C-25
	E-7
59790600	B-7
59790956	B-11
59791483	B-11
59791491	B-11
59793588	B-7
	B-9
59793752	B-11
59794115	B-13
59794123	B-13
59803635	B-13
59824862	D-3
59861872	E-7
59888214	B-17
	B-19
59888271	B-17
	B-19
59899021	C-23
598990211	C-31
59899641	D-7
59917682	B-13
59922591	C-17
	E-5
59923003	B-3
	B-5
59929711	B-23
59933622	B-17
	B-19
	C-41
	C-45
59938373	B-17
	B-19
59941203	B-17
	B-19
	E-7
59949461	B-17
	B-19
59949487	C-41
59949511	B-17
	B-19
59972877	B-17
	B-19
59986448	C-39
59986455	C-39
	C-41
59986463	B-17
	B-19
70000807	C-49
70010053	A-3
70036470	C-51
70037494	C-51
70058912	A-3
70059696	A-3
70059795	A-3
70066493	A-19
70066683	D-5
70066741	D-5
70067335	C-13
	C-15
70067343	C-15
70068861	F-5
70072723	C-9
70074380	C-9
70075320	C-5
70075718	C-9
70076609	C-5
70076955	C-9
70077060	C-53
70079496	C-53
70079504	C-53
70079512	C-53
70079520	C-53
70079546	C-53
70079553	C-53
70079561	C-53
70079579	C-53
70080742	A-19
70081302	C-51
70081476	C-11
70081484	C-11
70081690	E-3
70081708	E-3
70084496	C-13
	C-15
	C-17
70086723	C-49
70086814	D-3
70086822	D-3
70086830	D-3
70087721	C-7
70087747	A-3
70087754	A-3
70089644	F-5
70095674	C-11
70098223	C-13
	C-15
70098272	C-13
70098538	C-53
70098603	D-3
70098637	C-7
70098645	C-9
70099593	C-53
70099601	C-53
70126628	C-49
70130034	A-3
70131602	A-9
	A-17
70138615	C-9
70146105	C-5
70146113	C-5
70154612	C-7
70155692	E-23
70158506	F-5
70186150	F-5
70186572	C-51
70190053	A-27
70508437	A-5
	B-3
	B-5
70535356	D-3
70541016	C-51
70543905	C-53
70543913	C-53
70564257	A-5
70566021	A-7
70566088	A-9
	A-17
70566526	A-15
70567342	A-7
	A-15
70567896	C-5
70567904	C-5
70576020	A-3
70576038	A-11
70577432	C-9
70577614	C-51
70579222	A-29
70605233	F-5
70605647	C-49
70606165	A-7
70610852	F-5
70613104	C-5
70613153	C-5
70615034	D-3
70615141	D-3
70633854	C-3
70633995	E-5
70635289	F-5
70635305	B-21

NUMERICAL INDEX

COMM.NO.	PAGE
70635354	C-11
70635388	E-5
70635396	C-11
70645007	A-5
70645015	A-5
70647672	C-49
70663539	A-23
70682638	D-3
70682711	D-3
70689260	C-3
70701412	A-9
	A-17
70709506	A-3
70811179	A-3
70813852	A-13
70818885	A-29
70829676	C-5
70829684	C-5
70829841	C-11
70829858	C-11
70829890	D-5
70829908	A-29
70836176	A-5
70836358	E-21
70836366	E-21
70837489	C-5
70837497	A-29
70837505	A-29
70837513	A-27
70838941	C-49
70838958	C-49
70914924	D-5
70847108	A-9
70860242	A-19
70863261	A-17
70871355	A-23
70872585	A-25
70872601	A-25
70872650	A-25
70872668	A-25
70878061	A-25
70878723	B-13
70878731	B-13
70913058	C-9
70915822	A-21
70916663	B-23
81268120	F-5
81268211	A-7
81270746	A-7
90502816	B-13
90502915	B-11
94034188	A-27
94034345	D-3
94036704	A-3
94037298	A-7
	B-3
	B-5
	C-13
	C-15
94037330	B-3
	B-5
94037454	E-23
94039039	A-5
94041662	E-15
94042256	C-7
94042413	A-3
94051638	E-15
94052594	A-5
	B-3
	C-13
	C-15
94056835	C-15
94065307	A-7
94071909	C-7
94080850	A-5
	B-3
	B-5
94114469	C-49
94141009	A-7
94146925	F-5
94146933	F-5
70899463	D-3
94194594	A-7
	C-13
94204245	E-23
94227485	C-13
	C-15
94244746	C-15
94373339	F-5
95081865	C-13
95200648	B-17
	B-19
	E-7
95208971	A-3
95209870	D-3
95209888	C-19
95210258	C-29
95264891	E-11
95266425	A-5
	B-3
	B-5
	C-13
	C-15
95266433	B-3
	B-5
	C-17
95285946	E-17
95303350	E-5
95303756	A-7
	B-3
	B-5
	C-13
	C-15
	C-17
	C-19
95309829	C-11
95356978	C-17
95357604	C-3
95371217	C-19
95376133	C-3
95603163	E-5
95643383	E-5
95866687	B-5
95919239	C-11
95919460	C-13
	C-15
95920443	C-3
95922175	A-3
95922217	A-3
95922225	C-3
95934394	C-17
95971743	E-15
95987582	C-19
95988721	B-3
	B-5
95988739	E-5
96701560	E-17
96702329	C-11
	E-5
96702386	A-9
	A-17
96702428	E-13
96702733	B-3
	B-5
96702808	E-5
96702816	C-17
96702824	E-5
96702881	F-5
96703111	E-9
96703657	E-5
	E-9
96703665	B-3
	B-5
	E-17
96703707	A-23
96704309	F-5
96704549	E-5
	E-11
96704812	A-27
	C-49
96705009	A-25
	C-17
96705504	E-5

NUMERICAL INDEX

COMM.NO.	PAGE
96711031	E-5
	E-11
96711478	E-5
96711833	F-5
96711882	E-5
96712237	E-5
96712781	C-11
	C-13
	C-51
96712799	C-5
96713193	A-19
96713219	C-13
	C-15
96713318	C-49
	D-5
96713326	C-5
	C-11
	C-53
96713334	D-3
96713342	C-5
	C-11
96713375	C-49
96713466	C-49
96713482	A-5
96714084	A-23
96714134	A-5
96714233	D-3
96714241	C-11
	C-51
96714258	C-13
	C-15
	C-51
	D-5
96714266	C-11
	C-13
	C-15
	C-51
96715768	B-5
96718671	E-17
96718721	A-5
96718820	C-5
	C-9
96718838	D-3
96718861	D-5
96718887	A-27
	C-5
	C-49
96718895	A-27
96718903	A-7
	A-15
96718911	C-3
	C-5
96719174	A-5
	C-3
	C-5
	C-7
96719265	E-13
96719604	A-7
	C-3
	C-7
	C-49
	D-5
96719646	A-5
	C-5
	C-11
	C-49
	D-3
	D-5
96719729	A-5
	C-11
	C-51
	D-3
	D-5
96719745	C-9
	C-13
	C-15
96720206	C-7
96720750	C-9
96720925	A-5
96721501	A-19
96722368	A-5
96728431	F-5
96734066	E-17
96734314	A-23
96736822	E-5
	E-13
96737069	E-5
96738596	C-9
	E-5
	E-9
96738612	E-5
96739990	E-5
96741038	A-25
	E-5
	F-5
96741046	C-11
	E-5
	E-11
	E-13
	F-5
96742788	A-9
	A-17
96743984	F-5
97113484	F-5
97113682	A-5
97113740	A-3
97114250	B-3
	B-5
	C-13
97114524	F-5
97114557	F-5
97114573	F-5
97116065	C-13
	C-15
97116537	A-19
	B-5
	C-5
	C-11
97120588	F-5
97122402	A-3
97126189	F-5
97126247	A-5
97135008	F-5
97137319	A-5

VOLVO

Volvo Construction Equipment
www.volvo.com

Ref. No. VOE21A9920201 English
CPN 70917406
Printed in India 2008-4 CST
Volvo, Bangalore