RUTHZIL TRATOR COMERCIAL DE PEÇAS LTDA 11 97083-6812 ROLANDO CITRANGULO

VOLVO CONSTRUCTION EQUIPMENT

OPERATOR'S MANUAL

SD115B/135B

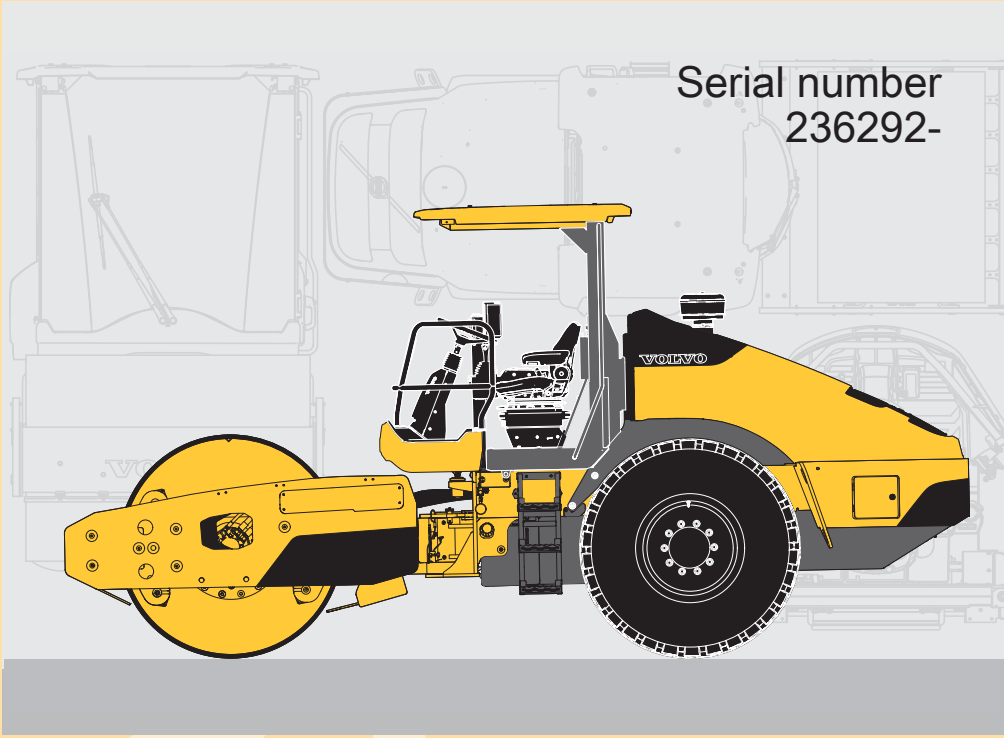

Foreword

OPERATOR'S MANUAL

This Operator's Manual is a guide for the correct use and maintenance of the machine. Study it carefully before starting and operating the machine, or carrying out any preventive maintenance. Keep the manual in the manual storage compartment so that it is always at hand. Replace it immediately if it is lost. The manual describes the applications for which the machine is primarily intended and is written to apply for all markets. Disregard the sections that are not applicable to the machine or to the work for which the machine is being used.

NOTE!
If this manual includes more than one machine, the information applies to all machines, unless otherwise stated.

Many hours are spent on design and production to make a machine that is efficient and safe for its intended use. Accidents that occur in spite of this are mostly caused by the human factor. A safety conscious person and a well maintained machine make a safe, efficient and profitable combination. **Therefore, read the safety instructions and follow them.** Volvo Construction Equipment continually strives to improve products and to make them more efficient through changes to their design. Volvo Construction Equipment retains the right to do this without introducing these improvements to products that have already been delivered. Volvo Construction Equipment also retains the right to change data and equipment, as well as instructions for service and other maintenance measures without prior notice.

Safety regulations

It is the operator's obligation to know and follow the applicable national and local safety regulations. The safety instructions in this manual apply unless applicable national or local regulations are more stringent.

It is the operator’s obligation to ensure that all Danger, Warning and Caution safety decals are in place on the machine and that they are readable.

Table of contents
Presentation
Instrument panels
Other controls
Operating instructions
Operating techniques
Safety when servicing
Maintenance
Specifications
Alphabetical index

Ref. No. 20049442-A
The original language is English. Original instructions.
2017.02
Copyright © 2017, Volvo Construction Equipment. All rights reserved.

The signal words Danger, Warning, Caution and Notice appear at various points in the Operator's Manual together with explanatory text. Read the text associated with the signal words to ensure machine and operator safety.

⚠ DANGER

The safety symbol combined with this signal word indicates a hazardous situation which, if not avoided, ***will result in death or serious injury.*** Danger is limited to the most extreme situations.

⚠ WARNING

The safety symbol combined with this signal word indicates a hazardous situation which, if not avoided, could result in ***death or serious injury***.

⚠ CAUTION

The safety symbol combined with this signal word indicates a hazardous situation which, if not avoided, could result in ***moderate or minor injury***.

NOTICE

The Notice symbol is used to notify of unsafe practices which could result in machine or property damage as well as other installation, operation or maintenance information which is important but not hazard related.

Get to know the capacity and limits of the machine!

Identification numbers

Enter the product identification number (PIN), manufacturer code and engine serial number. These numbers must be specified when ordering spare parts. For position and explanation of the PIN plate, see page *27*.

Manufacturer	Volvo Construction Equipment North America, LLC 312 Volvo Way Shippensburg, Pennsylvania 17257 USA
PIN of machine	
Manufacturer code	
Engine serial number	



Table of contents

Foreword 1
Identification numbers 3
Presentation 7
Machine view 18
CE-marking, EMC-directive 21
Communication equipment, installation 24
Safety components 26
Product plates 27
Information and warning decals 28
Instrument panels 48
Display unit 49
Instrument panel, cab post 72
Instrument panel, right 74
Other controls 81
Controls 81
ROPS 86
Cab 88
Operator comfort 92
Climate control system 97
Operating instructions 98
Safety rules when operating 98
Measures before operating 116
Starting engine 120
Vibration 125
Operating 127
Exhaust aftertreatment system 129
Measures after operating 131
Parking 132
Retrieving and towing 134
Transporting machine 161
Operating techniques 163
Eco driving 163
Attachments, connecting and disconnecting 164
Signalling diagram 165

Safety when servicing 167
Service position 167
Before service, read 169
Preparations before service 178
Fire prevention 180
Handling hazardous materials 183
Maintenance 189
Lubrication and service chart 189
Maintenance service, every 10 hours 197
Maintenance service, every 50 hours 201
Maintenance service, every 500 hours 211
Maintenance service, every 1000 hours 218
Maintenance service, when required 221
Specifications 235
Recommended lubricants 235
Fuel system 243
Service capacities and change intervals 249
Engine 251
Electrical system 252
Brake 254
Steering 255
Wheels 256
Drum 257
Cab 258
Noise and vibrations 259
Hydraulic system 260
Machine weights 261
Dimensions 262
Service history 268
Alphabetical index 271

Presentation

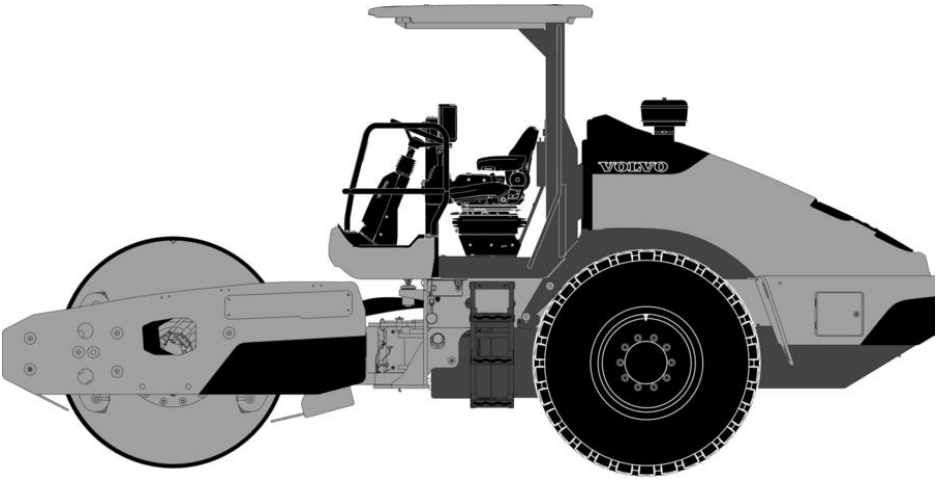

V1153326

Intended use

The soil compactor is intended to be used only for the compaction of soil, fine aggregates and other base materials. Use of the machine for any other purpose is contrary to its designated use. The manufacturer and local authorised dealer cannot be held responsible for any damage resulting from such use.

The machine is not for use in other applications or in potentially hazardous environments. Contact the manufacturer’s local authorised dealer for more information.

The risk of misuse lies entirely with the user.

Environmental requirements

Be aware of the environment when operating and maintaining the machine. Always follow national and local environmental guidelines applicable to handling the machine.

Machine

The machine is a single-drum vibratory roller soil compactor powered by a diesel engine that drives four hydraulic pumps. One pump powers the vibration drive motor, a second pump powers the

steering control valve and cylinder(s), a third pump powers the drum, differential and wheel hydrostatic systems and a fourth pump drives the cooling fan. Dual machine speed range capability is included. Direction of travel and machine speed are controlled by a propulsion control lever and travel speed selection buttons.

Moving the propulsion control lever to the stop position acts as a dynamic (operating) brake. An independent, spring-applied, hydraulically released drum drive brake and an independent, spring-applied, hydraulically released axle differential drive brake serve together as a parking brake.

Standard equipment includes an emergency stop switch to shut down the engine and apply the mechanical brake(s) in an emergency situation.

For a complete list of currently supplied and available features, contact a local authorised dealer or distributor.

Operator's station

The operator’s station is designed for convenience, ease of control, comfort and safety while providing maximum visibility to the work area. The operator’s station is mounted on four independent vibration isolators and can be equipped with several available options. The operator’s station can be tilted forward to access the hydraulic pump system.

A fully enclosed cab is available as an option. See page *13*.

Emergency exit



V1122708

Machines equipped with an enclosed cab have a window labelled as an emergency exit, located on the right side of the cab. If the normal cab exit is blocked during an emergency, use the emergency exit to leave the cab.

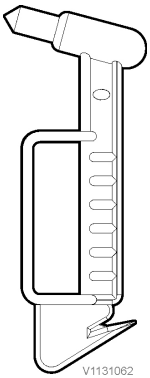

An emergency hammer is attached to the right rear cab post. In the event of an emergency and both cab emergency exits are blocked, use the hammer to break the front or rear glass and exit the cab.

Engine

The machine is powered by a liquid-cooled, electronic Volvo Tier 4 fuel-injected industrial diesel engine. The engine includes a dry type two-stage air cleaner, which sends an air cleaner restriction message to the display unit when the air filtration system needs attention. The air cleaner includes a dust evacuator check valve.

Electric start and belt-driven alternator charging are standard. Engine start is performed by a key-operated ignition switch. The engine speed (RPM) is controlled by the engine speed control keys located on the keypad on the operator's side console. Engine shutdown is performed by a key-operated ignition switch or, in an emergency, the emergency stop switch.

Refer to the Service Manual for additional engine maintenance procedures.

Auto idle shutdown

The optional auto idle shutdown feature conserves fuel, decreases engine hours and reduces emissions without negatively impacting productivity. See page *120*.

AdBlue®/DEF information

AdBlue®/DEF is needed to reduce nitrogen oxides (NOx). AdBlue®/DEF is filled in a separate tank on the machine which is completely separated from the fuel tank. AdBlue®/DEF may not be mixed in the fuel tank, and fuel may not be mixed in the AdBlue®/DEF-tank.

For information on ordering AdBlue®/DEF (only applies to USA-market):
- Volvo CE Customer Support: 1-877-823-1111 (office hours)
- www.volvoce.com (outside of office hours)

For information on ordering AdBlue®/DEF (other markets), contact your local Volvo dealer.

See *221* for information on filling AdBlue®/DEF.

Exhaust aftertreatment system

The exhaust aftertreatment system (EATS) consists of a diesel particulate filter (DPF) incorporated into the exhaust system. The DPF traps solid pollutants from the engine exhaust with a ceramic filter. Through a process called regeneration, the pollutants trapped by the DPF are burned into ash with high temperatures. When ash level reaches a certain point inside the DPF, it can be exchanged for a new one by Volvo Construction Equipment's qualified service technicians. Replacing the DPF reduces costly downtime needed to clean the DPF.

Propulsion

The propulsion system is a mechanically controlled, closed loop hydraulic system. The system uses a bidirectional variable output pump to drive the axle and the drum motors. The speed of the machine and the direction of machine travel is controlled by the propulsion control lever and the travel speed range buttons.

Drum

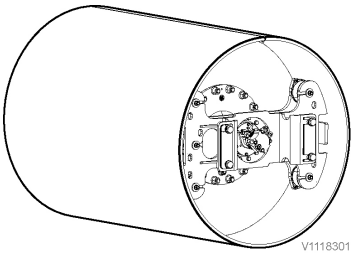
V1118301

Drums available for soil compactors include smooth or padfoot. Optional scrapers are available for each type of drum.

A hydraulically driven eccentric assembly vibrates the drum internally. Amplitude and frequency of vibration are controlled at the operator's station.

Vibration

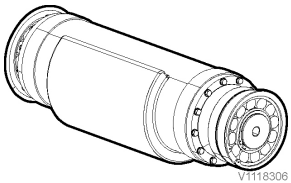
V1118306

The vibration system consists of an eccentric weight mounted inside the drum. A hydraulic motor drives the eccentric, which is capable of high and low vibration amplitude. High amplitude is recommended for thick lift compaction, low amplitude for thinner lifts and sensitive compaction areas. Vibration amplitude is controlled by buttons on the keypad mounted to the side console.

Vibration frequency

Drum vibration frequencies are identified in the machine specifications. See page *257* for drum vibration frequency ranges available for the machine.

Brake system

The standard braking components located in the drum drive motor assembly and the axle assembly are designed for use as a parking brake. The brakes are spring-applied and hydraulically released. Loss of engine power or loss of hydraulic pressure to the brake circuit will apply the brakes. Placing the propulsion control lever in the stop position acts as a dynamic (operating) brake.

Levelling blade

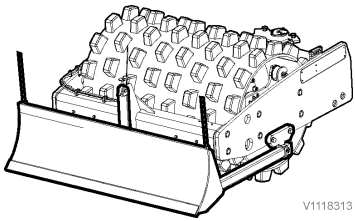
V1118313

The optional levelling blade is used for minor soil levelling. The blade is controlled by a foot pedal and a foot switch on the operator's platform. The foot pedal can move the blade up and down and the float switch allows the blade to float..

Frame

The machine includes a rear frame assembly and a front frame assembly connected by a swivel joint consisting of an articulation pin and an oscillation pin. The front frame assembly includes the drum, drum support and drive components, as well as the eccentric components and vibration motor. The rear frame assembly includes the hydraulic oil tank assembly, fuel tank, the propulsion control components, the engine and hydrostatic drive components.

Vandal cover

The machine is equipped with locks on the fuel tank, AdBlue®/DEF tank, battery door and hood controls to prevent vandalism and theft. The display unit is equipped with a lockable cover to prevent vandalism. Cab models feature locks on cab doors for securing the machine while not in use.

Electrical system

The battery disconnect switch, located inside the control box under the operator's platform, is connected to the positive (+) cable of the batteries. When the switch is turned to the off position, electrical power is disconnected from the majority of the machine. The battery disconnect switch should be turned off when the machine is not in use.

Cab

The cab is approved as a protective structure according to falling object protective structure (FOPS) and rollover protective structure (ROPS) standards. See page *13*.

If any part of the cab's protective structure is damaged, replace the cab immediately.

Never carry out any unauthorised alterations to the cab, for example: lowering the roof height, drilling, welding on brackets for a fire extinguisher, radio aerial or other equipment. Discuss any planned alterations to the cab with a local authorised dealer or distributor. Volvo Construction Equipment will decide whether the alteration may void the warranty.

FOPS and ROPS

⚠ WARNING

Risk of serious injury or death.
Structural damage caused by unauthorised modification, or the machine rolling over, weakens the rollover protective structure (ROPS) / falling objects protective structure (FOPS) and can result in serious injury or death from falling objects or machine rollover.
Do not repair, modify, drill, weld on or add attachments to the ROPS/FOPS unless authorised in writing by the manufacturer. Use only genuine original equipment manufacturer replacement parts. Do not operate this machine if the ROPS/ FOPS is structurally damaged, shows cracks, is not properly secured as originally installed, or has been involved in a rollover.

A rollover protective structure (ROPS), falling object protective structure (FOPS) and a seat belt are

provided as standard equipment on the machine. The ROPS and FOPS, used in conjunction with a seat belt, will lessen the possibility of death or serious injury in the event of a rollover.

Check the seat belt and associated parts daily. Ensure the mounting hardware is tight. Replace the entire seat belt immediately if there is any wear, the webbing is worn, cut, has loose stitching, the belt is deformed or the seat belt retractor does not work. Replace the seat belt if the machine has been involved in an accident where the belt has been subjected to high strain or loading. Inspect mounting hardware. never make changes to the seat belt or its mountings.
Only clean with warm water, do not use soap or detergent. Let the belt dry while it is fully pulled out before rolling it in.
Volvo Construciton Equipment recommends replacing the seat belt assemblies every 3 years regardless of appearance.

Instruments and controls, overview

Display unit and controls are located for operator convenience and comfort.

The propulsion control lever, keypad, horn, parking brake switch and the emergency stop switch are located to the right of the operator. Machines equipped with a cab have switches for front and rear wiper and washer controls located on the right side cab pillar.

The machine also contains a display unit with keypad control. The display unit is an LCD which can show machine information including: operating hours, time, date, travel speed, vibration speed, fan speed, hydraulic oil temperature, engine oil pressure, engine speed, coolant temperature, system voltage and important messages and alerts about the machine.

The keypad includes the following standard controls: vibration amplitude keys, high/low engine speed keys and travel speed range keys. The keypad may also include functions related to optional equipment such as auto/manual vibration, work lights, road lights, beacon and traction control. Operator controls have international symbols indicating machine functions.

Additional Icons

NOTE!
Some symbols shown in this section may not appear on your machine.

International symbols

Symbol	Description	Symbol	Description
V1084342	On/start	 V1084343	Seat (lap) belt
 V1084364	Off/stop	 V1084368	Linear
 V1084369	On/Off	 V1084371	Rotational
 V1084372	Plus (positive)	 V1084373	Volume empty
V1084374	Minus (negative)	 V1084375	Volume half full
 V1084447	Horn	 V1084448	Volume full
 V1084450	Battery condition	 V1084451	Grease
 V1084454	Hourmeter	 V1084455	Oil lubrication point
 V1084481	Lift point	 V1084482	Engine oil temperature
 V1084484	Jack or support point	 V1084485	Engine coolant
 V1084487	Filling or emptying	 V1084488	Engine coolant level

Symbol	Description	Symbol	Description
 V1084492	Read Operator's Manual	 V1084493	Coolant temperature
 V1084494	Engine oil	 n/min V1084495	Engine rotations (RPM)
 V1084496	Engine oil pressure	 V1084497	Gas inject (cold start)
 V1084498	Engine oil pressure – failure	 V1084499	Engine air filter
 V1084500	Engine oil level	 V1084501	Engine air filter – failure
 V1084502	Engine oil filter	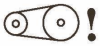 V1084503	Fan belt – failure
 V1084504	Emergency engine stop	 V1084505	Reverse direction
 V1084527	Engine start	 V1084528	Parking brake
 V1084529	Engine on/run	 V1084545	Hydraulic oil
 V1084534	Start switch	 V1084556	Hydraulic oil pressure
 V1084537	Transmission	 V1084558	Hydraulic oil level
 V1084544	Transmission oil level	 V1084560	Hydraulic oil filter
 V1084555	High gear	 V1084564	Control lever – multi-direction

Symbol	Description	Symbol	Description
 V1084557	Low gear	 V1084567	Clockwise rotation
 V1084559	Forward direction	 V1084569	Counterclockwise rotation
 V1084563	Hydraulic oil temperature	 V1084571	Engine electrical preheat
 V1084566	Diesel fuel	 V1084574	Fast speed
 V1084568	Fuel level	 V1084576	Slow speed
 V1084570	Fuel filter	 V1160867	Traction control
 V1084573	Work light	 V1084577	Control lever – dual-direction
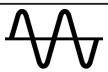 V1179755	High vibration	 V1084575	Flashing beacon
 V1179756	Low vibration		

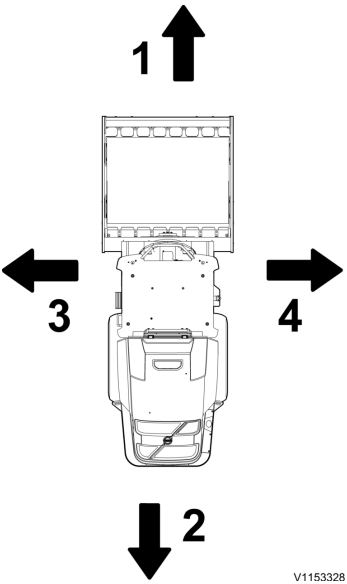

Machine view

Directional terms

The terms left and right, when used in this manual, indicate the sides of the machine as seen from the operator seat facing the front of the machine.

1 Front
2 Rear
3 Left
4 Right

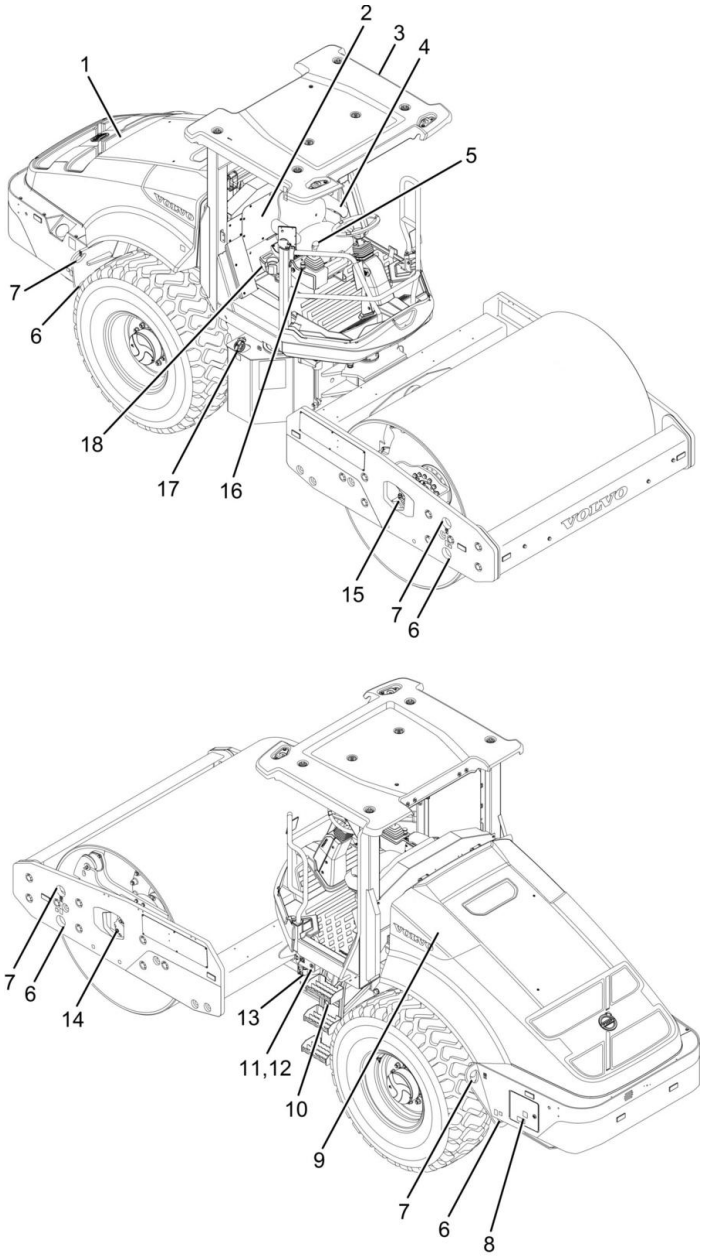

Item	Component	Item	Component
1	Coolant tank	10	Hydraulic tank
2	Fuse cover	11	Battery disconnect switch

Item	Component	Item	Component
3	ROPS and FOPS	12	Hood controls
4	Operator seat	13	Articulation lock pin
5	Propulsion control lever	14	Drum carrier and eccentric
6	Tie down and tow points	15	Drum planetary
7	Lift points	16	Emergency stop switch
8	Batteries	17	Fuel fill
9	Air cleaner	18	Operator side console

CE-marking, EMC-directive

EU Directives

If this machine is CE-marked, it meets the applicable “Essential Health and Safety Requirements” which are given in the EU Machinery Directive, 2006/42/EC.

Any person carrying out changes that affect the safety of the machine is responsible for the same.

As proof that the requirements are met, an EU Declaration of Conformity is supplied with the machine and includes both measured external values and guaranteed sound level. These Declarations are issued by Volvo Construction Equipment for each machine. The Declaration also covers attachments manufactured by Volvo Construction Equipment. The documentation should be kept safe, retained for at least 10 years and accompany the machine when it is sold.

The electronic equipment of the machine may cause interference to other electronic equipment, or suffer from external electromagnetic interference, creating safety hazards.

The EU’s EMC-directive about “Electromagnetic Compatibility,” 2014/30/EC, provides a general description of what demands can safely be made on the machine, where permitted limits have been determined and given according to international standards.

Volvo Construction Equipment machines have been tested for both electromagnetic interference and susceptibility and meet all the applicable requirements of the EMC Directive.

If other electronic equipment is fitted to this machine, the equipment must be CE-marked and tested on the machine with regard to electromagnetic interference.

Declaration of Conformity

The following is a generic version of the EC Declaration of Conformity. A signed and dated version with the machine's individual serial number and PIN is included with the shipment of the machine.

EC Declaration of Conformity for Machinery (IIA)

Volvo Construction Equipment North America, LLC, Shippensburg, PA, USA, hereby declares that the product:

Make: Volvo Construction Equipment

Type: Compaction Machine

Product Identification Number (PIN): VCEXXXXXXXXXXXXXXXXX

to which this declaration relates, is in conformity with the relevant provisions of Essential Health and Safety requirements of the:

Council Directive 2006/42/EC relating to Machinery.

Council Directive 2000/14/EC relating to Noise Emission in the Environment by equipment for use outdoors.

Council Directive 2014/30/EC on electromagnetic compatibility, and their Amendments relating to machinery, and other applicable Directives.

Harmonized standards applied:

EN 500-1:2006 + A1:2009 Mobile Road Construction Machinery - Safety - Part 1: Common Requirements.

EN 500-4:2009 Mobile Road Construction Machinery - Safety - Specific Requirements for Compaction Machines.

This declaration relates exclusively to the machinery in the state in which it was placed on the market, and excludes components which are added and/or operations carried out subsequently by the final user.

Signature of the issuer of this declaration:

Director, Road and Utility Product Platforms	Signature
	Date of issue

Signature of the person, established in the Community, authorised to compile the technical file:

Global Director Laws and Regulations	Signature
	Date of issue
Address	

This declaration may include attachments developed, designed/approved, marked and marketed by above-mentioned manufacturer.

Communication equipment, installation

NOTE!
All installation of optional electronic communication equipment must be performed by a qualified service technician and in accordance with the Volvo Construction Equipment instructions.

Protection against electromagnetic interference



V1178879

This machine has been tested in accordance with EU directive 2014/30/EC and Canadian ICES-2/NMB-2 guidelines governing electromagnetic interference. Test all non-approved electronic accessories before installation and use. Non-approved devices can cause interference to the machine's electronic systems.

Protection against electromagnetic interference

This machine has been tested in accordance with EU directive 2014/30/EC governing electromagnetic interference. Test all non-approved electronic accessories before installation and use. Non-approved devices can cause interference to the machine's electronic systems.

Guidelines for installing antenna

Install the aerial as follows:
- The aerial placement must be chosen to give good adaptation to the surroundings.
- The down lead from the aerial must be of the coaxial type. Make sure that the cable is undamaged, the sheath and braid are not split at the ends, and that the braid covers the connector ferrules and has good galvanic contact with them.
- Clean dirt and oxide from the bracket and bodywork before mounting the aerial. To maintain good galvanic contact, protect the mating surfaces against corrosion after installation.

Keep power supply cables away from cables that connect the aerial to the communications equipment to avoid interference. Installing cable

harnesses close to grounded plate surfaces has a screening effect against interference.

Safety components

Genuine Volvo spare parts guarantee the best service life, reliability, and safety for the machine and operator. If reliable and purpose-built parts are not used, your safety, health, and the machine's function may be compromised. Contact your dealer and state the machine's model designation/serial number (PIN-number) when ordering spare parts. Position of PIN-plate, see section "Product plates".

Your Volvo dealer always has up-to-date spare part information that is updated at regular intervals via the information system PROSIS.

Safety-classified machine and spare parts

Safety-classified machine and spare parts means that the components are intended to fulfil a safety function.

Examples of safety-classified machine parts/ spare parts

- Removable protective devices/guards over rotating parts and hot surfaces
- Protective plates, rails, covers, and steps
- Components included in systems to reduce sound and vibrations
- Components included in systems to improve the operator's visibility
- Complete operator's seat incl. seatbelt
- Decals and plates
- Cab filter

NOTE!
Safety-classified machine and spare parts shall be reinstalled, repaired, or replaced immediately if they have been removed or damaged.

When changing machine operator/owner, malfunctions and defects of safety-classified machine and spare parts shall be reported immediately and an action plan shall be established.

There is more important information in this Operator’s Manual about the components that are considered safety-classified.

Product plates

The machine and its components can be identified using the identification numbers on the machine's product plates. State these numbers when ordering spare parts or for any enquiries. Enter the numbers in the table on page *3*.

Use the diagram to locate the product plates.

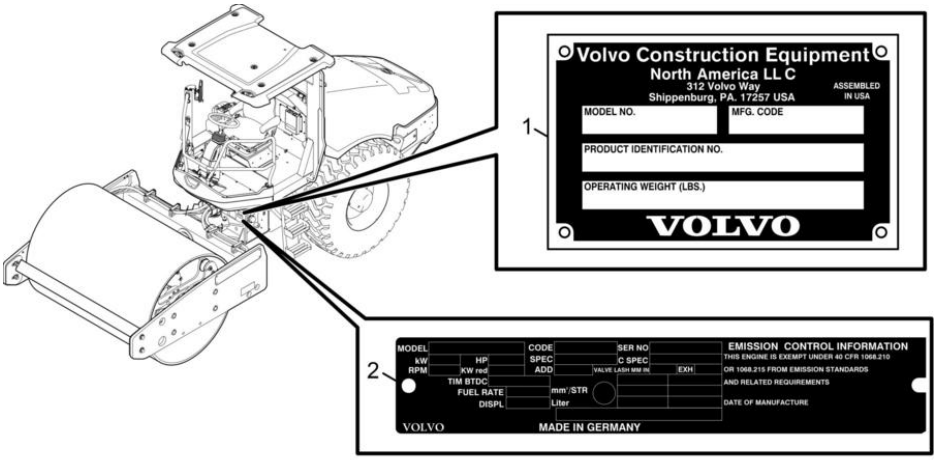

1 Engine identification plate
2 PIN plate

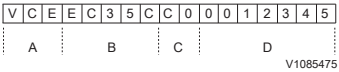

PIN format
A World manufacturer code
B Machine descriptor section
C Check letter section
D Machine serial number

Product identification number

Always provide the product identification number (PIN) when contacting the manufacturer or authorised Volvo dealers about the machine.

The PIN identifies the manufacturer, machine model and machine serial number according to ISO 10261. The PIN is located on the machine product plate.

PIN product plate

The machine serial number is stamped on the PIN plate and on the frame near the PIN plate.

Engine identification plate

The engine serial number is stamped on the engine identification plate located on top of the engine. The engine identification plate also identifies the engine model Tier/Stage for emission regulations.

Information and warning decals

Read, understand and obey the information and warning decals positioned on the machine before operating.

Keep the decals clean so that they can be read and understood. If they are lost or are no longer legible, replace them immediately. Refer to the parts catalogue for the proper location and part number of all decals.

Carefully apply replacement decals to thoroughly cleaned surfaces. Contact a local authorised dealer or distributor for additional information or assistance.

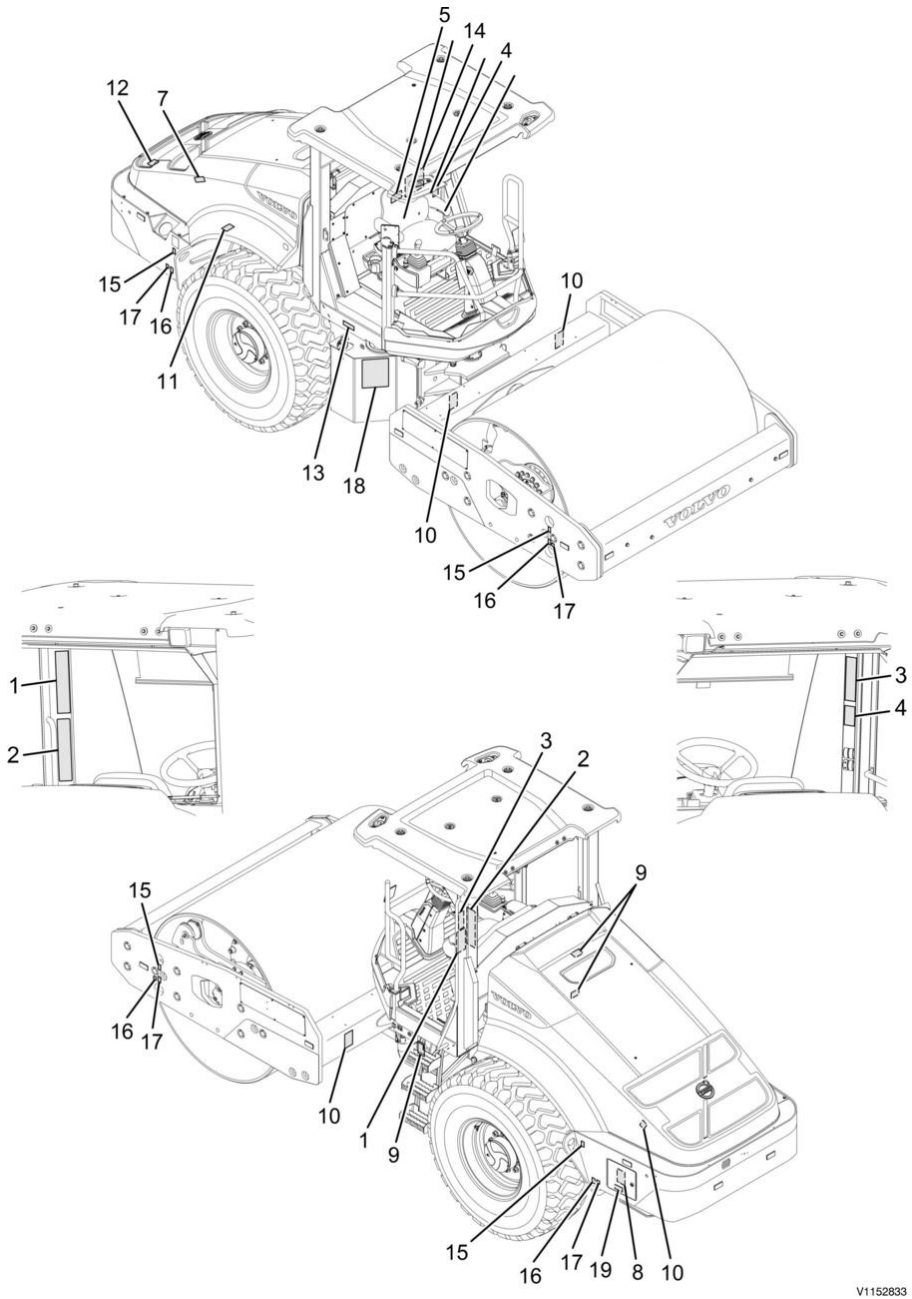
5
14
4
12
7
15
17
16
11
10
13
18
10
15
16
17
1
2
3
4
3
2
9
15
16
17
10
1
9
15
16
17
19
8
10
V1152833

Item	Decal	Quantity	Location
1	WARNING: Rollover	1	Left rear ROPS post Left front cab post (cab only)
2	Checklist	1	Left rear ROPS post Left front cab post (cab only)
3	WARNING: Improper operation	1	Left rear ROPS post Right front cab post (cab only)
4	WARNING: No riders	1	Left rear wall of the operator station
5	Fuse chart	1	Inside of the fuse cover panel
6	WARNING: Use of ether	2	Top of the engine hood Side of the engine air cleaner
7	WARNING: Rotating fan	2	Right and left side of the radiator and cooling package
8	WARNING: Combustible gas	1	Inside of the battery access door
9	WARNING: Runaway machine	1	Left side of the rear frame
10	WARNING: Crush area, articulation	2	Left and right side of the drum frame
11	WARNING: Hot pressurized fluid	1	Right inside of the engine compartment
12	WARNING: Crush area, hood	1	Inside rear of the engine compartment
13	WARNING: Not an entry	1	Right side of the operator station
14	WARNING: Towing tag — optional brake release valve only	3	Inside the Operator’s manual storage box
15	Lift point	4	Sides of drum frame and behind the tyre.
16	Tie down point	4	Sides of drum frame and behind the tyre.
17	Tow point	4	Sides of drum frame and behind the tyre.
18	Lubrication and service chart	1	Side of the fuel tank
19	Fuse chart, battery	1	Inside of the battery access door

North American decals

Warning decals have black text on white and orange backgrounds.

Caution decals have black text on white and yellow backgrounds.

Notice decals have white text on a blue background and black text on a white background.

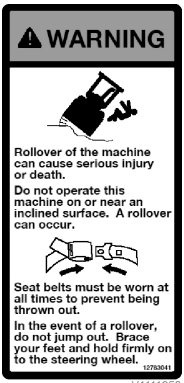

1 WARNING!
Rollover of machine can cause serious injury or death.
Do not operate this machine on or near an inclined surface. A rollover can occur.

Seat belts must be worn at all times to prevent being thrown out.

In the event of a rollover, do not jump out. Brace your feet and hold firmly on to the steering wheel.



V1120007

2 Checklist (ROPS/FOPS support)

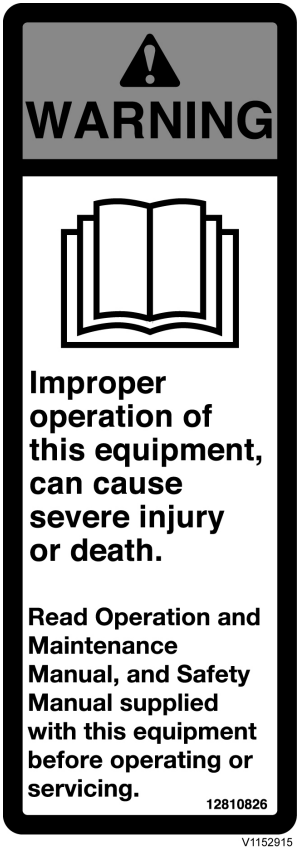

V1152915

3 WARNING!
Improper operation of this equipment can cause severe injury or death.

Read Operation and Maintenance Manual, and Safety Manual supplied with this equipment before operating or servicing.



V1131842

4 WARNING!
No Riders.

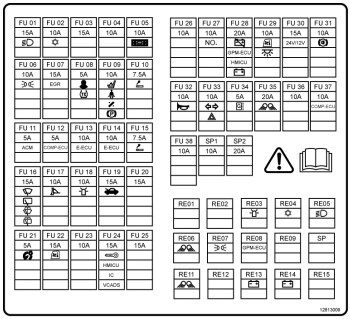

V1153045

5 Fuse chart



V1084298

6 WARNING!
Use of ether may cause explosion and severe injury.

This engine is equipped with an electric heater starting aid.

Do not use ether.



V1152917

7 WARNING!
Rotating fan blade can cause severe injury.

Keep hands away when the engine is running.

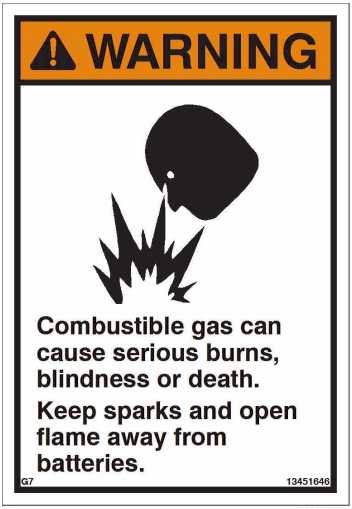

V1100682

8 WARNING!
Combustible gas can cause serious burns, blindness or death.

Keep sparks and open flame away from batteries.



V1084301

9 WARNING!
Runaway machine can cause severe injury or death.

Manually releasing brake and shunting propulsion pump will allow machine to roll freely.

Chock tyres and/or drums before starting towing procedures

Carefully follow towing instructions in the Operation and Maintenance manual.

Prior to manually releasing brakes, transfer tagout (towing) tag to the operator's steering wheel.



V1084293

10 WARNING!
Crush area.
Can cause severe injury or death.

Stay clear or install articulation lock before entering area.



V1152920

11 WARNING!
Hot pressurised fluids can cause serious burns.

Do not open radiator while hot.

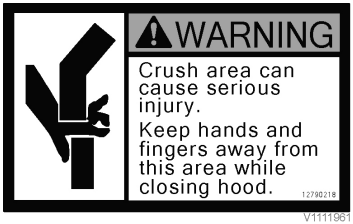

V1111961

12 WARNING!
Crush area can cause serious injury.
Keep hands and fingers away from this area while closing the hood.



V1152922

13 WARNING!
Not an entry.

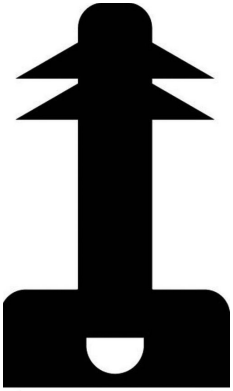

V1084300

14 WARNING!
Attach this tag to steering wheel prior to starting towing procedures.

Runaway machine can cause serious injury or death.

Brakes have been manually released.

Propulsion pump has been shunted.

This machine will roll freely if not chocked or restrained by another machine.

Consult Operator and Maintenance manual for towing instructions.

Return this tag to its storage position only after brakes and propulsion pump have been returned to normal conditions.

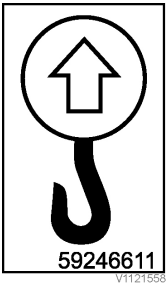

15 Lift point

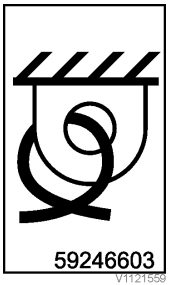

16 Tie-down point



17 Tow point

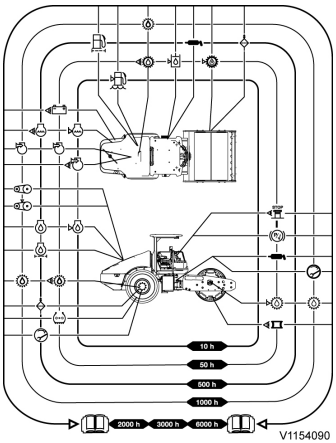

18 Lubrication and Service Chart

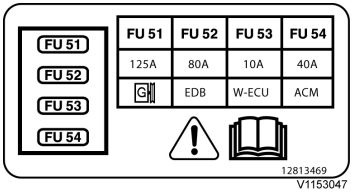

19 Battery compartment fuse chart

International decals

Decals without text are drawn in black on a yellow background.

Warning decals have black text on white and orange backgrounds.


V1111951

1 WARNING!
Rollover of the machine can cause serious injury or death.
Do not operate this machine on or near an inclined surface. A rollover can occur.

Seat belts must be worn at all times to prevent being thrown out.

In the event of a rollover, do not jump out. Brace your feet and hold firmly onto the steering wheel.



V1120007

2 Checklist (ROPS/FOPS support)

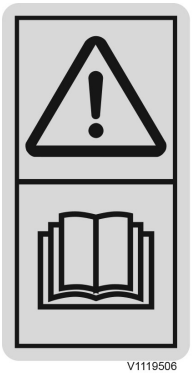

V1119506

3 WARNING!
Improper operation of this equipment can cause severe injury or death.

Read Operation and Maintenance Manual and Safety Manual supplied with this equipment before operating or servicing.



V1111949

4 WARNING!
No riders.

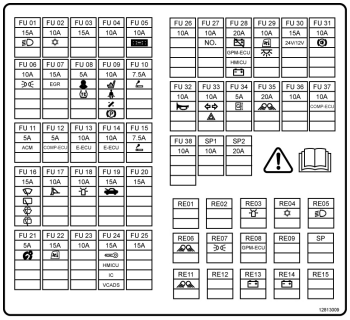

V1153045

5 Fuse chart

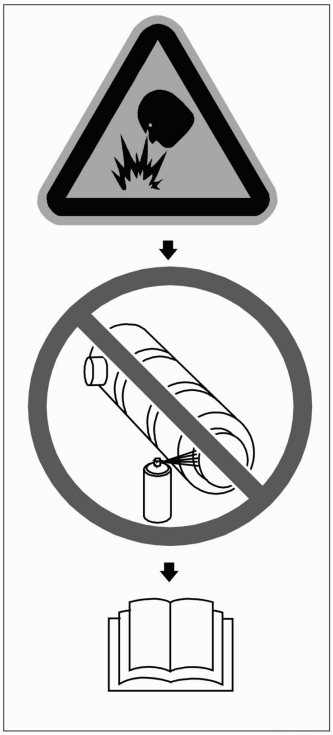
V1085241

6 WARNING!
Use of ether may cause explosion and severe injury.

This engine is equipped with an electric heater starting aid.

Do not use ether.

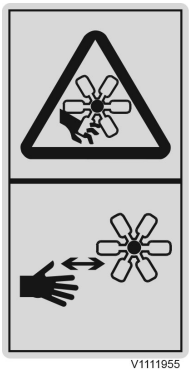
V1111955

7 WARNING!
Rotating fan blade can cause severe injury.

Keep hands away when the engine is running.


V1119503

8 WARNING!
Combustible gas can cause serious burns, blindness or death.

Keep sparks and open flame away from batteries.

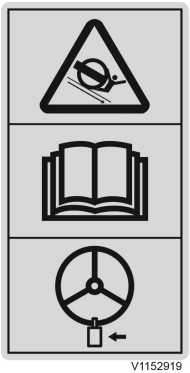
V1152919

9 WARNING!

Runaway machine can cause severe injury or death.

Manually releasing brake and shunting propulsion pump will allow machine to roll freely.

Chock tyres and/or drums before starting towing procedures.

Carefully follow towing instructions in the Operation and Maintenance manual.

Prior to manually releasing brakes, transfer tagout (towing) tag to operator's steering wheel.


V1111947

10 WARNING!
Crush area.
Can cause severe injury or death.

Stay clear or install articulation lock before entering area.


V1111954

11 WARNING!
Hot pressurised fluids can cause serious burns.

Do not open radiator while hot.

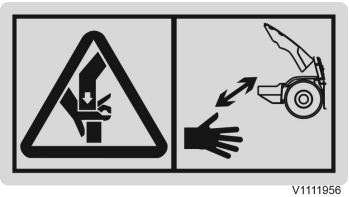
V1111956

12 WARNING!
Crush area can cause serious injury.
Keep hands and fingers away from this area while closing the hood.



V1152922

13 WARNING!
No Entry.



14 WARNING!

Attach this tag to steering wheel prior to starting towing procedures.

Runaway machine can cause serious injury or death.

Brakes have been manually released.

Propulsion pump has been shunted.

This machine will roll freely if not chocked or restrained by another machine.

Consult Operator and Maintenance manual for towing instructions.

Return this tag to its storage position only after brakes and propulsion pump have been returned to normal conditions.

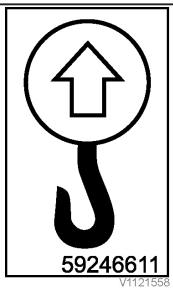

15 Lift point

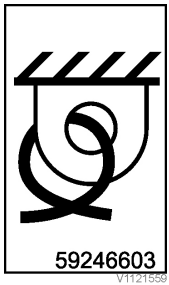

16 Tie-down point



17 Tow point

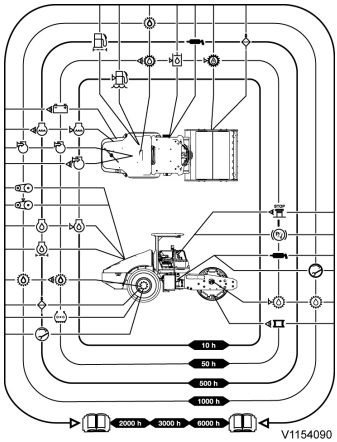

18 Lubrication and Service Chart

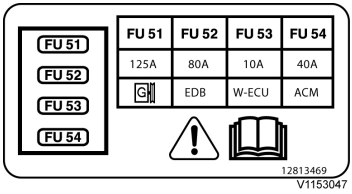

19 Battery compartment fuse chart

Instrument panels

Instrument panels

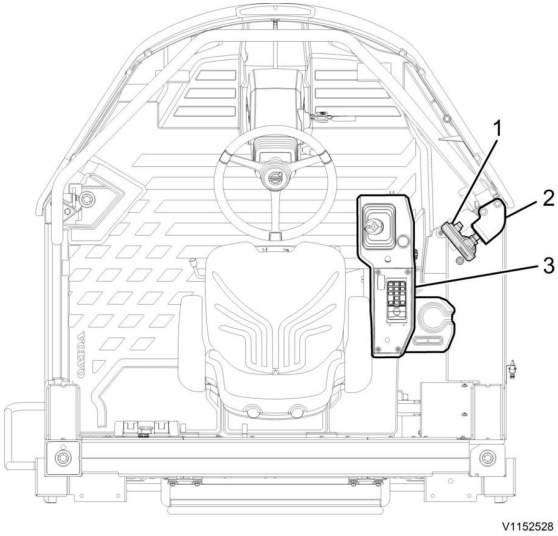

Item	Name	Page
1	Display unit	*49*
2	Instrument panel, cab post (cab only)	*72*
3	Instrument panel, right	*74*

Display unit

The display unit shows starting sequence, current operating information and alarm texts. With the aid of the keypad on the right instrument panel, the operator may also obtain information about the machine status and make settings. For the location of the display unit, see page *48*.

Operator input for the display unit is provided by the keypad. See page *76*.

Initial display

When the ignition key is turned to the on position (position 2, see page *81*), a test program will begin to run to verify the system. The starting sequence takes 4–5 seconds. All of the indicators at the bottom of the screen will turn on temporarily and then the initial display will show the current operating information for the machine.

NOTE!
If there are any machine messages, they will be displayed after the starting sequence is complete. Press the escape key once for each message to confirm the messages and return to the main screen.



Initial display

NOTE!
Example only. The information and number of icons depend on the current operating conditions and options installed on the machine.

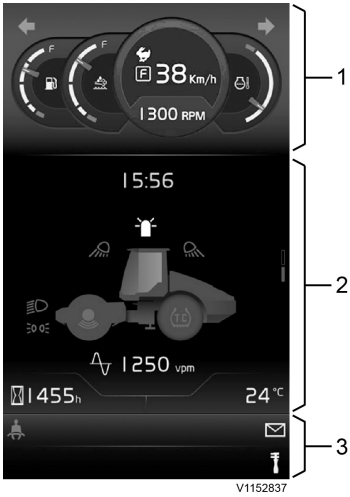

Display sections
1 Instrument cluster (metric units shown)
2 Operating display (Main screen 1 is shown.)
3 Indicator section (Not all indicators are shown.)

Display sections

The display has three sections.

Instrument cluster — The top section contains gauges and travel speed information. On machines with optional turn signals, it also has turn signal indicators.

Operating display — The middle section is used for the main screens, messages, menus and alarm texts.
For more information about the menus, see page *62*.
For more information about the alarm texts, see page *61*.

Indicators — The bottom section has two rows of indicators to inform the operator of warnings, checks that need to be made, machine functions that are active and operating information.
See page *57*.



Instrument cluster
1 Left turn indicator (option)
2 Fuel level gauge
3 AdBlue®/DEF level gauge
4 Travel speed and engine speed information
5 Engine coolant temperature gauge
6 Right turn indicator (option)

Instrument cluster

The instrument cluster has three gauges to show the fuel level, AdBlue®/DEF level and the engine coolant temperature. This section of the display also provides the operator with turn signal indicators (option), travel speed, travel speed range, travel direction and engine speed.

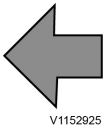

1 **Left turn indicator (option)**
The left turn indicator flashes when the left turn signal is on.
When the hazard lights are turned on (see page *72*), both the right and left turn indicators will flash at the same time.



1 Fuel level pointer



1 AdBlue®/DEF level pointer



1 Travel speed range indicator (fast speed icon shown)
2 Travel direction indicator (forward icon shown)
3 Travel speed (metric units shown)
4 Engine speed

2 **Fuel level gauge**
The fuel level gauge shows the amount of fuel remaining in the fuel tank. When the fuel tank is full, the fuel level pointer will be at the top of the scale near the “F”. As the fuel level decreases, the fuel level pointer will move toward the bottom. When the level is at a critically low level, the an alarm text will be displayed to tell the operator that the level is low.

3 **AdBlue®/DEF level gauge**
The AdBlue®/DEF level gauge shows the amount of urea remaining in the AdBlue®/DEF tank. When the AdBlue®/DEF tank is full, the AdBlue®/DEF level pointer will be at the top of the scale near the “F”. As the level decreases, the level pointer will move toward the bottom. When the level is at a critically low level, the an alarm text will be displayed to tell the operator that the level is low.

4 **Travel speed and engine speed information**
Travel speed and engine speed information is shown in the circular area near the centre of the top section of the display.
The travel speed range indicator shows which travel speed range is selected. A rabbit indicates the fast travel speed range. A turtle indicates the slow travel speed range. See page *76* for information on selecting engine speed and travel speed.
The travel speed is shown in km/h (mph). The units (km/h or mph) can be selected by the operator. See page *68*.
The travel direction is shown by either “F” (forward) or “R” (reverse).
The engine speed is shown at the bottom of the circle. The engine speed is displayed in rpm (revolutions per minute).

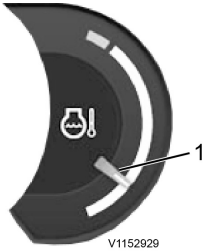

1 Pointer

5 **Engine coolant temperature gauge**
The engine coolant temperature gauge indicates the operating temperature of the engine coolant. The normal operating temperature is indicated when the pointer is approximately half way between the bottom and top of the gauge.

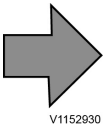

6 **Right turn indicator (option)**
The right turn indicator flashes when the right turn signal is on.

NOTE!
When the hazard lights are turned on (see page *72*), both the right and left turn indicators will flash at the same time.

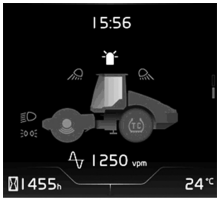

Operating display

NOTE!
Main screen 1 shown

Operating display

The middle section is used to show the main screens (main screen 1 and main screen 2), display information messages, display alarm texts and provide menu selection. For more information about the main screens, see page *53*.

NOTE!
On machines equipped with antitheft, the antitheft screen may be displayed when the ignition is turned on. See page *52*.



Indicators section

NOTE!
Example only. Not all indicators are shown at all times and some are available only by option.

Indicators

The bottom section has two rows of indicators to inform the operator of machine function status and warnings.

Antitheft screen

(If equipped)

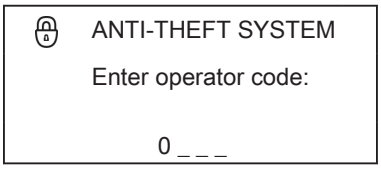

On machines equipped with antitheft, the antitheft screen is displayed when the ignition key is turned on and the machine has been shut down for more than 10 minutes. In order to operate the machine an operator code must be entered. An operator code consists of 4 numbers. If a valid code is entered, the

display unit will display the main screen (see page *53*) and the machine operation will be permitted. Valid codes are the primary operator code or the secondary operator code. To change the operator code, contact a qualified service technician.

NOTE!
The amount of time that the machine can be shutdown without requiring the operator code to restart the machine can be changed by a qualified service technician.

Wrong code

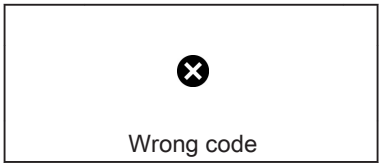

If an invalid operator code is entered, a message is displayed to inform the operator that the code is incorrect.
The operator is permitted three attempts to enter a valid code.

Too many wrong codes. Time to next attempt:

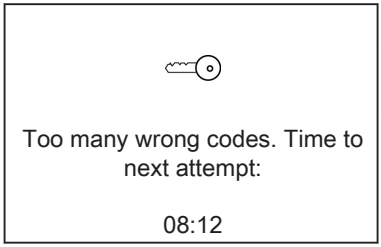

After three attempts and a valid operator code is not entered, the display unit will display a message to tell the operator how long to wait until any more attempts may be made to enter a valid code.

NOTE!
The amount of time required to wait after entering too many invalid operator codes can be changed by a qualified service technician.

Antitheft misconfigured. Contact Service.

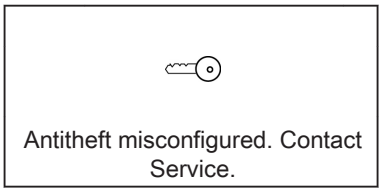

If the antitheft setup becomes invalid, a message is displayed to tell the operator. When this message is displayed, contact a qualified service technician.

Main screen

There are two main screens, main screen 1 and main screen 2. Main screen 1 is the default screen and is displayed when the machine is started. The main screens are displayed in the middle section of the display unit (see page *49*). To change the

display between the two main screens, use the up and down arrows on the keypad (see page *76*).

NOTE!
Pressing the select key on the keypad when either main screen is displayed will display the main menu. (See page *62*.)

Main screen 1

Main screen 1 is the default screen and is displayed when the machine is started. It provides the time, date, ambient temperature, machine operating hours and some machine operating information. This screen shows a simulated picture of the machine with indicators to show the operating condition of machine functions.

NOTE!
Machine functions that are options will not be shown on the display if they are not installed.

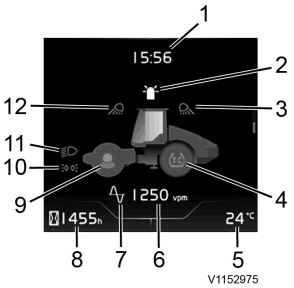

1 Time and date
2 Beacon light indicator (option)
3 Rear work lights indicator (option)
4 Traction control indicator (option)
5 Ambient temperature
6 Vibration frequency
7 Vibration amplitude
8 Hour meter
9 Vibration indicator
10 Marker lights (option)
11 Road lights (option)
12 Front work lights (option)

1 **Time and date**
The current time and date is displayed in a format selected by the operator. To change the time and date format, see page *68*.


V1153108

2 **Beacon light indicator**
The beacon light indicator shows if the beacon light is on or off. The beacon light is turned on and off using the keypad (see page *76*).

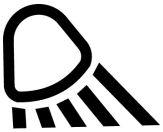
V1153109

3 **Rear work lights indicator (option)**
The rear work lights indicator shows if the rear work lights are on or off. The rear work lights are turned on and off using the keypad (see page *76*).



4 **Traction control indicator (option)**
The traction control indicator shows if the traction control is on or off. The traction control is turned on and off using the keypad (see page *76*).

5 **Ambient temperature**
The ambient temperature is the temperature outside of the cab. The displayed units for the ambient temperature can be set in the settings menu (see page *62*).

6 **Vibration frequency**
The vibration frequency is displayed numerically in vibrations per minute (vpm). Vibration frequency is selected using the keypad (see page *76*).

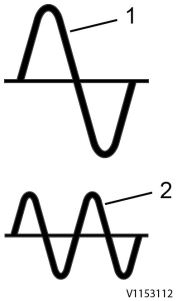

Vibration amplitude indicator
1 High vibration amplitude
2 Low vibration amplitude

7 **Vibration amplitude**
The vibration amplitude indicator shows if low or high vibration amplitude is selected. The vibration amplitude is selected using the keypad (see page *76*).
Vibration is turned on and off using the vibration on/off switch on the propulsion control lever. See page *74*.



Hour meter icon

8 **Hour meter**
The hour meter shows the total time, in hours, that the engine has been operating.

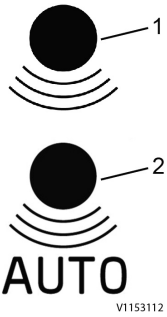

Vibration indicator
1 Manual mode
2 Automatic mode (option)

9 **Vibration indicator**
The vibration indicator shows if vibration is on or off. On machines with the autovibration option installed, it also shows if the automatic mode of vibration is turned on.



10 **Marker lights indicator (option)**
The marker lights indicator shows if the marker lights are on or off. The marker lights are turned on and off using the keypad (see page *76*).



Road lights

11 **Road lights indicator (option)**
The road lights indicator shows if the road lights are on or off. The road lights are turned on and off using the keypad (see page *76*).

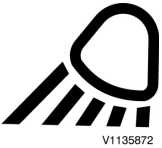

Front work lights

12 **Front work lights indicator (option)**
The front work lights indicator shows if the front work lights are on or off. The front work lights are turned on and off using the keypad (see page *76*).



V1152976

Main screen 2
Not equipped with impact meter (option)

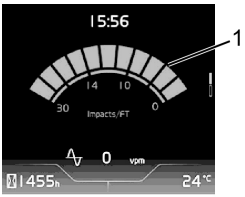

V1152977

Main screen 2
Equipped with impact meter (option)
1 Impact meter

Main screen 2

Main screen 2 shows some but not all of the same information as main screen 1. To change between main screen 1 and main screen 2, use the up and down arrow keys on the keypad (see page *76*).

On machines equipped with the impact meter (option), the number of impacts per distance travelled is also displayed on the impact meter. For more information about the impact meter, see page *60*.

Indicator icons

The bottom section of the display unit has two rows of indicators to provide the operator with information and warnings. The meaning of the icons on the indicators are explained as follows:

Message



V1118093

Message

The message icon indicates that there are messages for the operator. For information about how to read the messages, see page *70*.

Seat not occupied

The seat not occupied icon indicates that the operator is not sitting in the seat. When this indicator comes on, the operator should sit in the seat and fasten the seatbelt in order for the machine to continue with the current action or process. For example, the operator must be sitting in the seat to start the engine.



Seat not occupied

NOTE!
If the parking brake is released, an alarm text will also be displayed.
If the seat is not occupied for more than 5 seconds and the parking brake is released, the engine will shut down.

Seat belt



Seat belt

The seat belt icon indicates that the seat belt is not fastened.

Parking brake



Parking brake

The parking brake icon indicates that the parking brake is applied.

Vibration active

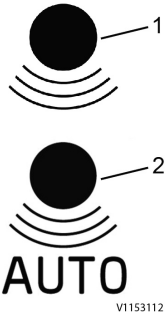

Vibration active
1 Vibration active, normal mode
2 Vibration active, automatic mode (option)

The vibration active icon indicates that vibration is active.

Battery

The battery icon indicates that the battery is not charging normally or the system voltage is low.

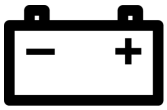

Battery

NOTE!
If the engine is running, an alarm text also will be displayed.

Engine oil pressure

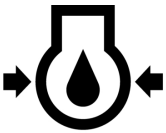

Engine oil pressure

The engine oil pressure icon indicates that the engine oil pressure is low. When this indicator comes on, shut down the machine and contact a qualified service technician.

Hydraulic oil temperature

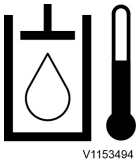

Hydraulic oil temperature

The hydraulic oil temperature icon indicates that the hydraulic oil temperature is high. When this indicator comes on, shut down the machine and contact a qualified service technician.

AdBlue®/DEF



AdBlue®/DEF

The AdBlue®/DEF icon indicates that the AdBlue®/DEF level is low. When this icon comes on, add more AdBlue®/DEF. See page *221*.

Preheater

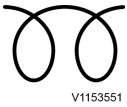

Preheater

The preheater icon indicates that the engine preheater is on. If the preheater icon comes on when starting the engine, wait for the preheater icon to turn off before starting.

Engine air filter



Engine air filter

The engine air filter icon indicates that the engine air filter is clogged and requires service.

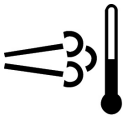

Exhaust system temperature

Exhaust system temperature

The exhaust system temperature icon indicates that the exhaust system temperature is high, above normal operating temperature.

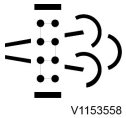

Regeneration needed

Regeneration needed

The regeneration needed icon indicates that the a regeneration procedure needs to be performed.



Service

Service

The service icon indicates that the machine requires service.

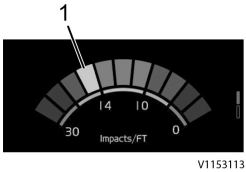

1 Highlighted segment

Impact meter

(option)

The impact meter shows an accurate display of the number of impacts per meter (or per foot, depending on the selected units). The segment of the display that represents the number of impacts is highlighted (changes from gray to a different, brighter colour). The numbers on the meter become brighter when the number of impacts is equal to that number.

Alarm texts

The information to the operator is provided on the operating display section of the display unit in the form of alarm texts, which are divided into three classes: Information, Check and Warning.

Information

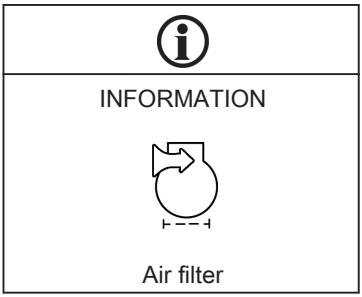

Example alarm text, information

- This screen gives useful information about the machine.
- The blue information symbol is shown.
- The buzzer sounds two times.
- Alarm text is shown for eight seconds and then changes to operating display.
- Repair or contact a workshop authorized by Volvo for information.
- After 8 seconds, the message will be automatically removed. Also, the operator can remove the on-screen information message by pressing the escape key.

Check

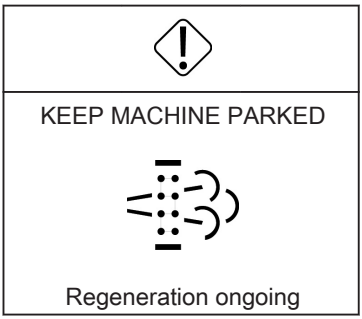

Example alarm text, check

- This screen tells the operator when a partial failure of the machine is detected.
- The amber central warning symbol is shown.
- The buzzer sounds four times.
- Press SELECT key to obtain more information about the malfunction.
- Alarm text is shown until confirmation is performed by pressing ESC key.
- Repair or contact a workshop authorized by Volvo for information.
- The operator can remove the on-screen check message by pressing the escape key. The message will still be available in the machine messages menu and the message symbol will be on if the cause of the message remains.

NOTE!
Some check messages will be displayed again, later, if the cause of the message remains.

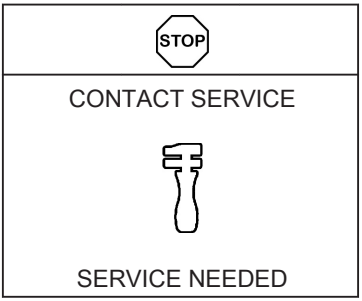

Example alarm text, warning

Warning

- This screen warns the operator when the electronic system senses a machine malfunction or a safety-related failure. Stop the machine immediately and investigate the cause.
- The red central warning symbol is shown.
- The buzzer will sound until the required action has been performed.
- The alarm text will be shown until the required action has been performed.
- Repair or contact a workshop authorized by Volvo for information.
- The operator can temporarily remove the on-screen warning message by pressing the escape key. The red central warning symbol will stay on until the cause of the message is resolved. The message will still be available in the machine messages menu and the message symbol will be on if the cause of the message remains. The message will be displayed again after 30 seconds if the cause of the message remains.

Main menu

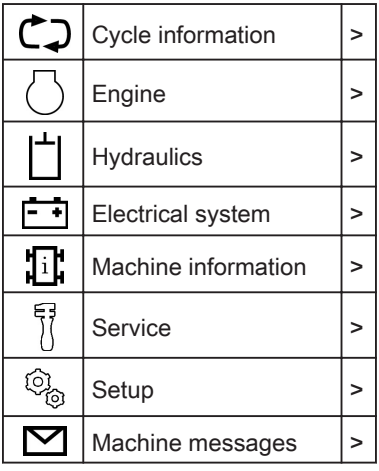

The main menu is the starting point for many display functions. It shows a list of more menus that can be displayed.

To display the main menu, press the SELECT key on the keypad while either main screen is displayed.

■ For information about the main screens, see page *53*.
■ For information about the keypad, see page *76*.

While the main menu is displayed, use the up and down arrow keys to choose the next menu. Press the SELECT key to display the chosen menu.

Press the ESC key to cancel an action or to return to a previous menu. Repeated pressing of the ESC key will return to the main screen.

Cycle information menu

↻	Cycle information
	Work timer 4h 50 min. >
	Current fuel cons. 1,5 L/h
	Average fuel cons. 2 L/h

NOTE!
The values and units that are shown here are examples. The values shown on your display will depend on operating conditions. The units are chosen by the operator. See page *68*.

The cycle information menu shows information about the current work cycle. The current work cycle is the time period since the last time that the work timer was reset by the operator.

To access the cycle information menu:
1 Press the SELECT key while either main screen is displayed.
2 Use the up and down arrow keys to choose Cycle information and press the SELECT key.

Use the up and down arrow keys to choose the next menu. Press the SELECT key to display the chosen menu.

Pressing the ESC key will return to the previous menu or the main screen. Repeated pressing of the ESC key from any menu will return to the main screen. For information on how to use the keypad and select the main screens, see pages *76* and *53*.

NOTE!
The units that are displayed are chosen by the operator. See page *68*.

Work timer

The work timer displays the total operating (engine running) time since the last reset. Use the up and down arrow keys to choose Work timer and press the SELECT key to display the next menu to reset the work timer to zero.

Current fuel cons.

The current rate of fuel consumption is displayed.

Average fuel cons.

The average fuel consumption since the work timer was reset is displayed.

Engine menu

The engine menu shows information about the operating condition of the engine. To access the engine menu:

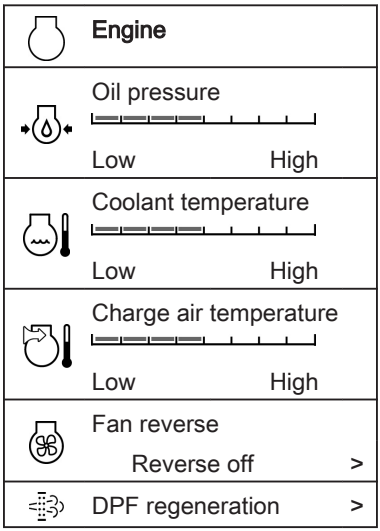

1 Press the select key while either main screen 1 or main screen 2 is displayed.
2 Use the up and down arrow keys to choose Engine and press the select key.

If necessary, use the up and down arrow keys to choose the next menu. Press the select key to display the chosen menu.

Pressing the escape key will return to the previous menu or the main screen. Repeated pressing of the escape key from any menu will return to the main screen. For information on how to use the keypad and select the main screens, see pages *76* and *53*.

Oil pressure

The engine oil pressure is displayed.

Coolant temperature

The temperature of the engine coolant is displayed.

Charge air temperature

The temperature of the engine charge air is displayed.

Fan reverse

(option)

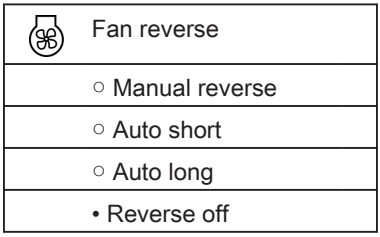

Fan reverse interval choices

The fan reverse function reverses the direction of rotation of the cooling unit in the engine compartment.
Use the up and down arrow keys to choose Fan reverse and press the select key to display the next menu with interval choices.
Use the up and down arrow keys to choose the interval and then press the select key to start or stop the fan reverse function:

Interval selection

Interval	Basic factory setting	Available reversal time duration	Available interval times
Manual reverse	30 seconds	20 – 180 seconds	Operator controlled
Auto short	30 seconds / 120 minutes	20 – 180 seconds	5 – 180 minutes

Interval	Basic factory setting	Available reversal time duration	Available interval times
Auto long	60 seconds / 240 minutes	20 – 180 seconds	5 – 360 minutes
Reverse off	Off	No reversal	

The selected interval determines the amount of time (duration) that the fan will operate in the reverse direction and the amount of time (interval) before the reversal will start again.

- **Manual reverse** — The fan reverse interval is controlled by the operator. When selected, the factory setting for fan reversal duration is 30 seconds. The duration can be adjusted by a qualified service technician.
- **Auto short** — The fan reverse function will start and stop automatically, using the duration and interval times set for this selection. When selected, the factory setting for fan reversal duration is 30 seconds and the interval before starting again is 15 minutes. The reversal duration and interval between reversals can be adjusted by a qualified service technician.
- **Auto long** — The fan reverse function will start and stop automatically, using the duration and interval times set for this selection. When selected, the factory setting for fan reversal duration is 30 seconds and the interval before starting again is 30 minutes. The reversal duration and interval between reversals can be adjusted by a qualified service technician.
- **Reverse off** — This indicates that the fan reverse function is turned off. Selecting this interval turns off the fan reverse function.

NOTE!
The amount of time that the fan reverse function remains on for the Auto short and Auto long choices can be adjusted by a qualified service technician.

DPF regeneration

	DPF regeneration
	Stop
	Start

Use the up and down arrow keys to choose DPF regeneration and press the select key to display the next menu with choices for starting and stopping the DPF regeneration process.

Use the up and down arrow keys to make your choice and press the select key to start or stop the DPF regeneration process.
Press the escape key to cancel and return to the Engine menu.

Hydraulics menu

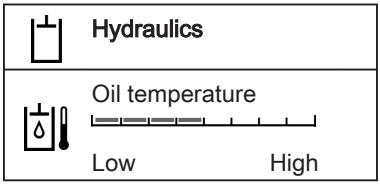

The hydraulics menu shows information about the hydraulics system. To access the hydraulics menu:
1 Press the SELECT key while either is displayed.
2 Use the up and down arrow keys to choose Hydraulics and press the SELECT key.

If necessary, use the up and down arrow keys to choose the next menu. Press the SELECT key to display the chosen menu.

Pressing the ESC key will return to the previous menu or the main screen. Repeated pressing of the ESC key from any menu will return to the main screen. For information on how to use the keypad and select the main screens, see pages *76* and *53*.

Oil temperature

The hydraulic oil temperature is displayed.

Electrical system menu

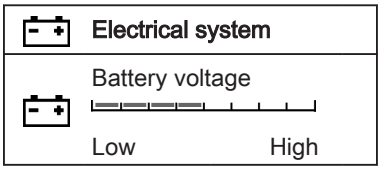

The electrical system menu shows information about the electrical system. To access the electrical system menu:
1 Press the SELECT key while either main screen is displayed.
2 Use the up and down arrow keys to choose Electrical system and press the SELECT key.

If necessary, use the up and down arrow keys to choose the next menu. Press the SELECT key to display the chosen menu.

Pressing the ESC key will return to the previous menu or the main screen. Repeated pressing of the ESC key from any menu will return to the main screen. For information on how to use the keypad and select the main screens, see pages *76* and *53*.

Battery voltage

Displays the battery voltage.

Machine information menu

Machine information
Machine model XXXXXX
Serial number XXXXXX

NOTE!
The machine model and serial number shown are examples. The values for your machine will be displayed.

The machine information menu shows information about the machine, such as the software part number, machine model and serial number.

To access the machine information menu:
1 Press the SELECT key while either main screen is displayed.
2 Use the up and down arrow keys to choose Machine information and press the SELECT key.

If necessary, use the up and down arrow keys to choose the next menu. Press the SELECT key to display the chosen menu.

Pressing the ESC key will return to the previous menu or the main screen. Repeated pressing of the ESC key from any menu will return to the main screen. For information on how to use the keypad and select the main screens, see pages *76* and *53*.

Machine model

The machine model is displayed.

Serial number

The last six digits of the product identification number is displayed. See page *27*.

Service menu

Service		
Confirm all other services done per Operator's Manual		
Engine oil/filter		
Time to service	500 h	>
Fuel filter/water sep		
Time to service	10 h	>
Axle oil		
Time to service	1000 h	>

The service menu shows a list of some of the service procedures to be performed by the operator. For a complete list of service tasks, see page *190*.

A timer is provided next to each procedure. The timer shows the number of hours remaining until the procedure needs to be performed. When the procedure has been performed, reset the timer to zero by choosing that procedure and pressing the select key.

To access the service menu:
1 Press the select key while either main screen 1 or main screen 2 is displayed.

Urea filter		
Time to service	1000 h	>
Hydraulic oil/Filters		
Time to service	2000 h	>
Drum oil		
Time to service	2000 h	>
DPF ash		
Time to service	3000 h	>
Engine coolant		
Time to service	6000 h	>
Service messages		
Off		>

2 Use the up and down arrow keys to choose Service and press the select key.

If necessary, use the up and down arrow keys to choose the next menu. Press the select key to display the chosen menu.

Pressing the escape key will return to the previous menu or the main screen. Repeated pressing of the escape key from any menu will return to the main screen. For information on how to use the keypad and select the main screens, see pages *76* and *53*.

NOTE!
The remaining hours for the service procedures shown are examples. The actual hours remaining for the procedures for your machine will be shown on the display unit.

Service messages, turn on and off

Choose the last item and press the select key to turn on and off the service messages.

Setup menu

Setup	
Units	>
Language	>
Time / date	>
Display brightness	>
Keypad brightness	>

The setup menu provides the operator a method to change how the display unit shows some information. To access the setup menu:
1 Press the select key while either main screen 1 or main screen 2 is displayed.
2 Use the up and down arrow keys to choose Setup and press the select key.

If necessary, use the up and down arrow keys to choose the next menu. Press the select key to display the chosen menu.

Pressing the escape key will return to the previous menu or the main screen. Repeated pressing of the escape key from any menu will return to the main screen. For information on how to use the keypad and select the main screens, see pages *76* and *53*.

Units

Units
• Metric
○ US

Use the up and down arrow keys to choose Units and press the select key to display the Units screen. When the Units screen is displayed, use the up and down arrow keys to choose the units (metric or US) used on the display unit.
Press the select key to save your choice.

Press the escape key to return to the Setup menu.

Language

Language
• English
○ Deutsch
○ Français
○ Italiano
○ Norsk
○ Svenska

Use the up and down arrow keys to choose Language and press the select key to display the Language screen.
When the Language screen is displayed, use the up and down arrow keys to choose the language that the display uses to display information.
Press the select key to save your choice.
Press the escape key to return to the Setup menu.

Time / date

Time / date	
Set time	>
Set date	>
Time format	>
Date format	>

Use the up and down arrow keys to choose Time / date and press the select key.
On the Time / date menu, use the up and down arrow keys to make your choice and press the select key to set the time, date, time format (12 hour or 24 hour) or date format.

Set time
24h:
↕ **15**:45

Note: 24 hour time format shown.

Set time

When the Set time screen is displayed, use the select key to select the hours or minutes part of the time.
Use the up and down arrow keys to set the time.
Press the select key to return to the hours part before pressing the escape key to save your setting.
Press the escape key to return to the Setup menu.

NOTE!
Pressing the escape key to return to the Setup menu without pressing the select key in each part of the setting will cancel the changes.

Set date
yyyymmdd
↕ 2015**04**22

Set date

When the Set date screen is displayed, use the select key to select the part of the date to be changed.
Use the up and down arrow keys to set the time.
Press the select key to return to the year part before pressing the escape key to save your setting.

Press the escape key to return to the Setup menu.

NOTE!
Pressing the escape key to return to the Setup menu without pressing the select key in each part of the setting will cancel the changes.

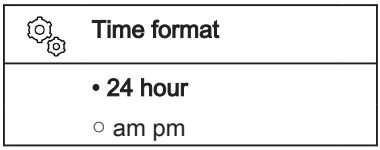

Time format

When the Time format screen is displayed, use the up and down arrow keys to choose the format that the display unit uses for displaying the time.
Press the select key to save your setting and return to the Setup menu.
Press the escape key to cancel (keep the previous time format) and return to the Setup menu.

Date format

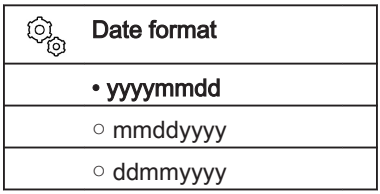

When the Date format screen is displayed, use the up and down arrow keys to choose the format that the display unit uses for displaying the date.
Press the select key to save your setting and return to the Setup menu.
Press the escape key to cancel (keep the previous date format) and return to the Setup menu.

Display brightness

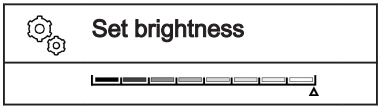

Use the up and down arrow keys to choose Display brightness and press the select key to display the Set brightness screen.
When the Set brightness screen is displayed, use the up and down arrow keys to adjust the brightness on the display unit.
Press the select key to save your setting and return to the Setup menu.
Press the escape key to cancel (keep the previous brightness setting) and return to the Setup menu.

Keypad brightness

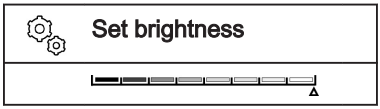

Use the up and down arrow keys to choose Keypad brightness and press the select key to display the Set brightness screen.
When the Set brightness screen is displayed, use the up and down arrow keys to adjust the brightness on the keypad.
Press the select key to save your setting and return to the Setup menu.
Press the escape key to cancel (keep the previous brightness setting) and return to the Setup menu.

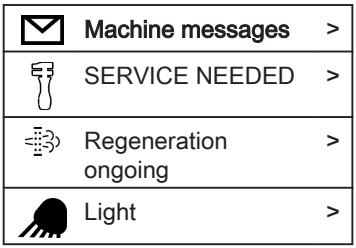

Example

Machine messages menu

The machine messages menu provides messages for the operator. When the envelope symbol ( ) is displayed on the main screen, there are stored messages.

To access the machine messages menu:
1 Press the SELECT key while either main screen is displayed.
2 Use the up and down arrow keys to choose Machine messages and press the SELECT key.

If necessary, use the up and down arrow keys to choose an item. Press the SELECT key to display more detailed information about the item.

Pressing the ESC key will return to the previous menu or the main screen. Repeated pressing of the ESC key from any menu will return to the main screen. For information on how to use the keypad and select the main screens, see pages *76* and *53*.

Shutdown screen

When the electrical system is turned off (turning the ignition key to the engine and electrical system off position or the key release position, see page *81*), the shutdown screen will be displayed for 180 seconds and then the display unit will turn off. The shutdown screen displays the hour meter icon and the total time, in hours, that the engine has been operating.

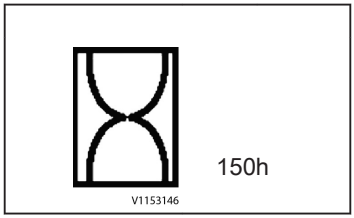

Example shutdown screen

Instrument panel, cab post

Cab post panel

Valid for option / configuration	
Option	**Configuration**
Cab	Volvo Cab

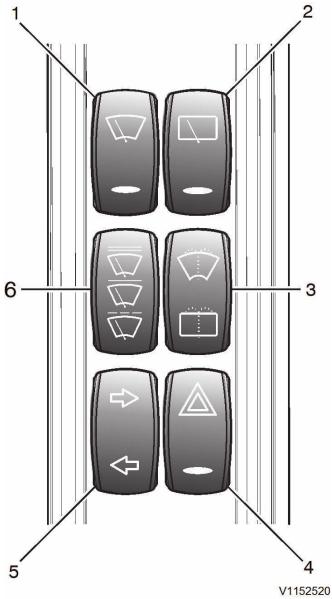

1	Front screen wiper switch
2	Rear screen wiper switch
3	Front and rear washer switch
4	Hazard lights switch (option)
5	Turn signals switch (option)
6	Front screen wiper speed switch

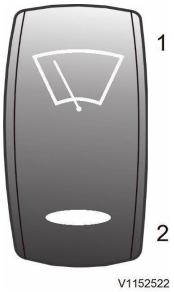

1 **Front screen wiper switch**
The front screen wiper switch is a two-position switch that controls the front screen wiper.

Position 1	Front screen wiper ON
Position 2	Front screen wiper OFF

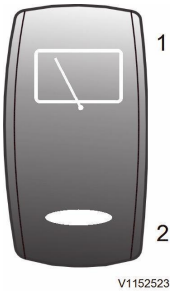

2 **Rear screen wiper switch**
The rear screen wiper switch is a two-position switch that controls the rear screen wiper.

Position 1	Rear screen wiper ON
Position 2	Rear screen wiper OFF

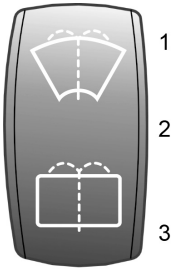

V1152524

3 **Front and rear washer switch**
The front and rear washer switch is a three-position toggle switch that controls the spraying of washer fluid on the front and rear windscreens. Press and hold the top or bottom of the switch to apply washer fluid to the windscreen. Release the switch to stop.

Position 1	Front washer on
Position 2	Washers off
Position 3	Rear washer on



V1135844

4 **Hazard lights switch (option)**
The hazard lights switch activates the turn signals and makes them blink together. The oval on the bottom of the switch will turn red while the hazard lights are active.

Position 1	Turns the hazard lights on
Position 2	Turns the hazard lights off

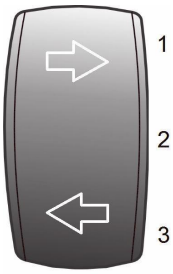

V1152526

5 **Turn signals switch (option)**
The turn signal switch is a three-position switch that controls the turn signals equipped with the road lights option.

Position 1	Turns the right turn signal on
Position 2	Turns the signals off
Position 3	Turns the left turn signal on

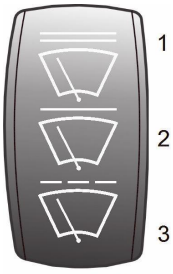

V1152527

6 **Front screen wiper speed switch**
The front screen wiper speed switch is a three-position switch that controls the speed of the front screen wiper.

Position 1	Constant fast
Position 2	Constant slow
Position 3	Intermittent

Instrument panel, right

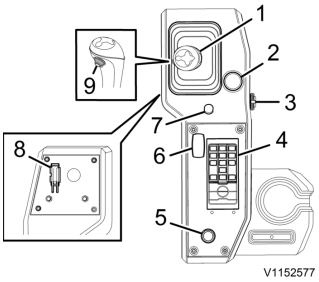

1	Propulsion control lever
2	Emergency stop switch
3	12 volt power outlet
4	Keypad
5	Vibration frequency control (option)
6	Parking brake switch
7	Horn button
8	Diagnostic connector (on bottom of console)
9	Vibration on/off switch



1 **Propulsion control lever**
The propulsion control lever controls machine direction, speed of travel and braking function. See page *127*.

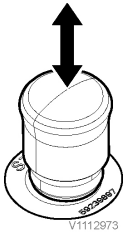

2 **Emergency stop switch**
Use the emergency stop switch in an emergency to shut down the engine and apply the parking brake.

NOTE!
Do not use the emergency stop switch for normal service braking. Use the emergency stop switch for emergency stopping only.

NOTE!
The emergency stop switch does not cut electrical power to the machine. See the battery disconnect switch on page *84*.



3 **12 volt power outlet**
The 12V power outlet allows the operator to power devices such as personal music players by plugging an appropriate adapter into the outlet.

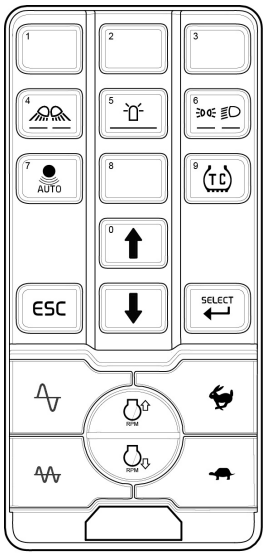

V1154108

4 **Keypad**
The keypad is used to enter data, select display screens and other machine operating functions. See page *76*.

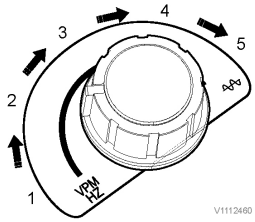

V1112460

5 **Vibration frequency control (option)**
The optional five-position vibration frequency control selects drum vibration frequencies. The drum has a vibration range of five frequencies in both high and low amplitude modes. Machines equipped with smooth drums vibrate at a higher frequency in high amplitude mode than machines equipped with padfoot drums.
The vibration frequency control is not used on machines equipped with two-speed vibration frequency controls.

Amplitude	Position 1	Position 2	Position 3	Position 4	Position 5
High	1400 vpm 23.3 Hz	1425 vpm 23.8 Hz	1550 vpm 25.8 Hz	1700 vpm 28.3 Hz	1850 vpm 30.8 Hz
Low	1425 vpm 23.8 Hz	1550 vpm 25.8 Hz	1625 vpm 27.1 Hz	1825 vpm 30.4 Hz	2025 vpm 33.8 Hz

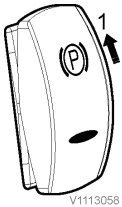

V1113058

6 **Parking brake switch**
The parking brake switch is a momentary switch that controls the parking brake. While the parking brake is on, the parking brake light will turn on in the instrument cluster and the oval at the bottom of the switch will turn red. When the parking brake is turned off, the parking brake light will extinguish. Press the switch once to apply the brake. Press the switch again to

release the brake. The parking brake switch is also used to test the parking brake. See page *202*.

Position 1 Applies or releases the parking brake

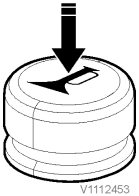

7 **Horn button**
Press the horn button to sound the horn.

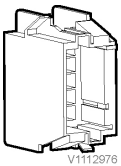

Located on bottom of console

8 **Diagnostics connector**
The diagnostics connector is used by a qualified service technician to access the machine's computer to identify and diagnose machine error codes using Volvo Construction Equipment's proprietary software.

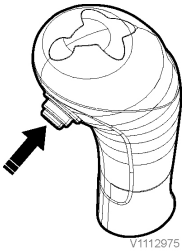

9 **Vibration on/off switch**
The vibration on/off switch is located on the propulsion control lever and actuates the vibration control module for compaction operations. Press the vibration on/off switch to turn drum vibration on. Press the switch again to turn drum vibration off.

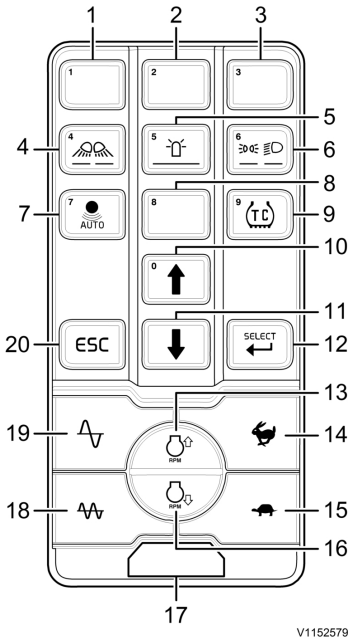

Keypad

Keypad

1	Number 1 key
2	Number 2 key
3	Number 3 key
4	Number 4/work lights key
5	Number 5/beacon light key
6	Number 6/road lights key
7	Number 7/auto vibration key
8	Number 8 key
9	Number 9/traction control key
10	Number 0/up arrow key
11	Down arrow key
12	Select key
13	High engine speed key
14	High travel speed key
15	Low travel speed key
16	Low engine speed key
17	Not used
18	Low vibration amplitude key
19	High vibration amplitude key
20	Escape key

Some of the number keys perform two functions: entering numbers and selecting machine functions. When a field on the display unit has been selected with the cursor and the SELECT key, the number keys will enter numbers when pressed. If no field is selected, the number keys activate the associated function when pressed.

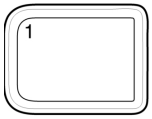

1 **Number 1 key**
Enters the number one (1).

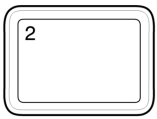

2 **Number 2 key**
Enters the number two (2).

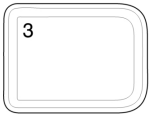

V1152614

3 **Number 3 key**
Enters the number three (3).



V1152615

4 **Number 4/work lights key**
Enters the number four (4).
Turns on and off the work lights.
When the work lights are off:
- The first press turns on the front work lights and the left icon on the key turns on.
- The second press turns on the front and rear work lights and both icons on the key turns on.
- The third press turns off the work lights and both icons on the key turn off.

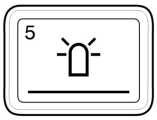

V1152616

5 **Number 5/beacon light key**
Enters the number five (5).
Turns on and off the beacon light.

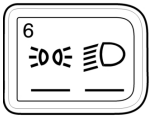

V1152617

6 **Number 6/road lights key**
Enters the number six (6).
Turns on and off the road lights.
When the road lights are off:
- The first press turns on the running lights and the left icon on the key turns on.
- The second press turns on the running and driving lights and both icons on the key turn on.
- The third press turns off the road lights and both icons on the key turn off.



V1152618

7 **Number 7/auto vibration key**
Enters the number seven (7).
Turns on and off the auto vibration function. See page *125*.

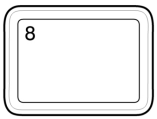

V1152619

8 **Number 8 key**
Enters the number eight (8).

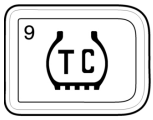

V1152620

9 **Number 9/traction control key**
Enters the number nine (9).
Turns on and off the traction control function.

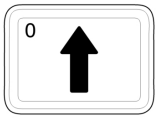

V1152621

10 **Number 0/up arrow key**
Enters the number zero (0).
Moves the selection (cursor) up in the main screen and menus.

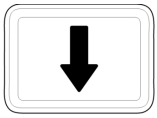
V1152622

11 **Down arrow key**
Moves the selection (cursor) down in the main screen and menus.

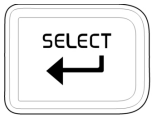

V1152623

12 **Select key**
Selects the item highlighted by the cursor or finishes a number entry. When main screen 1 or main screen 2 is displayed, the select key will display the main menu (see page *62*).



V1152625

13 **High engine speed key**
Selects high engine speed. Compacting must be done in high engine speed.

NOTE!
Any engine speed above low engine speed (800 rpm) is called high engine speed. High engine speed will vary depending on travel speed selection and vibration amplitude selection. Do not allow engine to idle for more than 10 minutes.

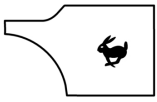
V1152624

14 **High travel speed key**
Selects high travel speed.

NOTE!
All compacting must be done in the low travel speed range. High travel speed range is used for travelling between site locations.

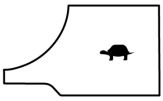
V1152627

15 **Low travel speed key**
Selects low travel speed.

NOTE!
All compacting must be done in the low travel speed range. High travel speed range is used for travelling between site locations.

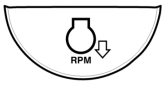

V1152626

16 **Low engine speed key**
Selects low engine speed.

NOTE!
Low engine speed is 800 rpm or less.
Do not allow the engine to idle for more than 10 minutes. Use high engine speed for everything other than intended idle.

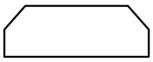
V1152628

17 **Not used**

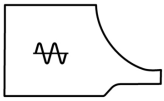
V1152629

18 **Low vibration amplitude key**
Selects low vibration amplitude.
Changing the vibration amplitude will change the engine idle speed. See page *251*.

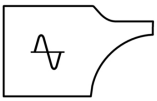
V1152630

19 **High vibration amplitude key**
Selects high vibration amplitude.
Changing the vibration amplitude will change the engine idle speed. See page *251*.



V1152631

20 **Escape key**
Returns to the previous menu or exits from the main menu.
Closes information screens that are permitted to be closed.

Other controls
Controls

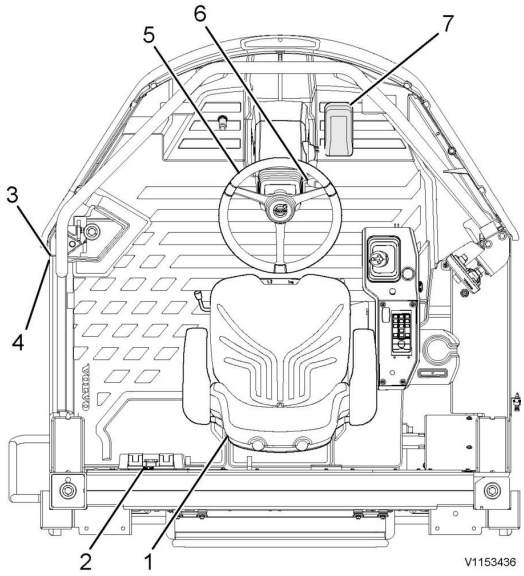

1	Operator's seat	5	Steering wheel
2	Power outlet	6	Steering wheel adjustment lever
3	Battery disconnect switch	7	Levelling blade foot controls (option)
4	Hood control		

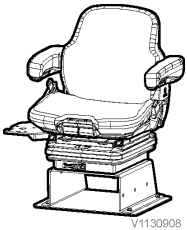

1 **Operator's seat**
See page *92* for more information.



2 **Power outlet**
The 12V power outlet allows the operator to power devices such as personal music players by plugging an appropriate adapter into the outlet.

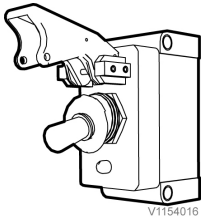
V1154016

3 **Battery disconnect switch**
The battery disconnect switch is connected to the positive (+) cable of the batteries. When the switch is turned to the off position, electrical power is disconnected from the machine. Turn the battery disconnect switch to off when the machine is not in use. See page *84* for more information.

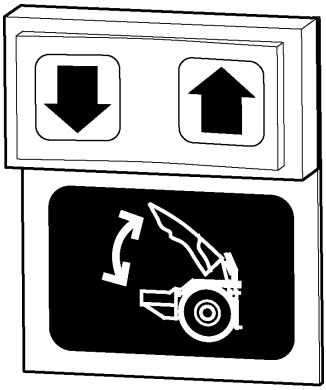
V1155773

4 **Hood control**
The hood control raises or lowers the engine hood. See page *85*.

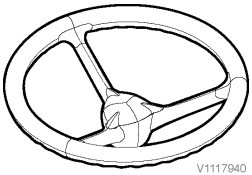
V1117940

5 **Steering wheel**
The steering wheel is used to steer the machine.


V1070255

6 **Steering wheel adjustment lever**
The steering wheel adjustment lever is positioned to the left under the steering wheel. Pull up on the lever to adjust the height of the steering wheel.
Push down on the lever to adjust the angle of the steering wheel.

NOTE!
Support the steering wheel before attempting to adjust the steering wheel angle.

WARNING

Risk of serious injury.
Adjusting the position of the operator console and seat assembly while operating the machine could cause loss of machine control. This could result in accidents and serious injuries.
Always stop the machine and apply the parking brake before adjusting the position of the operator console and seat assembly.

7 **Levelling blade foot controls (option)**
The levelling blade is optional for machines with padfoot drums. See page *83* for more information.

Levelling blade

Description

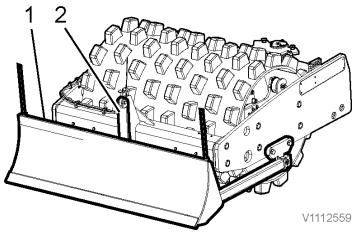

Levelling blade assembly
1 Levelling blade
2 Raising and lowering cylinder

NOTICE

Risk of machine damage.
Improper use of the levelling blade can cause machine damage.
Do not use the levelling blade for cutting or dozing material. It is designed for levelling use only.

The levelling blade uses a raising and lowering cylinder with a float feature.

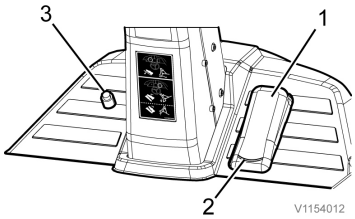

Levelling blade foot controls
1 Lowering position (toe)
2 Raise position (heel)
3 Blade float switch

Levelling blade controls

The foot pedal control positions the levelling blade. The levelling blade is raised by pressing the heel of the foot pedal control. The levelling blade is lowered by pressing the toe of the foot pedal control. Pressing and releasing the blade float switch engages the float function.

Road lights

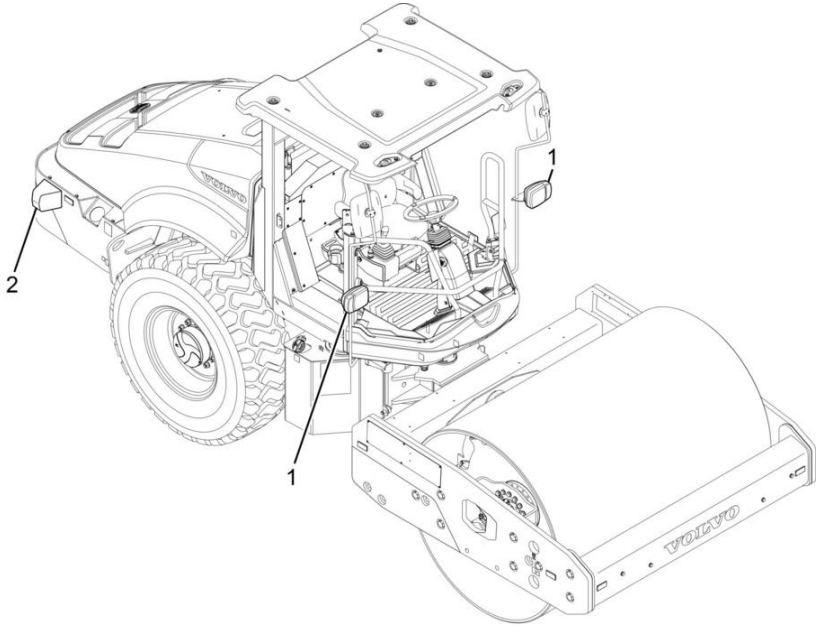

1	Front Road Lights	2	Rear Road Lights

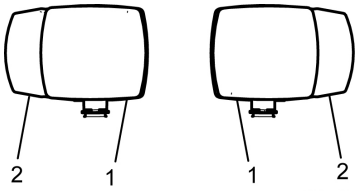

1 Front road lights
The front road lights turn on when the road lights key is pressed twice from “off”. The turn signal lights turn on when either the turn signal switch or hazard switch is pressed.

1 Road lights
2 Turn signal lights

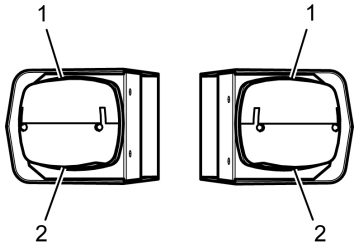

2 Rear road lights
The running lights turn on when the road lights key is pressed. The turn signal lights (located in the same housing) turn on when the turn signal switch or the hazard switch is pressed. The brake light turns on when the propulsion control lever is in the stop position.

1 Turn signal lights
2 Brake and running lights

Battery disconnect switch

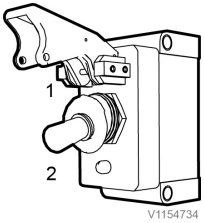

Position 1	Battery on
Position 2	Battery off

Use the battery disconnect switch to disconnect the battery from the main machine systems. The battery disconnect switch should be turned off when the machine is not in use. The indicator light (LED) turns off when the battery is disconnected.

NOTE!
The indicator light (LED) may stay on for up to 2 minutes, indicating that the battery is still connected.

Remove the negative battery cable(s) and cover exposed terminals before working on the machine's electrical system.

Hood control

⚠ WARNING

Risk of crushing injury.
Unexpected hood movement could cause serious injury.
Ensure that persons are clear of the engine compartment area before lowering the hood.

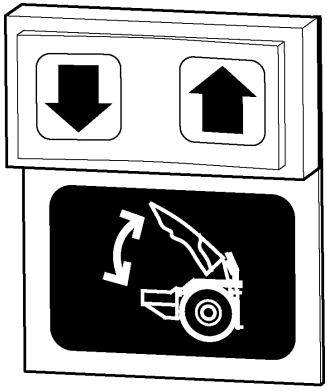

The hood control raises and lowers the engine hood and can be found below the left side of the operator’s station. See page *81*.

Before operating the engine hood, be sure that the machine is off and the parking brake is applied. To raise the hood, press and hold the right button. To lower the hood, press and hold the left button. Check that the hood is completely closed when not in use. If the hood cannot open for any reason, contact a qualified service technician.

ROPS

Work lights

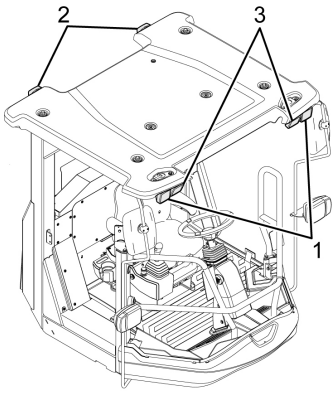

V1153630

The work lights are designed to light the work area of the machine. The front work lights and drum lights turn on when the work lights key is pressed. The rear work lights turn on when the work lights key is pressed a second time.

1 Front work lights
2 Rear work lights
3 Drum lights

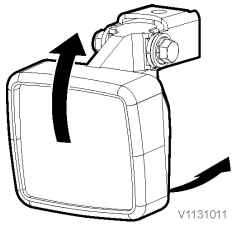
V1131011

The work lights can be adjusted to direct light on the drum or the area around the machine. Secure the machine against movement before attempting to adjust the work lights.

Work lights

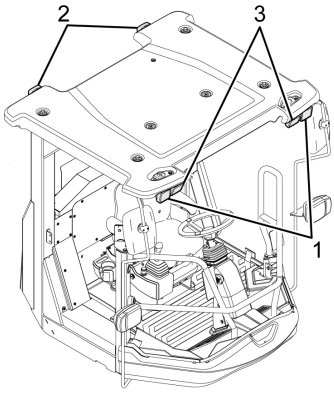

V1153630

The work lights are designed to light the work area of the machine. The front work lights and drum lights turn on when the work lights key is pressed. The rear work lights turn on when the work lights key is pressed a second time.

1 Front work lights
2 Rear work lights
3 Drum lights

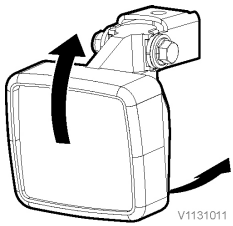

The work lights can be adjusted to direct light on the drum or the area around the machine. Secure the machine against movement before attempting to adjust the work lights.

Cab

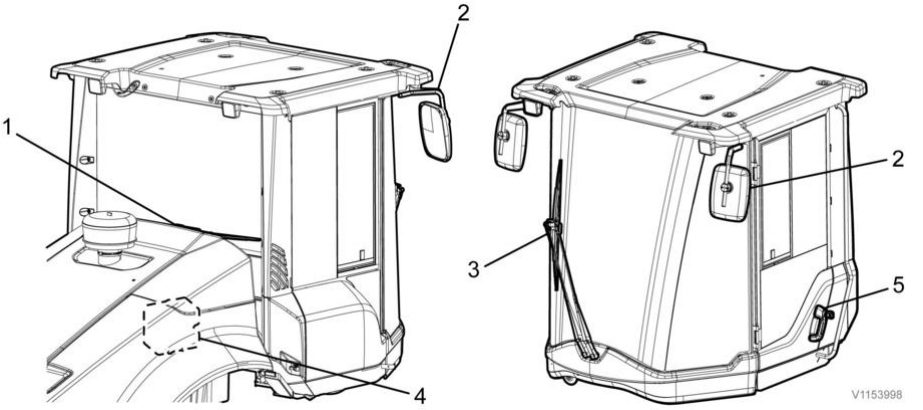

1	Rear windscreen wiper	4	Washer fluid fill point
2	Side mirrors	5	Door handle
3	Front windscreen wiper		



1 **Rear windscreen wiper**
The rear windscreen wiper is activated by switch inside the cab.

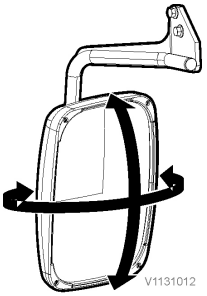

2 **Side mirrors**
The adjustable side mirrors assist with viewing of the left and right sides of the machine.

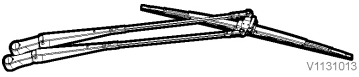

3 **Front windscreen wiper**
The front windscreen wiper is activated by switch inside the cab.

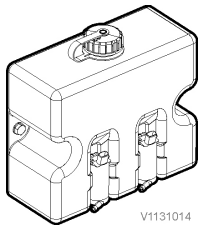

4 **Washer fluid tank**
The washer fluid tank is located inside the engine compartment. Raise the engine hood and remove the cap to fill the washer fluid tank. The washer system is activated by switch inside the cab.

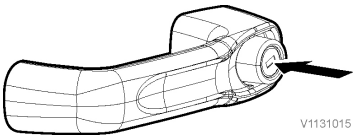

5 **Door handle**
To open the door, push the button in and pull. The handle has a lock for securing the machine when not in use.

Cab interior

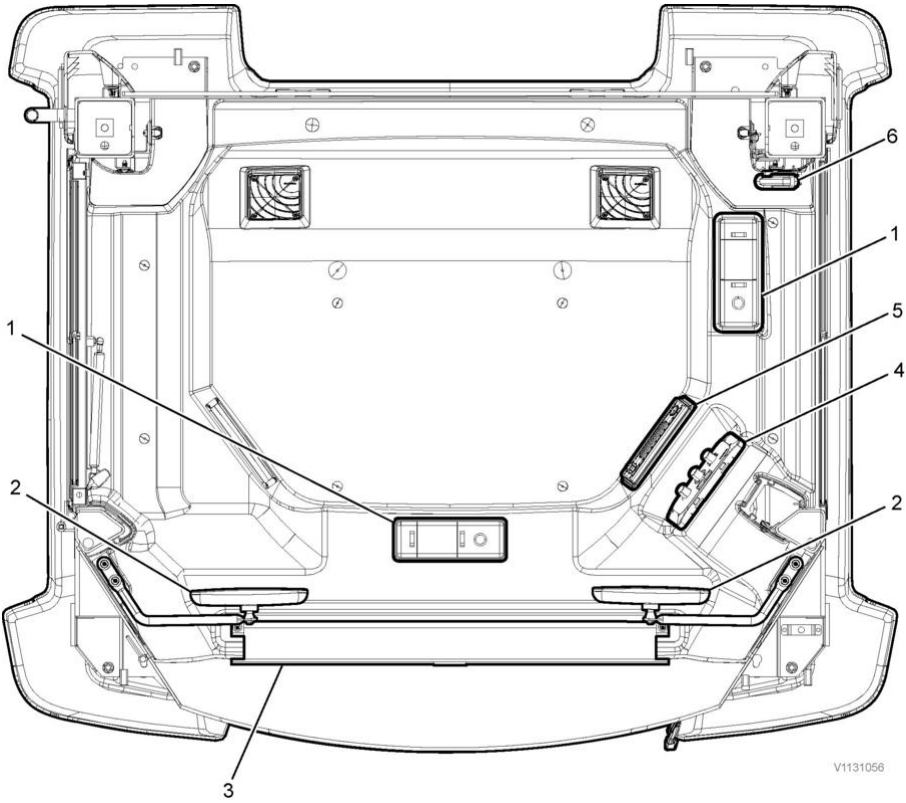

1	Cab interior light	4	Cab climate controls
2	Rear view mirror	5	CD/Radio (option)
3	Visor	6	Emergency hammer

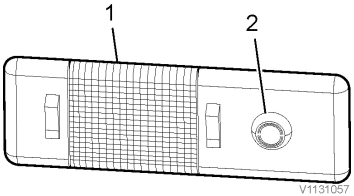

1 Main light
2 Spotlight

1 **Cab interior light**
There are two cab interior (dome) light installations. Each installation consists of two separate lights: a main light and an adjustable spotlight that are controlled by separate switches.
The main light switch has three positions. Press in the left end of the switch to activate the light. Put switch in the centre position to deactivate the light. Press in the right end of the switch to activate the light when door is open.
The spotlight switch has two positions. Press in the right end of the switch to activate the light. Press in the left end of the switch to deactivate the light.

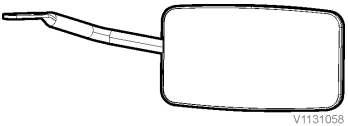

2 **Rear view mirror**
The rear view mirror can be adjusted to provide a view behind the machine.

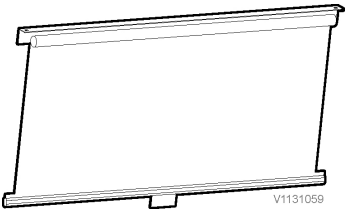

3 **Visor (option)**
The visor can be pulled down to screen the operator from sunlight.

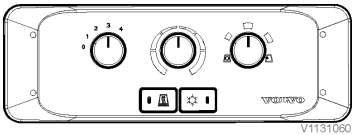

4 **Cab climate controls**
The cab climate controls modify the air exiting the cab vents. See page *97*.

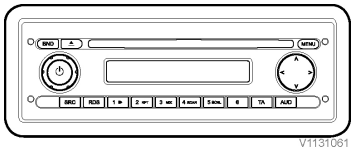

5 **Radio/MP3 player (option)**
A factory-installed radio/MP3 player is available as an option. The radio console is mounted in the headliner to the right, above the operator. Two speakers are installed in the headliner of the cab.
Refer to the instructions supplied in the package of manuals.

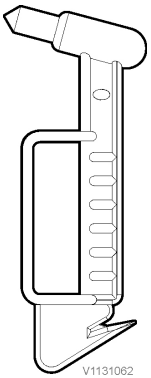

6 **Emergency hammer**
An emergency hammer is attached to the right rear cab post. In the event of an emergency and both cab emergency exits are blocked, use the hammer to break the front or rear glass and exit the cab.

Operator comfort

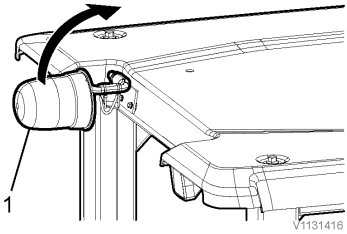

1 Beacon light

Beacon light (if equipped)

The optional beacon light is to be used when travelling on public roads and when the machine is a hindrance or impedes other traffic and when working on or by the side of the roadway. To use the beacon light, manually flip the light in to the upright position. When transporting the machine, flip the light back down in to the horizontal position. A switch on the front instrument panel turns on the beacon light. See page *76*.

Operator seat

WARNING

Risk of serious accidents.
Adjusting the position of the operator console and seat assembly while operating the machine could cause loss of machine control. This could result in accidents and serious injuries.
Always stop the machine and apply the parking brake before adjusting the position of the operator console and seat assembly.

The machine is equipped with a suspension seat that features several adjustments. A correctly adjusted operator's seat increases operator comfort and safety. An incorrectly adjusted seat may lead to injuries. The adjustments that can be made are:

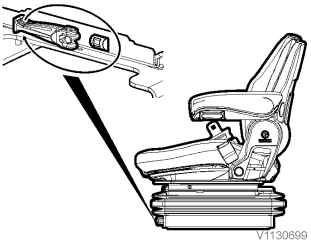

Height and weight adjustment

The height and weight adjustment handle provides resistance to lowering based on the operator’s weight. The handle is located in front of the seat, below the seat suspension bellows. To adjust, pull out slightly on the end of the handle and turn it clockwise or counterclockwise. A gauge next to the handle shows what weight the seat is set for and changes as the seat is adjusted. The measurement is given in kilograms.

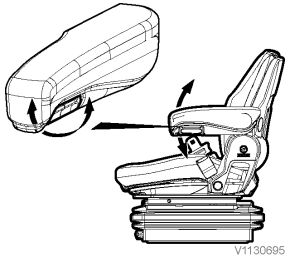

Armrest angle adjustment

An armrest angle adjustment knob is incorporated in the underside of the armrest. To adjust the armrest angle, turn the knob clockwise or counterclockwise to achieve the desired angle.

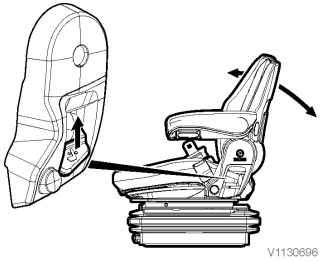

Backrest angle adjustment

The backrest adjustment handle is located at the rear left side of the seat cushion. To adjust the backrest angle, pull up on the handle and push the backrest to the desired angle.

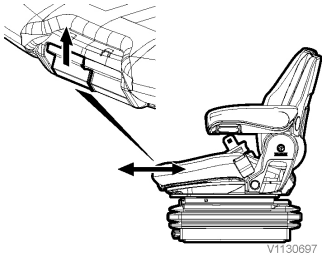

Seat cushion horizontal adjustment

The seat cushion horizontal adjustment handle is located on the front of the cushion, on the right. To adjust, pull up on the handle and pull the seat cushion forward or push it backward.

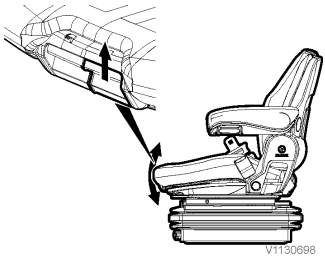

Cushion tilt adjustment

The seat cushion tilt adjustment handle is located on the front of the cushion, on the left. To adjust, pull up on the handle and pull the front of the seat cushion up or push it down.

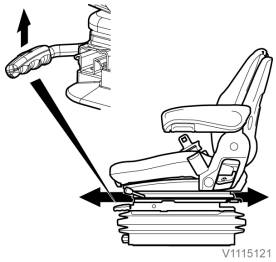

Seat horizontal adjustment

The horizontal adjustment handle is located below the seat cushion, on the right. To adjust, pull up on the handle and slide the seat forward and backward.

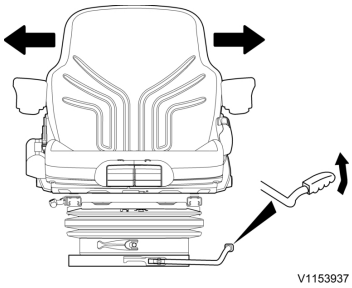

Seat lateral adjustment

The lateral adjustment handle is located on the left side of the seat suspension bellows. To adjust, pull up on the handle and slide the seat right and left.

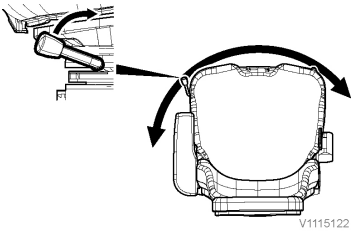

Seat rotation adjustment

The rotation adjustment lever is located below the seat cushion, on the left. To adjust, pull up on the lever and turn the seat toward the left and the right.

NOTE!
Slide the seat fully to the left before rotating the seat. After adjusting the seat rotation, slide the seat to the desired position.

Seat belt

⚠ WARNING

Risk of serious injury!
Unexpected machine movement can cause the operator to be ejected from the machine, causing serious injuries.
Operate the machine only while seated in the operator seat with the seat belt fastened.

The seat belt is critical to operator safety and must be worn at all times during machine operation to prevent the operator from being ejected from the cab or the operator platform if the machine rolls over or is involved in an accident. A fastened seat belt also helps the operator to maintain control of the machine if it moves suddenly or in an unexpected way. Failure to wear a seat belt during machine operation could result in serious injury or death. The seat belt is intended for one adult only. Keep the belt rolled up when not in use.

WARNING

Risk of serious injury or death.
A damaged seat belt could cause serious injury or death.
Check the seat belt and associated parts before start of machine operation.

Check the seat belt and associated parts daily. Ensure mounting hardware is tight. Replace the entire seat belt immediately if there is any wear, the webbing is worn, cut, has loose stitching, the belt is deformed or the seat belt retractor does not work. Replace the seat belt if the machine has been involved in an accident where the belt has been subjected to high strain or loading. Inspect mounting hardware. Changes to the belt or its mountings must never be made.
Only clean with warm water, do not use soap or detergent. Let the belt dry while it is fully pulled out before rolling it in.

Volvo Construction Equipment recommends replacing seat belt assemblies every 3 years regardless of appearance.

Operator's manual, storage

ROPS

A manual storage box is located to the left of the operator’s seat. Keep the manual in the storage box so that it is always available.

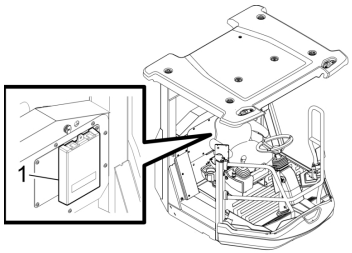

1 Operator’s Manual storage

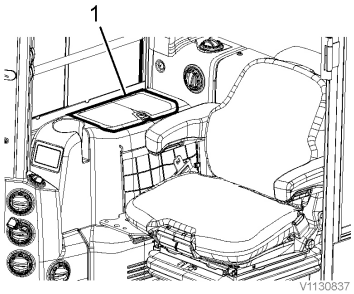

1 Operator’s Manual storage

Cab

A manual storage compartment is located to the right of the operator’s seat, inside the side console. Keep the manual in the storage compartment so that it is always available.

Climate control system

Cab climate control

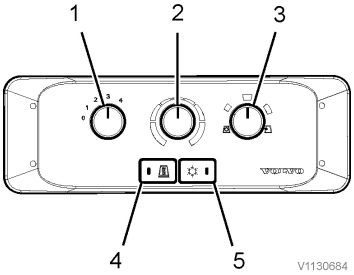

1	Fan speed control
2	Temperature control
3	Air intake control
4	Heater switch
5	Air conditioning switch

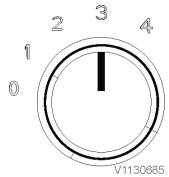

1 **Fan speed control**
The fan speed control allows the selection of air speed exiting the ventilation nozzles. Position zero (0) will turn off the fans. Position four (4) will set the fans to maximum speed.

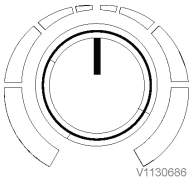

2 **Temperature control**
The temperature control allows the adjustment of the temperature of the air exiting the ventilation nozzles. Turn the control counterclockwise to lower the temperature. Turn the control clockwise to raise the temperature.

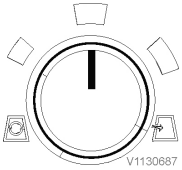

3 **Air intake control**
The air intake control allows the adjustment of the amount of air recirculated by the climate control system. Turn the control counterclockwise to recirculate the air inside the cab. Turn the control clockwise to allow more fresh air into the cab.

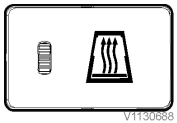

4 **Heater switch**
The heater switch turns on the heater. Press the heater switch once to turn it on. An LED will turn on while the heater is on. Press the heater switch again to turn the heater off.

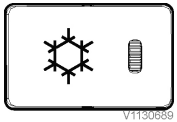

5 **Air conditioning switch**
The air conditioning switch turns on the air conditioning. Press the air conditioning switch once to turn it on. An LED will turn on while the air conditioner is on. Press the air conditioning switch again to turn the air conditioner off.

Operating instructions
Safety rules when operating

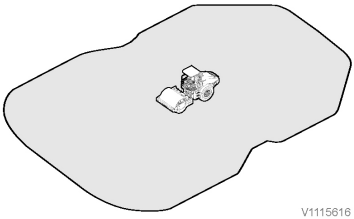
V1115616

Danger zone

The danger zone of this machine is within 7 meters (23 feet) from the nearest edge of the machine. This zone includes machine movements and attachment or extension movements. Trained and authorised personnel must first notify the operator of their presence and permission within the danger zone during machine operation. No other persons are permitted in the danger zone during machine operation.

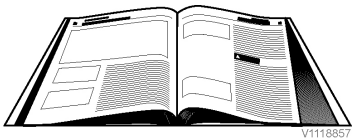
V1118857

Safety, general

- Read and understand this manual before starting the engine and operating or maintaining the machine.
- Contact a local authorised dealer or distributor with any questions. Never guess about how to safely operate and maintain this equipment.
- Only individuals who have been trained in safety during operation and maintenance of the machine, are authorised and have the required tools to do their jobs may operate and maintain this machine. All personnel must be alert to, recognise and avoid potential hazards associated with performing their work.
- Any repair or maintenance task not described in the Service and maintenance section of the Operator's Manual must be performed by a qualified service technician.
- A qualified service technician has specialised tools, is authorised to service the machine and has extensive training in:
  - Operation of the machine
  - Maintenance of the machine's systems
  - Repairing machine parts and components
  - All aspects of safe operation, maintenance and repair

- Wear or use proper personal protective equipment at all times while operating or maintaining the machine.

- Operate the machine only when it is in good condition. Any malfunction, especially those affecting the safety of the machine, must be corrected immediately. The machine must be used in accordance with its designated use as described in this manual.

- Never use this machine in any way other than as intended by Volvo Construction Equipment. Use of the machine for any other purpose is contrary to its designated use. See page 7 for an explanation of the intended use. Volvo Construction Equipment and Volvo Construction Equipment's local authorised dealer or distributor cannot be held responsible for any damage resulting from such use. The risk of such misuse lies entirely with the user.

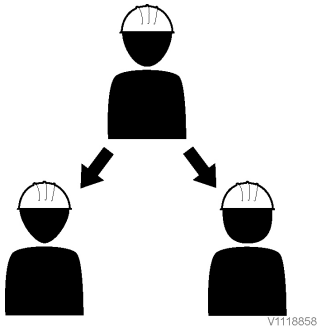

Selection and qualification of personnel

- Only qualified personnel may work on or with the machine. Statutory minimum age limits must be observed.

- Clearly describe the responsibilities of individuals who operate, setup, maintain or repair the machine.

- Define the machine operator's responsibilities for safe machine operation, including observing traffic regulations. The operator has the authority to refuse instructions by third parties that are contrary to safe practices.

- Do not allow persons being trained or instructed in the operation or maintenance of the machine to work without continuous supervision by an experienced operator or qualified service technician.

- All electrical work must be performed in accordance with electrical engineering guidelines and local regulations. Allow only skilled electricians, or persons instructed by them, to

work on the electrical system or electrical components of the machine.

- Never allow anyone except skilled and trained personnel to service or maintain the machine chassis, brake, hydraulic and steering systems.

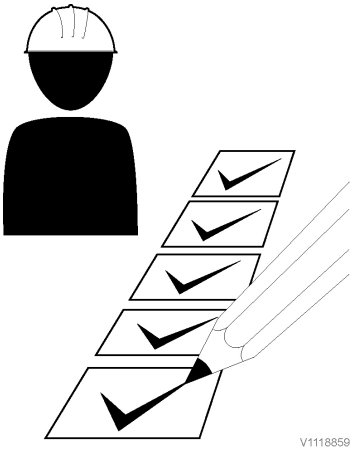
V1118859

Organisational measures

- Do not remove the Operator's Manual from the machine or where the machine is used. Store it in the compartment provided on the machine.

- Observe and instruct users of the machine in all applicable legal and mandatory regulations relevant to accident prevention and environmental protection. These compulsory regulations may also deal with handling hazardous substances, issuing or wearing personal protective equipment and observing traffic regulations.

- Supplement operating instructions with detailed work instructions for specific work activities and locations.

- Never let anyone who has not read the operating instructions and safety information operate or work on the machine. Reading the instructions after work has begun is too late. This is especially important for persons who only occasionally work on the machine, such as during set up or maintenance.

- Make sure personnel work in compliance with the operating instructions and are alert to risks and safety factors.

- Always tie back or otherwise secure long hair and wear close-fitting garments. Avoid wearing jewellery such as rings, bracelets and necklaces. Loose-fitting clothes, hair and jewellery are personal safety hazards. Clothing, hair or jewellery caught in the machinery may result in serious injury or death.

- Use personal protective equipment whenever required by work circumstances or by law.

- Follow all safety instructions in this Operator's Manual and on decals attached to the machine.
- Regularly inspect all safety warning and instruction decals attached to the machine for completeness and readability.
- Stop the machine immediately in the event of any malfunction. Report the malfunction to the proper supervisory personnel. Operating a machine that is not working properly may cause extensive damage to the machine or significantly increase hazards to operating personnel due to abnormal operating conditions.
- Never perform service or maintenance on the machine in any manner other than that which is described in the Operator's Manual or the Service Manual.
- Never make any modifications, additions or conversions to the machine without the manufacturer's approval in writing. This applies to the installation and adjustment of safety devices and valves as well as to welding work on load-bearing components.
- Complete all service and maintenance tasks at the required time interval as planned by the lubrication and service chart. See page *190*. Performing scheduled preventive maintenance consistently will extend the life of the machine.
- Follow all firefighting procedures.

Mandatory safety measures

- Never clean, lubricate or service the machine while the engine is running.
- Do not operate the machine while under the influence of drugs or alcohol.
- Always use personal protective equipment, such as hard hats, safety shoes, eye protection and ear protection while operating or maintaining the machine.

- Do not wear radio or music headphones while operating the machine.
- Do not wear jewellery while operating the machine.
- Ensure all guards and shields are in place and mounted securely.
- Clear all maintenance tools before starting the engine after maintenance.
- Contact a supervisor, or an authorised dealer or distributor, if there are any questions about the operation or maintenance of this machine. Never guess – always check!
- Failure to adhere to these safety instructions may result in serious injury or even death.

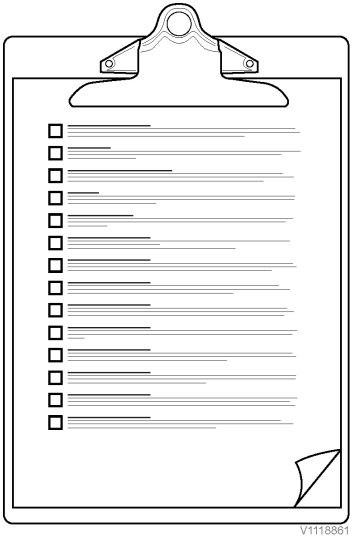
V1118861

Pre-start inspection

- Inspect the machine daily. Verify that routine maintenance and lubrication procedures are dutifully performed.
- Repair or replace any malfunctioning, broken or missing parts. Refer to the lubrication and service chart located in the Service and maintenance section in this manual. See page *190*.
- Verify that all safety warning and instruction decals are in place and readable. These instructions are as important as any other equipment on the machine. Refer to the decal location drawing in the Presentation section of this manual. See page *29*.
- Verify that all safety and protective devices are in place and in good working order.
- Never fill the fuel tank while the engine is running or while the machine is located near an open flame. Smoking is prohibited within 15 m (50 ft) of the machine while refuelling.
- Always fill the fuel tank either outside or in an adequately ventilated area.

- Always wipe up any spilled fuel.

- Check for any maintenance and repair warning tags placed on the machine. Do not operate the machine until repairs have been made and the warning tags have been removed by authorised personnel.

- Remove any dirt, debris or foreign material from the operator platform to reduce the danger of slipping.

- Know the location of the emergency stop switches and safety devices on the machine.

- Know the capabilities and limitations of the machine with respect to speed, gradeability, steering and braking.

- Be aware of the dimensions of the machine. This includes the height and width of the overall machine, as well as the transport vehicle dimensions and weight.

Safety when working in dangerous areas

- Check for dangerous conditions in the work area, such as holes, hills, underground culverts, manhole covers, water melt pits or kerb and street boxes. Avoid any operation that might violate safety rules.

- Use this machine only for the jobs it is intended for under safe conditions on the construction site. This includes the stability and condition of the ground, width of the driving lane and any objects which would interfere with the movement of the machine both above ground level and below ground level such as kerbs or ditches.

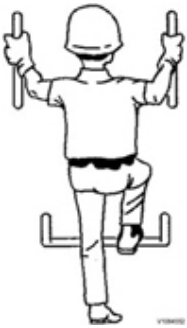
Three-point contact

Safety when starting

- Always use handrails and steps when mounting and dismounting the machine. Always maintain a three-point contact as shown.
- Always wear the seat belt when operating the machine.
- Read and follow all safety warning and instruction decals.
- Turn on the lighting system in conditions of poor visibility and after dark.
- Check the surrounding area for pedestrians. Do not start or operate the machine while someone is within the machine's danger zone, see page *98*.
- Return the propulsion control lever to the stop position before attempting to start the engine.
- Watch the indicators during start-up and shutdown procedures in accordance with the operating instructions.
- Make sure the parking brake is applied before starting the engine. See page *74* for parking brake control details.
- Start the engine only while in the operator seat.

Safety when operating

- Avoid any operating mode or procedure that might violate safety rules.
- Avoid any operation that might risk machine stability.
- Read and understand all safety information and operation instructions before operating the machine.
- Operate the machine only if all safety and protective devices originally provided are in place and in good condition. This includes removable

safety devices, emergency shutdown equipment, soundproofing elements and exhausts.

- Only move the machine through tunnels, underpasses and under power lines with sufficient clearance.

- Only cross bridges rated to hold the weight of the machine.

- Check the machine at least once each shift for damage and report damage to the work site supervisor. If the machine is not operating properly, shut down the engine immediately. Continued operation of a machine that is not working properly may cause additional damage to the machine or significantly increase the hazards to operating personnel.

- Check the machine's danger zone for pedestrians, see page *98*. Make sure no one is in danger or at risk before starting the engine or moving the machine. Make sure the line of travel is free of pedestrians and obstacles.

- Ensure all braking, steering, signalling and lighting systems are fully functional before moving the machine or starting work.

- Ensure that accessories have been safely stowed before moving the machine.

- Obey all applicable traffic regulations when travelling on public roads. Make sure the machine is in a condition that meets those regulations.

- Always keep a safe distance away from the edges of building pits and slopes.

- Always secure the machine to prevent inadvertent movement and unauthorised use before leaving it. See page *132*.

- Provide an observer when loading and unloading the machine from a transporter or lifting it with a crane.

- Look in all directions before changing the direction of travel.
- Never climb on or off the machine while it is operating or moving.
- Use extreme caution and be observant when operating the machine in close quarters or in congested areas.
- Never carry passengers.
- Know the hand signals used (required) for particular machine operations and machine travel, and know who has the responsibility for signalling. See page *165* for hand signal reference.
- Locate and memorise any work site obstructions and any other potential hazards in the area. Know the area the machine is to be operated in, where the fire extinguisher and first aid station is and who, if anyone, is trained in administering first aid.
- Always remain seated with the seat belt on during machine operations, travelling or loading and unloading.
- Do not work near overhanging banks or on grades that could cause the machine to slide or roll over.
- Avoid driving across slopes where the danger of a roll over is present. Always operate up and down slopes. Never change to a lower gear on a slope; always change to a lower gear before reaching a slope. Always keep the propulsion control lever in low speed range close to the stop position when climbing or descending hills.
- Never allow anyone to stand within the machine's danger zone when the engine is running, see page *98*.
- Control the machine travel speed with the propulsion control lever. Never use the engine speed throttle to control the travel speed of the machine.

- Control engine speed with the throttle control.
- Do not tow the machine except as explained in the operating instructions of this manual.
- Do not run the engine in a closed building for an extended length of time. Exhaust fumes can kill.
- Read and follow all safety warning and instruction decals.

Emergency cab exit



Emergency exit decal

- On machines with enclosed cabs, in case of emergency and a blockage of the normal cab exit occurs, exit the cab through the window identified with the “Emergency Exit” label, located at the right side of the cab.

Machine operator safety

- Always use the seat belt.
- Always remain seated with the seat belt on during machine operations, travelling or loading and unloading.
- Check the seat belt for wear and damage, see page *197*.
- All machine faults which can cause accidents must be corrected before operating.
- Always wear suitable clothing for safe handling and a hard hat.
- Do not use portable telephones, as it may interfere with important electronics. The mobile telephone must be connected to the electrical system of the machine and have a fixed external aerial installed according to the instructions of the manufacturer. See page *24* for installing communication equipment and aerial.
- Keep hands away from areas where there is a risk of crushing, e.g. covers, door and windows.



Three-point contact

- Use three-point contact (two hands and one foot or two feet and one hand), steps and handholds when entering or exiting the machine. Always face the machine. Do not jump!

- All doors, safety gates, ladders and cover plates must be secured during machine operations.

- Vibration (shaking) which arises when operating may be harmful to the operator. Reduce vibration by adjusting the seat and tightening the seat belt and adapting the travelling speed.

- The machine roll over protective structure (ROPS) when used in conjunction with a seat belt, will lessen the possibility of death or serious injury in the event of a rollover. Wear the seat belt when operating the machine. Hold firmly on to the steering wheel if the machine should roll over. Do not jump!

- If so equipped, the falling objects protective structure (FOPS) is designed to provide additional protection to the operator from falling objects.

- Do not remove, repair, modify, drill, weld on or add attachments to the ROPS or FOPS.

- Only walk and stand on surfaces that have slip protection.

- Do not enter or leave the machine during a thunderstorm.
  - Stay a safe distance away from the machine until the thunderstorm passes.

  - While on the machine, remain seated with the machine stationary until the thunderstorm passes. Do not touch any controls or anything made of metal.

Safety when boost starting

WARNING

Risk of explosion.
Boost-start can cause flammable gas emission from the battery. Sparks near the battery can cause an explosion resulting in serious injury.
Avoid short-circuits, open flame or electrical spark. The machine being boost-started must not come in contact with the supplying machine.

WARNING

Risk of explosion.
Batteries could explode due to the current surge if a fully charged battery is connected to a completely discharged or frozen battery.
Do not boost start a machine with a completely discharged or frozen battery.

- Be aware that lead acid batteries generate explosive gases while charging. Keep sparks, flames and lighted smoking materials away from batteries.
- Always wear eye protection when working on or near batteries, and never lean over the battery during the boost-start.
- Keep metal objects away from the top of the battery. Rings, watch straps, hand tools, clips or stray wires just brushing a battery post can cause a massive spark, possibly causing the battery to explode and releasing battery acid.

WARNING

Risk of crushing.
Unexpected machine movement can cause serious injury.
Never boost-start the engine by connecting directly to the starter motor.

- Follow these procedures when boost-starting the engine.

1 Connect the positive (+) terminal of the booster battery to the positive (+) terminal of the discharged battery.

2 Connect the negative (–) terminal of the booster battery to the best ground point on the machine, away from the battery.

3 Follow the engine starting procedure.

4 Remove the booster cables in the reverse order of their connection as soon as the engine starts.

Safety when stopping

- Always park the machine on solid level ground. If this is not practical, park the machine at a right angle to the slope and block the drum and wheels.
- Reduce the travel speed by moving the propulsion control lever slowly toward the stop position. To stop the machine, slowly move the propulsion control lever to the stop position. Apply the parking brake after the machine has come to a stop. Set the engine speed to lowest setting. Place the articulation lock in the locked position. Shut down the engine and lock all lockable compartments.
- Return all control switches to the off position and shut down the engine before leaving the machine.
- Always retract the seat belt fully before leaving the operator's station.
- Always mount and dismount the machine using walkways, steps and handrails provided. Never jump from the operator's platform to the ground.
- Always maintain a three-point contact when mounting and dismounting the machine. See page *103*.
- Use proper flags, barriers and warning devices to warn others of the machine, especially when parking in areas of heavy traffic.

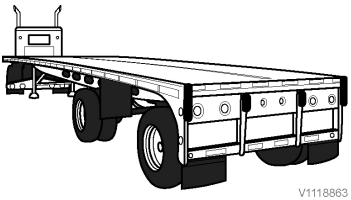
V1118863

Safety when transporting, towing and roading

Securing the machine for transport

- When securing the machine for transport, use only the designated tie-down locations to fasten the disabled machine to the transport vehicle. Decals on the machine indicate the locations to tie the machine down. Use only properly rated tie-downs and securing equipment. Place blocks at the front and rear of the machine while securing to the transport vehicle. If the transport vehicle will be stationary for an extended time, do not remove the blocks until it is time to transport the machine.
- Use only appropriate means of transport and lifting gear of adequate capacity.
- Fastening of loads and instructing crane operators must be entrusted to experienced personnel. The personnel giving the instructions must be within sight or sound of the operator.
- Do not attempt to load the machine on the transport vehicle without knowledge and experience operating the machine.
- Always use a ramp when loading the machine on the transport vehicle. Use ramps of adequate strength, low angle and proper height and width.
- Only load the machine while the transport vehicle is on level ground.
- Use proper blocks in front and rear of the wheels of the transporter when loading the machine.
- Approach the transporter loading ramps squarely to make sure the machine does not drop off the side of the ramp.
- Position the machine on the transporter, centred from side to side, and apply the brake.

- Keep the transporter deck clean of clay, oil, mud, ice, frost and other material that can become slippery.
- Secure the machine after it is loaded on to the transport vehicle. Block the drum, wheels or tracks of the machine with appropriate chocks.
- Shut down the engine, apply the parking brake and lock all lockable compartments.
- Secure the articulation lock in the locked position before transporting the machine.
- Fully close all hoods and panels before transporting the machine.
- Know the overall height and weight of the machine and transport vehicle. Observe height and weight regulations, and be sure the machine can safely pass over bridges and under overhead structures.
- Obey all traffic regulations and be sure that the proper clearance flags, lights and warning signs, including the “Slow Moving Vehicle” emblem, are properly displayed when moving the machine on public access roads.
- Know the approximate stopping distance at any given speed.
- Never turn corners at excessive speeds. Look in all directions before reversing direction of travel.
- See page *134* for specific towing instructions for this machine.

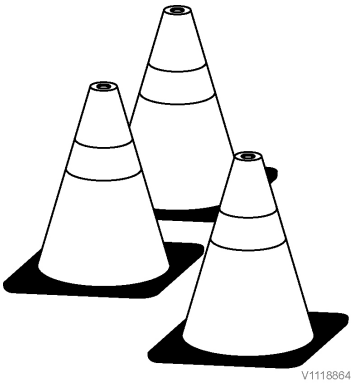
V1118864

Safety when operating on public roads

- Use necessary road signs, traffic-restricting arrangements and other safety devices when considering traffic speed and intensity or other local conditions.

- Use the rotating beacon light on the machine during road maintenance work, when the machine constitutes a hindrance or impedes other traffic and when working on or by the side of a roadway.

Electrocution hazard

DANGER

Risk of electrocution
Working near or making contact with overhead power lines may lead to electrical flashover and electrocution.
Always keep the minimum clearance from overhead power lines.

- Operating the machine near overhead power lines requires special precautions. Electrical flash-over may occur and cause serious injury to the operator and may also damage the machine and attachments even at great distances from the overhead power lines. See page *114* for overhead power line minimum clearances and procedures when operating near overhead power lines.

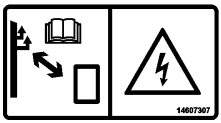

Power lines, minimum clearance

DANGER

Risk of electrocution
Working near or making contact with overhead power lines may lead to electrical flashover and electrocution.
Always keep the minimum clearance from overhead power lines.

High voltage is lethal and may be powerful enough to destroy the machine and attachments. Always contact the local authority before starting work operations near overhead power lines.

Operating the machine near overhead power lines requires special precautions.
Consider all overhead power lines to be 'live' with electric power, even those that are supposed to be without electric power. Contact with overhead power lines may cause power loss temporarily and power may be re-energised automatically without warning. Electrocution is possible if anyone touches both the machine and the ground.
Always be aware of the very serious risk if the machine comes in contact with high voltage. Remember that the voltage in the power line determines the safety distance. Electrical flashovers may damage the machine and injure the operator at relatively great distances from the power line. Always keep the minimum clearance from overhead power lines. See the table below.

Minimum clearance from overhead power lines

Voltage of overhead power lines Volt (V)	Minimum distance	
	m	ft
up to 50,000	3	10
50,000 to 69,000	4	13
69,000 to 138,000	5	16.4
138,000 to 250,000	6	20
250,000 to 500,000	8	26
500,000 to 550,000	11	35

550,000 to 750,000	13	43
more than 750,000	14	46

Know the location and voltage of all overhead power lines at the job site before operating the machine.
Contact the local authority if there is any question whether the power lines are energised or their voltage.

Keep the following in mind to ensure safety when operating:

- Operate the machine at slower than normal operation in the vicinity of power lines.
- Consider the long-span power line, which can sway and reduce the clearance.
- Pay attention when travelling over uneven ground that could cause the machine to lose balance.
- Keep all persons away from the machine whenever it is close to power lines.
- Prohibit persons from touching the machine or its load before it is confirmed to be safe.

If the machine comes in contact with overhead power lines:

- Stay in the operator's seat while the machine is in contact with the power line.
- Warn personnel outside the machine not to touch any part of the machine and to stay away.
- Stay in the operator's seat and lower any raised parts in contact with the overhead power lines, or drive the machine out of the overhead power lines if possible.
- If contact cannot be broken, stay in the operator's seat until the power is off.
- If the machine is on fire, jump out as far as possible without touching any wires or the machine. Keep upright and away.
- Find out what actions need to be taken if a person has been subjected to an electrical flashover.

Failure to follow this instruction can result in electrocution or death!

Measures before operating

Perform these checks and actions before operating

- Read and understand the Operator's Manual.
- Carry out daily (10 hour) maintenance. See page *192*. In cold weather, make sure that the lubricating oil is intended for winter use.
- Remove ice from windows, if necessary.
- Remove loose debris or material from the operator’s station.
- Clean dust from around the engine, battery and cooler.
- Check for faulty, loose parts or leaks, which can cause damage.
- Check around the Diesel Particulate Filter and exhaust for loose parts or air leaks.
- Check for cracks on the frame and tracks, if equipped.
- Check that hoods and covers are closed.
- Check that the battery disconnect switch is switched on.
- Check under the machine for material that could impair or prevent machine movement.
- Make sure the fire extinguisher, if equipped, is fully charged.
- Check steps and handholds for damage or loose parts.
- Adjust and clean the mirrors.
- Inspect working and other lights for proper operation.
- Ensure that there are no persons in the danger zone of the machine. See page *98*.

The defined operating temperature range of this machine is –20 °C (–4 °F) to +50 °C (+122 °F).

Actions before starting the engine

The following checks and verifications of the entire machine should be performed prior to starting the engine. These are in addition to the 10-hour daily routine maintenance.

1 Check the fuel and hydraulic tanks for any leaks.

2 Check the fuel and hydraulic lines, hoses, fittings, filler openings, drain plugs, pressure

cap, drums, engine, safety guards and area underneath the machine for signs of leakage.

3 Check condition of engine and machine.

4 Check for loose bolts, nuts and screws.

5 Check entire machine for any loose, worn and missing parts.

6 Check the wear condition of mounting pins and bushings on the steering cylinder. Note any wear in the pins and bushings and alert the proper personnel.

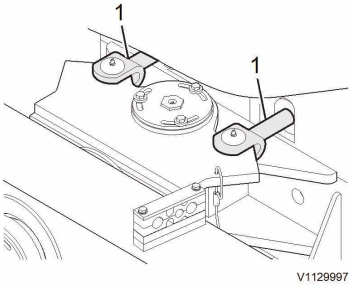

1 Steering cylinder

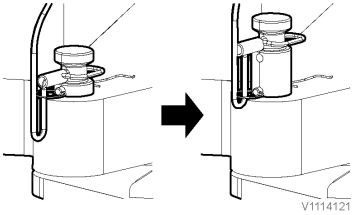

7 Place the articulation lock in the stowed position.

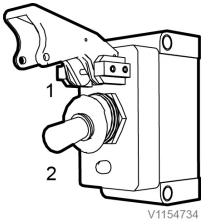

1 On
2 Off

8 Place the battery disconnect switch in the on position.

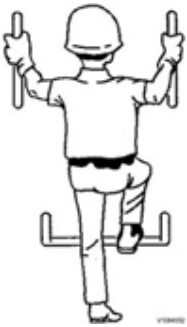

Three-point contact

WARNING

Risk of falling.
Careless mounting and dismounting of the machine could result in falling and injury.
Always use the three-point approach to access or leave the machine by using two hands and one foot or one hand and both feet. Use stepping surfaces and handholds. Always face the machine when entering or stepping down from the machine. Do not jump off!

9 Mount the machine maintaining a three-point contact.

10 Securely fasten the seat belt across hips.

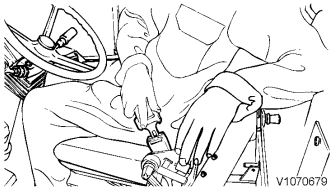

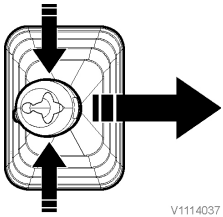

11 Make sure the propulsion control lever is in the stop position.

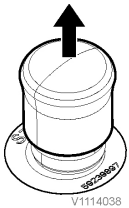

12 Check that the emergency stop switch is pulled out (reset) by pulling up on the switch.

NOTE!
The machine contains a circuit that will allow engine to start only when the propulsion control lever is in the stop position, the parking brake is applied, and the emergency stop switch is reset.

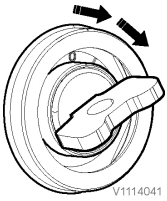

13 Turn the ignition switch to the on position and verify that the parking brake indicator turns on.

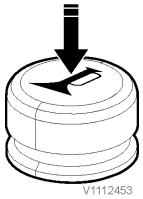
V1112453

14 Press the horn button to verify the horn is operational.

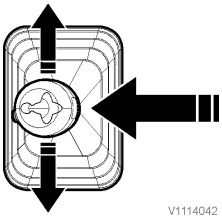
V1114042

15 Confirm that the engine will only start with the propulsion control lever in the stop position.

a Move the propulsion control lever into the forward or reverse position.
b Make sure no personnel are inside the danger zone, especially in front of or behind the machine. See page *98*.
c With the brake applied, turn the ignition key to the start position. The engine should not start.

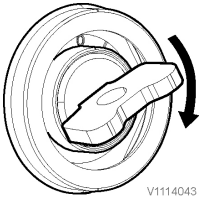
V1114043

NOTE!
If the engine starts, shut down the engine and contact a qualified service technician immediately.

d Return the ignition switch to the stop position.

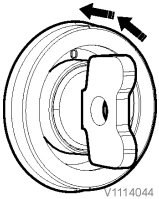
V1114044

NOTE!
The display unit will remain on for up to two minutes after the ignition switch is turned to the stop position. Do not attempt to start the engine or the electrical system until the display unit has completely powered off.

e Return the propulsion control lever to the stop position.

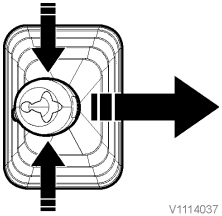
V1114037

Starting engine

Auto idle shutdown

Use the optional auto idle shutdown feature during daily operation to reduce engine idle time.

Auto idle shutdown will automatically shutdown the engine when the parking brake is applied, the engine speed is set to low and the following conditions are met for five minutes:
- Ambient temperature is above 6 °C (42.8 °F)
- Coolant temperature is below 104 °C (219.2 °F)
- Regeneration is not ongoing

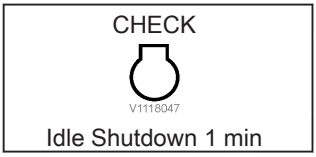

The display shows a check message to notify the operator when one minute remains until shutdown.

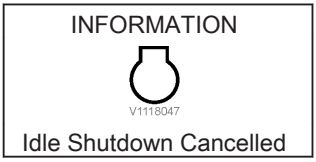

If any conditions change after the one minute notification, the auto idle shutdown timer stops and the display shows an info message to notify the operator that auto idle shutdown was cancelled.

NOTE!
Release the parking brake or change the engine speed setting to cancel auto idle shutdown.

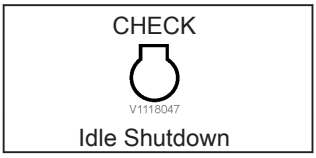

The display will show a check message at the end of five minutes and the engine will shut down.

NOTE!
Auto idle shutdown does not change the ignition key position or disconnect the machines electrical systems from the battery. Follow normal engine shutdown procedures at the end of each shift.

WARNING

Risk of serious injury.
Faulty controls or instruments can cause loss of machine control.
Do not operate the machine until the fault is corrected.

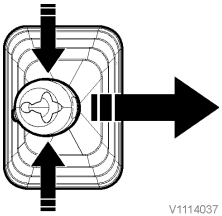
V1114037

1 Move the propulsion control lever to the (S) stop position.

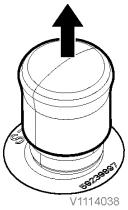
V1114038

2 If applied, reset the emergency stop switch by pulling upward on the emergency stop switch.

NOTE!
Engine will not crank if the emergency stop switch is pressed.

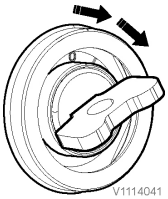
V1114041

3 Turn the ignition key to the on position. This will turn on the electrical system and start the display unit. A sensor will activate the engine preheater if it is needed.



V1152834

4 Verify that the display unit turns on. If any warning alarms appear, do not use the machine until the fault is corrected. See page *61*.


V1113124

5 Make sure the parking brake is applied.

NOTE!
Engine will not crank if the parking brake is not applied.

WARNING

Risk of explosion.
Spraying flammable starting aids into engine components could cause an explosion.
Never use starting aids while attempting to start the engine.

Contact a qualified service technician if the engine cannot be started.


V1120144

6 Verify that the preheater symbol is not active on the display unit. If it is, wait to start the engine until it turns off.

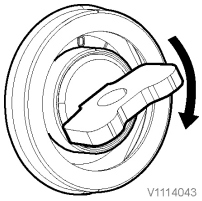
V1114043

7 Turn the ignition switch to the start position. Once the engine starts, release the switch immediately and it will return to the on position.

NOTE!
Run the engine for a short time to warm up the engine and hydraulic systems, but do not run the engine at idling speed in excess of 10 minutes.

Actions before operating while engine is running

The following checks and verifications should be performed before operating and with the engine running.

NOTE!
If any controls or devices do not function correctly, do not operate the machine until the condition(s) is corrected.

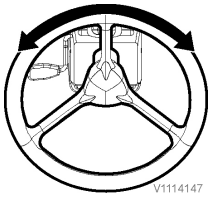
V1114147

1 Check for correct operation of the steering system with the engine running by turning the steering wheel fully left and right. The movement of the steering should be smooth and without hesitation. If not, do not operate the machine until the condition is corrected.

NOTE!
Ensure the articulation lock pin is stowed before checking the steering. See page *178*.

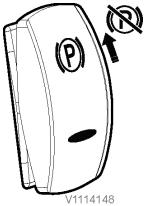
V1114148

2 With the engine running, release the parking brake control and ensure the parking brake light turns off.

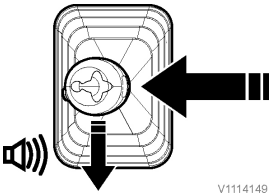
V1114149

3 Observe the area around machine for personnel and obstructions. If the machine is equipped with a backup alarm, slowly move propulsion control lever to the R (reverse) position to check that the alarm is operational. The alarm should sound even before the machine begins movement. If the alarm is not operational or does not sound immediately, do not operate the machine until the condition is corrected.

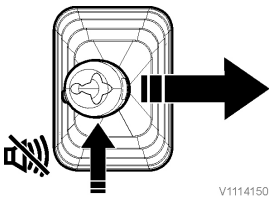
V1114150

4 Return the propulsion control lever slowly to the stop position.

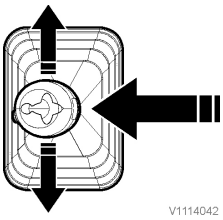
V1114042

5 Check for correct operation of the brake system by driving the machine in forward and reverse directions using propulsion control lever to alternately accelerate and brake machine movement.

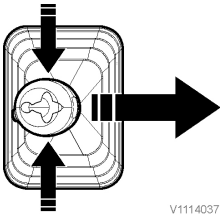
V1114037

6 Return the propulsion control lever to the stop position. If the brake system is not operating properly, do not operate the machine until the condition is corrected.

NOTE!
Braking should be smooth and capable of bringing the machine to a complete stop when the propulsion control lever is placed in stop position.

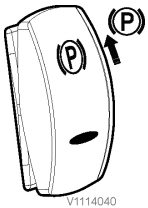
V1114040

7 Apply the parking brake by pressing the parking brake switch on the instrument panel.
Check for correct operation of the parking brake.
See page *202* for testing instructions.

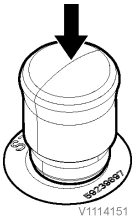
V1114151

8 Check for correct operation of the emergency stop switch. While the propulsion control lever is in the stop position, push the red emergency stop switch.

NOTE!
The engine should immediately shut down and the parking brake light should illuminate after returning the ignition switch to the stop position and then turning it to the on position.
A restart of the machine will be required after performing the above. Also, the emergency stop switch must be reset by pulling up on the emergency stop switch.

Vibration

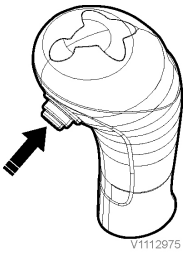
V1112975

Operating the machine's vibration controls

The vibration on/off switch turns vibration on and off.

Start drum vibration by pressing the vibration on/off switch located on the propulsion control lever. Stop vibration by pressing the vibration on/off switch again. Only switch vibration on when the machine is moving. Always switch vibration off before the machine comes to a halt. Never allow the machine to vibrate when the machine is stationary.

Turning the vibration on will change the engine idle speed. See page *251*.

Selecting automatic and manual vibration (option)



V1152618

Use the auto/manual vibration key to select automatic or manual vibration. In manual vibration mode, the drum will begin vibrating as soon as the vibration on/off switch is pressed. In automatic vibration mode, when the vibration on/off switch is pressed the drum will not begin vibrating until the machine has reached 1.7 kph. (1 mph) The drum will continue to vibrate until the vibration switch is pressed or machine speed slows to below 1.7 kph. (1 mph).
The machine speed at which automatic vibration starts can be changed by a qualified service technician. Contact a local authorised dealer or distributor about changing the speed.

Selecting drum vibration amplitude

Press the high or low vibration amplitude keys, located on the right console, to choose a desired amplitude setting (high or low).

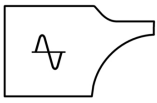
V1152630

Select low amplitude for the final or thin layer of soil, and when soil is loose and granular.


V1152629

Select high amplitude for initial or thick soil compaction.

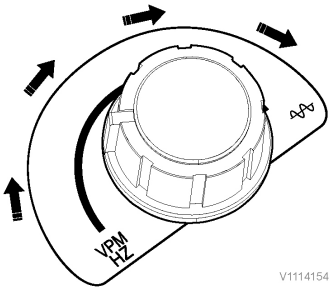

On machines equipped with two-speed vibration amplitude controls, the keys allow the selection of two vibration amplitudes. See page *257* for drum vibration frequencies.

Selecting drum vibration frequency (option)

Select drum vibration frequency by turning the vibration frequency control to the desired frequency. The dial is marked with the ranges of drum vibration frequency for high and low amplitude. Set to high or low amplitude using the vibration amplitude switch. See page *257* for drum vibration frequencies.

Material Natural Frequency		
Type of Soil		**Natural Frequency**
Sand	Uniformly Graded	1900 vpm (32 Hz)
Sand	Wet	1400 vpm (23 Hz)
Sand	Dry	1300 vpm (22 Hz)
Sandy gravel		1500–1700 vpm (25–28 Hz)
Clay (padfoot)		1200 vpm (20 Hz)
Silt	Firm	1500–1700 vpm (25–28 Hz)
Silt	Loose	900–1300 vpm (15–22 Hz)

Operating

Propulsion control lever

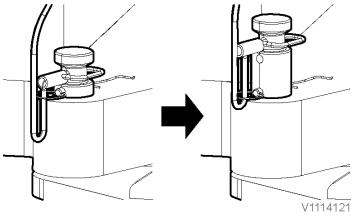

1 Always check the travel and work area for personnel and obstructions.

2 If the articulation lock is in the locked position, move it to the stowed position.

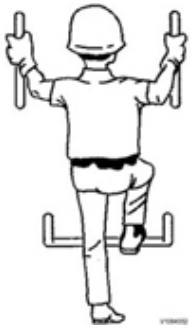

3 Mount the machine using the three-point system.

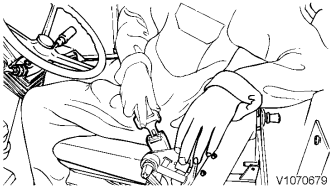

4 Fasten the seat belt securely around the hips.

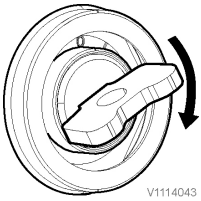

5 Start the engine. See page *116*, *121* and page *123* for details.



6 Press the high engine speed key.



7 Release the parking brake by pressing the parking brake switch. Observe that the parking brake indicator light goes out.

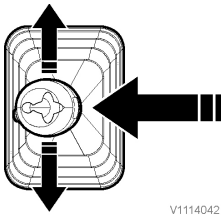

8 Slowly move the propulsion control lever in the desired direction and at a safe speed of travel as determined by the conditions. The further the propulsion control lever is moved from the stop position, the greater the machine travel speed in that direction.

NOTE!
Slowly move the propulsion control lever from the stop position to operate the machine at a slow speed of travel on inclined surfaces.

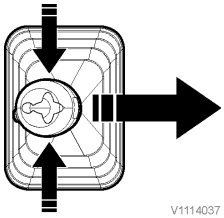

9 To slow down machine travel speed, slowly move the propulsion control lever toward the stop position. To stop machine travel speed, slowly move the propulsion control lever to the stop position.

Traction control

The optional traction system, Ultragrade, improves drum traction while climbing steep slopes and travelling over slippery ground or while loading and unloading the machine during transport operations. The traction system will turn on when the engine starts and can be turned off from the keypad on the instrument panel.

NOTE!
Traction control is only active when the machine is travelling at low speed.

Exhaust aftertreatment system

Exhaust aftertreatment system

WARNING

Risk for fire
Regeneration generates hot exhaust and causes hot exhaust pipe.
Do not perform regeneration in a flammable environment or park on or near flammable material during regeneration.

WARNING

Risk of severe burns.
Exhaust system components get very hot during regeneration and could cause severe burns to unprotected skin.
Avoid contact with engine compartment covers, interior components and structure during regeneration.

The purpose of regeneration is to increase the temperature in the exhaust aftertreatment system so that any trapped substances are burned off to allow the system to regain its full capacity.

Parked regeneration

Most of the regeneration is passive and requires no actions, but a parked regeneration must be run as part of the 500 hour maintenance service interval. It is important that the parked regeneration is run **before** changing the engine oil and replacing the engine oil filter.
It is possible to run a parked regeneration 450 hours after the last parked regeneration was performed.

NOTE!
Under certain operating conditions, the engine may require additional regeneration cycles. These additional regeneration cycles do not replace the 500 hour parked regeneration!

Parked regeneration takes approximately 30 minutes. No work can be performed on the machine during a parked regeneration. A parked regeneration requires that:

1 The engine has reached sufficient working temperature



High exhaust temperature indicator

2 The machine is parked in a fireproof area
3 The parking brake is applied (during the entire parked regeneration)
4 The engine is running (during the entire parked regeneration)

The high exhaust temperature indicator shows that a parked regeneration is in progress and that the exhaust temperature is high. No additional message is displayed. Do not shutdown the engine when the high exhaust temperature indicator is on.

NOTE!
The machine must be in an area that is not heat-sensitive when the high exhaust temperature indicator is on. Do not leave the machine during regeneration.

Use the engine menu to start or delay a regeneration. See page *63*.

Delaying regeneration

Delaying regeneration may be useful if the machine is in a heat-sensitive environment.
Do not cancel or delay regeneration unless absolutely necessary.

NOTE!
Alarm messages will appear on the display 550 hours after the last parked regeneration. Engine power will derate 600 hours after the last parked regeneration. Service only regeneration is required after 625 hours.

Other consequences of cancelling or delaying regeneration may include:
- higher fuel consumption
- shorter DPF service life
- damage to the aftertreatement system

Measures after operating

Actions after operating

Perform the following precautions each day after work in addition to the daily routine maintenance on the lubrication and service chart. Turn the engine off and apply the parking brake before performing these tasks.

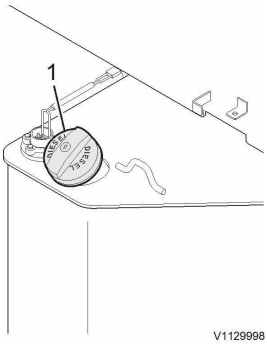

1 Fill the fuel tank to prevent condensation.

1 Fuel tank fill area

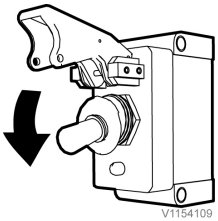

2 Turn the battery disconnect switch to the off position.

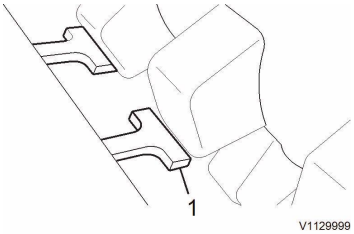

3 Clean the drum scrapers of accumulated material.

1 Drum scraper

4 If available, lock all vandal protection devices and cab doors on the machine.

Parking

Storage

Short term

Perform this maintenance when the machine will be shut down for a short term (2 weeks or less) parking or storage.

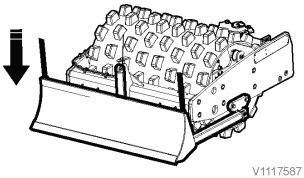
V1117587

1 Lower all components positioned by hydraulic cylinders.

2 Place all switches and controls in the off position.

3 Place the machine in the Service position. See page *167*.

4 Remove all valuable items from the machine which can be easily stolen.

5 Close and lock all doors and accessible areas.

Long term

Perform this maintenance when the machine will be shut down for a long term (more than 2 weeks) parking or storage for an extended period, such as for the off-season. The sequence of the steps may change dependent on storage location.

1 Perform all short term storage steps.

2 Lubricate the machine. See page *201* and *237*.

3 Fill the fuel tank to the maximum level. See page *221*.

4 Fill the hydraulic tank to the maximum level. See page *227*.

5 Have a qualified service technician check the engine coolant concentration to prepare the engine cooling system for freezing temperatures.

6 Wash the machine and allow it to dry. See page *223*.

7 Touch up the paint finish to avoid corrosion.

8 Treat exposed parts with anti-corrosion agent which can be easily removed at a later date.

NOTE!
Follow all safety instructions for application and removal of the anti-corrosion agent provided by the agent manufacturer.

9 Protect the tyres and all exposed rubber components against direct sunlight.

Prepare machine for use following storage

Perform this maintenance before bringing the machine back into service following storage.

1 Inspect machine for any damage or missing components. Repair or replace as necessary.

2 Remove all tyre and rubber protective covers

3 Remove anti-corrosion agent.

NOTE!
Follow all safety instructions for application and removal of the anti-corrosion agent provided by the agent manufacturer.

4 Check fuel, coolant and hydraulic oil levels and add as necessary.

5 Check tyre pressure and adjust as necessary. See page *207*.

6 Check belt tension and adjust as necessary. See page *218*.

7 Check air cleaner system for missing elements, loose connections and hoses. See page *198*.

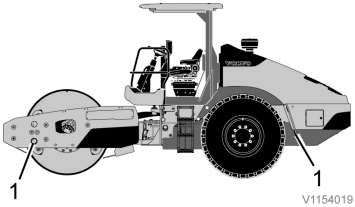

1 Tie down and tow points

Retrieving and towing

The following instructions are to be followed if it becomes necessary to tow the machine. Attach to the machine at the tie down and tow points only. Tie down and tow point locations are located on each side of the machine.

Towing a disabled machine

WARNING

Risk of serious injury or death.
Unexpected machine movement while preparing a disabled machine for towing can cause serious injury.
Always block the drums or tyres of a disabled machine or hitch it to its towing vehicle to prevent accidental movement.

WARNING

Risk of runaway machine.
Runaway machine can cause serious injury or death.
Ensure the tow vehicle is heavier than or equal to the weight of the disabled machine being towed. Ensure the tow vehicle has sufficient towing capacity, towing power, and braking capacity to control the disabled machine during tow operations.

WARNING

Risk of runaway machine.
A disabled machine that is not correctly secured to the tow vehicle could break free and cause serious injury.
Attach tow bars to the disabled machine at the tow points only. Use tow bars that are rated for a minimum of 1.5 times the weight of the disabled machine. Tow on level ground or up a slight grade.

WARNING

Risk of serious injury.
Release or breakage of the tow bars, chains or cables during the towing process could result in serious injury or death caused by flying pieces of steel.
Make sure the tow bars, chains or cables are correctly attached to the disabled machine and the tow vehicle. Instruct all personnel to stay clear of the tow vehicle and the disabled machine during the towing process.

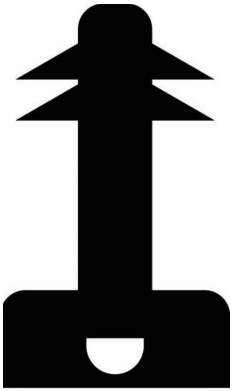

V1084300

Warning tow tag

NOTICE

Risk of machine damage.
Prolonged towing of the machine could lead to machine damage.
Do not tow the machine faster or further than the towing specifications allow.

Towing the disabled machine is limited to off the job site, onto the transporter, off the transporter, and into the shop. Maximum towing distance is 300 meters (984 feet). Maximum towing speed is 2.0 km/h (1.24 mph). Keep all drums or tyres of the machine on the ground while towing.

NOTICE

Risk of machine damage.
Dirt or dust entering sensitive areas of the machine could cause damage to machine systems and parts.
Maintain the greatest possible cleanliness while working on any machine systems.

Towing the machine requires bypassing the propulsion pump and releasing the spring-applied brakes.

The propulsion pump is designed with a bypass function that consists of two multi-function valve cartridges used to disengage the propulsion system.

The spring-applied brake will always be applied when the engine is not running unless it is manually released.

Bypass procedures are described on the following pages. The warning tow tag is also placed on the steering wheel of the machine as part of the towing procedures.

Bypassing the propulsion pump, releasing the brakes and towing the machine

1 Place the machine in the service position. See page *167*.

2 Remove the warning tow tag from the manual case and attach the tag to the steering wheel.

3 Raise operator’s platform to gain access to the propulsion pump and multi-function valves.

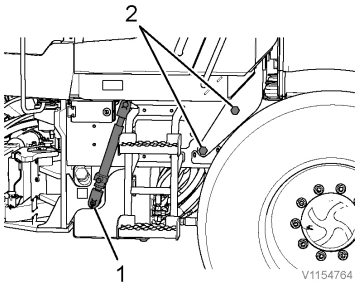

Left side of machine

1 Ratchet jack
2 ROPS support bolts (two (2) more on right side of the machine)

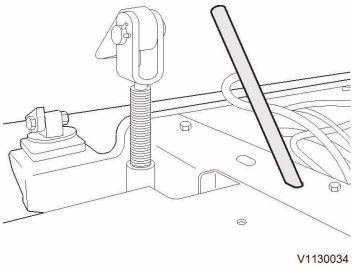

Jack lever installed between frame and operator's platform

Raising the operator's platform

a Remove the jack lever from behind the operator's seat.

b Install the jack lever to the ratchet jack.

c Disconnect the upper end of the ratchet jack from the ladder.

d Connect the upper end of the ratchet jack to the operator's platform.

e Operate the ratchet jack enough to remove force from the ROPS support bolts on the sides of the frame.

f Remove the four (4) ROPS support bolts.

g Operate the ratchet jack and raise the platform.

NOTE!
Tighten the jam nut on the ratchet jack to secure it in position.

h Remove the jack lever from the ratchet jack.

i Install the jack lever as a safety support between the frame and the operator's platform in the raised position.

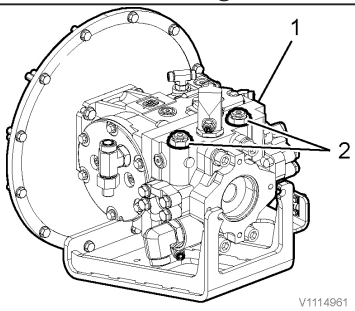

1 Propulsion pump
2 Multi-function valves

4 Locate the multi-function valves on the propulsion pump.

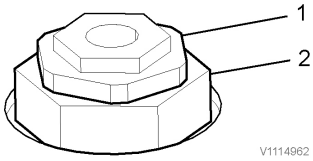

1 Middle size hex
2 Large hex

5 Place a wrench on the middle size hex and a second wrench on the large hex to prevent cartridge rotation, rotate the middle size hex three revolutions counterclockwise to open the bypass valve. Do not rotate more than three revolutions, as additional rotation will generate external leakage. Repeat for the other multi-function valve.

NOTE!
If the engine will not run, the tow valve option or a third party portable, hand-powered hydraulic pump is required to release the brakes prior to towing the machine. To release the brakes, use the following steps.

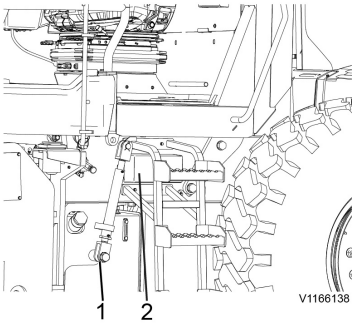

1 Ratchet jack
2 Brake valve cover

Using the tow valve option

a Move the ratchet jack from the stowed position to allow access to the brake valve cover bolts.

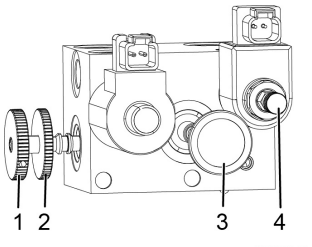

1 Flow control valve
2 Flow control valve jam nut
3 Hand pump
4 Solenoid override knob

b Remove the brake valve cover.

c Push the solenoid override knob in and turn it 90° counter-clockwise until it springs out.

d Turn the flow control valve jam nut counter-clockwise until it stops.

NOTE!
If the flow control valve jam nut is not backed out completely, the flow control valve cannot move into the proper position to allow the brakes to release.

e Turn the flow control valve clockwise until it stops.

f Use the hand pump to pressurise the system to 1.45 MPa (210 psi) to release the brakes.

g Install the brake valve cover.

Connecting a portable hydraulic pump

NOTICE

Risk of machine damage.
Dirt or dust entering sensitive areas of the machine could cause damage to machine systems and parts.
Maintain the greatest possible cleanliness while working on any machine systems.

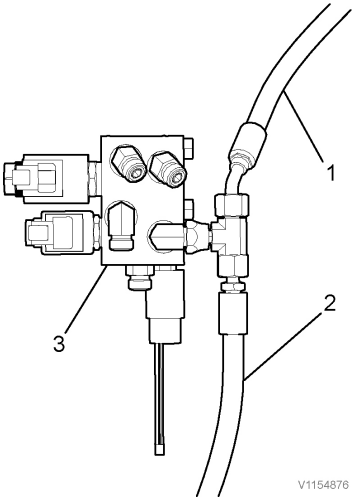

View of the brake manifold, looking over the frame rail

1 Drum brake line
2 Axle brake line
3 Brake manifold

a Locate the brake valve on the opposite side of the rear frame rail from the ladder.

b Clean the area around the drum and axle brake lines.
c Disconnect the drum and axle brake lines from the brake valve.

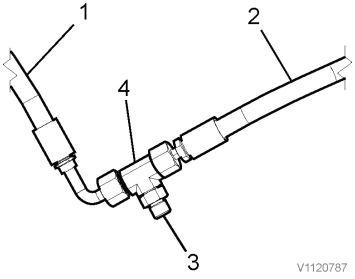

1 Drum brake line
2 Axle brake line
3 To portable hydraulic pump
4 #6 O-ring flat face run “T” all male

d Connect the drum and axle brake lines to a #6 O-ring flat face run “T”.
e Connect a hand powered hydraulic pump to the “T” and pressurise system to 1.45 MPa (210 psi) to release the brakes.

NOTICE

Risk of seal damage.
Excessive pressure could result in seal damage.
Do not pressurize the system beyond its rated capacity.

Do not exceed 1.45 MPa (210 psi). Excessive pressure may result in seal damage.

f Secure the hand-powered hydraulic pump to the rear frame.

6 Lower the operator's platform.

Lowering the operator's platform

a Remove the jack lever from between the operator's platform and the frame.

b Install the jack lever on to the ratchet jack.

c Loosen the jam nut to allow the ratchet jack to lower.

d Operate the ratchet jack and lower the operator's platform until the mounting holes align between the frame and ROPS support.

e Install the four (4) ROPS support bolts. The support plate will act as a guide to align the holes. Hand tighten the bolts.

NOTE!
It is not necessary to torque or apply thread locking compound to the ROPS bolts at this time.

f Fully lower the ratchet jack.

g Remove the jack lever from the ratchet jack.

h Store the jack lever behind the operator's seat.

i Disconnect the upper end of the ratchet jack from the operator's platform.

j Connect the upper end of the ratchet jack to the ladder.

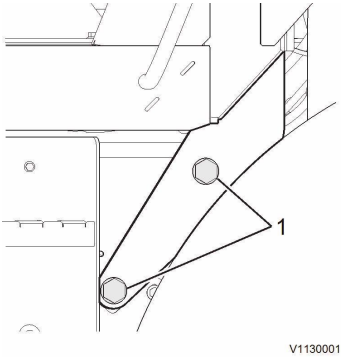

Left side of machine
1 ROPS support bolts (two (2) more on right side of machine)

7 Move the propulsion control lever at the operator station to the full forward or reverse position.

8 Connect the machine to an appropriate tow vehicle using adequate chains or draw bar, which can be secured in position at the selected tow points on the machine.

9 Remove the blocks from the wheels and drum and tow the machine. Do not use force on the tow points that exceeds 114097 N (25650 lbf). The direction of pull must not exceed ±10° in the vertical or sideways direction.

10 Block the wheels and drum when towing is complete.

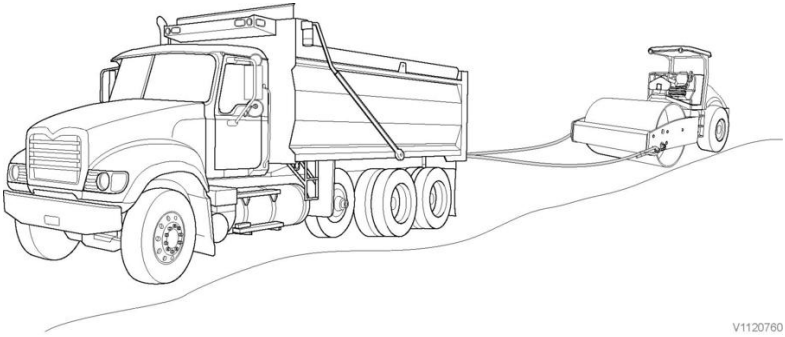

NOTICE

Risk of machine damage.
Prolonged towing of the machine could lead to machine damage.
Do not tow the machine faster or further than the towing specifications allow.

Towing the disabled machine is limited to off the job site, on to the transporter, off the transporter, and into the shop. Maximum towing distance is 300 meters (984 feet). Maximum towing speed is 2.0 km/h (1.24 mph). Keep all drums or tyres of the machine on the ground while towing.

Restoring operation of the propulsion pump and applying the brake

Restoring operation of the propulsion pump requires raising the operator platform to gain access to the propulsion pump and multi-function valves.

NOTICE

Risk of machine damage.
Dirt or dust entering sensitive areas of the machine could cause damage to machine systems and parts.
Maintain the greatest possible cleanliness while working on any machine systems.

1 Block the wheels and drum.

2 Move the propulsion control lever to the stop position.

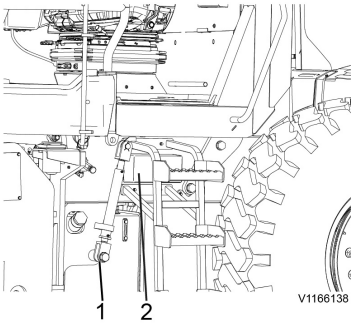

1 Ratchet jack
2 Brake valve cover

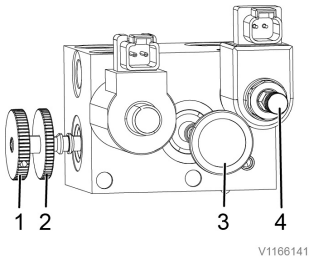

1 Flow control valve
2 Flow control valve jam nut
3 Hand pump
4 Solenoid override knob

3 If the tow valve option was used:
- a Remove the brake valve cover.
- b Push the solenoid override knob in and turn it 90° counter-clockwise until it stops.
- c Turn the flow control valve counter-clockwise until it stops.
- d Turn the flow control valve jam nut clockwise until it stops.
- e Install the brake valve cover.

4 Raise operator platform to gain access to the propulsion pump and multi-function valves.

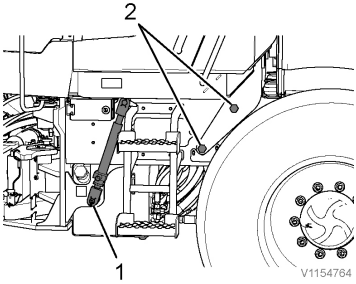

Left side of machine

1 Jack lever
2 ROPS support bolts (two (2) more on right side of the machine)

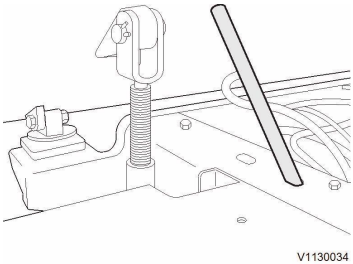

Jack lever installed between frame and operator's platform

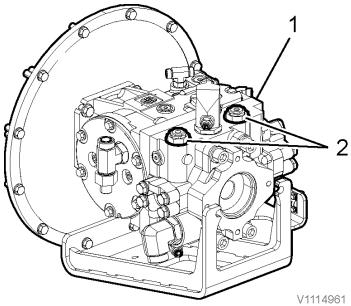

1 Propulsion pump
2 Multi-function valves

Raising the operator's platform

a Remove the jack lever from behind the operator's seat.

b Install the jack lever to the ratchet jack.

c Disconnect the upper end of the ratchet jack from the ladder.

d Connect the upper end of the ratchet jack to the operator's platform.

e Operate the ratchet jack enough to remove force form the ROPS support bolts on the sides of the frame.

f Remove the four (4) ROPS support bolts.

g Operate the ratchet jack and raise the platform.

NOTE!
Tighten the jam nut on the ratchet jack to secure it in place.

h Remove the jack lever from the ratchet jack.

i Install the jack lever as a safety support between the frame and the operator's platform and hand tighten the jam nut to hold the platform in the raised position.

5 If a hand-powered hydraulic pump was used, relieve the system pressure, disconnect the portable hydraulic pump, remove the "T" and connect the drum and axle brake lines to the brake valve.

6 Locate the multi-function valves on the propulsion pump.

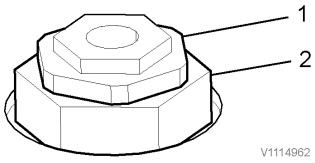

1 Middle size hex
2 Large hex

7 Place a wrench on the middle size hex and a second wrench on the large hex to prevent cartridge rotation. Rotate the middle size hex three revolutions clockwise and tighten to close the bypass valve. Repeat for the other multi-function valve.

NOTE!
Fluid will leak from valves which are not sufficiently tightened.

8 Lower the operator's platform.

Lowering the operator's platform

a Remove the jack lever from between the operator's platform and the frame.

b Install the jack lever on to the ratchet jack.

c Loosen the jam nut to allow the ratchet jack to lower.

d Operate the ratchet jack and lower the operator's platform until the mounting holes align between the frame and ROPS support.

e Install the four (4) ROPS support bolts. The support plate will act as a guide to align the holes. Apply thread-locking compound and torque the bolts to specification.

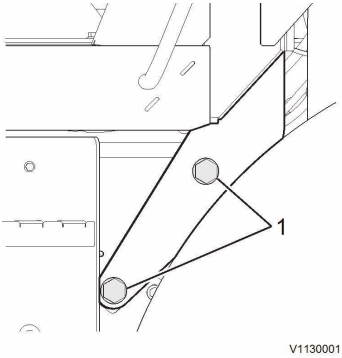

Left side of machine
1 ROPS support bolts (two (2) more on right side of machine)

WARNING

Risk of crushing injury or death.
Improperly installed ROPS could result in serious injury or death in the event of a rollover.
Do not operate the machine until the ROPS support bolts have been properly torqued.

Improperly torqued ROPS bolts will not properly support the machine in the event of a rollover. The ROPS bolts must be torqued to a particular tightness by a qualified service technician using special tools.

f Fully lower the ratchet jack.

g Remove the jack lever from the ratchet jack.

h Store the jack lever behind the operator's seat.

i Disconnect the upper end of the ratchet jack from the operator's platform.

j Connect the upper end of the ratchet jack to the ladder.

9 Pull the emergency stop switch up, turn ignition switch to the on position and verify the park brake switch light is illuminated to indicate the parking brake is applied.

10 Check the parking brake using the parking brake test switch procedures.

11 Remove warning tow tag from the steering wheel and return it to the manual case.

Towing a disabled machine

WARNING

Risk of serious injury or death.
Unexpected machine movement while preparing a disabled machine for towing can cause serious injury.
Always block the drums or tyres of a disabled machine or hitch it to its towing vehicle to prevent accidental movement.

WARNING

Risk of runaway machine.
Runaway machine can cause serious injury or death.
Ensure the tow vehicle is heavier than or equal to the weight of the disabled machine being towed. Ensure the tow vehicle has sufficient towing capacity, towing power, and braking capacity to control the disabled machine during tow operations.

WARNING

Risk of runaway machine.
A disabled machine that is not correctly secured to the tow vehicle could break free and cause serious injury.
Attach tow bars to the disabled machine at the tow points only. Use tow bars that are rated for a minimum of 1.5 times the weight of the disabled machine. Tow on level ground or up a slight grade.

WARNING

Risk of serious injury.
Release or breakage of the tow bars, chains or cables during the towing process could result in serious injury or death caused by flying pieces of steel.
Make sure the tow bars, chains or cables are correctly attached to the disabled machine and the tow vehicle. Instruct all personnel to stay clear of the tow vehicle and the disabled machine during the towing process.

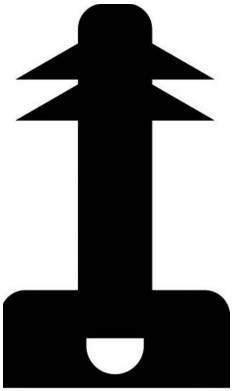

V1084300

Warning tow tag

NOTICE

Risk of machine damage.
Prolonged towing of the machine could lead to machine damage.
Do not tow the machine faster or further than the towing specifications allow.

Towing the disabled machine is limited to off the job site, on to the transporter, off the transporter, and into the shop. Maximum towing distance is 300 meters (984 feet). Maximum towing speed is 2.0 km/h (1.24 mph). Keep all drums or tyres of the machine on the ground while towing.

NOTICE

Risk of machine damage.
Dirt or dust entering sensitive areas of the machine could cause damage to machine systems and parts.
Maintain the greatest possible cleanliness while working on any machine systems.

Towing the machine requires bypassing the propulsion pump and releasing the spring-applied brakes.

The propulsion pump is designed with a bypass function that consists of two multi-function valve cartridges used to disengage the propulsion system.

The spring-applied brake will always be applied when the engine is not running unless it is manually released.

Bypass procedures are described on the following pages. The warning tow tag is also placed on the steering wheel of the machine as part of the towing procedures.

Bypassing the propulsion pump, releasing the brakes and towing the machine

1 Place the machine in the service position. See page *167*.
2 Remove the warning tow tag from the manual case and attach the tag to the steering wheel.
3 Raise operator’s platform to gain access to the propulsion pump and multi-function valves.

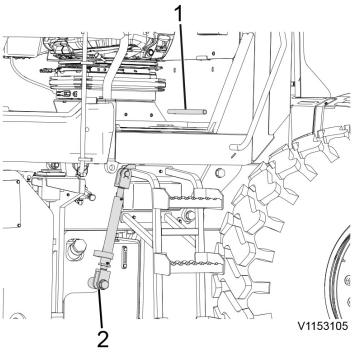

Ratchet jack connected to the ladder
1 Jack lever
2 Ratchet jack

Raising the operator's platform

a Remove the jack lever from behind the operator's seat.

b Install the jack lever to the ratchet jack.

c Disconnect the upper end of the ratchet jack from the ladder.

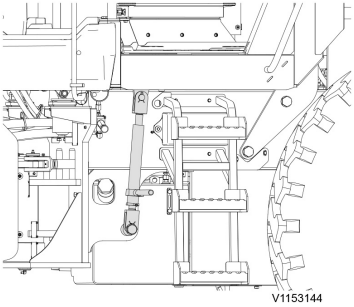

Ratchet jack with jack lever connected to the operator's platform.

d Connect the upper end of the ratchet jack to the operator's platform.

e Operate the ratchet jack enough to remove force from the ROPS support bolts on the sides of the frame.

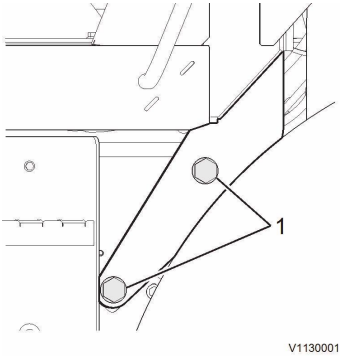

Left side of machine
1 ROPS support bolts (two (2) more on right side of the machine)

f Remove the four (4) ROPS support bolts.

g Operate the ratchet jack and raise the platform.

NOTE!
Tighten the jam nut on the ratchet jack to secure it in position.

h Remove the jack lever from the ratchet jack.

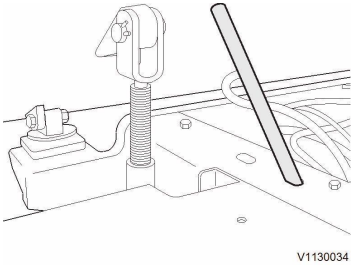

Jack lever installed between frame and operator’s platform

i Install the jack lever as a safety support between the frame and the operator’s platform in the raised position.

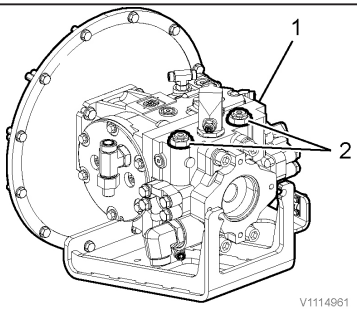

1 Propulsion pump
2 Multi-function valves

4 Locate the multi-function valves on the propulsion pump.

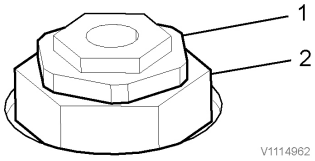

1 Middle-sized hex
2 Large hex

5 Place a wrench on the middle-sized hex and a second wrench on the large hex to prevent cartridge rotation, rotate the middle-sized hex three revolutions counterclockwise to open the bypass valve. Do not rotate more than three revolutions, as additional rotation will generate external leakage. Repeat for the other multi-function valve.

NOTE!
If the engine will not run, the tow valve option or a third party portable, hand-powered hydraulic pump is required to release the brakes prior to towing the machine. To release the brakes, use the following steps.

Using the tow valve option

a Remove the brake valve cover.

b Turn the override knob in clockwise until it stops.

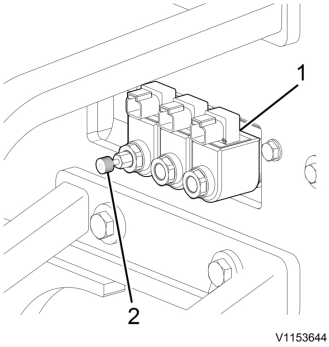

1 Brake valve
2 Override knob

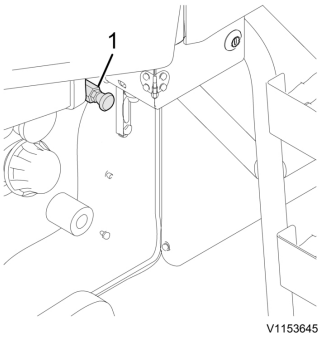

1 Hand pump

c Use the hand pump to pressurise the system to 1.45 MPa (210 psi) to release the brakes.

d Install the brake valve cover.

Connecting a portable hydraulic pump

NOTICE

Risk of machine damage.
Dirt or dust entering sensitive areas of the machine could cause damage to machine systems and parts.
Maintain the greatest possible cleanliness while working on any machine systems.

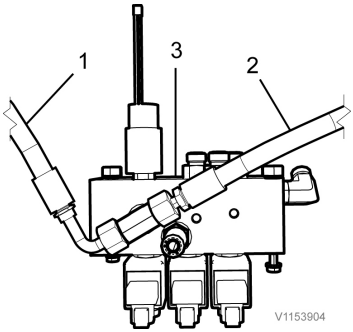

View of brake valve, looking over the side of the frame rail

1 Drum brake line
2 Axle brake line
3 Brake valve

a Locate the brake valve on the opposite side of the rear frame rail from the ladder.

b Clean the area around the drum and axle brake lines.

c Disconnect the drum and axle brake lines from the brake valve.

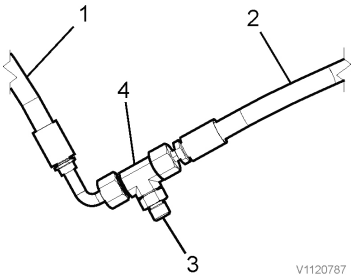

1 Drum brake line
2 Axle brake line
3 To hand-powered hydraulic pump
4 #6 O-ring flat face run “T” all male

d Connect the drum and brake lines to a #6 O-ring flat face run “T”.

e Connect a hand-powered hydraulic pump to the “T” and pressurise system to 1.45 MPa (210 psi) to release the brakes.

NOTICE

Risk of seal damage.
Excessive pressure could result in seal damage.
Do not pressurize the system beyond its rated capacity.

Do not exceed 1.45 MPa (210 psi). Excessive pressure may result in seal damage.

f Secure the hand-powered hydraulic pump to the rear frame.

6 Lower the operator’s platform.

Lowering the operator’s platform

a Remove the jack lever from between the operator’s platform and the frame.

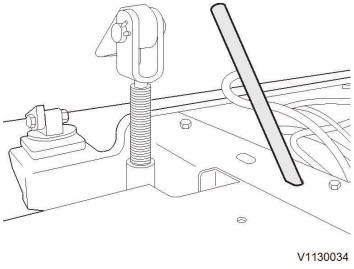

Jack lever installed between frame and operator’s platform

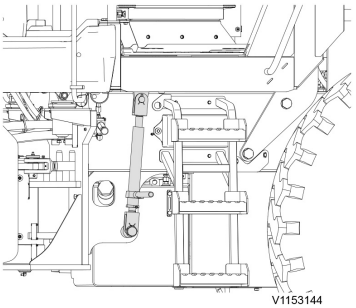

Ratchet jack with jack lever connected to the operator’s platform

b Install the jack lever on to the ratchet jack.

c Loosen the jam nut to allow the ratchet jack to lower.

d Operate the ratchet jack and lower the operator’s platform until the mounting holes align between the frame and ROPS support.

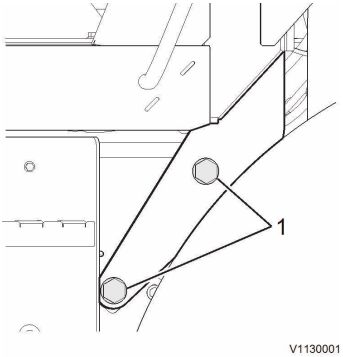

Left side of the machine
1 ROPS bolts

e Install the four (4) ROPS support bolts.

NOTE!
It is not necessary to torque or apply thread-locking compound to the ROPS support bolts at this time.

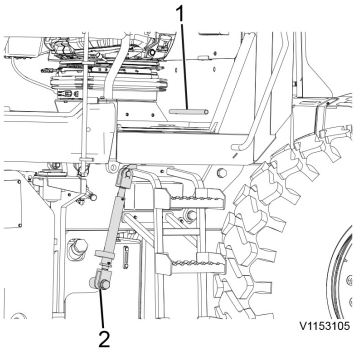

Ratchet jack and jack lever storage locations
1 Jack lever
2 Ratchet jack

f Fully lower the ratchet jack.

g Remove the jack lever from the ratchet jack.

h Store the jack lever behind the operator's seat.

i Disconnect the upper end of the ratchet jack from the operator's platform.

j Connect the upper end of the ratchet jack to the ladder.

7 Move the propulsion control lever at the operator station to the full forward or reverse position.

8 Connect the machine to an appropriate tow vehicle using adequate chains or draw bar, which can be secured in position at the selected tow points on the machine.

9 Remove the blocks from the wheels and drum and tow the machine. Do not use force on the tow points that exceeds 114 097 N (25 650 lbf). The direction of pull must not exceed ±10° in the vertical or sideways direction.

10 Block the wheels and drum when towing is complete.

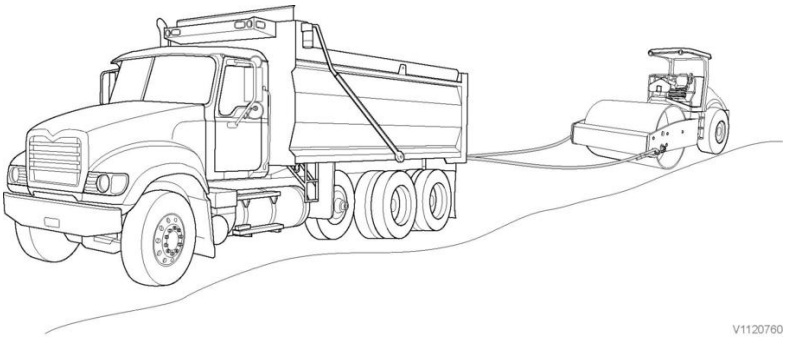

NOTICE

Risk of machine damage.
Prolonged towing of the machine could lead to machine damage.
Do not tow the machine faster or further than the towing specifications allow.

Towing the disabled machine is limited to off the job site, on to the transporter, off the transporter, and into the shop. Maximum towing distance is 300 meters (984 feet). Maximum towing speed is 2.0 km/h (1.24 mph). Keep all drums or tyres of the machine on the ground while towing.

Restoring operation of the propulsion pump and applying the brake

Restoring operation of the propulsion pump requires raising the operator platform to gain access to the propulsion pump and hydraulic multi-function valves.

NOTICE

Risk of machine damage.
Dirt or dust entering sensitive areas of the machine could cause damage to machine systems and parts.
Maintain the greatest possible cleanliness while working on any machine systems.

1 Block the wheels and drum.

2 Move the propulsion control lever to the stop position.

3 If the tow valve option was used:

a Remove the brake valve cover.

b Turn the override knob counter-clockwise until it stops

c Install the brake valve cover.

4 If a hand-powered hydraulic pump was used, relieve the system pressure, disconnect the portable hydraulic pump, remove the “T” and re-connect the drum and axle brake lines to the brake valve.

5 Raise operator platform to gain access to the propulsion pump and multi-function valves.

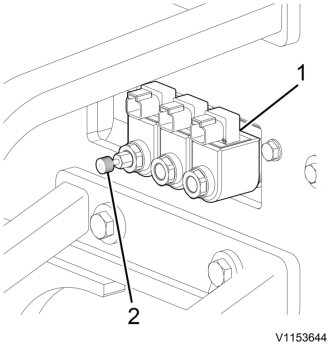

1 Brake valve
2 Override knob

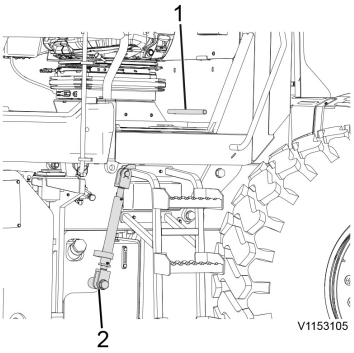

Ratchet jack connected ot ladder
1 Jack lever
2 Ratchet jack

Raising the operator's platform

a Remove the jack lever from behind the operator's seat.

b Install the jack lever to the ratchet jack.

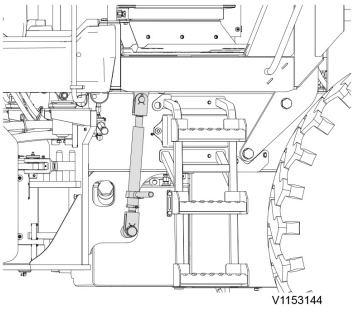

Ratchet jack with jack lever connected to the operator's platform

c Disconnect the upper end of the ratchet jack from the ladder.

d Connect the upper end of the ratchet jack to the operator's platform.

e Operate the ratchet jack enough to remove force from the ROPS support bolts on the sides of the frame.

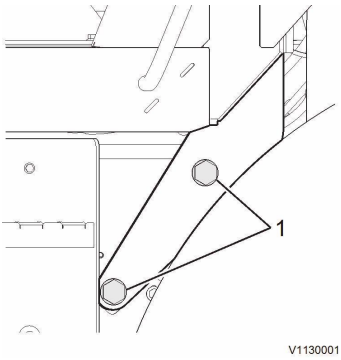

1 Left ROPS support bolts

f Remove the four (4) ROPS support bolts.

g Operate the ratchet jack and raise the platform.

NOTE!
Tighten the jam nut on the ratchet jack to secure it in position.

h Continue raising the operator's platform using the ratchet jack.

i Remove the jack lever from the ratchet jack.

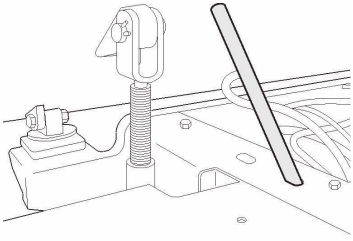

Jack lever installed between frame and operator's platform

j Install the jack lever as a safety support between the frame and the operator's platform in the raised position.

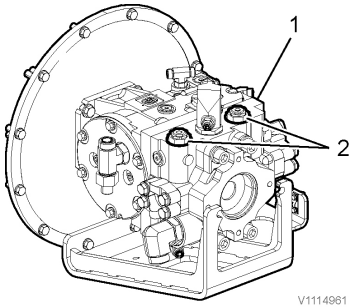

1 Propulsion pump
2 Multi-function valves

6 Locate the multi-function valves on the propulsion pump.

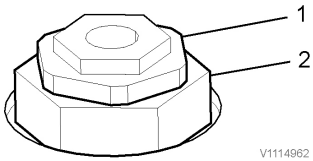

1 Middle-sized hex
2 Large hex

7 Place a wrench on the middle-sized hex and a second wrench on the large hex to prevent cartridge rotation. Rotate the middle-sized hex three revolutions clockwise and tighten to close the bypass valve. Repeat for the other multi-function valve.

NOTE!
Fluid will leak from valves which are not sufficiently tightened.

8 Lower the operator platform.

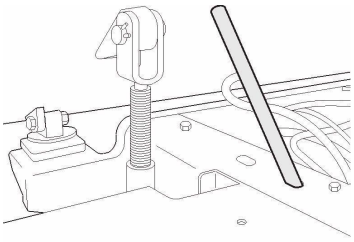

Jack lever installed between frame and operator's platform

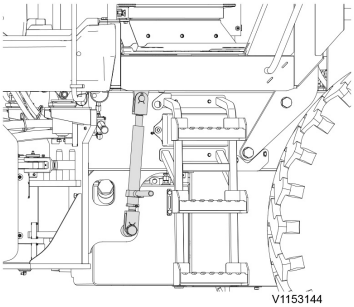

Ratchet jack with jack lever connected to the operator's platform

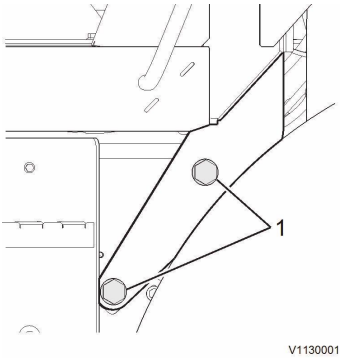

1 Left ROPS support bolts

Lowering the operator's platform

a Remove the jack lever from between the operator's platform and the frame.

b Install the jack lever on to the ratchet jack.

c Loosen the jam nut to allow the ratchet jack to lower.

d Operate the ratchet jack and lower the operator's platform until the mounting holes align between the frame and ROPS support.

e Install the four (4) ROPS support bolts. Apply thread-locking compound and torque the bolts to specification.

WARNING

Risk of crushing injury or death.
Improperly installed ROPS could result in serious injury or death in the event of a rollover.
Do not operate the machine until the ROPS support bolts have been properly torqued.

Improperly torqued ROPS bolts will not properly support the machine in the event of a rollover. The ROPS bolts must be torqued to a specific tightness by a qualified service technician using special tools.

f Fully lower the ratchet jack.

g Remove the jack lever from the ratchet jack.

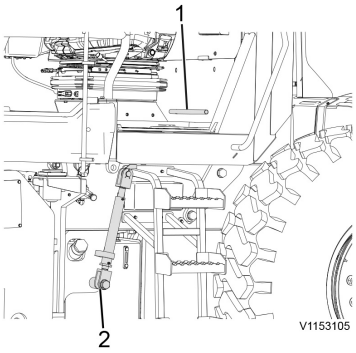

Ratchet jack and jack lever storage locations
1 Jack lever
2 Ratchet jack

h Store the jack lever behind the operator's seat.

i Disconnect the upper end of the ratchet jack from the operator's platform.

j Connect the upper end of the ratchet jack to the ladder.

k Remove the lever from the jack and place it in the storage location.

9 Turn the ignition switch to the on position, pull the emergency stop switch up and verify the park brake switch light is illuminated to indicate the parking brake is applied.

10 Check the parking brake using the parking brake test switch procedures. See page *202*.

11 Remove warning tow tag from the steering wheel and return it to the battery box.

Transporting machine

Before driving machine on public roads, check with a supervisor for instructions and information with respect to traffic regulations regarding construction machinery.

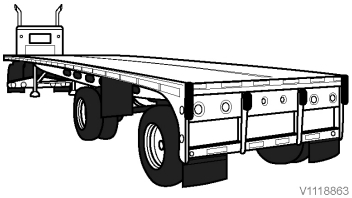
V1118863

Loading the machine under its own power

1 Choose level ground which will solidly support the vehicle.
2 Clean the trailer surface and loading ramps.
3 Before loading machine, block the wheels of the trailer.
4 A signal person must assist the operator with any necessary warnings.
5 Approach the transporter loading ramps squarely to make sure machine does not drop off side of ramp.
6 Drive machine on to transporter.
7 Shut engine down, apply parking brake and lock all lockable compartments.

Securing the machine to the transporter

1 After loading the machine on to the carrier, instal the articulation lock pin and secure the machine.
2 Block the drum / wheels.
3 Tie down the machine using a chain and tensioning device or other appropriate equipment to the tie-down points.
4 The driver of the transport must be aware of its total weight, load on the axles, and the overall dimensions of the machine.

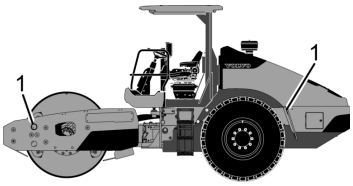

1 Lifting points

Lifting machine

DANGER

Risk of crushing.
A suspended machine could fall. A falling machine will cause fatal injury to persons below.
Never step under a suspended machine.

Never remain on a machine while it is being lifted.

When raising the machine off the ground, apply the parking brake and install the articulation lock, if equipped. Attach the lifting apparatus only to the machine's designated lifting points using properly rated lifting straps, cables or chains. Use spreader bars to ensure equal weight distribution during lifting as well as to avoid contact with the machine.

Use care when attaching and securing lifting tackle to individual parts and large assemblies being moved for replacement purposes to avoid the risk of accidents. Use lifting gear that is in proper operating condition and with adequate lifting capacity. Never work or stand under suspended loads.

Operating techniques
Eco driving

Operating to reduce fuel consumption also reduces wear on the machine and is environmentally friendly. The operating behaviour has an influence on economical machine operation.

Always:

1 Avoid unnecessary machine motions.

2 Shut down the engine instead of allowing the machine to idle for long periods of time.

3 Plan your work site. Review your work area and plan its layout with regard to the machines that will work there. Your work will be much more productive and organized. Keep the ground even and free from larger stones or other objects that form obstacles.

4 Consult with other operators so that machines and trucks work together in the most effective way.

5 Use the correct tyre pressure. See page *207*.

6 Perform scheduled maintenance as indicated on the lubrication and service chart at the given intervals.

Attachments, connecting and disconnecting

The installation and removal of optional equipment must be done by a qualified service technician.

Signalling diagram

If the operator's visibility is restricted use a signal man.

The faster lifting, lowering, or movement that is required, the livelier the signal man's movements should be. If two or several operators use the same signal man, determine ahead of time how the lift is to be done and how signals shall be given to each operator.



START
Arms extended horizontally with palms facing forward



STOP
Right arm pointing up with palm facing forward



END
Hands held together at chest height



MOVE FORWARD
Both arms bent with palms facing up and underarms moving slowly and repeatedly up towards the body



MOVE BACK
Both arms bent with palms facing down and underarms moving slowly and repeatedly down away from the body

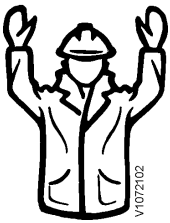

DANGER (EMERGENCY STOP)
Both arms up with palms facing forward

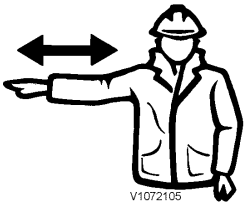

OPERATE IN INDICATED DIRECTION
Arm extended horizontally with palm facing down and small movements back and forth slowly to the right

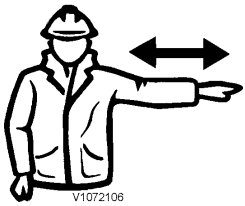

OPERATE IN INDICATED DIRECTION
Arm extended horizontally with palm facing down and small movements back and forth slowly to the left



HORIZONTAL DISTANCE
Hands indicate relevant distance

Safety when servicing
Service position

WARNING

Risk of burns!
Hot liquids and machine parts can cause burns.
Allow the machine to cool before beginning any service.

WARNING

Risk of burns.
Hot oil can cause severe burns to unprotected skin.
Always wear personal protective gloves, goggles and clothing when handling hot oil.

Before performing any service, maintenance or inspection procedure, the machine must be placed in the service position.

NOTE!
Refer to all applicable safety information, as well as the Service and Maintenance sections in the Operator's and Service Manuals before opening the machine areas to conduct any maintenance or repairs to the machine.

NOTE!
It is important to maintain the greatest possible cleanliness in the work area and to ensure that the machine is properly cleaned before carrying out service and maintenance procedures. The qualified service technician must take the necessary precautions to prevent dirt and debris from entering sensitive areas of the machine, which could cause damage to machine systems and components.

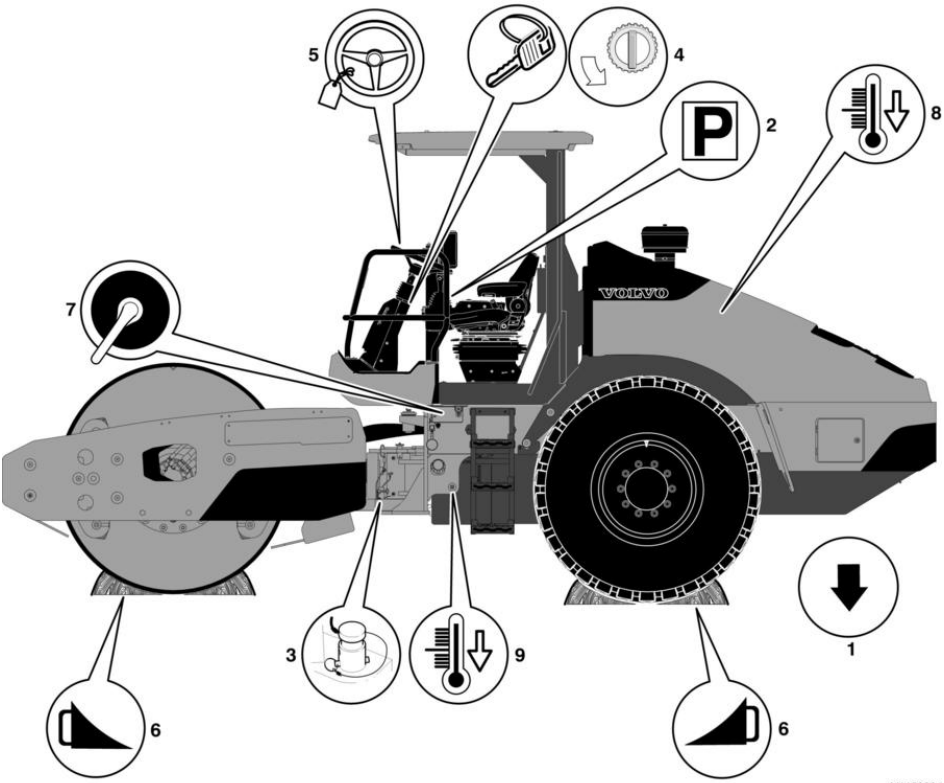

Service position

1 Position the machine on firm level ground.
2 Apply the parking brake.
3 Install the articulation lock pin. See page *178*.
4 Shut down the engine and remove and retain the ignition key.
5 Attach a warning label to the steering wheel.
6 Block the drum and tyres.
7 Turn off the battery disconnect switch.
8 Allow the engine to cool (unless draining engine oil).
9 Allow hydraulic oil to cool and pressures to fall before working on the hydraulic system.

Before service, read

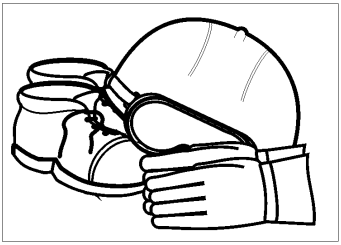
V1070879

Prevent personal injuries

- Read the instructions in the Operator's Manual before starting to work on the machine. It is also important to read and follow the information and instructions on plates and decals.
- Do not wear loose-fitting clothes or jewellery that may get caught and cause injuries.
- Always use a hard hat, eye protection (safety glasses or goggles), gloves, and protective work footwear when required by the job.
- Do not start the engine indoors without adequate ventilation.
- Do not stand in front of or behind the machine while the engine is running.
- Turn off the engine before removing any protective covers or opening any engine hoods.
- Accumulated pressure remains in the system even when the engine has been turned off. If a system is opened without first depressurising it, high-pressure fluid may jet out.
- Use a piece of paper or cardboard when checking for leaks. Use of hands or other bare skin can lead to injury.
- Make sure that stepping surfaces, handholds, and slip-protected surfaces are free from oil, diesel fuel, dirt, and ice.
- Only step on parts of the machine that are provided with slip protection.
- It is important to use the right tools and the right equipment. Defective tools or equipment must be repaired or replaced.
- If service work has to be done under a raised attachment, it must first be secured. Engage the control lockout and apply the parking brake, if the attachment is installed on the machine.

Prevent machine damage

- Use equipment with sufficient lifting capacity if the machine or parts of it are to be lifted or supported.
- Volvo Construction Equipment will not accept any responsibility if other lifting devices, tools, work methods, lubricants, and parts are used other than those described in this Operator's Manual.
- Make sure that no tools or other objects that may cause damage have been forgotten in or on the machine.
- Release the pressure in the hydraulic system before beginning service work.
- Never set a relief valve to a higher pressure than that recommended by the valve manufacturer.
- Machines used in environmentally contaminated or health-hazardous areas must be equipped for such operations. As well, special safety rules apply for service work on such machines.
- When installing two-way radio, mobile telephone or similar equipment, the installation must be performed according to the manufacturer's instructions in order to eliminate interference with the electronic system and components intended for the machine's function. See page *24*.
- Close and lock all protective plates, covers, and hoods on the machine before starting the engine and operating the machine.
- Maintain three-point contact with the machine (two feet and one hand) when cleaning or scraping the windscreen, if equipped.

Prevent environmental influence

Be conscious of the environment when carrying out service and maintenance. Oil and other liquids will cause damage when released into the environment. Oil degrades very slowly in water and sediment. One litre of oil can destroy millions of litres of drinking water.

NOTICE

Risk for the environment!
Dispose of used oil, coolant, fuel, liquids, shop cloths and filters in accordance with local environmental guidelines.

- When draining, oils and liquids must be collected in suitable container and steps taken to avoid spillage.

- Used filters must be drained of all liquid before they are passed on as waste. Used filters from machines which work in environments with asbestos or other dangerous dust, must be placed in the bag supplied with the new filter.

- Batteries contain substances dangerous to the environment and health. Used batteries must be handled as waste dangerous to the environment and discarded in accordance with local environmental guidelines.

- Consumables (e.g. used rags, gloves and bottles) may also be contaminated with oils and liquids dangerous to the environment. Store, seal and label contaminated consumables in an approved container until they can be discarded in accordance with local environmental guidelines.

Safety during maintenance

NOTICE

Risk of machine damage.
Service and maintenance performed by unqualified personnel could damage the machine.
Any service or maintenance task not described in the Operator's Manual must be performed by a qualified service technician.

Security

- Place the machine in the service position when performing any maintenance and repair work. See page *167*.

- Do not perform service or maintenance on the machine unless it is secured to prevent movement. See page *167*. Place the articulation

lock in the locked position, if equipped. Block the drum, wheels or tracks of the machine with appropriate chocks.

- Follow the start-up and shutdown procedures set forth in the operating instructions before performing any work on the machine. This includes the operation, conversion or adjustment of the machine and its safety-oriented devices, and any work related to maintenance, inspection and repair.

- Perform maintenance and repair work only if the machine is positioned on stable and level ground and has been secured to prevent movement.

General

- Never service, clean or examine the machine with the engine running unless otherwise stated in the cleaning or service procedure.

- Repair or replace faulty parts immediately.

- Properly tighten any threaded connections that have been loosened during maintenance and repair.

- Replace and check any safety devices removed during setup, maintenance or repair activities upon completion of the maintenance and repair activity.

- Do not alter the engine governor settings from those indicated in the engine manual and the engine option plate.

- Always replace damaged or lost warning and instruction decals. It is dangerous to operate the machine without these decals. Refer to the Parts Catalogue for the proper location and part number of all decals.

- Use only genuine original equipment manufacturer’s replacement parts. This will protect the warranty and ensure the safe operation and optimum performance of the machine.

- Touch any grounded metal component to discharge static electricity before filling the fuel tank.

- Never fill the fuel tank of the machine with the engine running. Do not permit sparks, open flames or smoking within 15 m (50 ft) of the machine while refuelling. Always wipe up any spilled fuel. Never overfill the fuel tank.

- Never fill the Adblue®/DEF tank of the machine with the engine running. Always wipe up any spills. Never overfill the Adblue®/DEF tank.

Electrical

- Turn of the battery disconnect switch and then disconnect the battery cables before working on the electrical system.

- If battery charging is required, ensure the battery charger is turned off when making the connections.

- Check de-energised parts for the presence of power. Ground or short circuit any parts found to contain residual power. Insulate adjacent live parts and elements.

- Check and inspect machine electrical equipment at regular intervals. Faults, such as loose connections or scorched cables, must be corrected immediately.

- Use only correct fuses with the specified current rating. Shut down the engine immediately if trouble occurs in the electrical system.

- Allow only a skilled electrician, or instructed person working under the supervision and guidance of a skilled electrician, to work on the electrical system of the machine. All work must be done in accordance with electrical engineering guidelines and local regulations.

- Remove electrical power to components of the machine before performing inspection, maintenance and repair work. Follow established lockout tagout procedures.

Hydraulic

- Visually inspect hydraulic hose assemblies at regular intervals. Replace hydraulic hose assemblies if they show signs of chafing, cracking, brittleness, deformation, blistering, leakage, fitting separation, corrosion or other damages which may affect their function and strength.

- Inspect hydraulic hoses and threaded connections regularly. Look for leaks and signs of damage. Always replace faulty parts before operating the machine.

- Remember that hot hydraulic oil will cause serious burns. Wait for hot hydraulic oil to cool before disconnecting hydraulic oil lines.

- Do not work on hydraulic oil lines while the engine is running and the system is under pressure. The hydraulic oil remains under pressure long after the engine has been shut down. Do not work on any hydraulic hose or fitting until the hydraulic oil pressure has been relieved correctly.

- Depressurise the hydraulic system sections to be serviced before servicing them. Follow the manufacturer’s instructions for the specific equipment involved.

- Use a piece of cardboard to check for hydraulic leaks, and always wear gloves and eye protection while checking. Use of hands or other bare skin can lead to serious injury.

- Remember that hydraulic oil penetration from a pin-hole leak can cause serious injury or death. Get immediate treatment if hydraulic oil has been injected under the skin.

- Route and fit hydraulic lines properly. Ensure that no connections are interchanged. The fittings, lengths and quality of the hoses must comply with the technical requirements.

Oils

- Observe all product-related safety regulations when handling oil, grease and other chemical substances.
- Be careful when handling hot fluid or parts to avoid burning or scalding. Wear appropriate personal protective equipment.
- Do not allow used consumables and replaced parts to sit unattended for long periods of time.
- Store, seal and label all consumable and replaced parts in an approved container until they can be discarded in accordance with local environmental guidelines.

Suffocation hazard

⚠ DANGER

Risk of suffocation.
Exhaust fumes from internal combustion engines contain carbon monoxide, a colourless, odourless gas, which is fatal when inhaled in a confined area.
Avoid internal combustion engine operation in any area without proper ventilation.

- Breathing exhaust fumes from internal combustion engines can lead to loss of consciousness, carbon monoxide poisoning and suffocation. Avoid breathing exhaust fumes.
- Never operate internal combustion engines in an enclosed area with poor ventilation.
- Failure to obey this instruction could result in carbon monoxide poisoning, suffocation and death.

Safety when welding

WARNING

Risk of serious injury or death.
Structural damage caused by unauthorised modification, or the machine rolling over, weakens the rollover protective structure (ROPS) / falling objects protective structure (FOPS) and can result in serious injury or death from falling objects or machine rollover.
Do not repair, modify, drill, weld on or add attachments to the ROPS/FOPS unless authorised in writing by the manufacturer. Use only genuine original equipment manufacturer replacement parts. Do not operate this machine if the ROPS/ FOPS is structurally damaged, shows cracks, is not properly secured as originally installed, or has been involved in a rollover.

NOTICE

Before starting any electric welding, disconnect the battery connections. All connections to the control units (ECU) should be disconnected. Connect the welding unit's ground cable as close as possible to the welding point.

- Proper welding procedures are necessary in order to avoid damage to the electronic controls and to the bearings.
- Allow only qualified and authorised personnel to weld, flame cut or perform any grinding work on the machine. There may be a risk of explosion and fire.
- Clean the machine before starting welding, flame cutting and grinding operations. Remove dust and other flammable substances and make sure that the premises are adequately ventilated to avoid the risk of fire and explosion.
- Make sure all welding work is carried out by fully trained, instructed, qualified and authorised personnel. All regulations and safety stipulations must be strictly adhered to as well as the generally recognised standards for performing welding work.

- Ensure that the welding current does not flow through any bearings.

Some simple rules regarding tyre handling

TYRE INFLATION - Check the unit tyre pressure when cold and inflate to the recommended pressure. Remove the wheel from the machine if the tyre pressure is below 80% of the recommended pressure. Place the tyre in a cage and inflate using a clip-on air check and remove tyre pressure gauge. Do not overinflate; otherwise, the tyre may explode, causing severe injury or death.

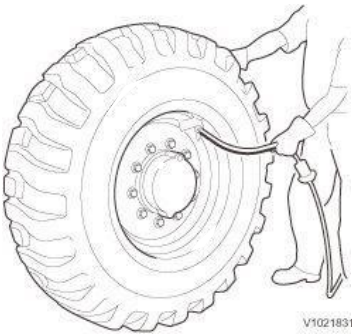

Never stand to the side of the tyre while inflating

Inflating

- Never stand to the side of the tyre while inflating. Use a self-locking outlet with a hose long enough to allow you to stand outside of the hazard zone during inflation. See the illustration.
- Make sure that the hazard zone is clear when the tyre is inflated.
- Tyres and rims suspected of being damaged should not be inflated with the wheel attached to the machine.

Fitting of tyres and rims

- Handling of tyres should be performed by authorised personnel only.
- The tyre should be deflated before removal from the machine.
- Never install a tyre on a rim that has not been recommended for that tyre.
- Use a lubricant recommended by the tyre manufacturer when fitting onto the rim.

Repairing tyres and rims

- Never cut, weld nor heat the wheel parts in any manner.
- Exercise caution when using bead breakers and hydraulic jacks. Remain outside the hazard zone when removing foreign objects from the tyres. A bead breaker that releases can cause severe personal injury and may result in death.

Preparations before service

Steering joint lock

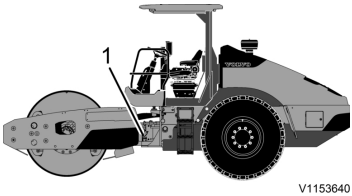

1 Articulation lock pin

The articulation lock is used to prevent accidental articulation of the machine. The articulation lock pin must be in the locked position prior to shipment and before performing any checks or service operations. Place the articulation lock pin in the stowed position for compaction operations.

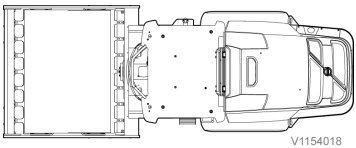

1 Align the front and rear frames of the machine.

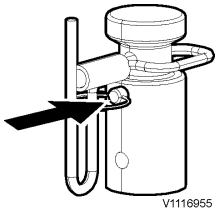

2 Place the attached hitch pin into the upper slot of the articulation lock pin.

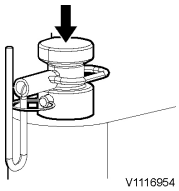

3 Place the lock pin into the hole in the swivel frame.

NOTE!
If the front and rear frames were aligned correctly in step 1, then the lock pin will slide in up to the hitch pin. If this happens, the following steps need not be taken.

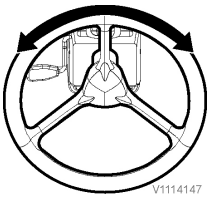

4 Slowly articulate the machine left and right.

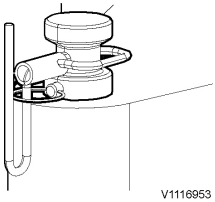
V1116953

5 The pin will fall the rest of the distance into the hole when the machine is aligned correctly. The machine will stop articulating when the pin is in the locked position.

Fire prevention

⚠ WARNING

Risk of explosion or fire.
Operating in environments with flammable or explosive particulates or fumes in the air could increase the risk of an explosion or fire.
Only operate the machine in well-ventilated environments.

There is always a risk of fire. Find out what type of fire extinguisher is used at the work site and learn how to use it. A fire extinguisher is optional equipment and is available from a local authorised dealer or distributor.

If the machine is equipped with a handheld fire extinguisher it should of the type ABE (ABC in North America). The designation ABE means that it can be used to extinguish fires in both solid organic materials and fluids, and that the extinguishing agent does not conduct electricity. Efficiency class I means that the fire extinguisher must have an effective operating time of at least 8 seconds, Efficiency class II at least 11 seconds, and Efficiency class III at least 15 seconds.

A portable fire extinguisher ABE I normally corresponds to an effective content of 4 kg (8.8 lb) (EN-class 13A89BC), standard EN 3-1995 part 1, 2, 4, and 5.

The fire extinguisher must be inspected and maintained so that it works when it is needed. Replace or refill a fire extinguisher after every use.

Fire prevention actions

- Smoking or an open flame is prohibited near the machine when refuelling or when the fuel system is open to contact with the ambient air.
- Diesel fuel is flammable and must not be used for cleaning. Use car care products intended for cleaning or degreasing. Other certain solvents may cause skin rash, damage the paint finish and constitute a fire hazard.
- Electrical cables must not lie directly against oil or fuel lines.
- Examine hoses and electrical cables for friction damage. Incorrectly installed hoses and cables can rub against other parts causing hoses to

rupture and exposed wire to arc. This applies particularly to unfused cables, which are red and marked R (B+) and routed between the batteries, between battery and starter motor or between alternator and starter motor.

- Do not weld or grind on components which are filled with flammable liquids, e.g. tanks and hydraulic pipes. A fire extinguisher must be on hand during welding operations.
- Keep the work site service area clean. Oil and water make floors and stepping surfaces slippery, and may also be dangerous in connection with electrical equipment or electrical power tools. Oily or greasy clothes are a serious fire hazard.
- Clean dust and oil from the machine daily. This reduces the risk of fire and also makes it easier to detect loose or damaged parts.

NOTICE

Risk of machine damage!
When using high pressure cleaning methods, forced entry of water or steam will cause damage to electrical components, control panels and hydraulic solenoid valves.
Protect all electrical components, control panels and hydraulic solenoid valves against entry of water or steam when using high pressure cleaning methods. Do not spray directly on to components. Keep the end of the spray nozzle back a minimum distance of 1 m (3 ft).

- Be extra thorough when cleaning a machine operating in conditions with high risk of fire (for example, saw mills and landfill sites).

Actions in case of fire

If the situation allows and it is possible without risking safety, take the following actions at the slightest sign of fire:

1 Stop the machine if it is moving.
2 Lower the attachments to the ground.
3 Move the lockout lever, if installed, to locked position.
4 Stop the engine.
5 Leave the operator’s station.
6 Call the fire department.
7 Turn off the battery disconnect switch, if it can be reached safely.

8 Try to put out the fire, if possible. If not, move away from the machine and the dangerous area.

Checklist after a fire or heat exposure

- As a precaution, all O-rings and seals should be handled as if they were made of fluoro rubber. See page *185*.

⚠ WARNING

Risk of chemical burns.
Acids lingering on a machine after a fire could splash back during vigorous washing and burn exposed skin and eyes.
Wear personal protective equipment and never use high-pressure washing equipment while washing the machine after a fire.

- Never touch burnt components or parts with bare hands when there is a risk of exposure to contact with burnt fluoro rubber. See page *185*.
- Wear thick, protective neoprene gloves, goggles, and an approved respirator.
- First, wash the machine and fire-affected parts thoroughly with plenty of lime water (a solution or a suspension of calcium hydroxide, i.e. slaked lime).
- Seek medical attention if skin contact with burnt fluoro rubber is suspected. Wash the affected skin thoroughly with clean water, then treat with Hydrofluoric Acid Burn Jelly or similar.
- Symptoms (redness and pain in affected area) may not appear until several hours after contact with burnt fluoro rubber.
- Wash protective gloves, rags and other items that may have contacted burnt fluoro rubber with lime water, then discard.

Handling hazardous materials

Safety when handling hazardous materials

The following substances are contained in or emitted by this machine and may be hazardous if exposed to or used incorrectly. Further information may be obtained by contacting a local authorised dealer or distributor.

Substance	Precaution
Coolant	Avoid ingestion, skin contact and breathing fumes
Hydraulic oil	Avoid ingestion, skin contact and breathing fumes
Engine lubricating oil	Avoid ingestion, skin contact and breathing fumes
Paving mixtures	Avoid ingestion, skin contact and breathing fumes
Preservative grease	Avoid ingestion, skin contact and breathing fumes
Rust preventive	Avoid ingestion, skin contact and breathing fumes
Engine fuel	Avoid ingestion, skin contact and breathing fumes
Battery electrolyte	Avoid ingestion, skin contact and breathing fumes
SAE gear oil	Avoid ingestion, skin contact and breathing fumes
AdBlue®/DEF	Avoid ingestion, skin contact and breathing fumes
Washer fluid	Avoid ingestion, skin contact and breathing fumes
The following substances may be produced during the operation of this machine and may be hazardous.	
Substance	**Precaution**
Engine exhaust fumes	Avoid breathing fumes

Substance	Precaution
Engine exhaust fumes	Avoid buildup of fumes in confined spaces
Electric motor dust (brushes, insulation)	Avoid breathing dust during maintenance

Battery disposal

WARNING

Risk of chemical burns.
Contact with battery acid causes serious chemical burns.
Always wear personal protective gloves, goggles and clothing when handling batteries.


Battery disposal symbol

Batteries contain substances dangerous to everyone's health and the environment. Discard batteries in accordance with local and national environmental guidelines. Remember battery electrolyte is corrosive. Do not dispose as general trash.

Refrigerant

Environmental precautions

The air conditioning system of the machine is filled with R134a refrigerant at the factory. R134a refrigerant is a flourinated greenhouse gas and contributes to global warming.

Do not release refrigerant into the environment. See page *258* for the amount of R134a refrigerant in your machine and its global warming potential.

Safety precautions

Work on the air conditioning system must only be performed by a qualified service technician. Do not attempt to perform work on the air conditioning system.

Wear safety goggles, chemical resistant gloves (e.g., neoprene or butyl rubber) and appropriate personal protective equipment to protect bare skin when there is a risk of contact with refrigerant.

Actions in case of exposure

Eye contact: Rinse with warm water and apply a light bandage. Seek medical attention immediately.

Limited skin contact: Rinse with warm water and apply a light bandage. Seek medical attention immediately.

Extensive skin contact: Rinse with warm water and carefully heat the area with warm water or warm clothing. Seek medical attention immediately.

Inhalation: Leave the area and find fresh air. Seek medical attention immediately.

Health hazards with paint, plastics and rubber

Work on painted surfaces

Never weld or cut with a torch on painted surfaces. All paint decomposes when heated and generates a vast number of different substances that may be irritating and, in case of repeated exposure, be very hazardous to health.

The following safety actions shall be followed:

- Remove the paint by sandblasting at least 10 cm (4 in) around the welding or cutting point (use breathing mask).
  If the paint cannot be removed by sandblasting, then remove the paint in another way, e.g., with paint solvent/remover.

⚠ WARNING

Risk of chemical burns.
Paint remover and solvent can cause damage to respiratory tracts when inhaled and damage to skin and eyes on contact.
Use personal protective equipment and work in a well-ventilated area when removing paint with removers or solvents.

- Grinding machines with high-speed grinding discs also heat the paint and may only be used if there is an air extractor on the grinder. Use breathing protection as well.

Rubber and plastics

⚠ WARNING

Risk of chemical injury.
Heated rubber and plastics produce toxic components that could damage exposed skin and eyes and respiratory tract.
Never heat or ignite plastics or rubber on the machine.

The following safety instructions shall be followed:

- Do not weld or cut with a torch near polymer materials (plastics and rubber) without first protecting them from the heat.
- Never burn polymer materials when scrapping them.
- Be careful when handling machines that have been exposed to fire or other intense heat. See page *182*.
- Always use gloves, protective safety glasses and breathing protection.

Fluoro rubber

WARNING

Risk of chemical burns.
Fluoro rubber seals when heated beyond their rated limits will produce a corrosive acid that could remain on machine parts for years.
Never touch any fire-affected parts. Contact with this acid requires immediate medical attention.

WARNING

Risk of toxin inhalation.
Fluoro rubber seals when heated beyond their rated limits will release a very toxic gas that is corrosive to respiratory tracts.
Move away from and do not inhale any smoke coming from the machine. Inhalation of toxic gas requires immediate medical attention.

Certain seals designed to withstand high operating temperatures (e.g., in engines, transmissions, axles, brakes, hydraulic motors and pumps) may be made of fluoro rubber, which, when heated to high temperatures, generate hydrogen fluoride and hydrofluoric acid.

Hydrofluoric acid is highly acidic and corrosive. It cannot be rinsed or washed off the skin and causes very severe burn and corrosive injuries that take a very long time to heal. As a rule, injured tissue must be removed surgically.

Hydrofluoric acid may remain on machine parts for a very long time (several years) after a fire.

NOTE!
In case of contact with hydrofluoric acid, it may take several hours before any symptoms appear.

If swelling, redness or burning sensations appear and contact with heated fluoro rubber is suspected to be the cause, seek immediate medical attention.
If a machine or a component for a machine has been exposed to fire or other intense heat, it shall be handled by specially trained personnel.

For all handling of machines after a fire, use heavy-duty gloves made of neoprene rubber and effective safety goggles.

WARNING

Risk of toxin inhalation.
Burning of painted, plastic or rubber parts produces gases that could damage respiratory tracts.
Never burn painted or rubber parts or any plastics.

Decontamination

The area around a heated part that is suspected to be made of fluoro rubber shall be decontaminated by thorough and ample washing with lime water (a solution or suspension of calcium hydroxide in water, that is, slaked lime). After completing the decontamination work, wash the gloves in lime water and then discard them.

Follow the safety actions for health and handling the machine after it has been exposed to a fire or other intense heat. See page *182*.

Asbestos information

The components in Volvo Construction Equipment's machines are free from asbestos. That is why it is important to use genuine Volvo Construction Equipment spare parts.

Maintenance
Lubrication and service chart

Symbol key

These standard symbols are used in the Lubrication and Service Chart.

Symbol	Description	Symbol	Description
 V1131123	Emergency stop switch check	 V1131124	Parking brake check
 V1084494	Engine oil	 V1084500	Engine oil level
 V1084502	Engine oil filter	 V1084558	Hydraulic oil level
 V1084570	Diesel fuel filter	 V1084778	Fuel/water separator
 V1084779	Axle/brake oil	 V1132074	Axle/brake oil check
 V1119453	Synthetic oil check	 V1084450	Battery condition
 V1084842	Tyre pressure/wheel nuts	 V1074076	Engine coolant check
 V1116949	Engine coolant system integrity	 V1084451	Grease
 V1116948	Air cleaner system integrity	 V1084836	Engine air intake integrity
 V1084843	Axle breather/carrier breather	 V1093624	Belt tension condition

Lubrication and service chart

Symbol	Description	Symbol	Description
 V1116951	Belt check	 V1116946	Torque
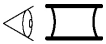 V1131125	Inspect drum isolators	 V1084492	Operator's Manual

Other service and maintenance jobs not included on the lubrication and service chart must be performed by a qualified service technician. Contact a local authorised dealer or distributor for information.

Lubrication and service chart

Checks, oil changes and lubrication

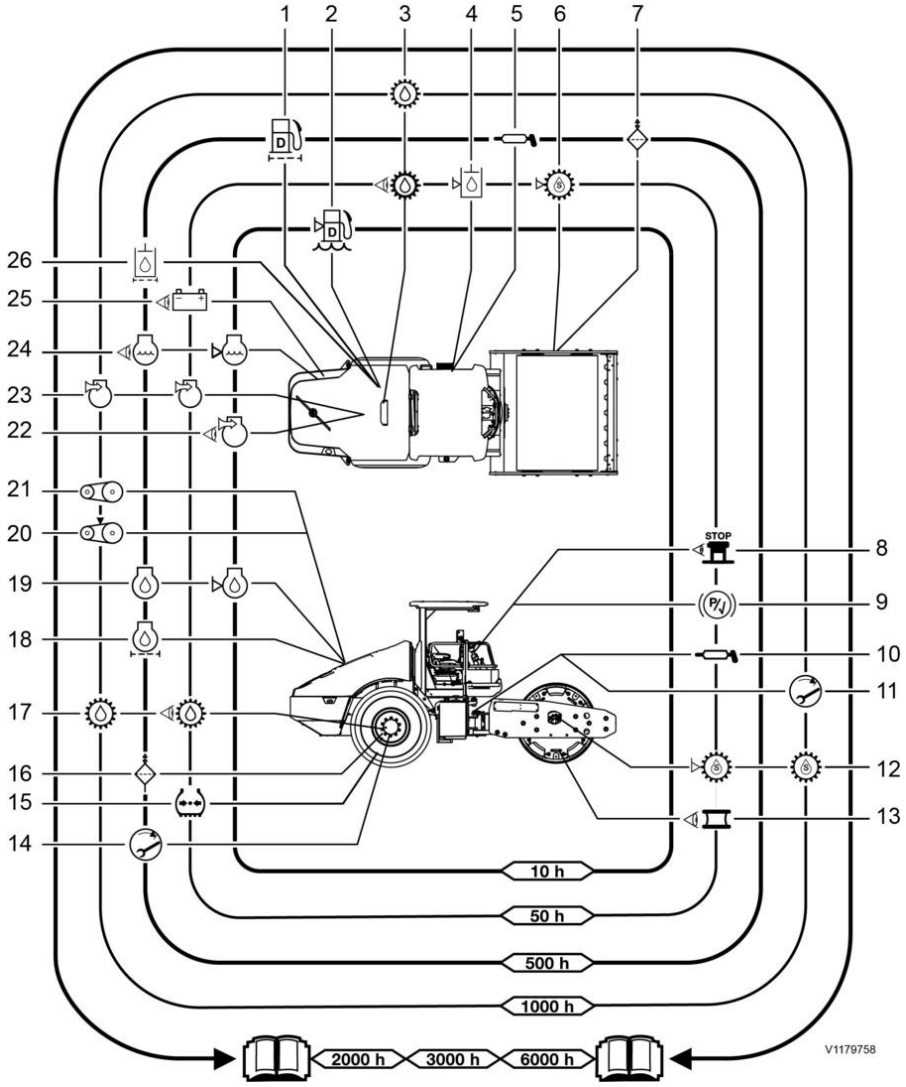

There is an additional 8000 hour maintenance interval. See page *195*.

Maintenance service, first 100 hours

New equipment requires the following initial one-time break-in maintenance after 100 hours of

operation. Perform this one-time initial break-in maintenance in addition to the 10 and 50 hour maintenance tasks. After this initial phase, the regular intervals listed in the Maintenance Service schedules should be followed.

See page *237* for lubricant specifications	
Service	**Page**
Change the planetary drive oil.	Service Manual(1)
Change the axle oil.	Service Manual
Change the axle hub oil.	Service Manual
Torque the articulation pin.	Service Manual
Torque the oscillation pin.	Service Manual

Maintenance service, every 10 hours

Action	Item	Page
Read and perform the checks found in "Actions before operating" in the Operating instructions		*116*
Drain the fuel/water separator.	1	*198*
Check the engine oil level.	19	*199*
Check the engine air intake for obstruction. Check the engine air cleaner system integrity.	22	*198*
Check the engine coolant level.	24	*199*
Check the condition of the seat belt.		*197*

Maintenance service, every 50 hours

Action	Item	Page
Perform the 10 hour maintenance service.		
Check the axle for leaks.	3	*201*
Check the hydraulic oil level. Add oil as necessary.	4	*205*
Check the drum eccentric oil level. Add oil as necessary. Check the drum carrier oil level. Add oil as necessary.	6	*205* *206*
Check the function of the emergency stop switch.	8	*123*
Check the function of the parking brake.	9	*202*

1. Items that refer to the Service Manual must be performed by a qualified service technician.

Action	Item	Page
Grease the swivel joint pins. Grease the steering cylinder pins.	10	*201*
Check the drum planetary drive oil level and add as necessary.	12	*207*
Check the drum shock mounts.	13	*209*
Check the tyre pressure. Add air as necessary.	15	*207*
Check the axle hubs for leaks.	17	*201*
Clean the primary engine air filter.	23	*208*
Check battery cables for wear and exposed wire. Check battery fluid and charge level.	25	*203*
Grease the levelling blade, if equipped.		*201*
Empty the engine air pre-cleaner.		Follow direction of the side of the pre-cleaner

Maintenance service, every 500 hours

Action	Item	Page
Perform the 10 and 50 hour maintenance services.		
Perform a parked regeneration.		*129*
Replace the fuel filter. Replace the water separator filter.	1	Service Manual(1)
Apply grease to the ratchet jack grease point.	5	*211*
Clean the drum carrier breather.	7	*211*
Check the wheel nut torque.	14	Service Manual
Clean the axle breathers.	16	*212*
Change the engine oil filter.	18	Service Manual
Change the engine oil.	19	Service Manual
Check the cooling system integrity.	24	*214*
Clean the cab main air filter and prefilter, if equipped.		*215* *215*
Replace the hydraulic oil filter.	26	Service Manual(a)

a)Items that refer to the Service Manual must be performed by a qualified service technician.

1. Items that refer to the Service Manual must be performed by a qualified service technician.

Maintenance service, every 1000 hours

Action	Item	Page
Perform the 10, 50 and 500 hour maintenance services.		
Change the axle oil.	3	Service Manual(1)
Change the axle transfer case oil. (If equipped with Traction Control HD.)	3	Service Manual
Check and ensure the articulation and oscillation pins are torqued to correct values.	11	Service Manual
Change the planetary drive oil.	12	Service Manual
Change the axle hub oil.	17	Service Manual
Check the belt tensioner.	20	*218*
Inspect the belt for cracks, wear and damage.	21	*218*
Replace the air cleaner primary filter.	23	*219*
Replace the cab air prefilter.		*219*

Maintenance service, every 2000 hours

Action	Page
Perform the 10, 50, 500 and 1000 hour maintenance services.	
Change the hydraulic oil.	Service Manual(a)
Replace the hydraulic tank breather filter.	Service Manual
Replace the fuel tank breather filter.	Service Manual
Check engine valve clearance.	Service Manual
Check the engine coolant mixture.	Service Manual
Replace the secondary engine air cleaner filter.	Service Manual
Replace the main cab air filter.	Service Manual

a)Items that refer to the Service Manual must be performed by a qualified service technician.

1. Items that refer to the Service Manual must be performed by a qualified service technician.

Maintenance service, every 3000 hours

Action	Page
Perform the 10, 50, 500 and 1000 hour maintenance services.	
Change the drum eccentric oil.	Service Manual[(a)]
Change the drum carrier oil.	Service Manual

a)Items that refer to the Service Manual must be performed by a qualified service technician.

Maintenance service, every 6000 hours

Action	Page
Perform the 10, 50, 500, 1000, 2000 and 3000 hour maintenance services.	
Drain and fill the engine coolant.	Service Manual[(a)]
Replace the AdBlue®/DEF pump unit filter.	Service Manual
Replace the AdBlue®/DEF tank breather filter.	Service Manual

a)Items that refer to the Service Manual must be performed by a qualified service technician.

Maintenance service, every 8000 hours

Action	Page
Check and clean the diesel particulate filter.	Service Manual (a)

a)Items that refer to the Service Manual must be performed by a qualified service technician.

Maintenance service, when required

Action	Page
Access the engine compartment.	
Clean and wash the machine.	*223*
Clean the engine compartment.	*225*
Clean the radiator.	*226*
Apply new paint to parts where paint has been scraped or worn away.	*225*

Action	Page
Tighten loose bolted connections.	
Fill the engine oil.	*228*
Fill the hydraulic oil.	*227*
Fill the fuel tank.	*221*
Fill the AdBlue®/DEF tank.	*221*
Fill the engine coolant.	*228*
Fill the axle oil.	*229*
Fill the axle hub oil.	*230*
Fill the drum carrier oil.	*231*
Fill the drum eccentric oil.	*232*
Fill the drum planetary oil.	*232*
Change the wiper blades. (cab only)	

Maintenance service, every 10 hours

Seat belt

WARNING

Risk of serious injury!
Unexpected machine movement can cause the operator to be ejected from the machine, causing serious injuries.
Operate the machine only while seated in the operator seat with the seat belt fastened.

The seat belt is critical to operator safety and must be worn at all times during machine operation to prevent the operator from being ejected from the cab or the operator platform if the machine rolls over or is involved in an accident. A fastened seat belt also helps the operator to maintain control of the machine if it moves suddenly or in an unexpected way. Failure to wear a seat belt during machine operation could result in serious injury or death. The seat belt is intended for one adult only. Keep the belt rolled up when not in use.

WARNING

Risk of serious injury or death.
A damaged seat belt could cause serious injury or death.
Check the seat belt and associated parts before start of machine operation.

Check the seat belt and associated parts daily. Ensure mounting hardware is tight. Replace the entire seat belt immediately if there is any wear, the webbing is worn, cut, has loose stitching, the belt is deformed or the seat belt retractor does not work. Replace the seat belt if the machine has been involved in an accident where the belt has been subjected to high strain or loading. Inspect mounting hardware. Changes to the belt or its mountings must never be made.
Only clean with warm water, do not use soap or detergent. Let the belt dry while it is fully pulled out before rolling it in.

Volvo Construction Equipment recommends replacing seat belt assemblies every 3 years regardless of appearance.

Water separator, checking

NOTICE

Risk for the environment!
Dispose of used oil, coolant, fuel, liquids, shop cloths and filters in accordance with local environmental guidelines.

1 Place the machine in service position. See page *167*.
2 Raise the engine hood.
3 Check for the presence of water in the water trap.
If water is present:
4 Place an appropriate container under the water separator drain valve.
5 Slowly turn drain valve on the bottom of the water separator counterclockwise until fluid starts flowing.
6 Drain the fluid until it turns a distinct red colour. Turn the drain valve clockwise until the fluid stops flowing.

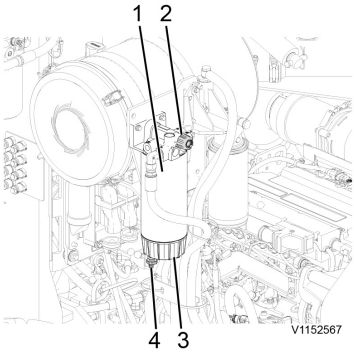

Left side of engine
1 Filter element
2 Hand pump
3 Water trap
4 Drain valve

NOTE!
In case of impurities, the filter may be clogged. Replace the water separator and clean the water trap.
In winter, check if the water in the water trap has frozen. Any ice will cause a clog.
If more than 59 ml (2 oz) are drained, the fuel filter must be filled with fuel and the system must be bled. Refer to the service manual.

Engine air cleaner system integrity, checking

1 Place the machine in service position. See page *167*.
2 Raise the engine hood.

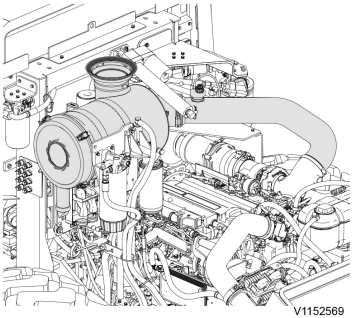

Air cleaner

3 Check connections between the air cleaner and the engine to make sure that all connections are tight and secure. Tighten as necessary.

4 Lower the engine hood.

Coolant level, checking

1 Place the machine in service position. See page *167*.

2 Raise the engine hood.

3 Make sure that the coolant level in the expansion tank is between the MIN and MAX marks.

4 Add or drain coolant, as necessary. See page *228*.

5 Lower the engine hood.

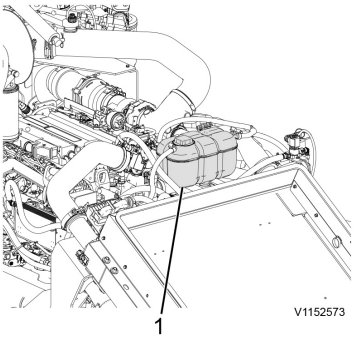

Rear of the engine
1 Expansion tank

Engine oil level, checking

1 Place the machine in service position. See page *167*.

2 Raise the engine hood.

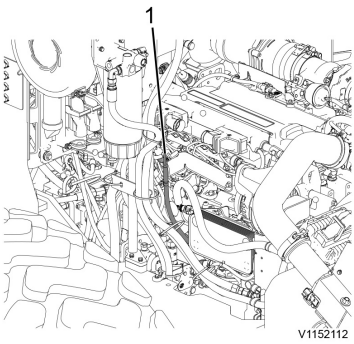

Left side of the engine
1 Dipstick

3 Clean the area around the engine oil dipstick.
4 Remove the dipstick.
5 Wipe the dipstick clean.
6 Install the dipstick into the engine.
7 Use the dipstick to ensure engine oil is at the proper level. Oil level must be between the full and low marks on the dipstick. Add or drain oil as necessary. See page *228*.
8 Install the dipstick into the engine.
9 Lower the engine hood.

Maintenance service, every 50 hours

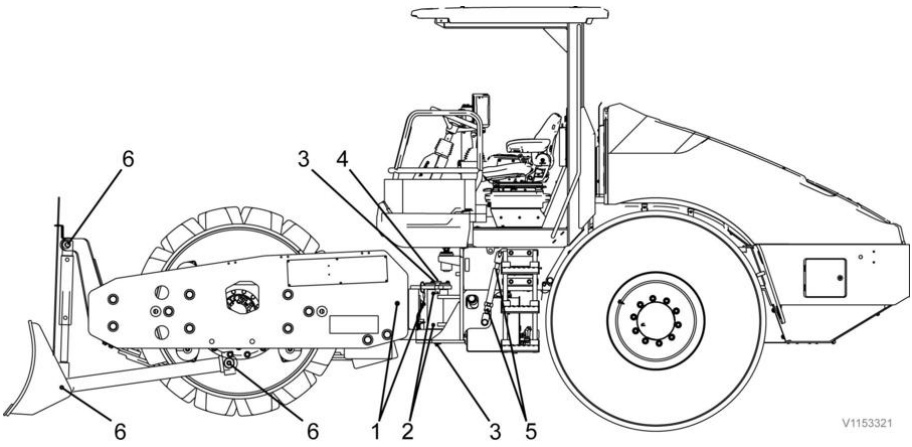

Item	Description	Number of Fittings	Interval hours	Amount
1	Oscillation pin	2	50 Hours	5 shots
2	Articulation bushing	2	50 Hours	5 shots
3	Articulation pin	2	50 Hours	5 shots
4	Steering cylinders	2	50 Hours	3 shots
5	Ratchet jack	2	500 Hours	3 shots
6	Levelling blade	4	50 Hours	3 shots

See page *237* for recommended lubricants.

NOTICE

Risk of machine damage.
Dirt or dust entering the grease fittings could cause damage to the grease fittings and bearings.
Carefully clean the grease fittings before applying grease.

NOTICE

Risk of machine damage.
Automatic grease guns could cause damage to bearing seals.
Use only manual grease guns to apply grease to the grease fittings.

Leakage, checking

1 Place the machine in service position. See page *167*.

2 Check around the axle and axle hub oil plugs for any signs of leakage.

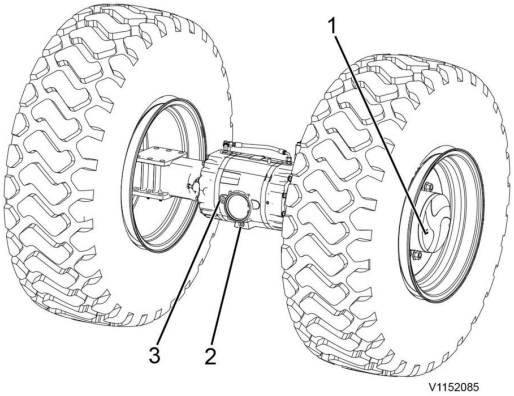

Axle and wheel hubs

1 Axle hub oil plug
2 Axle oil drain plug
3 Axle oil level check plug

Parking brake function, checking

1 Start the engine and position the machine in an area clear of personnel and obstructions.

NOTE!
Verify that the parking brake is applied before continuing. The parking brake icon, in the display unit, indicates that the parking brake is applied.

2 Press and hold the parking brake switch until the parking brake test function is activated and continue holding the switch while performing the test.

NOTE!
A message will be shown on the display unit to indicate that the parking brake test function is activated.

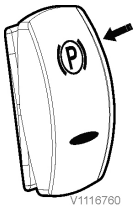

Press parking brake switch

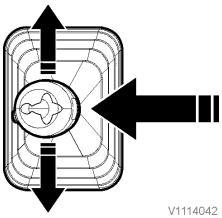

Move propulsion control lever in forward or reverse direction

3 Move the propulsion control lever momentarily in either the forward or reverse direction. The machine should not move. If the machine does move, shut down the engine and have the fault repaired before continuing operation.

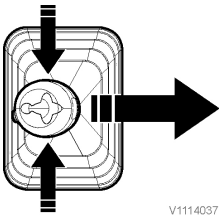

Propulsion control lever in stop position

4 Move the propulsion control lever to the stop position.

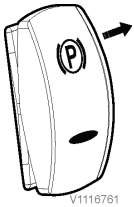

Release parking brake switch

5 Release the parking brake switch.

6 Ensure that the parking brake is applied and shut down the engine.

Battery system integrity, checking

1 Place the machine in service position. See page *167*.

2 Open the battery access door.

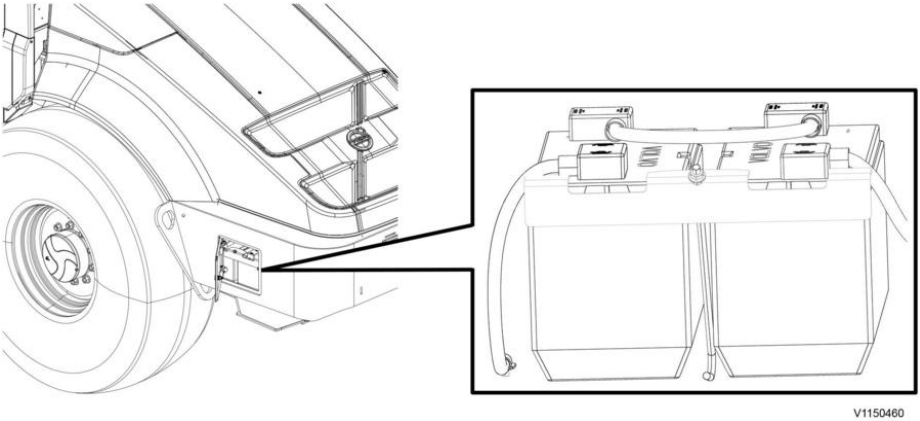

Battery location

3 Check the condition of the cables, terminals and wiring harness. Inspect the cables and connections for cracks, corrosion or exposed and frayed wires. Replace damaged wires, as necessary.

4 Ensure the wire connections are tight.

5 Close the battery access door.

6 Open the control box door.

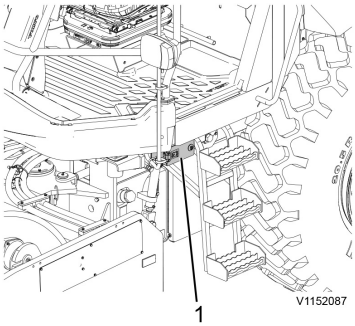

Left side of the machine below the operator's platform

1 Control box

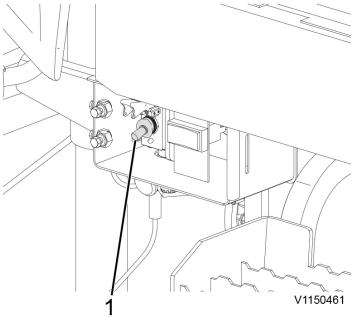

Inside of the control box
1 Battery disconnect switch

7 Check the function of the battery disconnect switch. See page *84*.

8 Close the control box door.

Hydraulic oil level, checking

1 Place the machine in service position. See page *167*.

2 Check the oil level sight gauge. The oil level must be maintained between the high and low level as indicated by the oil level decal.

3 Add oil as necessary. See page *227*.

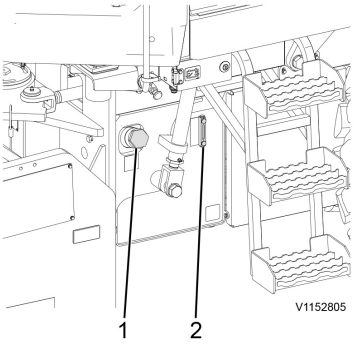

Below the operator's platform
1 Oil fill cap
2 Oil level sight gauge

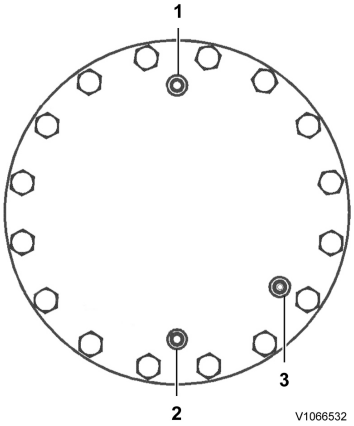

Position of drum for checking eccentric oil level

1 Eccentric fill plug (at 12 o'clock)
2 Eccentric drain plug (at 6 o'clock)
3 Eccentric oil level sight gauge (at 4 o'clock)

Drum eccentric oil level, checking

1 Position the machine so that the eccentric fill plug is in the 12 o'clock position, the drain plug is in the 6 o'clock position and the oil level sight gauge is in the 4 o'clock position.

NOTE!
The drum index angle, mounted on the inside of the drum, must be at the 12 o'clock position.

2 Place the machine in service position. See page *167*.

3 Check the oil level sight gauge. The oil must be in the centre of the gauge.

4 Add or drain oil as necessary. See page *232*.

Drum carrier oil level, checking

1 Place the machine in service position. See page *167*.

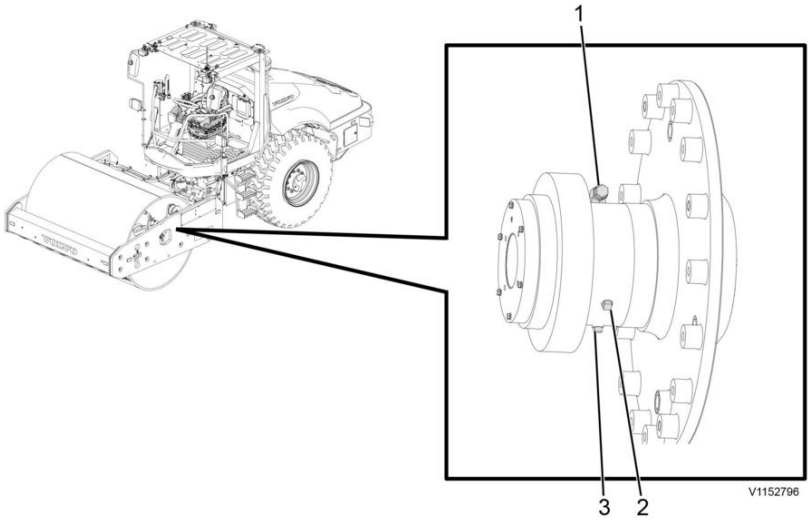

Drum carrier

1 Carrier breather

2 Oil level check plug
3 Oil drain plug

2 Clean around the oil level check plug.
3 Remove the oil level check plug and verify that the oil is level with the bottom of the level check plug hole.
4 Add or drain oil as necessary. See page *231*.
5 Clean and install the oil level check plug.

Drum drive planetary oil level, checking

1 Place the machine in service position. See page *167*.
2 Clean the area around the oil level check plug.
3 Remove the oil level check plug, located at the 3 o'clock position on the drum planetary drive
4 Verify that the oil level is filled to the bottom of the check level hole.
5 If necessary, add oil until level with bottom of the hole. See page *232*.
6 Clean, install and tighten the level check plug and clean up any excess oil.

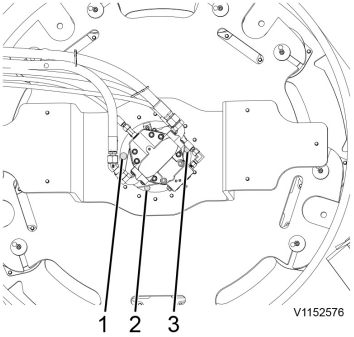

Right side of the drum
1 Oil fill plug
2 Oil drain plug
3 Oil level check plug

Tyres, checking air pressure

NOTE!
Before checking tyre pressures or inflating, see page *177*.

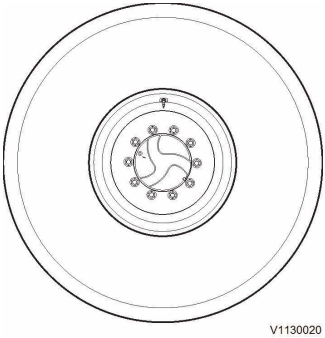

Tyre inflation valve at the 12 o'clock position

1 Place machine in the service position. See page *167*.

NOTE!
The tyre inflation valve should be located at the 12 o'clock position.

2 Check the tyre pressure only when tyres are cold using an appropriate pressure gauge.

NOTE!
Operating pressure is 0.11 MPa (16 psi) or below.

3 Check the tyre for visible defects such as cuts, punctures, bulges, leaks, excessive wear or cracking.

4 Check the wheel rim for excessive rust, cracks, missing or loose wheel bolts or other damage that could cause premature tyre wear or failure.

5 Report tyre and wheel rim defects to a qualified person who is equipped and trained to perform tyre repair service.

NOTE!
The tyres on this machine have ballast and require special handling when removing and fitting the tyre assembly for repairs.

NOTE!
Remove the wheel from the unit whenever pressure drops below 80% of the recommended pressure. Place the tyre in a cage and inflate using a clip-on air chuck and remote tyre pressure gauge. Do not over-inflate; otherwise, the tyre may explode causing severe injury or death.

Engine air cleaner primary filter, cleaning

1 Place the machine in service position. See page *167*.

2 Raise the engine hood.

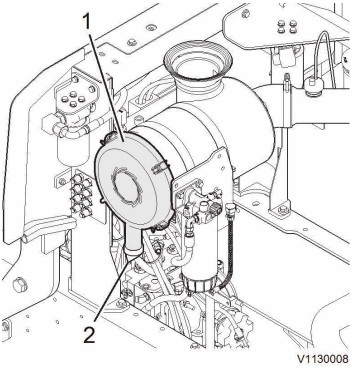

Air cleaner

1 Engine air filter housing cover
2 Rubber ejector valve

3 Wipe away all dirt from around the air cleaner housing and cover.

4 Release the four (4) retaining clips securing the air cleaner housing cover to the air cleaner.

5 Remove the air cleaner housing cover.

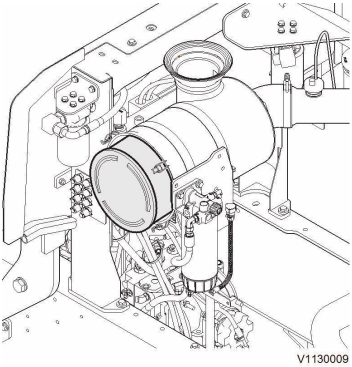

Engine air cleaner primary filter element

6 Remove the primary filter element, taking care not to damage it.

7 Clean the primary filter element. Remove dust and debris by shaking or using low pressure compressed air from the inside out of the primary filter element.

NOTE!
Do not attempt to clean the primary filter element by striking it.

NOTE!
Do not, under any circumstances, run the engine without a filter element or with a damaged one. Always have a spare filter element at hand and keep it well protected from dirt.

8 Ensure the rubber ejector valve is not damaged or clogged. Clean, as necessary.

9 Ensure the secondary filter element is secure and not damaged.

NOTE!
Replace the secondary filter element after every third primary element replacement or when damaged or extremely soiled.

10 Install the primary filter element.

11 Install the air cleaner housing end cover.

12 Secure the four (4) retaining clips to secure the air cleaner housing cover to the air cleaner.

13 Lower the engine hood.

Drum shock mounts, checking

1 Place the machine in service position. See page *167*.

2 Check all shock mounts for looseness or damage.

3 Replace any shock mounts that have torn or excessively cracked rubber. Tighten all bolts and nuts as necessary.

Maintenance service, every 500 hours

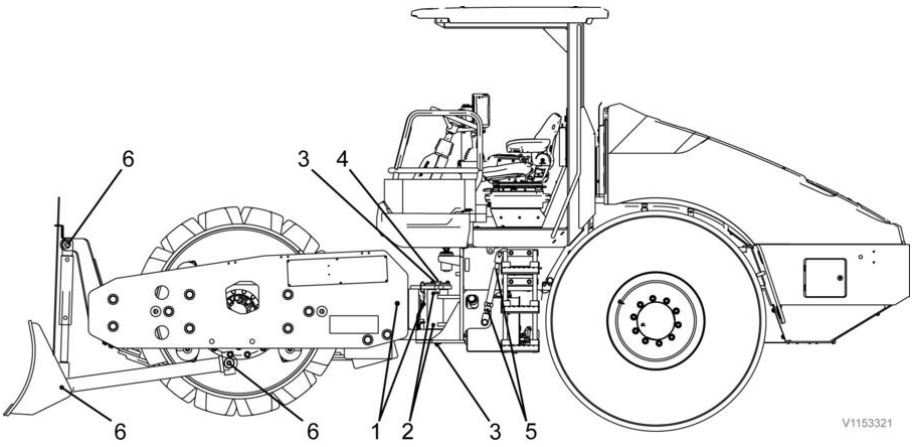

Item	Description	Number of Fittings	Interval hours	Amount
1	Oscillation pin	2	50 Hours	5 shots
2	Articulation bushing	2	50 Hours	5 shots
3	Articulation pin	2	50 Hours	5 shots
4	Steering cylinders	2	50 Hours	3 shots
5	Ratchet jack	2	500 Hours	3 shots
6	Levelling blade	4	50 Hours	3 shots

See page *237* for recommended lubricants.

NOTICE

Risk of machine damage.
Dirt or dust entering the grease fittings could cause damage to the grease fittings and bearings.
Carefully clean the grease fittings before applying grease.

NOTICE

Risk of machine damage.
Automatic grease guns could cause damage to bearing seals.
Use only manual grease guns to apply grease to the grease fittings.

Drum carrier breather, cleaning

1 Place the machine in service position. See page *167*.

2 Clean the area around the drum carrier breather.

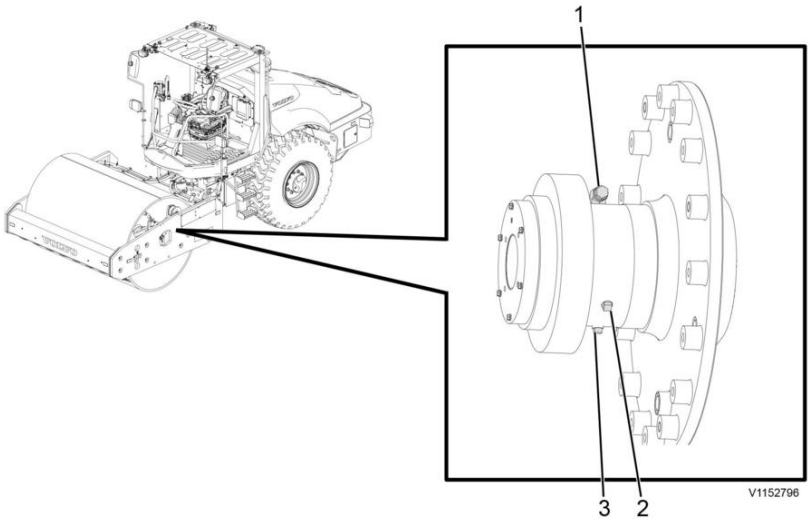

Drum carrier

1 Drum carrier breather
2 Oil level check plug
3 Oil drain plug

3 Remove the breather from the carrier.

4 Cover the breather port to prevent contaminants from entering the carrier.

5 Clean the breather in solvent.

6 Allow the breather to dry.

7 Install the breather into the carrier.

Axle breather, cleaning

Valid for option / configuration	
Option	**Configuration**
Traction control HD	Not installed

1 Place the machine in service position. See page *167*.

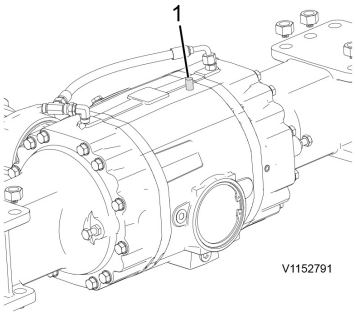

Axle

1 Axle breather

2 Clean the area around the axle breather.

3 Remove the breather from the axle.

4 Cover the breather port to prevent contaminants from entering the axle.

5 Clean the breather in solvent.

6 Allow the breather to dry.

7 Install the breather in to the axle.

Axle breathers, cleaning

Valid for option / configuration	
Option	**Configuration**
Traction control HD	Installed

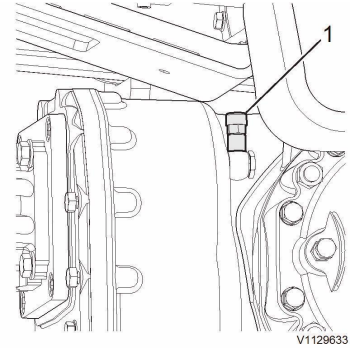

Axle

1 Axle breather

1 Place machine in the service position. See page *167*.

2 Thoroughly clean the area around the axle breathers located on the top of the axle.

3 Remove the axle breathers.

4 Cover the breather ports to avoid contaminants entering the axle.

5 Thoroughly clean the breathers in solvent and dry.

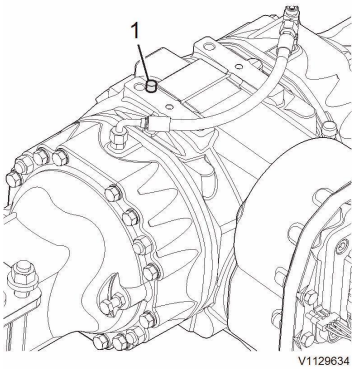

Axle
1 Axle breather

6 Install the breathers.

Cooling system integrity, checking

WARNING

Risk of scalding and severe burns to unprotected skin.
High-pressurised hot coolant may rush out of expansion tank and cause severe burns.
Before removing the expansion tank pressure cap:
- **Shut down the engine**
- **Allow the engine to cool**
- **Put on personal protective equipment, including face shield, apron, and gloves**
- **Turn the pressure cap slowly to release any pressure**

1 Place the machine in service position. See page *167*.
2 Raise the engine hood.
3 Inspect the radiator hoses for bulges, cracks or any type of damage. Replace damaged hoses, as necessary.
4 Check condition and tightness of radiator hose clamps. Replace damaged clamps and tighten existing clamps as necessary.
5 Look for leaks in any part of the cooling system. Tighten or replace leaking parts, as necessary.
6 Inspect the radiator for damage, dirt or debris collected in the fins. Clean or replace, as necessary.

7 Inspect the cooling fan. Clean or replace, as necessary.

8 Lower the engine hood.

Cab prefilter, cleaning

1 Place the machine in service position. See page *167*.

2 Open the access door on the right side of the cab.

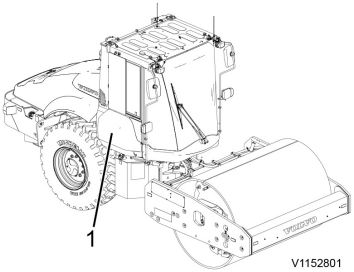

Right side of the machine
1 Access door

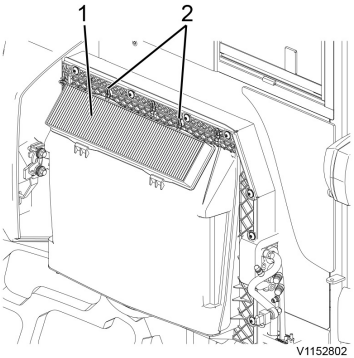

Cab filter housing
1 Prefilter
2 Fasteners

3 Turn the two (2) fasteners securing the prefilter to the main filter housing cover.

4 Remove the prefilter from the main filter housing cover.

5 Carefully shake the filter to remove debris.

NOTE!
Do not use compressed air or a vacuum to clean the filter.

6 Install the prefilter on to the main filter housing cover.

7 Turn the two (2) fasteners to secure the prefilter to the main filter housing cover.

8 Close the access door.

Cab main filter, cleaning

1 Place the machine in service position. See page *167*.

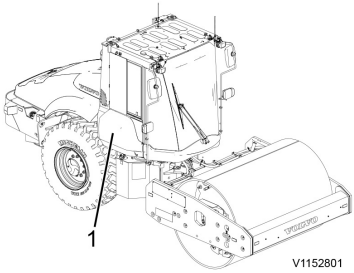

Right side of the machine
1 Access door

2 Open the access door on the right side of the cab.

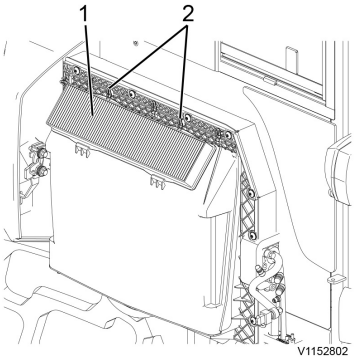

Cab filter housing
1 Prefilter
2 Fasteners

3 Turn the two (2) fasteners securing the prefilter to the main filter housing cover.

4 Remove the prefilter from the main filter housing cover.

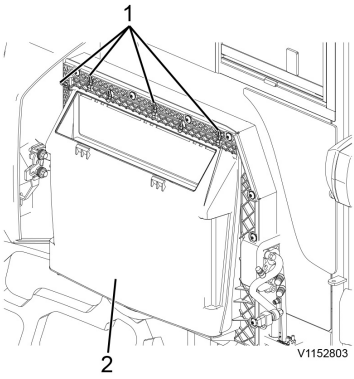

Cab filter housing
1 Fasteners
2 Main filter housing cover

5 Turn the four (4) fasteners securing the main filter housing cover to the filter housing.

6 Remove the main filter housing cover.

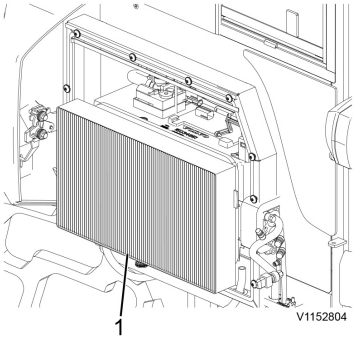

Cab filter housing
1 Main filter

7 Remove the main filter from the filter housing.

8 Carefully shake the filter to remove debris.

NOTE!
Do not use compressed air or a vacuum to clean the filter.

9 Install the main filter in to the filter housing.

10 Install the main filter housing cover on to the filter housing.

11 Turn the four (4) fasteners to secure the main filter housing cover to the filter housing.

12 Install the prefilter on to the main filter housing cover.

13 Turn the two (2) fasteners to secure the prefilter to the main filter housing cover.

14 Close the access door.

Axle breather filter, cleaning

1 Place the machine in service position. See page *167*.

2 Clean the area around the axle breather.

3 Remove the breather from the axle.

4 Cover the breather port to prevent contaminants from entering the axle.

5 Clean the breather in solvent.

6 Allow the breather to dry.

7 Install the breather in to the axle.

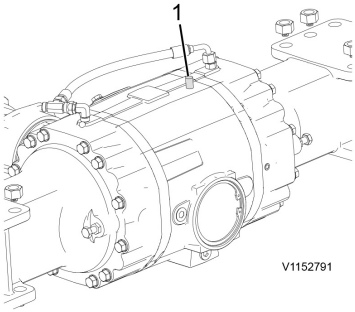

Axle
1 Axle breather

Maintenance service, every 1000 hours

Engine belt condition, checking

1 Place the machine in service position. See page *167*.
2 Raise the engine hood.
3 Make sure the belt is properly aligned on the pulleys.
4 Inspect the belt for damage. Transverse (across belt width) cracks are acceptable. Longitudinal (direction of the belt length) cracks are not acceptable and the belt must be replaced.
5 Inspect for frayed areas and missing belt pieces. Replace belt as necessary.
6 Lower the engine hood.

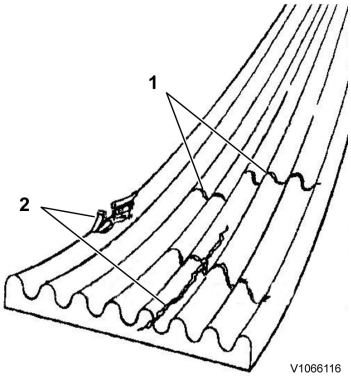

Belt cross section
1 Transverse cracks (acceptable)
2 Longitudinal cracks (unacceptable)

Engine belt tension, checking

1 Place the machine in service position. See page *167*.
2 Raise the engine hood.
3 Check that the engine belt can deflect 1.3 cm (0.5 in).

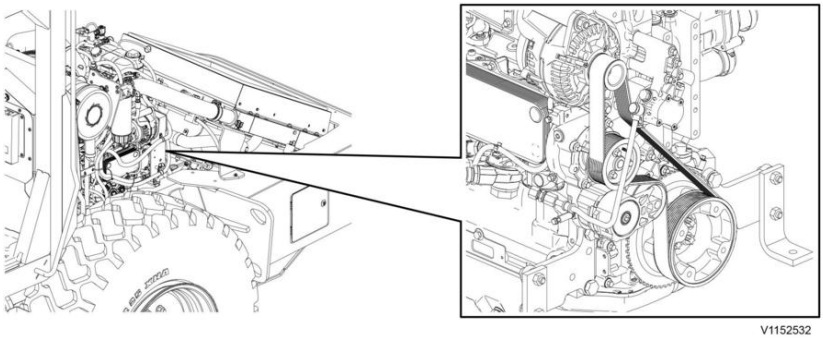

Engine belt location

4 Lower the engine hood.

Cab prefilter, replacing

NOTICE

Risk for the environment!
Dispose of used oil, coolant, fuel, liquids, shop cloths and filters in accordance with local environmental guidelines.

1 Place the machine in service position. See page *167*.

2 Open the access door on the right side of the cab.

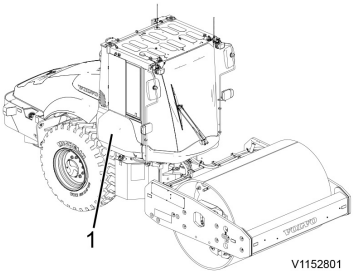

Right side of the machine
1 Access door

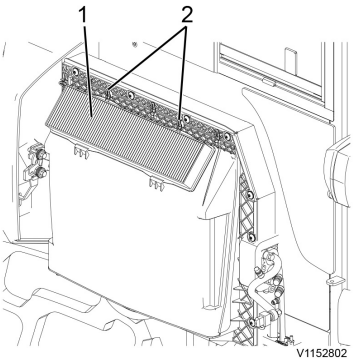

Cab filter housing
1 Prefilter
2 Fasteners

3 Turn the two (2) fasteners securing the prefilter to the main filter housing cover.

4 Remove the prefilter from the main filter housing cover.

5 Install the new prefilter on to the main filter housing cover.

6 Turn the two (2) fasteners to secure the prefilter to the main filter housing cover.

7 Close the access door.

Engine air cleaner primary filter, replacing

NOTICE

Risk for the environment!
Dispose of used oil, coolant, fuel, liquids, shop cloths and filters in accordance with local environmental guidelines.

1 Place the machine in service position. See page *167*.

2 Raise the engine hood.

3 Wipe away all dirt from around the air cleaner housing and cover.

4 Release the four (4) retaining clips securing the air cleaner housing cover to the air cleaner.

5 Remove the air cleaner housing cover.

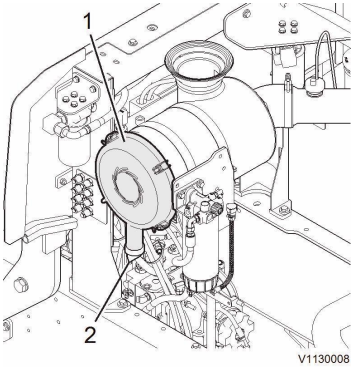

Air cleaner
1 Engine air filter housing cover
2 Rubber ejector valve

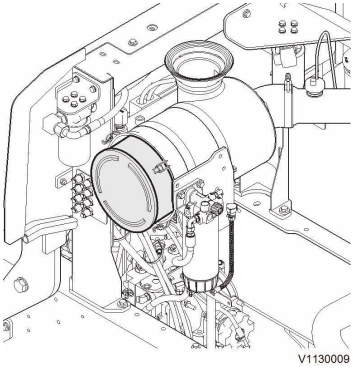

Engine air cleaner primary filter element

6 Remove the primary filter element.

NOTE!
Make a mark on the decal at the end of the secondary filter every time the primary filter has been replaced. This serves as a reminder that after the primary filter has been replaced three times, the secondary filter must be replaced. Refer to the Service Manual.

7 Install the primary filter element.

8 Install the air cleaner housing end cover.

9 Secure the four (4) retaining clips to secure the air cleaner housing cover to the air cleaner.

10 Lower the engine hood.

Maintenance service, when required

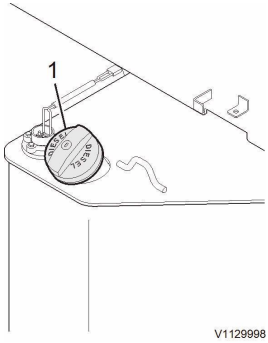

1 Fuel tank cap

Fuel, filling

1 Place the machine in service position. See page *167*.

2 Remove the fuel tank cap.

3 Add clean, filtered fuel through the fill area. Use only ultra-low-sulphur diesel fuel with a sulphur rating of less than 15 parts per million (ppm). See page *243*.

4 Install the fuel tank cap.

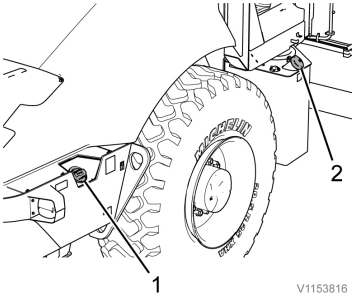

1 Fill point, AdBlue®/DEF
2 Fill point, fuel

AdBlue®/DEF, filling

WARNING

Risk of fatal accidents.
The machine can start to move and could cause serious injuries or death.
Turn off the engine and apply the parking brake before filling the tank.

NOTICE

Risk of machine damage.
Refilling fluids with anything other than what is specified in this manual could cause permanent damage to the catalyst system.
Only refill fluids with those specified in this procedure.

NOTICE

Risk of machine damage.
AdBlue®/DEF is highly corrosive. If the tank is overfilled, AdBlue®/DEF may leak out through the air vent pipe. If the tank is overfilled and the fluid in it freezes, the tank and hoses can be permanently damaged.
Do not overfill the tank. Always stop filling when the fluid level reaches the filling port or when an automatic filling nozzle shuts off.

NOTICE

Risk of machine damage.
A clogged AdBlue®/DEF filter can lead to difficulties filling the tank.
Filling AdBlue®/DEF in the tank with a damaged filter or without a filter in place can contaminate the AdBlue®/DEF fluid and seriously damage the aftertreatment system.
The filter might need to be removed, cleaned and put back in place before filling. Never damage the filter or fill AdBlue®/DEF without the filter in place. Turn to your local Volvo dealer for support.

Only fill fluid specified according to ISO 22241-1. We do not recommend reusing drained AdBlue®/DEF since there is a risk of impurities.

If the AdBlue®/DEF level is low, an alarm display is shown, see page *49*. Top up with AdBlue®/DEF in the AdBlue®/DEF tank. See page *249*.

NOTE!
Filling equipment for AdBlue®/DEF must be manufactured for a maximum flow of 40 L/minute (10.5 gpm) or must be adjustable to a flow of less than 40 L/minute (10.5 gpm). In case of problems when filling, and the problems persist after cleaning the filler filter, read the manual for the fill equipment to take suitable actions.

NOTE!
Wipe clean the spill cup after filling AdBlue®/DEF.

- AdBlue®/DEF is not classed as a hazardous fluid, but it should still be handled with care. It is very corrosive. Avoid spilling AdBlue®/DEF on electric cables and components.
- In case of skin contact, rinse thoroughly with water.
- In case of eye contact, rinse thoroughly for several minutes. Contact a doctor if needed.
- If inhaled, breathe fresh air and contact a doctor if needed.
- If swallowed, drink water and contact a doctor.
- AdBlue®/DEF should not come into contact with other chemicals.
- AdBlue®/DEF is not combustible. However, if AdBlue®/DEF is exposed to high temperatures it converts to ammonia and carbon dioxide. See also page *9*.
- AdBlue®/DEF may not be mixed in the fuel tank, and fuel may not be mixed in the AdBlue®/DEF tank.

For information on ordering AdBlue®/DEF (only applies to USA-market):
- **Volvo CE Customer Support: 1-877-823-1111 (office hours)**
- **www.volvoce.com (outside of office hours)**

For information on ordering AdBlue®/DEF (other markets), contact your local Volvo dealer.

Cleaning machine

The machine should be cleaned regularly with conventional car care products in order to eliminate the risk of damage to the paint finish and other surfaces on the machine.
Cleaning the machine prior to conducting repairs is especially important in order to reduce the risk of contaminants from entering sensitive areas of the machine.
Dust, dirt and other debris entering into the fuel, lubrication, cooling and hydraulic systems can cause premature wear, corrosion, blockages and overheating, which will damage expensive machine components and cause machine systems to fail.

NOTICE

Risk of machine damage.
Strong cleaning agents or chemicals could damage the paint on the machine.
Use only cleaning products approved for use on automobiles to clean the machine.

⚠ WARNING

Risk of fire.
Dust and debris accumulated on the machine can cause a fire.
Wash and clean the machine as needed to minimise the risk of fire.

NOTE!
Keep all exterior and interior window surfaces clean to ensure proper visibility.
In certain conditions dirt and debris can build up and become trapped between the cab vent windows and door seals, allowing unwanted moisture and dust to enter the cab. Clean any dirt and debris from the seals and sealing surfaces periodically to ensure proper performance.

Recommendations for cleaning the machine

1 Park the machine in a place intended for cleaning.
2 Remove any material jammed between the drum and its scraper.
3 Open the machine hood and clean the air cleaner evacuator valve and inspect the rubber for cracks. (Replace as necessary).

4 Install protective covers, barriers or safety cap plugs to protect sensitive components and machine areas from water entry.

NOTICE

If a high-pressure washer is used when cleaning, work carefully since damage may be caused to electrical components and insulation of the electrical cabling even at relatively moderate water pressure and temperature. Protect electrical cabling in a suitable manner.

5 Follow the instructions supplied with the car care product.
6 The water temperature must not exceed 60 °C (140 °F).
7 If high-pressure wash is used, keep a distance of at least 1 m (3 ft) between nozzle and machine surface. Excessive pressure and too short a distance may cause damage.
8 Use a soft sponge.
9 Finish by rinsing the whole machine with water only.

After cleaning:

1 Remove all protective materials, (covers, barriers, tape, plastic wrap or safety cap plugs etc.), added for protection against water entry.
2 Always lubricate the machine immediately after washing, especially in the areas that water or contaminates may have entered. These areas include the vertical and horizontal swivel pins and bushings and cylinder pins if the fittings are not plugged with a pipe plug.

   NOTE!
   Plugs indicate a maintenance-free bearing.
3 After washing, run the engine until it is warm. This will help to dry out engine components and electrical connections.
4 Perform the daily or as required maintenance checks.
5 Touch up the paint finish when required.

Touch-up painting

- Clean the machine.
- Check for faults to the paint finish that may expose bare metal.
- Carefully repair any faults to the paint finish.

Cleaning engine compartment

WARNING

Risk of crushing and cutting.
Rotating parts could cause serious injury.
Shut down the engine before cleaning the machine or any component of the machine.

WARNING

Risk of crushing. Rotating parts may cause serious injury. Never operate the machine with any of the engine or cooling module compartment doors open.

Machines operating in dusty environment or environment exposed to fire hazards (e.g., wood-processing, woodchip handling or grain handling and animal feed industries) require daily attention and cleaning of the engine compartment and surrounding areas.

Use caution when cleaning the radiator and cooling system. See page *226*.

Use compressed air to remove loose material.

Clean the machine engine at the end of the working shift.

Begin with the highest areas and end with the lowest on top of the fuel tank and areas near the fuel tank.

Use personal protective equipment such as protective goggles, gloves and respirator.

After cleaning, inspect the engine compartment. Contact a qualified service technician if there are any leaks, loose connections or worn electrical or hydraulic components.

Close all covers and hoods.

Radiator and coolers, cleaning

1 Place machine in the service position. See page *167*.

2 Raise the engine hood.

3 Check for signs of clogging of exposed cooling fins on the radiator or coolers. Remove any loose debris from the radiator and cooling fins.

4 If clogging is caused by dried on dirt, use a suitable soft brush to remove dirt from the cooling fins.

NOTE!
Take care not to damage the cooling fins of the radiator core.

5 In case of severe clogging (due to fluid leaks), apply an appropriate cleaning agent. Let it soak in, then wash it off with water spray and dry with compressed air.

NOTE!
When using compressed air, keep the nozzle at a distance from the fins to prevent damage. Damaged fins may cause leakage or overheating.

Repair leaks as necessary.

6 Lower the engine hood.

Hydraulic oil, filling

1 Place the machine in service position. See page *167*.

2 Remove the oil fill cap.

3 Fill the hydraulic tank. See pages *237* and *249*.

4 Install the oil fill cap.

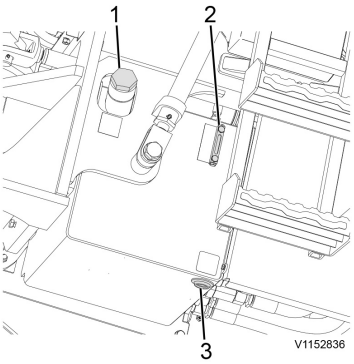

Below the operator's platform
1 Oil fill cap
2 Oil level sight gauge
3 Oil drain plug

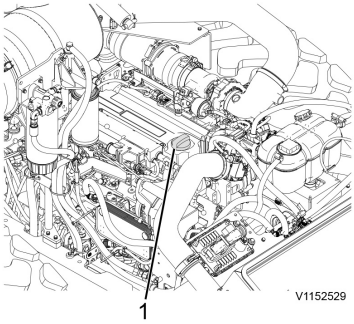

Location of engine oil fill cap

Engine oil, filling

1 Clean around the engine oil fill cap
2 Remove the engine oil fill cap.
3 Fill the engine with oil. See page *237* and *249*.
4 Install the engine oil fill cap.
5 Start the engine and check for leaks.
6 Shut down the engine.
7 Check the engine oil level.
8 Lower the engine hood.

Coolant, filling

WARNING

Risk of scalding and severe burns to unprotected skin.
High-pressurised hot coolant may rush out of expansion tank and cause severe burns.
Before removing the expansion tank pressure cap:
- **Shut down the engine**
- **Allow the engine to cool**
- **Put on personal protective equipment, including face shield, apron, and gloves**
- **Turn the pressure cap slowly to release any pressure**

NOTICE

Risk for the environment!
Dispose of used oil, coolant, fuel, liquids, shop cloths and filters in accordance with local environmental guidelines.

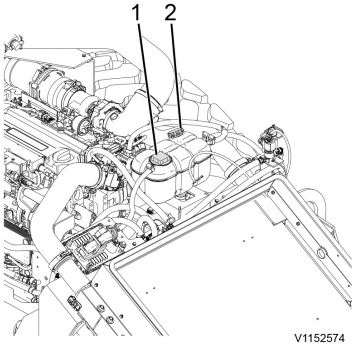

1 Place the machine in service position. See page *167*.
2 Raise the engine hood.
3 Remove the coolant expansion tank fill cap.
4 Fill the cooling system through the coolant expansion tank. See pages *237* and *249*.
5 Install the coolant expansion tank fill cap.
6 Lower the engine hood.

Axle oil, filling

Valid for option / configuration	
Option	**Configuration**
Traction control HD	Not installed

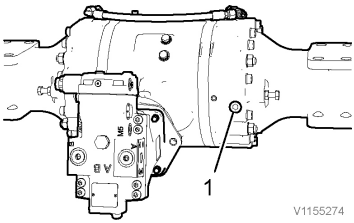

Front of the axle
1 Oil fill plug

NOTICE

Risk for the environment!
Dispose of used oil, coolant, fuel, liquids, shop cloths and filters in accordance with local environmental guidelines.

1 Place the machine in service position. See page *167*.
2 Remove the oil fill plug.
3 Fill the axle with oil through the fill hole until the oil is level with the bottom of the hole. See pages *237* and *249*.
4 Clean and install the oil fill plug.

Axle oil, filling

Valid for option / configuration	
Option	**Configuration**
Traction control HD	Installed

NOTICE

Risk for the environment!
Dispose of used oil, coolant, fuel, liquids, shop cloths and filters in accordance with local environmental guidelines.

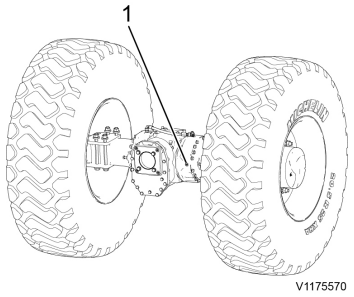

Front of the axle
1 Oil fill plug

1 Place the machine in service position. See page *167*.
2 Remove the oil fill plug.
3 Fill the axle with oil through the fill hole until the oil is level with the bottom of the hole. See pages *237* and *249*.
4 Clean and install the oil fill plug.

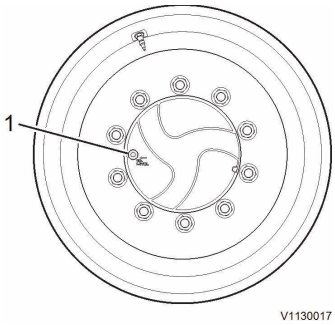

Axle hub
1 Oil fill/level hole, fill line below hole at 9 o'clock position

Axle hub oil, filling

1 Position the wheel so that the oil hole is in the nine o'clock position.
2 Place the machine in service position. See page *167*.
3 Fill the hub with oil until the oil is level with the bottom of the hole. See pages *237* and *249*.
4 Clean and install the oil plug.
5 Repeat the procedure for the opposite side of the machine, if necessary.

Drum carrier oil, filling

1 Place the machine in service position. See page *167*.

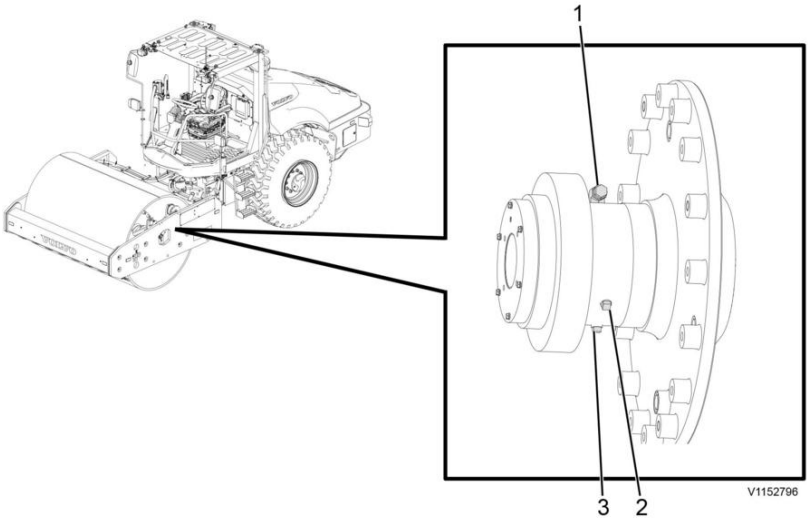

Drum carrier
1 Carrier breather
2 Oil level check plug
3 Oil drain plug

2 Clean around the drum carrier breather and plugs.
3 Remove the breather from the carrier.

4 Place an appropriate container under the oil level check plug. See page *249*.

5 Remove the oil level check plug.

6 Add oil through the breather port until oil flows out of the oil level check hole. See page *237*.

7 Clean and install the oil level check plug.

8 Clean and install the breather.

9 Clean up any excess oil.

Drum eccentric oil, filling

1 Position the machine with the oil fill plug at the 12 o'clock position.

2 Place the machine in service position. See page *167*.

3 Clean around the fill and drain plugs.

4 Remove the oil fill plug.

5 Fill the drum with oil through the fill hole until oil becomes visible through the sight gauge. See pages *237* and *249*.

6 Clean and install the oil fill plug.

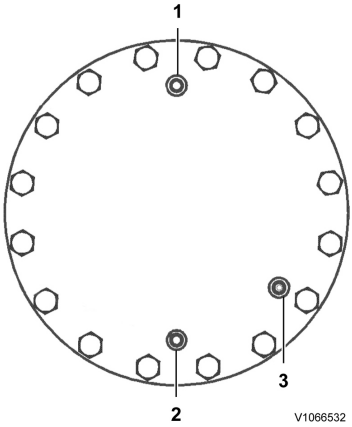

Position of drum for changing eccentric oil

1 Oil fill plug
2 Oil level sight gauge
3 Oil drain plug

Planetary drive oil, filling

NOTICE

Risk for the environment!
Dispose of used oil, coolant, fuel, liquids, shop cloths and filters in accordance with local environmental guidelines.

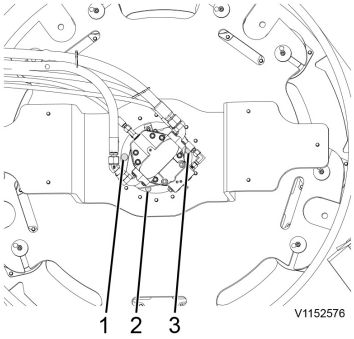

Right side of the drum
1 Oil fill plug
2 Oil drain plug
3 Oil level check plug

1 Place the machine in service position. See page *167*.
2 Clean the area around the planetary drive oil plugs.
3 Remove the oil level check plug.
4 Place an appropriate container under the oil level check plug.
5 Remove the oil fill plug.
6 Add new oil until the oil is level with the bottom of the oil level check plug. See pages *237* and *249*.
7 Clean and install the fill plug and level check plug.

Drum and scraper, checking

Drum condition

1 Place machine in the service position. See page *167*.
2 Inspect the drum and scraper to ensure that they are not damaged and that there is not a build up of soil or debris between the drum and the scraper.
3 Clean out the accumulated residue and replace the drum scraper as necessary.

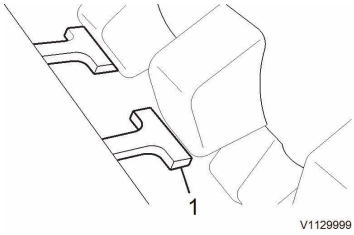

1 Drum Scraper

Drum scraper setting

1 Check universal drum scraper to ensure there is no damage. Check that drum scraper is adjusted correctly.
2 If necessary, adjustment is made with the hardware and shims located on the scraper bar assembly. Do not allow the scraper-to-drum

clearance to be less than 20 mm (0.75 in) or more than 25 mm (1 in).

Specifications
Recommended lubricants

General information

Lubrication is an essential part of preventive maintenance. Periodic lubrication of moving parts reduces the possibility of mechanical failures.

For maximum machine life and performance, use only genuine manufacturer-approved lubricants. See pages *190* and *237*. Different lubricants are needed, and some components require more frequent lubrication than others. It is important to follow the specific instructions regarding types of lubricants and the frequency of their application.

Items requiring regular service and the interval at which the service should be performed are shown on the lubrication and service chart, see page *190*. To obtain the maximum long-life results from the machine, follow the regular service program as recommended in this manual. The maintenance intervals are based on average operating conditions. In extremely severe, dusty or wet operating conditions, more frequent lubrication may be necessary.

Check engine oil, hydraulic oil, fuel and coolant levels with the machine parked on a level surface and while the oils and coolant is cold, unless otherwise specified.

All grease fittings are SAE standard, unless otherwise indicated. Grease non-sealed fittings until grease is seen extruding from the fitting. Grease fittings that are worn and will not hold the grease gun, or those that have a stuck check ball, must be replaced.

Over-lubrication of non-sealed fittings will not harm the fittings or components. Under-lubrication will lead to a shorter component life.

Unless otherwise indicated, items not equipped with grease fittings (linkages, pins, levers, etc.) should be lubricated with oil once a week. Motor oil, applied sparingly, will provide the necessary lubrication and help prevent rust. An anti-seize compound may be used if rust has not formed.

Clean the component before applying lubricant or anti-seize compound.

- Thoroughly wash all grease fittings with non-flammable, non-toxic cleaning solution before servicing to prevent dirt from entering while performing the service.
- Engine oil must be at operating temperature before draining.
- During regular lubrication service, visually check the entire unit to ensure that all fasteners are properly secured.
- Spot check several fasteners for proper torque. If any are found loose, a more thorough investigation must be performed.
- Stop the machine if any function does not operate properly. Report the problem to the supervisor or site manager. Do not continue operations until the problem is corrected. If necessary, contact a local authorised dealer or distributor for service and repairs.

The viscosity indications are according to SAE J 300.
The approval of Volvo is required if any other oil base quality (e.g., biologically degradable oil) is to be used.

Engine oil

Follow recommended change intervals according to the oil's grade and sulphur content in the fuel.

Oil grade	Sulphur content of the fuel (ppm)				
	< 15	15 — 500	500 — 3000	3000 — 5000	> 5000
	Oil change interval				
Volvo Ultra Diesel Engine Oil VDS-4	500 hours	Do not use this grade of fuel in this machine.			
API: CJ-4 ACEA: E9	250 hours	Do not use this grade of fuel in this machine.			

Table. Engine oil

Oil grade	Recommended viscosity at varying ambient temperatures										
	–40	–30	–20	–10	0	10	20	30	40	50	°C
	–40	–22	–4	14	32	50	68	86	104	122	°F
Volvo Ultra Diesel Engine Oil VDS-4 API C J-4 ACEA E 9	SAE 10W-30										
					SAE 15W-40						

Table. Hydraulic oil

Oil grade	Recommended viscosity at varying ambient temperatures										
	–40	–30	–20	–10	0	10	20	30	40	50	°C
	–40	–22	–4	14	32	50	68	86	104	122	°F
Volvo Super or Ultra Hydraulic Oil or Volvo Biodegradable Hydraulic Oil	ISO VG 46										

Table. Planetary drive oil

Oil grade	Recommended viscosity at varying ambient temperatures										
	–40	–30	–20	–10	0	10	20	30	40	50	°C
	–40	–22	–4	14	32	50	68	86	104	122	°F
Synthetic gear oil according to standard 1271,25	Mobil SHC 630										
	Chevron Cetus HiPerSYN 220										

Eccentric and Carrier oil

Follow recommended change intervals according to the oil grade.

Oil grade	Oil change interval
Mobil SCH 630	3000 hours
Chevron Cetus HiPerSYN 220	3000 hours
85W — 90 LS API G5	1000 hours

Table. Eccentric and carrier oil

Oil grade	Recommended viscosity at varying ambient temperatures
	–40 –30 –20 –10 0 10 20 30 40 50 °C –40 –22 –4 14 32 50 68 86 104 122 °F
Synthetic gear oil according to standard 1271,25	Mobil SHC 630 Chevron Cetus HiPerSYN 220 85W — 90 LS API G5

Table. Axle wheel ends, differential, brake and transfer case oils

Oil grade	Recommended viscosity at varying ambient temperatures
	–40 –30 –20 –10 0 10 20 30 40 50 °C –40 –22 –4 14 32 50 68 86 104 122 °F
Volvo Super Transmission Oil 80W 90 API GL5	80W 90

Table. Articulation, oscillation, steering cylinder and ratchet jack grease

Lubricant	Recommended viscosity at varying ambient temperatures										
	–40	–30	–20	–10	0	10	20	30	40	50	°C
	–40	–22	–4	14	32	50	68	86	104	122	°F
Super Grease Lithium EP 2	NLGI EP 2 grease										

Table. Articulation, oscillation, steering cylinder and ratchet jack grease

Lubricant	Recommended viscosity at varying ambient temperatures										
	–40	–30	–20	–10	0	10	20	30	40	50	°C
	–40	–22	–4	14	32	50	68	86	104	122	°F
Volvo multipurpose grease EP with Moly NLGI 2	NLGI EP 2 with Moly grease										

Table. Coolant

Coolant	Recommended mixture at varying ambient temperatures										
	–40	–30	–20	–10	0	10	20	30	40	50	°C
	–40	–22	–4	14	32	50	68	86	104	122	°F
Volvo coolant VCS	40/60 coolant/water										
	50/50 coolant/water										
	60/40 coolant/water										

Coolant

When using concentrated Volvo Coolant VCS and clean water, the mixture should contain 40–60% concentrated coolant and 60–40% clean water. The amount of concentrated coolant must never be less than 40% of the total mixture, see table below.

NOTICE

Risk of machine damage.
Mixing different coolants and corrosion preventives could damage the engine.
Use only Volvo Coolant VCS when filling the coolant system.

Freeze protection down to	Mixed-in amount of concentrated coolant
−25 °C (−13 °F)	40 %
−35 °C (−31 °F)	50%
−46 °C (−51 °F)	60%

Do not mix the coolant with water that contains a high degree of lime (hard water), salt or metals.
The clean water for the cooling system must also meet the following requirements:

Description	Value
Total number of solid particles	< 340 ppm
Total hardness	< 9.5° dH
Chloride	< 40 ppm
Sulphate	< 100 ppm
pH value	5.5–9
Silica	< 20 mg SiO_2/litre
Iron	< 0.10 mg Fe/litre
Manganese	< 0.05 mg Mn/litre
Electrical conductivity	< 500 µS/cm
Organic material, COD-Mn	< 15 mg/litre

Use ready-mixed Volvo Coolant VCS when a source of clean water is not available. Ready-mixed Volvo Coolant VCS contains 40% concentrated coolant. Do not mix with any other ready-mixed coolants since this may result in engine damage.

Hydraulic oil, specifications

The quality of the hydraulic oil is important to the satisfactory performance of any hydraulic system. The oil serves as the power transmission medium, system coolant and lubricant. Use the oil specifications to ensure proper system performance and life.

Attribute	Requirements
Viscosity	60 SUS minimum at operating temperature 7500 SUS minimum at starting temperature 150–225 SUS at 100 °F (generally) 44–48 SUS at 210 °F (generally)
Viscosity index	90 minimum
Aniline point	–175 minimum
API gravity	28 minimum Paraffinic oils: 28 or more Mixed base: 24–28 Naphthalic or asphaltic base: 24 or less
Recommended additives	Rust, oxidation inhibitors and foam depressant
Desirable characteristics	Stability of physical and chemical characteristics. High demulsibility (low emulsibility for separation of water, air, and contaminants). Resistance to the formation of gums, sludges, acids, tars and varnishes. High lubricity and film strength

Fuel system

Fuel

Fuel recommendations for EU-certified engines (with recirculation of exhausts (EGR) and aftertreatment of exhausts) for models from year 2011.

Diesel engines from 2011 and later are only intended to be run on sulphur-free fuel, with a maximum sulphur content of 10 ppm. Using any other fuel than sulphur-free fuel results in an engine with lower efficiency and shorter service life, permanent damage to advanced emission control devices and systems, inferior fuel economy, and possibly that the engine does not work at all. It is very likely that the manufacturer's warranties will become invalid and void when using unsuitable or incorrect fuels. Correct selection of fuel is decisive for good economy, performance, and engine life. Market fuel that meets EU's standard EN590 for diesel fuel oil should be used. Swedish Mk1-fuel that meets Swedish SS 155435 is also permitted. It is important that the fuel is not contaminated by dust or water since these can cause damage to the fuel system and also increase engine wear.

Fuel recommendations for USA-certified engines (with recirculation of exhausts (EGR) and aftertreatment of exhausts) for models from year 2011.

Diesel engines for model year 2011 and later are designed to only run on fuels with very low sulphur content, Ultra Low Sulphur Diesel (ULSD), with a maximum sulphur content of 15 ppm. Using any other fuel than ULSD results in an engine with lower efficiency and shorter service life, permanent damage to advanced emission control devices and systems, inferior fuel economy, and possibly that the engine does not work at all. It is very likely that the manufacturer's warranties will become invalid and void when using incorrect fuels, and use of other fuels than ULSD in diesel-powered machines is illegal and punishable by provisions of civil law and legislation. Correct selection of fuel is decisive for good economy, performance, and engine life. ASTM D 975 Number 2D ULSD should be used when climate conditions permit. ASTM D 975 Number 1D ULSD can be used in cold weather.

Mixtures of ASTM D 975-fuels Number 1D and Number 2D ULSD can be used to suit different climate conditions. It is important that the fuel is not contaminated by dust or water since these can cause damage to the fuel system and also increase engine wear.

NOTE!
It is very likely that the manufacturer's warranties will become invalid and void when using unsuitable or incorrect fuels.
NOTE!
If you are unsure of what fuel is in the fuel tank, do NOT use the machine

Alternative fuels

This statement is only valid for Volvo branded engines, but also includes engines for DD25 and C-series Skid Steer Loaders where warranty is provided by Volvo.

Hydro-treated vegetable oil (HVO) and fatty acid methyl ester (FAME) biodiesel are both made from renewable raw materials such as vegetable oils and animal fats, but they are chemically processed in different ways.

Hydro-treated vegetable oil (HVO)
HVO is created using a chemical process called hydro-treating. Hydro-treating creates an oxygen-free hydrocarbon product that is very similar to distillate diesel fuel and is well suited for use in diesel engines. HVO that conforms to CEN prEN 15940 is approved for use in all Volvo Construction Equipment diesel engines with no changes to maintenance intervals.

Biodiesel
Biodiesel is a product made from renewable resources such as vegetable oils or animal fat. Biodiesel that has been chemically processed into fatty acid methyl ester (FAME) can be blended with distillate diesel fuel and used in some diesel engines. Unblended biodiesel is referred to as B100 because it is 100% biodiesel.
Rapeseed methyl ester (RME) is the most common type of FAME used in Europe. Soy methyl ester (SME) and sunflower oil methyl ester (SOME) are the most common types of FAME used in the US. Although use of FAME biodiesel is now a legal requirement in some markets, it is not as suitable for use in diesel engines as conventional diesel fuel or HVO (hydro-treated vegetable oil).

Biodiesel fuel requirements
The FAME biodiesel blends specified in the table below are approved for use if:
- The biodiesel is pre-blended by the fuel supplier
- The biodiesel used in the blend conforms to EN14214 or ASTM D6751
- The distillate fuel used in the blend meets fuel sulphur requirements
- The distillate fuel used in the blend conforms to EN590 or ASTM D975

- B1-B5 biodiesel blends conform to EN590 or ASTM D975
- B6-B7 biodiesel blends conform to EN590 or ASTM D7467
- B8-B20 biodiesel blends conform to ASTM D7467

Engine emission designation	Engine size	Acceptable blend
EU Stage II / US Tier 2 * EU Stage IIIA / US Tier 3 * EU Stage IIIB / US Tier 4 interim EU Stage IV / US Tier 4 final	Below D4 / 4 litres	Up to B7
EU Stage II / US Tier 2 * EU Stage IIIA / US Tier 3 * EU Stage IIIB / US Tier 4 interim EU Stage IV / US Tier 4 final	D4–D8	Up to B7
EU Stage IIIB / US Tier 4 interim, equipped with High Sulphur Fuel Conversion Kit (only available in unregulated markets) EU Stage IV / US Tier 4 final, equipped with High Sulphur Fuel Conversion Kit (only available in unregulated markets)		
EU Stage II / US Tier 2 * EU Stage IIIA / US Tier 3 *	D9–D16	Up to B20
EU Stage IIIB / US Tier 4 interim EU Stage IV / US Tier 4 final	D11–D16	Up to B10
EU Stage IIIB / US Tier 4 interim, equipped with High Sulphur Fuel Conversion Kit (only available in unregulated markets) EU Stage IV / US Tier 4 final, equipped with High Sulphur Fuel Conversion Kit (only available in unregulated markets)		Up to B20
* As Tier 2 and Tier 3 emissions regulations ended in 2005 and 2010 respectively, engines produced since then typically **meet Stage II / Stage IIIA regulations**, allowing their sale in less regulated markets.		

NOTE!
Failures directly caused by the use of poor quality biofuel, or any other fuel not conforming to standards, are not factory defects and the manufacturer’s warranty does not apply.

Maintenance interval requirements
Additional service actions and shorter maintenance intervals are mandatory when using biodiesel blends above B10.

Every 10 hours
- Check the engine oil and change if it rises above the maximum fill level - Inspect the fuel system components and replace as necessary
Half of original interval
- Change the engine oil and filter - Replace the fuel filter(s)
Every year, regardless of operating hours
- Change the engine oil and filter - Clean the fuel tank

Effects of biodiesel on engine oil

Using biodiesel can lead to increased oil dilution. Use engine oil analysis tools frequently to check for fuel dilution and monitor engine oil condition. Check the engine oil level daily. Always change the engine oil if the oil level rises above the maximum fill level.

Effects of biodiesel on fuel systems

Biodiesel dissolves and loosens some fuel system deposits. During the initial conversion to biodiesel, loosened deposits will travel to the fuel filters and require more frequent fuel filter replacements. Start with new fuel filters when using biodiesel for the first time.

Biodiesel is aggressive to some materials used in fuel system components. Inspect seals, hoses, rubber and plastic components every 10 hours. Repair or replace any components that are damaged, softened or leaking. Clean biodiesel from painted surfaces immediately to prevent paint damage.

Biodiesel is more sensitive to bacteria and water contamination than distillate diesel fuel.

- Use as much fuel as possible before refilling the fuel tank in order to prevent bacteria growth if a machine is in regular use, e.g. regularlly uses up a tank of fuel within a week. In climates where condensation is a risk, or when the machine is working for short durations, keep the fuel tank full.
- Do not use biodiesel in machines with low utilization or operating time.
- Do not store machines for more than 4 weeks without flushing biodiesel out of the fuel system by operating the machine through at least one full tank of distillate diesel fuel.

- Always follow the manufacturer’s storage recommendations and “best-before” dates for each delivery of biodiesel.

Effects of biodiesel on exhaust after-treatment systems

Biodiesel leaves higher levels of ash in diesel particulate filters and may require more frequent diesel particulate filter (DPF) regeneration and cleaning. Biodiesel can cause deviations in temperatures and functionality of the DPF burner and may cause fault codes or errors.
Biodiesel exhaust gas is aggressive to some materials used in selective catalytic reduction systems (SCR) and may require more frequent cleaning, repairing or replacing of SCR parts.

Effects of biodiesel on cold weather operation

Biodiesel has a high viscosity at temperatures below 0 ˚C (32 ˚F) and may cause problems starting the engine. Use a fuel heater or park machines in a heated building if possible.

Effects of biodiesel on emissions compliance

Engines are certified to comply with U.S. EPA, California and EU emissions standards based upon the use of test fuels with specifications established by these regulatory agencies. Alternative fuels, including biodiesel, that are not substantially similar to the required test fuels may adversely affect engine emissions compliance. As a result, Volvo does not warrant that the engine will conform to applicable Federal or California and EU emissions limits when operated on, or having previously being operated on, biodiesel or other alternative fuels that are not substantially similar to specified test fuels used for certification,
nor if biodiesel / regular diesel is used in blends that exceed the recommendations.

Service capacities and change intervals

Fluid capacities are provided for qualified service technicians who must service the machine in remote locations where complete shop facilities and resources are not available. These capacities provide the qualified service technicians an approximation of the fluid capacities of the component to be serviced. Always ensure that the specified method of checking for accurate fluid levels is used. See page *190* for change intervals.

Valid for option / configuration	
Option	Configuration
Traction control HD	Not installed

Fluid capacities	Approximate capacity
Fuel	130 L (34 US gal)
Hydraulic oil	66 L (70 qt)
Engine crankcase	9.5 L (10 qt)
Engine coolant	22.2 L (23.5 qt)
Axle housing	11 L (11.6 qt)
Axle hub (each side)	1.0 L (1.1 qt)
Drum eccentric oil	37.6 L (39.7 qt)
Drum carrier oil	0.1 L (0.1 qt)
Planetary drive	3.7 L (3.9 qt)
AdBlue®/DEF	20 L (5.3 US gal)

Valid for option / configuration	
Option	Configuration
Traction control HD	Installed

Fluid capacities	Approximate capacity
Fuel	130 L (34 US gal)
Hydraulic oil	66 L (70 qt)
Engine crankcase	9.5 L (10 qt)
Engine coolant	22.2 L (23.5 qt)
Axle housing	11 L (11.6 qt)
Axle transfer case	1.9 L (2.0 qt)
Axle hub (each side)	1.0 L (1.1 qt)
Drum eccentric oil	37.6 L (39.7 qt)
Drum carrier oil	0.1 L (0.1 qt)

Fluid capacities	Approximate capacity
Planetary drive	3.7 L (3.9 qt)
AdBlue®/DEF	20 L (5.3 US gal)

Engine

Engine, specifications

Model standard (diesel)	Volvo / Deutz D4
Features	4 Cylinder, fuel-injected, turbocharged, EGR
Emission certification	EU Stage IV / US Tier 4 final
High idle, high travel speed	2200 rpm
High idle, low travel speed	1570 rpm
High idle, low travel speed, low amplitude drum vibration	1730 rpm
High idle, low travel speed, high amplitude drum vibration	1570 rpm
Idle, low	800 rpm
Power	110 kW (147.5 hp) at 2200 rpm
Maximum torque	609 Nm (449 lbf) at 1600 rpm

Electrical system

Electrical system, specifications

System voltage	24V Frame grounded
Battery	Two (2), 1125 CCA
Alternator	Bosch, 80 Amps
Starter	Melco 90P55

Fuses

The fuses for the machine are located behind the operator seat and are identified by a decal located on the inside of the fuse cover.

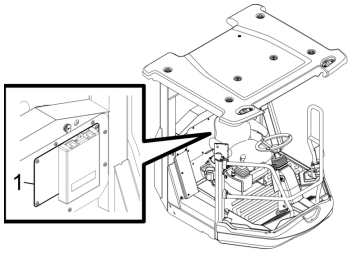

V1153042

Fuse	Rating	Circuit	Fuse	Rating	Circuit
FU 01	15 A	Road driving lights	FU 21	5 A	Switch backlights
FU 02	10 A	Air conditioner compressor	FU 22	15 A	HVAC
FU 03	15 A	(Spare)	FU 23	10 A	(Spare)
FU 04	10 A	(Spare)	FU 24	15 A	Ignition, HMICU, display, OBD2
FU 05	10 A	Radio	FU 25	15 A	(Spare)
FU 06	10 A	Road marker lights	FU 26	10 A	(Spare)
FU 07	15 A	Exhaust gas recirculation	FU 27	10 A	NOx sensors
FU 08	5 A	Variable vibration module, traction enhancement module, speed sensors	FU 28	20 A	CBAT (GPMECU)
FU 09	10 A	Seat switch, seatbelt switch, propulsion control lever, parking brake switch	FU 29	10 A	HVAC, interior lights
FU 10	7.5 A	Power port, side console	FU 30	15 A	Voltage converter
FU 11	5 A	Aftertreatment control module	FU 31	10 A	(Spare)
FU 12	5 A	Comp option	FU 32	10 A	Horn
FU 13	10 A	Engine ECU	FU 33	10 A	Turn signals, hazards
FU 14	10 A	Engine ECU	FU 34	5 A	Alternator

Fuse	Rating	Circuit	Fuse	Rating	Circuit
FU 15	7.5 A	Power port, rear wall	FU 35	20 A	Worklights and drum lights
FU 16	15 A	Front and rear wipers, washer motors	FU 36	10 A	(Spare)
FU 17	10 A	Levelling blade	FU 37	10 A	Comp Option
FU 18	10 A	Beacon	FU 38	10 A	(Spare)
FU 19	15 A	Hood motor	SP 1	10 A	(Spare)
FU 20	15 A	(Spare)	SP 2	20 A	(Spare)

Additional fuses are located by the battery in the engine compartment and are identified by a decal on the inside battery access door.

Fuse	Rating	Circuit
FU 51	125 A	Alternator
FU 52	80 A	Electrical distribution box
FU 53	10 A	W-ECU
FU 54	40 A	ACM

Relays

The relays for the machine are located behind the operator seat and are identified by a decal located on the inside of the fuse cover.

Relay	Circuit
RE 01	(Not used)
RE 02	(Not used)
RE 03	Beacon
RE 04	AC compressor
RE 05	Road lights
RE 06	Front work lights
RE 07	Marker lights
RE 08	CBAT (GPMECU)
RE 09	(Not used)
RE 11	Rear work lights
RE 12	(Spare)
RE 13	Main relay 1
RE 14	Main relay 2
SP	(Not used)

Brake

Brake system, specifications

Brakes	
Service	Dynamic hydrostatic through propulsion system
Secondary/parking brake	Spring-applied, hydraulically released, Multiple wet disc on axle and on drum drive
Pressure	1.5 MPa (1496 kPa) (217 psi) full release

Steering

Steering system, specifications

Steering	
Design	Centerpoint articulation
Type system	Double-acting, hydraulic dual-cylinder
Control system	Hydraulic
Number of cylinders	2
Articulation angle	(±) 35°
Frame oscillation angle	(±) 12°

Wheels

Tyres, specifications

Tyre size	23.1-26 R3, 10PR TT
Tyre pressure	0.11 MPa (110 kPa) (16 psi)
Ballast per tyre	387 kg (854 lb)

Drum

Drum vibration, specifications

Applies to models: SD135B

Vibration	Smooth drum		Padfoot drum	
2-speed frequency	31/34 Hz 1850/2025 vpm			
5-speed frequency, high amplitude	23/24/26/28/31 Hz 1400/1425/1550/1700/1850 vpm			
5-speed frequency, low amplitude	24/26/27/30/34 Hz 1425/1550/1625/1825/2025 vpm			
High amplitude centrifugal force	328 kN	73760 lbf	325 kN	73110 lbf
Low amplitude centrifugal force	278 kN	62560 lbf	275 kN	61910 lbf
High nominal amplitude	1.72 mm	0.086 in	1.68 mm	0.066 in
Low nominal amplitude	1.15 mm	0.045 in	1.13 mm	0.044 in

Drum vibration, specifications

Applies to models: SD115B

Vibration	Smooth drum		Padfoot drum	
2-speed frequency	31/34 Hz 1850/2025 vpm			
5-speed frequency, high amplitude	23/24/26/28/31 Hz 1400/1425/1550/1700/1850 vpm			
5-speed frequency, low amplitude	24/26/27/30/34 Hz 1425/1550/1625/1825/2025 vpm			
High amplitude centrifugal force	320 kN	72010 lbf	325 kN	73110 lbf
Low amplitude centrifugal force	270 kN	60810 lbf	275 kN	61910 lbf
High nominal amplitude	1.92 mm	0.076 in	1.68 mm	0.066 in
Low nominal amplitude	1.29 mm	0.051 in	1.13 mm	0.044 in

Cab

Refrigerant

Type	Quantity	GWP[a]
R-134a	1.13 kg	1.62 tonne CO_2-eq

a) Global warming potential (GWP) is a measure of how much heat a gas traps in the atmosphere relative to that of carbon dioxide (CO_2). GWP is calculated in terms of the 100–year warming potential of 1 kg of a greenhouse gas relative to 1 kg of CO_2.

Noise and vibrations

In accordance with the requirements of Machinery Directive 2006/42/EC, the following values were measured:

Table. Equivalent continuous A-weighted sound pressure level (dB) with vibration on

	Engine only	High amplitude vibration	Low amplitude vibration
Open ROPS	87 dB	86 dB	87 dB
Volvo Cab	81 dB	71 dB	73 dB

These measurements were recorded in accordance with the requirements of ISO 6394, ISO 6395 and ISO 6396 with the engine running at operating speed.

Vibration values

In accordance with the requirements of Machinery Directive 2006/42/EC, the following values were measured:

Arms/ hands	The weighted root mean square acceleration value to which the arms/ hands are subjected does not exceed 2.5 m/s²
Body/ posterior	The weighted root mean square acceleration value to which the body/ posterior is subjected does not exceed 0.5 m/s²

These measurements were recorded in accordance with the requirements of ISO 5349 and ISO 2631, with the machine's engine running at operating speed and drum vibration at maximum frequency and corresponding maximum amplitude.

Hydraulic system

Hydrostatic drive, specifications

Applies to models: SD135B

Propulsion system type	Hydrostatic two-speed motor on planetary axle with No-Spin® differential and two-speed drum drive motor	
	Smooth drum	**Padfoot drum**
Driven axles	1	1
Travel speed, high range	0–9.9 km/h (0–6.1 mph)	0–10.0 km/h (0–6.3 mph)
Travel speed, low range	0–4.2 km/h (0–2.6 mph)	0–4.3 km/h (0–2.7 mph)

Hydrostatic drive, specifications

Applies to models: SD115B

Propulsion system type	Hydrostatic two-speed motor on planetary axle with No-Spin® differential and two-speed drum drive motor	
	Smooth drum	**Padfoot drum**
Driven axles	1	1
Travel speed, high range	0–10.1 km/h (0–6.3 mph)	0–10.0 km/h (0–6.3 mph)
Travel speed, low range	0–4.4 km/h (0–2.8 mph)	0–4.3 km/h (0–2.7 mph)

Machine weights

Machine weights

Applies to models: SD135B

Weights (with ROPS and FOPS)		
Description	**Smooth drum**	**Padfoot drum**
Operating weight (full fuel)	12828 kg 28280 lb	13000 kg 28660 lb
Shipping weight (1/4 fuel)	12655 kg 27899 lb	12921 kg 28485 lb
Static weight at drum	5450 kg 12015 lb	5450 kg 12015 lb
Static weight at tyres	7378 kg 16265 lb	7550 kg 16644 lb

Machine weights

Applies to models: SD115B

Weights (with ROPS and FOPS)		
Description	Smooth drum	Padfoot drum
Operating weight (full fuel)	11700 kg 25794 lb	11900 kg 26234 lb
Shipping weight (1/4 fuel)	11600 kg 25573 lb	11800 kg 26014 lb
Static weight at drum	6293 kg 13873 lb	6900 kg 15211 lb
Static weight at tyres	5450 kg 12015 lb	5450 kg 12015 lb

Dimensions

Machine dimensions

Applies to models: SD115B

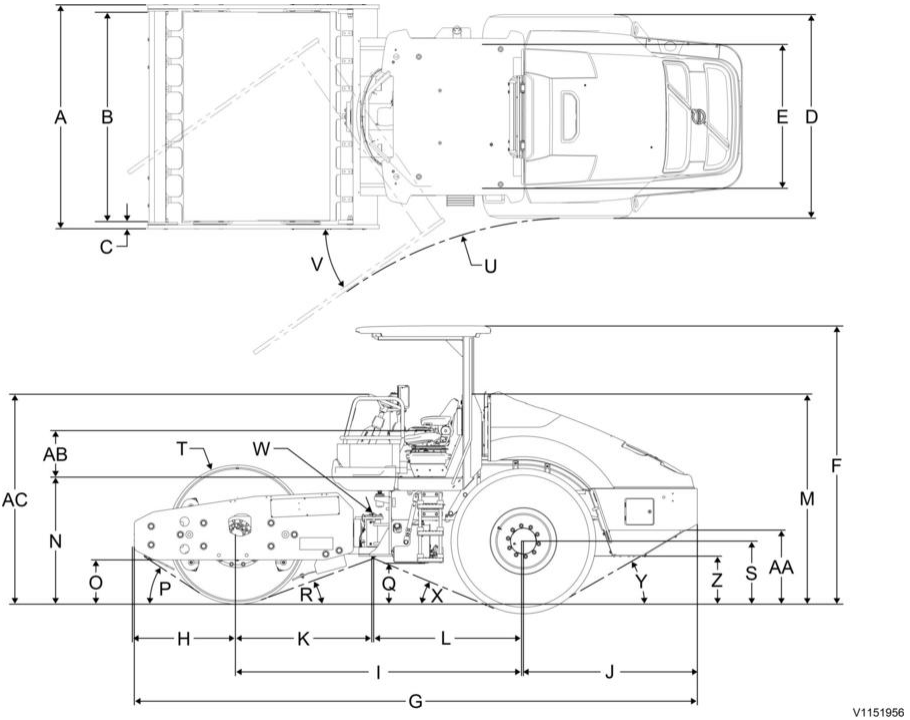

Item	Description		
A	Machine width	2286 mm	7 ft 6 in
B	Drum width	2134 mm	7 ft 0 in
C	Side clearance	79 mm	0 ft 3 in
D	Standard tyre loaded width	2080 mm	6 ft 10 in
E	Tyre track width	1471 mm	4 ft 10 in
F	Ground to standard ROPS/FOPS or cab	3000 mm	9 ft 10 in
G	Machine length	6091 mm	19 ft 12 in
H	Drum center to front bumper length	1115 mm	3 ft 8 in
I	Drum center to axle length	3095 mm	10 ft 2 in
J	Axle to rear bumper length	1881 mm	6 ft 2 in
K	Drum center to articulation point length	1475 mm	4 ft 10 in
L	Articulation point to axle length	1620 mm	5 ft 4 in
M	Ground to platform height	2266 mm	7 ft 5 in
N	Ground to deck height	1369 mm	4 ft 6 in
O	Kerb clearance	479 mm	1 ft 7 in
P	Drum frame front clearance angle	33°	
Q	Stairs clearance	441 mm	1 ft 5½ in
R	Drum frame rear clearance angle	20°	
S	Tyre rolling radius	680 mm	2 ft 3 in
T	Drum radius	750 mm	2 ft 5½ in
U	Inside turning radius	3800 mm	12 ft 5½ in
V	Articulation angle	35°	
W	Oscillation angle	±12°	
X	Rear frame, front clearance angle	23°	
Y	Rear frame, rear clearance angle	30°	
Z	Engine compartment clearance	517 mm	1 ft 8 in
AA	Rear bumper clearance	798 mm	2 ft 7½ in
AB	Deck to seat height	503 mm	1 ft 8 in
AC	Ground to steering wheel height	2264 mm	7 ft 5 in

Padfoot drum machine

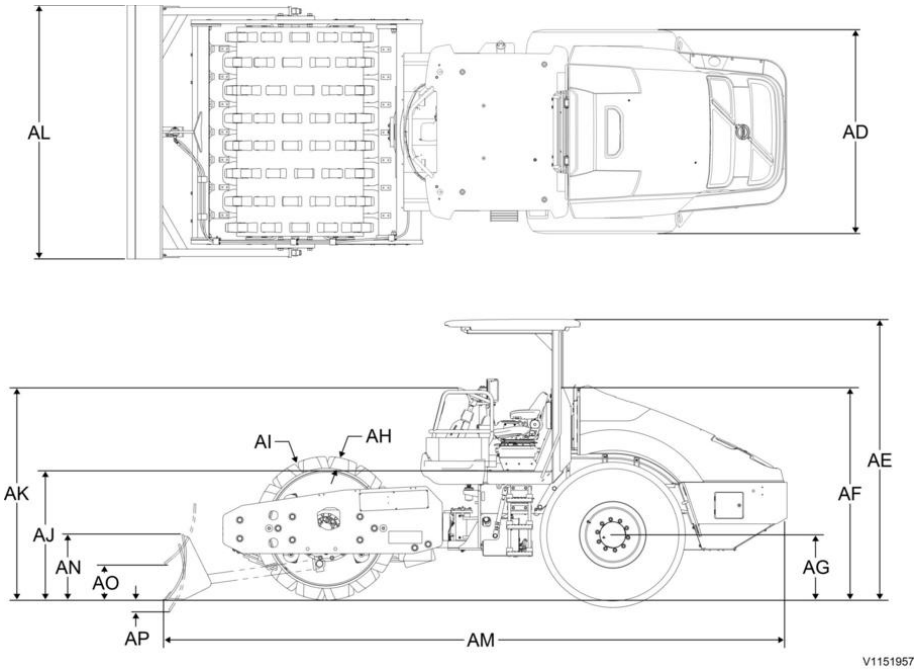

NOTE!
Dimensions are given when different from smooth drum models.

Item	Description		
AD	Standard tyre loaded width	2082 mm	6 ft 10 in
AE	Padfoot machine height	3020 mm	9 ft 11 in
AF	Ground to platform height	2288 mm	7 ft 6 in
AG	Wheel rolling radius	702 mm	2 ft 3½ in
AH	Padfoot height	127 mm	0 ft 5 in
AI	Padfoot drum radius	774.5 mm	2 ft 6½ in
AJ	Ground to deck height	1395 mm	4 ft 7 in
AK	Ground to steering wheel height	2288 mm	7 ft 6 in
AL	Levelling blade width	2591 mm	8 ft 6 in
AM	Machine and levelling blade length	6705 mm	22 ft 0 in
AN	Blade height	708 mm	2 ft 4 in
AO	Maximum blade height	387 mm	1 ft 3 in
AP	Blade below grade	116 mm	0 ft 4 in

Machine dimensions

Applies to models: SD135B

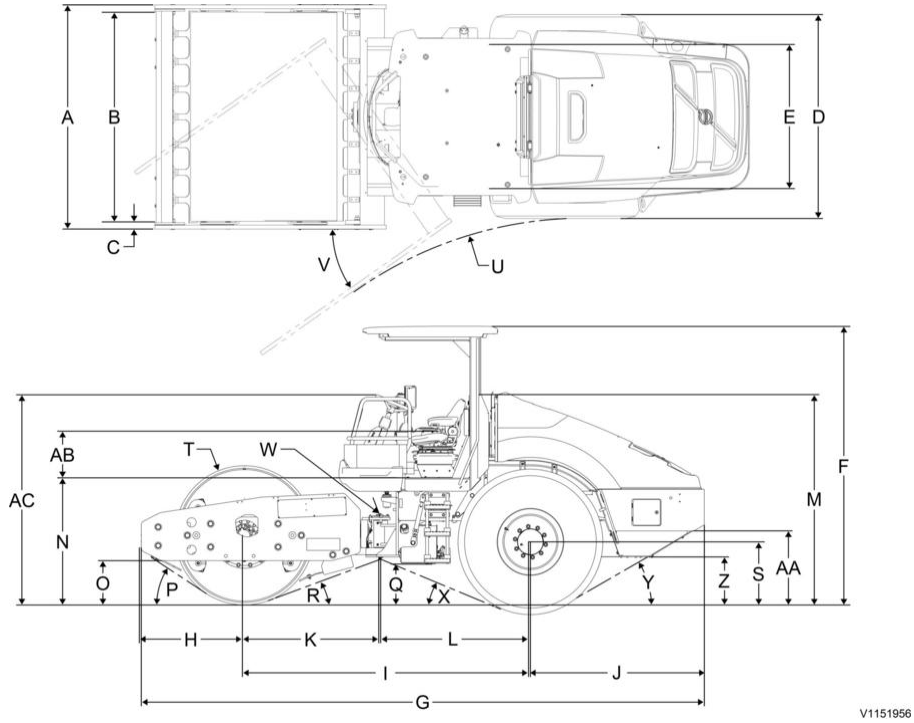

Item	Description		
A	Machine width	2286 mm	7 ft 6 in
B	Drum width	2134 mm	7 ft 0 in
C	Side clearance	79 mm	0 ft 3 in
D	Standard tyre loaded width	2080 mm	6 ft 10 in
E	Tyre track width	1471 mm	4 ft 10 in
F	Ground to standard ROPS/FOPS or cab	3000 mm	9 ft 10 in
G	Machine length	6091 mm	19 ft 12 in
H	Drum center to front bumper length	1115 mm	3 ft 8 in
I	Drum center to axle length	3095 mm	10 ft 2 in
J	Axle to rear bumper length	1881 mm	6 ft 2 in
K	Drum center to articulation point length	1475 mm	4 ft 10 in
L	Articulation point to axle length	1620 mm	5 ft 4 in
M	Ground to platform height	2271 mm	7 ft 5 in
N	Ground to deck height	1374 mm	4 ft 6 in
O	Kerb clearance	483 mm	1 ft 7 in
P	Drum frame front clearance angle	34°	
Q	Stairs clearance	444 mm	1 ft 5½ in
R	Drum frame rear clearance angle	23°	
S	Tyre rolling radius	685 mm	2 ft 3 in
T	Drum radius	755 mm	2 ft 6 in
U	Inside turning radius	3800 mm	12 ft 5½ in
V	Articulation angle	35°	
W	Oscillation angle	±12°	
X	Rear frame, front clearance angle	23°	
Y	Rear frame, rear clearance angle	31°	
Z	Engine compartment clearance	522 mm	1 ft 8½ in
AA	Rear bumper clearance	803 mm	2 ft 7½ in
AB	Deck to seat height	503 mm	1 ft 8 in
AC	Ground to steering wheel height	2269 mm	7 ft 5½ in

Padfoot drum machine

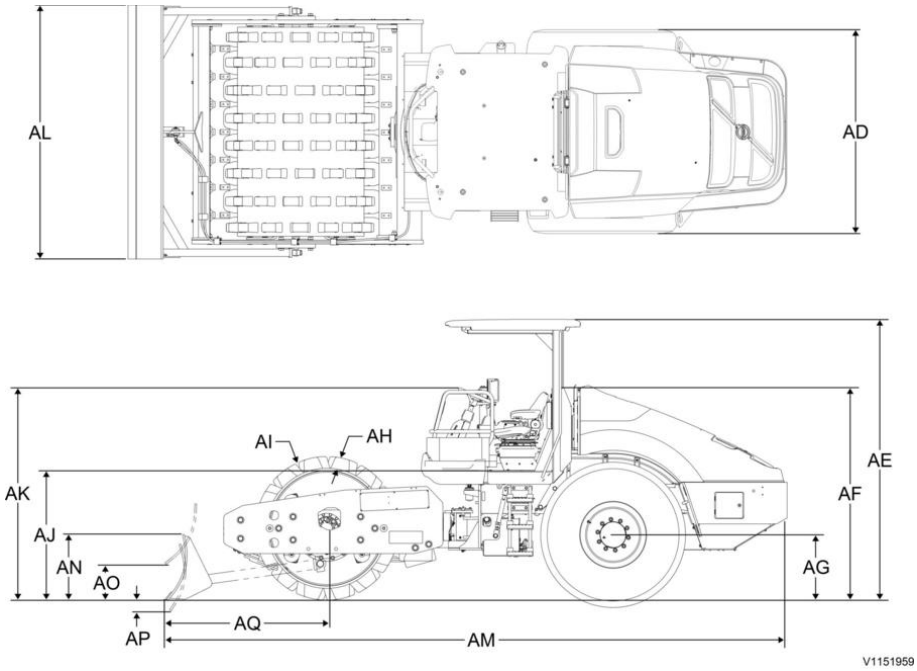

NOTE!
Dimensions are given when different from smooth drum models.

Item	Description		
AD	Standard tyre loaded width	2080 mm	6 ft 10 in
AE	Padfoot machine height	3020 mm	9 ft 11 in
AF	Ground to platform height	2288 mm	7 ft 6 in
AG	Wheel rolling radius	702 mm	2 ft 3½ in
AH	Padfoot height	127 mm	0 ft 5 in
AI	Padfoot drum radius	882 mm	2 ft 11 in
AJ	Ground to deck height	1440 mm	4 ft 8 in
AK	Ground to steering wheel height	2333 mm	7 ft 8 in
AL	Levelling blade width	2591 mm	8 ft 6 in
AM	Machine and levelling blade length	6672 mm	21 ft 4 in
AN	Blade height	718 mm	2 ft 4 in
AO	Maximum blade height	498 mm	1 ft 7½ in
AP	Blade below grade	30 mm	0 ft 1 in
AQ	Levelling blade length	1713 mm	5 ft 7½ in

Service history

Service First 100 hours		Type of service	Signature and stamp
Date	Hours	☐ Service and maintenance	

Service 500 hours		Type of service	Signature and stamp
Date	Hours	☐ Service and maintenance	

Service 1000 hours		Type of service	Signature and stamp
Date	Hours	☐ Service and maintenance	

Service 1500 hours		Type of service	Signature and stamp
Date	Hours	☐ Service and maintenance	

Service 2000 hours		Type of service	Signature and stamp
Date	Hours	☐ Service and maintenance	

Service 2500 hours		Type of service	Signature and stamp
Date	Hours	☐ Service and maintenance	

Service 3000 hours		Type of service	Signature and stamp
Date	Hours	☐ Service and maintenance	

Service 3500 hours		Type of service	Signature and stamp
Date	Hours	☐ Service and maintenance	

Service 4000 hours		Type of service	Signature and stamp
Date	Hours	☐ Service and maintenance	

Service 4500 hours		Type of service	Signature and stamp
Date	Hours	☐ Service and maintenance	

Service 5000 hours		Type of service	Signature and stamp
Date	Hours	☐ Service and maintenance	

Service 5500 hours		Type of service	Signature and stamp
Date	Hours	☐ Service and maintenance	

Service 6000 hours		Type of service	Signature and stamp
Date	Hours	☐ Service and maintenance	

Service 6500 hours		Type of service	Signature and stamp
Date	Hours	☐ Service and maintenance	

Service 7000 hours		Type of service	Signature and stamp
Date	Hours	☐ Service and maintenance	

Service 7500 hours		Type of service	Signature and stamp
Date	Hours	☐ Service and maintenance	

Service 8000 hours		Type of service	Signature and stamp
Date	Hours	☐ Service and maintenance	

Service 8500 hours		Type of service	Signature and stamp
Date	Hours	☐ Service and maintenance	

Service 9000 hours		Type of service	Signature and stamp
Date	Hours	☐ Service and maintenance	

Service 9500 hours		Type of service	Signature and stamp
Date	Hours	☐ Service and maintenance	

Service 10000 hours		Type of service	Signature and stamp
Date	Hours	☐ Service and maintenance	

Service 10500 hours		Type of service	Signature and stamp
Date	Hours	☐ Service and maintenance	

Service 11000 hours		Type of service	Signature and stamp
Date	Hours	☐ Service and maintenance	

Service 11500 hours		Type of service	Signature and stamp
Date	Hours	☐ Service and maintenance	

Service 12000 hours		Type of service	Signature and stamp
Date	Hours	☐ Service and maintenance	

Alphabetical index

A
Actions after operating..... 131
Actions before operating while engine is running.....123
Actions before starting the engine..... 116
AdBlue®/DEF information.....9
AdBlue®/DEF, filling..... 222
Additional Icons.....15
Alarm texts.....61
Alternative fuels..... 245
Antitheft screen.....52
Attachments, connecting and disconnecting..... 164
Auto idle shutdown.....9, 120
Axle breather filter, cleaning..... 217
Axle breather, cleaning..... 212
Axle breathers, cleaning..... 213
Axle hub oil, filling..... 231
Axle oil, filling..... 229, 230

B
Battery disconnect switch..... 85
Battery system integrity, checking..... 203
Before service, read.....169
Brake.....254
Brake system..... 12
Brake system, specifications.....254

C
Cab..... 13, 88, 258
Cab climate control..... 97
Cab interior..... 89
Cab main filter, cleaning..... 215
Cab post panel.....72
Cab prefilter, cleaning.....215
Cab prefilter, replacing.....219
CE-marking, EMC-directive..... 21
Checklist after a fire or heat exposure.. 182
Cleaning engine compartment..... 226
Cleaning machine..... 224
Climate control system.....97
Communication equipment, installation.. 24
Controls.....81
Coolant level, checking..... 199
Coolant, filling..... 229
Cooling system integrity, checking.....214
Cycle information menu..... 63

D
Danger zone..... 98
Declaration of Conformity..... 22
Dimensions..... 262
Display unit..... 49
Drum..... 11, 257
Drum and scraper, checking..... 233
Drum carrier breather, cleaning..... 212
Drum carrier oil level, checking.....206
Drum carrier oil, filling..... 231
Drum drive planetary oil level, checking207
Drum eccentric oil level, checking.....206
Drum eccentric oil, filling..... 232
Drum shock mounts, checking.....210
Drum vibration, specifications..... 257

E
Eco driving..... 163
Electrical system..... 13, 252
Electrical system menu.....66
Electrical system, specifications..... 252
Emergency exit..... 8
Engine.....9, 251
Engine air cleaner primary filter, cleaning.....208
Engine air cleaner primary filter, replacing..... 220
Engine air cleaner system integrity, checking.....198
Engine belt condition, checking..... 218
Engine belt tension, checking..... 218
Engine identification plate.....27
Engine menu.....63
Engine oil level, checking.....199
Engine oil, filling..... 228
Engine, specifications..... 251
Environmental requirements.....7
Exhaust aftertreatment system..... 11, 129

F
Fire prevention.....180
FOPS and ROPS..... 13
Frame.....12
Fuel..... 243
Fuel system.....243
Fuel, filling.....221
Fuses..... 252

G
General information..... 235
Guidelines for installing antenna.....24

H
Handling hazardous materials..... 183
Health hazards with paint, plastics and rubber.....185
Hood control.....85
Hydraulic oil level, checking.....205
Hydraulic oil, filling..... 227
Hydraulic oil, specifications.....242
Hydraulic system.....260
Hydraulics menu..... 66
Hydrostatic drive, specifications.....260

I
Impact meter....60
Indicator icons....57
Information and warning decals....28
Instrument panel, cab post....72
Instrument panel, right....74
Instruments and controls, overview....14
Intended use....7
International decals....39
International symbols....15
K
Keypad....77
L
Leakage, checking....202
Levelling blade....12, 83
Lifting machine....162
Lubrication and service chart....189, 191
M
Machine....7
Machine dimensions....262, 265
Machine information menu....67
Machine messages menu....71
Machine view....18
Machine weights....261
Main menu....62
Main screen....53
Maintenance service, every 10 hours....192, 197
Maintenance service, every 1000 hours....194, 218
Maintenance service, every 2000 hours 194
Maintenance service, every 3000 hours 195
Maintenance service, every 50 hours....192, 201
Maintenance service, every 500 hours....193, 211
Maintenance service, every 6000 hours 195
Maintenance service, every 8000 hours 195
Maintenance service, first 100 hours....191
Maintenance service, when required....195, 221
Measures after operating....131
Measures before operating....116
N
Noise and vibrations....259
North American decals....30
O
Operating....127
Operator comfort....92
Operator seat....92
Operator's manual, storage....95
Operator's station....8
P
Parking....132
Parking brake function, checking....202
PIN product plate....27
Planetary drive oil, filling....233
Power lines, minimum clearance....114
Preparations before service....178
Product identification number....27
Product plates....27
Propulsion....11
Propulsion control lever....127
Protection against electromagnetic interference....24
R
Radiator and coolers, cleaning....226
Recommended lubricants....235
Refrigerant....185, 258
Relays....253
Retrieving and towing....134
Road lights....84
ROPS....86
S
Safety components....26
Safety during maintenance....171
Safety rules when operating....98
Safety when boost starting....109
Safety when handling hazardous materials....183
Safety when operating....104
Safety when operating on public roads. 113
Safety when starting....104
Safety when stopping....110
Safety when transporting, towing and roading....111
Safety when welding....176
Safety when working in dangerous areas....103
Safety, general....98
Seat belt....94, 197
Service capacities and change intervals 249
Service history....268
Service menu....67
Service position....167
Setup menu....68
Shutdown screen....71
Signalling diagram....165
Some simple rules regarding tyre handling....177
Starting engine....120
Steering....255
Steering joint lock....178

Steering system, specifications.....255
Storage..... 132
Symbol key..... 189

T

Touch-up painting..... 225
Towing a disabled machine..... 135, 147
Traction control..... 128
Transporting machine..... 161
Tyres, checking air pressure.....207
Tyres, specifications..... 256

V

Vibration.....11, 125
Vibration values..... 259

W

Water separator, checking..... 198
Wheels.....256
Work lights..... 86

Ref. No. 20049442-A English
Volvo, Eskilstuna

VOLVO

Volvo Construction Equipment
www.volvo.com

Ref. No. 20049442A 2017.02
English
Volvo, Shippensburg