RUTHZIL TRATOR COMERCIAL DE PEÇAS LTDA 11 97083-6812 ROLANDO CITRANGULO

VOLVO

SD160TF SD170TF SD200TF

Legal Statement

This manual and its contents are produced and maintained by Volvo Construction Equipment in accordance with an agreement with Ingersoll-Rand regarding the depiction and use of its exclusive trademarks in support of equipment originally manufactured under the Ingersoll-Rand brand. Volvo Construction Equipment is fully responsible for the maintenance and accuracy of the information contained in this manual as it relates to applications for the referenced equipment manufactured exclusively under the Ingersoll-Rand brand.

HOW TO USE THIS MANUAL

This Parts Manual applies to all SD-160/190/200TF Series Vibratory Compactors - Effective with S/N 193672

When the Comm. # is <u>not</u> Known - Use the Word Index:

- The Word Index will make this item easy to locate. The Word Index is found in the very back of the book. The items listed are in alphabetical order and may be repeated several times depending on their functional descriptions.
- Let's assume you need to replace the AIR CLEANER PRIMARY FILTER ELEMENT.

Use any of the functional words in the item description to locate the desired item. Example: The first listing for the Air Cleaner Primary Filter Element in the **Word Index** is: Air Cleaner Primary Filter Element. The index shows the component will be found on page C-23 that is the **Parts List** page number for the Air Cleaner Installation.

A

Air Cleaner C23
Air Cleaner Primary Filter Element C23
Air Cleaner Safety Filter Element C23
Air Conditioner On/Off Switch A65
Air Pre-cleaner. C49
Air Recirculation Filter A59, A65
Airduct C49
Airscreen C49
Alarm, Audible E19
Alarm, Backup E11

- The item is also listed as:

Filter, Air Cleaner Primary Element
Element Filter, Air Cleaner Primary
Primary Element Filter, Air Cleaner

Using the Parts Identification Pages:

- The **PARTS IDENTIFICATION PAGES** consist of the **PARTS ILLUSTRATION** (even numbered pages) and the **PARTS LIST** (odd numbered pages).
- The **Parts Illustration** shows the assembly with its component parts identified by I**tem Numbers.**
- On the **Parts List**, the components are listed in **Item Number** order as found in the **ITEM** column. Other information provided by the **Parts List** is the **Comm. Number** which will be required to order Genuine Manufacturer Replacement Parts, a **functional description**, the **quantity** required to assemble one complete assembly, and any additional **notes/ dimensions** required to help place your parts order.
- **For the example: The Air Cleaner** Primary Filter Element is listed under the Air Cleaner (Item 1), Comm. Number 13421789, Quantity of 1.

- When the Comm. # is not known - Use the Table of Contents:
- Turn to the **TABLE OF CONTENTS** pages in the front of this manual. These pages show the major systems of the machine divided into **FUNCTIONAL GROUPS** (identified by capital letters).
- Find the **Functional Group** that best describes the area of the machine you are interested in. For example: Air Cleaner Installation
- See the sample **Table of Contents** shown below:

ENGINE

C

Coolant Recovery Bottle Installation C-20
Air Cleaner Installation.....C-22
Insulated Stud Assembly.....C-24

Listed under the **Functional Group** of Engine are **SECTIONS** (identified by numbers that describe major repairable components of that group. Find the listing that refers to the Air Cleaner Assembly.

- Since the Air Cleaner **Primary Filter Element** is what needs to be replaced, refer to the parts listing for the Air Cleaner Assembly. The Air Cleaner used on your machine is found in **Functional Group C,** this makes up the first part of the page number. Turn to that section of the parts manual and find the parts listing on page **C-23** for the Air Cleaner **(**13421789**)**.

When the Comm. # is Known - Use the Numerical Index:

- If you already know the **Comm. Number** (part number) for the item required, a **NUMERICAL INDEX** is provided in the back of the manual to assist you. Look up the **Comm. Number** desired and the **Numerical Index** will show the **Functional Group, Section, and Page Number** where the item can be found.

For our Primary Air Cleaner Filter Element Example: The **Comm. Number** 13525845 is found in the **Numerical Index**, it shows that component will be found on pages C-23 that is the Parts List page for the Air Cleaner Installation.

TABLE OF CONTENTS
SD-160/190/200TF Series - Effective With S/N 193672

TITLE	PAGE
TABLE OF CONTENTS	A
ABBREVIATIONS USED IN THIS MANUAL	F
LUBRICANTS, FILTERS AND MANUALS	H
RECOMMENDED SERVICE PARTS	J

Section A - AXLE AND MAIN FRAME

AXLE INSTALLATION	A-2
AXLE (13188131) - INTERNAL BREAKDOWN	A-4
AXLE DRIVE MOTOR (13254701) - INTERNAL BREAKDOWN	A-14
TIRE AND WHEEL ASSEMBLY	A-20
HOOD INSTALLATION	A-22
PROP PIN BLOCK ASSEMBLY	A-28
NO ROPS/HOOD LATCH DRAW INSTALLATION	A-30
ROPS/FOPS INSTALLATION	A-32
SEATBELT INSTALLATION	A-34
ROPS/HOOD DRAW LATCH INSTALLATION	A-36
GRILL SUPPORT INSTALLATION	A-38
SPRING ISOLATION FOAM INSTALLATION	A-40

Section B - DRUM

FRONT FRAME INSTALLATION - SD-160 - EFFECTIVE WITH S/N 196502	B-2
DRUM ASSEMBLY - SD-160 - EFFECTIVE WITH S/N 196615	B-6
BEARING HOUSING ASSEMBLY	B-8
ECCENTRIC SHAFT ASSEMBLY	B-10
CARRIER ASSEMBLY	B-12
VIBRATION MOTOR (54596259) - INTERNAL BREAKDOWN	B-14
DRIVE MOTOR ASSEMBLY	B-16
DRUM DRIVE MOTOR (13460407) - INTERNAL BREAKDOWN	B-18
DRUM ASSEMBLY - SD-160 - PRIOR TO S/N 196615	B-28
CARRIER ASSEMBLY - SD-160DX/160F - PRIOR TO S/N 196615	B-30
FRONT FRAME INSTALLATION - SD-160 - PRIOR TO S/N 196502	B-32
FRONT FRAME INSTALLATION - SD-190	B-36
SCRAPER INSTALLATION	B-40
DRUM ASSEMBLY - SD-190 - EFFECTIVE WITH S/N 196615	B-42
ECCENTRIC SHAFT ASSEMBLY	B-44
CARRIER ASSEMBLY	B-46
VIBRATION MOTOR - (13483706) - INTERNAL BREAKDOWN	B-48
DRIVE MOTOR ASSEMBLY	B-50
DRUM ASSEMBLY - SD-190 - PRIOR TO S/N 196615	B-52
CARRIER ASSEMBLY	B-56
FRONT FRAME INSTALLATION - SD-200	B-58
DRUM ASSEMBLY - SD-200 - EFFECTIVE WITH S/N 196615	B-62
ECCENTRIC SHAFT ASSEMBLY	B-64
CARRIER ASSEMBLY	B-66
DRIVE MOTOR ASSEMBLY	B-68
DRUM DRIVE MOTOR (13356340) - INTERNAL BREAKDOWN	B-70
MOTOR (13494927) - INTERNAL BREAKDOWN	B-72

TABLE OF CONTENTS
SD-160/190/200TF Series - Effective With S/N 193672

TITLE	PAGE
CONTROL (13494984) - INTERNAL BREAKDOWN	B-74
DRUM ASSEMBLY - SD-200 - PRIOR TO S/N 196615	B-76
CARRIER ASSEMBLY	B-78
REAR FRAME INSTALLATION - SD-160	B-80
HYDRAULIC TANK ASSEMBLY	B-84
FUEL TANK INSTALLATION	B-86
FUEL TANK ASSEMBLY	B-88
BRAKE SHUNT VALVE ASSEMBLY	B-90
THERMAL BYPASS VALVE INSTALLATION	B-92
REAR FRAME INSTALLATION - SD-190/SD-200	B-94
SMOOTH DRUM SCRAPER INSTALLATION - SD-160DX/SD-200DX	B-98
PADFOOT DRUM SCRAPER INSTALLATION - SD-200F	B-100
INSIDE SCRAPER INSTALLATION - OPTIONAL	B-102
INSIDE SCRAPER INSTALLATION - SD-160F/SD-200F - OPTIONAL	B-104
INSIDE SCRAPER INSTALLATION - SD-160DX/SD-160F/SD190DX/SD-200DX - OPTIONAL	B-106
BOLT-ON SHELL INSTALLATION - SD-160DX/SD-190DX - OPTIONAL	B-108

Section C - ENGINE

ENGINE INSTALLATION	C-2
ENGINE ASSEMBLY - SD-160	C-4
PUMP STACK ASSEMBLY - SD-160	C-8
PROPULSION PUMP ASSEMBLY	C-10
PROPULSION PUMP (13254669) - INTERNAL BREAKDOWN	C-12
OIL COOLER ASSEMBLY	C-18
COOLANT RECOVERY BOTTLE INSTALLATION	C-20
AIR CLEANER INSTALLATION	C-22
INSULATED STUD ASSEMBLY	C-24
FUEL LINE INSTALLATION	C-26
ENGINE ASSEMBLY - SD-190/SD-200	C-28
PUMP STACK ASSEMBLY - SD-190/SD-200	C-32
VIBRATION PUMP (13527965) - INTERNAL BREAKDOWN	C-34
EXHAUST INSTALLATION	C-42
AIR PRE-CLEANER INSTALLATION - SD-160 - OPTIONAL	C-44
AIR PRE-CLEANER INSTALLATION - SD-190/SD-200 - OPTIONAL	C-46
SOUND KIT WITH AIR PRE-CLEANER INSTALLATION - OPTIONAL	C-48
SOUND KIT WITHOUT AIR PRE-CLEANER INSTALLATION - OPTIONAL	C-50
CAB SOUND KIT WITH AIR PRE-CLEANER	C-52
FUEL STRAINER INSTALLATION - OPTIONAL	C-54
BLOCK HEATER INSTALLATION - OPTIONAL	C-56
GRID HEATER INSTALLATION	C-58

TABLE OF CONTENTS
SD-160/190/200TF Series - Effective With S/N 193672

TITLE **PAGE**

Section D - OPERATORS COMPARTMENT

OPERATOR PLATFORM INSTALLATION D-2
CONTROL PANEL ASSEMBLY D-6
EMERGENCY STOP ASSEMBLY D-8
FUSE COVER ASSEMBLY D-10
PEDESTAL AND SEAT INSTALLATION D-12
PEDESTAL ASSEMBLY D-14
GAUGE PANEL ASSEMBLY D-16
SEAT (43843572) - INTERNAL BREAKDOWN D-18
SUSPENSION SEAT INSTALLATION - OPTIONAL D-20
SEAT (13884747) - INTERNAL BREAKDOWN D-22
TILT STEERING WHEEL - OPTIONAL D-28
VANDAL COVER INSTALLATION D-30
GAUGE INSTALLATION - OPTIONAL D-32
CAB WITH HEAT INSTALLATION - SD-160 . . . . . D-34
CAB ASSEMBLY (18000471) - INTERNAL BREAKDOWN D-36
HEATER INSTALLATION D-50
HEATER (13237888) - INTERNAL BREAKDOWN D-60
SEATBELT INSTALLATION D-62
CAB WITH HEAT AND AIR CONDITIONING INSTALLATION - SD-160 . . . . . D-64
HEATING AND AIR CONDITIONING INSTALLATION D-66
HEATER/EVAPORATOR (13237367) - INTERNAL BREAKDOWN D-76
COMPRESSOR ASSEMBLY D-78
CONDENSOR ASSEMBLY D-80
TILT STEERING WHEEL (CAB) D-82
PRE-CAB WITH HEAT INSTALLATION - OPTIONAL D-84
NO ROPS/HOOD LATCH DRAW INSTALLATION D-86
PRE-CAB WITH HEAT AND AIR CONDITIONING INSTALLATION - SD-160 - OPTIONAL D-88
TILT STEERING WHEEL (CAB) D-90
CAB WITH HEAT INSTALLATION - SD-190/SD-200 . . . . . D-92
CAB ASSEMBLY (43828862) - INTERNAL BREAKDOWN D-94
CAB WITH HEAT AND AIR CONDITIONING - SD-190/SD-200 . . . . . D-108
PRE-CAB WITH HEAT INSTALLATION - SD-190/SD-200 - OPTIONAL D-110
PRE-CAB WITH HEAT AND AIR CONDITIONING INSTALLATION - SD-190/SD-200 - OPTIONAL D-112
CAB WITH HEAT INSTALLATION - EU D-114
CAB INSTALLATION - EU D-116
CAB ASSEMBLY - EU (80793201) - INTERNAL BREAKDOWN D-118
CAB/HOOD DRAW LATCH INSTALLATION D-124
PRE-CAB WITH HEAT INSTALLATION - EU D-126
HEATER INSTALLATION D-128
HEATER (13237888) - INTERNAL BREAKDOWN D-138
HEATER VALVE (13200027) - INTERNAL BREAKDOWN D-140
CAB WITH HEAT AND AIR CONDITIONING INSTALLATION - EU D-142
PRE-CAB WITH HEAT AND AIR CONDITIONING INSTALLATION - EU D-144
HEATER AND AIR CONDITIONING INSTALLATION D-146
COMPRESSOR ASSEMBLY D-156
CONDENSOR ASSEMBLY D-158
HEATER/EVAPORATOR (13237367) - INTERNAL BREAKDOWN D-160
HEATER VALVE (13200027) - INTERNAL BREAKDOWN D-162
ROPS/FOPS INSTALLATION - EU D-164
SEATBELT INSTALLATION D-166
ROPS/HOOD DRAW LATCH INSTALLATION D-168
FIRE EXTINGUISHER MOUNTING PLATE INSTALLATION D-170
FIRST AID MOUNTING ASSEMBLY D-172

TABLE OF CONTENTS
SD-160/190/200TF Series - Effective With S/N 193672

TITLE **PAGE**

SUSPENSION SEAT W/BACKREST EXTENSION INSTALLATION - OPTIONAL. D-174

Section E - ELECTRICAL

ELECTRICAL INSTALLATION E-2
FUSE BLOCK ASSEMBLY E-20
BATTERY INSTALLATION E-22
AUDIBLE ALARM INSTALLATION E-24
VARIABLE FREQUENCY/DUAL AMPLITUDE INSTALLATION E-28
VIBRATION PUMP (13254651) - SD-160. . . . . E-30
VIBRATION PUMP (13483698) - SD-190/200 . . . . . E-36
SPEEDOMETER/VPM METER INSTALLATION - OPTIONAL E-44
IMPACTOMETER/AUTOVIBRATION METER INSTALLATION - OPTIONAL E-46
GPS INSTALLATION - OPTIONAL E-48
ROAD LIGHTS INSTALLATION E-50
FRONT ROADLIGHT ASSEMBLY - RH E-54
FRONT ROADLIGHT ASSEMBLY - LH E-56
REAR SIGNAL ASSEMBLY - RH E-58
REAR SIGNAL ASSEMBLY - LH E-60
ROTATING BEACON LIGHT INSTALLATION - OPTIONAL. E-62
ROTATING BEACON W/CAB INSTALLATION - OPTIONAL E-64
WORKLIGHTS INSTALLATION - STRAIGHT COLUMN E-66
WORKLIGHTS INSTALLATION - TILT COLUMN E-70
DENSITY METER INSTALLATION - OPTIONAL E-74
COMPACTOMETER KIT (19288232) - INTERNAL BREAKDOWN E-76

Section G - DECALS AND PAINT

DECAL INSTALLATION - US G-2
DECAL INSTALLATION - EEC G-6

Section H - HYDRAULICS

HOSING INSTALLATION H-2
HYDRAULIC FILTER INSTALLATION H-14
TOW VALVE INSTALLATION - OPTIONAL H-16
BRAKE/SHUNT VALVE ASSEMBLY H-18
TRACTION ENHANCEMENT INSTALLATION H-20
TRACTION CONTROL VALVE ASSEMBLY H-24
LOOP FLUSHING VALVE ASSEMBLY H-26
LOOP FLUSHING VALVE (59077602) - INTERNAL BREAKDOWN. H-28
STRIKE-OFF BLADE INSTALLATION (NA) - OPTIONAL H-30
PUMP ASSEMBLY H-34
FOOT PEDAL ASSEMBLY H-36

TABLE OF CONTENTS
SD-160/190/200TF Series - Effective With S/N 193672

TITLE **PAGE**

Section I - SCHEMATICS

ELECTRICAL SCHEMATIC I-3
HYDRAULIC SCHEMATIC - SD-160 . . . . . I-6
HYDRAULIC SCHEMATIC - SD-190/200 . . . . . I-7

WORD INDEX W-1
NUMERIC INDEX X-1

STANDARD ABBREVIATIONS

AC	Alternating Current
A/R	As Required
ARC	Authorized Rebuilt Component
Assy	Assembly
BHCS	Button Head Cap Screw
Cu Yd	Cubic Yard
Cyl	Cylinder
DC	Direct Current
Dia	Diameter
Eff	Effective
FHCS	Flat Head Cap Screw
F-N-R	Forward-Neutral-Reverse
FOPS	Falling Object Protection System
F/P	Fork Positioning
Gr	Grade
HHCS	Hex Head Cap Screw
HHMS	Hex Head Machine Screw
HSBHCS	Hex Socket Button Head Cap Screw
ID	Inside Diameter
LH	Left Hand
M	Metric
MIK	Maintenance Interval Kit
mm	Millimeter
Nat Asp	Naturally Aspirated
Neg	Negative
NSS	Not Sold Separately
NSVA	Non Serviceable Assembly
OD	Outside Diameter
Pos	Positive
PSI	Pounds per Square Inch
Q/A	Quick-Attach
Ref	Reference
RH	Right Hand
RHSS	Round Head SelfTapping Screw
ROPS	Roll-Over Protection System
RPM	Revolutions Per Minute
SAE	Society of Automotive Engineers
Sec	Section
SFH	Slotted Fillister Head
SHCS	Socket Head Cap Screw
SMV	Slow Moving Vehicle
S/N	Serial Number
SPST	Single Pole/Single Throw
S.T.	Self-Tapping
Std	Standard
Str	Straight
Sw S	wivel
Tach	Tachometer
Temp	Temperature
Thd	Thread
Thk	Thick
Typ	Typical
UNC	Unified Coarse
UNF	Unified Fine
Univ	Universal
Var	Variable
V	Volt
VPM	Vibrations Per Minute
Wgt	Weight
w/	With
w/o	Without
Wp	Weatherproof

G

LUBRICANTS, FILTERS AND MANUALS

Lubricants, Filters And Manuals

LUBRICANTS

	1 Qt.	1 Gal.	5 Gal.	55 Gal.
Mobil DTE 15M Hydraulic Oil or equivalent ISO VG 46 VI 140 (minimum)				
above 12×C (10×F). For temperatures below -12× C (10× F) use Mobil SHC				
624 Hydraulic Oil or equivalent ISO VG 32	n/a	n/a	59045179	59045187
Multi Purpose Premium Engine Oil - SAE 15W-40	59022343	59023507	57022327	59022335
Mobilube HD 80W-90 LS Gear Lubricant or equivalant SAE	13248455	13248463	59022418	59022426
Mobil Multi-Purpose ATF	13248471	13248489	59023572	59023580
Mobil SHC 630 or equivalent ISO VG 220 lubricant	13248430	13248448	59877597	59022459
Mobil SHC 624 or equivalent ISO VG 32 Lubricant	13248414	13248422	59046177	59046165

FILTERS - SD-160

		Quantity
Engine Oil Filter	13284617	1
Fuel Filter	19295872	1
Fuel Filter	58827932	1
Suction Filter Element	13467774	2
Return Filter Element	59764498	1

FILTERS - SD-190/200

		Quantity
Engine Oil Filter	13284617	1
Fuel Filter	19295872	1
Fuel Filter	43802263	1
Suction Filter Element	13467774	2
Return Filter Element	59764498	1

MANUALS

Parts Manual - SD-160/190/200	43921006
Operation/Maintenance Manual	43882117
Engine Operation Manual - SD-160	13308861
Engine Operation Manual - SD-190/200	13852694
Engine Parts Manual - SD-160	13378500
Engine Parts Manual - SD-190/200	13852702
Safety Label Manual	13367792
CIMA Safety Manual	59483032

RECOMMENDED SERVICE PARTS

Recommended Service Parts

Assembly	Description	Y1 Qty	Y2 Qty	Y3 Qty	CPN
Battery Installation					
	Cover Plate	0	0	2	59583450
	Battery	2	2	0	54635859
	Battery Master Switch	0	0	1	13209648
Engine Installation					
	Lower	0	0	1	13279666
	O-ring	4	4	0	59993881
	Center Bonded Mount	0	0	2	59127720
	Valve Assembly	0	0	1	58921495
	Charge Relief Kit	0	0	1	59446138
	Recovery Bottle	0	0	1	58802851
	O-ring	1	1	1	50278019
	Cap	0	1	0	59154807
	Switch	0	0	1	58905803
	Propulsion Pump	0	0	1	13254669
	Seal Kit	0	0	1	58898677
	Shaft Seal Assembly	0	0	1	59155192
	O-ring Kit	0	0	3	59972877
	Coupling	0	1	0	59286336
	Steering Pump	0	0	1	58859380
	Engine Oil Filter	1	1	1	13284617
Exhaust Installation					
	Clamp	0	0	1	59495028
	Clamp	0	2	0	59534313
	Exhaust	0	0	1	59179218
	Muffler	0	0	1	13169537
	Clamp Seal	0	0	1	13093075
Operator Platform Installation					
	Screw	0	1	0	95860052
	Clevis	0	1	0	59929059
	Emergency Stop Switch	0	1	0	59111450
	Steering Valve	0	0	1	13277116
	Dust Boot	0	1	0	59108605
	Horn	1	1	1	13469010

Assembly	Description	Y1 Qty	Y2 Qty	Y3 Qty	CPN
	Dust Boot	0	1	0	59108100
	Seal Kit	0	0	1	54747340
	Nut	0	1	0	95943346
Axle Installation					
	Shaft Seal Assembly	0	0	1	13263553
	O-ring	2	2	0	59993881
	Axle Drive Motor	0	0	1	13254701
	O-ring	1	1	1	50278019
Electrical Installation					
	Electrical Connector	0	0	1	59436865
	Backup Alarm	0	0	1	13236203
	Nut	0	8	0	95943346
Unique No ROPS Operators Platform Installation					
	Hi/Low Amplitude Switch	0	0	1	54666060
	Hi/Low Travel Switch	0	0	1	54666086
	Park Brake Test Switch	0	0	1	54666102
	Hi/Low RPM Switch	0	0	1	54666078
	Cover	0	1	0	58892902
	Seat Switch Harness	0	0	1	13165071
	Nut	0	1	0	59126961
	Horn Button	1	1	0	59159558
	Dual Switch Seat Kit	0	0	1	13167945
	Park Brake Switch	0	1	0	54666094
	Steering Wheel	0	1	0	13158647
	Dual Switch Seat Kit	0	0	1	13198270
No ROPS/Hood Latch Draw Installation					
	Latch	0	2	0	59162149
Drum Assembly					
	O-ring	2	2	0	59993881
	Sight Gauge	0	1	0	59277772
	O-ring	1	1	1	50278019
	Speed Sensor	0	1	0	59249284
	Oil Seal	0	0	1	59277764
	Shaft Seal Assembly	0	0	1	59155192
	Drum Drive Motor	0	0	1	13460407
	Pipe Plug	2	2	0	59600593
	Shock Mount	0	20	0	13304787

Assembly	Description	Y1 Qty	Y2 Qty	Y3 Qty	CPN
	Wear Sleeve	0	0	1	59277756
	Magnetic Plug	0	0	2	59144428
	Vibration Motor	0	0	1	54596259
	V-ring Seal	0	0	1	13167390
Unique Smooth Drum Scraper Installation					
	Scraper Bar	0	0	1	13213913
ROPS/FOPS Installation					
	Seat Belt	1	1	0	13342720
	Latch	0	2	0	59162149
Back-up Alarm Installation					
	Temperature Switch	0	1	0	13406780
	High Temperature Alarm	0	0	1	58870924
Unique Variable Frequency/Dual Amplitude Assembly					
	Frequency Dial Knob	0	1	0	59047019
	Vibration Variation Selection Switch	0	0	1	58878562
	Charge Relief Kit	0	0	1	59446138
	Vibration Pump	0	0	1	13254651
	Speed Sensor Adapter	0	1	0	13176789
	Speed Sensor	0	1	0	13254503
	Shaft Seal Assembly	0	0	1	59155192
	O-ring	1	1	1	50278019
Inside Scraper Installation - Option					
	Scraper Bar	0	0	1	13213913
Suspension Seat Installation - Option					
	Seat Belt	0	0	1	13262837
Worklights Installation					
	Worklights	0	0	4	13406764
	Bulb	0	4	0	13468137
	Lamp	0	2	0	13321443
	F/R Worklights Switch	0	0	1	13197108
Rotating Beacon Light Installation - Option					
	Rotating Beacon	1	1	1	13176797
Vandal Cover Installation					
	Cable	0	0	1	59607861
	Ferrule	0	0	2	59607853
Gauge Installation - Option					
	Engine Oil Pressure Sender	0	1	0	58878000

Assembly	Description	Y1 Qty	Y2 Qty	Y3 Qty	CPN
	Temperature Gauge	0	0	1	58893983
	Sender	0	0	1	58913856
	Engine Oil Press Guage	0	1	0	58822313
	Voltmeter	0	1	1	58877796
Cab w/Heat And Air Conditioning Installation					
	F/R Worklights Switch	0	0	1	13197108
	Heater	0	1	0	13200027
	Front Wiper Switch	0	1	0	59196451
	Lamp	0	1	0	13321443
	Seat Belt	1	1	0	13342720
	Washer	0	1	0	59195925
	Rear Wiper Switch	0	1	0	59196444
	Blank Switch	0	0	1	58835398
	AC Switch	0	1	0	13156963
	Air Filter	0	1	0	13161757
	Washer	0	0	1	13228242
	Latch	0	2	0	59162149
	Rear Wiper Arm	0	1	0	59072694
Sound Kit w/Pre-cleaner Installation - Option					
	Air Pre-cleaner	1	1	0	59081323
Wheel and Tire Assembly					
	Nut	0	24	0	59163758
	Valve	0	2	0	59524447
	Valve Cap	2	2	2	59929711
Blade Option					
	Grease Fitting Cap	0	0	2	50270248
	Pin	0	2	0	59683805
	Dump Switch	0	0	3	58788852
	Bearing	0	2	0	50273986
Speedometer/VPM Meter Installation - Option					
	Speedometer	0	1	0	13179445
	Speed Sensor	0	1	0	59249284
Impactometer/Autovibration Meter Installation - Option					
	Speed Sensor Adapter	0	1	0	13176789
	Auto Vibration Switch	0	1	0	13190772
	Speed Sensor	0	1	0	59249284
	Speed Sensor	0	1	0	13254503

Assembly	Description	Y1 Qty	Y2 Qty	Y3 Qty	CPN
	Impactometer	0	1	0	13169404
Air Cleaner Installation - Option					
	Air Pre-cleaner	1	1	0	59081323
Bolt-on Shell Installation - Option					
	Scraper Tooth - SD-160DX	14	14	0	59175661
	Scraper Tooth - SD-190DX	14	14	0	13294632
Tow Valve Installation - Option					
	Manifold	0	0	1	13304878
	Pressure Switch	0	0	1	59110312
Block Heater Installation - Option					
	Block Heater	0	0	1	59118521

+ Designates parts that are to be replaced within the specified time intervals as stated in the maintenance schedule.

LUBRICANTS

	1 Qt.	1 Gal.	5 Gal.	55 Gal.
Mobil DTE 15M Hydraulic Oil or equivalent ISO VG 46 VI 140 (minimum) above 12°C (10°F). For temperatures below -12° C (10° F) use Mobil SHC 624 Hydraulic Oil or equivalent ISO VG 32	n/a	n/a	59045179	59045187
Multi Purpose Premium Engine Oil - SAE 15W-40	59022343	59023507	57022327	59022335
Mobilube HD 80W-90 LS Gear Lubricant or equivalant SAE	13248455	13248463	59022418	59022426
Mobil Multi-Purpose ATF	13248471	13248489	59023572	59023580
Mobil SHC 630 or equivalent ISO VG 220 lubricant	13248430	13248448	59877597	59022459
Mobil SHC 624 or equivalent ISO VG 32 Lubricant	13248414	13248422	59046177	59046165

O

Section A - AXLE AND MAIN FRAME

13296876 REV 0B

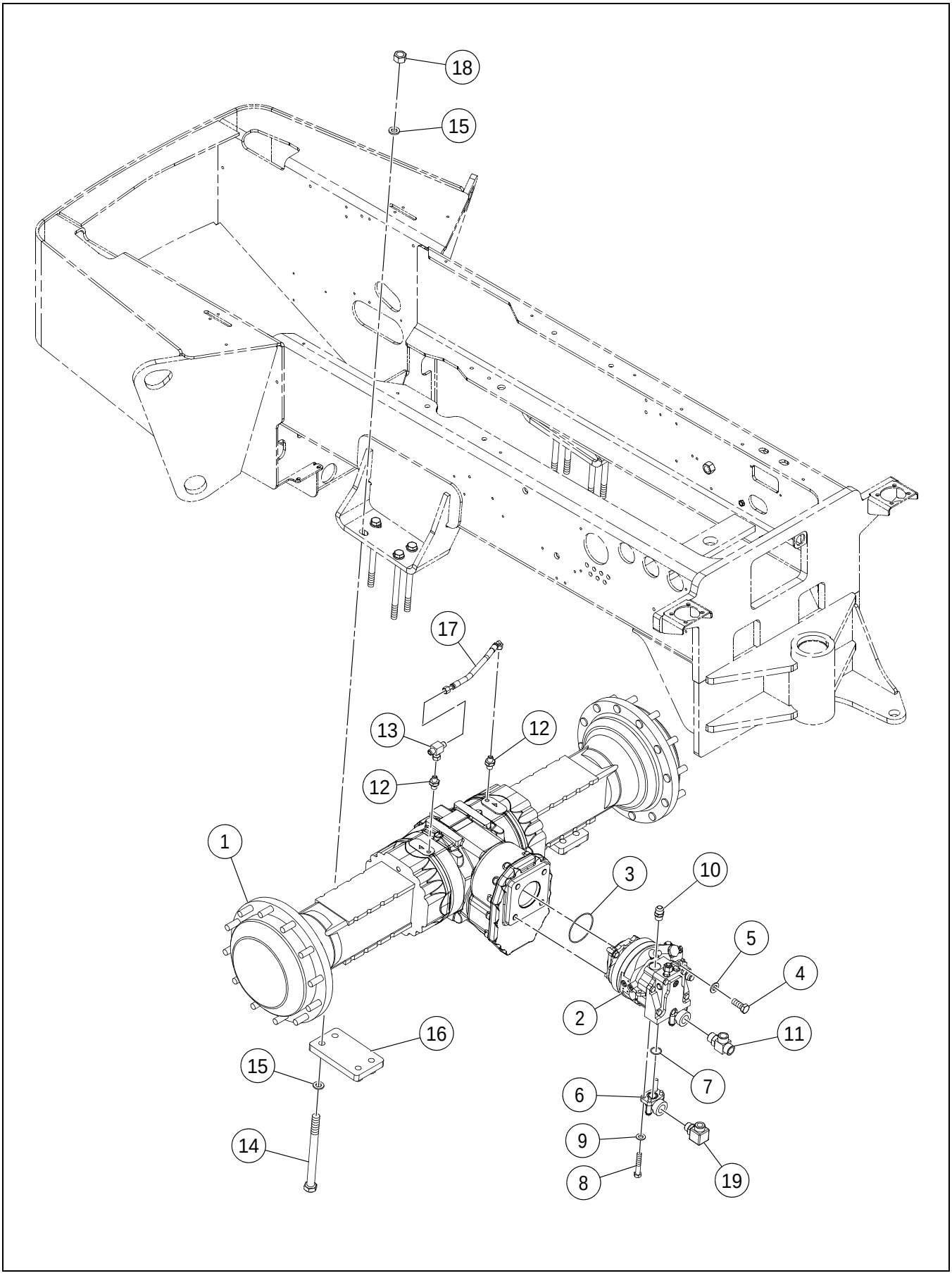

AXLE INSTALLATION

****Only Offered Parts Listed****

BOM 13176623

ITEM	COMM. NO.	DESCRIPTION	QTY	DIMENSIONS/NOTES
1	**13188131**	**Axle**	**1**	**See Breakdown A - 4.**
2	**13254701**	**Axle Drive Motor**	**1**	**See Breakdown A - 14.**
-	13284906	ARC - Axle Drive Motor		
3	59029710	O-ring	1	
4	96715768	HHCS, Fully Threaded, Zinc Plated	4	M14 x 2 x 35 Cl 8.8
5	96738604	Flatwasher, Zinc Plated	4	
6	58979964	Elbow	2	
7	59993881	O-ring	2	
8	95931614	HHCS, Zinc Plated	8	7/16 x 14 x 2.5 Grd 8
9	96738596	Flatwasher, Zinc Plated	8	M12 Hardened Cl 200
10	95356960	Adapter	1	
11	59923102	Adapter	1	
12	58954694	Adapter, Straight	2	
13	95480117	Tee	1	
14	96739784	HHCS, Zinc Plated	8	M20 x 2.5 x 280 Cl 10.9
15	96701560	Flatwasher, Zinc Plated	16	M20 Hardened
16	13297809	Base Plate	2	
17	58896218	Hose Assembly	1	
18	96703665	Hex Nut, Zinc Plated	8	M20 x 2.5 Cl 10
19	59922989	Adapter	1	

AXLE (13188131) - INTERNAL BREAKDOWN - SHEET 1 OF 5

59200428 REV 00

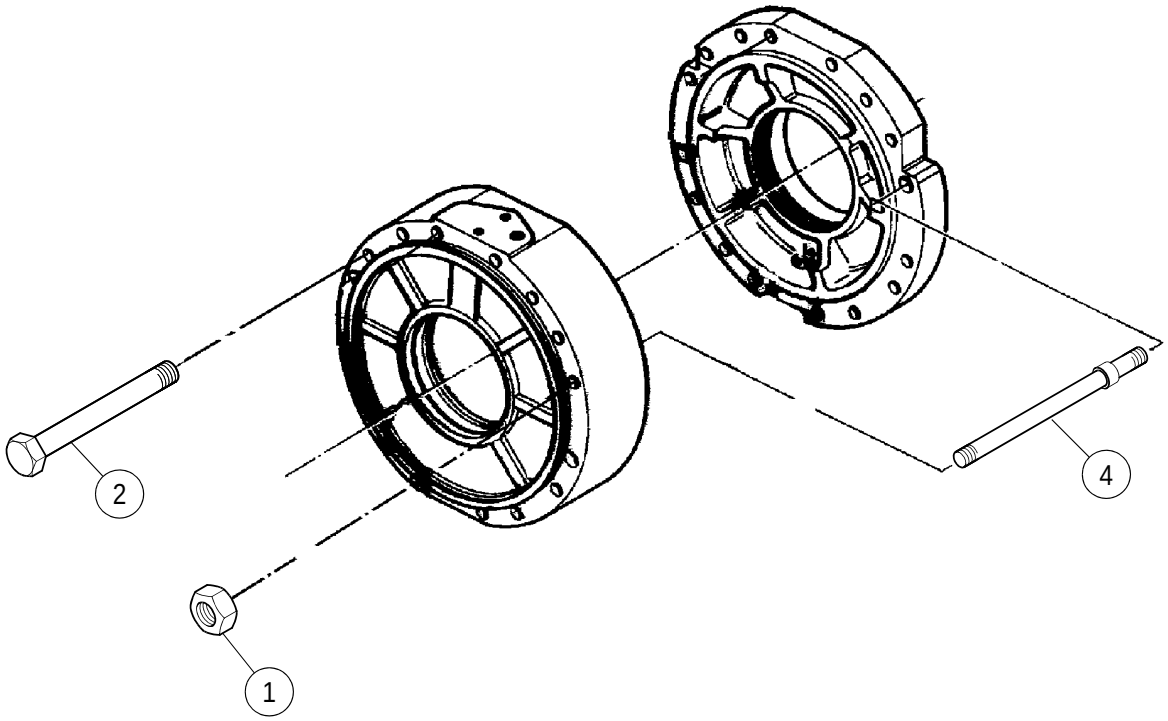

AXLE (13188131) - INTERNAL BREAKDOWN - SHEET 1 OF 5

****Only Offered Parts Listed****

BOM 13188131

ITEM	COMM. NO.	DESCRIPTION	QTY	DIMENSIONS/NOTES
1	13104161	Nut	4	
2	59218313	Bolt	28	
4	59218297	Stud	4	

59200428 REV 00

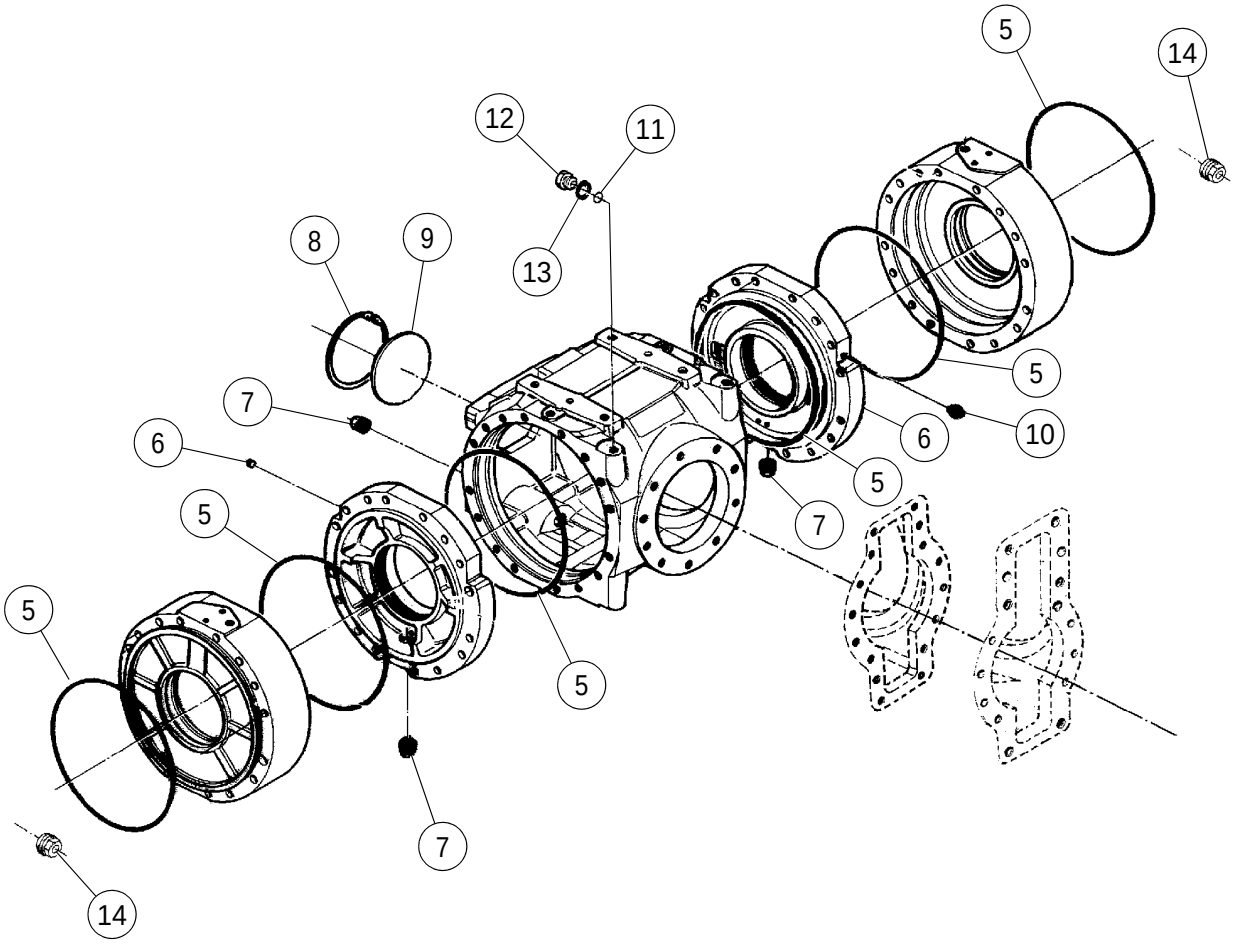

AXLE (13188131) - INTERNAL BREAKDOWN - SHEET 2 OF 5

****Only Offered Parts Listed****

BOM 13188131

ITEM	COMM. NO.	DESCRIPTION	QTY	DIMENSIONS/NOTES
5	58974155	O-ring	6	
6	59793489	Plug	1	
7	59078899	Magnet Plug	5	
8	58916578	Snap Ring	1	
9	59251009	Plug	1	
10	59793588	Vent	1	
11	58916610	O-ring	1	
12	58916545	Plug	1	
13	58916537	Seal Washer	1	
14	10486116	Plug	5	

59200428 REV 00

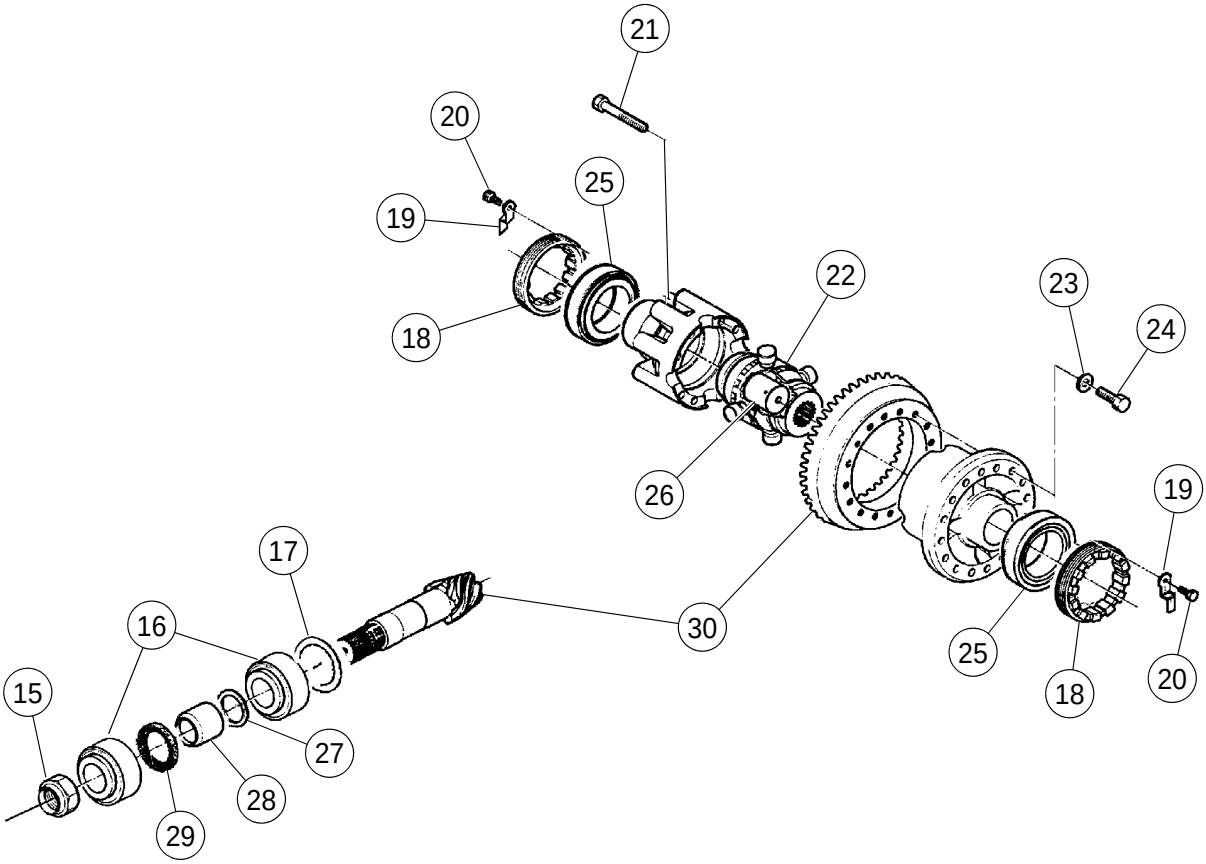

AXLE (13188131) - INTERNAL BREAKDOWN - SHEET 3 OF 5

****Only Offered Parts Listed****

BOM 13188131

ITEM	COMM. NO.	DESCRIPTION	QTY	DIMENSIONS/NOTES
15	59218321	Ring Nut	1	
16	58917436	Taper Roller Bearing	2	
17	59791483	Shim	1	
-	59791491	Shim	1	
-	59790956	Shim	1	
-	58917527	Shim	1	
18	54632773	Ring Nut	2	
19	59218339	Locking Plate	2	
20	59793752	Bolt	2	
21	58917295	Bolt	8	
22	58917303	No-Spin Differential	1	
23	59769356	Spring	16	
24	90502915	Bolt	16	
25	59778332	Taper Roller Bearing	1	
26	58917345	Spacer	1	
27	54632864	Shim	5	0.15mm
-	54632872	Shim	3	0.20mm
-	54632898	Shim	1	0.40mm
28	59218362	Spacer	1	
29	59218396	Seal Washer	1	
30	59218404	Bevel Gear Set	1	

59200428 REV 00

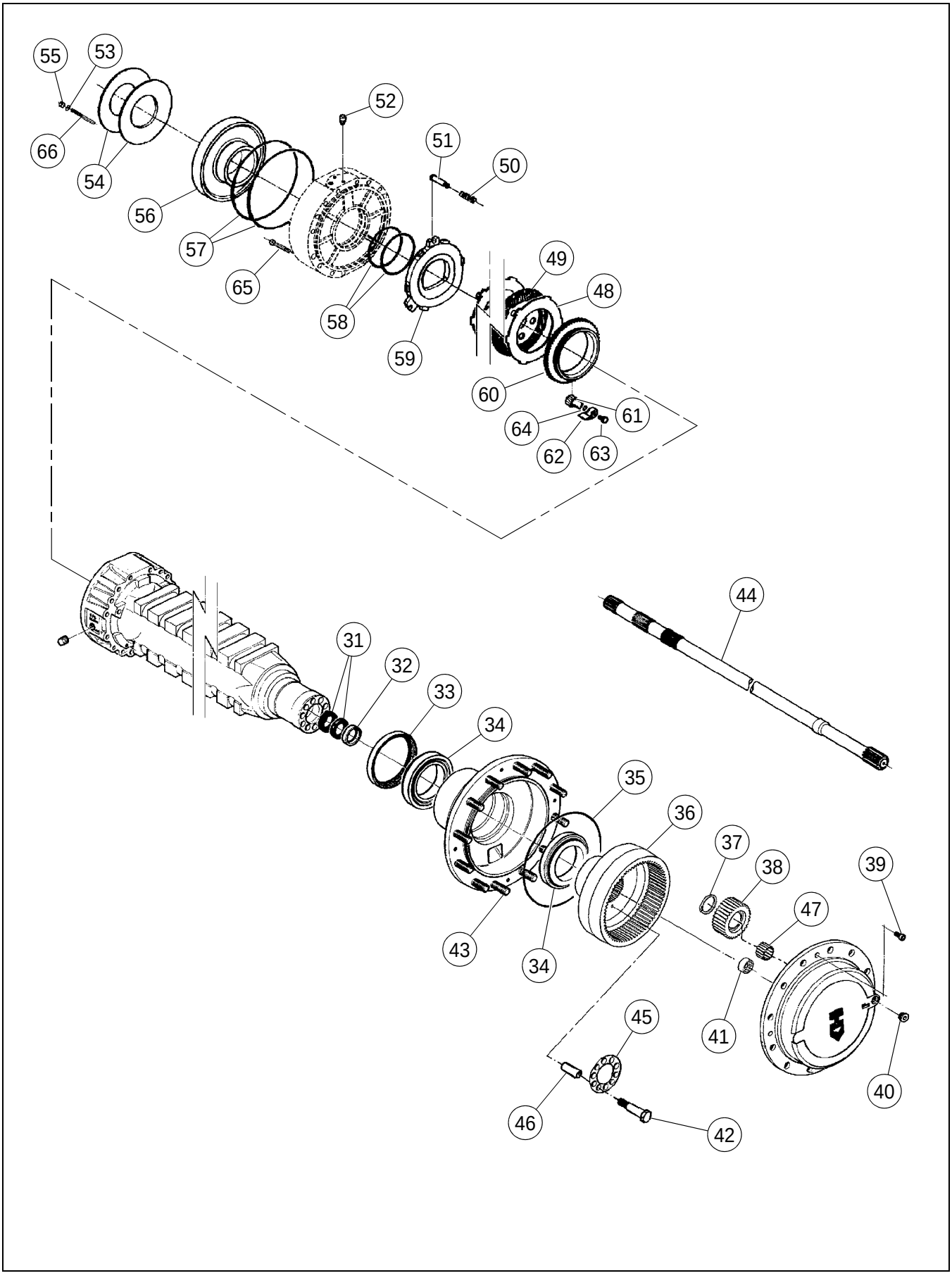

****Only Offered Parts Listed****

BOM 13188131

ITEM	COMM. NO.	DESCRIPTION	QTY	DIMENSIONS/NOTES
31	58916685	Seal	2	
32	58916693	Centering Spring	2	
33	58916933	Seal	2	
34	58916925	Taper Roller Bearing	4	
35	13228614	O-ring	2	
36	13228622	Ring Gear	2	
37	13228630	Circlip	6	
38	13227648	Planet Gear	6	
39	58804337	Cylinder Bolt	4	
40	13228655	Plug	2	
41	13228663	Friction Washer	2	
42	13228671	Bolt	20	
43	13228689	Wheel Stud	24	
44	13228697	Half Shaft	2	
45	13228705	Locking Plate	2	
46	13228713	Reduction Bushing	20	
47	13228721	Bearing	6	
48	59803635	Disc Brake	12	
49	59153668	Disc Brake	12	
50	58917055	Spring	6	
51	58917063	Adjusting Bolt	6	
52	59218453	Plug	4	
53	90502816	Washer	4	
54	59218461	Spring	4	
55	58917014	Nut	4	
56	59218487	Piston	2	
57	59218495	O-ring	4	
58	59778266	O-ring	4	
59	59218503	Intermediate Brake Disc	2	
60	59251074	Ring	2	
61	58917113	Pinion	2	
62	54633557	Locking Plate	2	
63	58917097	Bolt	2	
64	58917147	O-ring	2	
65	59080028	Cylinder Bolt	4	
66	59218511	Bolt	4	

59200428 REV 00

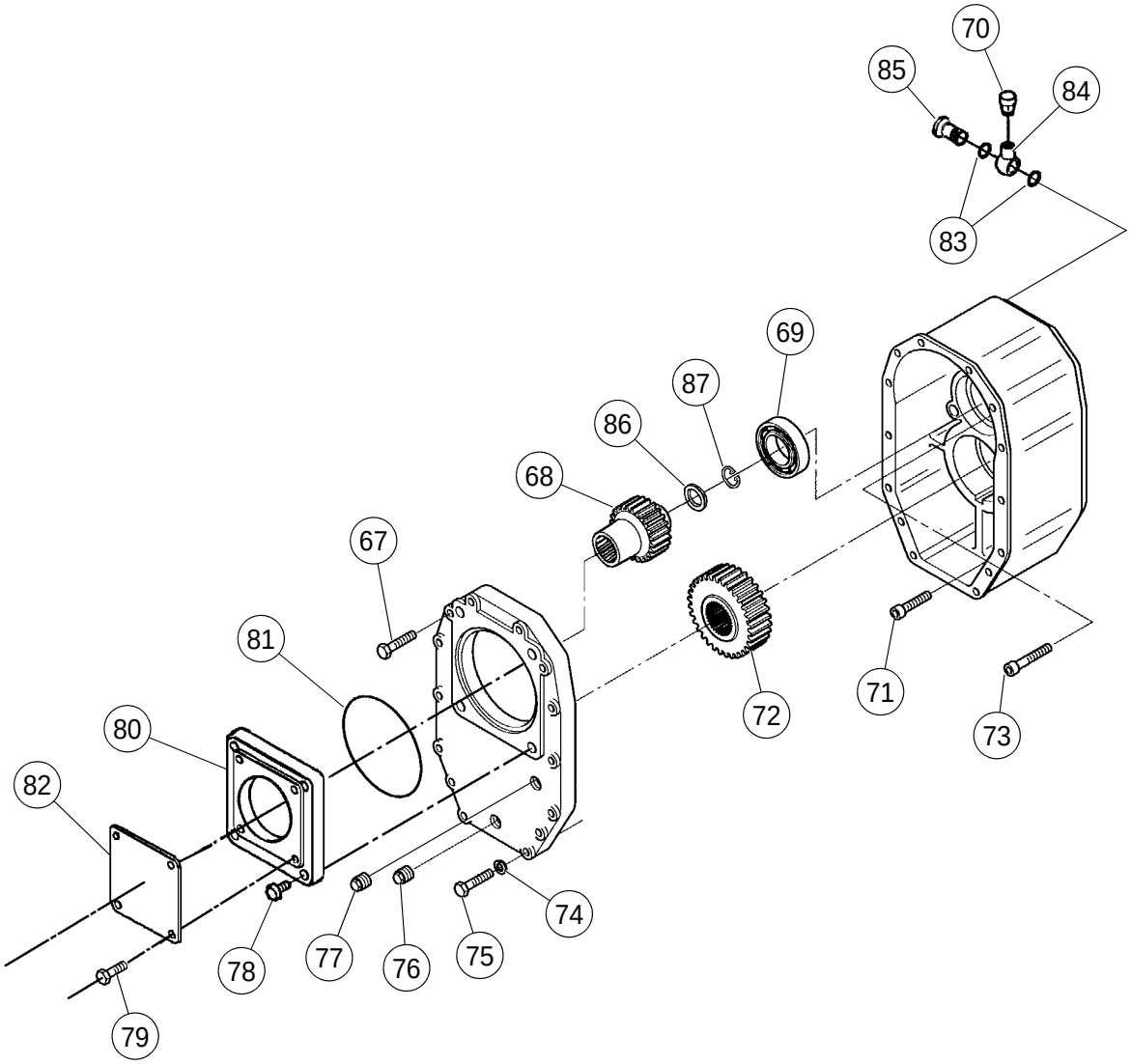

AXLE (13188131) - INTERNAL BREAKDOWN - SHEET 5 OF 5

****Only Offered Parts Listed****

BOM 13188131

ITEM	COMM. NO.	DESCRIPTION	QTY	DIMENSIONS/NOTES
67	59218172	Cylinder Bolt	4	
68	13228739	Gear	1	
69	59218198	Ball Bearing	1	
70	59904532	Vent	1	
71	59218214	Cylinder Bolt	10	
72	13228747	Gear	1	
73	59218230	Cylinder Bolt	4	
74	59790600	Ring	10	
75	59218248	Hex Bolt	10	
76	59078899	Magnet Plug	1	
77	10486116	Plug	1	
78	13228754	Cylinder Bolt	4	
79	59218263	Bolt	4	
80	59218271	Intermediate Cover	1	
81	59904722	O-ring	1	
82	59218289	Sheet	1	
83	13228762	Washer	2	
84	13228770	Adapter	1	
85	13228788	Adapter	1	
86	59790717	Spacer	1	
87	54761739	Washer	1	

AXLE DRIVE MOTOR (13254701) - INTERNAL BREAKDOWN - SHEET 1 OF 3

13254701 REV 00

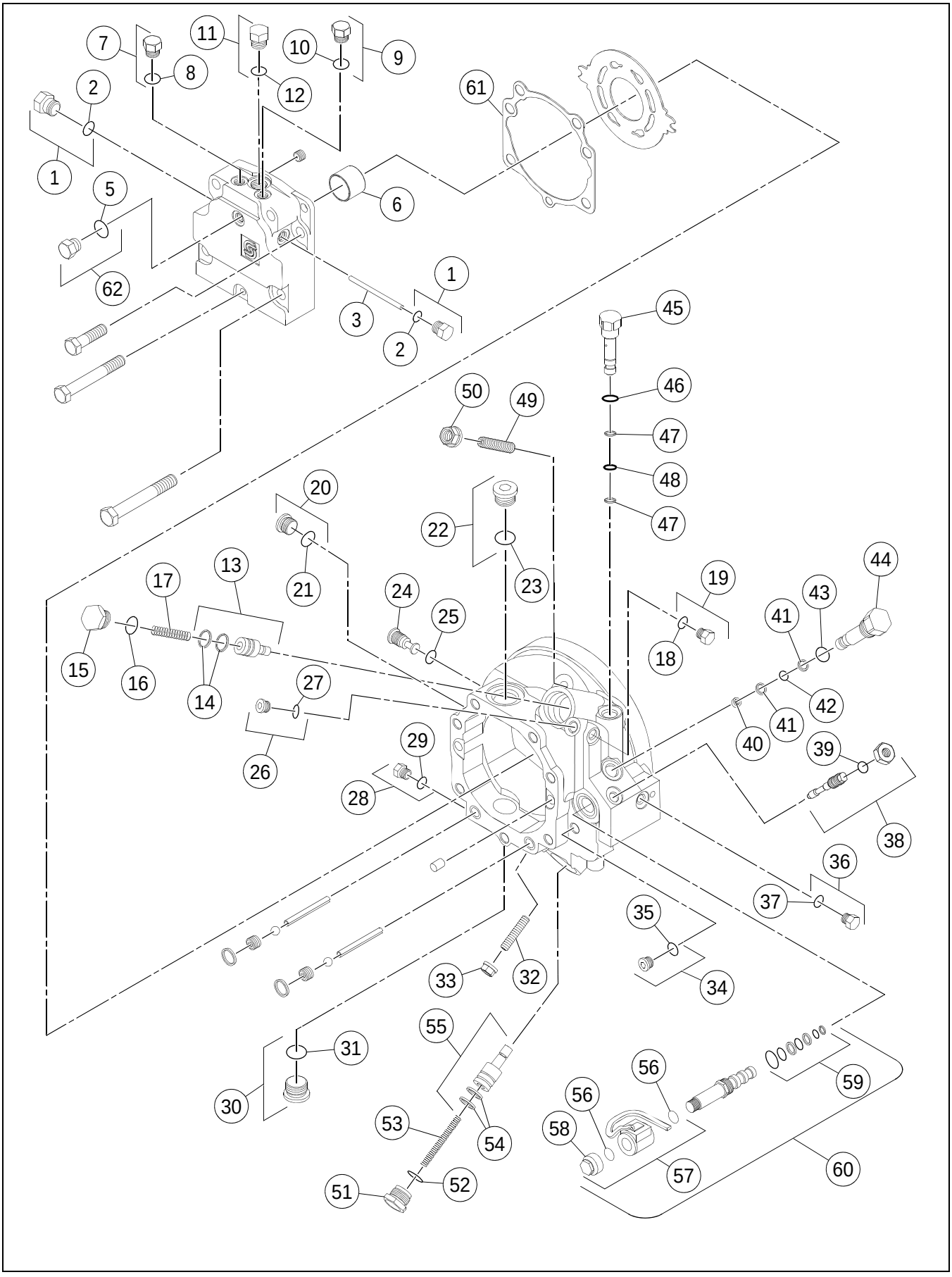

AXLE DRIVE MOTOR (13254701) - INTERNAL BREAKDOWN
- SHEET 1 OF 3

****Only Offered Parts Listed****

BOM 13254701

ITEM	COMM. NO.	DESCRIPTION	QTY	DIMENSIONS/NOTES
1	59933622	Plug	2	
2	58881863	- O-ring	2	
3	59019687	Loop Flushing Spool	1	
4	59933622	Plug (Not Shown)	1	
5	58881863	- O-ring	1	
6	59369603	Journal Bearing	1	
7	59933622	Plug	1	
8	58881863	- O-ring	1	
9	59933622	Plug	1	
10	58881863	- O-ring	1	
11	56998610	Plug	1	
-	50278019	- O-ring	1	
12	59360610	- O-ring	1	
13	58891656	Servo Piston Assembly	1	
14	13066220	- Piston Seal Ring	4	
15	58891631	Plug	1	
16	13491634	O-ring	1	
17	58891649	Spring	1	
18	58950783	Plug	1	
19	50278894	- O-ring	1	
20	59933622	Plug	1	
21	58881863	- O-ring	1	
22	59949461	Plug	1	
23	59986463	- O-ring	1	
24	58891573	Hold Down Pin	1	
25	58881863	O-ring	1	
26	58950783	Plug	1	
27	50278894	- O-ring	1	
28	58950783	Plug	1	
29	50278894	- O-ring	1	
30	59949461	Plug	1	
31	50278894	- O-ring	1	
32	58891599	Set Screw	1	
33	58891623	Nut Seal	1	
34	58950783	Plug	1	
35	50278894	- O-ring	1	
36	58950783	Plug	1	
37	50278894	- O-ring	1	
38	59004762	Shift Rate Kit	1	
39	50278894	- O-ring	1	
40	58891771	Filter Screen	1	
41	58891789	Backup Ring	1	
42	58891797	O-ring	1	
43	58881863	O-ring	1	
44	58891854	Orifice Plug	1	
45	59019620	Orifice Valve Assembly	1	

AXLE DRIVE MOTOR (13254701) - INTERNAL BREAKDOWN - SHEET 2 OF 3

13254701 REV 00

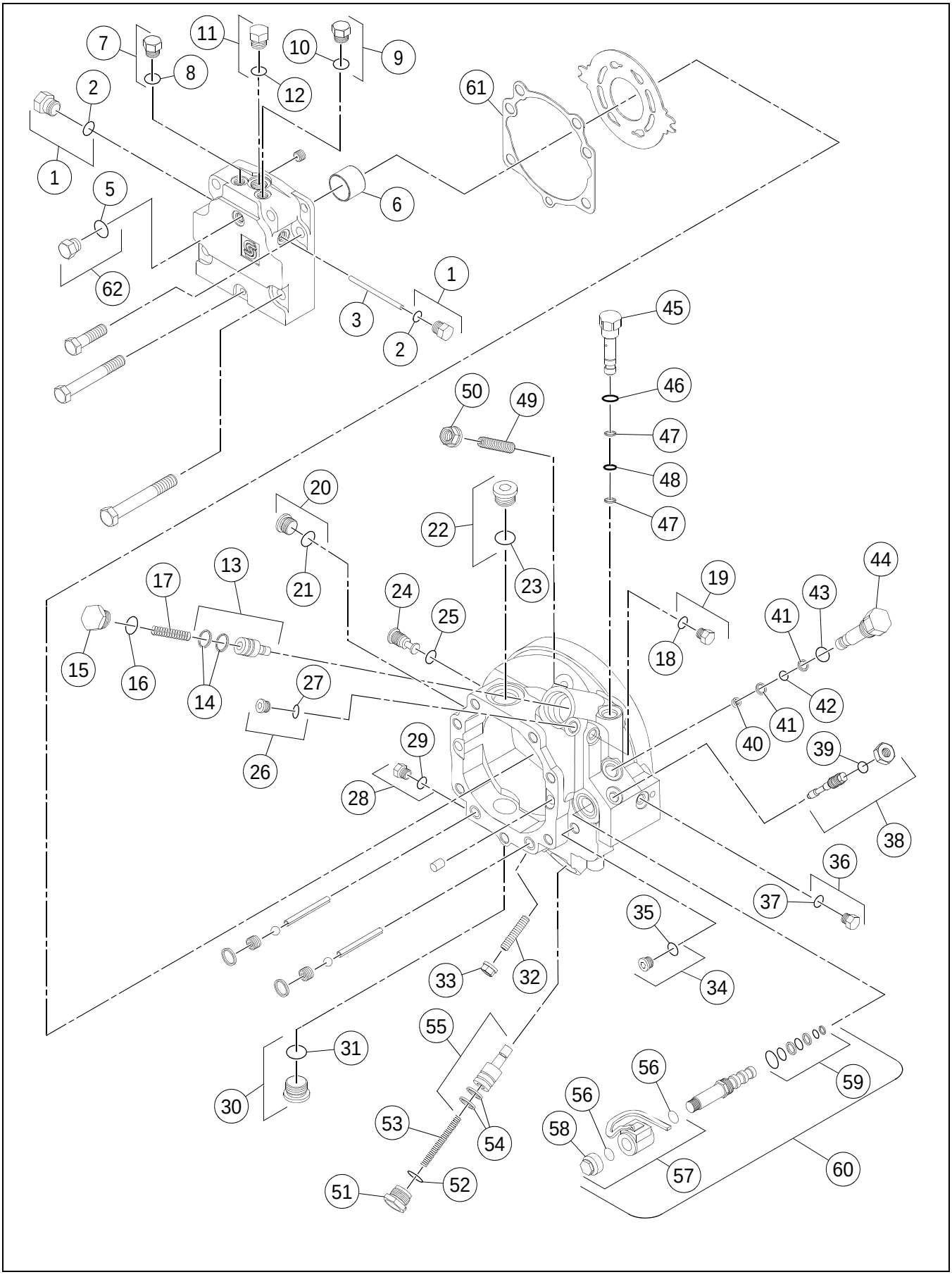

AXLE DRIVE MOTOR (13254701) - INTERNAL BREAKDOWN
- SHEET 2 OF 3

****Only Offered Parts Listed****

BOM 13254701

ITEM	COMM. NO.	DESCRIPTION	QTY	DIMENSIONS/NOTES
46	58881863	O-ring	1	
47	58891789	Backup Ring	2	
48	58891797	O-ring	1	
49	58891599	Set Screw	1	
50	58891623	Nut Seal	1	
51	58891631	Plug	1	
52	59019539	O-ring	1	
53	58891664	Spring	1	
54	13066220	Piston Seal Ring	4	
55	58891656	Servo Piston Assembly (Includes Item 54)	1	
56	13247275	O-ring	2	
57	59195735	Coil Kit	1	
58	13247283	Nut	1	
59	59195727	Seal Kit	1	
60	59155739	Valve Solenoid (Includes Items 56 thru 59)	1	
61	13066204	End Cap Gasket	1	
62	13247309	O-ring	1	

AXLE DRIVE MOTOR (13254701) - INTERNAL BREAKDOWN - SHEET 3 OF 3

13254701 REV 00

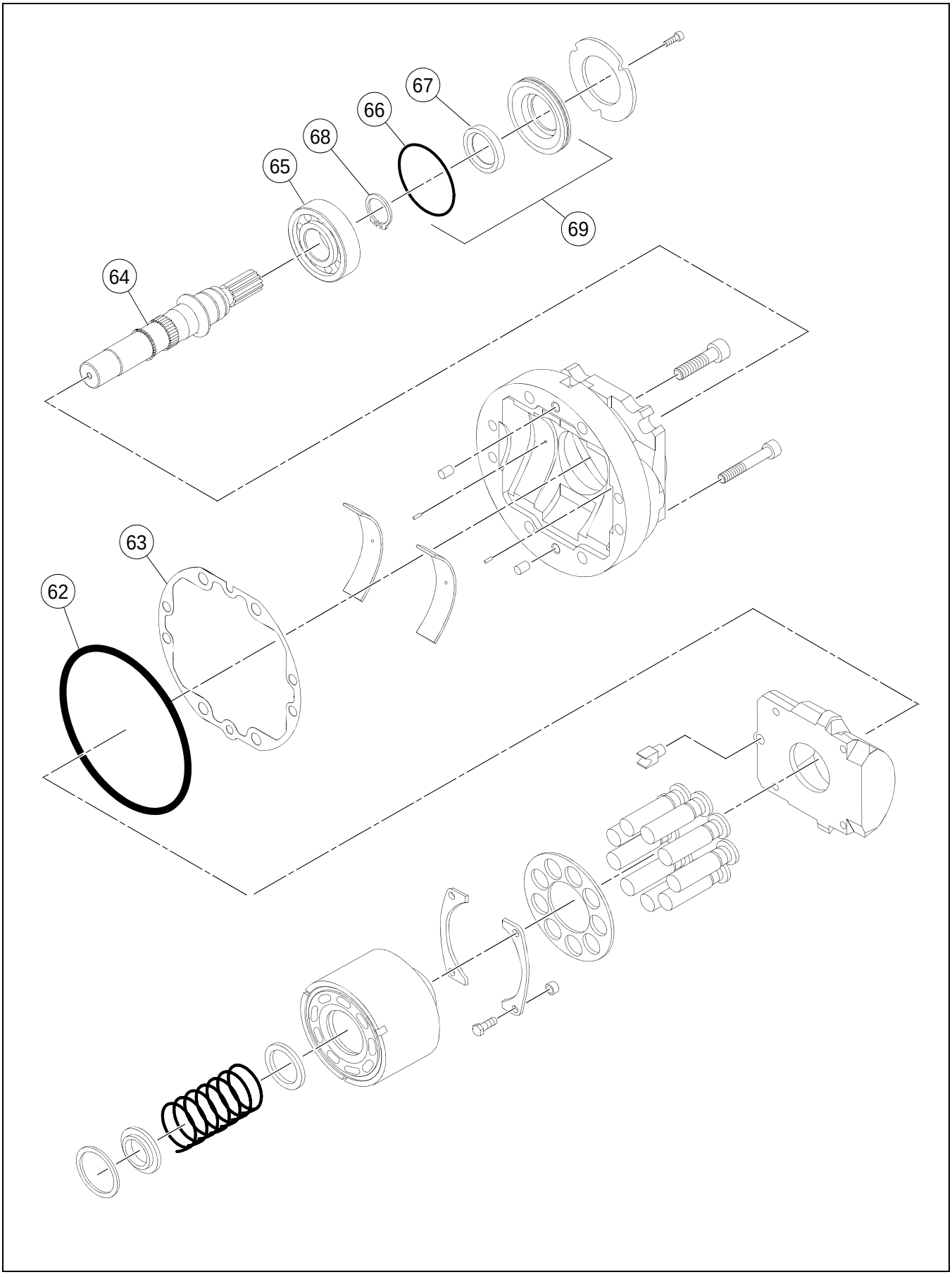

AXLE DRIVE MOTOR (13254701) - INTERNAL BREAKDOWN
- SHEET 3 OF 3

****Only Offered Parts Listed****

BOM 13254701

ITEM	COMM. NO.	DESCRIPTION	QTY	DIMENSIONS/NOTES
62	13247309	O-ring	1	
63	13066204	Gasket End Cap	1	
64	13066246	Shaft	1	
65	59369462	Bearing	1	
66	59369504	O-ring	1	
67	59369496	Seal	1	
68	59369470	Retaining Ring	1	
69	13263553	Shaft Seal Assembly (Includes Items 66 and 67)	1	

TIRE AND WHEEL ASSEMBLY

Dwg D59290700/01

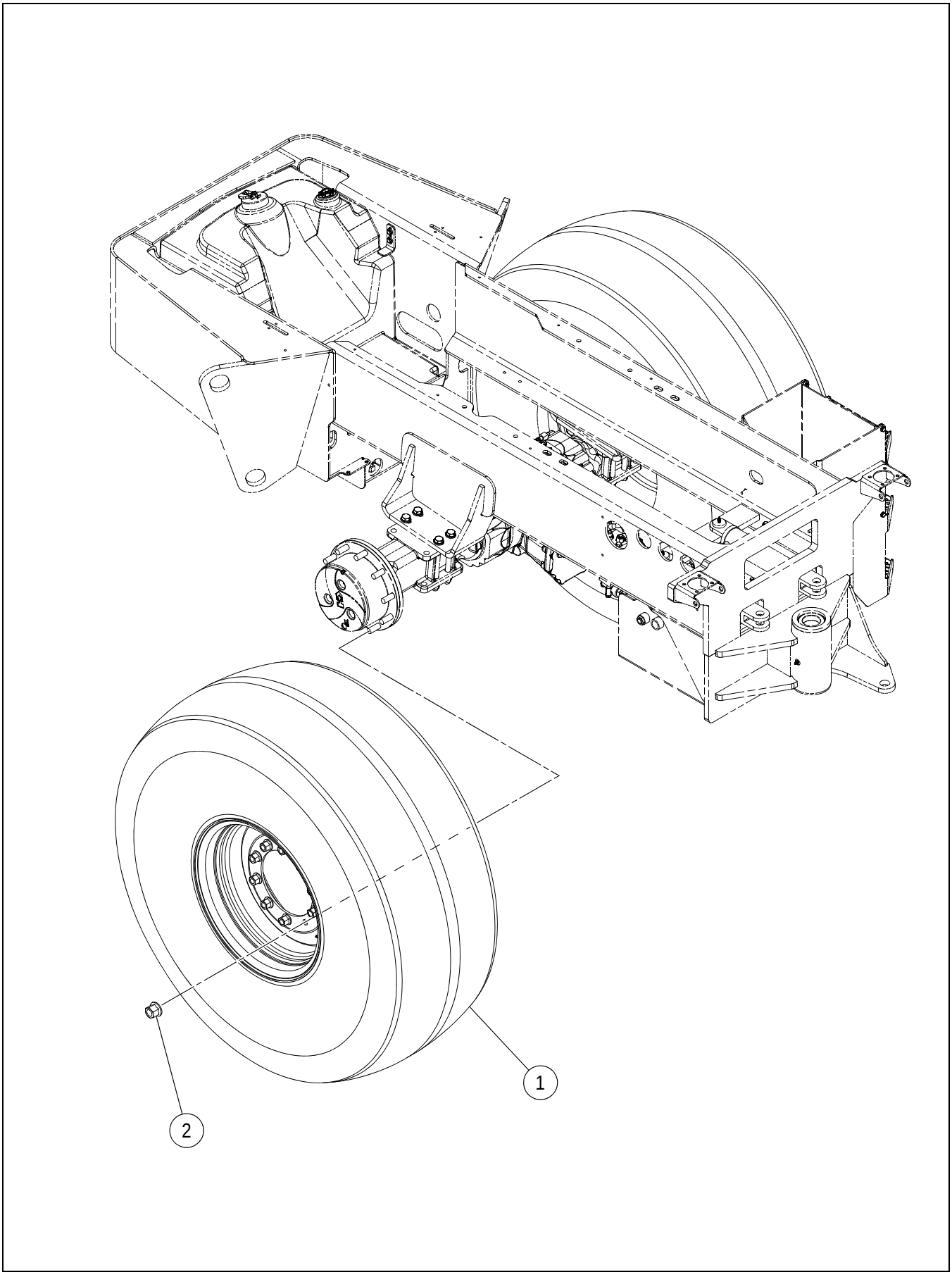

TIRE AND WHEEL ASSEMBLY

****Only Offered Parts Listed**** **BOM 13369046, 13369020, 13277652, 13277454, 13369491,**

ITEM	COMM. NO.	DESCRIPTION	QTY	DIMENSIONS/NOTES
1	13277660	Tire And Wheel Assembly - SD-160	2	Diamond Tread
-	13277470	- Wheel	1	
-	59929711	- Valve Cap	1	
-	59524447	- Air Valve	1	
-	50275536	- Tire	1	23.1 x 26 8Ply
	13278346	Tire And Wheel Assembly - SD-190/200	2	Diamond Tread
-	13277470	- Wheel	1	
-	59929711	- Valve Cap	1	
-	59524447	- Air Valve	1	
-	58998147	- Tire	1	23.1 x 26 10Ply
-	13277462	Tire And Wheel Assembly - SD-160	2	Lug Tread
-	13277470	- Wheel	1	
-	59929711	- Valve Cap	1	
-	59524447	- Air Valve	1	
-	59814889	- Tire	1	23.1 x 26 8Ply
-	13278312	Tire And Wheel Assembly - SD-190/200	2	Lug Tread
-	13277470	- Wheel	1	
-	59929711	- Valve Cap	1	
-	59524447	- Air Valve	1	
-	58998139	- Tire	1	23.1 x 26 10Ply
-	43879329	Tire And Wheel Assembly - SD-190	2	Michelin
-	43879287	- Wheel	1	17 x 25
-	43889195	- Valve Cap	1	
-	43889203	- Air Valve	1	
-	43879105	- Tire	1	20.5 x 25
-	20192357	- Rim Spud	1	
2	59163758	Wheel Nut	24	

HOOD INSTALLATION - SHEET 1 OF 3

13883202 REV 0B

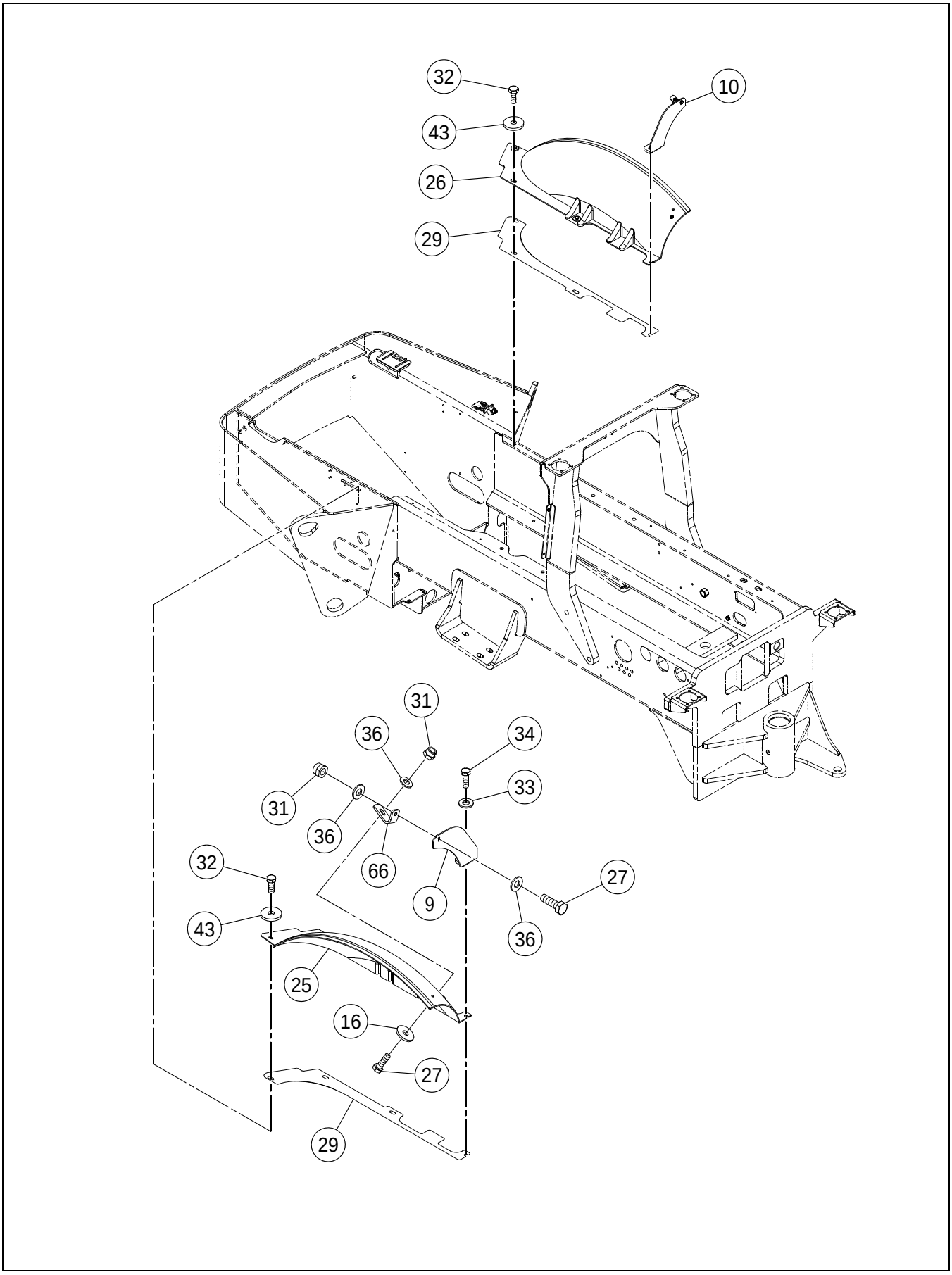

****Only Offered Parts Listed****

BOM 43871714, 13885439

ITEM	COMM. NO.	DESCRIPTION	QTY	DIMENSIONS/NOTES
9	13236468	Fender Support	1	
10	13234844	Fender Support	1	
16	96740188	Washer, Zinc Plated	8	M8 x 3 Cl HV100
25	13888870	Fender, RH	1	
26	13888888	Fender, LH	1	
27	96702659	HHCS, Fully Threaded, Zinc Plated	4	M8 x 1.25 x 25 Cl 8.8
29	NOT-USED	This Item Not Used W/this Bom	1	
31	96704606	Hex Locknut, Zinc Plated	8	M8 x 1.25 Cl 8
32	96702279	HHCS, Fully Threaded, Zinc Plated	6	M10 x 1.5 x 20 Cl 8.8
33	96741046	Flatwasher, Zinc Plated	2	M10 Cl 200
34	96704556	HHCS, Fully Threaded, Zinc Plated	2	M10 x 1.5 x 40 Cl 8.8
36	96741038	Flatwasher	30	M8 x 1.25 Cl 200
43	50264860	Washer	6	
66	NOT-USED	This Item Not Used W/this Bom	1	

13883202 REV 0B

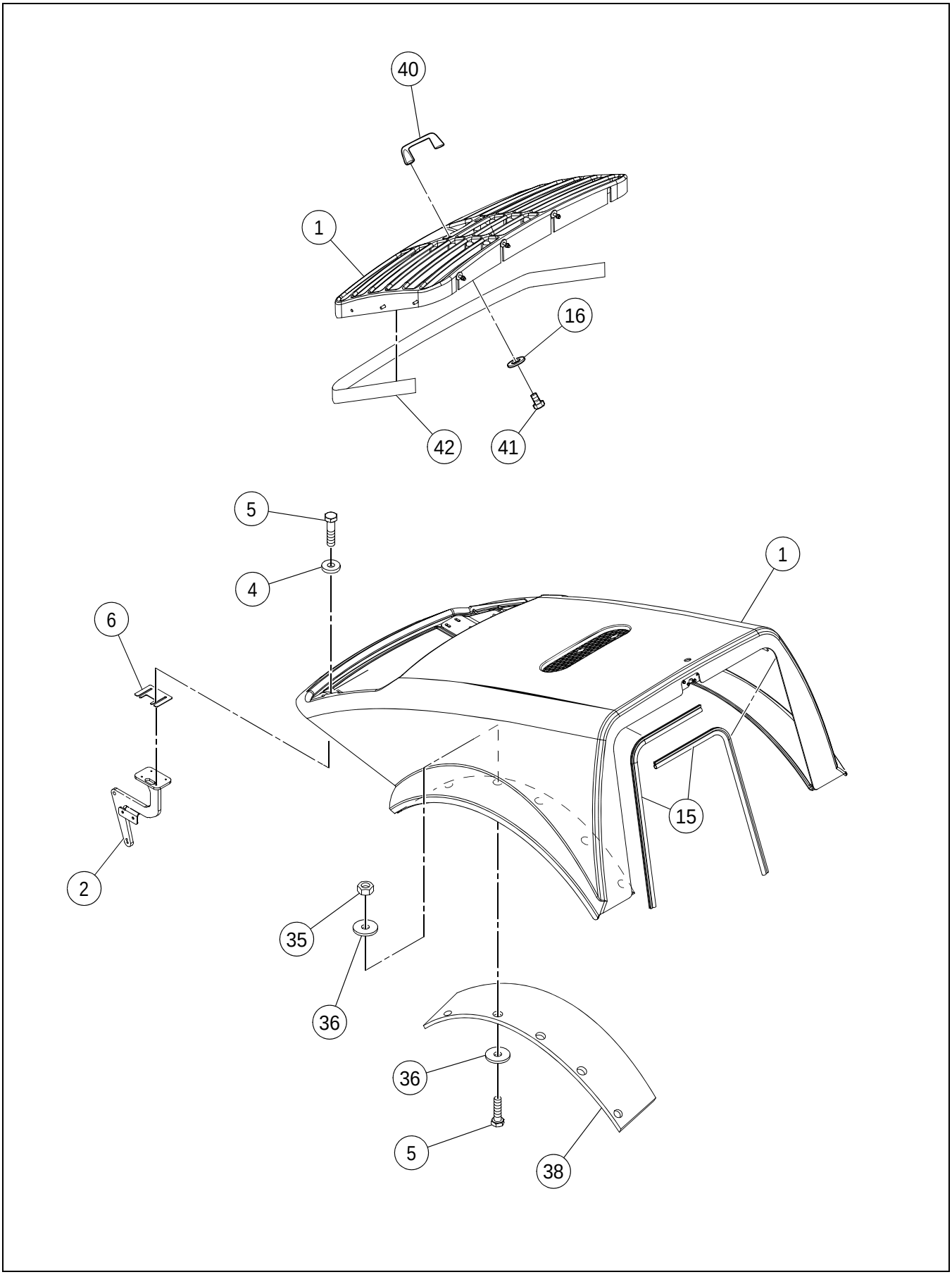

HOOD INSTALLATION - SHEET 2 OF 3

****Only Offered Parts Listed****

BOM 43871714, 13885439

ITEM	COMM. NO.	DESCRIPTION	QTY	DIMENSIONS/NOTES
1	13883210	Hood - SD-160	1	
-	13883780	Hood - SD-190/SD-200	1	
2	13325055	Hinge	1	
4	96712674	Flatwasher, Zinc Plated	8	M8 Hardened Cl 10
5	96702261	HHCS, Fully Threaded, Zinc Plated	18	M8 x 1.25 x 35 Cl 8.8
6	13238803	Hood Shim	2	
15	13883756	Seal Trim	1	
16	96740188	Washer, Zinc Plated	8	M8 x 3 Cl HV100
35	96701370	Nut, Zinc Plated	10	M8 x 1.25 Cl 8
36	96741038	Flatwasher	30	M8 x 1.25 Cl 200
38	18007674	Rubber Strip	2	
40	13883418	Hood Handle	1	
41	96702816	HHCS, Fully Threaded, Zinc Plated	2	M8 x 1.25 x 16 Cl 8.8
42	18009514	Rubber Edge Trim	1	

HOOD INSTALLATION - SHEET 3 OF 3

13883202 REV 0B

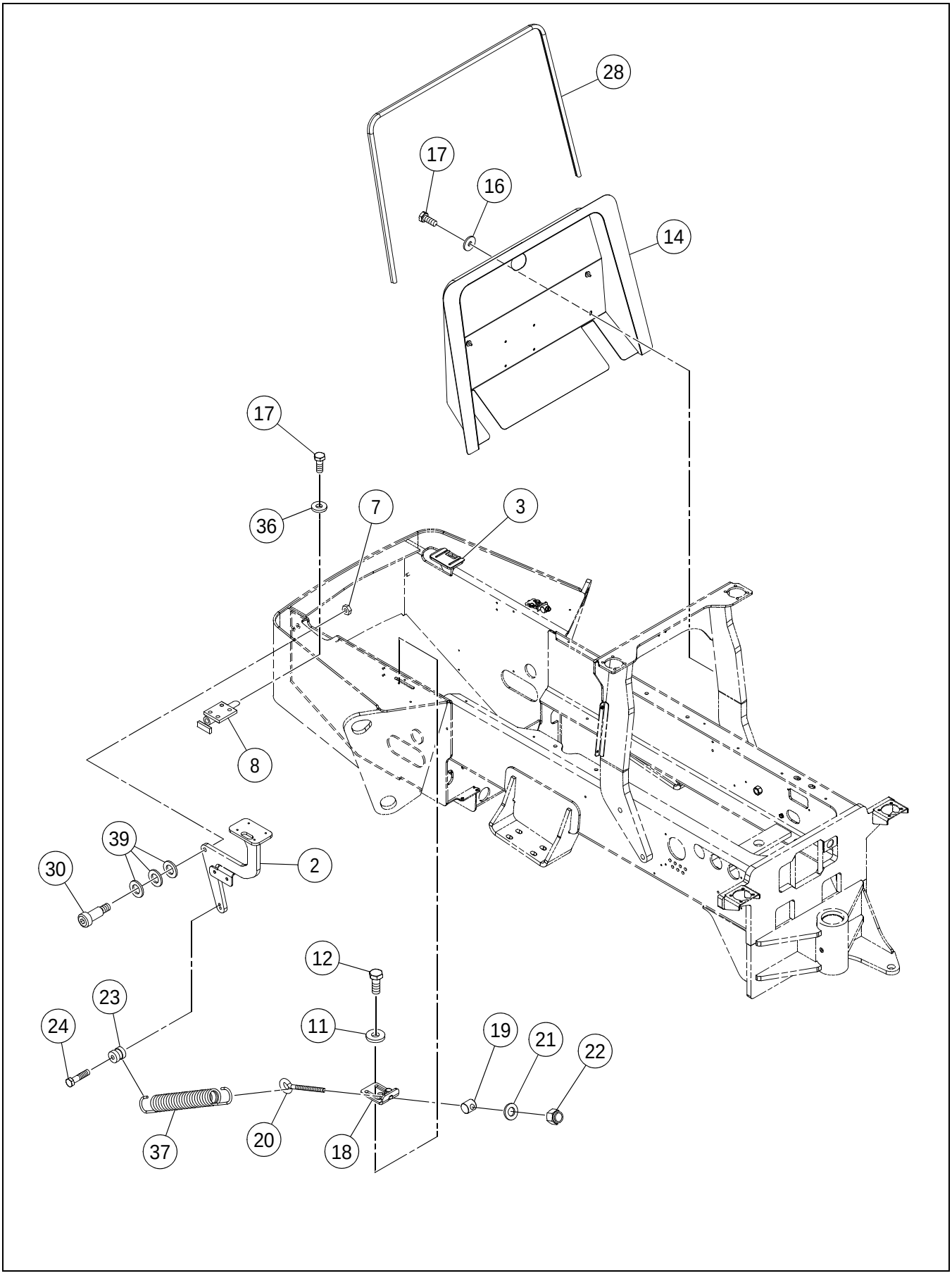

****Only Offered Parts Listed****

BOM 43871714, 13885439

ITEM	COMM. NO.	DESCRIPTION	QTY	DIMENSIONS/NOTES
2	13325055	Hinge	1	
3	13325170	Hinge	1	
7	96703657	Nut, Zinc Plated	2	M16 Cl 10
8	**NSVA**	**Prop Pin Block Assembly**	**1**	**See Page A - 28.**
11	96711833	Flatwasher, Zinc Plated	4	M10 Cl 10
12	96702287	HHCS, Fully Threaded, Zinc Plated	4	M10 x 1.5 x 25 Cl 8.8
13	13234877	Bracket (Not Shown)	2	
14	13882618	Hood Cowling - SD-160	1	
-	13883814	Hood Cowling - SD-190/SD-200	1	
16	96740188	Washer, Zinc Plated	8	M8 x 3 Cl HV100
17	96702824	HHCS, Fully Threaded, Zinc Plated	8	M8 x 1.25 x 20 Cl 8.8
18	13184700	Hood Spring Angle	2	
19	13184742	Spring Pivot	2	
20	13239090	Eye Bolt	2	
21	96738596	Flatwasher, Zinc Plated	2	M12 Hardened Cl 200
22	95923348	Locknut, Zinc Plated	2	1/2 x 13
23	13236377	Spring Pin	2	
24	96705595	HHCS, Fully Threaded, Zinc Plated	2	M12 x 1.75 x 50 Cl 8.8
28	13870936	Seal Trim - SD-160	1	
-	13185889	Seal Trim - SD-190/SD-200	1	
30	96716352	Shoulder Bolt	2	M16 x 2.0 x 40
36	96741038	Flatwasher	30	M8 x 1.25 Cl 200
37	13460365	Spring	2	
39	96738620	Flatwasher, Zinc Plated	6	M20 Hardened Cl 200

PROP PIN BLOCK ASSEMBLY

13459367 REV 01

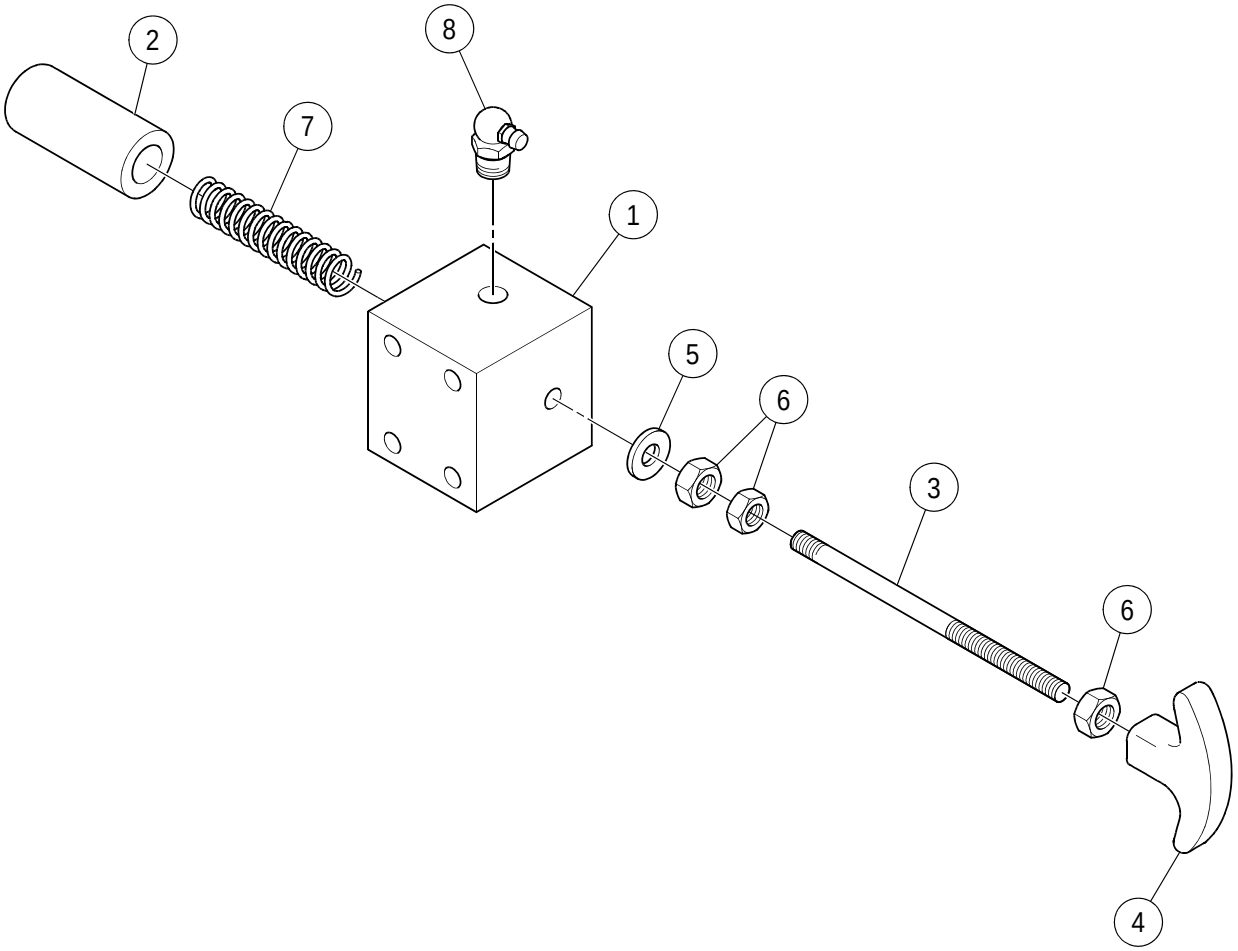

PROP PIN BLOCK ASSEMBLY

****Only Offered Parts Listed****

BOM 13459367

ITEM	COMM. NO.	DESCRIPTION	QTY	DIMENSIONS/NOTES
1	13459375	Prop Block	1	
2	13459383	Pin	1	
3	13459391	Rod	1	
4	13299581	T-Handle	1	
5	95922324	Flatwasher, Zinc Plated	1	1/4
6	95931564	Nut, Zinc Plated	3	1/4 x 20 Grd A
7	13459409	Spring	1	
8	95208971	Fitting	1	

NO ROPS/HOOD LATCH DRAW INSTALLATION

13883434 REV 02

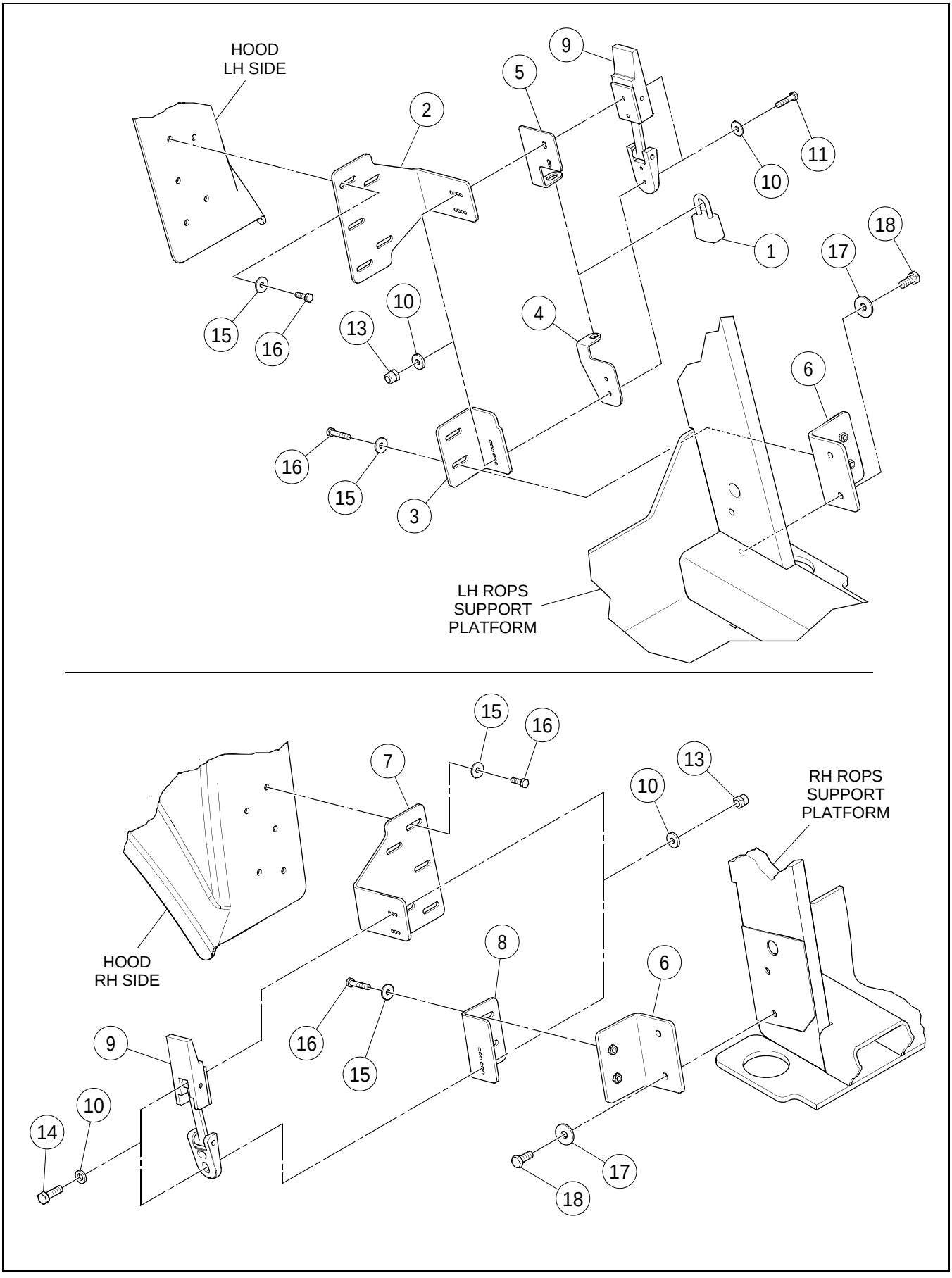

NO ROPS/HOOD LATCH DRAW INSTALLATION

****Only Offered Parts Listed****

BOM 13883434

ITEM	COMM. NO.	DESCRIPTION	QTY	DIMENSIONS/NOTES
1	13349212	Lock	1	
2	13881206	Hood Latch Bracket, LH	1	
3	13881198	ROPS Latch Bracket, LH	1	
4	13885355	Lock Tab, RH	1	
5	59163238	Lock Tab, RH	1	
6	13881396	No ROPS Latch Mounting Bracket	2	
7	13881230	Hood Latch Bracket RH	1	
8	13881222	RH ROPS Latch Bracket	1	
9	59162149	Latch	2	
10	95922332	Flatwasher, Zinc Plated	16	#10
11	96705736	HHCS, Fully Threaded, Zinc Plated	4	M5 x 0.8 x 20 Cl 8.8
13	96704580	Hex Locknut, Zinc Plated	8	M5 x 0.8 Cl 8
14	96705728	HHCS, Fully Threaded, Zinc Plated	4	M5 x 0.8 x 16 Cl 8.8
15	96740204	Washer	14	M8 x 25
16	96702659	HHCS, Fully Threaded, Zinc Plated	14	M8 x 1.25 x 25 Cl 8.8
17	96741046	Flatwasher, Zinc Plated	4	M10 Cl 200
18	96702287	HHCS, Fully Threaded, Zinc Plated	4	M10 x 1.5 x 25 Cl 8.8

13169842 REV 0M

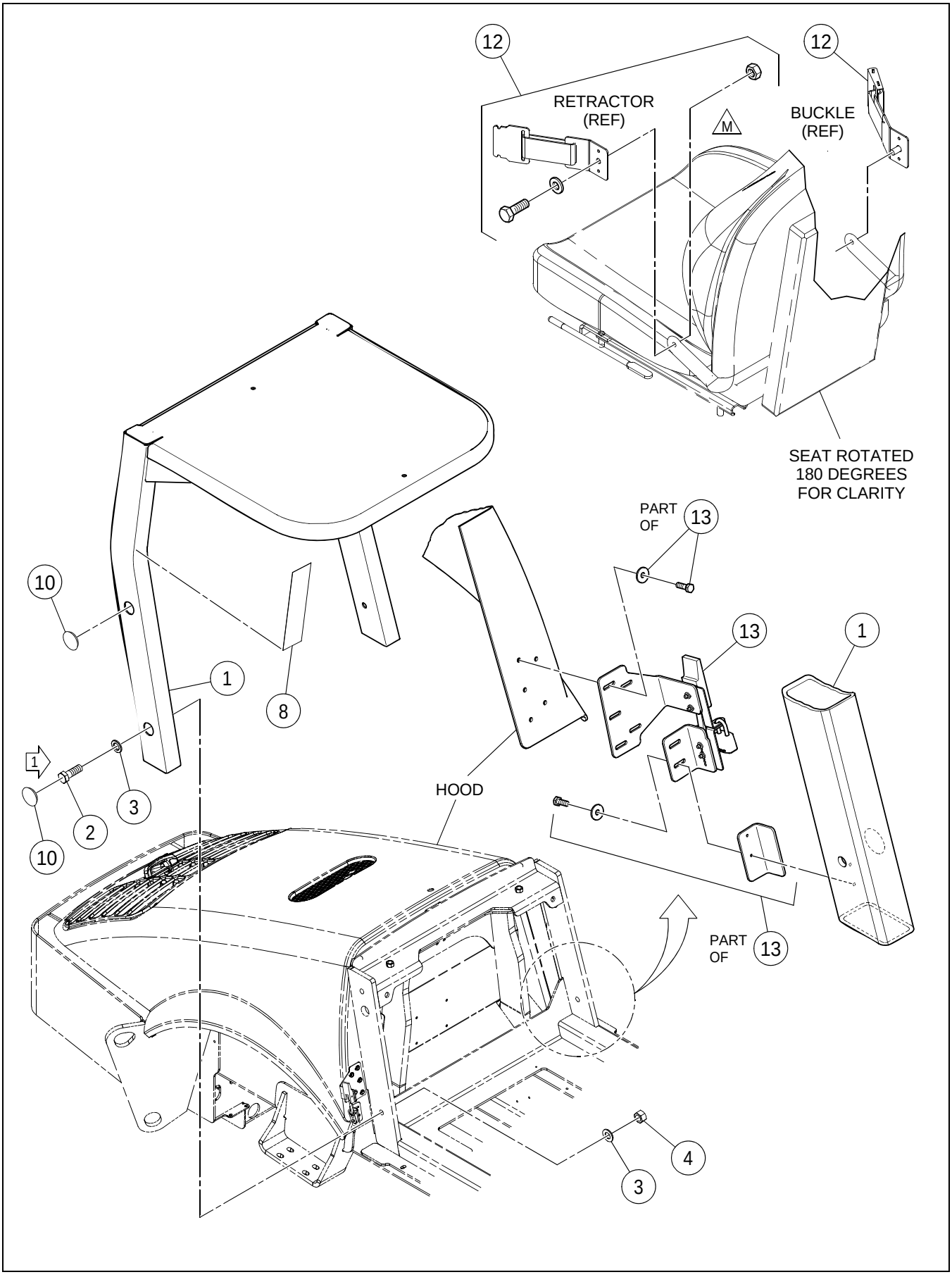

ROPS/FOPS INSTALLATION

****Only Offered Parts Listed****

BOM 13883244, 13883798

ITEM	COMM. NO.	DESCRIPTION	QTY	DIMENSIONS/NOTES
1	19298009	ROPS/FOPS - SD-160	1	
-	19298017	ROPS/FOPS - SD-190/SD-200	1	
2	96746235	HHCS, Zinc Plated - SD-160	4	M24 x 3 x 70 Cl 10.9
-	96715123	HHCS, Zinc Plated- SD-190/SD-200	4	M24 x 3 x 80 Cl 10.9
3	96702642	Washer, Zinc Plated	8	M24 Hardened
4	96727532	Hex Nut, Zinc Plated - SD-160 Only	4	M24 x 3 Cl 8
8	13197306	Decal: Checklist	1	
10	13309877	Plastic Plug	4	
12	**NSVA**	**Seatbelt Installation**	**1**	**See Page A - 34.**
13	**NSVA**	**ROPS/Hood Draw Latch Installation**	**1**	**See Page A - 36.**

43803394 REV 00

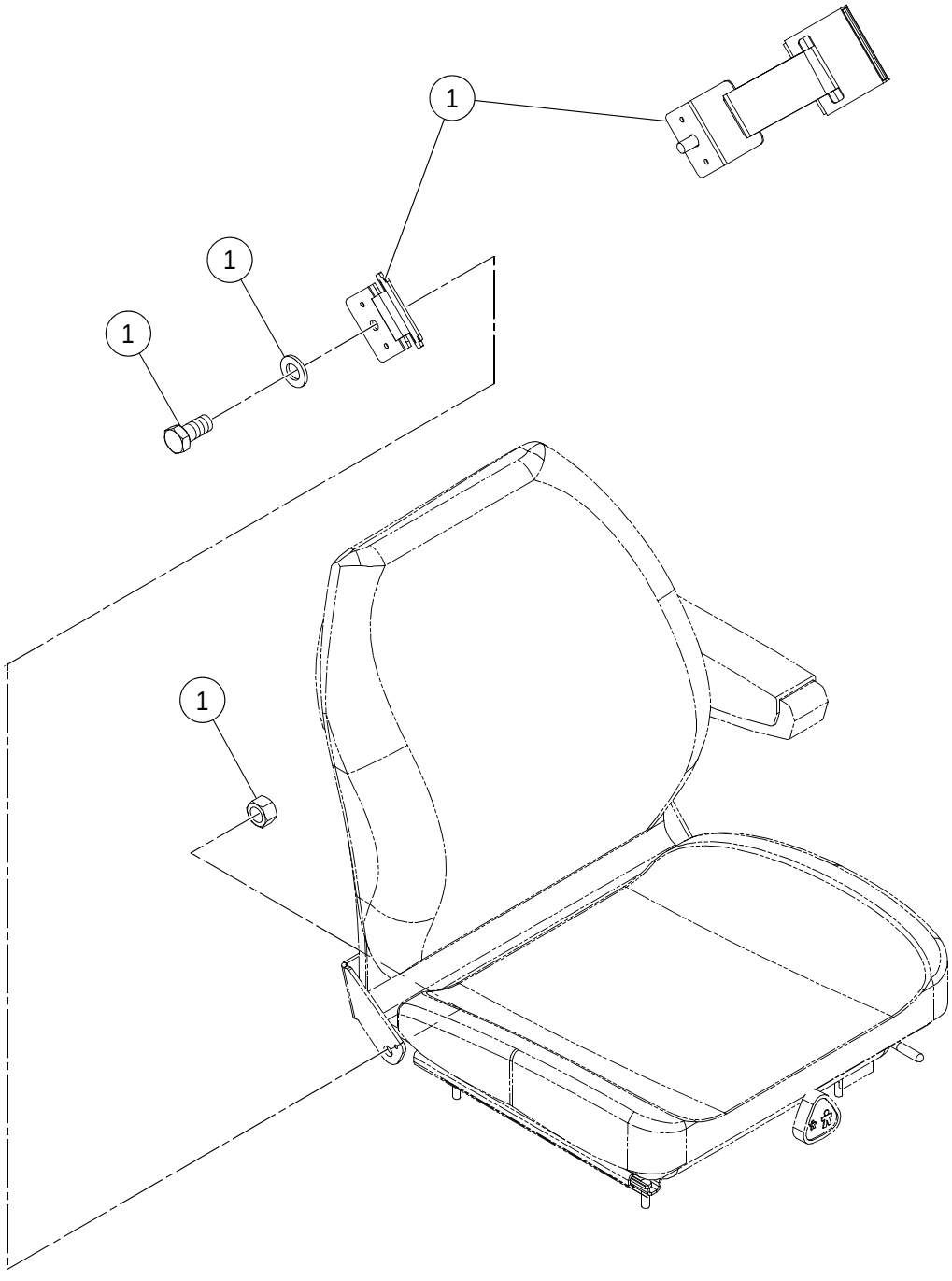

SEATBELT INSTALLATION

****Only Offered Parts Listed****

BOM 43803394

ITEM	COMM. NO.	DESCRIPTION	QTY	DIMENSIONS/NOTES
1	13342720	Seat Belt	1	

13883673 REV 02

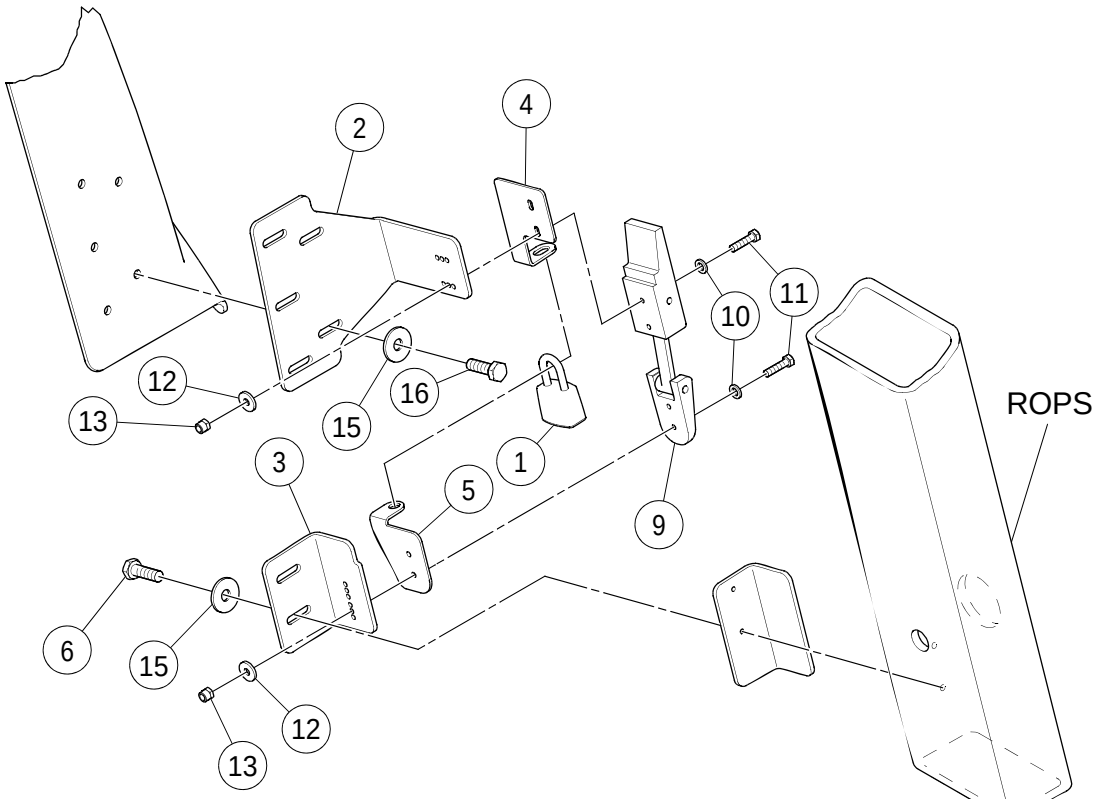

LH SIDE

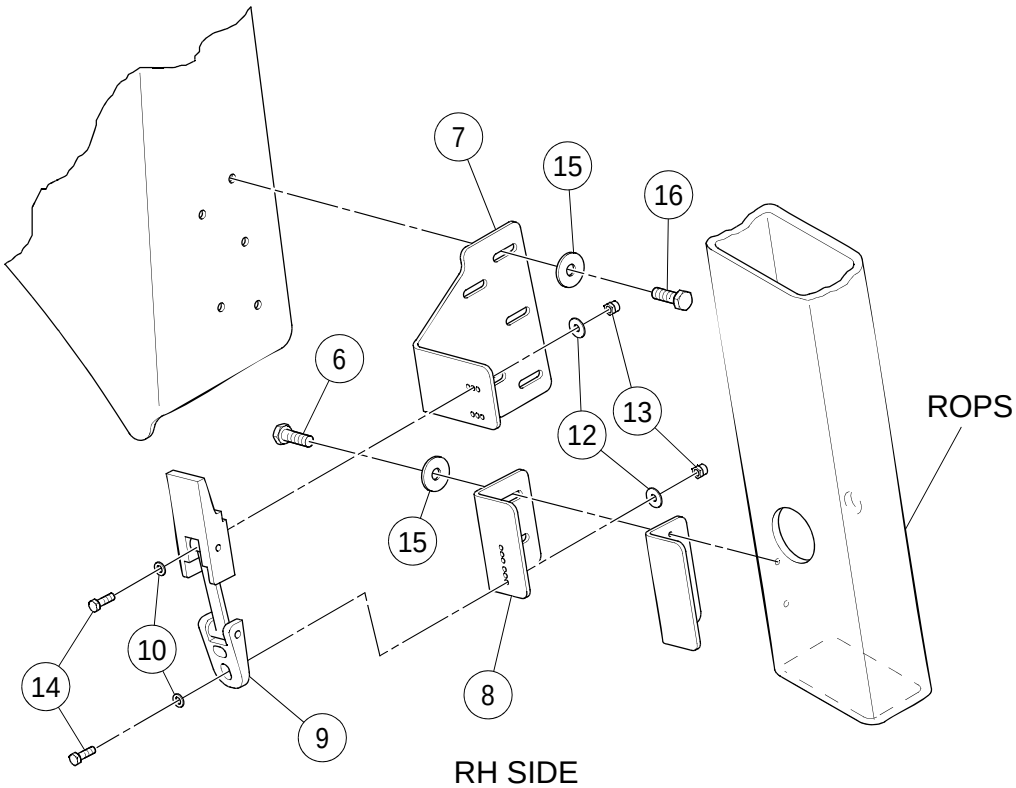

RH SIDE

ROPS/HOOD DRAW LATCH INSTALLATION

****Only Offered Parts Listed****

BOM 13883673

ITEM	COMM. NO.	DESCRIPTION	QTY	DIMENSIONS/NOTES
1	13349212	Lock	1	
2	13881206	Hood Latch Bracket, LH	1	
3	13881198	ROPS Latch Bracket, LH	1	
4	13885355	RH Lock Tab	1	
5	59163238	RH Lock Tab	1	
6	96702659	HHCS, Fully Threaded, Zinc Plated	14	M8 x 1.25 x 25 Cl 8.8
7	13881230	Hood Latch Bracket, RH	1	
8	13881222	ROPS Latch Bracket, RH	1	
9	59162149	Latch	2	
10	95922332	Flatwasher, Zinc Plated	16	#10
11	96705736	HHCS, Fully Threaded, Zinc Plated	4	M5 x 0.8 x 20 Cl 8.8
12	NOT-USED	This Item Not Used W/this Bom	1	
13	96704580	Hex Locknut, Zinc Plated	8	M5 x 0.8 Cl 8
14	96705728	HHCS, Fully Threaded, Zinc Plated	4	M5 x 0.8 x 16 Cl 8.8
15	96740204	Washer	14	M8 x 25
16	NOT-USED	This Item Not Used W/this Bom	1	

GRILL SUPPORT INSTALLATION

13885660 REV 00

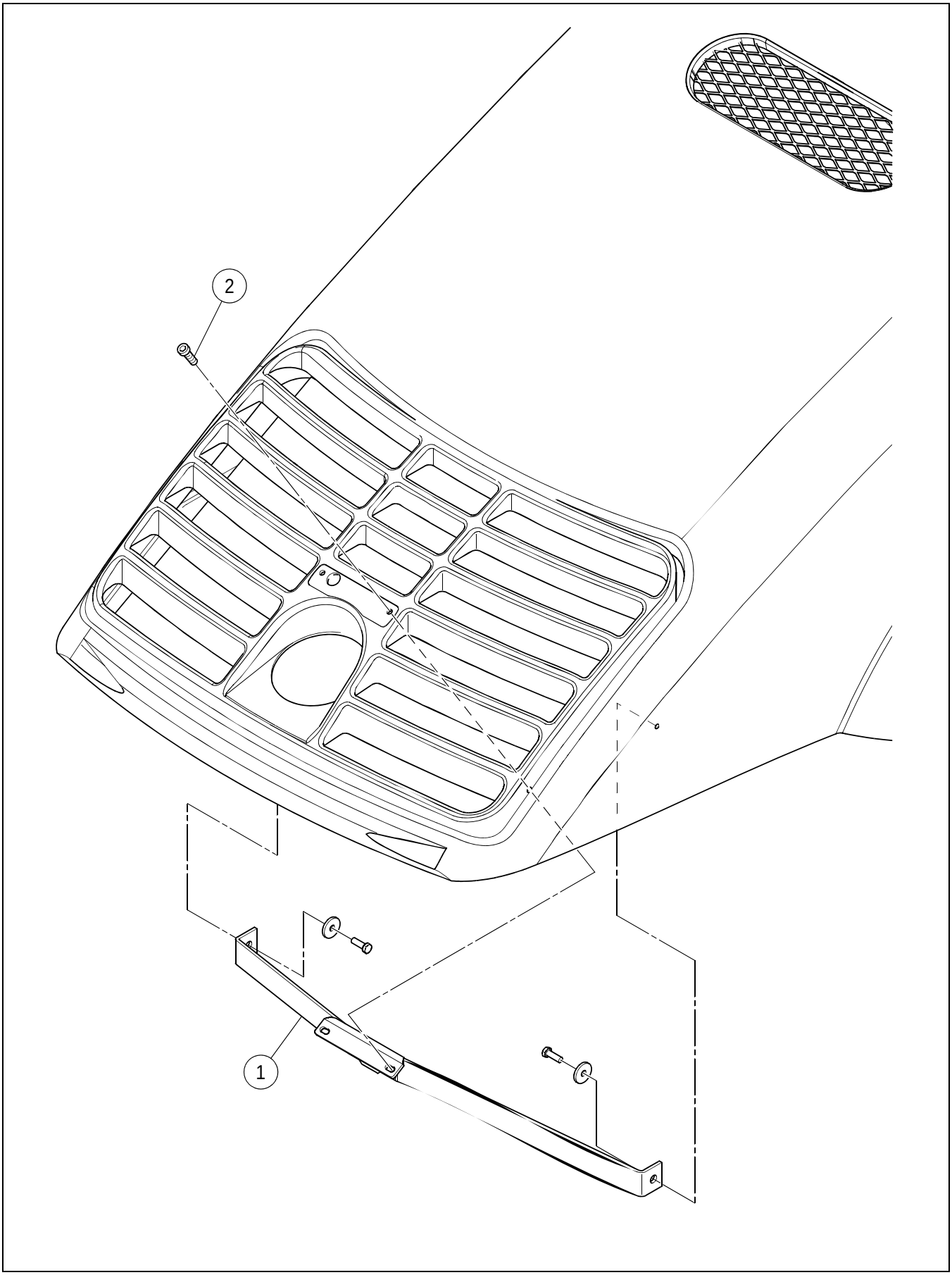

GRILL SUPPORT INSTALLATION

****Only Offered Parts Listed****

BOM 13885660

ITEM	COMM. NO.	DESCRIPTION	QTY	DIMENSIONS/NOTES
1	13885256	Grill Support	1	
2	96702824	HHCS, Fully Threaded, Zinc Plated	2	M8 x 1.25 x 20 Cl 8.8

SPRING ISOLATION FOAM INSTALLATION

19297118 REV 00

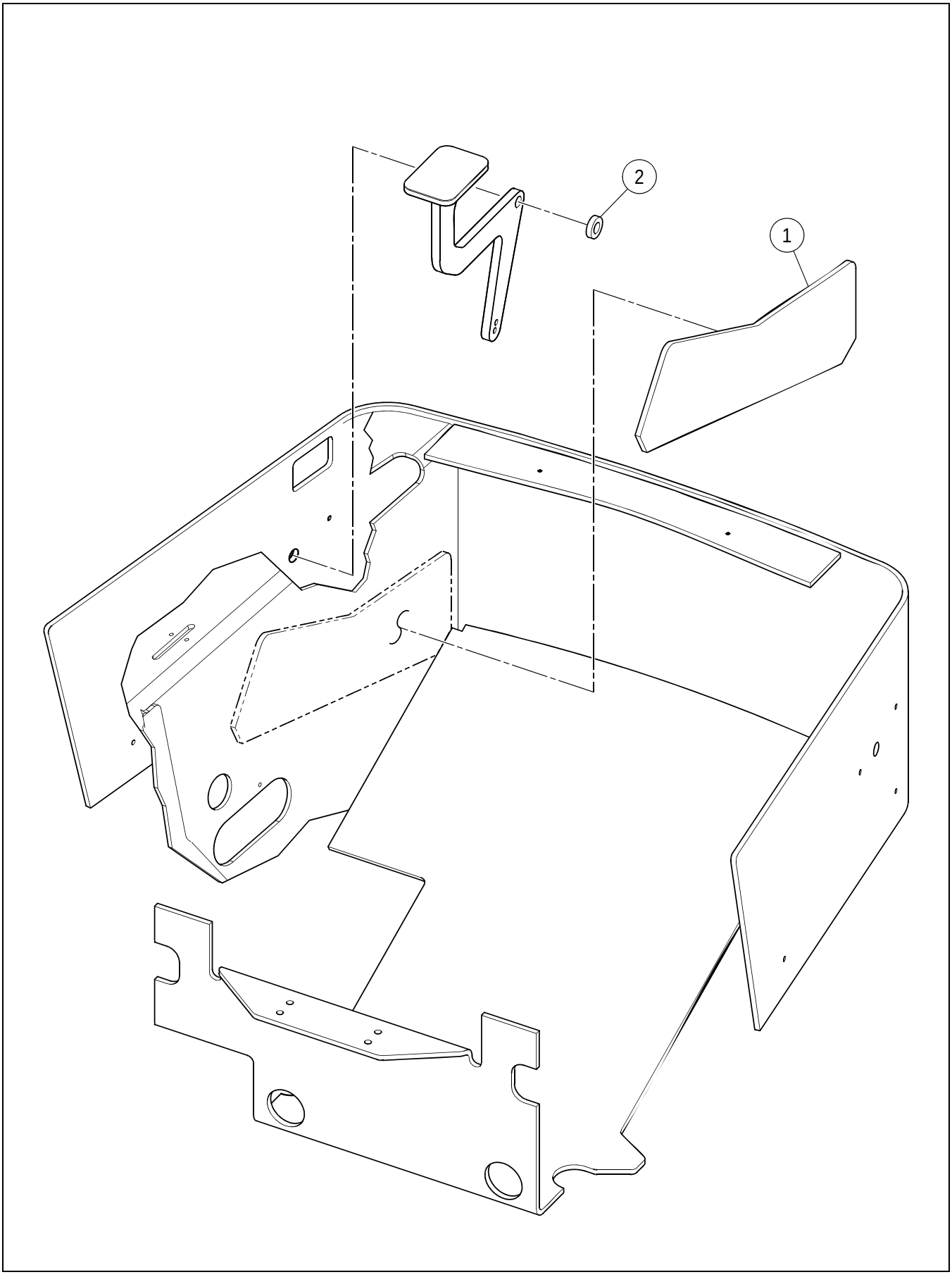

SPRING ISOLATION FOAM INSTALLATION

****Only Offered Parts Listed****

BOM 19297118

ITEM	COMM. NO.	DESCRIPTION	QTY	DIMENSIONS/NOTES
1	19294198	Isolation Pad Spring	2	
2	19295336	Hood Hinge Spacer	2	

Section B - DRUM

FRONT FRAME INSTALLATION - SD-160 - EFFECTIVE WITH S/N 196502 - SHEET 1 OF 2

43899673 REV 00

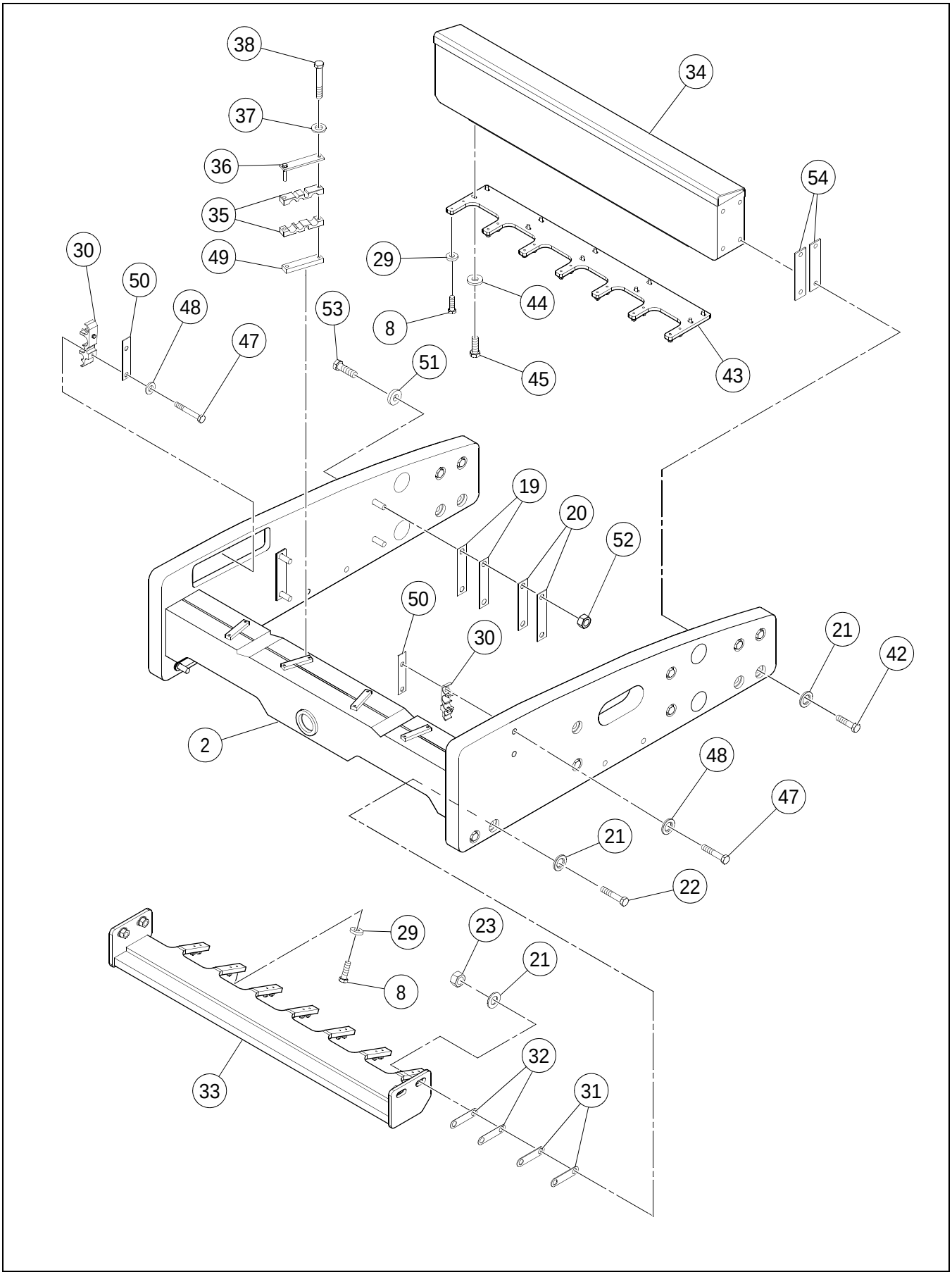

FRONT FRAME INSTALLATION - SD-160 - EFFECTIVE WITH S/N 196502 - SHEET 1 OF 2

****Only Offered Parts Listed****

BOM 43899665

ITEM	COMM. NO.	DESCRIPTION	QTY	DIMENSIONS/NOTES
2	43890748	Drum Frame	1	
8	96715081	HHCS, Zinc Plated	14	M12 x 1.75 x 45 Cl 8.8
19	13387956	Shim	12	
20	13387949	Shim	2	
21	96701578	Washer	16	
22	NOT-USED	This Item Not Used W/this Bom	1	
23	96720438	Hex Nut	4	M30 x 3.5
29	96712237	Flatwasher	14	
30	13209200	Hose Clamp	2	
31	NOT-USED	This Item Not Used W/this Bom	1	
32	NOT-USED	This Item Not Used W/this Bom	1	
33	NOT-USED	This Item Not Used W/this Bom	1	
34	13419387	Bumper	1	
35	13239967	Hose Clamp	8	
36	58880501	Clamp Plate	4	
37	96714399	Flatwasher, Zinc Plated	8	Cl 140
38	96704739	HHCS, Zinc Plated	8	M10 x 1.5 x 90 Cl 8.8
42	96702907	HHCS, Zinc Plated	12	M30 x 3.5 x 180 Cl 10.9
43	13504444	Scraper Mounting Bar	1	
44	59565044	Flatwasher, Hardened	10	
45	96715156	HHCS, Zinc Plated	10	M16 x 2.0 x 65 Cl 8.8
47	96728639	HHCS, Zinc Plated	4	M6 x 1.0 x 110 Cl 8.8
48	96741053	Flatwasher	4	
49	13209168	Spacer Bar	4	
50	13385042	Cover Plate	2	
51	96702642	Washer	4	M24
52	96703681	Hex Nut	4	
53	96751672	HHCS, Zinc Plated	4	M24 x 3.0 x 240 Cl 10.9
54	59298935	Shim	4	

FRONT FRAME INSTALLATION - SD-160 - EFFECTIVE WITH S/N 196502 - SHEET 2 OF 2

43899673 REV 00

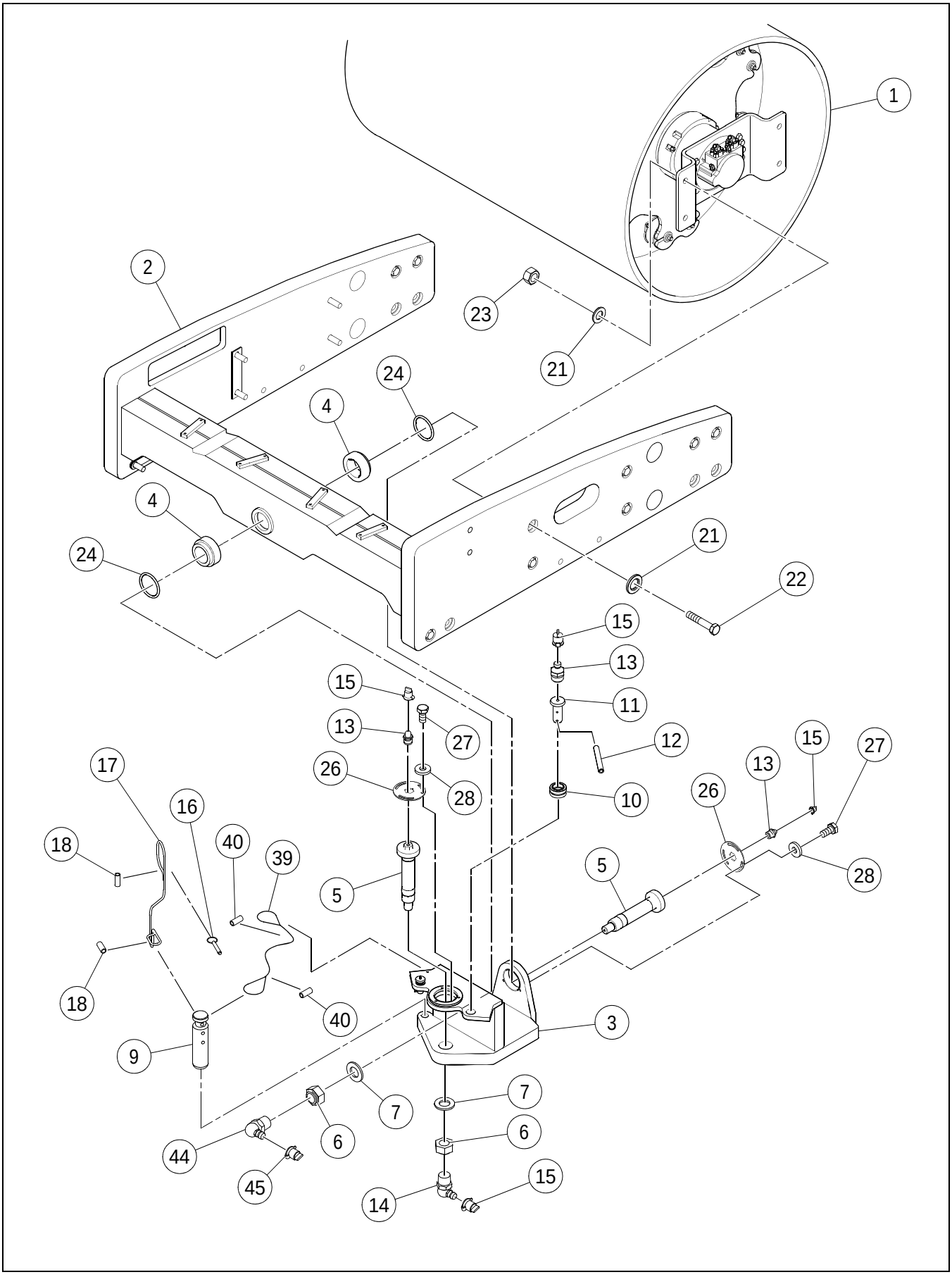

FRONT FRAME INSTALLATION - SD-160 - EFFECTIVE WITH S/N 196502 - SHEET 2 OF 2

****Only Offered Parts Listed****

BOM 43899665

ITEM	COMM. NO.	DESCRIPTION	QTY	DIMENSIONS/NOTES
1	**NSVA**	**Drum Assembly - Effective With S/N 196615**	**1**	**See Page B - 6.**
-	**NSVA**	**Drum Assembly - Prior to S/N 196615**	**1**	**See Page B - 28.**
2	43890748	Drum Frame	1	
3	43855303	Swivel	1	
4	43897362	Bearing	2	
5	43855071	Articulation/Oscillation Pin	2	
6	59003442	Elastic Stop Nut	2	
7	59299768	Washer	2	
9	59298208	Articulation Lock Pin	1	
10	59450528	Bushing	2	
11	59190975	Pivot Pin	2	
12	95098679	Roll Pin	2	
13	95201547	Grease Fitting	4	
14	95208971	Fitting	2	
15	50270248	Grease Fitting Cap	6	
16	59299545	Hitch Pin	1	
17	59607861	Cable	1	
18	59607853	Ferrule	2	
21	96701578	Washer	16	
22	NOT-USED	This Item Not Used W/this Bom	1	
23	96720438	Hex Nut	4	M30 x 3.5
24	43890714	Seal	2	
26	13413802	Lockplate	2	
27	96702808	HHCS, Zinc Plated	6	M12 x 1.75 x 30 Cl 10.9
28	96712237	Flatwasher	6	
39	59436741	Cable	1	
40	59214775	Sleeve	2	
44	59565044	Flatwasher, Hardened	10	
45	96715156	HHCS, Zinc Plated	10	M16 x 2.0 x 65 Cl 8.8

DRUM ASSEMBLY - SD-160 - EFFECTIVE WITH S/N 196615

43887843 REV 00

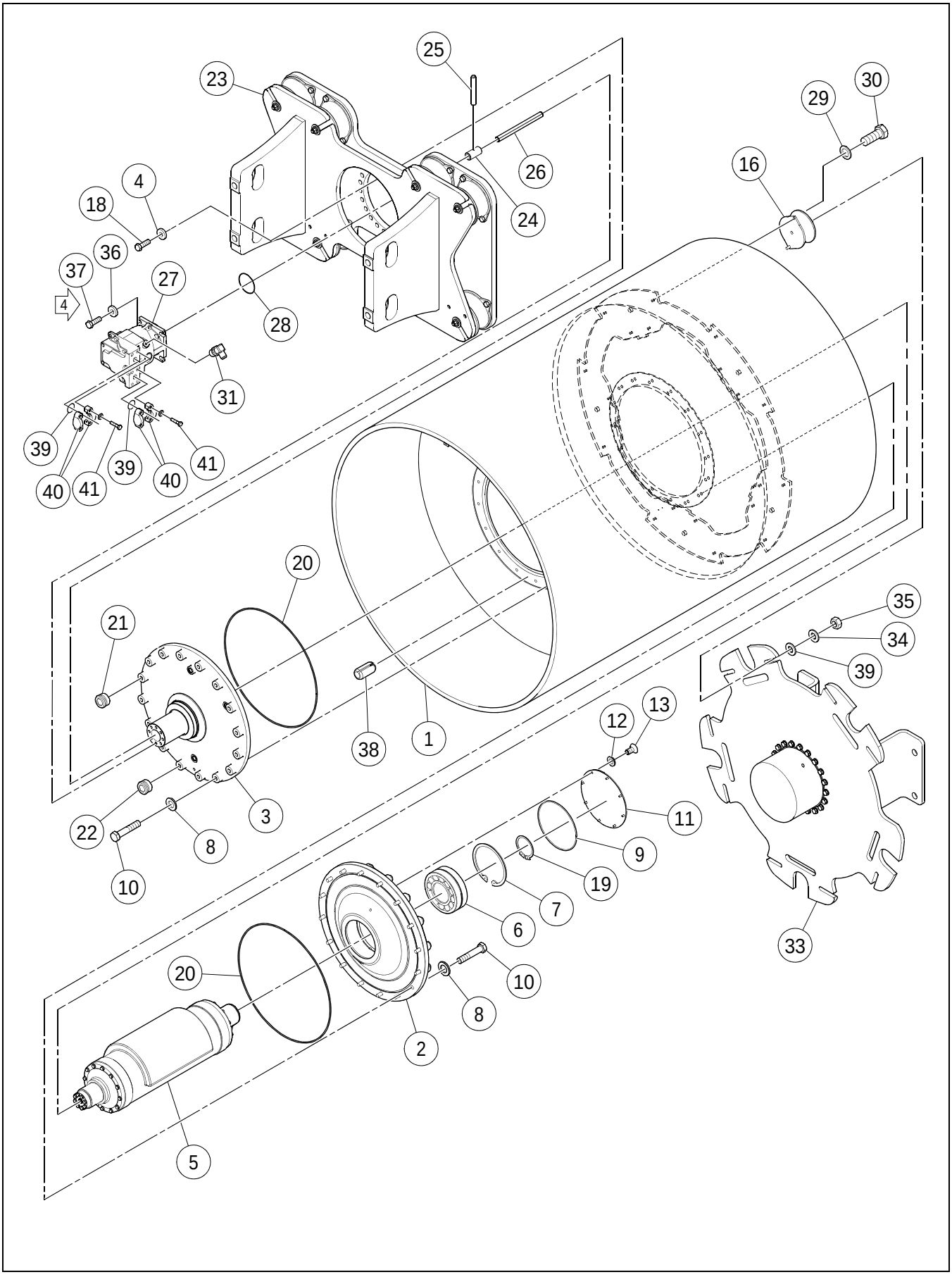

DRUM ASSEMBLY - SD-160 - EFFECTIVE WITH S/N 196615

****Only Offered Parts Listed****

BOM 43887850

ITEM	COMM. NO.	DESCRIPTION	QTY	DIMENSIONS/NOTES
1	13411962	Drum - SD-160DX	1	
-	13418512	Drum - SD-160F	1	
2	13329263	Bearing Drive	1	
3	**NSVA**	**Bearing Housing Assembly**	**1**	**See Page B - 8.**
4	96738612	Flatwasher, Zinc Plated	24	Cl 200
5	**NSVA**	**Eccentric Shaft Assembly**	**1**	**See Page B - 10.**
6	54591805	Bearing	1	
7	96711106	Retainer Ring	1	
8	96738620	Flatwasher	32	
9	95269320	O-ring	1	
10	96701909	HHCS, Zinc Plated	32	M20 x 2.5 x 90 Cl 10.9
11	59296384	Cover	1	
12	96741038	Flatwasher	12	
13	96702824	HHCS, Zinc Plated	12	M8 x 1.25 x 20 Cl 8.8
16	13304787	Shock Mount	12	
18	96705520	HHCS, Zinc Plated	24	M16 x 2.0 x 80 Cl 8.8
19	96711544	Retaining Ring	1	
20	95603163	O-ring	2	
21	59144428	Magnetic Plug	2	
22	59277772	Sight Gauge	1	
23	**NSVA**	**Carrier Assembly**	**1**	**See Page B - 12.**
24	59296236	Spline Coupling	1	
25	96701586	Spring Pin - SD-160DX	1	
-	96736822	Roll Pin - SD-160F	1	
26	13183272	Spline Shaft	1	
27	**54596259**	**Vibration Motor**	**1**	**See Breakdown B - 14.**
-	13284948	ARC - Vibration Motor	1	
28	95988820	O-ring	1	
29	96738596	Flatwasher	24	
30	96702790	HHCS, Zinc Plated	24	M12 x 1.75 x 25 Cl 10.9
31	95285946	Adapter	1	
33	**NSVA**	**Drive Motor Assembly**	**1**	**See Page B - 16.**
34	96716345	Flatwasher	12	M16
35	96703657	Nut	12	M16
36	96712237	Flatwasher	4	
37	96702329	HHCS, Zinc Plated	4	M12 x 1.75 x 35 Cl 8.8,
38	96737069	Roll Pin	1	
39	13855184	Washer	12	
40	NOT-USED	This Item Not Used W/this Bom	1	
41	NOT-USED	This Item Not Used W/this Bom	1	
43	58901653	Split Flange Clamp (Not Shown)	4	
44	96702667	HHCS, Zinc Plated (Not Shown)	8	M12 x 1.75 x 45 Cl 8.8
45	96738596	Flatwasher (Not Shown)	8	
46	59993881	O-ring - SD-160DX (Not Shown)	2	
-	59993873	O-ring - SD-160F	2	

BEARING HOUSING ASSEMBLY

43887827 REV 00

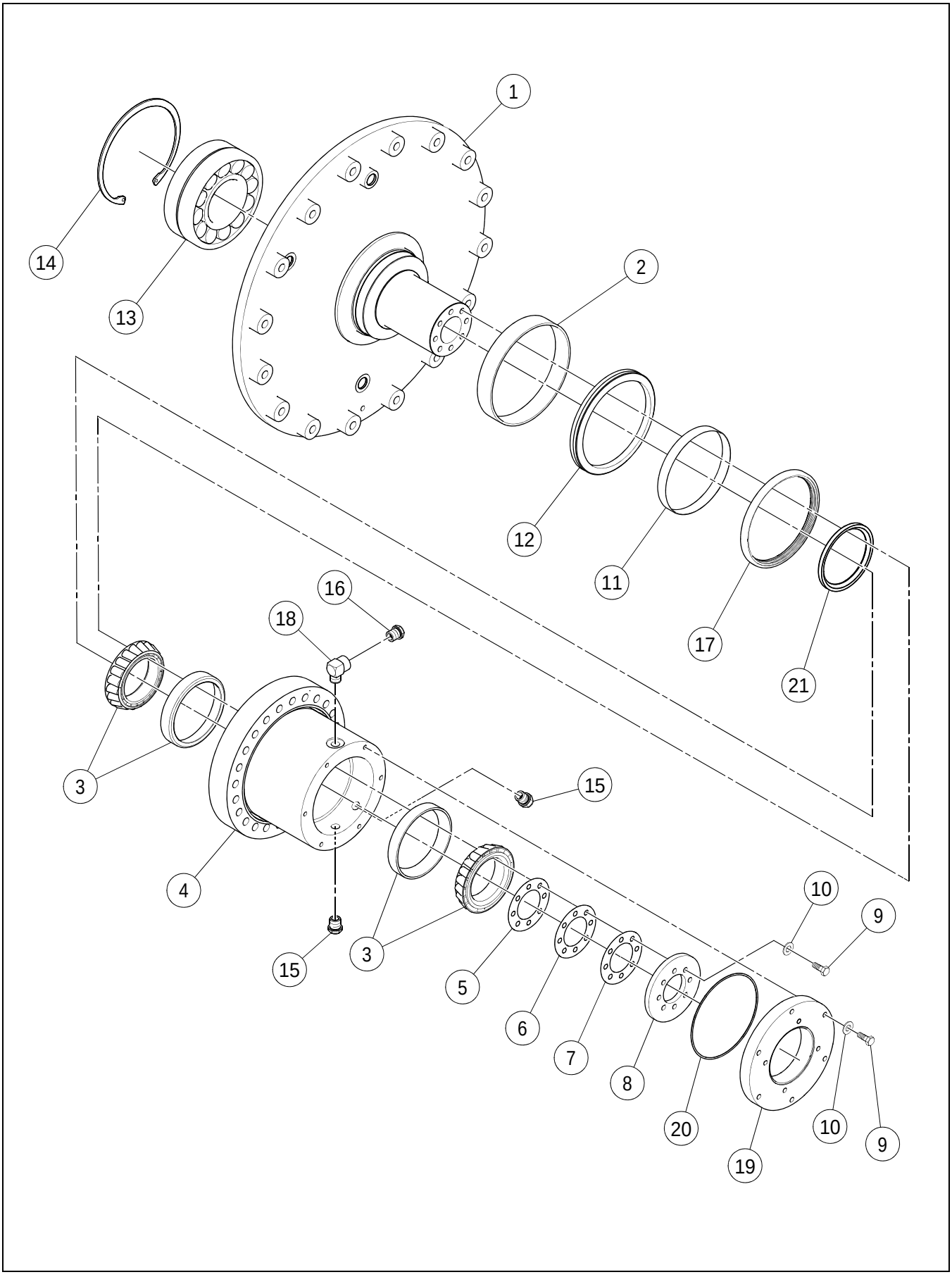

BEARING HOUSING ASSEMBLY

****Only Offered Parts Listed****

BOM 43887769

ITEM	COMM. NO.	DESCRIPTION	QTY	DIMENSIONS/NOTES
1	43887777	Bearing Housing Spindle	1	
2	43887785	Dust Band	1	
3	13414743	Bearing Taper Roller	2	
4	43887660	Carrier Housing	1	
5	13502141	Shim	2	.005"
6	13502133	Shim	2	.007"
7	13502125	Shim	3	.020"
8	13502166	Plate	1	
9	96704549	HHCS, Zinc Plated	14	M10 x 1.5 x 45 Cl 10.9
10	96741046	Flatwasher	14	
11	59277756	Wear Sleeve	1	
12	13167390	V-ring Seal	1	
13	54591805	Bearing	1	
14	96711106	Retainer Ring	1	
15	59600593	Pipe Plug	2	
16	54584776	Filtered Vent Breather	1	
17	59277764	Oil Seal	1	
18	95264891	Adapter	1	
19	43887835	End Plate	1	
20	13502240	O-ring Seal	1	
21	13447354	Spacer Ring	1	

ECCENTRIC SHAFT ASSEMBLY

43866508 REV 00

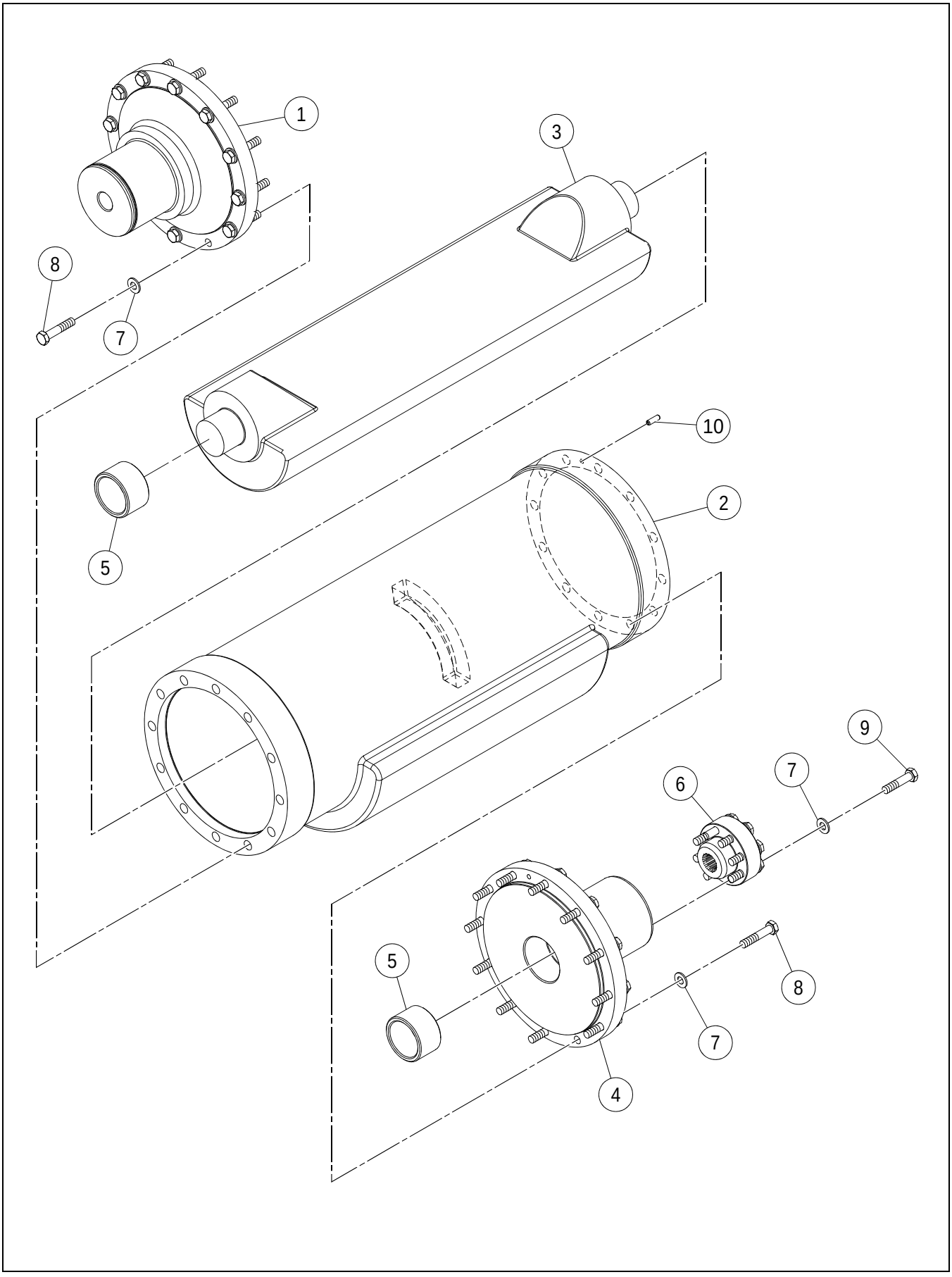

ECCENTRIC SHAFT ASSEMBLY

****Only Offered Parts Listed****

BOM 59278622

ITEM	COMM. NO.	DESCRIPTION	QTY	DIMENSIONS/NOTES
1	59295378	Drive Side Journal	1	
2	13218045	Eccentric Shaft - SD-160DX	1	
-	13290101	Eccentric Shaft- SD-160F	1	
3	59298042	Eccentric Shaft	1	
4	13276571	Drive Side Journal	1	
5	59296632	Oilite Bearing	2	
6	13183249	Splined Coupling	1	
7	96741046	Flatwasher	32	
8	96702436	HHCS, Zinc Plated	24	M10 x 1.5 x 50 Cl 10.9
9	96702428	HHCS, Zinc Plated	8	M10 x 1.5 x 45 Cl 8.8
10	96720990	Roll Pin	1	

CARRIER ASSEMBLY

43887751 REV 00

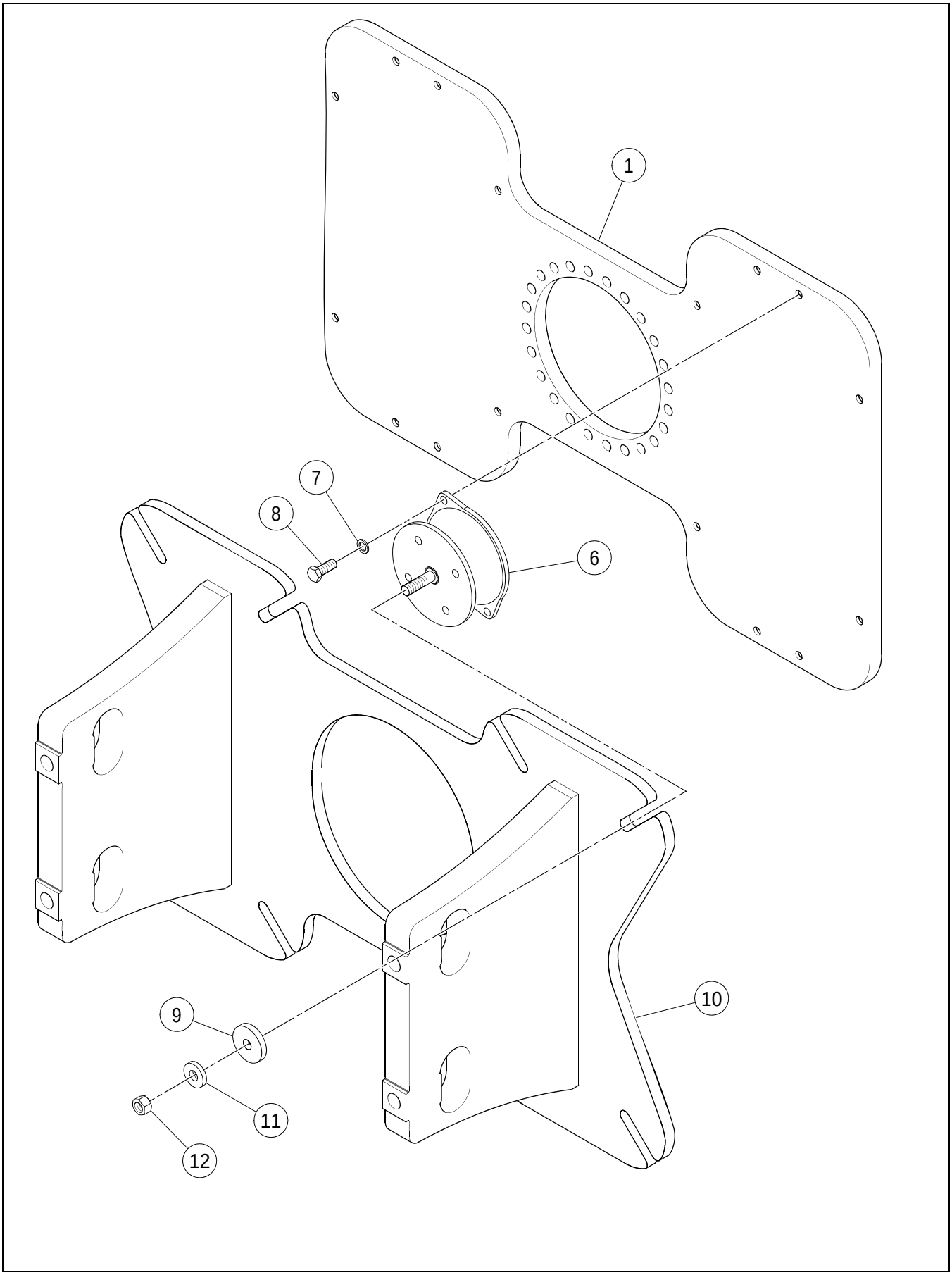

CARRIER ASSEMBLY

****Only Offered Parts Listed****

BOM 43887637

ITEM	COMM. NO.	DESCRIPTION	QTY	DIMENSIONS/NOTES
1	43887579	Carrier Plate	1	
6	13304787	Shock Mount	8	
7	96738596	Flatwasher	16	
8	96703111	HHCS, Zinc Plated	16	M12 x 1.75 x 35 Cl 10.9
9	13855184	Washer	8	
10	43887702	Shock Mount	1	
11	96716345	Flatwasher	8	M16
12	96703657	Nut	8	M16

VIBRATION MOTOR (54596259) - INTERNAL BREAKDOWN

54596259 REV 00

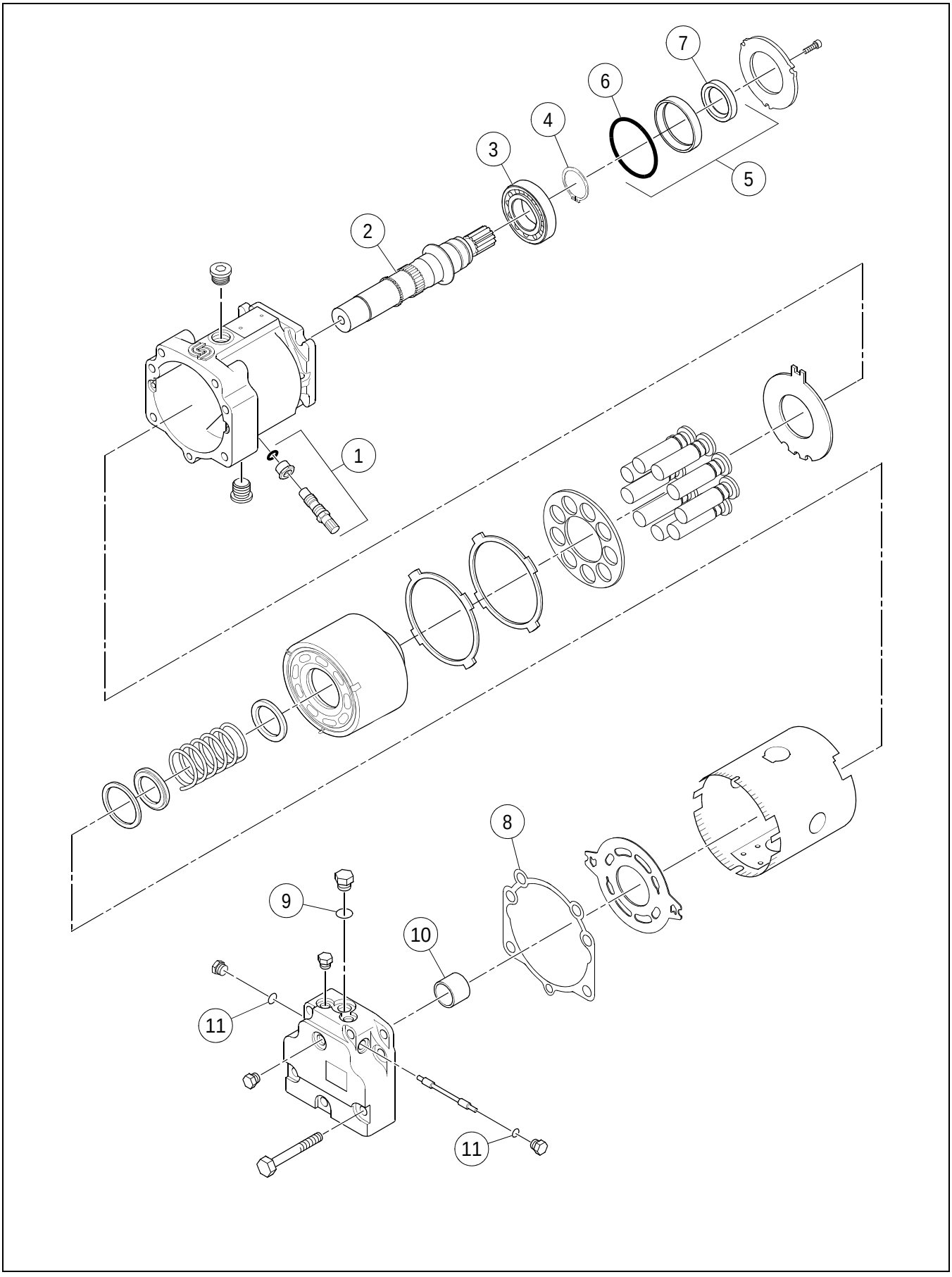

VIBRATION MOTOR (54596259) - INTERNAL BREAKDOWN

****Only Offered Parts Listed****

BOM 54596259

ITEM	COMM. NO.	DESCRIPTION	QTY	DIMENSIONS/NOTES
1	59249284	Speed Sensor	1	
2	59052704	Shaft	1	
3	59067538	Roller Bearing	1	
4	59785519	Ring	1	
5	59155192	Shaft Seal Assembly	1	
6	59368845	O-ring	1	
7	59368837	Seal	1	
8	59367755	End Cap Gasket	1	
9	50278019	O-ring	1	
10	59368886	Bearing	1	
11	59698811	O-ring	2	
-	13284948	ARC - Vibration Motor	1	

DRIVE MOTOR ASSEMBLY

13350525 REV 03

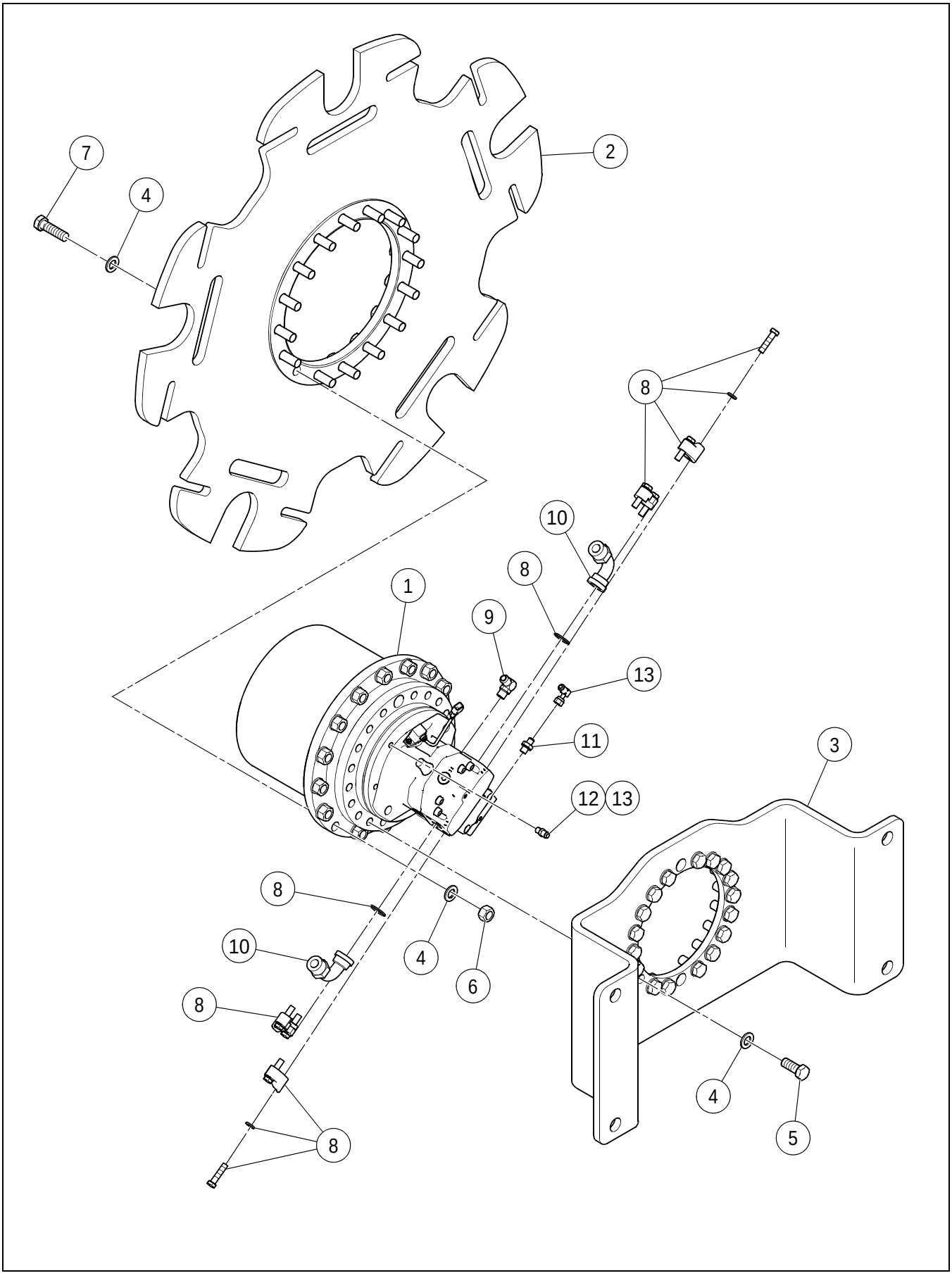

DRIVE MOTOR ASSEMBLY

****Only Offered Parts Listed****

BOM 13358957

ITEM	COMM. NO.	DESCRIPTION	QTY	DIMENSIONS/NOTES
1	**13460407**	**Drum Drive Motor**	**1**	**See Page B - 18.**
2	13413984	Drive Plate	1	
3	13412028	Drive Mounting	1	
4	96738620	Flatwasher	16	
5	96704481	HHCS, Zinc Plated	16	M20 x 2.5 x 50 Cl 8.8
6	96738612	Flatwasher, Zinc Plated	20	Cl 200
7	96745419	HHCS, Zinc Plated	20	M16 x 1.5 x 50 Cl 8.8
8	13184445	Split Clamp	2	
-	58896952	- Split Flange Clamp	4	
-	96704556	- HHCS, Zinc Plated	8	M10 x 1.5 x 40 Cl 8.8
-	59510065	- Lockwasher	8	
-	59990010	- O-ring	2	
9	58896580	Elbow	1	
10	59027060	Adapter	2	
11	58954694	Straight Adapter	1	
12	13351671	Adapter	1	
13	95326930	Adapter	2	

DRUM DRIVE MOTOR (13460407) - INTERNAL BREAKDOWN - SHEET 1 OF 5

Dwg 13460407/00

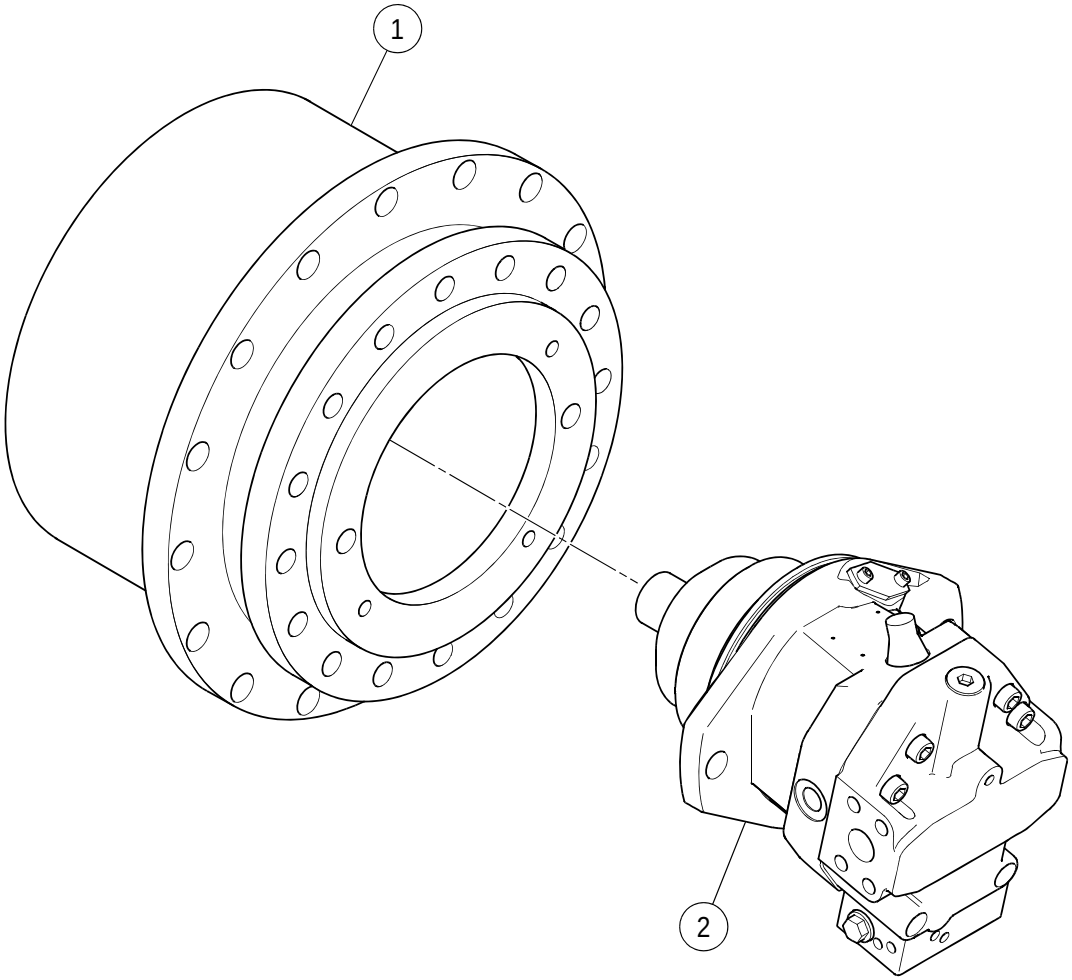

DRUM DRIVE MOTOR (13460407) - INTERNAL BREAKDOWN
- SHEET 1 OF 5

****Only Offered Parts Listed****

BOM 13460407

ITEM	COMM. NO.	DESCRIPTION	QTY	DIMENSIONS/NOTES
1	13494513	Gearbox	1	See Breakdown B - 20.
2	13461447	Complete Motor	1	See Breakdown B - 22.

DRUM DRIVE MOTOR (13460407) - INTERNAL BREAKDOWN - SHEET 2 OF 5

Dwg 13494513/01

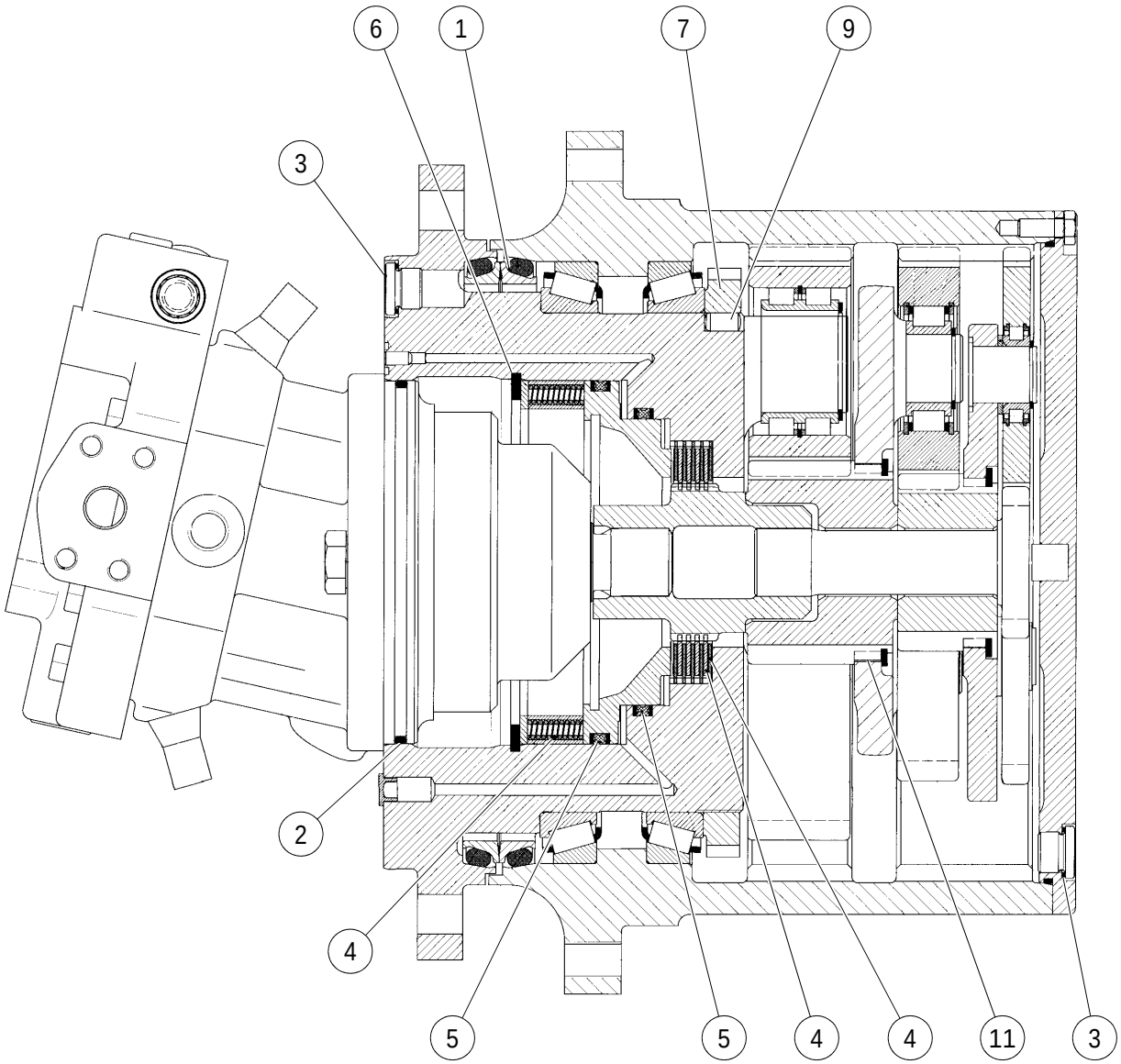

DRUM DRIVE MOTOR (13460407) - INTERNAL BREAKDOWN
- SHEET 2 OF 5

****Only Offered Parts Listed****

BOM 13494513

ITEM	COMM. NO.	DESCRIPTION	QTY	DIMENSIONS/NOTES
*	13494513	Gearbox	1	
1	13494521	- Face Seal	1	
2	13462163	- O-ring	1	
3	13462106	- Seal Ring	5	
4	13494539	- Brake Disc Kit	1	
5	13462205	- Seal Kit	1	
6	13871579	- Snap Ring	1	
7	13871587	- Shaft Nut	1	
8	13871595	- Face Seal (Not Shown)	1	
9	13871603	- Dowel Pin	1	
10	13871611	- Seal Kit (Not Shown)	1	
11	43888353	- Tapered Roller Bearing	2	

DRUM DRIVE MOTOR (13460407) - INTERNAL BREAKDOWN - SHEET 3 OF 5

Dwg 13461447/00

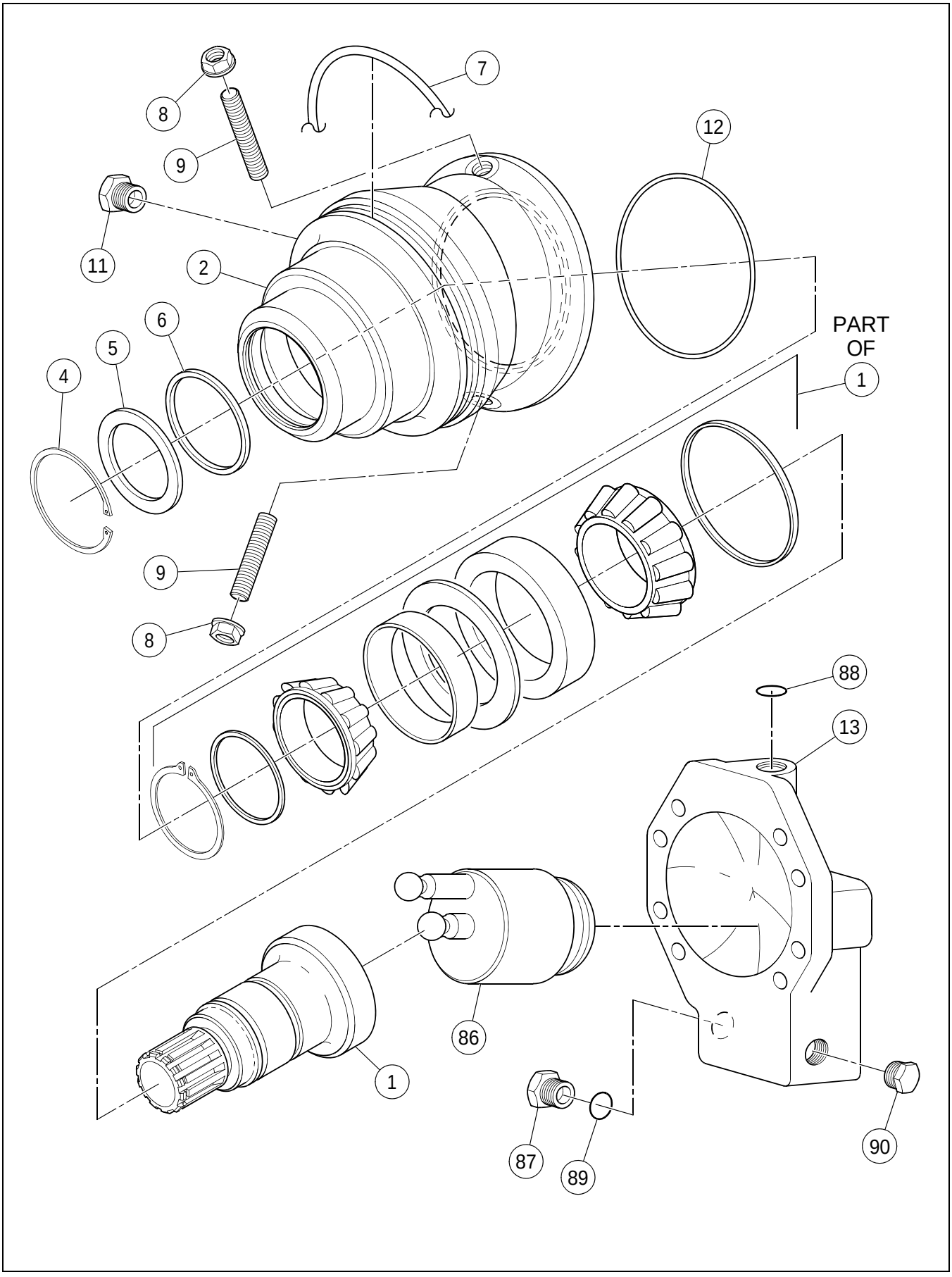

DRUM DRIVE MOTOR (13460407) - INTERNAL BREAKDOWN
- SHEET 3 OF 5

****Only Offered Parts Listed****

BOM 13461447

ITEM	COMM. NO.	DESCRIPTION	QTY	DIMENSIONS/NOTES
*	13461447	Complete Motor	1	
1	13462239	Rotary Group	1	
2	**13494547**	**Flange Cover**	**1**	**See Breakdown B - 24.**
3	13863915	O-ring (Not Shown)	1	
4	13462254	Retaining Ring	1	
5	13462262	Back-Up Plate	1	
6	13464862	Ring Shaft Seal	1	
7	13462163	O-ring	1	
8	13462296	Seal Locknut	2	
9	13462288	Threaded Pin	1	
10	13462304	Threaded Pin (Not Shown)	1	
11	13268263	Screw	1	
12	13462270	O-ring	1	
13	**13462247**	**Control Complete**	**1**	**See Breakdown B - 26.**
14	13863923	Speed Sensor (Not Shown)	1	
86	13462320	Rotary Group Hydraulic Section	1	
87	13269865	Locking Screw	1	
88	13462338	O-ring	1	
89	13269873	O-ring	1	
90	13269816	O-ring	1	

DRUM DRIVE MOTOR (13460407) - INTERNAL BREAKDOWN - SHEET 4 OF 5

Dwg 13494547/00

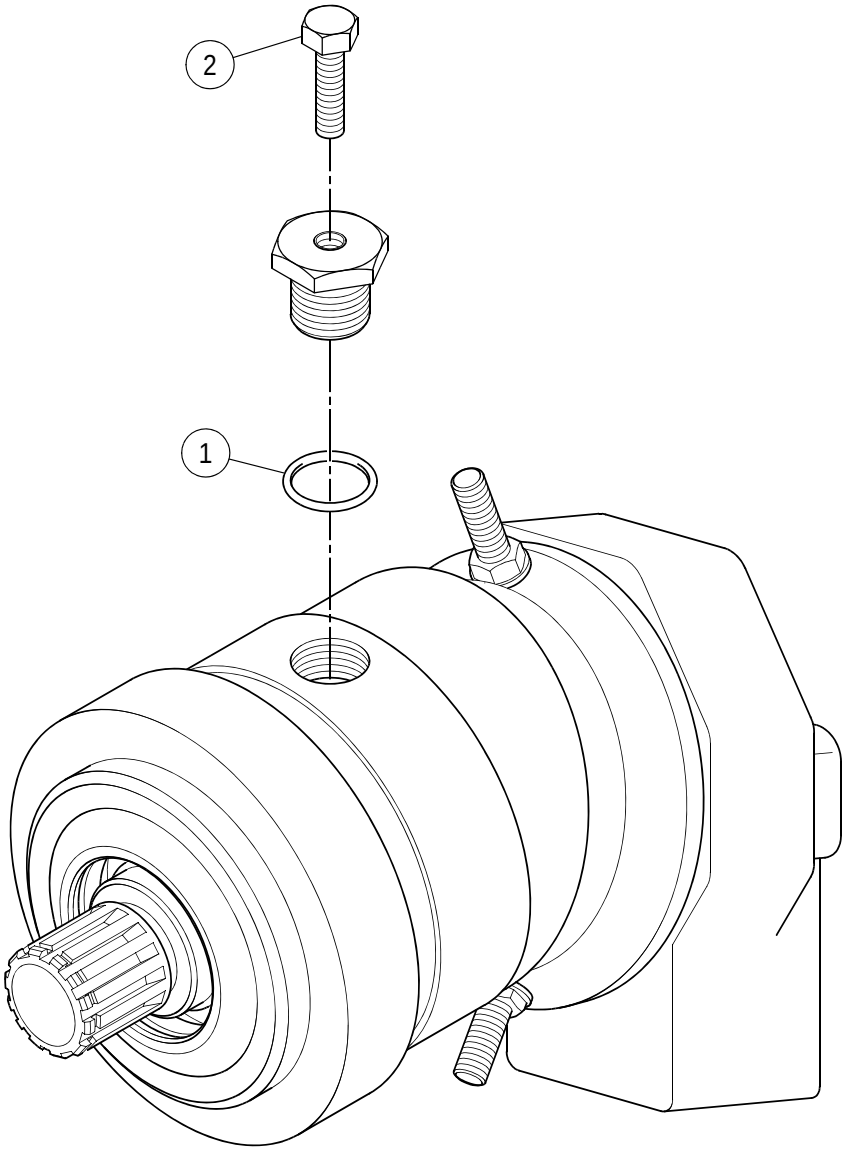

DRUM DRIVE MOTOR (13460407) - INTERNAL BREAKDOWN
- SHEET 4 OF 5

****Only Offered Parts Listed****

BOM 13494547

ITEM	COMM. NO.	DESCRIPTION	QTY	DIMENSIONS/NOTES
*	13494547	Flange Cover	1	
1	13494554	- O-ring	1	
2	13494562	- Screw	1	

DRUM DRIVE MOTOR (13460407) - INTERNAL BREAKDOWN - SHEET 5 OF 5

Dwg 13462247/00

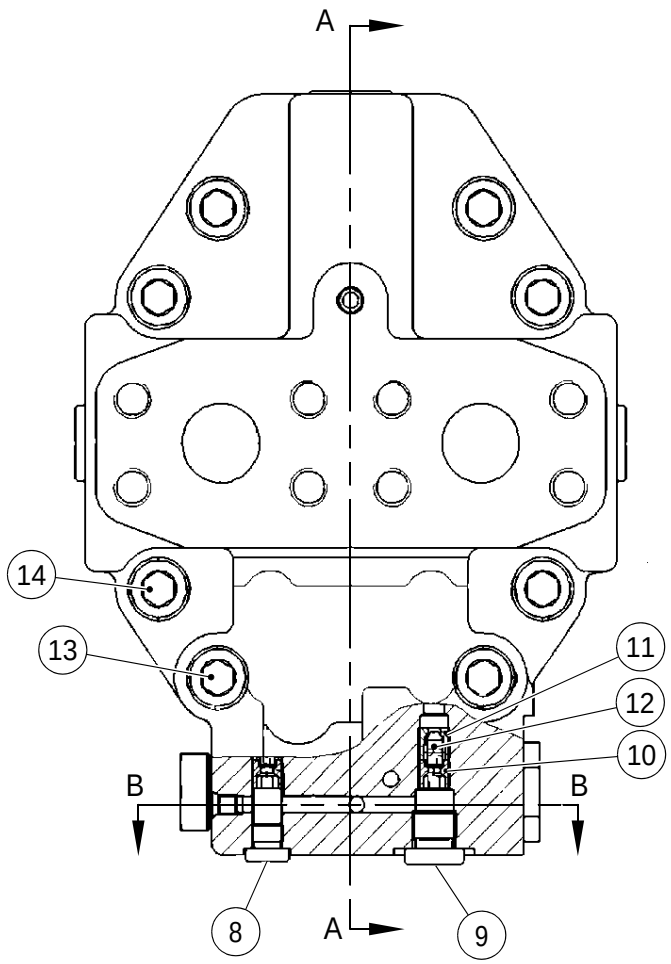

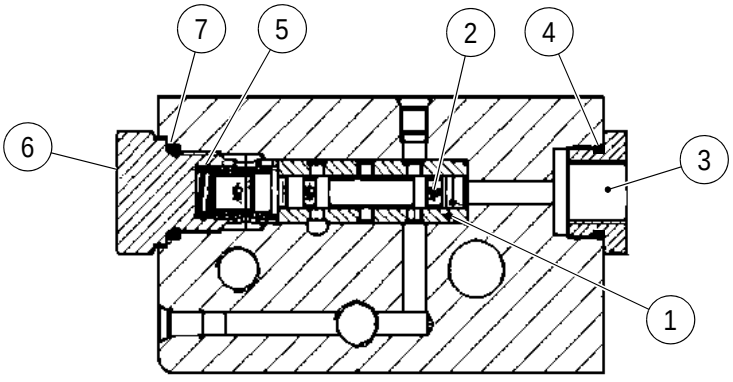

VIEW B - B

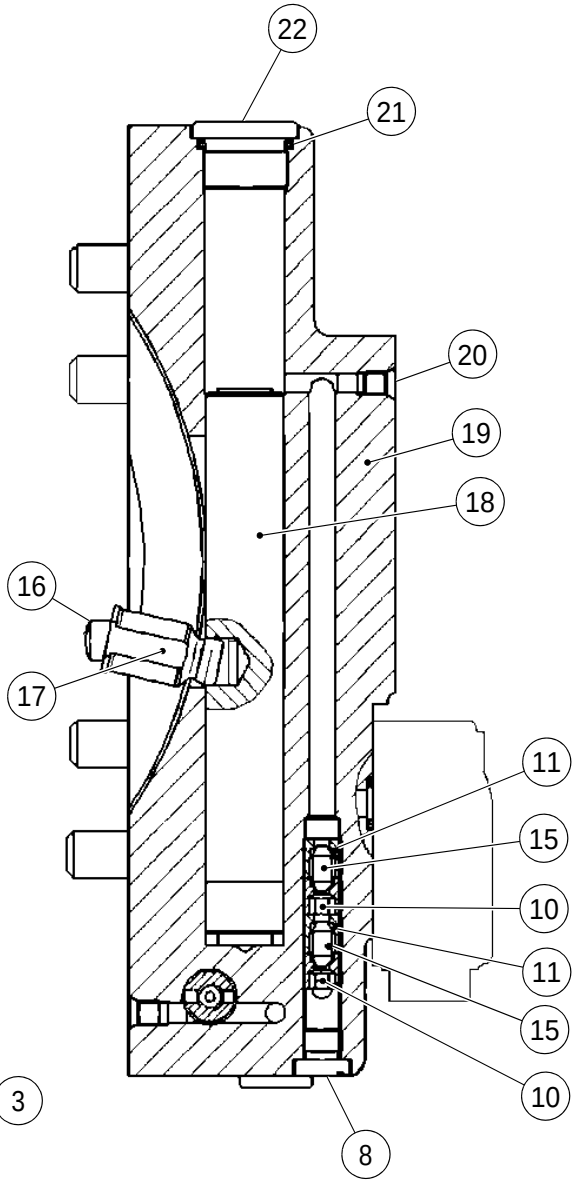

VIEW A - A

DRUM DRIVE MOTOR (13460407) - INTERNAL BREAKDOWN
- SHEET 5 OF 5

****Only Offered Parts Listed****

BOM 13462247

ITEM	COMM. NO.	DESCRIPTION	QTY	DIMENSIONS/NOTES
*	13462247	Control Complete	1	
1	13269840	- Control Bushing	1	
2	13269832	- Control Piston	1	
3	13269824	- Connection Stud	1	
4	13269816	- O-ring	1	
5	13269857	- Pressure Spring	1	
6	13269865	- Locking Screw	1	
7	13269873	- O-ring	1	
8	13269881	- Locking Screw	2	
9	13269808	- Locking Screw	1	
10	13269790	- Throttle Pin	3	
11	13269774	- Throttle Spur	3	
12	13269782	- Valve Pin	2	
13	13494570	- Screw	2	
14	13494588	- Screw	6	
15	13269907	- Throttle Pin	1	
16	13494596	- Cylinder Pin	1	
17	13494604	- Trunnion	1	
18	13494612	- Piston	1	
19	13494620	- Port Plate	1	
20	13268974	- Double Break Off Pin	4	
21	13462338	- O-ring	1	
22	13494638	- Locking Screw	1	

DRUM ASSEMBLY - SD-160 - PRIOR TO S/N 196615

Dwg 13475173/0C

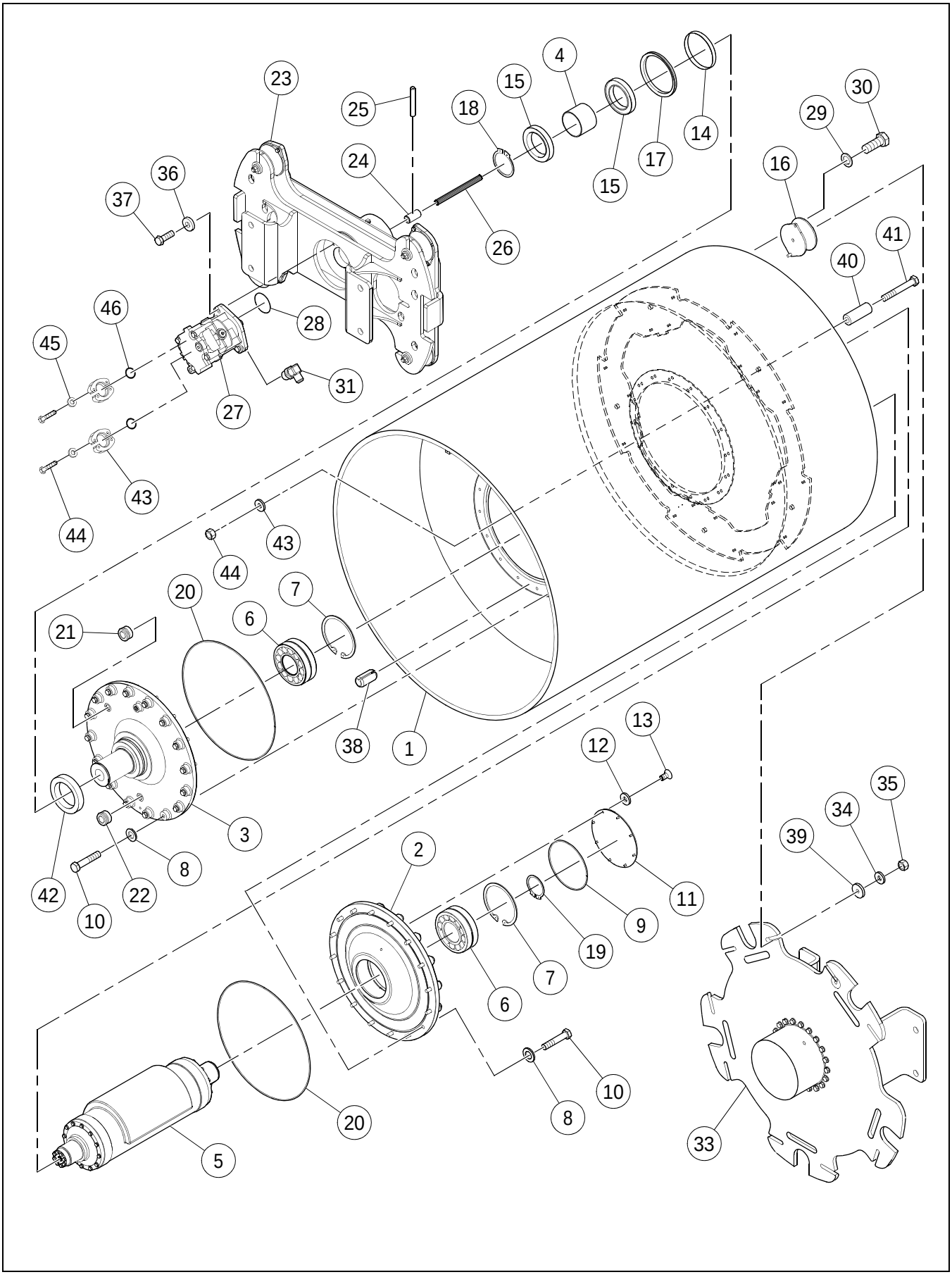

DRUM ASSEMBLY - SD-160 - PRIOR TO S/N 196615

****Only Offered Parts Listed****

BOM 13403548, 13403571

ITEM	COMM. NO.	DESCRIPTION	QTY	DIMENSIONS/NOTES
1	13411962	Drum (SD-160DX)	1	
-	13418512	Drum (SD-160F)	1	
2	13329263	Bearing Drive	1	
3	13412192	Bearing Spindle	1	
4	59277251	Spacer	1	
5	**NSVA**	**Eccentric Shaft Assembly**	**1**	**See Page B - 10.**
6	54591805	Bearing	2	
7	96711106	Retainer Ring	2	
8	96738620	Flatwasher, Zinc Plated	32	M20 Hardened Cl 200
9	95269320	O-ring	1	
10	96701909	HHCS, Zinc Plated	32	M20 x 2.5 x 90 Cl 10.9
11	59296384	Cover	1	
12	96741038	Flatwasher	12	M8 x 1.25 Cl 200
13	96702824	HHCS, Fully Threaded, Zinc Plated	12	M8 x 1.25 x 20 Cl 8.8
14	59277756	Wear Sleeve	1	
15	50269984	Bearing	2	
16	13304787	Shock Mount	12	
17	13167390	V-ring Seal	1	
18	96711510	Retaining Ring	1	
19	96711544	Retaining Ring	1	
20	95603163	O-ring	2	
21	59144428	Magnetic Plug	2	
22	59277772	Sight Gauge	1	
23	**NSVA**	**Carrier Assembly**	**1**	**See Page B - 30.**
24	59296236	Spline Coupling	1	
25	96701586	Spring Pin (SD-160DX)	1	
-	96736822	Roll Pin (SD-160F)	1	
26	13183272	Spline Shaft	1	
27	**54596259**	**Vibration Motor**	**1**	**See Breakdown B - 14.**
-	13284948	ARC - Vibration Motor	1	
28	95988820	O-ring	1	
29	96738596	Flatwasher, Zinc Plated	24	M12 Cl 200
30	96702790	HHCS	24	M12 x 1.75 x 25 Cl 10.9
31	95285946	Connector	1	
33	**NSVA**	**Drive Motor Assembly**	**1**	**See Page B - 16.**
34	59565044	Flatwasher	12	3/4 Hardened
35	96703657	Nut, Zinc Plated	12	M16 Cl 10
36	96712237	Flatwasher, Zinc Plated	4	M12 Hardened Cl 10
37	96702329	HHCS, Fully Threaded, Zinc Plated	4	M12 x 1.75 x 35 Cl 8.8
38	96737069	Roll Pin	1	
39	13855184	Washer	12	
40		This Item Not Used With This Assembly		
41		This Item Not Used With This Assembly		
42	13447354	Spacer Ring	1	
43	58901653	Split Flange Clamp	4	
44	96702667	HHCS, Fully Threaded, Zinc Plated	8	M12 x 1.75 x 45 Cl 8.8
45	96738596	Flatwasher, Zinc Plated	8	M12 Hardened Cl 200
46	59993881	O-ring (SD-160DX)	2	
-	59993873	O-ring (SD-160F)	2	

CARRIER ASSEMBLY - SD-160DX/160F - PRIOR TO S/N 196615

Dwg 13412002/01

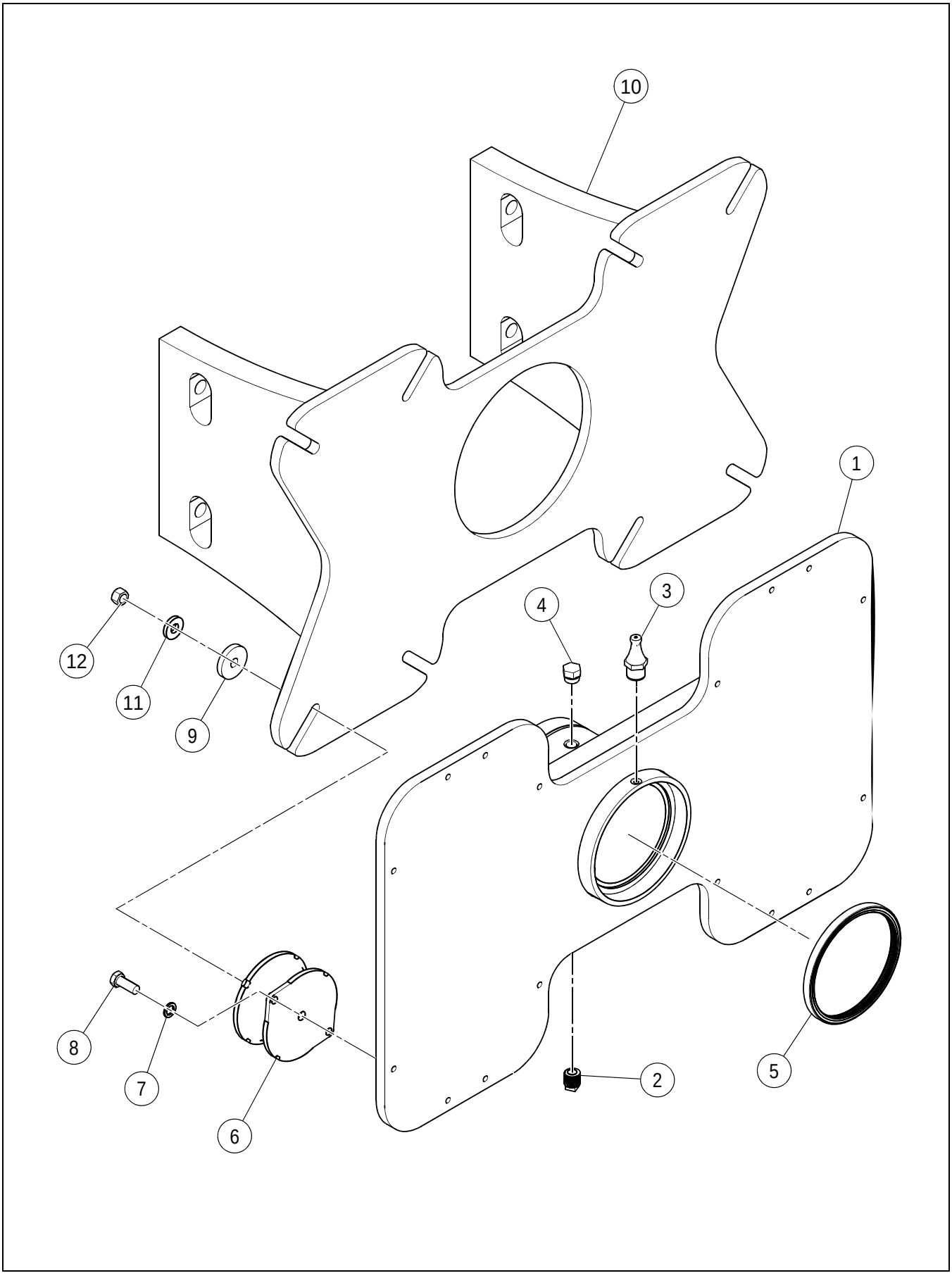

CARRIER ASSEMBLY - SD-160DX/160F - PRIOR TO S/N 196615

****Only Offered Parts Listed****

BOM 13412002

ITEM	COMM. NO.	DESCRIPTION	QTY	DIMENSIONS/NOTES
1	13481791	Carrier Plate	1	
2	59600593	Pipe Plug	2	
3	96702709	Grease Fitting	1	
4	54584776	Breather Filtered Vent	1	
5	59277764	Oil Seal	1	
6	13304787	Shock Mount	8	
7	96738596	Flatwasher	16	M12 Hardened Cl 200
8	96702808	HHCS, Fully Threaded, Zinc Plated	16	M12 x 1.75 x 30 Cl 10.9
9	13855184	Washer	8	
10	13451661	Shock Mount Plate	1	
11	59565044	Flatwasher	8	3/4 Hardened
12	96703657	Nut, Zinc Plated	8	M16 Cl 10

FRONT FRAME INSTALLATION - SD-160 - PRIOR TO S/N 196502 - SHEET 1 OF 2

Dwg 59291831/0N/01

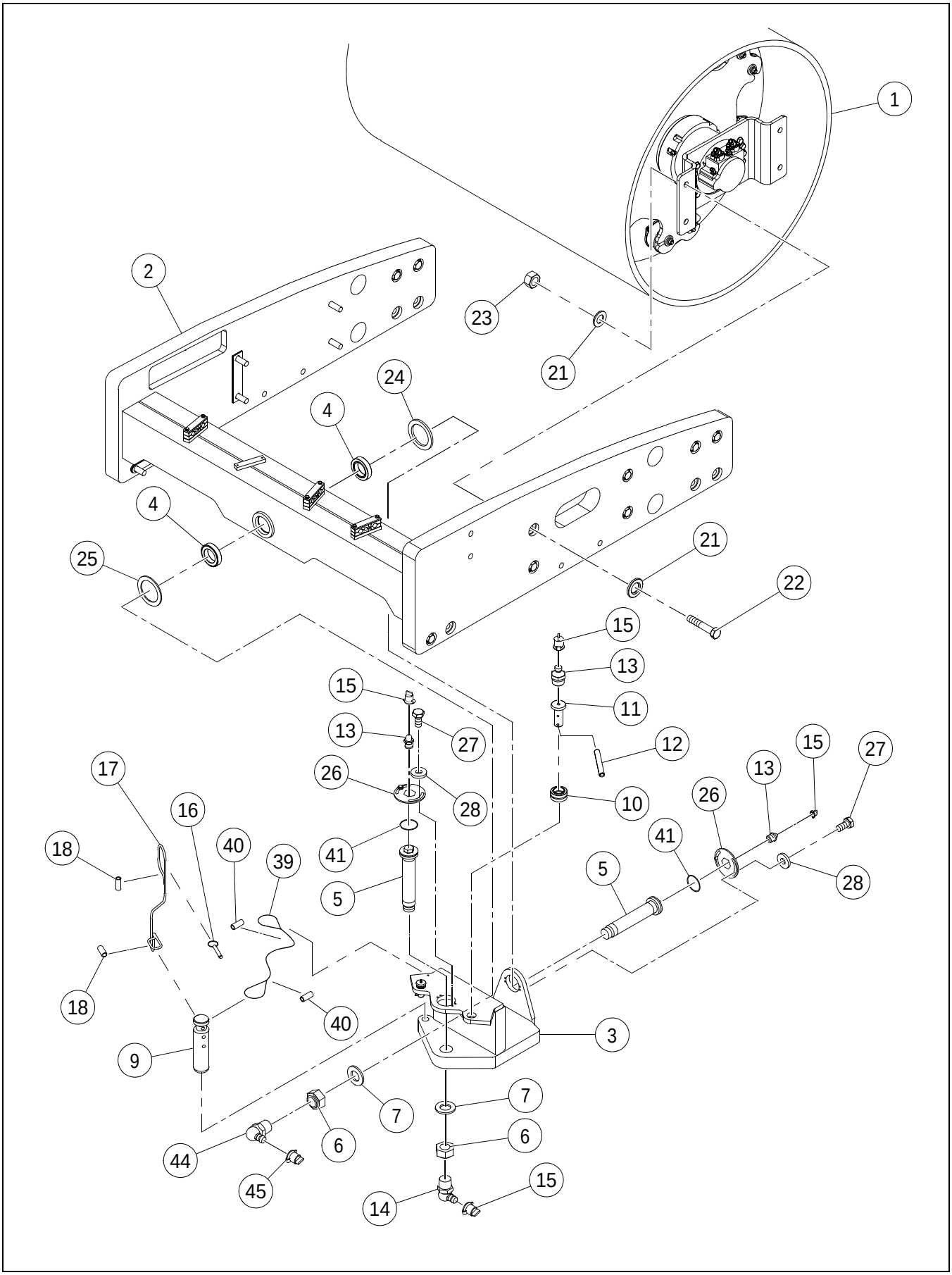

FRONT FRAME INSTALLATION - SD-160 - PRIOR TO S/N 196502 - SHEET 1 OF 2

****Only Offered Parts Listed****

BOM 13434931

ITEM	COMM. NO.	DESCRIPTION	QTY	DIMENSIONS/NOTES
1	**NSVA**	**Drum Assembly**	**1**	**See Page B - 28.**
2	13419346	Drum Frame	1	
3	43813948	Swivel	1	
4	13245337	Bearing	2	
5	43818954	Articulation/Oscillation Pin	2	
6	59003442	Stop Nut	2	
7	59299768	Washer	2	
9	59298208	Lock Pin	1	
10	59450528	Bushing	2	
11	59190975	Pivot Pin	2	
12	95098679	Rollpin	2	
13	95201547	Fitting	4	
14	95208971	Fitting	2	
15	50270248	Cap	6	
16	59299545	Hitch Pin	1	
17	59607861	Cable	1	
18	59607853	Ferrule	2	
21	96701578	Flatwasher, Zinc Plated	32	M30 Hardened
22	96747365	HHCS, Zinc Plated	4	M30 x 3.5 x 220
23	96720438	Hex Nut, Zinc Plated	4	M30 x 3.5 Cl 8
24	13238423	Dust Seal	1	
25	13238431	Dust Seal	1	
26	59109819	Lock Plate	2	
27	96712146	HHCS, Fully Threaded, Zinc Plated	8	M10 x 1.5 x 20 Cl 10.9
28	96711833	Flatwasher, Zinc Plated	8	M12 Hardened Cl 10
39	59436741	Cable	1	
40	59214775	Cable Sleeve	2	
41	95028452	O-ring	2	
44	59565044	Flatwasher	10	3/4 Hardened
45	96703962	HHCS, Fully Threaded, Zinc Plated	10	M16 x 50 Cl 8.8

FRONT FRAME INSTALLATION - SD-160 - PRIOR TO S/N 196502 - SHEET 2 OF 2

Dwg 59291831/0N/02

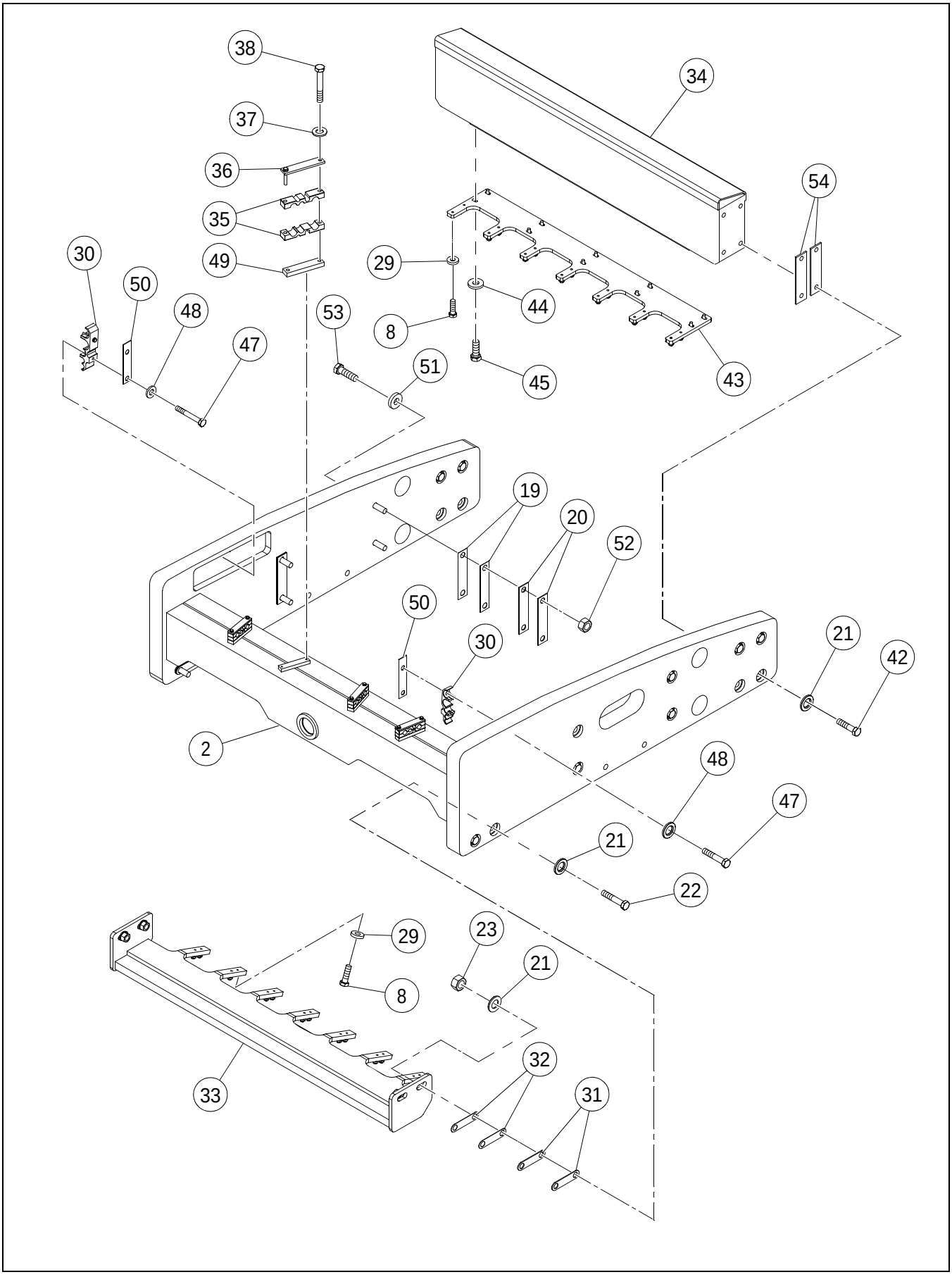

FRONT FRAME INSTALLATION - SD-160 - PRIOR TO S/N 196502 - SHEET 2 OF 2

****Only Offered Parts Listed****

BOM 13434931

ITEM	COMM. NO.	DESCRIPTION	QTY	DIMENSIONS/NOTES
2	13419346	Drum Frame	1	
8	96715081	Hex Head Bolt, Zinc Plated	14	M12 x 1.75 x 45 Cl 8.8
19	13387956	Shim	12	1.5mm
20	13387949	Shim	2	5.0mm
21	96701578	Flatwasher, Zinc Plated	16	M30 Hardened
22	96747365	HHCS, Zinc Plated	4	M30 x 3.5 x 220
23	96720438	Hex Nut, Zinc Plated	4	M30 x 3.5 Cl 8
29	96712237	Flatwasher, Zinc Plated	14	M12 Hardened Cl 10
30	13209200	Hose Clamp	2	
31		This item not used with this Assembly		
32		This item not used with this Assembly		
33		This item not used with this Assembly		
34	13419387	Bumper	1	
35	13239967	Hyrdaulic Hose Clamp	8	
36	58880501	Clamp Plate	4	
37	96714399	Flatwasher, Zinc Plated	8	M10 Cl 140
38	96704739	HHCS, Zinc Plated	8	M10 x 1.5 x 90 Cl 8.8
42	96702907	HHCS, Zinc Plated	8	M30 x 3.5 x 180 Cl 10.9
43	13504444	Scraper Bar	1	
44	59565044	Flatwasher	10	3/4 Hardened
45	96715156	HHCS, Zinc Plated	10	M16 x 2.0 x 65 Cl 8.8
47	96728639	HSBHCS, Zinc Plated	4	M6 x 1 x 110 Cl 8.8
48	96741053	Flatwasher, Zinc Plated	4	M6 Cl 200
49	13209168	Spacer Bar	4	
50	13385042	Cover Plate	1	
51	96702642	Washer, Zinc Plated	4	M24 Hardened
52	96703681	Hex Nut, Zinc Plated	4	M24 x 3.0 Cl 10
53	96751672	HHCS	4	M24 x 3.0 x 240 Cl 10.9
54	59298935	Shim	4	

FRONT FRAME INSTALLATION - SD-190 - SHEET 1 OF 2

13880919 REV 01

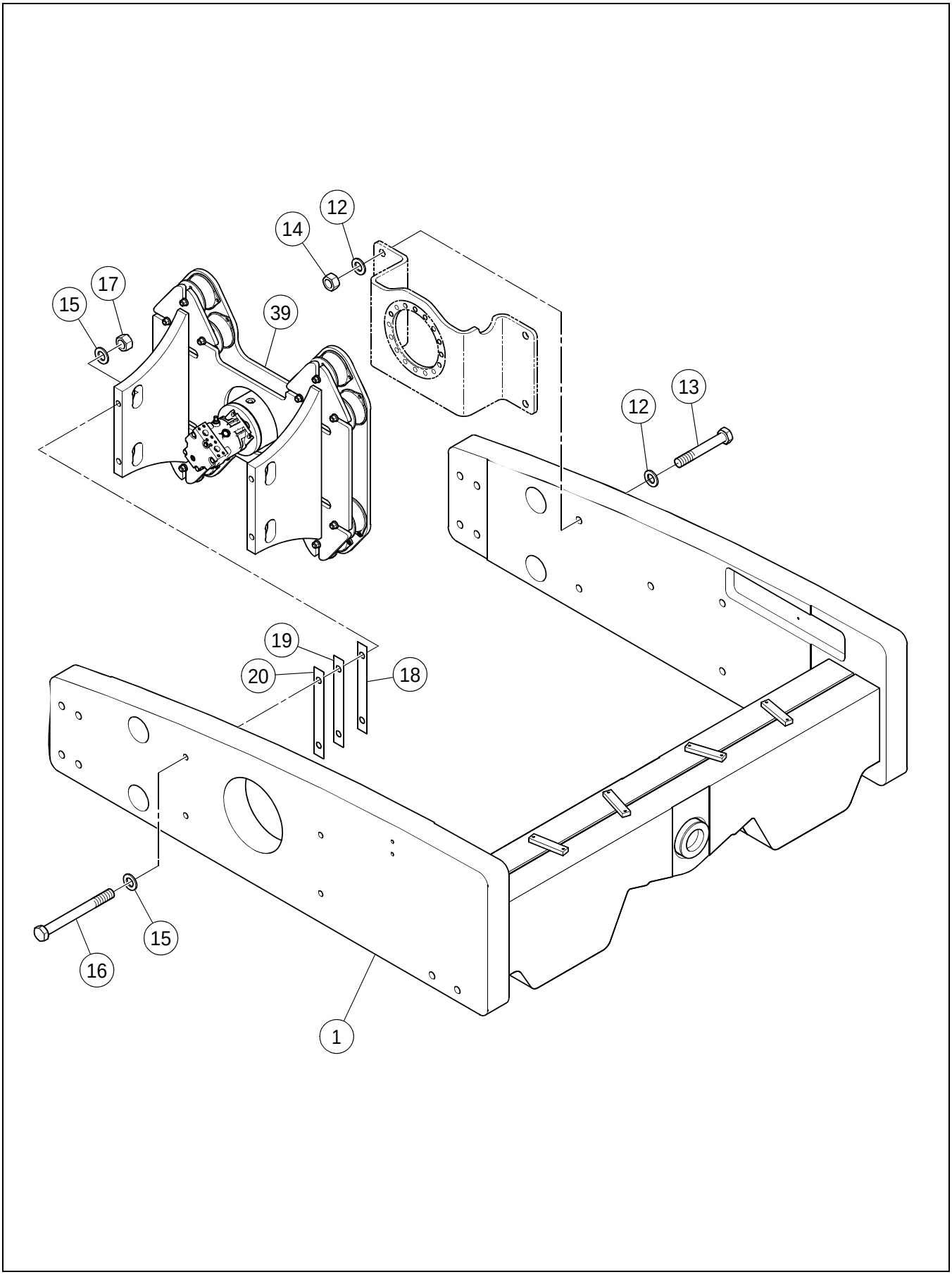

FRONT FRAME INSTALLATION - SD-190 - SHEET 1 OF 2

****Only Offered Parts Listed****

BOM 13880919

ITEM	COMM. NO.	DESCRIPTION	QTY	DIMENSIONS/NOTES
1	13419304	Frame	1	
12	96701578	Washer	8	
13	96747217	HHCS, Zinc Plated	4	M30 x 3.5 x 200 Cl 10.9
14	96720438	Hex Nut	4	M30 x 3.5
15	96738646	Flatwasher	8	
16	96751672	HHCS, Zinc Plated	4	M24 x 3.0 x 240 Cl 10.9
17	96703681	Hex Nut	4	
18	13880869	Shim	2	
19	13880877	Shim	2	
20	13880885	Shim	6	
39	**NSVA**	**Vibration Motor Installation**	**1**	

FRONT FRAME INSTALLATION - SD-190 - SHEET 2 OF 2

13880919 REV 01

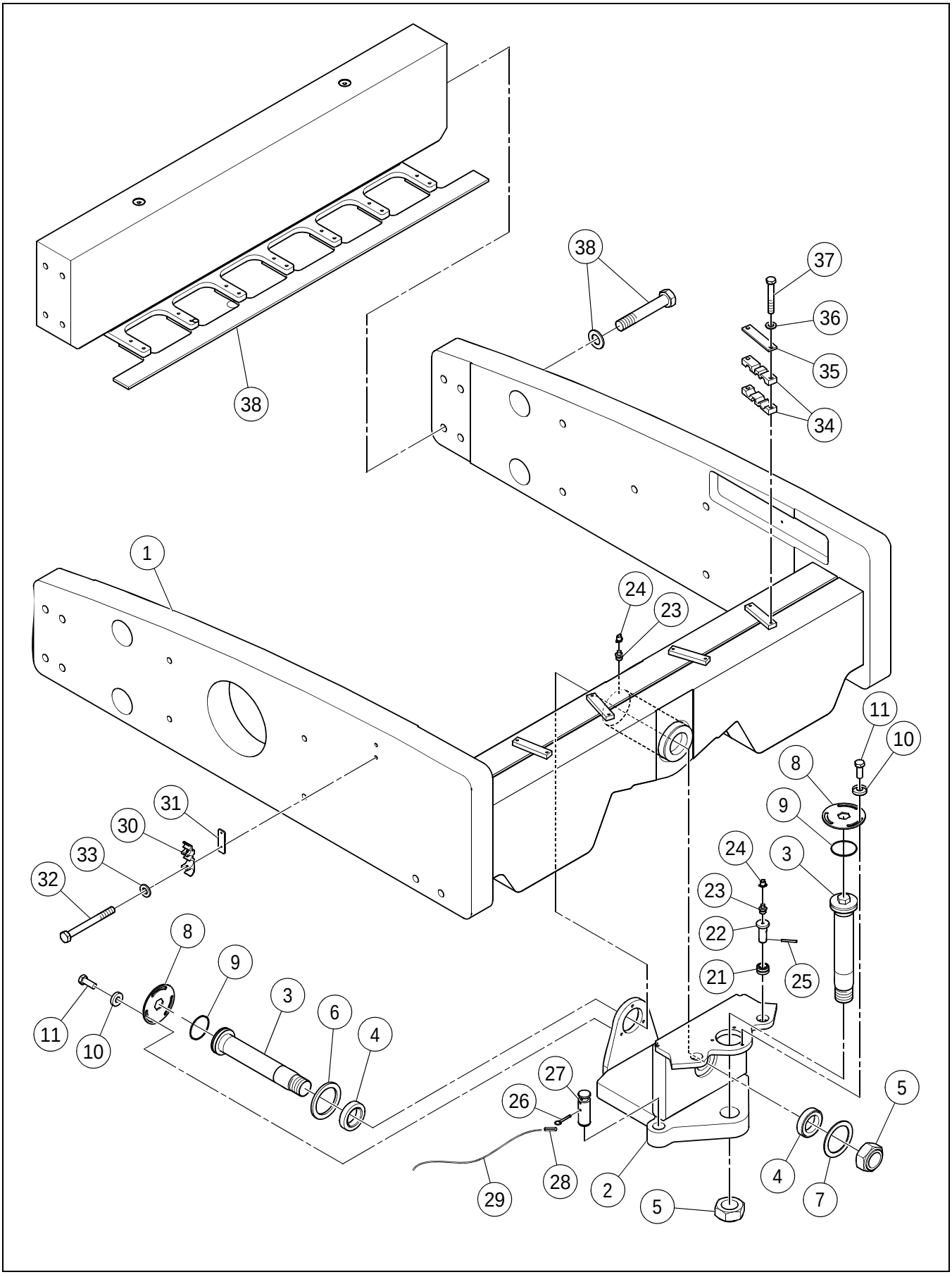

FRONT FRAME INSTALLATION - SD-190 - SHEET 2 OF 2

****Only Offered Parts Listed****

BOM 13880919

ITEM	COMM. NO.	DESCRIPTION	QTY	DIMENSIONS/NOTES
1	1341 9304	Frame	1	
2	13414016	Swivel	1	
3	13365713	Articulation/Oscilation Pin	2	
4	58795824	Bearing	2	
5	59003434	Locknut	2	
6	13294178	Dust Seal	1	
7	13294186	Dust Seal	1	
8	13413802	Lockplate	2	
9	95086658	O-ring	2	
10	96712237	Flatwasher	6	
11	96702808	HHCS, Zinc Plated	6	M12 x 1.75 x 30 Cl 10.9
21	59450528	Bushing	2	
22	59190975	Pivot Pin	2	
23	95201547	Grease Fitting	3	
24	50270248	Grease Fitting Cap	3	
25	95098679	Roll Pin	2	
26	13292834	Hitch Pin	1	
27	13292818	Lock Pin	1	
28	59214775	Sleeve	2	
29	59436741	Cable	1	
30	13209200	Hose Clamp	2	
31	13385042	Cover Plate	2	
32	96720156	HHCS, Zinc Plated	4	M6 x 1.0 x 80 Cl 8.8
33	96741053	Flatwasher	4	
34	13239967	Hose Clamp	8	
35	58880501	Clamp Plate	4	
36	96714399	Flatwasher, Zinc Plated	8	Cl 140
37	96704713	HHCS, Zinc Plated	8	M10 x 1.5 x 70 Cl 8.8
38	**NSVA**	**Scraper Installation**	**1**	**See Page B - 40.**

13880943 REV 00

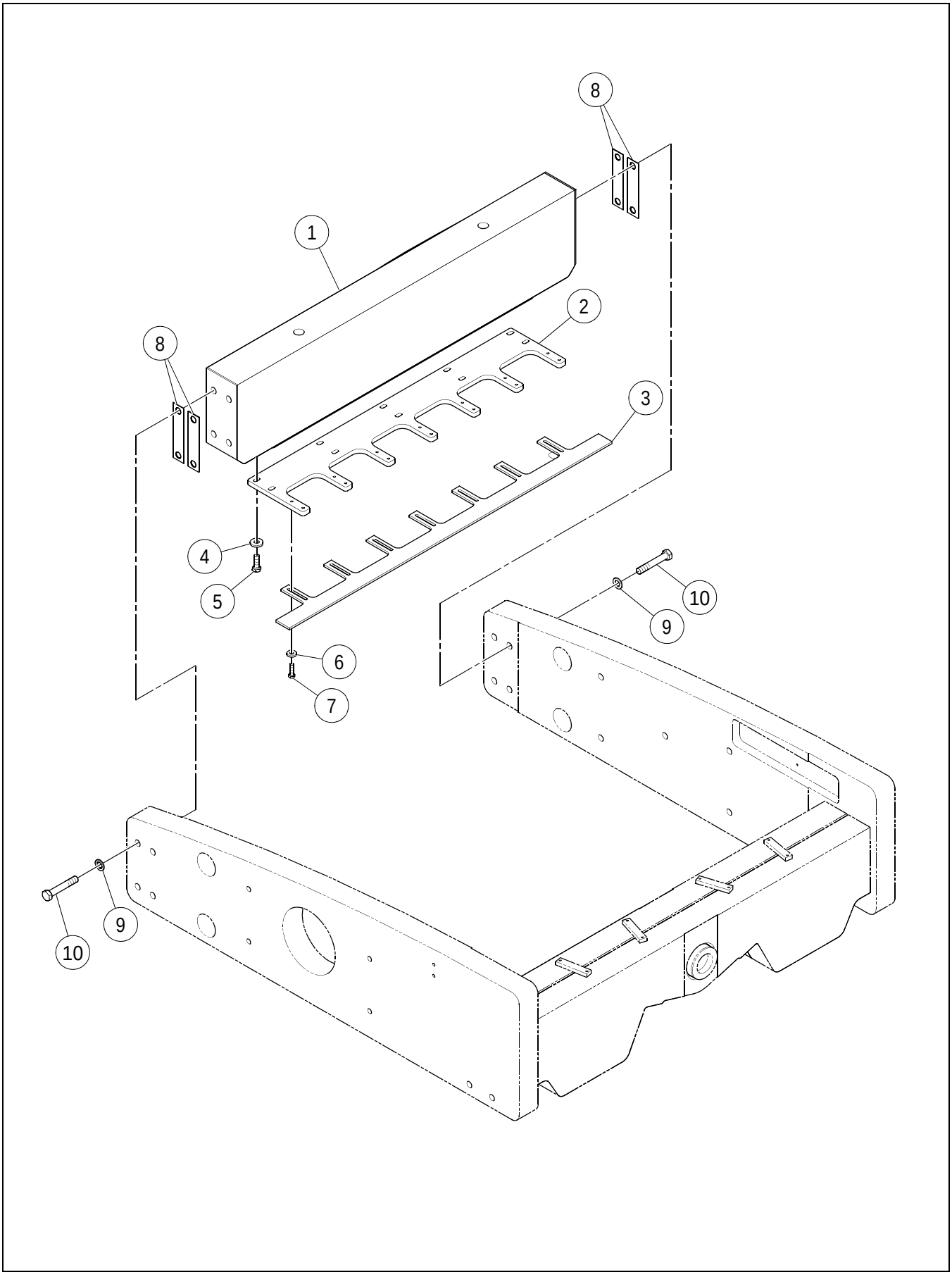

SCRAPER INSTALLATION

****Only Offered Parts Listed****

BOM 13880943

ITEM	COMM. NO.	DESCRIPTION	QTY	DIMENSIONS/NOTES
1	13419338	Bumper Machining	1	
2	13294467	Scraper Bar	1	
3	13881040	Scraper Bar	1	
4	96716345	Flatwasher	10	M16
5	96738513	HHCS , Zinc Plated	10	M16 x 2 x 45 Cl 8.8
6	96712237	Flatwasher	14	
7	96702444	HHCS , Zinc Plated	14	M12 x 1.75 x 40 Cl 8.8
8	59298935	Shim	8	
9	96701578	Washer	8	
10	96702907	HHCS , Zinc Plated	8	M30 x 3.5 x 180 Cl 10.9

DRUM ASSEMBLY - SD-190 - EFFECTIVE WITH S/N 196615

43889096 REV 00

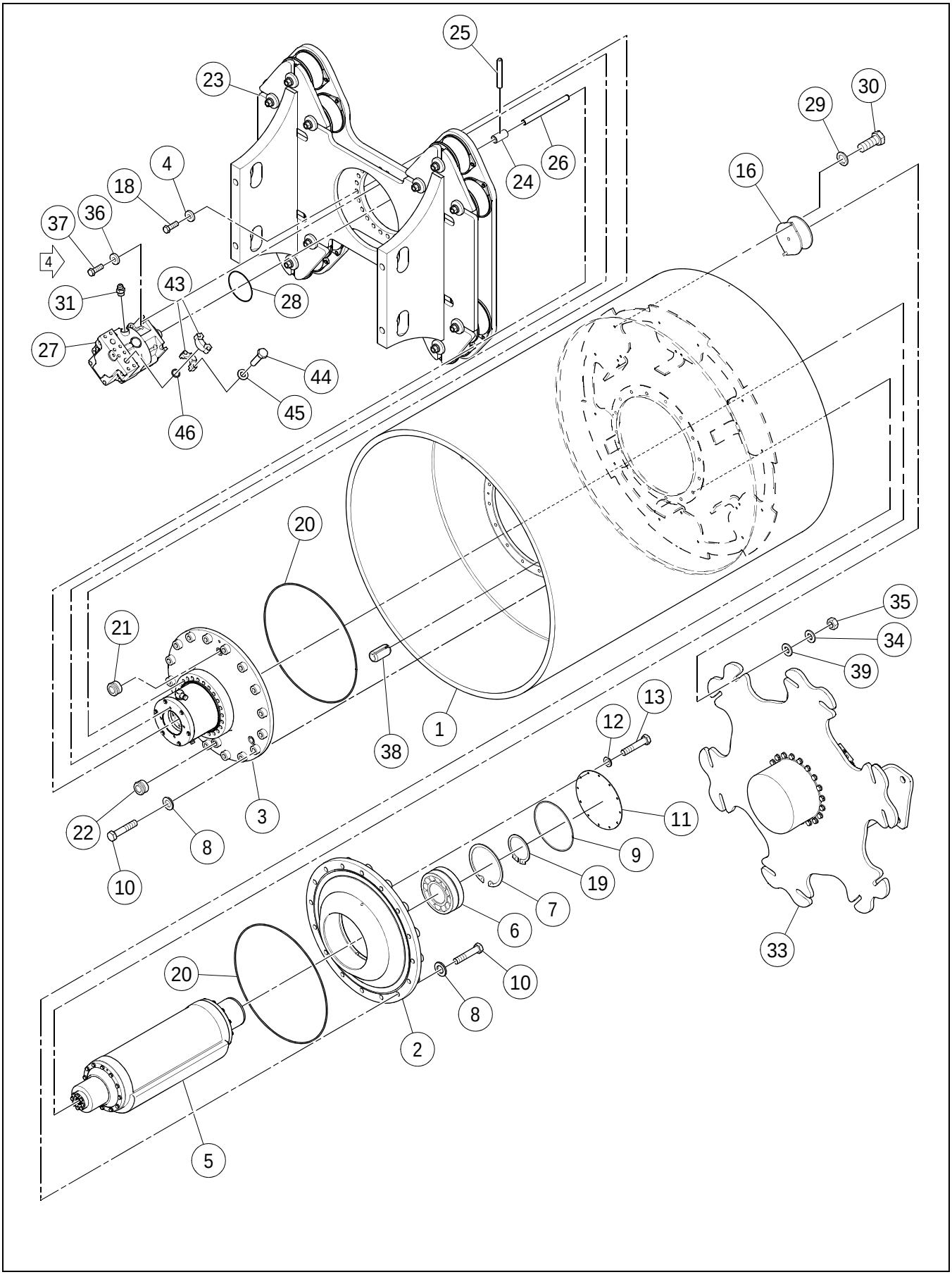

DRUM ASSEMBLY - SD-190 - EFFECTIVE WITH S/N 196615

****Only Offered Parts Listed****

BOM 43888890

ITEM	COMM. NO.	DESCRIPTION	QTY	DIMENSIONS/NOTES
1	13411962	Drum	1	
2	13329263	Drive Bearing	1	
3	**NSVA**	**Bearing Housing Assembly**	**1**	**See Page B - 8.**
4	96738612	Flatwasher, Zinc Plated	24	Cl 200
5	**NSVA**	**Eccentric Shaft Assembly**	**1**	**See Page B - 44.**
6	54591805	Bearing	1	
7	96711106	Retaining Ring	1	
8	96738620	Flatwasher	32	
9	95269320	O-ring	1	
10	96701909	HHCS, Zinc Plated	32	M20 x 2.5 x 90 Cl 10.9
11	59296384	Cover	1	
12	96741038	Flatwasher	12	
13	96702824	HHCS, Zinc Plated	12	M8 x 1.25 x 20 Cl 8.8
16	13304787	Shock Mount	12	
18	96705520	HHCS, Zinc Plated	24	M16 x 2.0 x 80 Cl 8.8
19	96711544	Retaining Ring	1	
20	95603163	O-ring	2	
21	59144428	Magnetic Plug	2	
22	59277772	Sight Gauge	1	
23	**NSVA**	**Carrier Assembly**	**1**	**See Page B - 46.**
24	59296236	Spline Coupling	1	
25	96701586	Spring Pin	1	
26	13183272	Spline Shaft	1	
27	**13483706**	**Vibration Motor**	**1**	**See Breakdown B - 48.**
28	95988820	O-ring	1	
29	96738596	Flatwasher	24	
30	96702790	HHCS, Zinc Plated	24	M12 x 1.75 x 25 Cl 10.9
31	95357570	Adapter	1	
33	**NSVA**	**Drive Motor Assembly**	**1**	**See Page B - 50.**
34	96716345	Flatwasher	12	M16
35	96703657	Nut	12	M16
36	96712237	Flatwasher	4	
37	96712237	Flatwasher	4	
38	96737069	Roll Pin	1	
39	13855184	Washer	12	
43	58901653	Split Flange Clamp	4	
44	96702667	HHCS, Zinc Plated	8	M12 x 1.75 x 45 Cl 8.8
45	96738596	Flatwasher	8	
46	59993881	O-ring	2	

ECCENTRIC SHAFT ASSEMBLY

43866508 REV 00

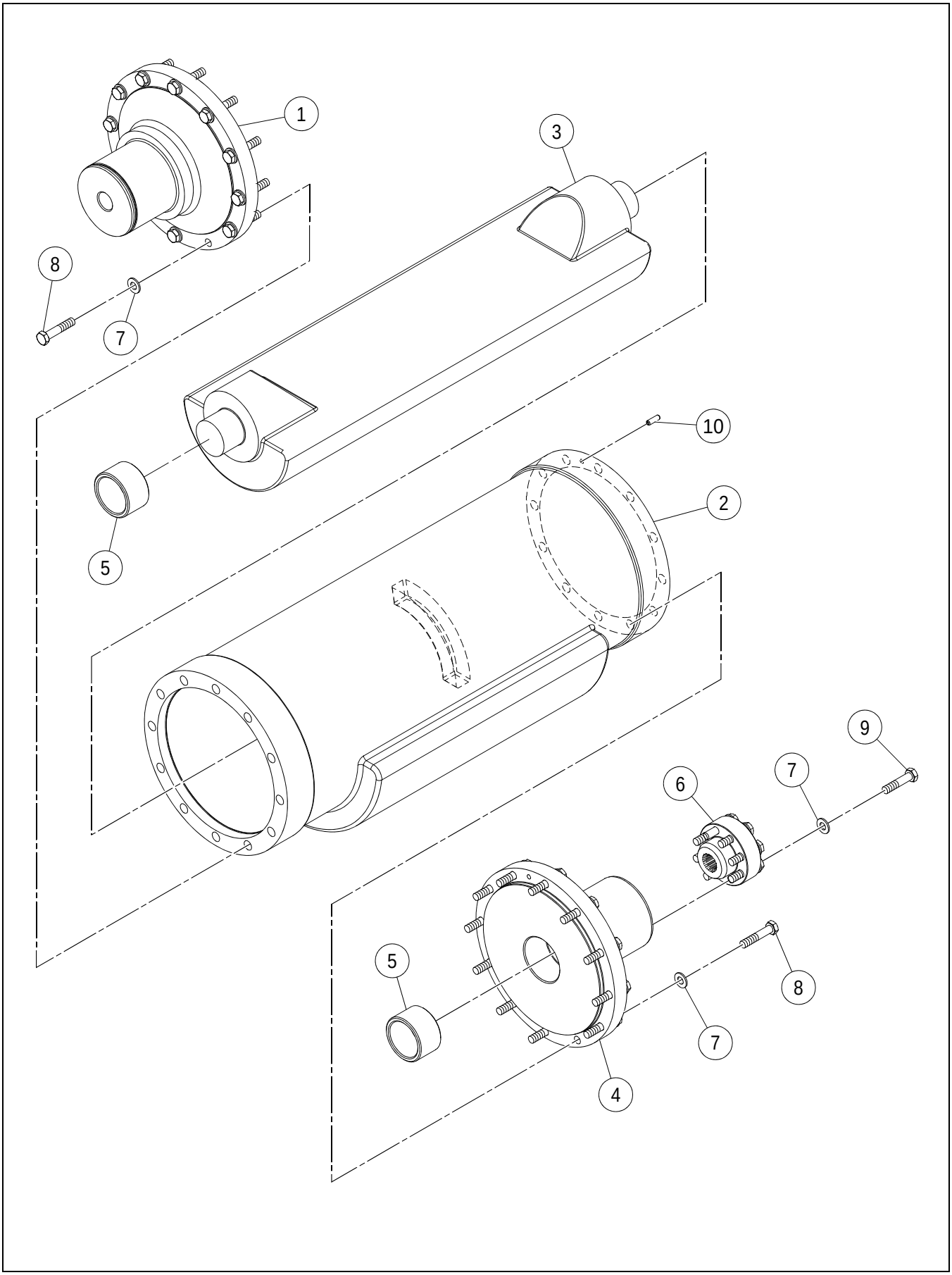

ECCENTRIC SHAFT ASSEMBLY

****Only Offered Parts Listed****

BOM 59278622

ITEM	COMM. NO.	DESCRIPTION	QTY	DIMENSIONS/NOTES
1	59295378	Drive Side Journal	1	
2	13218045	Eccentric Shaft	1	
3	59298042	Eccentric Shaft	1	
4	13276571	Drive Side Journal	1	
5	59296632	Oilite Bearing	2	
6	13183249	Splined Coupling	1	
7	96741046	Flatwasher	32	
8	96702436	HHCS, Zinc Plated	24	M10 x 1.5 x 50 Cl 10.9
9	96702428	HHCS, Zinc Plated	8	M10 x 1.5 x 45 Cl 8.8
10	96720990	Roll Pin	1	M6 x 20

43887967 REV 00

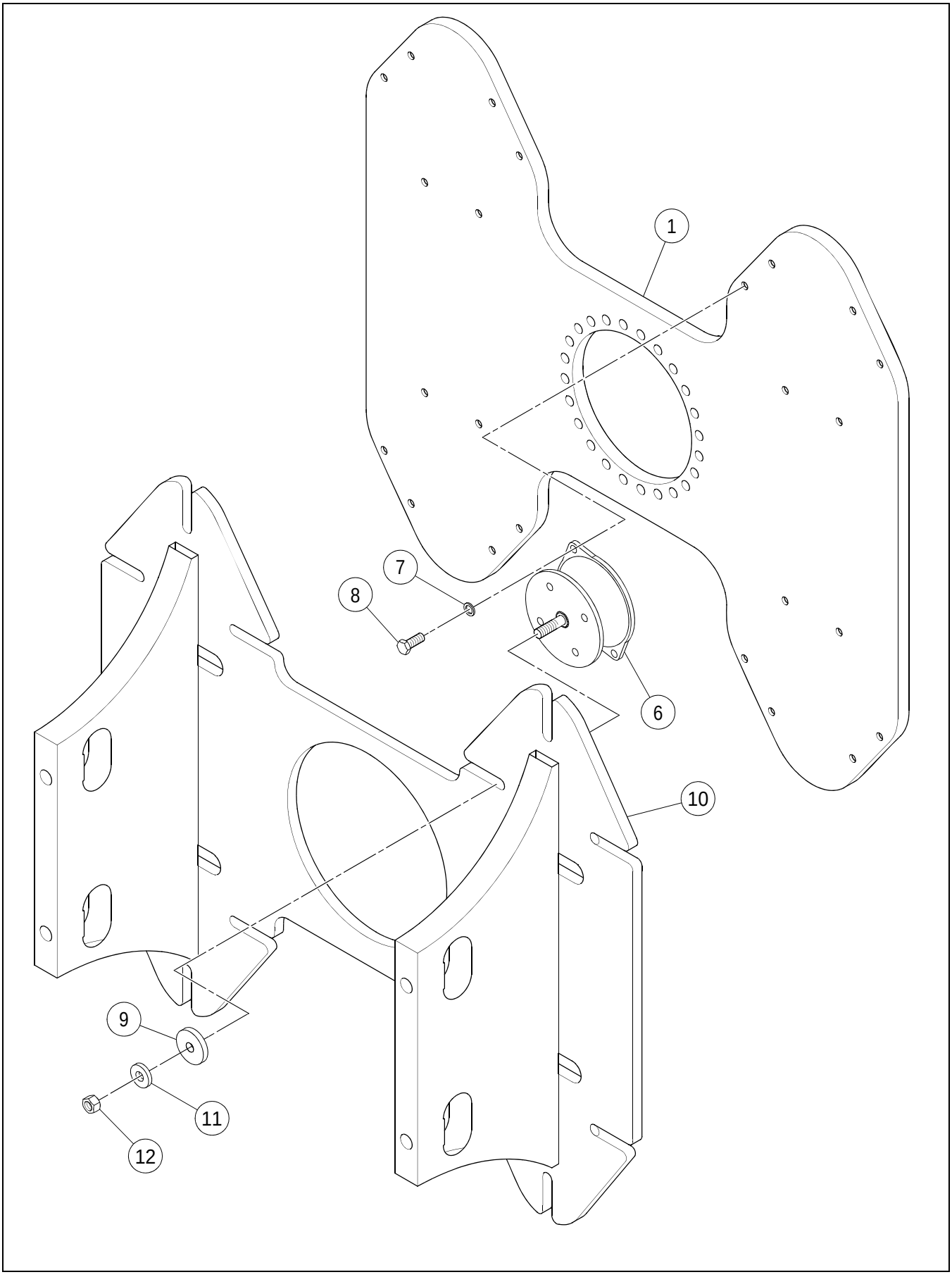

CARRIER ASSEMBLY

****Only Offered Parts Listed****

BOM 43888908

ITEM	COMM. NO.	DESCRIPTION	QTY	DIMENSIONS/NOTES
1	43887900	Carrier Plate	1	
6	13304787	Shock Mount	12	
7	96738596	Flatwasher	24	
8	96703111	HHCS, Zinc Platef	24	M12 x 1.75 x 35 Cl 10.9
9	13855184	Washer	12	
10	43887587	Shock Mount	1	
11	96716345	Flatwasher	12	M16
12	96703657	Nut	12	M16

VIBRATION MOTOR - (13483706) - INTERNAL BREAKDOWN

Dwg 13483706/01

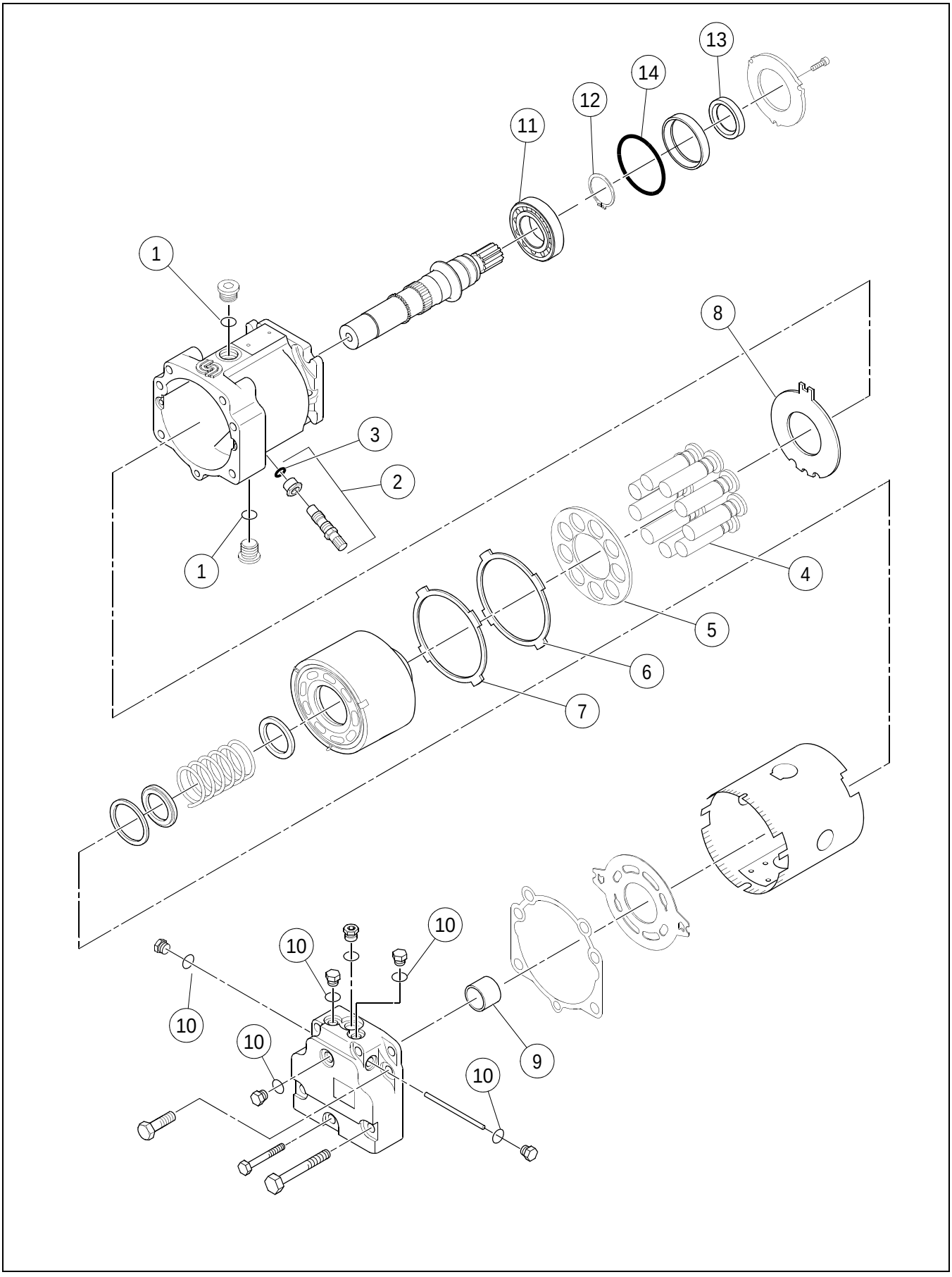

VIBRATION MOTOR - (13483706) - INTERNAL BREAKDOWN

****Only Offered Parts Listed****

BOM 13483706

ITEM	COMM. NO.	DESCRIPTION	QTY	DIMENSIONS/NOTES
1	59986463	O-ring	2	
2	59249284	Speed Sensor	1	
3	58881863	- O-ring	6	
4	58795535	Piston Assembly	9	
5	59369181	Slipper Guide	1	
6	59431916	Slipper Guide Retainer	1	
7	59431924	Slipper Guide Retainer Shim	1	
8	59094490	Thrust Plate	1	
9	59369603	Bearing Journal	1	
10	59360610	O-ring	1	
11	59369462	Bearing	1	
12	59369470	Retaining Ring	1	
13	59369496	Seal	1	
14	59369504	O-ring	1	
15	59480681	Overhaul Repair Kit (Not Shown)	1	

DRIVE MOTOR ASSEMBLY

13880711 REV 00

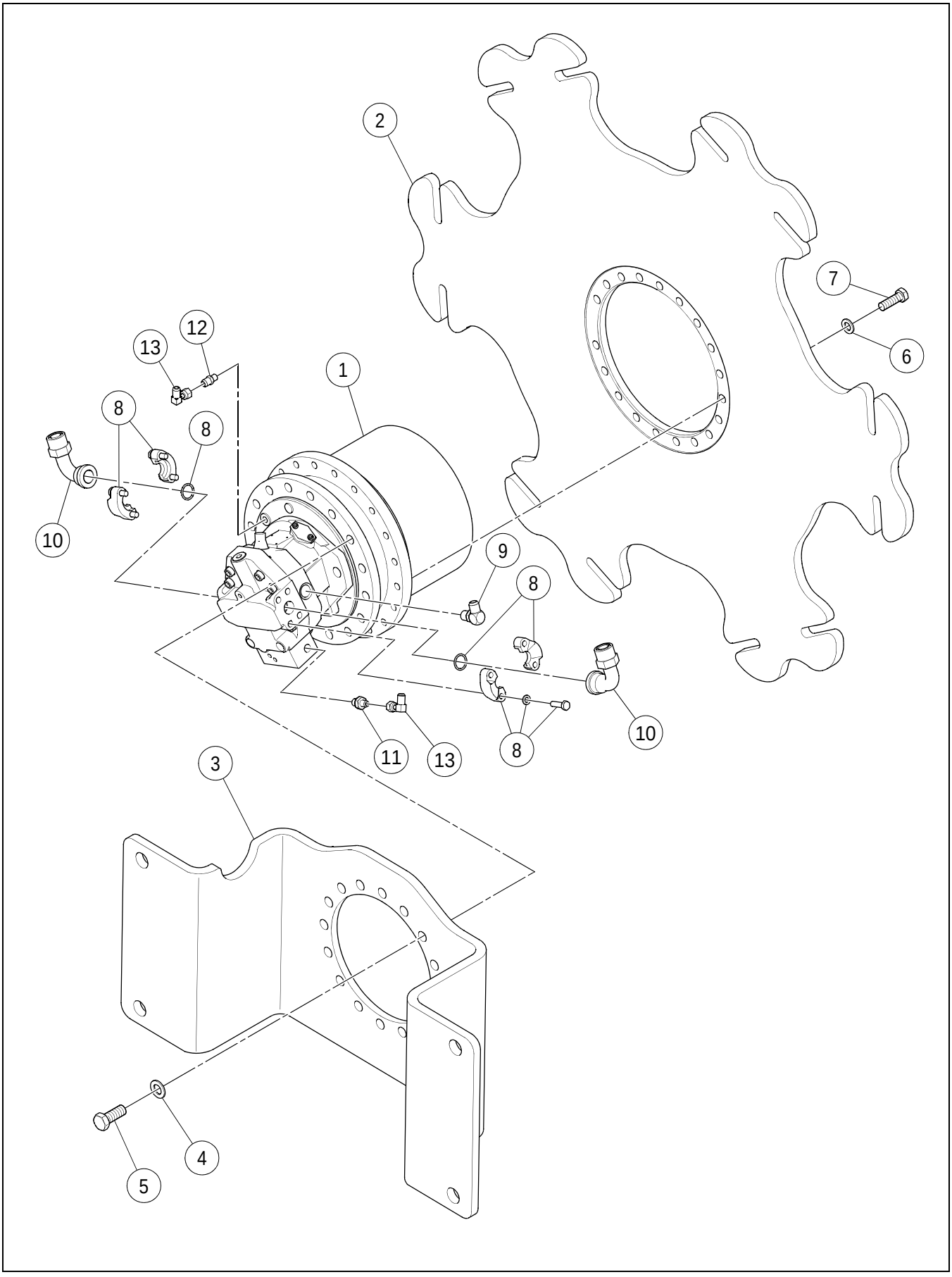

DRIVE MOTOR ASSEMBLY

****Only Offered Parts Listed****

BOM 13880711

ITEM	COMM. NO.	DESCRIPTION	QTY	DIMENSIONS/NOTES
1	**13460407**	**Drum Drive Motor**	**1**	**See Page B - 18.**
2	13413984	Drive Plate	1	
3	13880695	Drive Plate	1	
4	96738620	Flatwasher	16	
5	96704481	HHCS, Zinc Plated	16	M20 x 2.5 x 50 Cl 8.8
6	96738612	Flatwasher, Zinc Plated	20	Cl 200
7	96745419	HHCS, Zinc Plated	20	M16 x 1.5 x 50 Cl 8.8
8	13184445	Split Clamp	2	
-	58896952	- Split Flange Clamp	4	
-	96704556	- HHCS, Zinc Plated	8	M10 x 1.5 x 40 Cl 8.8
-	59510065	- Lockwasher	8	
-	59990010	- O-ring	2	
9	58896580	Elbow	1	
10	59027060	Adapter	2	
11	58954694	Straight Adapter	1	
12	13351671	Adapter	1	
13	95326930	Adapter	2	

DRUM ASSEMBLY - SD-190 - PRIOR TO S/N 196615 - SHEET 1 OF 2

Dwg 13880653/01/01

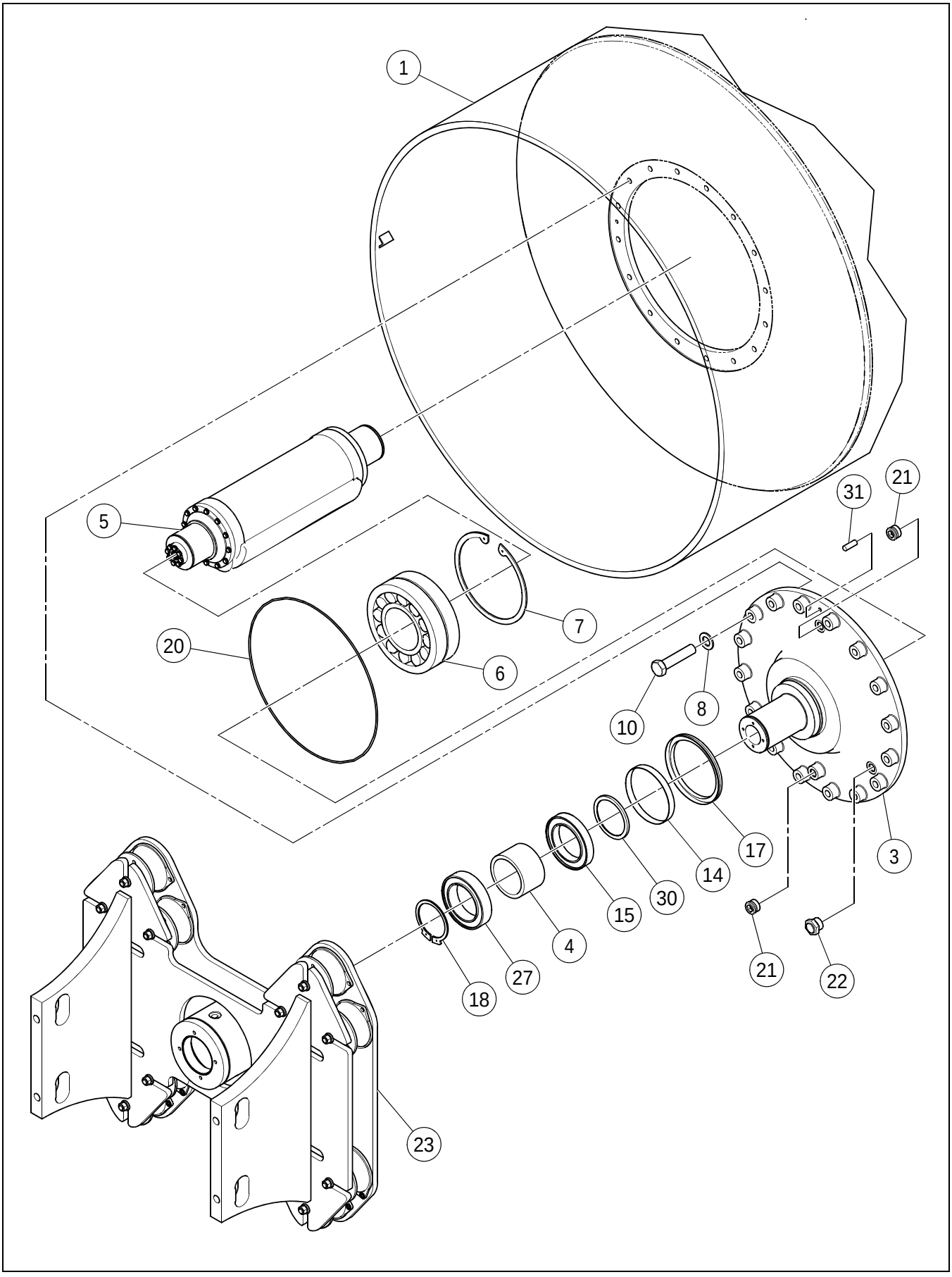

DRUM ASSEMBLY - SD-190 - PRIOR TO S/N 196615 - SHEET 1 OF 2

****Only Offered Parts Listed****

BOM 13880653

ITEM	COMM. NO.	DESCRIPTION	QTY	DIMENSIONS/NOTES
1	13411962	Drum	1	
3	13883061	Bearing Housing Spindle	1	
4	13415138	Spacer	1	
5	**NSVA**	**Eccentric Shaft Assembly**	**1**	**See Page B - 44.**
6	54591805	Bearing	2	
7	96711106	Retainer Ring	2	
8	96738620	Flatwasher	32	M20 Hardened
10	96701909	HHCS, Zinc Plated	32	M20 x 2.5 x 90 Cl 10.9
14	59277756	Wear Sleeve	1	
15	50269984	Bearing	1	
17	13167390	V-Ring Seal	1	
18	96711510	Retaining Ring	1	
20	95603163	O-ring	2	
21	59144428	Magetic Plug	2	
22	59277772	Sight Gauge	1	
23	**NSVA**	**Carrier Assembly**	**1**	**See Page B - 56.**
27	13414743	Bearing Taper Roller	1	
30	13447354	Spacer Ring	1	
31	96737069	Roll Pin	1	

DRUM ASSEMBLY - SD-190 - PRIOR TO S/N 196615 - SHEET 2 OF 2

Dwg 13880653/01/02

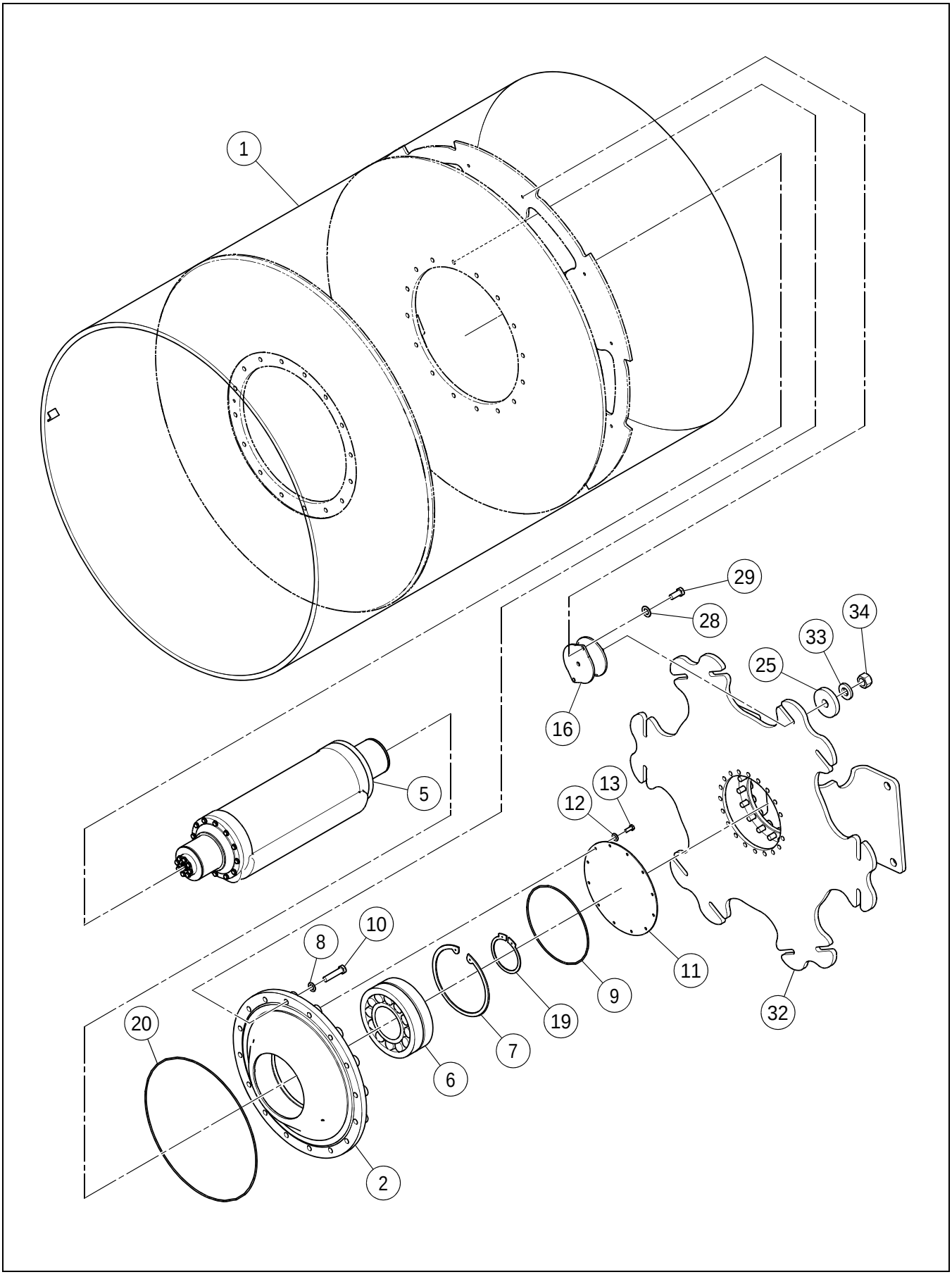

DRUM ASSEMBLY - SD-190 - PRIOR TO S/N 196615 - SHEET 2 OF 2

****Only Offered Parts Listed****

BOM 13880653

ITEM	COMM. NO.	DESCRIPTION	QTY	DIMENSIONS/NOTES
1	13411962	Drum	1	
2	13329263	Bearing Housing Drive	1	
5	**NSVA**	**Eccentric Shaft Assembly**	**1**	**See Page B - 44.**
6	54591805	Bearing	2	
7	96711106	Retainer Ring	2	
8	96738620	Flatwasher	32	M20 Hardened
9	95269320	O-ring	1	
10	96701909	HHCS, Zinc Plated	32	M20 x 2.5 x 90 Cl 10.9
11	59296384	Cover	1	
12	96741038	Flatwasher	12	M8
13	96702824	HHCS, Fully Threaded, Zinc Plated	12	M8 x 1.25 x 20 Cl 8.8
16	13304787	Shock Mount	12	
19	96711544	Retaining Ring	1	
20	95603163	O-ring	2	
25	13351408	Washer	12	
28	96745104	Flatwasher	24	M12 Hardened
29	96702808	HHCS	24	M12 x 1.75 x 30 Cl 10.9
32	**NSVA**	**Drive Motor Assembly**	**1**	**See Page B - 50.**
33	59565044	Washer	12	
34	96703657	Nut	12	M16

Dwg 13880851/00

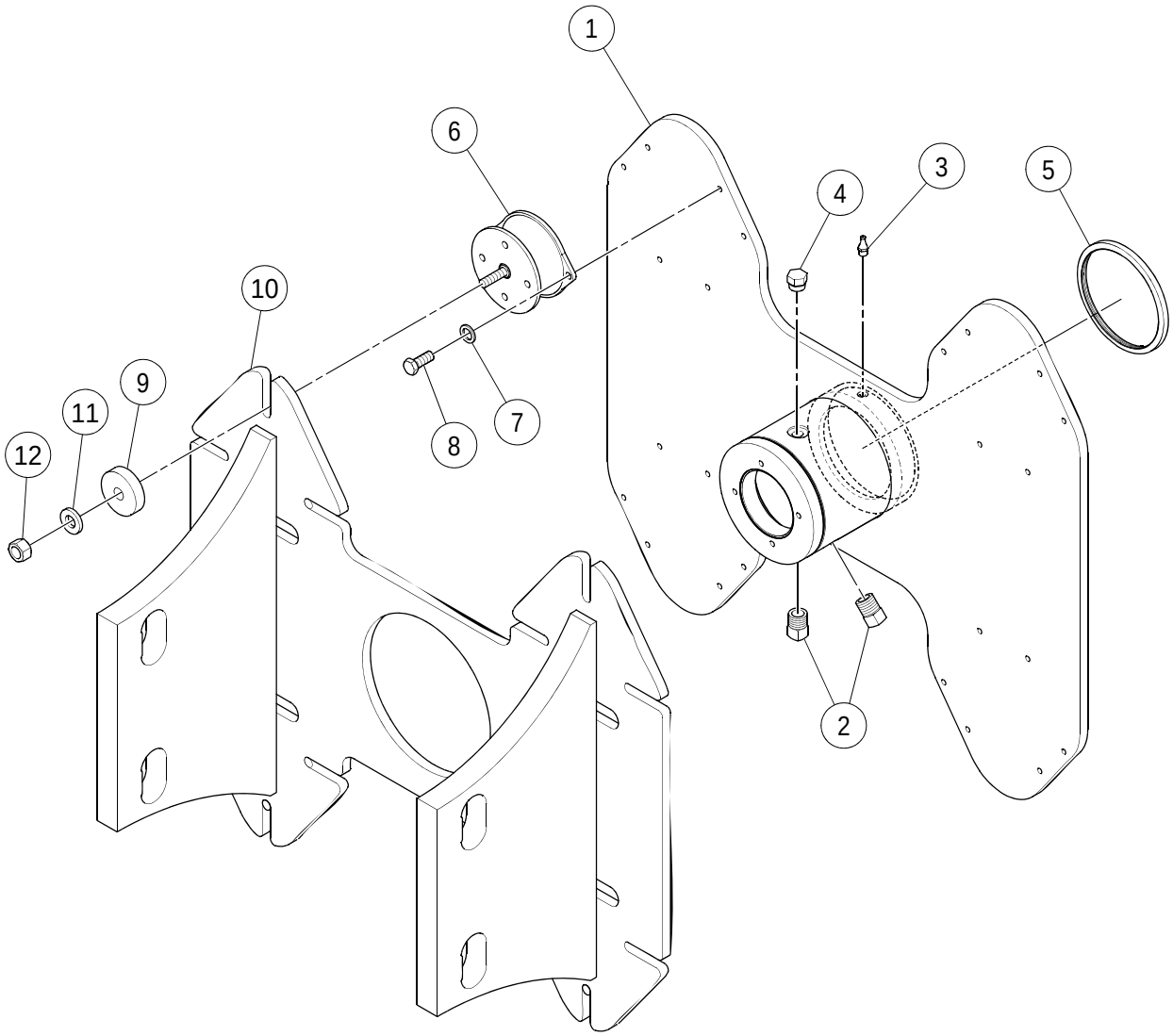

CARRIER ASSEMBLY

****Only Offered Parts Listed****

BOM 13880851

ITEM	COMM. NO.	DESCRIPTION	QTY	DIMENSIONS/NOTES
1	13882808	Carrier Plate	1	
2	59600593	Pipe Plug	2	
3	96702709	Grease Fitting	1	
4	54584776	Breather Filtered Vent	1	
5	59277764	Oil Seal	1	
6	13304787	Shock Mount	12	
7	96745104	Flatwasher	24	M12 Hardened
8	96702808	HHCS	24	M12 x 1.75 x 30 Cl 10.9
9	13855184	Washer	12	
10	13880844	Shock Mount	1	
11	59565044	Washer	1	
12	96703657	Nut	12	M16

FRONT FRAME INSTALLATION - SD-200 - SHEET 1 OF 2

13296256 REV 0N

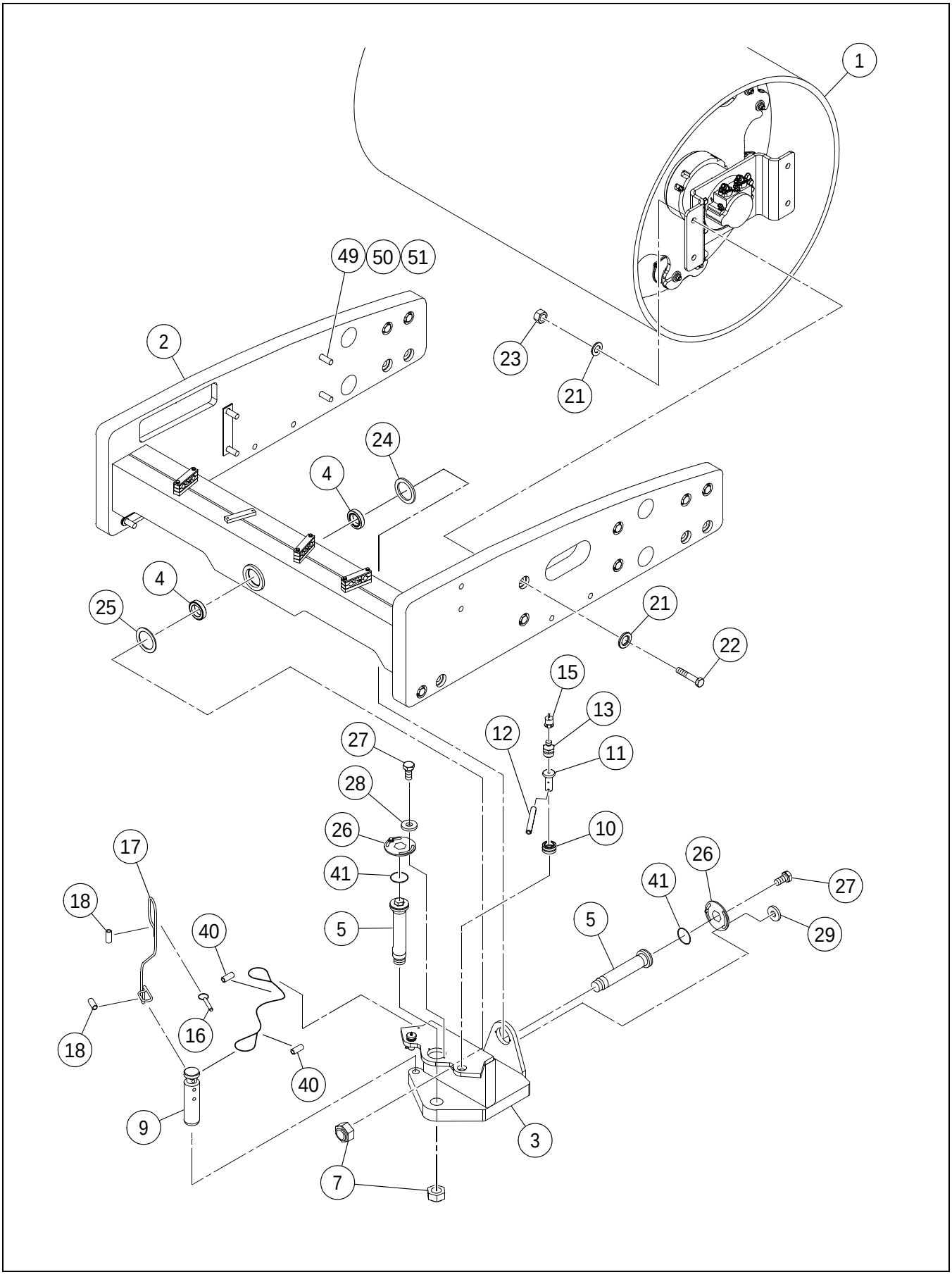

FRONT FRAME INSTALLATION - SD-200 - SHEET 1 OF 2

****Only Offered Parts Listed****

BOM 13437173

ITEM	COMM. NO.	DESCRIPTION	QTY	DIMENSIONS/NOTES
1	**NSVA**	**Drum Assembly - Effective S/N 196615**	**1**	**See Page B - 62.**
-	**NSVA**	**Drum Assembly - Prior to S/N 196615**	**1**	**See Page B - 76.**
2	13419304	Frame	1	
3	13414016	Swivel	1	
4	58795824	Bearing	2	
5	13365713	Articulation/Oscilation Pin	2	
7	59003434	Lock Nut	2	
8	96702444	HHCS, Zinc Plated	14	M12 x 1.75 x 40 Cl 8.8
9	13292818	Lock Pin	1	
10	59450528	Bushing	2	
11	59190975	Pivot Pin	2	
12	95098679	Roll Pin	2	
13	95201547	Grease Fitting	3	
15	50270248	Grease Fitting Cap	3	
16	13292834	Hitch Pin	1	
17	59607861	Cable	1	
18	59607853	Ferrule	2	
21	96701578	Washer	16	
22	96747217	HHCS, Zinc Plated	4	M30 x 3.5 x 200 Cl 10.9
23	96720438	Hex Nut	4	M30 x 3.5
24	13294178	Dust Seal	1	
25	13294186	Dust Seal	1	
26	13413802	Lockplate	2	
27	96702808	HHCS, Zinc Plated	6	M12 x 1.75 x 30 Cl 10.9
28	NOT-USED	This Item Not Used W/this Bom	1	
29	96712237	Flatwasher	20	
40	59214775	Sleeve	2	
41	95086658	O-ring	2	
49	96703681	Hex Nut	4	
50	96751672	HHCS, Zinc Plated	4	M24 x 3.0 x 240 Cl 10.9
51	96738646	Flatwasher	8	

13296256 REV 0N

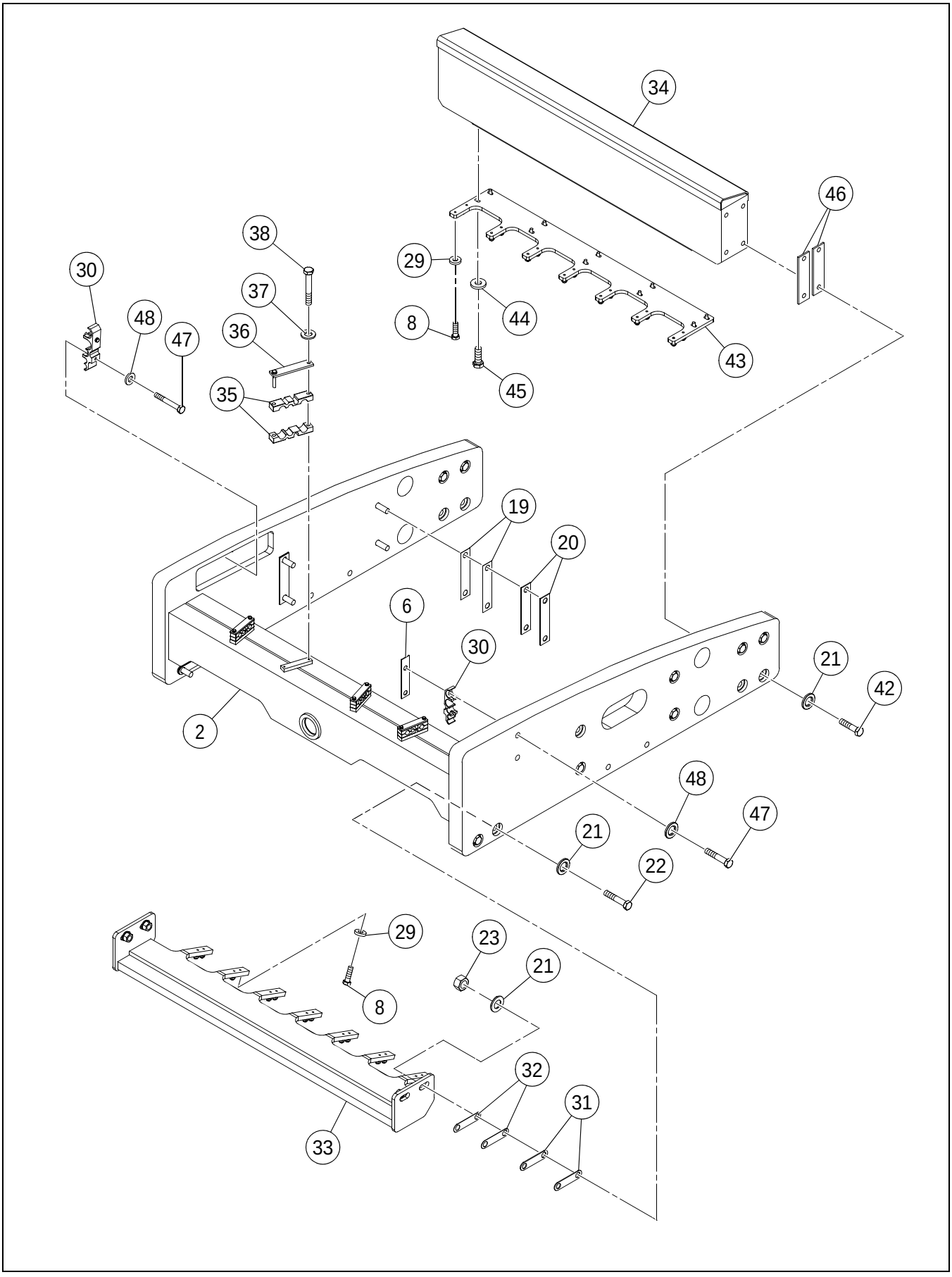

FRONT FRAME INSTALLATION - SD-200 - SHEET 2 OF 2

****Only Offered Parts Listed****

BOM 13437173

ITEM	COMM. NO.	DESCRIPTION	QTY	DIMENSIONS/NOTES
2	13419304	Frame	1	
6	13385042	Cover Plate	2	
8	96702444	HHCS, Zinc Plated	14	M12 x 1.75 x 40 Cl 8.8
19	13385281	Shim	12	1.5MM
20	13385299	Shim	2	5.0MM
21	96701578	Washer	16	
22	96747217	HHCS, Zinc Plated	4	M30 x 3.5 x 200 Cl 10.9
23	96720438	Hex Nut	4	M30 x 3.5
29	96712237	Flatwasher	20	
30	13209200	Hose Clamp	2	
31	NOT-USED	This Item Not Used W/this Bom	1	
32	NOT-USED	This Item Not Used W/this Bom	1	
33	NOT-USED	This Item Not Used W/this Bom	1	
34	13419338	Bumper	1	
35	13239967	Hose Clamp	8	
36	58880501	Clamp Plate	4	
37	96714399	Flatwasher, Zinc Plated	8	Cl 140
38	96704713	HHCS, Zinc Plated	8	M10 x 1.5 x 70 Cl 8.8
39	59436741	Cable (Not Shown)	1	
42	96702907	HHCS, Zinc Plated	8	M30 x 3.5 x 180 Cl 10.9
43	13294467	Scraper Bar	1	
44	96716345	Flatwasher	10	M16
45	96738513	HHCS, Zinc Plated	10	M16 x 2 x 45 Cl 8.8
46	59298935	Shim	8	
47	96728639	HHCS, Zinc Plated	4	M6 x 1.0 x 110
48	96741053	Flatwasher	4	

DRUM ASSEMBLY - SD-200 - EFFECTIVE WITH S/N 196615

43887975 REV 00

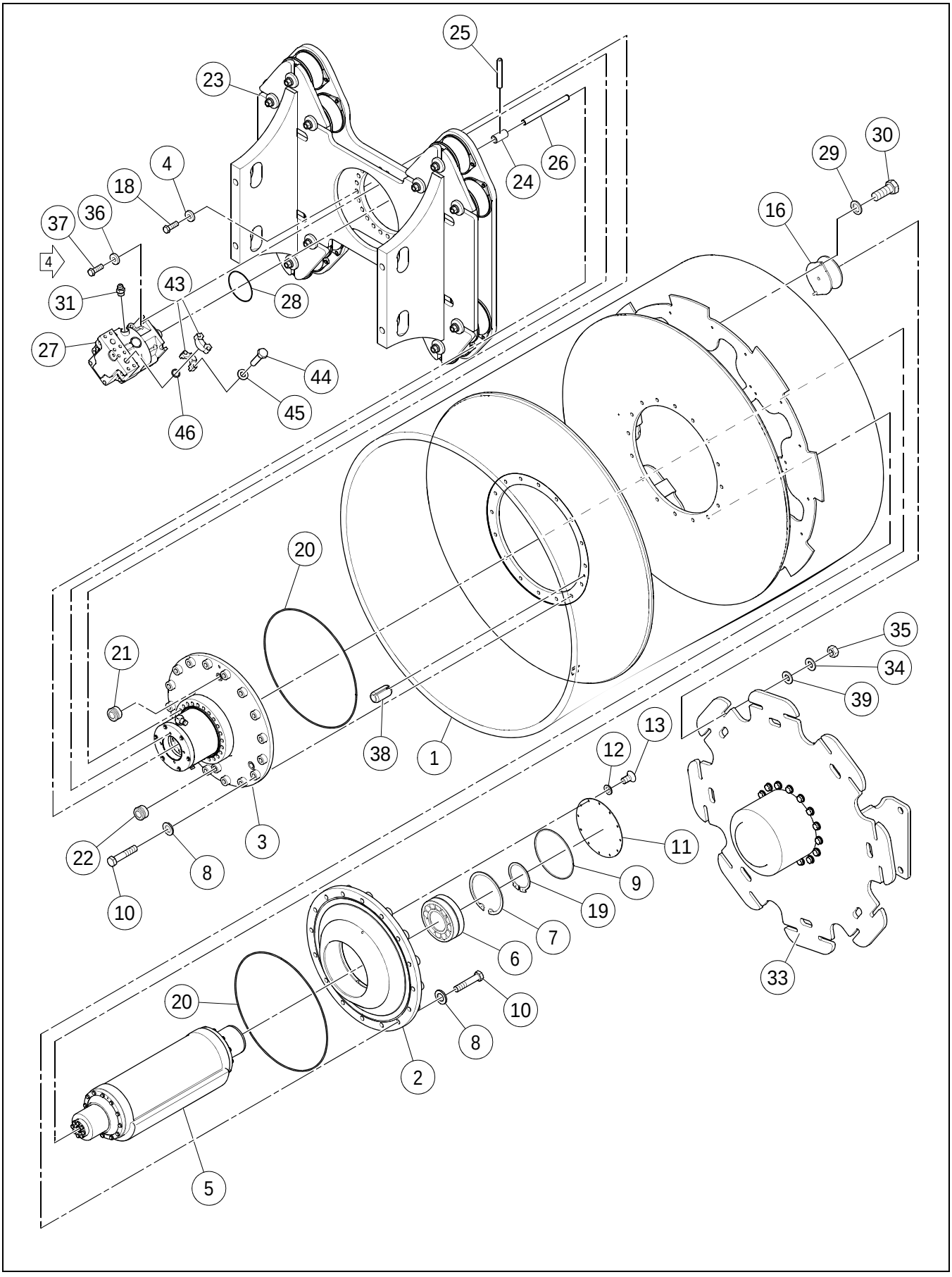

DRUM ASSEMBLY - SD-200 - EFFECTIVE WITH S/N 196615

****Only Offered Parts Listed****

BOM 43887876

ITEM	COMM. NO.	DESCRIPTION	QTY	DIMENSIONS/NOTES
1	13350673	Drum - SD-200DX	1	
-	13418496	Drum - SD-200F	1	
2	13329263	Drive Bearing	1	
3	**NSVA**	**Bearing Housing Assembly**	**1**	**See Page B - 8.**
4	96738612	Flatwasher, Zinc Plated	24	Cl 200
5	**NSVA**	**Eccentric Shaft Assembly**	**1**	**See Page B - 64.**
6	54591805	Bearing	1	
7	96711106	Retainer Ring	1	
8	96738620	Flatwasher	32	
9	95269320	O-ring	1	
10	96701909	HHCS, Zinc Plated	32	M20 x 2.5 x 90 Cl 10.9
11	13323233	Cover	1	
12	NOT-USED	This Item Not Used W/this Bom	1	
13	96743851	FHCS, Zinc Plated	12	M8 x 1.25 x 16 Cl 8.8
16	13304787	Shock Mount	16	
18	96705520	HHCS, Zinc Plated	24	M16 x 2.0 x 80 Cl 8.8
19	96711544	Retaining Ring	1	
20	95603163	O-ring	2	
21	59144428	Magnetic Plug	2	
22	59277772	Sight Gauge	1	
23	**NSVA**	**Carrier Assembly**	**1**	**See Page B - 66.**
24	59296236	Spline Coupling - SD-200DX	1	
25	96701586	Spring Pin- SD-200DX	1	
26	13183272	Spline Shaft- SD-200DX	1	
27	**13483706**	**Vibration Motor**	**1**	**See Breakdown B - 48.**
28	95988820	O-ring	1	
29	96738596	Flatwasher	32	
30	96702790	HHCS, Zinc Plated	32	M12 x 1.75 x 25 Cl 10.9
31	95357570	Adapter - SD-200DX	1	
33	**NSVA**	**Drive Motor Assembly**	**1**	**See Page B - 68.**
34	96716345	Flatwasher	16	M16
35	96703657	Nut	16	M16
36	96712237	Flatwasher	4	
37	96702329	HHCS, Zinc Plated	4	M12 x 1.75 x 35 Cl 8.8
38	96737069	Roll Pin	1	
39	13855184	Washer	16	
43	58901653	Split Flange Clamp	4	
44	96702667	HHCS, Zinc Plated	8	M12 x 1.75 x 45 Cl 8.8
45	96738596	Flatwasher	8	
46	59993881	O-ring	2	

ECCENTRIC SHAFT ASSEMBLY

43866508 REV 00

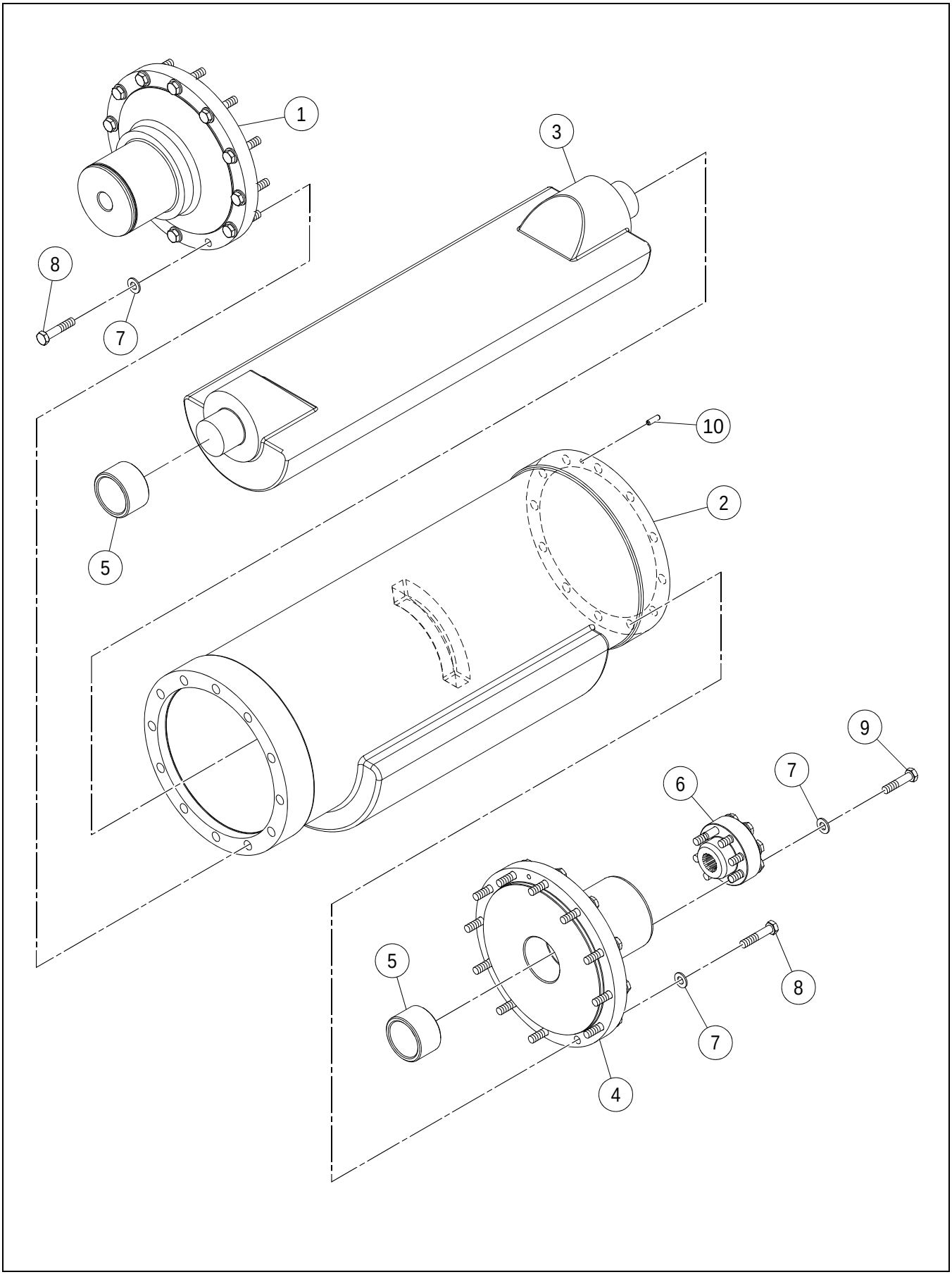

ECCENTRIC SHAFT ASSEMBLY

****Only Offered Parts Listed****

BOM 13277876

ITEM	COMM. NO.	DESCRIPTION	QTY	DIMENSIONS/NOTES
1	59295378	Drive Side Journal	1	
2	13218029	Eccentric Shaft - SD-200DX	1	
-	13290101	Eccentric Shaft - SD-200F	1	
3	59298042	Eccentric Shaft	1	
4	13276571	Drive Side Journal	1	
5	59296632	Oilite Bearing	2	
6	13183249	Splined Coupling	1	
7	96741046	Flatwasher	32	
8	96702436	HHCS, Zinc Plated	24	M10 x 1.5 x 50 Cl 10.9
9	96702428	HHCS, Zinc Plated	8	M10 x 1.5 x 45 Cl 8.8
10	96720990	Roll Pin	1	

CARRIER ASSEMBLY

43887967 REV 00

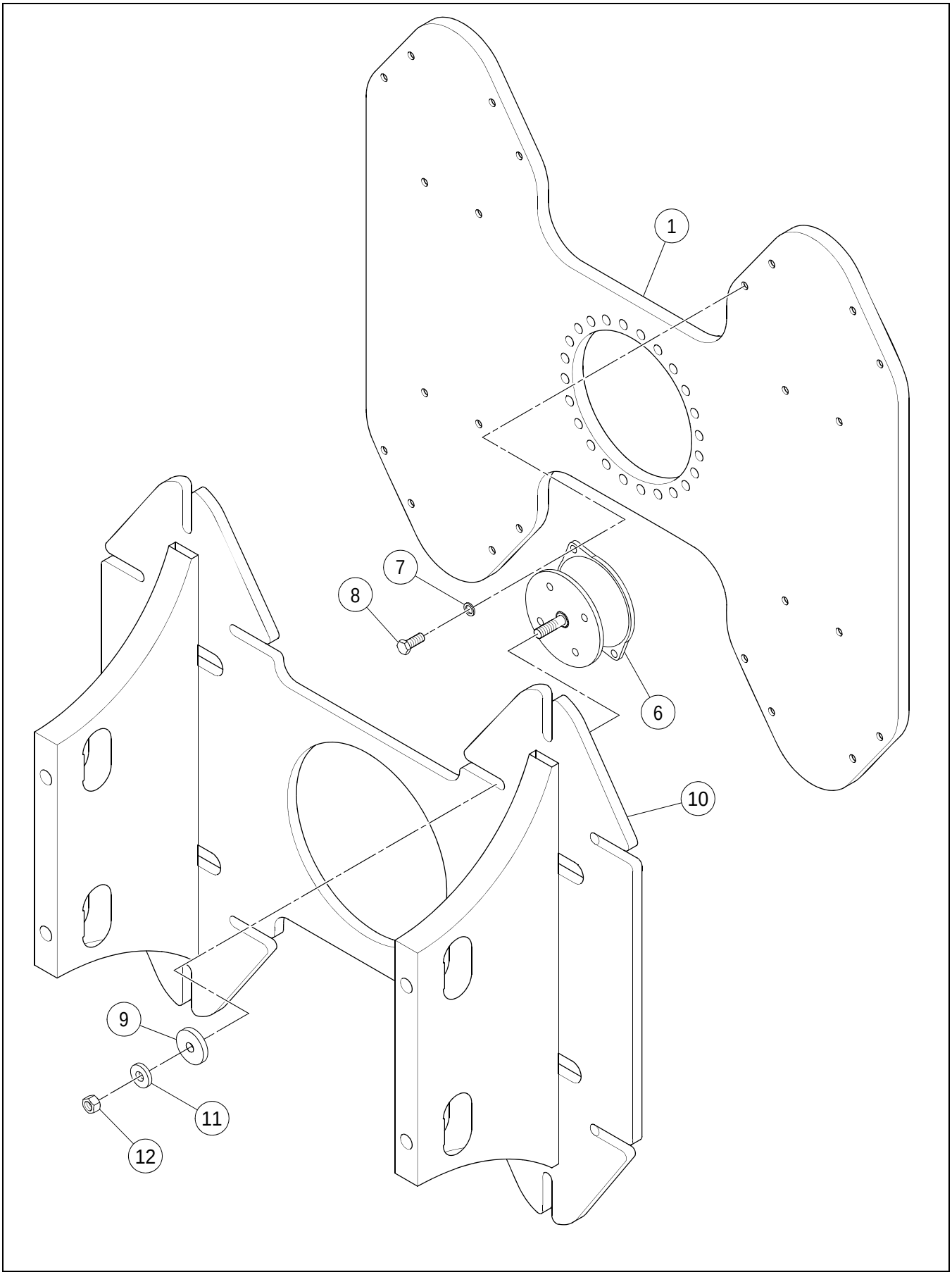

CARRIER ASSEMBLY

****Only Offered Parts Listed****

BOM 43887892

ITEM	COMM. NO.	DESCRIPTION	QTY	DIMENSIONS/NOTES
1	43887900	Carrier Plate	1	
6	13304787	Shock Mount	12	
7	96738596	Flatwasher	24	
8	96703111	HHCS, Zinc Plated	24	M12 x 1.75 x 35 Cl 10.9
9	13855184	Washer	12	
10	43887926	Shock Mount	1	
11	96716345	Flatwasher	12	M16
12	96703657	Nut	12	M16

DRIVE MOTOR ASSEMBLY

13277835 REV 05

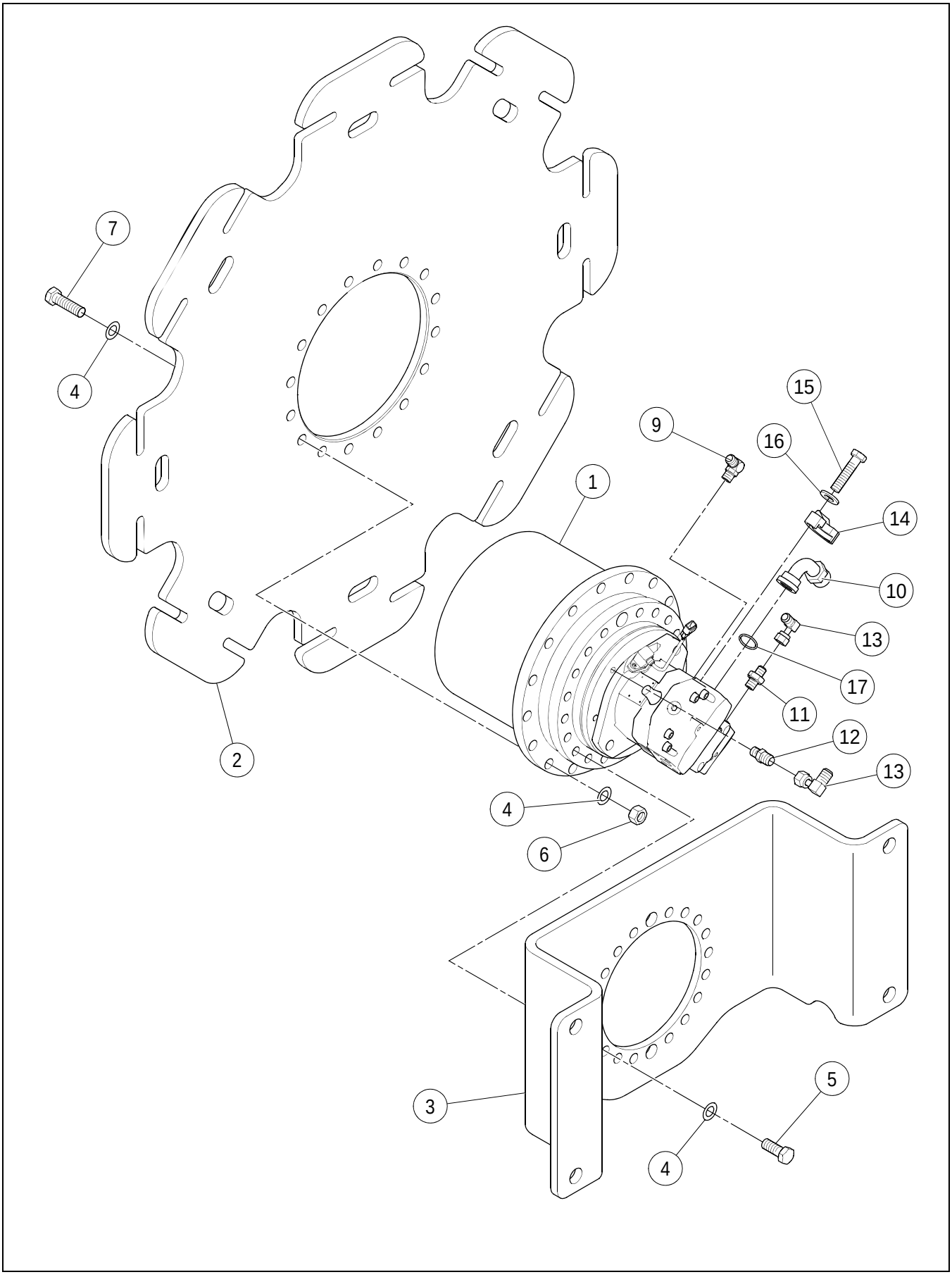

DRIVE MOTOR ASSEMBLY

****Only Offered Parts Listed****

BOM 13277835

ITEM	COMM. NO.	DESCRIPTION	QTY	DIMENSIONS/NOTES
1	**13356340**	**Drum Drive Motor**	**1**	**See Breakdown B - 70.**
2	13414008	Drive Plate	1	
3	13277819	Drive Mounting	1	
4	59565051	Flatwasher	50	
5	96744768	HHCS, Zinc Plated	18	M20 x 1.5 x 50 Cl 8.8
6	96720446	Hex Nut	16	M20 x 2.5
7	96740741	HHCS, Zinc Plated	16	M20 x 2.5 x 80 Cl 8.8
9	58896580	Elbow	1	
10	59327775	Adapter	2	
-	13444575	- O-ring	2	
11	59787879	Adapter	1	
12	13351671	Adapter	1	
13	95326930	Adapter	2	
14	58901653	Split Flange Clamp	4	
15	96702667	HHCS, Zinc Plated	8	M12 x 1.75 x 45 Cl 8.8
16	96738596	Flatwasher	8	
17	59993881	O-ring	2	

DRUM DRIVE MOTOR (13356340) - INTERNAL BREAKDOWN

Dwg 13356340 REV 00

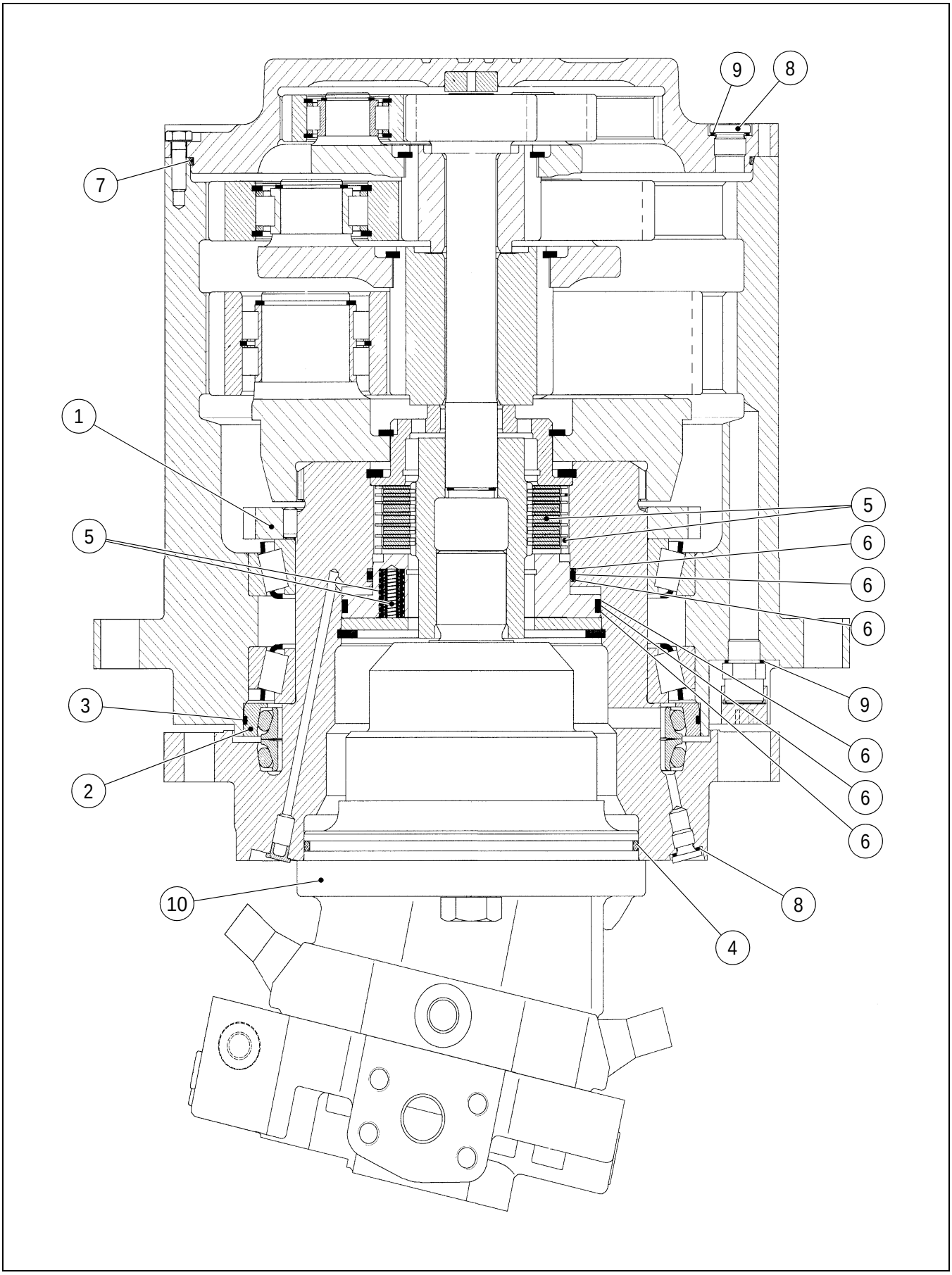

DRUM DRIVE MOTOR (13356340) - INTERNAL BREAKDOWN

****Only Offered Parts Listed****

BOM 13356340

ITEM	COMM. NO.	DESCRIPTION	QTY	DIMENSIONS/NOTES
1	43801315	Shaft Nut	1	
2	13494844	Seal Ring	1	
3	13462064	O-ring	1	
4	13494828	O-ring	1	
5	13494851	Disc Brake Kit	1	
6	13494869	Seal Kit	1	
7	43801323	O-ring	1	
8	43801331	Seal Ring	2	
9	13462106	Seal Ring	1	
10	**13494927**	**Motor**	**1**	**See Breakdown B - 72.**

MOTOR (13494927) - INTERNAL BREAKDOWN

Dwg 13494927/00

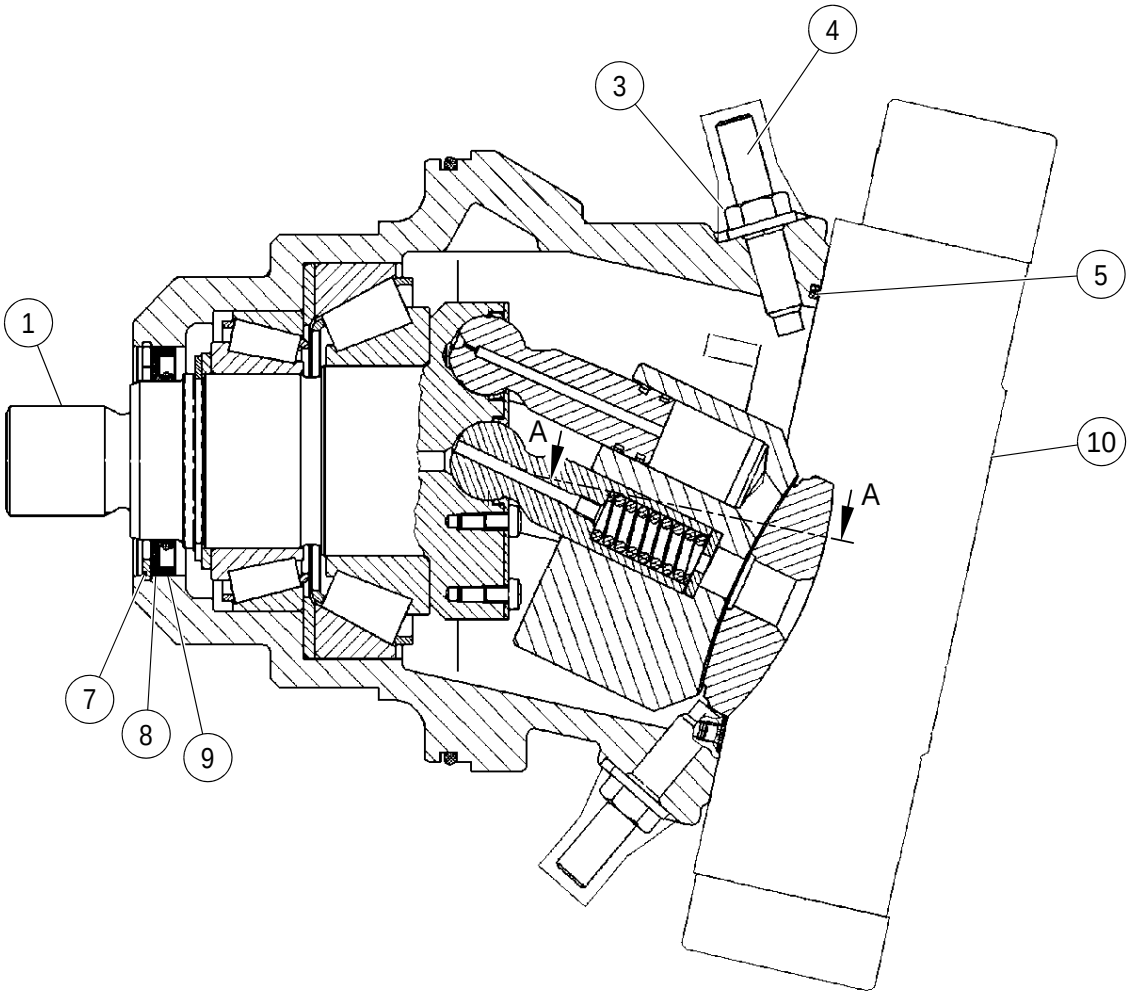

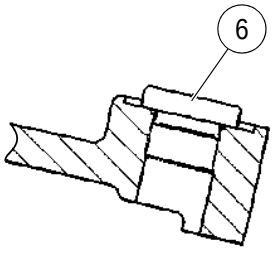

VIEW A - A

MOTOR (13494927) - INTERNAL BREAKDOWN

****Only Offered Parts Listed****

BOM 13494927

ITEM	COMM. NO.	DESCRIPTION	QTY	DIMENSIONS/NOTES
1	13494935	Rotary Group	1	
2	13494943	Sensor (Not Shown)	1	
3	13269741	Seal Locknut	2	
4	13269733	Threaded Pin	2	
5	13494950	O-ring	1	
6	13268263	Screw, Locking (Not Shown)	1	
7	13494968	Retaining Ring	1	
8	13494976	Backup Plate	1	
9	57575375	Shaft Seal Ring	1	
10	**13494984**	**Control**	**1**	**See Breakdown B - 74.**

Dwg 13494984/00

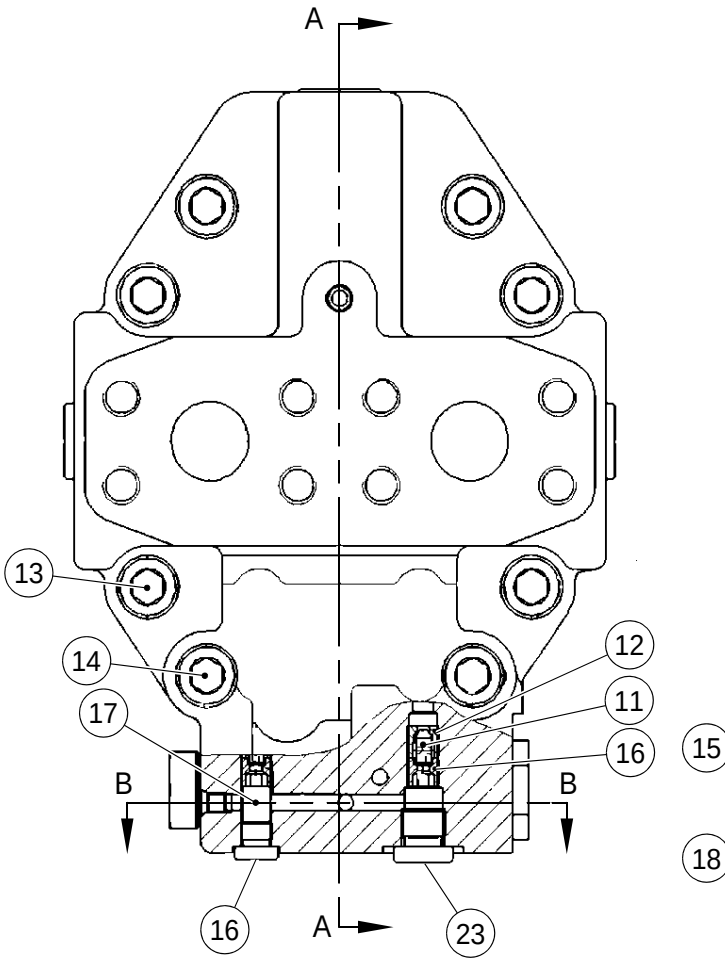

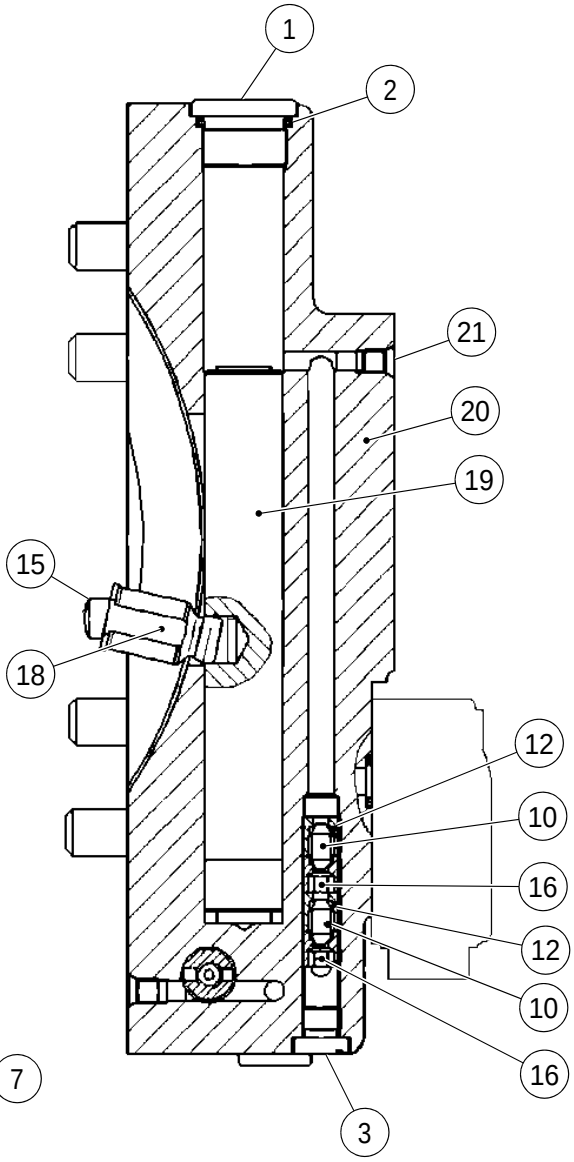

VIEW A - A

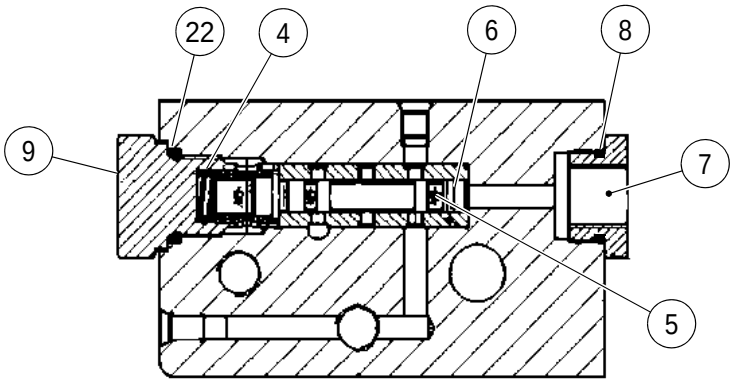

VIEW B - B

CONTROL (13494984) - INTERNAL BREAKDOWN

****Only Offered Parts Listed****

BOM 13494984

ITEM	COMM. NO.	DESCRIPTION	QTY	DIMENSIONS/NOTES
1	13269881	Locking Screw	2	
2	13269873	O-Ring	1	
3	13269865	Locking Screw	1	
4	13269857	Pressure Spring	1	
5	13269840	Control Bushing	1	
6	13269832	Control Piston	1	
7	13269824	Connection Stud	1	
8	13269816	O-Ring	1	
9	13269808	Locking Screw	1	
10	13269790	Throttle Pin	3	
11	13269782	Valve Pin	2	
12	13269774	Throttle Spur	3	
13	13494992	Screw	2	
14	13269766	Screw	6	
15	13269899	Cylinder Pin	2	
16	13269881	Locking Screw	2	
17	13269907	Throttle Pin	1	
18	13495007	Trunnion	1	
19	13495015	Piston	1	
20	13495023	Port Plate	1	
21	13268974	Double Break Off Pin	4	
22	13462338	O-Ring	1	
23	13495031	Locking Screw	1	

DRUM ASSEMBLY - SD-200 - PRIOR TO S/N 196615

Dwg 13504816/02

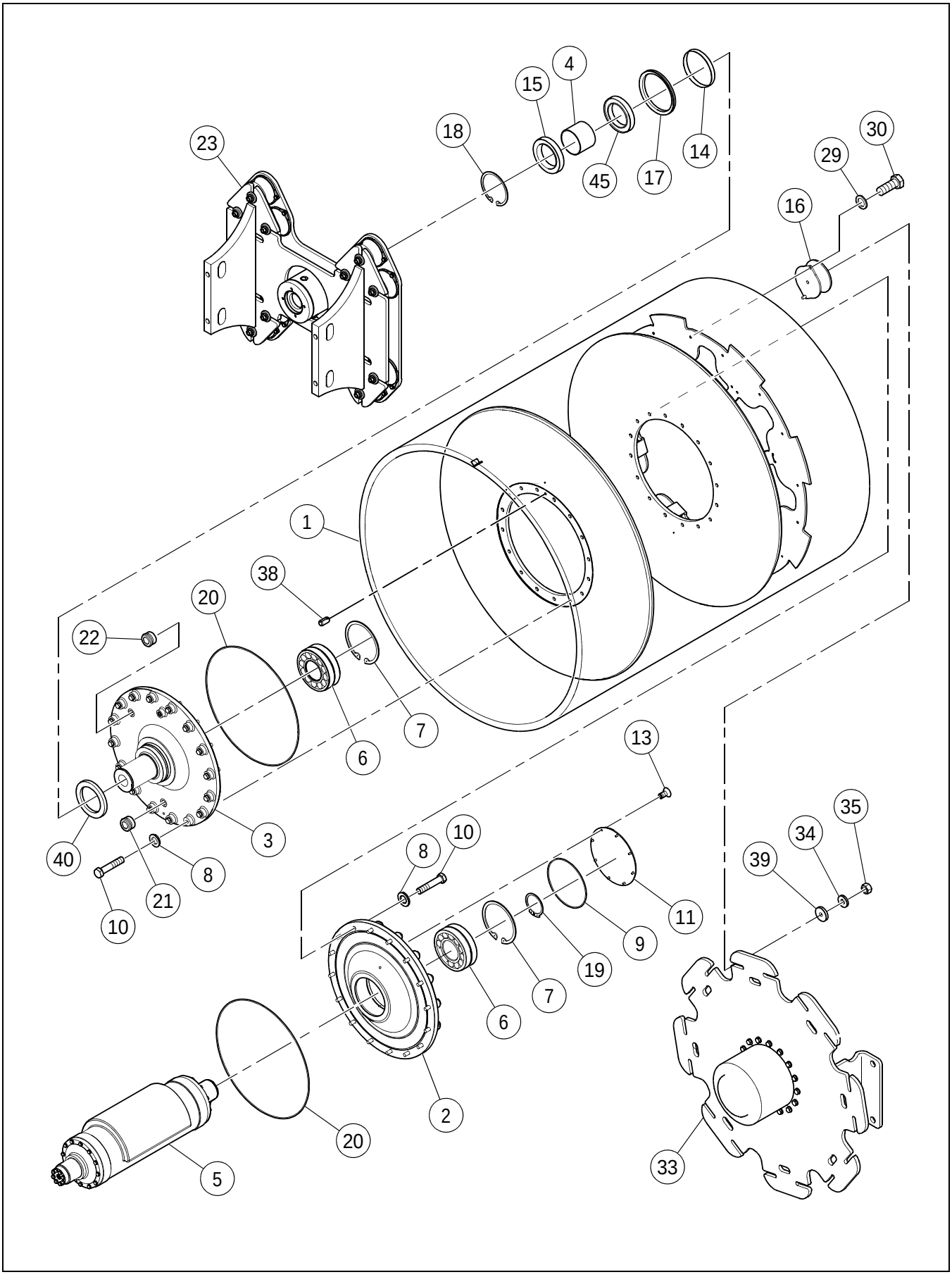

DRUM ASSEMBLY - SD-200 - PRIOR TO S/N 196615

****Only Offered Parts Listed****

BOM 13350640, 13350624, 13504816

ITEM	COMM. NO.	DESCRIPTION	QTY	DIMENSIONS/NOTES
1	13350673	Drum (SD-200DX)	1	
-	13418496	Drum (SD-200F)	1	
2	13329263	Bearing Drive	1	
3	13883061	Bearing Spindle	1	
4	13415138	Spacer	1	
5	**NSVA**	**Eccentric Shaft Assembly**	**1**	**See Page B - 64.**
6	54591805	Bearing	2	
7	96711106	Retainer Ring	2	
8	96738620	Flatwasher, Zinc Plated	32	M20 Hardened Cl 200
9	95269320	O-ring	1	
10	96701909	HHCS, Zinc Plated	32	M20 x 2.5 x 90 Cl 10.9
11	13323233	Cover	1	
13	96743851	HSHCS, Zinc Plated	12	M8 x 1.25 x 16 Cl 8.8
14	59277756	Wear Sleeve	1	
15	13414743	Bearing	1	
16	13304787	Shock Mount	16	
17	13167390	V-ring Seal	1	
18	96711510	Retaining Ring	1	
19	96711544	Retaining Ring	1	
20	95603163	O-ring	2	
21	59144428	Magnetic Plug	2	
22	59277772	Sight Gauge	1	
23	**NSVA**	**Carrier Assembly**	**1**	**See Page B - 78.**
24	59296236	Spline Coupling (Not Shown)	1	
29	96745104	Flatwasher	32	M12 Hardened Cl 200
30	96702790	HHCS, Fully Threaded, Zinc Plated	32	1.75 Cl 10.9
33	**NSVA**	**Drive Motor Assembly**	**1**	**See Page B - 68.**
34	96716345	Flatwasher, Zinc Plated	16	M16 Hardened Cl 10
35	96703657	Nut, Zinc Plated	16	M16 Cl 10
38	96737069	Roll Pin	1	
39	13855184	Washer	16	
40	13447354	Spacer Ring	1	
44	59993881	O-ring (Not Shown)	2	
45	50269984	Bearing	1	

Dwg 13504790/01

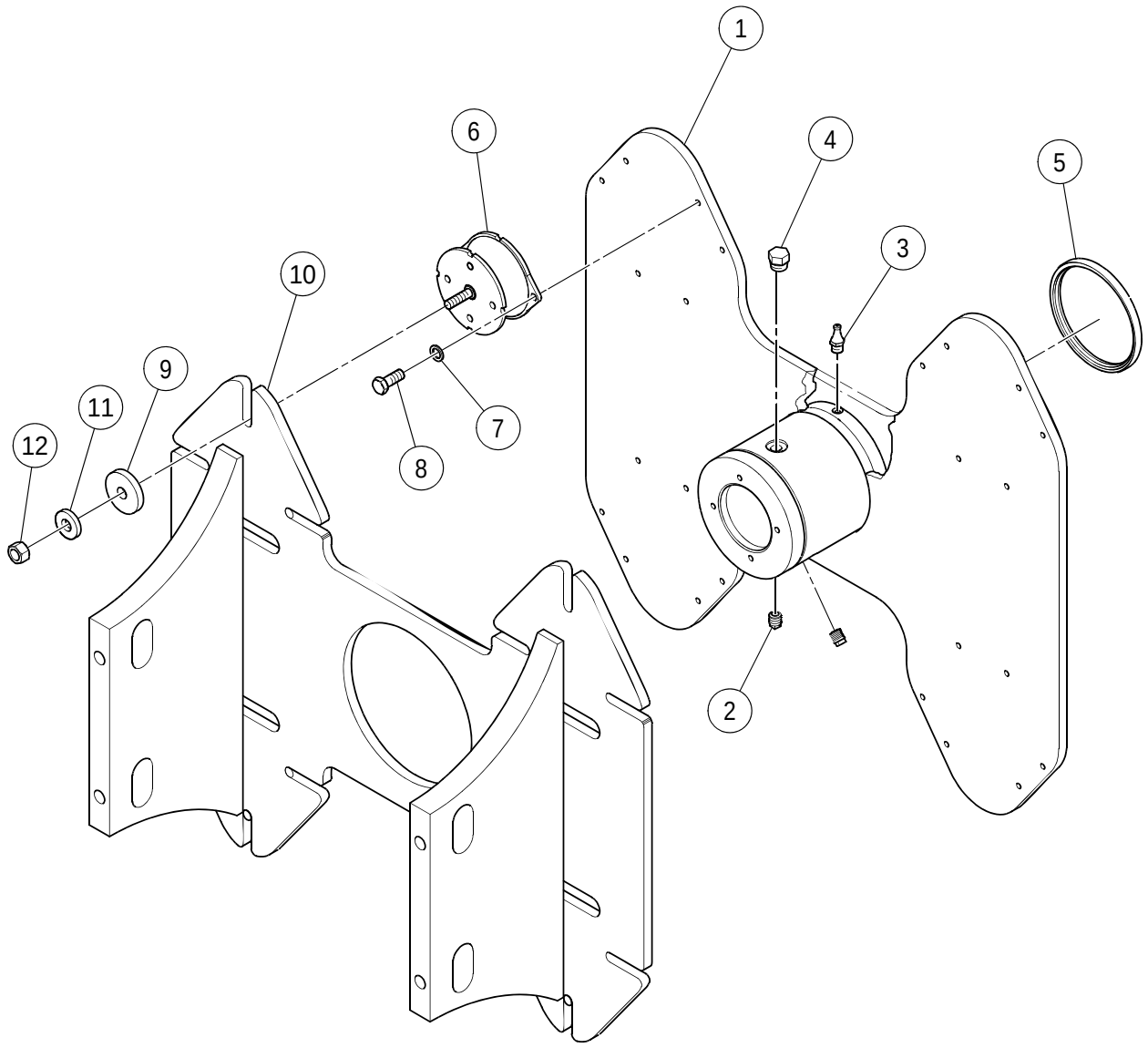

CARRIER ASSEMBLY

****Only Offered Parts Listed****

BOM 13504790

ITEM	COMM. NO.	DESCRIPTION	QTY	DIMENSIONS/NOTES
1	13882808	Carrier Plate	1	
2	59600593	Pipe Plug	2	
3	96702709	Grease Fitting	1	
4	54584776	Breather Filtered Vent	1	
5	59277764	Oil Seal	1	
6	13304787	Shock Mount	12	
7	96745104	Flatwasher	24	M12 Hardened
8	96702808	HHCS	24	M12 x 1.75 x 30 Cl 10.9
9	13351408	Washer	12	
10	13389416	Shock Mount	1	
11	59565044	Washer	12	
12	96703657	Nut	12	M16

REAR FRAME INSTALLATION - SD-160 - SHEET 1 OF 2

13182068 REV 0W

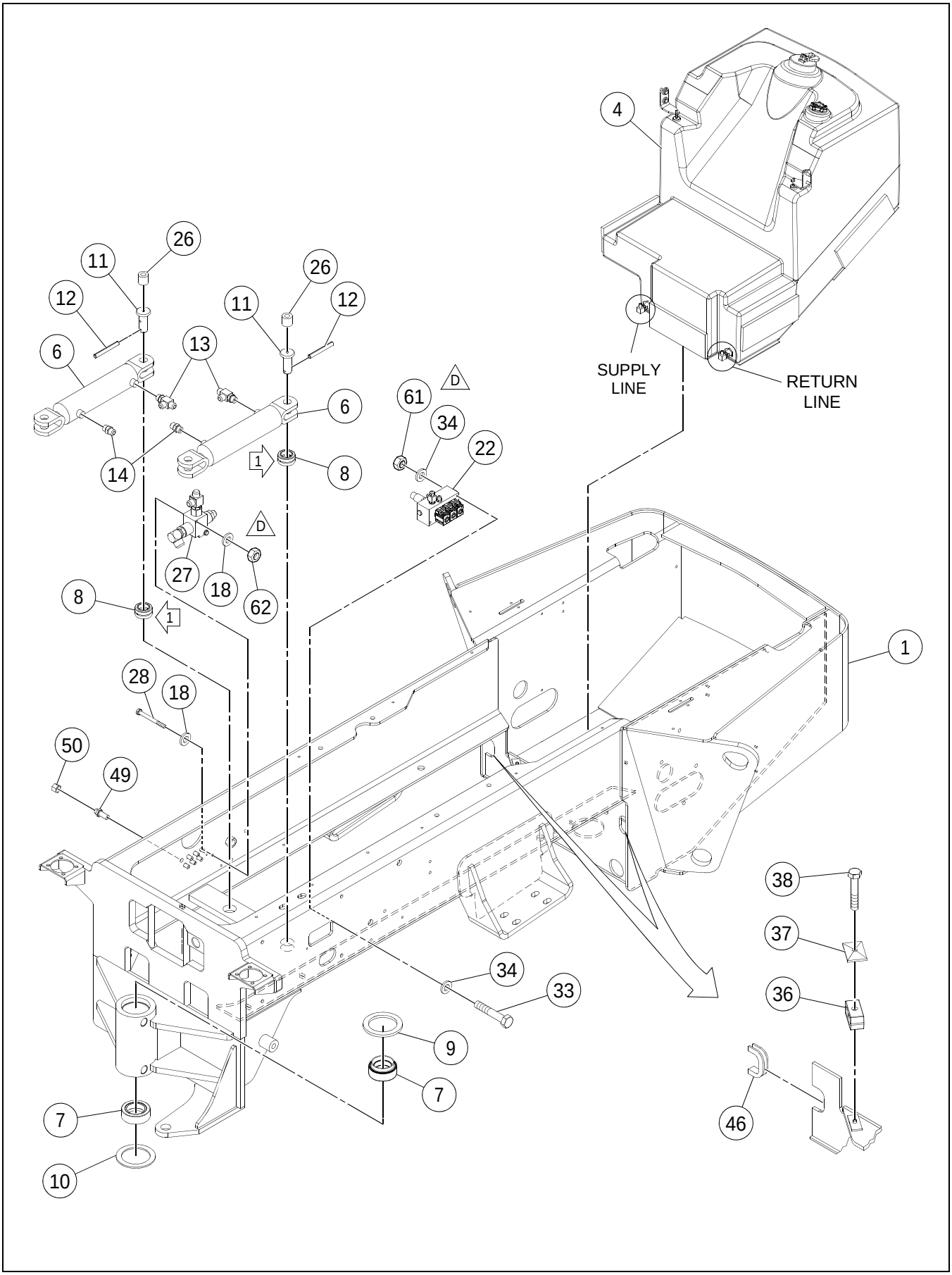

REAR FRAME INSTALLATION - SD-160 - SHEET 1 OF 2

****Only Offered Parts Listed****

BOM 43899681, 43801430

ITEM	COMM. NO.	DESCRIPTION	QTY	DIMENSIONS/NOTES
1	43896505	Main Frame - Effective with S/N 196502	1	
-	43869411	Main Frame - Prior to S/N 196502	1	
4	**NSVA**	**Fuel Tank Installation**	**1**	**See Page B - 86.**
6	13188198	Steering Cylinder	2	
-	54577838	- Locknut	2	
-	13228937	- Seal Kit	2	
7	43897362	Bearing - Effective with S/N 196502	2	
-	13245337	Bearing - Prior to S/N 196502	2	
8	13209903	Bearing	2	
9	43890714	Dust Seal - Effective with S/N 196502	2	
-	13238423	Dust Seal - Prior to S/N 196502	1	
10	13294186	Dust Seal - Effective with S/N 196502	1	
-	13238431	Dust Seal - Prior to S/N 196502	1	
11	59190975	Pivot Pin	2	
12	95098679	Roll Pin	2	
13	95488250	Tee	2	
14	95303368	Adapter	2	
18	96714399	Flatwasher, Zinc Plated	14	Cl 140
22	**NSVA**	**Brake Shunt Valve Assembly**	**1**	**See Page B - 90.**
26	95049359	Plug	2	
27	**NSVA**	**Thermal Bypass Valve Installation**	**1**	**See Page B - 92.**
28	96705272	HHCS, Zinc Plated	2	M10 x 1.5 x 80 Cl 8.8
33	96718978	HHCS, Zinc Plated	1	M8 x 1.25 x 80 Cl 8.8
34	96741038	Flatwasher	10	
36	59891002	Insert Clamp	2	
37	59583500	Cover Plate	1	
38	96705553	HHCS, Zinc Plated	1	M8 x 1.25 x 45 Cl 8.8
46	59892182	Trim	2	
49	59961821	Adapter	7	
50	59924043	Cap	7	
61	NOT-USED	This Item Not Used W/this Bom	1	
62	NOT-USED	This Item Not Used W/this Bom	1	

13182068 REV 0W

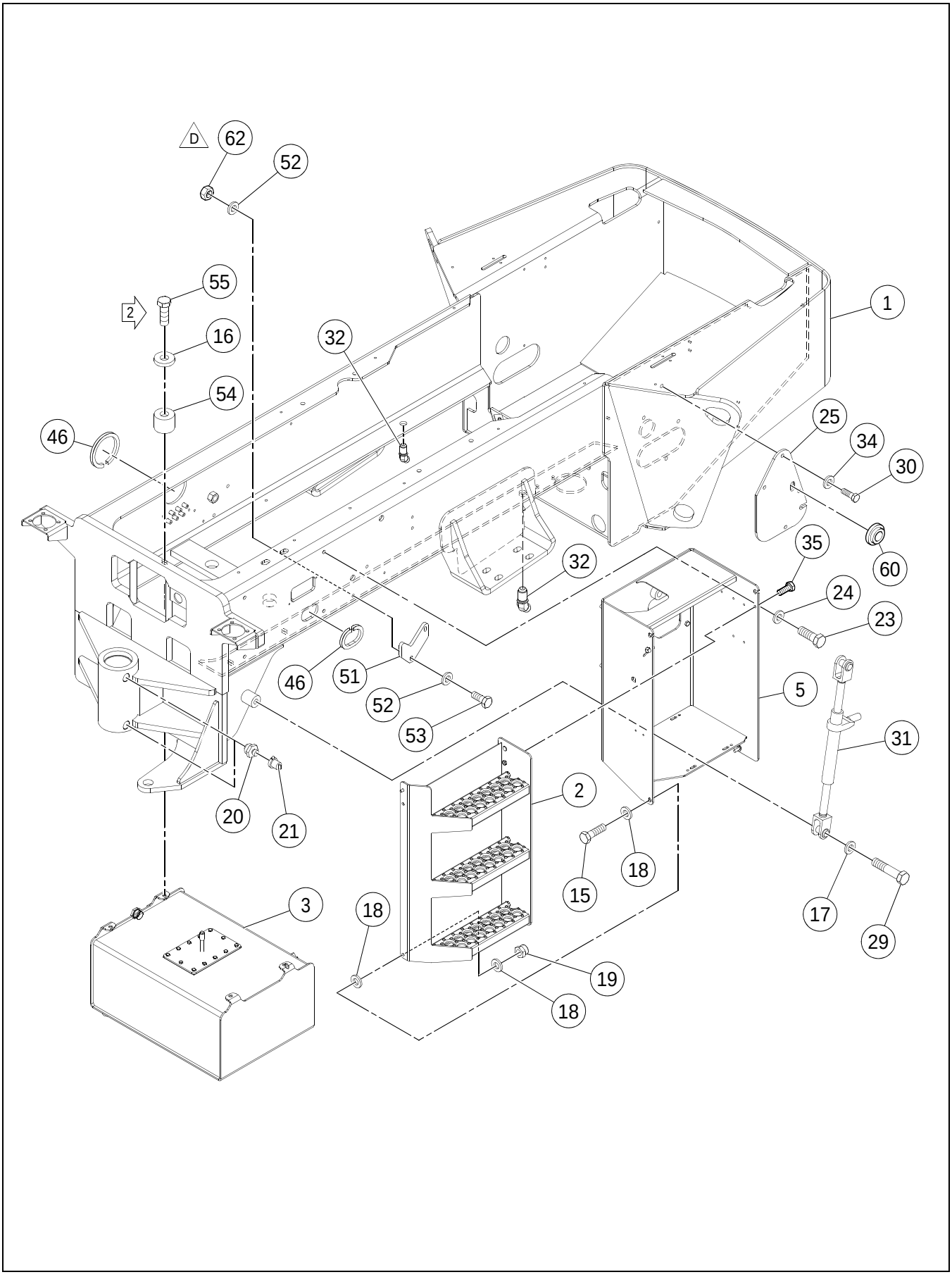

****Only Offered Parts Listed****

BOM 43899681

ITEM	COMM. NO.	DESCRIPTION	QTY	DIMENSIONS/NOTES
1	43896505	Main Frame - Effective with S/N 196502	1	
-	43869411	Main Frame - Prior to S/N 196502	1	
2	19280049	Step	1	
3	**NSVA**	**Hydraulic Tank Assembly**	**1**	**See Page B - 84.**
5	13501853	Battery Box	1	
15	96704309	HHCS, Zinc Plated	2	M10 x 1.5 x 35 Cl 8.8
16	96712237	Flatwasher	4	
17	96738646	Flatwasher	1	
18	96714399	Flatwasher, Zinc Plated	14	Cl 140
19	96704614	Nut	4	M10 x 1.5
20	95201547	Grease Fitting	2	
21	50270248	Grease Fitting Cap	2	
23	96702329	HHCS, Zinc Plated	4	M12 x 1.75 x 35 Cl 8.8,
24	96738596	Flatwasher	4	
25	13297536	Radiator Access Panel	2	
29	96712724	HHCS, Zinc Plated	1	M24 x 3.0 x 110 Cl 8.8
30	96702816	HHCS, Zinc Plated	8	M8 x 1.25 x 16 Cl 8.8
31	13209663	Ratchet Jack Assembly	1	
-	13247978	- Racket Jack	1	
-	13247937	- Lever	1	
-	13247945	- Coarialer Pin	1	
-	13247952	- Grooved Headless Pin	2	
-	13247960	- Hair Pin Clip	4	
32	95329876	Adapter	2	
34	96741038	Flatwasher	10	
35	96702287	HHCS, Zinc Plated	3	M10 x 1.5 x 25 Cl 8.8
44	96726435	HHCS, Zinc Plated (Not Shown)	1	M8 x 1.25 x 100 Cl 8.8
46	59892182	Trim	2	
51	13275953	V-block	2	
52	96711833	Washer	6	M10
53	96702774	HHCS, Zinc Plated	4	M10 x 1.5 x 25 Cl 10.9
54	13396007	Spacer	4	
55	96714910	HHCS, Zinc Plated	4	M12 x 1.75 x 60 Cl 10.9
56	19280080	Rubber Tie Down (Not Shown)	1	
57	19280098	Handle Storage Sleeve (Not Shown)	1	
58	95457586	Clamp (Not Shown)	2	
59	96701917	HHCS, Zinc Plated (Not Shown)	1	M10 x 1.5 x 30 Cl 8.8
60	54494638	Insulation Grommet	1	
62	NOT-USED	This Item Not Used W/this Bom	1	

HYDRAULIC TANK ASSEMBLY

13292560 REV 0C

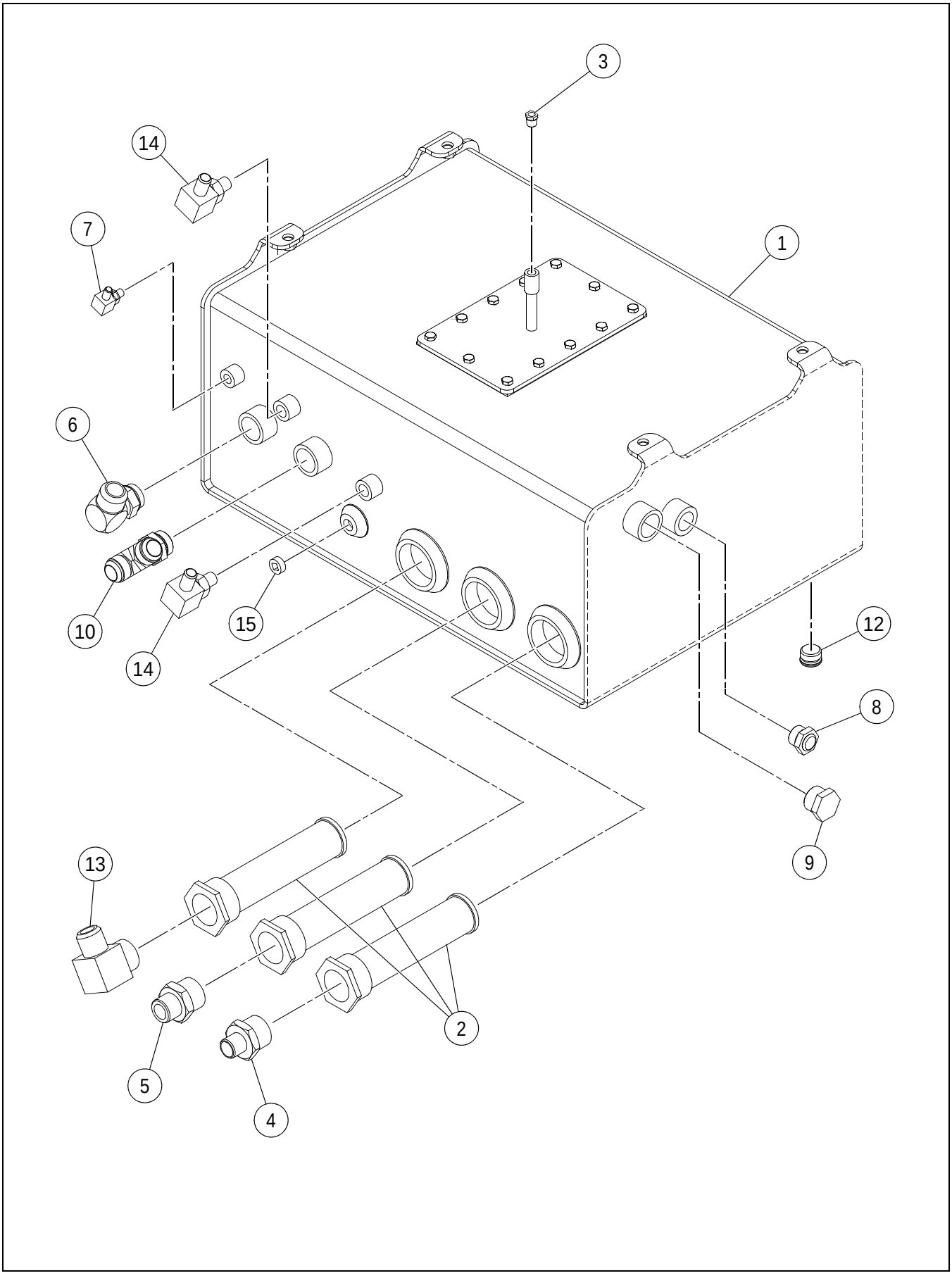

HYDRAULIC TANK ASSEMBLY

****Only Offered Parts Listed****

BOM 13292560

ITEM	COMM. NO.	DESCRIPTION	QTY	DIMENSIONS/NOTES
1	13396031	Hydraulic Tank	1	
-	13305099	- Hydraulic Tank Gasket	1	
-	13185384	- Hydraulic Tank Clean Out Lid	1	
-	95048393	- Nipple	1	
-	95011060	- Coupling Pipe	1	
-	96702824	- HHCS, Zinc Plated	12	M8 x 1.25 x 20 Cl 8.8
2	58855099	Tank Filter	3	
3	59093351	Filtered Vent Breather	1	
4	95316956	Adapter	1	
5	95316956	Adapter	1	
6	95280194	Adapter	1	
7	95329975	Adapter	1	
8	59277772	Sight Gauge	1	
9	95326955	Plug	1	
10	95488110	Adapter	1	
12	59144428	Magnetic Plug	1	
13	95286548	Adapter	1	
14	95303335	Adapter	2	
15	95043238	Pipe Plug	1	

FUEL TANK INSTALLATION

13184205 REV 03

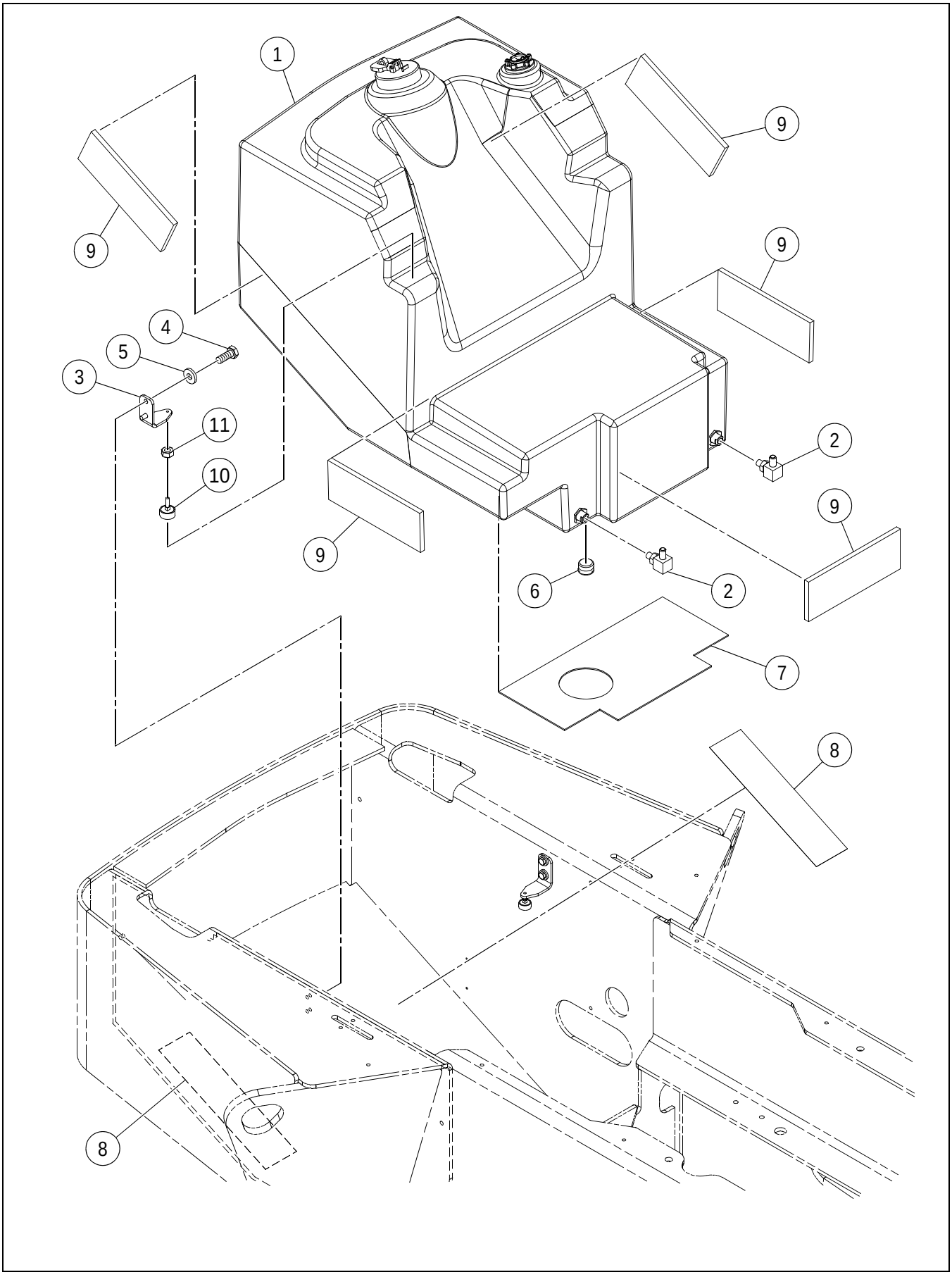

FUEL TANK INSTALLATION

****Only Offered Parts Listed****

BOM 13166301

ITEM	COMM. NO.	DESCRIPTION	QTY	DIMENSIONS/NOTES
1	**NSVA**	**Fuel Tank Assembly**	**1**	**See Page B - 88.**
2	95329975	Adapter	2	
3	13418215	Fuel Tank Bracket	2	
4	96702287	HHCS, Zinc Plated	4	M10 x 1.5 x 25 Cl 8.8
5	96711833	Washer	4	M10
6	59144428	Magnetic Plug	1	
7	19331032	Tank Base Guard	1	
8	59290726	Tape	2	
9	13184932	Tank Guard	5	
10	13418132	Elevator Bolt	2	3/8 x 16 x 1.75
11	95922894	Hex Nut	2	3/8 x 16

FUEL TANK ASSEMBLY

13182084 REV 02

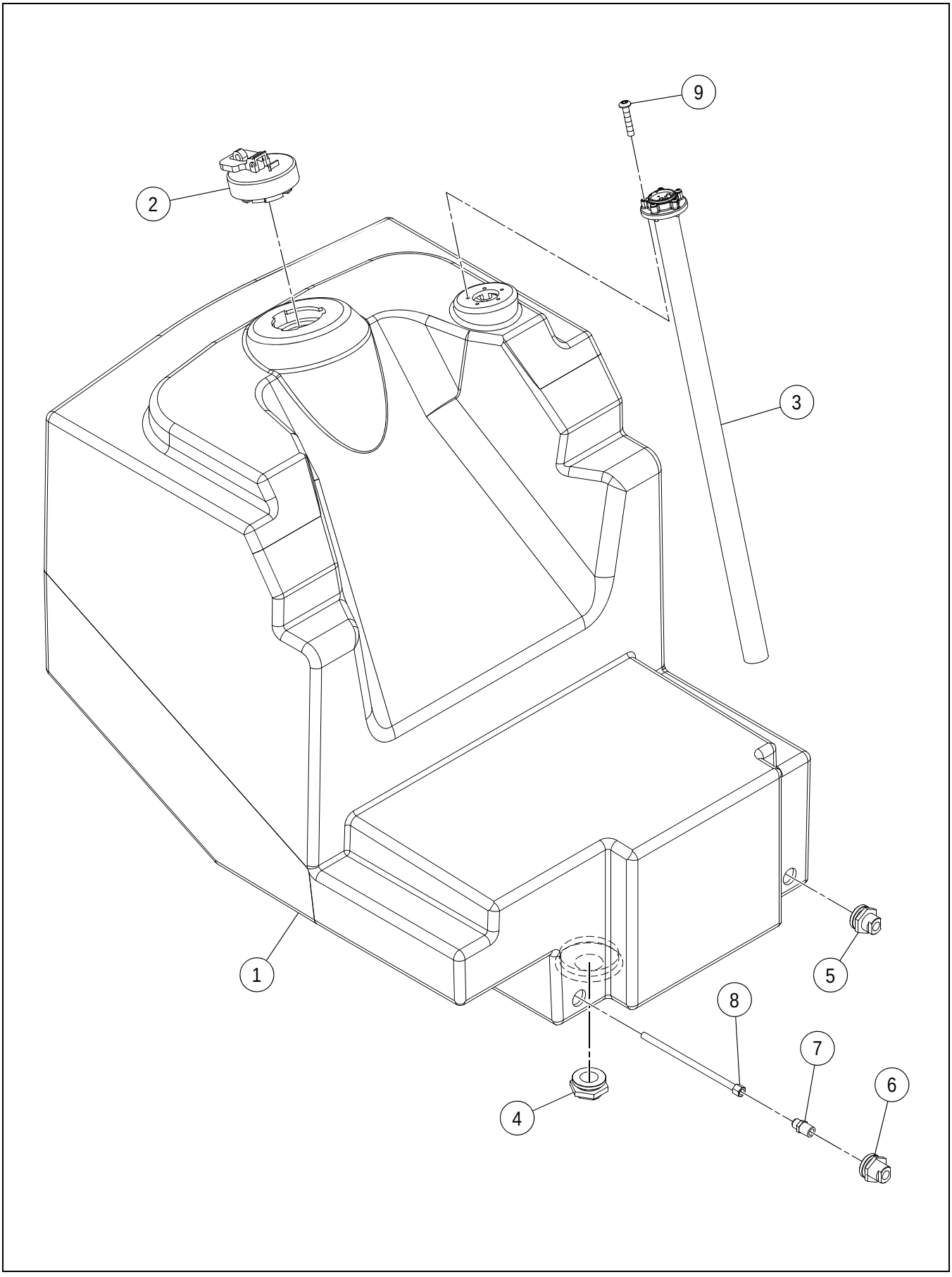

FUEL TANK ASSEMBLY

****Only Offered Parts Listed****

BOM 13213731

ITEM	COMM. NO.	DESCRIPTION	QTY	DIMENSIONS/NOTES
1	13213533	Fuel Tank	1	
2	13213574	Fuel Cap	1	
3	13213582	Fuel Sender	1	
4	13213624	Drain Port	1	
5	13213632	Return Port	1	
6	13213681	Supply Port	1	
7	95219713	Adapter	1	
8	13213699	Tube Assembly	1	
9	59266726	Capscrew	5	

BRAKE SHUNT VALVE ASSEMBLY

13209291 REV 04

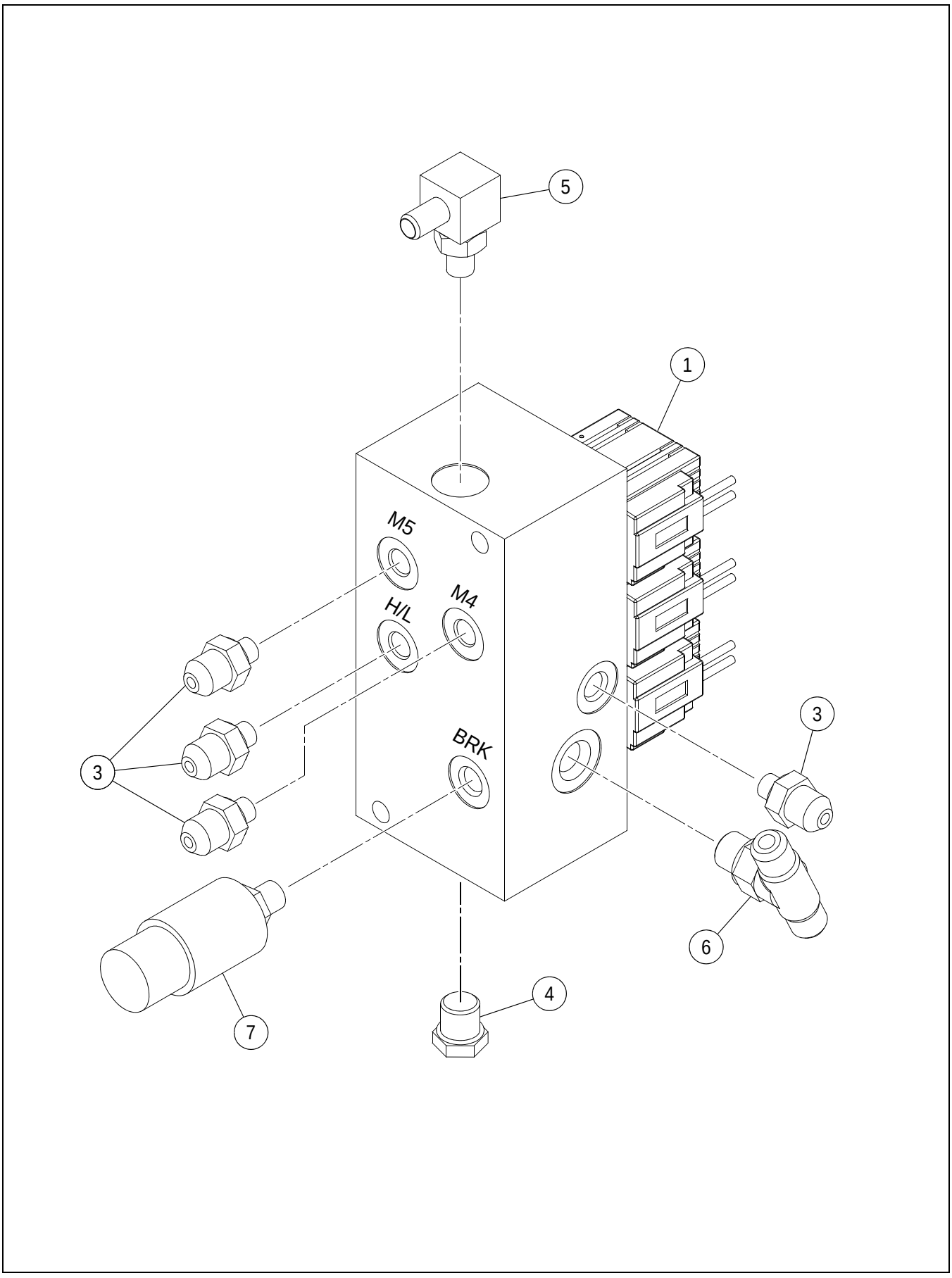

BRAKE SHUNT VALVE ASSEMBLY

****Only Offered Parts Listed****

BOM 13187984

ITEM	COMM. NO.	DESCRIPTION	QTY	DIMENSIONS/NOTES
1	19287036	Brake Shunt two-Speed Manifold	1	
-	19287051	- Valve	1	
-	19287093	- Valve	2	
-	19287101	- Coil	3	
3	95402806	Adapter	4	
4	95343596	Plug	1	
5	95329975	Adapter	1	
6	95431284	Pressure Cross	1	
7	59110312	Pressure Switch	1	

THERMAL BYPASS VALVE INSTALLATION

13185855 REV 03

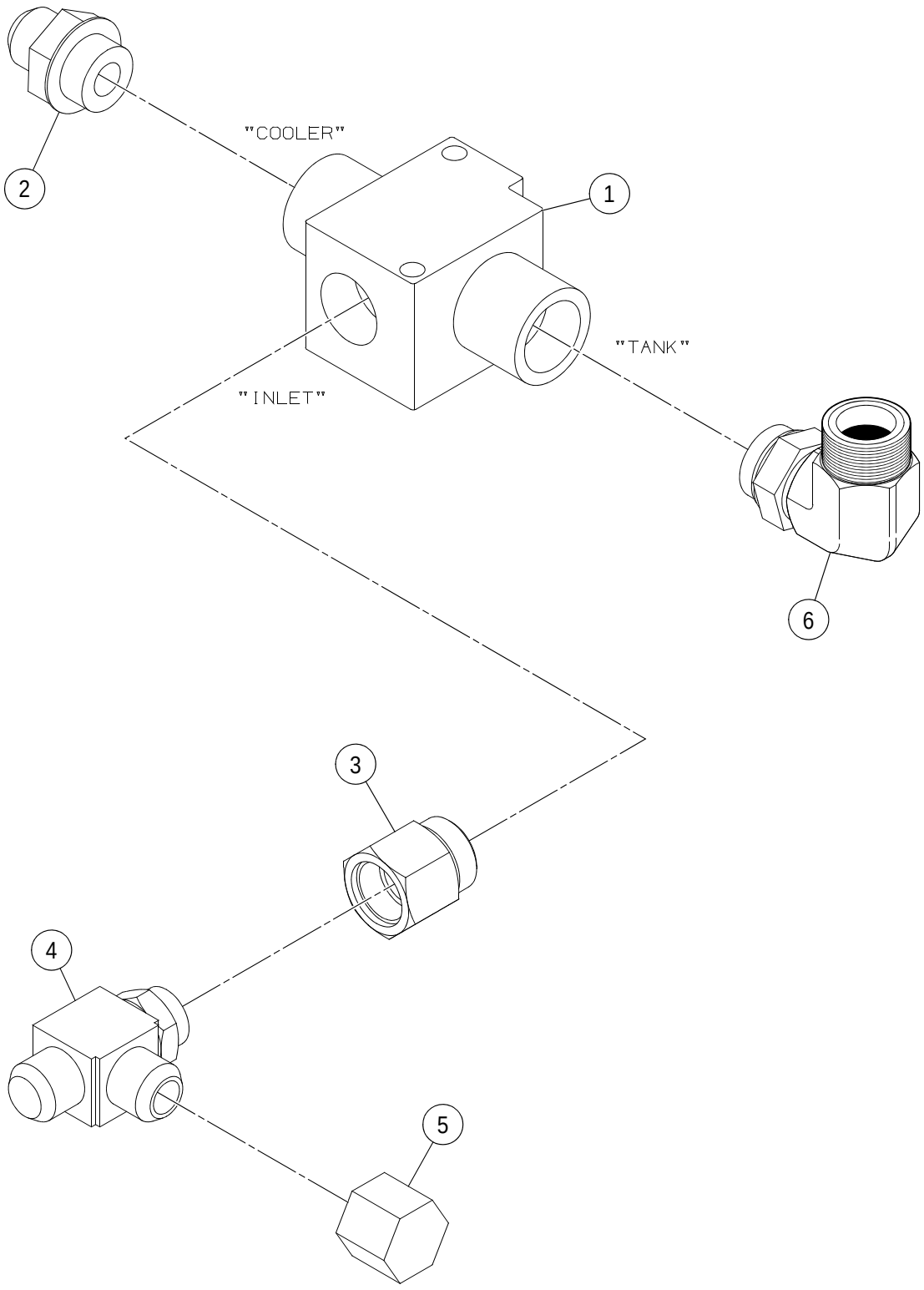

THERMAL BYPASS VALVE INSTALLATION

****Only Offered Parts Listed****

BOM 13162656

ITEM	COMM. NO.	DESCRIPTION	QTY	DIMENSIONS/NOTES
1	13205364	Thermal Bypass Valve	1	
2	95356978	Adapter	1	
3	59924472	Adapter	1	
4	95829263	Tee	1	
5	95387890	Cap	1	
6	95280194	Adapter	1	

REAR FRAME INSTALLATION - SD-190/SD-200 - SHEET 1 OF 2

13324348 REV 0D

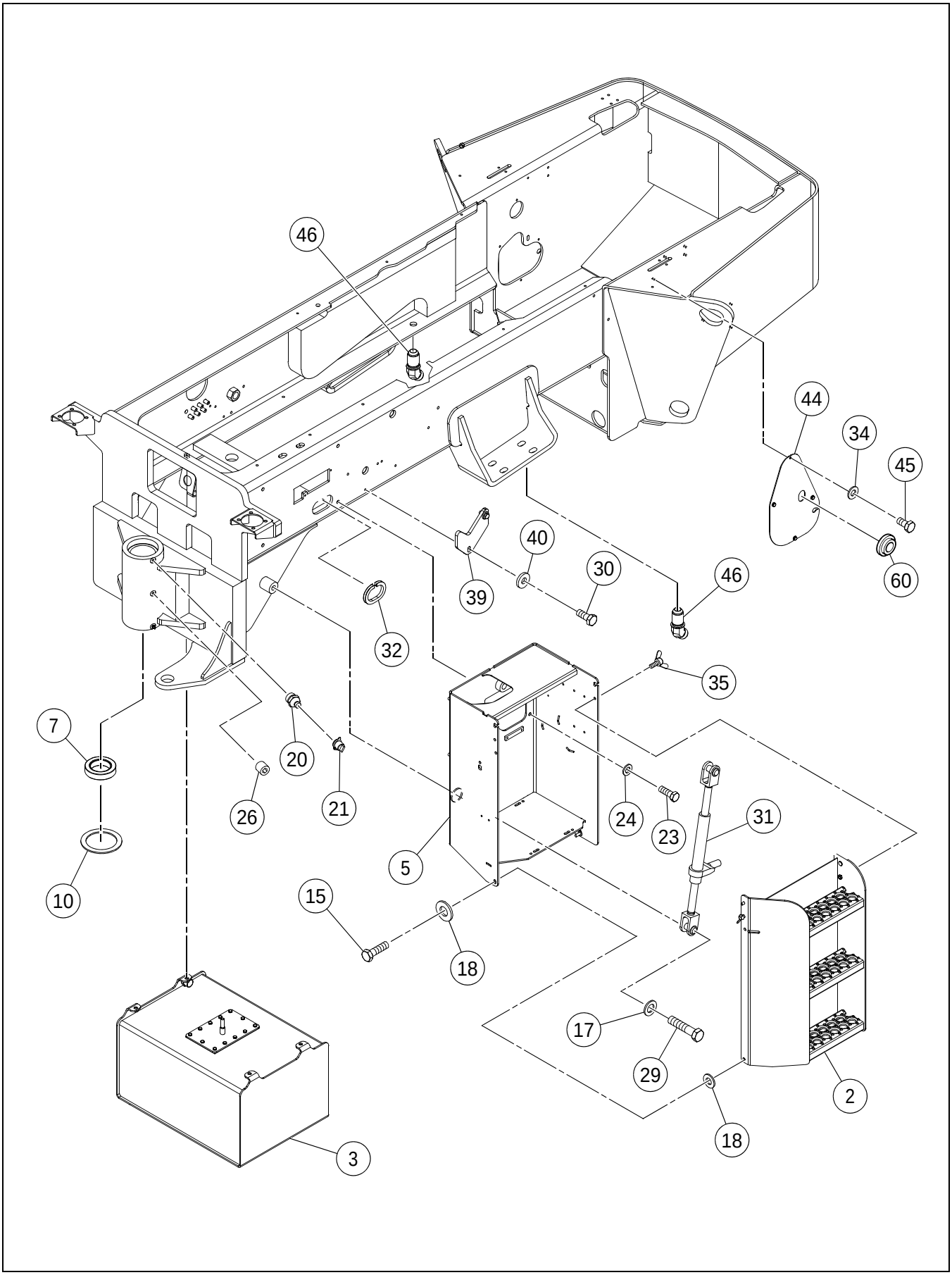

REAR FRAME INSTALLATION - SD-190/SD-200 - SHEET 1 OF 2

****Only Offered Parts Listed****

BOM 13870076

ITEM	COMM. NO.	DESCRIPTION	QTY	DIMENSIONS/NOTES
2	19280049	Step	1	
3	**NSVA**	**Hydraulic Tank Assembly**	**1**	**See Page B - 84.**
5	13501853	Battery Box	1	
7	58795824	Bearing	2	
10	13294186	Dust Seal	1	
15	96704309	HHCS, Zinc Plated	2	M10 x 1.5 x 35 Cl 8.8
17	96738646	Flatwasher	1	
18	96741046	Flatwasher	14	
20	95201547	Grease Fitting	3	
21	50270248	Grease Fitting Cap	3	
23	96702329	HHCS, Zinc Plated	4	M12 x 1.75 x 35 Cl 8.8
24	96738596	Flatwasher	4	
26	95049359	Plug	2	
29	96712724	HHCS, Zinc Plated	1	M24 x 3.0 x 110 Cl 8.8
30	96702774	HHCS, Zinc Plated	4	M10 x 1.5 x 25 Cl 10.9
31	13209663	Ratchet Jack Assembly	1	
-	13247978	- Racket Jack	1	
-	13247937	- Lever	1	
-	13247945	- Coarialer Pin	1	
-	13247952	- Grooved Headless Pin	2	
-	13247960	- Hair Pin Clip	4	
32	50829647	Trim	2	
34	96741038	Flatwasher	10	
35	96702287	HHCS, Zinc Plated	3	M10 x 1.5 x 25 Cl 8.8
39	13275953	V-block	2	
40	96711833	Washer	6	M10
44	13297536	Radiator Access Panel	2	
45	96702816	HHCS, Zinc Plated	8	M8 x 1.25 x 16 Cl 8.8
46	95329876	Adapter	2	
60	54494638	Insulation Grommet	1	

13324348 REV 0D

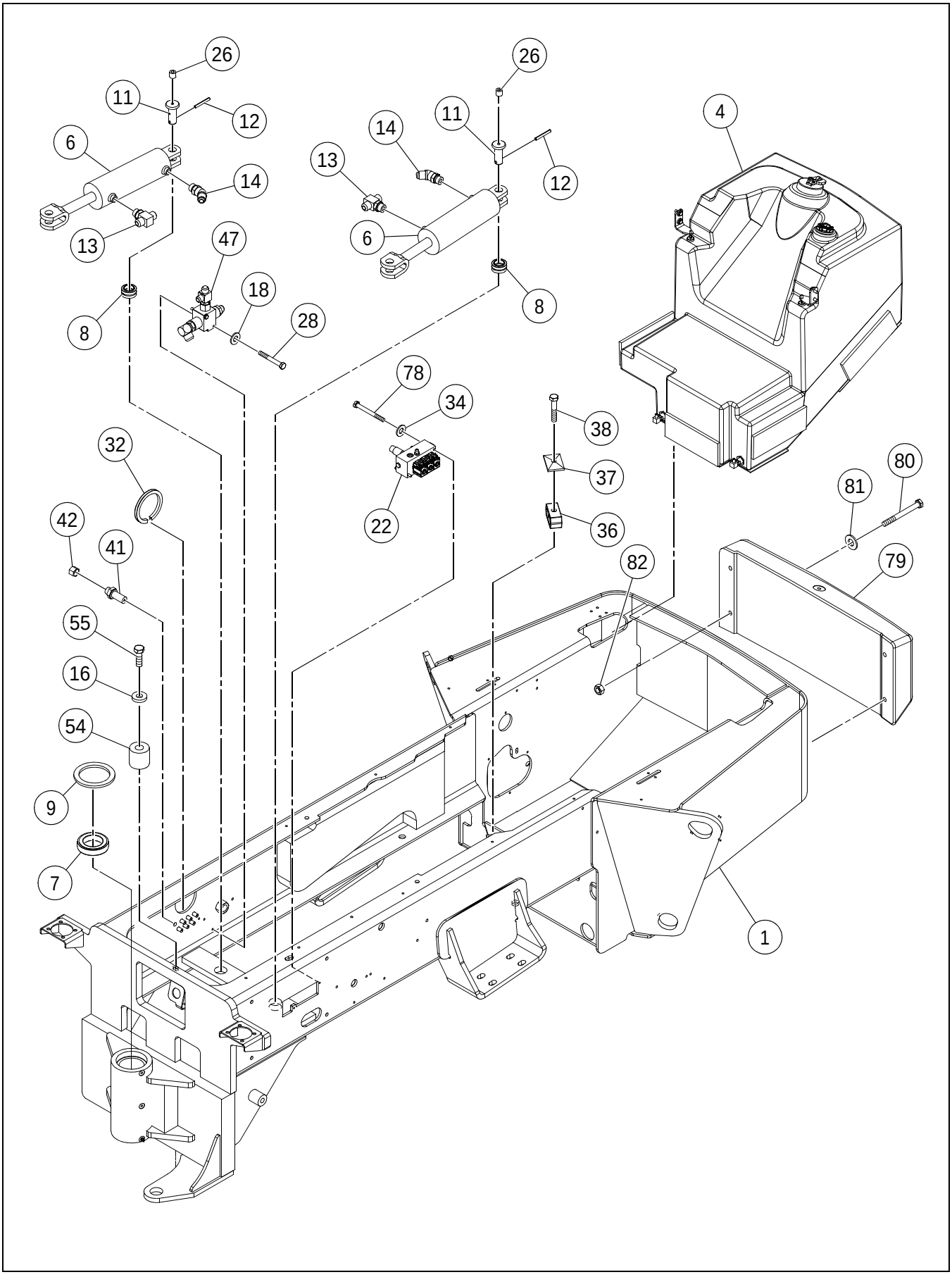

****Only Offered Parts Listed****

BOM 13870076

ITEM	COMM. NO.	DESCRIPTION	QTY	DIMENSIONS/NOTES
1	43869429	Main Frame	1	
4	**NSVA**	**Fuel Tank Installation**	**1**	**See Page B - 86.**
6	13295282	Steering Cylinder	2	
-	13495098	- Locknut	2	
-	13495106	- Seal Kit	2	
7	58795824	Bearing	2	
8	13209903	Bearing	2	
9	13294178	Dust Seal	1	
11	59190975	Pivot Pin	2	
12	95098679	Roll Pin	2	
13	59570887	Adapter, Tee	2	
14	95157400	Adapter	2	
16	96712237	Flatwasher	4	
18	96741046	Flatwasher	14	
19	96704614	Nut (Not Shown)	4	M10 x 1.5
22	**NSVA**	**Brake Shunt Valve Assembly**	**1**	**See Page B - 90.**
26	95049359	Plug	2	
28	96705272	HHCS, Zinc Plated	2	M10 x 1.5 x 80 Cl 8.8
32	50829647	Trim	2	
33	96718978	HHCS, Zinc Plated (Not Shown)	2	M8 x 1.25 x 80 Cl 8.8
34	96741038	Flatwasher	10	
36	59891002	Insert Clamp	1	
37	59583500	Cover Plate	1	
38	96705553	HHCS, Zinc Plated	1	M8 x 1.25 x 45 Cl 8.8
41	59961821	Adapter	7	
42	59924043	Cap	7	
47	**NSVA**	**Thermal Bypass Valve Installation**	**1**	**See Page B - 92.**
54	13396007	Spacer	4	
55	96714910	HHCS, Zinc Plated	4	M12 x 1.75 x 60 Cl 10.9
78	96718978	HHCS, Zinc Plated	2	M8 x 1.25 x 80 Cl 8.8
79	13328240	Rear Bumper Weight	1	
80	96717277	SHCS	4	M16 x 2 x 150 Cl 12.9
81	96716345	Flatwasher	4	M16
82	96711882	Hex Nut	4	M16 x 2.0
83	19280080	Rubber Tie Down (Not Shown)	1	
84	19280098	Handle Storage Sleeve (Not Shown)	1	
85	95457586	Clamp (Not Shown)	2	
86	96701917	HHCS, Zinc Plated (Not Shown)	1	M10 x 1.5 x 30 Cl 8.8

SMOOTH DRUM SCRAPER INSTALLATION - SD-160DX/SD-200DX

13324942 REV 00

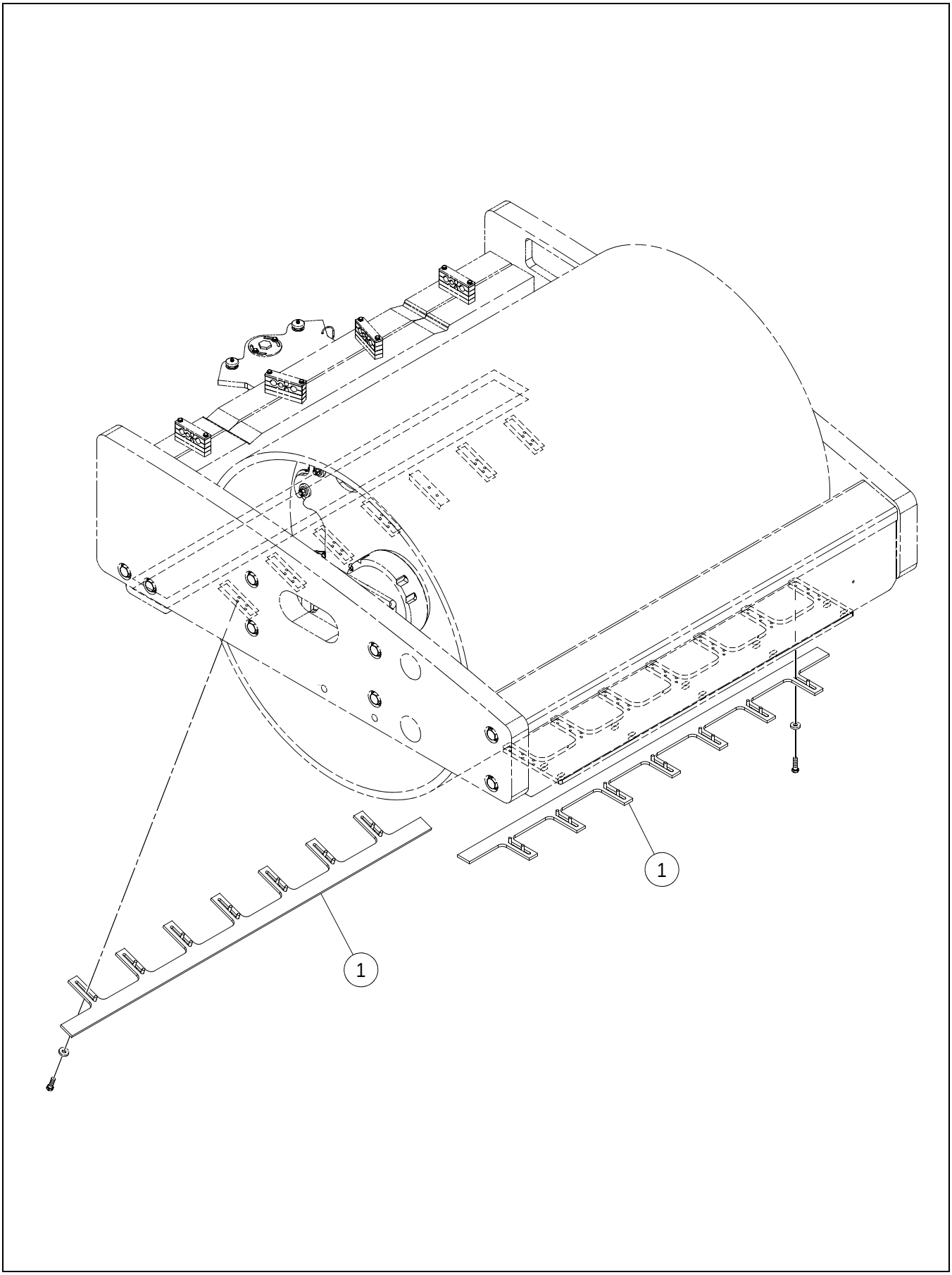

SMOOTH DRUM SCRAPER INSTALLATION - SD-160DX/SD-200DX

****Only Offered Parts Listed****

BOM 13290200

ITEM	COMM. NO.	DESCRIPTION	QTY	DIMENSIONS/NOTES
1	13213913	Scraper Bar	1	

13324959 REV 00

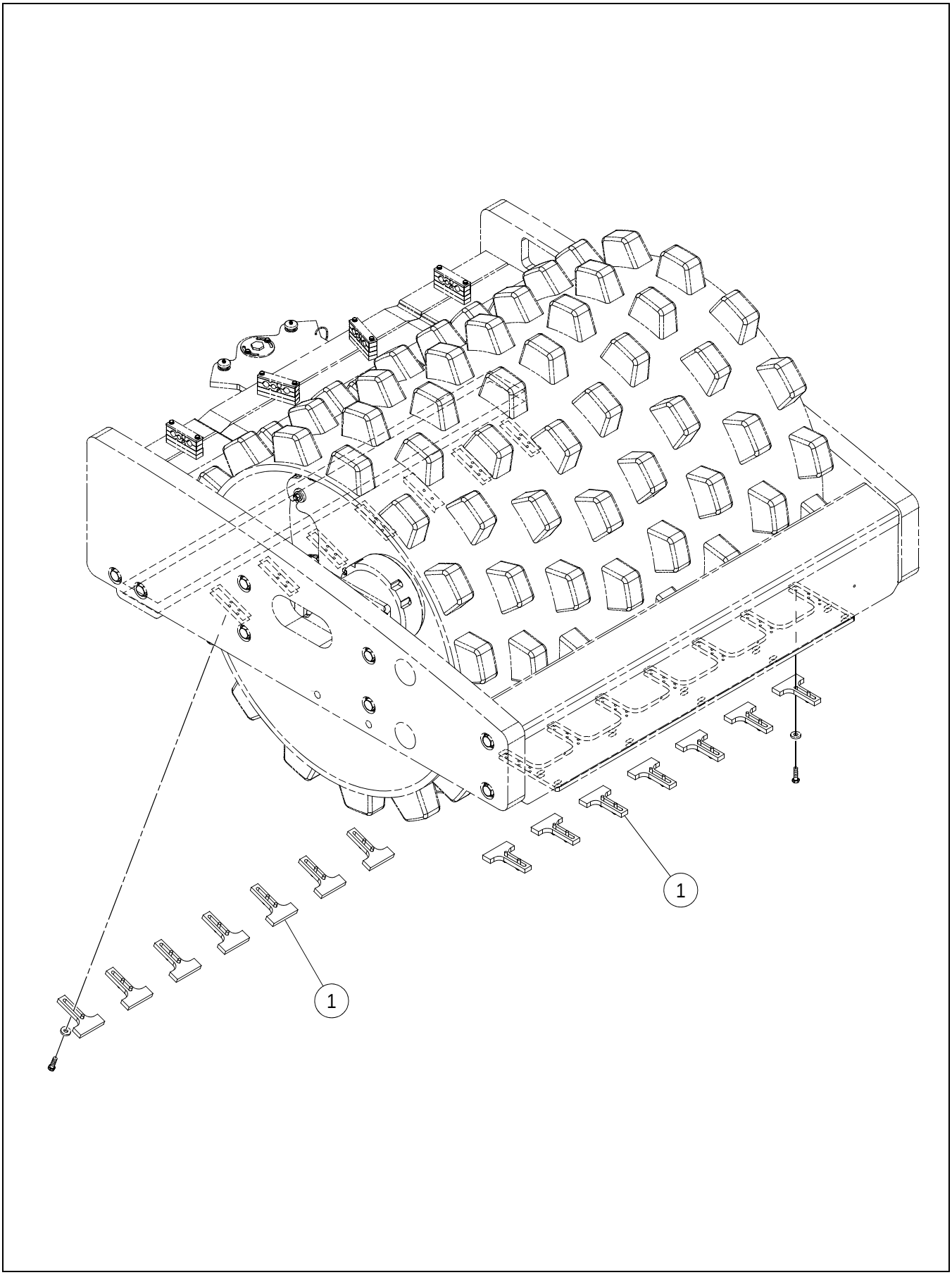

PADFOOT DRUM SCRAPER INSTALLATION - SD-200F

****Only Offered Parts Listed****

BOM 13196845

ITEM	COMM. NO.	DESCRIPTION	QTY	DIMENSIONS/NOTES
1	13294632	Scraper Tooth	14	

INSIDE SCRAPER INSTALLATION - OPTIONAL

13182175 REV 03

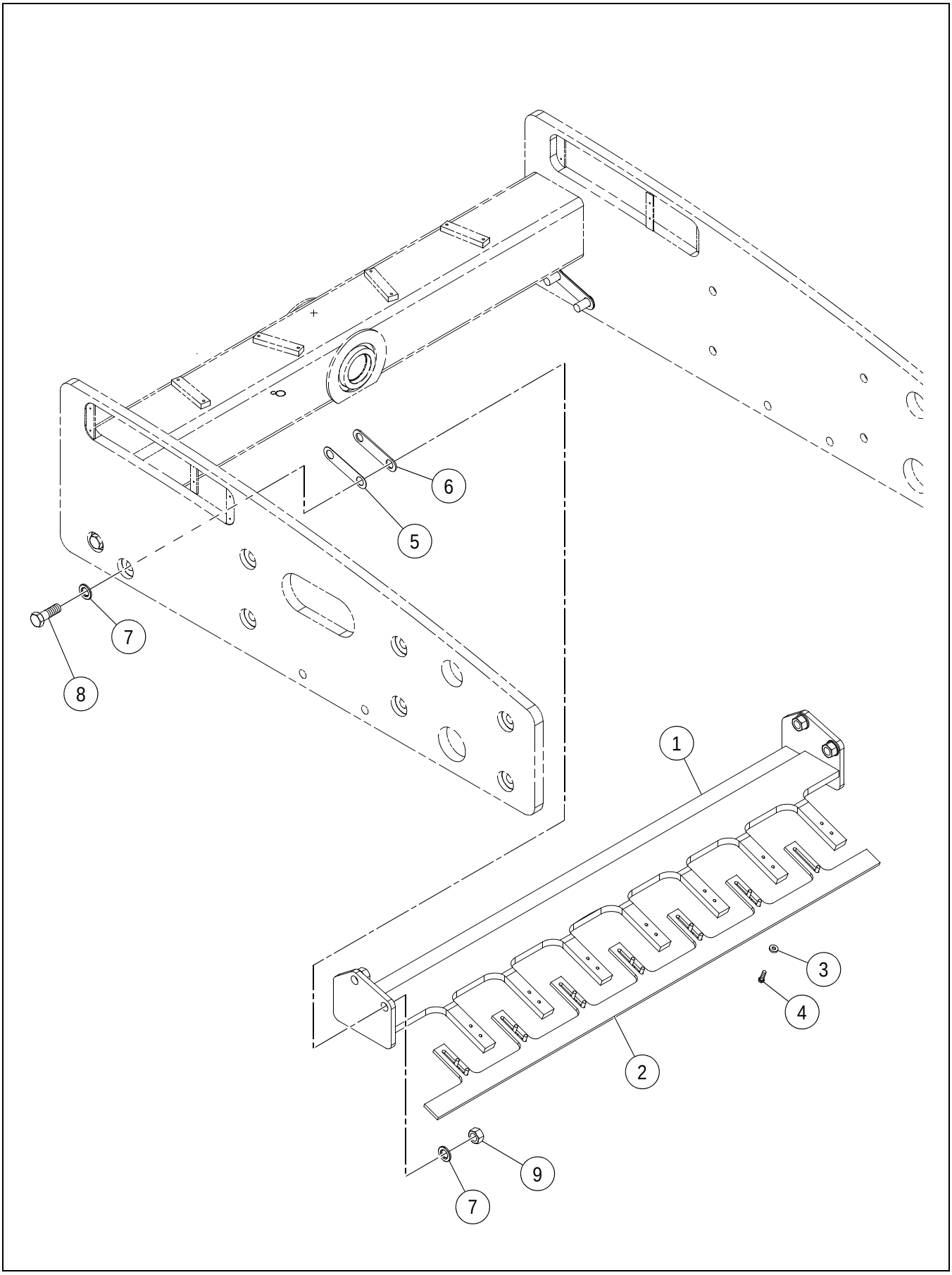

INSIDE SCRAPER INSTALLATION - OPTIONAL

****Only Offered Parts Listed****

BOM 13527924

ITEM	COMM. NO.	DESCRIPTION	QTY	DIMENSIONS/NOTES
1	13504451	Inside Scraper	1	
2	13213913	Scraper Bar	1	
3	96712237	Flatwasher	14	
4	96715081	HHCS, Zinc Plated	14	M12 x 1.75 x 45 Cl 8.8
5	59224899	Shim	4	
6	59224881	Shim	4	
7	96701578	Washer	8	
8	96747217	HHCS, Zinc Plated	4	M30 x 3.5 x 200 Cl 10.9
9	96720438	Hex Nut	4	M30 x 3.5

INSIDE SCRAPER INSTALLATION - SD-160F/SD-200F - OPTIONAL

13182217 REV 02

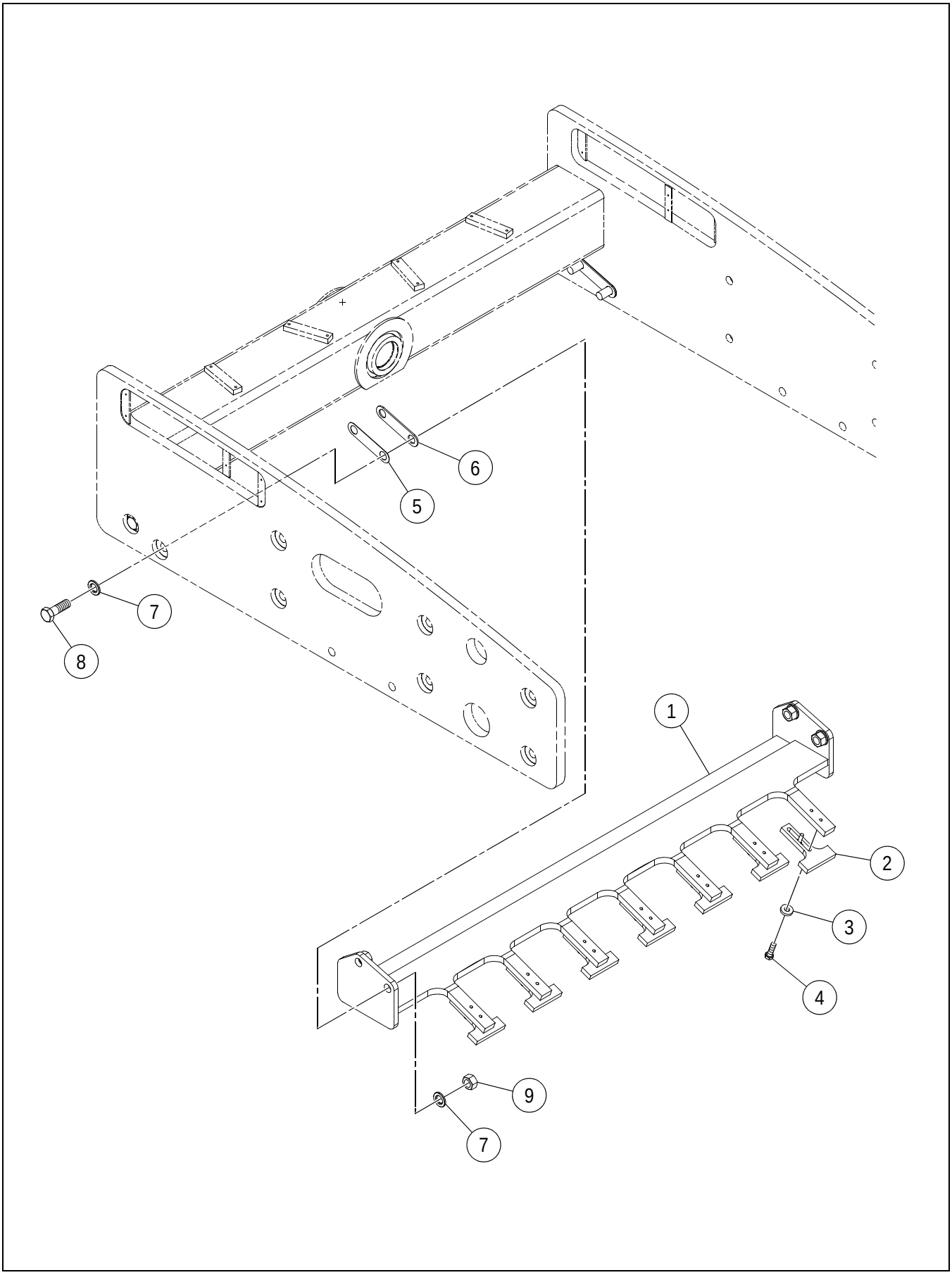

INSIDE SCRAPER INSTALLATION - SD-160F/SD-200F - OPTIONAL

****Only Offered Parts Listed****

BOM 13527932, 13527957

ITEM	COMM. NO.	DESCRIPTION	QTY	DIMENSIONS/NOTES
1	13504451	Inside Scraper - SD-160F	1	
-	13437199	Inside Scraper - SD-200F	1	
2	13294632	Scraper Tooth	7	
3	96712237	Flatwasher	14	
4	96715081	HHCS, Zinc Plated	14	M12 x 1.75 x 45 Cl 8.8
5	59224899	Shim	4	
6	59224881	Shim	4	
7	96701578	Washer	8	
8	96747217	HHCS, Zinc Plated	4	M30 x 3.5 x 200 Cl 10.9
9	96720438	Hex Nut	4	M30 x 3.5

INSIDE SCRAPER INSTALLATION - SD-160DX/SD-160F/ SD190DX/SD-200DX - OPTIONAL

13182175 REV 03

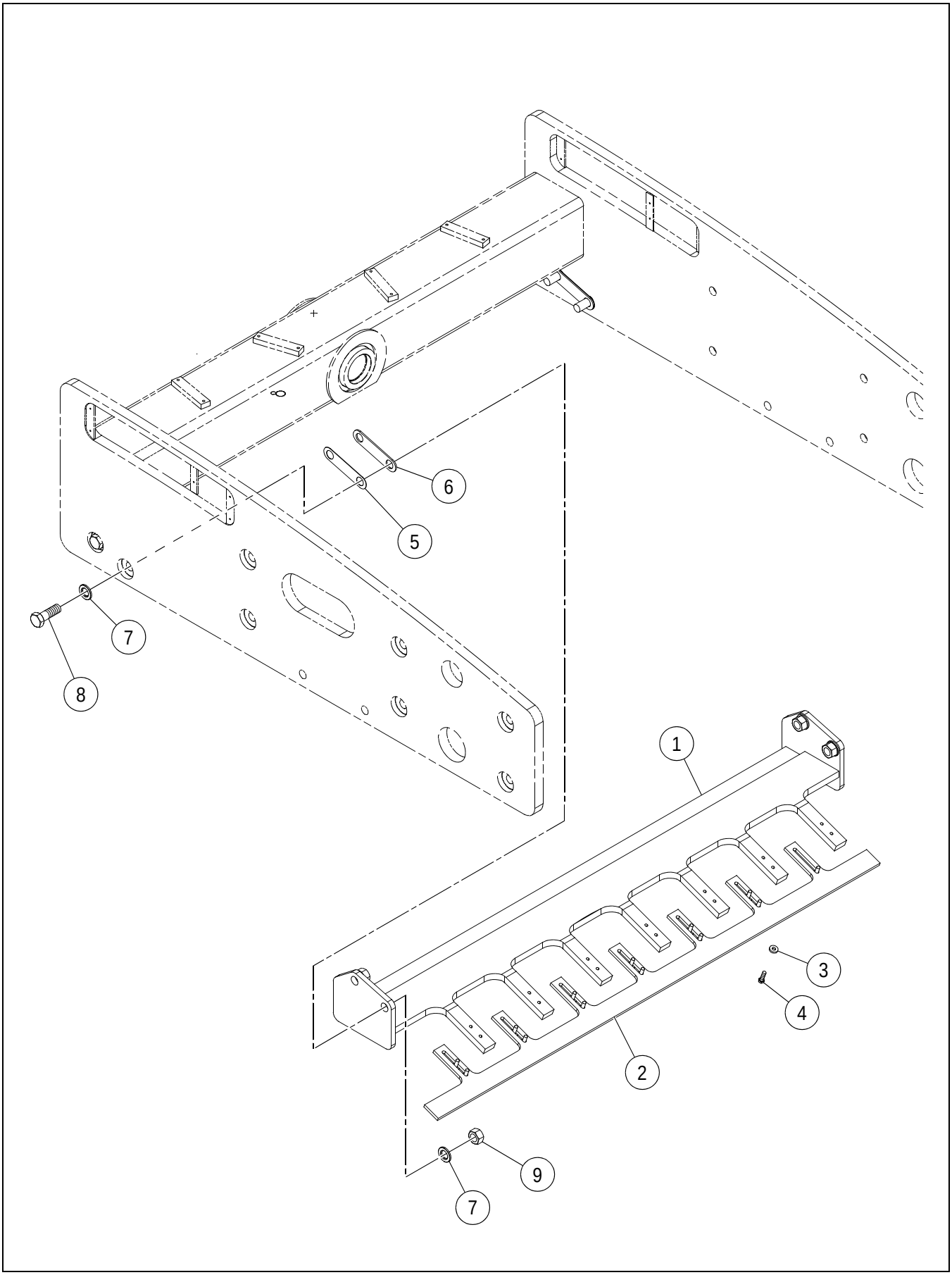

INSIDE SCRAPER INSTALLATION - SD-160DX/SD-160F/ SD190DX/SD-200DX - OPTIONAL

****Only Offered Parts Listed****

BOM 13527924, 13527940, 18007625

ITEM	COMM. NO.	DESCRIPTION	QTY	DIMENSIONS/NOTES
1	13504451	Inside Scraper - SD-160DX/SD-160F	1	
-	13437199	Inside Scraper - SD-190DX/SD-200DX	1	
2	13213913	Scraper Bar - SD-160DX/SD-160F/SD-200DX	1	
-	13881040	Scraper Bar - SD-190DX	1	
3	96712237	Flatwasher	14	
4	96715081	HHCS, Zinc Plated - SD-160DX/SD-160F/ SD-200DX	14	M12 x 1.75 x 45 Cl 8.8
-	96702444	HHCS, Zinc Plated - SD-190DX	14	M12 x 1.75 x 40 Cl 8.8
5	59224899	Shim	4	
6	59224881	Shim	4	
7	96701578	Washer	8	
8	96747217	HHCS, Zinc Plated	4	M30 x 3.5 x 200 Cl 10.9
9	96720438	Hex Nut	4	M30 x 3.5

BOLT-ON SHELL INSTALLATION - SD-160DX/SD-190DX - OPTIONAL

13321781 REV 0A

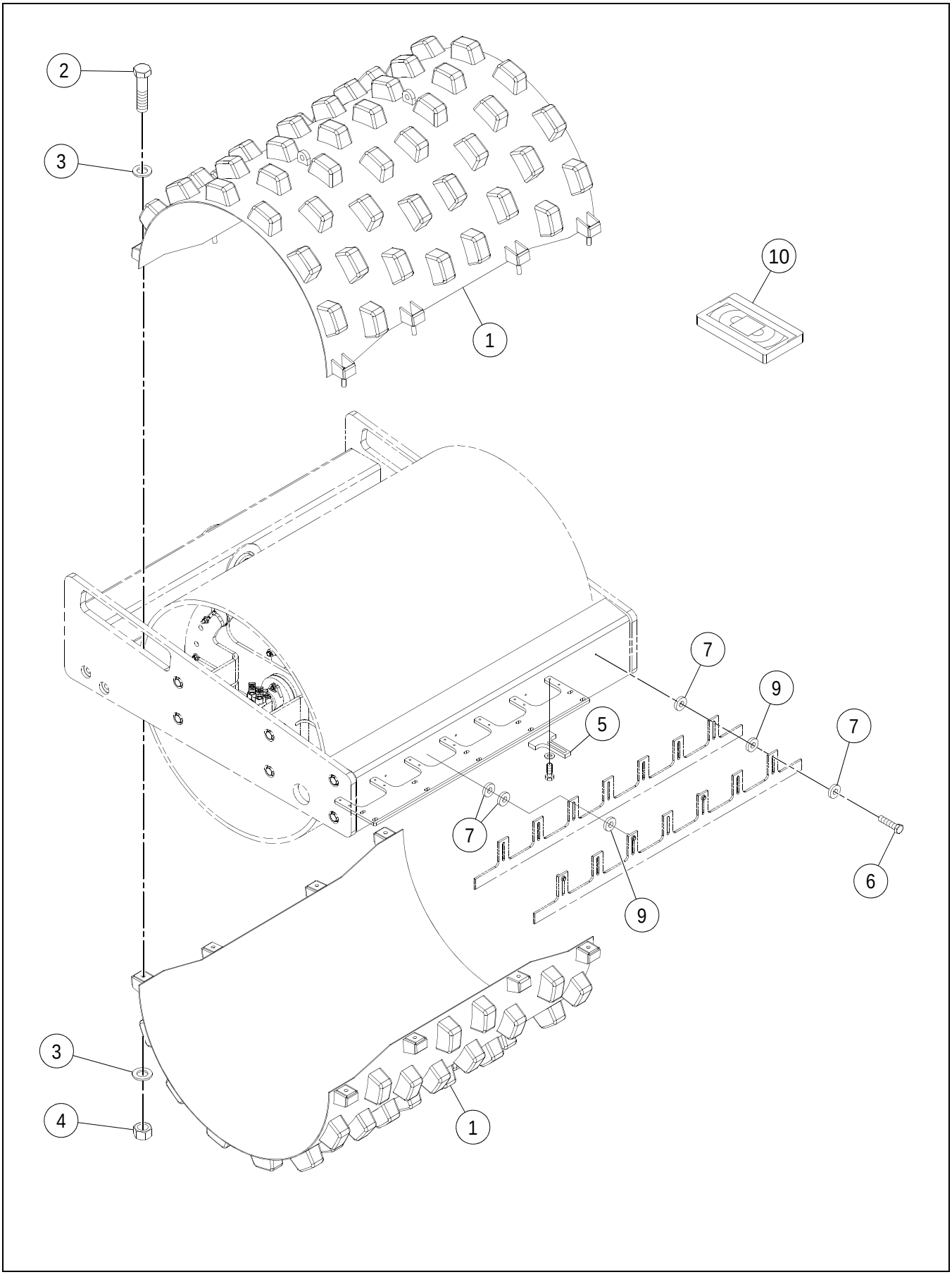

BOLT-ON SHELL INSTALLATION - SD-160DX/SD-190DX - OPTIONAL

****Only Offered Parts Listed****

BOM 13321781, 18007617

ITEM	COMM. NO.	DESCRIPTION	QTY	DIMENSIONS/NOTES
1	13447545	Clamp-on Shell	1	
2	96747886	HHCS, Zinc Plated	8	M24 x 3.0 x 110 Cl 10.9
3	96738646	Flatwasher	16	
4	96703681	Hex Nut	8	
5	59175661	Scraper Tooth - SD-160DX	14	
-	13294632	Scraper Tooth - SD-190DX	14	
6	96705637	HHCS, Zinc Plated	4	M12 x 1.75 x 55 Cl 8.8
7	96712237	Flatwasher- SD-160DX	10	
-	96712237	Flatwasher- SD-190DX	8	
9	96738596	Flatwasher	4	
10	NOT-USED	This Item Not Used W/this Bom	1	

Section C - ENGINE

13416078 REV 01

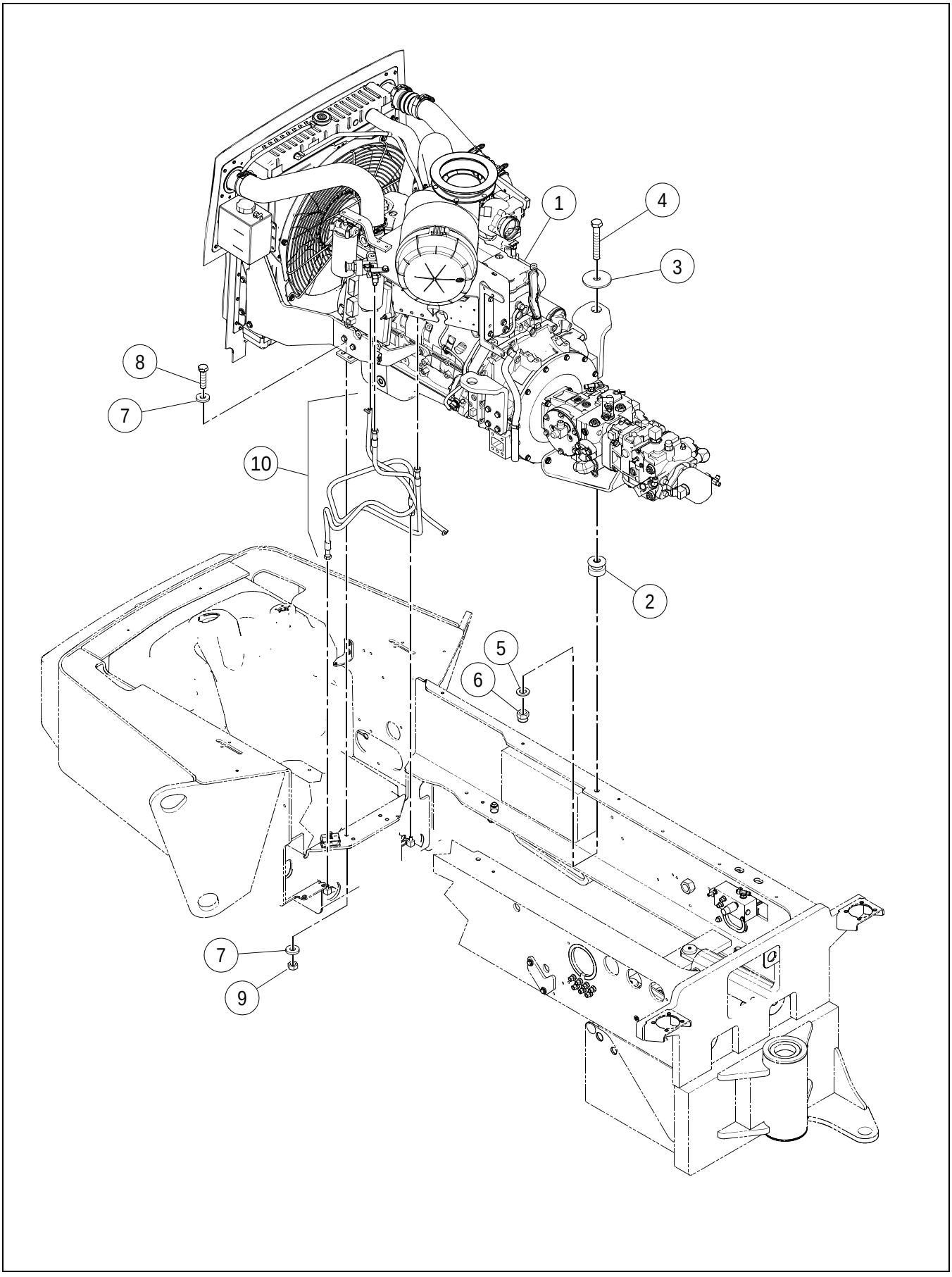

****Only Offered Parts Listed****

BOM 43801380

ITEM	COMM. NO.	DESCRIPTION	QTY	DIMENSIONS/NOTES
1	**NSVA**	**Engine Assembly - SD-160**	**1**	**See Page C - 4.**
-	**NSVA**	**Engine Assembly - SD-190/SD-200**	**1**	
2	59127720	Center Bonded Mount	2	
3	58879768	Snubbing Washer	2	
4	96704952	HHCS, Zinc Plated	2	M16 x 2 x 100 Cl 8.8
5	96738612	Flatwasher, Zinc Plated	2	Cl 200
6	96704630	Stop Nut	2	
7	96711833	Washer	8	M10
8	96704556	HHCS, Zinc Plated	4	M10 x 1.5 x 40 Cl 8.8
9	96704812	Hex Nut	4	
10	**NSVA**	**Fuel Line Installation**	**1**	**See Page C - 26.**

13416086 REV 0F

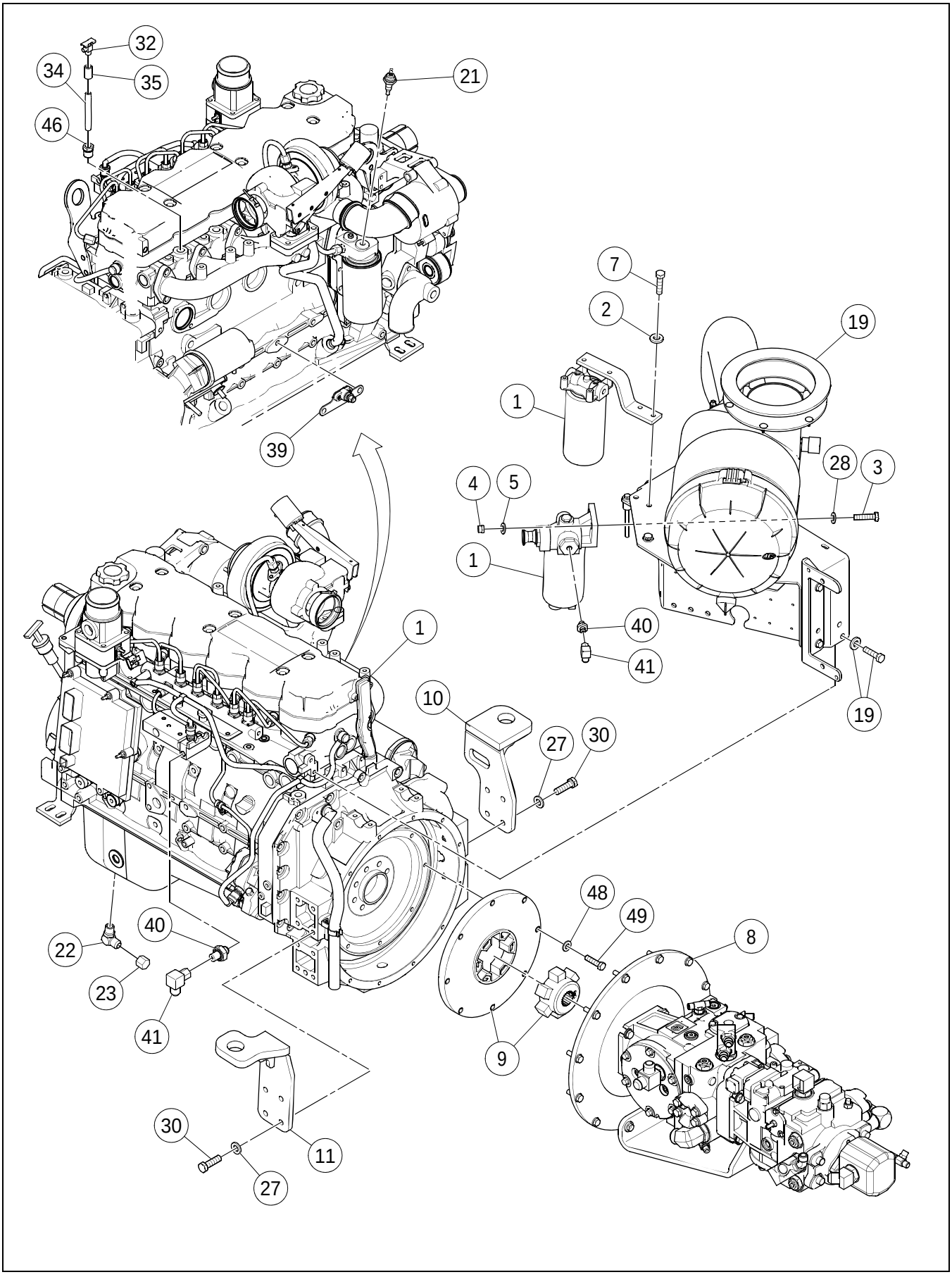

ENGINE ASSEMBLY - SD-160 - SHEET 1 OF 2

****Only Offered Parts Listed****

BOM 43801398

ITEM	COMM. NO.	DESCRIPTION	QTY	DIMENSIONS/NOTES
1	43801414	Engine	1	
-	13852256	- Alternator	1	
-	19295872	- Fuel Filter	2	3 MICRON
-	43802263	- Fuel Filter	1	
-	13284617	- Engine Oil Filter	1	
-	19331453	- Fan Belt	1	
-	19295856	- Starter	1	
2	96702659	HHCS, Zinc Plated	2	M8 x 1.25 x 25 Cl 8.8
3	96704556	HHCS, Zinc Plated	2	M10 x 1.5 x 40 Cl 8.8
4	96704614	Nut	2	M10 x 1.5
5	96711833	Washer	2	M10
7	96741038	Flatwasher	2	
8	**NSVA**	**Pump Stack Assembly - SD-160**	**1**	**See Page C - 8.**
9	59286336	Drive Coupling	1	
10	13884911	Rear Engine Mount, LH	1	
11	13885017	Rear Engine Mount, RH	1	
19	**NSVA**	**Air Cleaner Installation**	**1**	**See Page C - 22.**
21	13491691	Oil Pressure Switch	1	
22	58896580	Elbow	1	
23	95257325	Cap Nut	1	
27	96738596	Flatwasher	12	
28	96741046	Flatwasher	14	
30	96702444	HHCS, Zinc Plated	10	M12 x 1.75 x 40 Cl 8.8
32	58848920	Drain Assembly	1	
34	95056396	Nipple	1	
35	95011060	Coupling Pipe	1	
39	**NSVA**	**Insulated Stud Assembly**	**1**	**See Page C - 24.**
40	59884221	Adapter	2	
41	59977454	Adapter	2	
46	59924233	Reducing Bushing	1	
48	96741046	Flatwasher	8	
49	95919254	HHCS	8	3/8 x 16 x 1.50

ENGINE ASSEMBLY - SD-160 - SHEET 2 OF 2

13416086 REV 0F

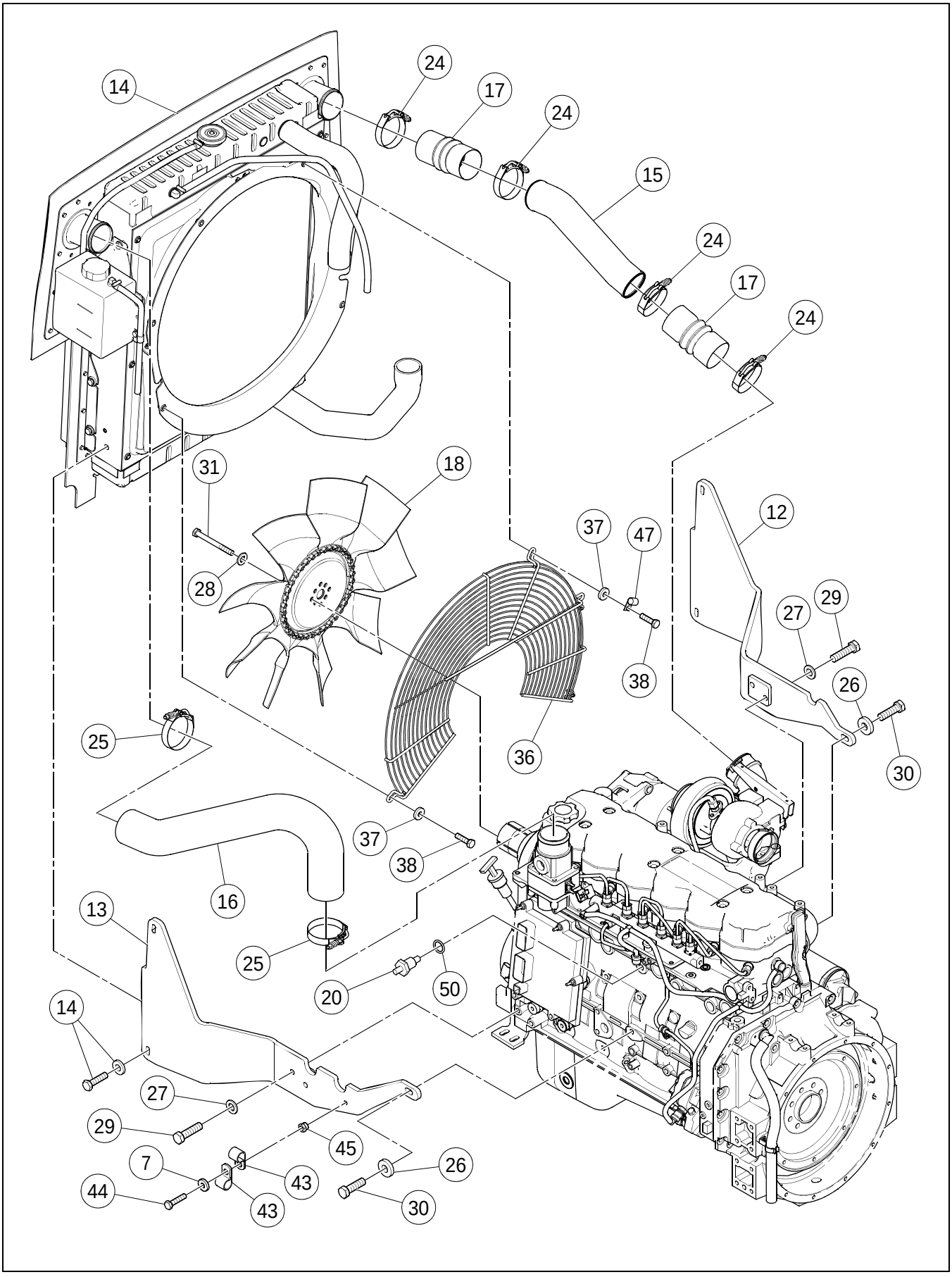

****Only Offered Parts Listed****

BOM 43801398

ITEM	COMM. NO.	DESCRIPTION	QTY	DIMENSIONS/NOTES
7	96741038	Flatwasher	2	
12	13218599	Radiator Bracket, LH	1	
13	13417951	Radiator Bracket, RH	1	
14	**NSVA**	**Oil Cooler Assembly**	**1**	**See Page C - 18.**
15	13417142	CAC Tube - Turbo Side	1	
16	13417118	CAC Tube - Cold Side	1	
17	13232202	Connector	2	
18	13157151	Fan	1	
20	19285584	Temperature Sender	1	
24	54680079	Clamp	4	
25	54680087	Clamp	2	
26	96712237	Flatwasher	2	
27	96738596	Flatwasher	12	
28	96741046	Flatwasher	14	
29	96702667	HHCS, Zinc Plated	4	M12 x 1.75 x 45 Cl 8.8,
30	96702444	HHCS, Zinc Plated	10	M12 x 1.75 x 40 Cl 8.8
31	96720594	HHCS, Zinc Plated	4	M10 x 1.5 x 100 Cl 8.8
33	95919254	HHCS (Not Shown)	4	3/8 x 16 x 1.50
36	13272661	Fan Guard	1	
37	96712674	Flatwasher	6	
38	96705587	HHCS, Zinc Plated	6	M8 x 1.25 x 30 Cl 8.8
43	95310231	Clamp	2	
44	96702261	HHCS, Zinc Plated	1	M8 x 1.25 x 35 Cl 8.8
45	96704606	Locknut	1	M8
47	59117333	Clamp	1	
50	95018065	O-ring	1	

PUMP STACK ASSEMBLY - SD-160

13483821 REV 0C

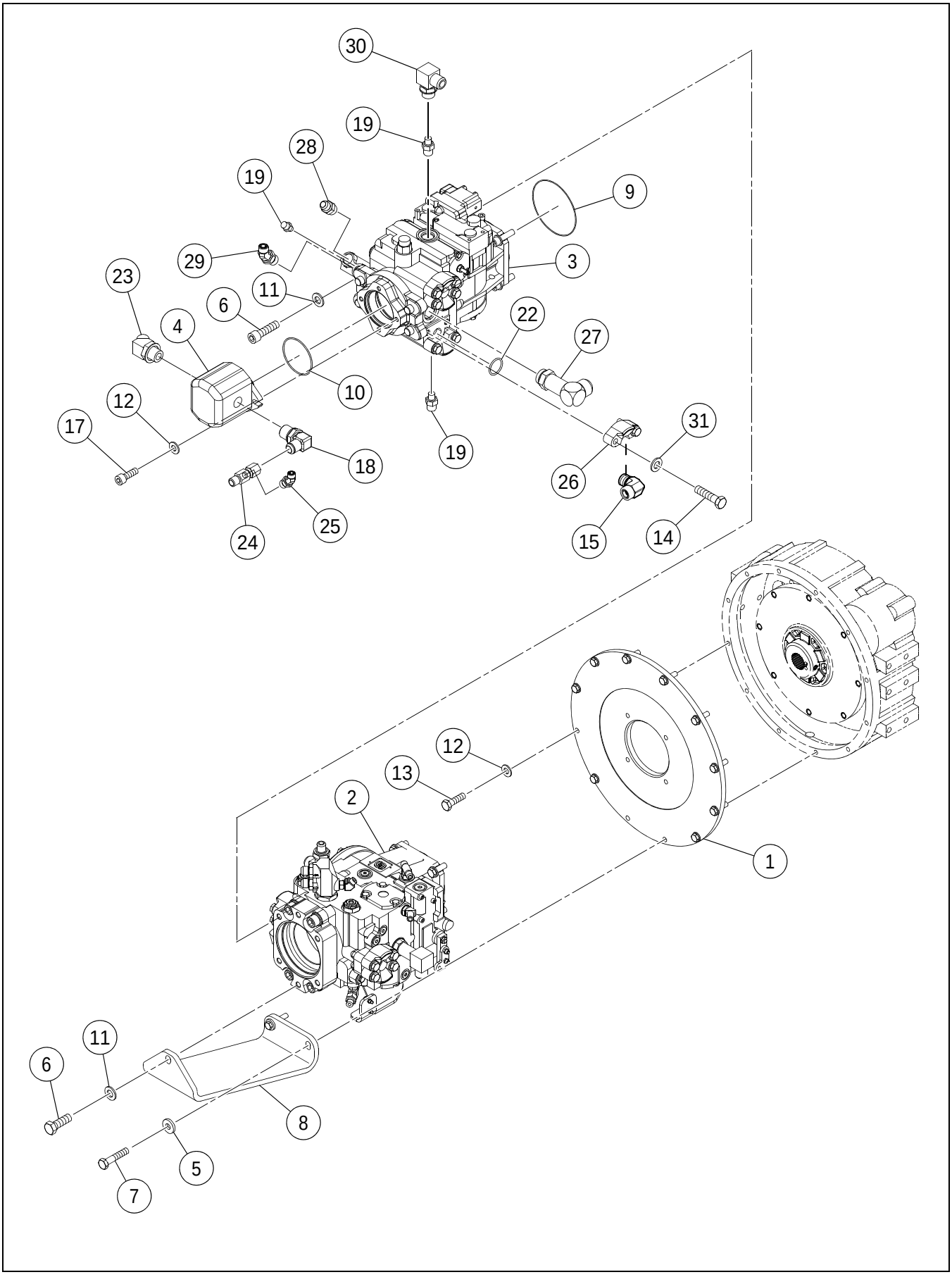

PUMP STACK ASSEMBLY - SD-160

****Only Offered Parts Listed****

BOM 13293428

ITEM	COMM. NO.	DESCRIPTION	QTY	DIMENSIONS/NOTES
1	58966086	Pump Mounting Plate	1	
2	**NSVA**	**Propulsion Pump Assembly**	**1**	**See Page C - 10.**
3	13527973	Vibration Pump	1	
4	58859380	Steering Pump	1	
-	58898677	- Seal Kit	1	
5	96711833	Washer	2	M10
6	95919569	HHCS	5	
7	96705116	HHCS, Zinc Plated	2	M10 x 1.5 x 50 Cl 8.8
8	13293808	Pump Stack Support Bracket	1	
9	95213583	O-ring	1	
10	95988713	O-ring	1	
11	96738596	Flatwasher	5	
12	96741046	Flatwasher	12	
13	96704309	HHCS, Zinc Plated	10	M10 x 1.5 x 35 Cl 8.8
14	95919460	HHCS	8	7/16 x 14 x 1.75
15	59327775	Adapter	2	
-	13444575	- 0-ring	2	
17	95055265	HSHCS	2	3/8 x 16 x 1.25
18	95303350	Elbow	1	
19	59922419	Adapter	3	
22	59993881	O-ring	2	
23	95796090	Adapter	1	
24	13208004	Adapter	1	
25	59922203	Adapter	1	
26	58901653	Split Flange Clamp	4	
27	95654638	Adapter	1	
28	95285946	Adapter	1	
29	95650339	Adapter	1	
30	95280186	Adapter	1	
31	59995126	Hardened Washer	8	

PROPULSION PUMP ASSEMBLY

13321856 REV 0B

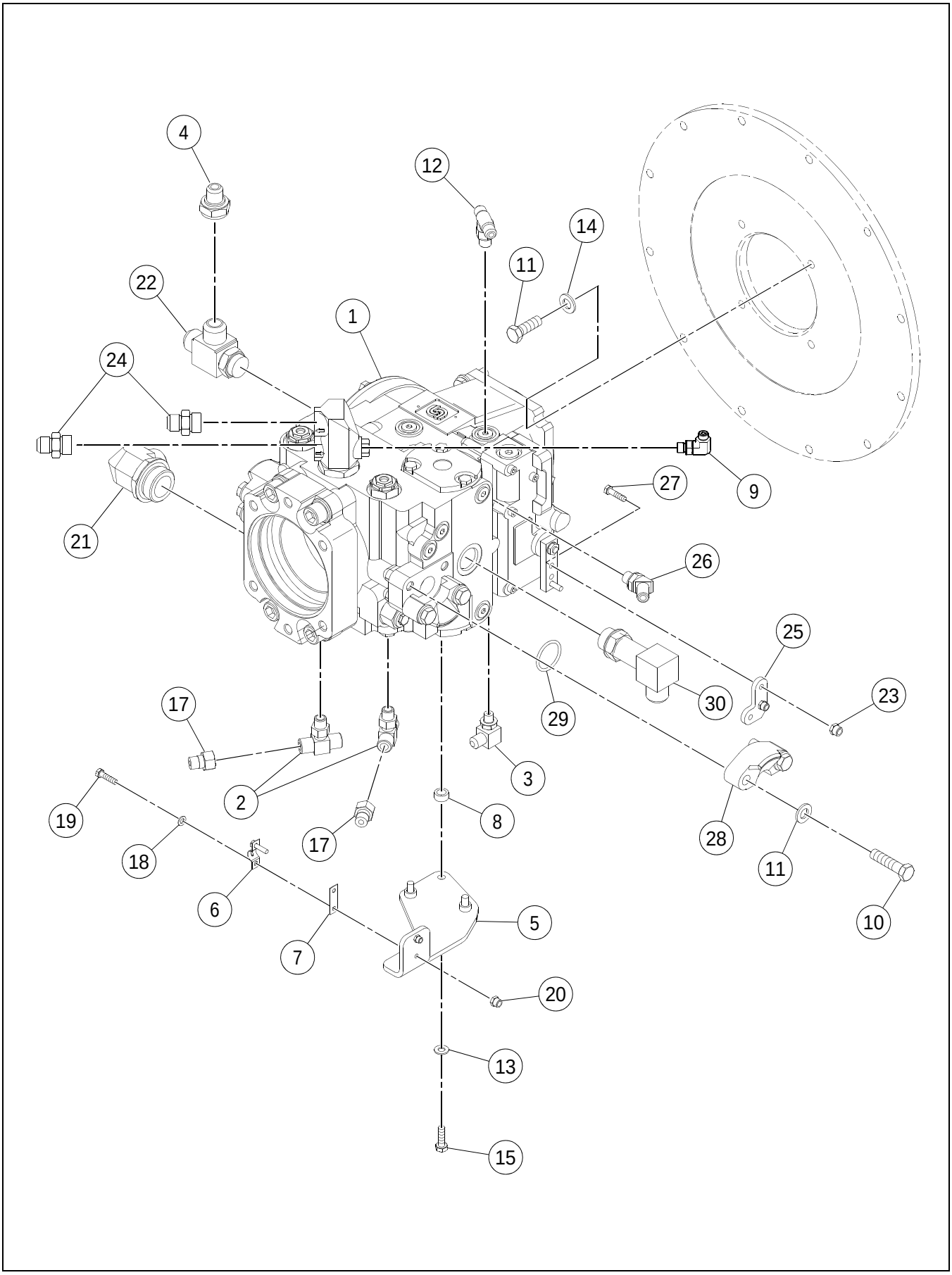

PROPULSION PUMP ASSEMBLY

****Only Offered Parts Listed****

BOM 13294194

ITEM	COMM. NO.	DESCRIPTION	QTY	DIMENSIONS/NOTES
1	**13254669**	**Propulsion Pump**	**1**	**See Breakdown C - 12.**
-	13284898	ARC - Propulsion Pump (Not Shown)	1	
2	59918581	Tee	2	
3	95653614	Adapter	1	
4	59672709	Reducer	1	
5	59109041	Propulsion Cable Mount	1	
6	59580571	Clamp	1	
7	59617985	Shim	1	
8	13213111	Spacer	3	
9	59922823	Adapter	1	
10	96705595	HHCS, Zinc Plated	8	M12 x 1.75 x 50 Cl 8.8
11	96738596	Flatwasher	12	
12	95431284	Cross, Pressure	1	
13	96741038	Flatwasher	3	
14	96702329	HHCS, Zinc Plated	4	M12 x 1.75 x 35 Cl 8.8
15	96702659	HHCS, Zinc Plated	3	M8 x 1.25 x 25 Cl 8.8,
17	59158881	Reducer	2	
18	96738554	Flatwasher	2	
19	96705736	HHCS, Zinc Plated	2	M5 x 0.8 x 20 Cl 8.8
20	96704580	Locknut	2	M5
21	95376133	Elbow	1	
22	95829263	Tee	1	
23	96704598	Locknut	2	M6
24	95285946	Adapter	2	
25	13187372	Pump Lever	1	
26	95866687	Adapter	1	
27	96701461	HHCS, Zinc Plated	2	M6 x 1 x 25 Cl 8.8
28	58901653	Split Flange Clamp	4	
29	59993881	O-ring	2	
30	59847798	Adapter	1	

PROPULSION PUMP (13254669) - INTERNAL BREAKDOWN - SHEET 1 OF 3

13254669 REV 00

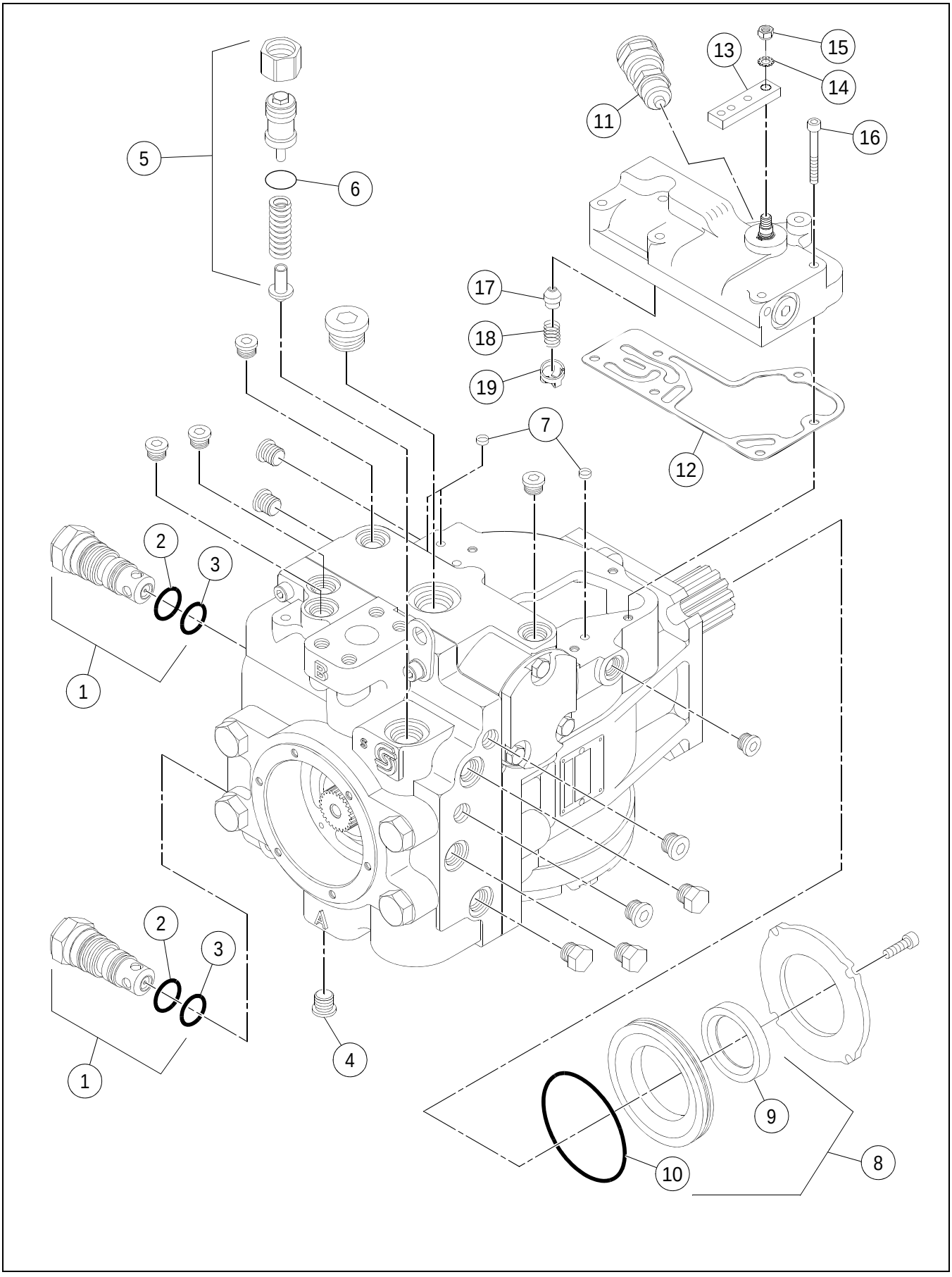

PROPULSION PUMP (13254669) - INTERNAL BREAKDOWN - SHEET 1 OF 3

****Only Offered Parts Listed****

BOM 13254669

ITEM	COMM. NO.	DESCRIPTION	QTY	DIMENSIONS/NOTES
1	58921495	Multi-Function Valve	1	
2	95210258	- O-ring	1	
3	59360735	- O-ring	1	
4	59933622	Plug	1	
5	59446138	Charge Relief Kit	1	
6	50278019	- O-ring	1	
7	58795766	Control Filter Screen	1	
8	59155192	Shaft Seal Assembly	1	
9	59368837	- Lip Seal	1	
10	59368845	- O-ring	1	
11	13228994	Neutral Start Switch	1	
12	59360685	Gasket	1	
13	59932418	Handle	1	
14	59360669	Washer	2	
15	59360677	Nut	1	
16	59360693	Screw	6	
17	59360776	Orifice Kit	1	
18	59360792	Spring	1	
19	59360800	Retainer Spring	1	

PROPULSION PUMP (13254669) - INTERNAL BREAKDOWN - SHEET 2 OF 3

13254669 REV 00

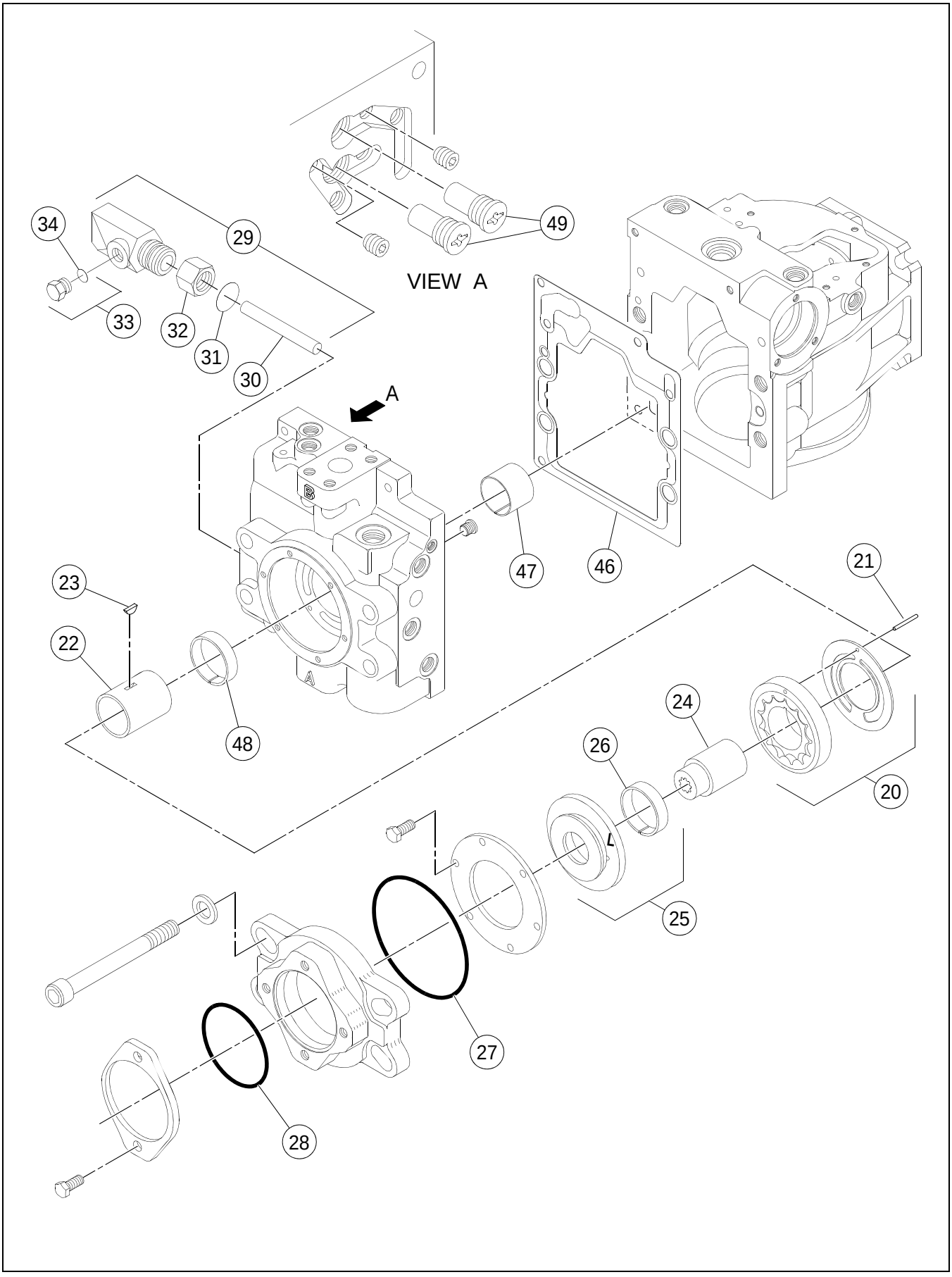

PROPULSION PUMP (13254669) - INTERNAL BREAKDOWN - SHEET 2 OF 3

****Only Offered Parts Listed****

BOM 13254669

ITEM	COMM. NO.	DESCRIPTION	QTY	DIMENSIONS/NOTES
20	58918558	Charge Pump Set	1	
21	59360461	Pin	1	
22	13248026	Charge Pump Shaft	1	
23	59360487	Key	1	
24	13495072	Coupling	1	
25	58918590	Charge Pump Cover Assembly	1	
26	59360354	- Bushing	1	
27	59360552	O-ring	1	
28	59029710	O-ring	1	
29	13248083	Remote Filtration Adapter	1	
30	58891490	- Filter Adaptor Tube	1	
31	59360941	- O-ring	1	
32	58891482	- Bulkhead Nut	1	
33	59933622	- Plug	1	
34	59698811	- O-ring	1	
46	13495080	End Cap Gasket	1	
47	59360347	Bearing	1	
48	59360354	Bushing	1	
49	59360750	Check Valve	2	

PROPULSION PUMP (13254669) - INTERNAL BREAKDOWN - SHEET 3 OF 3

13254669 REV 00

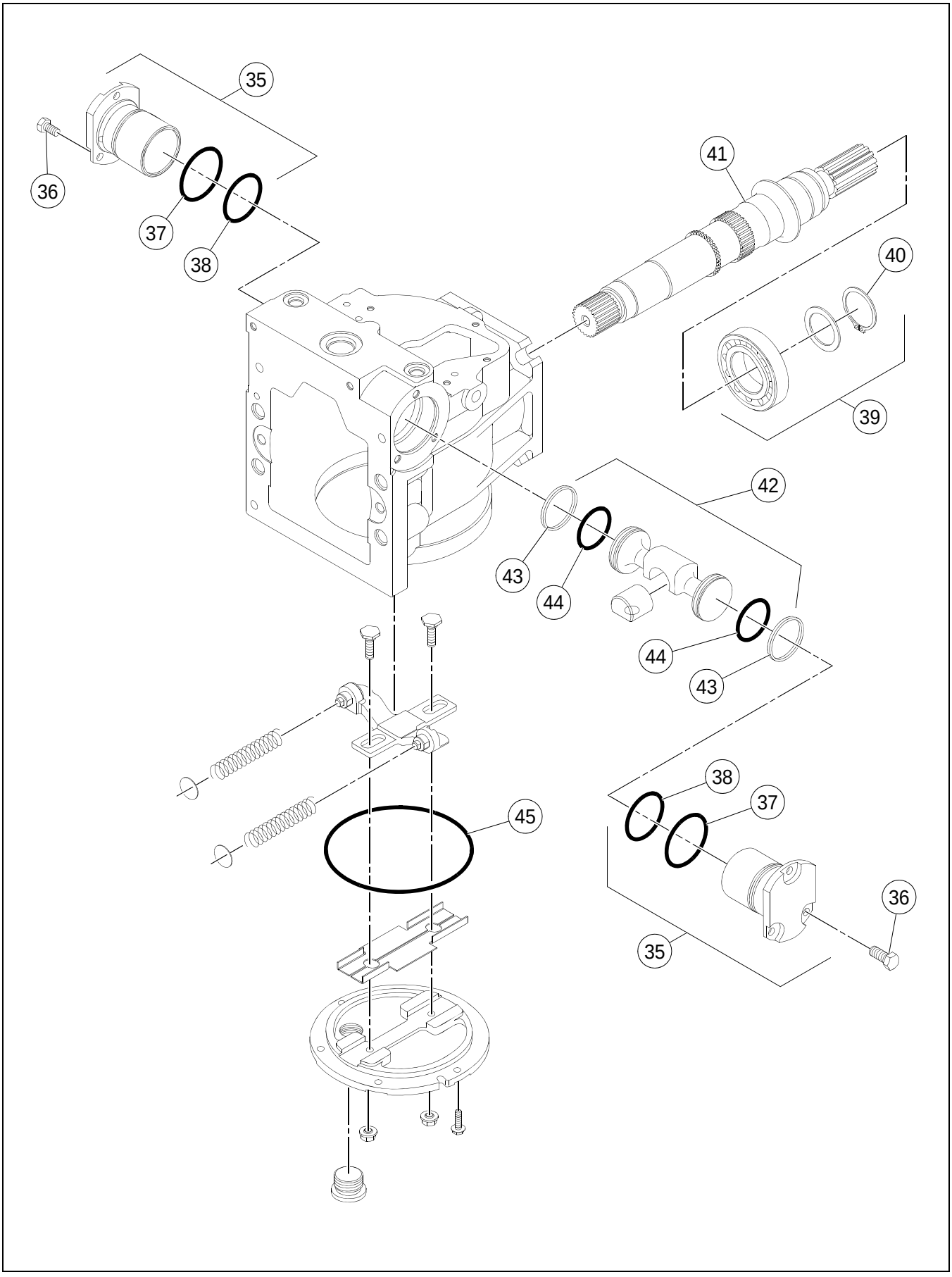

PROPULSION PUMP (13254669) - INTERNAL BREAKDOWN - SHEET 3 OF 3

****Only Offered Parts Listed****

BOM 13254669

ITEM	COMM. NO.	DESCRIPTION	QTY	DIMENSIONS/NOTES
35	59029637	Displacement Limiter Kit	1	
36	59360321	- Screw	3	
37	59360305	- O-ring	1	
38	59360313	- O-ring	1	
39	59231811	Roller Bearing	1	
40	59343269	- Retaining Pin	1	
41	59384347	Shaft	1	
42	59356444	Piston Kit	1	
43	59972877	- O-ring Kit	2	
44	59384693	- O-ring	2	
45	59360123	O-ring	1	

OIL COOLER ASSEMBLY

43888031 REV 00

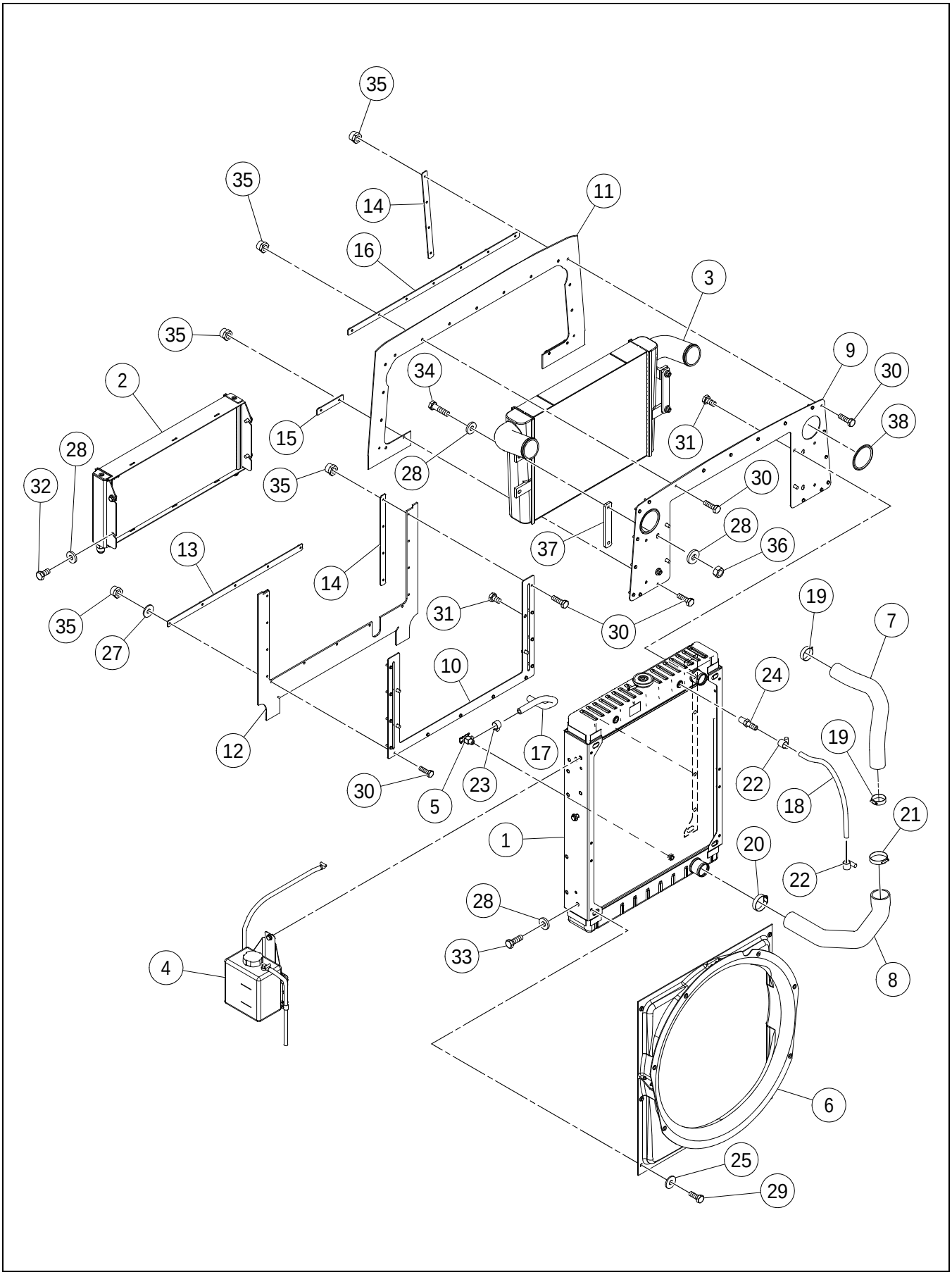

OIL COOLER ASSEMBLY

****Only Offered Parts Listed****

BOM 13353081

ITEM	COMM. NO.	DESCRIPTION	QTY	DIMENSIONS/NOTES
1	13346580	Radiator	1	
-	19293943	- Radiator Cap	1	
2	13313838	Oil Cooler	1	
3	13313846	Charge Air Cooler	1	
4	**NSVA**	**Coolant Recovery Bottle Installation**	**1**	**See Page C - 20.**
5	58848920	Drain Assembly	1	
6	13272547	Fan Shroud	1	
7	13417894	Upper Radiator Hose	1	
8	13279666	Lower Radiator Hose	1	
9	13279278	Baffle	1	
10	13322193	Lower Baffle Plate	1	
11	13292545	Rubber Baffle	1	
12	13292727	Lower Rubber Baffle	1	
13	13216577	Backing Plate	1	
14	13209341	Backing Plate	4	
15	13209424	Backing Plate	2	
16	13216460	Backing Plate	1	
17	59321687	Hose	1	
18	59643114	Hose Assembly	1	
19	95220893	Clamp	2	
20	95278008	Clamp	1	
21	95286266	Clamp	1	
22	50274299	Hose Clamp	1	
23	50274299	Hose Clamp	1	
24	59331934	Adapter	1	
25	96704663	Flatwasher	6	M6
27	96741053	Flatwasher	32	
28	96711833	Washer	16	M10
29	96701958	HHCS, Zinc Plated	6	M6 x 1 x 16 Cl 8.8
30	96704564	HHCS, Zinc Plated	32	M6 x 1 x 20 Cl 8.8
31	96701479	HHCS, Zinc Plated	8	M10 x 1.5 x 16 Cl 8.8
32	96702279	HHCS, Zinc Plated	4	M10 x 1.5 x 20 Cl 8.8
33	96701917	HHCS, Zinc Plated	4	M10 x 1.5 x 30 Cl 8.8
34	96704556	HHCS, Zinc Plated	4	M10 x 1.5 x 40 Cl 8.8
35	96704598	Locknut	32	M6
36	96704812	Hex Nut	4	
37	13297866	Spacer Block	2	
38	59151613	Trim	1	

COOLANT RECOVERY BOTTLE INSTALLATION

13299698 REV 00

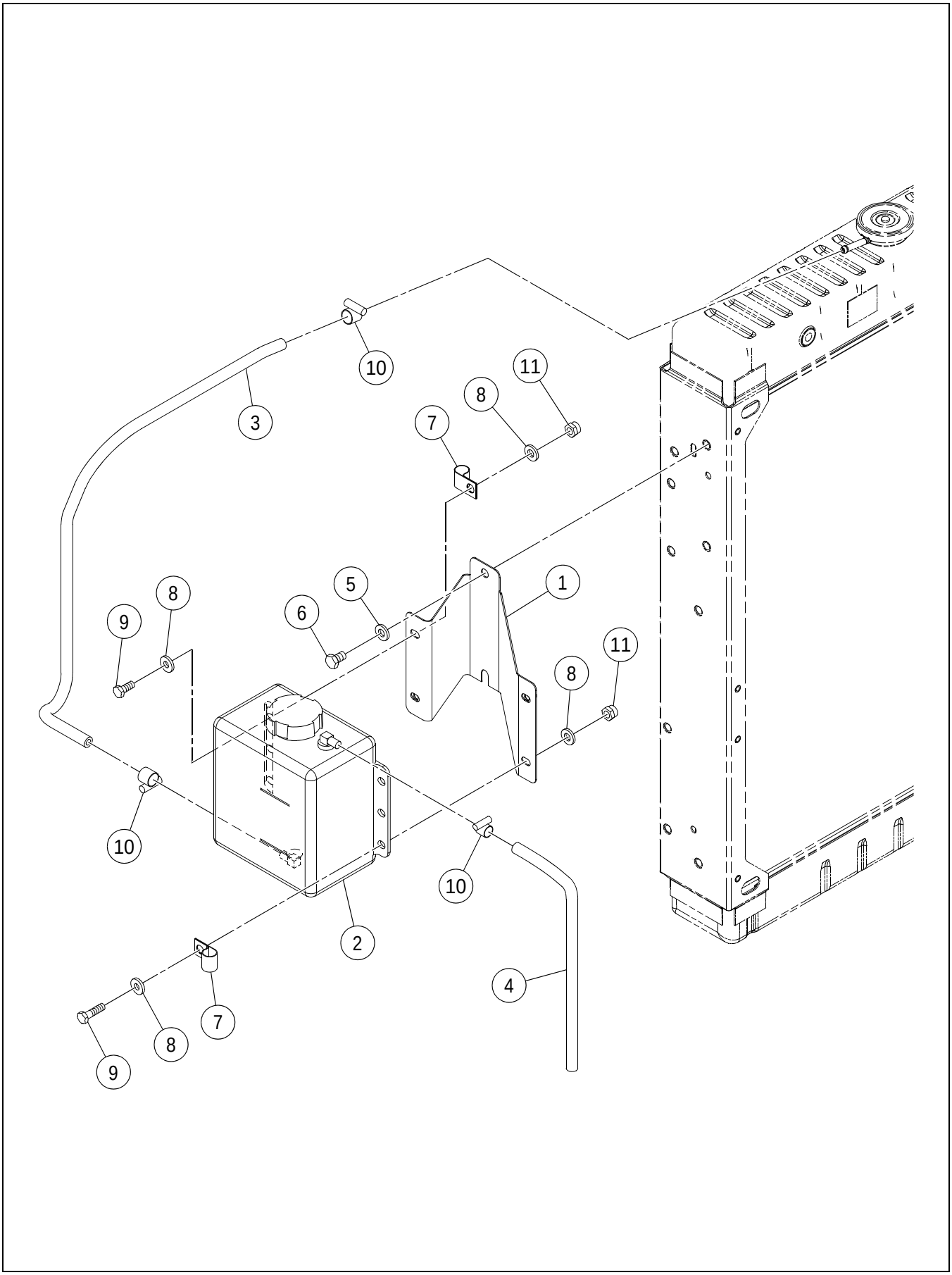

COOLANT RECOVERY BOTTLE INSTALLATION

****Only Offered Parts Listed****

BOM 13292479

ITEM	COMM. NO.	DESCRIPTION	QTY	DIMENSIONS/NOTES
1	43897420	Bracket Coolant Recovery	1	
2	58802851	Coolant Recovery Bottle	1	
-	59154807	- Coolant Recovery Bottle Cap	1	
3	13216734	Hose Assembly	1	33.0”
4	59242263	Hose Assembly	1	15.0"
5	96741046	Flatwasher	2	
6	96702279	HHCS, Zinc Plated	2	M10 x 1.5 x 20 Cl 8.8
7	59103598	Clamp	2	
8	96741038	Flatwasher	8	
9	96702659	HHCS, Zinc Plated	4	M8 x 1.25 x 25 Cl 8.8
10	50274299	Hose Clamp	3	
11	96704606	Locknut	4	M8

AIR CLEANER INSTALLATION

13417308 REV 05

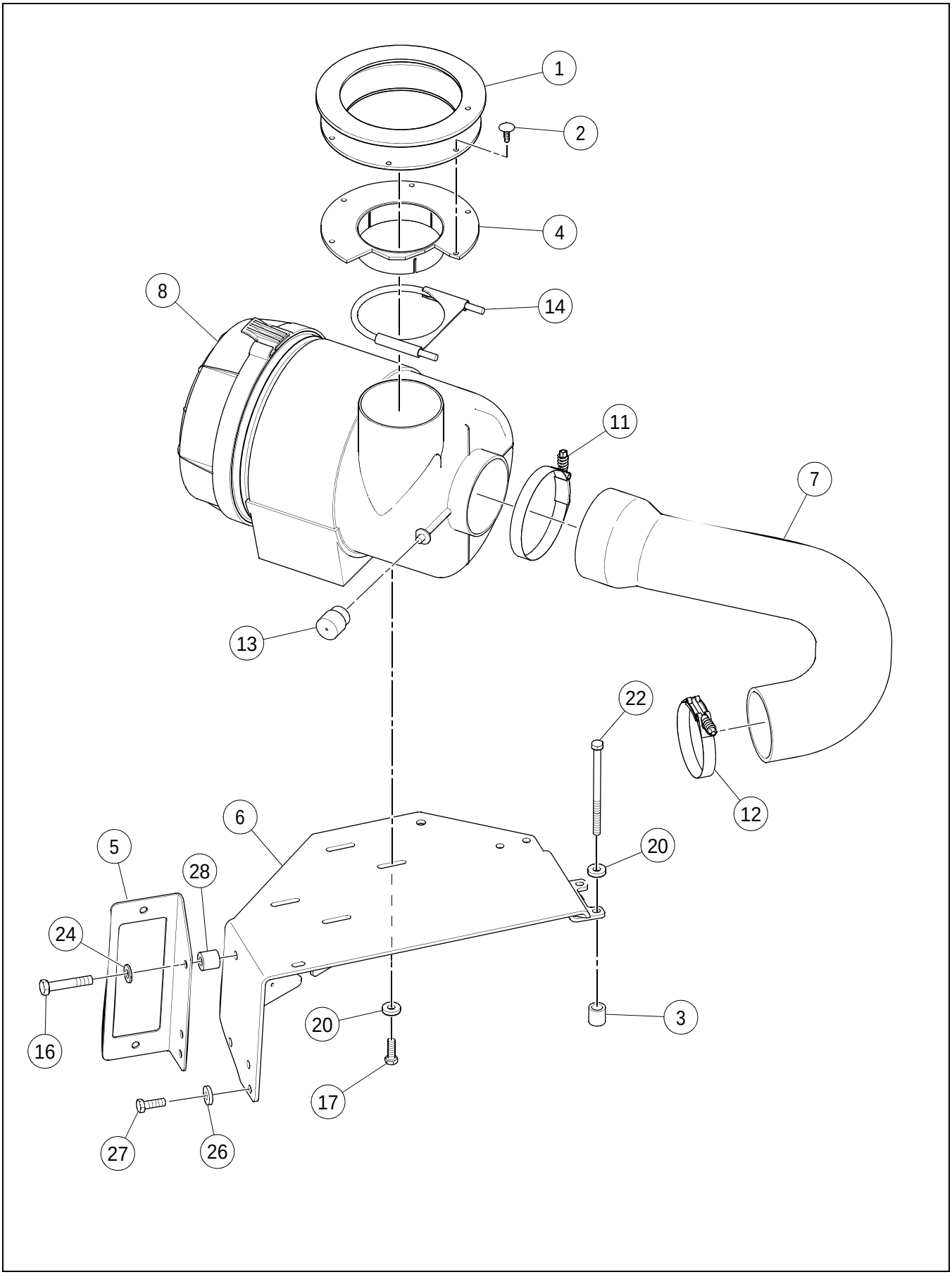

AIR CLEANER INSTALLATION

****Only Offered Parts Listed****

BOM 13417308

ITEM	COMM. NO.	DESCRIPTION	QTY	DIMENSIONS/NOTES
1	13167499	Air Intake Bellows	1	
2	13212501	Rivet	6	
3	13292354	Spacer	2	
4	13293055	Extension Tube	1	
5	43881978	Chassis Harness Bracket	1	
6	13417365	Air Cleaner Bracket	1	
7	13881149	Air Intake Hose	1	
8	13421789	Air Cleaner	1	
-	13525845	- Air Cleaner Primary Filter Element	1	
-	13525852	- Air Cleaner Safety Filter Element	1	
11	19288604	Clamp	1	
12	13459342	Clamp	1	
13	58905803	Switch	1	
14	59700526	Clamp	1	
16	96701370	Nut	2	M8 x 1.25
17	96702659	HHCS, Zinc Plated	4	M8 x 1.25 x 25 Cl 8.8
20	96712674	Flatwasher	6	
22	96726435	HHCS, Zinc Plated	2	M8 x 1.25 x 100 Cl 8.8
24	96713979	Hardened Washer	2	
26	96711833	Washer	2	M10
27	96701917	HHCS, Zinc Plated	2	M10 x 1.5 x 30 Cl 8.8
28	13885991	Isolator	2	

INSULATED STUD ASSEMBLY

13322821 REV 00

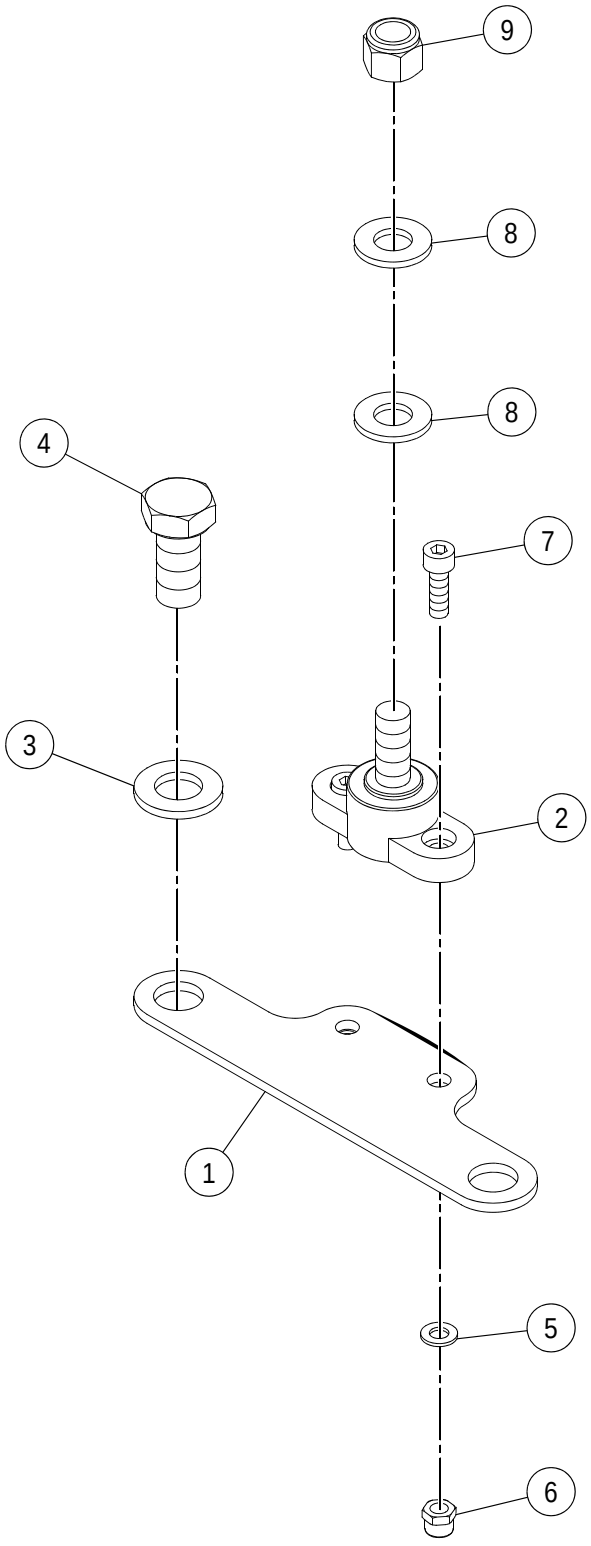

INSULATED STUD ASSEMBLY

****Only Offered Parts Listed****

BOM 13321963

ITEM	COMM. NO.	DESCRIPTION	QTY	DIMENSIONS/NOTES
1	13321955	Insulated Stud Bracket	1	
2	13321864	Insulated Stud	1	
3	96738596	Flatwasher	2	
4	96701495	HHCS, Zinc Plated	2	M12 x 1.75 x 25 Cl 8.8
5	96738554	Flatwasher	2	
6	96704580	Locknut	2	M5
7	96720115	SHCS, Zinc Plated	2	M5 x 0.8 x 16 Cl 8.8
8	96741046	Flatwasher	2	
9	95923322	Locknut	1	3/8 x 16

19285832 REV 00

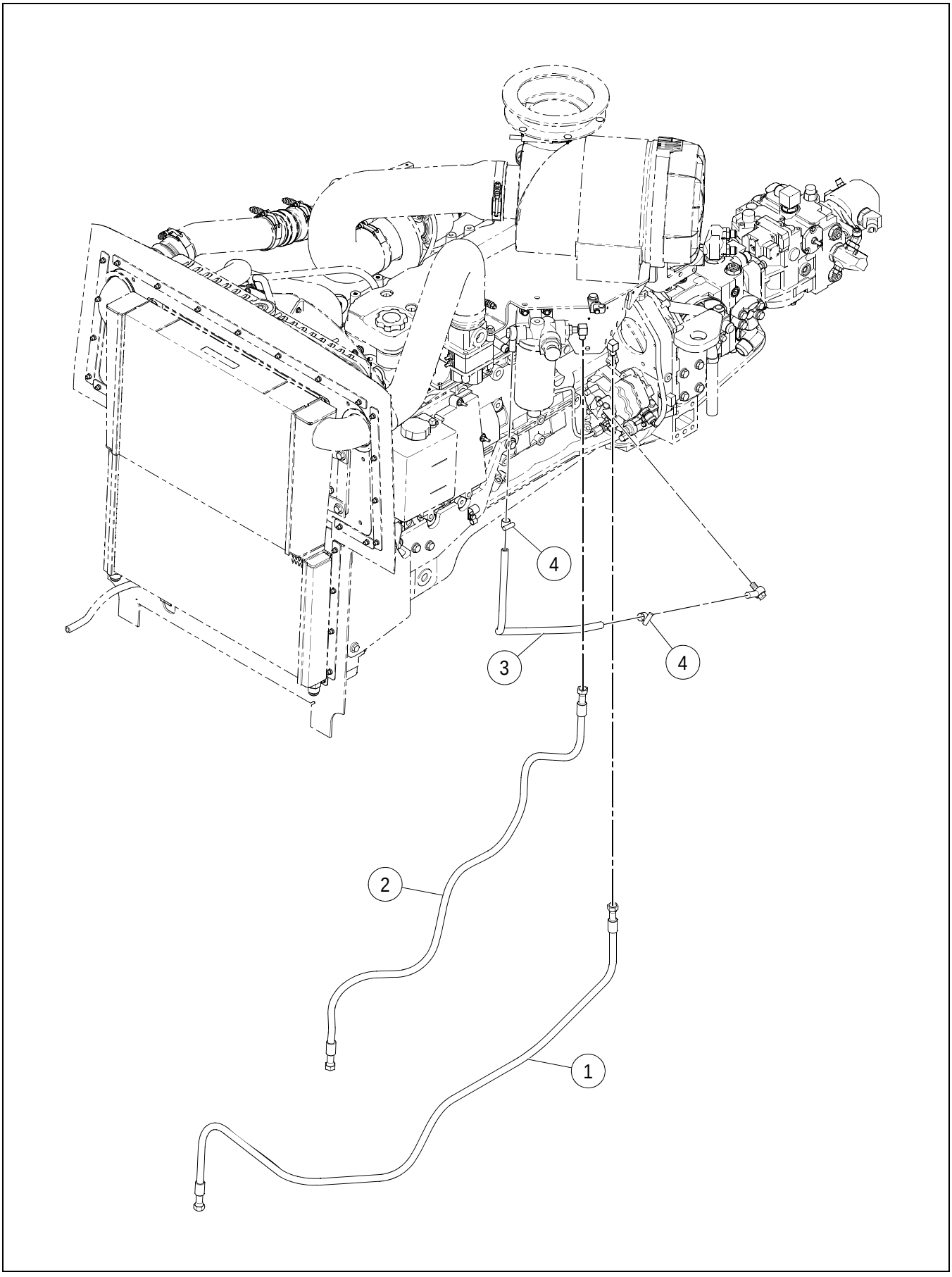

FUEL LINE INSTALLATION

****Only Offered Parts Listed****

BOM 19285832

ITEM	COMM. NO.	DESCRIPTION	QTY	DIMENSIONS/NOTES
1	43876820	Hose Assembly	1	68.0"
2	43876812	Hose Assembly	1	53.0"
3	43800143	Fuel Line	1	
4	50274299	Hose Clamp	2	

ENGINE ASSEMBLY - SD-190/SD-200 - SHEET 1 OF 2

13416086 REV 0F

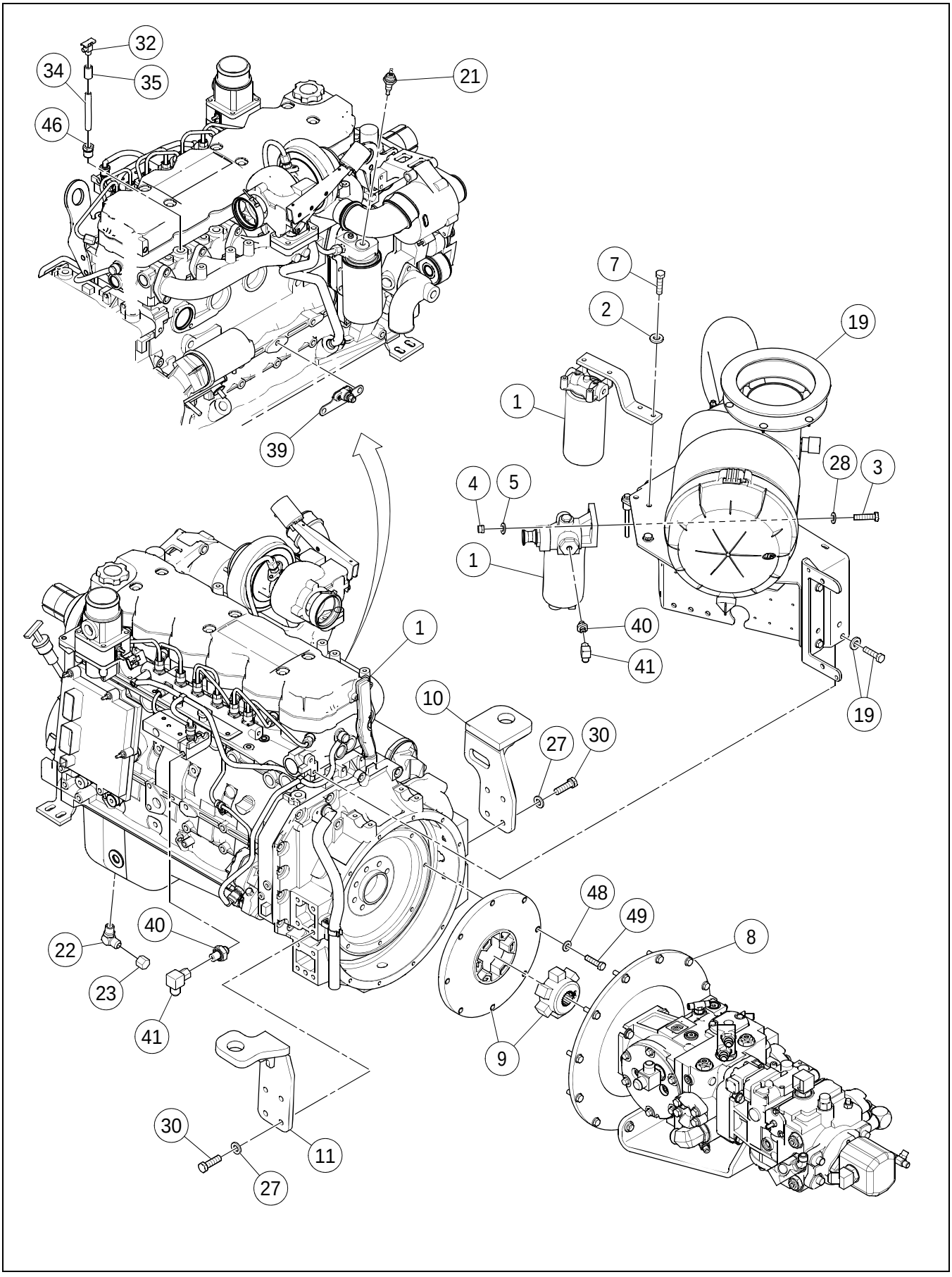

ENGINE ASSEMBLY - SD-190/SD-200 - SHEET 1 OF 2

****Only Offered Parts Listed****

BOM 13416086

ITEM	COMM. NO.	DESCRIPTION	QTY	DIMENSIONS/NOTES
1	13478797	Engine	1	
-	13852256	- Alternator	1	
-	19295872	- Fuel Filter	1	3 Micron
-	43802263	- Fuel Filter	1	25 Micron
-	13284617	- Engine Oil Filter	1	
-	19295914	- Fan Belt	1	
-	19295856	- Starter	1	
2	96702659	HHCS, Zinc Plated	2	M8 x 1.25 x 25 Cl 8.8
3	96704556	HHCS, Zinc Plated	2	M10 x 1.5 x 40 Cl 8.8
4	96704614	Nut	2	M10 x 1.5
5	96711833	Washer	2	M10
7	96741038	Flatwasher	2	
8	**NSVA**	**Pump Stack Assembly**	**1**	**See Page C - 32.**
9	59286336	Drive Coupling	1	
10	13884911	Rear Engine Mount, LH	1	
11	13885017	Rear Engine Mount, RH	1	
19	**NSVA**	**Air Cleaner Installation**	**1**	**See Page C - 22.**
21	13491691	Oil Pressure Switch	1	
22	58896580	Elbow	1	
23	95257325	Cap Nut	1	
27	96738596	Flatwasher	12	
28	96741046	Flatwasher	14	
30	96702444	HHCS, Zinc Plated	10	M12 x 1.75 x 40 Cl 8.8
32	58848920	Drain Assembly	1	
34	95056396	Nipple	1	
35	95011060	Coupling Pipe	1	
39	**NSVA**	**Insulated Stud Assembly**	**1**	**See Page C - 24.**
40	59884221	Adapter	2	
41	59977454	Adapter	2	
46	59924233	Reducing Bushing	1	
48	96741046	Flatwasher	8	
49	95919254	HHCS	8	3/8 x 16 x 1.50

13416086 REV 0F

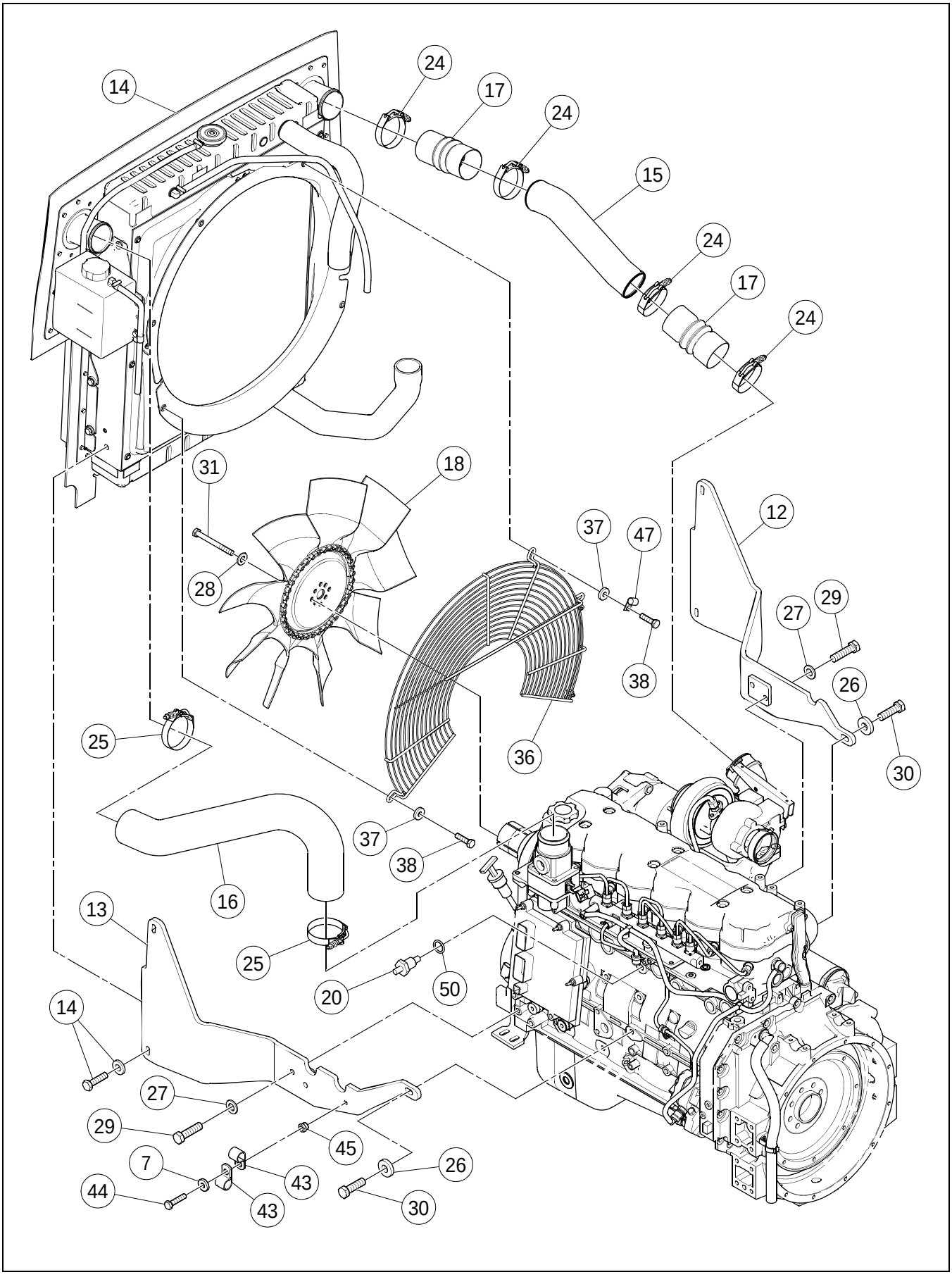

****Only Offered Parts Listed****

BOM 13416086

ITEM	COMM. NO.	DESCRIPTION	QTY	DIMENSIONS/NOTES
7	96741038	Flatwasher	2	
12	13218599	Radiator Bracket, LH	1	
13	13417951	Radiator Bracket	1	
14	**NSVA**	**Oil Cooler Assembly**	**1**	**See Page C - 18.**
15	13417142	CAC Tube - Turbo Side	1	
16	13417118	CAC Tube - Cold Side	1	
17	13232202	Connector	2	
18	13157151	Fan	1	
20	19285584	Temperature Sender	1	
24	54680079	Clamp	4	
25	54680087	Clamp	2	
26	96712237	Flatwasher	2	
27	96738596	Flatwasher	12	
28	96741046	Flatwasher	14	
29	96702667	HHCS, Zinc Plated	4	M12 x 1.75 x 45 Cl 8.8
30	96702444	HHCS, Zinc Plated	10	M12 x 1.75 x 40 Cl 8.8
31	96720594	HHCS, Zinc Plated	4	M10 x 1.5 x 100 Cl 8.8
33	95919254	HHCS (Not Shown)	4	3/8 x 16 x 1.50
36	13272661	Fan Guard	1	
37	96712674	Flatwasher	6	
38	96705587	HHCS, Zinc Plated	6	M8 x 1.25 x 30 Cl 8.8
43	95310231	Clamp	2	
44	96702261	HHCS, Zinc Plated	1	M8 x 1.25 x 35 Cl 8.8
45	96704606	Locknut	1	M8
47	59117333	Clamp	1	
50	95018065	O-ring	1	

PUMP STACK ASSEMBLY - SD-190/SD-200

13483821 REV 0C

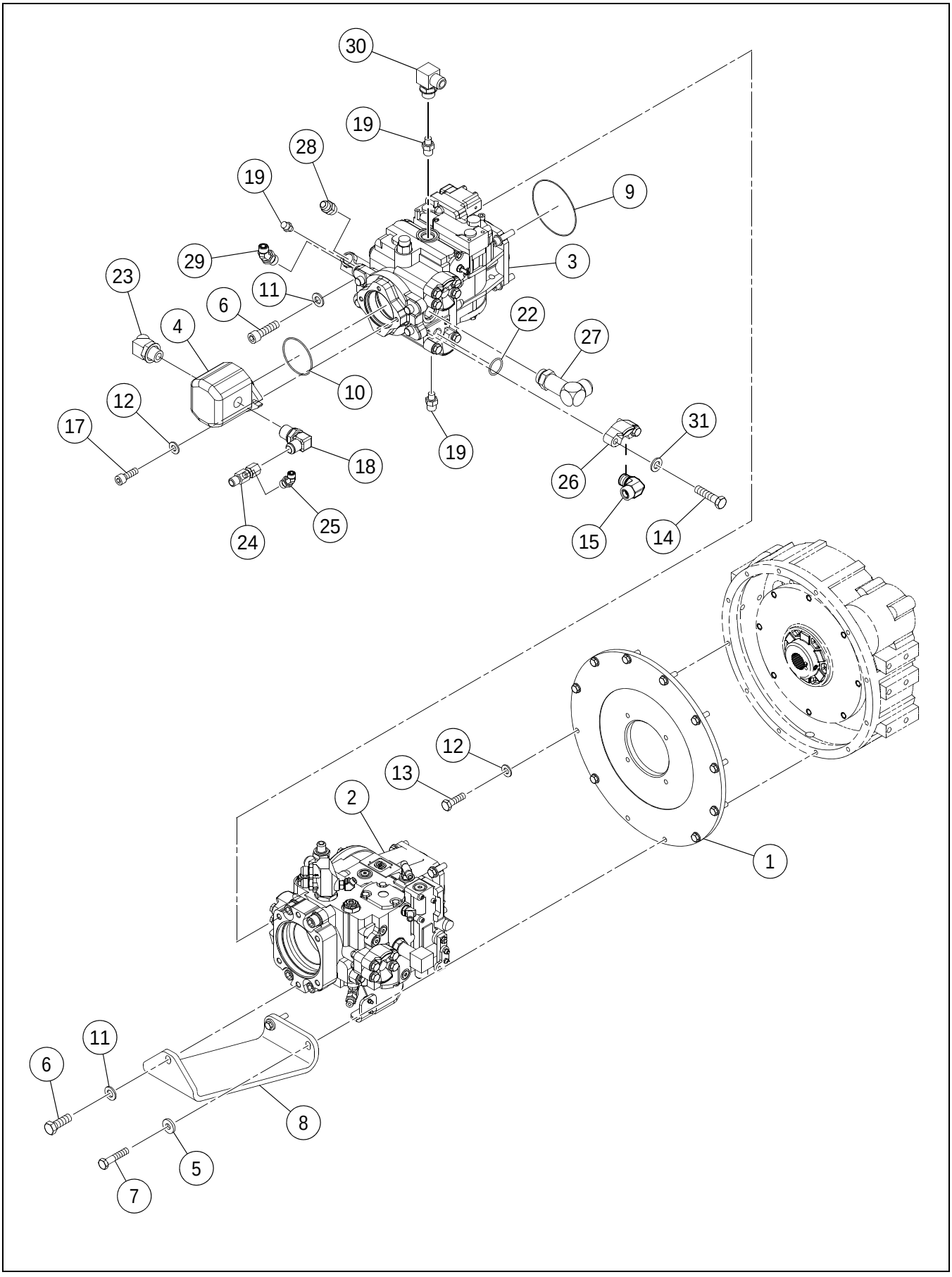

PUMP STACK ASSEMBLY - SD-190/SD-200

****Only Offered Parts Listed**** **BOM 13483730**

ITEM	COMM. NO.	DESCRIPTION	QTY	DIMENSIONS/NOTES
1	58966086	Pump Mounting Plate	1	
2	**NSVA**	**Propulsion Pump Assembly**	**1**	**See Page C - 10.**
3	**13527965**	**Vibration Pump**	**1**	**See Breakdown C - 34.**
4	58859380	Steering Pump	1	
-	58898677	- Seal Kit	1	
5	96711833	Washer	2	M10
6	43844828	Gear Pump	1	
-	58898677	- Seal Kit	1	
-	95919569	HHCS	5	
7	96705116	HHCS, Zinc Plated	2	M10 x 1.5 x 50 Cl 8.8
8	13293808	Pump Stack Support Bracket	1	
9	95213583	O-ring	1	
10	95988713	O-ring	1	
11	96738596	Flatwasher	5	
12	96741046	Flatwasher	12	
13	96704309	HHCS, Zinc Plated	10	M10 x 1.5 x 35 Cl 8.8
14	95919460	HHCS	8	7/16 x 14 x 1.75
15	59327775	Adapter	2	
-	13444575	- 0-ring	2	
17	95055265	HSHCS	2	3/8 x 16 x 1.25
18	95303350	Elbow	1	
19	59922419	Adapter	3	
22	59993881	O-ring	2	
23	95796090	Adapter	1	
24	13208004	Adapter	1	
25	59922203	Adapter	1	
26	58901653	Split Flange Clamp	4	
27	95654638	Adapter	1	
28	95285946	Adapter	1	
29	95650339	Adapter	1	
30	95280186	Adapter	1	
31	59995126	Hardened Washer	8	

VIBRATION PUMP (13527965) - INTERNAL BREAKDOWN - SHEET 1 OF 4

13527965 REV 00

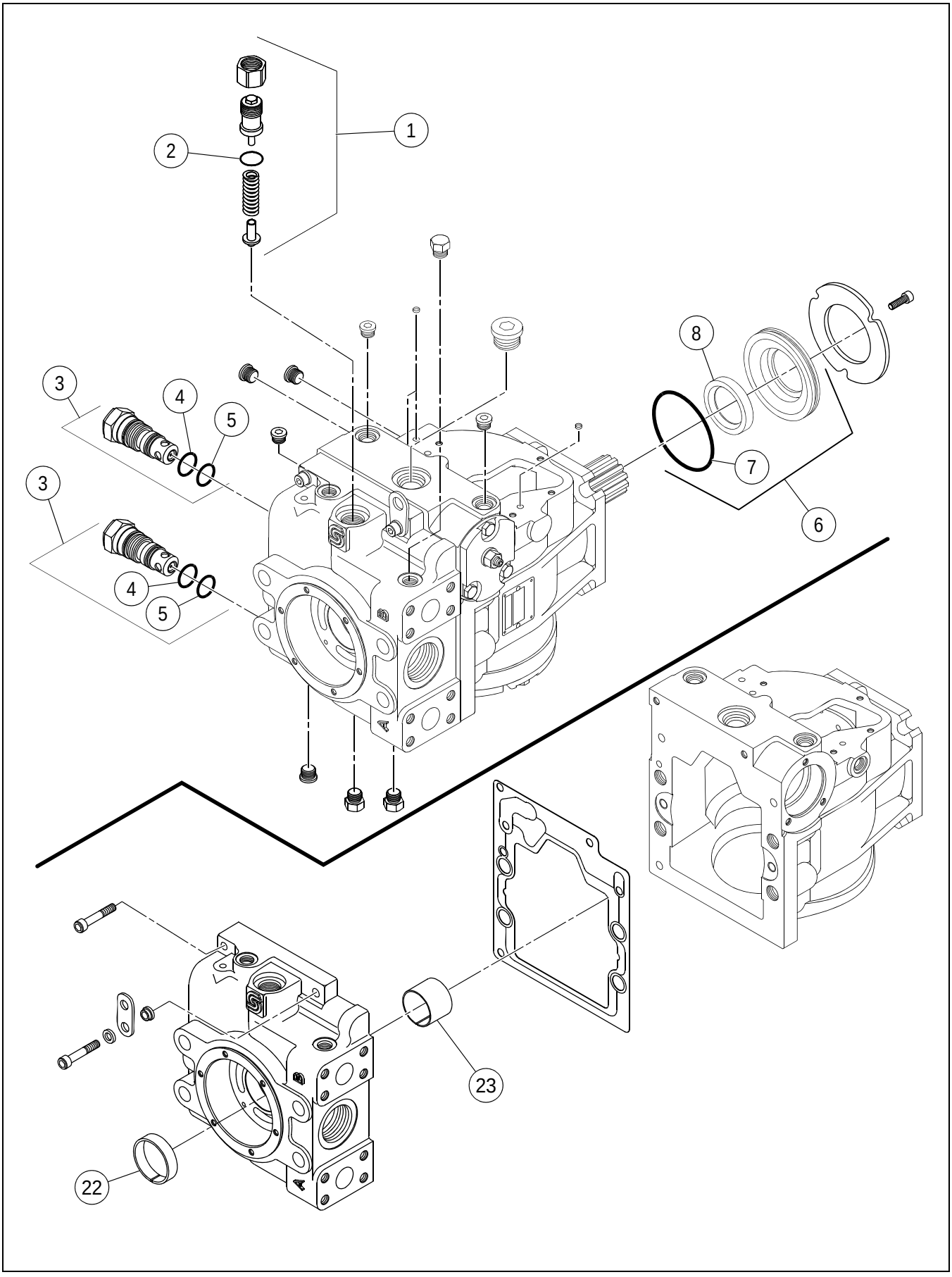

VIBRATION PUMP (13527965) - INTERNAL BREAKDOWN - SHEET 1 OF 4

****Only Offered Parts Listed****

BOM 13527965

ITEM	COMM. NO.	DESCRIPTION	QTY	DIMENSIONS/NOTES
1	59446138	Charge Relief Kit	1	
2	50278019	O-ring	1	
3	59029629	Multi-function Valve Assembly	2	
4	95210258	O-ring	2	
5	59360735	O-ring	2	
6	19281252	Shaft Seal Assembly	1	
7	59369504	O-ring	1	
8	19282987	Lip Seal	1	
22	59360354	Bushing	1	
23	59369603	Bearing	1	

VIBRATION PUMP (13527965) - INTERNAL BREAKDOWN - SHEET 2 OF 4

13527965 REV 00

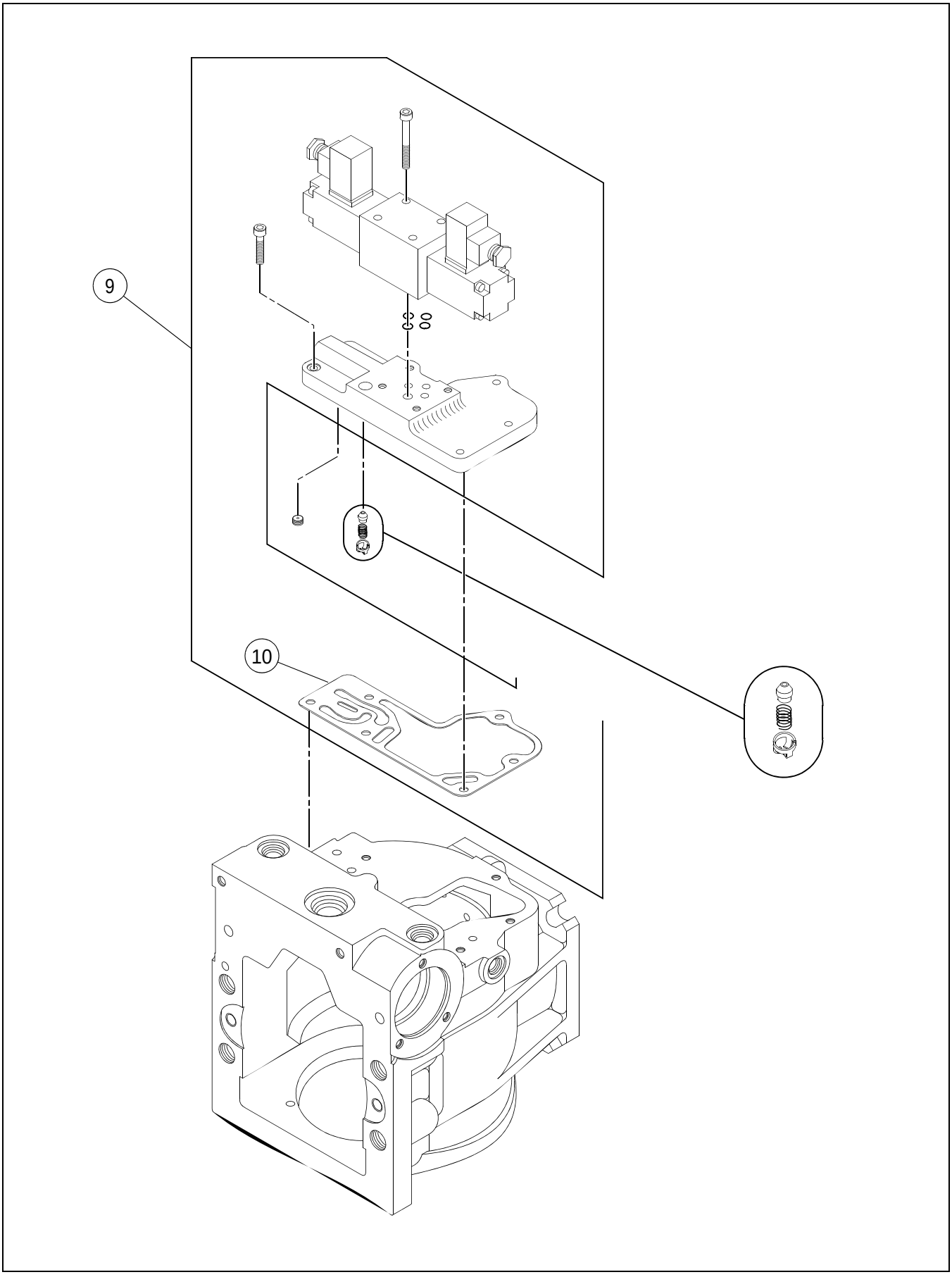

****Only Offered Parts Listed****

BOM 13527965

ITEM	COMM. NO.	DESCRIPTION	QTY	DIMENSIONS/NOTES
9	19288893	Control Kit	1	
10	59360685	Gasket	1	

VIBRATION PUMP (13527965) - INTERNAL BREAKDOWN - SHEET 3 OF 4

13527965 REV 00

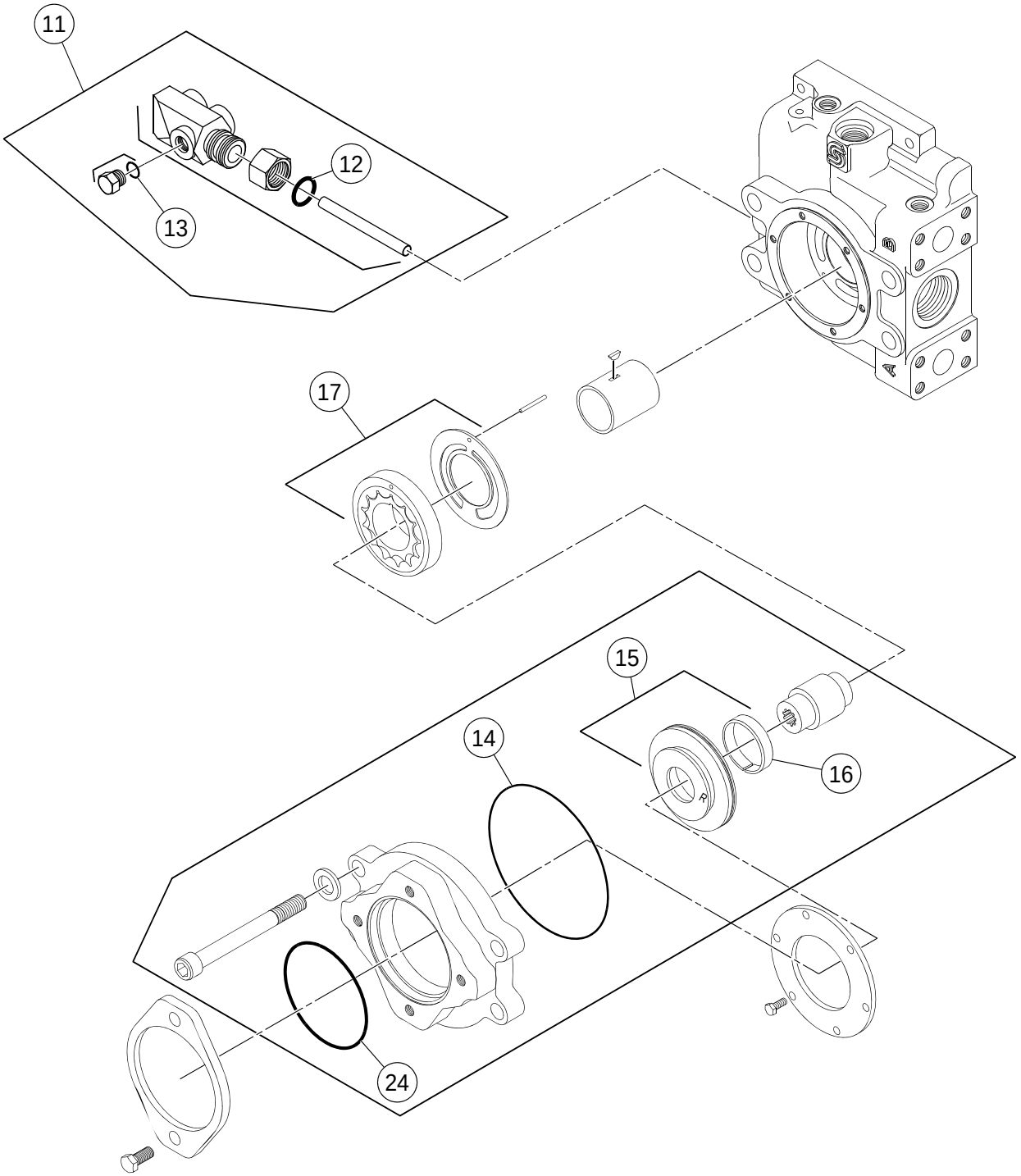

VIBRATION PUMP (13527965) - INTERNAL BREAKDOWN - SHEET 3 OF 4

****Only Offered Parts Listed****

BOM 13527965

ITEM	COMM. NO.	DESCRIPTION	QTY	DIMENSIONS/NOTES
11	19288901	Remote Filtration Kit	1	
12	59360941	O-ring	1	
13	59698811	O-ring	1	
14	59360552	O-ring	1	
15	58918590	Charge Pump Cover	1	
16	59360354	Bushing	1	
17	19288919	Charge Pump Set	1	
24	59986489	O-ring	1	

VIBRATION PUMP (13527965) - INTERNAL BREAKDOWN - SHEET 4 OF 4

13527965 REV 00

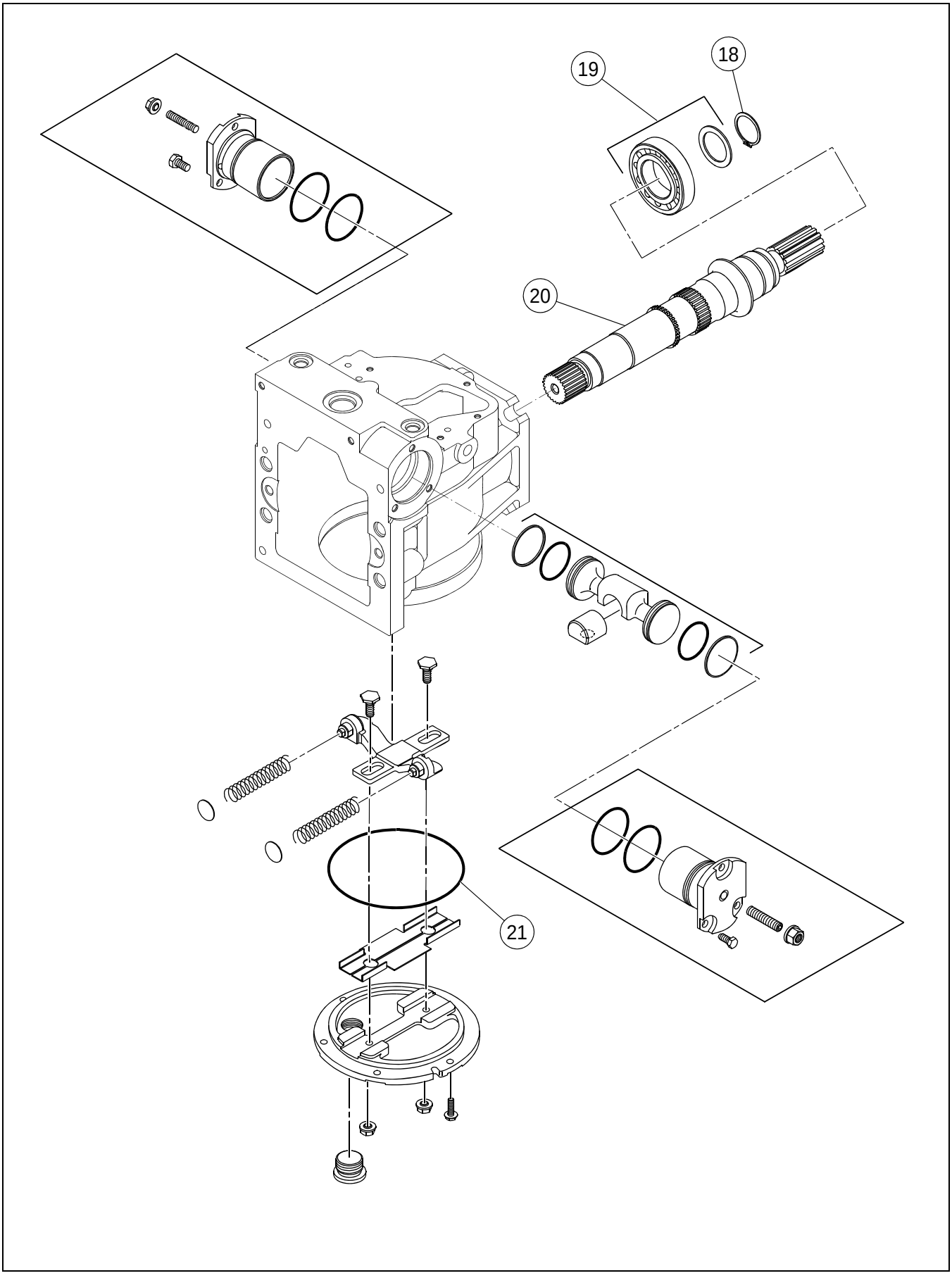

VIBRATION PUMP (13527965) - INTERNAL BREAKDOWN - SHEET 4 OF 4

****Only Offered Parts Listed****

BOM 13527965

ITEM	COMM. NO.	DESCRIPTION	QTY	DIMENSIONS/NOTES
18	59369470	Retaining Ring	1	
19	59369462	Bearing	1	
20	58828492	Shaft	1	
21	59369371	O-ring	1	
25	59369561	Gasket (Not Shown)	1	
26	59985044	Seal Kit (Not Shown)	1	

13843511 REV 02

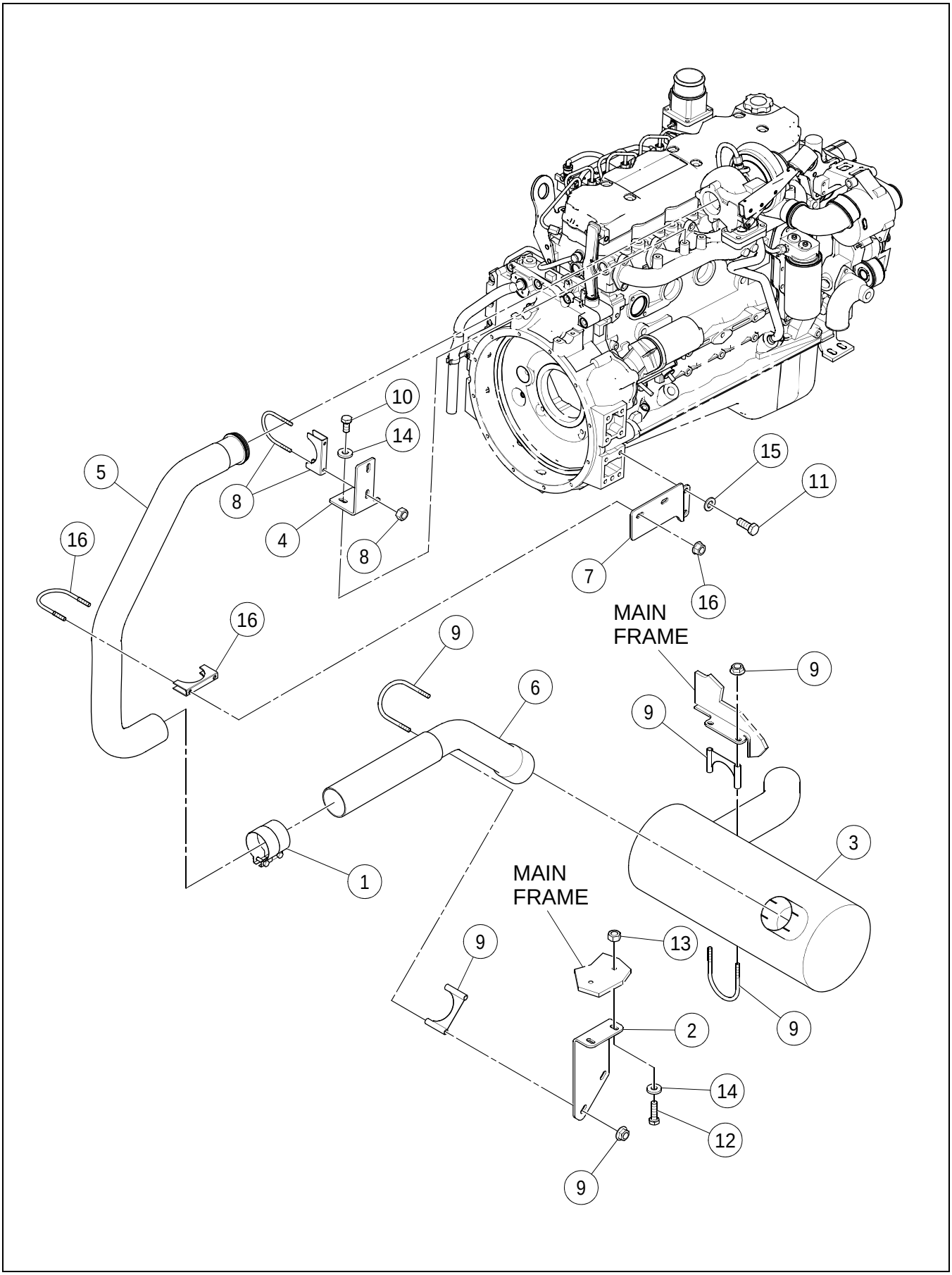

****Only Offered Parts Listed****

BOM 13843511

ITEM	COMM. NO.	DESCRIPTION	QTY	DIMENSIONS/NOTES
1	13093075	Clamp Seal	1	
2	13169362	Support Bracket	1	
3	13169537	Muffler	1	
4	13418439	Support Bracket	1	
5	13418447	Exhaust Pipe	1	
6	13885900	Exhaust Pipe	1	
7	13884143	Exhaust Bracket	1	
8	59495028	Clamp	1	
9	59534313	Clamp	2	
10	96702279	HHCS, Zinc Plated	2	M10 x 1.5 x 20 Cl 8.8
11	96702311	HHCS, Zinc Plated	2	M12 x 1.75 x 30 Cl 8.8
12	96704309	HHCS, Zinc Plated	4	M10 x 1.5 x 35 Cl 8.8,
13	96704812	Hex Nut	2	
14	96711833	Washer	4	M10
15	96738596	Flatwasher	2	
16	59179218	Exhaust Clamp	1	

AIR PRE-CLEANER INSTALLATION - SD-160 - OPTIONAL

13208848 REV 03

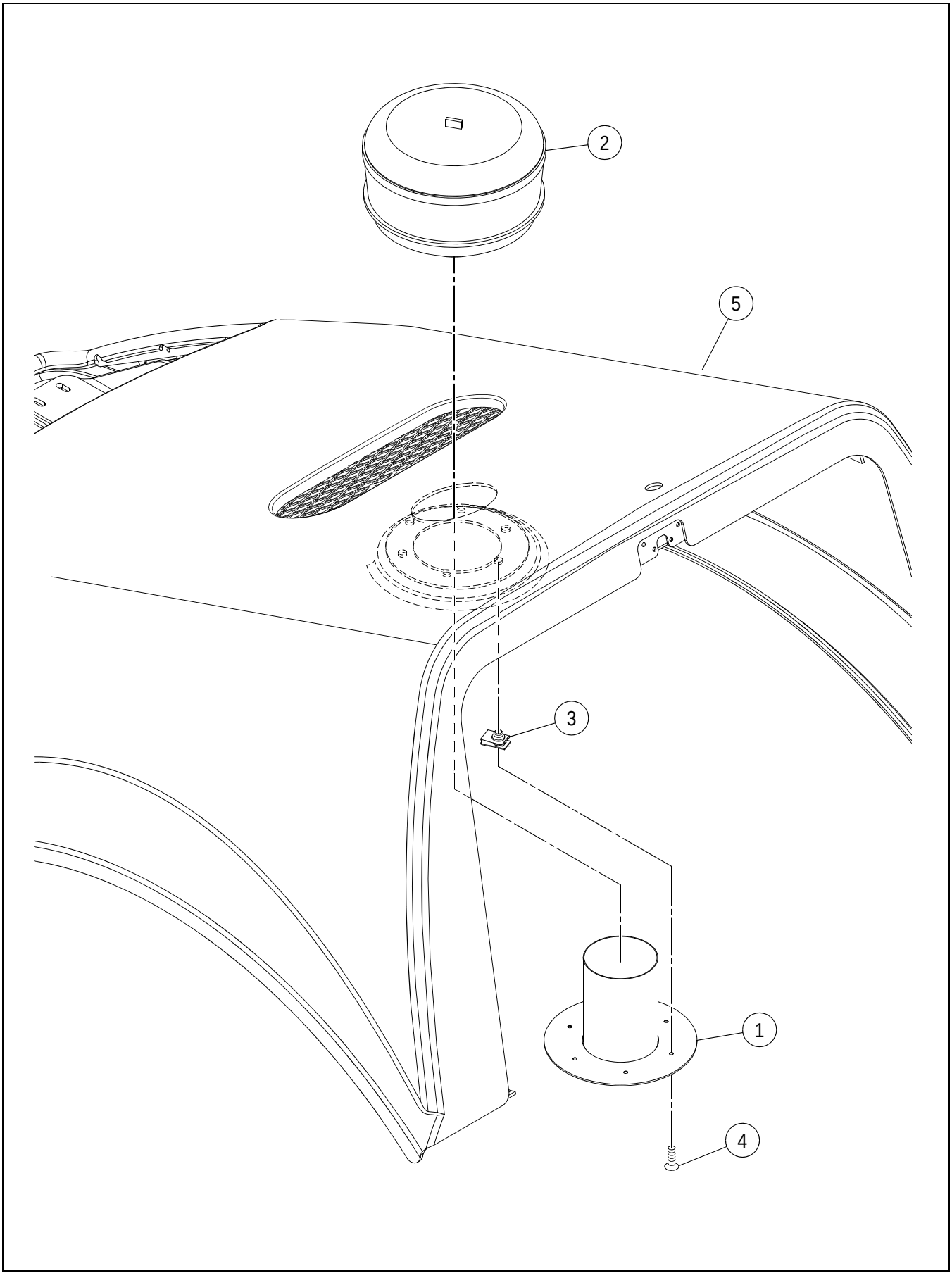

AIR PRE-CLEANER INSTALLATION - SD-160 - OPTIONAL

****Only Offered Parts Listed****

BOM 13883285

ITEM	COMM. NO.	DESCRIPTION	QTY	DIMENSIONS/NOTES
1	13273339	Air Pre-cleaner Stack	1	
2	59081323	Air Pre-cleaner	1	
-	59103259	- Cover Assembly	1	
-	58938275	- Bowl	1	
-	59103267	- Sleeve Assembly	1	
-	59103275	- Clamp	1	
3	13186598	U-nut	6	
4	96728506	FHCS, Zinc Plated	6	M6 x 1.0 x 20 Cl 8.8
5	13883277	Hood w/Pre-cleaner	1	

AIR PRE-CLEANER INSTALLATION - SD-190/SD-200 - OPTIONAL

13307319 REV 01

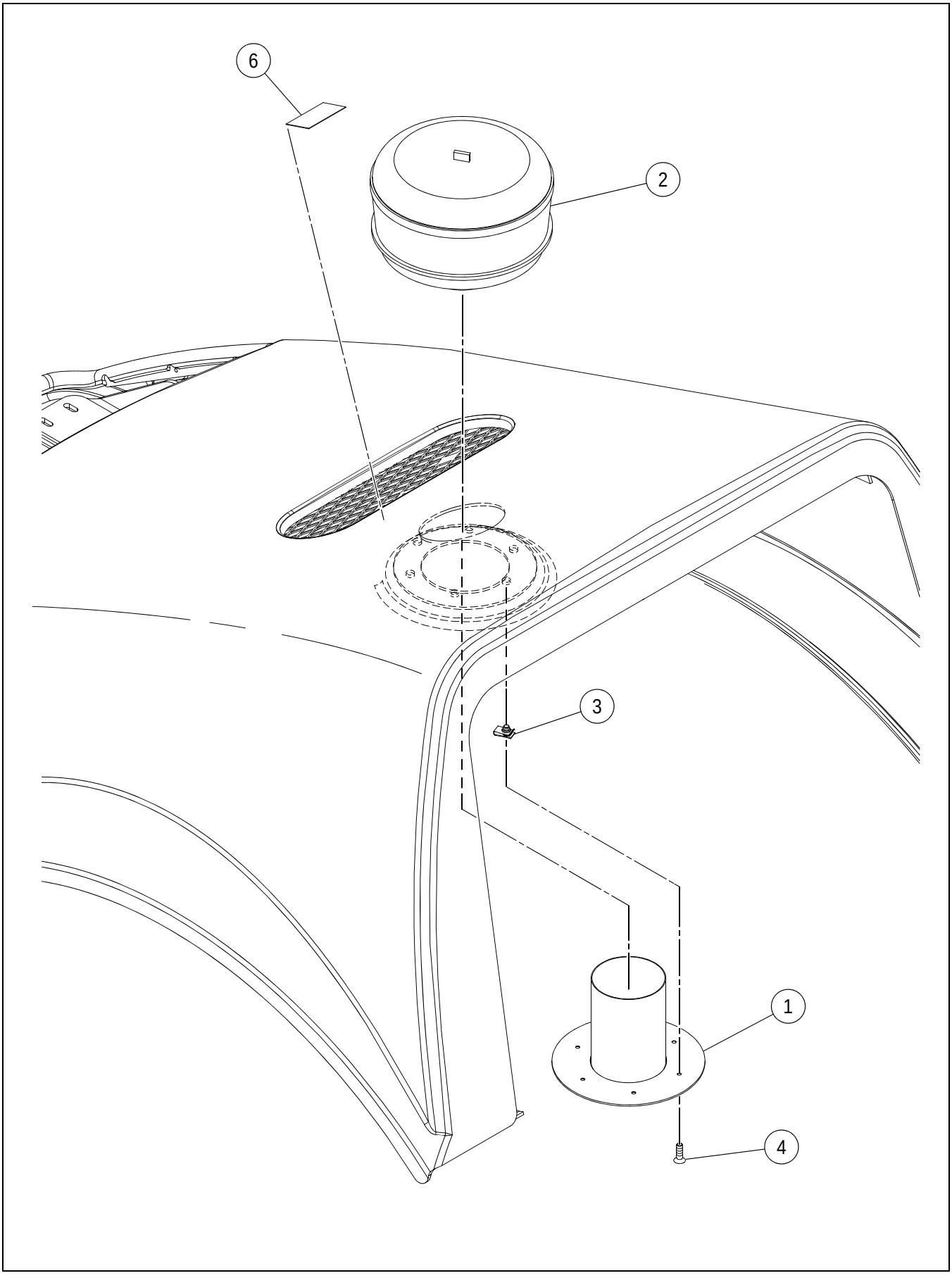

AIR PRE-CLEANER INSTALLATION - SD-190/SD-200 - OPTIONAL

****Only Offered Parts Listed****

BOM 19285709

ITEM	COMM. NO.	DESCRIPTION	QTY	DIMENSIONS/NOTES
1	13273339	Air Pre-cleaner Stack	1	
2	59081323	Air Pre-Cleaner	1	
-	59103259	- Cover Assembly	1	
-	58938275	- Bowl	1	
-	59103267	- Sleeve Assembly	1	
-	59103275	- Clamp	1	
3	13186598	U-nut	6	
4	96728506	FHCS, Zinc Plated	6	M6 X 1.0 X 20 Cl 8.8
5	19285691	Hood w/Pre-cleaner (Not Shown)	1	
6	59087452	Decal: Ether Use Warning	1	

SOUND KIT WITH AIR PRE-CLEANER INSTALLATION - OPTIONAL

13529839 REV 00

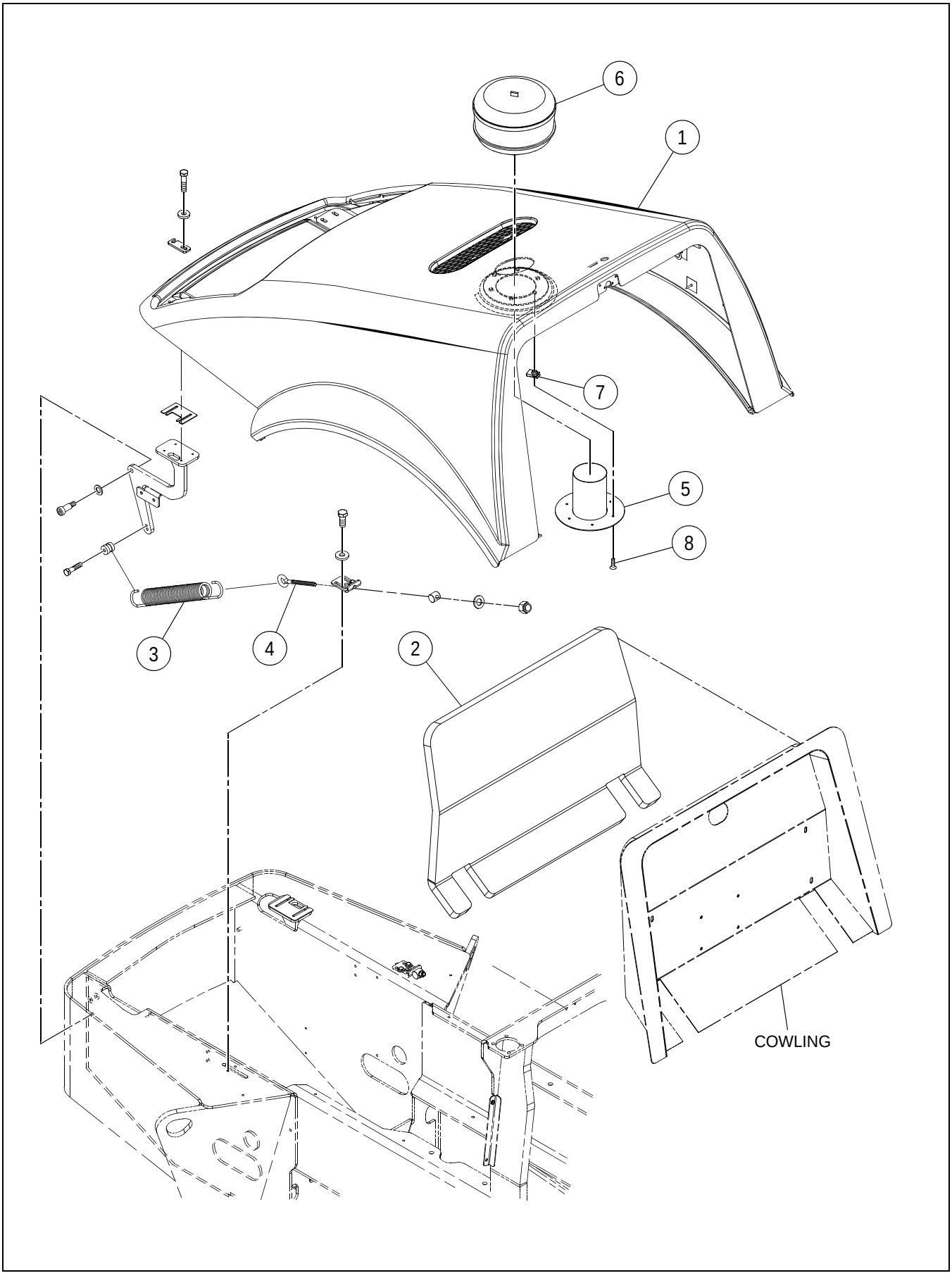

SOUND KIT WITH AIR PRE-CLEANER INSTALLATION - OPTIONAL

****Only Offered Parts Listed****

BOM 43805191, 43822832

ITEM	COMM. NO.	DESCRIPTION	QTY	DIMENSIONS/NOTES
1	43805183	Hood With Foam and Pre-cleaner - SD-160	1	
-	43805167	- Hood w/ Sound Spikes	1	
-	13218276	- Foam Pad	1	
-	13218292	- Foam Pad	1	
-	13218300	- Foam Pad	1	
-	13218284	- Foam Pad	1	
-	43822840	Hood With Foam and Pre-cleaner - SD-190/ SD-200	1	
-	43822857	- Hood w/Sound Spikes	1	
-	13218276	- Foam Pad	1	
-	13218292	- Foam Pad	1	
-	13218300	- Foam Pad	1	
-	13218284	- Foam Pad	1	
2	NOT-USED	This Item Not Used W/this Bom	1	
3	13460381	Spring	2	
4	13184833	Eye Bolt	2	
5	13273339	Air Pre-cleaner Stack	1	
6	59081323	Air Pre-cleaner	1	
-	59103259	- Cover Assembly	1	
-	58938275	- Bowl	1	
-	59103267	- Sleeve Assembly	1	
-	59103275	- Clamp	1	
7	13186598	U-nut	6	
8	96728506	FHCS, Zinc Plated	6	M6 x 1.0 x 20 Cl 8.8

SOUND KIT WITHOUT AIR PRE-CLEANER INSTALLATION - OPTIONAL

59287193 REV 0A

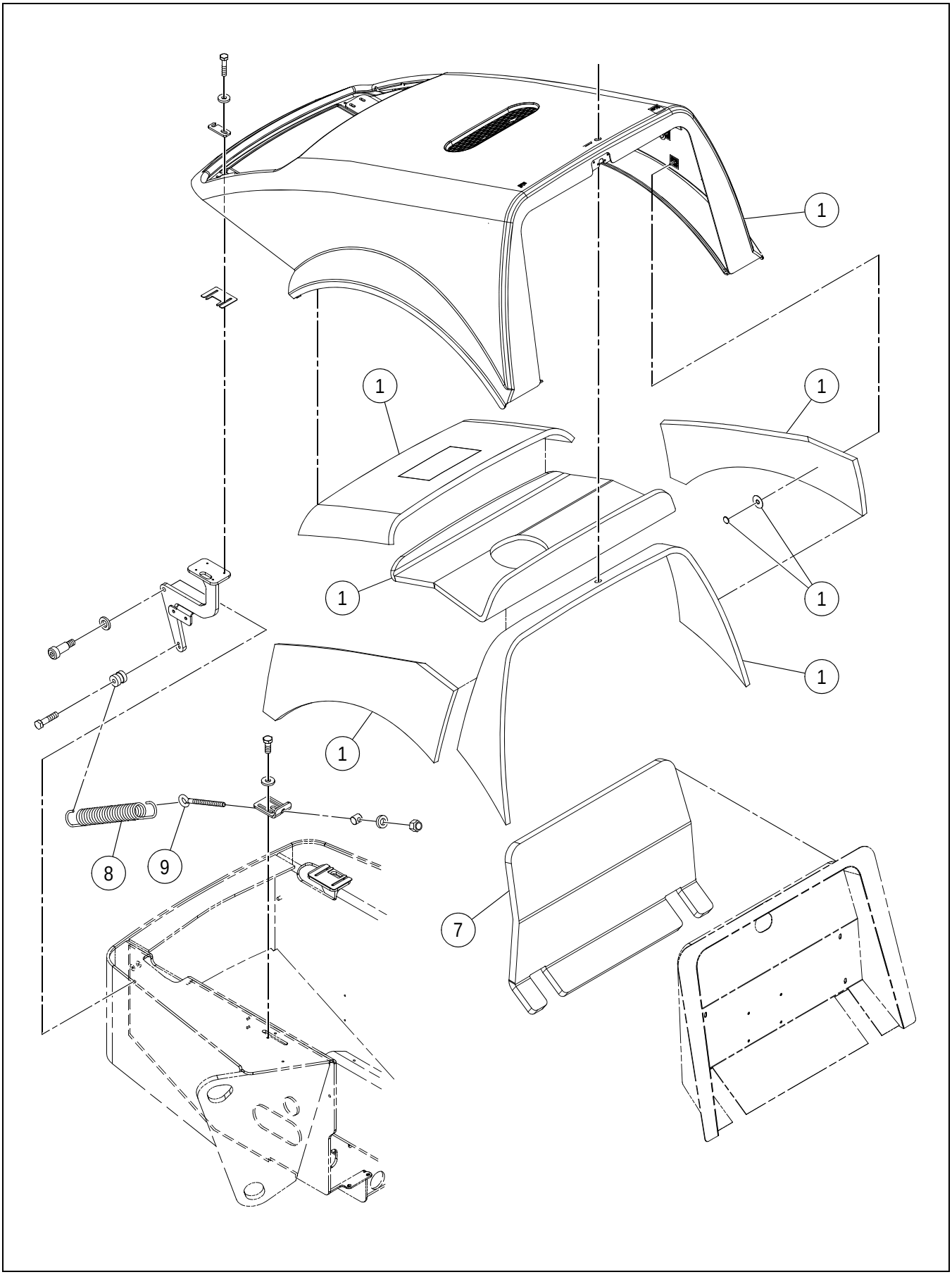

SOUND KIT WITHOUT AIR PRE-CLEANER INSTALLATION - OPTIONAL

****Only Offered Parts Listed****

BOM 43805217. 19285758

ITEM	COMM. NO.	DESCRIPTION	QTY	DIMENSIONS/NOTES
1	43805183	Hood w/Foam - SD-160	1	
-	43805167	- Hood w/ Sound Spikes	1	
-	13218276	- Foam Pad	1	
-	13218292	- Foam Pad	1	
-	13218300	- Foam Pad	1	
-	13218284	- Foam Pad	1	
-	13884374	Hood w/Foam - SD-190/SD-200	1	
7	NOT-USED	This Item Not Used W/this Bom	1	
8	13460381	Spring	2	
9	13184833	Eye Bolt	2	

CAB SOUND KIT WITH AIR PRE-CLEANER

43892447 REV 00

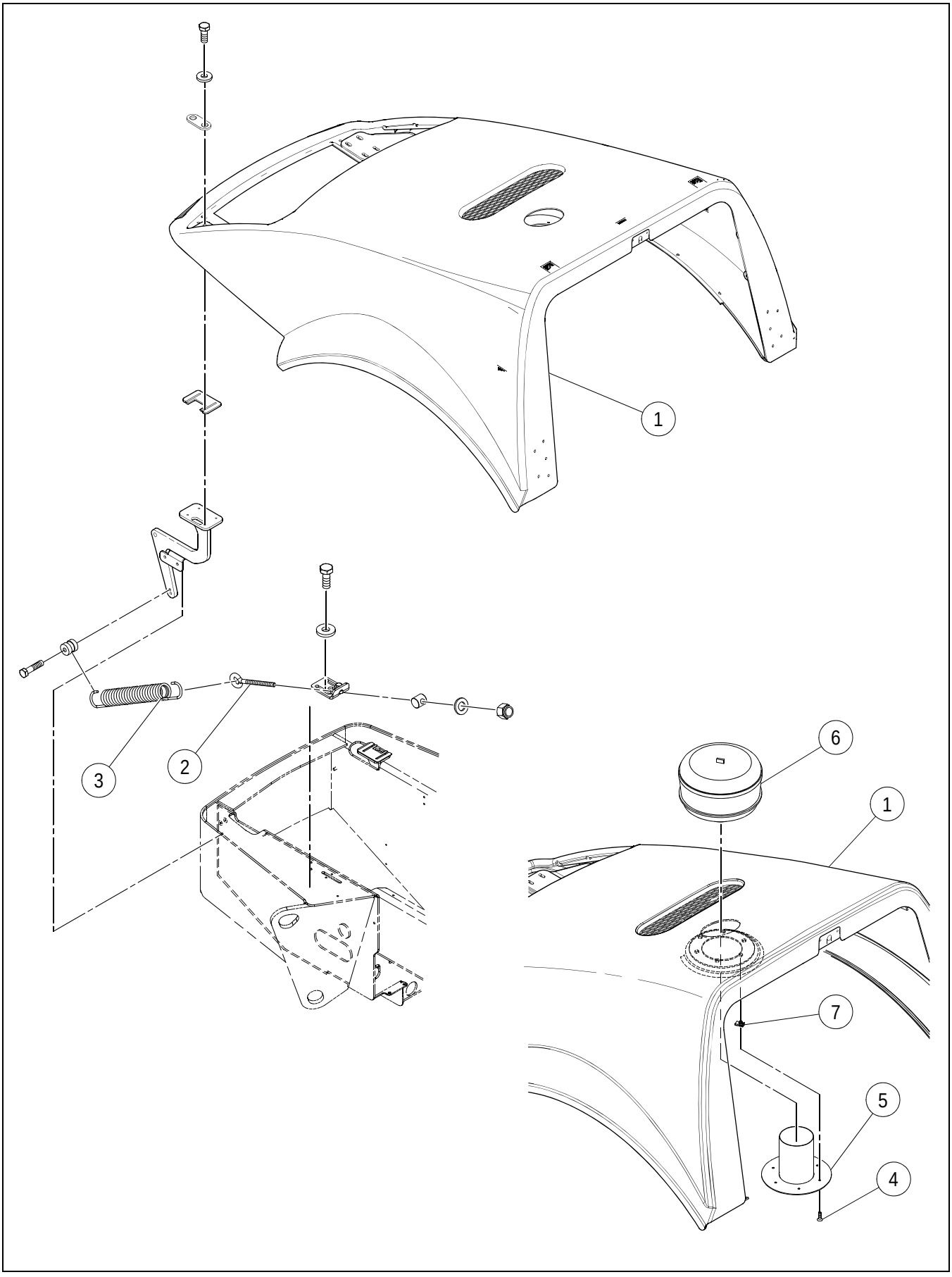

CAB SOUND KIT WITH AIR PRE-CLEANER

****Only Offered Parts Listed****

BOM 43892447

ITEM	COMM. NO.	DESCRIPTION	QTY	DIMENSIONS/NOTES
1	43853282	Hood with Foam and Pre-cleaner (U.S.)	1	
-	13218276	- Foam Pad	1	
-	13218292	- Foam Pad	1	
-	13218300	- Foam Pad	1	
-	13218284	- Foam Pad	1	
2	13184833	Eye Bolt	2	
3	13460381	Spring	2	
4	96728506	FHCS, Zinc Plated	6	M6 x 1.0 x 20 Cl 8.8
5	13273339	Air Pre-cleaner Stack	1	
6	59081323	Air Pre-cleaner	1	
-	59103259	- Cover Assembly	1	
-	58938275	- Bowl	1	
-	59103267	- Sleeve Assembly	1	
-	59103275	- Clamp	1	
7	13186598	U-nut	6	

FUEL STRAINER INSTALLATION - OPTIONAL

13235015 REV 00

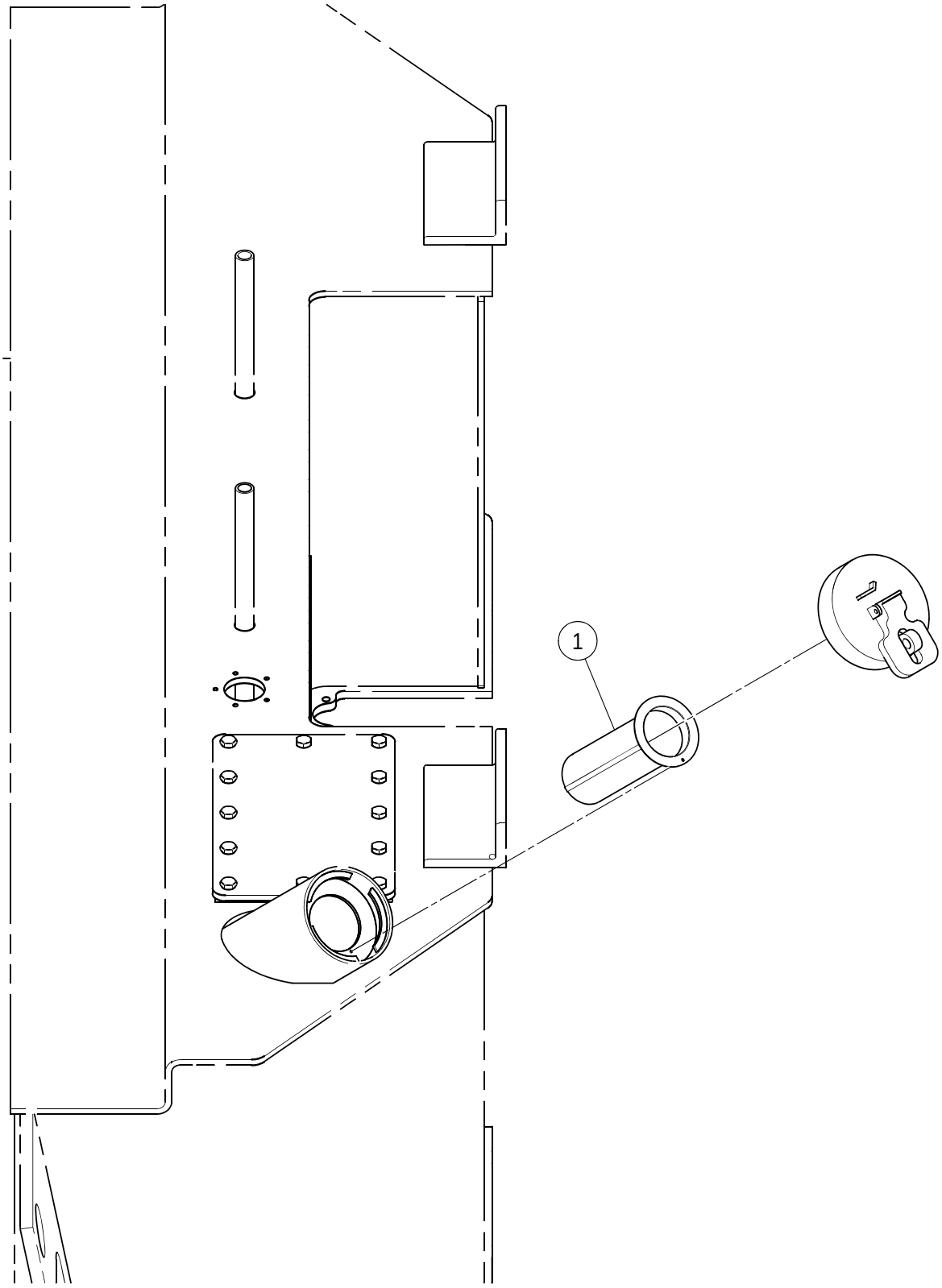

FUEL STRAINER INSTALLATION - OPTIONAL

****Only Offered Parts Listed****

BOM 13235015

ITEM	COMM. NO.	DESCRIPTION	QTY	DIMENSIONS/NOTES
1	13235007	Fuel Strainer	1	

59118539 REV 01

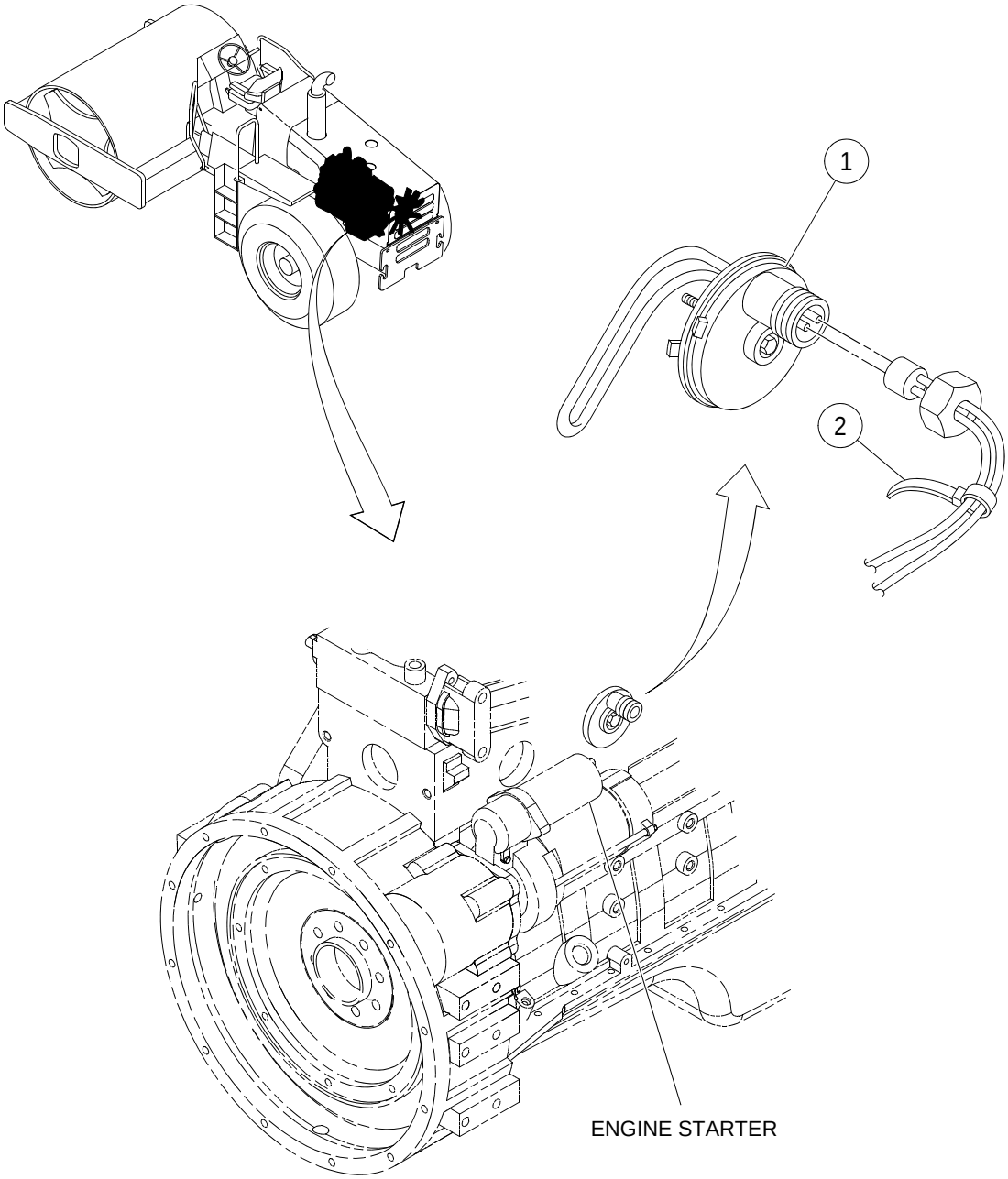

(ENGINE ROTATED 90 DEGREES C.C.W. FOR CLARITY)

BLOCK HEATER INSTALLATION - OPTIONAL

****Only Offered Parts Listed****

BOM 59118539

ITEM	COMM. NO.	DESCRIPTION	QTY	DIMENSIONS/NOTES
1	59118521	Block Heater	1	
-	59144394	- Cord	1	
2	95373973	Wire Tie	A/R	

GRID HEATER INSTALLATION

13885561 REV 00

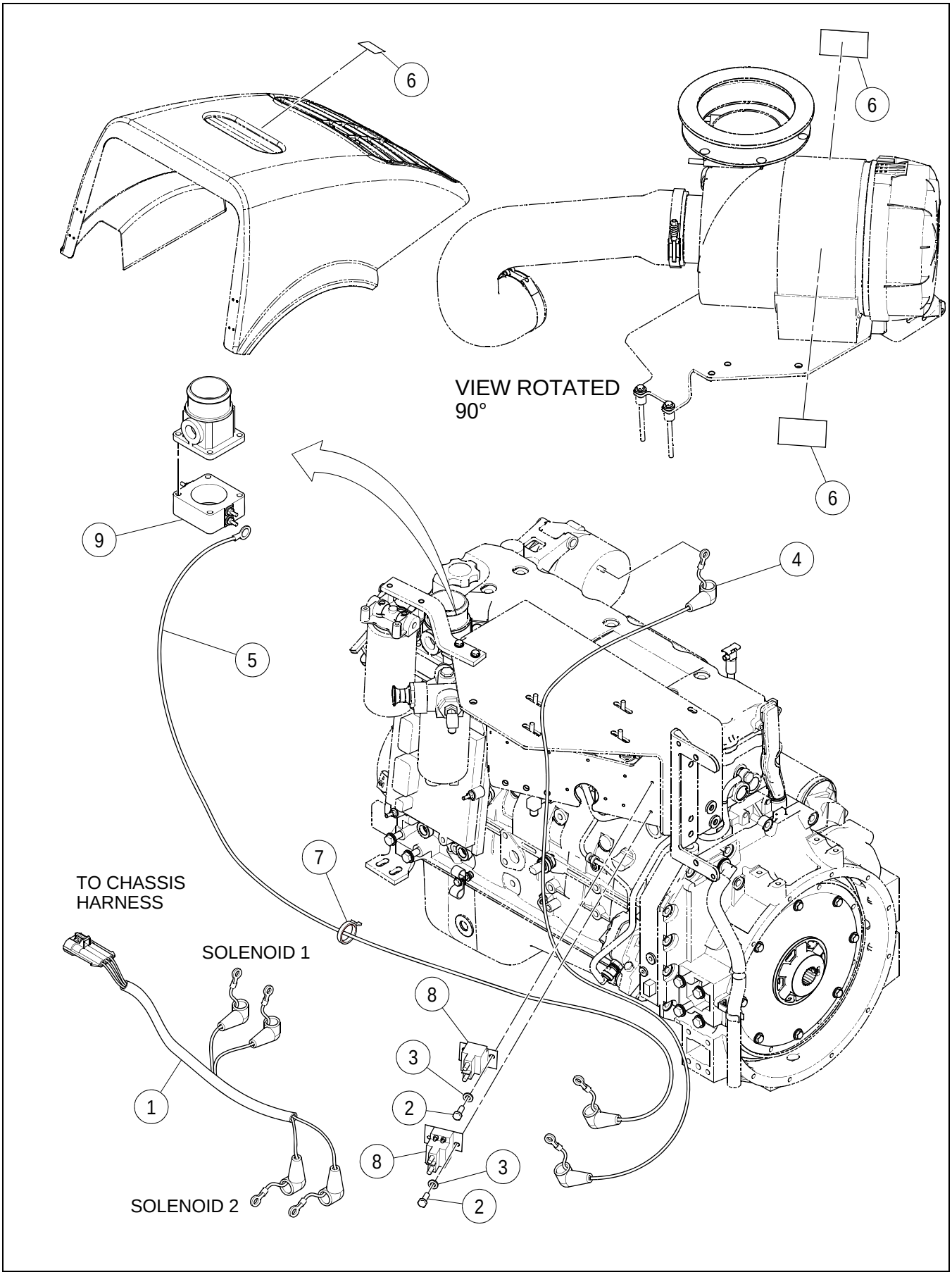

GRID HEATER INSTALLATION

****Only Offered Parts Listed****

BOM 13885579

ITEM	COMM. NO.	DESCRIPTION	QTY	DIMENSIONS/NOTES
1	19298983	Grid Heater Harness	1	
2	96705728	HHCS, Zinc Plated	4	M5 x 0.8 x 16 Cl 8.8
3	95922332	Flatwasher	4	
4	19299007	Power Lead, Engine Grid Heater	2	
5	19298991	Grid Heater Solenoid Cable	2	
6	59087452	Decal: Ether Use Warning	3	
7	95373973	Wire Tie	A/R	
8	13324181	Solenoid	2	
9	13882873	Grid Heater Option Kit	1	

Section D - OPERATORS COMPARTMENT

OPERATOR PLATFORM INSTALLATION - SHEET 1 OF 2

13169198 REV AC

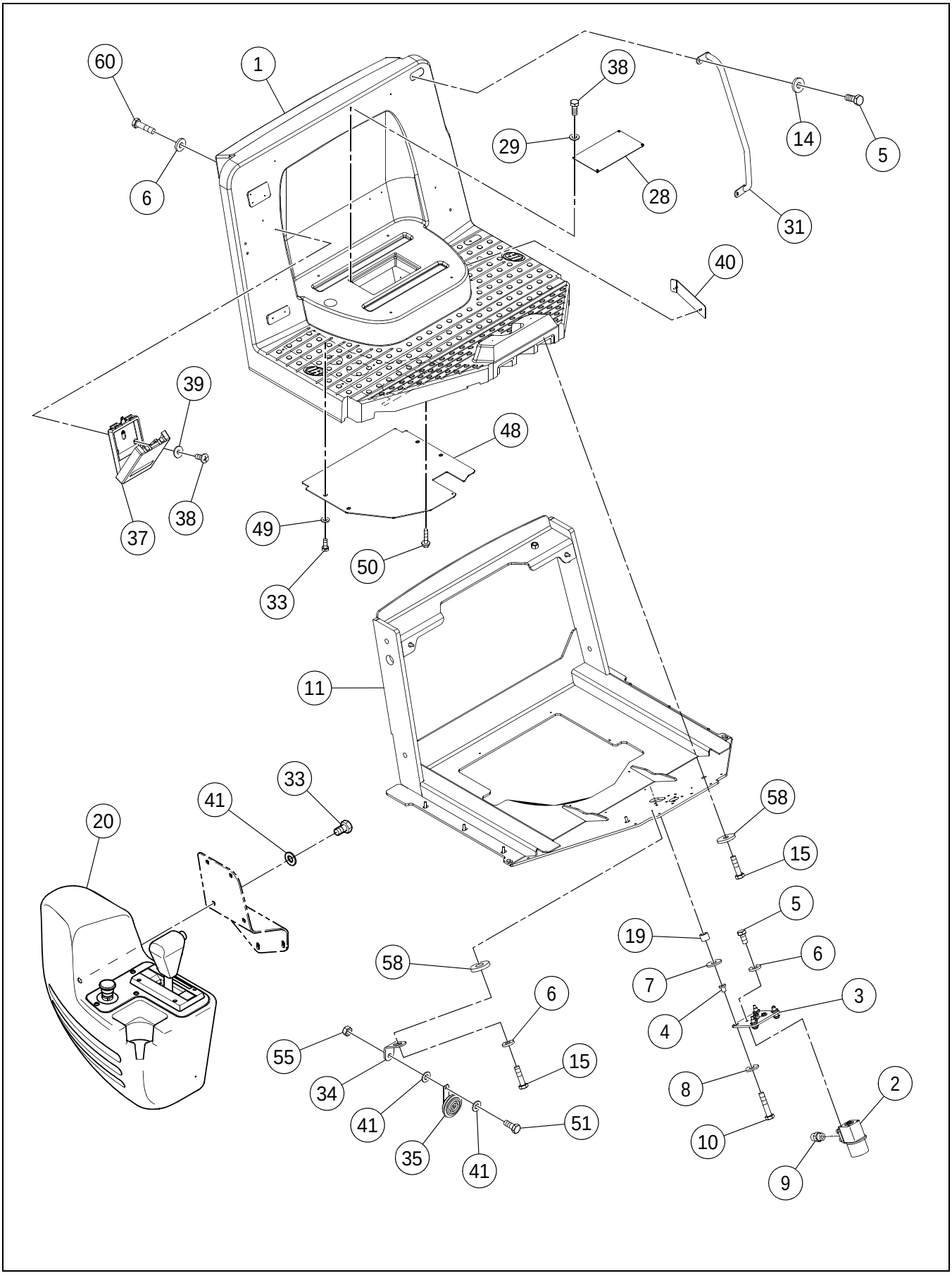

OPERATOR PLATFORM INSTALLATION - SHEET 1 OF 2

****Only Offered Parts Listed**** **BOM 13526603**

ITEM	COMM. NO.	DESCRIPTION	QTY	DIMENSIONS/NOTES
1	43891605	Operators Platform	1	
2	13277116	Steering Valve	1	
-	54747340	- Seal Kit	1	
3	13167721	Mounting Plate	1	
4	59424309	Shock Mount	4	
5	96702279	HHCS, Zinc Plated	7	M10 x 1.5 x 20 Cl 8.8
6	96741046	Flatwasher	5	
7	59437079	Head Washer	4	
8	59437087	Washer	4	
9	95303368	Adapter	4	
10	96705116	HHCS, Zinc Plated	4	M10 x 1.5 x 50 Cl 8.8
11	43919265	ROPS Support Platform - SD-160	1	
-	43919257	ROPS Support Platform - SD-190/SD-200	1	
14	96711833	Washer	10	M10
15	96704309	HHCS, Zinc Plated	6	M10 x 1.5 x 35 Cl 8.8,
19	13167812	Spacer	4	
20	**NSVA**	**Control Panel Assembly**	**1**	**See Page D - 6.**
28	43869262	Cover Plate	1	
29	96738554	Flatwasher	4	
31	13233309	Hand Rail	1	
33	96702824	HHCS, Zinc Plated	13	M8 x 1.25 x 20 Cl 8.8
34	13237490	Horn Bracket	1	
35	13469010	Horn	1	
37	59185074	Manual Box	1	
38	96728548	Self Tapping Screw	6	
39	96704663	Flatwasher	2	M6
40	**NSVA**	**Fuse Cover Assembly**	**1**	**See Page D - 10.**
41	96741038	Flatwasher	7	
48	43851203	Cover Plate	1	
49	96740204	Washer	8	M8 x 25
50	96728548	Self Tapping Screw	2	
51	96702659	HHCS, Zinc Plated	1	M8 x 1.25 x 25 Cl 8.8
55	96704804	Locknut	3	
58	50264860	Washer	8	
60	96705124	HHCS, Zinc Plated	2	M10 x 1.5 x 45 Cl 8.8

OPERATOR PLATFORM INSTALLATION - SHEET 2 OF 2

13169198 REV AC

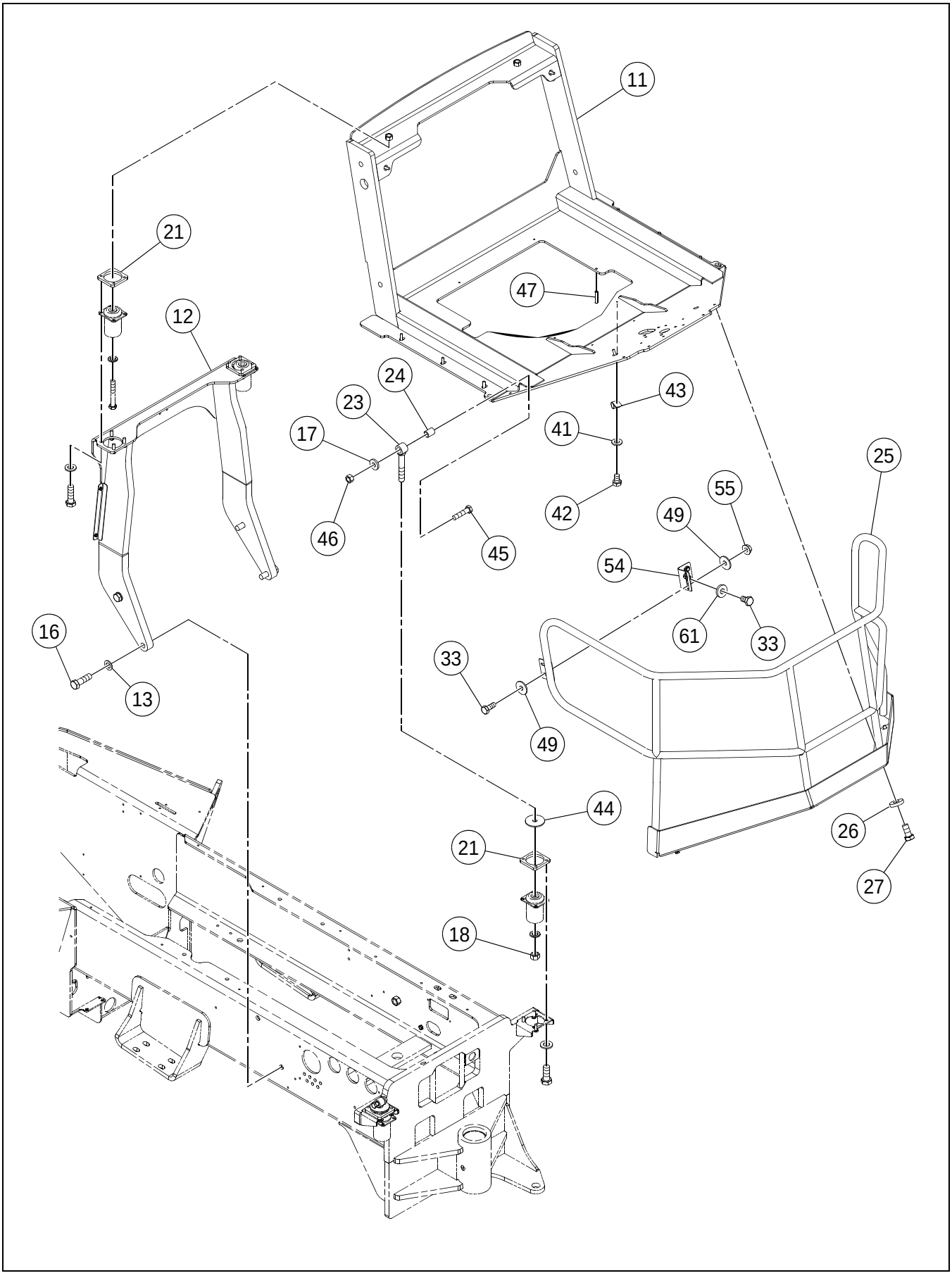

OPERATOR PLATFORM INSTALLATION - SHEET 2 OF 2

****Only Offered Parts Listed****

BOM 13526603

ITEM	COMM. NO.	DESCRIPTION	QTY	DIMENSIONS/NOTES
11	43919265	ROPS Support Platform	1	
12	13239157	ROPS Support	1	
13	96738646	Flatwasher	4	
16	96715123	HHCS, Zinc Plated	4	M24 x 3 x 80 Cl 10.9
17	59565044	Flatwasher, Hardened	2	
18	96703665	Hex Nut	2	M20 x 2.5
21	13412648	Spacer	4	
23	13214804	Eyebolt	2	
24	13217450	Sleeve	2	
25	13413158	Railing	1	
26	96712237	Flatwasher	6	
27	96702808	HHCS, Zinc Plated	8	M12 x 1.75 x 30 Cl 10.9
33	96702824	HHCS, Zinc Plated	13	M8 x 1.25 x 20 Cl 8.8
41	96741038	Flatwasher	7	
42	96705041	HHCS, Zinc Plated	2	M8 x 1.25 x 12 Cl 8.8
43	95301834	Clamp	2	
44	13225339	Washer	2	
45	96738208	HHCS, Zinc Plated	2	M16 x 2.0 x 70 Cl 10.9
46	96711882	Hex Nut	2	M16 x 2.0
47	96701594	Spring Pin	1	
49	96740204	Washer	8	M8 x 25
54	13231394	Support Bracket	1	
55	96704804	Locknut	3	
61	96740188	Washer	2	M8 x 3

CONTROL PANEL ASSEMBLY

13169743 REV 0F

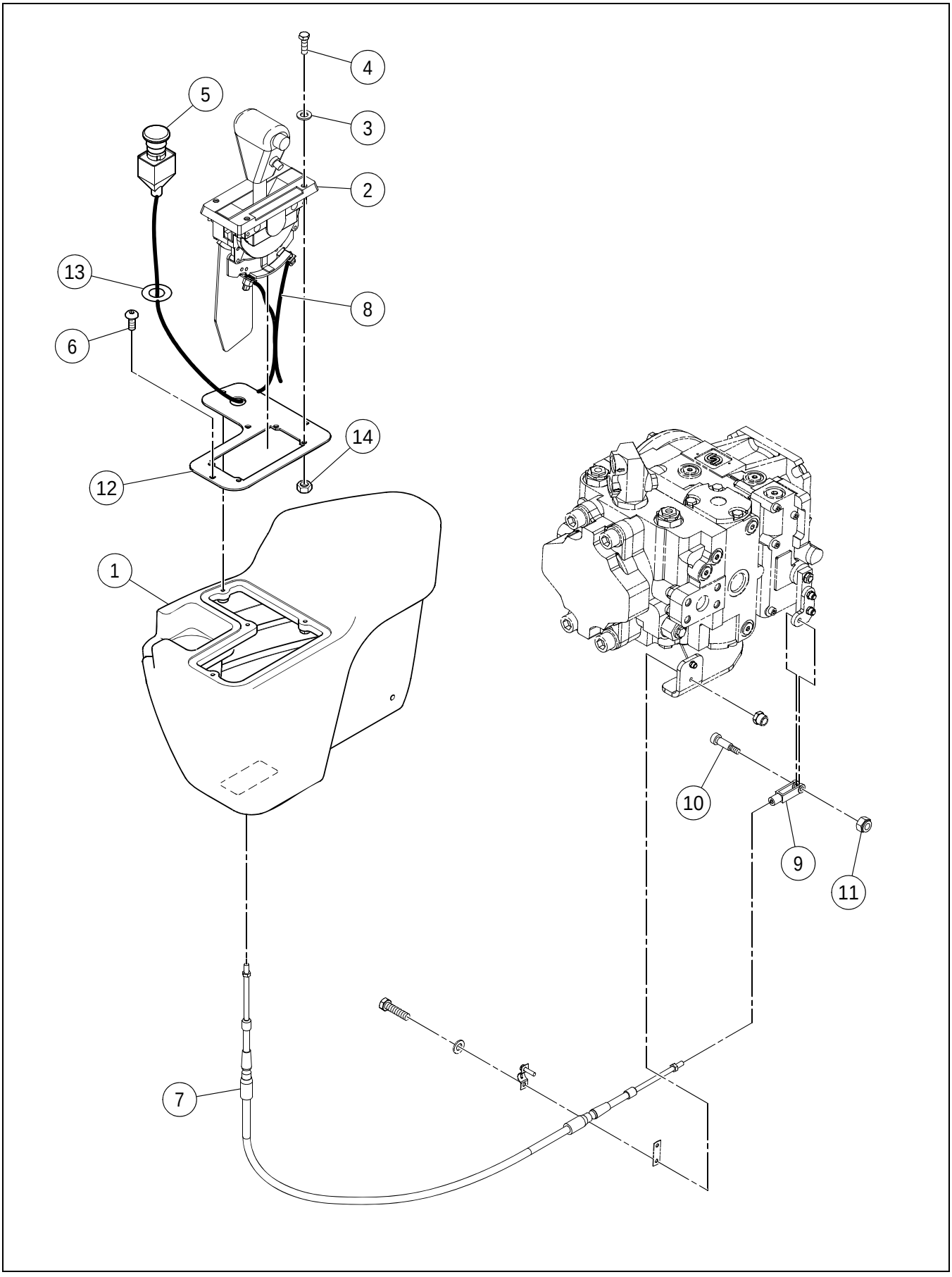

CONTROL PANEL ASSEMBLY

****Only Offered Parts Listed****

BOM 13166053

ITEM	COMM. NO.	DESCRIPTION	QTY	DIMENSIONS/NOTES
1	13880794	FSR Control Box	1	
2	43843556	F-Stop-R Control	1	
3	96738554	Flatwasher	4	
4	96702386	HHCS, Zinc Plated	4	M5 x 0.8 x 12 Cl 8.8
5	**NSVA**	**Emergency Stop Assembly**	**1**	**See Page D - 8.**
6	59148569	BHCS	4	
7	13320841	F-Stop-R Cable	1	
8	13304944	Side Console Harness	1	
9	59929059	Clevis	1	
10	95860052	Screw	1	
11	95943346	Nut	1	
12	13884408	Panel Side Console	1	
13	59239897	Decal: Stop	1	
14	96704580	Locknut	4	M5

EMERGENCY STOP ASSEMBLY

13169735 REV 0A

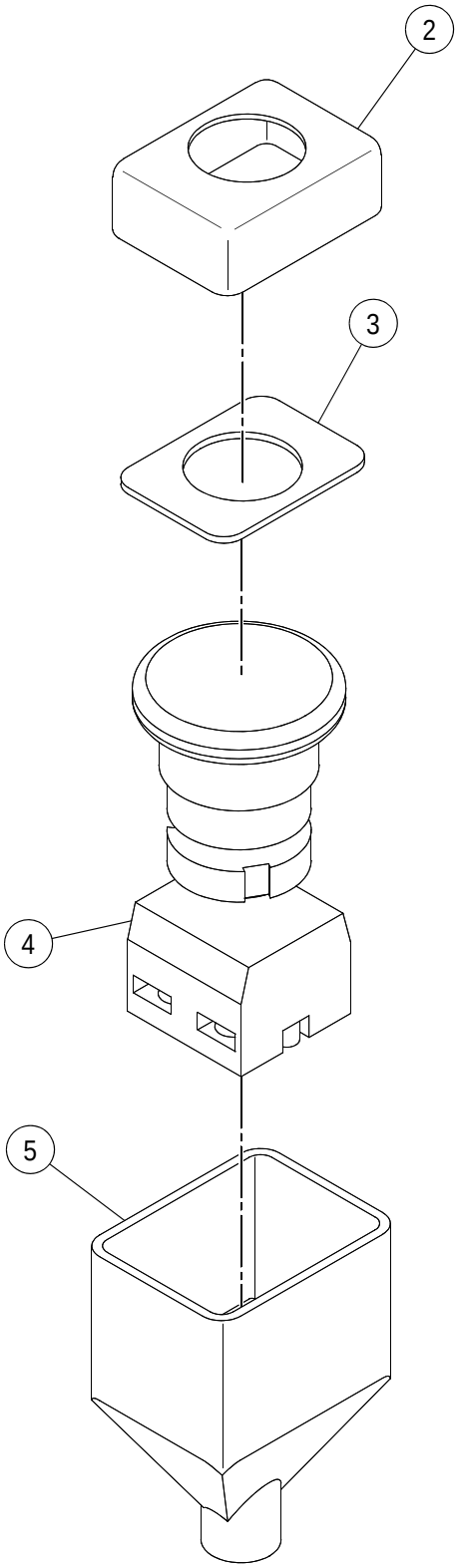

EMERGENCY STOP ASSEMBLY

****Only Offered Parts Listed****

BOM 13166087

ITEM	COMM. NO.	DESCRIPTION	QTY	DIMENSIONS/NOTES
2	59108100	Dust Boot	1	
3	59109116	Flatwasher	1	
4	59111450	Emergency Stop Switch	1	
-	58917543	- Emergency Stop Switch Bulb	1	
5	59108605	Dust Boot	1	

FUSE COVER ASSEMBLY

13215207 REV 00

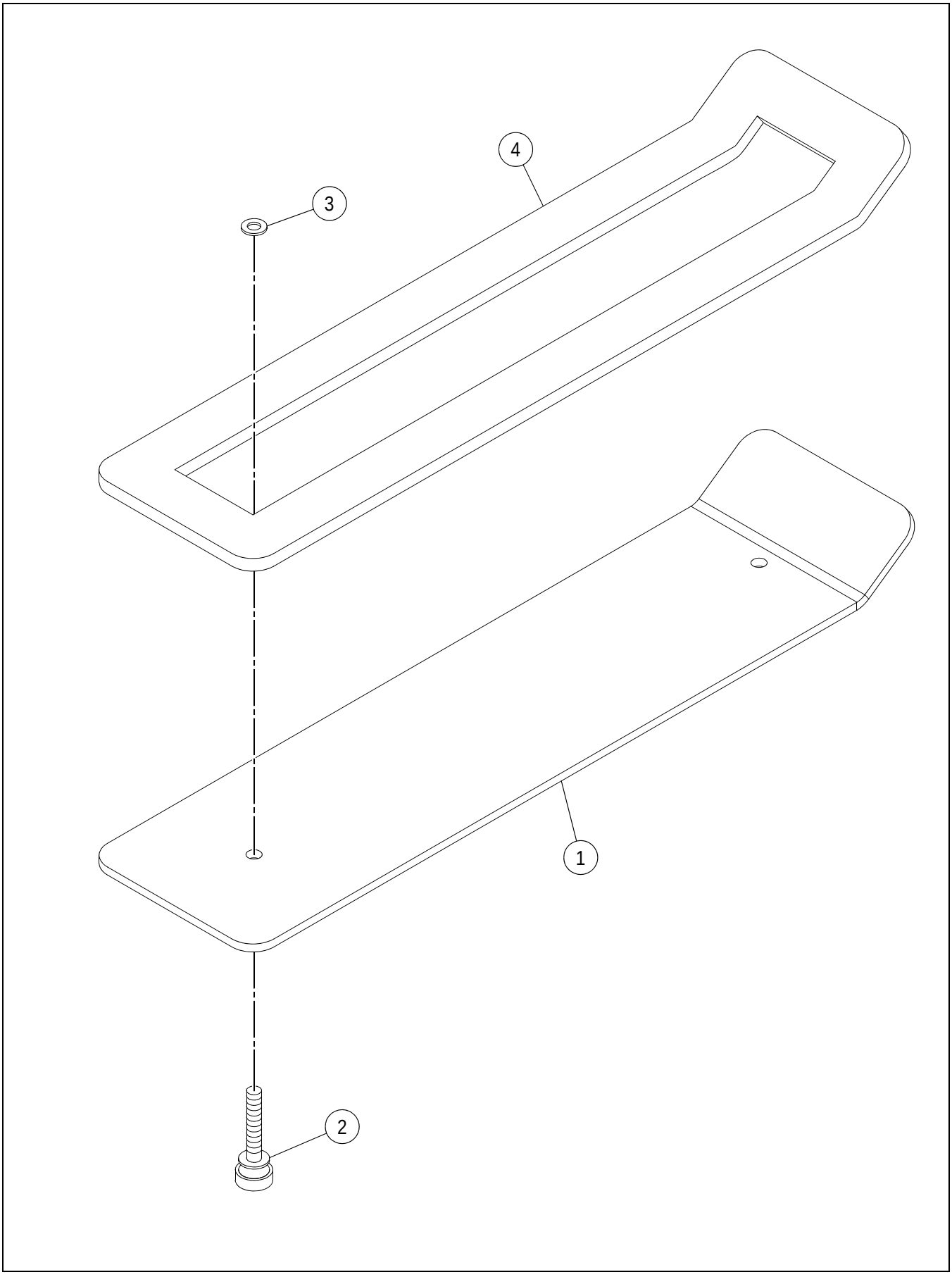

FUSE COVER ASSEMBLY

****Only Offered Parts Listed****

BOM 13214325

ITEM	COMM. NO.	DESCRIPTION	QTY	DIMENSIONS/NOTES
1	13214259	Fuse Cover	1	
2	13214317	Knurled Head Screw	2	
3	13214333	Split Washer	2	
4	13256193	Weather Strip	2	

PEDESTAL AND SEAT INSTALLATION

18000620 REV 0B

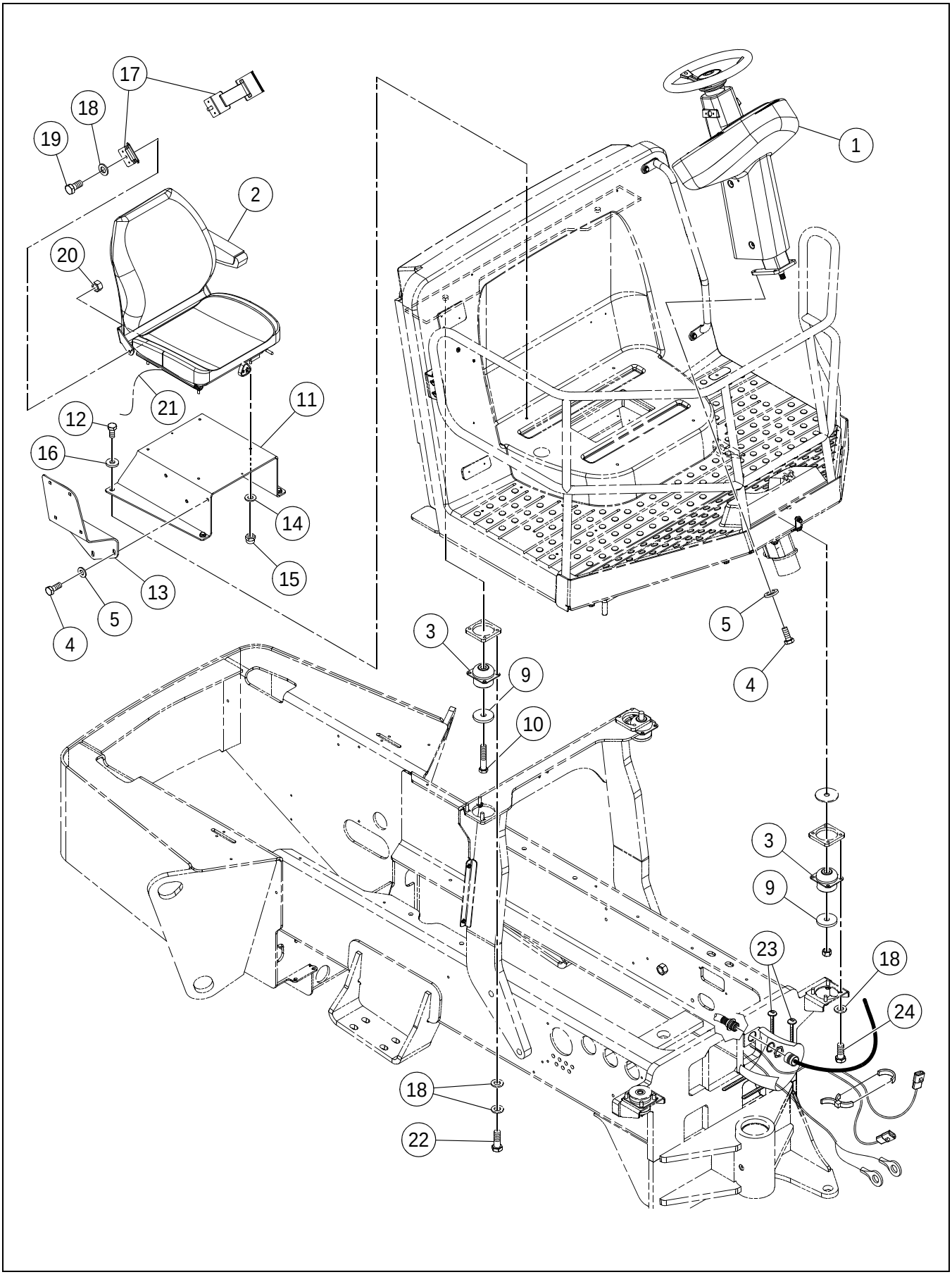

PEDESTAL AND SEAT INSTALLATION

****Only Offered Parts Listed****

BOM 43888841

ITEM	COMM. NO.	DESCRIPTION	QTY	DIMENSIONS/NOTES
1	**NSVA**	**Pedestal Assembly**	**1**	**See Page D - 14.**
2	**43843572**	**Seat**	**1**	**See Breakdown D - 18.**
3	13225503	Isolator	4	
4	96702287	HHCS, Zinc Plated	7	M10 x 1.5 x 25 Cl 8.8
5	96741046	Flatwasher	7	
9	96701560	Washer	4	
10	96741442	HHCS, Zinc Plated	2	M20 x 2.5 x 140 Cl 8.8
11	13236039	Seat Base	1	
12	96702287	HHCS, Zinc Plated	4	M10 x 1.5 x 25 Cl 8.8
13	13886981	Side Console Support	1	
14	96741038	Flatwasher	4	
15	96704606	Locknut	4	M8
16	96711833	Washer	4	M10
17	NOT-USED	This Item Not Used W/this Bom	1	
18	96738596	Flatwasher	24	
19	NOT-USED	This Item Not Used W/this Bom	1	
20	NOT-USED	This Item Not Used W/this Bom	1	
21	13165071	Seat Switch Harness	1	
22	96703111	HHCS, Zinc Plated	8	M12 x 1.75 x 35 Cl 10.9
23	95373973	Wire Tie	A/R	
24	96702808	HHCS, Zinc Plated	8	M12 x 1.75 x 30 Cl 10.9

PEDESTAL ASSEMBLY

43818871 REV 00

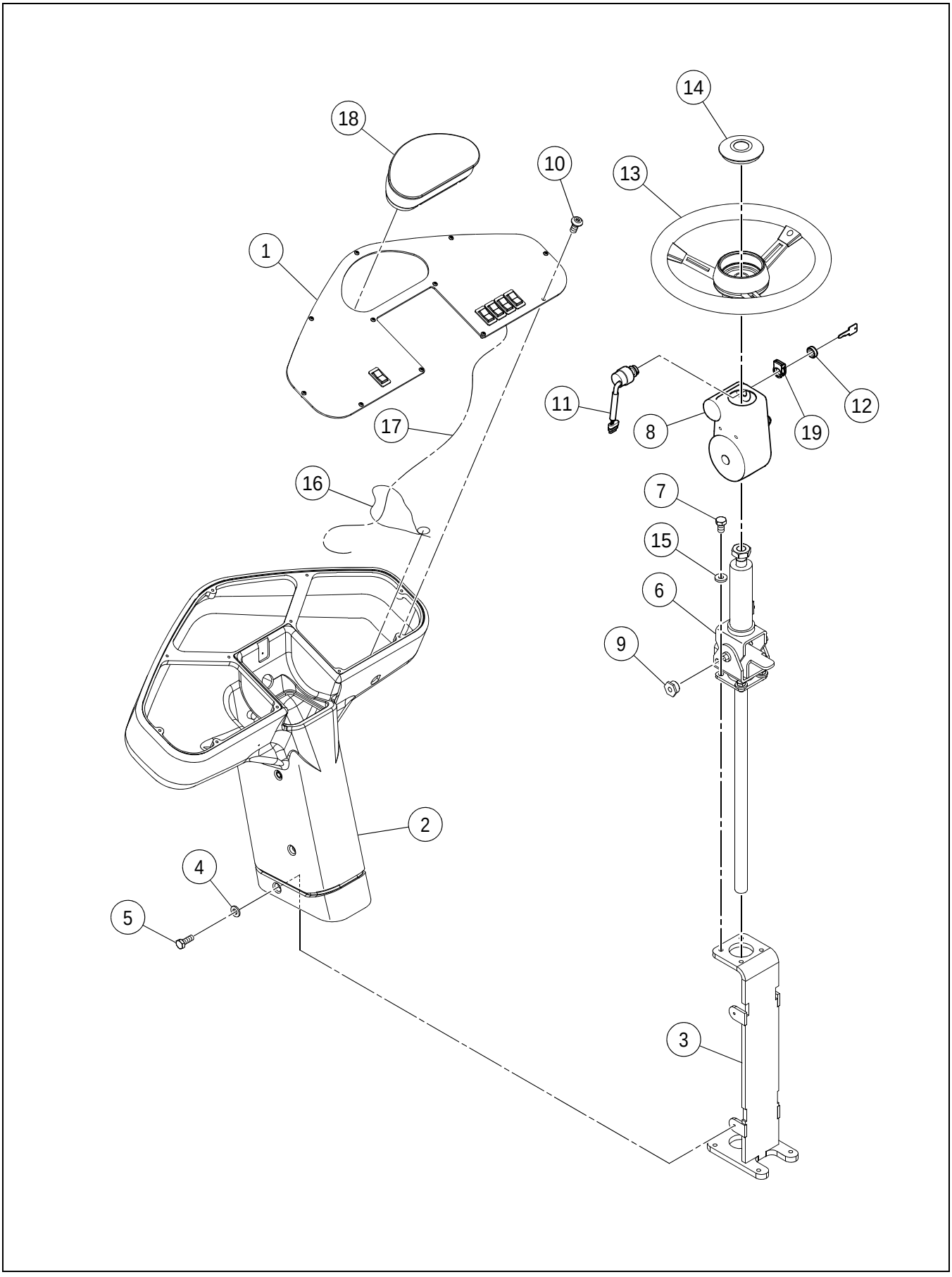

PEDESTAL ASSEMBLY

****Only Offered Parts Listed****

BOM 43888601, 43818855

ITEM	COMM. NO.	DESCRIPTION	QTY	DIMENSIONS/NOTES
1	**NSVA**	**Gauge Panel Assembly**	**1**	**See Page D - 16.**
2	43818855	Pedestal Cover - Effective with S/N 194911	1	
-	13276548	Pedestal Cover - Prior to S/N 194911	1	
3	13880612	Pedestal	1	
4	96741053	Flatwasher	4	
5	96701958	HHCS, Zinc Plated	4	M6 x 1 x 16 Cl 8.8
6	13236864	Straight Steering Column	1	
7	96701479	HHCS, Zinc Plated	4	M10 x 1.5 x 16 Cl 8.8
8	13411889	Column Cover - Effective with S/N 194911	1	
-	13270731	Column Cover -Straight- Prior to S/N 1194911	1	
9	13236872	Nut	2	
10	59148569	BHCS	11	
11	13459474	Ignition Switch - Effective with S/N 194911	1	
-	54461090	Ignition Switch - Prior to S/N 194911	1	
12	59126961	Ignition Switch Nut - Effective with S/N 194911	1	
-	58924333	Ignition Switch Nut - Prior to S/N 194911	1	
13	13158647	Steering Wheel	1	
14	59159558	Horn Button	1	
15	96711833	Washer	4	M10
16	58820168	Wire Tie	A/R	
17	43867555	Pedestal Harness - Effective with S/N 196502	1	
-	43818863	Pedestal Harness - Eff S/N 194912 Thru 196501	1	
-	43809912	Pedestal Harness - Prior to S/N 194911	1	
18	43871102	Instrument Cluster	1	
19	58892902	Igition Switch Cover	1	

GAUGE PANEL ASSEMBLY

13324827 REV 00

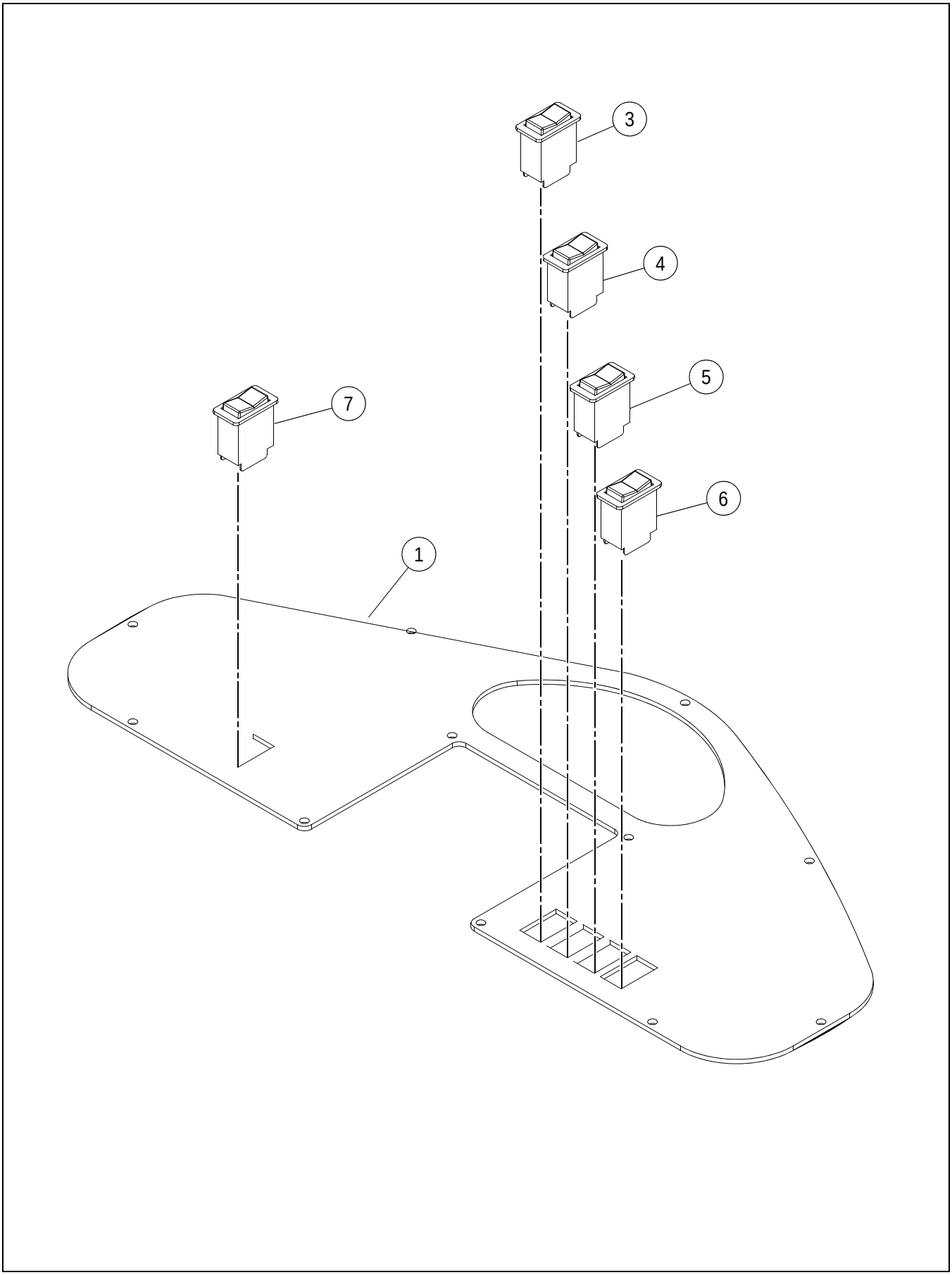

GAUGE PANEL ASSEMBLY

****Only Offered Parts Listed****

BOM 13276621

ITEM	COMM. NO.	DESCRIPTION	QTY	DIMENSIONS/NOTES
1	13355912	Instrument Panel	1	
3	54666102	Park Brake Test Switch	1	
4	54666094	Park Brake Switch	1	
5	54666086	Hi/low Travel Switch	1	
6	54666078	Hi/low RPM Switch	1	
7	54666060	Hi/low Amplitude Switch	1	

SEAT (43843572) - INTERNAL BREAKDOWN

13244504 REV 0B

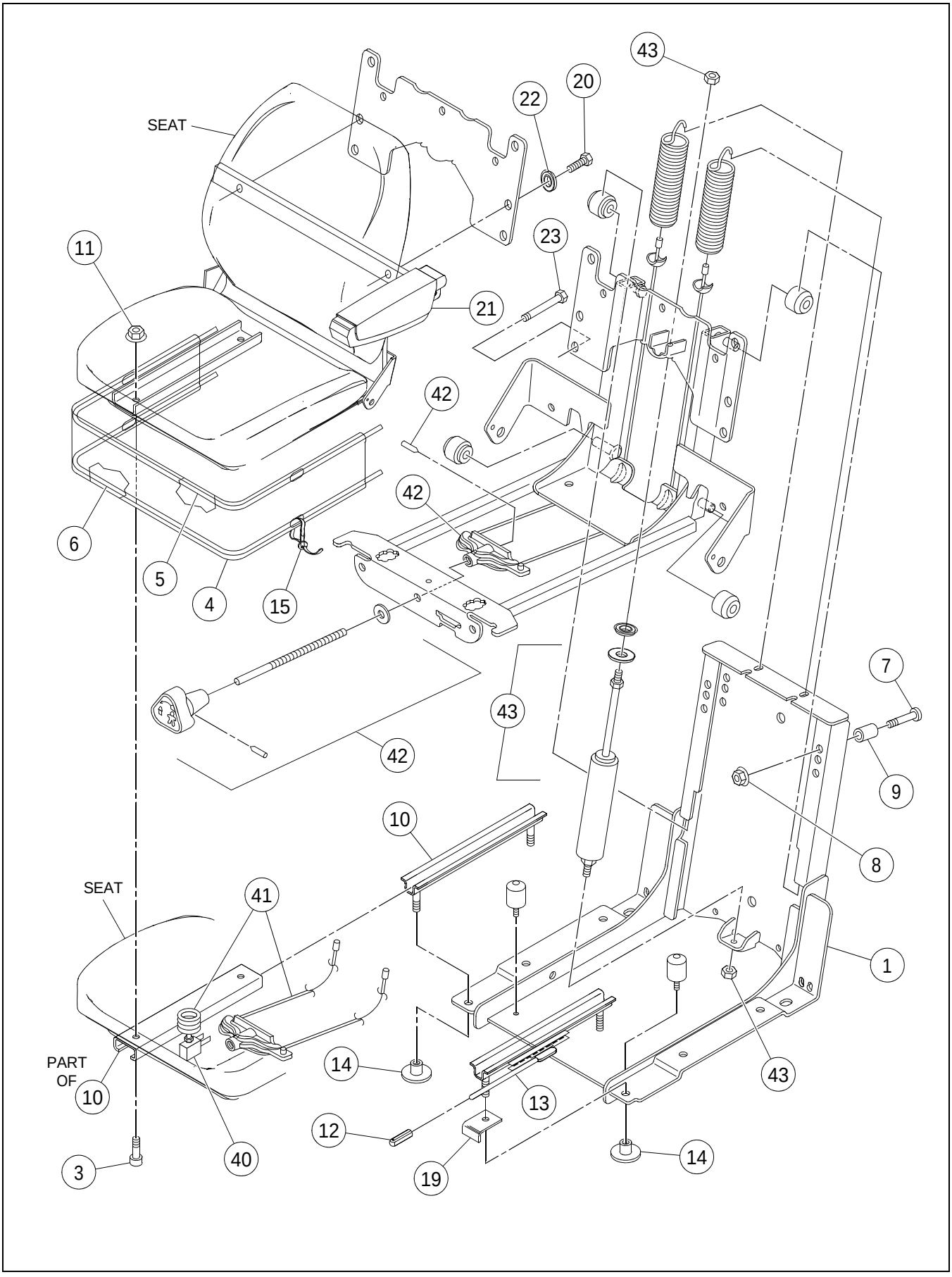

SEAT (43843572) - INTERNAL BREAKDOWN

****Only Offered Parts Listed****

BOM 43843572

ITEM	COMM. NO.	DESCRIPTION	QTY	DIMENSIONS/NOTES
1	59154450	Suspension	1	
3	13228820	Capscrew	4	
4	13228838	Sewn Boot	1	
5	59154492	Wire Form	1	
6	59154500	Wire Form	2	
7	59154518	Clevis Pin	2	
8	59154526	Nut	2	
9	13228846	Spacer	2	
10	13247473	Adjuster	1	
11	59154542	Flange Locknut	3	
12	13228853	Tip	1	
13	13247481	Adjuster	1	
14	13228861	Stud Protector	4	
15	59145821	Wire Tie	A/R	
19	59154393	Bracket	1	
20	13247549	Screw	2	
21	54531629	Arm w/Tube	1	
22	13247556	Washer	2	
23	43827625	Tapping Screw	4	
40	13167945	Dual Switch Seat Kit	1	
-	13281332	- Seat Pan And Cushion	1	
-	13198270	- Dual Switch Seat Kit	1	
-	13281365	- Compression Switch	1	
-	13281373	- Screw	1	
41	13258934	Spring Cable Kit	1	
42	54496385	Knob Kit	1	
43	54496377	Damper Kit	1	

SUSPENSION SEAT INSTALLATION - OPTIONAL

13169925 REV 0J

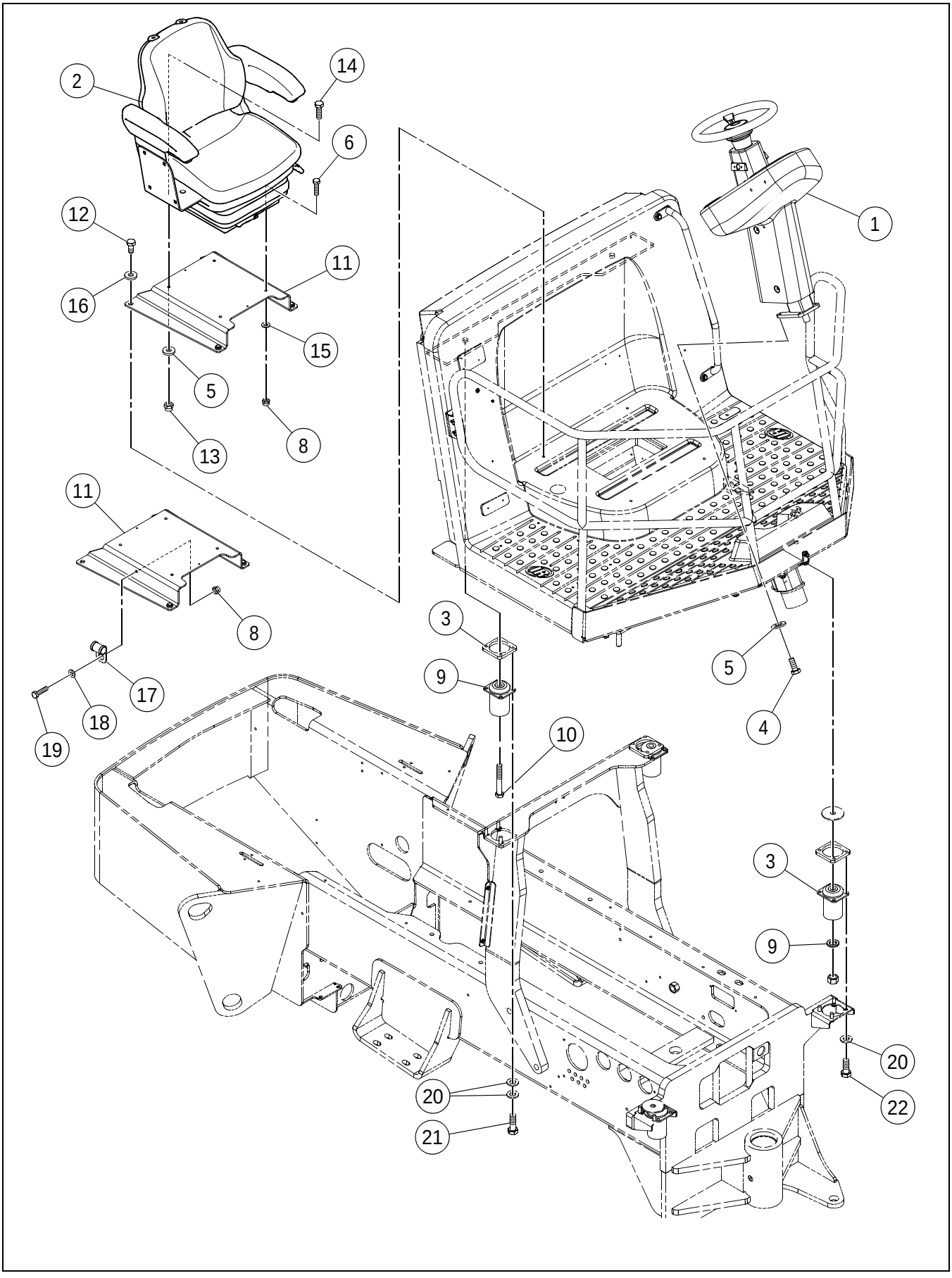

SUSPENSION SEAT INSTALLATION - OPTIONAL

****Only Offered Parts Listed****

BOM 59287268

ITEM	COMM. NO.	DESCRIPTION	QTY	DIMENSIONS/NOTES
1		This Item Not Used With This Assembly		
2	**13884747**	**Seat**	**1**	**See Breakdown D - 22.**
3		This Item Not Used With This Assembly		
4		This Item Not Used With This Assembly		
5		This Item Not Used With This Assembly		
6	96705587	HHCS, Zinc Plated	2	M8 X 1.25 X 30 Cl 8.8
8		This Item Not Used With This Assembly		
9		This Item Not Used With This Assembly		
10		This Item Not Used With This Assembly		
11	13235981	Seat Base	1	
12		This Item Not Used With This Assembly		
13	96704614	Nut	2	M10X1.5
14	96701917	HHCS, Zinc Plated	2	M10 x 1.5 x 30 Cl 8.8
15		This Item Not Used With This Assembly		
16		This Item Not Used With This Assembly		
17		This Item Not Used With This Assembly		
18		This Item Not Used With This Assembly		
19		This Item Not Used With This Assembly		
20		This Item Not Used With This Assembly		
21		This Item Not Used With This Assembly		
22		This Item Not Used With This Assembly		

Dwg 13884747/00

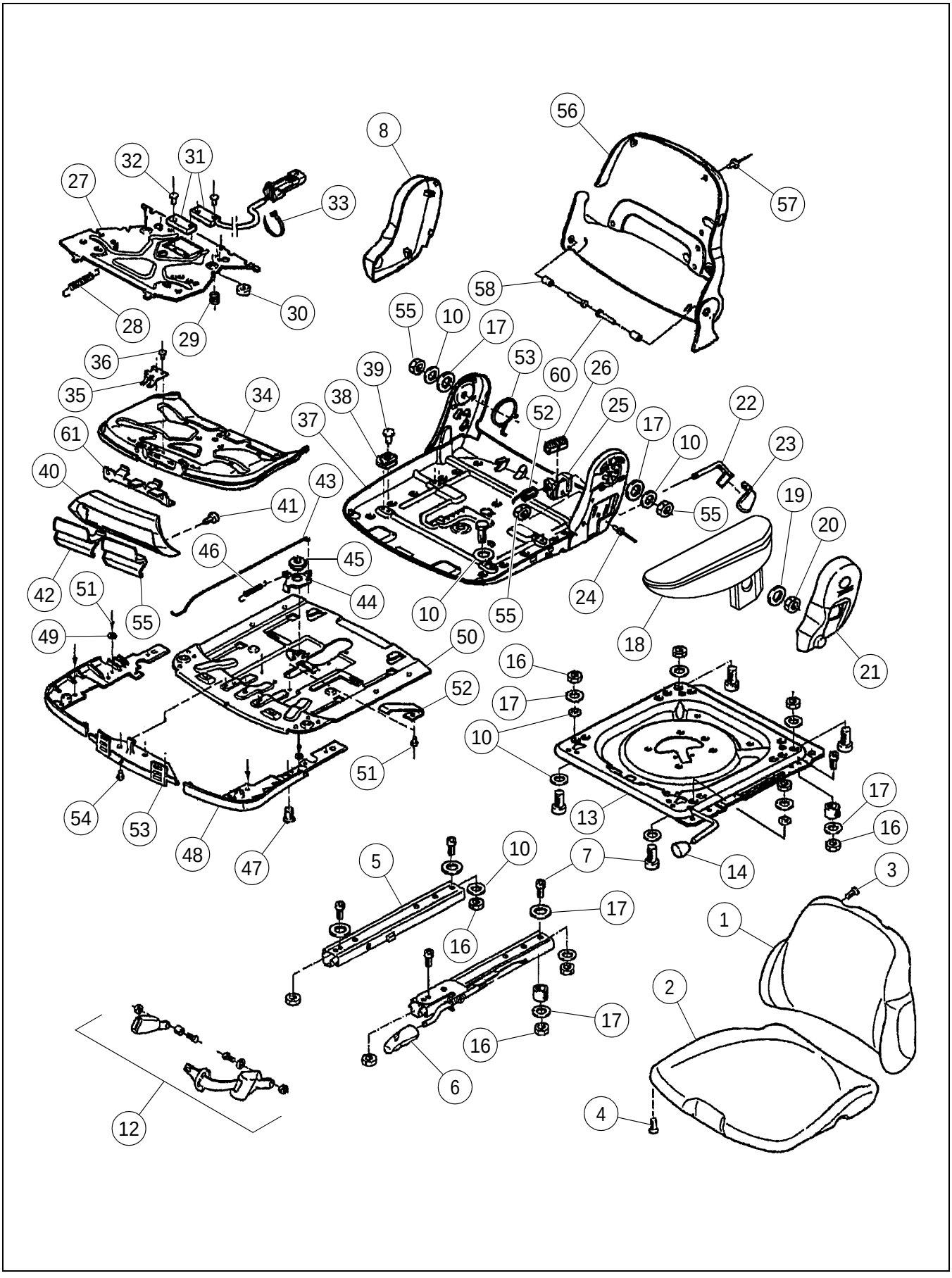

SEAT (13884747) - INTERNAL BREAKDOWN - SHEET 1 OF 3

****Only Offered Parts Listed****

BOM 13884747

ITEM	COMM. NO.	DESCRIPTION	QTY	DIMENSIONS/NOTES
1	13886999	Side Console Mount Plate	1	
2	13264239	Seat	1	
3	NSS	Not Sold Separately	4	
4	NSS	Not Sold Separately	4	
5	13262803	Adjustment Rail	1	
6	NSS	Not Sold Separately	1	
7	13262811	Screw	6	
8	13262829	Cover	1	
10	58845868	Washer	8	
12	13262837	Seat Belt	1	
13	13262845	Swivel	1	
14	NSS	Not Sold Separately	1	
16	58845835	Nut	9	
17	13262852	Washer	14	
18	13262860	Arm Rest	1	
19	NSS	Not Sold Separately	1	
20	NSS	Not Sold Separately	1	
21	13262878	Cover	1	
22	13262886	Lever	1	
23	NSS	Not Sold Separately	1	
24	NSS	Not Sold Separately	1	
25	13262894	Bearing Kit	1	
26	NSS	Not Sold Separately	1	
27	13262902	Switch	1	
28	NSS	Not Sold Separately	1	
29	NSS	Not Sold Separately	1	
30	NSS	Not Sold Separately	2	
31	13262910	Switch	1	
32	NSS	Not Sold Separately	1	
33	NSS	Not Sold Separately	1	
34	13262928	Seat Angle Adjustment Cover	1	
35	NSS	Not Sold Separately	1	
36	NSS	Not Sold Separately	1	
37	13262936	Seat Panel	1	
38	NSS	Not Sold Separately	1	
39	NSS	Not Sold Separately	5	
40	13262944	Seat Cover	1	
41	NSS	Not Sold Separately	2	
42	NSS	Not Sold Separately	1	
43	13262951	Rod	1	
44	13262969	Lever	1	
45	NSS	Not Sold Separately	1	

Dwg 13884747/00

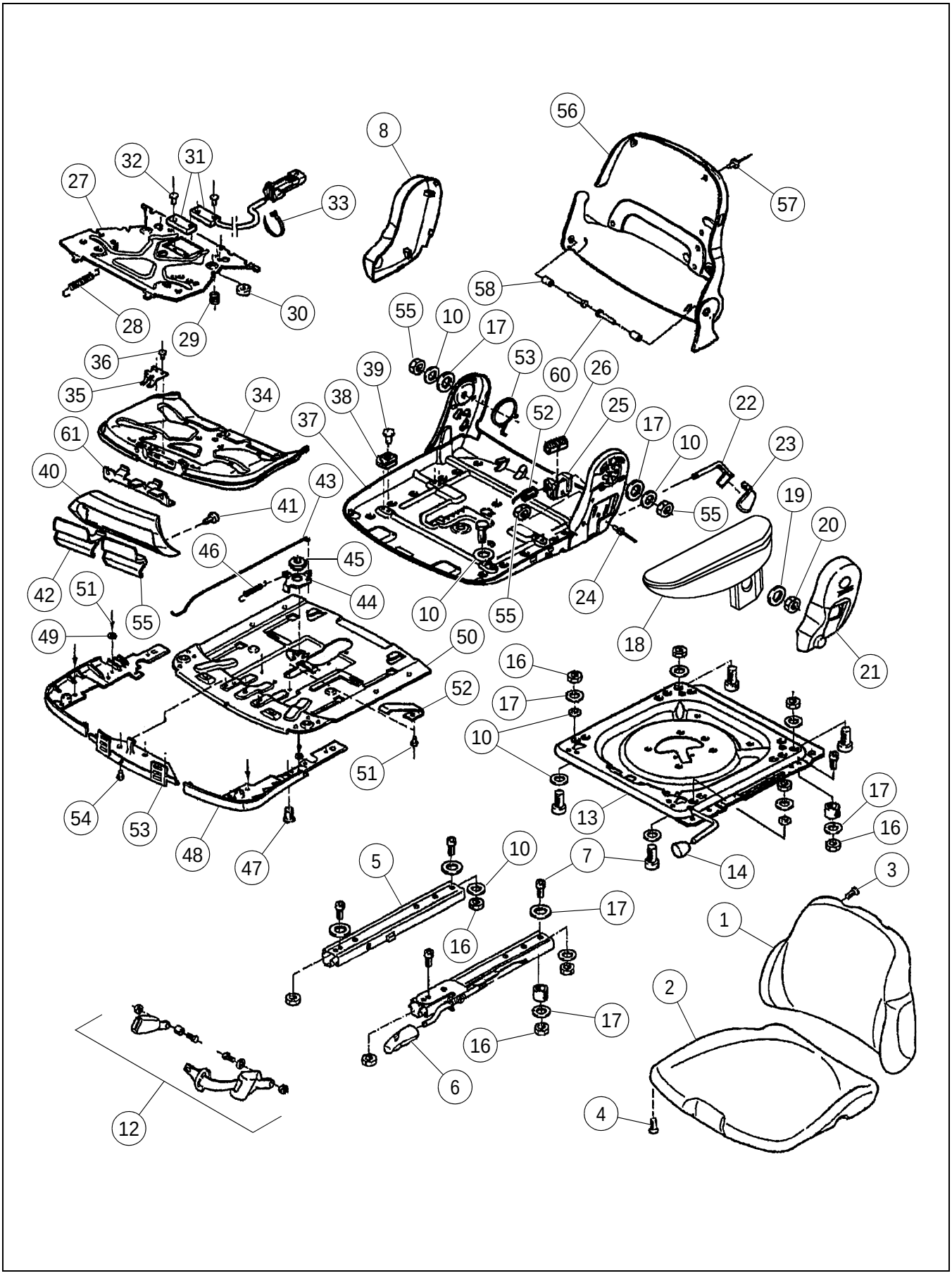

SEAT (13884747) - INTERNAL BREAKDOWN - SHEET 2 OF 3

****Only Offered Parts Listed****

BOM 13884747

ITEM	COMM. NO.	DESCRIPTION	QTY	DIMENSIONS/NOTES
46	NSS	Not Sold Separately	2	
47	NSS	Not Sold Separately	1	
48	13262977	Cover	1	
49	NSS	Not Sold Separately	2	
50	NSS	Not Sold Separately	1	
51	NSS	Not Sold Separately	2	
52	NSS	Not Sold Separately	1	
53	13262985	Leg Spring	1	
54	NSS	Not Sold Separately	1	
55	13262993	Nut	2	
56	13263009	Backrest	1	
57	NSS	Not Sold Separately	4	
58	NSS	Not Sold Separately	1	
60	NSS	Not Sold Separately	2	
61	13263017	Latch	1	

Dwg 13884747/00

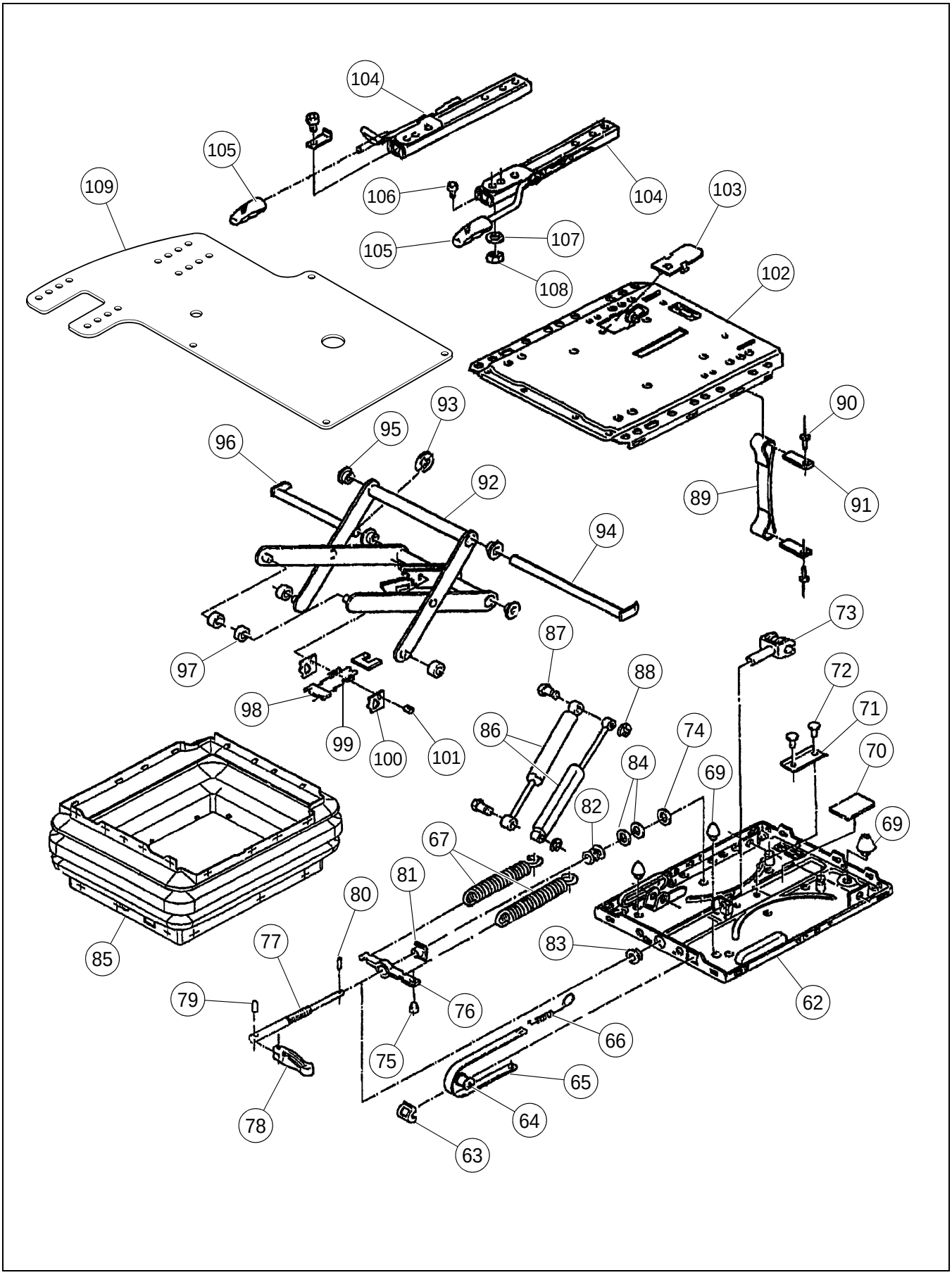

SEAT (13884747) - INTERNAL BREAKDOWN - SHEET 3 OF 3

****Only Offered Parts Listed****

BOM 13884747

ITEM	COMM. NO.	DESCRIPTION	QTY	DIMENSIONS/NOTES
62	13263025	Lower Suspension	1	
63	NSS	Not Sold Separately	1	
64	NSS	Not Sold Separately	1	
65	NSS	Not Sold Separately	1	
66	NSS	Not Sold Separately	1	
69	NSS	Not Sold Separately	1	
70	NSS	Not Sold Separately	1	
71	NSS	Not Sold Separately	1	
72	NSS	Not Sold Separately	2	
73	NSS	Not Sold Separately	1	
74	NSS	Not Sold Separately	1	
75	NSS	Not Sold Separately	1	
76	NSS	Not Sold Separately	1	
77	13263033	Adjustment Spindle	1	
78	NSS	Not Sold Separately	1	
79	NSS	Not Sold Separately	5	
80	NSS	Not Sold Separately	1	
81	NSS	Not Sold Separately	1	
82	NSS	Not Sold Separately	1	
83	NSS	Not Sold Separately	1	
84	NSS	Not Sold Separately	1	
85	13263041	Bellows	1	
86	NSS	Not Sold Separately	2	
87	NSS	Not Sold Separately	1	
88	NSS	Not Sold Separately	1	
89	13263058	Webbing	1	
90	NSS	Not Sold Separately	2	
91	NSS	Not Sold Separately	2	
92	13263066	Swing Arm	1	
93	NSS	Not Sold Separately	1	
94	NSS	Not Sold Separately	1	
95	NSS	Not Sold Separately	1	
96	NSS	Not Sold Separately	1	
97	NSS	Not Sold Separately	4	
98	NSS	Not Sold Separately	1	
99	NSS	Not Sold Separately	2	
100	NSS	Not Sold Separately	2	
101	NSS	Not Sold Separately	2	
102	13263074	Suspension Upper Par	1	
103	13263082	Cover	1	
104	13262803	Adjustment Rail	1	
105	13263090	Adjustment	1	
106	58845876	Screw	4	
107	13262852	Washer	4	
108	58845835	Nut	4	
109	13884465	Side Console Mount Plate	1	

TILT STEERING WHEEL - OPTIONAL

43818871 REV 00

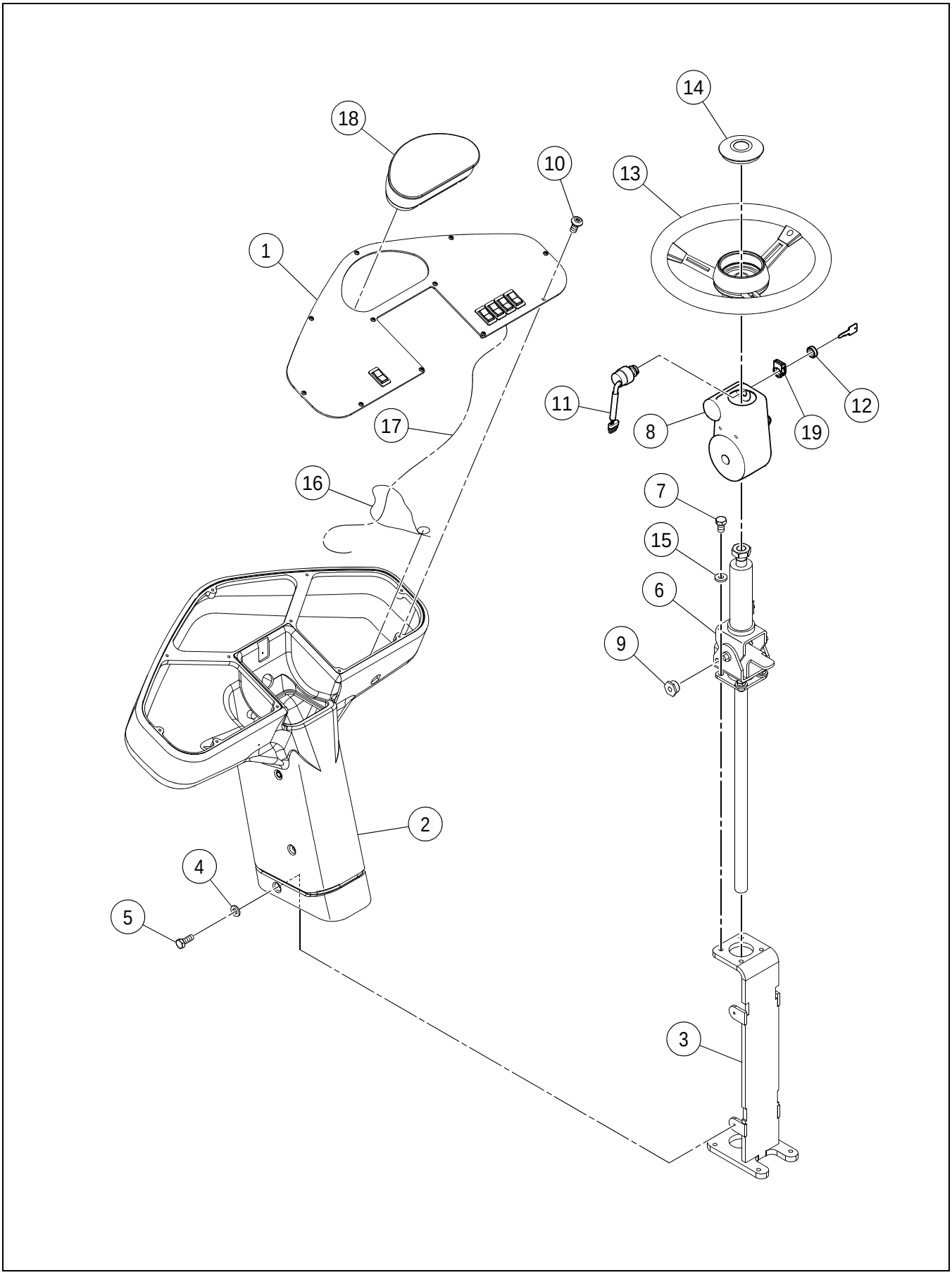

TILT STEERING WHEEL - OPTIONAL

****Only Offered Parts Listed****

BOM 43819614

ITEM	COMM. NO.	DESCRIPTION	QTY	DIMENSIONS/NOTES
1		This Item Not Used With This Assembly		
2		This Item Not Used With This Assembly		
3		This Item Not Used With This Assembly		
4		This Item Not Used With This Assembly		
5	13319942	Tilt Steering Column	1	
6		This Item Not Used With This Assembly		
7		This Item Not Used With This Assembly		
8	43818830	Tilt Column Cover - Effective S/N 194505	1	
-	13235478	Tilt Column Cover - Prior to S/N 194505	1	
9		This Item Not Used With This Assembly		
10		This Item Not Used With This Assembly		
11		This Item Not Used With This Assembly		
12		This Item Not Used With This Assembly		
13		This Item Not Used With This Assembly		
14		This Item Not Used With This Assembly		
15		This Item Not Used With This Assembly		
16		This Item Not Used With This Assembly		
17		This Item Not Used With This Assembly		
18		This Item Not Used With This Assembly		
19		This Item Not Used With This Assembly		

VANDAL COVER INSTALLATION

13413141 REV 00

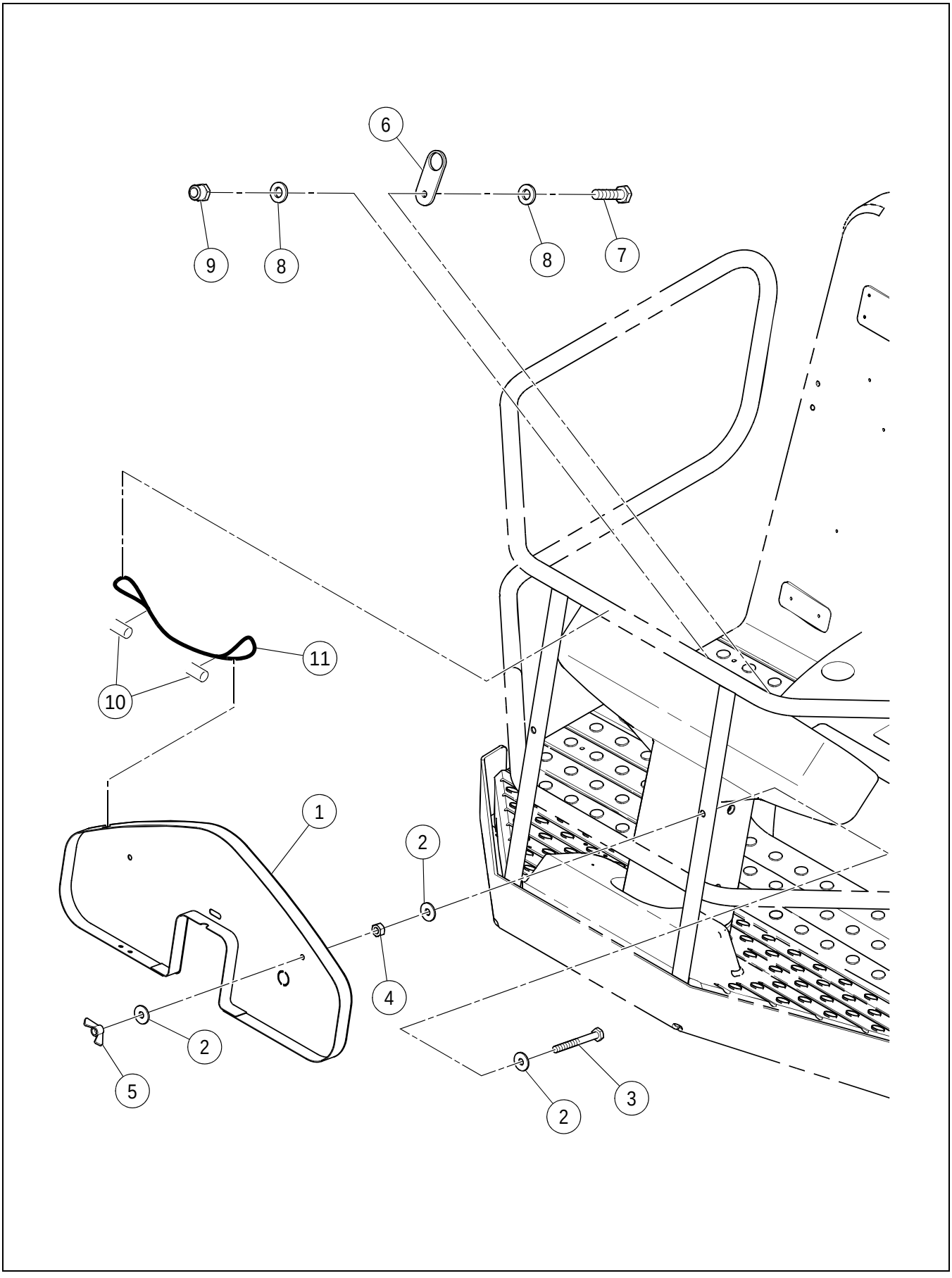

VANDAL COVER INSTALLATION

****Only Offered Parts Listed****

BOM 13413141

ITEM	COMM. NO.	DESCRIPTION	QTY	DIMENSIONS/NOTES
1	13324090	Vandal Cover	1	
2	96704663	Flatwasher	6	M6
3	95919304	HHCS	2	1/4 x 20 x 2.25
4	95931564	Hex Nut	2	1/4 x 20
5	59092924	Wing Nut	2	
6	13274832	Locking Plate	1	
7	96701461	HHCS, Zinc Plated	1	M6 x 1 x 25 Cl 8.8
8	96741053	Flatwasher	2	
9	96704598	Locknut	1	M6
10	59607853	Ferrule	2	
11	59607861	Cable	1	

GAUGE INSTALLATION - OPTIONAL

13235270 REV 06

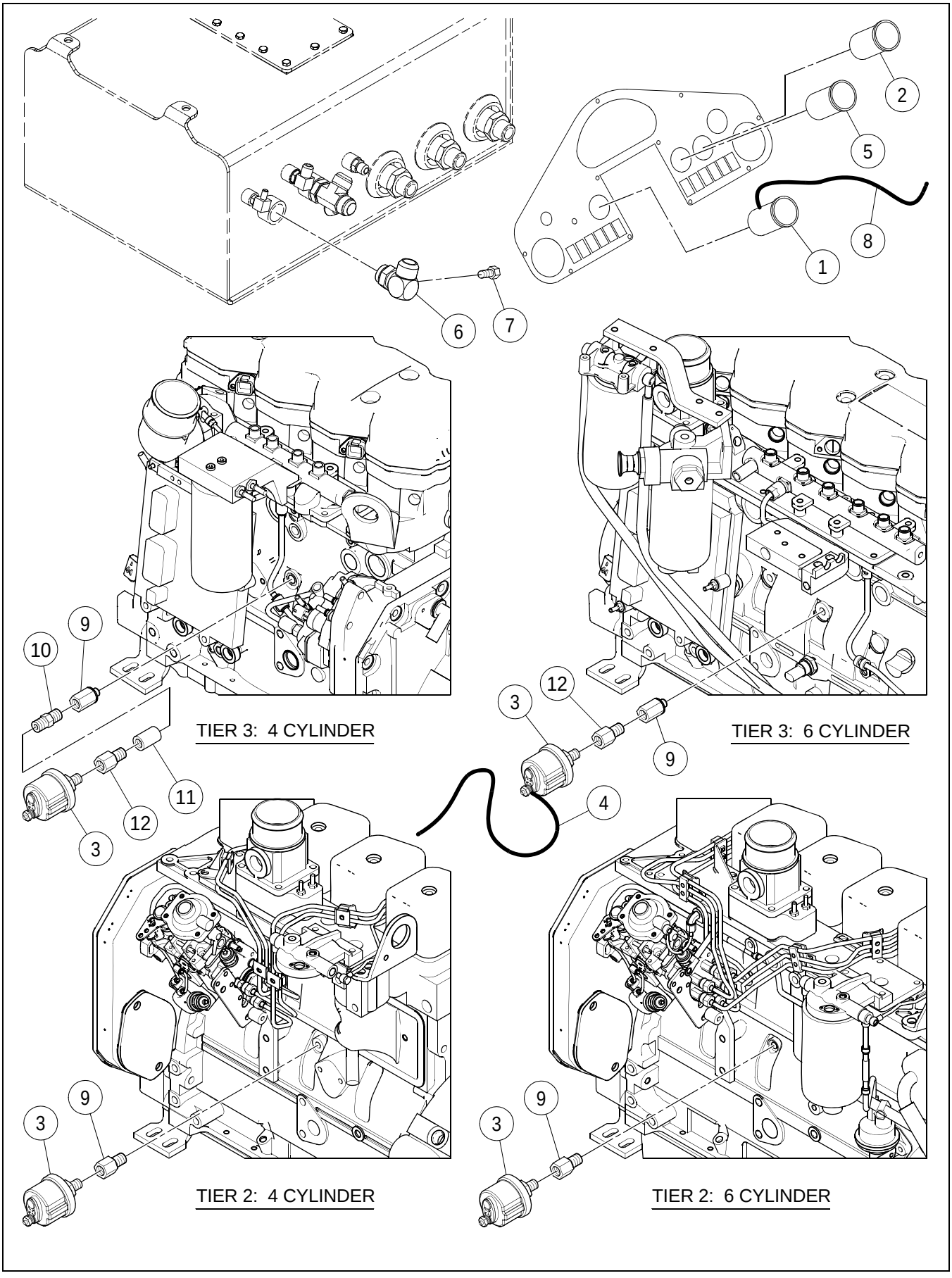

GAUGE INSTALLATION - OPTIONAL

****Only Offered Parts Listed****

BOM 13307699

ITEM	COMM. NO.	DESCRIPTION	QTY	DIMENSIONS/NOTES
1	58877796	Voltmeter	1	
2	58893983	Temperature Gauge	1	
3	58878000	Engine Oil Pressure Sender	1	
4	13493556	Gauge Harness	1	
5	58822313	Engine Oil Pressure Gauge	1	
6	13188958	Adapter	1	
-	95280194	- Adapter	1	
7	58913856	Sender	1	
8	13493515	Gauge Light Harness	1	
9	13889589	Adapter	1	
10	NOT-USED	This Item Not Used W/this Bom	1	
11	NOT-USED	This Item Not Used W/this Bom	1	
12	59924191	Adapter	1	

CAB WITH HEAT INSTALLATION - SD-160

19330778 REV 0E

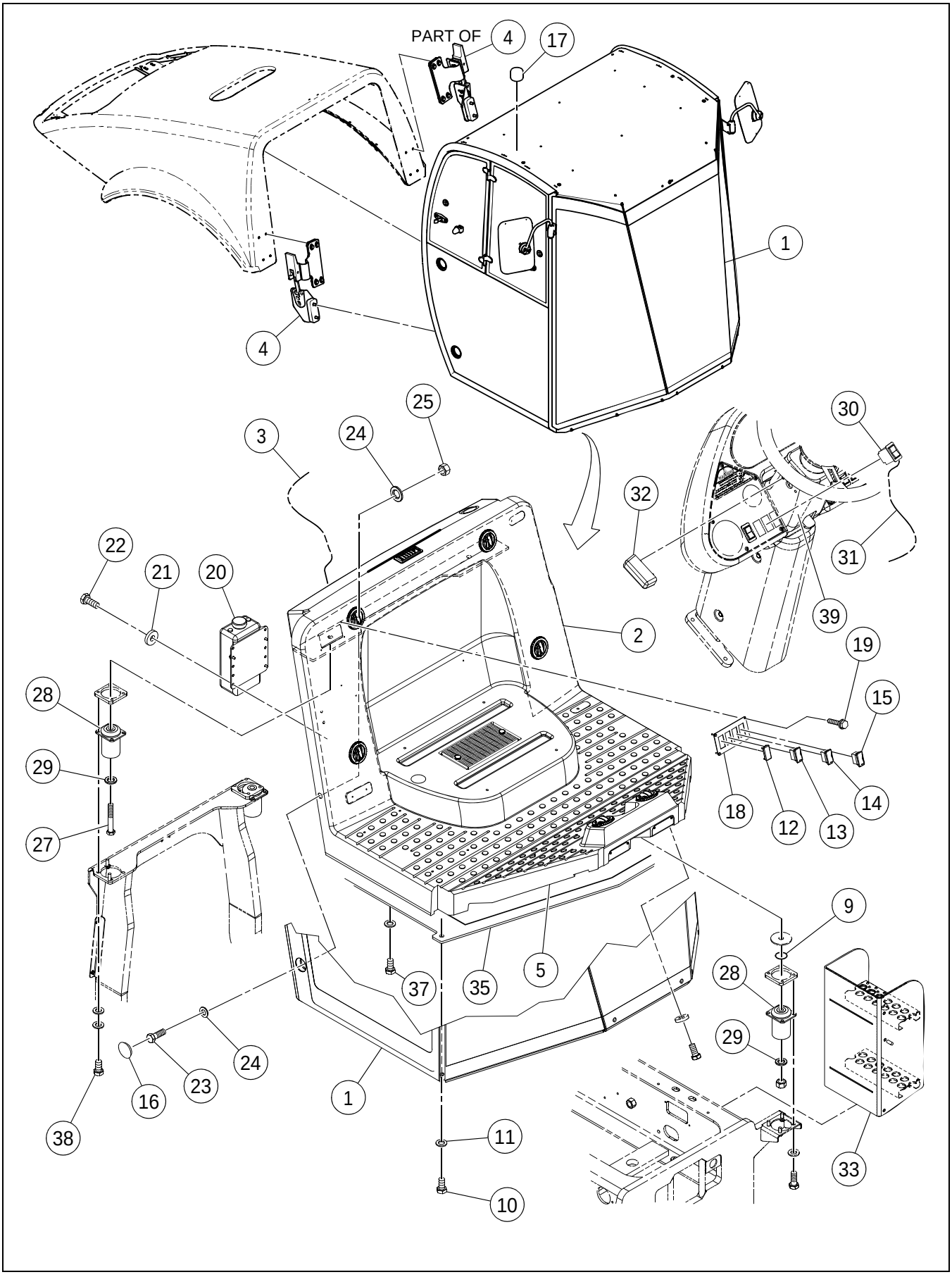

****Only Offered Parts Listed**** **BOM 43829308**

ITEM	COMM. NO.	DESCRIPTION	QTY	DIMENSIONS/NOTES
1	**18000471**	**Cab Assembly**	**1**	**See Breakdown D - 36.**
2	**NSVA**	**Heater Installation**	**1**	**See Page D - 50.**
3	13492822	Cab Heater Harness	1	
4	**NSVA**	**Cab/Hood Draw Latch Installation**	**1**	**See Page D - 124.**
5	43836451	Rubber Seal	1	
9	96746417	Washer, Plain	4	
10	96703178	HHCS, Zinc Plated	2	M16 x 2 x 30 Cl 8.8
11	96738612	Flatwasher, Zinc Plated	2	Cl 200
12	58835398	Switch: Blank	1	
13	59196451	Front Wiper Switch	1	
14	59196444	Rear Wiper Switch	1	
15	59195925	Washer	1	
16	13309877	Plastic Plug	4	
17	59326827	Plug	2	
18	13212576	Control	1	
19	95988093	Screw	4	
20	13215769	Washer	1	
21	96712674	Flatwasher	4	
22	96702824	HHCS, Zinc Plated	4	M8 x 1.25 x 20 Cl 8.8
23	96720032	HHCS, Zinc Plated	4	M24 x 3 x 70 Cl 8.8
24	96702642	Washer	4	M24
25	96727532	Hex Nut	4	M24 x 3
26	**NSVA**	**Seatbelt Installation (Not Shown)**	**1**	**See Page D - 62.**
27	NOT-USED	This Item Not Used W/this Bom	1	
28	NOT-USED	This Item Not Used W/this Bom	1	
29	NOT-USED	This Item Not Used W/this Bom	1	
30	13197108	Switch, F/R Worklights	1	
31	43818848	Work Lights Selector Harness - Effective with S/N 194702	1	
-	13225560	Work Lights Selector Harness - Prior to S/N 194702	1	
32	13322102	Panel Light Assembly - Effective with S/N 194702	1	
-	13321443	- Lamp	1	
-	13248935	Dash Lights - Prior to S/N 194702	2	
33	13887609	Cab Step	1	
35	43919232	ROPS Support Platform	1	
37	96704556	HHCS, Zinc Plated	6	M10 x 1.5 x 40 Cl 8.8
38	NOT-USED	This Item Not Used W/this Bom	1	
39	13335484	Cover Column	1	

CAB ASSEMBLY (18000471) - INTERNAL BREAKDOWN - SHEET 1 OF 7

43833946 REV 00

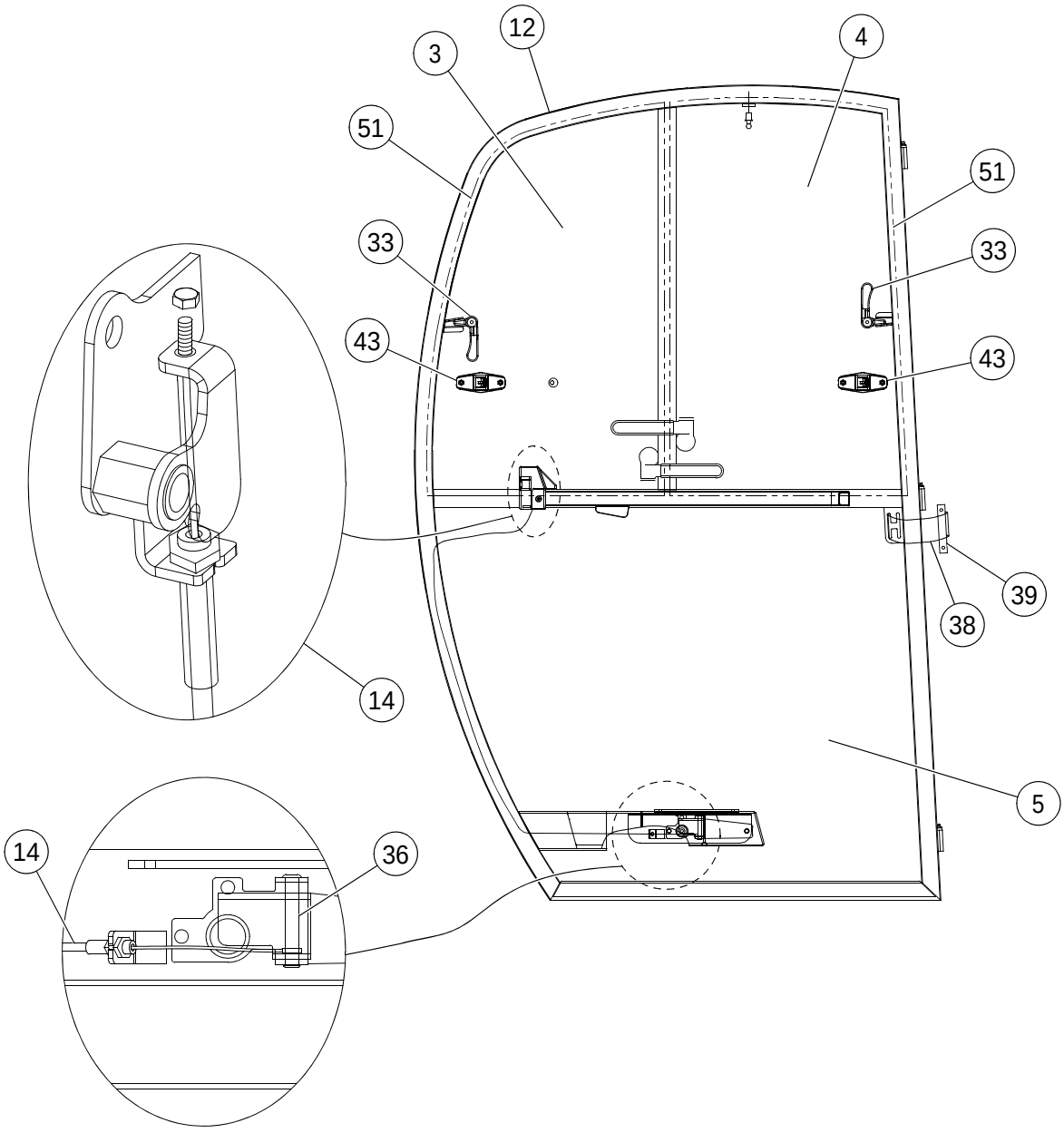

CAB ASSEMBLY (18000471) - INTERNAL BREAKDOWN - SHEET 1 OF 7

****Only Offered Parts Listed****

BOM 18000471

ITEM	COMM. NO.	DESCRIPTION	QTY	DIMENSIONS/NOTES
3	13519350	Door Rear Top Glass	1	
4	13519368	Door Front Top Glass	1	
5	13519376	Door Bottom Glass	1	
12	43835206	Door Assembly	1	
14	13382924	Door Latch Pivot Plate Kit	1	
33	13382759	Window Latch Kit	4	
36	13382940	Door Exterior Latch Kit	1	
38	43835297	Door Strap 6.5"	1	
39	13224332	Door Strap Metal Clamp	1	
43	13224381	Window Hold Back	4	
51	13285440	Rubber Seal	1	

CAB ASSEMBLY (18000471) - INTERNAL BREAKDOWN - SHEET 2 OF 7

43833946 REV 00

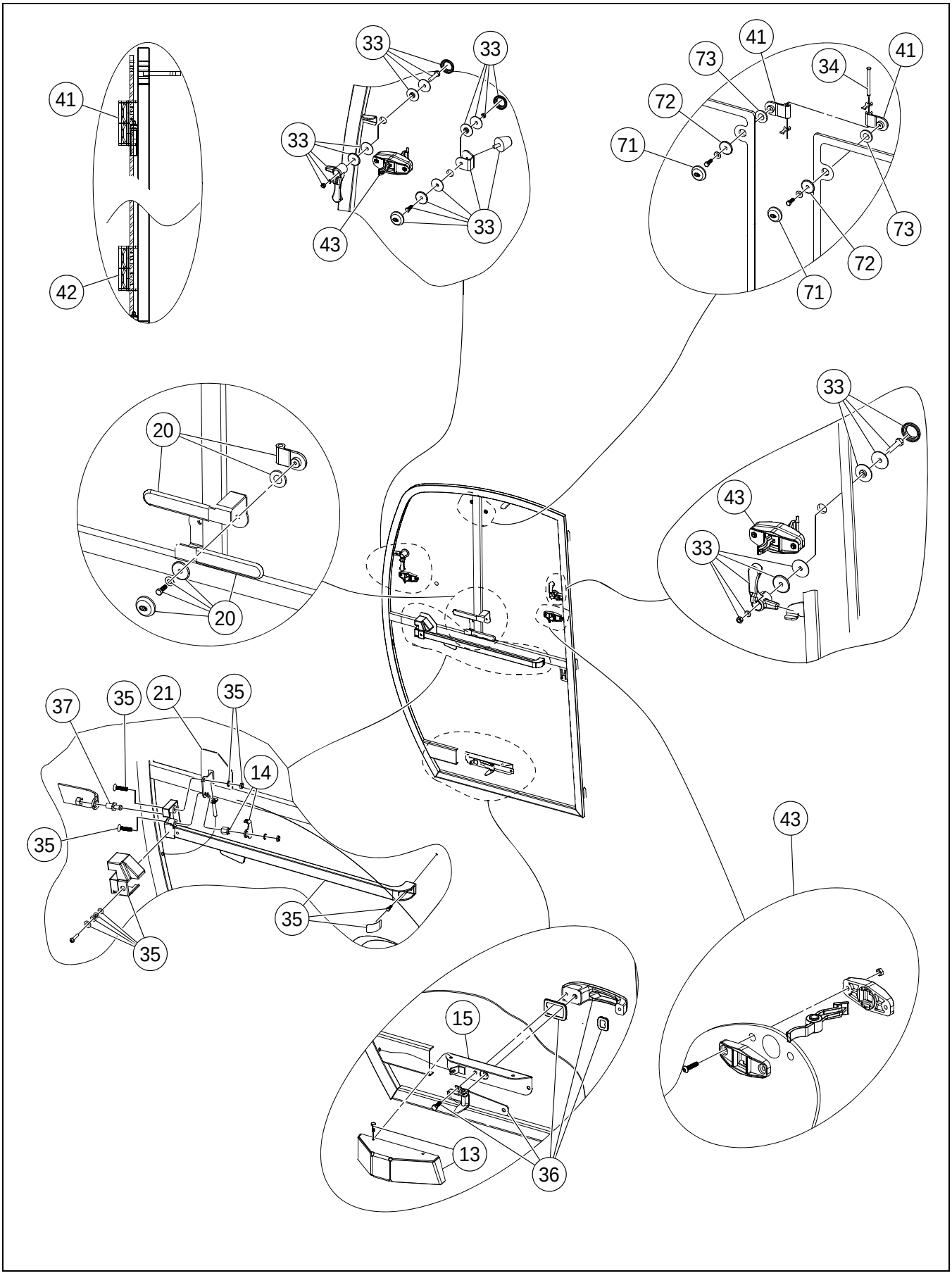

****Only Offered Parts Listed****

BOM 18000471

ITEM	COMM. NO.	DESCRIPTION	QTY	DIMENSIONS/NOTES
13	13382932	Lower Door Latch Cover Kit	1	
14	13382924	Door Latch Pivot Plate Kit	1	
15	43835214	Door Latch Cover Mounting Plate	1	
20	13382916	Side Window Grab Handle Kit	4	
21	43835255	Door Latch Profile Cover	1	
33	13382759	Window Latch Kit	4	
34	13382783	Window Hinge Pin Kit	4	
35	13382957	Door Inside Latch Kit	1	
36	13382940	Door Exterior Latch Kit	1	
37	13284500	Striker Bolt	1	
41	13224340	Window Hinge	4	
42	13224357	Window Hinge	4	
43	13224381	Window Hold Back	4	
71	13285473	Bolt Cover	4	
72	13285481	Washer	4	
73	43835446	Rubber Seal Washer	4	

43833946 REV 00

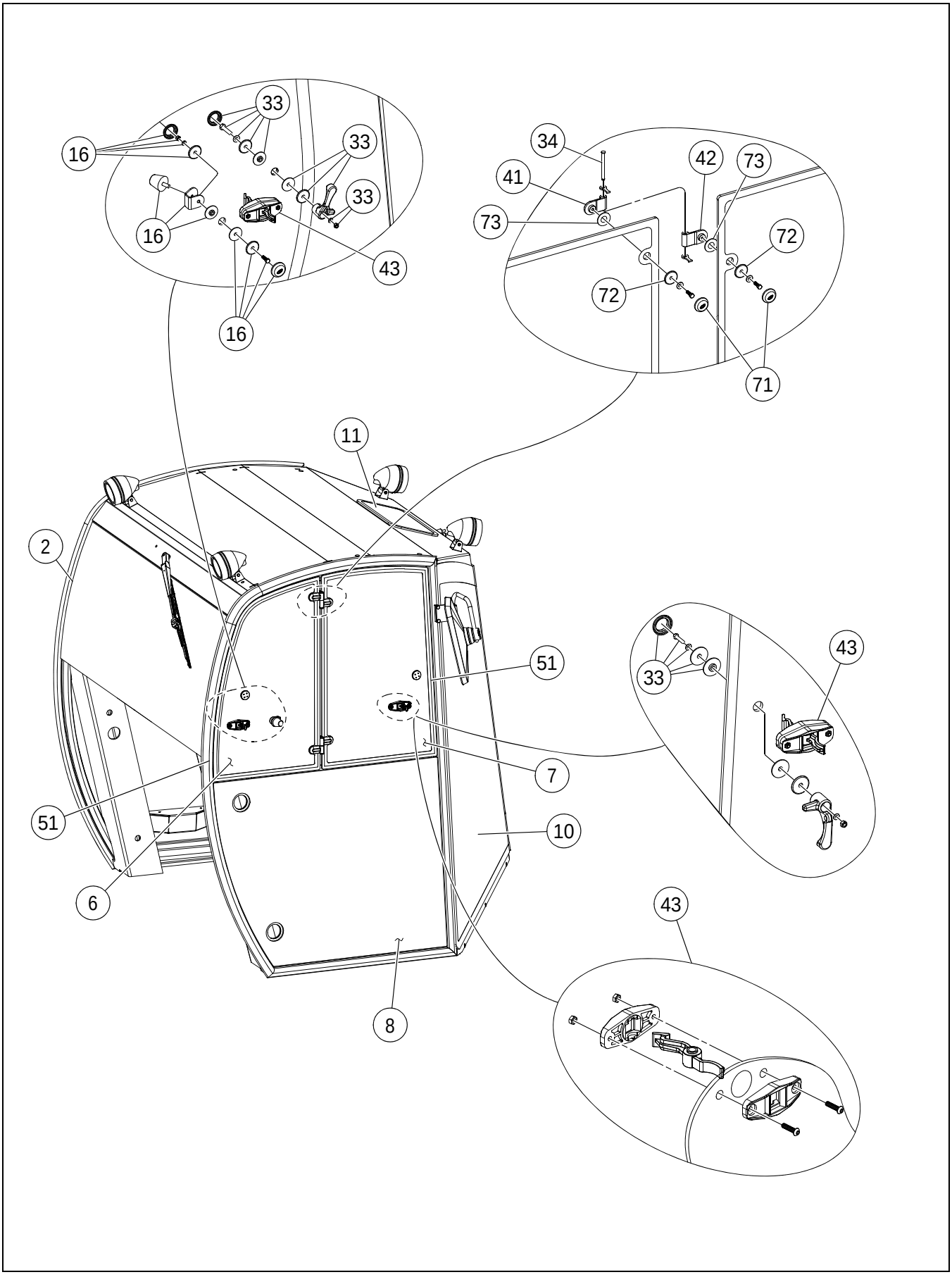

CAB ASSEMBLY (18000471) - INTERNAL BREAKDOWN - SHEET 3 OF 7

****Only Offered Parts Listed****

BOM 18000471

ITEM	COMM. NO.	DESCRIPTION	QTY	DIMENSIONS/NOTES
2	13519343	Rear Window Glass	1	
6	13519384	RH Side Top Rear Glass	1	
7	13519392	RH Side Top Front Glass	1	
8	13519400	RH Side Bottom Glass	1	
10	13382742	RH Side Front Glass	1	
11	13519434	GPS System Window Glass	1	
16	13382965	Window Bumper Kit	2	
33	13382759	Window Latch Kit	4	
34	13382783	Window Hinge Pin Kit	4	
41	13224340	Window Hinge	4	
42	13224357	Window Hinge	4	
43	13224381	Window Hold Back	4	
51	13285440	Rubber Seal	1	
71	13285473	Bolt Cover	4	
72	13285481	Washer	4	
73	43835446	Rubber Seal Washer	4	

43833946 REV 00

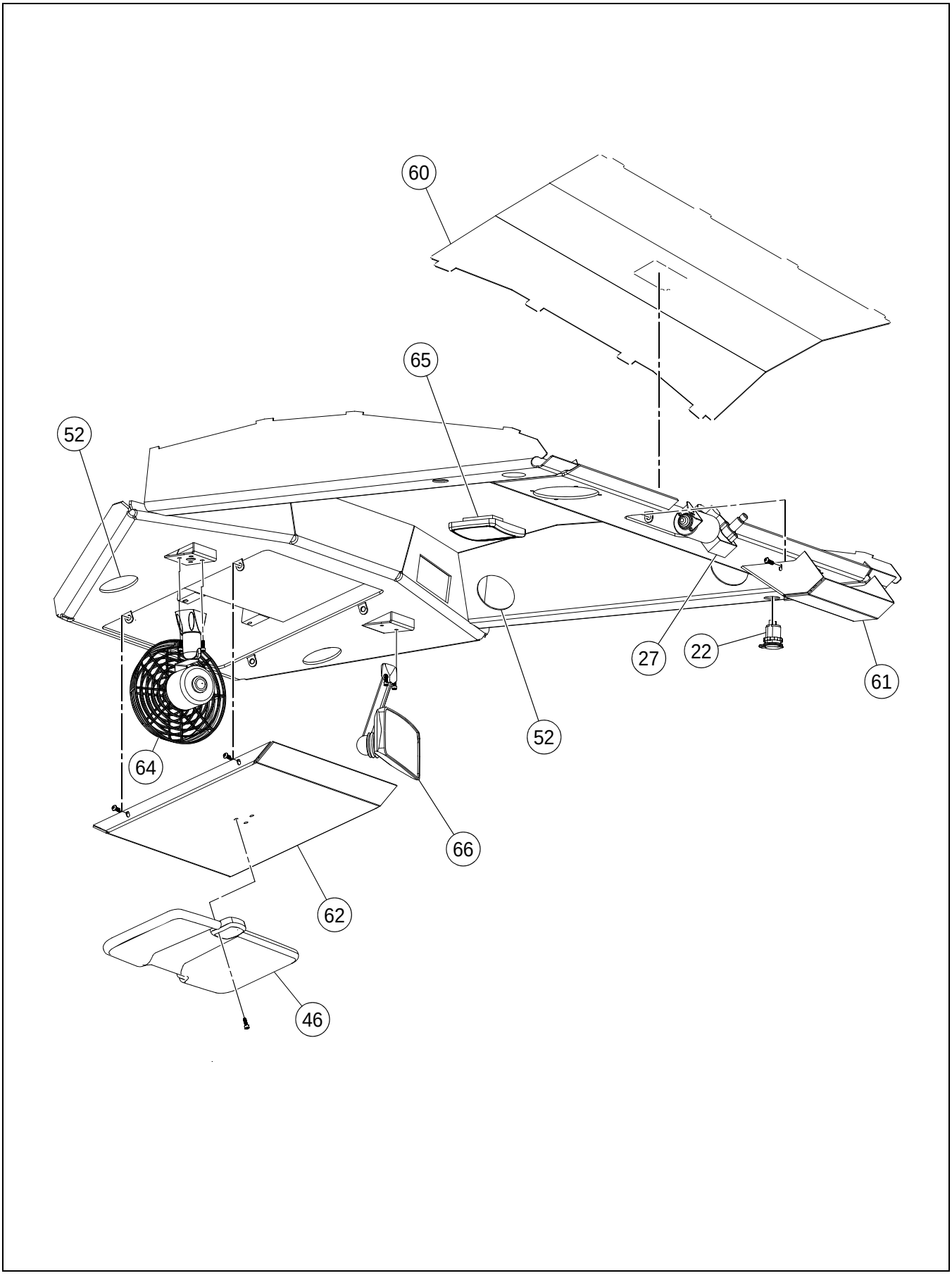

****Only Offered Parts Listed****

BOM 18000471

ITEM	COMM. NO.	DESCRIPTION	QTY	DIMENSIONS/NOTES
22	43835263	Power Port	1	
27	13871660	Wiper Motor	1	
46	58962887	Sun Visor Assembly	1	
52	13224449	Plug, Black	6	
60	43835388	Headliner	1	
61	43835396	Rear Wiper Cover	1	
62	43835404	Front Wiper Cover	1	
64	43835412	Defroster Fan 12V	1	
65	13224480	Interior Light	1	
66	13284567	Interior Mirror	1	

CAB ASSEMBLY (18000471) - INTERNAL BREAKDOWN - SHEET 5 OF 7

43833946 REV 00

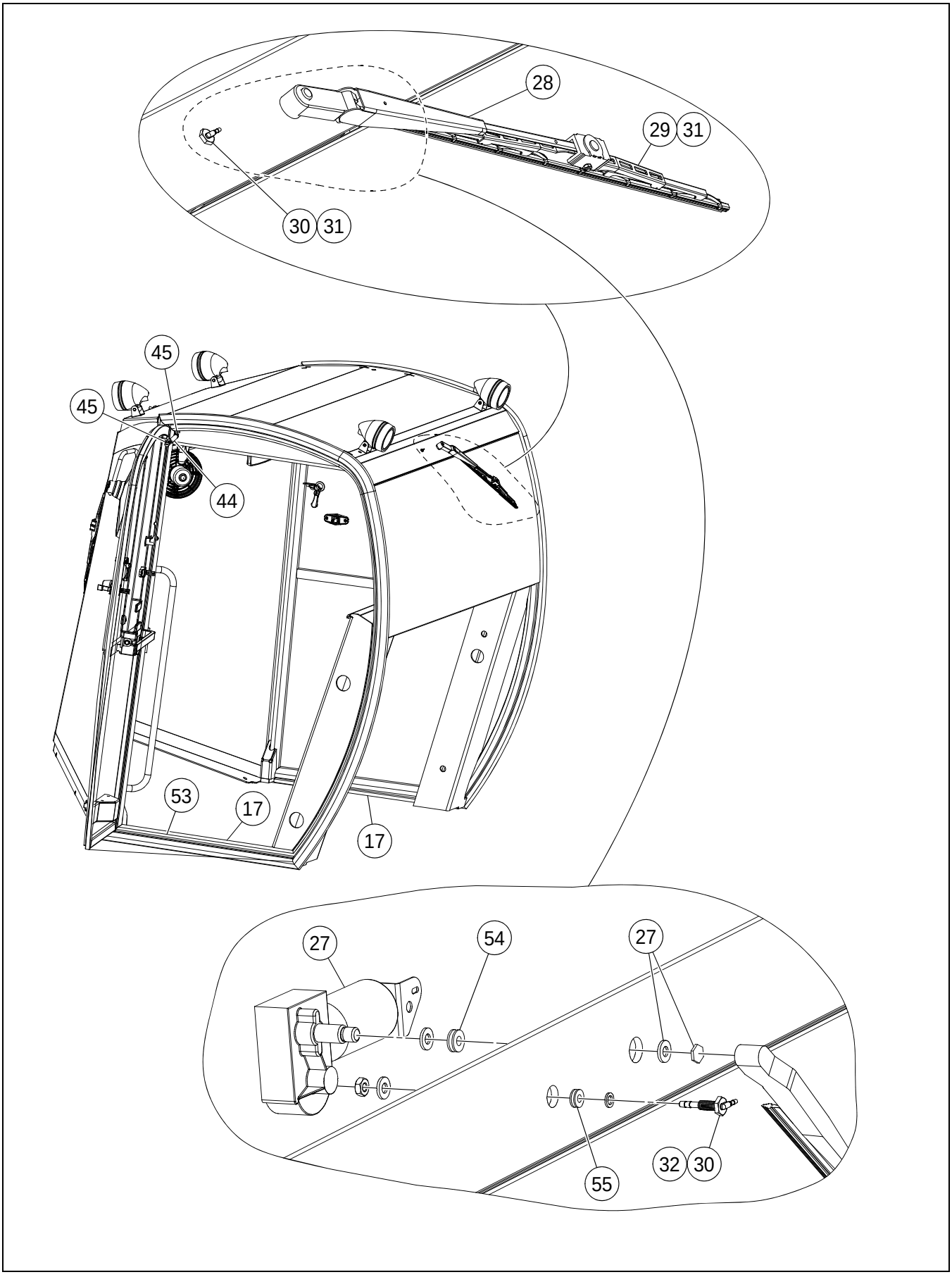

****Only Offered Parts Listed****

BOM 18000471

ITEM	COMM. NO.	DESCRIPTION	QTY	DIMENSIONS/NOTES
17	43835222	Deck Side Filler Strip	1	
27	13871660	Wiper Motor	1	
28	59072694	Rear Wiper Arm	1	
29	43835289	Wiper Blade Rear 20"	1	
30	13220835	Windshield Washer Hose Fitting	2	
31	13224241	Wet Arm Kit	2	
32	22085088	Washer Hose	1	
44	43835305	Door Shock	1	
45	13224431	Gas Shock Ball Mount	2	
53	54628326	Door Frame Weatherstrip	1	
54	43835347	Rubber Grommet	1	
55	13224464	Rubber Grommet	1	

43833946 REV 00

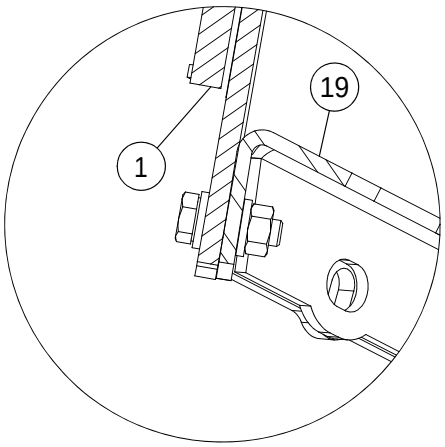

SECTION A-A

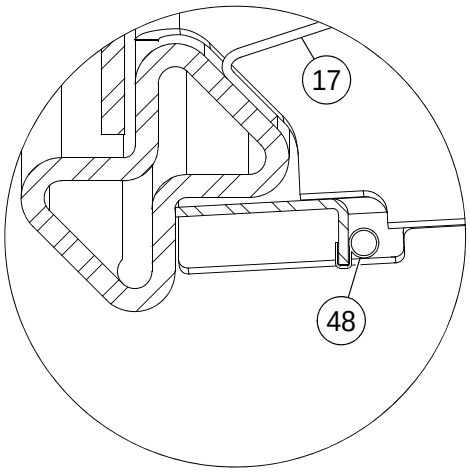

SECTION B-B

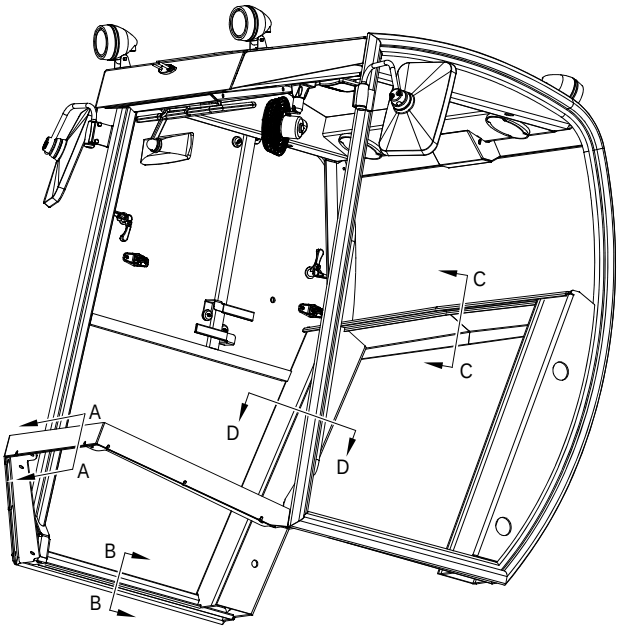

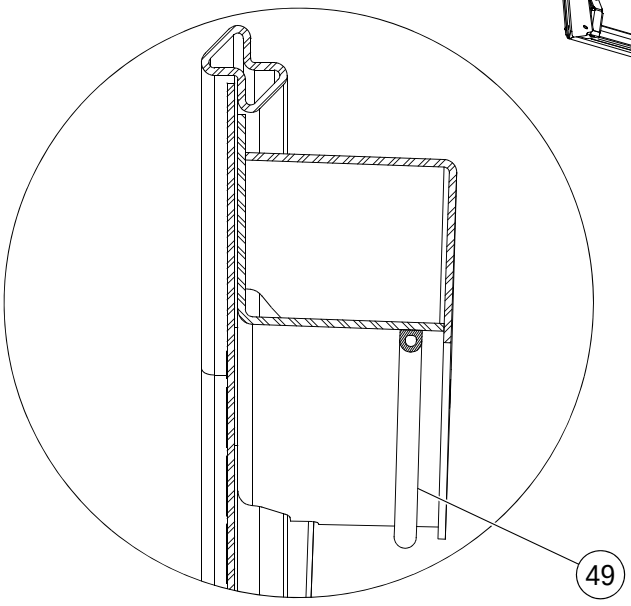

SECTION D-D

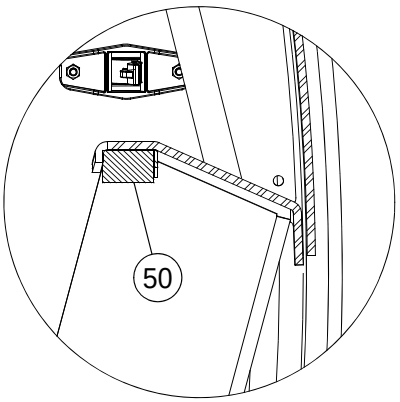

SECTION C-C

****Only Offered Parts Listed****

BOM 18000471

ITEM	COMM. NO.	DESCRIPTION	QTY	DIMENSIONS/NOTES
1	13382726	Front Center Window Glass	1	
17	43835222	Deck Side Filler Strip	1	
19	43835248	Front Window Lower Center Skirt	1	
48	59072702	Door Seal	1	
49	43835321	Rubber Seal	1	
50	43835339	Rubber Seal	1	

CAB ASSEMBLY (18000471) - INTERNAL BREAKDOWN - SHEET 7 OF 7

43833946 REV 00

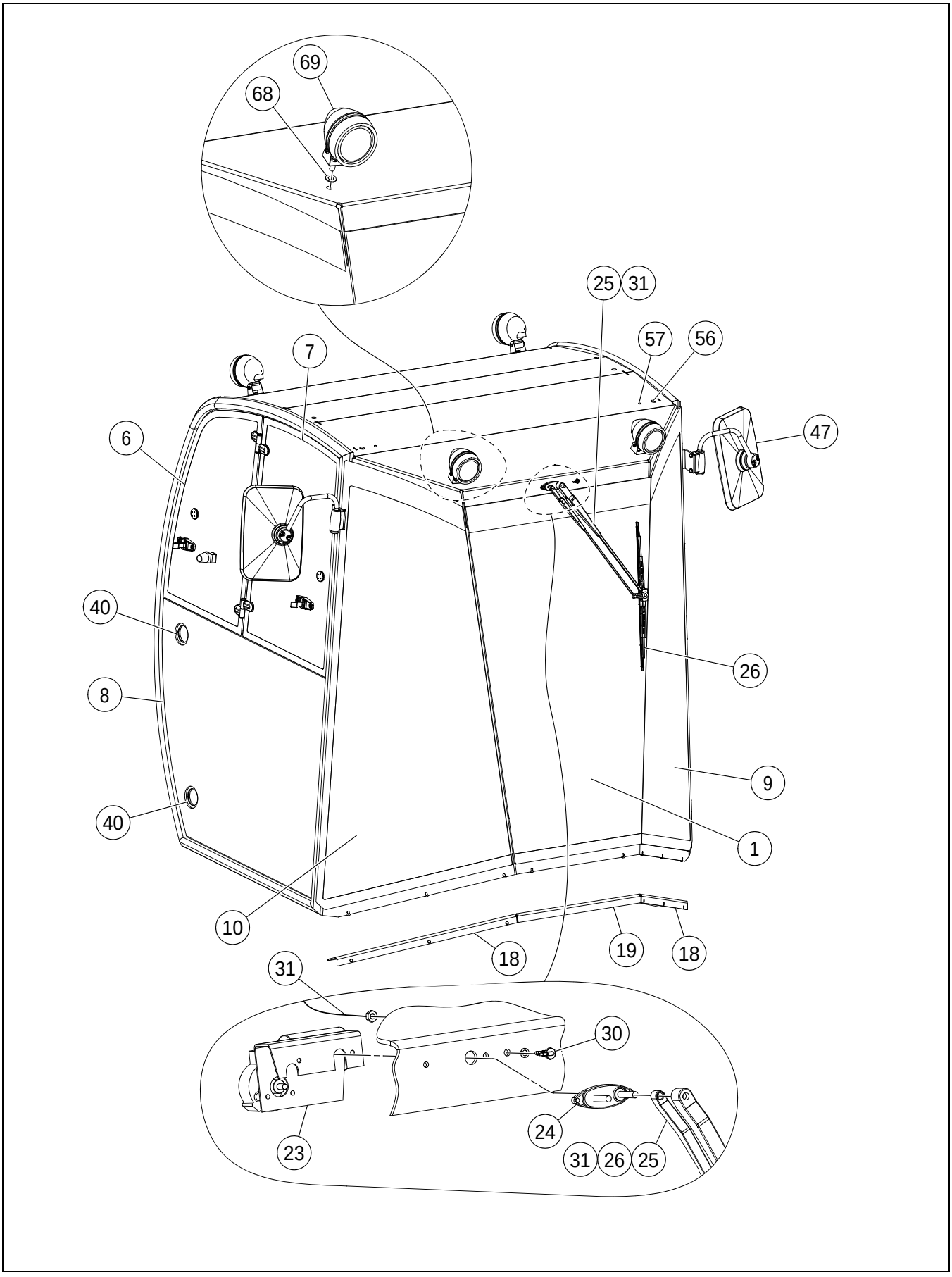

****Only Offered Parts Listed****

BOM 18000471

ITEM	COMM. NO.	DESCRIPTION	QTY	DIMENSIONS/NOTES
1	13382726	Front Center Window Glass	1	
6	13519384	RH Side Top Rear Glass	1	
7	13519392	RH Side Top Front Glass	1	
8	13519400	RH Side Bottom Glass	1	
9	13382734	LH Side Front Glass	1	
10	13382742	RH Side Front Glass	1	
18	43835230	Front Window Lower Side Skirts	1	
19	43835248	Front Window Lower Center Skirt	1	
23	43835271	Wiper Motor	1	
24	58962812	Mount	1	
25	13224217	Front Wiper Arm	1	
26	13224225	Front Wiper Blade	1	
30	13220835	Windshield Washer Hose Fitting	2	
31	13224241	Wet Arm Kit	2	
40	13224456	Plastic Plug	4	
47	43835313	Exterior Mirror Assembly	2	
56	43835354	Plastic Plug	2	
57	43835362	Plastic Plug	2	
58	58844556	Rubber Seal (Not Shown)	1	
59	43835370	Plastic Plug (Not Shown)	2	
63	13845367	Cab Harness (Not Shown)	1	
67	22088009	Pebble Cloth (Not Shown)	1	
68	43835420	Seal Washer	4	
69	43835438	Work Lights	4	
70	13285440	Rubber Seal (Not Shown)	1	
74	22067607	Adhesive (Not Shown)	5	
75	43806165	Sika (Not Shown)	1	

19287887 REV 0F

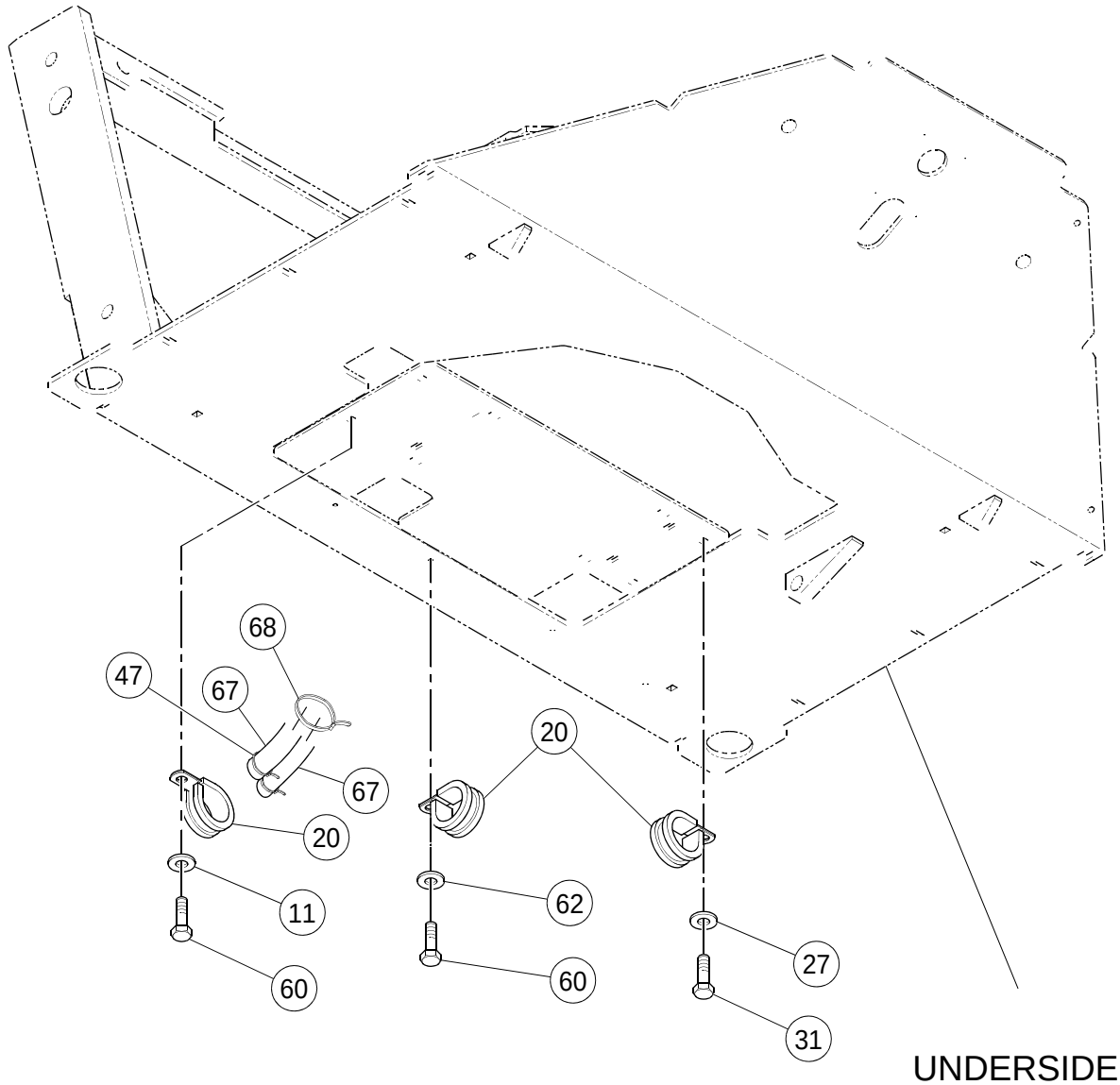

UNDERSIDE OF
OPERATORS
PLATFORM

****Only Offered Parts Listed****

BOM 19287994

ITEM	COMM. NO.	DESCRIPTION	QTY	DIMENSIONS/NOTES
11	96712674	Flatwasher	4	
20	95378873	Clamp	1	
27	96704663	Flatwasher	1	M6
31	96702394	HHCS, Zinc Plated	1	M6 x 1 x 12 Cl 8.8
47	95373973	Wire Tie	A/R	
60	96702824	HHCS, Zinc Plated	6	M8 x 1.25 x 20 Cl 8.8
62	NOT-USED	This Item Not Used W/this Bom	1	
67	43886696	Firesleeve	2	
68	95424586	Wire Tie	A/R	

19287887 REV 0F

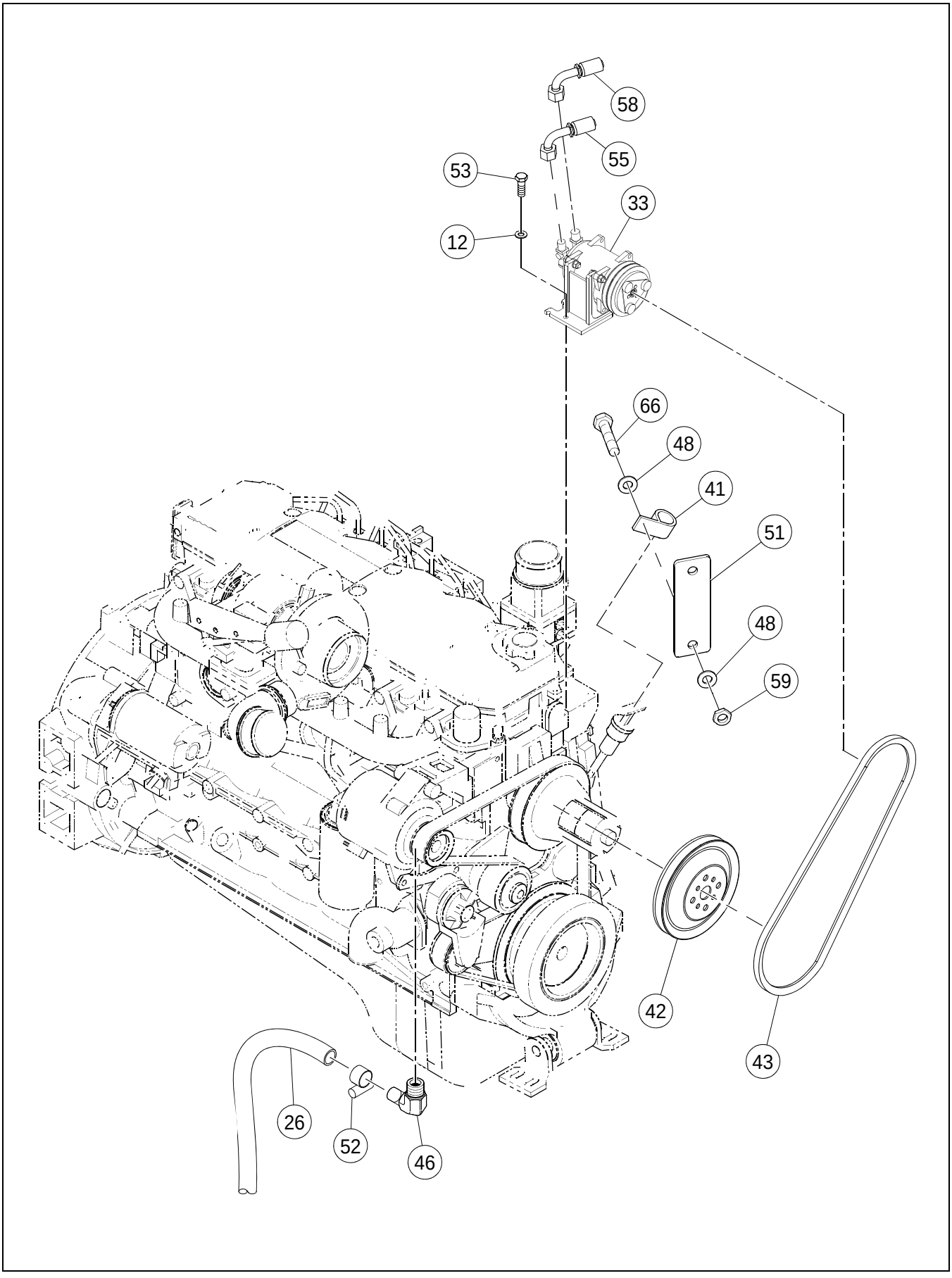

****Only Offered Parts Listed****

BOM 19287994

ITEM	COMM. NO.	DESCRIPTION	QTY	DIMENSIONS/NOTES
12	96701917	HHCS, Zinc Plated	4	M10 x 1.5 x 30 Cl 8.8
26	59823716	Hose	1	
33	NOT-USED	This Item Not Used W/this Bom	1	
41	NOT-USED	This Item Not Used W/this Bom	1	
42	NOT-USED	This Item Not Used W/this Bom	1	
43	NOT-USED	This Item Not Used W/this Bom	1	
46	58962226	Elbow	1	
48	96741046	Flatwasher	2	
51	NOT-USED	This Item Not Used W/this Bom	1	
52	95671285	Clamp	8	
53	13355003	Decal: Refridgerant Charge	1	
55	NOT-USED	This Item Not Used W/this Bom	1	
58	NOT-USED	This Item Not Used W/this Bom	1	
59	96704614	Nut	1	M10 x 1.5
66	NOT-USED	This Item Not Used W/this Bom	1	

19287887 REV 0F

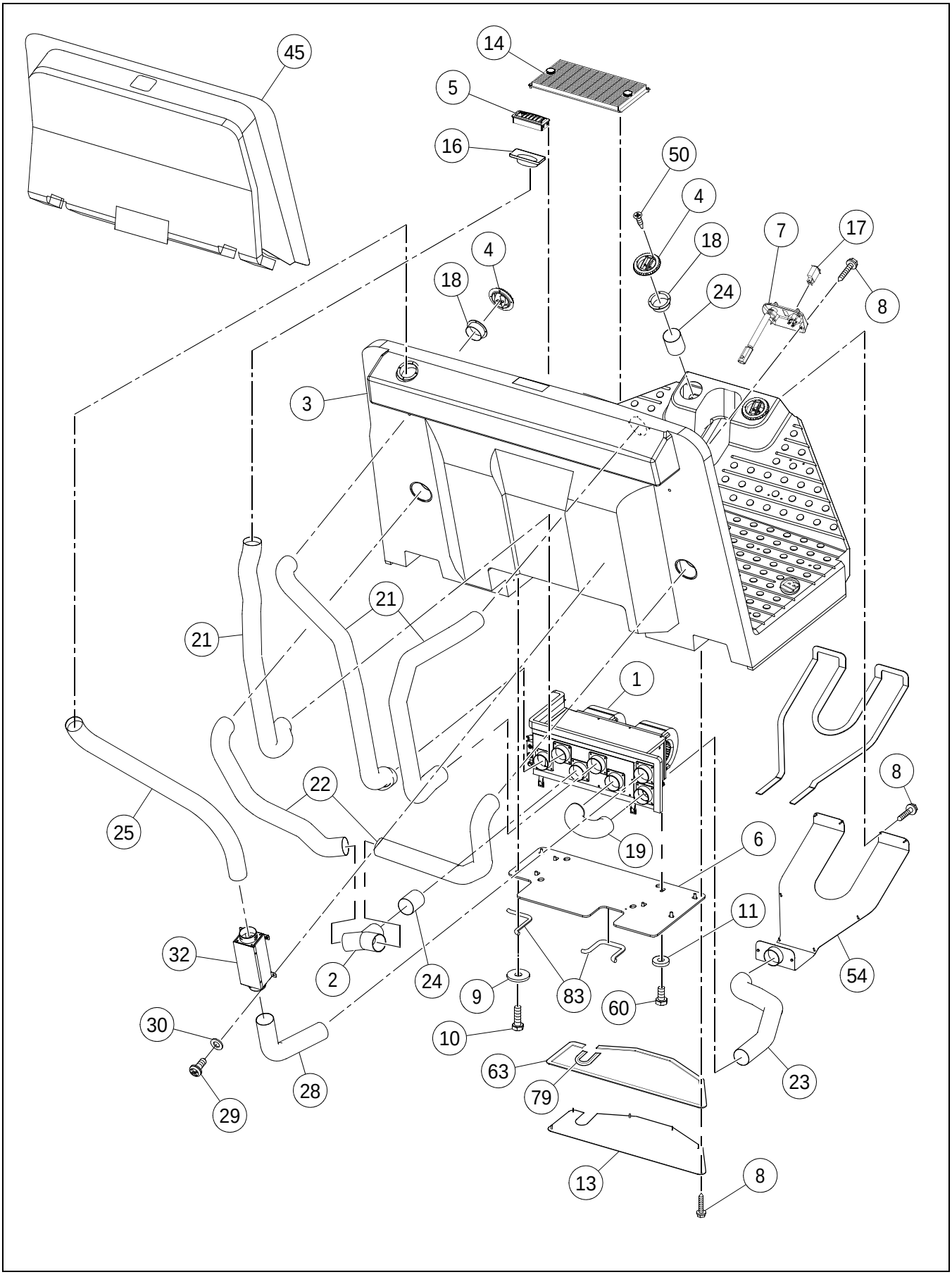

****Only Offered Parts Listed****

BOM 19287994

ITEM	COMM. NO.	DESCRIPTION	QTY	DIMENSIONS/NOTES
1	**13237888**	**Heater**	**1**	**See Breakdown D - 60.**
2	13162094	Y-splicer	1	
3	43843564	Operators Platform	1	
4	13161724	Louvers	6	
5	13179197	Louver	1	
6	13237326	Mounting Plate	1	
7	13254644	Heater	1	
8	95988093	Screw	19	
9	96740188	Washer	4	M8 x 3
10	96702659	HHCS, Zinc Plated	6	M8 x 1.25 x 25 Cl 8.8
11	96712674	Flatwasher	4	
13	13502083	Cover Plate	1	
14	13234927	Air Recirculation Filter Assembly	1	
-	13200019	- Recirculation	1	
-	13161757	- Air Recirculation Filter	1	
-	13200001	- Recirculation Filter Grill	1	
16	13179403	Louver Adapter	1	
17	13156997	Control Panel Plug	1	
18	13161732	Louver Adapter	7	
19	13176508	Bottom Duct Hose	1	
21	13295712	Upper Side Duct Hose	3	
22	13176516	Lower Side Duct Hose	2	
23	13176532	Plenum Hose	1	
24	59290742	Connector Hose	3	
25	59290734	Center Duct Hose	1	
28	59290783	Bottom Fresh Air Duct Hose	1	
29	96740444	Screw	4	
30	96738554	Flatwasher	4	
32	59290767	Fresh Air Filter	1	
45	59290817	Foam	1	
50	13209887	Wood Screw	14	
54	13234893	Plenum	1	
60	96702824	HHCS, Zinc Plated	6	M8 x 1.25 x 20 Cl 8.8
63	35898477	Foamtape	1	
79	13467485	Seal Trim	1	
83	50829662	Trim	1	

19287887 REV 0F

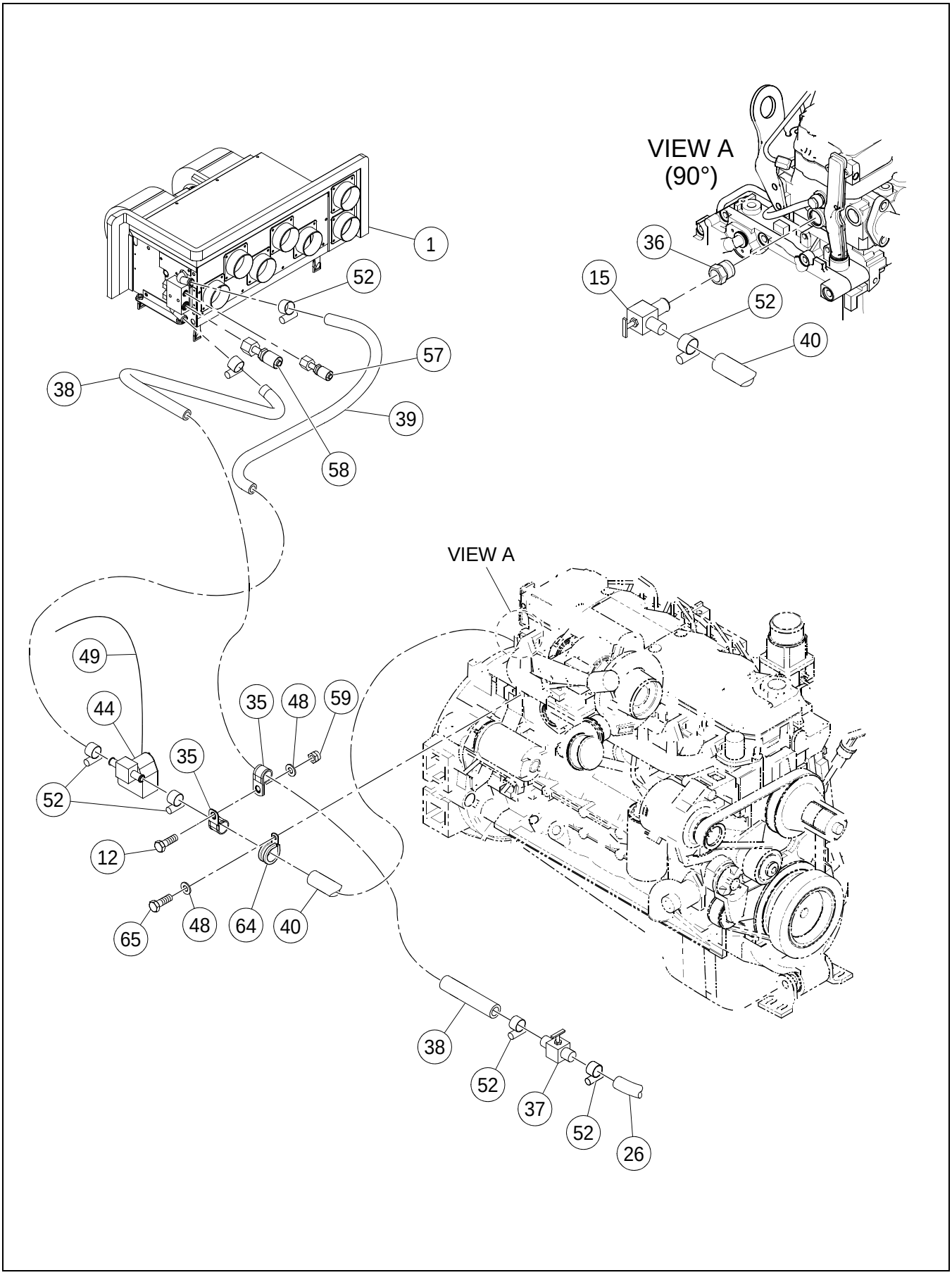

****Only Offered Parts Listed****

BOM 19287994

ITEM	COMM. NO.	DESCRIPTION	QTY	DIMENSIONS/NOTES
1	**13237888**	**Heater**	**1**	**See Breakdown D - 60.**
12	96701917	HHCS, Zinc Plated	4	M10 x 1.5 x 30 Cl 8.8
15	59392795	Valve	1	
26	59823716	Hose	1	
35	59465674	Clamp	2	
36	59903203	Reducer	1	
37	13254909	Shut-off Valve	1	
38	59919522	Hose Asembly	1	
39	59845743	Hose Asembly	1	
40	95285144	Hose	5	
44	13200027	Heater Valve	1	
-	13258942	- Mounting Bracket	1	
-	13258959	- Motor Adaptor	1	
-	13258967	- Heater Valve	1	
-	13258975	- Valve Lever Arm	1	
-	13258983	- Shaft Adapter	1	
-	13258991	- Plastite Screw	3	
-	13259007	- Screw	3	
-	13259015	- Washer	4	
-	13259023	- Spacer	3	
48	96741046	Flatwasher	2	M10 x 20.0
49	13200035	Wiring Harness	1	
52	95671285	Clamp	8	
57	NOT-USED	This Item Not Used W/this Bom	1	
58	NOT-USED	This Item Not Used W/this Bom	1	
59	96704614	Nut	1	M10 x 1.5
64	59465641	Clamp	1	
65	96702279	HHCS, Zinc Plated	1	M10 x 1.5 x 20 Cl 8.8

19287887 REV 0F

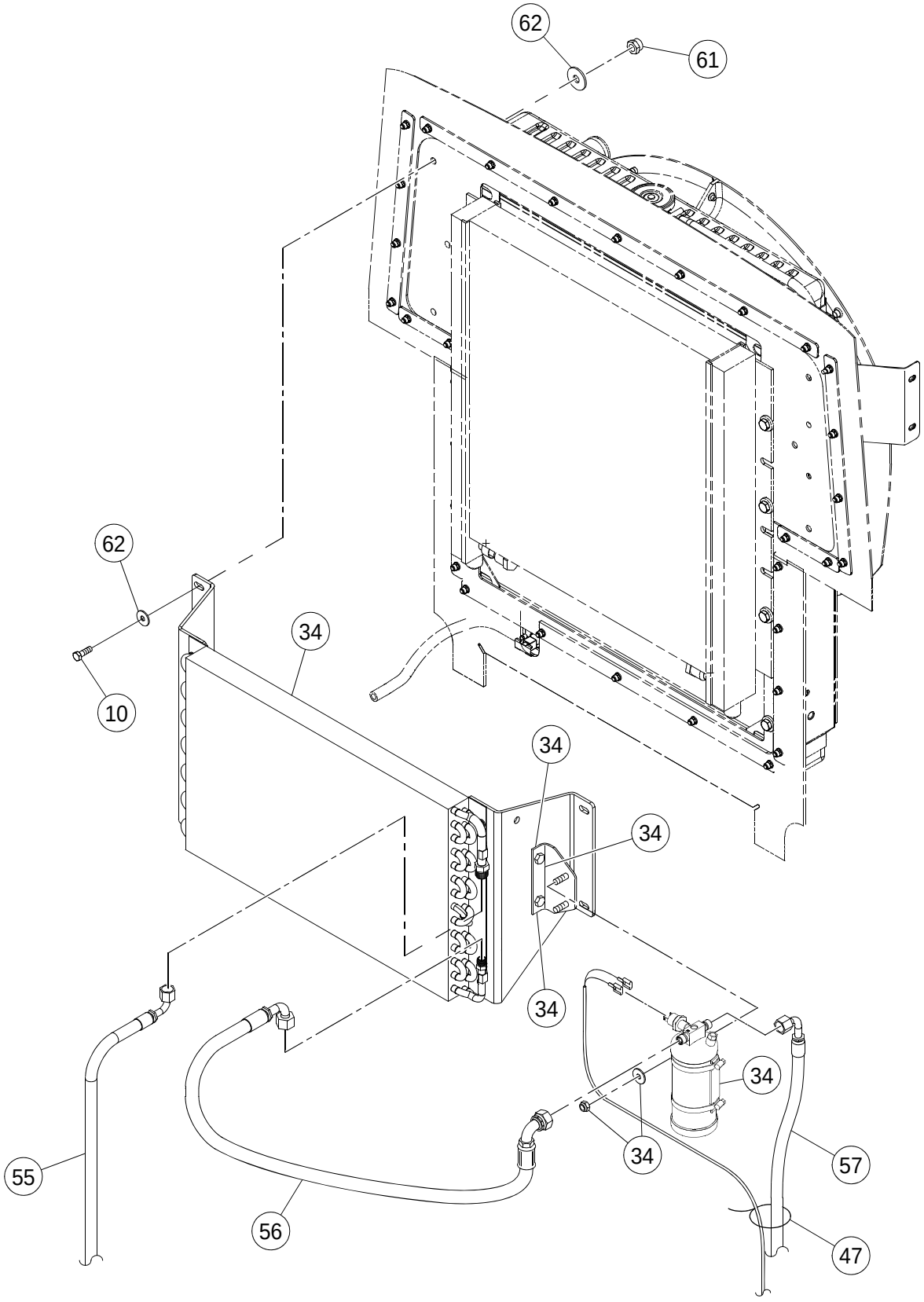

****Only Offered Parts Listed****

BOM 19287994

ITEM	COMM. NO.	DESCRIPTION	QTY	DIMENSIONS/NOTES
10	96702659	HHCS, Zinc Plated	6	M8 x 1.25 x 25 Cl 8.8
34	NOT-USED	This Item Not Used W/this Bom	1	
47	95373973	Wire Tie	A/R	
55	NOT-USED	This Item Not Used W/this Bom	1	
56	NOT-USED	This Item Not Used W/this Bom	1	
57	NOT-USED	This Item Not Used W/this Bom	1	
61	NOT-USED	This Item Not Used W/this Bom	1	
62	NOT-USED	This Item Not Used W/this Bom	1	

HEATER (13237888) - INTERNAL BREAKDOWN

13244652 REV 00

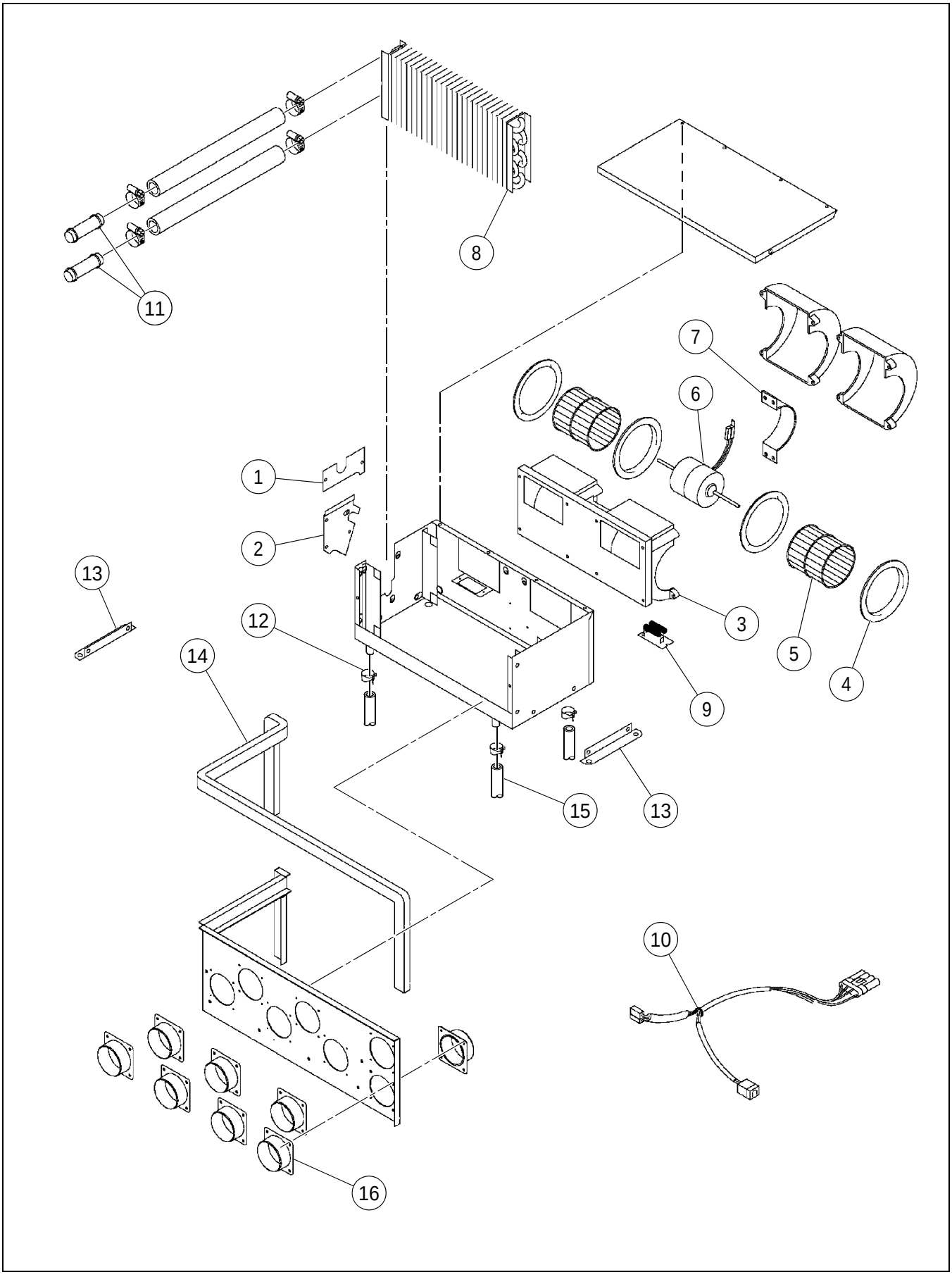

HEATER (13237888) - INTERNAL BREAKDOWN

****Only Offered Parts Listed****

BOM 13237888

ITEM	COMM. NO.	DESCRIPTION	QTY	DIMENSIONS/NOTES
1	13258702	Coil Cover	1	
2	13258710	Coil Cover	1	
3	13258728	Blower	1	
4	13258694	Venturi	2	
5	13258736	Blower Wheel	2	
6	13258744	Motor	1	
7	13258751	Motor Mount	1	
8	13258769	Heater Coil	1	
9	13258777	Resistor 12V	1	
10	13258785	Wiring Harness	1	
11	13258793	Heater Hose Assembly	2	
12	13258801	Drain Hose Clamp	4	
13	13258819	Mounting Bracket	1	
14	13258827	Foam Seal	1	
15	13258835	Drain Valve	4	
16	13258843	Hose Adapter	6	

43803394 REV 00

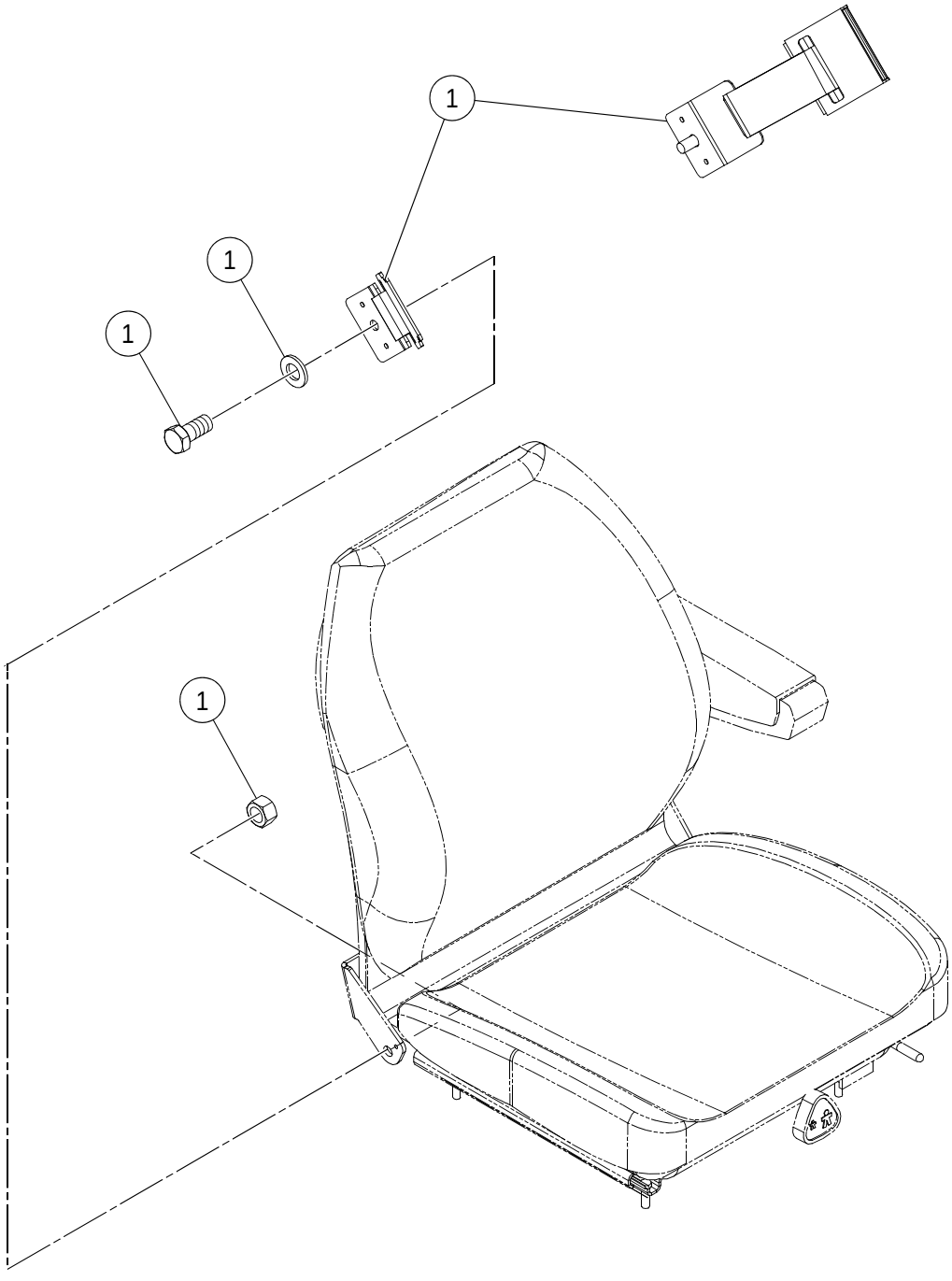

SEATBELT INSTALLATION

****Only Offered Parts Listed****

BOM 43803394

ITEM	COMM. NO.	DESCRIPTION	QTY	DIMENSIONS/NOTES
1	13342720	Seat Belt	1	

CAB WITH HEAT AND AIR CONDITIONING INSTALLATION - SD-160

19330778 REV 0E

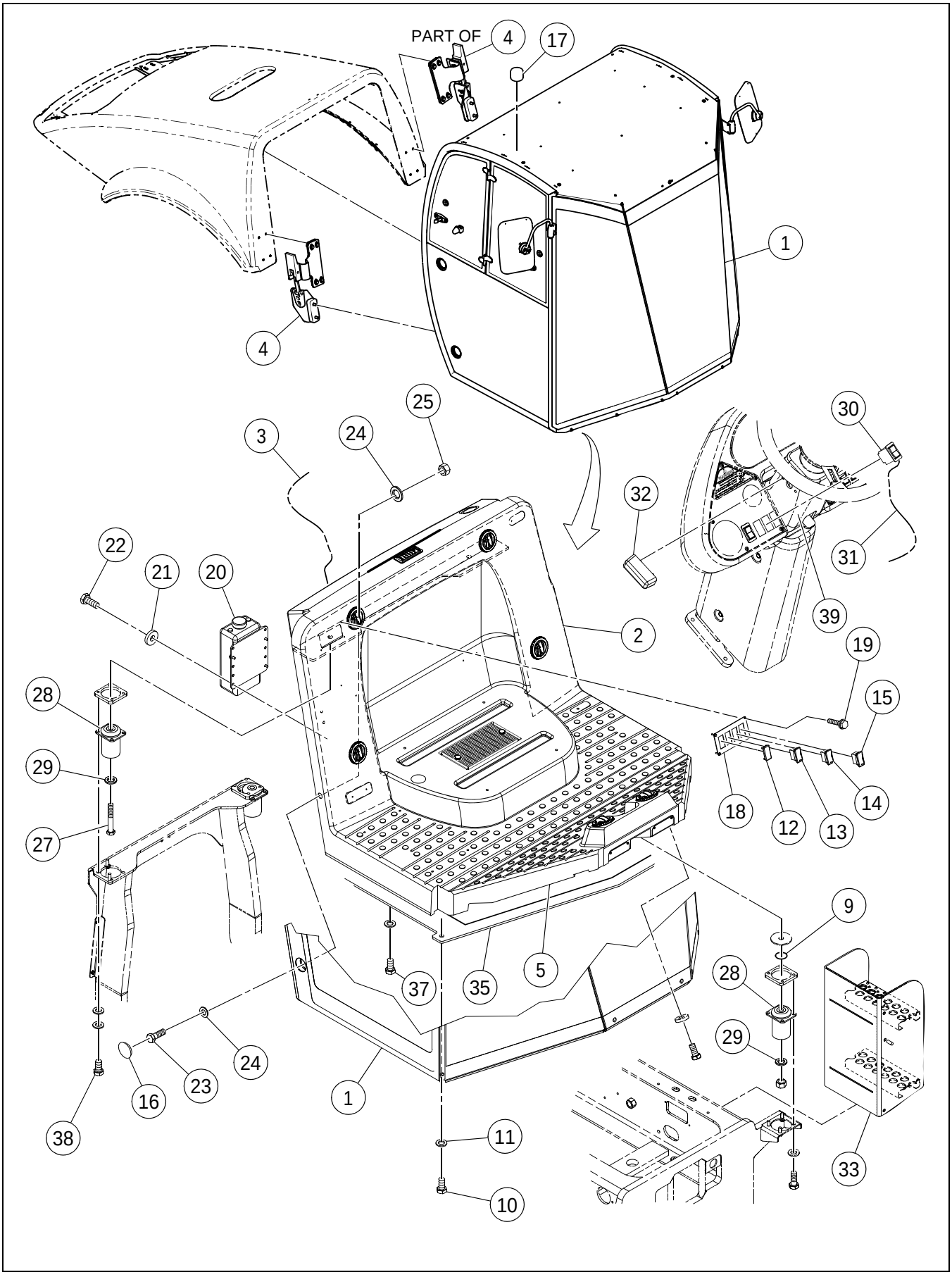

CAB WITH HEAT AND AIR CONDITIONING INSTALLATION - SD-160

****Only Offered Parts Listed****

BOM 43829316

ITEM	COMM. NO.	DESCRIPTION	QTY	DIMENSIONS/NOTES
1	**18000471**	**Cab Assembly**	**1**	**See Breakdown D - 36.**
2	**NSVA**	**Heating and Air Conditioning Installation**	**1**	**See Page D - 66.**
3	13492822	Cab And HVAC Harness	1	
4	**NSVA**	**Cab/Hood Draw Latch Installation**	**1**	**See Page D - 124.**
5	43836451	Rubber Seal	1	
9	96746417	Washer, Plain	4	
10	96703178	HHCS, Zinc Plated	2	M16 x 2 x 30 Cl 8.8
11	96738612	Flatwasher, Zinc Plated	2	Cl 200
12	58835398	Blank Switch	1	
13	59196451	Front Wiper Switch	1	
14	59196444	Rear Wiper Switch	1	
15	59195925	Washer	1	
16	13309877	Plastic Plug	4	
17	59326827	Plug	2	
18	13212576	Control	1	
19	95988093	Screw	4	
20	13215769	Washer	1	
21	96712674	Flatwasher	4	
22	96702824	HHCS, Zinc Plated	4	M8 x 1.25 x 20 Cl 8.8
23	96720032	HHCS, Zinc Plated	4	M24 x 3 x 70 Cl 8.8
24	96702642	Washer	4	M24
25	96727532	Hex Nut	4	M24 x 3
26	**NSVA**	**Seatbelt Installation (Not Shown)**	**1**	**See Page D - 62.**
27	NOT-USED	This Item Not Used W/this Bom	1	
28	NOT-USED	This Item Not Used W/this Bom	1	
29	NOT-USED	This Item Not Used W/this Bom	1	
30	13197108	F/R Worklights Switch	1	
31	43818848	Work Lights Selector Harness - Effective with S/N 194702	1	
-	13225560	Work Lights Selector Harness - Prior to S/N 194702	1	
32	13322102	Panel Light Assembly- Effective with S/N 194702	1	
-	13321443	- Lamp	1	
-	13248935	Dash Lights - Prior to S/N 194702	2	
33	13887609	Cab Step	1	
35	43919232	ROPS Support Platform - NA	1	
37	96704556	HHCS, Zinc Plated	6	M10 x 1.5 x 40 Cl 8.8
38	NOT-USED	This Item Not Used W/this Bom	1	
39	**NSVA**	**Tilt Steering Wheel (Cab) - Non-NA, Non-EU**	**1**	**See Page D - 82.**
-	13335492	Tilt Column Cover - NA	1	

19287887 REV 0G

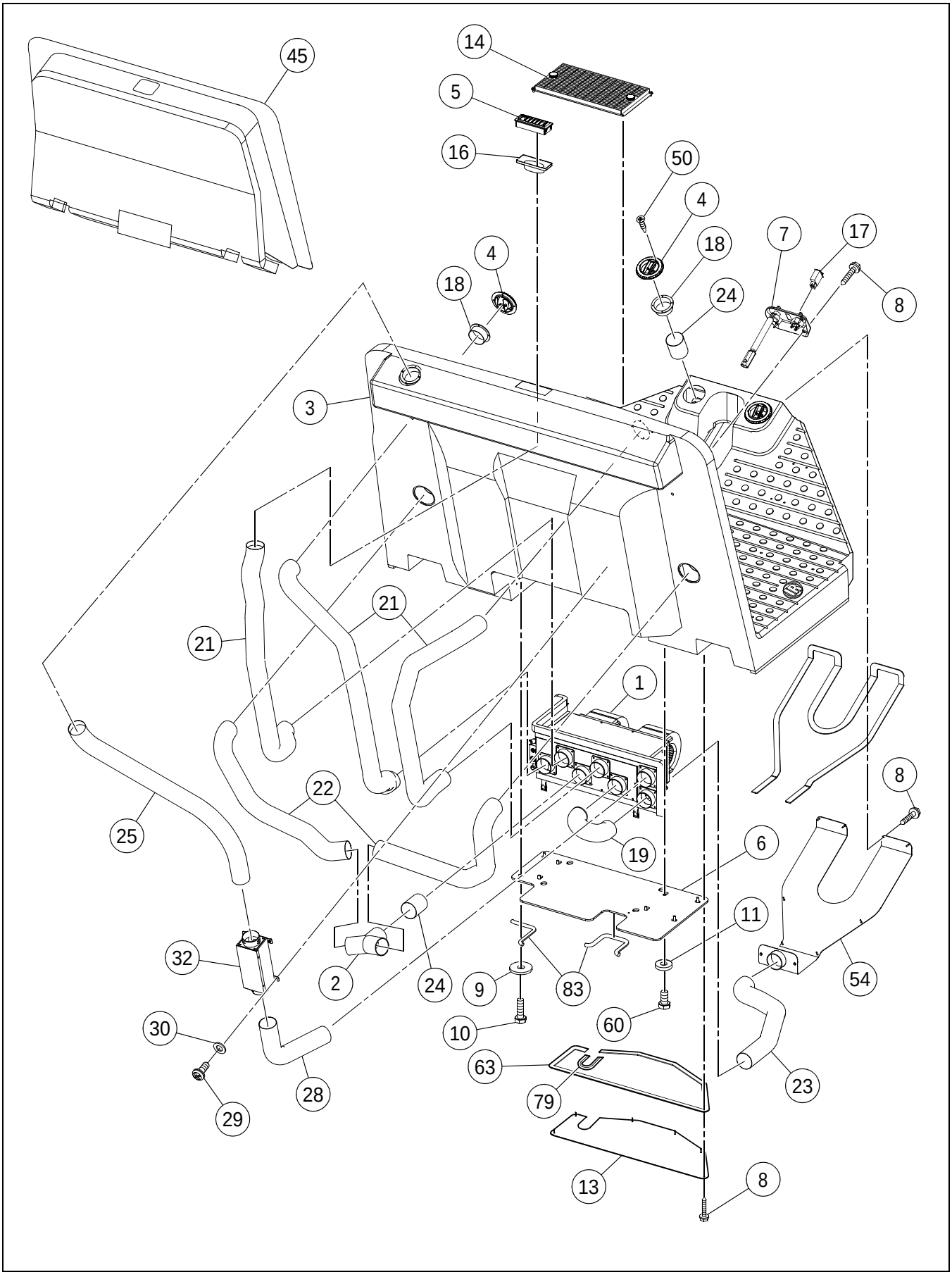

****Only Offered Parts Listed****

BOM 19287887

ITEM	COMM. NO.	DESCRIPTION	QTY	DIMENSIONS/NOTES
1	**13237367**	**Heater/Evaporator**	**1**	**See Breakdown D - 76.**
2	13162094	Y-splicer	1	
3	43843564	Operators Platform	1	
4	13161724	Louvers	6	
5	13179197	Louver	1	
6	13237326	Mounting Plate	1	
7	13254644	Heater	1	
8	96728548	Self Tapping Screw	19	
9	96740188	Washer	4	M8 x 3
10	96702659	HHCS, Zinc Plated	6	M8 x 1.25 x 25 Cl 8.8
11	96712674	Flatwasher	4	
13	13502083	Cover Plate	1	
14	13234927	Air Recirculation Filter Assembly	1	
-	13200019	- Recirculation	1	
-	13161757	- Air Recirculation Filter	1	
-	13200001	- Recirculation Filter Grill	1	
16	13179403	Louver Adapter	1	
17	13156963	AC Switch	1	
18	13161732	Louver Adapter	7	
19	13176508	Bottom Duct Hose	1	
21	13295712	Upper Side Duct Hose	3	
22	13176516	Lower Side Duct Hose	2	
23	13176532	Plenum Hose	1	
24	59290742	Connector Hose	3	
25	59290734	Center Duct Hose	1	
28	59290783	Bottom Fresh Air Duct Hose	1	
29	54487517	Tapping Screw	4	
30	96738554	Flatwasher	4	
32	59290767	Fresh Air Filter	1	
45	59290817	Foam	1	
50	13209887	Wood Screw	14	
54	13234893	Plenum	1	
60	96702824	HHCS, Zinc Plated	6	M8 x 1.25 x 20 Cl 8.8
63	35898477	Foamtape	1	
79	13467485	Seal Trim	1	
83	50829662	Trim	1	

19287887 REV 0G

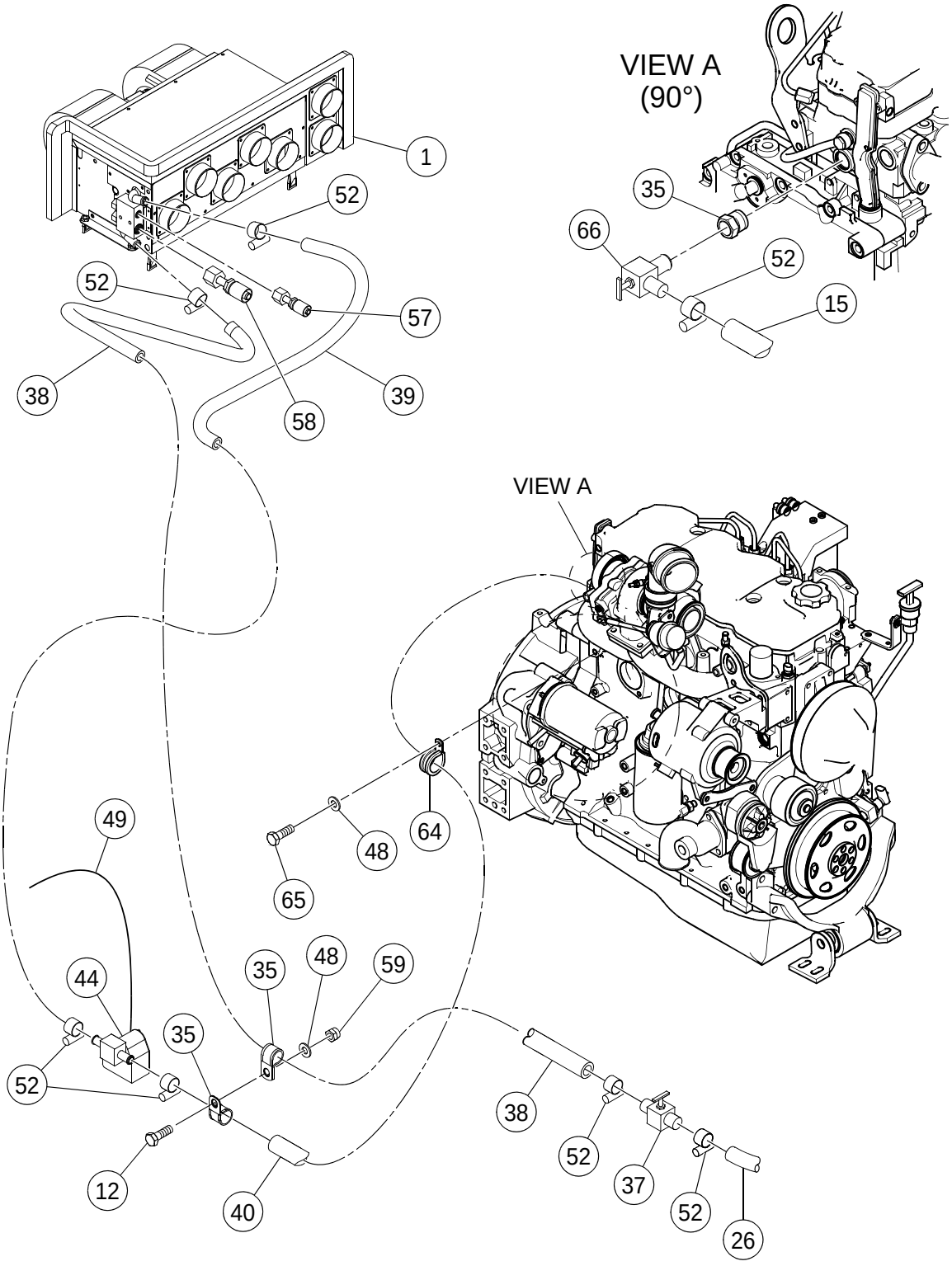

****Only Offered Parts Listed****

BOM 19287887

ITEM	COMM. NO.	DESCRIPTION	QTY	DIMENSIONS/NOTES
1	**13237367**	**Heater/Evaporator**	**1**	**See Breakdown D - 76.**
12	96701917	HHCS, Zinc Plated	4	M10 x 1.5 x 30 Cl 8.8
15	59392795	Valve	1	
26	59823716	Hose	1	
35	59465674	Clamp	2	
36	59903203	Reducer (Not Shown)	1	
37	13254909	Shut-off Valve	1	
38	59845768	Hose Assembly	1	
39	59775221	Hose Assembly	1	
40	95285144	Hose	5	
44	13200027	Heater Valve	1	
-	13258942	- Mounting Bracket	1	
-	13258959	- Motor Adaptor	1	
-	13258967	- Heater Valve	1	
-	13258975	- Valve Lever Arm	1	
-	13258983	- Shaft Adapter	1	
-	13258991	- Plastite Screw	3	
-	13259007	- Screw	3	
-	13259015	- Washer	4	
-	13259023	- Spacer	3	
48	96741046	Flatwasher	4	
49	13200035	Wiring Harness	1	
52	95671285	Clamp	8	
57	43801992	Hose Assembly	1	
58	43889153	Hose Assembly	1	
59	96704614	Nut	2	M10 x 1.5
64	59465641	Clamp	1	
65	96702279	HHCS, Zinc Plated	1	M10 x 1.5 x 20 Cl 8.8
66	96702279	HHCS, Zinc Plated	1	M10 x 1.5 x 20 Cl 8.8

19287887 REV 0G

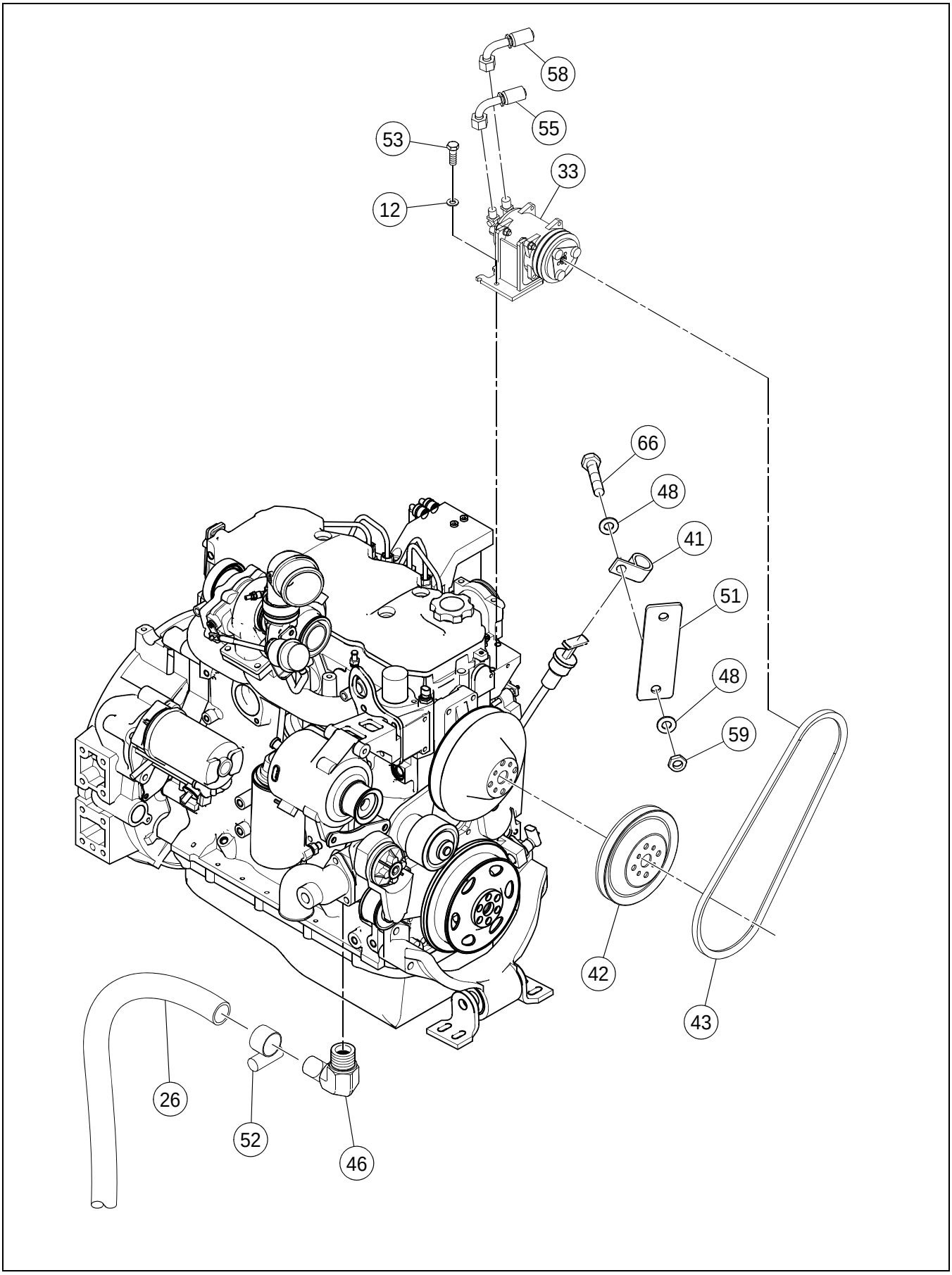

****Only Offered Parts Listed****

BOM 19287887

ITEM	COMM. NO.	DESCRIPTION	QTY	DIMENSIONS/NOTES
12	96701917	HHCS, Zinc Plated	4	M10 x 1.5 x 30 Cl 8.8
26	59823716	Hose	1	
33	**NSVA**	**Compressor Assembly**	**1**	**See Page D - 78.**
41	95301859	Clamp	1	
42	58910662	Compressor	1	
43	13236666	Compressor Belt	1	
46	58962226	Elbow	1	
48	96741046	Flatwasher	4	
51	43852359	HVAC/Dipstick Bracket	1	
52	95671285	Clamp	8	
53	13355003	Decal: Refridgerant Charge	1	
55	43801984	Hose Assembly	1	
58	43889153	Hose Assembly	1	
59	96704614	Nut	2	M10 x 1.5
66	96702279	HHCS, Zinc Plated	1	M10 x 1.5 x 20 Cl 8.8

19287887 REV 0G

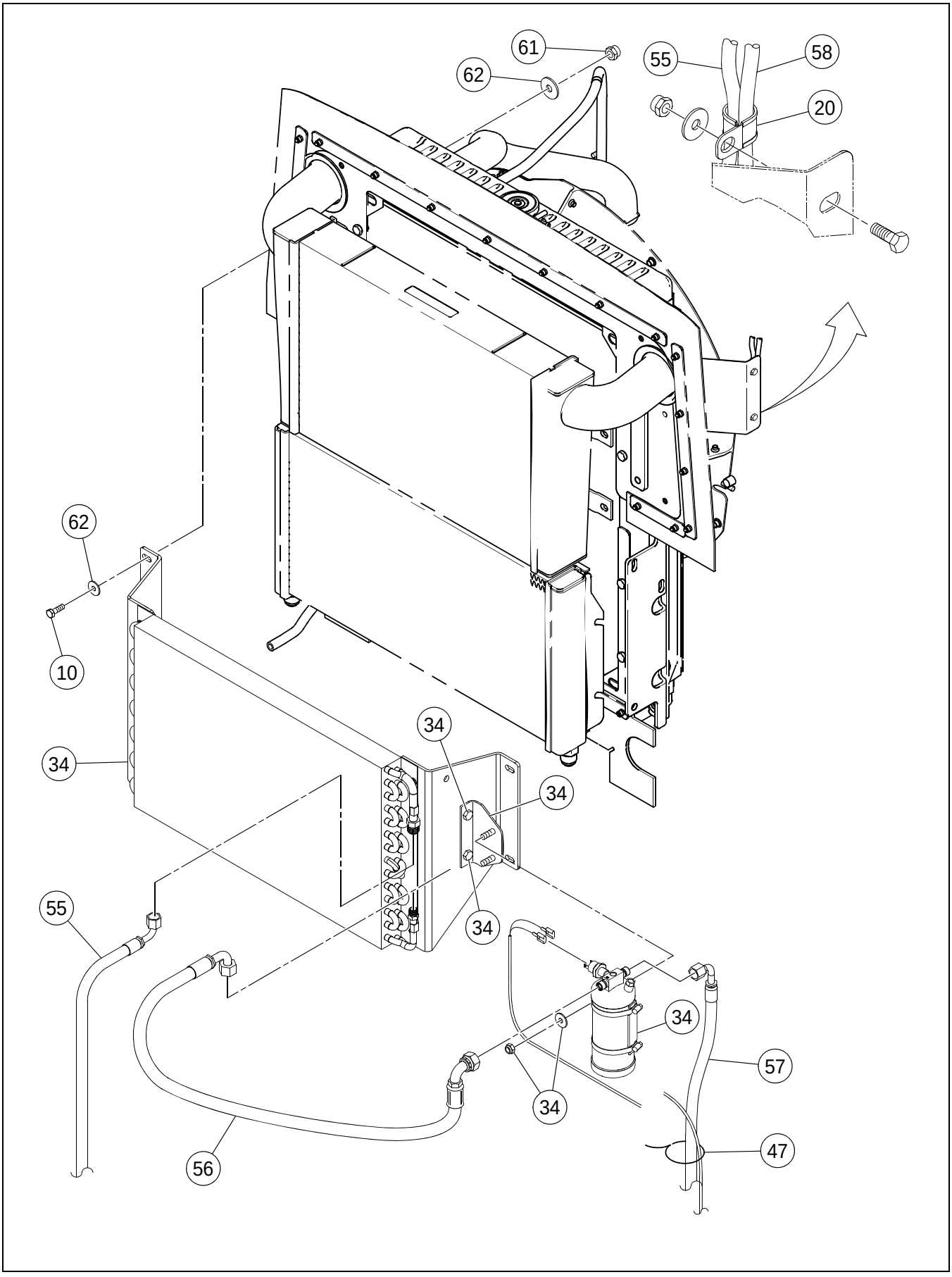

****Only Offered Parts Listed****

BOM 19287887

ITEM	COMM. NO.	DESCRIPTION	QTY	DIMENSIONS/NOTES
10	96702659	HHCS, Zinc Plated	6	M8 x 1.25 x 25 Cl 8.8
20	95378873	Clamp	1	
34	**NSVA**	**Condensor Assembly**	**1**	**See Page D - 80.**
47	95373973	Wire Tie	A/R	
55	43801984	Hose Assembly	1	
56	13225735	Coolant Hose	1	
57	43801992	Hose Assembly	1	
58	43889153	Hose Assembly	1	
61	96704606	Locknut	11	M8
62	96740204	Washer	16	M8 x 25

19287887 REV 0G

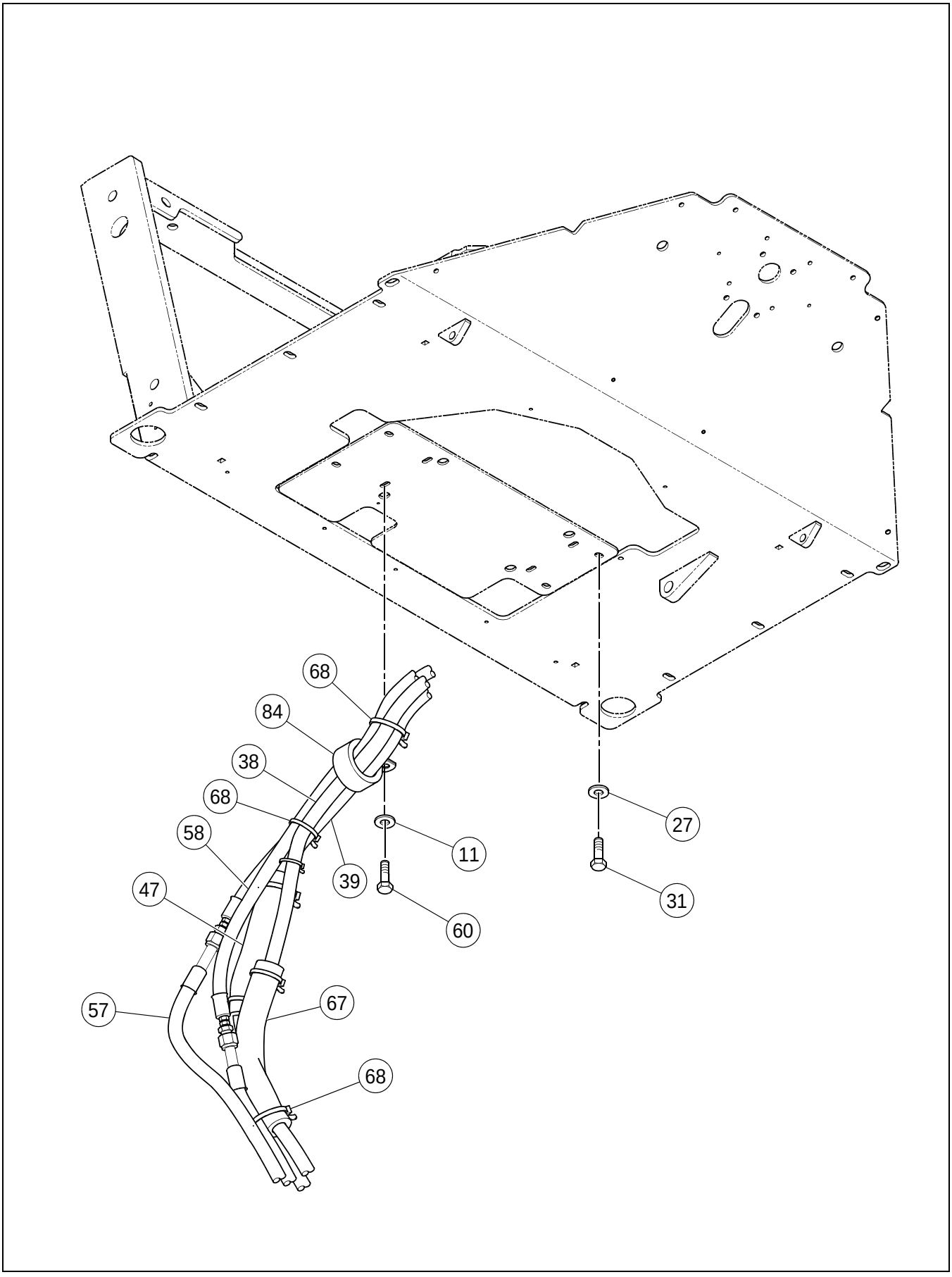

****Only Offered Parts Listed****

BOM 19287887

ITEM	COMM. NO.	DESCRIPTION	QTY	DIMENSIONS/NOTES
11	96712674	Flatwasher	4	
27	96704663	Flatwasher	1	M6
31	96702394	HHCS, Zinc Plated	1	M6 x 1 x 12 Cl 8.8
38	59845768	Hose Assembly	1	
39	59775221	Hose Assembly	1	
47	95373973	Wire Tie	A/R	
57	43801992	Hose Assembly	1	
58	43889153	Hose Assembly	1	
60	96702824	HHCS, Zinc Plated	6	M8 x 1.25 x 20 Cl 8.8
67	43886696	Firesleeve	2	
68	95424586	Wire Tie	A/R	
84	95322871	Clamp	1	

HEATER/EVAPORATOR (13237367) - INTERNAL BREAKDOWN

Dwg D13244611/00

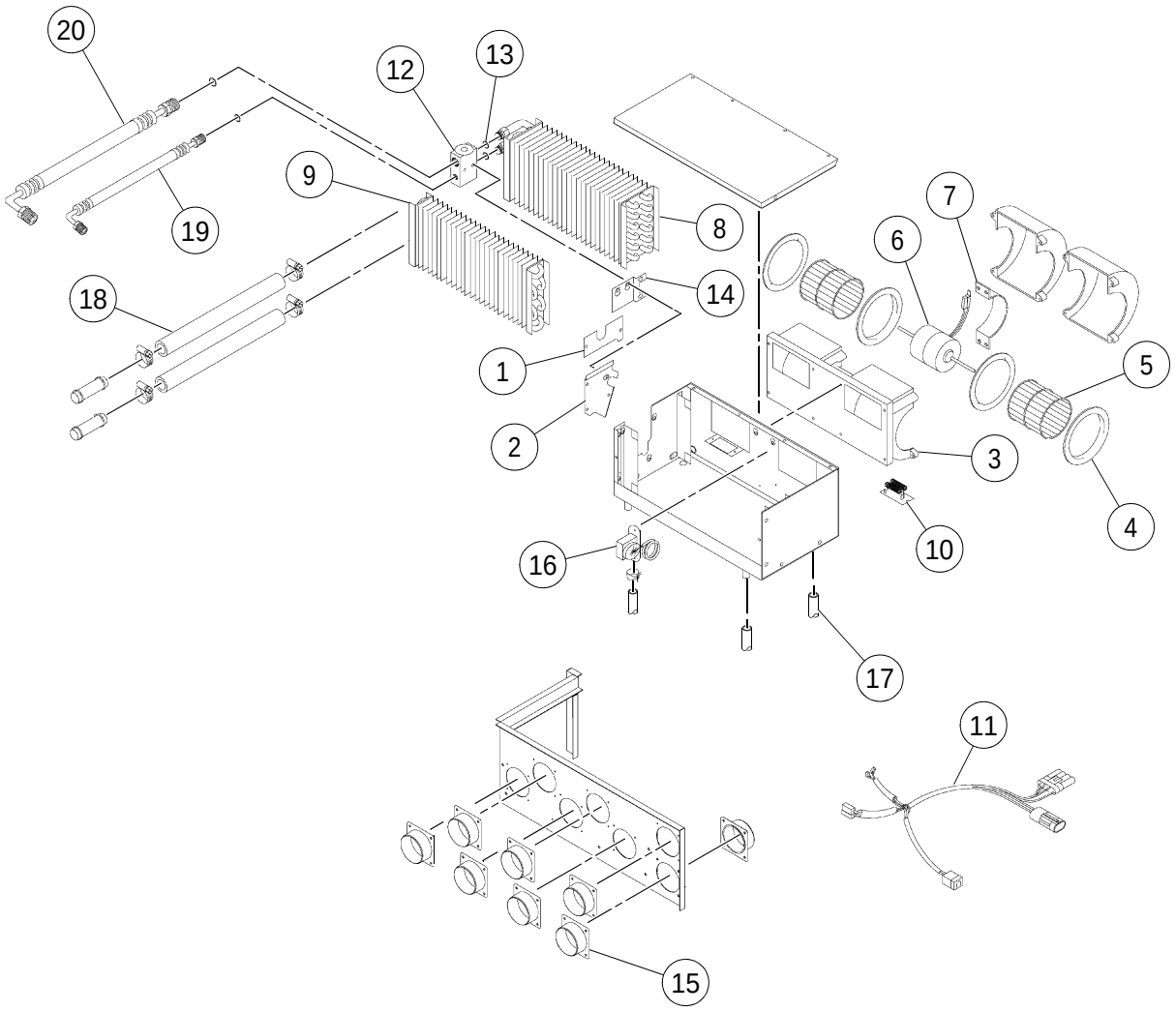

HEATER/EVAPORATOR (13237367) - INTERNAL BREAKDOWN

****Only Offered Parts Listed****

BOM 13237367

ITEM	COMM. NO.	DESCRIPTION	QTY	DIMENSIONS/NOTES
1	13258702	Coil Cover	1	
2	13258710	Coil Cover	1	
3	13258728	Blower, 12V	1	
-	13861752	Blower	1	
4	13258694	- Venturi	2	
5	13258736	- Blower Wheel	2	
6	13258744	- Motor	1	12V
7	13258751	- Motor Mount	1	
8	13258868	Evaporator Coil	1	
9	13258769	Heater Coil	1	
10	13258777	Resistor 12V	1	
11	13258876	Wire Harness	1	
12	13258884	Block Valve	1	
13	13258892	O-ring	2	
14	13258900	Valve Bracket	1	
15	13258843	Hose Adapter	6	
16	57588162	Thermostat	1	
17	13258835	Drain Valve	4	
18	13258793	Heater Hose Assembly	2	
19	13258918	Hose Assembly	1	
20	13258926	Hose Assembly	1	
-	13861414	Condenser/High Efficiency	1	
-	13845375	Cab Harness with Air Conditioning	1	

COMPRESSOR ASSEMBLY

13216064 REV 0C

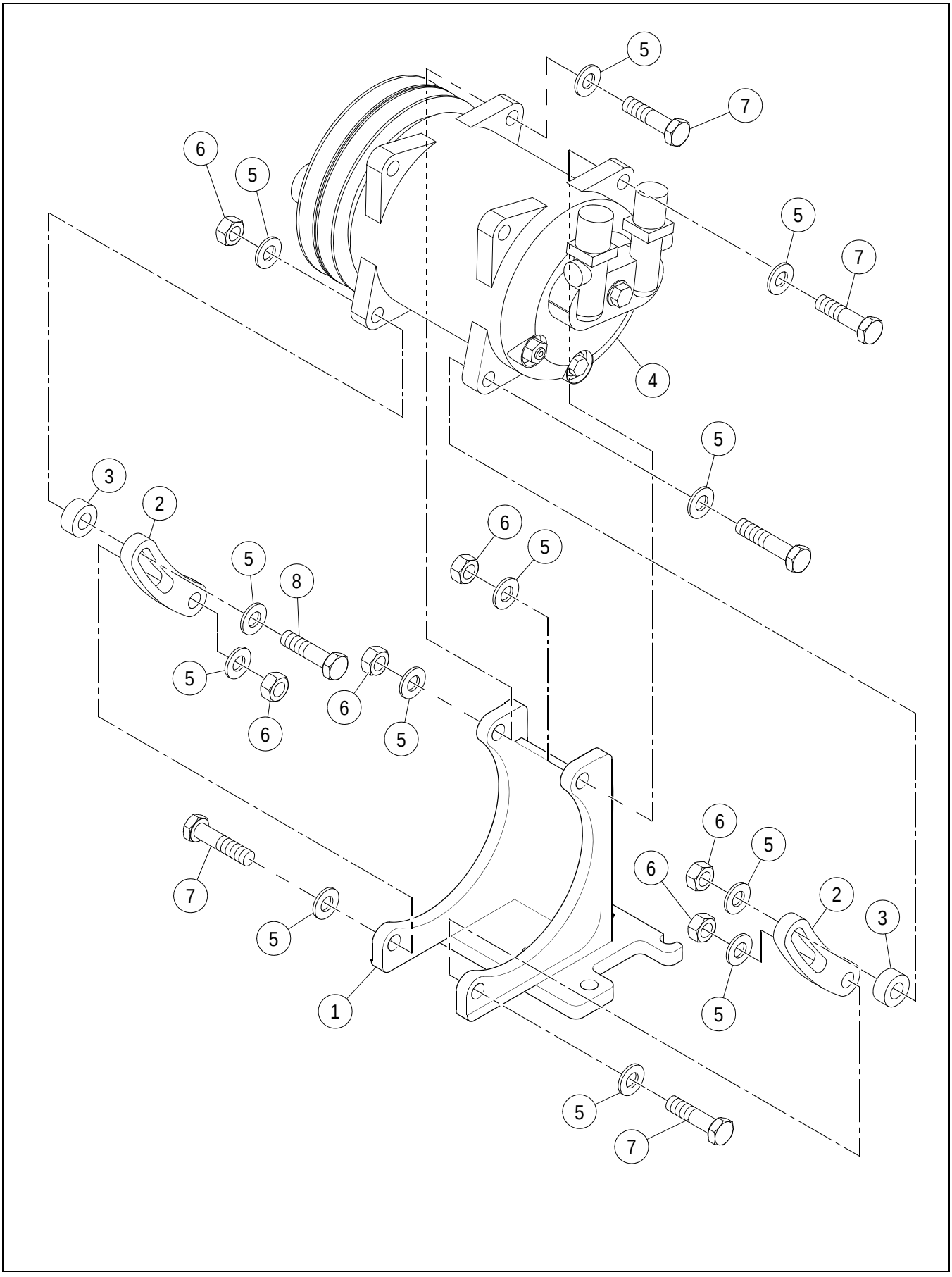

COMPRESSOR ASSEMBLY

****Only Offered Parts Listed****

BOM 43802024

ITEM	COMM. NO.	DESCRIPTION	QTY	DIMENSIONS/NOTES
1	43802032	Bracket	1	
2	59147991	Adjustment Arm	2	
3	59148007	Spacer	2	
4	13274576	Compressor	1	
-	13479381	- Magnetic Clutch	1	
5	96741046	Flatwasher	12	
6	96704812	Hex Nut	6	
7	96704358	HHCS, Zinc Plated	4	M10 x 1.5 x 40 Cl 8.8
8	96705116	HHCS, Zinc Plated	2	M10 x 1.5 x 50 Cl 8.8

CONDENSOR ASSEMBLY

13324835 REV 0B

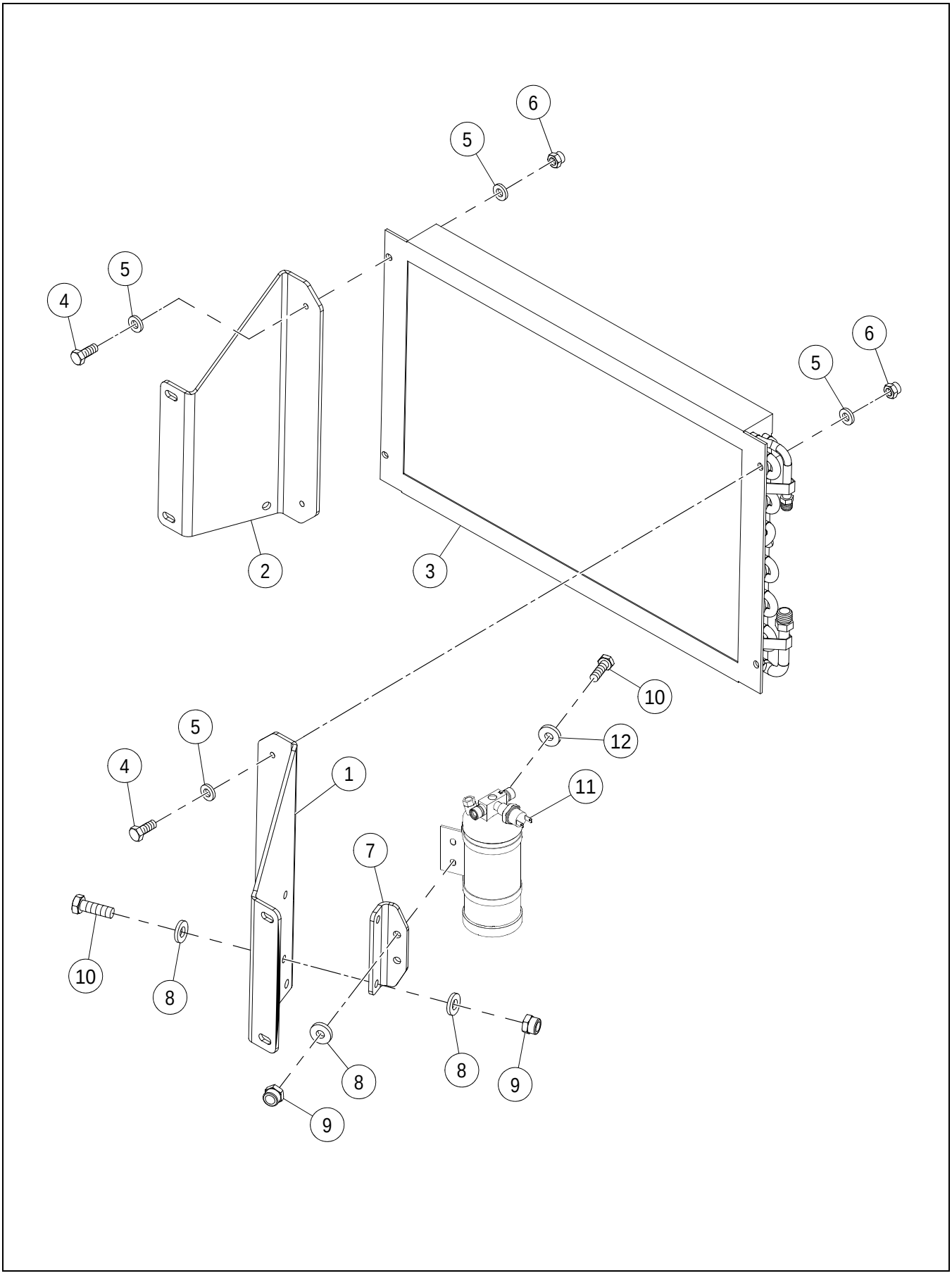

CONDENSOR ASSEMBLY

****Only Offered Parts Listed****

BOM 13356944

ITEM	COMM. NO.	DESCRIPTION	QTY	DIMENSIONS/NOTES
1	13297080	Condensor Bracket	1	
2	13297155	Condensor Bracket	1	
3	13356712	Condenser	1	
4	96704564	HHCS, Zinc Plated	4	M6 x 1 x 20 Cl 8.8
5	96704663	Flatwasher	8	M6
6	96704598	Locknut	4	M6
7	13297106	Dryer Mounting Bracket	1	
8	96741038	Flatwasher	6	
9	96704606	Locknut	4	M8
10	96702659	HHCS, Zinc Plated	4	M8 x 1.25 x 25 Cl 8.8
11	43837715	Drier/Binary Bracket	1	
-	43876242	- Receiver Drier	1	
-	43876259	- R/D Mounting Bracket	1	
-	43876267	- Clamp	2	
-	57607814	- Pressure Switch	1	
12	96712674	Flatwasher	2	

43818871 REV 00

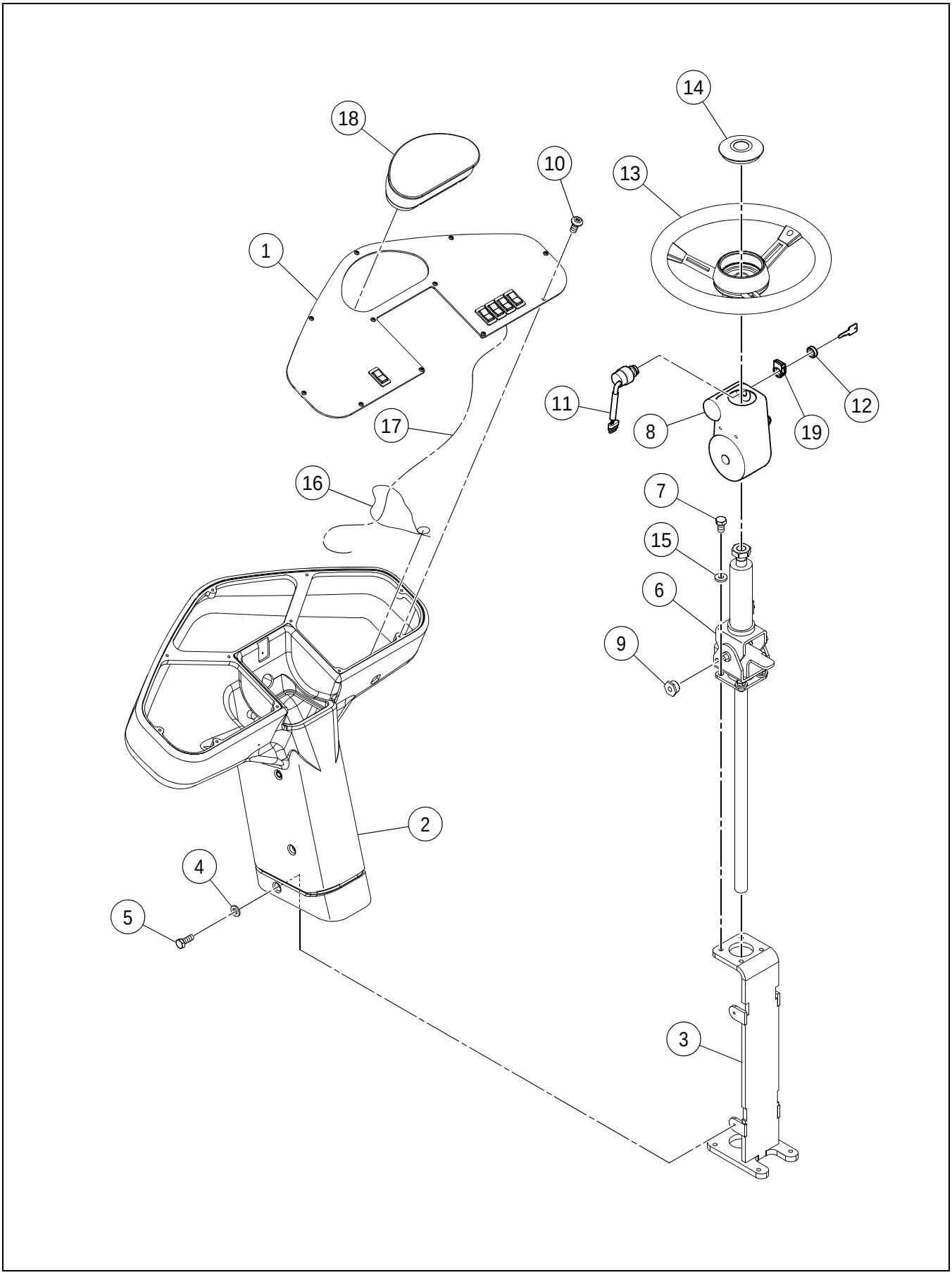

TILT STEERING WHEEL (CAB)

****Only Offered Parts Listed****

BOM 43819978

ITEM	COMM. NO.	DESCRIPTION	QTY	DIMENSIONS/NOTES
1	NOT-USED	This Item Not Used W/this Bom	1	
2	NOT-USED	This Item Not Used W/this Bom	1	
3	NOT-USED	This Item Not Used W/this Bom	1	
4	NOT-USED	This Item Not Used W/this Bom	1	
5	NOT-USED	This Item Not Used W/this Bom	1	
6	13319942	Tilt Steering Column	1	
7	NOT-USED	This Item Not Used W/this Bom	1	
8	13335492	Cover	1	
9	NOT-USED	This Item Not Used W/this Bom	1	
10	NOT-USED	This Item Not Used W/this Bom	1	
11	NOT-USED	This Item Not Used W/this Bom	1	
12	NOT-USED	This Item Not Used W/this Bom	1	
13	NOT-USED	This Item Not Used W/this Bom	1	
14	NOT-USED	This Item Not Used W/this Bom	1	
15	NOT-USED	This Item Not Used W/this Bom	1	
16	NOT-USED	This Item Not Used W/this Bom	1	
17	NOT-USED	This Item Not Used W/this Bom	1	
18	NOT-USED	This Item Not Used W/this Bom	1	
19	NOT-USED	This Item Not Used W/this Bom	1	

PRE-CAB WITH HEAT INSTALLATION - OPTIONAL

19330778 REV 0E

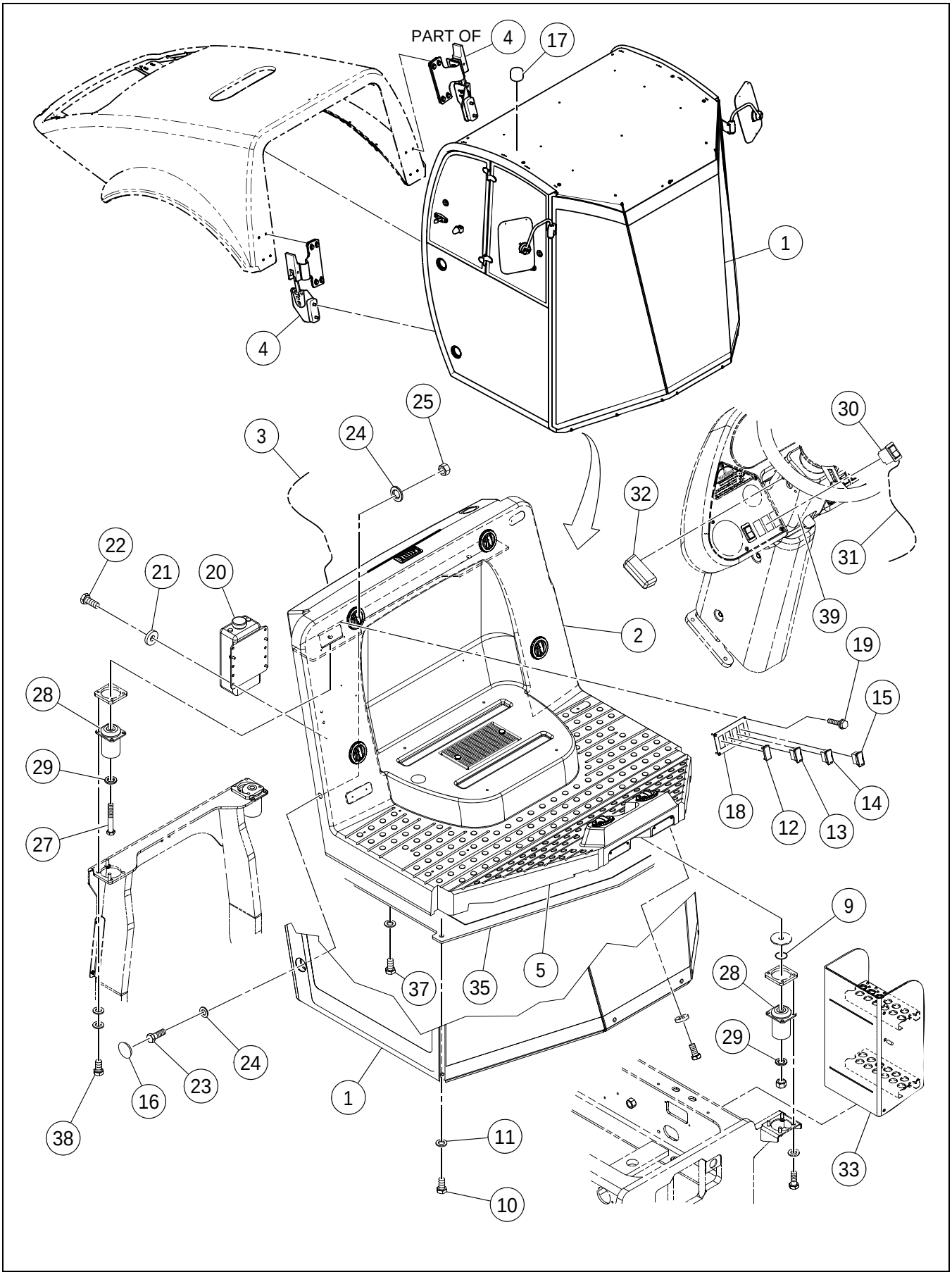

****Only Offered Parts Listed****

BOM 43822311

ITEM	COMM. NO.	DESCRIPTION	QTY	DIMENSIONS/NOTES
1	NOT-USED	This Item Not Used W/this Bom	1	
2	**NSVA**	**Heater Installation**	**1**	**See Page D - 50.**
3	13492822	Cab And HVAC Harness	1	
4	**NSVA**	**No ROPS/Hood Latch Draw Installation**	**1**	**See Page D - 86.**
5	43836451	Rubber Seal	1	
9	96746417	Washer, Plain	4	
10	NOT-USED	This Item Not Used W/this Bom	2	
11	NOT-USED	This Item Not Used W/this Bom	2	
12	58835398	Blank Switch	1	
13	59196451	Front Wiper Switch	1	
14	59196444	Rear Wiper Switch	1	
15	59195925	Washer	1	
16	NOT-USED	This Item Not Used W/this Bom	4	
17	NOT-USED	This Item Not Used W/this Bom	2	
18	13212576	Control	1	
19	95988093	Screw	4	
20	13215769	Washer	1	
21	96712674	Flatwasher	4	
22	96702824	HHCS, Zinc Plated	4	M8 x 1.25 x 20 Cl 8.8
23	NOT-USED	This Item Not Used W/this Bom	4	
24	NOT-USED	This Item Not Used W/this Bom	8	
25	NOT-USED	This Item Not Used W/this Bom	4	
27	NOT-USED	This Item Not Used W/this Bom	1	
28	NOT-USED	This Item Not Used W/this Bom	1	
29	NOT-USED	This Item Not Used W/this Bom	1	
30	13197108	F/R Worklights Switch	1	
31	43818848	Work Lights Selector Harness - Effective with S/N 194702	1	
-	13225560	Work Lights Selector Harness - Prior to S/N 194702	1	
32	13322102	Panel Light Assembly - Effective with S/N 194702	1	
-	13321443	- Lamp	1	
-	13248935	Dash Lights - Prior to S/N 194702	2	
33	NOT-USED	This Item Not Used W/this Bom	1	
35	43919232	ROPS Support Platform	1	
37	96704556	HHCS, Zinc Plated	6	M10 x 1.5 x 40 Cl 8.8
38	NOT-USED	This Item Not Used W/this Bom	1	
39	13335484	Cover Column	1	

NO ROPS/HOOD LATCH DRAW INSTALLATION

13883434 REV 02

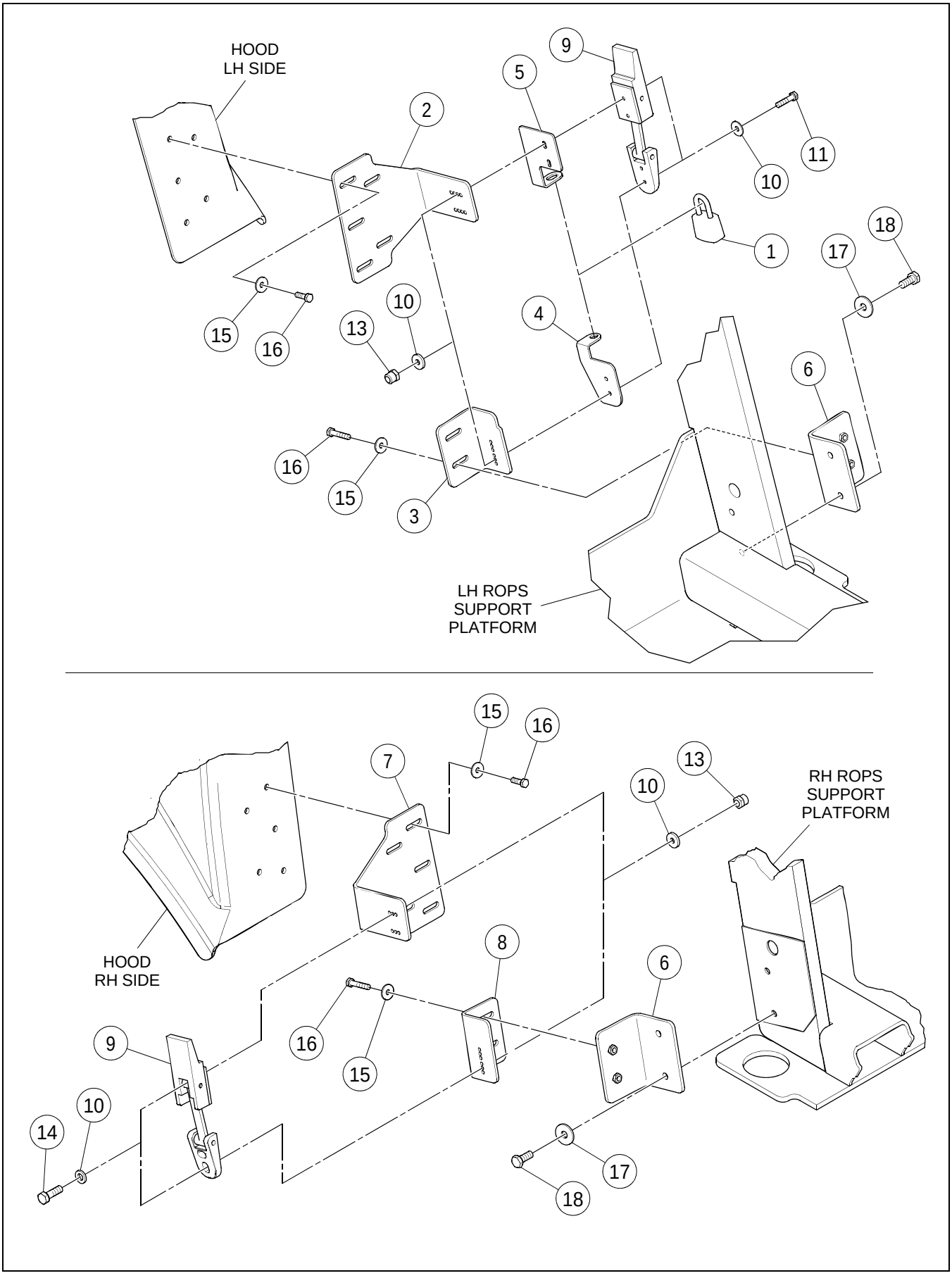

NO ROPS/HOOD LATCH DRAW INSTALLATION

****Only Offered Parts Listed****

BOM 13883434

ITEM	COMM. NO.	DESCRIPTION	QTY	DIMENSIONS/NOTES
1	13349212	Lock	1	
2	13881206	Bracket LH, Hood Latch	1	
3	13881198	Bracket LH, ROPS Latch	1	
4	13885355	Lock Tab, RH	1	
5	59163238	Lock Tab, RH	1	
6	13881396	No ROPS Latch Mounting Bracket	2	
7	13881230	RH Hood Latch Bracket	1	
8	13881222	RH ROPS Latch Bracket	1	
9	59162149	Latch	2	
10	95922332	Flatwasher	16	
11	96705736	HHCS, Zinc Plated	4	M5 x 0.8 x 20 Cl 8.8
13	96704580	Locknut	8	M5
14	96705728	HHCS, Zinc Plated	4	M5 x 0.8 x 16 Cl 8.8
15	96740204	Washer	14	M8 x 25
16	96702659	HHCS, Zinc Plated	14	M8 x 1.25 x 25 Cl 8.8
17	96741046	Flatwasher	4	
18	96702287	HHCS, Zinc Plated	4	M10 x 1.5 x 25 Cl 8.8

PRE-CAB WITH HEAT AND AIR CONDITIONING
INSTALLATION - SD-160 - OPTIONAL

19330778 REV 0E

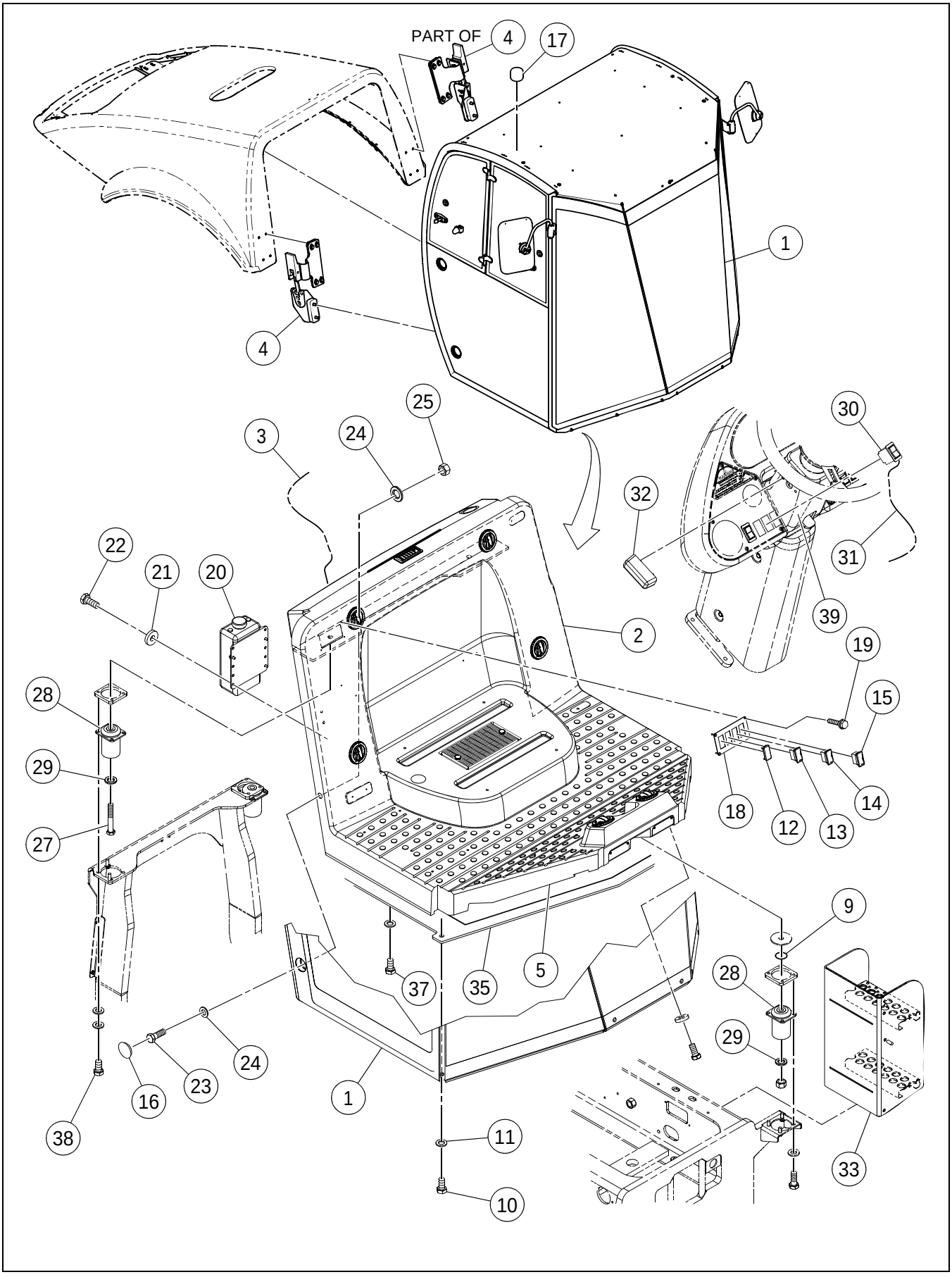

PRE-CAB WITH HEAT AND AIR CONDITIONING
INSTALLATION - SD-160 - OPTIONAL

****Only Offered Parts Listed****

BOM 43822329

ITEM	COMM. NO.	DESCRIPTION	QTY	DIMENSIONS/NOTES
1	NOT-USED	This Item Not Used W/this Bom	1	
2	**NSVA**	**Heating and Air Conditioning Installation**	**1**	**See Page D - 66.**
3	13492822	Cab And HVAC Harness	1	
4	**NSVA**	**No ROPS/Hood Latch Draw Installation**	**1**	**See Page D - 86.**
5	43836451	Rubber Seal	1	
9	96746417	Washer, Plain	4	
10	NOT-USED	This Item Not Used W/this Bom	2	
11	NOT-USED	This Item Not Used W/this Bom	2	
12	58835398	Blank Switch	1	
13	59196451	Front Wiper Switch	1	
14	59196444	Rear Wiper Switch	1	
15	59195925	Washer	1	
16	NOT-USED	This Item Not Used W/this Bom	4	
17	NOT-USED	This Item Not Used W/this Bom	2	
18	13212576	Control	1	
19	95988093	Screw	4	
20	13215769	Washer	1	
21	96712674	Flatwasher	4	
22	96702824	HHCS, Zinc Plated	4	M8 x 1.25 x 20 Cl 8.8
23	NOT-USED	This Item Not Used W/this Bom	4	
24	NOT-USED	This Item Not Used W/this Bom	8	
25	NOT-USED	This Item Not Used W/this Bom	4	
27	NOT-USED	This Item Not Used W/this Bom	1	
28	NOT-USED	This Item Not Used W/this Bom	1	
29	NOT-USED	This Item Not Used W/this Bom	1	
30	13197108	F/R Worklights Switch	1	
31	43818848	Work Lights Selector Harness - Effective with S/N 194702	1	
-	13225560	Work Lights Selector Harness - Prior to S/N 194702	1	
32	13322102	Panel Light Assembly - Effective with S/N 194702	1	
-	13321443	- Lamp	1	
-	13248935	Dash Lights - Prior to S/N 194702	2	
33	NOT-USED	This Item Not Used W/this Bom	1	
35	43919232	ROPS Support Platform	1	
37	96704556	HHCS, Zinc Plated	6	M10 x 1.5 x 40 Cl 8.8
38	NOT-USED	This Item Not Used W/this Bom	1	
39	**NSVA**	**Tilt Steering Wheel (Cab)**	**1**	**See Page D - 90.**

43818871 REV 00

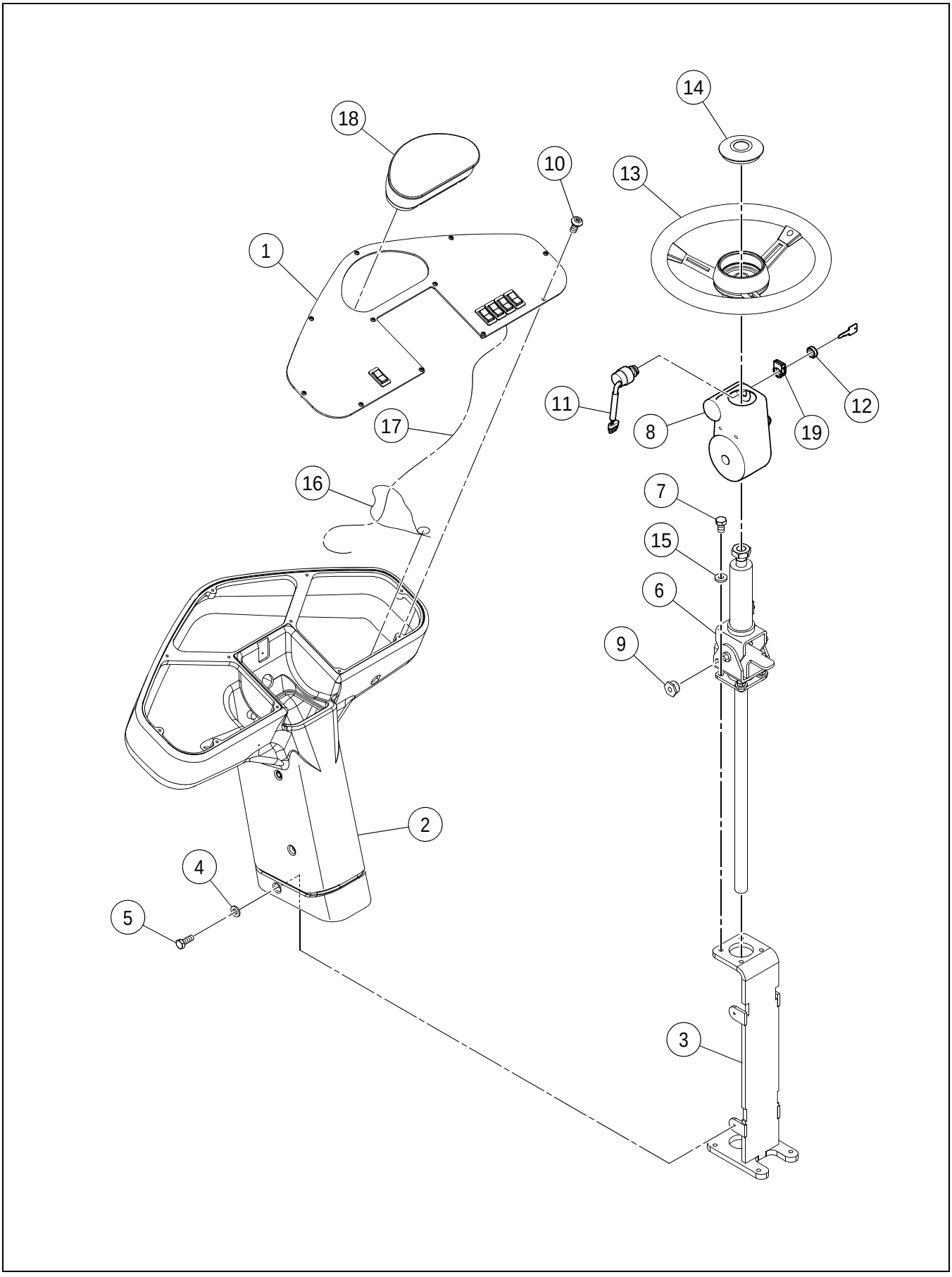

TILT STEERING WHEEL (CAB)

****Only Offered Parts Listed****

BOM 43819978

ITEM	COMM. NO.	DESCRIPTION	QTY	DIMENSIONS/NOTES
1	NOT-USED	This Item Not Used W/this Bom	1	
2	NOT-USED	This Item Not Used W/this Bom	1	
3	NOT-USED	This Item Not Used W/this Bom	1	
4	NOT-USED	This Item Not Used W/this Bom	1	
5	NOT-USED	This Item Not Used W/this Bom	1	
6	13319942	Tilt Steering Column	1	
7	NOT-USED	This Item Not Used W/this Bom	1	
8	13335492	Cover	1	
9	NOT-USED	This Item Not Used W/this Bom	1	
10	NOT-USED	This Item Not Used W/this Bom	1	
11	NOT-USED	This Item Not Used W/this Bom	1	
12	NOT-USED	This Item Not Used W/this Bom	1	
13	NOT-USED	This Item Not Used W/this Bom	1	
14	NOT-USED	This Item Not Used W/this Bom	1	
15	NOT-USED	This Item Not Used W/this Bom	1	
16	NOT-USED	This Item Not Used W/this Bom	1	
17	NOT-USED	This Item Not Used W/this Bom	1	
18	NOT-USED	This Item Not Used W/this Bom	1	
19	NOT-USED	This Item Not Used W/this Bom	1	

CAB WITH HEAT INSTALLATION - SD-190/SD-200

19330778 REV 0E

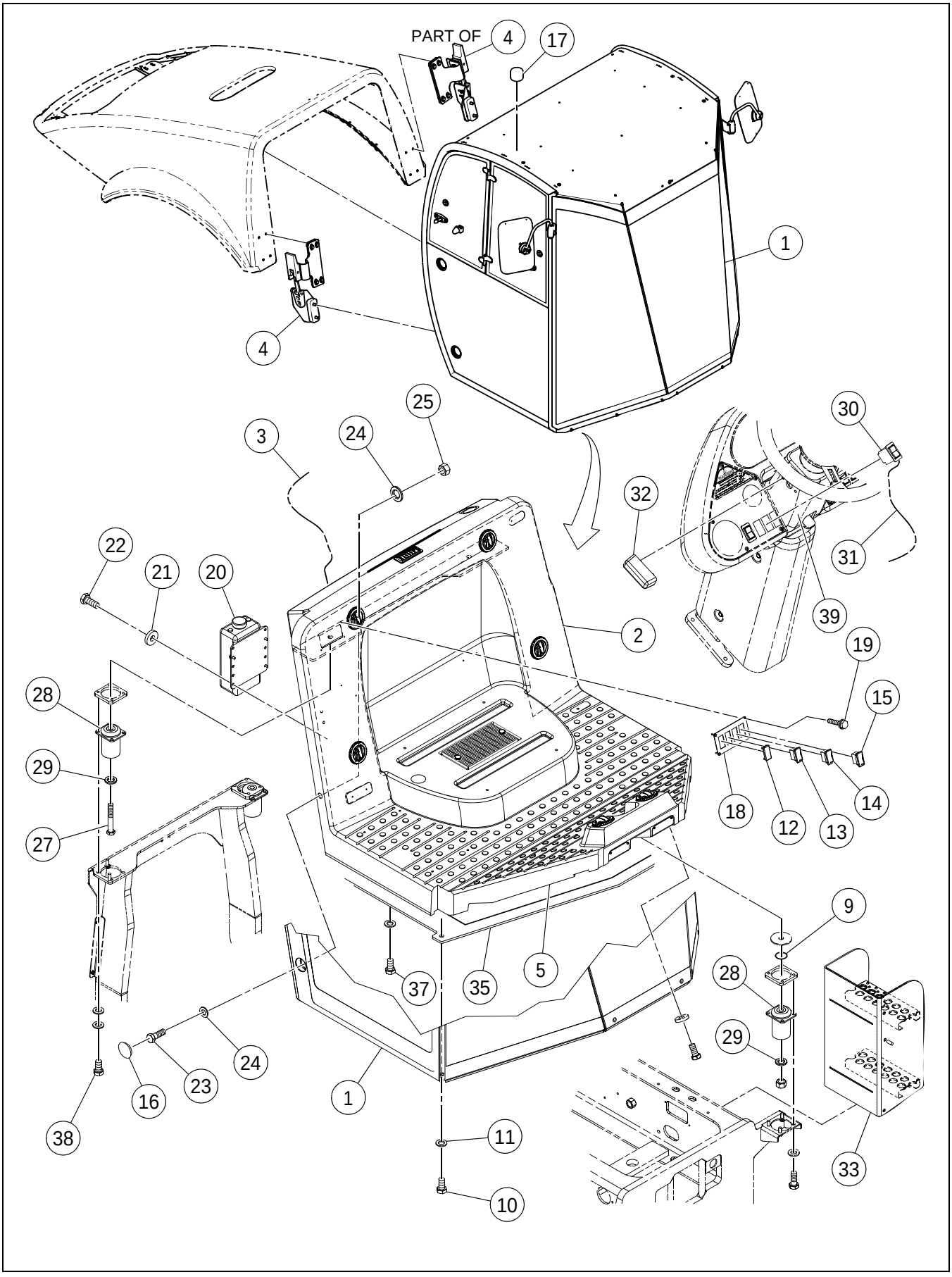

****Only Offered Parts Listed****

BOM 43828904

ITEM	COMM. NO.	DESCRIPTION	QTY	DIMENSIONS/NOTES
1	**43828862**	**Cab Assembly**	**1**	**See Breakdown D - 94.**
2	**NSVA**	**Heater Installation**	**1**	**See Page D - 50.**
3	13492822	Cab And Hvac Harness	1	
4	**NSVA**	**Cab/Hood Draw Latch Installation**	**1**	**See Page D - 124.**
5	NSVA	Rubber Seal	1	
9	96746417	Washer, Plain	4	
10	96703178	HHCS, Zinc Plated	2	M16 x 2 x 30 Cl 8.8
11	96738612	Flatwasher, Zinc Plated	2	Cl 200
12	58835398	Blank Switch	1	
13	59196451	Front Wiper Switch	1	
14	59196444	Rear Wiper Switch	4	
15	59195925	Washer	1	
16	13309877	Plastic Plug	4	
17	59326827	Plug	2	
18	13212576	Control	1	
19	95988093	Screw	4	
20	13215769	Washer	1	
21	96712674	Flatwasher	4	
22	96702824	HHCS, Zinc Plated	4	M8 x 1.25 x 20 Cl 8.8
23	96720032	HHCS, Zinc Plated	4	M24 x 3 x 70 Cl 8.8
24	96702642	Washer	4	M24
25	96727532	Hex Nut	4	M24 x 3
26	**NSVA**	**Seatbelt Installation (Not Shown)**	**1**	**See Page D - 62.**
27	NOT-USED	This Item Not Used W/this Bom	1	
28	NOT-USED	This Item Not Used W/this Bom	1	
29	NOT-USED	This Item Not Used W/this Bom	1	
30	13197108	F/R Worklights Switch	1	
31	43818848	Work Lights Selector Harness - Effective with S/N 194702	1	
-	13225560	Work Lights Selector Harness - Prior to S/N 194702	1	
32	13322102	Panel Light Assembly - Effective with S/N 194702	1	
-	13321443	- Lamp	1	
-	13248935	Dash Lights - Prior to S/N 194702	2	
33	13887609	Cab Step	1	
35	NOT-USED	This Item Not Used W/this Bom	1	
37	96704556	HHCS, Zinc Plated	6	M10 x 1.5 x 40 Cl 8.8
38	NOT-USED	This Item Not Used W/this Bom	1	
39	13335484	Cover Column	1	

CAB ASSEMBLY (43828862) - INTERNAL BREAKDOWN - SHEET 1 OF 7

43833946 REV 00

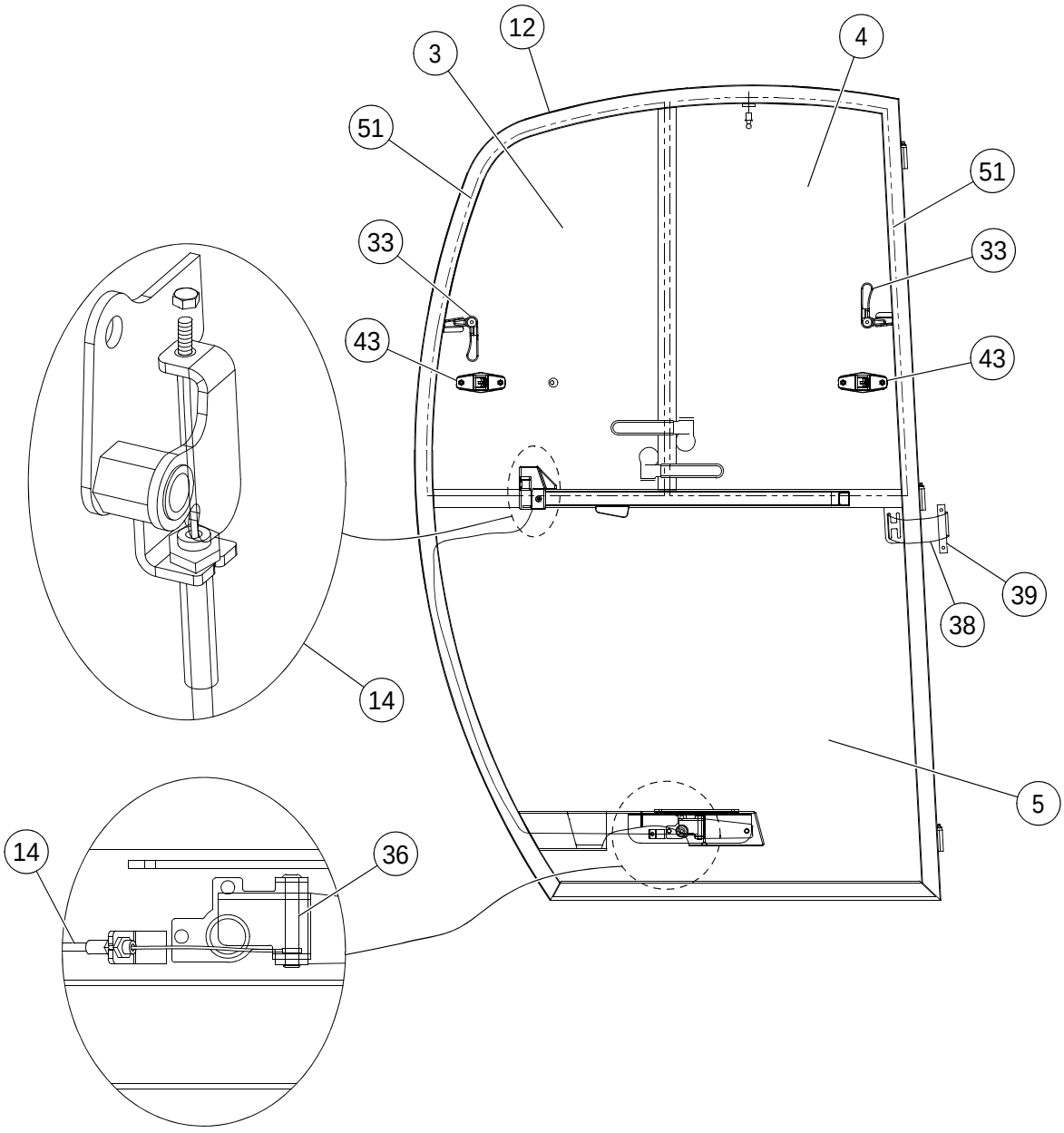

CAB ASSEMBLY (43828862) - INTERNAL BREAKDOWN - SHEET 1 OF 7

****Only Offered Parts Listed****

BOM 43828862

ITEM	COMM. NO.	DESCRIPTION	QTY	DIMENSIONS/NOTES
3	13519350	Door Rear Top Glass	1	
4	13519368	Door Front Top Glass	1	
5	13519376	Door Bottom Glass	1	
12	43835206	Door Assembly	1	
14	13382924	Door Latch Pivot Plate Kit	1	
33	13382759	Window Latch Kit	4	
36	13382940	Door Exterior Latch Kit	1	
38	43835297	Door Strap 6.5"	1	
39	13224332	Door Strap Metal Clamp	1	
43	13224381	Window Hold Back	4	
51	13285440	Rubber Seal	1	

CAB ASSEMBLY (43828862) - INTERNAL BREAKDOWN - SHEET 2 OF 7

43833946 REV 00

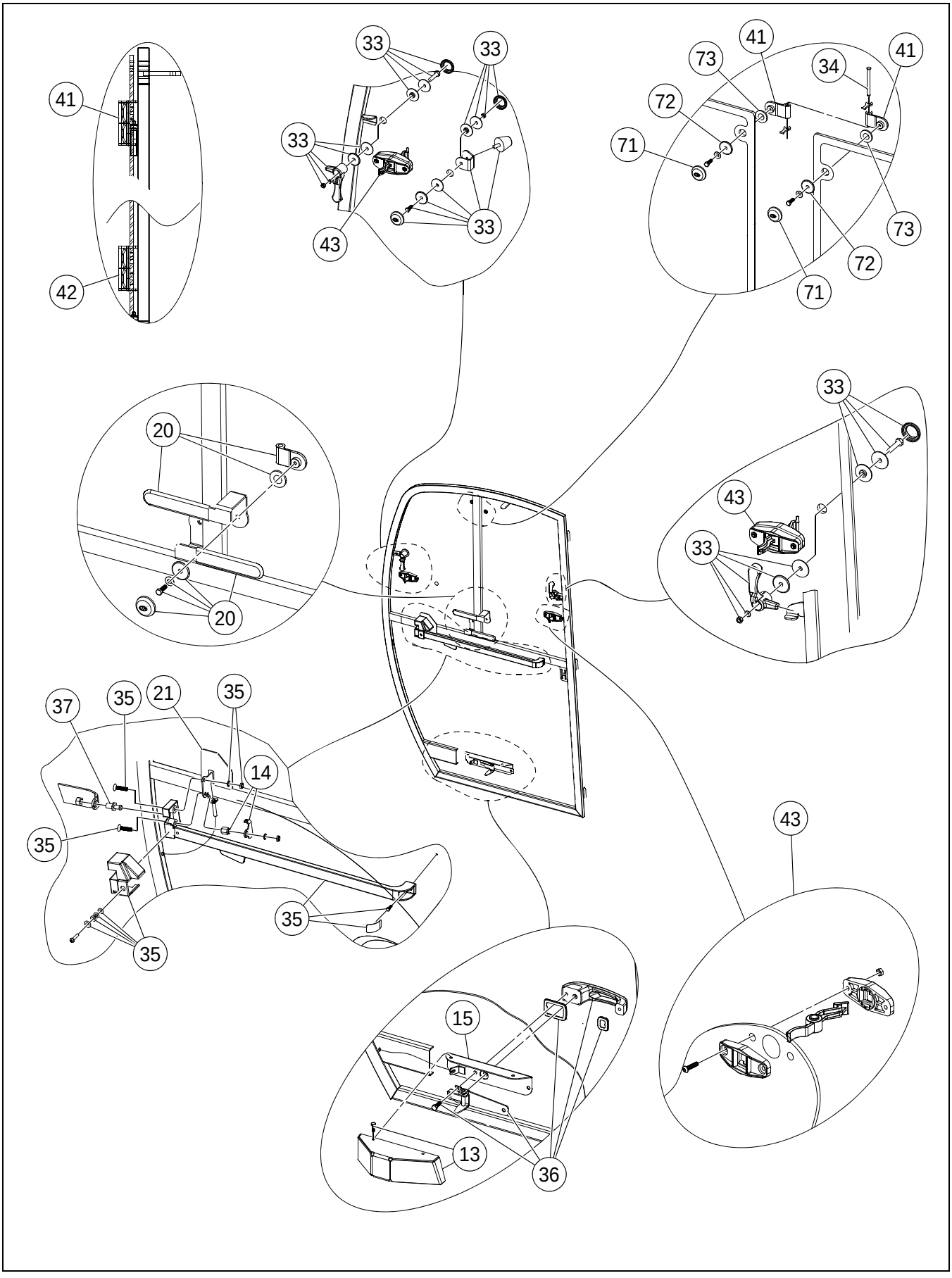

****Only Offered Parts Listed****

BOM 43828862

ITEM	COMM. NO.	DESCRIPTION	QTY	DIMENSIONS/NOTES
13	13382932	Lower Door Latch Cover Kit	1	
14	13382924	Door Latch Pivot Plate Kit	1	
15	43835214	Door Latch Cover Mounting Plate	1	
20	13382916	Side Window Grab Handle Kit	4	
21	43835255	Door Latch Profile Cover	1	
33	13382759	Window Latch Kit	4	
34	13382783	Window Hinge Pin Kit	4	
35	13382957	Door Inside Latch Kit	1	
36	13382940	Door Exterior Latch Kit	1	
37	13284500	Striker Bolt	1	
41	13224340	Window Hinge	4	
42	13224357	Window Hinge	4	
43	13224381	Window Hold Back	4	
71	13285473	Bolt Cover	4	
72	13285481	Washer	4	
73	43835446	Rubber Seal Washer	4	

CAB ASSEMBLY (43828862) - INTERNAL BREAKDOWN - SHEET 3 OF 7

43833946 REV 00

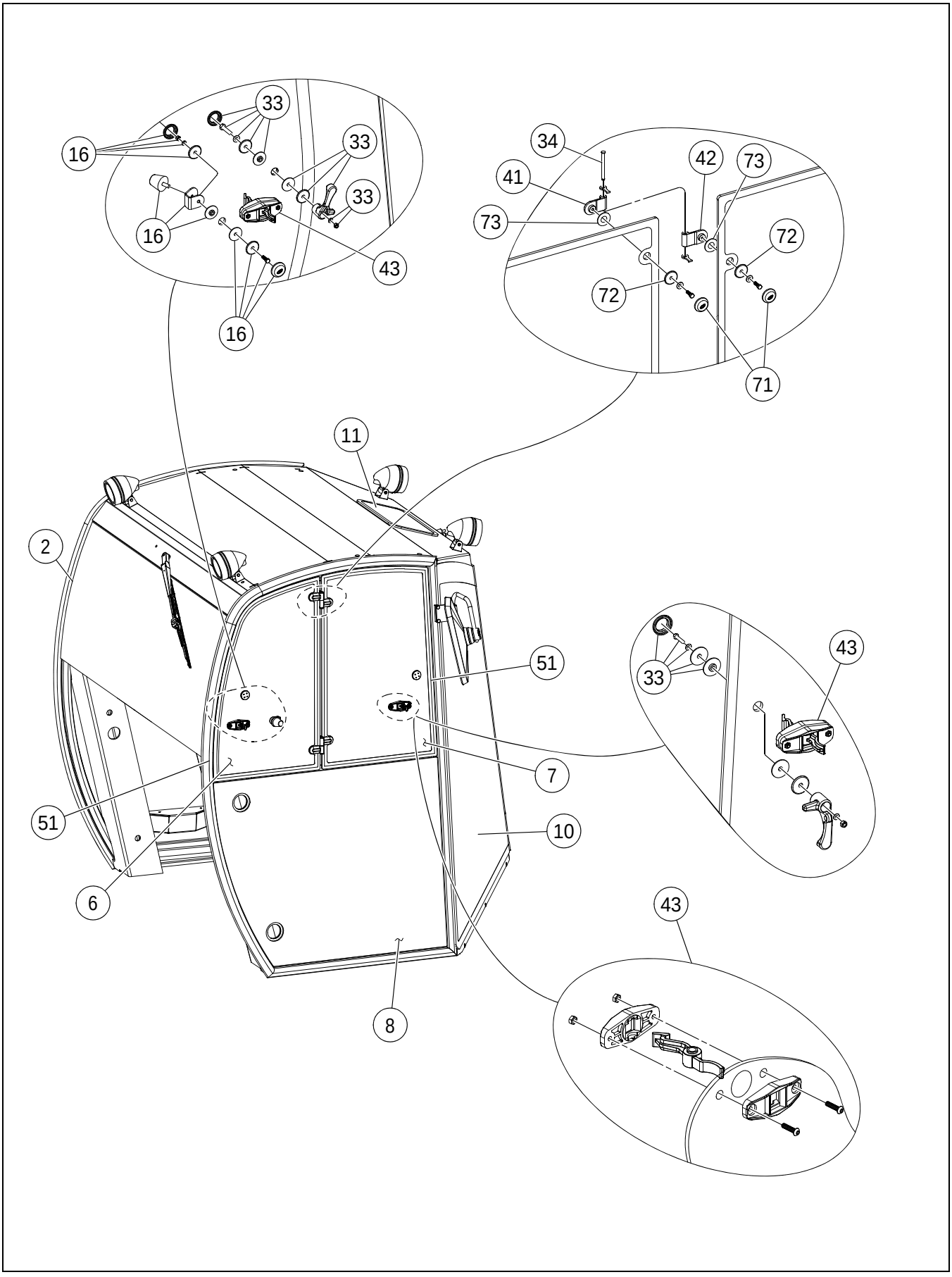

****Only Offered Parts Listed****

BOM 43828862

ITEM	COMM. NO.	DESCRIPTION	QTY	DIMENSIONS/NOTES
2	13519343	Rear Window Glass	1	
6	13519384	RH Side Top Rear Glass	1	
7	13519392	RH Side Top Front Glass	1	
8	13519400	RH Side Bottom Glass	1	
10	13382742	RH Side Front Glass	1	
11	13519434	GPS System Window Glass	1	
16	13382965	Window Bumper Kit	2	
33	13382759	Window Latch Kit	4	
34	13382783	Window Hinge Pin Kit	4	
41	13224340	Window Hinge	4	
42	13224357	Window Hinge	4	
43	13224381	Window Hold Back	4	
51	13285440	Rubber Seal	1	
71	13285473	Bolt Cover	4	
72	13285481	Washer	4	
73	43835446	Rubber Seal Washer	4	

CAB ASSEMBLY (43828862) - INTERNAL BREAKDOWN - SHEET 4 OF 7

43833946 REV 00

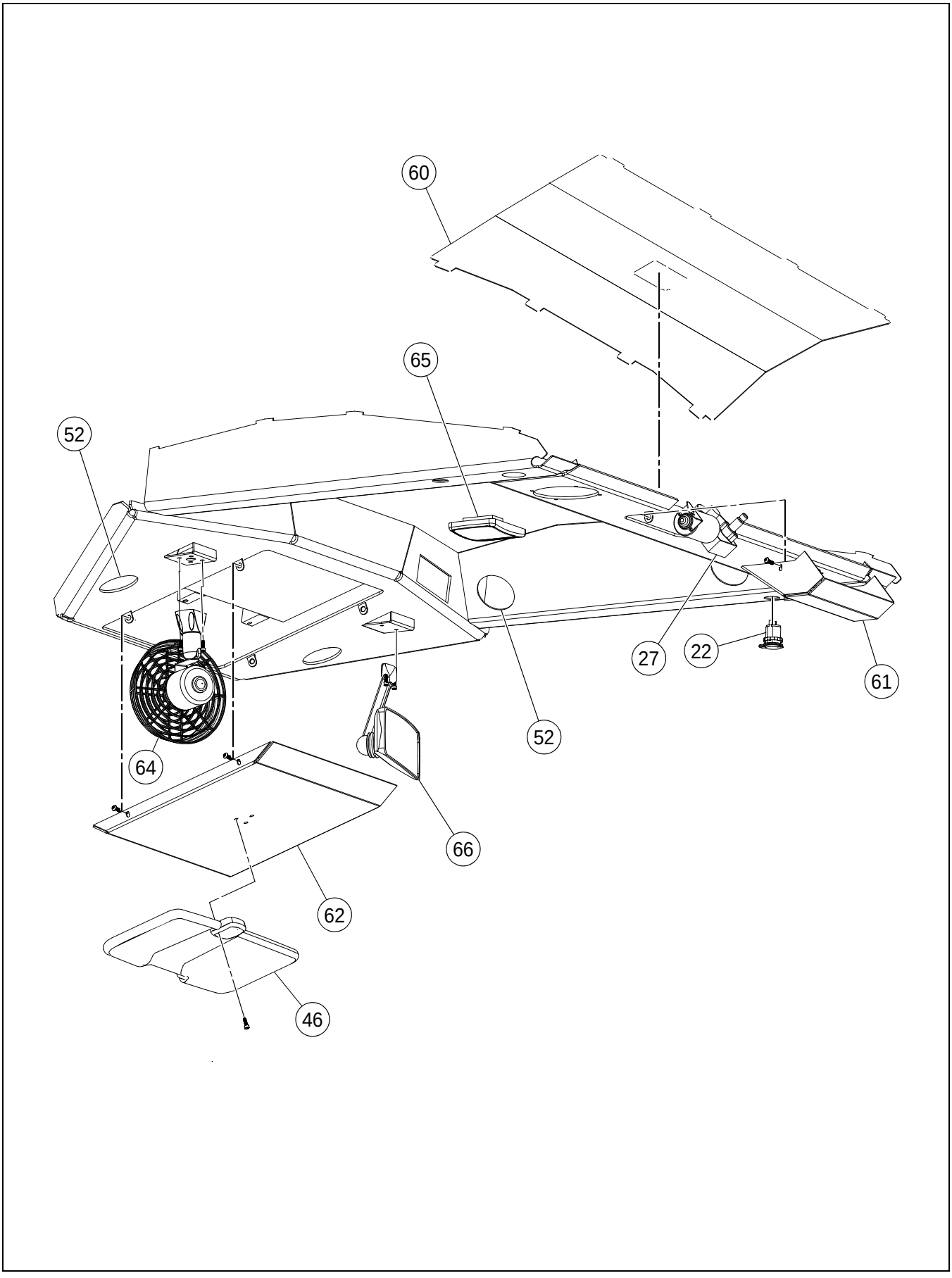

****Only Offered Parts Listed****

BOM 43828862

ITEM	COMM. NO.	DESCRIPTION	QTY	DIMENSIONS/NOTES
22	43835263	Power Port	1	
27	13871660	Wiper Motor	1	
46	58962887	Sun Visor Assembly	1	
52	13224449	Plug, Black	6	
60	43835388	Headliner	1	
61	43835396	Rear Wiper Cover	1	
62	43835404	Front Wiper Cover	1	
64	43835412	Defroster Fan 12V	1	
65	13224480	Interior Light	1	
66	13284567	Interior Mirror	1	

CAB ASSEMBLY (43828862) - INTERNAL BREAKDOWN - SHEET 5 OF 7

43833946 REV 00

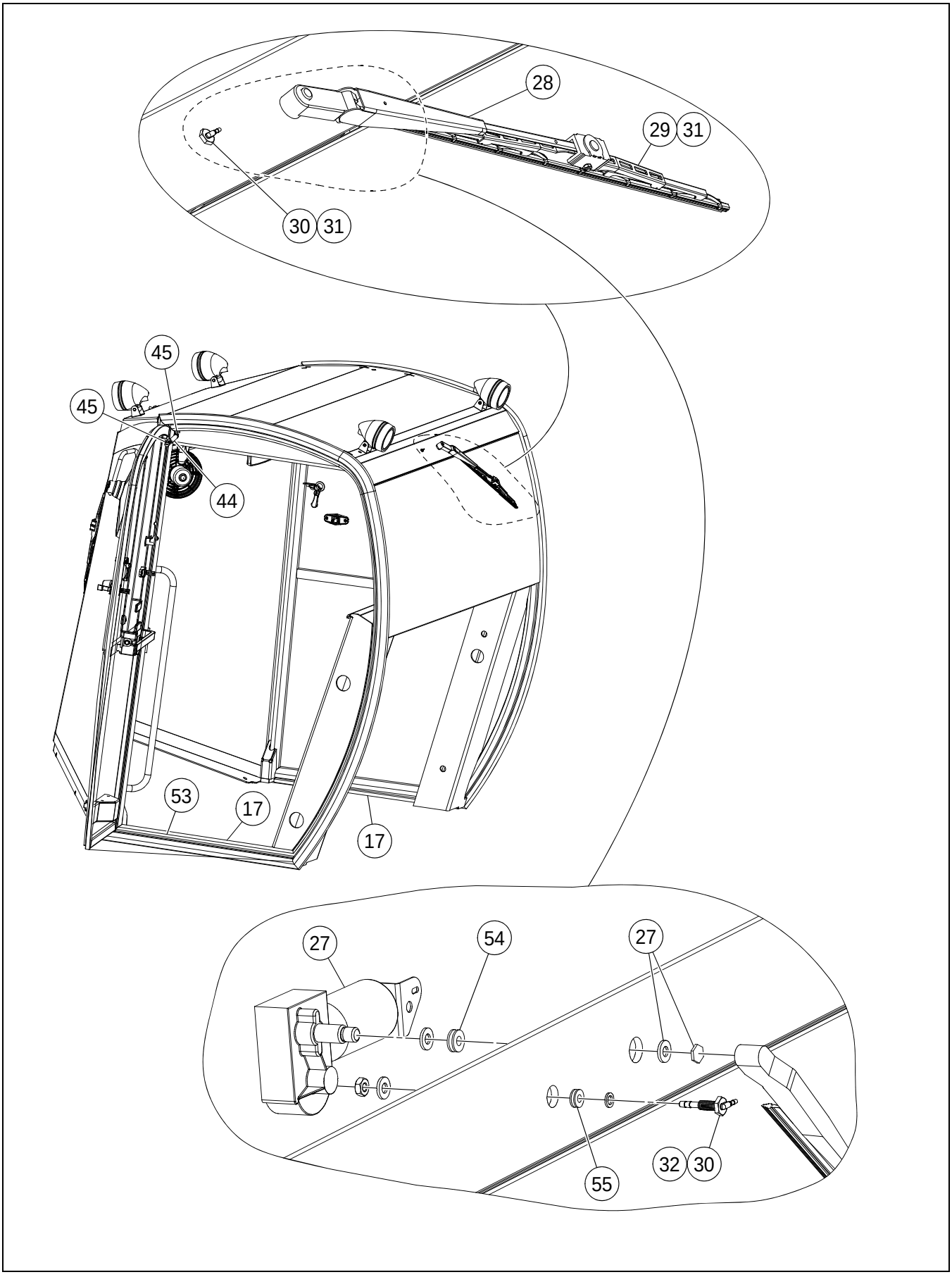

****Only Offered Parts Listed****

BOM 43828862

ITEM	COMM. NO.	DESCRIPTION	QTY	DIMENSIONS/NOTES
17	43835222	Deck Side Filler Strip	1	
27	13871660	Wiper Motor	1	
28	59072694	Rear Wiper Arm	1	
29	43835289	Wiper Blade Rear 20"	1	
30	13220835	Windshield Washer Hose Fitting	2	
31	13224241	Wet Arm Kit	2	
32	22085088	Washer Hose	1	
44	43835305	Door Shock	1	
45	13224431	Gas Shock Ball Mount	2	
53	54628326	Door Frame Weatherstrip	1	
54	43835347	Rubber Grommet	1	
55	13224464	Rubber Grommet	1	

CAB ASSEMBLY (43828862) - INTERNAL BREAKDOWN - SHEET 6 OF 7

43833946 REV 00

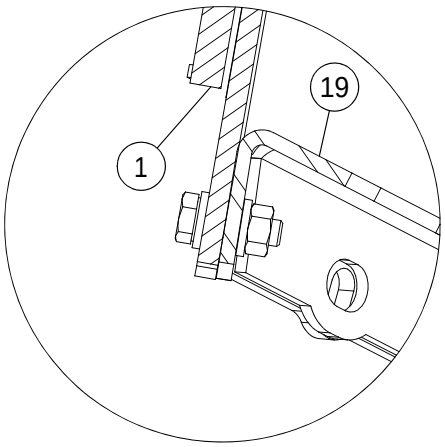

SECTION A-A

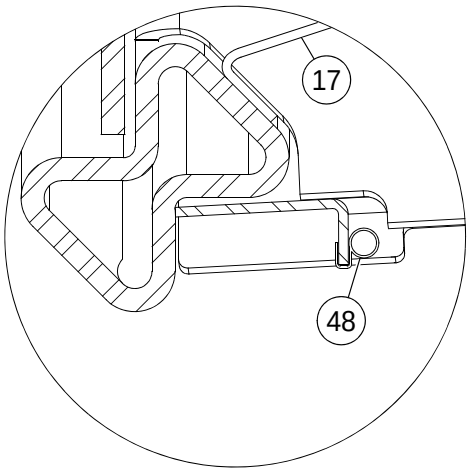

SECTION B-B

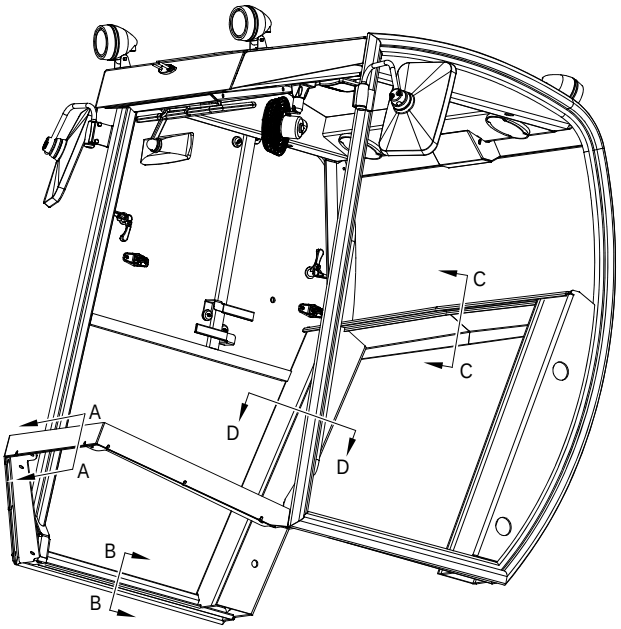

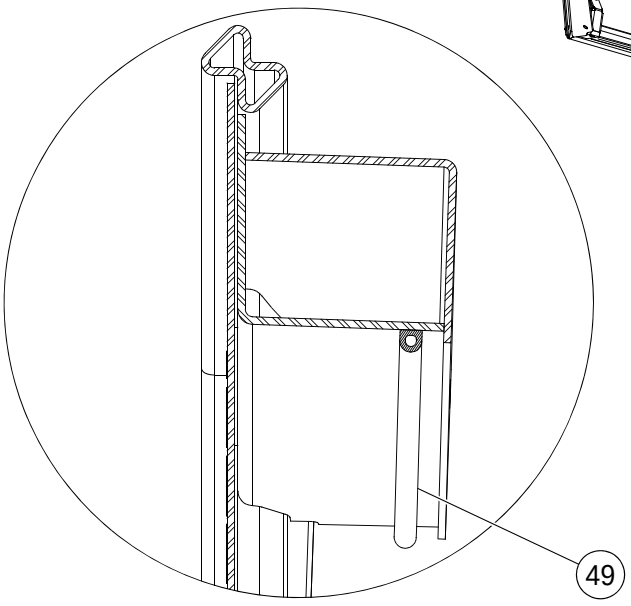

SECTION D-D

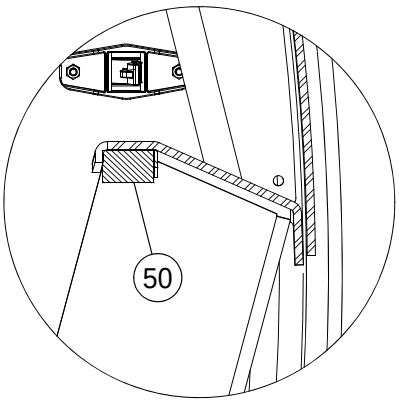

SECTION C-C

CAB ASSEMBLY (43828862) - INTERNAL BREAKDOWN - SHEET 6 OF 7

****Only Offered Parts Listed****

BOM 43828862

ITEM	COMM. NO.	DESCRIPTION	QTY	DIMENSIONS/NOTES
1	13382726	Front Center Window Glass	1	
17	43835222	Deck Side Filler Strip	1	
19	43835248	Front Window Lower Center Skirt	1	
48	59072702	Door Seal	1	
49	43835321	Rubber Seal	1	
50	43835339	Rubber Seal	1	

CAB ASSEMBLY (43828862) - INTERNAL BREAKDOWN - SHEET 7 OF 7

43833946 REV 00

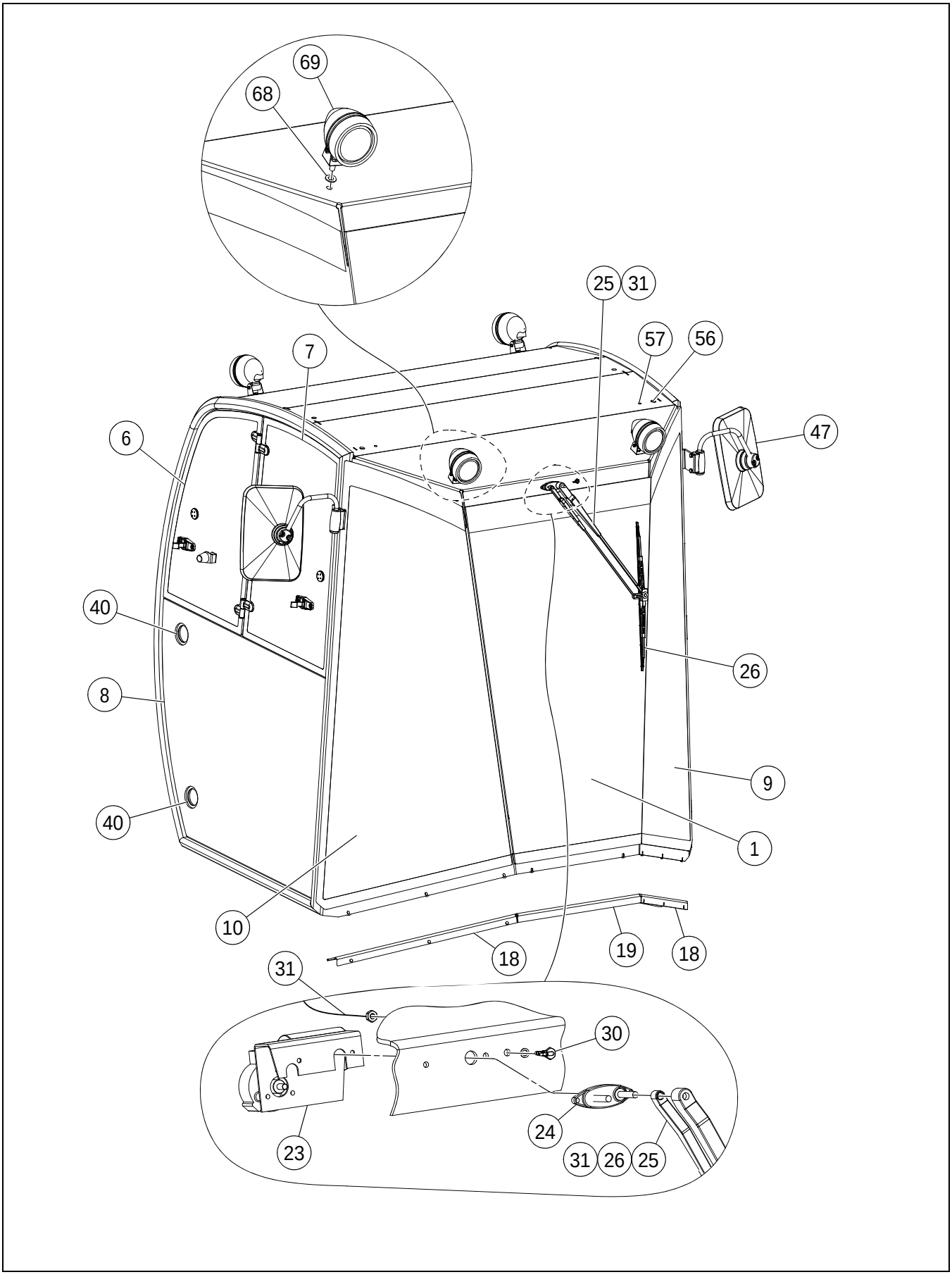

CAB ASSEMBLY (43828862) - INTERNAL BREAKDOWN - SHEET 7 OF 7

****Only Offered Parts Listed****

BOM 43828862

ITEM	COMM. NO.	DESCRIPTION	QTY	DIMENSIONS/NOTES
1	13382726	Front Center Window Glass	1	
6	13519384	RH Side Top Rear Glass	1	
7	13519392	RH Side Top Front Glass	1	
8	13519400	RH Side Bottom Glass	1	
9	13382734	LH Side Front Glass	1	
10	13382742	RH Side Front Glass	1	
18	43835230	Front Window Lower Side Skirts	1	
19	43835248	Front Window Lower Center Skirt	1	
23	43835271	Wiper Motor	1	
24	58962812	Mount	1	
25	13224217	Front Wiper Arm	1	
26	13224225	Front Wiper Blade	1	
30	13220835	Windshield Washer Hose Fitting	2	
31	13224241	Wet Arm Kit	2	
40	13224456	Plastic Plug	4	
47	43835313	Exterior Mirror Assembly	2	
56	43835354	Plastic Plug	2	
57	43835362	Plastic Plug	2	
58	58844556	Rubber Seal (Not Shown)	1	
59	43835370	Plastic Plug (Not Shown)	2	
63	13845367	Cab Harness (Not Shown)	1	
67	22088009	Pebble Cloth (Not Shown)	1	
68	43835420	Seal Washer	4	
69	43835438	Work Lights	4	
70	13285440	Rubber Seal (Not Shown)	1	
74	22067607	Adhesive (Not Shown)	5	
75	43806165	Sika (Not Shown)	1	

19330778 REV 0E

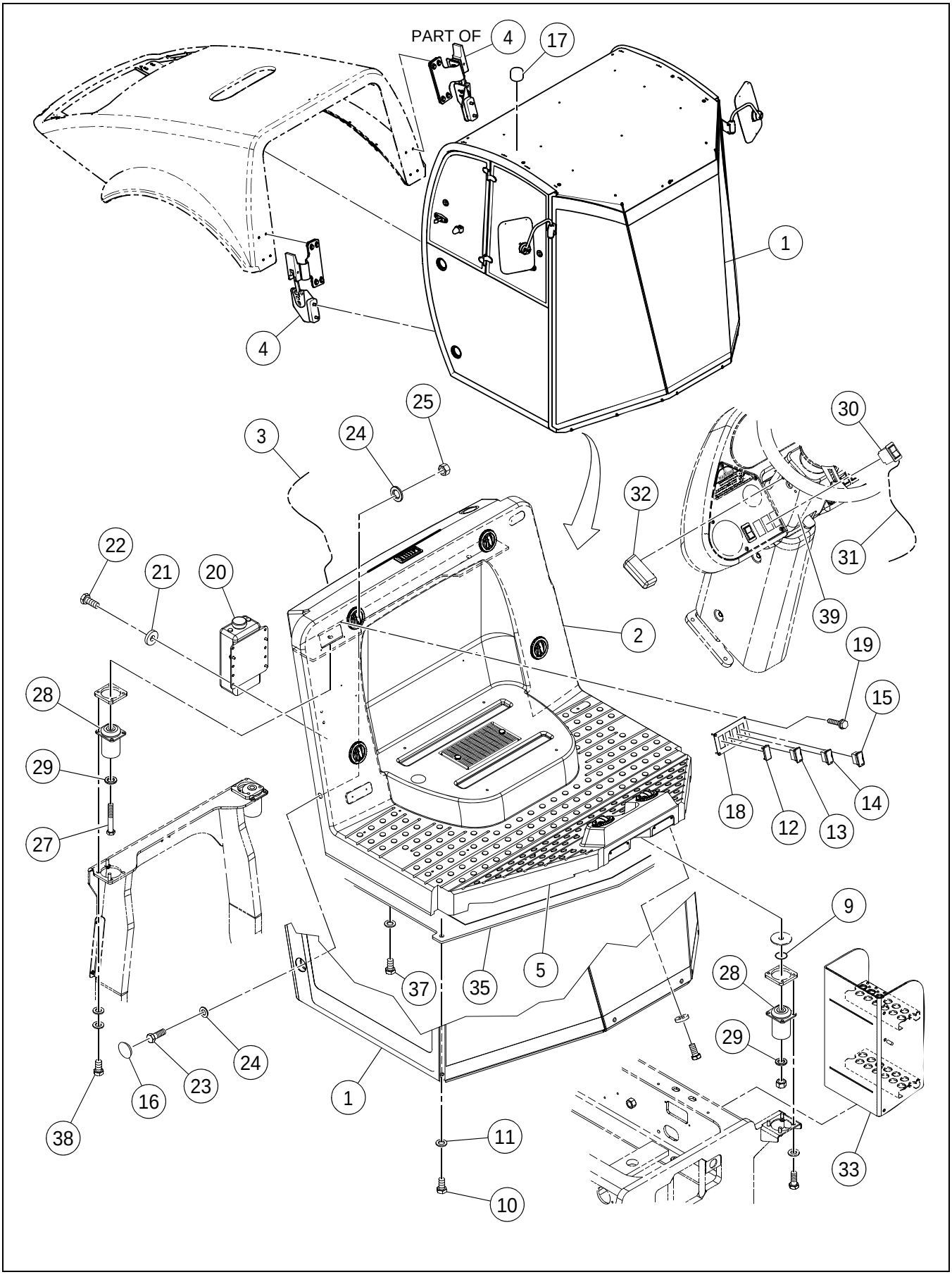

****Only Offered Parts Listed****

BOM 43828912, 43828888

ITEM	COMM. NO.	DESCRIPTION	QTY	DIMENSIONS/NOTES
1	**43828862**	**Cab Assembly**	**1**	**See Breakdown D - 94.**
2	**NSVA**	**Heating and Air Conditioning Installation**	**1**	**See Page D - 66.**
3	13492822	Cab And HVAC Harness	1	
4	**NSVA**	**Cab/Hood Draw Latch Installation**	**1**	**See Page D - 124.**
5	43836451	Rubber Seal	1	
9	96746417	Washer, Plain	4	
10	96703178	HHCS, Zinc Plated	2	M16 x 2 x 30 Cl 8.8
11	96738612	Flatwasher, Zinc Plated	2	Cl 200
12	58835398	Blank Switch	1	
13	59196451	Front Wiper Switch	1	
14	95988093	Screw	4	
15	59195925	Washer	1	
16	13309877	Plastic Plug	4	
17	59326827	Plug	2	
18	13212576	Control	1	
19	95988093	Self Tapping Screw	4	#6 x 3/4
20	13215769	Washer	1	
21	96712674	Flatwasher	4	
22	96702824	HHCS, Zinc Plated	4	M8 x 1.25 x 20 Cl 8.8
23	96720032	HHCS, Zinc Plated	4	M24 x 3 x 70 Cl 8.8
24	96702642	Washer	4	M24
25	96727532	Hex Nut	4	M24 x 3
26	**NSVA**	**Seatbelt Installation (Not Shown)**	**1**	**See Page D - 62.**
27	NOT-USED	This Item Not Used W/this Bom	1	
28	NOT-USED	This Item Not Used W/this Bom	1	
29	NOT-USED	This Item Not Used W/this Bom	1	
30	13197108	F/R Worklights Switch	1	
31	43818848	Work Lights Selector Harness - Effective with S/N 194702	1	
-	13225560	Work Lights Selector Harness - Prior to S/N 194702	1	
32	13322102	Panel Light Assembly- Effective with S/N 194702	1	
-	13321443	- Lamp	1	
-	13248935	Dash Lights - Prior to S/N 194702	2	
33	13887609	Cab Step	1	
35	NOT-USED	This Item Not Used W/this Bom	1	
37	96704556	HHCS, Zinc Plated	6	M10 x 1.5 x 40 Cl 8.8
38	NOT-USED	This Item Not Used W/this Bom	1	
39	**NSVA**	**Tilt Steering Wheel (Cab) - Non-NA, Non-EU**	**1**	**See Page D - 90.**
-	13335492	Tilt Cover Column - NA	1	

PRE-CAB WITH HEAT INSTALLATION - SD-190/SD-200 - OPTIONAL

19330778 REV 0D

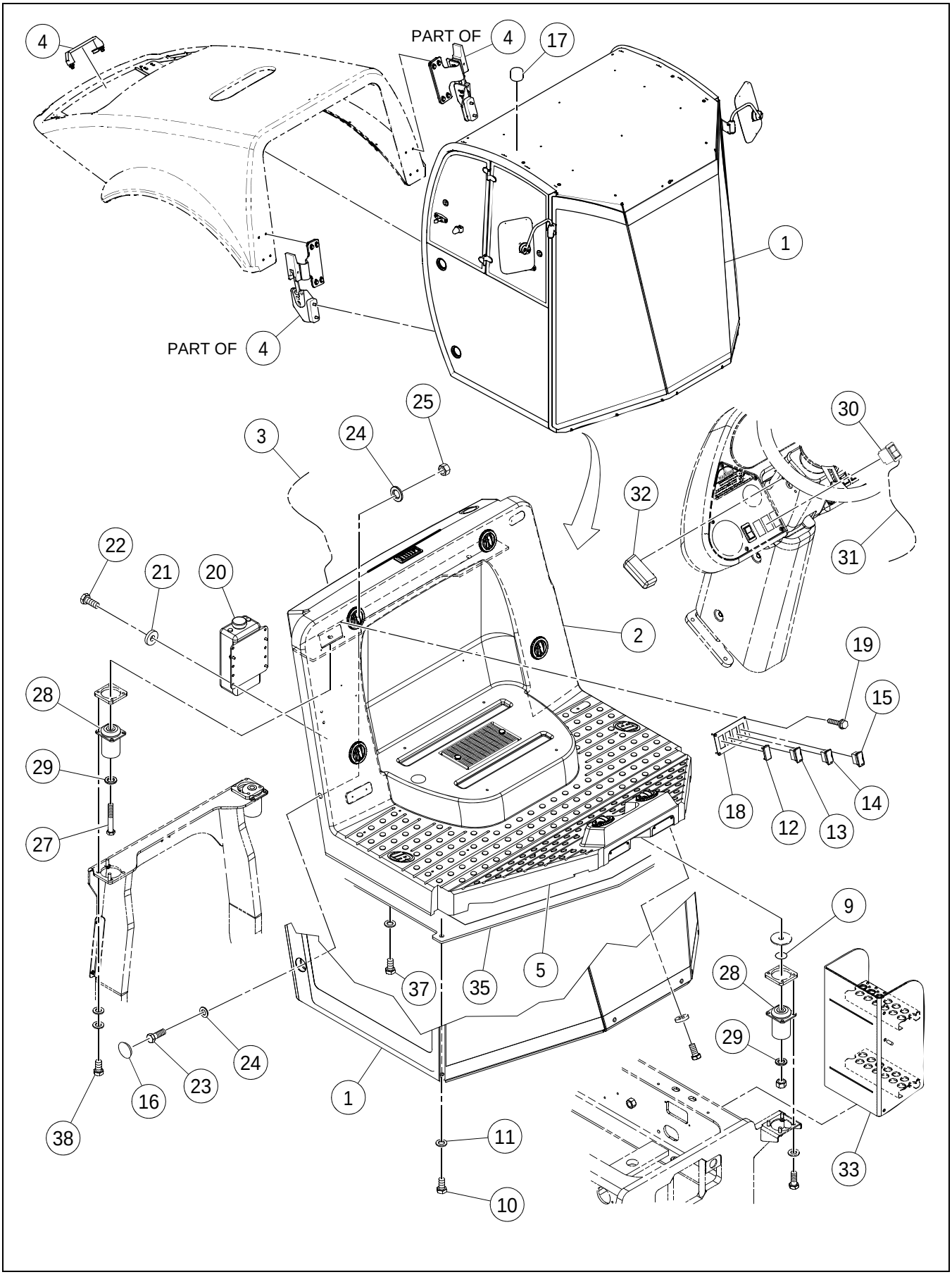

PRE-CAB WITH HEAT INSTALLATION - SD-190/SD-200 - OPTIONAL

****Only Offered Parts Listed****

BOM 43878925

ITEM	COMM. NO.	DESCRIPTION	QTY	DIMENSIONS/NOTES
1	NOT-USED	This Item Not Used W/this Bom	1	
2	**NSVA**	**Heater Installation**	**1**	**See Page D - 50.**
3	13492822	Cab And HVAC Harness	1	
4	**NSVA**	**No Rops/Hood Latch Draw Installation**	**1**	**See Page D - 86.**
5	43836451	Rubber Seal	1	
9	96746417	Washer, Plain	4	
10	NOT-USED	This Item Not Used W/this Bom	2	
11	NOT-USED	This Item Not Used W/this Bom	2	
12	58835398	Blank Switch	1	
13	59196451	Front Wiper Switch	1	
14	59196444	Rear Wiper Switch	1	
15	59195925	Washer	1	
16	NOT-USED	This Item Not Used W/this Bom	4	
17	NOT-USED	This Item Not Used W/this Bom	2	
18	13212576	Control	1	
19	95988093	Screw	4	
20	13215769	Washer	1	
21	96712674	Flatwasher	4	
22	96702824	HHCS, Zinc Plated	4	M8 x 1.25 x 20 Cl 8.8
23	NOT-USED	This Item Not Used W/this Bom	4	
24	NOT-USED	This Item Not Used W/this Bom	8	
25	NOT-USED	This Item Not Used W/this Bom	4	
27	NOT-USED	This Item Not Used W/this Bom	4	
28	NOT-USED	This Item Not Used W/this Bom	4	
29	NOT-USED	This Item Not Used W/this Bom	4	
30	13197108	F/R Worklights Switch	1	
31	43818848	Work Lights Selector Harness - Effective with S/N 194702	1	
-	13225560	Work Lights Selector Harness - Prior to S/N 194702	1	
32	13322102	Panel Light Assembly- Effective with S/N 194702	2	
-	13321443	- Lamp	2	
-	13248935	Dash Lights - Prior to S/N 194702	2	
33	NOT-USED	This Item Not Used W/this Bom	4	
35	NOT-USED	This Item Not Used W/this Bom	1	
37	NOT-USED	This Item Not Used W/this Bom	4	
38	NOT-USED	This Item Not Used W/this Bom	4	
39	13335484	Column Cover (Not Shown)	1	

PRE-CAB WITH HEAT AND AIR CONDITIONING
INSTALLATION - SD-190/SD-200 - OPTIONAL

19330778 REV 0D

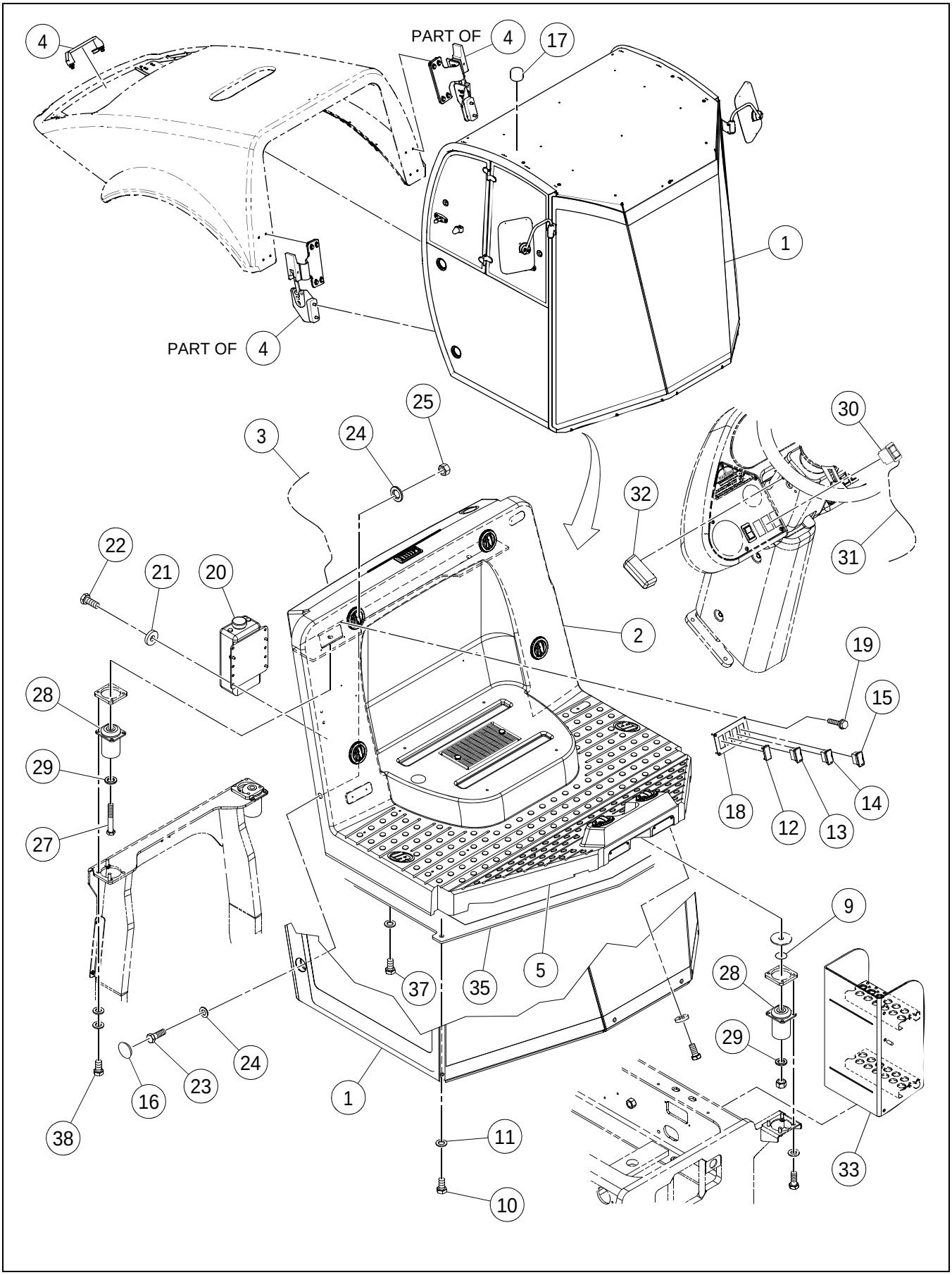

PRE-CAB WITH HEAT AND AIR CONDITIONING
INSTALLATION - SD-190/SD-200 - OPTIONAL

****Only Offered Parts Listed****

BOM 43878933

ITEM	COMM. NO.	DESCRIPTION	QTY	DIMENSIONS/NOTES
1	NOT-USED	This Item Not Used W/this Bom	1	
2	**NSVA**	**Heating and Air Conditioning Installation**	**1**	**See Page D - 66.**
3	13492822	Cab And HVAC Harness	1	
4	**NSVA**	**No Rops/Hood Latch Draw Installation**	**1**	**See Page D - 86.**
5	NSVA	Rubber Seal	1	
9	96746417	Washer, Plain	4	
10	NOT-USED	This Item Not Used W/this Bom	2	
11	NOT-USED	This Item Not Used W/this Bom	2	
12	58835398	Switch: Blank	1	
13	59196451	Front Wiper Switch	1	
14	59196444	Rear Wiper Switch	1	
15	59195925	Washer	1	
16	NOT-USED	This Item Not Used W/this Bom	4	
17	NOT-USED	This Item Not Used W/this Bom	2	
18	13212576	Control	1	
19	95988093	Screw	4	
20	13215769	Washer	1	
21	96712674	Flatwasher	4	
22	96702824	HHCS, Zinc Plated	4	M8 x 1.25 x 20 Cl 8.8
23	NOT-USED	This Item Not Used W/this Bom	4	
24	NOT-USED	This Item Not Used W/this Bom	8	
25	NOT-USED	This Item Not Used W/this Bom	4	
27	NOT-USED	This Item Not Used W/this Bom	1	
28	NOT-USED	This Item Not Used W/this Bom	1	
29	NOT-USED	This Item Not Used W/this Bom	1	
30	13197108	F/R Worklights Switch	1	
31	43818848	Work Lights Selector Harness - Effective with S/N 194702	1	
-	13225560	Work Lights Selector Harness - Prior to S/N 194702	1	
32	13322102	Panel Light Assembly- Effective with S/N 194702	2	
-	13321443	- Lamp	2	
-	13248935	Dash Lights - Prior to S/N 194702	2	
33	NOT-USED	This Item Not Used W/this Bom	1	
35	NOT-USED	This Item Not Used W/this Bom	1	
37	NOT-USED	This Item Not Used W/this Bom	1	
38	NOT-USED	This Item Not Used W/this Bom	1	
39	**NSVA**	**Tilt Steering Wheel (Cab)**	**1**	**See Page D - 90.**

No Drawing Required

CAB WITH HEAT INSTALLATION - EU

****Only Offered Parts Listed****

BOM 80833940

ITEM	COMM. NO.	DESCRIPTION	QTY	DIMENSIONS/NOTES
1	NSVA	Cab Installation - EU	1	See Page D - 116.
2	NSVA	Pre-Cab With Heat Installation - EU	1	See Page D - 126.

CAB INSTALLATION - EU

Dwg 80804354_0001

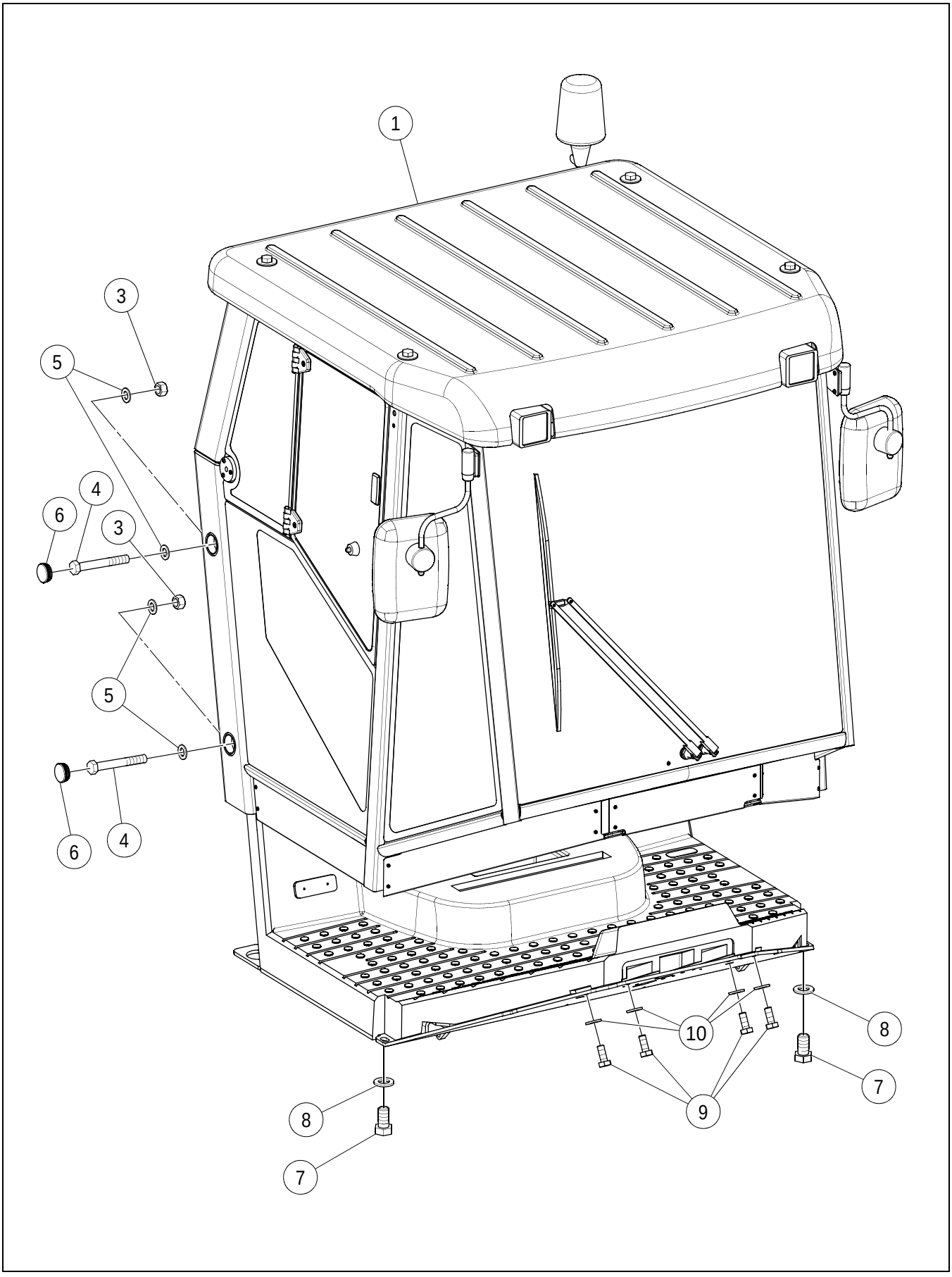

****Only Offered Parts Listed****

BOM 80804354

ITEM	COMM. NO.	DESCRIPTION	QTY	DIMENSIONS/NOTES
1	**80793201**	**Cab Assembly**	**1**	**See Breakdown D - 118.**
2	**NSVA**	**Cab/Hood Draw Latch Installation (Not Shown)**	**1**	**See Page D - 124.**
3	96720933	Hex Nut	4	
4	96721923	HHCS, Zinc Plated	4	M24 x 3.0 x 180 Cl 8.8
5	96720909	Flatwasher	8	M24 x Cl 140
6	80816499	Plug	2	
7	96722228	HHCS, Zinc Plated	2	M16 x 2 x 30 Cl 8.8
8	96720149	Flatwasher	2	M16 x Cl 140
9	96718861	HHCS, Zinc Plated	4	M12 x 1.75 x 25 Cl 8.8
10	96720131	Flatwasher	4	M12 x Cl 140
11	96753025	HHCS, Zinc Plated (Not Shown)	2	M16 x 2.0 x 70 Cl 10.9
12	14050439	Foam Strip (Not Shown)	4	

CAB ASSEMBLY - EU (80793201) - INTERNAL BREAKDOWN - SHEET 1 OF 3

Dwg 80793201 REV 00

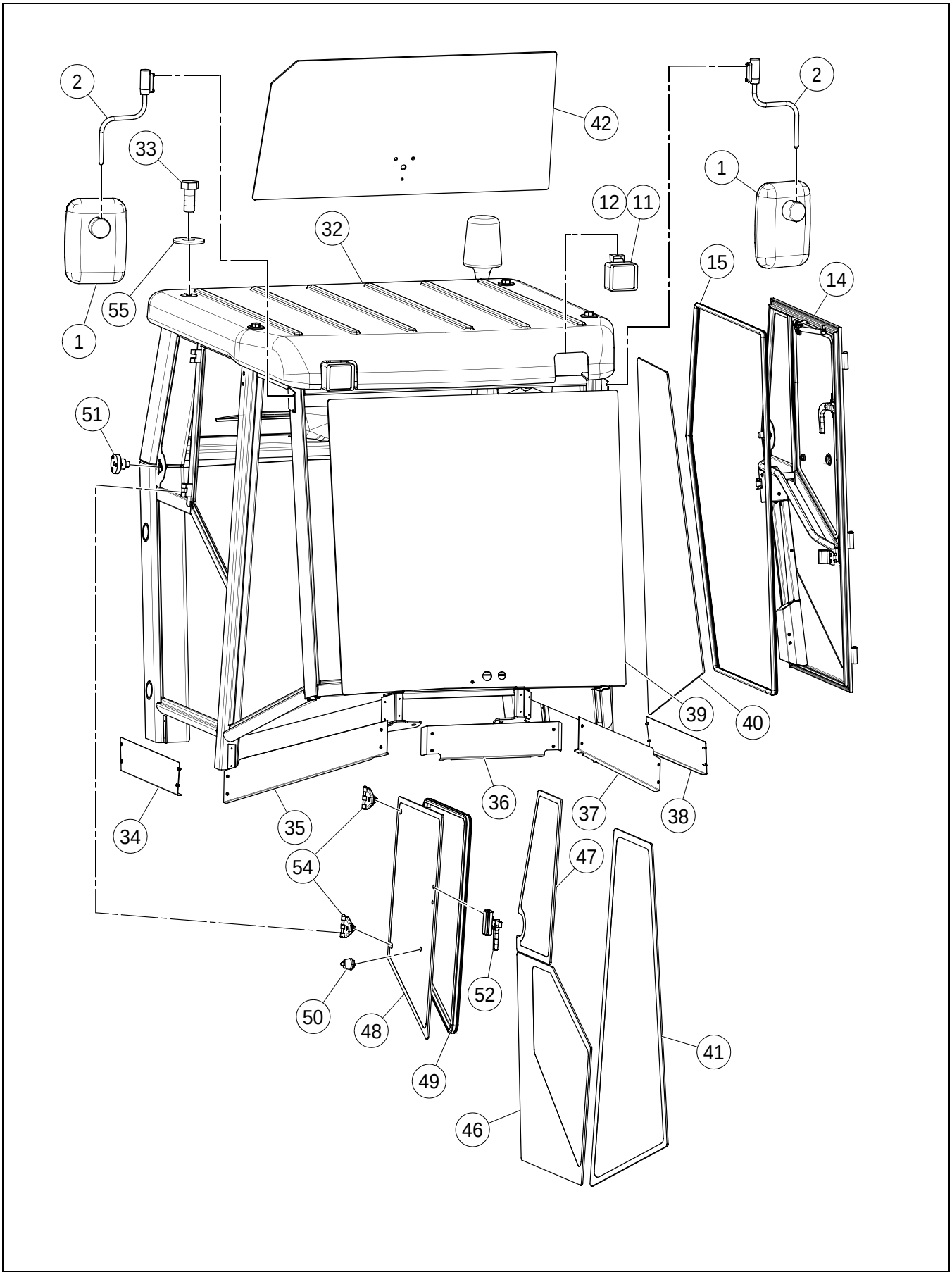

CAB ASSEMBLY - EU (80793201) - INTERNAL BREAKDOWN
- SHEET 1 OF 3

****Only Offered Parts Listed****

BOM 80793201

ITEM	COMM. NO.	DESCRIPTION	QTY	DIMENSIONS/NOTES
1	80808801	Outside Mirror	1	
2	80808819	Mirror Arm	1	
11	80808918	Working Light	1	
12	58861980	Bulb	1	
14	80808884	Cab Door	1	
15	80808892	Door Seal	1	
32	80809106	Roof	1	
33	96722228	HHCS, Zinc Plated	1	M16 x 2 x 30 Cl 8.8
34	80809114	Plate, RH	1	
35	80809122	Plate, Right Front	1	
36	80809130	Plate, Front	1	
37	80809148	Plate, Left Front	1	
38	80809155	Plate, LH	1	
39	80789621	Pane, Front	1	
40	80789639	Pane, LH	1	
41	80789647	Pane, RH	1	
42	80789654	Pane, Rear	1	
46	80789696	Side Pane, Lower RH	1	
47	80789704	Side Pane, Upper RH	1	
48	80789712	Drop Pane, RH	1	
49	80809163	Window Seal	1	
50	80809171	Window Latch	1	
51	80809189	Catch Recess	1	
52	80809197	Window Handle, RH	1	
54	80809213	Hinge Joint	1	
55	96726377	Washer	1	

CAB ASSEMBLY - EU (80793201) - INTERNAL BREAKDOWN - SHEET 2 OF 3

Dwg 80793201 REV 00

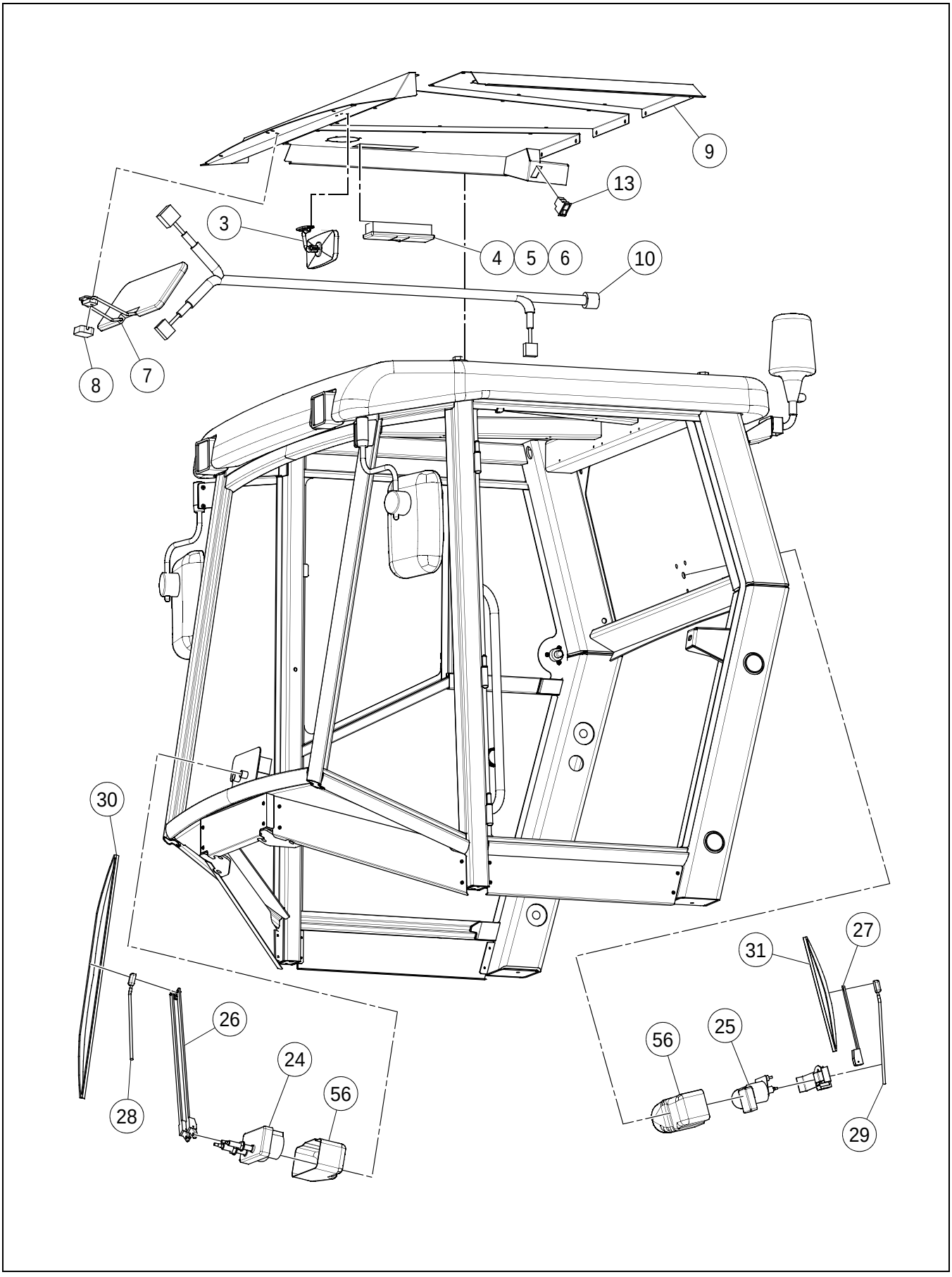

CAB ASSEMBLY - EU (80793201) - INTERNAL BREAKDOWN
- SHEET 2 OF 3

****Only Offered Parts Listed****

BOM 80793201

ITEM	COMM. NO.	DESCRIPTION	QTY	DIMENSIONS/NOTES
3	80808827	Inside Mirror	1	
4	80808835	Inside Light	1	
5	14110183	Unifilar Bulb	1	
6	58861998	Bulb	1	
7	80808843	Sunshade	1	
8	80808850	Sunshade Cover	1	
9	80808868	Interior Cover	1	
10	80808876	Cab Wire Harness	1	
13	80811409	Beacon Light Switch	1	
24	80809007	Wiper Motor w/Fastening Mount	1	
25	80809015	Wiper Motor w/Fastening Mount	1	
26	80809023	Arm Wiper	1	
27	80809031	Arm Wiper	1	
28	80809056	Water Wiper	1	
29	80809064	Water Wiper	1	
30	80809080	Water Wiper	1	
31	80809098	Water Wiper	1	
56	80816465	Wiper Cover	1	

CAB ASSEMBLY - EU (80793201) - INTERNAL BREAKDOWN - SHEET 3 OF 3

Dwg 80793201 REV 00

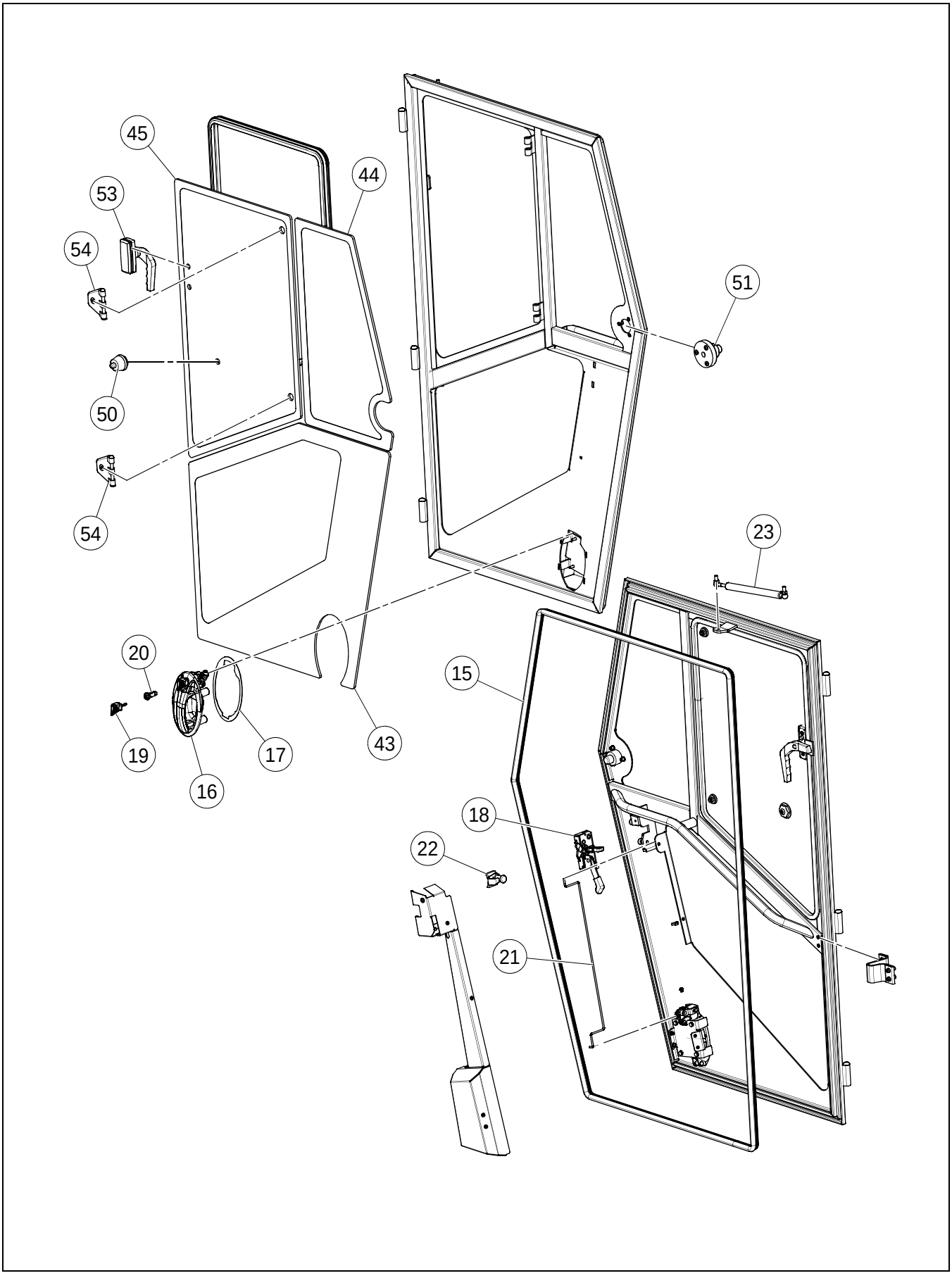

****Only Offered Parts Listed****

BOM 80793201

ITEM	COMM. NO.	DESCRIPTION	QTY	DIMENSIONS/NOTES
15	80808892	Door Seal	1	
16	80808900	Door Handle w/Cylinder	1	
17	80808926	Pad	1	
18	80808934	Latch	1	
19	80808942	Cab Key	1	
20	80808959	Cylinder	1	
21	80808975	Connecting Rod	1	
22	80808983	Catch Recess	1	
23	80808991	Compression Spring	1	
43	80789662	Door Pane, Lower LH	1	
44	80789670	Door Pane, Upper LH	1	
45	80789688	Drop Pane, LH	1	
50	80809171	Window Latch	1	
51	80809189	Catch Recess	1	
53	80809205	Window Handle, LH	1	
54	80809213	Hinge Joint	1	

CAB/HOOD DRAW LATCH INSTALLATION

19330497 REV 00

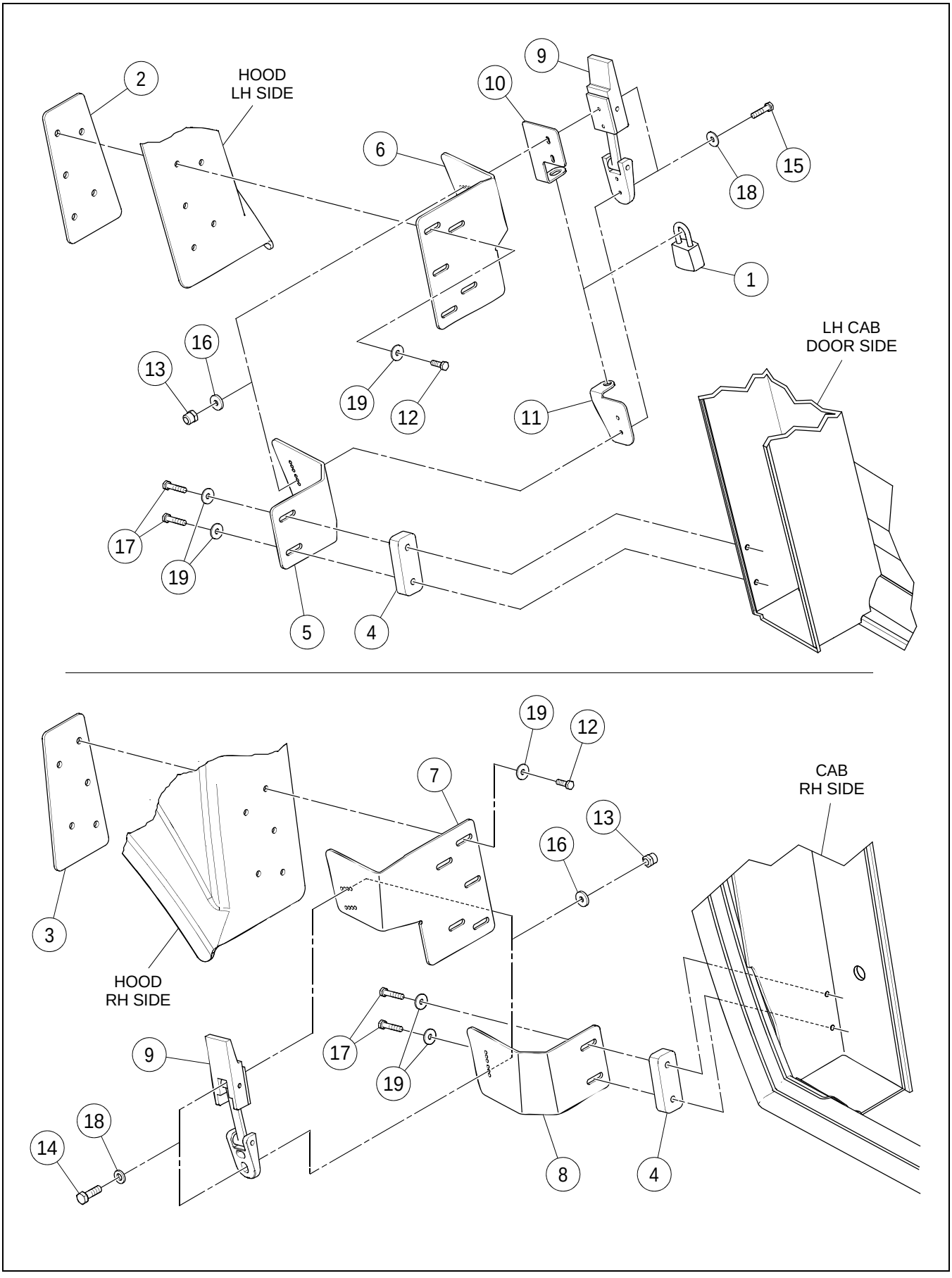

CAB/HOOD DRAW LATCH INSTALLATION

****Only Offered Parts Listed****

BOM 19330497

ITEM	COMM. NO.	DESCRIPTION	QTY	DIMENSIONS/NOTES
1	13349212	Lock	1	
2		This item not used with this Assembly		
3		This item not used with this Assembly		
4	13881370	Spacer Block	2	
5	13886684	Hood Latch Bracket, LH	1	
6	13886676	Cab Latch Bracket, LH	1	
7	13886700	Cab Latch Bracket, RH	1	
8	13886692	Hood Latch Bracket, RH	1	
9	59162149	Latch	2	
10	59163220	Lock Tab, RH	1	
11	59163238	RH Lock Tab	1	
12	96702659	HHCS, Fully Threaded, Zinc Plated	10	M8 x 1.25 x 25 Cl 8.8
13	96704580	Hex Locknut, Zinc Plated	8	M5 x 0.8 Cl 8
14	96705728	Screw, Fully Threaded, Zinc Plated	4	M5 x 0.8 x 16 Cl 8.8
15	96705736	HHCS, Fully Threaded, Zinc Plated	4	M5 x 0.8 x 20 Cl 8.8
16	95922332	Flatwasher, Zinc Plated	8	#10
17	96719786	HHCS, Zinc Plated	4	M8 x 1.25 x 40 Cl 8.8
18	95922332	Flatwasher, Zinc Plated	8	#10
19	96741038	Flatwasher	14	M8 x 1.25 Cl 200

PRE-CAB WITH HEAT INSTALLATION - EU

Dwg 19330778/0E

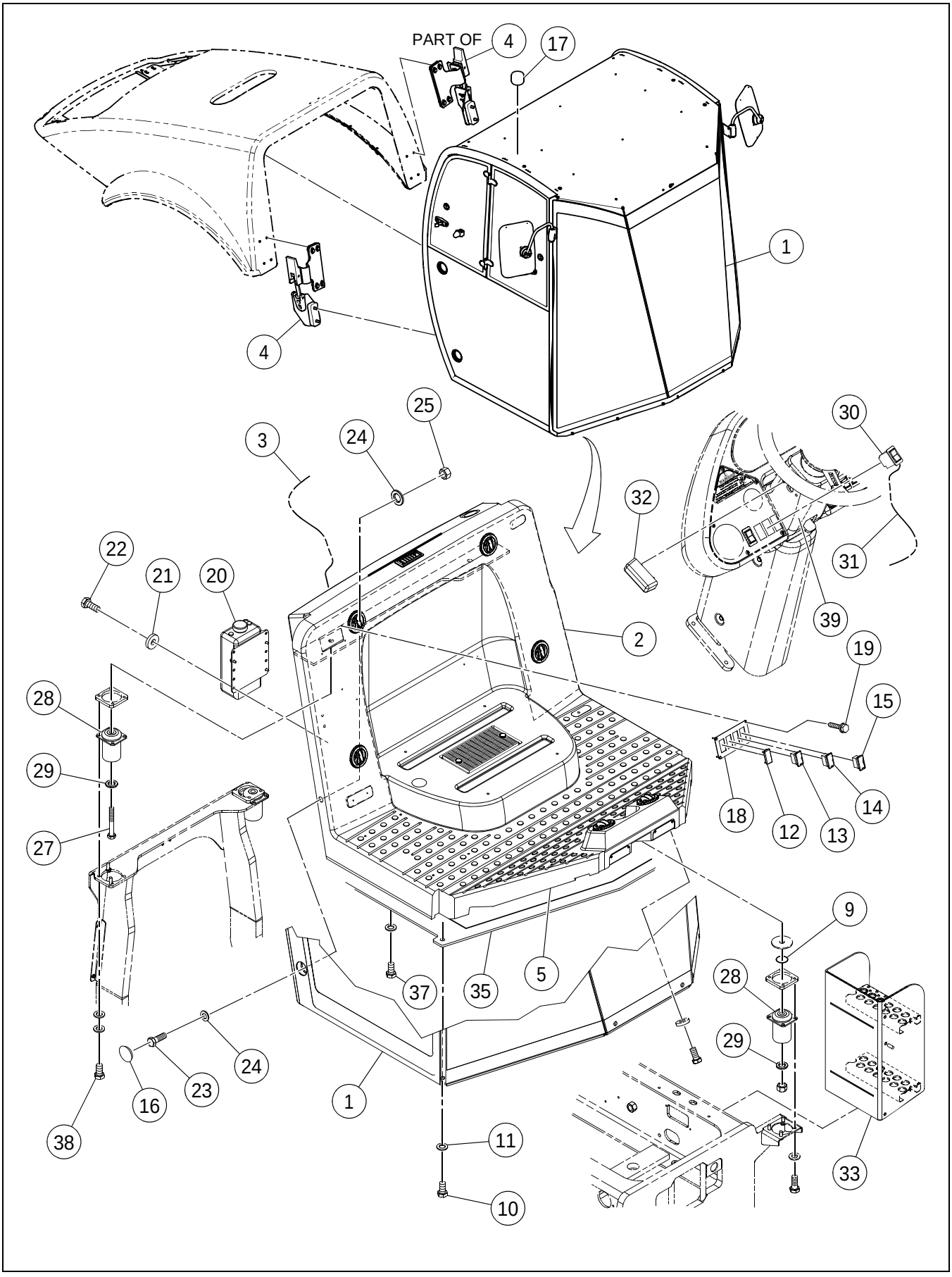

****Only Offered Parts Listed****

BOM 80833965

ITEM	COMM. NO.	DESCRIPTION	QTY	DIMENSIONS/NOTES
1		This item not used with this Assembly		
2	**NSVA**	**Heater Installation**	**1**	**See Page D - 128.**
3	13492822	Cab Heating And Air Conditioning Harness	1	
4		This item not used with this Assembly		
5	59946863	Seal Trim	4	
9	96746417	Washer Plain	4	
10		This item not used with this Assembly		
11		This item not used with this Assembly		
12	58835398	Blank Switch	1	
13	59196451	Front Wiper Switch	1	
14	59196444	Rear Wiper Switch	1	
15	59195925	Switch	1	
16		This item not used with this Assembly		
17		This item not used with this Assembly		
18	13212576	Control Panel	1	
19	95988093	Self-tapping Screw, Zinc Plated	4	#6 x 3/4
20	13215769	Washer Bottle	1	
-	13228242	- Washer Bottle Cap	1	
-	13228259	- Washer Bottle Pump	1	
21	96712674	Flatwasher, Zinc Plated	4	M8 Hardened Cl 10
22	96702824	HHCS, Fully Threaded, Zinc Plated	4	M8 x 1.25 x 20 Cl 8.8
23		This item not used with this Assembly		
24		This item not used with this Assembly		
25		This item not used with this Assembly		
27		This item not used with this Assembly		
28	96701560	Flatwasher, Zinc Plated	4	M20 Hardened
29	96741442	HHCS, Zinc Plated	3	M20 x 2.5 x 140 Cl 8.8
30	13197108	F/R Worklights Switch	1	
31	43818848	Work Lights Selector Harness - Effective with S/N 194702	1	
-	13225560	Work Lights Selector Harness - Prior to S/N 194702	1	
32	13322102	Light Assembly Panel - Effective with S/N 194702	2	
-	13321443	- Lamp LED - White	2	
-	13248935	Dash Lights - Prior to S/N 194702	2	
33		This item not used with this Assembly		
35		This item not used with this Assembly		
37	96704556	HHCS, Fully Threaded, Zinc Plated	6	M10 x 1.5 x 40 Cl 8.8
38		This item not used with this Assembly		
39		This item not used with this Assembly		

HEATER INSTALLATION - SHEET 1 OF 5

43825991 REV 0D

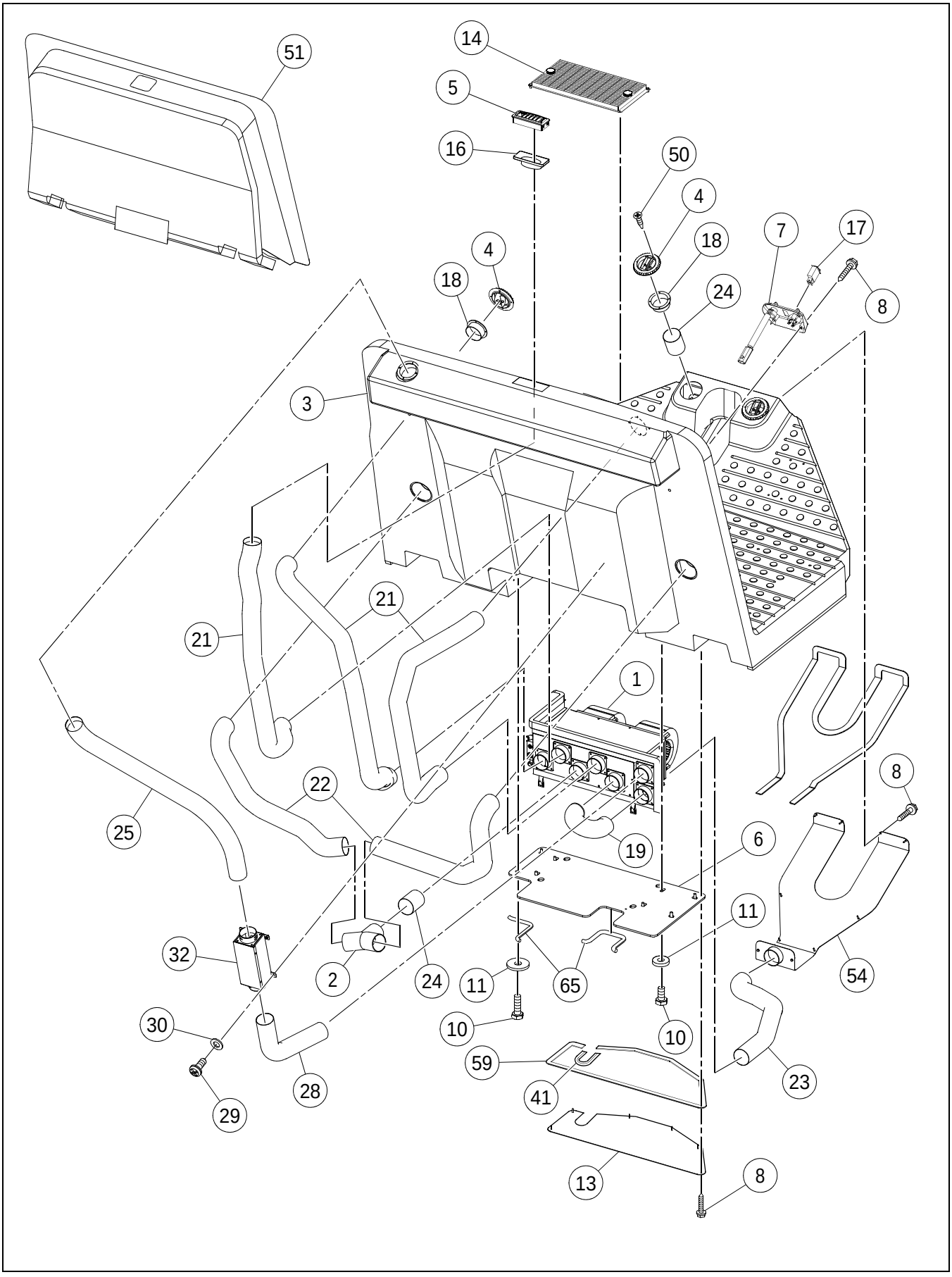

****Only Offered Parts Listed****

BOM 43824960

ITEM	COMM. NO.	DESCRIPTION	QTY	DIMENSIONS/NOTES
1	**13237888**	**Heater**	**1**	**See Breakdown D - 138.**
2	13162094	Y-splicer	1	
3	43843564	Operators Platform	1	
4	13161724	Louvers	6	
5	13179197	Louver	1	
6	13237326	Mounting Plate	1	
7	13254644	Heater	1	
8	96728548	Self-tapping Screw, Zinc Plated	19	1.6
10	96702659	HHCS, Fully Threaded, Zinc Plated	9	M8 x 1.25 x 25 Cl 8.8
11	96712674	Flatwasher, Zinc Plated	9	M8 Hardened Cl 10
13	13502083	Cover Plate	1	
14	13234927	Air Recirculation Filter Assembly	1	
-	13200019	- Recirculation	1	
-	13161757	- Air Recirculation Filter	1	
-	13200001	- Recirculation Filter Grill	1	
16	13179403	Louver Adapter	1	
17	13156997	Control Panel Plug	1	
18	13161732	Louver Adapter	7	
19	13176508	Bottom Duct Hose	1	
21	13295712	Upper Side Duct Hose	3	
22	13176516	Lower Side Duct Hose	2	
23	13176532	Plenum Hose	1	
24	59290742	Connector Hose	3	
25	59290734	Center Duct Hose	1	
28	59290783	Bottom Fresh Air Duct Hose	1	
29	96740444	Self-tapping Pan Head Screw, Zinc Plated	4	4.8 x 1.6 x 13
30	96738554	Flatwasher, Zinc Plated	4	M5 Hardened Cl 200
32	59290767	Fresh Air Filter	1	
41	13467485	Seal Trim	1	
50	13209887	Wood Screw	14	
51	59290817	Foam	1	
54	13234893	Plenum	1	
59	35898477	Foamtape	1	
65	50829662	Trim	1	

43825991 REV 0D

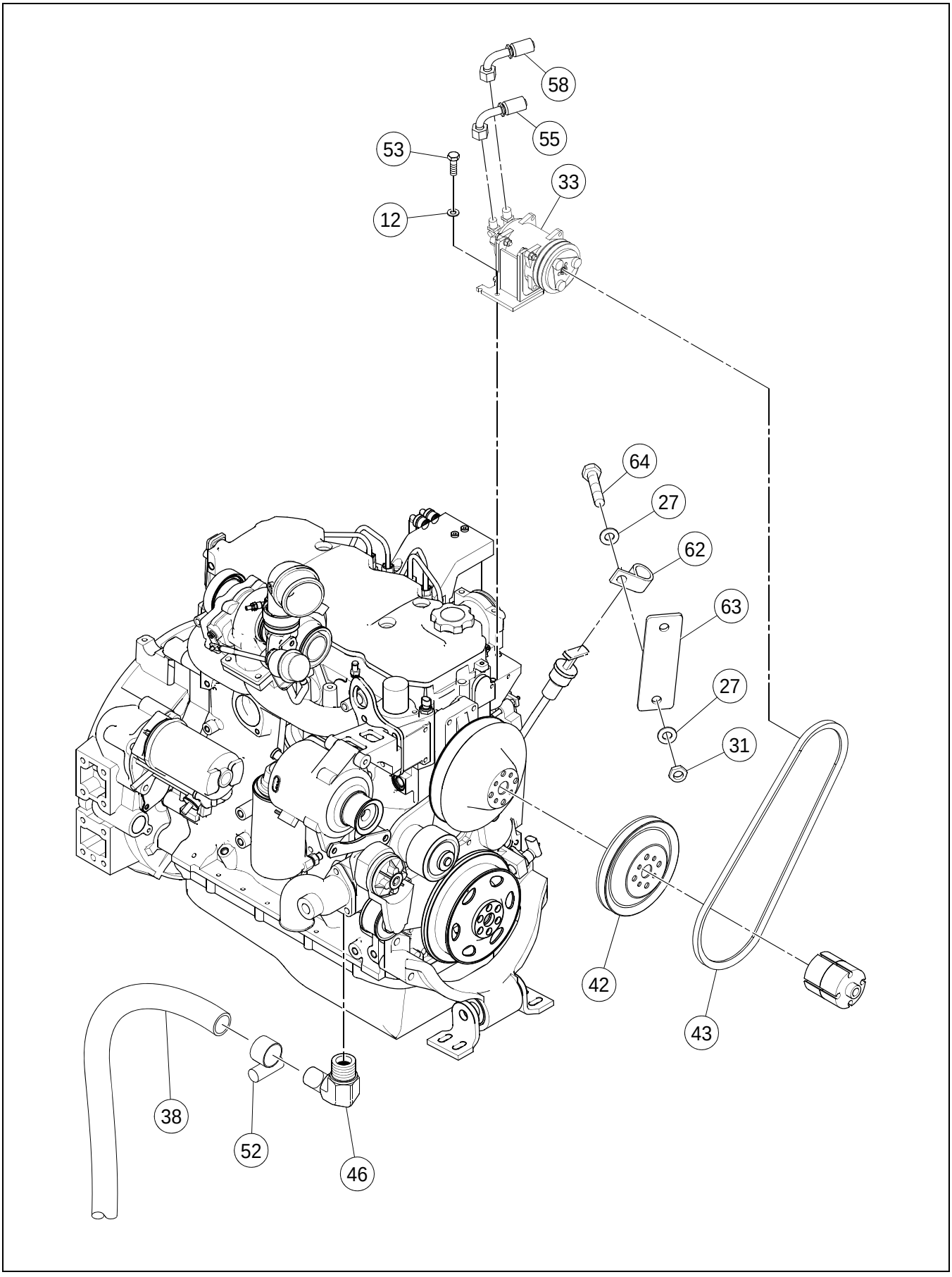

****Only Offered Parts Listed****

BOM 43824960

ITEM	COMM. NO.	DESCRIPTION	QTY	DIMENSIONS/NOTES
12		This item not used with this Assembly	1	
27	96741046	Flatwasher, Zinc Plated	2	M10 Cl 200
31	96704614	Nut, Zinc Plated	1	M10 x 1.5 Cl 8
33		This item not used with this Assembly	1	
38	59823716	Hose Assembly	1	
42		This item not used with this Assembly	1	
43		This item not used with this Assembly	1	
46	58962226	Elbow	1	
52	95671285	Clamp	8	
53	96701917	HHCS, Fully Threaded, Zinc Plated	1	M10 x 1.5 x 30 Cl 8.8
55		This item not used with this Assembly	1	
58		This item not used with this Assembly	1	
62		This item not used with this Assembly	1	
63		This item not used with this Assembly	1	
64		This item not used with this Assembly	1	

43825991 REV 0D

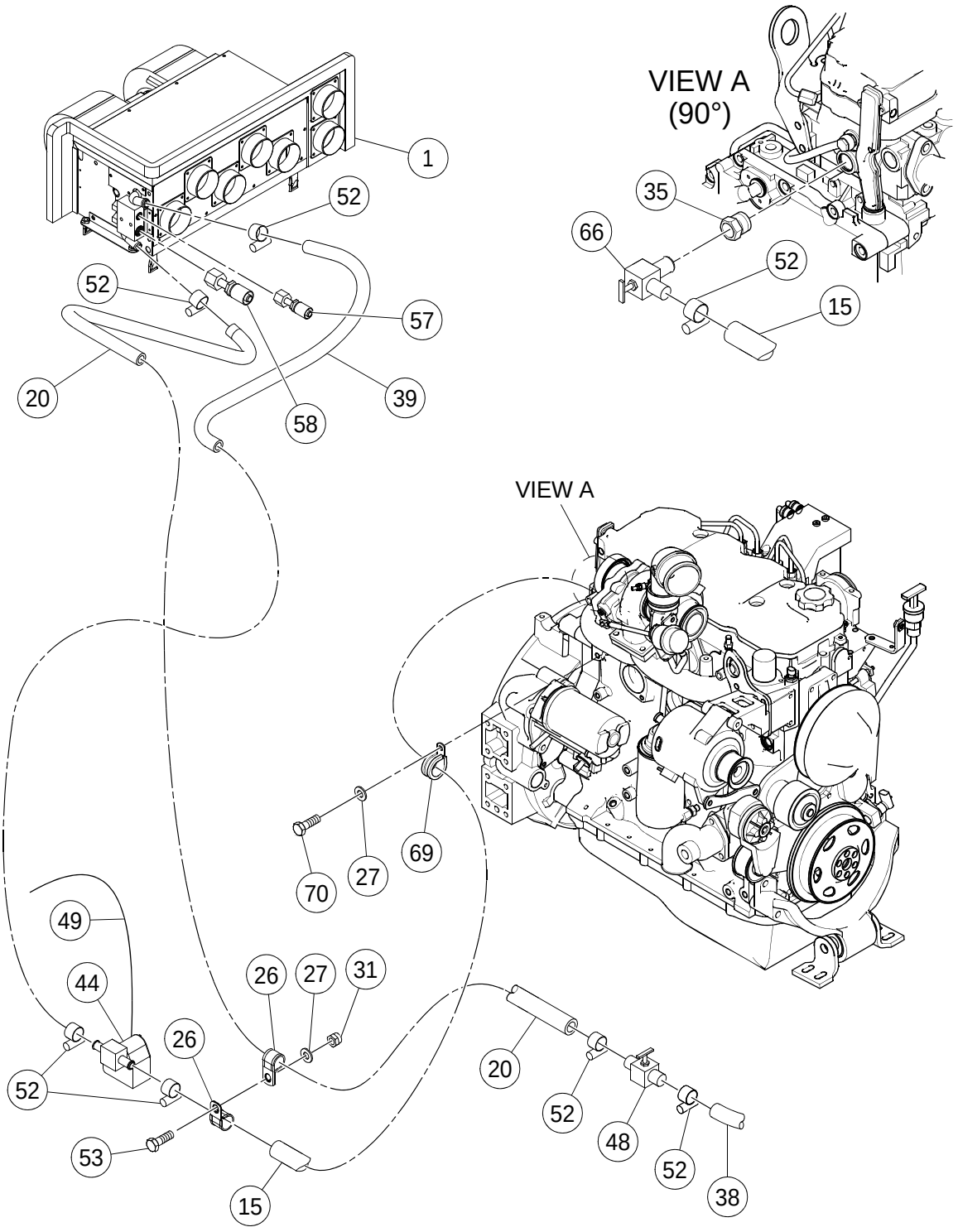

45 DECAL REFRIDGERANT CHARGE

****Only Offered Parts Listed****

BOM 43824960

ITEM	COMM. NO.	DESCRIPTION	QTY	DIMENSIONS/NOTES
1	**13237888**	**Heater**	**1**	**See Breakdown D - 138.**
15	95285144	Hose Assembly	5	
20	59919522	Hose Assembly	1	
26	59465674	Clamp	2	
27	96741046	Flatwasher, Zinc Plated	2	M10 Cl 200
31	96704614	Nut, Zinc Plated	1	M10 x 1.5 Cl 8
35	59903203	Reducer	1	
38	59823716	Hose Assembly	1	
39	59845743	Hose Assembly	1	
44	**13200027**	**Heater Valve**	**1**	**See Breakdown D - 140.**
45	NOT-USED	This item not used with this Assembly	1	
48	13254909	Shut-off Valve	1	
49	13200035	Wiring Harness	1	
52	95671285	Clamp	8	
53	96701917	HHCS, Fully Threaded, Zinc Plated	1	M10 x 1.5 x 30 Cl 8.8
57		This item not used with this Assembly	1	
58		This item not used with this Assembly	1	
66	59392795	Valve	1	
69	59465641	Clamp	1	
70	96702279	HHCS, Fully Threaded, Zinc Plated	1	M10 x 1.5 x 20 Cl 8.8

43825991 REV 0D

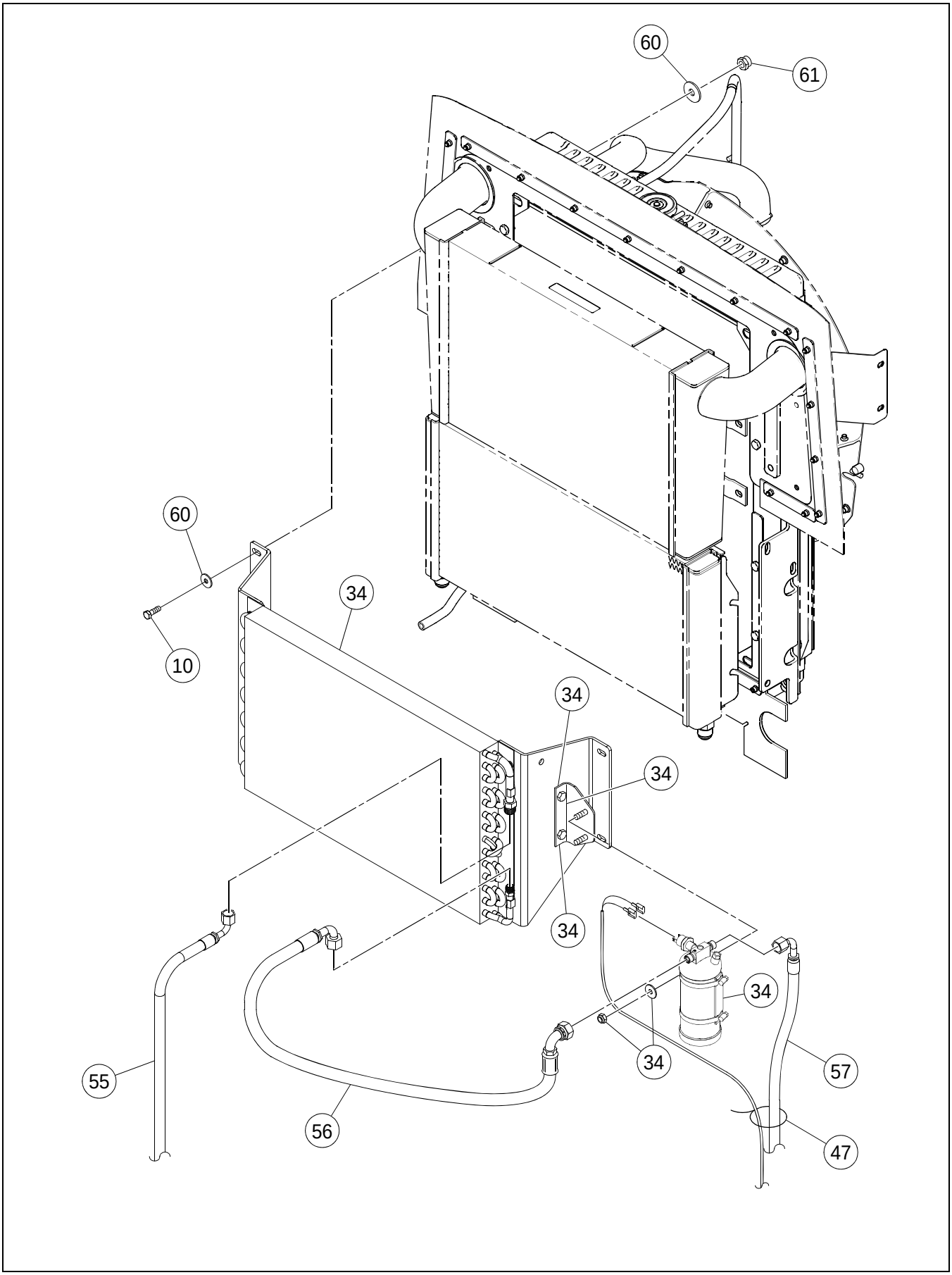

****Only Offered Parts Listed****

BOM 43824960

ITEM	COMM. NO.	DESCRIPTION	QTY	DIMENSIONS/NOTES
10	96702659	HHCS, Fully Threaded, Zinc Plated	9	M8 x 1.25 x 25 Cl 8.8
34		This item not used with this Assembly	1	
47	95373973	Wire Tie	A/R	
55		This item not used with this Assembly	1	
56		This item not used with this Assembly	1	
57		This item not used with this Assembly	1	
60		This item not used with this Assembly	1	
61		This item not used with this Assembly	1	

43825991 REV 0D

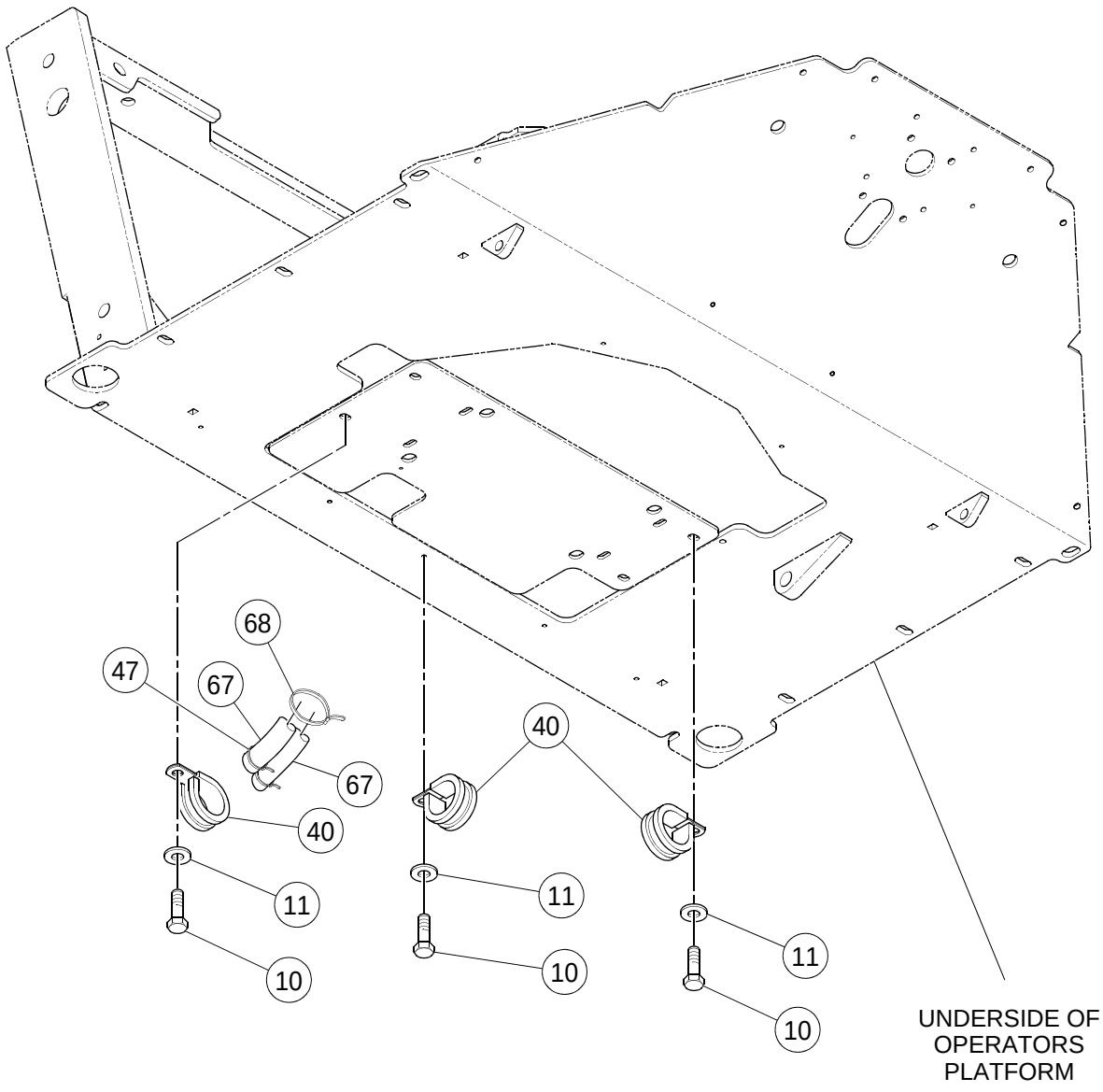

****Only Offered Parts Listed****

BOM 43824960

ITEM	COMM. NO.	DESCRIPTION	QTY	DIMENSIONS/NOTES
9	96740188	Washer, Zinc Plated (Not Shown)	4	M8 x 3 Cl HV100
10	96702659	HHCS, Fully Threaded, Zinc Plated	9	M8 x 1.25 x 25 Cl 8.8
11	96712674	Flatwasher, Zinc Plated	9	M8 Hardened Cl 10
40	95378873	Clamp	1	
47	95373973	Wire Tie	A/R	
67	43886696	Firesleeve	2	
68	95424586	Wire Tie	A/R	

HEATER (13237888) - INTERNAL BREAKDOWN

13244652 REV 00

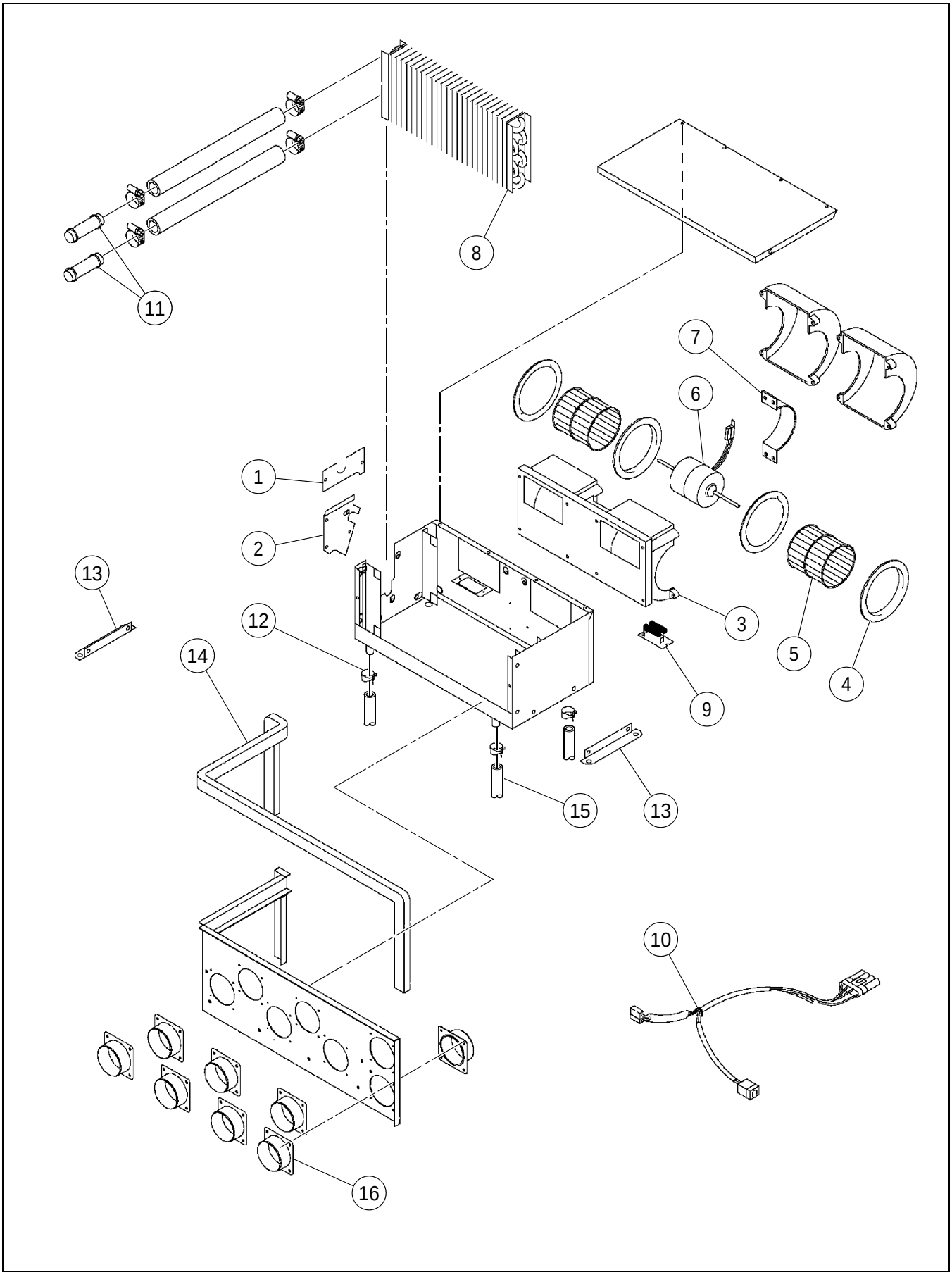

HEATER (13237888) - INTERNAL BREAKDOWN

****Only Offered Parts Listed****

BOM 13237888

ITEM	COMM. NO.	DESCRIPTION	QTY	DIMENSIONS/NOTES
1	13258702	Coil Cover	1	
2	13258710	Coil Cover	1	
3	13258728	Blower	1	
4	13258694	Venturi	2	
5	13258736	Blower Wheel	2	
6	13258744	Motor	1	
7	13258751	Motor Mount	1	
8	13258769	Heater Coil	1	
9	13258777	Resistor 12v	1	
10	13258785	Wiring Harness	1	
11	13258793	Heater Hose Assembly	2	
12	13258801	Drain Hose Clamp	4	
13	13258819	Mounting Bracket	1	
14	13258827	Foam Seal	1	
15	13258835	Drain Valve	4	
16	13258843	Hose Adapter	6	

HEATER VALVE (13200027) - INTERNAL BREAKDOWN

Dwg D13244645/00

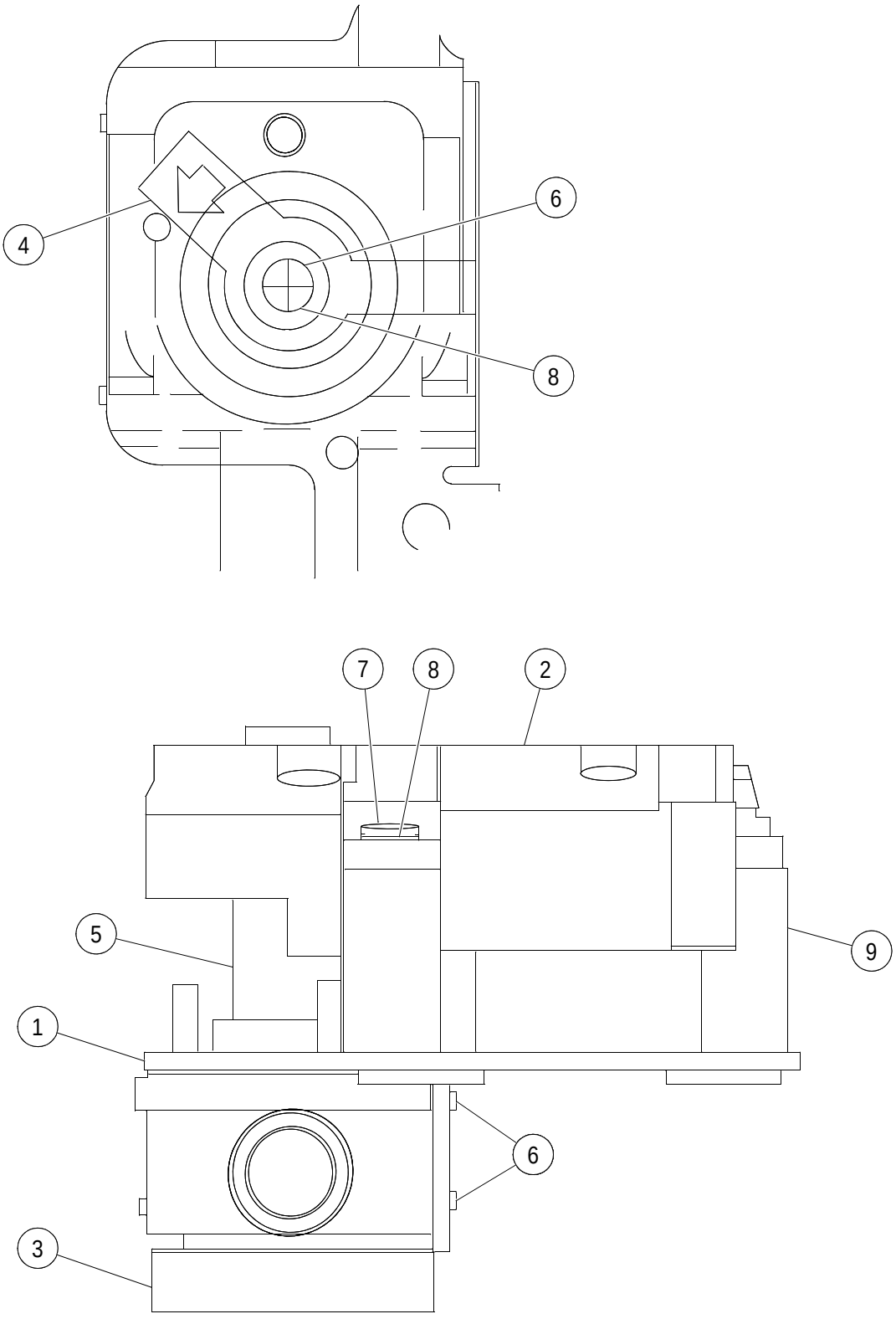

HEATER VALVE (13200027) - INTERNAL BREAKDOWN

****Only Offered Parts Listed****

BOM 13200027

ITEM	COMM. NO.	DESCRIPTION	QTY	DIMENSIONS/NOTES
1	13258942	Mounting Bracket	1	
2	13258959	Motor Adaptor	1	
3	13258967	Heater Valve	1	
4	13258975	Valve Lever Arm	1	
5	13258983	Shaft Adapter	1	
6	13258991	Plastite Screw	3	
7	13259007	Screw	3	
8	13259015	Washer	4	
9	13259023	Spacer	3	

No Drawing Required

CAB WITH HEAT AND AIR CONDITIONING INSTALLATION - EU

****Only Offered Parts Listed****

BOM 80833973

ITEM	COMM. NO.	DESCRIPTION	QTY	DIMENSIONS/NOTES
1	NSVA	Cab Installation - EU	1	See Page D - 116.
2	NSVA	Pre-Cab With Heat And Air Conditioning - EU	1	See Page D - 144.

PRE-CAB WITH HEAT AND AIR CONDITIONING
INSTALLATION - EU

Dwg 19330778 REV 0E

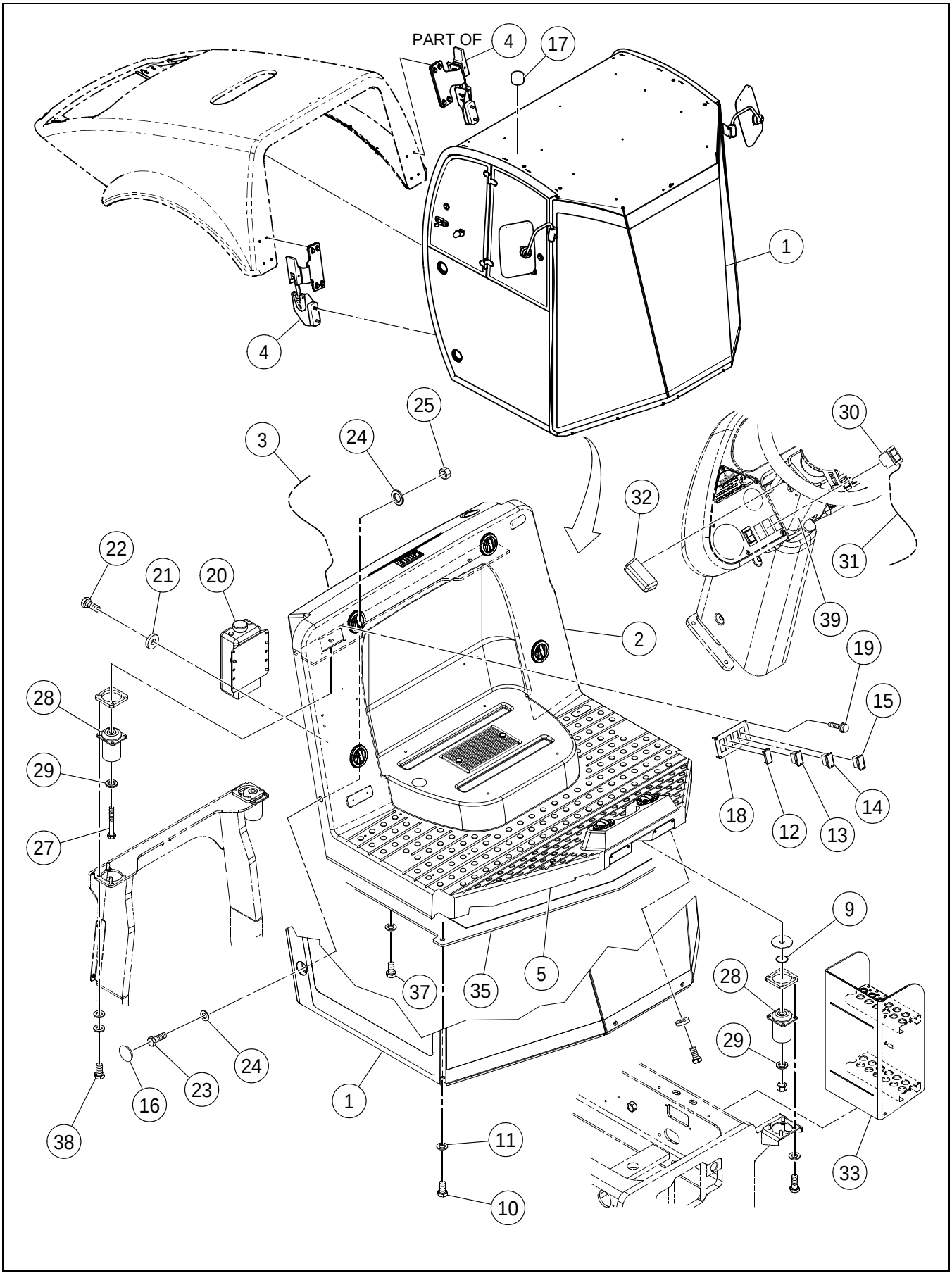

PRE-CAB WITH HEAT AND AIR CONDITIONING
INSTALLATION - EU

****Only Offered Parts Listed****

BOM 80833981

ITEM	COMM. NO.	DESCRIPTION	QTY	DIMENSIONS/NOTES
1		This item not used with this Assembly		
2	**NSVA**	**Heater And Air Conditioning Installation**	**1**	**See Page D - 146.**
3	13492822	Cab Heater And Air Conditioning Harness	1	
4		This item not used with this Assembly		
5	59946863	Seal Trim	4	
9	96746417	Washer	4	
10		This item not used with this Assembly		
11		This item not used with this Assembly		
12	58835398	Blank Switch	1	
13	59196451	Front Wiper Switch	1	
14	59196444	Rear Wiper Switch	1	
15	59195925	Switch	1	
16		This item not used with this Assembly		
17		This item not used with this Assembly		
18	13212576	Control Panel	1	
19	95988093	Self-tapping Screw, Zinc Plated	4	#6 x 3/4
20	13215769	Washer Bottle	1	
-	13228242	- Washer Bottle Cap	1	
-	13228259	- Washer Bottle Pump	1	
21	96712674	Flatwasher, Zinc Plated	4	M8 Hardened Cl 10
22	96702824	HHCS, Fully Threaded, Zinc Plated	4	M8 x 1.25 x 20 Cl 8.8
23		This item not used with this Assembly		
24		This item not used with this Assembly		
25		This item not used with this Assembly		
27		This item not used with this Assembly		
28	96701560	Flatwasher, Zinc Plated	4	M20 Hardened
29	96741442	HHCS, Zinc Plated	3	M20 x 2.5 x 140 Cl 8.8
30	13197108	F/R Worklights Switch	1	
31	43818848	Work Lights Selector Harness - Effective with S/N 194702	1	
-	13225560	Work Lights Selector Harness - Prior to S/N 194702	1	
32	13322102	Light Assembly Panel - Effective with S/N 194702	2	
-	13321443	- Lamp Led-White	2	
-	13248935	Dash Lights - Prior to S/N 194702	2	
33		This item not used with this Assembly		
35		This item not used with this Assembly		
37	96704556	HHCS, Fully Threaded, Zinc Plated	6	M10 x 1.5 x 40 Cl 8.8
38		This item not used with this Assembly		
39		This item not used with this Assembly		

HEATER AND AIR CONDITIONING INSTALLATION - SHEET 1 OF 5

43825991 REV 00D

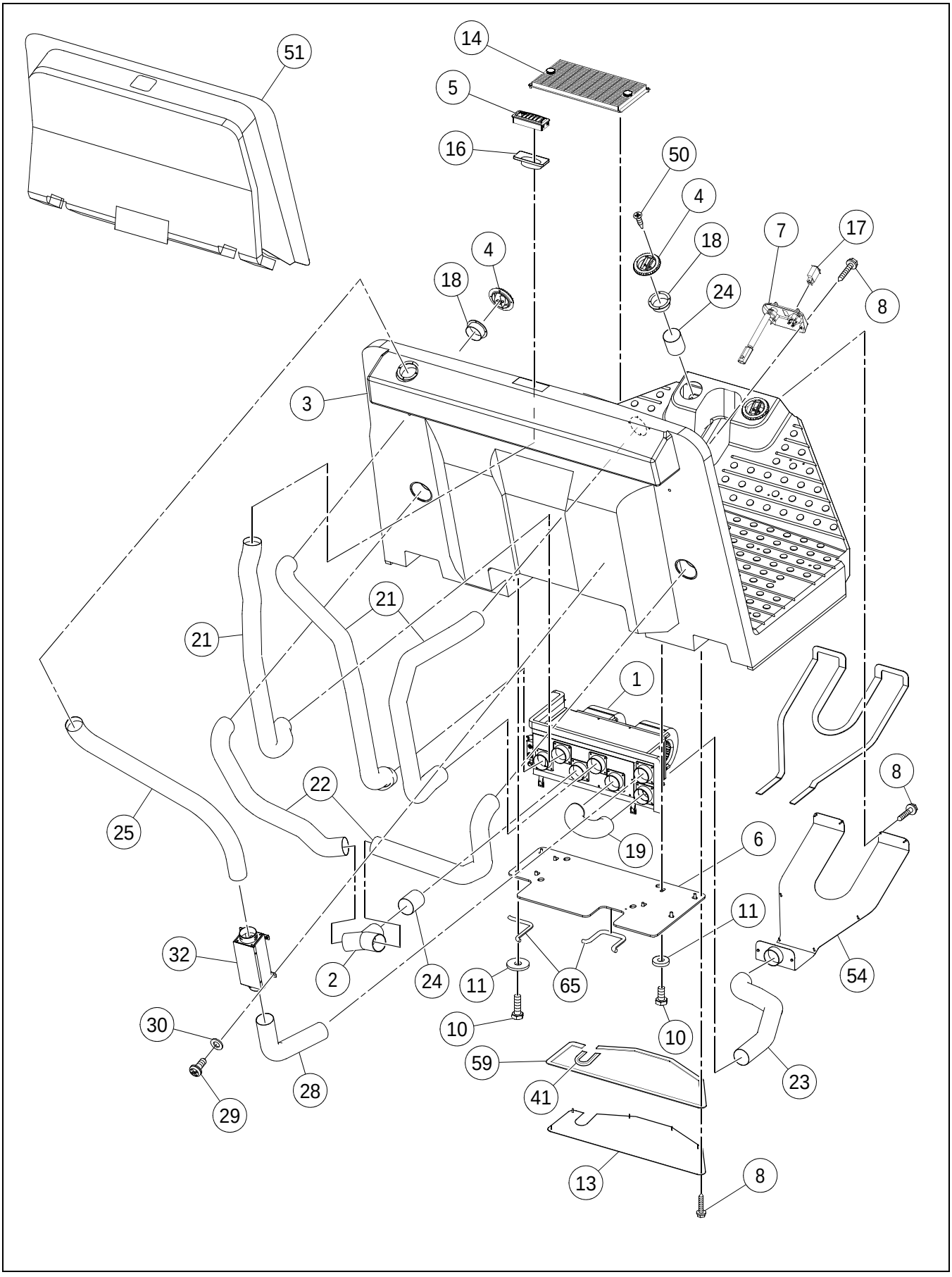

****Only Offered Parts Listed****

BOM 13888672

ITEM	COMM. NO.	DESCRIPTION	QTY	DIMENSIONS/NOTES
1	**13237367**	**Heater/Evaporator**	**1**	**See Breakdown D - 160.**
2	13162094	Y-splicer	1	
3	43843564	Operators Platform	1	
4	13161724	Louvers	6	
5	13179197	Louver	1	
6	13237326	Mounting Plate	1	
7	13254644	Heater	1	
8	96728548	Self-tapping Screw, Zinc Plated	19	1.6
10	96702659	HHCS, Fully Threaded, Zinc Plated	12	M8 x 1.25 x 25 Cl 8.8
11	96712674	Flatwasher, Zinc Plated	9	M8 Hardened Cl 10
13	13502083	Cover Plate	1	
14	13234927	Air Recirculation Filter Assembly	1	
-	13200019	- Recirculation	1	
-	13161757	- Air Recirculation Filter	1	
-	13200001	- Recirculation Filter Grill	1	
16	13179403	Louver Adapter	1	
17	13156963	Switch: Ac	1	
18	13161732	Louver Adapter	7	
19	13176508	Bottom Duct Hose	1	
21	13295712	Upper Side Duct Hose	3	
22	13176516	Lower Side Duct Hose	2	
23	13176532	Plenum Hose	1	
24	59290742	Connector Hose	3	
25	59290734	Center Duct Hose	1	
28	59290783	Bottom Fresh Air Duct Hose	1	
29	96740444	Self-tapping Pan Head Screw, Zinc Plated	4	4.8 x 1.6 x 13
30	96738554	Flatwasher, Zinc Plated	4	M5 Hardened Cl 200
32	59290767	Fresh Air Filter	1	
41	13467485	Seal Trim	1	
50	13209887	Wood Screw	14	
51	59290817	Foam	1	
54	13234893	Plenum	1	
59	35898477	Foamtape	1	
65	50829662	Trim	1	

43825991 REV 00D

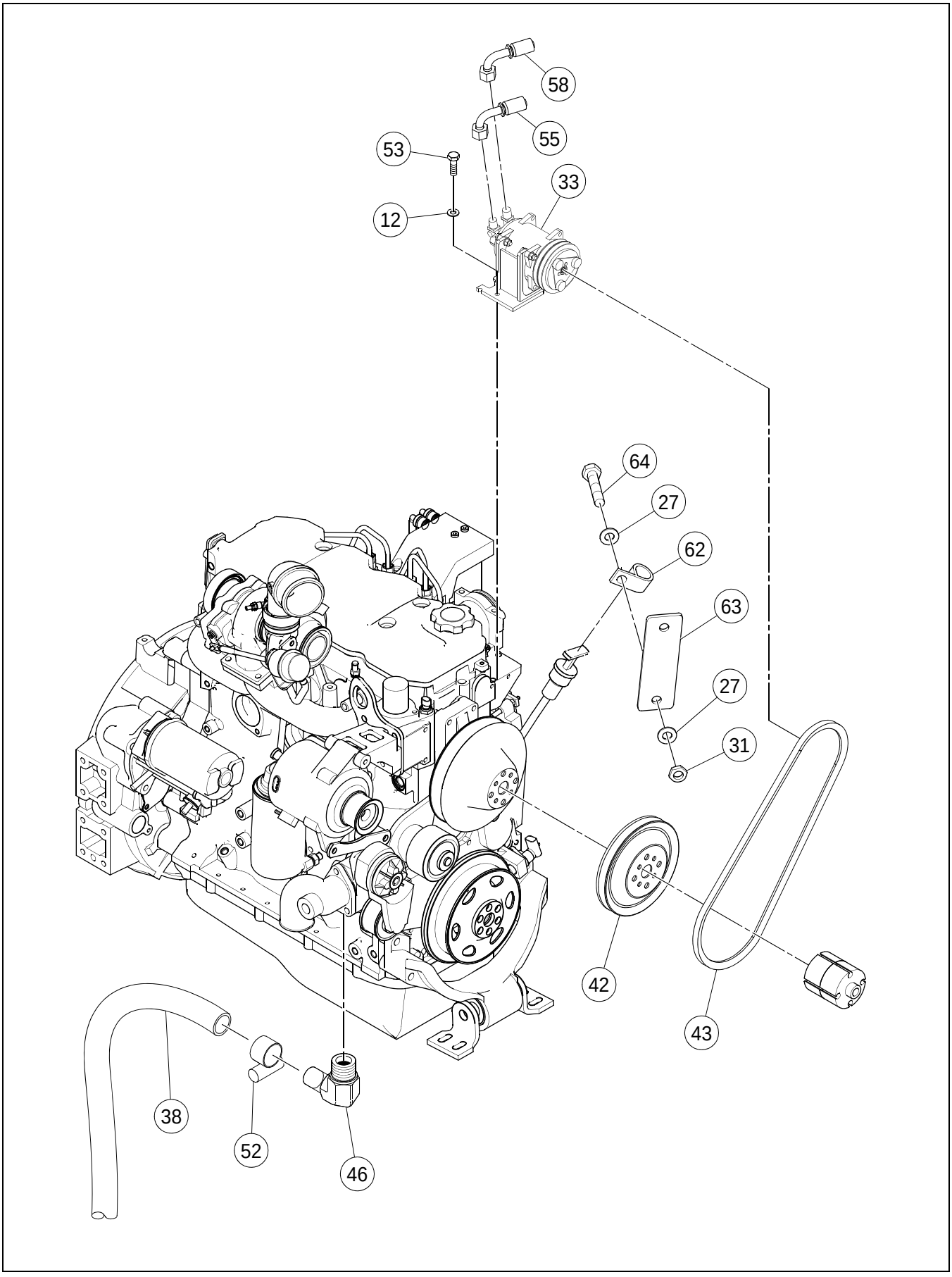

****Only Offered Parts Listed****

BOM 13888672

ITEM	COMM. NO.	DESCRIPTION	QTY	DIMENSIONS/NOTES
12	96714407	Flatwasher, Zinc Plated	3	M10
27	96741046	Flatwasher	4	
31	96704614	Nut, Zinc Plated	2	M10 x 1.5 Cl 8
33	**NSVA**	**Compressor Assembly**	**1**	**See Page D - 156.**
38	59823716	Hose Assembly	1	
42	58910662	Compressor Pulley	1	
43	13236666	Compressor Belt	1	
46	58962226	Elbow	1	
52	95671285	Clamp	8	
53	96701917	HHCS, Fully Threaded, Zinc Plated	4	M10 x 1.5 x 30 Cl 8.8
55	43801984	Hose Assembly	1	
58	43889153	Hose Assembly	1	
62	95301859	Clamp	1	
63	43852359	Heating and Air Conditioning/Dipstick Bracket	1	
64	96702279	HHCS, Fully Threaded, Zinc Plated	1	M10 x 1.5 x 20 Cl 8.8

43825991 REV 00D

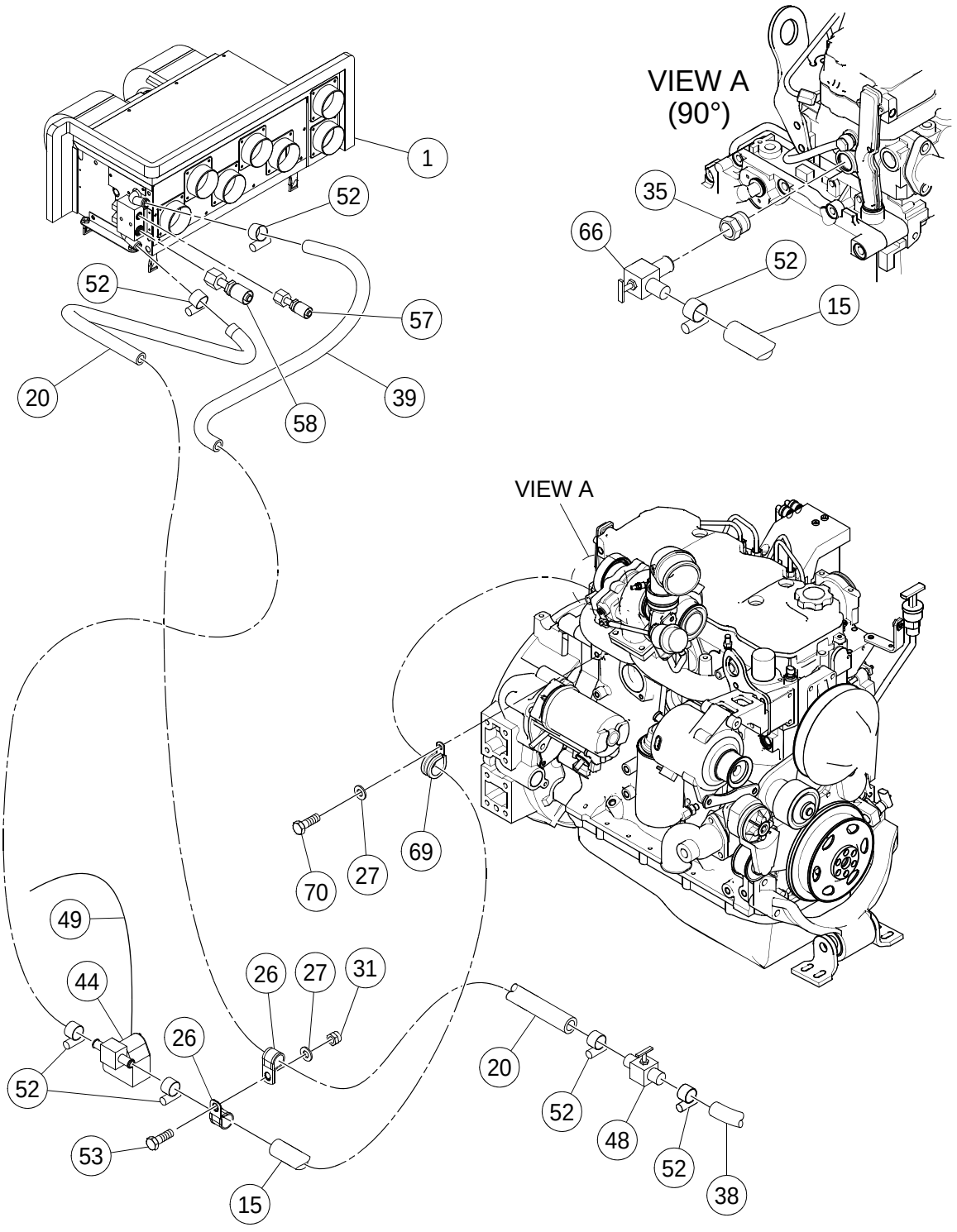

45 DECAL REFRIDGERANT CHARGE

****Only Offered Parts Listed****

BOM 13888672

ITEM	COMM. NO.	DESCRIPTION	QTY	DIMENSIONS/NOTES
1	**13237367**	**Heater/Evaporator**	**1**	**See Breakdown D - 160.**
20		This item not used with this Assembly		
15	95285144	Hose Assembly	5	
26	59465674	Clamp	2	
27	96741046	Flatwasher	4	
31	96704614	Nut, Zinc Plated	2	M10 x 1.5 Cl 8
35	59903203	Reducer	1	
38	59823716	Hose Assembly	1	
39	59845743	Hose Assembly	1	
44	**13200027**	**Heater Valve**	**1**	**See Breakdown D - 162.**
45	13355003	Decal: Refridgerant Charge	1	
48	13254909	Shut-off Valve	1	
49	13200035	Wiring Harness	1	
52	95671285	Clamp	8	
53	96701917	HHCS, Fully Threaded, Zinc Plated	4	M10 x 1.5 x 30 Cl 8.8
57	43801992	Hose Assembly	1	
58	43889153	Hose Assembly	1	
66	59392795	Valve	1	
69	59465641	Clamp	1	
70	96702279	HHCS, Fully Threaded, Zinc Plated	1	M10 x 1.5 x 20 Cl 8.8

43825991 REV 00D

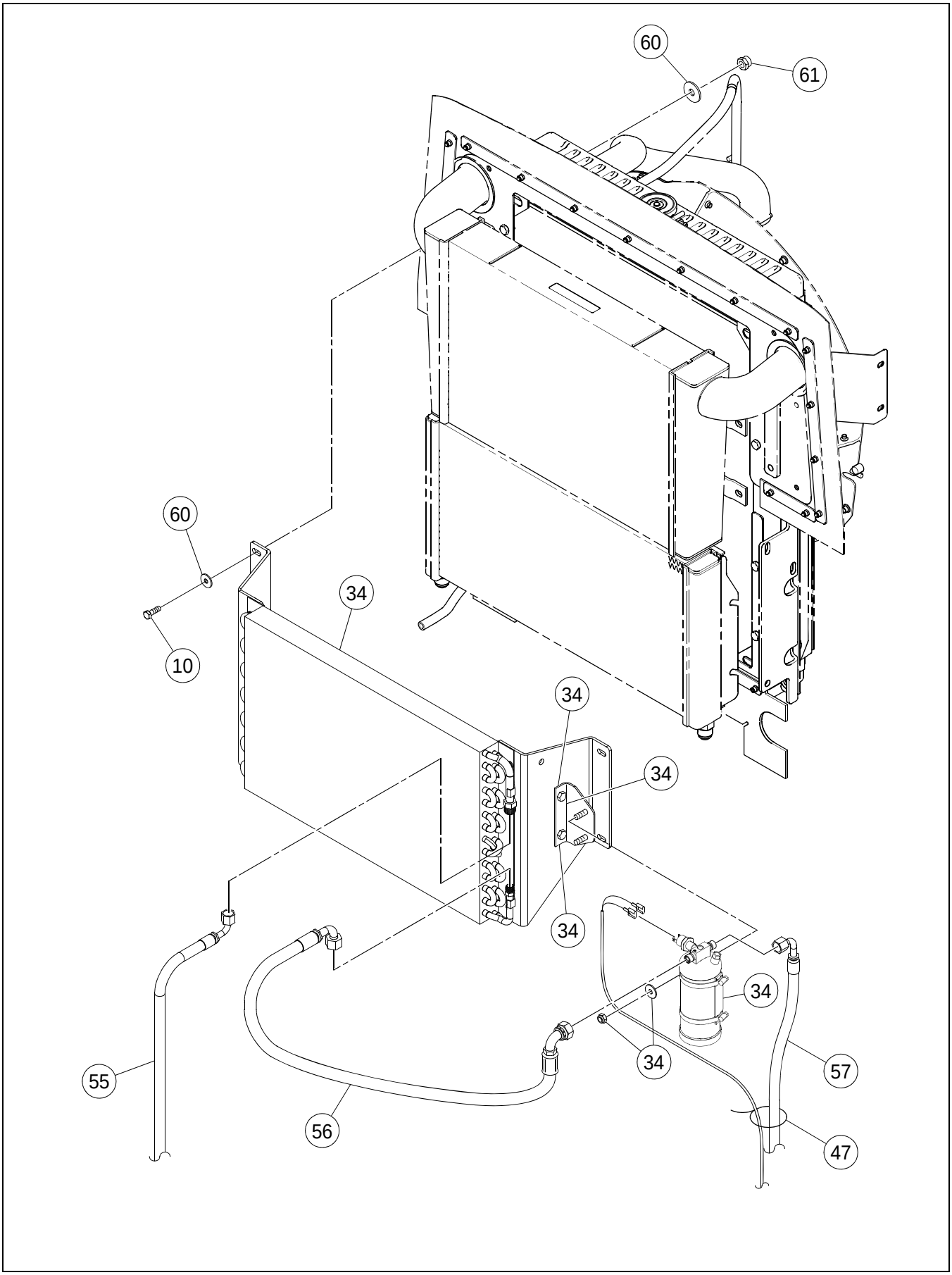

****Only Offered Parts Listed****

BOM 13888672

ITEM	COMM. NO.	DESCRIPTION	QTY	DIMENSIONS/NOTES
10	96702659	HHCS, Fully Threaded, Zinc Plated	12	M8 x 1.25 x 25 Cl 8.8
34	**NSVA**	**Condensor Assembly**	**1**	**See Page D - 158.**
47	95373973	Wire Tie	A/R	
55	43801984	Hose Assembly	1	
56	13225735	Coolant Hose	1	
57	43801992	Hose Assembly	1	
60	96740204	Washer	8	M8 x 25
61	96704606	Hex Locknut, Zinc Plated	5	M8 x 1.25 Cl 8

43825991 REV 00D

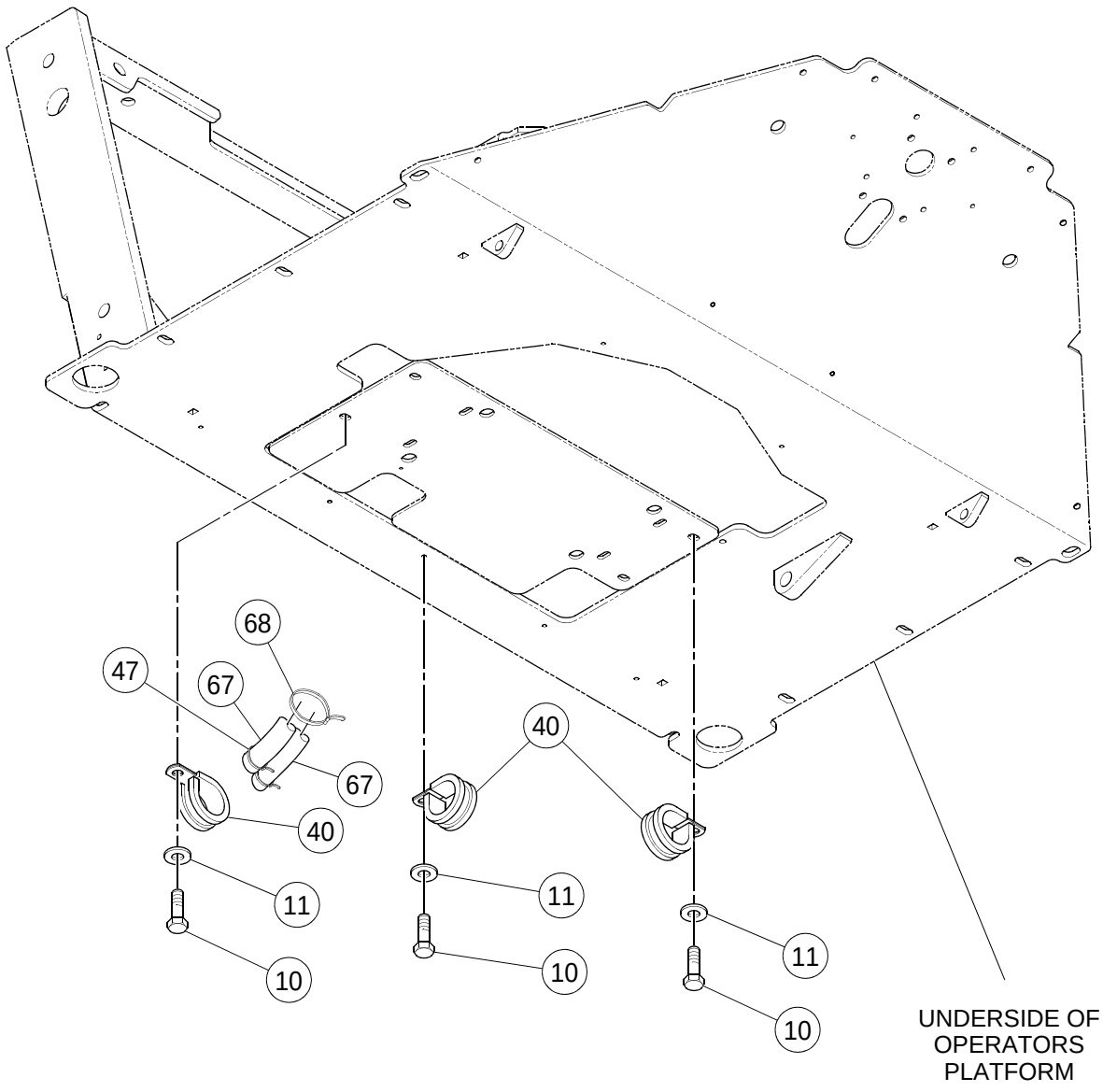

****Only Offered Parts Listed****

BOM 13888672

ITEM	COMM. NO.	DESCRIPTION	QTY	DIMENSIONS/NOTES
9	96740188	Washer, Zinc Plated (Not Shown)	4	M8 x 3 Cl HV100
10	96702659	HHCS, Fully Threaded, Zinc Plated	12	M8 x 1.25 x 25 Cl 8.8
11	96712674	Flatwasher, Zinc Plated	9	M8 Hardened Cl 10
40	95378873	Clamp	3	
47	95373973	Wire Tie	A/R	
67	43886696	Firesleeve	2	
68	95424586	Wire Tie	A/R	
71	95322871	Clamp (Not Shown)	1	

COMPRESSOR ASSEMBLY

43825181 REV 0C

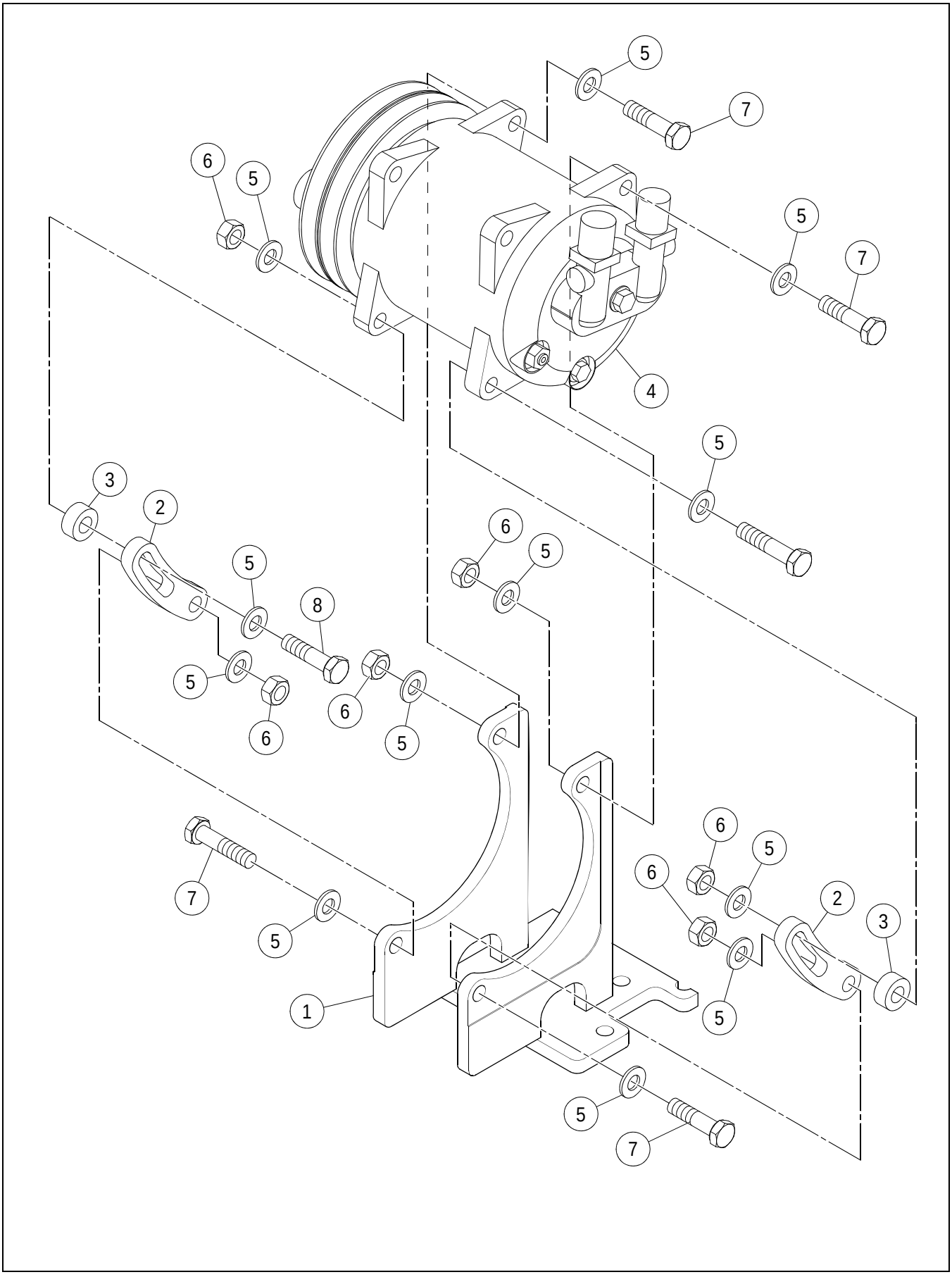

COMPRESSOR ASSEMBLY

****Only Offered Parts Listed****

BOM 13888680

ITEM	COMM. NO.	DESCRIPTION	QTY	DIMENSIONS/NOTES
1	13888698	Bracket	1	
2	59147991	Adjustment Arm	2	
3	59148007	Spacer	2	
4	13274576	Compressor	1	
-	13479381	- Magnetic Clutch	1	
5	96741046	Flatwasher, Zinc Plated	12	M10 Cl 200
6	96704812	Hex Nut, Zinc Plated	6	M10 x 1.5 Cl 8
7	96704358	HHCS, Zinc Plated	4	M10 x 1.5 x 40 Cl 8.8
8	96705116	HHCS, Fully Threaded, Zinc Plated	2	M10 x 1.5 x 50 Cl 8.8

CONDENSOR ASSEMBLY

13324835 REV 0B

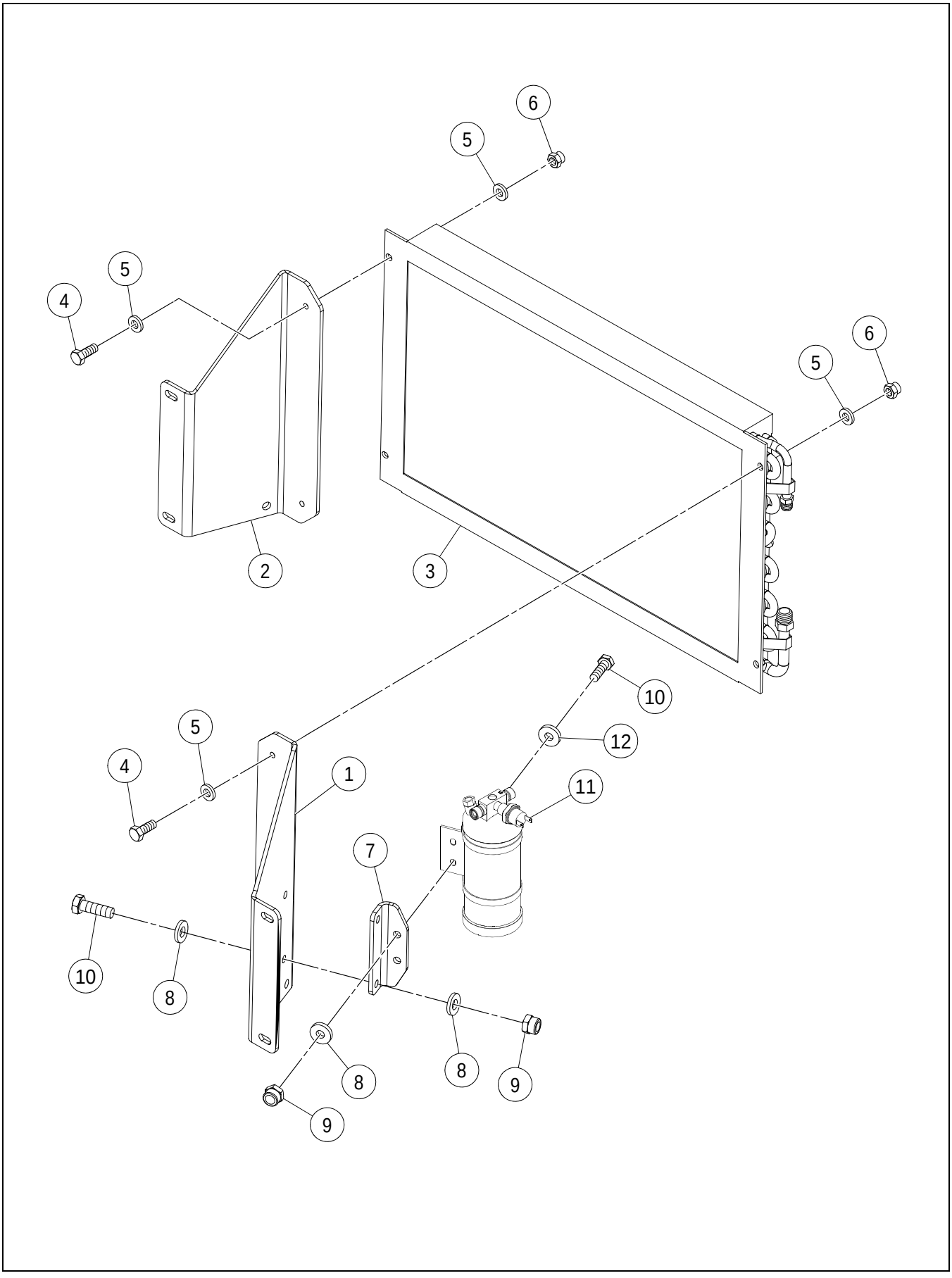

CONDENSOR ASSEMBLY

****Only Offered Parts Listed****

BOM 13297072

ITEM	COMM. NO.	DESCRIPTION	QTY	DIMENSIONS/NOTES
1	13297080	Condensor Bracket	1	
2	13297155	Condensor Bracket	1	
3	13356712	Condenser	1	
4	96704564	HHCS, Fully Threaded, Zinc Plated	4	M6 x 1.0 x 20 Cl 8.8
5	96704663	Flatwasher, Zinc Plated	8	M6 Large
6	96704598	Hex Locknut, Zinc Plated	4	M6 Cl 8
7	13297106	Dryer Mounting Bracket	1	
8	96741038	Flatwasher	6	M8 x 1.25 Cl 200
9	96704606	Hex Locknut, Zinc Plated	4	M8 x 1.25 Cl 8
10	96702659	HHCS, Fully Threaded, Zinc Plated	4	M8 x 1.25 x 25 Cl 8.8
11	43837715	Drier/Binary Bracket	1	
-	43876242	- Receiver Drier	1	
-	43876259	- R/D Mounting Bracket	1	
-	43876267	- Clamp	2	
-	57607814	- Pressure Switch	1	
12	96712674	Flatwasher, Zinc Plated	2	M8 Hardened Cl 10

HEATER/EVAPORATOR (13237367) - INTERNAL BREAKDOWN

Dwg D13244611/00

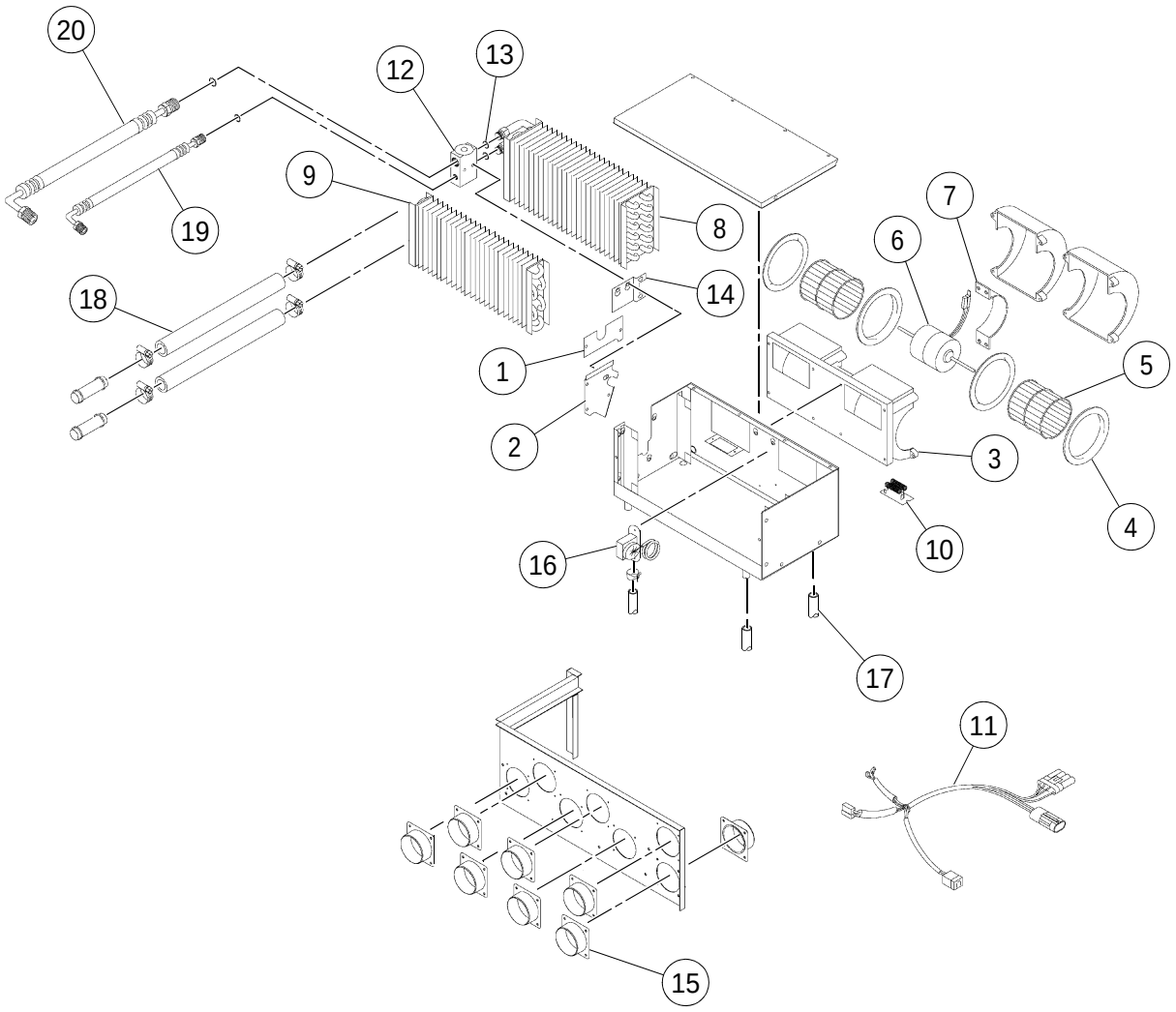

HEATER/EVAPORATOR (13237367) - INTERNAL BREAKDOWN

****Only Offered Parts Listed****

BOM 13237367

ITEM	COMM. NO.	DESCRIPTION	QTY	DIMENSIONS/NOTES
1	13258702	Coil Cover	1	
2	13258710	Coil Cover	1	
3	13258728	Blower, 12V	1	
-	13861752	Blower	1	
4	13258694	- Venturi	2	
5	13258736	- Blower Wheel	2	
6	13258744	- Motor	1	12V
7	13258751	- Motor Mount	1	
8	13258868	Evaporator Coil	1	
9	13258769	Heater Coil	1	
10	13258777	Resistor 12V	1	
11	13258876	Wire Harness	1	
12	13258884	Block Valve	1	
13	13258892	O-ring	2	
14	13258900	Valve Bracket	1	
15	13258843	Hose Adapter	6	
16	57588162	Thermostat	1	
17	13258835	Drain Valve	4	
18	13258793	Heater Hose Assembly	2	
19	13258918	Hose Assembly	1	
20	13258926	Hose Assembly	1	
-	13861414	Condenser/High Efficiency	1	
-	13845375	Cab Harness with Air Conditioning	1	

HEATER VALVE (13200027) - INTERNAL BREAKDOWN

Dwg D13244645/00

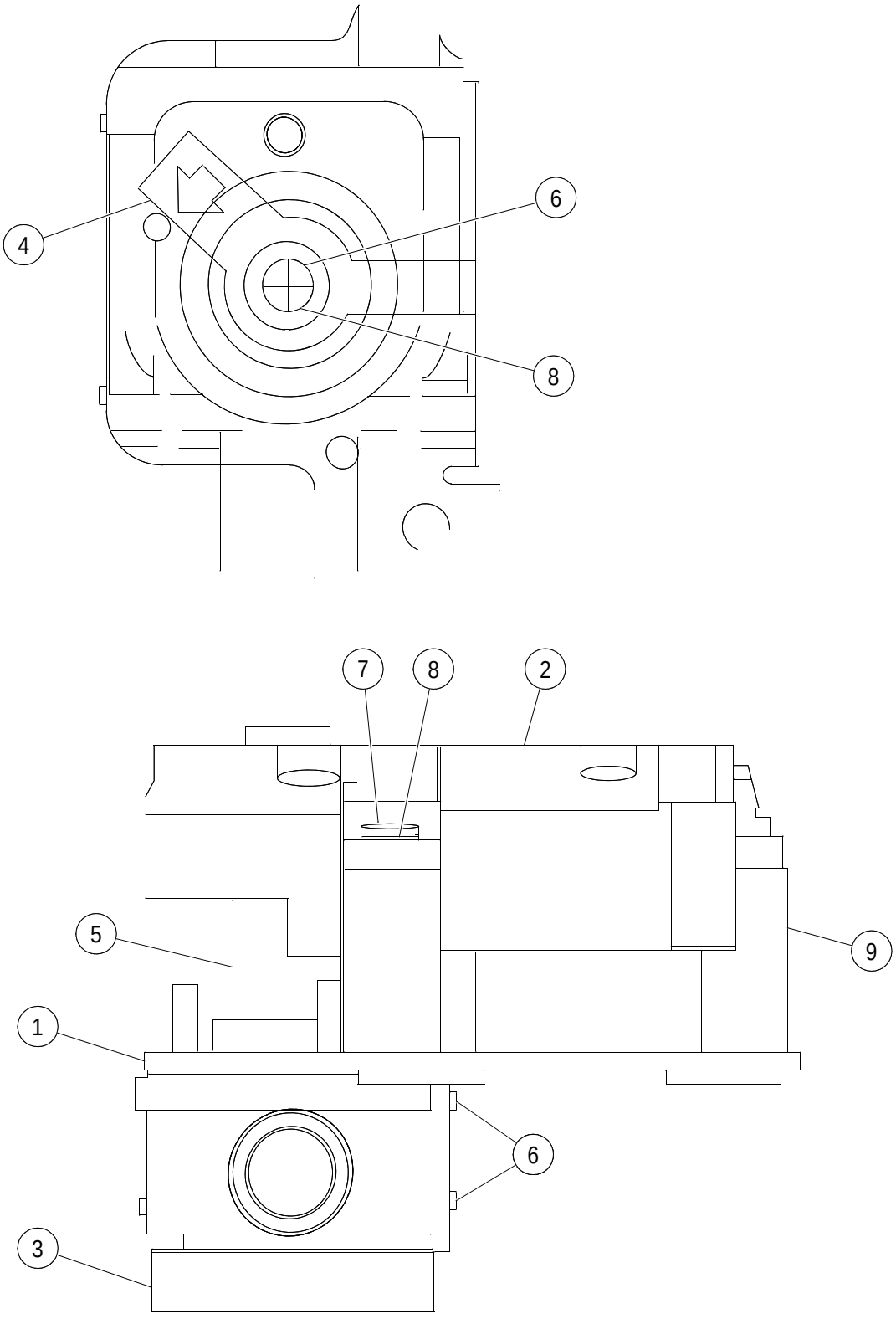

HEATER VALVE (13200027) - INTERNAL BREAKDOWN

****Only Offered Parts Listed****

BOM 13200027

ITEM	COMM. NO.	DESCRIPTION	QTY	DIMENSIONS/NOTES
1	13258942	Mounting Bracket	1	
2	13258959	Motor Adaptor	1	
3	13258967	Heater Valve	1	
4	13258975	Valve Lever Arm	1	
5	13258983	Shaft Adapter	1	
6	13258991	Plastite Screw	3	
7	13259007	Screw	3	
8	13259015	Washer	4	
9	13259023	Spacer	3	

Dwg 13169842 REV 0M

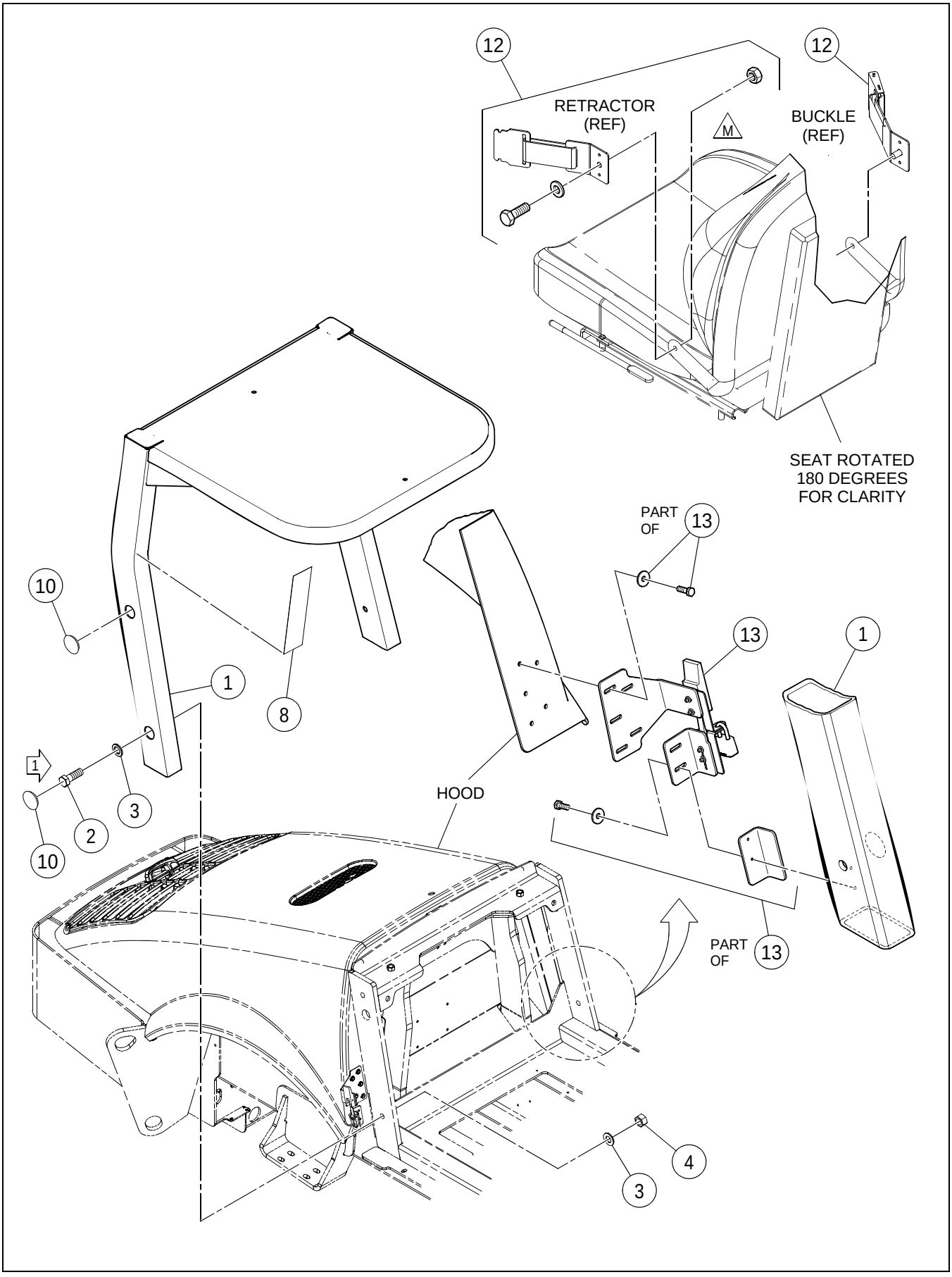

ROPS/FOPS INSTALLATION - EU

****Only Offered Parts Listed****

BOM 13883236

ITEM	COMM. NO.	DESCRIPTION	QTY	DIMENSIONS/NOTES
1	19298009	ROPS/FOPS	1	
2	96746235	HHCS, Zinc Plated	4	M24 x 3 x 70 Cl 10.9
3	96702642	Washer, Zinc Plated	8	M24 Hardened
4	96727532	Hex Nut, Zinc Plated	4	M24 x 3 Cl 8
8	13197306	Decal: Checklist	1	
10	13309877	Plug	1	
12	**NSVA**	**Seatbelt Installation**	**1**	**See Page D - 166.**
13	**NSVA**	**ROPS/Hood Draw Latch Installation**	**1**	**See Page D - 168.**

SEATBELT INSTALLATION

43803394 REV 00

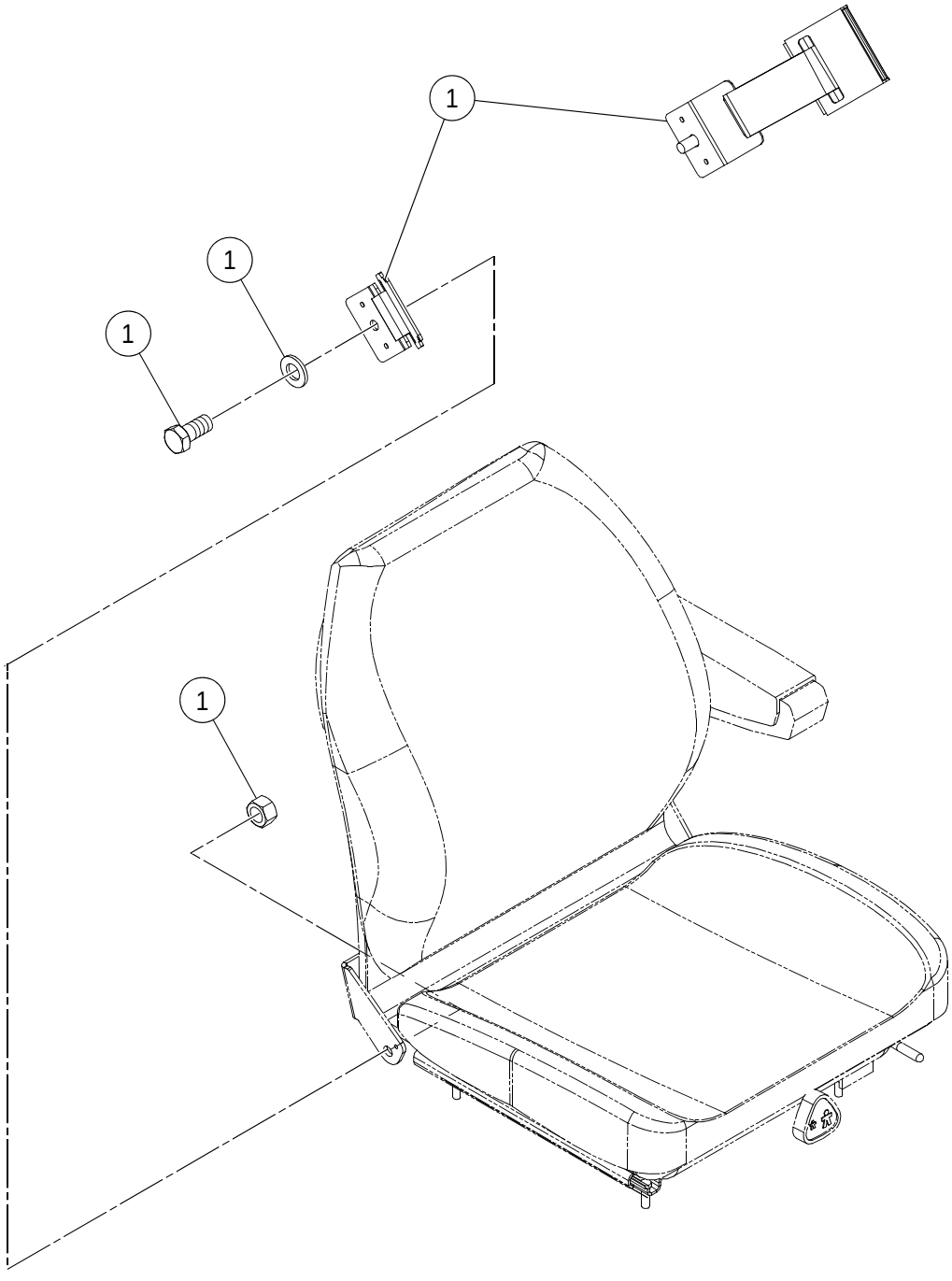

SEATBELT INSTALLATION

****Only Offered Parts Listed****

BOM 43803394

ITEM	COMM. NO.	DESCRIPTION	QTY	DIMENSIONS/NOTES
1	13342720	Seat Belt	1	

ROPS/HOOD DRAW LATCH INSTALLATION

13883673 REV 002

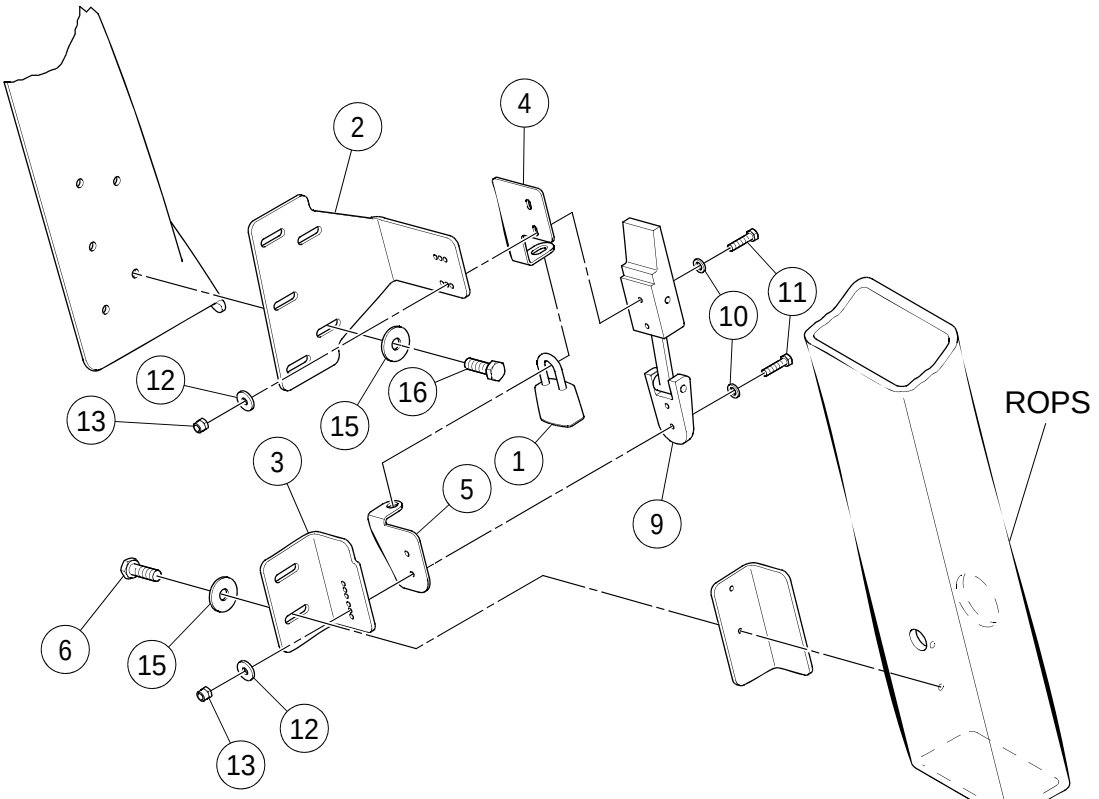

LH SIDE

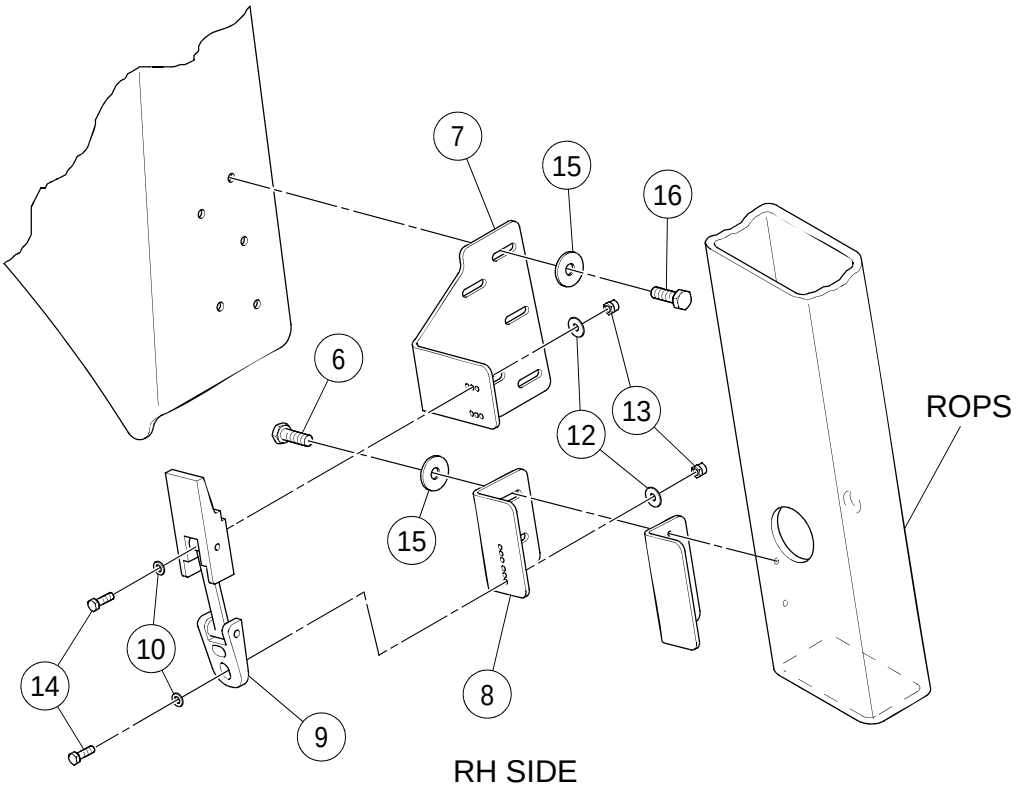

RH SIDE

ROPS/HOOD DRAW LATCH INSTALLATION

****Only Offered Parts Listed****

BOM 13883673

ITEM	COMM. NO.	DESCRIPTION	QTY	DIMENSIONS/NOTES
1	13349212	Lock	1	
2	13881206	Hood Latch Bracket LH	1	
3	13881198	ROPS Latch Bracket LH	1	
4	13885355	RH Lock Tab	1	
5	59163238	RH Lock Tab	1	
6	96702659	HHCS, Fully Threaded, Zinc Plated (Not Shown)	14	M8 x 1.25 x 25 Cl 8.8
7	13881230	Hood Latch Bracket RH	1	
8	13881222	ROPS Latch Bracket RH	1	
9	59162149	Latch	2	
10	95922332	Flatwasher, Zinc Plated	16	#10
11	96705736	HHCS, Fully Threaded, Zinc Plated	4	M5 x 0.8 x 20 Cl 8.8
12		This item not used with this Assembly		
13	96704580	Hex Locknut, Zinc Plated	8	M5 x 0.8 Cl 8
14	96705728	Screw, Fully Threaded, Zinc Plated	4	M5 x 0.8 x 16 Cl 8.8
15	96740204	Washer	14	M8 x 25
16		This item not used with this Assembly		

FIRE EXTINGUISHER MOUNTING PLATE INSTALLATION

13233689 REV 00

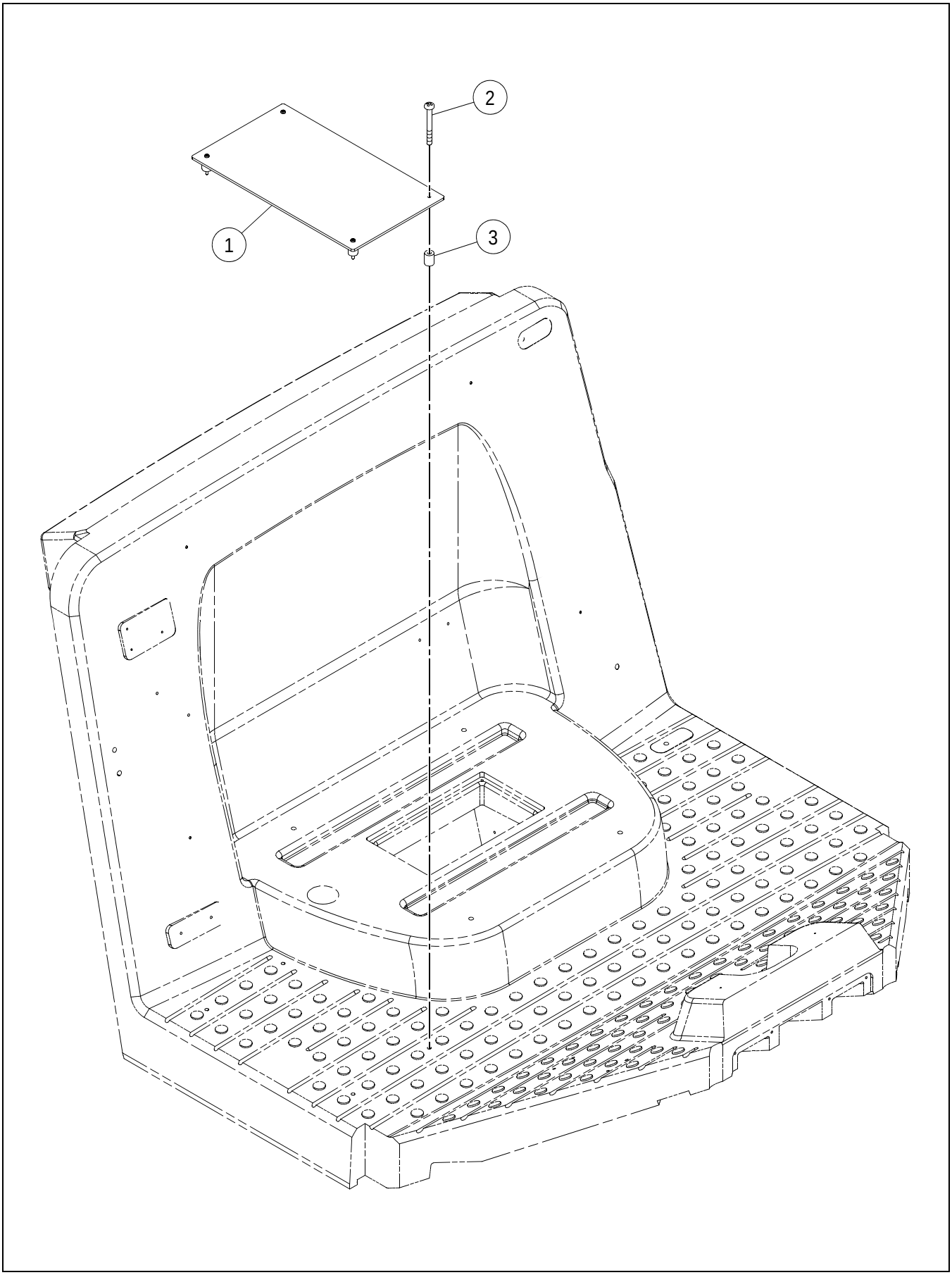

FIRE EXTINGUISHER MOUNTING PLATE INSTALLATION

****Only Offered Parts Listed****

BOM 13156898

ITEM	COMM. NO.	DESCRIPTION	QTY	DIMENSIONS/NOTES
1	13292982	Mounting Plate	1	
2	96715180	Self-tapping Screw	4	
3	13157961	Spacer	4	

FIRST AID MOUNTING ASSEMBLY

13233697 REV 01

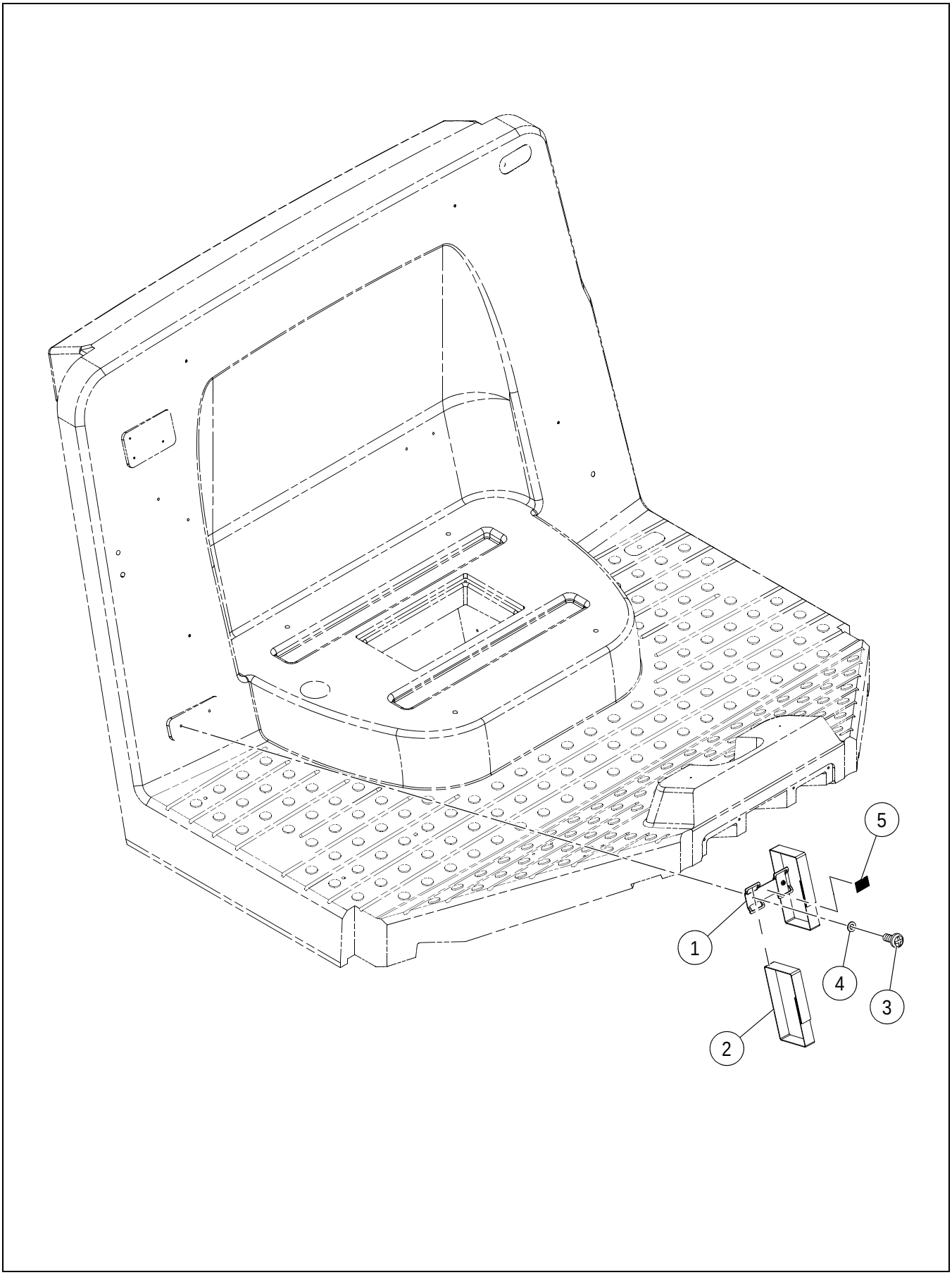

FIRST AID MOUNTING ASSEMBLY

****Only Offered Parts Listed****

BOM 13223995

ITEM	COMM. NO.	DESCRIPTION	QTY	DIMENSIONS/NOTES
1	59275917	Mounting Bracket	1	
2	59275990	First Aid Strap	2	
3	96740444	Screw	2	
4	96738554	Flatwasher	2	
5	59289025	Decal: First Aid	1	

SUSPENSION SEAT W/BACKREST EXTENSION
INSTALLATION - OPTIONAL

13169925 REV 0J

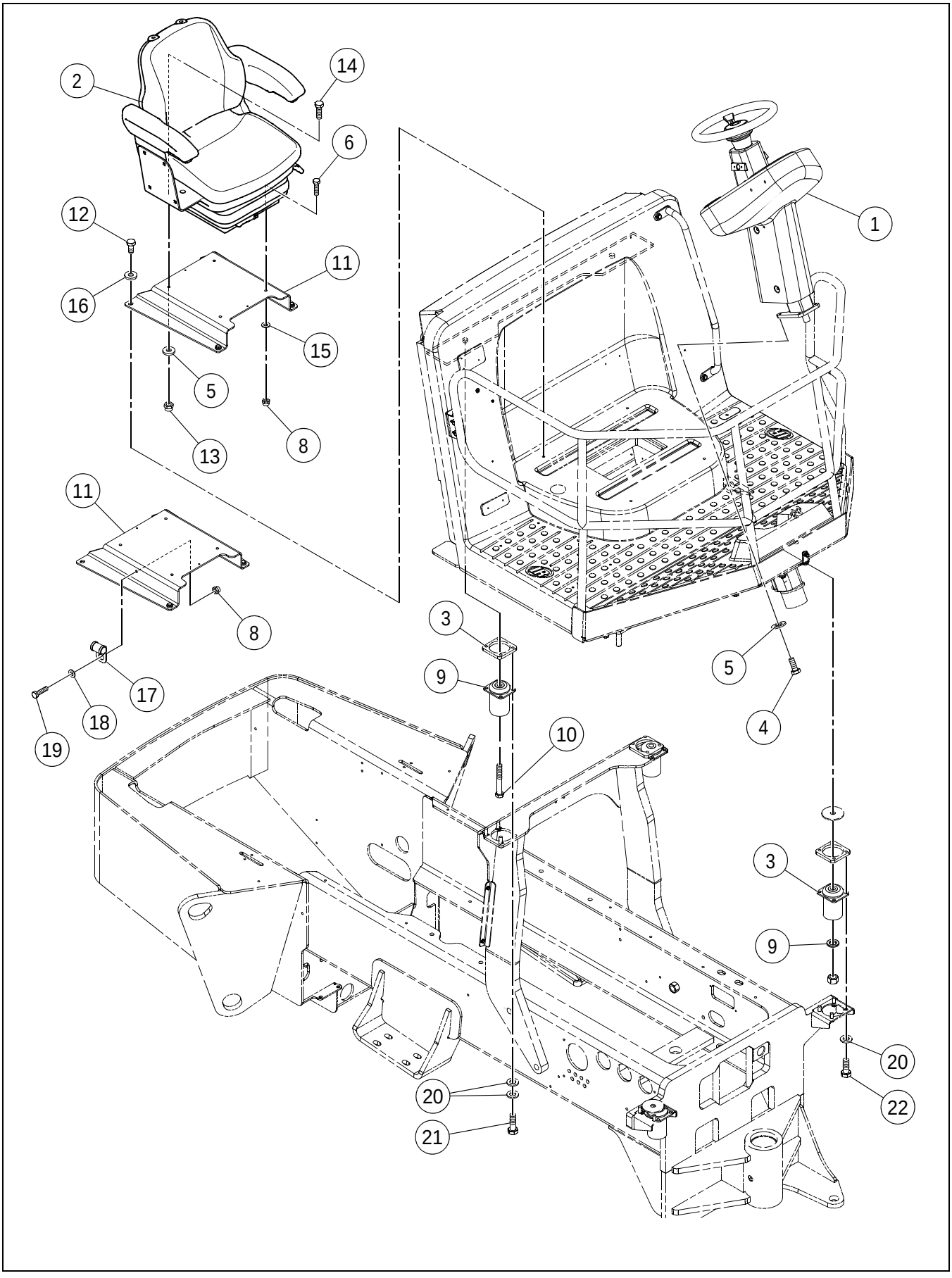

SUSPENSION SEAT W/BACKREST EXTENSION
INSTALLATION - OPTIONAL

****Only Offered Parts Listed****

BOM 13869557

ITEM	COMM. NO.	DESCRIPTION	QTY	DIMENSIONS/NOTES
1		This item not used with this Assembly		
2	13884770	Seat Assembly	1	
-	13886999	- Side Console Mount Plate	1	
-	13263041	- Bellows	1	
-	13263090	- Adjustment	1	
-	13262910	- Switch	1	
-	13462650	- Tension	2	
-	13462668	- Bumper Set	1	
3		This item not used with this Assembly		
4		This item not used with this Assembly		
5		This item not used with this Assembly		
6	96705587	HHCS, Zinc Plated	2	M8 x 1.25 x 30 Cl 8.8
8		This item not used with this Assembly		
9		This item not used with this Assembly		
10		This item not used with this Assembly		
11	13235981	Seat Base	1	
12		This item not used with this Assembly		
13	96704614	Nut	2	M10 x 1.5
14	96701917	HHCS, Zinc Plated	2	M10 x 1.5 x 30 Cl 8.8
15		This item not used with this Assembly		
16		This item not used with this Assembly		
17		This item not used with this Assembly		
18		This item not used with this Assembly		
19		This item not used with this Assembly		
20		This item not used with this Assembly		
21		This item not used with this Assembly		
22		This item not used with this Assembly		

Section E - ELECTRICAL

43891340 REV 0A

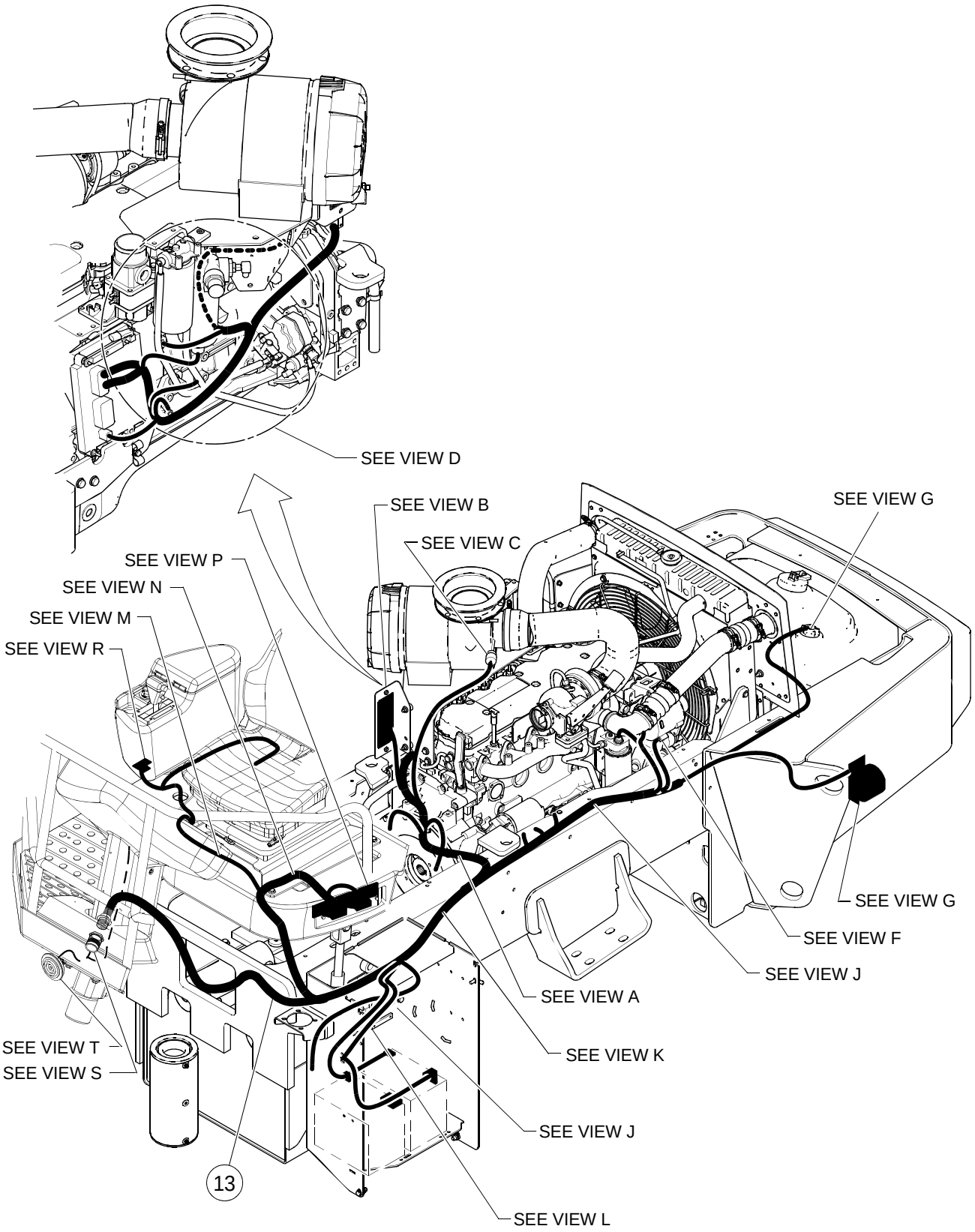

SD-116, SD-160, SD-190, SD-200

****Only Offered Parts Listed****

BOM 13501937

ITEM	COMM. NO.	DESCRIPTION	QTY	DIMENSIONS/NOTES
13	19332063	Chassis Harness	1	
-	19281419	- Potted Diode Pack	2	
-	13864954	- Fuse Block Cover Assembly	1	
-	13264858	- Cover	1	
-	13864806	- Foam Pad	1	

43891340 REV 0A

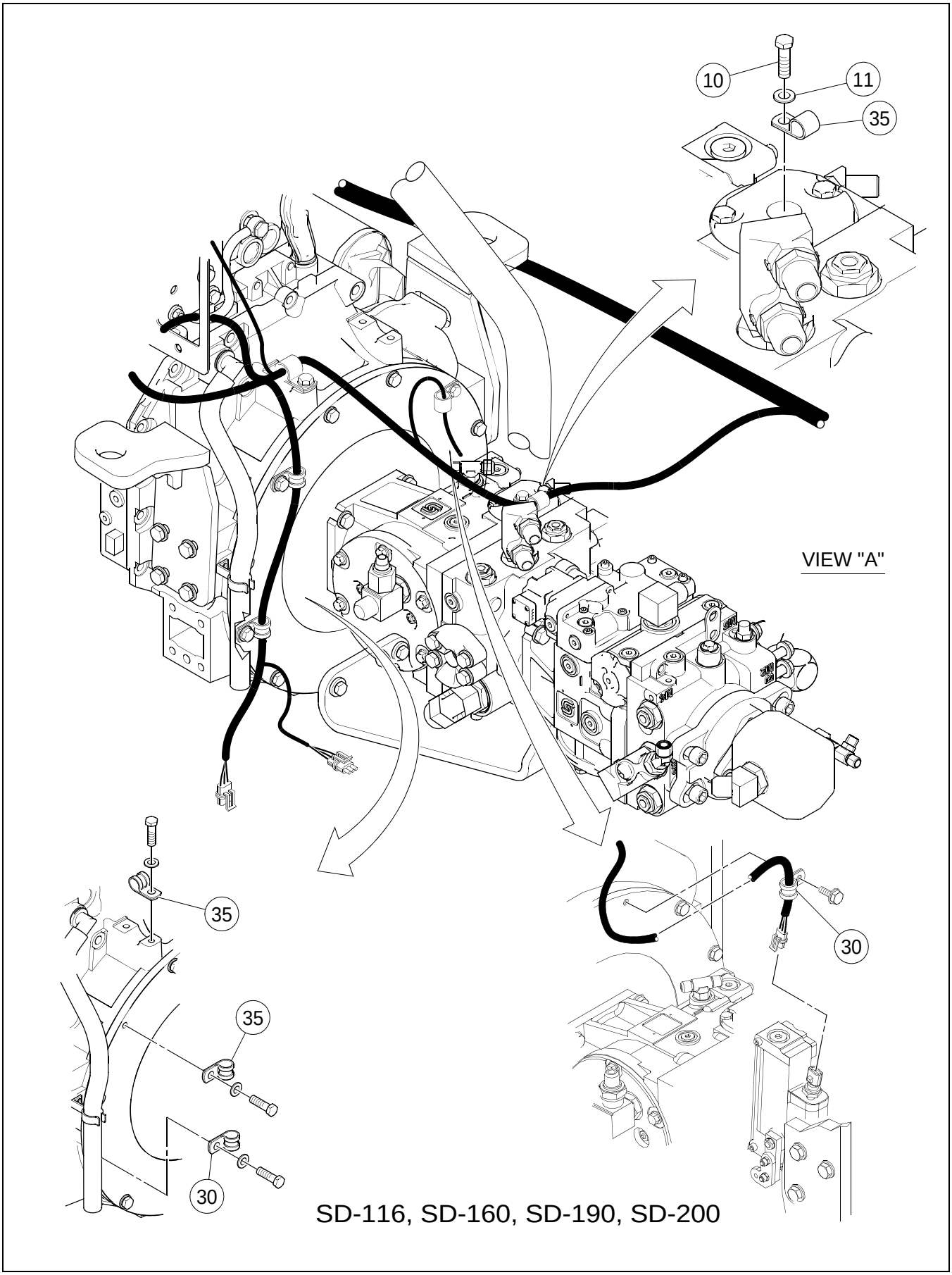

SD-116, SD-160, SD-190, SD-200

****Only Offered Parts Listed****

BOM 13501937

ITEM	COMM. NO.	DESCRIPTION	QTY	DIMENSIONS/NOTES
10	96702824	HHCS, Zinc Plated	3	M8 x 1.25 x 20 Cl 8.8
11	96712674	Flatwasher	3	
30	59661413	Clamp	6	
35	59121855	Clamp	8	
56	96704606	Locknut	3	M8

43891340 REV 0A

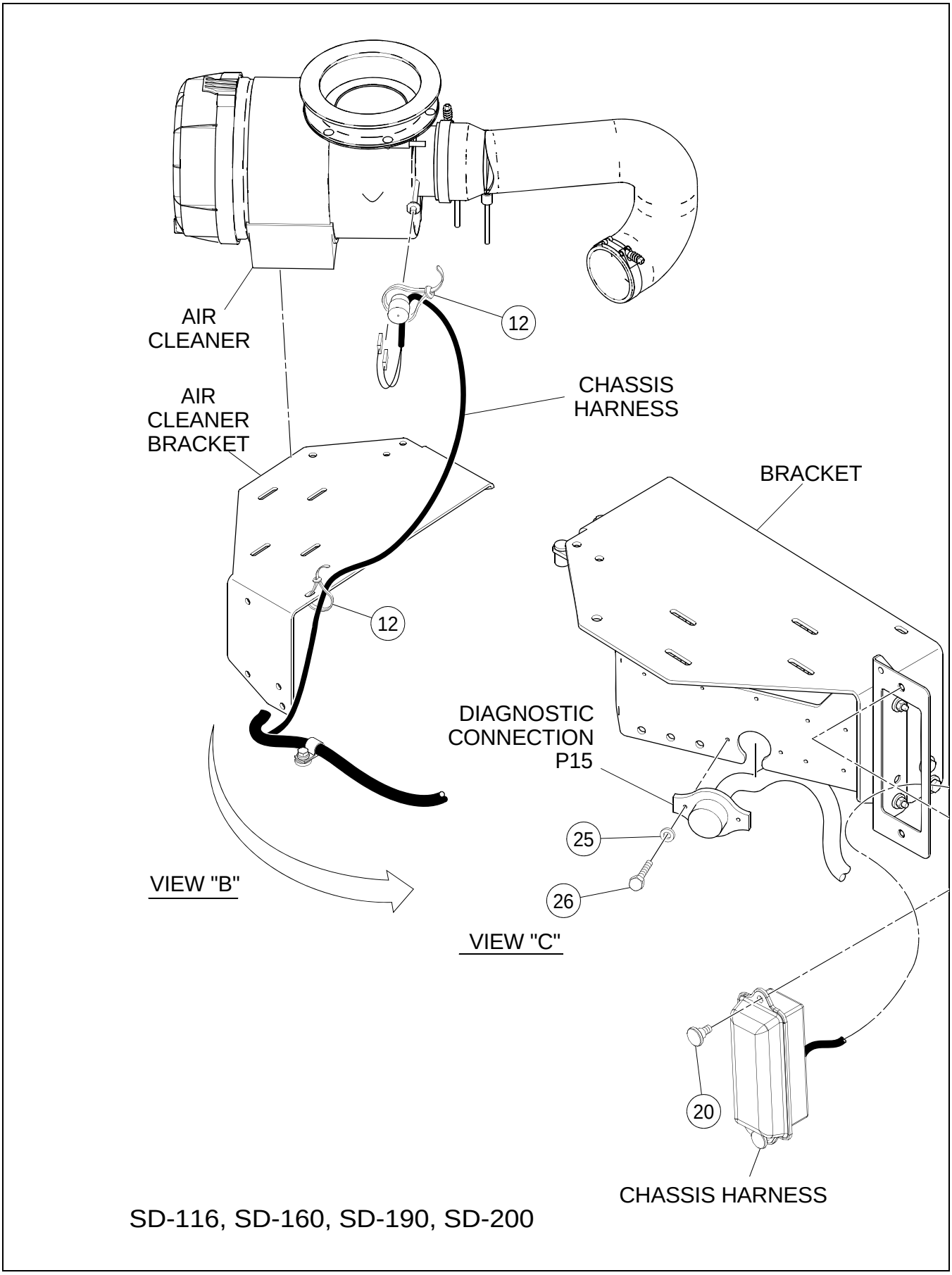

SD-116, SD-160, SD-190, SD-200

****Only Offered Parts Listed****

BOM 13501937

ITEM	COMM. NO.	DESCRIPTION	QTY	DIMENSIONS/NOTES
12	95373973	Wire Tie	A/R	
20	96745518	Screw	2	
25	96741053	Flatwasher	2	
26	96701461	HHCS, Zinc Plated	2	M6 x 1 x 25 Cl 8.8

43891340 REV 0A

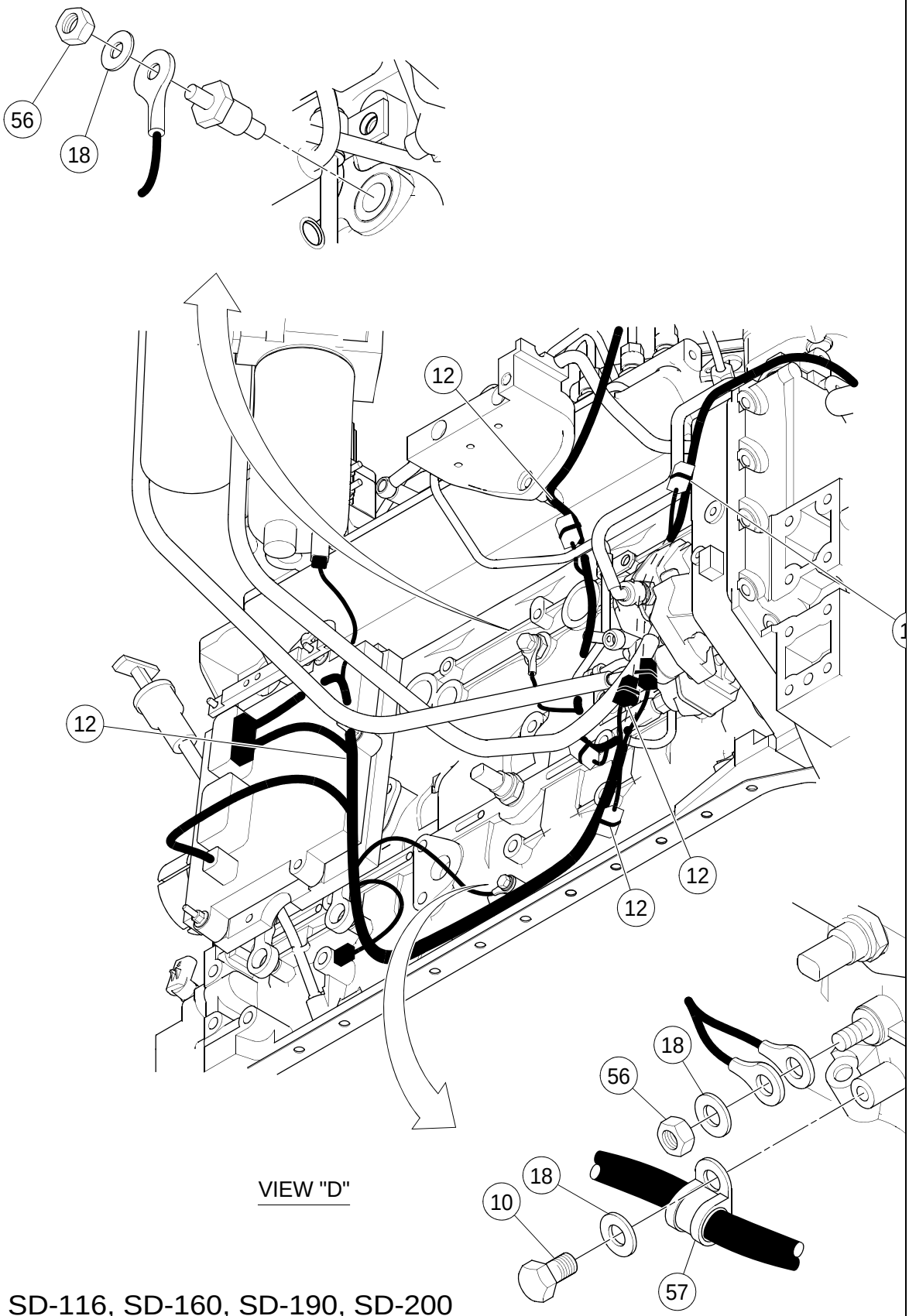

VIEW "D"

SD-116, SD-160, SD-190, SD-200

****Only Offered Parts Listed****

BOM 13501937

ITEM	COMM. NO.	DESCRIPTION	QTY	DIMENSIONS/NOTES
10	96702824	HHCS, Zinc Plated	3	M8 x 1.25 x 20 Cl 8.8
12	95373973	Wire Tie	A/R	
18	96741038	Flatwasher	7	
56	96704606	Locknut	3	M8
57		This Item Not Used With This Assembly		

43891340 REV 0A

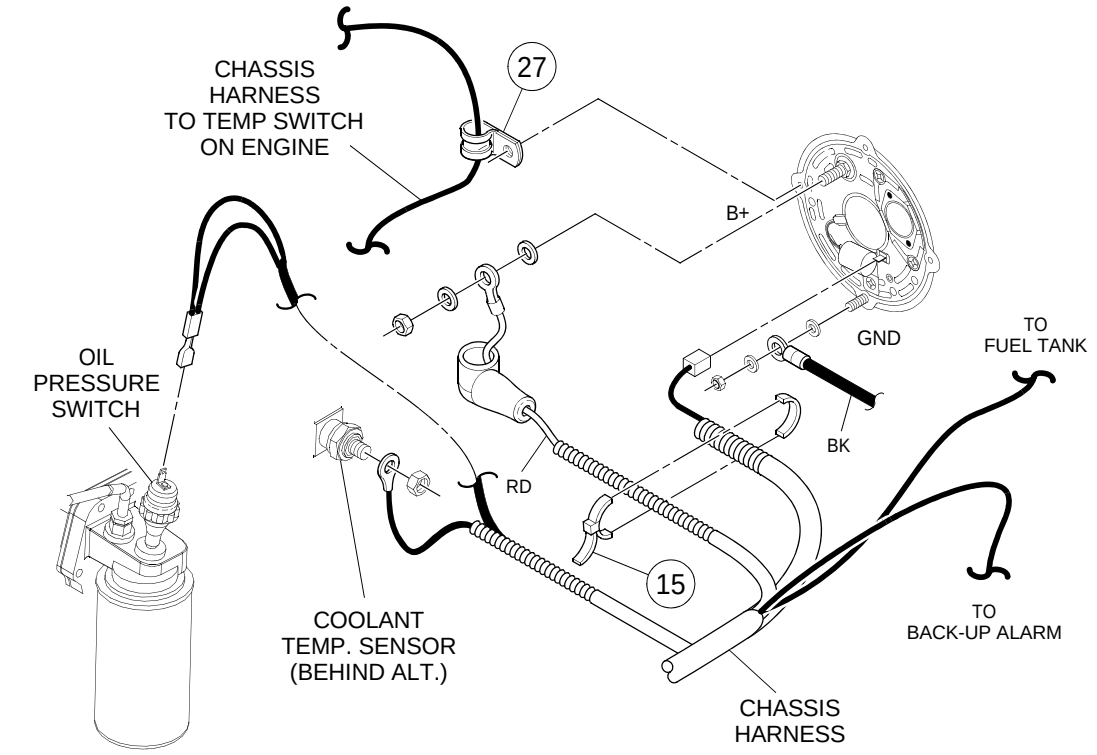

VIEW "F"

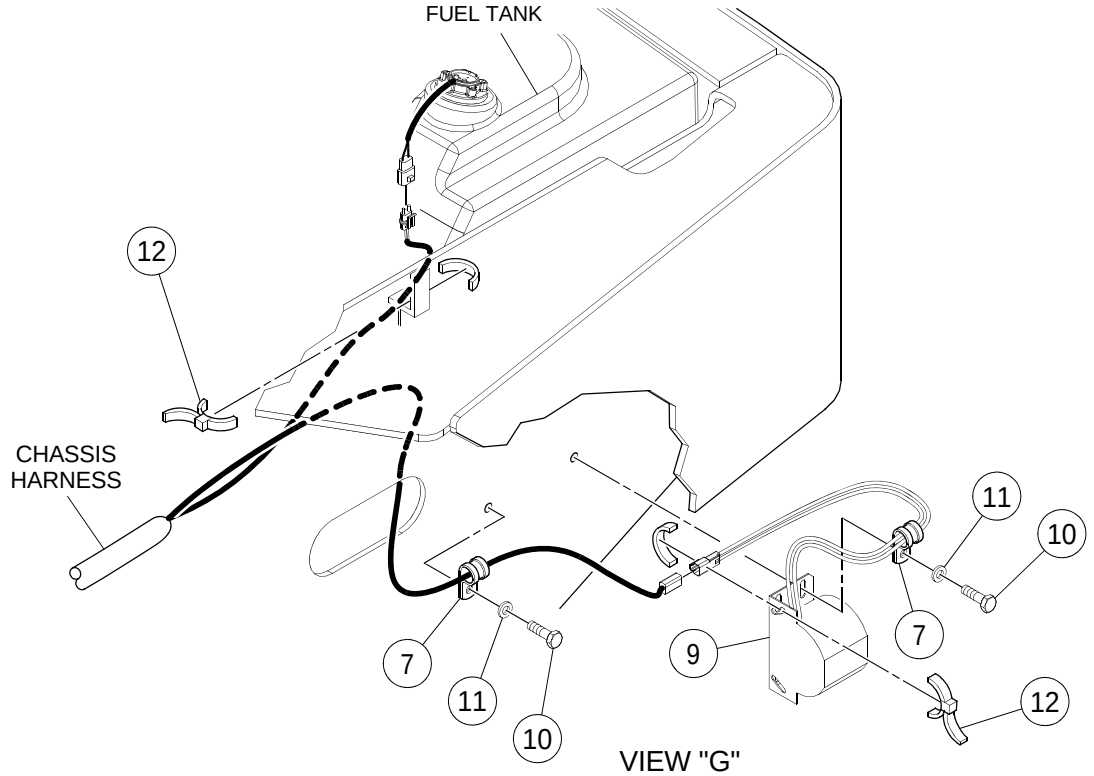

VIEW "G"

****Only Offered Parts Listed****

BOM 13501937

ITEM	COMM. NO.	DESCRIPTION	QTY	DIMENSIONS/NOTES
7	59117317	Clamp	3	
9	13236203	Backup Alarm	1	
-	59436865	- Electrical Connector	1	
10	96702824	HHCS, Zinc Plated	3	M8 x 1.25 x 20 Cl 8.8
11	96712674	Flatwasher	3	
12	95373973	Wire Tie	A/R	
27	59852533	Clamp	1	

43891340 REV 0A

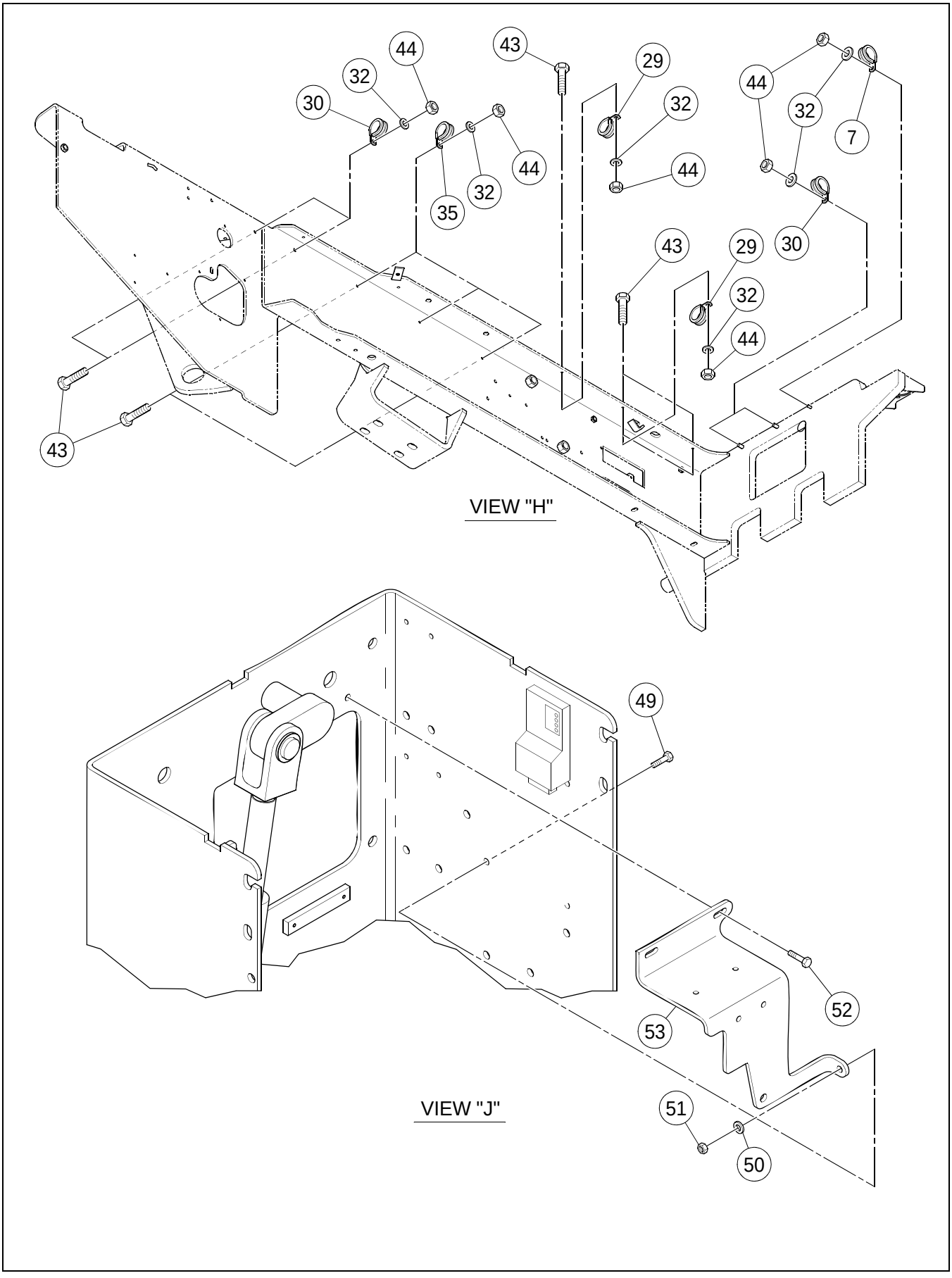

****Only Offered Parts Listed****

BOM 13501937

ITEM	COMM. NO.	DESCRIPTION	QTY	DIMENSIONS/NOTES
7	59117317	Clamp	3	
29	59465641	Clamp	4	
30	59661413	Clamp	6	
32	96741046	Flatwasher	11	
35	59121855	Clamp	8	
43	96701917	HHCS, Zinc Plated	8	M10 x 1.5 x 30 Cl 8.8
44	96704614	Nut	11	M10 x 1.5
49	96704564	HHCS, Zinc Plated	1	M6 x 1 x 20 Cl 8.8
50	96741053	Flatwasher	1	
51	96704598	Locknut	1	M6
52	96702394	HHCS, Zinc Plated	2	M6 x 1 x 12 Cl 8.8
53	43813724	Bracket	1	

43891340 REV 0A

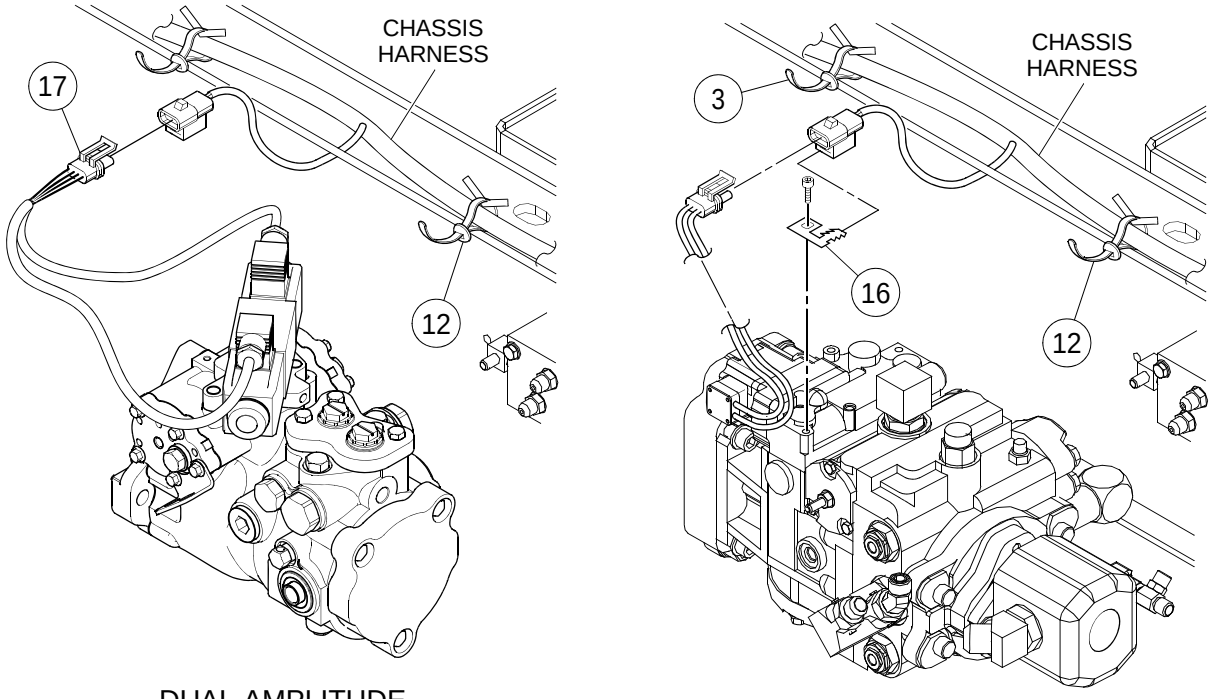

DUAL AMPLITUDE
VIB OPTION

VARIABLE
VIB OPTION

VIEW "K"

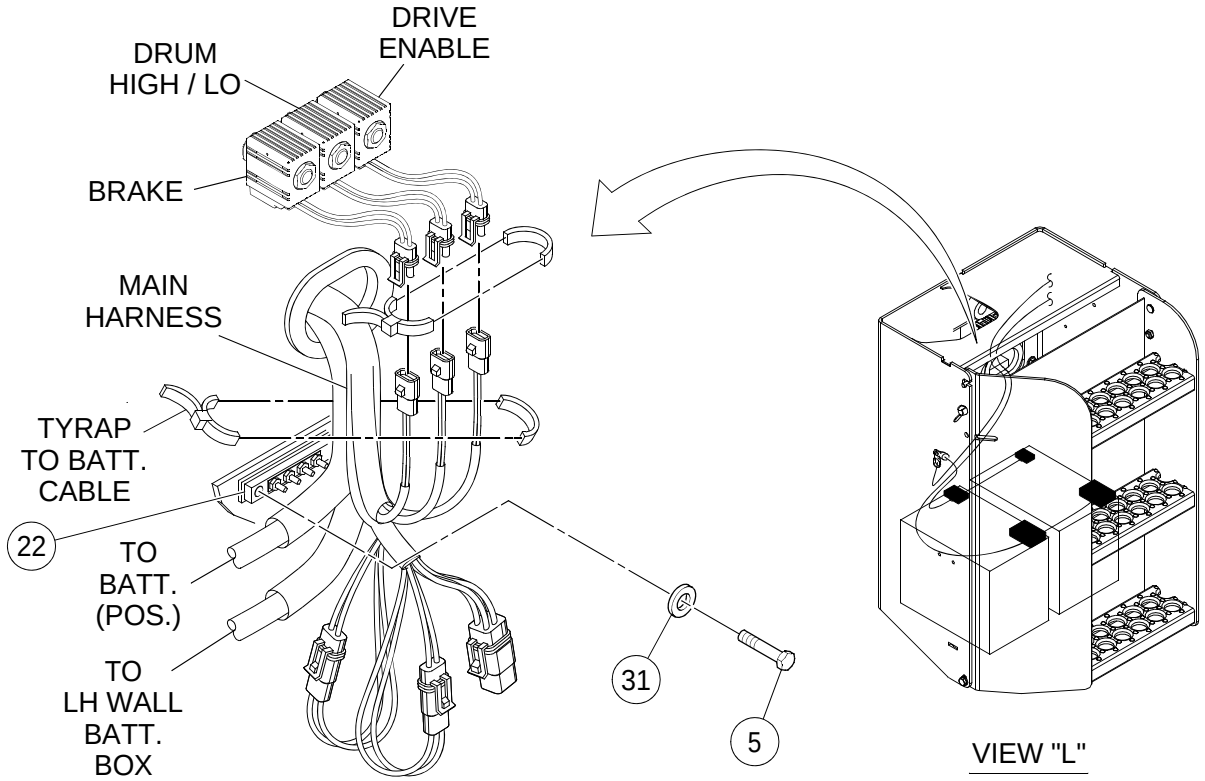

VIEW "L"

****Only Offered Parts Listed****

BOM 13501937

ITEM	COMM. NO.	DESCRIPTION	QTY	DIMENSIONS/NOTES
3	58820168	Wire Tie	A/R	
5	96705173	HHCS, Zinc Plated	1	M4 x 0.7 x 16 Cl 8.8
12	95373973	Wire Tie	A/R	
16	59048868	Clip Connector	1	
17	13493499	Two Speed Vibration Selector Harness	1	
22	13322060	Terminal Block	1	
31	96705165	Flatwasher, Zinc Plated	1	Cl 140

43891340 REV 0A

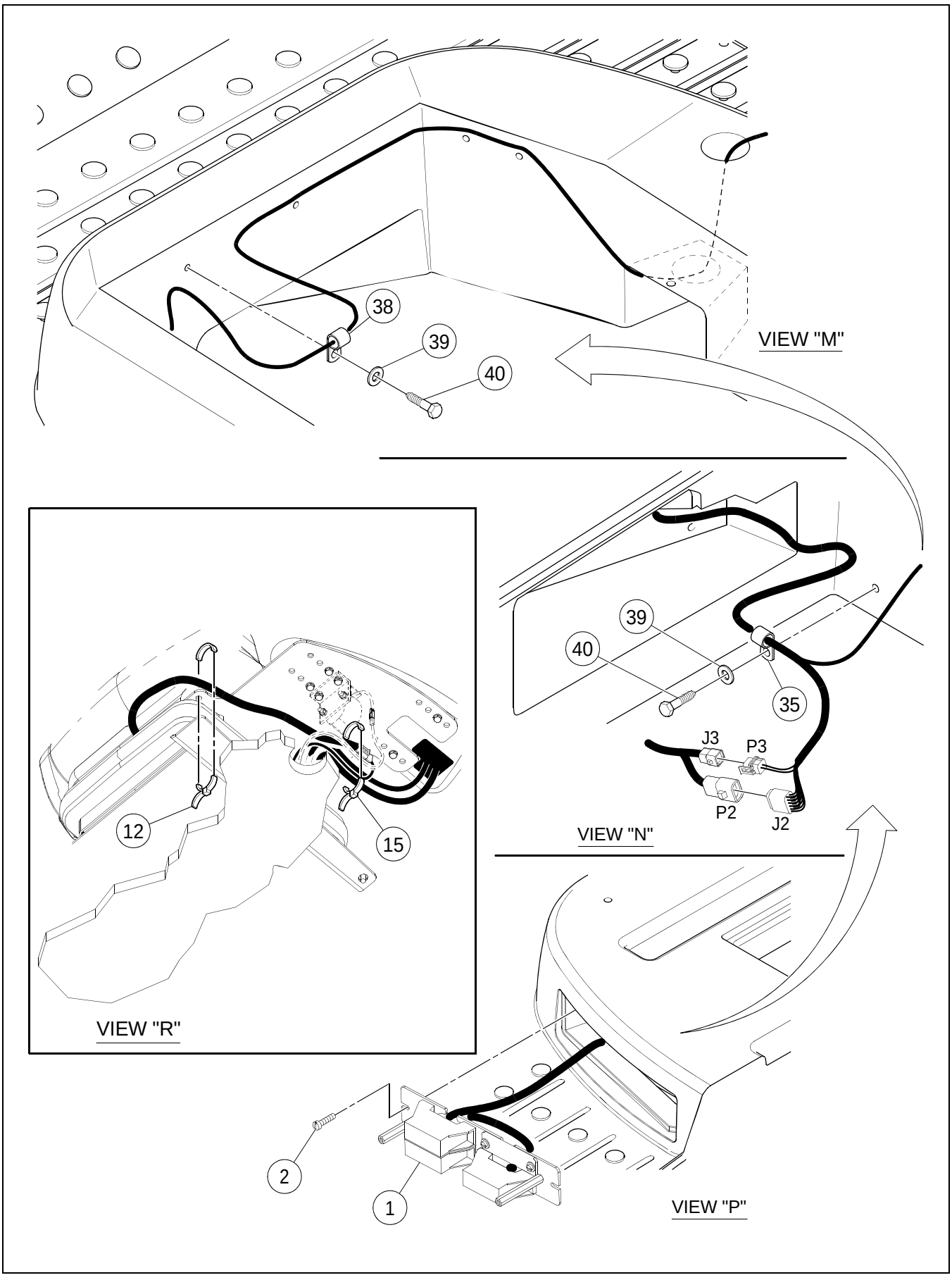

****Only Offered Parts Listed****

BOM 13501937

ITEM	COMM. NO.	DESCRIPTION	QTY	DIMENSIONS/NOTES
1	**NSVA**	**Fuse Block Assembly**	**1**	**See Page E - 20.**
2	59148569	BHCS	2	
12	95373973	Wire Tie	A/R	
15	95424586	Wire Tie	A/R	
35	59121855	Clamp	8	
38	59103598	Clamp	5	
39	96728548	Self Tapping Screw	7	
40	96704663	Flatwasher	7	M6

43891340 REV 0A

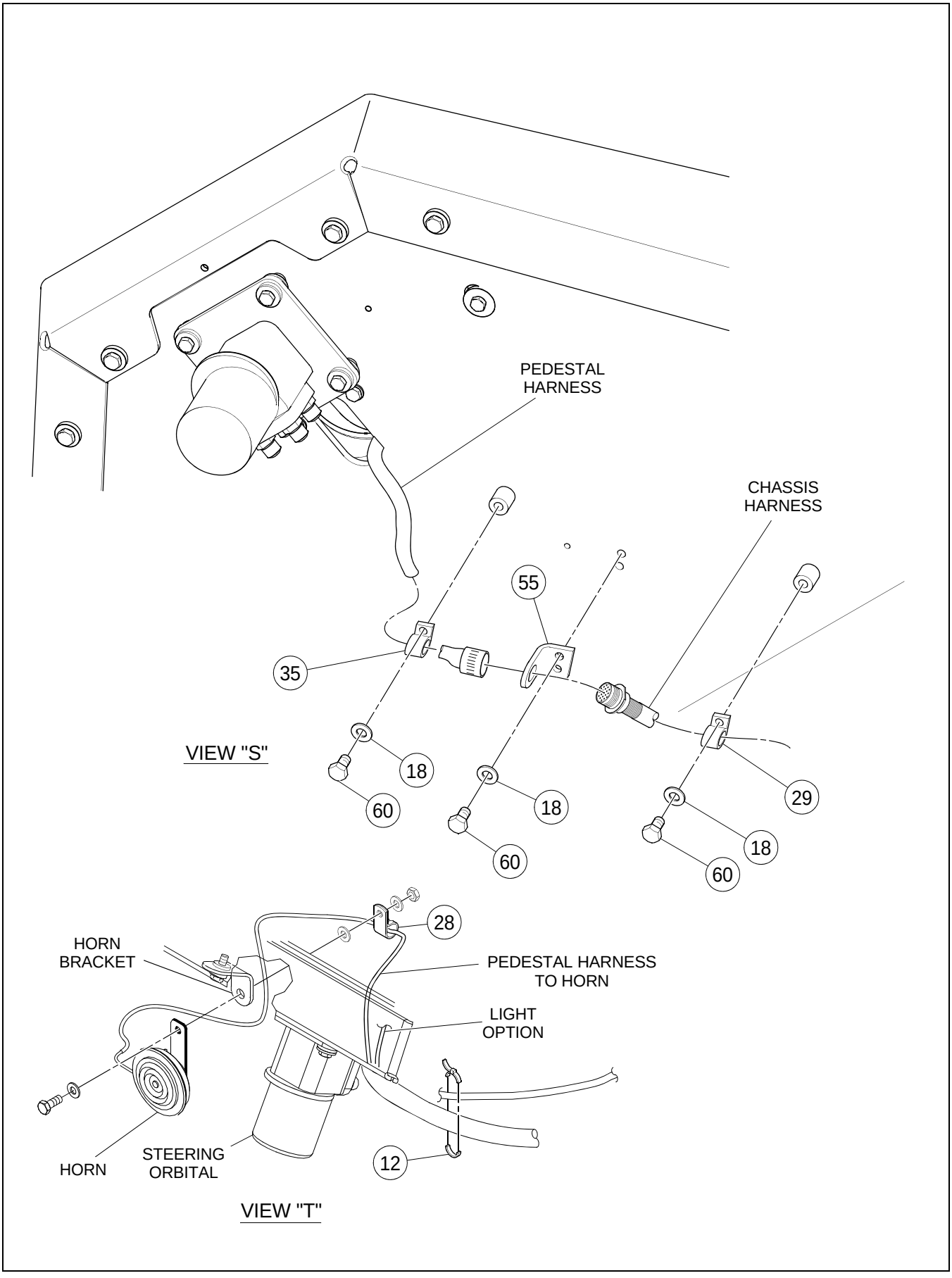

****Only Offered Parts Listed****

BOM 13501937

ITEM	COMM. NO.	DESCRIPTION	QTY	DIMENSIONS/NOTES
12	95373973	Wire Tie	A/R	
18	96741038	Flatwasher	7	
24	13307749	Cable Terminal Block (Not Shown)	1	
28	59117309	Clamp	1	
29	59465641	Clamp	4	
33	96702279	HHCS, Zinc Plated (Not Shown)	1	M10 x 1.5 x 20 Cl 8.8
35	59121855	Clamp	8	
55	43861095	Mount Bracket	1	
60	96705041	HHCS, Zinc Plated	4	M8 x 1.25 x 12 Cl 8.8

FUSE BLOCK ASSEMBLY

13209986 REV 02

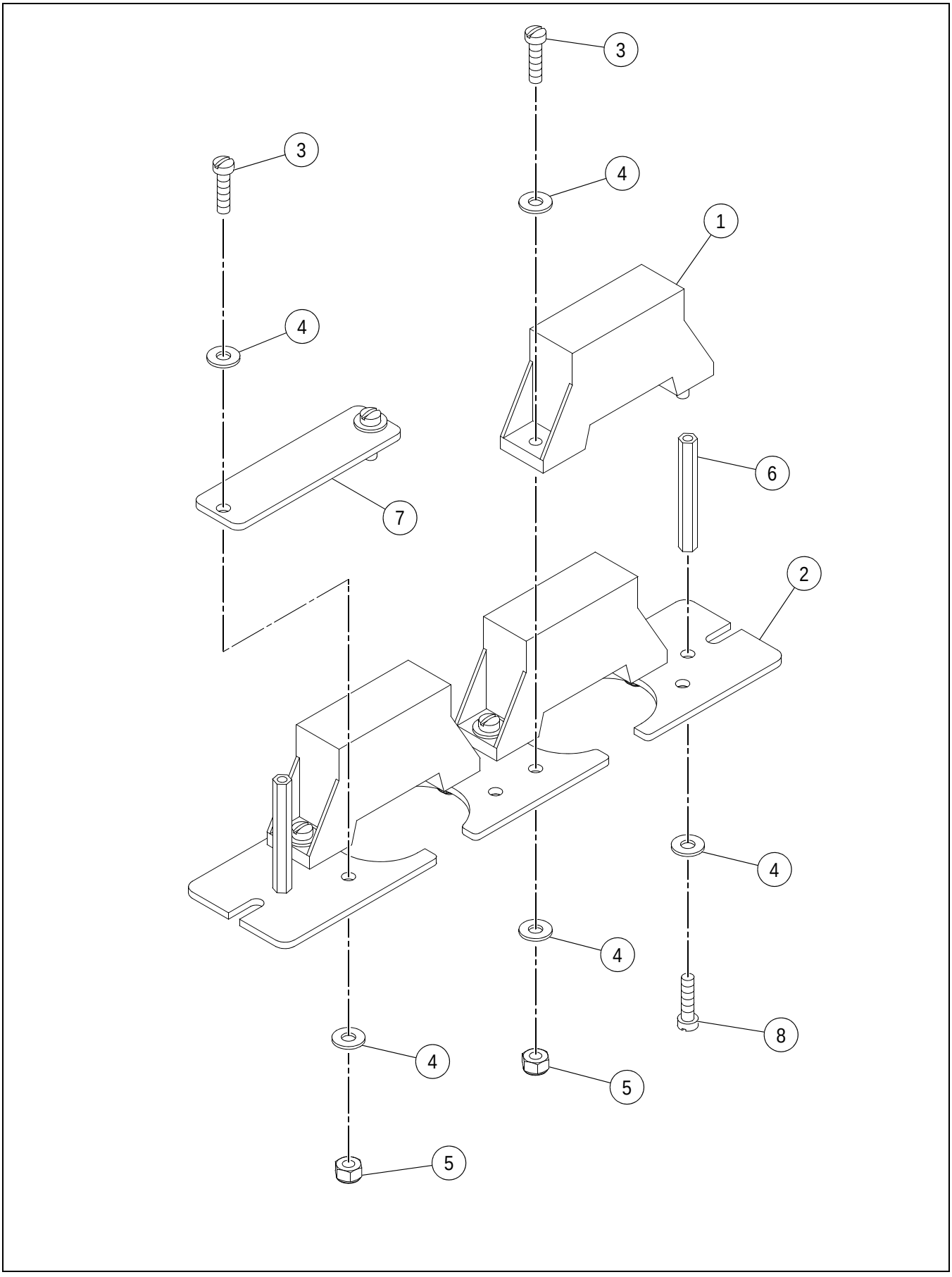

FUSE BLOCK ASSEMBLY

****Only Offered Parts Listed****

BOM 43827559

ITEM	COMM. NO.	DESCRIPTION	QTY	DIMENSIONS/NOTES
1	43827575	Fuse Harness	1	
2	13233440	Fuse Mounting Plate	1	
3	95922134	Screw	8	
4	95922332	Flatwasher	18	
5	95943346	Nut	8	
6	13214267	Standoff	2	
7	13209135	Fuse Cover Plate	1	
8	95932141	Screw	2	10 x 32 x .75

43809474 REV 0A

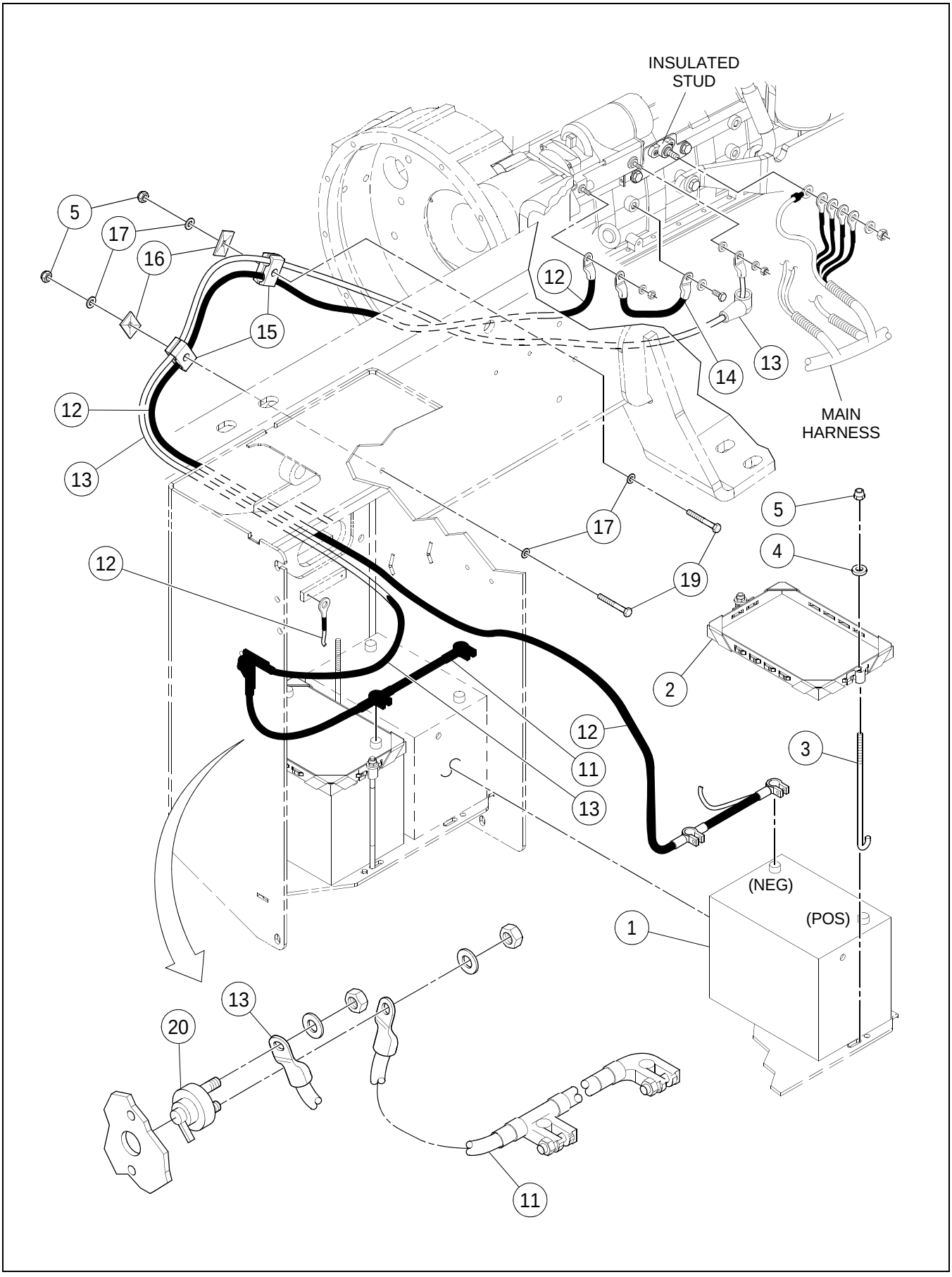

BATTERY INSTALLATION

****Only Offered Parts Listed****

BOM 19286558

ITEM	COMM. NO.	DESCRIPTION	QTY	DIMENSIONS/NOTES
1	54635859	Battery	2	
2	19295492	Battery Hold Down	2	
3	59211805	J-hook	4	
4	96712674	Flatwasher	4	
5	96704606	Locknut	6	M8
11	43838218	Positive Battery Cable	1	
12	43879303	Negative Battery Cable	1	
13	43896620	Starter Cable, Positive	1	
14	13306519	Ground Cable Jumper	1	
15	59583468	Insert Clamp	4	
16	59583450	Cover Plate	2	
17	96741038	Flatwasher	4	
19	96712252	HHCS, Zinc Plated	2	M8 x 1.25 x 60 Cl 8.8
20	13209648	Battery Master Switch	1	

AUDIBLE ALARM INSTALLATION - SHEET 1 OF 2

43822360 REV 0A

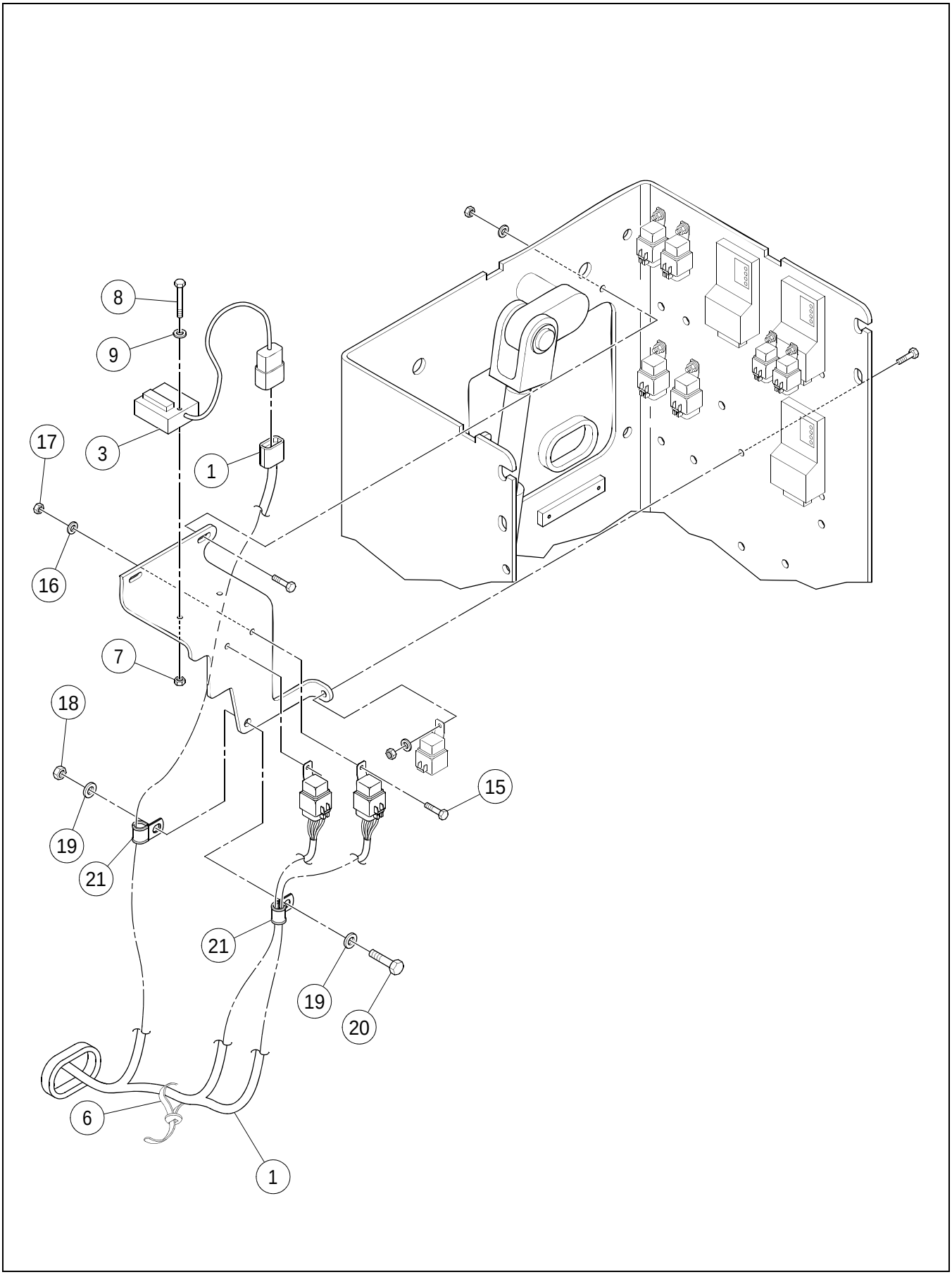

AUDIBLE ALARM INSTALLATION - SHEET 1 OF 2

****Only Offered Parts Listed****

BOM 43800762

ITEM	COMM. NO.	DESCRIPTION	QTY	DIMENSIONS/NOTES
1	43879659	Audible Alarm Harness	1	
3	13313648	Delay Timer	1	
6	95373973	Wire Tie	A/R	
7	96703756	Hex Nut	1	
8	96715073	RCHNS	1	M4 x 33
9	96738547	Flatwasher, Zinc Plated	1	Cl 200
15	96704564	HHCS, Zinc Plated	2	M6 x 1 x 20 Cl 8.8
16	96741053	Flatwasher	3	
17	96704598	Locknut	2	M6
18	96704606	Locknut	1	M8
19	96741038	Flatwasher	2	
20	96705587	HHCS, Zinc Plated	1	M8 x 1.25 x 30 Cl 8.8
21	59117333	Clamp	1	

AUDIBLE ALARM INSTALLATION - SHEET 2 OF 2

43822360 REV 0A

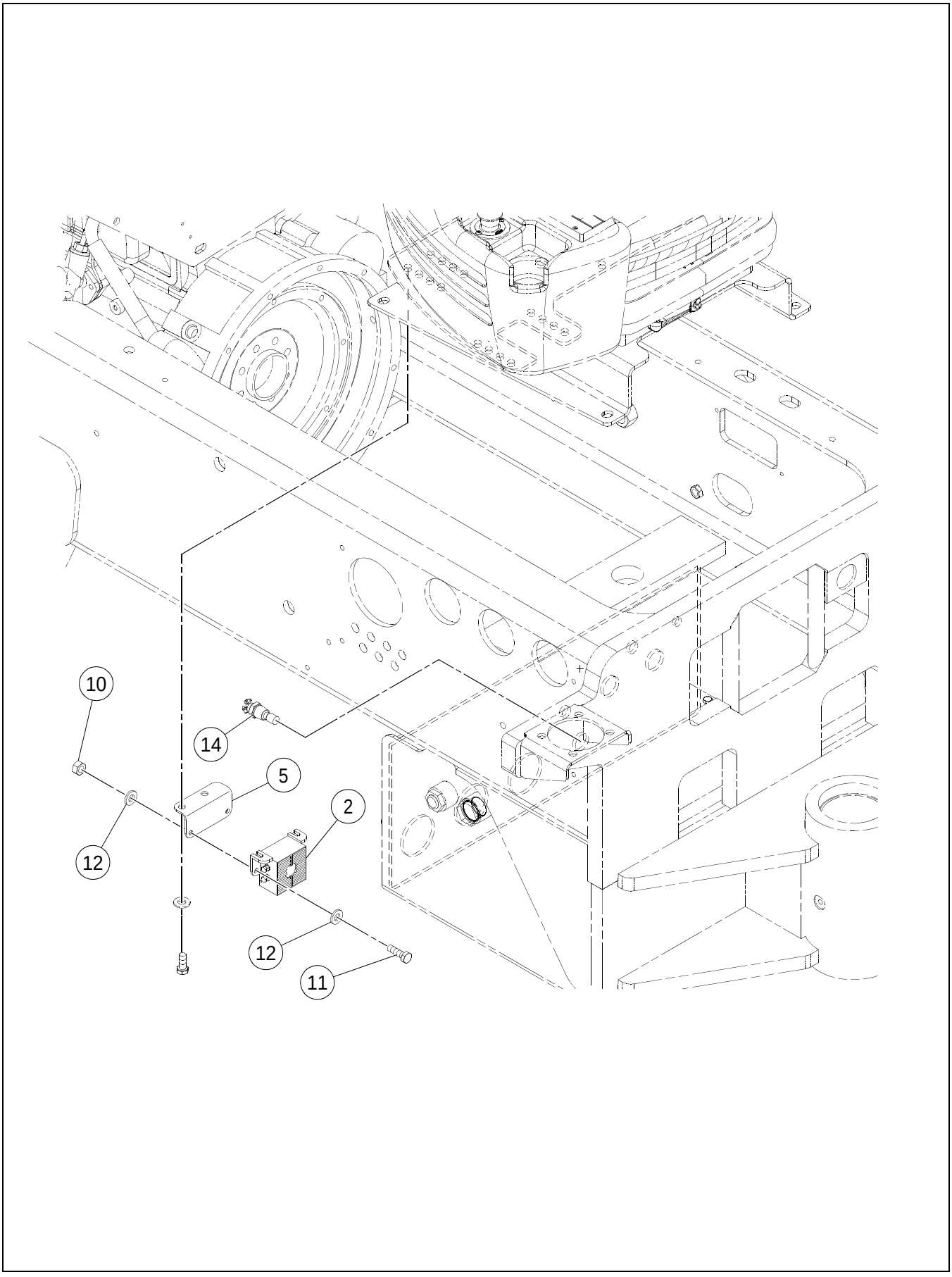

AUDIBLE ALARM INSTALLATION - SHEET 2 OF 2

****Only Offered Parts Listed****

BOM 43800762

ITEM	COMM. NO.	DESCRIPTION	QTY	DIMENSIONS/NOTES
2	58870924	High Temperature Alarm	1	
5	13214028	Bracket	1	
10	96704234	Nut	2	M6 x 1
11	96714472	HHCS, Zinc Plated	2	M6 x 1 x 20 Cl 10.9
12	96741053	Flatwasher	4	
14	13406780	Temperature Switch	1	

VARIABLE FREQUENCY/DUAL AMPLITUDE INSTALLATION

13233614 REV 0F

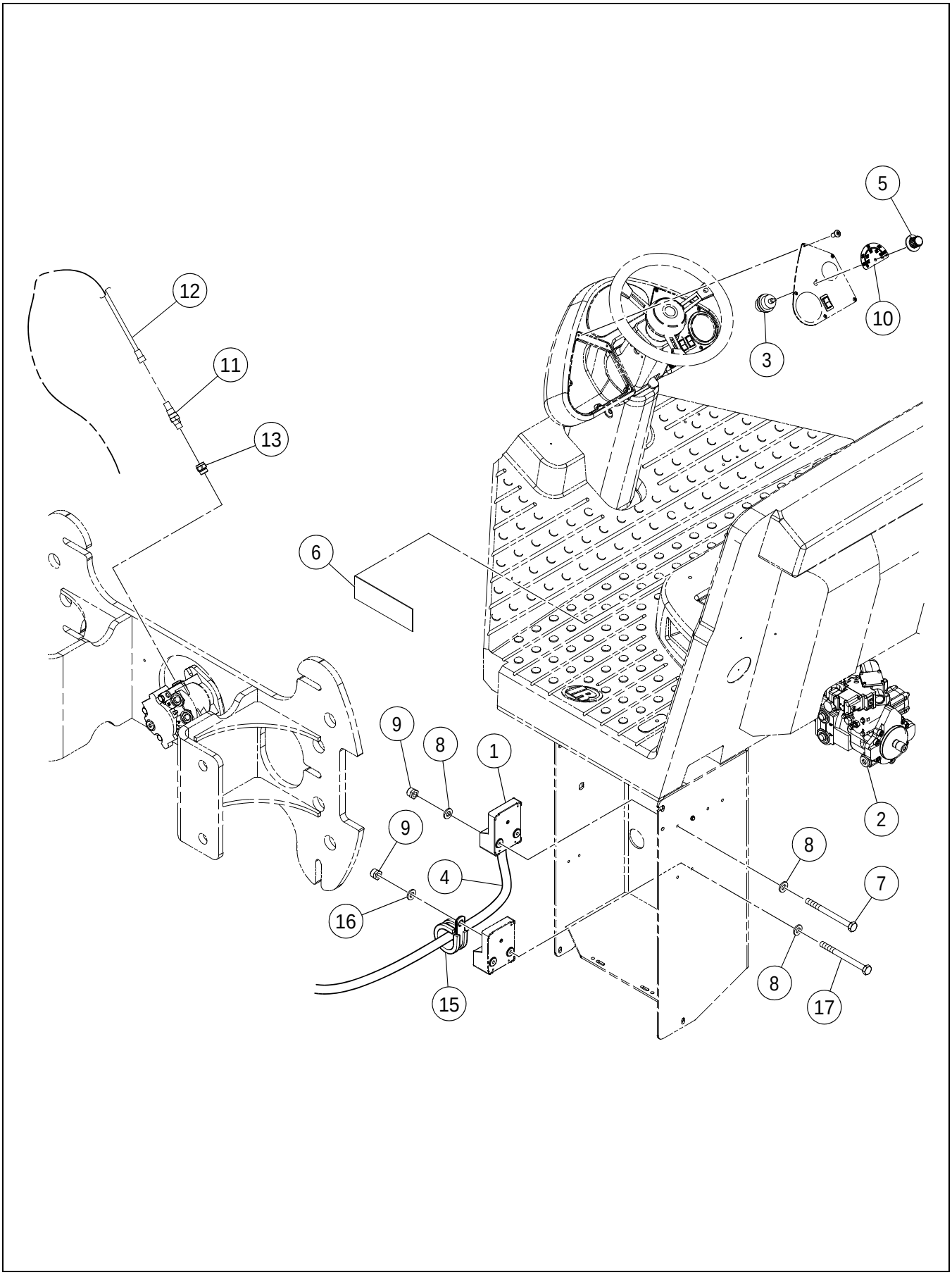

VARIABLE FREQUENCY/DUAL AMPLITUDE INSTALLATION

****Only Offered Parts Listed**** **BOM 13304290**

ITEM	COMM. NO.	DESCRIPTION	QTY	DIMENSIONS/NOTES
1	43821008	Vibration Variation Control (SD-160DX)	1	
-	43821016	Vibration Variation Control (SD-160F)	1	
-	43821057	Vibration Variation Control (SD-190DX/SD-200DX)	1	
-	43821065	Vibration Variation Control (SD-200F)	1	
2	**13254651**	**Vibration Pump - SD-160**	**1**	**See Breakdown E - 30.**
-	13284880	ARC - Vibration Pump (SD-160)	1	
-	**13483698**	**Vibration Pump (SD-190/200)**	**1**	**See Breakdown E - 36.**
3	13205083	Switch/Harness Assembly	1	
-	13198908	- Vibration Variation Wire Harness	1	
-	58878562	- Vibration Variation Selection Switch	1	
4	13492681	Variable Vibration Harness	1	
5	59047019	Frequency Dial Knob	1	
6	58877549	Decal: Natural Frequency	1	
7	96706825	HHCS, Zinc Plated	2	M6 x 1.0 x 70 Cl 8.8
8	96741053	Flatwasher	5	
9	96702873	Locknut	2	
10	43821545	Decal: Variable Frequency (SD-160DX)	1	
-	43821552	Decal: Variable Frequency (SD-160F)	1	
-	43821578	Decal: Variable Frequency(SD-190DX/SD-200DX)	1	
-	43821586	Decal: Variable Frequency (SD-200F)	1	
11	13254503	Speed Sensor	1	
12	13493523	Vibration Sensor Harness	1	
13	13176789	Speed Sensor Adapter	1	
15	59121855	Clamp	1	
16	96704663	Flatwasher	1	M6
17	96704564	HHCS, Zinc Plated	1	M6 x 1 x 20 Cl 8.8

VIBRATION PUMP (13254651) - SD-160 - SHEET 1 OF 3

Dwg 13254561/00/01

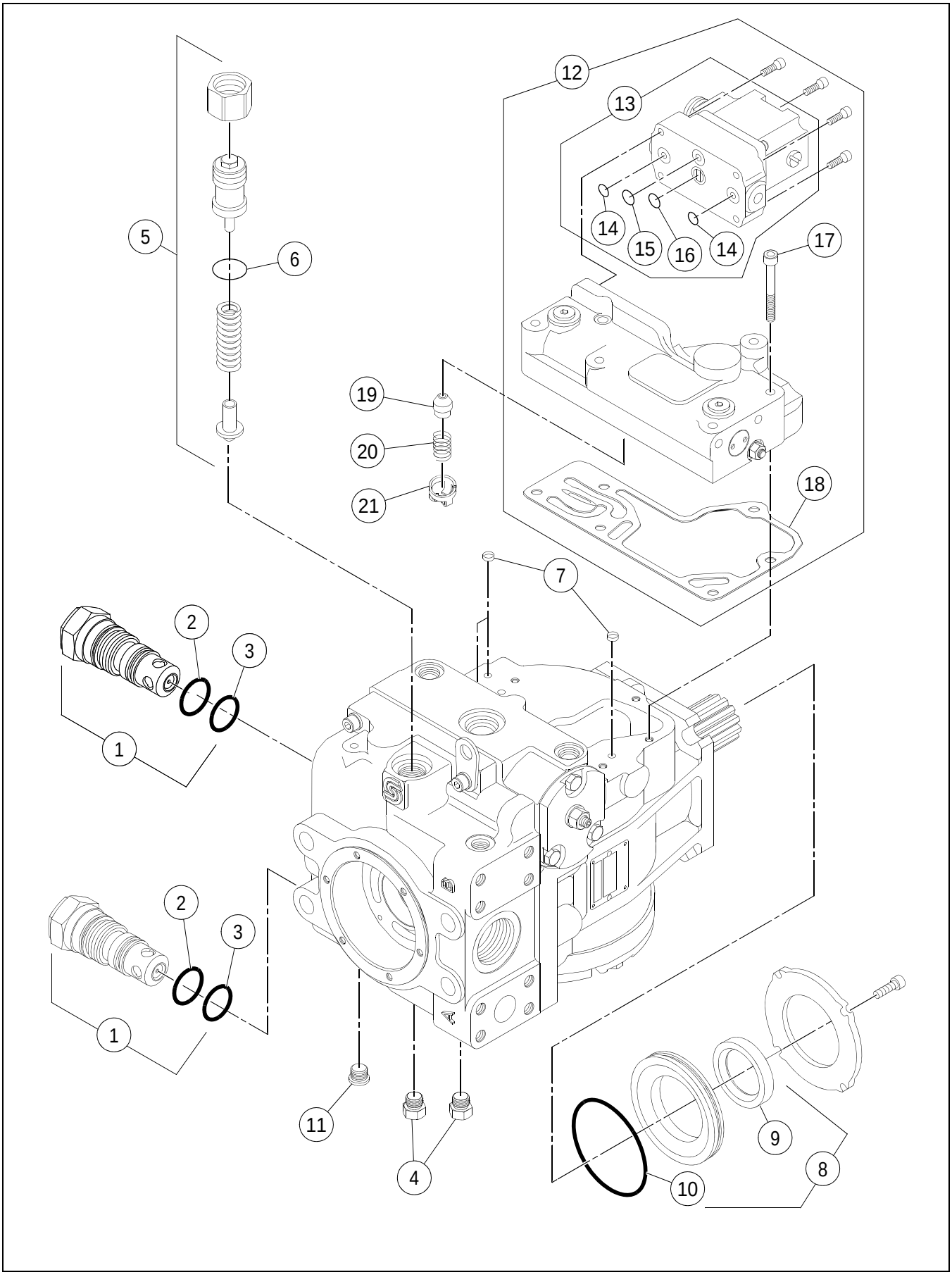

VIBRATION PUMP (13254651) - SD-160 - SHEET 1 OF 3

****Only Offered Parts Listed****

BOM 13254651

ITEM	COMM. NO.	DESCRIPTION	QTY	DIMENSIONS/NOTES
1	59029629	Multi-Function Valve Assembly	1	
2	95210258	- O-ring	1	
3	59360735	- O-ring	1	
4	59933622	Plug	1	
5	59446138	Charge Relief Kit	1	
6	50278019	- O-ring	1	
7	58795766	Control Filter Screen	1	
8	59155192	Shaft Seal Assembly	1	
9	59368837	- Lip Seal	1	
10	59368845	- O-ring	1	
11	59933622	Plug	1	
12	54506837	EDC Kit	1	
13	13461215	- PCP	1	
14	13461231	- O-ring	2	
15	59154286	- O-ring	1	
16	13461249	- O-ring	1	
17	59360693	- Screw	6	
18	59395996	- Control Gasket	1	
19	59360776	Orifice Kit	1	
20	59360792	Spring	1	
21	59360800	Retainer Spring	1	

Dwg 13254561/00/02

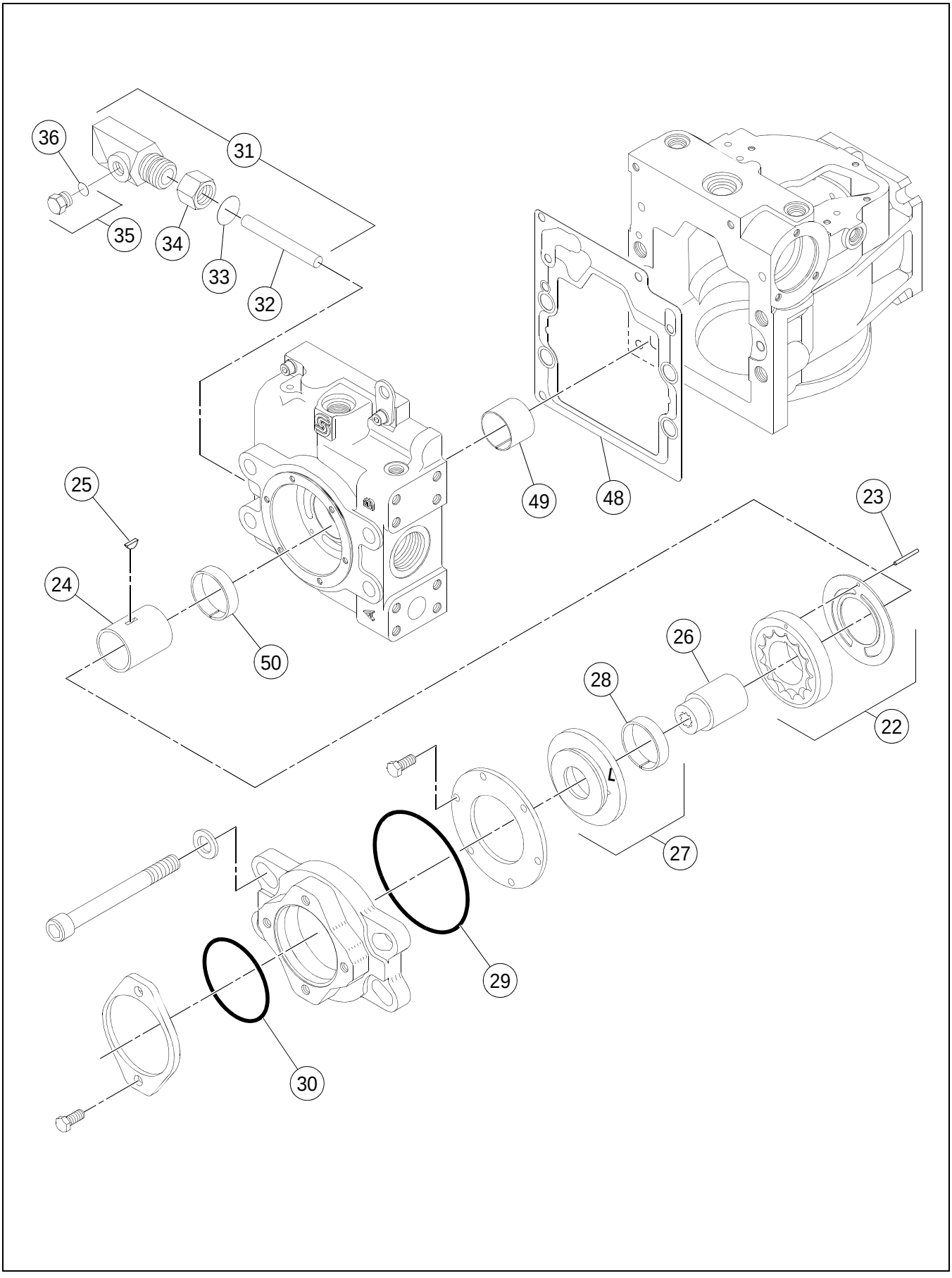

****Only Offered Parts Listed****

BOM 13254651

ITEM	COMM. NO.	DESCRIPTION	QTY	DIMENSIONS/NOTES
22	59399162	Charge Pump	1	
23	59384784	Pin	1	
24	13495049	Charge Pump Shaft	1	
25	59384768	Key	1	
26	13495056	Coupling	1	
27	58918590	Charge Pump Cover Assembly	1	
28	59360354	- Bushing	1	
29	59360552	O-ring	1	
30	59986489	O-ring	1	
31	13248083	Remote Filtration Adapter	1	
32	58891490	- Filter Adapter Tube	1	
33	59360941	- O-ring	1	
34	58891482	- Bulkhead Nut	1	
35	59933622	- Plug	1	
36	59698811	- O-ring	1	
48	58891979	Gasket End Cap	1	
49	59368886	Journal Bearing	1	
50	59360354	Bushing	1	

Dwg 13254561/00/03

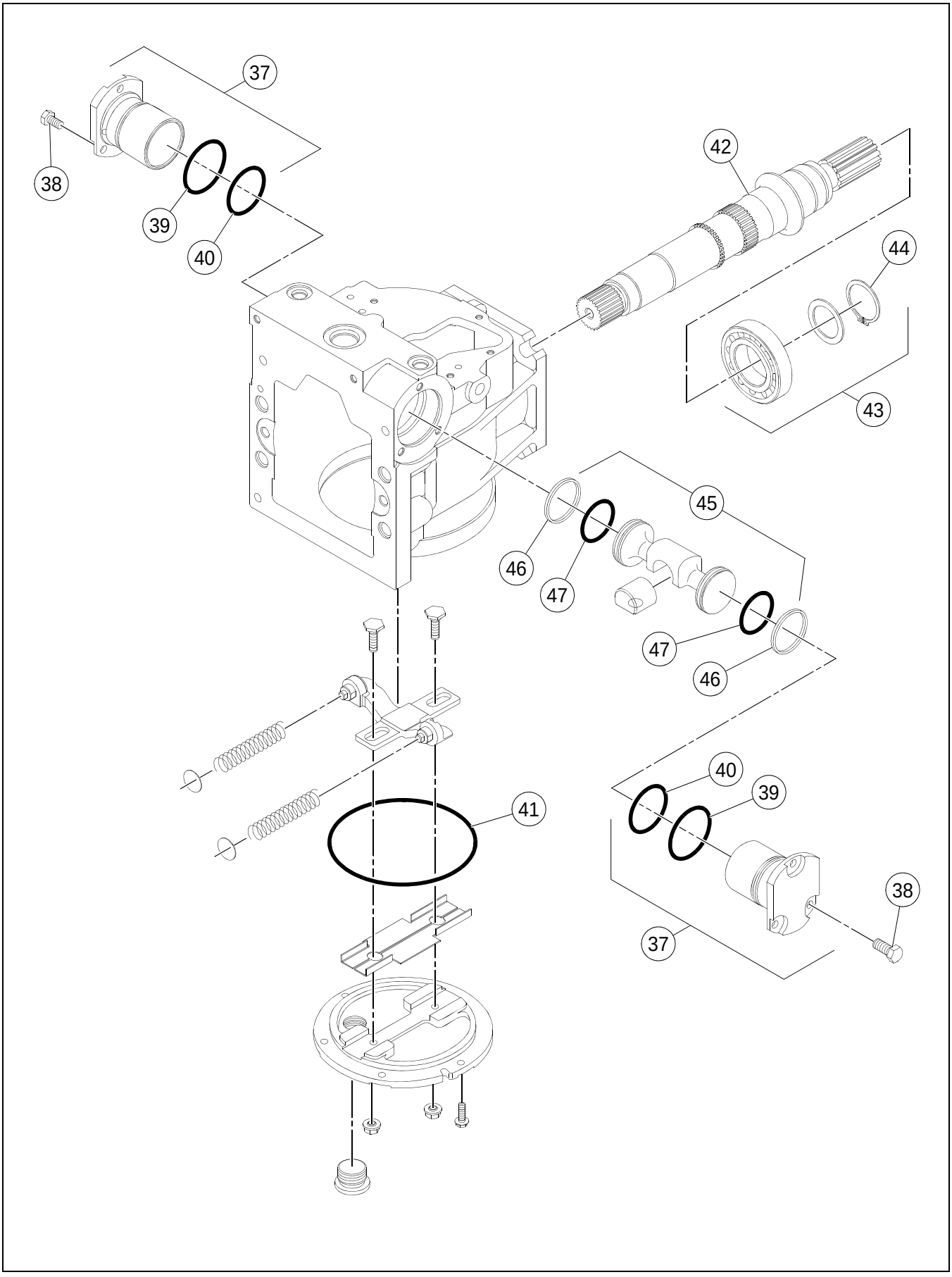

****Only Offered Parts Listed****

BOM 13254651

ITEM	COMM. NO.	DESCRIPTION	QTY	DIMENSIONS/NOTES
37	59029637	Displacement Limiter Kit	1	
38	59360321	- Screw	3	
39	58891953	- O-ring	1	
40	13495064	- O-ring	1	
41	59360552	O-ring	1	
42	59029561	Shaft	1	
43	59067538	Roller Bearing	1	
44	59785519	- Ring	1	
45	59399279	Servo Piston Kit	1	
46	59384685	- Piston Ring	2	
47	59384693	- O-ring	2	

Dwg 13483698/00/01

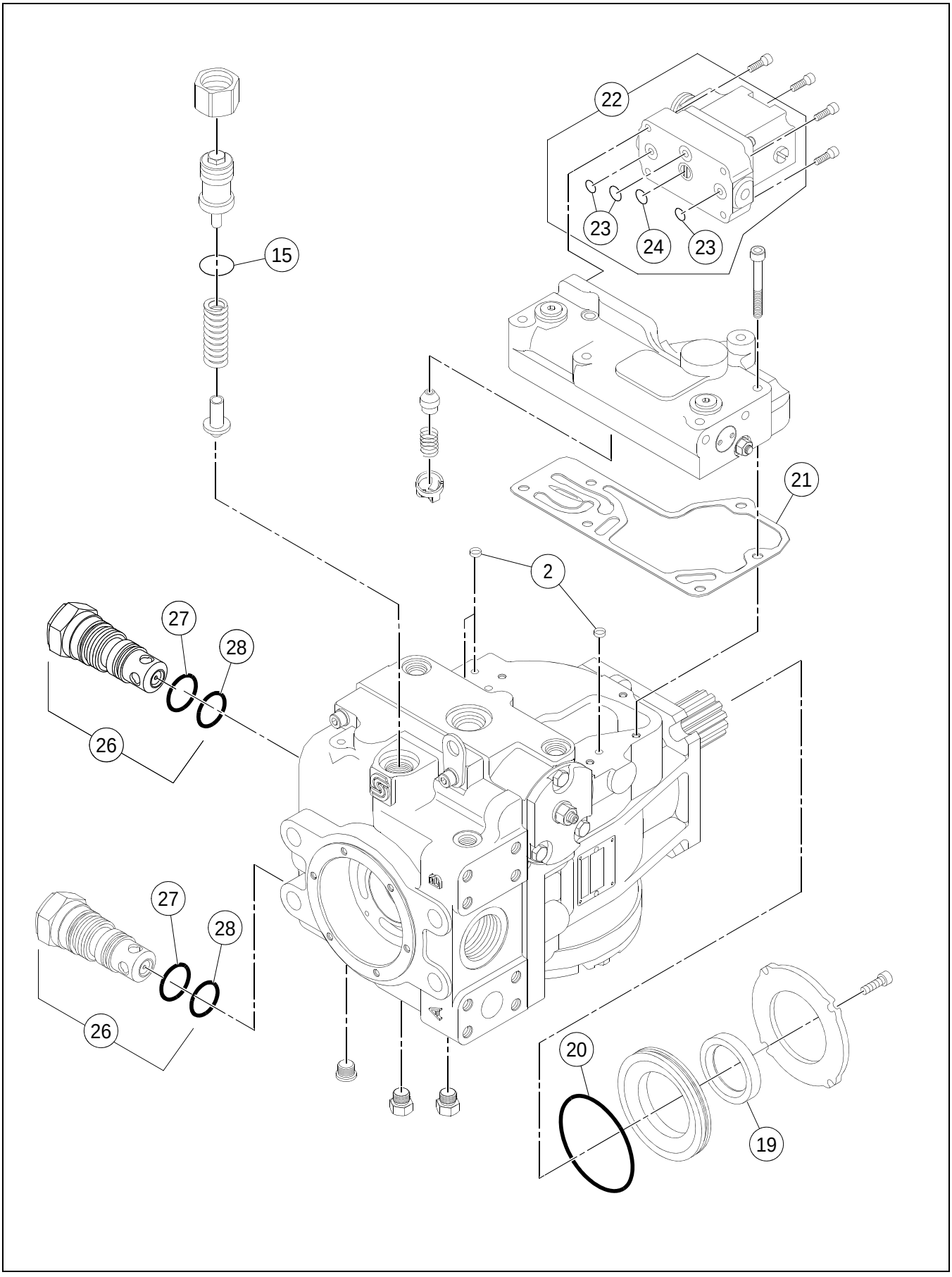

VIBRATION PUMP (13483698) - SD-190/200 - SHEET 1 OF 4

****Only Offered Parts Listed****

BOM 13483698

ITEM	COMM. NO.	DESCRIPTION	QTY	DIMENSIONS/NOTES
2	58795766	Control Filter Screen	3	
15	59360610	O-ring	1	
19	19282987	Seal	1	
20	59369504	O-ring	1	
21	59360685	Gasket	1	
22	13461215	Pcp	1	
23	59154286	- O-ring	3	
24	13268487	- O-ring	1	
26	59029629	Multi-Function Valve Assembly	2	
27	95210258	- O-ring	2	
28	59360735	- O-ring	2	

Dwg 13483698/00/02

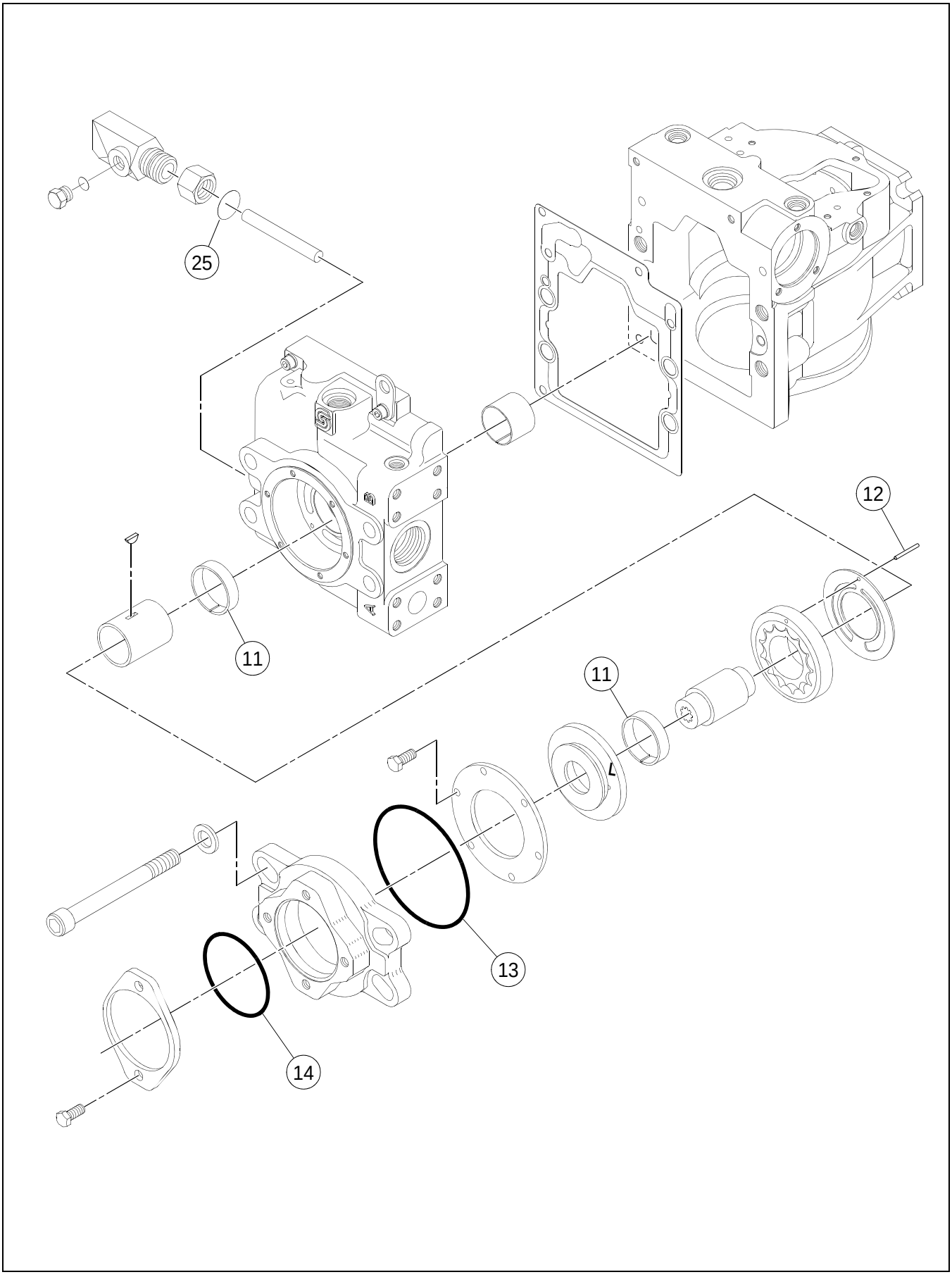

****Only Offered Parts Listed****

BOM 13483698

ITEM	COMM. NO.	DESCRIPTION	QTY	DIMENSIONS/NOTES
11	59360354	Bushing	2	
12	59369637	Pin	1	
13	59360552	O-ring	1	
14	59986489	O-ring	1	
25	59360941	O-ring	1	

Dwg 13483698/00/03

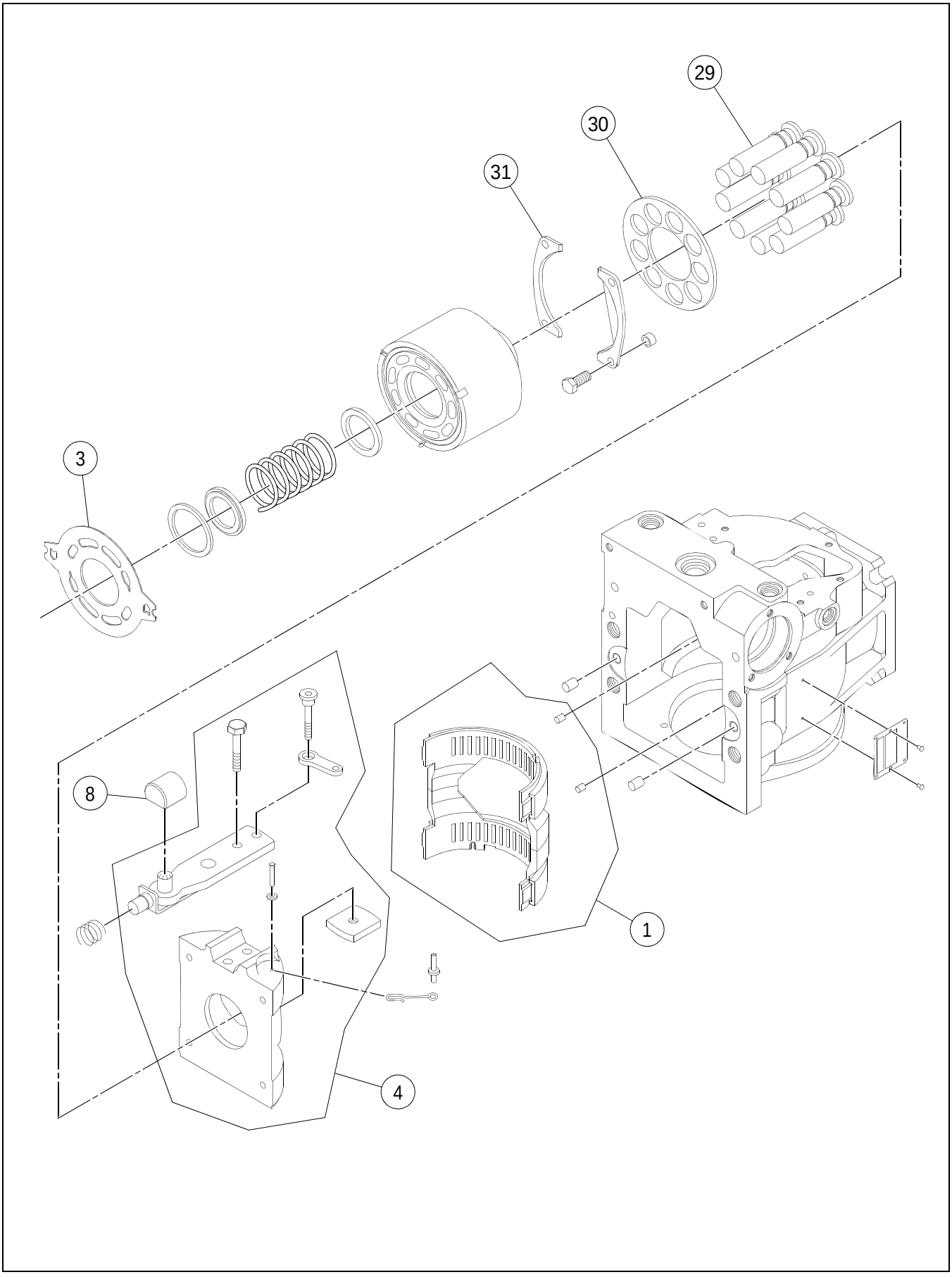

****Only Offered Parts Listed****

BOM 13483698

ITEM	COMM. NO.	DESCRIPTION	QTY	DIMENSIONS/NOTES
1		This item not used with this Assembly		
3	13474648	Valve Plate	1	
4		This item not used with this Assembly		
8	13228945	Servo Piston Kit	1	
29	58795535	Piston Assembly	9	
30	59369181	Slipper Guide	1	
31	59369199	Bearing Slipper Guide	2	

Dwg 13483698/00/04

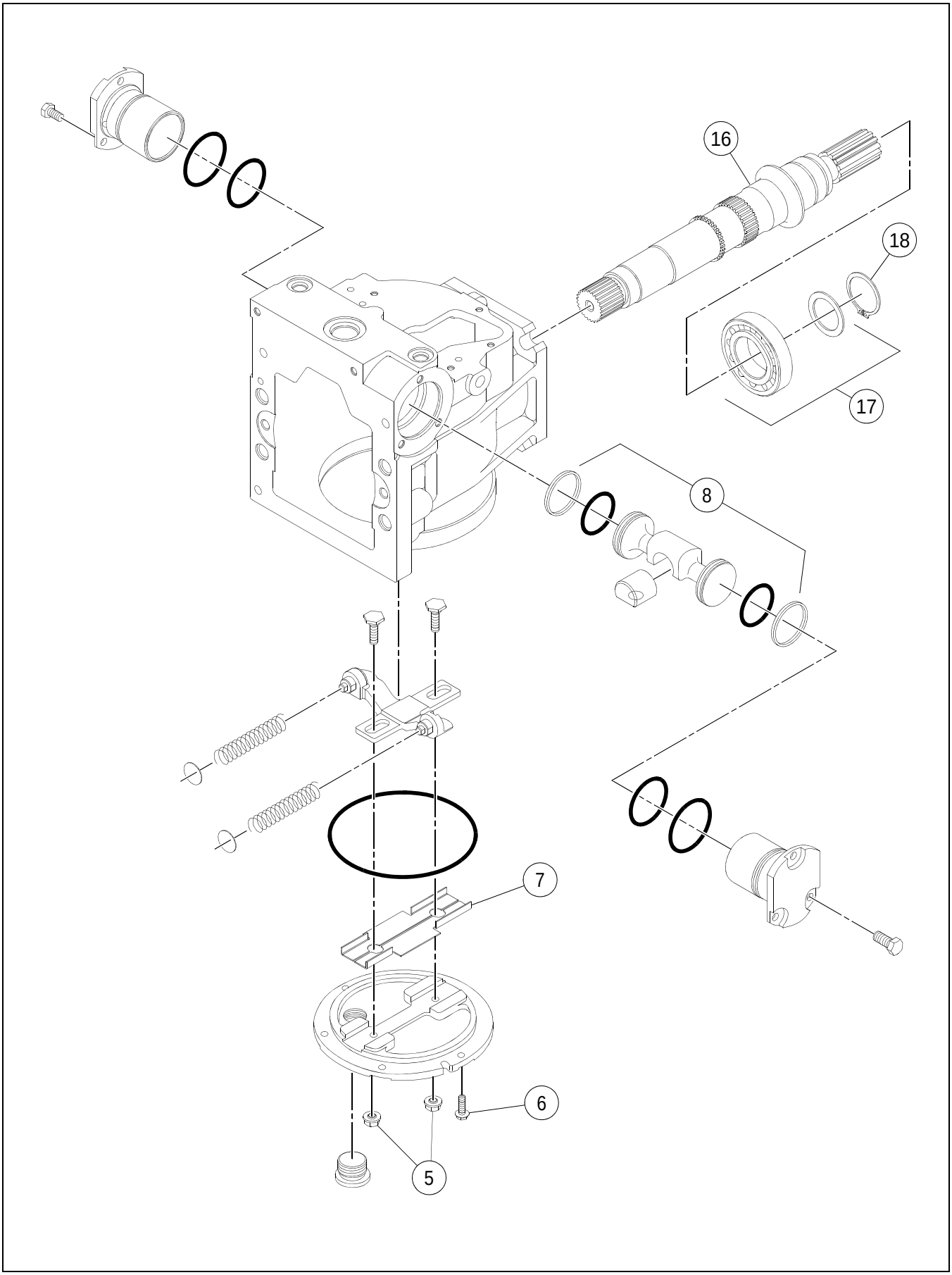

****Only Offered Parts Listed****

BOM 13483698

ITEM	COMM. NO.	DESCRIPTION	QTY	DIMENSIONS/NOTES
5	59360115	Nut	2	
6	59034447	Screw	6	
7	13495940	Insert Assembly	1	
8	13228945	Servo Piston Kit	1	
10	59369603	Bearing Journal (Not Shown)	1	
16	58828492	Shaft	1	
17	59369462	Bearing	1	
18	59369470	Retaining Ring	1	
32	59985044	Seal Kit (Not Shown)	1	
33	19281252	Shaft Seal Assembly (Not Shown)	1	

13235593 REV 00

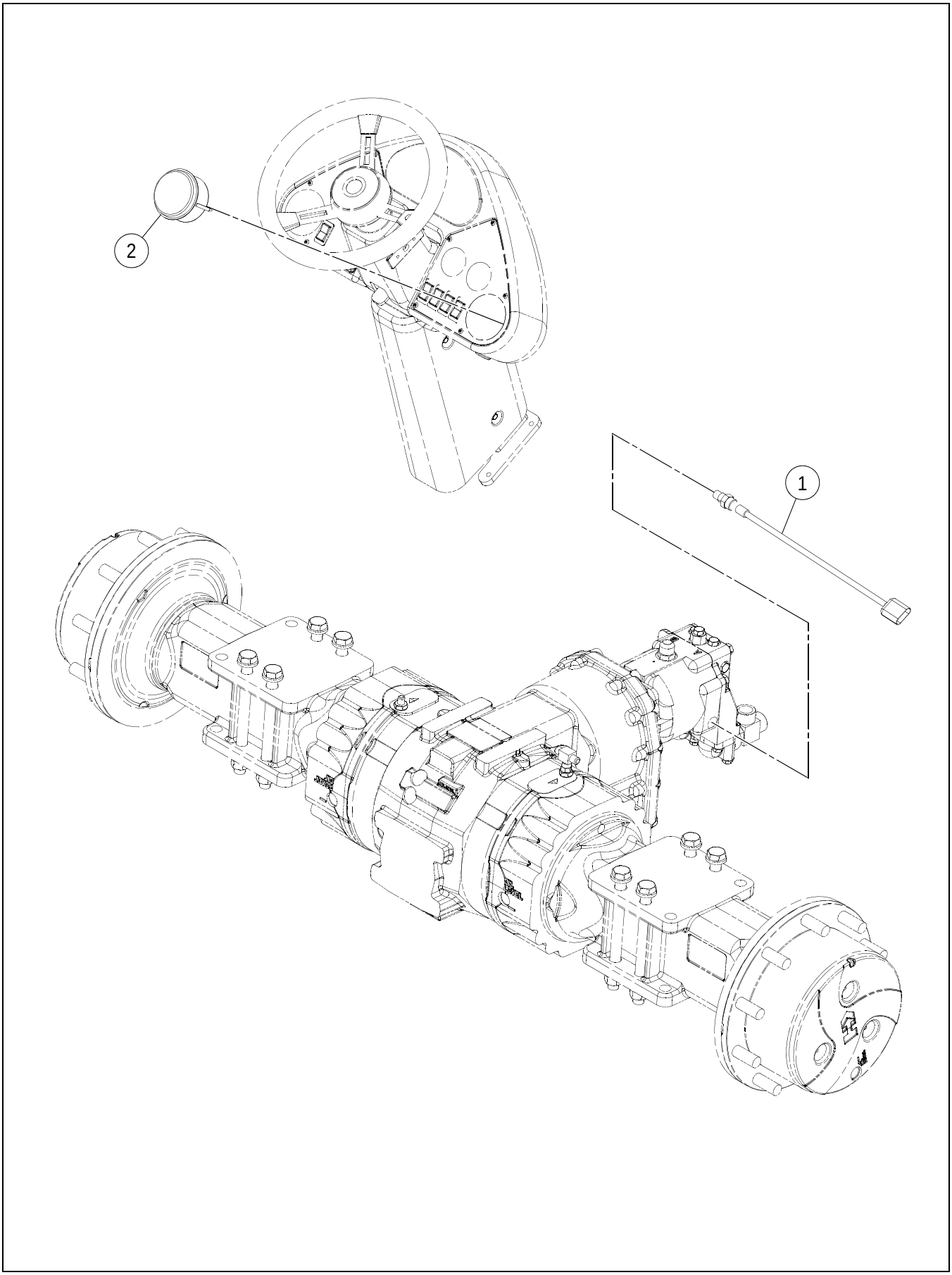

SPEEDOMETER/VPM METER INSTALLATION - OPTIONAL

****Only Offered Parts Listed****

BOM 59287433

ITEM	COMM. NO.	DESCRIPTION	QTY	DIMENSIONS/NOTES
1	59249284	Speed Sensor	1	
2	13179445	Speedometer	1	

IMPACTOMETER/AUTOVIBRATION METER INSTALLATION - OPTIONAL

13233432 REV 002

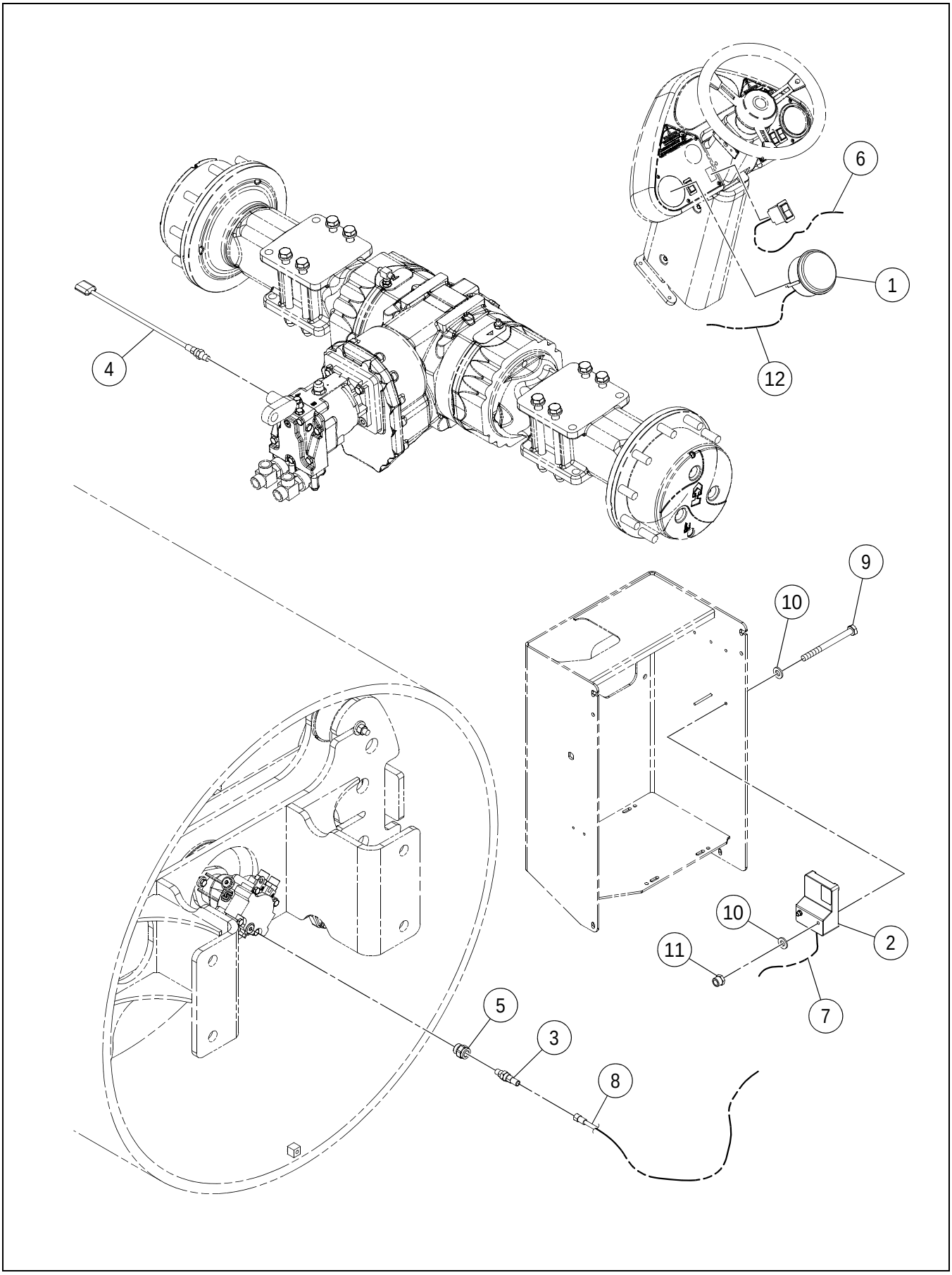

IMPACTOMETER/AUTOVIBRATION METER INSTALLATION - OPTIONAL

****Only Offered Parts Listed****

BOM 13304282

ITEM	COMM. NO.	DESCRIPTION	QTY	DIMENSIONS/NOTES
1	13169404	Impactometer	1	
2	18008441	Impactometer/Auto Vibration Controller	1	
3	13254503	Speed Sensor	1	
4	59249284	Speed Sensor	1	
5	13176789	Speed Sensor Adapter	1	
6	13205075	Switch/Harness Assembly	1	
-	13198916	- Auto/manual Selector Harness	1	
-	13190772	- Auto Vibration Switch	1	
7	13493481	Auto/Manual Module Harness	1	
8	13493523	Vibration Sensor Harness	1	
9	96706825	HHCS, Zinc Plated	2	M6 x 1.0 x 70 Cl 8.8
10	96741053	Flatwasher	4	
11	96702873	Locknut	2	
12	13225123	Single Gauge Light Harness	1	
13	59121855	Clamp (Not Shown)	1	
14	96704663	Flatwasher (Not Shown)	1	M6

13429543 REV 00

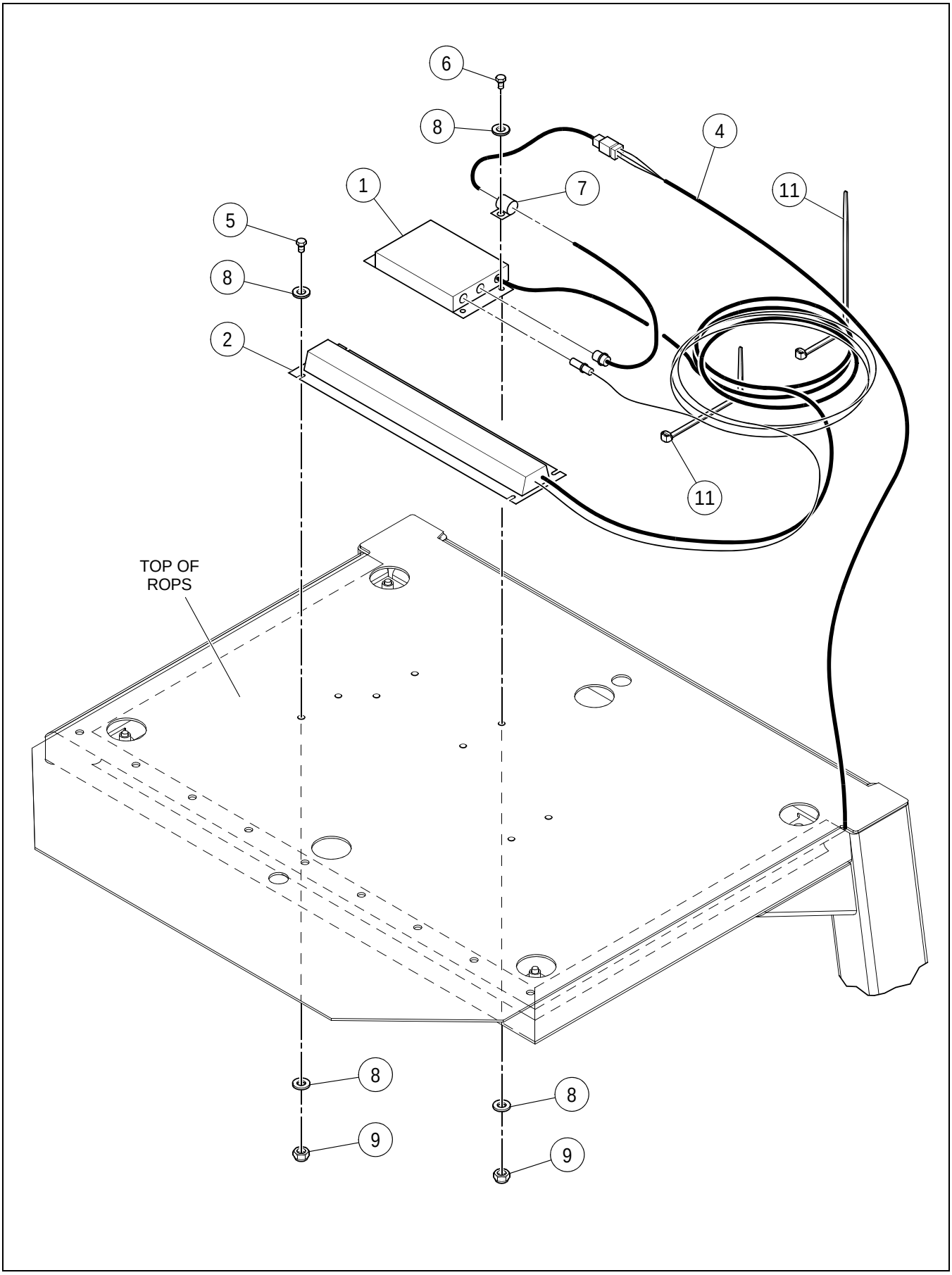

GPS INSTALLATION - OPTIONAL

****Only Offered Parts Listed****

BOM 13429543

ITEM	COMM. NO.	DESCRIPTION	QTY	DIMENSIONS/NOTES
1	NOT-USED	This Item Not Used W/this Bom	1	
2	NOT-USED	This Item Not Used W/this Bom	1	
3	13429931	Trakpak With Antenna (Not Shown)	1	
-	13429535	- Trakpak	1	
-	13429519	- Bar Antenna	1	
4	13425608	GPS Mobile Net Harness	1	
5	96705793	HHCS, Zinc Plated	4	M6 x 1 x 30 Cl 8.8
6	96704564	HHCS, Zinc Plated	4	M6 x 1 x 20 Cl 8.8
7	58754458	Insulated Clamp	1	
8	96741053	Flatwasher	16	
9	96704598	Locknut	8	M6
10	95424586	Wire Tie (Not Shown)	A/R	
11	95373973	Wire Tie	A/R	

43804798 REV 000

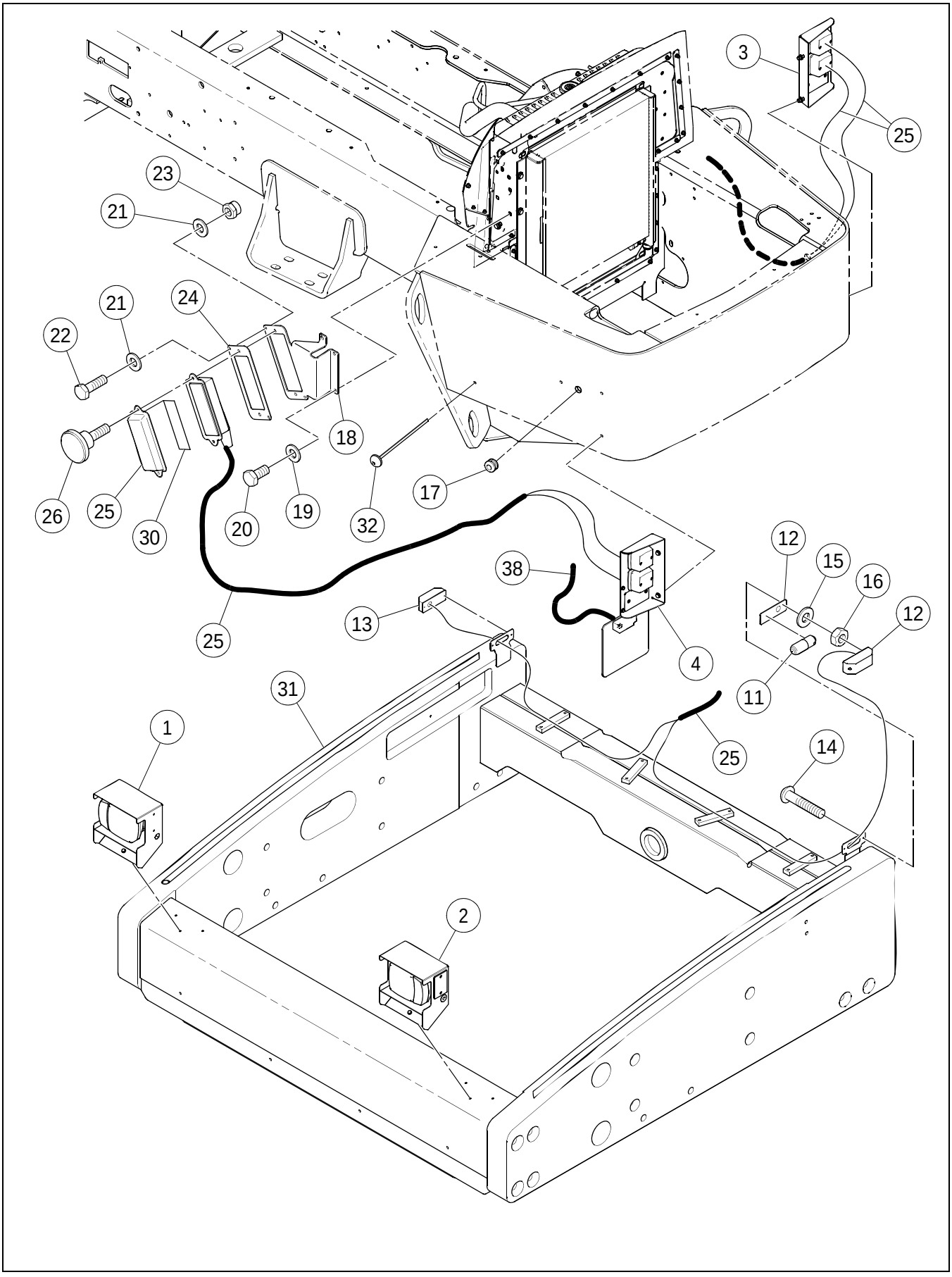

ROAD LIGHTS INSTALLATION - SHEET 1 OF 2

****Only Offered Parts Listed****

BOM 43902410, 43819689

ITEM	COMM. NO.	DESCRIPTION	QTY	DIMENSIONS/NOTES
1	**NSVA**	**Front Roadlight Assembly - RH**	**1**	**See Page E - 54.**
2	**NSVA**	**Front Roadlight Assembly - LH**	**1**	**See Page E - 56.**
3	**NSVA**	**Rear Signal Assembly - RH**	**1**	**See Page E - 58.**
4	**NSVA**	**Rear Signal Assembly - LH**	**1**	**See Page E - 60.**
11	13250386	Light Bulb	2	
12	13216775	Repeater Flasher Lamp	1	
13	13216783	Repeater Flasher Lamp	1	
14	96720974	BHSHCS	8	M4 x 20
15	96738547	Flatwasher, Zinc Plated	8	Cl 200
16	96703756	Hex Nut	8	
17	59849661	Grommet	2	
18	43890565	Homologation Harness Bracket	1	
19	96741046	Flatwasher	3	
20	96702279	HHCS, Zinc Plate	3	M10 x 1.5 x 20 Cl 8.8
21	96741038	Flatwasher	2	
22	NOT-USED	This Item Not Used W/this Bom	1	
23	NOT-USED	This Item Not Used W/this Bom	1	
24	NOT-USED	This Item Not Used W/this Bom	1	
25	13382270	Road Light Chassis Harness	1	
26	96745518	Screw	2	
30	13403647	Decal: Fuse Homologation	1	
31	43854181	Drum Frame - Effective with S/N 196502	1	
-	13414065	Drum Frame - Prior to S/N 196502	1	
32	58820168	Wire Tie	A/R	
38	13382122	License Plate Light	1	

ROAD LIGHTS INSTALLATION - SHEET 2 OF 2

43804798 REV 000

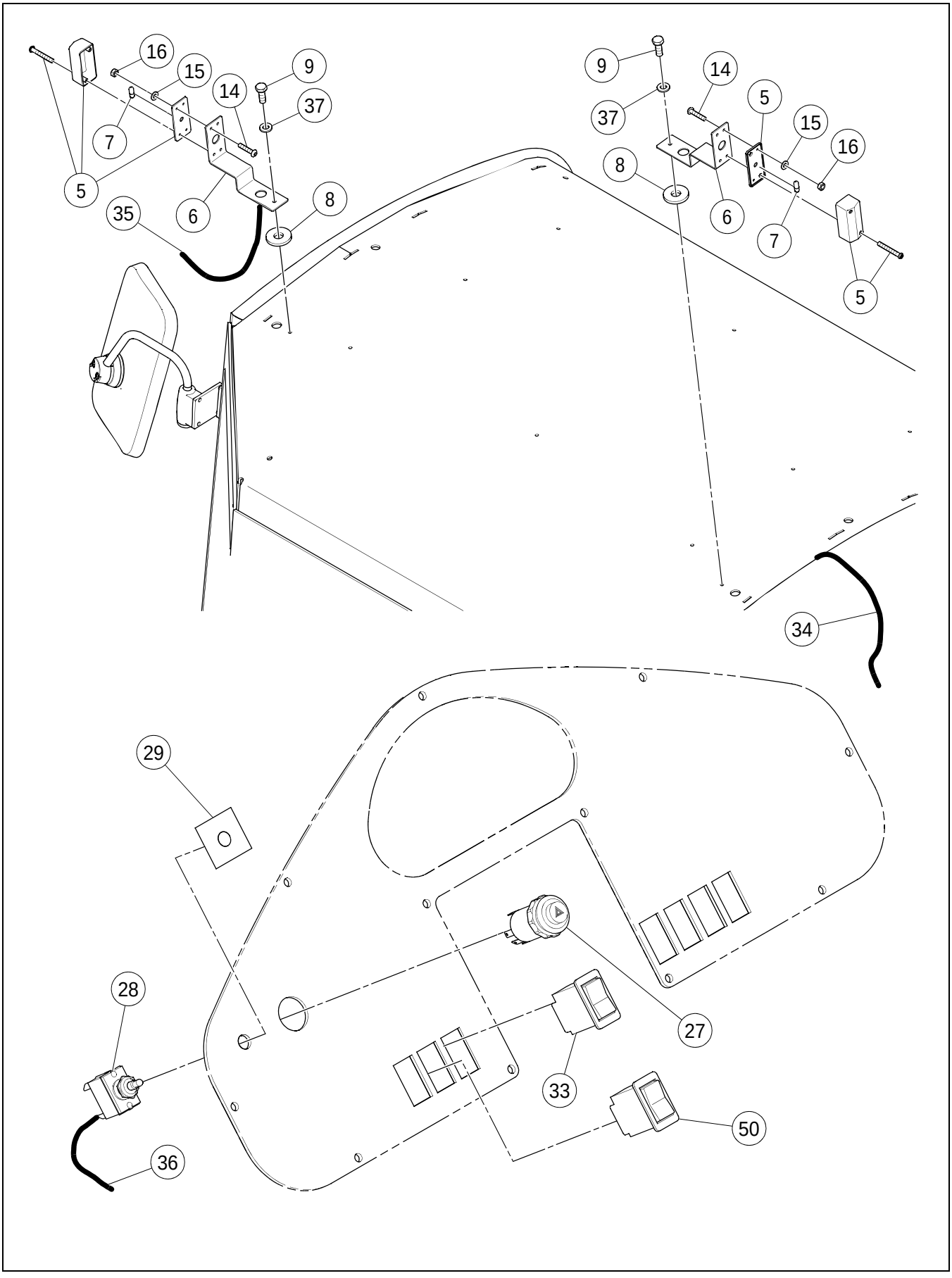

****Only Offered Parts Listed****

BOM 43902410, 43819689

ITEM	COMM. NO.	DESCRIPTION	QTY	DIMENSIONS/NOTES
5	59291088	Lamp Marker	2	
6	43804756	Marker Light Bracket	2	
7	13354014	Bulb	2	
8	54601299	Reinforced Rubber Washer	2	
9	96701958	HHCS, Zinc Plated	2	M6 x 1 x 16 Cl 8.8
14	96720974	BHSHCS	8	M4 x 20
15	96738547	Flatwasher, Zinc Plated	8	Cl 200
16	96703756	Hex Nut	8	
27	13230024	Hazard Warning Switch	1	
28	58834086	Switch	1	
29	13229638	Decal: Turn Signal	1	
33	13346762	Road Light Switch	1	
34	13382247	ROPS Position Light	1	
35	13346739	Side Marker Jump Wire	2	
36	43819598	Road Light Pedestal Harness	1	
37	96741053	Flatwasher	2	
50	NOT-USED	This Item Not Used W/this Bom	1	

FRONT ROADLIGHT ASSEMBLY - RH

13414073 REV 00

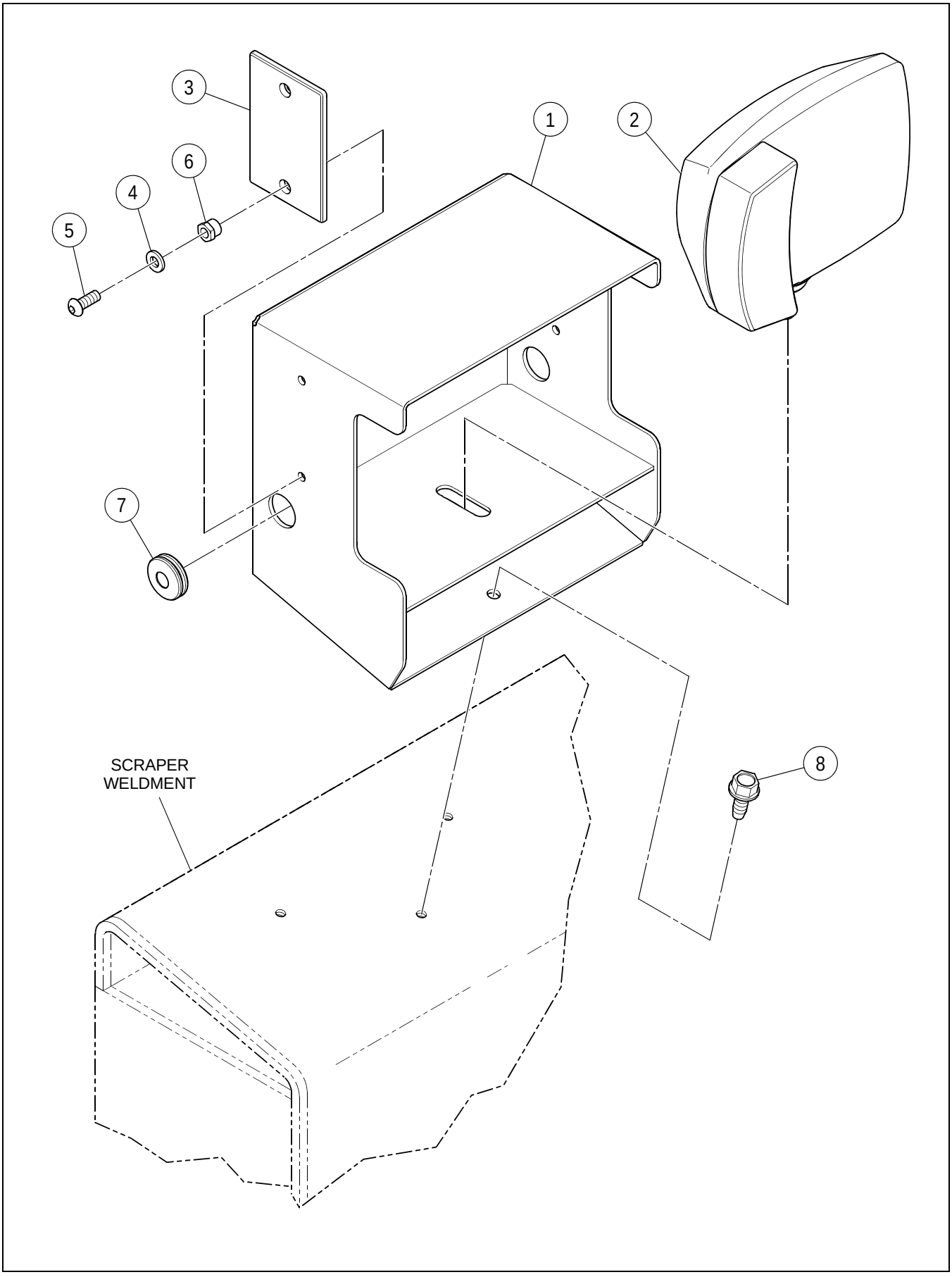

FRONT ROADLIGHT ASSEMBLY - RH

****Only Offered Parts Listed****

BOM 13414073

ITEM	COMM. NO.	DESCRIPTION	QTY	DIMENSIONS/NOTES
1	13414032	Light Housing	1	
2	13352174	Road Light	1	
3	59291070	Amber Reflector	1	
4	96741053	Flatwasher	2	
5	96727987	HSBHCS	2	M6 x 1.0 x 16
6	96704598	Locknut	2	M6
7	58893108	Grommet	1	
8	96702659	HHCS, Zinc Plated	3	M8 x 1.25 x 25 Cl 8.8

FRONT ROADLIGHT ASSEMBLY - LH

13414057 REV 00

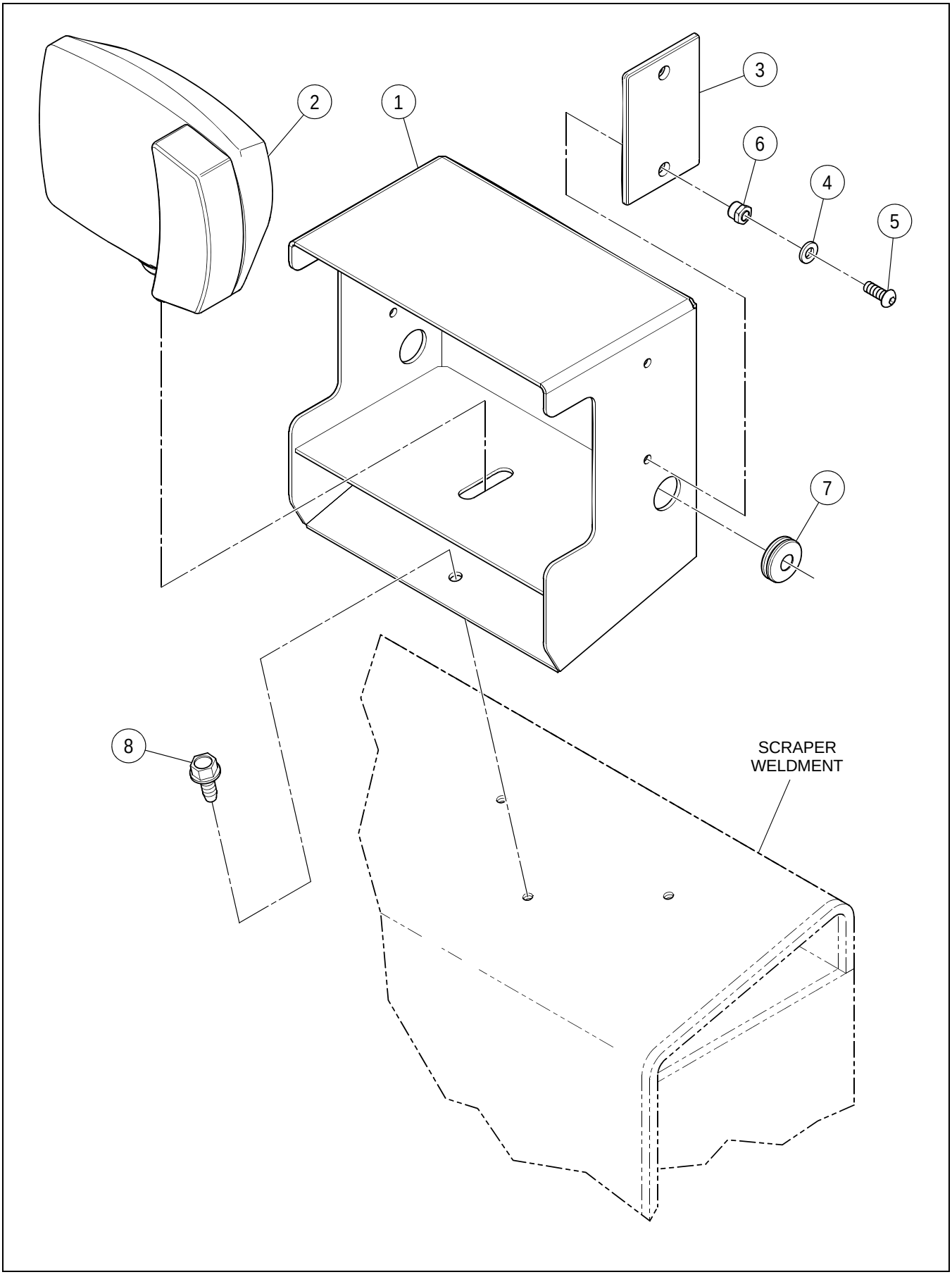

FRONT ROADLIGHT ASSEMBLY - LH

****Only Offered Parts Listed****

BOM 13414057

ITEM	COMM. NO.	DESCRIPTION	QTY	DIMENSIONS/NOTES
1	13414032	Light Housing	1	
2	13351887	Road Light	1	
3	59291070	Amber Reflector	1	
4	96741053	Flatwasher	2	
5	96727987	HSBHCS	2	M6 x 1.0 x 16
6	96704598	Locknut	2	M6
7	58893108	Grommet	1	
8	96702659	HHCS, Zinc Plated	3	M8 x 1.25 x 25 Cl 8.8

REAR SIGNAL ASSEMBLY - RH

13358700 REV 00

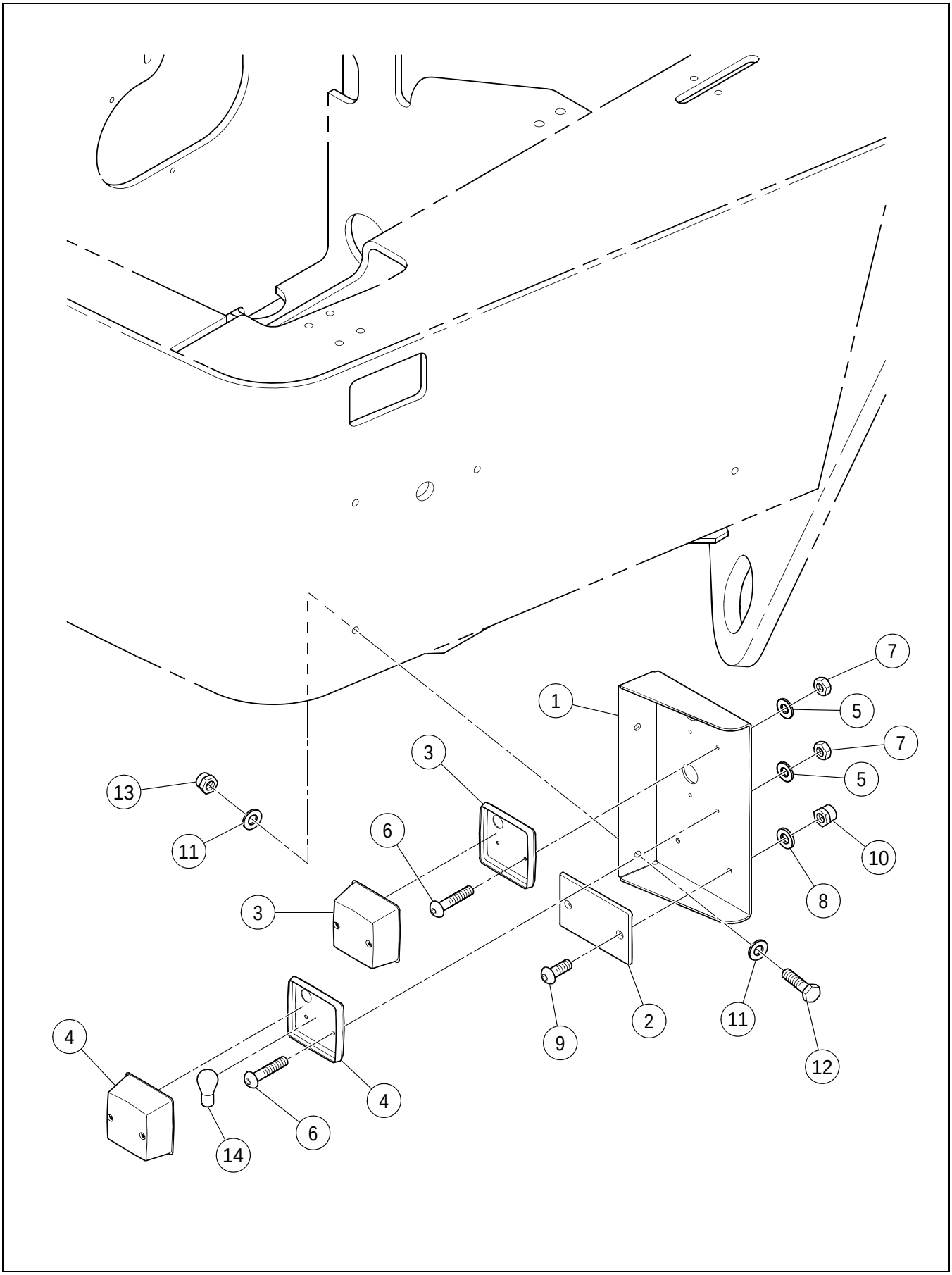

REAR SIGNAL ASSEMBLY - RH

****Only Offered Parts Listed****

BOM 13358700

ITEM	COMM. NO.	DESCRIPTION	QTY	DIMENSIONS/NOTES
1	13352505	Rear Lamp Bracket	1	
2	59291062	Red Reflector	1	
3	13929328	Rear Lamp	1	
-	13247366	- Bulb	1	
-	13247374	- Bulb	1	
4	13250733	Brake Lamp	1	
5	96738547	Flatwasher, Zinc Plated	4	ID-4.3,OD-9.0X0.8THK Cl 200
6	96720974	BHSHCS	4	M4 x 20
7	96703756	Hex Nut	4	
8	96741053	Flatwasher	2	
9	96727987	HSBHCS	2	M6 x 1.0 x 16
10	96704598	Locknut	2	M6
11	96741038	Flatwasher	4	
12	96705587	HHCS, Zinc Plated	2	M8 x 1.25 x 30 Cl 8.8
13	96704606	Locknut	2	M8
14	13250386	Light Bulb	1	

REAR SIGNAL ASSEMBLY - LH

13358684 REV 01

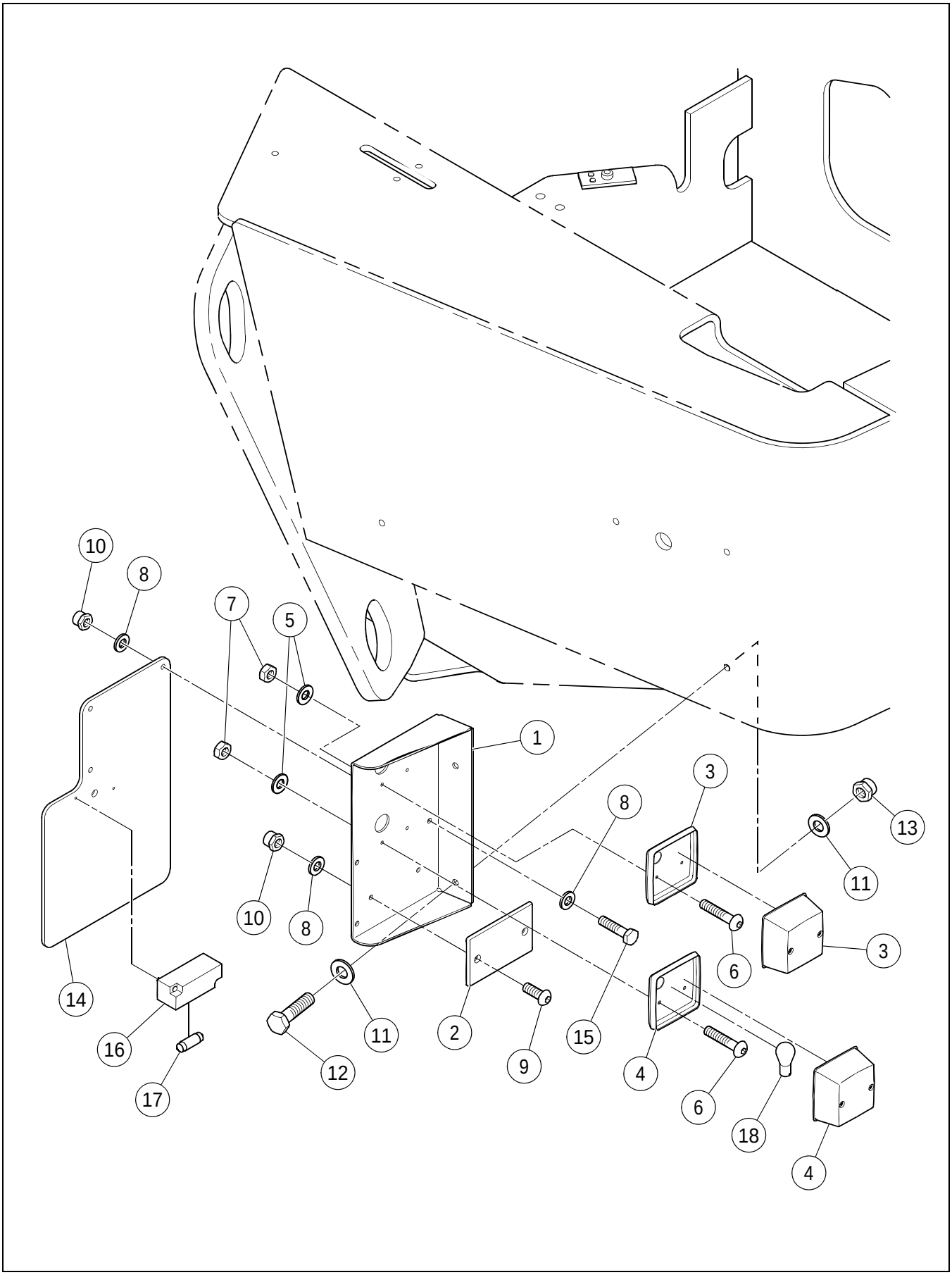

REAR SIGNAL ASSEMBLY - LH

****Only Offered Parts Listed****

BOM 13358684

ITEM	COMM. NO.	DESCRIPTION	QTY	DIMENSIONS/NOTES
1	13352489	Rear Lamp Bracket	1	
2	59291062	Red Reflector	1	
3	13929328	Rear Lamp	1	
-	13247366	- Bulb	1	
-	13247374	- Bulb	1	
4	13250733	Brake Lamp	1	
5	96738547	Flatwasher, Zinc Plated	4	Cl 200
6	96720974	BHSHCS	4	M4 x 20
7	96703756	Hex Nut	4	
8	96741053	Flatwasher	8	
9	96727987	HSBHCS	2	M6 x 1.0 x 16
10	96704598	Locknut	5	M6
11	96741038	Flatwasher	4	
12	96705587	HHCS, Zinc Plated	2	M8 x 1.25 x 30 Cl 8.8
13	96704606	Locknut	2	M8
14	13413661	License Plate Mounting Bracket	1	
15	96701461	HHCS, Zinc Plated	3	M6 x 1 x 25 Cl 8.8
16	14262083	License Plate Light	1	
17	58863176	Light Bulb	1	
18	13250386	Light Bulb	1	

ROTATING BEACON LIGHT INSTALLATION - OPTIONAL

43821131 REV 000

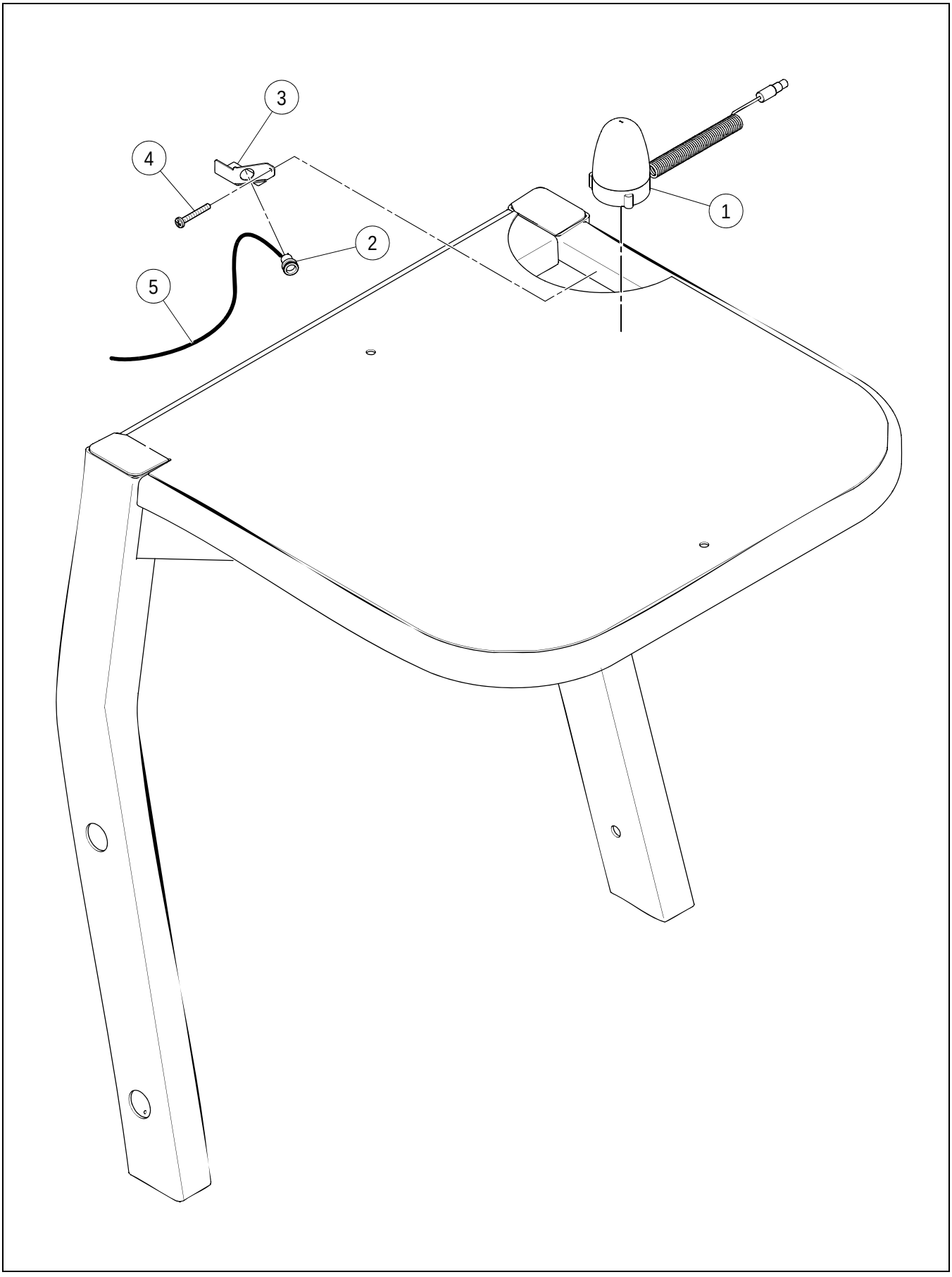

ROTATING BEACON LIGHT INSTALLATION - OPTIONAL

****Only Offered Parts Listed****

BOM 43821131

ITEM	COMM. NO.	DESCRIPTION	QTY	DIMENSIONS/NOTES
1	13176797	Rotating Beacon Light	1	
-	13259098	- Beacon Light Bulb	1	
2	19282102	Power Port	1	
3	13278007	Power Port Mounting Bracket	1	
4	NOT-USED	This Item Not Used W/this Bom	1	
5	13225115	Beacon Light Harness	1	
6	96741053	Flatwasher (Not Shown)	4	
7	96701461	HHCS, Zinc Plated (Not Shown)	2	M6 x 1 x 25 Cl 8.8,
8	96704598	Locknut (Not Shown)	2	M6
9	59326827	Plug (Not Shown)	1	

ROTATING BEACON W/CAB INSTALLATION - OPTIONAL

43821131 REV 00

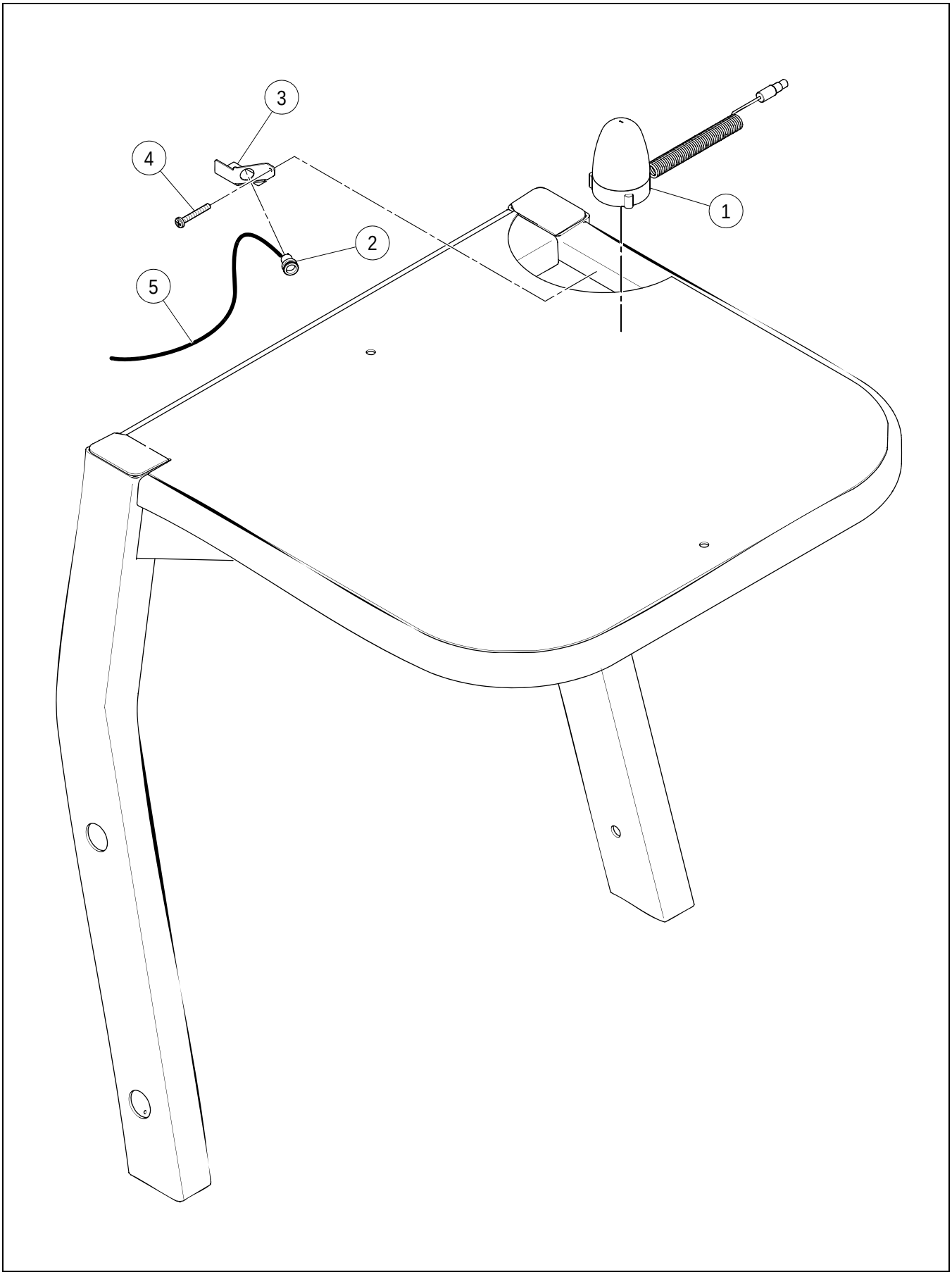

ROTATING BEACON W/CAB INSTALLATION - OPTIONAL

****Only Offered Parts Listed****

BOM 43821164

ITEM	COMM. NO.	DESCRIPTION	QTY	DIMENSIONS/NOTES
1	13176797	Rotating Beacon Light	1	
-	13259098	- Beacon Light Bulb	1	
2	NOT-USED	This Item Not Used W/this Bom	1	
3	NOT-USED	This Item Not Used W/this Bom	1	
4	NOT-USED	This Item Not Used W/this Bom	1	
5	NOT-USED	This Item Not Used W/this Bom	1	

WORKLIGHTS INSTALLATION - STRAIGHT COLUMN - SHEET 1 OF 2

43819622 REV 00

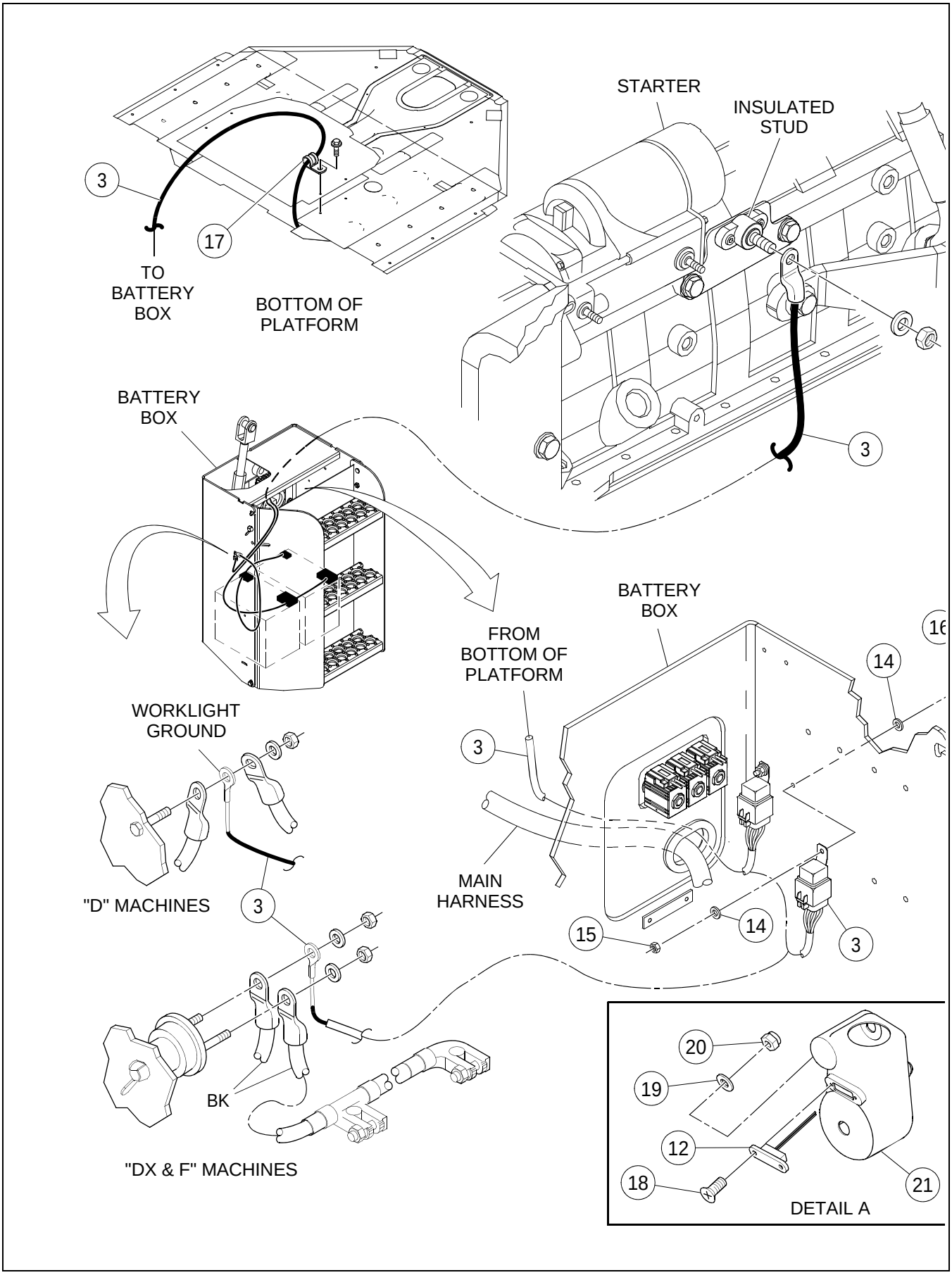

WORKLIGHTS INSTALLATION - STRAIGHT COLUMN - SHEET 1 OF 2

****Only Offered Parts Listed****

BOM 43819622

ITEM	COMM. NO.	DESCRIPTION	QTY	DIMENSIONS/NOTES
3	13492665	Worklight Harness	1	
12	13322102	Panel Light Assembly	2	
-	13321443	- Lamp	2	
14	96738554	Flatwasher	4	
15	96704580	Locknut	2	M5
16	96705728	HHCS, Zinc Plated	2	M5 x 0.8 x 16 Cl 8.8,
17	95301842	Clamp	1	
18	96745492	Screw	4	
19	96738547	Flatwasher, Zinc Plated	4	Cl 200
20	13236906	Locknut	4	
21	13335484	Cover Column	1	

WORKLIGHTS INSTALLATION - STRAIGHT COLUMN - SHEET 2 OF 2

43819622 REV 00

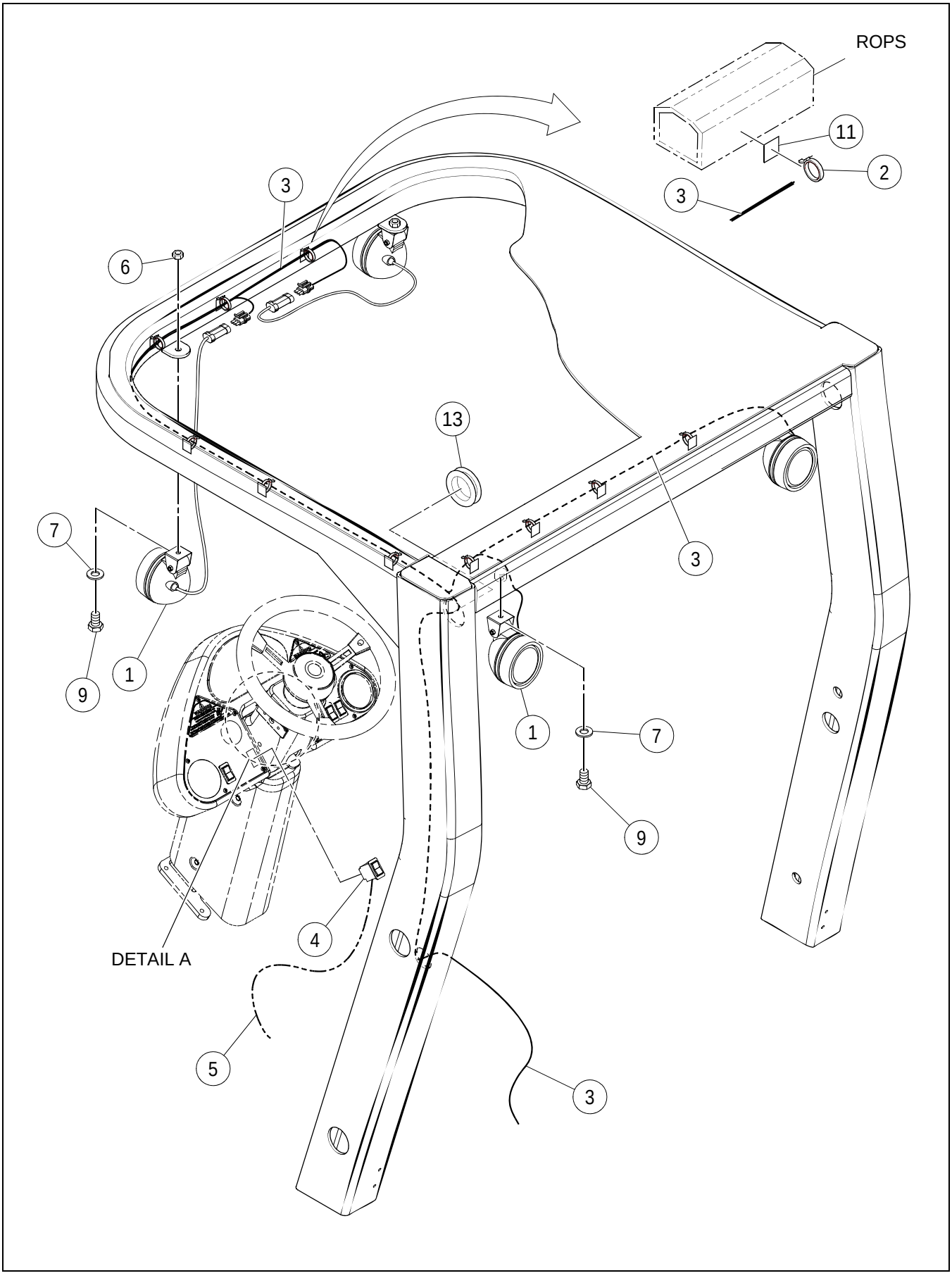

WORKLIGHTS INSTALLATION - STRAIGHT COLUMN - SHEET 2 OF 2

****Only Offered Parts Listed****

BOM 43819622

ITEM	COMM. NO.	DESCRIPTION	QTY	DIMENSIONS/NOTES
1	13359815	Worklights	4	
-	13406764	- Worklights	4	
-	13468137	- Bulb	4	
-	13855200	- Light Bracket	4	
-	95924239	- Lockwasher	8	5/16
-	96728522	- HHCS, Zinc Plated	4	M8 x 1.25 x 60 Cl 8.8
-	96704606	- Locknut	4	M8
2	95373973	Wire Tie	A/R	
3	13492665	Worklight Harness	1	
4	13197108	F/R Worklights Switch	1	
5	43818848	Work Lights Selector Harness - Effective with S/N 194702	1	
-	13225560	Work Lights Selector Harness - Prior to S/N 194702	1	
6	96704812	Hex Nut	2	
7	96741046	Flatwasher	4	
9	96702279	HHCS, Zinc Plated	4	M10 x 1.5 x 20 Cl 8.8
11	43850692	Wire Tie Base	10	
13	59896613	Grommet	1	

43819622 REV 00

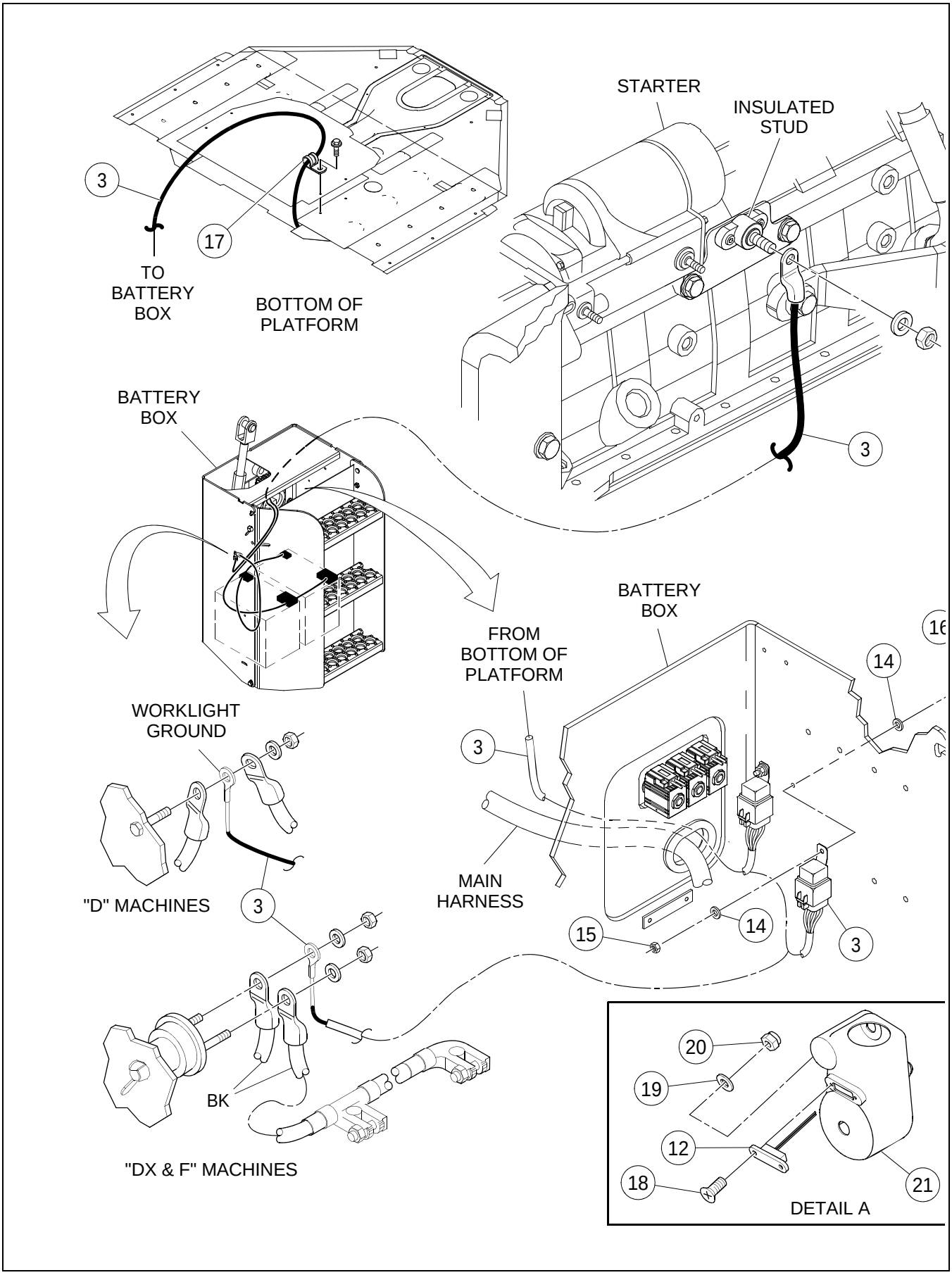

WORKLIGHTS INSTALLATION - TILT COLUMN - SHEET 1 OF 2

****Only Offered Parts Listed****

BOM 43819648

ITEM	COMM. NO.	DESCRIPTION	QTY	DIMENSIONS/NOTES
3	13492665	Worklight Harness	1	
12	13322102	Panel Light Assembly	2	
-	13321443	- Lamp	2	
14	96738554	Flatwasher	4	
15	96704580	Locknut	2	M5
16	96705728	HHCS, Zinc Plated	2	M5 x 0.8 x 16 Cl 8.8
17	95301842	Clamp	1	
18	96745492	Screw	4	
19	96738547	Flatwasher, Zinc Plated	4	Cl 200
20	13236906	Locknut	4	
21	13335492	Cover	1	

WORKLIGHTS INSTALLATION - TILT COLUMN - SHEET 2 OF 2

43819622 REV 00

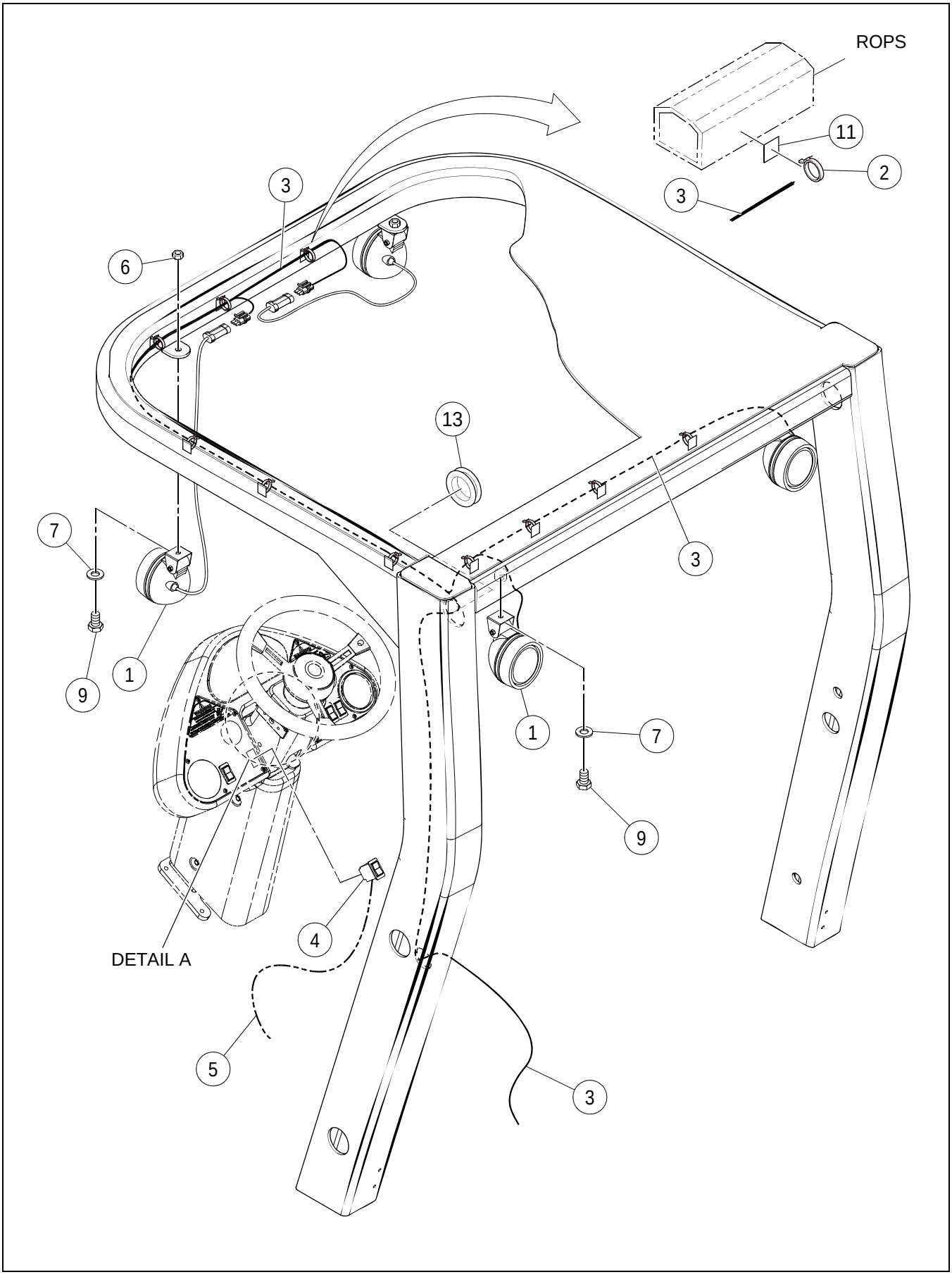

****Only Offered Parts Listed****

BOM 43819648

ITEM	COMM. NO.	DESCRIPTION	QTY	DIMENSIONS/NOTES
1	13359815	Worklights	4	
-	13406764	- Worklights	4	
-	13468137	- Bulb	4	
-	13855200	- Light Bracket	4	
-	95924239	- Lockwasher	8	5/16
-	96728522	- HHCS, Zinc Plated	4	M8 x 1.25 x 60 Cl 8.8
-	96704606	- Locknut	4	M8
2	95373973	Wire Tie	A/R	
3	13492665	Worklight Harness	1	
4	13197108	F/R Worklights Switch	1	
5	43818848	Work Lights Selector Harness - Effective with S/N 194702	1	
-	13225560	Work Lights Selector Harness - Prior to S/N 194702	1	
6	96704812	Hex Nut	2	
7	96741046	Flatwasher	4	
9	96702279	HHCS, Zinc Plated	4	M10 x 1.5 x 20 Cl 8.8
11	43850692	Wire Tie Base	10	
13	59896613	Grommet	1	

DENSITY METER INSTALLATION - OPTIONAL

19288380 REV 00

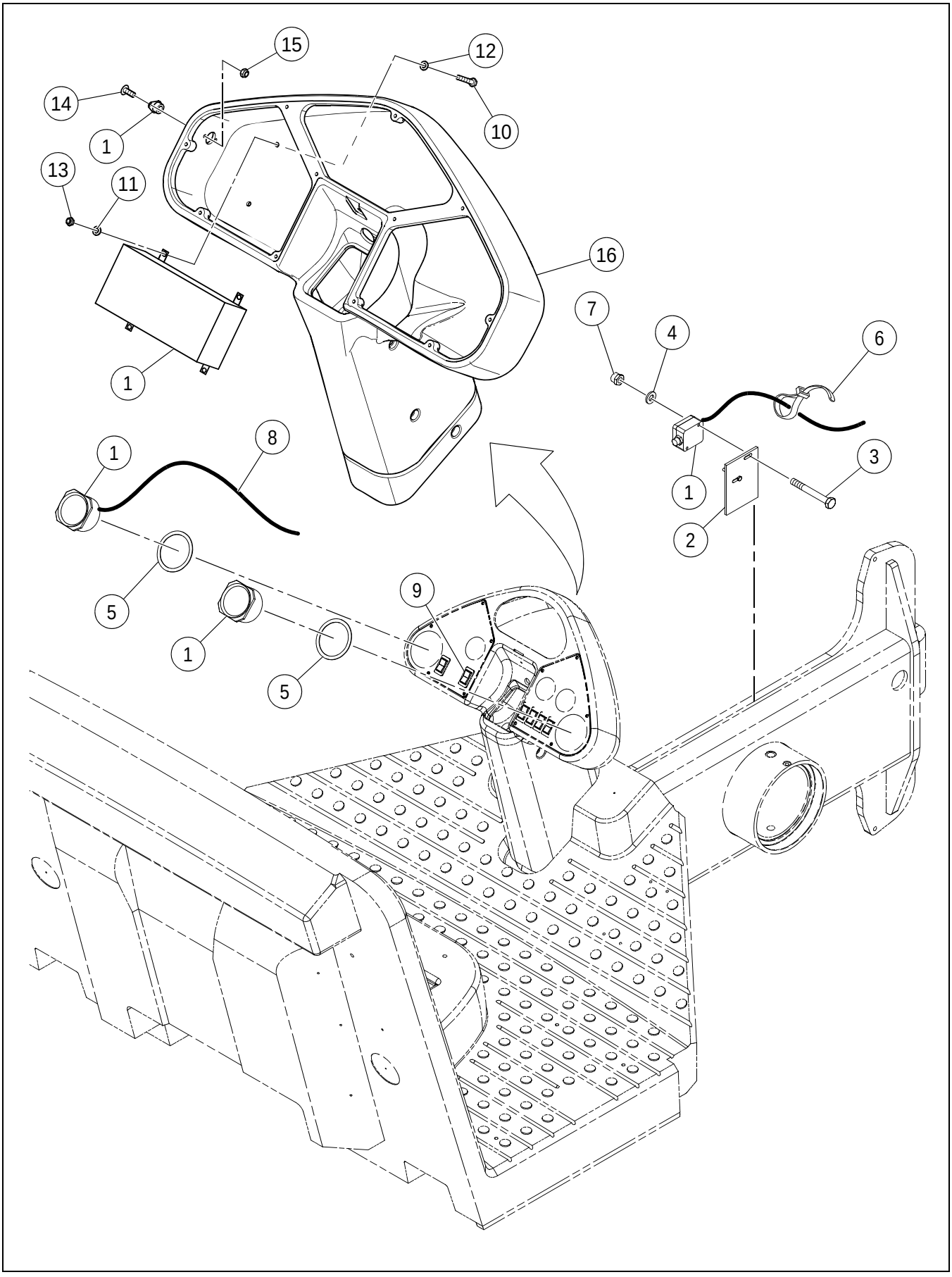

DENSITY METER INSTALLATION - OPTIONAL

****Only Offered Parts Listed****

BOM 19288380

ITEM	COMM. NO.	DESCRIPTION	QTY	DIMENSIONS/NOTES
1	19288372	Compactometer Kit	1	
-	**19288232**	- Compactometer Kit	**1**	**See Breakdown E - 76.**
-	58814237	- Electrical Terminal	3	
-	58797036	- Seal	3	
-	59020362	- 3W Socket M/P Connector	1	
-	59020370	- Secondary 3W M/P Lock	1	
2	13159843	Plate	1	
3	96705546	HHCS, Zinc Plated	2	M6 X 1.0 X 50 Cl 8.8
4	96741053	Flatwasher	2	
5	13293006	Ring Plate	4	
6	95373973	Wire Tie	A/R	
7	96704598	Locknut	2	M6
8	13255930	Compactometer Harness	1	
9	13342878	Density Meter Switch	1	
10	96705736	HHCS, Zinc Plated	4	M5 x 0.8 x 20 Cl 8.8
11	96738554	Flatwasher	4	
12	96718598	Flatwasher, Hardened	4	M5 x 2.0
13	96704580	Locknut	4	M5
14	59229492	HSBHCS	2	
15	59137448	Locknut	2	
16	13870449	Pedestal	1	

COMPACTOMETER KIT (19288232) - INTERNAL BREAKDOWN

19288232 REV 00

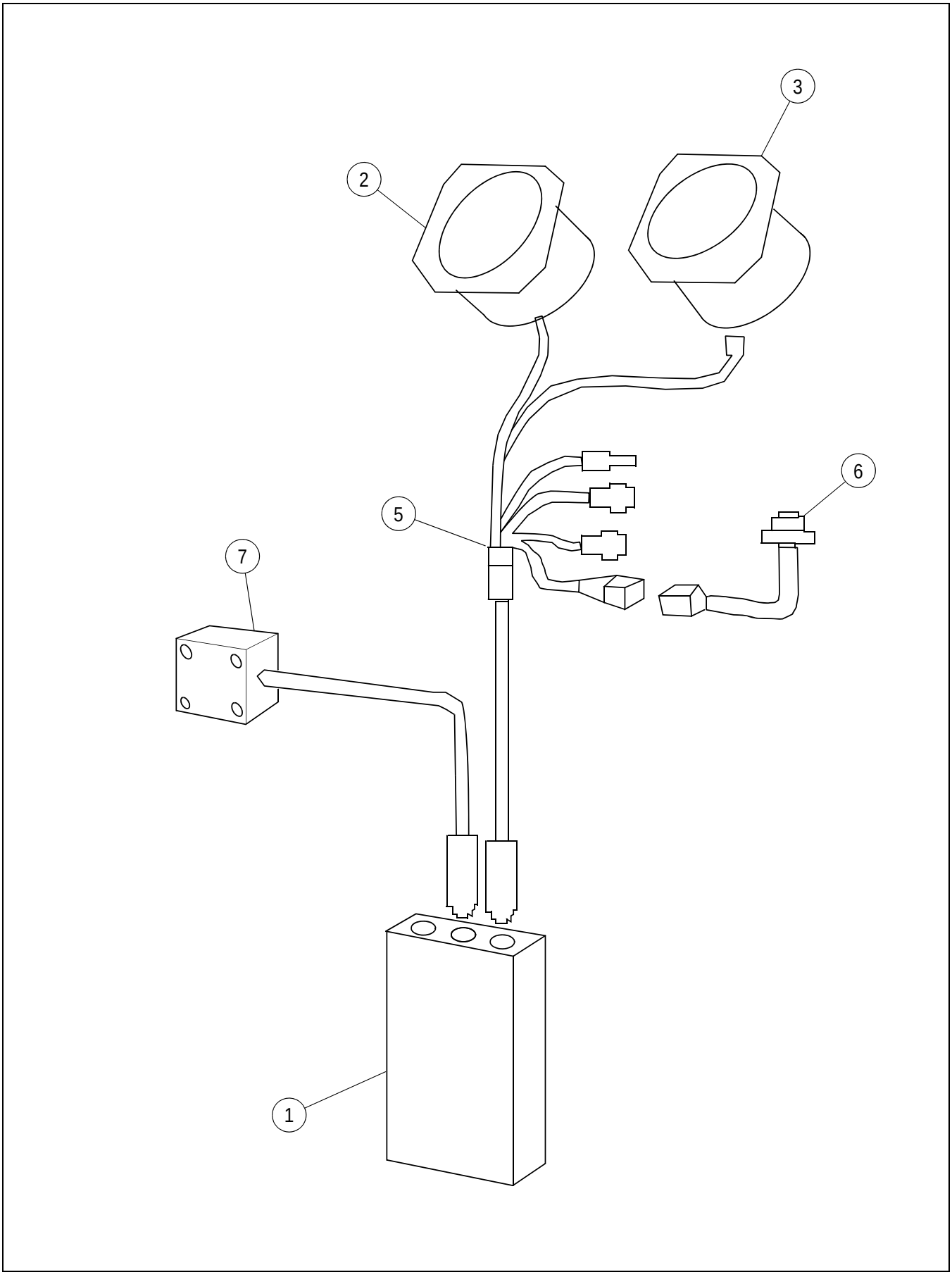

COMPACTOMETER KIT (19288232) - INTERNAL BREAKDOWN

****Only Offered Parts Listed****

BOM 19288232

ITEM	COMM. NO.	DESCRIPTION	QTY	DIMENSIONS/NOTES
1	19288257	Digital Processor	1	
2	13263918	CMV Dial	1	
3	13263926	F Dial	1	
5	19288265	Cable	1	
6	19288422	CI-CDS Cable	1	
7	19288273	Cable Sensor	1	

Section G - DECALS AND PAINT

DECAL INSTALLATION - US - SHEET 1 OF 2

Dwg 43899590 REV 00

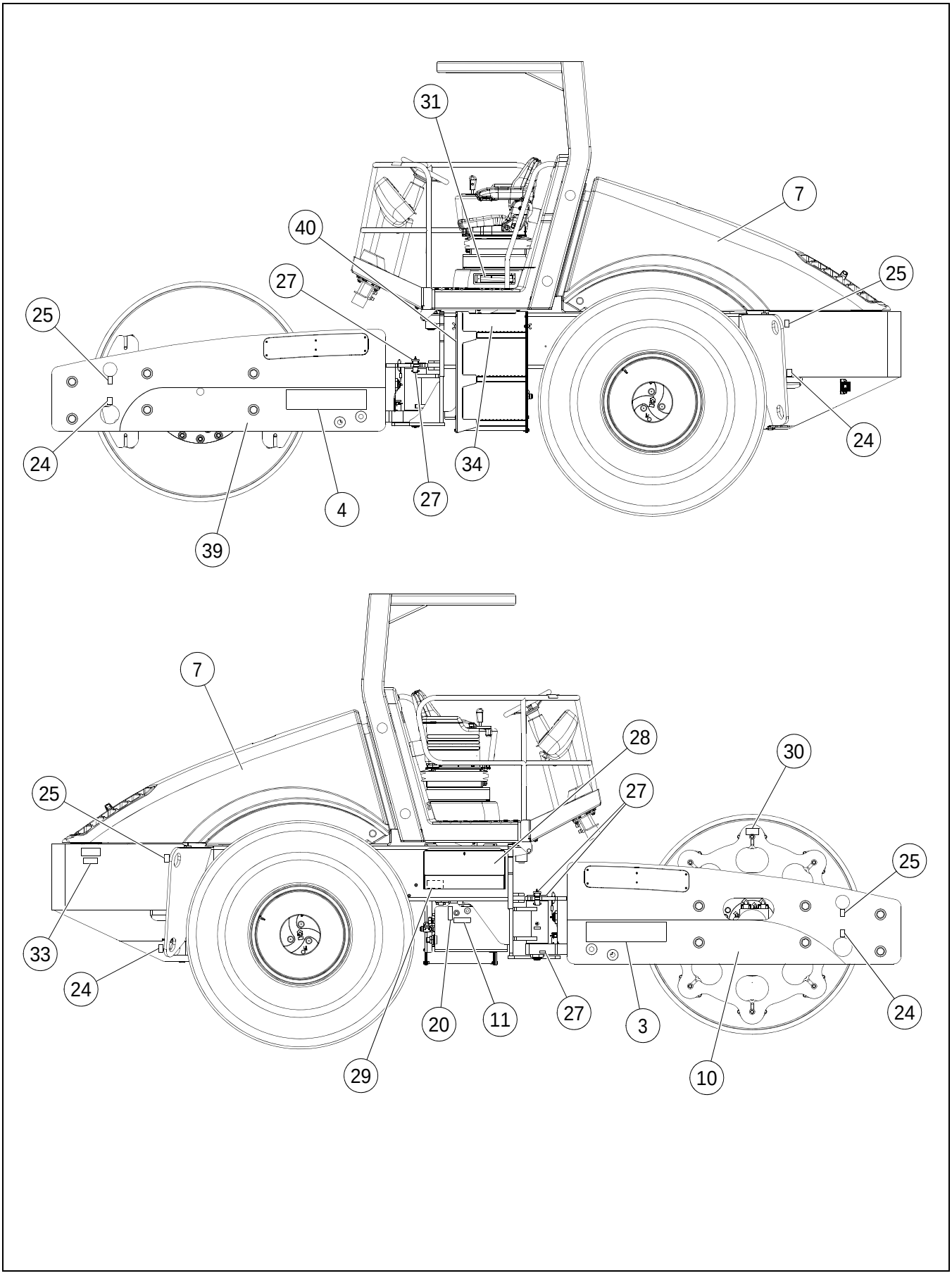

DECAL INSTALLATION - US - SHEET 1 OF 2

****Only Offered Parts Listed**** **BOM 43902113, 43861533, 43861525, 13255799, 13255807,**

ITEM	COMM. NO.	DESCRIPTION	QTY	DIMENSIONS/NOTES
3	13255591	Decal: SD-160DX, RH	1	
-	13255559	Decal: SD-160F, RH	1	
-	18006619	Decal: SD-190DX, RH	1	
-	13255625	Decal: SD-200DX, RH	1	
-	13255575	Decal: SD-200F, RH	1	
4	13255609	Decal: SD-160DX, LH	1	
-	13255567	Decal: SD-160F, LH	1	
-	18006627	Decal: SD-190DX, LH	1	
-	13255617	Decal: SD-200DX, LH	1	
-	13255583	Decal: SD-200F, LH	1	
7	13855572	Decal: Signature	2	
10	13447602	Decal: Stripe	1	
11	13199344	Decal: Hydraulic Oil	1	
20	58978255	Decal: Hydraulic Oil Level	1	
24	59246603	Decal: Tie Down	4	
25	59246611	Decal: Lift Point	4	
27	59605915	Decal: Grease - SD-160DX/SD-160F - Effective with S/N 196502	8	
-	59605915	Decal: Grease - SD-160DX/SD-160F - Prior to S/N 196502	4	
-	59605915	Decal: Grease - SD-190DX/SD-200DX/SD-200F	4	
28	43843499	Decal: Lube Chart	1	
29	59290858	Decal: Hydraulic Pressure Test	1	
30		This Item Not Used With This Assembly		
31	13480116	Decal: Fuse Chart	1	
33	13325378	Decal: Hood Release	1	
34	Not-Used	This Item Not Used W/This	1	
39	13447669	Decal: Curved Stripe	1	
40	13208012	Decal: Master Disconnect	1	
50	13285002	Decal: Warning - Buckle Up (Not Shown)	1	
51	13285010	Decal: Warning Tag - ROPS (Not Shown)	1	
52	13285028	Decal: Warning Tag - ROPS Installation (Not Shown)	1	

DECAL INSTALLATION - US - SHEET 2 OF 2

Dwg 43899590 REV 00

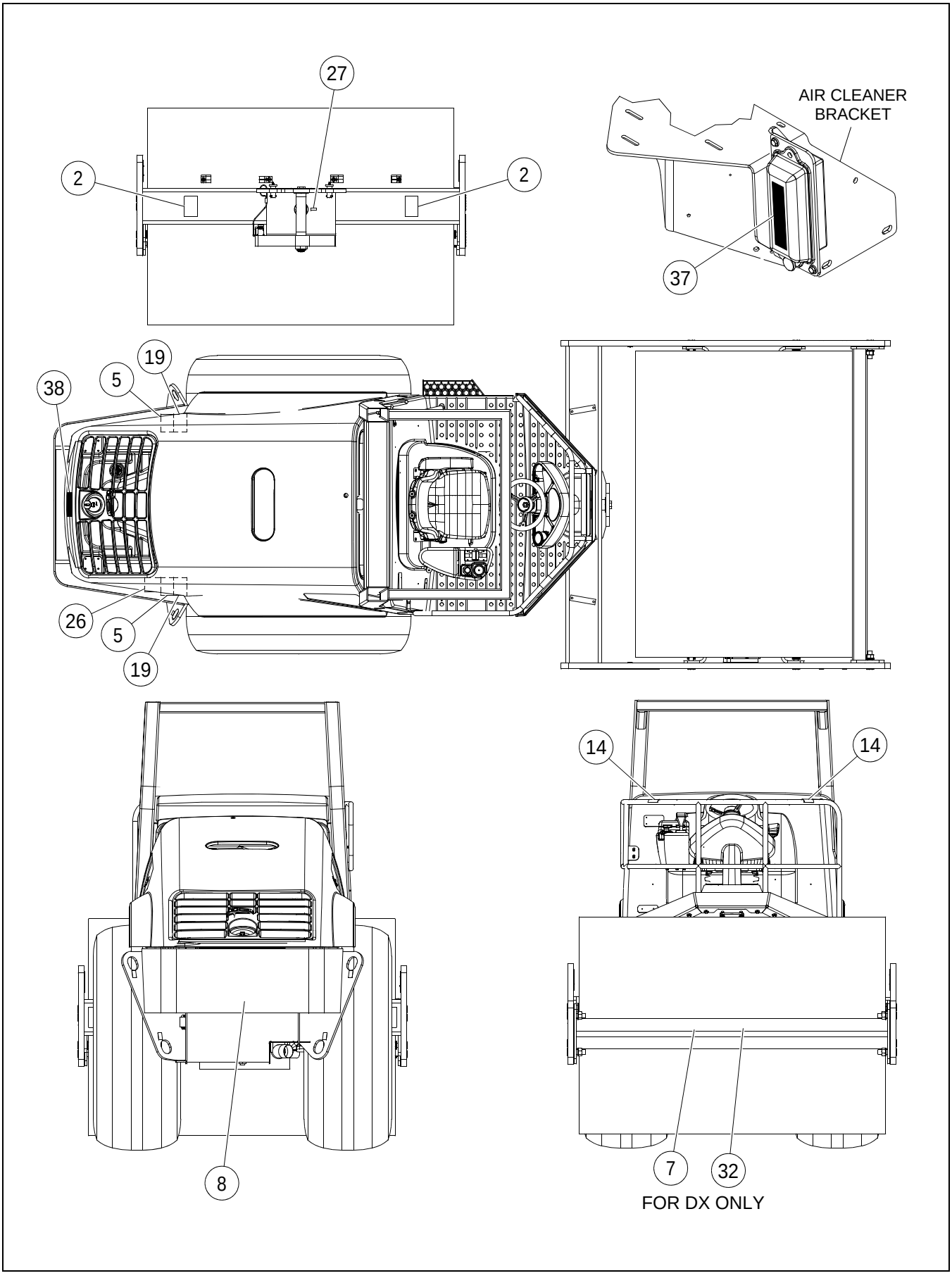

****Only Offered Parts Listed**** **BOM 43902113, 43861533, 43861525, 13255799, 13255807,**

ITEM	COMM. NO.	DESCRIPTION	QTY	DIMENSIONS/NOTES
2	58965542	Decal: Crush Area	2	
5	59020040	Decal: Pressure Hazard Warning	2	
7	13855572	Decal: Signature	2	
8	13855655	Decal: Monogram	1	
14	59667287	Decal: Warning Rail	2	
19	59051151	Decal: Warning	2	
26	59087999	Decal: Radiator Fill	1	
27	59605915	Decal: Grease - SD-160DX/SD-160F - Effective with S/N 196502	8	
-	59605915	Decal: Grease - SD-160DX/SD-160F - Prior to S/N 196502	4	
-	59605915	Decal: Grease - SD-190DX/SD-200DX/SD-200F	4	
32	13870696	Decal: Signature - SD-160DX/SD-160F/SD-200DX/SD-200F	1	
-	18006635	Decal: Lube Chart- SD-190DX	1	
37	43890201	Decal: Fuse (Engine)	1	
38	13855671	Decal: Warning - Hood Crush	1	
		Optional Decals:		
-	13418454	Decal: Leased Property	1	
-	59162982	Decal: Biodegradable Oil	1	
-	13387238	Decal: Mobil Envirosyn	1	
**	59947507	Beige Paint	1	Gallon
**	35304286	Beige Paint	1	Spray Can

Dwg 43899699 REV 00

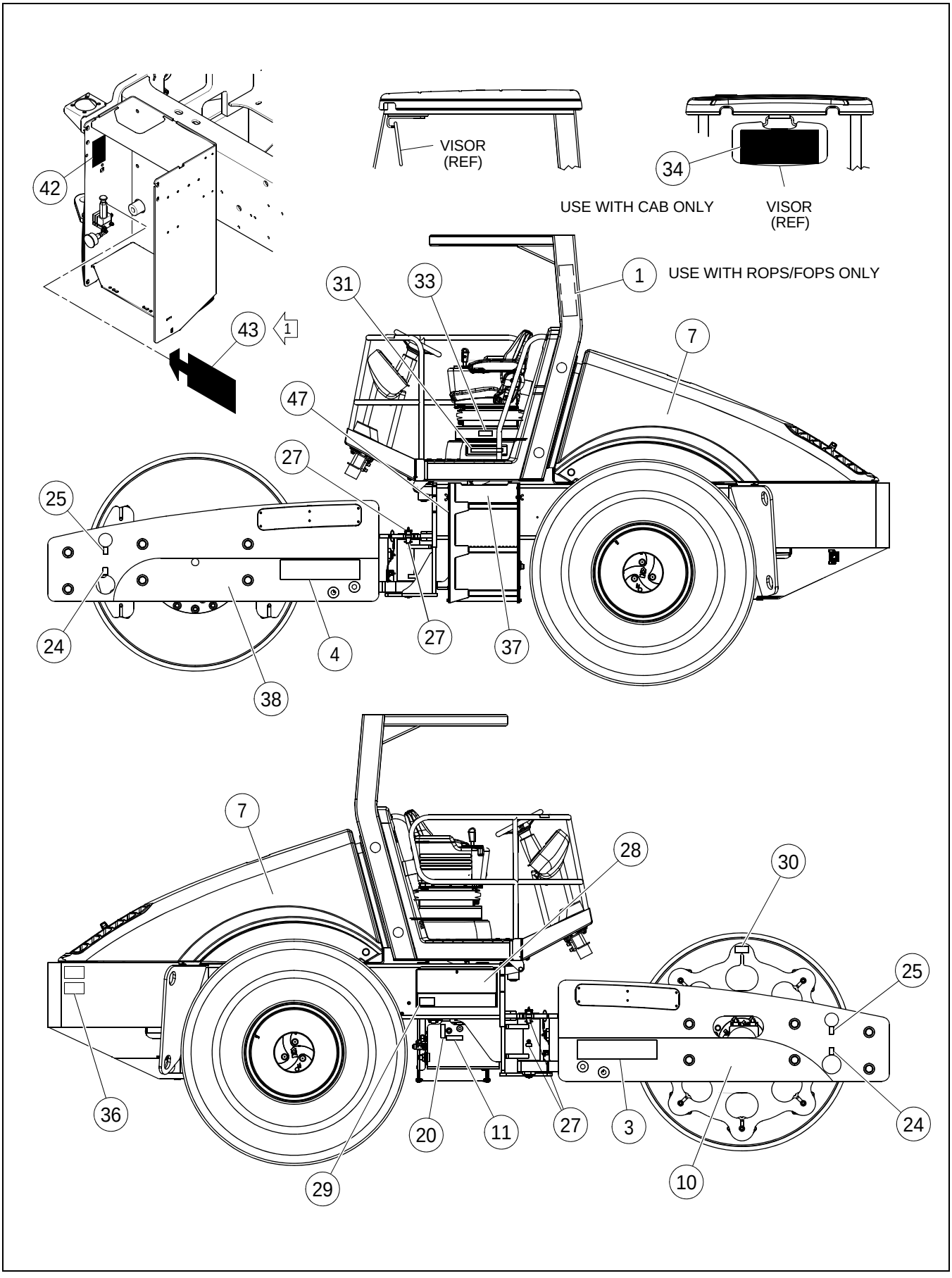

DECAL INSTALLATION - EEC - SHEET 1 OF 4

****Only Offered Parts Listed**** **BOM 18007914, 18007641, 43902741**

ITEM	COMM. NO.	DESCRIPTION	QTY	DIMENSIONS/NOTES
1	13225552	Decal: Checklist (German)	1	
-	13226055	Decal: Checklist (French)	1	
-	13226071	Decal: Checklist (Spanish)	1	
-	13226097	Decal: Checklist (Portuguese)	1	
-	13197306	Decal: Checklist (UK)	1	
-	13459227	Decal: Checklist (Russian)	1	
3	13255591	Decal: SD-160DX, RH	1	
-	13255559	Decal: SD-160F, RH	1	
-	18006619	Decal: SD-190DX, RH	1	
-	13255625	Decal: SD-200DX, RH	1	
-	13255575	Decal: SD-200F, RH	1	
4	13255609	Decal: SD-160DX, LH	1	
-	13255567	Decal: SD-160F, LH	1	
-	18006627	Decal: SD-190DX, LH	1	
-	13255617	Decal: SD-200DX, LH	1	
-	13255583	Decal: SD-200F, LH	1	
7	13855572	Decal: Signature (SD-160/SD-200)	2	
-	13163332	Decal: Signature (SD-190)	3	
10	13447560	Decal: Stripe (SD-160/SD-200)	1	
-	13197413	Decal: Stripe (SD-190)	1	
11	58978222	Decal: Hydraulic Oil	1	
20	58978255	Decal: Hydraulic Oil Level	1	
24	58978289	Decal: Tie Down	4	
25	58992603	Decal: Lift Point	4	
27	59605915	Decal: Grease - SD-160DX/SD-160F	8	
-	59605915	Decal: Grease - SD-190DX/SD-200DX/SD-200F	5	
28	43843507	Decal: Lubechart (German)	1	
-	43843515	Decal: Lubechart (French)	1	
-	43843523	Decal: Lubechart (Spanish)	1	
-	43843531	Decal: Lubechart (Portuguese)	1	
-	43843499	Decal: Lubechart (UK)	1	
-	43843549	Decal: Lubechart (Russian)	1	
29	59290858	Decal: Hydraulic Pressure Test	1	
30	13225875	Decal: Missing Shock (German)	1	
-	13225909	Decal: Missing Shock (French)	1	
-	13225933	Decal: Missing Shock (Spanish)	1	
-	13225966	Decal: Missing Shock (Portuguese)	1	
-	13208038	Decal: Missing Shock (UK)	1	
-	13459193	Decal: Missing Shock (Russian)	1	
31	13226006	Decal: Fuse (German)	1	
-	13226014	Decal: Fuse (French)	1	
-	13226022	Decal: Fuse (Spanish)	1	
-	13226030	Decal: Fuse (Portuguese)	1	
-	13480116	Decal: Fuse (UK)	1	
-	13459268	Decal: Fuse Chart (Russian)	1	

Dwg 43899699 REV 00

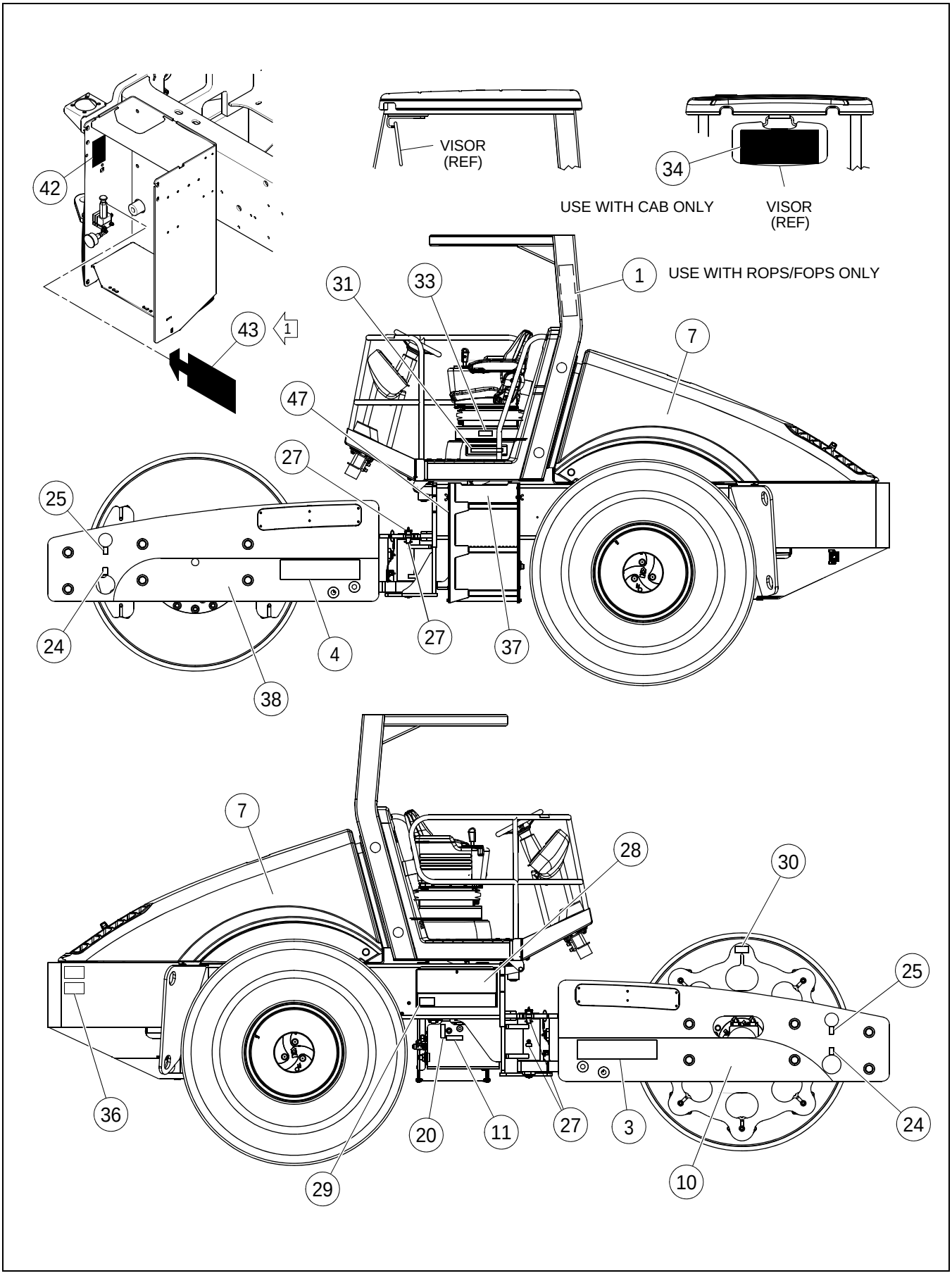

****Only Offered Parts Listed**** **BOM 18007641, 18007914, 18007922, 13309927, 13225842,**

ITEM	COMM. NO.	DESCRIPTION	QTY	DIMENSIONS/NOTES
33	58952466	Decal: Natural Frequency (German)	1	
-	13255054	Decal: Natural Frequency (French)	1	
-	13255062	Decal: Natural Frequency (Spanish)	1	
-	13255070	Decal: Natural Frequency (Portuguese)	1	
-	58877549	Decal: Natural Frequency (UK)	1	
-	13459201	Decal: Natural Frequency (Russian)	1	
34	13225545	Decal: Checklist (German)	1	
-	13226063	Decal: Checklist (French)	1	
-	13226089	Decal: Checklist (Spanish)	1	
-	13255005	Decal: Checklist (Portuguese)	1	
-	13197314	Decal: Checklist (UK)	1	
-	13459219	Decal: Checklist (Russian)	1	
36	13325378	Decal: Lower Hood (SD-160)	1	
-	13291687	Decal: Lower Hood (SD-200)	1	
37	13198353	Decal: Genuine Parts	1	
38	13447628	Decal: Curved Stripe	1	
42	13385323	Decal: Runaway Warning (German)	1	
-	13385349	Decal: Runaway Warning (French)	1	
-	13385364	Decal: Runaway Warning (Spanish)	1	
-	13385380	Decal: Runaway Warning (Portugese)	1	
-	13366075	Decal: Runaway Warning (UK)	1	
-	13459250	Decal: Runaway Warning (Russian)	1	
43	13385331	Decal: Tow Tag (German)	3	
-	13385356	Decal: Tow Tag (French)	3	
-	13385372	Decal: Tow Tag (Spanish)	3	
-	13385398	Decal: Tow Tag (Portugese)	3	
-	13366067	Decal: Tow Tag (UK)	3	
-	13459243	Decal: Tow Tag (Russian)	3	
47	13208012	Decal: Master Disconnect	1	

Dwg 43899699 REV 00

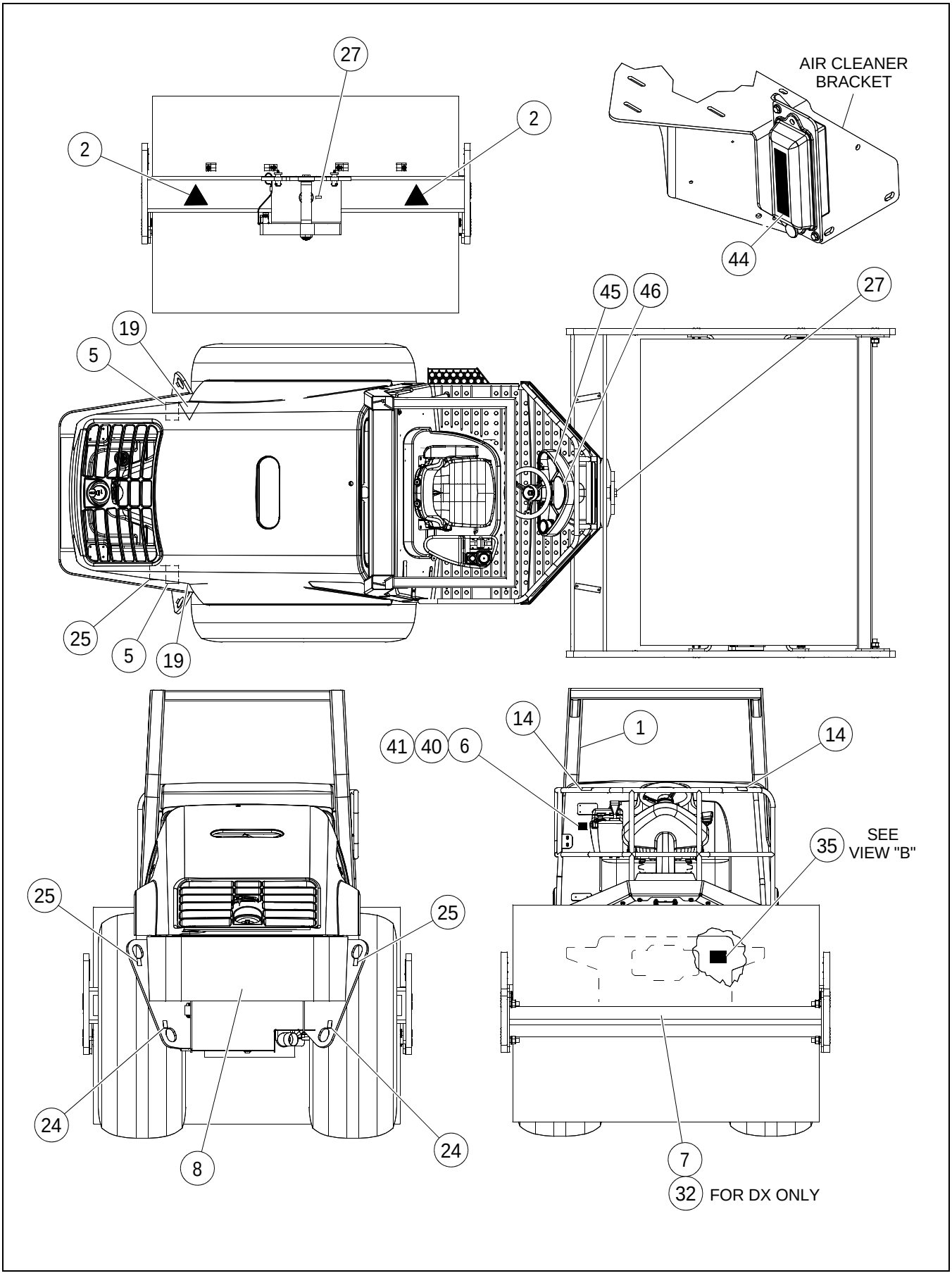

****Only Offered Parts Listed**** **BOM 18007641, 18007914, 18007922, 13309927, 13225842,**

ITEM	COMM. NO.	DESCRIPTION	QTY	DIMENSIONS/NOTES
1	13225552	Decal: Checklist (German)	1	
-	13226055	Decal: Checklist (French)	1	
-	13226071	Decal: Checklist (Spanish)	1	
-	13226097	Decal: Checklist (Portuguese)	1	
-	13197306	Decal: Checklist (UK)	1	
-	13459227	Decal: Checklist (Russian)	1	
2	58918947	Decal: Warning	2	
5	59020040	Decal: Pressure Hazard Warning (SD-160)	2	
-	59050948	Decal: Pressure Hazard Warning (SD-190/ 200)	2	
6	58978271	Decal: Read Manual	1	
7	13855572	Decal: Signature (SD-160/SD-200)	2	
-	13163332	Decal: Signature (SD-190)	3	
8	13855655	Decal: Signature (SD-160/SD-200)	1	
-	13225727	Decal: Signature (SD-190)	1	
14	58978248	Decal: Railing Warning	2	
19	58978198	Decal: Rotating Fan	2	
24	58978289	Decal: Tie Down	4	
25	58992603	Decal: Lift Point	4	
26	59131920	Decal: Radiator Fill (German) (Not Shown)	1	
-	59131912	Decal: Radiator Fill (French)	1	
-	59131946	Decal: Radiator Fill (Spanish)	1	
-	59131938	Decal: Radiator Fill (Portuguese)	1	
-	59087999	Decal: Radiator Fill (UK)	1	
-	13459185	Decal: Radiator Fill (Russian)	1	
27	59605915	Decal: Grease	5	
32		This Item Not Used With This Assembly		
35	13206941	Decal: Sound Power (SD-160/SD-200)	1	
-	13206958	Decal: Sound Power (SD-190DX)	1	
36	13325378	Decal: Lower Hood (SD-160/SD-200) (Not Shown)	1	
-	13291687	Decal: Lower Hood (SD-190)	1	
39	59579094	Pop Rivet (Not Shown)	4	
40		This Item Not Used With This Assembly		
41		This Item Not Used With This Assembly		
44	13396486	Decal: Fuse (German)	1	
-	13396478	Decal: Fuse (French)	1	
-	13396494	Decal: Fuse (Spanish)	1	
-	13437603	Decal: Fuse (Portugese)	1	
-	13459235	Decal: Fuse (Russian)	1	

Dwg 43899699 REV 00

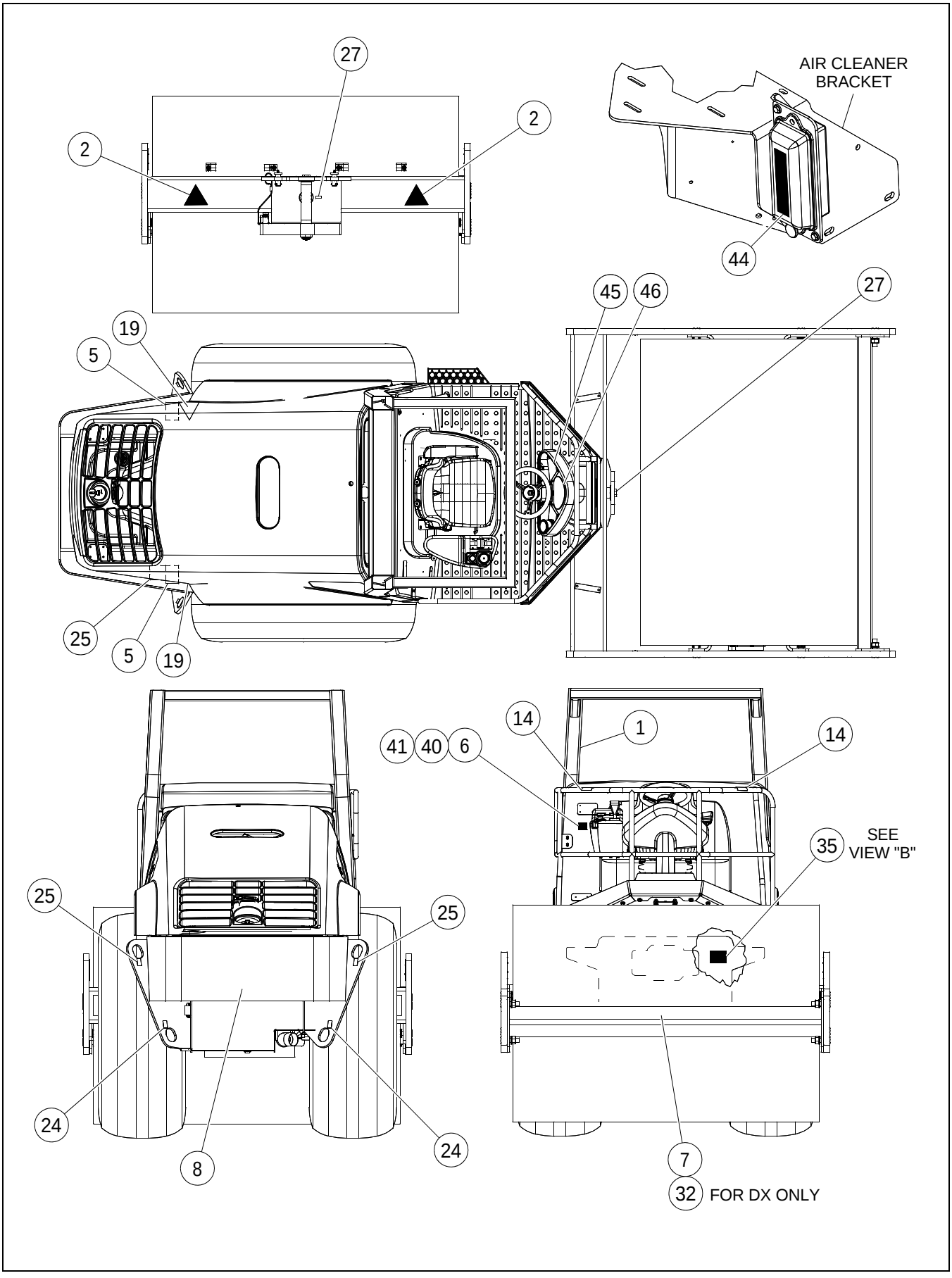

****Only Offered Parts Listed**** **BOM 18007641, 18007914, 18007922, 13309927, 13225842,**

ITEM	COMM. NO.	DESCRIPTION	QTY	DIMENSIONS/NOTES
45	13437983	Decal: Read Manual	1	
46	13437991	Decal: Rollover	1	
50	13285002	Decal: Warning - Buckle Up (Not Shown)	1	
51	13285010	Decal: Warning Tag - ROPS (Not Shown)	1	
52	13285028	Decal: Warning Tag - ROPS Installation (Not Shown)	1	
**	59947507	Beige Paint	1	Gallon
**	35304286	Beige Paint	1	Spray Can

Section H - HYDRAULICS

13403068 REV 0G

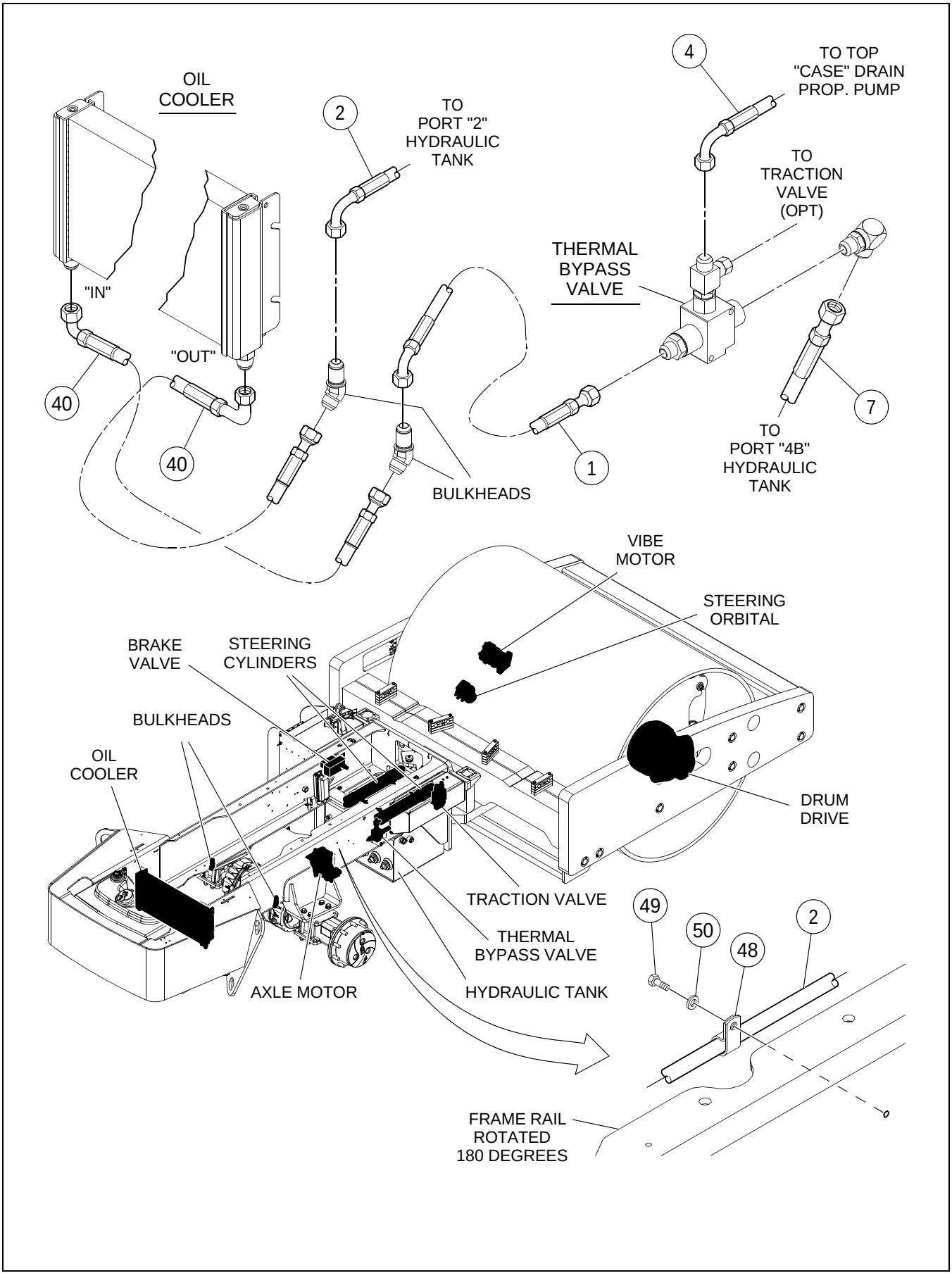

HOSING INSTALLATION - SHEET 1 OF 6

****Only Offered Parts Listed****

BOM 43881754

ITEM	COMM. NO.	DESCRIPTION	QTY	DIMENSIONS/NOTES
1	13225073	Hose Assembly	1	37.5”
2	13204425	Hose Assembly (SD-160DX/SD-160F)	1	59.0”
-	13313887	Hose Assembly (SD-190DX/SD-200DX/SD-200F)	1	58.0”
4	13225099	Hose Assembly	1	15.5”
7	59203406	Hose Assembly	1	
40	13313952	Hose Assembly	2	30.25
48	95457586	Clamp	1	
49	96714829	HHCS	1	M12 x 1.75 x 20 Cl 10.9
50	96738596	Flatwasher, Zinc Plated	1	M12 Cl 200

13403068 REV 0G

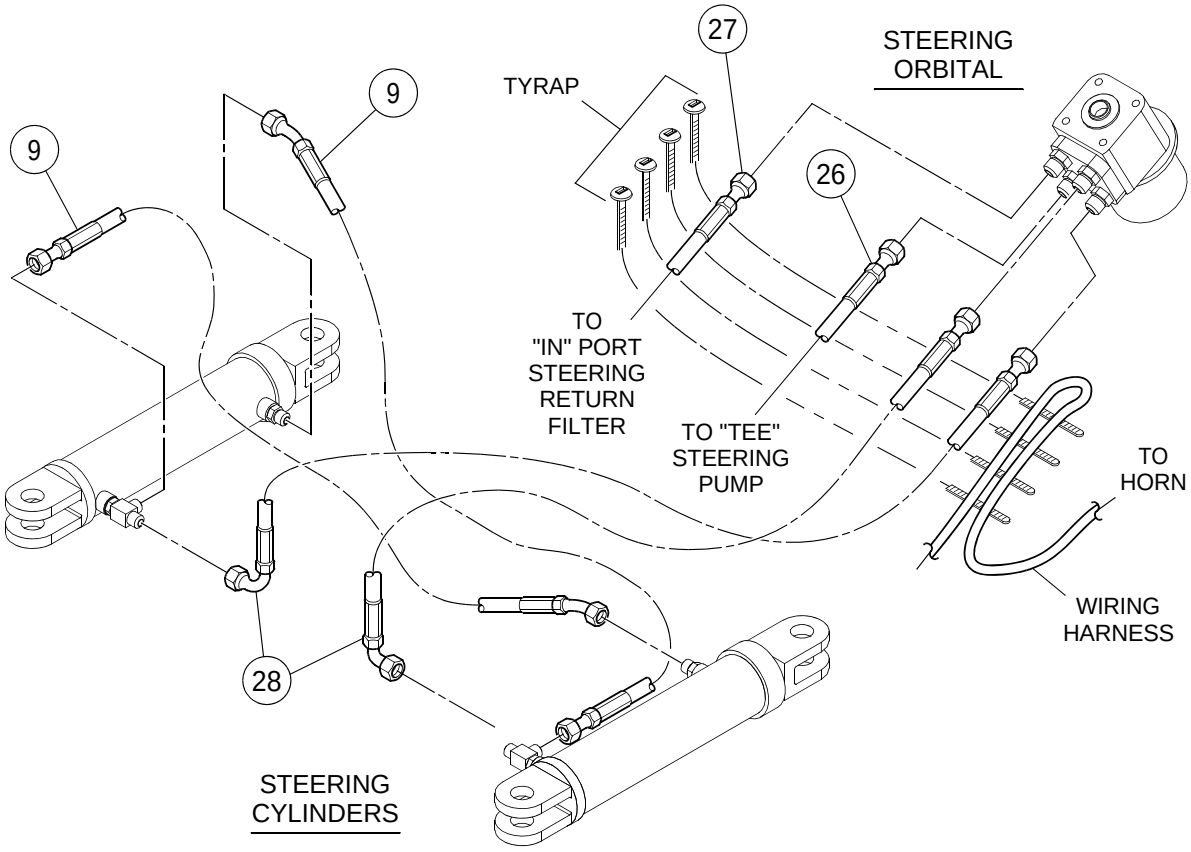

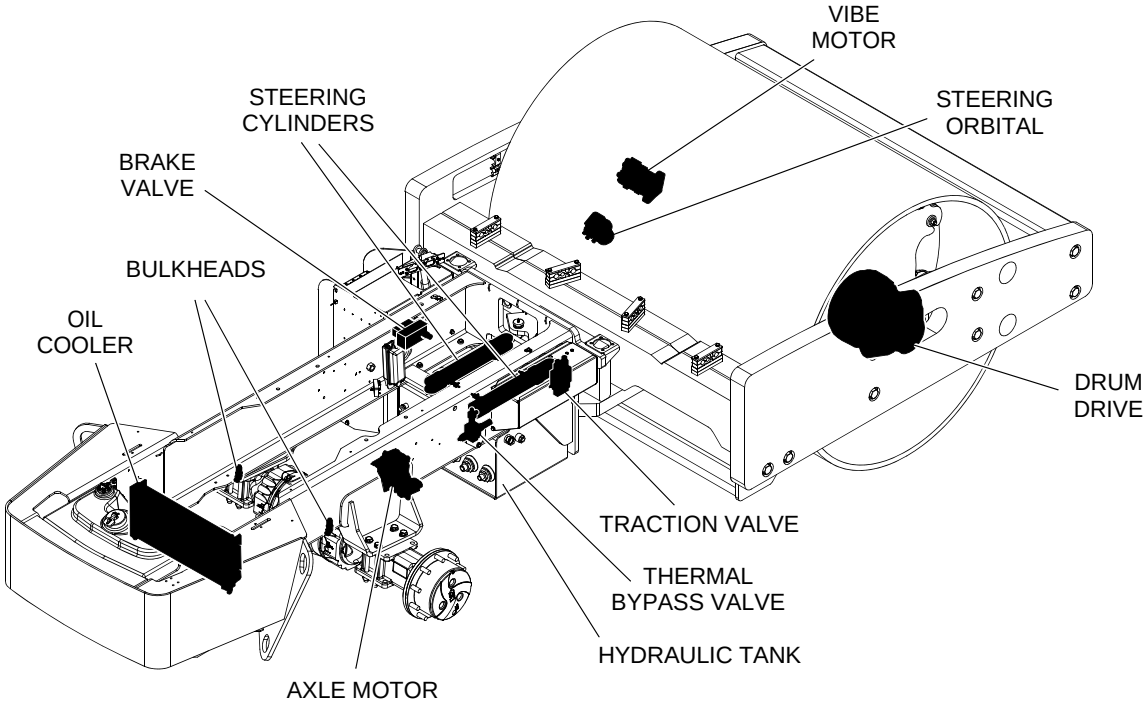

****Only Offered Parts Listed****

BOM 43881754

ITEM	COMM. NO.	DESCRIPTION	QTY	DIMENSIONS/NOTES
9	13204334	Hose Assembly (SD-160DX/SD-160F)	2	15.0”
-	13314067	Hose Assembly (SD-190DX/SD-200DX/SD-200F)	2	12.5"
26	43871201	Hose Assembly (SD-160DX/SD-160F)	1	32.0”
-	13313960	Hose Assembly (SD-190DX/SD-200DX/SD-200F)	1	30.5”
27	13204359	Hose Assembly	1	44.0”
28	13199062	Hose Assembly (SD-160DX/SD-160F)	2	40.0”
-	54537097	Hose Assembly (SD-190DX/SD-200DX/SD-200F)	2	33.0"

13403068 REV 0G

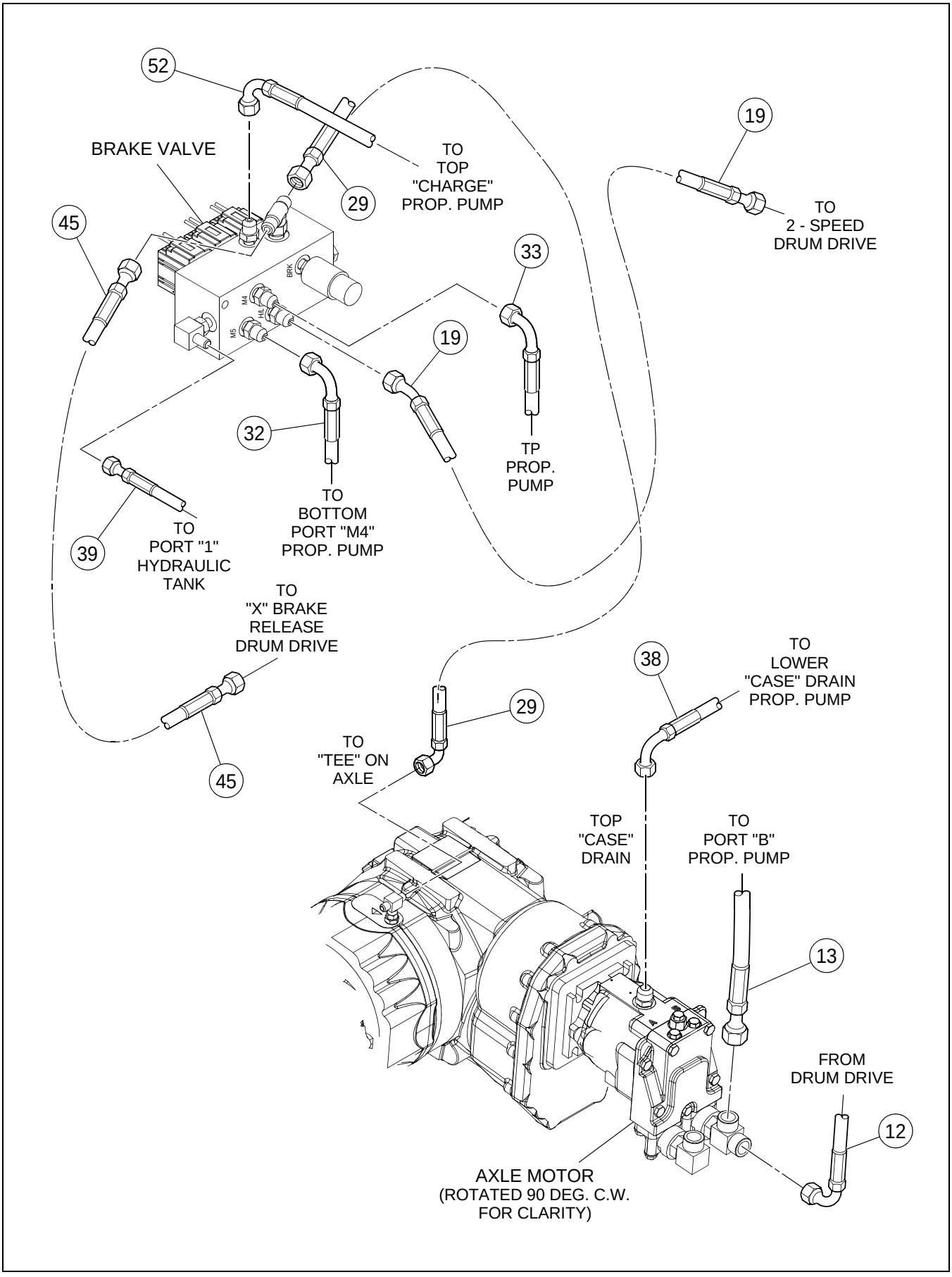

****Only Offered Parts Listed****

BOM 43881754

ITEM	COMM. NO.	DESCRIPTION	QTY	DIMENSIONS/NOTES
12	13199187	Hose Assembly (SD-160DX/SD-160F)	1	145.0”
-	18004093	Hose Assembly (SD-190DX)	1	148.5"
-	13319843	Hose Assembly (SD-200DX/SD-200F)	1	
13	58896044	Hose Assembly	1	22.5"
19	13364815	Hose Assembly (SD-160DX/SD-160F)	1	
-	13364807	Hose Assembly (SD-190DX/SD-200DX/SD-200F)	1	
29	13199104	Hose Assembly	1	51.0”
32	54638564	Hose Assembly	1	21.0"
33	43871243	Hose Assembly	1	16.0”
38	13204391	Hose Assembly	1	17.00
39	13204755	Hose Assembly	1	14.00
45	13364823	Hose Assembly (SD-160DX/SD-160F)	1	
-	13364799	Hose Assembly (SD-190DX/SD-200DX/SD-200F)	1	
52	13207618	Hose Assembly	1	23.0

13403068 REV 0G

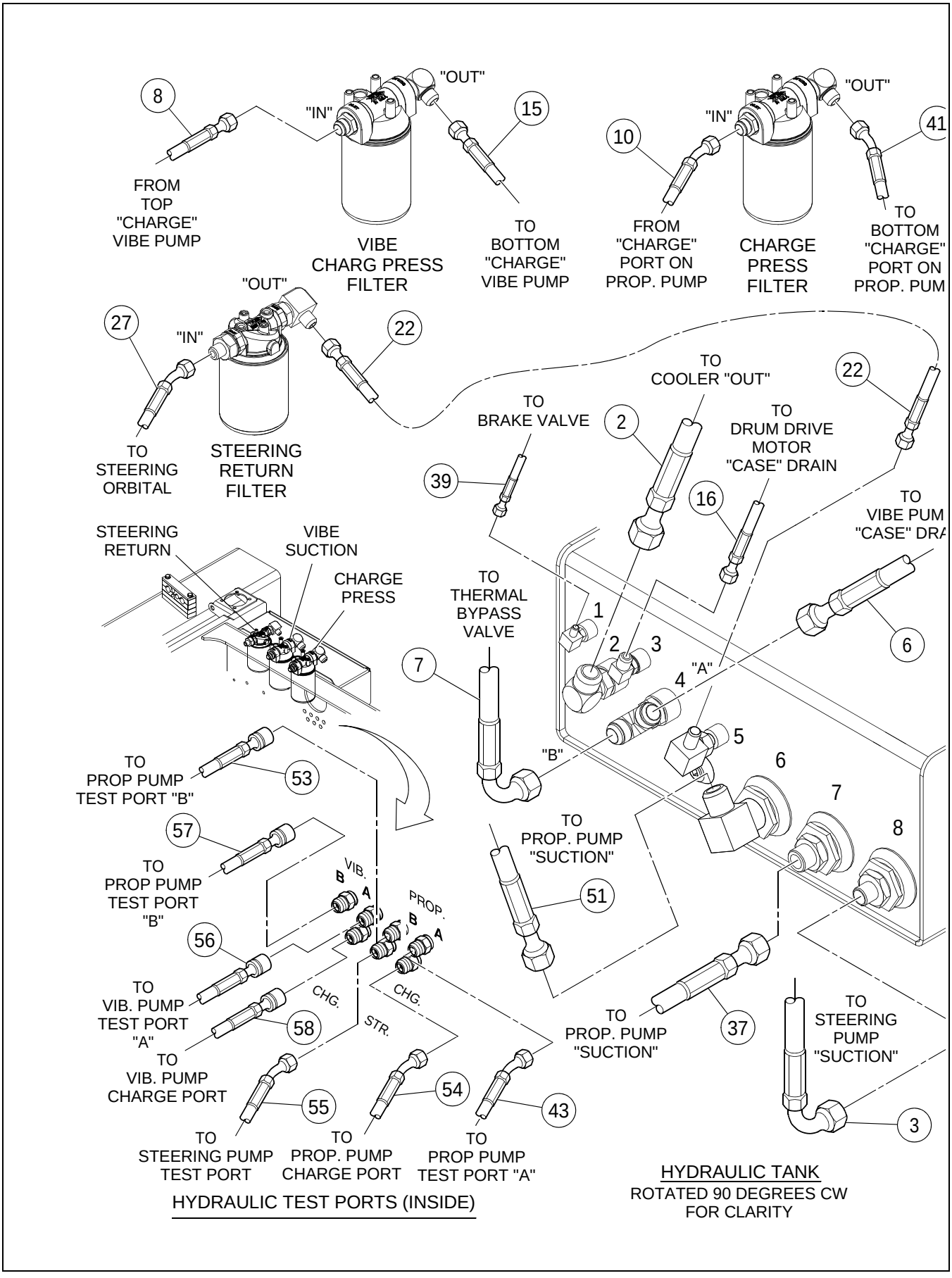

****Only Offered Parts Listed****

BOM 43881754

ITEM	COMM. NO.	DESCRIPTION	QTY	DIMENSIONS/NOTES
2	13204425	Hose Assembly (SD-160DX/SD-160F)	1	59.0”
-	13313887	Hose Assembly (SD-190DX/SD-200DX/SD-200F)	1	58.0”
3	59810820	Hose Assembly	1	31.0"
6	13307525	Hose Assembly	1	31.0”
7	59203406	Hose Assembly	1	
8	13204334	Hose Assembly	1	15.0”
10	13307541	Hose Assembly	1	21.0”
15	13365127	Hose Assembly	1	25.0”
16	13199161	Hose Assembly (SD-160DX/SD-160F)	1	140.0”
-	13319835	Hose Assembly (SD-190DX/SD-200DX/SD-200F)	1	149.0"
22	13307566	Hose Assembly	1	47.0”
27	13204359	Hose Assembly	1	44.0”
37	59546275	Hose Assembly	1	29.0"
39	13204755	Hose Assembly	1	14.00
41	13280805	Hose Assembly (SD-160DX/SD-160F)	1	25.0"
-	13307608	Hose Assembly (SD-190DX/SD-200DX/SD-200F)	1	26.0”
43	13434436	Hose Assembly	1	
51	13307616	Hose Assembly	1	24.0
53	43871987	Hose Assembly	1	23.0"
54	43872027	Hose Assembly	1	31.0"
55	13425061	Hose Assembly	1	
56	59148726	Hose Assembly	1	28.0"
57	59198937	Hose Assembly	1	
58	43871995	Hose Assembly	1	16.0"

13403068 REV 0G

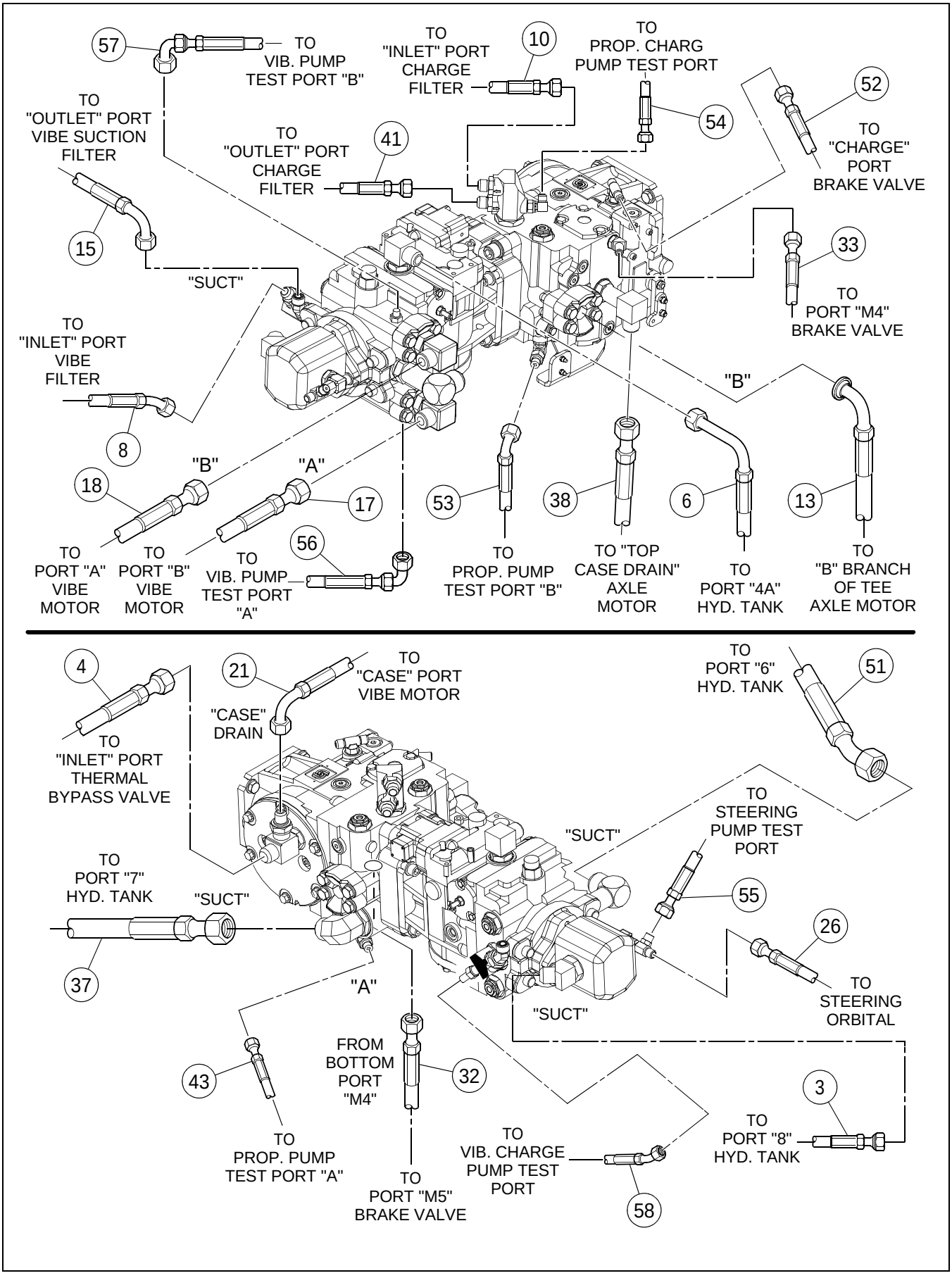

****Only Offered Parts Listed****

BOM 43881754

ITEM	COMM. NO.	DESCRIPTION	QTY	DIMENSIONS/NOTES
3	59810820	Hose Assembly	1	31.0"
4	13225099	Hose Assembly	1	15.5”
6	13307525	Hose Assembly	1	31.0”
8	13204334	Hose Assembly	1	15.0”
10	13307541	Hose Assembly	1	21.0”
13	58896044	Hose Assembly	1	22.5"
15	13365127	Hose Assembly	1	25.0”
17	13483896	Hose Assembly	1	127.0"
18	13483904	Hose Assembly	1	125.0"
21	43871193	Hose Assembly (SD-160DX/SD-160F)	1	147.0”
-	13199112	Hose Assembly (SD-190DX/SD-200DX/SD-200F)	1	157.0”
26	43871201	Hose Assembly (SD-160DX/SD-160F)	1	32.0”
-	13313960	Hose Assembly (SD-190DX/SD-200DX/SD-200F)	1	30.5”
32	54638564	Hose Assembly	1	21.0"
33	43871243	Hose Assembly	1	16.0”
37	59546275	Hose Assembly	1	29.0"
38	13204391	Hose Assembly	1	17.0”
41	13280805	Hose Assembly (SD-160DX/SD-160F)	1	25.0"
-	13307608	Hose Assembly (SD-190DX/SD-200DX/SD-200F)	1	26.0”
43	13434436	Hose Assembly	1	
51	13307616	Hose Assembly	1	24.0
52	13207618	Hose Assembly	1	23.0
53	43871987	Hose Assembly	1	23.0"
54	43872027	Hose Assembly	1	31.0"
55	13425061	Hose Assembly	1	
56	59148726	Hose Assembly	1	28.0"
57	59198937	Hose Assembly	1	
58	43871995	Hose Assembly	1	16.0"

13403068 REV 0G

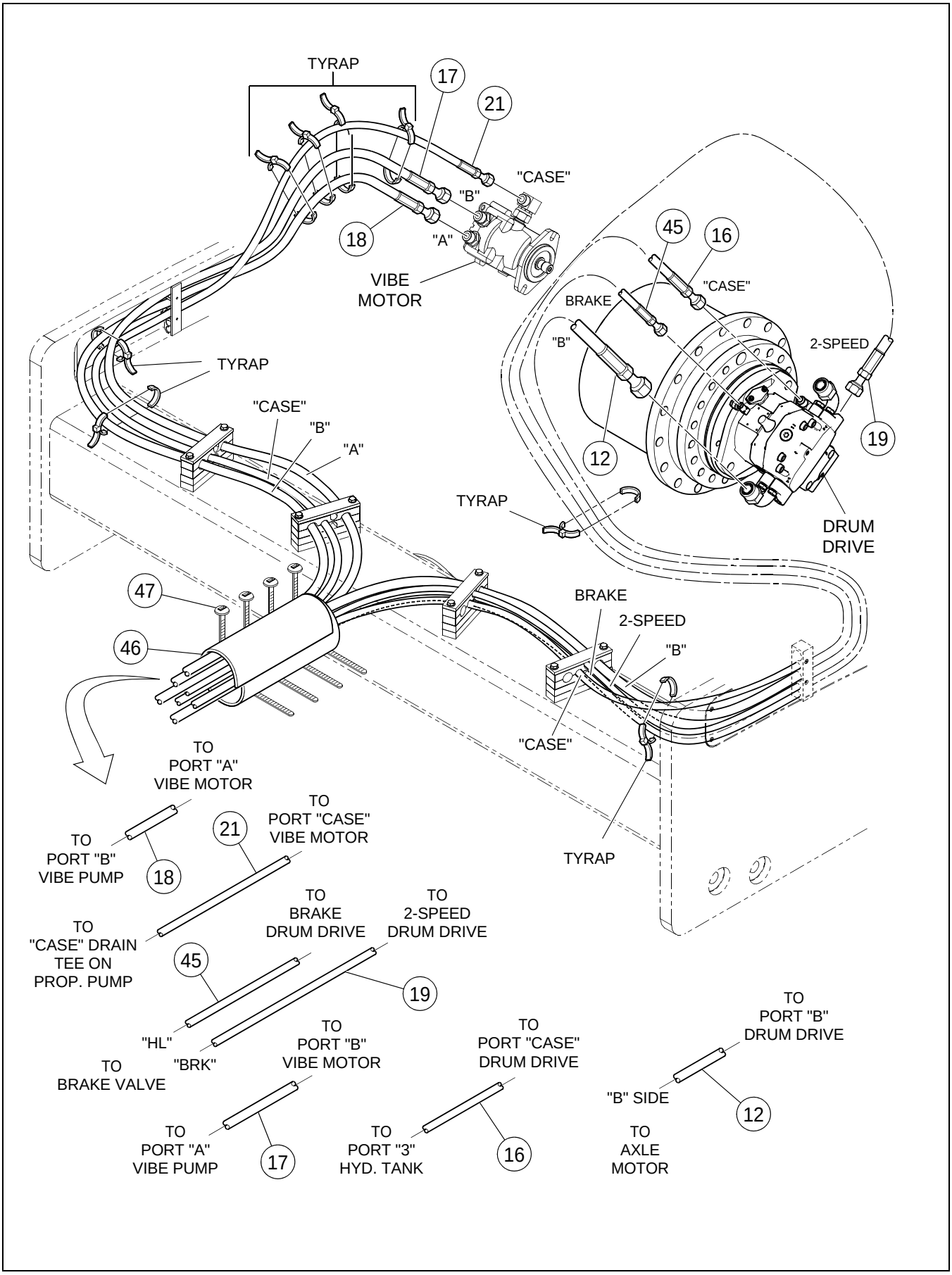

****Only Offered Parts Listed****

BOM 43881754

ITEM	COMM. NO.	DESCRIPTION	QTY	DIMENSIONS/NOTES
12	13199187	Hose Assembly (SD-160DX/SD-160F)	1	145.0”
-	18004093	Hose Assembly (SD-190DX)	1	148.5"
-	13319843	Hose Assembly (SD-200DX/SD-200F)	1	
16	13199161	Hose Assembly (SD-160DX/SD-160F)	1	140.0”
-	13319835	Hose Assembly (SD-190DX/SD-200DX/SD-200F)	1	149.0"
17	13483896	Hose Assembly	1	127.0"
18	13483904	Hose Assembly	1	125.0"
19	13364815	Hose Assembly (SD-160DX/SD-160F)	1	
-	13364807	Hose Assembly (SD-190DX/SD-200DX/SD-200F)	1	
21	43871193	Hose Assembly (SD-160DX/SD-160F)	1	147.0”
-	13199112	Hose Assembly (SD-190DX/SD-200DX/SD-200F)	1	157.0”
45	13364823	Hose Assembly (SD-160DX/SD-160F)	1	
-	13364799	Hose Assembly (SD-190DX/SD-200DX/SD-200F)	1	
46	59672733	Hose Guard	1	
47	95424586	Wire Tie	A/R	

HYDRAULIC FILTER INSTALLATION

13296637 REV 00

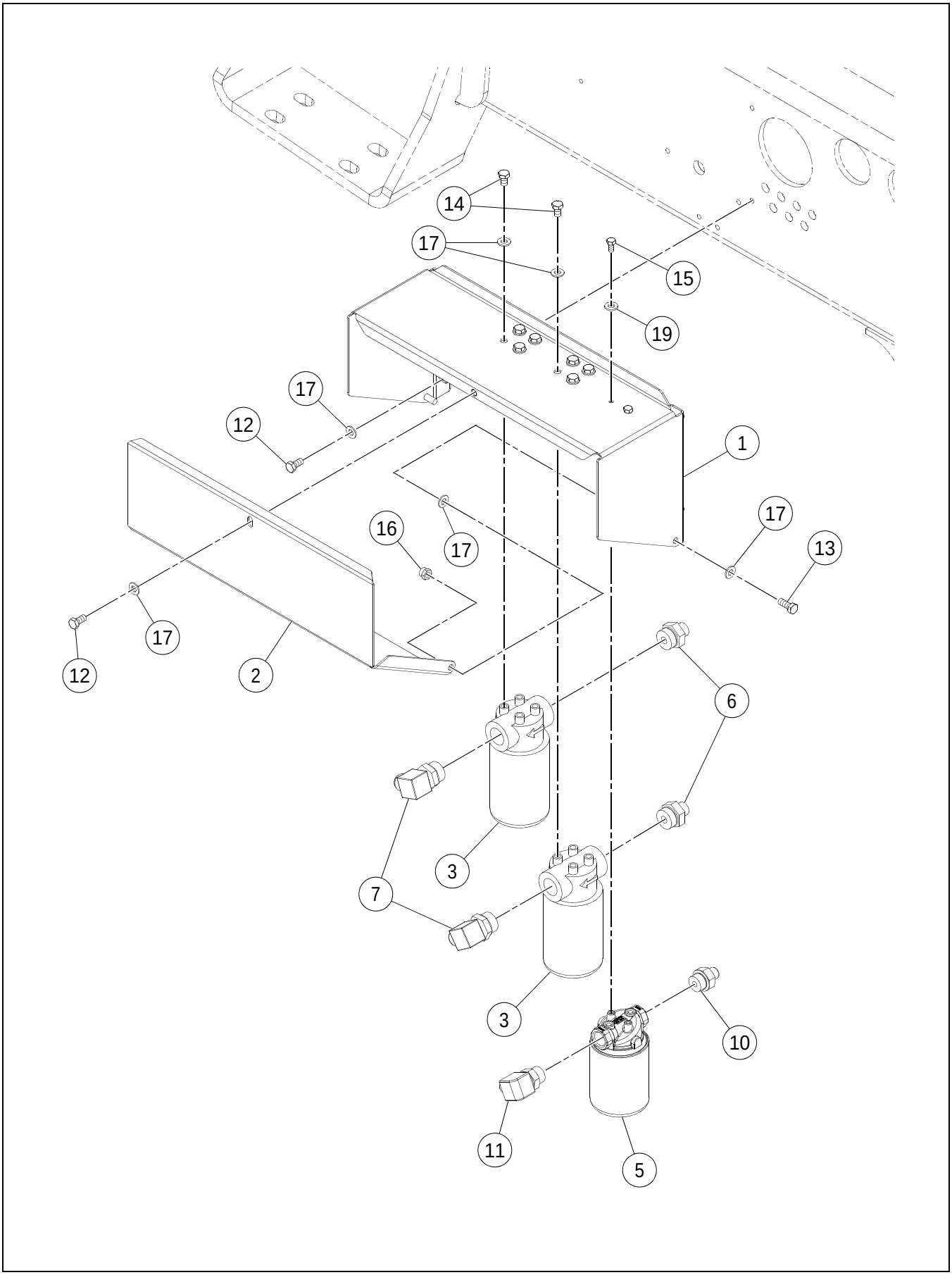

HYDRAULIC FILTER INSTALLATION

****Only Offered Parts Listed****

BOM 13295654

ITEM	COMM. NO.	DESCRIPTION	QTY	DIMENSIONS/NOTES
1	13295639	Filter Bracket	1	
2	13215405	Filter Door	1	
3	13408240	Pressure Filter	2	
-	13467774	- Pressure Filter Element	2	
5	13190723	Return Filter	1	
-	59764498	- Return Filter Element	1	
6	95366019	Adapter	2	
7	95341673	Adapter	2	
10	95357570	Adapter	1	
11	95330692	Elbow	1	
12	96702279	HHCS, Zinc Plated	6	M10 x 1.5 x 20 Cl 8.8
13	96702287	HHCS, Zinc Plated	2	M10 x 1.5 x 25 Cl 8.8
14	96701479	HHCS, Zinc Plated	8	M10 x 1.5 x 16 Cl 8.8
15	95919528	HHCS	2	1/4 x 20 x .625
16	96704614	Nut	2	M10 x 1.5
17	96741046	Flatwasher	17	
19	96741053	Flatwasher	2	

TOW VALVE INSTALLATION - OPTIONAL

13233838 REV 0E

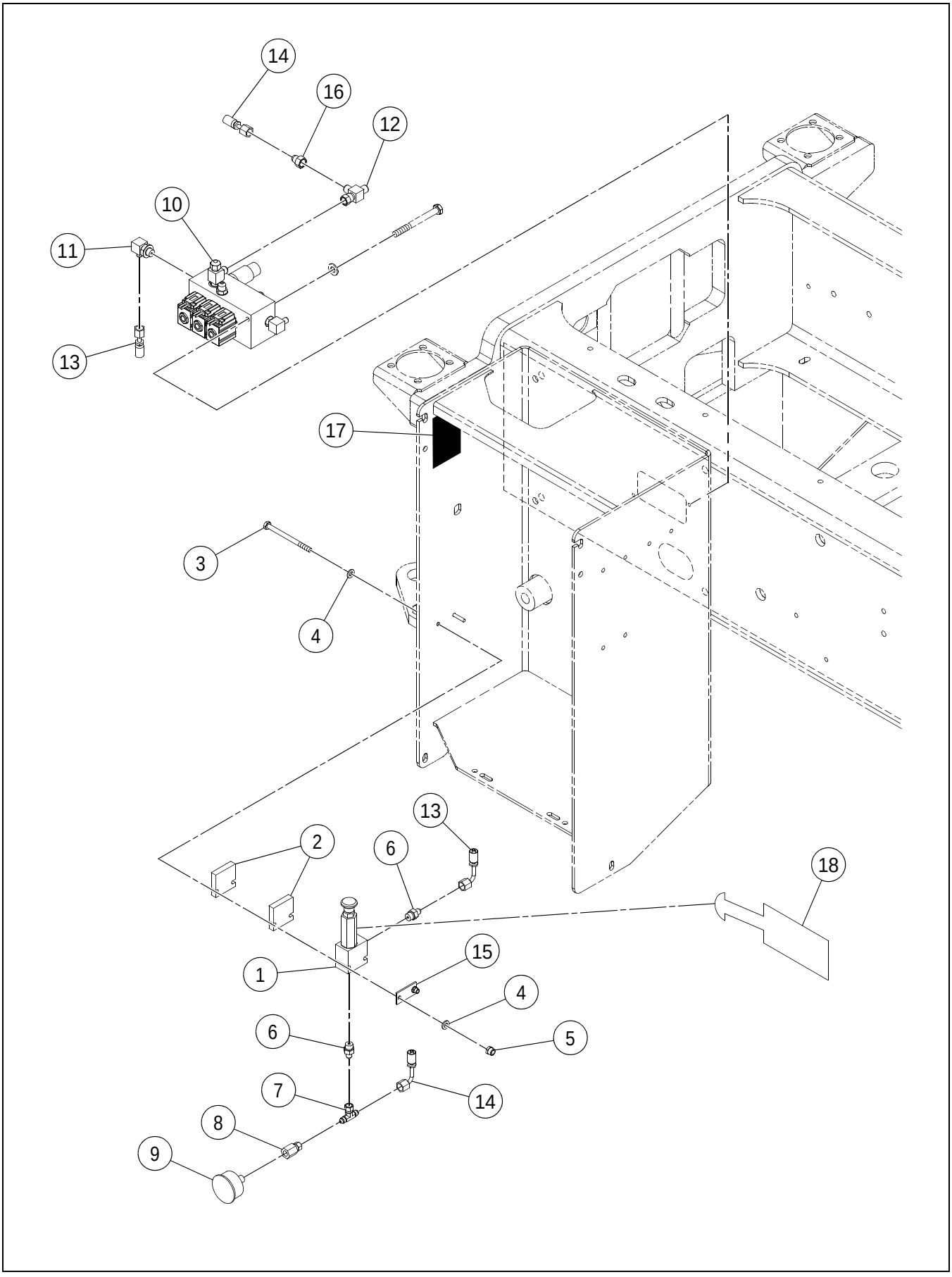

TOW VALVE INSTALLATION - OPTIONAL

****Only Offered Parts Listed****

BOM 59287359

ITEM	COMM. NO.	DESCRIPTION	QTY	DIMENSIONS/NOTES
1	13205513	Hand Pump	1	
2	13214812	Spacer Block	2	
3	96720156	HHCS, Zinc Plated	2	M6 x 1.0 x 80 Cl 8.8
4	96741053	Flatwasher	4	
5	96704598	Locknut	2	M6
6	95371258	Adapter	2	
7	95649844	Tee	1	
8	59665877	Adapter	1	
9	59197012	Dial Pressure Gauge	1	
10	**NSVA**	**Brake/Shunt Valve Assembly**	**1**	**See Page H - 18.**
11	95365094	Adapter	1	
12	95415667	Tee	1	
13	59959080	Hose Assembly	1	
14	13225529	Hose Assembly	1	42.0”
15	13235320	Retaining Plate	1	
16	59742890	Reducing Bushing	1	
17	13366075	Decal: Warning-Runaway	1	
18	13366067	Decal: Tow Tag	3	

BRAKE/SHUNT VALVE ASSEMBLY

13217559 REV 04

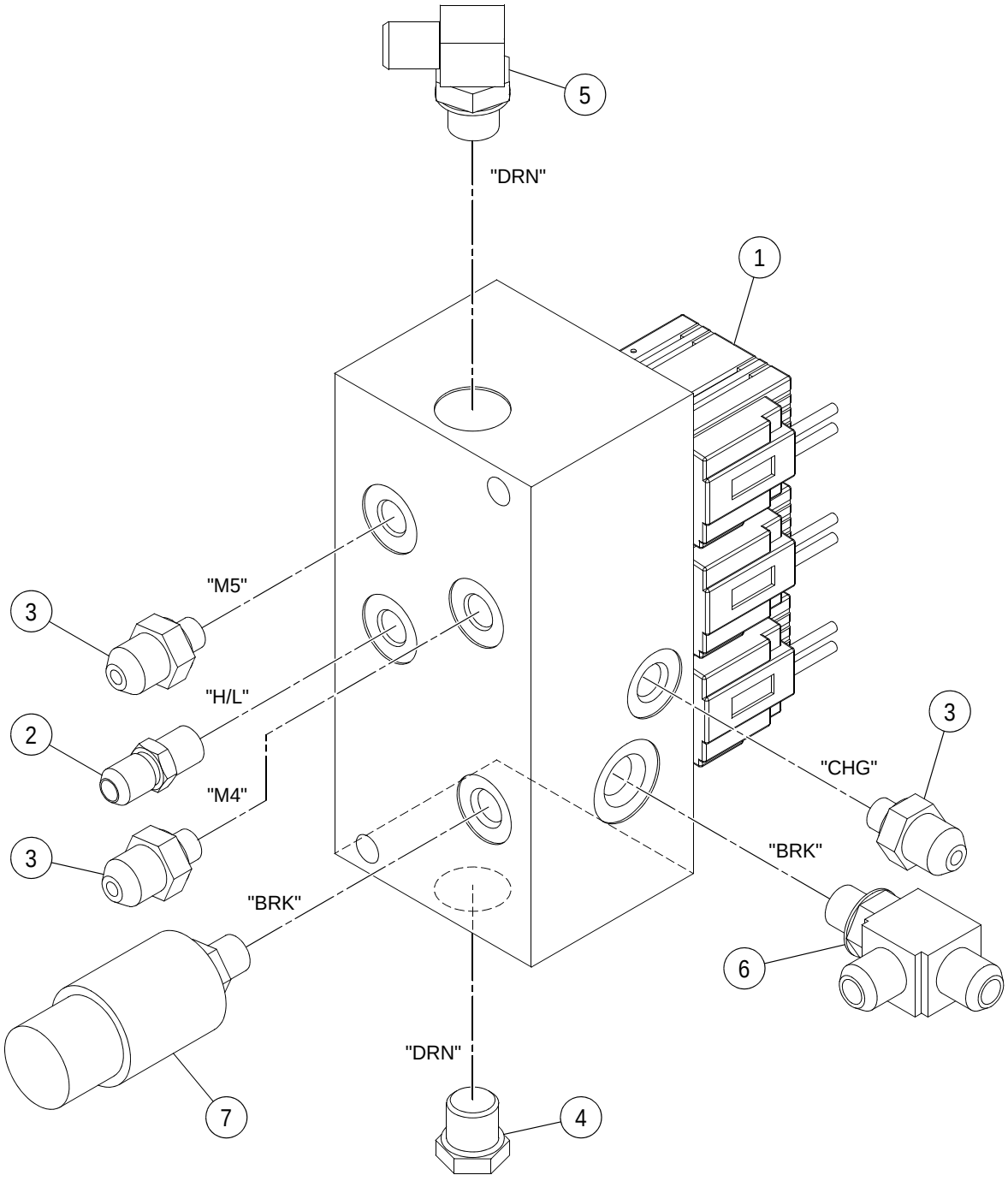

BRAKE/SHUNT VALVE ASSEMBLY

****Only Offered Parts Listed****

BOM 80817992

ITEM	COMM. NO.	DESCRIPTION	QTY	DIMENSIONS/NOTES
1	13304878	Manifold	1	
-	13258603	- Valve	1	
-	13258611	- Solenoid Valve	1	
-	13269436	- Seal Kit	1	
-	13429782	- Solenoid Valve	1	
-	13258629	- 12 VDC Coil W/diode	3	
2	95323366	Plug	1	
3	95402806	Adapter	3	
4	95343596	Plug	1	
5	95329975	Adapter	1	
6	95188710	Tee	1	
7	59110312	Pressure Switch	1	

TRACTION ENHANCEMENT INSTALLATION - SHEET 1 OF 2

13403035 REV 0A

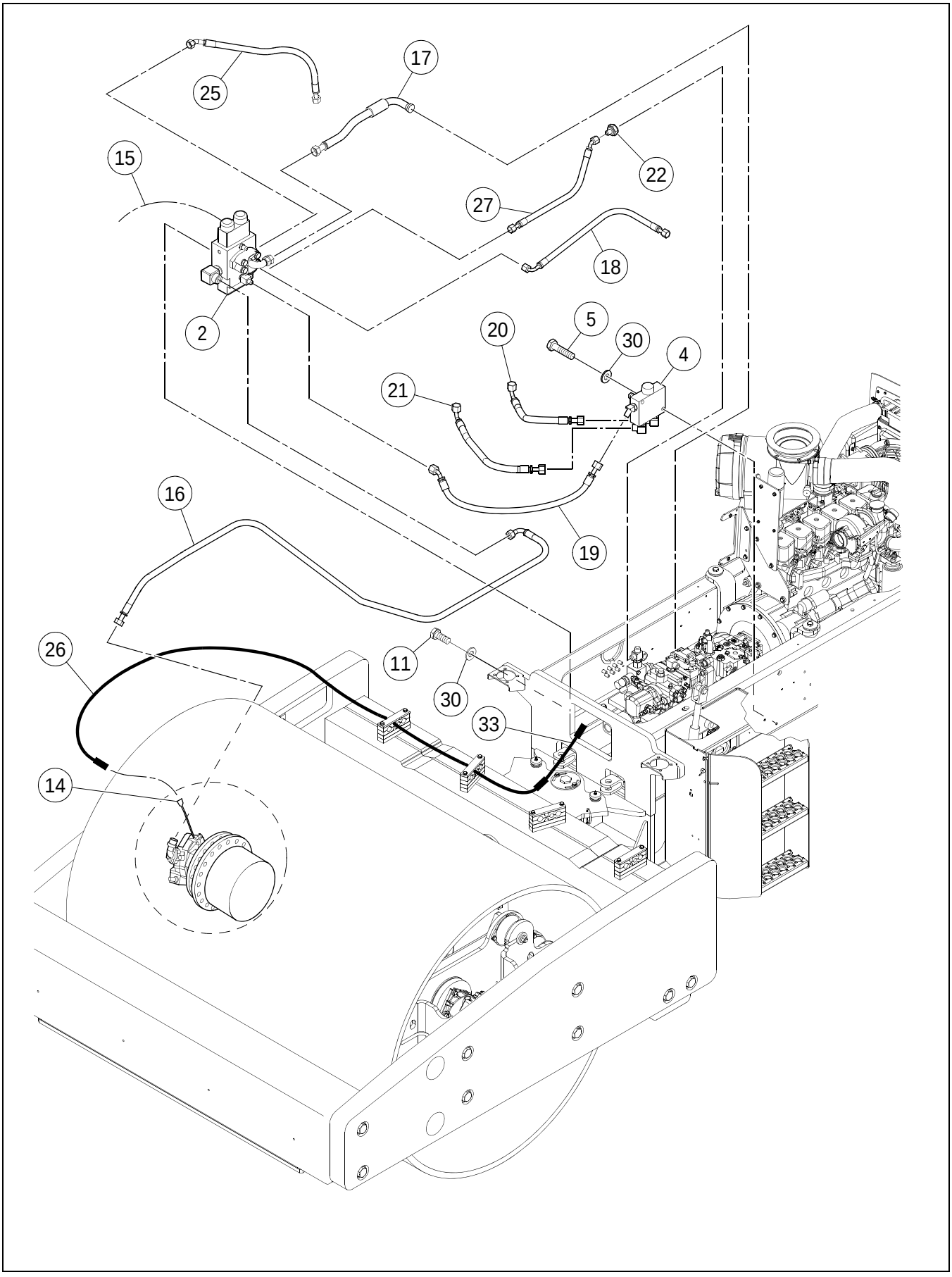

TRACTION ENHANCEMENT INSTALLATION - SHEET 1 OF 2

****Only Offered Parts Listed****

BOM 43887504

ITEM	COMM. NO.	DESCRIPTION	QTY	DIMENSIONS/NOTES
2	**NSVA**	**Traction Control Valve Assembly**	**1**	**See Page H - 24.**
4	**NSVA**	**Loop Flushing Valve Assembly**	**1**	**See Page H - 26.**
5	96702428	HHCS, Zinc Plated	2	M10 x 1.5 x 45 Cl 8.8
11	96702287	HHCS, Zinc Plated	2	M10 x 1.5 x 25 Cl 8.8
14	13375548	Motor Speed Sensor Assembly	1	
15	13492707	Traction Control Harness	1	
16	13199195	Hose Assembly (SD-160DX/SD-160F)	1	143.0”
-	18004051	Hose Assembly (SD-190DX)	1	146.0"
-	13319868	Hose Assembly (SD-200DX/SD-200F)	1	146.0"
17	13204466	Hose Assembly	1	21.5”
18	13199088	Hose Assembly	1	42.0”
19	13225065	Hose Assembly	1	35.0”
20	13044193	Hose Assembly	1	14.0"
21	58849845	Hose Assembly	1	19.0"
22	59743013	Reducer	1	
25	13307731	Hose Assembly (SD-160DX/SD-160F)	1	44.0”
-	13409693	Hose Assembly (SD-190DX/SD-200DX/SD-200F)	1	34.5”
26	13493473	Speed Sensor Harness	1	
27	13197660	Hose Assembly	1	
30	96741046	Flatwasher	4	
33	13248919	Resistor Harness	1	

13403035 REV 0A

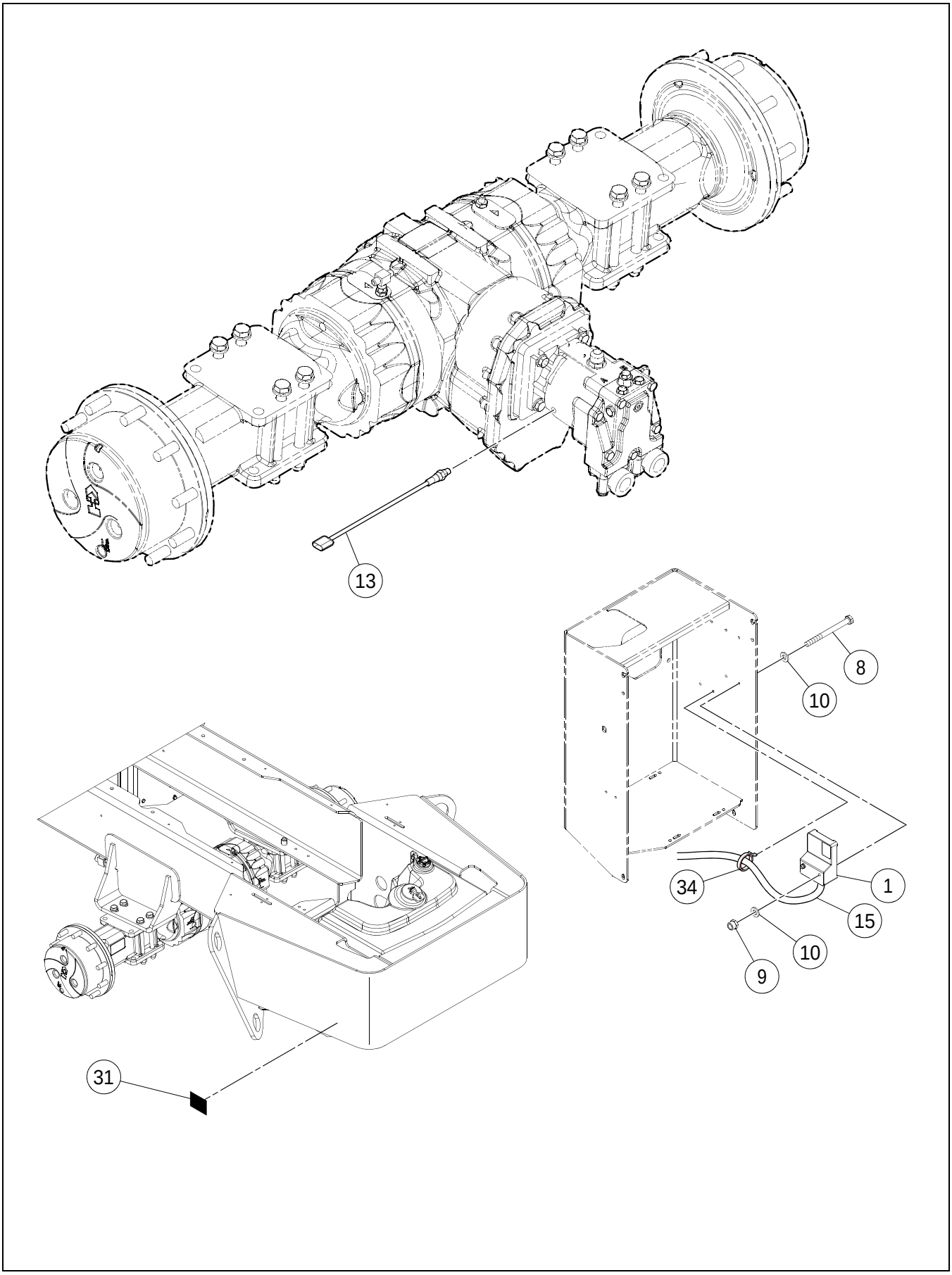

TRACTION ENHANCEMENT INSTALLATION - SHEET 2 OF 2

****Only Offered Parts Listed****

BOM 43887504

ITEM	COMM. NO.	DESCRIPTION	QTY	DIMENSIONS/NOTES
1	13375787	Traction Microcontrol (SD-160DX/SD-160F)	1	
-	18008656	Traction Microcontrol (SD-190DX)	1	
-	13307392	Traction Microcontrol (SD-200DX/SD-200F)	1	
8	96706825	HHCS, Zinc Plated	2	M6 x 1.0 x 70 Cl 8.8
9	96702873	Locknut	2	
10	96741053	Flatwasher	4	
13	59249284	Speed Sensor	1	
15	13492707	Traction Control Harness	1	
31	NOT-USED	This Item Not Used W/this Bom	1	
32	13304266	Decal: Ultra Grade (Not Shown)	1	
34	95424586	Wire Tie	A/R	

TRACTION CONTROL VALVE ASSEMBLY

13188727 REV 05

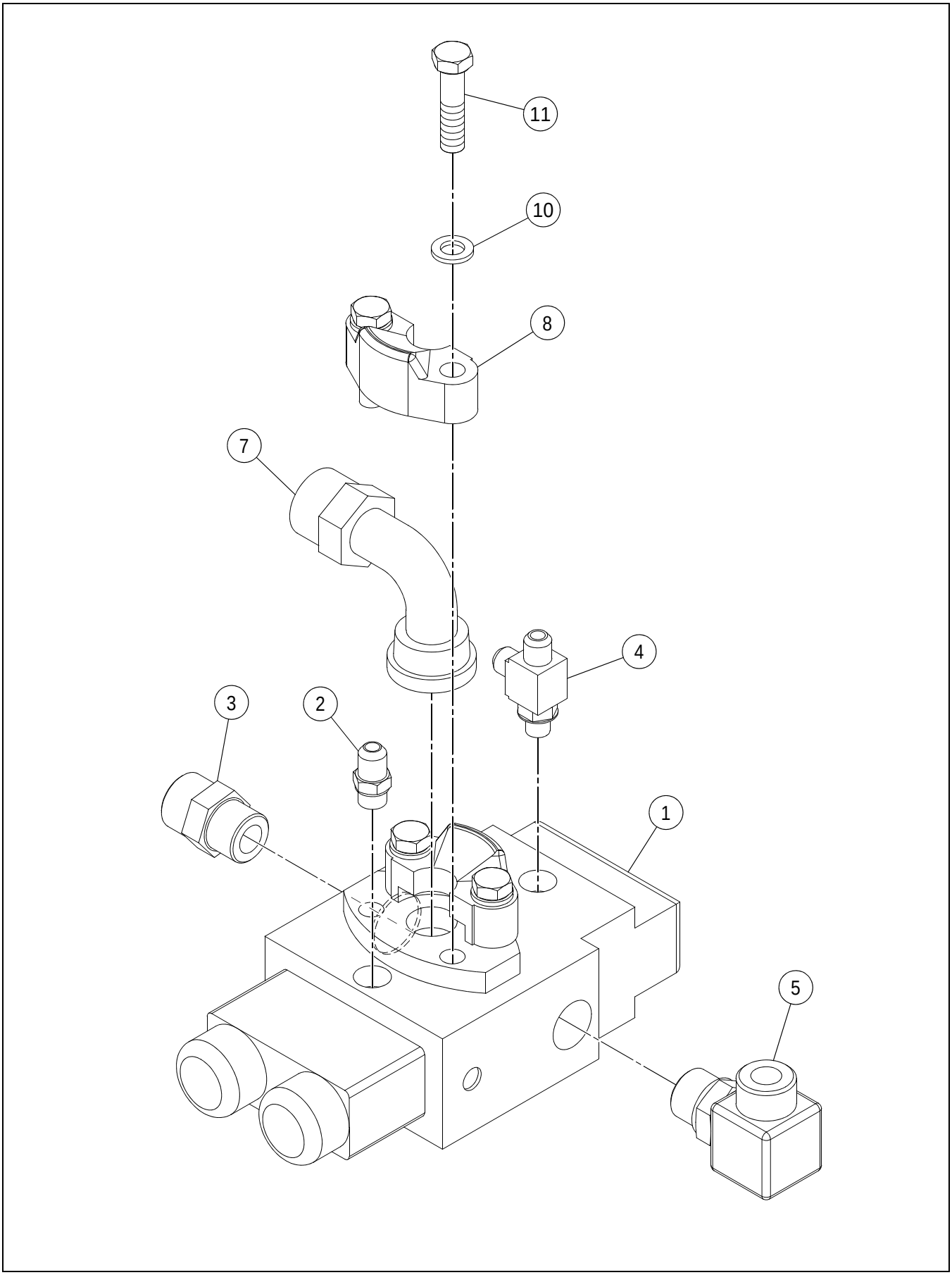

TRACTION CONTROL VALVE ASSEMBLY

****Only Offered Parts Listed****

BOM 13187026

ITEM	COMM. NO.	DESCRIPTION	QTY	DIMENSIONS/NOTES
1	13165659	Traction Control Valve	1	
-	13263934	- Solenoid	1	
2	95365078	Adapter	1	
3	59922591	Adapter	1	
4	95188710	Tee	1	
5	59922971	Elbow	1	
7	59327775	Adapter	1	
-	13444575	- 0-ring	1	
8	58901653	Split Flange Clamp	2	
10	95922381	Flatwasher	4	
11	95919460	HHCS	4	7/16x 14 x 1.75

LOOP FLUSHING VALVE ASSEMBLY

13188693 REV 00

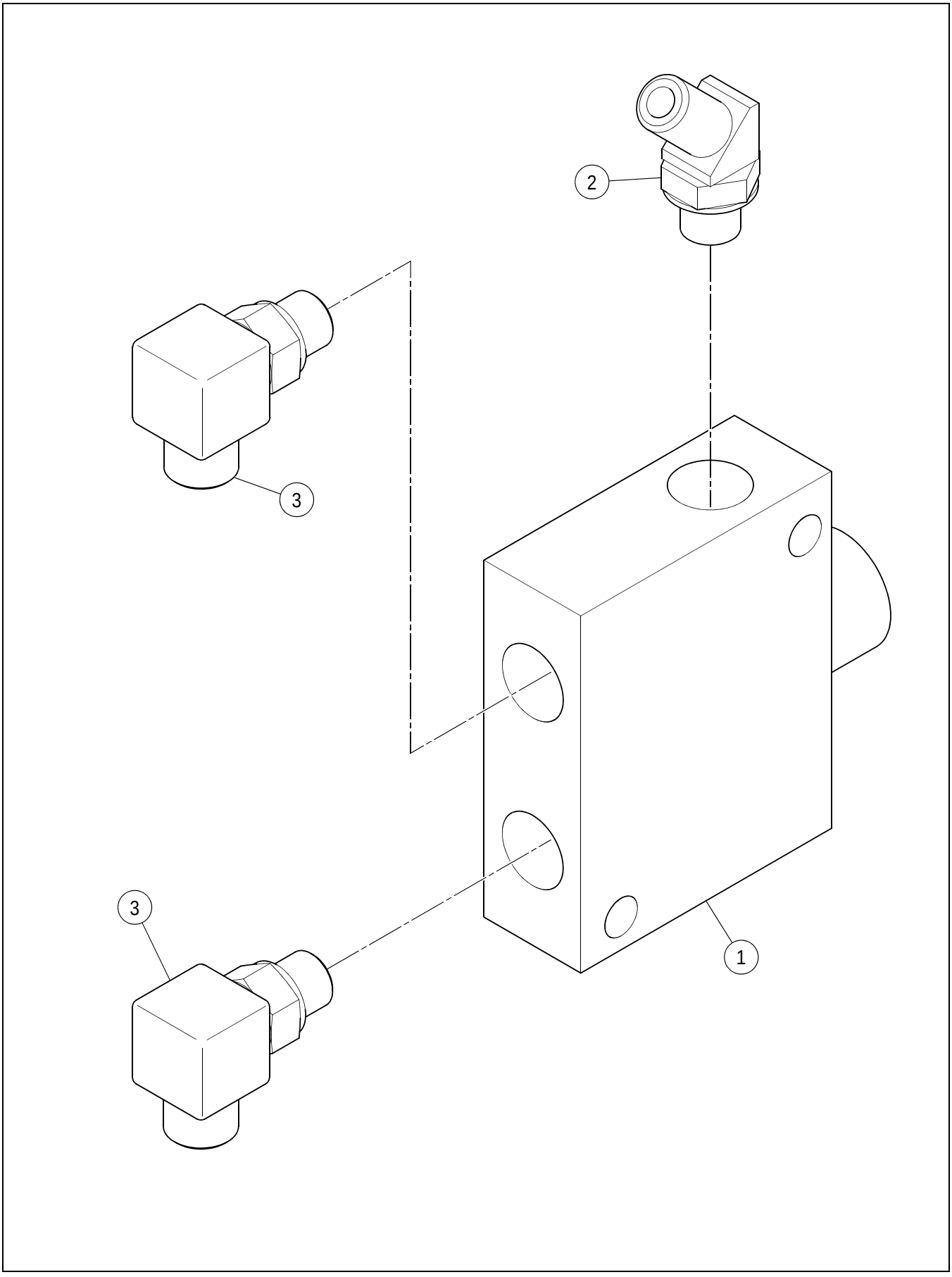

LOOP FLUSHING VALVE ASSEMBLY

****Only Offered Parts Listed****

BOM 13187000

ITEM	COMM. NO.	DESCRIPTION	QTY	DIMENSIONS/NOTES
1	**59077602**	**Loop Flushing Valve**	**1**	**See Breakdown H - 28.**
2	95866687	Adapter	1	
3	59922864	Elbow	2	

LOOP FLUSHING VALVE (59077602) - INTERNAL BREAKDOWN

13303318 REV 00

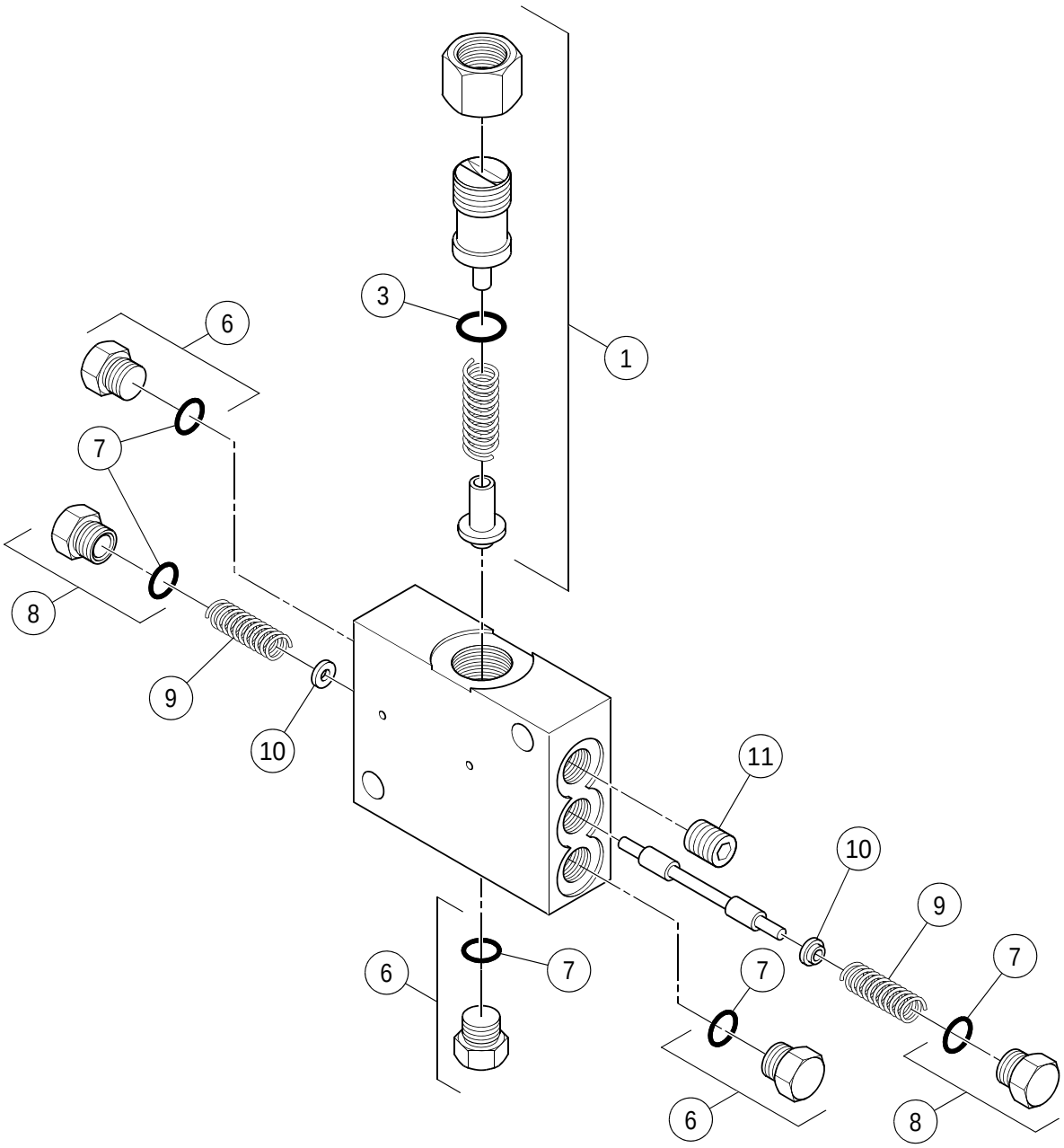

LOOP FLUSHING VALVE (59077602) - INTERNAL BREAKDOWN

****Only Offered Parts Listed****

BOM 59077602

ITEM	COMM. NO.	DESCRIPTION	QTY	DIMENSIONS/NOTES
1	59040923	Relief	1	
3	50278019	O-ring	1	
6	59933622	Plug	3	
7	59698811	O-ring	5	
8	58799784	Special Plug	2	
9	58799768	Compression Spring	2	
10	58799750	Spring Guide	2	
11	59102913	Orifice Plug	1	

STRIKE-OFF BLADE INSTALLATION (NA) - OPTIONAL -
SHEET 1 OF 2

13880059 REV 0B

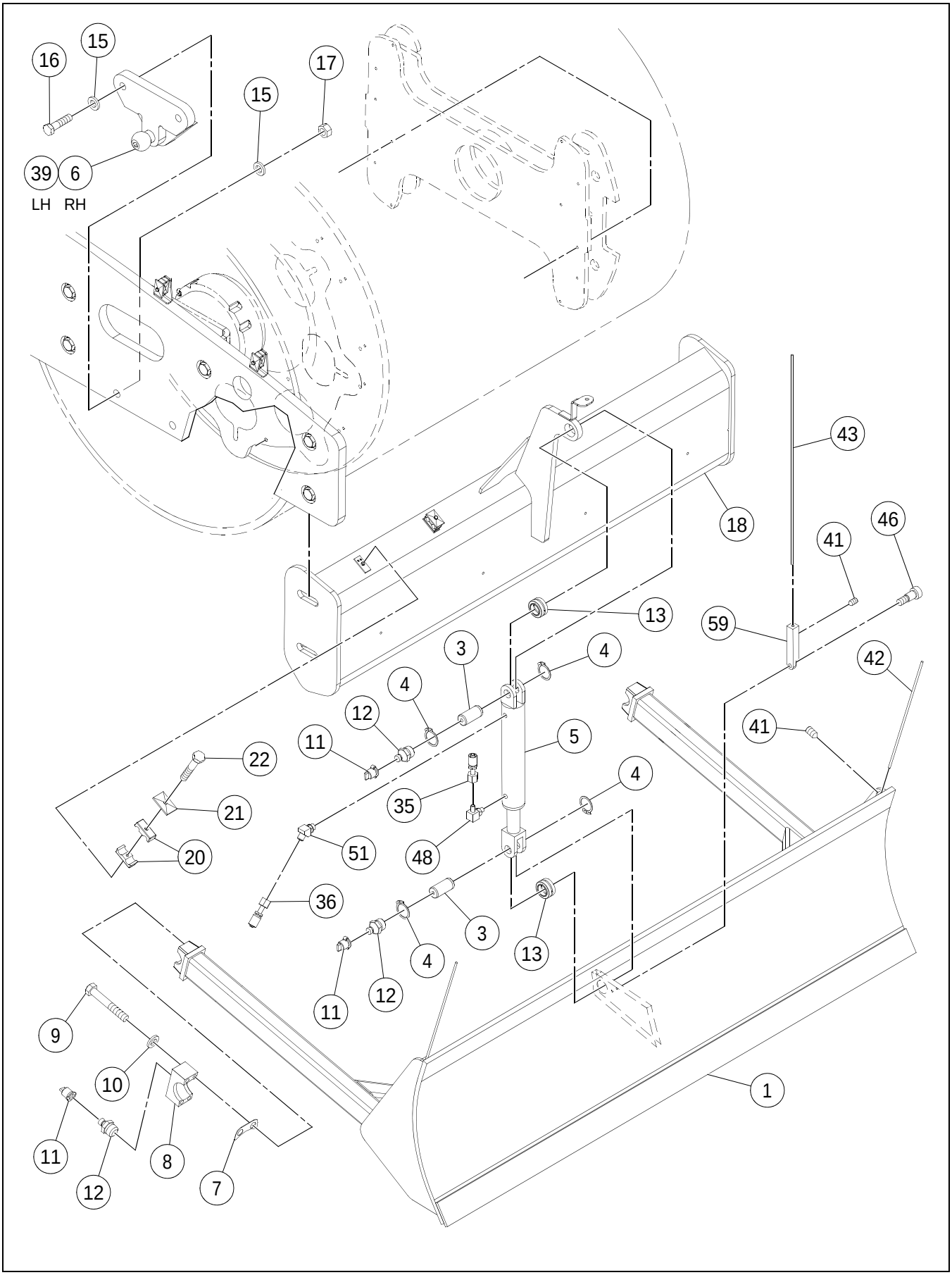

STRIKE-OFF BLADE INSTALLATION (NA) - OPTIONAL -
SHEET 1 OF 2

****Only Offered Parts Listed****

BOM 43902311

ITEM	COMM. NO.	DESCRIPTION	QTY	DIMENSIONS/NOTES
1	13451299	Strike-off Blade	1	
3	59683805	Pin	2	
4	95223384	Retaining Ring	4	
5	13515283	Hydraulic Cylinder	1	
-	13515770	- Cylinder Seal Kit	1	
-	54577838	- Locknut	1	
6	13396304	Blade Bracket, RH	1	
7	58895079	Shim	4	
8	59631606	Cap	2	
9	95919643	HHCS	8	1/2 x 13 x 3.25
10	59673137	Flat Washer	8	
11	50270248	Grease Fitting Cap	2	
12	95201547	Grease Fitting	2	
13	50273986	Bearing	2	
15	96701578	Washer	8	
16	96747365	HHCS, Zinc Plated	4	M30 x 3.5 x 220 Cl 10.9
17	96703699	Hex Nut	4	M30
18	13294962	Blade Scraper	1	
20	59587014	Insert Clamp	16	
21	59583500	Cover Plate	8	
22	96705553	HHCS, Zinc Plated	4	M8 x 1.25 x 45 Cl 8.8
35	13255955	Hose Assembly	1	238.0"
36	13255971	Hose Assembly	1	233.0"
39	13396320	Blade Bracket, LH	1	
41	96708722	Screw	6	
42	13296231	Reflective Marker	2	
43	13294806	Reflective Marker	1	
46	96739388	Bolt	1	
48	95329975	Adapter	1	
51	95363339	Elbow	1	
59	13280458	Hose Assembly	1	33.0"

STRIKE-OFF BLADE INSTALLATION (NA) - OPTIONAL - SHEET 2 OF 2

13880059 REV 0B

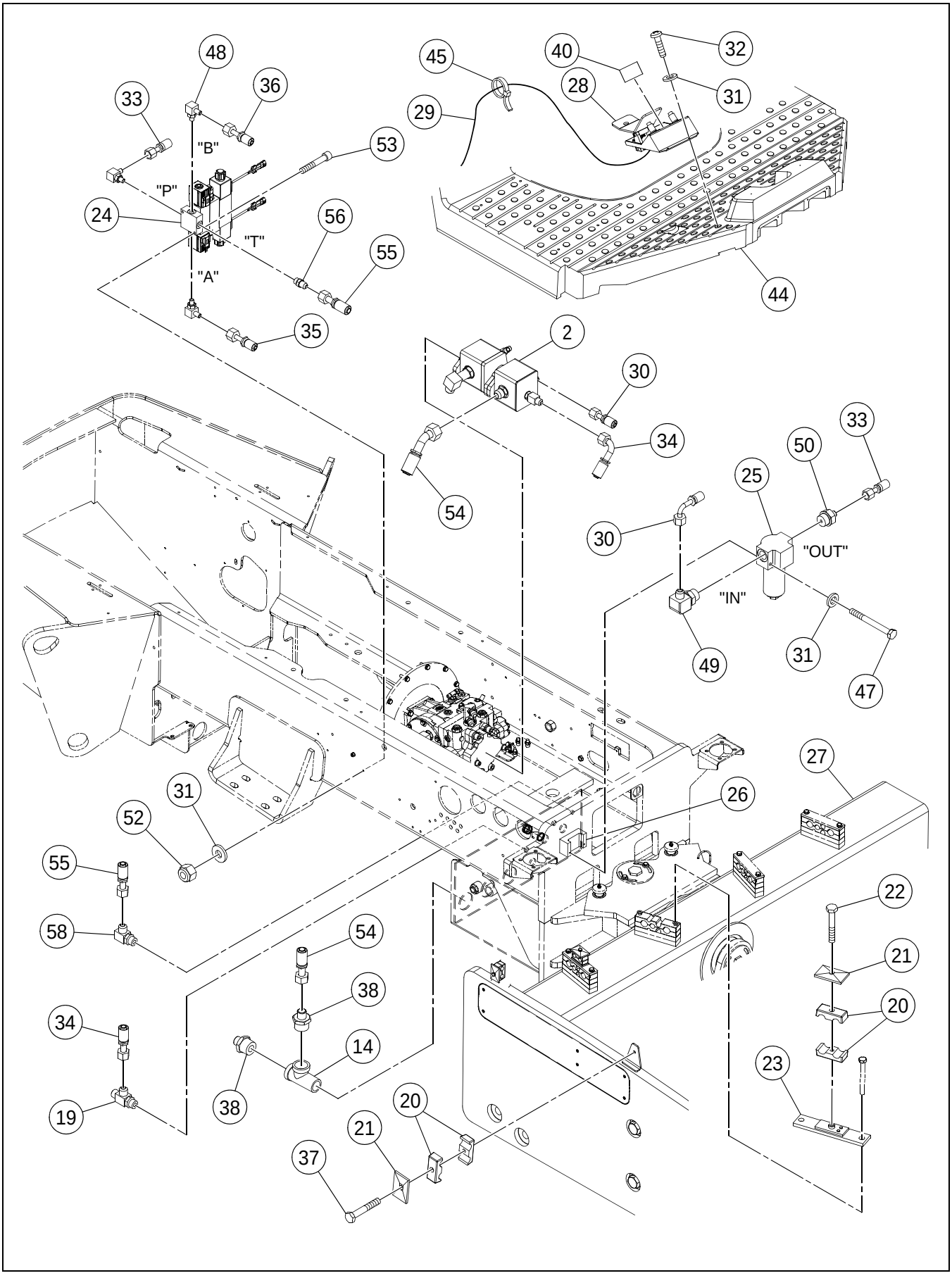

STRIKE-OFF BLADE INSTALLATION (NA) - OPTIONAL -
SHEET 2 OF 2

****Only Offered Parts Listed****

BOM 43902311

ITEM	COMM. NO.	DESCRIPTION	QTY	DIMENSIONS/NOTES
2	**NSVA**	**Pump Assembly**	**1**	**See Page H - 34.**
14	95280087	Tee	1	
19	95488250	Tee	1	
20	59587014	Insert Clamp	16	
21	59583500	Cover Plate	8	
22	96705553	HHCS, Zinc Plated	4	M8 x 1.25 x 45 Cl 8.8
23	13238969	Cover Plate	2	
-	58880501	- Clamp Plate	2	
24	13289814	Blade Valve Assembly	1	
-	13293923	- Directional Valve	1	
-	13293402	- Meter Valve	1	
-	13254776	- Side Ported Subplate	1	
-	13277710	- Flow Valve	1	
25	13254784	Pressure Filter	1	
-	13461645	- Filter Element	1	
26	43854579	Rear Frame	1	
27	43854140	Drum Frame	1	
28	**NSVA**	**Foot Pedal Assembly**	**1**	**See Page H - 36.**
29	13289871	Blade Control Wiring Harness	1	
30	13365127	Hose Assembly	1	25.0”
31	96741053	Flatwasher	8	
32	54487517	Tapping Screw	4	
33	13204680	Hose Assembly	1	51.5”
34	54537097	Hose Assembly	1	
35	13255955	Hose Assembly	1	238.0"
36	13255971	Hose Assembly	1	233.0"
37	96728142	HHCS, Zinc Plated	4	M8 x 1.25 x 55 Cl 10.9
38	95279337	Adapter	2	
40	13340096	Decal: Blade Control	1	
44	13887039	Operator Platform	1	
45	58820168	Wire Tie	A/R	
47	96704887	HHCS, Zinc Plated	2	M6 x 1 x 60 Cl 8.8
48	95329975	Adapter	1	
49	95330692	Elbow	1	
50	59328575	Adapter	2	
52	96704598	Locknut	2	M6
53	96708987	SHCS	2	M6 x 1 x 35 Cl 10.9
54	54462106	Hose Assembly	1	
55	13289913	Hose Assembly	1	41.0"
56	95365078	Adapter	1	
57	13294756	Mounting Block	1	
58	95415667	Tee	1	

13323019 REV 03

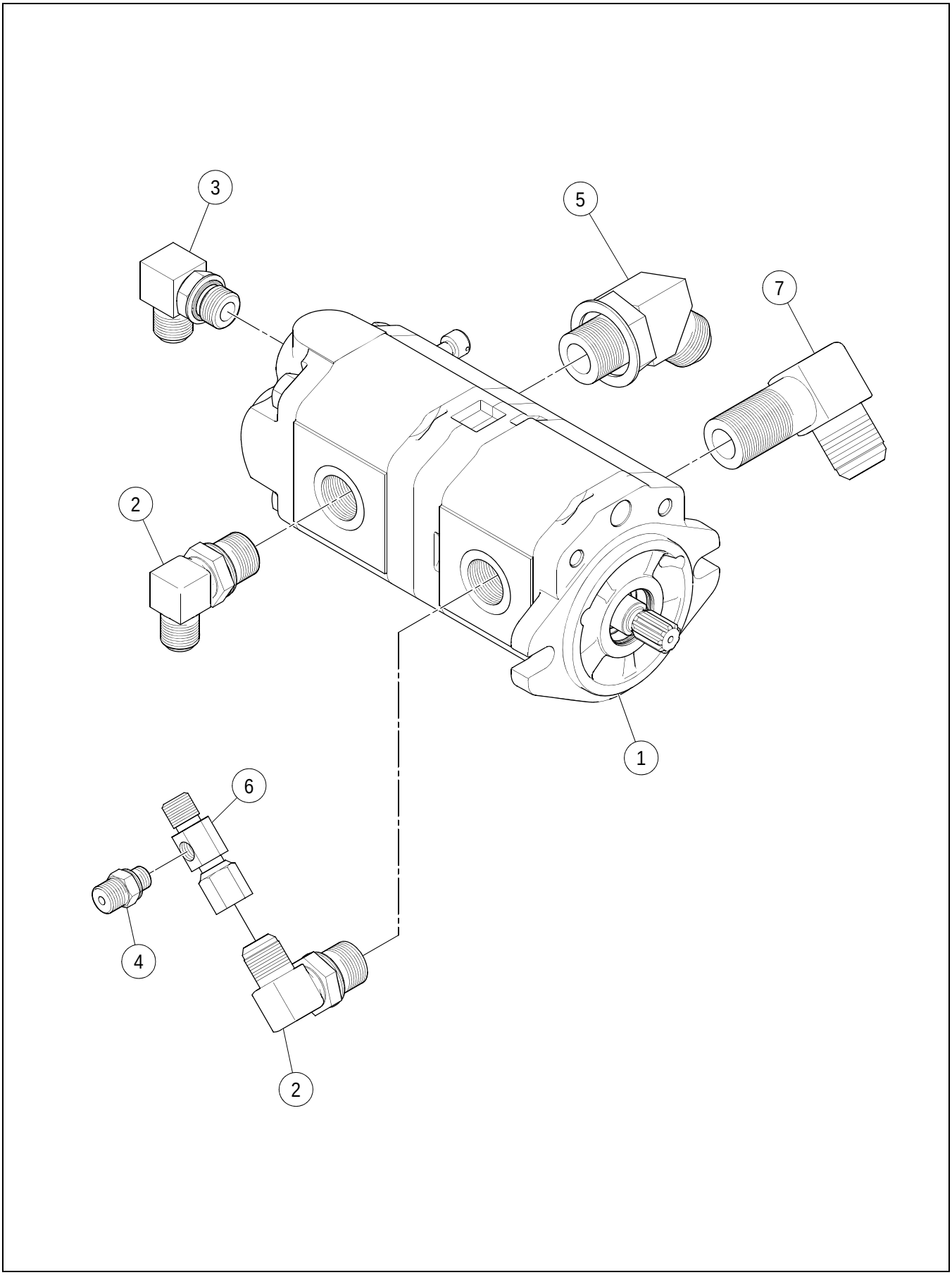

PUMP ASSEMBLY

****Only Offered Parts Listed****

BOM 13323019

ITEM	COMM. NO.	DESCRIPTION	QTY	DIMENSIONS/NOTES
1	13323027	Pump	1	
2	95303350	Elbow	2	
3	95303335	Adapter	1	
4	59929182	Adapter	1	
5	95359410	Adapter	1	
6	13208004	Adapter	1	
7	59847798	Adapter	1	

FOOT PEDAL ASSEMBLY

13271440 REV 01

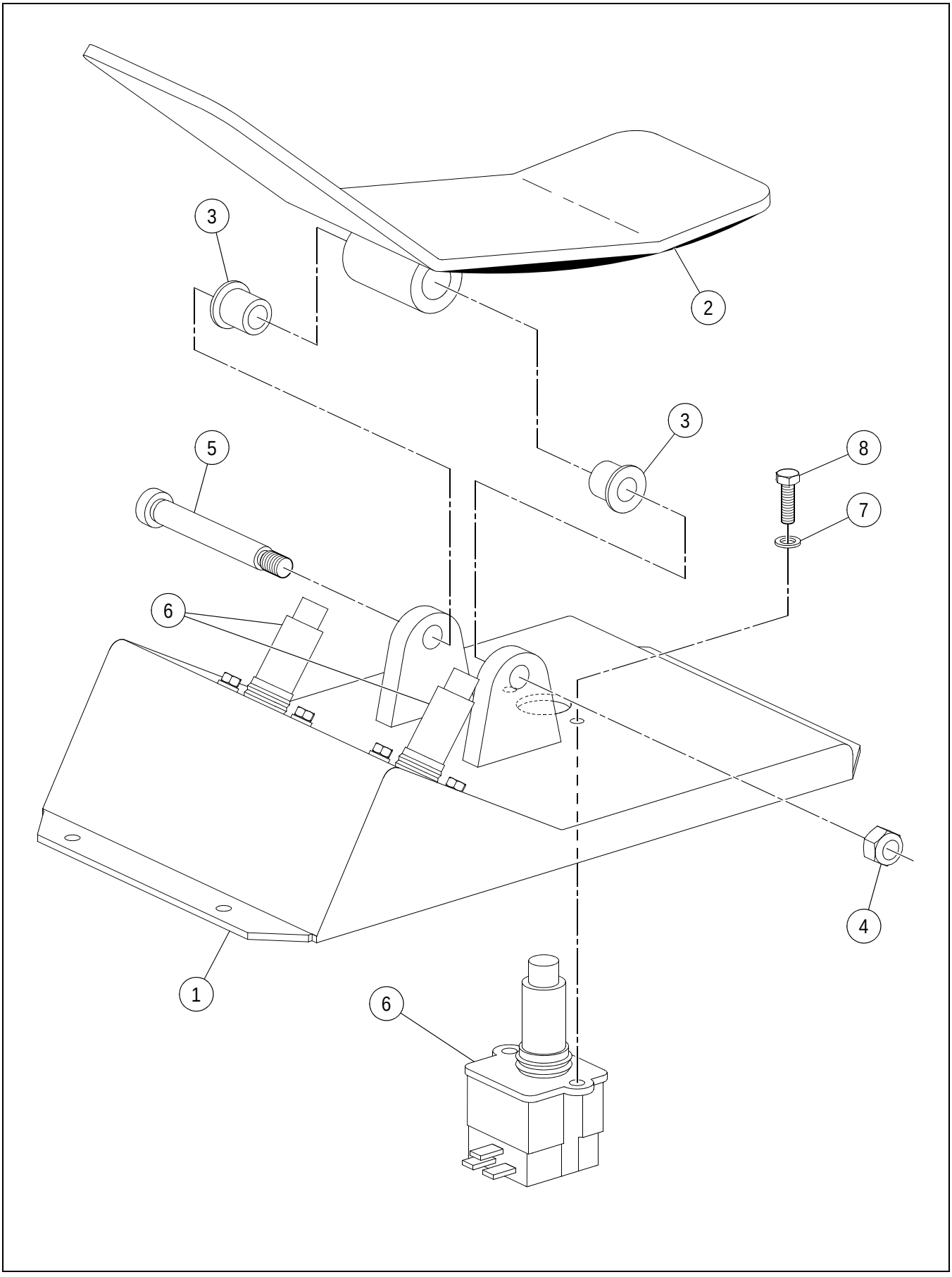

FOOT PEDAL ASSEMBLY

****Only Offered Parts Listed****

BOM 13271440

ITEM	COMM. NO.	DESCRIPTION	QTY	DIMENSIONS/NOTES
1	13271903	Foot Pedal Mount	1	
2	13271762	Foot Pedal	1	
3	58920216	Flanged Bushing	2	
4	95923314	Locknut	1	5/16 x 18
5	95944260	Bolt	1	
6	58788852	Dump Switch	3	
7	96741053	Flatwasher	6	
8	96701958	HHCS, Zinc Plated	6	M6 x 1 x 16 Cl 8.8

SECTION I - SCHEMATICS

SCHEMATICS

GENERAL INFORMATION

Hydraulic and electrical schematics are included here for the convenience of the owner/ operator. Additional copies of the schematics are available by contacting the manufacturer. See your local authorized dealer for assistance if required.

For ultimate machine life and maximum performance, we recommend the use of genuine manufacturer replacement parts.

The electrical and hydraulic schematics included herein are applicable to the SD-160/190/ 200TF Series - Effective With S/N 193672.

Electrical Schematics

- Electrical Schematic, Drawing No. 18007682, Page I-3.

Hydraulic Schematics

- Hydraulic Schematic - SD-160DX and SD-160F, Drawing No. 13365374, page I-6.
- Hydraulic Schematic - SD-190DX, SD-200DX and SD-200F, Drawing No. 13414289, page I-7.

Electrical Schematic

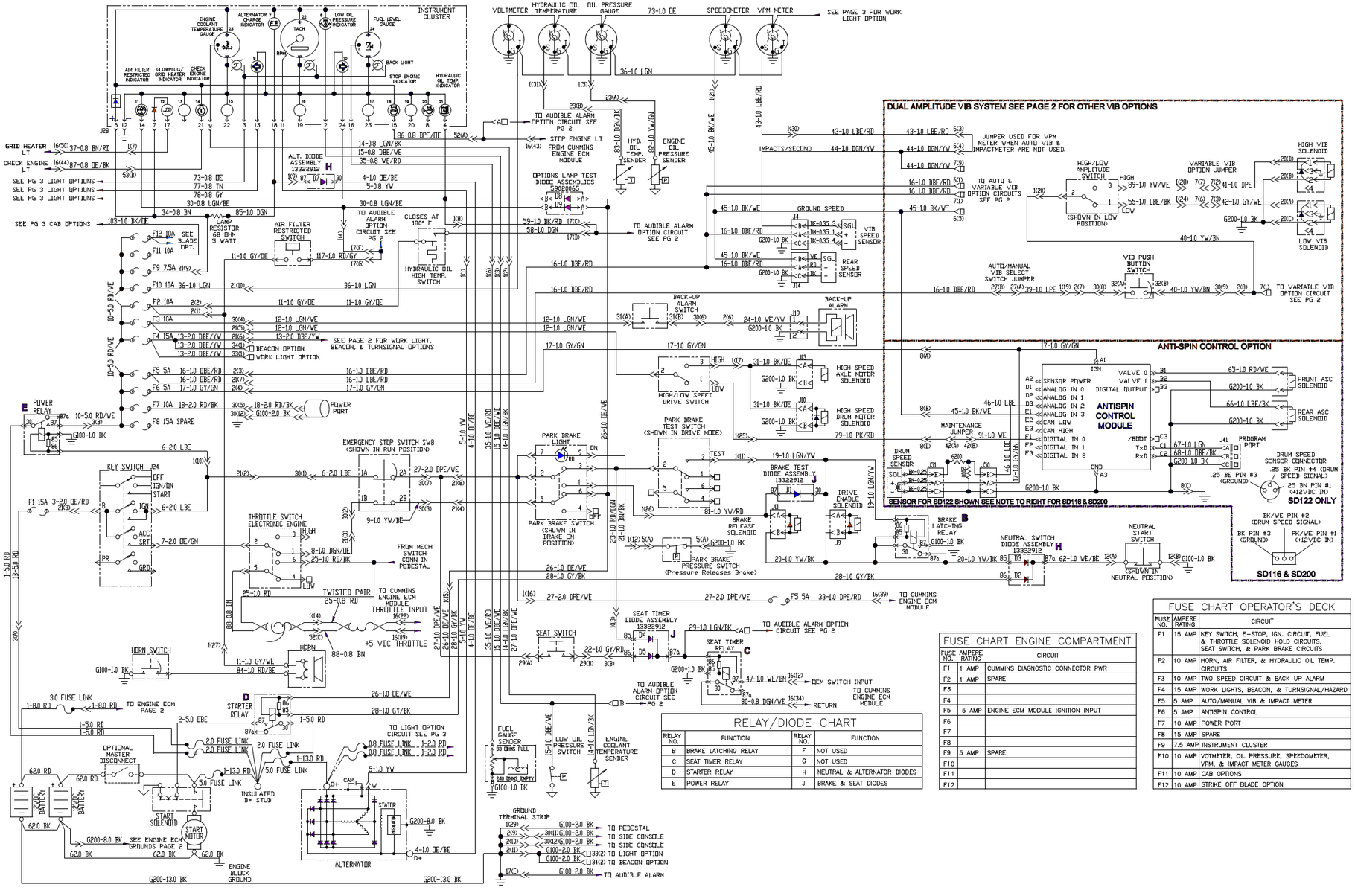

RELAY/DIODE CHART

RELAY NO.	FUNCTION	RELAY NO.	FUNCTION
B	BRAKE LATCHING RELAY	F	NOT USED
C	SEAT TIMER RELAY	G	NOT USED
D	STARTER RELAY	H	NEUTRAL & ALTERNATOR DIODES
E	POWER RELAY	J	BRAKE & SEAT DIODES

FUSE CHART ENGINE COMPARTMENT

FUSE AMPERE NO.	RATING	CIRCUIT
F1	1 AMP	CUMMINS DIAGNOSTIC CONNECTOR PWR
F2	1 AMP	SPARE
F3		
F4		
F5	5 AMP	ENGINE ECM MODULE IGNITION INPUT
F6		
F7		
F8		
F9	5 AMP	SPARE
F10		
F11		
F12		

FUSE CHART OPERATOR'S DECK

FUSE NO.	AMPERE RATING	CIRCUIT
F1	15 AMP	KEY SWITCH, E-STOP, IGN. CIRCUIT, FUEL & THROTTLE SOLENOID HOLD CIRCUITS, SEAT SWITCH, & PARK BRAKE CIRCUITS
F2	10 AMP	HORN, AIR FILTER, & HYDRAULIC OIL TEMP. CIRCUITS
F3	10 AMP	TWO SPEED CIRCUIT & BACK UP ALARM
F4	15 AMP	WORK LIGHTS, BEACON, & TURNSIGNAL/HAZARD
F5	5 AMP	AUTO/MANUAL VIB & IMPACT METER
F6	5 AMP	ANTISPIN CONTROL
F7	10 AMP	POWER PORT
F8	15 AMP	SPARE
F9	7.5 AMP	INSTRUMENT CLUSTER
F10	10 AMP	VOTMETER, OIL PRESSURE, SPEEDOMETER, VPM, & IMPACT METER GAUGES
F11	10 AMP	CAB OPTIONS
F12	10 AMP	STRIKE OFF BLADE OPTION

18007682_0A01

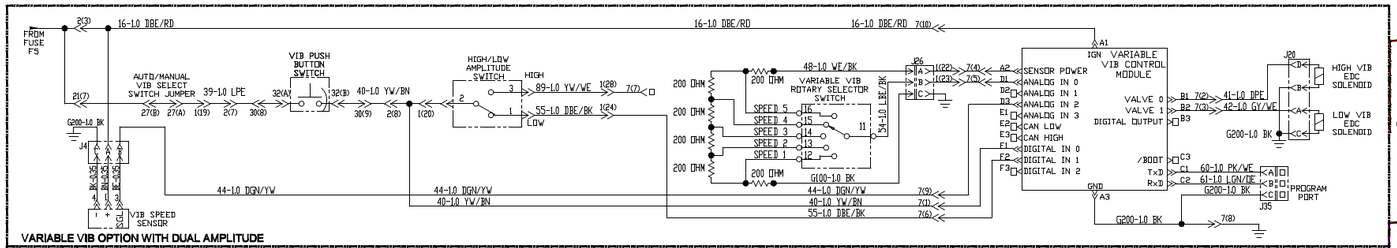

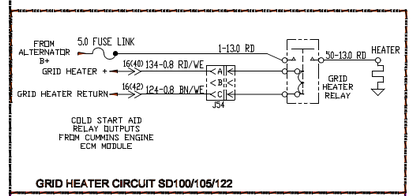

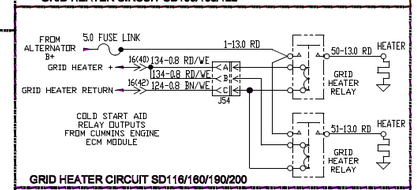

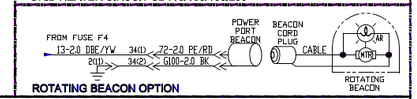

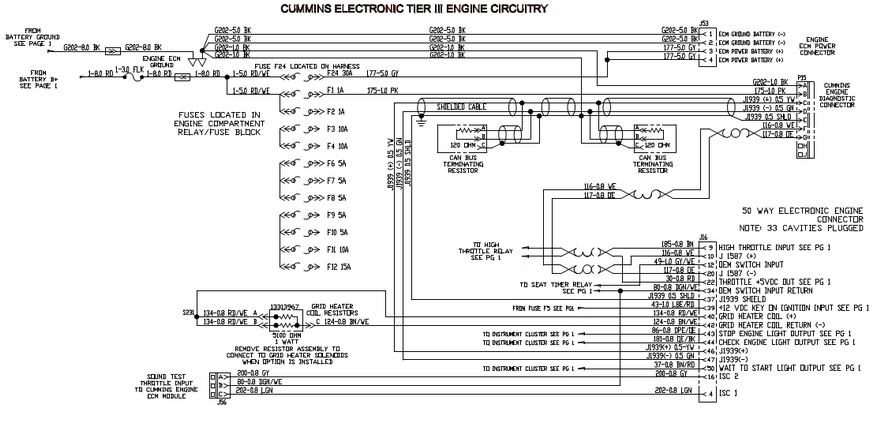

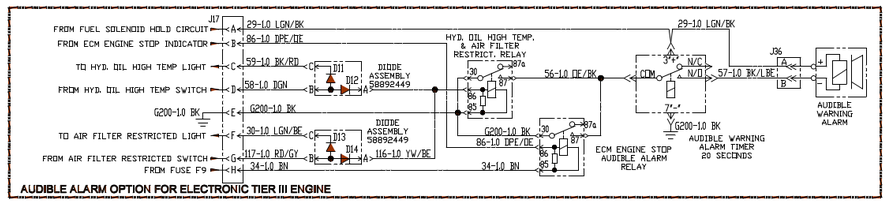

18007682_0A02

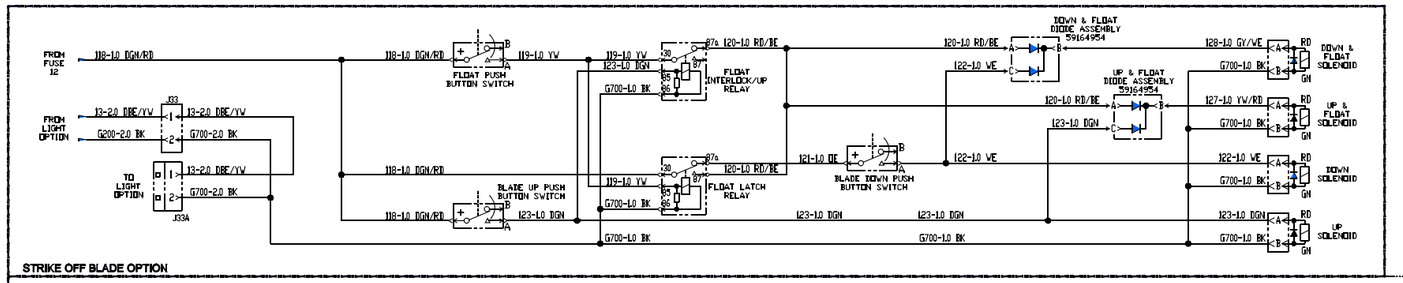

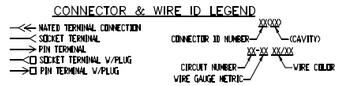

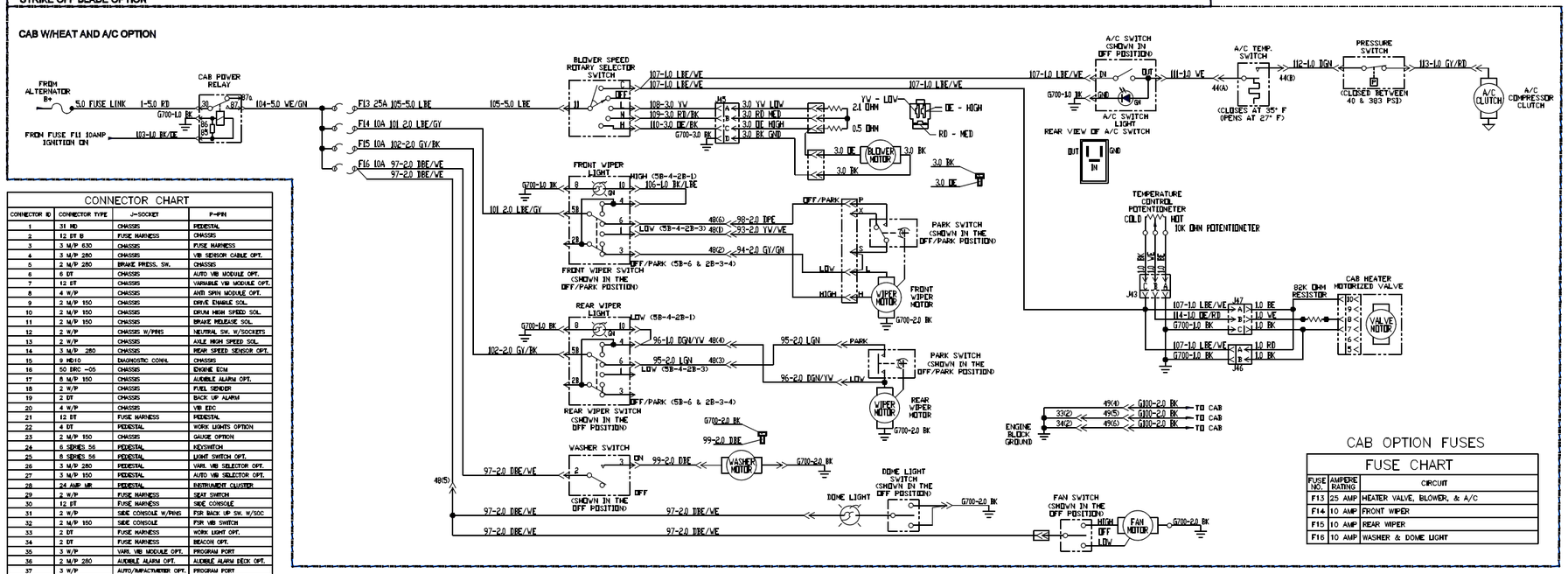

CONNECTOR CHART

CONNECTOR ID	CONNECTOR TYPE	J-SOCKET	P-PIN
1	31 MD	CHASSIS	PEDESTAL
2	12 DT B	FUSE HARNESS	CHASSIS
3	3 M/P 630	CHASSIS	FUSE HARNESS
4	3 M/P 280	CHASSIS	VIB SENSOR CABLE OPT.
5	2 M/P 280	BRAKE PRESS. SW.	CHASSIS
6	6 DT	CHASSIS	AUTO VIB MODULE OPT.
7	12 DT	CHASSIS	VARIABLE VIB MODULE OPT.
8	4 W/P	CHASSIS	ANTI SPIN MODULE OPT.
9	2 M/P 150	CHASSIS	DRIVE ENABLE SOL.
10	2 M/P 150	CHASSIS	DRUM HIGH SPEED SOL.
11	2 M/P 150	CHASSIS	BRAKE RELEASE SOL.
12	2 W/P	CHASSIS W/PINS	NEUTRAL SW. W/SOCKETS
13	2 W/P	CHASSIS	AXLE HIGH SPEED SOL.
14	3 M/P 280	CHASSIS	REAR SPEED SENSOR OPT.
15	9 MD10	DIAGNOSTIC CONN.	CHASSIS
16	50 DRC -05	CHASSIS	ENGINE ECM
17	8 M/P 150	CHASSIS	AUDIBLE ALARM OPT.
18	2 W/P	CHASSIS	FUEL SENDER
19	2 DT	CHASSIS	BACK UP ALARM
20	4 W/P	CHASSIS	VIB EDC
21	12 DT	FUSE HARNESS	PEDESTAL
22	4 DT	PEDESTAL	WORK LIGHTS OPTION
23	2 M/P 150	CHASSIS	GAUGE OPTION
24	6 SERIES 56	PEDESTAL	KEYSWITCH
25	6 SERIES 56	PEDESTAL	LIGHT SWITCH OPT.
26	3 M/P 280	PEDESTAL	VARI. VIB SELECTOR OPT.
27	3 M/P 150	PEDESTAL	AUTO VIB SELECTOR OPT.
28	24 AMP MR	PEDESTAL	INSTRUMENT CLUSTER
29	2 W/P	FUSE HARNESS	SEAT SWITCH
30	12 DT	FUSE HARNESS	SIDE CONSOLE
31	2 W/P	SIDE CONSOLE W/PINS	FSR BACK UP SW. W/SOC
32	2 M/P 150	SIDE CONSOLE	FSR VIB SWITCH
33	2 DT	FUSE HARNESS	WORK LIGHT OPT.
34	2 DT	FUSE HARNESS	BEACON OPT.
35	3 W/P	VARI. VIB MODULE OPT.	PROGRAM PORT
36	2 M/P 280	AUDIBLE ALARM OPT.	AUDIBLE ALARM DECK OPT.
37	3 W/P	AUTO/IMPACTMETER OPT.	PROGRAM PORT
38	3 M/P 150	AUTO/IMPACTMETER OPT.	IMPACT METER MODE
39	2 DT	COLUMN LIGHT OPT.	WORK LIGHT SELECTOR OPT.
40	2 DT	COLUMN LIGHT OPT.	WORK LIGHT SELECTOR OPT.
41	3 W/P	ANTI SPIN CONTROL OPT.	PROGRAM PORT
42	2 M/P 150	ANTI SPIN CONTROL OPT.	MAINTENANCE CONNECTOR
43	3 M/P 150	CAB HARNESS OPT.	TEMPERATURE CONTROL
44	2 W/P	CAB HARNESS OPT.	AC TEMPERATURE SWITCH
45	4 W/P	CAB HARNESS OPT.	FAN MOTOR
46	2 W/P	CAB HARNESS OPT.	HEATER VALVE
47	3 W/P	HEATER VALVE	CAB HARNESS OPT.
48	6 DT	CAB HARNESS OPT.	CAB
49	6 DT	CAB HARNESS OPT.	CAB
50	3 M/P 280	ANTI SPIN CONTROL OPT.	RESISTOR
51	3 M/P 150	RESISTOR	DRUM SPEED SENSOR
52	3 DT	CHASSIS	PEDESTAL
53	4 DTP	CHASSIS	ENGINE ECM PWR
54	3 M/P 150	CHASSIS	GRID HEATER OPTION
55	3 DT	CHASSIS	ENGINE J1939 CONNECTOR
56	3 DT	CHASSIS	THROTTLE SWITCH SOUND TEST
57	1 W MSP	POSITIVE BATTERY CABLE	CHASSIS
58	1 W MSP	CHASSIS	NEGATIVE BATTERY CABLE

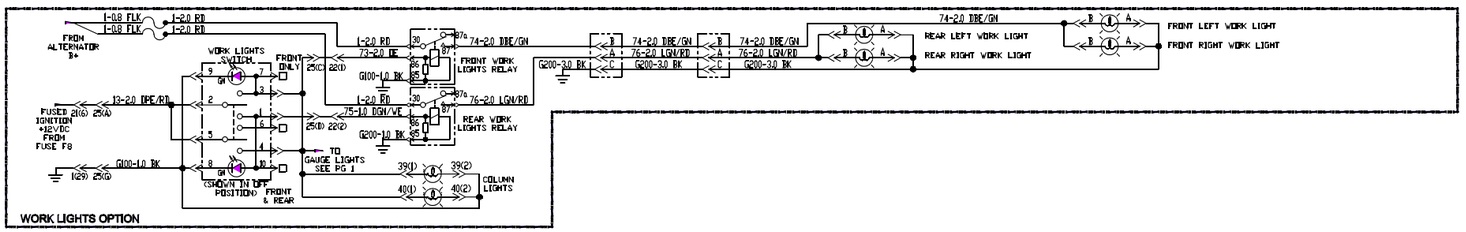

CAB OPTION FUSES

FUSE CHART

FUSE NO.	AMPERE RATING	CIRCUIT
F13	25 AMP	HEATER VALVE, BLOWER, & A/C
F14	10 AMP	FRONT WIPER
F15	10 AMP	REAR WIPER
F16	10 AMP	WASHER & DOME LIGHT

18007682_0A03

Hydraulic Schematic - SD-160DX/SD-160F

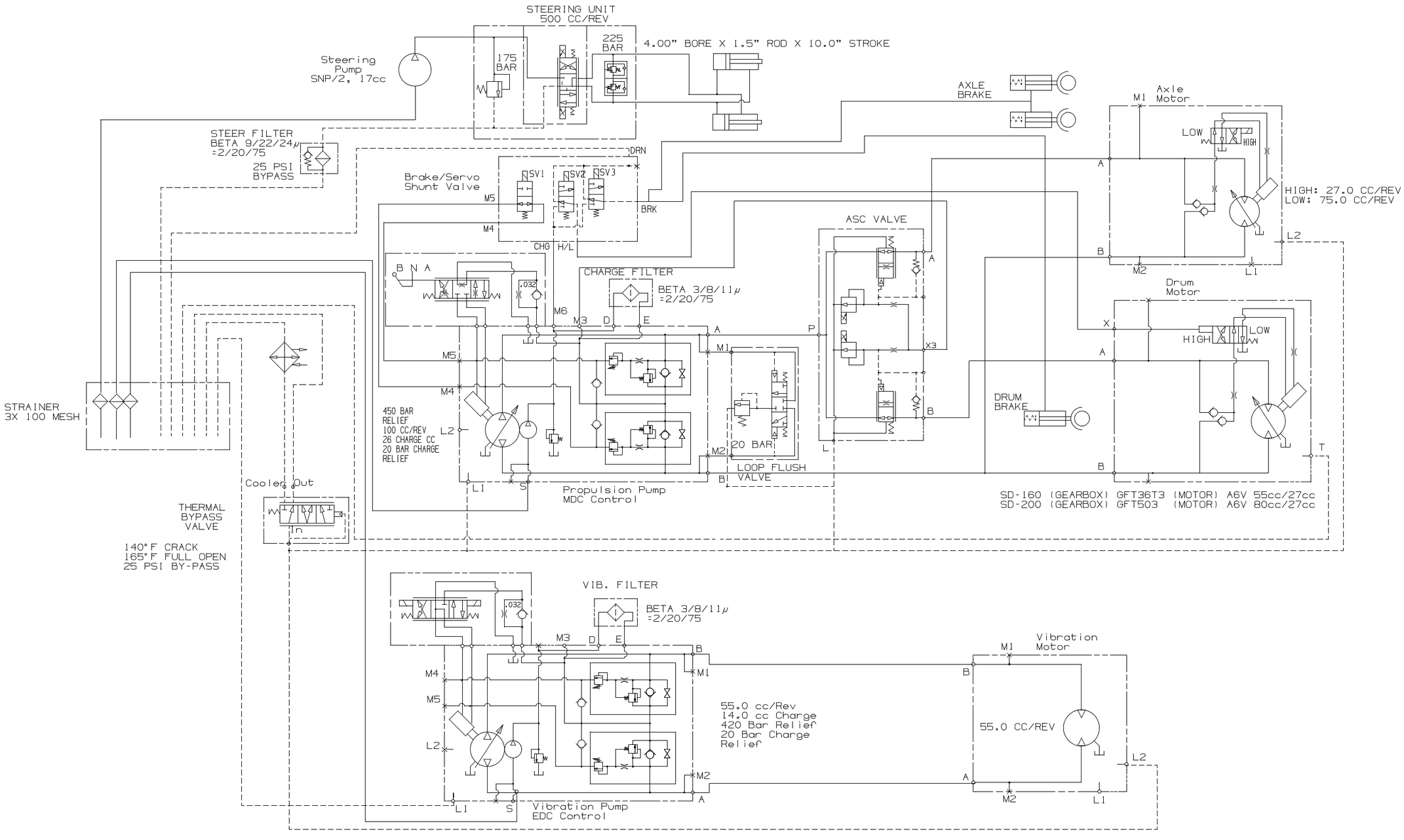

Hydraulic Schematic - SD-190DX/SD-200DX/SD-200F

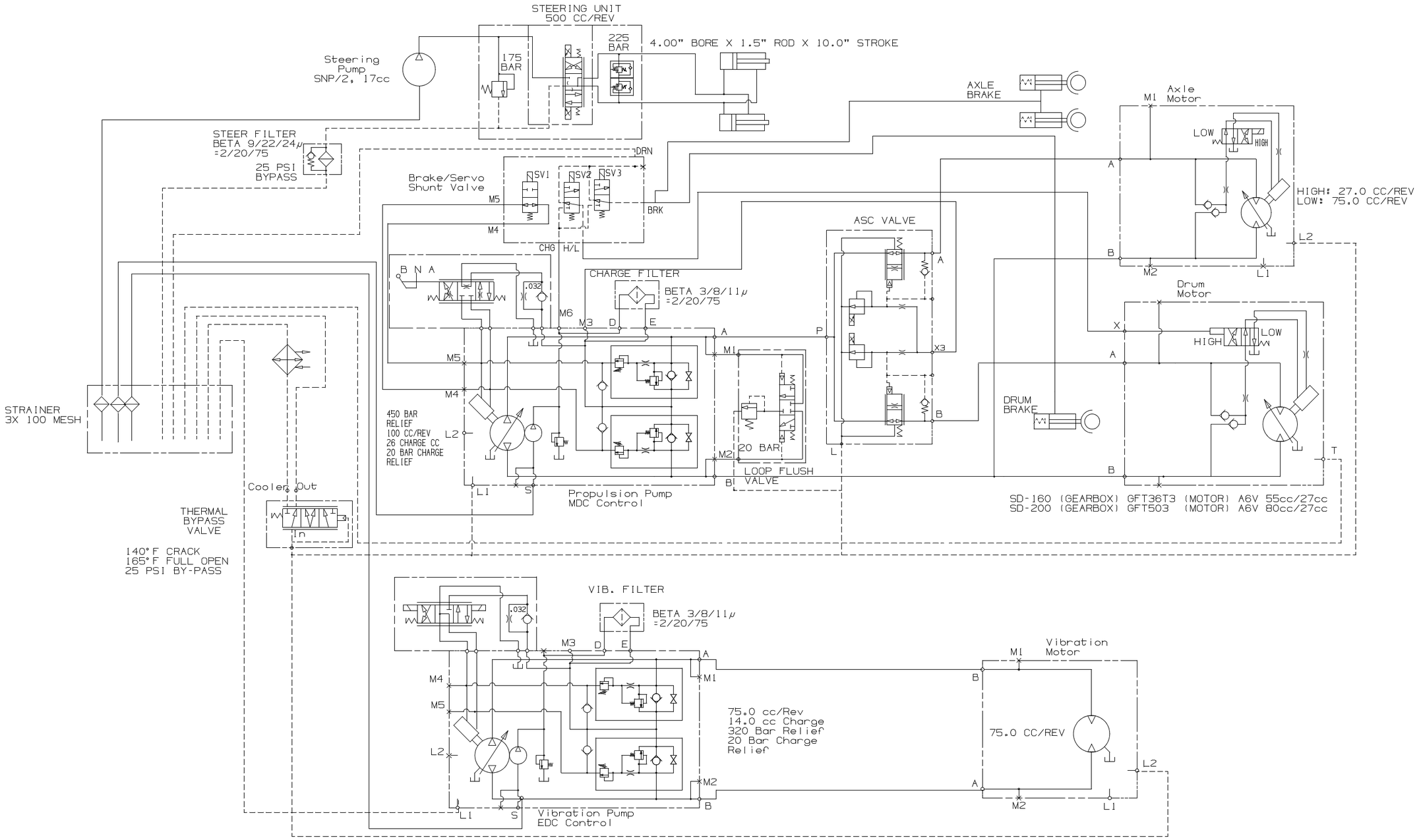

HOW TO USE THIS INDEX

When the Description is Known - Use the Word Index:

- The Word Index makes **any** item easy to locate.
- Use any of the **functional** words in the item description to locate the desired item. The items listed are in alphabetical order in the first column of the index and may be **repeated** several times depending on their **functional descriptions**.

> If searching for the *Air Cleaner Primary Filter Element*, the first listing in the **Word Index** is:
>
> *Air Cleaner Primary Filter Element*
>
> The item is also listed as:
>
> *Filter, Air Cleaner Primary Element*
> *Element Filter, Air Cleaner Primary*
> *Primary Element Filter, Air Cleaner*

- The alpha-numeric listing in the second column of the index is the location of the item in the manual. The location is identified as; the **Functional Group, Section Number**, and **Parts List Page Number**. Example: C-23 would be Functional Group C, Page 23.

> The index shows the filter will be found on page C-23 which is the **Parts List** page number for the
>
> *Air Cleaner Installation*

Always use Volvo Replacement parts!

WORD INDEX

A

AC Switch D-67
Adapter
  Straight A-3
  Tee B-97
Adapter - SD-200DX B-63
Adhesive D-49, D-107
Adjuster D-19
Adjusting Bolt A-11
Adjustment D-27, D-175
Adjustment Arm D-79, D-157
Adjustment Rail D-23, D-27
Adjustment Spindle D-27
Air Cleaner C-23
Air Cleaner Bracket C-23
Air Cleaner Installation C-5, C-29
Air Cleaner Primary Filter Element C-23
Air Cleaner Safety Filter Element C-23
Air Intake Bellows C-23
Air Intake Hose C-23
Air Pre-Cleaner C-47
Air Pre-cleaner C-45, C-49, C-53
Air Pre-cleaner Stack C-45, C-47, C-49, C-53
Air Recirculation Filter D-55, D-67, D-129, D-147
Air Recirculation Filter Assembly D-55, D-67, D-129, D-147
Air Valve A-21
Alternator C-5, C-29
Amber Reflector E-55, E-57
ARC - Axle Drive Motor A-3
ARC - Propulsion Pump C-11
ARC - Vibration Motor B-7, B-15, B-29
ARC - Vibration Pump (SD-160) E-29
Arm Rest D-23
Arm w/Tube D-19
Arm Wiper D-121
Articulation Lock Pin B-5
Articulation/Oscilation Pin B-39, B-59
Articulation/Oscillation Pin B-5, B-33
Audible Alarm Harness E-25
Auto Vibration Switch E-47
Auto/Manual Module Harness E-47
Auto/manual Selector Harness E-47
Axle A-3
Axle Drive Motor A-3

B

Backrest D-25
Backup Alarm E-11
Back-Up Plate B-23
Backup Plate B-73
Backup Ring A-15, A-17
Baffle C-19
Ball Bearing A-13
Bar Antenna E-49
Base Plate A-3
Battery E-23
Battery Box B-83, B-95
Battery Hold Down E-23
Battery Master Switch E-23
Beacon Light Bulb E-63, E-65
Beacon Light Harness E-63
Beacon Light Switch D-121
Bearing - Effective with S/N 196502 . . . . . B-81
Bearing - Prior to S/N 196502 . . . . . B-81
Bearing Drive B-7, B-29, B-77
Bearing Housing Assembly B-7, B-43, B-63
Bearing Housing Drive B-55
Bearing Housing Spindle B-9, B-53
Bearing Journal B-49
Bearing Journal E-43
Bearing Kit D-23
Bearing Slipper Guide E-41
Bearing Spindle B-29, B-77
Bearing Taper Roller B-9, B-53
Beige Paint G-5, G-13
Bellows D-27, D-175
Bevel Gear Set A-9
BHCS D-7, D-15, E-17
BHSHCS E-51, E-53, E-59, E-61
Blade Bracket
  LH H-31
  RH H-31
Blade Control Wiring Harness H-33
Blade Scraper H-31
Blade Valve Assembly H-33
Blank Switch D-65, D-85, D-89, D-93, D-109, D-111, D-127, D-145
Block Heater C-57
Block Valve D-77, D-161
Blower D-61, D-77, D-139, D-161
  12V D-77, D-161
Blower Wheel D-61, D-77, D-139, D-161
Bolt Cover D-39, D-41, D-97, D-99
Bottom Duct Hose D-55, D-67, D-129, D-147
Bottom Fresh Air Duct Hose D-55, D-67, D-129, D-147
Bowl C-45, C-47, C-49, C-53
Bracket A-27
Bracket Coolant Recovery C-21
Bracket LH
  Hood Latch D-87
  ROPS Latch D-87
Brake Disc Kit B-21
Brake Lamp E-59, E-61
Brake Shunt two-Speed Manifold B-91
Brake Shunt Valve Assembly B-81, B-97
Brake/Shunt Valve Assembly H-17
Breather Filtered Vent B-31, B-57, B-79
Bulb . . . D-119, D-121, E-53, E-59, E-61, E-69, E-73
Bulkhead Nut C-15, E-33
Bumper B-3, B-35, B-61
Bumper Machining B-41
Bumper Set D-175

C

Cab And HVAC Harness . . D-65, D-85, D-89, D-109, D-111, D-113
Cab And Hvac Harness D-93
Cab Assembly D-35, D-65, D-93, D-109, D-117
Cab Door D-119
Cab Harness D-49, D-107
Cab Harness with Air Conditioning D-77, D-161
Cab Heater And Air Conditioning Harness D-145
Cab Heater Harness D-35
Cab Heating And Air Conditioning Harness . . .D-127
Cab Installation - EU D-115, D-143
Cab Key D-123
Cab Latch Bracket
LH D-125
RH D-125
Cab Step D-35, D-65, D-93, D-109
Cab Wire Harness D-121
Cab/Hood Draw Latch Installation D-35, D-65, D-93, D-109
Cab/Hood Draw Latch Installation D-117
Cable B-5, B-33, B-39, B-59, D-31, E-77
Cable B-61
Cable Sensor E-77
Cable Sleeve B-33
Cable Terminal Block. E-19
CAC Tube - Cold Side C-7, C-31
CAC Tube - Turbo Side C-7, C-31
Cap Nut C-5, C-29
Carrier Assembly B-7, B-29, B-43, B-53, B-63, B-77
Carrier Housing B-9
Carrier Plate . . . B-13, B-31, B-47, B-57, B-67, B-79
Catch Recess D-119, D-123
Center Bonded Mount C-3
Center Duct Hose D-55, D-67, D-129, D-147
Centering Spring A-11
Charge Air Cooler C-19
Charge Pump E-33
Charge Pump Cover C-39
Charge Pump Cover Assembly C-15, E-33
Charge Pump Set C-15, C-39
Charge Pump Shaft C-15, E-33
Charge Relief Kit C-13, C-35, E-31
Chassis Harness E-3
Chassis Harness Bracket C-23
Check Valve C-15
CI-CDS Cable E-77
Circlip A-11
Clamp. B-83, B-97, D-155, E-47
Clamp Plate B-3, B-35, B-39, B-61, H-33
Clamp Seal C-43
Clamp-on Shell B-109
Clevis Pin D-19
Clip Connector E-15
CMV Dial E-77
Coarialer Pin B-83, B-95
Coil Cover D-61, D-77, D-139, D-161
Coil Kit A-17
Column Cover - Effective with S/N 194911 . . . . D-15
Column Cover D-111
Column Cover -Straight- Prior to S/N 1194911 . D-15
Compactometer Harness E-75
Compactometer Kit E-75
Complete Motor B-19, B-23
Compression Spring D-123, H-29
Compression Switch D-19
Compressor D-71, D-79, D-157
Compressor Assembly D-71, D-149
Compressor Belt D-71, D-149
Compressor Pulley D-149
Condenser D-81, D-159
Condenser/High Efficiency D-77, D-161
Condensor Assembly D-73, D-153
Condensor Bracket D-81, D-159
Connecting Rod D-123
Connection Stud B-27, B-75
Connector Hose D-55, D-67, D-129, D-147
Control Bushing B-27, B-75
Control Complete B-23, B-27
Control Filter Screen C-13, E-31, E-37
Control Gasket E-31
Control Kit C-37
Control Panel D-127, D-145
Control Panel Assembly D-3
Control Panel Plug D-55, D-129
Control Piston B-27, B-75
Coolant Hose D-73, D-153
Coolant Recovery Bottle C-21
Coolant Recovery Bottle Cap C-21
Coolant Recovery Bottle Installation C-19
Cord C-57
Coupling Pipe B-85, C-5, C-29
Cover Assembly C-45, C-47, C-49, C-53
Cover Column D-35, D-85, D-93, E-67
Cross
Pressure C-11
Cylinder D-123
Cylinder Bolt A-11, A-13
Cylinder Seal Kit H-31

D

Damper Kit D-19
Dash Lights - Prior to S/N 194702 . D-35, D-65, D-85, D-89, D-93, D-109, D-111, D-113, D-127, D-145
Deck Side Filler Strip D-45, D-47, D-103, D-105
Defroster Fan 12V D-43, D-101
Delay Timer E-25
Density Meter Switch E-75
Dial Pressure Gauge H-17
Digital Processor E-77
Directional Valve H-33
Disc Brake A-11
Disc Brake Kit B-71
Displacement Limiter Kit C-17, E-35

Door Assembly D-37, D-95
Door Bottom Glass D-37, D-95
Door Exterior Latch Kit D-37, D-39, D-95, D-97
Door Frame Weatherstrip D-45, D-103
Door Front Top Glass D-37, D-95
Door Handle w/Cylinder D-123
Door Inside Latch Kit D-39, D-97
Door Latch Cover Mounting Plate D-39, D-97
Door Latch Pivot Plate Kit . . .D-37, D-39, D-95, D-97
Door Latch Profile Cover D-39, D-97
Door Pane
Lower LH D-123
Upper LH D-123
Door Rear Top Glass D-37, D-95
Door Seal D-47, D-105, D-119, D-123
Door Shock D-45, D-103
Door Strap 6.5" D-37, D-95
Door Strap Metal Clamp D-37, D-95
Double Break Off Pin B-27, B-75
Dowel Pin B-21
Drain Assembly C-5, C-19, C-29
Drain Hose Clamp D-61, D-139
Drain Port B-89
Drain Valve D-61, D-77, D-139, D-161
Drier/Binary Bracket D-81, D-159
Drive Bearing B-43, B-63
Drive Coupling C-5, C-29
Drive Motor Assembly . .B-7, B-29, B-43, B-55, B-63, B-77
Drive Mounting B-17, B-69
Drive Side Journal B-11, B-45, B-65
Drop Pane
LH D-123
RH D-119
Drum B-43, B-53, B-55
Drum - SD-160DX B-7
Drum - SD-160F B-7
Drum - SD-200DX B-63
Drum - SD-200F B-63
Drum (SD-160DX) B-29
Drum (SD-160F) B-29
Drum (SD-200DX) B-77
Drum (SD-200F) B-77
Drum Assembly B-33
Drum Assembly - Effective S/N 196615 . . . . . .B-59
Drum Assembly - Effective With S/N 196615 . . . .B-5
Drum Assembly - Prior to S/N 196615 . . . .B-5, B-59
Drum Drive Motor B-17, B-51, B-69
Drum Frame B-3, B-5, B-33, B-35, H-33
Drum Frame - Effective with S/N 196502 . . . . . .E-51
Drum Frame - Prior to S/N 196502 . . . . . .E-51
Dryer Mounting Bracket D-81, D-159
Dual Switch Seat Kit D-19
Dump Switch H-37
Dust Boot D-9
Dust Seal B-33, B-39, B-59, B-95, B-97
Dust Seal - Effective with S/N 196502 . . . . . .B-81
Dust Seal - Prior to S/N 196502 . . . . . B-81

E

Eccentric Shaft B-11, B-45, B-65
Eccentric Shaft - SD-160DX B-11
Eccentric Shaft - SD-200DX B-65
Eccentric Shaft - SD-200F B-65
Eccentric Shaft Assembly . . . B-7, B-29, B-43, B-53, B-55, B-63, B-77
Eccentric Shaft- SD-160F B-11
EDC Kit E-31
Electrical Connector E-11
Electrical Terminal E-75
Elevator Bolt B-87
Emergency Stop Assembly D-7
Emergency Stop Switch D-9
Emergency Stop Switch Bulb D-9
End Cap Gasket A-17, B-15, C-15
End Plate B-9
Engine C-5, C-29
Engine Assembly - SD-160 . . . . . C-3
Engine Assembly - SD-190/SD-200 . . . . . C-3
Engine Oil Filter C-5, C-29
Engine Oil Pressure Gauge D-33
Engine Oil Pressure Sender D-33
Evaporator Coil D-77, D-161
Exhaust Bracket C-43
Exhaust Clamp C-43
Exhaust Pipe C-43
Extension Tube C-23
Exterior Mirror Assembly D-49, D-107
Eye Bolt A-27, C-49, C-51, C-53
Eyebolt D-5

F

F Dial E-77
F/R Worklights Switch D-65, D-85, D-89, D-93, D-109, D-111, D-113, D-127, D-145, E-69, E-73
Face Seal B-21
Face Seal B-21
Fan C-7, C-31
Fan Belt C-5, C-29
Fan Guard C-7, C-31
Fan Shroud C-19
Fender
LH A-23
RH A-23
Fender Support A-23
Ferrule B-5, B-33, B-59, D-31
FHCS
Zinc Plated B-63, C-45, C-47, C-49, C-53
Filter Adapter Tube E-33
Filter Adaptor Tube C-15
Filter Bracket H-15
Filter Door H-15
Filter Element H-33
Filter Screen A-15

Firesleeve D-51, D-75, D-137, D-155
First Aid Strap D-173
Flange Cover B-23, B-25
Flange Locknut D-19
Flanged Bushing H-37
Flow Valve H-33
Foam D-55, D-67, D-129, D-147
Foam Pad C-49, C-51, C-53, E-3
Foam Seal D-61, D-139
Foam Strip D-117
Foamtape D-55, D-67, D-129, D-147
Foot Pedal H-37
Foot Pedal Assembly H-33
Foot Pedal Mount H-37
Frame B-37, B-39, B-59, B-61
Frequency Dial Knob E-29
Fresh Air Filter D-55, D-67, D-129, D-147
Friction Washer A-11
Front Center Window Glass D-47, D-49, D-105, D-107
Front Roadlight Assembly - LH E-51
Front Roadlight Assembly - RH E-51
Front Window Lower Center Skirt D-47, D-49, D-105, D-107
Front Window Lower Side Skirts D-49, D-107
Front Wiper Arm D-49, D-107
Front Wiper Blade D-49, D-107
Front Wiper Cover D-43, D-101
Front Wiper Switch . . D-35, D-65, D-85, D-89, D-93, D-109, D-111, D-113, D-127, D-145
FSR Control Box D-7
F-Stop-R Cable D-7
F-Stop-R Control D-7
Fuel Cap B-89
Fuel Filter C-5, C-29
Fuel Line C-27
Fuel Line Installation C-3
Fuel Sender B-89
Fuel Strainer C-55
Fuel Tank B-89
Fuel Tank Assembly B-87
Fuel Tank Bracket B-87
Fuel Tank Installation B-81, B-97
Fuse Block Assembly E-17
Fuse Block Cover Assembly E-3
Fuse Cover D-11
Fuse Cover Assembly D-3
Fuse Cover Plate E-21
Fuse Harness E-21
Fuse Mounting Plate E-21

G

Gas Shock Ball Mount D-45, D-103
Gasket C-41
Gasket End Cap A-19, E-33
Gauge Harness D-33
Gauge Light Harness D-33
Gauge Panel Assembly D-15
Gear A-13
Gear Pump C-33
Gearbox B-19, B-21
GPS Mobile Net Harness E-49
GPS System Window Glass D-41, D-99
Grease Fitting Cap B-5, B-39, B-59, B-83, B-95, H-31
Grid Heater Harness C-59
Grid Heater Option Kit C-59
Grid Heater Solenoid Cable C-59
Grill Support A-39
Grooved Headless Pin B-83, B-95
Ground Cable Jumper E-23

H

Hair Pin Clip B-83, B-95
Half Shaft A-11
Hand Pump H-17
Hand Rail D-3
Handle C-13
Handle Storage Sleeve B-83, B-97
Hazard Warning Switch E-53
Head Washer D-3
Headliner D-43, D-101
Heater D-55, D-57, D-67, D-129, D-133, D-147
Heater And Air Conditioning Installation D-145
Heater Coil D-61, D-77, D-139, D-161
Heater Hose Assembly . . D-61, D-77, D-139, D-161
Heater Installation . D-35, D-85, D-93, D-111, D-127
Heater Valve D-57, D-69, D-133, D-141, D-151, D-163
Heater/Evaporator D-67, D-69, D-147, D-151
Heating and Air Conditioning Installation D-65, D-89, D-109, D-113
Heating and Air Conditioning/Dipstick Bracket D-149
Hi/low RPM Switch D-17
Hi/low Travel Switch D-17
High Temperature Alarm E-27
Hinge A-25, A-27
Hinge Joint D-119, D-123
Hitch Pin B-5, B-33, B-39, B-59
Hold Down Pin A-15
Homologation Harness Bracket E-51
Hood - SD-160 . . . . . A-25
Hood - SD-190/SD-200 . . . . . A-25
Hood Cowling - SD-160 . . . . . A-27
Hood Cowling - SD-190/SD-200 . . . . . A-27
Hood Handle A-25
Hood Hinge Spacer A-41
Hood Latch Bracket
LH A-31, A-37, D-125
RH A-37, D-125
Hood Latch Bracket LH D-169
Hood Latch Bracket RH A-31, D-169
Hood Shim A-25
Hood Spring Angle A-27
Hood w/ Sound Spikes C-49, C-51

Hood w/Foam - SD-160 . . . . . C-51
Hood w/Foam - SD-190/SD-200 . . . . . C-51
Hood w/Pre-cleaner C-45
Hood w/Pre-cleaner C-47
Hood w/Sound Spikes C-49
Hood With Foam and Pre-cleaner - SD-160 . . . . C-49
Hood With Foam and Pre-cleaner - SD-190/SD-200 . C-49
Hood with Foam and Pre-cleaner (U.S.) C-53
Horn D-3
Horn Bracket D-3
Horn Button D-15
Hose Adapter D-61, D-77, D-139, D-161
Hose Asembly D-57
Hose Assembly (SD-160DX/SD-160F) H-3, H-5, H-7, H-9, H-11, H-13, H-21
Hose Assembly (SD-190DX) H-7, H-13, H-21
Hose Assembly (SD-190DX/SD-200DX/SD-200F) . . H-3, H-5, H-7, H-9, H-11, H-13, H-21
Hose Assembly (SD-200DX/SD-200F) . . . H-7, H-13, H-21
HSBHCS
Zinc Plated B-35
HSHCS C-9, C-33
Zinc Plated B-77
HVAC/Dipstick Bracket D-71
Hydraulic Cylinder H-31
Hydraulic Tank B-85
Hydraulic Tank Assembly B-83, B-95
Hydraulic Tank Clean Out Lid B-85
Hydraulic Tank Gasket B-85
Hyrdaulic Hose Clamp B-35

I

Igition Switch Cover D-15
Ignition Switch - Effective with S/N 194911 . . . . D-15
Ignition Switch - Prior to S/N 194911 . . . . . D-15
Ignition Switch Nut - Effective with S/N 194911 . D-15
Ignition Switch Nut - Prior to S/N 194911 . . . . . D-15
Impactometer E-47
Impactometer/Auto Vibration Controller E-47
Insert Assembly E-43
Inside Light D-121
Inside Mirror D-121
Inside Scraper B-103
Inside Scraper - SD-160DX/SD-160F B-107
Inside Scraper - SD-160F B-105
Inside Scraper - SD-190DX/SD-200DX B-107
Inside Scraper - SD-200F B-105
Instrument Cluster D-15
Instrument Panel D-17
Insulated Clamp E-49
Insulated Stud C-25
Insulated Stud Assembly C-5, C-29
Insulated Stud Bracket C-25
Insulation Grommet B-83, B-95
Interior Cover D-121
Interior Light D-43, D-101
Interior Mirror D-43, D-101
Intermediate Brake Disc A-11
Intermediate Cover A-13
Isolation Pad Spring A-41
Isolator C-23, D-13

J

J-hook E-23
Journal Bearing A-15, E-33

K

Key C-15, E-33
Knob Kit D-19
Knurled Head Screw D-11

L

Lamp . D-35, D-65, D-85, D-89, D-93, D-109, D-111, D-113, E-67, E-71
Lamp LED - White D-127
Lamp Led-White D-145
Lamp Marker E-53
Latch . A-31, A-37, D-25, D-87, D-123, D-125, D-169
Leg Spring D-25
Lever B-83, B-95, D-23
LH Side Front Glass D-49, D-107
License Plate Light E-51, E-61
License Plate Mounting Bracket E-61
Light Assembly Panel - Effective with S/N 194702 . . D-127, D-145
Light Bracket E-69, E-73
Light Bulb E-51, E-59, E-61
Light Housing E-55, E-57
Lip Seal C-13, C-35, E-31
Lock A-31, A-37, D-87, D-125, D-169
Lock Nut B-59
Lock Pin B-33, B-39, B-59
Lock Tab
RH A-31, D-87, D-125
Locking Plate A-9, A-11, D-31
Loop Flushing Spool A-15
Loop Flushing Valve H-27
Loop Flushing Valve Assembly H-21
Louver D-55, D-67, D-129, D-147
Louver Adapter D-55, D-67, D-129, D-147
Louvers D-55, D-67, D-129, D-147
Lower Baffle Plate C-19
Lower Door Latch Cover Kit D-39, D-97
Lower Radiator Hose C-19
Lower Rubber Baffle C-19
Lower Side Duct Hose . . . D-55, D-67, D-129, D-147
Lower Suspension D-27

M

Magetic Plug B-53
Magnet Plug A-7, A-13

Magnetic Clutch D-79, D-157
Main Frame B-97
Main Frame - Effective with S/N 196502 . B-81, B-83
Main Frame - Prior to S/N 196502 . . . . . B-81, B-83
Manifold H-19
Manual Box D-3
Marker Light Bracket E-53
Meter Valve H-33
Mirror Arm D-119
Motor B-71, D-61, D-77, D-139, D-161
Motor Adaptor D-57, D-69, D-141, D-163
Motor Mount D-61, D-77, D-139, D-161
Motor Speed Sensor Assembly H-21
Mount D-49, D-107
Mount Bracket E-19
Mounting Block H-33
Muffler C-43
Multi-Function Valve C-13
Multi-Function Valve Assembly E-31, E-37
Multi-function Valve Assembly C-35

N

Negative Battery Cable E-23
Neutral Start Switch C-13
No ROPS Latch Mounting Bracket A-31, D-87
No ROPS/Hood Latch Draw Installation . .D-85, D-89
No Rops/Hood Latch Draw Installation .D-111, D-113
No-Spin Differential A-9

O

Oil Cooler C-19
Oil Cooler Assembly C-7, C-31
Oil Pressure Switch C-5, C-29
Oilite Bearing B-11, B-45, B-65
Operator Platform H-33
Operators Platform . .D-3, D-55, D-67, D-129, D-147
Optional Decals
G-5
Orifice Kit C-13, E-31
Orifice Plug A-15, H-29
Orifice Valve Assembly A-15
Outside Mirror D-119
Overhaul Repair Kit B-49

P

Pad D-123
Pane
Front D-119
LH D-119
Rear D-119
RH D-119
Panel Light Assembly E-67, E-71
Panel Light Assembly - Effective with S/N 194702 . .
D-35, D-85, D-89, D-93
Panel Light Assembly- Effective with S/N 194702 . . .
D-65, D-109, D-111, D-113
Panel Side Console D-7
Park Brake Switch D-17
Park Brake Test Switch D-17
PCP E-31
Pcp E-37
Pebble Cloth. D-49, D-107
Pedestal D-15, E-75
Pedestal Assembly D-13
Pedestal Cover - Effective with S/N 194911 . . . D-15
Pedestal Cover - Prior to S/N 194911 . . . . . D-15
Pedestal Harness - Eff S/N 194912 Thru 196501 . . .
D-15
Pedestal Harness - Effective with S/N 196502 . D-15
Pedestal Harness - Prior to S/N 194911 . . . . . D-15
Pin A-29, C-15, E-33, E-39, H-31
Pinion A-11
Piston A-11, B-27, B-75
Piston Assembly B-49, E-41
Piston Kit C-17
Piston Ring E-35
Piston Seal Ring A-15, A-17
Pivot Pin B-5, B-33, B-39, B-59, B-81, B-97
Planet Gear A-11
Plastic Plug . . A-33, D-35, D-49, D-65, D-93, D-107,
D-109
Plastic Plug. D-49, D-107
Plastite Screw D-57, D-69, D-141, D-163
Plate B-9, E-75
Front D-119
Left Front D-119
LH D-119
RH D-119
Right Front D-119
Plenum D-55, D-67, D-129, D-147
Plenum Hose D-55, D-67, D-129, D-147
Plug
Black D-43, D-101
Plug A-15, E-63
Port Plate B-27, B-75
Positive Battery Cable E-23
Potted Diode Pack E-3
Power Lead
Engine Grid Heater C-59
Power Port D-43, D-101, E-63
Power Port Mounting Bracket E-63
Pre-Cab With Heat And Air Conditioning - EU D-143
Pre-Cab With Heat Installation - EU D-115
Pressure Cross B-91
Pressure Filter H-15, H-33
Pressure Filter Element H-15
Pressure Spring B-27, B-75
Pressure Switch B-91, D-81, D-159, H-19
Prop Block A-29
Prop Pin Block Assembly A-27
Propulsion Cable Mount C-11
Propulsion Pump C-11
Propulsion Pump Assembly C-9, C-33

Pump H-35
Pump Assembly H-33
Pump Lever C-11
Pump Mounting Plate C-9, C-33
Pump Stack Assembly C-29
Pump Stack Assembly - SD-160 . . . . . .C-5
Pump Stack Support Bracket C-9, C-33

R

R/D Mounting Bracket D-81, D-159
Racket Jack B-83, B-95
Radiator C-19
Radiator Access Panel B-83, B-95
Radiator Bracket C-31
LH C-7, C-31
RH C-7
Radiator Cap C-19
Railing D-5
Ratchet Jack Assembly B-83, B-95
RCHNS E-25
Rear Bumper Weight B-97
Rear Engine Mount
LH C-5, C-29
RH C-5, C-29
Rear Frame H-33
Rear Lamp E-59, E-61
Rear Lamp Bracket E-59, E-61
Rear Signal Assembly - LH E-51
Rear Signal Assembly - RH E-51
Rear Window Glass D-41, D-99
Rear Wiper Arm D-45, D-103
Rear Wiper Cover D-43, D-101
Rear Wiper Switch . . D-35, D-65, D-85, D-89, D-93, D-111, D-113, D-127, D-145
Receiver Drier D-81, D-159
Recirculation D-55, D-67, D-129, D-147
Recirculation Filter Grill . . . D-55, D-67, D-129, D-147
Red Reflector E-59, E-61
Reducer C-11, D-57, D-133, D-151, H-21
Reducer D-69
Reducing Bushing C-5, C-29, H-17
Reduction Bushing A-11
Reflective Marker H-31
Reinforced Rubber Washer E-53
Relief H-29
Remote Filtration Adapter C-15, E-33
Remote Filtration Kit C-39
Repeater Flasher Lamp E-51
Resistor 12V D-61, D-77, D-161
Resistor 12v D-139
Resistor Harness H-21
Retainer Ring B-7, B-9, B-29, B-53, B-55, B-63, B-77
Retainer Spring C-13, E-31
Retaining Pin C-17
Retaining Plate H-17
Return Filter H-15
Return Filter Element H-15
Return Port B-89
RH Hood Latch Bracket D-87
RH Lock Tab A-37, D-125, D-169
RH ROPS Latch Bracket A-31, D-87
RH Side Bottom Glass . . . D-41, D-49, D-99, D-107
RH Side Front Glass D-41, D-49, D-99, D-107
RH Side Top Front Glass . D-41, D-49, D-99, D-107
RH Side Top Rear Glass . . D-41, D-49, D-99, D-107
Rim Spud A-21
Ring Gear A-11
Ring Nut A-9
Ring Plate E-75
Ring Shaft Seal B-23
Road Light E-55, E-57
Road Light Chassis Harness E-51
Road Light Pedestal Harness E-53
Road Light Switch E-53
Rod A-29, D-23
Roll Pin - SD-160F B-7
Roll Pin (SD-160F) B-29
Roller Bearing B-15, C-17, E-35
Roof D-119
ROPS Latch Bracket
LH A-31, A-37
RH A-37
ROPS Latch Bracket LH D-169
ROPS Latch Bracket RH D-169
ROPS Position Light E-53
ROPS Support D-5
ROPS Support Platform D-5, D-35, D-85, D-89
ROPS Support Platform - NA D-65
ROPS Support Platform - SD-160 . . . . . D-3
ROPS Support Platform - SD-190/SD-200 . . . . . D-3
ROPS/FOPS D-165
ROPS/FOPS - SD-160 . . . . . A-33
ROPS/FOPS - SD-190/SD-200 . . . . . A-33
ROPS/Hood Draw Latch Installation A-33, D-165
Rotary Group B-23, B-73
Rotary Group Hydraulic Section B-23
Rotating Beacon Light E-63, E-65
Rubber Baffle C-19
Rubber Edge Trim A-25
Rubber Grommet D-45, D-103
Rubber Seal . . D-35, D-37, D-41, D-47, D-65, D-85, D-89, D-93, D-95, D-99, D-105, D-109, D-111, D-113
Rubber Seal D-49, D-107
Rubber Seal Washer D-39, D-41, D-97, D-99
Rubber Tie Down B-83, B-97

S

Scraper Bar B-35, B-41, B-61, B-99, B-103
Scraper Bar - SD-160DX/SD-160F/SD-200DX B-107
Scraper Bar - SD-190DX B-107
Scraper Installation B-39
Scraper Mounting Bar B-3
Scraper Tooth B-101, B-105
Scraper Tooth - SD-160DX B-109

WORD INDEX

Scraper Tooth - SD-190DX B-109
Seal Kit. B-21, C-41, E-43
Seal Locknut B-23, B-73
Seal Ring B-21, B-71
Seal Trim - SD-160 . . . . . A-27
Seal Trim - SD-190/SD-200 . . . . . A-27
Seal Washer A-7, A-9, D-49, D-107
Seat D-13, D-21, D-23
Seat Angle Adjustment Cover D-23
Seat Assembly D-175
Seat Base D-13, D-21, D-175
Seat Belt A-35, D-23, D-63, D-167
Seat Cover D-23
Seat Pan And Cushion D-19
Seat Panel D-23
Seat Switch Harness D-13
Seatbelt Installation A-33, D-165
Seatbelt Installation D-35, D-65, D-93, D-109
Secondary 3W M/P Lock E-75
Sender D-33
Sensor B-73
Servo Piston Assembly A-15
Servo Piston Assembly A-17
Servo Piston Kit E-35, E-41, E-43
Set Screw A-15, A-17
Sewn Boot D-19
Shaft Adapter D-57, D-69, D-141, D-163
Shaft Nut B-21, B-71
Shaft Seal Assembly B-15, C-13, C-35, E-31
Shaft Seal Assembly A-19
Shaft Seal Assembly E-43
Shaft Seal Ring B-73
Sheet A-13
Shift Rate Kit A-15
Shock Mount B-7, B-13, B-29, B-31, B-43, B-47, B-55, B-57, B-63, B-67, B-77, B-79, D-3
Shock Mount Plate B-31
Shoulder Bolt A-27
Shut-off Valve D-57, D-69, D-133, D-151
Side Console Harness D-7
Side Console Mount Plate D-23, D-27, D-175
Side Console Support D-13
Side Marker Jump Wire E-53
Side Pane
  Lower RH D-119
  Upper RH D-119
Side Ported Subplate H-33
Side Window Grab Handle Kit D-39, D-97
Sight Gauge B-7, B-29, B-43, B-53, B-63, B-77, B-85
Sika D-49, D-107
Single Gauge Light Harness E-47
Sleeve B-5, B-39, B-59, D-5
Sleeve Assembly C-45, C-47, C-49, C-53
Slipper Guide B-49, E-41
Slipper Guide Retainer B-49
Slipper Guide Retainer Shim B-49
Snap Ring A-7, B-21
Snubbing Washer C-3
Solenoid C-59, H-25
Solenoid Valve H-19
Spacer Bar B-3, B-35
Spacer Ring B-9, B-29, B-53, B-77
Special Plug H-29
Speed Sensor . . B-15, B-49, E-29, E-45, E-47, H-23
Speed Sensor. B-23
Speed Sensor Adapter E-29, E-47
Speed Sensor Harness H-21
Speedometer E-45
Spline Coupling B-7, B-29, B-43
Spline Coupling - SD-200DX B-63
Spline Coupling B-77
Spline Shaft B-7, B-29, B-43
Spline Shaft- SD-200DX B-63
Split Clamp B-17, B-51
Split Flange Clamp B-7
Split Washer D-11
Spring Cable Kit D-19
Spring Guide H-29
Spring Pin A-27, B-43, D-5
Spring Pin - SD-160DX B-7
Spring Pin (SD-160DX) B-29
Spring Pin- SD-200DX B-63
Spring Pivot A-27
Standoff E-21
Starter C-5, C-29
Starter Cable
  Positive E-23
Steering Cylinder B-81, B-97
Steering Pump C-9, C-33
Steering Valve D-3
Steering Wheel D-15
Step B-83, B-95
Straight Adapter B-17, B-51
Straight Steering Column D-15
Strike-off Blade H-31
Striker Bolt D-39, D-97
Stud A-5
Stud Protector D-19
Sun Visor Assembly D-43, D-101
Sunshade D-121
Sunshade Cover D-121
Supply Port B-89
Support Bracket C-43, D-5
Suspension D-19
Suspension Upper Par D-27
Swing Arm D-27
Switch C-23, D-23, D-127, D-145, D-175, E-53
  Ac D-147
  Blank D-35, D-113
  F/R Worklights D-35
Switch/Harness Assembly E-29, E-47
Swivel B-5, B-33, B-39, B-59, D-23

T

Tank Base Guard B-87
Tank Filter B-85
Tank Guard B-87
Tape B-87
Taper Roller Bearing A-9, A-11
Tapered Roller Bearing B-21
Tapping Screw D-19, D-67, H-33
Temperature Gauge D-33
Temperature Sender C-7, C-31
Temperature Switch E-27
Tension D-175
Terminal Block E-15
T-Handle A-29
Thermal Bypass Valve B-93
Thermal Bypass Valve Installation B-81, B-97
Thermostat D-77, D-161
Threaded Pin B-23, B-73
Threaded Pin B-23
Throttle Pin B-27, B-75
Throttle Spur B-27, B-75
Thrust Plate B-49
Tilt Column Cover - Effective S/N 194505 . . . . . D-29
Tilt Column Cover - NA D-65
Tilt Column Cover - Prior to S/N 194505 . . . . . D-29
Tilt Cover Column - NA D-109
Tilt Steering Column D-29, D-83, D-91
Tilt Steering Wheel (Cab) D-89, D-113
Tilt Steering Wheel (Cab) - Non-NA
Non-EU D-65, D-109
Tip D-19
Tire A-21
Tire And Wheel Assembly - SD-160 . . . . . A-21
Tire And Wheel Assembly - SD-190 . . . . . A-21
Tire And Wheel Assembly - SD-190/200 . . . . . A-21
Traction Control Harness H-21, H-23
Traction Control Valve H-25
Traction Control Valve Assembly H-21
Traction Microcontrol (SD-160DX/SD-160F) . . . H-23
Traction Microcontrol (SD-190DX) H-23
Traction Microcontrol (SD-200DX/SD-200F) . . . H-23
Trakpak E-49
Trakpak With Antenna E-49
Trunnion B-27, B-75
Tube Assembly B-89
Two Speed Vibration Selector Harness E-15

U

Unifilar Bulb D-121
U-nut C-45, C-47, C-49, C-53
Upper Radiator Hose C-19
Upper Side Duct Hose . . . D-55, D-67, D-129, D-147

V

Valve B-91, D-57, D-69, D-133, D-151, H-19
Valve Bracket D-77, D-161
Valve Cap A-21
Valve Lever Arm D-57, D-69, D-141, D-163
Valve Pin B-27, B-75
Valve Plate E-41
Valve Solenoid (Includes Items 56 thru 59) A-17
Vandal Cover D-31
Variable Vibration Harness E-29
V-block B-83, B-95
Vent A-7, A-13
Venturi D-61, D-77, D-139, D-161
Vibration Motor B-7, B-29, B-43, B-63
Vibration Motor Installation B-37
Vibration Pump C-9, C-33
Vibration Pump - SD-160 . . . . . E-29
Vibration Pump (SD-190/200) E-29
Vibration Sensor Harness E-29, E-47
Vibration Variation Control (SD-160DX) E-29
Vibration Variation Control (SD-160F) E-29
Vibration Variation Control (SD-190DX/SD-200DX) . E-29
Vibration Variation Control (SD-200F) E-29
Vibration Variation Selection Switch E-29
Vibration Variation Wire Harness E-29
Voltmeter D-33
V-Ring Seal B-53
V-ring Seal B-9, B-29, B-77

W

Washer Bottle D-127, D-145
Washer Bottle Cap D-127, D-145
Washer Bottle Pump D-127, D-145
Washer Hose D-45, D-103
Washer Plain D-127
Water Wiper D-121
Weather Strip D-11
Webbing D-27
Wet Arm Kit D-45, D-49, D-103, D-107
Wheel A-21
Wheel Nut A-21
Wheel Stud A-11
Window Bumper Kit D-41, D-99
Window Handle
LH D-123
RH D-119
Window Hinge D-39, D-41, D-97, D-99
Window Hinge Pin Kit D-39, D-41, D-97, D-99
Window Hold Back . . D-37, D-39, D-41, D-95, D-97, D-99
Window Latch D-119, D-123
Window Latch Kit D-37, D-39, D-41, D-95, D-97, D-99
Window Seal D-119
Windshield Washer Hose Fitting . D-45, D-49, D-103, D-107
Wing Nut D-31
Wiper Blade Rear 20" D-45, D-103
Wiper Cover D-121
Wiper Motor .D-43, D-45, D-49, D-101, D-103, D-107
Wiper Motor w/Fastening Mount D-121

Wire Form D-19
Wire Harness D-77, D-161
Wire Tie E-49
Wire Tie Base E-69, E-73
Wiring Harness . . . D-57, D-61, D-69, D-133, D-139, D-151
Work Lights D-49, D-107
Work Lights Selector Harness - Effective with S/N 194702 D-35, D-65, D-85, D-89, D-93, D-109, D-111, D-113, D-127, D-145, E-69, E-73
Work Lights Selector Harness - Prior to S/N 194702 . D-35, D-65, D-85, D-89, D-93, D-109, D-111, D-113, D-127, D-145, E-69, E-73
Working Light D-119
Worklight Harness E-67, E-69, E-71, E-73
Worklights E-69, E-73

Y

Y-splicer D-55, D-67, D-129, D-147

NUMERICAL INDEX

COMM.NO. PAGE	COMM.NO. PAGE	COMM.NO. PAGE	COMM.NO. PAGE
10486116 ..... A-7	13176516 ..... D-55	13197108 .....D-35	13204391 .....H-7
..... A-13	..... D-67	.....D-65	.....H-11
13044193 ..... H-21	..... D-129	.....D-85	13204425 .....H-3
13066204 ..... A-17	..... D-147	.....D-89	.....H-9
..... A-19	13176532 ..... D-55	.....D-93	13204466 .....H-21
13066220 ..... A-15	..... D-67	.....D-109	13204680 .....H-33
..... A-17	..... D-129	.....D-111	13204755 .....H-7
13066246 ..... A-19	..... D-147	.....D-113	.....H-9
13093075 .....C-43	13176789 .....E-29	.....D-127	13205075 .....E-47
13104161 ..... A-5	.....E-47	.....D-145	13205083 .....E-29
13156963 ..... D-67	13176797 .....E-63	.....E-69	13205364 .....B-93
..... D-147	.....E-65	.....E-73	13205513 .....H-17
13156997 ..... D-55	13179197 ..... D-55	13197306 .....A-33	13206941 .....G-11
..... D-129	..... D-67	.....D-165	13206958 .....G-11
13157151 .....C-7	..... D-129	.....G-7	13207618 .....H-7
.....C-31	..... D-147	.....G-11	.....H-11
13157961 ..... D-171	13179403 ..... D-55	13197314 .....G-9	13208004 .....C-9
13158647 ..... D-15	..... D-67	13197413 .....G-7	.....C-33
13159843 .....E-75	..... D-129	13197660 .....H-21	.....H-35
13161724 ..... D-55	..... D-147	13198270 .....D-19	13208012 .....G-3
..... D-67	13179445 .....E-45	13198353 .....G-9	.....G-9
..... D-129	13183249 .....B-11	13198908 .....E-29	13208038 .....G-7
..... D-147	.....B-45	13198916 .....E-47	13209135 .....E-21
13161732 ..... D-55	.....B-65	13199062 .....H-5	13209168 .....B-3
..... D-67	13183272 .....B-7	13199088 .....H-21	.....B-35
..... D-129	.....B-29	13199104 .....H-7	13209200 .....B-3
..... D-147	.....B-43	13199112 .....H-11	.....B-35
13161757 ..... D-55	.....B-63	.....H-13	.....B-39
..... D-67	13184445 .....B-17	13199161 .....H-9	.....B-61
..... D-129	.....B-51	.....H-13	13209341 .....C-19
..... D-147	13184700 ..... A-27	13199187 .....H-7	13209424 .....C-19
13162094 ..... D-55	13184742 ..... A-27	.....H-13	13209648 .....E-23
..... D-67	13184833 .....C-49	13199195 .....H-21	13209663 .....B-83
..... D-129	.....C-51	13199344 .....G-3	.....B-95
..... D-147	.....C-53	13200001 .....D-55	13209887 .....D-55
13163332 ..... G-7	13184932 .....B-87	.....D-67	.....D-67
..... G-11	13185384 .....B-85	.....D-129	.....D-129
13165071 ..... D-13	13185889 ..... A-27	.....D-147	.....D-147
13165659 ..... H-25	13186598 .....C-45	13200019 .....D-55	13209903 .....B-81
13167390 .....B-9	.....C-47	.....D-67	.....B-97
.....B-29	.....C-49	.....D-129	13212501 .....C-23
.....B-53	.....C-53	.....D-147	13212576 .....D-35
.....B-77	13187372 .....C-11	13200027 .....D-57	.....D-65
13167499 .....C-23	13188131 ..... A-3	.....D-69	.....D-85
13167721 ..... D-3	13188198 .....B-81	.....D-133	.....D-89
13167812 ..... D-3	13188958 ..... D-33	.....D-151	.....D-93
13167945 ..... D-19	13190723 ..... H-15	13200035 .....D-57	.....D-109
13169362 .....C-43	13190772 .....E-47	.....D-69	.....D-111
13169404 .....E-47		.....D-133	.....D-113
13169537 .....C-43		.....D-151	.....D-127
13176508 ..... D-55		13204334 .....H-5	.....D-145
..... D-67		.....H-9	13213111 .....C-11
..... D-129		.....H-11	13213533 .....B-89
..... D-147		13204359 .....H-5	13213574 .....B-89
		.....H-9	13213582 .....B-89
			13213624 .....B-89

NUMERICAL INDEX

COMM.NO. PAGE	COMM.NO. PAGE	COMM.NO. PAGE	COMM.NO. PAGE
13213632 .....B-89	13224241 ..... D-45	13225735 .....D-73	13234844 .....A-23
13213681 .....B-89	..... D-49	.....D-153	13234877 .....A-27
13213699 .....B-89	..... D-103	13225875 .....G-7	13234893 .....D-55
13213913 .....B-99	..... D-107	13225909 .....G-7	.....D-67
.....B-103	13224332 ..... D-37	13225933 .....G-7	.....D-129
.....B-107	..... D-95	13225966 .....G-7	.....D-147
13214028 .....E-27	13224340 ..... D-39	13226006 .....G-7	13234927 .....D-55
13214259 ..... D-11	..... D-41	13226014 .....G-7	.....D-67
13214267 .....E-21	..... D-97	13226022 .....G-7	.....D-129
13214317 ..... D-11	..... D-99	13226030 .....G-7	.....D-147
13214333 ..... D-11	13224357 ..... D-39	13226055 .....G-7	13235007 .....C-55
13214804 ..... D-5	..... D-41	.....G-11	13235320 .....H-17
13214812 ..... H-17	..... D-97	13226063 .....G-9	13235478 .....D-29
13215405 ..... H-15	..... D-99	13226071 .....G-7	13235981 .....D-21
13215769 ..... D-35	13224381 ..... D-37	.....G-11	.....D-175
..... D-65	..... D-39	13226089 .....G-9	13236039 .....D-13
..... D-85	..... D-41	13226097 .....G-7	13236203 .....E-11
..... D-89	..... D-95	.....G-11	13236377 .....A-27
..... D-93	..... D-97	13227648 .....A-11	13236468 .....A-23
..... D-109	..... D-99	13228242 .....D-127	13236666 .....D-71
..... D-111	13224431 ..... D-45	.....D-145	.....D-149
..... D-113	..... D-103	13228259 .....D-127	13236864 .....D-15
..... D-127	13224449 ..... D-43	.....D-145	13236872 .....D-15
..... D-145	..... D-101	13228614 .....A-11	13236906 .....E-67
13216460 .....C-19	13224456 ..... D-49	13228622 .....A-11	.....E-71
13216577 .....C-19	..... D-107	13228630 .....A-11	13237326 .....D-55
13216734 .....C-21	13224464 ..... D-45	13228655 .....A-11	.....D-67
13216775 .....E-51	..... D-103	13228663 .....A-11	.....D-129
13216783 .....E-51	13224480 ..... D-43	13228671 .....A-11	.....D-147
13217450 ..... D-5	..... D-101	13228689 .....A-11	13237367 .....D-67
13218029 .....B-65	13225065 ..... H-21	13228697 .....A-11	.....D-69
13218045 .....B-11	13225073 ..... H-3	13228705 .....A-11	.....D-147
.....B-45	13225099 ..... H-3	13228713 .....A-11	.....D-151
13218276 .....C-49	..... H-11	13228721 .....A-11	13237490 .....D-3
.....C-51	13225115 .....E-63	13228739 .....A-13	13237888 .....D-55
.....C-53	13225123 .....E-47	13228747 .....A-13	.....D-57
13218284 .....C-49	13225339 ..... D-5	13228754 .....A-13	.....D-129
.....C-51	13225503 ..... D-13	13228762 .....A-13	.....D-133
.....C-53	13225529 ..... H-17	13228770 .....A-13	13238423 .....B-33
13218292 .....C-49	13225545 ..... G-9	13228788 .....A-13	.....B-81
.....C-51	13225552 ..... G-7	13228820 .....D-19	13238431 .....B-33
.....C-53	..... G-11	13228838 .....D-19	.....B-81
13218300 .....C-49	13225560 ..... D-35	13228846 .....D-19	13238803 .....A-25
.....C-51	..... D-65	13228853 .....D-19	13238969 .....H-33
.....C-53	..... D-85	13228861 .....D-19	13239090 .....A-27
13218599 .....C-7	..... D-89	13228937 .....B-81	13239157 .....D-5
.....C-31	..... D-93	13228945 .....E-41	13239967 .....B-3
13220835 ..... D-45	..... D-109	.....E-43	.....B-35
..... D-49	..... D-111	13228994 .....C-13	.....B-39
..... D-103	..... D-113	13229638 .....E-53	.....B-61
..... D-107	..... D-127	13230024 .....E-53	13245337 .....B-33
13224217 ..... D-49	..... D-145	13231394 .....D-5	.....B-81
..... D-107	.....E-69	13232202 .....C-7	13247275 .....A-17
13224225 ..... D-49	.....E-73	.....C-31	13247283 .....A-17
..... D-107	13225727 ..... G-11	13233309 .....D-3	13247309 .....A-17
		13233440 .....E-21	.....A-19

NUMERICAL INDEX

COMM.NO. PAGE	COMM.NO. PAGE	COMM.NO. PAGE	COMM.NO. PAGE
13247366 ..... E-59	13255559 ..... G-3	13258769 ..... D-61	13258975 ..... D-57
..... E-61	..... G-7	..... D-77	..... D-69
13247374 ..... E-59	13255567 ..... G-3	..... D-139	..... D-141
..... E-61	..... G-7	..... D-161	..... D-163
13247473 ..... D-19	13255575 ..... G-3	13258777 ..... D-61	13258983 ..... D-57
13247481 ..... D-19	..... G-7	..... D-77	..... D-69
13247549 ..... D-19	13255583 ..... G-3	..... D-139	..... D-141
13247556 ..... D-19	..... G-7	..... D-161	..... D-163
13247937 ..... B-83	13255591 ..... G-3	13258785 ..... D-61	13258991 ..... D-57
..... B-95	..... G-7	..... D-139	..... D-69
13247945 ..... B-83	13255609 ..... G-3	13258793 ..... D-61	..... D-141
..... B-95	..... G-7	..... D-77	..... D-163
13247952 ..... B-83	13255617 ..... G-3	..... D-139	13259007 ..... D-57
..... B-95	..... G-7	..... D-161	..... D-69
13247960 ..... B-83	13255625 ..... G-3	13258801 ..... D-61	..... D-141
..... B-95	..... G-7	..... D-139	..... D-163
13247978 ..... B-83	13255930 ..... E-75	13258819 ..... D-61	13259015 ..... D-57
..... B-95	13255955 ..... H-31	..... D-139	..... D-69
13248026 ..... C-15	..... H-33	13258827 ..... D-61	..... D-141
13248083 ..... C-15	13255971 ..... H-31	..... D-139	..... D-163
..... E-33	..... H-33	13258835 ..... D-61	13259023 ..... D-57
13248919 ..... H-21	13256193 ..... D-11	..... D-77	..... D-69
13248935 ..... D-35	13258603 ..... H-19	..... D-139	..... D-141
..... D-65	13258611 ..... H-19	..... D-161	..... D-163
..... D-85	13258629 ..... H-19	13258843 ..... D-61	13259098 ..... E-63
..... D-89	13258694 ..... D-61	..... D-77	..... E-65
..... D-93	..... D-77	..... D-139	13262803 ..... D-23
..... D-109	..... D-139	..... D-161	..... D-27
..... D-111	..... D-161	13258868 ..... D-77	13262811 ..... D-23
..... D-113	13258702 ..... D-61	..... D-161	13262829 ..... D-23
..... D-127	..... D-77	13258876 ..... D-77	13262837 ..... D-23
..... D-145	..... D-139	..... D-161	13262845 ..... D-23
13250386 ..... E-51	..... D-161	13258884 ..... D-77	13262852 ..... D-23
..... E-59	13258710 ..... D-61	..... D-161	..... D-27
..... E-61	..... D-77	13258892 ..... D-77	13262860 ..... D-23
13250733 ..... E-59	..... D-139	..... D-161	13262878 ..... D-23
..... E-61	..... D-161	13258900 ..... D-77	13262886 ..... D-23
13254503 ..... E-29	13258728 ..... D-61	..... D-161	13262894 ..... D-23
..... E-47	..... D-77	13258918 ..... D-77	13262902 ..... D-23
13254644 ..... D-55	..... D-139	..... D-161	13262910 ..... D-23
..... D-67	..... D-161	13258926 ..... D-77	..... D-175
..... D-129	13258736 ..... D-61	..... D-161	13262928 ..... D-23
..... D-147	..... D-77	13258934 ..... D-19	13262936 ..... D-23
13254651 ..... E-29	..... D-139	13258942 ..... D-57	13262944 ..... D-23
13254669 ..... C-11	..... D-161	..... D-69	13262951 ..... D-23
13254701 ..... A-3	13258744 ..... D-61	..... D-141	13262969 ..... D-23
13254776 ..... H-33	..... D-77	..... D-163	13262977 ..... D-25
13254784 ..... H-33	..... D-139	13258959 ..... D-57	13262985 ..... D-25
13254909 ..... D-57	..... D-161	..... D-69	13262993 ..... D-25
..... D-69	13258751 ..... D-61	..... D-141	13263009 ..... D-25
..... D-133	..... D-77	..... D-163	13263017 ..... D-25
..... D-151	..... D-139	13258967 ..... D-57	13263025 ..... D-27
13255005 ..... G-9	..... D-161	..... D-69	13263033 ..... D-27
13255054 ..... G-9		..... D-141	13263041 ..... D-27
13255062 ..... G-9		..... D-163	..... D-175
13255070 ..... G-9			13263058 ..... D-27

NUMERICAL INDEX

COMM.NO. PAGE	COMM.NO. PAGE	COMM.NO. PAGE	COMM.NO. PAGE
13263066 ..... D-27	13273339 .....C-45	13285473 .....D-39	13297155 .....D-81
13263074 ..... D-27	.....C-47	.....D-41	.....D-159
13263082 ..... D-27	.....C-49	.....D-97	13297536 .....B-83
13263090 ..... D-27	.....C-53	.....D-99	.....B-95
..... D-175	13274576 ..... D-79	13285481 .....D-39	13297809 .....A-3
13263553 ..... A-19	..... D-157	.....D-41	13297866 .....C-19
13263918 .....E-77	13274832 ..... D-31	.....D-97	13299581 .....A-29
13263926 .....E-77	13275953 .....B-83	.....D-99	13304266 .....H-23
13263934 ..... H-25	.....B-95	13289814 .....H-33	13304787 .....B-7
13264239 ..... D-23	13276548 ..... D-15	13289871 .....H-33	.....B-13
13264858 .....E-3	13276571 .....B-11	13289913 .....H-33	.....B-29
13268263 .....B-23	.....B-45	13290101 .....B-11	.....B-31
.....B-73	.....B-65	.....B-65	.....B-43
13268487 .....E-37	13277116 ..... D-3	13291687 .....G-9	.....B-47
13268974 .....B-27	13277462 ..... A-21	.....G-11	.....B-55
.....B-75	13277470 ..... A-21	13292354 .....C-23	.....B-57
13269436 ..... H-19	13277660 ..... A-21	13292545 .....C-19	.....B-63
13269733 .....B-73	13277710 ..... H-33	13292727 .....C-19	.....B-67
13269741 .....B-73	13277819 .....B-69	13292818 .....B-39	.....B-77
13269766 .....B-75	13278007 .....E-63	.....B-59	.....B-79
13269774 .....B-27	13278312 ..... A-21	13292834 .....B-39	13304878 .....H-19
.....B-75	13278346 ..... A-21	.....B-59	13304944 .....D-7
13269782 .....B-27	13279278 .....C-19	13292982 .....D-171	13305099 .....B-85
.....B-75	13279666 .....C-19	13293006 .....E-75	13306519 .....E-23
13269790 .....B-27	13280458 ..... H-31	13293055 .....C-23	13307392 .....H-23
.....B-75	13280805 ..... H-9	13293402 .....H-33	13307525 .....H-9
13269808 .....B-27	..... H-11	13293808 .....C-9	.....H-11
.....B-75	13281332 ..... D-19	.....C-33	13307541 .....H-9
13269816 .....B-23	13281365 ..... D-19	13293923 .....H-33	.....H-11
.....B-27	13281373 ..... D-19	13294178 .....B-39	13307566 .....H-9
.....B-75	13284500 ..... D-39	.....B-59	13307608 .....H-9
13269824 .....B-27	..... D-97	.....B-97	.....H-11
.....B-75	13284567 ..... D-43	13294186 .....B-39	13307616 .....H-9
13269832 .....B-27	..... D-101	.....B-59	.....H-11
.....B-75	13284617 .....C-5	.....B-81	13307731 .....H-21
13269840 .....B-27	.....C-29	.....B-95	13307749 .....E-19
.....B-75	13284880 .....E-29	13294467 .....B-41	13309877 .....A-33
13269857 .....B-27	13284898 .....C-11	.....B-61	.....D-35
.....B-75	13284906 ..... A-3	13294632 .....B-101	.....D-65
13269865 .....B-23	13284948 .....B-7	.....B-105	.....D-93
.....B-27	.....B-15	.....B-109	.....D-109
.....B-75	.....B-29	13294756 .....H-33	.....D-165
13269873 .....B-23	13285002 ..... G-3	13294806 .....H-31	13313648 .....E-25
.....B-27	..... G-13	13294962 .....H-31	13313838 .....C-19
.....B-75	13285010 ..... G-3	13295282 .....B-97	13313846 .....C-19
13269881 .....B-27	..... G-13	13295639 .....H-15	13313887 .....H-3
.....B-75	13285028 ..... G-3	13295712 .....D-55	.....H-9
13269899 .....B-75	..... G-13	.....D-67	13313952 .....H-3
13269907 .....B-27	13285440 ..... D-37	.....D-129	13313960 .....H-5
.....B-75	..... D-41	.....D-147	.....H-11
13270731 ..... D-15	..... D-49	13296231 .....H-31	13314067 .....H-5
13271762 ..... H-37	..... D-95	13297080 .....D-81	13319835 .....H-9
13271903 ..... H-37	..... D-99	.....D-159	.....H-13
13272547 .....C-19	..... D-107	13297106 .....D-81	13319843 .....H-7
13272661 .....C-7		.....D-159	.....H-13
.....C-31			13319868 .....H-21

NUMERICAL INDEX

COMM.NO. PAGE	COMM.NO. PAGE	COMM.NO. PAGE	COMM.NO. PAGE
13319942 ..... D-29	13335492 ..... D-65	13375548 .....H-21	13387949 .....B-3
..... D-83	..... D-83	13375787 .....H-23	.....B-35
..... D-91	..... D-91	13382122 .....E-51	13387956 .....B-3
13320841 ..... D-7	..... D-109	13382247 .....E-53	.....B-35
13321443 ..... D-35	.....E-71	13382270 .....E-51	13389416 .....B-79
..... D-65	13340096 ..... H-33	13382726 .....D-47	13396007 .....B-83
..... D-85	13342720 ..... A-35	.....D-49	.....B-97
..... D-89	..... D-63	.....D-105	13396031 .....B-85
..... D-93	..... D-167	.....D-107	13396304 .....H-31
..... D-109	13342878 .....E-75	13382734 .....D-49	13396320 .....H-31
..... D-111	13346580 .....C-19	.....D-107	13396478 .....G-11
..... D-113	13346739 .....E-53	13382742 .....D-41	13396486 .....G-11
..... D-127	13346762 .....E-53	.....D-49	13396494 .....G-11
..... D-145	13349212 ..... A-31	.....D-99	13403647 .....E-51
.....E-67	..... A-37	.....D-107	13406764 .....E-69
.....E-71	..... D-87	13382759 .....D-37	.....E-73
13321864 .....C-25	..... D-125	.....D-39	13406780 .....E-27
13321955 .....C-25	..... D-169	.....D-41	13408240 .....H-15
13322060 .....E-15	13350673 .....B-63	.....D-95	13409693 .....H-21
13322102 ..... D-35	.....B-77	.....D-97	1341 9304 .....B-39
..... D-65	13351408 .....B-55	.....D-99	13411889 .....D-15
..... D-85	.....B-79	13382783 .....D-39	13411962 .....B-7
..... D-89	13351671 .....B-17	.....D-41	.....B-29
..... D-93	.....B-51	.....D-97	.....B-43
..... D-109	.....B-69	.....D-99	.....B-53
..... D-111	13351887 .....E-57	13382916 .....D-39	.....B-55
..... D-113	13352174 .....E-55	.....D-97	13412028 .....B-17
..... D-127	13352489 .....E-61	13382924 .....D-37	13412192 .....B-29
..... D-145	13352505 .....E-59	.....D-39	13412648 .....D-5
.....E-67	13354014 .....E-53	.....D-95	13413158 .....D-5
.....E-71	13355003 ..... D-53	.....D-97	13413661 .....E-61
13322193 .....C-19	..... D-71	13382932 .....D-39	13413802 .....B-5
13323027 ..... H-35	..... D-151	.....D-97	.....B-39
13323233 .....B-63	13355912 ..... D-17	13382940 .....D-37	.....B-59
.....B-77	13356340 .....B-69	.....D-39	13413984 .....B-17
13324090 ..... D-31	13356712 ..... D-81	.....D-95	.....B-51
13324181 .....C-59	..... D-159	.....D-97	13414008 .....B-69
13325055 ..... A-25	13359815 .....E-69	13382957 .....D-39	13414016 .....B-39
..... A-27	.....E-73	.....D-97	.....B-59
13325170 ..... A-27	13364799 ..... H-7	13382965 .....D-41	13414032 .....E-55
13325378 ..... G-3	..... H-13	.....D-99	.....E-57
..... G-9	13364807 ..... H-7	13385042 .....B-3	13414065 .....E-51
..... G-11	..... H-13	.....B-35	13414743 .....B-9
13328240 .....B-97	13364815 ..... H-7	.....B-39	.....B-53
13329263 .....B-7	..... H-13	.....B-61	.....B-77
.....B-29	13364823 ..... H-7	13385281 .....B-61	13415138 .....B-53
.....B-43	..... H-13	13385299 .....B-61	.....B-77
.....B-55	13365127 ..... H-9	13385323 .....G-9	13417118 .....C-7
.....B-63	..... H-11	13385331 .....G-9	.....C-31
.....B-77	..... H-33	13385349 .....G-9	13417142 .....C-7
13335484 ..... D-35	13365713 .....B-39	13385356 .....G-9	.....C-31
..... D-85	.....B-59	13385364 .....G-9	13417365 .....C-23
..... D-93	13366067 ..... G-9	13385372 .....G-9	13417894 .....C-19
..... D-111	..... H-17	13385380 .....G-9	13417951 .....C-7
.....E-67	13366075 ..... G-9	13385398 .....G-9	.....C-31
	..... H-17	13387238 .....G-5	13418132 .....B-87

NUMERICAL INDEX

COMM.NO. PAGE	COMM.NO. PAGE	COMM.NO. PAGE	COMM.NO. PAGE
13418215 .....B-87	13459268 ..... G-7	13481791 .....B-31	13494943 .....B-73
13418439 .....C-43	13459342 .....C-23	13483698 .....E-29	13494950 .....B-73
13418447 .....C-43	13459375 ..... A-29	13483706 .....B-43	13494968 .....B-73
13418454 ..... G-5	13459383 ..... A-29	.....B-63	13494976 .....B-73
13418496 .....B-63	13459391 ..... A-29	13483896 .....H-11	13494984 .....B-73
.....B-77	13459409 ..... A-29	.....H-13	13494992 .....B-75
13418512 .....B-7	13459474 ..... D-15	13483904 .....H-11	13495007 .....B-75
.....B-29	13460365 ..... A-27	.....H-13	13495015 .....B-75
13419304 .....B-37	13460381 .....C-49	13491634 .....A-15	13495023 .....B-75
.....B-59	.....C-51	13491691 .....C-5	13495031 .....B-75
.....B-61	.....C-53	.....C-29	13495049 .....E-33
13419338 .....B-41	13460407 .....B-17	13492665 .....E-67	13495056 .....E-33
.....B-61	.....B-51	.....E-69	13495064 .....E-35
13419346 .....B-33	13461215 .....E-31	.....E-71	13495072 .....C-15
.....B-35	.....E-37	.....E-73	13495080 .....C-15
13419387 .....B-3	13461231 .....E-31	13492681 .....E-29	13495098 .....B-97
.....B-35	13461249 .....E-31	13492707 .....H-21	13495106 .....B-97
13421789 .....C-23	13461447 .....B-19	.....H-23	13495940 .....E-43
13425061 ..... H-9	.....B-23	13492822 .....D-35	13501853 .....B-83
..... H-11	13461645 ..... H-33	.....D-65	.....B-95
13425608 .....E-49	13462064 .....B-71	.....D-85	13502083 .....D-55
13429519 .....E-49	13462106 .....B-21	.....D-89	.....D-67
13429535 .....E-49	.....B-71	.....D-93	.....D-129
13429782 ..... H-19	13462163 .....B-21	.....D-109	.....D-147
13429931 .....E-49	.....B-23	.....D-111	13502125 .....B-9
13434436 ..... H-9	13462205 .....B-21	.....D-113	13502133 .....B-9
..... H-11	13462239 .....B-23	.....D-127	13502141 .....B-9
13437199 .....B-105	13462247 .....B-23	.....D-145	13502166 .....B-9
.....B-107	.....B-27	13493473 .....H-21	13502240 .....B-9
13437603 ..... G-11	13462254 .....B-23	13493481 .....E-47	13504444 .....B-3
13437983 ..... G-13	13462262 .....B-23	13493499 .....E-15	.....B-35
13437991 ..... G-13	13462270 .....B-23	13493515 .....D-33	13504451 .....B-103
13444575 .....B-69	13462288 .....B-23	13493523 .....E-29	.....B-105
.....C-9	13462296 .....B-23	.....E-47	.....B-107
.....C-33	13462304 .....B-23	13493556 .....D-33	13515283 .....H-31
..... H-25	13462320 .....B-23	13494513 .....B-19	13515770 .....H-31
13447354 .....B-9	13462338 .....B-23	.....B-21	13519343 .....D-41
.....B-29	.....B-27	13494521 .....B-21	.....D-99
.....B-53	.....B-75	13494539 .....B-21	13519350 .....D-37
.....B-77	13462650 ..... D-175	13494547 .....B-23	.....D-95
13447545 .....B-109	13462668 ..... D-175	.....B-25	13519368 .....D-37
13447560 ..... G-7	13464862 .....B-23	13494554 .....B-25	.....D-95
13447602 ..... G-3	13467485 ..... D-55	13494562 .....B-25	13519376 .....D-37
13447628 ..... G-9	..... D-67	13494570 .....B-27	.....D-95
13447669 ..... G-3	..... D-129	13494588 .....B-27	13519384 .....D-41
13451299 ..... H-31	..... D-147	13494596 .....B-27	.....D-49
13451661 .....B-31	13467774 ..... H-15	13494604 .....B-27	.....D-99
13459185 ..... G-11	13468137 .....E-69	13494612 .....B-27	.....D-107
13459193 ..... G-7	.....E-73	13494620 .....B-27	13519392 .....D-41
13459201 ..... G-9	13469010 ..... D-3	13494638 .....B-27	.....D-49
13459219 ..... G-9	13474648 .....E-41	13494828 .....B-71	.....D-99
13459227 ..... G-7	13478797 .....C-29	13494844 .....B-71	.....D-107
..... G-11	13479381 ..... D-79	13494851 .....B-71	13519400 .....D-41
13459235 ..... G-11	..... D-157	13494869 .....B-71	.....D-49
13459243 ..... G-9	13480116 ..... G-3	13494927 .....B-71	.....D-99
13459250 ..... G-9	..... G-7	13494935 .....B-73	.....D-107

NUMERICAL INDEX

COMM.NO. PAGE	COMM.NO. PAGE	COMM.NO. PAGE	COMM.NO. PAGE
13519434 ..... D-41	13880877 .....B-37	13886700 .....D-125	19288422 .....E-77
..... D-99	13880885 .....B-37	13886981 .....D-13	19288604 .....C-23
13525845 .....C-23	13881040 .....B-41	13886999 .....D-23	19288893 .....C-37
13525852 .....C-23	.....B-107	.....D-175	19288901 .....C-39
13527965 .....C-33	13881149 .....C-23	13887039 .....H-33	19288919 .....C-39
13527973 .....C-9	13881198 ..... A-31	13887609 .....D-35	19293943 .....C-19
13845367 ..... D-49	..... A-37	.....D-65	19294198 .....A-41
..... D-107	..... D-87	.....D-93	19295336 .....A-41
13845375 ..... D-77	..... D-169	.....D-109	19295492 .....E-23
..... D-161	13881206 ..... A-31	13888698 .....D-157	19295856 .....C-5
13852256 .....C-5	..... A-37	13888870 .....A-23	.....C-29
.....C-29	..... D-87	13888888 .....A-23	19295872 .....C-5
13855184 .....B-7	..... D-169	13889589 .....D-33	.....C-29
.....B-13	13881222 ..... A-31	13929328 .....E-59	19295914 .....C-29
.....B-29	..... A-37	.....E-61	19298009 .....A-33
.....B-31	..... D-87	14050439 .....D-117	.....D-165
.....B-43	..... D-169	14110183 .....D-121	19298017 .....A-33
.....B-47	13881230 ..... A-31	14262083 .....E-61	19298983 .....C-59
.....B-57	..... A-37	18000471 .....D-35	19298991 .....C-59
.....B-63	..... D-87	.....D-65	19299007 .....C-59
.....B-67	..... D-169	18004051 .....H-21	19331032 .....B-87
.....B-77	13881370 ..... D-125	18004093 .....H-7	19331453 .....C-5
13855200 .....E-69	13881396 ..... A-31	.....H-13	19332063 .....E-3
.....E-73	..... D-87	18006619 .....G-3	20192357 .....A-21
13855572 ..... G-3	13882618 ..... A-27	.....G-7	22067607 .....D-49
..... G-5	13882808 .....B-57	18006627 .....G-3	.....D-107
..... G-7	.....B-79	.....G-7	22085088 .....D-45
..... G-11	13882873 .....C-59	18006635 .....G-5	.....D-103
13855655 ..... G-5	13883061 .....B-53	18007674 .....A-25	22088009 .....D-49
..... G-11	.....B-77	18008441 .....E-47	.....D-107
13855671 ..... G-5	13883210 ..... A-25	18008656 .....H-23	35304286 .....G-5
13861414 ..... D-77	13883277 .....C-45	18009514 .....A-25	.....G-13
..... D-161	13883418 ..... A-25	19280049 .....B-83	35898477 .....D-55
13861752 ..... D-77	13883756 ..... A-25	.....B-95	.....D-67
..... D-161	13883780 ..... A-25	19280080 .....B-83	.....D-129
13863915 .....B-23	13883814 ..... A-27	.....B-97	.....D-147
13863923 .....B-23	13884143 .....C-43	19280098 .....B-83	43800143 .....C-27
13864806 .....E-3	13884374 .....C-51	.....B-97	43801315 .....B-71
13864954 .....E-3	13884408 ..... D-7	19281252 .....C-35	43801323 .....B-71
13870449 .....E-75	13884465 ..... D-27	.....E-43	43801331 .....B-71
13870696 ..... G-5	13884747 ..... D-21	19281419 .....E-3	43801414 .....C-5
13870936 ..... A-27	13884770 ..... D-175	19282102 .....E-63	43801984 .....D-71
13871579 .....B-21	13884911 .....C-5	19282987 .....C-35	.....D-73
13871587 .....B-21	.....C-29	.....E-37	.....D-149
13871595 .....B-21	13885017 .....C-5	19285584 .....C-7	.....D-153
13871603 .....B-21	.....C-29	.....C-31	43801992 .....D-69
13871611 .....B-21	13885256 ..... A-39	19285691 .....C-47	.....D-73
13871660 ..... D-43	13885355 ..... A-31	19287036 .....B-91	.....D-75
..... D-45	..... A-37	19287051 .....B-91	.....D-151
..... D-101	..... D-87	19287093 .....B-91	.....D-153
..... D-103	..... D-169	19287101 .....B-91	43802032 .....D-79
13880612 ..... D-15	13885900 .....C-43	19288232 .....E-75	43802263 .....C-5
13880695 .....B-51	13885991 .....C-23	19288257 .....E-77	.....C-29
13880794 ..... D-7	13886676 ..... D-125	19288265 .....E-77	43804756 .....E-53
13880844 .....B-57	13886684 ..... D-125	19288273 .....E-77	43805167 .....C-49
13880869 .....B-37	13886692 ..... D-125	19288372 .....E-75	.....C-51

NUMERICAL INDEX

COMM.NO. PAGE	COMM.NO. PAGE	COMM.NO. PAGE	COMM.NO. PAGE
43805183 .....C-49	43835271 ..... D-49	43843564 .....D-55	43887660 .....B-9
.....C-51	..... D-107	.....D-67	43887702 .....B-13
43806165 ..... D-49	43835289 ..... D-45	.....D-129	43887777 .....B-9
..... D-107	..... D-103	.....D-147	43887785 .....B-9
43809912 ..... D-15	43835297 ..... D-37	43843572 .....D-13	43887835 .....B-9
43813724 .....E-13	..... D-95	43844828 .....C-33	43887900 .....B-47
43813948 .....B-33	43835305 ..... D-45	43850692 .....E-69	.....B-67
43818830 ..... D-29	..... D-103	.....E-73	43887926 .....B-67
43818848 ..... D-35	43835313 ..... D-49	43851203 .....D-3	43888353 .....B-21
..... D-65	..... D-107	43852359 .....D-71	43889153 .....D-69
..... D-85	43835321 ..... D-47	.....D-149	.....D-71
..... D-89	..... D-105	43853282 .....C-53	.....D-73
..... D-93	43835339 ..... D-47	43854140 .....H-33	.....D-75
..... D-109	..... D-105	43854181 .....E-51	.....D-149
..... D-111	43835347 ..... D-45	43854579 .....H-33	.....D-151
..... D-113	..... D-103	43855071 .....B-5	43889195 .....A-21
..... D-127	43835354 ..... D-49	43855303 .....B-5	43889203 .....A-21
..... D-145	..... D-107	43861095 .....E-19	43890201 .....G-5
.....E-69	43835362 ..... D-49	43867555 .....D-15	43890565 .....E-51
.....E-73	..... D-107	43869262 .....D-3	43890714 .....B-5
43818855 ..... D-15	43835370 ..... D-49	43869411 .....B-81	.....B-81
43818863 ..... D-15	..... D-107	.....B-83	43890748 .....B-3
43818954 .....B-33	43835388 ..... D-43	43869429 .....B-97	.....B-5
43819598 .....E-53	..... D-101	43871102 .....D-15	43891605 .....D-3
43821008 .....E-29	43835396 ..... D-43	43871193 .....H-11	43896505 .....B-81
43821016 .....E-29	..... D-101	.....H-13	.....B-83
43821057 .....E-29	43835404 ..... D-43	43871201 .....H-5	43896620 .....E-23
43821065 .....E-29	..... D-101	.....H-11	43897362 .....B-5
43821545 .....E-29	43835412 ..... D-43	43871243 .....H-7	.....B-81
43821552 .....E-29	..... D-101	.....H-11	43897420 .....C-21
43821578 .....E-29	43835420 ..... D-49	43871987 .....H-9	43919232 .....D-35
43821586 .....E-29	..... D-107	.....H-11	.....D-65
43822840 .....C-49	43835438 ..... D-49	43871995 .....H-9	.....D-85
43822857 .....C-49	..... D-107	.....H-11	.....D-89
43827575 .....E-21	43835446 ..... D-39	43872027 .....H-9	43919257 .....D-3
43827625 ..... D-19	..... D-41	.....H-11	43919265 .....D-3
43828862 ..... D-93	..... D-97	43876242 .....D-81	.....D-5
..... D-109	..... D-99	.....D-159	50264860 .....A-23
43835206 ..... D-37	43836451 ..... D-35	43876259 .....D-81	.....D-3
..... D-95	..... D-65	.....D-159	50269984 .....B-29
43835214 ..... D-39	..... D-85	43876267 .....D-81	.....B-53
..... D-97	..... D-89	.....D-159	.....B-77
43835222 ..... D-45	..... D-109	43876812 .....C-27	50270248 .....B-5
..... D-47	..... D-111	43876820 .....C-27	.....B-33
..... D-103	43837715 ..... D-81	43879105 .....A-21	.....B-39
..... D-105	..... D-159	43879287 .....A-21	.....B-59
43835230 ..... D-49	43838218 .....E-23	43879303 .....E-23	.....B-83
..... D-107	43843499 ..... G-3	43879329 .....A-21	.....B-95
43835248 ..... D-47	..... G-7	43879659 .....E-25	.....H-31
..... D-49	43843507 ..... G-7	43881978 .....C-23	50273986 .....H-31
..... D-105	43843515 ..... G-7	43886696 .....D-51	50274299 .....C-19
..... D-107	43843523 ..... G-7	.....D-75	.....C-21
43835255 ..... D-39	43843531 ..... G-7	.....D-137	.....C-27
..... D-97	43843549 ..... G-7	.....D-155	50275536 .....A-21
43835263 ..... D-43	43843556 ..... D-7	43887579 .....B-13	
..... D-101		43887587 .....B-47	

NUMERICAL INDEX

COMM.NO. PAGE	COMM.NO. PAGE	COMM.NO. PAGE	COMM.NO. PAGE
50278019 ..... A-15	54666102 ..... D-17	58848920 .....C-5	58896580 .....B-17
.....B-15	54680079 .....C-7	.....C-19	.....B-51
.....C-13	.....C-31	.....C-29	.....B-69
.....C-35	54680087 .....C-7	58849845 .....H-21	.....C-5
.....E-31	.....C-31	58855099 .....B-85	.....C-29
..... H-29	54747340 ..... D-3	58859380 .....C-9	58896952 .....B-17
50278894 ..... A-15	54761739 ..... A-13	.....C-33	.....B-51
50829647 .....B-95	56998610 ..... A-15	58861980 .....D-119	58898677 .....C-9
.....B-97	57575375 .....B-73	58861998 .....D-121	.....C-33
50829662 ..... D-55	57588162 ..... D-77	58863176 .....E-61	58901653 .....B-7
..... D-67	..... D-161	58870924 .....E-27	.....B-29
..... D-129	57607814 ..... D-81	58877549 .....E-29	.....B-43
..... D-147	..... D-159	.....G-9	.....B-63
54461090 ..... D-15	58754458 .....E-49	58877796 .....D-33	.....B-69
54462106 ..... H-33	58788852 ..... H-37	58878000 .....D-33	.....C-9
54487517 ..... D-67	58795535 .....B-49	58878562 .....E-29	.....C-11
..... H-33	.....E-41	58879768 .....C-3	.....C-33
54494638 .....B-83	58795766 .....C-13	58880501 .....B-3	.....H-25
.....B-95	.....E-31	.....B-35	58905803 .....C-23
54496377 ..... D-19	.....E-37	.....B-39	58910662 .....D-71
54496385 ..... D-19	58795824 .....B-39	.....B-61	.....D-149
54506837 .....E-31	.....B-59	.....H-33	58913856 .....D-33
54531629 ..... D-19	.....B-95	58881863 .....A-15	58916537 .....A-7
54537097 ..... H-5	.....B-97	.....A-17	58916545 .....A-7
..... H-33	58797036 .....E-75	.....B-49	58916578 .....A-7
54577838 .....B-81	58799750 ..... H-29	58891482 .....C-15	58916610 .....A-7
..... H-31	58799768 ..... H-29	.....E-33	58916685 .....A-11
54584776 .....B-9	58799784 ..... H-29	58891490 .....C-15	58916693 .....A-11
.....B-31	58802851 .....C-21	.....E-33	58916925 .....A-11
.....B-57	58804337 ..... A-11	58891573 .....A-15	58916933 .....A-11
.....B-79	58814237 .....E-75	58891599 .....A-15	58917014 .....A-11
54591805 .....B-7	58820168 ..... D-15	.....A-17	58917055 .....A-11
.....B-9	.....E-15	58891623 .....A-15	58917063 .....A-11
.....B-29	.....E-51	.....A-17	58917097 .....A-11
.....B-43	..... H-33	58891631 .....A-15	58917113 .....A-11
.....B-53	58822313 ..... D-33	.....A-17	58917147 .....A-11
.....B-55	58828492 .....C-41	58891649 .....A-15	58917295 .....A-9
.....B-63	.....E-43	58891656 .....A-15	58917303 .....A-9
.....B-77	58834086 .....E-53	.....A-17	58917345 .....A-9
54596259 .....B-7	58835398 ..... D-35	58891664 .....A-17	58917436 .....A-9
.....B-29	..... D-65	58891771 .....A-15	58917527 .....A-9
54601299 .....E-53	..... D-85	58891789 .....A-15	58917543 .....D-9
54628326 ..... D-45	..... D-89	.....A-17	58918558 .....C-15
..... D-103	..... D-93	58891797 .....A-15	58918590 .....C-15
54632773 ..... A-9	..... D-109	.....A-17	.....C-39
54632864 ..... A-9	..... D-111	58891854 .....A-15	.....E-33
54632872 ..... A-9	..... D-113	58891953 .....E-35	58918947 .....G-11
54632898 ..... A-9	..... D-127	58891979 .....E-33	58920216 .....H-37
54633557 ..... A-11	..... D-145	58892902 .....D-15	58921495 .....C-13
54635859 .....E-23	58844556 ..... D-49	58893108 .....E-55	58924333 .....D-15
54638564 ..... H-7	..... D-107	.....E-57	58938275 .....C-45
..... H-11	58845835 ..... D-23	58893983 .....D-33	.....C-47
54666060 ..... D-17	..... D-27	58895079 .....H-31	.....C-49
54666078 ..... D-17	58845868 ..... D-23	58896044 .....H-7	.....C-53
54666086 ..... D-17	58845876 ..... D-27	.....H-11	58950783 .....A-15
54666094 ..... D-17		58896218 .....A-3	58952466 .....G-9

NUMERICAL INDEX

COMM.NO.	PAGE
58954694	A-3
	B-17
	B-51
58962226	D-53
	D-71
	D-131
	D-149
58962812	D-49
	D-107
58962887	D-43
	D-101
58965542	G-5
58966086	C-9
	C-33
58974155	A-7
58978198	G-11
58978222	G-7
58978248	G-11
58978255	G-3
	G-7
58978271	G-11
58978289	G-7
	G-11
58979964	A-3
58992603	G-7
	G-11
58998139	A-21
58998147	A-21
59003434	B-39
	B-59
59003442	B-5
	B-33
59004762	A-15
59019539	A-17
59019620	A-15
59019687	A-15
59020040	G-5
	G-11
59020362	E-75
59020370	E-75
59027060	B-17
	B-51
59029561	E-35
59029629	C-35
	E-31
	E-37
59029637	C-17
	E-35
59029710	A-3
	C-15
59034447	E-43
59040923	H-29
59047019	E-29
59048868	E-15
59050948	G-11
59051151	G-5
59052704	B-15
59067538	B-15
	E-35
59072694	D-45
	D-103
59072702	D-47
	D-105
59077602	H-27
59078899	A-7
	A-13
59080028	A-11
59081323	C-45
	C-47
	C-49
	C-53
59087452	C-47
	C-59
59087999	G-5
	G-11
59092924	D-31
59093351	B-85
59094490	B-49
59102913	H-29
59103259	C-45
	C-47
	C-49
	C-53
59103267	C-45
	C-47
	C-49
	C-53
59103275	C-45
	C-47
	C-49
	C-53
59103598	C-21
	E-17
59108100	D-9
59108605	D-9
59109041	C-11
59109116	D-9
59109819	B-33
59110312	B-91
	H-19
59111450	D-9
59117309	E-19
59117317	E-11
	E-13
59117333	C-7
	C-31
	E-25
59118521	C-57
59121855	E-5
	E-13
	E-17
	E-19
	E-29
	E-47
59126961	D-15
59127720	C-3
59131912	G-11
59131920	G-11
59131938	G-11
59131946	G-11
59137448	E-75
59144394	C-57
59144428	B-7
	B-29
	B-43
	B-53
	B-63
	B-77
	B-85
	B-87
59145821	D-19
59147991	D-79
	D-157
59148007	D-79
	D-157
59148569	D-7
	D-15
	E-17
59148726	H-9
	H-11
59151613	C-19
59153668	A-11
59154286	E-31
	E-37
59154393	D-19
59154450	D-19
59154492	D-19
59154500	D-19
59154518	D-19
59154526	D-19
59154542	D-19
59154807	C-21
59155192	B-15
	C-13
	E-31
59155739	A-17
59158881	C-11
59159558	D-15
59162149	A-31
	A-37
	D-87
	D-125
	D-169
59162982	G-5
59163220	D-125
59163238	A-31
	A-37
	D-87
	D-125
	D-169
59163758	A-21
59175661	B-109
59179218	C-43
59185074	D-3
59190975	B-5
	B-33
	B-39
	B-59
	B-81
	B-97
59195727	A-17
59195735	A-17
59195925	D-35
	D-65
	D-85
	D-89
	D-93
	D-109
	D-111
	D-113
	D-127
	D-145
59196444	D-35
	D-65
	D-85
	D-89
	D-93
	D-111
	D-113
	D-127
	D-145
59196451	D-35
	D-65
	D-85
	D-89
	D-93
	D-109
	D-111
	D-113
	D-127
	D-145
59197012	H-17
59198937	H-9
	H-11
59203406	H-3
	H-9
59211805	E-23

NUMERICAL INDEX

COMM.NO.	PAGE
59214775	B-5
	B-33
	B-39
	B-59
59218172	A-13
59218198	A-13
59218214	A-13
59218230	A-13
59218248	A-13
59218263	A-13
59218271	A-13
59218289	A-13
59218297	A-5
59218313	A-5
59218321	A-9
59218339	A-9
59218362	A-9
59218396	A-9
59218404	A-9
59218453	A-11
59218461	A-11
59218487	A-11
59218495	A-11
59218503	A-11
59218511	A-11
59224881	B-103
	B-105
	B-107
59224899	B-103
	B-105
	B-107
59229492	E-75
59231811	C-17
59239897	D-7
59242263	C-21
59246603	G-3
59246611	G-3
59249284	B-15
	B-49
	E-45
	E-47
	H-23
59251009	A-7
59251074	A-11
59266726	B-89
59275917	D-173
59275990	D-173
59277251	B-29
59277756	B-9
	B-29
	B-53
	B-77
59277764	B-9
	B-31
	B-57
	B-79
59277772	B-7
	B-29
	B-43
	B-53
	B-63
	B-77
	B-85
59286336	C-5
	C-29
59289025	D-173
59290726	B-87
59290734	D-55
	D-67
	D-129
	D-147
59290742	D-55
	D-67
	D-129
	D-147
59290767	D-55
	D-67
	D-129
	D-147
59290783	D-55
	D-67
	D-129
	D-147
59290817	D-55
	D-67
	D-129
	D-147
59290858	G-3
	G-7
59291062	E-59
	E-61
59291070	E-55
	E-57
59291088	E-53
59295378	B-11
	B-45
	B-65
59296236	B-7
	B-29
	B-43
	B-63
	B-77
59296384	B-7
	B-29
	B-43
	B-55
59296632	B-11
	B-45
	B-65
59298042	B-11
	B-45
	B-65
59298208	B-5
	B-33
59298935	B-3
	B-35
	B-41
	B-61
59299545	B-5
	B-33
59299768	B-5
	B-33
59321687	C-19
59326827	D-35
	D-65
	D-93
	D-109
	E-63
59327775	B-69
	C-9
	C-33
	H-25
59328575	H-33
59331934	C-19
59343269	C-17
59356444	C-17
59360115	E-43
59360123	C-17
59360305	C-17
59360313	C-17
59360321	C-17
	E-35
59360347	C-15
59360354	C-15
	C-35
	C-39
	E-33
	E-39
59360461	C-15
59360487	C-15
59360552	C-15
	C-39
	E-33
	E-35
	E-39
59360610	A-15
	B-49
	E-37
59360669	C-13
59360677	C-13
59360685	C-13
	C-37
	E-37
59360693	C-13
	E-31
59360735	C-13
	C-35
	E-31
	E-37
59360750	C-15
59360776	C-13
	E-31
59360792	C-13
	E-31
59360800	C-13
	E-31
59360941	C-15
	C-39
	E-33
	E-39
59367755	B-15
59368837	B-15
	C-13
	E-31
59368845	B-15
	C-13
	E-31
59368886	B-15
	E-33
59369181	B-49
	E-41
59369199	E-41
59369371	C-41
59369462	A-19
	B-49
	C-41
	E-43
59369470	A-19
	B-49
	C-41
	E-43
59369496	A-19
	B-49
59369504	A-19
	B-49
	C-35
	E-37
59369561	C-41
59369603	A-15
	B-49
	C-35
	E-43
59369637	E-39
59384347	C-17
59384685	E-35
59384693	C-17
	E-35
59384768	E-33
59384784	E-33

NUMERICAL INDEX

COMM.NO. PAGE	COMM.NO. PAGE	COMM.NO. PAGE	COMM.NO. PAGE
59392795 ..... D-57	59583450 ..... E-23	59791491 ..... A-9	59924233 ..... C-5
..... D-69	59583468 ..... E-23	59793489 ..... A-7	..... C-29
..... D-133	59583500 ..... B-81	59793588 ..... A-7	59924472 ..... B-93
..... D-151	..... B-97	59793752 ..... A-9	59929059 ..... D-7
59395996 ..... E-31	..... H-31	59803635 ..... A-11	59929182 ..... H-35
59399162 ..... E-33	..... H-33	59810820 ..... H-9	59929711 ..... A-21
59399279 ..... E-35	59587014 ..... H-31	..... H-11	59932418 ..... C-13
59424309 ..... D-3	..... H-33	59814889 ..... A-21	59933622 ..... A-15
59431916 ..... B-49	59600593 ..... B-9	59823716 ..... D-53	..... C-13
59431924 ..... B-49	..... B-31	..... D-57	..... C-15
59436741 ..... B-5	..... B-57	..... D-69	..... E-31
..... B-33	..... B-79	..... D-71	..... E-33
..... B-39	59605915 ..... G-3	..... D-131	..... H-29
..... B-61	..... G-5	..... D-133	59946863 ..... D-127
59436865 ..... E-11	..... G-7	..... D-149	..... D-145
59437079 ..... D-3	..... G-11	..... D-151	59947507 ..... G-5
59437087 ..... D-3	59607853 ..... B-5	59845743 ..... D-57	..... G-13
59446138 ..... C-13	..... B-33	..... D-133	59949461 ..... A-15
..... C-35	..... B-59	..... D-151	59959080 ..... H-17
..... E-31	..... D-31	59845768 ..... D-69	59961821 ..... B-81
59450528 ..... B-5	59607861 ..... B-5	..... D-75	..... B-97
..... B-33	..... B-33	59847798 ..... C-11	59972877 ..... C-17
..... B-39	..... B-59	..... H-35	59977454 ..... C-5
..... B-59	..... D-31	59849661 ..... E-51	..... C-29
59465641 ..... D-57	59617985 ..... C-11	59852533 ..... E-11	59985044 ..... C-41
..... D-69	59631606 ..... H-31	59884221 ..... C-5	..... E-43
..... D-133	59643114 ..... C-19	..... C-29	59986463 ..... A-15
..... D-151	59661413 ..... E-5	59891002 ..... B-81	..... B-49
..... E-13	..... E-13	..... B-97	59986489 ..... C-39
..... E-19	59665877 ..... H-17	59892182 ..... B-81	..... E-33
59465674 ..... D-57	59667287 ..... G-5	..... B-83	..... E-39
..... D-69	59672709 ..... C-11	59896613 ..... E-69	59990010 ..... B-17
..... D-133	59672733 ..... H-13	..... E-73	..... B-51
..... D-151	59673137 ..... H-31	59903203 ..... D-57	59993873 ..... B-7
59480681 ..... B-49	59683805 ..... H-31	..... D-69	..... B-29
59495028 ..... C-43	59698811 ..... B-15	..... D-133	59993881 ..... A-3
59510065 ..... B-17	..... C-15	..... D-151	..... B-7
..... B-51	..... C-39	59904532 ..... A-13	..... B-29
59524447 ..... A-21	..... E-33	59904722 ..... A-13	..... B-43
59534313 ..... C-43	..... H-29	59918581 ..... C-11	..... B-63
59546275 ..... H-9	59700526 ..... C-23	59919522 ..... D-57	..... B-69
..... H-11	59742890 ..... H-17	..... D-133	..... B-77
59565044 ..... B-3	59743013 ..... H-21	59922203 ..... C-9	..... C-9
..... B-5	59764498 ..... H-15	..... C-33	..... C-11
..... B-29	59769356 ..... A-9	59922419 ..... C-9	..... C-33
..... B-31	59775221 ..... D-69	..... C-33	59995126 ..... C-9
..... B-33	..... D-75	59922591 ..... H-25	..... C-33
..... B-35	59778266 ..... A-11	59922823 ..... C-11	80789621 ..... D-119
..... B-55	59778332 ..... A-9	59922864 ..... H-27	80789639 ..... D-119
..... B-57	59785519 ..... B-15	59922971 ..... H-25	80789647 ..... D-119
..... B-79	..... E-35	59922989 ..... A-3	80789654 ..... D-119
..... D-5	59787879 ..... B-69	59923102 ..... A-3	80789662 ..... D-123
59565051 ..... B-69	59790600 ..... A-13	59924043 ..... B-81	80789670 ..... D-123
59570887 ..... B-97	59790717 ..... A-13	..... B-97	80789688 ..... D-123
59579094 ..... G-11	59790956 ..... A-9	59924191 ..... D-33	80789696 ..... D-119
59580571 ..... C-11	59791483 ..... A-9		80789704 ..... D-119

NUMERICAL INDEX

COMM.NO. PAGE	COMM.NO. PAGE	COMM.NO. PAGE	COMM.NO. PAGE
80789712 ..... D-119	95043238 .....B-85	95285144 .....D-57	95366019 .....H-15
80793201 ..... D-117	95048393 .....B-85	.....D-69	95371258 .....H-17
80808801 ..... D-119	95049359 .....B-81	.....D-133	95373973 .....C-57
80808819 ..... D-119	.....B-95	.....D-151	.....C-59
80808827 ..... D-121	.....B-97	95285946 .....B-7	.....D-13
80808835 ..... D-121	95055265 .....C-9	.....B-29	.....D-51
80808843 ..... D-121	.....C-33	.....C-9	.....D-59
80808850 ..... D-121	95056396 .....C-5	.....C-11	.....D-73
80808868 ..... D-121	.....C-29	.....C-33	.....D-75
80808876 ..... D-121	95086658 .....B-39	95286266 .....C-19	.....D-135
80808884 ..... D-119	.....B-59	95286548 .....B-85	.....D-137
80808892 ..... D-119	95098679 .....B-5	95301834 .....D-5	.....D-153
..... D-123	.....B-33	95301842 .....E-67	.....D-155
80808900 ..... D-123	.....B-39	.....E-71	.....E-7
80808918 ..... D-119	.....B-59	95301859 .....D-71	.....E-9
80808926 ..... D-123	.....B-81	.....D-149	.....E-11
80808934 ..... D-123	.....B-97	95303335 .....B-85	.....E-15
80808942 ..... D-123	95157400 .....B-97	.....H-35	.....E-17
80808959 ..... D-123	95188710 ..... H-19	95303350 .....C-9	.....E-19
80808975 ..... D-123	..... H-25	.....C-33	.....E-25
80808983 ..... D-123	95201547 .....B-5	.....H-35	.....E-49
80808991 ..... D-123	.....B-33	95303368 .....B-81	.....E-69
80809007 ..... D-121	.....B-39	.....D-3	.....E-73
80809015 ..... D-121	.....B-59	95310231 .....C-7	.....E-75
80809023 ..... D-121	.....B-83	.....C-31	95376133 .....C-11
80809031 ..... D-121	.....B-95	95316956 .....B-85	95378873 .....D-51
80809056 ..... D-121	..... H-31	95322871 .....D-75	.....D-73
80809064 ..... D-121	95208971 ..... A-29	.....D-155	.....D-137
80809080 ..... D-121	.....B-5	95323366 .....H-19	.....D-155
80809098 ..... D-121	.....B-33	95326930 .....B-17	95387890 .....B-93
80809106 ..... D-119	95210258 .....C-13	.....B-51	95402806 .....B-91
80809114 ..... D-119	.....C-35	.....B-69	.....H-19
80809122 ..... D-119	.....E-31	95326955 .....B-85	95415667 .....H-17
80809130 ..... D-119	.....E-37	95329876 .....B-83	.....H-33
80809148 ..... D-119	95213583 .....C-9	.....B-95	95424586 .....D-51
80809155 ..... D-119	.....C-33	95329975 .....B-85	.....D-75
80809163 ..... D-119	95219713 .....B-89	.....B-87	.....D-137
80809171 ..... D-119	95220893 .....C-19	.....B-91	.....D-155
..... D-123	95223384 ..... H-31	.....H-19	.....E-17
80809189 ..... D-119	95257325 .....C-5	.....H-31	.....E-49
..... D-123	.....C-29	.....H-33	.....H-13
80809197 ..... D-119	95264891 .....B-9	95330692 .....H-15	.....H-23
80809205 ..... D-123	95269320 .....B-7	.....H-33	95431284 .....B-91
80809213 ..... D-119	.....B-29	95341673 .....H-15	.....C-11
..... D-123	.....B-43	95343596 .....B-91	95457586 .....B-83
80811409 ..... D-121	.....B-55	.....H-19	.....B-97
80816465 ..... D-121	.....B-63	95356960 .....A-3	.....H-3
80816499 ..... D-117	.....B-77	95356978 .....B-93	95480117 .....A-3
90502816 ..... A-11	95278008 .....C-19	95357570 .....B-43	95488110 .....B-85
90502915 ..... A-9	95279337 ..... H-33	.....B-63	95488250 .....B-81
95011060 .....B-85	95280087 ..... H-33	.....H-15	.....H-33
.....C-5	95280186 .....C-9	95359410 .....H-35	
.....C-29	.....C-33	95363339 .....H-31	
95018065 .....C-7	95280194 .....B-85	95365078 .....H-25	
.....C-31	.....B-93	.....H-33	
95028452 .....B-33	..... D-33	95365094 .....H-17	

NUMERICAL INDEX

COMM.NO. PAGE	COMM.NO. PAGE	COMM.NO. PAGE	COMM.NO. PAGE
95603163 .....B-7	95931564 ..... A-29	96701909 .....B-7	96702329 .....B-7
.....B-29	..... D-31	.....B-29	.....B-29
.....B-43	95931614 ..... A-3	.....B-43	.....B-63
.....B-53	95932141 .....E-21	.....B-53	.....B-83
.....B-55	95943346 ..... D-7	.....B-55	.....B-95
.....B-63	.....E-21	.....B-63	.....C-11
.....B-77	95944260 ..... H-37	.....B-77	96702386 .....D-7
95649844 ..... H-17	95988093 ..... D-35	96701917 .....B-83	96702394 .....D-51
95650339 .....C-9	..... D-55	.....B-97	.....D-75
.....C-33	..... D-65	.....C-19	.....E-13
95653614 .....C-11	..... D-85	.....C-23	96702428 .....B-11
95654638 .....C-9	..... D-89	.....D-21	.....B-45
.....C-33	..... D-93	.....D-53	.....B-65
95671285 ..... D-53	..... D-109	.....D-57	.....H-21
..... D-57	..... D-111	.....D-69	96702436 .....B-11
..... D-69	..... D-113	.....D-71	.....B-45
..... D-71	..... D-127	.....D-131	.....B-65
..... D-131	..... D-145	.....D-133	96702444 .....B-41
..... D-133	95988713 .....C-9	.....D-149	.....B-59
..... D-149	.....C-33	.....D-151	.....B-61
..... D-151	95988820 .....B-7	.....D-175	.....B-107
95796090 .....C-9	.....B-29	.....E-13	.....C-5
.....C-33	.....B-43	96701958 .....C-19	.....C-7
95829263 .....B-93	.....B-63	.....D-15	.....C-29
.....C-11	96701370 ..... A-25	.....E-53	.....C-31
95860052 ..... D-7	.....C-23	.....H-37	96702642 .....A-33
95866687 .....C-11	96701461 .....C-11	96702261 .....A-25	.....B-3
..... H-27	..... D-31	.....C-7	.....B-35
95919254 .....C-5	.....E-7	.....C-31	.....D-35
.....C-7	.....E-61	96702279 .....A-23	.....D-65
.....C-29	.....E-63	.....C-19	.....D-93
.....C-31	96701479 .....C-19	.....C-21	.....D-109
95919304 ..... D-31	..... D-15	.....C-43	.....D-165
95919460 .....C-9	..... H-15	.....D-3	
.....C-33	96701495 .....C-25	.....D-57	
..... H-25	96701560 ..... A-3	.....D-69	
95919528 ..... H-15	..... D-13	.....D-71	
95919569 .....C-9	..... D-127	.....D-133	
.....C-33	..... D-145	.....D-149	
95919643 ..... H-31	96701578 .....B-3	.....D-151	
95922134 .....E-21	.....B-5	.....E-19	
95922324 ..... A-29	.....B-33	.....E-51	
95922332 ..... A-31	.....B-35	.....E-69	
..... A-37	.....B-37	.....E-73	
.....C-59	.....B-41	.....H-15	
..... D-87	.....B-59	96702287 .....A-27	
..... D-125	.....B-61	.....A-31	
..... D-169	.....B-103	.....B-83	
.....E-21	.....B-105	.....B-87	
95922381 ..... H-25	.....B-107	.....B-95	
95922894 .....B-87	..... H-31	.....D-13	
95923314 ..... H-37	96701586 .....B-7	.....D-87	
95923322 .....C-25	.....B-29	.....H-15	
95923348 ..... A-27	.....B-43	.....H-21	
95924239 .....E-69	.....B-63	96702311 .....C-43	
.....E-73	96701594 ..... D-5		

NUMERICAL INDEX

COMM.NO. PAGE	COMM.NO. PAGE	COMM.NO. PAGE	COMM.NO. PAGE
96702659 ..... A-23	96702824 ..... A-27	96703681 .....B-3	96704580 .....A-31
..... A-31	..... A-39	.....B-35	.....A-37
..... A-37	.....B-7	.....B-37	.....C-11
.....C-5	.....B-29	.....B-59	.....C-25
.....C-11	.....B-43	.....B-109	.....D-7
.....C-21	.....B-55	96703699 .....H-31	.....D-87
.....C-23	.....B-85	96703756 .....E-25	.....D-125
.....C-29	..... D-3	.....E-51	.....D-169
..... D-3	..... D-5	.....E-53	.....E-67
..... D-55	..... D-35	.....E-59	.....E-71
..... D-59	..... D-51	.....E-61	.....E-75
..... D-67	..... D-55	96703962 .....B-33	96704598 .....C-11
..... D-73	..... D-65	96704234 .....E-27	.....C-19
..... D-81	..... D-67	96704309 .....B-83	.....D-31
..... D-87	..... D-75	.....B-95	.....D-81
..... D-125	..... D-85	.....C-9	.....D-159
..... D-129	..... D-89	.....C-33	.....E-13
..... D-135	..... D-93	.....C-43	.....E-25
..... D-137	..... D-109	.....D-3	.....E-49
..... D-147	..... D-111	96704358 .....D-79	.....E-55
..... D-153	..... D-113	.....D-157	.....E-57
..... D-155	..... D-127	96704481 .....B-17	.....E-59
..... D-159	..... D-145	.....B-51	.....E-61
..... D-169	.....E-5	96704549 .....B-9	.....E-63
.....E-55	.....E-9	96704556 .....A-23	.....E-75
.....E-57	.....E-11	.....B-17	.....H-17
96702667 .....B-7	96702873 .....E-29	.....B-51	.....H-33
.....B-29	.....E-47	.....C-3	96704606 .....A-23
.....B-43	..... H-23	.....C-5	.....C-7
.....B-63	96702907 .....B-3	.....C-19	.....C-21
.....B-69	.....B-35	.....C-29	.....C-31
.....C-7	.....B-41	.....D-35	.....D-13
.....C-31	.....B-61	.....D-65	.....D-73
96702709 .....B-31	96703111 .....B-13	.....D-85	.....D-81
.....B-57	.....B-47	.....D-89	.....D-153
.....B-79	.....B-67	.....D-93	.....D-159
96702774 .....B-83	..... D-13	.....D-109	.....E-5
.....B-95	96703178 ..... D-35	.....D-127	.....E-9
96702790 .....B-7	..... D-65	.....D-145	.....E-23
.....B-29	..... D-93	96704564 .....C-19	.....E-25
.....B-43	..... D-109	.....D-81	.....E-59
.....B-63	96703657 ..... A-27	.....D-159	.....E-61
.....B-77	.....B-7	.....E-13	.....E-69
96702808 .....B-5	.....B-13	.....E-25	.....E-73
.....B-31	.....B-29	.....E-29	
.....B-39	.....B-31	.....E-49	
.....B-55	.....B-43		
.....B-57	.....B-47		
.....B-59	.....B-55		
.....B-79	.....B-57		
..... D-5	.....B-63		
..... D-13	.....B-67		
96702816 ..... A-25	.....B-77		
.....B-83	.....B-79		
.....B-95	96703665 ..... A-3		
	..... D-5		

NUMERICAL INDEX

COMM.NO. PAGE	COMM.NO. PAGE	COMM.NO. PAGE	COMM.NO. PAGE
96704614 .....B-83	96705520 .....B-7	96711833 .....A-27	96712674 .....A-25
.....B-97	.....B-43	.....B-33	.....C-7
.....C-5	.....B-63	.....B-83	.....C-23
.....C-29	96705546 .....E-75	.....B-87	.....C-31
..... D-21	96705553 .....B-81	.....B-95	.....D-35
..... D-53	.....B-97	.....C-3	.....D-51
..... D-57	..... H-31	.....C-5	.....D-55
..... D-69	..... H-33	.....C-9	.....D-65
..... D-71	96705587 .....C-7	.....C-19	.....D-67
..... D-131	.....C-31	.....C-23	.....D-75
..... D-133	..... D-21	.....C-29	.....D-81
..... D-149	..... D-175	.....C-33	.....D-85
..... D-151	.....E-25	.....C-43	.....D-89
..... D-175	.....E-59	.....D-3	.....D-93
.....E-13	.....E-61	.....D-13	.....D-109
..... H-15	96705595 ..... A-27	.....D-15	.....D-111
96704630 .....C-3	.....C-11	96711882 .....B-97	.....D-113
96704663 .....C-19	96705637 .....B-109	.....D-5	.....D-127
..... D-3	96705728 ..... A-31	96712146 .....B-33	.....D-129
..... D-31	..... A-37	96712237 .....B-3	.....D-137
..... D-51	.....C-59	.....B-5	.....D-145
..... D-75	..... D-87	.....B-7	.....D-147
..... D-81	..... D-125	.....B-29	.....D-155
..... D-159	..... D-169	.....B-35	.....D-159
.....E-17	.....E-67	.....B-39	.....E-5
.....E-29	.....E-71	.....B-41	.....E-11
.....E-47	96705736 ..... A-31	.....B-43	.....E-23
96704713 .....B-39	..... A-37	.....B-59	96712724 .....B-83
.....B-61	.....C-11	.....B-61	.....B-95
96704739 .....B-3	..... D-87	.....B-63	96713979 .....C-23
.....B-35	..... D-125	.....B-83	96714399 .....B-3
96704804 ..... D-3	..... D-169	.....B-97	.....B-35
..... D-5	.....E-75	.....B-103	.....B-39
96704812 .....C-3	96705793 .....E-49	.....B-105	.....B-61
.....C-19	96706825 .....E-29	.....B-107	.....B-81
.....C-43	.....E-47	.....B-109	.....B-83
..... D-79	..... H-23	.....C-7	96714407 .....D-149
..... D-157	96708722 ..... H-31	.....C-31	96714472 .....E-27
.....E-69	96708987 ..... H-33	.....D-5	96714829 .....H-3
.....E-73	96711106 .....B-7	96712252 .....E-23	96714910 .....B-83
96704887 ..... H-33	.....B-9		.....B-97
96704952 .....C-3	.....B-29		96715073 .....E-25
96705041 ..... D-5	.....B-43		96715081 .....B-3
.....E-19	.....B-53		.....B-35
96705116 .....C-9	.....B-55		.....B-103
.....C-33	.....B-63		.....B-105
..... D-3	.....B-77		.....B-107
..... D-79	96711510 .....B-29		96715123 .....A-33
..... D-157	.....B-53		.....D-5
96705124 ..... D-3	.....B-77		96715156 .....B-3
96705165 .....E-15	96711544 .....B-7		.....B-5
96705173 .....E-15	.....B-29		.....B-35
96705272 .....B-81	.....B-43		96715180 .....D-171
.....B-97	.....B-55		96715768 .....A-3
	.....B-63		
	.....B-77		

NUMERICAL INDEX

COMM.NO. PAGE	COMM.NO. PAGE	COMM.NO. PAGE	COMM.NO. PAGE
96716345 .....B-7	96727532 ..... A-33	96738596 .....A-3	96740188 .....A-23
.....B-13	..... D-35	.....A-27	.....A-25
.....B-41	..... D-65	.....B-7	.....A-27
.....B-43	..... D-93	.....B-13	.....D-5
.....B-47	..... D-109	.....B-29	.....D-55
.....B-61	..... D-165	.....B-31	.....D-67
.....B-63	96727987 .....E-55	.....B-43	.....D-137
.....B-67	.....E-57	.....B-47	.....D-155
.....B-77	.....E-59	.....B-63	96740204 .....A-31
.....B-97	.....E-61	.....B-67	.....A-37
96716352 ..... A-27	96728142 ..... H-33	.....B-69	.....D-3
96717277 .....B-97	96728506 .....C-45	.....B-83	.....D-5
96718598 .....E-75	.....C-47	.....B-95	.....D-73
96718861 ..... D-117	.....C-49	.....B-109	.....D-87
96718978 .....B-81	.....C-53	.....C-5	.....D-153
.....B-97	96728522 .....E-69	.....C-7	.....D-169
96719786 ..... D-125	.....E-73	.....C-9	96740444 .....D-55
96720032 ..... D-35	96728548 ..... D-3	.....C-11	.....D-129
..... D-65	..... D-67	.....C-25	.....D-147
..... D-93	..... D-129	.....C-29	.....D-173
..... D-109	..... D-147	.....C-31	96740741 .....B-69
96720115 .....C-25	.....E-17	.....C-33	96741038 .....A-23
96720131 ..... D-117	96728639 .....B-3	.....C-43	.....A-25
96720149 ..... D-117	.....B-35	.....D-13	.....A-27
96720156 .....B-39	.....B-61	.....H-3	.....B-7
..... H-17	96736822 .....B-7	96738604 .....A-3	.....B-29
96720438 .....B-3	.....B-29	96738612 .....B-7	.....B-43
.....B-5	96737069 .....B-7	.....B-17	.....B-55
.....B-33	.....B-29	.....B-43	.....B-81
.....B-35	.....B-43	.....B-51	.....B-83
.....B-37	.....B-53	.....B-63	.....B-95
.....B-59	.....B-63	.....C-3	.....B-97
.....B-61	.....B-77	.....D-35	.....C-5
.....B-103	96738208 ..... D-5	.....D-65	.....C-7
.....B-105	96738513 .....B-41	.....D-93	.....C-11
.....B-107	.....B-61	.....D-109	.....C-21
96720446 .....B-69	96738547 .....E-25	96738620 .....A-27	.....C-29
96720594 .....C-7	.....E-51	.....B-7	.....C-31
.....C-31	.....E-53	.....B-17	.....D-3
96720909 ..... D-117	.....E-59	.....B-29	.....D-5
96720933 ..... D-117	.....E-61	.....B-43	.....D-13
96720974 .....E-51	.....E-67	.....B-51	.....D-81
.....E-53	.....E-71	.....B-53	.....D-125
.....E-59	96738554 .....C-11	.....B-55	.....D-159
.....E-61	.....C-25	.....B-63	.....E-9
96720990 .....B-11	..... D-3	.....B-77	.....E-19
.....B-45	..... D-7	96738646 .....B-37	.....E-23
.....B-65	..... D-55	.....B-59	.....E-25
96721923 ..... D-117	..... D-67	.....B-83	.....E-51
96722228 ..... D-117	..... D-129	.....B-95	.....E-59
..... D-119	..... D-147	.....B-109	.....E-61
96726377 ..... D-119	..... D-173	.....D-5	
96726435 .....B-83	.....E-67	96739388 .....H-31	
.....C-23	.....E-71	96739784 .....A-3	
	.....E-75		

NUMERICAL INDEX

COMM.NO. PAGE	COMM.NO. PAGE	COMM.NO. PAGE	COMM.NO. PAGE
96741046 ..... A-23	96741053 .....B-3	96747217 .....B-37	
..... A-31	.....B-35	.....B-59	
.....B-9	.....B-39	.....B-61	
.....B-11	.....B-61	.....B-103	
.....B-45	.....C-19	.....B-105	
.....B-65	..... D-15	.....B-107	
.....B-95	..... D-31	96747365 .....B-33	
.....B-97	.....E-7	.....B-35	
.....C-5	.....E-13	.....H-31	
.....C-7	.....E-25	96747886 .....B-109	
.....C-9	.....E-27	96751672 .....B-3	
.....C-21	.....E-29	.....B-35	
.....C-25	.....E-47	.....B-37	
.....C-29	.....E-49	.....B-59	
.....C-31	.....E-53	96753025 .....D-117	
.....C-33	.....E-55	NOT-USED A-23	
..... D-3	.....E-57	.....A-37	
..... D-13	.....E-59	.....B-3	
..... D-53	.....E-61	.....B-5	
..... D-57	.....E-63	.....B-7	
..... D-69	.....E-75	.....B-59	
..... D-71	..... H-15	.....B-61	
..... D-79	..... H-17	.....B-63	
..... D-87	..... H-23	.....B-81	
..... D-131	..... H-33	.....B-83	
..... D-133	..... H-37	.....B-109	
..... D-149	96741442 ..... D-13	.....C-49	
..... D-151	..... D-127	.....C-51	
..... D-157	..... D-145	.....D-13	
.....E-13	96743851 .....B-63	.....D-33	
.....E-51	.....B-77	.....D-35	
.....E-69	96744768 .....B-69	.....D-51	
.....E-73	96745104 .....B-55	.....D-53	
..... H-15	.....B-57	.....D-57	
..... H-21	.....B-77	.....D-59	
	.....B-79	.....D-65	
	96745419 .....B-17	.....D-83	
	.....B-51	.....D-85	
	96745492 .....E-67	.....D-89	
	.....E-71	.....D-91	
	96745518 .....E-7	.....D-93	
	.....E-51	.....D-109	
	96746235 ..... A-33	.....D-111	
	..... D-165	.....D-113	
	96746417 ..... D-35	.....D-133	
	..... D-65	.....E-49	
	..... D-85	.....E-51	
	..... D-89	.....E-53	
	..... D-93	.....E-63	
	..... D-109	.....E-65	
	..... D-111	.....H-23	
	..... D-113		
	..... D-127		
	..... D-145		

The warranty statement is provided within the manual kit shipped with the machine.

VOLVO

Volvo Construction Equipment
www.volvo.com

Ref. No. VOE21A9920212 English
CPN 43937796
Printed in USA 2007-09 CST
Volvo, Shippensburg