RUTHZIL TRATOR COMERCIAL DE PEÇAS LTDA 11 97083-6812 ROLANDO CITRANGULO

VOLVO

SD25TF

Legal Statement

This manual and its contents are produced and maintained by Volvo Construction Equipment in accordance with an agreement with Ingersoll-Rand regarding the depiction and use of its exclusive trademarks in support of equipment originally manufactured under the Ingersoll-Rand brand. Volvo Construction Equipment is fully responsible for the maintenance and accuracy of the information contained in this manual as it relates to applications for the referenced equipment manufactured exclusively under the Ingersoll-Rand brand.

HOW TO USE THIS MANUAL

This Parts Manual applies to all SD-25TF Series Vibratory Compactors

---

When the Comm. # is <u>not</u> Known - Use the Word Index:

- Volvo's Word Index will make this item easy to locate. The Word Index is found in the very back of the book. The items listed are in alphabetical order and may be repeated several times depending on their functional descriptions.

- Let's assume you need to replace the PRIMARY AIR CLEANER FILTER ELEMENT.

Use any of the functional words in the item description to locate the desired item. Example: The first listing for the Primary Air Cleaner Filter Element in the **Word Index** is: Air Cleaner Primary Filter Element. The index shows the component will be found on page C-23 that is the **Parts List** page number for the Air Cleaner Installation.

A
Air Cleaner C23
Air Cleaner Bracket C23
Air Cleaner Installation C5
Air Cleaner Primary Filter Element C23
Air Cleaner Safety Filter Element C23
Air Valve A7
Alarm, Audible D7
Alarm, Backup E5

- The item is also listed as:

Element, Air Cleaner Primary Filter
Filter Element, Air Cleaner Primary
Primary Filter Element, Air Cleaner

Using the Parts Identification Pages:

- The **PARTS IDENTIFICATION PAGES** consist of the **PARTS ILLUSTRATION** (even numbered pages) and the **PARTS LIST** (odd numbered pages).

- The **Parts Illustration** shows the assembly with its component parts identified by I**tem Numbers.**

- On the **Parts List**, the components are listed in **Item Number** order as found in the **ITEM** column. Other information provided by the **Parts List** is the **Comm. Number** which will be required to order Genuine Manufacturer Replacement Parts, a **functional description**, the **quantity** required to assemble one complete assembly, and any additional **notes/ dimensions** required to help place your parts order.

- **For the example: The Air Cleaner** Primary Filter Element is listed under the Air Cleaner (Item 1), Comm. Number 22370688, Quantity of 1.

When the Comm. # is <u>not</u> known - Use the Table of Contents:

- Turn to the **TABLE OF CONTENTS** pages in the front of this manual. These pages show the major systems of the machine divided into **FUNCTIONAL GROUPS** (identified by capital letters).
- Find the **Functional Group** that best describes the area of the machine you are interested in. For example: Air Cleaner Installation
- See the sample **Table of Contents** shown below:

ENGINE

C

ENGINE INSTALLATION.....C-2
ENGINE ASSEMBLY.....C-4
PROPULSION PUMP ASSEMBLY.....C-6
PROPULSION PUMP (13224019) - INTERNAL BREAKDOWN.....C-8
RADIATOR/ENGINE MOUNTS INSTALLATION.....C-16
VIBRATION/STEERING PUMP ASSEMBLY.....C-18
RADIATOR/OIL COOLER ASSEMBLY.....C-20
AIR CLEANER INSTALLATION.....C-22

Listed under the **Functional Group** of Engine are **SECTIONS** (identified by numbers that describe major repairable components of that group. Find the listing that refers to the Air Cleaner Installation.

- Since the Air Cleaner **Primary Filter Element** is what needs to be replaced, refer to the parts listing for the Air Cleaner Installation. The Air Cleaner used on your machine is found in **Functional Group C,** this makes up the first part of the page number. Turn to that section of the parts manual and find the parts listing on page **C-23** for the Air Cleaner **(**13325444**)**.

When the Comm. # <u>is</u> Known - Use the Numerical Index:

- If you already know the **Comm. Number** (part number) for the item required, a **NUMERICAL INDEX** is provided in the back of the manual to assist you. Look up the **Comm. Number** desired and the **Numerical Index** will show the **Functional Group, Section, and Page Number** where the item can be found.

For our Primary Air Cleaner Filter Element Example: The **Comm. Number** 22370688 is found in the **Numerical Index**, it shows that component will be found on pages C-23 that is the Parts List page for the Air Cleaner Installation.

TABLE OF CONTENTS
SD-25TF Series

TITLE **PAGE**

TABLE OF CONTENTS . . . . . A
ABBREVIATIONS USED IN THIS MANUAL C
LUBRICANTS, FILTERS AND MANUALS. . . . . D
RECOMMENDED SERVICE PARTS . . . . . F

Section A - AXLE AND MAIN FRAME

WHEEL DRIVE INSTALLATION A-2
DRIVE MOTOR (13323787) - INTERNAL BREAKDOWN A-4
TIRE AND WHEEL ASSEMBLY A-6
HOOD INSTALLATION A-8
ROPS/FOPS INSTALLATION A-10
ARCH ROPS INSTALLATION - OPTIONAL A-12

Section B - DRUM

FRONT FRAME INSTALLATION. B-2
DRUM ASSEMBLY B-4
CARRIER ASSEMBLY B-6
DRUM DRIVE ASSEMBLY B-8
DRUM DRIVE MOTOR (13309752) - INTERNAL BREAKDOWN B-10
REAR FRAME INSTALLATION B-12
REAR FRAME INSTALLATION (CONTINUED) B-14
FUEL TANK ASSEMBLY B-16
HYDRAULIC OIL TEMPERATURE LIGHT INSTALLATION B-18
SCRAPER INSTALLATION - SD-25D B-20
SCRAPER INSTALLATION - SD-25F B-22
INSIDE SCRAPER INSTALLATION - SD-25D - OPTIONAL. B-24
INSIDE SCRAPER INSTALLATION - SD-25F - OPTIONAL B-26
UNIVERSAL INSIDE SCRAPER INSTALLATION - SD-25D WITHOUT BOLT-ON SHELL - OPTIONAL . . B-28
BOLT-ON SHELL INSTALLATION - SD-25D - OPTIONAL. B-30
UNIVERSAL INSIDE SCRAPER FOR BOLT-ON-SHELL INSTALLATION - SD-25D - OPTIONAL B-32

Section C - ENGINE

ENGINE INSTALLATION. C-2
ENGINE ASSEMBLY C-4
PROPULSION PUMP ASSEMBLY C-6
PROPULSION PUMP (13224019) - INTERNAL BREAKDOWN. C-8
RADIATOR/ENGINE MOUNTS INSTALLATION. C-16
VIBRATION/STEERING PUMP ASSEMBLY. C-18
RADIATOR/OIL COOLER ASSEMBLY C-20
AIR CLEANER INSTALLATION. C-22
FUEL LINE INSTALLATION. C-24

TABLE OF CONTENTS
SD-25TF Series

TITLE **PAGE**

Section D - OPERATORS COMPARTMENT

OPERATORS PLATFORM INSTALLATION D-2
PEDESTAL ASSEMBLY D-4
LEFT-HAND PANEL ASSEMBLY D-6
RIGHT-HAND PANEL ASSEMBLY D-8
THROTTLE ASSEMBLY D-10
SEAT ASSEMBLY D-12
SEAT (54670302) - INTERNAL BREAKDOWN D-14
HORN ASSEMBLY D-16
CONSOLE ASSEMBLY D-18
EMERGENCY STOP ASSEMBLY D-20
VANDAL COVER INSTALLATION - OPTIONAL D-22
SAFETY LABEL MANUAL INSTALLATION D-24

Section E - ELECTRICAL

WIRE HARNESS INSTALLATION E-2
BATTERY INSTALLATION E-4
POWER SOCKET INSTALLATION - OPTIONAL E-6
WORKLIGHTS INSTALLATION - OPTIONAL E-8
BEACON LIGHT INSTALLATION - OPTIONAL E-14

Section G - DECALS

DECAL INSTALLATION G-2

Section H - HYDRAULICS

REAR FRAME HOSING INSTALLATION H-2
HYDRAULIC FILTER INSTALLATION H-4
VALVE INSTALLATION H-6
BRAKE SHUNT VALVE ASSEMBLY H-8
VIBRATION VALVE ASSEMBLY H-10
TWIN LOCK VALVE ASSEMBLY H-12
TWO-WAY BLADE INSTALLATION - OPTIONAL H-14
BLADE ASSEMBLY H-18
FOOT PEDAL ASSEMBLY H-20
LIFT VALVE ASSEMBLY H-22
LIFT MANIFOLD (13309901) - INTERNAL BREAKDOWN H-24
FOUR-WAY BLADE INSTALLATION - OPTIONAL H-26
TILT SWITCH ASSEMBLY H-32
TILT BLADE ASSEMBLY H-34
TILT BLADE SUB-ASSEMBLY H-36
TILT BLADE VALVE ASSEMBLY H-38
TILT MANIFOLD (13309919) - INTERNAL BREAKDOWN H-40

WORD INDEX W-1
NUMERIC INDEX X-1

STANDARD ABBREVIATIONS

AC	Alternating Current
A/R	As Required
ARC	Authorized Rebuilt Component
Assy	Assembly
BHCS	Button Head Cap Screw
Cu Yd	Cubic Yard
Cyl	Cylinder
DC	Direct Current
Dia	Diameter
Eff	Effective
FHCS	Flat Head Cap Screw
F-N-R	Forward-Neutral-Reverse
FOPS	Falling Object Protection System
F/P	Fork Positioning
Gr	Grade
HHCS	Hex Head Cap Screw
HHMS	Hex Head Machine Screw
HSBHCS	Hex Socket Button Head Cap Screw
ID	Inside Diameter
LH	Left Hand
M	Metric
MIK	Maintenance Interval Kit
mm	Millimeter
Nat Asp	Naturally Aspirated
Neg	Negative
NSS	Not Sold Separately
NSVA	Non Serviceable Assembly
OD	Outside Diameter
Pos	Positive
PSI	Pounds per Square Inch
Q/A	Quick-Attach
Ref	Reference
RH	Right Hand
RHSS	Round Head SelfTapping Screw
ROPS	Roll-Over Protection System
RPM	Revolutions Per Minute
SAE	Society of Automotive Engineers
Sec	Section
SFH	Slotted Fillister Head
SHCS	Socket Head Cap Screw
SMV	Slow Moving Vehicle
S/N	Serial Number
SPST	Single Pole/Single Throw
S.T.	Self-Tapping
Std	Standard
Str	Straight
Sw S	wivel
Tach	Tachometer
Temp	Temperature
Thd	Thread
Thk	Thick
Typ	Typical
UNC	Unified Coarse
UNF	Unified Fine
Univ	Universal
Var	Variable
V	Volt
VPM	Vibrations Per Minute
Wgt	Weight
w/	With
w/o	Without
Wp	Weatherproof

Section A - AXLE AND MAIN FRAME

WHEEL DRIVE INSTALLATION

Dwg 13309802/02

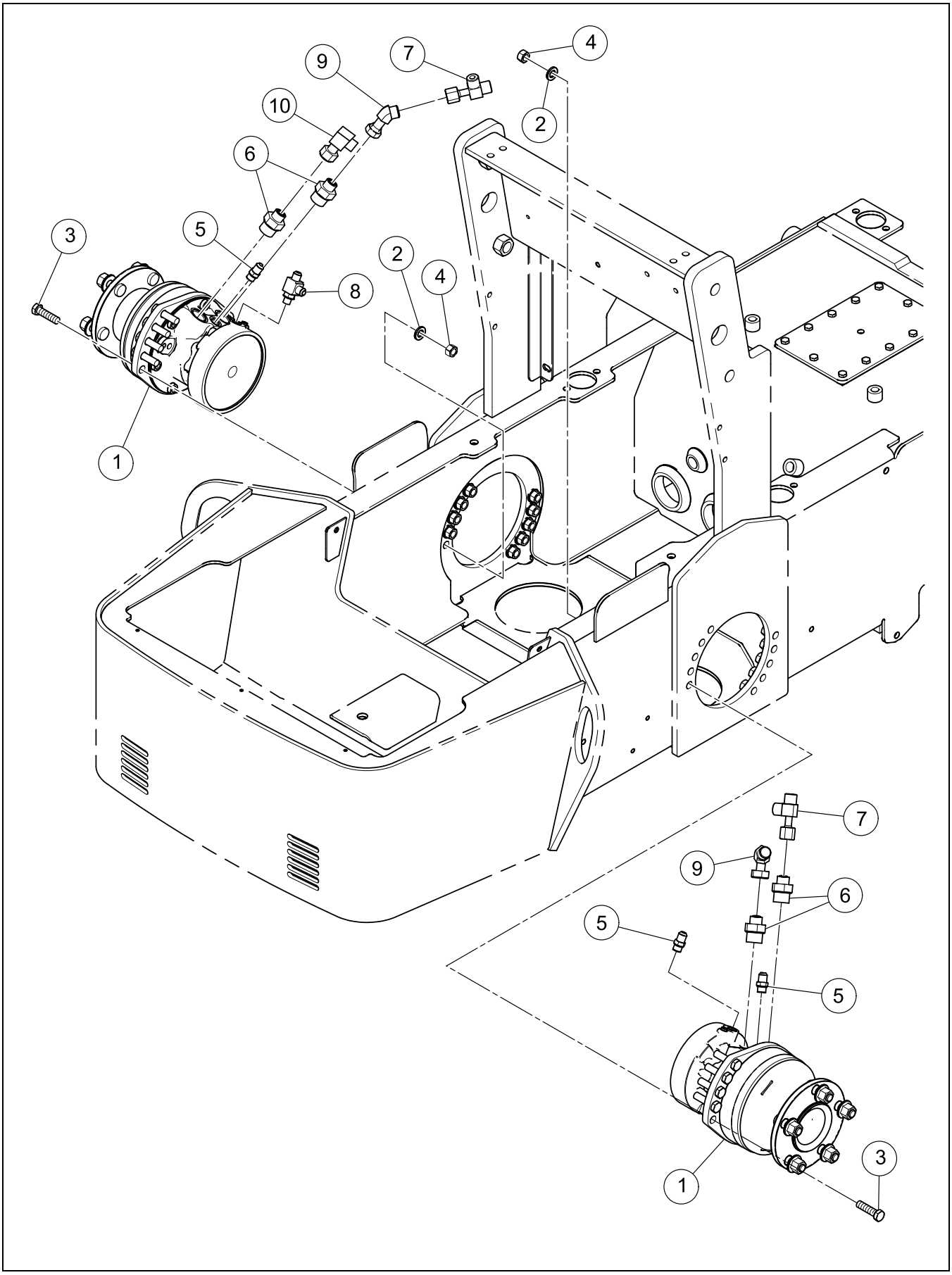

BOM 13309802

ITEM	COMM. NO.	DESCRIPTION	QTY	DIMENSIONS/NOTES
1	**13323787**	**Drive Motor**	**2**	**See Breakdown A - 4.**
2	96738596	Flatwasher, Zinc Plated	20	M12 Hardened Cl 200
3	96715081	Hex Head Bolt, Zinc Plated	20	M12 x 1.75 x 45 Cl 8.8
4	96704291	Hex Nut, Zinc Plated	20	M12 x 1.75 Cl 8
5	95365078	Adapter	3	
6	59922518	Adapter, Straight	4	
7	59923797	Tee	2	
8	95188710	Run Tee	1	
9	59054189	Adapter, Swivel	2	
10	59923466	Adapter	1	

DRIVE MOTOR (13323787) - INTERNAL BREAKDOWN

Dwg 13323787/00

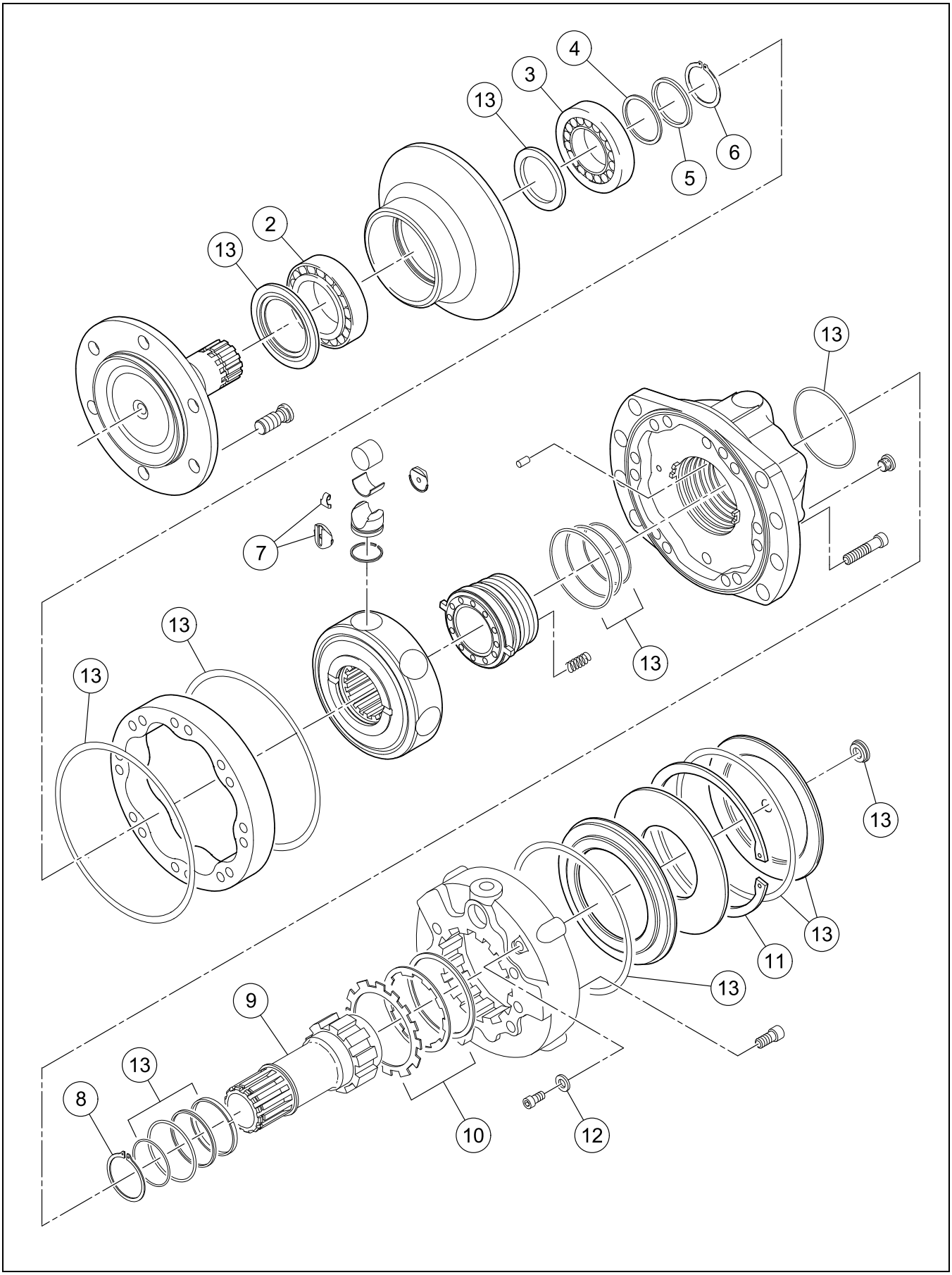

DRIVE MOTOR (13323787) - INTERNAL BREAKDOWN

BOM 13323787

ITEM	COMM. NO.	DESCRIPTION	QTY	DIMENSIONS/NOTES
2	13281761	Bearing	2	
3	13281779	Bearing	2	
4	13281787	Stud Set	2	
5	13281795	Ring	2	
6	13281803	Snap Ring	2	
7	13281399	Repair Kit	2	
8	13281902	Shim	4	
9	13281969	Shaft	2	
10	13281910	Brake Disc Kit	2	
11	13281886	Snap Ring	2	
12	59902668	Seal	2	
13	13281654	Seal Kit	2	

Dwg D13223714/00

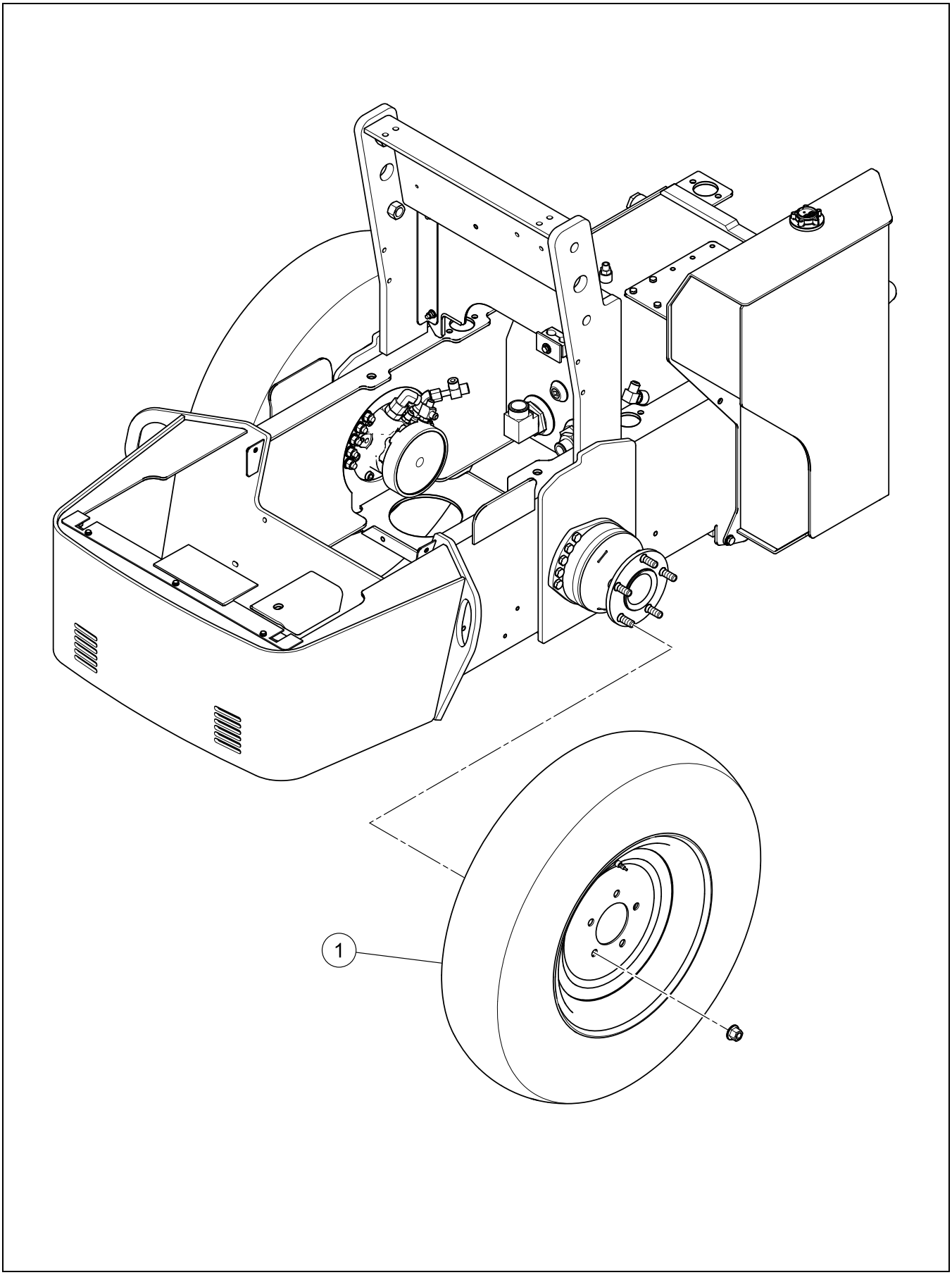

TIRE AND WHEEL ASSEMBLY

BOM 13223706, 13223771

ITEM	COMM. NO.	DESCRIPTION	QTY	DIMENSIONS/NOTES
1	13271408	Tire And Wheel Assembly	2	Diamond Tread
-	13271358	- Tire	2	7.5-16 4 Ply
-	13271374	- Wheel Rim	2	
-	59929711	- Valve Cap	2	
-	59524447	- Air Valve	2	
-	13323720	Tire Wheel Assembly	2	Lug Tread
-	13323738	- Tire	2	8-16 6 Ply
-	13271374	- Wheel Rim	2	
-	59929711	- Valve Cap	2	
-	59524447	- Air Valve	2	

HOOD INSTALLATION

Dwg 13328232/04

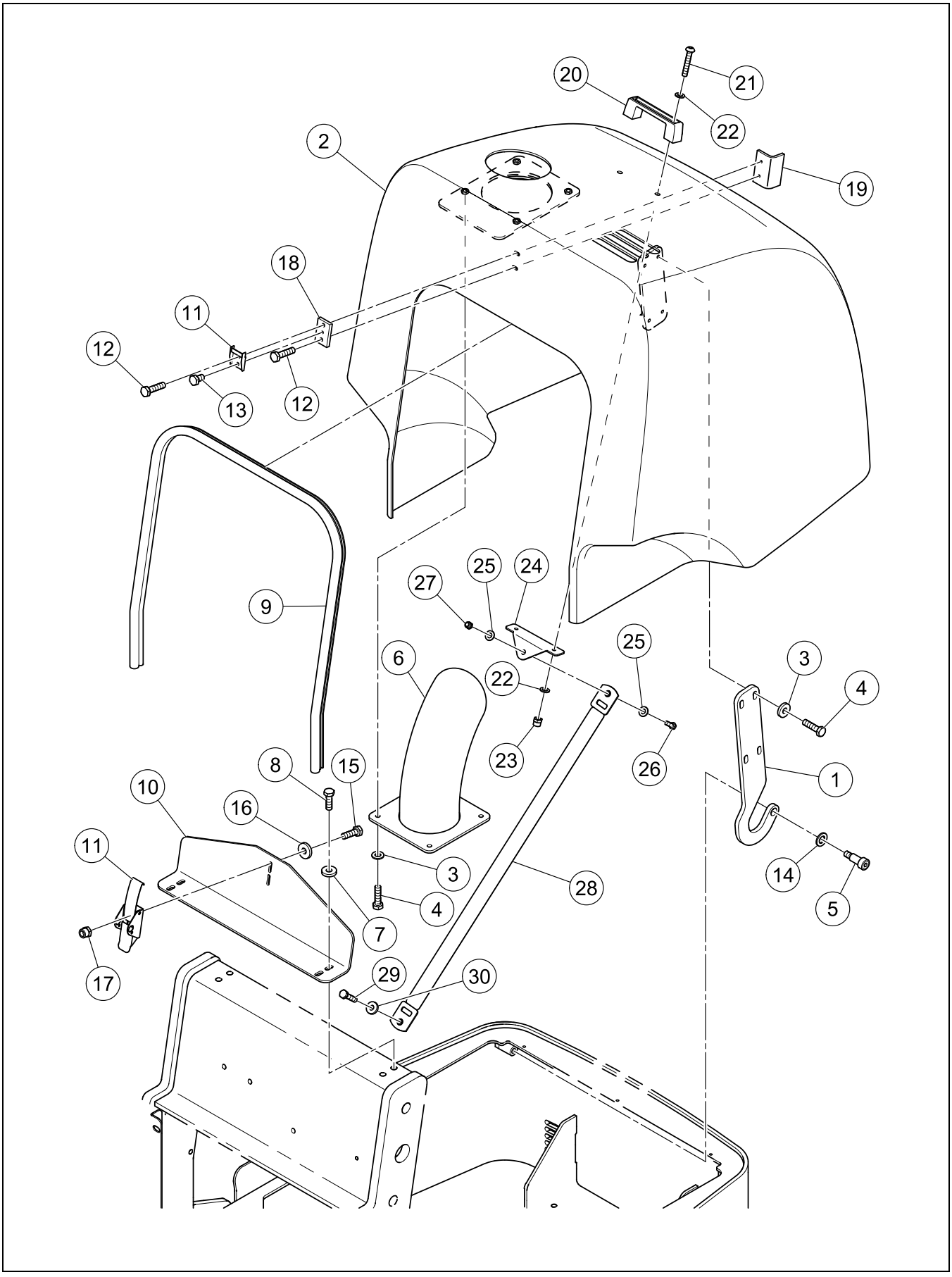

HOOD INSTALLATION

BOM 13328232

ITEM	COMM. NO.	DESCRIPTION	QTY	DIMENSIONS/NOTES
1	13388459	Hinge Plate	2	
2	13389028	Hood	1	
3	96712674	Washer, Zinc Platedr	12	M8 Hardened Cl 10
4	96705587	HHCS, Fully Threaded, Zinc Plated	12	M8 x 1.25 x 30 Cl 8.8
5	96727458	Hex Socket Shoulder Screw	2	M12 x 1.75 x 30 Cl 12.9
6	13271432	Exhaust Tube	1	
7	96741038	Flatwasher	4	M8 x 1.25 Cl 200
8	96702659	HHCS, Fully Threaded, Zinc Plated	8	M8 x 1.25 x 25 Cl 8.8
9	13327911	Trim Seal	1	
10	13384789	Backing Plate	1	
11	54496328	Hood Latch	1	
12	96701461	HHCS, Fully Threaded	2	M6 x 25 Cl 8.8
13	96705769	HHCS, Fully Threaded, Zinc Plated	1	M6 x 1.0 x 10 Cl 8.8
14	96738612	Flatwasher, Zinc Plated	2	M16 Hardened Cl 200
15	96704564	HHCS, Fully Threaded, Zinc Plated	2	M6 x 1.0 x 20 Cl 8.8
16	96721121	Washer, Zinc Plated	2	M6 Cl 10
17	96704598	Hex Locknut, Zinc Plated	2	M6 Cl 8
18	13385604	Latch Backing Plate	1	
19	13385612	Latch Plate Clamp	1	
20	54469390	Grab Handle	1	
21	96740436	BHCS	2	M5 x 0.8 UNS
22	96738554	Flatwasher, Zinc Plated	4	M5 Hardened Cl 200
23	96704580	Hex Locknut, Zinc Plated	2	M5 x 0.8 Cl 8
24	59269191	Backing Plate	1	
25	96741046	Flatwasher, Zinc Plated	2	M10 Cl 200
26	96702659	HHCS, Fully Threaded, Zinc Plated	1	M8 x 1.25 x 25 Cl 8.8
27	96704606	Hex Locknut, Zinc Plated	1	M8 x 1.25 Cl 8
28	13207055	Hood Strap	1	
29	96702261	HHCS, Fully Threaded, Zinc Plated	1	M8 x 1.25 x 35 Cl 8.8
30	96712674	Washer, Zinc Plated	1	M8 Hardened Cl 10

Dwg D13190483/01

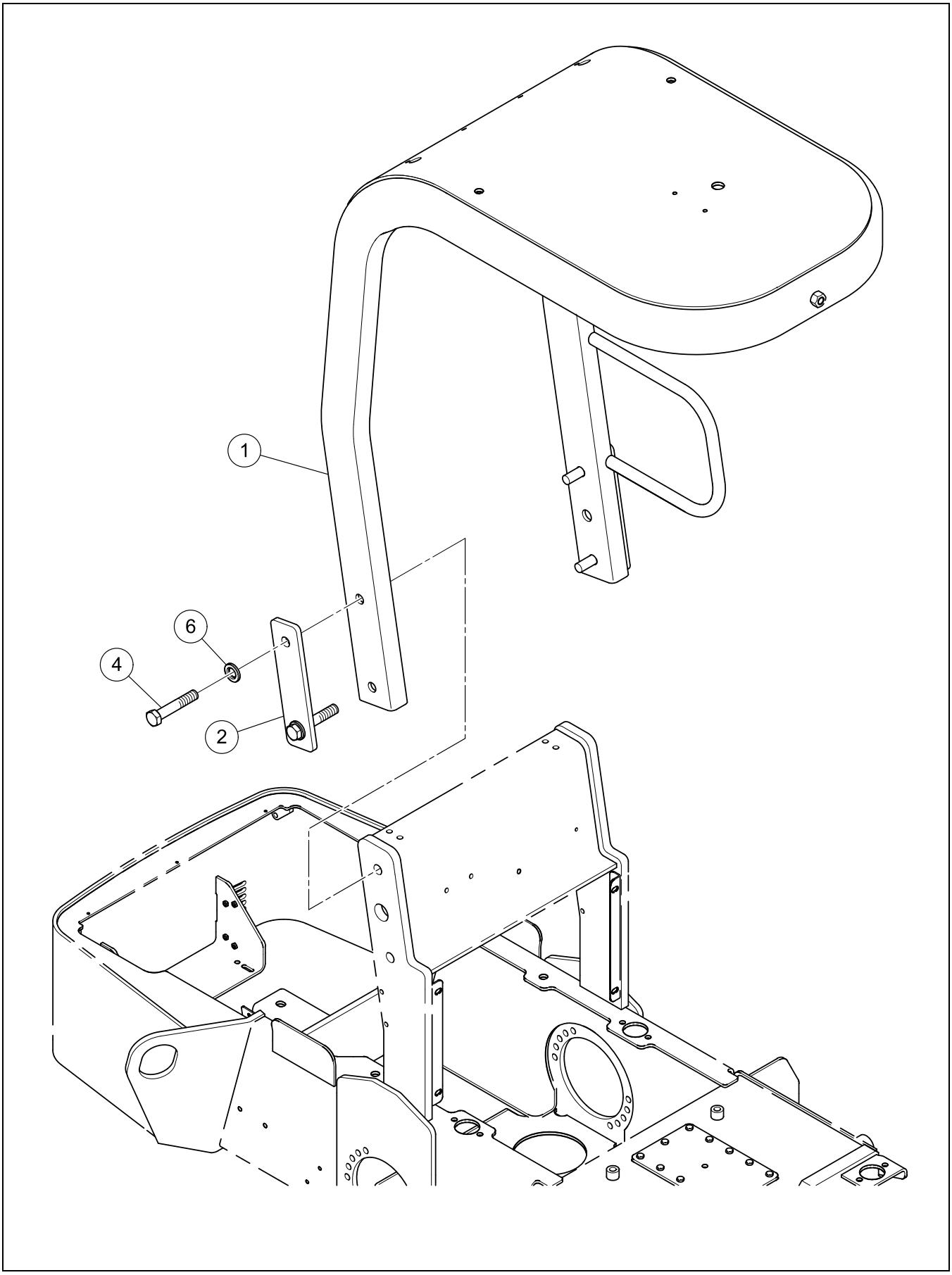

BOM 13190483

ITEM	COMM. NO.	DESCRIPTION	QTY	DIMENSIONS/NOTES
1	13314091	ROPS/FOPS	1	
2	13325642	FOPS Plate	2	
4	96700927	HHCS, Zinc Plated	4	M20 x 2.5 x 110 Cl 8.8
6	96701560	Flatwasher, Zinc Plated	4	M20 Hardened

ARCH ROPS INSTALLATION - OPTIONAL

Dwg D13178579/02

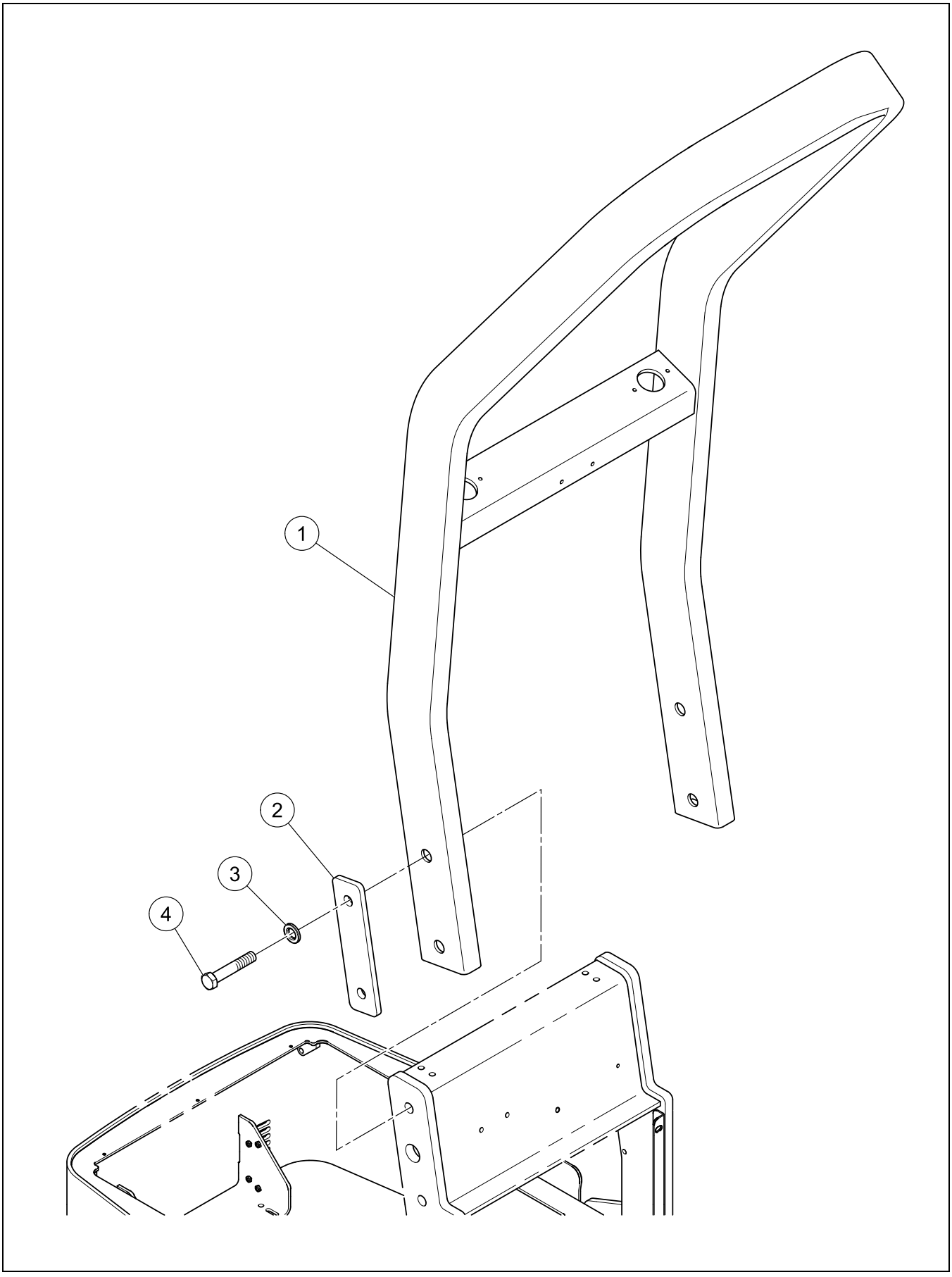

ARCH ROPS INSTALLATION - OPTIONAL

BOM 13369368

ITEM	COMM. NO.	DESCRIPTION	QTY	DIMENSIONS/NOTES
1	13314109	Arch ROPS	1	
2	13325642	FOPS Plate	2	
3	96701560	Flatwasher, Zinc Plated	4	M20 Hardened
4	96700927	HHCS, Zinc Plated	4	M20 x 2.5 x 110 Cl 8.8

Always use Manufacturer Replacement parts!*

Section B - DRUM

FRONT FRAME INSTALLATION

Dwg 13384615/03

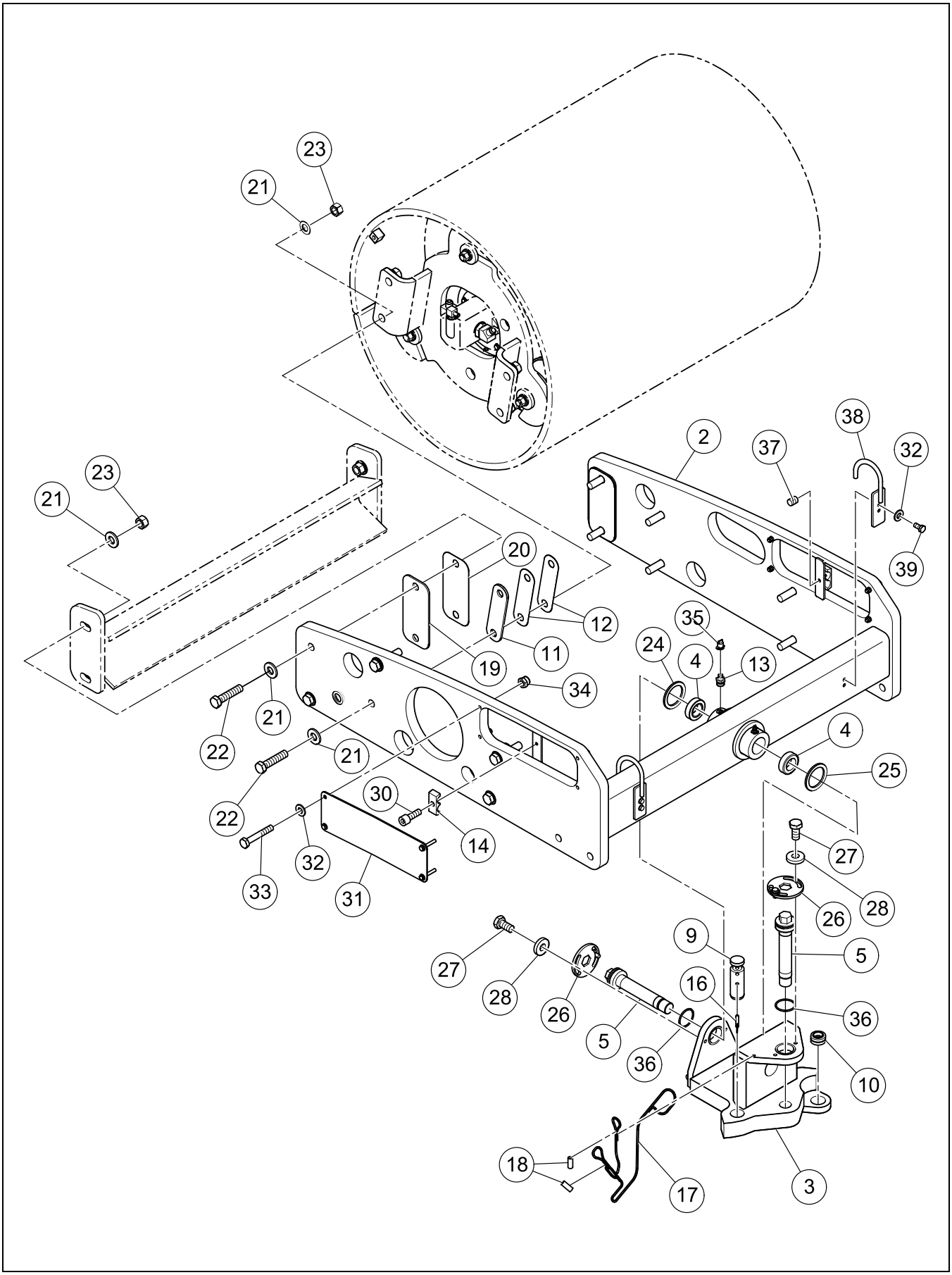

FRONT FRAME INSTALLATION

BOM 13384615

ITEM	COMM. NO.	DESCRIPTION	QTY	DIMENSIONS/NOTES
2	13395967	Drum Frame	1	
3	13324405	Swivel	1	
4	13270657	Bearing	2	
5	13324470	Pin	2	
6	13325956	Scraper - SD-25D	1	
-	13352547	Scraper - SD-25F	1	
9	13326475	Articulation Pin	1	
10	50275445	Bearing	1	
11	13326590	Shim	2	5.0mm
12	13326608	Shim	4	1.5mm
13	95201547	Fitting	2	
14	59891002	Insert Clamp	1	
16	59299545	Hitch Pin	1	
17	59607861	Cable	1	
18	59607853	Ferrule	2	
19	13326491	Shim	2	5.0mm
20	13326509	Shim	2	1.5mm
21	96701560	Flatwasher, Zinc Plated	24	M20 Hardened
22	96700927	HHCS, Zinc Plated	12	M20 x 2.5 x 110 Cl 8.8
23	96720446	Hex Nut, Zinc Plated	12	M20 x 2.5 Cl 8
24	13324637	Dust Seal	1	
25	13324645	Dust Seal	1	
26	13324488	Lock Plate	2	
27	96702279	HHCS, Fully Threaded, Zinc Plated	4	M10 x 1.5 x 20 Cl 8.8
28	96711833	Flatwasher, Zinc Plated	4	M10 Cl 10
30	96728712	Hex Socket Shoulder Screw, Zinc Plated	2	M8 x 1.25 x 25 Cl 8.8
31	13326764	Hose Cover Plate	2	
32	96741038	Flatwasher	12	M8 x 1.25 Cl 200
33	96715131	HHCS, Zinc Plated	8	M8 x 1.25 x 70 Cl 8.8
34	96704606	Hex Locknut, Zinc Plated	8	M8 x 1.25 Cl 8
35	50270248	Cap	2	
36	95018453	O-ring	2	
37	59618579	Insert Clamp	1	
38	13388319	Hose Holder Bracket	2	
39	96702824	HHCS, Fully Threaded, Zinc Plated	4	M8 x 1.25 x 20 Cl 8.8

DRUM ASSEMBLY

Dwg D13384623/00

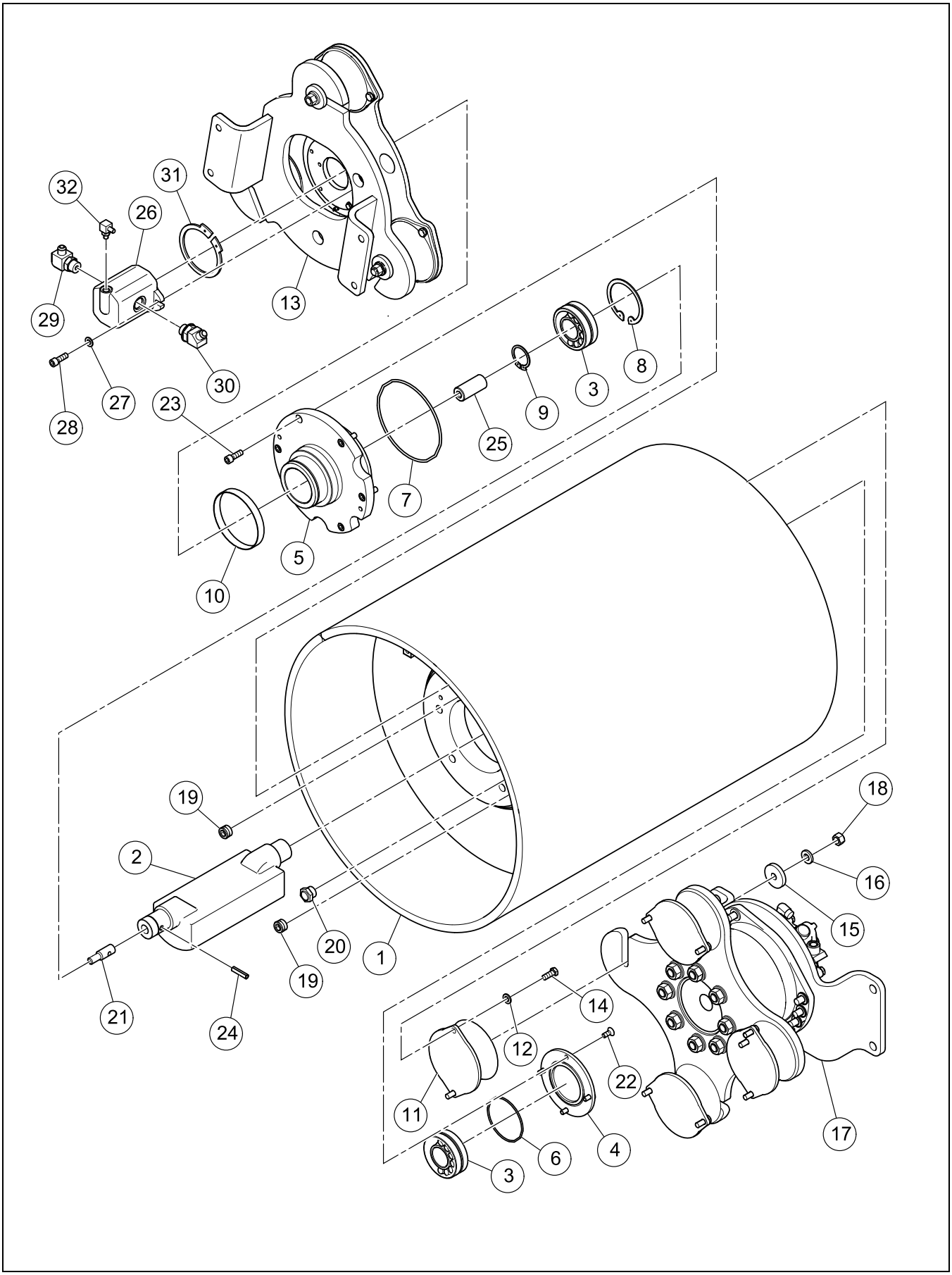

DRUM ASSEMBLY

BOM 13384623, 13384649

ITEM	COMM. NO.	DESCRIPTION	QTY	DIMENSIONS/NOTES
1	13388392	Drum (SD-25D)	1	
-	13355482	Drum (SD-25F)	1	
2	13384607	Eccentric Casting	1	
3	13185756	Bearing	2	
4	59389239	Bearing Cover	1	
5	13299904	Bearing Housing	1	
6	95988879	O-ring	1	
7	95733887	O-ring	1	
8	95223178	Ring	1	
9	95223434	Retaining Ring	1	
10	59539064	Wear Sleeve	1	
11	13384631	Shock Mount	4	
12	96738596	Flatwasher, Zinc Plated	8	M12 Hardened Cl 200
13	**NSVA**	**Carrier Assembly**	**1**	**See Page B - 6.**
14	96702311	HHCS, Fully Threaded, Zinc Plated	8	M12 x 1.75 x 30 Cl 8.8
15	13351408	Washer	4	
16	59565044	Washer	4	
17	**NSVA**	**Drum Drive Assembly**	**1**	**See Page B - 8.**
18	96703657	Nut, Zinc Plated	4	M16 Cl 10
19	59144428	Magnetic Plug	2	
20	59277772	Sight Gauge	1	
21	59475087	Spline Shaft	1	
22	96706759	HSCS	4	M10 x 1.5 x 25 Cl 8.8
23	96708284	SHCS	6	M12 x 1.75 x 35 Cl 8.8
24	95098695	Rollpin	1	
25	59278036	Spline Coupling	1	
26	13309851	Vibration Motor	1	
-	59489658	- Seal Kit	1	
27	96741046	Flatwasher, Zinc Plated	2	M10 Cl 200
28	96700364	HSHCS	2	M10 x 1.5 Cl 10.9
29	95303350	Adapter, 90°	1	
30	95650339	Elbow, 45°	1	
31	96711510	Retaining Ring	1	
32	95329975	Adapter	1	

Dwg 13299995/06

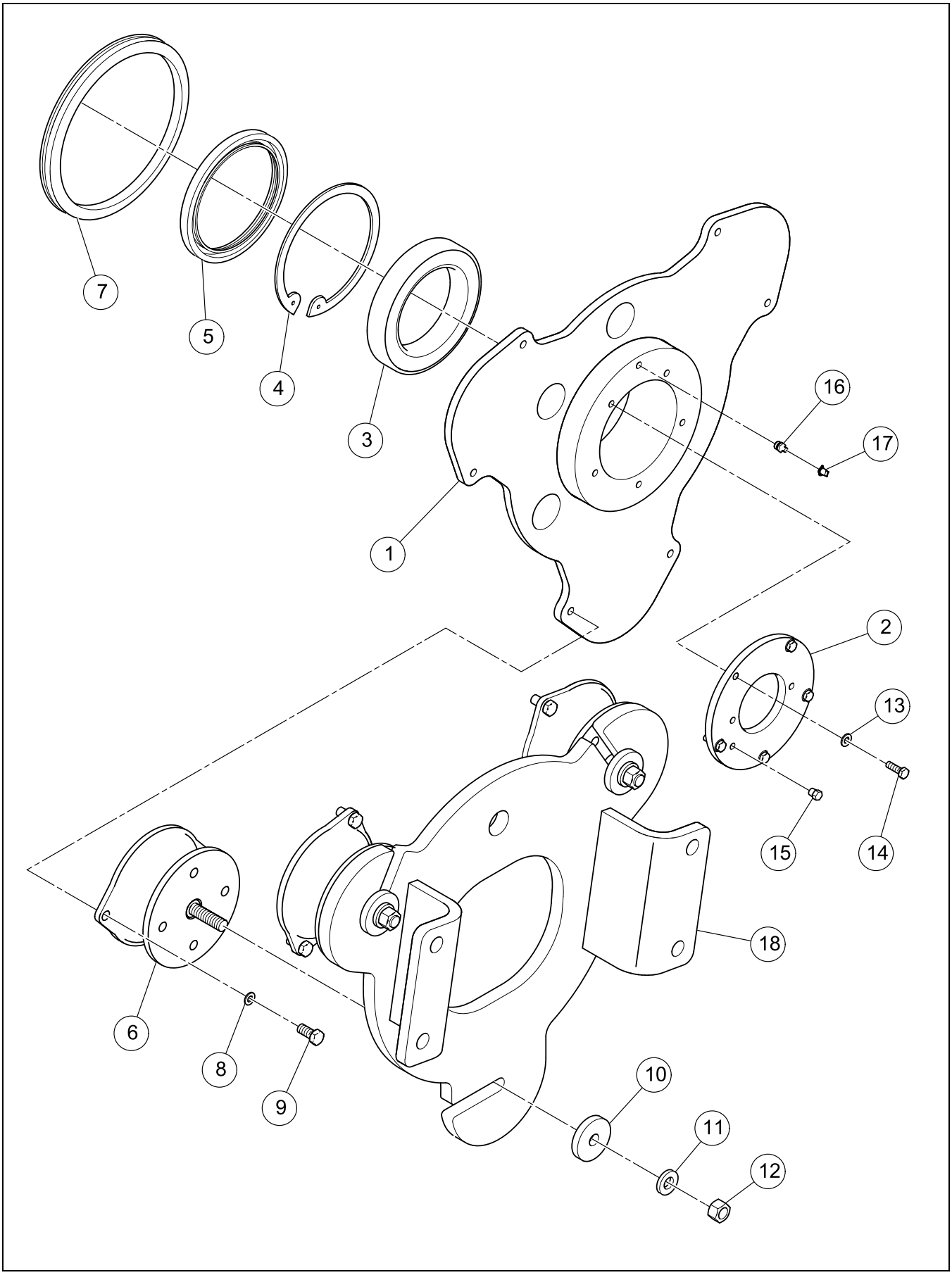

CARRIER ASSEMBLY

BOM 13299995

ITEM	COMM. NO.	DESCRIPTION	QTY	DIMENSIONS/NOTES
1	13299987	Vibration Plate	1	
2	59278010	Vibration Motor Plate	1	
3	50269984	Bearing	1	
4	95043360	Retaining Ring	1	
5	59133900	Seal	1	
6	13304761	Shock Mount	3	
7	13323431	V-ring Seal	1	
8	96738596	Flatwasher, Zinc Plated	6	M12 Hardened Cl 200
9	96702790	HHCS, Fully Threaded, Zinc Plated	6	1.75 Cl 10.9
10	13351408	Washer	3	
11	59565044	Washer	3	
12	96703657	Nut, Zinc Plated	3	M16 Cl 10
13	96741038	Flatwasher	5	M8 x 1.25 Cl 200
14	96702659	HHCS, Fully Threaded, Zinc Plated	5	M8 x 1.25 x 25 Cl 8.8
15	59669127	Fitting	1	
16	95208989	Grease Fitting	1	
17	50270248	Cap	1	
18	13413604	Vibration Plate	1	

DRUM DRIVE ASSEMBLY

Dwg 13299938/03

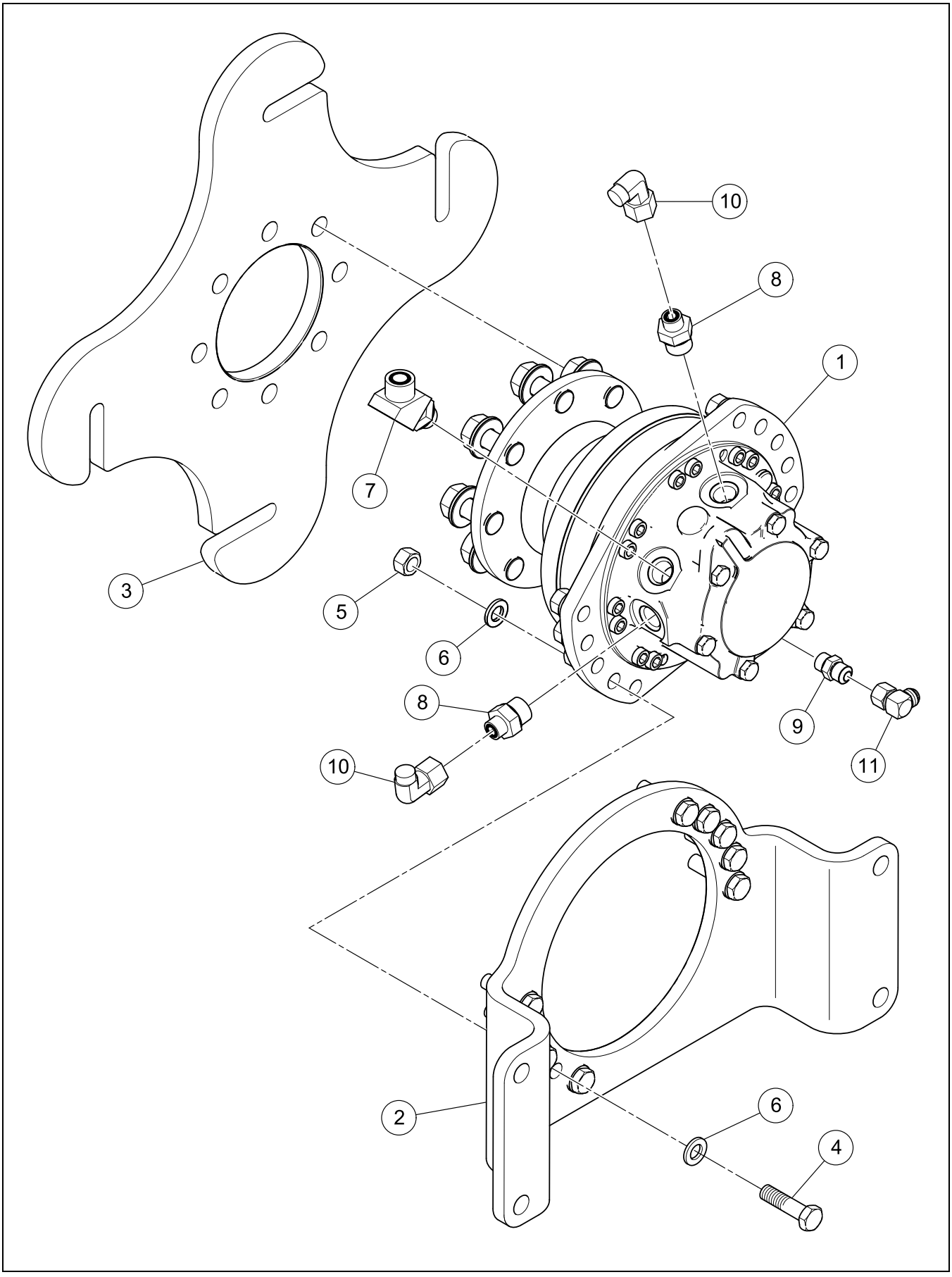

DRUM DRIVE ASSEMBLY

BOM 13299938

ITEM	COMM. NO.	DESCRIPTION	QTY	DIMENSIONS/NOTES
1	**13309752**	**Drum Drive Motor**	**1**	**See Breakdown B - 10.**
2	13324819	Drive Motor Mounting Plate	1	
3	13413992	Drive Plate	1	
4	96704515	HHCS, Zinc Plated	10	M16 x 2.0 x 60 Cl 10.9
5	96703657	Nut, Zinc Plated	10	M16 Cl 10
6	96738612	Flatwasher, Zinc Plated	20	M16 Hardened Cl 200
7	59922336	Adapter	1	
8	59922518	Adapter, Straight	2	
9	95303368	Adapter	1	
10	59923466	Adapter	2	
11	95302121	Adapter, 90°	1	

DRUM DRIVE MOTOR (13309752) - INTERNAL BREAKDOWN

Dwg 13309752/00

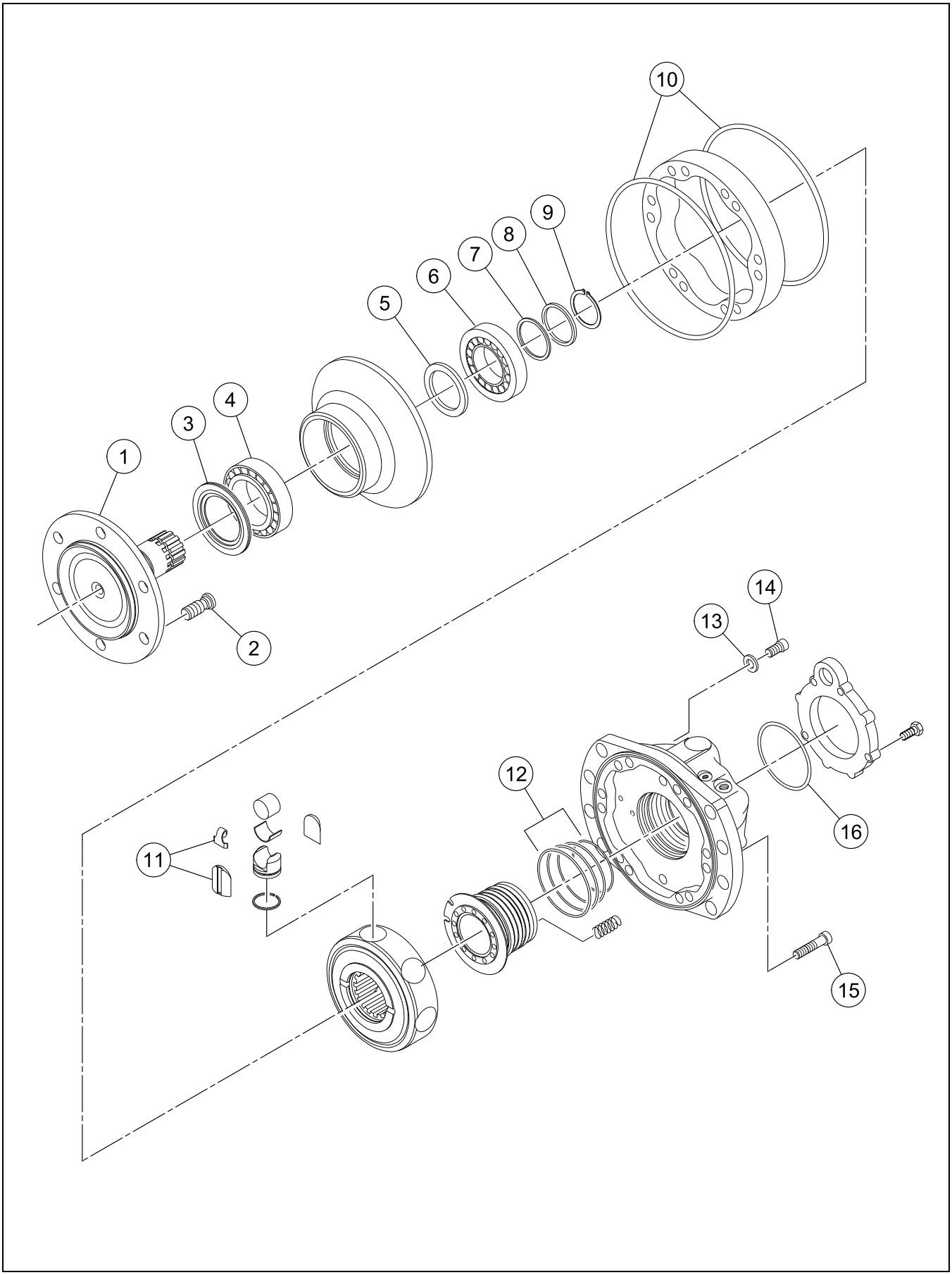

DRUM DRIVE MOTOR (13309752) - INTERNAL BREAKDOWN

BOM 13309752

ITEM	COMM. NO.	DESCRIPTION	QTY	DIMENSIONS/NOTES
1	13264023	Shaft	1	
3	13496336	Set Of Studs	1	
3	13496344	Environmental Seal	1	
4	13496351	Bearing	1	
5	13264312	Environmental Seal	1	
6	13496369	Bearing	1	
7	13264338	Shim Set	1	
8	13496377	Thrust Ring	1	
9	13264049	Snap Ring	1	
10	13264064	O-ring	2	
11	13264080	Repair Kit	1	
12	13264106	Seal Kit	1	
13	59902668	Seal	2	
14	59902676	Bleed Screw	2	
15	13496401	Bolt	16	
16	59902684	O-ring	1	
17	13264007	Seal Kit (Not Shown)	1	
18	13496419	Seal Kit (Not Shown)	1	

REAR FRAME INSTALLATION

Dwg 13326392/08

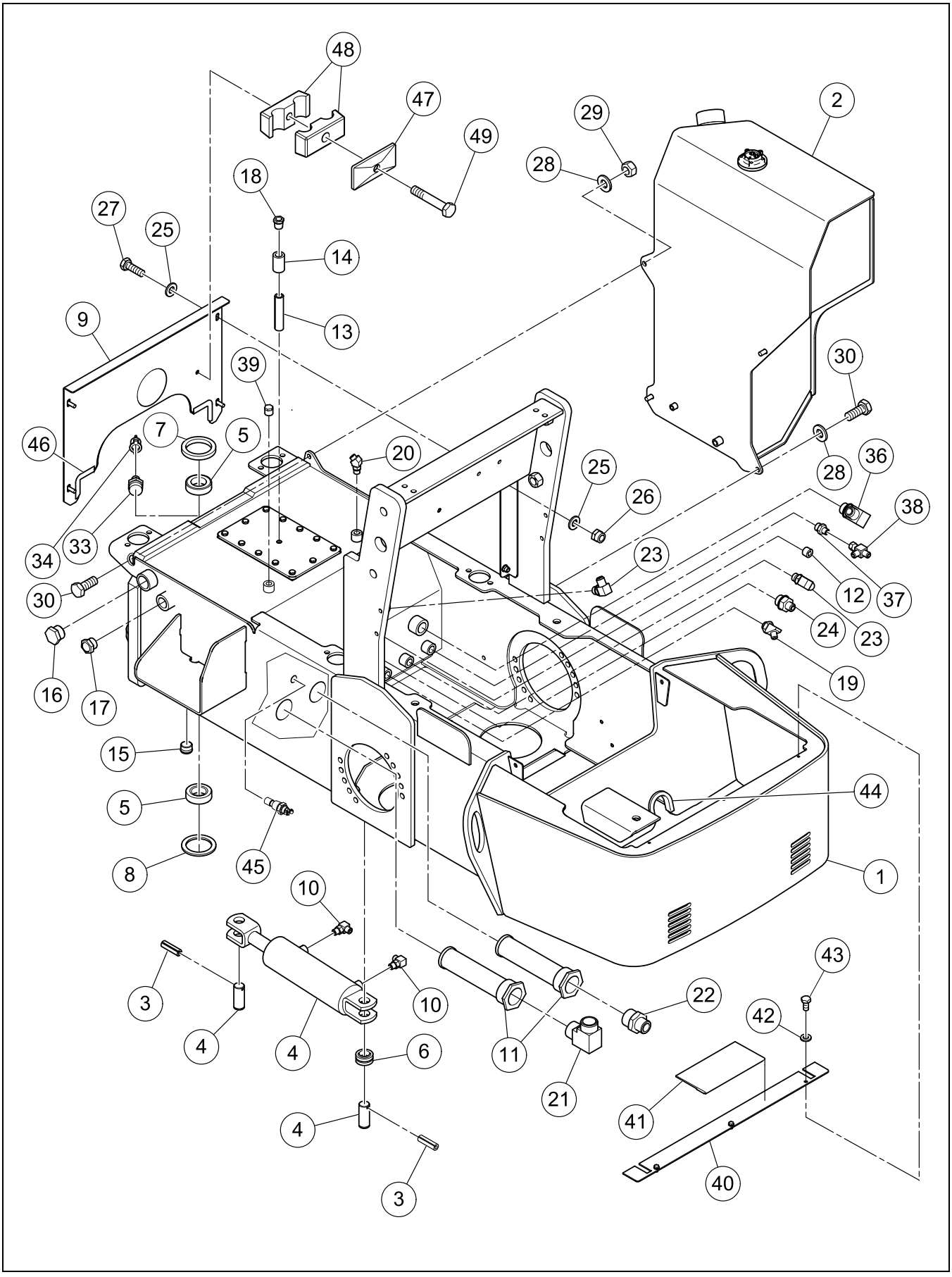

BOM 13326392

ITEM	COMM. NO.	DESCRIPTION	QTY	DIMENSIONS/NOTES
1	13388988	Rear Frame	1	
-	13185384	- Clean Out Lid	1	
-	13305099	- Hydraulic Tank Cover Gasket	1	
-	96702824	- HHCS, Fully Threaded, Zinc Plated	12	M8 x 1.25 x 20 Cl 8.8
2	**NSVA**	**Fuel Tank Assembly**	**1**	**See Page B - 16.**
3	96736343	Pin	4	
4	13349170	Steering Cylinder	1	
-	56998503	- Nut	1	
-	13496435	- Cotter Pin	4	
-	13496443	- Clevis Pin	2	
-	13496450	- Seal Kit	1	
5	13270657	Bearing	2	
6	50275445	Bearing	1	
7	13324637	Dust Seal	1	
8	13324645	Dust Seal	1	
9	13326376	Cowling Cover	1	
10	59922823	Adapter, 90°	2	
11	58855099	Tank Filter	2	
12	95043238	Pipe Plug	1	
13	95048393	Nipple	1	
14	95011060	Coupling Pipe	1	
15	59144428	Magnetic Plug	1	
16	95326955	Plug	1	
17	59277772	Sight Gauge	1	
18	59093351	Filtered Breather Vent	1	
19	95029989	Adapter	1	
20	59919670	Adapter	1	
21	95286548	Adapter	1	
22	95316956	Adapter	1	
23	95303335	Elbow	2	
24	95357570	Adapter	1	
25	96741038	Flatwasher	8	M8 x 1.25 Cl 200
26	96704606	Hex Locknut, Zinc Plated	5	M8 x 1.25 Cl 8
27	96702659	HHCS, Fully Threaded, Zinc Plated	4	M8 x 1.25 x 25 Cl 8.8
28	96741046	Flatwasher, Zinc Plated	6	M10 Cl 200
29	96704812	Hex Nut, Zinc Plated	4	M10 x 1.5 Cl 8
30	96702287	HHCS, Fully Threaded, Zinc Plated	4	M10 x 1.5 x 25 Cl 8.8
33	95201547	Fitting	2	
34	50270248	Cap	2	
36	95280186	Elbow	1	
37	95356903	Adapter, Straight	1	
38	95415667	Swivel Tee	1	
39	95343596	Plug	1	
40	13353792	Baffle Support	1	
41	13238050	Wiper Seal	1	
42	96741053	Flatwasher, Zinc Plated	3	M6 Cl 200

Dwg 13326392/08

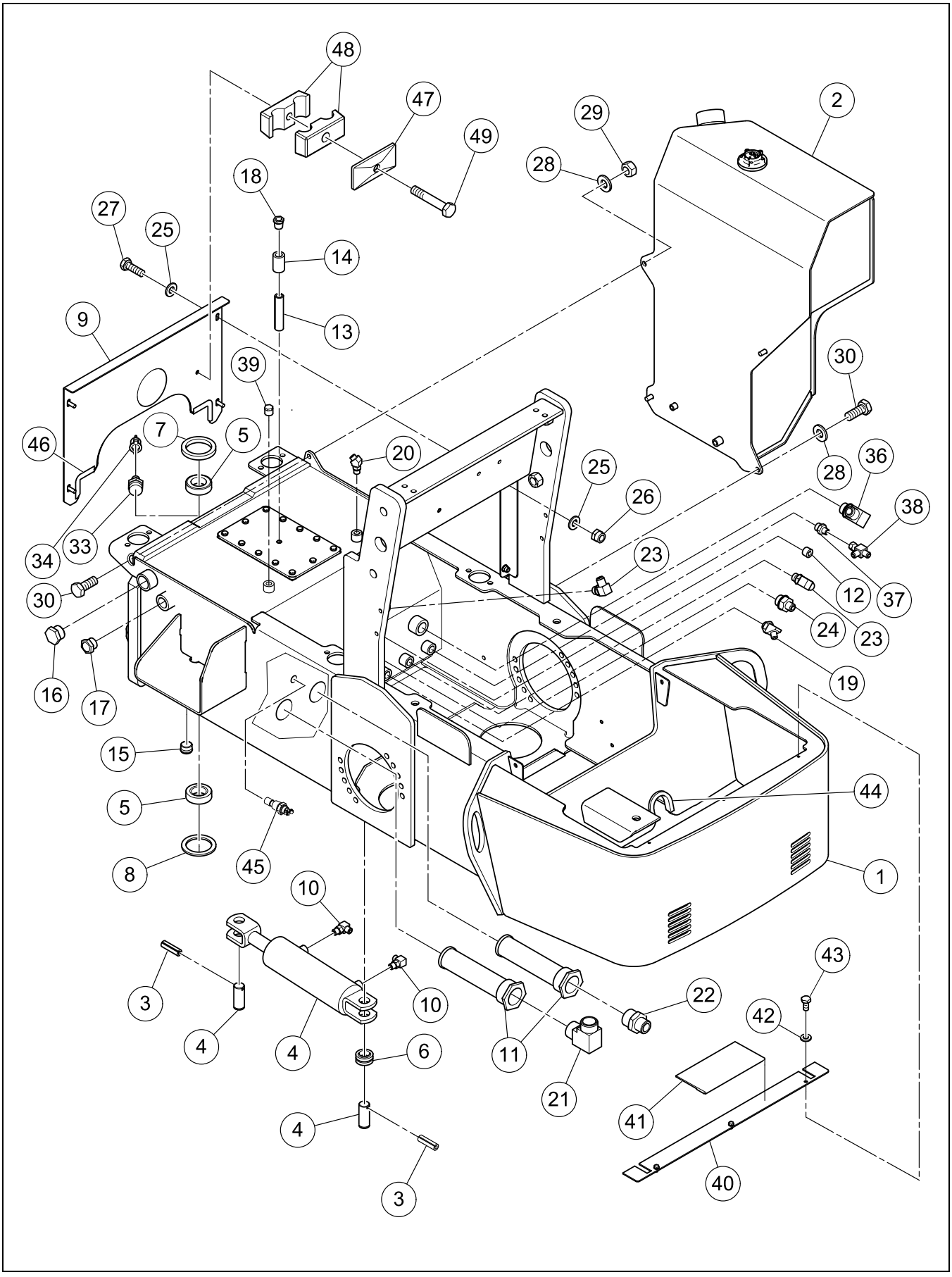

BOM 13326392

ITEM	COMM. NO.	DESCRIPTION	QTY	DIMENSIONS/NOTES
43	96714548	HHCS, Fully Threaded, Zinc Plated	3	M6 x 12 Cl 10.9
44	50829647	Trim	A/R	
45	**NSVA**	**Hydraulic Oil Temperature Light Installation**	**1**	**See Page B - 18.**
46	50829654	Trim	1	
47	59583500	Cover Plate	1	
48	59618579	Insert Clamp	2	
49	96712583	HHCS, Zinc Plated	1	M8 x 1 Cl 8.8

FUEL TANK ASSEMBLY

Dwg D13325469/02

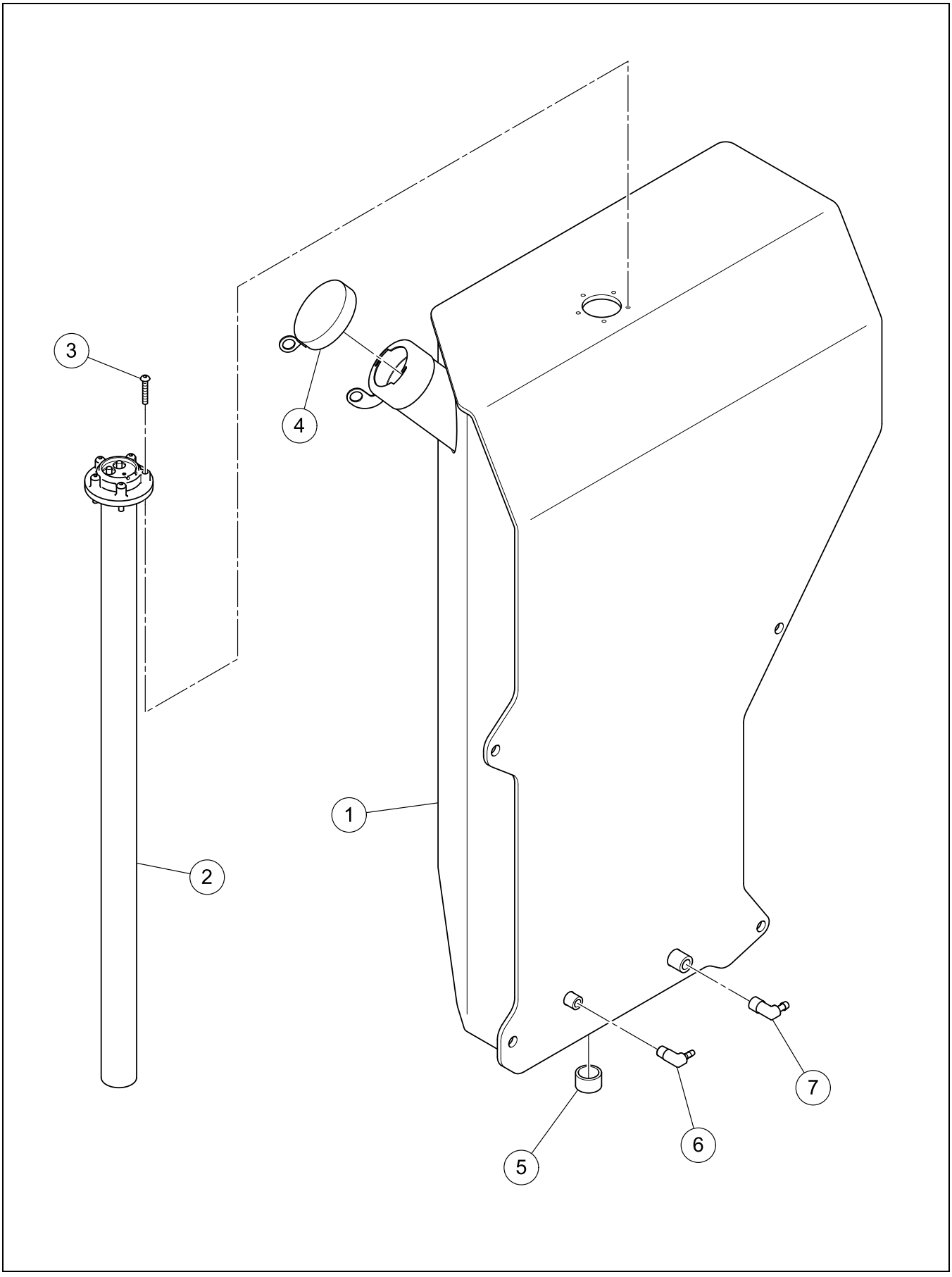

FUEL TANK ASSEMBLY

BOM 13325469

ITEM	COMM. NO.	DESCRIPTION	QTY	DIMENSIONS/NOTES
1	13451331	Fuel Tank	1	
2	13213582	Fuel Level Sender	1	
3	96740436	BHCS	5	M5 x 0.8 UNS
4	54581236	Fuel Tank Cap	1	
5	13356738	Magnetic Plug	1	
6	59229617	Elbow	1	
7	59303289	Adapter	1	

HYDRAULIC OIL TEMPERATURE LIGHT INSTALLATION

Dwg D59287425/00

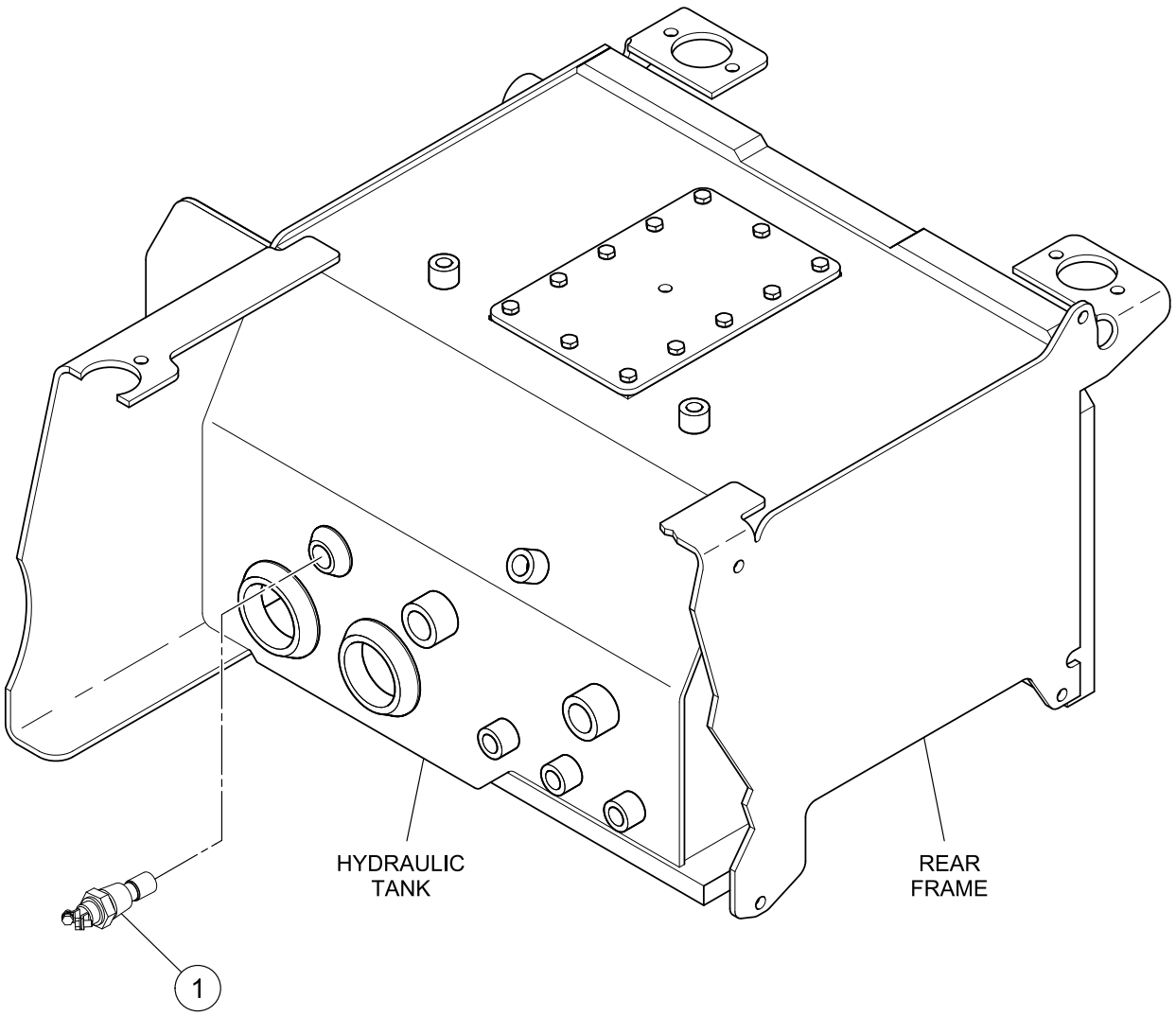

HYDRAULIC OIL TEMPERATURE LIGHT INSTALLATION

BOM 59287425

ITEM	COMM. NO.	DESCRIPTION	QTY	DIMENSIONS/NOTES
1	13421334	Hydraulic Oil Temperature Switch	1	

Dwg D13190533/01

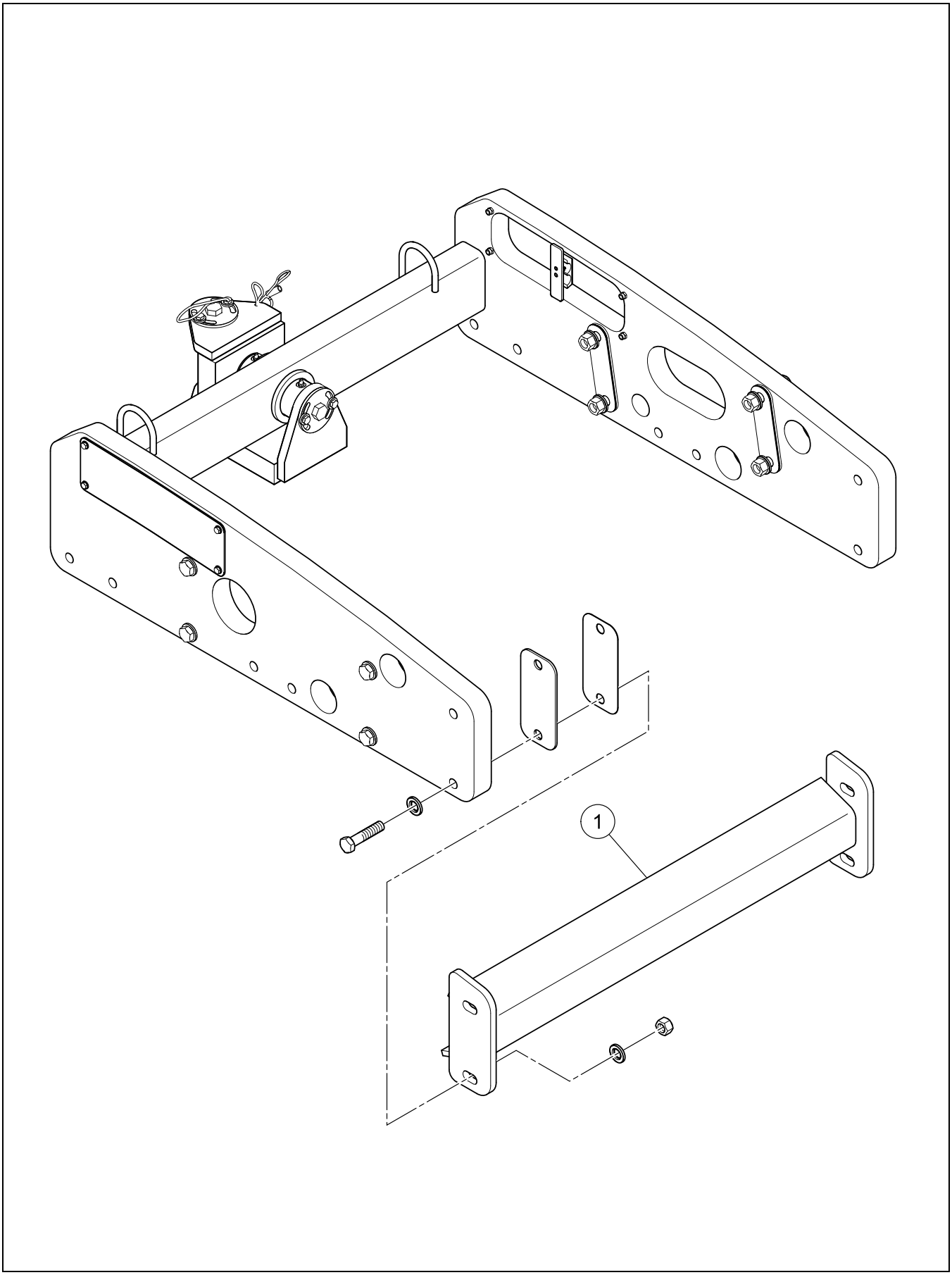

SCRAPER INSTALLATION - SD-25D

BOM 13190533

ITEM	COMM. NO.	DESCRIPTION	QTY	DIMENSIONS/NOTES
1	13325956	Scraper	1	

Dwg D13277298/01

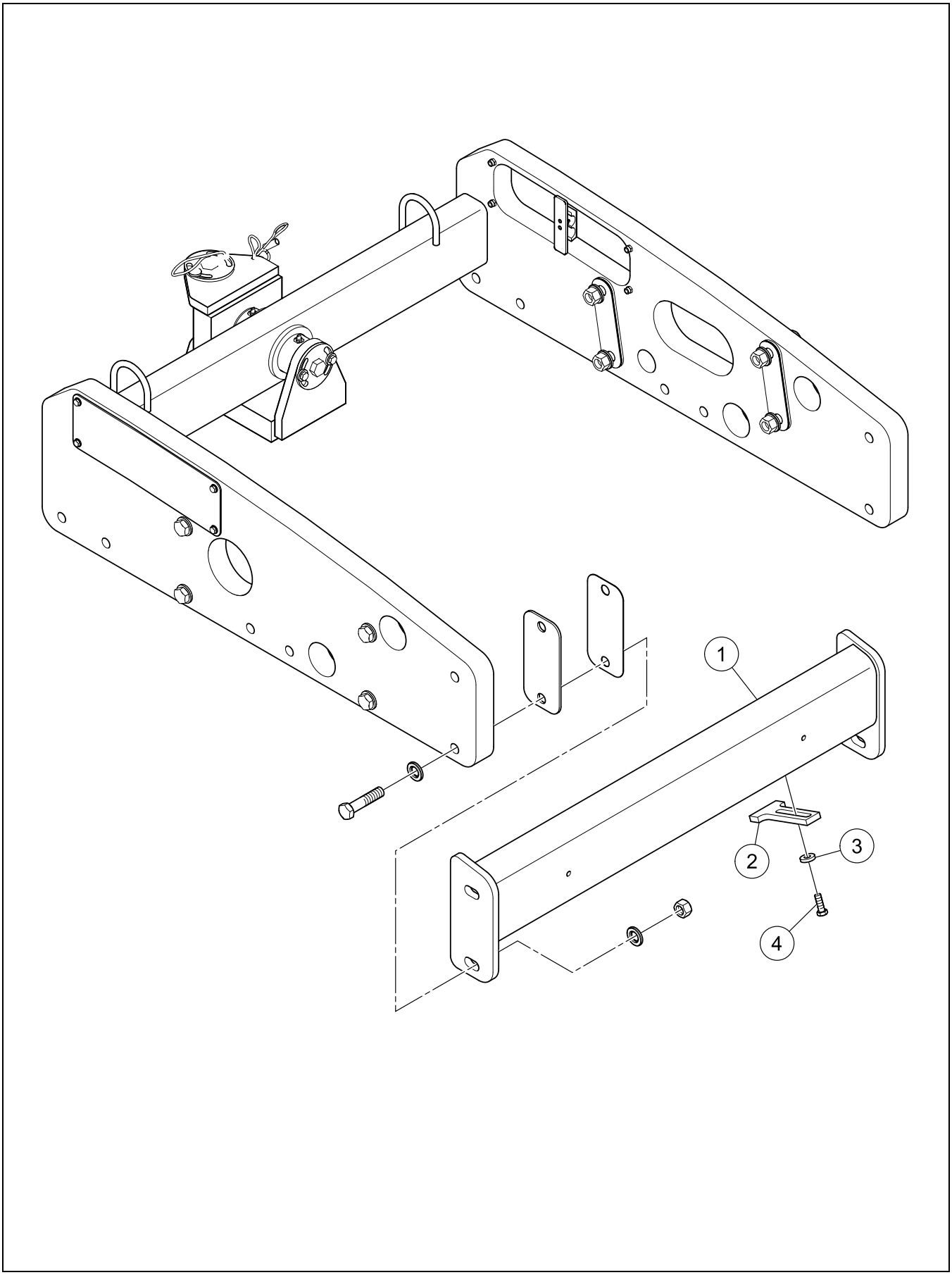

BOM 13326699

ITEM	COMM. NO.	DESCRIPTION	QTY	DIMENSIONS/NOTES
1	13352547	Scraper	1	
2	13352554	Scraper Tooth	4	
3	96712237	Flatwasher, Zinc Plated	10	M12 Hardened Cl 10
4	96702329	HHCS, Fully Threaded, Zinc Plated	10	M12 x 1.75 x 35 Cl 8.8

INSIDE SCRAPER INSTALLATION - SD-25D - OPTIONAL

Dwg D13407127/00

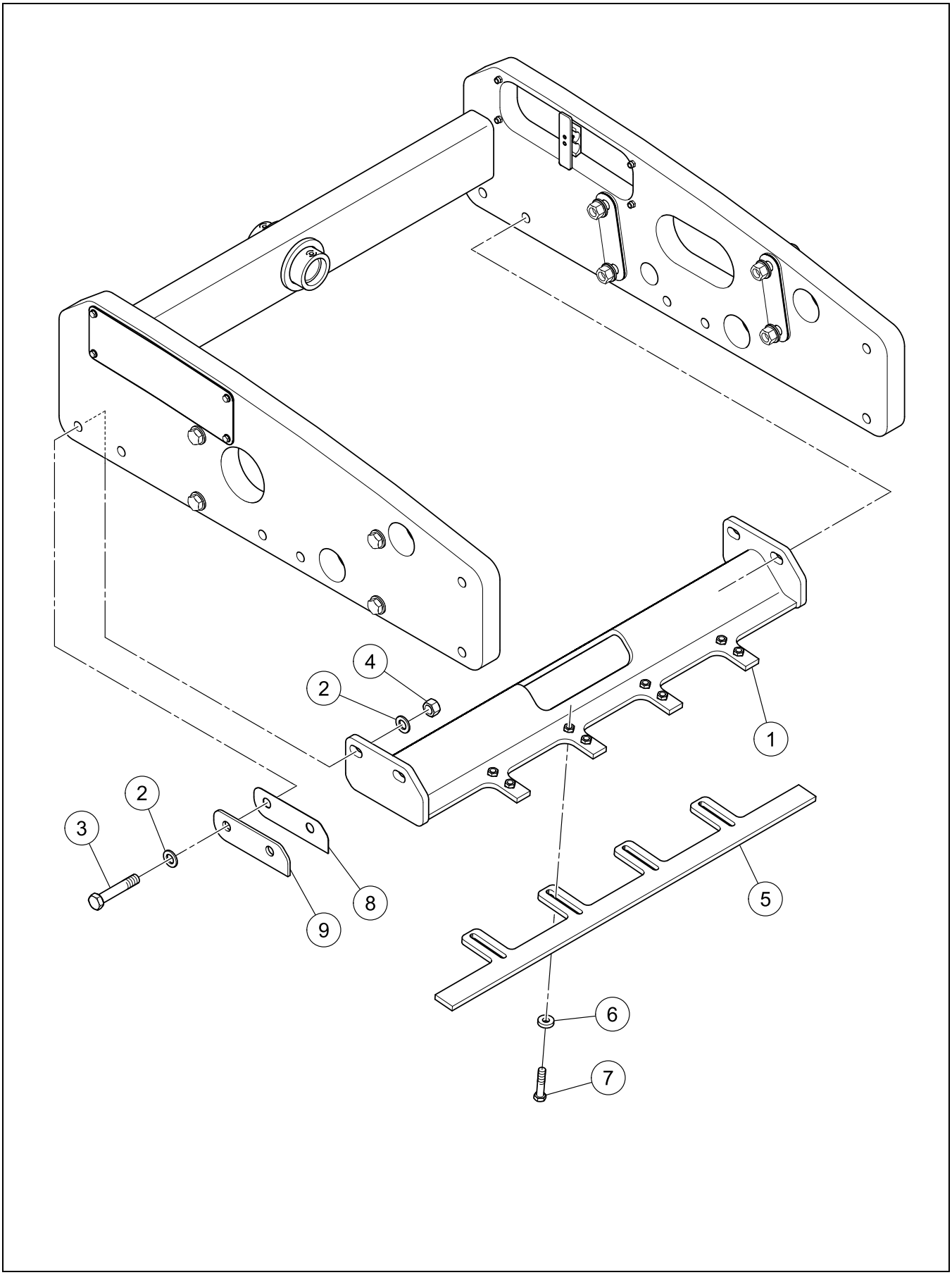

INSIDE SCRAPER INSTALLATION - SD-25D - OPTIONAL

BOM 13407127

ITEM	COMM. NO.	DESCRIPTION	QTY	DIMENSIONS/NOTES
1	13359948	Inside Scraper	1	
2	96738620	Flatwasher, Zinc Plated	8	M20 Hardened Cl 200
3	96700927	HHCS, Zinc Plated	4	M20 x 2.5 x 110 Cl 8.8
4	96720446	Hex Nut, Zinc Plated	4	M20 x 2.5 Cl 8
5	13359245	Scraper Bar	1	
6	96712237	Flatwasher, Zinc Plated	8	M12 Hardened Cl 10
7	96702444	HHCS, Fully Threaded, Zinc Plated	8	M12 x 1.75 x 40 Cl 8.8
8	13407168	Shim	2	1.5mm
9	13407176	Shim	2	3.0mm

INSIDE SCRAPER INSTALLATION - SD-25F - OPTIONAL

Dwg D13407135/00

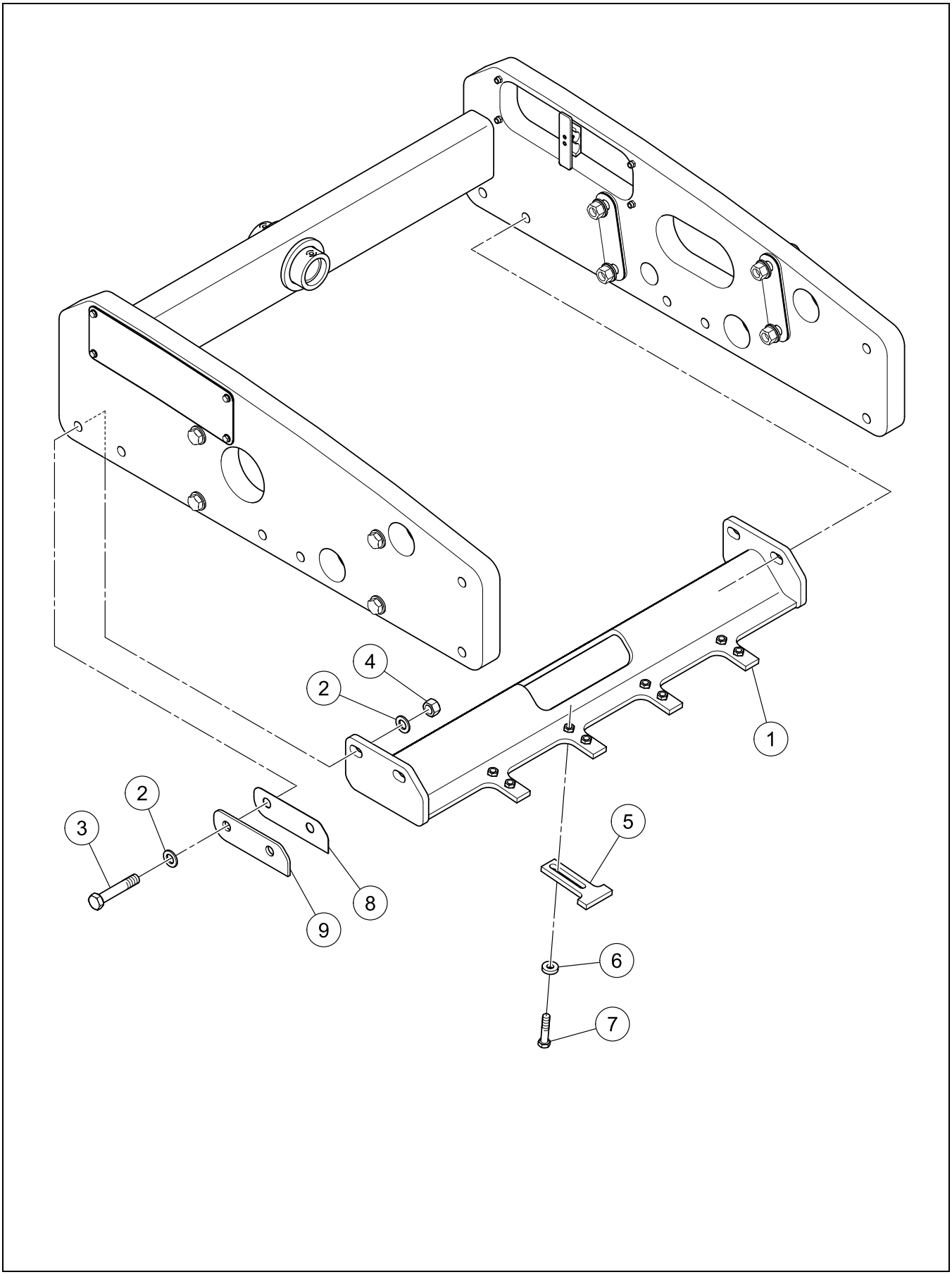

INSIDE SCRAPER INSTALLATION - SD-25F - OPTIONAL

BOM 13407135

ITEM	COMM. NO.	DESCRIPTION	QTY	DIMENSIONS/NOTES
1	13359948	Inside Scraper	1	
2	96738620	Flatwasher, Zinc Plated	8	M20 Hardened Cl 200
3	96700927	HHCS, Zinc Plated	4	M20 x 2.5 x 110 Cl 8.8
4	96720446	Hex Nut, Zinc Plated	4	M20 x 2.5 Cl 8
5	13352554	Scraper Tooth	4	
6	96712237	Flatwasher, Zinc Plated	8	M12 Hardened Cl 10
7	96702444	HHCS, Fully Threaded, Zinc Plated	8	M12 x 1.75 x 40 Cl 8.8
8	13407168	Shim	2	1.5mm
9	13407176	Shim	2	3.0mm

UNIVERSAL INSIDE SCRAPER INSTALLATION - SD-25D
WITHOUT BOLT-ON SHELL - OPTIONAL

Dwg D13404686/00

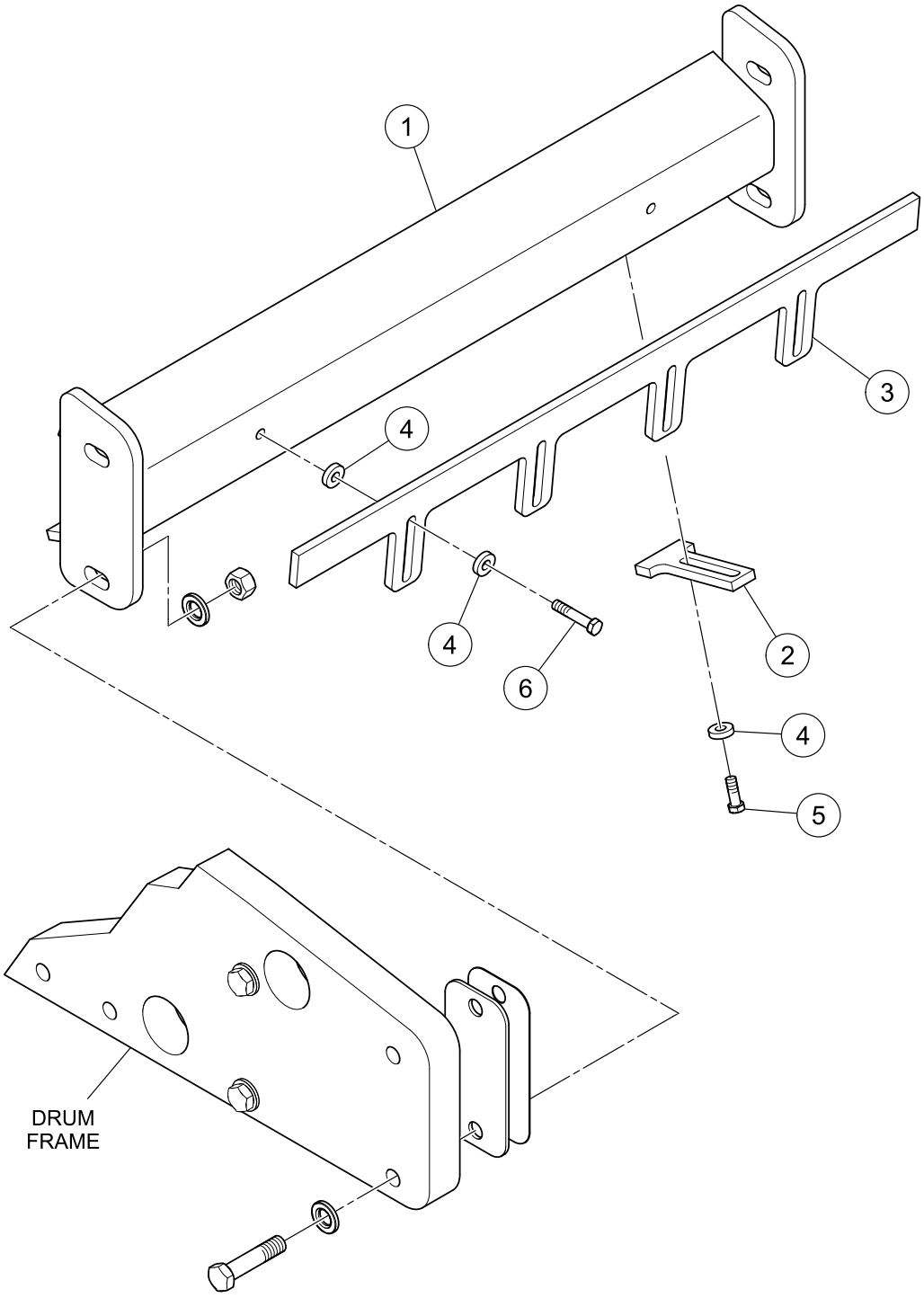

UNIVERSAL INSIDE SCRAPER INSTALLATION - SD-25D
WITHOUT BOLT-ON SHELL - OPTIONAL

BOM 13404686

ITEM	COMM. NO.	DESCRIPTION	QTY	DIMENSIONS/NOTES
1	13352547	Scraper	1	
2	13352554	Scraper Tooth	4	
3	13359245	Scraper Bar	1	
4	96712237	Flatwasher, Zinc Plated	12	M12 Hardened Cl 10
5	96702329	HHCS, Fully Threaded, Zinc Plated	8	M12 x 1.75 x 35 Cl 8.8
6	96705066	HHCS, Fully Threaded, Zinc Plated	2	M12 x 1.75 x 60 Cl 8.8

BOLT-ON SHELL INSTALLATION - SD-25D - OPTIONAL

Dwg D13359252/01

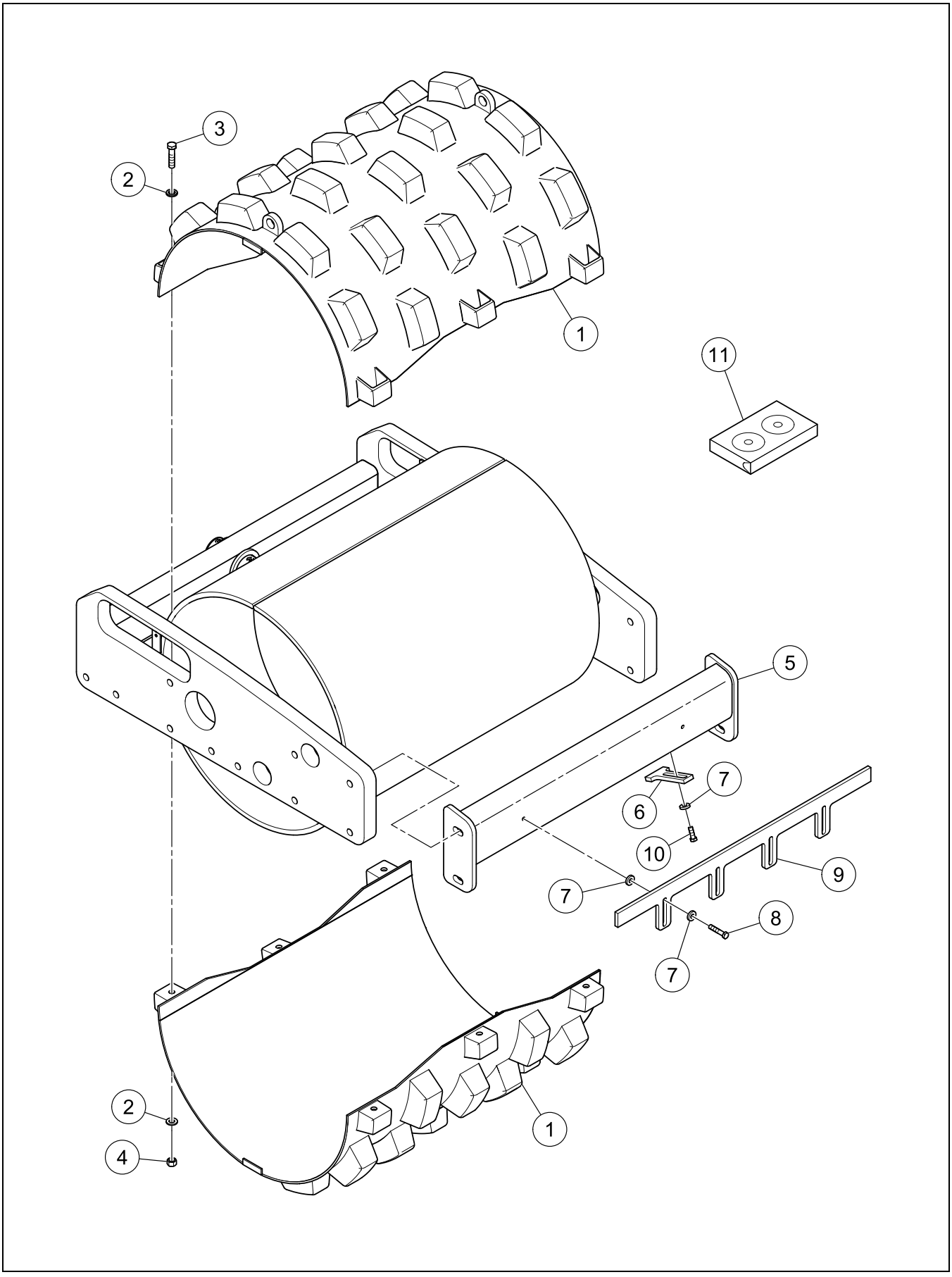

BOLT-ON SHELL INSTALLATION - SD-25D - OPTIONAL

BOM 13359252

ITEM	COMM. NO.	DESCRIPTION	QTY	DIMENSIONS/NOTES
1	13396080	Clamp-On Shell	1	
2	96701552	Washer, Zinc Plated	12	M16 Hardened
3	96720040	Hex Head Bolt, Zinc Plated	6	M16 x 2.0 Cl 8.8
4	96711882	Hex Nut, Zinc Plated	6	M16 x 2.0 Cl 8
5	13352547	Scraper	1	
6	13352554	Scraper Tooth	4	
7	96712237	Flatwasher, Zinc Plated	12	M12 Hardened Cl 10
8	96702329	HHCS, Fully Threaded, Zinc Plated	8	M12 x 1.75 x 35 Cl 8.8
9	13359245	Scraper Bar	1	
10	96705066	HHCS, Fully Threaded, Zinc Plated	2	M12 x 1.75 x 60 Cl 8.8
11	13155262	Video: Padfoot Shell Instructions	1	

UNIVERSAL INSIDE SCRAPER FOR BOLT-ON-SHELL INSTALLATION - SD-25D - OPTIONAL

Dwg D13404702/00

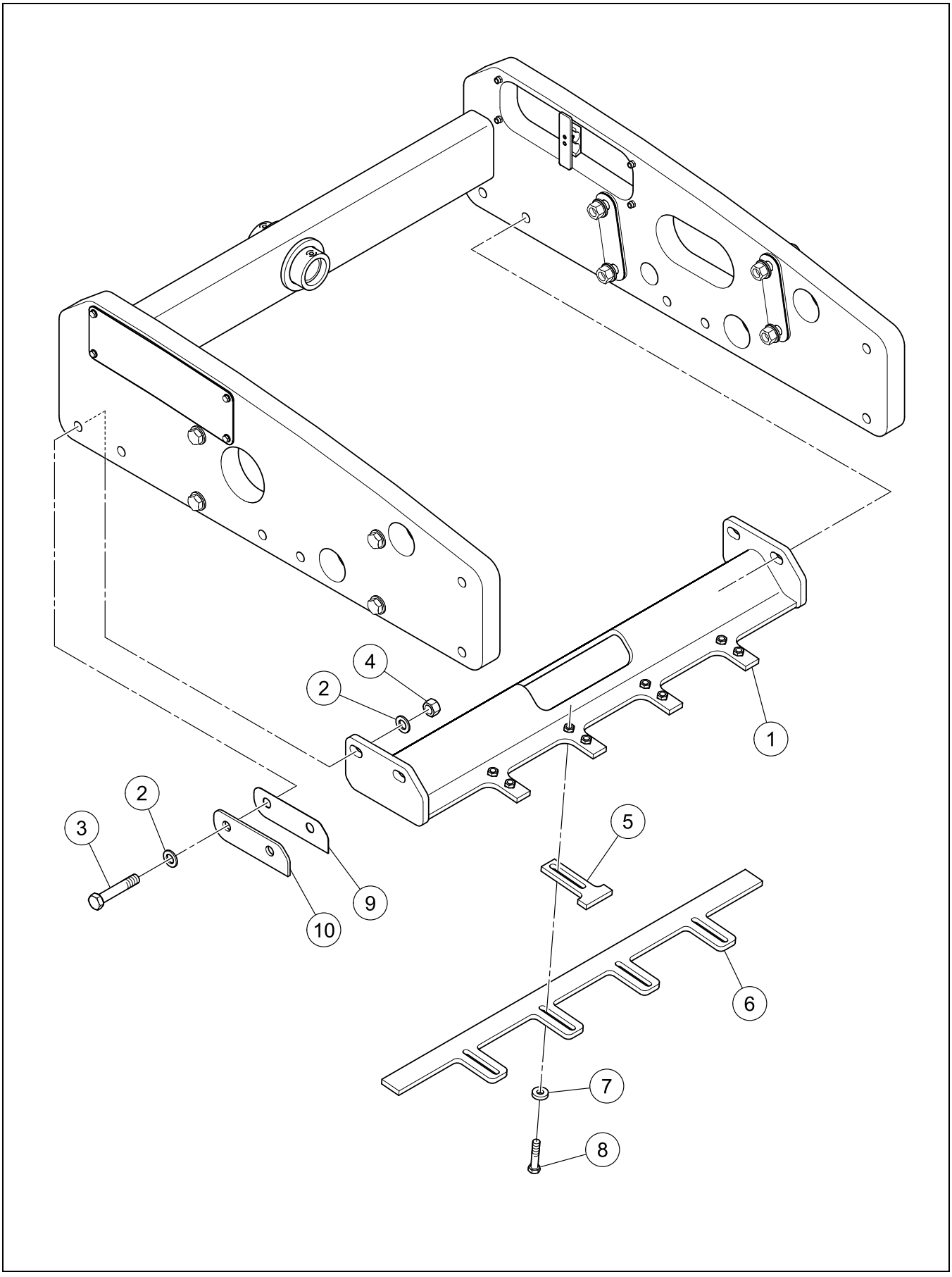

UNIVERSAL INSIDE SCRAPER FOR BOLT-ON-SHELL INSTALLATION - SD-25D - OPTIONAL

BOM 13404702

ITEM	COMM. NO.	DESCRIPTION	QTY	DIMENSIONS/NOTES
1	13359948	Inside Scraper	1	
2	96738620	Flatwasher, Zinc Plated	8	M20 Hardened Cl 200
3	96700927	HHCS, Zinc Plated	4	M20 x 2.5 x 110 Cl 8.8
4	96720446	Hex Nut, Zinc Plated	4	M20 x 2.5 Cl 8
5	13352554	Scraper Tooth	4	
6	13359245	Scraper Bar	1	
7	96712237	Flatwasher, Zinc Plated	8	M12 Hardened Cl 10
8	96705637	Bolt, Zinc Plated	8	M12 x 1.25 x 55 Cl 8.8
9	13407168	Shim	2	1.5mm
10	13407176	Shim	2	3.0mm

Always use Manufacturer Replacement parts!*

Section C - ENGINE

Dwg 13326343/05

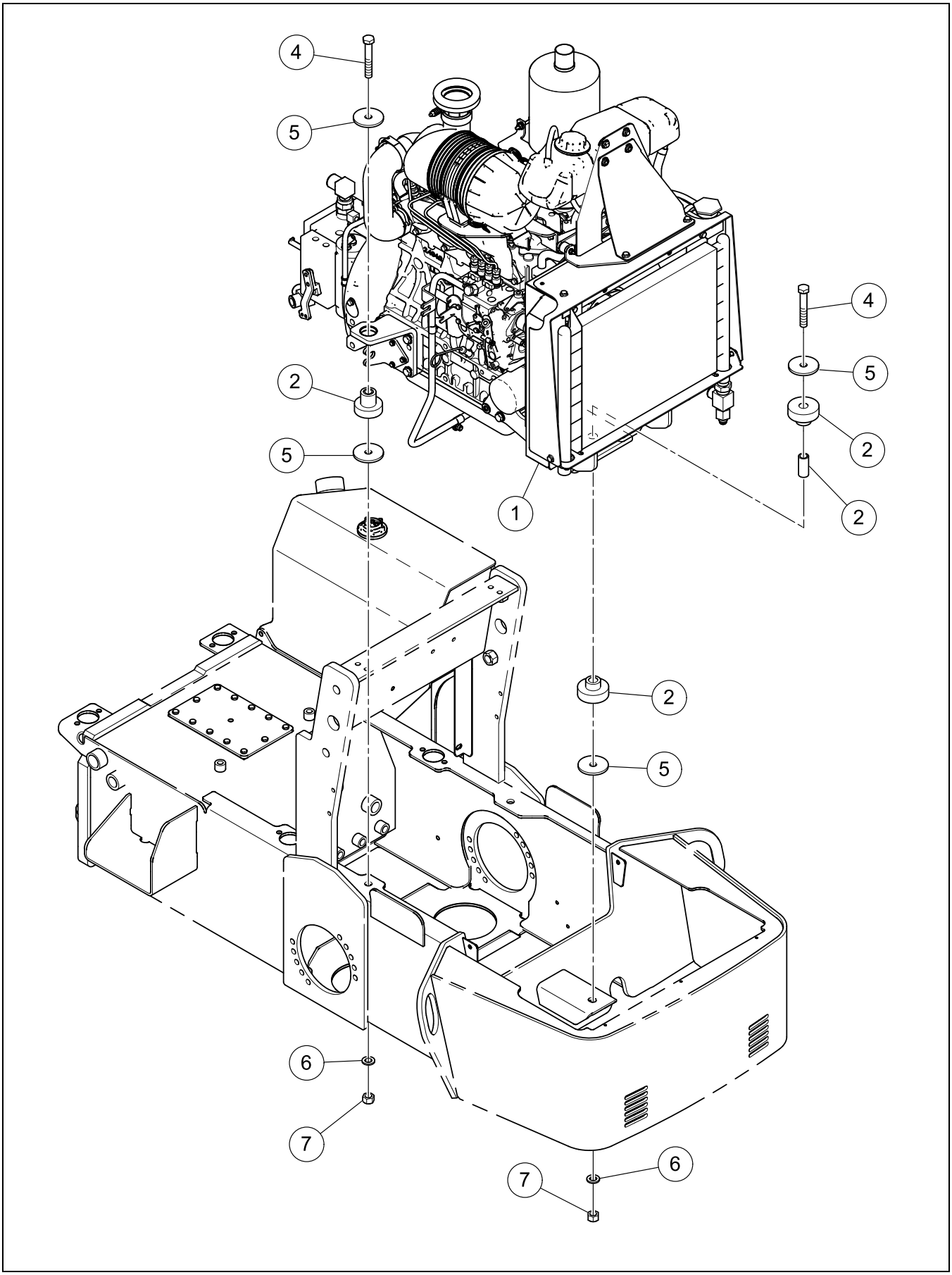

BOM 13326343

ITEM	COMM. NO.	DESCRIPTION	QTY	DIMENSIONS/NOTES
1	**NSVA**	**Engine Assembly**	**1**	**See Page C - 4.**
2	59256982	Shock Mounting Kit	3	
4	96739982	Hex Head Bolt, Zinc Plated	3	M16 x 2.0 Cl 10.9
5	59256545	Washer	6	
6	96738612	Flatwasher, Zinc Plated	3	M16 Hardened Cl 200
7	96703657	Nut, Zinc Plated	3	M16 Cl 10

ENGINE ASSEMBLY

Dwg 13326103/08

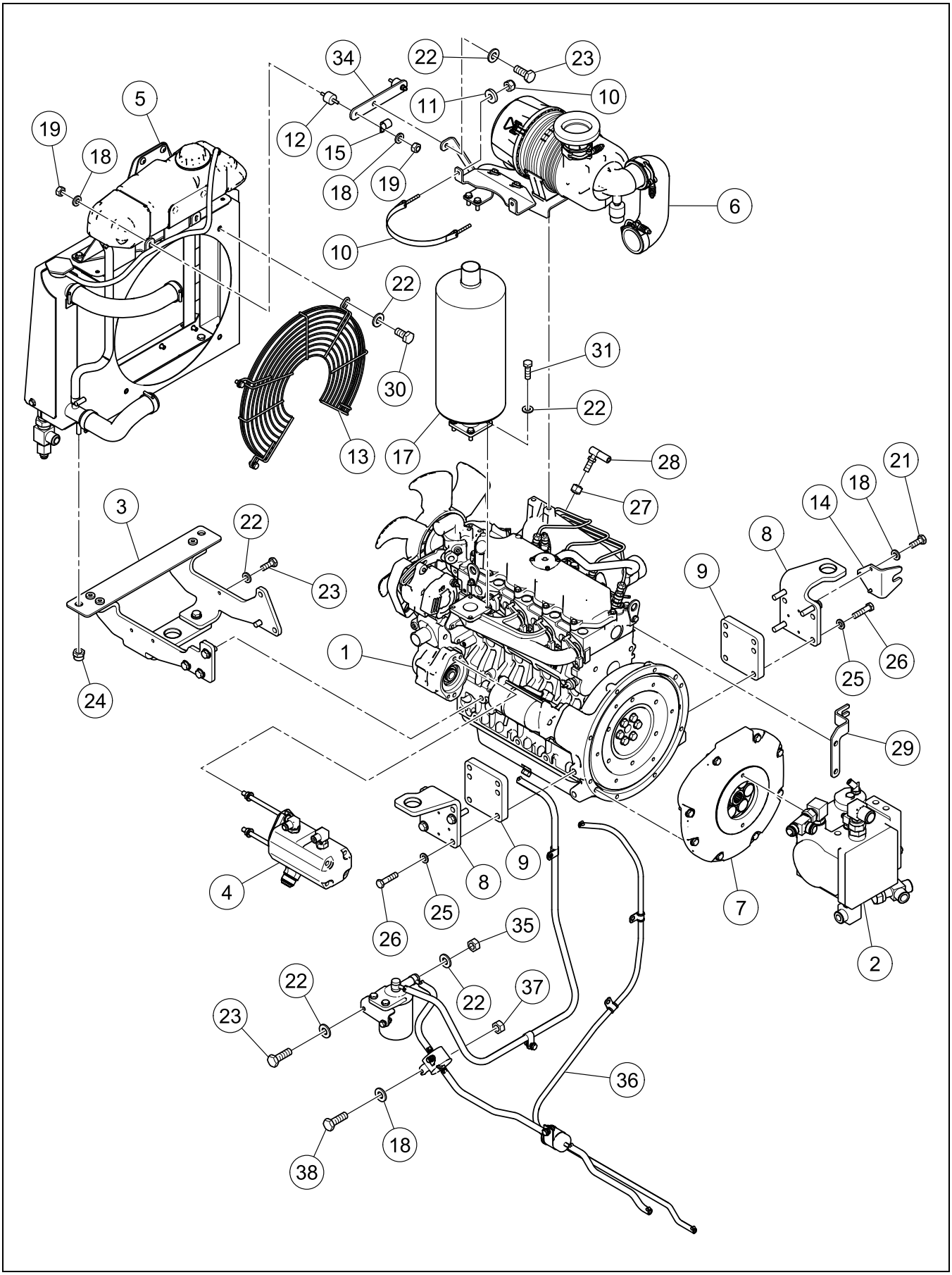

ENGINE ASSEMBLY

BOM 13326103, 59162834

ITEM	COMM. NO.	DESCRIPTION	QTY	DIMENSIONS/NOTES
1	13412119	Engine	1	
-	13496476	- Starter	1	
-	13496898	- Alternator	1	
-	13478078	- Engine Oil Filter	1	
-	13478086	- Fan Belt	1	
-	13496484	- Fuel Filter Kit	1	
-	54477161	- Fuel Filter Element	1	
-	13496492	- Fuel Pump	1	
2	**NSVA**	**Propulsion Pump Assembly**	**1**	**See Page C - 6.**
3	**NSVA**	**Radiator/Engine Mounts Installation**	**1**	**See Page C - 16.**
4	**NSVA**	**Vibration/Steering Pump Assembly**	**1**	**See Page C - 18.**
5	**NSVA**	**Radiator/Oil Cooler Assembly**	**1**	**See Page C - 20.**
6	**NSVA**	**Air Cleaner Installation**	**1**	**See Page C - 22.**
7	59211128	Pump Housing Mount	1	
8	13353891	Rear Engine Mount	2	
9	13325261	Engine Mount Spacer	2	
10	13356415	Strap Clamp	1	
11	96721121	Washer, Zinc Plated	2	M6 Cl 10
12	59259606	Sandwich Mount	2	
13	13355060	Fan Guard	1	
14	13325394	Propulsion Cable Bracket	1	
15	95301842	Clamp	1	
17	13355029	Muffler	1	
18	96741053	Flatwasher, Zinc Plated	6	M6 Cl 200
19	96704234	Nut, Zinc Plated	3	M6 x 1.0 Cl 8
21	96701958	HHCS, Fully Threaded, Zinc Plated	5	M6 x 16 Cl 8.8
22	96741038	Flatwasher	13	M8 x 1.25 Cl 200
23	96702824	HHCS, Fully Threaded, Zinc Plated	3	M8 x 1.25 x 20 Cl 8.8
24	96704614	Nut, Zinc Plated	2	M10 x 1.5 Cl 8
25	96738596	Flatwasher, Zinc Plated	8	M12 Hardened Cl 200
26	96746003	HHCS, Zinc Plated	8	M12 x 50 x 1.25 Cl 8.8
27	95925939	Hex Nut, Zinc Plated	1	
28	59455410	Ball Stud	1	
29	13353149	Throttle Bracket	1	
30	96702816	HHCS, Fully Threaded, Zinc Plated	4	M8 x 1.25 x 16 Cl 8.8
31	96702659	HHCS, Fully Threaded, Zinc Plated	6	M8 x 1.25 x 25 Cl 8.8
34	13353735	Radiator Plate	1	
35	96701370	Nut, Zinc Plated	2	M8 x 1.25 Cl 8
36	**NSVA**	**Fuel Line Installation**	**1**	**See Page C - 24.**
37	96704598	Hex Locknut, Zinc Plated	2	M6 Cl 8
38	96704564	HHCS, Fully Threaded, Zinc Plated	2	M6 x 1.0 x 20 Cl 8.8
**	59162982	Decal: Biodegradeable Oil (Optional)	1	

PROPULSION PUMP ASSEMBLY

Dwg 13324900/04

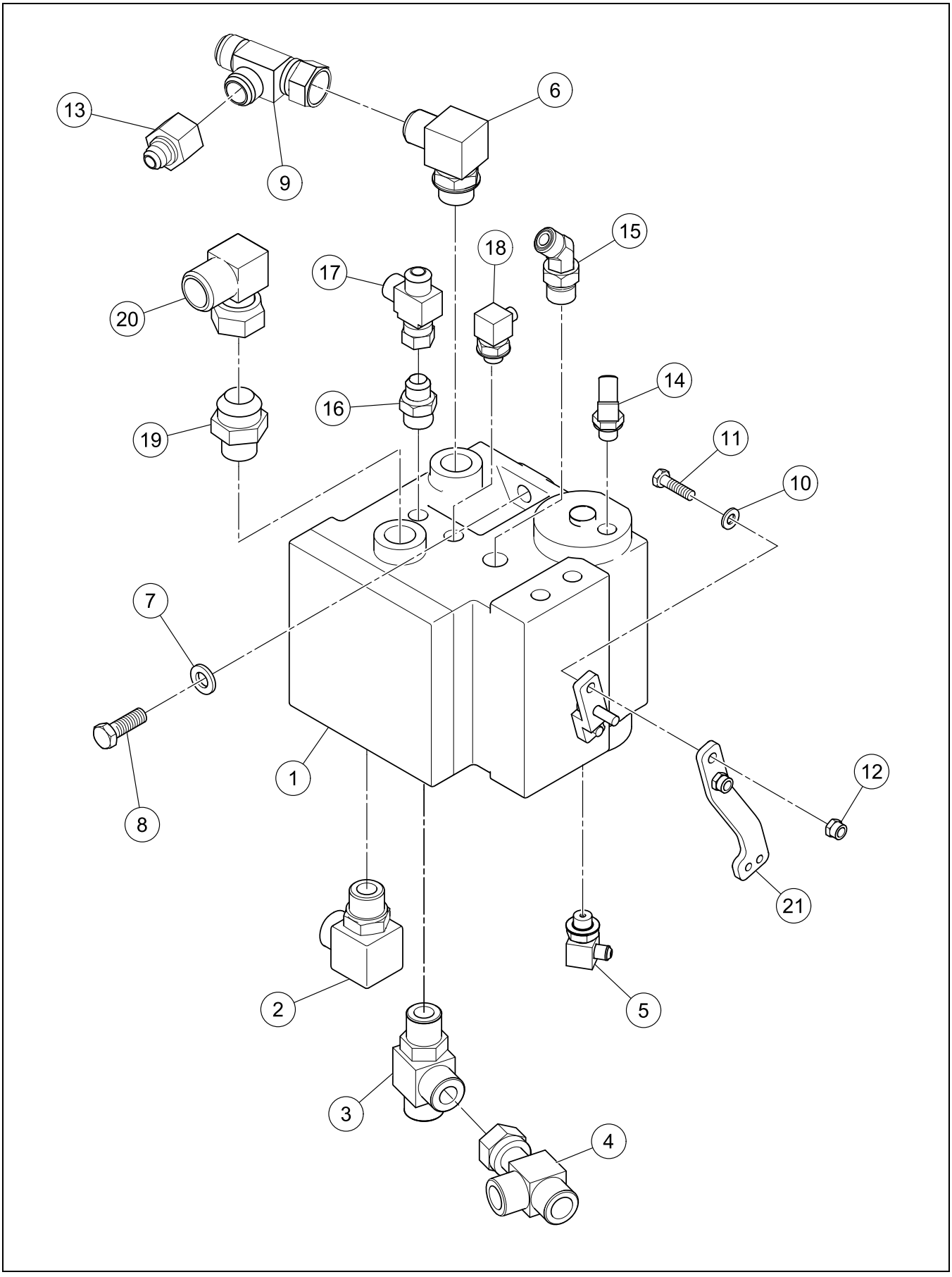

PROPULSION PUMP ASSEMBLY

BOM 13324900

ITEM	COMM. NO.	DESCRIPTION	QTY	DIMENSIONS/NOTES
1	**13224019**	**Propulsion Pump**	**1**	**See Breakdown C - 8.**
2	59922971	Fitting	1	
3	59923094	Adapter	1	
4	59903161	Adapter, Tee	1	
5	95365094	Adapter	1	
6	95280186	Elbow, 90°	1	
7	96738596	Flatwasher, Zinc Plated	2	M12 Hardened Cl 200
8	96702329	HHCS, Fully Threaded, Zinc Plated	2	M12 x 1.75 x 35 Cl 8.8
9	95739306	Tee	1	
10	96741038	Flatwasher	2	M8 x 1.25 Cl 200
11	96705587	HHCS, Fully Threaded, Zinc Plated	2	M8 x 1.25 x 30 Cl 8.8
12	96704606	Hex Locknut, Zinc Plated	2	M8 x 1.25 Cl 8
13	59743013	Adapter	1	
14	95866687	Adapter	1	
15	95650339	Adapter	1	
16	95285946	Connector	1	
17	95416731	Swivel Tee	1	
18	95365094	Adapter	1	
19	95371217	Adapter	1	
20	95278990	Adapter	1	
21	13324892	Propulsion Control Lever	1	

PROPULSION PUMP (13224019) - INTERNAL BREAKDOWN - SHEET 1 OF 4

Dwg 13224019/00/01

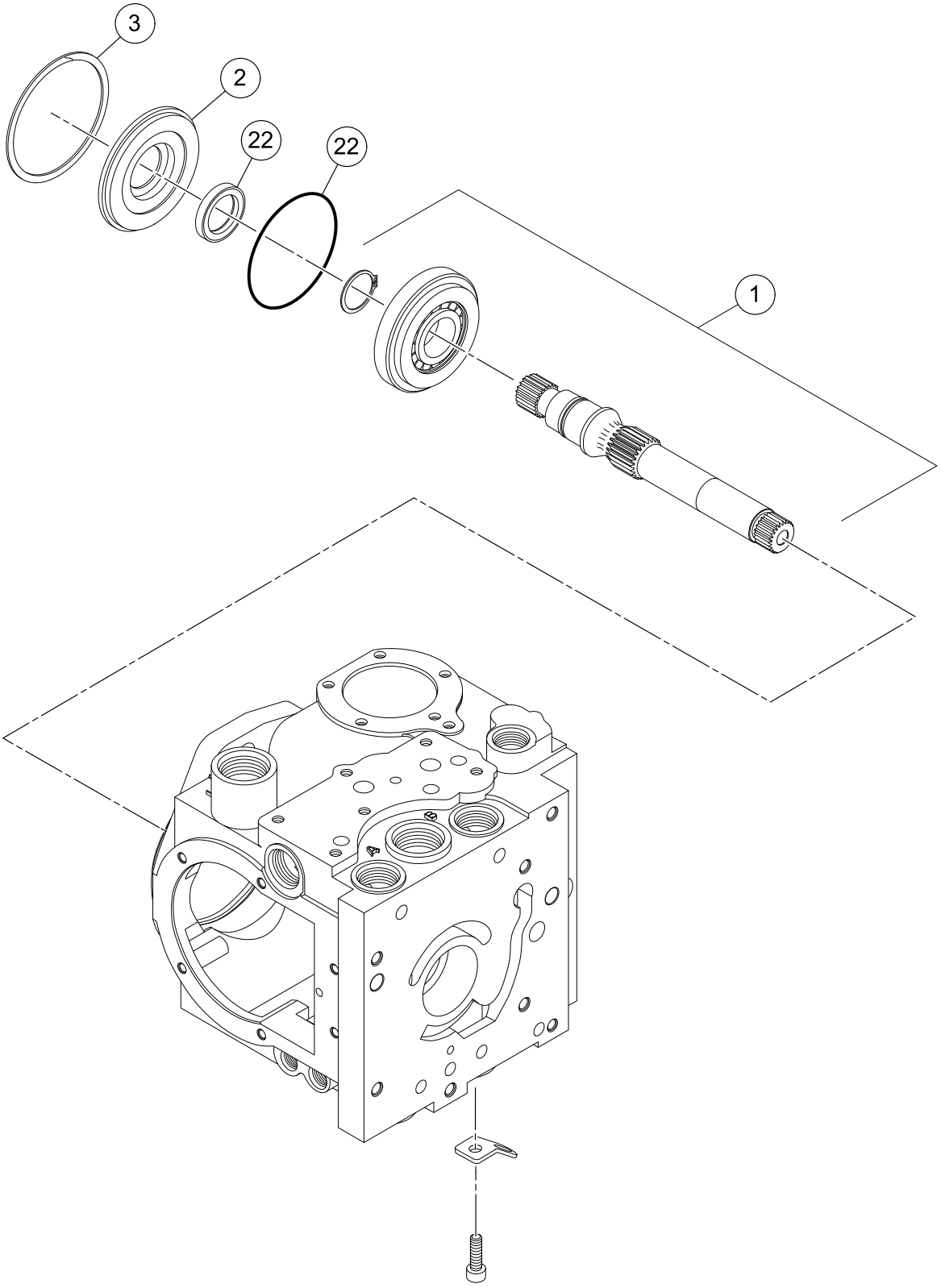

PROPULSION PUMP (13224019) - INTERNAL BREAKDOWN - SHEET 1 OF 4

BOM 13224019

ITEM	COMM. NO.	DESCRIPTION	QTY	DIMENSIONS/NOTES
1	59051433	Shaft	1	
2	59145870	Carrier Shaft Seal	1	
3	59145862	Retaining Ring	1	
22	59051755	Overhaul Gasket/Seal Kit	1	

PROPULSION PUMP (13224019) - INTERNAL BREAKDOWN - SHEET 2 OF 4

Dwg D13224019/00/02

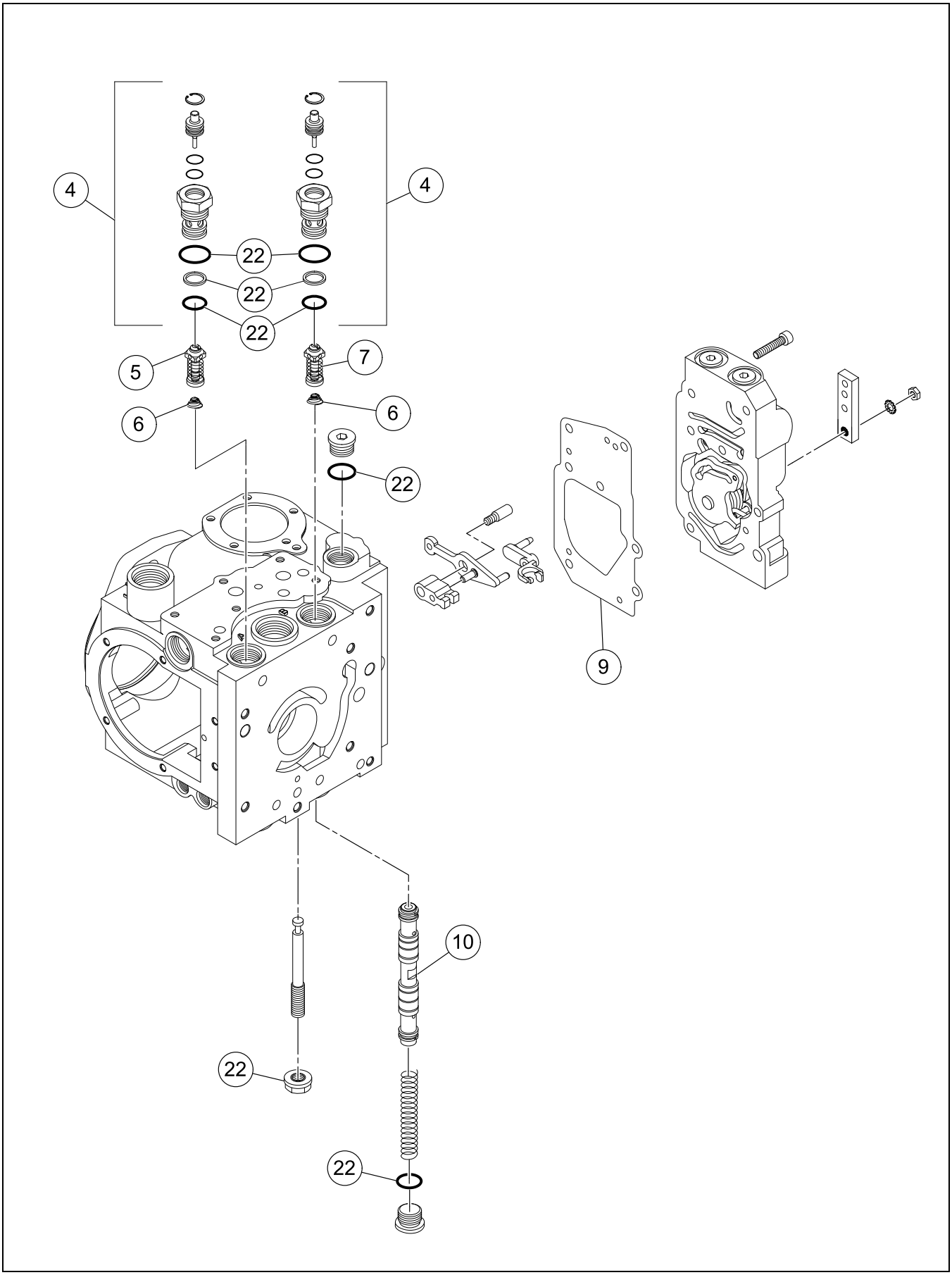

PROPULSION PUMP (13224019) - INTERNAL BREAKDOWN - SHEET 2 OF 4

BOM 13224019

ITEM	COMM. NO.	DESCRIPTION	QTY	DIMENSIONS/NOTES
4	54492525	Bypass Valve Assembly	2	
5	13268495	SCR Valve	1	
6	13263702	Spring	2	
7	13268495	SCR Valve	1	
9	59142026	Gasket Control Handle	1	
10	59051482	Spool Assembly	1	
22	59051755	Overhaul Gasket/Seal Kit	1	

PROPULSION PUMP (13224019) - INTERNAL BREAKDOWN - SHEET 3 OF 4

Dwg 13224019/00/03

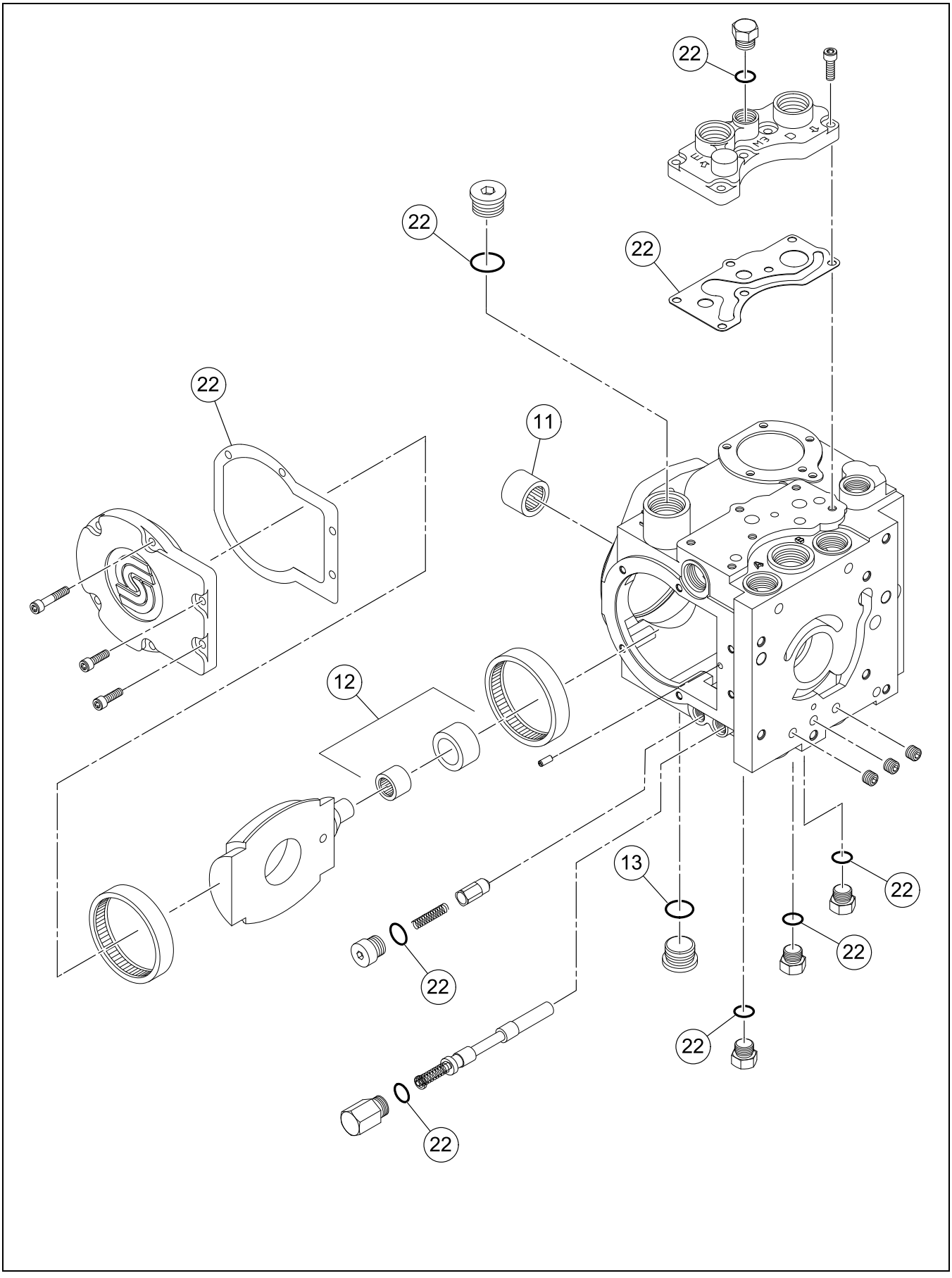

BOM 13224019

ITEM	COMM. NO.	DESCRIPTION	QTY	DIMENSIONS/NOTES
11	58950759	Needle Bearing	1	
12	13474531	Cam Follower Bearing Assembly	1	
13	59986463	O-ring	2	
22	59051755	Overhaul Gasket/Seal Kit	1	

PROPULSION PUMP (13224019) - INTERNAL BREAKDOWN - SHEET 4 OF 4

Dwg 13224019/00/04

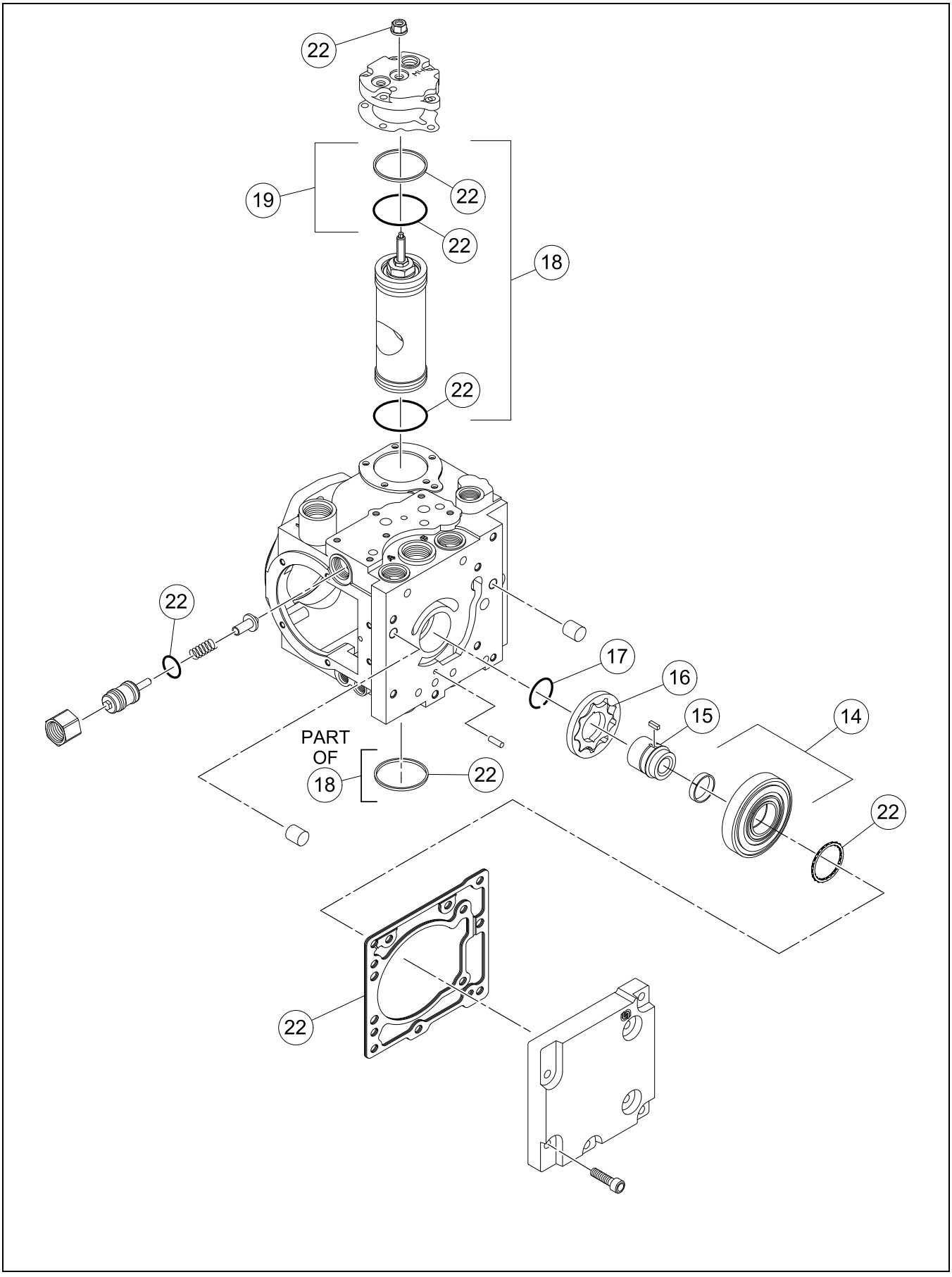

PROPULSION PUMP (13224019) - INTERNAL BREAKDOWN - SHEET 4 OF 4

BOM 13224019

ITEM	COMM. NO.	DESCRIPTION	QTY	DIMENSIONS/NOTES
14	13474549	Gear Rotor Cover Assembly	1	
15	59194068	Coupling	1	
16	13268453	Gear Rotor Assembly	1	
17	59194043	Retaining Ring	1	
18	59051664	Servo Piston Kit	1	
19	59972877	O-ring Kit	2	
20	59051698	Cylinder Block Kit (Not Shown)	1	
21	59051748	Valve Plate, RH (Not Shown)	1	
22	59051755	Overhaul Gasket/Seal Kit	1	

Dwg D13325220/01

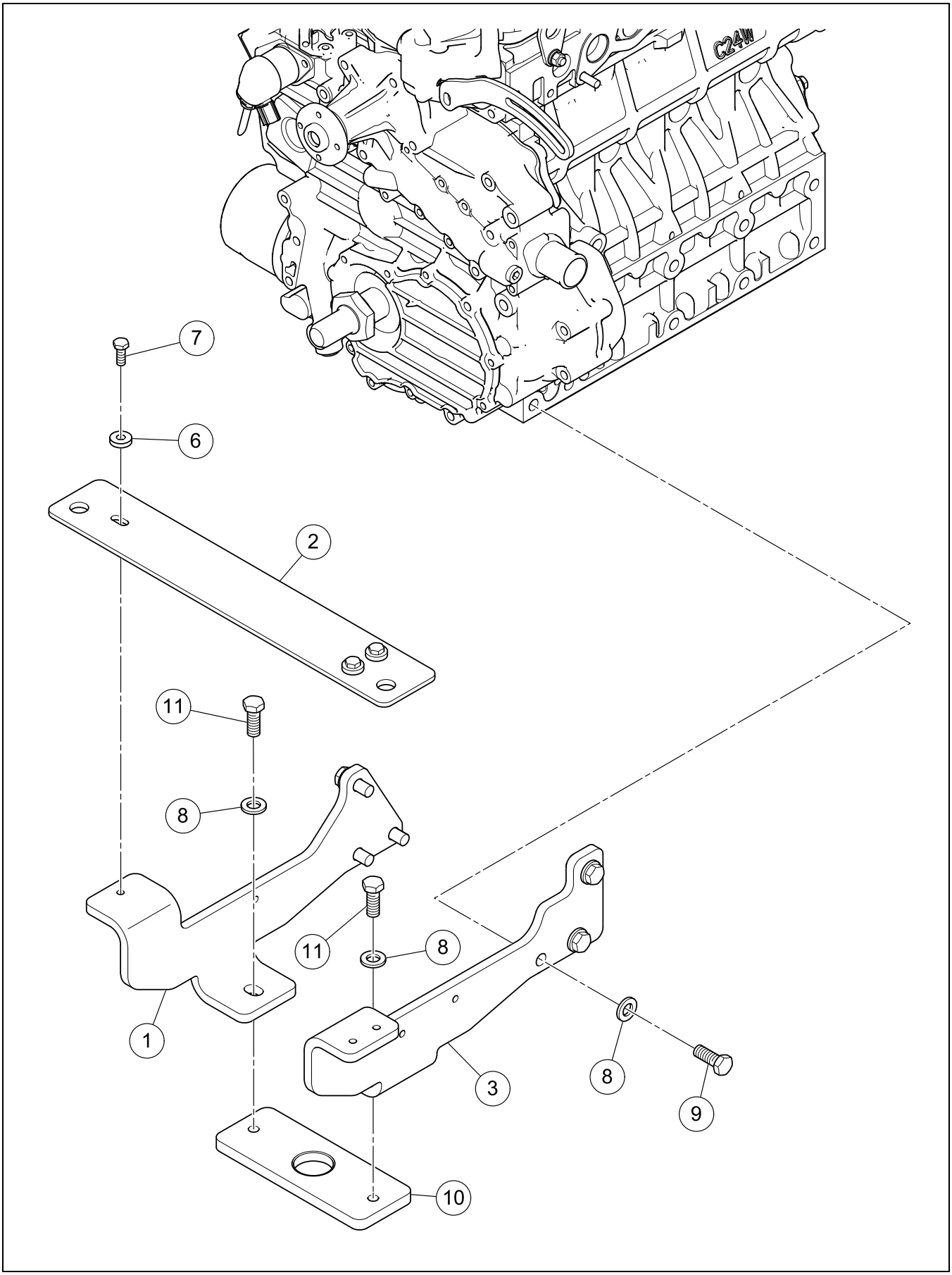

BOM 13325220

ITEM	COMM. NO.	DESCRIPTION	QTY	DIMENSIONS/NOTES
1	13325246	Radiator Mounting Plate, RH	1	
2	59226399	Top Mounting Plate	1	
3	13325238	Radiator Mounting Plate, LH	1	
6	96712674	Washer, Zinc Plated	3	M8 Hardened Cl 10
7	96702824	HHCS, Fully Threaded, Zinc Plated	3	M8 x 1.25 x 20 Cl 8.8
8	96738596	Flatwasher, Zinc Plated	8	M12 Hardened Cl 200
9	96729595	HHCS, Fully Threaded, Zinc Plated	6	M12 x 1.25 x 30 Cl 8.8
10	59256552	Front Mounting Plate	1	
11	96702311	HHCS, Fully Threaded, Zinc Plated	2	M12 x 1.75 x 30 Cl 8.8

VIBRATION/STEERING PUMP ASSEMBLY

Dwg D13355979/00

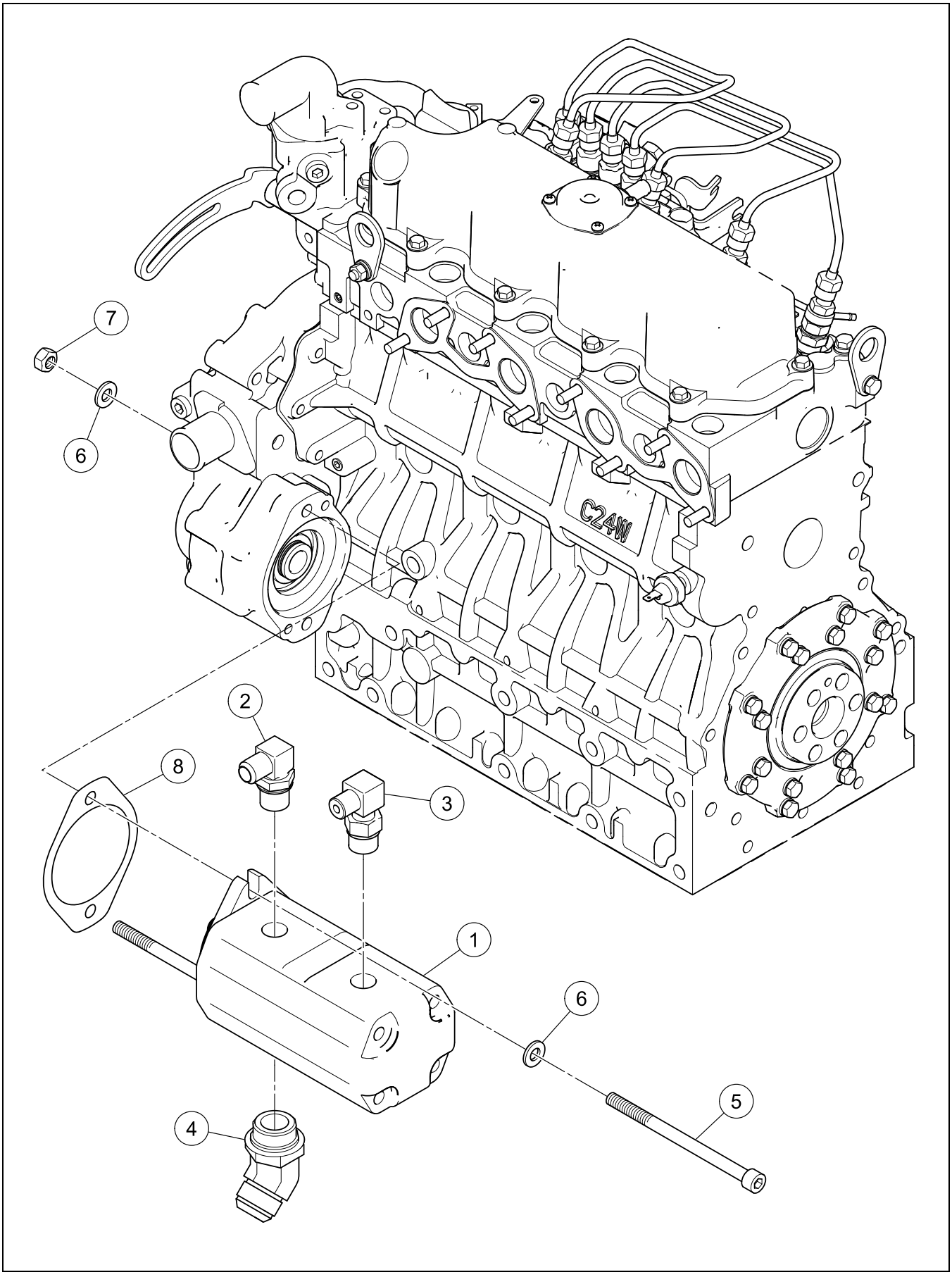

VIBRATION/STEERING PUMP ASSEMBLY

BOM 13355979

ITEM	COMM. NO.	DESCRIPTION	QTY	DIMENSIONS/NOTES
1	59227041	Vibration/Steering Pump	1	
-	58898677	- Seal Kit	1	
-	58785189	- Retaining Ring	1	
-	54505227	- Lip Seal	1	
2	95303350	Adapter	1	
3	59922872	Adapter	1	
4	95469128	Adapter	1	
5	96739925	SHCS, Zinc Plated	2	M10 x 1.5 x 150 Cl 8.8
6	96741046	Flatwasher, Zinc Plated	4	M10 Cl 200
7	96704812	Hex Nut, Zinc Plated	2	M10 x 1.5 Cl 8
8	59558395	Gasket	1	

RADIATOR/OIL COOLER ASSEMBLY

Dwg 13325717/08

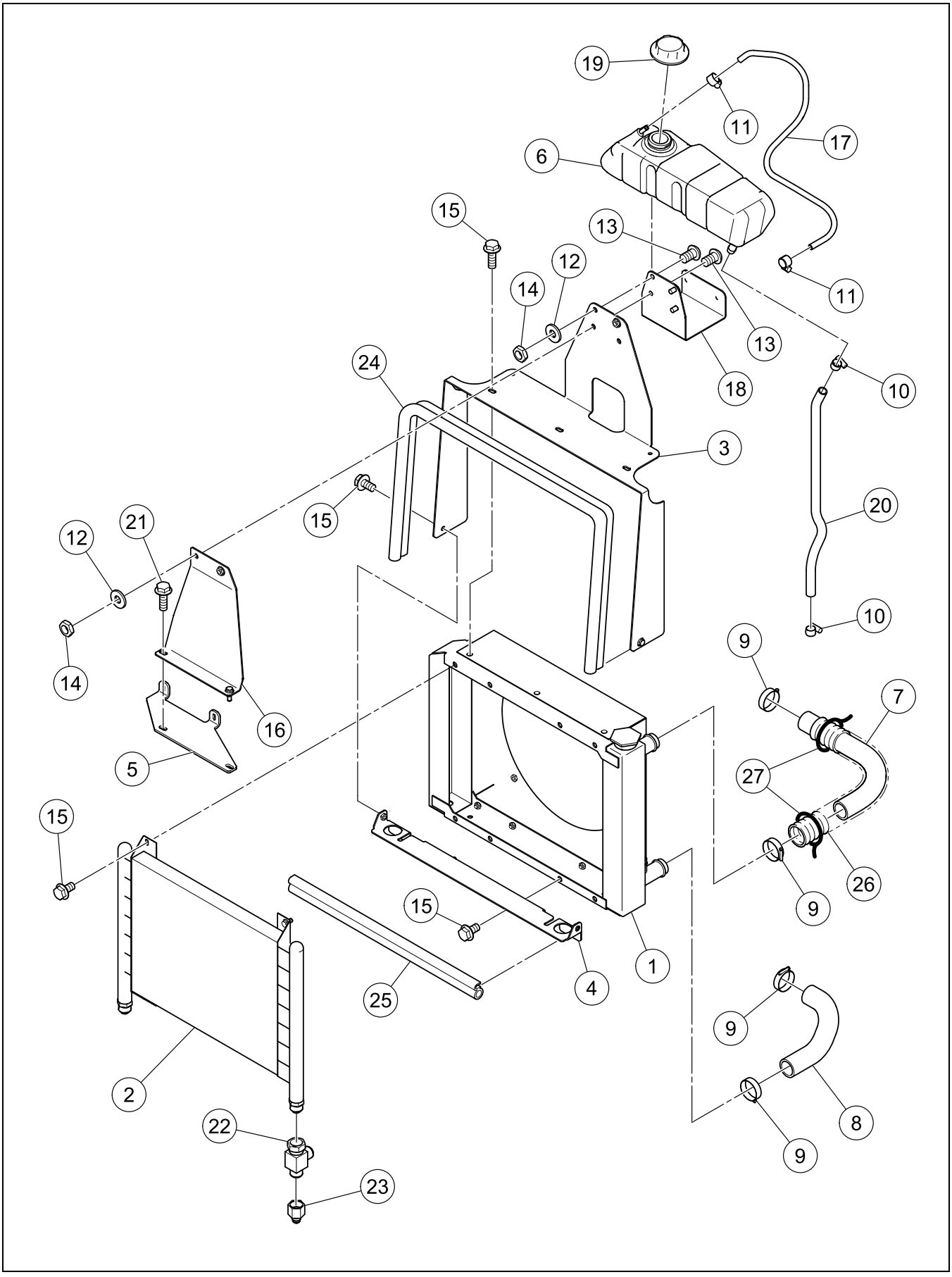

RADIATOR/OIL COOLER ASSEMBLY

BOM 13325717

ITEM	COMM. NO.	DESCRIPTION	QTY	DIMENSIONS/NOTES
1	13353495	Radiator	1	
-	13400890	- Radiator Cap	1	
2	59265033	Oil Cooler	1	
3	13355490	Top Shroud	1	
4	59266460	Bottom Shroud	1	
5	13354782	Shock Mount Plate	1	
6	13354790	Expansion Tank	1	
7	13325204	Upper Radiator Hose	1	
8	13353768	Lower Radiator Hose	1	
9	95220893	Hose Clamp	4	
10	95671285	Hose Clamp	2	
11	13305446	Spring Clamp	2	
12	96741046	Flatwasher, Zinc Plated	4	M10 Cl 200
13	96741111	HSBHCS, Zinc Plated	4	M10 x 1.5 x 16 Cl 8.8
14	59471938	Locknut	4	M10 x 1.5
15	96704218	Lockbolt, Zinc Plated	8	M8 x 1.25 x 16 Cl 90
16	13355508	Expansion Tank Stiffener	1	
17	59138958	Hose Assembly	1	30.0"
18	13354808	Expansion Tank Bracket	1	
19	13354816	Expansion Tank Cap	1	
20	13365358	Hose Assembly	1	21.0"
21	96712153	Hex Flanged Head Lockbolt, Zinc Plated	2	M8 x 1.25 x 25 Cl 90
22	95739306	Tee	1	
23	59672709	Adapter	1	
24	59208819	Seal Trim	4	
25	13185871	Seal Trim	2	
26	58848979	Spiral Wrap	1	
27	20933685	Cable Tie	A/R	

AIR CLEANER INSTALLATION

Dwg 13325873/07

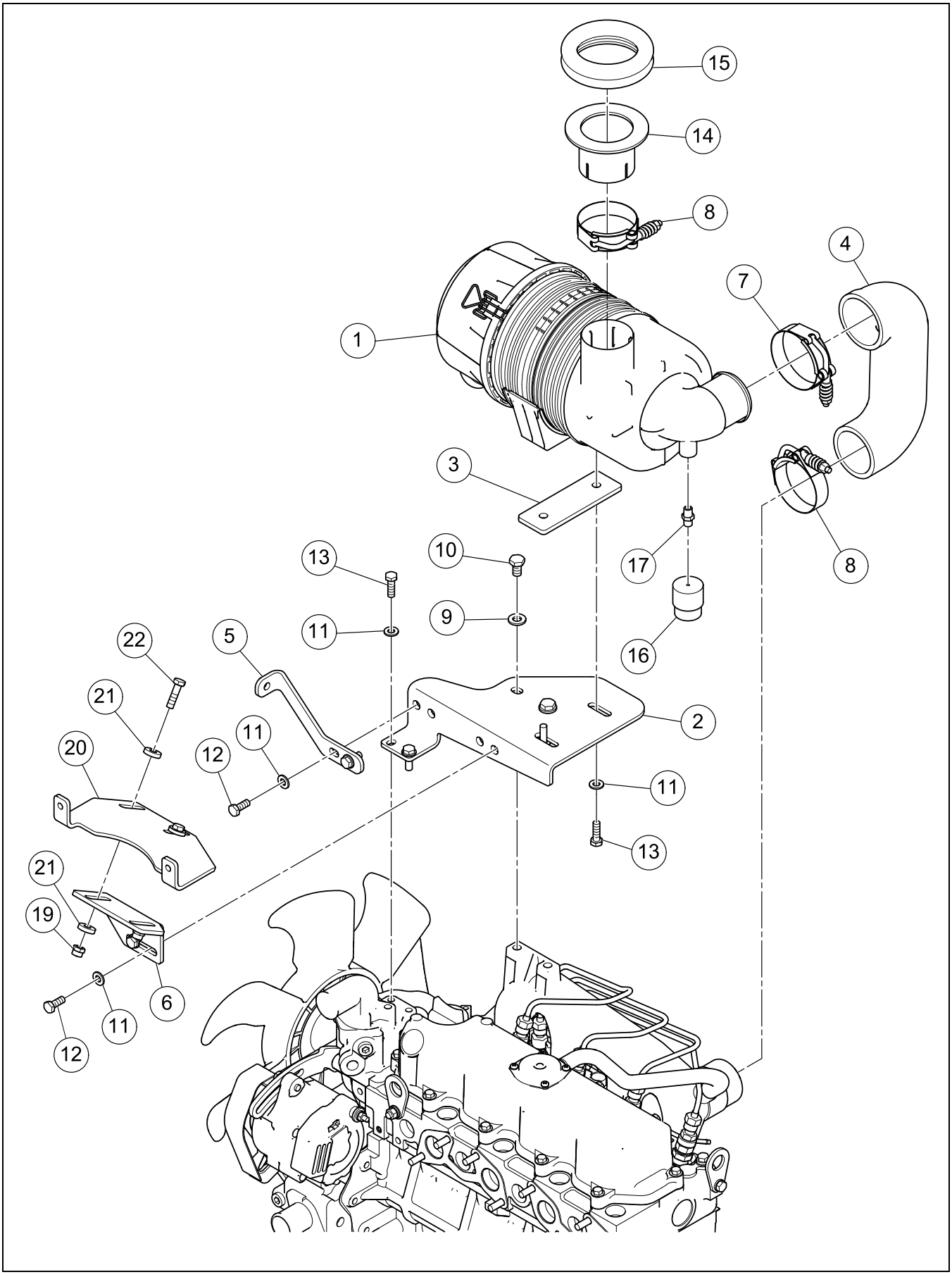

AIR CLEANER INSTALLATION

BOM 13325873

ITEM	COMM. NO.	DESCRIPTION	QTY	DIMENSIONS/NOTES
1	13325444	Air Cleaner	1	
-	22370662	- Cover Assembly	1	
-	22370688	- Air Cleaner Primary Filter Element	1	
-	22370696	- Air Cleaner Safety Filter Element	1	
-	22370704	- Dust Ejector Valve	1	
-	22370712	- Clip	2	
2	13325428	Air Cleaner Bracket	1	
3	13325436	Air Cleaner Spacer	1	
4	13325147	Air Intake Hose	1	
5	13324934	Shock Bracket	1	
6	13356217	Lower Muffler Bracket	1	
7	54680061	Clamp	1	
8	54680053	Clamp	2	
9	96741046	Flatwasher, Zinc Plated	2	M10 Cl 200
10	96739776	HHCS, Fully Threaded, Zinc Plated	2	M10 x 1.25 x 16 Cl 8.8
11	96741038	Flatwasher	8	M8 x 1.25 Cl 200
12	96702824	HHCS, Fully Threaded, Zinc Plated	4	M8 x 1.25 x 20 Cl 8.8
13	96702659	HHCS, Fully Threaded, Zinc Plated	4	M8 x 1.25 x 25 Cl 8.8
14	13355078	Extension Tube	1	
15	13328547	Seal Trim	1	
16	58905803	Switch	1	
17	95418976	Fitting	1	
19	96704606	Locknut	2	
20	13356092	Upper Muffler Bracket	1	
21	96712674	Washer, Zinc Plated	4	M8 Hardened Cl 10
22	96705587	HHCS, Fully Threaded, Zinc Plated	2	M8 x 1.25 x 30 Cl 8.8

FUEL LINE INSTALLATION

Dwg D13355532/00

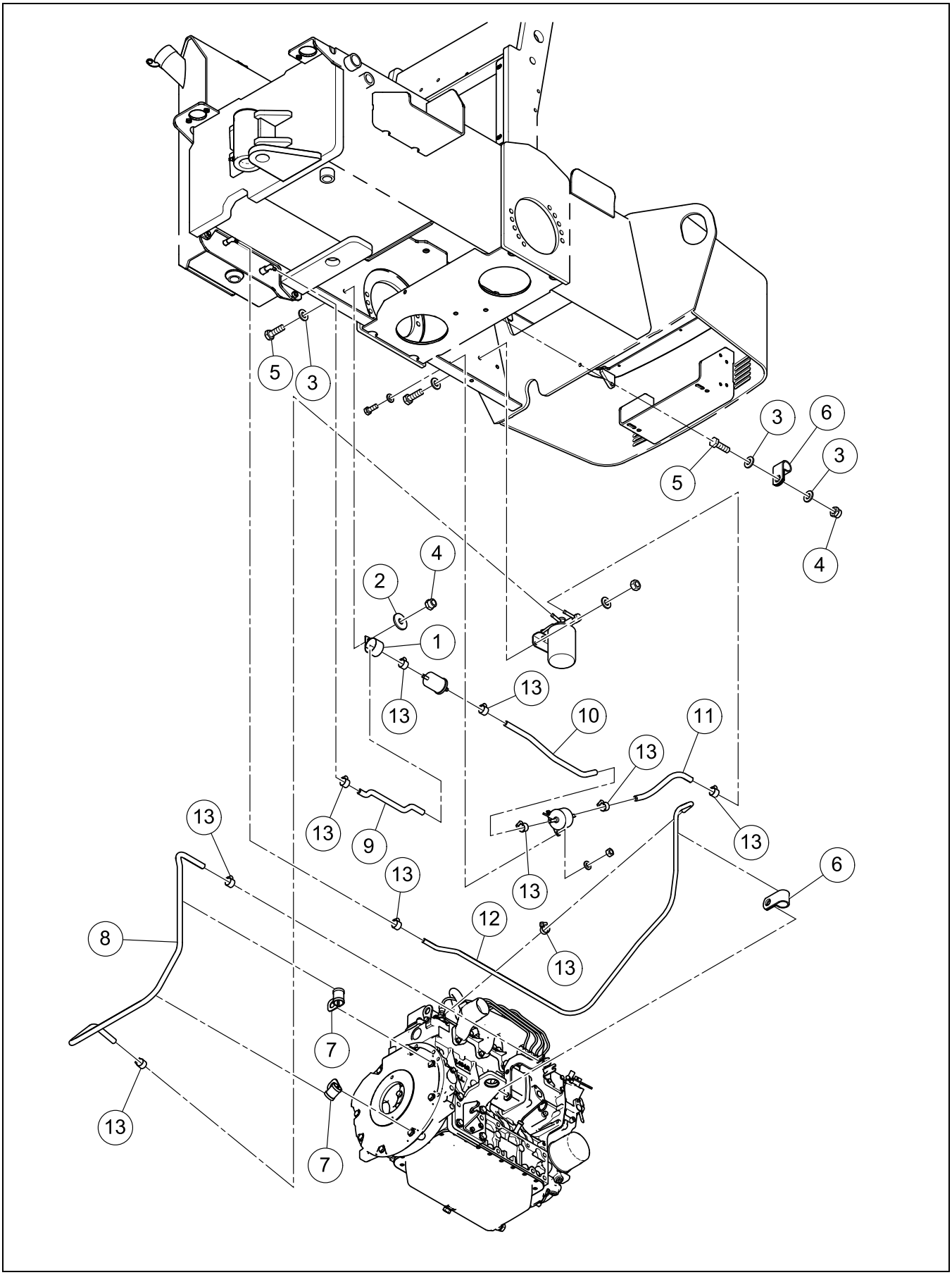

FUEL LINE INSTALLATION

BOM 13355532

ITEM	COMM. NO.	DESCRIPTION	QTY	DIMENSIONS/NOTES
1	95378873	Hose Clamp	1	
2	96740204	Washer	1	M8 x 25
3	96741038	Flatwasher	3	M8 x 1.25 Cl 200
4	96704606	Hex Locknut, Zinc Plated	2	M8 x 1.25 Cl 8
5	96702659	HHCS, Fully Threaded, Zinc Plated	2	M8 x 1.25 x 25 Cl 8.8
6	95368338	Hose Clamp	2	
7	59117317	Clamp	2	
8	59122549	Hose Assembly	1	45.0"
9	58802869	Hose Assembly	1	12.0"
10	13349980	Hose Assembly	1	14.0"
11	58760570	Fuel Hose	1	10.0"
12	59242305	Hose Assembly	1	61.0"
13	50274299	Hose Clamp	10	

Always use Manufacturer Replacement parts!*

Section D - OPERATORS COMPARTMENT

OPERATORS PLATFORM INSTALLATION

Dwg 13189659/08

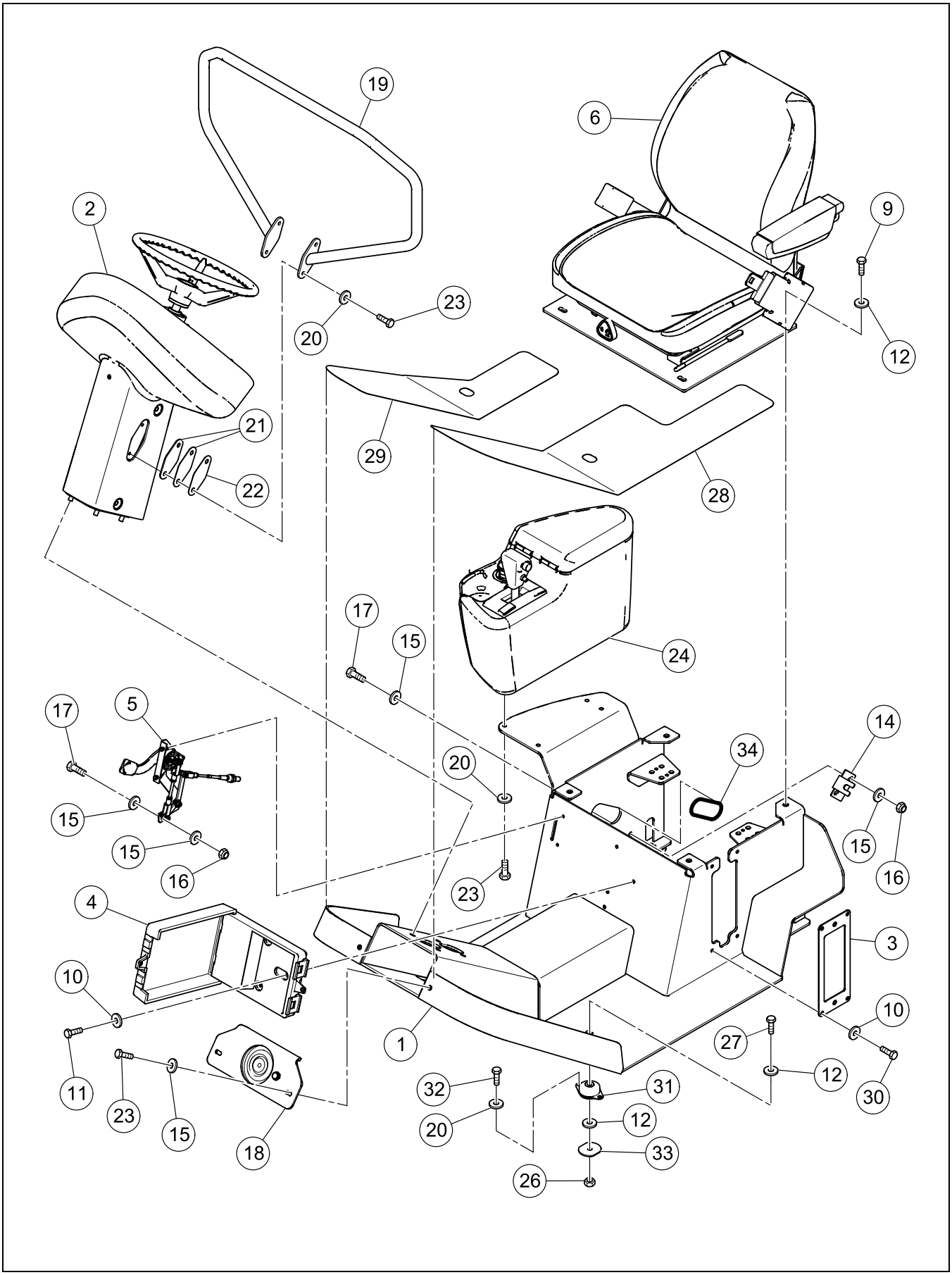

OPERATORS PLATFORM INSTALLATION

BOM 13189659

ITEM	COMM. NO.	DESCRIPTION	QTY	DIMENSIONS/NOTES
1	13414156	Operators Platform	1	
2	**NSVA**	**Pedestal Assembly**	**1**	**See Page D - 4.**
3	13329800	Adapter Plate	1	
4	59185074	Manual Case	1	
5	**NSVA**	**Throttle Assembly**	**1**	**See Page D - 10.**
6	**NSVA**	**Seat Assembly**	**1**	**See Page D - 12.**
9	96702287	HHCS, Fully Threaded, Zinc Plated	4	M10 x 1.5 x 25 Cl 8.8
10	96741053	Flatwasher, Zinc Plated	7	M6 Cl 200
11	96704564	HHCS, Fully Threaded, Zinc Plated	3	M6 x 1.0 x 20 Cl 8.8
12	96711833	Flatwasher, Zinc Plated	12	M10 Cl 10
14	13272505	Throttle Mount	1	
15	96712674	Washer, Zinc Plated	10	M8 Hardened Cl 10
16	96704606	Hex Locknut, Zinc Plated	4	M8 x 1.25 Cl 8
17	96705587	HHCS, Fully Threaded, Zinc Plated	4	M8 x 1.25 x 30 Cl 8.8
18	**NSVA**	**Horn Assembly**	**1**	**See Page D - 16.**
19	13324678	Handrail	1	
20	96741038	Flatwasher	8	M8 x 1.25 Cl 200
21	13324686	Handrail Shim	4	1.5mm
22	13324702	Handrail Shim	2	3.0mm
23	96702824	HHCS, Fully Threaded, Zinc Plated	10	M8 x 1.25 x 20 Cl 8.8
24	**NSVA**	**Console Assembly**	**1**	**See Page D - 18.**
26	96701990	Hex Nut, Zinc Plated	4	M10 x 1.5
27	96703798	HHCS, Zinc Plated	4	M10 x 1.5 Cl 10.9
28	13385778	Deck Tread, LH	1	
29	13385786	Deck Tread, RH	1	
30	96701958	HHCS, Fully Threaded, Zinc Plated	4	M6 x 16 Cl 8.8
31	13356639	Isolator	4	
32	96702816	HHCS, Fully Threaded, Zinc Plated	8	M8 x 1.25 x 16 Cl 8.8
33	13355474	Isolator Back Plate	4	
34	50829647	Trim	A/R	

PEDESTAL ASSEMBLY

Dwg 13272018/04

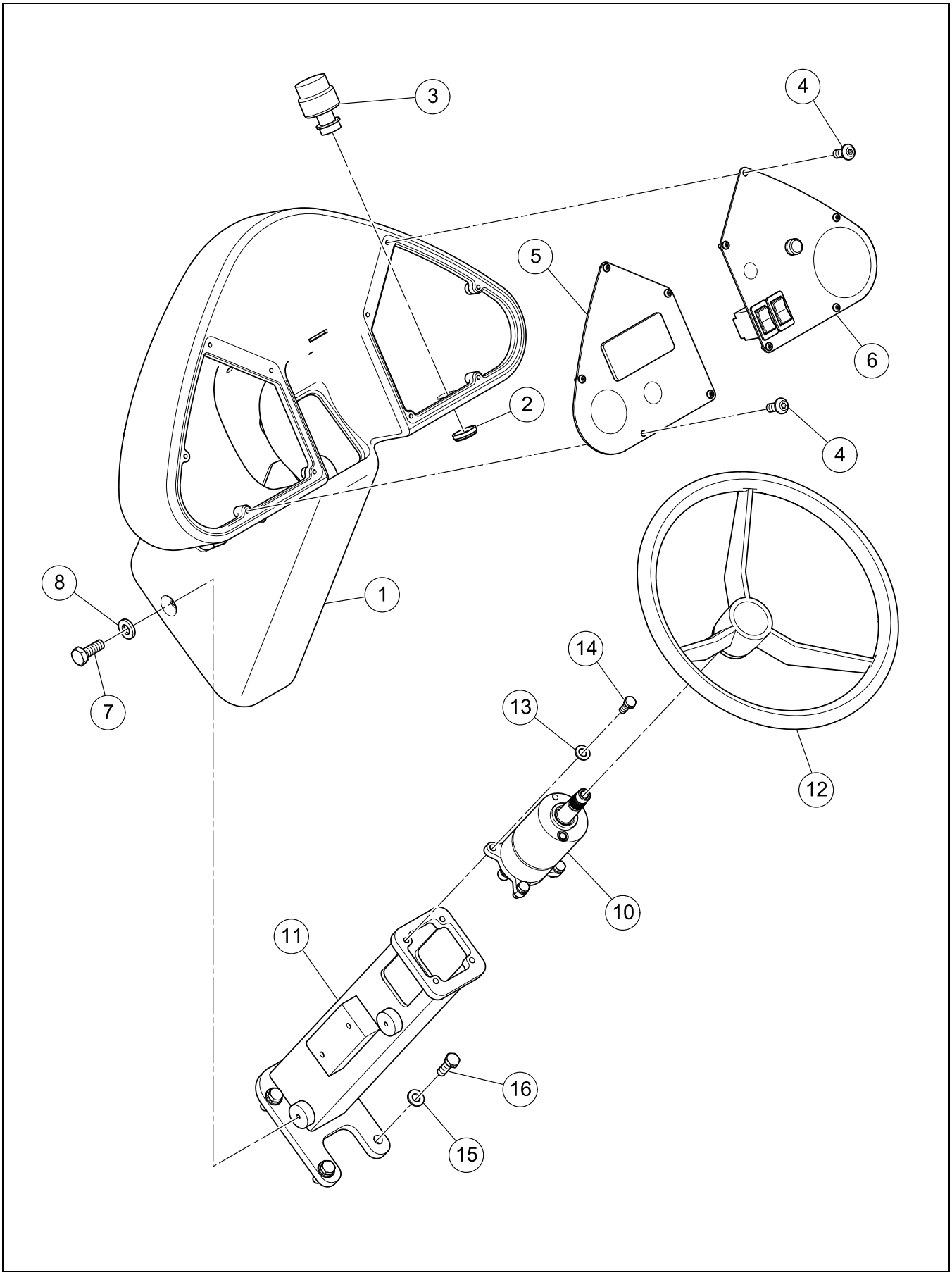

PEDESTAL ASSEMBLY

BOM 13272018

ITEM	COMM. NO.	DESCRIPTION	QTY	DIMENSIONS/NOTES
1	13272281	Pedestal Shroud	1	
2	58924333	Ignition Switch Nut	1	
3	13305180	Ignition Switch	1	
-	58917261	- Ignition Key	1	
-	13284690	- Key Tag	1	
4	59148569	HSBHCS	10	M5 x 0.8 x 12
5	**NSVA**	**Left-Hand Panel Assembly**	**1**	**See Page D - 6.**
6	**NSVA**	**Right-Hand Panel Assembly**	**1**	**See Page D - 8.**
7	96701958	HHCS, Fully Threaded, Zinc Plated	4	M6 x 16 Cl 8.8
8	96741053	Flatwasher, Zinc Plated	4	M6 Cl 200
10	13359849	Steering Valve	1	
-	13496500	- Seal Kit	1	
11	13411566	Pedestal	1	
12	59213405	Steering Wheel w/Cap	1	
13	96741038	Flatwasher	4	M8 x 1.25 Cl 200
14	96702824	HHCS, Fully Threaded, Zinc Plated	4	M8 x 1.25 x 20 Cl 8.8
15	96741046	Flatwasher, Zinc Plated	4	M10 Cl 200
16	96701917	HHCS, Fully Threaded, Zinc Plated	4	M10 x 1.5 x 30 Cl 8.8

LEFT-HAND PANEL ASSEMBLY

Dwg 13322904/02

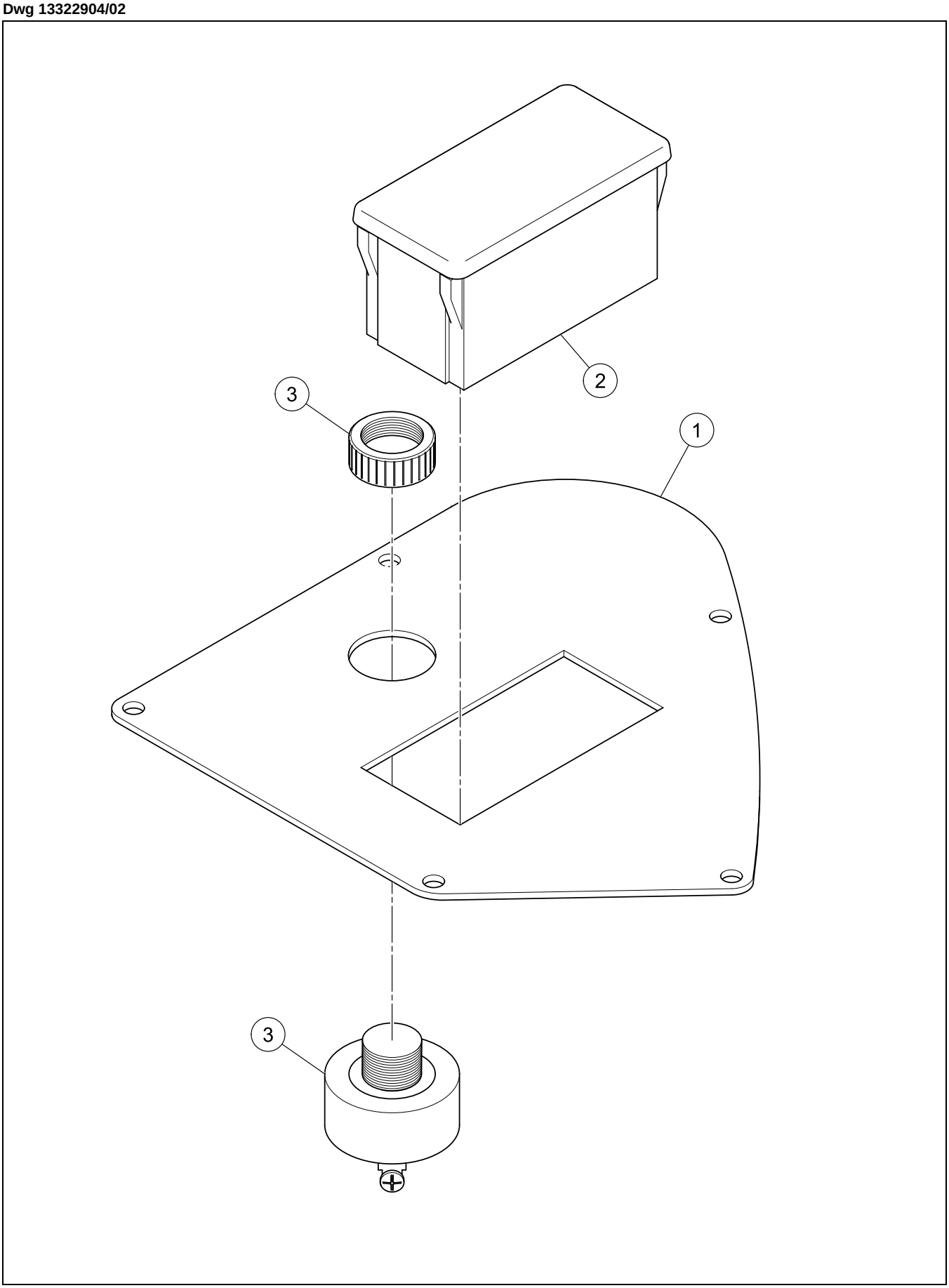

LEFT-HAND PANEL ASSEMBLY

BOM 13322904

ITEM	COMM. NO.	DESCRIPTION	QTY	DIMENSIONS/NOTES
1	13322896	Panel, LH	1	
2	13403910	Gauge Panel	1	
3	13420179	Audible Alarm	1	

RIGHT-HAND PANEL ASSEMBLY

Dwg D13322946/01

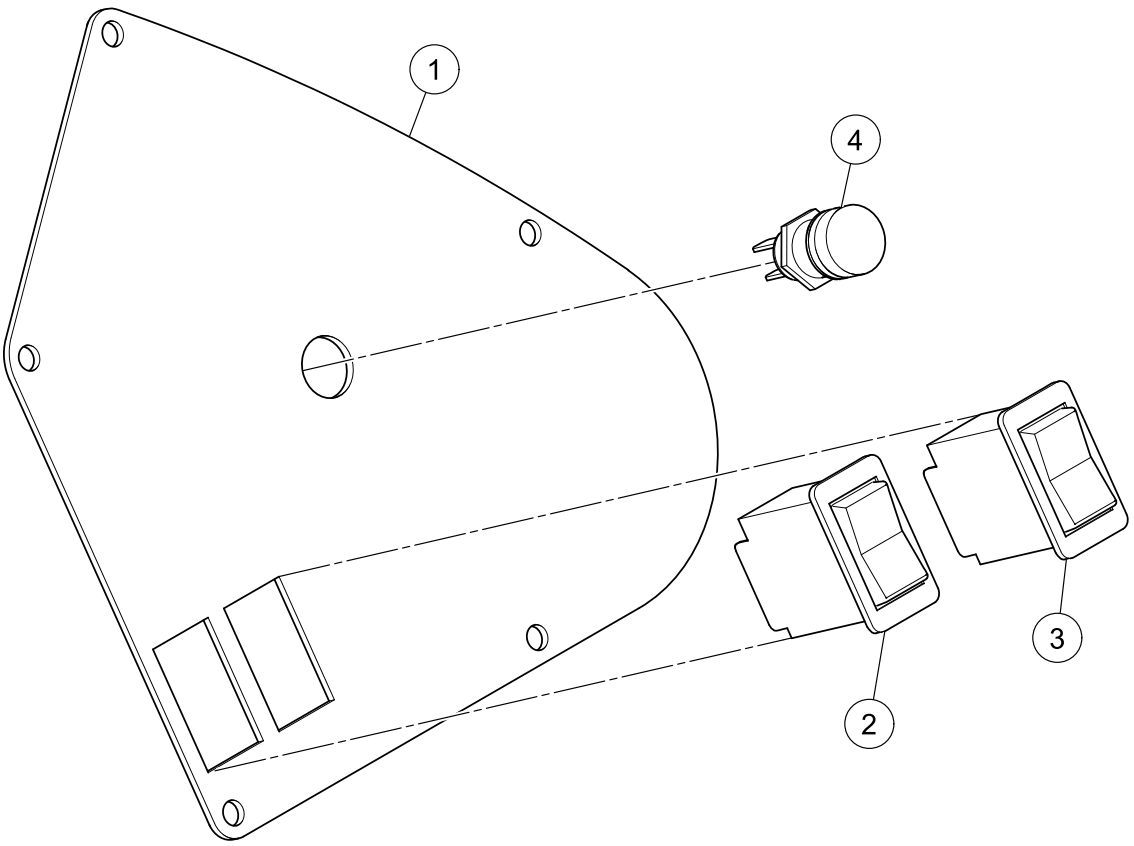

RIGHT-HAND PANEL ASSEMBLY

BOM 13322946

ITEM	COMM. NO.	DESCRIPTION	QTY	DIMENSIONS/NOTES
1	13322953	Panel, RH	1	
2	54666102	Parking Brake Test Switch	1	
3	54666094	Parking Brake Switch	1	
4	58771668	Horn Switch	1	

THROTTLE ASSEMBLY

Dwg D13352265/00

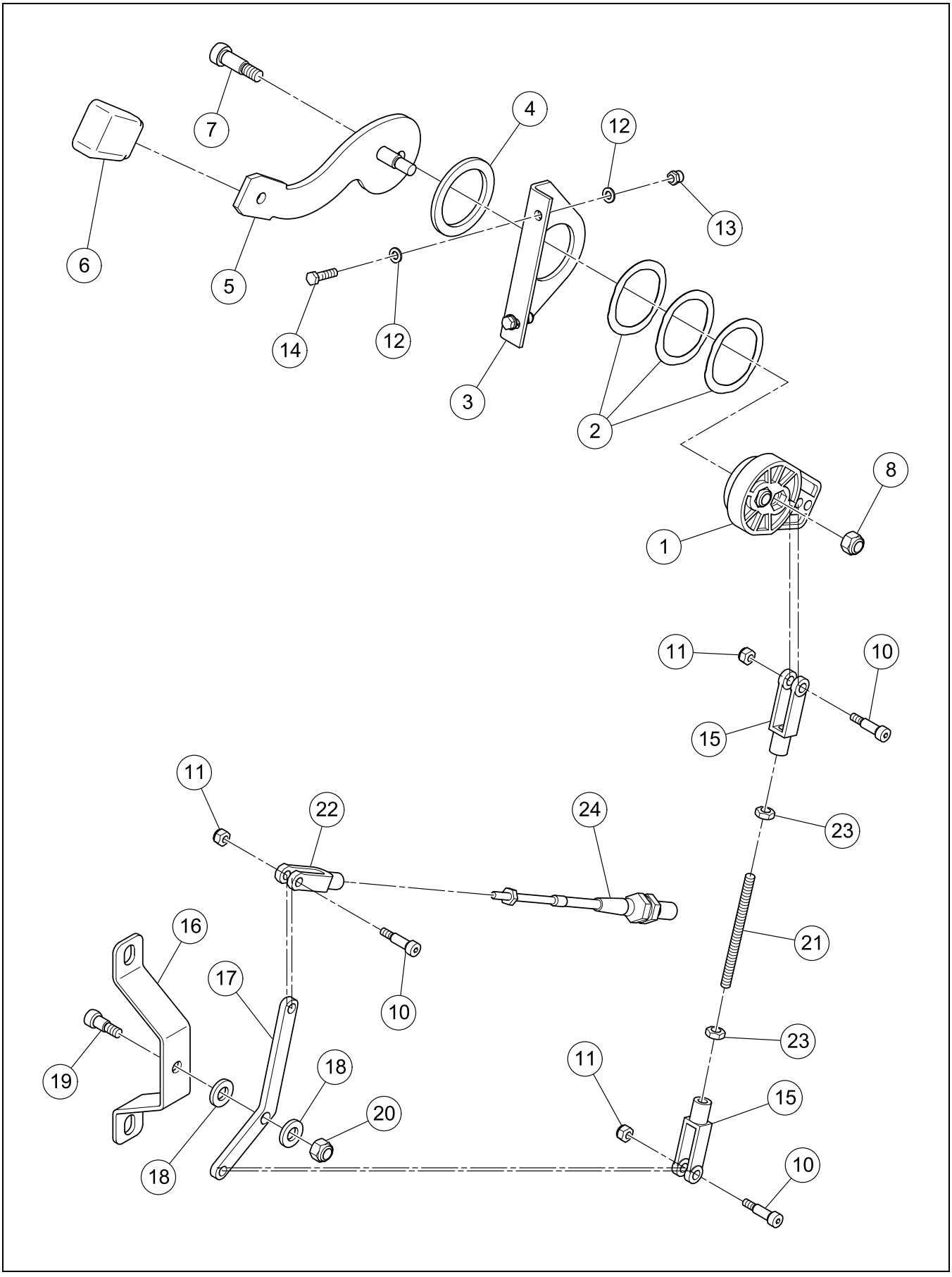

THROTTLE ASSEMBLY

BOM 13352265

ITEM	COMM. NO.	DESCRIPTION	QTY	DIMENSIONS/NOTES
1	59219287	Throttle Lever	1	
2	59219261	Spring Washer	3	
3	59226548	Throttle Bracket	1	
4	59219253	Friction Washer	1	
5	59219279	Throttle Lever	1	
6	59219246	Throttle Lever Grip	1	
7	95326609	HSHCS	2	UNC
8	95923314	Locknut	2	5/16 x 18 UNJC
10	95860052	Screw	3	
11	95943346	Locknut, Zinc Plated	3	#10 x 24
12	96738554	Flatwasher, Zinc Plated	4	M5 Hardened Cl 200
13	96704580	Hex Locknut, Zinc Plated	2	M5 x 0.8 Cl 8
14	96705736	HHCS, Fully Threaded, Zinc Plated	2	M5 x 0.8 x 20 Cl 8.8
15	59662312	Clevis Assembly	2	
16	13352257	Bell Crank Bracket	1	
17	13352331	Pivot Arm	1	
18	59044305	Nylon Washer	2	
19	95453916	Hex Socket Shoulder Screw	1	5/16 x 3/8
20	95923298	Locknut, Zinc Plated	1	1/4 x 20
21	13352604	Threaded Rod	1	
22	59901306	Clevis	1	
23	95923058	Hex Nut, Zinc Plated	2	1/4 x 28 Grd A
24	13349147	Throttle Control Cable	1	

SEAT ASSEMBLY

Dwg D13324207/02

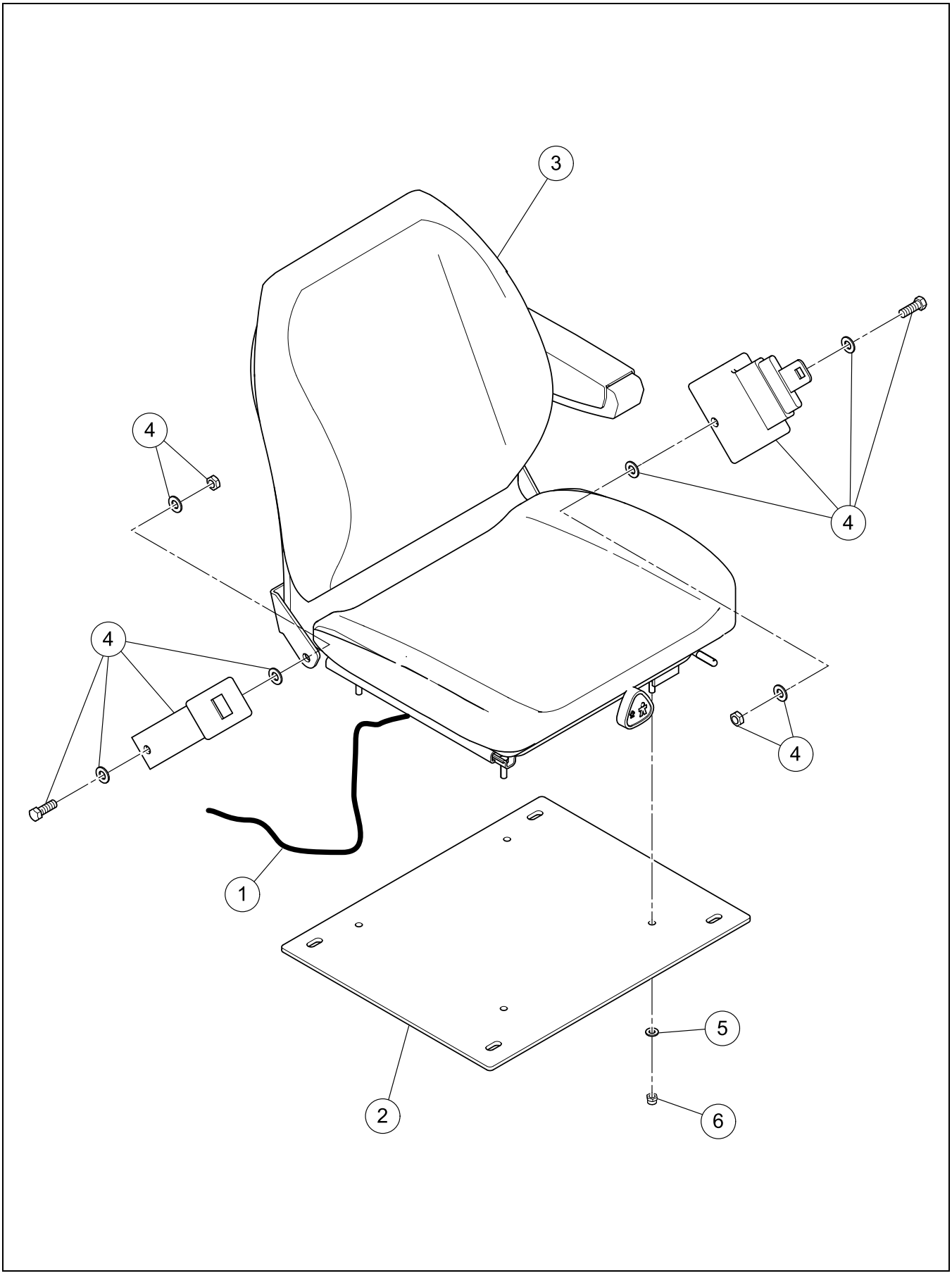

SEAT ASSEMBLY

BOM 13324207

ITEM	COMM. NO.	DESCRIPTION	QTY	DIMENSIONS/NOTES
1	13165071	Seat Switch Wire Harness	1	
2	13350004	Seat Plate	1	
3	**54670302**	**Seat**	**1**	**See Breakdown D - 14.**
4	13342720	Retractable Seatbelt	1	
5	96741038	Flatwasher	4	M8 x 1.25 Cl 200
6	96704606	Hex Locknut, Zinc Plated	4	M8 x 1.25 Cl 8

SEAT (54670302) - INTERNAL BREAKDOWN

D13244504/01

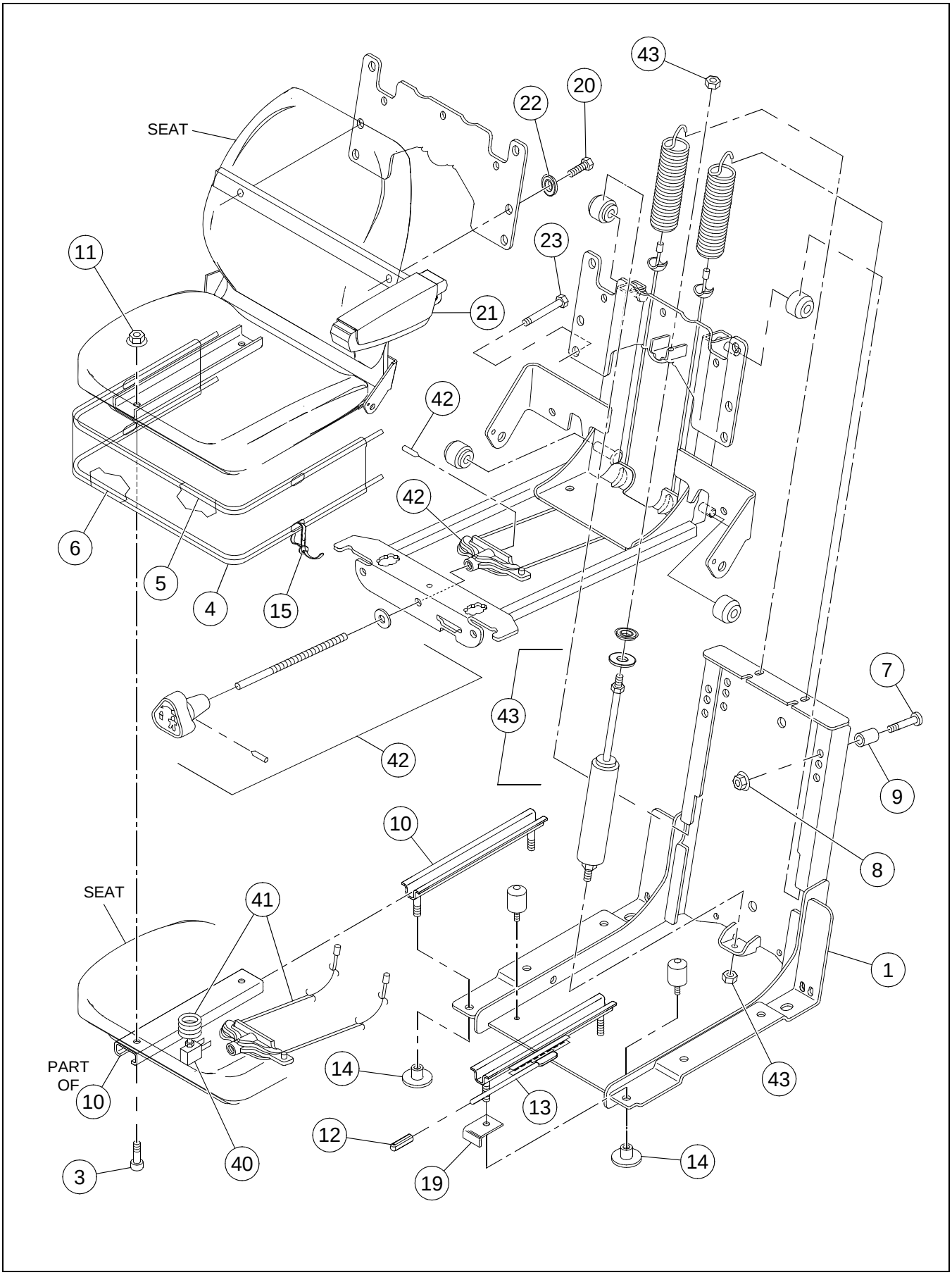

SEAT (54670302) - INTERNAL BREAKDOWN

BOM 54670302

ITEM	COMM. NO.	DESCRIPTION	QTY	DIMENSIONS/NOTES
1	59154450	Suspension Assembly	1	
3	13228820	Capscrew	4	
4	13228838	Boot	1	
5	59154492	Wire	1	
6	59154500	Wire	2	
7	59154518	Pin	2	
8	59154526	Nut	2	
9	13228846	Spacer	2	
10	13247473	Adjuster	1	
11	59154542	Nut	3	
12	13228853	Tip	1	
13	13247481	Adjuster - Latcher W/Handle	1	
14	13228861	Stud Protector	4	
15	59145821	Wire Tie	A/R	
16	NSS	Spring	1	
17	NSS	Switch Assemlby w/o Boot	1	
18	NSS	Switch Assemlby w/ Boot	1	
19	59154393	Bracket	1	
20	13247549	Screw	2	
21	54531629	Arm Rest Assembly	1	
22	13247556	Washer	2	
23	13228960	Screw	4	
24	NSS	Screw	1	
25	NSS	Seat Frame	1	
26	NSS	Channel	1	
27	NSS	Spring	2	
28	NSS	Roller	4	
29	NSS	Bumper	2	
30	NSS	Damper	1	
31	NSS	Nut	2	
32	NSS	Washer	1	
33	NSS	Spacer	1	
34	NSS	Cable Assembly	1	
35	NSS	Knob Tension	1	
36	NSS	Shaft	1	
37	NSS	Pin Spring	2	
38	NSS	Spring Haanger	1	
39	NSS	Washer	1	
40	13137945	Cushion and Switch Kit	1	
-	13281332	- Seat Pan And Cushion	1	
-	13198270	- Dual Switch Seat Kit	1	
-	13281365	- Compression Switch	1	
-	13281373	- Screw	1	
41	13258934	Spring Cable Kit (Includes items 24, 34)t	1	
42	54496385	Knob Kit (Includes items 35,36,37,38,39)	1	
43	54496377	Damper Kit (Includes items 30,31,32,33)	1	
44	13493077	Seat Belt Kit (Not Shown)	1	

HORN ASSEMBLY

Dwg 13324363/02

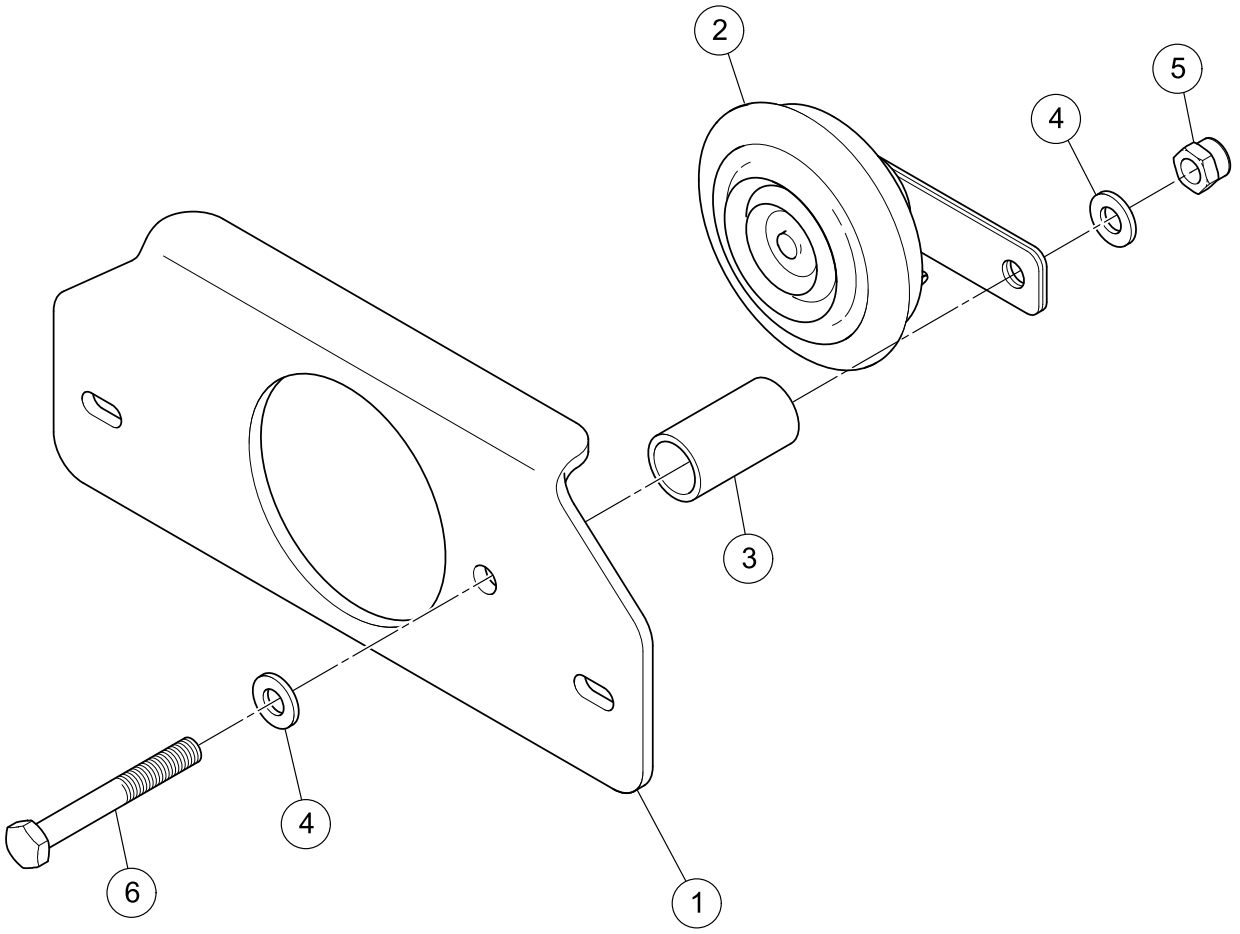

HORN ASSEMBLY

BOM 13324363

ITEM	COMM. NO.	DESCRIPTION	QTY	DIMENSIONS/NOTES
1	13329917	Cover Plate	1	
2	13469010	Horn	1	
3	59165019	Spacer	1	
4	96741046	Flatwasher, Zinc Plated	2	M10 Cl 200
5	96704614	Nut, Zinc Plated	1	M10 x 1.5 Cl 8
6	96705272	HHCS, Zinc Plated	1	M10 x 80 Cl 8.8

CONSOLE ASSEMBLY

Dwg 13324215/02

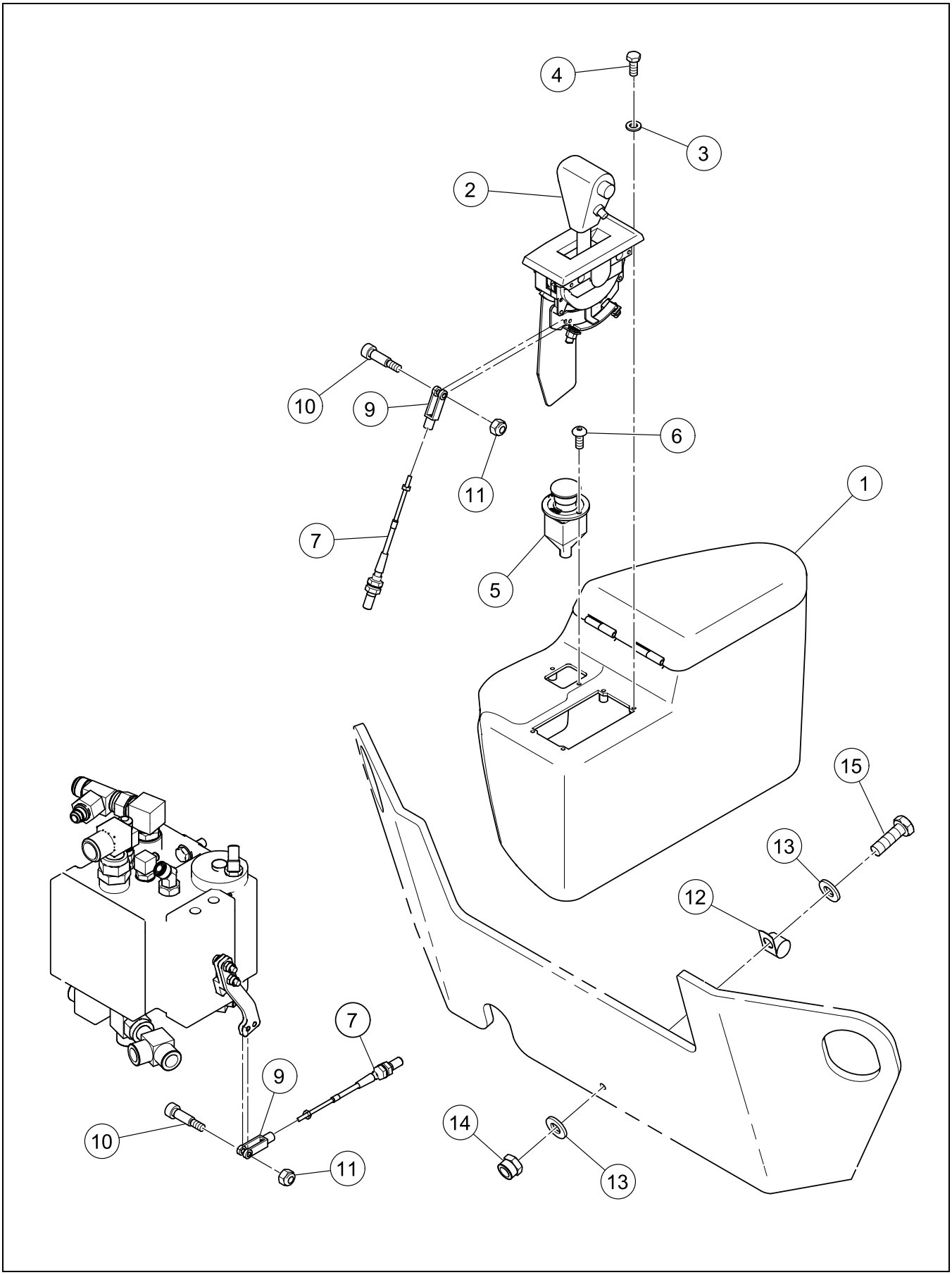

CONSOLE ASSEMBLY

BOM 13324215

ITEM	COMM. NO.	DESCRIPTION	QTY	DIMENSIONS/NOTES
1	NSS	Side Console Assembly	1	
-	13186242	- Side Console	1	
-	13186390	- Side Console Pocket	1	
-	13186374	- Side Console Cover	1	
2	13289921	F-Stop-R Control	1	
-	13382445	- F-Stop-R Switch	1	
3	96738554	Flatwasher, Zinc Plated	4	M5 Hardened Cl 200
4	96702386	HHCS, Fully Threaded, Zinc Plated	4	M5 x 0.8 x 12 Cl 8.8
5	**NSVA**	**Emergency Stop Assembly**	**1**	**See Page D - 20.**
6	59148569	HSBHCS	2	M5 x 0.8 x 12
7	13349972	F-Stop-R Control Cable	1	
9	59929059	Clevis	2	
10	95860052	Screw	2	
11	95943346	Locknut, Zinc Plated	2	#10 x 24
12	95301842	Clamp	1	
13	96741038	Flatwasher	2	M8 x 1.25 Cl 200
14	96704606	Hex Locknut, Zinc Plated	1	M8 x 1.25 Cl 8
15	96705587	HHCS, Fully Threaded, Zinc Plated	1	M8 x 1.25 x 30 Cl 8.8

EMERGENCY STOP ASSEMBLY

Dwg D13169735/00

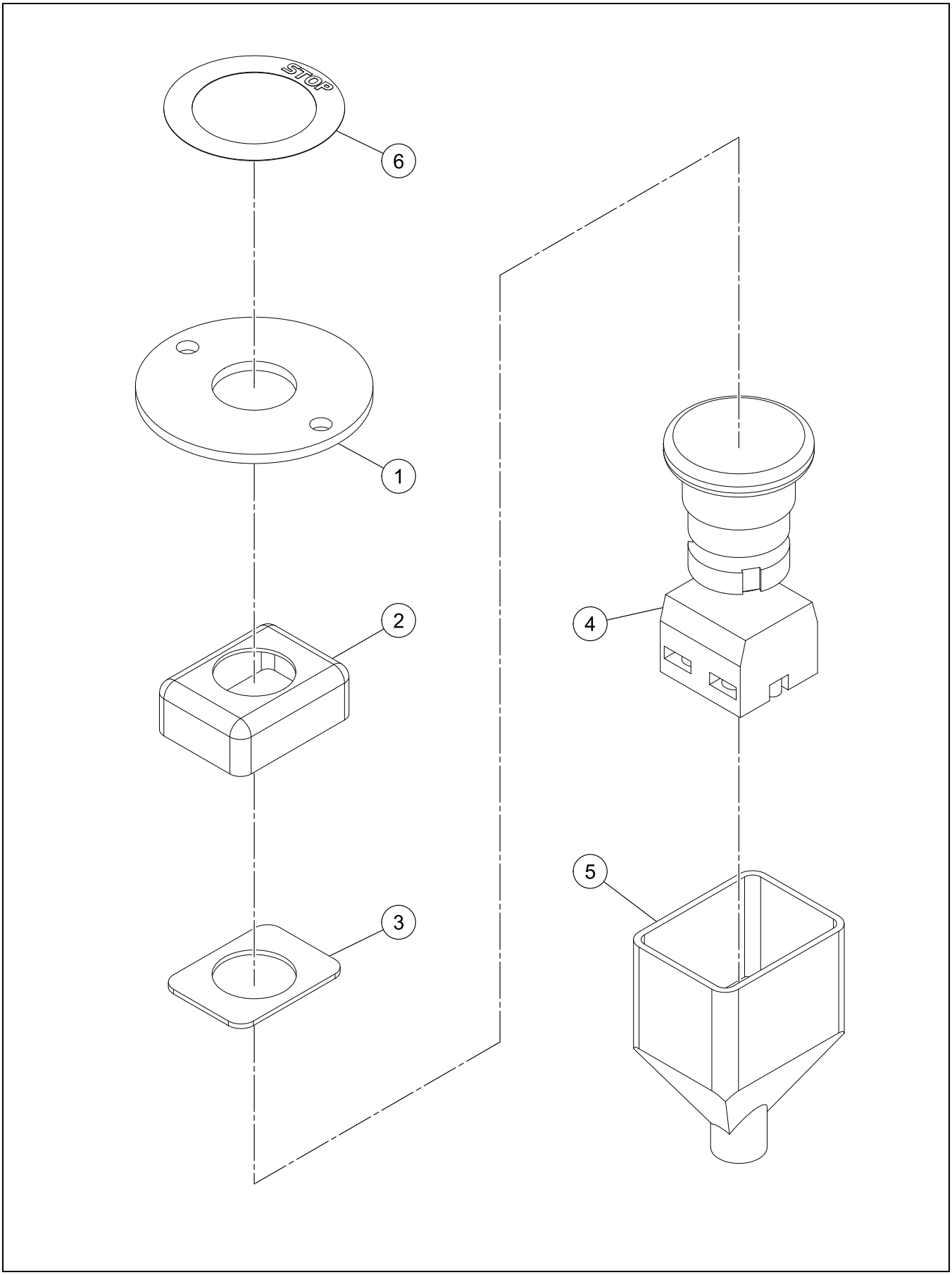

EMERGENCY STOP ASSEMBLY

BOM 13166087

ITEM	COMM. NO.	DESCRIPTION	QTY	DIMENSIONS/NOTES
1	13166079	Mounting Plate	1	
2	59108100	Dust Boot, Top	1	
3	59109116	Washer	1	
4	59111450	Emergency Stop Switch	1	
-	58917543	- Emergency Stop Switch Bulb	1	
5	59108605	Dust Boot, Bottom	1	
6	59239897	Decal: Stop	1	

VANDAL COVER INSTALLATION - OPTIONAL

Dwg 13182118/05

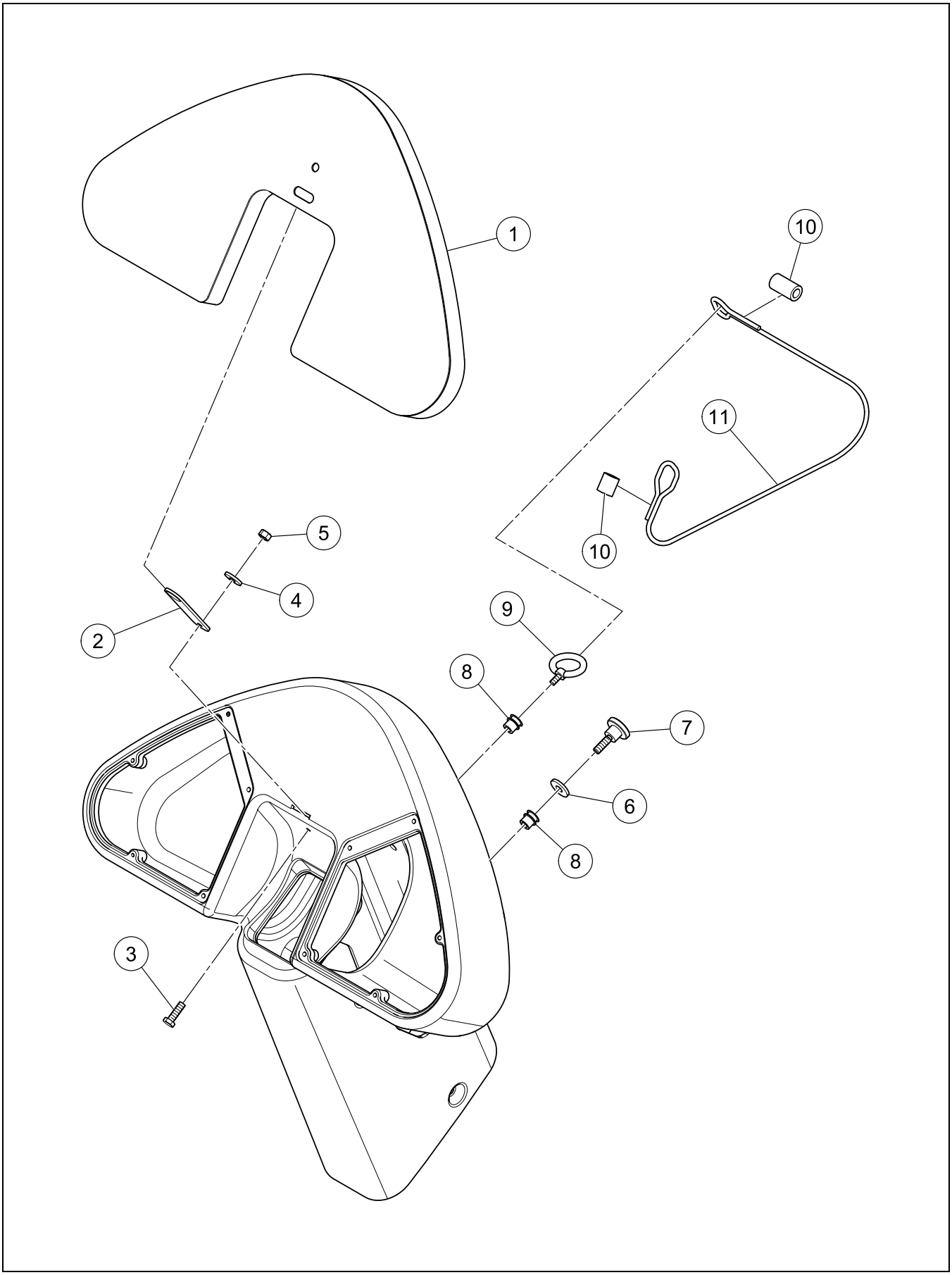

VANDAL COVER INSTALLATION - OPTIONAL

BOM 59287466, 13359385

ITEM	COMM. NO.	DESCRIPTION	QTY	DIMENSIONS/NOTES
1	13359369	Vandal Cover (Installation w/ Worklights)	1	
-	13290440	Vandal Cover (Installation w/o Worklights)	1	
2	13182373	Locking Plate	1	
3	96705728	Screw, Fully Threaded, Zinc Plated	1	M5 x 0.8 x 16 Cl 8.8
4	96718598	Washer, Zinc Plated	1	M5 x 2.0 Cl 10, Hardened
5	96705132	Hex Nut, Zinc Plated	1	M5 x 0.08 Cl 8
6	54601299	Reinforced Rubber Washer	1	
7	96745518	Screw, Zinc Plated	1	M8 x 1.25
8	13235676	Knurled Thread Insert	2	
9	13235692	Eyebolt	1	
10	59214775	Cable Sleeve (Installation w/o Worklights	2	
-	59607853	Ferrule (Installation w/o Worklights)	2	
11	13412655	Cable	1	

SAFETY LABEL MANUAL INSTALLATION

Dwg D59292730/00

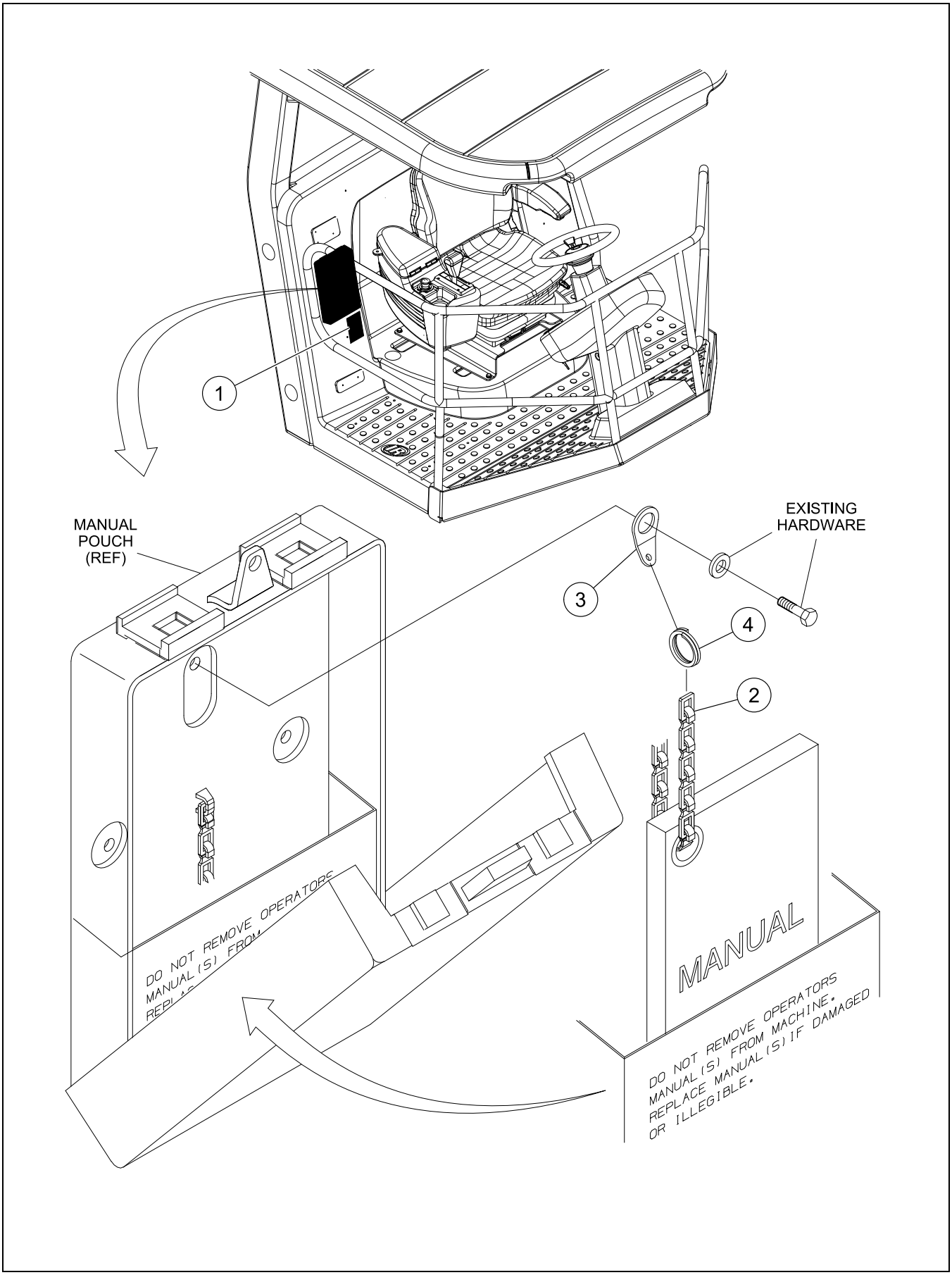

SAFETY LABEL MANUAL INSTALLATION

BOM 13189642

ITEM	COMM. NO.	DESCRIPTION	QTY	DIMENSIONS/NOTES
1	13367545	Safety Label Manual	1	
2	58874389	Plumb Chain	1	
3	58874397	Formed Washer	1	
4	58880303	Split Ring	1	

Always use Manufacturer Replacement parts!*

Section E - ELECTRICAL

WIRE HARNESS INSTALLATION

Dwg 13349998/03

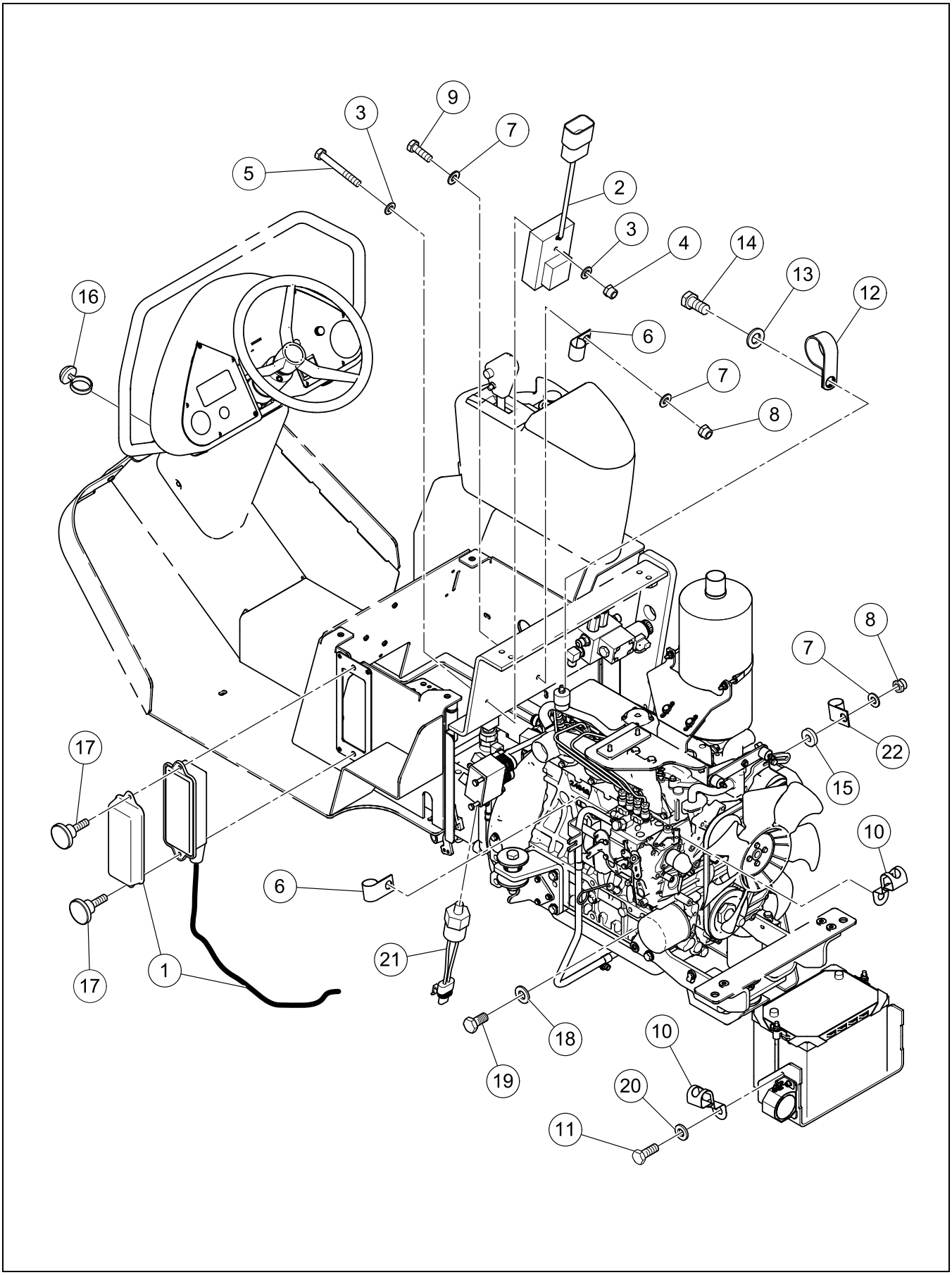

WIRE HARNESS INSTALLATION

BOM 13189543

ITEM	COMM. NO.	DESCRIPTION	QTY	DIMENSIONS/NOTES
1	13489828	Main Wire Harness	1	
2	13349055	Delay Timer	1	
-	13349923	- Two-Second Timer Module	1	
3	96738554	Flatwasher, Zinc Plated	2	M5 Hardened Cl 200
4	96704580	Hex Locknut, Zinc Plated	1	M5 x 0.8 Cl 8
5	96738448	Hex Head Bolt, Zinc Plated	1	M5 x 0.8 Cl 8.8
6	59117333	Clamp	2	
7	96741038	Flatwasher	3	M8 x 1.25 Cl 200
8	96704606	Hex Locknut, Zinc Plated	2	M8 x 1.25 Cl 8
9	96702659	HHCS, Fully Threaded, Zinc Plated	1	M8 x 1.25 x 25 Cl 8.8
10	59020305	Clamp	2	
11	96703012	SHCS	1	M6 x 20 Cl 8.8
12	95457586	Clamp	2	
13	96738596	Flatwasher, Zinc Plated	1	M12 Hardened Cl 200
14	96740543	HHCS, Fully Threaded, Zinc Plated	1	M12 x 1.25 x 25 Cl 8.8
15	96713979	Washer, Zinc Plated	1	M8 Hardened
16	58820168	Wire Tie	A/R	
17	96745518	Screw, Zinc Plated	2	M8 x 1.25
18	96741046	Flatwasher, Zinc Plated	1	M10 Cl 200
19	96702352	HHCS, Fully Threaded, Zinc Plated	1	M10 x 1.25 x 20 Cl 8.8
20	96741053	Flatwasher, Zinc Plated	1	M6 Cl 200
21	59090878	Oil Pressure Switch	1	
22	95654208	Clamp	2	

BATTERY INSTALLATION

Dwg 13327994/03

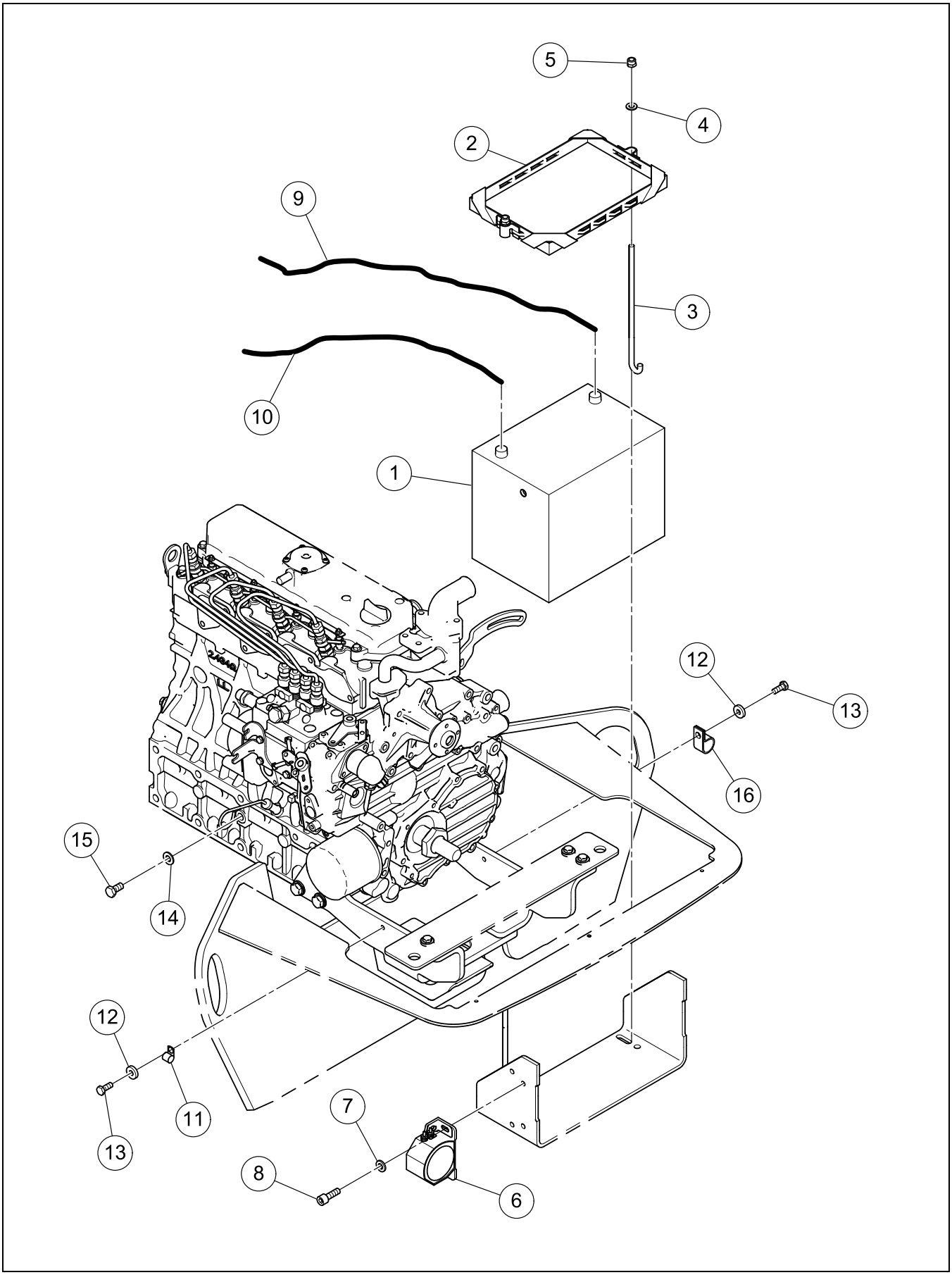

BATTERY INSTALLATION

BOM 13327994

ITEM	COMM. NO.	DESCRIPTION	QTY	DIMENSIONS/NOTES
1	54635859	Battery	1	
2	59225920	Holddown	1	
3	59211805	J-hook	2	
4	96712674	Washer, Zinc Plated	2	M8 Hardened Cl 10
5	96704606	Hex Locknut, Zinc Plated	2	M8 x 1.25 Cl 8
6	54535844	Backup Alarm	1	
7	96741053	Flatwasher, Zinc Plated	2	M6 Cl 200
8	96703012	SHCS	2	M6 x 20 Cl 8.8
9	13334131	Positive Battery Cable	1	
10	13334149	Negative Battery Cable	1	
11	95368338	Hose Clamp	1	
12	96712674	Washer, Zinc Plated	2	M8 Hardened Cl 10
13	96702824	HHCS, Fully Threaded, Zinc Plated	2	M8 x 1.25 x 20 Cl 8.8
14	96704895	Flatwasher, Zinc Plated	1	M12 Cl 140
15	96740261	HHCS, Fully Threaded, Zinc Plated	1	M12 x 1.25 x 20 Cl 10.9
16	95654208	Clamp	1	

POWER SOCKET INSTALLATION - OPTIONAL

Dwg D13307764/00

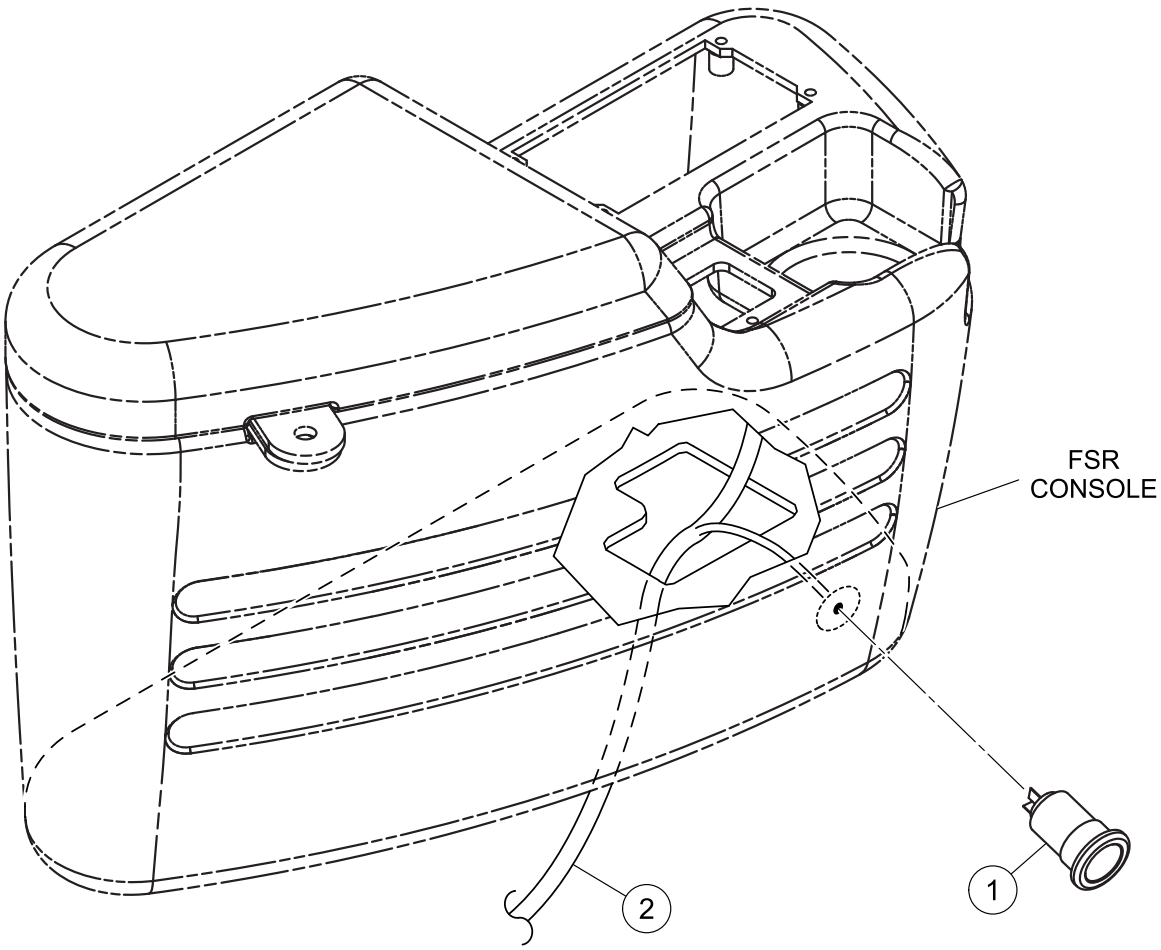

POWER SOCKET INSTALLATION - OPTIONAL

BOM 13307764

ITEM	COMM. NO.	DESCRIPTION	QTY	DIMENSIONS/NOTES
1	13173323	Power Port	1	
2	13493531	Power Socket Wire Harness	1	

WORKLIGHTS INSTALLATION - OPTIONAL - SHEET 1 OF 3

Dwg D13359278/01/01

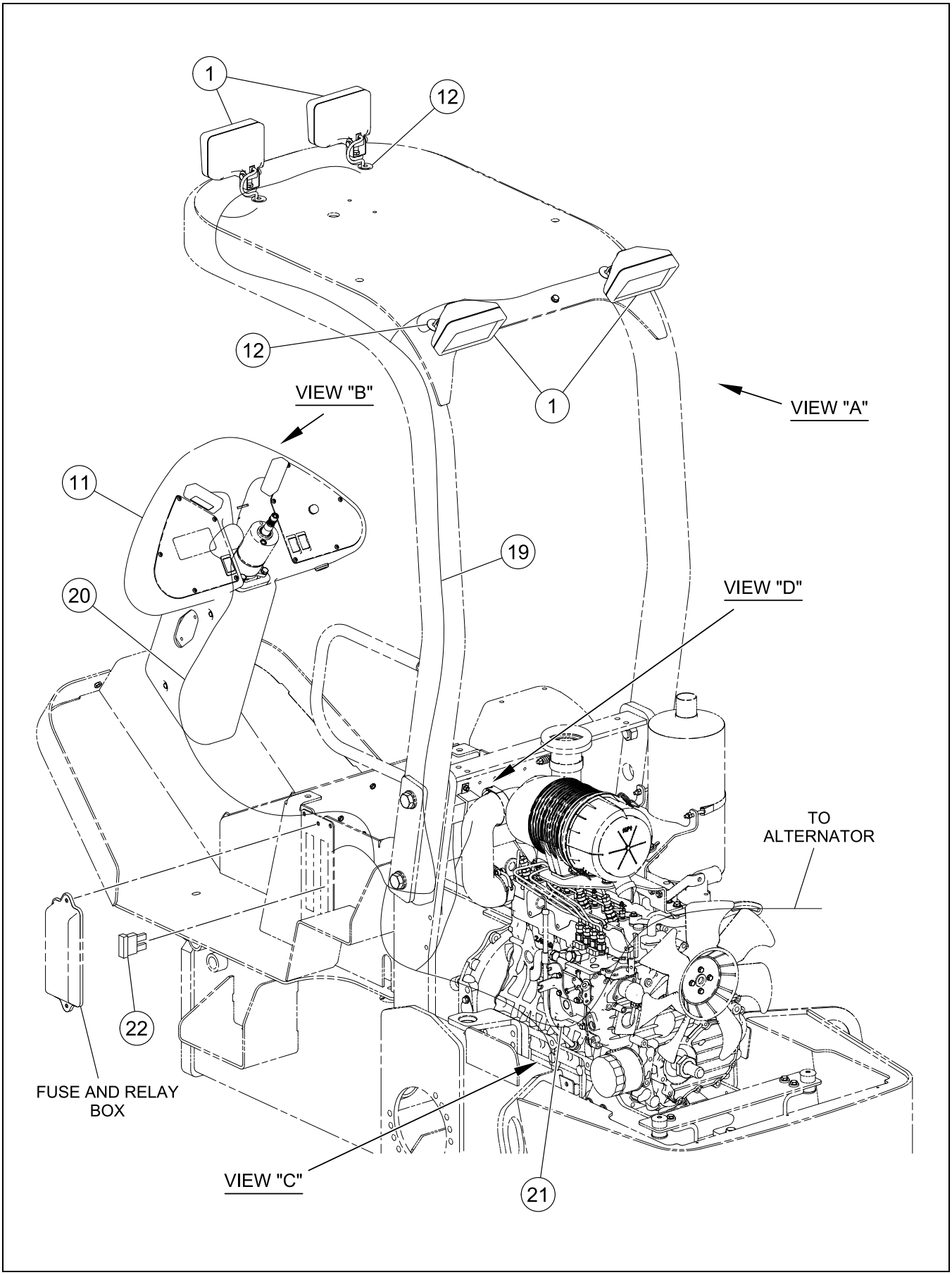

BOM 13359278

ITEM	COMM. NO.	DESCRIPTION	QTY	DIMENSIONS/NOTES
1	13482179	Worklight Assembly	4	
11	13359344	Pedestal Shroud	1	
12	58948035	Grommet	4	
19	13498670	ROPS Worklights Harness	1	
20	13382478	Pedestal Worklights Harness	1	
21	13382486	Chassis Worklights Harness	1	
22	59483339	Fuse	2	15 Amp

Dwg D13359278/01/02

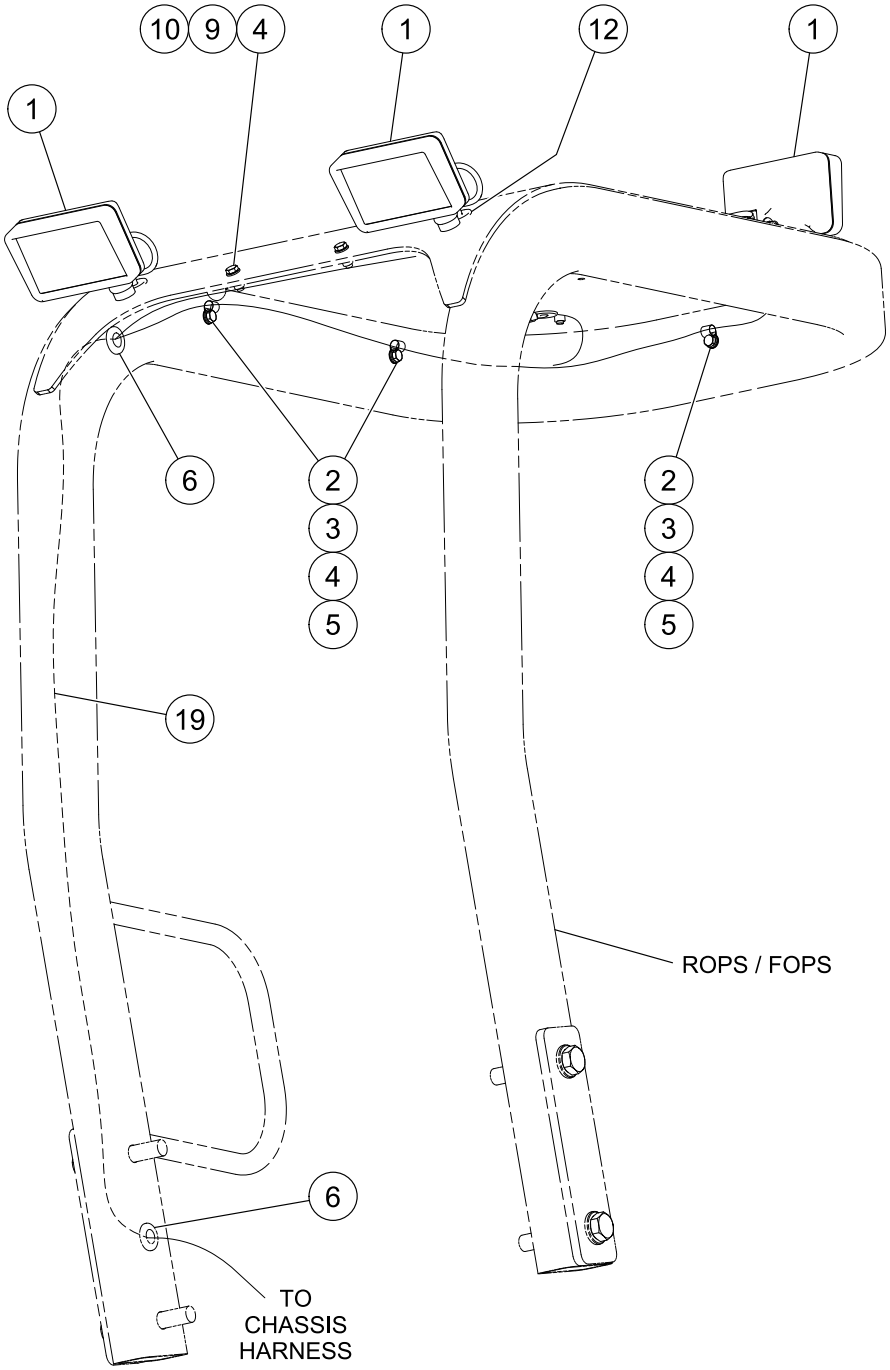

VIEW "A"

BOM 13359278

ITEM	COMM. NO.	DESCRIPTION	QTY	DIMENSIONS/NOTES
1	13482179	Worklight Assembly	4	
2	13235676	Knurled Thread Insert	3	
3	95301842	Clamp	5	
4	96741038	Flatwasher	7	M8 x 1.25 Cl 200
5	96702824	HHCS, Fully Threaded, Zinc Plated	3	M8 x 1.25 x 20 Cl 8.8
6	59704429	Grommet	2	
9	96704606	Hex Locknut, Zinc Plated	2	M8 x 1.25 Cl 8
10	96702659	HHCS, Fully Threaded, Zinc Plated	2	M8 x 1.25 x 25 Cl 8.8
12	58948035	Grommet	4	
19	13498670	ROPS Worklights Harness	1	

Dwg D13359278/01/03

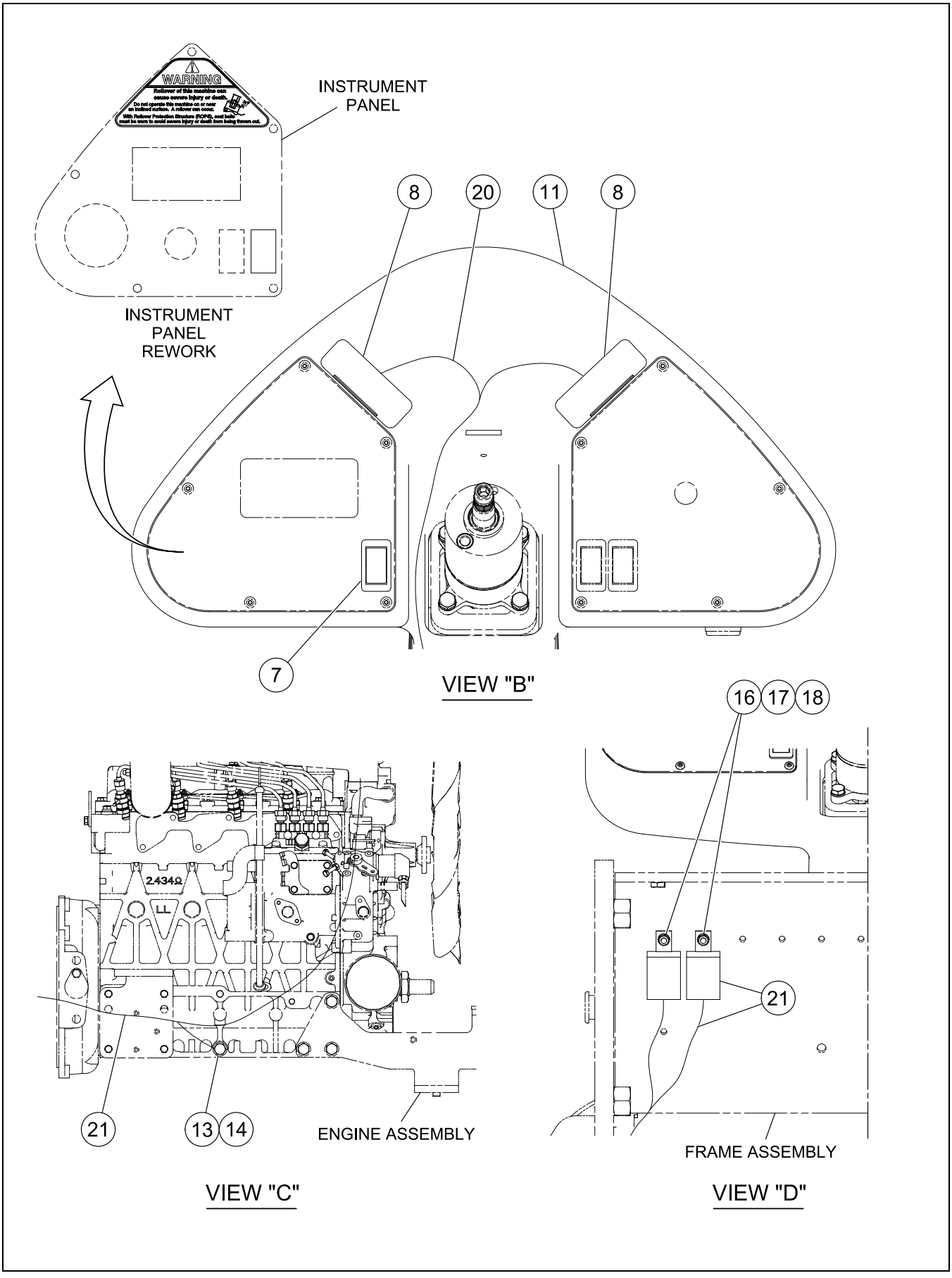

BOM 13359278

ITEM	COMM. NO.	DESCRIPTION	QTY	DIMENSIONS/NOTES
7	13197108	Worklights Switch	1	
8	13248935	Dash Lights	2	
11	13359344	Pedestal Shroud	1	
13	96738596	Flatwasher, Zinc Plated	1	M12 Hardened Cl 200
14	96740543	HHCS, Fully Threaded, Zinc Plated	1	M12 x 1.25 x 25 Cl 8.8
16	96704564	HHCS, Fully Threaded, Zinc Plated	2	M6 x 1.0 x 20 Cl 8.8
17	96741053	Flatwasher, Zinc Plated	2	M6 Cl 200
18	96704234	Nut, Zinc Plated	2	M6 x 1.0 Cl 8
20	13382478	Pedestal Worklights Harness	1	
21	13382486	Chassis Worklights Harness	1	

BEACON LIGHT INSTALLATION - OPTIONAL

Dwg D13404629/00

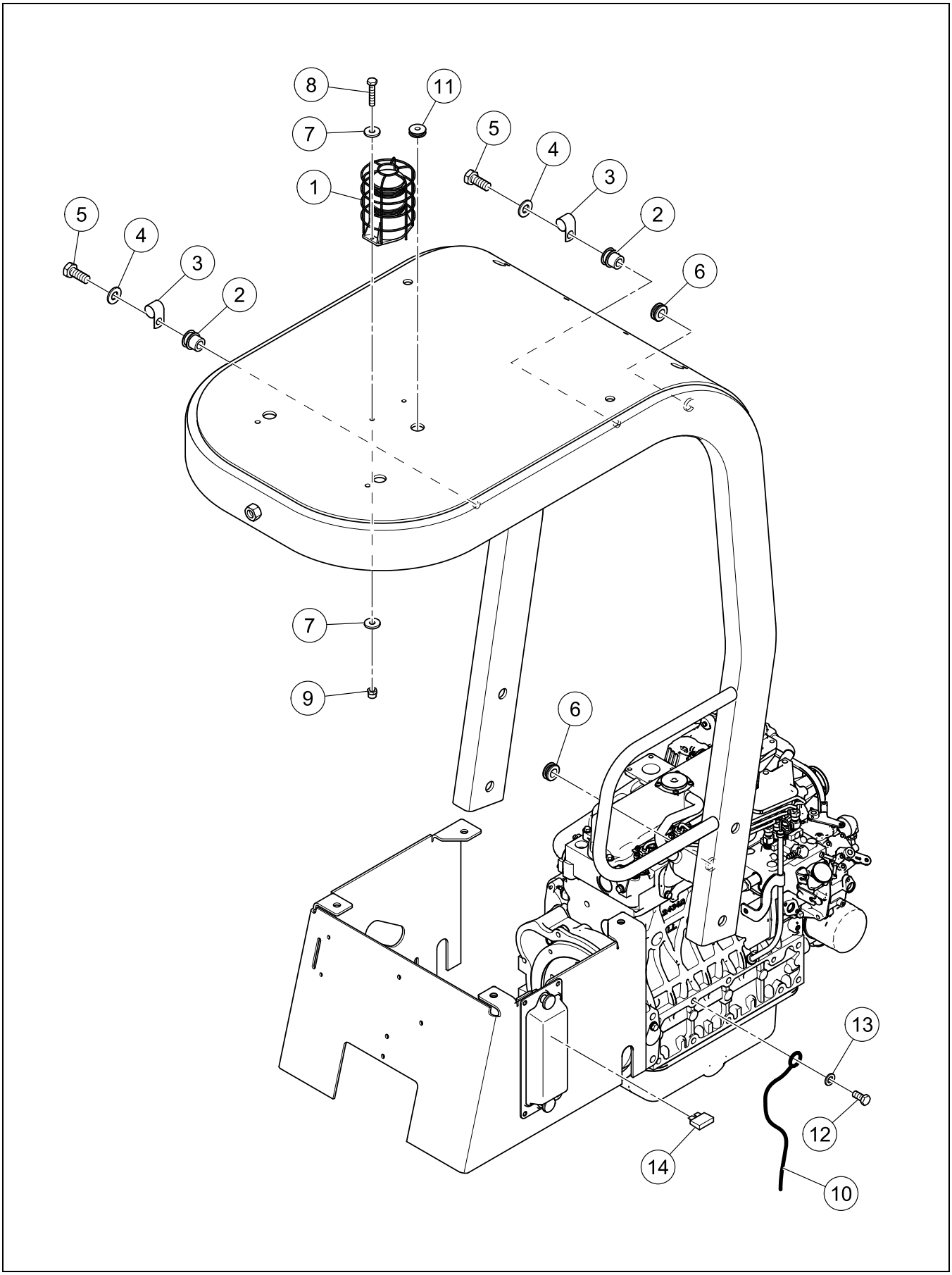

BEACON LIGHT INSTALLATION - OPTIONAL

BOM 13404629

ITEM	COMM. NO.	DESCRIPTION	QTY	DIMENSIONS/NOTES
1	59083105	Strobe Light	1	
-	59023077	- Amber Lens	1	
-	59022871	- Bulb	1	
2	13235676	Knurled Thread Insert	2	
3	95301842	Clamp	2	
4	96741038	Flatwasher	2	M8 x 1.25 Cl 200
5	96702824	HHCS, Fully Threaded, Zinc Plated	2	M8 x 1.25 x 20 Cl 8.8
6	59704429	Grommet	2	
7	96718598	Washer, Zinc Plated	4	M5 x 2.0 Cl 10, Hardened
8	96705744	HHCS, Fully Threaded, Zinc Plated	2	M5 x 0.8 x 25 Cl 8.8
9	96704580	Hex Locknut, Zinc Plated	2	M5 x 0.8 Cl 8
10	13400841	Beacon Light Harness	1	
11	58948035	Grommet	1	
12	96740543	HHCS, Fully Threaded, Zinc Plated	1	M12 x 1.25 x 25 Cl 8.8
13	96738596	Flatwasher, Zinc Plated	1	M12 Hardened Cl 200
14	59325712	Fuse	1	10 Amp

Always use Manufacturer Replacement parts!*

Section G - DECALS

Dwg 13189600/06

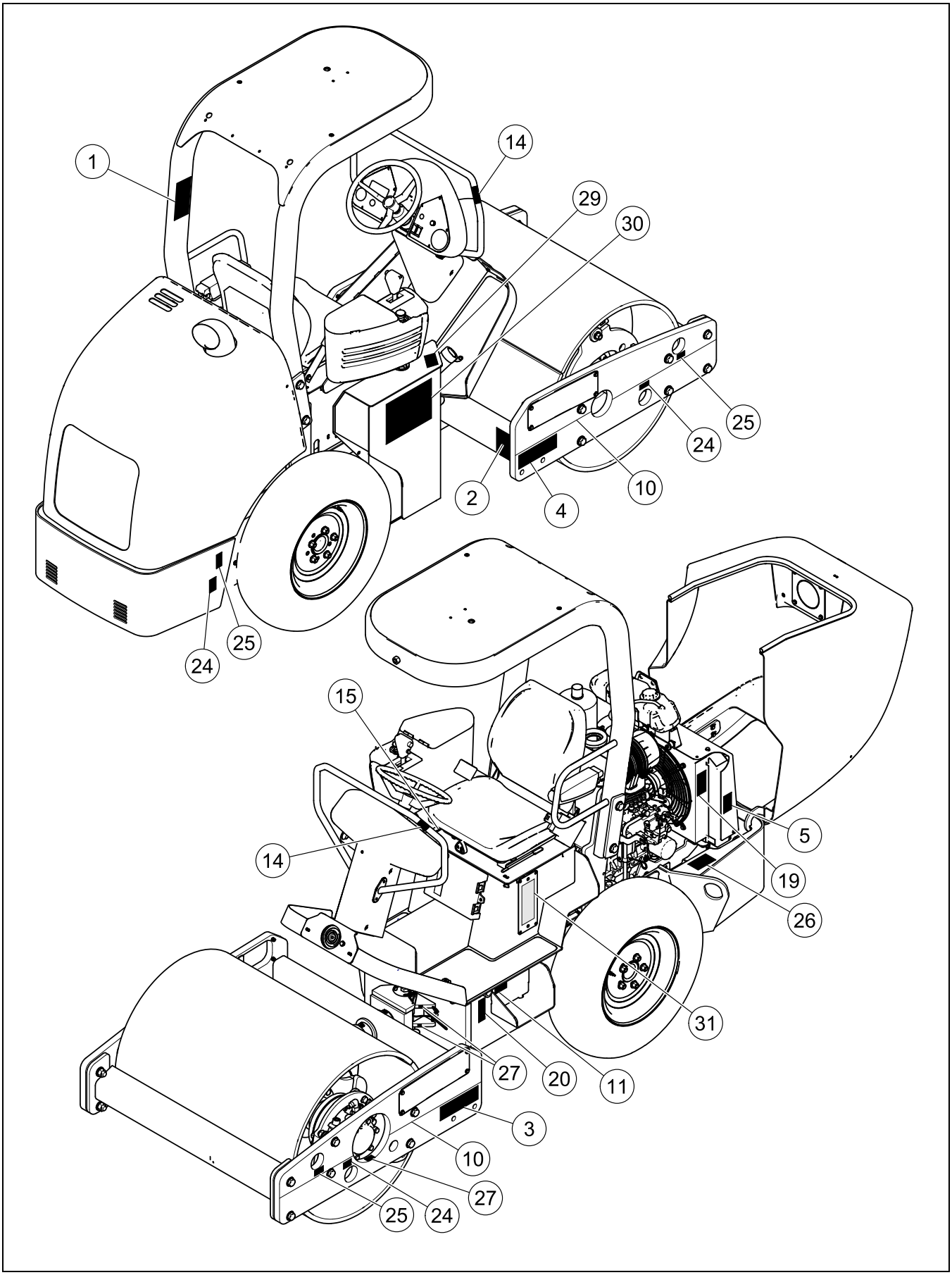

DECAL INSTALLATION

BOM 13189600, 13225263, 13225271

ITEM	COMM. NO.	DESCRIPTION	QTY	DIMENSIONS/NOTES
1	13266986	Decal: Checklist	1	
2	58965542	Decal: Crush Area	2	
3	13365994	Decal: Sd25D TF Series, RH	1	
-	13366026	Decal: Sd25F TF Series, RH	1	
4	13366018	Decal: Sd25D TF Series, LH	1	
-	13366034	Decal: Sd25F TF Series, LH	1	
5	59246660	Decal: Pressure Hazard Warning	2	
10	13459334	Decal: Stripe	1	
11	13199344	Decal: Hydraulic Oil	1	
14	59667287	Decal: Warning Rail	2	
15	13280433	Decal: Throttle	1	
19	59246645	Decal: Warning - Rotating Fan	1	
20	58978255	Decal: Hydraulic Oil Level	1	
24	59246603	Decal: Tie Down	4	
25	59246611	Decal: Lift Point	4	
26	59147439	Decal: Coolant System Fill	1	
27	59605915	Decal: Grease	4	
29	58978214	Decal: Diesel Fuel	1	
30	13366042	Decal: Lube Chart	1	
31	13382296	Decal: Fuse	1	
**	13363577	Decal Kit (Includes Items 1, 2 and 5 thru 31; order Items 3 and 4 separately)	1	
		Optional Decals:		
-	59162982	Biodegradable Oil Decal	1	
**	59947507	Beige Paint	1	Gallon
**	35304286	Beige Paint	1	Spray Can

Always use Manufacturer Replacement parts!*

Section H - HYDRAULICS

REAR FRAME HOSING INSTALLATION

Dwg 13189634/03

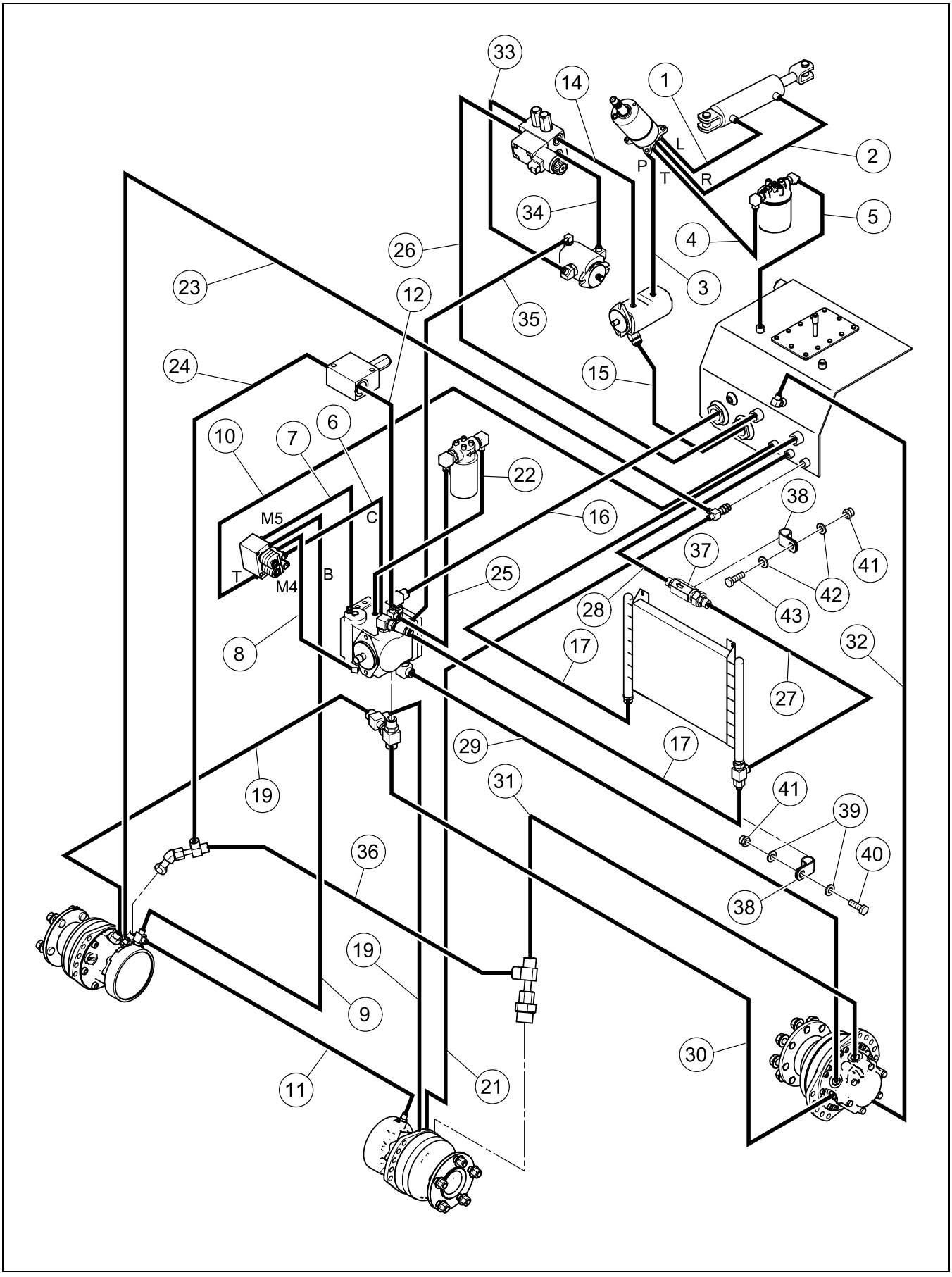

REAR FRAME HOSING INSTALLATION

BOM 13189634

ITEM	COMM. NO.	DESCRIPTION	QTY	DIMENSIONS/NOTES
1	13334172	Hose Assembly	1	84.0"
2	13334222	Hose Assembly	1	93.0"
3	13407358	Hose Assembly	1	81.5"
4	13407366	Hose Assembly	1	64.0"
5	59218792	Hose Assembly	1	31.0"
6	13334180	Hose Assembly	1	11.0"
7	13334206	Hose Assembly	1	16.0"
8	13334214	Hose Assembly	1	17.0"
9	13334230	Hose Assembly	1	14.0"
10	13365192	Hose Assembly	1	30.25"
11	54638564	Hose Assembly	1	21.0"
12	13365119	Hose Assembly	1	36.0"
14	13365127	Hose Assembly	1	25.0"
15	59884494	Hose Assembly	1	30.0"
16	59726463	Hose Assembly	1	20.0"
17	13259874	Hose Assembly	2	60.0"
19	13365226	Hose Assembly	2	34.5"
21	13334255	Hose Assembly	1	11.0"
22	13280482	Hose Assembly	1	23.0"
23	13207618	Hose Assembly	1	23.0"
24	59125278	Hose Assembly	1	16.0"
25	13365135	Hose Assembly	1	16.5"
26	13204342	Hose Assembly	1	36.0"
27	58926908	Hose Assembly	1	23.0"
28	13280490	Hose Assembly	1	21.0"
29	13334271	Hose Assembly	1	77.0"
30	13365341	Hose Assembly	1	125.0"
31	13365101	Hose Assembly	1	85.0"
32	58883745	Hose Assembly	1	95.0"
33	13365150	Hose Assembly	1	107.0"
34	13422399	Hose Assembly	1	108.0"
35	13365176	Hose Assembly	1	79.0"
36	13334263	Hose Assembly	1	21.0"
37	NSS	Check Valve Assembly	1	
-	59268862	- Check Valve	1	
-	95303368	- Adapter	2	
38	95457586	Clamp	3	
39	96741038	Flatwasher	4	M8 x 1.25 Cl 200
40	96705587	HHCS, Fully Threaded, Zinc Plated	2	M8 x 1.25 x 30 Cl 8.8
41	96704606	Hex Locknut, Zinc Plated	3	M8 x 1.25 Cl 8
42	59887182	Washer	2	Hardened
43	96705587	HHCS, Fully Threaded, Zinc Plated	1	M8 x 1.25 x 30 Cl 8.8

HYDRAULIC FILTER INSTALLATION

Dwg D13189576/02

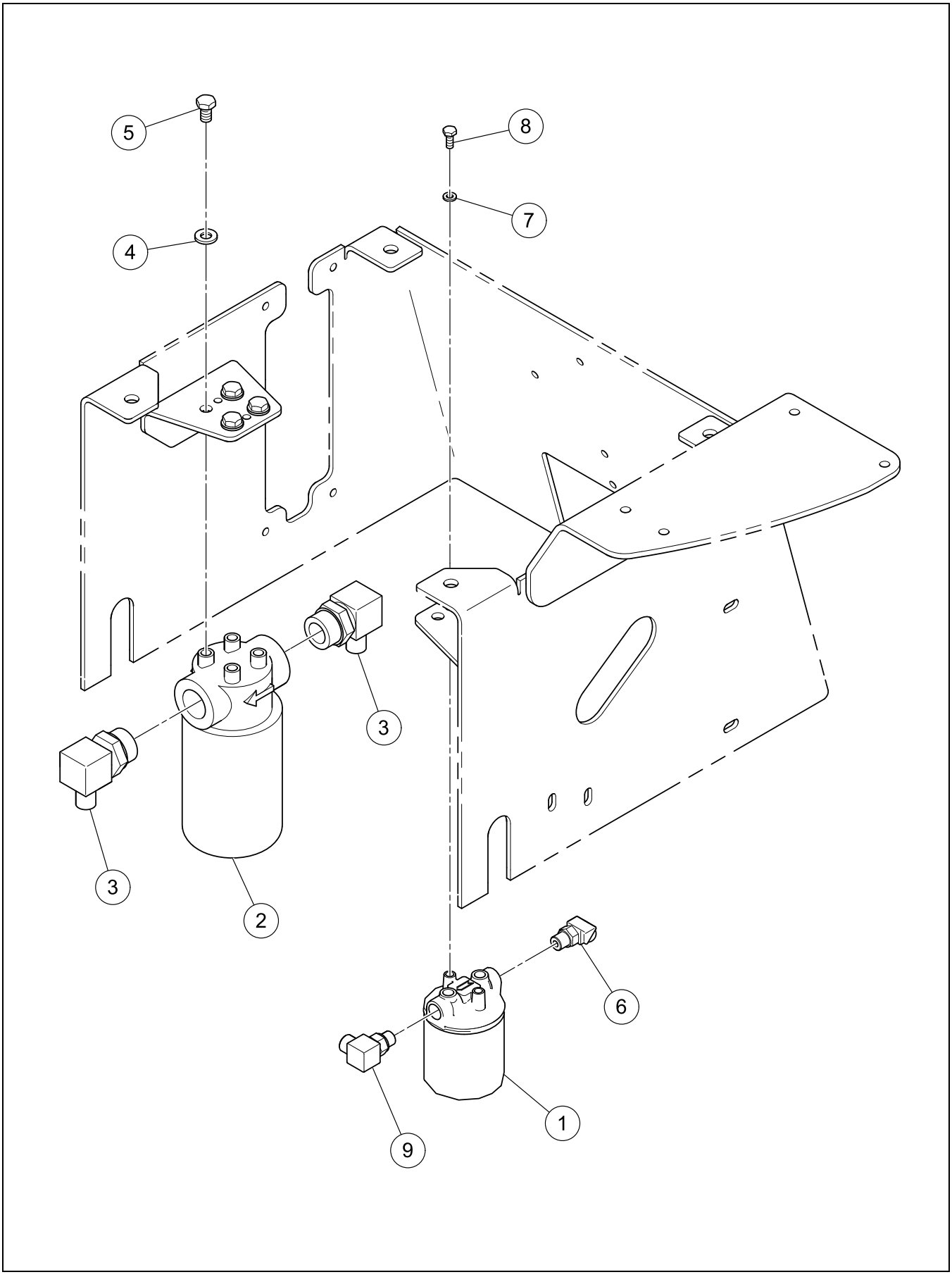

HYDRAULIC FILTER INSTALLATION

BOM 13189576

ITEM	COMM. NO.	DESCRIPTION	QTY	DIMENSIONS/NOTES
1	13324876	Steering/Return Filter	1	
-	13360805	- Steering/Return Filter Element	1	
2	58979048	Charge Filter	1	
-	58887936	- Charge Filter Element	1	
3	95341673	Adapter	2	
4	96741046	Flatwasher, Zinc Plated	4	M10 Cl 200
5	96701479	HHCS, Fully Threaded, Zinc Plated	4	M10 x 1.5 x 16 Cl 8.8
6	59918441	Adapter	1	
7	96741053	Flatwasher, Zinc Plated	2	M6 Cl 200
8	95919528	HHCS, Zinc Plated	2	1/4 x 20 x 0.625 Grd 8
9	59922864	Adapter, 90°	1	

VALVE INSTALLATION

Dwg D13319785/00

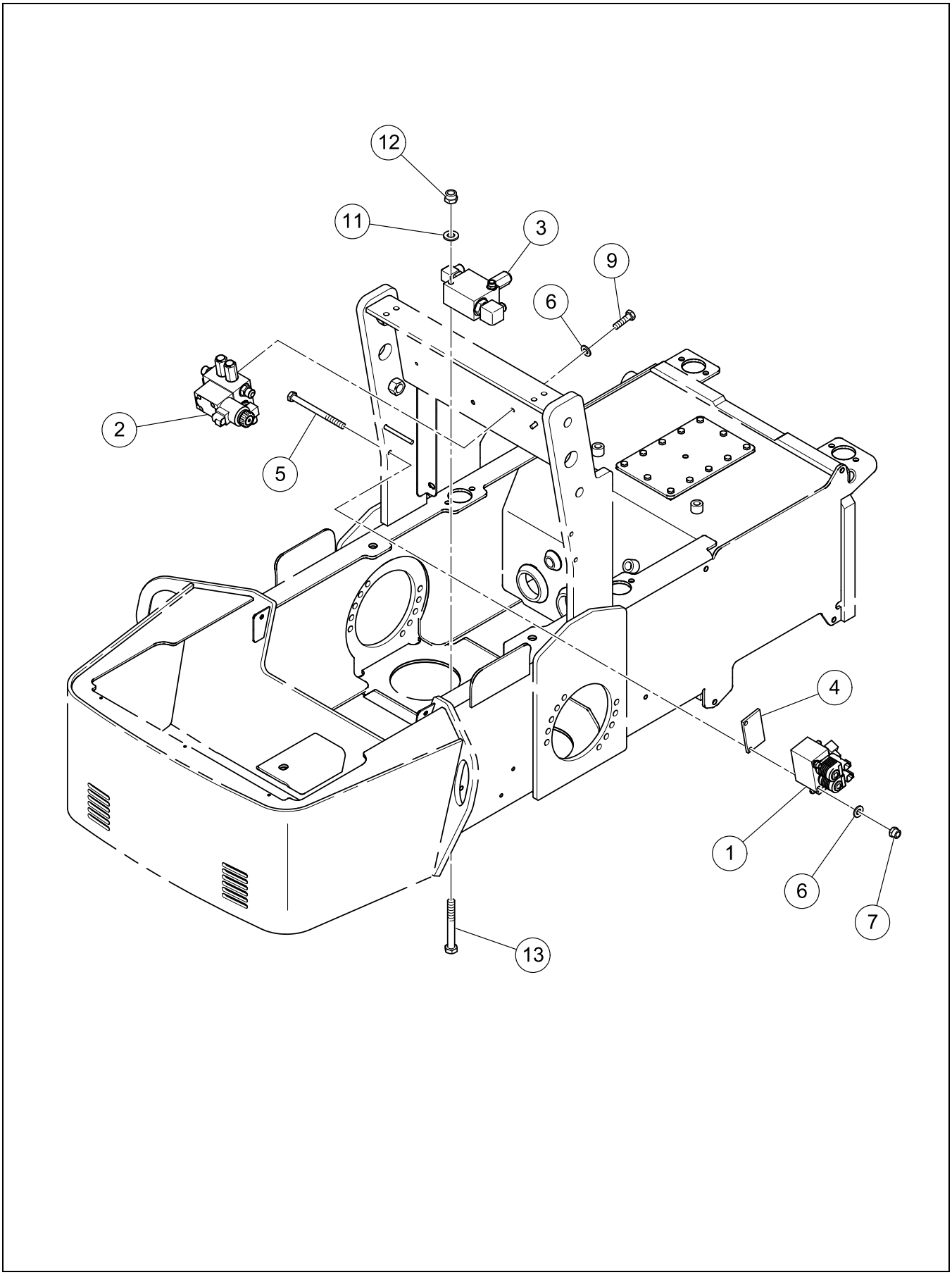

BOM 13319785

ITEM	COMM. NO.	DESCRIPTION	QTY	DIMENSIONS/NOTES
1	**NSVA**	**Brake Shunt Valve Assembly**	**1**	**See Page H - 8.**
2	**NSVA**	**Vibration Valve Assembly**	**1**	**See Page H - 10.**
3	**NSVA**	**Twin Lock Valve Assembly**	**1**	**See Page H - 12.**
4	13355599	Spacer Plate	1	
5	96726435	HHCS, Zinc Plated	2	M8 x 1.25 x 100 Cl 8.8
6	96741038	Flatwasher	2	M8 x 1.25 Cl 200
7	96704606	Hex Locknut, Zinc Plated	2	M8 x 1.25 Cl 8
9	96702659	HHCS, Fully Threaded, Zinc Plated	2	M8 x 1.25 x 25 Cl 8.8
11	96741046	Flatwasher, Zinc Plated	2	M10 Cl 200
12	96704614	Nut, Zinc Plated	2	M10 x 1.5 Cl 8
13	96705272	HHCS, Zinc Plated	2	M10 x 80 Cl 8.8

BRAKE SHUNT VALVE ASSEMBLY

Dwg D13365259/01

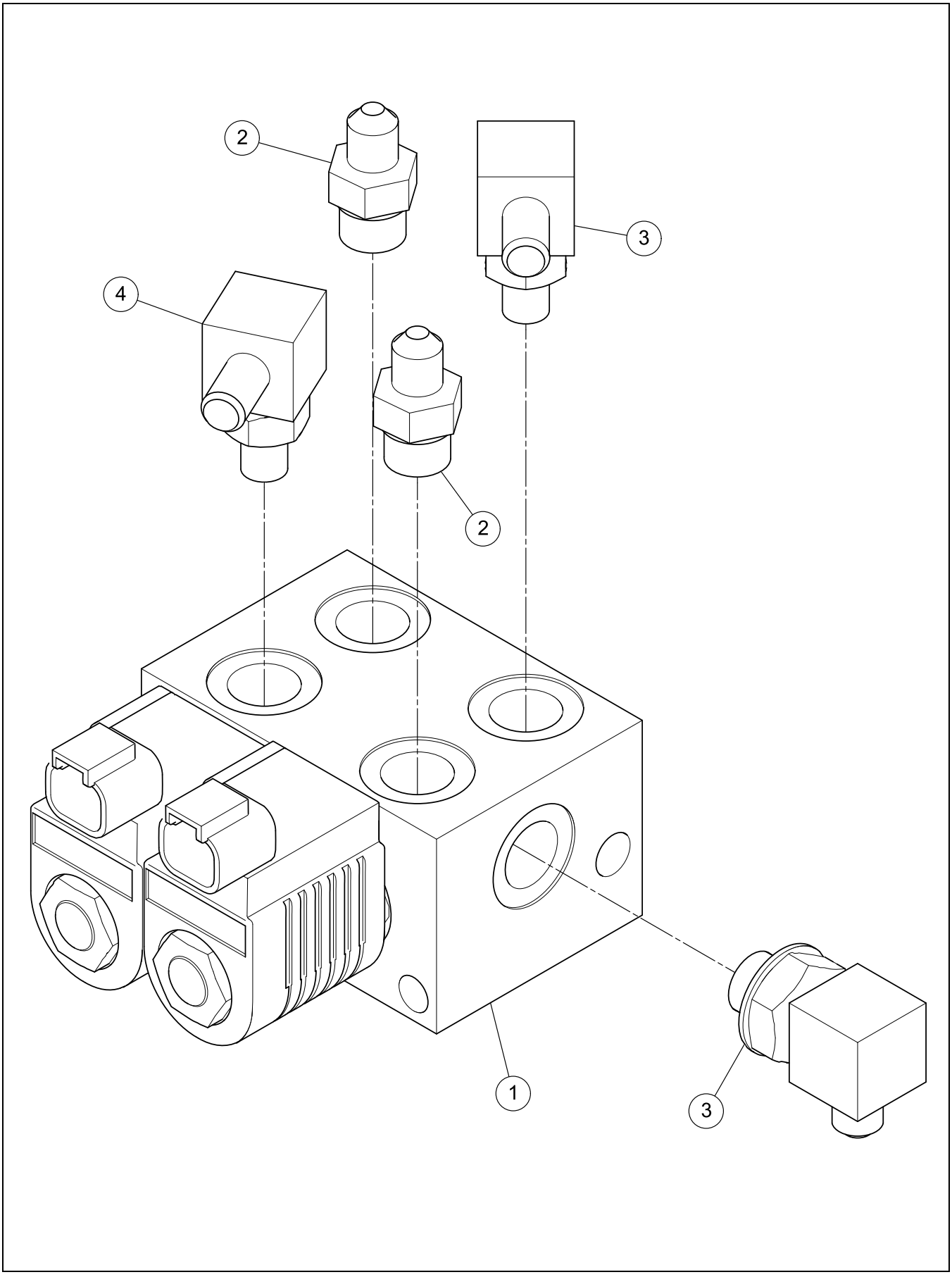

BRAKE SHUNT VALVE ASSEMBLY

BOM 13365259

ITEM	COMM. NO.	DESCRIPTION	QTY	DIMENSIONS/NOTES
1	13309869	Brake Shunt Valve	1	
-	13378625	- Solenoid Valve	1	D0816W
-	13461876	- Seal Kit	1	
-	13378641	- Coil	1	
-	13378658	- Nut	1	
-	13378666	- Solenoid Valve	1	D01016W
-	13461926	- Seal kit	1	
-	13378682	- Coil	1	
-	13378690	- Nut	1	
2	95371258	Adapter	2	
3	95329975	Adapter	2	
4	95365094	Adapter	1	

VIBRATION VALVE ASSEMBLY

Dwg 13365267/01

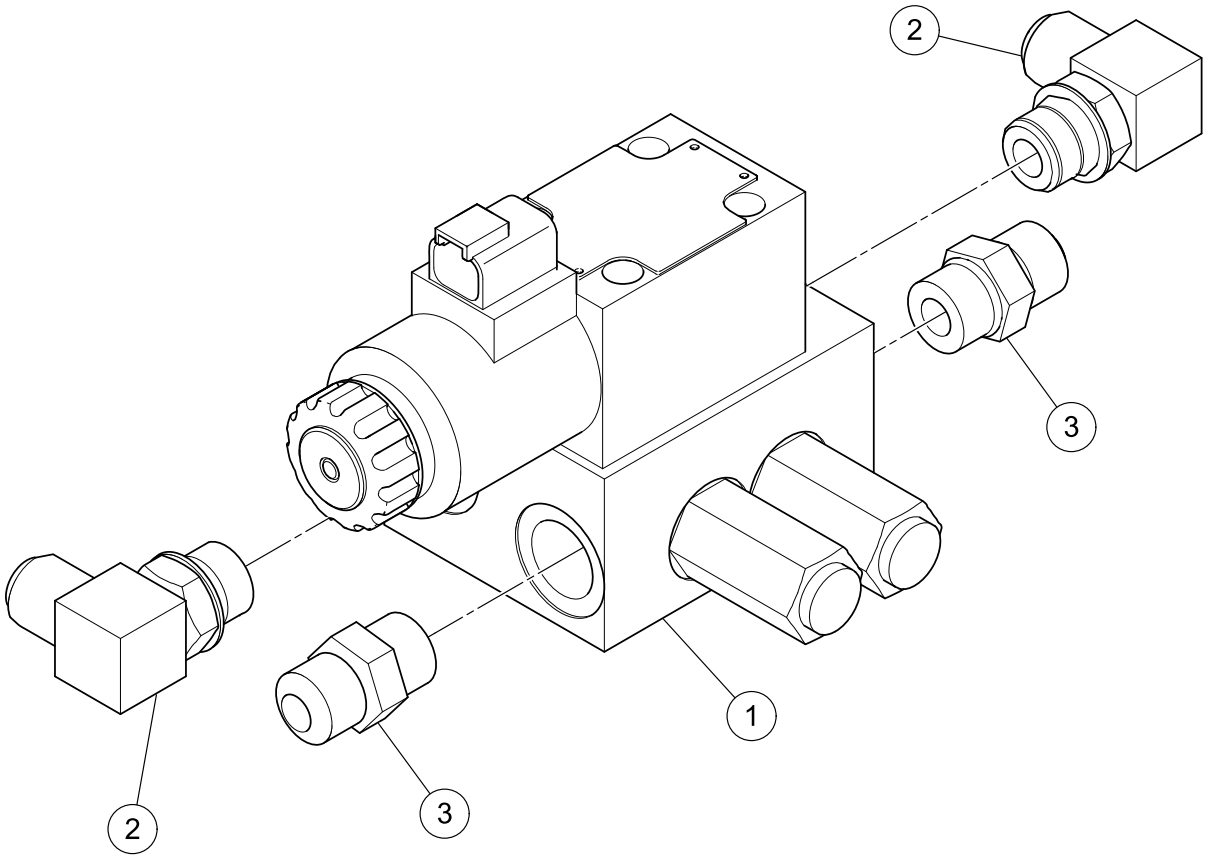

VIBRATION VALVE ASSEMBLY

BOM 13365267

ITEM	COMM. NO.	DESCRIPTION	QTY	DIMENSIONS/NOTES
1	13309844	Vibration Valve	1	
-	13378708	- Relief Valve	1	CP208 - 340
-	13466297	- Seal Kit	1	
-	13378724	- DCV03 Valve	1	
-	13378732	- Seal kit	1	
-	13378740	- Relief Valve	1	CP208 - 260
-	13466297	- Seal Kit	1	
2	95303335	Elbow	2	
3	95303368	Adapter	2	

TWIN LOCK VALVE ASSEMBLY

Dwg 13365275/01

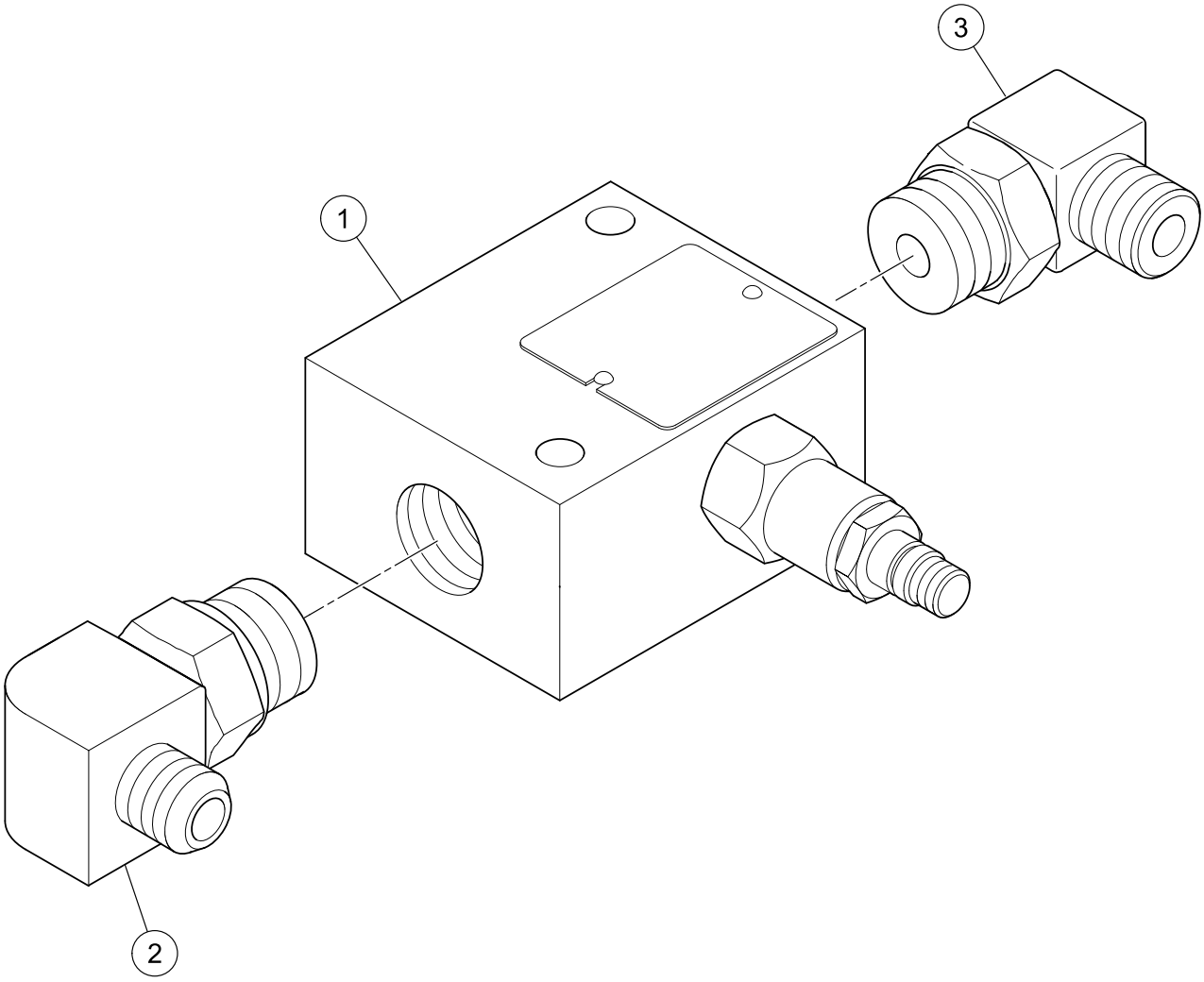

TWIN LOCK VALVE ASSEMBLY

BOM 13365275

ITEM	COMM. NO.	DESCRIPTION	QTY	DIMENSIONS/NOTES
1	13476668	Twin Lock Valve	1	
-	13476866	- Relief Valve	1	
-	13476874	- Check Valve	1	
2	95330692	Adapter, 90°	1	
3	59922914	Adapter	1	

TWO-WAY BLADE INSTALLATION - OPTIONAL -
SHEET 1 OF 2

Dwg 13404645/03/01

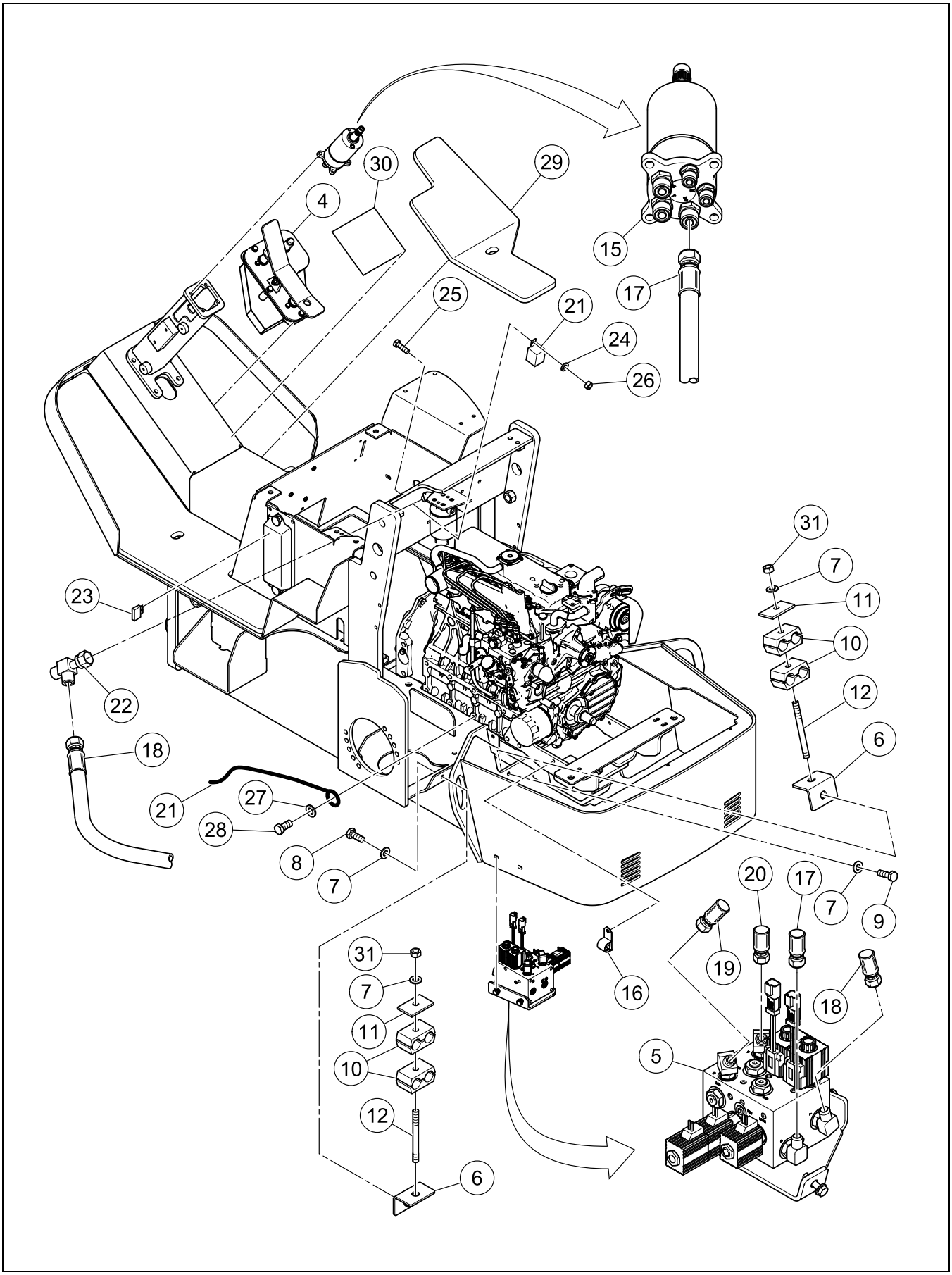

TWO-WAY BLADE INSTALLATION - OPTIONAL - SHEET 1 OF 2

BOM 13404645

ITEM	COMM. NO.	DESCRIPTION	QTY	DIMENSIONS/NOTES
4	**NSVA**	**Foot Pedal Assembly**	**1**	**See Page H - 20.**
5	**NSVA**	**Lift Valve Assembly**	**1**	**See Page H - 22.**
6	13359120	Angle Mounting	2	
7	96741038	Flatwasher	4	M8 x 1.25 Cl 200
8	96702824	HHCS, Fully Threaded, Zinc Plated	1	M8 x 1.25 x 20 Cl 8.8
9	96702659	HHCS, Fully Threaded, Zinc Plated	1	M8 x 1.25 x 25 Cl 8.8
10	59583468	Insert Clamp	13	
11	59583450	Cover Plate	4	
12	96747548	Stud	2	
15	13359765	Steering Valve	1	
-	13496500	- Seal Kit	1	
16	59020222	Conduit Clamp	1	
17	13382312	Hose Assembly	1	110.0”
18	13382320	Hose Assembly	1	69.0”
19	13382338	Hose Assembly	1	169.0”
20	13382346	Hose Assembly	1	172.0”
21	13400858	Blade Lift Control Harness	1	
22	59918540	Adapter, Tee	1	
23	59325712	Fuse	1	10 Amp
24	96741053	Flatwasher, Zinc Plated	2	M6 Cl 200
25	96704564	HHCS, Fully Threaded, Zinc Plated	2	M6 x 1.0 x 20 Cl 8.8
26	96704234	Nut, Zinc Plated	2	M6 x 1.0 Cl 8
27	96738596	Flatwasher, Zinc Plated	1	M12 Hardened Cl 200
28	96740543	HHCS, Fully Threaded, Zinc Plated	1	M12 x 1.25 x 25 Cl 8.8
29	13388111	Blade Deck Mat, RH	1	
30	13340096	Decal: Blade Control	1	
31	96701370	Nut, Zinc Plated	2	M8 x 1.25 Cl 8

TWO-WAY BLADE INSTALLATION - OPTIONAL - SHEET 2 OF 2

Dwg 13404645/03/02

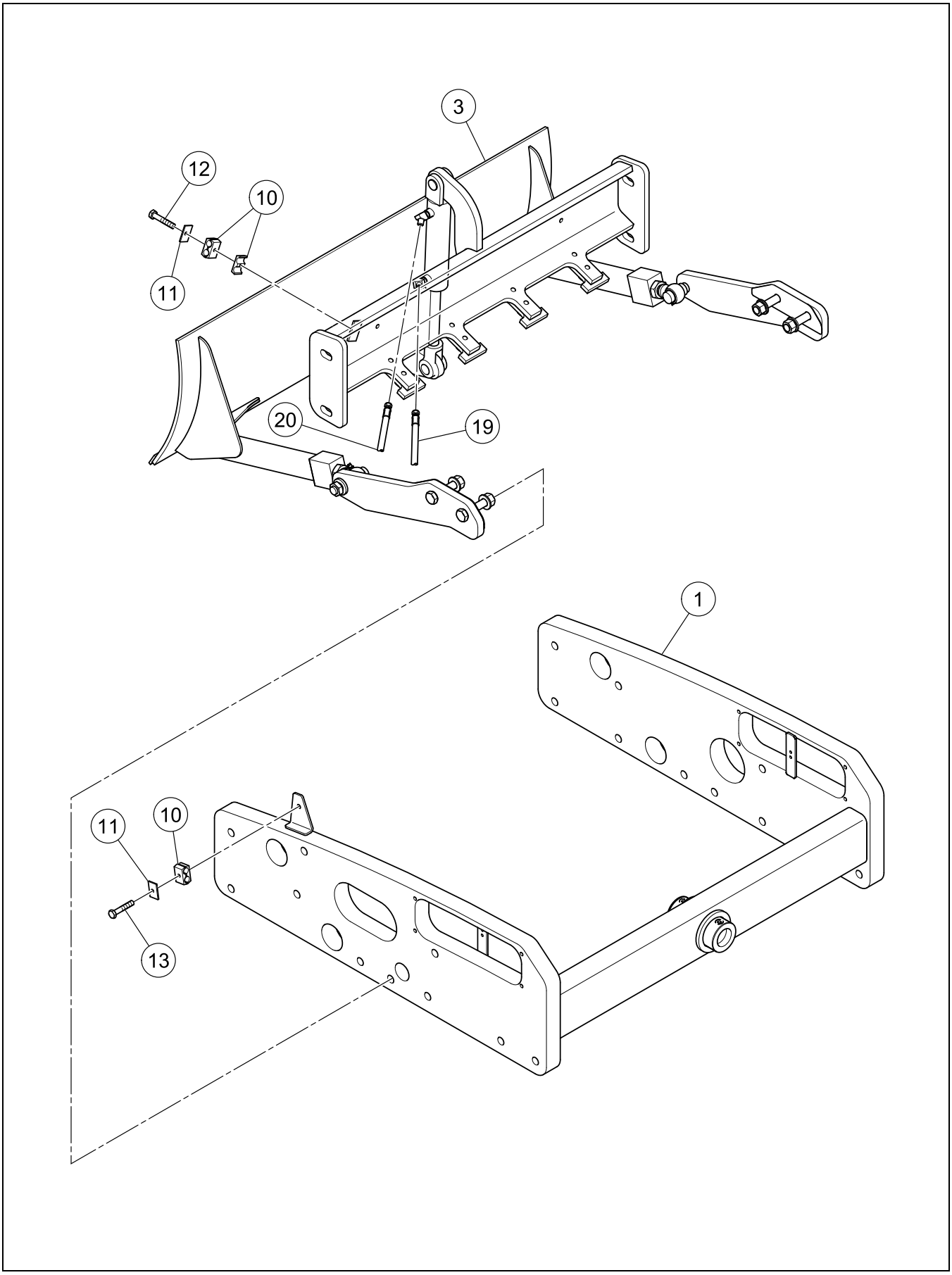

TWO-WAY BLADE INSTALLATION - OPTIONAL - SHEET 2 OF 2

BOM 13404645

ITEM	COMM. NO.	DESCRIPTION	QTY	DIMENSIONS/NOTES
1	13359021	Drum Frame	1	
3	**NSVA**	**Blade Assembly**	**1**	**See Page H - 18.**
10	59583468	Insert Clamp	13	
11	59583450	Cover Plate	4	
12	96747548	Stud	2	
13	96705553	HHCS, Zinc Plated	2	M8 x 1.25 x 45 Cl 8.8
19	13382338	Hose Assembly	1	169.0”
20	13382346	Hose Assembly	1	172.0”

BLADE ASSEMBLY

Dwg D13359112/00

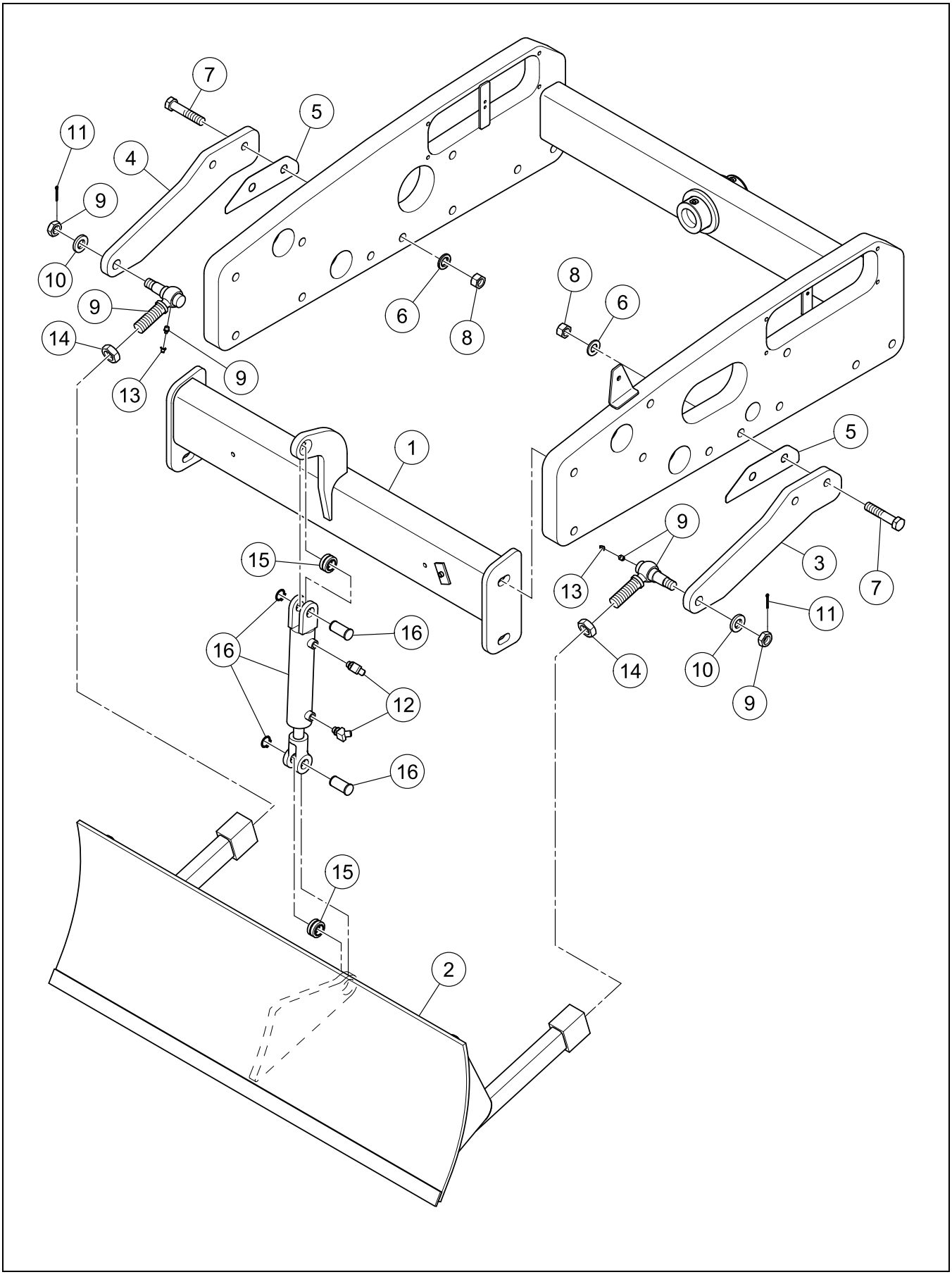

BLADE ASSEMBLY

BOM 13359112

ITEM	COMM. NO.	DESCRIPTION	QTY	DIMENSIONS/NOTES
1	13357033	Scraper	1	
2	13357058	Blade	1	
3	13359039	Blade Frame Mount, LH	1	
4	13359047	Blade Frame Mount, RH	1	
5	13356407	Shim	2	
6	96701560	Flatwasher, Zinc Plated	4	M20 Hardened
7	96726419	HHCS, Zinc Plated	4	M20 x 2.5 x 100 Cl 8.8
8	96720446	Hex Nut, Zinc Plated	4	M20 x 2.5 Cl 8
9	59139410	Ball Socket	2	
10	59565069	Washer	2	
11	95929675	Cotter Pin	2	5/32 x 1.25
12	95363339	Elbow, 45°	2	
13	50270248	Cap	2	
14	95925129	Hex Jam Nut	2	1 1/8 - 12
15	50275445	Bearing	2	
16	13359674	Hydraulic Cylinder	1	
-	59698902	- Nut	1	
-	13496559	- Clevis Pin	1	
-	13496567	- Seal Kit	1	

FOOT PEDAL ASSEMBLY

Dwg C13359088/00

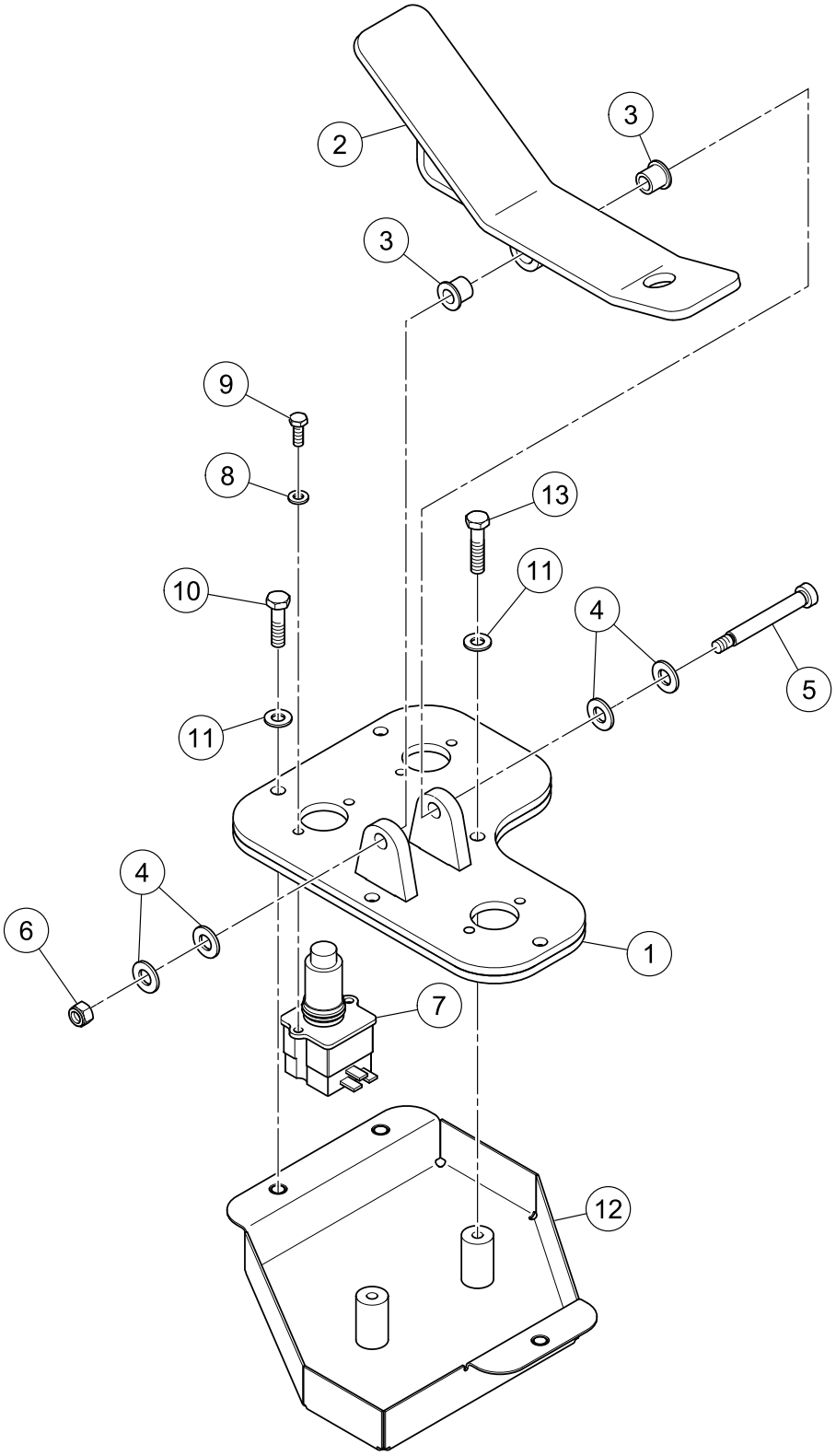

FOOT PEDAL ASSEMBLY

BOM 13359088

ITEM	COMM. NO.	DESCRIPTION	QTY	DIMENSIONS/NOTES
1	13356845	Foot Pedal Mounting Plate	1	
2	13356803	Foot Pedal	1	
3	58920216	Flanged Bushing	2	
4	96741046	Flatwasher, Zinc Plated	4	M10 Cl 200
5	95944260	Bolt	1	
6	95923314	Locknut	1	5/16-18 UNJC
7	58788852	Dump Switch	3	
8	96741053	Flatwasher, Zinc Plated	6	M6 Cl 200
9	96701958	HHCS, Fully Threaded, Zinc Plated	6	M6 x 16 Cl 8.8
10	96741038	Flatwasher	5	M8 x 1.25 Cl 200
11	96705587	HHCS, Fully Threaded, Zinc Plated	3	M8 x 1.25 x 30 Cl 8.8
12	13357819	Switch Cover	1	
13	96702261	HHCS, Fully Threaded, Zinc Plated	2	M8 x 1.25 x 35 Cl 8.8

LIFT VALVE ASSEMBLY

Dwg 13359104/01

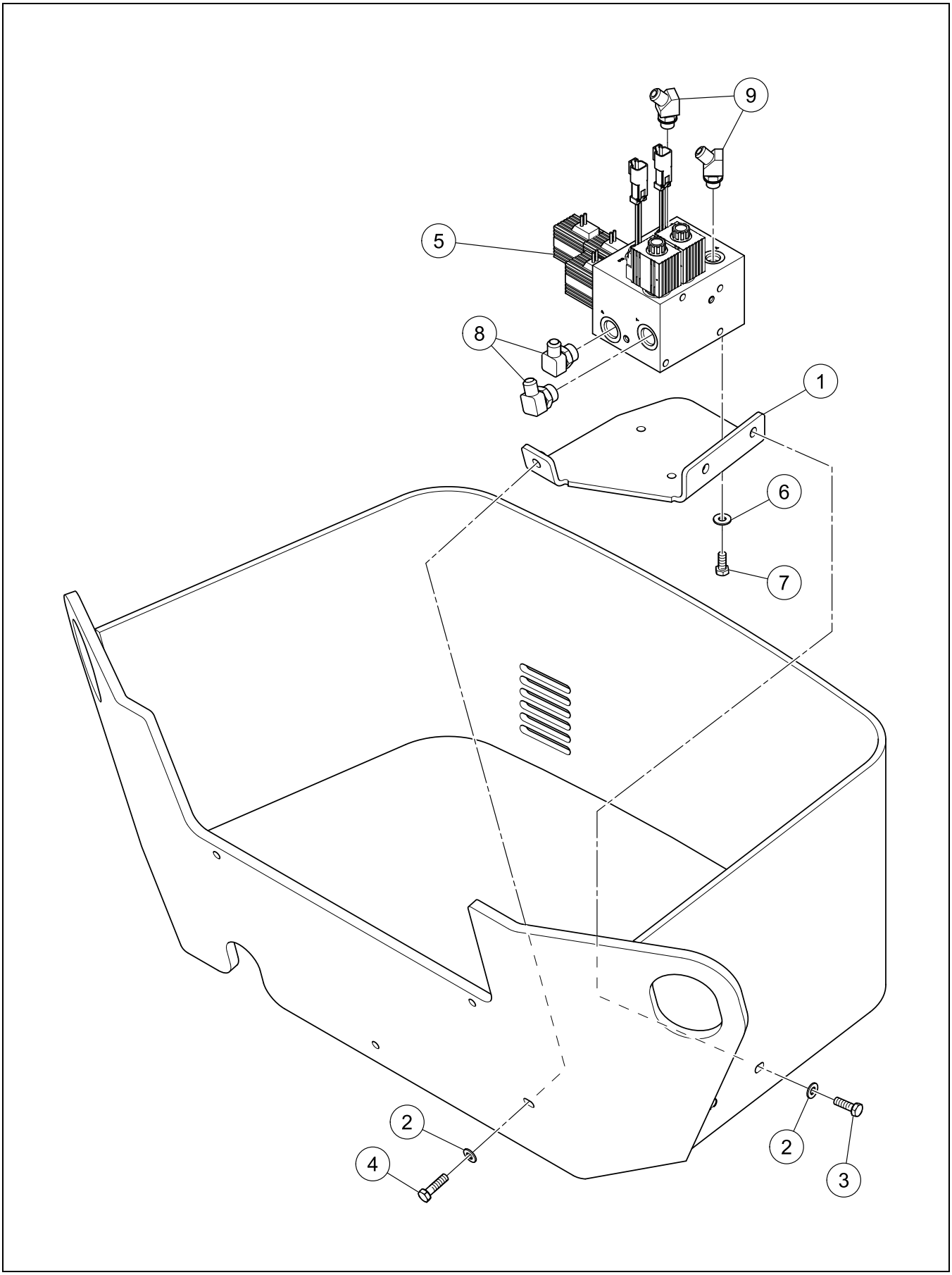

LIFT VALVE ASSEMBLY

BOM 13359104

ITEM	COMM. NO.	DESCRIPTION	QTY	DIMENSIONS/NOTES
1	13356480	Valve Mounting Bracket	1	
2	96741038	Flatwasher	3	M8 x 1.25 Cl 200
3	96702659	HHCS, Fully Threaded, Zinc Plated	2	M8 x 1.25 x 25 Cl 8.8
4	96705587	HHCS, Fully Threaded, Zinc Plated	1	M8 x 1.25 x 30 Cl 8.8
5	**13309901**	**Lift Manifold**	**1**	**See Breakdown H - 24.**
6	95922183	Flatwasher, Zinc Plated	3	1/4
7	95920419	HHCS, Zinc Plated	3	5/16 x 18 x 0.75 Grd 8
8	95356853	Adapter	2	
9	95363339	Elbow, 45°	2	

LIFT MANIFOLD (13309901) - INTERNAL BREAKDOWN

Dwg 13309901/01

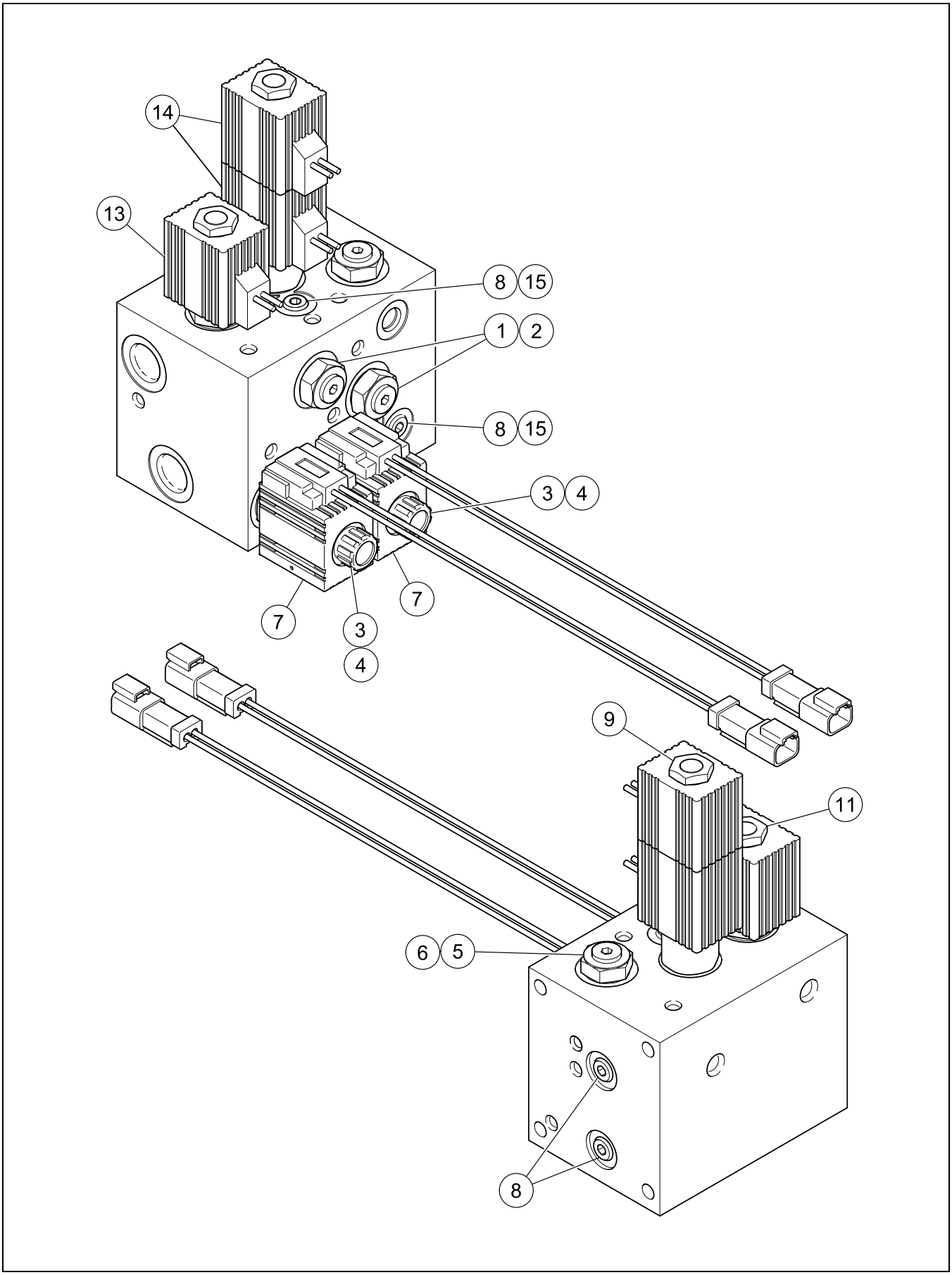

LIFT MANIFOLD (13309901) - INTERNAL BREAKDOWN

BOM 13309901

ITEM	COMM. NO.	DESCRIPTION	QTY	DIMENSIONS/NOTES
1	13258645	Check Valve	2	
2	13268347	- Seal Kit	1	
3	54680970	Solenoid Valve	2	
4	13268347	- Seal Kit	1	
5	13377924	Pilot Check Cartridge	1	
6	13377932	- Seal Kit	1	
7	13378203	Coil	2	
8	13378211	Orifice Cover	4	
9	13377940	Stem	1	
10	13282199	Seal Kit (Not Shown)	1	
11	13378229	Valve	1	
12	13263264	Seal Kit (Not Shown)	1	
13	13378237	Coil	1	
14	13378237	Coil	2	
15	13378245	Orifice	2	

FOUR-WAY BLADE INSTALLATION - OPTIONAL -
SHEET 1 OF 3

Dwg 13404660/02/01

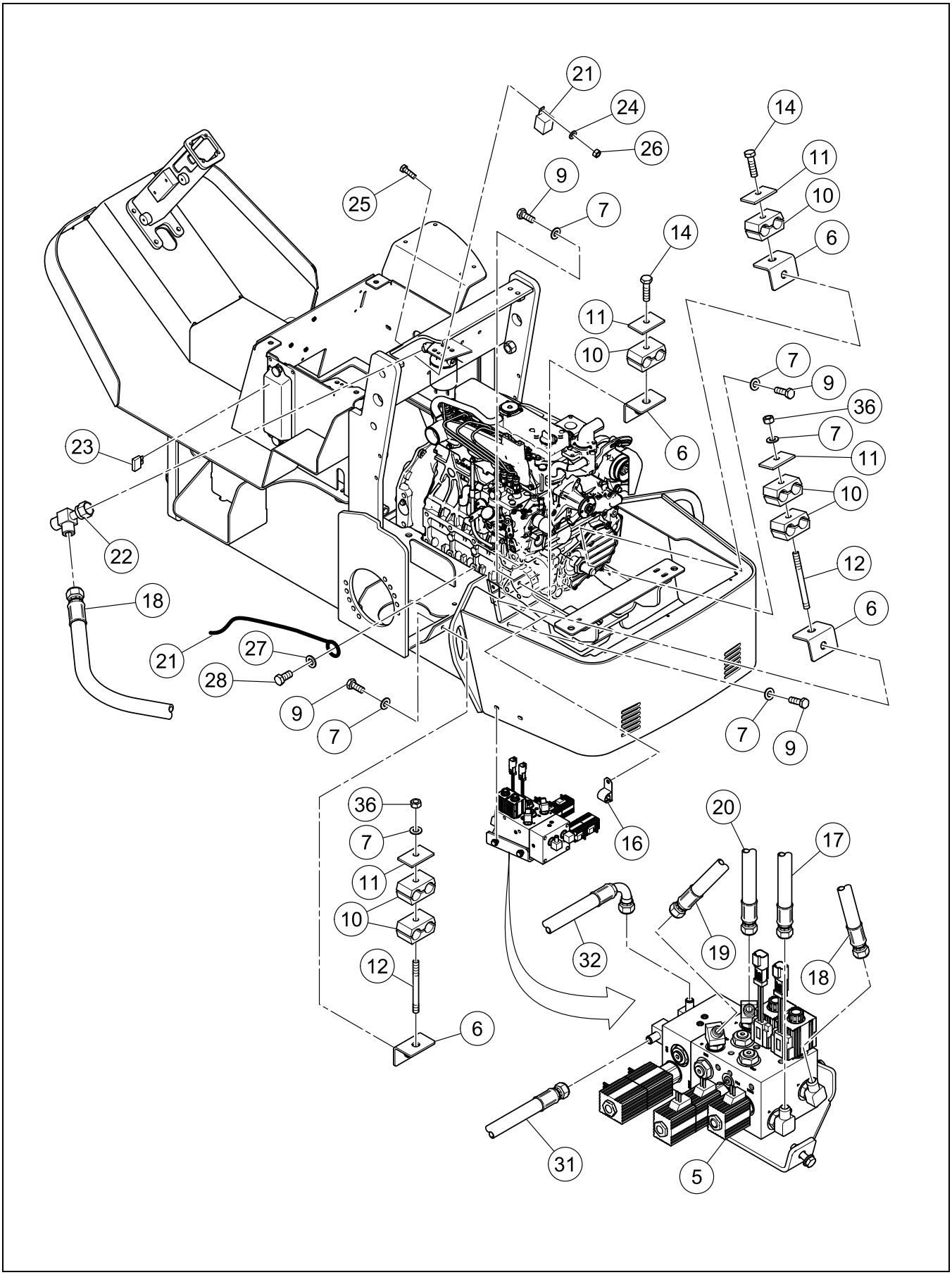

FOUR-WAY BLADE INSTALLATION - OPTIONAL - SHEET 1 OF 3

BOM 13404660

ITEM	COMM. NO.	DESCRIPTION	QTY	DIMENSIONS/NOTES
5	**NSVA**	**Tilt Blade Valve Assembly**	**1**	**See Page H - 38.**
6	13359120	Angle Mounting	4	
7	96741038	Flatwasher	6	M8 x 1.25 Cl 200
8	96702824	HHCS, Fully Threaded, Zinc Plated (Not Shown)	2	M8 x 1.25 x 20 Cl 8.8
9	96702659	HHCS, Fully Threaded, Zinc Plated	2	M8 x 1.25 x 25 Cl 8.8
10	59583468	Insert Clamp	19	
11	59583450	Cover Plate	6	
12	96747548	Stud	2	
14	96705587	HHCS, Fully Threaded, Zinc Plated	3	M8 x 1.25 x 30 Cl 8.8
16	59020222	Conduit Clamp	1	
17	13382312	Hose Assembly	1	110.0”
18	13382320	Hose Assembly	1	69.0”
19	13382338	Hose Assembly	1	169.0”
20	13382346	Hose Assembly	1	172.0”
21	13401500	Wire Harness	1	
22	59918540	Adapter, Tee	1	
23	59325712	Fuse	1	10 Amp
24	96741053	Flatwasher, Zinc Plated	4	M6 Cl 200
25	96704564	HHCS, Fully Threaded, Zinc Plated	4	M6 x 1.0 x 20 Cl 8.8
26	96704234	Nut, Zinc Plated	4	M6 x 1.0 Cl 8
27	96738596	Flatwasher, Zinc Plated	1	M12 Hardened Cl 200
28	96740543	HHCS, Fully Threaded, Zinc Plated	1	M12 x 1.25 x 25 Cl 8.8
31	13466545	Hose Assembly	1	186.0"
32	13466552	Hose Assembly	1	192.0"
36	96701370	Nut, Zinc Plated	2	M8 x 1.25 Cl 8

FOUR-WAY BLADE INSTALLATION - OPTIONAL -
SHEET 2 OF 3

Dwg 13404660/02/02

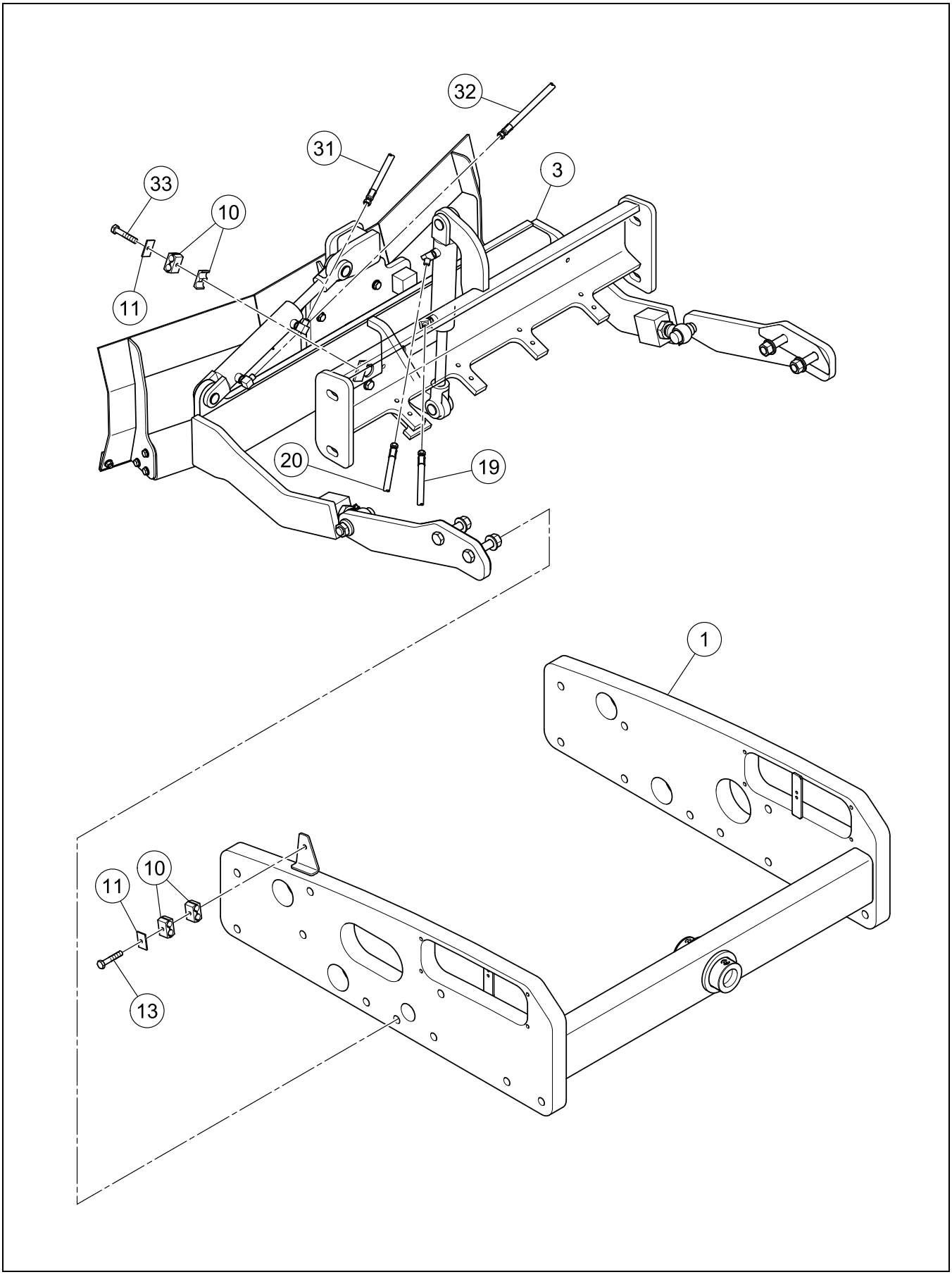

FOUR-WAY BLADE INSTALLATION - OPTIONAL - SHEET 2 OF 3

BOM 13404660

ITEM	COMM. NO.	DESCRIPTION	QTY	DIMENSIONS/NOTES
1	13359021	Drum Frame	1	
3	**NSVA**	**Tilt Blade Assembly**	**1**	**See Page H - 34.**
10	59583468	Insert Clamp	19	
11	59583450	Cover Plate	6	
13	96715131	HHCS, Zinc Plated	1	M8 x 1.25 x 70 Cl 8.8
19	13382338	Hose Assembly	1	169.0”
20	13382346	Hose Assembly	1	172.0”
31	13466545	Hose Assembly	1	186.0"
32	13466552	Hose Assembly	1	192.0"
33	96705553	HHCS, Zinc Plated	1	M8 x 1.25 x 45 Cl 8.8

FOUR-WAY BLADE INSTALLATION - OPTIONAL - SHEET 3 OF 3

Dwg 13404660/02/03

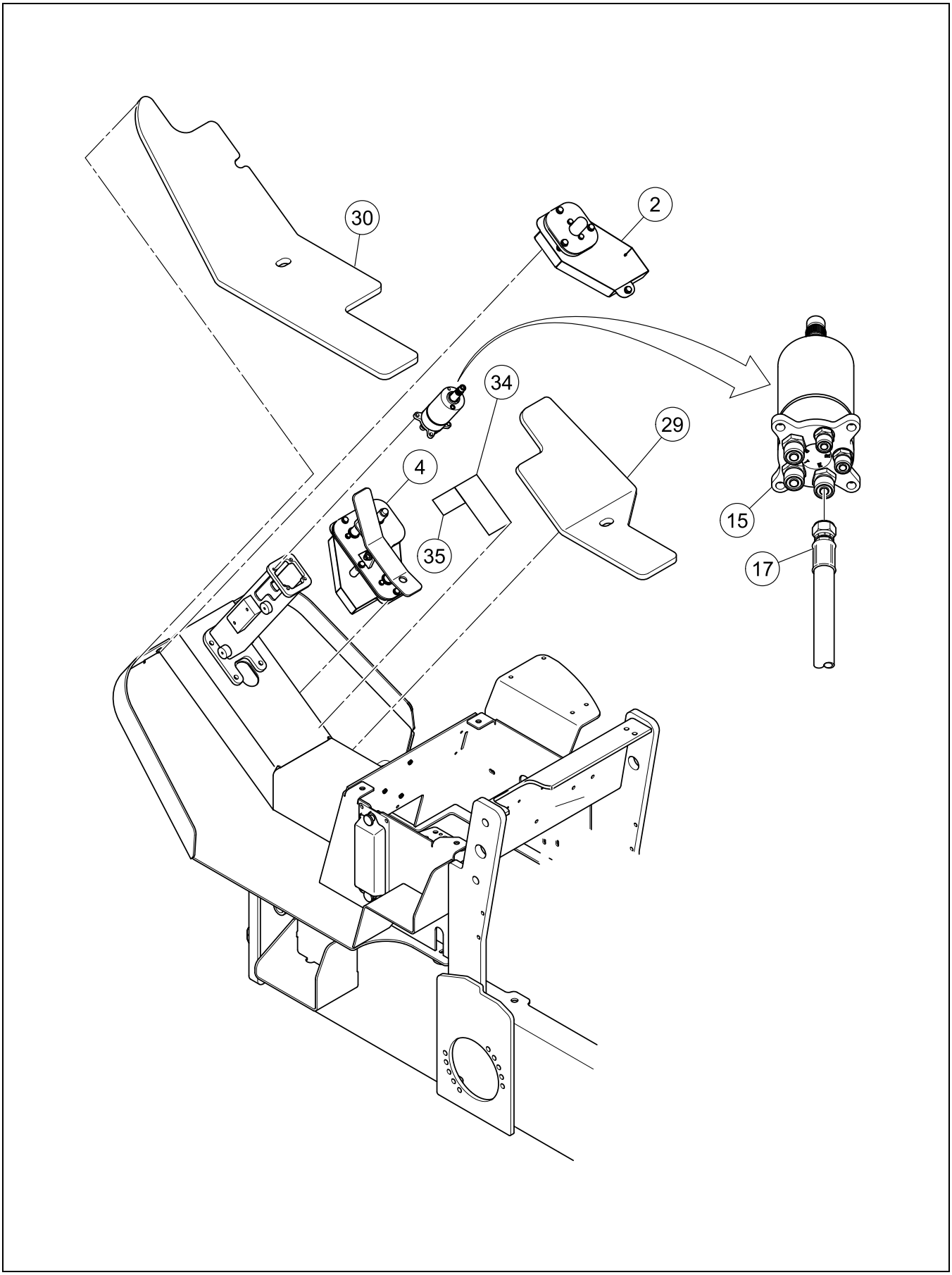

FOUR-WAY BLADE INSTALLATION - OPTIONAL - SHEET 3 OF 3

BOM 13404660

ITEM	COMM. NO.	DESCRIPTION	QTY	DIMENSIONS/NOTES
2	**NSVA**	**Tilt Switch Assembly**	**1**	**See Page H - 32.**
4	**NSVA**	**Foot Pedal Assembly**	**1**	**See Page H - 20.**
15	13359765	Steering Valve	1	
-	13496500	- Seal Kit	1	
17	13382312	Hose Assembly	1	110.0”
29	13388111	Blade Deck Mat, RH	1	
30	13389895	Blade Deck Mat, RH	1	
34	13340096	Decal: Blade Control	1	
35	13340104	Decal: Blade Tilt	1	

TILT SWITCH ASSEMBLY

Dwg 13389721/00

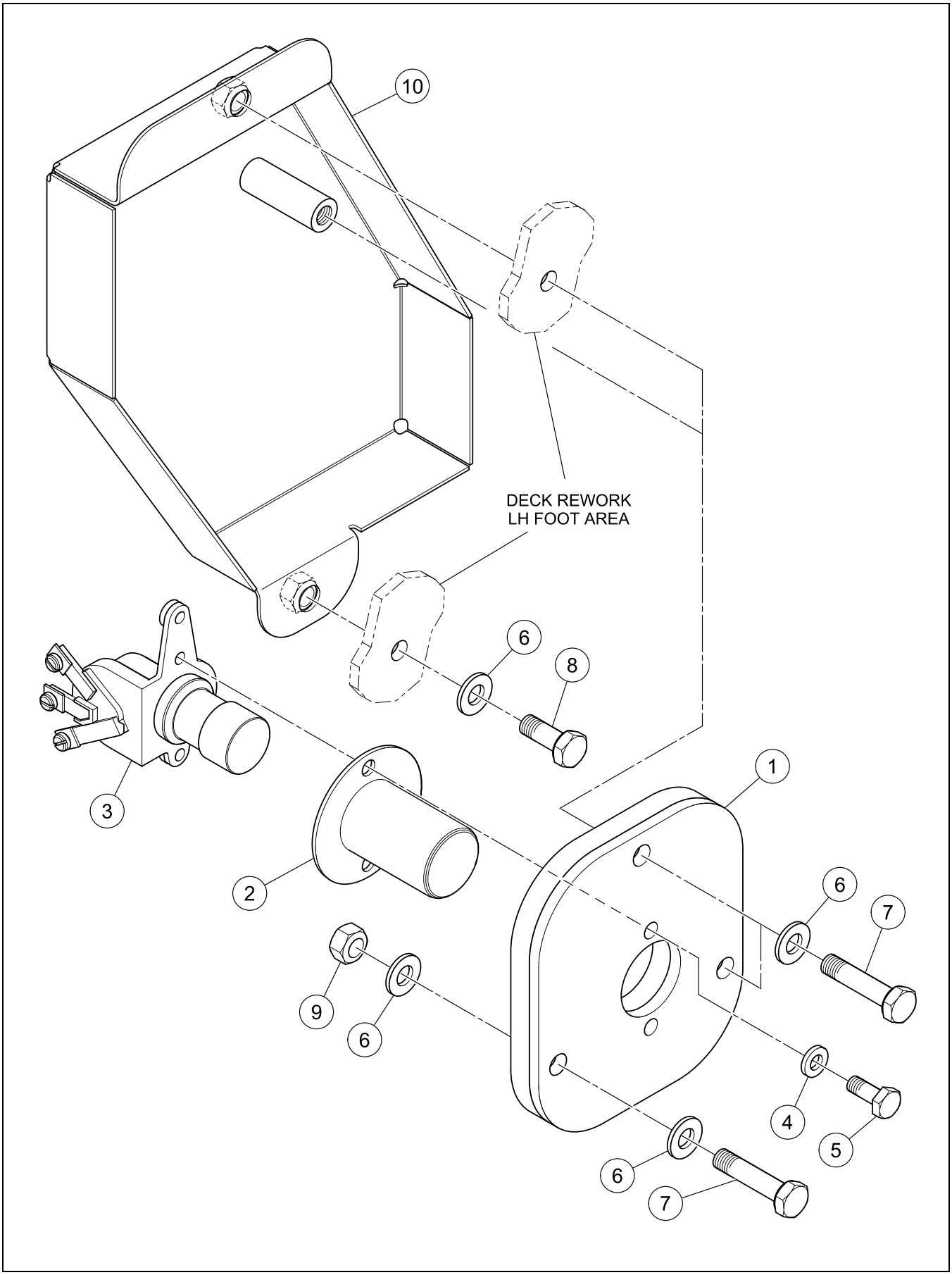

TILT SWITCH ASSEMBLY

BOM 13389721

ITEM	COMM. NO.	DESCRIPTION	QTY	DIMENSIONS/NOTES
1	13389663	Switch Mounting Plate	1	
2	59478040	Switch Boot	1	
3	59338210	Tilt Switch	1	
4	96741053	Flatwasher, Zinc Plated	2	M6 Cl 200
5	95919528	HHCS, Zinc Plated	2	1/4 x 20 x 0.625 Grd 8
6	96741038	Flatwasher	5	M8 x 1.25 Cl 200
7	96702261	HHCS, Fully Threaded, Zinc Plated	3	M8 x 1.25 x 35 Cl 8.8
8	96702824	HHCS, Fully Threaded, Zinc Plated	1	M8 x 1.25 x 20 Cl 8.8
9	96701370	Nut, Zinc Plated	1	M8 x 1.25 Cl 8
10	13389697	Switch Cover	1	

TILT BLADE ASSEMBLY

Dwg 13387972/01

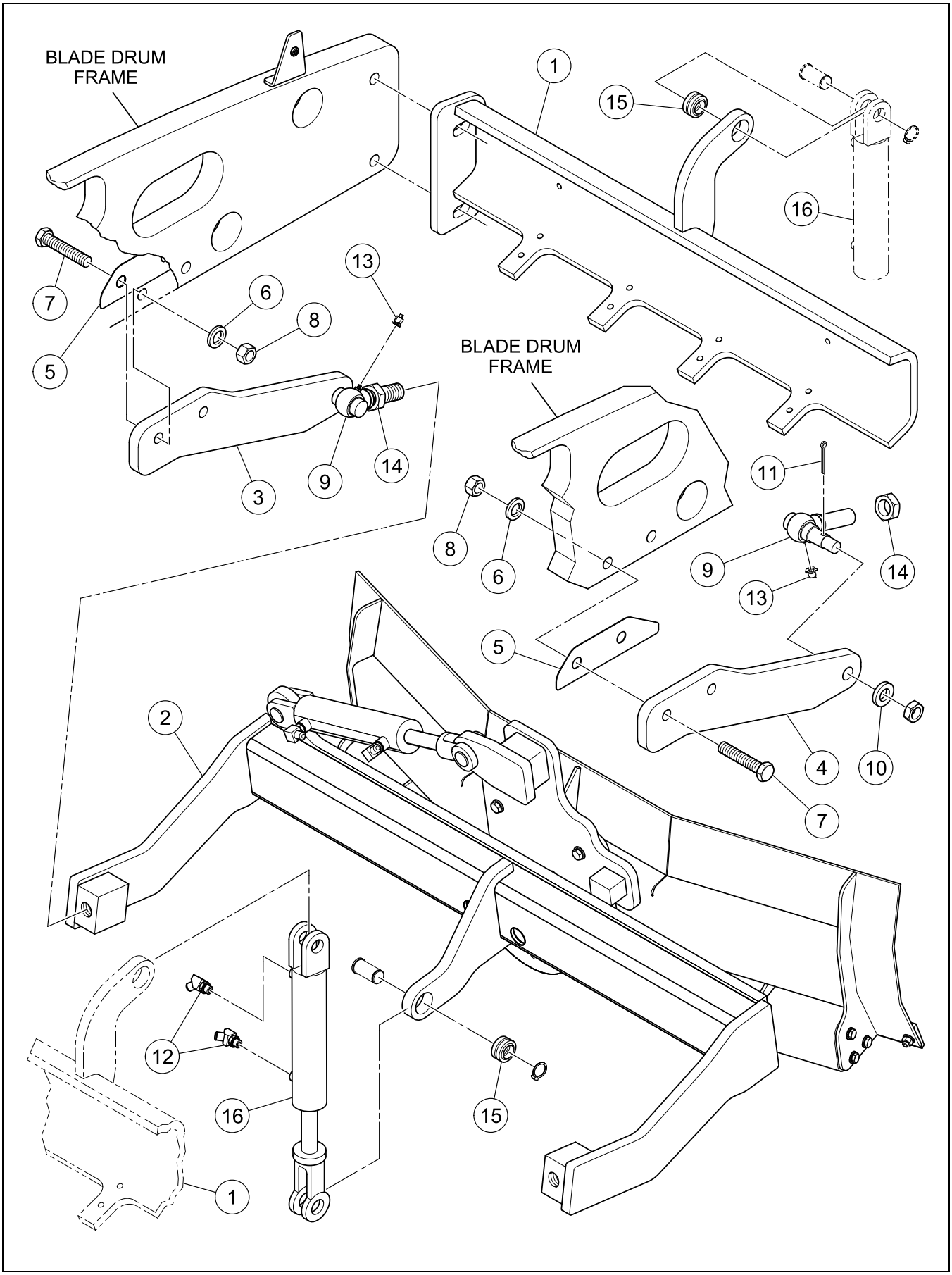

TILT BLADE ASSEMBLY

BOM 13387972

ITEM	COMM. NO.	DESCRIPTION	QTY	DIMENSIONS/NOTES
1	13357033	Scraper	1	
2	**NSVA**	**Tilt Blade Sub-Assembly**	**1**	**See Page H - 36.**
3	13359039	Blade Frame Mount, LH	1	
4	13359047	Blade Frame Mount, RH	1	
5	13356407	Shim	2	
6	96701560	Flatwasher, Zinc Plated	4	M20 Hardened
7	96726419	HHCS, Zinc Plated	4	M20 x 2.5 x 100 Cl 8.8
8	96720446	Hex Nut, Zinc Plated	4	M20 x 2.5 Cl 8
9	59139410	Ball Socket	2	
10	59565069	Washer	2	
11	95929675	Cotter Pin	2	5/32 x 1.25
12	95363339	Elbow, 45°	2	
13	50270248	Cap	2	
14	95925129	Hex Jam Nut	2	1 1/8 x 12
15	50275445	Bearing	2	
16	13359674	Hydraulic Cylinder Assembly	1	
-	59698902	- Nut	1	
-	13496559	- Clevis Pin	1	
-	13496567	- Seal Kit	1	

TILT BLADE SUB-ASSEMBLY

Dwg 13387881/03

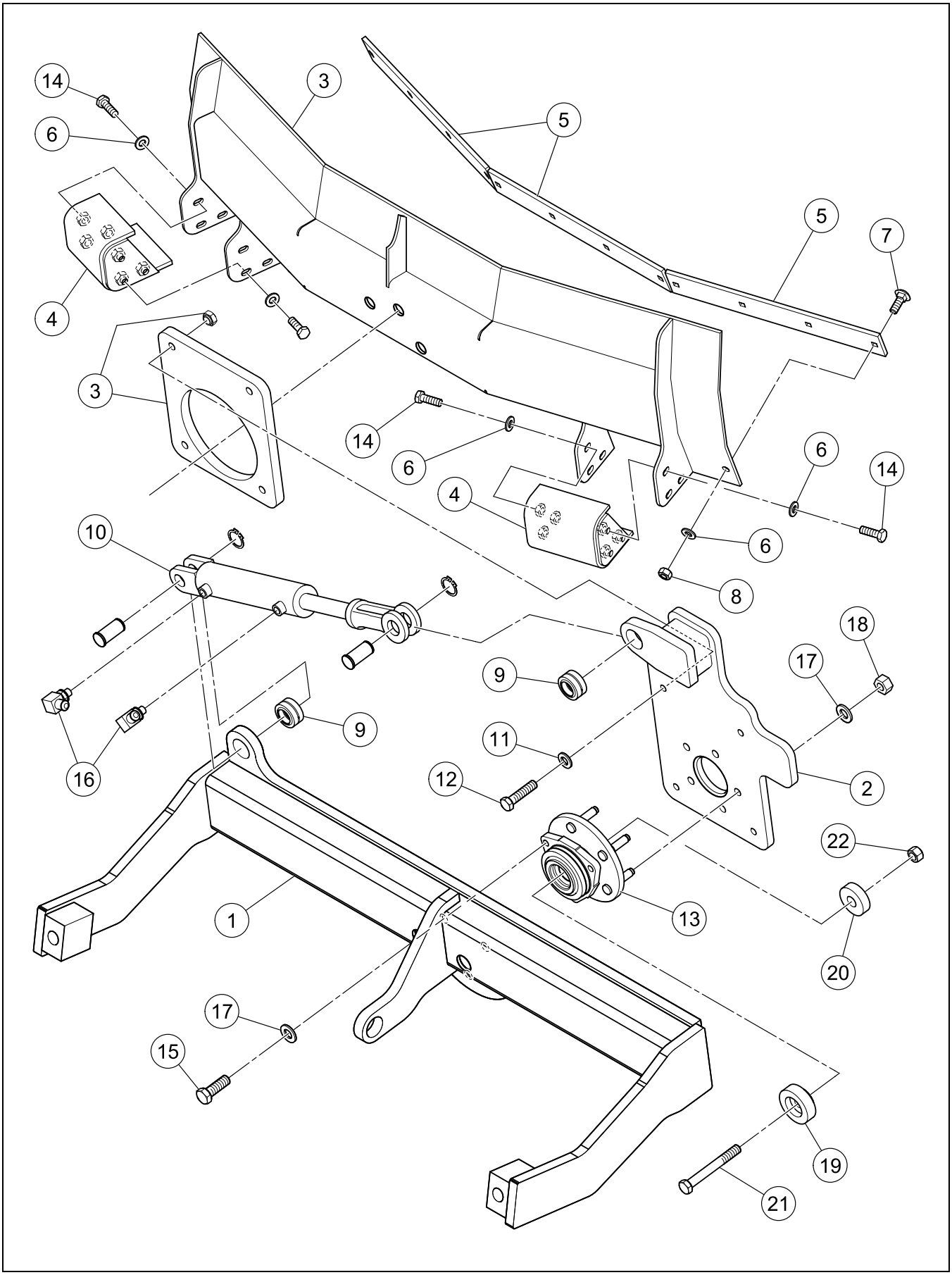

TILT BLADE SUB-ASSEMBLY

BOM 13387881

ITEM	COMM. NO.	DESCRIPTION	QTY	DIMENSIONS/NOTES
1	13412861	Blade Support	1	
2	13410592	Pivot Plate	1	
3	13387832	U-blade	1	
4	13297429	Skid Plate	2	
5	13387873	Scraper Bar Blade	3	
6	96741046	Flatwasher, Zinc Plated	24	M10 Cl 200
7	96741319	Carriage Bolt, Zinc Plated	12	M10 x 1.5 Cl 8.8
8	96704812	Hex Nut, Zinc Plated	12	M10 x 1.5 Cl 8
9	50275445	Bearing	2	
10	13359674	Hydraulic Cylinder	1	
-	59698902	- Nut	1	
-	13496559	- Clevis Pin	1	
-	13496567	- Seal Kit	1	
11	96738596	Flatwasher, Zinc Plated	4	M12 Hardened Cl 200
12	96705595	HHCS, Fully Threaded, Zinc Plated	4	M12 x 1.75 x 50 Cl 8.8
13	13388434	Tilt Bearing Hub	1	
14	96701917	HHCS, Fully Threaded, Zinc Plated	12	M10 x 1.5 x 30 Cl 8.8
15	96747316	HHCS, Fully Threaded, Zinc Plated	3	M14 x 1.5 x 40 Cl 8.8
16	95653614	Adapter	2	
17	96738604	Flatwasher, Zinc Plated	8	M14 Hardened Cl 200
18	59353524	Hex Nut	5	9/16 x 18
19	13414909	Cap	1	
20	13414891	Washer Cap	1	
21	96735758	HHCS, Zinc Plated	1	M16 x 2.0 x 130 Cl 8.8
22	96711882	Hex Nut	1	M16 x 2.0

TILT BLADE VALVE ASSEMBLY

Dwg 13388442/00

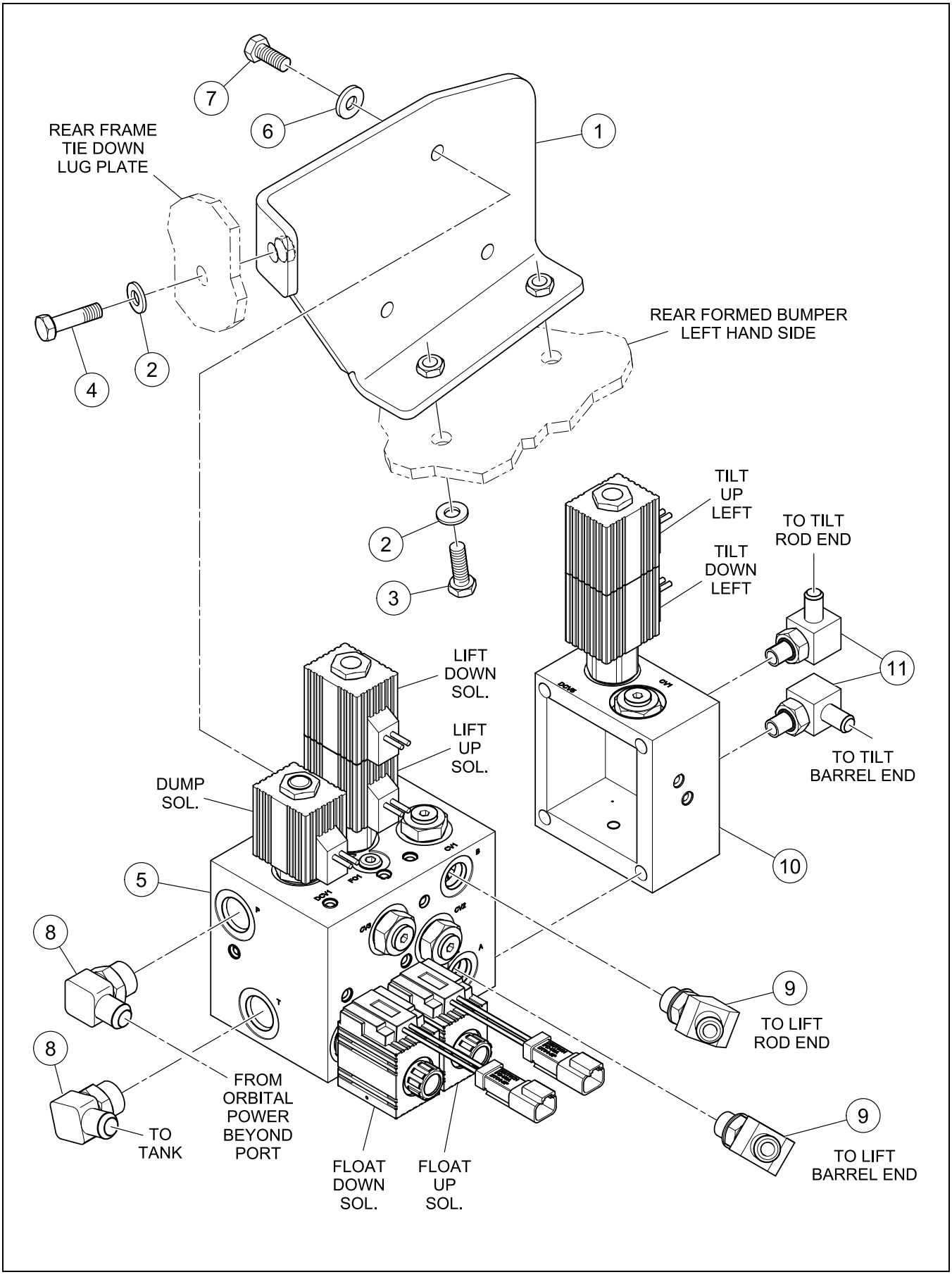

TILT BLADE VALVE ASSEMBLY

BOM 13388442

ITEM	COMM. NO.	DESCRIPTION	QTY	DIMENSIONS/NOTES
1	13356480	Valve Mounting Bracket	1	
2	96741038	Flatwasher	3	M8 x 1.25 Cl 200
3	96702659	HHCS, Fully Threaded, Zinc Plated	2	M8 x 1.25 x 25 Cl 8.8
4	96705587	HHCS, Fully Threaded, Zinc Plated	1	M8 x 1.25 x 30 Cl 8.8
5	**13309901**	**Lift Manifold**	**1**	**See Breakdown H - 24.**
6	95922183	Flatwasher, Zinc Plated	3	1/4 Dia
7	95920419	HHCS, Zinc Plated	3	5/16 x 18 x 0.75 Grd 8
8	95356853	Adapter	2	
9	95363339	Elbow, 45°	2	
10	**13309919**	**Tilt Manifold**	**1**	**See Breakdown H - 40.**
11	95329975	Adapter	2	

TILT MANIFOLD (13309919) - INTERNAL BREAKDOWN

Dwg 13309919/00

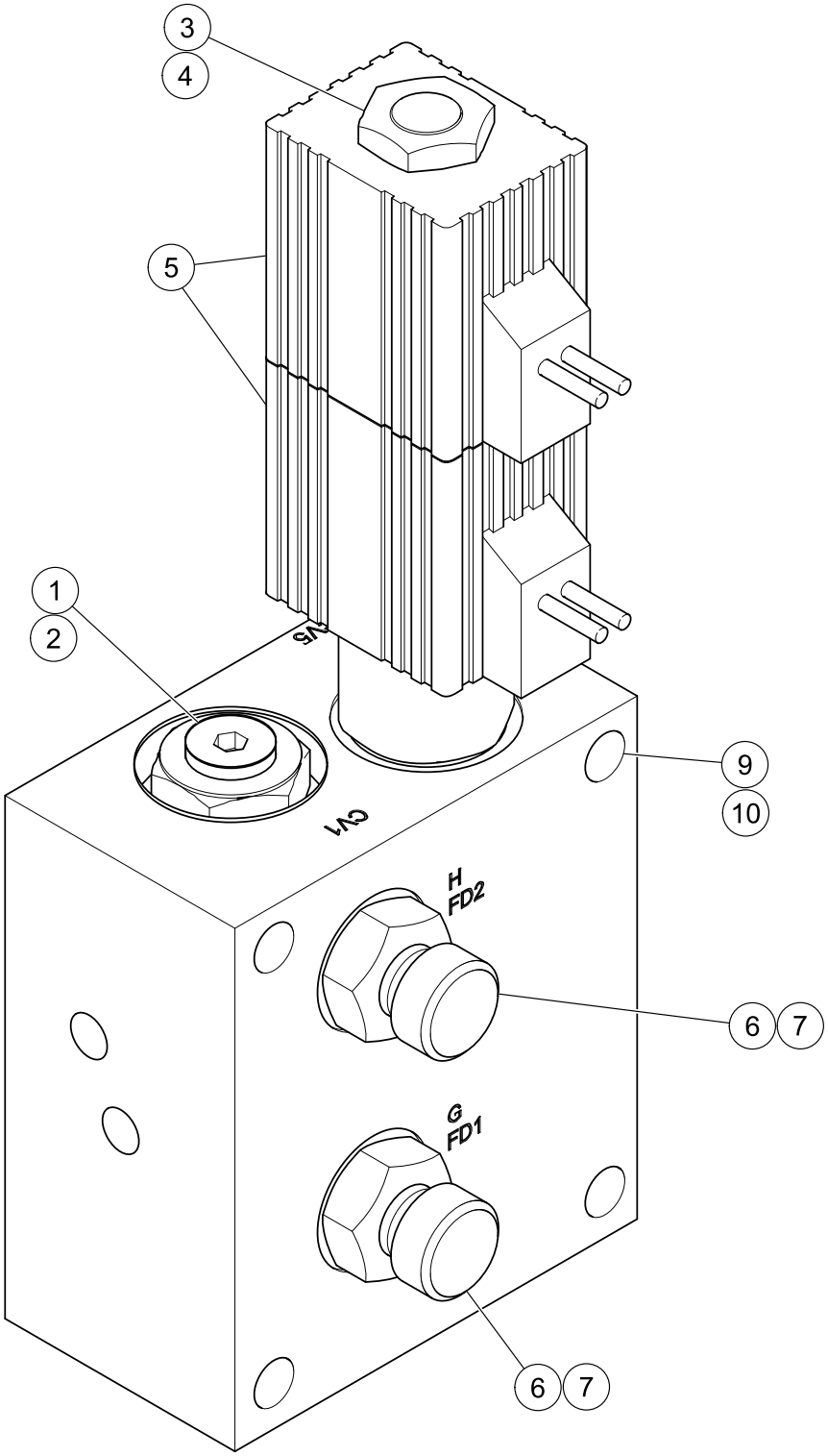

TILT MANIFOLD (13309919) - INTERNAL BREAKDOWN

BOM 13309919

ITEM	COMM. NO.	DESCRIPTION	QTY	DIMENSIONS/NOTES
1	13377924	Pilot Check Cartridge	1	
2	13377932	- Seal Kit	1	
3	13377940	Stem SD	1	
4	13282199	- Seal Kit	1	
5	13377957	Coil	2	
6	13377965	Fitting	2	
7	13377973	FRF Orifice Disk	1	
8	59053124	O-ring (Not Shown)	1	
9	13377981	HHCS	4	5/16 x 18 x 20
10	13377999	Washer	4	

Always use Manufacturer Replacement parts!*

HOW TO USE THIS INDEX

When the Description is Known - Use the Word Index:

- Volvo's Word Index makes **any** item easy to locate.
- Use any of the **functional** words in the item description to locate the desired item. The items listed are in alphabetical order in the first column of the index and may be **repeated** several times depending on their **functional descriptions**.

> If searching for the *Primary Air Cleaner Filter Element*, the first listing in the **Word Index** is:
>
> *Air Cleaner Primary Filter Element*
>
> The item is also listed as:
>
> *Element, Air Cleaner Primary Filter*
> *Filter Element, Air Cleaner Primary*
> *Primary Filter Element, Air Cleaner*

- The alpha-numeric listing in the second column of the index is the location of the item in the manual. The location is identified as; the **Functional Group, Section Number**, and **Parts List Page Number**. Example: C-23 would be Functional Group C, Page 23.

> The index shows the filter will be found on page C-23 which is the **Parts List** page number for the
>
> *Air Cleaner Installation*

Always use Manfacturer Replacement parts!

WORD INDEX

A

Air Cleaner C23
Air Cleaner Bracket C23
Air Cleaner Installation C5
Air Cleaner Primary Filter Element C23
Air Cleaner Safety Filter Element C23
Air Valve A7
Alarm, Audible D7
Alarm, Backup E5
Alternator C5
Amber Lens E15
Arch ROPS A13
Articulation Pin B3
Audible Alarm D7

B

Backup Alarm E5
Battery E5
Battery Cable, Negative E5
Battery Cable, Positive E5
Beacon Light Harness E15
Beige Paint G3
Belt,, Fan C5
Blade H19
Blade Assembly H17
Blade Deck Mat, RH H15, H31
Blade Frame Mount, LH H35
Blade Frame Mount, RH H35
Blade Lift Control Harness H15
Blade, Scraper Bar H37
Boot, Bottom Dust D21
Boot, Switch H33
Boot, Top Dust D21
Bracket, Air Cleaner C23
Bracket, Expansion Tank C21
Bracket, Propulsion Cable C5
Bracket, Shock C23
Bracket, Throttle C5, D11
Brake Shunt Valve H9
Brake Shunt Valve Assembly H7
Breather Vent, Filtered B13
Bulb, Emergency Stop Switch D21

C

Cable, F-Stop-R Control D19
Cap, Expansion Tank C21
Cap, Fuel Tank B17
Cap, Radiator C21
Cap, Valve A7
Carrier Assembly B5
Case, Manual D3
Chain, Plumb D25
Charge Filter H5
Charge Filter Element H5
Chassis Worklights Harness E9, E13
Check Valve H3, H13
Check Valve Assembly H3
Clamp-On Shell B31
Clean Out Lid B13
Console Assembly D3
Control Cable, Throttle D11
Control Lever, Propulsion C7
Control, F-Stop-R D19
Cooler, Oil C21
Coupling, Spline B5
Cover, Cowling B13
Cowling Cover B13
Cylinder, Hydraulic H19, H37
Cylinder, Steering B13

D

Dash Lights E13
Decal Kit G3
Decal: Biodegradeable Oil C5
Decal: Blade Control H15, H31
Decal: Blade Tilt H31
Decal: Stop D21
Deck Tread, LH D3
Deck Tread, RH D3
Delay Timer E3
Drive Motor A3
Drum (SD-25D) B5
Drum (SD-25F) B5
Drum Drive Assembly B5
Drum Drive Motor B9
Drum Frame B3, H17, H29
Dump Switch H21
Dust Boot, Bottom D21
Dust Boot, Top D21
Dust Ejector Valve C23

E

Element, Air Cleaner Primary Filter C23
Element, Air Cleaner Safety Filter C23
Element, Charge Filter H5
Element, Fuel Filter C5
Element, Steering/Return Filter H5
Emergency Stop Assembly D19
Emergency Stop Switch D21
Emergency Stop Switch Bulb D21
Engine C5
Engine Assembly C3
Engine Mount, Rear C5
Engine Oil Filter C5
Expansion Tank C21
Expansion Tank Bracket C21
Expansion Tank Cap C21

F

Fan Belt C5
Fan Guard C5
Filter Element, Air Cleaner Primary C23
Filter Element, Air Cleaner Safety C23

Filter Element, Fuel C5
Filter Kit, Fuel C5
Filter, Charge H5
Filter, Engine Oil C5
Filter, Steering/Return H5
Filter, Tank B13
Filtered Breather Vent B13
Foot Pedal H21
Foot Pedal Assembly H15, H31
Foot Pedal Mounting Plate H21
Frame, Drum B3, H17, H29
Frame, Rear B13
F-Stop-R Control D19
F-Stop-R Control Cable D19
F-Stop-R Switch D19
Fuel Filter Element C5
Fuel Filter Kit C5
Fuel Hose C25
Fuel Level Sender B17
Fuel Line Installation C5
Fuel Pump C5
Fuel Tank B17
Fuel Tank Assembly B13
Fuel Tank Cap B17
Fuse E9, E15, H15

G

Gasket, Hydraulic Tank Cover B13
Gauge Panel D7
Gauge, Sight B5, B13
Grab Handle A9
Grip, Throttle Lever D11
Guard, Fan C5

H

Handle, Grab A9
Handrail D3
Harness , Pedestal Worklights E9, E13
Harness Blade Lift Control H15
Harness, Beacon Light E15
Harness, Chassis Worklights E9, E13
Harness, Main Wire E3
Harness, Power Socket Wire E7
Harness, ROPS Worklights E9, E11
Harness, Seat Switch Wire D13
Harness, Wire H27
Hinge Plate A9
Hood A9
Hood Latch A9
Hood Strap A9
Horn D17
Horn Assembly D3
Horn Switch D9
Hose, Fuel C25
Hydraulic Cylinder H19, H37
Hydraulic Cylinder Assembly H35
Hydraulic Oil Temperature Light Installation B15
Hydraulic Oil Temperature Switch B19
Hydraulic Tank Cover Gasket B13

I

Ignition Key D5
Ignition Switch D5
Ignition Switch Nut D5
Inside Scraper B25, B27, B33
Key Tag D5
Key Tag D5
Key, Ignition D5
Kit, Decal G3

L

Latch, Hood A9
Left-Hand Panel Assembly D5
Lens, Amber E15
Lever , Throttle D11
Lid, Clean Out B13
Lift Manifold H23, H39
Lift Valve Assembly H15
Light, Strobe E15
Lights, Dash E13
Lower Muffler Bracket C23
Lower Radiator Hose C21

M

Main Wire Harness E3
Manifold, Lift H23, H39
Manifold, Tilt H39
Manual Case D3
Manual, Safety Label D25
Mat, RH Blade Deck H15, H31
Motor, Drive A3
Motor, Drum Drive B9
Motor, Vibration B5
Mount, LH Blade Frame H35
Mount, RH Blade Frame H35
Mount, Shock B5, B7
Mounting Kit, Shock C3
Mounting Plate, Foot Pedal H21
Mounting Plate, LH Radiator C17
Mounting Plate, RH Radiator C17
Muffler C5
Muffler Bracket, Lower C23
Muffler Bracket, Upper C23

N

Negative Battery Cable E5

O

Oil Cooler C21
Oil Filter, Engine C5
Oil Pressure Switch E3
Operators Platform D3

P

Paint, Beige G3
Panel, Gauge D7
Panel, LH D7
Panel, RH D9
Parking Brake Switch D9
Parking Brake Test Switch D9
Pedal, Foot H21
Pedestal D5
Pedestal Assembly D3
Pedestal Worklights Harness E9, E13
Pin, Articulation B3
Platform, Operators D3
Plumb Chain D25
Positive Battery Cable E5
Power Port E7
Power Socket Wire Harness E7
Primary Filter Element, Air Cleaner C23
Propulsion Cable Bracket C5
Propulsion Control Lever C7
Propulsion Pump C7
Propulsion Pump Assembly C5
Pump, Fuel C5
Pump, Propulsion C7
Pump, Vibration/Steering C19

R

Radiator C21
Radiator Cap C21
Radiator Hose, Lower C21
Radiator Hose, Upper C21
Radiator Mounting Plate, LH C17
Radiator Mounting Plate, RH C17
Radiator/Engine Mounts Installation C5
Radiator/Oil Cooler Assembly C5
Rear Engine Mount C5
Rear Frame B13
Relief Valve H13
Retractable Seatbelt D13
Right-Hand Panel Assembly D5
Rim, Wheel A7
ROPS Worklights Harness E9, E11
ROPS, Arch A13
ROPS/FOPS A11

S

Safety Filter Element, Air Cleaner C23
Safety Label Manual D25
Scraper - SD-25D B3
Scraper - SD-25F B3
Scraper B21, B23, B29, B31, H19, H35
Scraper Bar B25, B29, B31, B33
Scraper Bar Blade H37
Scraper Tooth B23, B27, B29, B31, B33
Scraper, Inside B25, B27, B33
Seat D13
Seat Assembly D3
Seat Belt Kit D15
Seat Plate D13
Seat Switch Wire Harness D13
Seatbelt, Retractable D13
Sender, Fuel Level B17
Shaft, Spline B5
Shell, Clamp-On B31
Shock Bracket C23
Shock Mount B5, B7
Shock Mounting Kit C3
Side Console Assembly D19
Sight Gauge B5, B13
Spline Coupling B5
Spline Shaft B5
Starter C5
Steering Cylinder B13
Steering Valve D5, H15, H31
Steering Wheel w/Cap D5
Steering/Return Filter H5
Steering/Return Filter Element H5
Strap, Hood A9
Strobe Light E15
Switch Boot H33
Switch Dump H21
Switch Nut, Ignition D5
Switch, Emergency Stop D21
Switch, F-Stop-R D19
Switch, Horn D9
Switch, Hydraulic Oil Temperature B19
Switch, Ignition D5
Switch, Oil Pressure E3
Switch, Parking Brake D9
Switch, Parking Brake Test D9
Switch, Tilt H33
Switch, Worklights E13
Swivel B3

T

Tank Filter B13
Tank, Expansion C21
Tank, Fuel B17
Throttle Assembly D3
Throttle Bracket C5, D11
Throttle Control Cable D11
Throttle Lever D11
Throttle Lever Grip D11
Tilt Blade Assembly H29
Tilt Blade Sub-Assembly H35
Tilt Blade Valve Assembly H27
Tilt Manifold H39
Tilt Switch H33
Tilt Switch Assembly H31
Timer Module, Two-Second E3
Timer, Delay E3
Tire A7
Tire And Wheel Assembly A7
Tooth, Scraper B23, B27, B29, B31, B33

Tread, LH Deck D3
Tread, RH Deck D3
Twin Lock Valve H13
Twin Lock Valve Assembly H7
Two-Second Timer Module E3

U

Upper Muffler Bracket C23
Upper Radiator Hose C21

V

Valve Cap A7
Valve, Air A7
Valve, Brake Shunt H9
Valve, Check H3, H13
Valve, Dust Ejector C23
Valve, Relief H13
Valve, Steering D5, H15, H31
Valve, Twin Lock H13
Valve, Vibration H11
Vandal Cover (Installation w/ Worklights) D23
Vandal Cover (Installation w/o Worklights) D23
Vibration Motor B5
Vibration Valve H11
Vibration Valve Assembly H7
Vibration/Steering Pump C19
Vibration/Steering Pump Assembly C5
Video: Padfoot Shell Instructions B31

W

Wheel Rim A7
Wheel w/Cap, Steering D5
Wire Harness H27
Worklight Assembly E9, E11
Worklights Switch E13

NUMERICAL INDEX

COMM.NO. PAGE	COMM.NO. PAGE	COMM.NO. PAGE	COMM.NO. PAGE
13137945 ..... D-15	13266986 ..... G-3	13322896 .....D-7	13334222 .....H-3
13155262 .....B-31	13268347 ..... H-25	13322953 .....D-9	13334230 .....H-3
13165071 ..... D-13	13268453 .....C-15	13323431 .....B-7	13334255 .....H-3
13166079 ..... D-21	13268495 .....C-11	13323720 .....A-7	13334263 .....H-3
13173323 .....E-7	13270657 .....B-3	13323738 .....A-7	13334271 .....H-3
13182373 ..... D-23	.....B-13	13323787 .....A-3	13340096 .....H-15
13185384 .....B-13	13271358 ..... A-7	13324405 .....B-3	.....H-31
13185756 .....B-5	13271374 ..... A-7	13324470 .....B-3	13340104 .....H-31
13185871 .....C-21	13271408 ..... A-7	13324488 .....B-3	13342720 .....D-13
13186242 ..... D-19	13271432 ..... A-9	13324637 .....B-3	13349055 ..... E-3
13186374 ..... D-19	13272281 ..... D-5	.....B-13	13349147 .....D-11
13186390 ..... D-19	13272505 ..... D-3	13324645 .....B-3	13349170 .....B-13
13197108 .....E-13	13280433 ..... G-3	.....B-13	13349923 ..... E-3
13198270 ..... D-15	13280482 ..... H-3	13324678 .....D-3	13349972 .....D-19
13198353 ..... G-3	13280490 ..... H-3	13324686 .....D-3	13349980 .....C-25
13199344 ..... G-3	13281332 ..... D-15	13324702 .....D-3	13350004 .....D-13
13204342 ..... H-3	13281365 ..... D-15	13324819 .....B-9	13351408 .....B-5
13207055 ..... A-9	13281373 ..... D-15	13324876 .....H-5	.....B-7
13207618 ..... H-3	13281399 ..... A-5	13324892 .....C-7	13352257 .....D-11
13213582 .....B-17	13281654 ..... A-5	13324934 .....C-23	13352331 .....D-11
13224019 .....C-7	13281761 ..... A-5	13325147 .....C-23	13352547 .....B-3
13228820 ..... D-15	13281779 ..... A-5	13325204 .....C-21	.....B-23
13228838 ..... D-15	13281787 ..... A-5	13325238 .....C-17	.....B-29
13228846 ..... D-15	13281795 ..... A-5	13325246 .....C-17	.....B-31
13228853 ..... D-15	13281803 ..... A-5	13325261 .....C-5	13352554 .....B-23
13228861 ..... D-15	13281886 ..... A-5	13325394 .....C-5	.....B-27
13228960 ..... D-15	13281902 ..... A-5	13325428 .....C-23	.....B-29
13235676 ..... D-23	13281910 ..... A-5	13325436 .....C-23	.....B-31
.....E-11	13281969 ..... A-5	13325444 .....C-23	.....B-33
.....E-15	13282199 ..... H-25	13325642 .....A-11	13352604 .....D-11
13235692 ..... D-23	..... H-41	.....A-13	13353149 .....C-5
13238050 .....B-13	13284690 ..... D-5	13325956 .....B-3	13353495 .....C-21
13247473 ..... D-15	13289921 ..... D-19	.....B-21	13353735 .....C-5
13247481 ..... D-15	13290440 ..... D-23	13326376 .....B-13	13353768 .....C-21
13247549 ..... D-15	13297429 ..... H-37	13326475 .....B-3	13353792 .....B-13
13247556 ..... D-15	13299904 .....B-5	13326491 .....B-3	13353891 .....C-5
13248935 .....E-13	13299987 .....B-7	13326509 .....B-3	13354782 .....C-21
13258645 ..... H-25	13304761 .....B-7	13326590 .....B-3	13354790 .....C-21
13258934 ..... D-15	13305099 .....B-13	13326608 .....B-3	13354808 .....C-21
13259874 ..... H-3	13305180 ..... D-5	13326764 .....B-3	13354816 .....C-21
13263264 ..... H-25	13305446 .....C-21	13327911 .....A-9	13355029 .....C-5
13263702 .....C-11	13309752 .....B-9	13328547 .....C-23	13355060 .....C-5
13264007 .....B-11	13309844 ..... H-11	13329800 .....D-3	13355078 .....C-23
13264023 .....B-11	13309851 .....B-5	13329917 .....D-17	13355474 .....D-3
13264049 .....B-11	13309869 ..... H-9	13334131 .....E-5	13355482 .....B-5
13264064 .....B-11	13309901 ..... H-23	13334149 .....E-5	13355490 .....C-21
13264080 .....B-11	..... H-39	13334172 .....H-3	13355508 .....C-21
13264106 .....B-11	13309919 ..... H-39	13334180 .....H-3	13355599 .....H-7
13264312 .....B-11	13314091 ..... A-11	13334206 .....H-3	13356092 .....C-23
13264338 .....B-11	13314109 ..... A-13	13334214 .....H-3	13356217 .....C-23

NUMERICAL INDEX

COMM.NO.	PAGE
13356407	H-19
	H-35
13356415	C-5
13356480	H-23
	H-39
13356639	D-3
13356738	B-17
13356803	H-21
13356845	H-21
13357033	H-19
	H-35
13357058	H-19
13357819	H-21
13359021	H-17
	H-29
13359039	H-19
	H-35
13359047	H-19
	H-35
13359120	H-15
	H-27
13359245	B-25
	B-29
	B-31
	B-33
13359344	E-9
	E-13
13359369	D-23
13359674	H-19
	H-35
	H-37
13359765	H-15
	H-31
13359849	D-5
13359948	B-25
	B-27
	B-33
13360805	H-5
13363577	G-3
13365101	H-3
13365119	H-3
13365127	H-3
13365135	H-3
13365150	H-3
13365176	H-3
13365192	H-3
13365226	H-3
13365341	H-3
13365358	C-21
13365994	G-3
13366018	G-3
13366026	G-3
13366034	G-3
13366042	G-3
13367545	D-25
13377924	H-25
	H-41
13377932	H-25
	H-41
13377940	H-25
	H-41
13377957	H-41
13377965	H-41
13377973	H-41
13377981	H-41
13377999	H-41
13378203	H-25
13378211	H-25
13378229	H-25
13378237	H-25
13378245	H-25
13378625	H-9
13378641	H-9
13378658	H-9
13378666	H-9
13378682	H-9
13378690	H-9
13378708	H-11
13378724	H-11
13378732	H-11
13378740	H-11
13382296	G-3
13382312	H-15
	H-27
	H-31
13382320	H-15
	H-27
13382338	H-15
	H-17
	H-27
	H-29
13382346	H-15
	H-17
	H-27
	H-29
13382445	D-19
13382478	E-9
	E-13
13382486	E-9
	E-13
13384607	B-5
13384631	B-5
13384789	A-9
13385604	A-9
13385612	A-9
13385778	D-3
13385786	D-3
13387832	H-37
13387873	H-37
13388111	H-15
	H-31
13388319	B-3
13388392	B-5
13388434	H-37
13388459	A-9
13388988	B-13
13389028	A-9
13389663	H-33
13389697	H-33
13389895	H-31
13395900	G-3
13395967	B-3
13396080	B-31
13400841	E-15
13400858	H-15
13400890	C-21
13401500	H-27
13403910	D-7
13407168	B-25
	B-27
	B-33
13407176	B-25
	B-27
	B-33
13407358	H-3
13407366	H-3
13410592	H-37
13411566	D-5
13412119	C-5
13412655	D-23
13412861	H-37
13413604	B-7
13413992	B-9
13414156	D-3
13414891	H-37
13414909	H-37
13420179	D-7
13421334	B-19
13422399	H-3
13451331	B-17
13459334	G-3
13461876	H-9
13461926	H-9
13466297	H-11
13466545	H-27
	H-29
13466552	H-27
	H-29
13469010	D-17
13474531	C-13
13474549	C-15
13476668	H-13
13476866	H-13
13476874	H-13
13478078	C-5
13478086	C-5
13482179	E-9
	E-11
13489828	E-3
13493077	D-15
13493531	E-7
13496336	B-11
13496344	B-11
13496351	B-11
13496369	B-11
13496377	B-11
13496401	B-11
13496419	B-11
13496435	B-13
13496443	B-13
13496450	B-13
13496476	C-5
13496484	C-5
13496492	C-5
13496500	D-5
	H-15
	H-31
13496559	H-19
	H-35
	H-37
13496567	H-19
	H-35
	H-37
13496898	C-5
13498670	E-9
	E-11
20933685	C-21
22370662	C-23
22370688	C-23
22370696	C-23

NUMERICAL INDEX

COMM.NO.	PAGE	COMM.NO.	PAGE	COMM.NO.	PAGE	COMM.NO.	PAGE
22370704	C-23	58880303	D-25	59142026	C-11	59269191	A-9
22370712	C-23	58883745	H-3	59144428	B-5	59277772	B-5
35304286	G-3	58887936	H-5		B-13		B-13
50269984	B-7	58898677	C-19	59145821	D-15	59278010	B-7
50270248	B-3	58905803	C-23	59145862	C-9	59278036	B-5
	B-7	58917261	D-5	59145870	C-9	59299545	B-3
	B-13	58917543	D-21	59147439	G-3	59303289	B-17
	H-19	58920216	H-21	59148569	D-5	59325712	E-15
	H-35	58924333	D-5		D-19		H-15
50274299	C-25	58926908	H-3	59154393	D-15		H-27
50275445	B-3	58948035	E-9	59154450	D-15	59338210	H-33
	B-13		E-11	59154492	D-15	59353524	H-37
	H-19		E-15	59154500	D-15	59389239	B-5
	H-35	58950759	C-13	59154518	D-15	59455410	C-5
	H-37	58965542	G-3	59154526	D-15	59471938	C-21
50829647	B-15	58978214	G-3	59154542	D-15	59475087	B-5
	D-3	58978255	G-3	59162982	C-5	59478040	H-33
50829654	B-15	58979048	H-5	59165019	D-17	59483339	E-9
54469390	A-9	59020222	H-15	59185074	D-3	59489658	B-5
54477161	C-5		H-27	59194043	C-15	59524447	A-7
54492525	C-11	59020305	E-3	59194068	C-15	59539064	B-5
54496328	A-9	59022871	E-15	59208819	C-21	59558395	C-19
54496377	D-15	59023077	E-15	59211128	C-5	59565044	B-5
54496385	D-15	59044305	D-11	59211805	E-5		B-7
54505227	C-19	59051433	C-9	59213405	D-5	59565069	H-19
54531629	D-15	59051482	C-11	59214775	D-23		H-35
54535844	E-5	59051664	C-15	59218792	H-3	59583450	H-15
54581236	B-17	59051698	C-15	59219246	D-11		H-17
54601299	D-23	59051748	C-15	59219253	D-11		H-27
54612486	G-3	59051755	C-9	59219261	D-11		H-29
54612494	G-3		C-11	59219279	D-11	59583468	H-15
54635859	E-5		C-13	59219287	D-11		H-17
54638564	H-3		C-15	59225920	E-5		H-27
54666094	D-9	59053124	H-41	59226399	C-17		H-29
54666102	D-9	59054189	A-3	59226548	D-11	59583500	B-15
54670302	D-13	59083105	E-15	59227041	C-19	59605915	G-3
54680053	C-23	59090878	E-3	59229617	B-17	59607853	B-3
54680061	C-23	59093351	B-13	59239897	D-21		D-23
54680970	H-25	59108100	D-21	59242305	C-25	59607861	B-3
56998503	B-13	59108605	D-21	59246603	G-3	59618579	B-3
58760570	C-25	59109116	D-21	59246611	G-3		B-15
58771668	D-9	59111450	D-21	59246645	G-3	59662312	D-11
58785189	C-19	59117317	C-25	59246660	G-3	59667287	G-3
58788852	H-21	59117333	E-3	59256545	C-3	59669127	B-7
58802869	C-25	59122549	C-25	59256552	C-17	59672709	C-21
58820168	E-3	59125278	H-3	59256982	C-3	59698902	H-19
58848979	C-21	59133900	B-7	59259606	C-5		H-35
58855099	B-13	59138958	C-21	59265033	C-21		H-37
58874389	D-25	59139410	H-19	59266460	C-21	59704429	E-11
58874397	D-25		H-35	59268862	H-3		E-15

NUMERICAL INDEX

COMM.NO. PAGE	COMM.NO. PAGE	COMM.NO. PAGE	COMM.NO. PAGE
59726463 ..... H-3	95286548 .....B-13	95671285 .....C-21	96701958 .....C-5
59743013 .....C-7	95301842 .....C-5	95733887 .....B-5	.....D-3
59884494 ..... H-3	..... D-19	95739306 .....C-7	.....D-5
59887182 ..... H-3	.....E-11	.....C-21	.....H-21
59891002 .....B-3	.....E-15	95860052 .....D-11	96701990 .....D-3
59901306 ..... D-11	95302121 .....B-9	.....D-19	96702261 .....A-9
59902668 ..... A-5	95303335 .....B-13	95866687 .....C-7	.....H-21
.....B-11	..... H-11	95919528 .....H-5	.....H-33
59902676 .....B-11	95303350 .....B-5	.....H-33	96702279 .....B-3
59902684 .....B-11	.....C-19	95920419 .....H-23	96702287 .....B-13
59903161 .....C-7	95303368 .....B-9	.....H-39	.....D-3
59918441 ..... H-5	..... H-3	95922183 .....H-23	96702311 .....B-5
59918540 ..... H-15	..... H-11	.....H-39	.....C-17
..... H-27	95316956 .....B-13	95923058 .....D-11	96702329 .....B-23
59919670 .....B-13	95326609 ..... D-11	95923298 .....D-11	.....B-29
59922336 .....B-9	95326955 .....B-13	95923314 .....D-11	.....B-31
59922518 ..... A-3	95329975 .....B-5	.....H-21	.....C-7
.....B-9	..... H-9	95925129 .....H-19	96702352 .....E-3
59922823 .....B-13	..... H-39	.....H-35	96702386 .....D-19
59922864 ..... H-5	95330692 ..... H-13	95925939 .....C-5	96702444 .....B-25
59922872 .....C-19	95341673 ..... H-5	95929675 .....H-19	.....B-27
59922914 ..... H-13	95343596 .....B-13	.....H-35	96702659 .....A-9
59922971 .....C-7	95356853 ..... H-23	95943346 .....D-11	.....B-7
59923094 .....C-7	..... H-39	.....D-19	.....B-13
59923466 ..... A-3	95356903 .....B-13	95944260 .....H-21	.....C-5
.....B-9	95357570 .....B-13	95988879 .....B-5	.....C-23
59923797 ..... A-3	95363339 ..... H-19	96700364 .....B-5	.....C-25
59929059 ..... D-19	..... H-23	96700927 .....A-11	.....E-3
59929711 ..... A-7	..... H-35	.....A-13	.....E-11
59947507 ..... G-3	..... H-39	.....B-3	.....H-7
59972877 .....C-15	95365078 ..... A-3	.....B-25	.....H-15
59986463 .....C-13	95365094 .....C-7	.....B-27	.....H-23
95011060 .....B-13	..... H-9	.....B-33	.....H-27
95018453 .....B-3	95368338 .....C-25	96701370 .....C-5	.....H-39
95029989 .....B-13	.....E-5	.....H-15	96702790 .....B-7
95043238 .....B-13	95371217 .....C-7	.....H-27	96702816 .....C-5
95043360 .....B-7	95371258 ..... H-9	.....H-33	.....D-3
95048393 .....B-13	95378873 .....C-25	96701461 .....A-9	96702824 .....B-3
95098695 .....B-5	95415667 .....B-13	96701479 .....H-5	.....B-13
95188710 ..... A-3	95416731 .....C-7	96701552 .....B-31	.....C-5
95201547 .....B-3	95418976 .....C-23	96701560 .....A-11	.....C-17
.....B-13	95453916 ..... D-11	.....A-13	.....C-23
95208989 .....B-7	95457586 .....E-3	.....B-3	.....D-3
95220893 .....C-21	..... H-3	.....H-19	.....D-5
95223178 .....B-5	95469128 .....C-19	.....H-35	.....E-5
95223434 .....B-5	95650339 .....B-5	96701917 .....D-5	.....E-11
95278990 .....C-7	.....C-7	.....H-37	.....E-15
95280186 .....B-13	95653614 ..... H-37		.....H-15
.....C-7	95654208 .....E-3		.....H-27
95285946 .....C-7	.....E-5		.....H-33

NUMERICAL INDEX

COMM.NO. PAGE	COMM.NO. PAGE	COMM.NO. PAGE	COMM.NO. PAGE
96703012 ..... E-3	96705272 ..... D-17	96720446 ..... B-3	96740543 ..... E-3
..... E-5	..... H-7	..... B-25	..... E-13
96703657 ..... B-5	96705553 ..... H-17	..... B-27	..... E-15
..... B-7	..... H-29	..... B-33	..... H-15
..... B-9	96705587 ..... A-9	..... H-19	..... H-27
..... C-3	..... C-7	..... H-35	96741038 ..... A-9
96703798 ..... D-3	..... C-23	96721121 ..... A-9	..... B-3
96704218 ..... C-21	..... D-3	..... C-5	..... B-7
96704234 ..... C-5	..... D-19	96726419 ..... H-19	..... B-13
..... E-13	..... H-3	..... H-35	..... C-5
..... H-15	..... H-21	96726435 ..... H-7	..... C-7
..... H-27	..... H-23	96727458 ..... A-9	..... C-23
96704291 ..... A-3	..... H-27	96728712 ..... B-3	..... C-25
96704515 ..... B-9	..... H-39	96729595 ..... C-17	..... D-3
96704564 ..... A-9	96705595 ..... H-37	96735758 ..... H-37	..... D-5
..... C-5	96705637 ..... B-33	96736343 ..... B-13	..... D-13
..... D-3	96705728 ..... D-23	96738448 ..... E-3	..... D-19
..... E-13	96705736 ..... D-11	96738554 ..... A-9	..... E-3
..... H-15	96705744 ..... E-15	..... D-11	..... E-11
..... H-27	96705769 ..... A-9	..... D-19	..... E-15
96704580 ..... A-9	96706759 ..... B-5	..... E-3	..... H-3
..... D-11	96708284 ..... B-5	96738596 ..... A-3	..... H-7
..... E-3	96711510 ..... B-5	..... B-5	..... H-15
..... E-15	96711833 ..... B-3	..... B-7	..... H-21
96704598 ..... A-9	..... D-3	..... C-5	..... H-23
..... C-5	96711882 ..... B-31	..... C-7	..... H-27
96704606 ..... A-9	..... H-37	..... C-17	..... H-33
..... B-3	96712153 ..... C-21	..... E-3	..... H-39
..... B-13	96712237 ..... B-23	..... E-13	96741046 ..... A-9
..... C-7	..... B-25	..... E-15	..... B-5
..... C-23	..... B-27	..... H-15	..... B-13
..... C-25	..... B-29	..... H-27	..... C-19
..... D-3	..... B-31	..... H-37	..... C-21
..... D-13	..... B-33	96738604 ..... H-37	..... C-23
..... D-19	96712583 ..... B-15	96738612 ..... A-9	..... D-5
..... E-3	96712674 ..... A-9	..... B-9	..... D-17
..... E-5	..... C-17	..... C-3	..... E-3
..... E-11	..... C-23	96738620 ..... B-25	..... H-5
..... H-3	..... D-3	..... B-27	..... H-7
..... H-7	..... E-5	..... B-33	..... H-21
96704614 ..... C-5	96713979 ..... E-3	96739776 ..... C-23	..... H-37
..... D-17	96714548 ..... B-15	96739925 ..... C-19	
..... H-7	96715081 ..... A-3	96739982 ..... C-3	
96704812 ..... B-13	96715131 ..... B-3	96740204 ..... C-25	
..... C-19	..... H-29	96740261 ..... E-5	
..... H-37	96718598 ..... D-23	96740436 ..... A-9	
96704895 ..... E-5	..... E-15	..... B-17	
96705066 ..... B-29	96720040 ..... B-31		
..... B-31			
96705132 ..... D-23			

NUMERICAL INDEX

COMM.NO. PAGE	COMM.NO. PAGE	COMM.NO. PAGE	COMM.NO. PAGE
96741053 .....B-13			
.....C-5			
..... D-3			
..... D-5			
.....E-3			
.....E-5			
.....E-13			
..... H-5			
..... H-15			
..... H-21			
..... H-27			
..... H-33			
96741111 .....C-21			
96741319 ..... H-37			
96745518 ..... D-23			
.....E-3			
96746003 .....C-5			
96747316 ..... H-37			
96747548 ..... H-15			
..... H-17			
..... H-27			

The warranty statement is provided within the manual kit shipped with the machine.

VOLVO

Volvo Construction Equipment
www.volvo.com

Ref. No. VOE21A9920173 English
CPN 43930536
Printed in USA 2007-09 CST
Volvo, Shippensburg