RUTHZIL TRATOR COMERCIAL DE PEÇAS LTDA 11 97083-6812 ROLANDO CITRANGULO

VOLVO

SD45TF

Legal Statement

This manual and its contents are produced and maintained by Volvo Construction Equipment in accordance with an agreement with Ingersoll-Rand regarding the depiction and use of its exclusive trademarks in support of equipment originally manufactured under the Ingersoll-Rand brand. Volvo Construction Equipment is fully responsible for the maintenance and accuracy of the information contained in this manual as it relates to applications for the referenced equipment manufactured exclusively under the Ingersoll-Rand brand.

HOW TO USE THIS MANUAL

This Parts Manual applies to all SD-45TF Series Vibratory Compactors - Effective With S/N 175787

When the Comm. # is not Known - Use the Word Index:

- Volvo's Word Index will make this item easy to locate. The Word Index is found in the very back of the book. The items listed are in alphabetical order and may be repeated several times depending on their functional descriptions.

- Let's assume you need to replace the AIR CLEANER PRIMARY FILTER ELEMENT.

Use any of the functional words in the item description to locate the desired item. Example: The first listing for the Primary Air Cleaner Filter Element in the **Word Index** is: Air Cleaner Primary Filter Element. The index shows the component will be found on page C-15 that is the **Parts List** page number for the Air Cleaner Assembly.

A

Air Cleaner C15
Air Cleaner Primary Filter Element C15
Air Cleaner Safety Filter Element C15
Air Valve A17
Alarm E13
Alarm, Backup B13
Alternator C5
Alternator Diode E13
Amber Lens E17, E19
ARC - Axle Drive Motor A3
ARC - Drum Drive Motor B9

- The item is also listed as:

Element, Air Cleaner Primary Filter
Filter Element, Air Cleaner Primary
Primary Filter Element, Air Cleaner

Using the Parts Identification Pages:

- The **PARTS IDENTIFICATION PAGES** consist of the **PARTS ILLUSTRATION** (even numbered pages) and the **PARTS LIST** (odd numbered pages).

- The **Parts Illustration** shows the assembly with its component parts identified by **Item Numbers.**

- On the **Parts List**, the components are listed in **Item Number** order as found in the **ITEM** column. Other information provided by the **Parts List** is the **Comm. Number** which will be required to order Genuine Manufacturer Replacement Parts, a **functional description**, the **quantity** required to assemble one complete assembly, and any additional **notes/ dimensions** required to help place your parts order.

- **For the example: The Air Cleaner** Primary Filter Element is listed under the Air Cleaner (Item 2), Comm. Number 13255443, Quantity of 1.

When the Comm. # is not known - Use the Table of Contents:

- Turn to the **TABLE OF CONTENTS** pages in the front of this manual. These pages show the major systems of the machine divided into **FUNCTIONAL GROUPS** (identified by capital letters).
- Find the **Functional Group** that best describes the area of the machine you are interested in. For example: Air Cleaner Assembly
- See the sample **Table of Contents** shown below:

ENGINE

C

Engine Installation C-2
Engine Assembly C-4
Pump Stack Assembly.....C-8
Propulsion Pump (13304860) - Internal Breakdown.....C-10
Air Cleaner Assembly.....C-12
Exhaust Assembly C-14

Listed under the **Functional Group** of Engine are **SECTIONS** (identified by numbers that describe major repairable components of that group. Find the listing that refers to the Engine Assembly.

- Since the Air Cleaner **Primary Filter Element** is what needs to be replaced, refer to the parts listing for the Air Cleaner Assembly. The Air Cleaner used on your machine is found in **Functional Group C,** this makes up the first part of the page number. Turn to that section of the parts manual and find the parts listing on page **C-15** for the Air Cleaner **(**13255443**)**.

When the Comm. # is Known - Use the Numerical Index:

- If you already know the **Comm. Number** (part number) for the item required, a **NUMERICAL INDEX** is provided in the back of the manual to assist you. Look up the **Comm. Number** desired and the **Numerical Index** will show the **Functional Group, Section, and Page Number** where the item can be found.

For our Air Primary Cleaner Filter Element Example: The **Comm. Number** 13255443 is found in the **Numerical Index**, it shows that component will be found on pages C-15 that is the Parts List page for the Engine Assembly.

TABLE OF CONTENTS
SD-45TF

TITLE	PAGE
TABLE OF CONTENTS	A
ABBREVIATIONS USED IN THIS MANUAL	D
LUBRICANTS, FILTERS AND MANUALS	F
RECOMMENDED SERVICE PARTS	H

Section A - AXLE

AXLE INSTALLATION	A-2
AXLE (54685128) - INTERNAL BREAKDOWN	A-4
AXLE DRIVE MOTOR (13289897) - INTERNAL BREAKDOWN	A-14
TIRE AND WHEEL ASSEMBLY	A-16
HOOD INSTALLATION	A-18
ROPS/FOPS INSTALLATION	A-20
ARCH ROPS INSTALLATION	A-22
NO ROPS INSTALLATION - OPTIONAL	A-24
VANDAL COVER INSTALLATION - OPTIONAL	A-26
FIRST AID MOUNTING INSTALLATION - OPTIONAL	A-28

Section B - DRUM AND MAIN FRAME

FRONT FRAME INSTALLATION	B-2
DRUM ASSEMBLY	B-4
CARRIER ASSEMBLY	B-6
DRUM DRIVE ASSEMBLY	B-8
DRUM DRIVE MOTOR (13177399) - INTERNAL BREAKDOWN	B-10
REAR FRAME INSTALLATION	B-12
HYDRAULIC TANK ASSEMBLY	B-14
FUEL TANK ASSEMBLY	B-16
BRAKE/SHUNT TWO-SPEED MANIFOLD ASSEMBLY	B-18
BRAKE/SHUNT TWO-SPEED MANIFOLD (13205133) - INTERNAL BREAKDOWN	B-20
THERMAL BYPASS VALVE ASSEMBLY	B-22
TRACTION VALVE ASSEMBLY	B-24
TRACTION VALVE (13254537) - INTERNAL BREAKDOWN	B-26
HANGER ASSEMBLY	B-28
DRUM SCRAPER INSTALLATION - SD-45F	B-30
DRUM SCRAPER INSTALLATION - SD-45D	B-32
INSIDE SCRAPER INSTALLATION - SD-45F - OPTIONAL	B-34
INSIDE SCRAPER INSTALLATION - SD-45D - OPTIONAL	B-36
INSIDE SCRAPER FOR BOLT-ON SHELL INSTALLATION - SD-45D - OPTIONAL	B-38
BOLT-ON SHELL INSTALLATION - SD-45D - OPTIONAL	B-40
BRAKE KIT INSTALLATION - EEC	B-42
DRUM DRIVE MOTOR WITH BRAKE (13179106) - INTERNAL BREAKDOWN	B-44
UNIVERSAL SCRAPER INSTALLATION - OPTIONAL	B-46

TABLE OF CONTENTS
SD-45TF

TITLE **PAGE**

Section C - ENGINE

ENGINE INSTALLATION C-2
ENGINE ASSEMBLY C-4
PUMP STACK ASSEMBLY C-8
PROPULSION PUMP (13304860) - INTERNAL BREAKDOWN C-10
AIR CLEANER ASSEMBLY C-14
EXHAUST ASSEMBLY C-16
REMOTE OIL DRAIN ASSEMBLY C-18
RADIATOR AND OIL COOLER INSTALLATION C-20
RADIATOR AND OIL COOLER ASSEMBLY C-22
AIR PRECLEANER INSTALLATION - OPTIONAL C-24

Section D - OPERATORS COMPARTMENT

OPERATORS PLATFORM INSTALLATION D-2
STEERING VALVE ASSEMBLY D-6
SEAT ASSEMBLY D-8
CONSOLE ASSEMBLY D-10
EMERGENCY STOP ASSEMBLY D-12
SEAT (54670302) - INTERNAL BREAKDOWN D-14
THROTTLE ASSEMBLY D-16
PEDESTAL ASSEMBLY D-18
RIGHT-HAND PANEL ASEEMBLY D-20
LEFT-HAND PANEL ASSEMBLY D-22
GAUGE INSTALLATION - OPTIONAL D-24
STEERING KNOB INSTALLATION - OPTIONAL D-26

Section E - ELECTRICAL

WIRE HARNESS INSTALLATION E-2
RELAY PANEL ASSEMBLY E-4
FUSE BLOCK ASSEMBLY E-6
BATTERY INSTALLATION E-8
BATTERY MASTER SWITCH INSTALLATION - OPTIONAL E-10
AUDIBLE ALARM INSTALLATION - OPTIONAL E-12
POWER SOCKET INSTALLATION - OPTIONAL E-14
FOPS BEACON LIGHT INSTALLATION - OPTIONAL E-16
ROPS BEACON LIGHT INSTALLATION - OPTIONAL E-18
FOPS WORKLIGHT INSTALLATION - OPTIONAL E-20
ROPS WORKLIGHT INSTALLATION - OPTIONAL E-22
HYDRAULIC OIL TEMPERATURE GAUGE INSTALLATION - OPTIONAL E-24

Section G - DECALS

DECAL INSTALLATION - US G-2
DECAL INSTALLATION - EEC G-6

TABLE OF CONTENTS
SD-45TF

TITLE **PAGE**

Section H - HYDRAULICS

HOSING INSTALLATION H-2
HYDRAULIC FILTER INSTALLATION H-10
TOW VALVE INSTALLATION - OPTIONAL H-12
MANIFOLD ASSEMBLY (13304878) - INTERNAL BREAKDOWN H-14
HYDRAULIC TEST PORT INSTALLATION - OPTIONAL H-16
STRIKE-OFF BLADE INSTALLATION - OPTIONAL H-18
PUMP ASSEMBLY H-22
FOOT PEDAL ASSEMBLY H-24
LIFT VALVE ASSEMBLY H-26
LIFT MANIFOLD (13309901) - INTERNAL BREAKDOWN H-28
TILT BLADE INSTALLATION - OPTIONAL H-30
TILT BLADE ASSEMBLY H-32
SWITCH PEDAL ASSEMBLY H-34
FOOT PEDAL ASSEMBLY H-36
LIFT/TILT VALVE ASSEMBLY H-38
TILT MANIFOLD (13309919) - INTERNAL BREAKDOWN H-40

WORD INDEX W-1
NUMERIC INDEX X-1

STANDARD ABBREVIATIONS

AC	Alternating Current
A/R	As Required
ARC	Authorized Rebuilt Component
Assy	Assembly
BHCS	Button Head Cap Screw
Cu Yd	Cubic Yard
Cyl	Cylinder
DC	Direct Current
Dia	Diameter
Eff	Effective
FHCS	Flat Head Cap Screw
F-N-R	Forward-Neutral-Reverse
FOPS	Falling Object Protection System
F/P	Fork Positioning
Gr	Grade
HHCS	Hex Head Cap Screw
HHMS	Hex Head Machine Screw
HSBHCS	Hex Socket Button Head Cap Screw
ID	Inside Diameter
LH	Left Hand
M	Metric
MIK	Maintenance Interval Kit
mm	Millimeter
Nat Asp	Naturally Aspirated
Neg	Negative
NSS	Not Sold Separately
NSVA	Non Serviceable Assembly
OD	Outside Diameter
Pos	Positive
PSI	Pounds per Square Inch
Q/A	Quick-Attach
Ref	Reference
RH	Right Hand
RHSS	Round Head SelfTapping Screw
ROPS	Roll-Over Protection System
RPM	Revolutions Per Minute
SAE	Society of Automotive Engineers
Sec	Section
SFH	Slotted Fillister Head
SHCS	Socket Head Cap Screw
SMV	Slow Moving Vehicle
S/N	Serial Number
SPST	Single Pole/Single Throw
S.T.	Self-Tapping
Std	Standard
Str	Straight
Sw S	wivel
Tach	Tachometer
Temp	Temperature
Thd	Thread
Thk	Thick
Typ	Typical
UNC	Unified Coarse
UNF	Unified Fine
Univ	Universal
Var	Variable
V	Volt
VPM	Vibrations Per Minute
Wgt	Weight
w/	With
w/o	Without
Wp	Weatherproof

Always use Manufacturer Replacement parts!

LUBRICANTS, FILTERS AND MANUALS

Lubricants, Filters and Manuals

LUBRICANTS

	1 Qt.	1 Gal.	5 Gal.	55 Gal.
Mobil DTE 15M Hydraulic Oil or equivalent ISO VG 46 VI 140 (minimum) above 12°C (10°F). For temperatures below -12°C (-10°F) use Mobil SHC 624 Hydraulic Oil or equivalent ISO VG 32	n/a	n/a	59045179	59045187
Multi-Purpose Premium Engine Oil - SAE 15W-40	59022343	59023507	57022327	59022335
Premium Limited-Slip Component Lubricant	13248455	13248463	59022418	59022426
Premium Multi-Purpose ATF	13248471	13248489	59023572	59023580
Mobil SHC 630 or equivalent ISO VG 220 lubricant	13248430	13248448	59877597	59022459
Synthetic Plus Component Lubricant	13248414	13248422	59046177	59046165

FILTERS

		Quantity
Engine Oil Filter	13287305	1
Fuel Filter	54637145	1
Suction Filter Element	58887936	1
Return Filter Element	59764498	1

MANUALS

Parts Manual	13457700
Operation/Maintenance Manual	13457536
Cummins Engine Operation Manual	13155171
Cummins Engine Parts Manual	13155189
Safety Label Manual	13302120
CIMA Safety Manual	59483032

RECOMMENDED SERVICE PARTS

Recommended Service Parts

Assembly	Description	Y1 Qty	Y2 Qty	Y3 Qty	CPN
Air Cleaner					
	Primary Filter Element	2	2	2	13255443
	Safety Element	1	1		13255450
	Dust Ejector Valve	1	1		35393677
Drum					
	Shock Mount		6		13304787
	Fuel Cap		1		59212951
	Filtered Breather Vent	1	1		59093351
	Tank Filter		1		58855099
	Tank Cover Gasket			1	13305099
	Drive Motor			1	13177399
	V-Ring Seal			1	13167390
	Bearing			1	50269984
	Magnetic Plug			1	59144428
	Sight Gauge			1	59277772
	Vibration Motor			1	13223938
	Wear Sleeve			1	59277756
	Tooth Scraper (SD-45F)			1	13274063
Electrical					
	Dimmer Switch	1	1		59338210
	Alternator Diode	1	1	1	59020065
	Relay	1	1	1	58965377
	High Temperature Alarm			1	58870924
	Horn	1	1	1	13469010
Engine					
	Engine Oil Filter	2	2	2	13287305
	Fuel Filter	2	2	2	54637145
	Radiator Cap	1	1	1	59498790
	Starter			1	13426473
	Alternator			1	54637095
	Fan Belt			1	13284989
	Radiator Hose, Upper			1	13233093
	Radiator Hose, Lower			1	13233143
	Oil Pressure Switch			1	13491691

Assembly	Description	Y1 Qty	Y2 Qty	Y3 Qty	CPN
	Throttle Lever			1	59219279
	Drive Coupling		1		59286302
	Temperature Sender		1		58913856
	Coolant Recovery Bottle			1	54467329
	Oil Cooler		1		13232731
Frame					
	Steering Cylinder		1		13188339
	Bearing	1	1		50275445
	Bushing		1		59450528
	Pivot Pin	1	1		59190975
	Axle Drive Motor			1	13289897
	Two Rotor Latch		1		13185780
	Cable			1	59607861
	Ferrule			1	59607853
Hydraulics					
	Hydraulic Filter Element - Return	2	2	2	59764498
	Hydraulic Filter Element - Suction	2	2	2	58887936
	Propulsion Pump			1	13304860
	Steering Pump			1	58858820
	Steering Valve			1	13218987
	Brake/Shunt Valve			1	13205133
	Traction Valve			1	13254537
Instrument Panel					
	Hydraulic Oil Temperature Gauge			1	58893983
	Hydraulic Oil Temperature Sender			1	58913856
	Voltmeter		1	1	58877796
	Multiple Instrument Panel			1	13309521
	Engine Oil Pressure Sender			1	13275078
Pedestal					
	Ignition Key	1	1	1	58917261
	Ignition Switch		1		54461090
	Spinner Kit		1		59199141
	Coolant Recovery Bottle Cap		1		59154807
	Seat			1	54670302
	Dual Switch Seat Kit		1		13167945
	Isolator			1	36875565
	Steering Wheel		1		13158647

Assembly	Description	Y1 Qty	Y2 Qty	Y3 Qty	CPN
Rear Wheels					
	Valve Caps	2	2	2	59929711
	Air Valve		2		59524447
Side Console					
	FSR Control		1		13289921
	Emergency Stop Switch		1		59111450
	Dust Boot, Top		1		59108100
	Dust Boot, Bottom		1		59108605
	Horn Button	1	1		59159558
Kits					
	SD-45 Decal Kit		1		13309000
	Drum Drive Motor Seal Kit			1	13493754
	Steering Cylinder Seal Kit		1		13229042
	Propulsion Pump Seal Kit			1	59972877
	Vibration Motor Seal Kit			1	13493762
	Steering Valve Seal Kit			1	54747340
	Steering Pump Seal Kit			1	58898677
Miscellaneous					
	Backup Alarm		1		13295605
Optional Equipment					
	Beacon Light Option				
	Strobe Light	1	1	1	59083105
	Light Bulb	1	1	1	59022871
	10 Amp Fuse	1	1	1	59325712
	Worklights Option				
	Light Bulb	2	2		58875543
	Dash Lights	1	1		13248935
	15 Amp Fuse	2	2		59483339
	Tow Valve Option				
	Three-Section Valve			1	13304878
	Blade Options				
	Hydraulic Pump			1	13205497
	Hydraulic Pump Seal Kit			1	13461033
	Hydraulic Cylinder (All Blades)			1	58783507
	Hydraulic Cylinder Seal Kit (All Blades)			1	58866336
	Hydraulic Cylinder (Tilt Blade)			1	59269563

Assembly	Description	Y1 Qty	Y2 Qty	Y3 Qty	CPN
	Hydraulic Cylinder Seal Kit (Tilt Blade)			1	54505896
	Pivot Pin	1	1		59190975
	Bearing	1	1		50268127
	Scraper			1	13296850
	Lift Manifold			1	13309901
	Tilt Manifold			1	13309919
	Battery Master Switch Option				
	Battery Master Switch			1	13209648
	Audible Alarm Option				
	Temperature Switch			1	13421334
	Audible Alarm			1	58870924
	Switch Pedal Option				
	Switch Boot			1	59478040
	Dump Switch			1	58788852

+ Designates parts that are to be replaced within the specified time intervals as stated in the maintenance schedule.

Always use Manufacturer Replacement parts!

Section A - AXLE

AXLE INSTALLATION

Dwg D13177639/02

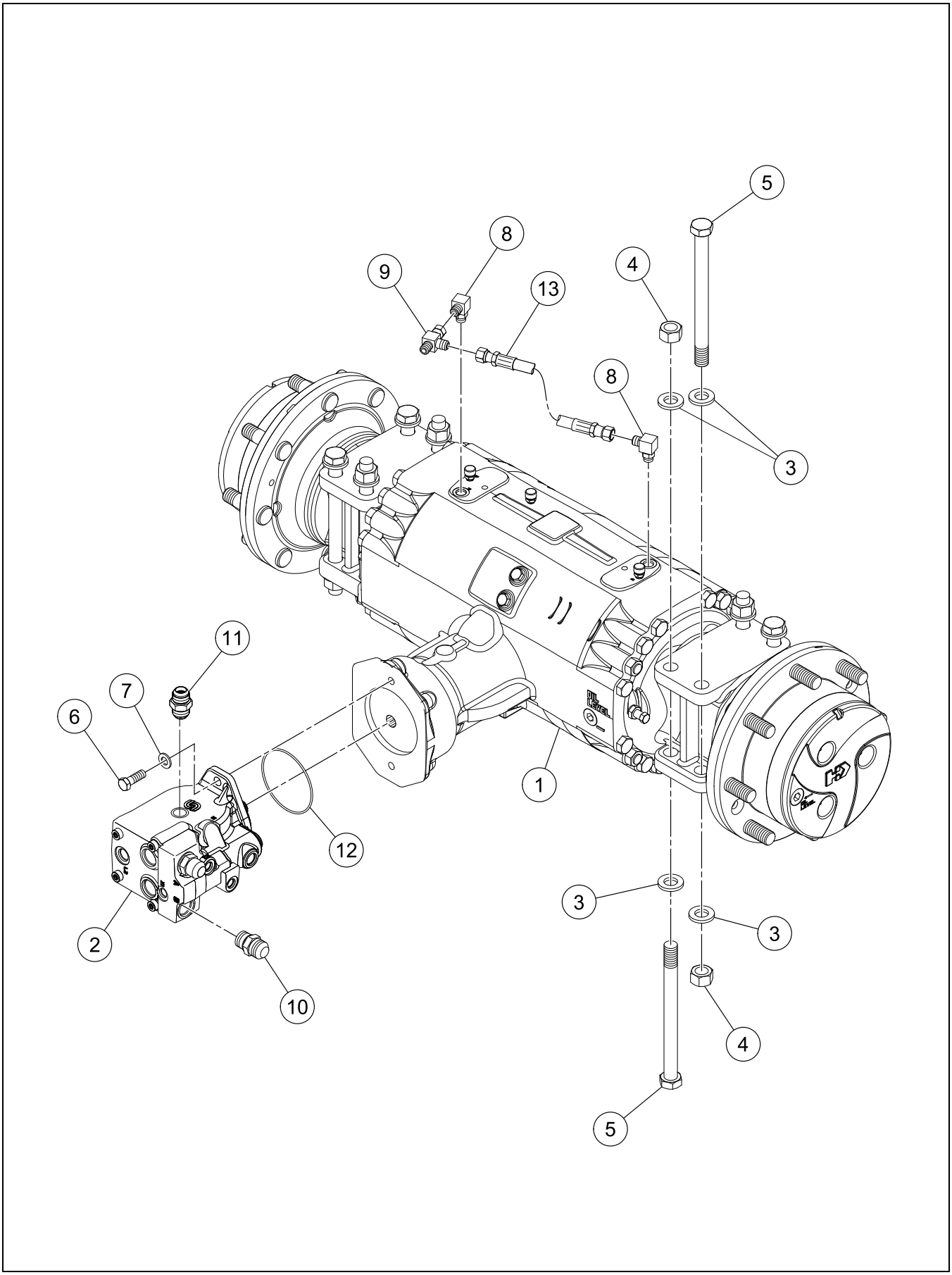

BOM 13177639

ITEM	COMM. NO.	DESCRIPTION	QTY	DIMENSIONS/NOTES
1	**54685128**	**Axle**	**1**	**See Breakdown A - 4.**
2	**13289897**	**Axle Drive Motor**	**1**	**See Breakdown A - 14.**
-	13284914	ARC - Axle Drive Motor	1	
3	59565051	Flatwasher	16	3/4
4	96703665	Nut, Zinc Plated	8	M20 x 2.5 Cl 10
5	96702733	HHCS, Zinc Plated	8	M20 x 2.5 x 240 Cl 10.9
6	96702329	HHCS, Fully Threaded, Zinc Plated	2	M12 x 1.75 x 35 Cl 8.8
7	96738596	Flatwasher, Zinc Plated	2	M12 Hardened Cl 200
8	96744693	Elbow, 90°	2	
9	95415667	Swivel Tee	1	
10	59922591	Adapter	2	
11	95285946	Connector	1	
12	13275615	O-ring	1	
13	13204755	Hose Assembly	1	14.0"

AXLE (54685128) - INTERNAL BREAKDOWN - SHEET 1 OF 5

Dwg 54685128/01/01

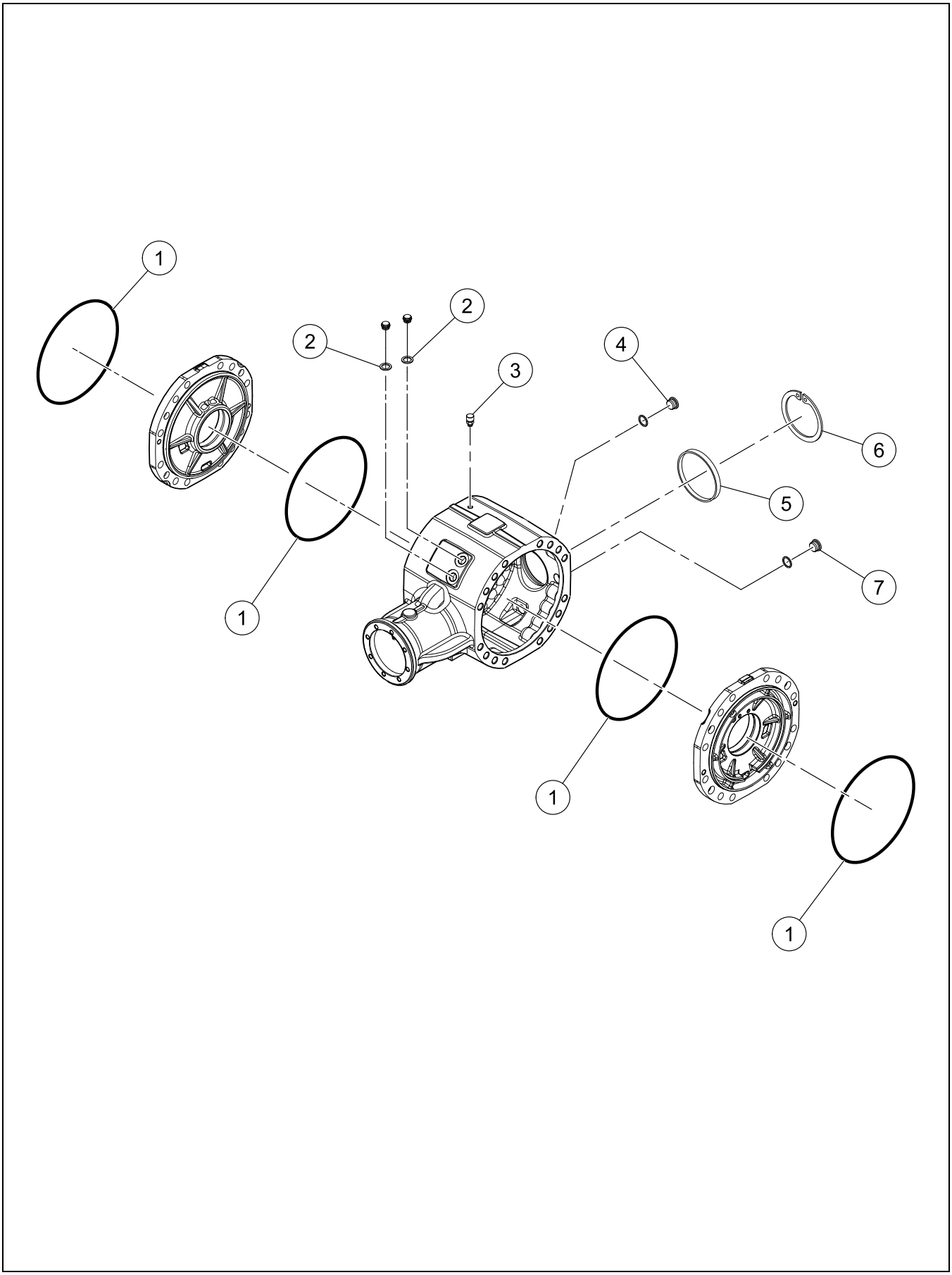

AXLE (54685128) - INTERNAL BREAKDOWN - SHEET 1 OF 5

BOM 54685128

ITEM	COMM. NO.	DESCRIPTION	QTY	DIMENSIONS/NOTES
1	13263298	Ring	4	
2	13243753	Seal Washer	2	
3	59146233	Vent	1	
4	13485743	Plug	1	
5	13263306	Plug	1	
6	59790824	Circlip	1	
7	59146241	Magnetic Plug	1	
27	59242842	Seal (Not Shown)	2	

AXLE (54685128) - INTERNAL BREAKDOWN - SHEET 2 OF 5

Dwg 54685128/01/02

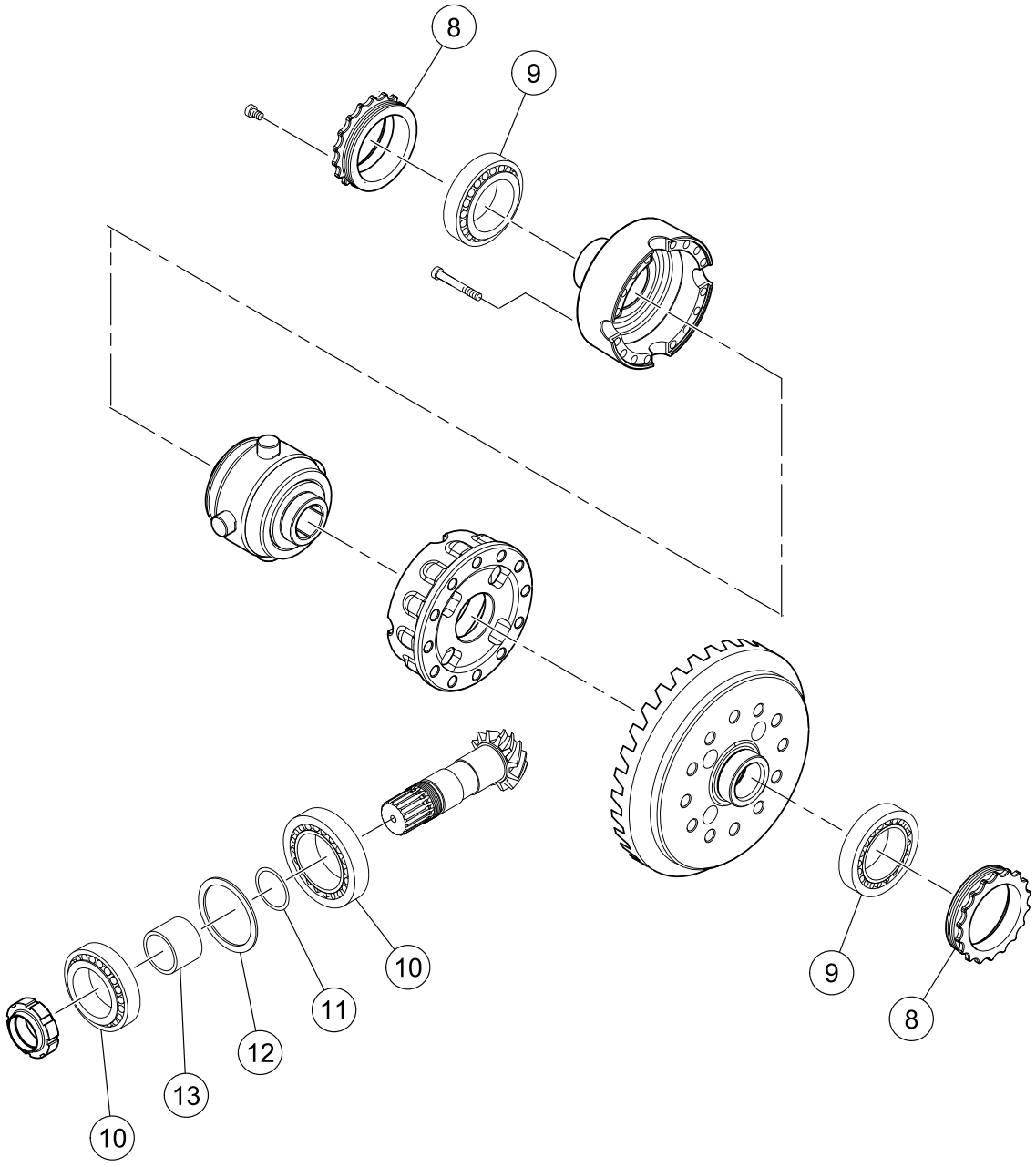

BOM 54685128

ITEM	COMM. NO.	DESCRIPTION	QTY	DIMENSIONS/NOTES
8	59146274	Ring Nut	2	
9	59793786	Tapered Bearing	2	
10	59769661	Bearing	2	
11	59794149	Shim	1	
12	59154146	Shim	1	
13	59146381	Spacer	1	

Dwg 54685128/01/03

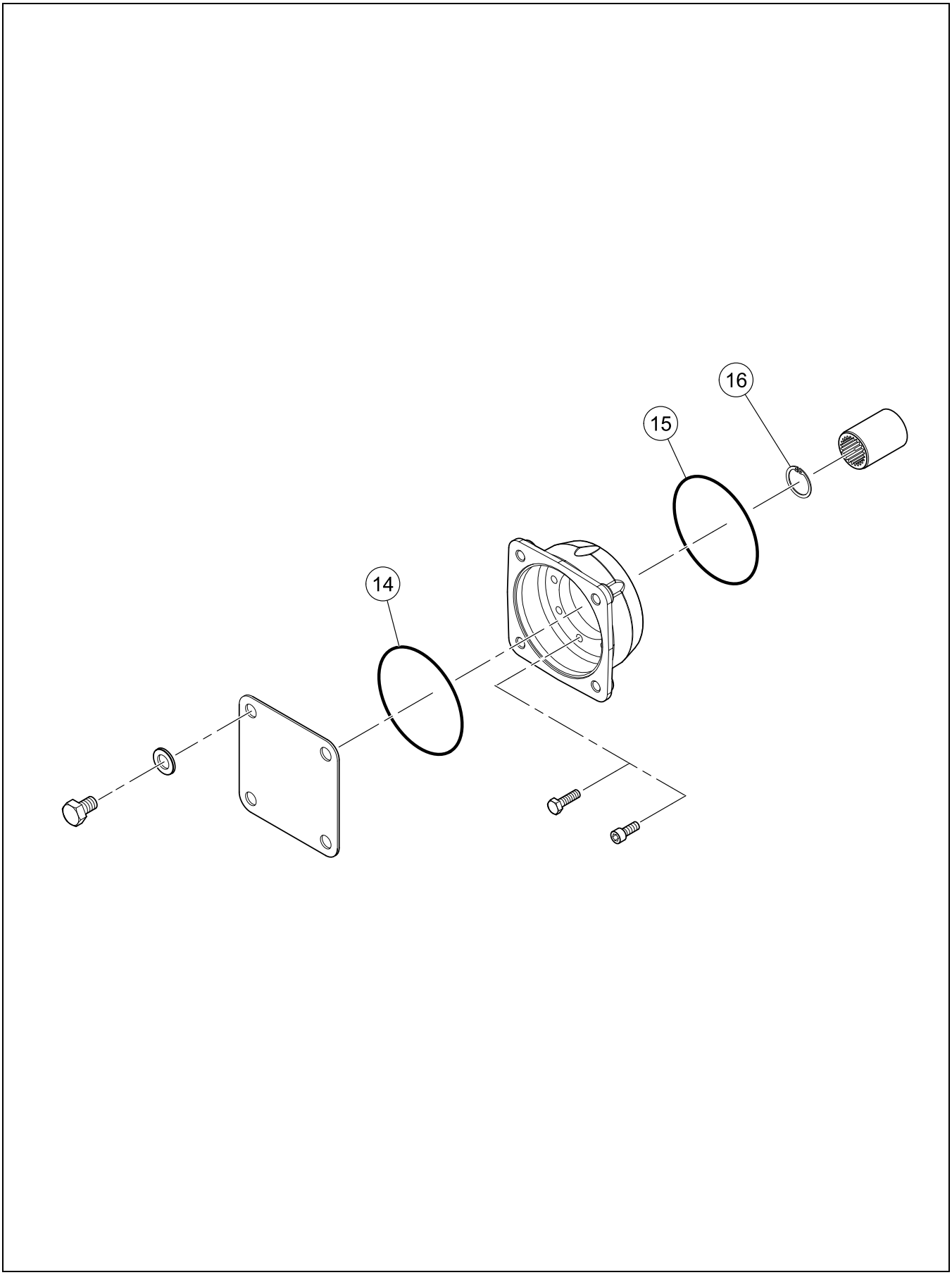

BOM 54685128

ITEM	COMM. NO.	DESCRIPTION	QTY	DIMENSIONS/NOTES
14	90502592	O-ring	1	
15	58916628	O-ring	1	
16	59984864	Snap Ring	1	

Dwg 54685128/01/04

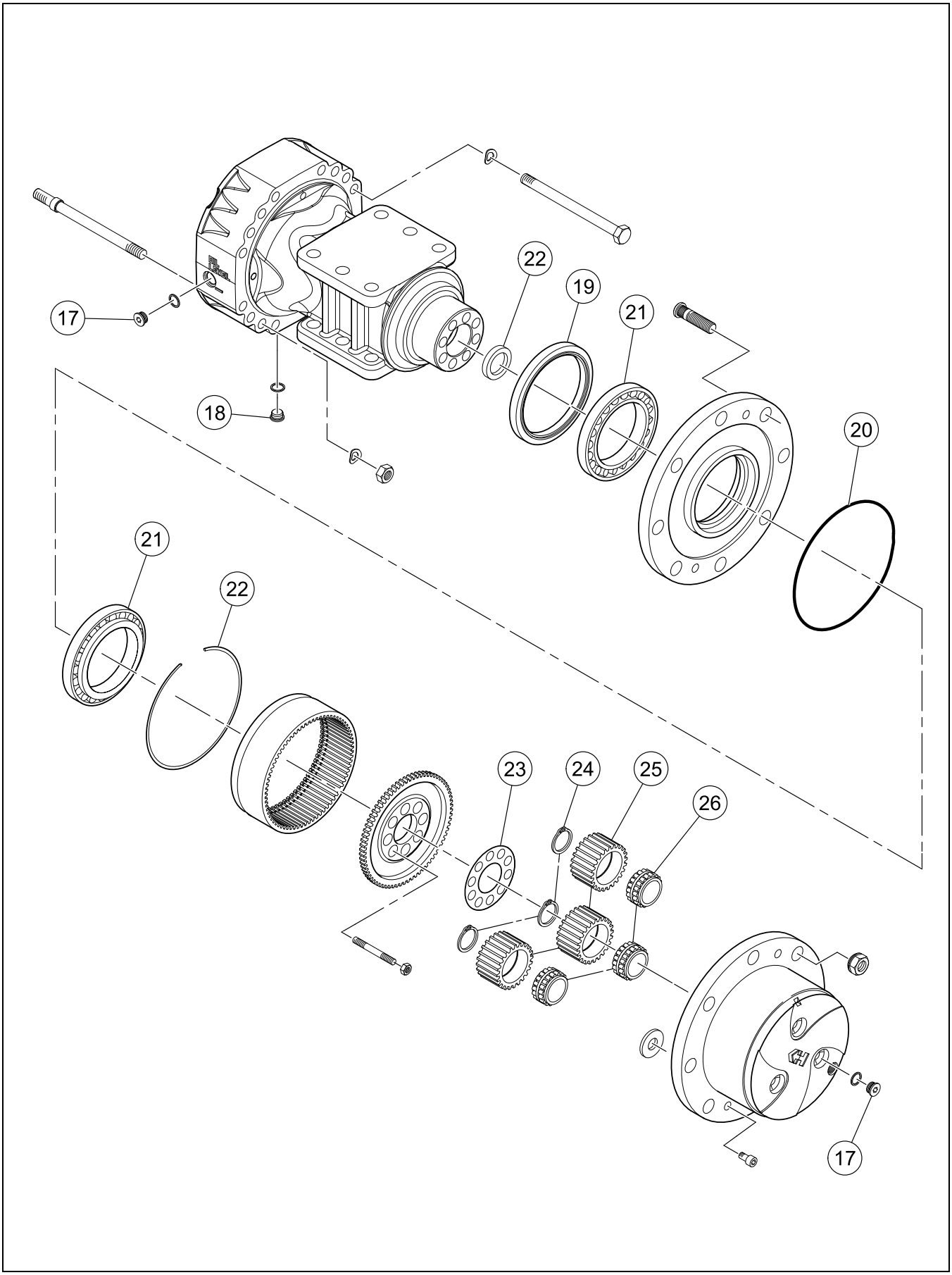

BOM 54685128

ITEM	COMM. NO.	DESCRIPTION	QTY	DIMENSIONS/NOTES
17	13485743	Plug	4	
18	59146241	Magnetic Plug	2	
19	59146605	Seal	2	
20	59793521	O-ring	2	
21	59146613	Bearing	4	
22	59153627	Circlip	2	
23	59153650	Locking Plate	2	
24	59146654	Circlip	6	
25	59146662	Planet Gear	6	
26	59146670	Bearing	6	

AXLE (54685128) - INTERNAL BREAKDOWN - SHEET 5 OF 5

Dwg 54685128/01/05

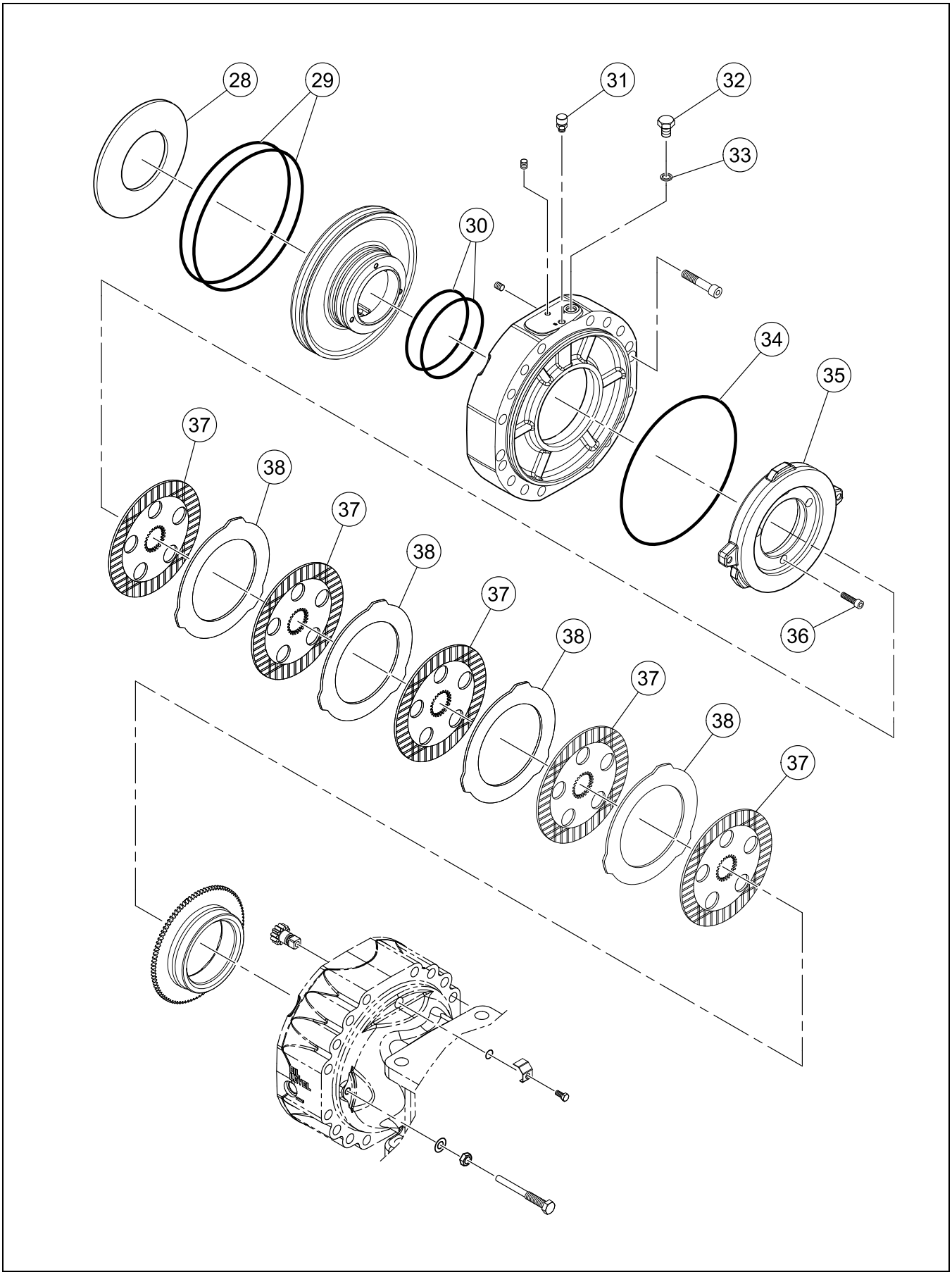

BOM 54685128

ITEM	COMM. NO.	DESCRIPTION	QTY	DIMENSIONS/NOTES
28	59218461	Spring	2	
29	13263447	O-ring	4	
30	13263462	O-ring	4	
31	59146233	Vent	2	
32	59153866	Bolt	2	
33	59153858	Seal Washer	2	
34	13263298	Ring	2	
35	13263298	Ring	2	
36	59146282	Cylinder Bolt	6	
37	54705447	Disc Brake	6	
38	59153759	Intermediate Disc Brake	4	

AXLE DRIVE MOTOR (13289897) - INTERNAL BREAKDOWN

Dwg 13289897/02

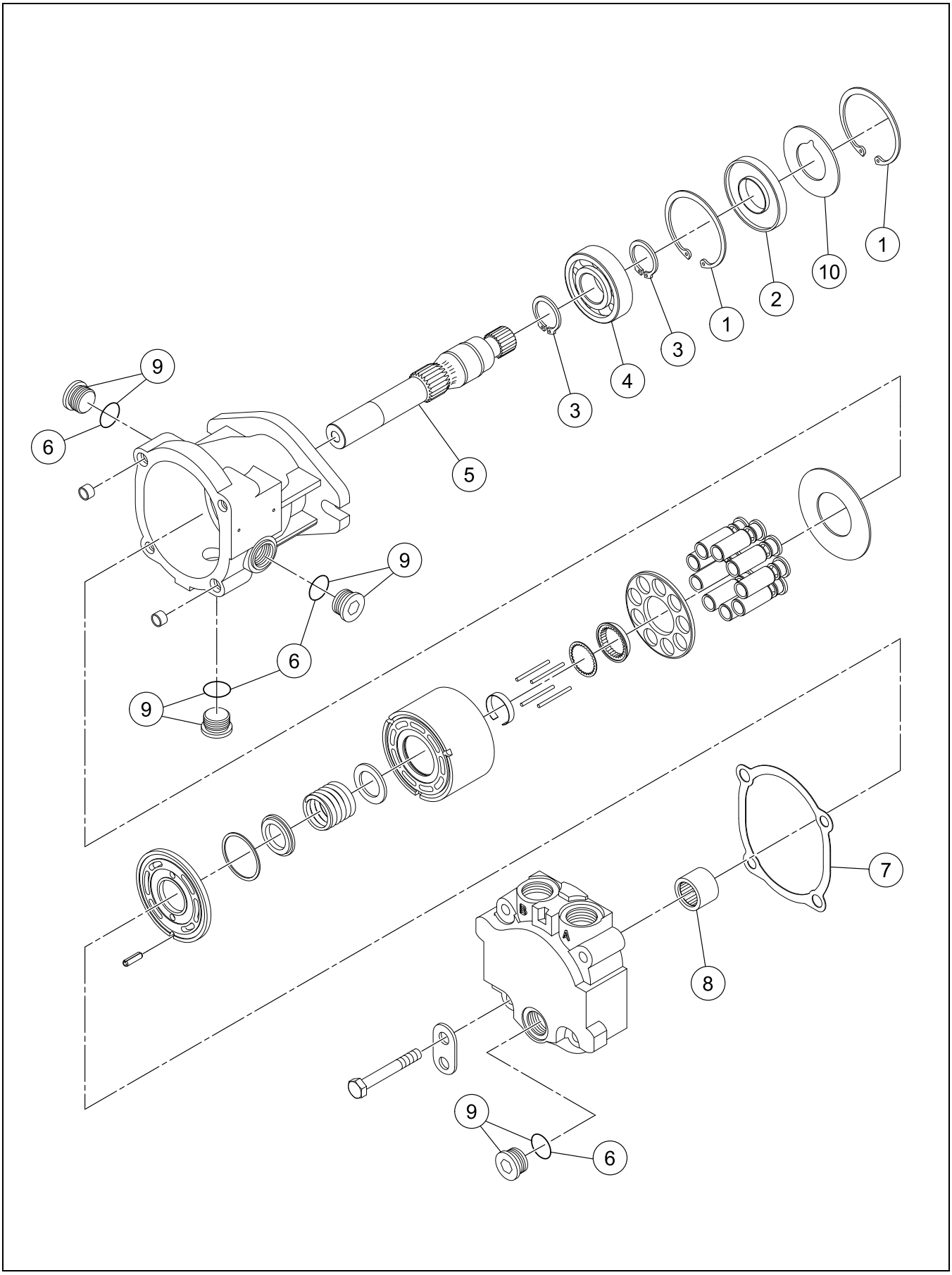

AXLE DRIVE MOTOR (13289897) - INTERNAL BREAKDOWN

BOM 13289897

ITEM	COMM. NO.	DESCRIPTION	QTY	DIMENSIONS/NOTES
1	59785493	Retaining Ring	2	
2	59941203	Seal	1	
3	59785519	Ring	1	
4	95200648	Ball Bearing	1	
5	13228200	Shaft	1	
6	59155176	O-ring	4	
7	59387498	Gasket	1	
8	59387605	Needle Bearing	1	
9	58891540	Socket Head Plug	4	
10	59245209	Support Washer	1	

Dwg D13187729/01

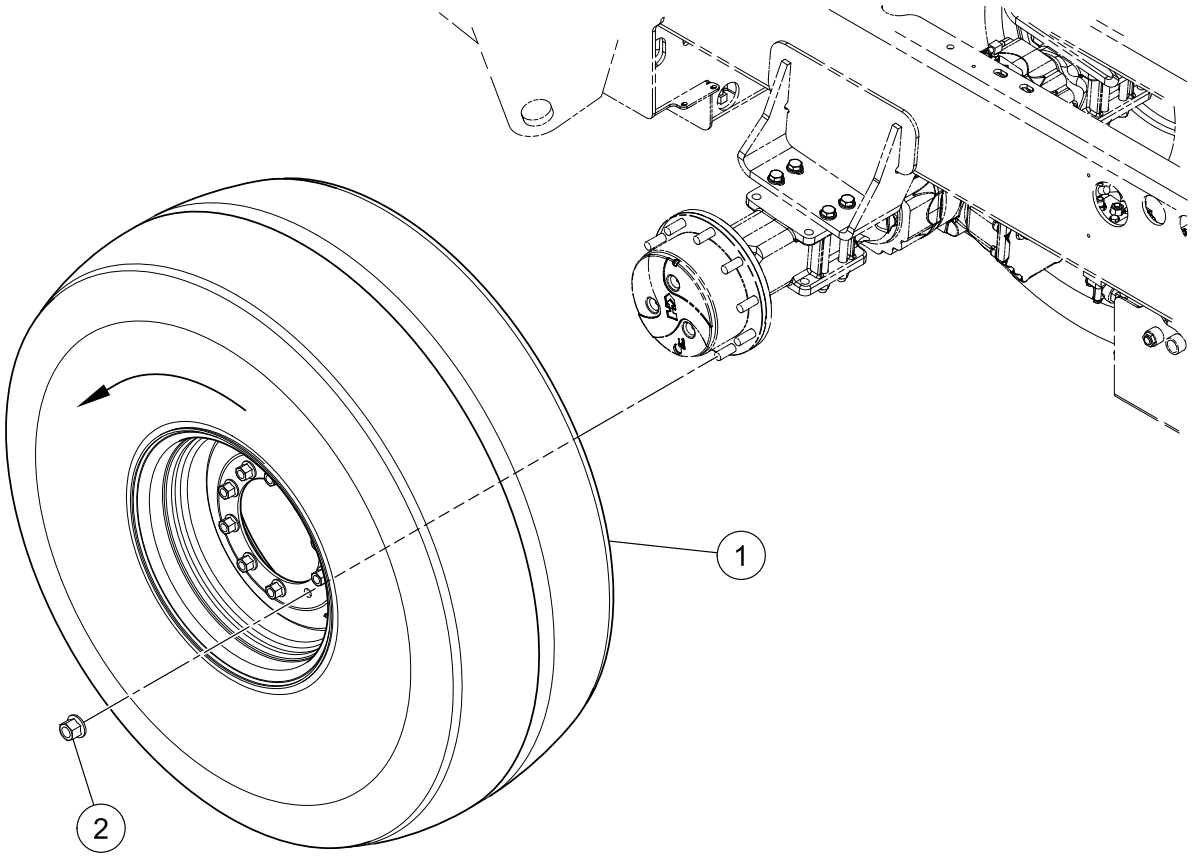

BOM 13187729, 13223631, 13187737, 13187752, 13223649, 13323035

ITEM	COMM. NO.	DESCRIPTION	QTY	DIMENSIONS/NOTES
1	13187737	Tire And Wheel Assembly	2	Lug Tread
-	13187711	- Wheel Rim	2	
-	59885491	- Tire	2	12.4-24 4 Ply
-	59524447	- Air Valve	2	
-	59929711	- Valve Cap	2	
-	13323035	Tire And Wheel Assembly	2	Diamond Tread
-	13323043	- Wheel Rim	2	
-	13323050	- Tire	2	12.4-28 6 Ply
-	13323167	- Tube	2	
-	59929711	- Valve Cap	2	
2	59163758	Wheel Nut	16	M22 x 1.5

HOOD INSTALLATION

Dwg 13290697/05

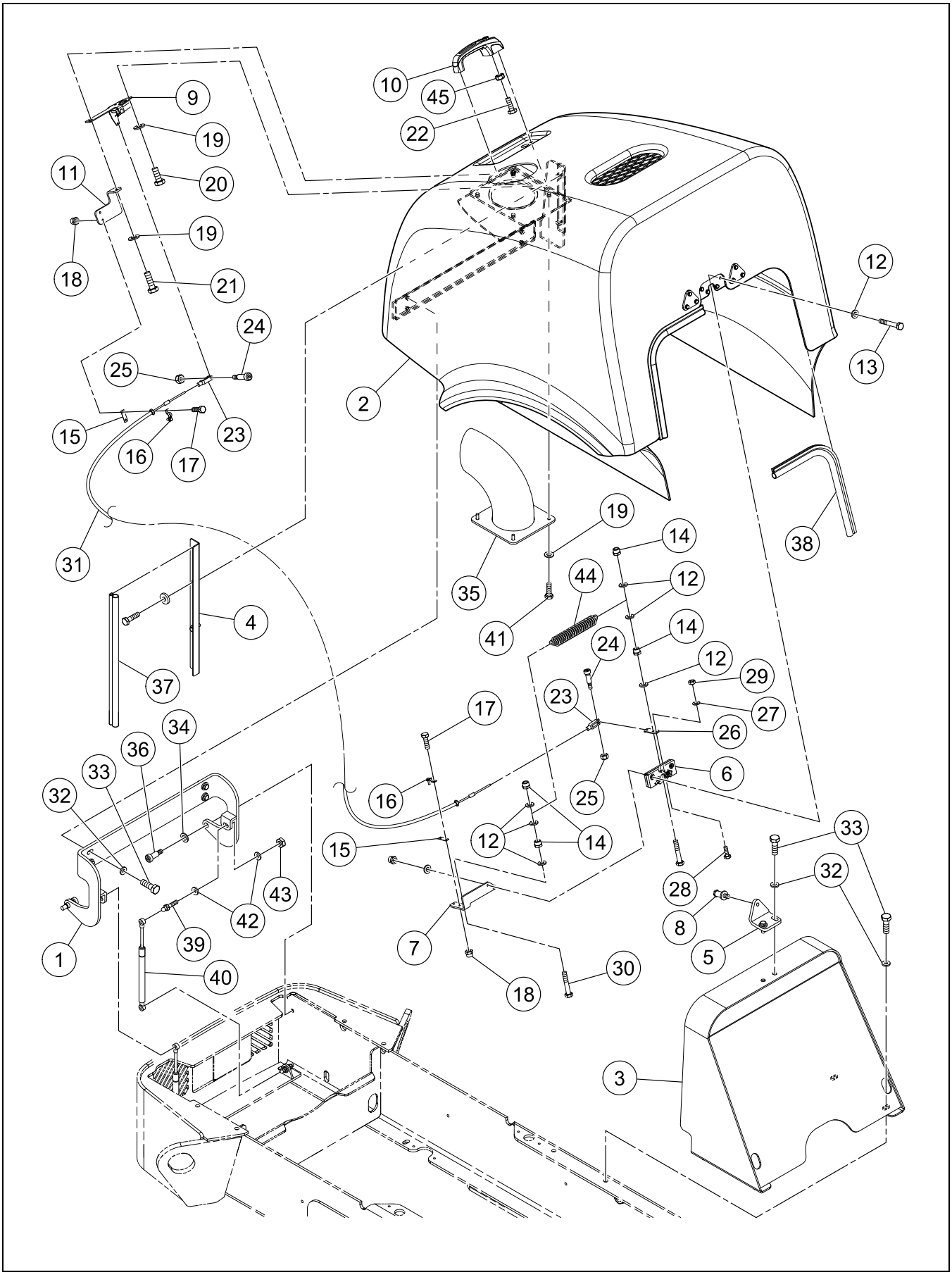

HOOD INSTALLATION

BOM 13384326

ITEM	COMM. NO.	DESCRIPTION	QTY	DIMENSIONS/NOTES
1	13293352	Hinge	1	
2	13245329	Hood	1	
3	13327945	Hood Cowling	1	
4	13270350	Baffle Mounting Angle	2	
5	13272208	Striker Plate	1	
6	13185780	Hood Latch	1	
7	13232343	Cable Support	1	
8	13182480	Striker	1	
9	13186143	Bell Crank	1	
10	13384300	Hood Handle	1	
-	58917261	- Hood Key	1	
-	13284690	- Key Tag	1	
11	13292867	Cable Bracket	1	
12	96741053	Flatwasher, Zinc Plated	14	M6 Cl 200
13	96706809	HHCS, Zinc Plated	4	M6 x 1.0 x 40 Cl 8.8
14	96704598	Hex Locknut, Zinc Plated	8	M6 Cl 8
15	59617985	Shim	2	
16	59617977	Clamp	2	
17	96705728	Screw, Fully Threaded, Zinc Plated	4	M5 x 0.8 x 16 Cl 8.8
18	96704580	Hex Locknut, Zinc Plated	4	M5 x 0.8 Cl 8
19	96741038	Flatwasher	6	M8 x 1.25 Cl 200
20	96702824	HHCS, Fully Threaded, Zinc Plated	1	M8 x 1.25 x 20 Cl 8.8
21	96702659	HHCS, Fully Threaded, Zinc Plated	1	M8 x 1.25 x 25 Cl 8.8
22	95919767	HHCS, Zinc Plated	1	1/4 x 20 x 0.75 Grd 8
23	59901306	Clevis	2	
24	95860052	Screw	2	10 x 24 x 0.375
25	95943346	Locknut, Zinc Plated	2	#10 x 24
26	13232350	Lever Extension	1	
27	96738547	Flatwasher, Zinc Plated	1	M4 Hardened Cl 200
28	96705694	HHCS, Zinc Plated	1	M4 x 0.7 x 12 Cl 8.8
29	96703756	Hex Nut, Zinc Plated	1	M4 x 0.7 Cl 8
30	96705801	HHCS, Fully Threaded, Zinc Plated	2	M6 x 35 Cl 8.8
31	13293048	Cable	1	
32	96711833	Flatwasher, Zinc Plated	10	M10 Cl 10
33	96701917	HHCS, Fully Threaded, Zinc Plated	10	M10 x 1.5 x 30 Cl 8.8
34	96738612	Flatwasher, Zinc Plated	2	M16 Hardened Cl 200
35	13271432	Exhaust Tube	1	
36	96727458	Hex Socket Shoulder Screw	2	M12 x 1.75 x 30 Cl 12.9
37	13273073	Seal Trim	2	
38	13273081	Seal Trim	2	
39	59475202	Ball Stud	2	
40	13293261	Gas Spring	2	
41	96705587	HHCS, Fully Threaded, Zinc Plated (Not Shown)	4	M8 x 1.25 x 30 Cl 8.8
42	96729736	Washer	4	
43	95929782	Hex Nut, Zinc Plated	2	5/16 x 18 Grd A
44	59307041	Spring	1	
45	96704234	Nut, Zinc Plated	1	M6 x 1.0 Cl 8

Dwg D13178553/00

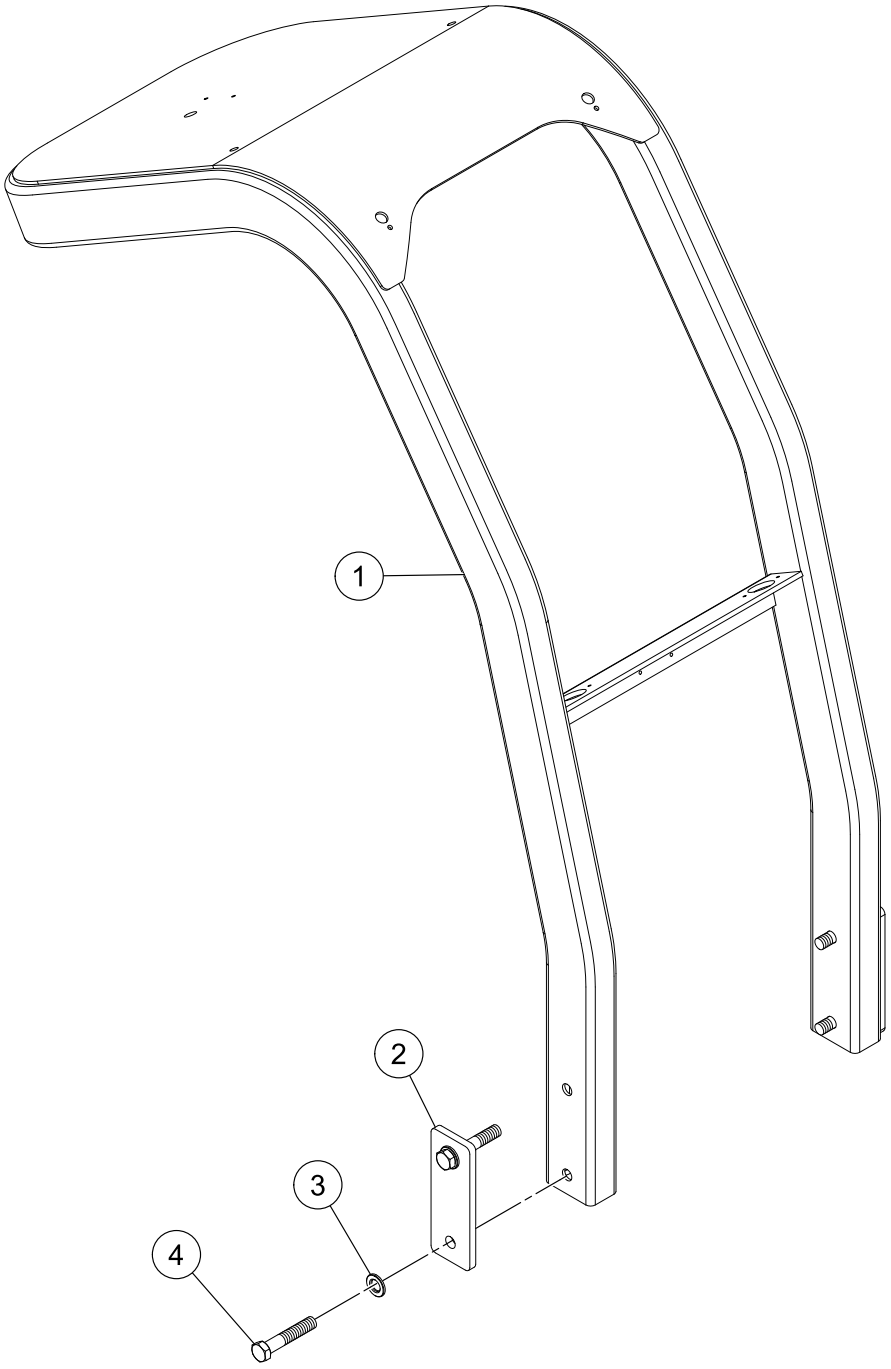

BOM 13178553

ITEM	COMM. NO.	DESCRIPTION	QTY	DIMENSIONS/NOTES
1	13275276	ROPS/FOPS	1	
2	13275789	ROPS Plate	2	
3	96702642	Washer, Zinc Plated	4	M24 Hardened
4	96715578	HHCS	4	

ARCH ROPS INSTALLATION

Dwg D13178579/02

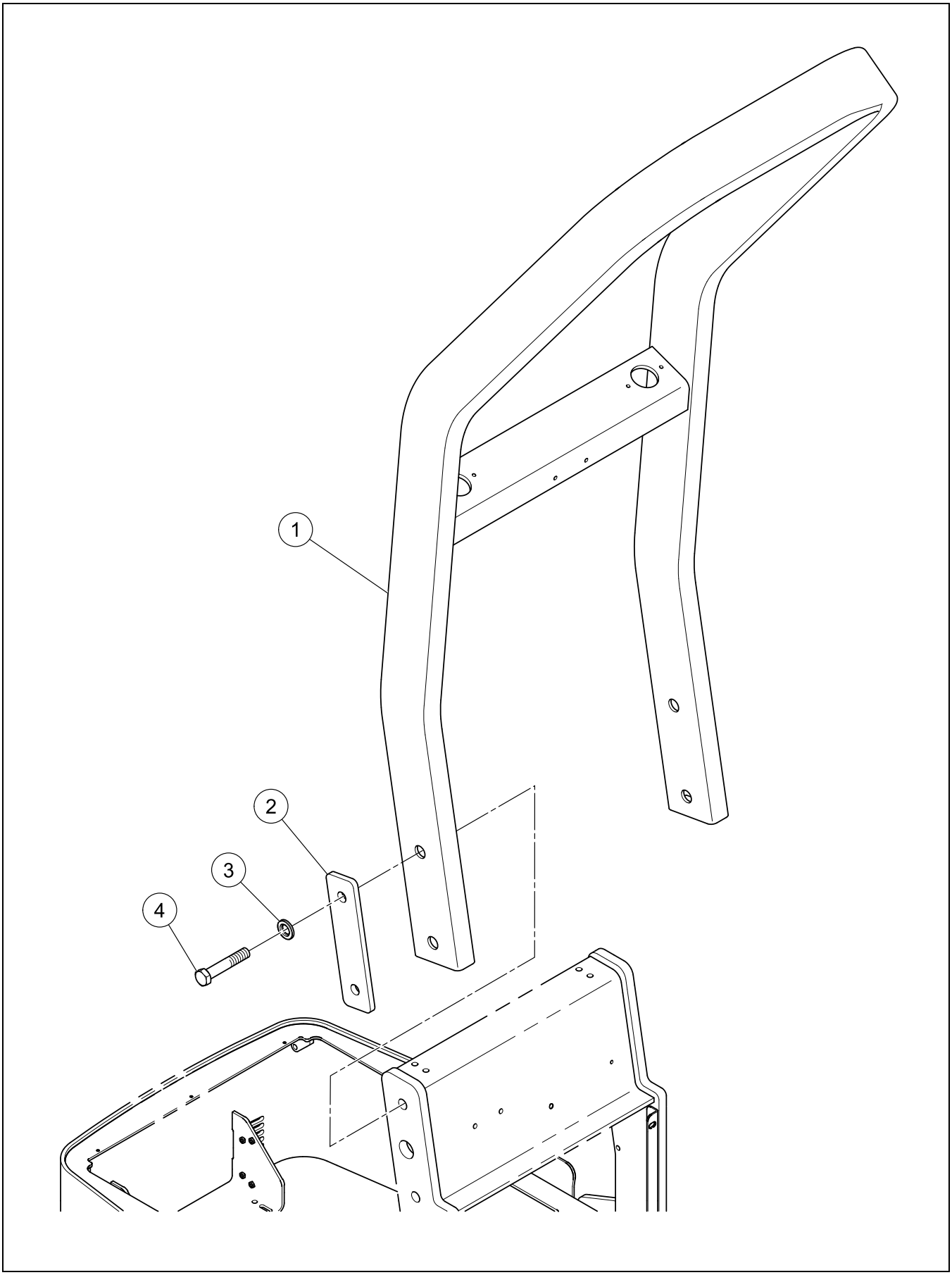

BOM 13369400

ITEM	COMM. NO.	DESCRIPTION	QTY	DIMENSIONS/NOTES
1	13234059	Arch ROPS	1	
2	13275789	ROPS Plate	2	
3	96702642	Washer, Zinc Plated	4	M24 Hardened
4	96712716	HHCS	4	

NO ROPS INSTALLATION - OPTIONAL

Dwg 13414552/00

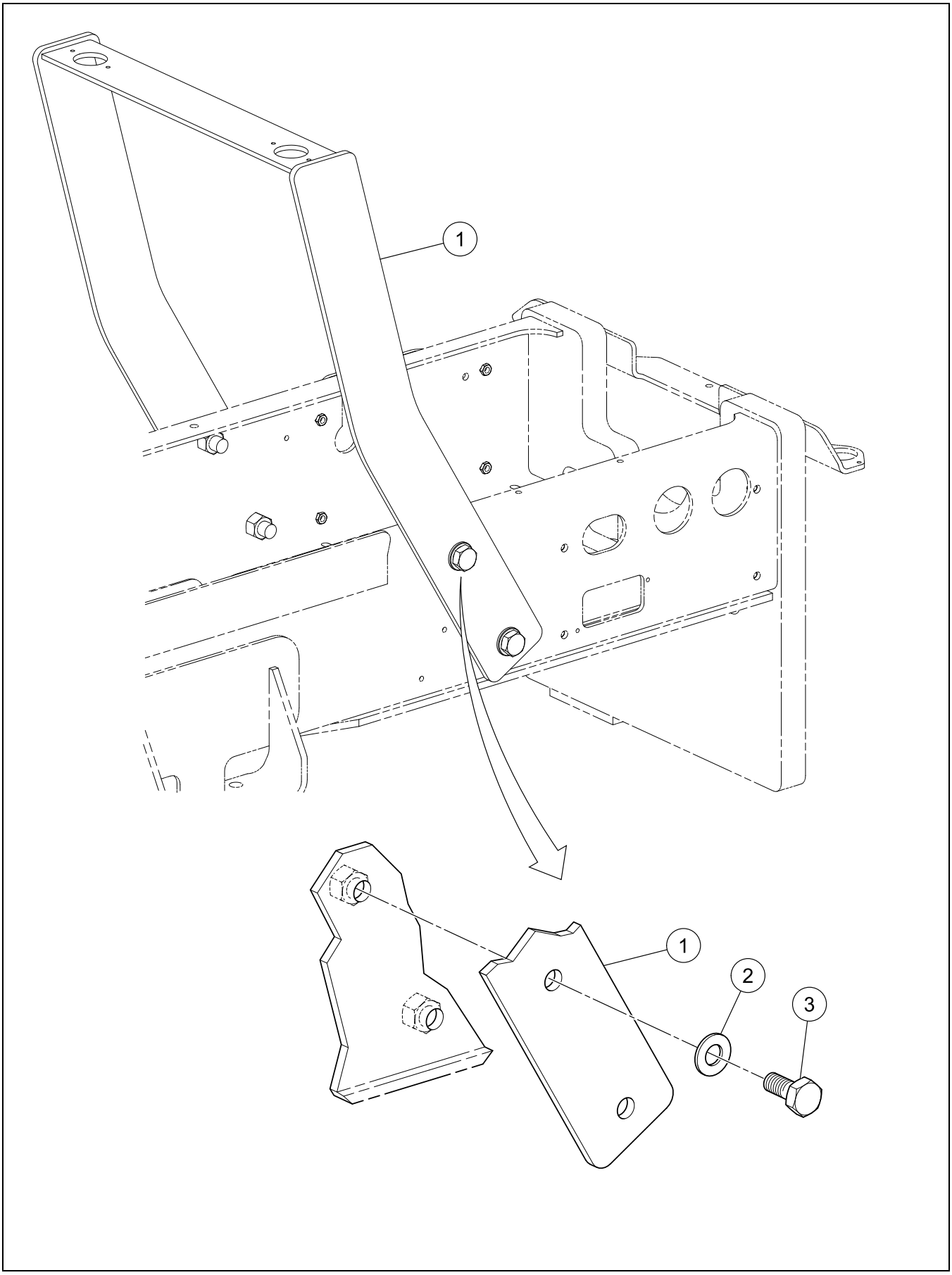

NO ROPS INSTALLATION - OPTIONAL

BOM 13414552

ITEM	COMM. NO.	DESCRIPTION	QTY	DIMENSIONS/NOTES
1	13414578	Support Bracket	1	
2	96702642	Washer, Zinc Plated	4	M24 Hardened
3	96720008	HHCS, Fully Threaded, Zinc Plated	4	M24 x 3.0 x 65 Cl 8.8

VANDAL COVER INSTALLATION - OPTIONAL

Dwg D13182118/05

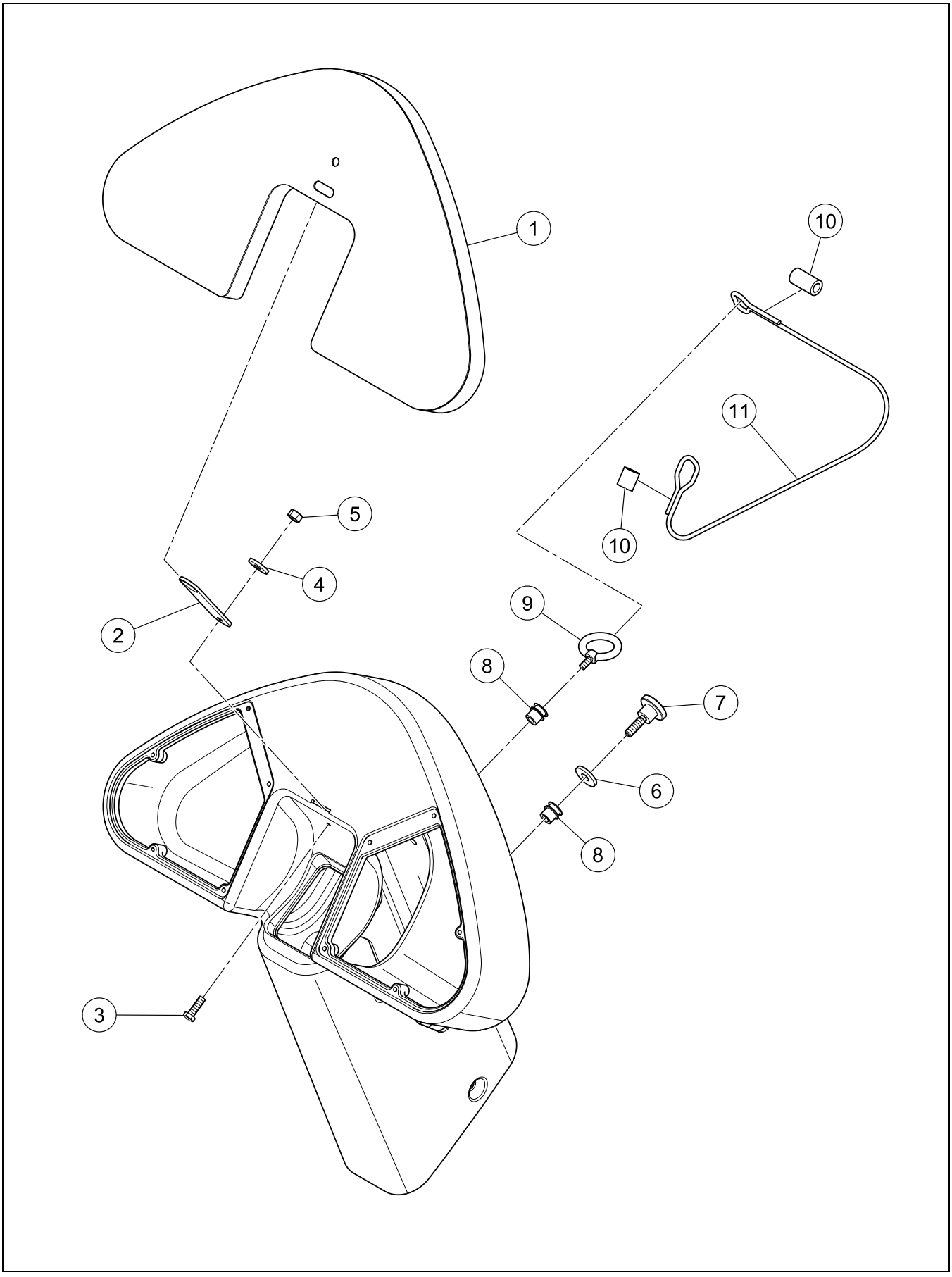

VANDAL COVER INSTALLATION - OPTIONAL

BOM 59287466

ITEM	COMM. NO.	DESCRIPTION	QTY	DIMENSIONS/NOTES
1	13290440	Vandal Cover	1	
2	13182373	Locking Plate	1	
3	96705728	Screw, Fully Threaded, Zinc Plated	1	M5 x 0.8 x 16 Cl 8.8
4	96718598	Washer, Zinc Plated	1	M5 x 2.0 Cl 10 Hardened
5	96705132	Hex Nut, Zinc Plated	1	M5 x 0.08 Cl 8
6	54601299	Rubber Washer	1	
7	96745518	Screw, Zinc Plated	1	M8 x 1.25
8	13235676	Insert	2	
9	13235692	Eyebolt	1	
10	59607853	Ferrule	2	
11	13412655	Cable	1	

FIRST AID MOUNTING INSTALLATION - OPTIONAL

Dwg D13233697/01

FIRST AID MOUNTING INSTALLATION - OPTIONAL

BOM 13223995

ITEM	COMM. NO.	DESCRIPTION	QTY	DIMENSIONS/NOTES
1	59275917	Mounting Bracket	1	
2	59275990	First Aid Strap	2	
3	96740444	Screw, Zinc Plated	2	4.8 x 1.6 x 13
4	96738554	Flatwasher, Zinc Plated	2	M5 Hardened Cl 200
5	59289025	Decal: First Aid	1	

Always use Manufacturer Replacement parts!*

Section B - DRUM AND MAIN FRAME

FRONT FRAME INSTALLATION

Dwg D13177654/03

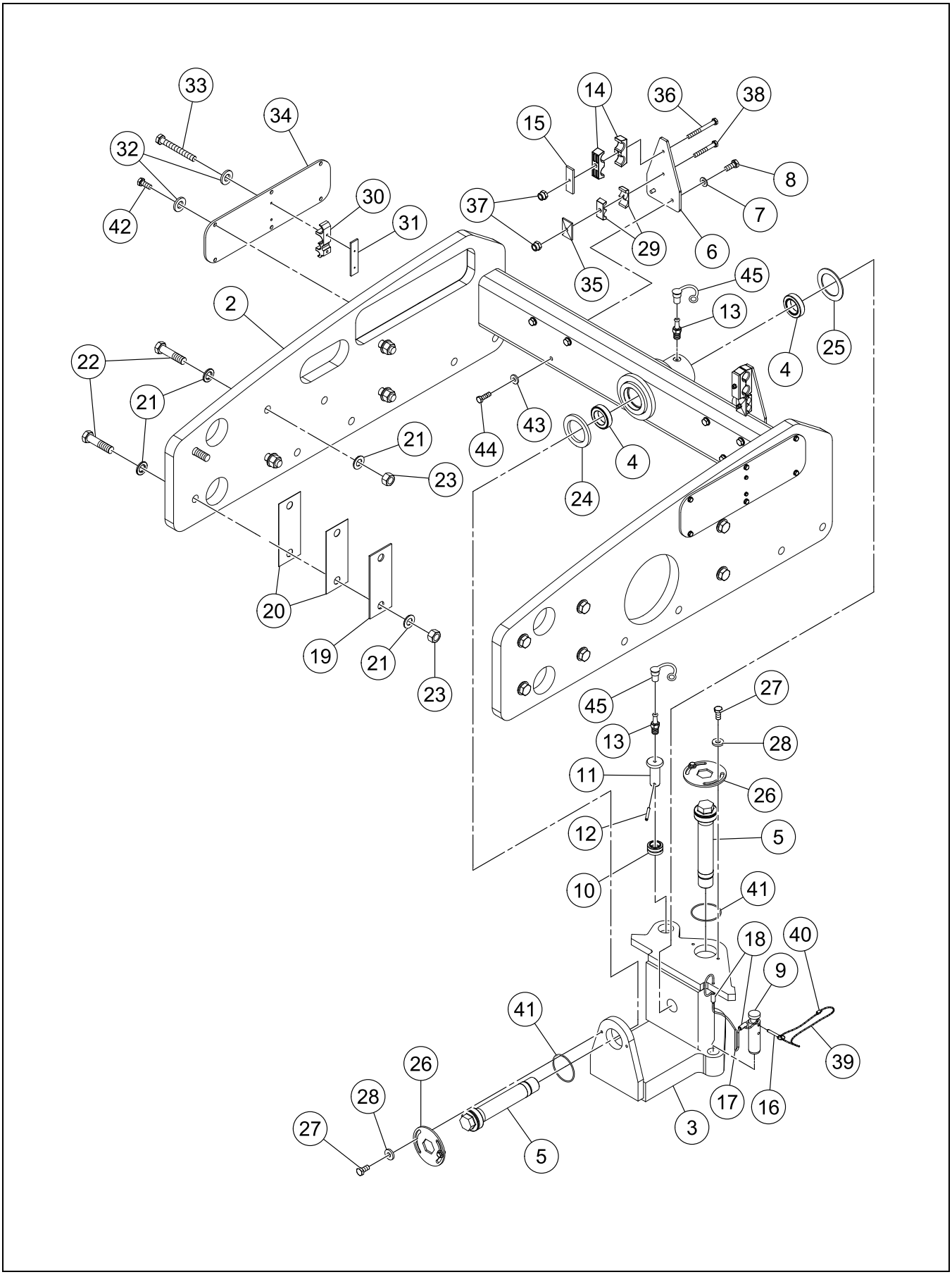

FRONT FRAME INSTALLATION

BOM 13177654

ITEM	COMM. NO.	DESCRIPTION	QTY	DIMENSIONS/NOTES
2	13459441	Drum Frame	1	
3	13230362	Swivel	1	
4	13187877	Bearing	2	
5	13219142	Pin	2	
6	13274451	Clamp Plate	2	
7	96741046	Flatwasher, Zinc Plated	4	M10 Cl 200
8	96702287	HHCS, Fully Threaded, Zinc Plated	4	M10 x 1.5 x 25 Cl 8.8
9	59298208	Articulation Pin	1	
10	59450528	Bushing	1	
11	59190975	Pivot Pin	1	
12	95098679	Rollpin	1	
13	95201547	Fitting	2	
14	59829432	Insert Clamp	4	
15	59656322	Cover Plate	2	
16	59299545	Hitch Pin	1	
17	59607861	Cable	1	
18	59607853	Ferrule	2	
19	13237128	Shim	4	5.0mm
20	13237144	Shim	8	1.5mm
21	96702642	Washer, Zinc Plated	24	M24 Hardened
22	96712716	HHCS	12	
23	96727532	Hex Nut, Zinc Plated	12	M24 x 3 Cl 8
24	13187968	Dust Seal	1	
25	13187976	Dust Seal	1	
26	59109819	Lock Plate	2	
27	96712146	HHCS, Fully Threaded, Zinc Plated	4	M10 x 1.5 x 20 Cl 10.9
28	96711833	Flatwasher, Zinc Plated	4	M10 Cl 10
29	59891002	Insert Clamp	4	
30	13213509	Hose Clamp	2	
31	13213525	Clamp Plate	2	
32	96741053	Flatwasher, Zinc Plated	16	M6 Cl 200
33	96705546	HHCS, Zinc Plated	4	M6 x 1.0 x 50 Cl 8.8
34	13291307	Hose Cover Plate	2	
35	59583500	Cover Plate	2	
36	96718978	HHCS, Zinc Plated	2	M8 x 1.25 x 80 Cl 8.8
37	96704606	Hex Locknut, Zinc Plated	4	M8 x 1.25 Cl 8
38	96712252	Bolt, Zinc Plated	2	M8 x 1.25 Cl 8.8
39	59436741	Cable	1	
40	59214775	Cable Sleeve	1	
41	95018719	O-ring	2	
42	96702394	HHCS, Fully Threaded, Zinc Plated	12	M6 x 1 x 12 Cl 8.8
43	96712237	Flatwasher, Zinc Plated	6	M12 Hardened Cl 10
44	96702311	HHCS, Fully Threaded, Zinc Plated	6	M12 x 1.75 x 30 Cl 8.8
45	50270248	Cap	2	

DRUM ASSEMBLY

Dwg D13187018/04

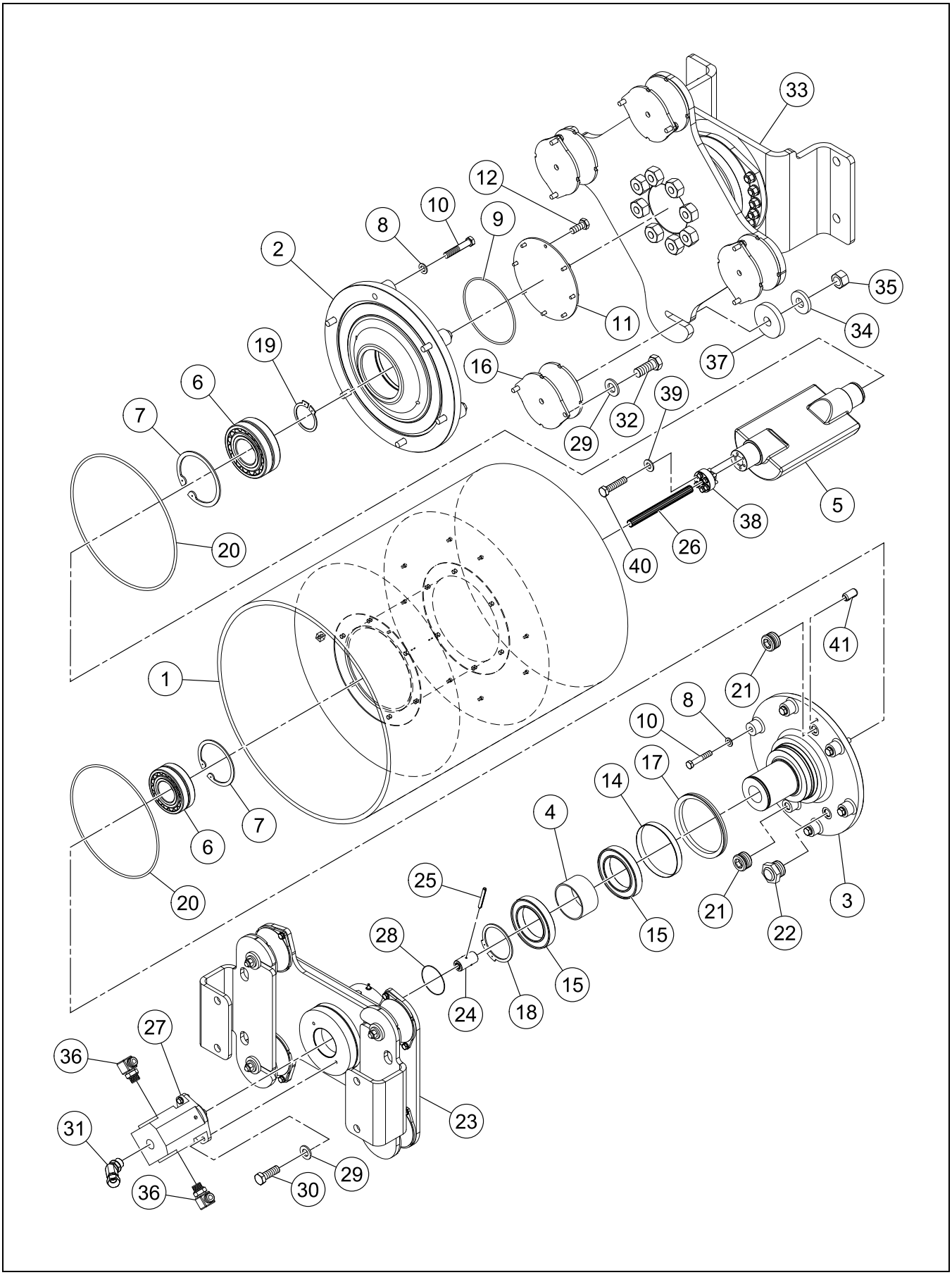

DRUM ASSEMBLY

BOM 13187018, 13188776

ITEM	COMM. NO.	DESCRIPTION	QTY	DIMENSIONS/NOTES
1	13273578	Drum (SD-45D)	1	
-	13273511	Drum (SD-45F)	1	
2	13181730	Bearing Housing Drive	1	
3	13181664	Bearing Housing Spindle	1	
4	13181862	Spacer	1	
5	13181748	Eccentric Shaft	1	
6	59208512	Spherical Roller Bearing	2	
7	96710983	Ring Clip	2	
8	96738612	Flatwasher, Zinc Plated	12	M16 Hardened Cl 200
9	95720256	O-ring	1	
10	96739990	Hex Head Bolt, Zinc Plated	12	M16 x 2.0 x 90 Cl 10.9
11	13323928	Cover	1	
12	96743851	HSHCS, Zinc Plated	8	M8 x 1.25 x 16 Cl 8.8
14	59277756	Wear Sleeve	1	
15	50269984	Bearing	2	
16	13304787	Shock Mount	4	
17	13167390	V-ring Seal	1	
18	96711510	Retaining Ring	1	
19	96711411	Ring Clip	1	
20	95028247	O-ring	2	
21	59144428	Magnetic Plug	2	
22	59277772	Sight Gauge	1	
23	**NSVA**	**Carrier Assembly**	**1**	**See Page B - 6.**
24	59549014	Coupling	1	
25	96733290	Roll Pin	1	
26	13181698	Spline Shaft	1	
27	13223938	Vibration Motor	1	
-	13493762	- Seal Kit	1	
28	95988739	O-ring	1	
29	96738596	Hardened Flatwasher	10	
30	96702311	HHCS, Fully Threaded, Zinc Plated - SD-45D	2	M12 x 1.75 x 30 Cl 8.8
-	96702329	HHCS, Fully Threaded, Zinc Plated - SD-45F	2	M12 x 1.75 x 35 Cl 8.8
31	95363339	Elbow, 45°	1	
32	96702808	HHCS, Fully Threaded, Zinc Plated	8	M12 x 1.75 x 30 Cl 10.9
33	**NSVA**	**Drum Drive Assembly**	**1**	**See Page B - 8.**
34	59565044	Flatwasher	4	3/4 Hardened
35	96703657	Nut, Zinc Plated	4	M16 Cl 10
36	59922989	Adapter	2	
37	13351408	Washer	4	
38	13207519	Spline Coupling	1	
39	96741046	Flatwasher, Zinc Plated	6	M10 Cl 200
40	96705124	HHCS, Fully Threaded, Zinc Plated	6	M10 x 1.5 x 45 Cl 8.8
41	96737069	Roll Pin	1	

Dwg D13187141/00

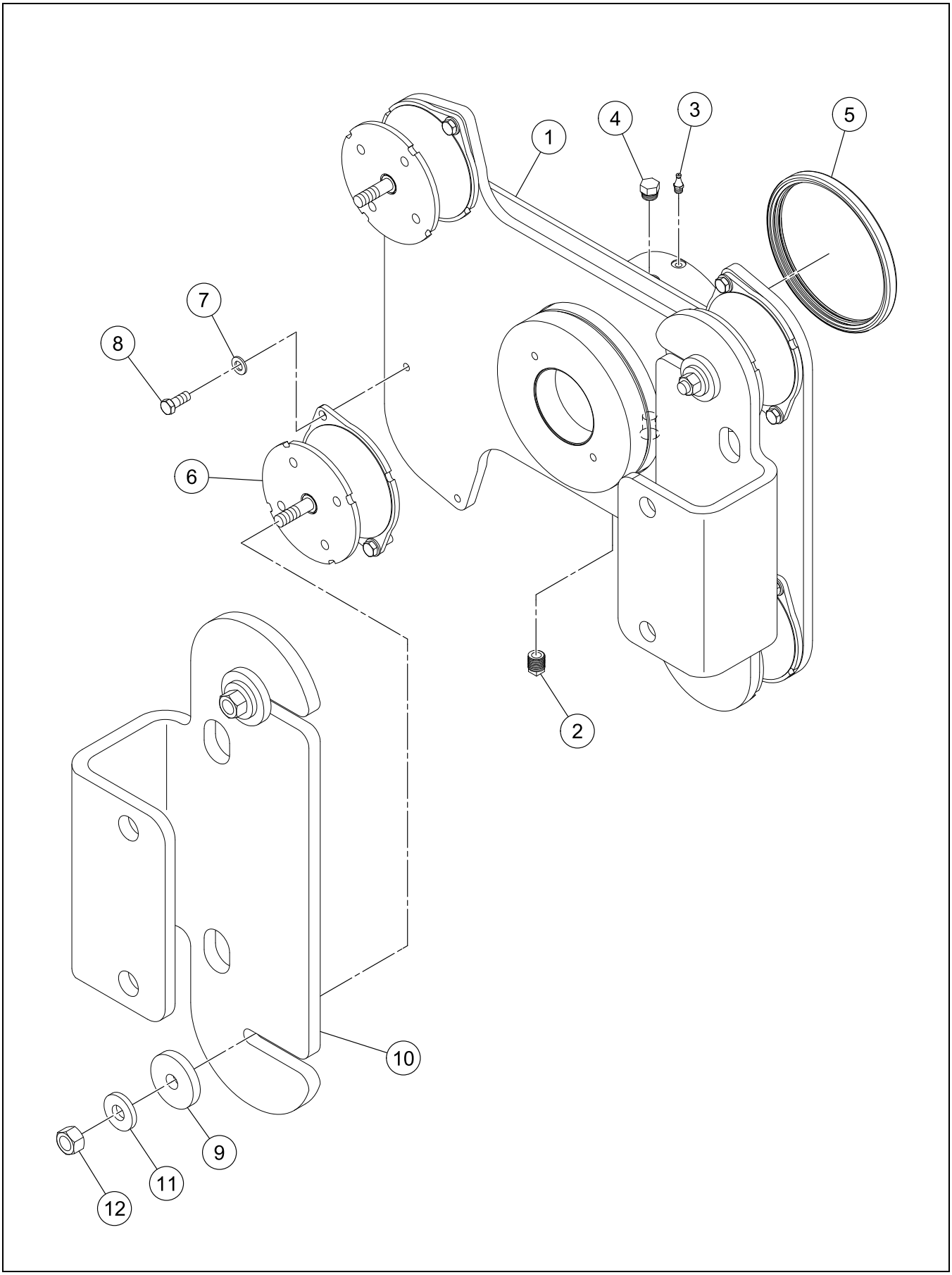

CARRIER ASSEMBLY

BOM 13187141

ITEM	COMM. NO.	DESCRIPTION	QTY	DIMENSIONS/NOTES
1	13187158	Carrier Plate	1	
2	59600593	Pipe Plug	2	
3	96702709	Grease Fitting	1	
4	54584776	Breather Filtered Vent	1	
5	59277764	Oil Seal	1	
6	13304787	Shock Mount	4	
7	96738596	Flatwasher, Zinc Plated	8	M12 Hardened Cl 200
8	96702808	HHCS, Fully Threaded, Zinc Plated	8	M12 x 1.75 x 30 Cl 10.9
9	13351408	Washer	4	
10	13232665	Shock Plate	2	
11	59565044	Washer	4	3/4 Hardened
12	96703657	Nut, Zinc Plated	4	M16 Cl 10

DRUM DRIVE ASSEMBLY

Dwg D13188206/00

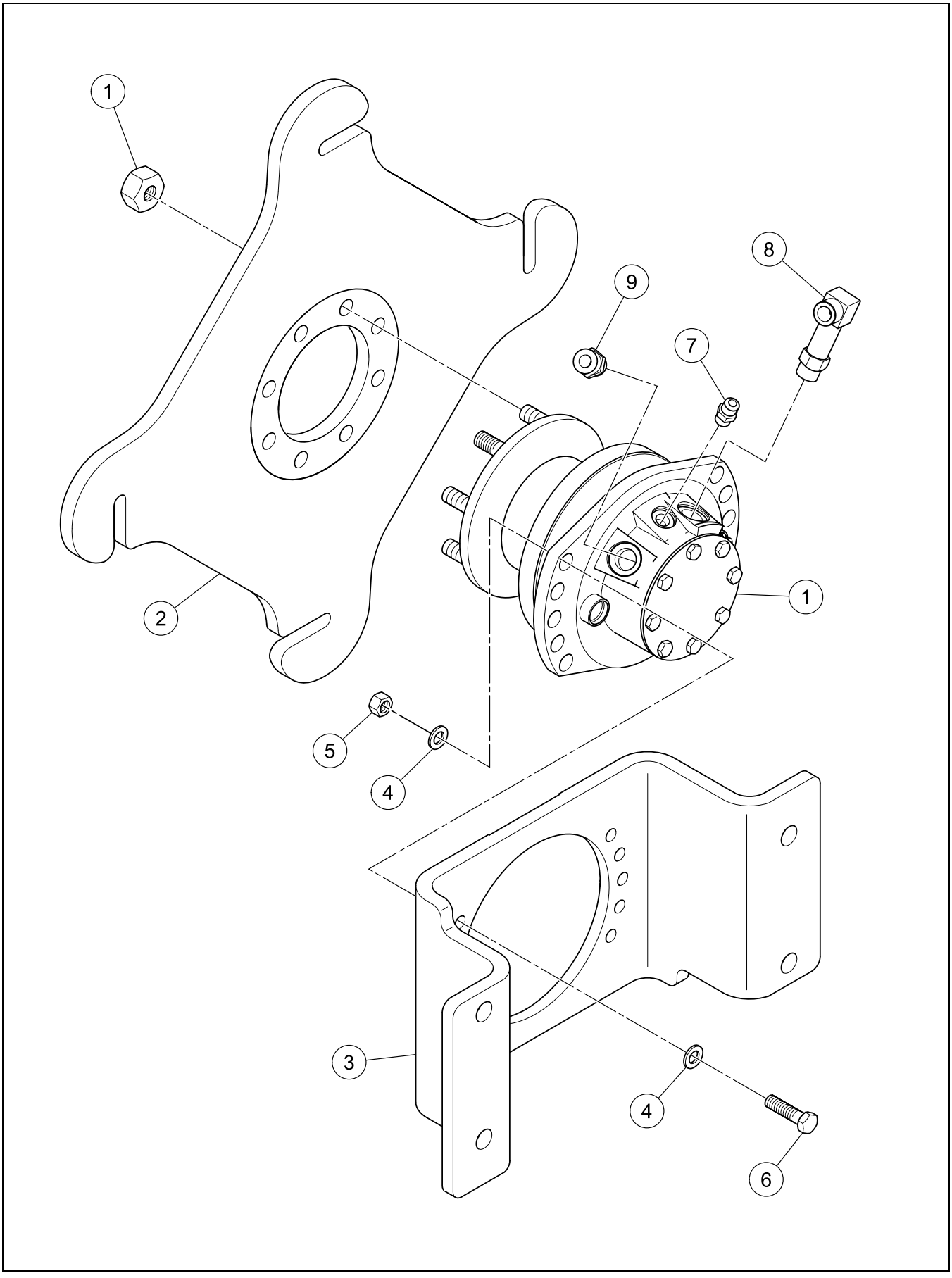

DRUM DRIVE ASSEMBLY

BOM 13188206

ITEM	COMM. NO.	DESCRIPTION	QTY	DIMENSIONS/NOTES
1	**13177399**	**Drum Drive Motor**	**1**	**See Breakdown B - 10.**
-	13361050	ARC - Drum Drive Motor	1	
2	13232681	Drive Plate	1	
3	13273768	Drive Plate	1	
4	96738612	Flatwasher, Zinc Plated	20	M16 Hardened Cl 200
5	96711882	Hex Nut, Zinc Plated	10	M16 x 2.0 Cl 8
6	96700893	HHCS, Zinc Plated	10	M16 x 2.0 x 60 Cl 8.8
7	95303368	Adapter	1	
8	59408567	Adapter	1	
9	59922591	Adapter	1	

DRUM DRIVE MOTOR (13177399) - INTERNAL BREAKDOWN

Dwg 13177399/00

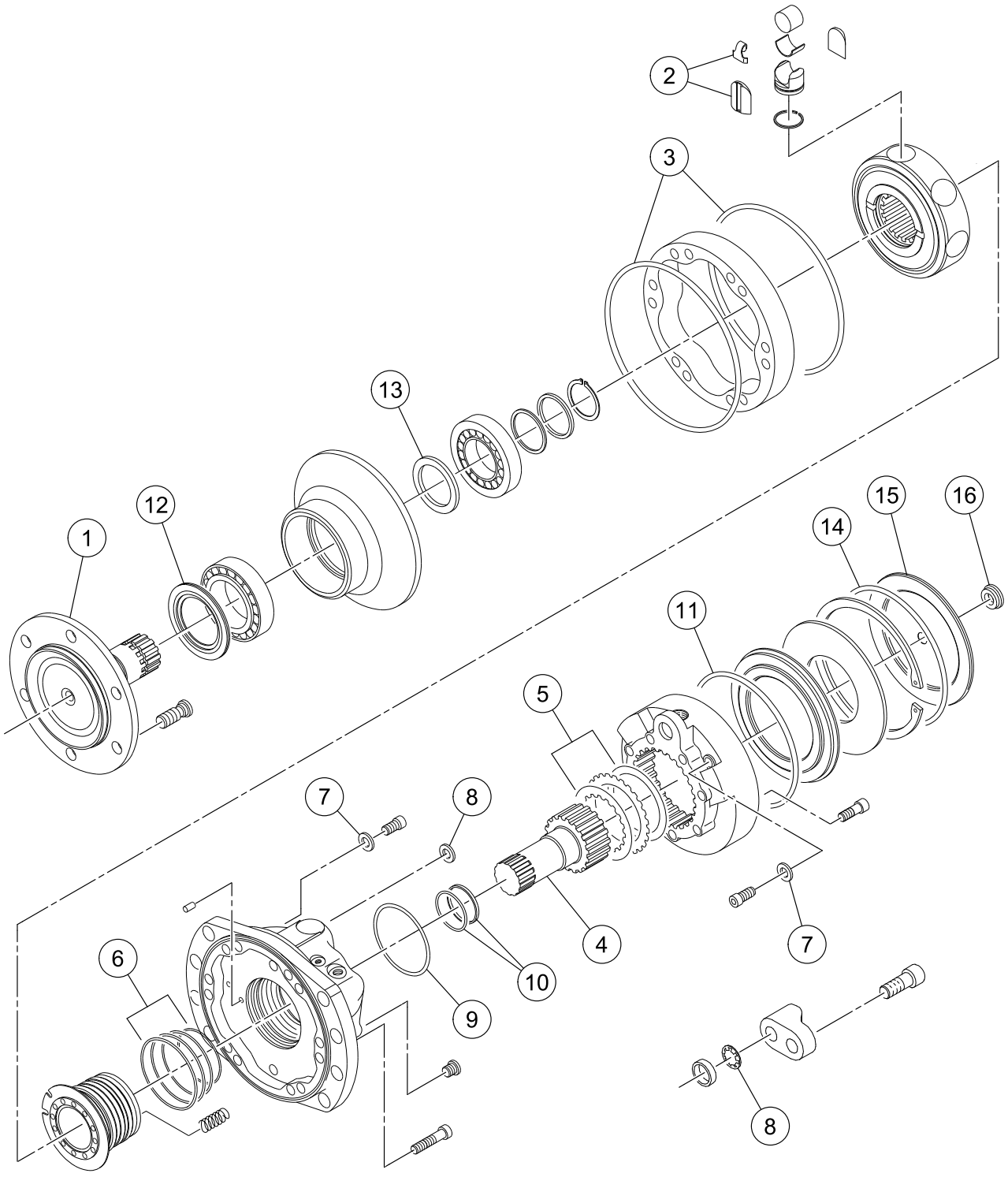

Item #17 - includes 3, 6, 7, 8, 9, 10, 11, 12, 13, 14, 15, 16

DRUM DRIVE MOTOR (13177399) - INTERNAL BREAKDOWN

BOM 13177399

ITEM	COMM. NO.	DESCRIPTION	QTY	DIMENSIONS/NOTES
1	13264023	Shaft	1	
2	13264080	Repair Kit	1	
3	13264064	O-ring	2	
4	13264148	Shaft	1	
5	13264155	Brake Disc Kit	1	
6	13264106	Seal Kit	1	
7	59902668	Seal	2	
8	13262498	Holder	1	
9	59902684	O-ring	1	
10	13264130	Seal	1	
11	13264163	O-ring	1	
12	13493747	Lip Seal	1	
13	13264312	Environmental Seal	1	
14	13264189	Snap Ring	1	
15	13264379	Protector	1	
16	59022319	Rubber Plug	1	
17	13264007	Seal Kit	1	
18	13493754	Seal Kit (Not Shown)	1	

REAR FRAME INSTALLATION

Dwg D13277686/03

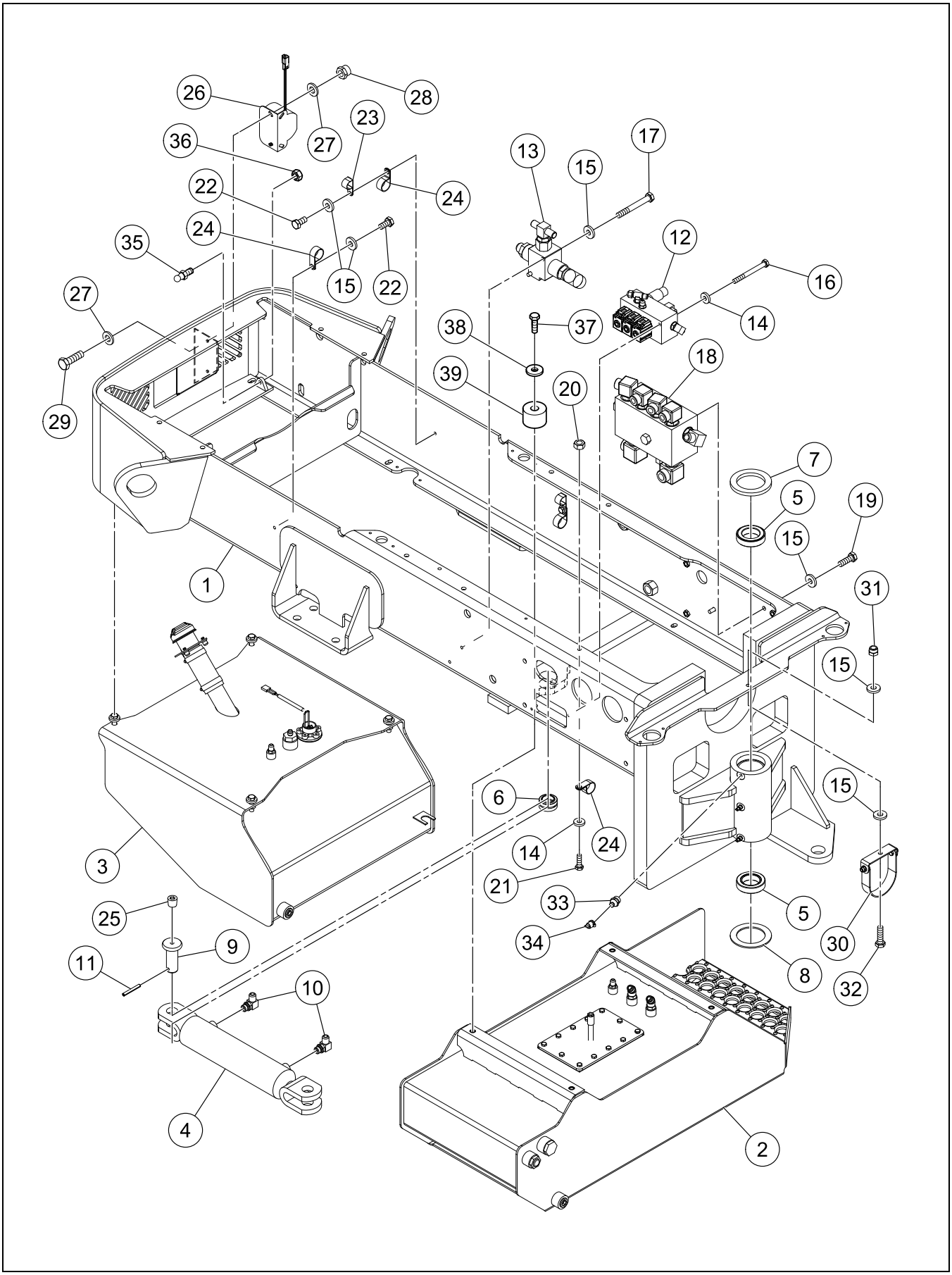

BOM 13177662

ITEM	COMM. NO.	DESCRIPTION	QTY	DIMENSIONS/NOTES
1	13438031	Rear Frame	1	
2	**NSVA**	**Hydraulic Tank Assembly**	**1**	**See Page B - 14.**
3	**NSVA**	**Fuel Tank Assembly**	**1**	**See Page B - 16.**
4	13188339	Steering Cylinder	1	
-	54577838	- Locknut	1	
-	13229042	- Repair Kit	1	
5	13187877	Bearing	2	
6	13209903	Bearing	1	
7	13187968	Dust Seal	1	
8	13187976	Dust Seal	1	
9	59190975	Pivot Pin	1	
10	95303335	Elbow	2	
11	95098679	Rollpin	1	
12	**NSVA**	**Brake/Shunt Two-Speed Manifold Assembly**	**1**	**See Page B - 18.**
13	**NSVA**	**Thermal Bypass Valve Assembly**	**1**	**See Page B - 22.**
14	96712674	Washer, Zinc Plated	3	M8 Hardened Cl 10
15	96711833	Flatwasher, Zinc Plated	10	M10 Cl 10
16	96718978	HHCS, Zinc Plated	2	M8 x 1.25 x 80 Cl 8.8
17	96705272	HHCS, Zinc Plated	2	M10 x 80 Cl 8.8
18	**NSVA**	**Traction Valve Assembly**	**1**	**See Page B - 24.**
19	96701917	HHCS, Fully Threaded, Zinc Plated	2	M10 x 1.5 x 30 Cl 8.8
20	96701370	Nut, Zinc Plated	1	M8 x 1.25 Cl 8
21	96702659	HHCS, Fully Threaded, Zinc Plated	1	M8 x 1.25 x 25 Cl 8.8
22	96702279	HHCS, Fully Threaded, Zinc Plated	4	M10 x 1.5 x 20 Cl 8.8
23	59020271	Clamp	4	
24	95457586	Clamp	4	
25	95049359	Pipe Plug	1	
26	13295605	Backup Alarm	1	
27	96704663	Washer, Zinc Plated	4	M6 Large
28	96702873	Locknut, Zinc Plated	2	M6 Cl 10
29	96704564	HHCS, Fully Threaded, Zinc Plated	2	M6 x 1.0 x 20 Cl 8.8
30	**NSVA**	**Hanger Assembly**	**1**	**See Page B - 28.**
31	96702881	Locknut	1	
32	96704309	HHCS	1	
33	95201547	Fitting	3	
34	50270248	Cap	3	
35	59475202	Ball Stud	2	
36	95929782	Hex Nut	2	
37	96714050	HHCS, Zinc Plated	4	M12 x 1.75 x 70 Cl 8.8
38	96712237	Flatwasher, Zinc Plated	4	M12 Hardened Cl 10
39	13396007	Spacer	4	

HYDRAULIC TANK ASSEMBLY

Dwg D13278221/01

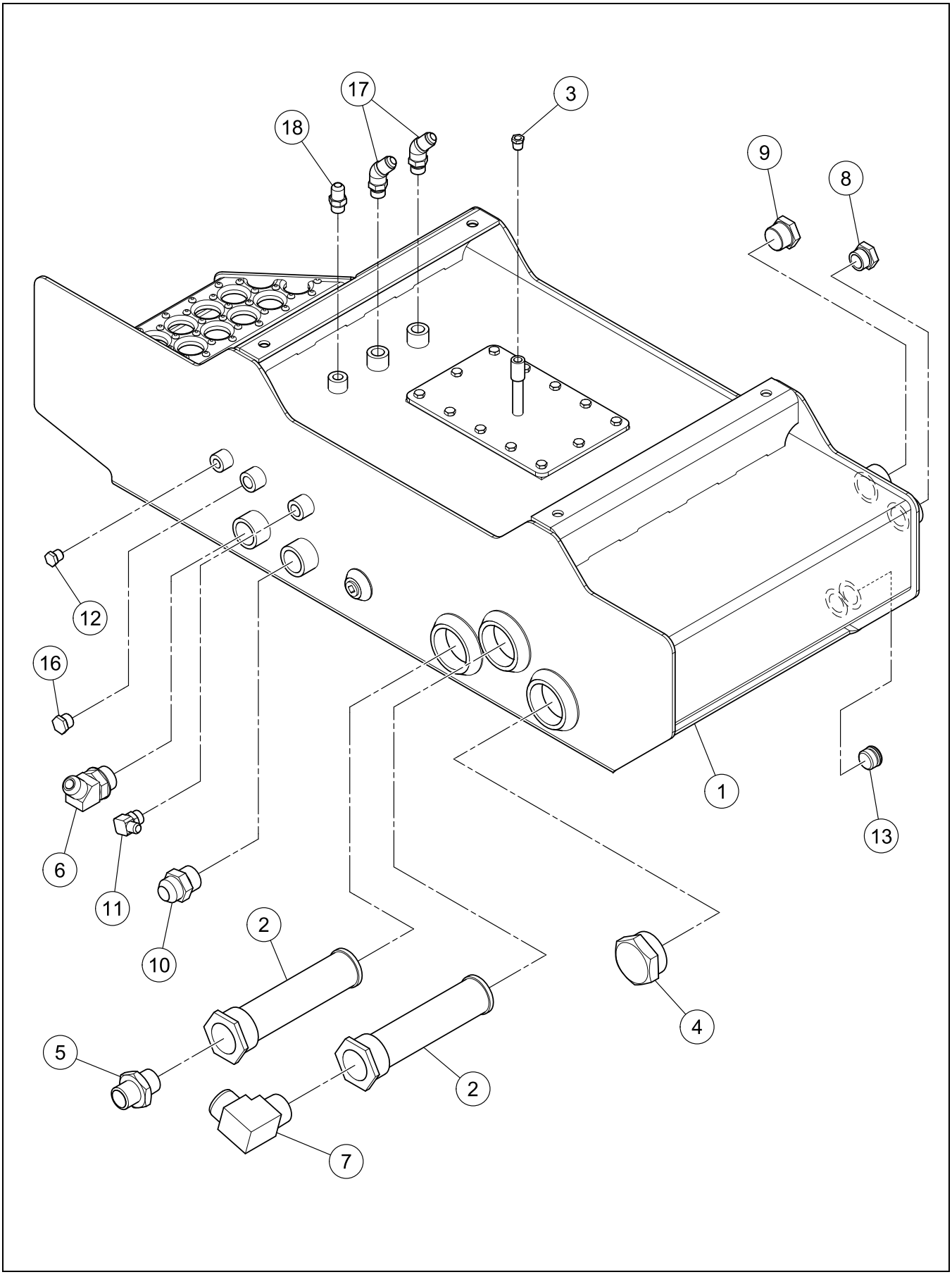

HYDRAULIC TANK ASSEMBLY

BOM 13234240

ITEM	COMM. NO.	DESCRIPTION	QTY	DIMENSIONS/NOTES
1	13272885	Hydraulic Tank	1	
-	13305099	- Hydraulic Tank Gasket	1	
-	13185384	- Hydraulic Tank Clean Out Lid	1	
-	95048393	- Nipple	1	
-	95011060	- Coupling	1	
-	96702824	- HHCS, Fully Threaded, Zinc Plated	12	M8 x 1.25 x 20 Cl 8.8
2	58855099	Hydraulic Tank Filter	2	
3	59093351	Breather Filtered Vent	1	
4	95895611	Pipe Plug	1	
5	95219770	Adapter	1	
6	95182705	Adapter	1	
7	95286548	Adapter	1	
8	59277772	Sight Gauge	1	
9	95326955	Plug	1	
10	95329983	Adapter	1	
11	95356853	Adapter	1	
12	95343596	Plug	1	
13	59144428	Magnetic Plug	1	
16	95323465	Plug	1	
17	95157400	Adapter	2	
18	95365078	Adapter	1	

FUEL TANK ASSEMBLY

Dwg D13234422/03

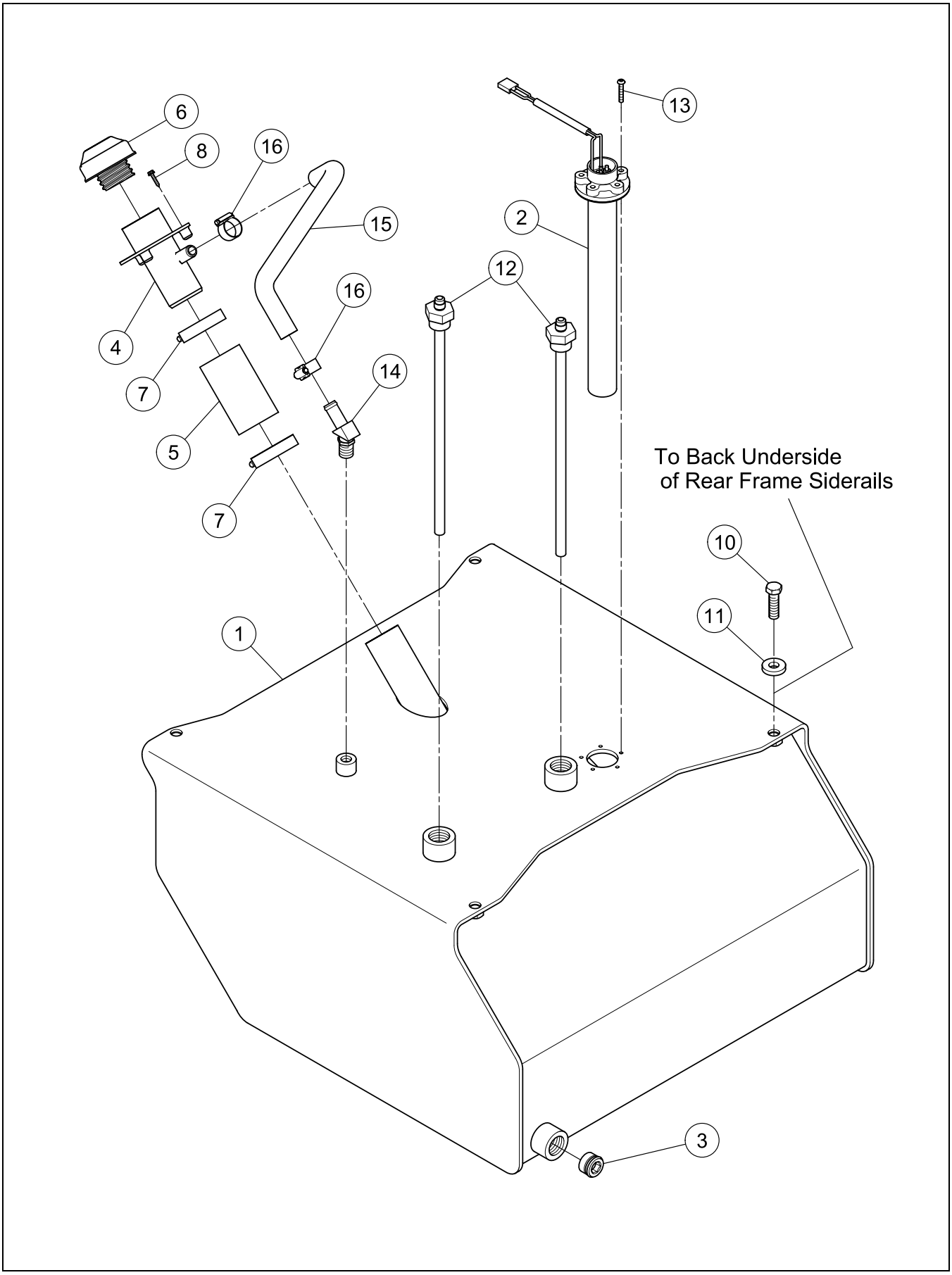

FUEL TANK ASSEMBLY

BOM 13276803

ITEM	COMM. NO.	DESCRIPTION	QTY	DIMENSIONS/NOTES
1	13320353	Fuel Tank	1	
2	13276787	Fuel Level Sender	1	
3	59144428	Magnetic Plug	1	
4	59212936	Fuel Inlet	1	
5	13270228	Fuel Inlet Hose	1	
6	59212951	Fuel Cap	1	
7	95302683	Hose Clamp	2	
8	95988093	Self-tapping Screw, Zinc Plated	3	#6 x 3/4
10	96702444	HHCS, Fully Threaded, Zinc Plated	4	M12 x 1.75 x 40 Cl 8.8
11	96712237	Flatwasher, Zinc Plated	4	M12 Hardened Cl 10
12	13235189	Fuel Supply Tube	2	
13	96740436	HSBHCS	5	M5 x 0.8 UNS
14	13321062	Hose Fitting, 45°	1	
15	13307491	Fuel Hose	1	
16	95671285	Hose Clamp	2	

BRAKE/SHUNT TWO-SPEED MANIFOLD ASSEMBLY

Dwg D13278395/01

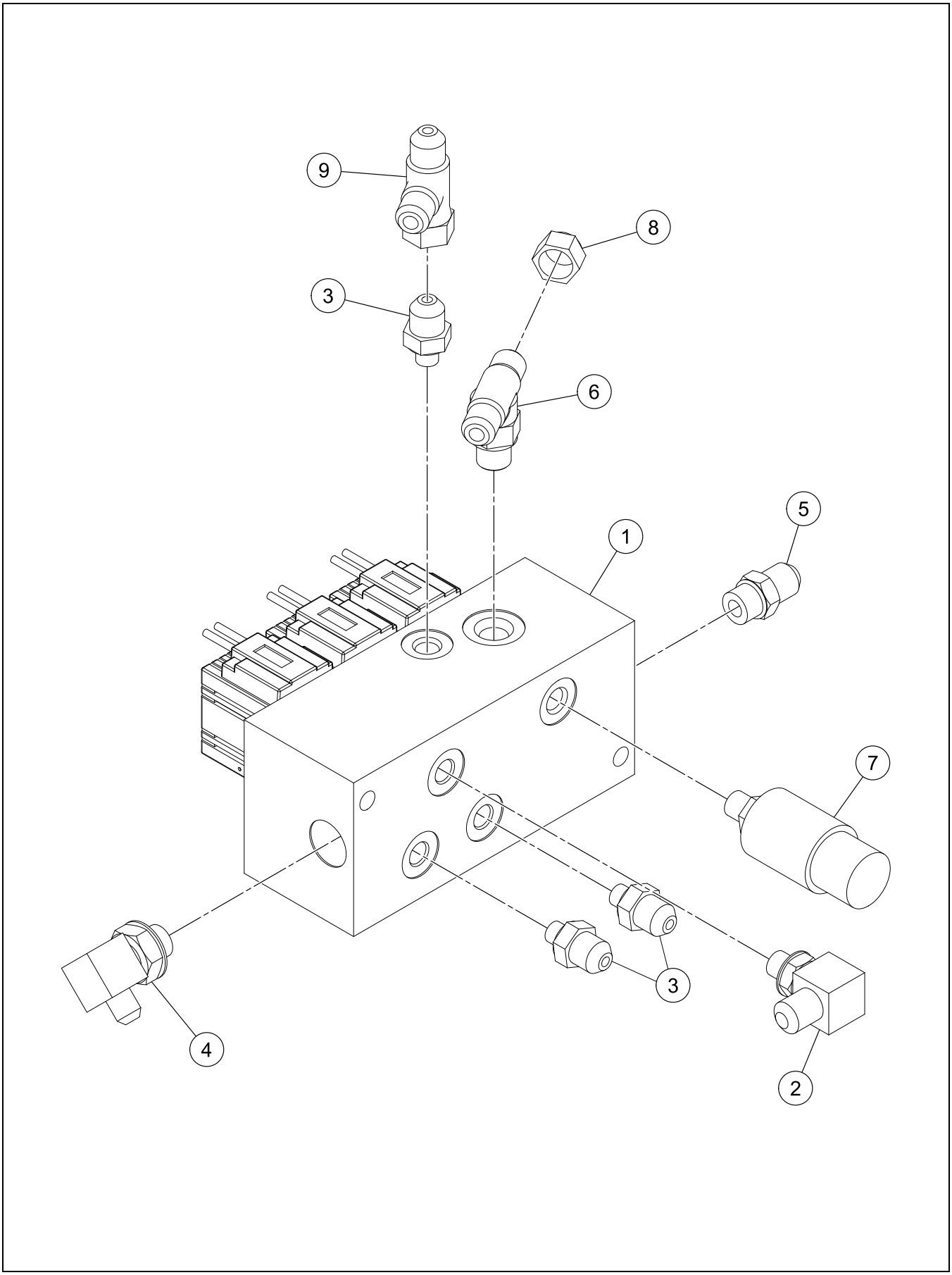

BRAKE/SHUNT TWO-SPEED MANIFOLD ASSEMBLY

BOM 13275243

ITEM	COMM. NO.	DESCRIPTION	QTY	DIMENSIONS/NOTES
1	**13205133**	**Brake/Shunt Two-Speed Manifold**	**1**	**See Breakdown B - 20.**
2	95653614	Adapter	1	
3	95402806	Adapter	3	
4	95365094	Adapter	1	
5	95365078	Adapter	1	
6	95431284	Tee	1	
7	59110312	Pressure Switch	1	
8	95257341	Cap	1	
9	95415667	Swivel Tee	1	

BRAKE/SHUNT TWO-SPEED MANIFOLD (13205133) - INTERNAL BREAKDOWN

Dwg D13244595/00

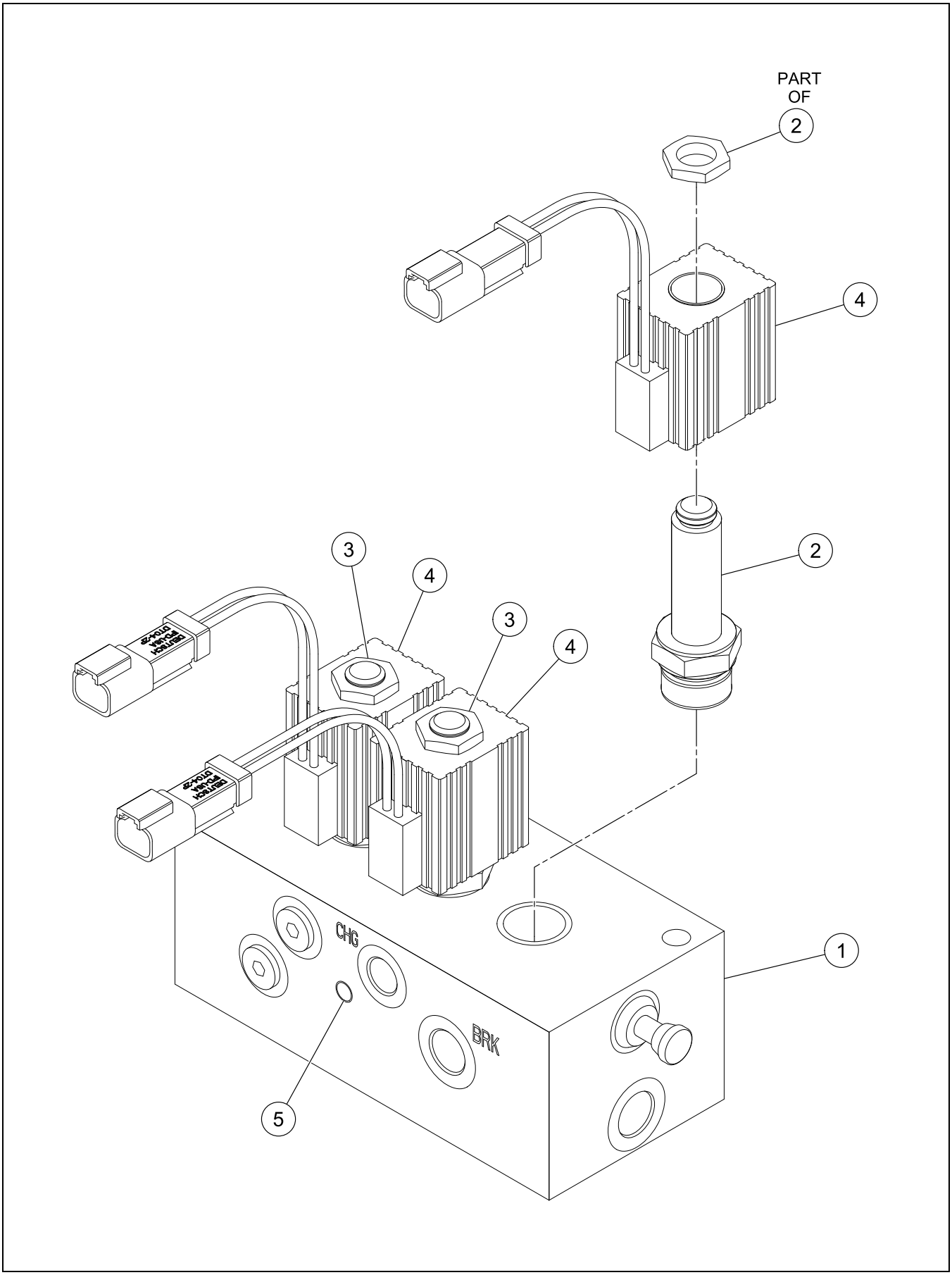

BRAKE/SHUNT TWO-SPEED MANIFOLD (13205133) - INTERNAL BREAKDOWN

BOM 13205133

ITEM	COMM. NO.	DESCRIPTION	QTY	DIMENSIONS/NOTES
1	13258660	Manifold	1	
2	13258603	Valve	1	
3	13258611	Valve	2	
-	13269436	- Seal Kit	2	
4	13258678	Coil	3	
5		This Item Not Used With This Assembly		

THERMAL BYPASS VALVE ASSEMBLY

Dwg D13278528/01

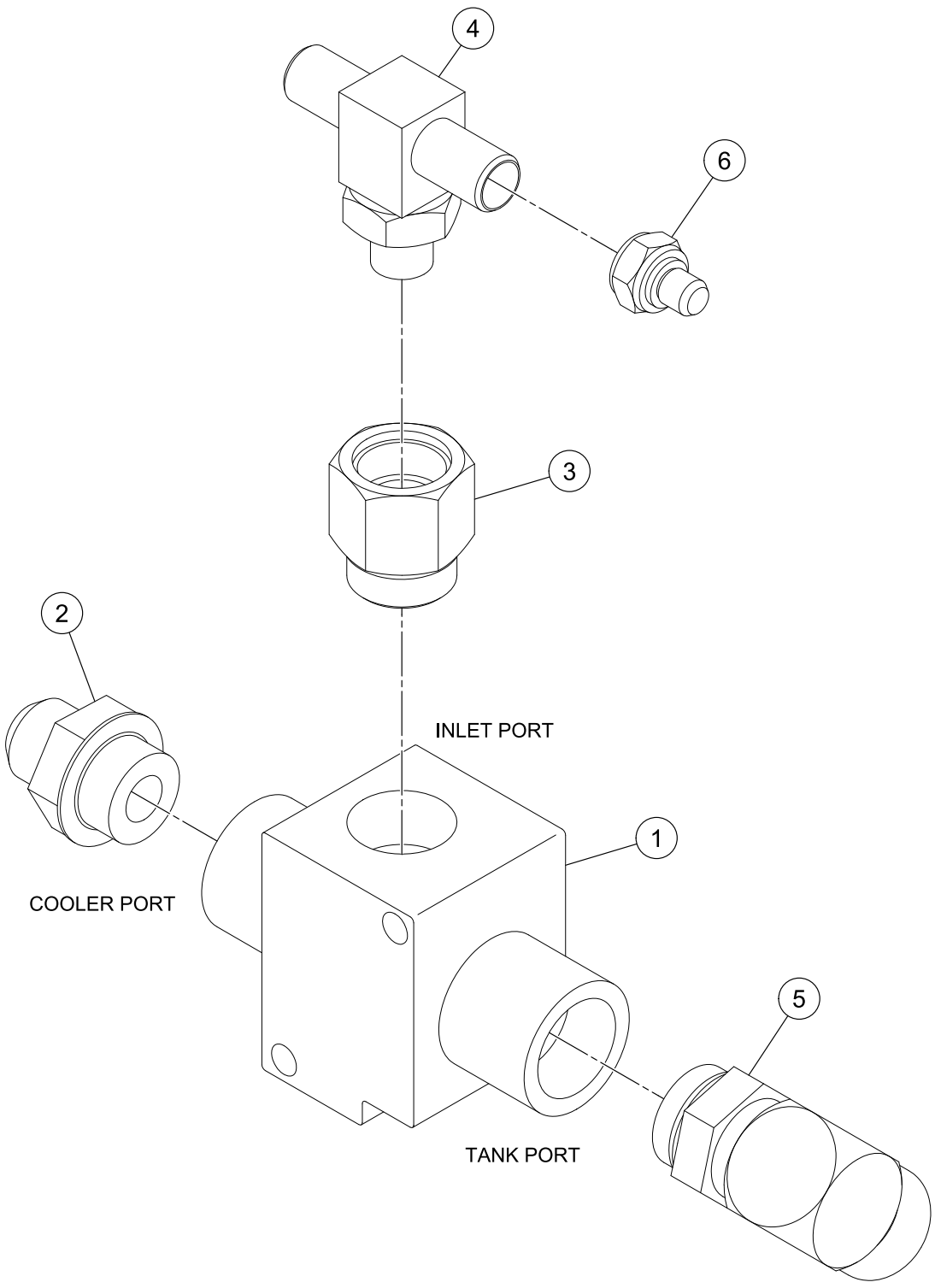

THERMAL BYPASS VALVE ASSEMBLY

BOM 13275268

ITEM	COMM. NO.	DESCRIPTION	QTY	DIMENSIONS/NOTES
1	59186346	Thermal Bypass Valve	1	
-	13493770	- Seal	2	
2	95356978	Adapter	1	
3	59924472	Adapter	1	
4	95469169	Tee	1	
5	95280194	Adapter	1	
6	59743013	Reducer	1	

TRACTION VALVE ASSEMBLY

Dwg D13278536/01

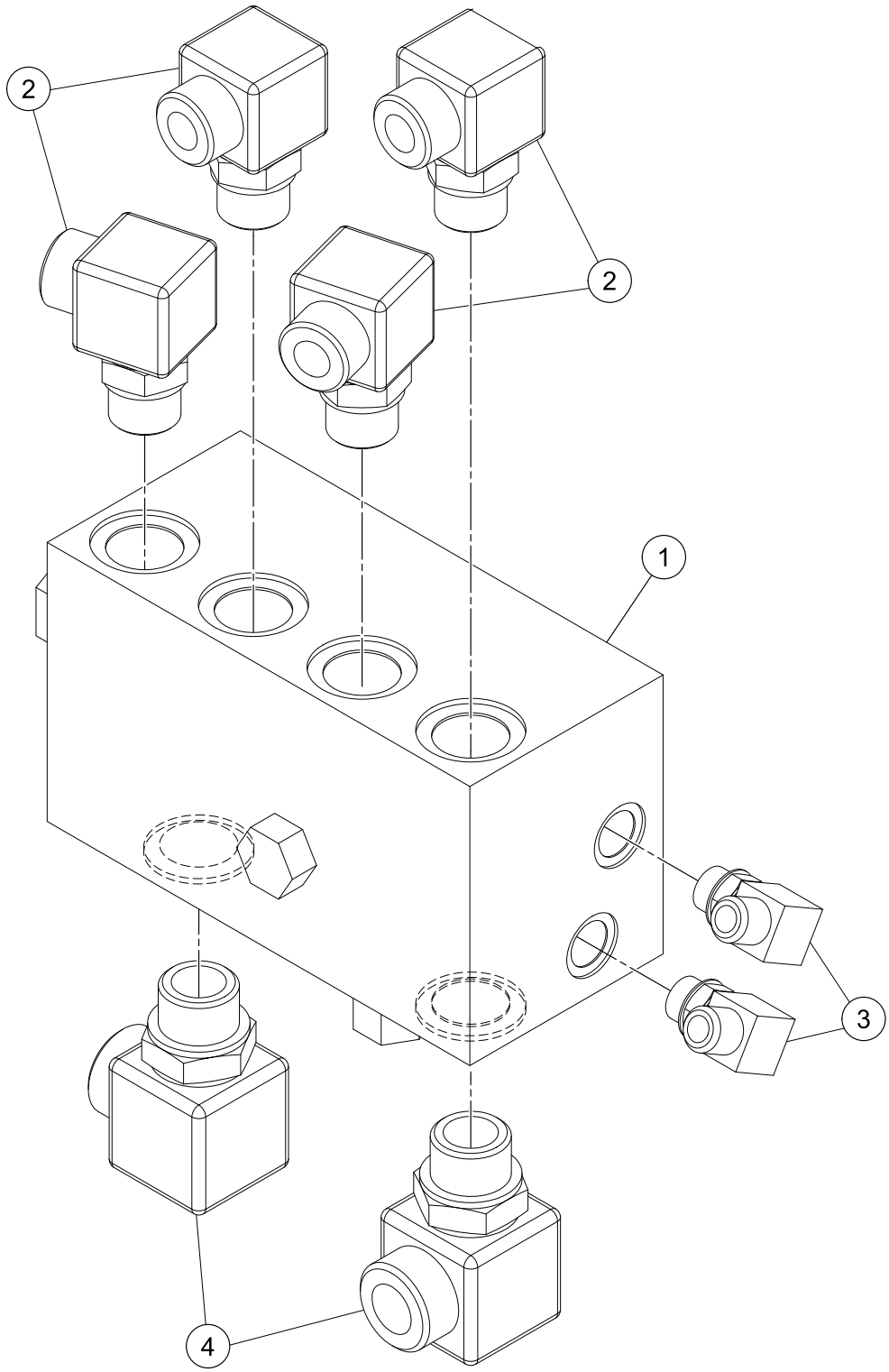

TRACTION VALVE ASSEMBLY

BOM 13275557

ITEM	COMM. NO.	DESCRIPTION	QTY	DIMENSIONS/NOTES
1	**13254537**	**Traction Valve**	**1**	**See Breakdown B - 26.**
2	59922971	Fitting	4	
3	95329975	Adapter	2	
4	59923003	Adapter	2	

TRACTION VALVE (13254537) - INTERNAL BREAKDOWN

Dwg 13254537/00

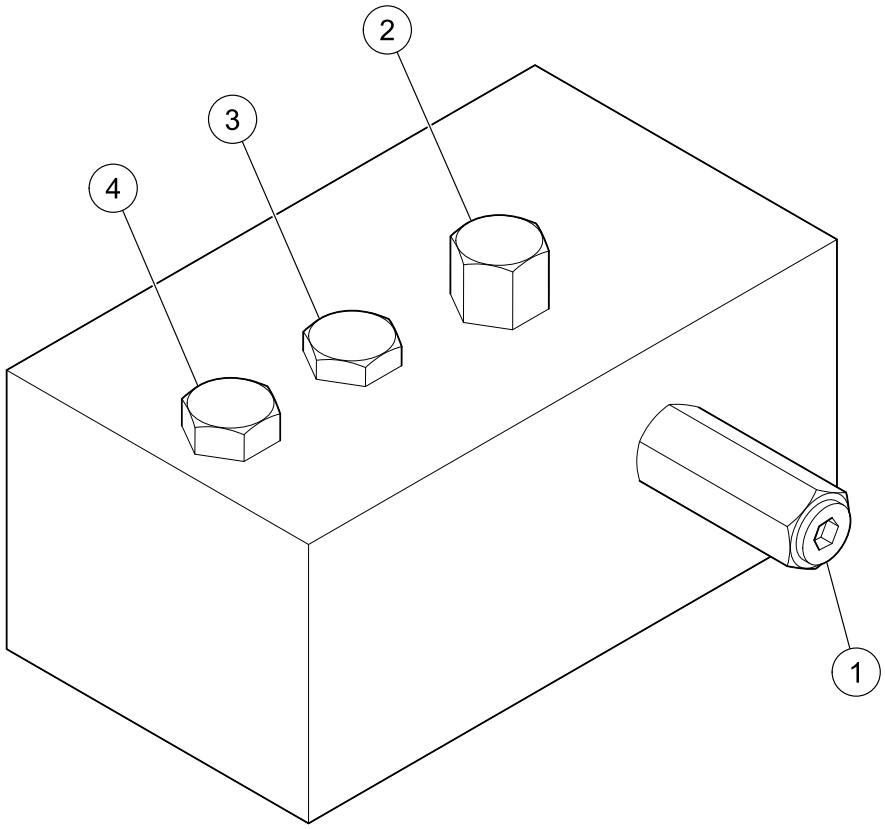

TRACTION VALVE (13254537) - INTERNAL BREAKDOWN

BOM 13254537

ITEM	COMM. NO.	DESCRIPTION	QTY	DIMENSIONS/NOTES
1	13377387	Relief Valve	1	
2	13377395	Shuttle Valve	1	
3	13377403	Check Valve	1	
4	13377411	Flow Control	1	

HANGER ASSEMBLY

Dwg D13278569/00

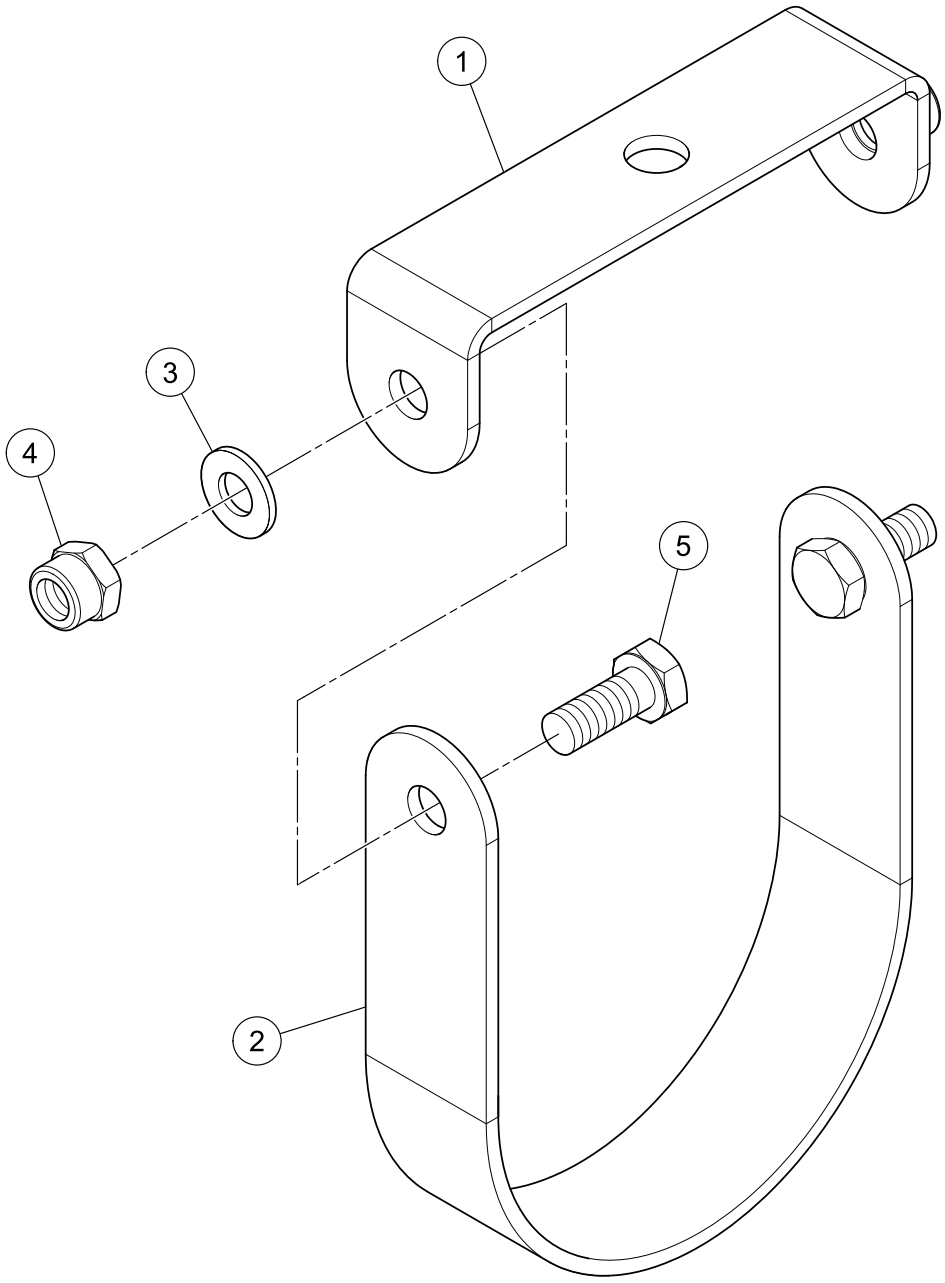

HANGER ASSEMBLY

BOM 13275862

ITEM	COMM. NO.	DESCRIPTION	QTY	DIMENSIONS/NOTES
1	13275854	Strap Hanger	1	
2	13275870	Strap	1	
3	96741038	Flatwasher	2	M8 x 1.25 Cl 200
4	96728431	Locknut, Zinc Plated	2	M8 x 1.25 Cl 10
5	96743984	HSBHCS, Zinc Plated	2	M8 x 1.25 x 20 Cl 8.8

Dwg D13277298/01

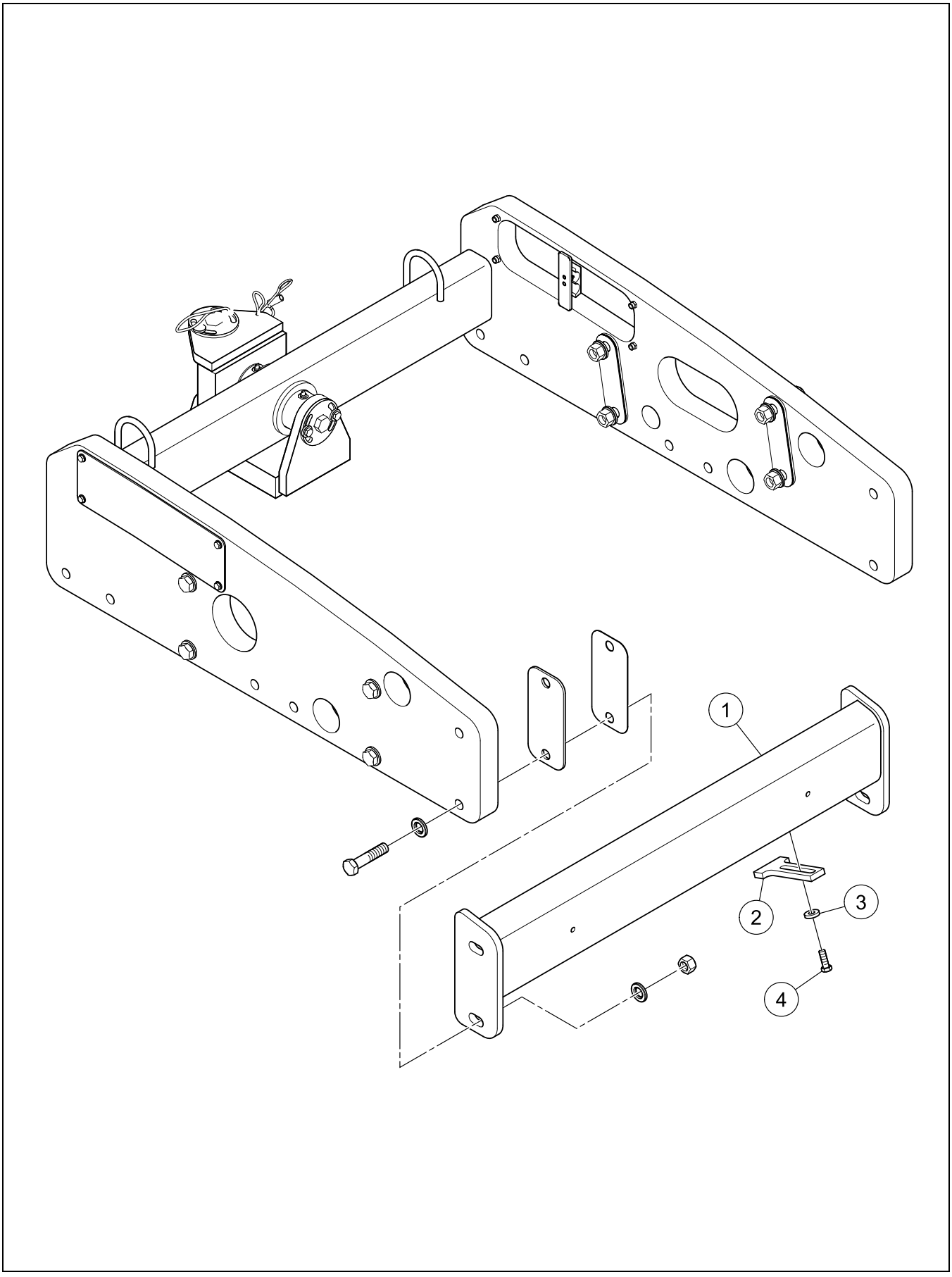

BOM 13178785

ITEM	COMM. NO.	DESCRIPTION	QTY	DIMENSIONS/NOTES
1	13296835	Scraper	1	
2	13274063	Scraper Tooth	6	
3	96712237	Flatwasher, Zinc Plated	12	M12 Hardened Cl 10
4	96715081	Hex Head Bolt, Zinc Plated	12	M12 x 1.75 x 45 Cl 8.8

DRUM SCRAPER INSTALLATION - SD-45D

Dwg D13277322/00

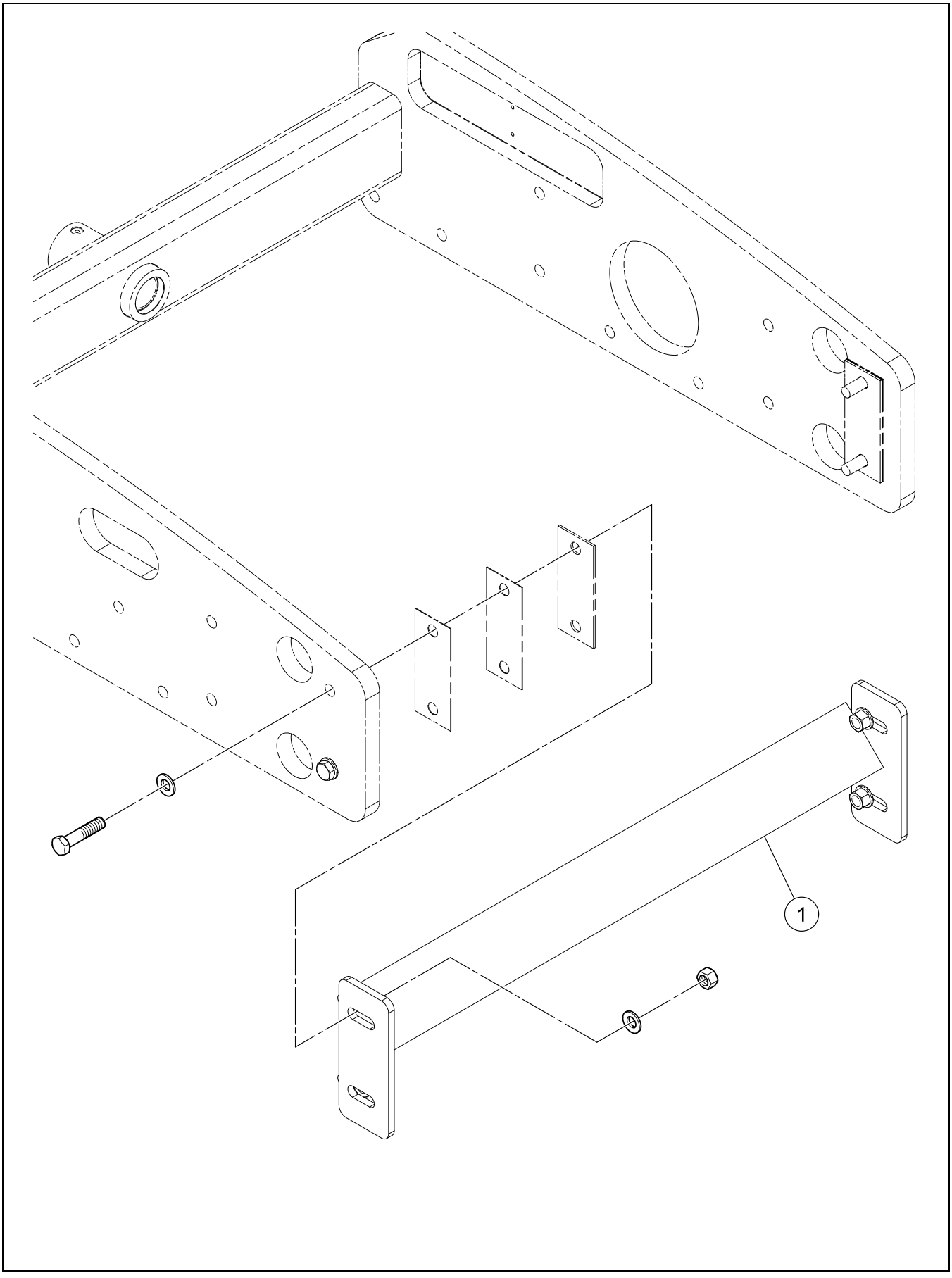

BOM 13178603

ITEM	COMM. NO.	DESCRIPTION	QTY	DIMENSIONS/NOTES
1	13291638	Smooth Scraper	1	

INSIDE SCRAPER INSTALLATION - SD-45F - OPTIONAL

Dwg D13277579/03

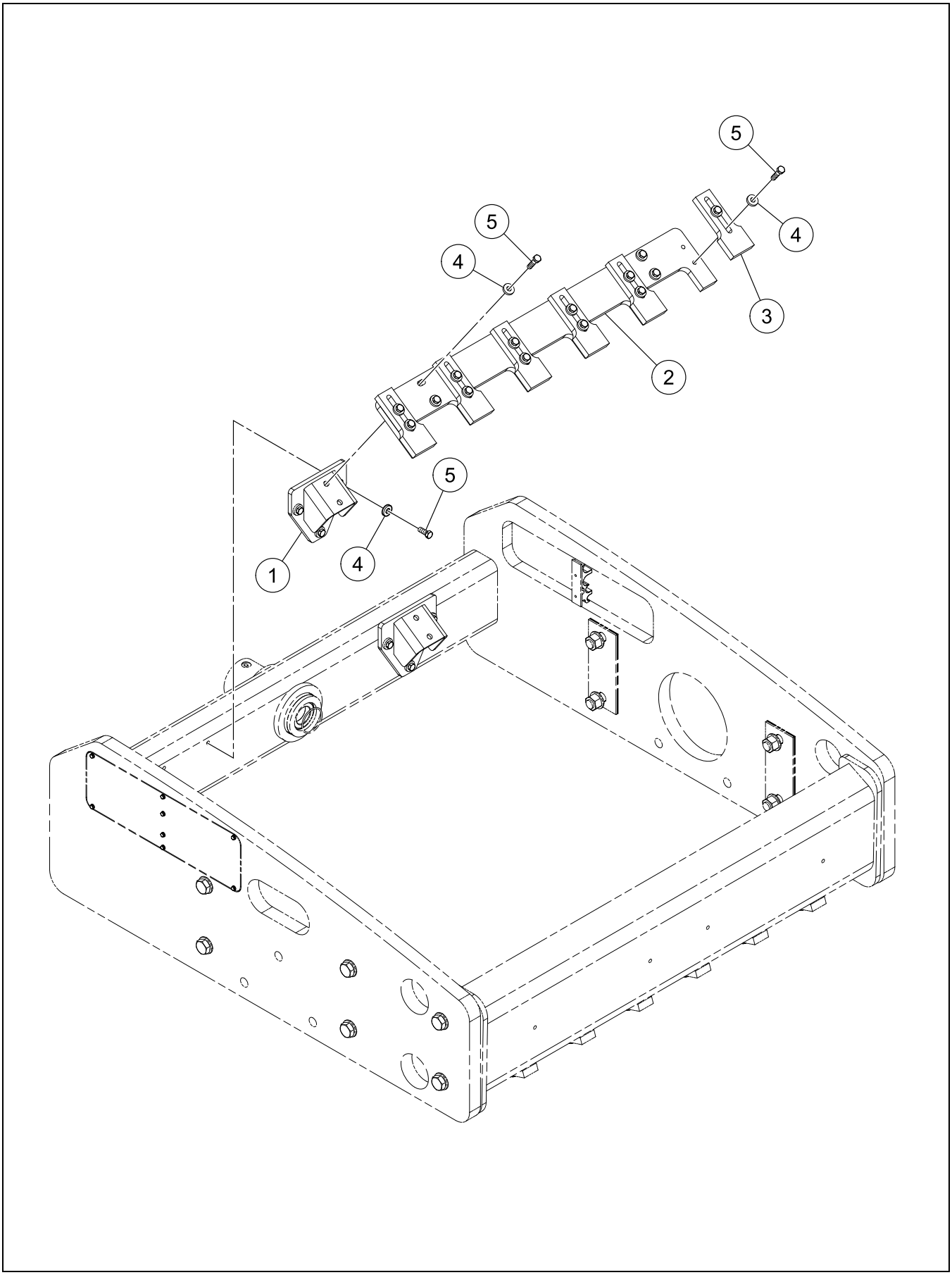

INSIDE SCRAPER INSTALLATION - SD-45F - OPTIONAL

BOM 13291034

ITEM	COMM. NO.	DESCRIPTION	QTY	DIMENSIONS/NOTES
1	13290820	Mounting Plate	2	
2	13296819	Scraper Wrapper	1	
3	13274063	Scraper Tooth	6	
4	96712237	Flatwasher, Zinc Plated	22	M12 Hardened Cl 10
5	96715081	Hex Head Bolt, Zinc Plated	22	M12 x 1.75 x 45 Cl 8.8

INSIDE SCRAPER INSTALLATION - SD-45D - OPTIONAL

Dwg D13277512/02

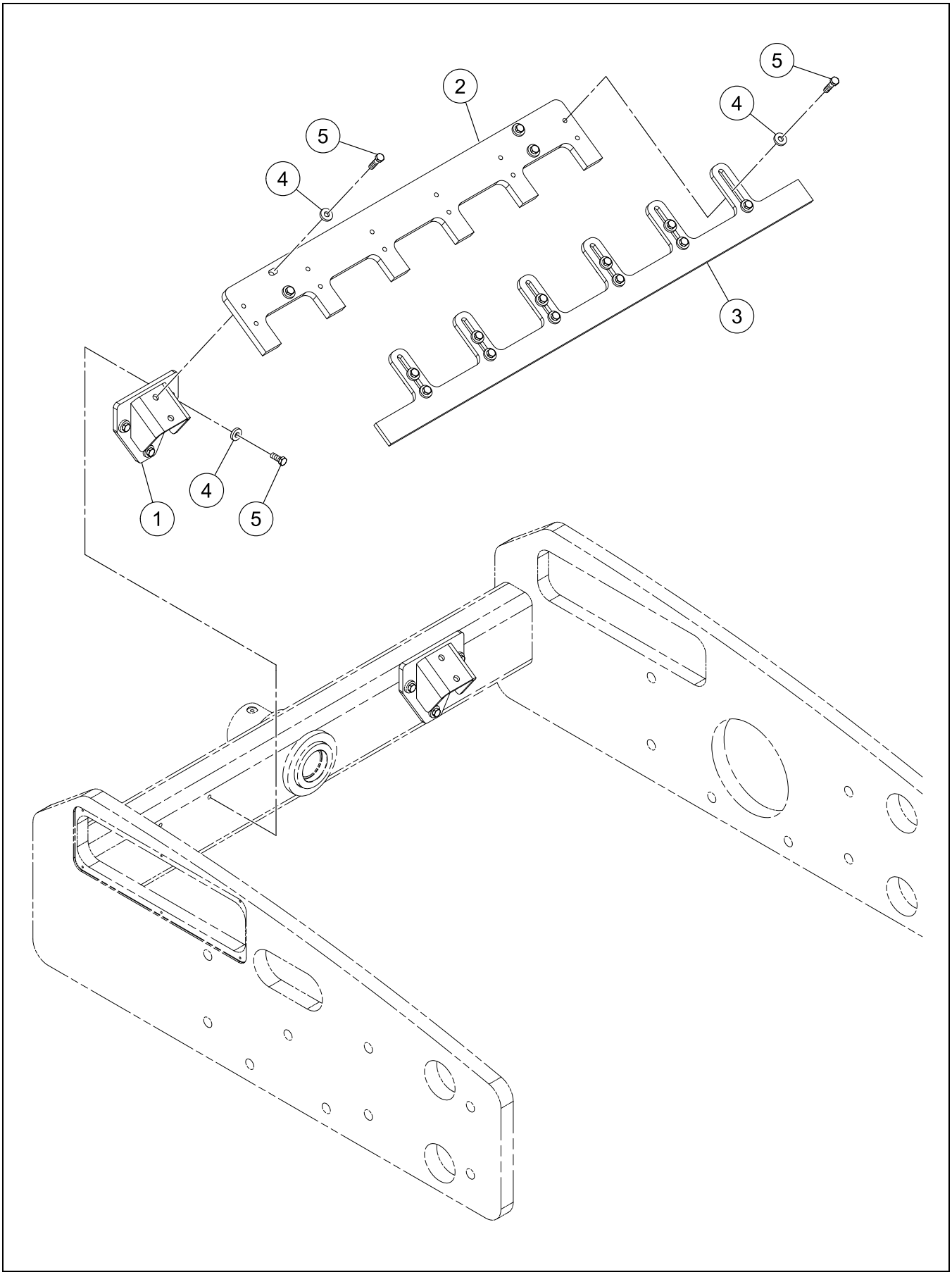

INSIDE SCRAPER INSTALLATION - SD-45D - OPTIONAL

BOM 13290986

ITEM	COMM. NO.	DESCRIPTION	QTY	DIMENSIONS/NOTES
1	13290820	Mounting Plate	2	
2	13296819	Scraper Wrapper	1	
3	13274121	Scraper Bar	1	
4	96712237	Flatwasher, Zinc Plated	22	M12 Hardened Cl 10
5	96715081	Hex Head Bolt, Zinc Plated	22	M12 x 1.75 x 45 Cl 8.8

INSIDE SCRAPER FOR BOLT-ON SHELL INSTALLATION - SD-45D - OPTIONAL

Dwg D13277637/03

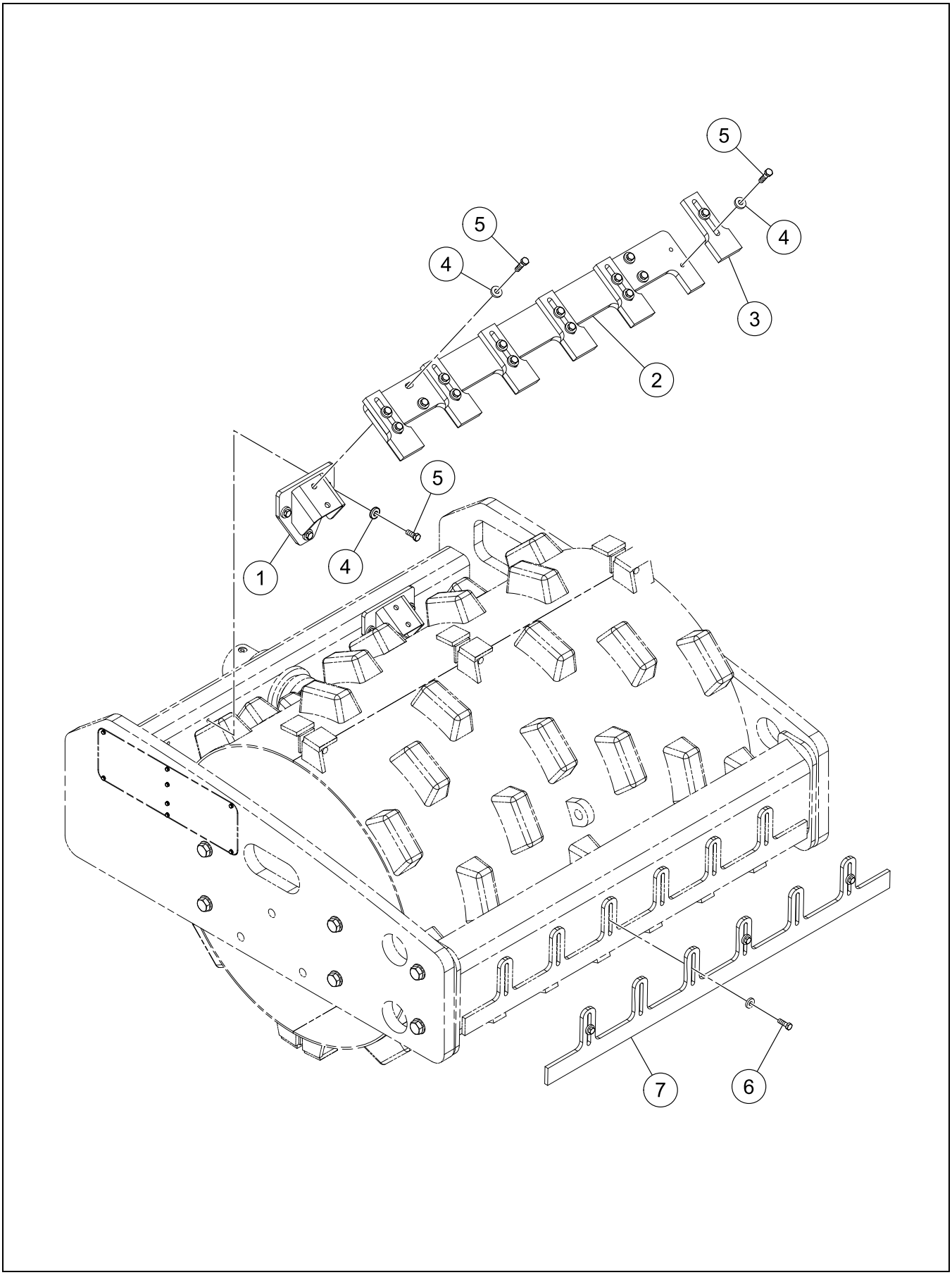

INSIDE SCRAPER FOR BOLT-ON SHELL INSTALLATION - SD-45D - OPTIONAL

BOM 13245386

ITEM	COMM. NO.	DESCRIPTION	QTY	DIMENSIONS/NOTES
1	13290820	Mounting Plate	2	
2	13296819	Scraper Wrapper	1	
3	13274063	Scraper Tooth	6	
4	96712237	Flatwasher, Zinc Plated	22	M12 Hardened Cl 10
5	96715081	Hex Head Bolt, Zinc Plated	22	M12 x 1.75 x 45 Cl 8.8
6	96702667	HHCS, Fully Threaded, Zinc Plated	4	M12 x 1.75 x 45 Cl 8.8
7	13274121	Scraper Bar	1	

BOLT-ON SHELL INSTALLATION - SD-45D - OPTIONAL

Dwg D13277389/02

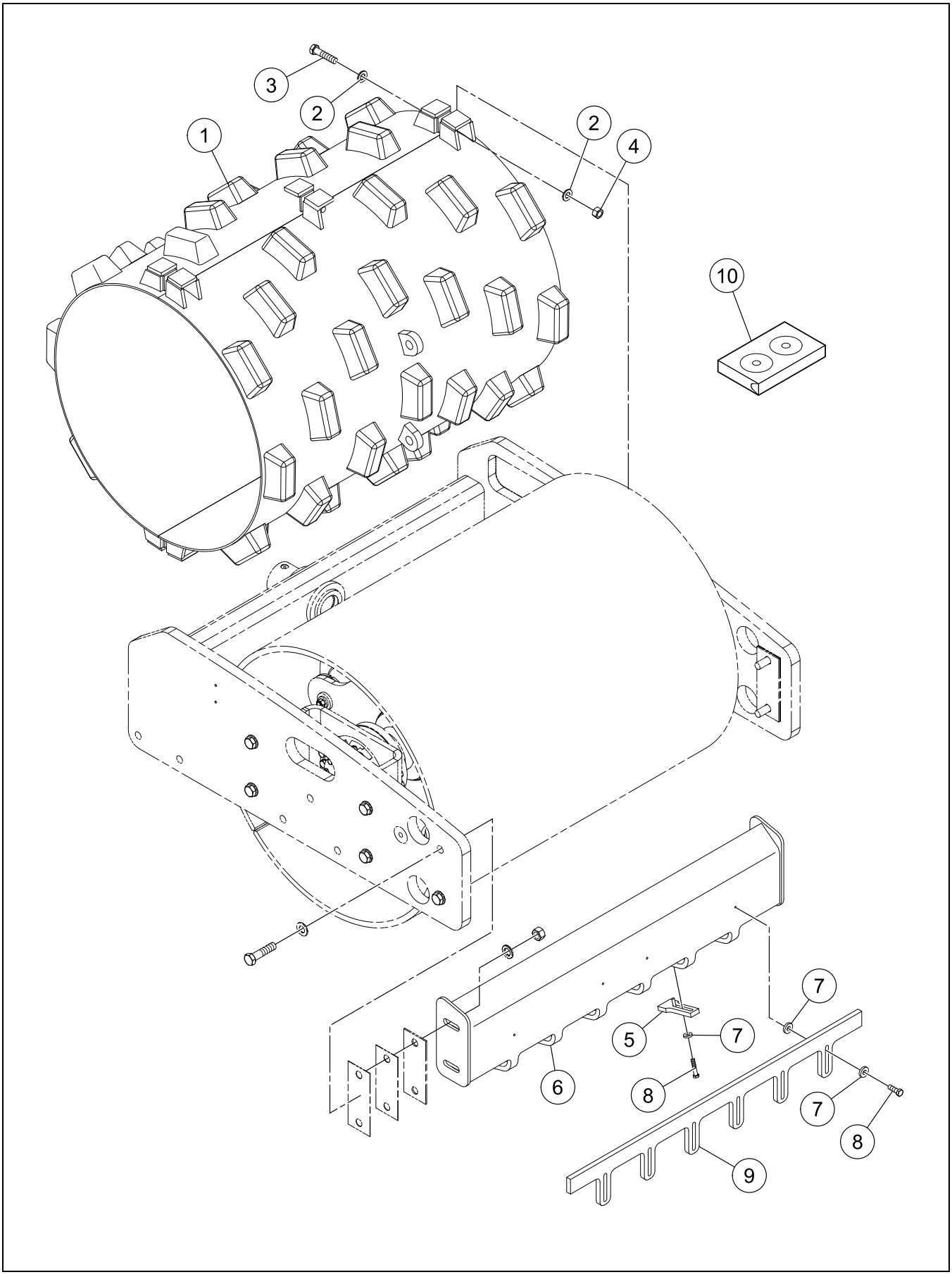

BOLT-ON SHELL INSTALLATION - SD-45D - OPTIONAL

BOM 13178637

ITEM	COMM. NO.	DESCRIPTION	QTY	DIMENSIONS/NOTES
1	13273677	Padfoot Shell	1	
2	96701560	Flatwasher, Zinc Plated	12	M20 Hardened
3	96700919	HHCS, Zinc Plated	6	M20 x 2.5 x 90 Cl 8.8
4	96720446	Hex Nut, Zinc Plated	6	M20 x 2.5 Cl 8
5	13274063	Scraper Tooth	6	
6	13296835	Scraper	1	
7	96712237	Flatwasher, Zinc Plated	20	M12 Hardened Cl 10
8	96715081	Hex Head Bolt, Zinc Plated	16	M12 x 1.75 x 45 Cl 8.8
9	13274121	Scraper Bar	1	
10	13155262	Video: Padfoot Shell Instructions	1	

Dwg D13304100/00

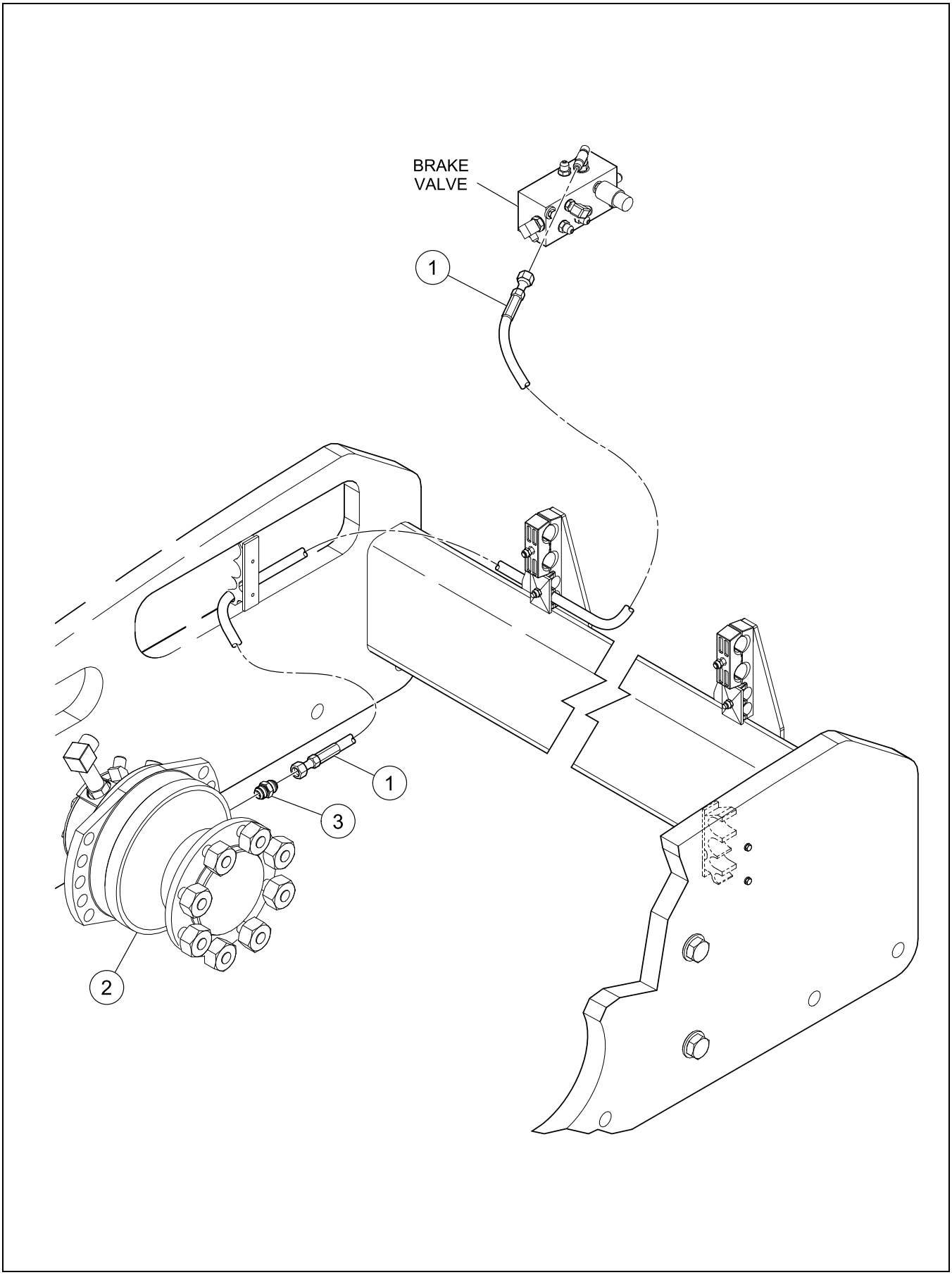

BOM 13304100

ITEM	COMM. NO.	DESCRIPTION	QTY	DIMENSIONS/NOTES
1	13281035	Hose Assembly	1	88.0"
2	**13179106**	**Drum Drive Motor W/Brake**	**1**	**See Breakdown B - 44.**
3	95866687	Adapter	1	

DRUM DRIVE MOTOR WITH BRAKE (13179106) - INTERNAL BREAKDOWN

Dwg D13244900/00

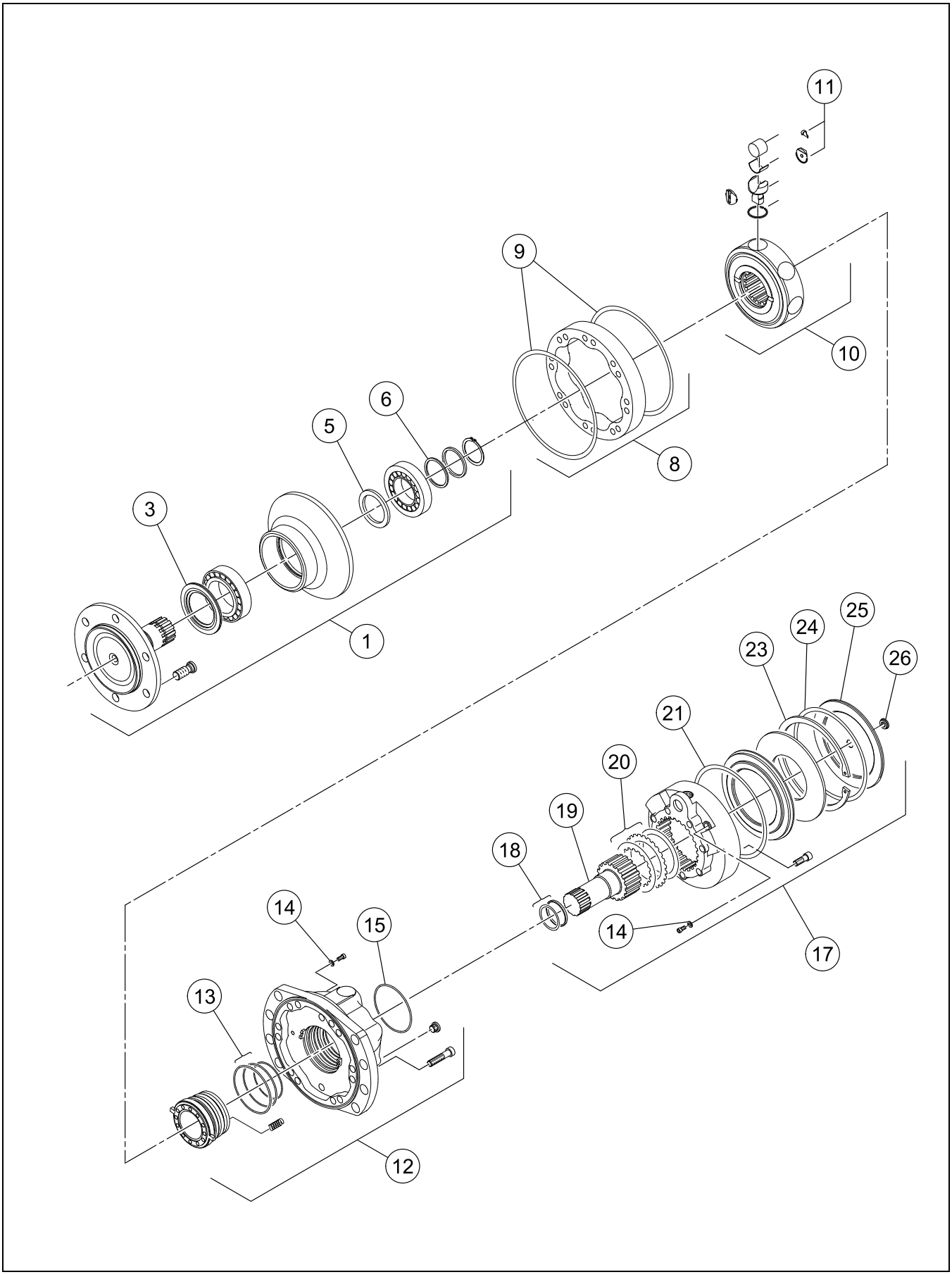

DRUM DRIVE MOTOR WITH BRAKE (13179106) - INTERNAL BREAKDOWN

BOM 13179106

ITEM	COMM. NO.	DESCRIPTION	QTY	DIMENSIONS/NOTES
1	13264015	Support	1	
3	NSS	- Environment Seal	1	
5	NSS	- Rubber Seal Ring	1	
6	13264338	- Shim Set	1	
8	13264056	Cam	1	
9	NSS	- O-ring	2	
10	13267072	Cylinder Block	1	
11	13264080	- Cylinder Block Repair Kit	1	
12	13264098	Complete Valving Cover	1	
13	13264106	- Valving Cover Seal Kit	1	
14	NSS	- Washer	4	
15	NSS	- O-ring	1	
17	13264122	Disc Brake	1	
18	NSS	- Seal	1	
19	13264148	- Shaft	1	
20	13264155	- Brake Discs Kit	1	
21	NSS	- O-ring	1	
23	13264189	- Snap Ring	1	
24	NSS	- O-ring	1	
25	NSS	- Protector	1	
26	NSS	- Plug	1	
27	13264197	Seal Kit (Includes items 3,5,9,14,15 and 21 Not Shown)	1	
28	13264007	Seal Kit (Includes seal kit item 27 plus items 13,18,24,25 and 26 Not Shown)	1	

Dwg D13277355/01

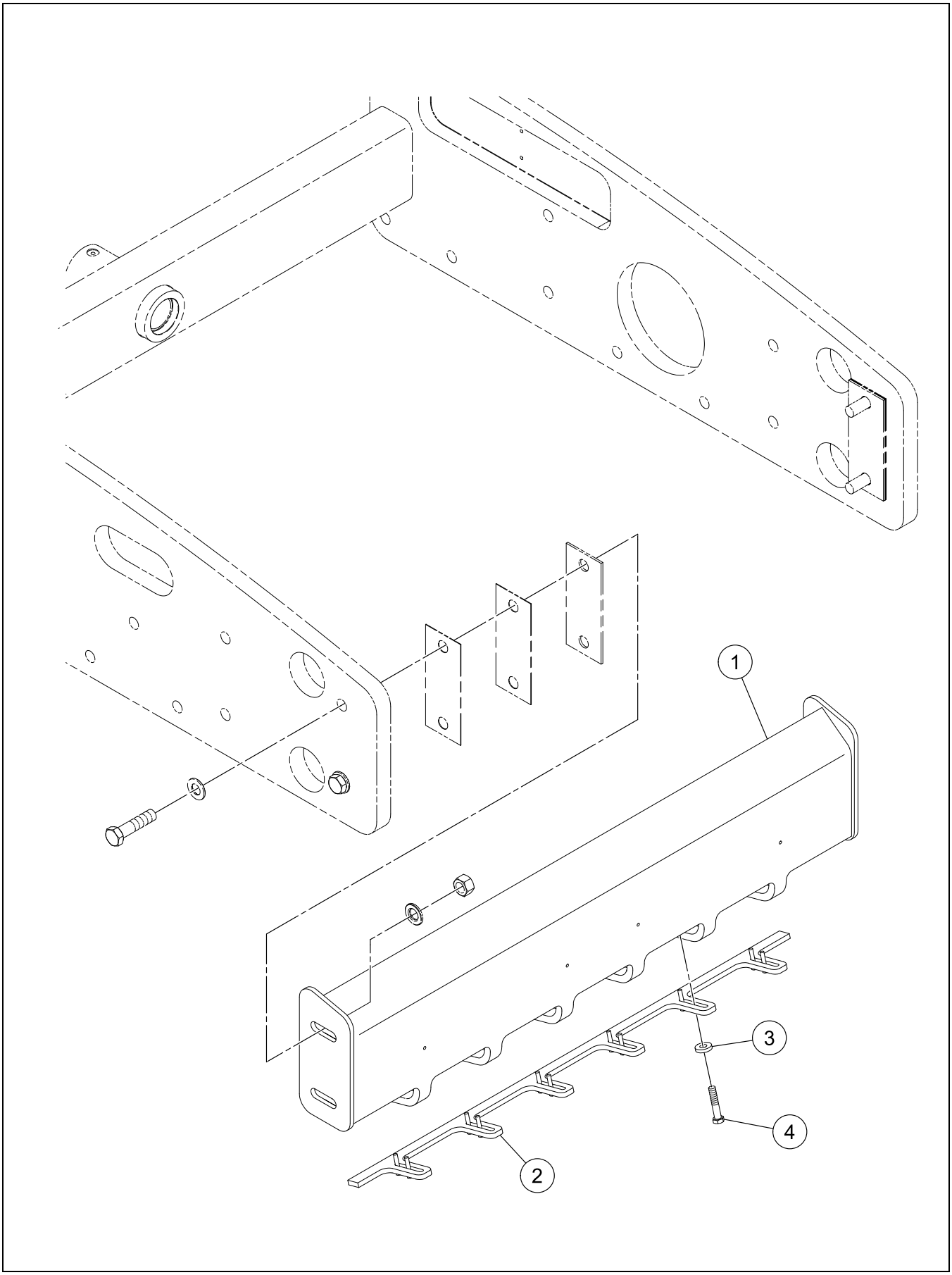

BOM 13319769

ITEM	COMM. NO.	DESCRIPTION	QTY	DIMENSIONS/NOTES
1	13296835	Scraper	1	
2	13274121	Scraper Bar	1	
3	96712237	Flatwasher, Zinc Plated	12	M12 Hardened Cl 10
4	96702329	HHCS, Fully Threaded, Zinc Plated	12	M12 x 1.75 x 35 Cl 8.8

Always use Manufacturer Replacement parts!*

Section C - ENGINE

Dwg D13279617/00

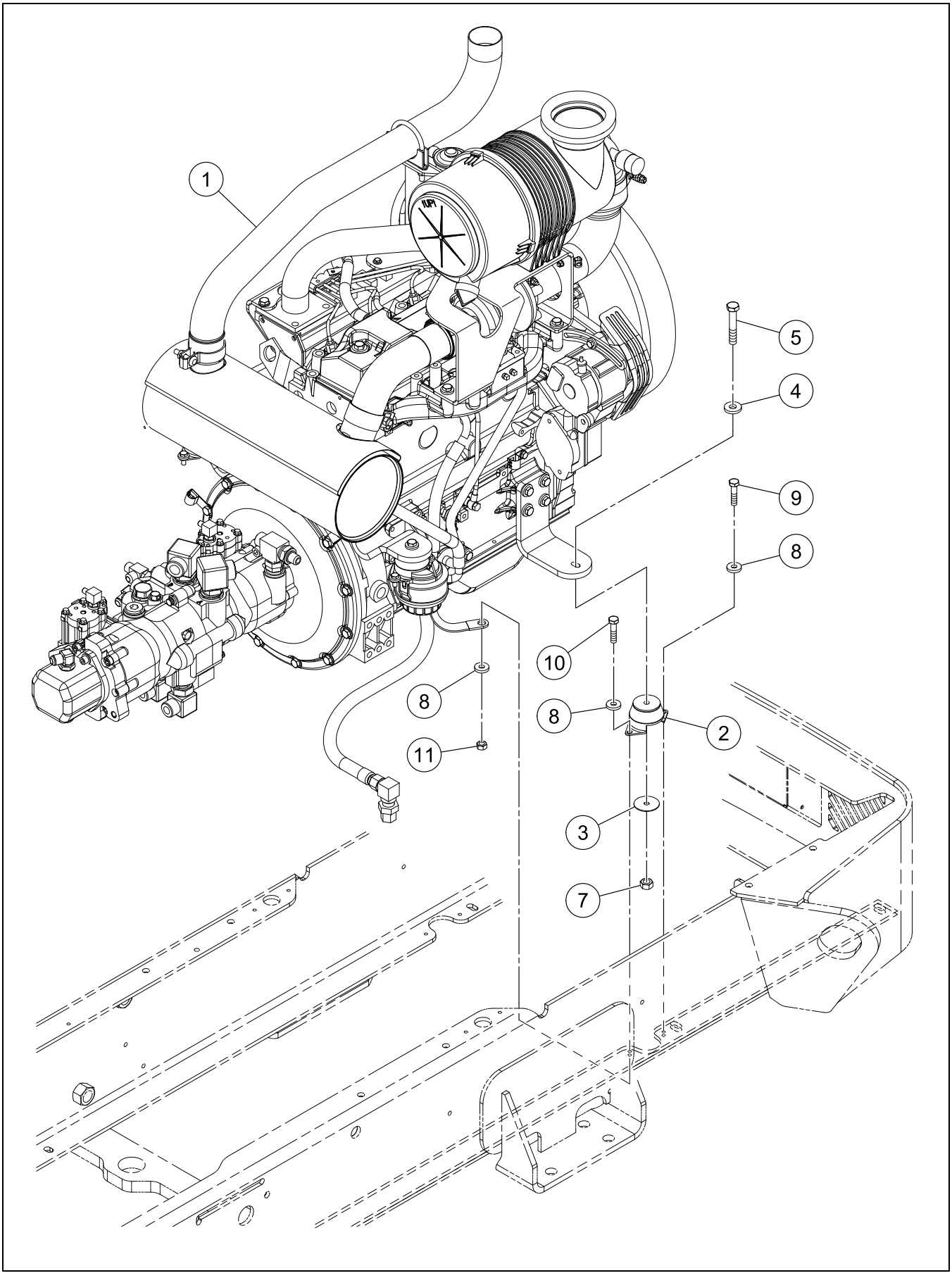

BOM 13352133

ITEM	COMM. NO.	DESCRIPTION	QTY	DIMENSIONS/NOTES
1	**NSVA**	**Engine Assembly**	**1**	**See Page C - 4.**
2	13296892	Isolator	4	
3	50264860	Washer	4	
4	96741046	Flatwasher, Zinc Plated	4	M10 Cl 200
5	96703798	HHCS, Zinc Plated	4	M10 x 1.5 Cl 10.9
7	96701990	Hex Nut, Zinc Plated	4	M10 x 1.5
8	96712674	Washer, Zinc Plated	9	M8 Hardened Cl 10
9	96702824	HHCS, Fully Threaded, Zinc Plated	8	M8 x 1.25 x 20 Cl 8.8
10	96702261	HHCS, Fully Threaded, Zinc Plated	1	M8 x 1.25 x 35 Cl 8.8
11	96701370	Nut, Zinc Plated	1	M8 x 1.25 Cl 8

ENGINE ASSEMBLY - SHEET 1 OF 2

Dwg D13279856/05/01

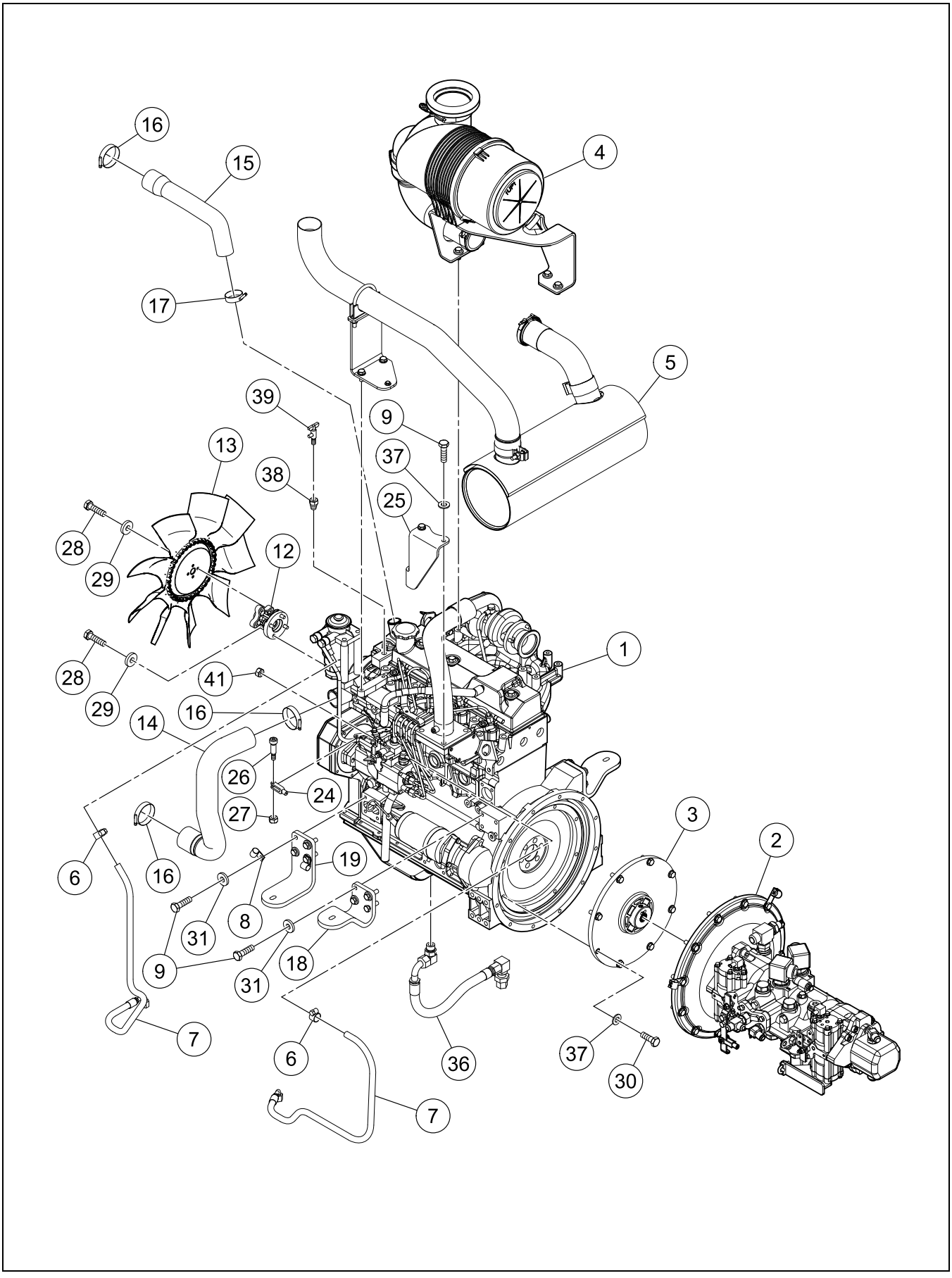

ENGINE ASSEMBLY - SHEET 1 OF 2

BOM 13352125, 59162834

ITEM	COMM. NO.	DESCRIPTION	QTY	DIMENSIONS/NOTES
1	13319256	Engine	1	
-	13287305	- Engine Oil Filter	1	
-	54637145	- Fuel Filter	1	
-	13426473	- Starter	1	
-	54637095	- Alternator	1	
-	13284989	- Fan Belt	1	
2	**NSVA**	**Pump Stack Assembly**	**1**	**See Page C - 8.**
3	59286302	Drive Coupling	1	
4	**NSVA**	**Air Cleaner Assembly**	**1**	**See Page C - 14.**
5	**NSVA**	**Exhaust Assembly**	**1**	**See Page C - 16.**
6	50274299	Hose Clamp	2	
7	13239272	Hose Assembly	2	31.0"
8	59117333	Clamp	2	
9	96704309	HHCS, Fully Threaded, Zinc Plated	18	M10 x 1.5 x 35 Cl 8.8
12	54528021	Fan Spacer	1	
13	13237789	Engine Fan	1	
14	13233143	Lower Radiator Hose	1	
15	13233093	Upper Radiator Hose	1	
16	95302683	Hose Clamp	3	
17	95139986	Clamp	1	
18	13321195	Rear Engine Mount	2	
19	13275680	Front Engine Mount	2	
24	59901306	Clevis	1	
25	13238852	Throttle Cable Bracket	1	
26	95860052	Screw	1	10 x 24 x 0.375
27	95943346	Locknut, Zinc Plated	1	#10 x 24
28	96705587	HHCS, Fully Threaded, Zinc Plated	8	M8 x 1.25 x 30 Cl 8.8
29	96712674	Washer, Zinc Plated	12	M8 Hardened Cl 10
30	96701917	HHCS, Fully Threaded, Zinc Plated	8	M10 x 1.5 x 30 Cl 8.8
31	96711833	Flatwasher, Zinc Plated	17	M10 Cl 10
36	**NSVA**	**Remote Oil Drain Assembly**	**1**	**See Page C - 18.**
37	96741046	Flatwasher, Zinc Plated	9	M10 Cl 200
38	59924217	Reducer	1	
39	58848920	Drain Assembly	1	
40	96702279	HHCS, Fully Threaded, Zinc Plated (Not Shown)	1	M10 x 1.5 x 20 Cl 8.8
41	96704598	Hex Locknut, Zinc Plated	1	M6 Cl 8

Dwg D13279856/05/02

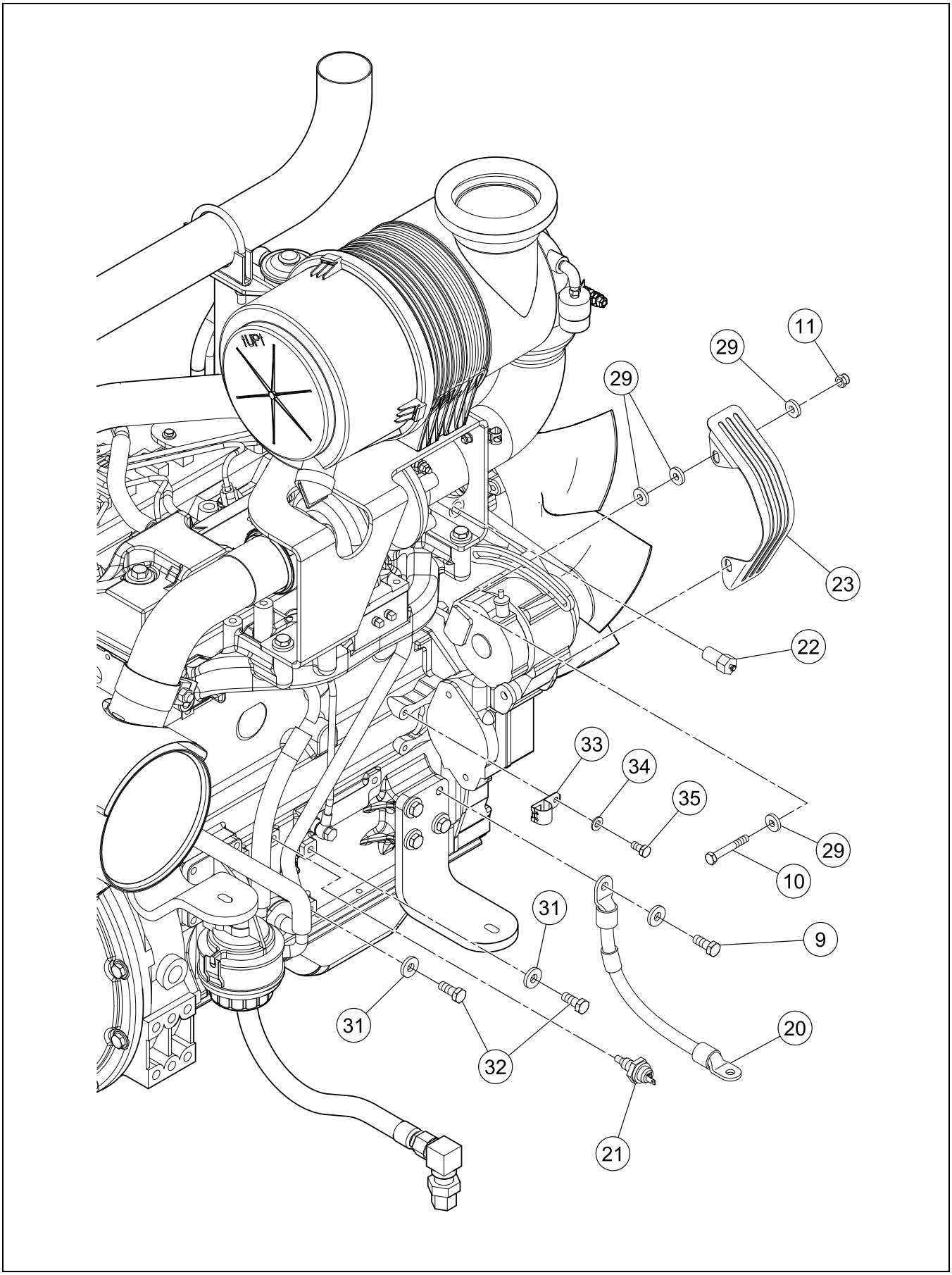

BOM 13352125, 59162834

ITEM	COMM. NO.	DESCRIPTION	QTY	DIMENSIONS/NOTES
9	96704309	HHCS, Fully Threaded, Zinc Plated	18	M10 x 1.5 x 35 Cl 8.8
10	96726302	HHCS, Fully Threaded, Zinc Plated	1	M8 x 1.25 x 55 Cl 8.8
11	96704606	Hex Locknut, Zinc Plated	1	M8 x 1.25 Cl 8
20	59104406	Ground Cable	1	
21	13491691	Oil Pressure Switch	1	
22	59816322	Temperature Sender	1	
23	59268185	Alternator Belt Guard	1	
29	96712674	Washer, Zinc Plated	12	M8 Hardened Cl 10
31	96711833	Flatwasher, Zinc Plated	17	M10 Cl 10
32	96702287	HHCS, Fully Threaded, Zinc Plated	2	M10 x 1.5 x 25 Cl 8.8
33	59020222	Conduit Clamp	3	
34	96741038	Flatwasher	1	M8 x 1.25 Cl 200
35	96702816	HHCS, Fully Threaded, Zinc Plated	1	M8 x 1.25 x 16 Cl 8.8
**	59162982	Decal: Biodegradable Oil (Optional)	1	

PUMP STACK ASSEMBLY

Dwg D13219217/02

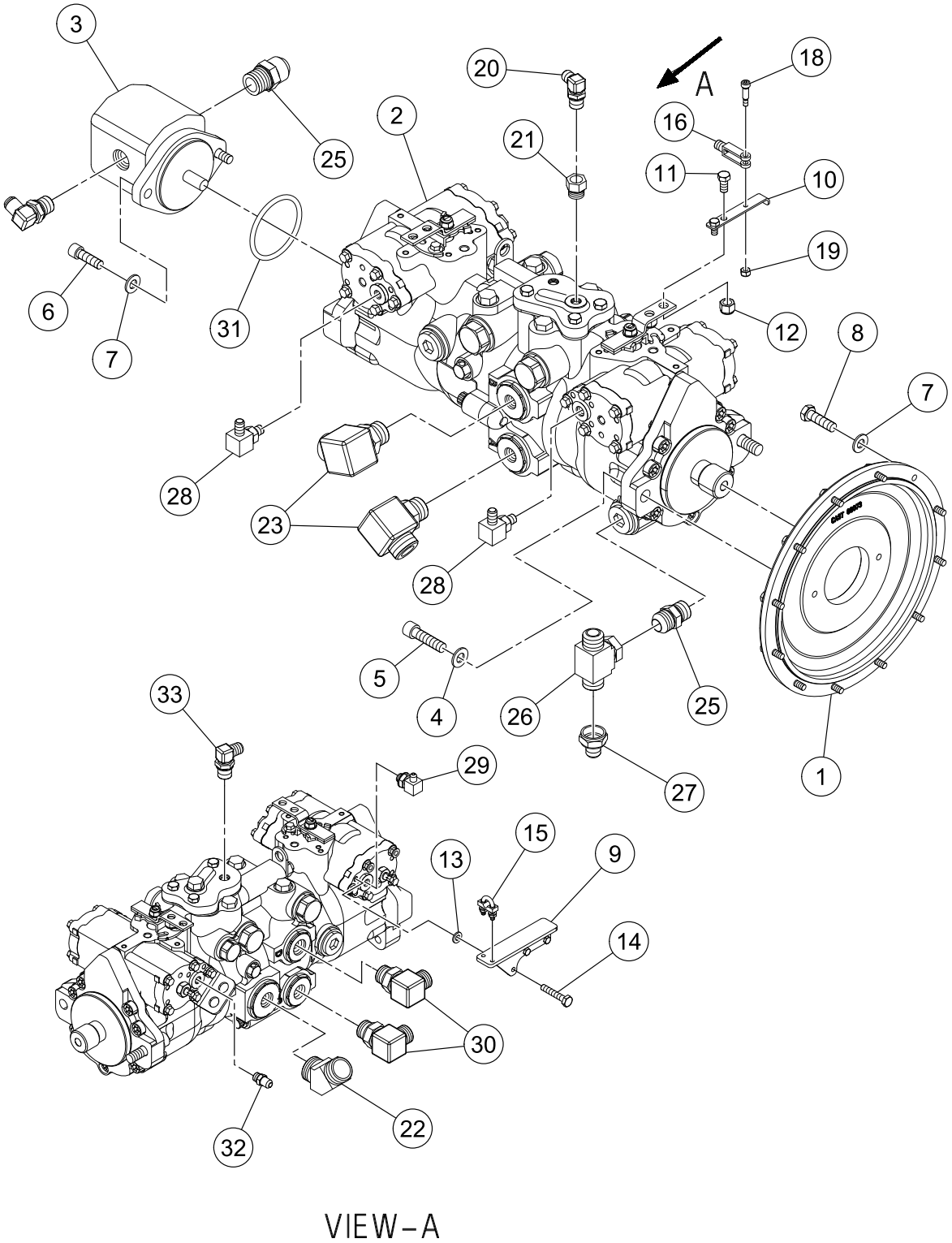

PUMP STACK ASSEMBLY

BOM 13219217

ITEM	COMM. NO.	DESCRIPTION	QTY	DIMENSIONS/NOTES
1	13232814	Pump Mounting Plate	1	
2	**13304860**	**Propulsion Pump**	**1**	**See Breakdown C - 10.**
-	13284922	ARC - Propulsion Pump	1	
3	58858820	Steering Pump	1	
-	58898677	- Seal Kit	1	
4	95922399	Washer, Zinc Plated	2	1/2
5	95055034	HHCS	2	
6	95055265	HHCS	2	3/8 x 16 x 1.25
7	96741046	Flatwasher, Zinc Plated	14	M10 Cl 200
8	96704309	HHCS, Fully Threaded, Zinc Plated	12	M10 x 1.5 x 35 Cl 8.8
9	59927764	Control Plate	1	
10	59926618	Control Lever	1	
11	95920781	HHCS	2	
12	95923264	Locknut	2	
13	96741053	Flatwasher, Zinc Plated	3	M6 Cl 200
14	95920641	HHCS, Zinc Plated	3	1/4 x 20 x 1.375 Grd 8
15	59588418	Clamp Kit	1	
16	59929059	Clevis	1	
18	95860052	Screw	1	10 x 24 x 0.375
19	95943346	Locknut, Zinc Plated	1	#10 x 24
20	95488250	Tee	1	
21	95426235	Adapter	1	
22	95387338	Adapter	1	
23	59923003	Adapter	2	
25	95356960	Adapter	2	
26	95657730	Tee	1	
27	59672709	Adapter	1	
28	95329975	Adapter	2	
29	95365094	Adapter	1	
30	59922989	Adapter	2	
31	95988796	O-ring	1	
32	95365078	Adapter	1	
33	95303350	Adapter	2	

PROPULSION PUMP (13304860) - INTERNAL BREAKDOWN - SHEET 1 OF 2

Dwg 13304860/00/01

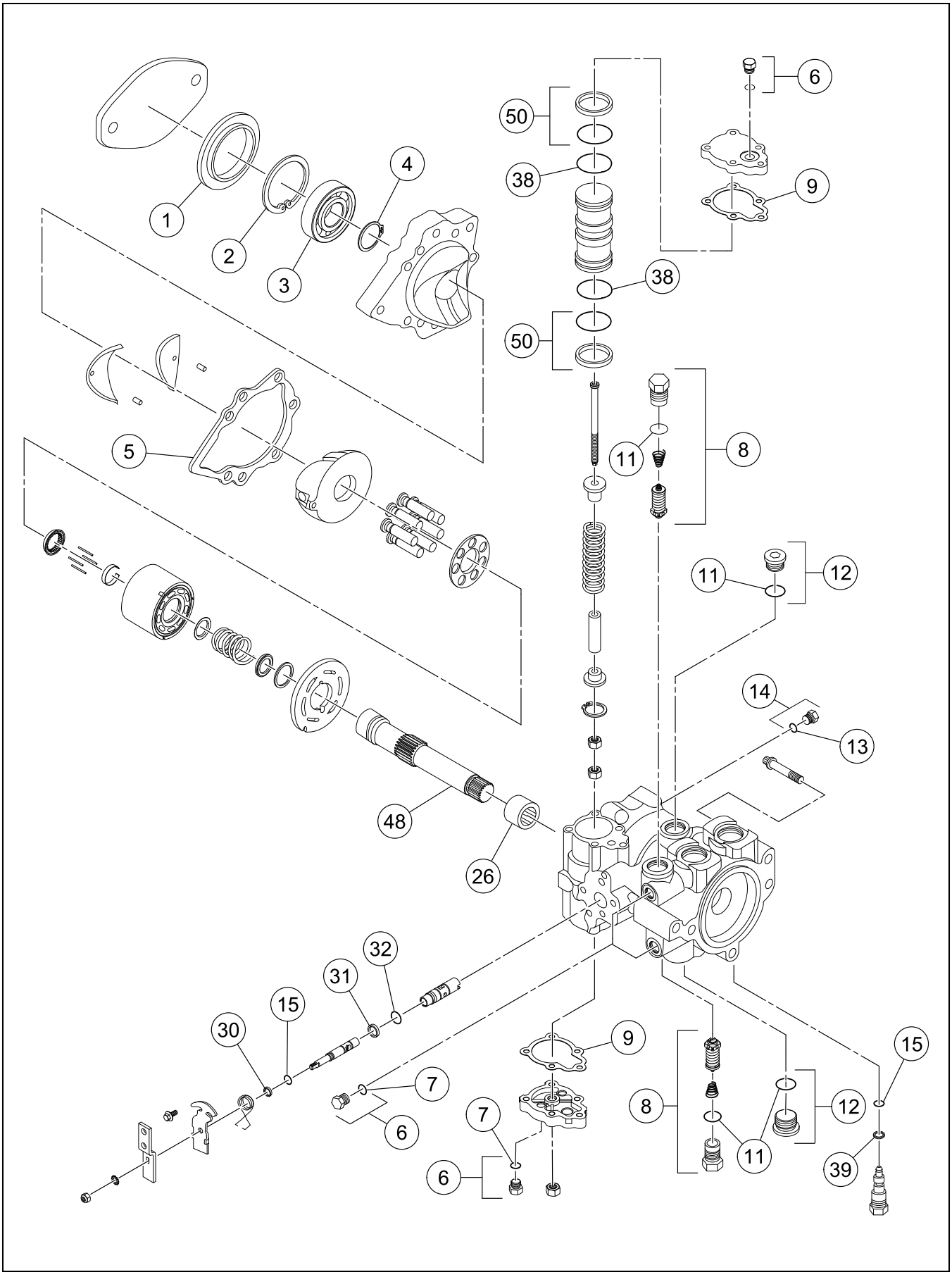

PROPULSION PUMP (13304860) - INTERNAL BREAKDOWN - SHEET 1 OF 2

BOM 13304860

ITEM	COMM. NO.	DESCRIPTION	QTY	DIMENSIONS/NOTES
1	59102749	Seal A Pad	1	
2	59785493	Retaining Ring	3	
3	95200648	Ball Bearing	1	
4	59785519	Ring	3	
5	59949511	Front Gasket	2	
6	59933622	Plug	6	
7	58881863	O-ring	6	
8	59337063	Valve Kit	2	
9	59938373	Servo Gasket	4	
11	59986463	O-ring	7	
12	59949461	Plug	3	
13	50278894	O-ring	1	
14	58950783	Plug	1	
15	13247358	O-ring	4	
26	59785303	Bearing	2	
30		This Item Not Used With This Assembly		
31	13268305	Backup Ring	2	
32	13268297	O-ring	2	
38	59422907	Piston Ring	4	
39	59986422	Backup Ring	2	
48	59949792	Shaft	1	
50	59972877	O-ring Kit	1	

PROPULSION PUMP (13304860) - INTERNAL BREAKDOWN - SHEET 2 OF 2

Dwg 13304860/00/02

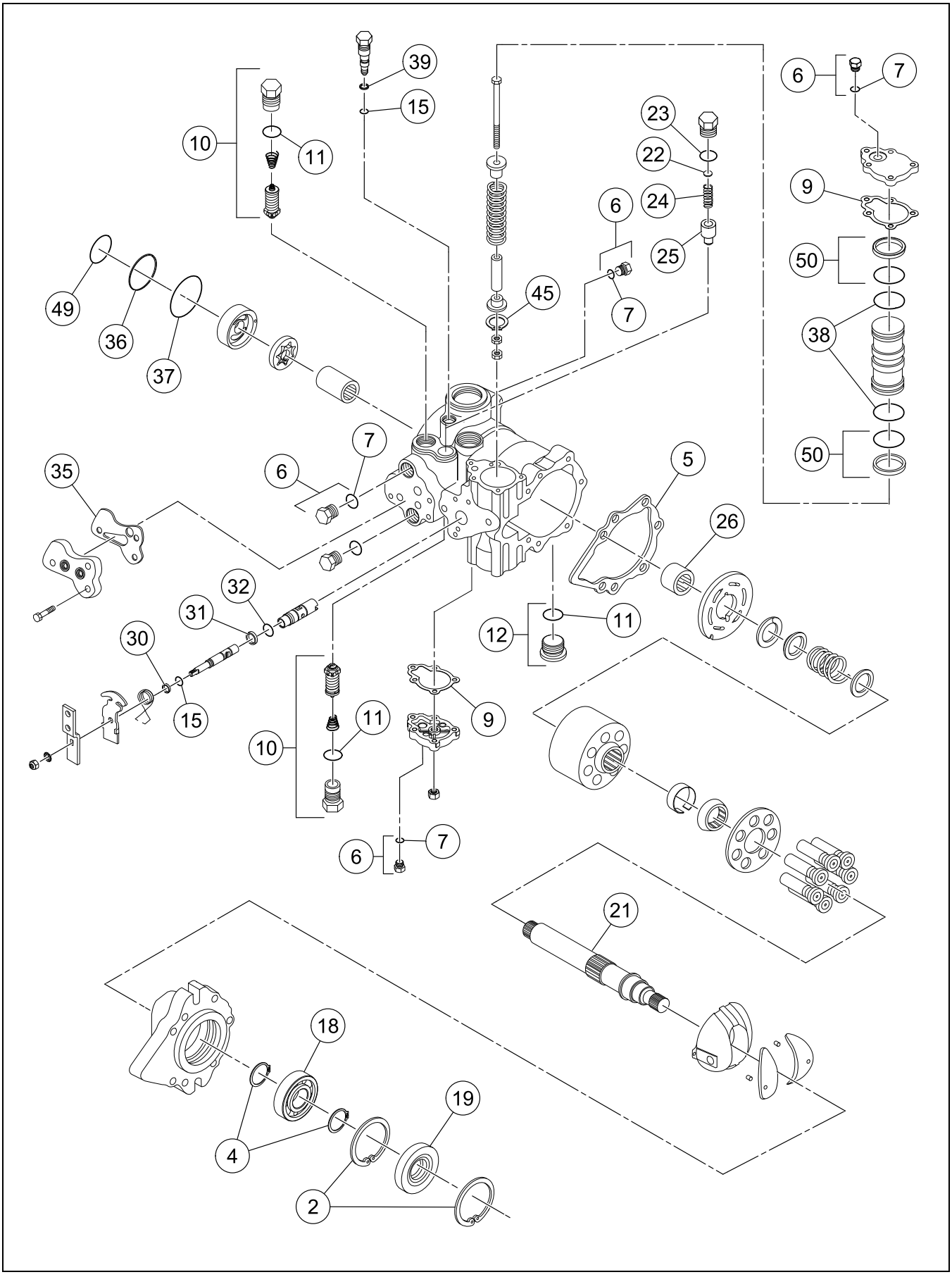

PROPULSION PUMP (13304860) - INTERNAL BREAKDOWN - SHEET 2 OF 2

BOM 13304860

ITEM	COMM. NO.	DESCRIPTION	QTY	DIMENSIONS/NOTES
2	59785493	Retaining Ring	3	
4	59785519	Ring	3	
5	59949511	Front Gasket	2	
6	59933622	Plug	6	
7	58881863	O-ring	6	
9	59938373	Servo Gasket	4	
10	13493788	SCR Kit	2	
11	59986463	O-ring	7	
12	59949461	Plug	3	
15	13247358	O-ring	4	
18	13493796	Ball Bearing	1	
19	59941203	Seal	1	
21	59949693	Shaft	1	
22	58220583	Shim Pack	1	
23	59360610	O-ring	1	
24	59034348	Charge Valve Spring	1	
25	58220633	Charge Relief Valve	1	
26	59785303	Bearing	2	
30		This Item Not Used With This Assembly		
31	13268305	Backup Ring	2	
32	13268297	O-ring	2	
35	13090097	Seal Filter Adapter	1	
36	59431734	O-ring	1	
37	13066345	Special O-ring	1	
38	59422907	Piston Ring	4	
39	59986422	Backup Ring	2	
45	59888362	Ring	1	
49	13066352	O-ring	1	
50	59972877	O-ring Kit	1	

AIR CLEANER ASSEMBLY

Dwg D13277611/04

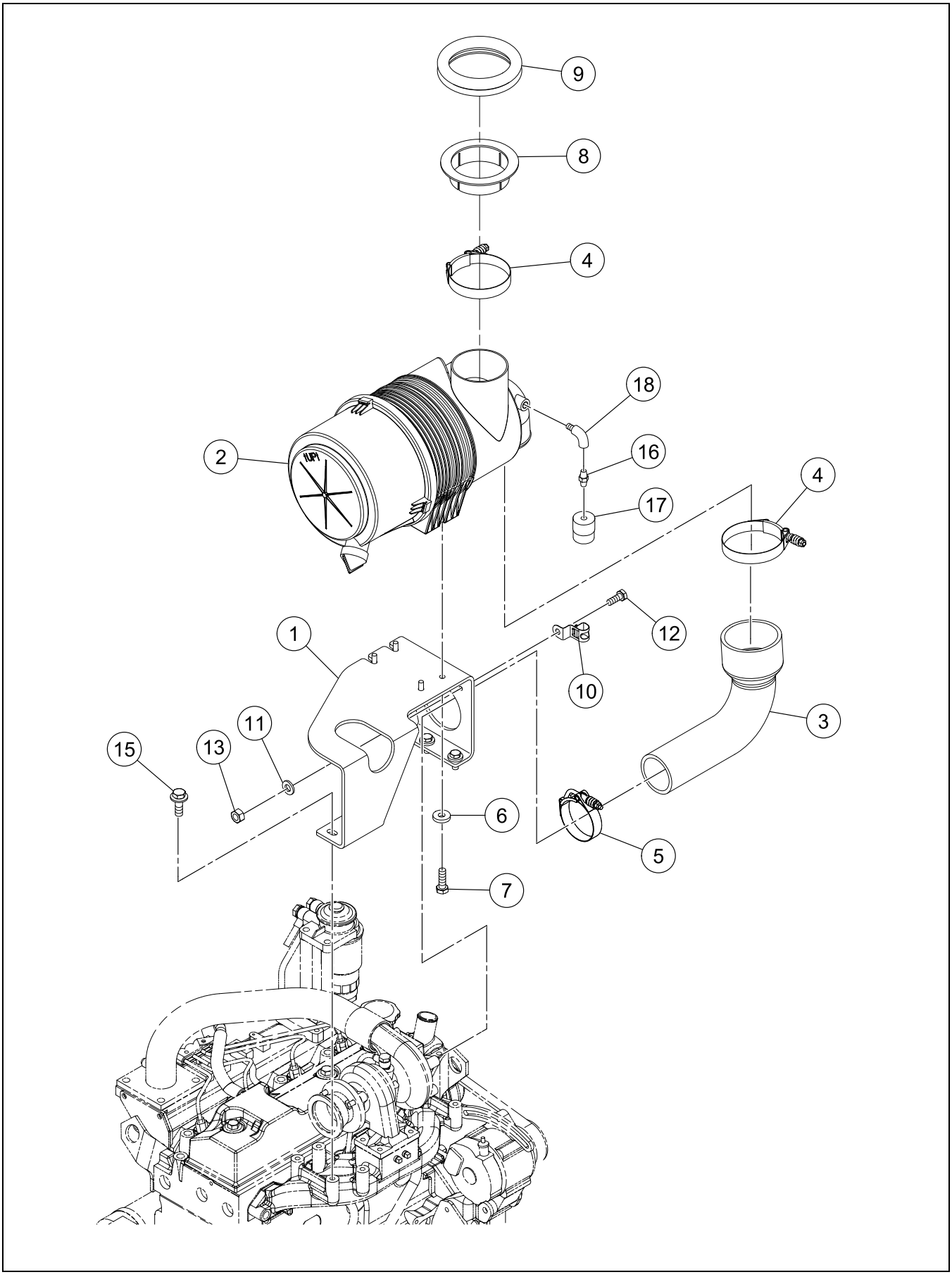

AIR CLEANER ASSEMBLY

BOM 13277611

ITEM	COMM. NO.	DESCRIPTION	QTY	DIMENSIONS/NOTES
1	13356175	Air Cleaner Bracket	1	
2	13277983	Air Cleaner	1	
-	54415393	- Cover Assembly	1	
-	13255443	- Air Cleaner Primary Filter Element	1	
-	13255450	- Air Cleaner Safety Filter Element	1	
-	35393677	- Dust Ejector Valve	1	
-	35393669	- Clip	3	
3	13277405	Air Intake Hose	1	
4	54680103	Clamp	2	
5	54680061	Clamp	1	
6	96712674	Washer, Zinc Plated	4	M8 Hardened Cl 10
7	96702659	HHCS, Fully Threaded, Zinc Plated	4	M8 x 1.25 x 25 Cl 8.8
8	13278429	Extension Tube	1	
9	13273156	Seal Trim	1	
10	59020305	Clamp	1	
11	96741053	Flatwasher, Zinc Plated	1	M6 Cl 200
12	96701958	HHCS, Fully Threaded, Zinc Plated	1	M6 x 16 Cl 8.8
13	96704234	Nut, Zinc Plated	1	M6 x 1.0 Cl 8
15	96704838	HHCS	4	
16	95418976	Adapter	1	
17	58905803	Switch	1	
18	95365599	Elbow	1	

EXHAUST ASSEMBLY

Dwg D13290358/02

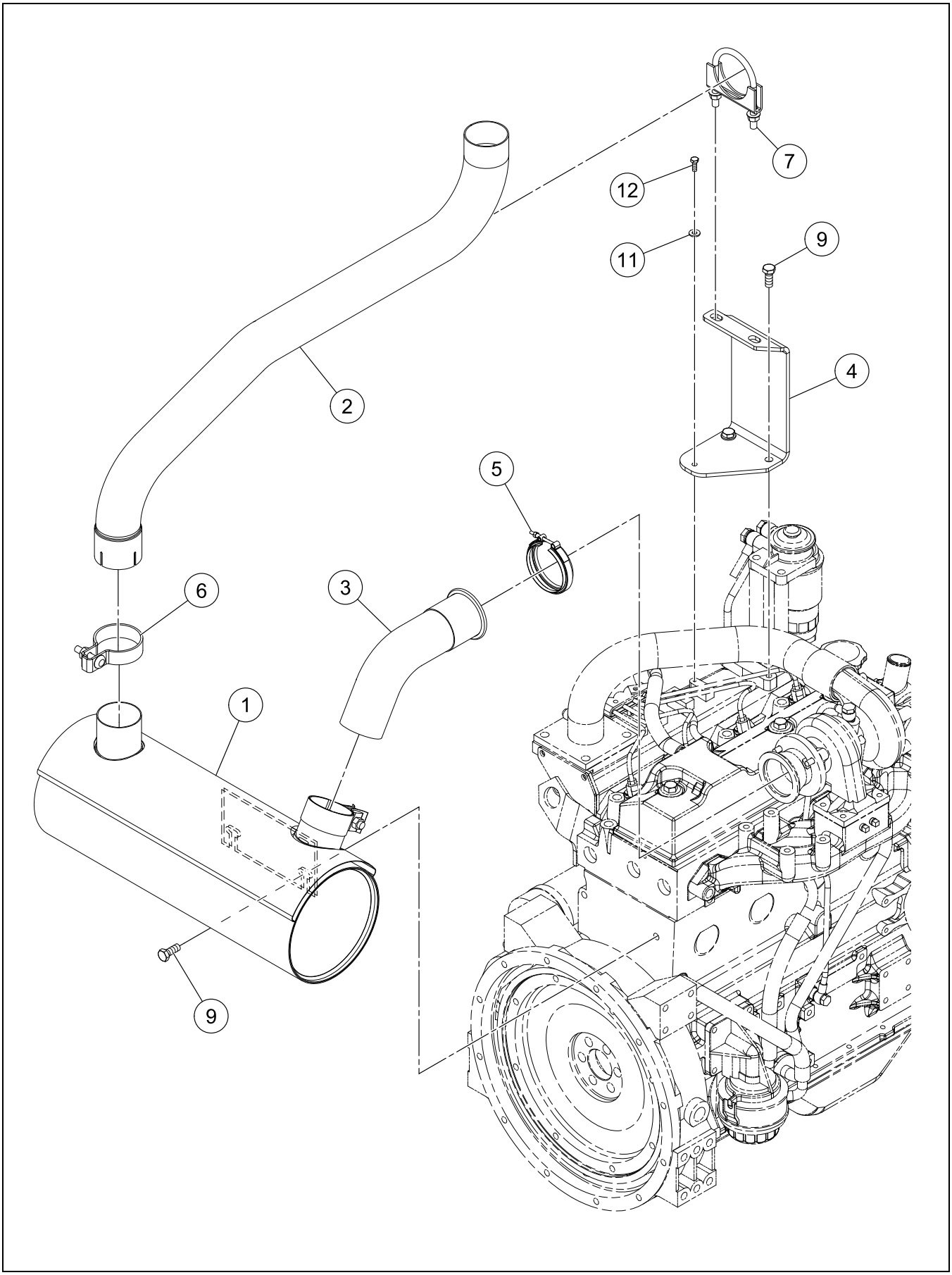

EXHAUST ASSEMBLY

BOM 13278353

ITEM	COMM. NO.	DESCRIPTION	QTY	DIMENSIONS/NOTES
1	13230412	Muffler	1	
2	13328661	Exhaust Pipe	1	
3	54534664	Exhaust Pipe	1	
4	13275565	Tail Pipe Bracket	1	
5	36854941	Clamp	1	
6	58848904	Exhaust Clamp	1	
7	59179226	Exhaust Clamp	1	
9	96704432	Lockbolt, Zinc Plated	4	M10 x 1.5 x 20 Cl 90
11	95922324	Flatwasher, Zinc Plated	1	1/4
12	96701958	HHCS, Fully Threaded, Zinc Plated	1	M6 x 16 Cl 8.8

REMOTE OIL DRAIN ASSEMBLY

Dwg D13290523/01

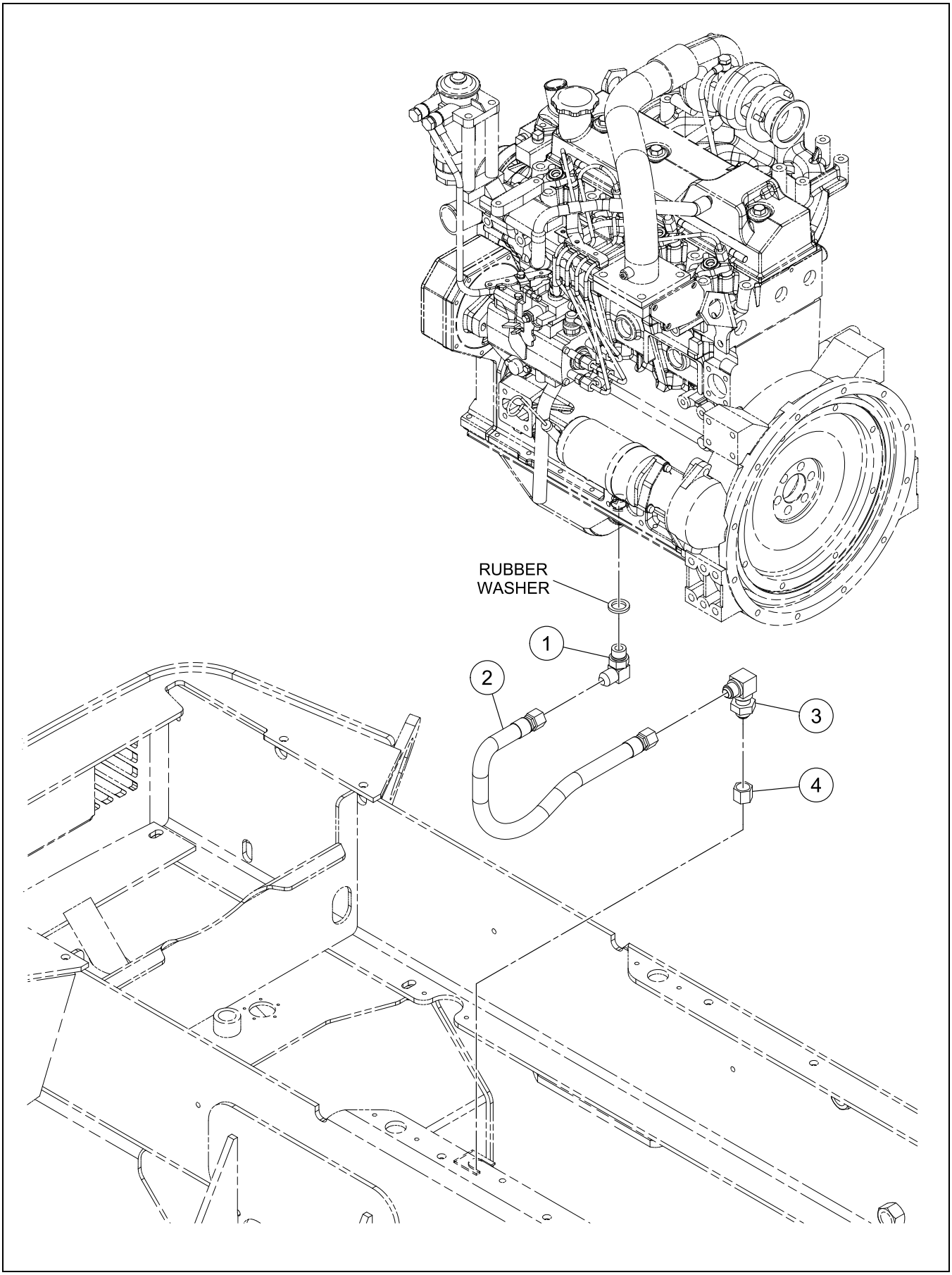

REMOTE OIL DRAIN ASSEMBLY

BOM 13278726

ITEM	COMM. NO.	DESCRIPTION	QTY	DIMENSIONS/NOTES
1	96719976	Elbow	1	
2	13364724	Hose Assembly	1	33.0"
3	54592944	Elbow	1	
4	95448940	Cap Nut	1	

RADIATOR AND OIL COOLER INSTALLATION

Dwg D13233101/00

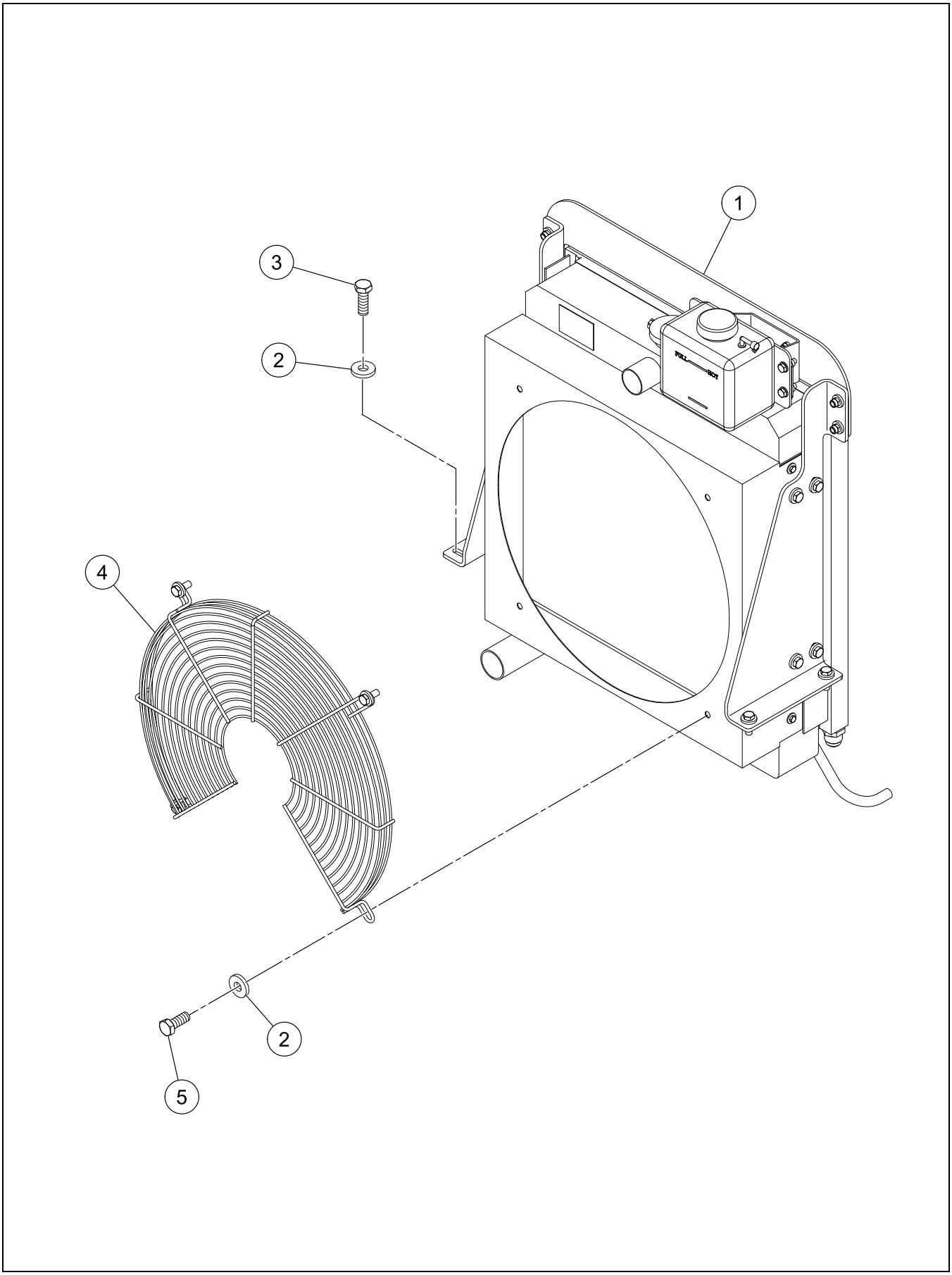

BOM 13233101

ITEM	COMM. NO.	DESCRIPTION	QTY	DIMENSIONS/NOTES
1	**NSVA**	**Radiator And Oil Cooler Assembly**	**1**	**See Page C - 22.**
2	96711833	Flatwasher, Zinc Plated	8	M10 Cl 10
3	96701917	HHCS, Fully Threaded, Zinc Plated	4	M10 x 1.5 x 30 Cl 8.8
4	13296769	Engine Fan Guard	1	
5	96702287	HHCS, Fully Threaded, Zinc Plated	4	M10 x 1.5 x 25 Cl 8.8

RADIATOR AND OIL COOLER ASSEMBLY

Dwg D13237409/01

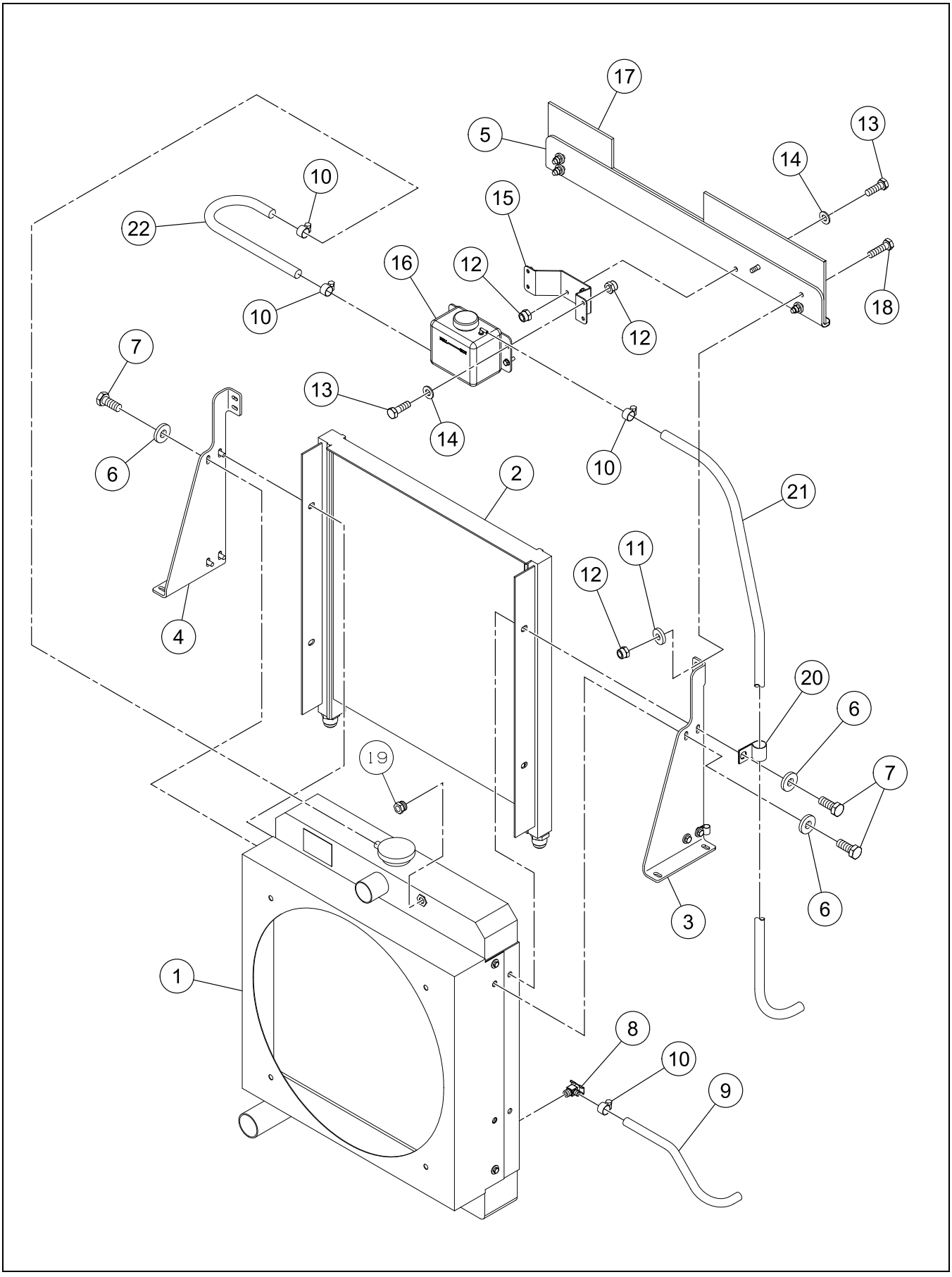

RADIATOR AND OIL COOLER ASSEMBLY

BOM 13237409

ITEM	COMM. NO.	DESCRIPTION	QTY	DIMENSIONS/NOTES
1	13296868	Radiator	1	
-	59498790	- Radiator Cap	1	
2	13232731	Oil Cooler	1	
3	13292917	Radiator Bracket, LH	1	
4	13292925	Radiator Bracket, RH	1	
5	13328687	Baffle Plate	1	
6	96711833	Flatwasher, Zinc Plated	8	M10 Cl 10
7	96702287	HHCS, Fully Threaded, Zinc Plated	8	M10 x 1.5 x 25 Cl 8.8
8	58848920	Drain Assembly	1	
9	59321687	Hose Assembly	1	13.0"
10	50274299	Hose Clamp	4	
11	96712674	Flatwasher	4	Hardened
12	96704606	Hex Locknut, Zinc Plated	10	M8 x 1.25 Cl 8
13	96702659	HHCS, Fully Threaded, Zinc Plated	6	M8 x 1.25 x 25 Cl 8.8
14	96741038	Flatwasher	6	M8 x 1.25 Cl 200
15	13271283	Coolant Recovery Bottle Bracket	1	
16	54467329	Coolant Recovery Bottle	1	
-	59154807	- Coolant Recovery Bottle Cap w/Tether	1	
17	13272737	Seal Trim	1	
18	96705587	HHCS, Fully Threaded, Zinc Plated	4	M8 x 1.25 x 30 Cl 8.8
19	95101010	Plug	1	
20	59117333	Clamp	2	
21	13062963	Hose Assembly	1	36.0"
22	59242263	Hose Assembly	1	15.0"

AIR PRECLEANER INSTALLATION - OPTIONAL

Dwg 13388590/00

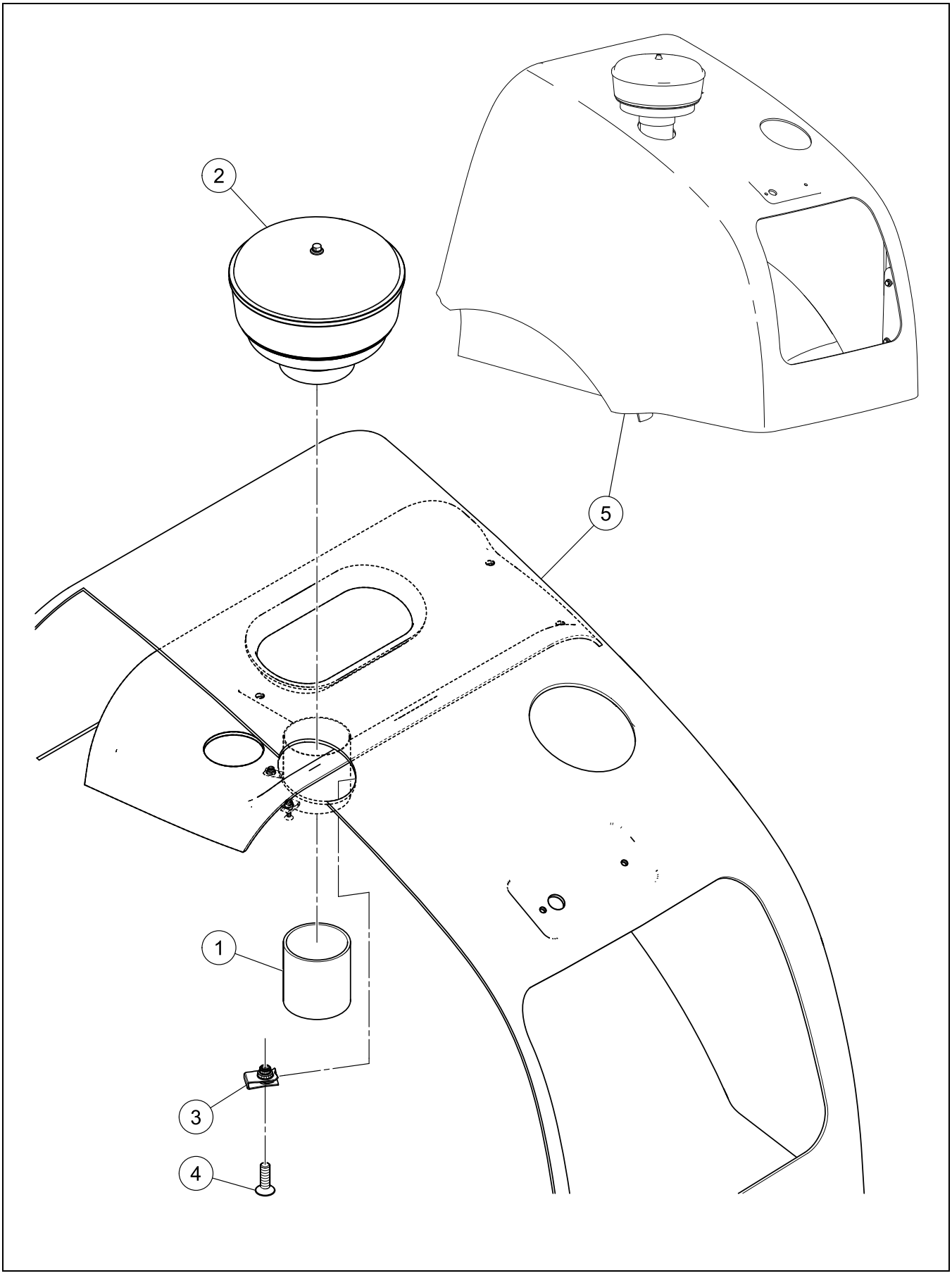

AIR PRECLEANER INSTALLATION - OPTIONAL

BOM 13388590

ITEM	COMM. NO.	DESCRIPTION	QTY	DIMENSIONS/NOTES
1	13388616	Precleaner Stack	1	
2	59450213	Precleaner	1	
-	54525738	- Cover	1	
-	54525746	- Bowl	1	
-	54525753	- Sleeve	1	
-	54525761	- Clamp	1	
3	13186598	U-nut	4	
4	96728506	HHCS, Zinc Plated	4	M6 x 1.0 x 20 Cl 8.8
5	13388608	Hood	1	

Always use Manufacturer Replacement parts!*

Section D - OPERATORS COMPARTMENT

OPERATORS PLATFORM INSTALLATION - SHEET 1 OF 2

Dwg D13278973/01/01

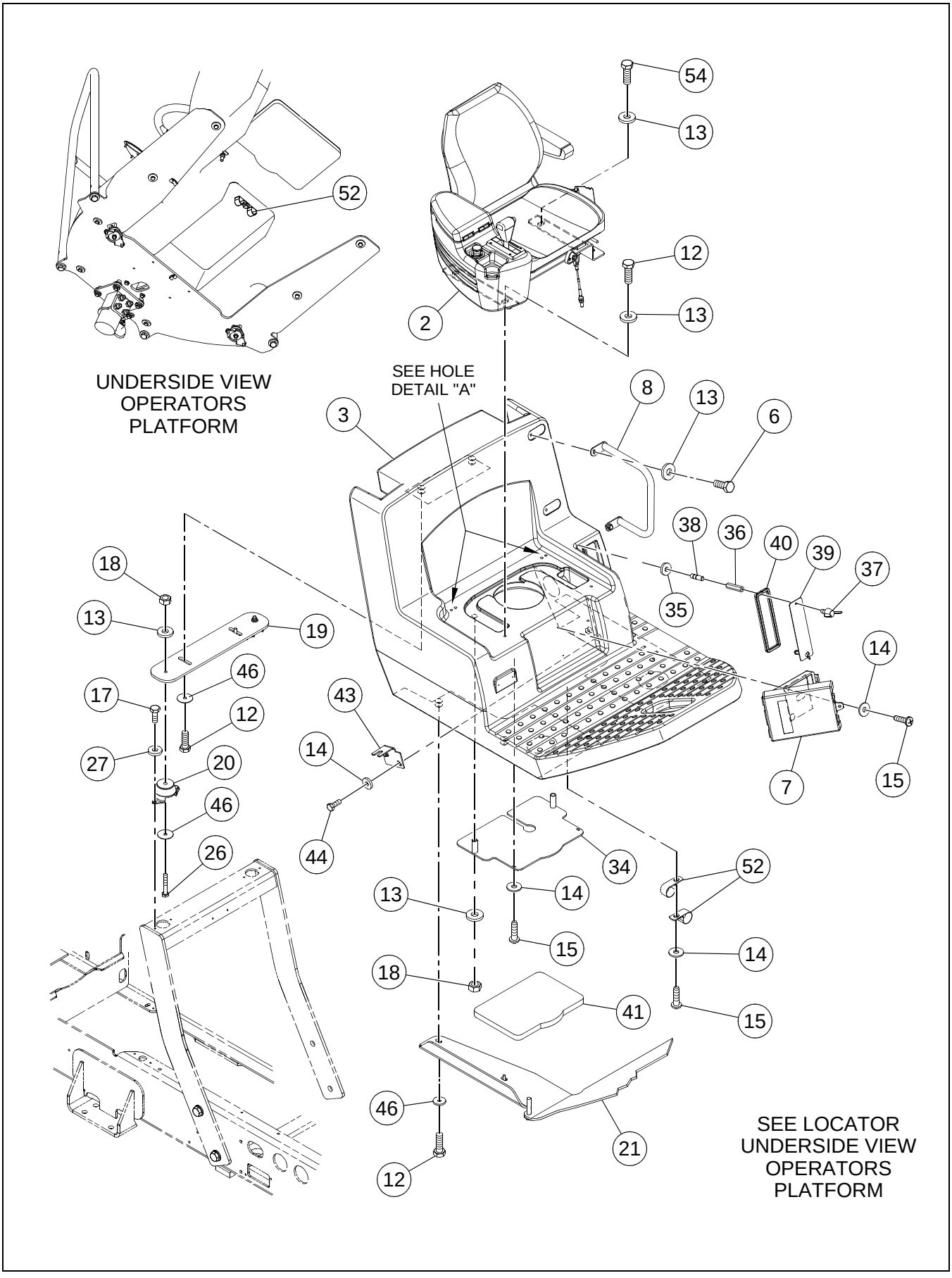

OPERATORS PLATFORM INSTALLATION - SHEET 1 OF 2

BOM 13177753

ITEM	COMM. NO.	DESCRIPTION	QTY	DIMENSIONS/NOTES
2	**NSVA**	**Seat Assembly**	**1**	**See Page D - 8.**
3	13295357	Operators Platform	1	
6	96702287	HHCS, Fully Threaded, Zinc Plated	6	M10 x 1.5 x 25 Cl 8.8
7	59185074	Manual Case	1	
8	13232863	Hand Rail	1	
12	96701917	HHCS, Fully Threaded, Zinc Plated	12	M10 x 1.5 x 30 Cl 8.8
13	96711833	Flatwasher, Zinc Plated	10	M10 Cl 10
14	96704663	Washer, Zinc Plated	8	M6 Large
15	54487517	Self-tapping Screw	6	14 x 1
17	96702824	HHCS, Fully Threaded, Zinc Plated	8	M8 x 1.25 x 20 Cl 8.8
18	96704812	Hex Nut, Zinc Plated	6	M10 x 1.5 Cl 8
19	13274824	Shock Plate	1	
20	36875565	Isolator	4	
21	13295456	Pivot Plate	1	
26	96704960	HHCS, Fully Threaded, Zinc Plated	2	M10 x 1.5 x 60 Cl 8.8
27	96712674	Washer, Zinc Plated	8	M8 Hardened Cl 10
34	13295498	Backing Plate	1	
35	96721121	Washer, Zinc Plated	2	M6 Cl 10
36	13236534	Stand Off	2	
37	96743844	Wing Screw	2	
38	96743927	Stud	2	
39	59290304	Fuse Cover	1	
40	13236757	Seal Trim	1	
41	13236773	Foam	1	
43	13272505	Throttle Mount	1	
44	96702394	HHCS, Fully Threaded, Zinc Plated	2	M6 x 1 x 12 Cl 8.8
46	50264860	Washer	14	
52	59020271	Clamp	2	
54	96720594	HHCS, Zinc Plated	2	M10 x 1.5 x 100 Cl 8.8

OPERATORS PLATFORM INSTALLATION - SHEET 2 OF 2

Dwg D13278973/01/02

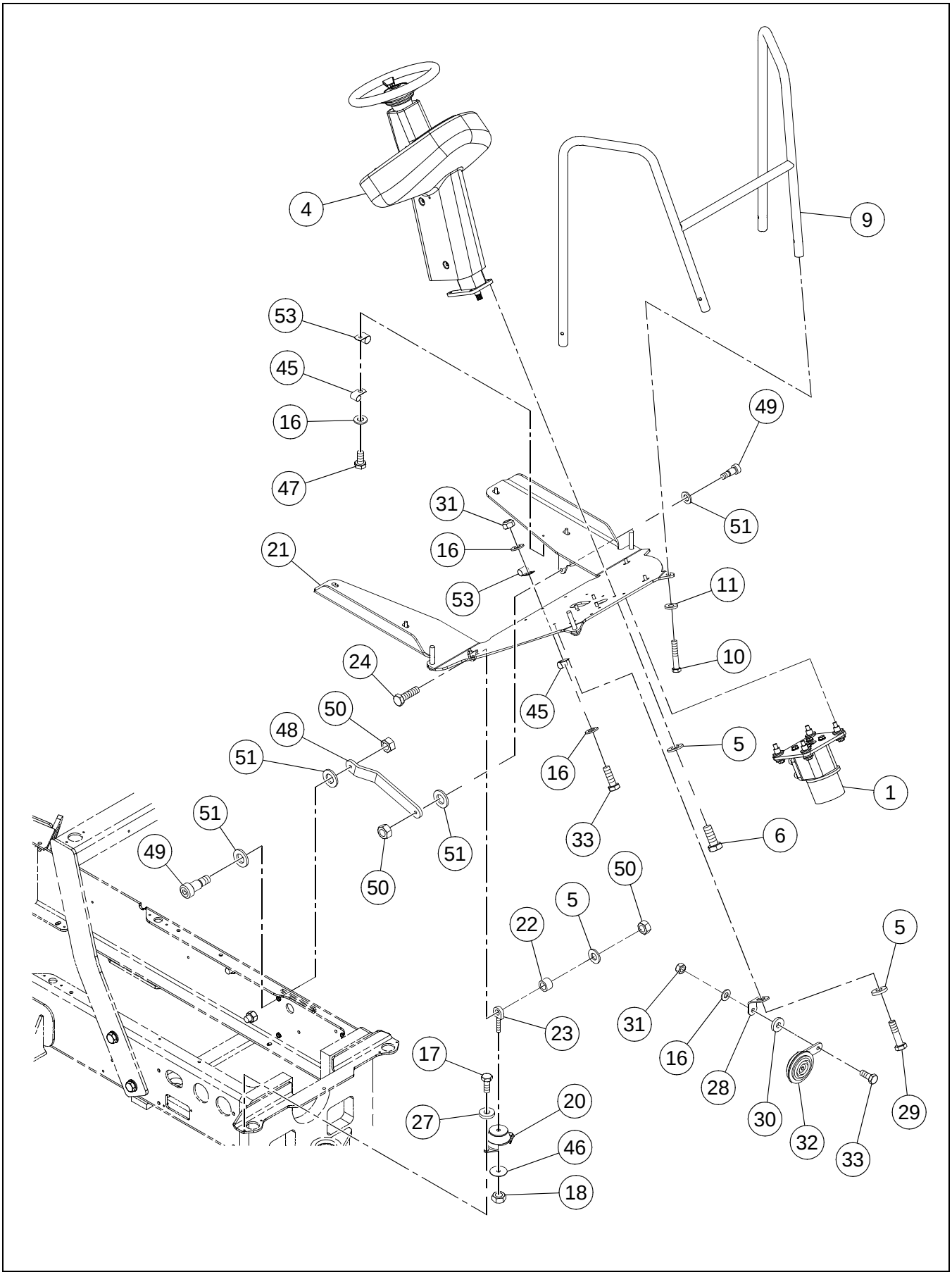

OPERATORS PLATFORM INSTALLATION - SHEET 2 OF 2

BOM 13177753

ITEM	COMM. NO.	DESCRIPTION	QTY	DIMENSIONS/NOTES
1	**NSVA**	**Steering Valve Assembly**	**1**	**See Page D - 6.**
4	**NSVA**	**Pedestal Assembly**	**1**	**See Page D - 18.**
5	96741046	Flatwasher, Zinc Plated	7	M10 Cl 200
6	96702287	HHCS, Fully Threaded, Zinc Plated	6	M10 x 1.5 x 25 Cl 8.8
9	13271671	Railing	1	
10	59565044	Flatwasher	4	3/4 Hardened
11	96704937	HHCS, Fully Threaded, Zinc Plated	4	M16 x 2 x 90 Cl 8.8
16	96741038	Flatwasher	4	M8 x 1.25 Cl 200
17	96702824	HHCS, Fully Threaded, Zinc Plated	8	M8 x 1.25 x 20 Cl 8.8
18	96704812	Hex Nut, Zinc Plated	6	M10 x 1.5 Cl 8
20	36875565	Isolator	4	
21	13295456	Pivot Plate	1	
22	59214585	Bushing	2	
23	13234190	Eyebolt	2	
24	96702410	HHCS, Fully Threaded, Zinc Plated	2	M10 x 35 Cl 10.9
27	96712674	Washer, Zinc Plated	8	M8 Hardened Cl 10
28	13237490	Horn Bracket	1	
29	96701479	HHCS, Fully Threaded, Zinc Plated	1	M10 x 1.5 x 16 Cl 8.8
30	96713979	Washer, Zinc Plated	1	M8 Hardened
31	96705009	Locknut, Zinc Plated	2	M8 x 1.25 Cl 8
32	13469010	Horn	1	
33	96702659	HHCS, Fully Threaded, Zinc Plated	2	M8 x 1.25 x 25 Cl 8.8
45	95301842	Clamp	2	
46	50264860	Washer	14	
47	96702824	HHCS, Fully Threaded, Zinc Plated	1	M8 x 1.25 x 20 Cl 8.8
48	13290135	Lockbar	1	
49	96739594	SHCS, Zinc Plated	2	M10 x 1.5 x 16 Cl 12.9
50	96701990	Hex Nut, Zinc Plated	4	M10 x 1.5
51	96738596	Flatwasher, Zinc Plated	6	M12 Hardened Cl 200
53	95301834	Clamp	2	

STEERING VALVE ASSEMBLY

Dwg D13278825/00

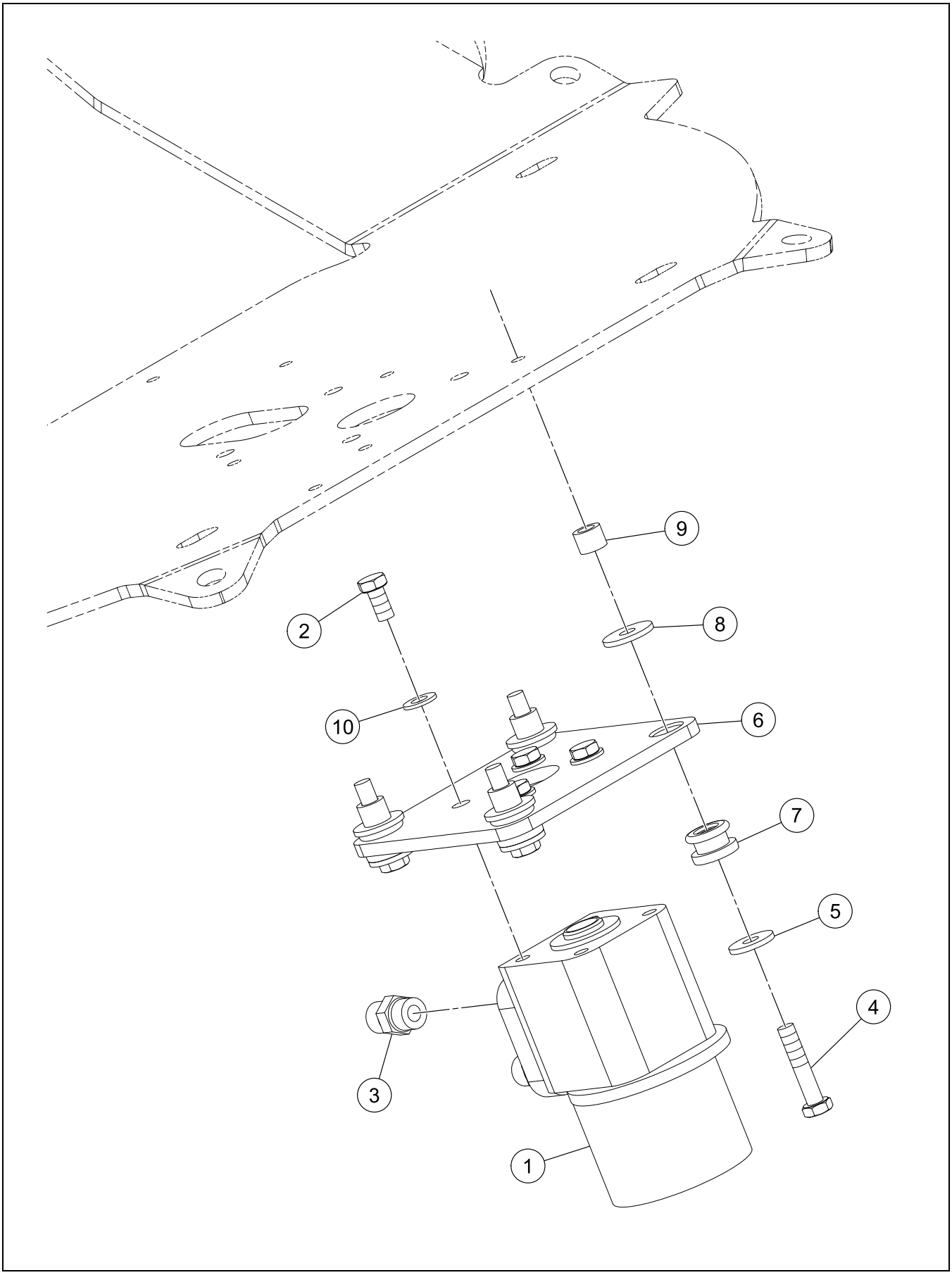

STEERING VALVE ASSEMBLY

BOM 13276167

ITEM	COMM. NO.	DESCRIPTION	QTY	DIMENSIONS/NOTES
1	13218987	Steering Valve	1	
-	54747340	- Seal Kit	1	
2	96702279	HHCS, Fully Threaded, Zinc Plated	4	M10 x 1.5 x 20 Cl 8.8
3	95303368	Adapter	4	
4	96705116	HHCS, Fully Threaded, Zinc Plated	4	M10 x 1.5 x 50 Cl 8.8
5	59437087	Tail Washer	4	
6	13167721	Mounting Plate	1	
7	59424309	Shock Mount	4	
8	59437079	Head Washer	4	
9	13167812	Spacer	4	
10	96741046	Flatwasher, Zinc Plated	4	M10 Cl 200

SEAT ASSEMBLY

Dwg D13278759/01

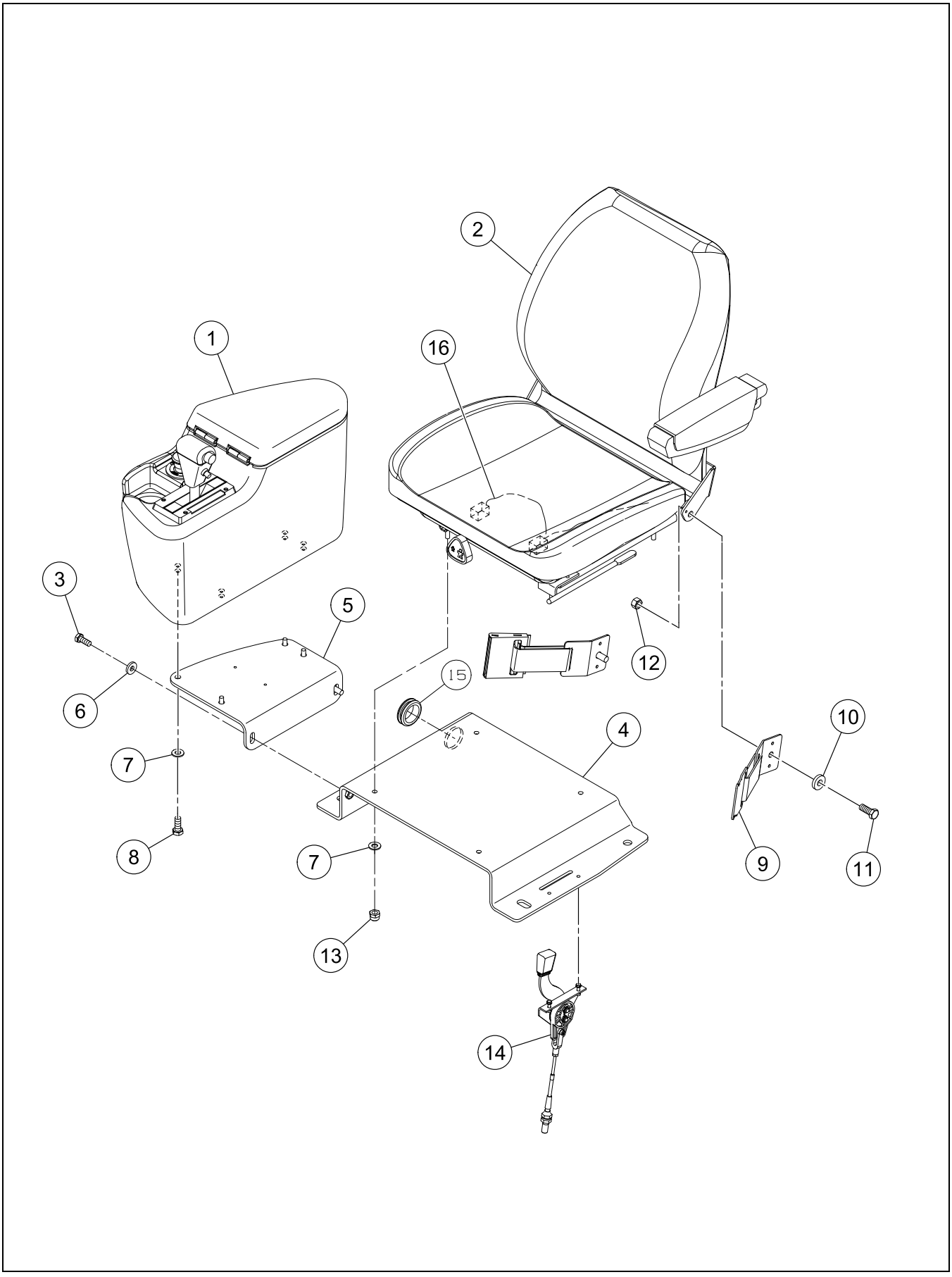

SEAT ASSEMBLY

BOM 13276134

ITEM	COMM. NO.	DESCRIPTION	QTY	DIMENSIONS/NOTES
1	**NSVA**	**Console Assembly**	**1**	**See Page D - 10.**
2	**54670302**	**Seat**	**1**	**See Breakdown D - 14.**
3	96702287	HHCS, Fully Threaded, Zinc Plated	2	M10 x 1.5 x 25 Cl 8.8
4	13295365	Seat Base	1	
5	13272562	Side Console Support	1	
6	96741046	Flatwasher, Zinc Plated	2	M10 Cl 200
7	96741038	Flatwasher	8	M8 x 1.25 Cl 200
8	96702824	HHCS, Fully Threaded, Zinc Plated	4	M8 x 1.25 x 20 Cl 8.8
9	59227561	Seat Belt	1	
10	96738596	Flatwasher, Zinc Plated	2	M12 Hardened Cl 200
11	96702790	HHCS, Fully Threaded, Zinc Plated	2	M12 x 1.75 x 25 Cl 10.9
12	96702857	Nut, Zinc Plated	2	M12 x 1.75 Cl 10
13	96704606	Hex Locknut, Zinc Plated	4	M8 x 1.25 Cl 8
14	**NSVA**	**Throttle Assembly**	**1**	**See Page D - 16.**
15	59160234	Grommet	1	
16	13165071	Seat Switch Wire Harness	1	

CONSOLE ASSEMBLY

Dwg D13325162/01

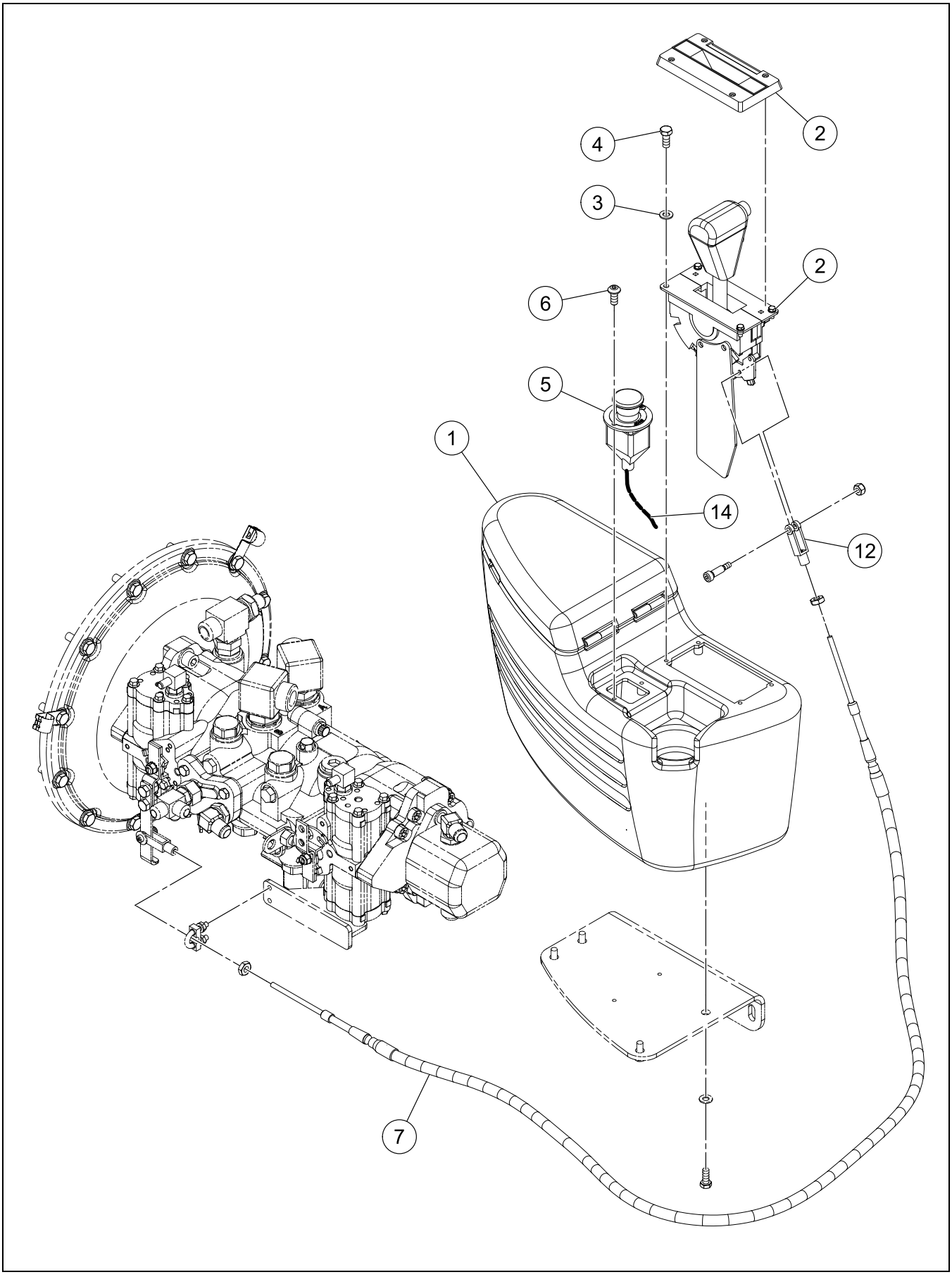

CONSOLE ASSEMBLY

BOM 13218839

ITEM	COMM. NO.	DESCRIPTION	QTY	DIMENSIONS/NOTES
1	13186176	Side Console Assembly	1	
-	13186242	- Side Console	1	
-	13186390	- Side Console Pocket	1	
-	13186374	- Side Console Cover	1	
2	13289921	F-Stop-R Control	1	
-	13382445	- F-Stop-R Control Switch	1	
3	96738554	Flatwasher, Zinc Plated	4	M5 Hardened Cl 200
4	96702386	HHCS, Fully Threaded, Zinc Plated	4	M5 x 0.8 x 12 Cl 8.8
5	**NSVA**	**Emergency Stop Assembly**	**1**	**See Page D - 12.**
6	59148569	HHCS	2	M5 x 0.8 x 12
7	13188453	F-Stop-R Control Cable	1	
12	59901306	Clevis	1	
14	13492640	Side Console Wire Harness	1	

EMERGENCY STOP ASSEMBLY

Dwg D13169735/00

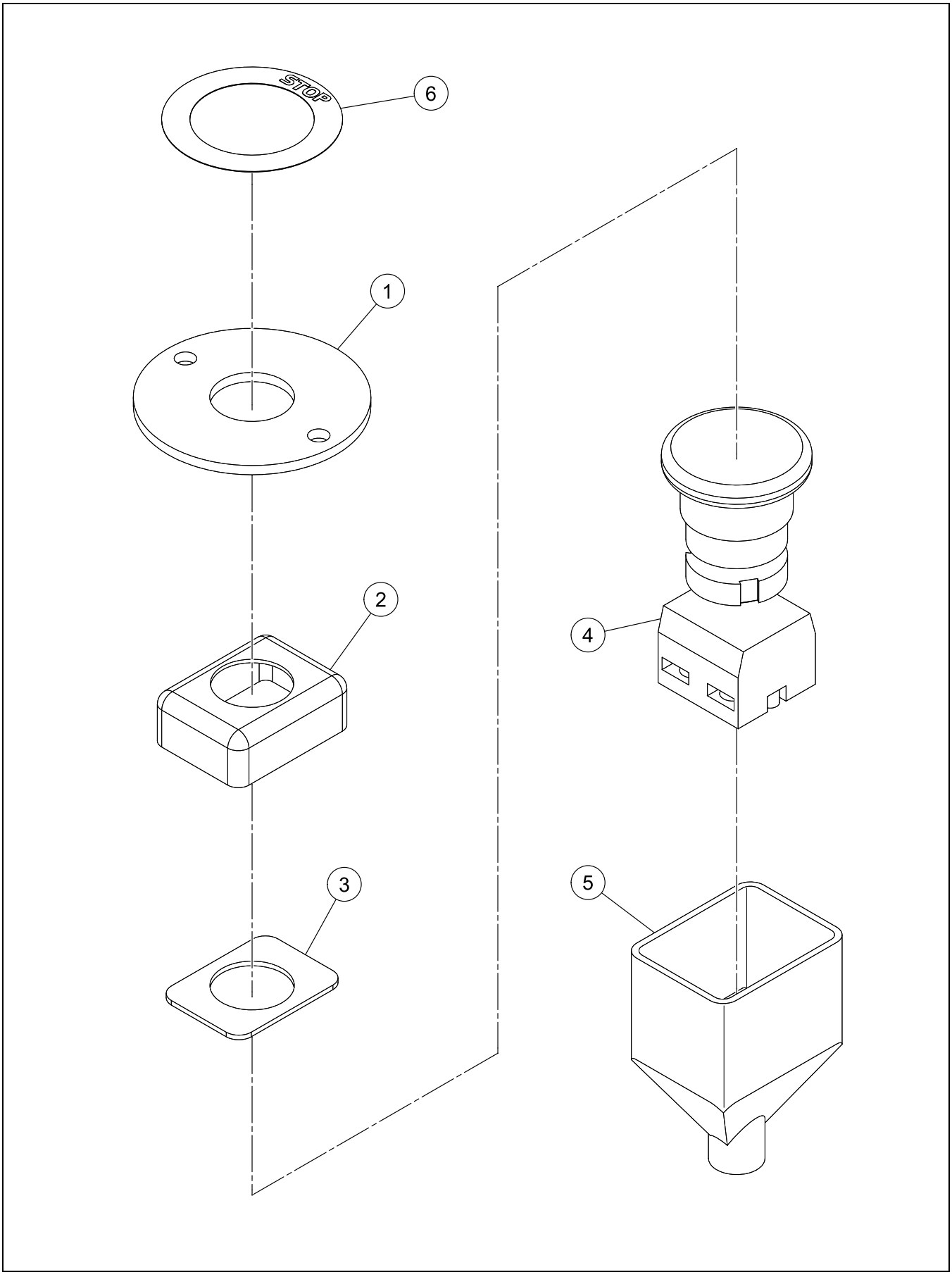

EMERGENCY STOP ASSEMBLY

BOM 13166087

ITEM	COMM. NO.	DESCRIPTION	QTY	DIMENSIONS/NOTES
1	13166079	Mounting Plate	1	
2	59108100	Dust Boot, Top	1	
3	59109116	Washer	1	
4	59111450	Emergency Stop Switch	1	
-	58917543	- Emergency Stop Switch Bulb	1	
5	59108605	Dust Boot, Bottom	1	
6	59239897	Decal: Stop	1	

SEAT (54670302) - INTERNAL BREAKDOWN

D13244504/01

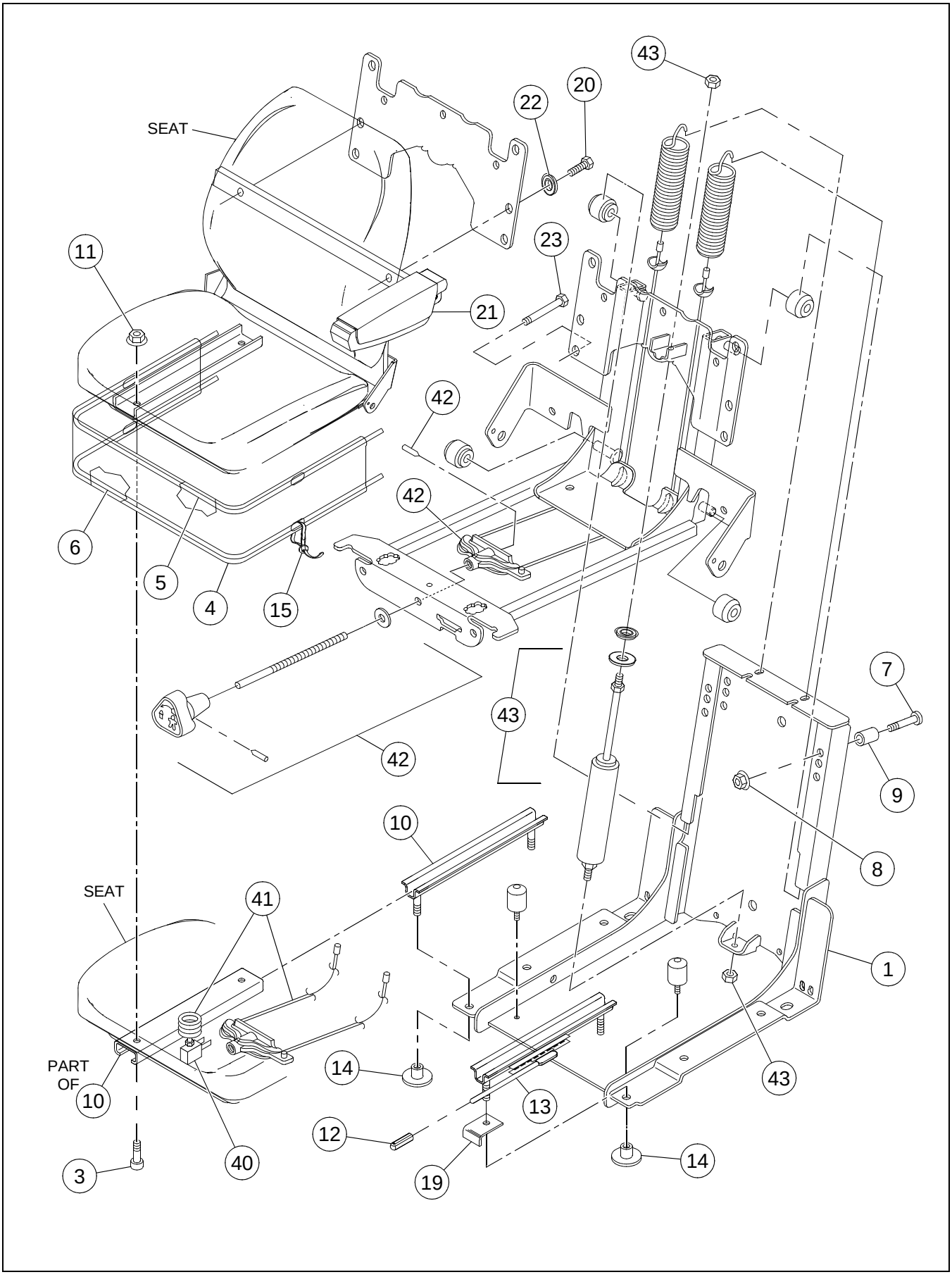

SEAT (54670302) - INTERNAL BREAKDOWN

BOM 54670302

ITEM	COMM. NO.	DESCRIPTION	QTY	DIMENSIONS/NOTES
1	59154450	Suspension Assembly	1	
3	13228820	Capscrew	4	
4	13228838	Boot	1	
5	59154492	Wire	1	
6	59154500	Wire	2	
7	59154518	Pin	2	
8	59154526	Nut	2	
9	13228846	Spacer	2	
10	13247473	Adjuster	1	
11	59154542	Nut	3	
12	13228853	Tip	1	
13	13247481	Adjuster - Latcher W/Handle	1	
14	13228861	Stud Protector	4	
15	59145821	Wire Tie	A/R	
19	59154393	Bracket	1	
20	13247549	Screw	2	
21	54531629	Arm Rest Assembly	1	
22	13247556	Washer	2	
23	13228960	Screw	4	
40	13167945	Cushion and Switch Kit	1	
-	13281332	- Seat Pan And Cushion	1	
-	13198270	- Dual Switch Seat Kit	1	
-	13281365	- Compression Switch	1	
-	13281373	- Screw	1	
41	13258934	Spring Cable Kit (Includes items 24, 34)t	1	
42	54496385	Knob Kit (Includes items 35,36,37,38,39)	1	
43	54496377	Damper Kit (Includes items 30,31,32,33)	1	
44	13493077	Seat Belt Kit (Not Shown)	1	

THROTTLE ASSEMBLY

Dwg D13278650/00

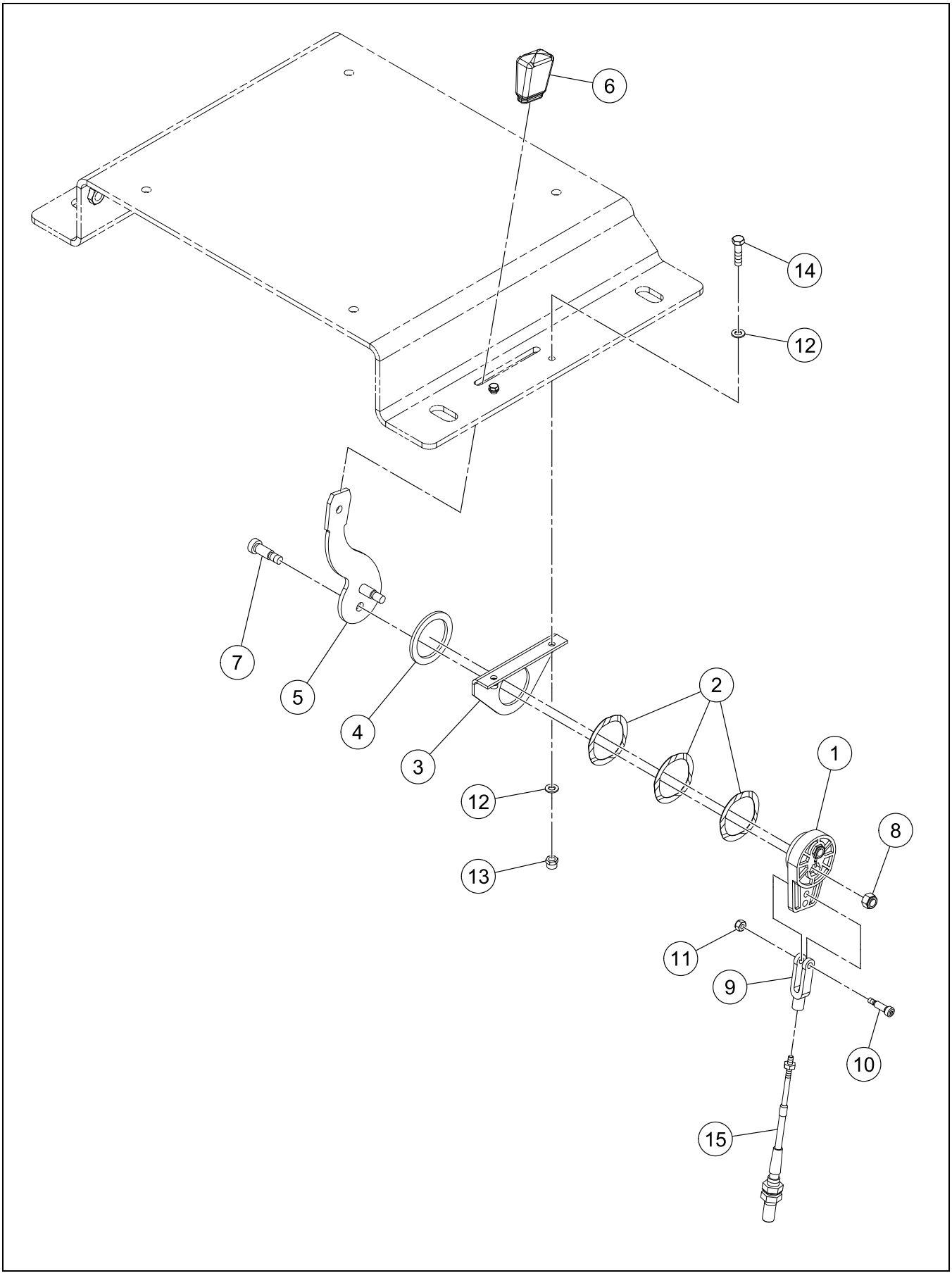

THROTTLE ASSEMBLY

BOM 13272109

ITEM	COMM. NO.	DESCRIPTION	QTY	DIMENSIONS/NOTES
1	59219287	Throttle Lever	1	
2	59219261	Spring Washer	3	
3	59226548	Throttle Bracket	1	
4	59219253	Friction Washer	1	
5	59219279	Throttle Lever	1	
6	59219246	Throttle Lever Grip	1	
7	95326609	HSHCS	2	UNC
8	95923314	Locknut	2	5/16 x 18 UNJC
9	59901306	Clevis	1	
10	95860052	Screw	1	10 x 24 x 0.375
11	95943346	Locknut, Zinc Plated	1	#10 x 24
12	96738554	Flatwasher, Zinc Plated	4	M5 Hardened Cl 200
13	96704580	Hex Locknut, Zinc Plated	2	M5 x 0.8 Cl 8
14	96705736	HHCS, Fully Threaded, Zinc Plated	2	M5 x 0.8 x 20 Cl 8.8
15	54465075	Throttle Cable	1	

PEDESTAL ASSEMBLY

Dwg D13169867/07

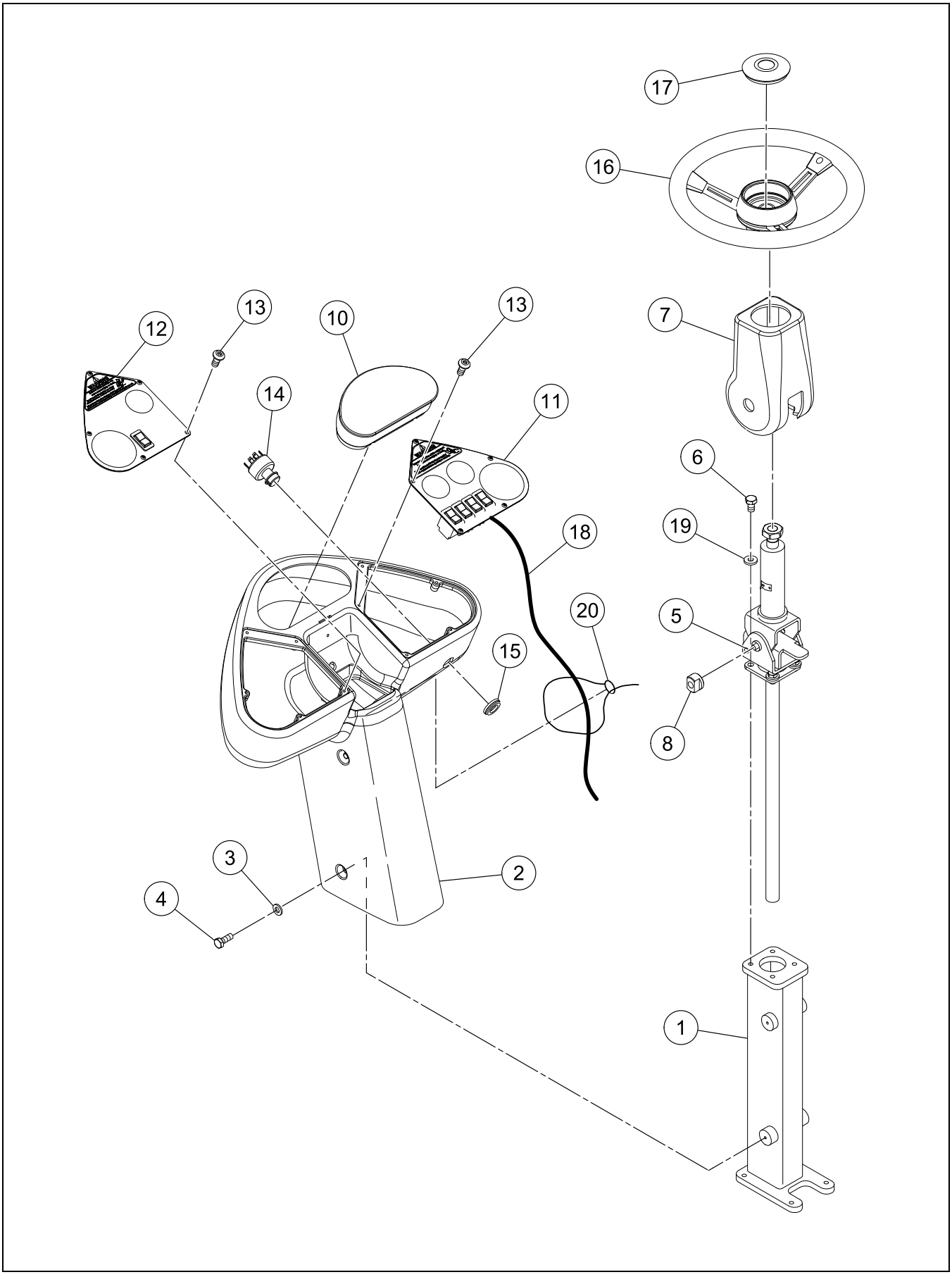

PEDESTAL ASSEMBLY

BOM 13218870, 59293613

ITEM	COMM. NO.	DESCRIPTION	QTY	DIMENSIONS/NOTES
1	59298489	Pedestal	1	
2	13235882	Pedestal Shroud	1	
3	96741053	Flatwasher, Zinc Plated	4	M6 Cl 200
4	96701958	HHCS, Fully Threaded, Zinc Plated	4	M6 x 16 Cl 8.8
5	13236864	Steering Column	1	
-	59972919	- Nut	1	
-	13258686	- Wire	1	
-	13319942	Tilt Steering Column (Optional)	1	
6	96701479	HHCS, Fully Threaded, Zinc Plated	4	M10 x 1.5 x 16 Cl 8.8
7	13270731	Steering Column Cover	1	
-	13235478	Tilt Steering Column Cover (Optional)	1	
8	13236872	Pivot Nut	2	
10	13309521	Instrument Panel	1	
11	**NSVA**	**Right-Hand Panel Assembly**	**1**	**See Page D - 20.**
12	**NSVA**	**Left-Hand Panel Assembly**	**1**	**See Page D - 22.**
13	59148569	HHCS	10	M5 x 0.8 x 12
14	54461090	Ignition Switch	1	
-	58917261	- Ignition Key	1	
-	13284690	- Key Tag	1	
15	58924333	Ignition Switch Nut	1	
16	13158647	Steering Wheel	1	
17	59159558	Horn Button	1	
18	13470067	Pedestal Wire Harness	1	
19	96711833	Flatwasher, Zinc Plated	4	M10 Cl 10
20	58820168	Wire Tie	A/R	

RIGHT-HAND PANEL ASEEMBLY

Dwg D13278890/00

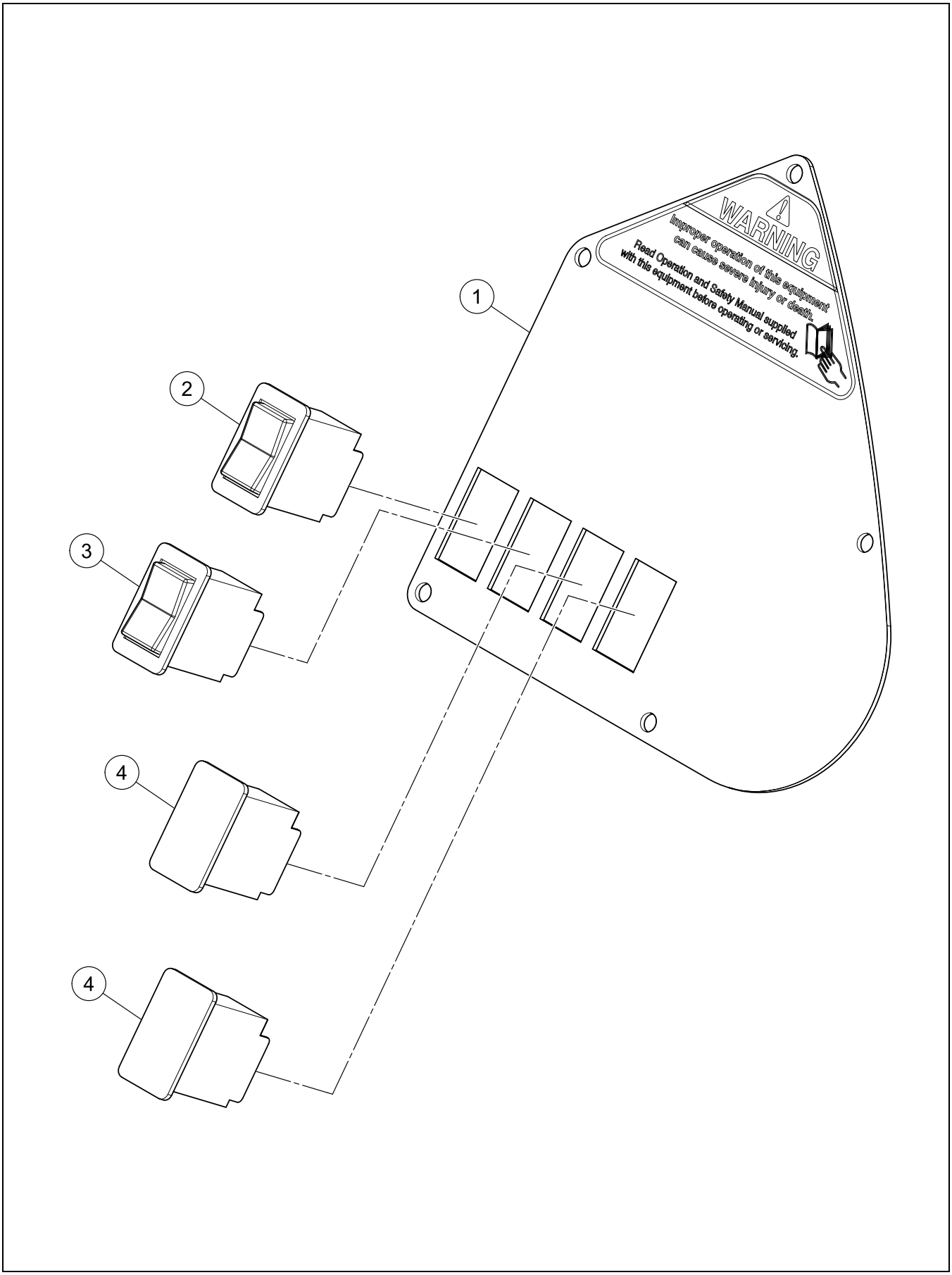

RIGHT-HAND PANEL ASEEMBLY

BOM 13272992

ITEM	COMM. NO.	DESCRIPTION	QTY	DIMENSIONS/NOTES
1	13187109	Panel, RH	1	
2	54666102	Brake Test Switch	1	
3	54666094	Parking Brake Switch	1	
4	13225156	Switch Plug	2	

LEFT-HAND PANEL ASSEMBLY

Dwg D13169826/00

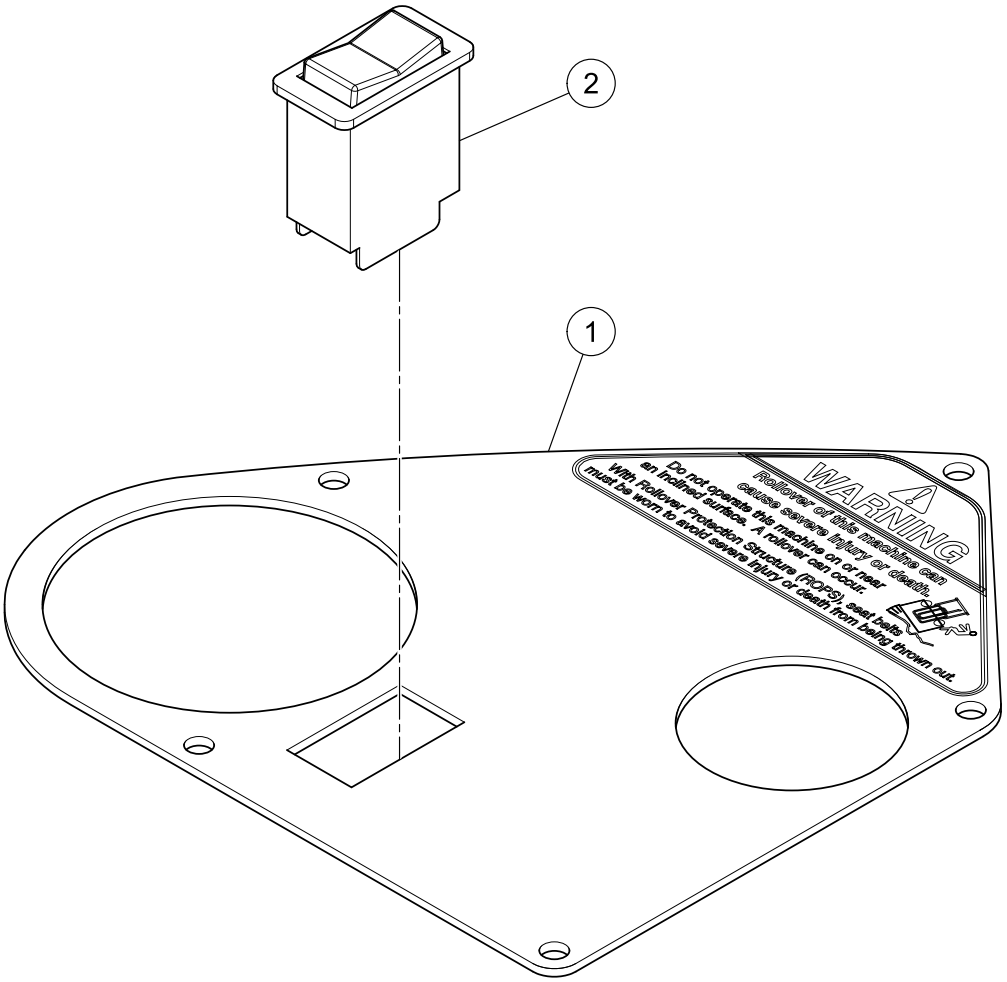

LEFT-HAND PANEL ASSEMBLY

BOM 13233721

ITEM	COMM. NO.	DESCRIPTION	QTY	DIMENSIONS/NOTES
1	13187117	Panel, LH	1	
2	13225156	Switch Plug	1	

GAUGE INSTALLATION - OPTIONAL

Dwg D13293956/01

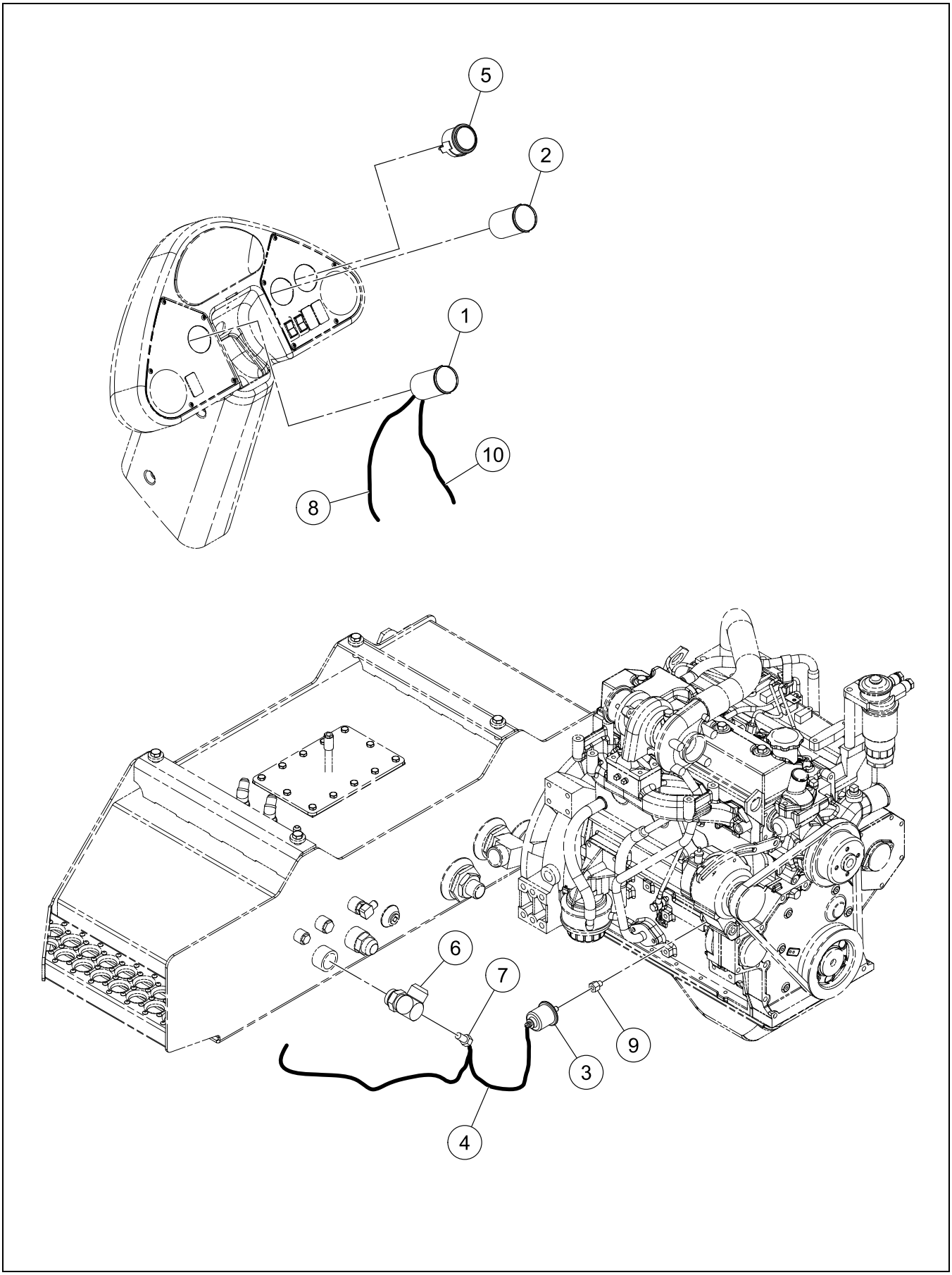

GAUGE INSTALLATION - OPTIONAL

BOM 13274097

ITEM	COMM. NO.	DESCRIPTION	QTY	DIMENSIONS/NOTES
1	58877796	Voltmeter	1	
2	59124586	Oil Pressure Gauge	1	
3	13275078	Engine Oil Pressure Sender	1	
4	13319751	Gauge Wire Harness	1	
5	58893983	Hydraulic Oil Temperature Gauge	1	
6	13352034	Fitting	1	
7	58913856	Hydraulic Oil Temperature Sender	1	
8	59110171	Temperature Gauge Light Wire Harness	1	
-	59824250	- Temperature Gauge Light Kit	3	
9	54747720	Adapter	1	
10	13266978	Temperature Gauge Wire Harness	1	

STEERING KNOB INSTALLATION - OPTIONAL

Dwg D59288548/00

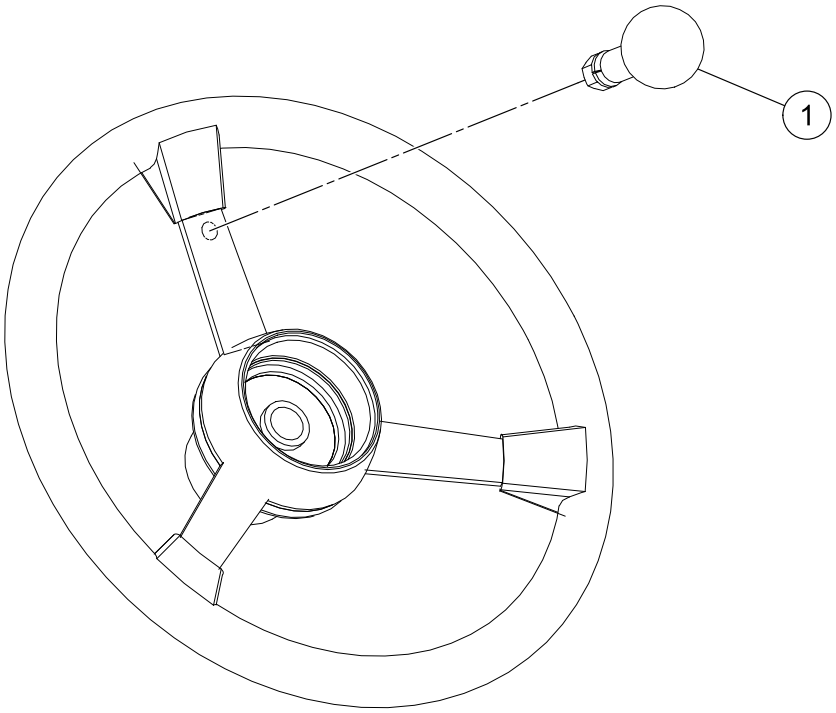

STEERING WHEEL

STEERING KNOB INSTALLATION - OPTIONAL

BOM 59199141

ITEM	COMM. NO.	DESCRIPTION	QTY	DIMENSIONS/NOTES
1	59199141	Spinner Kit	1	

Always use Manufacturer Replacement parts!*

Section E - ELECTRICAL

WIRE HARNESS INSTALLATION

Dwg D13177647/00

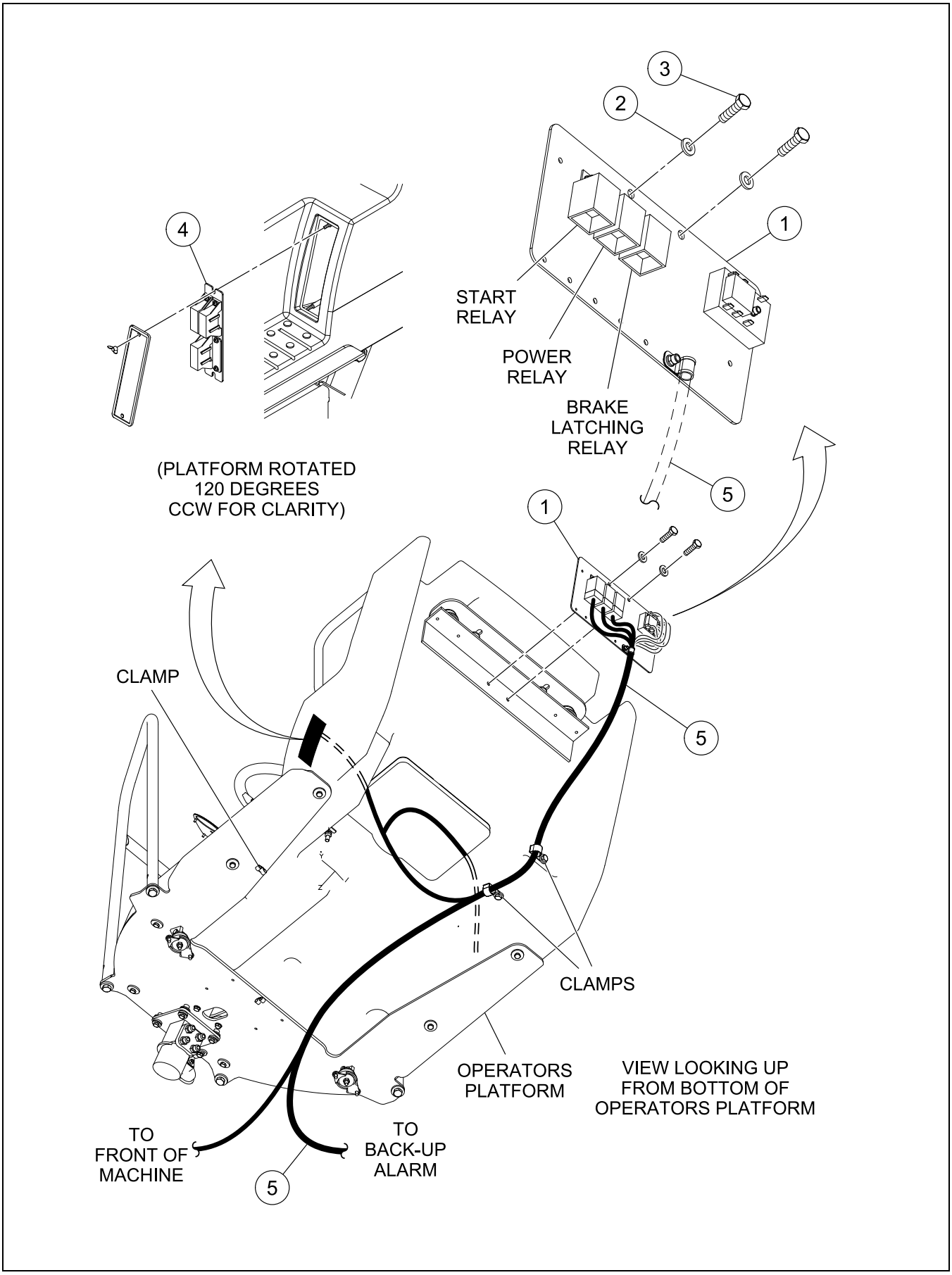

BOM 13177647

ITEM	COMM. NO.	DESCRIPTION	QTY	DIMENSIONS/NOTES
1	**NSVA**	**Relay Panel Assembly**	**1**	**See Page E - 4.**
2	96713979	Washer, Zinc Plated	2	M8 Hardened
3	96702816	HHCS, Fully Threaded, Zinc Plated	1	M8 x 1.25 x 16 Cl 8.8
4	**NSVA**	**Fuse Block Assembly**	**1**	**See Page E - 6.**
5	13492657	Fuse Wire Harness	1	

RELAY PANEL ASSEMBLY

Dwg D13291893/00

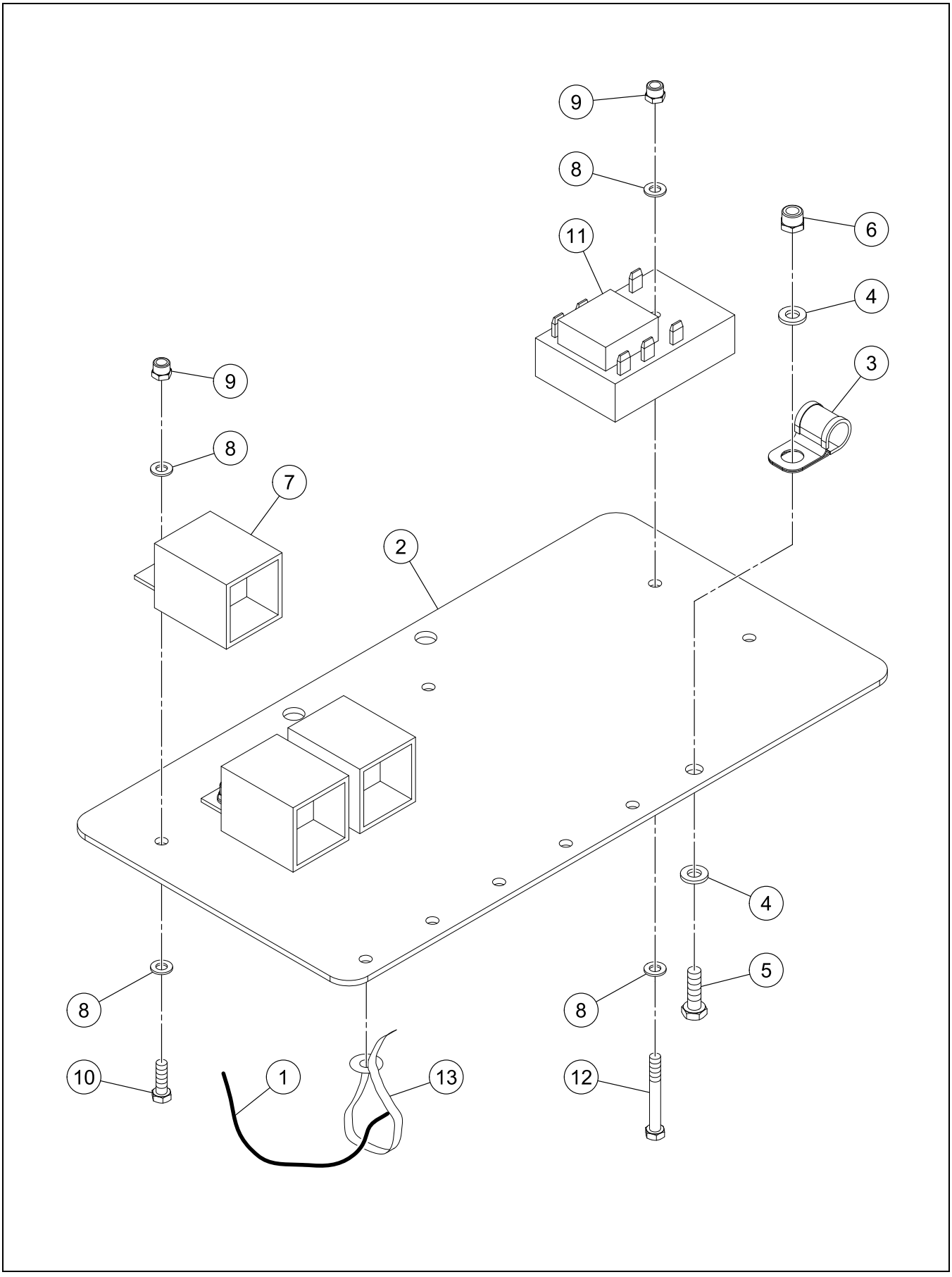

RELAY PANEL ASSEMBLY

BOM 13234679

ITEM	COMM. NO.	DESCRIPTION	QTY	DIMENSIONS/NOTES
1	13489786	Chassis Wire Harness	1	
2	13291596	Relay Mounting Plate	1	
3	59117317	Clamp	1	
4	96741053	Flatwasher, Zinc Plated	2	M6 Cl 200
5	96704564	HHCS, Fully Threaded, Zinc Plated	1	M6 x 1.0 x 20 Cl 8.8
6	96702873	Locknut, Zinc Plated	1	M6 Cl 10
7		This Item Not Used With This Assembly		
8	96738554	Flatwasher, Zinc Plated	8	M5 Hardened Cl 200
9	96702865	Locknut, Zinc Plated	4	M5 x 0.8 Cl 10
10	96705728	Screw, Fully Threaded, Zinc Plated	3	M5 x 0.8 x 16 Cl 8.8
11	13349055	Two Second Delay Timer	1	
12	96705751	HHCS, Fully Threaded, Zinc Plated	1	M5 x 0.8 x 40 Cl 8.8
13	58820168	Wire Tie	A/R	
14	59970384	Shock (Not Shown)	3	
15	95923298	Locknut, Zinc Plated (Not Shown)	3	1/4 x 20

FUSE BLOCK ASSEMBLY

Dwg D13235858/01

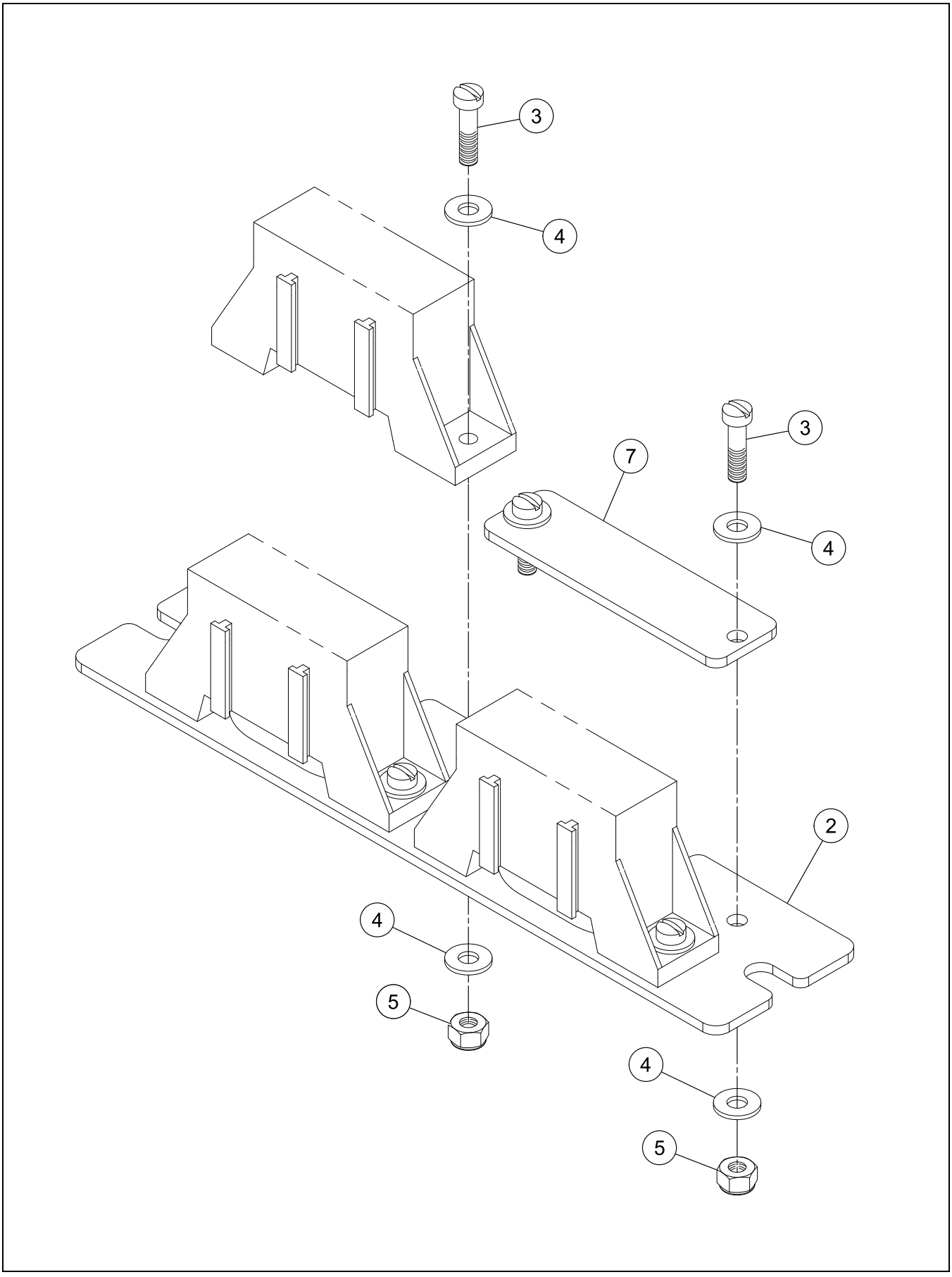

FUSE BLOCK ASSEMBLY

BOM 13235858

ITEM	COMM. NO.	DESCRIPTION	QTY	DIMENSIONS/NOTES
2	13235866	Fuse Plate	1	
3	95922134	Screw, Zinc Plated	8	#10 x 24 x 1 Grd B
4	95922332	Flatwasher, Zinc Plated	16	#10
5	95943346	Locknut, Zinc Plated	8	#10 x 24
7	13209135	Fuse Cover Plate	1	

BATTERY INSTALLATION

Dwg D13278320/01

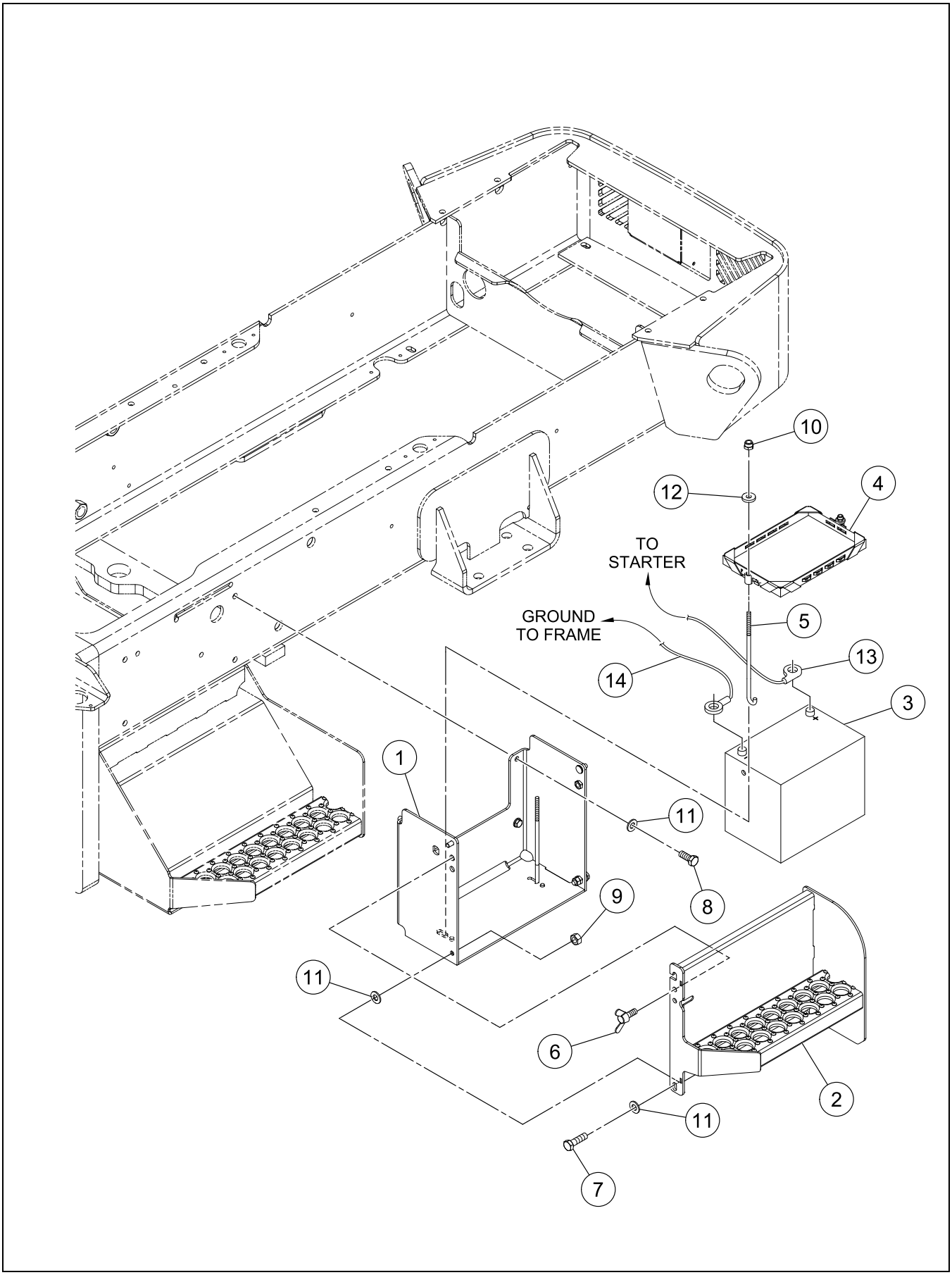

BATTERY INSTALLATION

BOM 13177688

ITEM	COMM. NO.	DESCRIPTION	QTY	DIMENSIONS/NOTES
1	13290259	Battery Box	1	
2	13273057	Step	1	
3	54635859	Battery	1	
4	59225920	Battery Holddown	1	
5	59211805	J-hook	2	
6	59136226	Wingscrew	2	M10 x 25
7	96704309	HHCS, Fully Threaded, Zinc Plated	2	M10 x 1.5 x 35 Cl 8.8
8	96702287	HHCS, Fully Threaded, Zinc Plated	4	M10 x 1.5 x 25 Cl 8.8
9	96704812	Hex Nut, Zinc Plated	2	M10 x 1.5 Cl 8
10	96704606	Hex Locknut, Zinc Plated	2	M8 x 1.25 Cl 8
11	96741046	Flatwasher, Zinc Plated	8	M10 Cl 200
12	96713979	Washer, Zinc Plated	2	M8 Hardened
13	13266960	Positive Battery Cable	1	
14	13256177	Negative Battery Cable	1	

BATTERY MASTER SWITCH INSTALLATION - OPTIONAL

Dwg D13271150/00

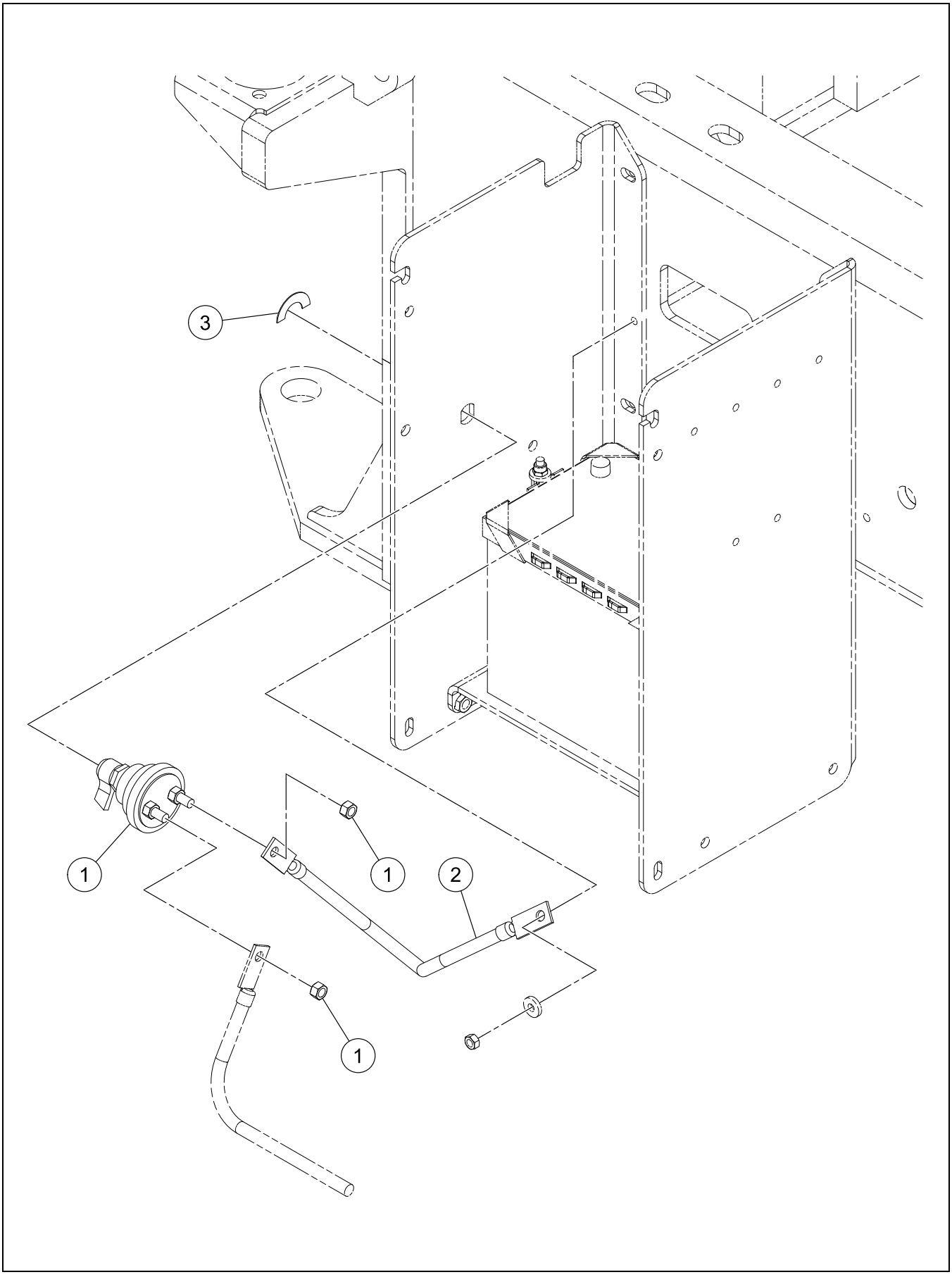

BATTERY MASTER SWITCH INSTALLATION - OPTIONAL

BOM 13178090

ITEM	COMM. NO.	DESCRIPTION	QTY	DIMENSIONS/NOTES
1	13209648	Battery Master Switch	1	
2	13255922	Battery Master Switch Cable	1	
3	13208012	Decal: Master Disconnect	1	

AUDIBLE ALARM INSTALLATION - OPTIONAL

Dwg D13293931/00

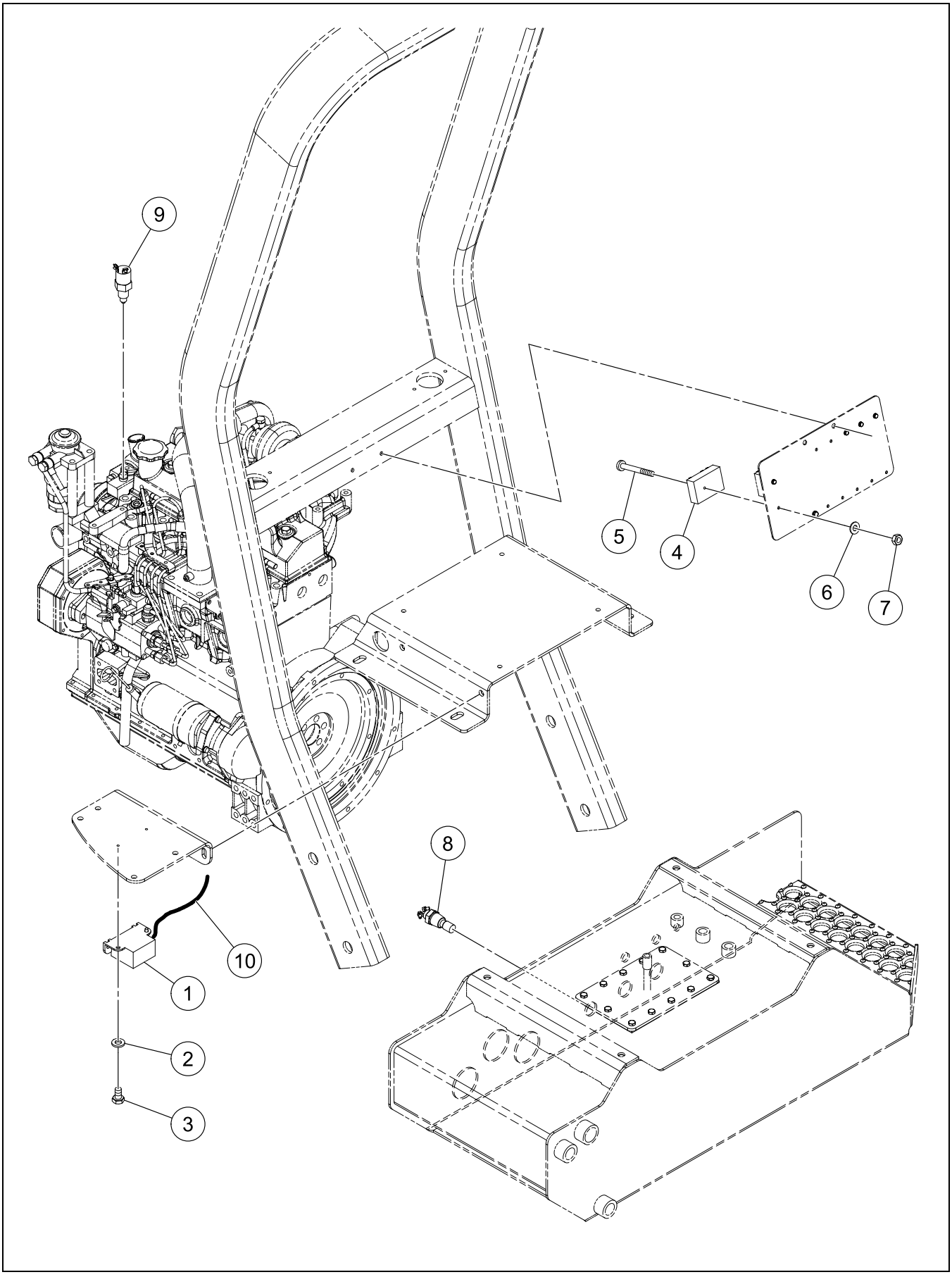

AUDIBLE ALARM INSTALLATION - OPTIONAL

BOM 13177761

ITEM	COMM. NO.	DESCRIPTION	QTY	DIMENSIONS/NOTES
1	58870924	Alarm	1	
2	96741053	Flatwasher, Zinc Plated	2	M6 Cl 200
3	96705769	Hex Head Screw, Fully Threaded, Zinc Plated	2	M6 x 1.0 x 10 Cl 8.8
4	58870932	Timer	1	
5	96715073	RCHNS, Zinc Plated	1	M4 x 0.7 x 35 Cl 10.9
6	96738547	Flatwasher, Zinc Plated	1	M4 Hardened Cl 200
7	96703756	Hex Nut, Zinc Plated	1	M4 x 0.7 Cl 8
8	13421334	Temperature Switch	1	
9	54716378	Temperature Switch	1	
10	13300082	Audible Alarm Wire Harness	1	
-	58965377	- Relay	1	
-	59020065	- Alternator Diode	1	
-	59164954	- Diode Harness	1	

POWER SOCKET INSTALLATION - OPTIONAL

Dwg D13307764/00

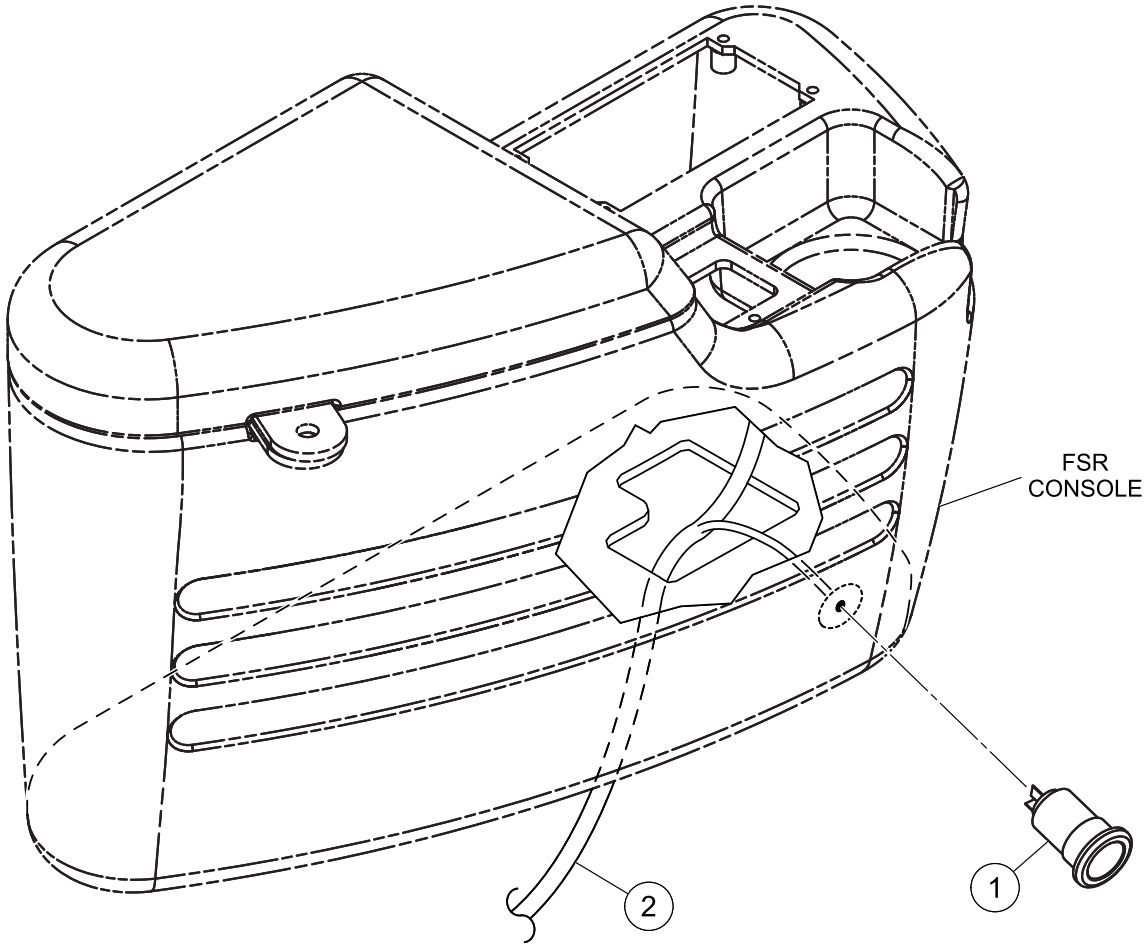

POWER SOCKET INSTALLATION - OPTIONAL

BOM 13307764

ITEM	COMM. NO.	DESCRIPTION	QTY	DIMENSIONS/NOTES
1	13173323	Power Port	1	
2	13493531	Power Socket Wire Harness	1	

FOPS BEACON LIGHT INSTALLATION - OPTIONAL

Dwg D13294103/03

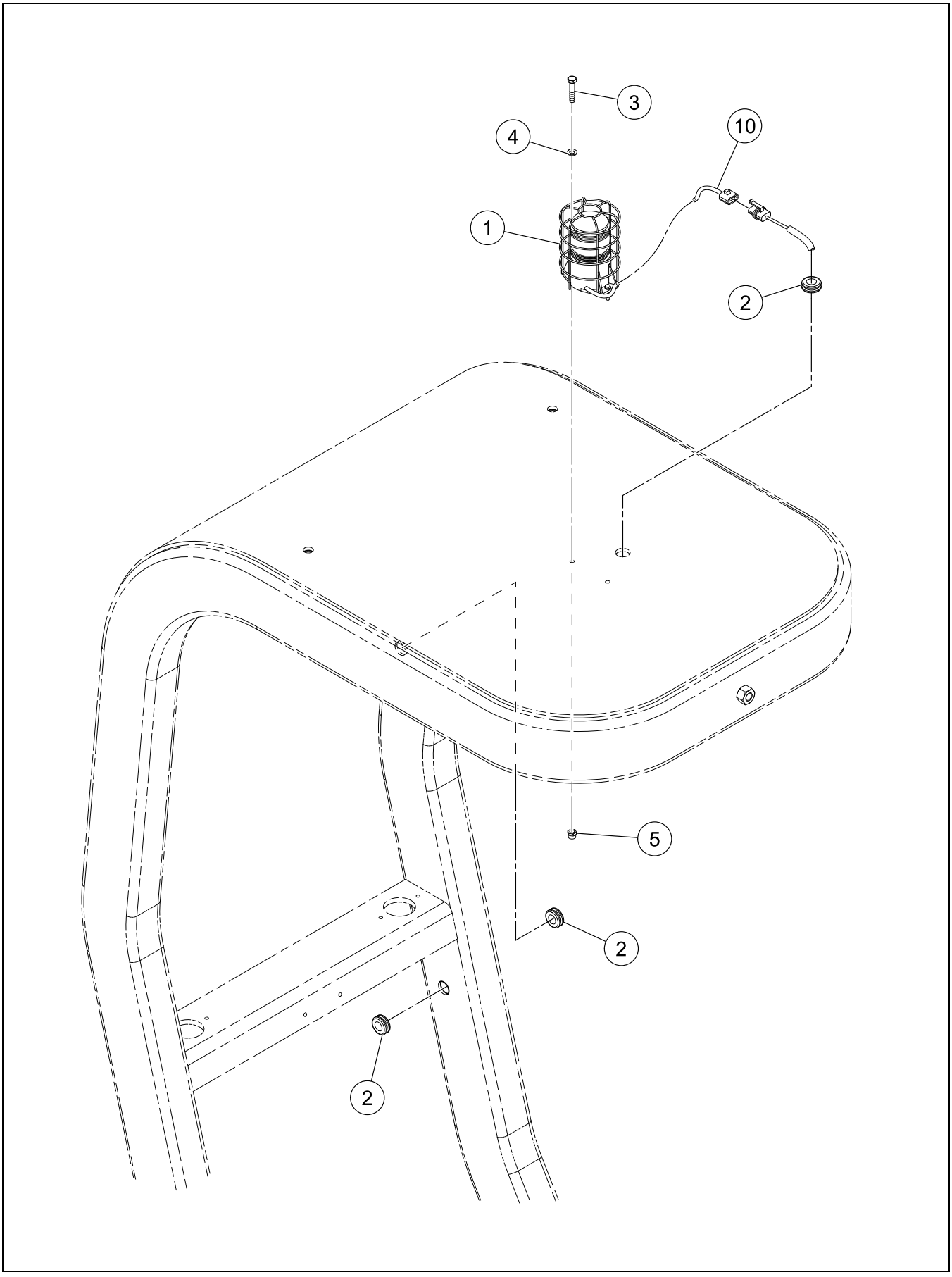

FOPS BEACON LIGHT INSTALLATION - OPTIONAL

BOM 13238480

ITEM	COMM. NO.	DESCRIPTION	QTY	DIMENSIONS/NOTES
1	59083105	Beacon Light	1	
-	59023077	- Amber Lens	1	
-	59022871	- Beacon Light Bulb	1	
2	59704403	Grommet	3	
3	96705744	HHCS, Fully Threaded, Zinc Plated	2	M5 x 0.8 x 25 Cl 8.8
4	96738554	Flatwasher, Zinc Plated	2	M5 Hardened Cl 200
5	96704580	Hex Locknut, Zinc Plated	2	M5 x 0.8 Cl 8
10	13300090	Beacon Light Wire Harness	1	

ROPS BEACON LIGHT INSTALLATION - OPTIONAL

Dwg D13294038/01

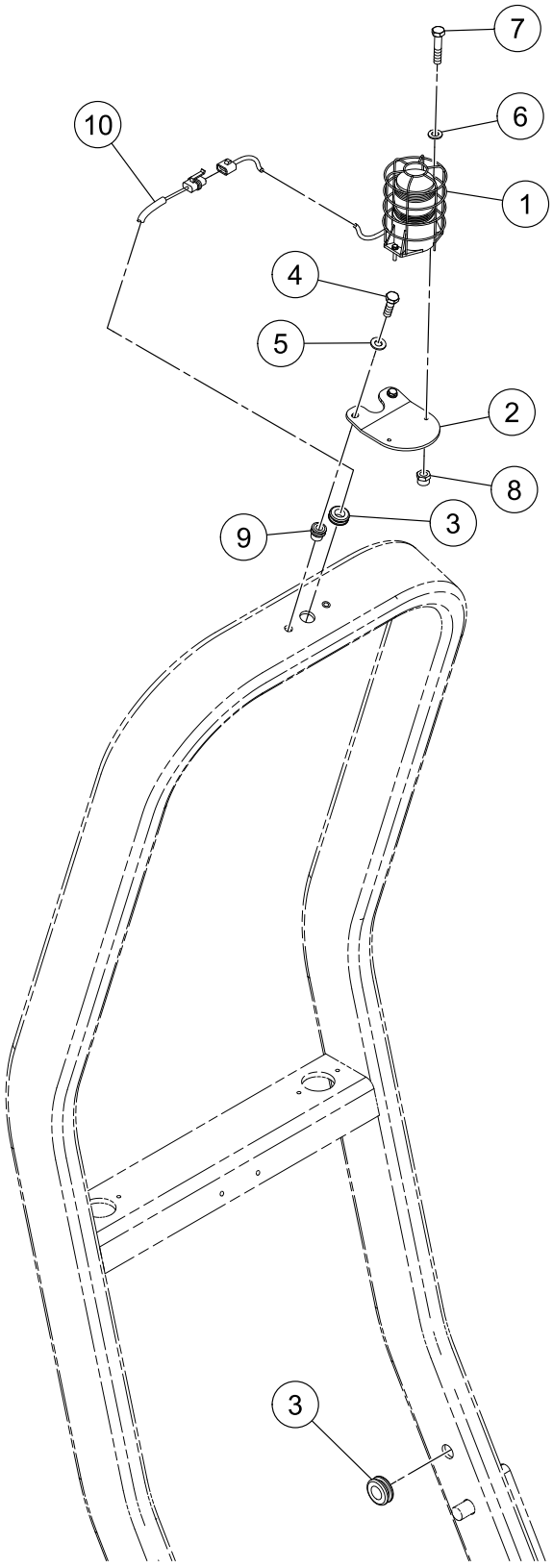

ROPS BEACON LIGHT INSTALLATION - OPTIONAL

BOM 13234505

ITEM	COMM. NO.	DESCRIPTION	QTY	DIMENSIONS/NOTES
1	59083105	Beacon Light	1	
-	59023077	- Amber Lens	1	
-	59022871	- Beacon Light Bulb	1	
2	13272851	Beacon Bracket	1	
3	59704403	Grommet	2	
4	96702659	HHCS, Fully Threaded, Zinc Plated	2	M8 x 1.25 x 25 Cl 8.8
5	96741038	Flatwasher	2	M8 x 1.25 Cl 200
6	96705744	HHCS, Fully Threaded, Zinc Plated	2	M5 x 0.8 x 25 Cl 8.8
7	96738554	Flatwasher, Zinc Plated	2	M5 Hardened Cl 200
8	96704580	Hex Locknut, Zinc Plated	2	M5 x 0.8 Cl 8
9	13235676	Knurled Thread Insert	2	
10	13300090	Beacon Light Wire Harness	1	

FOPS WORKLIGHT INSTALLATION - OPTIONAL

Dwg D13349931/01

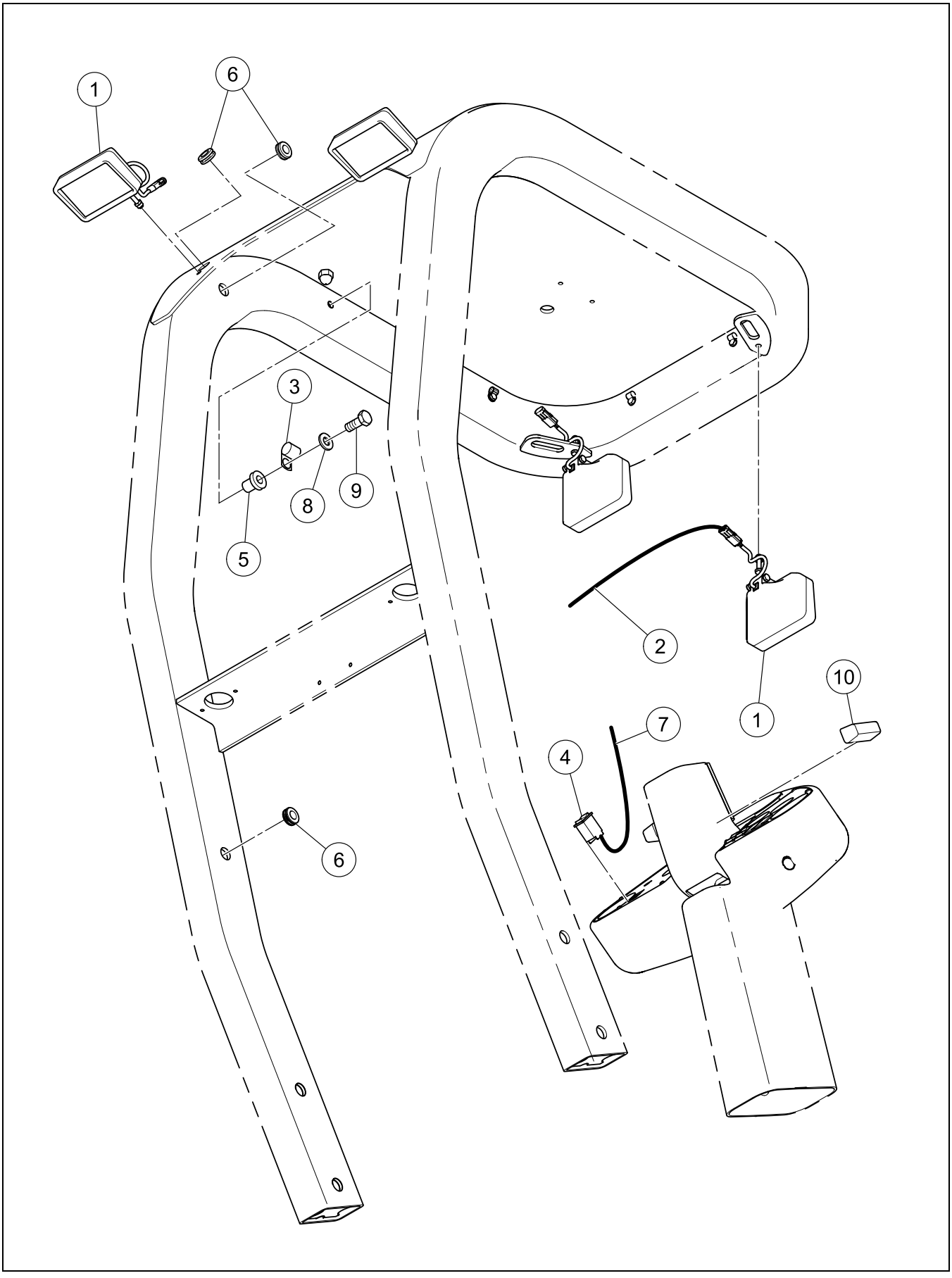

FOPS WORKLIGHT INSTALLATION - OPTIONAL

BOM 13177852

ITEM	COMM. NO.	DESCRIPTION	QTY	DIMENSIONS/NOTES
1	59259598	Worklight Assembly	4	
-	58837949	- Worklight	4	
-	58875543	- Worklight Bulb	4	
-	58860438	- Lens and Reflector	4	
-	59854943	- Connector	4	
-	59854828	- Male Pin	8	
-	59854877	- Cable Seal	8	
2	13254859	Worklight Wire Harness	1	
3	95301842	Clamp	6	
4	13197108	Front/Rear Worklights Switch	1	
5	13235676	Knurled Thread Insert	4	
6	59704403	Grommet	4	
7	13349964	Worklight Wire Harness	1	
-	58965377	- Relay	2	
8	96741038	Flatwasher	6	M8 x 1.25 Cl 200
9	96702824	HHCS, Fully Threaded, Zinc Plated	6	M8 x 1.25 x 20 Cl 8.8
10	13248935	Dash Lights	2	
11	96704606	Hex Locknut, Zinc Plated (Not Shown)	2	M8 x 1.25 Cl 8

ROPS WORKLIGHT INSTALLATION - OPTIONAL

Dwg D13294327/00

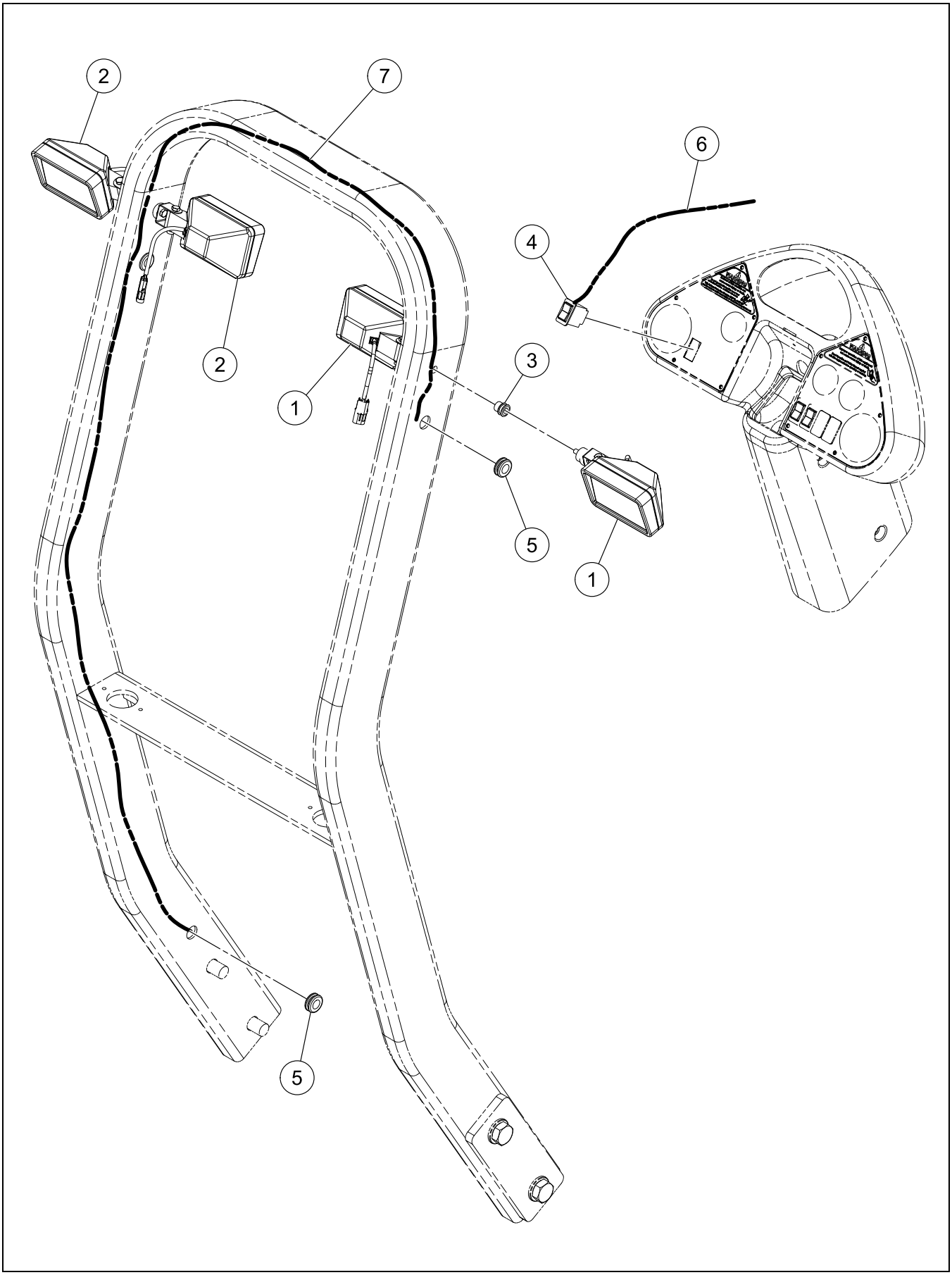

ROPS WORKLIGHT INSTALLATION - OPTIONAL

BOM 13272976

ITEM	COMM. NO.	DESCRIPTION	QTY	DIMENSIONS/NOTES
1	59265777	Worklight Assembly	2	
-	54525084	- Worklight	2	
-	58875543	- Worklight Bulb	2	
-	59854943	- Connector	2	
-	59854828	- Male Pin	4	
-	59854877	- Cable Seal	4	
2	59265793	Worklight Assembly	2	
-	54525134	- Worklight	2	
-	58875543	- Worklight Bulb	2	
-	59854943	- Connector	2	
-	59854828	- Male Pin	4	
-	59854877	- Cable Seal	4	
3	13235676	Insert	4	
4	13197108	Front/Rear Worklights Switch	1	
5	59704403	Grommet	5	
6	13254859	Worklight Wire Harness	1	
7	13224068	Worklight Wire Harness	1	
-	58965377	- Relay	2	

HYDRAULIC OIL TEMPERATURE GAUGE INSTALLATION - OPTIONAL

Dwg 13275888/00

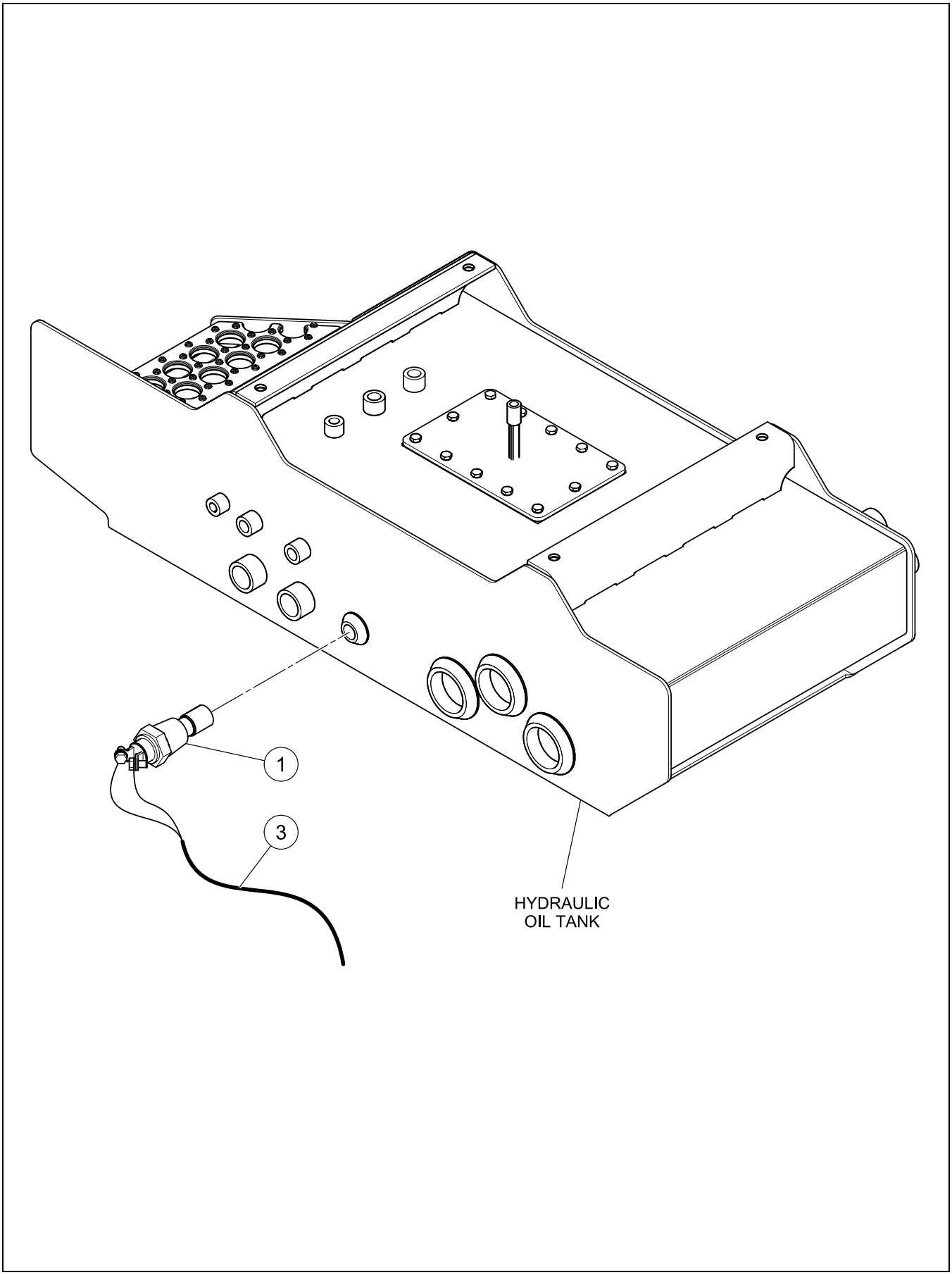

HYDRAULIC OIL TEMPERATURE GAUGE INSTALLATION - OPTIONAL

BOM 13275888

ITEM	COMM. NO.	DESCRIPTION	QTY	DIMENSIONS/NOTES
1	13421334	Hydraulic Oil Temperature Switch	1	
3	13421961	Hydraulic Oil Temperature Light Wire Harness	1	
-	13421953	- Hydraulic Oil Temperature Light Chassis Wire Harness	1	
-	13313986	- Hydraulic Oil Temperature Light Pedestal Wire Harness	1	
4	13250261	Fuse (Not Shown)	1	7.5 Amp

Always use Manufacturer Replacement parts!*

Section G - DECALS

DECAL INSTALLATION - US - SHEET 1 OF 2

Dwg D13291927/09/01

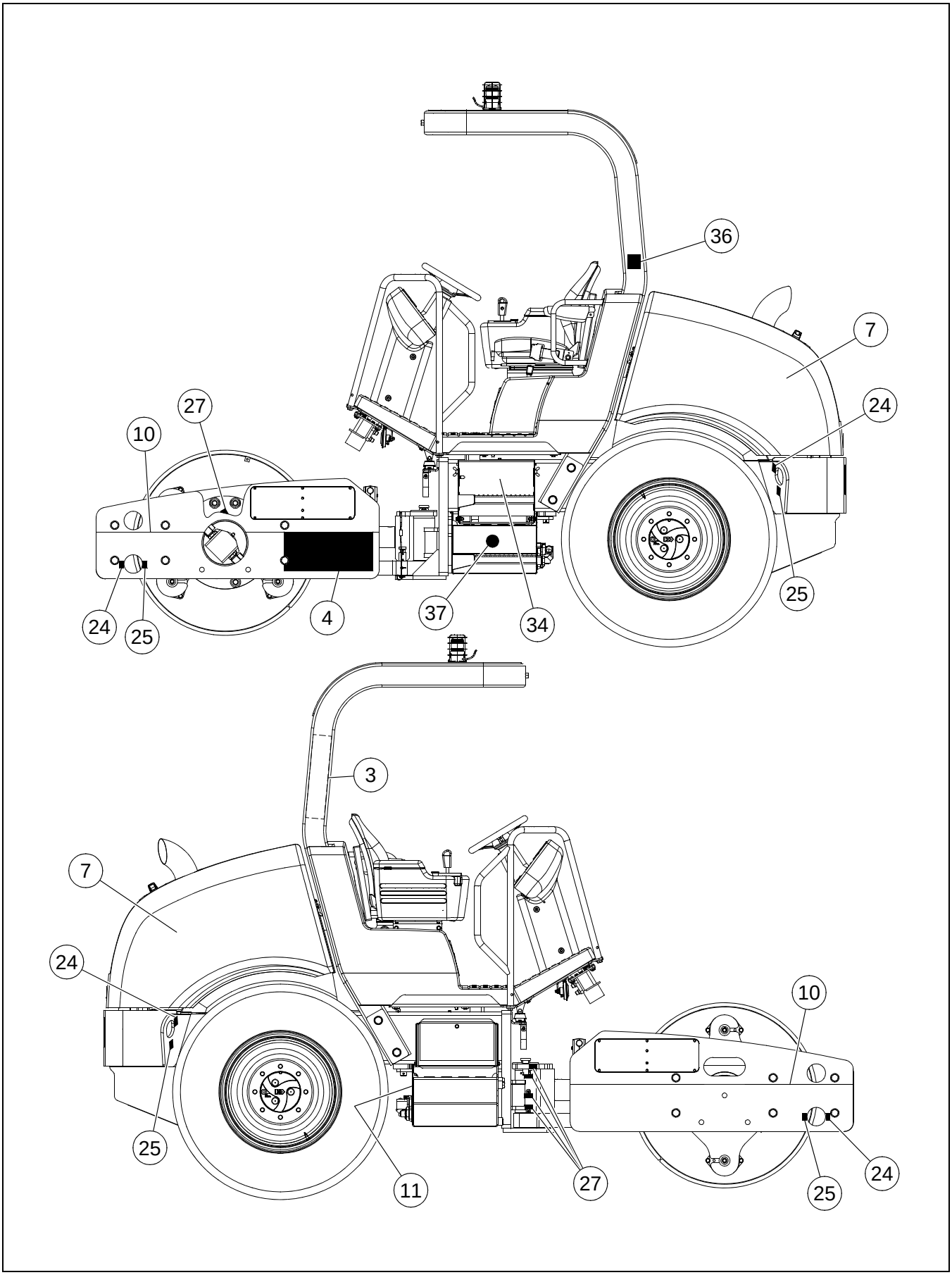

DECAL INSTALLATION - US - SHEET 1 OF 2

BOM 13177704, 13225248, 13225255, 13415211

ITEM	COMM. NO.	DESCRIPTION	QTY	DIMENSIONS/NOTES
3	13304217	Decal: SD-45D TF Series, RH	1	
-	13304233	Decal: SD-45F TF Series, RH	1	
4	13304225	Decal: SD-45D TF Series, LH	1	
-	13304241	Decal: SD-45F TF Series, LH	1	
7	13163340	Decal: Signature	2	
10	13459326	Decal: Stripe	1	
11	13199344	Decal: Hydraulic Oil	1	
24	59246603	Decal: Tie Down	4	
25	59246611	Decal: Lift Point	4	
27	59605915	Decal: Grease	5	
34	13198353	Decal: Genuine Parts	1	
36	13304159	Decal: Warning - Platform	1	
37	13395900	Decal: Global Engineering	1	

Dwg D13291927/09/02

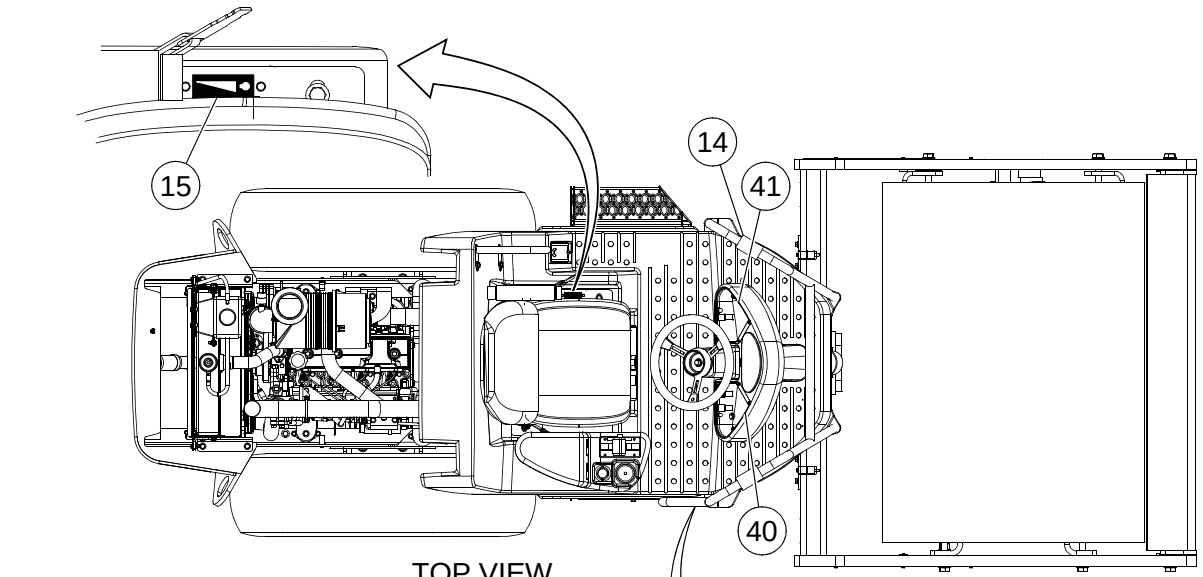

TOP VIEW
w/o HOOD & ROPS

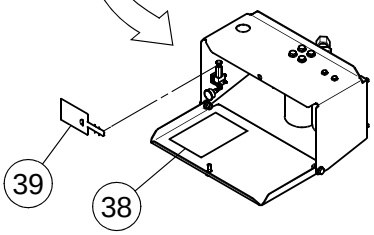

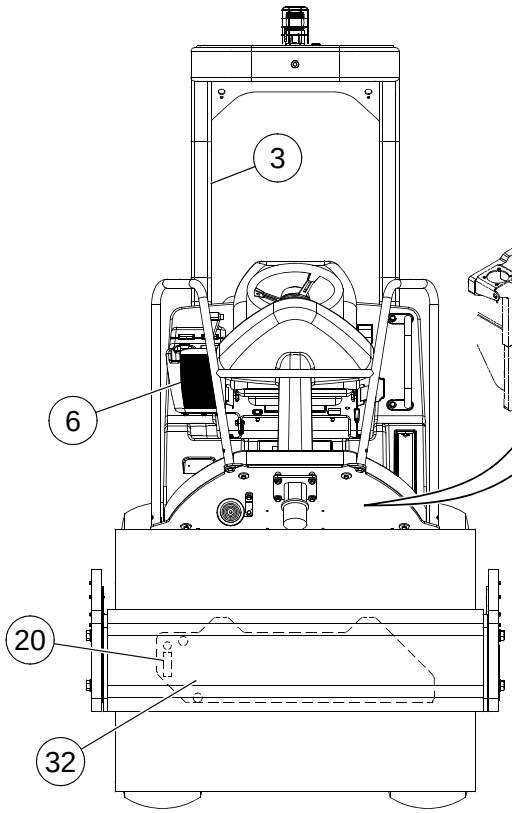

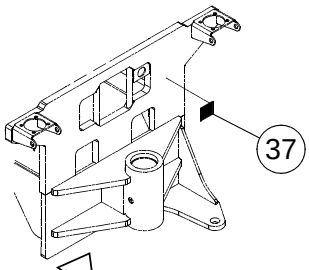

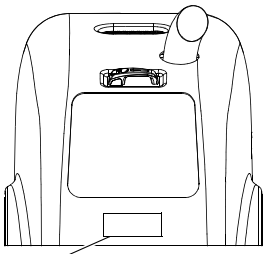

FRONT VIEW
OF HOOD

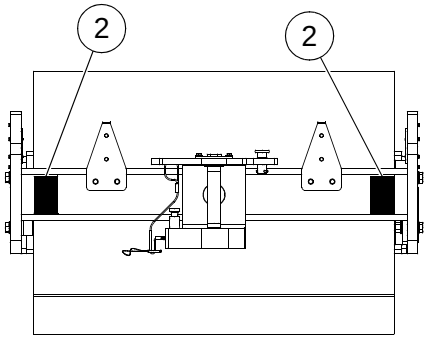

REAR VIEW OF
DRUM & FRONT FRAME

DECAL INSTALLATION - US - SHEET 2 OF 2

BOM 13177704, 13225248, 13225255, 13415211

ITEM	COMM. NO.	DESCRIPTION	QTY	DIMENSIONS/NOTES
1	13266986	Decal: SD-45 Checklist	1	
2	58965542	Decal: Crush Area	2	
5	59020040	Decal: Pressure Hazard Warning (Not Shown)	2	
6		This Item Not Used With This Assembly		
8	54612494	Decal: Corporate Mononogram	1	
14	59667287	Decal: Rail Warning	2	
15	13280433	Decal: Throttle	1	
19	59051151	Decal: Warning	2	
20	58978255	Decal: Hydraulic Oil Level	1	
26	13304258	Decal: Radiator Fill	1	
28	13458807	Decal: Lube Chart (Not Shown)	1	
31	13255906	Decal: Fuse Chart	1	
32	13163332	Decal: Signature	1	
		Optional Decals:		
-	59162982	Decal: Biodegradable Oil	1	
**	13309000	Decal Kit (Includes Items 1, 2 and 5 thru 37; order Items 3 and 4 separately)	1	
**	59947507	Beige Paint	1	Gallon
**	35304286	Beige Paint	1	Spray Can

DECAL INSTALLATION - EEC - SHEET 1 OF 2

Dwg D13255880/04/01

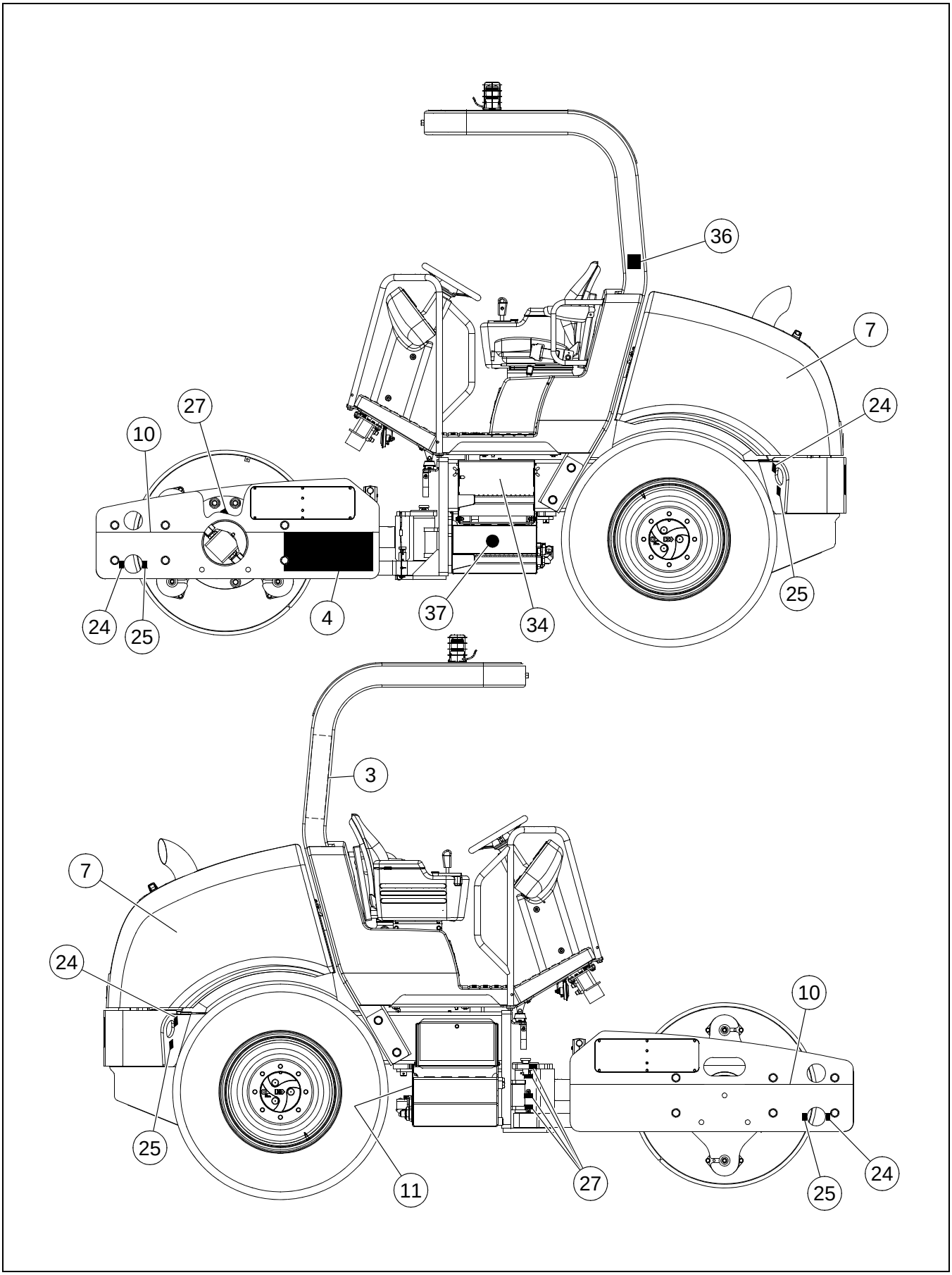

DECAL INSTALLATION - EEC - SHEET 1 OF 2

BOM 13255880, 13225248, 13225255, 13178660, 13178686, 13178702, 13178728, 13178744

ITEM	COMM. NO.	DESCRIPTION	QTY	DIMENSIONS/NOTES
1	13280409	Decal: Checklist - German (Not Shown)	1	
-	13266994	Decal: Checklist - French	1	
-	13280417	Decal: Checklist - Spanish	1	
-	13280425	Decal: Checklist - Portuguese	1	
-	13266986	Decal: Checklist - UK	1	
3	13304217	Decal: SD-45D TF Series, RH	1	
-	13304233	Decal: SD-45F TF Series, RH	1	
4	13304225	Decal: SD-45D TF Series, LH	1	
-	13304241	Decal: SD-45F TF Series, LH	1	
5	59050948	Decal: Pressure Hazard Warning	2	
7	13163340	Decal: Signature	2	
10	13197413	Decal: Stripe	1	
11	58978222	Decal: Hydraulic Oil	1	
19	58978198	Decal: Rotating Fan	2	
24	58978289	Decal: Tie Down	4	
25	58992603	Decal: Lift Point	4	
27	59605915	Decal: Grease	5	
28	13458831	Decal: Lube Chart - German (Not Shown)	1	
-	13458849	Decal: Lube Chart - French	1	
-	13458856	Decal: Lube Chart - Spanish	1	
-	13458864	Decal: Lube Chart - Portuguese	1	
34	13198353	Decal: Genuine Parts	1	
36	13304142	Decal: Tilt	1	

Dwg D13255880/04/02

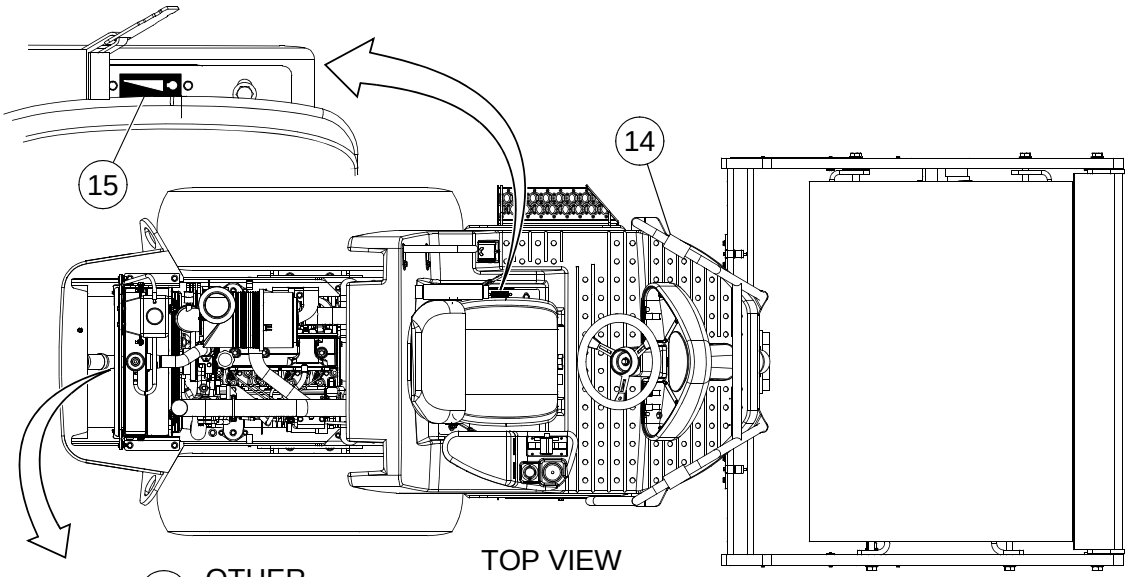

TOP VIEW
w/o HOOD & ROPS

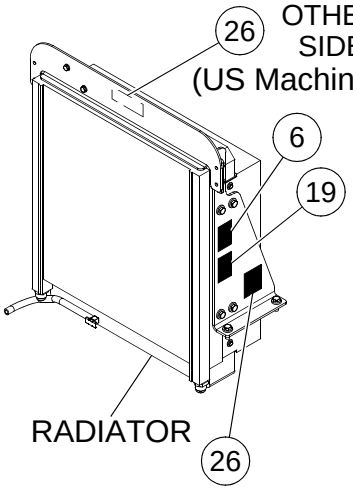

OTHER
SIDE
(US Machines Only)

RADIATOR

(EU Machines Only)

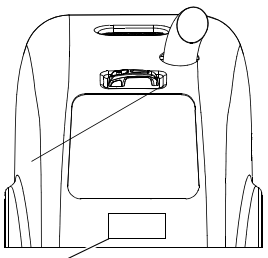

FRONT VIEW
OF HOOD

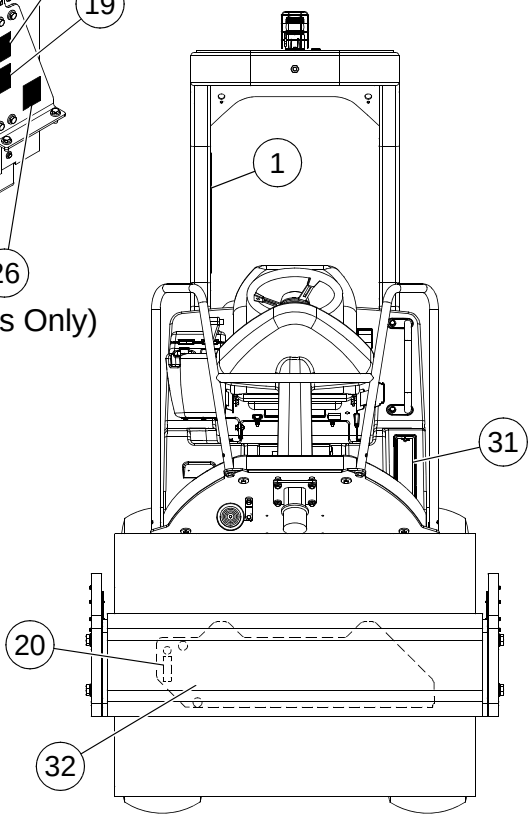

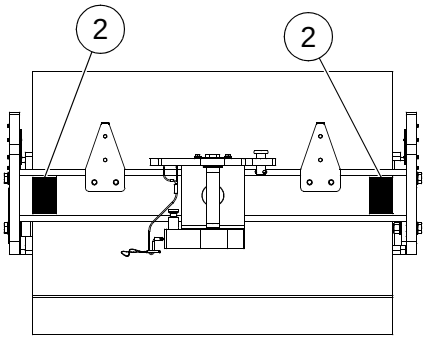

REAR VIEW OF
DRUM & FRONT FRAME

DECAL INSTALLATION - EEC - SHEET 2 OF 2

BOM 13255880, 13225248, 13225255, 13178660, 13178686, 13178702, 13178728, 13178744

ITEM	COMM. NO.	DESCRIPTION	QTY	DIMENSIONS/NOTES
2	58918947	Decal: Warning	2	
3	13304217	Decal: SD-45D TF Series, RH	1	
-	13304233	Decal: SD-45F TF Series, RH	1	
6	58978271	Decal: Read Manual	1	
8	54612494	Decal: Corporate Monogram	1	
14	58978248	Decal: Railing Warning	2	
15	13280433	Decal: Throttle	1	
20	58978255	Decal: Hydraulic Oil Level	1	
26	59131920	Decal: Radiator Fill - German (Not Shown)	1	
-	59131912	Decal: Radiator Fill - French	1	
-	59131946	Decal: Radiator Fill - Spanish	1	
-	59131938	Decal: Radiator Fill - Portuguese	1	
-	59087999	Decal: Radiator Fill - UK	1	
31	13395926	Decal: Fuse Chart - German (Not Shown)	1	
-	13395934	Decal: Fuse Chart - French	1	
-	13395942	Decal: Fuse Chart - Spanish	1	
-	13395959	Decal: Fuse Port - Portuguese	1	
-	13255906	Decal: Fuse Chart - UK	1	
32	13163332	Decal: Signature	1	
37	13206941	Decal: Sound Power 109DB	1	
38	13385323	Decal: Warning Runaway - German	1	
-	13385349	Decal: Warning Runaway - French	1	
-	13385364	Decal: Warning Runaway - Spanish	1	
-	13385380	Decal: Warning Runaway - Portuguese	1	
39	13385331	Decal: Tow Tag - German	3	
-	13385356	Decal: Tow Tag - French	3	
-	13385372	Decal: Tow Tag - Spanish	3	
-	13385398	Decal: Tow Tag - Portuguese	3	
40	13438007	Decal: Operators Manual	1	
41	13438015	Decal: Rollover	1	
**	13309018	Decal Kit (Includes Items 2, 5 thru 25, 27, 32, and 34 thru 37; order Items 1, 3, 4, 26, 28, 31, and 33 separately)	1	
**	59947507	Beige Paint	1	Gallon
**	35304286	Beige Paint	1	Spray Can

Always use Manufacturer Replacement parts!*

Section H - HYDRAULICS

HOSING INSTALLATION - SHEET 1 OF 4

Dwg D13177738/04/01

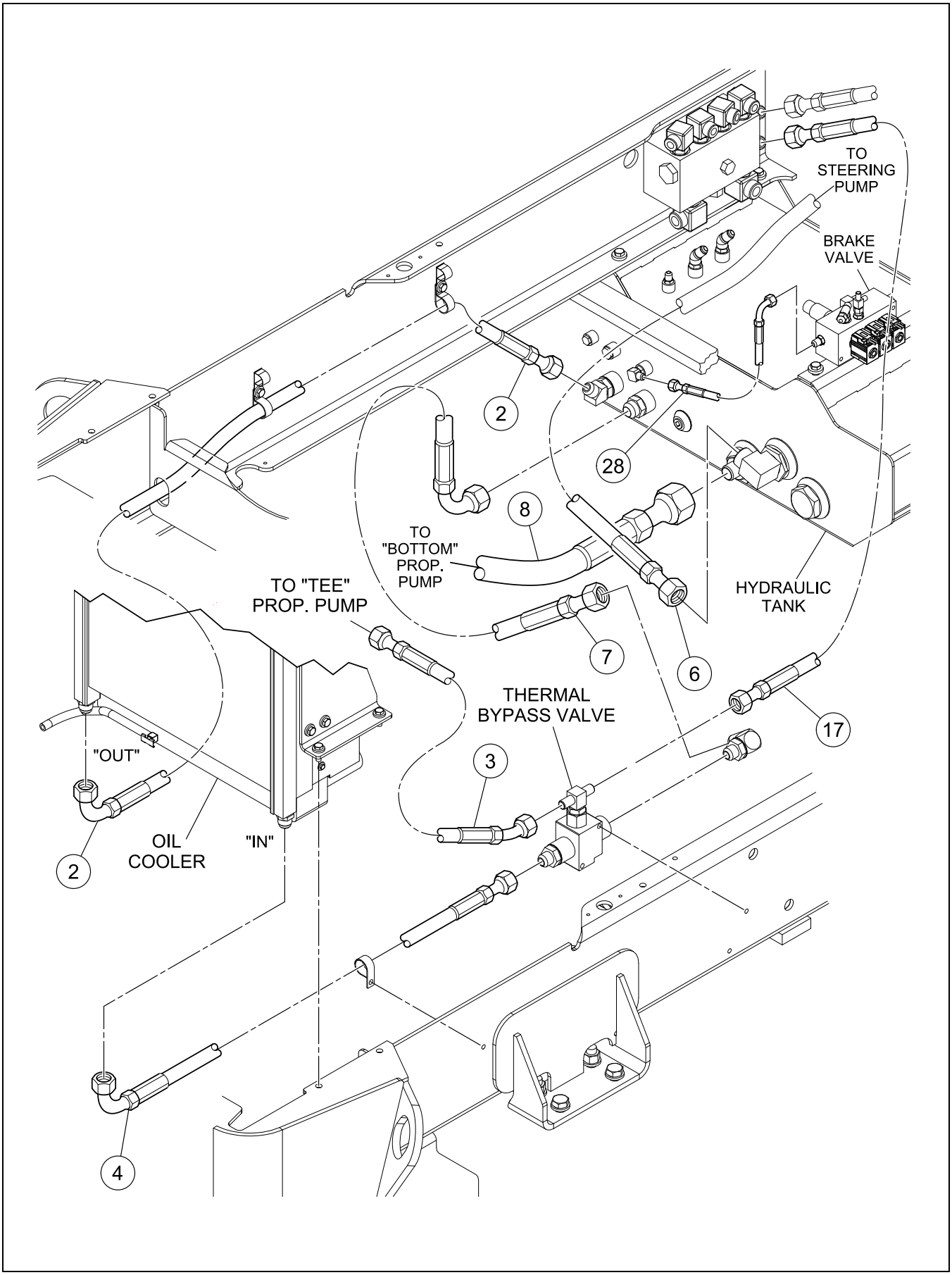

BOM 13177738

ITEM	COMM. NO.	DESCRIPTION	QTY	DIMENSIONS/NOTES
2	13280441	Hose Assembly	1	64.0"
3	59822114	Hose Assembly	1	16.5"
4	13259940	Hose Assembly	1	45.0"
6	13280466	Hose Assembly	1	18.5"
7	59887505	Hose Assembly	1	23.0"
8	13280474	Hose Assembly	1	26.0"
17	13256060	Hose Assembly	1	42.0"
28	13207618	Hose Assembly	1	23.0"

Dwg D13177738/04/02

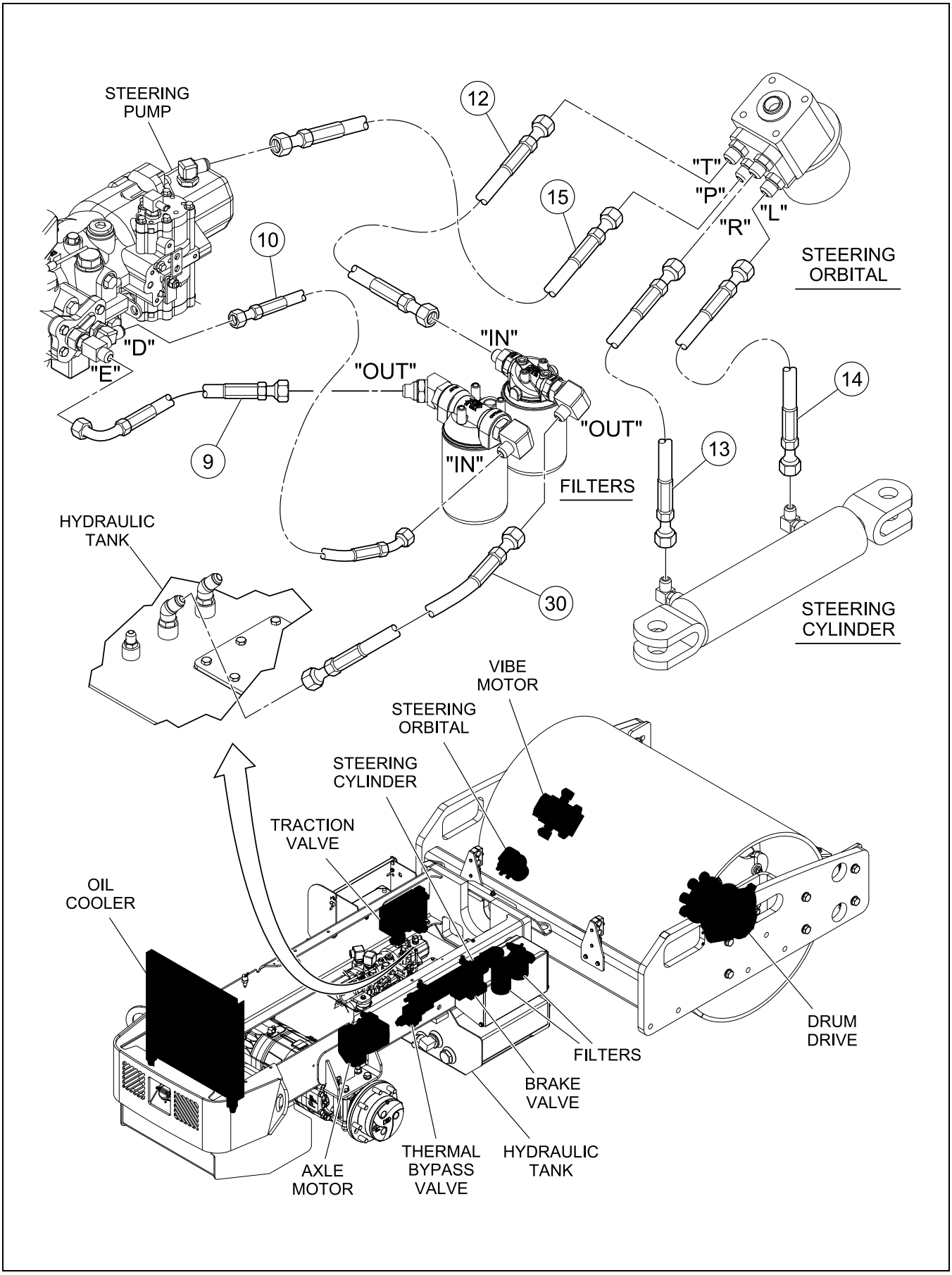

BOM 13177738

ITEM	COMM. NO.	DESCRIPTION	QTY	DIMENSIONS/NOTES
9	13280482	Hose Assembly	1	23.0"
10	13280805	Hose Assembly	1	25.0"
12	54488184	Hose Assembly	1	30.0"
13	13280813	Hose Assembly	1	37.0"
14	13280821	Hose Assembly	1	29.0"
15	13280839	Hose Assembly	1	34.0"
30	13254941	Hose Assembly	1	38.0"

Dwg D13177738/04/03

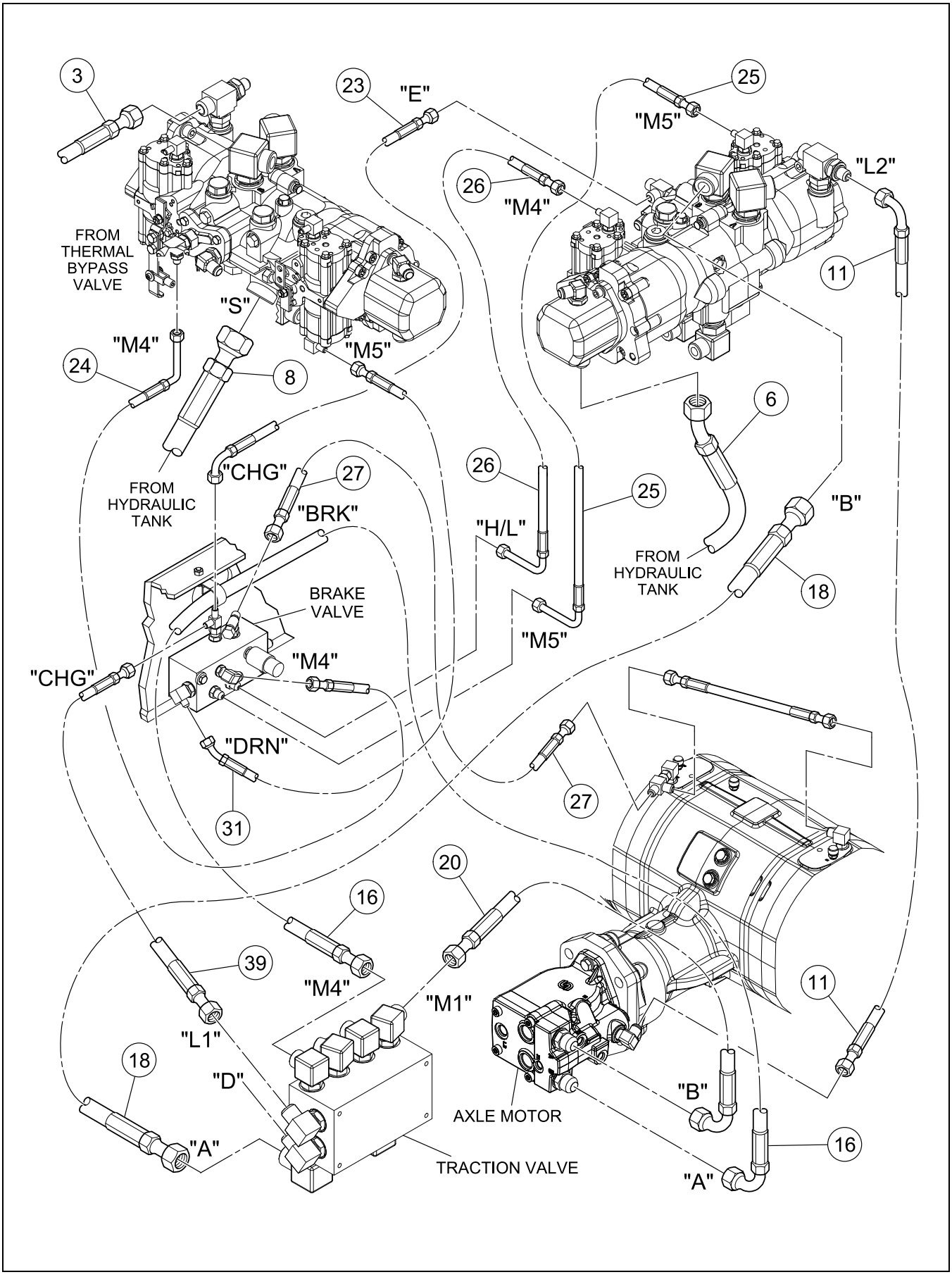

BOM 13177738

ITEM	COMM. NO.	DESCRIPTION	QTY	DIMENSIONS/NOTES
3	59822114	Hose Assembly	1	16.5"
6	13280466	Hose Assembly	1	18.5"
8	13280474	Hose Assembly	1	26.0"
11	13280490	Hose Assembly	1	21.0"
16	13129267	Hose Assembly	1	70.0"
18	13280854	Hose Assembly	1	27.0"
20	13280870	Hose Assembly	1	24.0"
23	13256052	Hose Assembly	1	19.5"
24	13280920	Hose Assembly	1	24.0"
25	13207527	Hose Assembly	1	27.0"
26	13280938	Hose Assembly	1	19.5"
27	13280946	Hose Assembly	1	30.0"
31	13280987	Hose Assembly	1	15.0"
39	13256078	Hose Assembly	1	29.0"

Dwg D13177738/04/04

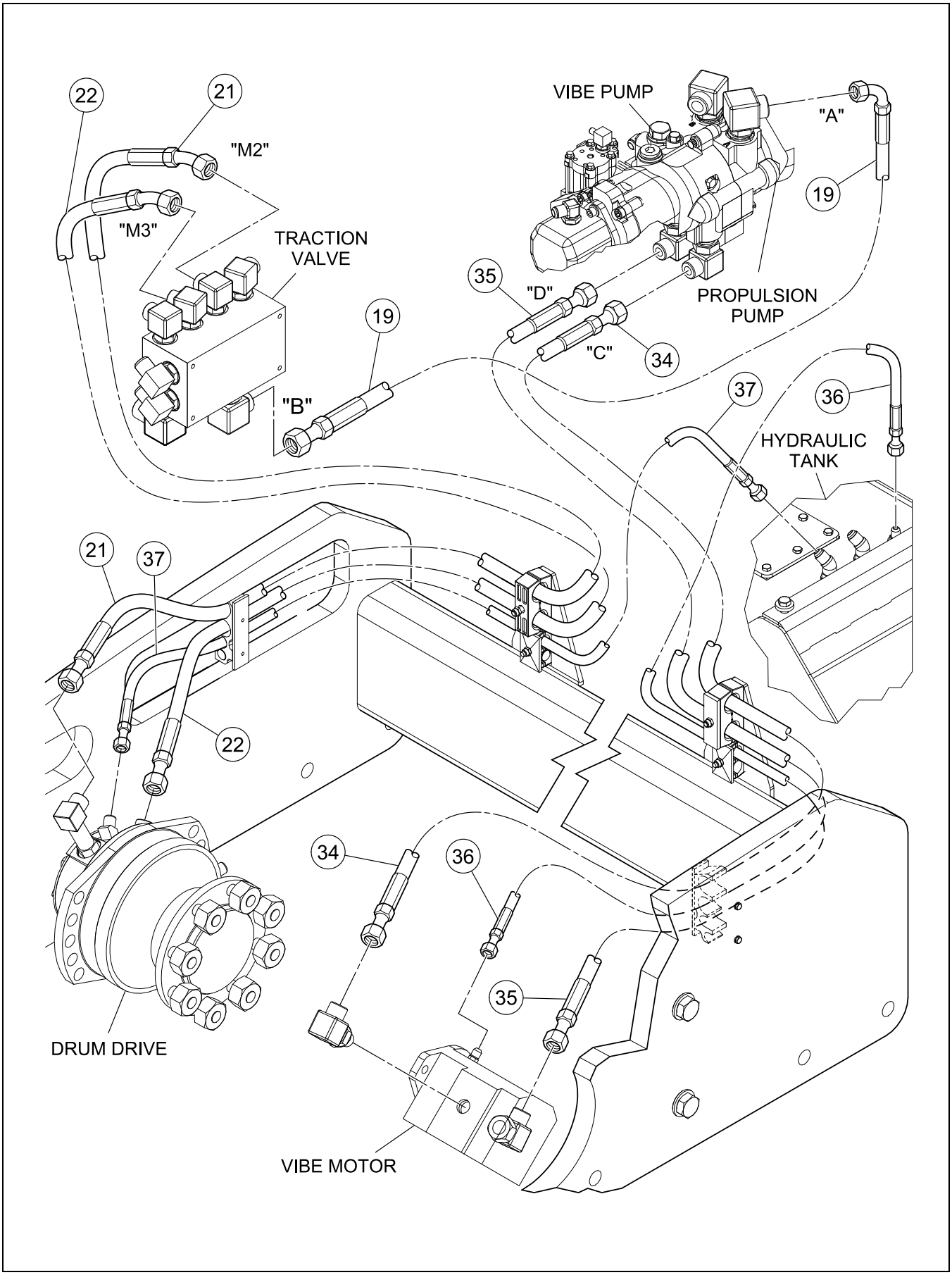

BOM 13177738

ITEM	COMM. NO.	DESCRIPTION	QTY	DIMENSIONS/NOTES
19	13280862	Hose Assembly	1	24.0"
21	13280888	Hose Assembly	1	86.0"
22	13280896	Hose Assembly	1	80.0"
34	13281001	Hose Assembly	1	97.0"
35	13281019	Hose Assembly	1	95.0"
36	13281027	Hose Assembly	1	95.0"
37	54488218	Hose Assembly	1	84.0"

HYDRAULIC FILTER INSTALLATION

Dwg D13177670/03

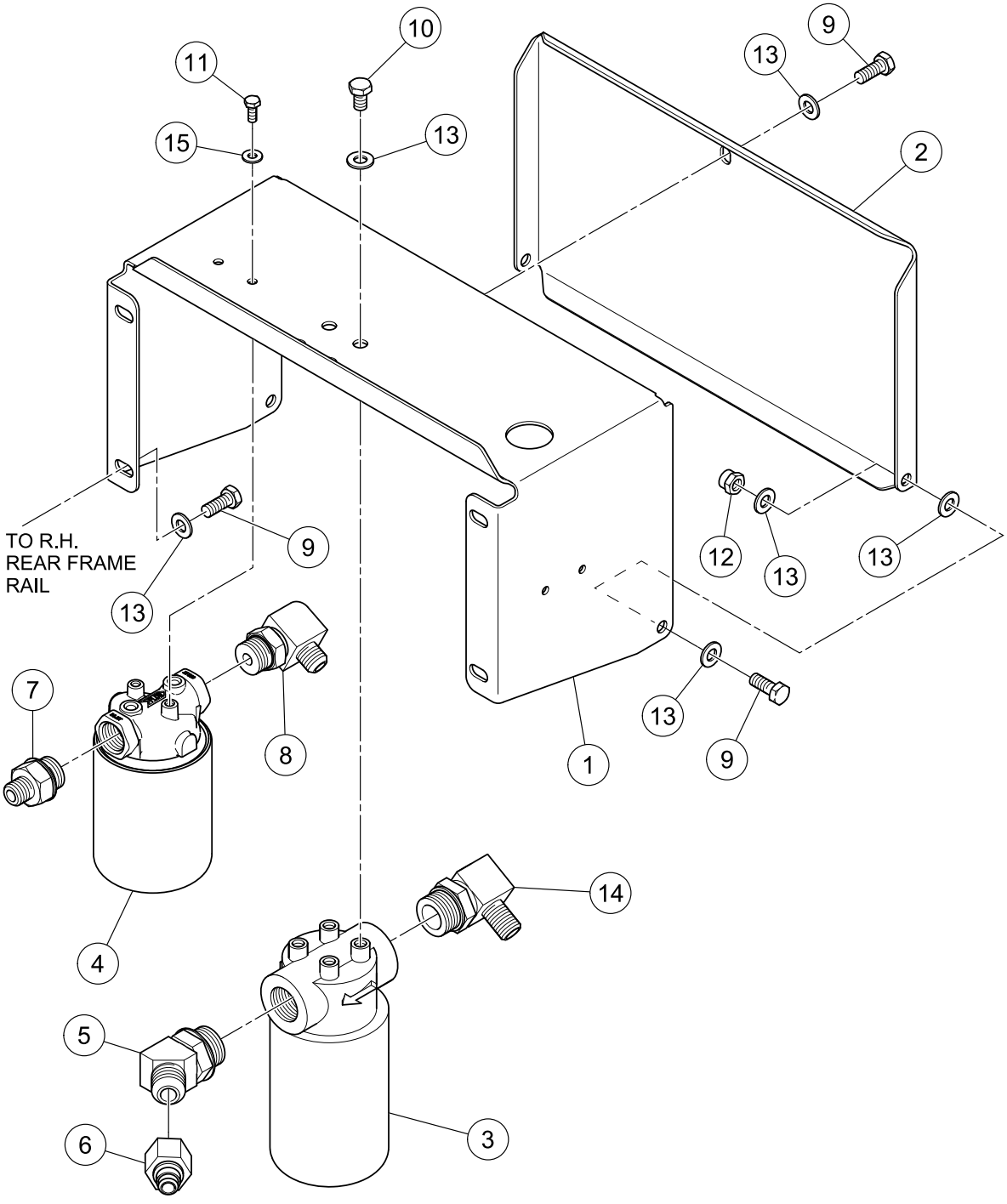

HYDRAULIC FILTER INSTALLATION

BOM 13177670

ITEM	COMM. NO.	DESCRIPTION	QTY	DIMENSIONS/NOTES
1	13297783	Filter Bracket	1	
2	13231956	Filter Door	1	
3	58979048	Suction Filter	1	
-	58887936	- Suction Filter Element	1	
4	13190723	Return Filter	1	
-	59764498	- Return Filter Element	1	
5	95182705	Adapter	1	
6	59672709	Adapter	1	
7	95357570	Adapter	1	
8	95330692	Adapter, 90°	1	
9	96702287	HHCS, Fully Threaded, Zinc Plated	7	M10 x 1.5 x 25 Cl 8.8
10	96701479	HHCS, Fully Threaded, Zinc Plated	4	M10 x 1.5 x 16 Cl 8.8
11	95919528	HHCS, Zinc Plated	2	1/4 x 20 x 0.625 Grd 8
12	96704614	Nut, Zinc Plated	2	M10 x 1.5 Cl 8
13	96741046	Flatwasher, Zinc Plated	15	M10 Cl 200
14	95341673	Adapter	1	
15	96741053	Flatwasher, Zinc Plated	2	M6 Cl 200

TOW VALVE INSTALLATION - OPTIONAL

Dwg D13177894/05

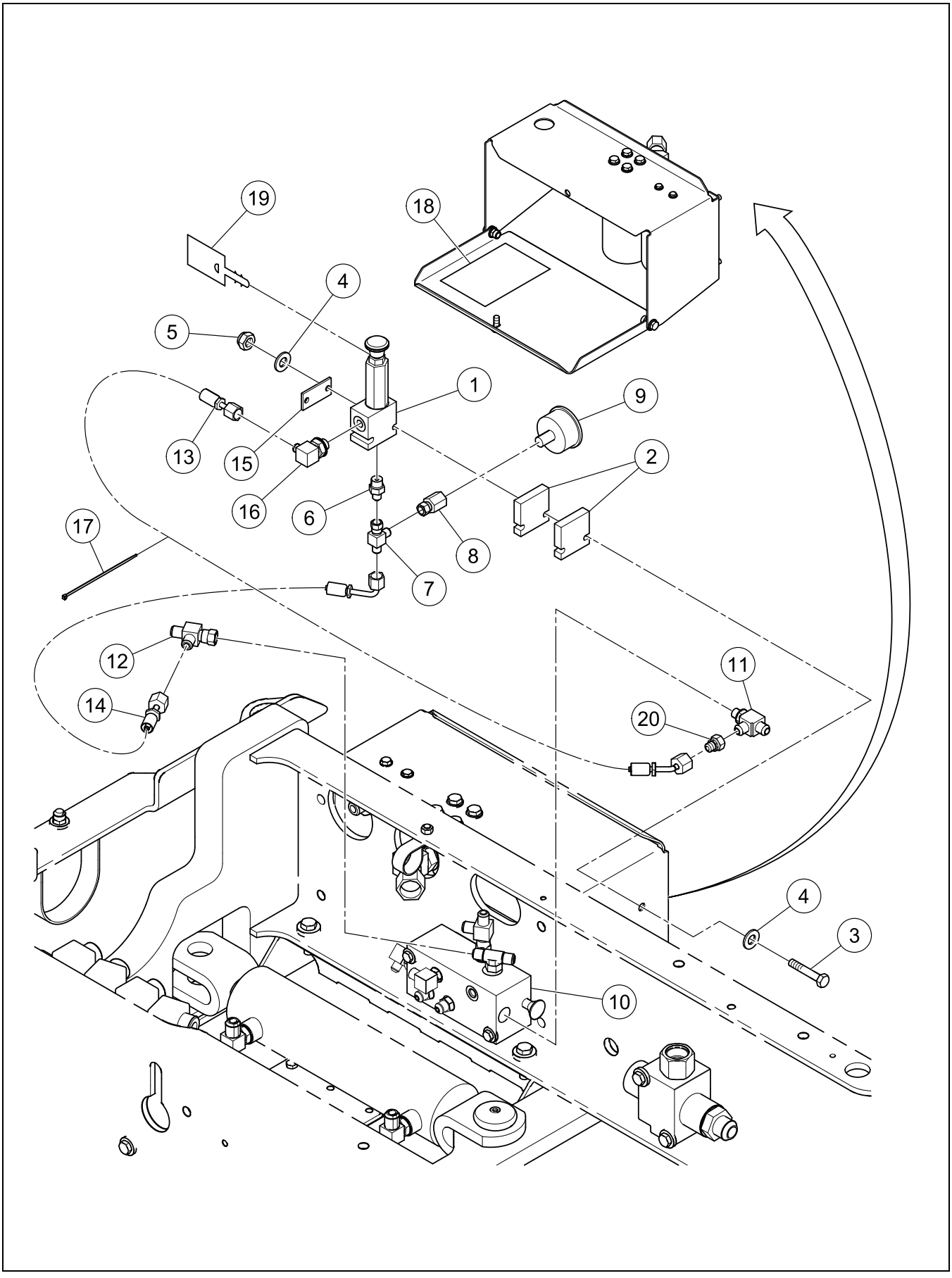

TOW VALVE INSTALLATION - OPTIONAL

BOM 13177894

ITEM	COMM. NO.	DESCRIPTION	QTY	DIMENSIONS/NOTES
1	13205513	Hand Pump	1	
2	13214812	Spacer Block	2	
3	96720156	HHCS, Zinc Plated	2	M6 x 1.0 x 80 Cl 8.8
4	96741053	Flatwasher, Zinc Plated	4	M6 Cl 200
5	96704598	Hex Locknut, Zinc Plated	2	M6 Cl 8
6	95371258	Adapter	1	
7	95473443	Tee	1	
8	59665877	Adapter	1	
9	59197012	Pressure Gauge Dial	1	
10	**13304878**	**Manifold Assembly**	**1**	**See Breakdown H - 14.**
11	95188710	Run Tee	1	
12	95415667	Swivel Tee	1	
13	13334081	Hose Assembly	1	38.0"
14	13334107	Hose Assembly	1	38.0"
15	13235320	Retaining Plate	1	
16	95365094	Adapter	1	
17	58820168	Wire Tie	A/R	
18	13366075	Decal: Warning-Runaway Machine	1	
19	13366067	Decal: Tow Tag	3	
20	59742890	Reducer	1	

MANIFOLD ASSEMBLY (13304878) - INTERNAL BREAKDOWN

Dwg D13304878/00

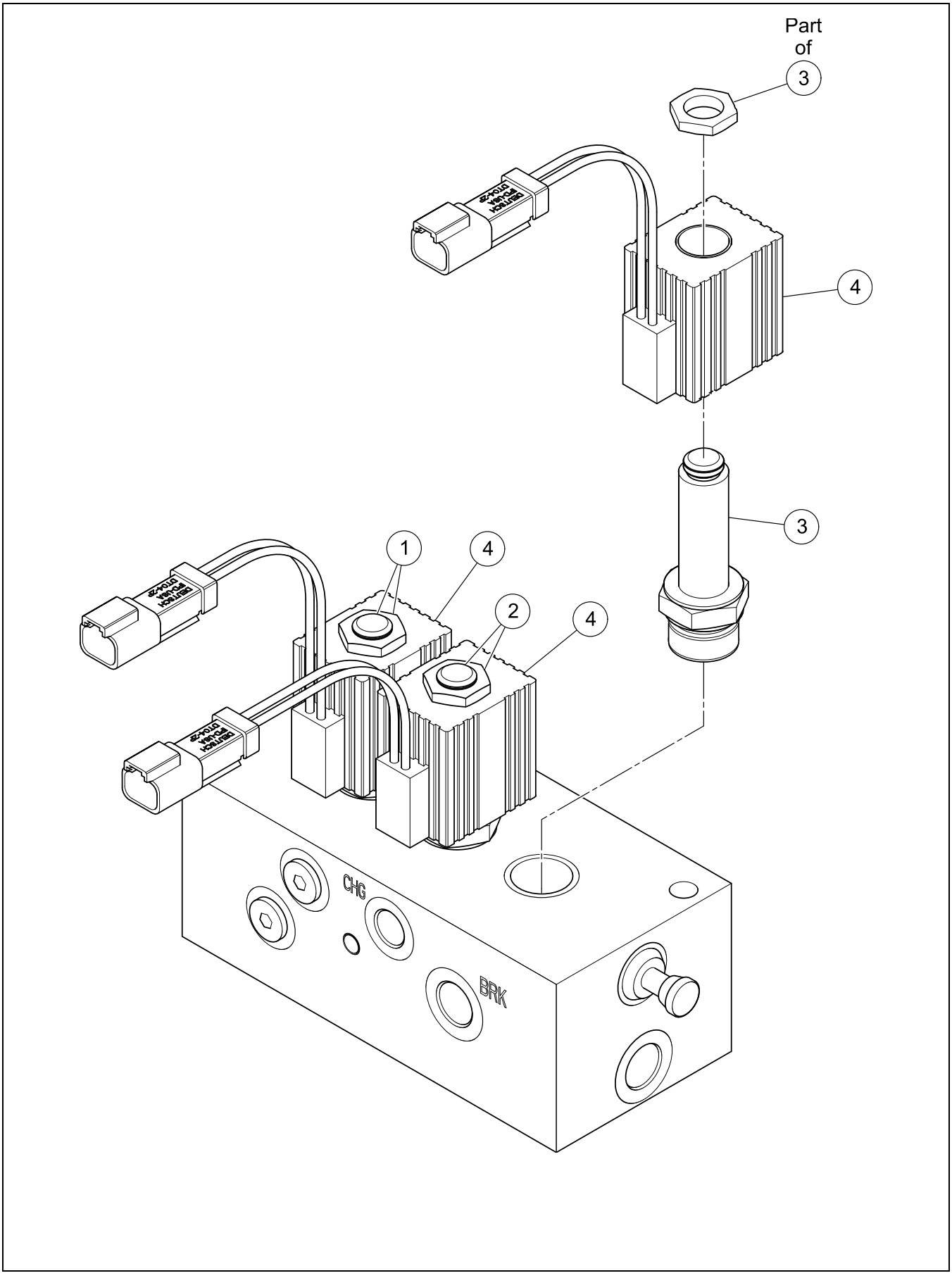

MANIFOLD ASSEMBLY (13304878) - INTERNAL BREAKDOWN

BOM 13304878

ITEM	COMM. NO.	DESCRIPTION	QTY	DIMENSIONS/NOTES
1	13258603	Valve	1	
2	13258611	Valve	1	
-	13269436	- Seal Kit	1	
3	13429782	Valve	1	
4	13258629	Coil	3	

HYDRAULIC TEST PORT INSTALLATION - OPTIONAL

Dwg D13256003/00

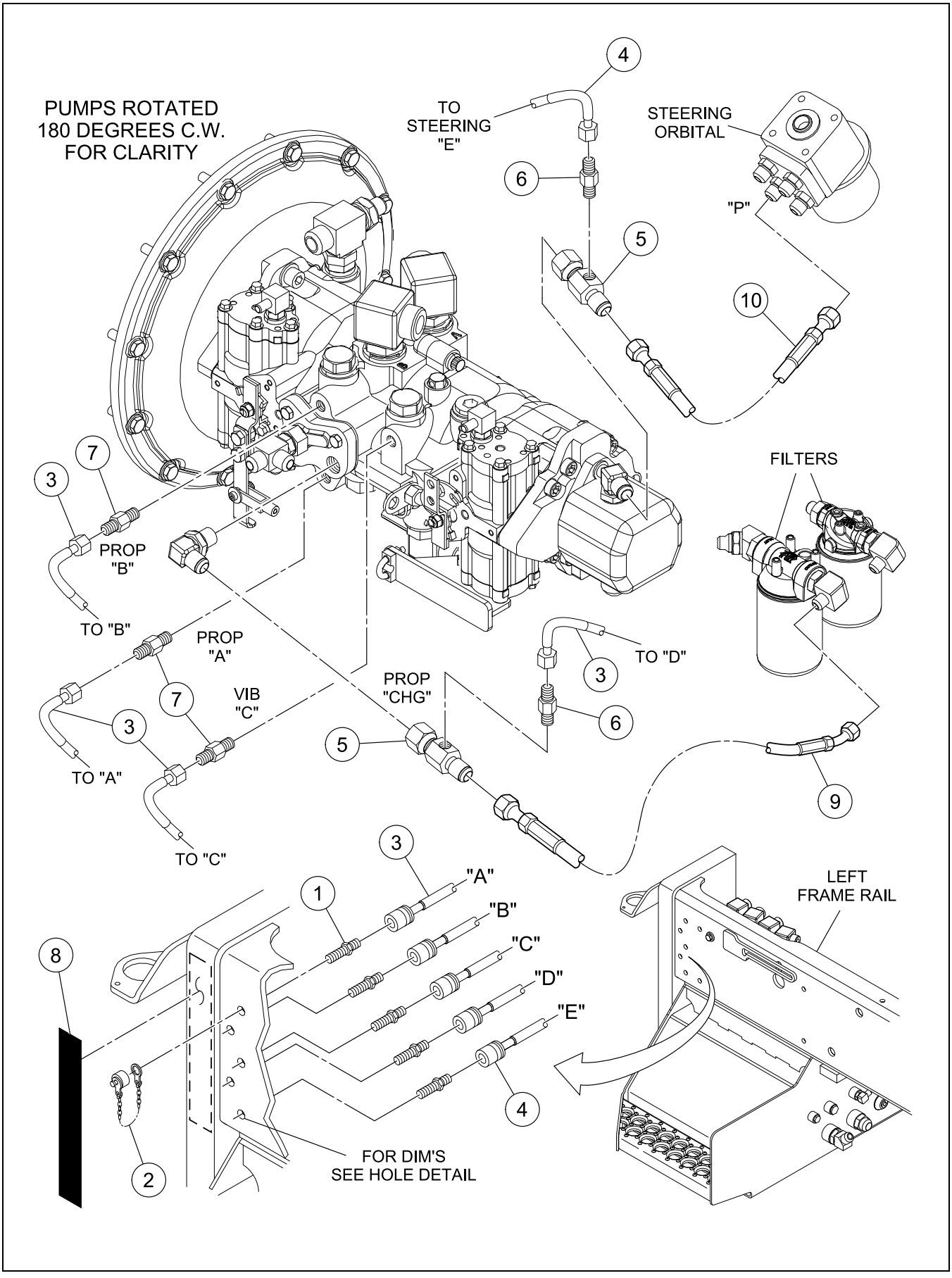

HYDRAULIC TEST PORT INSTALLATION - OPTIONAL

BOM 13256003

ITEM	COMM. NO.	DESCRIPTION	QTY	DIMENSIONS/NOTES
1	59961821	Adapter	5	
2	59924043	ORS Cap	5	
3	13255179	Hose Assembly	4	40.0"
4	13256029	Hose Assembly	1	30.5"
5	13208004	Adapter	2	
6	59929182	Adapter, Straight	2	
7	59922419	Adapter, Straight	3	
8	13256037	Decal: Hydraulic Test Port	1	
9	58926908	Hose Assembly	1	23.0"
10	13256011	Hose Assembly	1	32.0"

STRIKE-OFF BLADE INSTALLATION - OPTIONAL - SHEET 1 OF 2

Dwg D13328935/05/01

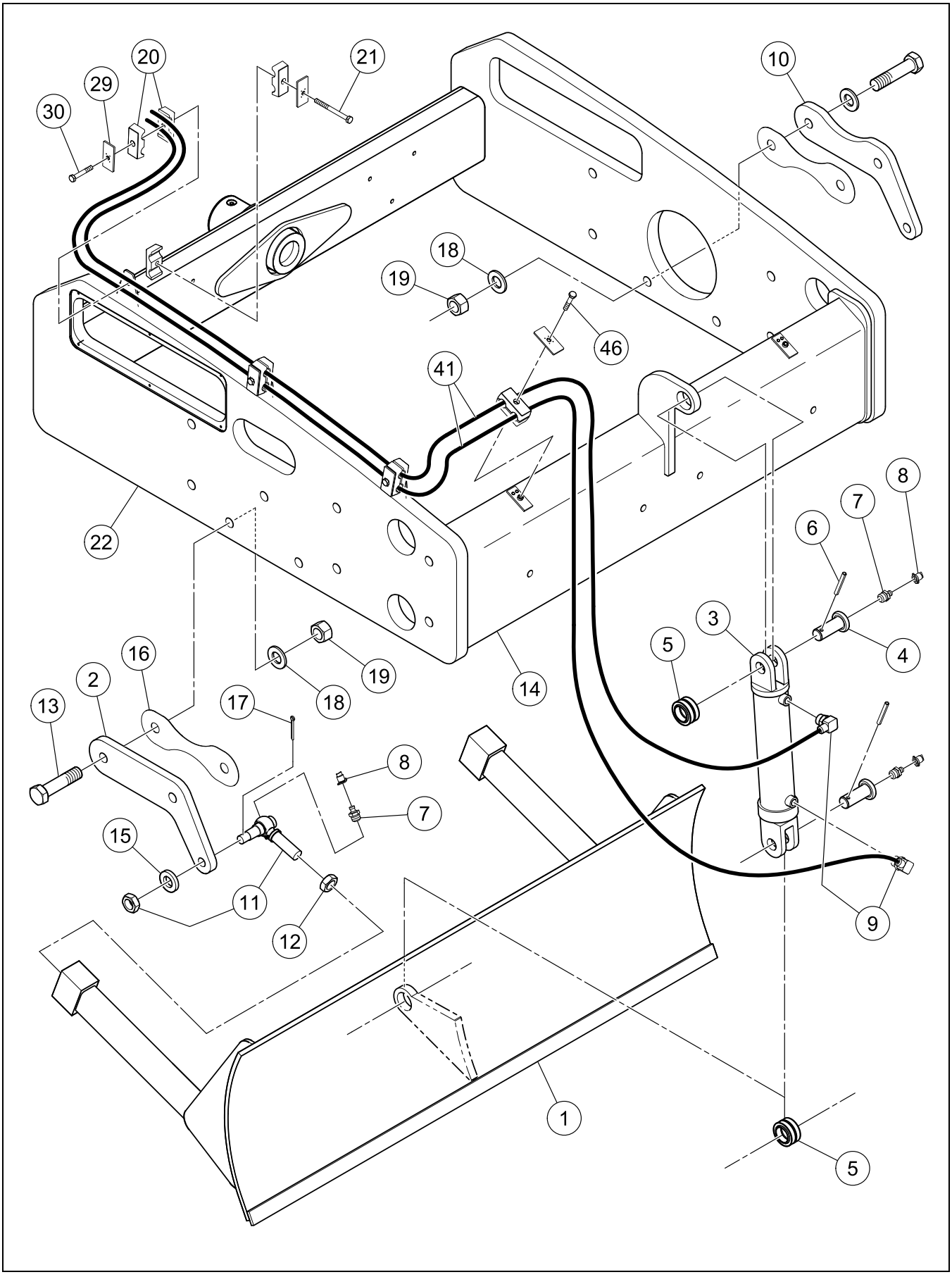

STRIKE-OFF BLADE INSTALLATION - OPTIONAL - SHEET 1 OF 2

BOM 13328935

ITEM	COMM. NO.	DESCRIPTION	QTY	DIMENSIONS/NOTES
1	13415518	Strike-off Blade	1	
2	13278734	Blade Mounting Plate, RH	1	
3	58783507	Cylinder Assembly	1	
-	56998503	- Nut	1	
-	58866336	- Seal Kit	1	
4	59190975	Pivot Pin	2	
5	50268127	Bearing	2	
6	95098679	Rollpin	2	
7	95201547	Fitting	4	
8	50270248	Cap	4	
9	95356853	Adapter	2	
10	13278742	Blade Mounting Plate, LH	1	
11	59139410	Ball Socket	2	
12	95925129	Jam Nut	2	
13	96712716	HHCS	4	
14	13296850	Strike-off Blade Scraper	1	
15	59565069	Washer	2	7/8 Hardened
16	13278817	Shim	2	
17	95929675	Cotter Pin	2	
18	96702642	Washer, Zinc Plated	4	M24 Hardened
19	96727532	Hex Nut, Zinc Plated	4	M24 x 3 Cl 8
20	59587014	Insert Clamp	10	
21	96728456	Hex Head Bolt	1	
22	13278916	Front Frame	1	
29	59583500	Cover Plate	5	
30	96702402	HHCS, Zinc Plated	3	M8 x 1.25 x 50 Cl 8.8
41	13382338	Hose Assembly	2	169.0”
46	96705553	HHCS, Zinc Plated	1	M8 X 1.25 x 45 Cl 8.8

STRIKE-OFF BLADE INSTALLATION - OPTIONAL - SHEET 2 OF 2

Dwg D13328935/05/02

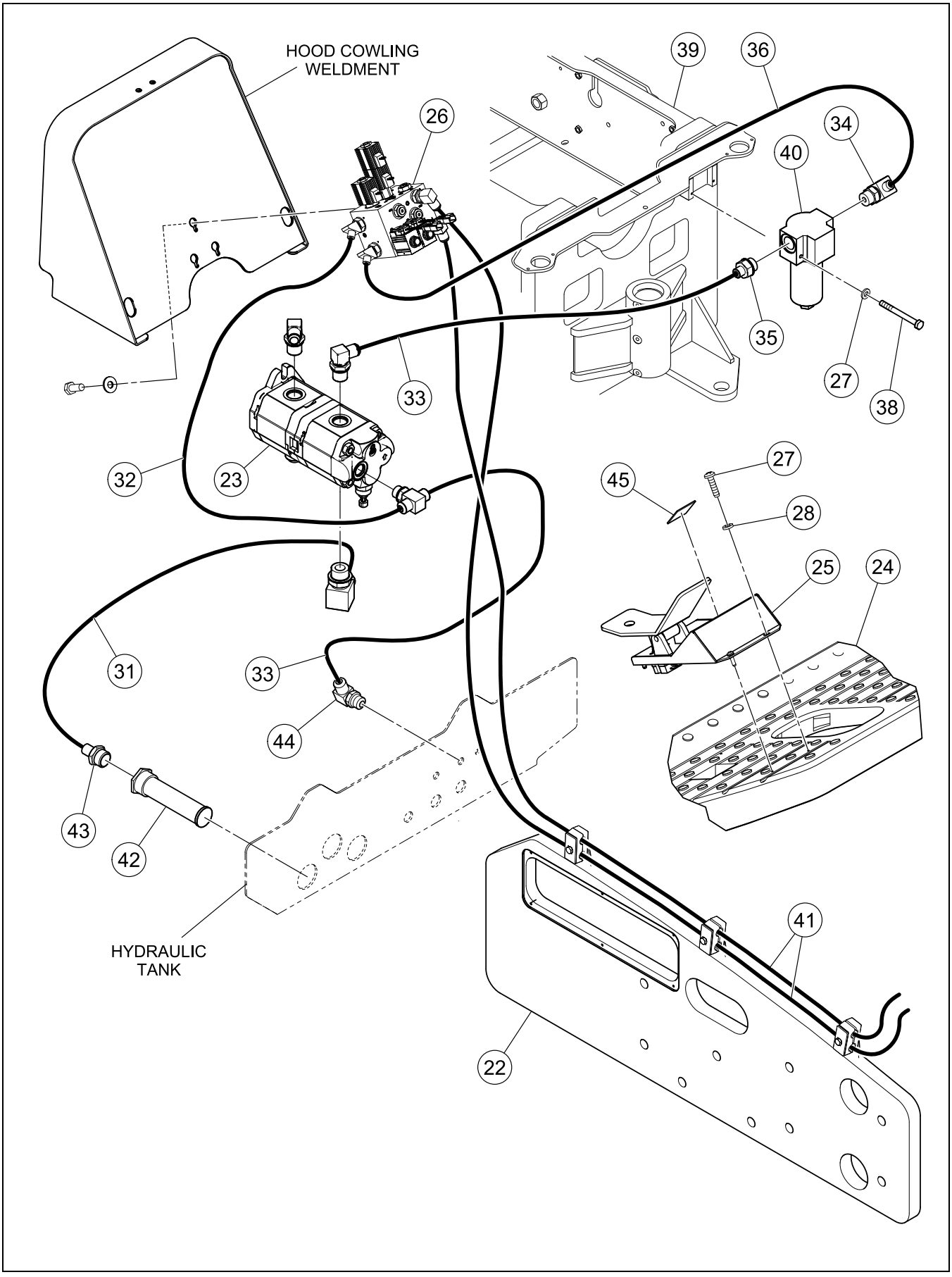

STRIKE-OFF BLADE INSTALLATION - OPTIONAL - SHEET 2 OF 2

BOM 13328935

ITEM	COMM. NO.	DESCRIPTION	QTY	DIMENSIONS/NOTES
22	13278916	Front Frame	1	
23	**NSVA**	**Pump Assembly**	**1**	**See Page H - 22.**
24	13278940	Platform	1	
25	**NSVA**	**Foot Pedal Assembly**	**1**	**See Page H - 24.**
26	**NSVA**	**Lift Valve Assembly**	**1**	**See Page H - 26.**
27	96741053	Flatwasher	6	
28	54487517	Self-tapping Screw	4	14 x 1
31	13280458	Hose Assembly	1	33.0"
32	13319405	Hose Assembly	1	22.0"
33	13280953	Hose Assembly	2	28.0"
34	95330692	Adapter, 90°	1	
35	95357570	Adapter	1	
36	13319413	Hose Assembly	1	52.0"
37	13319439	Wire Harness (Not Shown)	1	
38	96704887	HHCS, Fully Threaded, Zinc Plated	2	M6 x 60 Cl 8.8
39	13389010	Blade Frame	1	
40	13254784	Pressure Filter	1	
-	13461645	- Pressure Filter Element	1	
41	13382338	Hose Assembly	2	169.0”
42	58855099	Tank Filter	1	
43	95279337	Adapter	1	
44	95303335	Elbow	1	
45	13340096	Decal: Blade Control	1	

PUMP ASSEMBLY

Dwg D13297510/03

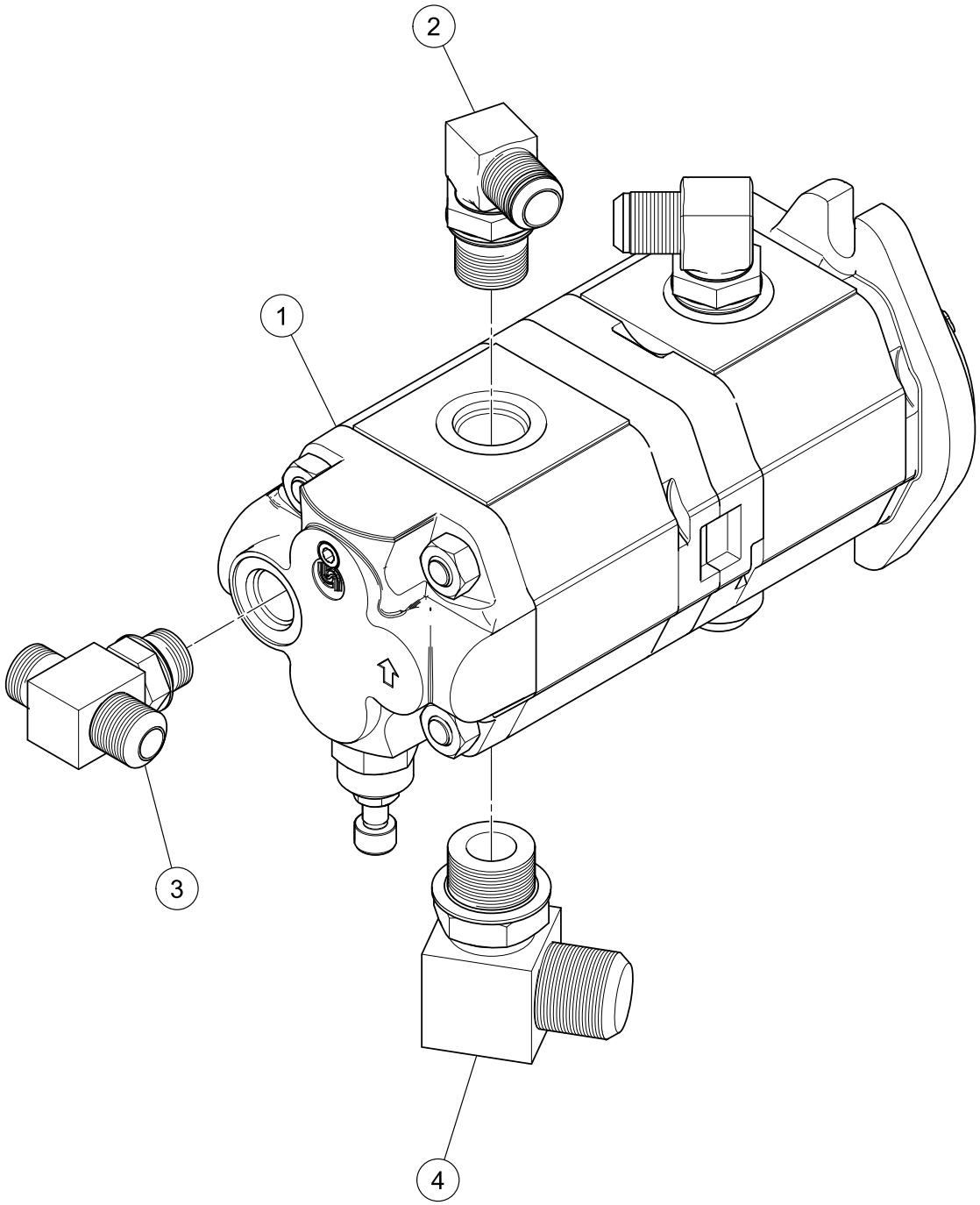

PUMP ASSEMBLY

BOM 13297510

ITEM	COMM. NO.	DESCRIPTION	QTY	DIMENSIONS/NOTES
1	13205497	Pump	1	
-	13461033	- Seal Kit	1	
2	95303350	Adapter	2	
3	59570887	Fitting	1	
4	95280186	Elbow, 90°	1	

FOOT PEDAL ASSEMBLY

Dwg D13271440/01

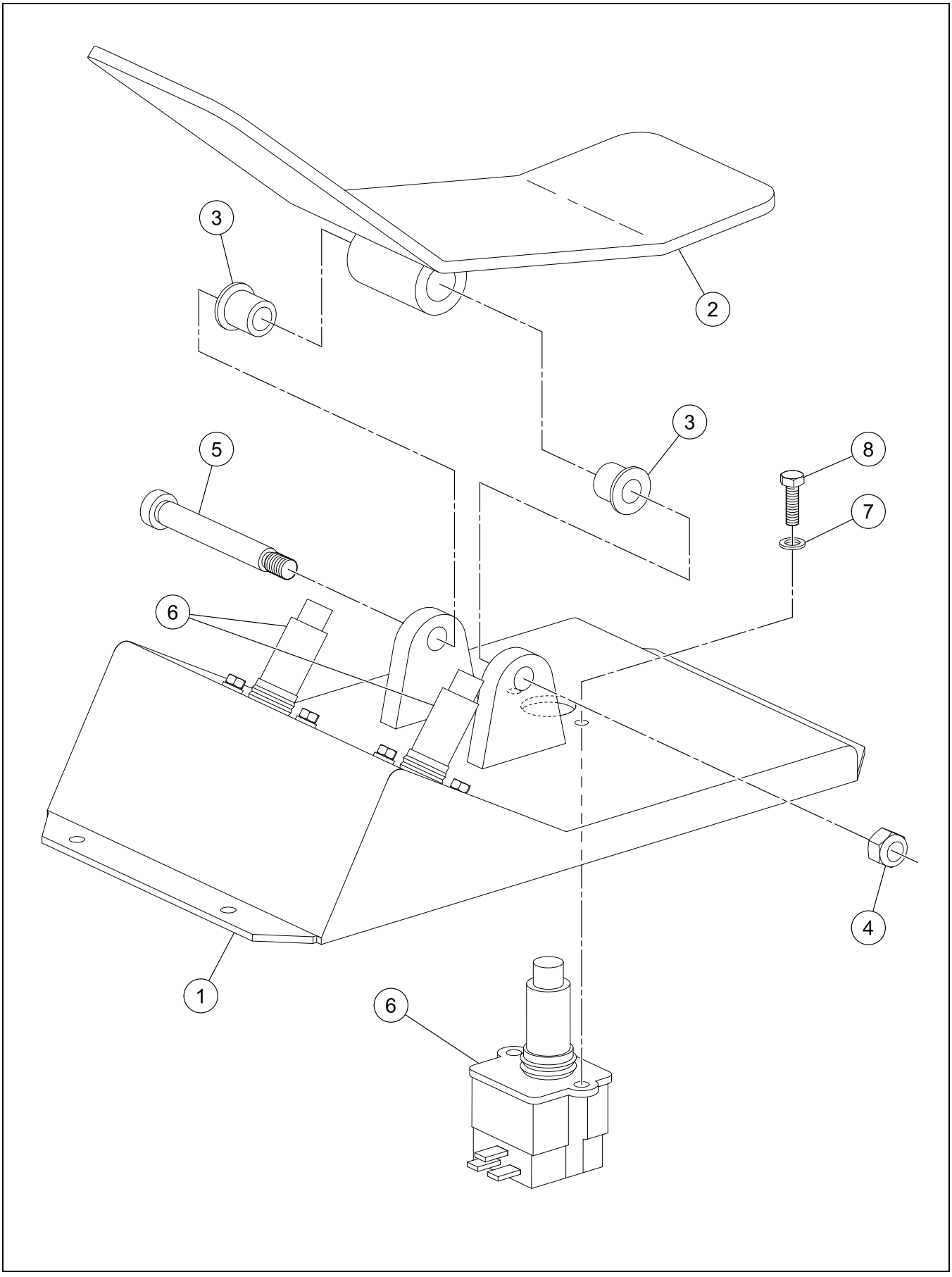

FOOT PEDAL ASSEMBLY

BOM 13271440

ITEM	COMM. NO.	DESCRIPTION	QTY	DIMENSIONS/NOTES
1	13271903	Foot Pedal Mount	1	
2	13271762	Foot Pedal	1	
3	58920216	Flanged Bushing	2	
4	95923314	Locknut	1	5/16 x 18 UNJC
5	95944260	Bolt	1	
6	58788852	Dump Switch	3	
7	96741053	Flatwasher, Zinc Plated	6	M6 Cl 200
8	96701958	HHCS, Fully Threaded, Zinc Plated	6	M6 x 16 Cl 8.8

LIFT VALVE ASSEMBLY

Dwg D13328943/01

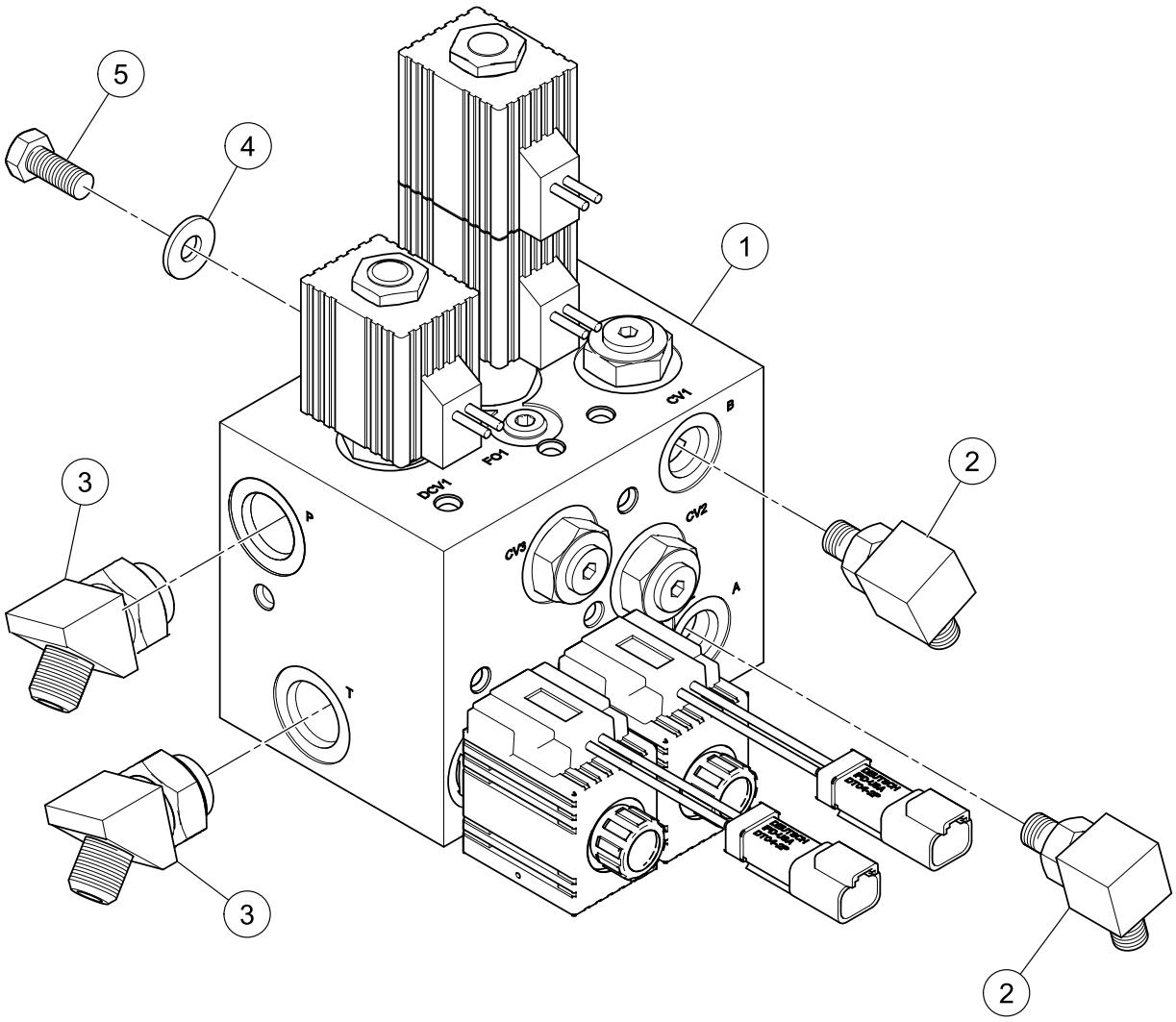

LIFT VALVE ASSEMBLY

BOM 13328943

ITEM	COMM. NO.	DESCRIPTION	QTY	DIMENSIONS/NOTES
1	**13309901**	**Lift Manifold**	**1**	**See Breakdown H - 28.**
2	95329975	Adapter	2	
3	95029989	Adapter	2	
4	95922183	Flatwasher, Zinc Plated	3	1/4
5	95920419	HHCS, Zinc Plated	3	5/16 x 18 x 0.75 Grd 8

LIFT MANIFOLD (13309901) - INTERNAL BREAKDOWN

Dwg 13309901/01

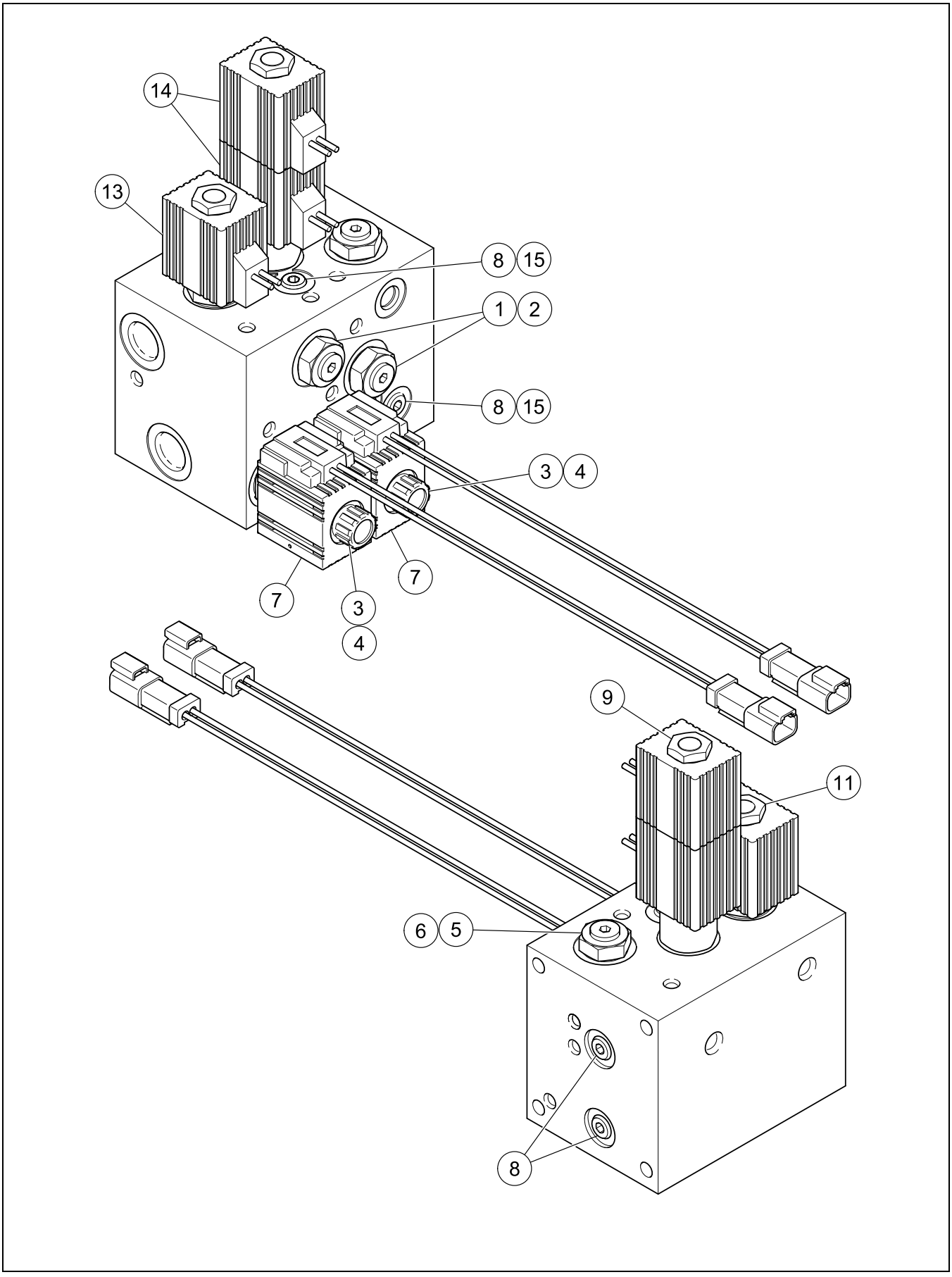

LIFT MANIFOLD (13309901) - INTERNAL BREAKDOWN

BOM 13309901

ITEM	COMM. NO.	DESCRIPTION	QTY	DIMENSIONS/NOTES
1	13258645	Check Cartridge	2	
2	13268347	- Seal Kit	1	
3	54680970	Stem SD	2	
4	13268347	- Seal Kit	1	
5	13377924	Pilot Check Cartridge	1	
6	13377932	- Seal Kit	1	
7	13378203	Coil	2	
8	13378211	Orifice Cover	4	
9	13377940	Valve	1	
10	13282199	- Seal Kit (Not Shown)	1	
11	13378229	Valve	1	
12	13263264	- Seal Kit (Not Shown)	1	
13	13378237	Coil	1	
14	13378237	Coil	2	
15	13378245	Orifice	2	

TILT BLADE INSTALLATION - OPTIONAL

Dwg 13298989/05

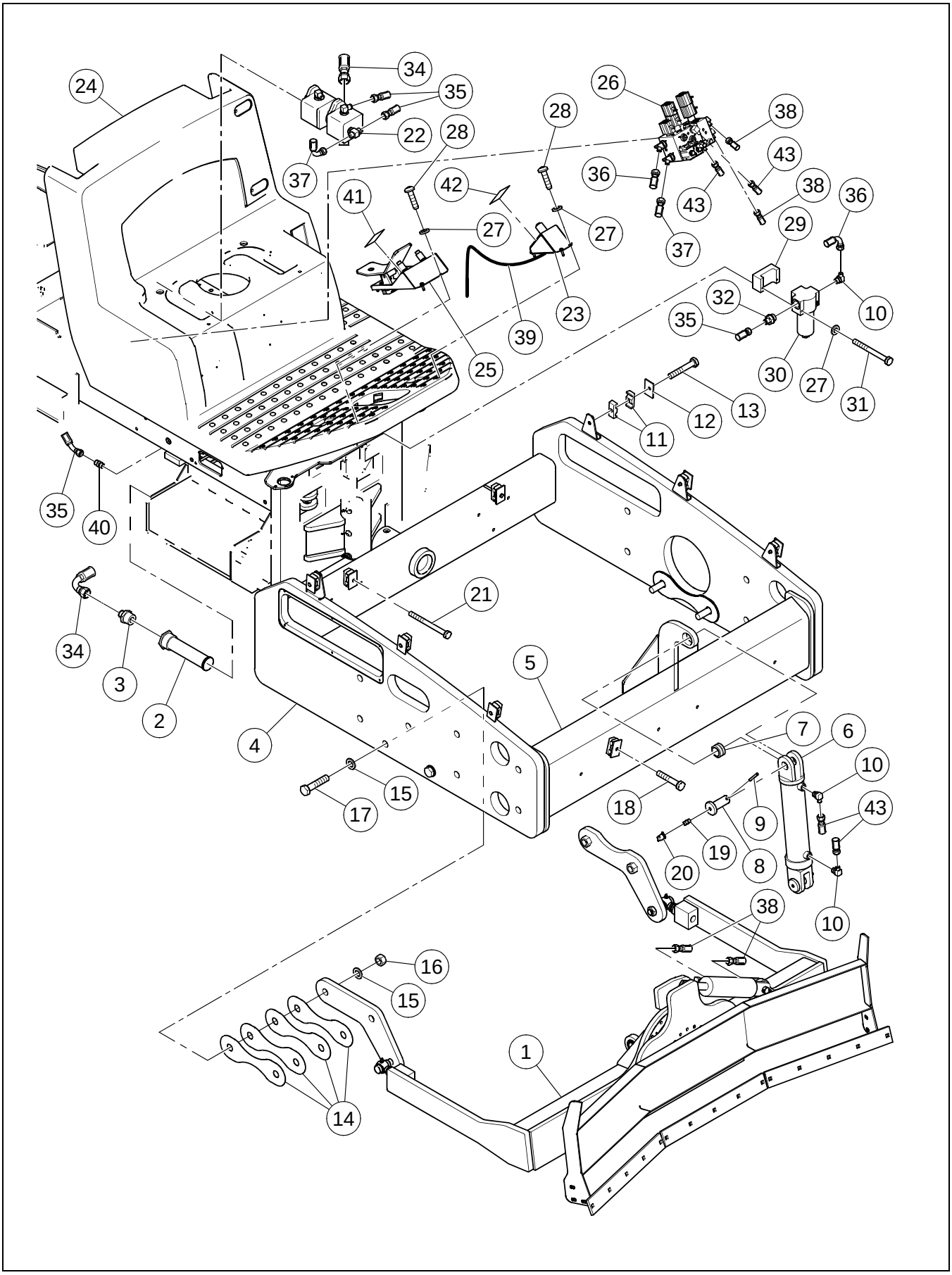

TILT BLADE INSTALLATION - OPTIONAL

BOM 13298989

ITEM	COMM. NO.	DESCRIPTION	QTY	DIMENSIONS/NOTES
1	**NSVA**	**Tilt Blade Assembly**	**1**	**See Page H - 32.**
2	58855099	Tank Filter	1	
3	95279337	Adapter	1	
4	13297478	Front Frame	1	
5	13296462	Scraper	1	
6	58783507	Cylinder Assembly	1	
-	56998503	- Nut	1	
-	58866336	- Seal Kit	1	
7	50268127	Bearing	1	
8	59190975	Pivot Pin	2	
9	95098679	Rollpin	2	
10	95356853	Adapter	3	
11	59587014	Insert Clamp	18	
12	59583500	Cover Plate	9	
13	96702402	HHCS, Zinc Plated	6	M8 x 1.25 x 50 Cl 8.8
14	13278817	Shim	8	
15	96738646	Flatwasher, Zinc Plated	8	M24 Hardened Cl 200
16	96727532	Hex Nut, Zinc Plated	4	M24 x 3 Cl 8
17	96712724	HHCS, Zinc Plated	4	M24 x 3 x 110 Cl 8.8
18	96705553	HHCS, Zinc Plated	1	M8 x 1.25 x 45 Cl 8.8
19	95201547	Fitting	2	
20	50270248	Cap	2	
21	96728456	Hex Head Bolt	2	
22	**NSVA**	**Pump Assembly**	**1**	**See Page H - 22.**
23	**NSVA**	**Switch Pedal Assembly**	**1**	**See Page H - 34.**
24	13326863	Platform	1	
25	**NSVA**	**Foot Pedal Assembly**	**1**	**See Page H - 36.**
26	**NSVA**	**Lift/Tilt Valve Assembly**	**1**	**See Page H - 38.**
27	96741053	Flatwasher, Zinc Plated	10	M6 Cl 200
28	54487517	Self-tapping Screw	8	14 x 1
29	13389010	Blade Frame	1	
30	13254784	Pressure Filter	1	
-	13461645	- Pressure Filter Element	1	
31	96704887	HHCS, Fully Threaded, Zinc Plated	2	M6 x 60 Cl 8.8
32	95357570	Adapter	1	
34	13280458	Hose Assembly	1	33.0"
35	13280953	Hose Assembly	2	28.0"
36	13319413	Hose Assembly	1	52.0"
37	13319405	Hose Assembly	1	22.0"
38	13319421	Hose Assembly	2	158.0"
39	13319447	Tilt Blade Wire Harness	1	
40	95303335	Adapte	1	
41	13340096	Decal: Blade Control	1	
42	13340104	Decal: Tilt Blade	1	
43	13382338	Hose Assembly	2	169.0”

TILT BLADE ASSEMBLY

Dwg D13298963/05

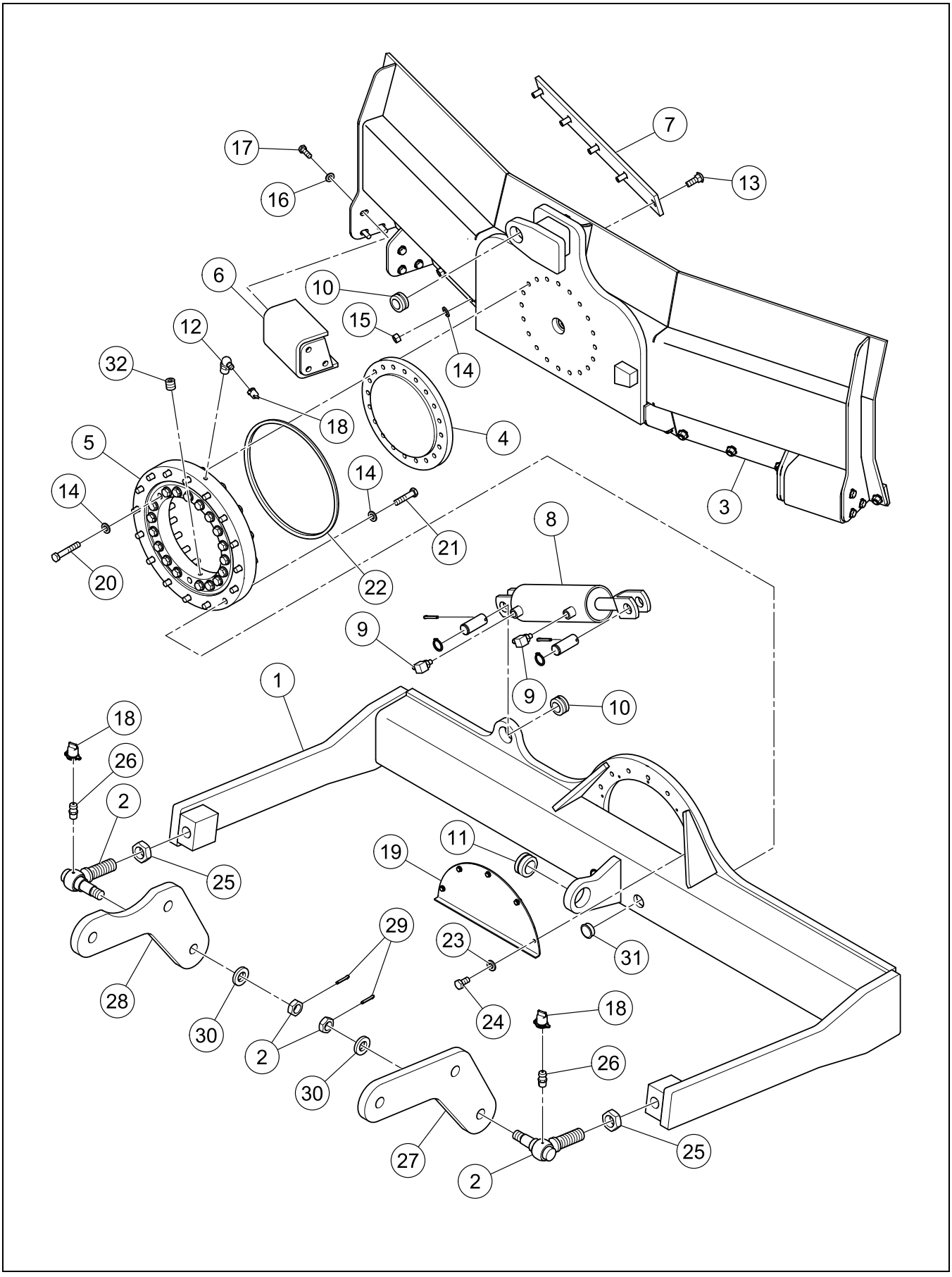

TILT BLADE ASSEMBLY

BOM 13298963

ITEM	COMM. NO.	DESCRIPTION	QTY	DIMENSIONS/NOTES
1	13412903	Blade Support	1	
2	59139410	Ball Socket	2	
3	13296710	U-blade	1	
4	13296132	Bearing Retainer Plate	1	
5	58968900	Table Bearing	1	
6	13297429	Skid Plate	2	
7	13297379	Scraper Bar Blade	3	
8	59269563	Hydraulic Cylinder	1	
-	95077467	- Locknut	1	
-	54505854	- Cotter Pin	1	
-	54505862	- Retainer Ring	2	
-	54505870	- Clevis Pin	2	
-	54505896	- Seal Kit	2	
9	95329975	Adapter	2	
10	50275445	Bearing	2	
11	50268127	Bearing	1	
12	95208971	Fitting	1	
13	96720487	Screw	15	
14	96738596	Flatwasher, Zinc Plated	51	M12 Hardened Cl 200
15	96704291	Hex Nut, Zinc Plated	15	M12 x 1.75 Cl 8
16	96741046	Flatwasher, Zinc Plated	12	M10 Cl 200
17	96701917	HHCS, Fully Threaded, Zinc Plated	12	M10 x 1.5 x 30 Cl 8.8
18	50270248	Cap	3	
19	13298591	Bearing Cover	1	
20	96714928	HHCS	19	
21	96733894	HHCS	16	
22	13326830	V-ring Seal	1	
23	96741053	Flatwasher, Zinc Plated	5	M6 Cl 200
24	96702394	HHCS, Fully Threaded, Zinc Plated	5	M6 x 1 x 12 Cl 8.8
25	95925129	Jam Nut	2	
26	95246393	Grease Fitting	2	
27	13296322	Blade Mounting Plate, RH	1	
28	13296314	Blade Mounting Plate, LH	1	
29	95929675	Cotter Pin	2	
30	59565069	Washer	2	7/8 Hardened
31	59813287	Button Plug	2	
32	95049359	Plug	4	

SWITCH PEDAL ASSEMBLY

Dwg D13327010/02

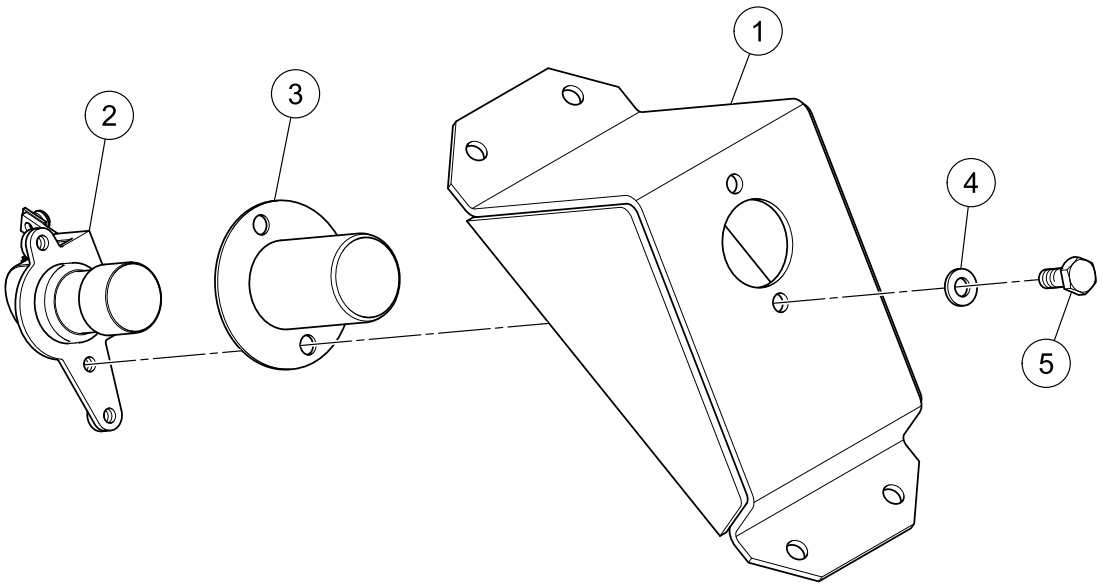

SWITCH PEDAL ASSEMBLY

BOM 13327010

ITEM	COMM. NO.	DESCRIPTION	QTY	DIMENSIONS/NOTES
1	13326947	Switch Pedal	1	
2	59338210	Dimmer Switch	1	
3	59478040	Switch Boot	1	
4	96741053	Flatwasher, Zinc Plated	2	M6 Cl 200
5	95919528	HHCS, Zinc Plated	2	1/4 x 20 x 0.625 Grd 8

FOOT PEDAL ASSEMBLY

Dwg 13321948/01

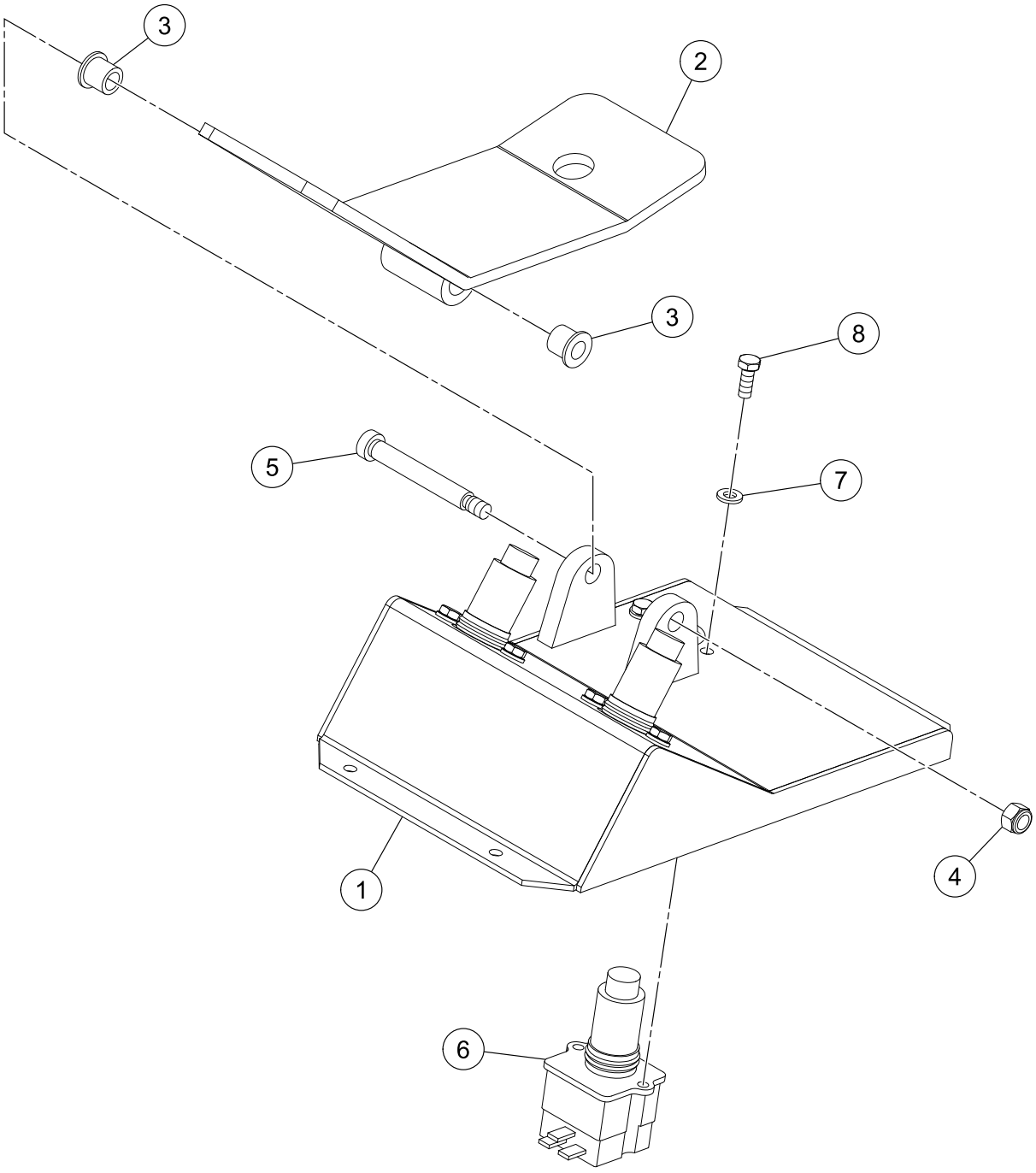

FOOT PEDAL ASSEMBLY

BOM 13321948

ITEM	COMM. NO.	DESCRIPTION	QTY	DIMENSIONS/NOTES
1	13271903	Foot Pedal Mount	1	
2	13271762	Foot Pedal	1	
3	58920216	Flanged Bushing	2	
4	95923314	Locknut	1	5/16 x 18 UNJC
5	95944260	Bolt	1	
6	58788852	Dump Switch	3	
7	96741053	Flatwasher, Zinc Plated	6	M6 Cl 200
8	96701958	HHCS, Fully Threaded, Zinc Plated	6	M6 x 16 Cl 8.8

LIFT/TILT VALVE ASSEMBLY

Dwg B13327143/02

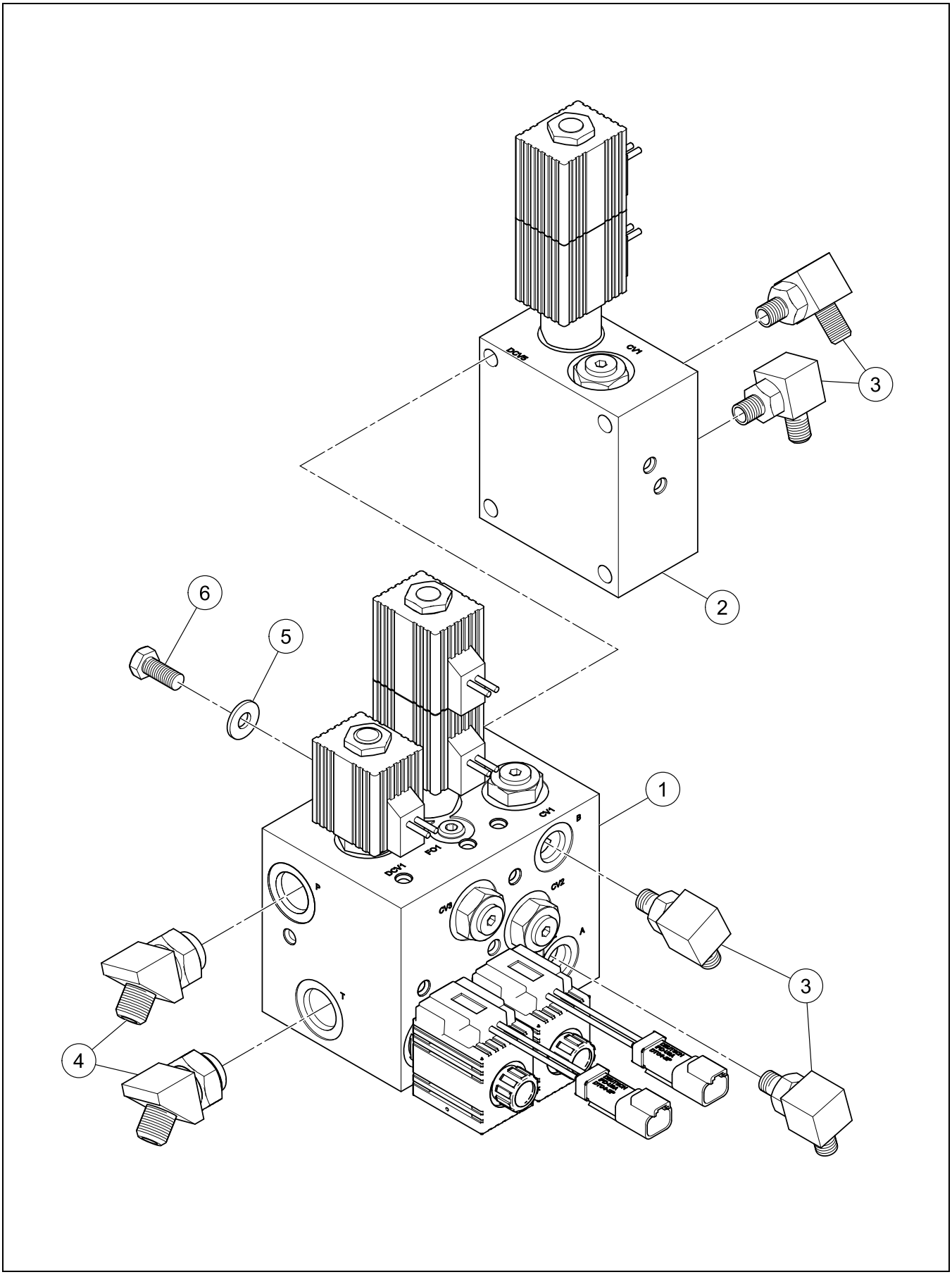

LIFT/TILT VALVE ASSEMBLY

BOM 13327143

ITEM	COMM. NO.	DESCRIPTION	QTY	DIMENSIONS/NOTES
1	**13309901**	**Lift Manifold**	**1**	**See Breakdown H - 28.**
2	**13309919**	**Tilt Manifold**	**1**	**See Breakdown H - 40.**
3	95329975	Adapter	4	
4	95029989	Adapter	2	
5	95922183	Flatwasher, Zinc Plated	3	1/4
6	95920419	HHCS, Zinc Plated	3	5/16 x 18 x 0.75 Grd 8

TILT MANIFOLD (13309919) - INTERNAL BREAKDOWN

Dwg 13309919/00

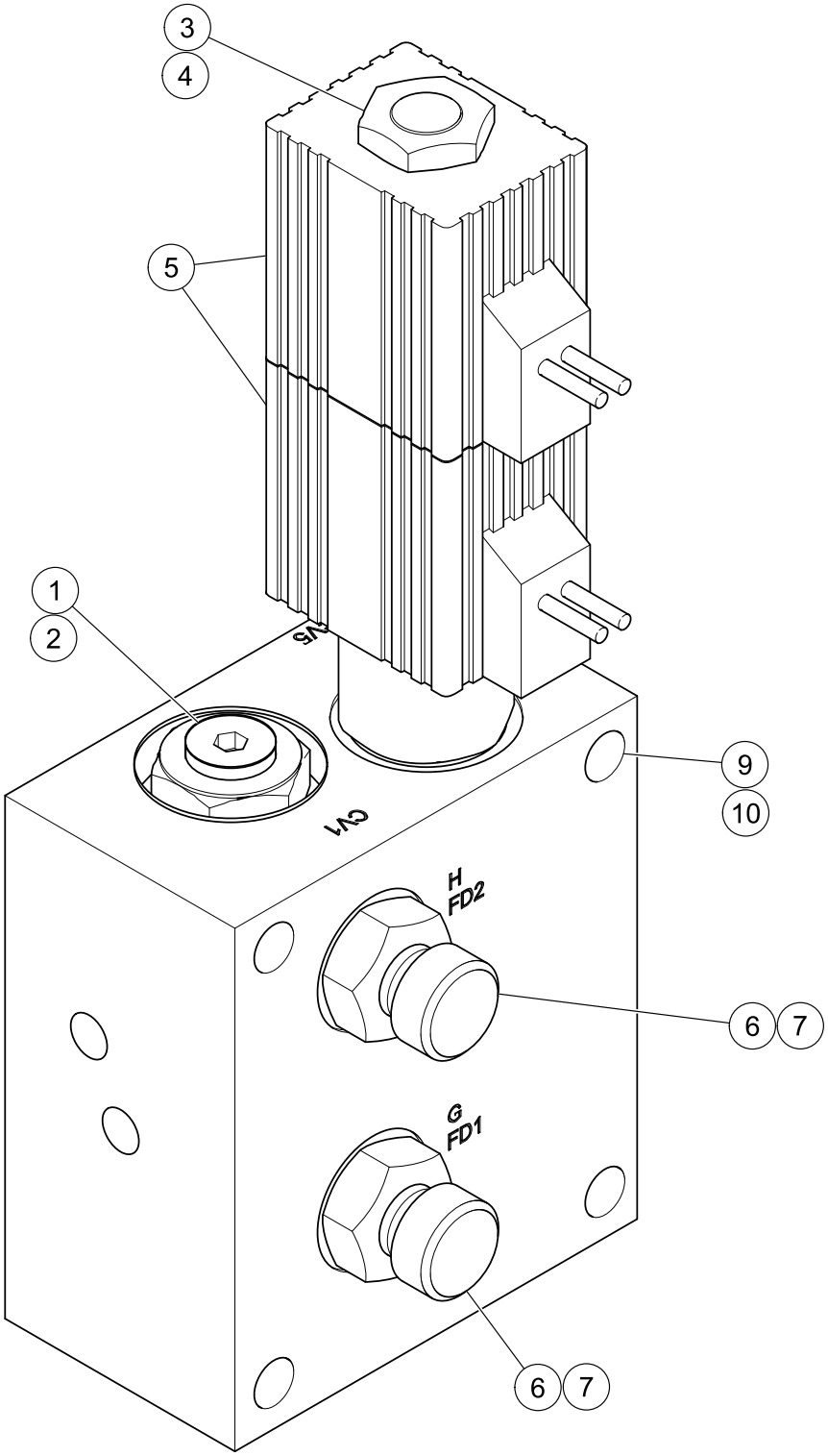

TILT MANIFOLD (13309919) - INTERNAL BREAKDOWN

BOM 13309919

ITEM	COMM. NO.	DESCRIPTION	QTY	DIMENSIONS/NOTES
1	13377924	Pilot Check Cartridge	1	
2	13377932	- Seal Kit	1	
3	13377940	Stem SD	1	
4	13282199	- Seal Kit	1	
5	13377957	Coil	2	
6	13377965	Fitting	2	
7	13377973	FRF Orifice Disk	1	
8	59053124	O-ring (Not Shown)	1	
9	13377981	HHCS	4	
10	13377999	Washer	4	

Always use Manufacturer Replacement parts!*

HOW TO USE THIS INDEX

When the Description is Known - Use the Word Index:

- Volvo's Word Index makes **any** item easy to locate.
- Use any of the **functional** words in the item description to locate the desired item. The items listed are in alphabetical order in the first column of the index and may be **repeated** several times depending on their **functional descriptions**.

> If searching for the *Air Cleaner Primary Filter Element*, the first listing in the **Word Index** is:
>
> *Air Cleaner Primary Filter Element*
>
> The item is also listed as:
>
> *Element, Air Cleaner Primary Filter*
> *Filter Element, Air Cleaner Primary*
> *Primary Filter Element, Air Cleaner*

- The alpha-numeric listing in the second column of the index is the location of the item in the manual. The location is identified as; the **Functional Group, Section Number**, and **Parts List Page Number**. Example: C-15 would be Functional Group C, Page 15.

> The index shows the filter will be found on page C-15 which is the **Parts List** page number for the
>
> *Air Cleaner Assembly*

Always use Manufacturer Replacement parts!

WORD INDEX

A

Air Cleaner C15
Air Cleaner Primary Filter Element C15
Air Cleaner Safety Filter Element C15
Air Valve A17
Alarm E13
Alarm, Backup B13
Alternator C5
Alternator Diode E13
Amber Lens E17, E19
ARC - Axle Drive Motor A3
ARC - Drum Drive Motor B9
ARC - Propulsion Pump C9
Arch ROPS A23
Articulation Pin B3
Audible Alarm Wire Harness E13
Axle A3
Axle Drive Motor A3

B

Backup Alarm B13
Bar, Scraper B37, B47
Battery E9
Battery Master Switch E11
Battery Master Switch Cable E11
Beacon Light E17, E19
Beacon Light Bulb E17, E19
Beacon Light Wire Harness E17, E19
Beige Paint G5, G9
Belt, Fan C5
Biodegradable Oil (Optional), Decal C7
Blade Control, Decal H21, H31
Blade Frame H21, H31
Blade, Strike-off H19
Bottle, Coolant Recovery C23
Bracket, Radiator, LH C23
Bracket, Radiator, RH C23
Brake Test Switch D21
Brake/Shunt Two-Speed Manifold B19
Breather Filtered Vent B15
Bulb, Beacon Light E17, E19
Bulb, Emergency Stop Switch D13
Bulb, Worklight E21, E23
Button, Horn D19

C

Cable, Battery Master Switch E11
Cable, F-Stop-R Control D11
Cable, Negative Battery E9
Cable, Positive Battery E9
Cable, Throttle D17
Cap, Coolant Recovery Bottle w/Tether C23
Cap, Radiator C23
Cap, Valve A17
Carrier Plate B7
Case, Manual D3
Chassis Wire Harness E5
Clamp, Exhaust C17
Cleaner, Air C15
Column, Steering D19
Console, Side Assembly D11
Control, F-Stop-R D11
Coolant Recovery Bottle C23
Coolant Recovery Bottle Cap w/Tether C23
Cooler, Oil C23
Coupling, Drive C5
Cover, Vandal A27
Cushion and Switch Kit D15
Cylinder Assembly H19, H31
Cylinder, Hydraulic H33
Cylinder, Steering B13

D

Dash Lights E21
Decal: Biodegradable Oil (Optional) C7
Decal: Blade Control H21, H31
Decal: First Aid A29
Decal: Global Engineering G3
Decal: Hydraulic Test Port H17
Decal: Master Disconnect E11
Decal: Signature G7
Decal: Stop D13
Decal: Tilt Blade H31
Decal: Tow Tag H13
Decal: Warning-Runaway Machine H13
Dial, Pressure Gauge H13
Dimmer Switch H35
Diode Harness E13
Diode, Alternator E13
Drive Coupling C5
Drum (SD-45D) B5
Drum (SD-45F) B5
Drum Drive Motor B9
Drum Drive Motor W/Brake B43
Drum Frame B3
Dump Switch H25, H37

E

Element, Air Cleaner Primary Filter C15
Element, Air Cleaner Safety Filter C15
Element, Pressure Filter H21, H31
Element, Return Filter H11
Element, Suction Filter H11
Emergency Stop Switch D13
Emergency Stop Switch Bulb D13
Engine C5
Engine Oil Filter C5
Engine Oil Pressure Sender D25
Exhaust Clamp C17
Exhaust Pipe C17

F

Fan Belt C5

Filter Element, Air Cleaner Primary C15
Filter Element, Air Cleaner Safety C15
Filter Element, Pressure H21, H31
Filter Element, Return H11
Filter Element, Suction H11
Filter, Engine Oil C5
Filter, Fuel C5
Filter, Hydraulic Tank B15
Filter, Pressure H21, H31
Filter, Return H11
Filter, Suction H11
Filter, Tank H21, H31
First Aid Strap A29
First Aid, Decal A29
Foot Pedal H37
Frame, Blade H21, H31
Frame, Drum B3
Frame, Rear B13
Front/Rear Worklights Switch E21, E23
F-Stop-R Control D11
F-Stop-R Control Cable D11
F-Stop-R Control Switch D11
Fuel Filter C5
Fuel Level Sender B17
Fuel Tank B17
Fuse E25
Fuse Plate E7
Fuse Wire Harness E3

G

Gasket, Hydraulic Tank B15
Gauge Wire Harness D25
Gauge, Hydraulic Oil Temperature D25
Gauge, Oil Pressure D25
Global Engineering, Decal G3
Grip, Throttle Lever D17

H

Hand Pump H13
Handle, Hood A19
Harness, Audible Alarm Wire E13
Harness, Beacon Light Wire E17, E19
Harness, Chassis Wire E5
Harness, Diode E13
Harness, Fuse Wire E3
Harness, Gauge Wire D25
Harness, Hydraulic Oil Temperature Light Chassis Wire E25
Harness, Hydraulic Oil Temperature Light Pedestal Wire E25
Harness, Hydraulic Oil Temperature Light Wire . . E25
Harness, Pedestal Wire D19
Harness, Power Socket Wire E15
Harness, Seat Switch Wire D9
Harness, Side Console Wire D11
Harness, Temperature Gauge Light Wire D25
Harness, Temperature Gauge Wire D25
Harness, Tilt Blade Wire H31
Harness, Wire H21
Harness, Worklight Wire E21, E23
Hood A19, C25
Hood Handle A19
Hood Key A19
Hood Latch A19
Horn D5
Horn Button D19
Hose, Lower Radiator C5
Hose, Upper Radiator C5
Hydraulic Cylinder H33
Hydraulic Oil Temperature Gauge D25
Hydraulic Oil Temperature Light Chassis Wire Harness E25
Hydraulic Oil Temperature Light Pedestal Wire Harness E25
Hydraulic Oil Temperature Light Wire Harness . . E25
Hydraulic Oil Temperature Sender D25
Hydraulic Oil Temperature Switch E25
Hydraulic Tank B15
Hydraulic Tank Clean Out Lid B15
Hydraulic Tank Filter B15
Hydraulic Tank Gasket B15
Hydraulic Test Port, Decal H17

I

Ignition Key D19
Ignition Switch D19
Instructions, Video Padfoot Shell B41
Instrument Panel D19
Key Tag A19, D19

K

Key, Hood A19
Key, Ignition D19
Kit, Cushion and Switch D15
Kit, Seat Belt D15
Kit, Spinner D27
Kit, Temperature Gauge Light D25

L

Latch, Hood A19
Lens and Reflector E21
Lens, Amber E17, E19
Lever, Throttle D17
Lid, Hydraulic Tank Clean Out B15
Lift Manifold H27, H39
Light, Beacon E17, E19
Lights, Dash E21
Lower Radiator Hose C5

M

Manifold, Brake/Shunt Two-Speed B19
Manifold, Lift H27, H39
Manifold, Tilt H39

Manual Case D3
Master Disconnect, Decal E11
Motor, ARC - Axle Drive A3
Motor, ARC - Drum Drive B9
Motor, Axle Drive A3
Motor, Drum Drive W/Brake B43
Motor, Drum Drive B9
Motor, Vibration B5
Mount, Shock D7
Muffler C17

N

Negative Battery Cable E9

O

Oil Cooler C23
Oil Filter, Engine C5
Oil Pressure Gauge D25
Oil Pressure Switch C7
Operators Platform D3

P

Padfoot Shell B41
Paint, Beige G5, G9
Panel, Instrument D19
Parking Brake Switch D21
Pedal, Foot H37
Pedestal D19
Pedestal Wire Harness D19
Pin, Articulation B3
Pipe, Exhaust C17
Plate, Carrier B7
Plate, Fuse E7
Platform, Operators D3
Port, Power E15
Positive Battery Cable E9
Power Port E15
Power Socket Wire Harness E15
Precleaner C25
Precleaner Stack C25
Pressure Filter H21, H31
Pressure Filter Element H21, H31
Pressure Gauge Dial H13
Pressure Switch B19
Primary Filter Element, Air Cleaner C15
Propulsion Pump C9
Pump H23
Pump, ARC - Propulsion C9
Pump, Hand H13
Pump, Propulsion C9
Pump, Steering C9

R

Radiator C23
Radiator Bracket, LH C23
Radiator Bracket, RH C23
Radiator Cap C23
Rear Frame B13
Reflector, Lens and E21
Relay E13, E21, E23
Return Filter H11
Return Filter Element H11
Rim, Wheel A17
ROPS, Arch A23
ROPS/FOPS A21

S

Safety Filter Element, Air Cleaner C15
Scraper B31, B41, B47
Scraper Bar B37, B47
Scraper Tooth B31, B35, B39, B41
Scraper Wrapper B35, B37, B39
Scraper, Smooth B33
Scraper, Strike-off Blade H19
Seat D9
Seat Belt Kit D15
Seat Switch Wire Harness D9
Sender, Engine Oil Pressure D25
Sender, Fuel Level B17
Sender, Hydraulic Oil Temperature D25
Sender, Temperature C7
Shell, Padfoot B41
Shock Mount D7
Side Console Assembly D11
Side Console Wire Harness D11
Signature, Decal G7
Smooth Scraper B33
Spinner Kit D27
Stack, Precleaner C25
Starter C5
Steering Column D19
Steering Cylinder B13
Steering Pump C9
Steering Valve D7
Steering Wheel D19
Stop, Decal D13
Strap, First Aid A29
Strike-off Blade H19
Strike-off Blade Scraper H19
Suction Filter H11
Suction Filter Element H11
Switch, Battery Master E11
Switch, Brake Test D21
Switch, Dimmer H35
Switch, Dump H25, H37
Switch, Emergency Stop D13
Switch, Front/Rear Worklights E21, E23
Switch, F-Stop-R Control D11
Switch, Hydraulic Oil Temperature E25
Switch, Ignition D19
Switch, Oil Pressure C7
Switch, Parking Brake D21
Switch, Pressure B19

Switch, Temperature E13
Swivel B3

T

Tag, Key A19, D19
Tank Filter H21, H31
Tank Filter, Hydraulic B15
Tank, Fuel B17
Tank, Hydraulic B15
Temperature Gauge Light Kit D25
Temperature Gauge Light Wire Harness D25
Temperature Gauge Wire Harness D25
Temperature Sender C7
Temperature Switch E13
Thermal Bypass Valve B23
Throttle Cable D17
Throttle Lever D17
Throttle Lever Grip D17
Tilt Blade Wire Harness H31
Tilt Blade, Decal H31
Tilt Manifold H39
Timer, Two Second Delay E5
Tire A17
Tooth, Scraper B31, B35, B39, B41
Tow Tag, Decal H13
Traction Valve B25
Two Second Delay Timer E5

U

Upper Radiator Hose C5

V

Valve Cap A17
Valve, Air A17
Valve, Steering D7
Valve, Thermal Bypass B23
Valve, Traction B25
Vandal Cover A27
Vent, Breather Filtered B15
Vibration Motor B5
Video Padfoot Shell Instructions B41
Voltmeter D25

W

Warning-Runaway Machine, Decal H13
Wheel Nut A17
Wheel Rim A17
Wheel, Steering D19
Wire Harness H21
Worklight E21, E23
Worklight Bulb E21, E23
Worklight Wire Harness E21, E23
Wrapper, Scraper B35, B37, B39

NUMERICAL INDEX

COMM.NO.	PAGE
13062963	C-23
13066345	C-13
13066352	C-13
13090097	C-13
13129267	H-7
13155262	B-41
13158647	D-19
13163332	G-5
	G-9
13163340	G-3
	G-7
13165071	D-9
13166079	D-13
13167390	B-5
13167721	D-7
13167812	D-7
13167945	D-15
13173323	E-15
13177399	B-9
13179106	B-43
13181664	B-5
13181698	B-5
13181730	B-5
13181748	B-5
13181862	B-5
13182373	A-27
13182480	A-19
13185384	B-15
13185780	A-19
13186143	A-19
13186176	D-11
13186242	D-11
13186374	D-11
13186390	D-11
13186598	C-25
13187109	D-21
13187117	D-23
13187158	B-7
13187711	A-17
13187737	A-17
13187877	B-3
	B-13
13187968	B-3
	B-13
13187976	B-3
	B-13
13188339	B-13
13188453	D-11
13190723	H-11
13197108	E-21
	E-23
13197413	G-7
13198270	D-15
13198353	G-3
	G-7
13199344	G-3
13204755	A-3
13205133	B-19
13205497	H-23
13205513	H-13
13206941	G-9
13207519	B-5
13207527	H-7
13207618	H-3
13208004	H-17
13208012	E-11
13209135	E-7
13209648	E-11
13209903	B-13
13213509	B-3
13213525	B-3
13214812	H-13
13218987	D-7
13219142	B-3
13223938	B-5
13224068	E-23
13225156	D-21
	D-23
13228200	A-15
13228820	D-15
13228838	D-15
13228846	D-15
13228853	D-15
13228861	D-15
13228960	D-15
13229042	B-13
13230362	B-3
13230412	C-17
13231956	H-11
13232343	A-19
13232350	A-19
13232665	B-7
13232681	B-9
13232731	C-23
13232814	C-9
13232863	D-3
13233093	C-5
13233143	C-5
13234059	A-23
13234190	D-5
13235189	B-17
13235320	H-13
13235478	D-19
13235676	A-27
	E-19
	E-21
	E-23
13235692	A-27
13235866	E-7
13235882	D-19
13236534	D-3
13236757	D-3
13236773	D-3
13236864	D-19
13236872	D-19
13237128	B-3
13237144	B-3
13237490	D-5
13237789	C-5
13238852	C-5
13239272	C-5
13243753	A-5
13245329	A-19
13247358	C-11
	C-13
13247473	D-15
13247481	D-15
13247549	D-15
13247556	D-15
13248935	E-21
13250261	E-25
13254537	B-25
13254784	H-21
	H-31
13254859	E-21
	E-23
13254941	H-5
13255179	H-17
13255443	C-15
13255450	C-15
13255906	G-5
	G-9
13255922	E-11
13256011	H-17
13256029	H-17
13256037	H-17
13256052	H-7
13256060	H-3
13256078	H-7
13256177	E-9
13258603	B-21
	H-15
13258611	B-21
	H-15
13258629	H-15
13258645	H-29
13258660	B-21
13258678	B-21
13258686	D-19
13258934	D-15
13259940	H-3
13262498	B-11
13263264	H-29
13263298	A-5
	A-13
13263306	A-5
13263447	A-13
13263462	A-13
13264007	B-11
	B-45
13264015	B-45
13264023	B-11
13264056	B-45
13264064	B-11
13264080	B-11
	B-45
13264098	B-45
13264106	B-11
	B-45
13264122	B-45
13264130	B-11
13264148	B-11
	B-45
13264155	B-11
	B-45
13264163	B-11
13264189	B-11
	B-45
13264197	B-45
13264312	B-11
13264338	B-45
13264379	B-11
13266960	E-9
13266978	D-25
13266986	G-5
	G-7
13266994	G-7
13267072	B-45
13268297	C-11
	C-13
13268305	C-11
	C-13
13268347	H-29
13269436	B-21
	H-15
13270228	B-17
13270350	A-19
13270731	D-19
13271283	C-23
13271432	A-19
13271671	D-5
13271762	H-25
	H-37
13271903	H-25
	H-37
13272208	A-19
13272505	D-3
13272562	D-9
13272737	C-23
13272851	E-19
13272885	B-15
13273057	E-9
13273073	A-19
13273081	A-19

NUMERICAL INDEX

COMM.NO.	PAGE
13273156	C-15
13273511	B-5
13273578	B-5
13273677	B-41
13273768	B-9
13274063	B-31
	B-35
	B-39
	B-41
13274121	B-37
	B-39
	B-41
	B-47
13274451	B-3
13274824	D-3
13275078	D-25
13275276	A-21
13275565	C-17
13275615	A-3
13275680	C-5
13275789	A-21
	A-23
13275854	B-29
13275870	B-29
13276787	B-17
13277405	C-15
13277983	C-15
13278429	C-15
13278734	H-19
13278742	H-19
13278817	H-19
	H-31
13278916	H-19
	H-21
13278940	H-21
13280409	G-7
13280417	G-7
13280425	G-7
13280433	G-5
	G-9
13280441	H-3
13280458	H-21
	H-31
13280466	H-3
	H-7
13280474	H-3
	H-7
13280482	H-5
13280490	H-7
13280805	H-5
13280813	H-5
13280821	H-5
13280839	H-5
13280854	H-7
13280862	H-9
13280870	H-7
13280888	H-9
13280896	H-9
13280920	H-7
13280938	H-7
13280946	H-7
13280953	H-21
	H-31
13280987	H-7
13281001	H-9
13281019	H-9
13281027	H-9
13281035	B-43
13281332	D-15
13281365	D-15
13281373	D-15
13282199	H-29
	H-41
13284690	A-19
	D-19
13284914	A-3
13284922	C-9
13284989	C-5
13287305	C-5
13289897	A-3
13289921	D-11
13290135	D-5
13290259	E-9
13290440	A-27
13290820	B-35
	B-37
	B-39
13291307	B-3
13291596	E-5
13291638	B-33
13292867	A-19
13292917	C-23
13292925	C-23
13293048	A-19
13293261	A-19
13293352	A-19
13295357	D-3
13295365	D-9
13295456	D-3
	D-5
13295498	D-3
13295605	B-13
13296132	H-33
13296314	H-33
13296322	H-33
13296462	H-31
13296710	H-33
13296769	C-21
13296819	B-35
	B-37
	B-39
13296835	B-31
	B-41
	B-47
13296850	H-19
13296868	C-23
13296892	C-3
13297379	H-33
13297429	H-33
13297478	H-31
13297783	H-11
13298591	H-33
13300082	E-13
13300090	E-17
	E-19
13304142	G-7
13304159	G-3
13304217	G-3
	G-7
	G-9
13304225	G-3
	G-7
13304233	G-3
	G-7
	G-9
13304241	G-3
	G-7
13304258	G-5
13304787	B-5
	B-7
13304860	C-9
13304878	H-13
13305099	B-15
13307491	B-17
13309000	G-5
13309018	G-9
13309521	D-19
13309901	H-27
	H-39
13309919	H-39
13313986	E-25
13319256	C-5
13319405	H-21
	H-31
13319413	H-21
	H-31
13319421	H-31
13319439	H-21
13319447	H-31
13319751	D-25
13319942	D-19
13320353	B-17
13321062	B-17
13321195	C-5
13323035	A-17
13323043	A-17
13323050	A-17
13323167	A-17
13323928	B-5
13326830	H-33
13326863	H-31
13326947	H-35
13327945	A-19
13328661	C-17
13328687	C-23
13334081	H-13
13334107	H-13
13340096	H-21
	H-31
13340104	H-31
13349055	E-5
13349964	E-21
13351408	B-5
	B-7
13352034	D-25
13356175	C-15
13361050	B-9
13364724	C-19
13366067	H-13
13366075	H-13
13377387	B-27
13377395	B-27
13377403	B-27
13377411	B-27
13377924	H-29
	H-41
13377932	H-29
	H-41
13377940	H-29
	H-41
13377957	H-41
13377965	H-41
13377973	H-41
13377981	H-41
13377999	H-41
13378203	H-29
13378211	H-29
13378229	H-29
13378237	H-29
13378245	H-29
13382338	H-19
	H-21
	H-31
13382445	D-11
13384300	A-19
13385323	G-9
13385331	G-9
13385349	G-9
13385356	G-9
13385364	G-9
13385372	G-9
13385380	G-9
13385398	G-9

NUMERICAL INDEX

COMM.NO.	PAGE
13388608	C-25
13388616	C-25
13389010	H-21
	H-31
13395900	G-3
13395926	G-9
13395934	G-9
13395942	G-9
13395959	G-9
13396007	B-13
13412655	A-27
13412903	H-33
13414578	A-25
13415518	H-19
13421334	E-13
	E-25
13421953	E-25
13421961	E-25
13426473	C-5
13429782	H-15
13438007	G-9
13438015	G-9
13438031	B-13
13458807	G-5
13458831	G-7
13458849	G-7
13458856	G-7
13458864	G-7
13459326	G-3
13459441	B-3
13461033	H-23
13461645	H-21
	H-31
13469010	D-5
13470067	D-19
13485743	A-5
	A-11
13489786	E-5
13491691	C-7
13492640	D-11
13492657	E-3
13493077	D-15
13493531	E-15
13493747	B-11
13493754	B-11
13493762	B-5
13493770	B-23
13493788	C-13
13493796	C-13
35304286	G-5
	G-9
35393669	C-15
35393677	C-15
36854941	C-17
36875565	D-3
	D-5
50264860	C-3
	D-3
	D-5
50268127	H-19
	H-31
	H-33
50269984	B-5
50270248	B-3
	B-13
	H-19
	H-31
	H-33
50274299	C-5
	C-23
50275445	H-33
50278894	C-11
54415393	C-15
54461090	D-19
54465075	D-17
54467329	C-23
54487517	D-3
	H-21
	H-31
54488184	H-5
54488218	H-9
54496377	D-15
54496385	D-15
54505854	H-33
54505862	H-33
54505870	H-33
54505896	H-33
54525084	E-23
54525134	E-23
54525738	C-25
54525746	C-25
54525753	C-25
54525761	C-25
54528021	C-5
54531629	D-15
54534664	C-17
54577838	B-13
54584776	B-7
54592944	C-19
54601299	A-27
54612494	G-5
	G-9
54635859	E-9
54637095	C-5
54637145	C-5
54666094	D-21
54666102	D-21
54670302	D-9
54680061	C-15
54680103	C-15
54680970	H-29
54685128	A-3
54705447	A-13
54716378	E-13
54747340	D-7
54747720	D-25
56998503	H-19
	H-31
58220583	C-13
58220633	C-13
58783507	H-19
	H-31
58788852	H-25
	H-37
58820168	D-19
	E-5
	H-13
58837949	E-21
58848904	C-17
58848920	C-5
	C-23
58855099	B-15
	H-21
	H-31
58858820	C-9
58860438	E-21
58866336	H-19
	H-31
58870924	E-13
58870932	E-13
58875543	E-21
	E-23
58877796	D-25
58881863	C-11
	C-13
58887936	H-11
58891540	A-15
58893983	D-25
58898677	C-9
58905803	C-15
58913856	D-25
58916628	A-9
58917261	A-19
	D-19
58917543	D-13
58918947	G-9
58920216	H-25
	H-37
58924333	D-19
58926908	H-17
58950783	C-11
58965377	E-13
	E-21
	E-23
58965542	G-5
58968900	H-33
58978198	G-7
58978222	G-7
58978248	G-9
58978255	G-5
	G-9
58978271	G-9
58978289	G-7
58979048	H-11
58992603	G-7
59020040	G-5
59020065	E-13
59020222	C-7
59020271	B-13
	D-3
59020305	C-15
59022319	B-11
59022871	E-17
	E-19
59023077	E-17
	E-19
59034348	C-13
59050948	G-7
59051151	G-5
59053124	H-41
59083105	E-17
	E-19
59087999	G-9
59093351	B-15
59102749	C-11
59104406	C-7
59108100	D-13
59108605	D-13
59109116	D-13
59109819	B-3
59110171	D-25
59110312	B-19
59111450	D-13
59117317	E-5
59117333	C-5
	C-23
59124586	D-25
59131912	G-9
59131920	G-9
59131938	G-9
59131946	G-9
59136226	E-9
59139410	H-19
	H-33
59144428	B-5
	B-15
	B-17
59145821	D-15
59146233	A-5
	A-13
59146241	A-5
	A-11
59146274	A-7
59146282	A-13

NUMERICAL INDEX

COMM.NO.	PAGE
59146381	A-7
59146605	A-11
59146613	A-11
59146654	A-11
59146662	A-11
59146670	A-11
59148569	D-11
	D-19
59153627	A-11
59153650	A-11
59153759	A-13
59153858	A-13
59153866	A-13
59154146	A-7
59154393	D-15
59154450	D-15
59154492	D-15
59154500	D-15
59154518	D-15
59154526	D-15
59154542	D-15
59154807	C-23
59155176	A-15
59159558	D-19
59160234	D-9
59162982	C-7
	G-5
59163758	A-17
59164954	E-13
59179226	C-17
59185074	D-3
59186346	B-23
59190975	B-3
	B-13
	H-19
	H-31
59197012	H-13
59199141	D-27
59208512	B-5
59211805	E-9
59212936	B-17
59212951	B-17
59214585	D-5
59214775	B-3
59218461	A-13
59219246	D-17
59219253	D-17
59219261	D-17
59219279	D-17
59219287	D-17
59225920	E-9
59226548	D-17
59227561	D-9
59239897	D-13
59242263	C-23
59242842	A-5
59245209	A-15
59246603	G-3
59246611	G-3
59259598	E-21
59265777	E-23
59265793	E-23
59268185	C-7
59269563	H-33
59275917	A-29
59275990	A-29
59277756	B-5
59277764	B-7
59277772	B-5
	B-15
59286302	C-5
59289025	A-29
59290304	D-3
59298208	B-3
59298489	D-19
59299545	B-3
59307041	A-19
59321687	C-23
59337063	C-11
59338210	H-35
59360610	C-13
59387498	A-15
59387605	A-15
59408567	B-9
59422907	C-11
	C-13
59424309	D-7
59431734	C-13
59436741	B-3
59437079	D-7
59437087	D-7
59450213	C-25
59450528	B-3
59475202	A-19
	B-13
59478040	H-35
59498790	C-23
59524447	A-17
59549014	B-5
59565044	B-5
	B-7
	D-5
59565051	A-3
59565069	H-19
	H-33
59570887	H-23
59583500	B-3
	H-19
	H-31
59587014	H-19
	H-31
59588418	C-9
59600593	B-7
59605915	G-3
	G-7
59607853	A-27
	B-3
59607861	B-3
59617977	A-19
59617985	A-19
59656322	B-3
59665877	H-13
59667287	G-5
59672709	C-9
	H-11
59704403	E-17
	E-19
	E-21
	E-23
59742890	H-13
59743013	B-23
59764498	H-11
59769661	A-7
59785303	C-11
	C-13
59785493	A-15
	C-11
	C-13
59785519	A-15
	C-11
	C-13
59790824	A-5
59793521	A-11
59793786	A-7
59794149	A-7
59813287	H-33
59816322	C-7
59822114	H-3
	H-7
59824250	D-25
59829432	B-3
59854828	E-21
	E-23
59854828	E-23
59854877	E-21
	E-23
59854877	E-23
59854943	E-21
	E-23
59854943	E-23
59885491	A-17
59887505	H-3
59888362	C-13
59891002	B-3
59901306	A-19
	C-5
	D-11
	D-17
59902668	B-11
59902684	B-11
59922419	H-17
59922591	A-3
	B-9
59922971	B-25
59922989	B-5
	C-9
59923003	B-25
	C-9
59924043	H-17
59924217	C-5
59924472	B-23
59926618	C-9
59927764	C-9
59929059	C-9
59929182	H-17
59929711	A-17
59933622	C-11
	C-13
59938373	C-11
	C-13
59941203	A-15
	C-13
59947507	G-5
	G-9
59949461	C-11
	C-13
59949511	C-11
	C-13
59949693	C-13
59949792	C-11
59961821	H-17
59970384	E-5
59972877	C-11
	C-13
59972919	D-19
59984864	A-9
59986422	C-11
	C-13
59986463	C-11
	C-13
90502592	A-9
95011060	B-15
95018719	B-3
95028247	B-5
95029989	H-27
	H-39
95048393	B-15
95049359	B-13
	H-33
95055034	C-9
95055265	C-9
95077467	H-33

NUMERICAL INDEX

COMM.NO. PAGE	COMM.NO. PAGE	COMM.NO. PAGE	COMM.NO. PAGE
95098679 .....B-3	95357570 ..... H-11	95929675 .....H-19	96702394 .....B-3
.....B-13	..... H-21	.....H-33	.....D-3
..... H-19	..... H-31	95929782 .....A-19	.....H-33
..... H-31	95363339 .....B-5	.....B-13	96702402 .....H-19
95101010 .....C-23	95365078 .....B-15	95943346 .....A-19	.....H-31
95139986 .....C-5	.....B-19	.....C-5	96702410 .....D-5
95157400 .....B-15	.....C-9	.....C-9	96702444 .....B-17
95182705 .....B-15	95365094 .....B-19	.....D-17	96702642 .....A-21
..... H-11	.....C-9	..... E-7	.....A-23
95188710 ..... H-13	..... H-13	95944260 .....H-25	.....A-25
95200648 ..... A-15	95365599 .....C-15	.....H-37	.....B-3
.....C-11	95371258 ..... H-13	95988093 .....B-17	.....H-19
95201547 .....B-3	95387338 .....C-9	95988739 .....B-5	96702659 .....A-19
.....B-13	95402806 .....B-19	95988796 .....C-9	.....B-13
..... H-19	95415667 ..... A-3	96700893 .....B-9	.....C-15
..... H-31	.....B-19	96700919 .....B-41	.....C-23
95208971 ..... H-33	..... H-13	96701370 .....B-13	.....D-5
95219770 .....B-15	95418976 .....C-15	.....C-3	..... E-19
95246393 ..... H-33	95426235 .....C-9	96701479 .....D-5	96702667 .....B-39
95257341 .....B-19	95431284 .....B-19	.....D-19	96702709 .....B-7
95279337 ..... H-21	95448940 .....C-19	.....H-11	96702733 .....A-3
..... H-31	95457586 .....B-13	96701560 .....B-41	96702790 .....D-9
95280186 ..... H-23	95469169 .....B-23	96701917 .....A-19	96702808 .....B-5
95280194 .....B-23	95473443 ..... H-13	.....B-13	.....B-7
95285946 ..... A-3	95488250 .....C-9	.....C-5	96702816 .....C-7
95286548 .....B-15	95653614 .....B-19	.....C-21	..... E-3
95301834 ..... D-5	95657730 .....C-9	.....D-3	96702824 .....A-19
95301842 ..... D-5	95671285 .....B-17	.....H-33	.....B-15
.....E-21	95720256 .....B-5	96701958 .....C-15	.....C-3
95302683 .....B-17	95860052 ..... A-19	.....C-17	.....D-3
.....C-5	.....C-5	.....D-19	.....D-5
95303335 .....B-13	.....C-9	.....H-25	.....D-9
..... H-21	..... D-17	.....H-37	..... E-21
..... H-31	95866687 .....B-43	96701990 .....C-3	96702857 .....D-9
95303350 .....C-9	95895611 .....B-15	.....D-5	96702865 ..... E-5
..... H-23	95919528 ..... H-11	96702261 .....C-3	96702873 .....B-13
95303368 .....B-9	..... H-35	96702279 .....B-13	..... E-5
..... D-7	95919767 ..... A-19	.....C-5	96702881 .....B-13
95323465 .....B-15	95920419 ..... H-27	.....D-7	96703657 .....B-5
95326609 ..... D-17	..... H-39	96702287 .....B-3	.....B-7
95326955 .....B-15	95920641 .....C-9	.....C-7	96703665 .....A-3
95329975 .....B-25	95920781 .....C-9	.....C-21	96703756 .....A-19
.....C-9	95922134 ..... E-7	.....C-23	..... E-13
..... H-27	95922183 ..... H-27	.....D-3	96703798 .....C-3
..... H-33	..... H-39	.....D-5	96704234 .....A-19
..... H-39	95922324 .....C-17	.....D-9	.....C-15
95329983 .....B-15	95922332 ..... E-7	..... E-9	96704291 .....H-33
95330692 ..... H-11	95922399 .....C-9	.....H-11	96704309 .....B-13
..... H-21	95923264 .....C-9	96702311 .....B-3	.....C-5
95341673 ..... H-11	95923298 ..... E-5	.....B-5	.....C-7
95343596 .....B-15	95923314 ..... D-17	96702329 .....A-3	.....C-9
95356853 .....B-15	..... H-25	.....B-5	..... E-9
..... H-19	..... H-37	.....B-47	96704432 .....C-17
..... H-31	95925129 ..... H-19	96702386 .....D-11	96704564 .....B-13
95356960 .....C-9	..... H-33		..... E-5
95356978 .....B-23			

NUMERICAL INDEX

COMM.NO.	PAGE
96704580	A-19
	D-17
	E-17
	E-19
96704598	A-19
	C-5
	H-13
96704606	B-3
	C-7
	C-23
	D-9
	E-9
	E-21
96704614	H-11
96704663	B-13
	D-3
96704812	D-3
	D-5
	E-9
96704838	C-15
96704887	H-21
	H-31
96704937	D-5
96704960	D-3
96705009	D-5
96705116	D-7
96705124	B-5
96705132	A-27
96705272	B-13
96705546	B-3
96705553	H-19
	H-31
96705587	A-19
	C-5
	C-23
96705694	A-19
96705728	A-19
	A-27
	E-5
96705736	D-17
96705744	E-17
	E-19
96705751	E-5
96705769	E-13
96705801	A-19
96706809	A-19
96710983	B-5
96711411	B-5
96711510	B-5
96711833	A-19
	B-3
	B-13
	C-5
	C-7
	C-21
	C-23
	D-3
	D-19
96711882	B-9
96712146	B-3
96712237	B-3
	B-13
	B-17
	B-31
	B-35
	B-37
	B-39
	B-41
	B-47
96712252	B-3
96712674	B-13
	C-3
	C-5
	C-7
	C-15
	C-23
	D-3
	D-5
96712716	A-23
	B-3
	H-19
96712724	H-31
96713979	D-5
	E-3
	E-9
96714050	B-13
96714928	H-33
96715073	E-13
96715081	B-31
	B-35
	B-37
	B-39
	B-41
96715578	A-21
96718598	A-27
96718978	B-3
	B-13
96719976	C-19
96720008	A-25
96720156	H-13
96720446	B-41
96720487	H-33
96720594	D-3
96721121	D-3
96726302	C-7
96727458	A-19
96727532	B-3
	H-19
	H-31
96728431	B-29
96728456	H-19
	H-31
96728506	C-25
96729736	A-19
96733290	B-5
96733894	H-33
96737069	B-5
96738547	A-19
	E-13
96738554	A-29
	D-11
	D-17
	E-5
	E-17
	E-19
96738596	A-3
	B-5
	B-7
	D-5
	D-9
	H-33
96738612	A-19
	B-5
	B-9
96738646	H-31
96739594	D-5
96739990	B-5
96740436	B-17
96740444	A-29
96741038	A-19
	B-29
	C-7
	C-23
	D-5
	D-9
	E-19
	E-21
96741046	B-3
	B-5
	C-3
	C-5
	C-9
	D-5
	D-7
	D-9
	E-9
	H-11
	H-33
96741053	A-19
	B-3
	C-9
	C-15
	D-19
	E-5
	E-13
	H-11
	H-13
	H-21
	H-25
	H-31
	H-33
	H-35
	H-37
96743844	D-3
96743851	B-5
96743927	D-3
96743984	B-29
96744693	A-3
96745518	A-27

The warranty statement is provided within the manual kit shipped with the machine.

VOLVO

Volvo Construction Equipment
www.volvo.com

Ref. No. VOE21A9920175 English
CPN 43931005
Printed in USA 2007-09 CST
Volvo, Shippensburg