RUTHZIL TRATOR COMERCIAL DE PEÇAS LTDA 11 97083-6812 ROLANDO CITRANGULO

VOLVO

SD70TF SD77TF

Legal Statement

This manual and its contents are produced and maintained by Volvo Construction Equipment in accordance with an agreement with Ingersoll-Rand regarding the depiction and use of its exclusive trademarks in support of equipment originally manufactured under the Ingersoll-Rand brand. Volvo Construction Equipment is fully responsible for the maintenance and accuracy of the information contained in this manual as it relates to applications for the referenced equipment manufactured exclusively under the Ingersoll-Rand brand.

HOW TO USE THIS MANUAL

This Parts Manual applies to all SD-70/77TF Vibratory Compactors - Effective with S/N 176756

When the Comm. # is <u>not</u> Known - Use the Word Index:

- Volvo's Word Index will make this item easy to locate. The Word Index is found in the very back of the book. The items listed are in alphabetical order and may be repeated several times depending on their functional descriptions.

- Let's assume you need to replace the AIR CLEANER PRIMARY FILTER ELEMENT.

Use any of the functional words in the item description to locate the desired item. Example: The first listing for the Air Cleaner Primary Filter Element in the **Word Index** is: Air Cleaner Primary Filter Element. The index shows the component will be found on page C-5 that is the **Parts List** page number for the Engine Assembly.

A

Adjuster A-211, D-17
Adjustment Arm A-77, A-131, A-185
Adjustment Rail D-23
Adjustment Rails D-19
Adjustment Spindle D-23
Air Cleaner C-5
Air Cleaner Bracket C-7
Air Cleaner Primary Filter Element C-5
Air Cleaner Restriction Indicator Switch E-25
Air Cleaner Safety Filter Element C-5

The item is also listed as:

Element, Air Cleaner Primary Filter
Filter Element, Air Cleaner Primary
Primary Filter Element, Air Cleaner

Using the Parts Identification Pages:

- The **PARTS IDENTIFICATION PAGES** consist of the **PARTS ILLUSTRATION** (even numbered pages) and the **PARTS LIST** (odd numbered pages).

- The **Parts Illustration** shows the assembly with its component parts identified by I**tem Numbers.**

- On the **Parts List**, the components are listed in **Item Number** order as found in the **ITEM** column. Other information provided by the **Parts List** is the **Comm. Number** which will be required to order Genuine Manufacturer Replacement Parts, a **functional description**, the **quantity** required to assemble one complete assembly, and any additional **notes/ dimensions** required to help place your parts order.

- **For the example:** The Air Cleaner Primary Filter Element is listed under the Air Cleaner (Item 9), Comm. Number 13299946, Quantity of 1.

When the Comm. # is <u>not</u> known - Use the Table of Contents:

- Turn to the **TABLE OF CONTENTS** pages in the front of this manual. These pages show the major systems of the machine divided into **FUNCTIONAL GROUPS** (identified by capital letters).
- Find the **Functional Group** that best describes the area of the machine you are interested in. For example: Engine Assembly
- See the sample **Table of Contents** shown below:

ENGINE

C

Engine Installation.....C-2
Engine Assembly.....C-4
Pump Stack Assembly.....C-8
Propulsion Pump (13197454) - Internal Breakdown.....C-12
Vibration Pump (13289947) - SD-70D/70F - Eff S/N 178653 - Internal Breakdown.....C-18
Vibration Pump (13223904) - SD-70D/70F - Prior S/N 178653 - Internal Breakdown...C-22
Vibration Pump (13304753) - SD-77DX/77F - Eff S/N 178653 - Internal Breakdown....C-26
Vibration Pump (13223912) - SD-77DX/77F Prior S/N 178653 - Internal Breakdown...C-30

Listed under the **Functional Group** of Engine are **SECTIONS** (identified by numbers that describe major repairable components of that group. Find the listing that refers to the Engine Assembly.

- Since the **Air Cleaner Primary Filter Element** is what needs to be replaced, refer to the parts listing for the Engine Assembly. The Air Cleaner used on your machine is found in **Functional Group C,** this makes up the first part of the page number. Turn to that section of the parts manual and find the parts listing on page **C-5** for the Air Cleaner **(**13299946**)**.

When the Comm. # <u>is</u> Known - Use the Numerical Index:

- If you already know the **Comm. Number** (part number) for the item required, a **NUMERICAL INDEX** is provided in the back of the manual to assist you. Look up the **Comm. Number** desired and the **Numerical Index** will show the **Functional Group, Section, and Page Number** where the item can be found.

For our Air Cleaner Primary Filter Element Example: The **Comm. Number** 13255443 is found in the **Numerical Index**, it shows that component will be found on pages **C-5** that is the Parts List page for the Engine Assembly.

TABLE OF CONTENTS
SD-70/77TF

TITLE **PAGE**

TABLE OF CONTENTS . . . . . A
STANDARD ABBREVIATIONS . . . . . F
LUBRICANTS, FILTERS, AND MANUALS . . . . . H
RECOMMENDED SERVICE PARTS . . . . . J

Section A - AXLE

AXLE INSTALLATION A-2
AXLE (13157565) - INTERNAL BREAKDOWN A-4
AXLE DRIVE MOTOR (59290114) - INTERNAL BREAKDOWN A-10
TIRE AND WHEEL ASSEMBLY A-14
HOOD INSTALLATION A-16
HOOD ASSEMBLY A-18
HOOD WITH SOUND FOAM ASSEMBLY - EU A-22
HOOD WITH SOUND SPIKES - EU A-24
PROP PIN BLOCK ASSEMBLY A-26
ROPS/FOPS INSTALLATION - EFFECTIVE WITH S/N 191508 . . . . . A-28
ROPS/FOPS INSTALLATION - PRIOR TO S/N 191508 . . . . . A-30
RETRACTABLE SEATBELT INSTALLATION A-32
SEAT BELT - OPTIONAL A-34
ROPS/HOOD BRACKET INSTALLATION A-36
HOOD DRAW LATCH INSTALLATION A-38
CAB WITH HEATER - EFFECTIVE WITH S/N 190193, INCLUDING 189806 . . . . . A-42
CAB HEATER ASSEMBLY - OPTIONAL A-44
HEATER (13237888) - INTERNAL BREAKDOWN A-48
HEATER VALVE (13200027) - INTERNAL BREAKDOWN A-50
CAB WITH HEATER AND AIR CONDITIONING - EFFECTIVE WITH S/N 190193, INCLUDING 189806 . . A-52
CAB ASSEMBLY (18000489) - INTERNAL BREAKDOWN - EFF WITH S/N 190193 INCL. 189806 . . . A-54
CAB HEATER AND AIR CONDITIONING ASSEMBLY - OPTIONAL A-68
HEATER/EVAPORATOR (13237367) - INTERNAL BREAKDOWN A-74
COMPRESSOR ASSEMBLY A-76
CONDENSOR ASSEMBLY A-78
CAB/HOOD DRAW LATCH INSTALLATION A-80
SEAT BELT INSTALLATION A-82
TILT STEERING WHEEL (CAB) A-84
PRE-CAB WITH HEATING AND AIR CONDITIONING - EFFECTIVE WITH S/N 190193, INCLUDING 189806 OPTION A-86
NO ROPS/HOOD DRAW LATCH INSTALLATION A-88
CAB WITH HEATER INSTALLATION - PRIOR TO S/N 190193, EXCLUDING 189806 - OPTIONAL . . . A-90
CAB HEATER ASSEMBLY - OPTIONAL A-94
HEATER (13237888) - INTERNAL BREAKDOWN A-98
HEATER VALVE (13200027) - INTERNAL BREAKDOWN A-100
HOOD CAB DRAW LATCH INSTALLATION A-102
CAB W/HEATER AND AIR CONDITIONING INSTL - PRIOR S/N 190193, EXCL 189806 - OPTIONAL A-106
CAB ASSEMBLY (13410956) - INTERNAL BREAKDOWN - PRIOR S/N 189996 EXCLUDING 189806 A-110
CAB GLASS ASSEMBLY A-118
CAB GLASS ASSEMBLY - LIGHT TINT - EFFECTIVE S/N 189996 AND 190031 ONLY A-120
CAB HEATER AND AIR CONDITIONING ASSEMBLY - OPTIONAL A-122
HEATER/EVAPORATOR (13237367) - INTERNAL BREAKDOWN A-128
COMPRESSOR ASSEMBLY A-130
CONDENSOR ASSEMBLY A-132
CAB/HOOD DRAW LATCH INSTALLATION A-134
SEAT BELT INSTALLATION A-136
CAB WITH HEATER INSTALLATION - EU A-138
CAB WITH HEATER ASSEMBLY A-140
CAB ASSEMBLY - EU (80793201) - INTERNAL BREAKDOWN A-142

TABLE OF CONTENTS
SD-70/77TF

TITLE **PAGE**

CAB/HOOD DRAW LATCH INSTALLATION . . . A-148
PRE-CAB WITH HEATER ASSEMBLY . . . A-150
CAB HEATER ASSEMBLY - OPTIONAL . . . A-152
HEATER (13237888) - INTERNAL BREAKDOWN . . . A-156
HEATER VALVE (13200027) - INTERNAL BREAKDOWN . . . A-158
NO ROPS/HOOD DRAW LATCH INSTALLATION . . . A-160
CAB WITH HEAT AND AIR CONDITIONING INSTALLATION - EU . . . A-162
CAB WITH HEATER AND AIR CONDITIONING ASSEMBLY - EU . . . A-164
CAB ASSEMBLY - EU (80793201) - INTERNAL BREAKDOWN . . . A-166
CAB/HOOD DRAW LATCH INSTALLATION . . . A-172
PRE-CAB WITH HEAT AND AIR CONDITIONING ASSEMBLY - EU . . . A-174
CAB HEATER AND AIR CONDITIONING ASSEMBLY - OPTIONAL . . . A-176
HEATER/EVAPORATOR (13237367) - INTERNAL BREAKDOWN . . . A-182
COMPRESSOR ASSEMBLY . . . A-184
CONDENSOR ASSEMBLY . . . A-186
HEATER VALVE (13200027) - INTERNAL BREAKDOWN . . . A-188
ROPS/FOPS INSTALLATION - EU . . . A-190
RETRACTABLE SEATBELT INSTALLATION . . . A-192
ROPS/HOOD BRACKET INSTALLATION . . . A-194
PRE-ROPS INSTALLATION - EU . . . A-196
VANDAL COVER INSTALLATION - EFFECTIVE WITH S/N 180465 . . . A-200
VANDAL COVER INSTALLATION - PRIOR TO S/N 180465 - OPTIONAL . . . A-202
FIRE EXTINGUISHER MOUNTING PLATE INSTALLATION - OPTIONAL . . . A-204
FIRST AID MOUNTING INSTALLATION - OPTIONAL . . . A-206
NO ROPS INSTALLATION - SD-77DX/F - OPTIONAL . . . A-208
SEAT (54670302) - INTERNAL BREAKDOWN . . . A-210
SOUND KIT INSTALLATION - OPTIONAL . . . A-212
HOOD WITH SOUND FOAM ASSEMBLY - EU . . . A-214
HOOD WITH SOUND SPIKES - EU . . . A-216
HOOD ASSEMBLY . . . A-218
HOOD SOUND KIT WITH AIR PRECLEANER INSTALLATION - OPTIONAL . . . A-222
HOOD WITH FOAM AND PRE-CLEANER ASSEMBLY . . . A-224
HOOD WITH SOUND SPIKES AND PRE-CLEANER . . . A-226
HOOD ASSEMBLY . . . A-228

Section B - DRUM AND FRAME

FRONT FRAME INSTALLATION . . . B-2
DRUM ASSEMBLY . . . B-4
ECCENTRIC ASSEMBLY . . . B-8
CARRIER ASSEMBLY . . . B-10
VIBRATION MOTOR (13197447) - INTERNAL BREAKDOWN . . . B-12
DRUM DRIVE ASSEMBLY - EFFECTIVE WITH S/N 191508 . . . B-14
DRUM DRIVE ASSEMBLY - EFFECTIVE WITH S/N 176885 . . . B-16
DRUM DRIVE MOTOR (13360284) - INTERNAL BREAKDOWN - EFFECTIVE S/N 176885 . . . B-18
DRUM DRIVE ASSEMBLY - PRIOR TO S/N 176885 . . . B-22
DRUM DRIVE MOTOR W/BRAKE (13179122) - SD-70D/77DX - INTERNAL BREAKDOWN . . . B-24
DRUM DRIVE MOTOR W/BRAKE (13179148) - SD-77F - INTERNAL BREAKDOWN . . . B-26
REAR FRAME INSTALLATION . . . B-28
HYDRAULIC TANK ASSEMBLY . . . B-30
FUEL TANK INSTALLATION . . . B-32
FUEL TANK ASSEMBLY . . . B-34
BRAKE/SHUNT TWO-SPEED MANIFOLD ASSEMBLY . . . B-36
BRAKE/SHUNT TWO-SPEED MANIFOLD (13205133) - INTERNAL BREAKDOWN . . . B-38
THERMAL BYPASS VALVE INSTALLATION . . . B-40
RATCHET JACK (13209663) - INTERNAL BREAKDOWN . . . B-42

TABLE OF CONTENTS
SD-70/77TF

TITLE **PAGE**

MAIN FRAME INSTALLATION - EU B-44
HYDRAULIC TANK ASSEMBLY - EU B-46
BRAKE/SHUNT AND TOW VALVE ASSEMBLY B-48
BOLT-ON SHELL INSTALLATION - SD-70D - OPTIONAL. B-50
BOLT-ON SHELL SCRAPER ASSEMBLY - SD-70D - OPTIONAL. B-52
BOLT-ON SHELL INSTALLATION - SD-77DX - OPTIONAL B-54
DRUM SCRAPER INSTALLATION - SD-70D B-56
SMOOTH SCRAPER INSTALLATION - SD-70D/77DX B-58
DRUM SCRAPER INSTALLATION - SD-77F. B-60
STANDARD DRUM SCRAPER INSTALLATION - SD-70D/77DX. B-62
INSIDE SCRAPER INSTALLATION - SD-70D/SD-77DX - OPTIONAL. B-64
INSIDE SCRAPER INSTALLATION - SD-77F - OPTIONAL B-66
DRUM DRIVE W/BRAKE INSTALLATION - SD-77DX - OPTIONAL B-68
FUEL STRAINER INSTALLATION - OPTIONAL. B-70
FRONT FRAME ASSEMBLY - SD-70D/70F B-72

Section C - ENGINE

ENGINE INSTALLATION C-2
ENGINE ASSEMBLY. C-4
PUMP STACK ASSEMBLY C-8
PROPULSION PUMP (13197454) - INTERNAL BREAKDOWN. C-12
VIBRATION PUMP (13289947) - SD-70D/70F - EFFECTIVE WITH S/N 178653 - INTERNAL BREAKDOWN. C-18
VIBRATION PUMP (13223904) - SD-70D/70F - PRIOR S/N 178653 - INTERNAL BREAKDOWN C-22
VIBRATION PUMP (13304753) - SD-77DX/77F - EFFECTIVE WITH S/N 178653 - INTERNAL BREAKDOWN. C-26
VIBRATION PUMP (13223912) - SD-77DX/77F - PRIOR S/N 178653 - INTERNAL BREAKDOWN C-30
RADIATOR AND OIL COOLER INSTALLATION C-34
RADIATOR AND OIL COOLER ASSEMBLY C-36
EXHAUST INSTALLATION C-38
AIR PRE-CLEANER INSTALLATION - OPTIONAL. C-40
HOOD ASSEMBLY C-42
BLOCK HEATER INSTALLATION - OPTIONAL C-46
COLD START INSTALLATION - OPTIONAL C-48

Section D - OPERATORS COMPARTMENT

OPERATORS PLATFORM INSTALLATION D-2
CONTROL CONSOLE ASSEMBLY D-6
EMERGENCY STOP ASSEMBLY D-8
FUSE COVER ASSEMBLY. D-10
PEDESTAL AND SEAT INSTALLATION - SD-70D/F. D-12
PEDESTAL AND SEAT INSTALLATION - SD-77DX/F D-14
SEAT (54670302) - SD-70D/70F - INTERNAL BREAKDOWN D-16
SEAT (54655360) - INTERNAL BREAKDOWN. D-18
PEDESTAL ASSEMBLY - EFFECTIVE WITH S/N 194400 - SD-70D/70F D-24
PEDESTAL ASSEMBLY - PRIOR TO S/N 194400 - SD-70D/70F D-26
PEDESTAL ASSEMBLY - SD-77DX/77F D-28
GAUGE PANEL ASSEMBLY D-30
GAUGE INSTALLATION - OPTIONAL D-32
SUSPENSION SEAT INSTALLATION - SD-70D/70F - OPTIONAL D-34
SAFETY MANUAL INSTALLATION D-36
STEERING KNOB INSTALLATION - OPTIONAL D-38

TABLE OF CONTENTS
SD-70/77TF

TITLE **PAGE**

Section E - ELECTRICAL

WIRING HARNESS INSTALLATION E-2
FUSE BLOCK ASSEMBLY E-14
BATTERY INSTALLATION E-16
AUDIBLE ALARM INSTALLATION - OPTIONAL E-18
WATER TEMPERATURE GAUGE KIT E-22
AIR CLEANER RESTRICTION INDICATOR INSTALLATION - OPTIONAL E-24
POWER SOCKET INSTALLATION - OPTIONAL E-26
BEACON LIGHT INSTALLATION - OPTIONAL E-28
SPEEDOMETER/VPM METER INSTALLATION - OPTIONAL E-30
IMPACTOMETER/AUTOVIBRATION METER INSTALLATION - OPTIONAL E-32
VARIABLE FREQUENCY/DUAL AMPLITUDE INSTALLATION - OPTIONAL E-34
VIBRATION PUMP (13304753) - EFFECTIVE WITH S/N 178653 - INTERNAL BREAKDOWN E-36
VIBRATION PUMP (13223912) - PRIOR TO S/N 178653 - INTERNAL BREAKDOWN E-40
COMPACTOMETER INSTALLATION - OPTIONAL E-44
COMPACTOMETER KIT (59181735) - INTERNAL BREAKDOWN E-46
ROADLIGHT INSTALLATION - OPTIONAL E-48
RIGHT FRONT ROADLIGHT ASSEMBLY E-54
LEFT FRONT ROADLIGHT ASSEMBLY E-56
RIGHT REAR SIGNAL ASSEMBLY E-58
LEFT REAR SIGNAL ASSEMBLY E-60
INSULATED STUD ASSEMBLY E-62
WORKLIGHTS INSTALLATION - EFFECTIVE WITH S/N 194400 . . . . . E-64
WORKLIGHTS INSTALLATION - EFFECTIVE WITH S/N 191508 THRU 194399 . . . . . E-68
WORKLIGHTS INSTALLATION - PRIOR TO S/N 191508 . . . . . E-72
GPS INSTALLATION - OPTIONAL E-76
LOST STEERING PRESSURE SWITCH E-78

Section G - DECALS AND PAINT

DECAL INSTALLATION - U.S. G-2
DECAL INSTALLATION - EEC G-6

TABLE OF CONTENTS
SD-70/77TF

TITLE **PAGE**

Section H - HYDRAULICS

HOSING INSTALLATION H-2
HHYDRAULIC FILTER INSTALLATION - EFFECTIVE WITH S/N 178653 . . . . . H-14
HYDRAULIC FILTER INSTALLATION - PRIOR TO S/N 178653 . . . . . H-16
TOW VALVE INSTALLATION - OPTIONAL H-18
MANIFOLD ASSEMBLY (80817992) - INTERNAL BREAKDOWN H-20
HYDRAULIC TEST PORT INSTALLATION - OPTIONAL H-22
TRACTION ENHANCEMENT INSTALLATION - OPTIONAL H-24
TRACTION CONTROL VALVE ASSEMBLY H-28
LOOP FLUSHING VALVE ASSEMBLY H-30
LOOP FLUSHING VALVE (59077602) - INTERNAL BREAKDOWN H-32
HOSE COVER INSTALLATION - OPTIONAL H-34
LEVELING BLADE INSTALLATION - EFFECTIVE WITH S/N 176885 - OPTIONAL. H-36
LEVELING BLADE PUMP ASSEMBLY H-40
STRIKE-OFF BLADE INSTALLATION - PRIOR TO S/N 176885 - OPTIONAL H-44
STRIKE-OFF BLADE PUMP ASSEMBLY H-46
FOOT PEDAL ASSEMBLY H-48

WORD INDEX W-1
NUMERIC INDEX X-1

STANDARD ABBREVIATIONS

AC	Alternating Current
A/R	As Required
ARC	Authorized Rebuilt Component
Assy	Assembly
BHCS	Button Head Cap Screw
Cu Yd	Cubic Yard
Cyl	Cylinder
DC	Direct Current
Dia	Diameter
Eff	Effective
FHCS	Flat Head Cap Screw
F-N-R	Forward-Neutral-Reverse
FOPS	Falling Object Protection System
F/P	Fork Positioning
Gr	Grade
HHCS	Hex Head Cap Screw
HHMS	Hex Head Machine Screw
HSBHCS	Hex Socket Button Head Cap Screw
ID	Inside Diameter
LH	Left Hand
M	Metric
MIK	Maintenance Interval Kit
mm	Millimeter
Nat Asp	Naturally Aspirated
Neg	Negative
NSS	Not Sold Separately
NSVA	Non Serviceable Assembly
OD	Outside Diameter
Pos	Positive
PSI	Pounds per Square Inch
Q/A	Quick-Attach
Ref	Reference
RH	Right Hand
RHSS	Round Head SelfTapping Screw
ROPS	Roll-Over Protection System
RPM	Revolutions Per Minute
SAE	Society of Automotive Engineers
Sec	Section
SFH	Slotted Fillister Head
SHCS	Socket Head Cap Screw
SMV	Slow Moving Vehicle
S/N	Serial Number
SPST	Single Pole/Single Throw
S.T.	Self-Tapping
Std	Standard
Str	Straight
Sw S	wivel
Tach	Tachometer
Temp	Temperature
Thd	Thread
Thk	Thick
Typ	Typical
UNC	Unified Coarse
UNF	Unified Fine
Univ	Universal
Var	Variable
V	Volt
VPM	Vibrations Per Minute
Wgt	Weight
w/	With
w/o	Without
Wp	Weatherproof

Always use Manufacturer Replacement parts!

LUBRICANTS, FILTERS AND MANUALS

Lubricants, Filters and Manuals

LUBRICANTS

	1 Qt.	1 Gal.	5 Gal.	55 Gal.
Mobil DTE 15M Hydraulic Oil or equivalent ISO VG 46 VI 140(minimum) above 12°C (10°F). For temperatures below -12°C (-10°F) use Mobil SHC 624 Hydraulic Oil or equivalent ISO VG 32	n/a	n/a	59045179	59045187
Multi-Purpose Premium Engine Oil - SAE 15W-40	59022343	59023507	57022327	59022335
Premium Limited-Slip Component Lubricant	13248455	13248463	59022418	59022426
Premium Multi-Purpose ATF	13248471	13248489	59023572	59023580
Mobil SHC 630 or equivalent ISO VG 220 lubricant	13248430	13248448	59877597	59022459
Synthetic Plus Component Lubricant	13248414	13248422	59046177	59046165

FILTERS

		Quantity
Engine Oil Filter	13284716	1
Fuel Filter	13360730	1
In-line Fuel Filter	13064282	1
Charge Pressure Filter Element	58887936	1
Suction Filter Element	59764498	1
Return Filter Element	59764498	1

MANUALS

Parts Manual	43908581
Operation/Maintenance Manual	43816636
Cummins Engine Operation Manual	13308861
Cummins Engine Parts Manual	13379433
Safety Label Manual	13367792
CIMA Safety Manual	59483032

RECOMMENDED SERVICE PARTS

Recommended Service Parts

Assembly	Description	Y1 Qty	Y2 Qty	Y3 Qty	CPN
Air Cleaner					
	Air Cleaner Primary Filter Element	2	2	2	13255443
	Air Cleaner Safety Filter Element		1	1	13255450
	Dust Ejector Valve			1	35393677
	Air Pre-Cleaner	1	1		59081323
Drum					
	Shock Mount - eff with S/N 176885		6		13304787
	Shock Mount - prior to S/N 176885		4		13304787
	Swivel		1		13290879
	Bearing		2		13187877
	Pivot Pin		1		59190975
	Bearing Housing Drive			1	13184072
	Bearing Housing Spindle			1	13218177
	V-Ring Seal			1	13167390
	Drum Drive Motor - Eff S/N 176885 - All Models			1	13360284
	Drum Drive Motor - Prior to S/N 176885 - SD-70D/77DX			1	13179122
	-Drum Drive Motor Seal Kit		1		13262670
	Drum Drive Motor - Prior to S/N 176885 - SD-77F			1	13179148
	-Drum Drive Motor Seal Kit		1		13262670
	Vibration Motor			1	13197447
	Breather Filtered Vent	1	1		59093351
	Sight Gauge			1	59277772
	Magnetic Plug			1	59144428
	Hydraulic Tank Filter		1		58855099
	Spherical Roller Bearing			1	59208512
	Coupling	1	1		59613612
Electrical					
	Ignition Key	1	1	1	58917261
	Ignition Switch		1		54461090
	Vibration/Frequency Knob		1		59047019
	Speed Sensor		1		13254503

RECOMMENDED SERVICE PARTS SD-70/77TF Series (EFFECTIVE WITH S/N 176756)

Assembly	Description	Y1 Qty	Y2 Qty	Y3 Qty	CPN
	Oil Pressure Sender		1		58878000
	Beacon Lamp	1	1	1	13176797
	Water Temperature Switch		1		13406780
	Engine Oil Pressure Gauge		1		58822313
	Hydraulic Oil Temperature Gauge		1		58893983
	Hydraulic Oil Temperature Sender		1		58913856
	Speedometer Gauge		1		13179445
	Impactometer Gauge		1		13169404
	VPM Gauge		1		13179452
	Air Conditioner Switch		1		13156963
	AutoVibration Switch		1		13190772
	Battery Master Switch		1		13209648
	Emergency Stop Switch		1		59111450
	Front Wiper Switch		1		59196451
	Rear Wiper Switch		1		59196444
	Brake Test Switch	1	1	1	54666102
	Washer Switch		1		59195925
	Park Brake Switch	1	1	1	54666094
	Hi/Low Travel Switch			1	54666086
	Hi/Low RPM Switch			1	54666078
	Hi/Low Amplitude Switch			1	54666060
	Front/Rear Worklights Switch			1	13197108
	Voltmeter			1	58877796
	Fuel Level Sender			1	13213764
	Bulb, Worklights	1	1	1	13468137
Engine					
	Engine Oil Filter	2	2	2	13284716
	Fuel Filter	2	2	2	13360730
	In-Line Fuel Filter	1	1	1	13064282
	Pre-Fuel Filter	1	1	1	13360730
	Battery	1	1		54616081
	Battery Hold Down		1		19295492
	Fan Belt	1	1		13429030
	Fuel Throttle Solenoid	1	1		59009134
	Temperature Sender		1		59816322
	Drive Coupling		1		59286336
	Engine Mount		1		59097162

Assembly	Description	Y1 Qty	Y2 Qty	Y3 Qty	CPN
	Oil Pressure Switch		1		13491691
	Muffler			1	13188438
	Muffler Clamp			2	59179218
	Radiator Hose, Bottom			1	13251707
	Radiator Hose, Top			1	13168851
	Starter			1	13360516
	Alternator			1	54726948
Frame					
	Axle Drive Motor			1	59290114
	Fuel Cap		1		13213574
	Striker		1		13284500
Hydraulics					
	Vibration Pump - SD-70D/70F - Effective with S/N 178653			1	13289947
	Vibration Pump - SD-70D/70F - Prior to S/N 178653			1	13223904
	Vibration Pump - SD-77DX/77F - Effective with S/N 178653			1	13304753
	Vibration Pump - SD-77DX/77F - Prior to S/N 178653			1	13223912
	Steering Pump			1	58858820
	Steering Pump Seal Kit		1		58898677
	Propulsion Pump			1	13197454
	Steering Valve			1	13218987
	Steering Valve Seal Kit		1		54747340
	Traction Control Valve			1	13165659
	Loop Flushing Valve			1	59077602
	Charge Pressure Filter Element	2	2	2	58887936
	Suction Filter Element	2	2	2	59764498
	Return Filter Element	2	2	2	59764498
Pedestal Assembly					
	Instrument Panel			1	13309521
	Horn	1	1	1	13469010
	Horn Button	1	1		59159558
	Washer Bottle Cap			1	13228242
	Spinner Kit			1	59199141
	FSR Control	1	1		13289921

RECOMMENDED SERVICE PARTS SD-70/77TF Series (EFFECTIVE WITH S/N 176756)

Assembly	Description	Y1 Qty	Y2 Qty	Y3 Qty	CPN
	Top Dust Boot			1	59108100
	Bottom Dust Boot			1	59108605
Miscellaneous					
	Seat Belt			1	59227561
	Battery Cable (Positive)			1	13463393
	Cable (Ground)			1	13207758
Rear Wheels					
	Valve Caps	2	2	2	59929711
	Air Valve		2	2	59524447
Kits					
	SD-70/77TF Decal Kit		1		13227087
	Vibration Pump Seal Kit			1	58813791
	Drum Drive Motor Seal Kit - Eff S/N 176885		1		13462205
Audible Alarm					
	Audible Alarm			1	58870924
	Water Switch			1	59636738
Air Cleaner Restriction Switch					
	Air Cleaner Restriction Switch			1	59873984
Cab with Heater (and Air Conditioning)					
	Heater Valve		1		13200027
Block Heater					
	Block Heater			1	59118521
Strike-Off Blade					
	Strike-off Blade Cylinder			1	59195008
	Seal Kit			1	59221309
	Dump Switch			1	58788852

+ Designates parts that are to be replaced within the specified time intervals as stated in the

maintenance schedule.

LUBRICANTS

	1 Qt.	1 Gal.	5 Gal.	55 Gal.
Mobil DTE 15M Hydraulic Oil or equivalent ISO VG 46 VI 140(minimum) above 12°C (10°F). For temperatures below -12°C (-10°F) use Mobil SHC 624 Hydraulic Oil or equivalent ISO VG 32	n/a	n/a	59045179	59045187
Multi-Purpose Premium Engine Oil - SAE 15W-40	59022343	59023507	57022327	59022335
Premium Limited-Slip Component Lubricant	13248455	13248463	59022418	59022426
Premium Multi-Purpose ATF	13248471	13248489	59023572	59023580
Mobil SHC 630 or equivalent ISO VG 220 lubricant	13248430	13248448	59877597	59022459
Synthetic Plus Component Lubricant	13248414	13248422	59046177	59046165

O

Section A - AXLE

AXLE INSTALLATION

Dwg 13217567/0c

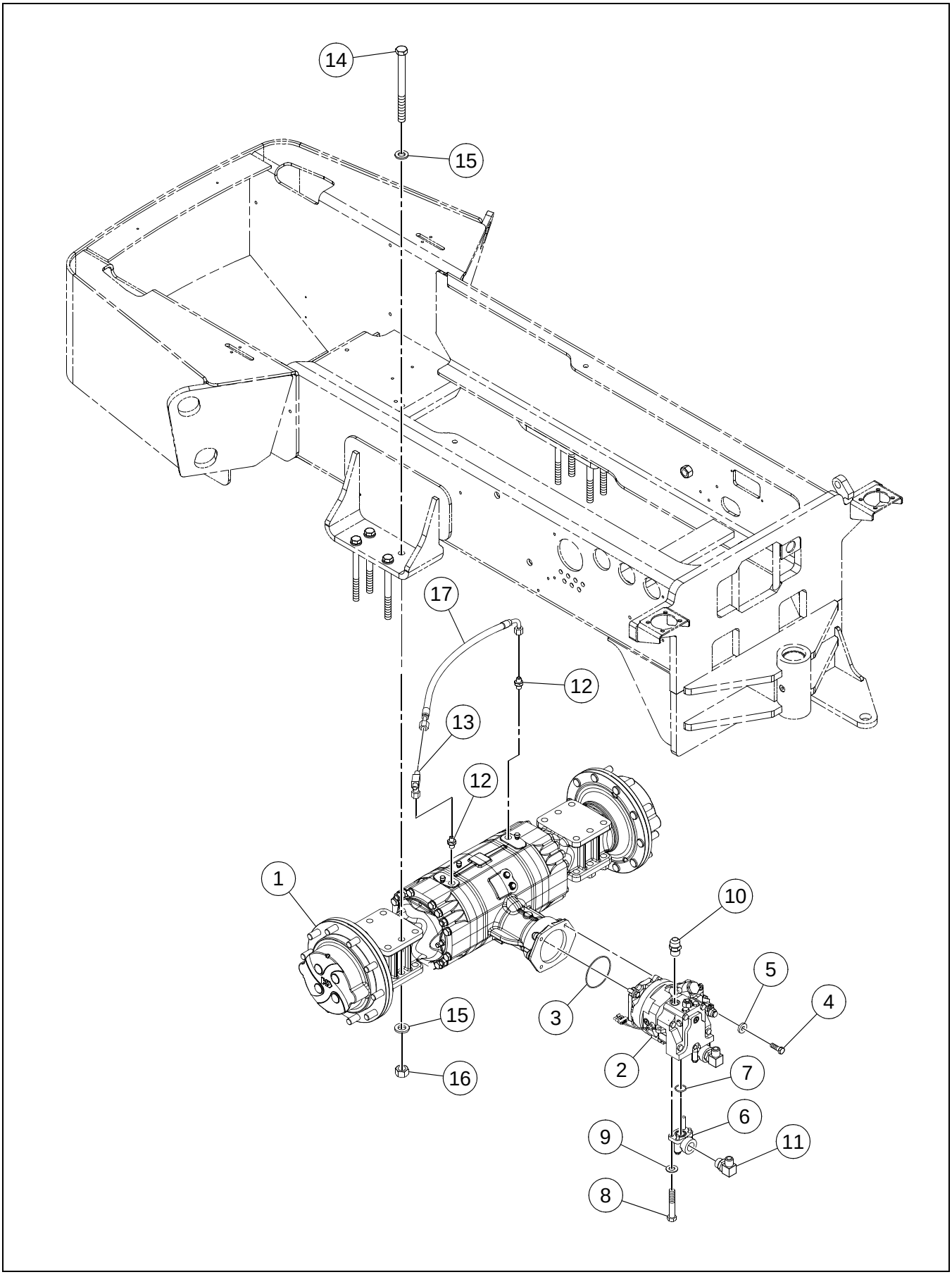

BOM 13175781

ITEM	COMM. NO.	DESCRIPTION	QTY	DIMENSIONS/NOTES
1	**13157565**	**Axle**	**1**	**See Breakdown A - 4.**
-	13285598	ARC - Axle	1	
2	**59290114**	**Axle Drive Motor**	**1**	**See Breakdown A - 10.**
-	13284955	ARC - Axle Drive Motor	1	
3	90502592	O-ring	1	
4	96702329	HHCS, Fully Threaded, Zinc Plated	4	M12 x 1.75 x 35 Cl 8.8
5	96712237	Flatwasher, Zinc Plated	4	M12 Hardened Cl 10
6	58979964	Flanged Elbow	2	
7	59993881	O-ring	2	
8	96714043	HHCS, Zinc Plated	8	M12 x 1.75 x 65, Cl 8.8
9	96738596	Flatwasher, Zinc Plated	8	M12 Hardened Cl 200
10	95303392	Adapter	1	
11	59922989	Adapter	2	
12	58954694	Adapter, Straight	2	
13	95480117	Tee	2	
14	96741863	Flatwasher, Zinc Plated	8	M20 x 2.5 x 220 Cl 10.9
15	59565051	Flatwasher	16	3/4
16	96703665	Nut, Zinc Plated	8	M20 x 2.5 Cl 10
17	58896218	Hose Assembly	1	14.5"

AXLE (13157565) - INTERNAL BREAKDOWN - SHEET 1 OF 3

Dwg D13244728/01/01

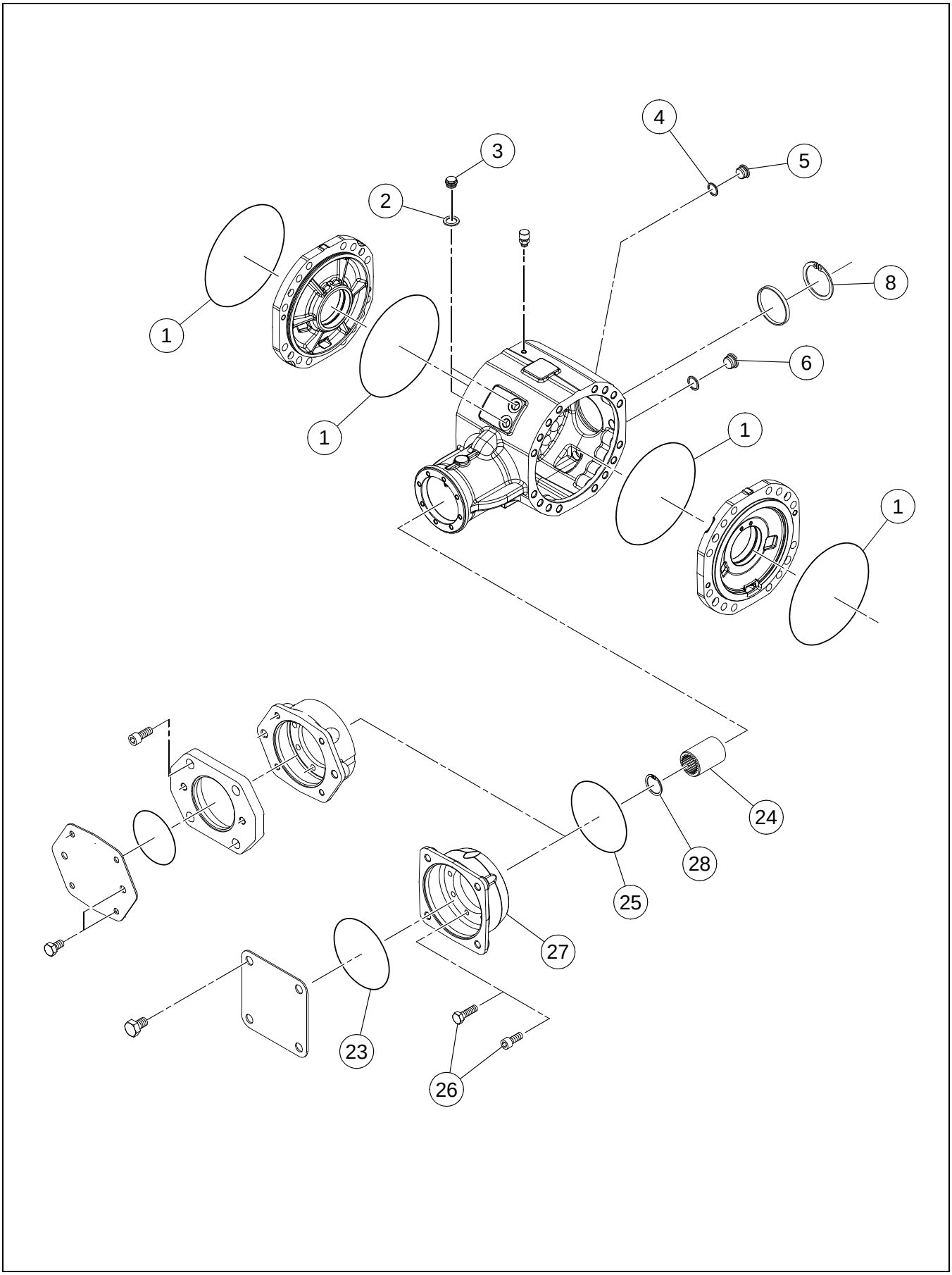

AXLE (13157565) - INTERNAL BREAKDOWN - SHEET 1 OF 3

BOM 13157565

ITEM	COMM. NO.	DESCRIPTION	QTY	DIMENSIONS/NOTES
1	13263470	O-ring	4	
2	13243753	Seal Washer	2	
3	59430694	Bolt	2	
4	59794123	Washer	1	
5	59146241	Magnetic Plug	1	
6	59794115	Plug	1	
8	59790824	Circlip	1	
23	90502592	O-ring	1	
24	13263371	Bushing	1	
25	58916628	O-ring	1	
26	90502949	Cylinder Bolt	8	
27	13266846	Adapter	1	
28	13263389	Circlip	1	

AXLE (13157565) - INTERNAL BREAKDOWN - SHEET 2 OF 3

Dwg D13244728/01/02

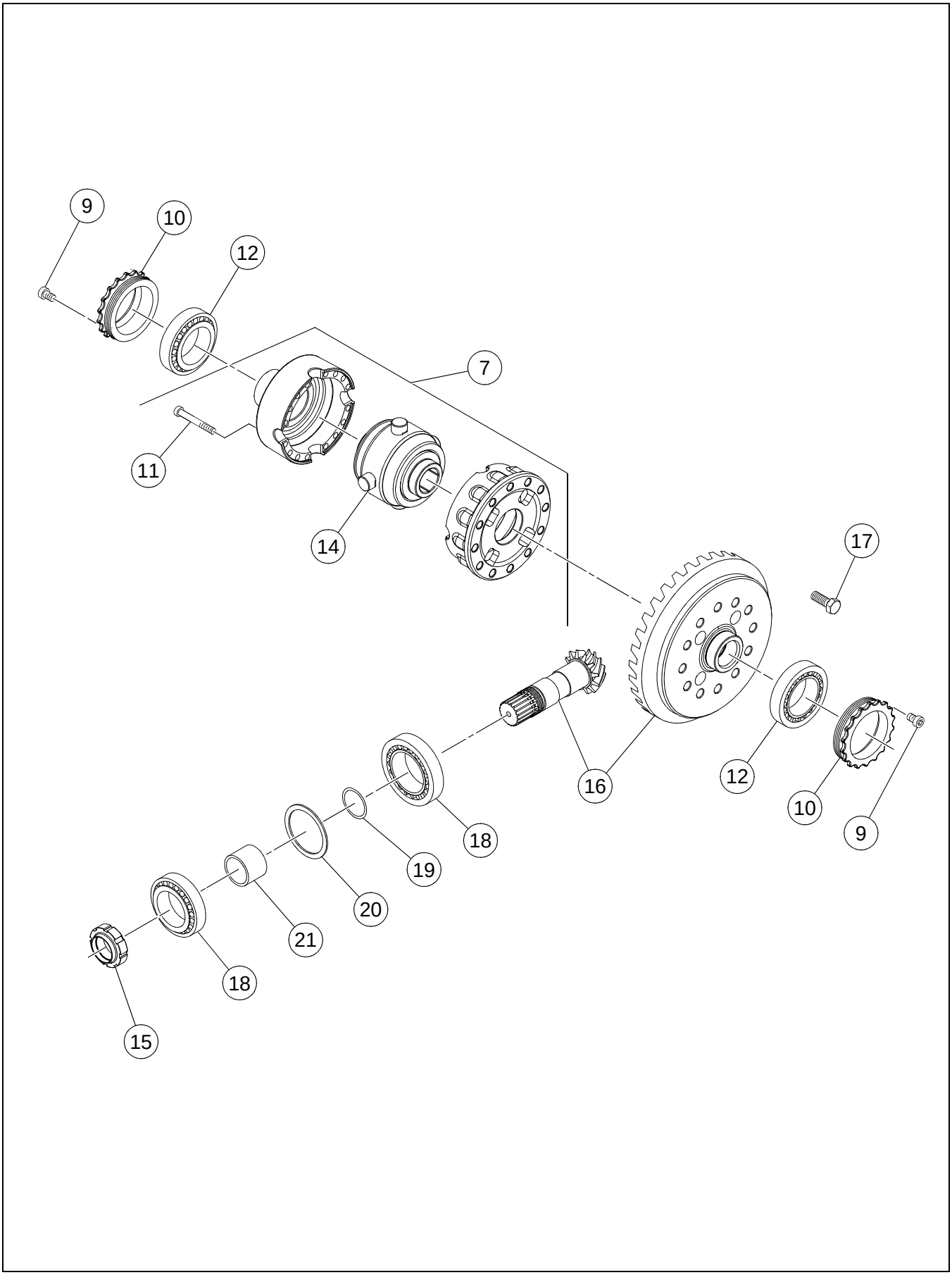

AXLE (13157565) - INTERNAL BREAKDOWN - SHEET 2 OF 3

BOM 13157565

ITEM	COMM. NO.	DESCRIPTION	QTY	DIMENSIONS/NOTES
7	13263355	Differential Kit (Includes Items 11 and 14)	1	
9	59146290	Bolt	2	
10	59146274	Nut	2	
11	13263314	Cylinder Bolt	16	
12	59793786	Bearing	2	
14	13263322	Differential	1	
15	59218321	Ring Nut	1	
16	13263330	Bevel Gear Set	1	
17	54632781	Bolt	12	
18	59769661	Bearing	2	
19	59154179	Shim	A/R	(0.15 mm)
-	59154187	Shim	A/R	(0.2 mm)
-	59794149	Shim	A/R	(0.4 mm)
-	59154195	Shim	A/R	(0.5 mm)
20	59154120	Shim	A/R	(0.2 mm)
-	59154138	Shim	A/R	(0.3 mm)
-	59154146	Shim	A/R	(0.15 mm)
-	59154153	Shim	A/R	(0.1 mm)
21	59146381	Spacer	1	

AXLE (13157565) - INTERNAL BREAKDOWN - SHEET 3 OF 3

Dwg D13244728/01/03

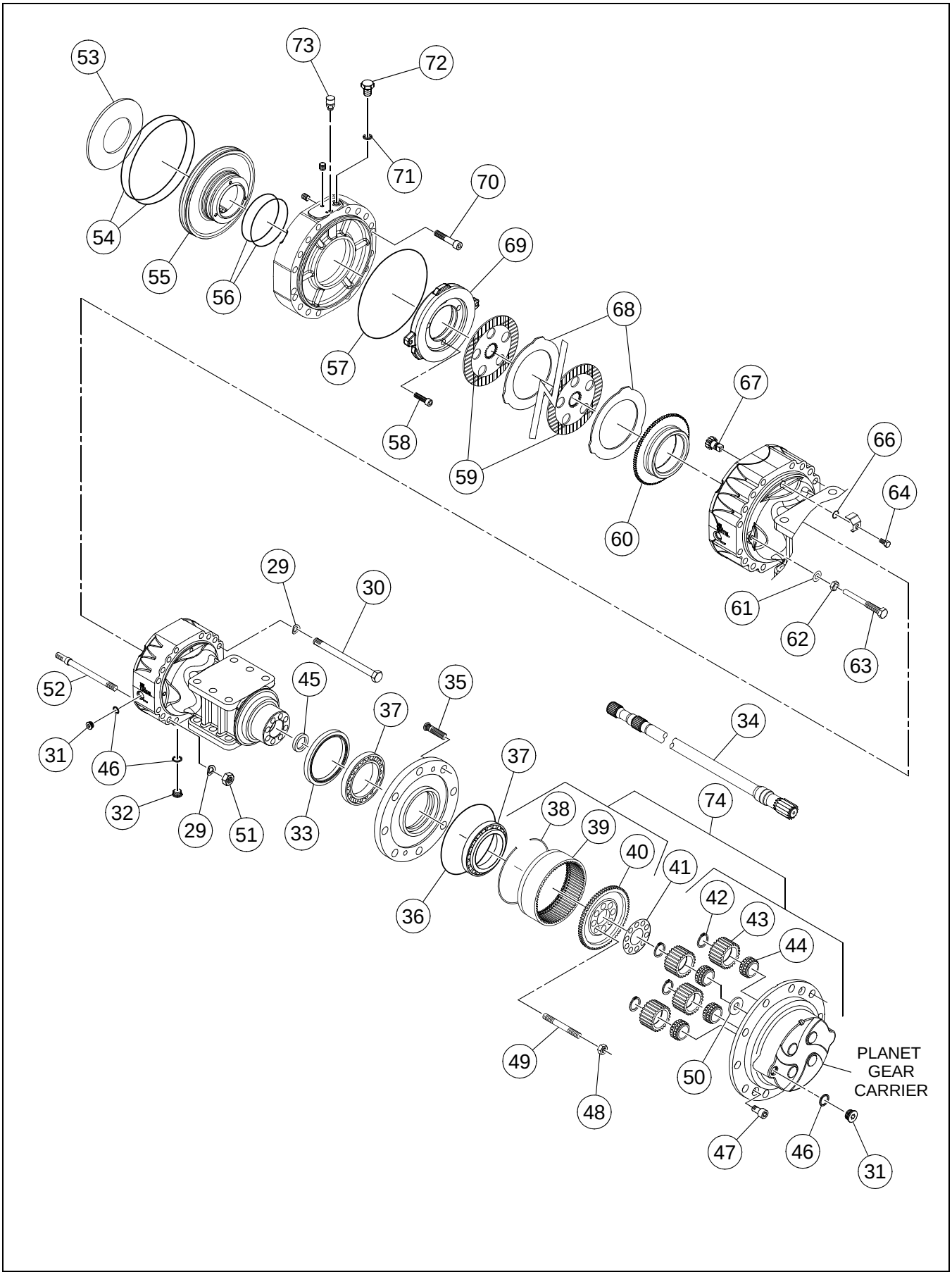

AXLE (13157565) - INTERNAL BREAKDOWN - SHEET 3 OF 3

BOM 13157565

ITEM	COMM. NO.	DESCRIPTION	QTY	DIMENSIONS/NOTES
29	13229083	Spring Washer	32	
30	13263405	Bolt	24	
31	59794115	Plug	4	
32	59146241	Plug	2	
33	59146605	Seal	2	
34	13263413	Half Shaft	2	
35	54633185	Wheel Stud	20	
36	58974155	O-ring	2	
37	59146613	Bearing	4	
38	59153627	Circlip	2	
39	59243162	Gear Ring	2	
40	59242834	Ring Gear Support	2	
41	59153650	Locking Plate	2	
42	59146654	Circlip	8	
43	59146662	Planet Gear	8	
44	59146670	Bearing	8	
45	59242842	Seal	2	
46	59794123	Washer	6	
47	59246835	Bolt	4	
48	59153619	Nut	16	
49	59153601	Stud	16	
50	59242867	Friction Washer	2	
51	13229190	Nut	8	
52	13263439	Stud	2	
53	59218461	Spring	2	
54	13263447	O-ring	4	
55	13263454	Piston	2	
56	13263462	O-ring	4	
57	13263470	O-ring	2	
58	59146282	Cylinder Bolt	6	
59	54705447	Disc Brake	8	
60	13263488	Ring	2	
61	90502816	Washer	4	
62	58917014	Nut	4	
63	13263496	Adjusting Bolt	4	
64	59793752	Bolt	2	
66	59309393	O-ring	2	
67	59309385	Pinion	2	
68	59153759	Intermediate Brake Disc	8	
69	13263504	Disc	2	
70	13263512	Bolt	2	
71	59153858	Seal Washer	2	
72	59153866	Bolt	2	
73	59146233	Vent	2	
74	13247416	Carrier Gear Kit (Includes Items 38 thru 44)	2	

AXLE DRIVE MOTOR (59290114) - INTERNAL BREAKDOWN - SHEET 1 OF 2

Dwg D13244868/01/01

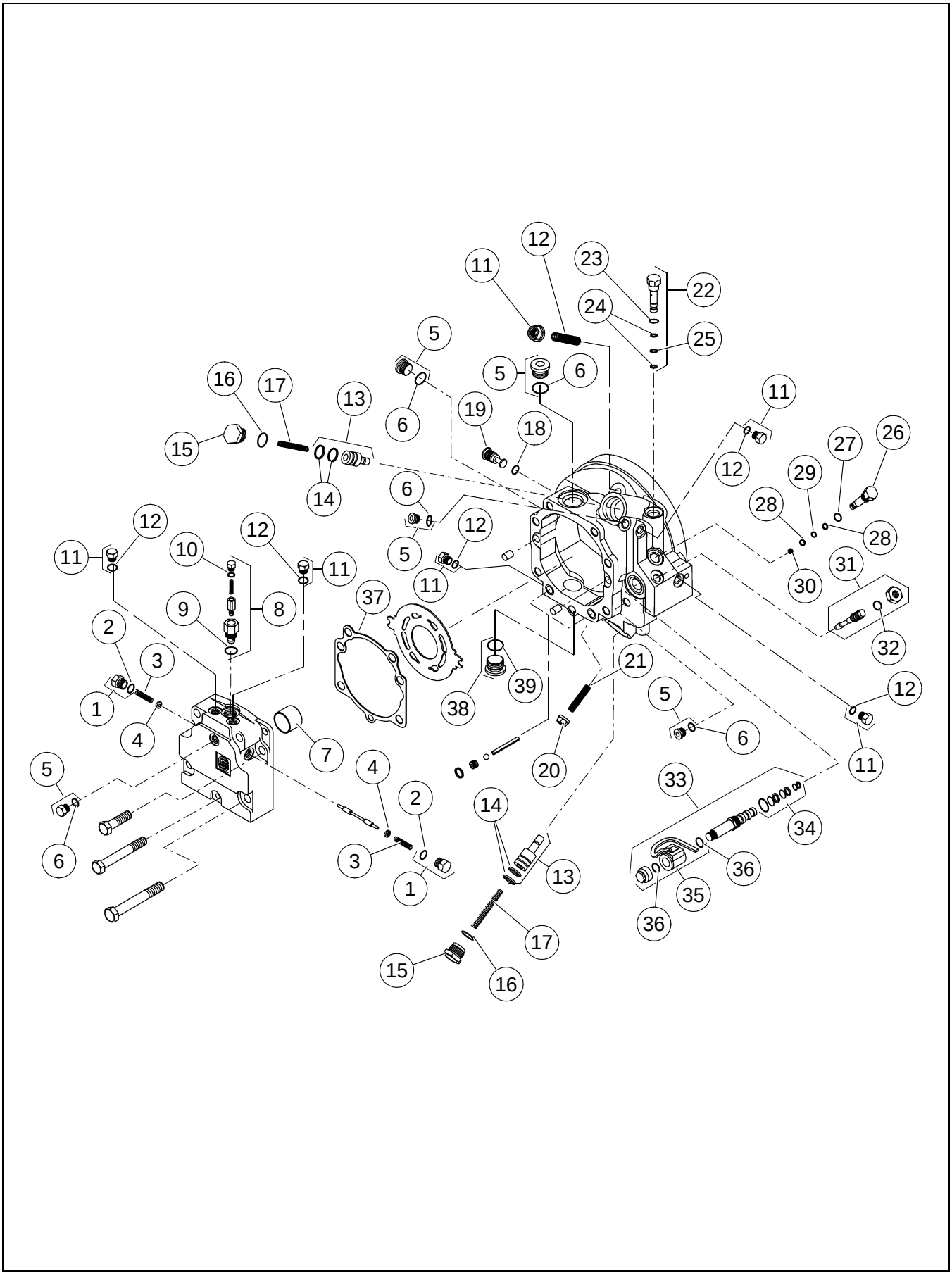

AXLE DRIVE MOTOR (59290114) - INTERNAL BREAKDOWN
- SHEET 1 OF 2

BOM 59290114

ITEM	COMM. NO.	DESCRIPTION	QTY	DIMENSIONS/NOTES
1	59249292	Plug	1	
2	59698811	- O-ring	2	
3	58799768	Compression Spring	2	
4	58799750	Spring Guide	2	
5	59933622	Plug	6	
6	50278894	- O-ring	6	
7	59368886	Journal Bearing	1	
8	13247267	Relief Cartridge	1	
9	50278019	- O-ring	1	
10	59698811	- O-ring	1	
11	59933622	Plug	5	
12	50278894	- O-ring	5	
13	58891656	Servo Piston Assembly	2	
14	13066220	- Piston Seal Ring	4	
15	58891631	Plug	2	
16	59019539	O-ring	2	
17	58891649	Spring	2	
18	59698811	O-ring	1	
19	59142018	Neutral Return Spring	1	
20	58891623	Nut Seal	1	
21	58891599	Set Screw	1	
22	58891854	Orifice Plug	1	
23	59698811	- O-ring	1	
24	58891789	- Back Up Ring	2	
25	58891797	- O-ring	1	
26		This item not used with this Assembly		
27	59698811	O-ring	1	
28	58891789	Back Up Ring	2	
29	58891797	O-ring	1	
30	58891771	Screen Filter	1	
31	59004762	Shift Rate Kit	1	
32	50278894	- O-ring	1	
33	59155739	Solenoid Valve	1	
34	59195727	- Seal Kit	1	
35	13247275	- O-ring	2	
36	13247275	- O-ring	2	
37	58891672	Gasket End Cap	1	
38	58891540	Socket Head Plug	2	
39	50278019	- O-ring	2	

AXLE DRIVE MOTOR (59290114) - INTERNAL BREAKDOWN - SHEET 2 OF 2

Dwg D13244868/01/02

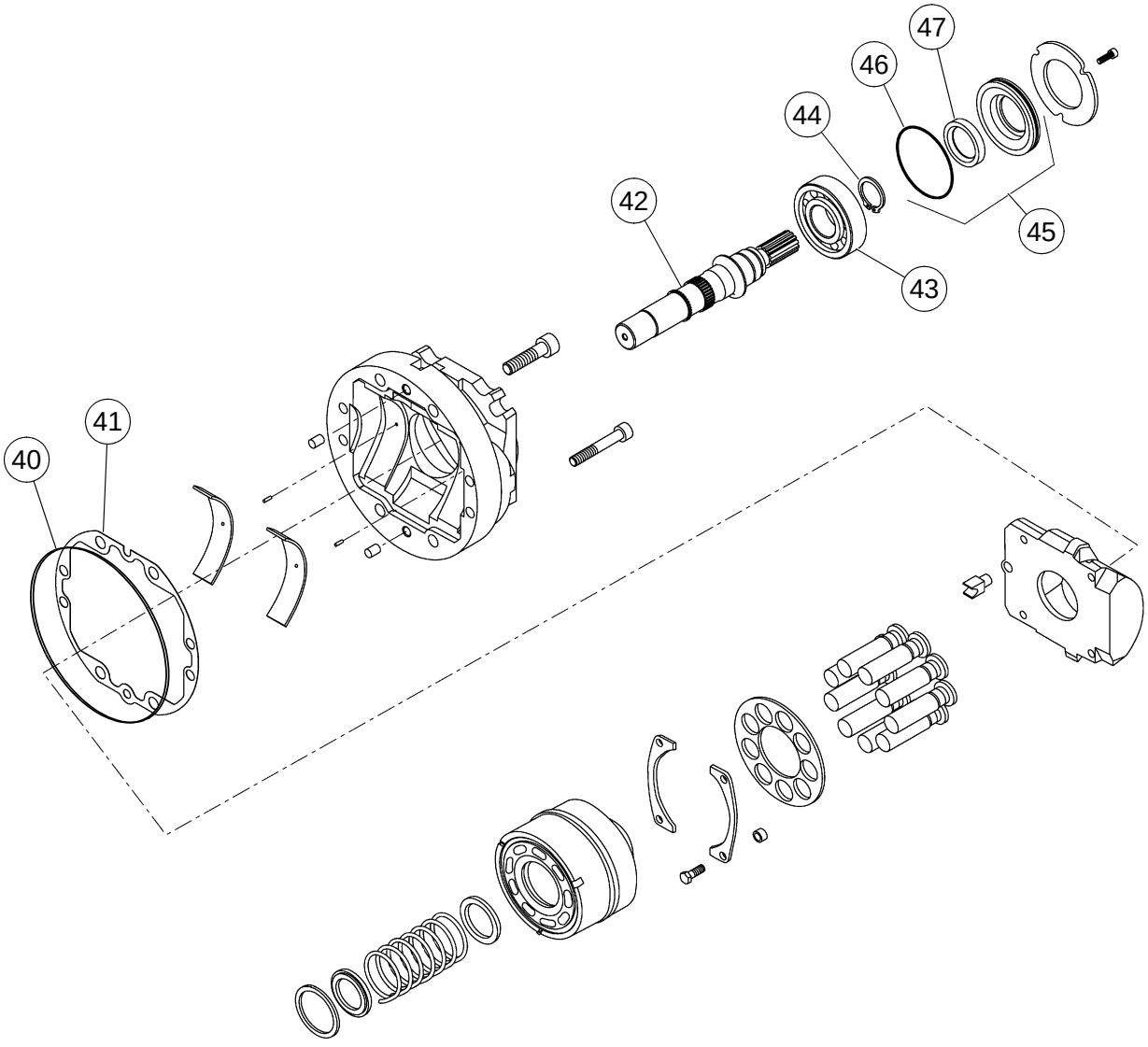

AXLE DRIVE MOTOR (59290114) - INTERNAL BREAKDOWN
- SHEET 2 OF 2

BOM 59290114

ITEM	COMM. NO.	DESCRIPTION	QTY	DIMENSIONS/NOTES
40	13247309	O-ring	1	
41	58891755	Gasket Cover	1	
42	58891805	Shaft	1	
43	59067538	Roller Bearing	1	
44	59785519	Ring	1	
45	59155192	Shaft Seal Assembly	1	
46	59368845	- O-ring	1	
47	59368837	- Seal Lip	1	

TIRE AND WHEEL ASSEMBLY

Dwg D13175294/00

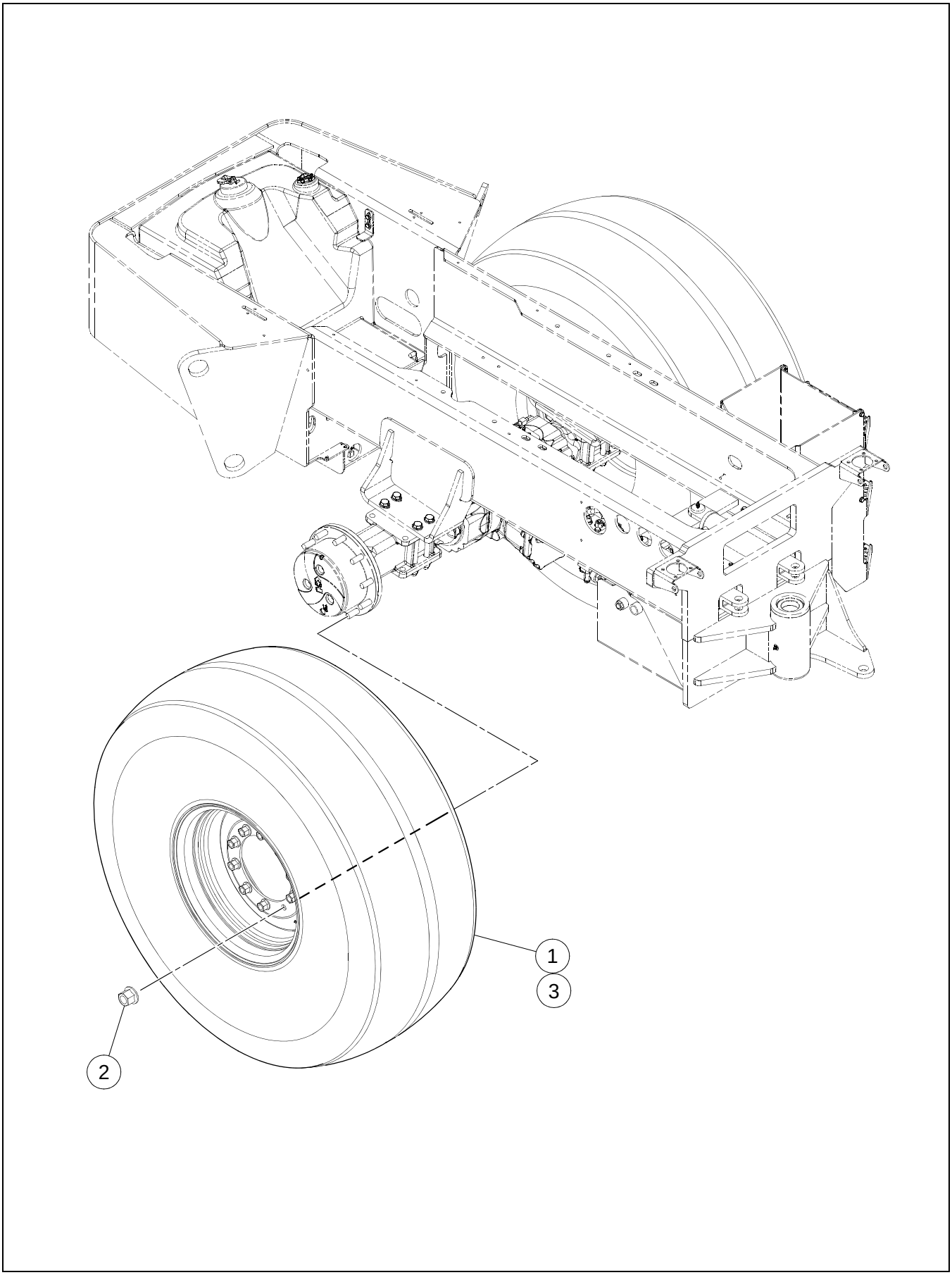

BOM 13175294

ITEM	COMM. NO.	DESCRIPTION	QTY	DIMENSIONS/NOTES
1	13187240	Tire And Wheel Assembly	2	Diamond Tread
-	13187257	- Wheel Rim	1	
-	59929711	- Valve Cap	1	
-	59524447	- Air Valve	1	
-	59626051	- Tire	1	14.9 x 24 6Ply
-	59366401	- Tire Tube	4	
-	13187398	Tire And Wheel Assembly	2	Lug Tread
-	13187257	- Wheel Rim	1	
-	59929711	- Valve Cap	1	
-	59524447	- Air Valve	1	
-	13198064	- Tire	1	14.9 x 24 8Ply
2	59163758	Wheel Nut	20	
3	59869008	Cacl 35%	90	

HOOD INSTALLATION

Dwg 43853118/00

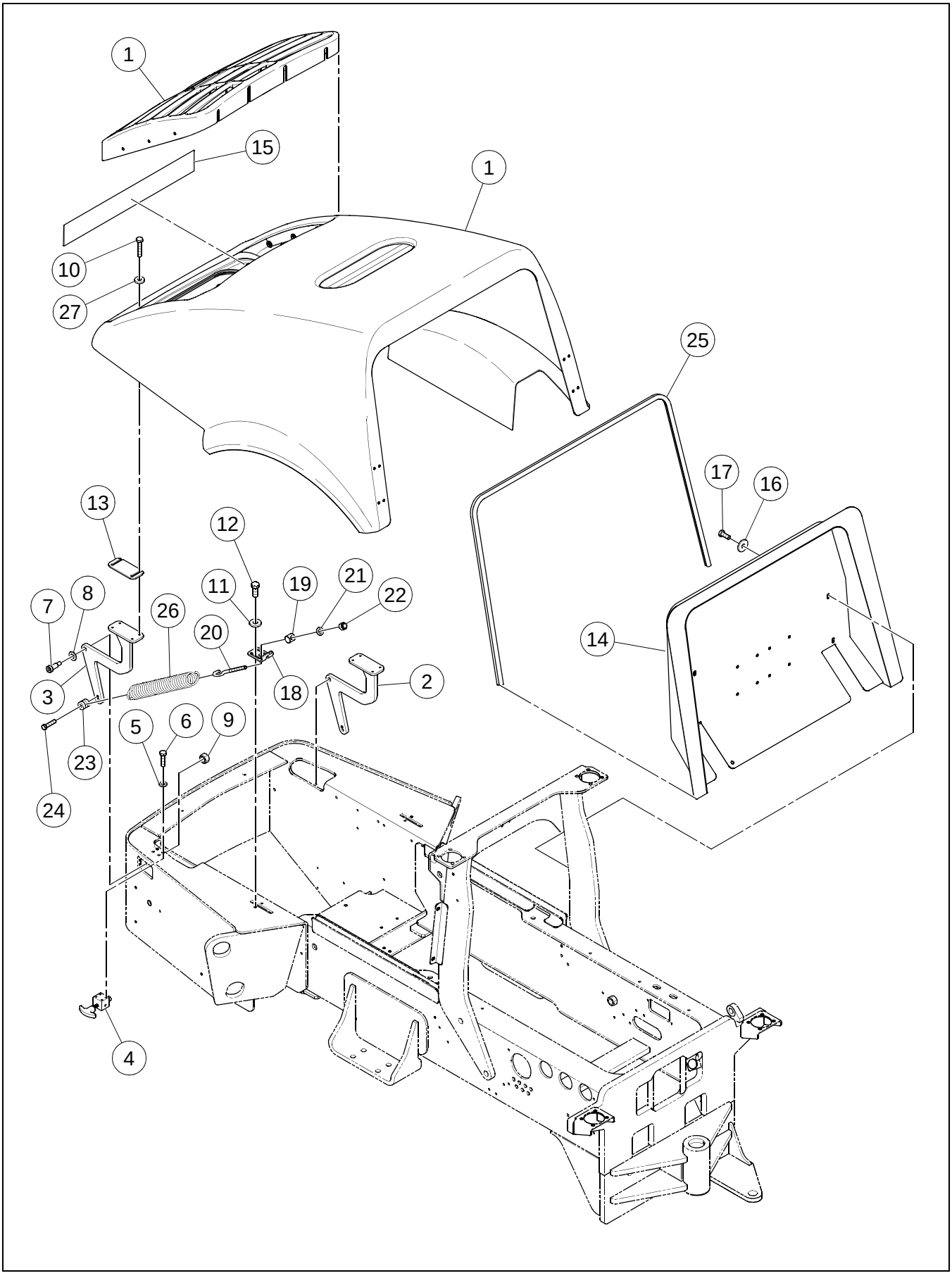

BOM 43853118, 43892322

ITEM	COMM. NO.	DESCRIPTION	QTY	DIMENSIONS/NOTES
1	**NSVA**	**Hood Assembly**	**1**	**See Page A - 18.**
-	**NSVA**	**Hood w/Sound Foam Assembly (EU)**	**1**	**See Page A - 22.**
2	13236633	Hinge, LH	1	
3	13459417	Hinge, RH	1	
4	**NSVA**	**Prop Pin Block Assembly**	**1**	**See Page A - 26.**
5	96741038	Flatwasher	4	M8
6	96705587	HHCS, Fully Threaded, Zinc Plated	4	M8 x 1.25 x 30 Cl 8.8
7	96727458	HHCS	2	M12 x 30
8	96738612	Flatwasher	2	M16 Hardened
9	96702857	Locknut	2	
10	96719786	HHCS, Zinc Plated	8	M8 x 1.25 x 40 Cl 8.8
11	96711833	Washer	4	M10
12	96702287	HHCS, Fully Threaded, Zinc Plated	4	M10 x 1.5 x 25 Cl 8.8
13	13295340	Shim	2	
14	13882618	Hood Cowling	1	
-	13882626	- Cowling Wrapper	1	
-	13882634	- Support Panel	1	
-	13217195	- Cowling Wrapper	1	
-	96703442	- Hexagon Nut	1	
-	96703459	- Nut	8	M8 x 1.25
15	13238217	Baffle Wiper	1	
16	96740188	Washer	6	M8 x 3
17	96702824	HHCS, Fully Threaded, Zinc Plated	1	M8 x 1.25 x 20 Cl 8.8
18	13184700	Angle Hood Spring	2	
19	13184742	Spring Pivot	2	
20	43850460	Eye Bolt	2	
21	96738596	Flatwasher	2	M12 Hardened
22	95923348	Locknut	2	1/2 x 13
23	13236377	Spring Pin	2	
24	96705595	HHCS, Fully Threaded, Zinc Plated	2	M12 x 1.75 x 50 Cl 8.8
25	13870936	Seal Trim	1	
26	13460365	Spring	2	
27	96712674	Washer	10	Hardened
28	13278478	Seal Angle (Not Shown)	2	
29	54487517	Self Tapping Screw (Not Shown)	6	14 x 1
30	13270632	Seal Trim (Not Shown)	2	
31	13238217	Baffle Wiper (Not Shown)	1	
32	13883418	Hood Handle (Not Shown)	1	
33	96702816	HHCS, Fully Threaded, Zinc Plated (Not Shown)	2	M8 x 1.25 x 16 Cl 8.8

HOOD ASSEMBLY - SHEET 1 OF 2

Dwg 43888155/00/01

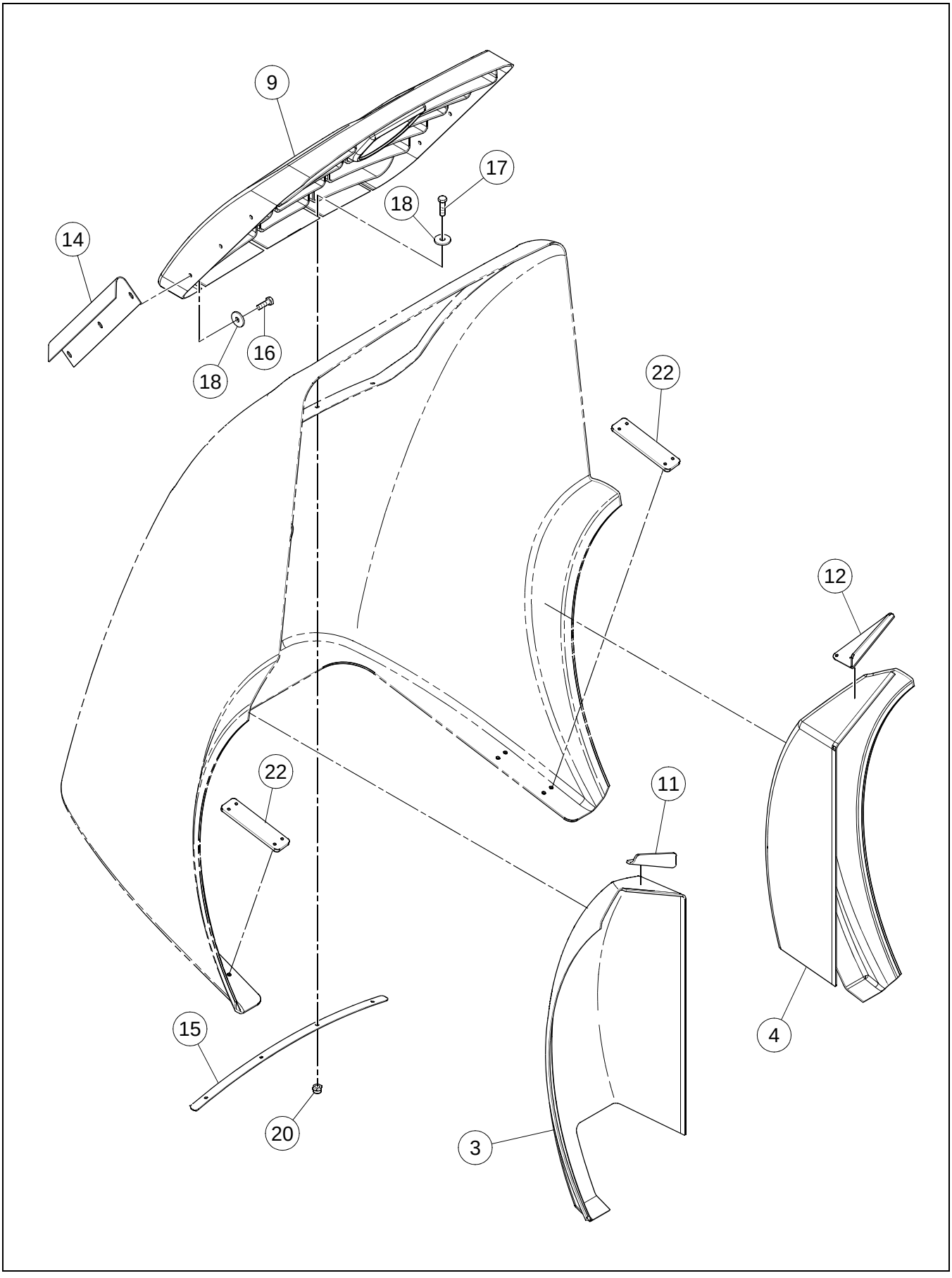

HOOD ASSEMBLY - SHEET 1 OF 2

BOM 43888155

ITEM	COMM. NO.	DESCRIPTION	QTY	DIMENSIONS/NOTES
3	13230081	Fender, LH	1	
4	13231337	Fender, RH	1	
9	13882550	Grill	1	
11	13233606	Supt Plate, LH	1	
12	13233622	Supt Plate, RH	1	
14	13889480	Grill Support Bar	2	
15	13238084	Top Grill Supt	1	
16	96702659	HHCS, Zinc Plated	6	M8 x 1.25 x 25 Cl 8.8
17	96702261	HHCS, Zinc Plated	4	M8 x 1.25 x 35 Cl 8.8
18	96740188	Washer	10	M8 x 3
20	96704606	Locknut	4	M8
22	13883442	Backing Plate	2	

HOOD ASSEMBLY - SHEET 2 OF 2

Dwg 43888155/00/02

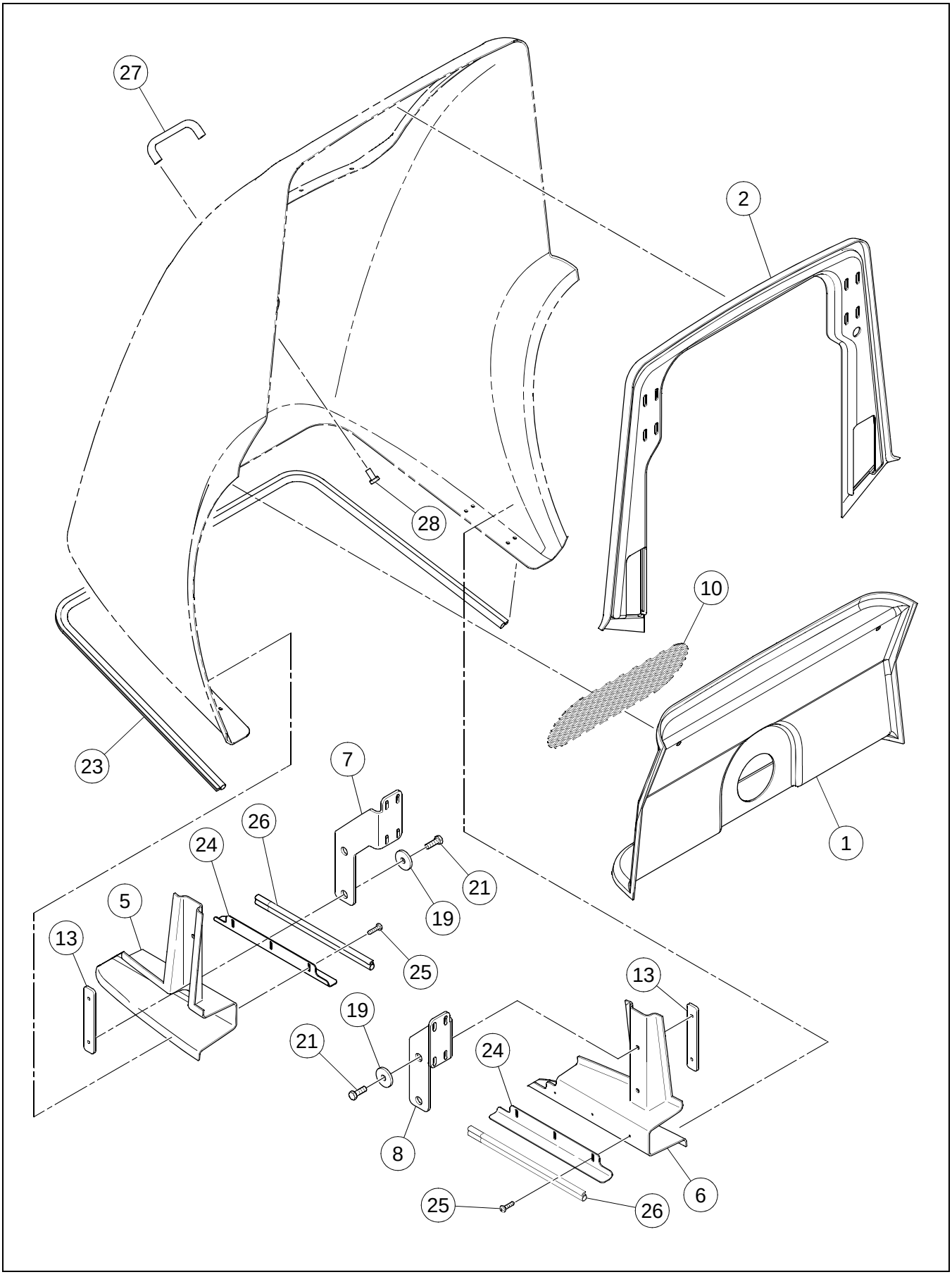

HOOD ASSEMBLY - SHEET 2 OF 2

BOM 43888155

ITEM	COMM. NO.	DESCRIPTION	QTY	DIMENSIONS/NOTES
1	13219001	Airduct	1	
2	13219019	Hood Supt Bottom	1	
5	13230602	Side Panel, LH	1	
6	13230933	Side Panel	1	
7	13230586	Hinge Supt	1	
8	13231873	Hinge Plate	1	
10	13212543	Airscreen	1	
13	13238035	Backing Plate	2	
19	50264860	Washer	4	
21	96701917	HHCS, Fully Threaded, Zinc Plated	4	M10 x 1.5 x 30 Cl 8.8
23	13883376	Seal Trim	1	
24	13278478	Seal Angle	2	
25	54487517	Tapping Screw	6	14 x 1
26	13270632	Seal Trim	2	
27	13883418	Hood Handle	1	
28	96702816	HHCS, Fully Threaded, Zinc Plated	2	M8 x 1.25 x 16 Cl 8.8

HOOD WITH SOUND FOAM ASSEMBLY - EU

Dwg 43853092/00

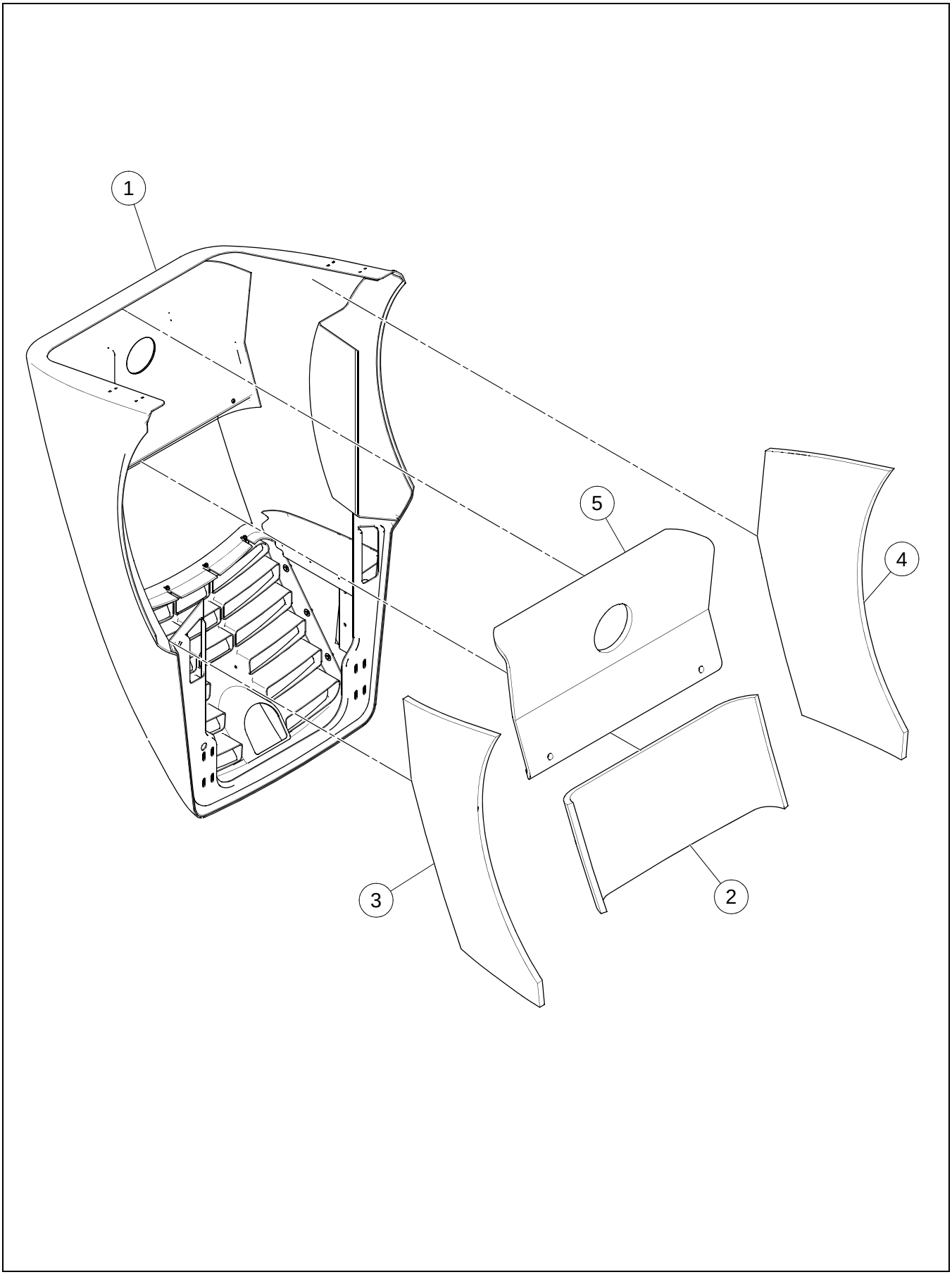

HOOD WITH SOUND FOAM ASSEMBLY - EU

BOM 43853092

ITEM	COMM. NO.	DESCRIPTION	QTY	DIMENSIONS/NOTES
1	**NSVA**	**Hood w/Sound Spikes (EU)**	**1**	**See Page A - 24.**
2	13276027	Rear Foam	1	
3	13276043	Right Foam	1	
4	13276068	Left Foam	1	
5	13276035	Top Foam	1	

HOOD WITH SOUND SPIKES - EU

Dwg 43853100/00

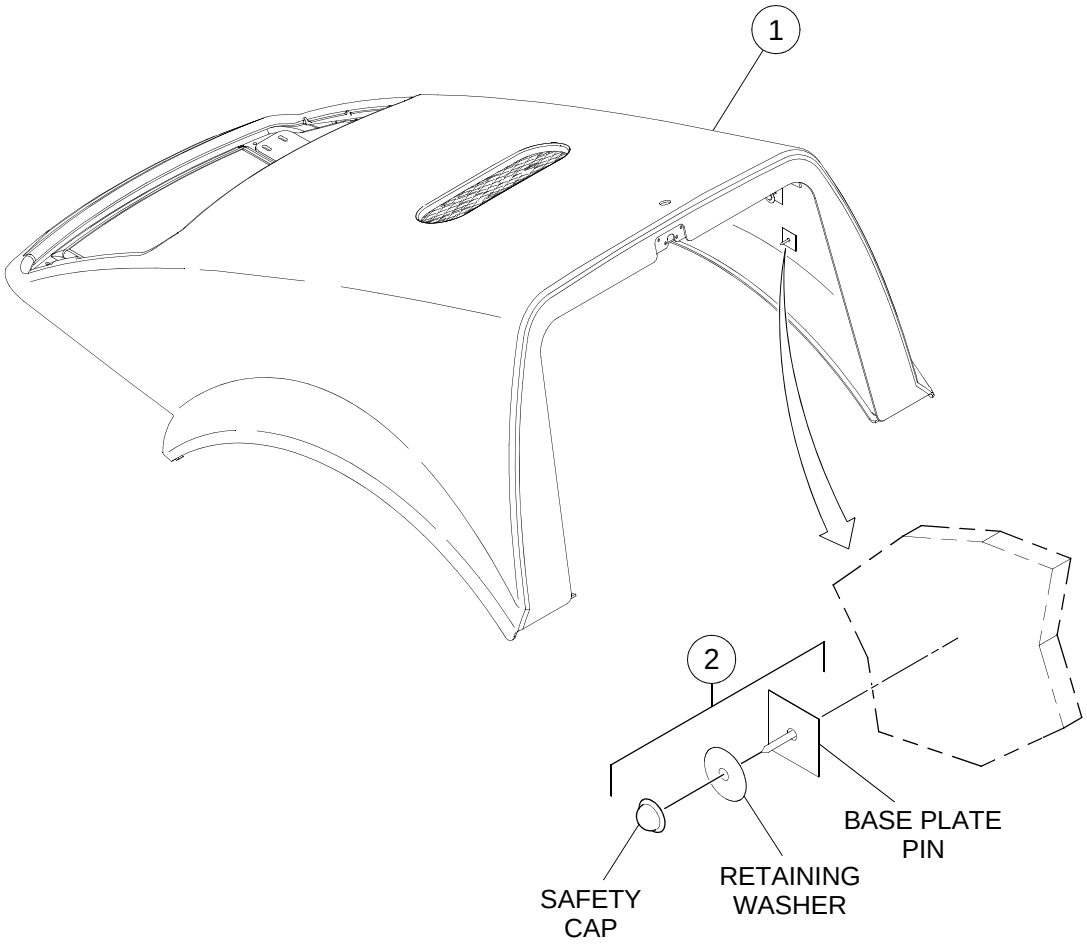

HOOD WITH SOUND SPIKES - EU

BOM 43853100

ITEM	COMM. NO.	DESCRIPTION	QTY	DIMENSIONS/NOTES
1	**NSVA**	**Hood Assembly**	**1**	**See Page A - 18.**
2	59268854	Hanger Kit	52	

PROP PIN BLOCK ASSEMBLY

Dwg 13459367/01

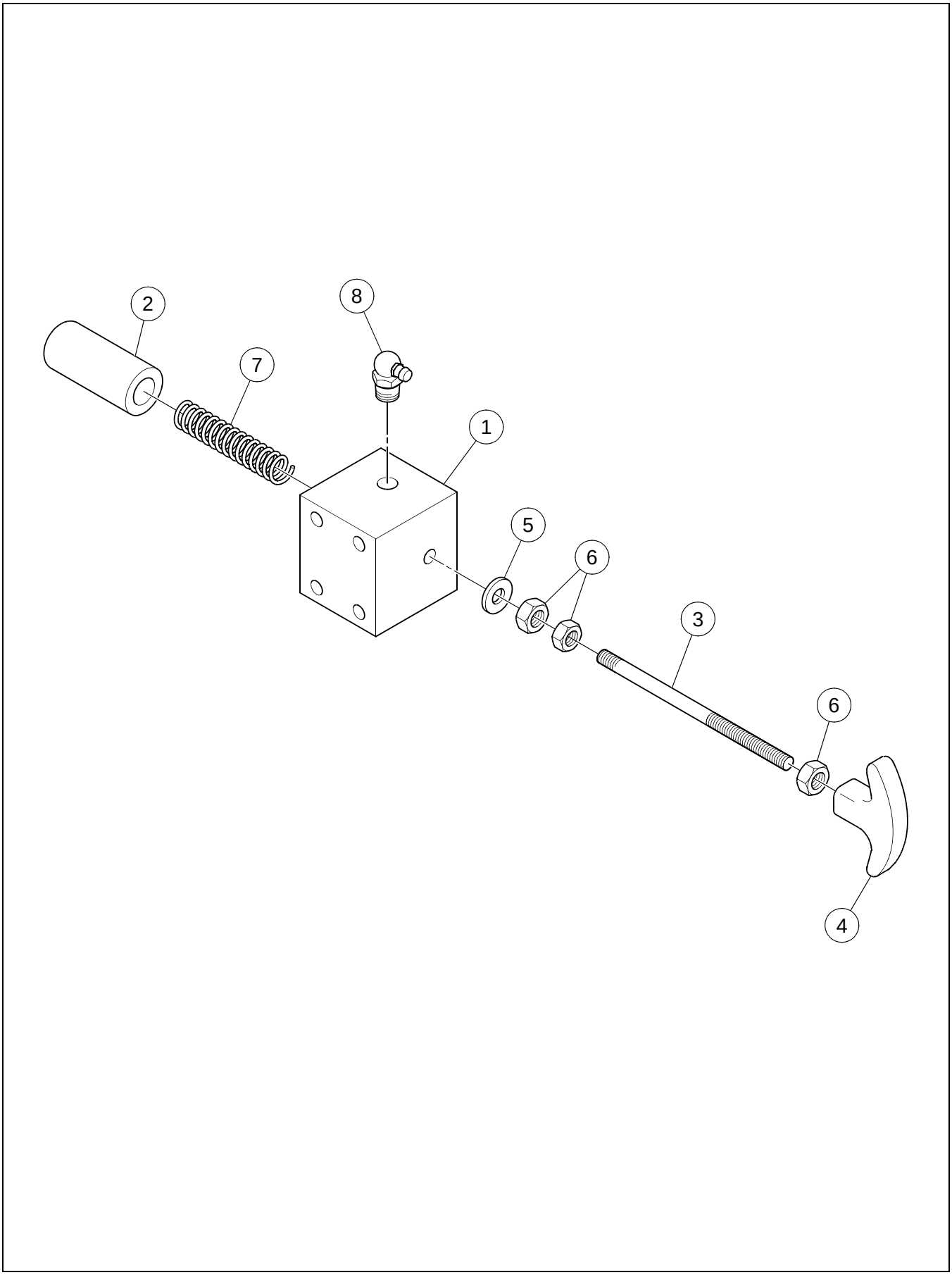

PROP PIN BLOCK ASSEMBLY

BOM 13459367

ITEM	COMM. NO.	DESCRIPTION	QTY	DIMENSIONS/NOTES
1	13459375	Prop Block	1	
2	13459383	Pin	1	
3	13459391	Rod	1	
4	13299581	T-Handle	1	
5	95922324	Flatwasher	1	1/4
6	95931564	Hex Nut	3	1/4 x 20
7	13459409	Spring	1	
8	95208971	Grease Fitting	1	

Dwg 13169842/0m

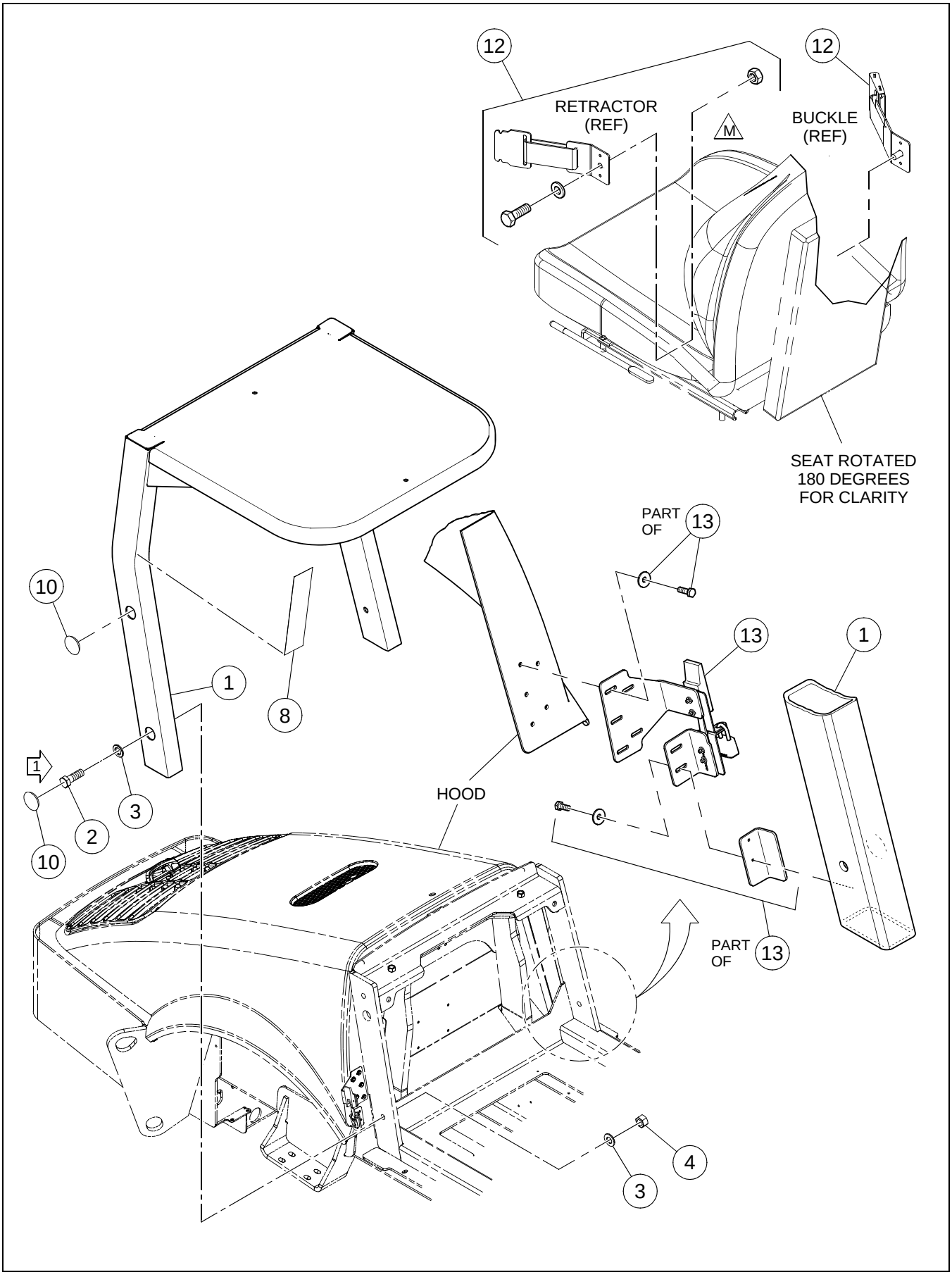

BOM 13882527

ITEM	COMM. NO.	DESCRIPTION	QTY	DIMENSIONS/NOTES
1	19297993	Rops/Fops	1	
2	96746235	HHCS, Zinc Plated	4	M24 x 3 x 70 Cl 10.9
3	96702642	Flatwasher	8	M24 Hardened
4	96727532	Hex Nut	4	M24 x 3
8	13197306	Checklist Decal	1	
10	13309877	Plug	4	
12	**NSVA**	**Retractable Seatbelt Installation**	**1**	**See Page A - 32.**
13	**NSVA**	**Rops/Hood Bracket Installation**	**1**	**See Page A - 36.**

Dwg 13169842/0k

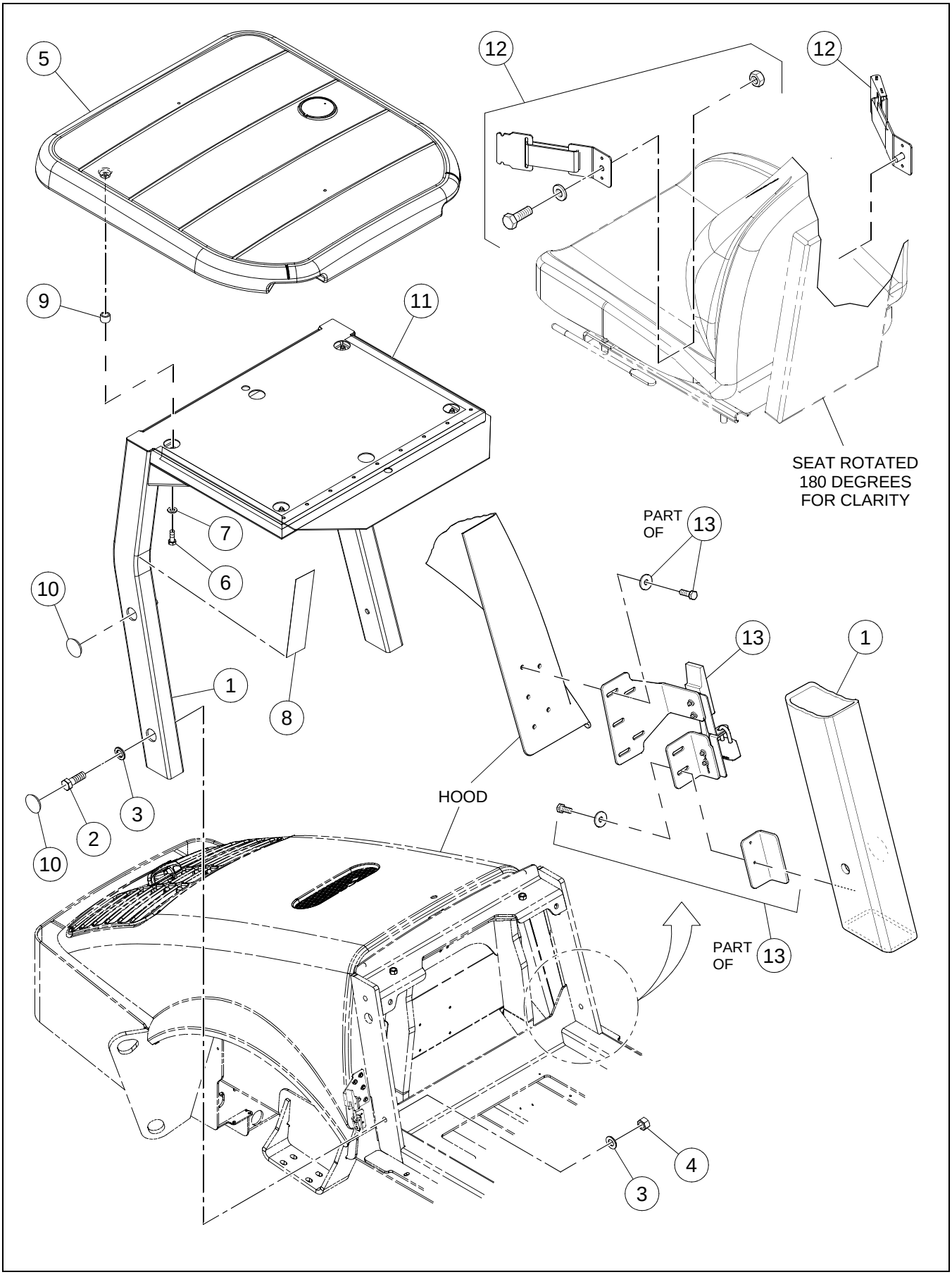

BOM 59286971

ITEM	COMM. NO.	DESCRIPTION	QTY	DIMENSIONS/NOTES
1	13234075	ROPS	1	
2	96720032	HHCS, Fully Threaded, Zinc Plated	4	M24 x 3.0 x 70 Cl 8.8
3	96702642	Washer, Zinc Plated	8	M24 Hardened
4	96727532	Hex Nut, Zinc Plated	4	M24 x 3 Cl 8
5	13233218	Roof (FOPS)	1	
6	96702444	HHCS, Fully Threaded, Zinc Plated	6	M12 x 1.75 x 40 Cl 8.8
7	96738596	Flatwasher, Zinc Plated	6	M12 Hardened Cl 200
8	13197306	Decal: Checklist	1	
9	13237219	Spacer	4	
10	13309877	Plug	4	
11	35898477	Foam Tape	5	
12	**NSVA**	**Seat Belt Option**	**1**	**See Page A - 34.**
13	**NSVA**	**Hood Draw Latch Installation**	**1**	**See Page A - 38.**

RETRACTABLE SEATBELT INSTALLATION

Dwg 43803394/00

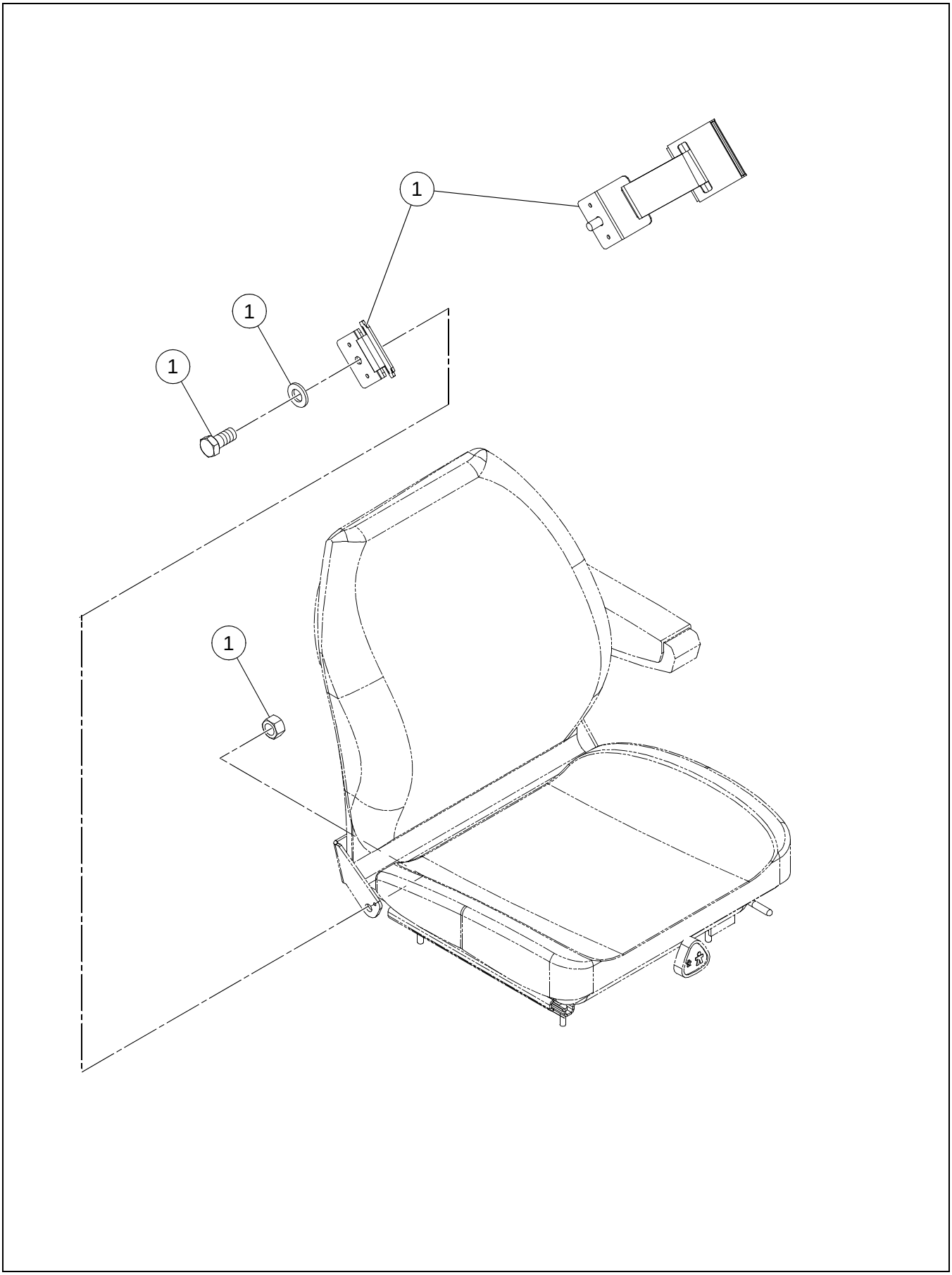

BOM 43803394

ITEM	COMM. NO.	DESCRIPTION	QTY	DIMENSIONS/NOTES
1	13342720	Retractable Seatbelt	1	

SEAT BELT - OPTIONAL

Dwg 13861869/00

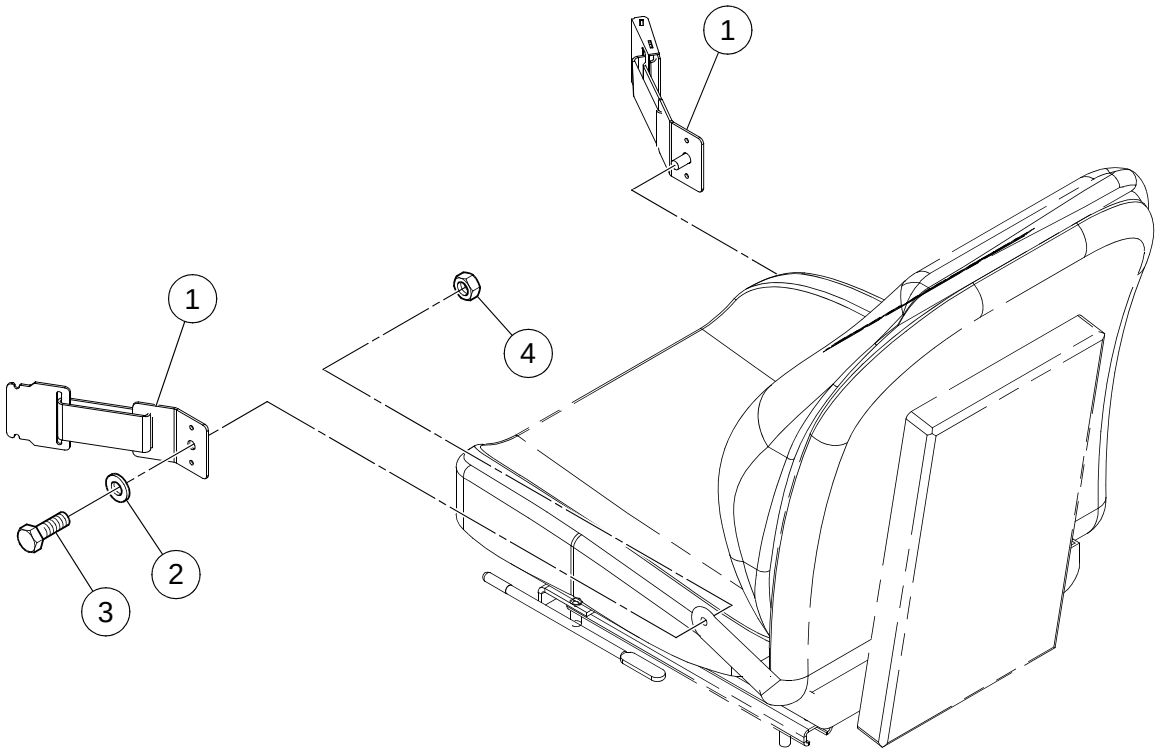

SEAT BELT - OPTIONAL

BOM 13861869

ITEM	COMM. NO.	DESCRIPTION	QTY	DIMENSIONS/NOTES
1	59227561	Seat Belt	1	
2	96738596	Flatwasher	2	M12 Hardened
3	96702790	HHCS	2	M12 x 1.75 x 25 Cl 10.9
4	96702857	Locknut	2	

ROPS/HOOD BRACKET INSTALLATION

Dwg 13883152/00

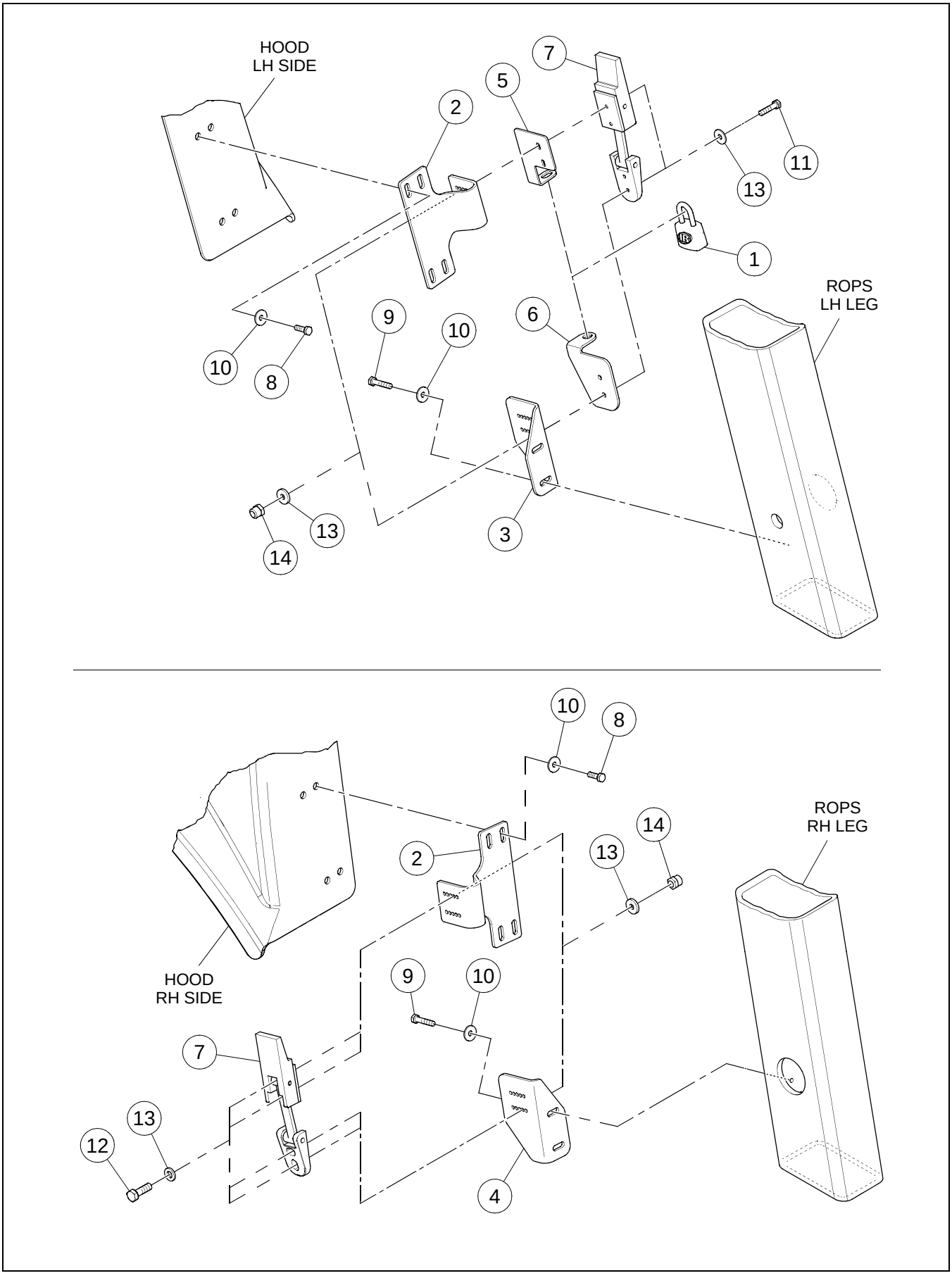

ROPS/HOOD BRACKET INSTALLATION

BOM 13883152

ITEM	COMM. NO.	DESCRIPTION	QTY	DIMENSIONS/NOTES
1	13349212	Lock	1	
2	13881545	Hood Bracket	2	
3	13881537	ROPS Bracket, LH	1	
4	13881529	ROPS Bracket, RH	1	
5	13885355	Lock Tab, RH	1	
6	59163238	Lock Tab, RH	1	
7	59162149	Latch	2	
8	96705587	HHCS, Fully Threaded, Zinc Plated	8	M8 x 1.25x30 Cl 8.8
9	96702659	HHCS, Zinc Plated	4	M8 x 1.25 x 25 Cl 8.8
10	96741038	Flatwasher	12	M8 x 16.0
11	96705736	HHCS, Fully Threaded, Zinc Plated	4	M5 x 0.8 x 20 Cl 8.8
12	96705728	HHCS, Zinc Plated	4	M5 x 0.8 x 16 Cl 8.8
13	95922332	Flatwasher	16	#10
14	96704580	Hex Locknut	8	M5

HOOD DRAW LATCH INSTALLATION - SHEET 1 OF 2

Dwg 13881651/02

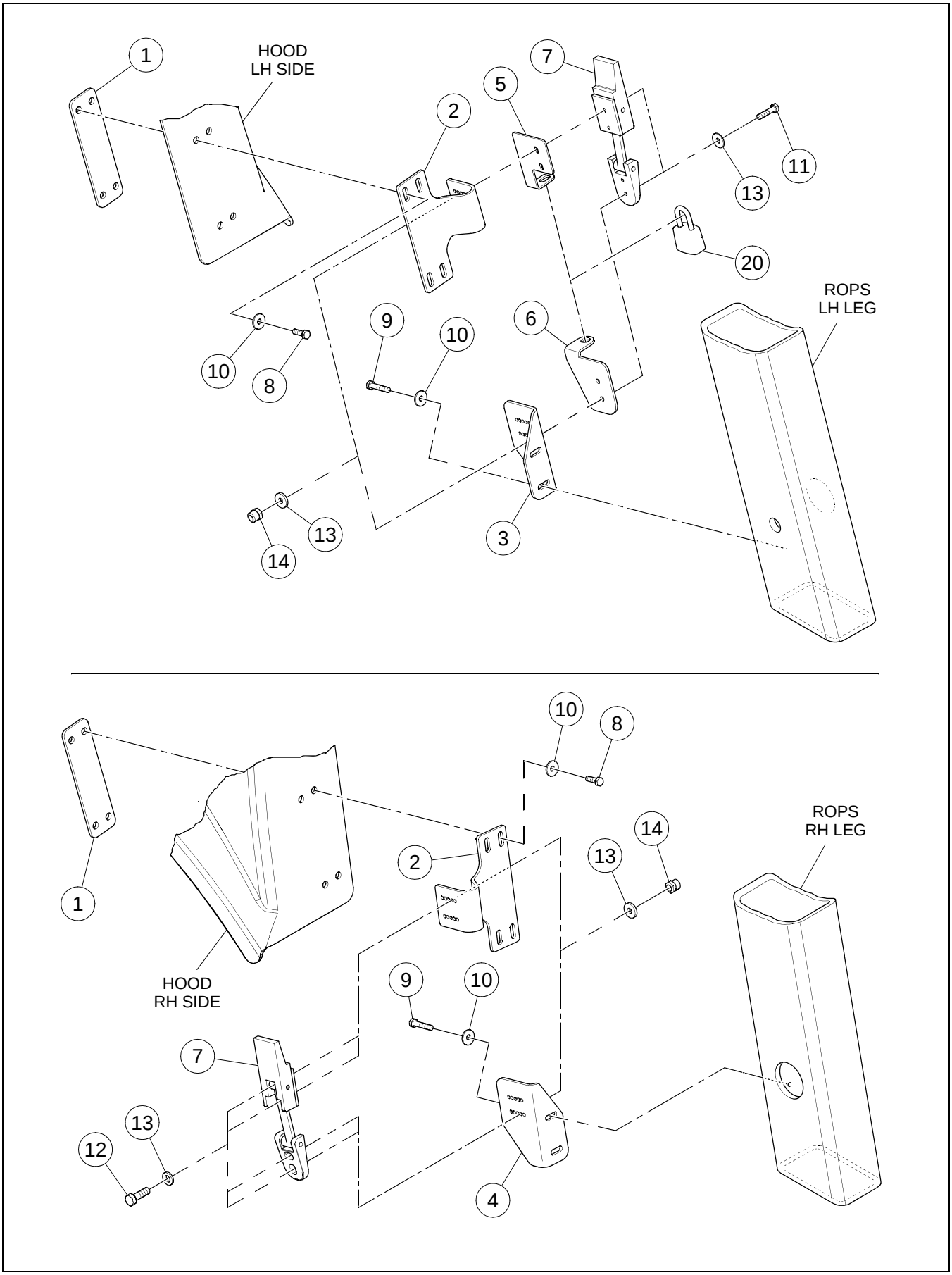

HOOD DRAW LATCH INSTALLATION - SHEET 1 OF 2

BOM 13881651

ITEM	COMM. NO.	DESCRIPTION	QTY	DIMENSIONS/NOTES
1	13881560	Backing Plate	2	
2	13881545	Hood Bracket	2	
3	13881537	ROPS Bracket, LH	1	
4	13881529	ROPS Bracket, RH	1	
5	13885355	Lock Tab, RH	1	
6	59163238	Lock Tab, RH	1	
7	59162149	Latch	2	
8	96705587	HHCS, Fully Threaded, Zinc Plated	8	M8 x 1.25 x 30 Cl 8.8
9	96702659	HHCS, Zinc Plated	4	M8 x 1.25 x 25 Cl 8.8
10	96741038	Flatwasher	12	M8
11	96705736	HHCS, Fully Threaded, Zinc Plated	4	M5 x 0.8 x 20 Cl 8.8
12	96705728	HHCS, Zinc Plated	4	M5 x 0.8 x 16 Cl 8.8
13	95922332	Flatwasher	16	#10
14	96704580	Hex Locknut	8	M5
20	13349212	Lock	1	

HOOD DRAW LATCH INSTALLATION - SHEET 2 OF 2

Dwg 13881651/02

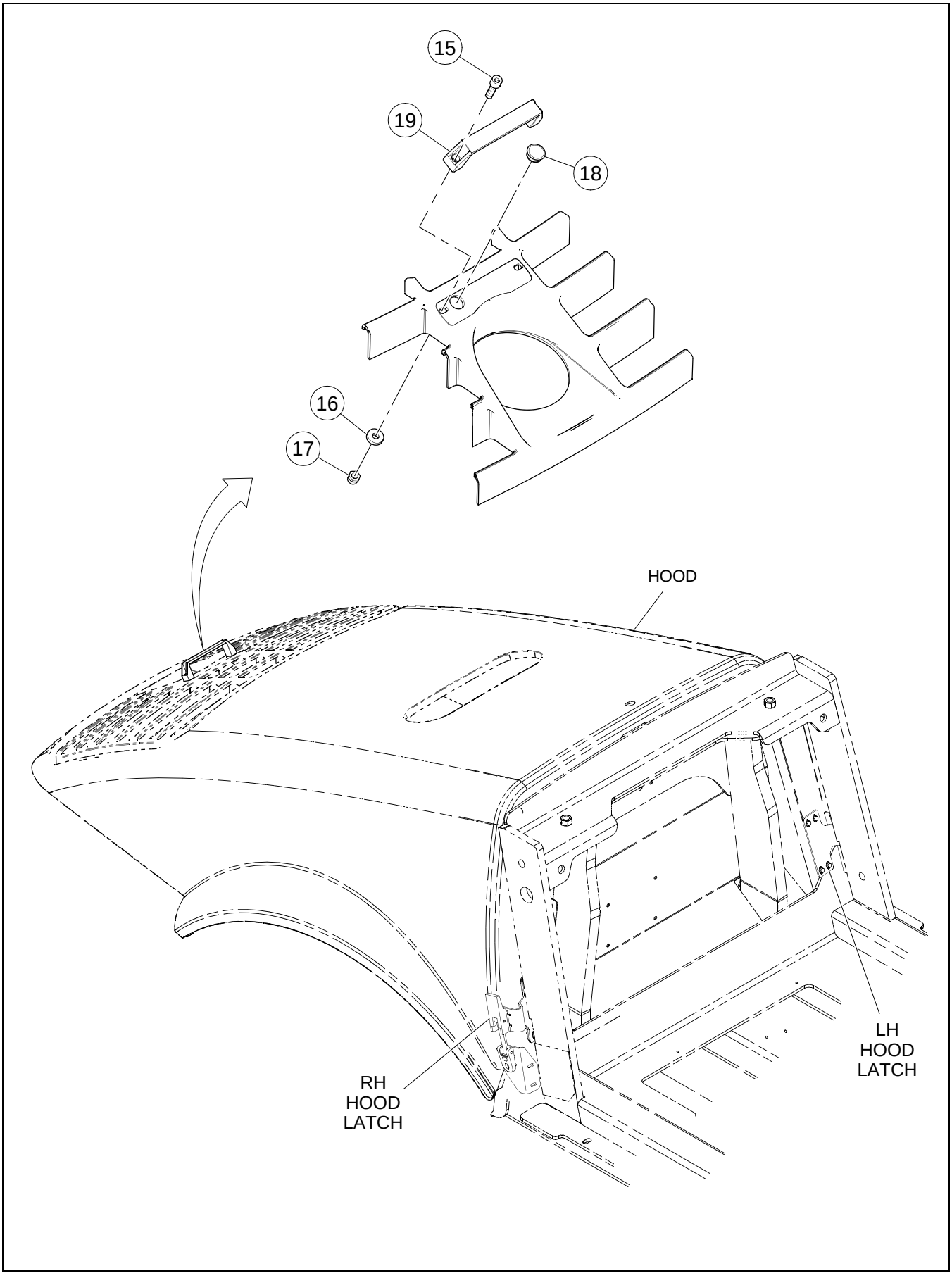

HOOD DRAW LATCH INSTALLATION - SHEET 2 OF 2

BOM 13881651

ITEM	COMM. NO.	DESCRIPTION	QTY	DIMENSIONS/NOTES
15	96702469	SHCS	2	M8 x 30
16	96712674	Washer	2	Hardened
17	96704606	Hex Locknut	2	M8
18	59876219	Head Plug	1	
19	59187799	Handle Plastic Pull	1	

CAB WITH HEATER - EFFECTIVE WITH S/N 190193, INCLUDING 189806

Dwg 19330778/0e

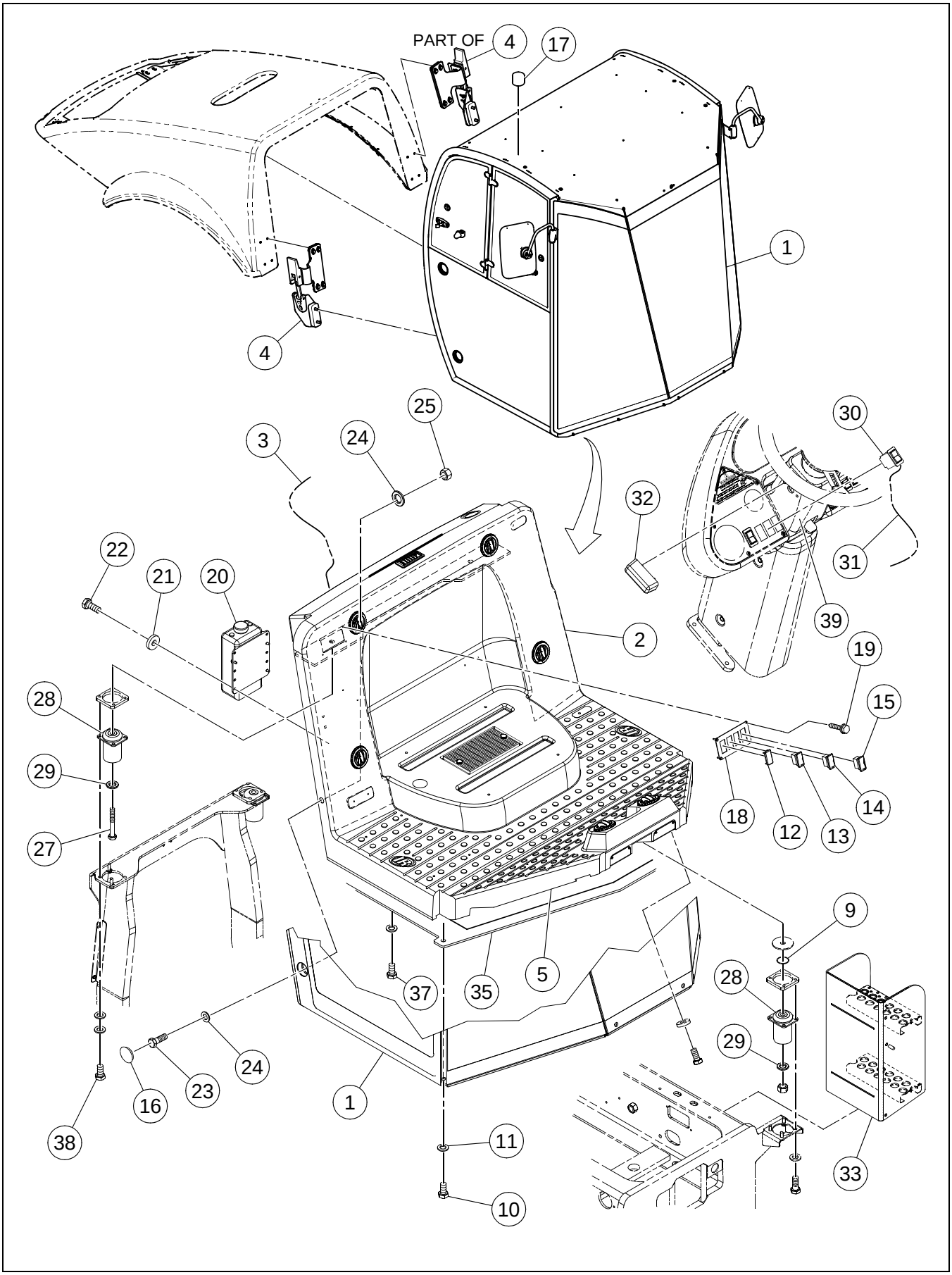

CAB WITH HEATER - EFFECTIVE WITH S/N 190193, INCLUDING 189806

BOM 19281161, 19281195

ITEM	COMM. NO.	DESCRIPTION	QTY	DIMENSIONS/NOTES
1	**18000489**	**Cab Assembly (Effective S/N 190193 Including 189806)**	**1**	**See Breakdown A - 54.**
2	**NSVA**	**Cab Heater Assembly**	**1**	**See Page A - 44.**
3	13492822	Harness Cab And Hvac	1	
4	**NSVA**	**Cab/Hood Draw Latch Installation**	**1**	**See Page A - 80.**
5	43836451	Rubber Seal	1	
9	96746417	Washer	4	
10	96703152	HHCS, Zinc Plated	2	M16 x 2 x 30 Cl 10.9
11	96738612	Flatwasher	2	M16 Hardened
12	58835398	Switch Blank	1	
13	59196451	Front Wiper Switch	1	
14	59196444	Rear Wiper Switch	1	
15	59195925	Switch	1	
16	13309877	Plug	4	
17	59326827	Domed Plug	2	
18	13212576	Control Panel	1	
19	95988093	Self Tapping Screw	4	#6 x 3/4
20	13215769	Washer Bottle	1	
-	13228242	- Washer Bottle Cap	1	
-	13228259	- Washer Bottle Pump	1	
21	96712674	Washer	4	
22	96702824	HHCS, Fully Threaded, Zinc Plated	4	M8 x 1.25 x 20 Cl 8.8
23	96746235	HHCS, Zinc Plated	4	M24 x 3 x 70 Cl 10.9
24	96702642	Flatwasher	8	M24 Hardened
25	96727532	Hex Nut	4	M24 x 3
26	**NSVA**	**Seat Belt Installation (Not Shown)**	**1**	**See Page A - 82.**
27	96741442	HHCS, Zinc Plated	2	M20 x 2.5 x 140 Cl 8.8
28	13225503	Isolator Hystec	4	
29	96701560	Flatwasher	4	M20 Hardened
30	13197108	F/R Worklights Switch	1	
31	43818848	Work Lights Harness (Eff S/N 194400)	1	
-	13225560	Work Lights Harness (Prior to S/N 194400)	1	
32	13322102	Light Panel Assembly (Eff S/N 194400)	2	
-	13248935	Dash Lights (Prior to S/N 194400)	2	
33	13411640	Step Door	1	
35	43868710	ROPS Support Platform	1	
37	96704556	HHCS, Zinc Plated	6	M10 x 1.5 x 40 Cl 8.8
38	96703111	HHCS, Fully Threaded, Zinc Plated	8	M12 x 1.75 x 35 Cl 10.9
39	13335484	Fixed Cover Column (Eff S/N 194400)	1	

CAB HEATER ASSEMBLY - OPTIONAL - SHEET 1 OF 2

Dwg 13273503/0d/01

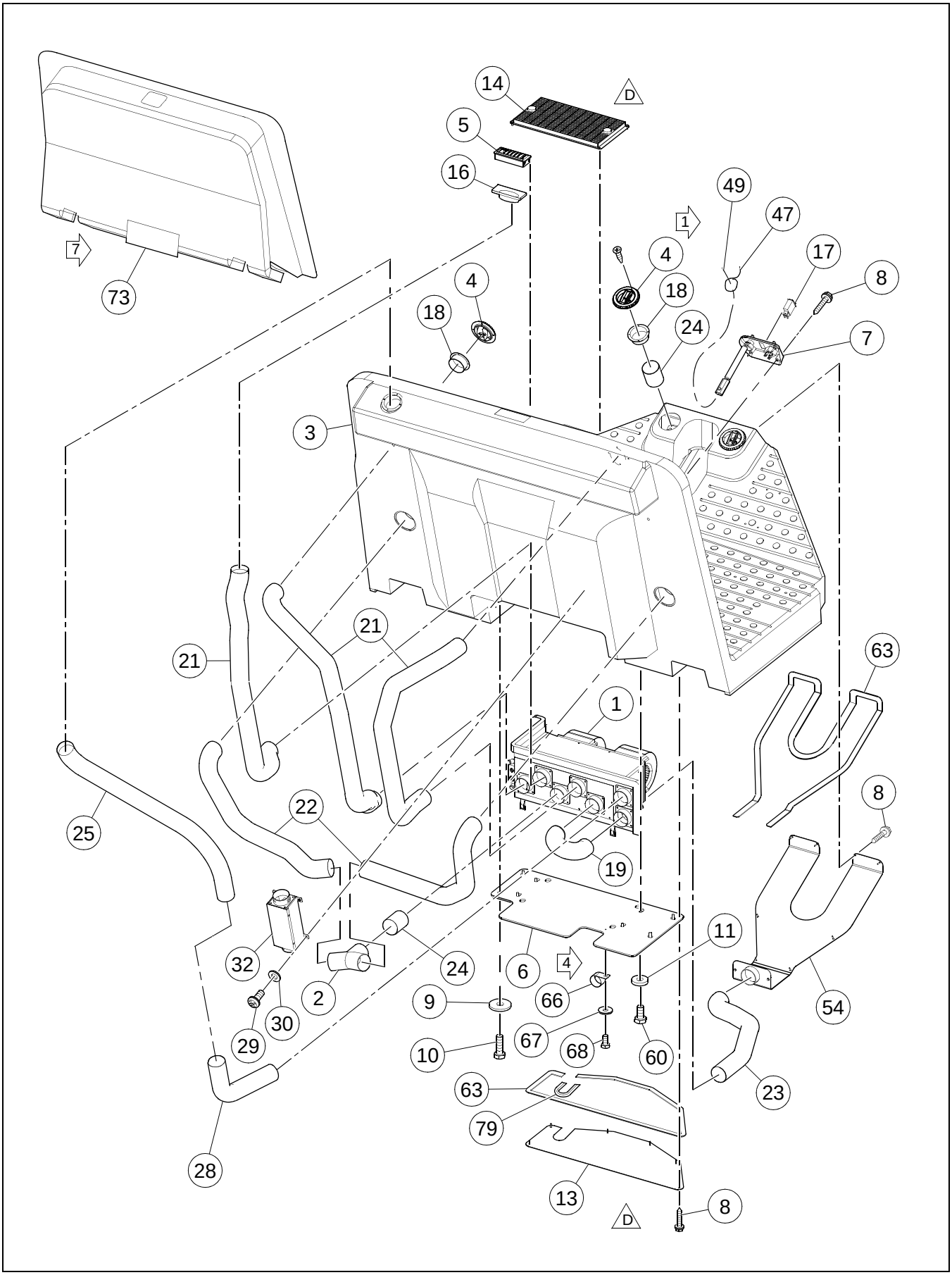

CAB HEATER ASSEMBLY - OPTIONAL - SHEET 1 OF 2

BOM 13273503

ITEM	COMM. NO.	DESCRIPTION	QTY	DIMENSIONS/NOTES
1	**13237888**	**Heater**	**1**	**See Breakdown A - 48.**
2	13162094	Y-Splicer	1	
3	43843564	Operators Platform	1	
4	13161724	Louver	6	
5	13179197	Louver	1	
6	13237326	Mounting Plate	1	
7	13254644	Heater Control Panel	1	
8	96728548	Self-tapping Screw, Zinc Plated	19	1.6
9	96740188	Washer, Zinc Plated	4	M8 x 3 Cl HV100
10	96702659	HHCS, Fully Threaded, Zinc Plated	4	M8 x 1.25 x 25 Cl 8.8
11	96712674	Washer, Zinc Plated	6	M8 Hardened Cl 10
13	13502083	Cover Plate	1	
14	NSS	Air Recirculation Filter Assembly	1	
-	13200019	- Recirculation Filter Cover	1	
-	13161757	- Air Recirculation Filter	1	
-	13200001	- Recirculation Filter Grill	1	
16	13179403	Louver Adapter	1	
17	13156997	Control Panel Plug	1	
18	13161732	Louver Adapter	7	
19	13176508	Bottom Duct Hose	1	
21	13295712	Upper Side Duct Hose	3	
22	13176516	Lower Side Duct Hose	2	
23	13176532	Plenum Hose	1	
24	59290742	Connector Hose	3	
25	59290734	Top Fresh Air Duct Hose	1	
28	59290783	Bottom Fresh Air Duct Hose	1	
29	54487517	Self-tapping Screw	4	14 x 1
30	96738554	Flatwasher, Zinc Plated	4	M5 Hardened Cl 200
32	59290767	Fresh Air Filter	1	
-	13262464	- Air Filter	1	
47	95373973	Wire Tie	A/R	
49	13200035	Wiring Harness	1	
50	13209887	Wood Screw (Not Shown)	14	
54	13234893	Plenum	1	
60	96702824	HHCS, Fully Threaded, Zinc Plated	6	M8 x 1.25 x 20 Cl 8.8
63	35898477	Foamtape	A/R	
66	95378873	Hose Clamp	1	
67	96704663	Washer, Zinc Plated	1	M6 Large
68	96702394	HHCS, Fully Threaded, Zinc Plated	1	M6 x 1 x 12 Cl 8.8
73	59290817	Foam	1	
79	13467485	Seal Trim	1	

CAB HEATER ASSEMBLY - OPTIONAL - SHEET 2 OF 2

Dwg 13273503/0d/02

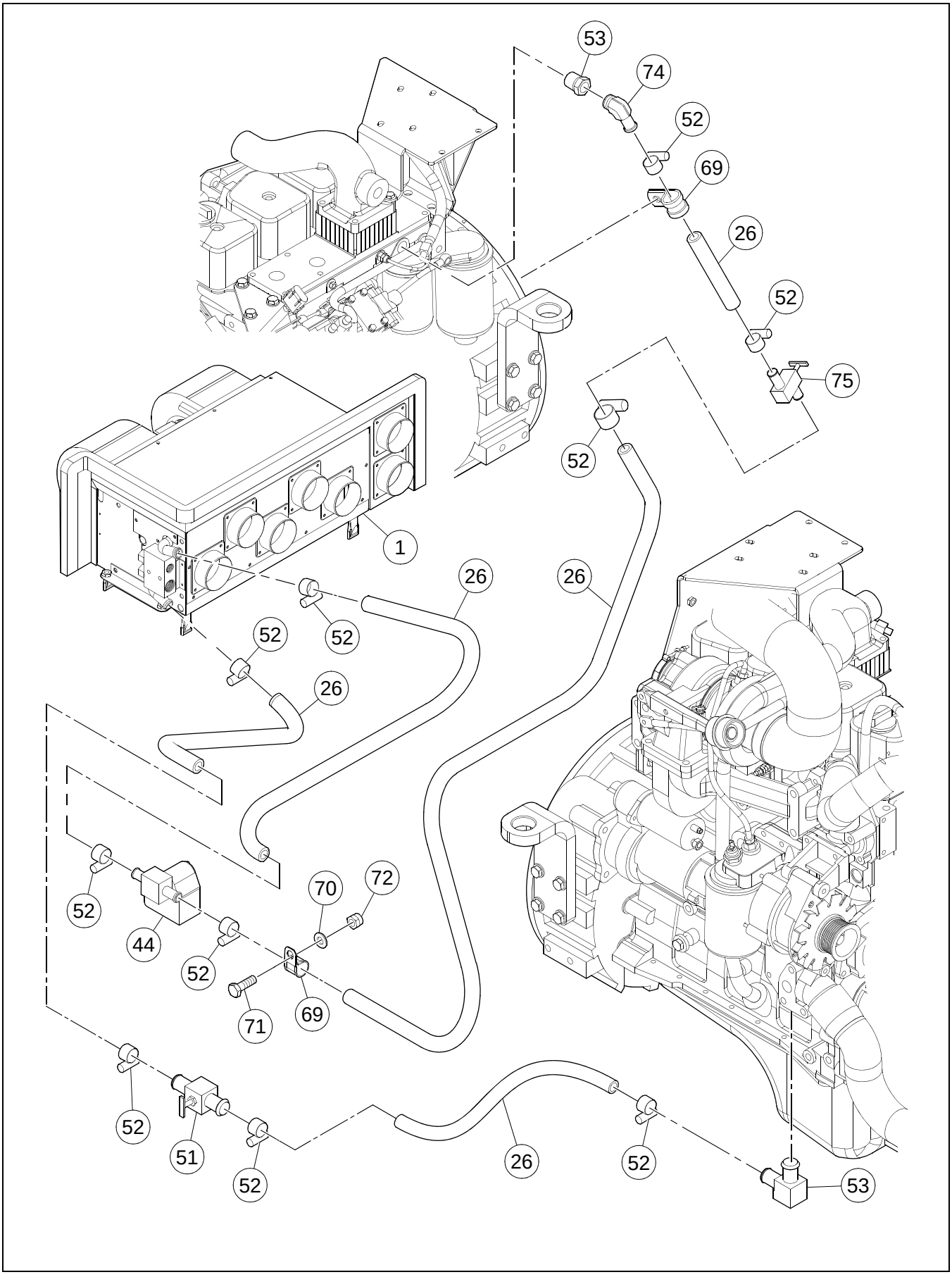

CAB HEATER ASSEMBLY - OPTIONAL - SHEET 2 OF 2

BOM 13273503

ITEM	COMM. NO.	DESCRIPTION	QTY	DIMENSIONS/NOTES
1	**13237888**	**Heater**	**1**	**See Breakdown A - 48.**
26	95285144	Heater Hose	1	
44	**13200027**	**Heater Valve**	**1**	**See Breakdown A - 50.**
51	13254909	Valve	2	
52	95671285	Hose Clamp	10	
53	59924241	External Reducer	1	
69	59465674	Clamp	2	
70	96741046	Flatwasher, Zinc Plated	1	M10 Cl 200
71	96701917	HHCS, Fully Threaded, Zinc Plated	1	M10 x 1.5 x 30 Cl 8.8
72	96704614	Nut, Zinc Plated	1	M10 x 1.5 Cl 8
74	13273818	Elbow, Male	1	
75	13254909	Shut-off Valve	1	
76	58962226	Elbow, Male (Not Shown)	1	

HEATER (13237888) - INTERNAL BREAKDOWN

Dwg 13244652/00

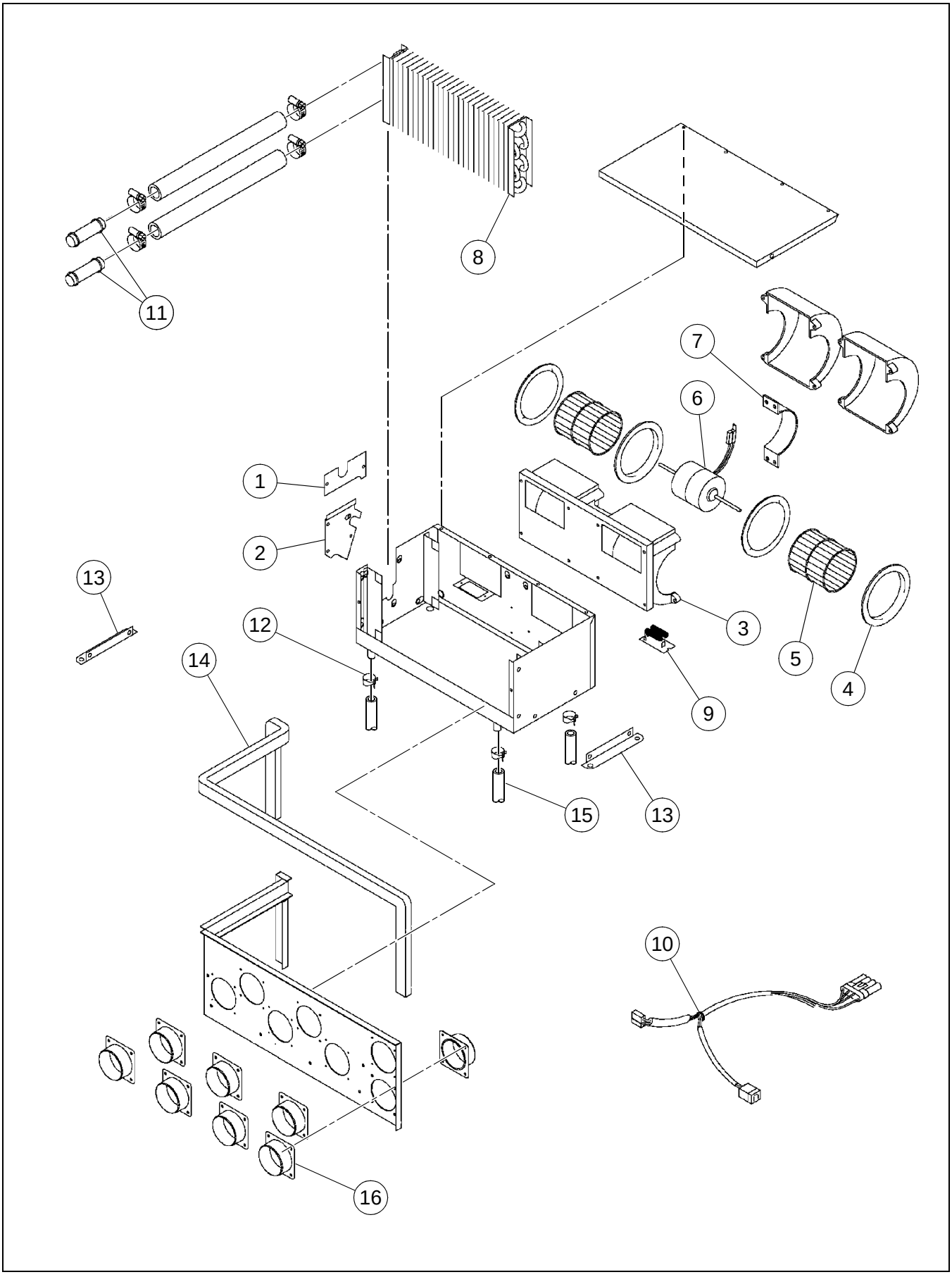

HEATER (13237888) - INTERNAL BREAKDOWN

BOM 13237888

ITEM	COMM. NO.	DESCRIPTION	QTY	DIMENSIONS/NOTES
1	13258702	Coil Cover	1	
2	13258710	Coil Cover	1	
3	13258728	Blower, 12V	1	
4	13258694	- Venturi	2	
5	13258736	- Blower Wheel	2	
6	13258744	- Motor, 12V	1	
7	13258751	- Motor Mount	1	
8	13258769	Heater Coil	1	
9	13258777	Resisto	1	12V
10	13258785	Wiring Harness	1	
11	13258793	Heater Hose Assembly	2	
12	13258801	Drain Hose Clamp	4	
13	13258819	Mounting Bracket	1	
14	13258827	Foam Seal	1	
15	13258835	Drain Valve	4	
16	13258843	Hose Adapter	6	

HEATER VALVE (13200027) - INTERNAL BREAKDOWN

Dwg D13244645/00

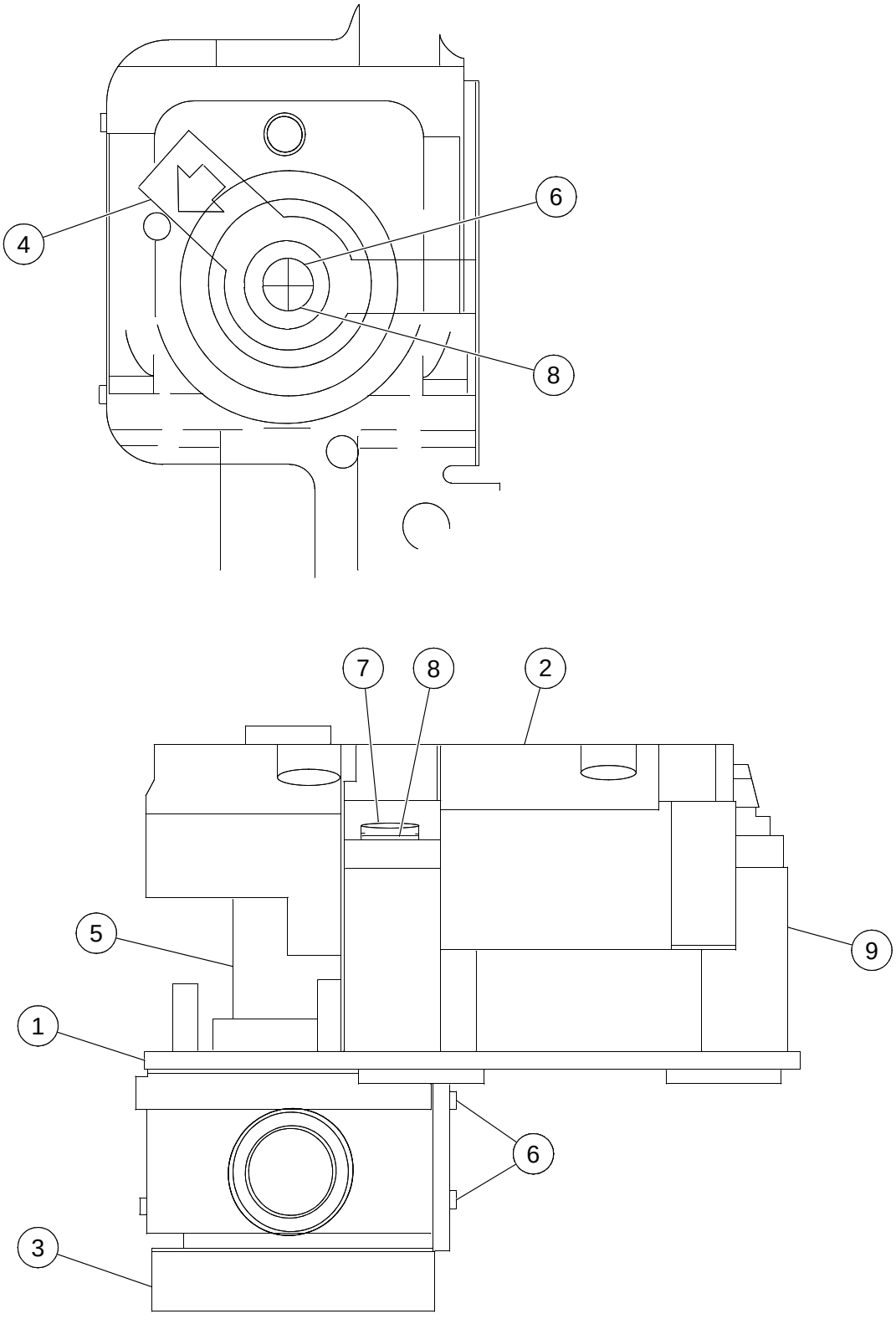

HEATER VALVE (13200027) - INTERNAL BREAKDOWN

BOM 13200027

ITEM	COMM. NO.	DESCRIPTION	QTY	DIMENSIONS/NOTES
1	13258942	Mounting Bracket	1	
2	13258959	Motor Adaptor	1	
3	13258967	Heater Valve	1	
4	13258975	Valve Lever Arm	1	
5	13258983	Shaft Adapter	1	
6	13258991	Plastite Screw	3	
7	13259007	Screw	3	
8	13259015	Washer	4	
9	13259023	Spacer	3	

CAB WITH HEATER AND AIR CONDITIONING - EFFECTIVE WITH S/N 190193, INCLUDING 189806

Dwg 19330778/0e

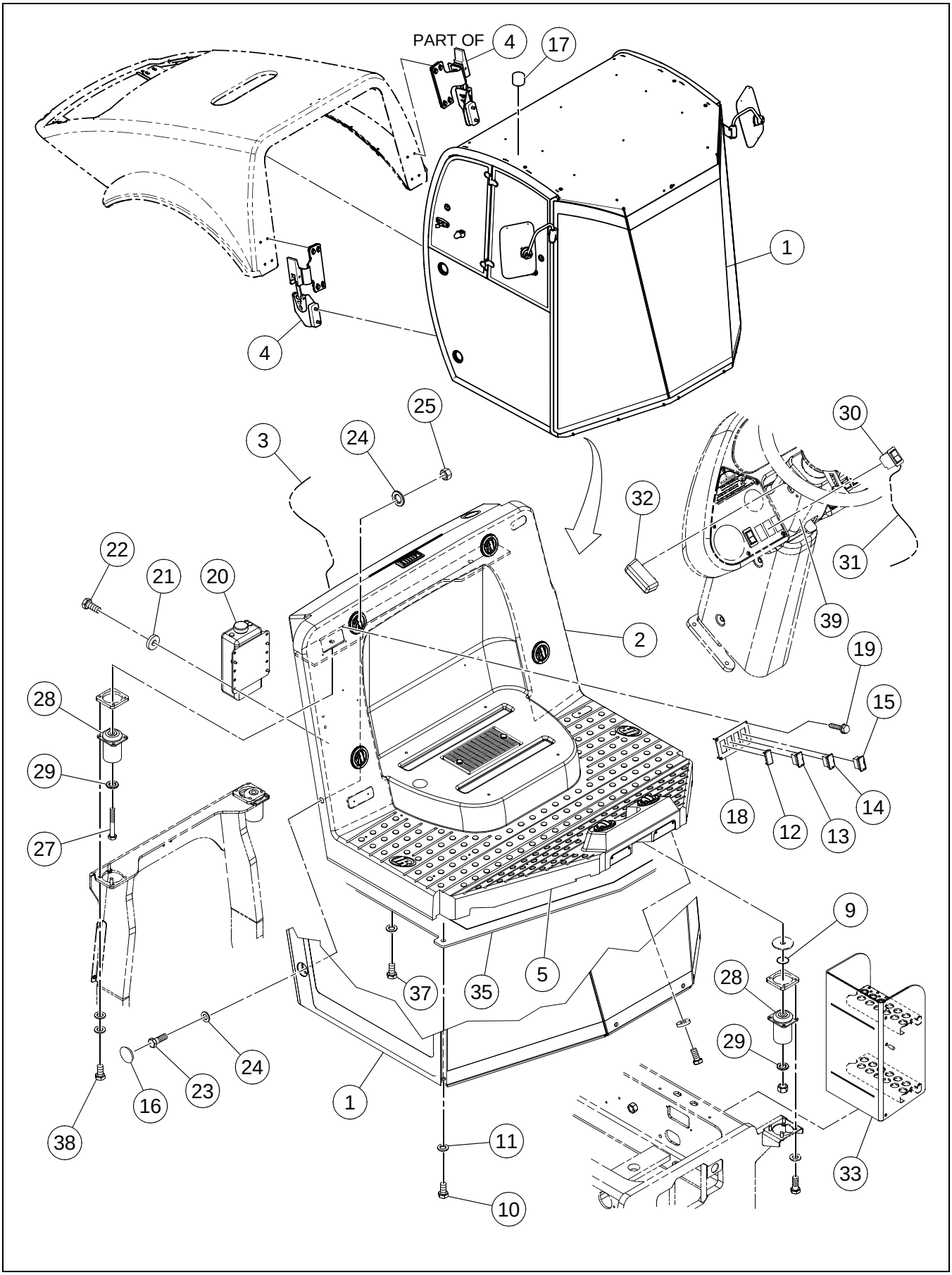

CAB WITH HEATER AND AIR CONDITIONING - EFFECTIVE WITH S/N 190193, INCLUDING 189806

BOM 19281153, 19281187

ITEM	COMM. NO.	DESCRIPTION	QTY	DIMENSIONS/NOTES
1	**18000489**	**Cab Assembly (Effective S/N 190193 Including 189806)**	**1**	**See Breakdown A - 54.**
2	**NSVA**	**Cab Heater And Air Conditioning Assembly**	**1**	**See Page A - 68.**
3	13492822	Harness Cab And Hvac	1	
4	**NSVA**	**Cab/Hood Draw Latch Installation**	**1**	**See Page A - 80.**
5	43836451	Rubber Seal	1	
9	96746417	Washer	4	
10	96703152	HHCS, Zinc Plated	2	M16 x 2 x 30 Cl 10.9
11	96738612	Flatwasher	2	M16 Hardened
12	58835398	Switch Blank	1	
13	59196451	Front Wiper Switch	1	
14	59196444	Rear Wiper Switch	1	
15	59195925	Switch	1	
16	13309877	Plug	4	
17	59326827	Domed Plug	2	
18	13212576	Control Panel	1	
19	95988093	Self Tapping Screw	4	#6 x 3/4
20	13215769	Washer Bottle	1	
-	13228242	- Washer Bottle Cap	1	
-	13228259	- Washer Bottle Pump	1	
21	96712674	Washer	4	
22	96702824	HHCS, Fully Threaded, Zinc Plated	4	M8 x 1.25 x 20 Cl 8.8
23	96746235	HHCS, Zinc Plated	4	M24 x 3 x 70 Cl 10.9
24	96702642	Flatwasher	8	M24 Hardened
25	96727532	Hex Nut	4	M24 x 3
26	**NSVA**	**Seat Belt Installation (Not Shown)**	**1**	**See Page A - 82.**
27	96741442	HHCS, Zinc Plated	2	M20 x 2.5 x 140 Cl 8.8
28	13225503	Isolator Hystec	4	
29	96701560	Flatwasher	4	M20 Hardened
30	13197108	F/R Worklights Switch	1	
31	43818848	Work Lights Harness (Eff S/N 194400)	1	
-	13225560	Work Lights Harness (Prior to S/N 194400)	1	
32	13322102	Light Panel Assembly (Eff S/N 194400)	2	
-	13248935	Dash Lights (Prior to S/N 194400)	2	
33	13411640	Step Door	1	
35	43868710	ROPS Support Platform	1	
37	96704556	HHCS, Zinc Plated	6	M10 x 1.5 x 40 Cl 8.8
38	96703111	HHCS, Fully Threaded, Zinc Plated	8	M12 x 1.75 x 35 Cl 10.9
39	**NSVA**	**Tilt Steering Wheel (Cab)**	**1**	**See Page A - 84.**

CAB ASSEMBLY (18000489) - INTERNAL BREAKDOWN - EFFECTIVE WITH S/N 190193 INCL. 189806 - SHEET 1 OF 7

Dwg 43833946/00

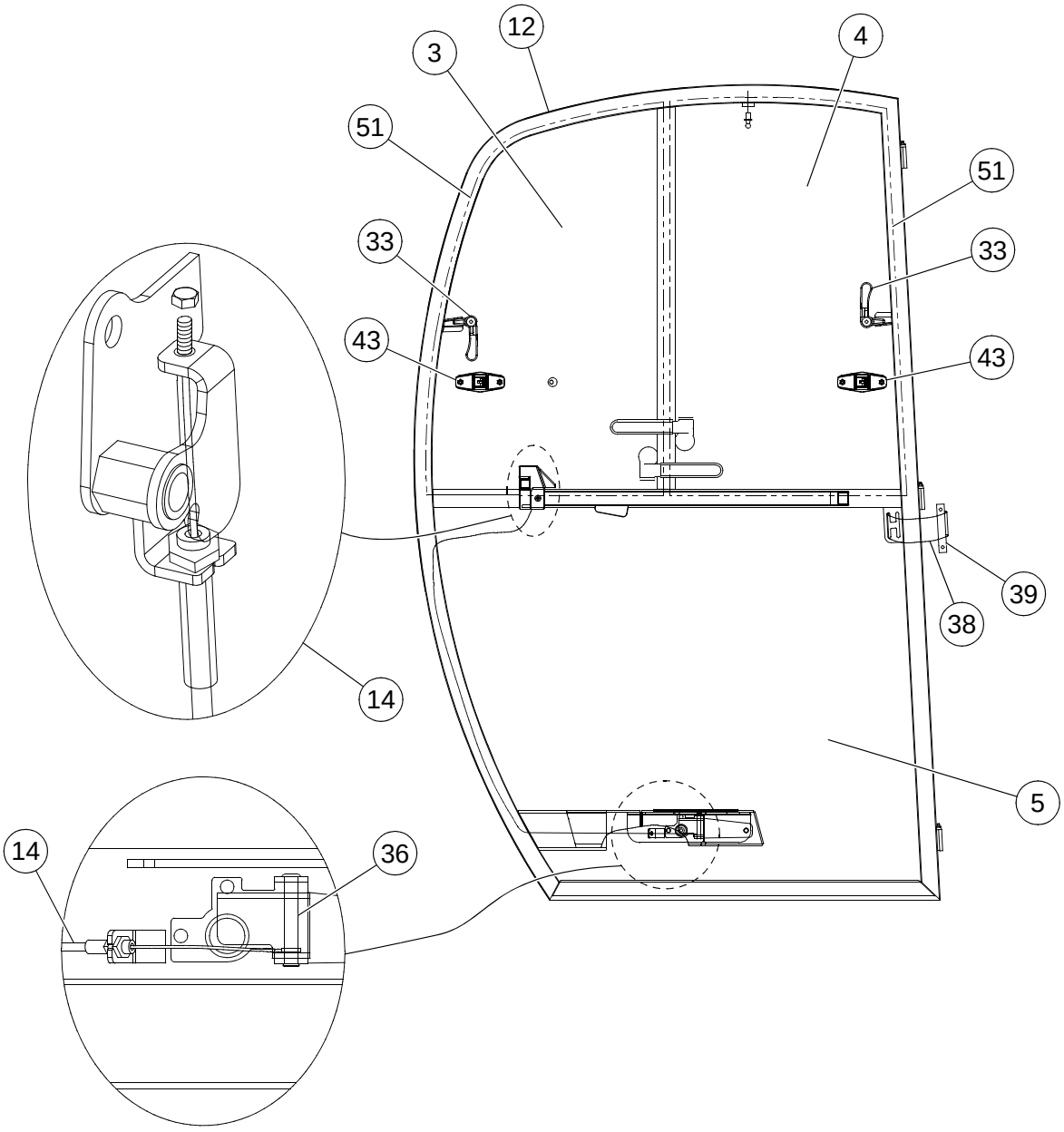

CAB ASSEMBLY (18000489) - INTERNAL BREAKDOWN - EFFECTIVE WITH S/N 190193 INCL. 189806 - SHEET 1 OF 7

BOM 18000489

ITEM	COMM. NO.	DESCRIPTION	QTY	DIMENSIONS/NOTES
3	13519350	Door Rear Top Glass	1	
4	13519368	Door Front Top Glass	1	
5	13519376	Door Bottom Glass	1	
12	43835206	Door Assembly	1	
14	13382924	Door Latch Pivot Plate Kit	1	
33	13382759	Window Latch Kit	4	
36	13382940	Door Exterior Latch Kit	1	
38	43835297	Door Strap 6.5"	1	
39	13224332	Door Strapmetal Clamp	1	
43	13224381	Window Hold Back	4	
51	13285440	Rubber Seal	1	

CAB ASSEMBLY (18000489) - INTERNAL BREAKDOWN - EFFECTIVE WITH S/N 190193 INCL. 189806 - SHEET 2 OF 7

Dwg 43833946/00

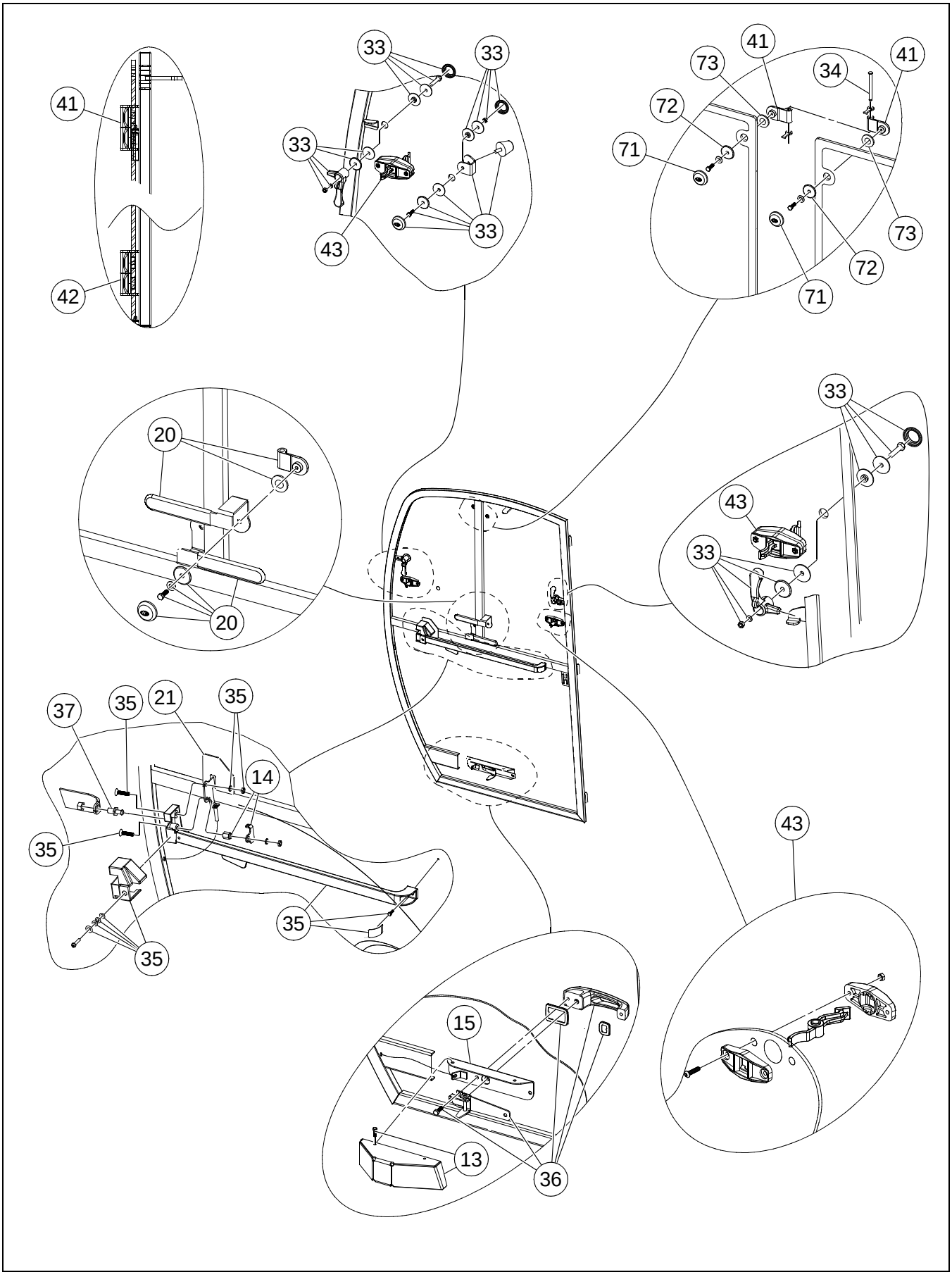

BOM 18000489

ITEM	COMM. NO.	DESCRIPTION	QTY	DIMENSIONS/NOTES
13	13382932	Lower Door Latch Cover Kit	1	
14	13382924	Door Latch Pivot Plate Kit	1	
15	43835214	Door Latch Cover Mounting Plate	1	
20	13382916	Side Window Grab Handle Kit	4	
21	43835255	Door Latch Profile Cover	1	
33	13382759	Window Latch Kit	4	
34	13382783	Window Hinge Pin Kit	4	
35	13382957	Door Inside Latch Kit	1	
36	13382940	Door Exterior Latch Kit	1	
37	13284500	Striker Bolt	1	
41	13224340	Window Hinge, LH	4	
42	13224357	Window Hinge, RH	4	
43	13224381	Window Hold Back	4	
71	13285473	Plastic Bolt Cover Ir Logo	4	
72	13285481	Plastic Cover Washer	4	
73	43835446	Rubber Seal Washer	4	

Dwg 43833946/00

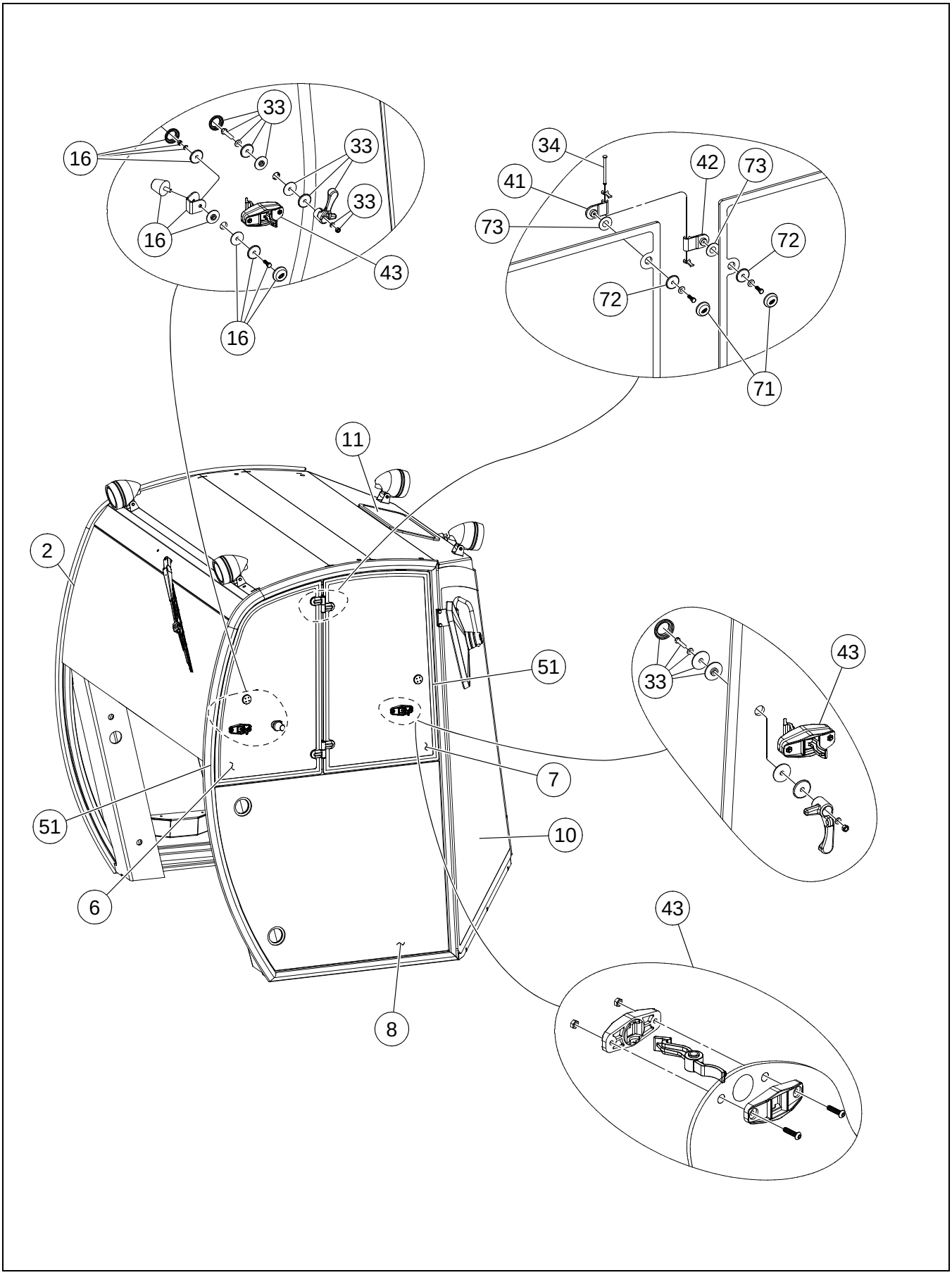

BOM 18000489

ITEM	COMM. NO.	DESCRIPTION	QTY	DIMENSIONS/NOTES
2	13519343	Rear Window Glass	1	
6	13519384	Side Top Rear Glass, RH	1	
7	13519392	Side Top Front Glass, RH	1	
8	13519400	Side Bottom Glass, RH	1	
10	13382742	Side Front Glass, RH	1	
11	13519434	Optional GPS System Window	1	
16	13382965	Window Bumper Kit	2	
33	13382759	Window Latch Kit	4	
34	13382783	Window Hinge Pin Kit	4	
41	13224340	Window Hinge, LH	4	
42	13224357	Window Hinge, RH	4	
43	13224381	Window Hold Back	4	
51	13285440	Rubber Seal	1	
71	13285473	Plastic Bolt Cover Ir Logo	4	
72	13285481	Plastic Cover Washer	4	
73	43835446	Rubber Seal Washer	4	

CAB ASSEMBLY (18000489) - INTERNAL BREAKDOWN - EFFECTIVE WITH S/N 190193 INCL. 189806 - SHEET 4 OF 7

Dwg 43833946/00

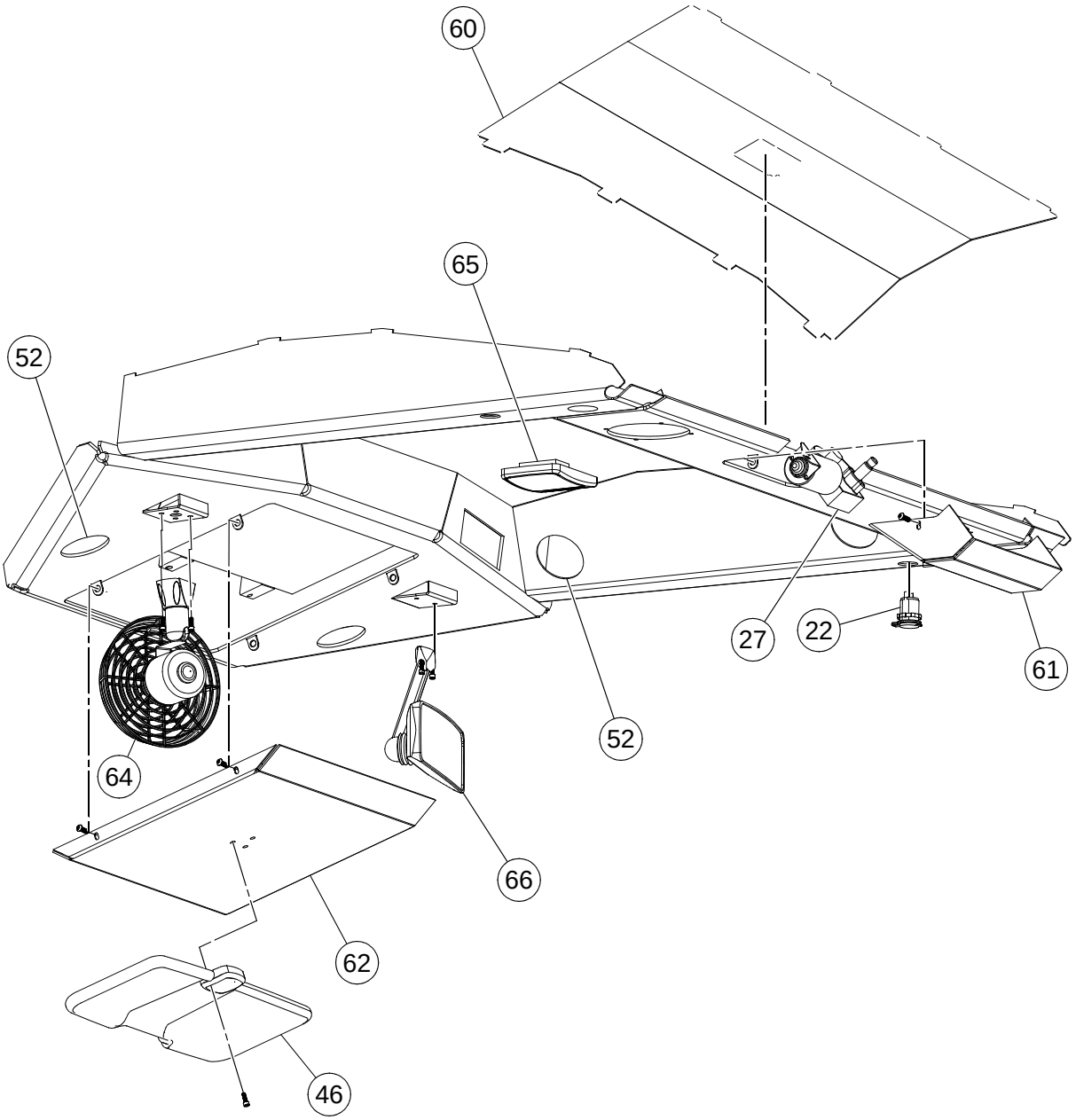

BOM 18000489

ITEM	COMM. NO.	DESCRIPTION	QTY	DIMENSIONS/NOTES
22	43835263	Power Port	1	
27	13871660	Motor Wiper	1	
46	58962887	Sun Visor	1	
52	13224449	Plastic Plug	6	
60	43835388	Headliner - Center Pc W/Tri	1	
61	43835396	Rear Wiper Cover	1	
62	43835404	Front Wiper Cover	1	
64	43835412	Defroster Fan	1	
65	13224480	Interior Light	1	
66	13284567	Interior Mirror	1	

CAB ASSEMBLY (18000489) - INTERNAL BREAKDOWN - EFFECTIVE WITH S/N 190193 INCL. 189806 - SHEET 5 OF 7

Dwg 43833946/00

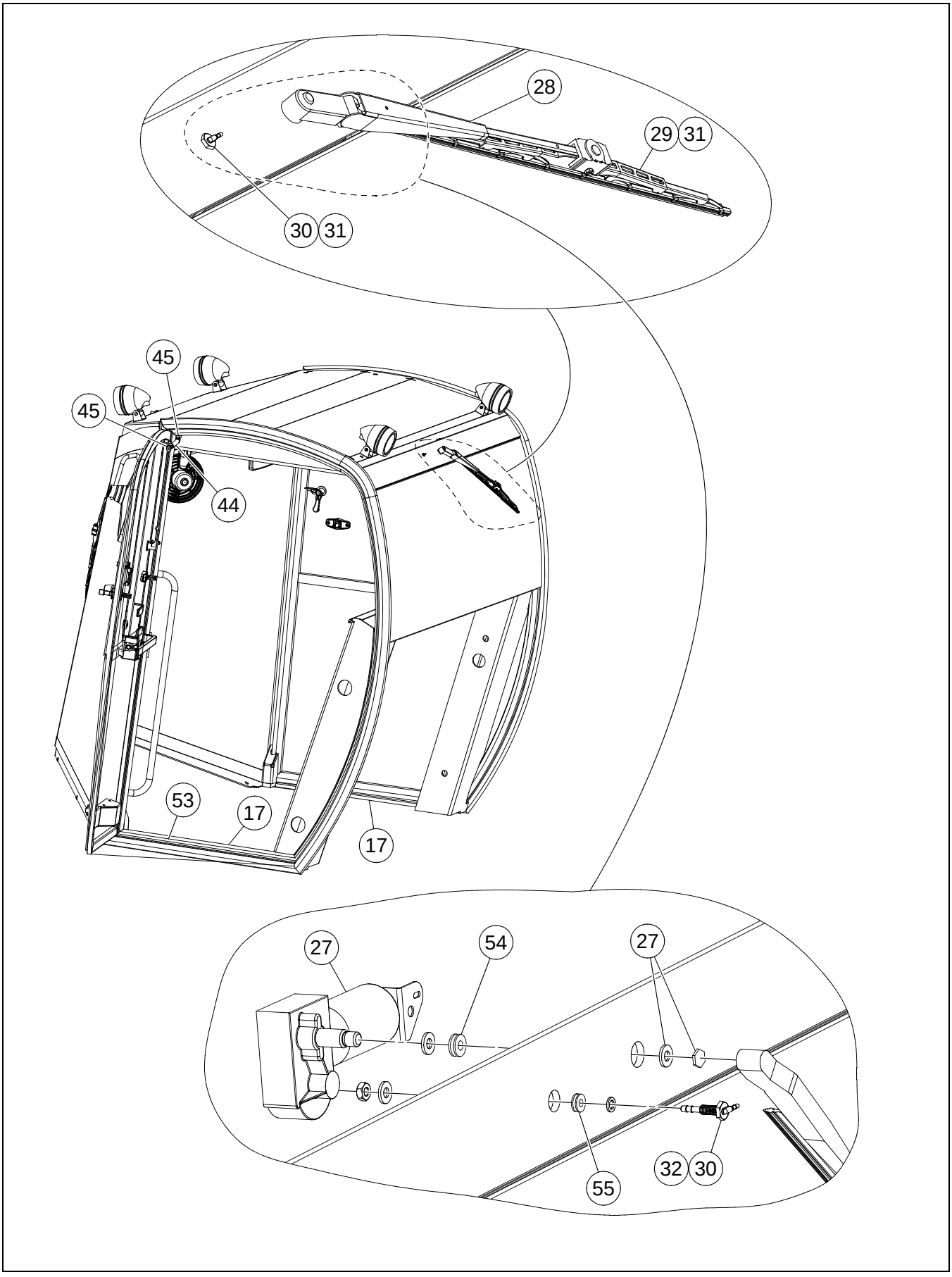

BOM 18000489

ITEM	COMM. NO.	DESCRIPTION	QTY	DIMENSIONS/NOTES
17	43835222	Deck Side Filler Strip	1	
28	59072694	Arm Wiper Rear	1	
29	43835289	Wiper Blade Rear 20"	1	
30	13220835	Hose Winds Fitting Washer	2	
31	13224241	Wet Arm Kit	2	
32	22085088	Washer Hose 5/32"	1	
44	43835305	Door Shock 350 N 15.94"	1	
45	13224431	Gas Shock Ball Mount	2	
53	54628326	Weatherstrip Door Frame	1	
54	43835347	Rubber Grommet	1	
55	13224464	Rubber Grommet	1	

CAB ASSEMBLY (18000489) - INTERNAL BREAKDOWN - EFFECTIVE WITH S/N 190193 INCL. 189806 - SHEET 6 OF 7

Dwg 43833946/00

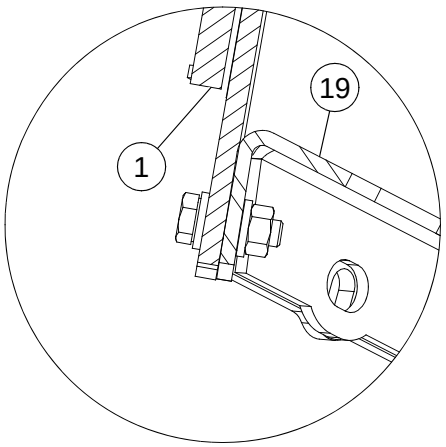

SECTION A-A

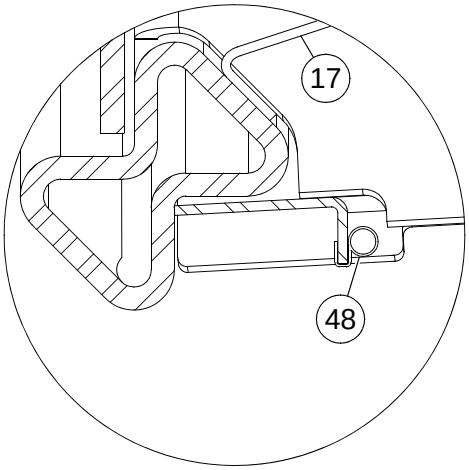

SECTION B-B

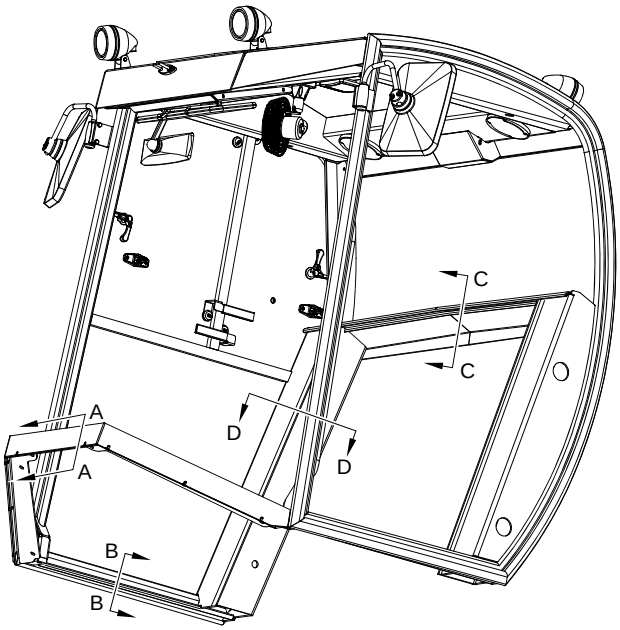

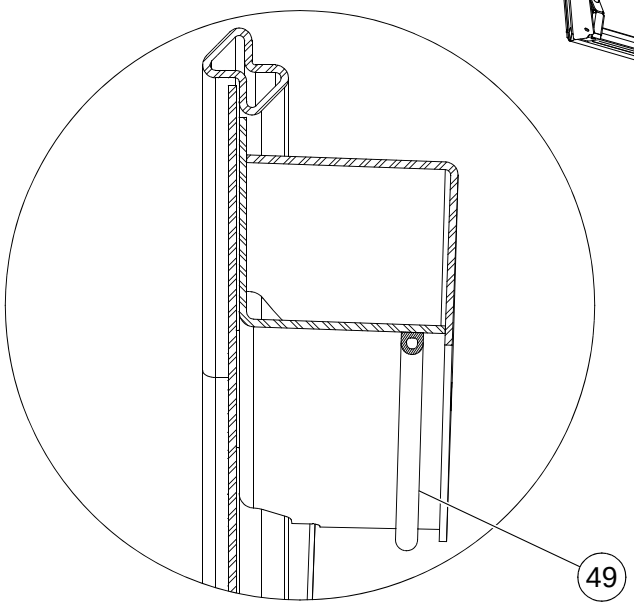

SECTION D-D

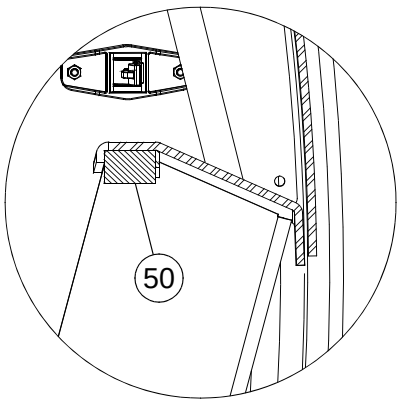

SECTION C-C

BOM 18000489

ITEM	COMM. NO.	DESCRIPTION	QTY	DIMENSIONS/NOTES
1	13382726	Front Center Window Glass	1	
17	43835222	Deck Side Filler Strip	1	
19	43835248	Front Window Lower Center Skirt	1	
48	59072702	Door Seal	1	
49	43835321	Rubber Seal	1	
50	43835339	Rubber Seal	1	

CAB ASSEMBLY (18000489) - INTERNAL BREAKDOWN - EFFECTIVE WITH S/N 190193 INCL. 189806 - SHEET 7 OF 7

Dwg 43833946/00

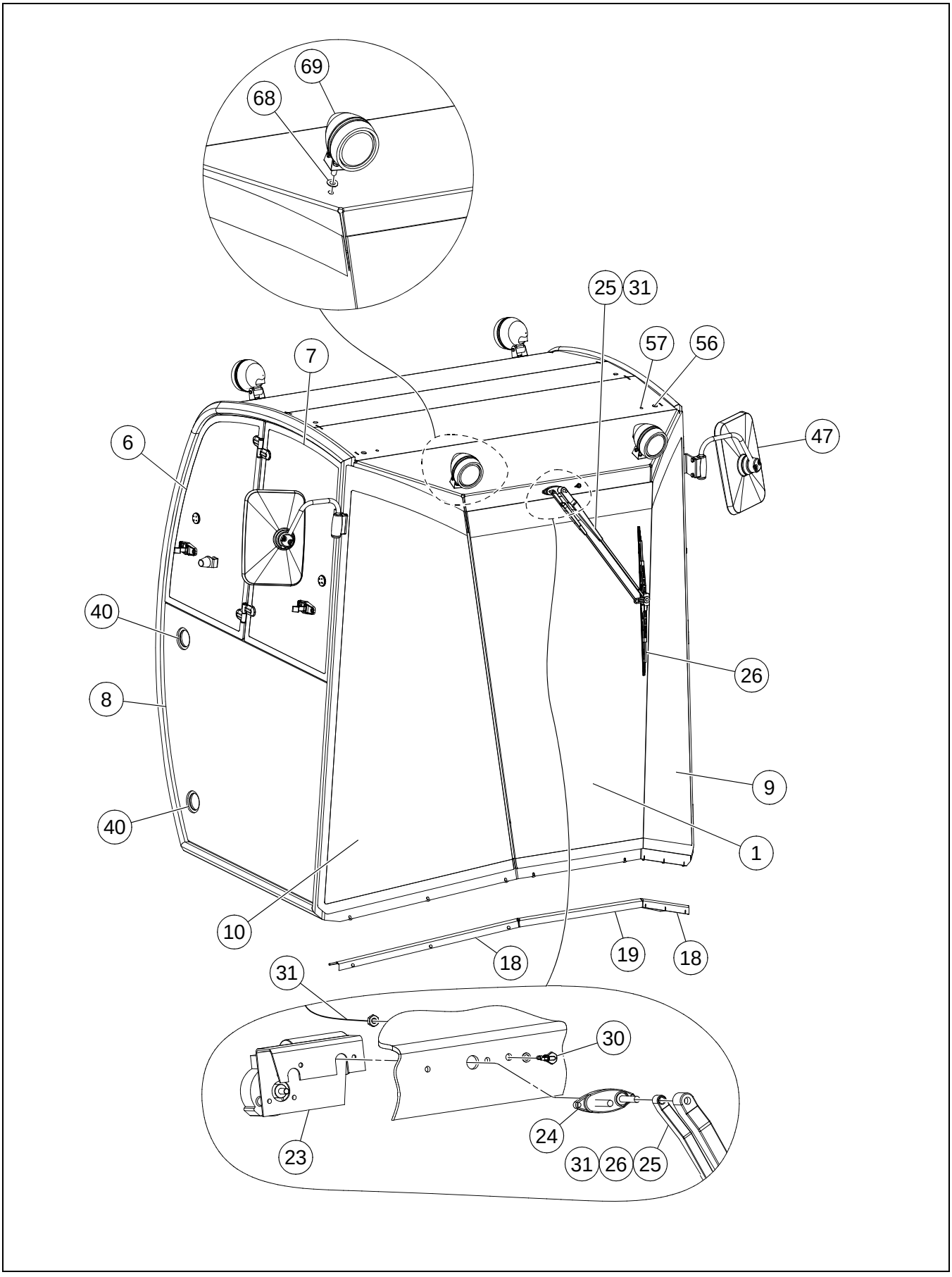

BOM 18000489

ITEM	COMM. NO.	DESCRIPTION	QTY	DIMENSIONS/NOTES
1	13382726	Front Center Window Glass	1	
6	13519384	Side Top Rear Glass, RH	1	
7	13519392	Side Top Front Glass, RH	1	
8	13519400	Side Bottom Glass, RH	1	
9	13382734	Side Front Glass, LH	1	
10	13382742	Side Front Glass, RH	1	
18	43835230	Front Window Lower Side Skirt	1	
19	43835248	Front Window Lower Center Skirt	1	
23	43835271	Wiper Motor 12v 68 Degree	1	
24	58962812	Pantagraph Mount	1	
25	13224217	Front Wiper Arm-22""Pano	1	
26	13224225	Front Wiper Blade -28""	1	
30	13220835	Hose Winds Fitting Washer	2	
31	13224241	Wet Arm Kit	2	
40	13224456	Plastic Plug-2.5 Inch	4	
47	43835313	Exterior Mirror Assembly	2	
56	43835354	Plastic Plug	2	
57	43835362	Plastic Plug	2	
58	58844556	Rubber Seal (Not Shown)	1	
59	43835370	Plastic Plug (Not Shown)	2	
63	13845367	Cab Wire Harness (Not Shown)	1	
67	22088009	Pebble Cloth (Not Shown)	1	
68	43835420	Seal Washer	4	
69	43835438	Work Lights	4	
70	13285440	Rubber Seal (Not Shown)	1	
74	22067607	Adhesive (Not Shown)	5	
75	43806165	Sika (Not Shown)	1	

CAB HEATER AND AIR CONDITIONING ASSEMBLY - OPTIONAL - SHEET 1 OF 3

Dwg 13273206/0c/01

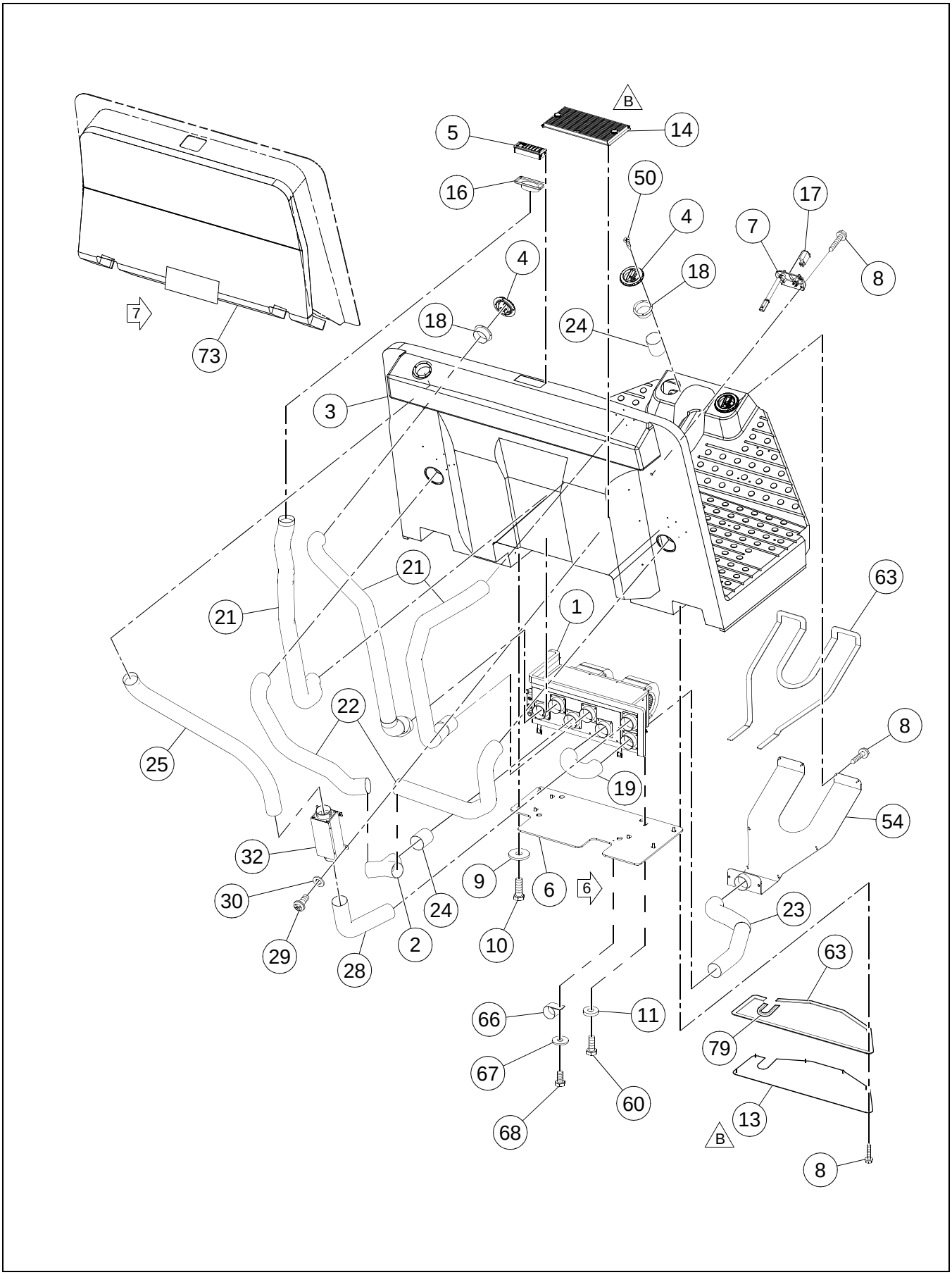

CAB HEATER AND AIR CONDITIONING ASSEMBLY - OPTIONAL - SHEET 1 OF 3

BOM 13273206

ITEM	COMM. NO.	DESCRIPTION	QTY	DIMENSIONS/NOTES
1	**13237367**	**Heater/Evaporator/AC**	**1**	**See Breakdown A - 74.**
2	13162094	Y-Splicer	1	
3	43843564	Operators Platform	1	
4	13161724	Louver	6	
5	13179197	Louver	1	
6	13237326	Mounting Plate	1	
7	13254644	Heater/AC Control Panel	1	
8	96728548	Self-tapping Screw, Zinc Plated	19	1.6
9	96740188	Washer, Zinc Plated	4	M8 x 3 Cl HV100
10	96702659	HHCS, Fully Threaded, Zinc Plated	8	M8 x 1.25 x 25 Cl 8.8
11	96712674	Washer, Zinc Plated	6	M8 Hardened Cl 10
13	13502083	Cover Plate	1	
14	NSS	Air Recirculation Filter Assembly	1	
-	13200019	- Recirculation Filter Cover	1	
-	13161757	- Air Recirculation Filter	1	
-	13200001	- Recirculation Filter Grill	1	
16	13179403	Louver Adapter	1	
17	13156963	Air Conditioner On/Off Switch	1	
18	13161732	Louver Adapter	7	
19	13176508	Bottom Duct Hose	1	
21	13295712	Upper Side Duct Hose	3	
22	13176516	Lower Side Duct Hose	2	
23	13176532	Plenum Hose	1	
24	59290742	Connector Hose	3	
25	59290734	Top Fresh Air Duct Hose	1	
28	59290783	Bottom Fresh Air Duct Hose	1	
29	54487517	Self-tapping Screw	4	14 x 1
30	96738554	Flatwasher, Zinc Plated	4	M5 Hardened Cl 200
32	59290767	Fresh Air Filter Assembly	1	
-	13262464	- Air Filter	1	
50	13209887	Wood Screw	14	
54	13234893	Plenum	1	
60	96702824	HHCS, Fully Threaded, Zinc Plated	6	M8 x 1.25 x 20 Cl 8.8
63	35898477	Foamtape	A/R	
66	95378873	Hose Clamp	1	
67	96704663	Washer, Zinc Plated	1	M6 Large
68	96702394	HHCS, Fully Threaded, Zinc Plated	1	M6 x 1 x 12 Cl 8.8
73	59290817	Foam	1	
79	13467485	Seal Trim	1	

CAB HEATER AND AIR CONDITIONING ASSEMBLY - OPTIONAL - SHEET 2 OF 3

Dwg 13273206/0c/02

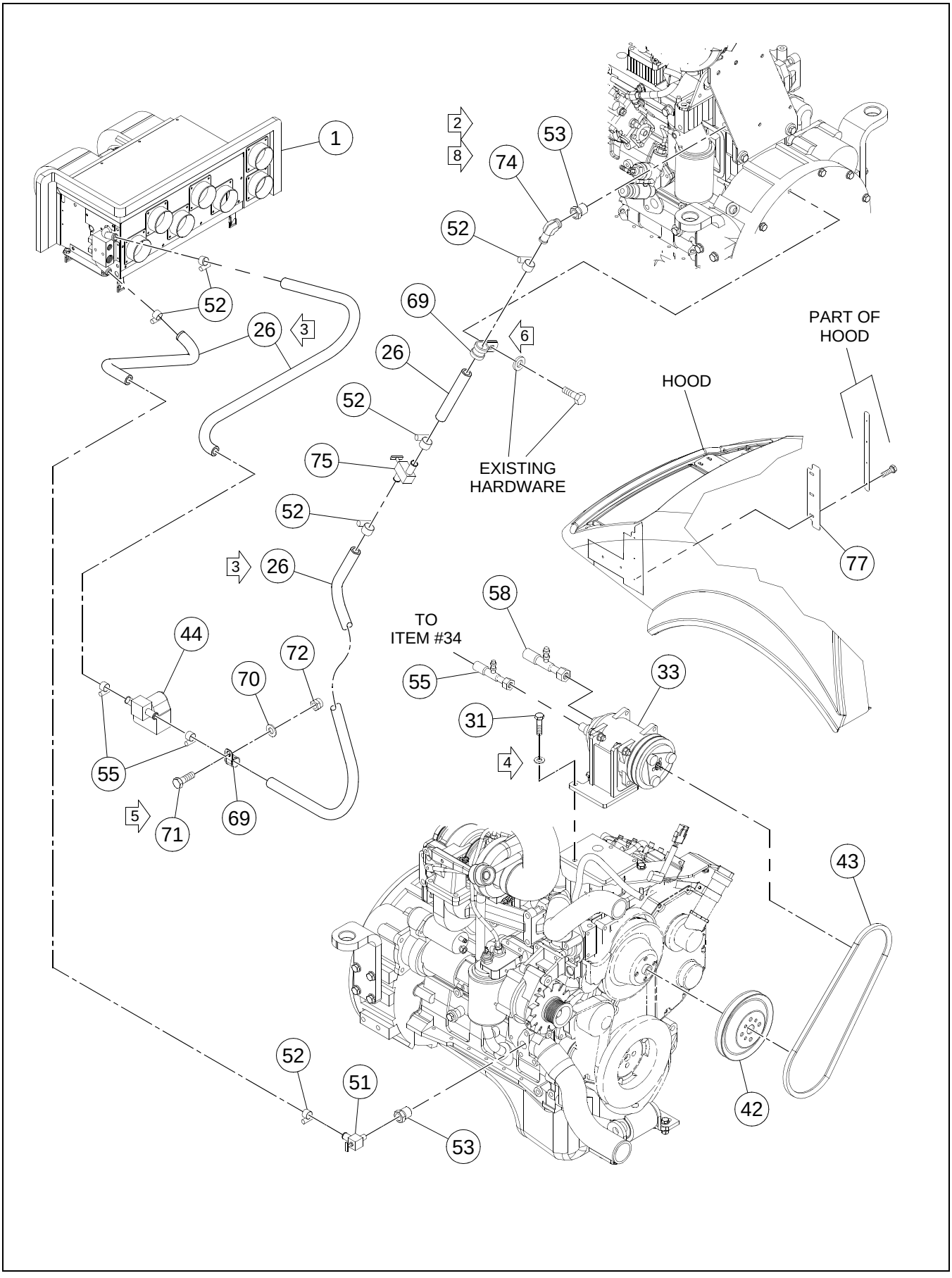

CAB HEATER AND AIR CONDITIONING ASSEMBLY - OPTIONAL - SHEET 2 OF 3

BOM 13273206

ITEM	COMM. NO.	DESCRIPTION	QTY	DIMENSIONS/NOTES
1	**13237367**	**Heater/Evaporator/AC**	**1**	**See Breakdown A - 74.**
26	95285144	Bulk Hose	1	
31	96704556	HHCS, Fully Threaded, Zinc Plated	3	M10 x 1.5 x 40 Cl 8.8
33	**NSVA**	**Compressor Assembly**	**1**	**See Page A - 76.**
42	58910662	Compressor Pulley	1	
43	13236666	Compressor Belt	1	
44	**13200027**	**Heater Valve**	**1**	**See Breakdown A - 50.**
51	13254909	Shut off Valve	2	
52	95671285	Hose Clamp	10	
53	59924241	External Reducer	1	
55	13266903	Coolant Hose #1	1	
58	13266911	Coolant Hose #4	1	
69	59465674	Clamp	3	
70	96741046	Flatwasher, Zinc Plated	2	M10 Cl 200
71	96701917	HHCS, Fully Threaded, Zinc Plated	2	M10 x 1.5 x 30 Cl 8.8
72	96704614	Nut, Zinc Plated	1	M10 x 1.5 Cl 8
74	13273818	Elbow, Male	1	
75	13254909	Shut-off Valve	1	
77	13279476	Plate Seal	1	
78	13355003	Decal: Refridgerant Charge (Not Shown)	1	

CAB HEATER AND AIR CONDITIONING ASSEMBLY - OPTIONAL - SHEET 3 OF 3

Dwg 13273206/0c/03

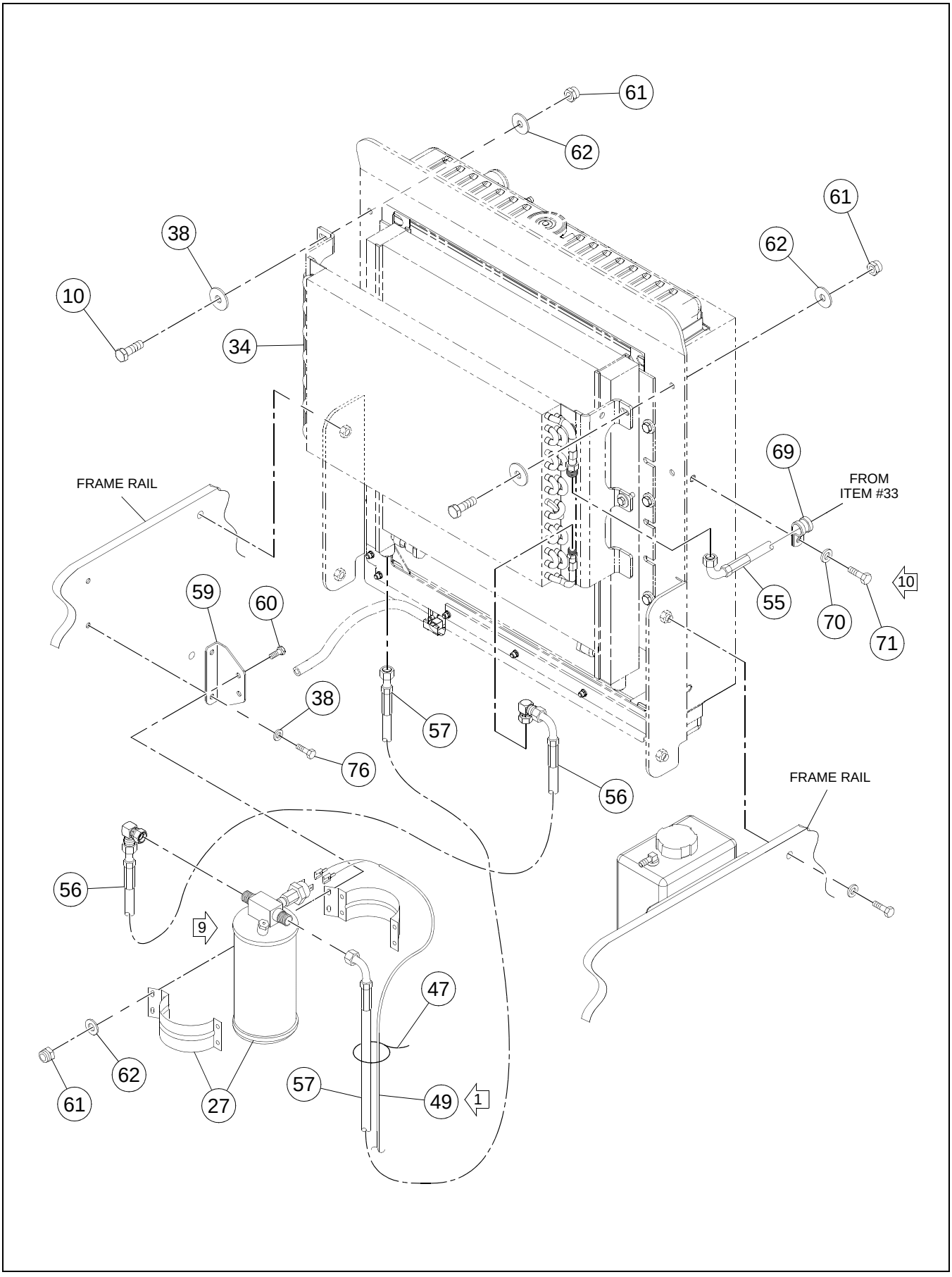

CAB HEATER AND AIR CONDITIONING ASSEMBLY - OPTIONAL - SHEET 3 OF 3

BOM 13273206

ITEM	COMM. NO.	DESCRIPTION	QTY	DIMENSIONS/NOTES
10	96702659	HHCS, Fully Threaded, Zinc Plated	8	M8 x 1.25 x 25 Cl 8.8
27	43837715	Dryer/Binary Bracket	1	
-	43876242	- Receiver Drier	1	
-	43876259	- R/D Mounting Bracket	1	
-	43876267	- Clamp	2	
-	57607814	- Pressure Switch	1	
34	**NSVA**	**Condensor Assembly**	**1**	**See Page A - 78.**
38	96741038	Flatwasher	6	M8 x 1.25 Cl 200
47	95373973	Wire Tie	A/R	
49	13200035	Cab Heater and A/C Wire Harness	1	
55	13266903	Coolant Hose #1	1	
56	13266937	Coolant Hose #2	1	
57	13266929	Coolant Hose #3	1	
59	13274386	Dryer Mounting Bracket	1	
60	96702824	HHCS, Fully Threaded, Zinc Plated	6	M8 x 1.25 x 20 Cl 8.8
61	96704606	Hex Locknut, Zinc Plated	1	M8 x 1.25 Cl 8
62	96713979	Washer, Zinc Plated	6	M8 Hardened
69	59465674	Clamp	3	
70	96741046	Flatwasher, Zinc Plated	2	M10 Cl 200
71	96701917	HHCS, Fully Threaded, Zinc Plated	2	M10 x 1.5 x 30 Cl 8.8
76	96702816	HHCS, Fully Threaded, Zinc Plated	2	M8 x 1.25 x 16 Cl 8.8
80	58962226	Elbow, Male (Not Shown)	1	
81	59465674	Clamp	2	
82	96741038	Flatwasher	2	M8 x 16.0
83	96705587	HHCS, Fully Threaded, Zinc Plated	1	M8 x 1.25 x 30 Cl 8.8
84	96704606	Hex Locknut	1	M8

HEATER/EVAPORATOR (13237367) - INTERNAL BREAKDOWN

Dwg D13244611/00

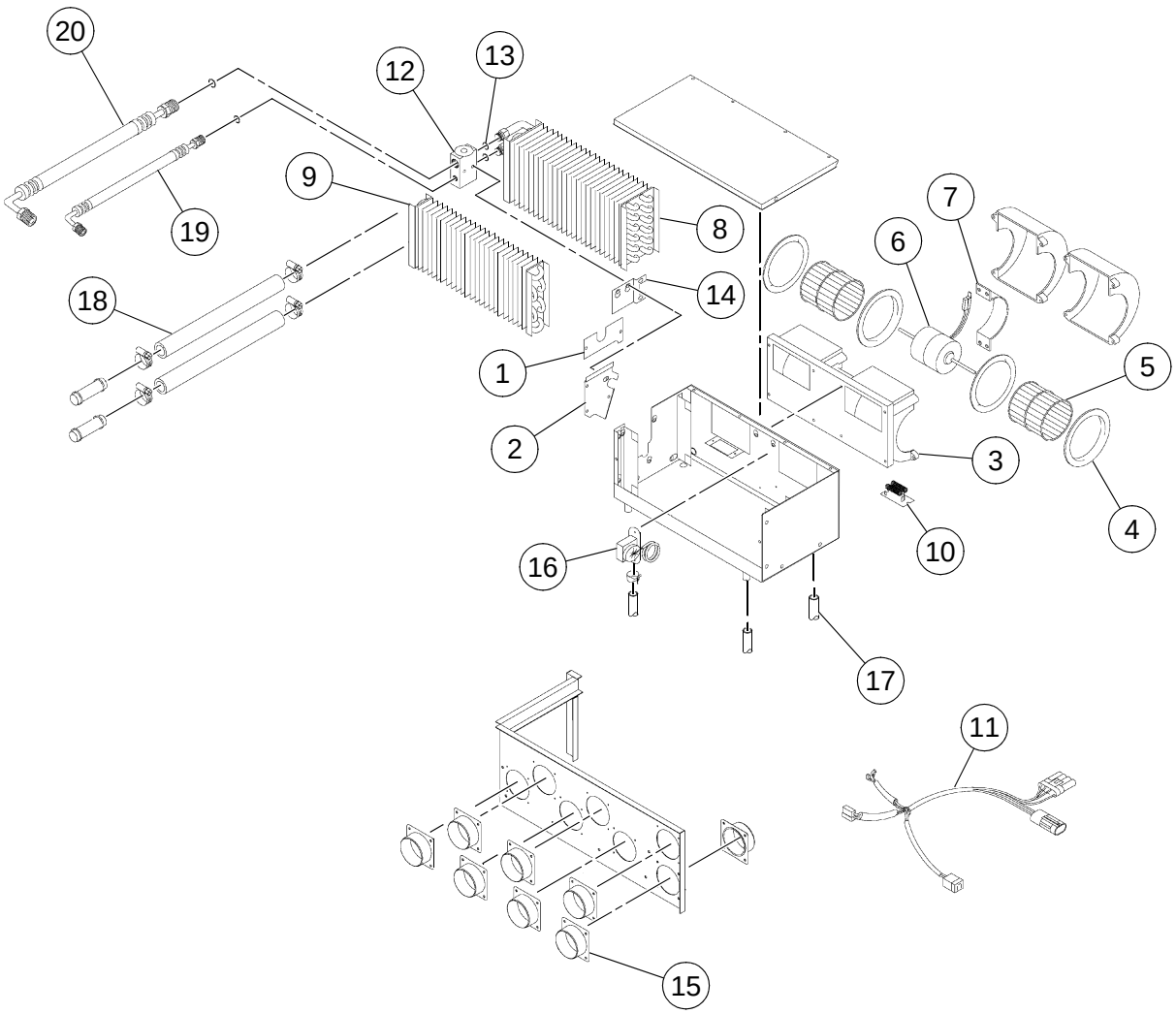

HEATER/EVAPORATOR (13237367) - INTERNAL BREAKDOWN

BOM 13237367

ITEM	COMM. NO.	DESCRIPTION	QTY	DIMENSIONS/NOTES
1	13258702	Coil Cover	1	
2	13258710	Coil Cover	1	
3	13258728	Blower, 12V	1	
4	13258694	- Venturi	2	
5	13258736	- Blower Wheel	2	
6	13258744	- Motor	1	12V
7	13258751	- Motor Mount	1	
8	13258868	Evaporator Coil	1	
9	13258769	Heater Coil	1	
10	13258777	Resistor 12V	1	
11	13258876	Wiring Harness	1	
12	13258884	Block Valve	1	
13	13258892	O-Ring	2	
14	13258900	Valve Bracket	1	
15	13258843	Hose Adapter	6	
16	57588162	Thermostat	1	
17	13258835	Drain Valve	4	
18	13258793	Heater Hose Assembly	2	
19	13258918	Hose Assembly	1	
20	13258926	Hose Assembly	1	

COMPRESSOR ASSEMBLY

Dwg 13274527/0a

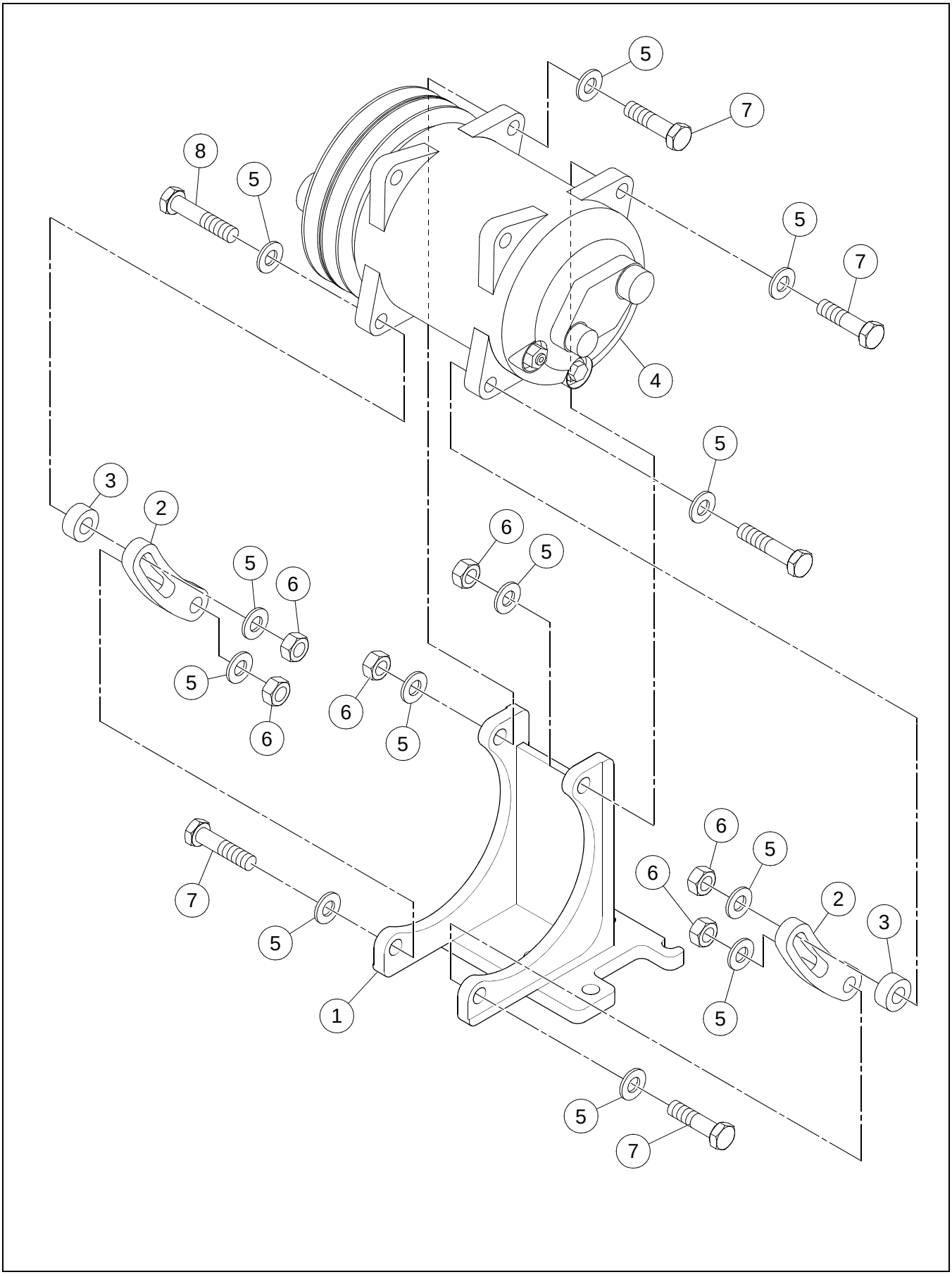

COMPRESSOR ASSEMBLY

BOM 13274527

ITEM	COMM. NO.	DESCRIPTION	QTY	DIMENSIONS/NOTES
1	13356134	Bracket	1	
2	59147991	Adjustment Arm	2	
3	59148007	Spacer	2	
4	13274535	Compressor	1	
5	96741046	Flatwasher, Zinc Plated	12	M10 Cl 200
6	96704812	Hex Nut, Zinc Plated	6	M10 x 1.5 Cl 8
7	96704358	HHCS, Zinc Plated	4	M10 x 1.5 x 40 Cl 8.8
8	96705116	HHCS, Fully Threaded, Zinc Plated	2	M10 x 1.5 x 50 Cl 8.8

CONDENSOR ASSEMBLY

Dwg D13273214/00

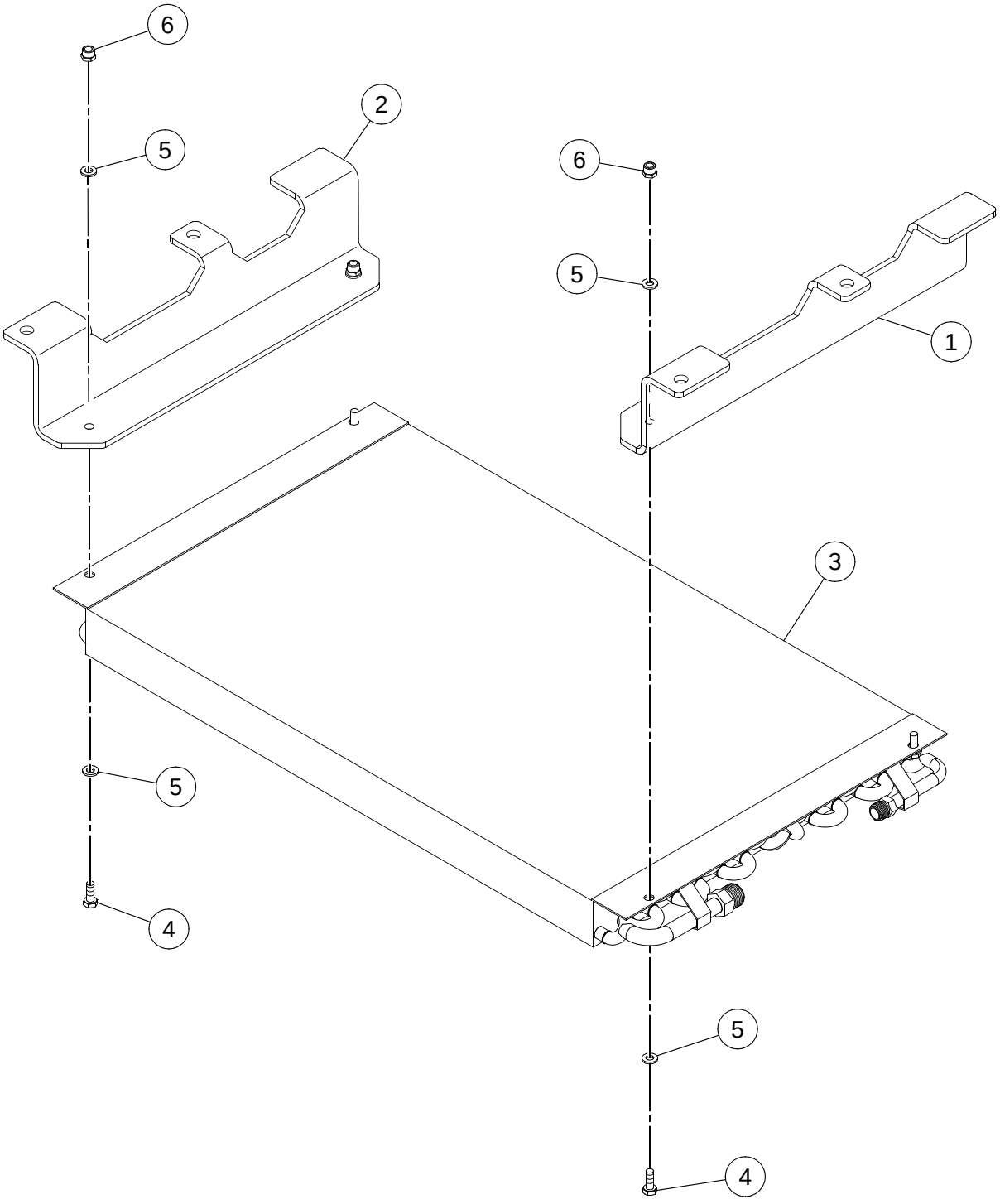

CONDENSOR ASSEMBLY

BOM 13273214

ITEM	COMM. NO.	DESCRIPTION	QTY	DIMENSIONS/NOTES
1	13274485	Condensor Bracket, RH	1	
2	13273230	Condensor Bracket, LH	1	
3	13356712	Condensor	1	
4	96704564	HHCS, Fully Threaded, Zinc Plated	4	M6 x 1 x 20 Cl 8.8
5	96704663	Washer, Zinc Plated	8	M6 Large
6	96704598	Hex Locknut, Zinc Plated	4	M6 Cl 8

CAB/HOOD DRAW LATCH INSTALLATION

Dwg 13883160/00

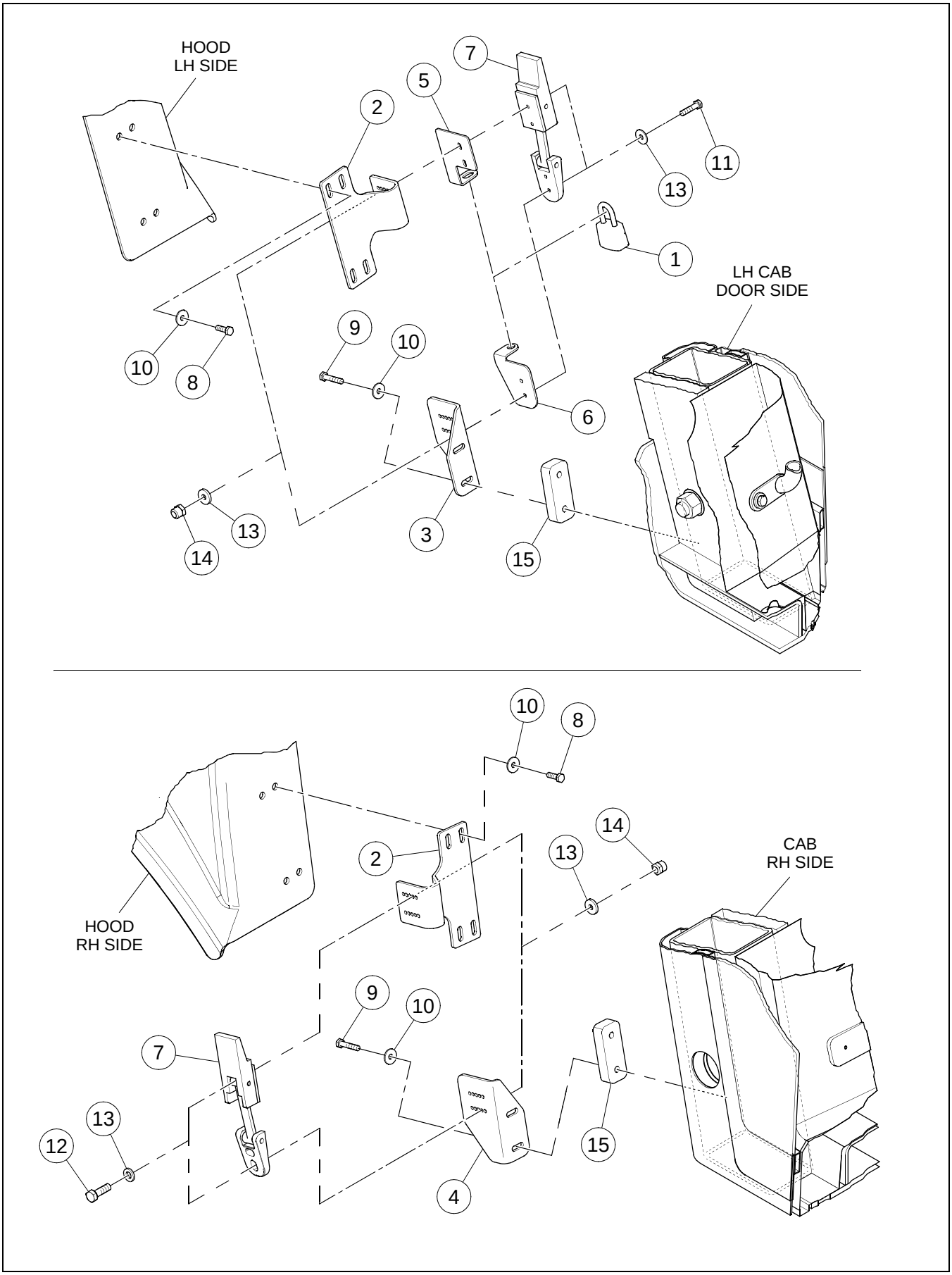

CAB/HOOD DRAW LATCH INSTALLATION

BOM 13883160

ITEM	COMM. NO.	DESCRIPTION	QTY	DIMENSIONS/NOTES
1	13349212	Lock	1	
2	43809086	Hood Bracket	2	
3	43809094	Cab Bracket	1	
4	43809102	Cab Bracket	1	
5	13885355	Lock Tab, RH	1	
6	59163238	Lock Tab, RH	1	
7	59162149	Latch	2	
8	96705587	HHCS, Fully Threaded, Zinc Plated	8	M8 x 1.25 x 30 Cl 8.8
9	96719786	HHCS, Zinc Plated	4	M8 x 1.25 x 40 Cl 8.8
10	96741038	Flatwasher	12	M8
11	96705736	HHCS, Fully Threaded, Zinc Plated	4	M5 x 0.8 x 20 Cl 8.8
12	96705728	HHCS, Zinc Plated	4	M5 x 0.8 x 16 Cl 8.8
13	95922332	Flatwasher	16	#10
14	96704580	Hex Locknut	8	M5
15	13881370	Spacer Block	2	

SEAT BELT INSTALLATION

Dwg 43803394/00

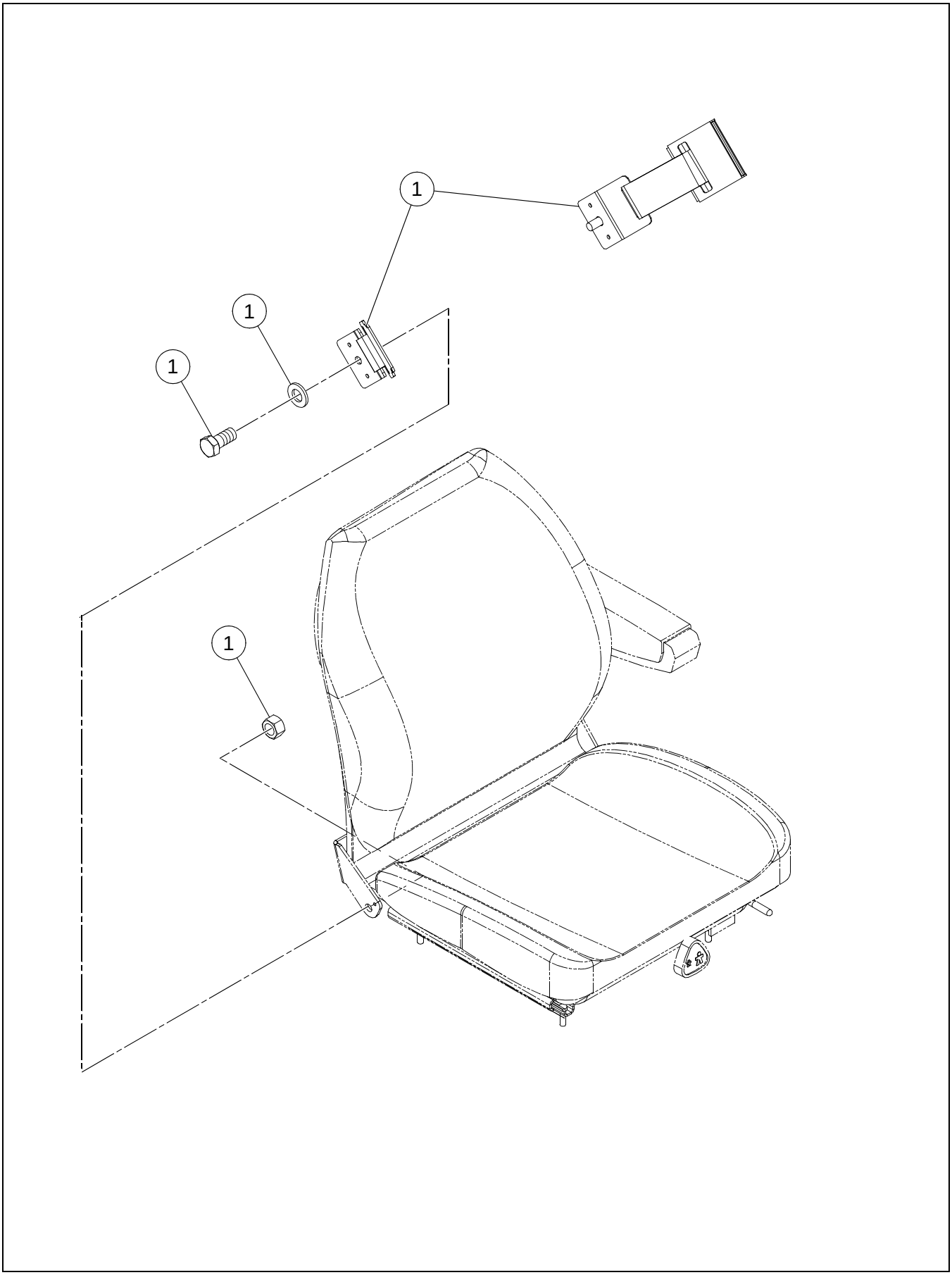

BOM 43803394

ITEM	COMM. NO.	DESCRIPTION	QTY	DIMENSIONS/NOTES
1	13342720	Retractable Seatbelt	1	3.0"

TILT STEERING WHEEL (CAB)

Dwg 43818871/00

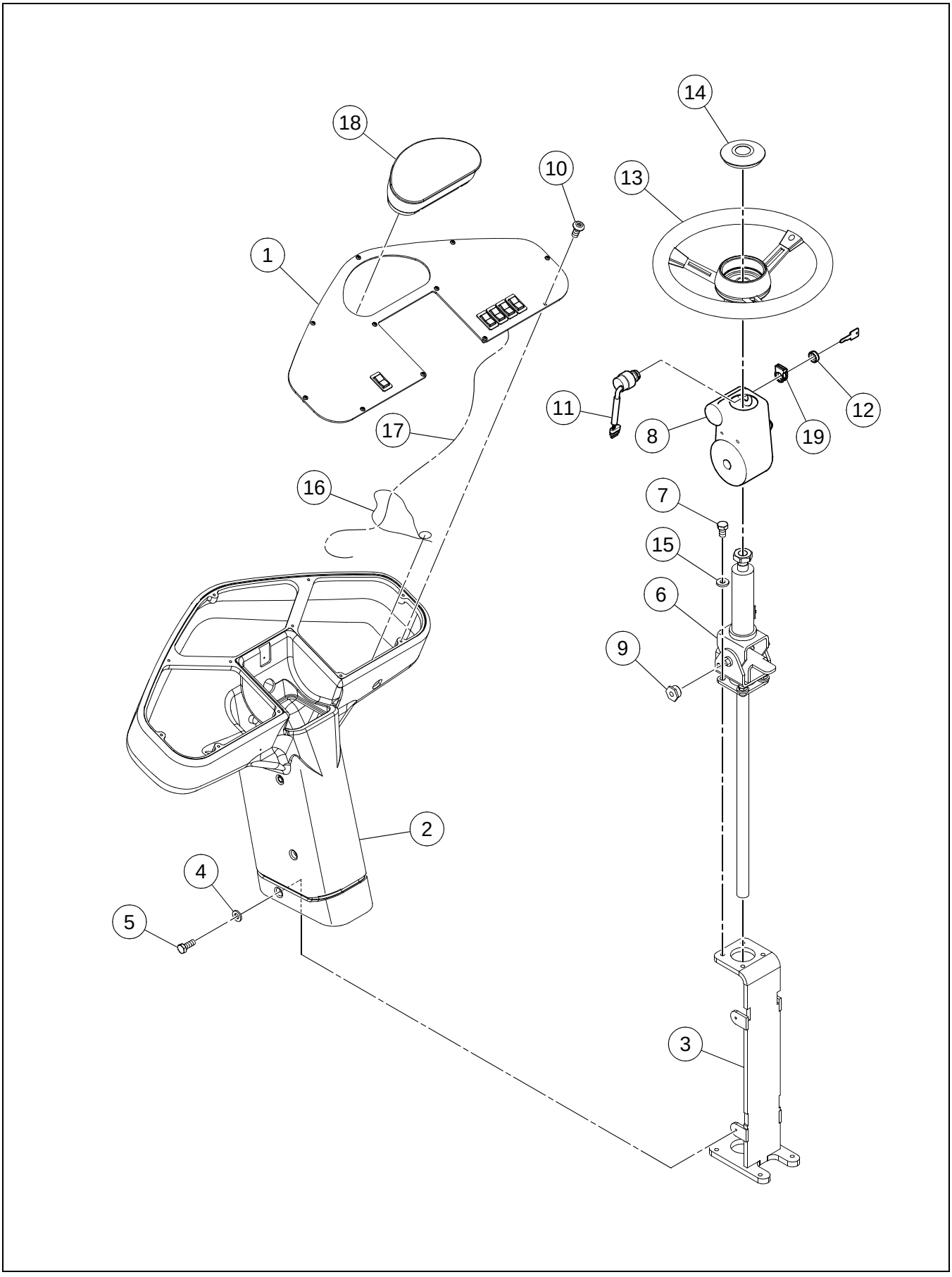

TILT STEERING WHEEL (CAB)

BOM 43819978

ITEM	COMM. NO.	DESCRIPTION	QTY	DIMENSIONS/NOTES
1		This item not used with this Assembly		
2		This item not used with this Assembly		
3		This item not used with this Assembly		
4		This item not used with this Assembly		
5		This item not used with this Assembly		
6	13319942	Tilt Steering Column	1	
7		This item not used with this Assembly		
8	13335492	Tilt Cover Column	1	
9		This item not used with this Assembly		
10		This item not used with this Assembly		
11		This item not used with this Assembly		
12		This item not used with this Assembly		
13		This item not used with this Assembly		
14		This item not used with this Assembly		
15		This item not used with this Assembly		
16		This item not used with this Assembly		
17		This item not used with this Assembly		
18		This item not used with this Assembly		
19		This item not used with this Assembly		

PRE-CAB WITH HEATING AND AIR CONDITIONING - EFFECTIVE WITH S/N 190193, INCLUDING 189806 - OPTION

Dwg 19330778/0e

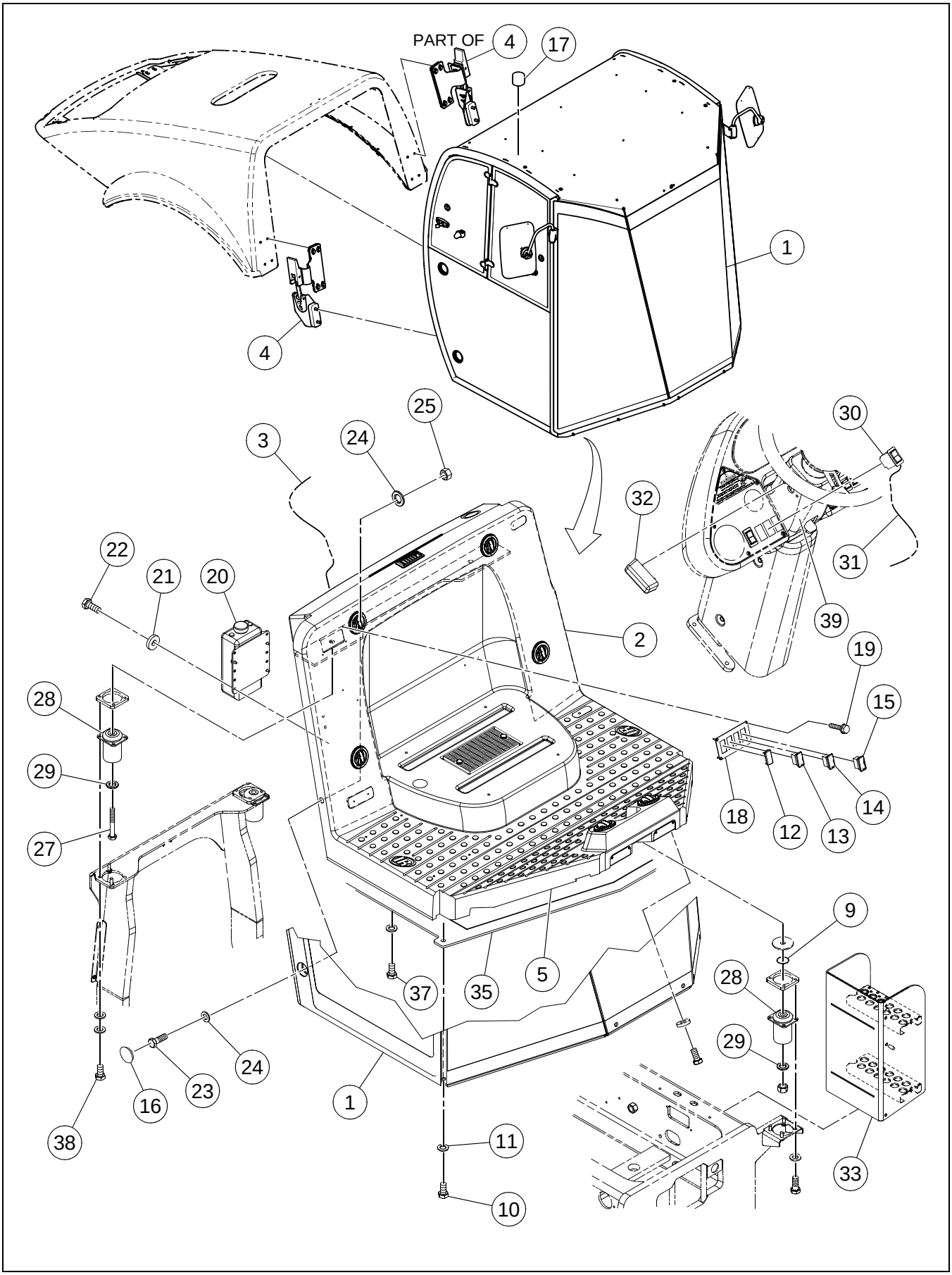

BOM 43821826, 43821834

ITEM	COMM. NO.	DESCRIPTION	QTY	DIMENSIONS/NOTES
1		This item not used with this Assembly		
2	**NSVA**	**Cab Heater Assembly**	**1**	**See Page A - 44.**
3	13492822	Harness Cab And Hvac	1	
4	**NSVA**	**No ROPS/Hood Draw Latch Installation**	**1**	**See Page A - 88.**
5	43836451	Rubber Seal	1	
9	96746417	Washer	4	
10		This item not used with this Assembly		
11		This item not used with this Assembly		
12	58835398	Switch Blank	1	
13	59196451	Wiper Switch, Front	1	
14	59196444	Wiper Switch, Rear	1	
15	59195925	Switch	1	
16		This item not used with this Assembly		
17		This item not used with this Assembly		
18	13212576	Control Panel	1	
19	95988093	Self Tapping Screw	4	#6 x 3/4
20	13215769	Washer Bottle	1	
-	13228242	- Cap	1	
-	13228259	- Pump	1	
21	96712674	Washer	4	Hardened
22	96702824	HHCS, Fully Threaded, Zinc Plated	4	M8 x 1.25 x 20 Cl 8.8
23		This item not used with this Assembly		
24		This item not used with this Assembly		
25		This item not used with this Assembly		
27	96741442	HHCS, Zinc Plated	2	M20 x 2.5 x 140 Cl 8.8
28	13225503	Hystec Isolator	4	
29	96701560	Flatwasher	4	M20 Hardened
30	13197108	F/R Worklights Switch	1	
31	43818848	Work Lights Harness (Eff S/N 194400)	1	
-	13225560	Work Lights Harness (Prior to S/N 194400)	1	
32	13322102	Light Panel Assembly (Eff S/N 194400)	2	
-	13248935	Dash Lights (Prior to S/N 194400)	2	
33		This item not used with this Assembly		
35	43868710	ROPS Supt Platform	1	
37	96704556	HHCS, Zinc Plated	6	M10 x 1.5 x 40 Cl 8.8
38	96703111	HHCS, Fully Threaded, Zinc Plated	8	M12 x 1.75 x 35 Cl 10.9
39	13335484	Fixed Cover Column	1	

NO ROPS/HOOD DRAW LATCH INSTALLATION

Dwg 13882907/00

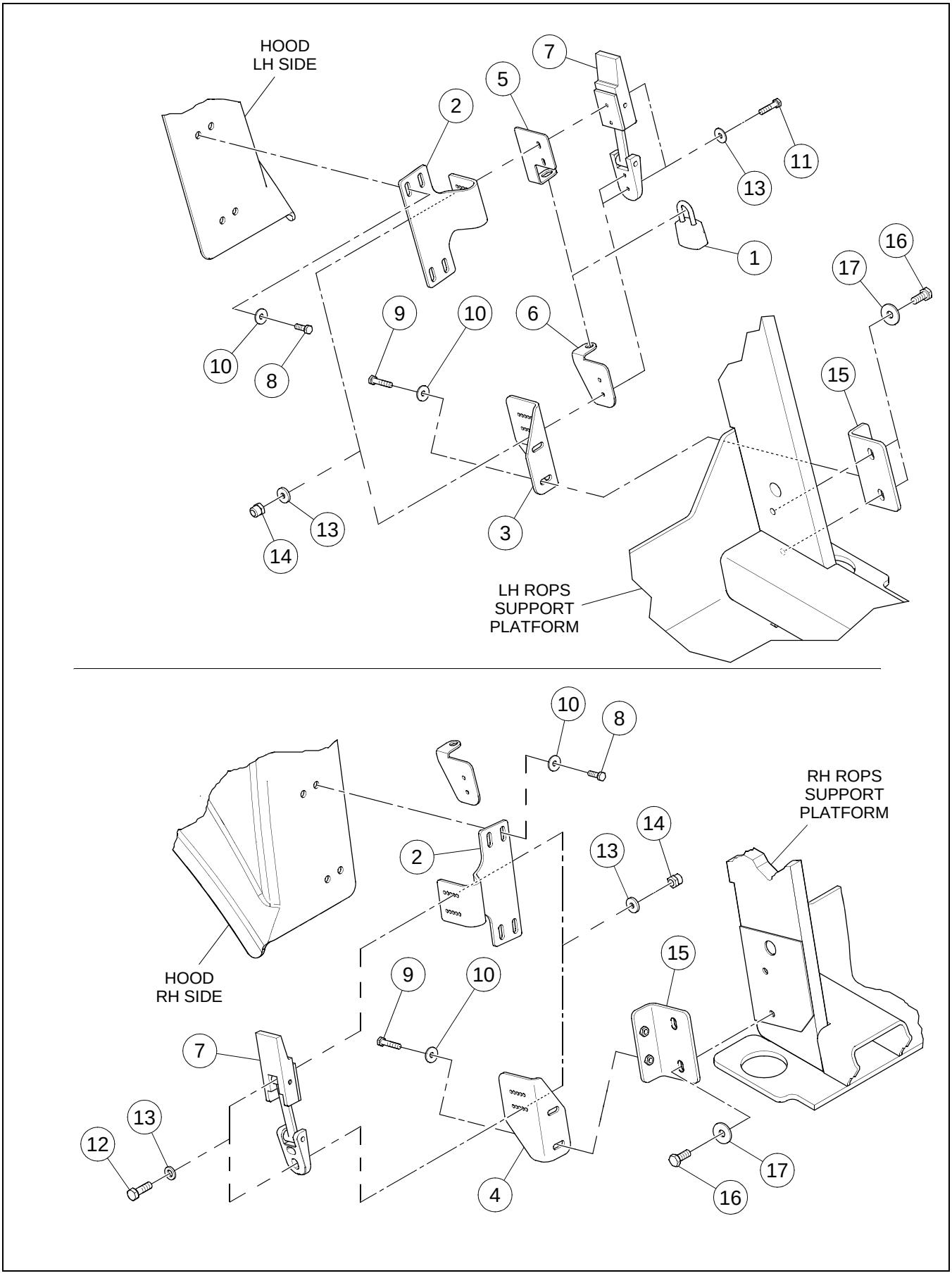

NO ROPS/HOOD DRAW LATCH INSTALLATION

BOM 13882907

ITEM	COMM. NO.	DESCRIPTION	QTY	DIMENSIONS/NOTES
1	13349212	Lock	1	
2	13881545	Hood Bracket	2	
3	13881537	ROPS Bracket, LH	1	
4	13881529	ROPS Bracket, RH	1	
5	13885355	Lock Tab, RH	1	
6	59163238	Lock Tab, RH	1	
7	59162149	Latch	2	
8	96705587	HHCS, Fully Threaded, Zinc Plated	8	M8 x 1.25 x 30 Cl 8.8
9	96702659	HHCS, Zinc Plated	4	M8 x 1.25 x 25 Cl 8.8
10	96741038	Flatwasher	12	M8
11	96705736	HHCS, Fully Threaded, Zinc Plated	4	M5 x 0.8 x 20 Cl 8.8
12	96705728	HHCS, Zinc Plated	4	M5 x 0.8 x 16 Cl 8.8
13	95922332	Flatwasher	16	#10
14	96704580	Hex Locknut	8	M5
15	13881628	No ROPS Mounting Bracket	2	
16	96702824	HHCS, Fully Threaded, Zinc Plated	4	M8 x 1.25 x 20 Cl 8.8
17	96741046	Flatwasher	4	M10

CAB WITH HEATER INSTALLATION - PRIOR TO S/N 190193, EXCLUDING 189806 - OPTIONAL - SHEET 1 OF 2

Dwg 13255369/0g

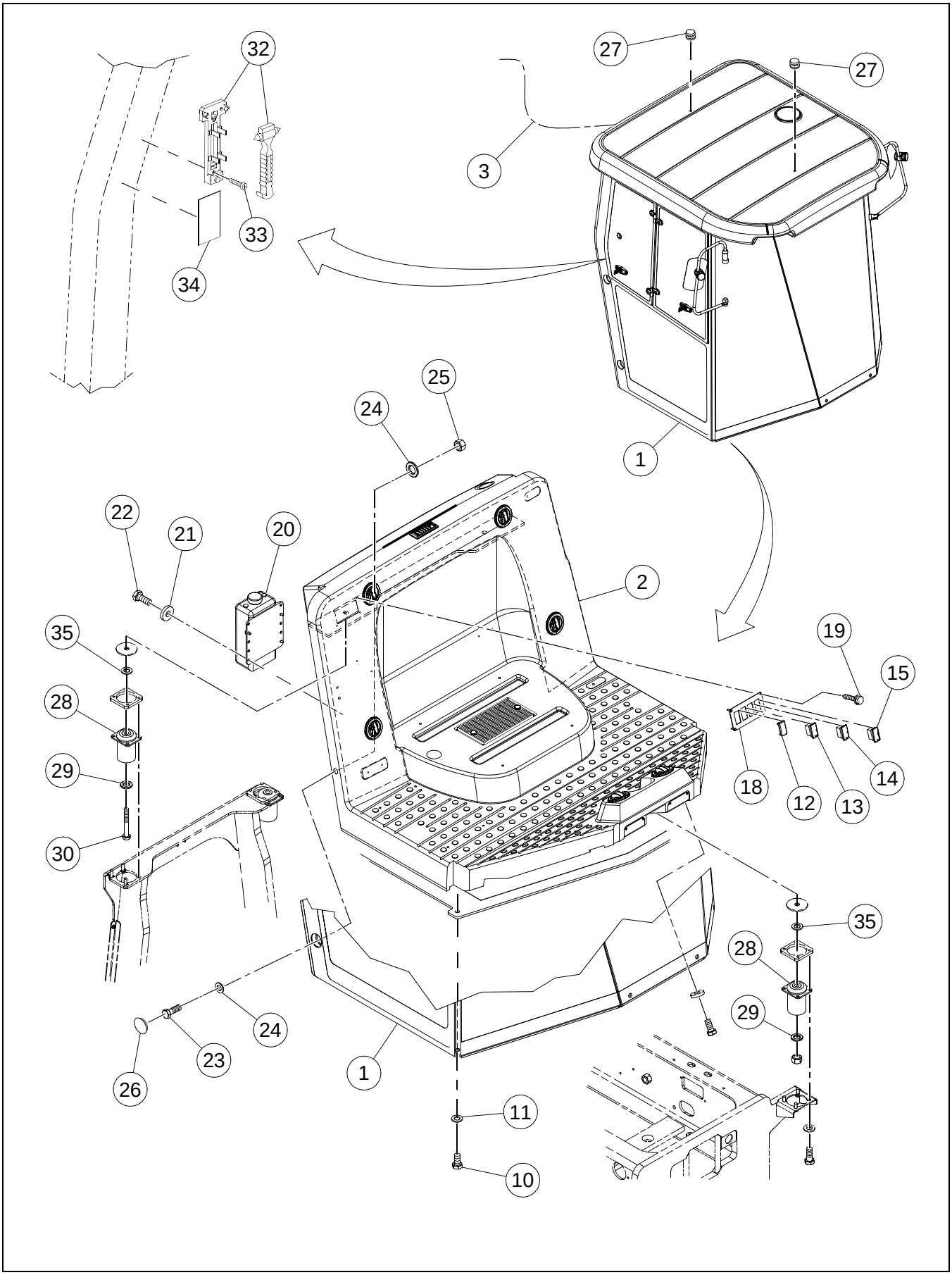

CAB WITH HEATER INSTALLATION - PRIOR TO S/N 190193, EXCLUDING 189806 - OPTIONAL - SHEET 1 OF 2

BOM 13368519, 13368527

ITEM	COMM. NO.	DESCRIPTION	QTY	DIMENSIONS/NOTES
1	**13410956**	**Cab Assembly (Prior to S/N 189996 Excluding 189806)**	**1**	**See Breakdown A - 110.**
2	**NSVA**	**Cab Heater Assembly - Optional**	**1**	**See Page A - 122.**
3	13492822	Cab Wire Harness	1	
10	96703178	HHCS, Fully Threaded, Zinc Plated	2	M16 x 20 x 30 Cl 8.8
11	96738612	Flatwasher, Zinc Plated	2	M16 Hardened Cl 200
12	58835398	Blank Plug	1	
13	59196451	Front Wiper Switch	1	
14	59196444	Rear Wiper Switch	1	
15	59195925	Washer Switch	1	
18	13212576	Control Panel	1	
19	95988093	Self-tapping Screw, Zinc Plated	4	#6 x 3/4
20	13215769	Washer Bottle	1	
-	13228242	- Washer Bottle Cap	1	
-	13228259	- Washer Bottle Pump	1	
21	96712674	Washer, Zinc Plated	4	M8 Hardened Cl 10
22	96702824	HHCS, Fully Threaded, Zinc Plated	4	M8 x 1.25 x 20 Cl 8.8
23	96720032	HHCS, Fully Threaded, Zinc Plated	4	M24 x 3.0 x 70 Cl 8.8
24	96702642	Washer, Zinc Plated	8	M24 Hardened
25	96727532	Hex Nut, Zinc Plated	4	M24 x 3 Cl 8
26	13309877	Plug	4	
27	59326827	Domed Plug	2	
28	13225503	Isolator (SD-70D/F only)	4	
29	96701560	Flatwasher, Zinc Plated (SD-70D/F only)	2	M20 Hardened
30	96741442	BHCS, Zinc Plated (SD-70D/F only)	2	M20 x 2.5 x 140 Cl 8.8
32	13410964	Escape Hammer	1	
33	96714365	Screw, Zinc Plated - SD-70D/70F	3	M4 x 0.07 x 20 Cl 8.8
-	96743653	Screw, Zinc Plated - SD-77DX/77F	3	M4 x 0.7 x 12 Cl 8.8
34	13396452	Decal: Emergency Exit	1	
35	96746417	Washer	4	

CAB WITH HEATER INSTALLATION - PRIOR TO S/N 190193, EXCLUDING 189806 - OPTIONAL - SHEET 2 OF 2

Dwg 13255369/0g

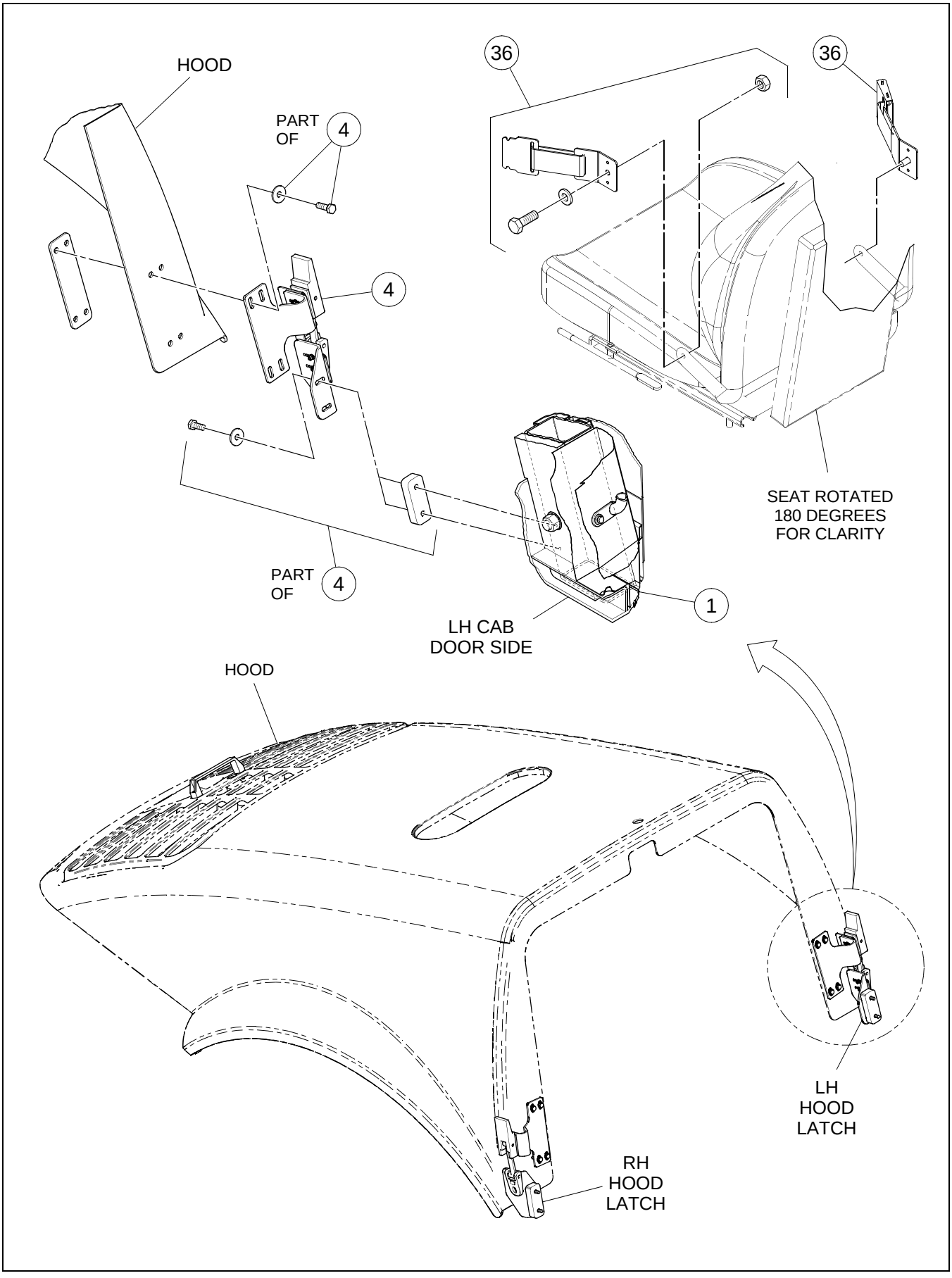

CAB WITH HEATER INSTALLATION - PRIOR TO S/N 190193, EXCLUDING 189806 - OPTIONAL - SHEET 2 OF 2

BOM 13368519, 13368527

ITEM	COMM. NO.	DESCRIPTION	QTY	DIMENSIONS/NOTES
1	**13410956**	**Cab Assembly (Prior to S/N 189996 Excluding 189806)**	**1**	**See Breakdown A - 110.**
4	**NSVA**	**Hood Cab Draw Latch Installation**	**1**	**See Page A - 134.**
31	59946863	Seal Trim (Not Shown)	4	
36	**NSVA**	**Seat Belt - Optional**	**1**	**See Page A - 136.**

CAB HEATER ASSEMBLY - OPTIONAL - SHEET 1 OF 2

Dwg 13273503/0d/01

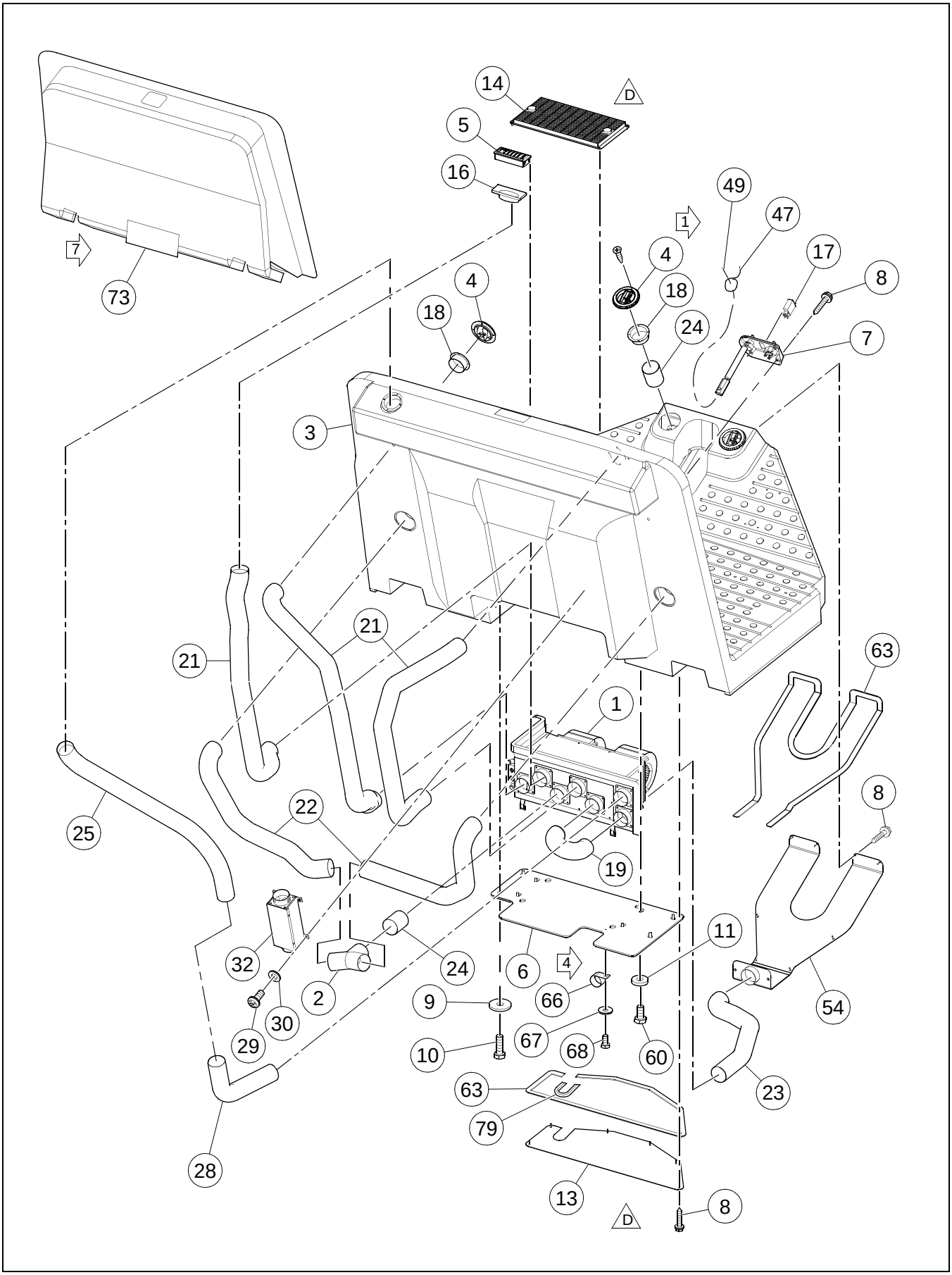

CAB HEATER ASSEMBLY - OPTIONAL - SHEET 1 OF 2

BOM 13273503

ITEM	COMM. NO.	DESCRIPTION	QTY	DIMENSIONS/NOTES
1	**13237888**	**Heater**	**1**	**See Breakdown A - 98.**
2	13162094	Y-Splicer	1	
3	43843564	Operators Platform	1	
4	13161724	Louver	6	
5	13179197	Louver	1	
6	13237326	Mounting Plate	1	
7	13254644	Heater Control Panel	1	
8	96728548	Self-tapping Screw, Zinc Plated	19	1.6
9	96740188	Washer, Zinc Plated	4	M8 x 3 Cl HV100
10	96702659	HHCS, Fully Threaded, Zinc Plated	4	M8 x 1.25 x 25 Cl 8.8
11	96712674	Washer, Zinc Plated	6	M8 Hardened Cl 10
13	13502083	Cover Plate	1	
14	NSS	Air Recirculation Filter Assembly	1	
-	13200019	- Recirculation Filter Cover	1	
-	13161757	- Air Recirculation Filter	1	
-	13200001	- Recirculation Filter Grill	1	
16	13179403	Louver Adapter	1	
17	13156997	Control Panel Plug	1	
18	13161732	Louver Adapter	7	
19	13176508	Bottom Duct Hose	1	
21	13295712	Upper Side Duct Hose	3	
22	13176516	Lower Side Duct Hose	2	
23	13176532	Plenum Hose	1	
24	59290742	Connector Hose	3	
25	59290734	Top Fresh Air Duct Hose	1	
28	59290783	Bottom Fresh Air Duct Hose	1	
29	54487517	Self-tapping Screw	4	14 x 1
30	96738554	Flatwasher, Zinc Plated	4	M5 Hardened Cl 200
32	59290767	Fresh Air Filter	1	
-	13262464	- Air Filter	1	
47	95373973	Wire Tie	A/R	
49	13200035	Wiring Harness	1	
50	13209887	Wood Screw (Not Shown)	14	
54	13234893	Plenum	1	
60	96702824	HHCS, Fully Threaded, Zinc Plated	6	M8 x 1.25 x 20 Cl 8.8
63	35898477	Foamtape	A/R	
66	95378873	Hose Clamp	1	
67	96704663	Washer, Zinc Plated	1	M6 Large
68	96702394	HHCS, Fully Threaded, Zinc Plated	1	M6 x 1 x 12 Cl 8.8
73	59290817	Foam	1	
79	13467485	Seal Trim	1	

CAB HEATER ASSEMBLY - OPTIONAL - SHEET 2 OF 2

Dwg 13273503/0d/02

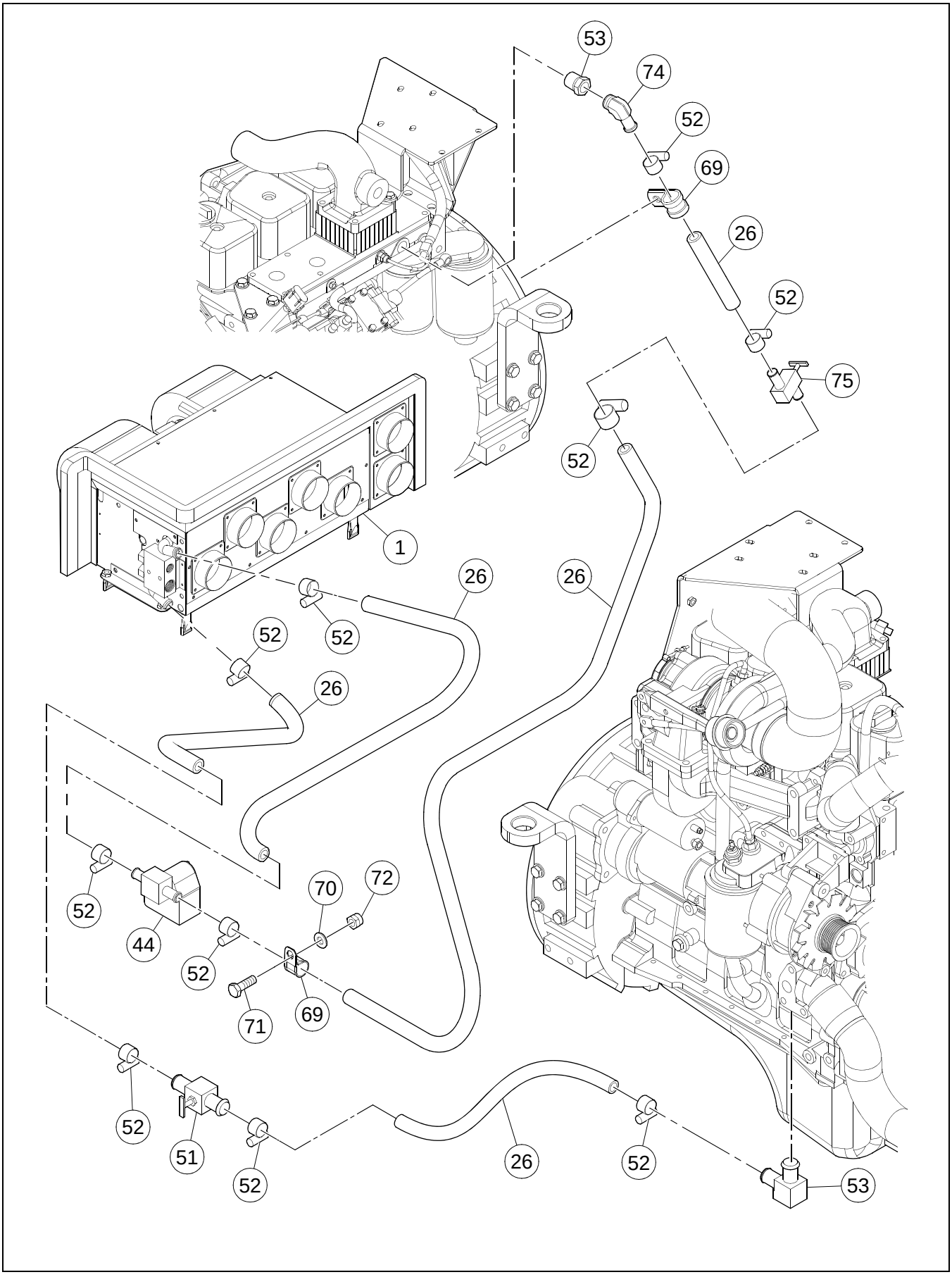

BOM 13273503

ITEM	COMM. NO.	DESCRIPTION	QTY	DIMENSIONS/NOTES
1	**13237888**	**Heater**	**1**	**See Breakdown A - 98.**
26	95285144	Heater Hose	1	
44	**13200027**	**Heater Valve**	**1**	**See Breakdown A - 100.**
51	13254909	Valve	2	
52	95671285	Hose Clamp	10	
53	59924241	External Reducer	1	
69	59465674	Clamp	2	
70	96741046	Flatwasher, Zinc Plated	1	M10 Cl 200
71	96701917	HHCS, Fully Threaded, Zinc Plated	1	M10 x 1.5 x 30 Cl 8.8
72	96704614	Nut, Zinc Plated	1	M10 x 1.5 Cl 8
74	13273818	Elbow, Male	1	
75	13254909	Shut-off Valve	1	
76	58962226	Elbow, Male (Not Shown)	1	

HEATER (13237888) - INTERNAL BREAKDOWN

Dwg 13244652/00

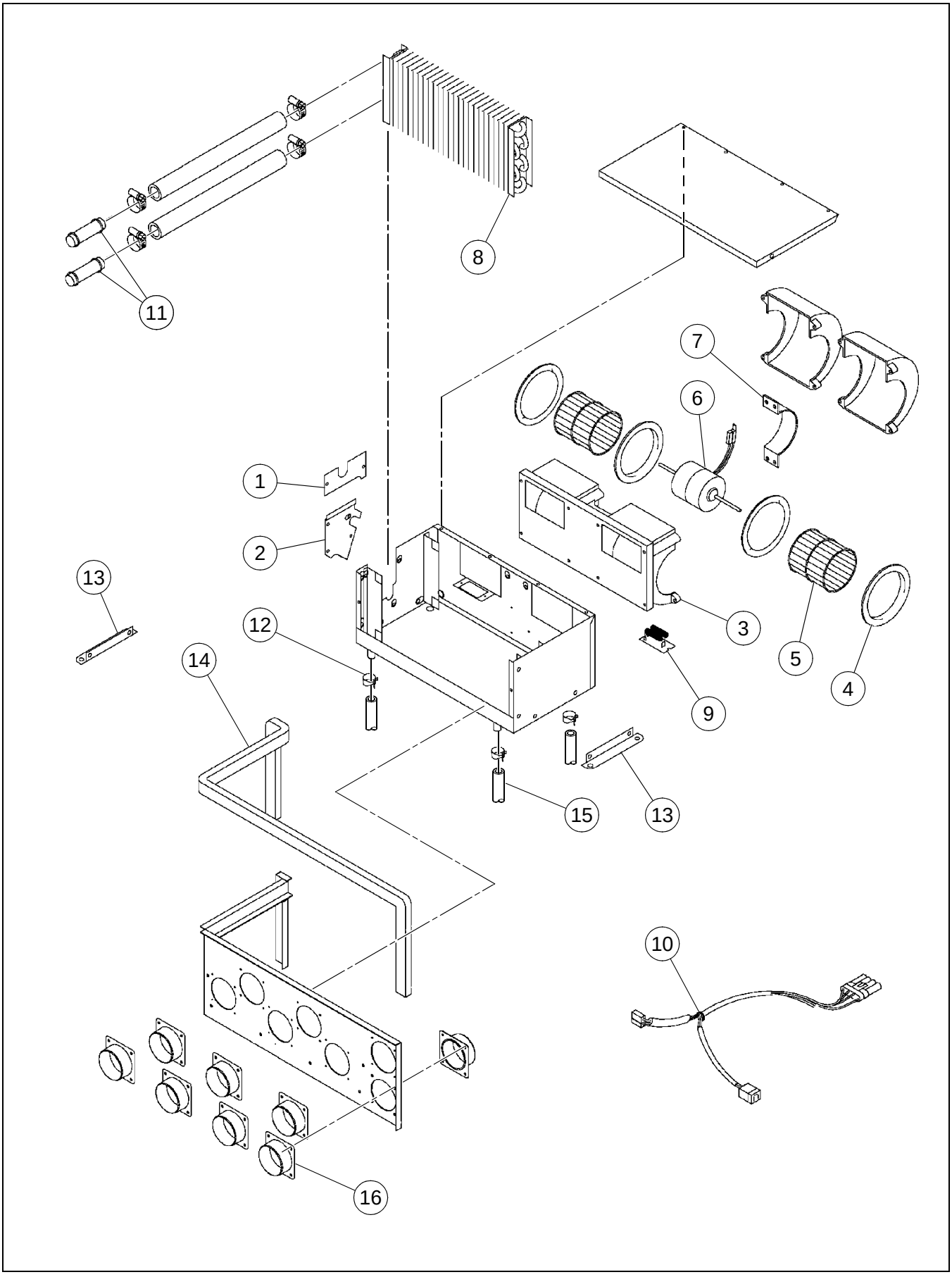

HEATER (13237888) - INTERNAL BREAKDOWN

BOM 13237888

ITEM	COMM. NO.	DESCRIPTION	QTY	DIMENSIONS/NOTES
1	13258702	Coil Cover	1	
2	13258710	Coil Cover	1	
3	13258728	Blower, 12V	1	
4	13258694	- Venturi	2	
5	13258736	- Blower Wheel	2	
6	13258744	- Motor, 12V	1	
7	13258751	- Motor Mount	1	
8	13258769	Heater Coil	1	
9	13258777	Resisto	1	12V
10	13258785	Wiring Harness	1	
11	13258793	Heater Hose Assembly	2	
12	13258801	Drain Hose Clamp	4	
13	13258819	Mounting Bracket	1	
14	13258827	Foam Seal	1	
15	13258835	Drain Valve	4	
16	13258843	Hose Adapter	6	

HEATER VALVE (13200027) - INTERNAL BREAKDOWN

Dwg D13244645/00

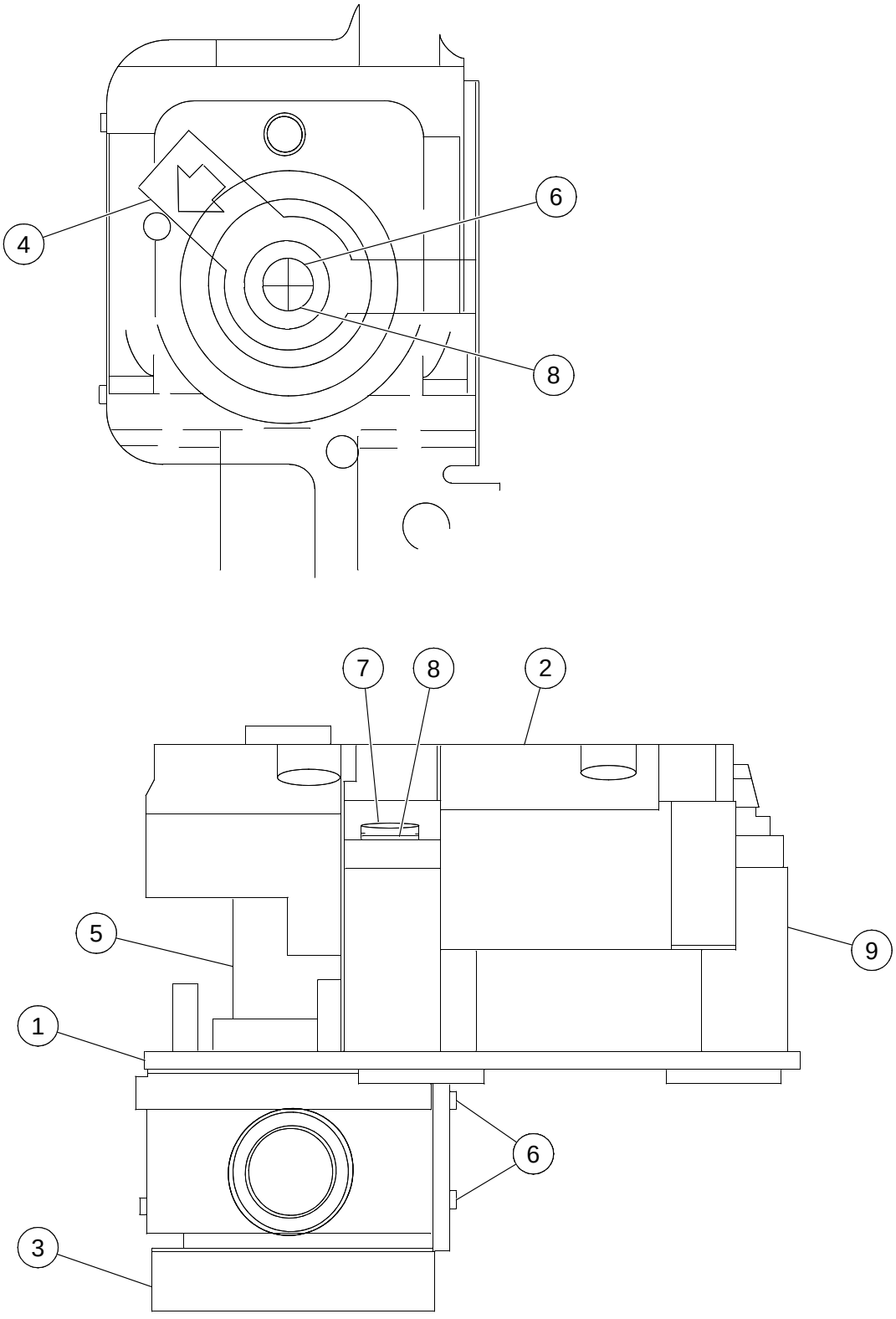

HEATER VALVE (13200027) - INTERNAL BREAKDOWN

BOM 13200027

ITEM	COMM. NO.	DESCRIPTION	QTY	DIMENSIONS/NOTES
1	13258942	Mounting Bracket	1	
2	13258959	Motor Adaptor	1	
3	13258967	Heater Valve	1	
4	13258975	Valve Lever Arm	1	
5	13258983	Shaft Adapter	1	
6	13258991	Plastite Screw	3	
7	13259007	Screw	3	
8	13259015	Washer	4	
9	13259023	Spacer	3	

HOOD CAB DRAW LATCH INSTALLATION - SHEET 1 OF 2

Dwg 13881701/02

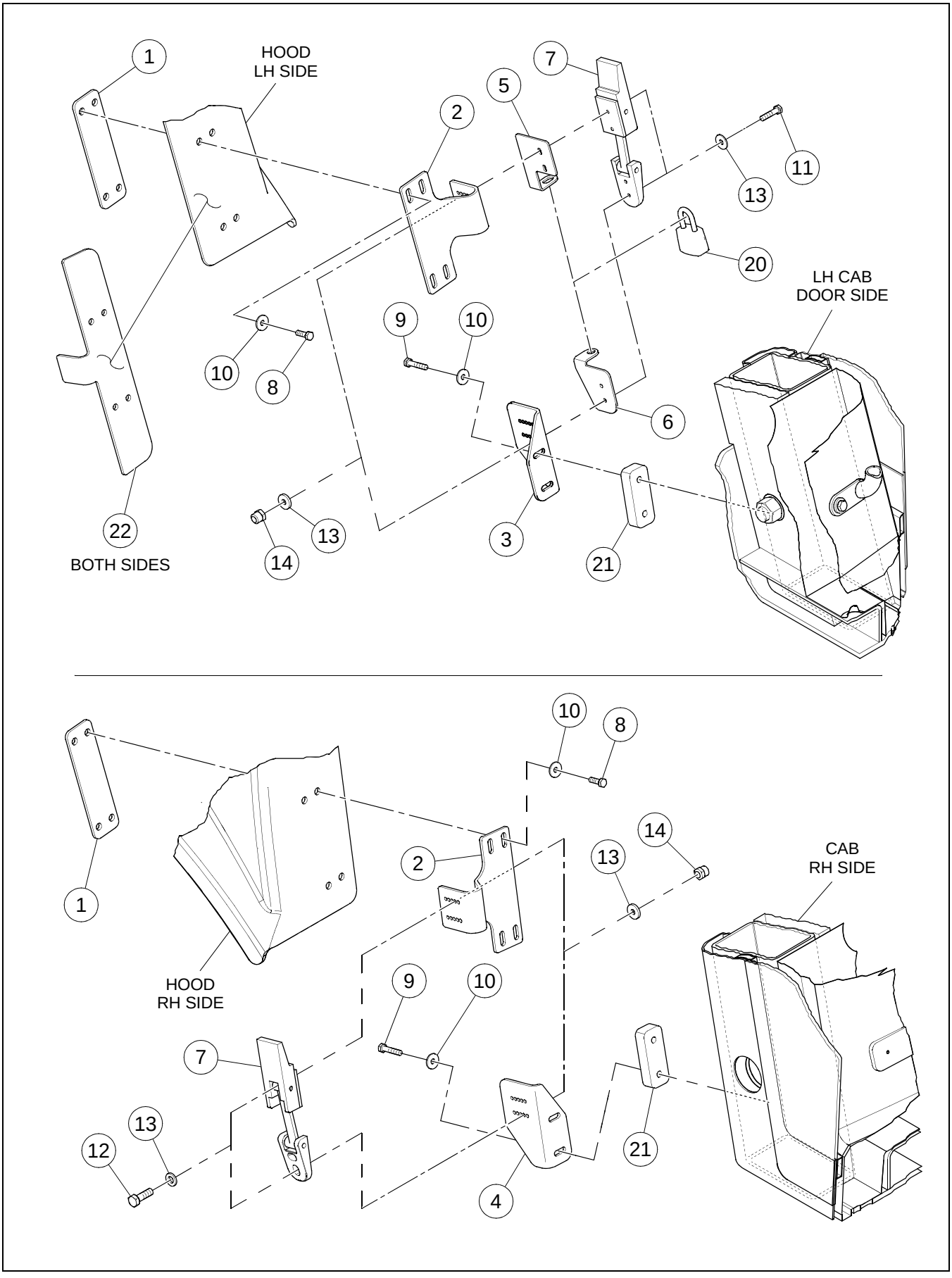

HOOD CAB DRAW LATCH INSTALLATION - SHEET 1 OF 2

BOM 13881701

ITEM	COMM. NO.	DESCRIPTION	QTY	DIMENSIONS/NOTES
1	13881560	Backing Plate	2	
2	13881545	Hood Bracket	2	
3	13881784	Rops Bracket, LH	1	
4	13881792	Rops Bracket, RH	1	
5	13885355	Lock Tab, RH	1	
6	59163238	Lock Tab, RH	1	
7	59162149	Latch	2	
8	96705587	HHCS, Fully Threaded, Zinc Plated	8	M8 x 1.25 x 30 Cl 8.8
9	96728704	HHCS, Zinc Plated	4	M8 x 1.25 x 40 Cl 8.8
10	96741038	Flatwasher	14	M8
11	96705736	HHCS, Fully Threaded, Zinc Plated	4	M5 x 0.8 x 20 Cl 8.8
12	96705728	HHCS, Zinc Plated	4	M5 x 0.8 x 16 Cl 8.8
13	95922332	Flatwasher	16	#10
14	96704580	Hex Locknut	8	M5
20	13349212	Lock	1	
21	13881370	Spacer Block	2	
22		This item not used with this Assembly		

HOOD CAB DRAW LATCH INSTALLATION - SHEET 2 OF 2

Dwg 13881701/02

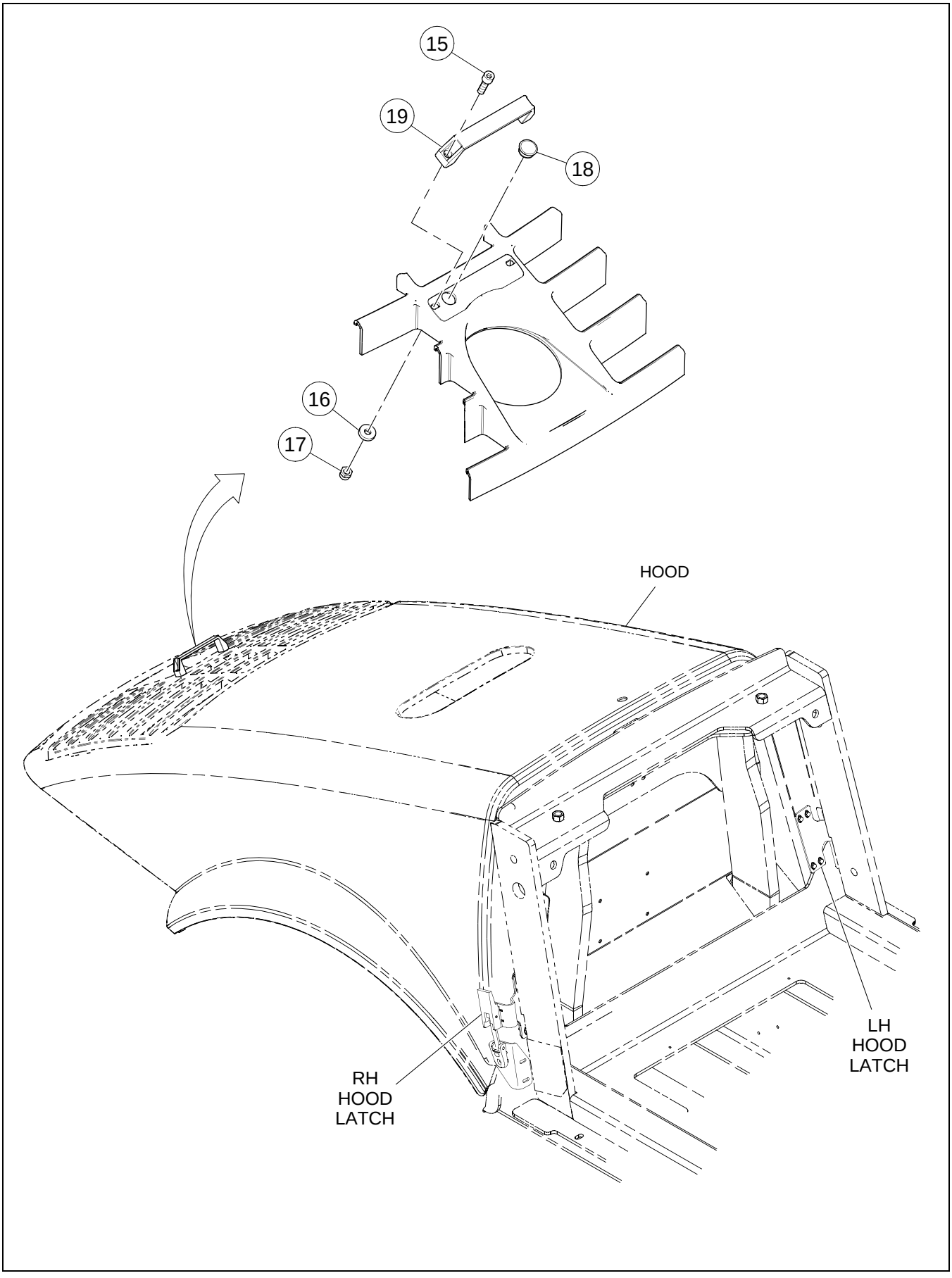

HOOD CAB DRAW LATCH INSTALLATION - SHEET 2 OF 2

BOM 13881701

ITEM	COMM. NO.	DESCRIPTION	QTY	DIMENSIONS/NOTES
15	96702469	SHCS	2	M8 x 30
16	96712674	Washer	2	Hardened
17	96704606	Hex Locknut	2	M8
18	59876219	Head Plug	1	
19	59187799	Handle Plastic Pull	1	

CAB W/HEATER AND AIR CONDITIONING INSTL - PRIOR S/N 190193, EXCL 189806 - OPTIONAL - SHEET 1 OF 2

Dwg 13255369/0g

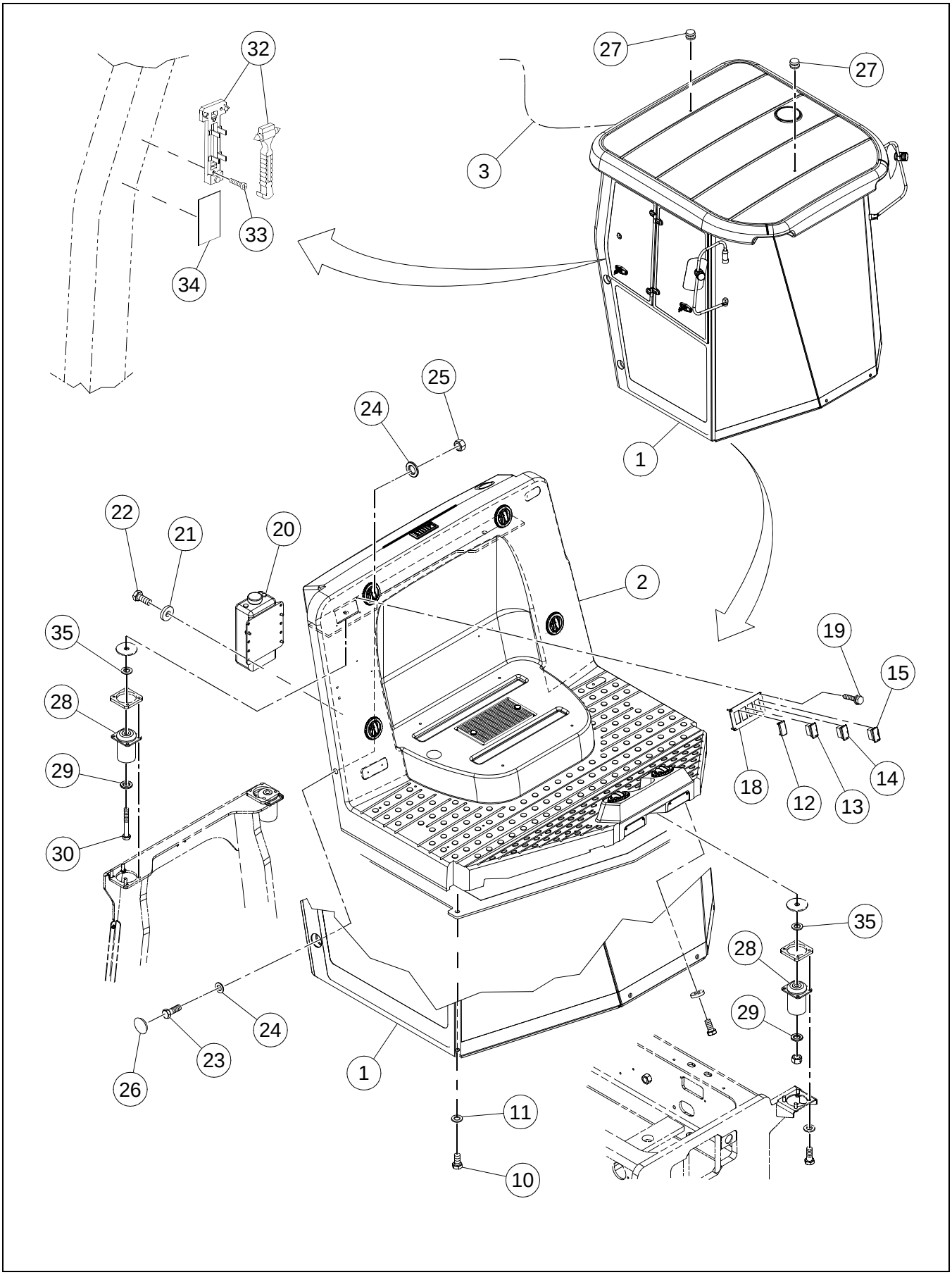

CAB W/HEATER AND AIR CONDITIONING INSTL - PRIOR S/N 190193, EXCL 189806 - OPTIONAL - SHEET 1 OF 2

BOM 13369459, 13369467

ITEM	COMM. NO.	DESCRIPTION	QTY	DIMENSIONS/NOTES
1	**13410956**	**Cab Assembly (Prior to S/N 189996 Excluding 189806)**	**1**	**See Breakdown A - 110.**
2	**NSVA**	**Cab Heater And A/C Assembly - Optional**	**1**	**See Page A - 122.**
3	13492822	Cab Heater And A/C Wire Harness	1	
10	96703178	HHCS, Fully Threaded, Zinc Plated	2	M16 x 20 x 30 Cl 8.8
11	96738612	Flatwasher, Zinc Plated	2	M16 Hardened Cl 200
12	58835398	Blank Plug	1	
13	59196451	Front Wiper Switch	1	
14	59196444	Rear Wiper Switch	1	
15	59195925	Washer Switch	1	
18	13212576	Control Panel	1	
19	95988093	Self-tapping Screw, Zinc Plated	4	#6 x 3/4
20	13215769	Washer Bottle	1	
-	13228242	- Washer Bottle Cap	1	
-	13228259	- Washer Bottle Pump	1	
21	96712674	Washer, Zinc Plated	4	M8 Hardened Cl 10
22	96702824	HHCS, Fully Threaded, Zinc Plated	4	M8 x 1.25 x 20 Cl 8.8
23	96720032	HHCS, Fully Threaded, Zinc Plated	4	M24 x 3.0 x 70 Cl 8.8
24	96702642	Washer, Zinc Plated	8	M24 Hardened
25	96727532	Hex Nut, Zinc Plated	4	M24 x 3 Cl 8
26	13309877	Plug	4	
27	59326827	Domed Plug	2	
28	13225503	Isolator (SD-70D/70F only)	4	
29	96701560	Flatwasher, Zinc Plated (SD-70D/70F only)	2	M20 Hardened
30	96741442	BHCS, Zinc Plated (SD-70D/70F only)	2	M20 x 2.5 x 140 Cl 8.8
31	59946863	Seal Trim (Not Shown)	4	
32	13410964	Escape Hammer	1	
33	96714365	Screw, Zinc Plated	3	M4 x 0.07 x 20 Cl 8.8
34	13396452	Decal: Emergency Exit	1	
35	96746417	Washer	4	

CAB W/HEATER AND AIR CONDITIONING INSTL - PRIOR S/N 190193, EXCL 189806 - OPTIONAL - SHEET 2 OF 2

Dwg 13255369/0g

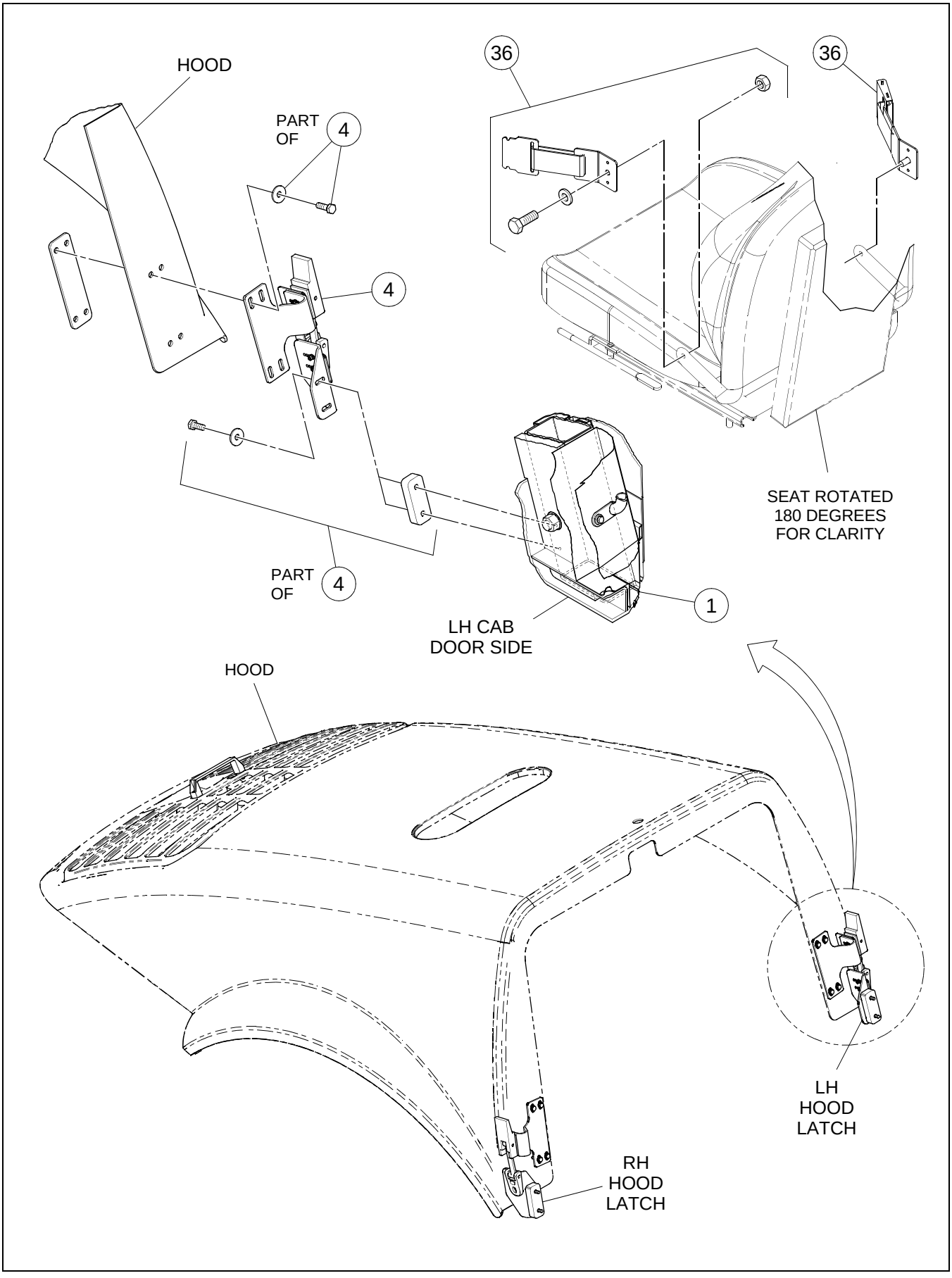

CAB W/HEATER AND AIR CONDITIONING INSTL - PRIOR S/N 190193, EXCL 189806 - OPTIONAL - SHEET 2 OF 2

BOM 13369459, 13369467

ITEM	COMM. NO.	DESCRIPTION	QTY	DIMENSIONS/NOTES
1	13410956	Cab Assembly (Prior to S/N 189996 Excluding 189806)	1	See Breakdown A - 110.
4	NSVA	Hood Cab Draw Latch Installation	1	See Page A - 134.
36	NSVA	Seat Belt Optional	1	See Page A - 136.

CAB ASSEMBLY (13410956) - INTERNAL BREAKDOWN - PRIOR TO S/N 189996 EXCLUDING 189806 - SHEET 1 OF 4

Dwg D13244710/01/01

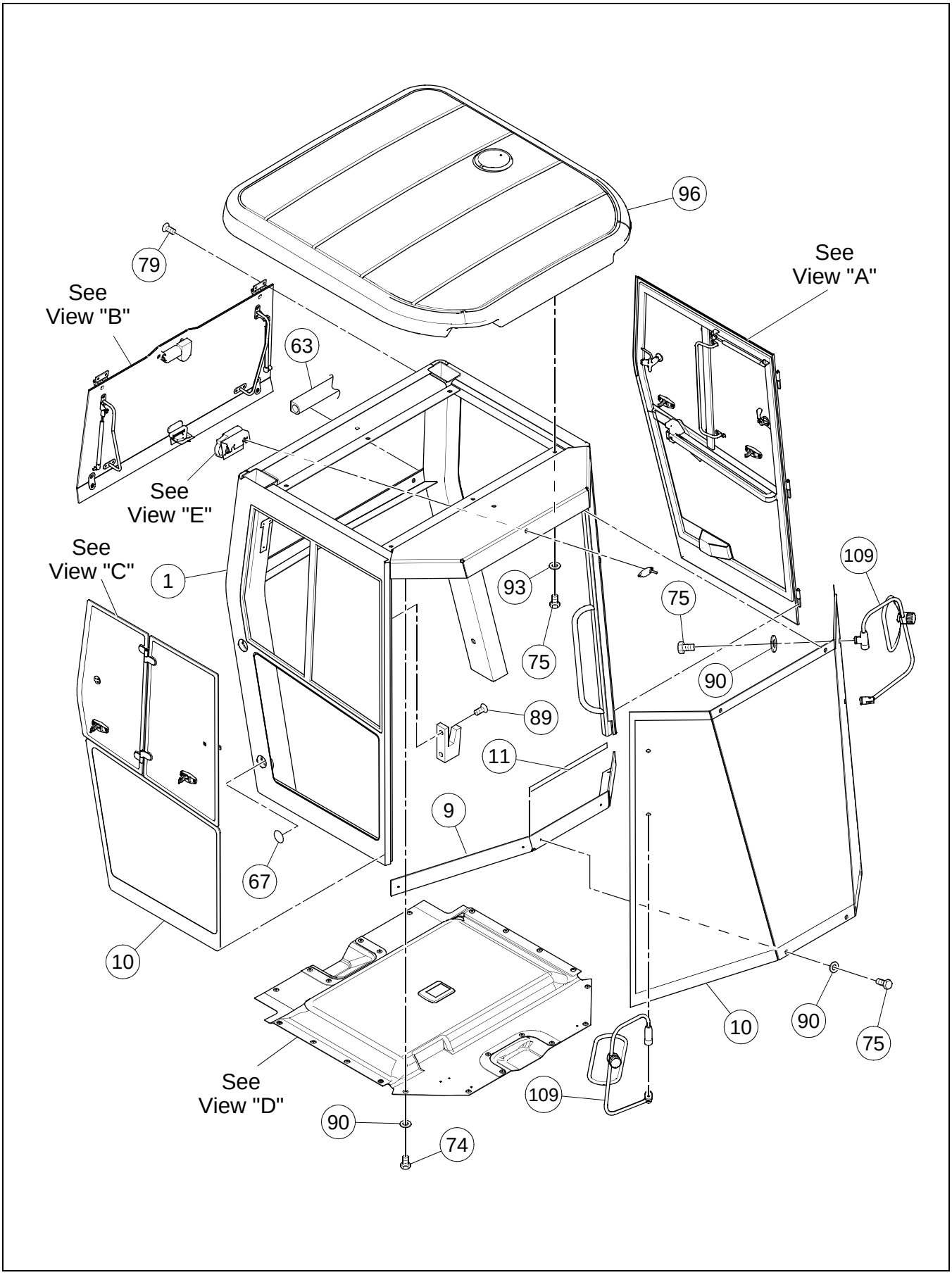

CAB ASSEMBLY (13410956) - INTERNAL BREAKDOWN - PRIOR TO S/N 189996 EXCLUDING 189806 - SHEET 1 OF 4

BOM 13410956, 13882584

ITEM	COMM. NO.	DESCRIPTION	QTY	DIMENSIONS/NOTES
1	22112007	Enclosed Rops	1	
9	22112080	Front Window Lower Mount	1	
10	**NSVA**	**Cab Glass Assembly**	**1**	**See Page A - 118.**
-	**NSVA**	**Cab Glass Assembly - Light Tint (S/N 189996 and 190031 Only)**	**1**	**See Page A - 120.**
11	13224175	Front Window Lower Skirt	1	
63	54628326	Door Frame Weatherstrip	12	
67	13224456	Plastic Plug	6	
74	96701958	HHCS, Fully Threaded, Zinc Plated	14	M6 x 16 Cl 8.8
75	96704564	HHCS, Fully Threaded, Zinc Plated	34	M6 x 1 x 20 Cl 8.8
79	96743273	FHCS, Zinc Plated	4	M8 x 1.25 x 25 Cl 8.8
89	96743257	BHCS, Zinc Plated	2	M4 x 0.7 x 25 Cl 8.8
90	96741053	Flatwasher, Zinc Plated	86	M6 Cl 200
93	96702311	HHCS, Fully Threaded, Zinc Plated	6	M12 x 1.75 x 30 Cl 8.8
96	13233218	Roof (FOPS)	1	
109	22125512	Exterior Mirror	2	

CAB ASSEMBLY (13410956) - INTERNAL BREAKDOWN - PRIOR TO S/N 189996 EXCLUDING 189806 - SHEET 2 OF 4

Dwg D13244710/01/02

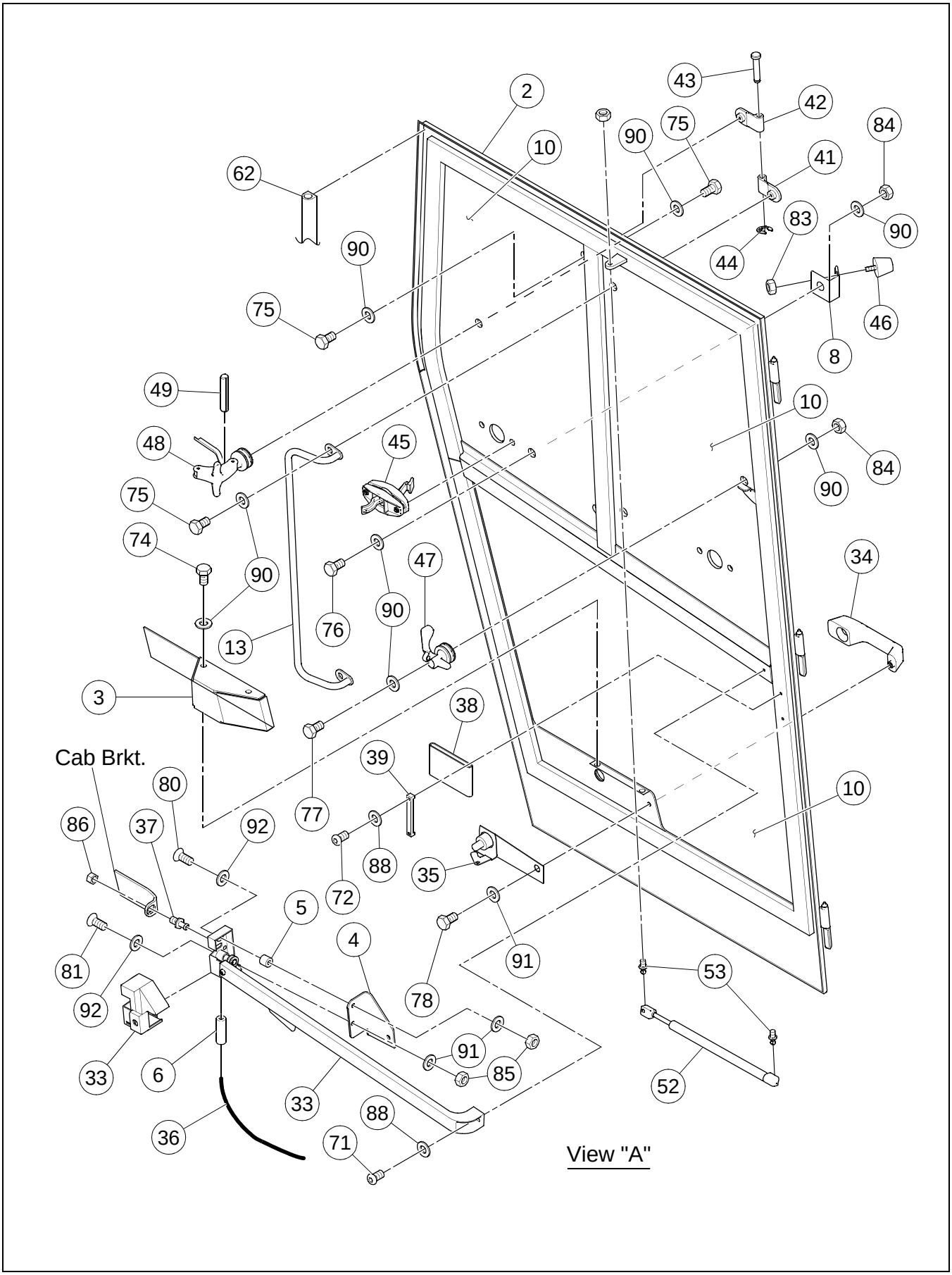

BOM 13410956, 13882584

ITEM	COMM. NO.	DESCRIPTION	QTY	DIMENSIONS/NOTES
2	22112015	Door	1	
3	22112023	Door Latch Cover	1	
4	22112031	Door Latch Pivot Plate	1	
5	22112049	Door Latch Pivot Spacer	1	
6	22112056	Door Latch Cable Rod Coupler	1	
8	22112072	Side Window Bumper Mount	2	
10	**NSVA**	**Cab Glass Assembly**	**1**	**See Page A - 118.**
-	**NSVA**	**Cab Glass Assembly (S/N 189996 and 190031 Only)**	**1**	**See Page A - 120.**
13	13224191	Side Window Grab Handle	2	
33	13224282	Door Latch Handle, RH	1	
34	13224290	Outside Door Handle	1	
-	58917261	- Cab Door Key	1	
35	13224308	Door Latch Bell Crank	1	
36	13224316	Door Latch Cable	1	
37	59195909	Striker Bolt	1	
38	13224324	Door Strap	1	
39	13224332	Door Strap Metal Clamp	1	
41	13224340	Window Hinge, LH	4	
42	13224357	Window Hinge, RH	4	
43	13224365	Window Hinge Clevis Pin	4	
44	13224373	Window Hinge Pin Clip	4	
45	13224381	Window Hold Back	2	
46	13224399	Window Bumper	2	
47	59154658	Window Latch Kit	2	
48	13224407	Throwout Arm w/Pin	2	
49	95201273	Roll Pin	2	
52	13224423	Door Gas Shock	1	
53	13224431	Gas Shock Ball Mount	6	
62	59142208	Window Seal	12	
71	96743265	HSBHCS, Zinc Plated	1	M5 x 0.8 x 16 Cl 8.8
72	96727987	HSBHCS	4	M6 x 1 x 16 Grd A2
74	96701958	HHCS, Fully Threaded, Zinc Plated	14	M6 x 16 Cl 8.8
75	96704564	HHCS, Fully Threaded, Zinc Plated	34	M6 x 1 x 20 Cl 8.8
76	96701461	HHCS, Fully Threaded	12	M6 x 25 Cl 8.8
77	96705793	HHCS, Fully Threaded, Zinc Plated	2	Cl 8.8
78	96705587	HHCS, Fully Threaded, Zinc Plated	2	M8 x 1.25 x 30 Cl 8.8
80	96743281	FHCS, Zinc Plated	3	M8 x 1.25 x 35 Cl 8.8
81	96743299	FHCS, Zinc Plated	1	M8 x 1.25 x 45 Cl 8.8
83	95929782	Hex Nut, Zinc Plated	2	5/16 x 18 Grd A
84	96704234	Nut, Zinc Plated	14	M6 x 1 Cl 8
85	96701370	Nut, Zinc Plated	4	M8 x 1.25 Cl 8
86	96704291	Hex Nut, Zinc Plated	1	M12 x 1.75 Cl 8
88	96738554	Flatwasher, Zinc Plated	1	M5 Hardened Cl 200
90	96741053	Flatwasher, Zinc Plated	86	M6 Cl 200
91	96741038	Flatwasher	6	M8 x 1.25 Cl 200
92	96738596	Flatwasher, Zinc Plated	7	M12 Hardened Cl 200

CAB ASSEMBLY (13410956) - INTERNAL BREAKDOWN - PRIOR TO S/N 189996 EXCLUDING 189806 - SHEET 3 OF 4

Dwg D13244710/01/03

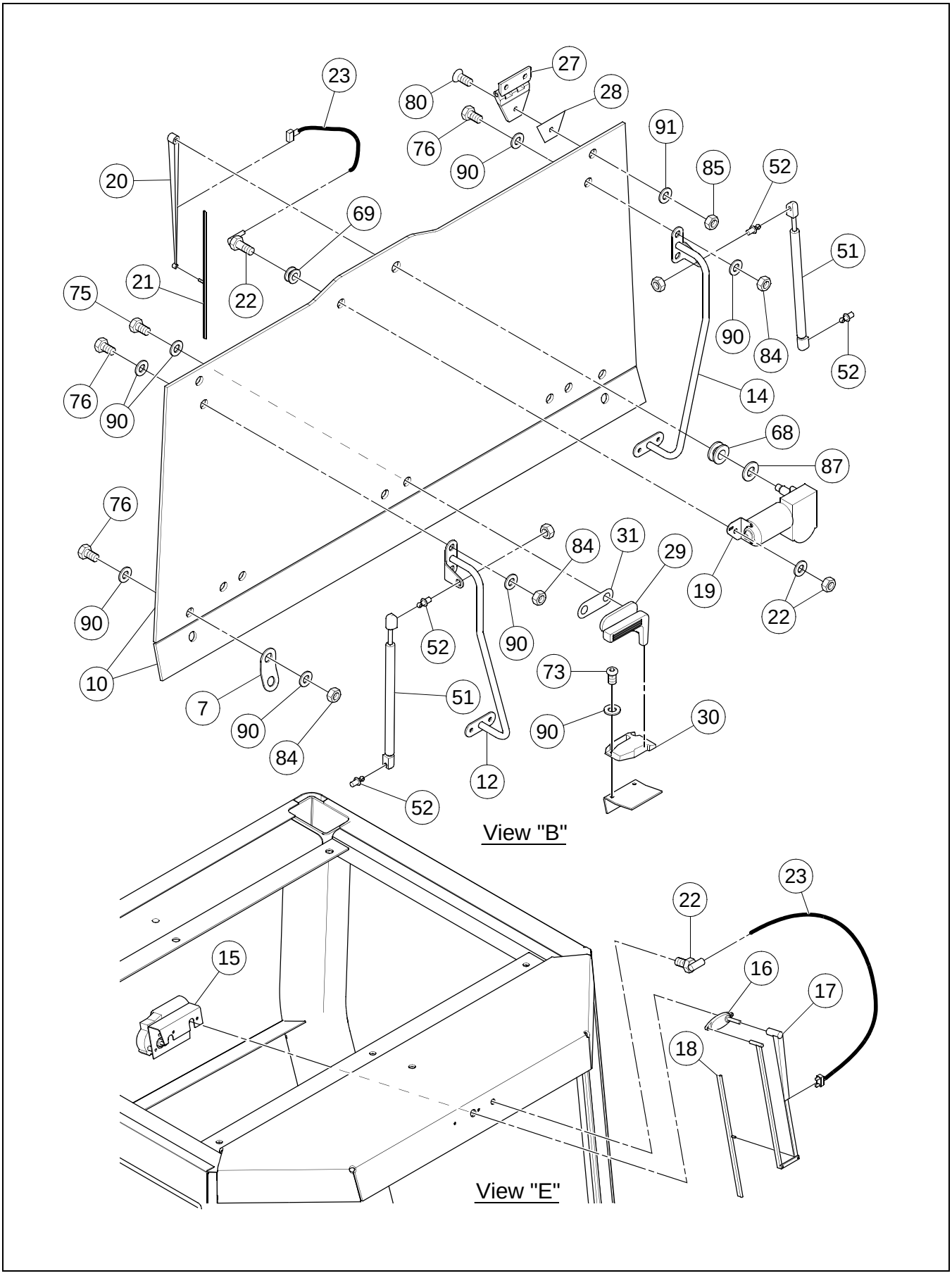

ITEM	COMM. NO.	DESCRIPTION	QTY	DIMENSIONS/NOTES
7	22112064	Rear Window Connector Plate	2	
10	**NSVA**	**Cab Glass Assembly**	**1**	**See Page A - 118.**
-	**NSVA**	**Cab Glass Assembly Light Tint (S/N 189996 and 190031 Only)**	**1**	**See Page A - 120.**
12	13224183	Right Rear Window Grab Handle	1	
14	13224209	Left Rear Window Grab Handle	1	
15	58790296	Wiper Motor	1	
16	58962812	Pantagraph Mount	1	
17	13224217	Front Wiper Arm	1	22"
18	13224225	Front Wiper Blade	1	28"
19	13224233	Wiper Motor	1	12V 1100
20	59072694	Rear Wiper Arm	1	
21	58962846	Rear Wiper Blade	1	
22	13220835	Windshield Washer Hose Fitting	2	
23	13224241	Wet Arm Kit	2	
27	59154682	Window Hinge	2	
28	54720156	Window Hinge Pad	2	
29	13224258	Window Holdout Handle	2	
30	13224266	Window Holdout Plate	2	
31	13224274	Window Holdout Pad	2	
51	13224415	Window Gas Shock	2	
52	13224423	Door Gas Shock	1	
68	54516034	Bushing	2	
69	13224464	Rubber Grommet	1	
73	96718689	HSBHCS	4	M6 x 1.0 x 20 Grd A2
75	96704564	HHCS, Fully Threaded, Zinc Plated	34	M6 x 1 x 20 Cl 8.8
76	96701461	HHCS, Fully Threaded	12	M6 x 25 Cl 8.8
80	96743281	FHCS, Zinc Plated	3	M8 x 1.25 x 35 Cl 8.8
84	96704234	Nut, Zinc Plated	14	M6 x 1 Cl 8
85	96701370	Nut, Zinc Plated	4	M8 x 1.25 Cl 8
87	95922274	Flatwasher, Zinc Plated	1	5/8
90	96741053	Flatwasher, Zinc Plated	86	M6 Cl 200
91	96741038	Flatwasher	6	M8 x 1.25 Cl 200

CAB ASSEMBLY (13410956) - INTERNAL BREAKDOWN - PRIOR TO S/N 189996 EXCLUDING 189806 - SHEET 4 OF 4

Dwg D13244710/01/04

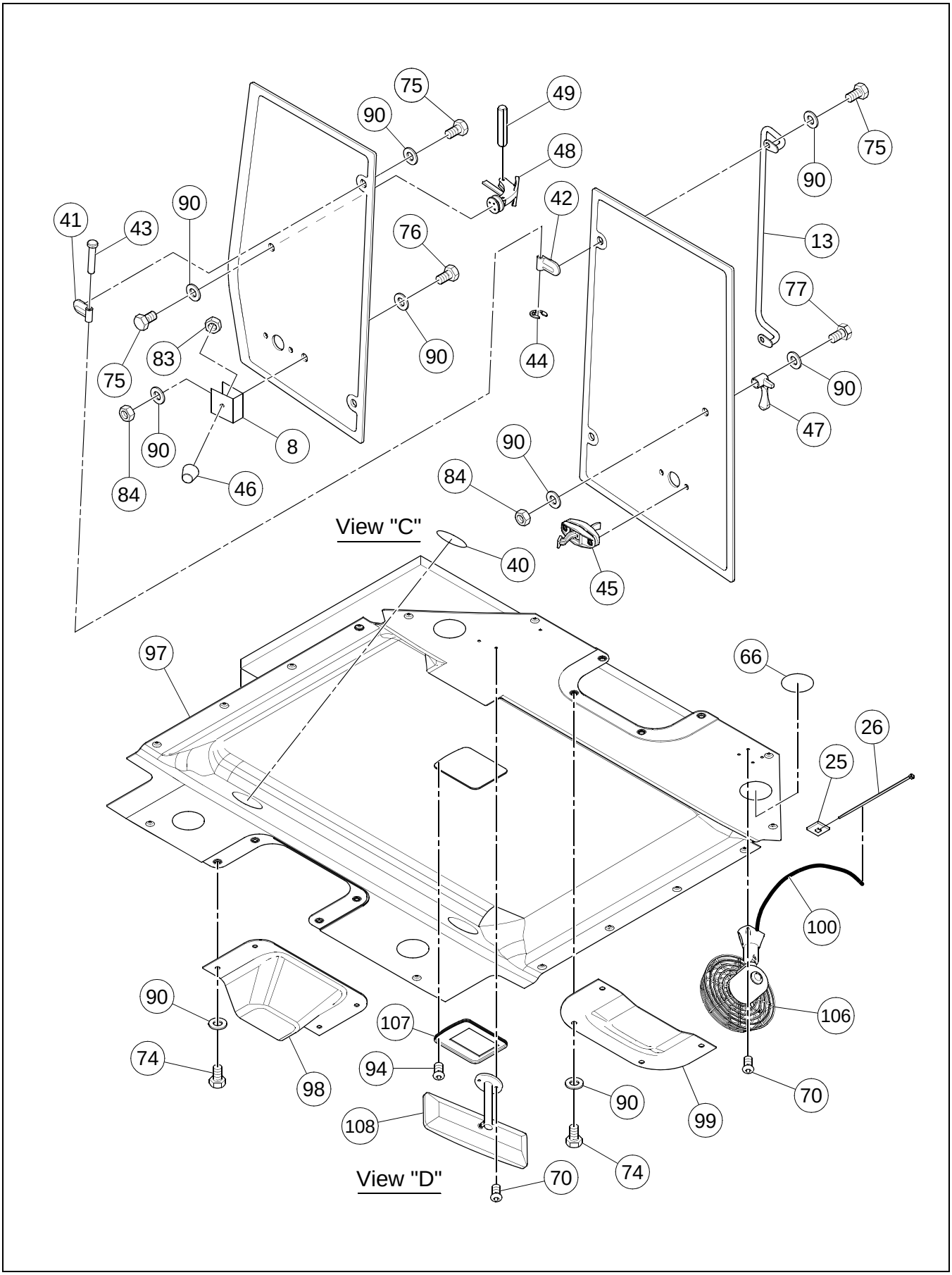

BOM 13410956, 13882584

ITEM	COMM. NO.	DESCRIPTION	QTY	DIMENSIONS/NOTES
8	22112072	Side Window Bumper Mount	2	
13	13224191	Side Window Grab Handle	2	
25	59670554	Adhesive	A/R	
26	95373973	Wire Tie	A/R	
40	13284518	Plastic Plug	2	
41	13224340	Window Hinge, LH	4	
42	13224357	Window Hinge, RH	4	
43	13224365	Window Hinge Clevis Pin	4	
44	13224373	Window Hinge Pin Clip	4	
45	13224381	Window Hold Back	2	
46	13224399	Window Bumper	2	
47	59154658	Window Latch Kit	2	
48	13224407	Throwout Arm w/Pin	2	
49	95201273	Roll Pin	2	
66	13224449	Plastic Plug	4	
70	96707906	SHCS	6	M5 x 0.8 x 20 Cl 8.8
74	96701958	HHCS, Fully Threaded, Zinc Plated	14	M6 x 16 Cl 8.8
75	96704564	HHCS, Fully Threaded, Zinc Plated	34	M6 x 1 x 20 Cl 8.8
76	96701461	HHCS, Fully Threaded	12	M6 x 25 Cl 8.8
77	96705793	HHCS, Fully Threaded, Zinc Plated	2	Cl 8.8
83	95929782	Hex Nut, Zinc Plated	2	5/16 x 18 Grd A
84	96704234	Nut, Zinc Plated	14	M6 x 1 Cl 8
90	96741053	Flatwasher, Zinc Plated	86	M6 Cl 200
94	96743240	BHCS, Zinc Plated	2	M4 x 0.7 x 16 Cl 8.8
97	13223961	Center Headliner	1	
98	13223987	Rear Wiper Cover Headliner	1	
99	13223979	Front Wiper Cover Headliner	1	
100	13845367	Cab Wire Harness	1	
106	13224472	Defrost Fan	1	12V
107	13224480	Interior Light	1	12V
108	13224498	Interior Mirror	1	

CAB GLASS ASSEMBLY

Dwg 13224076/00

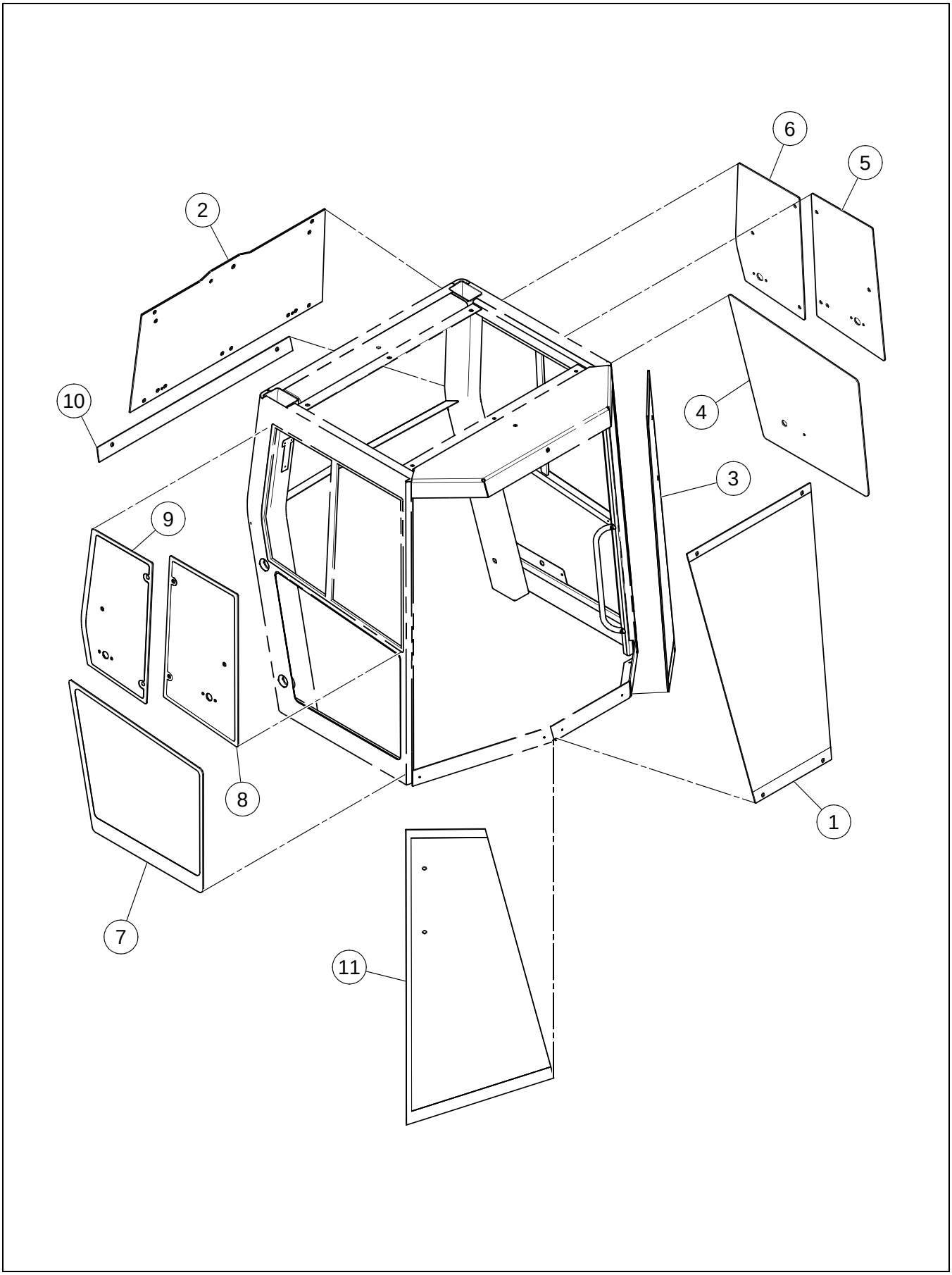

CAB GLASS ASSEMBLY

BOM 13224076

ITEM	COMM. NO.	DESCRIPTION	QTY	DIMENSIONS/NOTES
1	13187612	Front Center Window Glass	1	
2	13187620	Rear Window Glass	1	
3	13187638	Front Left Side Window Glass	1	
-	13304126	- Rubber Plug	2	
4	13187646	Door Bottom Window Glass	1	
5	13187653	Door Top Window Glass	1	
6	13187661	Top Rear Window Glass	1	
7	13187679	Right Bottom Window Glass	1	
8	13187687	Top Front Window Glass, RH	1	
9	13187695	Top Rear Window Glass, RH	1	
10	13187703	Rear Bottom Window Glass	1	
11	13205125	Front Right Side Window Glass	1	
-	13304126	- Rubber Plug	2	

List Only
No Drawing Required

CAB GLASS ASSEMBLY - LIGHT TINT - EFFECTIVE S/N 189996 AND 190031 ONLY

BOM 19299304

ITEM	COMM. NO.	DESCRIPTION	QTY	DIMENSIONS/NOTES
1	13885777	Front Center Window Light Tint Glass	1	
2	13885785	Rear Window Light Tint Glass	1	
3	13885793	Front Left Side Window Light Tint Glass	1	
-	13304126	- Rubber Plug	2	
4	13885801	Door Bottom Window Light Tint Glass	1	
5	13885819	Door Top Window Light Tint Glass	1	
6	13885827	Top Rear Window Light Tint Glass	1	
7	13885835	Right Bottom Window Light Tint Glass	1	
8	13885843	Top Front Window Light Tint Glass, RH	1	
9	13885850	Top Rear Window Light Tint Glass, RH	1	
10	13885868	Rear Bottom Window Light Tint Glass	1	
11	13885876	Front Right Side Window Light Tint Glass	1	
-	13304126	- Rubber Plug	2	

CAB HEATER AND AIR CONDITIONING ASSEMBLY - OPTIONAL - SHEET 1 OF 3

Dwg 13273206/0c/01

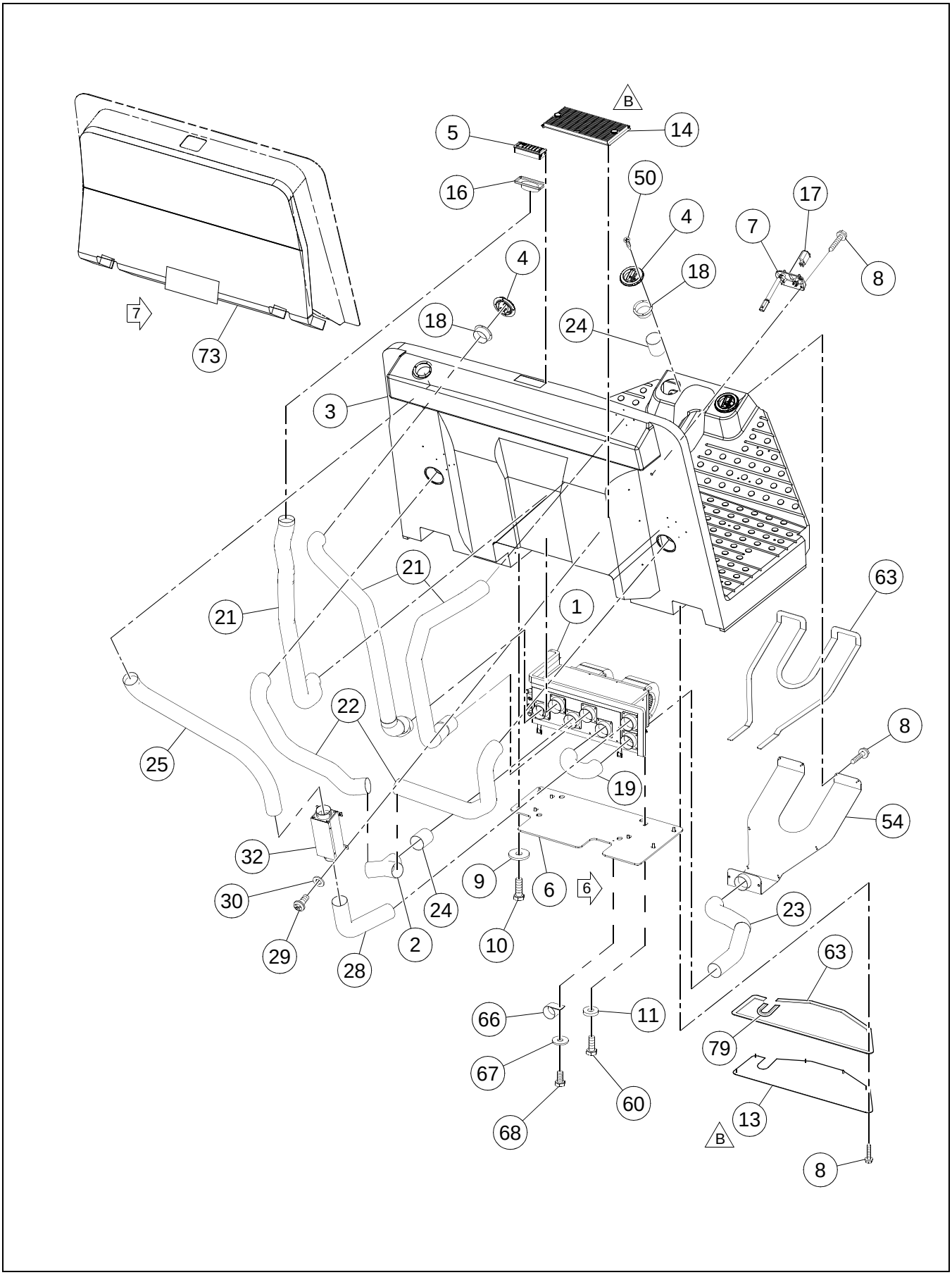

CAB HEATER AND AIR CONDITIONING ASSEMBLY - OPTIONAL - SHEET 1 OF 3

BOM 13273206

ITEM	COMM. NO.	DESCRIPTION	QTY	DIMENSIONS/NOTES
1	**13237367**	**Heater/Evaporator/AC**	**1**	**See Breakdown A - 128.**
2	13162094	Y-Splicer	1	
3	43843564	Operators Platform	1	
4	13161724	Louver	6	
5	13179197	Louver	1	
6	13237326	Mounting Plate	1	
7	13254644	Heater/AC Control Panel	1	
8	96728548	Self-tapping Screw, Zinc Plated	19	1.6
9	96740188	Washer, Zinc Plated	4	M8 x 3 Cl HV100
10	96702659	HHCS, Fully Threaded, Zinc Plated	8	M8 x 1.25 x 25 Cl 8.8
11	96712674	Washer, Zinc Plated	6	M8 Hardened Cl 10
13	13502083	Cover Plate	1	
14	NSS	Air Recirculation Filter Assembly	1	
-	13200019	- Recirculation Filter Cover	1	
-	13161757	- Air Recirculation Filter	1	
-	13200001	- Recirculation Filter Grill	1	
16	13179403	Louver Adapter	1	
17	13156963	Air Conditioner On/Off Switch	1	
18	13161732	Louver Adapter	7	
19	13176508	Bottom Duct Hose	1	
21	13295712	Upper Side Duct Hose	3	
22	13176516	Lower Side Duct Hose	2	
23	13176532	Plenum Hose	1	
24	59290742	Connector Hose	3	
25	59290734	Top Fresh Air Duct Hose	1	
28	59290783	Bottom Fresh Air Duct Hose	1	
29	54487517	Self-tapping Screw	4	14 x 1
30	96738554	Flatwasher, Zinc Plated	4	M5 Hardened Cl 200
32	59290767	Fresh Air Filter Assembly	1	
-	13262464	- Air Filter	1	
50	13209887	Wood Screw	14	
54	13234893	Plenum	1	
60	96702824	HHCS, Fully Threaded, Zinc Plated	6	M8 x 1.25 x 20 Cl 8.8
63	35898477	Foamtape	A/R	
66	95378873	Hose Clamp	1	
67	96704663	Washer, Zinc Plated	1	M6 Large
68	96702394	HHCS, Fully Threaded, Zinc Plated	1	M6 x 1 x 12 Cl 8.8
73	59290817	Foam	1	
79	13467485	Seal Trim	1	

CAB HEATER AND AIR CONDITIONING ASSEMBLY - OPTIONAL - SHEET 2 OF 3

Dwg 13273206/0c/02

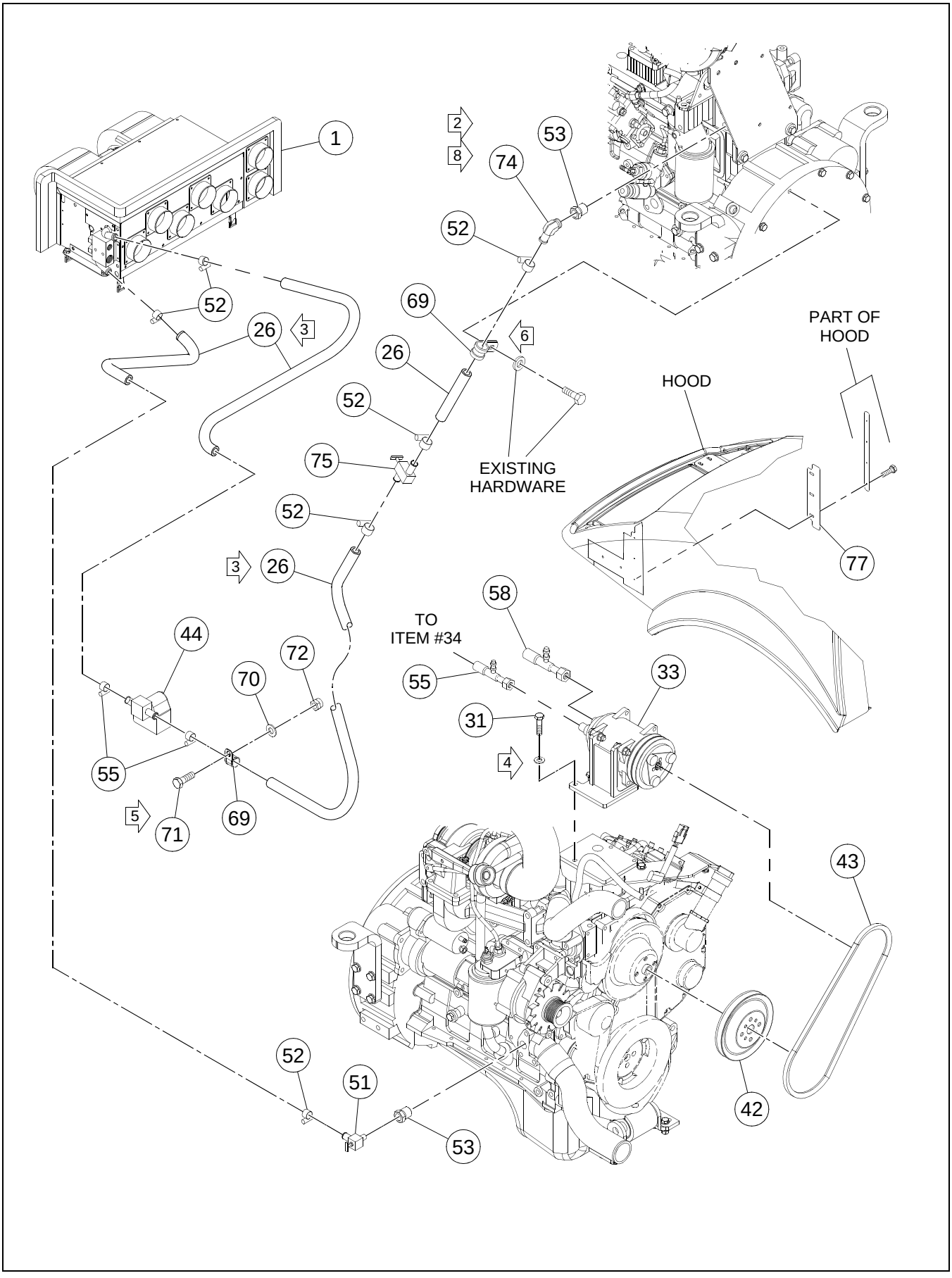

CAB HEATER AND AIR CONDITIONING ASSEMBLY - OPTIONAL - SHEET 2 OF 3

BOM 13273206

ITEM	COMM. NO.	DESCRIPTION	QTY	DIMENSIONS/NOTES
1	**13237367**	**Heater/Evaporator/AC**	**1**	**See Breakdown A - 128.**
26	95285144	Bulk Hose	1	
31	96704556	HHCS, Fully Threaded, Zinc Plated	3	M10 x 1.5 x 40 Cl 8.8
33	**NSVA**	**Compressor Assembly**	**1**	**See Page A - 130.**
42	58910662	Compressor Pulley	1	
43	13236666	Compressor Belt	1	
44	**13200027**	**Heater Valve**	**1**	**See Breakdown A - 100.**
51	13254909	Shut off Valve	2	
52	95671285	Hose Clamp	10	
53	59924241	External Reducer	1	
55	13266903	Coolant Hose #1	1	
58	13266911	Coolant Hose #4	1	
69	59465674	Clamp	3	
70	96741046	Flatwasher, Zinc Plated	2	M10 Cl 200
71	96701917	HHCS, Fully Threaded, Zinc Plated	2	M10 x 1.5 x 30 Cl 8.8
72	96704614	Nut, Zinc Plated	1	M10 x 1.5 Cl 8
74	13273818	Elbow, Male	1	
75	13254909	Shut-off Valve	1	
77	13279476	Plate Seal	1	
78	13355003	Decal: Refridgerant Charge (Not Shown)	1	

CAB HEATER AND AIR CONDITIONING ASSEMBLY - OPTIONAL - SHEET 3 OF 3

Dwg 13273206/0c/03

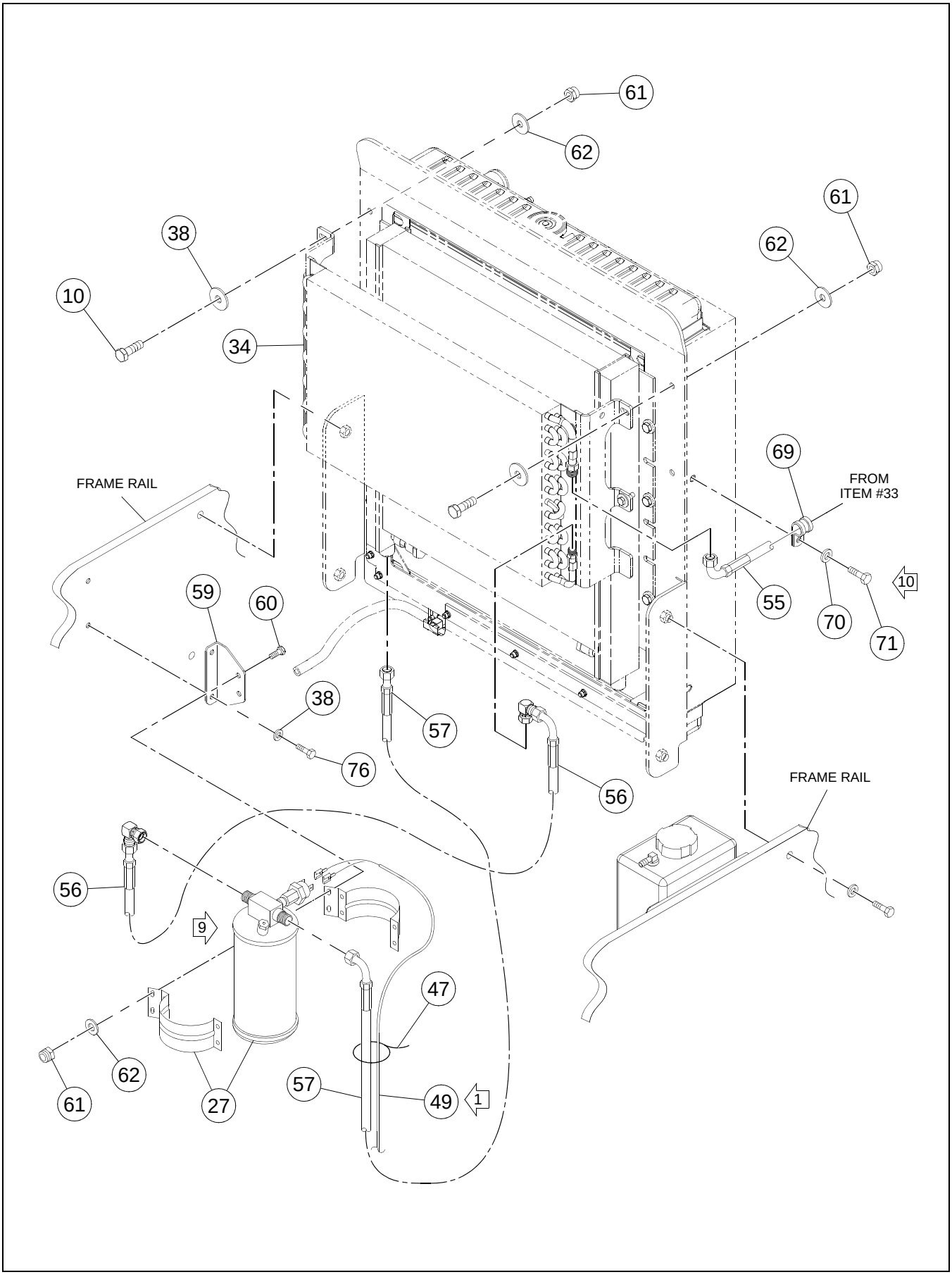

CAB HEATER AND AIR CONDITIONING ASSEMBLY - OPTIONAL - SHEET 3 OF 3

BOM 13273206

ITEM	COMM. NO.	DESCRIPTION	QTY	DIMENSIONS/NOTES
10	96702659	HHCS, Fully Threaded, Zinc Plated	8	M8 x 1.25 x 25 Cl 8.8
27	43837715	Dryer/Binary Bracket	1	
-	43876242	- Receiver Drier	1	
-	43876259	- R/D Mounting Bracket	1	
-	43876267	- Clamp	2	
-	57607814	- Pressure Switch	1	
34	**NSVA**	**Condensor Assembly**	**1**	**See Page A - 132.**
38	96741038	Flatwasher	6	M8 x 1.25 Cl 200
47	95373973	Wire Tie	A/R	
49	13200035	Cab Heater and A/C Wire Harness	1	
55	13266903	Coolant Hose #1	1	
56	13266937	Coolant Hose #2	1	
57	13266929	Coolant Hose #3	1	
59	13274386	Dryer Mounting Bracket	1	
60	96702824	HHCS, Fully Threaded, Zinc Plated	6	M8 x 1.25 x 20 Cl 8.8
61	96704606	Hex Locknut, Zinc Plated	1	M8 x 1.25 Cl 8
62	96713979	Washer, Zinc Plated	6	M8 Hardened
69	59465674	Clamp	3	
70	96741046	Flatwasher, Zinc Plated	2	M10 Cl 200
71	96701917	HHCS, Fully Threaded, Zinc Plated	2	M10 x 1.5 x 30 Cl 8.8
76	96702816	HHCS, Fully Threaded, Zinc Plated	2	M8 x 1.25 x 16 Cl 8.8
80	58962226	Elbow, Male (Not Shown)	1	
81	59465674	Clamp	2	
82	96741038	Flatwasher	2	M8 x 16.0
83	96705587	HHCS, Fully Threaded, Zinc Plated	1	M8 x 1.25 x 30 Cl 8.8
84	96704606	Hex Locknut	1	M8

HEATER/EVAPORATOR (13237367) - INTERNAL BREAKDOWN

Dwg D13244611/00

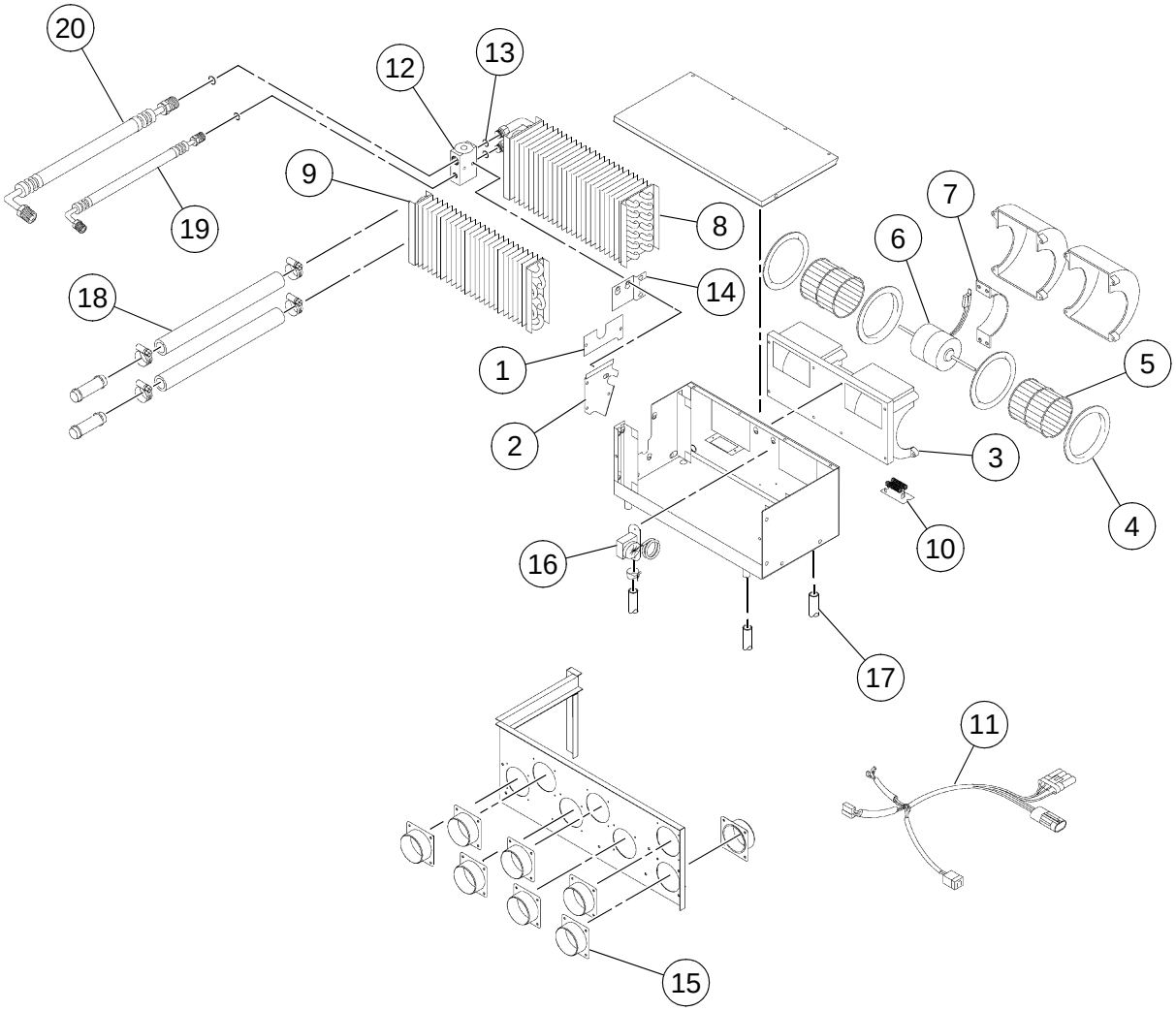

HEATER/EVAPORATOR (13237367) - INTERNAL BREAKDOWN

BOM 13237367

ITEM	COMM. NO.	DESCRIPTION	QTY	DIMENSIONS/NOTES
1	13258702	Coil Cover	1	
2	13258710	Coil Cover	1	
3	13258728	Blower, 12V	1	
4	13258694	- Venturi	2	
5	13258736	- Blower Wheel	2	
6	13258744	- Motor	1	12V
7	13258751	- Motor Mount	1	
8	13258868	Evaporator Coil	1	
9	13258769	Heater Coil	1	
10	13258777	Resistor 12V	1	
11	13258876	Wiring Harness	1	
12	13258884	Block Valve	1	
13	13258892	O-Ring	2	
14	13258900	Valve Bracket	1	
15	13258843	Hose Adapter	6	
16	57588162	Thermostat	1	
17	13258835	Drain Valve	4	
18	13258793	Heater Hose Assembly	2	
19	13258918	Hose Assembly	1	
20	13258926	Hose Assembly	1	

COMPRESSOR ASSEMBLY

Dwg 13274527/0a

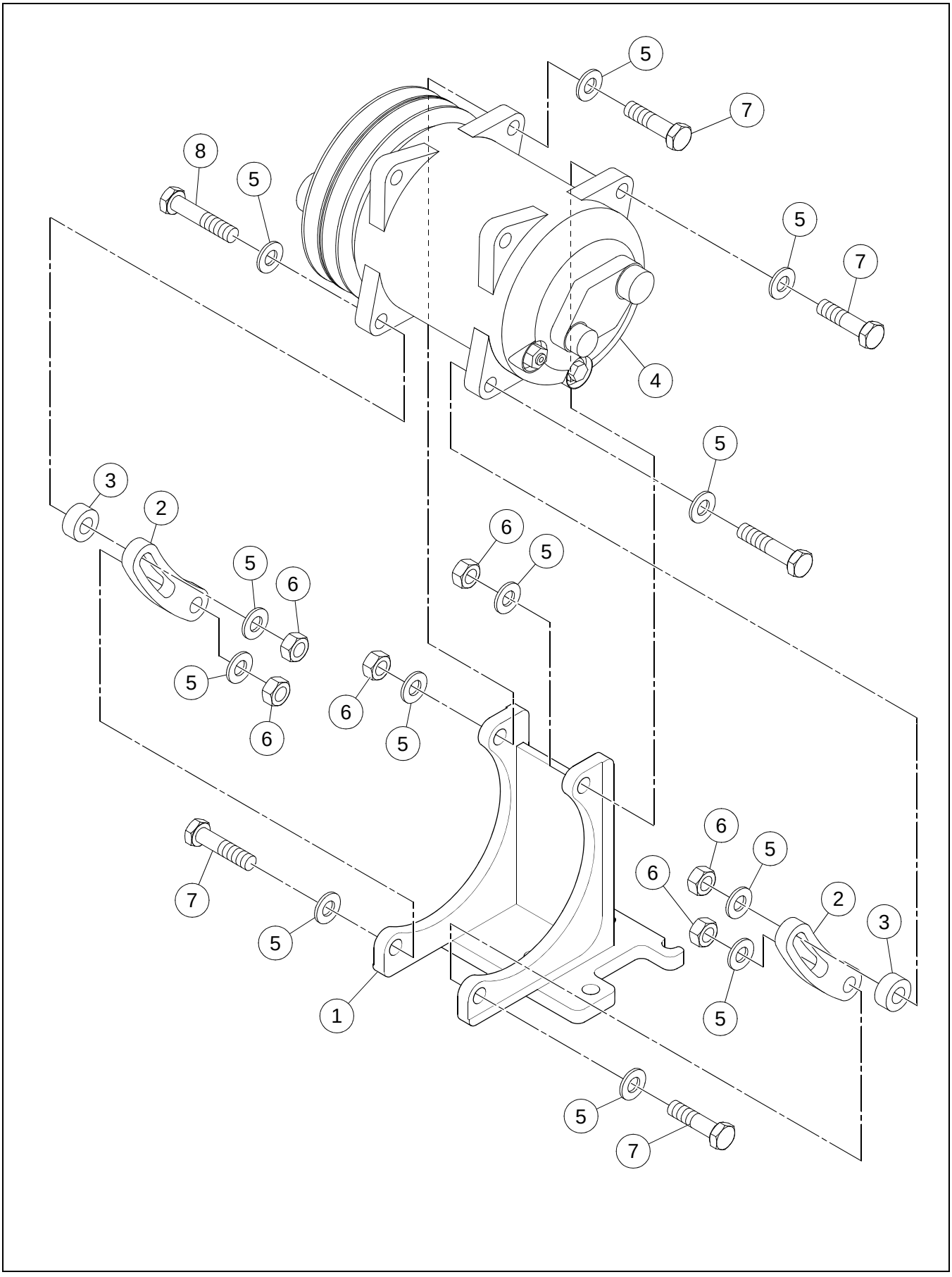

COMPRESSOR ASSEMBLY

BOM 13274527

ITEM	COMM. NO.	DESCRIPTION	QTY	DIMENSIONS/NOTES
1	13356134	Bracket	1	
2	59147991	Adjustment Arm	2	
3	59148007	Spacer	2	
4	13274535	Compressor	1	
5	96741046	Flatwasher, Zinc Plated	12	M10 Cl 200
6	96704812	Hex Nut, Zinc Plated	6	M10 x 1.5 Cl 8
7	96704358	HHCS, Zinc Plated	4	M10 x 1.5 x 40 Cl 8.8
8	96705116	HHCS, Fully Threaded, Zinc Plated	2	M10 x 1.5 x 50 Cl 8.8

CONDENSOR ASSEMBLY

Dwg D13273214/00

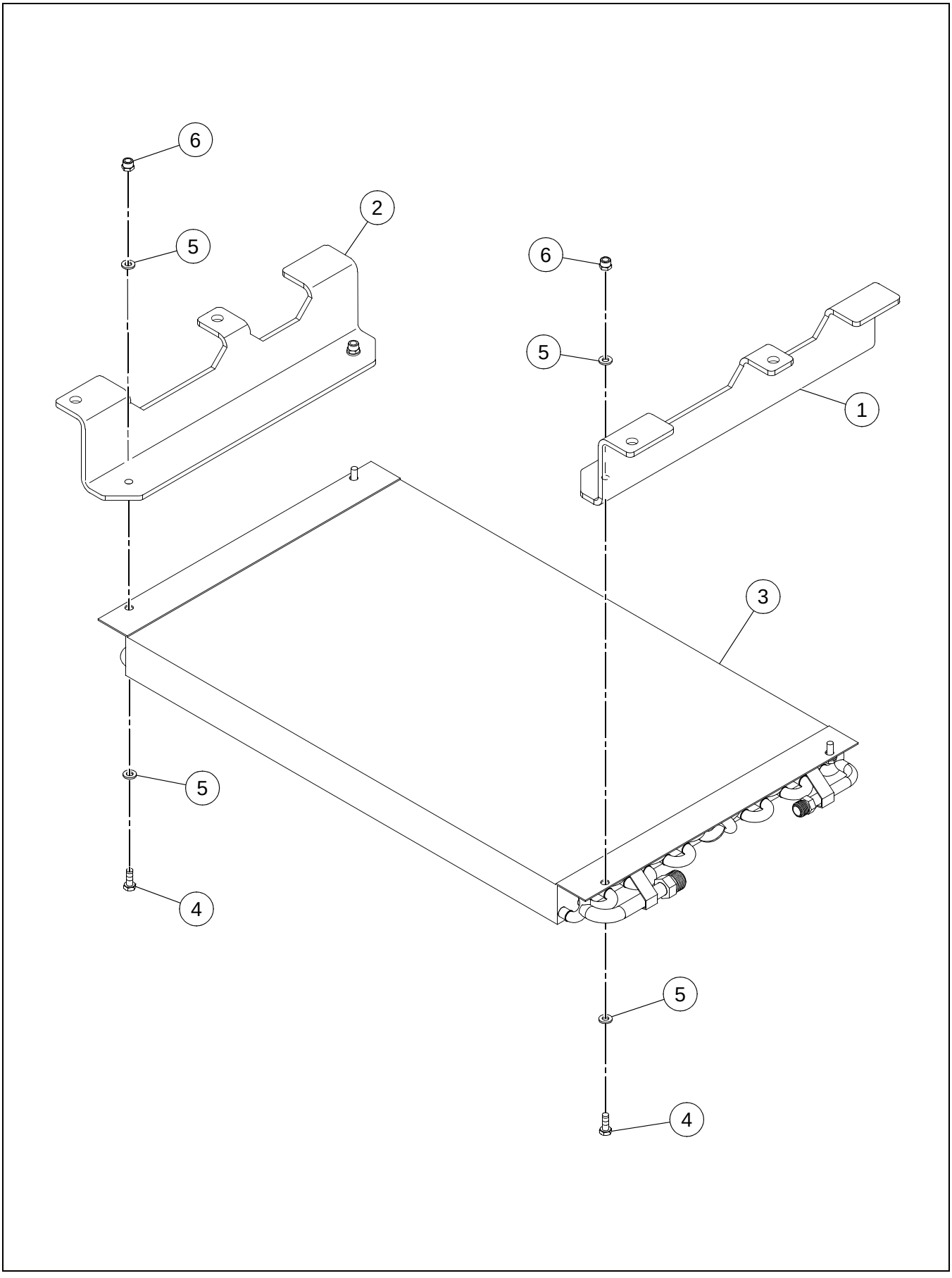

CONDENSOR ASSEMBLY

BOM 13273214

ITEM	COMM. NO.	DESCRIPTION	QTY	DIMENSIONS/NOTES
1	13274485	Condensor Bracket, RH	1	
2	13273230	Condensor Bracket, LH	1	
3	13356712	Condensor	1	
4	96704564	HHCS, Fully Threaded, Zinc Plated	4	M6 x 1 x 20 Cl 8.8
5	96704663	Washer, Zinc Plated	8	M6 Large
6	96704598	Hex Locknut, Zinc Plated	4	M6 Cl 8

CAB/HOOD DRAW LATCH INSTALLATION

Dwg 13883160/00

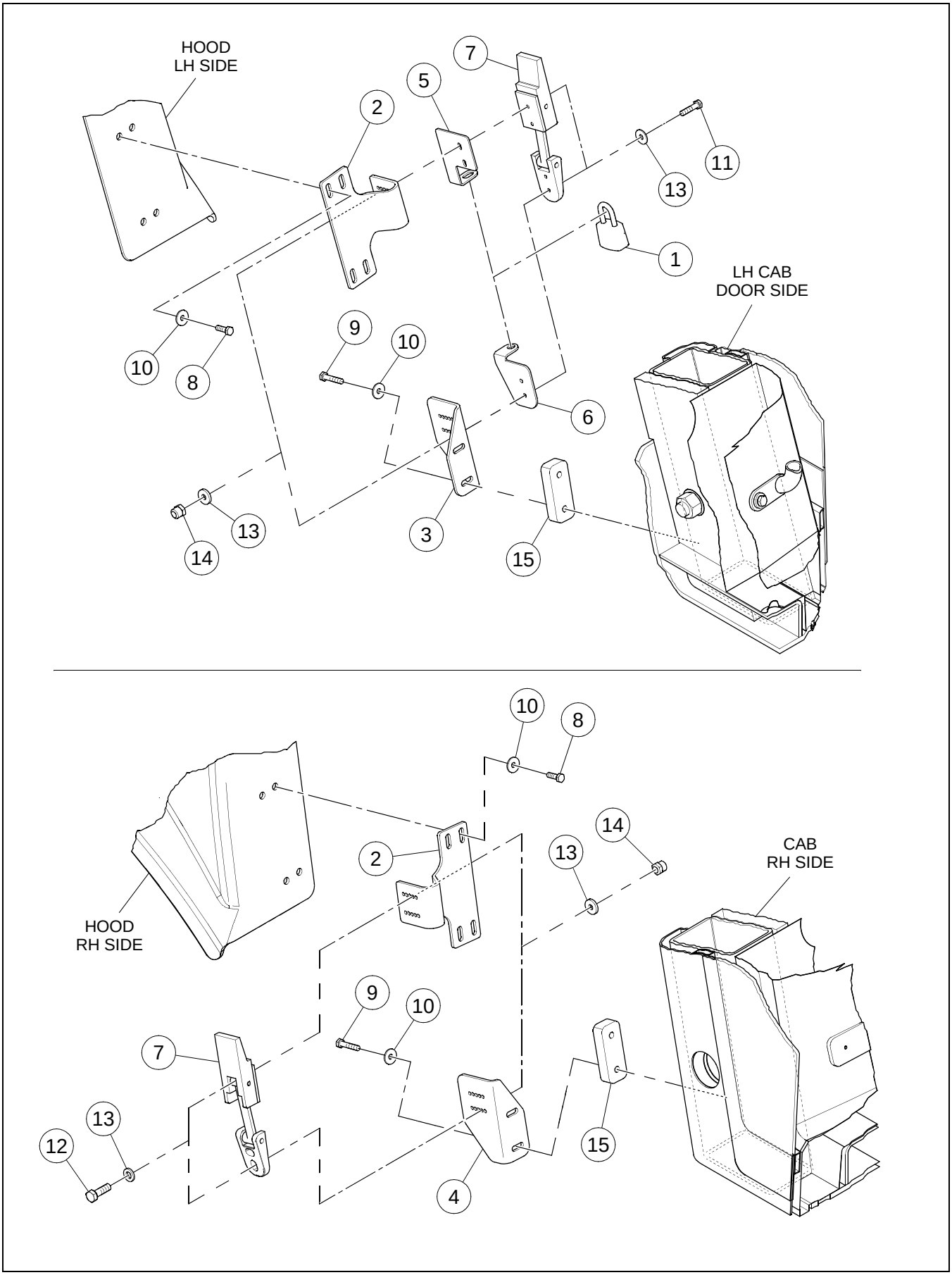

CAB/HOOD DRAW LATCH INSTALLATION

BOM 13883160

ITEM	COMM. NO.	DESCRIPTION	QTY	DIMENSIONS/NOTES
1	13349212	Lock	1	
2	43809086	Hood Bracket	2	
3	43809094	Cab Bracket	1	
4	43809102	Cab Bracket	1	
5	13885355	Lock Tab, RH	1	
6	59163238	Lock Tab, RH	1	
7	59162149	Latch	2	
8	96705587	HHCS, Fully Threaded, Zinc Plated	8	M8 x 1.25 x 30 Cl 8.8
9	96719786	HHCS, Zinc Plated	4	M8 x 1.25 x 40 Cl 8.8
10	96741038	Flatwasher	12	M8
11	96705736	HHCS, Fully Threaded, Zinc Plated	4	M5 x 0.8 x 20 Cl 8.8
12	96705728	HHCS, Zinc Plated	4	M5 x 0.8 x 16 Cl 8.8
13	95922332	Flatwasher	16	#10
14	96704580	Hex Locknut	8	M5
15	13881370	Spacer Block	2	

SEAT BELT INSTALLATION

Dwg 43803394/00

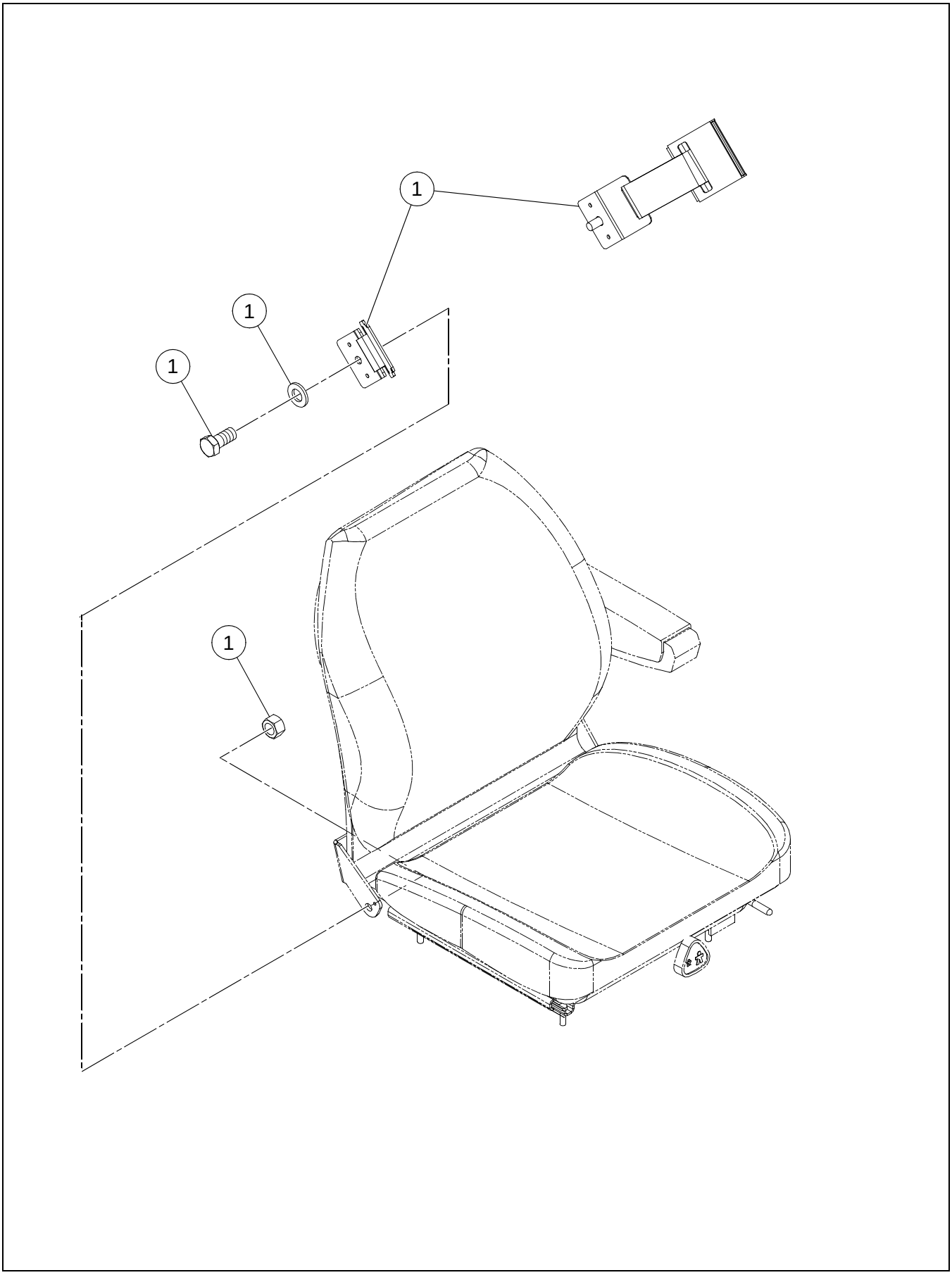

BOM 43803394

ITEM	COMM. NO.	DESCRIPTION	QTY	DIMENSIONS/NOTES
1	13342720	Retractable Seatbelt	1	3.0"

List Only
No Drawing Required

BOM 80817943

ITEM	COMM. NO.	DESCRIPTION	QTY	DIMENSIONS/NOTES
1	NSVA	Cab with Heater Assembly	1	See Page A - 152.
2	NSVA	Pre-Cab w/Heater Option	1	See Page A - 174.

CAB WITH HEATER ASSEMBLY

Dwg 80804354 REV 00

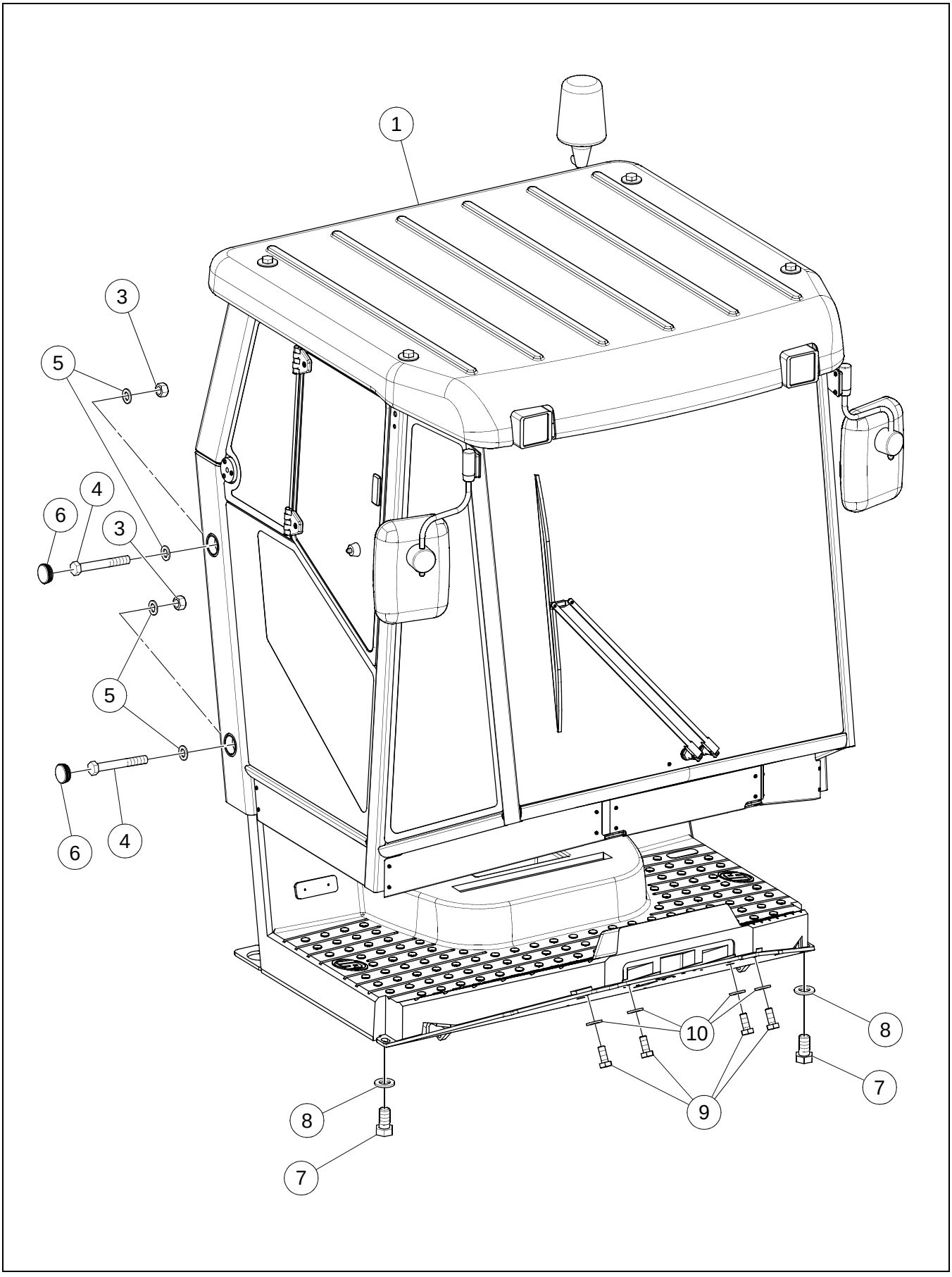

BOM 80804354

ITEM	COMM. NO.	DESCRIPTION	QTY	DIMENSIONS/NOTES
1	**80793201**	**Cab Assembly**	**1**	**See Breakdown A - 142.**
2	**NSVA**	**Cab/Hood Draw Latch Installation (Not Shown)**	**1**	**See Page A - 148.**
3	96720933	Hex Nut	4	
4	96721923	HHCS, Zinc Plated	4	M24 x 3.0 x 180 Cl 8.8
5	96720909	Flatwasher	8	M24 x Cl 140
6	80816499	Plug	2	
7	96722228	HHCS, Zinc Plated	2	M16 x 2 x 30 Cl 8.8
8	96720149	Flatwasher	2	M16 x Cl 140
9	96718861	HHCS, Zinc Plated	4	M12 x 1.75 x 25 Cl 8.8
10	96720131	Flatwasher	4	M12 x Cl 140
11	96753025	HHCS, Zinc Plated (Not Shown)	2	M16 x 2.0 x 70 Cl 10.9
12	14050439	Foam Strip (Not Shown)	4	

CAB ASSEMBLY - EU (80793201) - INTERNAL BREAKDOWN - SHEET 1 OF 3

Dwg 80793201 REV 00

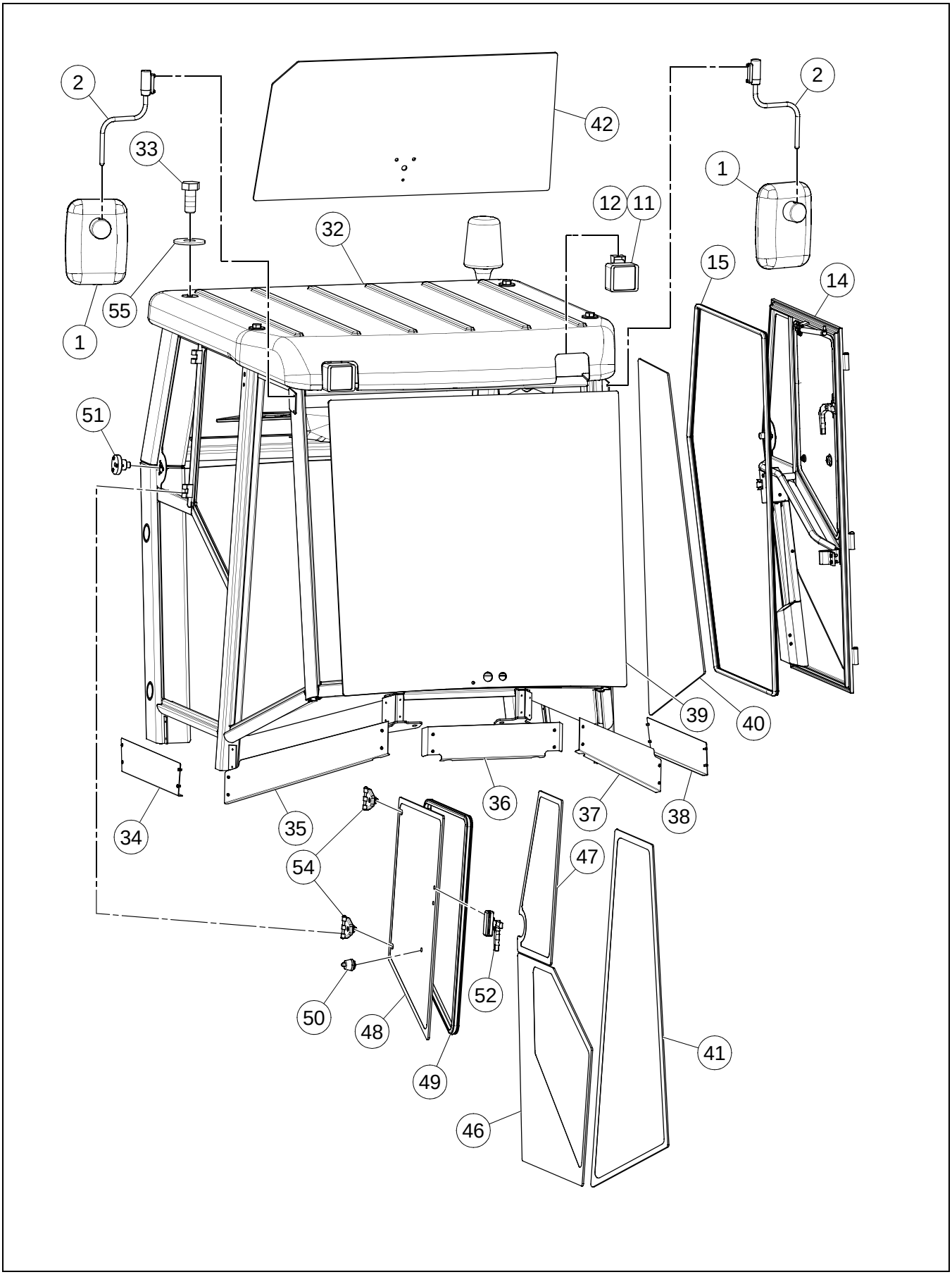

CAB ASSEMBLY - EU (80793201) - INTERNAL BREAKDOWN
- SHEET 1 OF 3

BOM 80793201

ITEM	COMM. NO.	DESCRIPTION	QTY	DIMENSIONS/NOTES
1	80808801	Outside Mirror	1	
2	80808819	Mirror Arm	1	
11	80808918	Working Light	1	
12	58861980	Bulb	1	
14	80808884	Cab Door	1	
15	80808892	Door Seal	1	
32	80809106	Roof	1	
33	96722228	HHCS, Zinc Plated	1	M16 x 2 x 30 Cl 8.8
34	80809114	Plate, RH	1	
35	80809122	Plate, Right Front	1	
36	80809130	Plate, Front	1	
37	80809148	Plate, Left Front	1	
38	80809155	Plate, LH	1	
39	80789621	Pane, Front	1	
40	80789639	Pane, LH	1	
41	80789647	Pane, RH	1	
42	80789654	Pane, Rear	1	
46	80789696	Side Pane, Lower RH	1	
47	80789704	Side Pane, Upper RH	1	
48	80789712	Drop Pane, RH	1	
49	80809163	Window Seal	1	
50	80809171	Window Latch	1	
51	80809189	Catch Recess	1	
52	80809197	Window Handle, RH	1	
54	80809213	Hinge Joint	1	
55	96726377	Washer	1	

CAB ASSEMBLY - EU (80793201) - INTERNAL BREAKDOWN - SHEET 2 OF 3

Dwg 80793201 REV 00

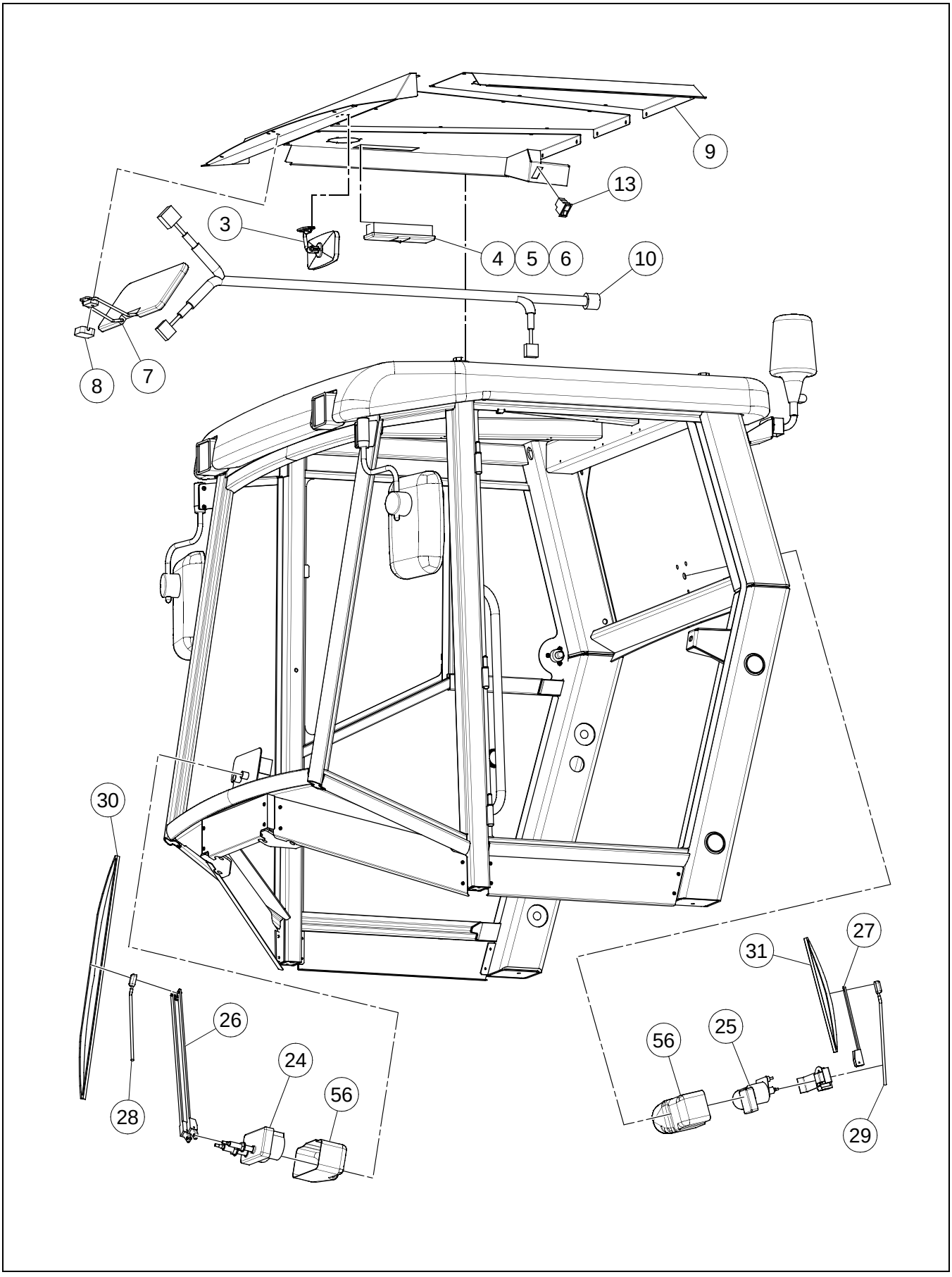

CAB ASSEMBLY - EU (80793201) - INTERNAL BREAKDOWN
- SHEET 2 OF 3

BOM 80793201

ITEM	COMM. NO.	DESCRIPTION	QTY	DIMENSIONS/NOTES
3	80808827	Inside Mirror	1	
4	80808835	Inside Light	1	
5	14110183	Unifilar Bulb	1	
6	58861998	Bulb	1	
7	80808843	Sunshade	1	
8	80808850	Sunshade Cover	1	
9	80808868	Interior Cover	1	
10	80808876	Cab Wire Harness	1	
13	80811409	Beacon Light Switch	1	
24	80809007	Wiper Motor w/Fastening Mount	1	
25	80809015	Wiper Motor w/Fastening Mount	1	
26	80809023	Arm Wiper	1	
27	80809031	Arm Wiper	1	
28	80809056	Water Wiper	1	
29	80809064	Water Wiper	1	
30	80809080	Water Wiper	1	
31	80809098	Water Wiper	1	
56	80816465	Wiper Cover	1	

CAB ASSEMBLY - EU (80793201) - INTERNAL BREAKDOWN - SHEET 3 OF 3

Dwg 80793201 REV 00

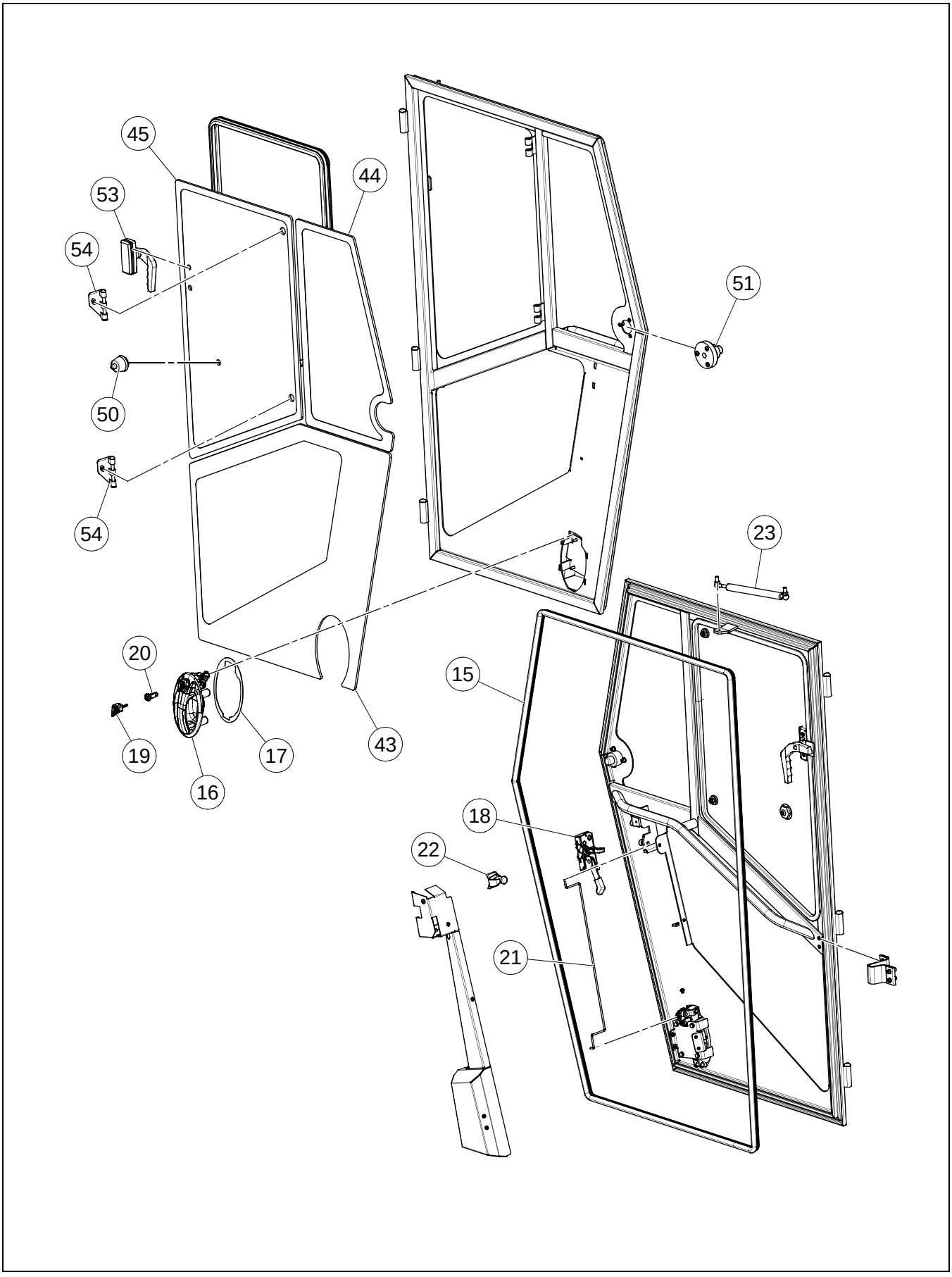

BOM 80793201

ITEM	COMM. NO.	DESCRIPTION	QTY	DIMENSIONS/NOTES
15	80808892	Door Seal	1	
16	80808900	Door Handle w/Cylinder	1	
17	80808926	Pad	1	
18	80808934	Latch	1	
19	80808942	Cab Key	1	
20	80808959	Cylinder	1	
21	80808975	Connecting Rod	1	
22	80808983	Catch Recess	1	
23	80808991	Compression Spring	1	
43	80789662	Door Pane, Lower LH	1	
44	80789670	Door Pane, Upper LH	1	
45	80789688	Drop Pane, LH	1	
50	80809171	Window Latch	1	
51	80809189	Catch Recess	1	
53	80809205	Window Handle, LH	1	
54	80809213	Hinge Joint	1	

CAB/HOOD DRAW LATCH INSTALLATION

19330497 REV 00

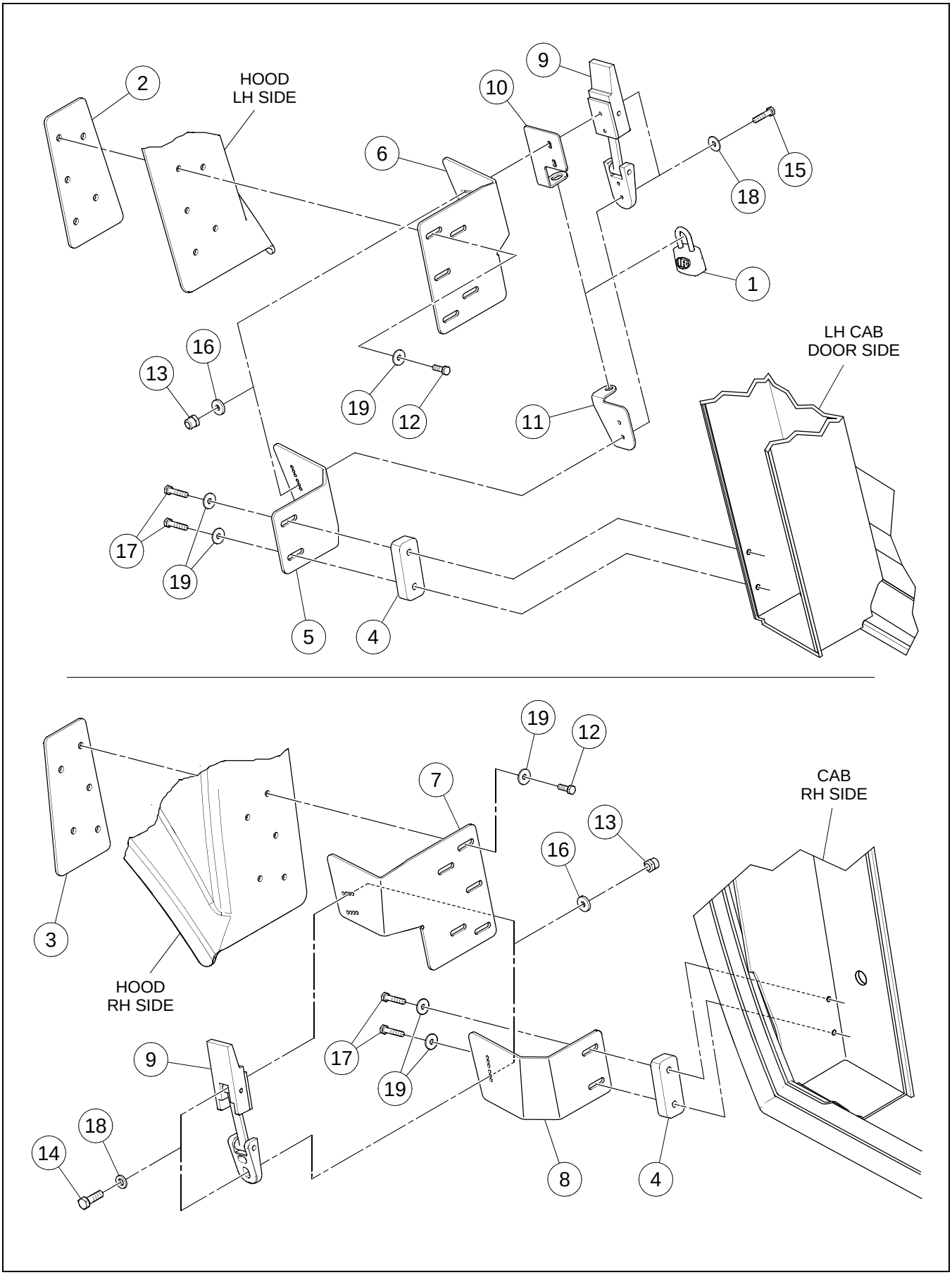

CAB/HOOD DRAW LATCH INSTALLATION

BOM 19330497

ITEM	COMM. NO.	DESCRIPTION	QTY	DIMENSIONS/NOTES
1	13349212	Lock	1	
2		This item not used with this Assembly		
3		This item not used with this Assembly		
4	13881370	Spacer Block	2	
5	13886684	Hood Latch Bracket, LH	1	
6	13886676	Cab Latch Bracket, LH	1	
7	13886700	Cab Latch Bracket, RH	1	
8	13886692	Hood Latch Bracket, RH	1	
9	59162149	Latch	2	
10	59163220	Lock Tab, RH	1	
11	59163238	RH Lock Tab	1	
12	96702659	HHCS, Fully Threaded, Zinc Plated	10	M8 x 1.25 x 25 Cl 8.8
13	96704580	Hex Locknut, Zinc Plated	8	M5 x 0.8 Cl 8
14	96705728	Screw, Fully Threaded, Zinc Plated	4	M5 x 0.8 x 16 Cl 8.8
15	96705736	HHCS, Fully Threaded, Zinc Plated	4	M5 x 0.8 x 20 Cl 8.8
16	95922332	Flatwasher, Zinc Plated	8	#10
17	96719786	HHCS, Zinc Plated	4	M8 x 1.25 x 40 Cl 8.8
18	95922332	Flatwasher, Zinc Plated	8	#10
19	96741038	Flatwasher	14	M8 x 1.25 Cl 200

PRE-CAB WITH HEATER ASSEMBLY

Dwg 19330778/0d

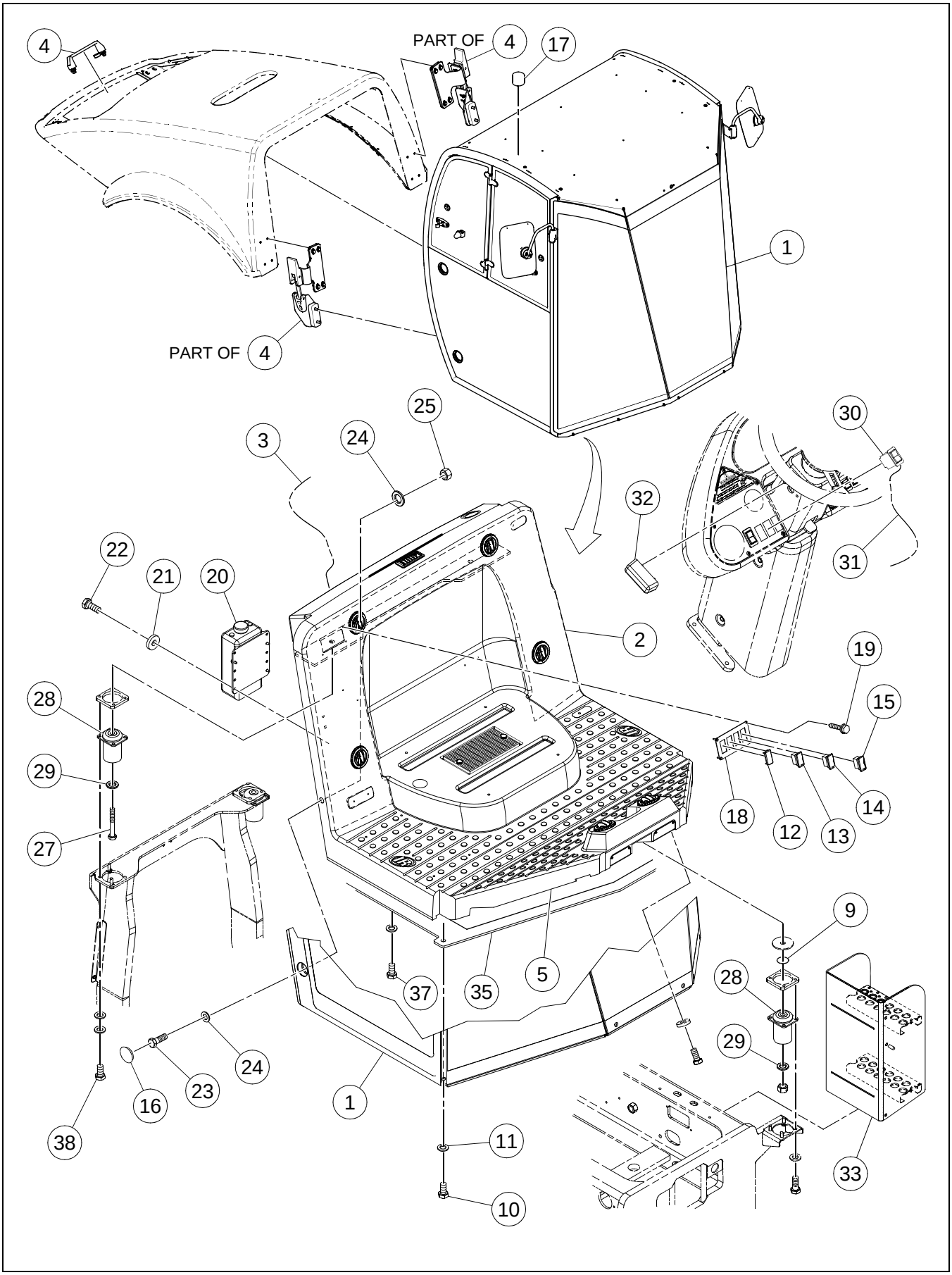

BOM 80818057

ITEM	COMM. NO.	DESCRIPTION	QTY	DIMENSIONS/NOTES
1		This item not used with this Assembly		
2	**NSVA**	**Cab Heater Assembly**	**1**	**See Page A - 152.**
3	13492822	Cab Heating And Air Conditioning Harness	1	
4	**NSVA**	**No ROPS/Hood Draw Latch Installation**	**1**	**See Page A - 160.**
5	59946863	Seal Trim	4	
9	96746417	Washer Plain	4	
10		This item not used with this Assembly		
11		This item not used with this Assembly		
12	58835398	Blank Switch	1	
13	59196451	Front Wiper Switch	1	
14	59196444	Rear Wiper Switch	1	
15	59195925	Switch	1	
16		This item not used with this Assembly		
17		This item not used with this Assembly		
18	13212576	Control Panel	1	
19	95988093	Self-tapping Screw, Zinc Plated	4	#6 x 3/4
20	13215769	Washer Bottle	1	
-	13228242	- Washer Bottle Cap	1	
-	13228259	- Washer Bottle Pump	1	
21	96712674	Flatwasher, Zinc Plated	4	M8 Hardened Cl 10
22	96702824	HHCS, Fully Threaded, Zinc Plated	4	M8 x 1.25 x 20 Cl 8.8
23		This item not used with this Assembly		
24		This item not used with this Assembly		
25		This item not used with this Assembly		
27	96741442	HHCS, Zinc Plated	2	M20 x 2.5 x 140 Cl 8.8
28		This item not used with this Assembly		
29	96701560	Flatwasher, Zinc Plated	4	M20 Hardened
30	13197108	F/R Worklights Switch	1	
31	13225560	Work Lights Selector Harness	1	
32	13248935	Light Assembly Panel	2	
33		This item not used with this Assembly		
35		This item not used with this Assembly		
37	96704556	HHCS, Fully Threaded, Zinc Plated	6	M10 x 1.5 x 40 Cl 8.8
38		This item not used with this Assembly		

CAB HEATER ASSEMBLY - OPTIONAL - SHEET 1 OF 2

Dwg 13273503/0d/01

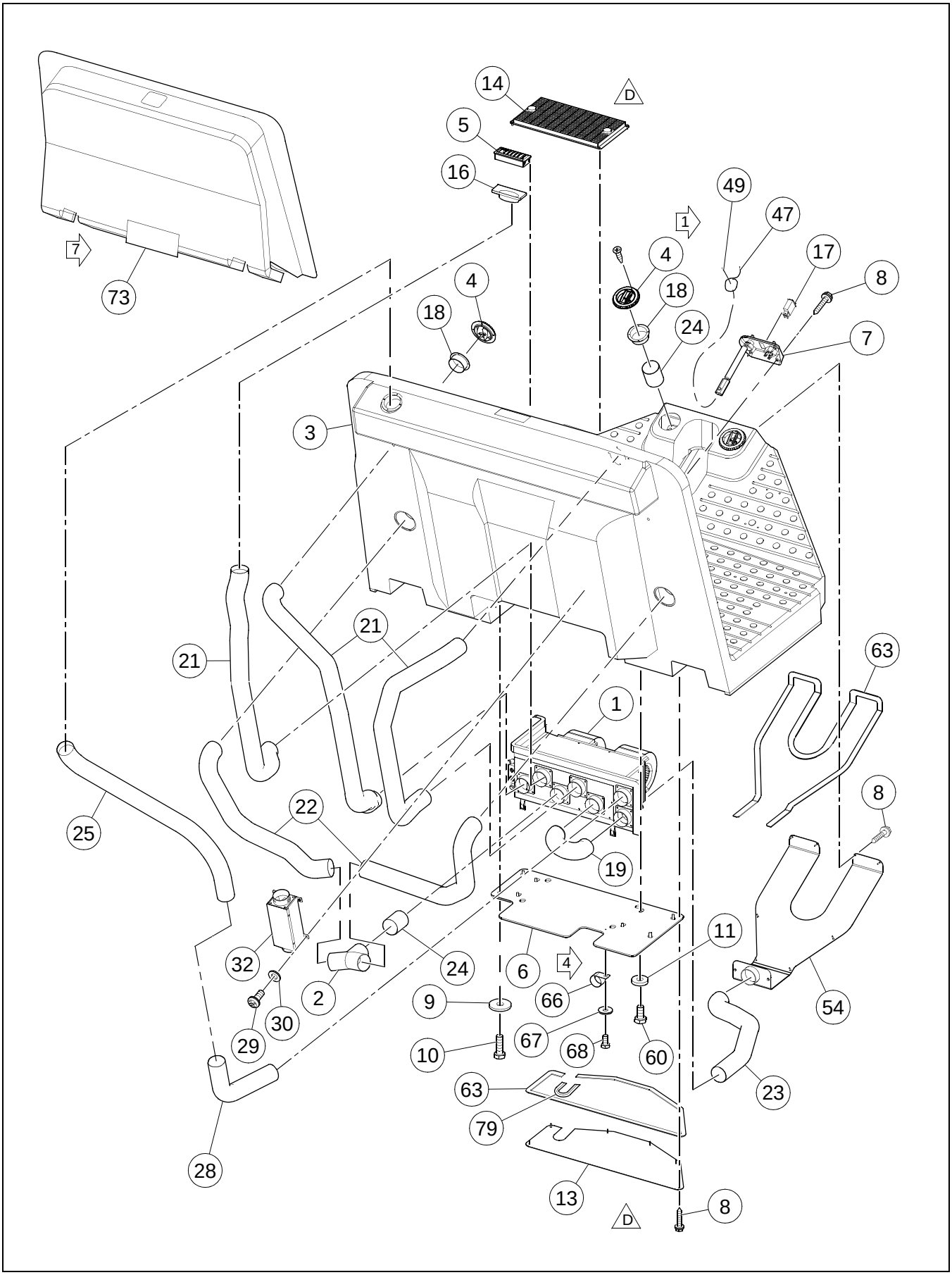

CAB HEATER ASSEMBLY - OPTIONAL - SHEET 1 OF 2

BOM 13273503

ITEM	COMM. NO.	DESCRIPTION	QTY	DIMENSIONS/NOTES
1	**13237888**	**Heater**	**1**	**See Breakdown A - 156.**
2	13162094	Y-Splicer	1	
3	43843564	Operators Platform	1	
4	13161724	Louver	6	
5	13179197	Louver	1	
6	13237326	Mounting Plate	1	
7	13254644	Heater Control Panel	1	
8	96728548	Self-tapping Screw, Zinc Plated	19	1.6
9	96740188	Washer, Zinc Plated	4	M8 x 3 Cl HV100
10	96702659	HHCS, Fully Threaded, Zinc Plated	4	M8 x 1.25 x 25 Cl 8.8
11	96712674	Washer, Zinc Plated	6	M8 Hardened Cl 10
13	13502083	Cover Plate	1	
14	NSS	Air Recirculation Filter Assembly	1	
-	13200019	- Recirculation Filter Cover	1	
-	13161757	- Air Recirculation Filter	1	
-	13200001	- Recirculation Filter Grill	1	
16	13179403	Louver Adapter	1	
17	13156997	Control Panel Plug	1	
18	13161732	Louver Adapter	7	
19	13176508	Bottom Duct Hose	1	
21	13295712	Upper Side Duct Hose	3	
22	13176516	Lower Side Duct Hose	2	
23	13176532	Plenum Hose	1	
24	59290742	Connector Hose	3	
25	59290734	Top Fresh Air Duct Hose	1	
28	59290783	Bottom Fresh Air Duct Hose	1	
29	54487517	Self-tapping Screw	4	14 x 1
30	96738554	Flatwasher, Zinc Plated	4	M5 Hardened Cl 200
32	59290767	Fresh Air Filter	1	
-	13262464	- Air Filter	1	
47	95373973	Wire Tie	A/R	
49	13200035	Wiring Harness	1	
50	13209887	Wood Screw (Not Shown)	14	
54	13234893	Plenum	1	
60	96702824	HHCS, Fully Threaded, Zinc Plated	6	M8 x 1.25 x 20 Cl 8.8
63	35898477	Foamtape	A/R	
66	95378873	Hose Clamp	1	
67	96704663	Washer, Zinc Plated	1	M6 Large
68	96702394	HHCS, Fully Threaded, Zinc Plated	1	M6 x 1 x 12 Cl 8.8
73	59290817	Foam	1	
79	13467485	Seal Trim	1	

CAB HEATER ASSEMBLY - OPTIONAL - SHEET 2 OF 2

Dwg 13273503/0d/02

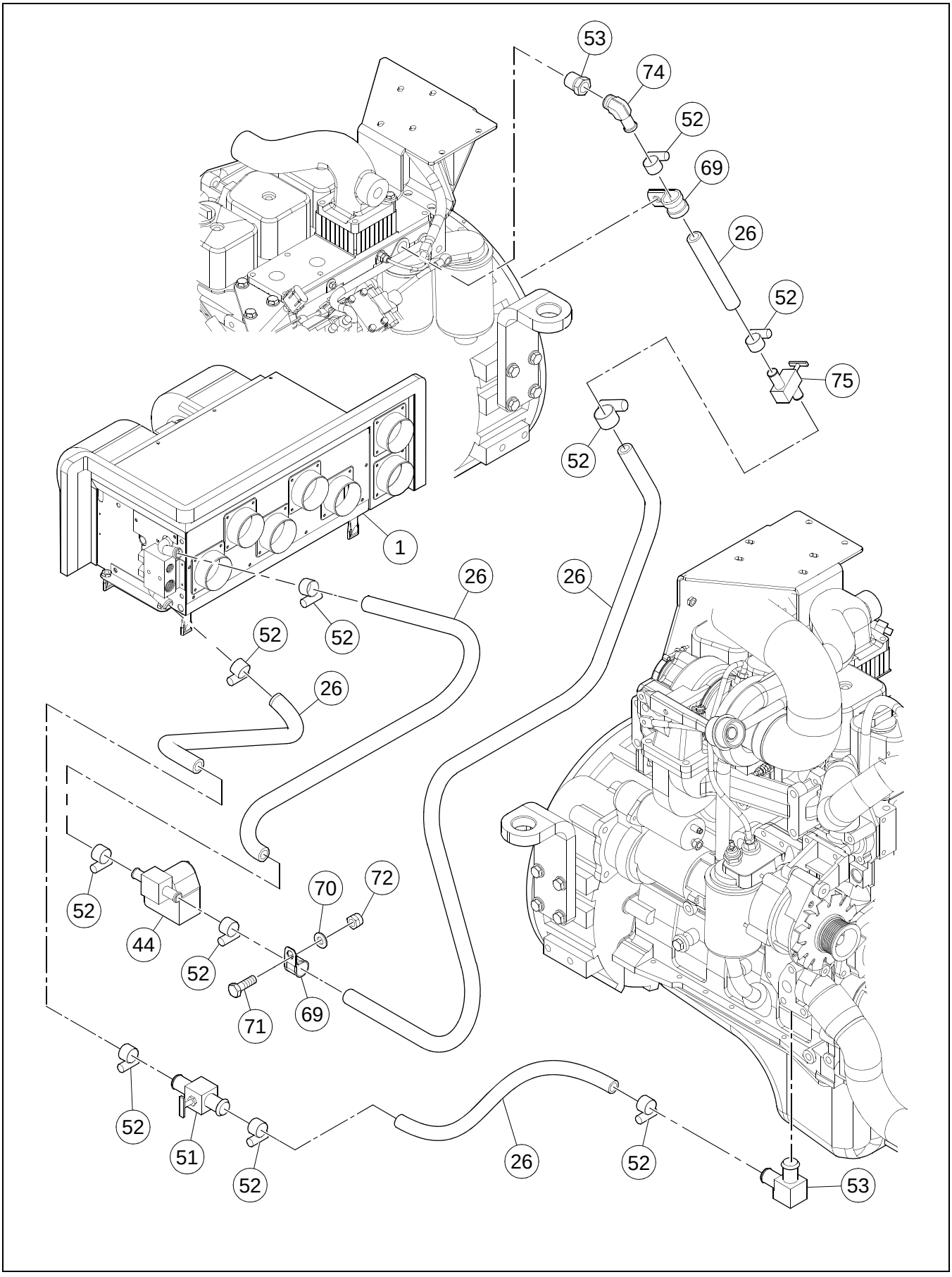

BOM 13273503

ITEM	COMM. NO.	DESCRIPTION	QTY	DIMENSIONS/NOTES
1	**13237888**	**Heater**	**1**	**See Breakdown A - 156.**
26	95285144	Heater Hose	1	
44	**13200027**	**Heater Valve**	**1**	**See Breakdown A - 158.**
51	13254909	Valve	2	
52	95671285	Hose Clamp	10	
53	59924241	External Reducer	1	
69	59465674	Clamp	2	
70	96741046	Flatwasher, Zinc Plated	1	M10 Cl 200
71	96701917	HHCS, Fully Threaded, Zinc Plated	1	M10 x 1.5 x 30 Cl 8.8
72	96704614	Nut, Zinc Plated	1	M10 x 1.5 Cl 8
74	13273818	Elbow, Male	1	
75	13254909	Shut-off Valve	1	
76	58962226	Elbow, Male (Not Shown)	1	

HEATER (13237888) - INTERNAL BREAKDOWN

Dwg 13244652/00

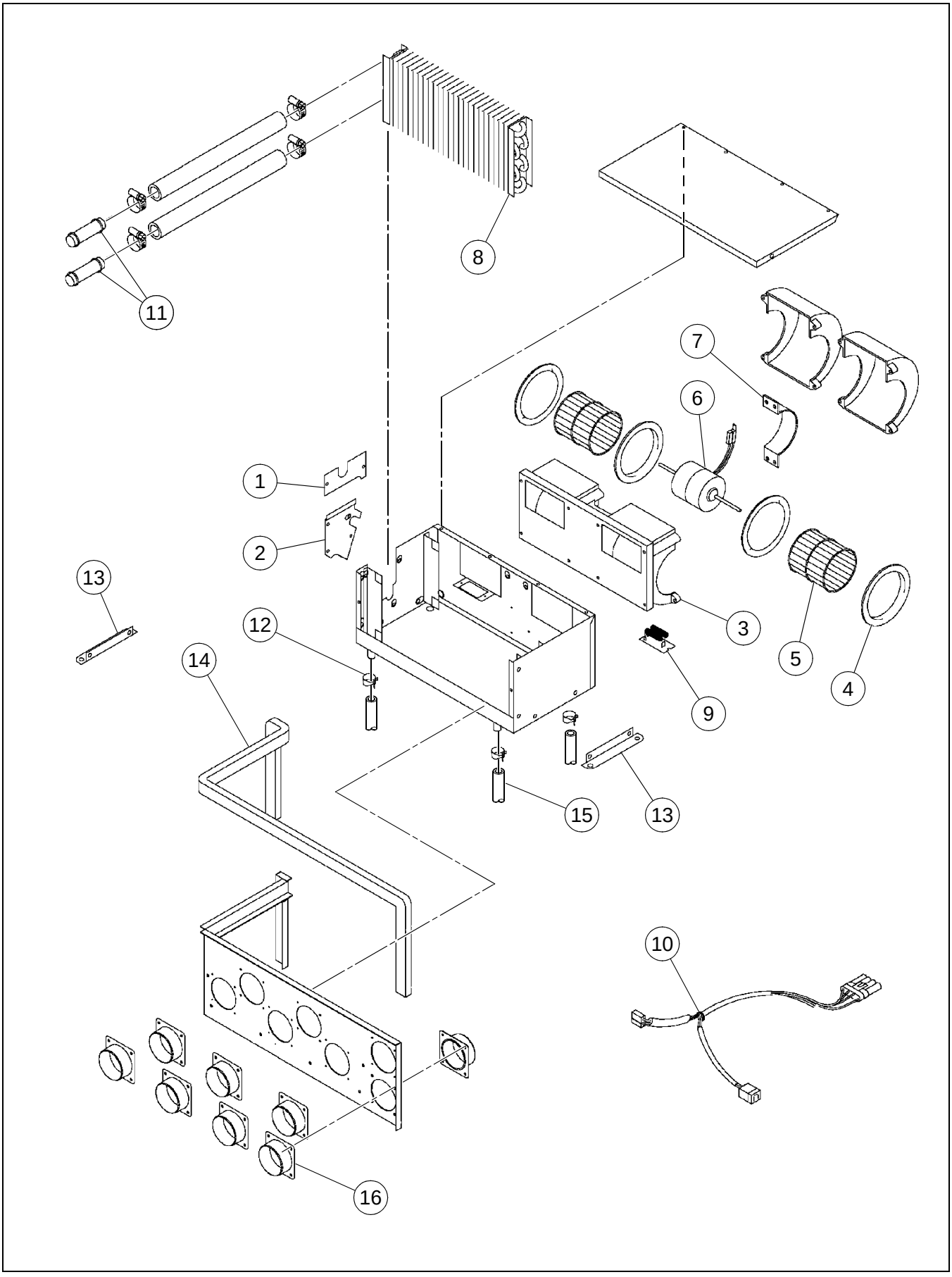

HEATER (13237888) - INTERNAL BREAKDOWN

BOM 13237888

ITEM	COMM. NO.	DESCRIPTION	QTY	DIMENSIONS/NOTES
1	13258702	Coil Cover	1	
2	13258710	Coil Cover	1	
3	13258728	Blower, 12V	1	
4	13258694	- Venturi	2	
5	13258736	- Blower Wheel	2	
6	13258744	- Motor, 12V	1	
7	13258751	- Motor Mount	1	
8	13258769	Heater Coil	1	
9	13258777	Resisto	1	12V
10	13258785	Wiring Harness	1	
11	13258793	Heater Hose Assembly	2	
12	13258801	Drain Hose Clamp	4	
13	13258819	Mounting Bracket	1	
14	13258827	Foam Seal	1	
15	13258835	Drain Valve	4	
16	13258843	Hose Adapter	6	

HEATER VALVE (13200027) - INTERNAL BREAKDOWN

Dwg D13244645/00

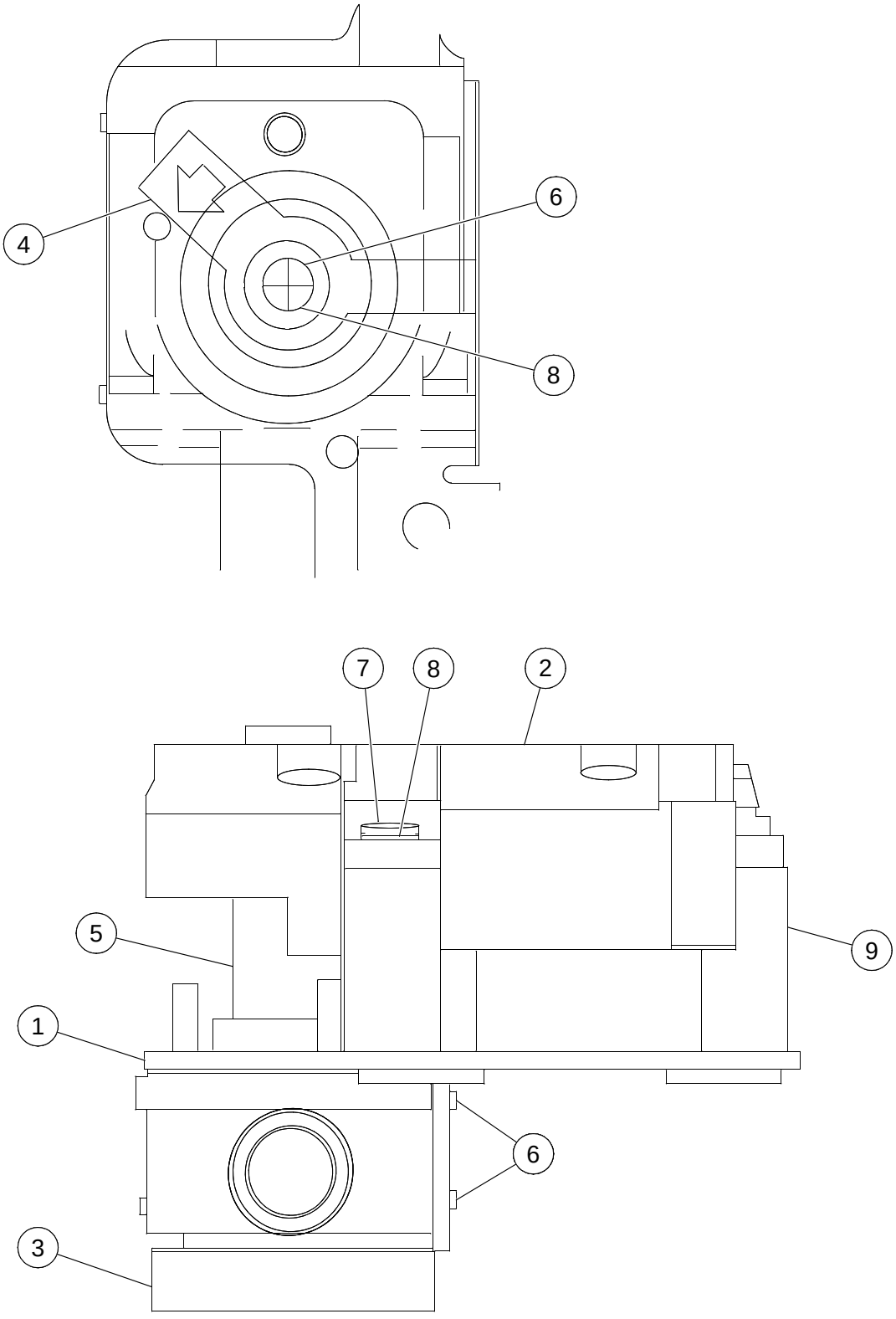

HEATER VALVE (13200027) - INTERNAL BREAKDOWN

BOM 13200027

ITEM	COMM. NO.	DESCRIPTION	QTY	DIMENSIONS/NOTES
1	13258942	Mounting Bracket	1	
2	13258959	Motor Adaptor	1	
3	13258967	Heater Valve	1	
4	13258975	Valve Lever Arm	1	
5	13258983	Shaft Adapter	1	
6	13258991	Plastite Screw	3	
7	13259007	Screw	3	
8	13259015	Washer	4	
9	13259023	Spacer	3	

NO ROPS/HOOD DRAW LATCH INSTALLATION

Dwg 13882907/00

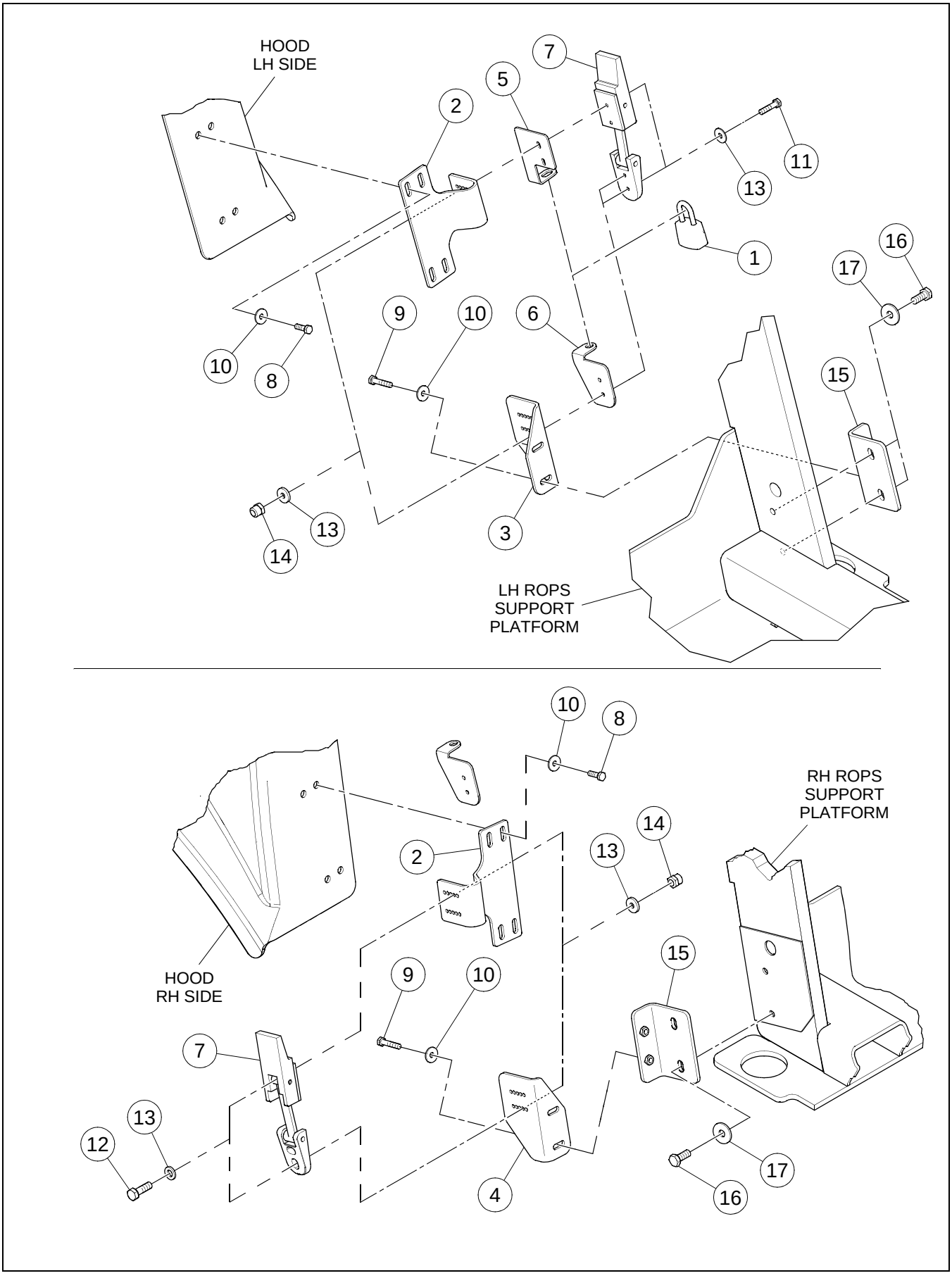

NO ROPS/HOOD DRAW LATCH INSTALLATION

BOM 13882907

ITEM	COMM. NO.	DESCRIPTION	QTY	DIMENSIONS/NOTES
1	13349212	Lock	1	
2	13881545	Hood Bracket	2	
3	13881537	ROPS Bracket, LH	1	
4	13881529	ROPS Bracket, RH	1	
5	13885355	Lock Tab, RH	1	
6	59163238	Lock Tab, RH	1	
7	59162149	Latch	2	
8	96705587	HHCS, Fully Threaded, Zinc Plated	8	M8 x 1.25 x 30 Cl 8.8
9	96702659	HHCS, Zinc Plated	4	M8 x 1.25 x 25 Cl 8.8
10	96741038	Flatwasher	12	M8
11	96705736	HHCS, Fully Threaded, Zinc Plated	4	M5 x 0.8 x 20 Cl 8.8
12	96705728	HHCS, Zinc Plated	4	M5 x 0.8 x 16 Cl 8.8
13	95922332	Flatwasher	16	#10
14	96704580	Hex Locknut	8	M5
15	13881628	No ROPS Mounting Bracket	2	
16	96702824	HHCS, Fully Threaded, Zinc Plated	4	M8 x 1.25 x 20 Cl 8.8
17	96741046	Flatwasher	4	M10

List Only
No Drawing Required

CAB WITH HEAT AND AIR CONDITIONING INSTALLATION - EU

BOM 80817935

ITEM	COMM. NO.	DESCRIPTION	QTY	DIMENSIONS/NOTES
1	**NSVA**	**Cab with Heat and Air Conditioning Assembly**	**1**	**See Page A - 176.**
2	**NSVA**	**Pre-Cab w/Heat and Air Conditioning Assembly**	**1**	**See Page A - 174.**

CAB WITH HEATER AND AIR CONDITIONING ASSEMBLY - EU

Dwg 80804354 REV 00

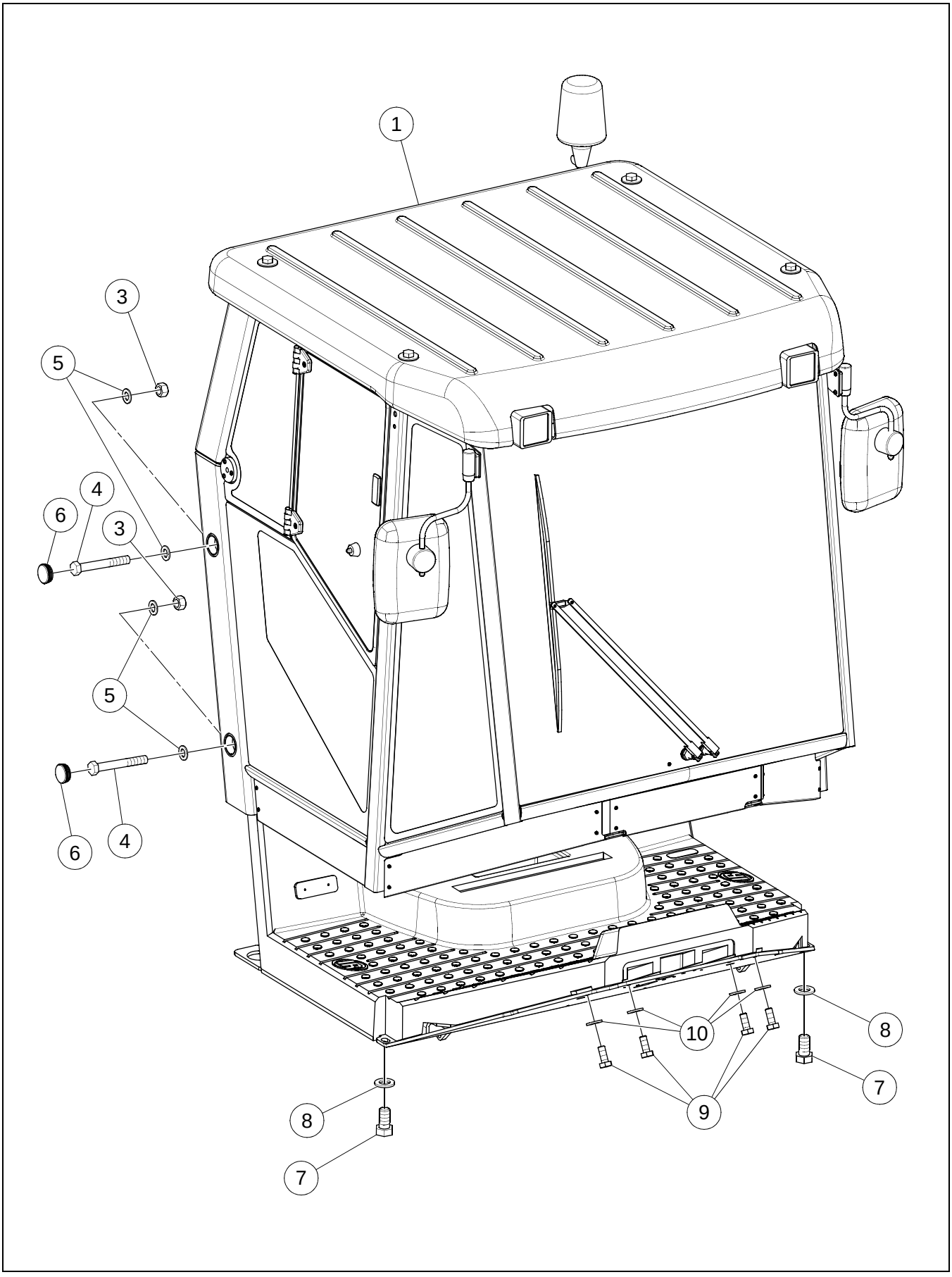

CAB WITH HEATER AND AIR CONDITIONING ASSEMBLY - EU

BOM 80804354

ITEM	COMM. NO.	DESCRIPTION	QTY	DIMENSIONS/NOTES
1	**80793201**	**Cab Assembly**	**1**	**See Breakdown A - 166.**
2	**NSVA**	**Cab/Hood Draw Latch Installation (Not Shown)**	**1**	**See Page A - 172.**
3	96720933	Hex Nut	4	
4	96721923	HHCS, Zinc Plated	4	M24 x 3.0 x 180 Cl 8.8
5	96720909	Flatwasher	8	M24 x Cl 140
6	80816499	Plug	2	
7	96722228	HHCS, Zinc Plated	2	M16 x 2 x 30 Cl 8.8
8	96720149	Flatwasher	2	M16 x Cl 140
9	96718861	HHCS, Zinc Plated	4	M12 x 1.75 x 25 Cl 8.8
10	96720131	Flatwasher	4	M12 x Cl 140
11	96753025	HHCS, Zinc Plated (Not Shown)	2	M16 x 2.0 x 70 Cl 10.9
12	14050439	Foam Strip (Not Shown)	4	

CAB ASSEMBLY - EU (80793201) - INTERNAL BREAKDOWN - SHEET 1 OF 3

Dwg 80793201 REV 00

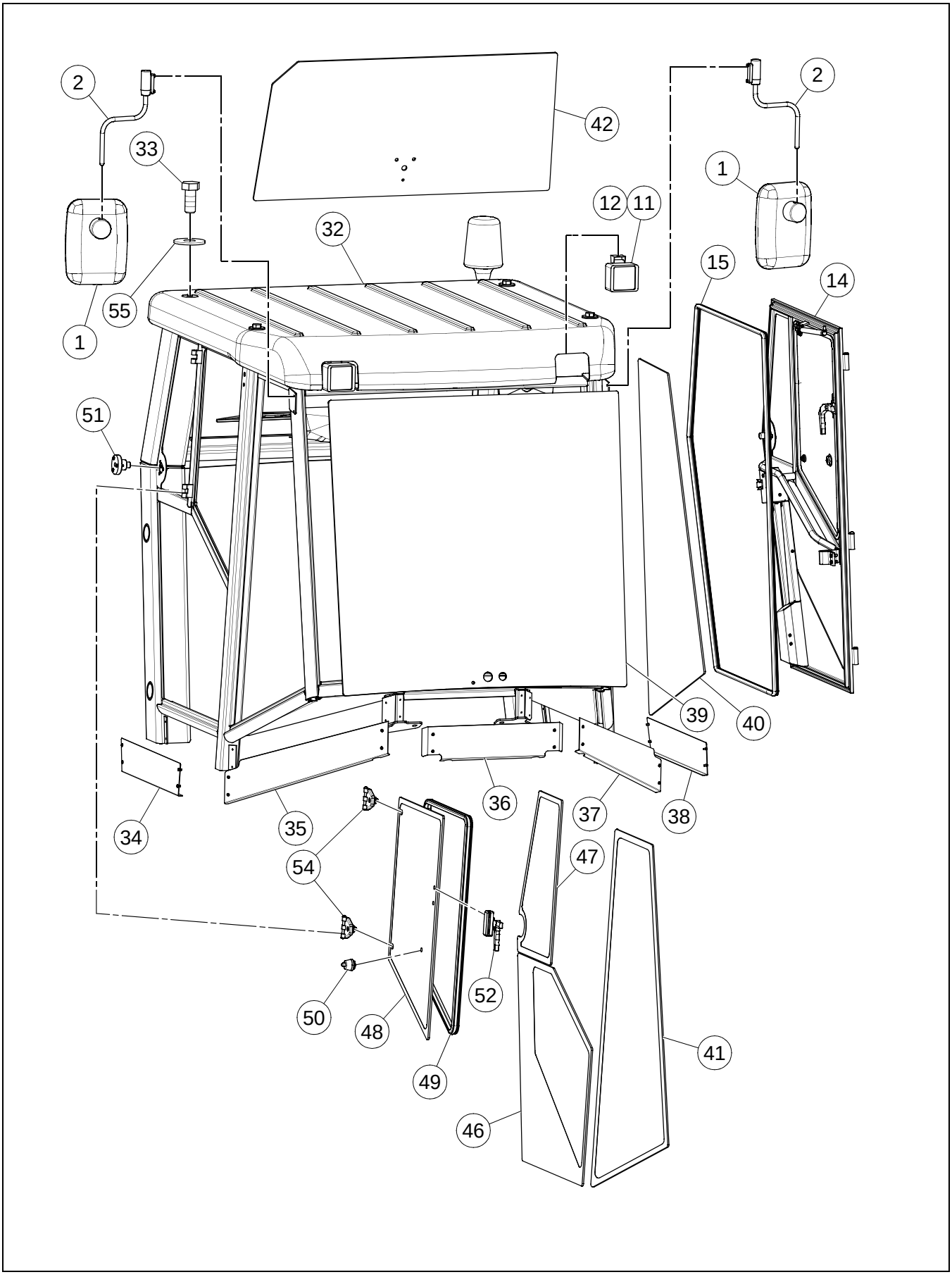

CAB ASSEMBLY - EU (80793201) - INTERNAL BREAKDOWN
- SHEET 1 OF 3

BOM 80793201

ITEM	COMM. NO.	DESCRIPTION	QTY	DIMENSIONS/NOTES
1	80808801	Outside Mirror	1	
2	80808819	Mirror Arm	1	
11	80808918	Working Light	1	
12	58861980	Bulb	1	
14	80808884	Cab Door	1	
15	80808892	Door Seal	1	
32	80809106	Roof	1	
33	96722228	HHCS, Zinc Plated	1	M16 x 2 x 30 Cl 8.8
34	80809114	Plate, RH	1	
35	80809122	Plate, Right Front	1	
36	80809130	Plate, Front	1	
37	80809148	Plate, Left Front	1	
38	80809155	Plate, LH	1	
39	80789621	Pane, Front	1	
40	80789639	Pane, LH	1	
41	80789647	Pane, RH	1	
42	80789654	Pane, Rear	1	
46	80789696	Side Pane, Lower RH	1	
47	80789704	Side Pane, Upper RH	1	
48	80789712	Drop Pane, RH	1	
49	80809163	Window Seal	1	
50	80809171	Window Latch	1	
51	80809189	Catch Recess	1	
52	80809197	Window Handle, RH	1	
54	80809213	Hinge Joint	1	
55	96726377	Washer	1	

CAB ASSEMBLY - EU (80793201) - INTERNAL BREAKDOWN - SHEET 2 OF 3

Dwg 80793201 REV 00

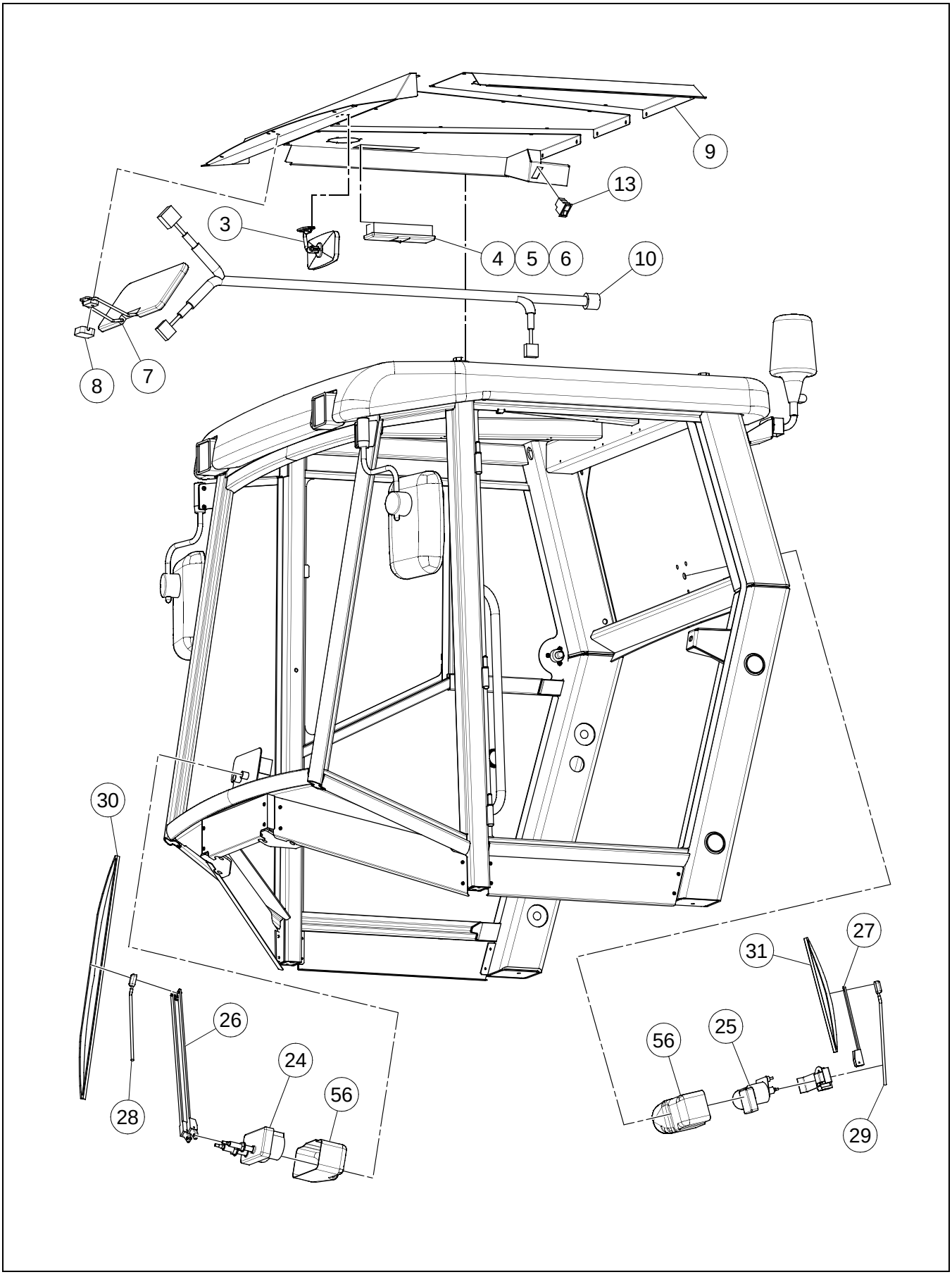

BOM 80793201

ITEM	COMM. NO.	DESCRIPTION	QTY	DIMENSIONS/NOTES
3	80808827	Inside Mirror	1	
4	80808835	Inside Light	1	
5	14110183	Unifilar Bulb	1	
6	58861998	Bulb	1	
7	80808843	Sunshade	1	
8	80808850	Sunshade Cover	1	
9	80808868	Interior Cover	1	
10	80808876	Cab Wire Harness	1	
13	80811409	Beacon Light Switch	1	
24	80809007	Wiper Motor w/Fastening Mount	1	
25	80809015	Wiper Motor w/Fastening Mount	1	
26	80809023	Arm Wiper	1	
27	80809031	Arm Wiper	1	
28	80809056	Water Wiper	1	
29	80809064	Water Wiper	1	
30	80809080	Water Wiper	1	
31	80809098	Water Wiper	1	
56	80816465	Wiper Cover	1	

CAB ASSEMBLY - EU (80793201) - INTERNAL BREAKDOWN - SHEET 3 OF 3

Dwg 80793201 REV 00

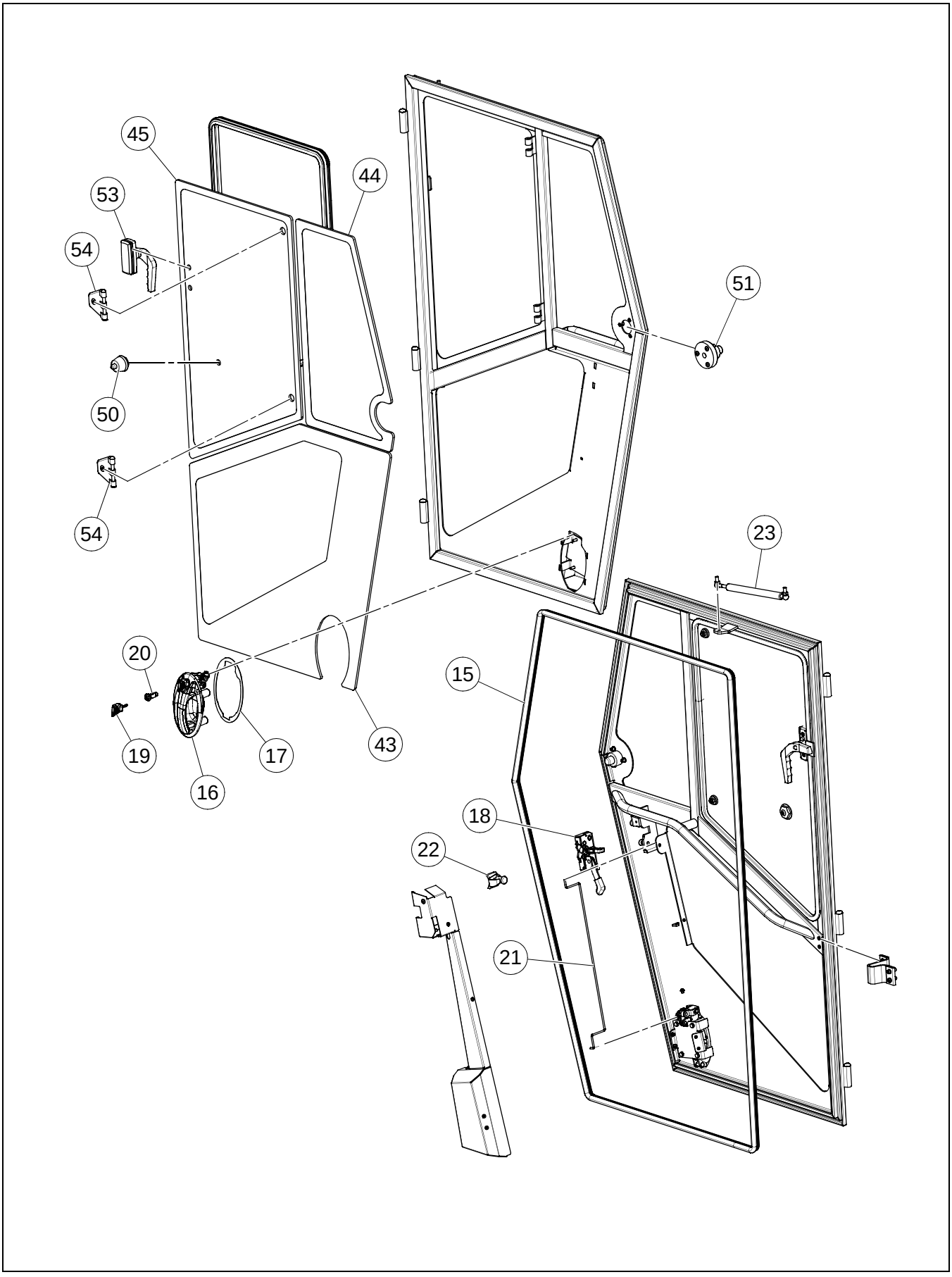

BOM 80793201

ITEM	COMM. NO.	DESCRIPTION	QTY	DIMENSIONS/NOTES
15	80808892	Door Seal	1	
16	80808900	Door Handle w/Cylinder	1	
17	80808926	Pad	1	
18	80808934	Latch	1	
19	80808942	Cab Key	1	
20	80808959	Cylinder	1	
21	80808975	Connecting Rod	1	
22	80808983	Catch Recess	1	
23	80808991	Compression Spring	1	
43	80789662	Door Pane, Lower LH	1	
44	80789670	Door Pane, Upper LH	1	
45	80789688	Drop Pane, LH	1	
50	80809171	Window Latch	1	
51	80809189	Catch Recess	1	
53	80809205	Window Handle, LH	1	
54	80809213	Hinge Joint	1	

CAB/HOOD DRAW LATCH INSTALLATION

19330497 REV 00

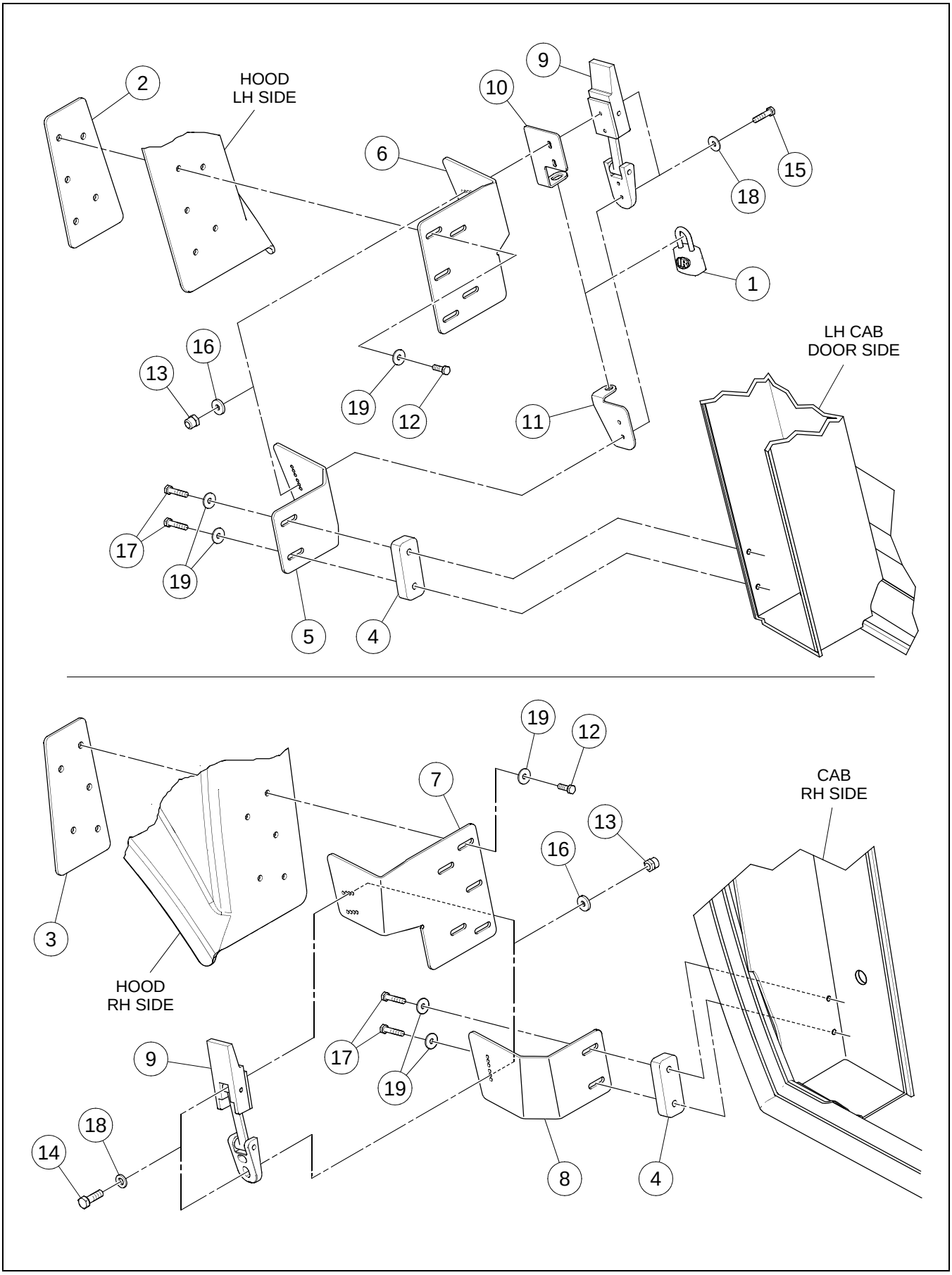

CAB/HOOD DRAW LATCH INSTALLATION

BOM 19330497

ITEM	COMM. NO.	DESCRIPTION	QTY	DIMENSIONS/NOTES
1	13349212	Lock	1	
2		This item not used with this Assembly		
3		This item not used with this Assembly		
4	13881370	Spacer Block	2	
5	13886684	Hood Latch Bracket, LH	1	
6	13886676	Cab Latch Bracket, LH	1	
7	13886700	Cab Latch Bracket, RH	1	
8	13886692	Hood Latch Bracket, RH	1	
9	59162149	Latch	2	
10	59163220	Lock Tab, RH	1	
11	59163238	RH Lock Tab	1	
12	96702659	HHCS, Fully Threaded, Zinc Plated	10	M8 x 1.25 x 25 Cl 8.8
13	96704580	Hex Locknut, Zinc Plated	8	M5 x 0.8 Cl 8
14	96705728	Screw, Fully Threaded, Zinc Plated	4	M5 x 0.8 x 16 Cl 8.8
15	96705736	HHCS, Fully Threaded, Zinc Plated	4	M5 x 0.8 x 20 Cl 8.8
16	95922332	Flatwasher, Zinc Plated	8	#10
17	96719786	HHCS, Zinc Plated	4	M8 x 1.25 x 40 Cl 8.8
18	95922332	Flatwasher, Zinc Plated	8	#10
19	96741038	Flatwasher	14	M8 x 1.25 Cl 200

PRE-CAB WITH HEAT AND AIR CONDITIONING ASSEMBLY - EU

Dwg 19330778/0d

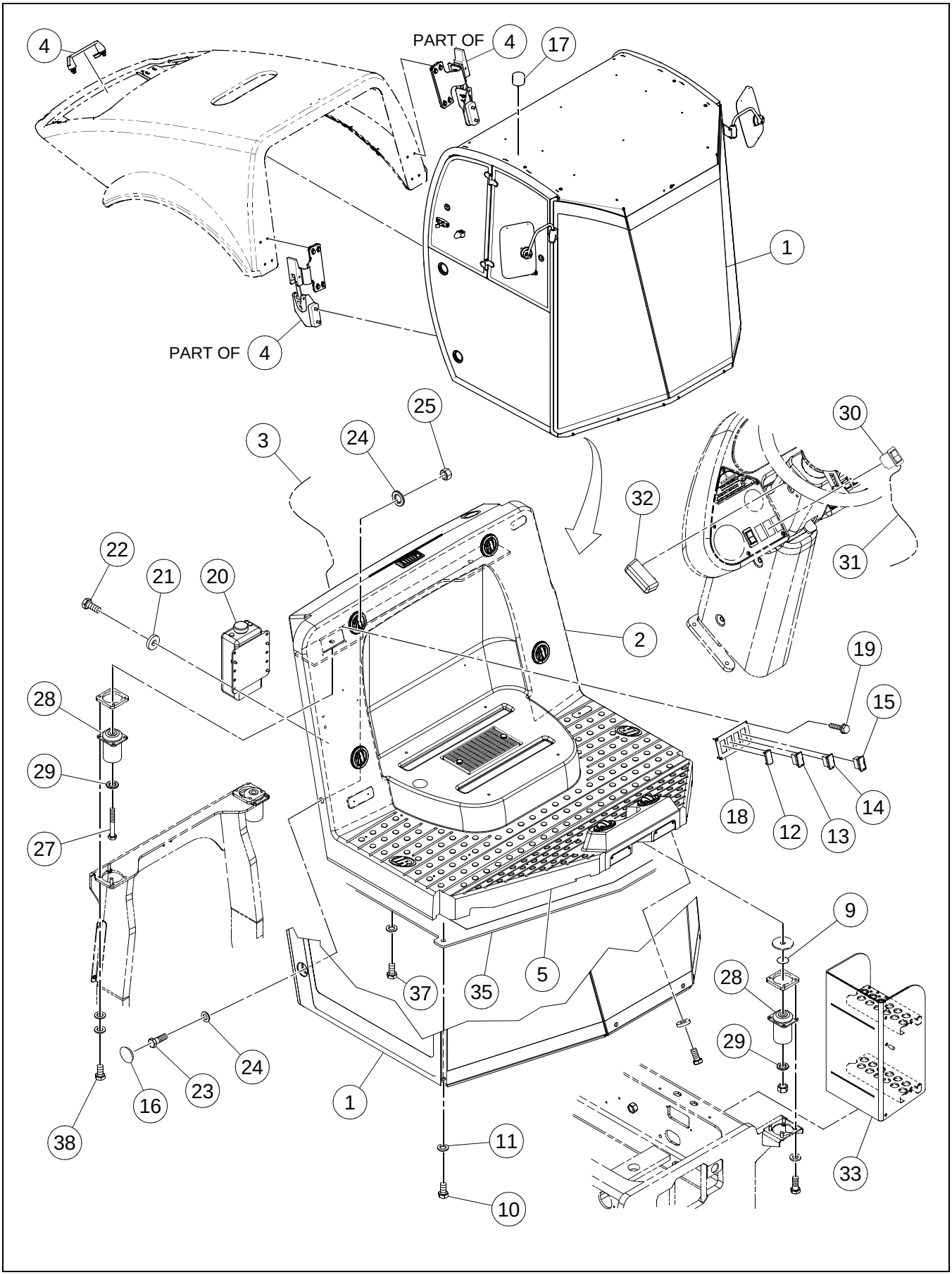

PRE-CAB WITH HEAT AND AIR CONDITIONING ASSEMBLY - EU

BOM 80818065

ITEM	COMM. NO.	DESCRIPTION	QTY	DIMENSIONS/NOTES
1		This item not used with this Assembly		
2	**NSVA**	**Cab Heater Assembly**	**1**	**See Page A - 176.**
3	13492822	Cab Heating And Air Conditioning Harness	1	
4	**NSVA**	**No ROPS/Hood Draw Latch Installation**	**1**	**See Page A - 160.**
5	59946863	Seal Trim	4	
9	96746417	Washer Plain	4	
10		This item not used with this Assembly		
11		This item not used with this Assembly		
12	58835398	Blank Switch	1	
13	59196451	Front Wiper Switch	1	
14	59196444	Rear Wiper Switch	1	
15	59195925	Switch	1	
16		This item not used with this Assembly		
17		This item not used with this Assembly		
18	13212576	Control Panel	1	
19	95988093	Self-tapping Screw, Zinc Plated	4	#6 x 3/4
20	13215769	Washer Bottle	1	
-	13228242	- Washer Bottle Cap	1	
-	13228259	- Washer Bottle Pump	1	
21	96712674	Flatwasher, Zinc Plated	4	M8 Hardened Cl 10
22	96702824	HHCS, Fully Threaded, Zinc Plated	4	M8 x 1.25 x 20 Cl 8.8
23		This item not used with this Assembly		
24		This item not used with this Assembly		
25		This item not used with this Assembly		
27	96741442	HHCS, Zinc Plated	2	M20 x 2.5 x 140 Cl 8.8
28		This item not used with this Assembly		
29	96701560	Flatwasher, Zinc Plated	4	M20 Hardened
30	13197108	F/R Worklights Switch	1	
31	13225560	Work Lights Selector Harness	1	
32	13248935	Light Assembly Panel	2	
33		This item not used with this Assembly		
35		This item not used with this Assembly		
37	96704556	HHCS, Fully Threaded, Zinc Plated	6	M10 x 1.5 x 40 Cl 8.8
38		This item not used with this Assembly		

CAB HEATER AND AIR CONDITIONING ASSEMBLY - OPTIONAL - SHEET 1 OF 3

Dwg 13273206/0c/01

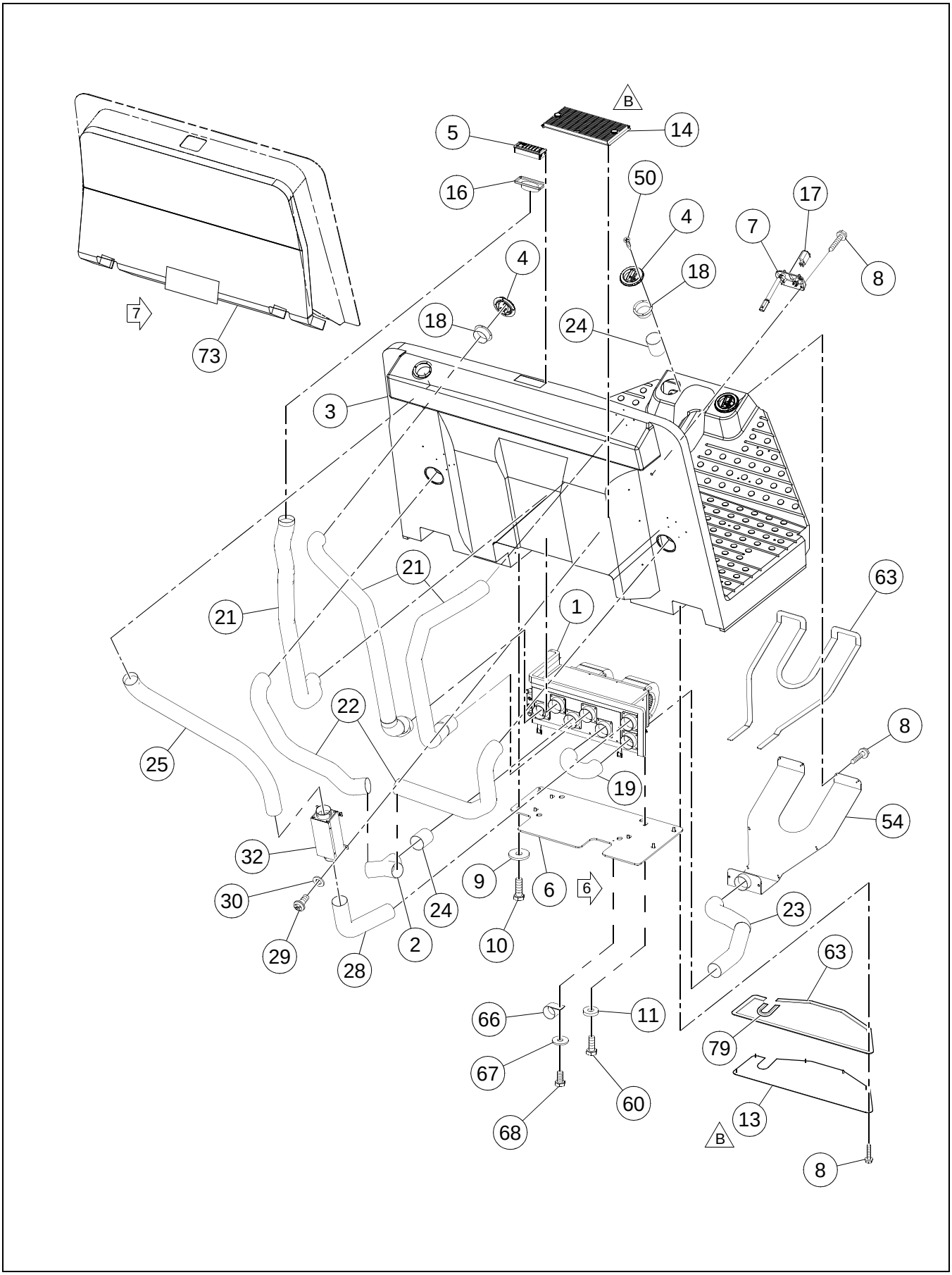

CAB HEATER AND AIR CONDITIONING ASSEMBLY - OPTIONAL - SHEET 1 OF 3

BOM 13273206

ITEM	COMM. NO.	DESCRIPTION	QTY	DIMENSIONS/NOTES
1	**13237367**	**Heater/Evaporator/AC**	**1**	**See Breakdown A - 182.**
2	13162094	Y-Splicer	1	
3	43843564	Operators Platform	1	
4	13161724	Louver	6	
5	13179197	Louver	1	
6	13237326	Mounting Plate	1	
7	13254644	Heater/AC Control Panel	1	
8	96728548	Self-tapping Screw, Zinc Plated	19	1.6
9	96740188	Washer, Zinc Plated	4	M8 x 3 Cl HV100
10	96702659	HHCS, Fully Threaded, Zinc Plated	8	M8 x 1.25 x 25 Cl 8.8
11	96712674	Washer, Zinc Plated	6	M8 Hardened Cl 10
13	13502083	Cover Plate	1	
14	NSS	Air Recirculation Filter Assembly	1	
-	13200019	- Recirculation Filter Cover	1	
-	13161757	- Air Recirculation Filter	1	
-	13200001	- Recirculation Filter Grill	1	
16	13179403	Louver Adapter	1	
17	13156963	Air Conditioner On/Off Switch	1	
18	13161732	Louver Adapter	7	
19	13176508	Bottom Duct Hose	1	
21	13295712	Upper Side Duct Hose	3	
22	13176516	Lower Side Duct Hose	2	
23	13176532	Plenum Hose	1	
24	59290742	Connector Hose	3	
25	59290734	Top Fresh Air Duct Hose	1	
28	59290783	Bottom Fresh Air Duct Hose	1	
29	54487517	Self-tapping Screw	4	14 x 1
30	96738554	Flatwasher, Zinc Plated	4	M5 Hardened Cl 200
32	59290767	Fresh Air Filter Assembly	1	
-	13262464	- Air Filter	1	
50	13209887	Wood Screw	14	
54	13234893	Plenum	1	
60	96702824	HHCS, Fully Threaded, Zinc Plated	6	M8 x 1.25 x 20 Cl 8.8
63	35898477	Foamtape	A/R	
66	95378873	Hose Clamp	1	
67	96704663	Washer, Zinc Plated	1	M6 Large
68	96702394	HHCS, Fully Threaded, Zinc Plated	1	M6 x 1 x 12 Cl 8.8
73	59290817	Foam	1	
79	13467485	Seal Trim	1	

CAB HEATER AND AIR CONDITIONING ASSEMBLY - OPTIONAL - SHEET 2 OF 3

Dwg 13273206/0c/02

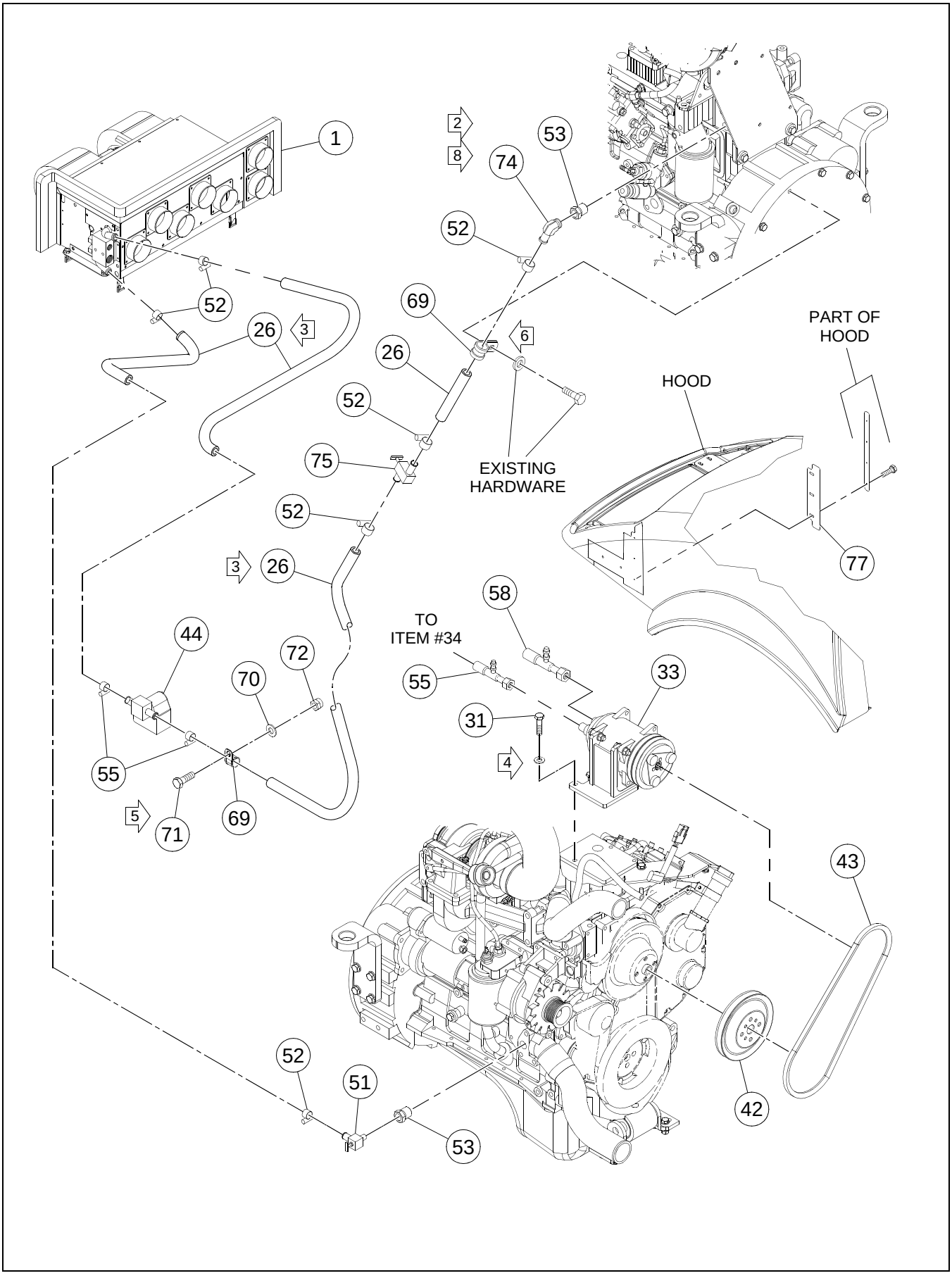

CAB HEATER AND AIR CONDITIONING ASSEMBLY - OPTIONAL - SHEET 2 OF 3

BOM 13273206

ITEM	COMM. NO.	DESCRIPTION	QTY	DIMENSIONS/NOTES
1	**13237367**	**Heater/Evaporator/AC**	**1**	**See Breakdown A - 182.**
26	95285144	Bulk Hose	1	
31	96704556	HHCS, Fully Threaded, Zinc Plated	3	M10 x 1.5 x 40 Cl 8.8
33	**NSVA**	**Compressor Assembly**	**1**	**See Page A - 184.**
42	58910662	Compressor Pulley	1	
43	13236666	Compressor Belt	1	
44	**13200027**	**Heater Valve**	**1**	**See Breakdown A - 188.**
51	13254909	Shut off Valve	2	
52	95671285	Hose Clamp	10	
53	59924241	External Reducer	1	
55	13266903	Coolant Hose #1	1	
58	13266911	Coolant Hose #4	1	
69	59465674	Clamp	3	
70	96741046	Flatwasher, Zinc Plated	2	M10 Cl 200
71	96701917	HHCS, Fully Threaded, Zinc Plated	2	M10 x 1.5 x 30 Cl 8.8
72	96704614	Nut, Zinc Plated	1	M10 x 1.5 Cl 8
74	13273818	Elbow, Male	1	
75	13254909	Shut-off Valve	1	
77	13279476	Plate Seal	1	
78	13355003	Decal: Refridgerant Charge (Not Shown)	1	

CAB HEATER AND AIR CONDITIONING ASSEMBLY - OPTIONAL - SHEET 3 OF 3

Dwg 13273206/0c/03

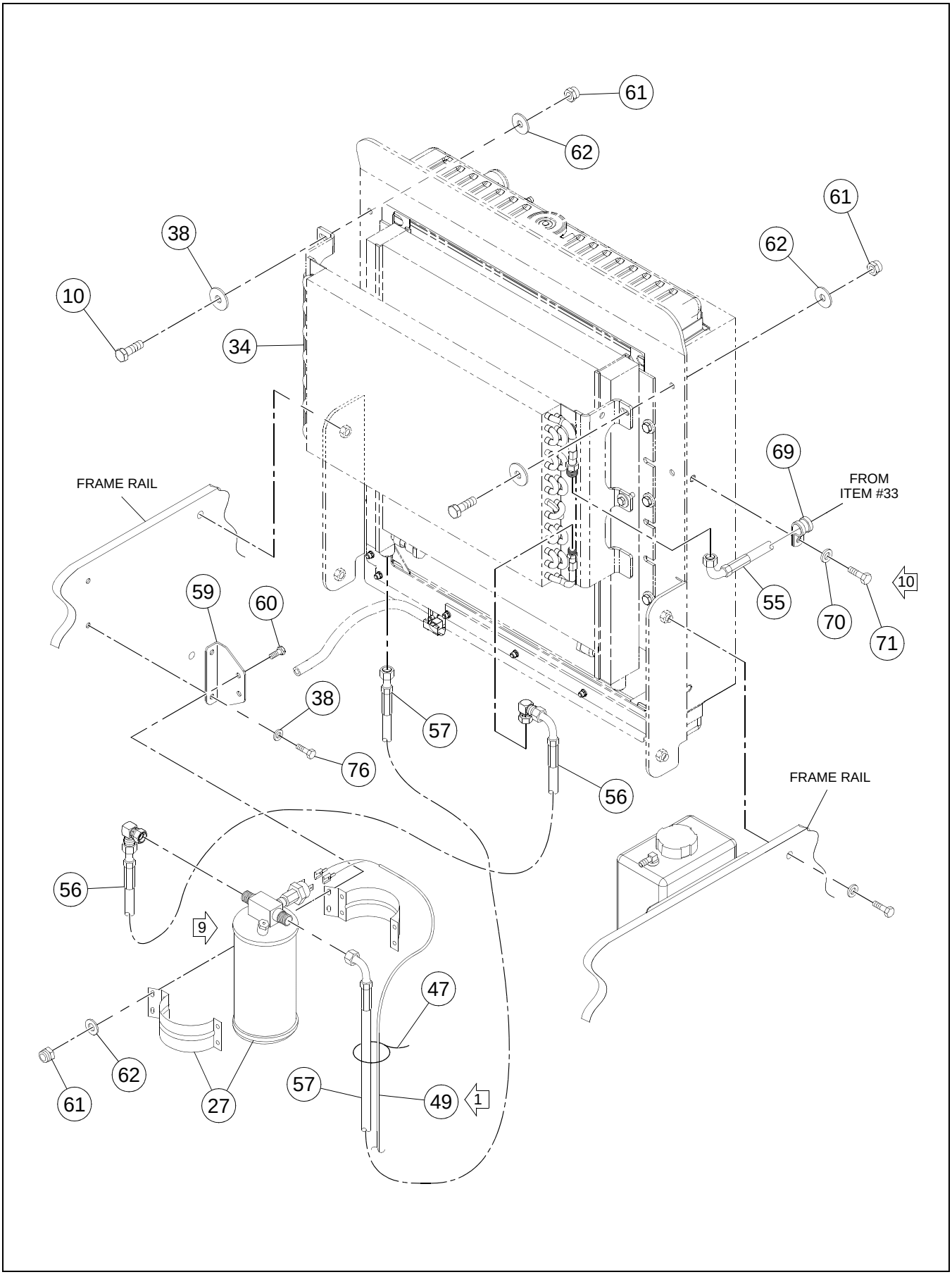

CAB HEATER AND AIR CONDITIONING ASSEMBLY - OPTIONAL - SHEET 3 OF 3

BOM 13273206

ITEM	COMM. NO.	DESCRIPTION	QTY	DIMENSIONS/NOTES
10	96702659	HHCS, Fully Threaded, Zinc Plated	8	M8 x 1.25 x 25 Cl 8.8
27	43837715	Dryer/Binary Bracket	1	
-	43876242	- Receiver Drier	1	
-	43876259	- R/D Mounting Bracket	1	
-	43876267	- Clamp	2	
-	57607814	- Pressure Switch	1	
34	**NSVA**	**Condensor Assembly**	**1**	**See Page A - 186.**
38	96741038	Flatwasher	6	M8 x 1.25 Cl 200
47	95373973	Wire Tie	A/R	
49	13200035	Cab Heater and A/C Wire Harness	1	
55	13266903	Coolant Hose #1	1	
56	13266937	Coolant Hose #2	1	
57	13266929	Coolant Hose #3	1	
59	13274386	Dryer Mounting Bracket	1	
60	96702824	HHCS, Fully Threaded, Zinc Plated	6	M8 x 1.25 x 20 Cl 8.8
61	96704606	Hex Locknut, Zinc Plated	1	M8 x 1.25 Cl 8
62	96713979	Washer, Zinc Plated	6	M8 Hardened
69	59465674	Clamp	3	
70	96741046	Flatwasher, Zinc Plated	2	M10 Cl 200
71	96701917	HHCS, Fully Threaded, Zinc Plated	2	M10 x 1.5 x 30 Cl 8.8
76	96702816	HHCS, Fully Threaded, Zinc Plated	2	M8 x 1.25 x 16 Cl 8.8
80	58962226	Elbow, Male (Not Shown)	1	
81	59465674	Clamp	2	
82	96741038	Flatwasher	2	M8 x 16.0
83	96705587	HHCS, Fully Threaded, Zinc Plated	1	M8 x 1.25 x 30 Cl 8.8
84	96704606	Hex Locknut	1	M8

HEATER/EVAPORATOR (13237367) - INTERNAL BREAKDOWN

Dwg D13244611/00

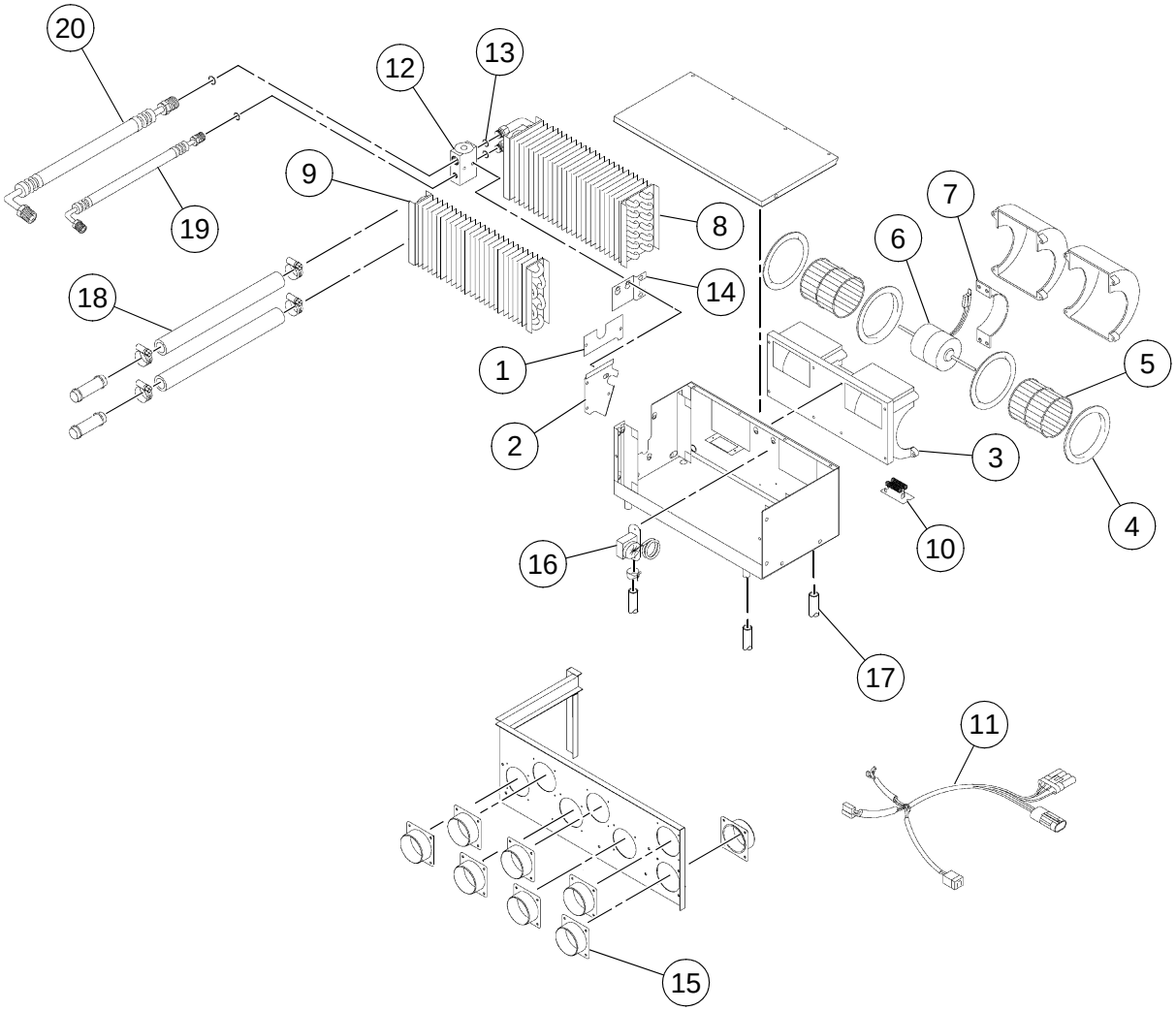

HEATER/EVAPORATOR (13237367) - INTERNAL BREAKDOWN

BOM 13237367

ITEM	COMM. NO.	DESCRIPTION	QTY	DIMENSIONS/NOTES
1	13258702	Coil Cover	1	
2	13258710	Coil Cover	1	
3	13258728	Blower, 12V	1	
4	13258694	- Venturi	2	
5	13258736	- Blower Wheel	2	
6	13258744	- Motor	1	12V
7	13258751	- Motor Mount	1	
8	13258868	Evaporator Coil	1	
9	13258769	Heater Coil	1	
10	13258777	Resistor 12V	1	
11	13258876	Wiring Harness	1	
12	13258884	Block Valve	1	
13	13258892	O-Ring	2	
14	13258900	Valve Bracket	1	
15	13258843	Hose Adapter	6	
16	57588162	Thermostat	1	
17	13258835	Drain Valve	4	
18	13258793	Heater Hose Assembly	2	
19	13258918	Hose Assembly	1	
20	13258926	Hose Assembly	1	

COMPRESSOR ASSEMBLY

Dwg 13274527/0a

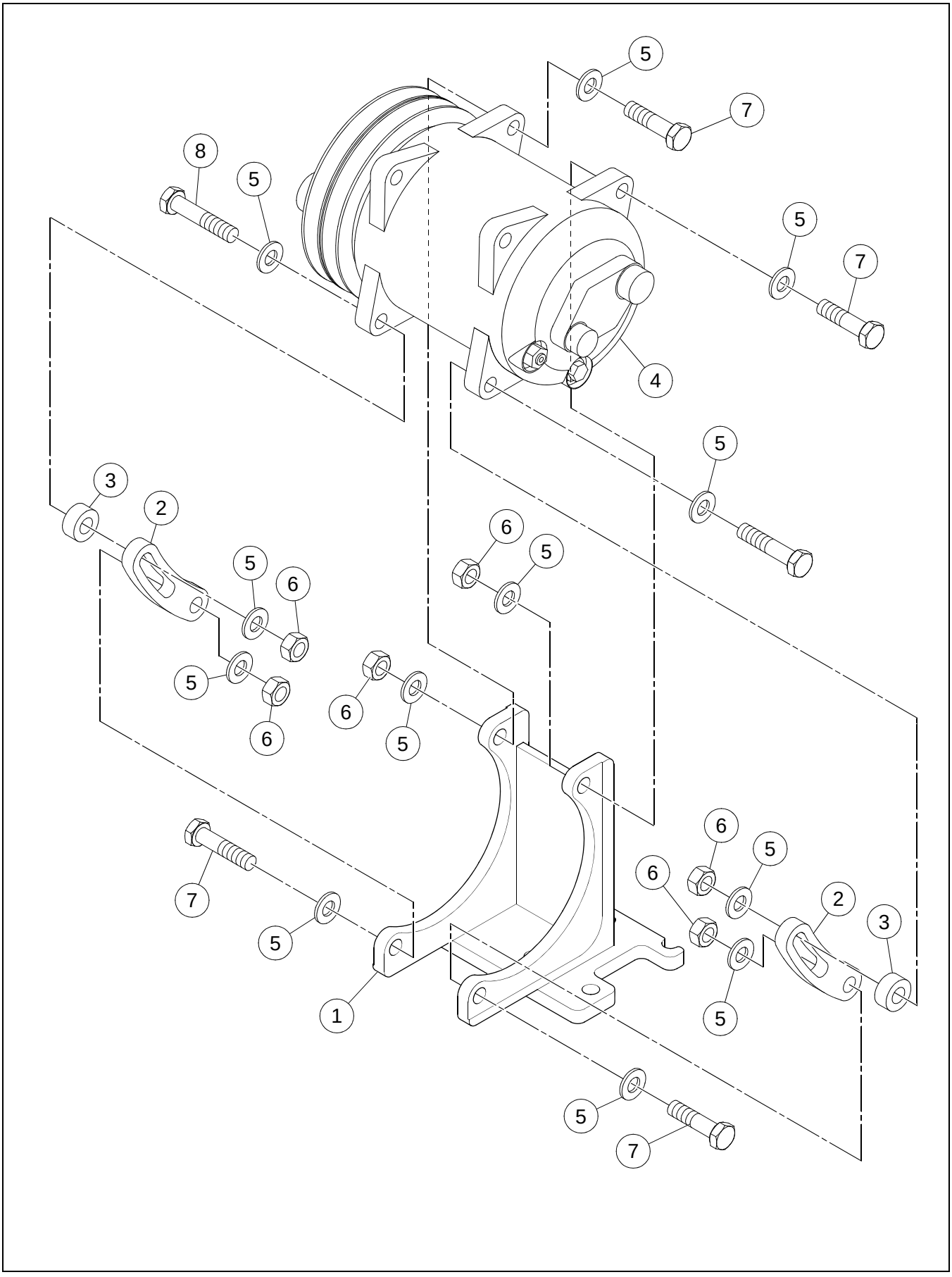

COMPRESSOR ASSEMBLY

BOM 13274527

ITEM	COMM. NO.	DESCRIPTION	QTY	DIMENSIONS/NOTES
1	13356134	Bracket	1	
2	59147991	Adjustment Arm	2	
3	59148007	Spacer	2	
4	13274535	Compressor	1	
5	96741046	Flatwasher, Zinc Plated	12	M10 Cl 200
6	96704812	Hex Nut, Zinc Plated	6	M10 x 1.5 Cl 8
7	96704358	HHCS, Zinc Plated	4	M10 x 1.5 x 40 Cl 8.8
8	96705116	HHCS, Fully Threaded, Zinc Plated	2	M10 x 1.5 x 50 Cl 8.8

CONDENSOR ASSEMBLY

Dwg D13273214/00

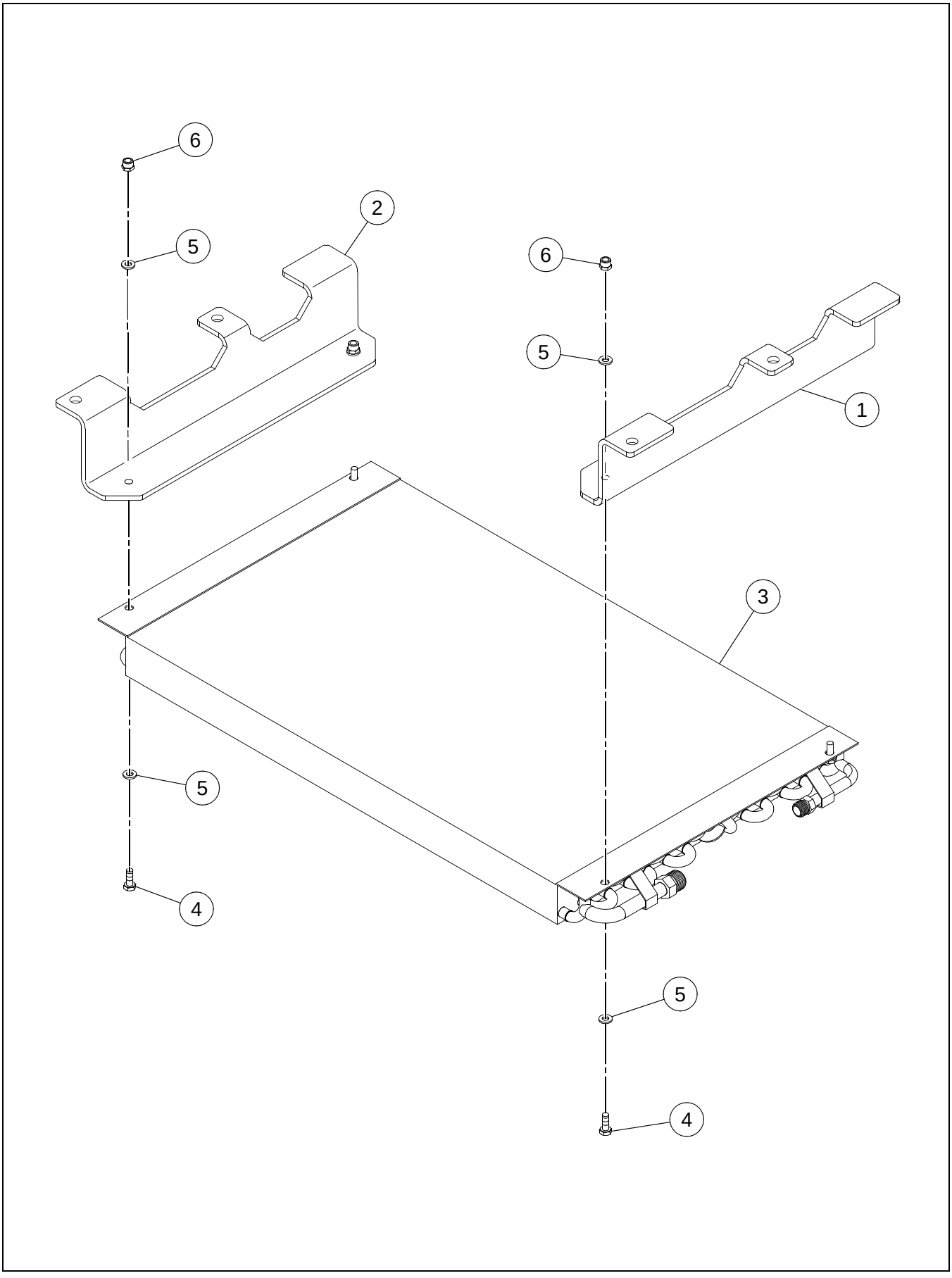

CONDENSOR ASSEMBLY

BOM 13273214

ITEM	COMM. NO.	DESCRIPTION	QTY	DIMENSIONS/NOTES
1	13274485	Condensor Bracket, RH	1	
2	13273230	Condensor Bracket, LH	1	
3	13356712	Condensor	1	
4	96704564	HHCS, Fully Threaded, Zinc Plated	4	M6 x 1 x 20 Cl 8.8
5	96704663	Washer, Zinc Plated	8	M6 Large
6	96704598	Hex Locknut, Zinc Plated	4	M6 Cl 8

HEATER VALVE (13200027) - INTERNAL BREAKDOWN

Dwg D13244645/00

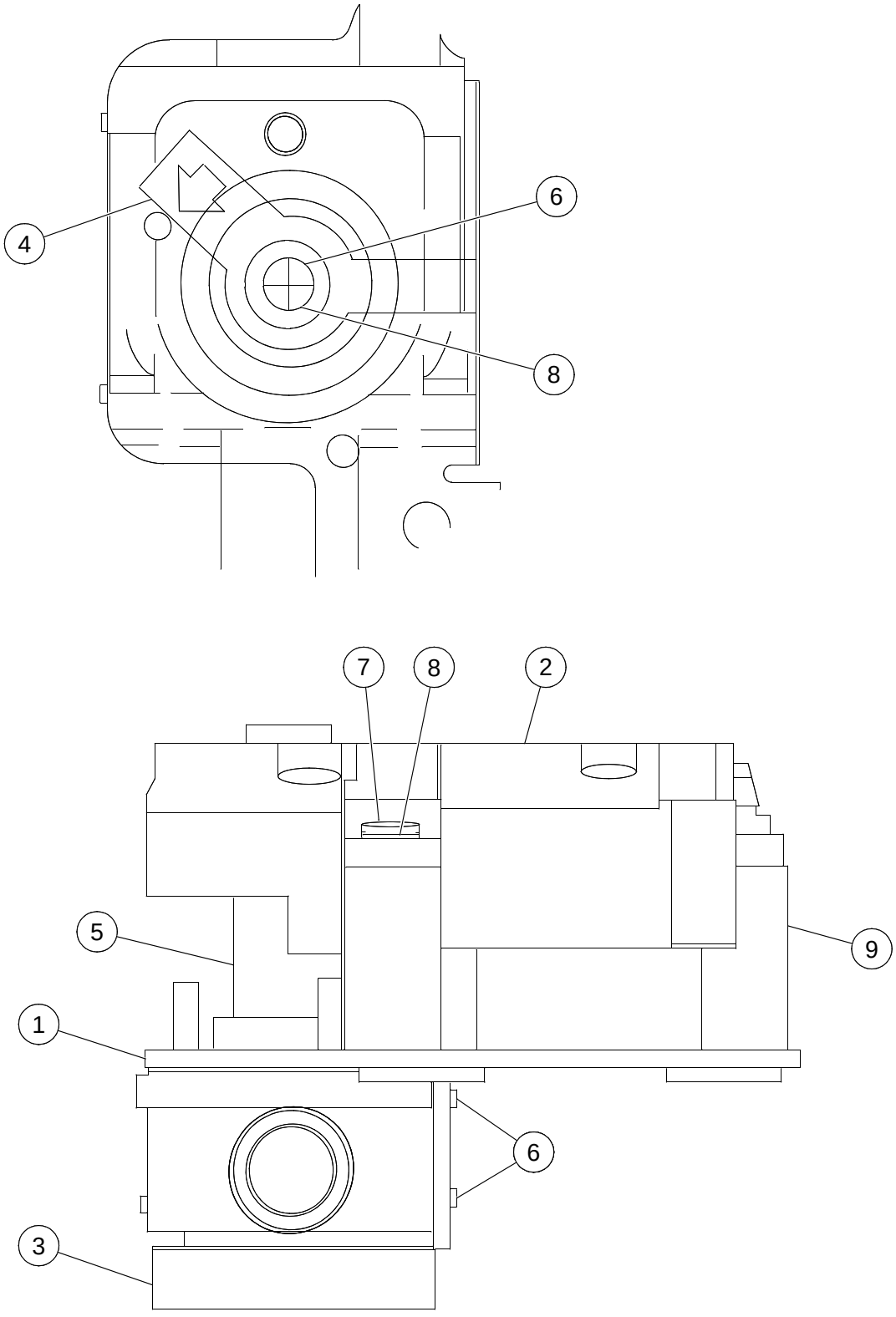

HEATER VALVE (13200027) - INTERNAL BREAKDOWN

BOM 13200027

ITEM	COMM. NO.	DESCRIPTION	QTY	DIMENSIONS/NOTES
1	13258942	Mounting Bracket	1	
2	13258959	Motor Adaptor	1	
3	13258967	Heater Valve	1	
4	13258975	Valve Lever Arm	1	
5	13258983	Shaft Adapter	1	
6	13258991	Plastite Screw	3	
7	13259007	Screw	3	
8	13259015	Washer	4	
9	13259023	Spacer	3	

Dwg 13169842/0m

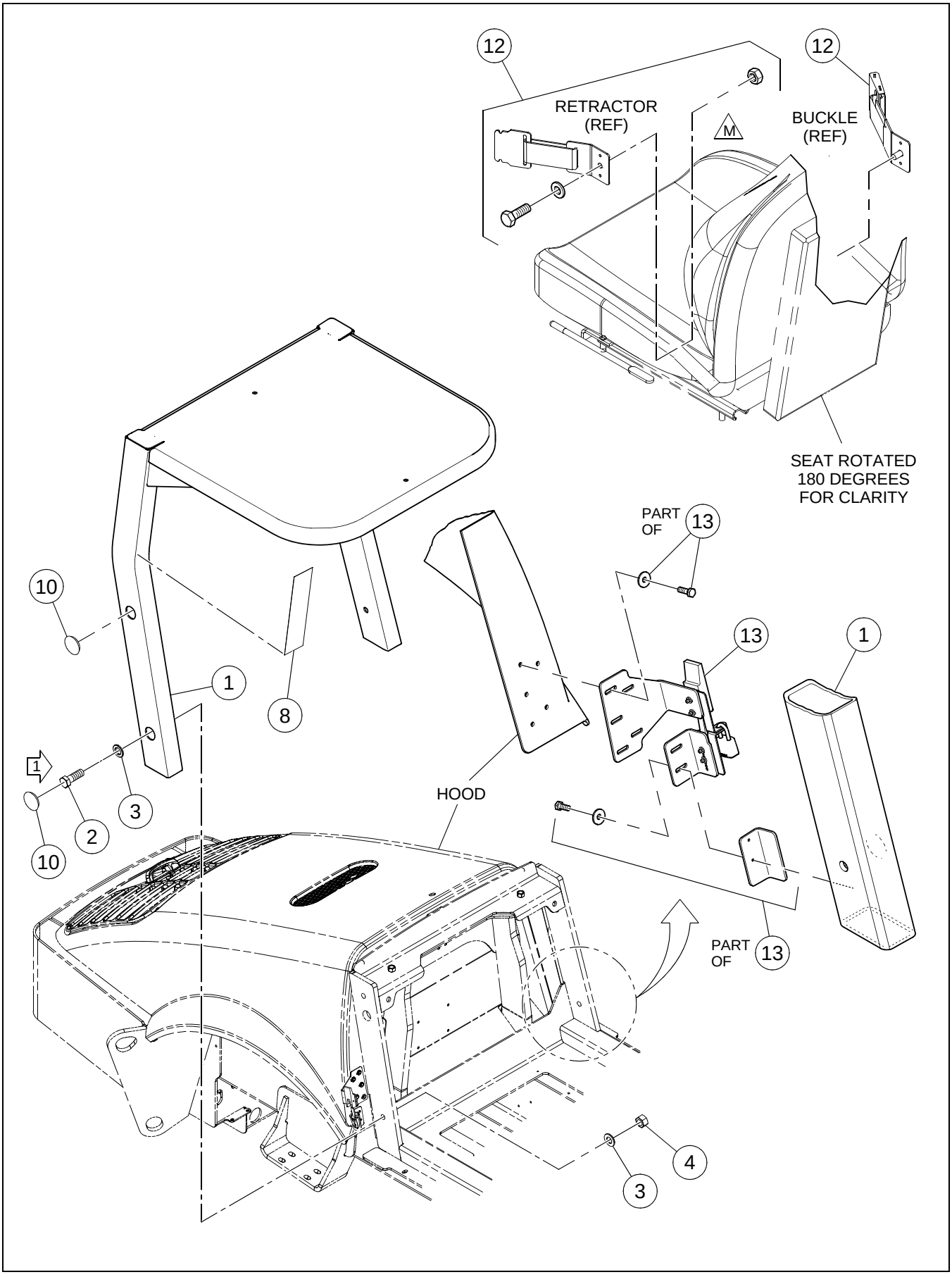

BOM 13882527

ITEM	COMM. NO.	DESCRIPTION	QTY	DIMENSIONS/NOTES
1	19297993	Rops/Fops	1	
2	96746235	HHCS, Zinc Plated	4	M24 x 3 x 70 Cl 10.9
3	96702642	Flatwasher	8	M24 Hardened
4	96727532	Hex Nut	4	M24 x 3
8	13197306	Checklist Decal	1	
10	13309877	Plug	4	
12	**NSVA**	**Retractable Seatbelt Installation**	**1**	**See Page A - 192.**
13	**NSVA**	**Rops/Hood Bracket Installation**	**1**	**See Page A - 194.**

RETRACTABLE SEATBELT INSTALLATION

Dwg 43803394/00

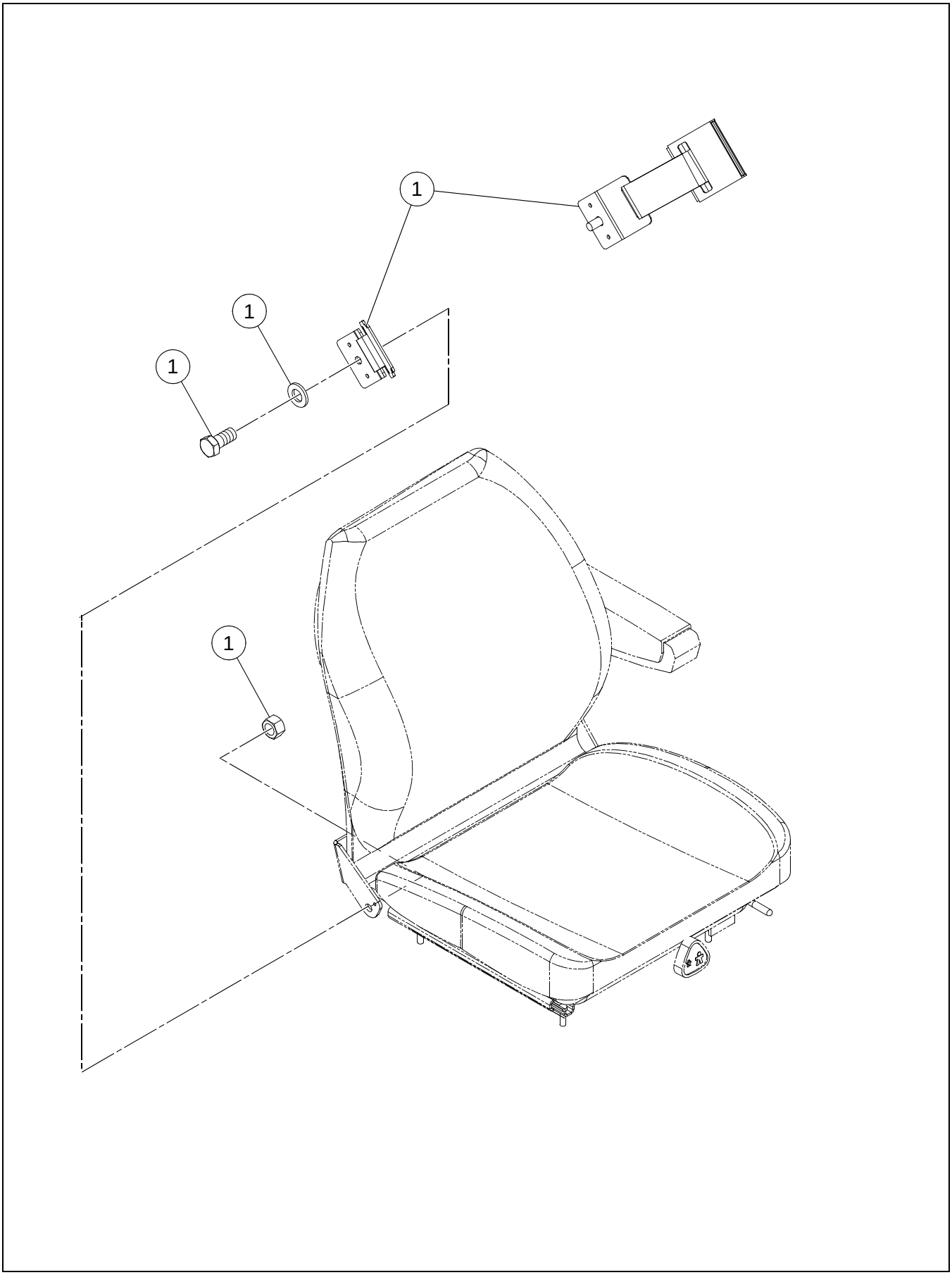

BOM 43803394

ITEM	COMM. NO.	DESCRIPTION	QTY	DIMENSIONS/NOTES
1	13342720	Retractable Seatbelt	1	

ROPS/HOOD BRACKET INSTALLATION

Dwg 13883152/00

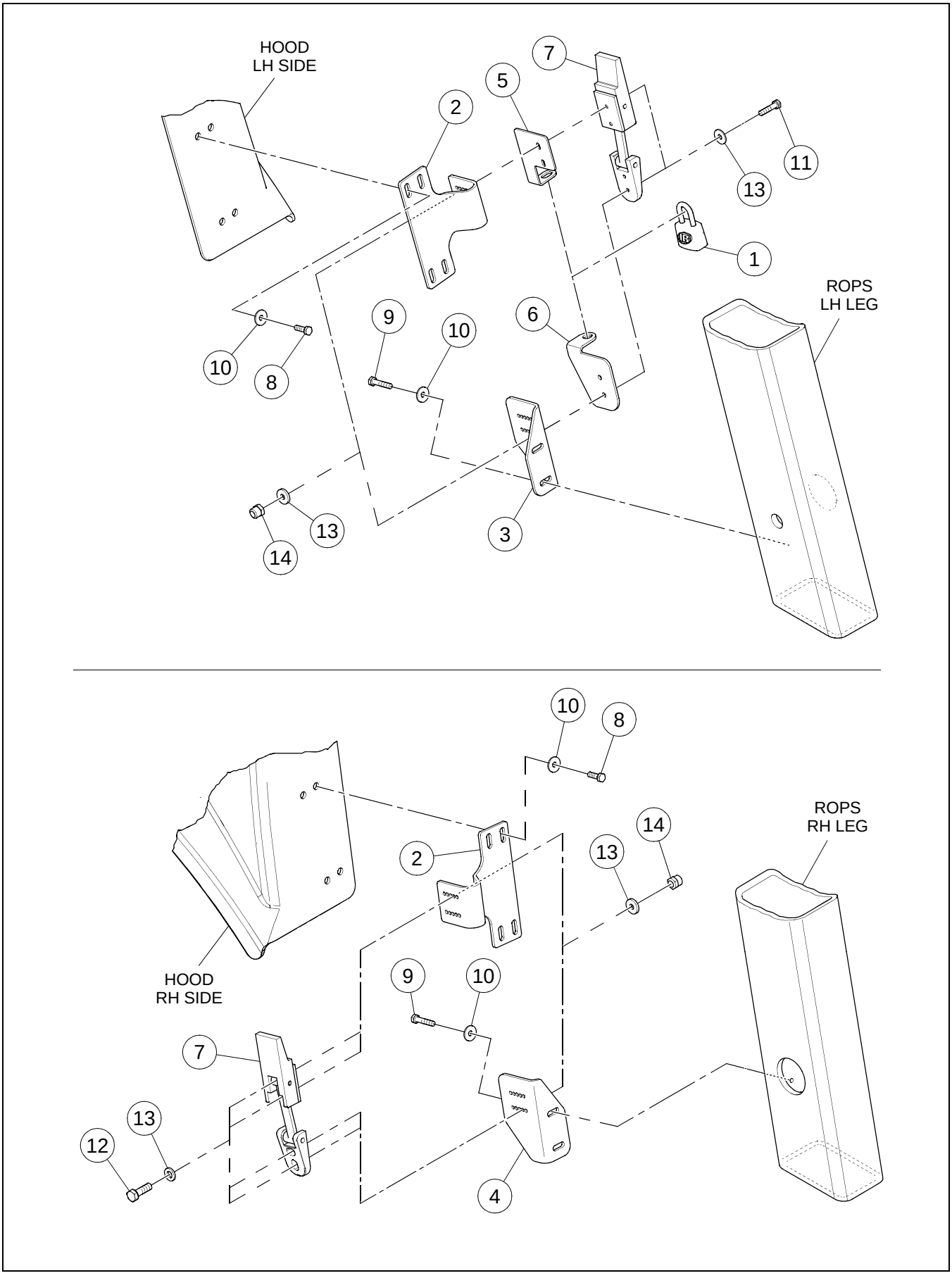

ROPS/HOOD BRACKET INSTALLATION

BOM 13883152

ITEM	COMM. NO.	DESCRIPTION	QTY	DIMENSIONS/NOTES
1	13349212	Lock	1	
2	13881545	Hood Bracket	2	
3	13881537	ROPS Bracket, LH	1	
4	13881529	ROPS Bracket, RH	1	
5	13885355	Lock Tab, RH	1	
6	59163238	Lock Tab, RH	1	
7	59162149	Latch	2	
8	96705587	HHCS, Fully Threaded, Zinc Plated	8	M8 x 1.25x30 Cl 8.8
9	96702659	HHCS, Zinc Plated	4	M8 x 1.25 x 25 Cl 8.8
10	96741038	Flatwasher	12	M8 x 16.0
11	96705736	HHCS, Fully Threaded, Zinc Plated	4	M5 x 0.8 x 20 Cl 8.8
12	96705728	HHCS, Zinc Plated	4	M5 x 0.8 x 16 Cl 8.8
13	95922332	Flatwasher	16	#10
14	96704580	Hex Locknut	8	M5

Dwg 13169198/Ac/01

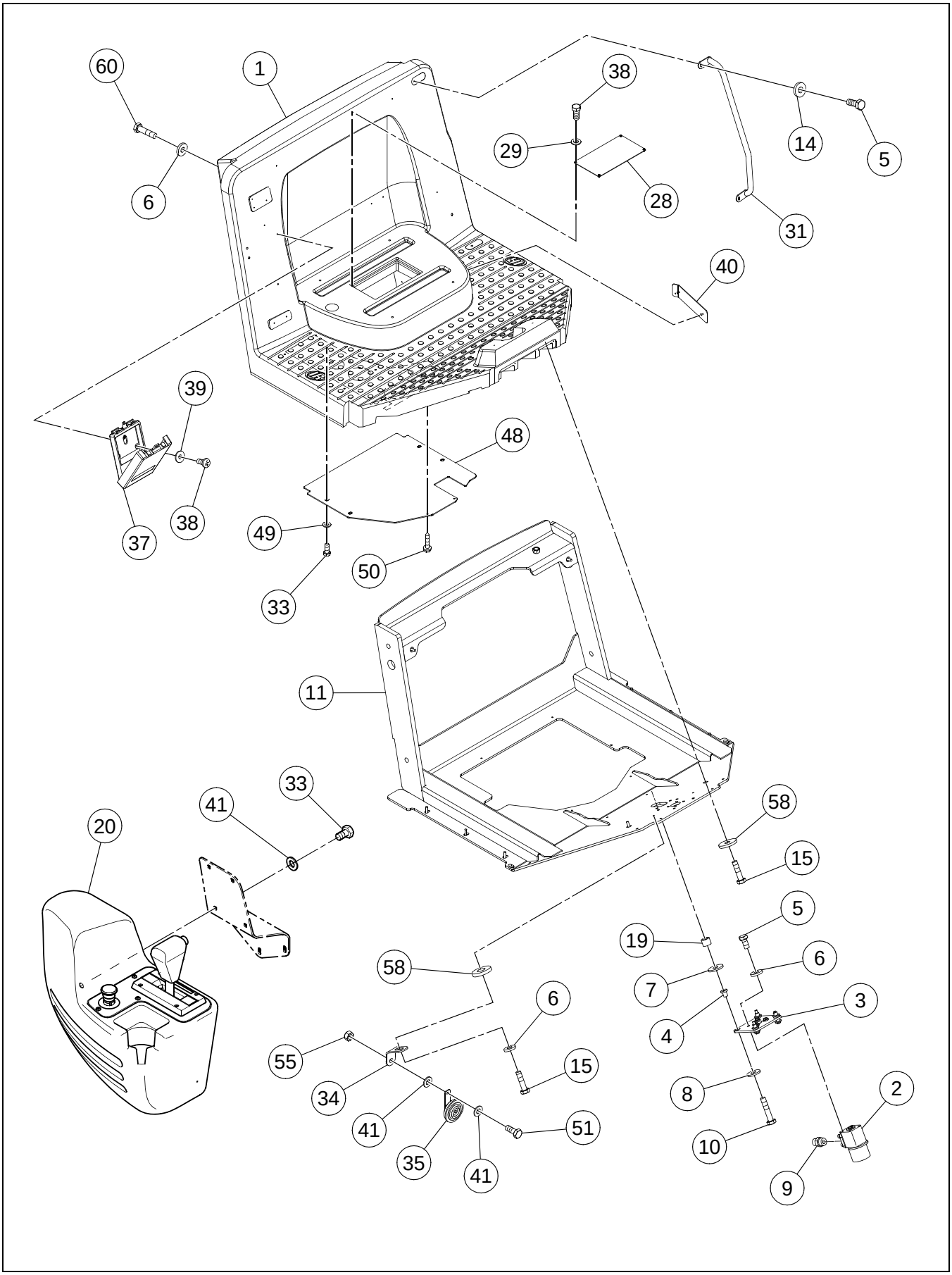

BOM 80816705

ITEM	COMM. NO.	DESCRIPTION	QTY	DIMENSIONS/NOTES
1	43891605	Operators Platform	1	
2		This item not used with this Assembly		
3		This item not used with this Assembly		
4		This item not used with this Assembly		
5	96718838	HHCS, Zinc Plated	7	M10 x 1.5 x 20 Cl 8.8
6		This item not used with this Assembly		
7		This item not used with this Assembly		
8		This item not used with this Assembly		
9		This item not used with this Assembly		
10		This item not used with this Assembly		
11		This item not used with this Assembly		
14	96712849	Washer	4	
15		This item not used with this Assembly		
19		This item not used with this Assembly		
20		This item not used with this Assembly		
28	43869262	Cover Plate	1	
29		This item not used with this Assembly		
31		This item not used with this Assembly		
33		This item not used with this Assembly		
34		This item not used with this Assembly		
35		This item not used with this Assembly		
37		This item not used with this Assembly		
38		This item not used with this Assembly		
39		This item not used with this Assembly		
40		This item not used with this Assembly		
41		This item not used with this Assembly		
48	43851203	Cover Plate	1	
49	58867052	Washer	8	
50		This item not used with this Assembly		
51		This item not used with this Assembly		
55		This item not used with this Assembly		
58		This item not used with this Assembly		
60		This item not used with this Assembly		

Dwg 13169198/Ac/02

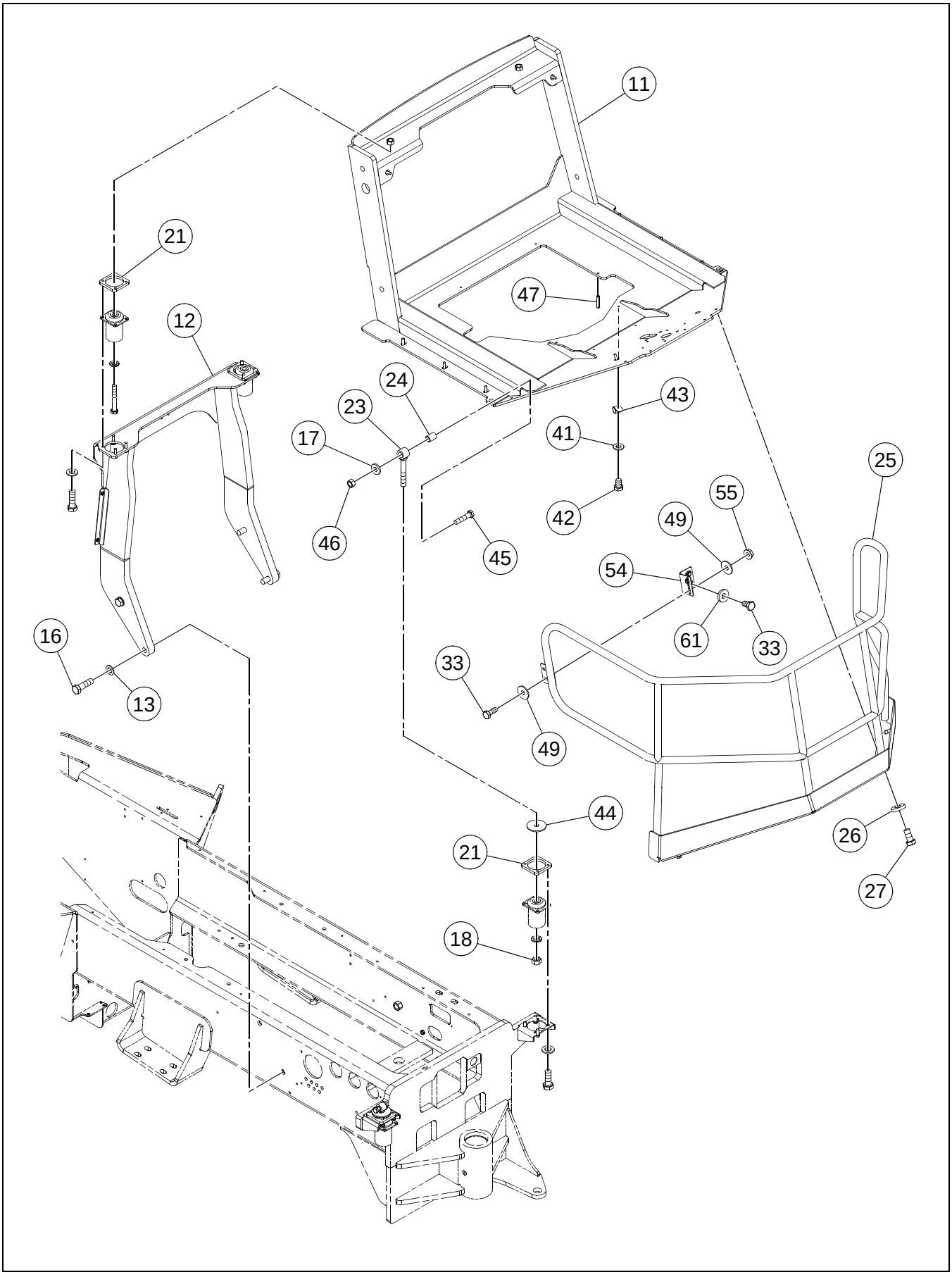

BOM 80816705

ITEM	COMM. NO.	DESCRIPTION	QTY	DIMENSIONS/NOTES
11		This item not used with this Assembly		
12		This item not used with this Assembly		
13		This item not used with this Assembly		
16		This item not used with this Assembly		
17		This item not used with this Assembly		
18		This item not used with this Assembly		
21		This item not used with this Assembly		
23		This item not used with this Assembly		
24		This item not used with this Assembly		
25	13413158	Railing	1	
26	96719513	Washer	6	
27	96720636	HHCS	8	M12 x 1.75 x 30 Cl 10.9
33		This item not used with this Assembly		
41		This item not used with this Assembly		
42		This item not used with this Assembly		
43		This item not used with this Assembly		
44		This item not used with this Assembly		
45		This item not used with this Assembly		
46		This item not used with this Assembly		
49	58867052	Washer	8	
54	13231394	Support Bracket	1	
55		This item not used with this Assembly		
59	59214650	U-Nut (Not Shown)	1	
61		This item not used with this Assembly		

VANDAL COVER INSTALLATION - EFFECTIVE WITH S/N 180465

Dwg 13413141/00

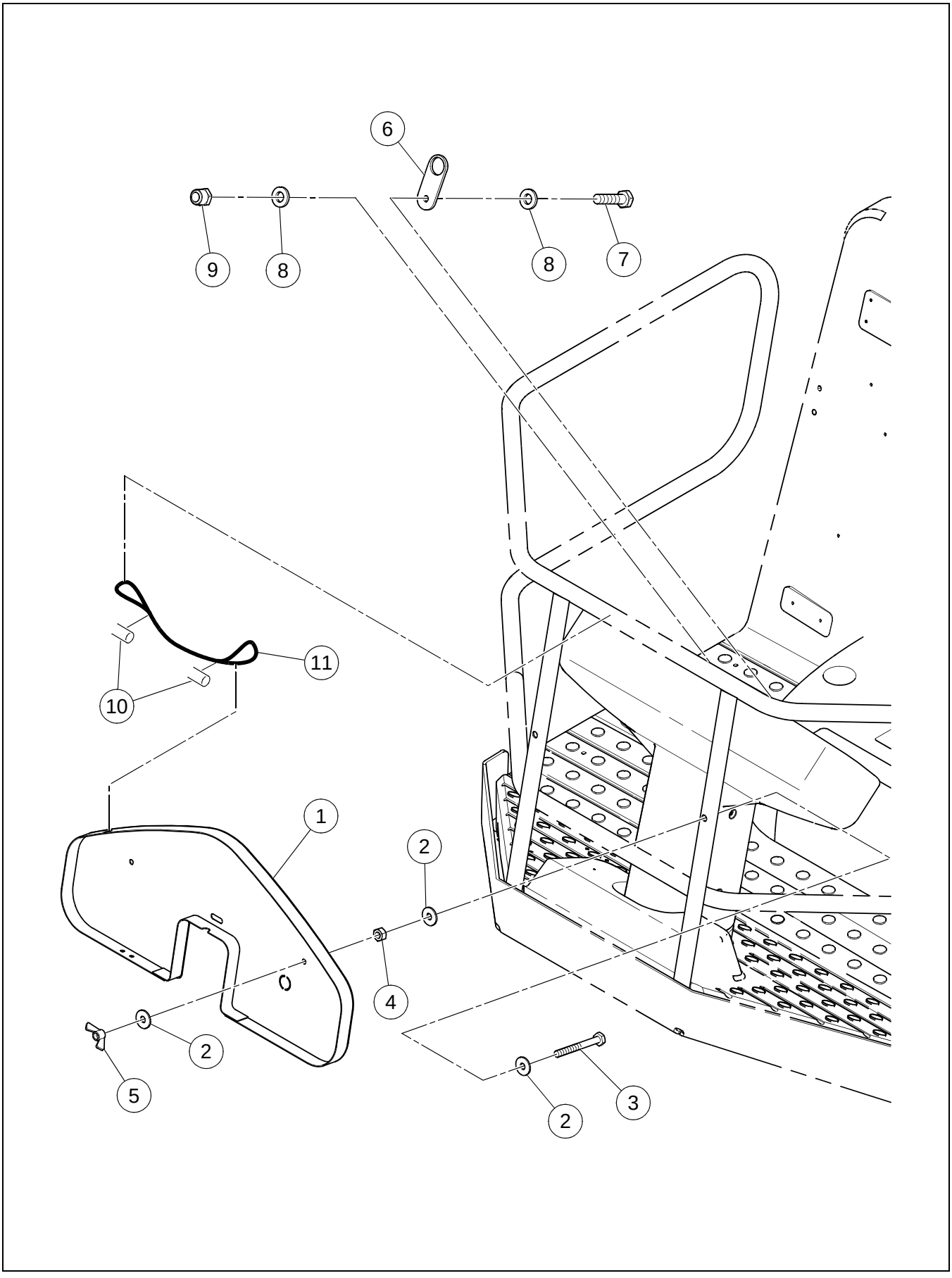

VANDAL COVER INSTALLATION - EFFECTIVE WITH S/N 180465

BOM 13413141

ITEM	COMM. NO.	DESCRIPTION	QTY	DIMENSIONS/NOTES
1	13324090	Vandal Cover	1	
2	96704663	Washer, Zinc Plated	6	M6 Large
3	95919304	HHCS, Zinc Plated	2	1/4 x 20 x 2.25 Grd 8
4	95931564	Nut, Zinc Plated	2	1/4 x 20 Grd A
5	59092924	Locking Wingnut	2	1/4 x 20
6	13274832	Locking Plate	1	
7	96701461	HHCS, Fully Threaded, Zinc Plated	1	M6 x 1 x 25 Cl 8.8
8	96741053	Flatwasher, Zinc Plated	2	M6 Cl 200
9	96704598	Hex Locknut, Zinc Plated	1	M6 Cl 8
10	59607853	Ferrule	2	
11	59607861	Cable	1	

VANDAL COVER INSTALLATION - PRIOR TO S/N 180465 - OPTIONAL

Dwg D13351499/01

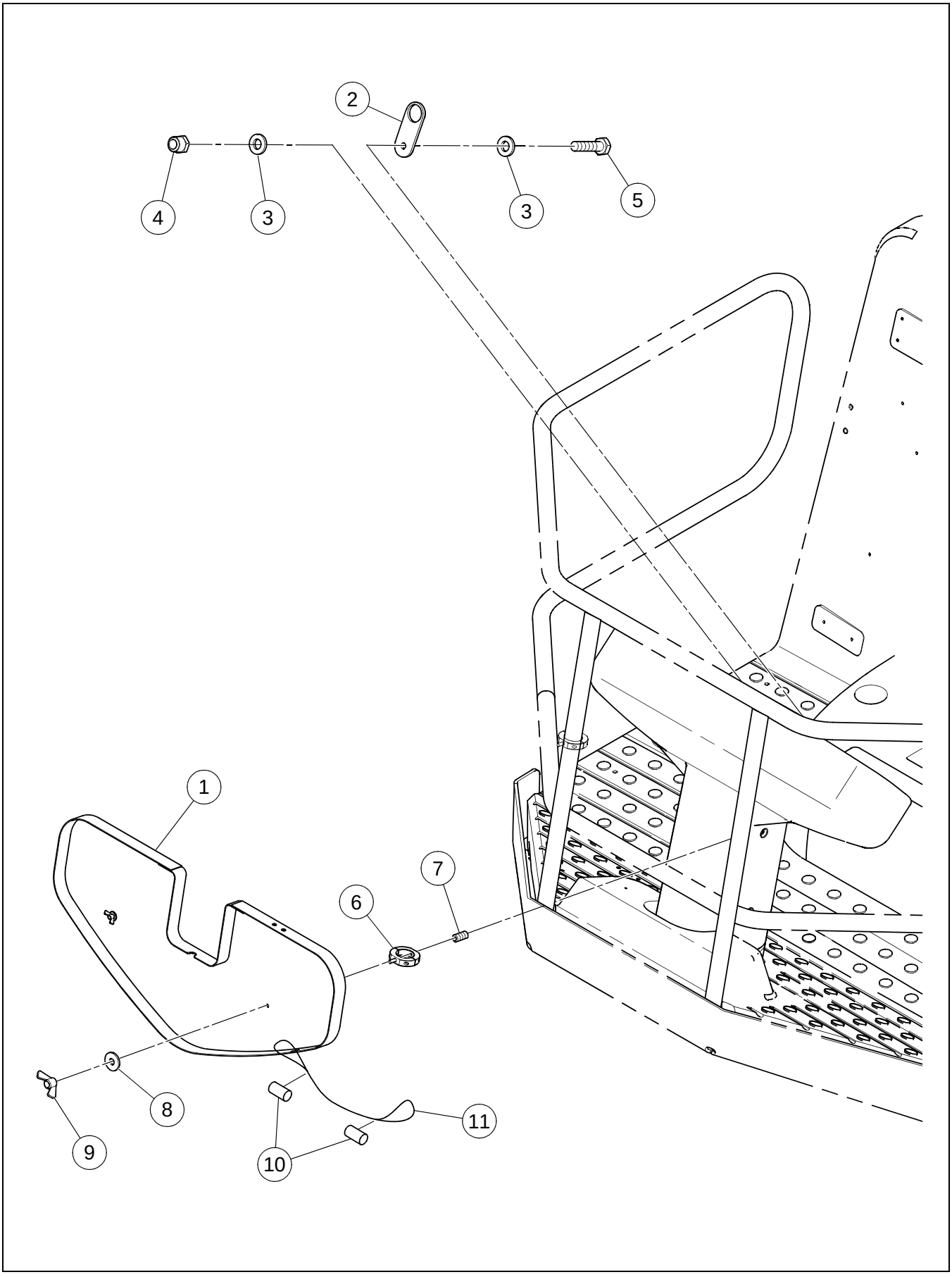

VANDAL COVER INSTALLATION - PRIOR TO S/N 180465 - OPTIONAL

BOM 13324082

ITEM	COMM. NO.	DESCRIPTION	QTY	DIMENSIONS/NOTES
1	13324090	Vandal Cover	1	
2	13274832	Locking Plate	1	
3	96741053	Flatwasher, Zinc Plated	2	M6 Cl 200
4	96704598	Hex Locknut, Zinc Plated	1	M6 Cl 8
5	96701461	HHCS, Fully Threaded, Zinc Plated	1	M6 x 1 x 25 Cl 8.8
6	13324116	Mounting Collar	2	
7	95231163	Screw	2	#10 x 24 x 0.375
8	96704663	Washer, Zinc Plated	2	M6 Large
9	59092924	Locking Wingnut	2	
10	59607853	Ferrule	2	
11	59607861	Cable	1	
12	95383980	Flat Head Screw (Not Shown)	2	1/4 x 20 x 1

FIRE EXTINGUISHER MOUNTING PLATE INSTALLATION - OPTIONAL

Dwg D13233689/00

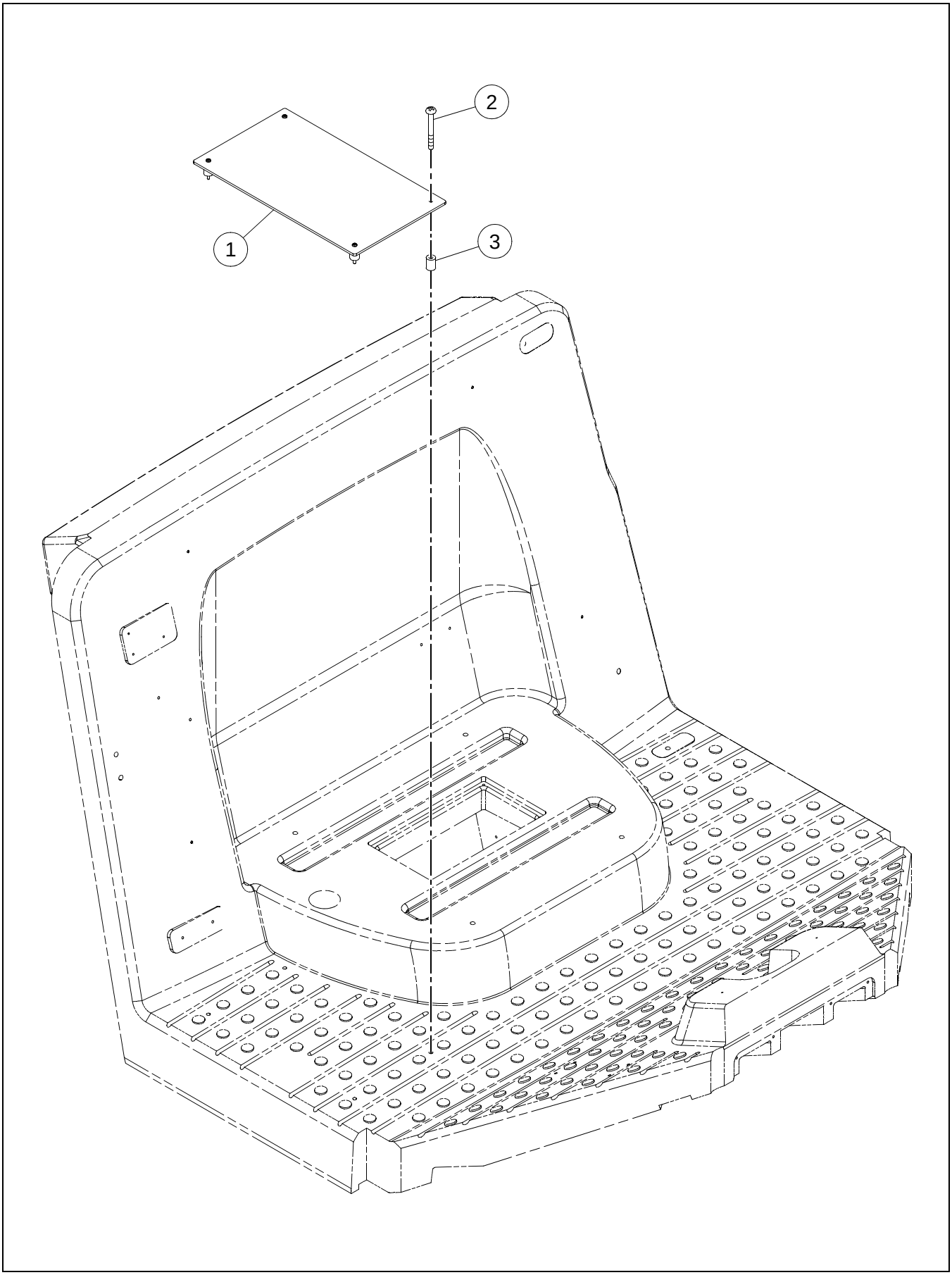

FIRE EXTINGUISHER MOUNTING PLATE INSTALLATION - OPTIONAL

BOM 13156898

ITEM	COMM. NO.	DESCRIPTION	QTY	DIMENSIONS/NOTES
1	13292982	Mounting Plate	1	
2	96715180	Self-tapping Screw	4	1.6
3	13157961	Spacer	4	

FIRST AID MOUNTING INSTALLATION - OPTIONAL

Dwg D13233697/01

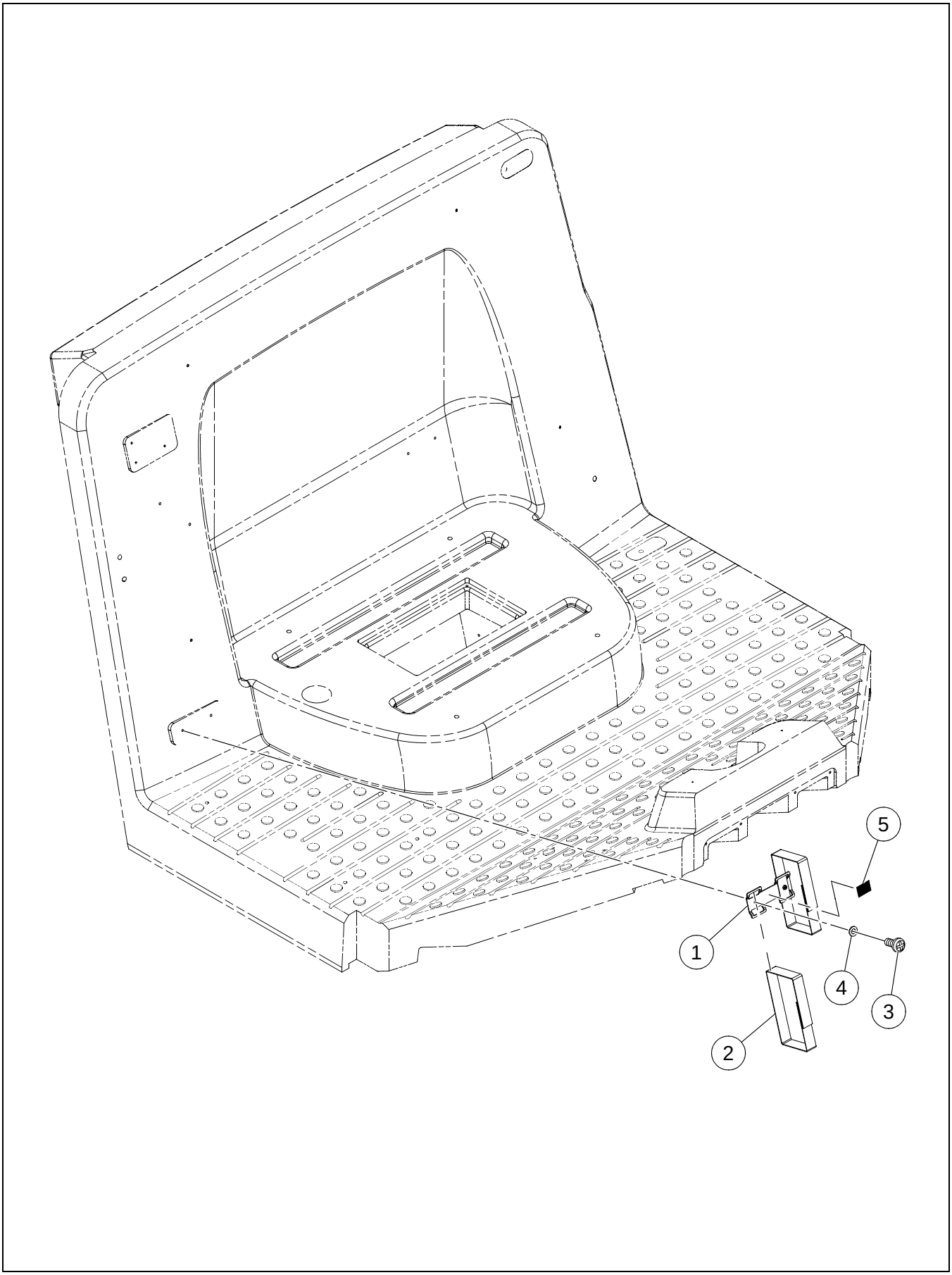

FIRST AID MOUNTING INSTALLATION - OPTIONAL

BOM 13223995

ITEM	COMM. NO.	DESCRIPTION	QTY	DIMENSIONS/NOTES
1	59275917	Mounting Bracket	1	
2	59275990	First Aid Strap	2	
3	96740444	Self-tapping Pan Head Screw	2	4.8 x 1.6 x 13
4	96738554	Flatwasher, Zinc Plated	2	M5 Hardened Cl 200
5	59289025	Decal: First Aid	1	

NO ROPS INSTALLATION - SD-77DX/F - OPTIONAL

Dwg 13270764/0a

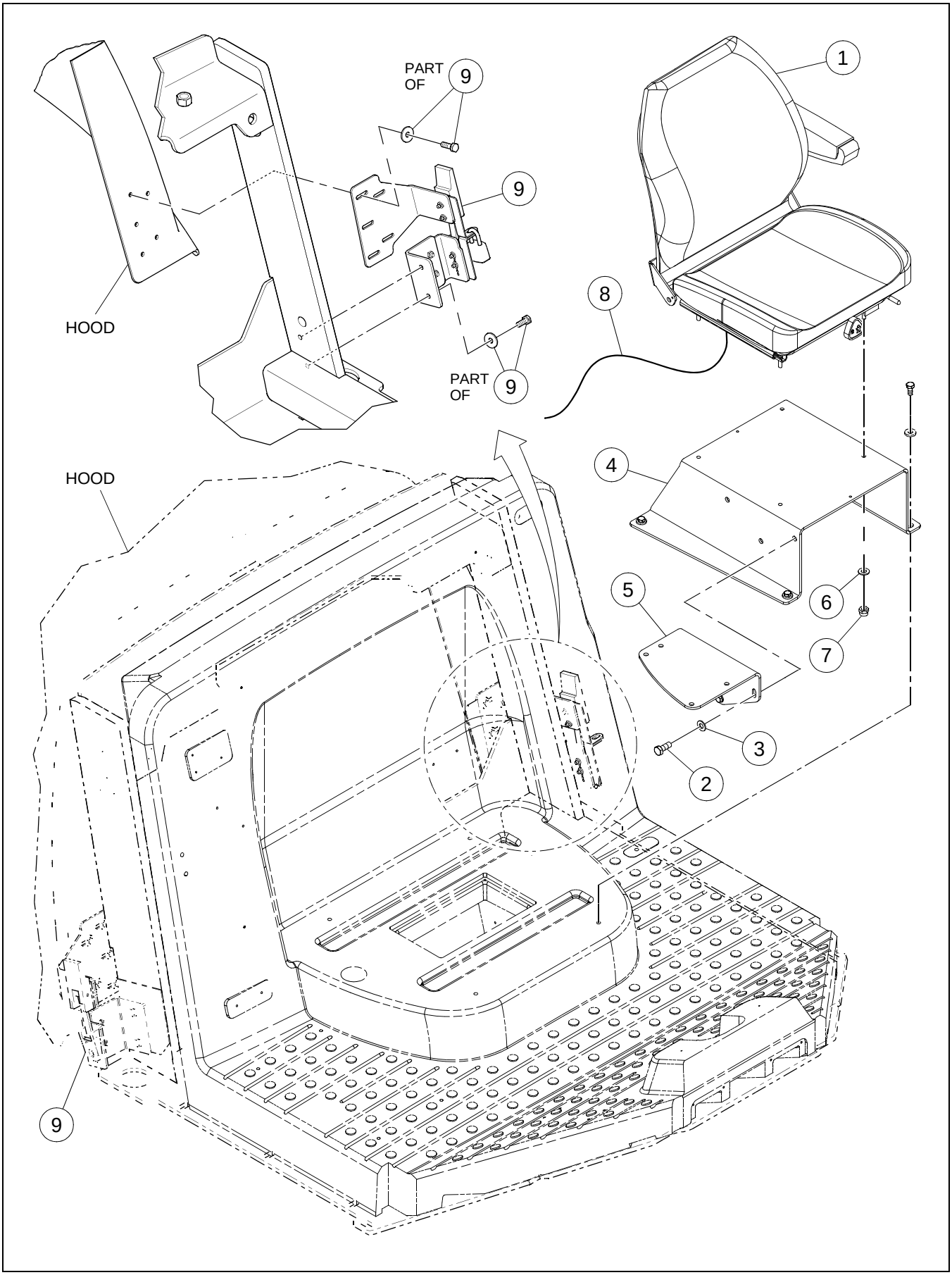

BOM 13369442

ITEM	COMM. NO.	DESCRIPTION	QTY	DIMENSIONS/NOTES
1	**54670302**	**Seat**	**1**	**See Breakdown A - 210.**
2	96702287	HHCS, Fully Threaded, Zinc Plated	3	M10 x 1.5 x 25 Cl 8.8
3	96741046	Flatwasher, Zinc Plated	3	M10 Cl 200
4	13236039	Seat Base	1	
5	13237508	Side Console Support	1	
6	96741038	Flatwasher	4	M8 x 1.25 Cl 200
7	96704606	Hex Locknut, Zinc Plated	4	M8 x 1.25 Cl 8
8	13165071	Seat Switch Wire Harness	1	
9		This item not used with this Assembly		

SEAT (54670302) - INTERNAL BREAKDOWN

Dwg D13244504/01

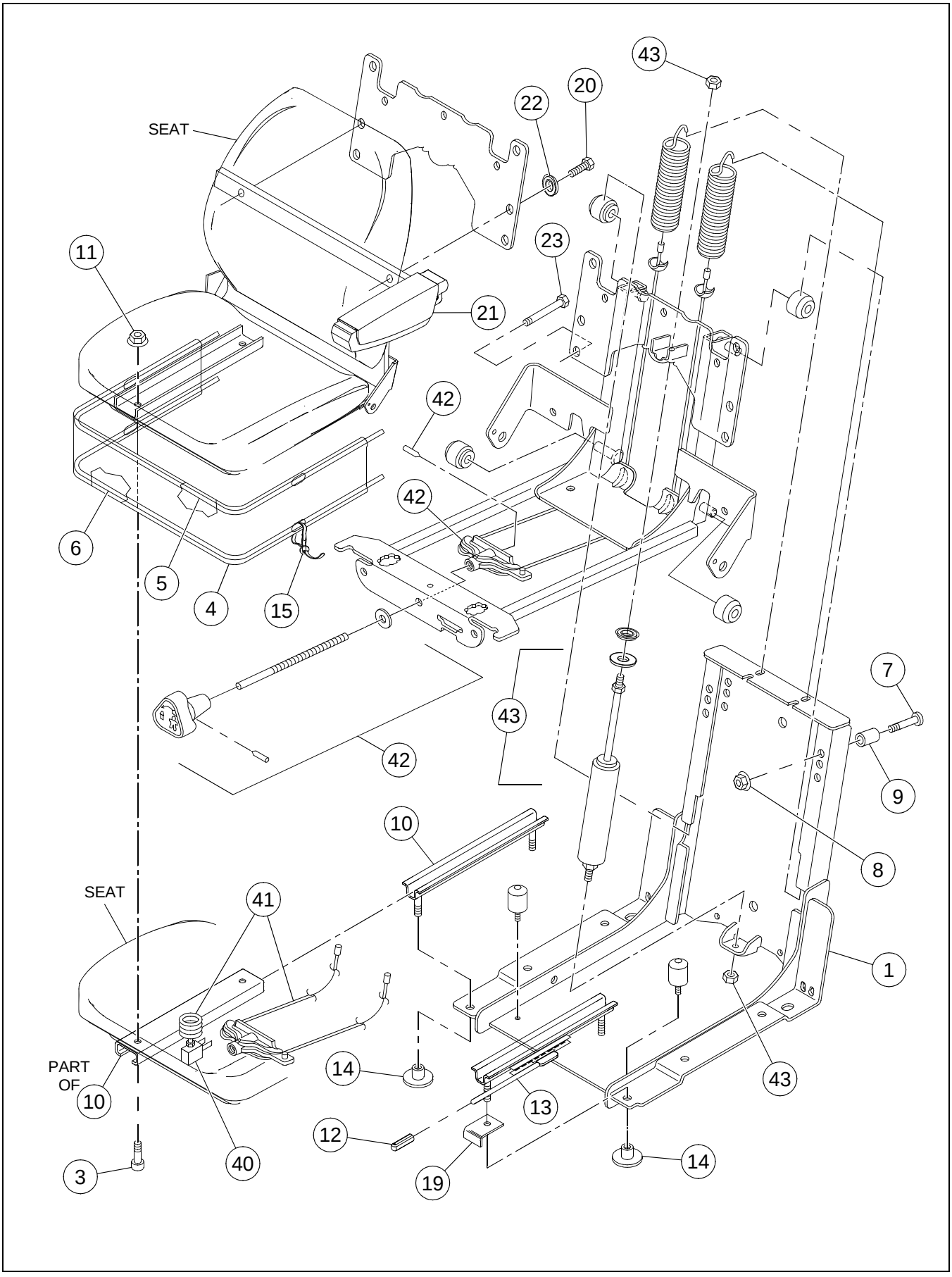

SEAT (54670302) - INTERNAL BREAKDOWN

BOM 54670302

ITEM	COMM. NO.	DESCRIPTION	QTY	DIMENSIONS/NOTES
1	59154450	Suspension Assembly	1	
3	13228820	Capscrew	4	
4	13228838	Boot	1	
5	59154492	Wire	1	
6	59154500	Wire	2	
7	59154518	Pin	2	
8	59154526	Nut	2	
9	13228846	Spacer	2	
10	13247473	Adjuster	1	
11	59154542	Nut	3	
12	13228853	Tip	1	
13	13247481	Adjuster - Latcher W/Handle	1	
14	13228861	Stud Protector	4	
15	59145821	Wire Tie	A/R	
19	59154393	Bracket	1	
20	13247549	Screw	2	
21	54531629	Arm Rest Assembly	1	
22	13247556	Washer	2	
23	13228960	Screw	4	
40	13137945	Cushion and Switch Kit	1	
-	13281332	- Seat Pan And Cushion	1	
-	13198270	- Dual Switch Seat Kit	1	
-	13281365	- Compression Switch	1	
-	13281373	- Screw	1	
41	13258934	Spring Cable Kit (Includes items 24, 34)t	1	
42	54496385	Knob Kit (Includes items 35,36,37,38,39)	1	
43	54496377	Damper Kit (Includes items 30,31,32,33)	1	

SOUND KIT INSTALLATION - OPTIONAL

Dwg 43853084/00

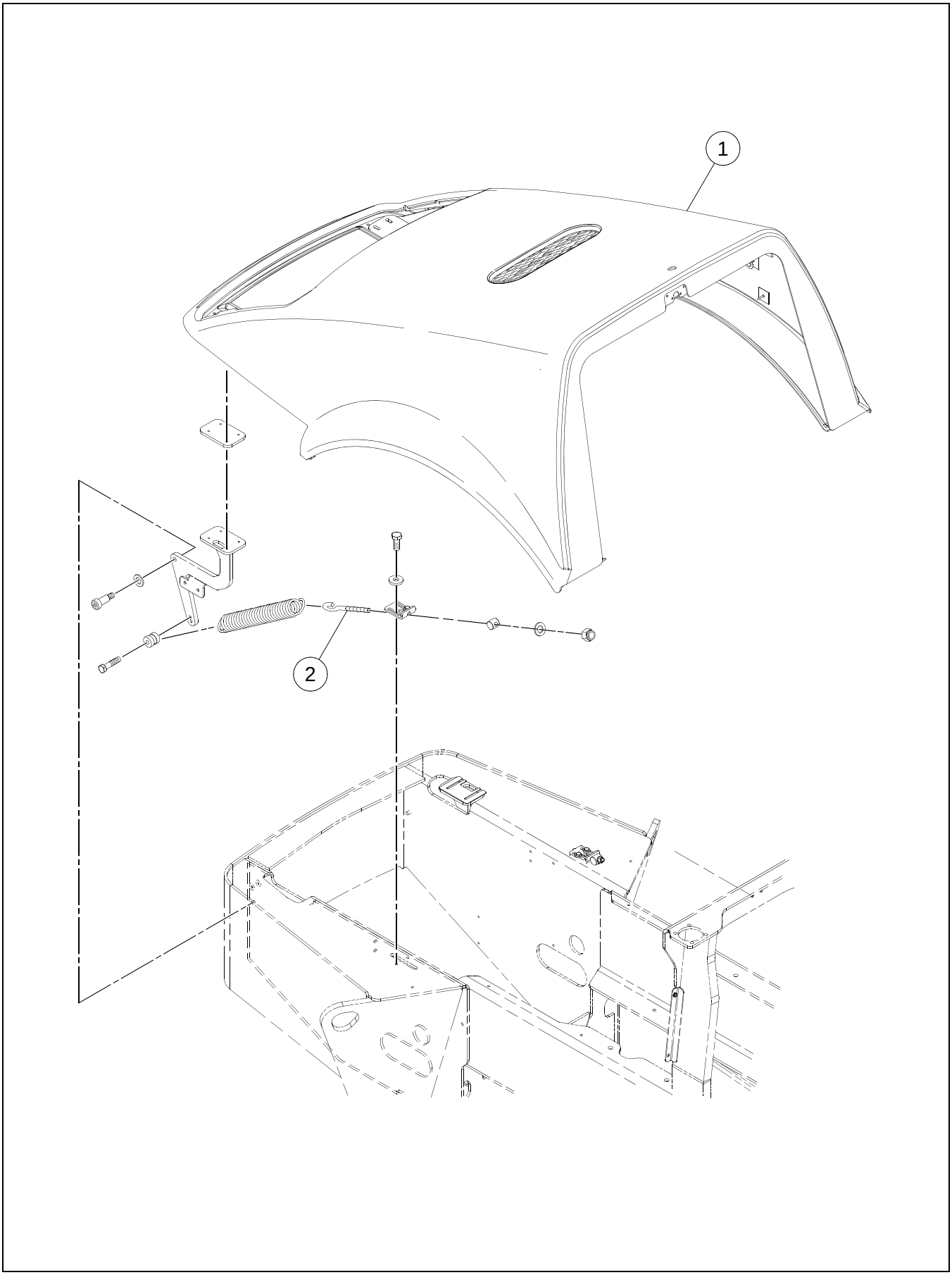

BOM 13174339, 13276050, 13372990, 43853084

ITEM	COMM. NO.	DESCRIPTION	QTY	DIMENSIONS/NOTES
1	**NSVA**	**Hood w/Sound Foam**	**1**	**See Page A - 214.**
2	13184833	Eye Bolt	2	

HOOD WITH SOUND FOAM ASSEMBLY - EU

Dwg 43853092/00

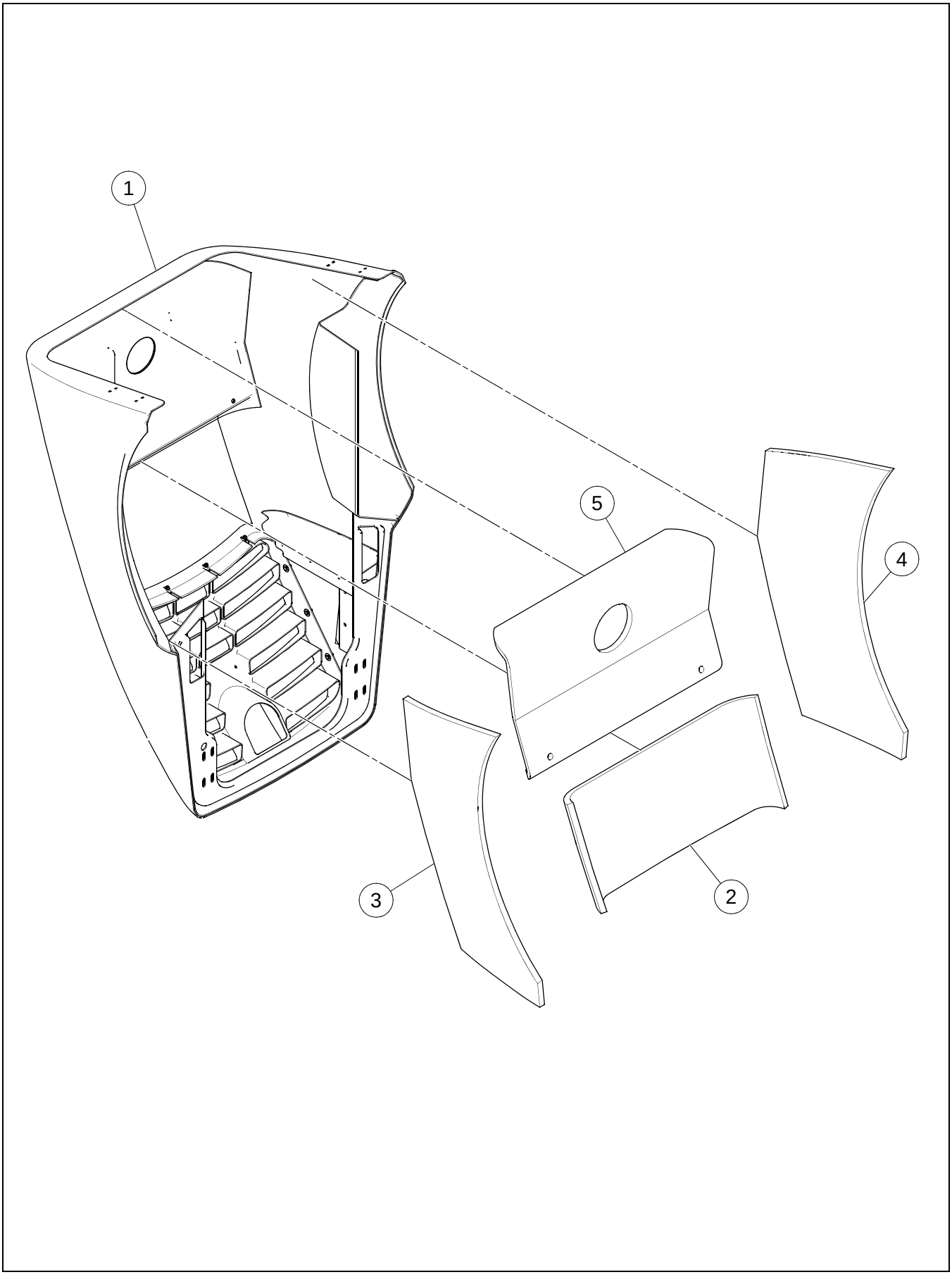

HOOD WITH SOUND FOAM ASSEMBLY - EU

BOM 43853092

ITEM	COMM. NO.	DESCRIPTION	QTY	DIMENSIONS/NOTES
1	**NSVA**	**Hood w/Sound Spikes (EU)**	**1**	**See Page A - 216.**
2	13276027	Rear Foam	1	
3	13276043	Right Foam	1	
4	13276068	Left Foam	1	
5	13276035	Top Foam	1	

HOOD WITH SOUND SPIKES - EU

Dwg 43853100/00

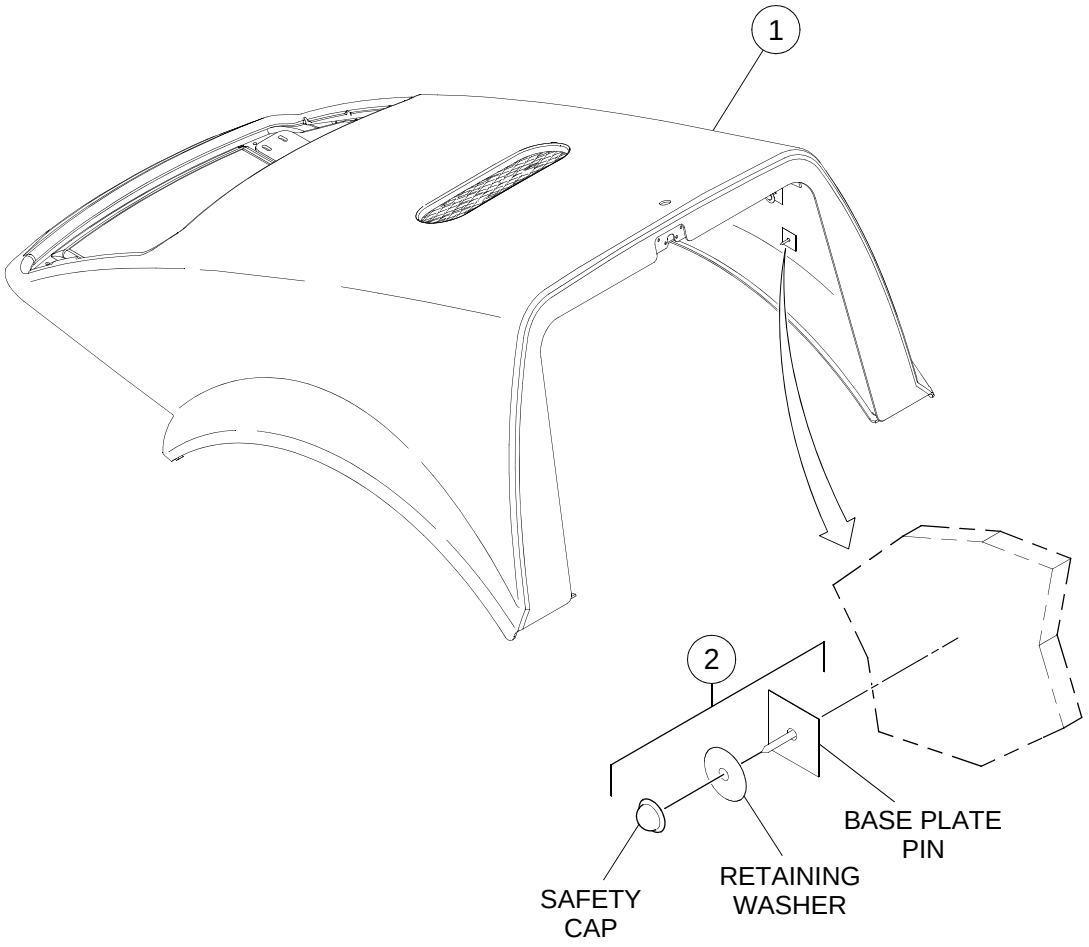

HOOD WITH SOUND SPIKES - EU

BOM 43853100

ITEM	COMM. NO.	DESCRIPTION	QTY	DIMENSIONS/NOTES
1	**NSVA**	**Hood Assembly**	**1**	**See Page A - 218.**
2	59268854	Hanger Kit	52	

HOOD ASSEMBLY - SHEET 1 OF 2

Dwg 43888155/00/01

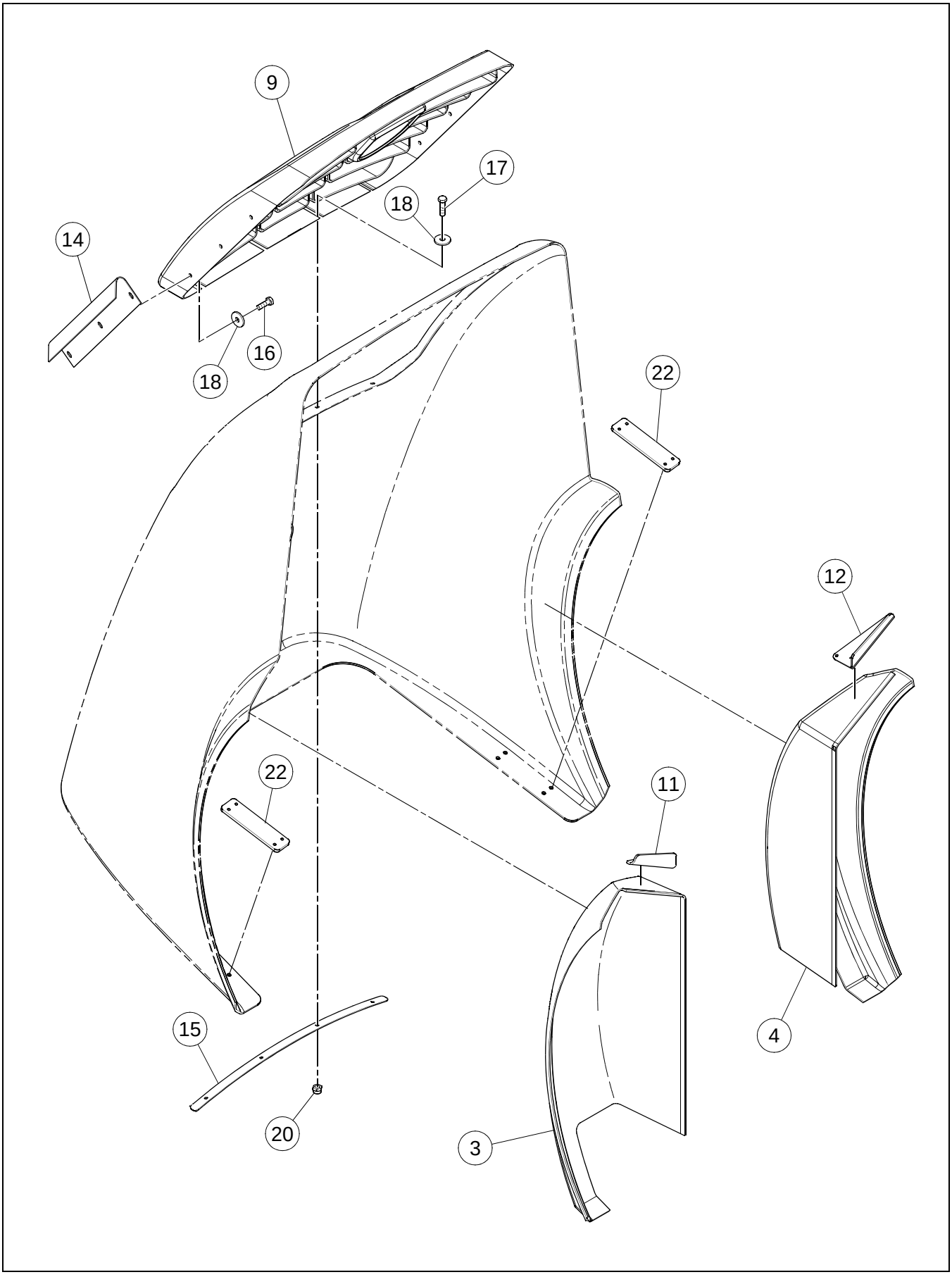

HOOD ASSEMBLY - SHEET 1 OF 2

BOM 43888155

ITEM	COMM. NO.	DESCRIPTION	QTY	DIMENSIONS/NOTES
3	13230081	Fender, LH	1	
4	13231337	Fender, RH	1	
9	13882550	Grill	1	
11	13233606	Supt Plate, LH	1	
12	13233622	Supt Plate, RH	1	
14	13889480	Grill Support Bar	2	
15	13238084	Top Grill Supt	1	
16	96702659	HHCS, Zinc Plated	6	M8 x 1.25 x 25 Cl 8.8
17	96702261	HHCS, Zinc Plated	4	M8 x 1.25 x 35 Cl 8.8
18	96740188	Washer	10	M8 x 3
20	96704606	Locknut	4	M8
22	13883442	Backing Plate	2	

HOOD ASSEMBLY - SHEET 2 OF 2

Dwg 43888155/00/02

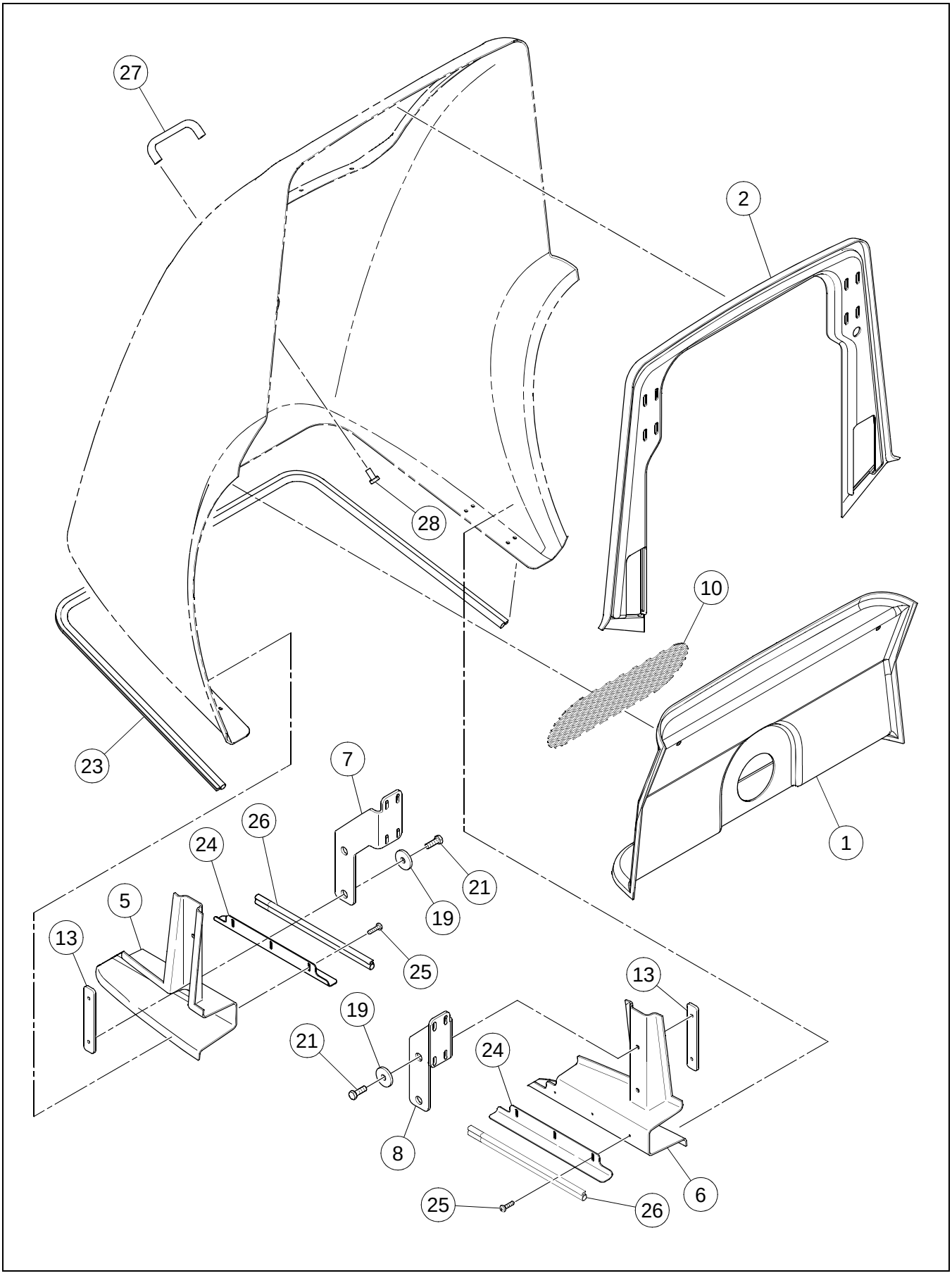

HOOD ASSEMBLY - SHEET 2 OF 2

BOM 43888155

ITEM	COMM. NO.	DESCRIPTION	QTY	DIMENSIONS/NOTES
1	13219001	Airduct	1	
2	13219019	Hood Supt Bottom	1	
5	13230602	Side Panel, LH	1	
6	13230933	Side Panel	1	
7	13230586	Hinge Supt	1	
8	13231873	Hinge Plate	1	
10	13212543	Airscreen	1	
13	13238035	Backing Plate	2	
19	50264860	Washer	4	
21	96701917	HHCS, Fully Threaded, Zinc Plated	4	M10 x 1.5 x 30 Cl 8.8
23	13883376	Seal Trim	1	
24	13278478	Seal Angle	2	
25	54487517	Tapping Screw	6	14 x 1
26	13270632	Seal Trim	2	
27	13883418	Hood Handle	1	
28	96702816	HHCS, Fully Threaded, Zinc Plated	2	M8 x 1.25 x 16 Cl 8.8

HOOD SOUND KIT WITH AIR PRECLEANER INSTALLATION - OPTIONAL

Dwg 43853027/00

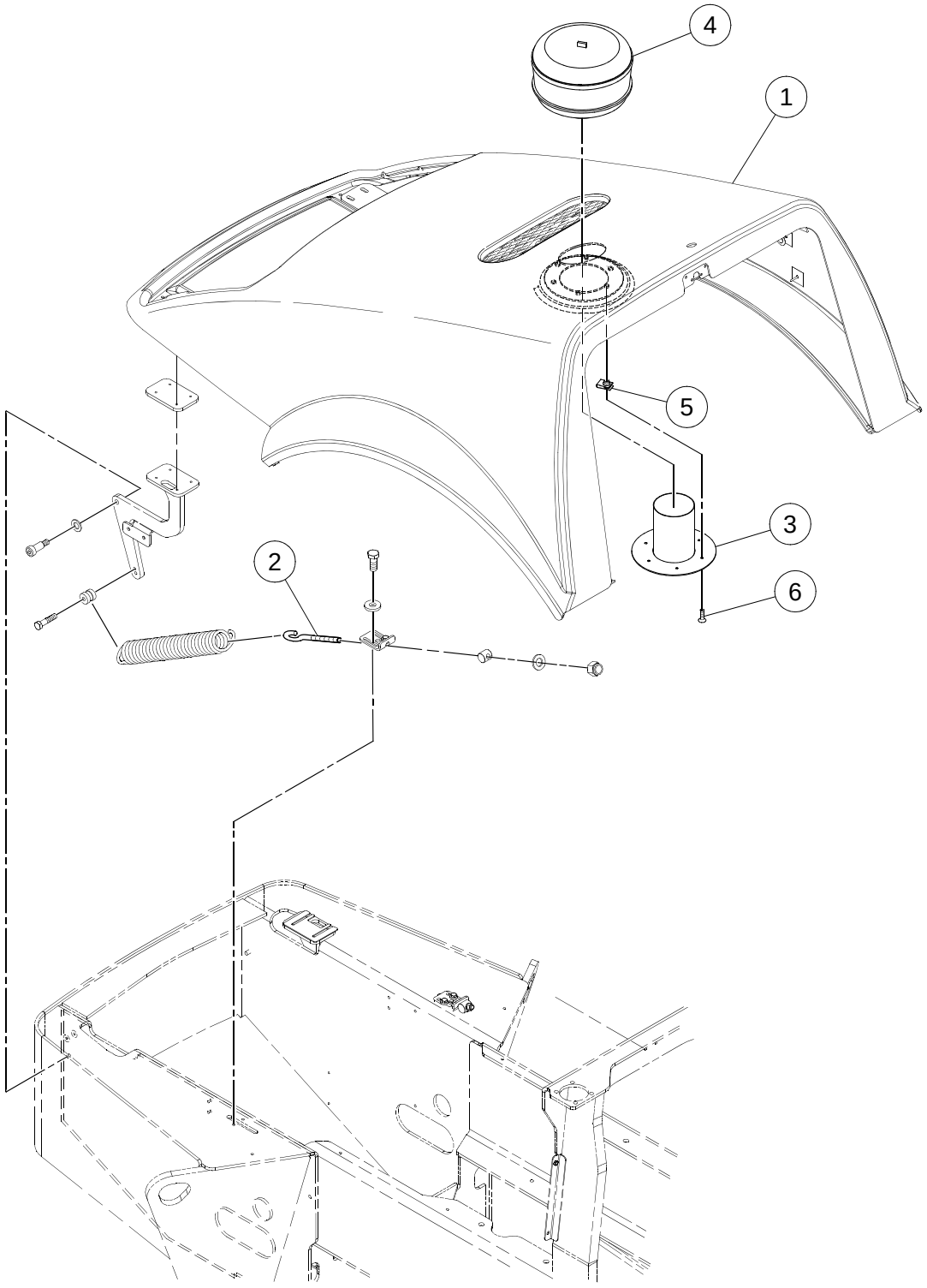

HOOD SOUND KIT WITH AIR PRECLEANER INSTALLATION - OPTIONAL

BOM 13529896, 13529888, 43853027

ITEM	COMM. NO.	DESCRIPTION	QTY	DIMENSIONS/NOTES
1	**NSVA**	**Hood w/Foam And Pre-cleaner Assembly**	**1**	**See Page A - 224.**
2	13184833	Eye Bolt	2	
3	13273339	Precleaner Stack	1	
4	59081323	Air Precleaner	1	
-	59103259	- Cover	1	
-	58938275	- Precleaner Bowl	1	
-	59103267	- Sleeve	1	
-	59103275	- Clamp	1	
5	13186598	U-nut	6	
6	96728506	HHCS, Zinc Plated	6	M6 x 1.0 x 20 Cl 8.8
7	59290817	Foam (Not used with Cab)	1	

HOOD WITH FOAM AND PRE-CLEANER ASSEMBLY

Dwg 43853035/00

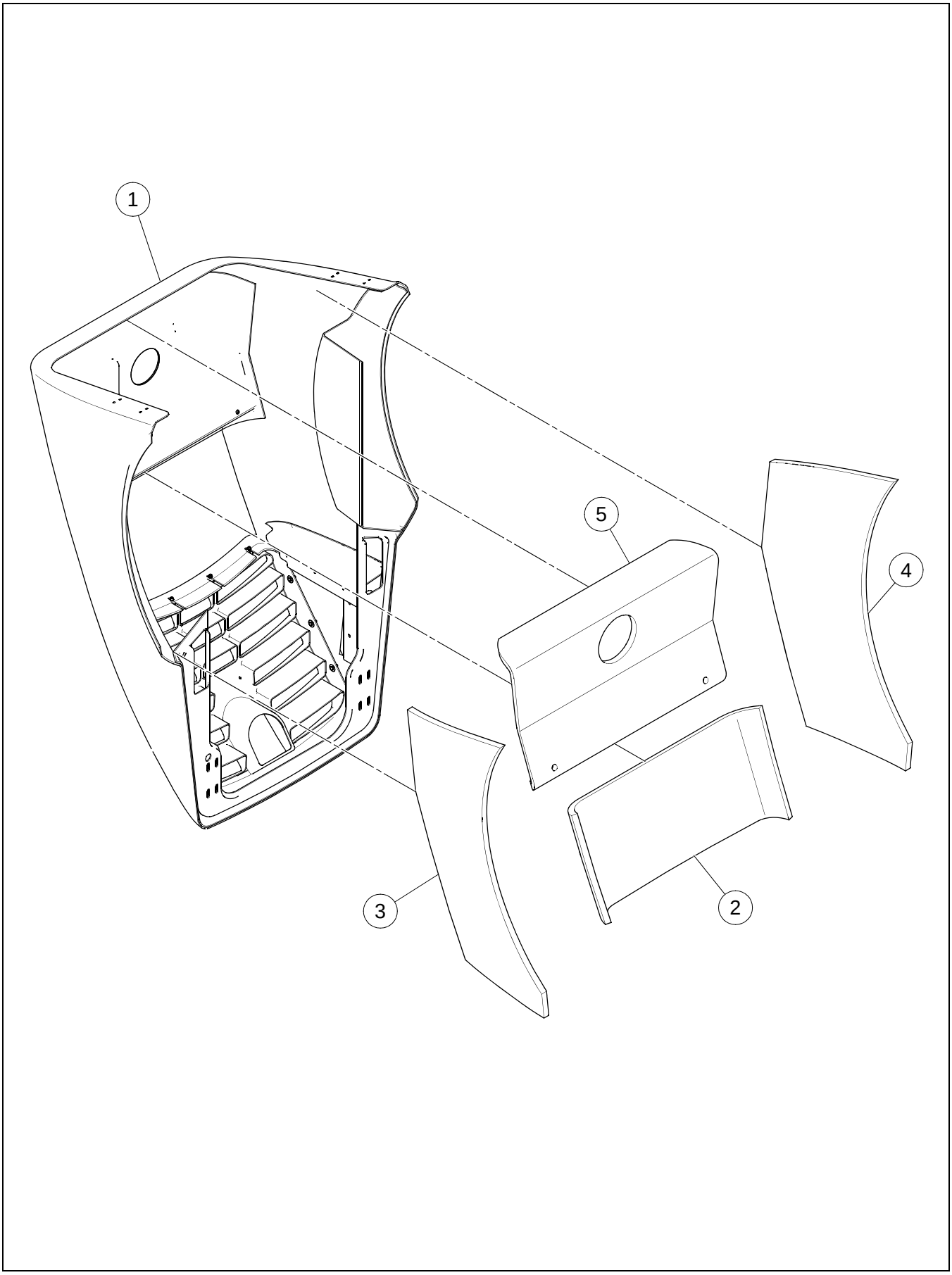

HOOD WITH FOAM AND PRE-CLEANER ASSEMBLY

BOM 43853035

ITEM	COMM. NO.	DESCRIPTION	QTY	DIMENSIONS/NOTES
1	**NSVA**	**Hood Sound Spikes Pre-Cleaner**	**1**	**See Page A - 226.**
2	13276027	Rear Foam	1	
3	13276043	Right Foam	1	
4	13276068	Left Foam	1	
5	13276035	Top Foam	1	

HOOD WITH SOUND SPIKES AND PRE-CLEANER

Dwg 43853043/00

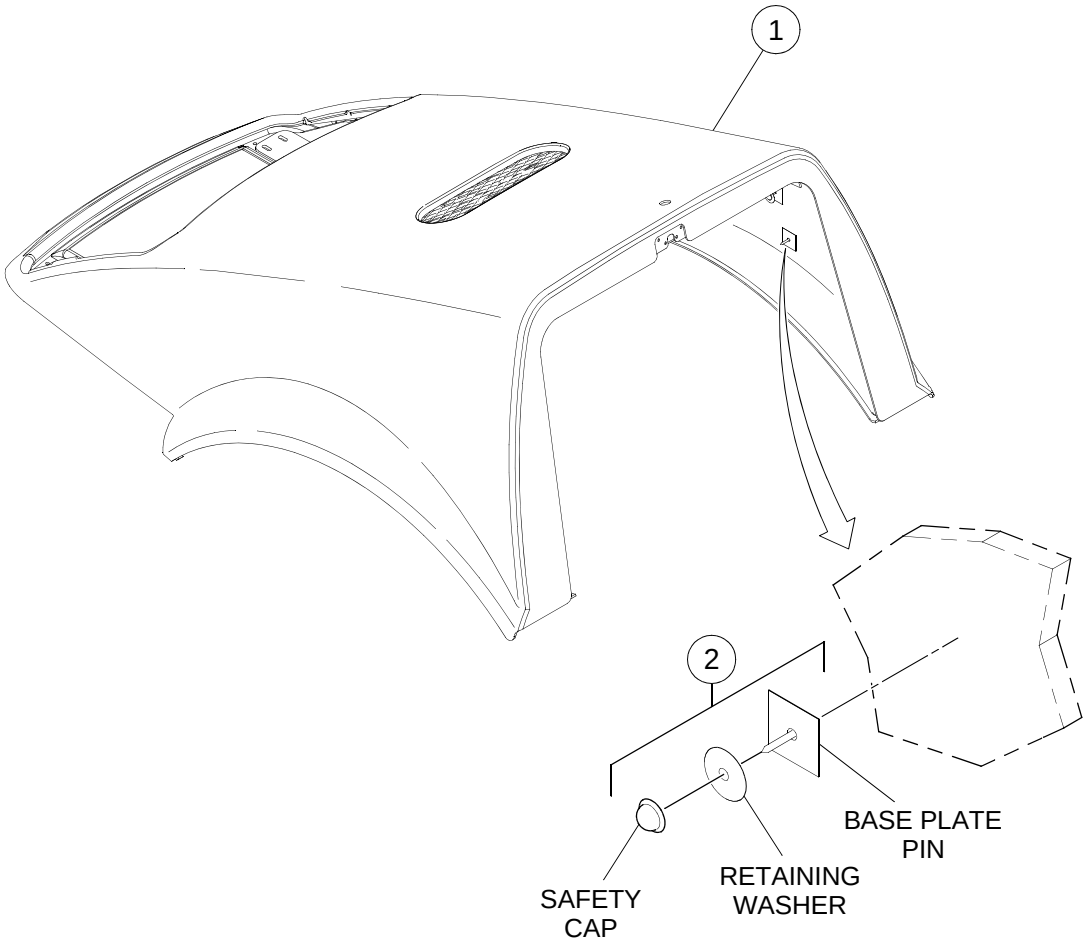

HOOD WITH SOUND SPIKES AND PRE-CLEANER

BOM 43853043

ITEM	COMM. NO.	DESCRIPTION	QTY	DIMENSIONS/NOTES
1	43853050	Hood w/Pre-Cleaner	1	
-	**NSVA**	- Hood Assembly	**1**	**See Page A - 228.**
2	59268854	Hanger Kit	52	

HOOD ASSEMBLY - SHEET 1 OF 2

Dwg 43888155/00/01

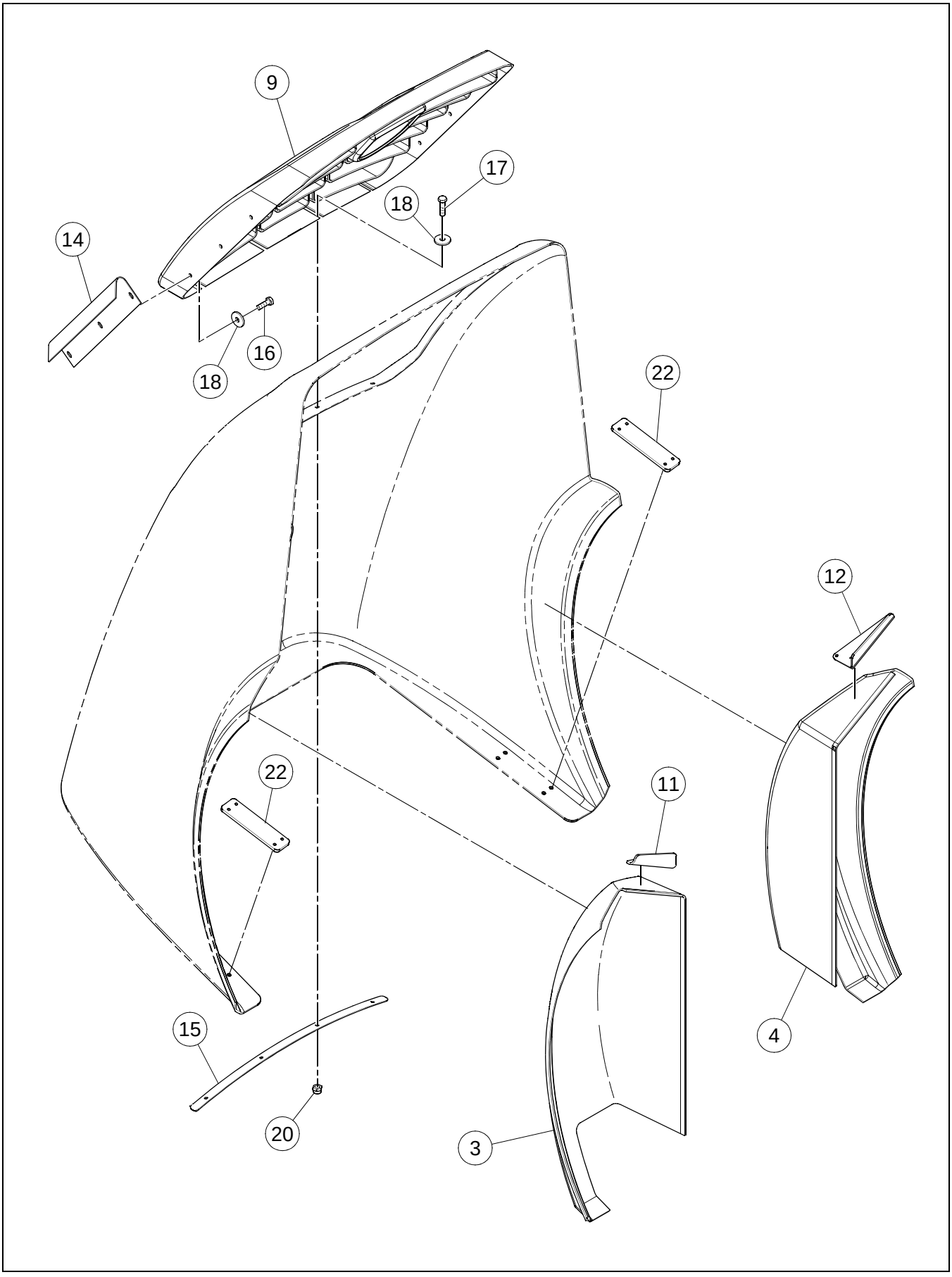

HOOD ASSEMBLY - SHEET 1 OF 2

BOM 43888155

ITEM	COMM. NO.	DESCRIPTION	QTY	DIMENSIONS/NOTES
3	13230081	Fender, LH	1	
4	13231337	Fender, RH	1	
9	13882550	Grill	1	
11	13233606	Supt Plate, LH	1	
12	13233622	Supt Plate, RH	1	
14	13889480	Grill Support Bar	2	
15	13238084	Top Grill Supt	1	
16	96702659	HHCS, Zinc Plated	6	M8 x 1.25 x 25 Cl 8.8
17	96702261	HHCS, Zinc Plated	4	M8 x 1.25 x 35 Cl 8.8
18	96740188	Washer	10	M8 x 3
20	96704606	Locknut	4	M8
22	13883442	Backing Plate	2	

HOOD ASSEMBLY - SHEET 2 OF 2

Dwg 43888155/00/02

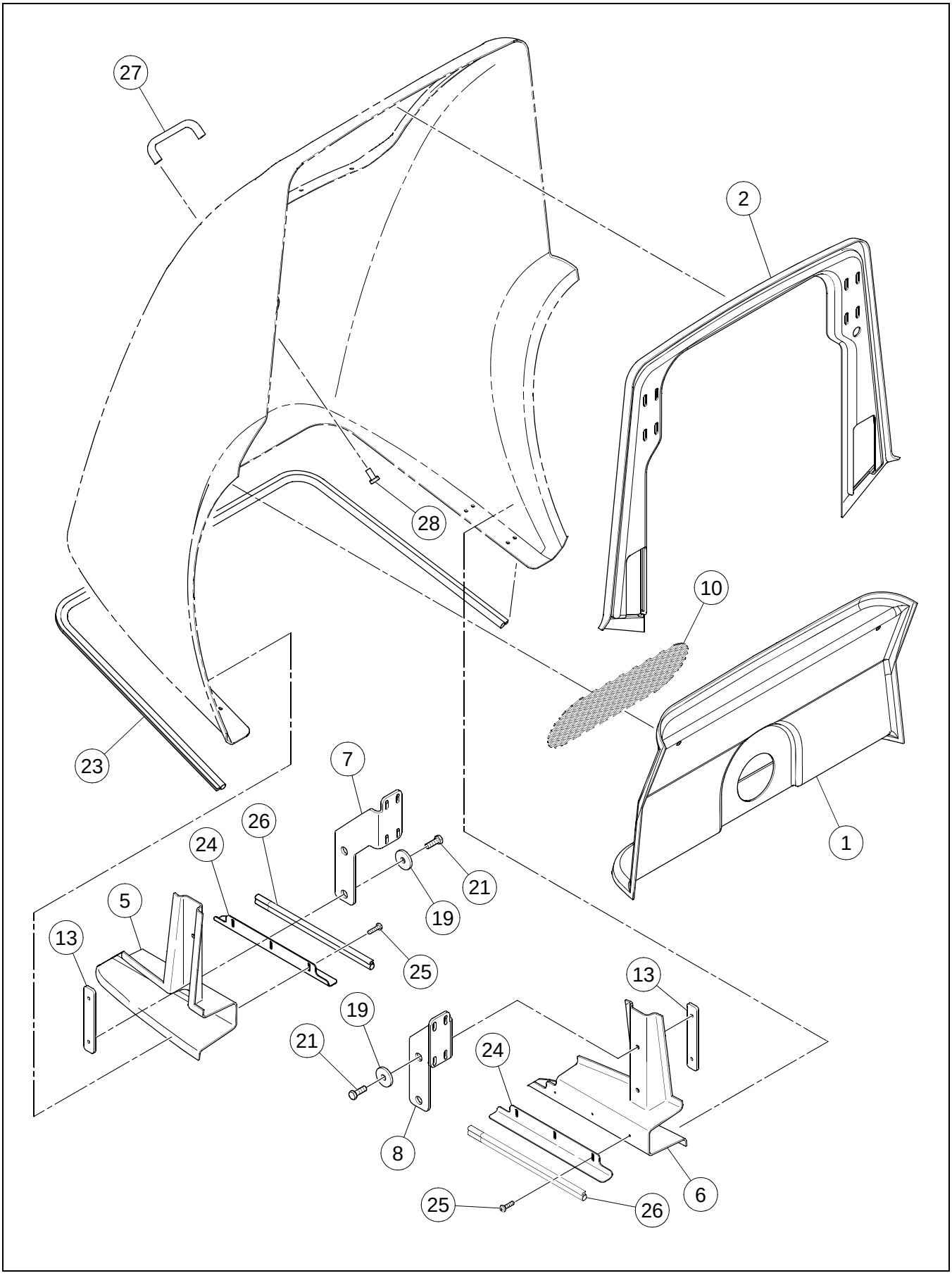

HOOD ASSEMBLY - SHEET 2 OF 2

BOM 43888155

ITEM	COMM. NO.	DESCRIPTION	QTY	DIMENSIONS/NOTES
1	13219001	Airduct	1	
2	13219019	Hood Supt Bottom	1	
5	13230602	Side Panel, LH	1	
6	13230933	Side Panel	1	
7	13230586	Hinge Supt	1	
8	13231873	Hinge Plate	1	
10	13212543	Airscreen	1	
13	13238035	Backing Plate	2	
19	50264860	Washer	4	
21	96701917	HHCS, Fully Threaded, Zinc Plated	4	M10 x 1.5 x 30 Cl 8.8
23	13883376	Seal Trim	1	
24	13278478	Seal Angle	2	
25	54487517	Tapping Screw	6	14 x 1
26	13270632	Seal Trim	2	
27	13883418	Hood Handle	1	
28	96702816	HHCS, Fully Threaded, Zinc Plated	2	M8 x 1.25 x 16 Cl 8.8

Always use Manufacturer Replacement parts!*

Section B - DRUM AND FRAME

FRONT FRAME INSTALLATION

Dwg 13218201/0k

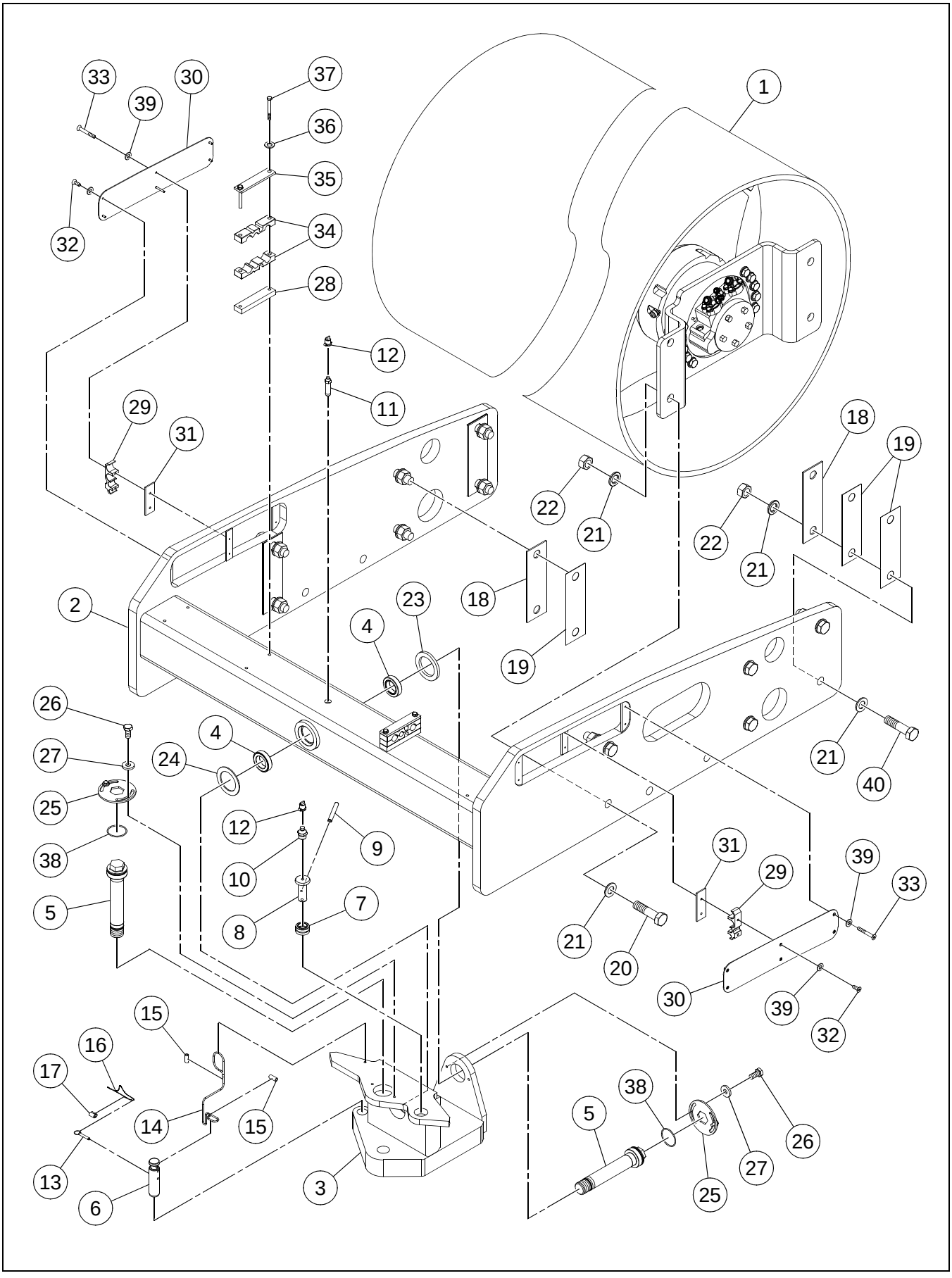

BOM 13174149, 13175286

ITEM	COMM. NO.	DESCRIPTION	QTY	DIMENSIONS/NOTES
1	**NSVA**	**Drum Assembly**	**1**	**See Page B - 4.**
2	43819713	Drum Frame	1	
3	13290879	Swivel	1	
4	13187877	Bearing	2	
5	13219142	Articulation/Oscillation Pin	2	
6	59298208	Articulation Lockpin	1	
7	59450528	Bushing	1	
8	59190975	Pivot Pin	1	
9	95098679	Rollpin	1	
10	95201547	Grease Fitting	1	
11	95412946	Fitting	1	
12	50270248	Cap	2	
13	59299545	Hitch Pin	1	
14	59607861	Cable	1	
15	59607853	Ferrule	2	
16	59436741	Cable	1	
17	59214775	Cable Sleeve	1	
18	13188263	Shim	4	5.0mm
19	13188271	Shim	6	1.5mm
20	96728803	HHCS, Zinc Plated	8	M30 x 3.5 x 110 Cl 10.9
21	96701578	Flatwasher, Zinc Plated	24	M30 Hardened
22	96720438	Hex Nut, Zinc Plated	12	M30 x 3.5 Cl 8
23	13187968	Dust Seal	1	
24	13187976	Dust Seal	1	
25	59109819	Lock Plate	2	
26	96712146	HHCS, Fully Threaded, Zinc Plated	4	M10 x 1.5 x 20 Cl 10.9
27	96711833	Flatwasher, Zinc Plated	4	M10 Cl 10
28	13209168	Spacer Bar	2	
29	13213509	Hose Clamp	2	
30	13295829	Hose Cover Plate	1	
31	13213525	Clamp Plate	1	
32	96701958	HHCS, Fully Threaded, Zinc Plated	12	M6 x 16 Cl 8.8
33	96705546	HHCS, Zinc Plated	4	M6 x 1.0 x 50 Cl 8.8
34	13239967	Hydraulic Hose Clamp	4	
35	58880501	Clamp Plate	2	
36	96714399	Flatwasher, Zinc Plated	4	M10 Cl 140
37	96704739	HHCS, Zinc Plated	4	M10 x 1.5 x 90 Cl 8.8
38	95018719	O-ring	2	
39	96741053	Flatwasher, Zinc Plated	16	M6 Cl 200
40	96728803	HHCS, Fully Threaded, Zinc Plated	4	M30 x 3.5 x 110 Cl 10.9

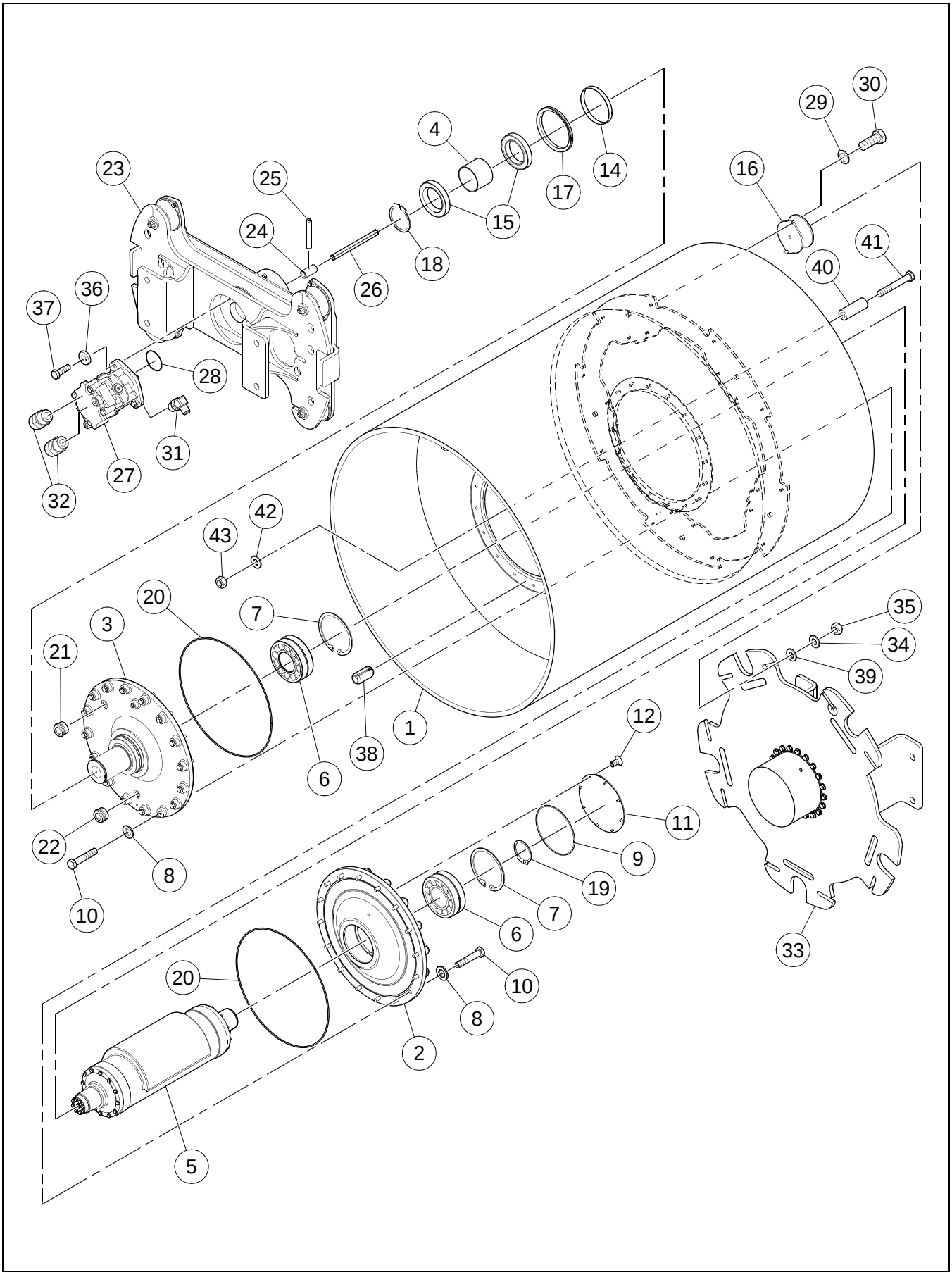
1
2
3
4
5
6
7
8
9
10
11
12
14
15
16
17
18
19
20
21
22
23
24
25
26
27
28
29
30
31
32
33
34
35
36
37
38
39
40
41
42
43

DRUM ASSEMBLY - SHEET 1 OF 2

BOM 13179593, 13409123, 13175708, 13186762, 18006361

ITEM	COMM. NO.	DESCRIPTION	QTY	DIMENSIONS/NOTES
1	13447743	Drum (SD-70D/77DX) - Eff S/N 191508	1	
-	13451273	Drum (SD-70/77F) - Eff S/N 176885	1	
-	13276241	Drum (SD-70D/77DX) - Prior to S/N 176885	1	
-	13276225	Drum (SD-70/77F) - Prior to S/N 176885	1	
2	13184072	Bearing Housing Drive	1	
3	13218177	Bearing Housing Spindle	1	
4	13179577	Spacer	1	
5	**NSVA**	**Eccentric Assembly**	**1**	**See Page B - 8.**
6	59208512	Spherical Roller Bearing	2	
7	96710983	Clip Ring	2	
8	96738612	Flatwasher, Zinc Plated	16	M16 Hardened Cl 200
9	95720256	O-ring	1	
10	96739990	Hex Head Bolt, Zinc Plated	16	M16 x 2.0 x 90 Cl 10.9
11	13412069	Cover	1	
12	96743851	HSHCS, Zinc Plated	8	M8 x 1.25 x 16 Cl 8.8
14	59277756	Wear Sleeve	1	
15	50269984	Bearing	2	
16	13304787	Shock Mount - Effective with S/N 191508	6	
-	13304787	Shock Mount - Prior to S/N 176885	4	
17	13167390	V-ring Seal	1	
18	96711510	Retaining Ring	1	
19	96711411	Clip Ring	1	
20	95439006	O-ring	2	
21	59144428	Magnetic Plug	2	
22	59277772	Sight Gauge	1	
23	**NSVA**	**Carrier Assembly**	**1**	**See Page B - 10.**
24	59613612	Coupling	1	
25	96736822	Roll Pin	1	
26	13182308	Spline Shaft	1	
27	**13197447**	**Vibration Motor**	**1**	**See Breakdown B - 12.**
-	13284849	ARC - Vibration Motor	1	
28	95988739	O-ring	1	
29	96738596	Flatwasher - Effective with S/N 191508	12	M12 Hardened Cl 200
-	96738596	Flatwasher, Zinc Plated - Prior to S/N 176885	8	M12 Hardened Cl 200
30	96702790	HHCS, FT, Zn - Effective S/N 191508	12	M12 x 1.75 x 25 Cl 10.9
-	96702808	HHCS, FT, Zn - Prior to S/N 176885	10	M12 x 1.75 x 30 Cl 10.9
31	95303350	Adapter	1	
32	59922591	Adapter	2	
33	**NSVA**	**Drum Drive Assembly - Eff S/N 191508**	**1**	**See Page B - 14.**
-	**NSVA**	**Drum Drive Assembly - Eff S/N 176885**	**1**	**See Page B - 16.**
-	**NSVA**	**Drum Drive Assembly - Prior S/N 176885**	**1**	**See Page B - 22.**
34	59565044	Flatwasher - Effective with S/N 191508	6	3/4 Hardened
-	59565044	Flatwasher - Prior to S/N 176885	4	3/4 Hardened
35	96703657	Nut, Zinc Plated - Effective with S/N 191508	6	M16 Cl 10
-	96703657	Nut, Zinc Plated - Prior to S/N 176885	4	M16 Cl 10
36	96712237	Flatwasher, Zinc Plated	2	M12 Hardened Cl 10

DRUM ASSEMBLY - SHEET 2 OF 2

Dwg 13329362/0b

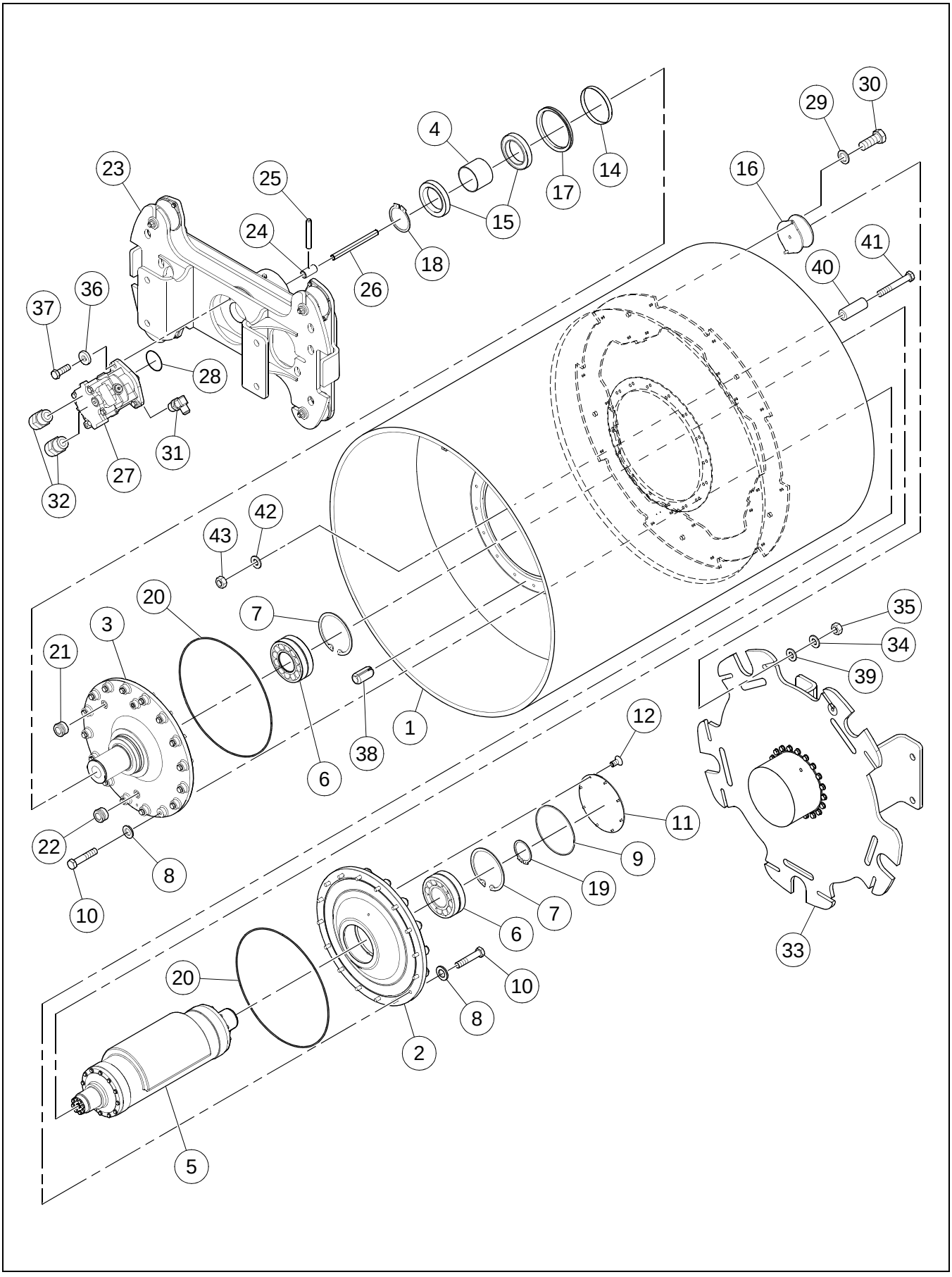

BOM 13179593, 13409123, 13175708, 13186762, 18006361

ITEM	COMM. NO.	DESCRIPTION	QTY	DIMENSIONS/NOTES
37	96702329	HHCS, Fully Threaded, Zinc Plated	2	M12 x 1.75 x 35 Cl 8.8
38	96737069	Roll Pin	1	
39	13351408	Washer - Effective with S/N 191508	6	
-	13351408	Washer - Prior to S/N 176885	4	
40		This item not used with this Assembly		
41		This item not used with this Assembly		
42		This item not used with this Assembly		
43		This item not used with this Assembly		

ECCENTRIC ASSEMBLY

Dwg 43866508/00

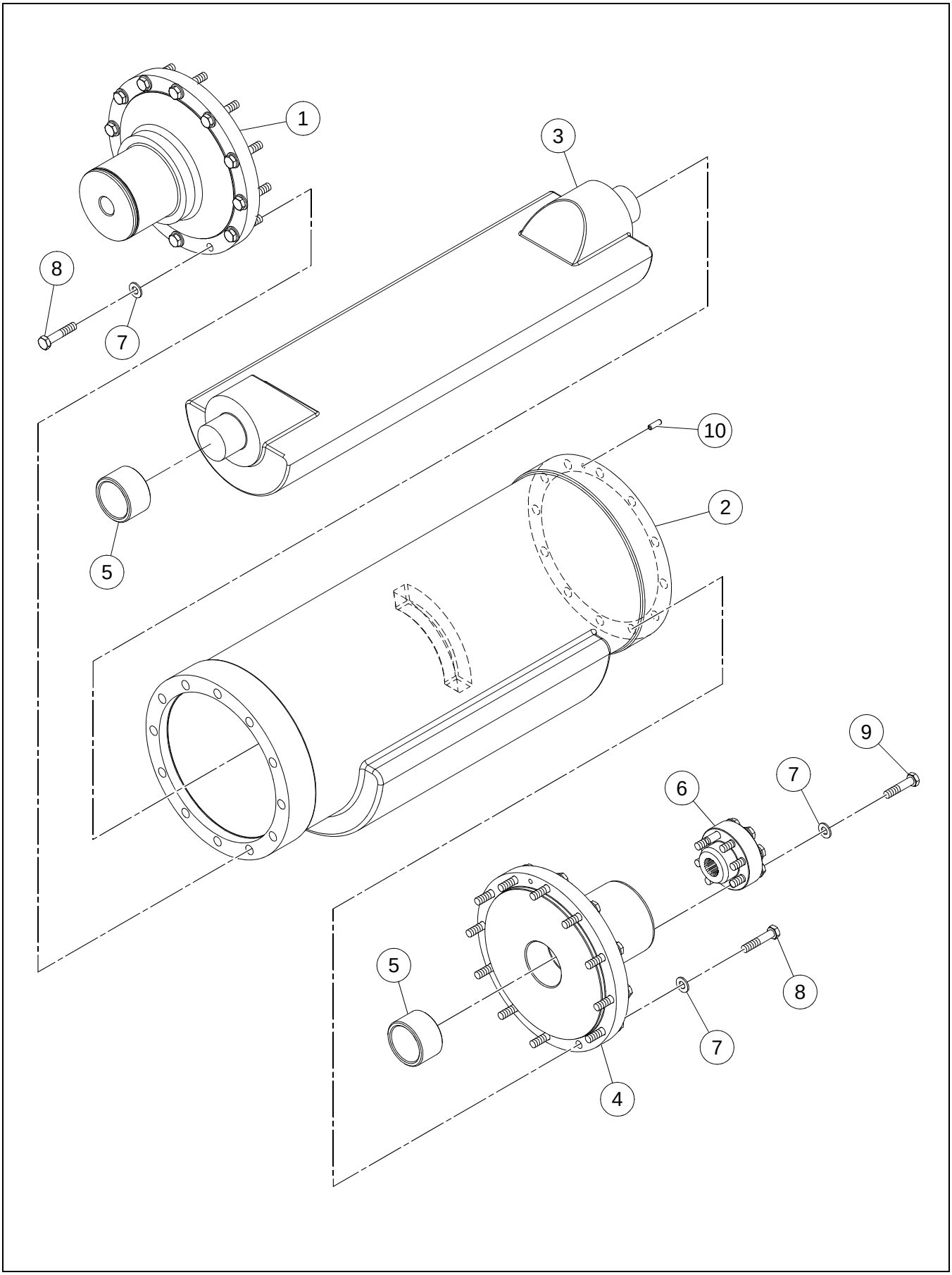

ECCENTRIC ASSEMBLY

BOM 13179254, 13186770

ITEM	COMM. NO.	DESCRIPTION	QTY	DIMENSIONS/NOTES
1	13179239	Drive Side Journal	1	
2	13218128	Eccentric Shaft (SD-70D/SD-77DX)	1	
-	13218144	Eccentric Shaft (SD-77F)	1	
3	13179205	Eccentric Shaft	1	
4	13218136	Non-Drive Side Journal	1	
5	59296632	Oilite Bearing	2	
6	13179247	Spline Coupling	1	
7	96741046	Flatwasher, Zinc Plated	30	M10 Cl 200
8	96702436	HHCS, Zinc Plated	24	M10 x 1.5 x 50 Cl 10.9
9	96702428	HHCS, Zinc Plated	6	M10 x 1.5 x 45 Cl 8.8
10	96720990	Roll Pin	1	

CARRIER ASSEMBLY

Dwg D13184528/02

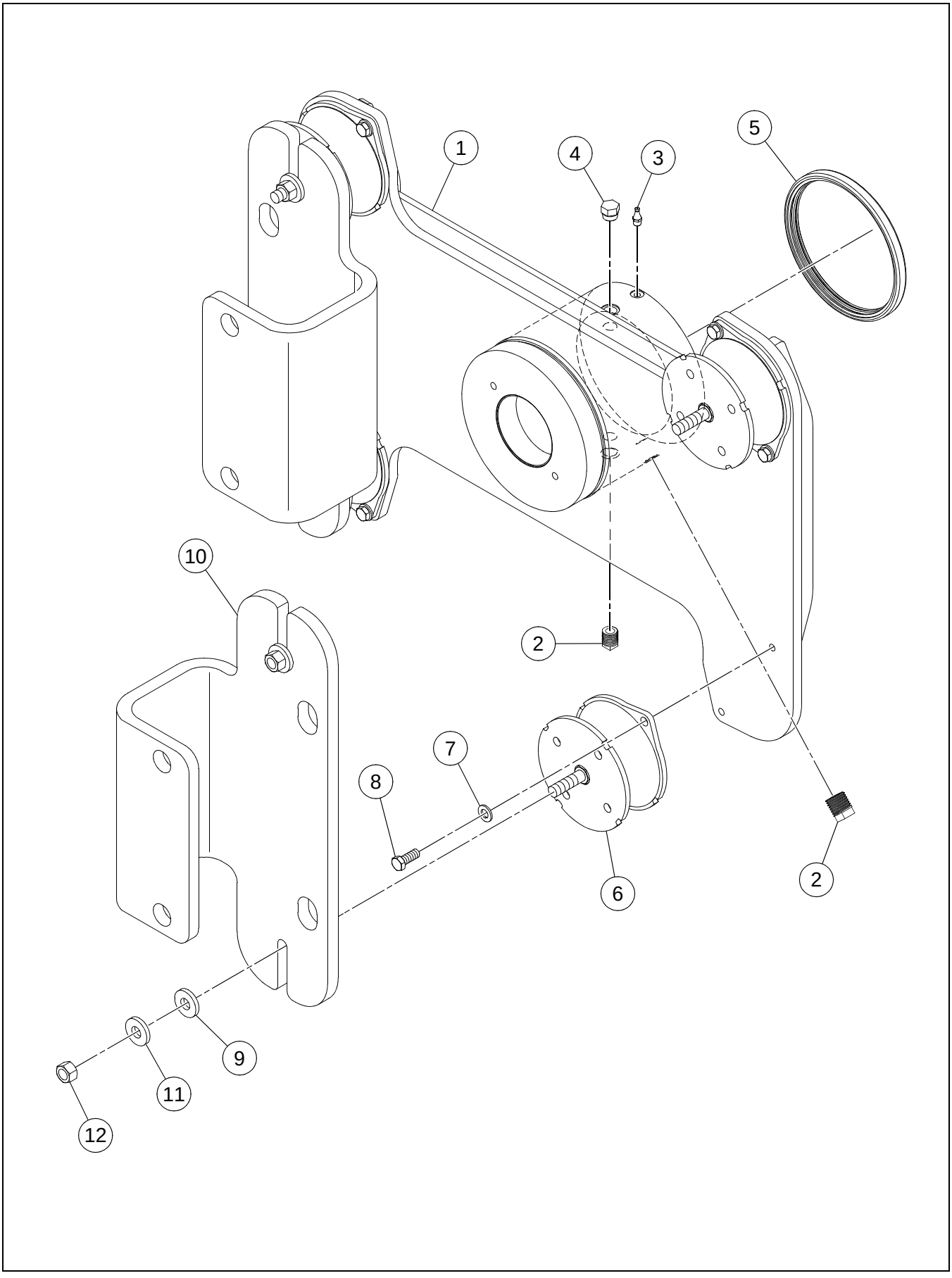

CARRIER ASSEMBLY

BOM 13179551

ITEM	COMM. NO.	DESCRIPTION	QTY	DIMENSIONS/NOTES
1	13185376	Carrier Plate	1	
2	59600593	Pipe Plug	2	
3	96702709	Grease Fitting	1	
4	54584776	Breather Filtered Vent	1	
5	59277764	Oil Seal	1	
6	13304787	Shock Mount	4	
7	96738596	Flatwasher	8	M12 Hardened Cl 200
8	96702808	HHCS, Fully Threaded, Zinc Plated	8	M12 x 1.75 x 30 Cl 10.9
9	13351408	Washer	4	
10	13232616	Shock Mount Plate	2	
11	59565044	Flatwasher	4	3/4 Hardened
12	96703657	Nut, Zinc Plated	4	M16 Cl 10

VIBRATION MOTOR (13197447) - INTERNAL BREAKDOWN

Dwg 13197447/00

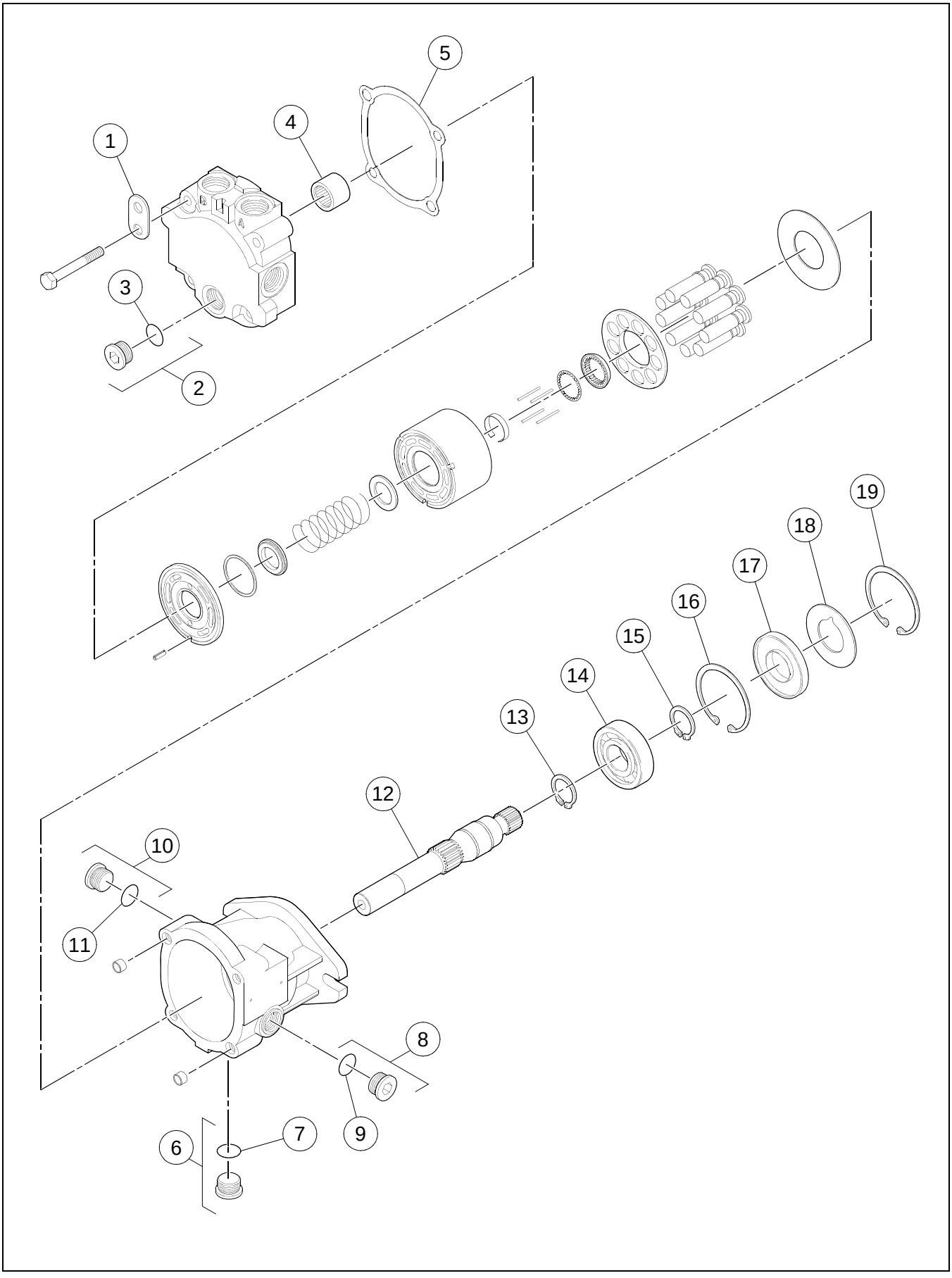

VIBRATION MOTOR (13197447) - INTERNAL BREAKDOWN

BOM 13197447

ITEM	COMM. NO.	DESCRIPTION	QTY	DIMENSIONS/NOTES
1	59360966	Lifting Bracket	1	
2	58891540	Socket Head Plug	1	
3	50278019	- O-ring	1	
4	59387605	Needle Bearing	1	
5	59387498	End Cap Gasket	1	
6	56998610	Socket Head Plug	1	
7	50278019	- O-ring	1	
8	58891540	Socket Head Plug	1	
9	50278019	- O-ring	1	
10	58891540	Socket Head Plug	1	
11	50278019	- O-ring	1	
12	13228200	Shaft	1	
13	59785519	Retaining Ring	1	
14	95200648	Ball Bearing	1	
15	59785519	Retaining Ring	1	
16	59861872	Retaining Ring	1	
17	59941203	Lip Seal	1	
18	59245209	Retaining Ring	1	
19	59861872	Retaining Ring	1	

DRUM DRIVE ASSEMBLY - EFFECTIVE WITH S/N 191508

Dwg 18006353/01

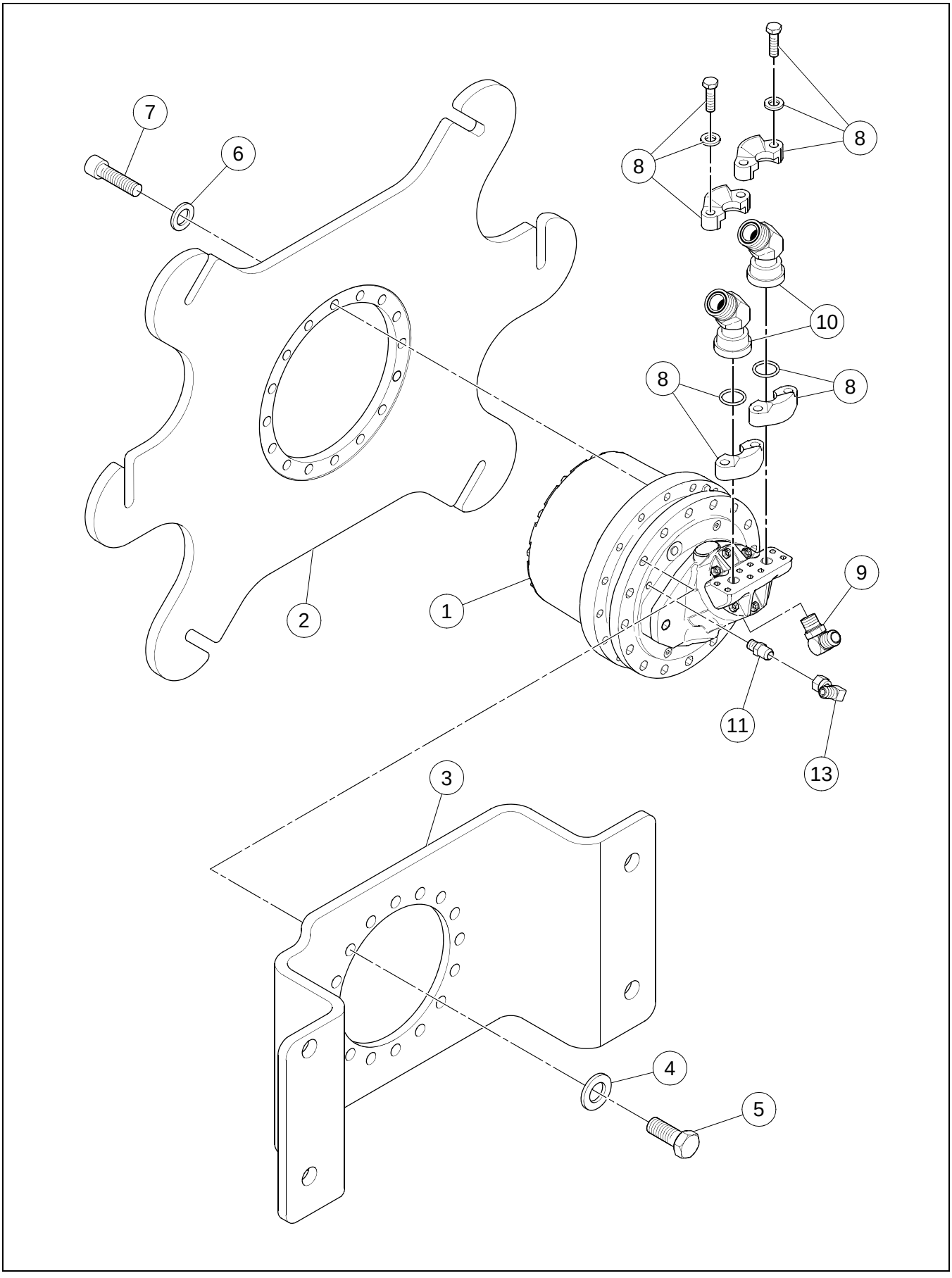

DRUM DRIVE ASSEMBLY - EFFECTIVE WITH S/N 191508

BOM 18006353

ITEM	COMM. NO.	DESCRIPTION	QTY	DIMENSIONS/NOTES
1	18002154	Drum Drive Motor	1	
2	13413893	Drive Plate	1	
3	13357702	Drive Motor Mounting Bracket	1	
4	96738620	Flatwasher, Zinc Plated	16	M20 Hardened Cl 200
5	96704481	HHCS, Fully Threaded, Zinc Plated	16	2.5 Cl 8.8
6	96714019	Flatwasher, Zinc Plated	16	M16 Hardened Cl 10
7	96708425	Allen Screw	16	
8	13184445	Split Clamp	2	
-	58896952	- S.F. Clamp	4	
-	96704556	- HHCS, Zinc Plated	8	M10 x 1.5 x 40 Cl 8.8
-	59510065	- Lockwasher	8	
-	59990010	- O-ring	2	
9	58896580	Adapter	1	
10	59177915	Split Flange	2	
11	59787879	Adapter	1	
13	95415824	Adapter	1	

DRUM DRIVE ASSEMBLY - EFFECTIVE WITH S/N 176885

Dwg 13357728/02

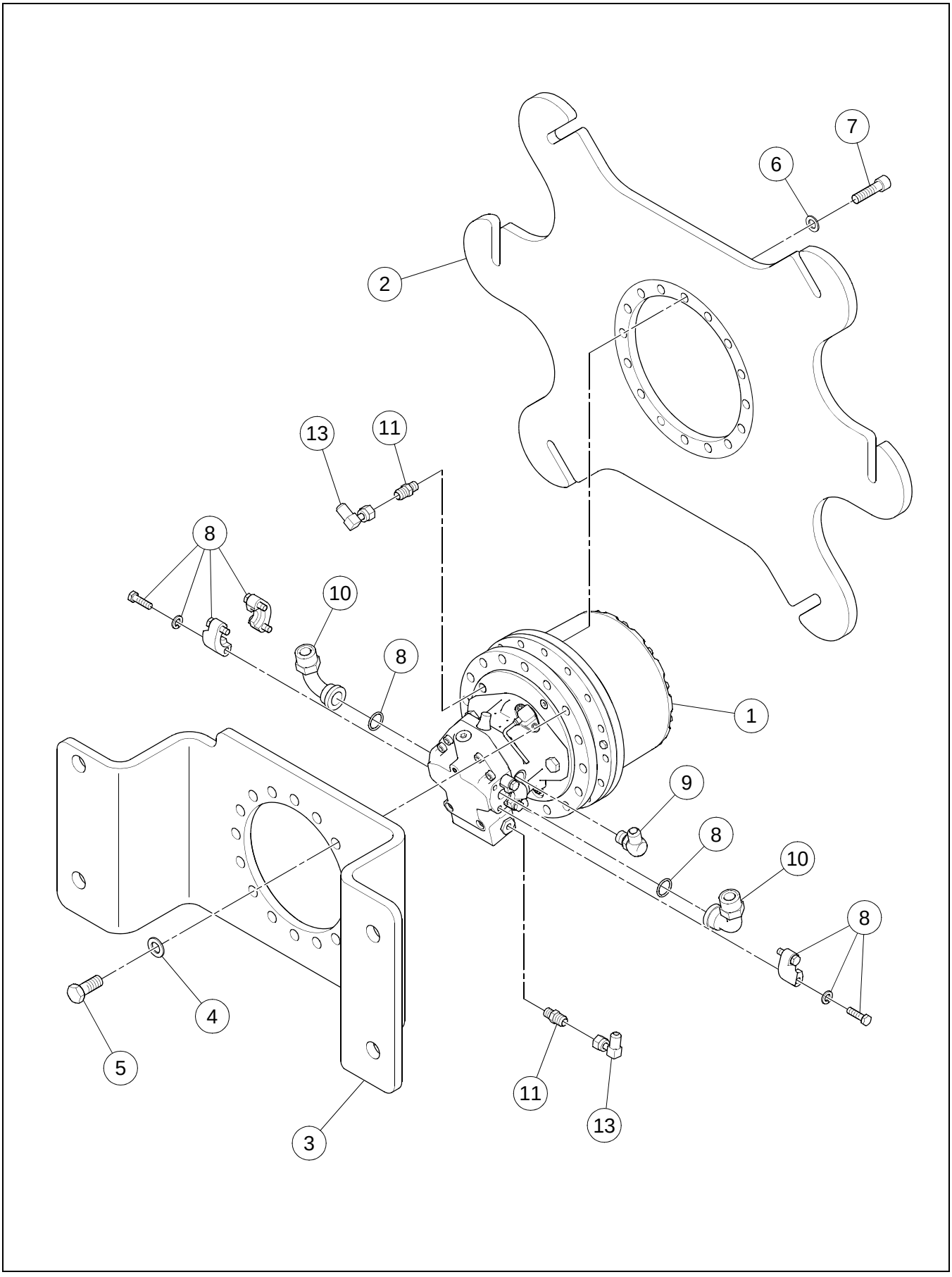

DRUM DRIVE ASSEMBLY - EFFECTIVE WITH S/N 176885

BOM 13357728

ITEM	COMM. NO.	DESCRIPTION	QTY	DIMENSIONS/NOTES
1	**13360284**	**Drum Drive Motor**	**1**	**See Breakdown B - 18.**
2	13413893	Drive Plate	1	
3	13357702	Drive Motor Mounting Bracket	1	
4	96738620	Flatwasher, Zinc Plated	16	M20 Hardened Cl 200
5	96704481	HHCS, Fully Threaded, Zinc Plated	16	2.5 Cl 8.8
6	96714019	Flatwasher, Zinc Plated	16	M16 Hardened Cl 10
7	96708425	Allen Screw	16	
8	13184445	Split Clamp	2	
-	58896952	- S.F. Clamp	4	
-	96704556	- HHCS, Zinc Plated	8	M10 x 1.5 x 40 Cl 8.8
-	59510065	- Lockwasher	8	
-	59990010	- O-ring	2	
9	58896580	Adapter	1	
10	59027060	Adapter	2	
11	59787879	Adapter, Straight	2	
13	95326930	Swivel Elbow	2	

DRUM DRIVE MOTOR (13360284) - INTERNAL BREAKDOWN - EFFECTIVE WITH S/N 176885 - SHEET 1 OF 2

Dwg 13360284/00

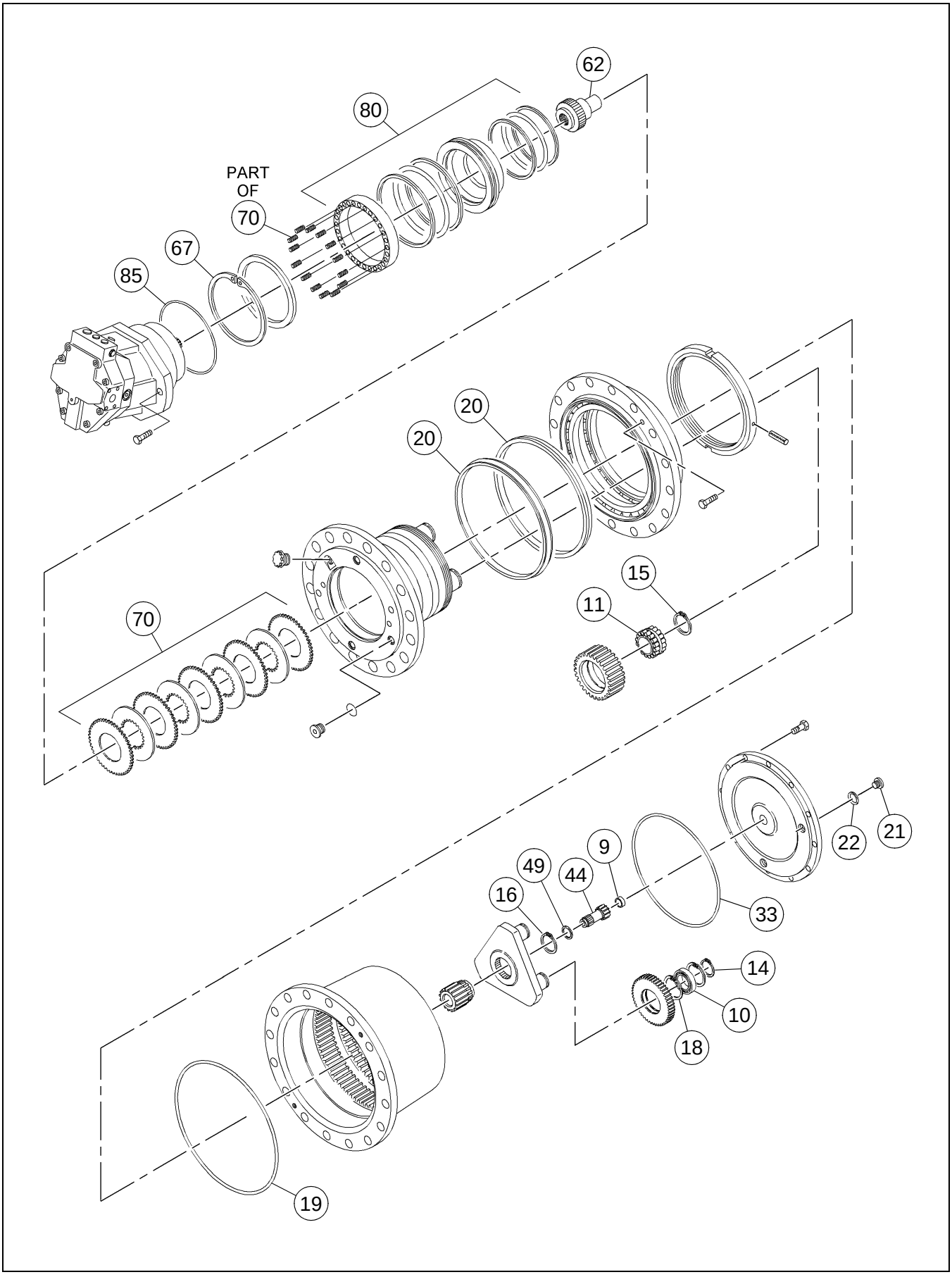

DRUM DRIVE MOTOR (13360284) - INTERNAL BREAKDOWN
- EFFECTIVE WITH S/N 176885 - SHEET 1 OF 2

BOM 13360284

ITEM	COMM. NO.	DESCRIPTION	QTY	DIMENSIONS/NOTES
1	13461447	Motor, Complete (Not Shown)	1	
-	13462239	- Rotary Group	1	
-	13494547	- Flange Cover	1	
-	13494554	- O-ring	1	
-	13494562	- Screw	1	
-	13863915	- O-ring	1	
-	13462254	- Retaining Ring	1	
-	13462262	- Back Up Plate	1	
-	13464862	- Shaft Seal Ring	1	
-	13462163	- O-ring	1	
-	13462296	- Locknut Seal	2	
-	13462288	- Threaded Pin	1	
-	13462304	- Threaded Pin	1	
-	13268263	- Locking Screw	1	
-	13462270	- O-ring	1	
-	13462247	- Control - Complete	1	
-	13269840	- Control Bushing	1	
-	13269832	- Control Piston	1	
-	13269824	- Connection Stud	1	
-	13269816	- O-ring	1	
-	13269857	- Pressure Spring	1	
-	13269865	- Locking Screw	1	
-	13269873	- O-ring	1	
-	13269881	- Locking Screw	2	
-	13269808	- Locking Screw	1	
-	13269790	- Throttle Pin	3	
-	13269774	- Throttle Spur	3	
-	13269782	- Valve Pin	2	
-	13494570	- Screw	2	
-	13494588	- Screw	6	
-	13269907	- Throttle Pin	1	
-	13494596	- Cylinder Pin	1	
-	13494604	- Trunnion	1	
-	13494612	- Piston	1	
-	13494620	- Port Plate	1	
-	13268974	- Double Break Off Pin	4	
-	13462338	- O-ring	1	
-	13494638	- Locking Screw	1	
-	13863923	- Speed Sensor	1	
-	13462320	- Rotary Group Hydraulic Section	1	
-	13269865	- Locking Screw	1	
-	13462338	- O-ring	1	
-	13269873	- O-ring	1	
-	13269816	- O-ring	1	
4	13503412	Shaft Nut (Not Shown)	1	
9	13461991	Thrust Button	1	

DRUM DRIVE MOTOR (13360284) - INTERNAL BREAKDOWN - EFFECTIVE WITH S/N 176885 - SHEET 2 OF 2

Dwg 13360284/00

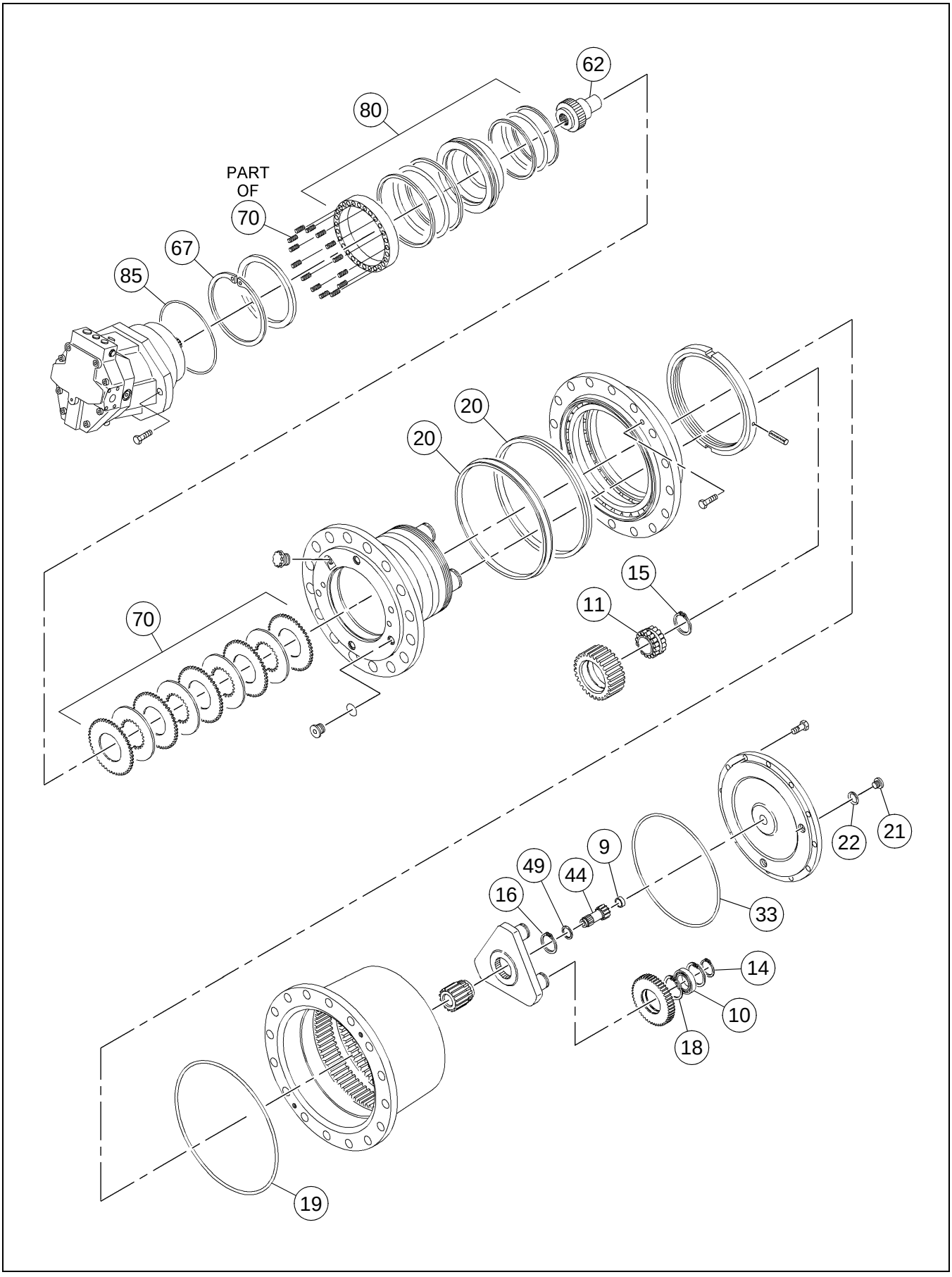

DRUM DRIVE MOTOR (13360284) - INTERNAL BREAKDOWN - EFFECTIVE WITH S/N 176885 - SHEET 2 OF 2

BOM 13360284

ITEM	COMM. NO.	DESCRIPTION	QTY	DIMENSIONS/NOTES
10	13462007	Cylindrical Bearing	3	
11	13462015	Cylindrical Bearing	4	
14	13462023	Snap Ring	3	
15	13462031	Snap Ring	4	
16	13462049	Snap Ring	1	
18	13462056	Snap Ring	6	
19	13462064	O-ring	1	
20	13462072	Face Seal	1	
21	13462098	Screw Plug	2	
22	13462106	Seal Ring	2	
33	13462114	O-ring	1	
44	13462122	Input Shaft	1	
49	13462130	Thrust Washer	1	
62	13462148	Coupler	1	
67	13462155	Snap Ring	1	
70	13462171	Disk Brake Kit	1	
80	13462205	Seal Kit	1	
85	13462163	O-ring	1	

DRUM DRIVE ASSEMBLY - PRIOR TO S/N 176885

Dwg D13184569/05

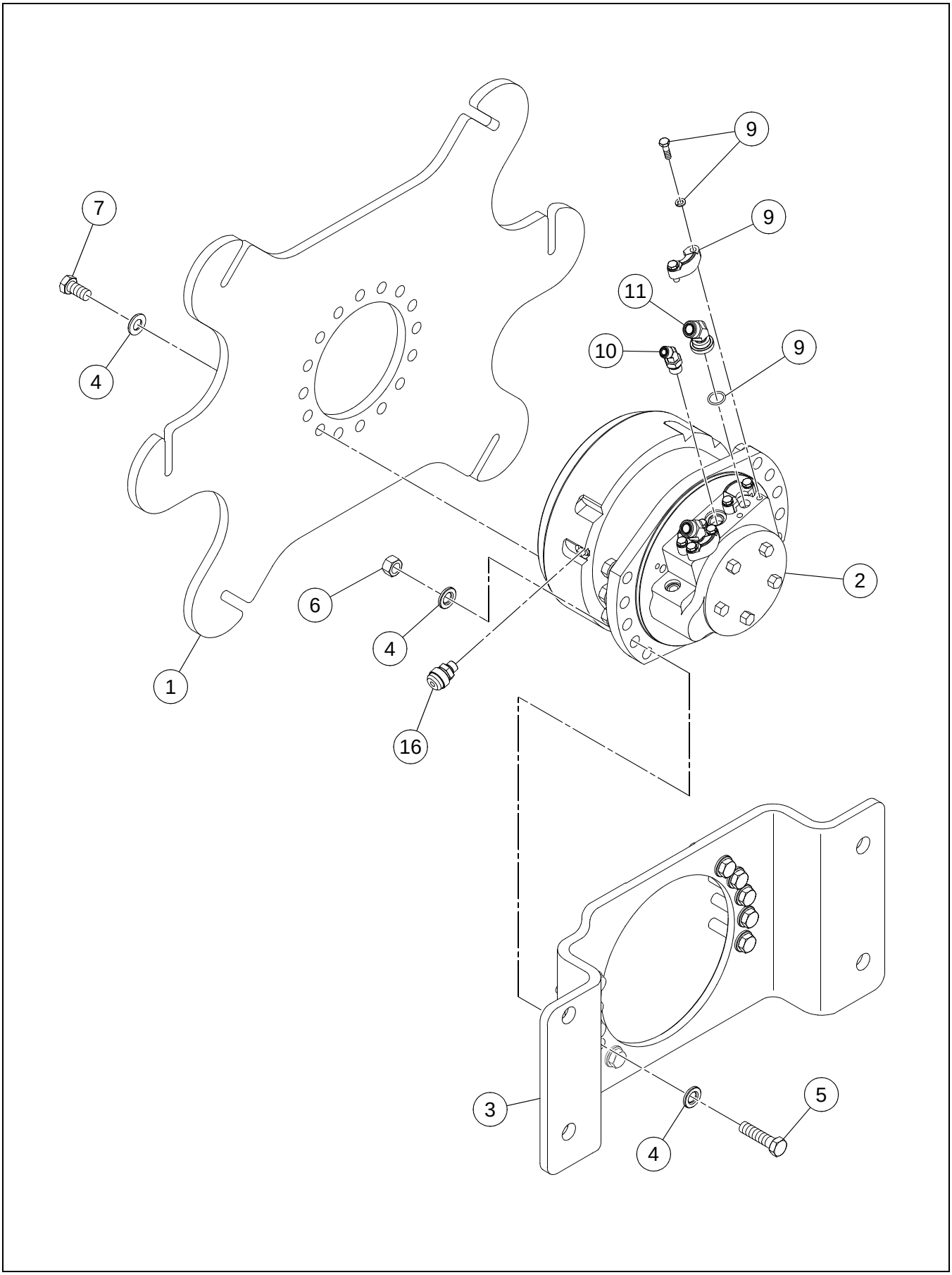

DRUM DRIVE ASSEMBLY - PRIOR TO S/N 176885

BOM 13179585, 13186796

ITEM	COMM. NO.	DESCRIPTION	QTY	DIMENSIONS/NOTES
1	13275342	Drive Plate	1	
2	**13179122**	**Drum Drive Motor w/Brake (SD-70D/SD-77DX)**	**1**	**See Breakdown B - 24.**
-	13360920	ARC - Drum Drive Motor w/Brake (SD-70D/SD-77DX)	1	
-	**13179148**	**Drum Drive Motor w/Brake (SD-77F)**	**1**	**See Breakdown B - 26.**
	13360979	ARC - Drum Drive Motor w/Brake (SD-77F)		
3	13216007	Drum Motor Mounting Bracket	1	
4	96701560	Flatwasher, Zinc Plated	36	M20 Hardened
5	96718671	HHCS, Zinc Plated	10	M20 x 2.5 x 80 Cl 8.8
6	96720446	Hex Nut, Zinc Plated	10	M20 x 2.5 Cl 8
7	96740998	HHCS, Fully Threaded, Zinc Plated	16	M20 x 1.5 x 40 Cl 8.8
9	13184445	Split Clamp	2	
-	59990010	- O-ring	2	
10	95650339	Adapter	1	
11	59177915	Split Flange Adapter	2	
16	95303368	Adapter	1	

DRUM DRIVE MOTOR W/BRAKE (13179122) - SD-70D/77DX - INTERNAL BREAKDOWN

Dwg D13244819/01

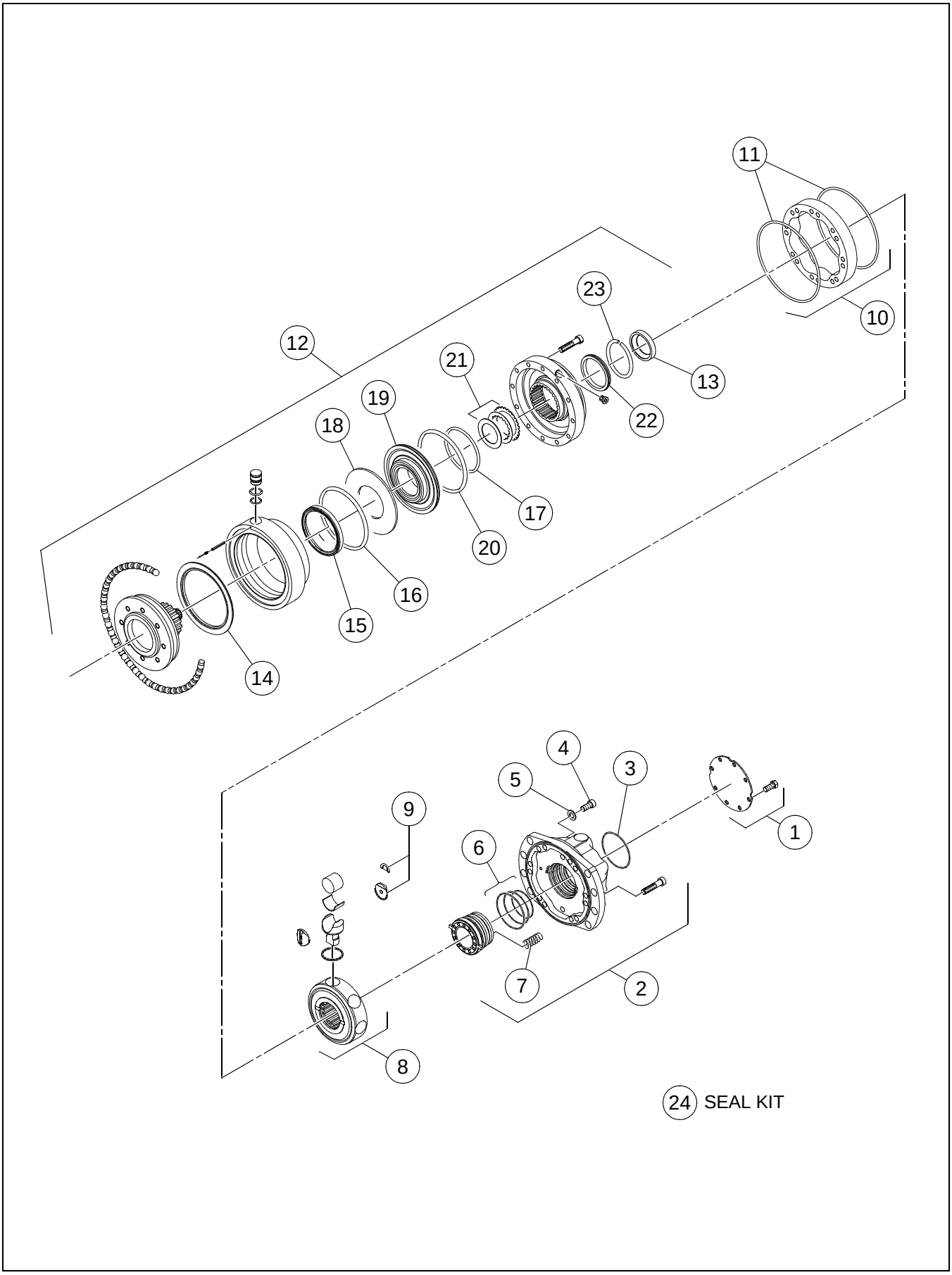

DRUM DRIVE MOTOR W/BRAKE (13179122) - SD-70D/77DX - INTERNAL BREAKDOWN

BOM 13179122

ITEM	COMM. NO.	DESCRIPTION	QTY	DIMENSIONS/NOTES
1	13316419	Reinforced Cover Plate Kit	1	
2	13263397	Complete Valving Cover	1	
3	59902684	- Seal	1	
4	59902676	- Screw	1	
5	59902668	- Seal	2	
6	13263421	- Seal Kit	1	
7	59080309	- Spring	12	
8	13284419	Cylinder Block	1	
9	59241851	- Repair Kit	1	
10	59241828	Cam	1	
11	59241505	- O-Ring	2	
12	13262761	Complete Bearing	1	
13	13263215	- Thrust Ring	1	
14	13263223	- Ring	1	
15	54563408	- Seal Shaft	1	
16	58804592	- O-Ring	1	
17	59241562	- O-Ring	1	
18	13263231	- Spring Washer	1	
19	13284427	- Brake Piston	1	
20	59241554	- O-Ring	1	
21	59241570	- Seal Kit	1	
22	13263199	- Thrust Ring	1	
23	13263207	- Spring Washer	1	
24	13262670	Seal Kit	1	

DRUM DRIVE MOTOR W/BRAKE (13179148) - SD-77F - INTERNAL BREAKDOWN

Dwg D13244827/01

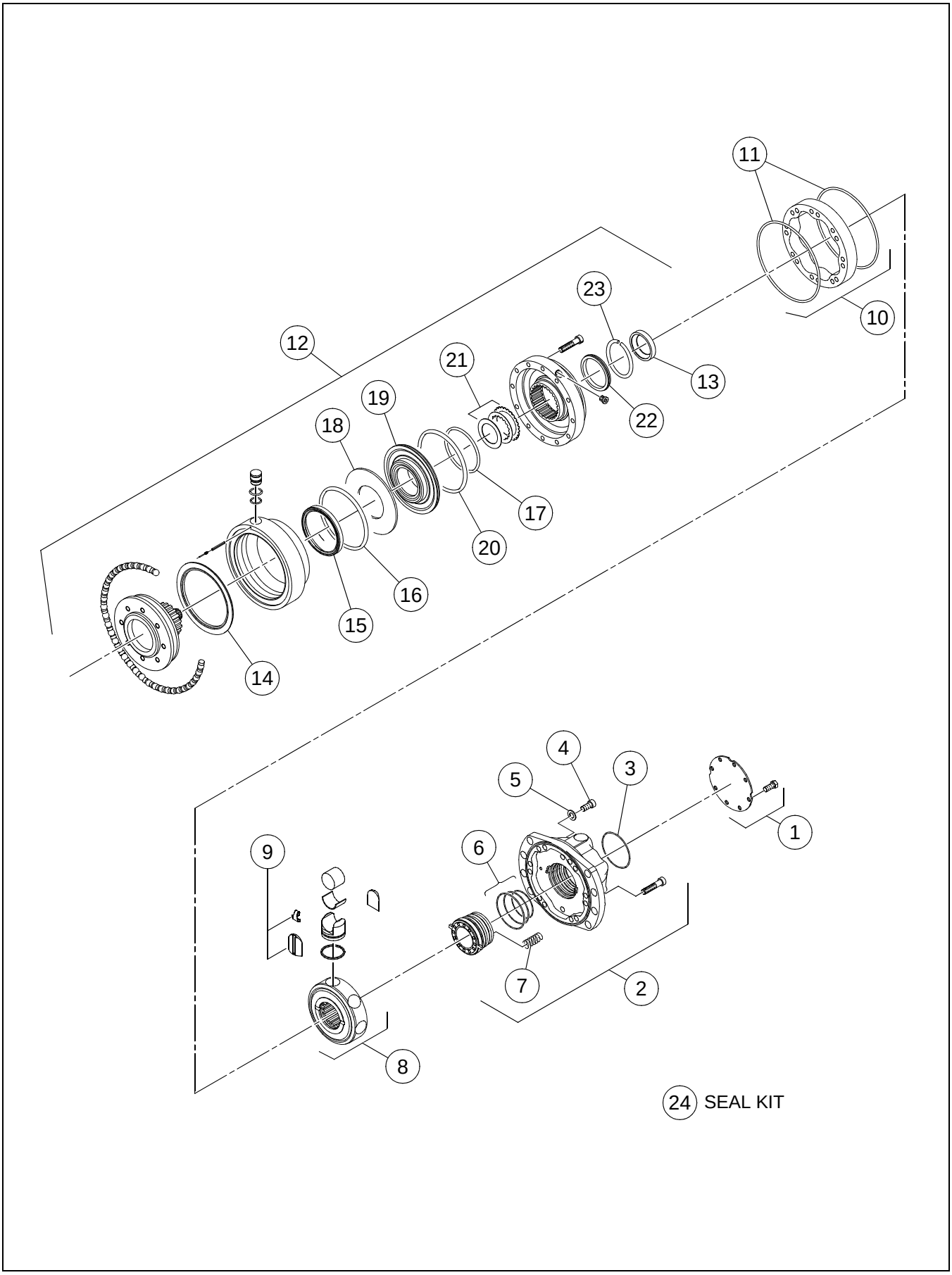

DRUM DRIVE MOTOR W/BRAKE (13179148) - SD-77F - INTERNAL BREAKDOWN

BOM 13179148

ITEM	COMM. NO.	DESCRIPTION	QTY	DIMENSIONS/NOTES
1	59902841	Back Plate	1	
2	13263397	Complete Valving Cover	1	
3	59902684	- Seal	1	
4	59902676	- Screw	1	
5	59902668	- Seal	2	
6	13263439	- Seal Kit	1	
7	59080309	- Spring	12	
8	13263520	Cylinder Block	1	
9	59234518	- Repair Kit	1	
10	59241828	Cam	1	
11	59241505	- O-Ring	2	
12	13262761	Complete Bearing	1	
13	13263215	- Thrust Ring	1	
14	13263223	- Ring	1	
15	54563408	- Seal Shaft	1	
16	58804592	- O-Ring	1	
17	59241562	- O-Ring	1	
18	13263231	- Spring Washer	1	
19	13263231	- Brake Piston	1	
20	59241554	- O-Ring	1	
21	59241570	- Seal Kit	1	
22	13263199	- Thrust Ring	1	
23	13263207	- Spring Washer	1	
24	13262670	Seal Kit	1	

REAR FRAME INSTALLATION

Dwg 13216700/09

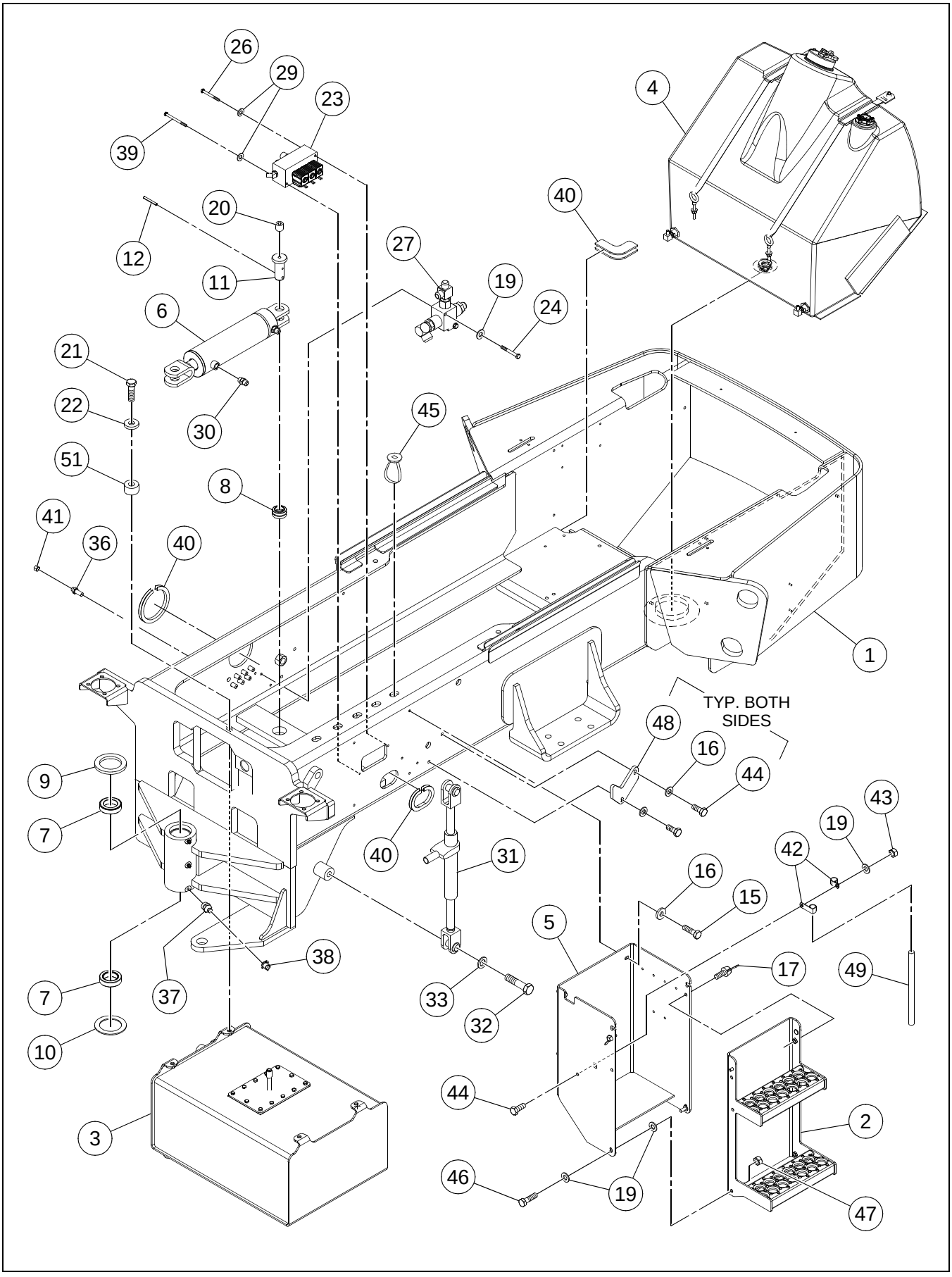

BOM 13270624, 13174164, 13504824

ITEM	COMM. NO.	DESCRIPTION	QTY	DIMENSIONS/NOTES
1	43814474	Main Frame	1	
2	13279385	Step	1	
3	**NSVA**	**Hydraulic Tank Assembly**	**1**	**See Page B - 30.**
4	**NSVA**	**Fuel Tank Installation**	**1**	**See Page B - 32.**
5	43824291	Battery Box	1	
6	13188198	Steering Cylinder	1	
-	54577838	- Locknut	1	
-	13228937	- Seal Kit	1	
7	13187877	Bearing	2	
8	13209903	Steering Bearing	1	
9	13187968	Dust Seal	1	
10	13187976	Dust Seal	1	
11	59190975	Pivot Pin	1	
12	95098679	Roll Pin	1	
15	96704309	HHCS, Fully Threaded, Zinc Plated	4	M10 x 1.5 x 35 Cl 8.8
16	96711833	Flatwasher, Zinc Plated	8	M10 Cl 10
17	96702287	HHCS, Fully Threaded, Zinc Plated	2	M10 x 1.5 x 25 Cl 8.8
19	96741046	Flatwasher, Zinc Plated	7	M10 Cl 200
20	95049359	Plug	1	
21	96714910	HHCS, Zinc Plated	4	M12 x 1.75 x 60 Cl 10.9
22	96712237	Flatwasher, Zinc Plated	4	M12 Hardened Cl 10
23	**NSVA**	**Brake/Shunt Two-Speed Manifold Assembly**	**1**	**See Page B - 36.**
24	96705272	HHCS, Zinc Plated	2	M10 x 80 Cl 8.8
26	96718978	HHCS, Zinc Plated	1	M8 x 1.25 x 80 Cl 8.8
27	**NSVA**	**Thermal Bypass Valve Installation**	**1**	**See Page B - 40.**
29	96741038	Flatwasher	2	M8 x 1.25 Cl 200
30	95303368	Adapter	2	
31	**13209663**	**Ratchet Jack**	**1**	**See Breakdown B - 42.**
32	96712716	HHCS, Zinc Plated	1	M24 x 3.0 x 100, Cl 8.8
33	96738646	Flatwasher, Zinc Plated	1	M24 Hardened Cl 200
34	96701958	HHCS, Fully Threaded, Zn (Not Shown)	2	M6 x 1 x 16 Cl 8.8
35	96741053	Flatwasher (Not Shown)	2	M6
36	59961821	Adapter	7	
37	95201547	Grease Fitting	3	
38	50270248	Cap	3	
39	96728464	HHCS, Fully Threaded, Zinc Plated	1	M8 x 1.25 x 100, Cl 8.8
40	50829647	Trim	4	
41	59924043	ORS Cap	7	
42	95301867	Clamp	1	
43	96704614	Nut, Zinc Plated	1	M10 x 1.5 Cl 8
44	96702774	HHCS, Fully Threaded, Zinc Plated	5	M10 x 1.5 x 25 Cl 10.9
45	58820168	Wire Tie	A/R	
46	96704556	HHCS, Fully Threaded, Zinc Plated	2	M10 x 1.5 x 40 Cl 8.8
47	96704812	Hex Nut, Zinc Plated	2	M10 x 1.5 Cl 8
48	13275953	V-block	2	
49		This item not used with this Assembly		
51	13396007	Spacer	4	

HYDRAULIC TANK ASSEMBLY

Dwg 13166285/11

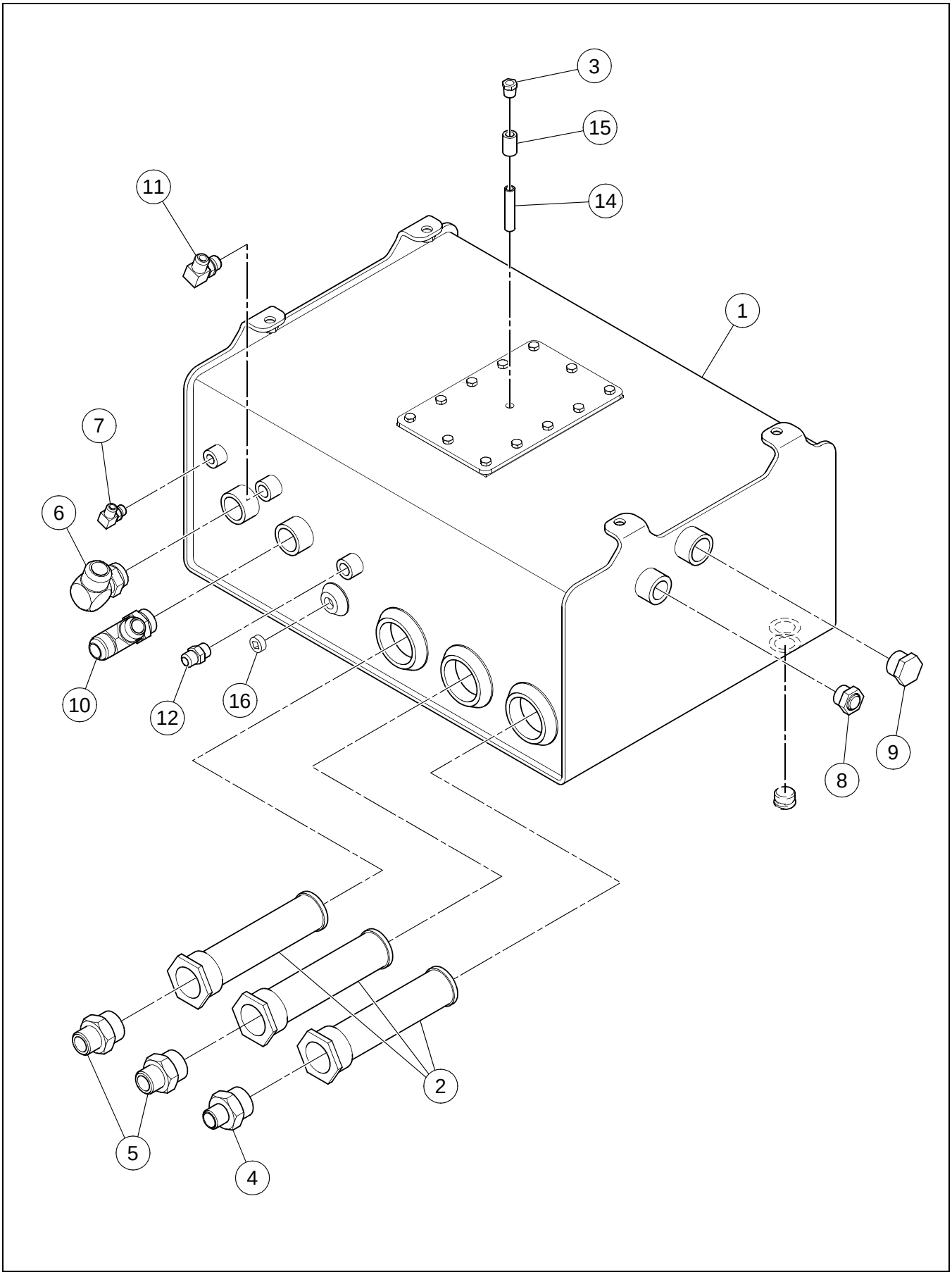

HYDRAULIC TANK ASSEMBLY

BOM 43850379

ITEM	COMM. NO.	DESCRIPTION	QTY	DIMENSIONS/NOTES
1	43850346	Hydraulic Tank	1	
-	43850361	- Tank Bottom Wrapper	1	
-	43850353	- Tank Top Wrapper	1	
-	13305099	- Hydraulic Tank Gasket	1	
-	59992081	- O-ring	2	
-	13185384	- Hydraulic Tank Clean Out Lid	1	
-	96701883	- Hex Nut	4	M12 x 1.75
-	59995019	- O-ring	1	
-	95329215	- Flat Flange	3	
-	59992099	- O-ring	3	
-	95403515	- Flange	1	
-	96702824	- HHCS, Fully Threaded, Zinc Plated	12	M8 x 1.25 x 20 Cl 8.8
-	13870720	- Drain Boss	1	
-	59431494	- O-ring	1	
-	43850320	- Magnetic Plug	1	
2	58855099	Hydraulic Tank Filter	3	
3	59093351	Breather Filtered Vent	1	
4	95279337	Adapter	1	
5	95316956	Adapter	2	
6	95280194	Adapter	1	
7	95329975	Adapter	1	
8	59277772	Sight Gauge	1	
9	95326955	Plug	1	
10	95488110	Adapter	1	
11	95303335	Elbow	1	
12	95303368	Adapter	1	
13	59144428	Magnetic Drain Plug (Not Shown)	1	
14	95048393	Nipple	1	
15	95011060	Pipe Coupling	1	
16	95043238	Pipe Plug	1	

FUEL TANK INSTALLATION

Dwg D13216817/03

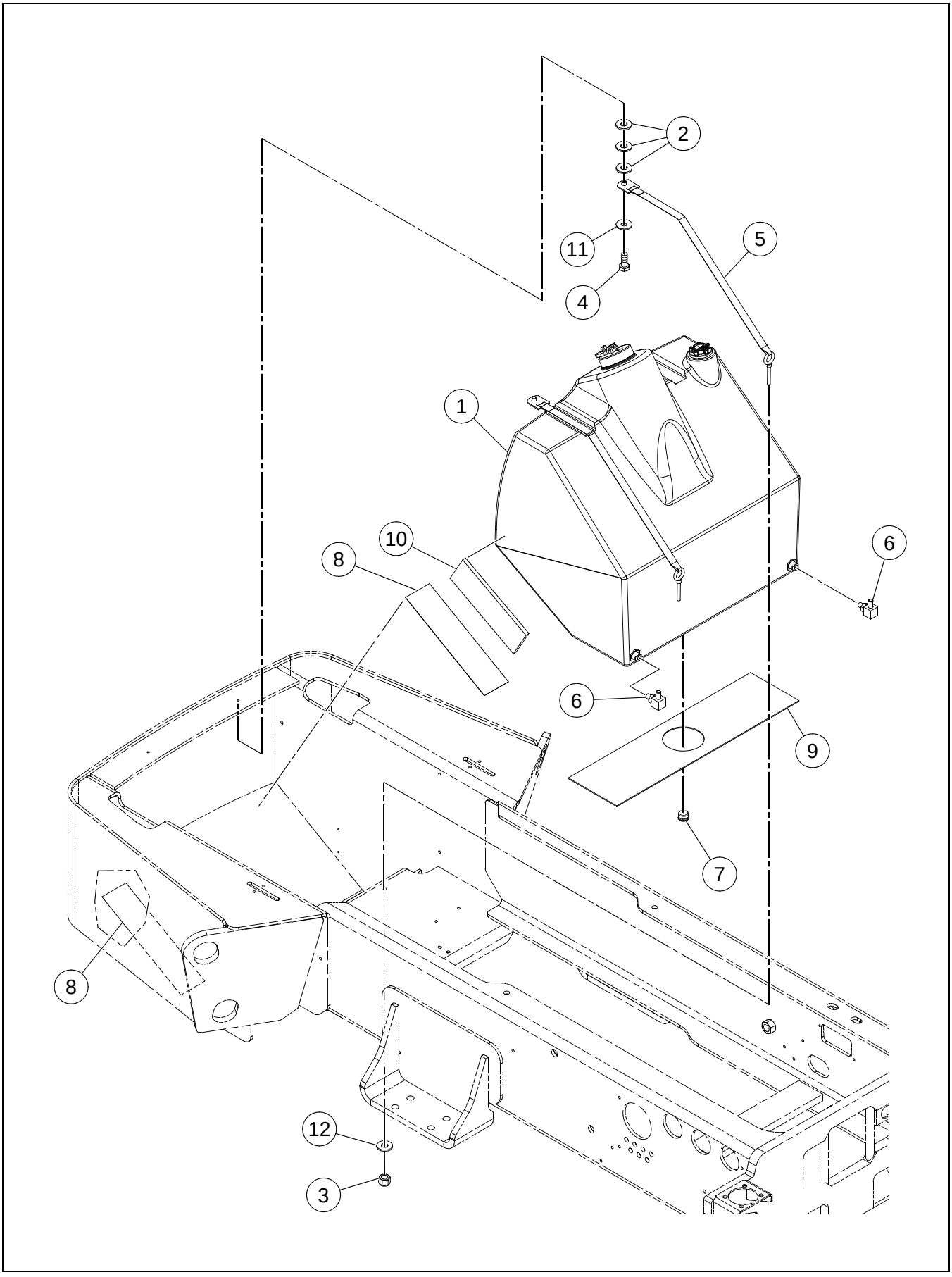

BOM 13213780

ITEM	COMM. NO.	DESCRIPTION	QTY	DIMENSIONS/NOTES
1	**NSVA**	**Fuel Tank Assembly**	**1**	**See Page B - 34.**
2	96712674	Washer, Zinc Plated	6	M8 Hardened Cl 10
3	95923322	Locknut, Zinc Plated	2	3/8 x 16
4	96705587	HHCS, Fully Threaded, Zinc Plated	2	M8 x 1.25 x 30 Cl 8.8
5	13238134	Belt	2	
6	95329975	Adapter	2	
7	59144428	Magnetic Plug	1	
8	59290726	Tape	2	
9	19331024	Tank Guard Base	1	
10	13184932	Tank Guard	2	
11	59887182	Washer	2	Hardened
12	96714407	Flatwasher, Zinc Plated	2	M10

FUEL TANK ASSEMBLY

Dwg D13217005/00

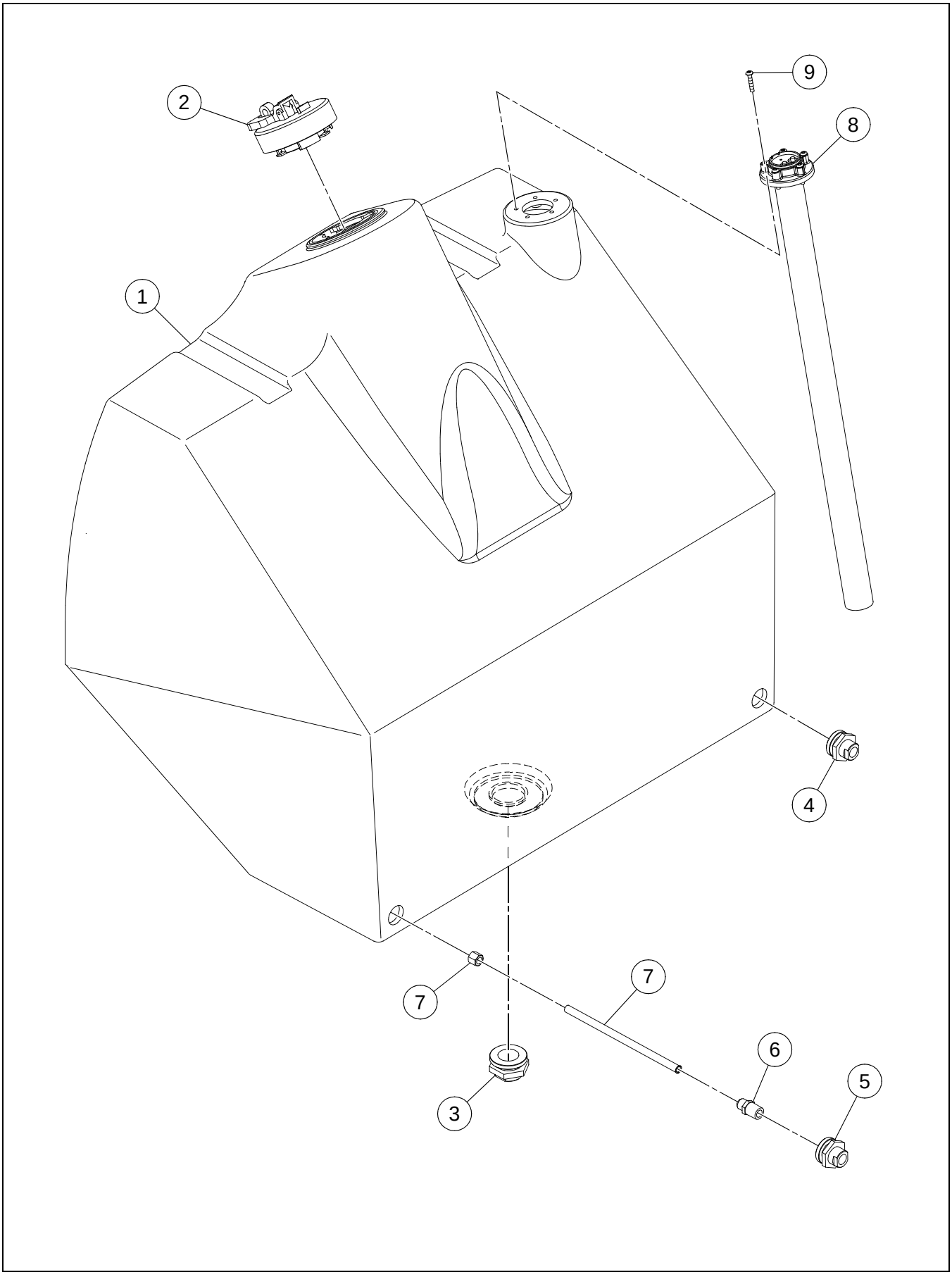

FUEL TANK ASSEMBLY

BOM 13213756

ITEM	COMM. NO.	DESCRIPTION	QTY	DIMENSIONS/NOTES
1	13213749	Fuel Tank	1	
2	13213574	Vented Fuel Cap	1	
3	13213624	Drain Port	1	
-	13247390	- O-ring	1	
4	13213632	Return Port	1	
-	13247382	- O-ring	1	
5	13213681	Supply Port	1	
-	13247382	- O-ring	1	
6	95219713	Adapter	1	
7	13213699	Tube Assembly	1	
8	13213764	Fuel Level Sender	1	
9	59266726	BHCS	5	M5 x 0.08 x 20

BRAKE/SHUNT TWO-SPEED MANIFOLD ASSEMBLY

Dwg 13217559/04

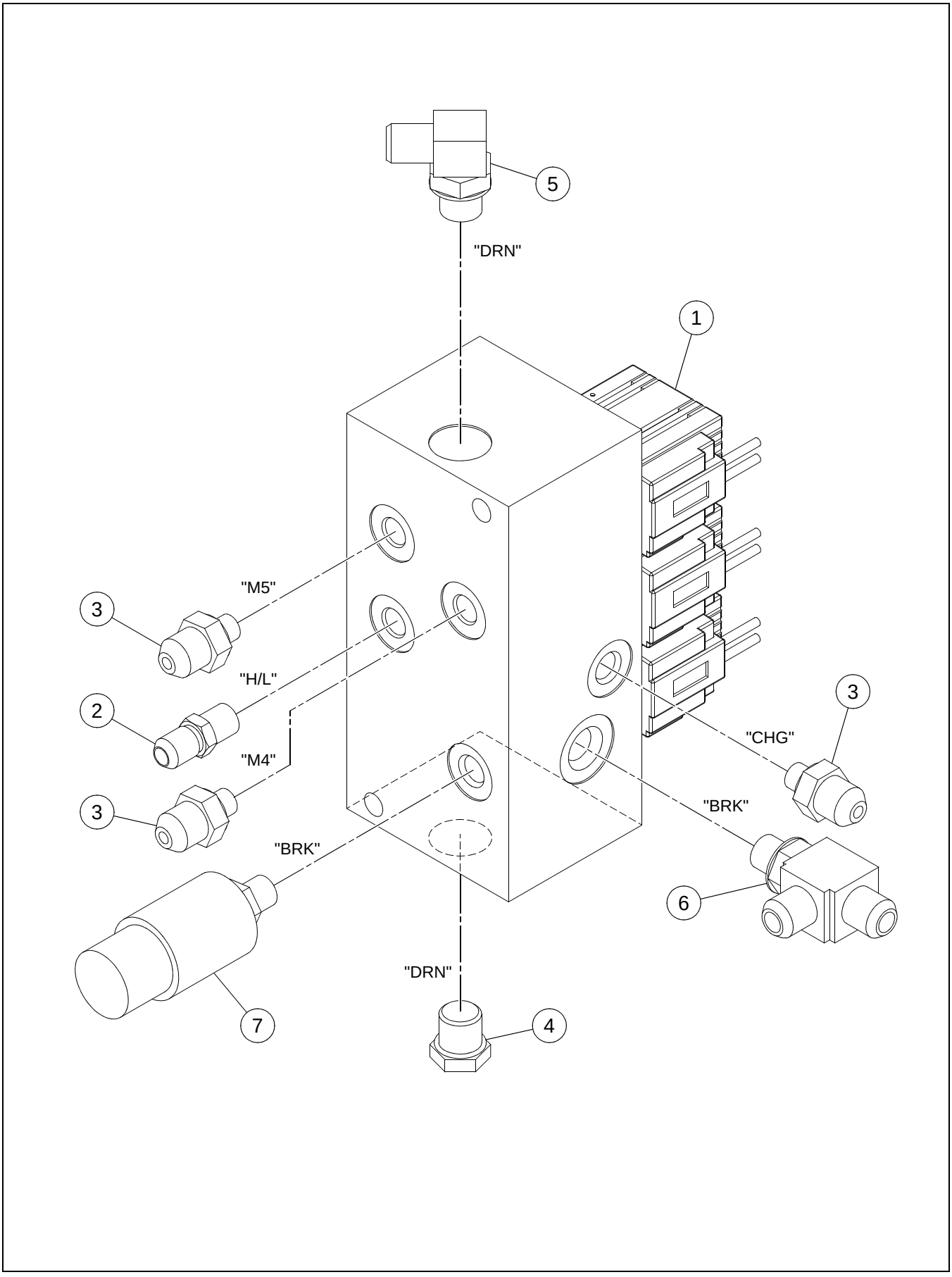

BRAKE/SHUNT TWO-SPEED MANIFOLD ASSEMBLY

BOM 13217047

ITEM	COMM. NO.	DESCRIPTION	QTY	DIMENSIONS/NOTES
1	**19287036**	**Brake/Shunt Two-Speed Manifold**	**1**	**See Breakdown B - 38.**
2	95365086	Adapter (Effective with S/N 176885)	1	
-	95323366	Plug (Prior to S/N 176885)	1	
3	95402806	Adapter, Straight	3	
4	95343596	Plug	1	
5	95329975	Adapter	1	
6	95188710	Run Tee	1	
7	59110312	Pressure Switch	1	

BRAKE/SHUNT TWO-SPEED MANIFOLD (13205133) - INTERNAL BREAKDOWN

Dwg 13205133/00

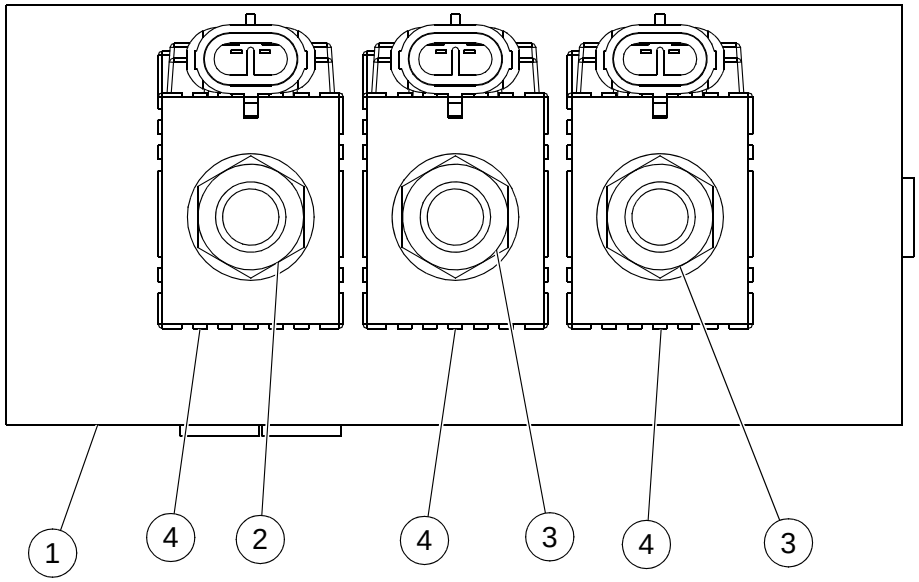

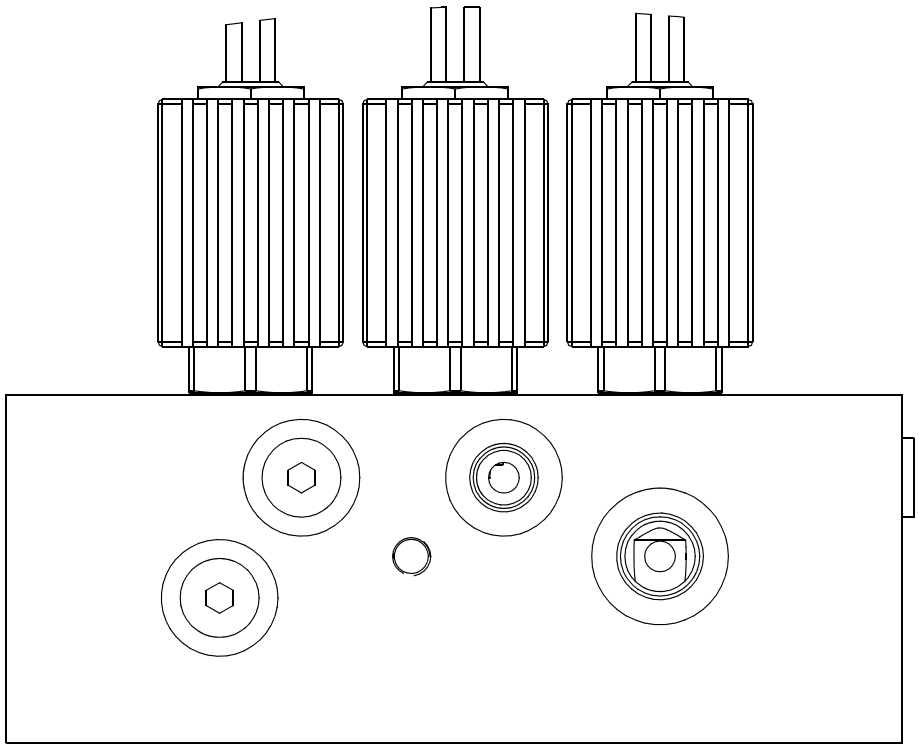

BRAKE/SHUNT TWO-SPEED MANIFOLD (13205133) - INTERNAL BREAKDOWN

BOM 13205133

ITEM	COMM. NO.	DESCRIPTION	QTY	DIMENSIONS/NOTES
1	19287036	Manifold	1	
2	19287051	Valve	1	
3	19287093	Valve	2	
4	19287101	Coil	3	

THERMAL BYPASS VALVE INSTALLATION

Dwg D13185855/03

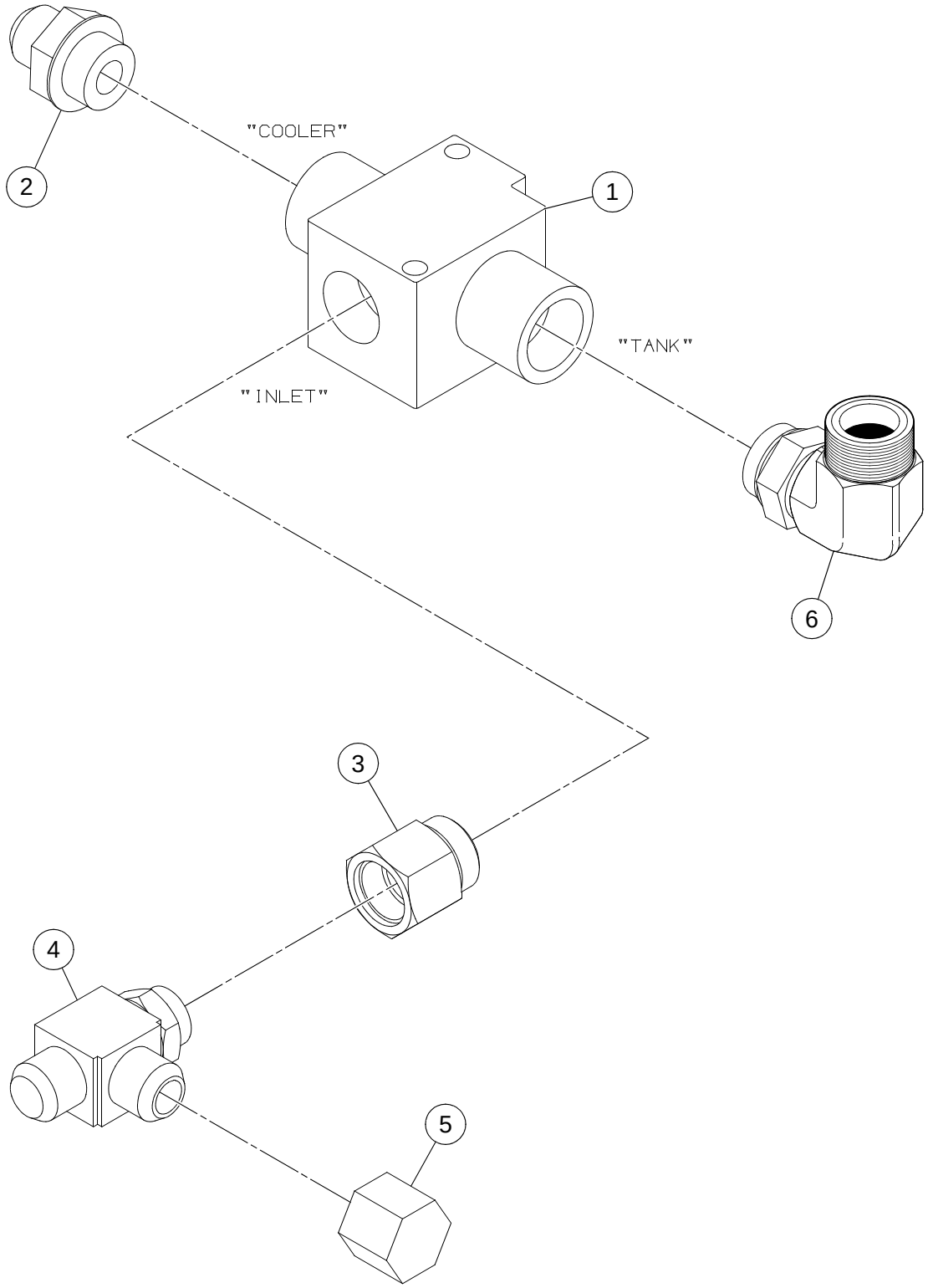

THERMAL BYPASS VALVE INSTALLATION

BOM 13162656

ITEM	COMM. NO.	DESCRIPTION	QTY	DIMENSIONS/NOTES
1	13205364	Thermal Bypass Valve	1	
2	95356978	Adapter	1	
3	59924472	Adapter, ORB Reducer	1	
4	95829263	Tee	1	
5	95387890	Cap	1	
6	95280194	Adapter	1	

RATCHET JACK (13209663) - INTERNAL BREAKDOWN

Dwg D13244496/01

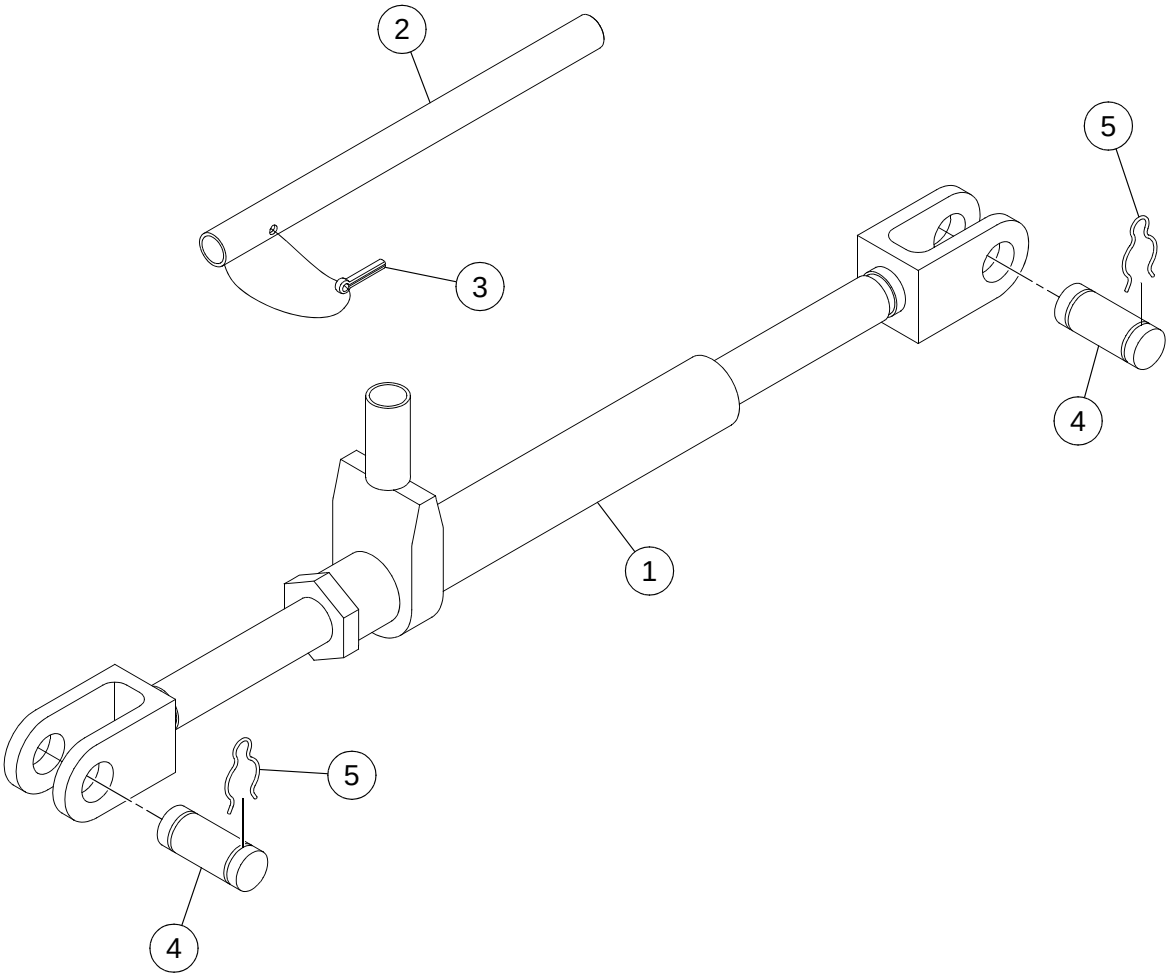

RATCHET JACK (13209663) - INTERNAL BREAKDOWN

BOM 13209663

ITEM	COMM. NO.	DESCRIPTION	QTY	DIMENSIONS/NOTES
1	13247978	Racket Jack	1	
2	13247937	Lever	1	12"
3	13247945	Cotter Pin	1	
4	13247952	Grooved Headless Pin	2	
5	13247960	Hair Pin Clip	4	

MAIN FRAME INSTALLATION - EU

Dwg 13216700/09

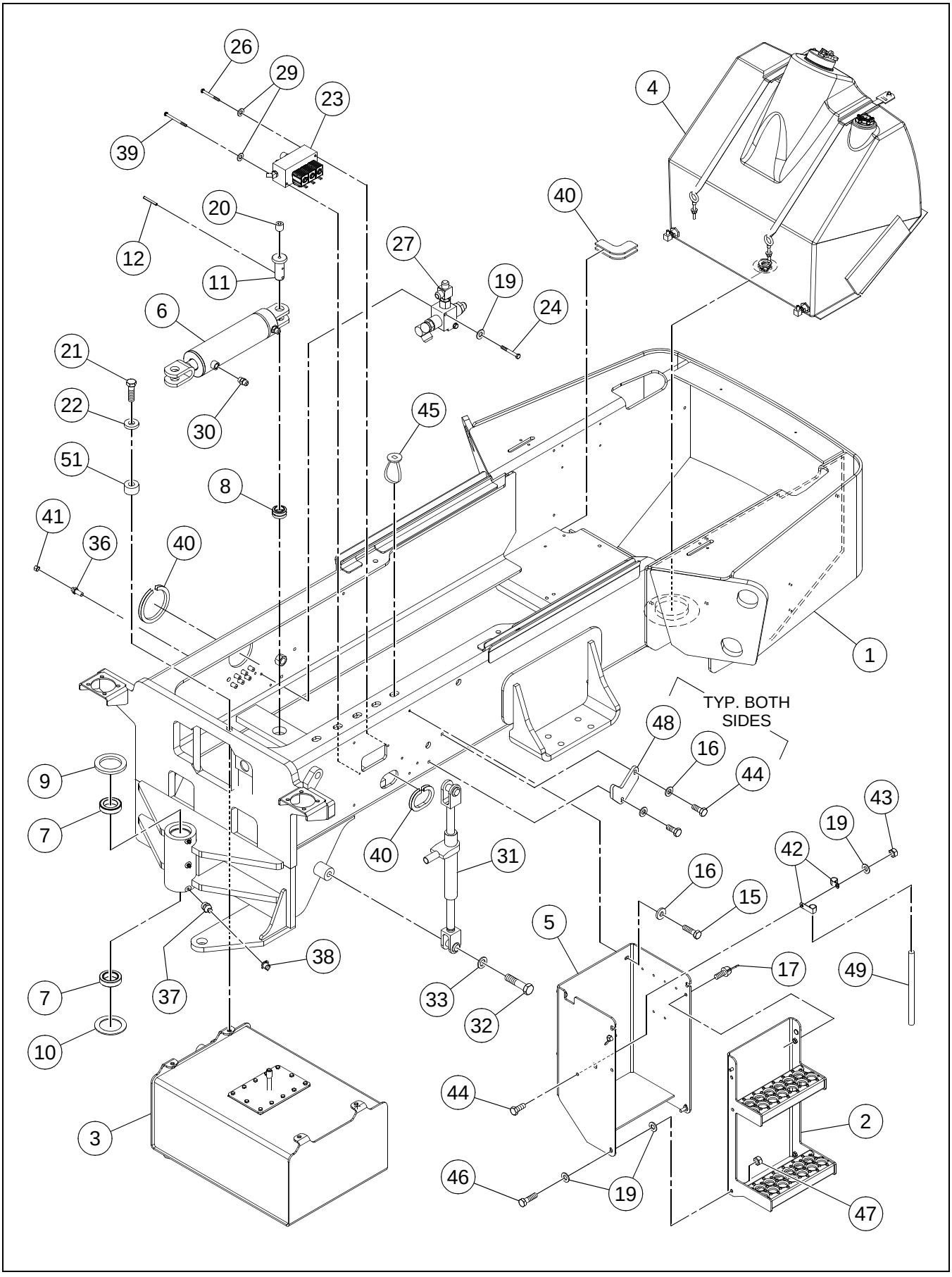

BOM 80817976

ITEM	COMM. NO.	DESCRIPTION	QTY	DIMENSIONS/NOTES
1	13504667	Main Frame	1	
2	13279385	Step Door	1	
3	**NSVA**	**Hydraulic Tank Assembly**	**1**	**See Page B - 46.**
4	**NSVA**	**Fuel Tank Installation**	**1**	**See Page B - 32.**
5	43824291	Battery Box	1	
6	13188198	Cylinder	1	
7	13187877	Angular Contact Bearing	2	
8	13209903	Steering Bearing	1	
9	13187968	Dust Seal	1	
10	13187976	Dust Seal	1	
11	59190975	Pivot Pin	1	
12	95098679	Rollpin	1	
15	96704309	HHCS, Fully Threaded, Zinc Plated	4	M10 x 1.5 x 35 Cl 8.8
16	96711833	Washer	8	M10
17	96702287	HHCS, Fully Threaded, Zinc Plated	2	M10 x 1.5 x 25 Cl 8.8
19	96741046	Flatwasher	7	M10 x 20.0
20	95049359	Plug	1	
21	96714910	HHCS	4	M12 x 1.75 x 60 Cl 10.9
22	96712237	Flatwasher	4	
23	**NSVA**	**Brake/Shunt and Tow Valve Assembly**	**1**	**See Page B - 48.**
24	96705272	HHCS, Zinc Plated	2	M10 x 1.5 x 80 Cl 8.8
26	96718978	HHCS, Zinc Plated	1	M8 x 1.25 x 80 Cl 8.8
27	**NSVA**	**Thermal Bypass Valve Installation**	**1**	**See Page B - 40.**
29	96741038	Flatwasher	2	M8 x 16.0
30	95303368	Adapter, Straight	2	
31	**13209663**	**Ratchet Jack**	**1**	**See Breakdown B - 42.**
32	96712716	HHCS, Zinc Plated	1	M24 x 3.0 x 100 Cl 8.8
33	96738646	Flatwasher, Zinc Plated	1	M24 Cl 200
34	96701958	HHCS, Fully Threaded, Zinc Plated (Not Shown)	2	M6 x 1 x 16 Cl 8.8
35	96741053	Flatwasher (Not Shown)	2	M6 x 12.0
36	59961821	Adapter	7	
37	95201547	Grease Fitting	3	
38	50270248	Cap	3	
39	96728464	HHCS, Zinc Plated	1	M8 x 1.25 x 100 Cl 8.8
40	50829647	Bulk Trim	4	
41	59924043	Cap	7	
42	95301867	Clamp	1	
43	96704614	Nut	1	M10 x 1.5
44	96702774	HHCS, Fully Threaded, Zinc Plated	5	M10 x 1.5 x 25 Cl 10.9
45	58820168	Wire Tie	A/R	
46	96704556	HHCS, Zinc Plated	2	M10 x 1.5 x 40 Cl 8.8
47	96704812	Hex Nut	2	
48	13275953	V-Block	2	
49		This item not used with this Assembly	1	
51	13396007	Spacer	4	

HYDRAULIC TANK ASSEMBLY - EU

Dwg 13166285/10

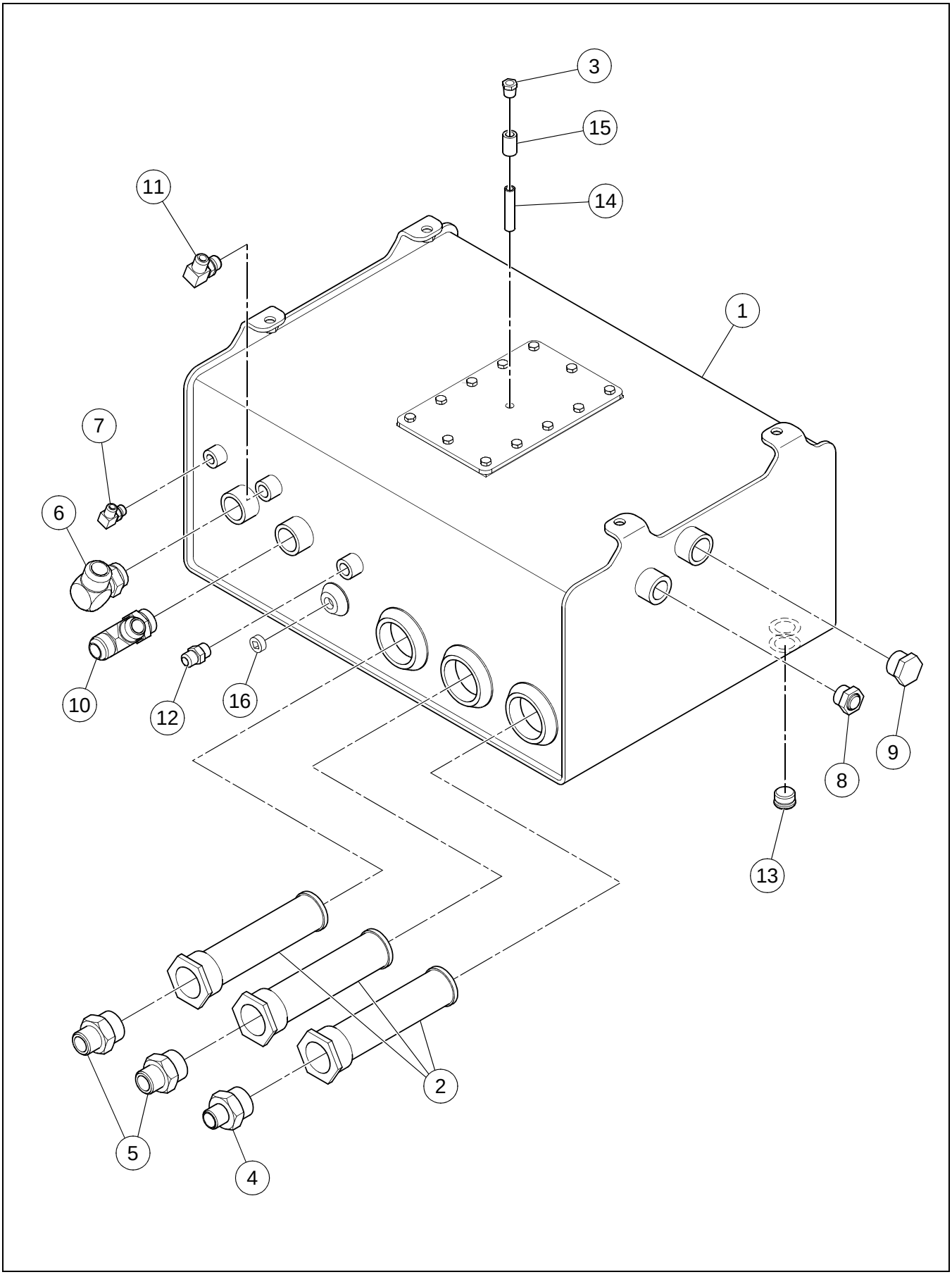

HYDRAULIC TANK ASSEMBLY - EU

BOM 13158480

ITEM	COMM. NO.	DESCRIPTION	QTY	DIMENSIONS/NOTES
1	13396015	Hydraulic Tank	1	
-	13396023	- Tank Bottom Wrapper	1	
-	13186473	- Tank Top Wrapper	1	
-	13305099	- Tank Cover Gasket	1	
-	59992081	- O-ring	2	
-	13185384	- Lid Clean Out	1	
-	96701883	- Hex Nut	4	M12 x 1.75
-	59995019	- O-ring	1	
-	95329215	- Flange	3	
-	59992099	- O-ring	3	
-	95403515	- Flange	1	
-	96702824	- HHCS, Fully Threaded, Zinc Plated	12	M8 x 1.25 x 20 Cl 8.8
-	13870720	- Drain Boss	1	
-	59431494	- O-ring	1	
-	43850320	- Magnetic Plug	1	
2	58855099	Tank Filter	3	
3	59093351	Breather Filtered Vent	1	
4	95279337	Adapter	1	
5	95316956	Adapter, Straight	2	
6	95280194	Adapter	1	
7	95329975	Adapter, 90°	1	
8	59277772	Sight Gauge	1	
9	95326955	Plug	1	
10	95488110	Adapter	1	
11	95303335	Adapter, 90°	1	
12	95303368	Adapter, Straight	1	
13		This item not used with this Assembly		
14	95048393	Nipple	1	
15	95011060	Pipe Coupling	1	
16	95043238	Pipe Plug	1	

BRAKE/SHUNT AND TOW VALVE ASSEMBLY

Dwg D13277413/00

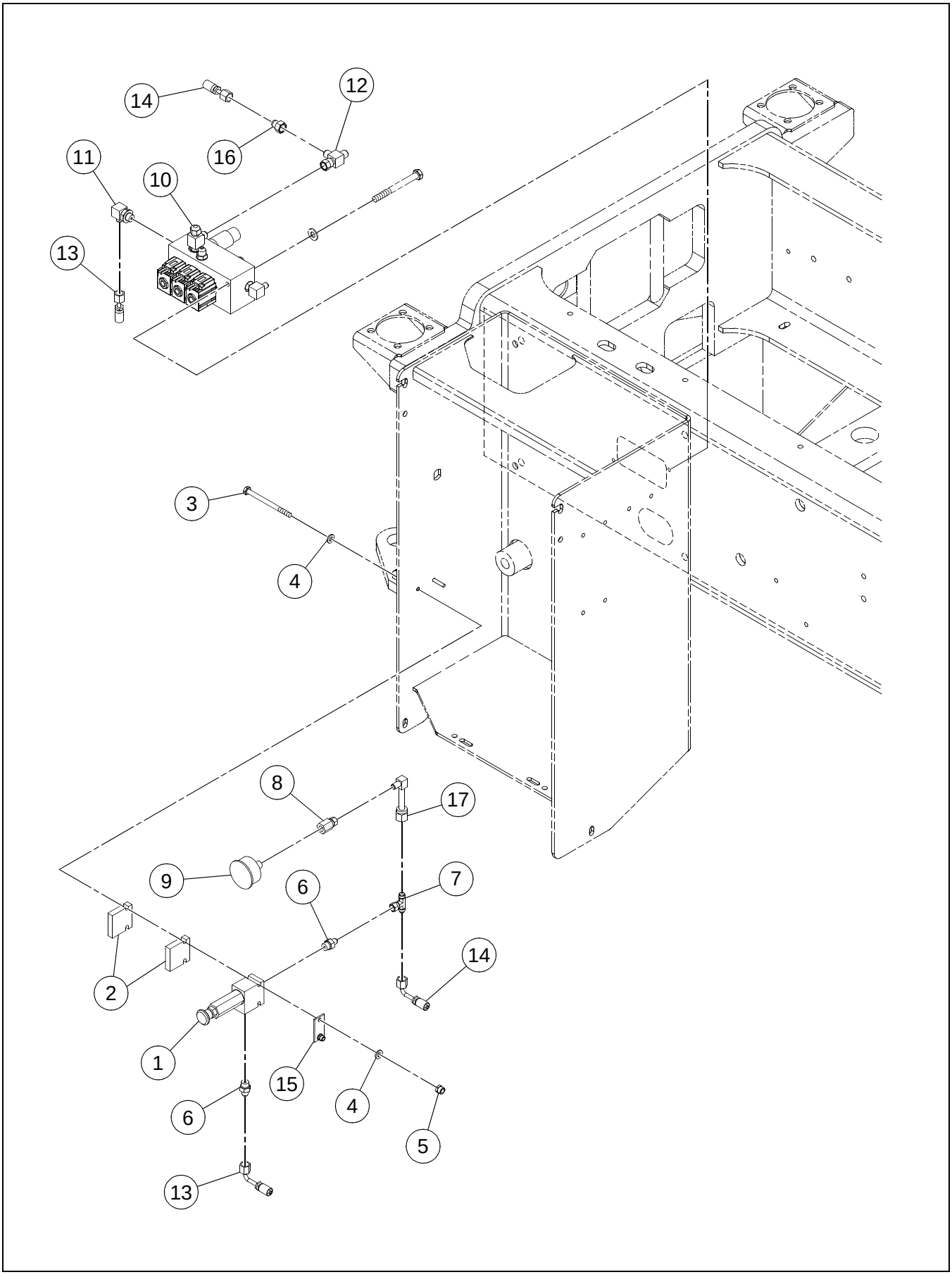

BRAKE/SHUNT AND TOW VALVE ASSEMBLY

BOM 80817984

ITEM	COMM. NO.	DESCRIPTION	QTY	DIMENSIONS/NOTES
1	13205513	Hand Pump	1	
2	13214812	Spacer Block	2	
3	96720156	HHCS, Zinc Plated	2	M6 x 1.0 x 80 Cl 8.8
4	96741053	Flatwasher	4	M6 x 12.0
5	96704598	Hex Locknut	2	M6
6	95371258	Adapter	2	
7	95649844	Adapter	1	
8	59665877	Adapter	1	
9	59197012	Gauge Dial Pressure	1	
10	**NSVA**	**Brake/Shunt Two Speed Valve Assembly**	**1**	**See Page B - 38.**
11	95365094	Adapter	1	
12	95415667	Swivel Tee	1	
13	59959080	Hose Assembly	1	
14	13225529	Hose Assembly	1	42.0"
15	13235320	Retaining Plate	1	
16	59742890	Reducer	1	
17	13281043	Elbow	1	

BOLT-ON SHELL INSTALLATION - SD-70D - OPTIONAL

Dwg D13271309/00

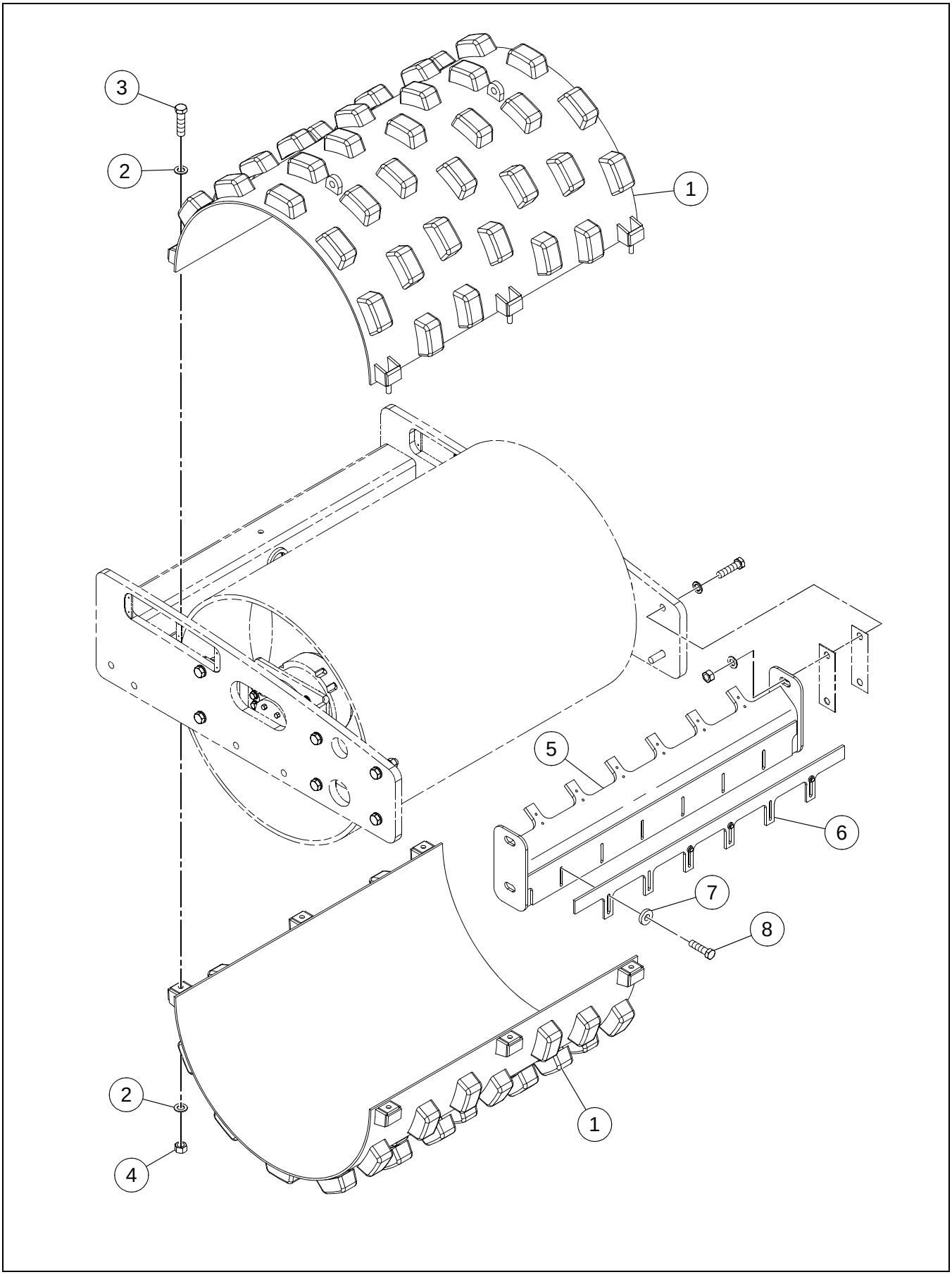

BOLT-ON SHELL INSTALLATION - SD-70D - OPTIONAL

BOM 13175336

ITEM	COMM. NO.	DESCRIPTION	QTY	DIMENSIONS/NOTES
1	59025270	Bolt-On Shell	1	
2	96738620	Flatwasher, Zinc Plated	12	M20 Hardened Cl 200
3	96704978	HHCS, Zinc Plated	6	M20 x 2.5 x 80 Cl 10.9
4	96720446	Hex Nut, Zinc Plated	6	M20 x 2.5 Cl 8
5	**NSVA**	**Bolt-On Shell Scraper Assembly - SD-70D - Optional**	**1**	**See Page B - 52.**
6	13235874	Scraper	1	
7	96712237	Flatwasher, Zinc Plated	4	M12 Hardened Cl 10
8	96702329	HHCS, Fully Threaded, Zinc Plated	4	M12 x 1.75 x 35 Cl 8.8

BOLT-ON SHELL SCRAPER ASSEMBLY - SD-70D - OPTIONAL

Dwg D13271010/01

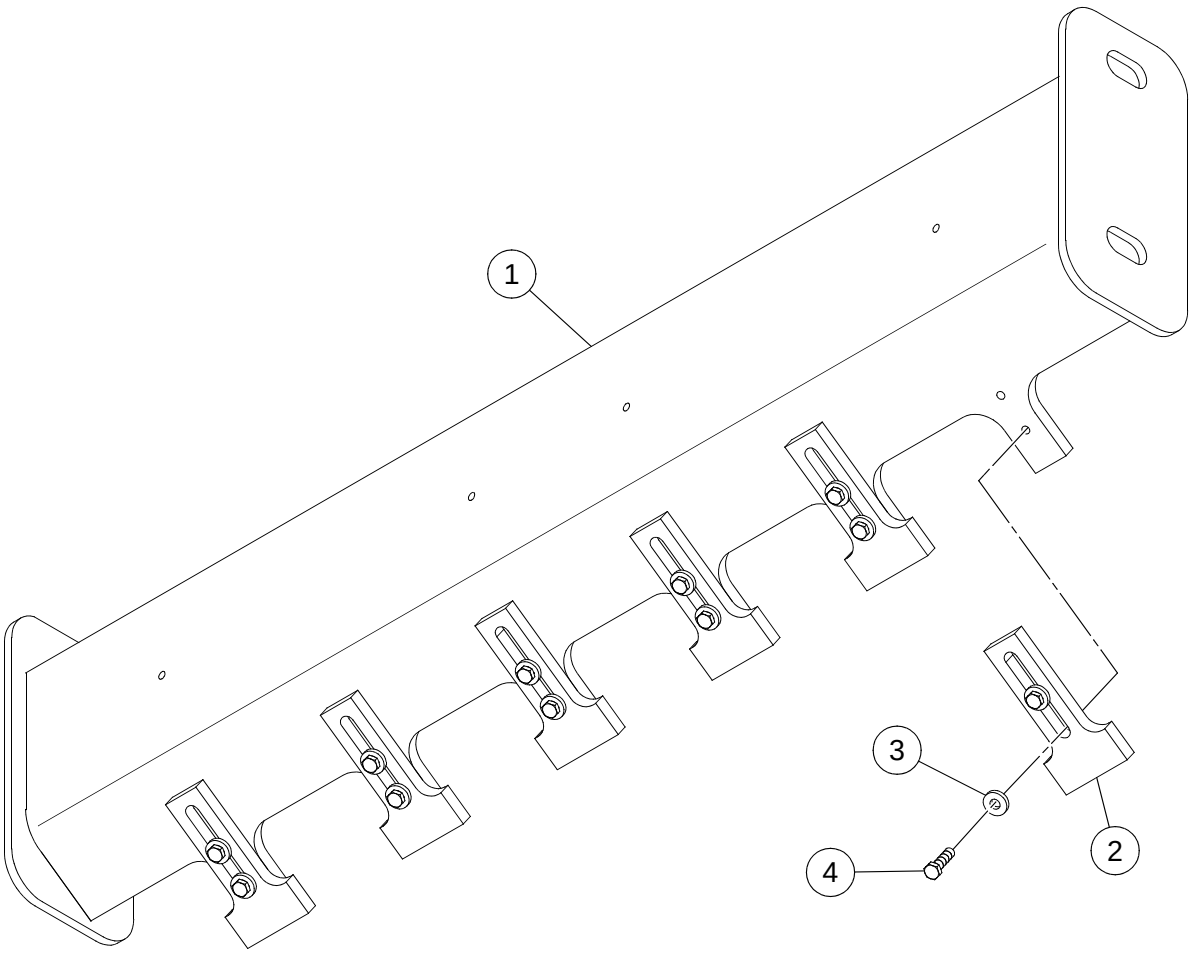

BOLT-ON SHELL SCRAPER ASSEMBLY - SD-70D - OPTIONAL

BOM 13176052

ITEM	COMM. NO.	DESCRIPTION	QTY	DIMENSIONS/NOTES
1	13323936	Scraper	1	
2	13438023	Scraper Tooth	6	
3	96712237	Flatwasher, Zinc Plated	12	M12 Hardened Cl 10
4	96715081	Hex Head Bolt, Zinc Plated	12	M12 x 1.75 x 45 Cl 8.8

BOLT-ON SHELL INSTALLATION - SD-77DX - OPTIONAL

Dwg D13271275/00

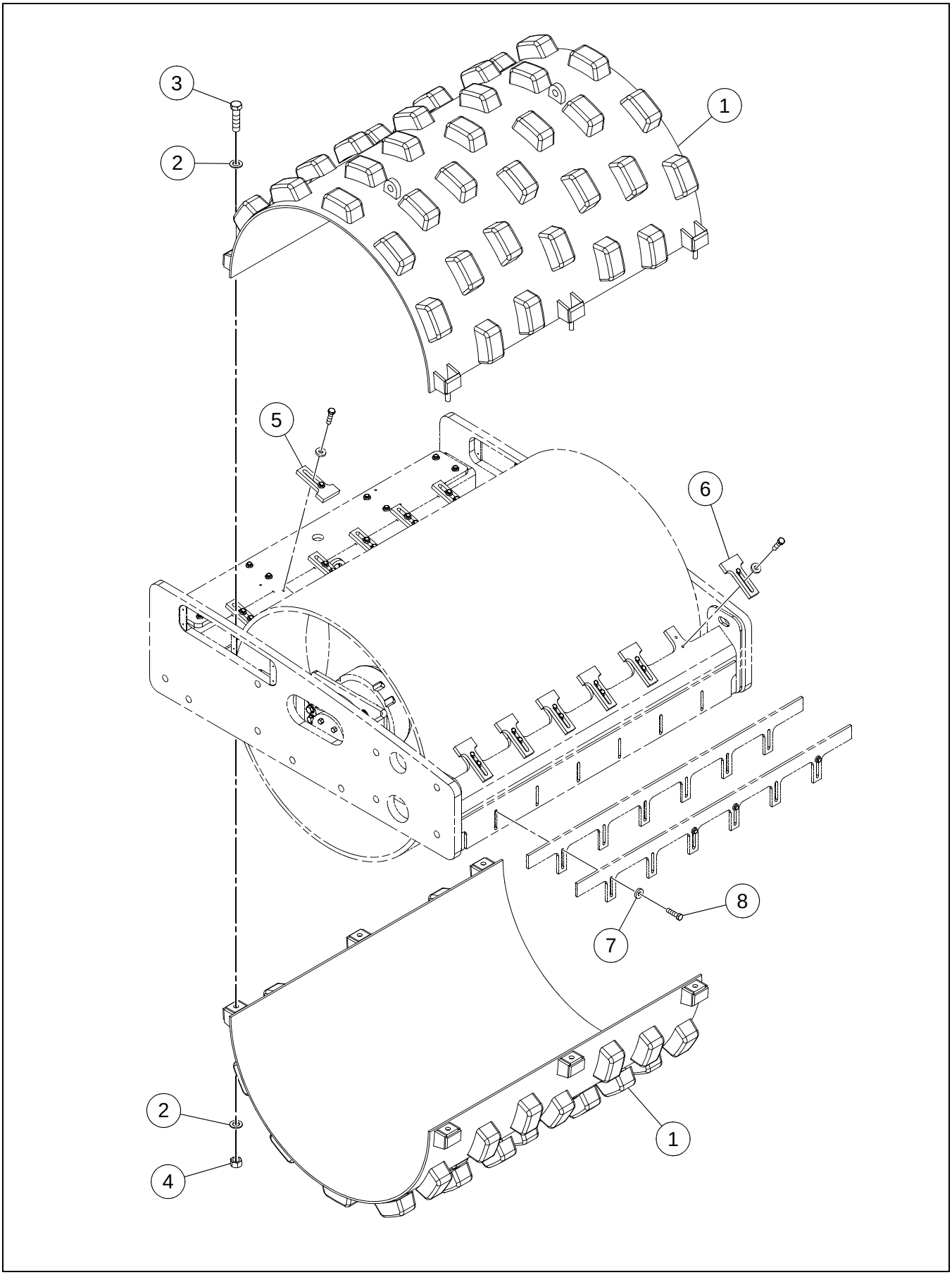

BOLT-ON SHELL INSTALLATION - SD-77DX - OPTIONAL

BOM 18009290

ITEM	COMM. NO.	DESCRIPTION	QTY	DIMENSIONS/NOTES
1	59025270	Bolt-On Shell	1	
2	96738620	Flatwasher, Zinc Plated	12	M20 Hardened Cl 200
4	96720446	Hex Nut, Zinc Plated	6	M20 x 2.5 Cl 8
5		This Item Not Used With This Assembly		
6	13438023	Scraper Tooth	12	
7	96712237	Flatwasher, Zinc Plated	4	M12 Hardened Cl 10
8	96715081	Hex Head Bolt, Zinc Plated (For Scraper Storage)	4	M12 x 1.75 x 45 Cl 8.8

Dwg D13270921/00

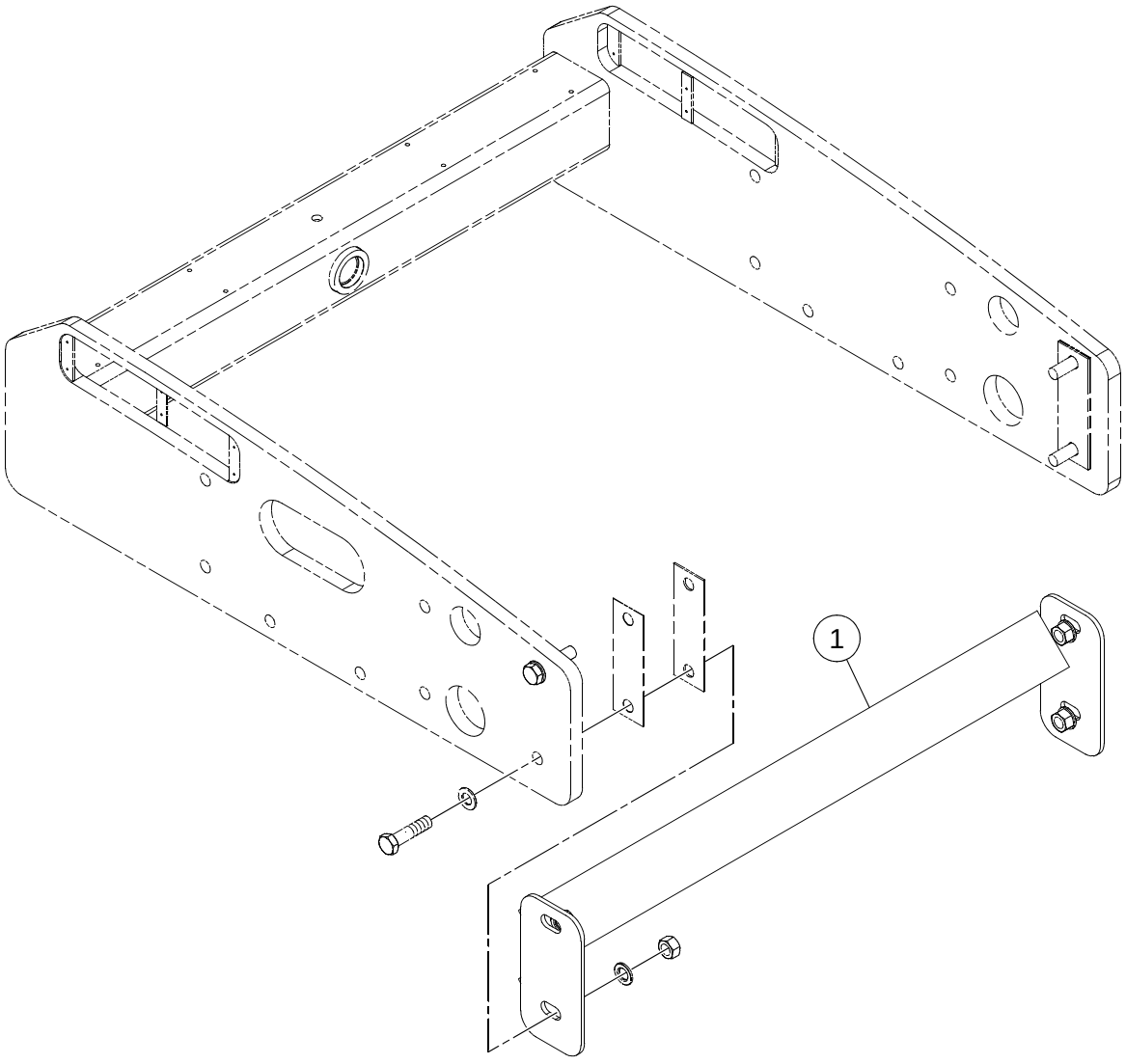

BOM 13175237

ITEM	COMM. NO.	DESCRIPTION	QTY	DIMENSIONS/NOTES
1	13212832	Scraper	1	

Dwg D13271002/01

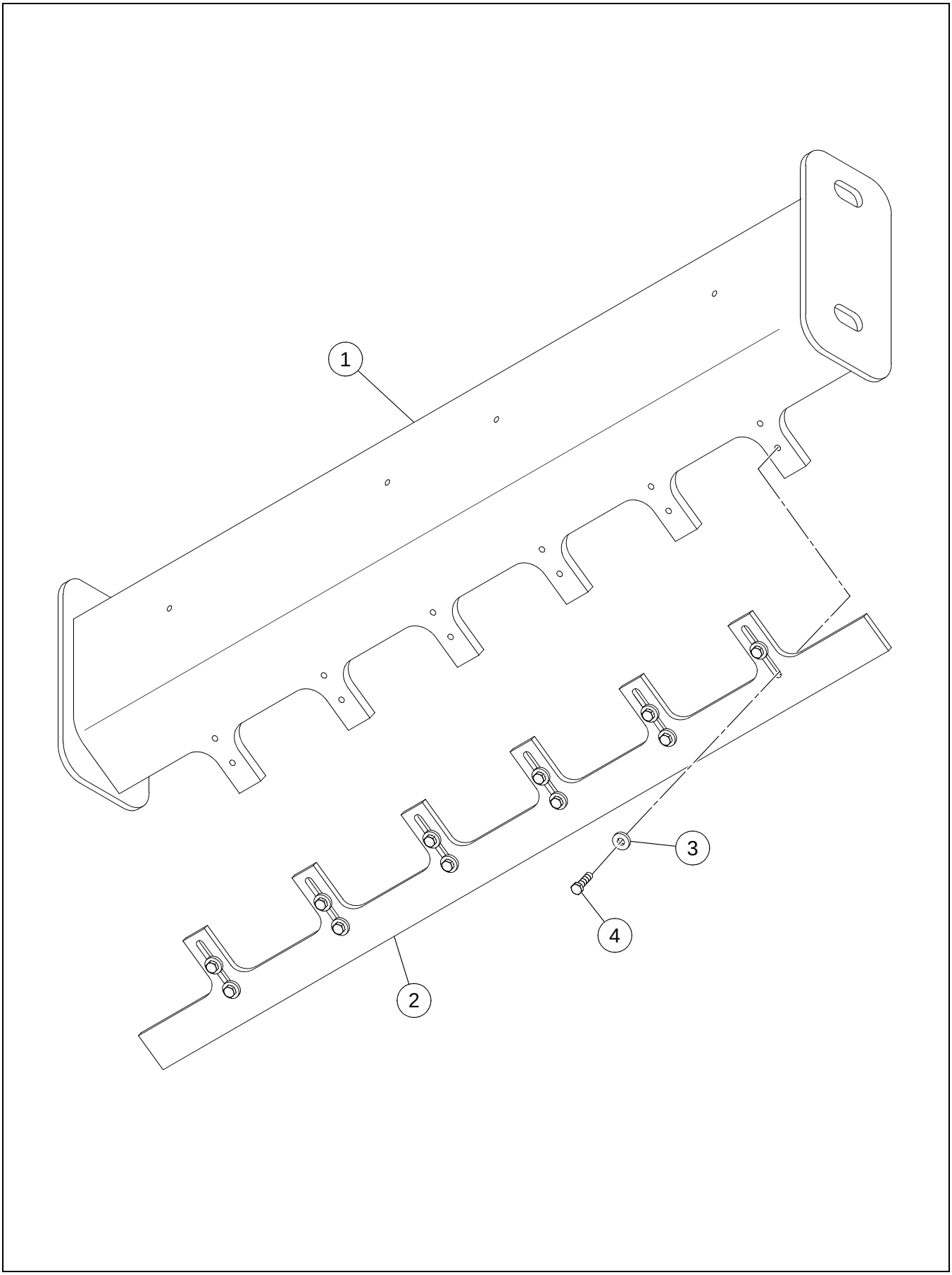

BOM 13175666, 13175492

ITEM	COMM. NO.	DESCRIPTION	QTY	DIMENSIONS/NOTES
1	13323936	Scraper	1	
2	13235874	Scraper Bar	1	
3	96712237	Flatwasher, Zinc Plated	12	M12 Hardened Cl 10
4	96715081	Hex Head Bolt, Zinc Plated	12	M12 x 1.75 x 45 Cl 8.8

Dwg D13271010/01

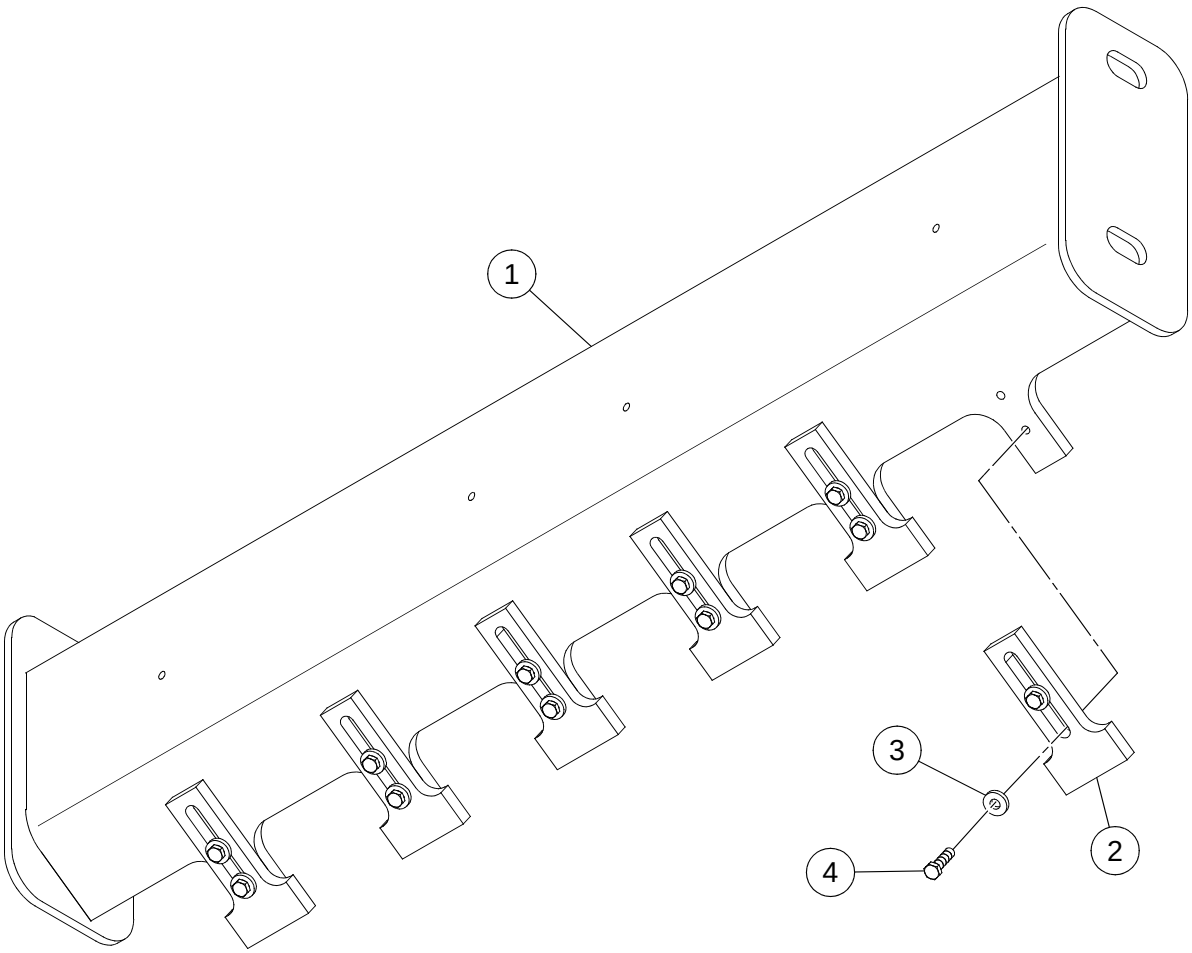

BOM 13176052

ITEM	COMM. NO.	DESCRIPTION	QTY	DIMENSIONS/NOTES
1	13323936	Scraper	1	
2	13438023	Scraper Tooth	6	
3	96712237	Flatwasher, Zinc Plated	12	M12 Hardened Cl 10
4	96715081	Hex Head Bolt, Zinc Plated	12	M12 x 1.75 x 45 Cl 8.8

Dwg 13519764/00

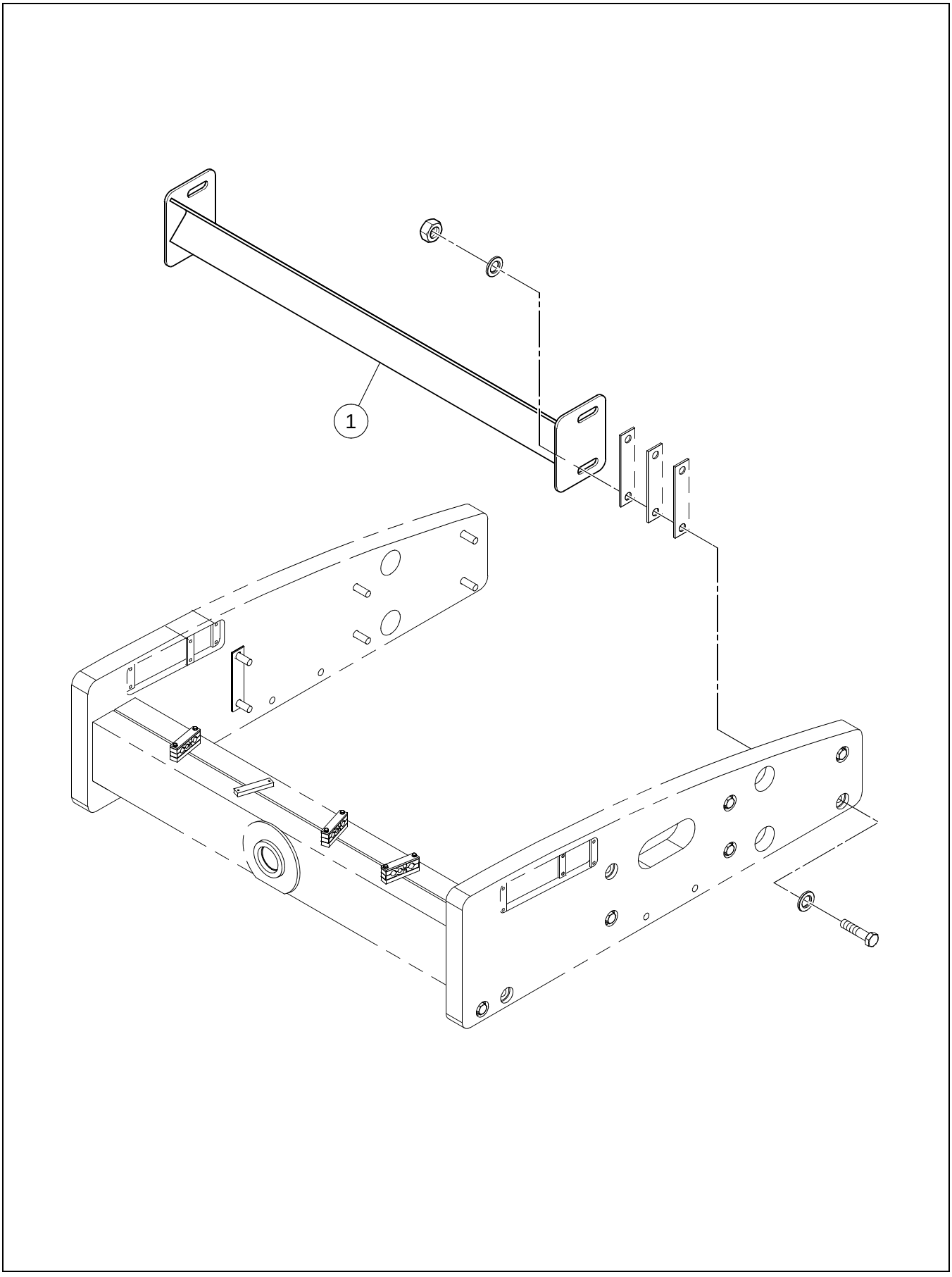

BOM 13528211

ITEM	COMM. NO.	DESCRIPTION	QTY	DIMENSIONS/NOTES
1	13416458	Scraper	1	

INSIDE SCRAPER INSTALLATION - SD-70D/SD-77DX - OPTIONAL

Dwg D13271028/00

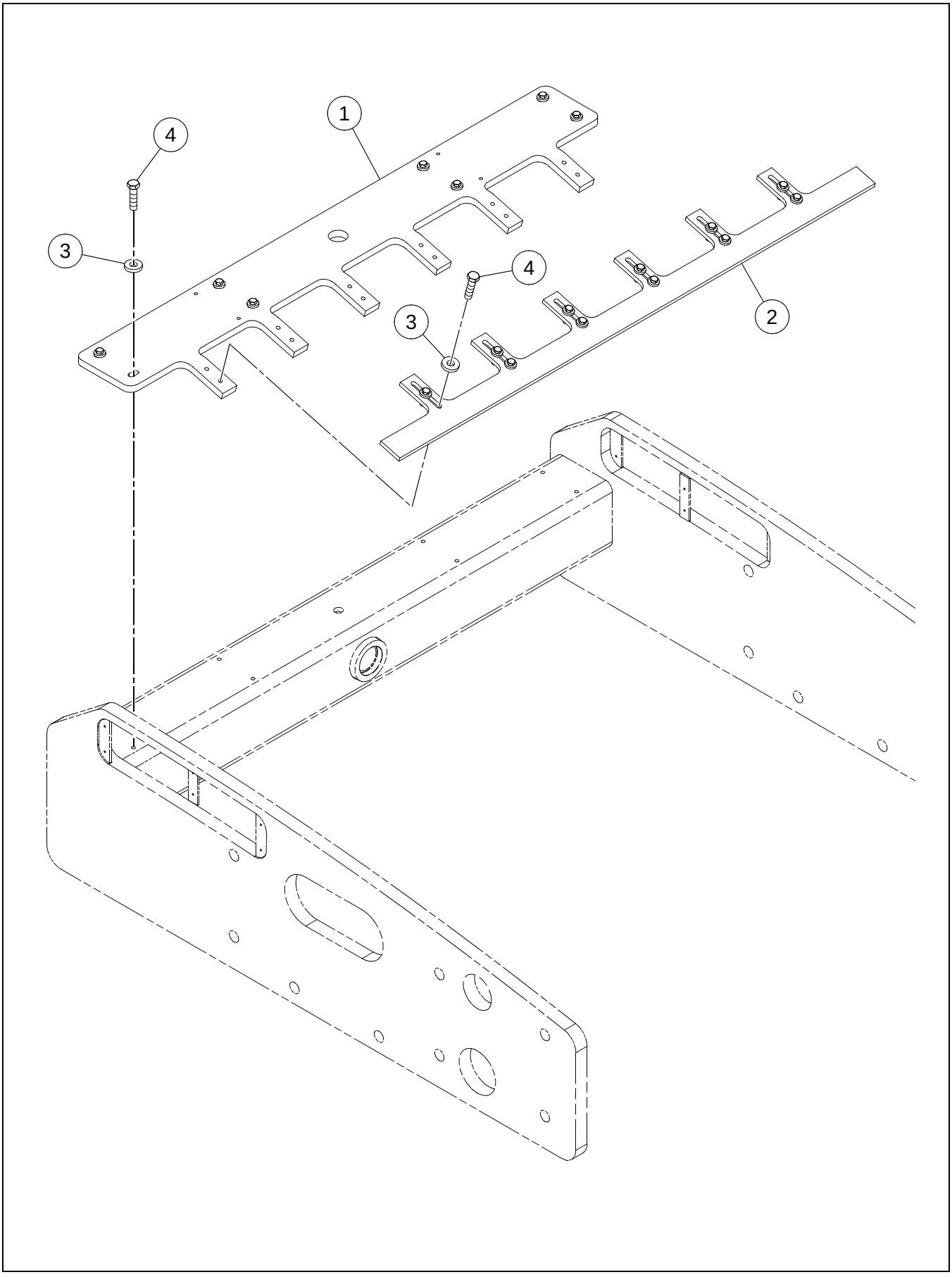

INSIDE SCRAPER INSTALLATION - SD-70D/SD-77DX - OPTIONAL

BOM 13271838, 13213087

ITEM	COMM. NO.	DESCRIPTION	QTY	DIMENSIONS/NOTES
1	13279922	Scraper Bar	1	
2	13235874	Scraper Bar	1	
3	96712237	Flatwasher, Zinc Plated	20	M12 Hardened Cl 10
4	96715081	Hex Head Bolt, Zinc Plated	20	M12 x 1.75 x 45 Cl 8.8

INSIDE SCRAPER INSTALLATION - SD-77F - OPTIONAL

Dwg D13271051/00

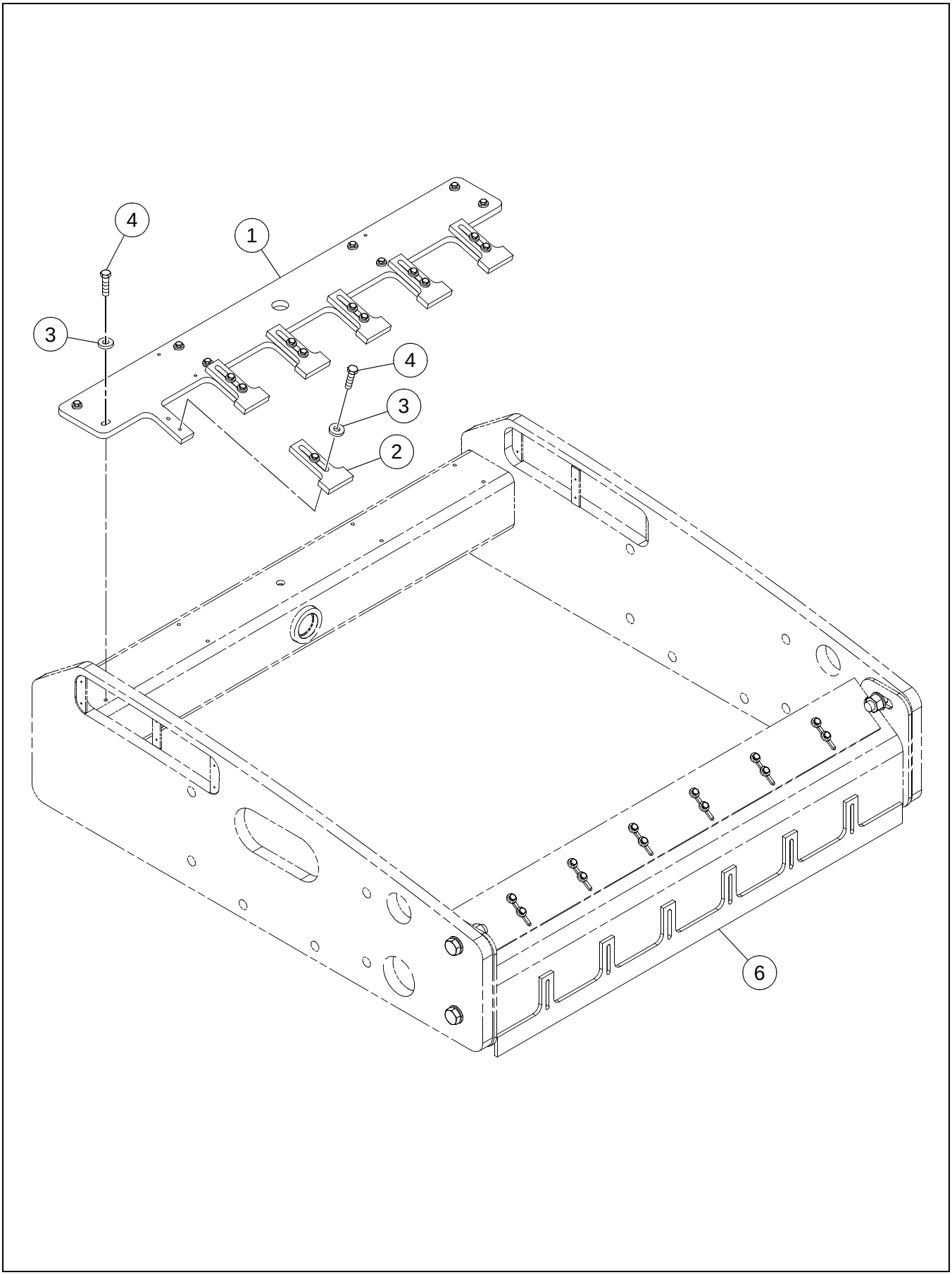

INSIDE SCRAPER INSTALLATION - SD-77F - OPTIONAL

BOM 13176334, 13271853, 18009308

ITEM	COMM. NO.	DESCRIPTION	QTY	DIMENSIONS/NOTES
1	13279922	Scraper Bar	1	
2	13438023	Scraper Tooth	6	
3	96712237	Flatwasher, Zinc Plated	20	M12 Hardened Cl 10
4	96715081	Hex Head Bolt, Zinc Plated	20	M12 x 1.75 x 45 Cl 8.8
6	13235874	Scraper Bar (For SD-70/77D Bolt-On Shell)	1	

DRUM DRIVE W/BRAKE INSTALLATION - SD-77DX - OPTIONAL

Dwg D13213392/00

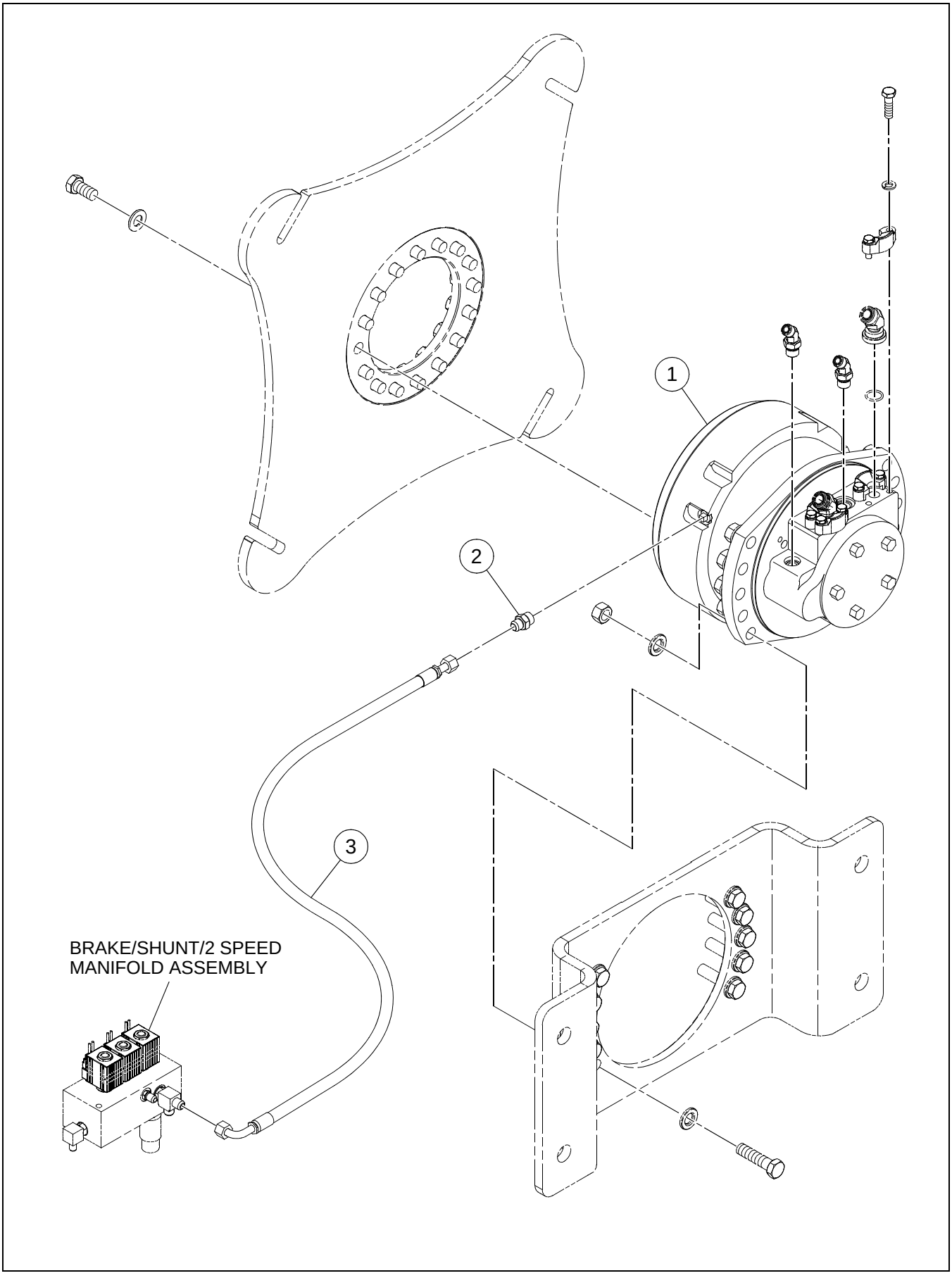

DRUM DRIVE W/BRAKE INSTALLATION - SD-77DX - OPTIONAL

BOM 13175328

ITEM	COMM. NO.	DESCRIPTION	QTY	DIMENSIONS/NOTES
1	**13179122**	**Drum Drive Motor w/Brake**	**1**	**See Breakdown B - 24.**
2	95372173	Adapter	1	
3	13207691	Hose Assembly	1	126.00"

FUEL STRAINER INSTALLATION - OPTIONAL

Dwg 13235015/00

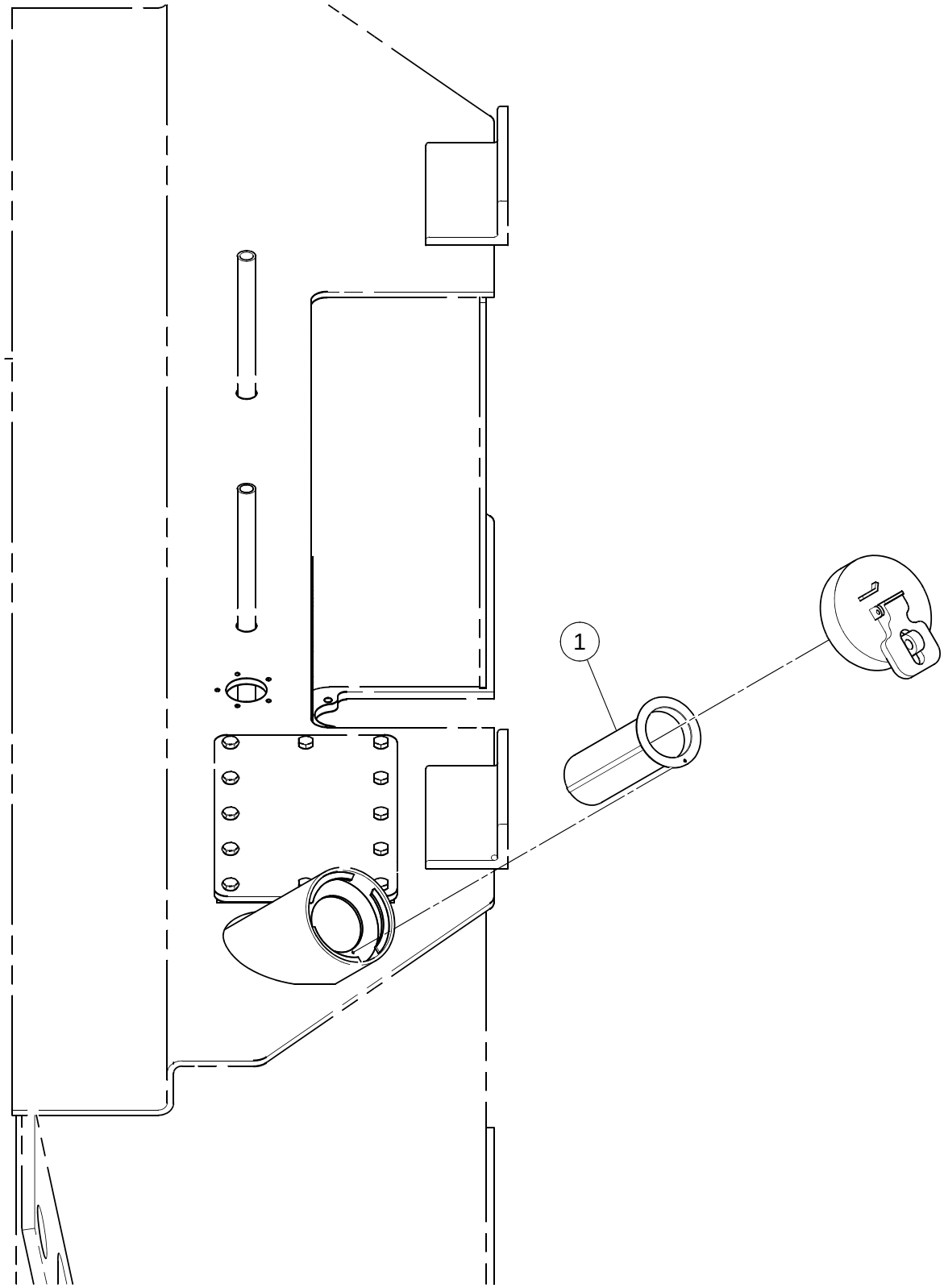

FUEL STRAINER INSTALLATION - OPTIONAL

BOM 13235015

ITEM	COMM. NO.	DESCRIPTION	QTY	DIMENSIONS/NOTES
1	13235007	Fuel Strainer	1	
2	95887303	Self-tapping Screw (Not Shown)	1	#4

Dwg D13271069/00

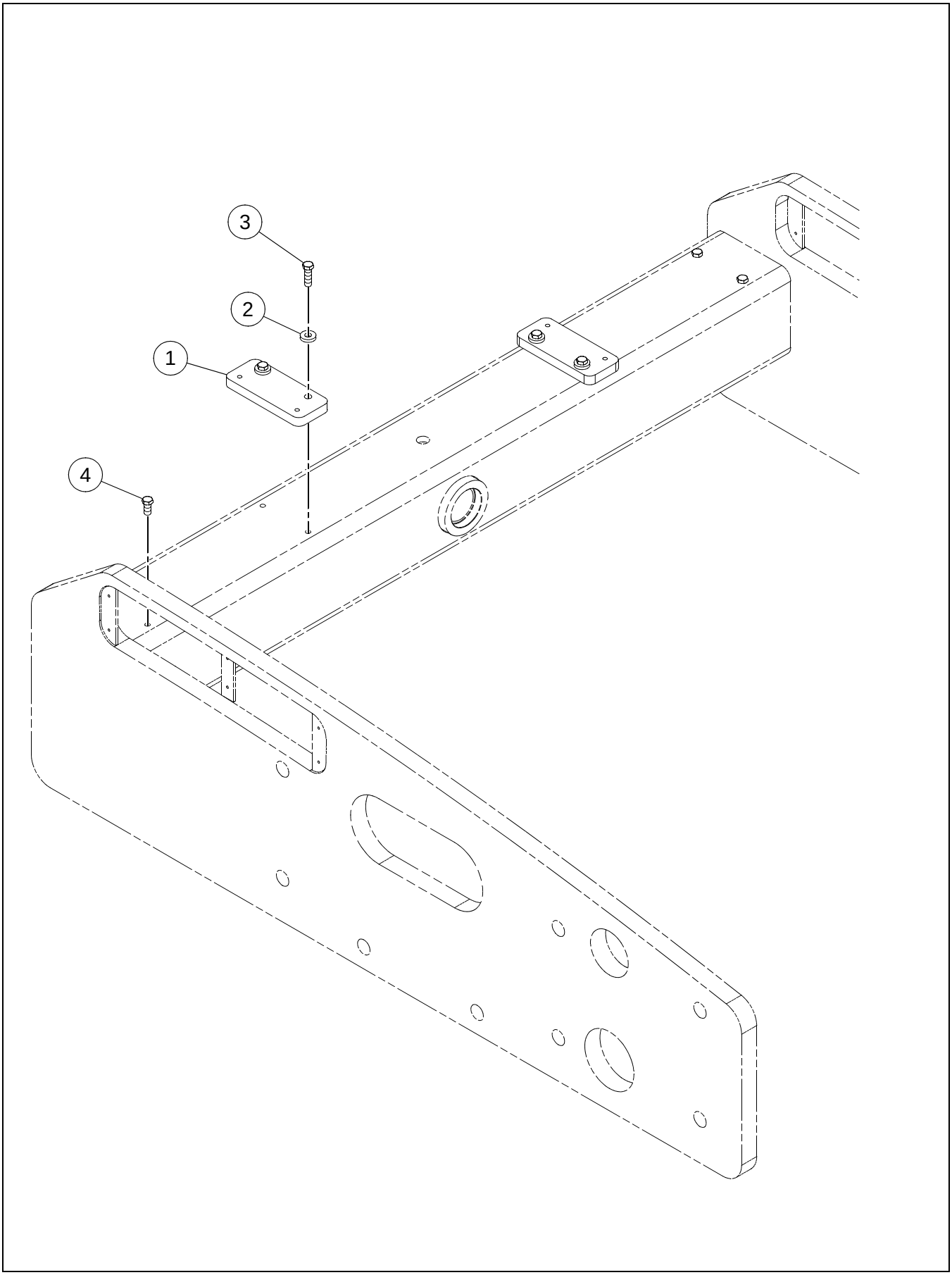

FRONT FRAME ASSEMBLY - SD-70D/70F

BOM 13236062

ITEM	COMM. NO.	DESCRIPTION	QTY	DIMENSIONS/NOTES
1	13236054	Hose Mounting Plate	2	
2	96712237	Flatwasher, Zinc Plated	4	M12 Hardened Cl 10
3	96702444	HHCS, Fully Threaded, Zinc Plated	4	M12 x 1.75 x 40 Cl 8.8
4	96701495	HHCS, Fully Threaded, Zinc Plated	4	M12 x 1.75 x 25 Cl 8.8

Always use Manufacturer Replacement parts!*

Section C - ENGINE

ENGINE INSTALLATION

Dwg D13238514/02

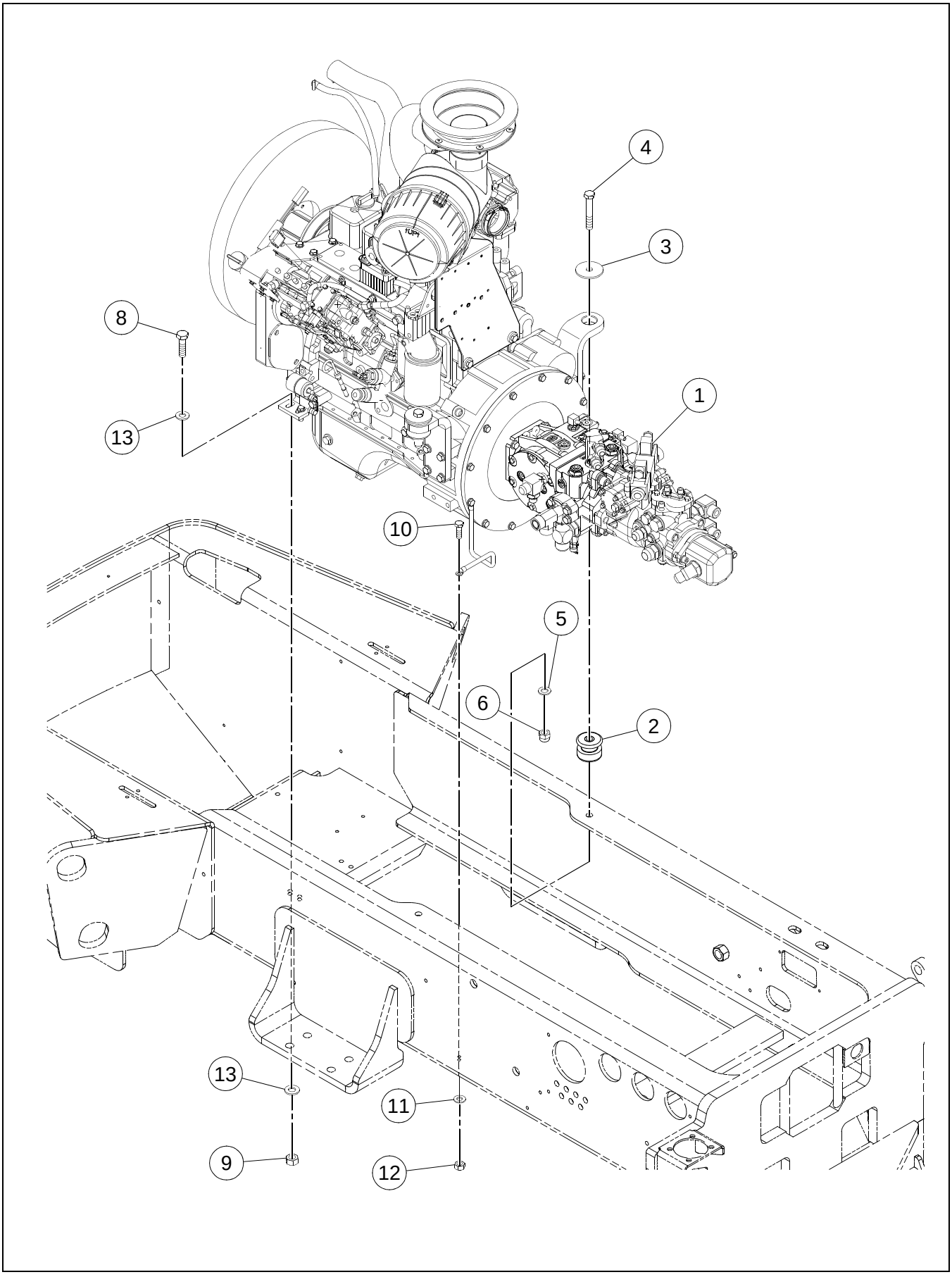

BOM 13175054

ITEM	COMM. NO.	DESCRIPTION	QTY	DIMENSIONS/NOTES
1	**NSVA**	**Engine Assembly**	**1**	**See Page C - 4.**
2	59097162	Engine Mount	2	
3	58879768	Snubbing Washer	2	
4	96704952	HHCS, Fully Threaded, Zinc Plated	2	16 x 2.0 x 100 Cl 8.8
5	96738612	Flatwasher, Zinc Plated	2	M16 Hardened Cl 200
6	96704630	Stop Nut, Zinc Plated	2	M16 x 2.0 Cl 8
8	96704556	HHCS, Fully Threaded, Zinc Plated	4	M10 x 1.5 x 40 Cl 8.8
9	96704812	Hex Nut, Zinc Plated	4	M10 x 1.5 Cl 8
10	96702659	HHCS, Fully Threaded, Zinc Plated	1	M8 x 1.25 x 25 Cl 8.8
11	96741038	Flatwasher	5	M8 x 1.25 Cl 200
12	96701370	Nut, Zinc Plated	1	M8 x 1.25 Cl 8
13	96711833	Flatwasher, Zinc Plated	8	M10 Cl 10

ENGINE ASSEMBLY - SHEET 1 OF 2

Dwg 13238332/0p/01

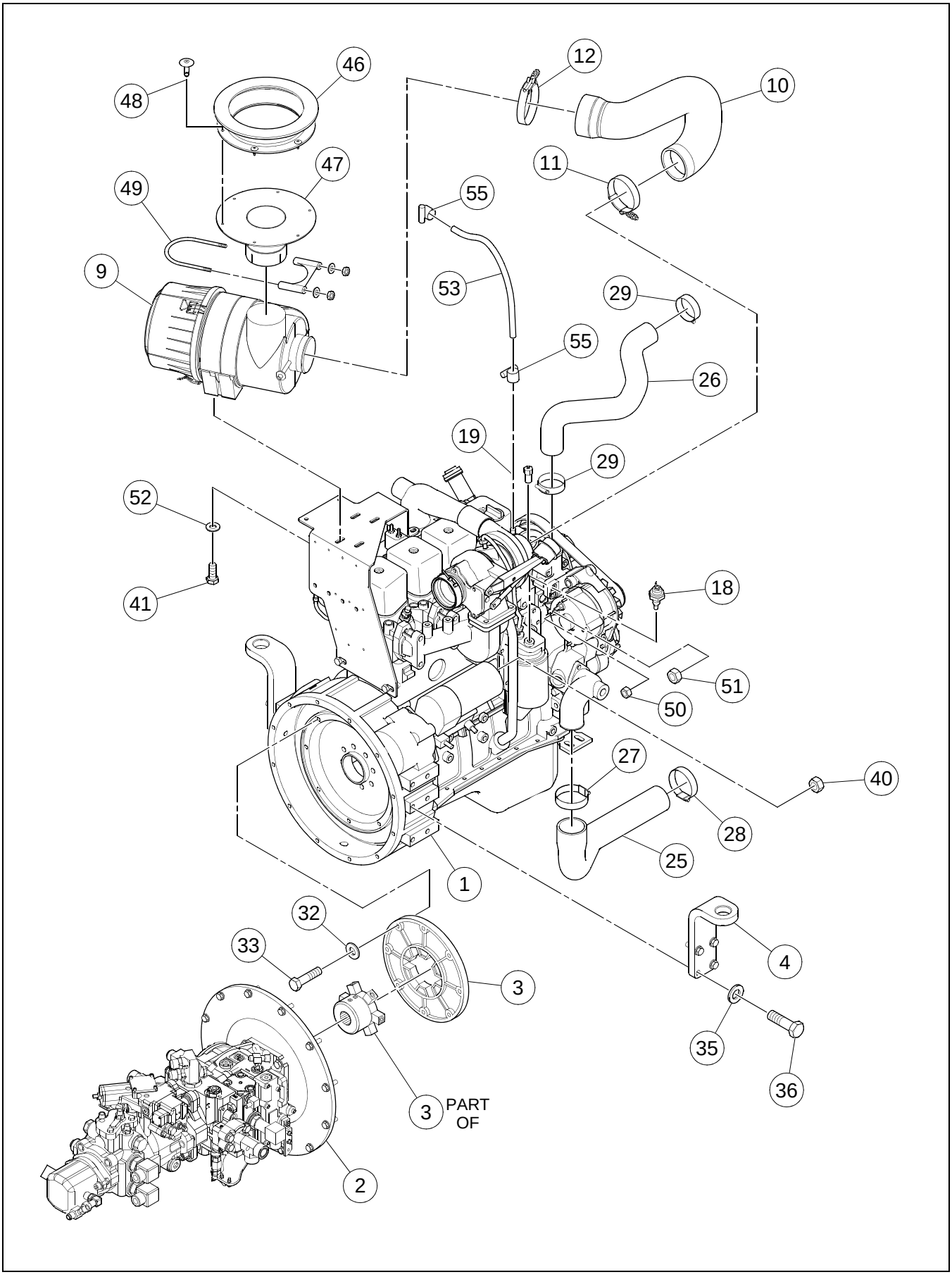

ENGINE ASSEMBLY - SHEET 1 OF 2

BOM 13251962

ITEM	COMM. NO.	DESCRIPTION	QTY	DIMENSIONS/NOTES
1	13845136	Engine	1	
-	13284716	- Engine Oil Filter	1	
-	13064282	- Pre-fuel Filter	1	
-	13360730	- Water/Fuel Separator Filter	1	
-	13429030	- Fan Belt	1	
-	13852256	- Alternator	1	
-	43830728	- Starting Motor	1	12 V
-	43830736	- ARC Starter	1	
2	**NSVA**	**Pump Stack Assembly**	**1**	**See Page C - 8.**
3	59286336	Drive Coupling	1	
4	13213947	Rear Engine Mount	2	
9	13299946	Air Cleaner	1	
-	13255443	- Air Cleaner Primary Filter Element	1	
-	13255450	- Air Cleaner Safety Filter Element	1	
-	54415393	- Cover	1	
-	35393677	- Dust Ejector Valve	1	
-	35393669	- Clip	3	
10	13188347	Air Intake Hose	1	
11	54680087	T-bolt Spring Clamp	1	
12	54680103	T-bolt Spring Clamp	1	
18	13491691	Oil Pressure Switch	1	
19	59816322	Temperature Sender	1	
25	13251707	Lower Radiator Hose	1	
26	13168851	Upper Radiator Hose	1	
27	95286266	Hose Clamp	1	
28	95278008	Hose Clamp	1	
29	95220893	Hose Clamp	2	
32	96741046	Flatwasher, Zinc Plated	15	M10 Cl 200
33	95919254	HHCS, Zinc Plated	8	3/8 x 16 x 1.50 Grd 8
35	96738596	Flatwasher, Zinc Plated	10	M12 Hardened Cl 200
36	96702444	HHCS, Fully Threaded, Zinc Plated	10	M12 x 1.75 x 40 Cl 8.8
40	96704812	Hex Nut, Zinc Plated	1	M10 x 1.5 Cl 8
41	96702824	HHCS, Fully Threaded, Zinc Plated	4	M8 x 1.25 x 20 Cl 8.8
46	13167499	Air Intake Bellows	1	
47	13274618	Extension Tube	1	
48	13212501	Rivet Tree	6	
49	59344176	U-bolt Clamp	1	
50	96705132	Hex Nut, Zinc Plated	3	M5 x 0.08 Cl 8
51	96701370	Nut, Zinc Plated	1	M8 x 1.25 Cl 8
52	96741038	Flatwasher	4	M8 x 1.25 Cl 200
53	59827261	Hose Assembly	1	16.5”
55	95302709	Hose Clamp	2	
58	18007690	Injector Bracket (Not Shown)	1	

ENGINE ASSEMBLY - SHEET 2 OF 2

Dwg 13238332/0p/02

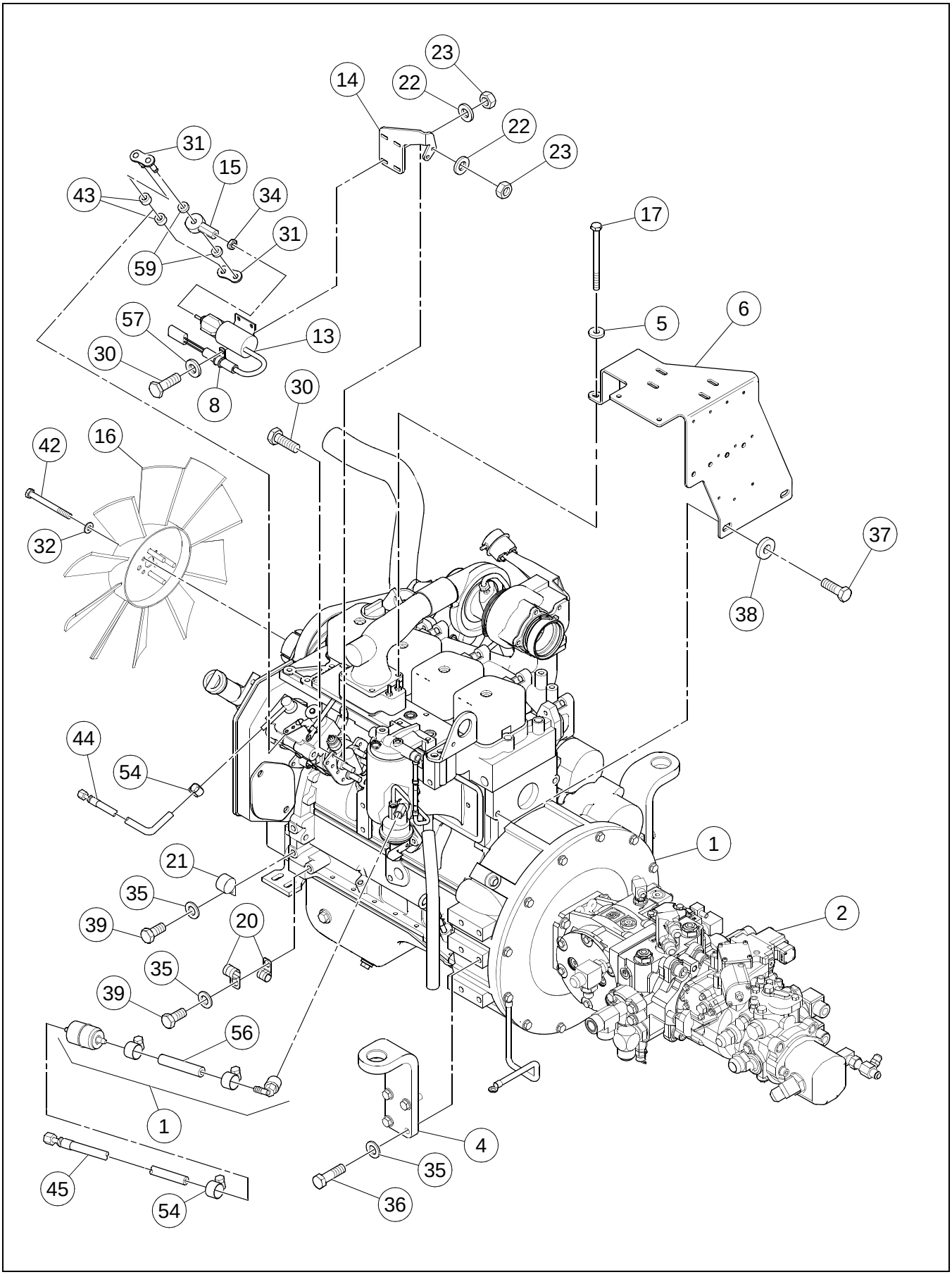

ENGINE ASSEMBLY - SHEET 2 OF 2

BOM 13251962

ITEM	COMM. NO.	DESCRIPTION	QTY	DIMENSIONS/NOTES
1	13319264	Engine	1	4BT3.9-C95
-	13284716	- Engine Oil Filter	1	
-	13064282	- Pre-fuel Filter	1	
-	13360730	- Water/Fuel Separator Filter	1	
-	13429030	- Fan Belt	1	
-	54726948	- Alternator	1	
-	13360516	- Starting Motor	1	
2	**NSVA**	**Pump Stack Assembly**	**1**	**See Page C - 8.**
4	13213947	Rear Engine Mount	2	
5	96712674	Washer, Zinc Plated	2	M8 Hardened Cl 10
6	13359740	Air Cleaner Bracket	1	
8	59121855	Clamp	1	
13	59009134	Fuel Throttle Solenoid	1	
-	54651088	- Solenoid Stop	1	
-	54578117	- Rubber Boot	1	
14	13501713	Throttle Mounting Bracket	1	
15	13501390	Rod End	1	
16	59819292	Engine Fan	1	
-	59309104	- Fan Belt	1	
17	96726435	HHCS, Zinc Plated	2	M8 x 1.25 x 100 Cl 8.8
20	59726075	Clamp	2	
21	95378873	Hose Clamp	1	
22	96741053	Flatwasher, Zinc Plated	4	M6 Cl 200
23	96703640	Nut, Zinc Plated	6	M6, Cl 10
24	96701958	HHCS, Fully Threaded, Zinc Plated (Not Shown)	4	M6 x 16 Cl 8.8
30	96704564	HHCS, Fully Threaded, Zinc Plated	6	M6 x 1.0 x 20 Cl 8.8
31	13501697	Flatwasher, Zinc Plated	1	1/4
32	96741046	Flatwasher, Zinc Plated	12	M10 Cl 200
34	95923058	Hex Nut, Zinc Plated	1	1/4 x 28 Grd A
35	96738596	Flatwasher, Zinc Plated	10	M12 Hardened Cl 200
36	96702444	HHCS, Fully Threaded, Zinc Plated	10	M12 x 1.75 x 40 Cl 8.8
37	96702329	HHCS, Fully Threaded, Zinc Plated	2	M12 x 1.75 x 35 Cl 8.8
38	96712237	Flatwasher, Zinc Plated	4	M12 Hardened Cl 10
39	96701495	HHCS, Fully Threaded, Zinc Plated	2	M12 x 1.75 x 25 Cl 8.8
42	96720594	HHCS, Zinc Plated	4	M10 x 1.5 x 100 Cl 8.8
43	13501366	Spacer	1	
44	59098764	Hose Assembly	1	77.0”
45	59138925	Hose Assembly	1	34.0”
54	50274299	Hose Clamp	2	
56	59586511	Hose Assembly	1	18.0”
57	96704663	Washer, Zinc Plated	8	M6 Large
59	13501374	Spacer	2	

PUMP STACK ASSEMBLY - SHEET 1 OF 2

Dwg 13217104/0h/01

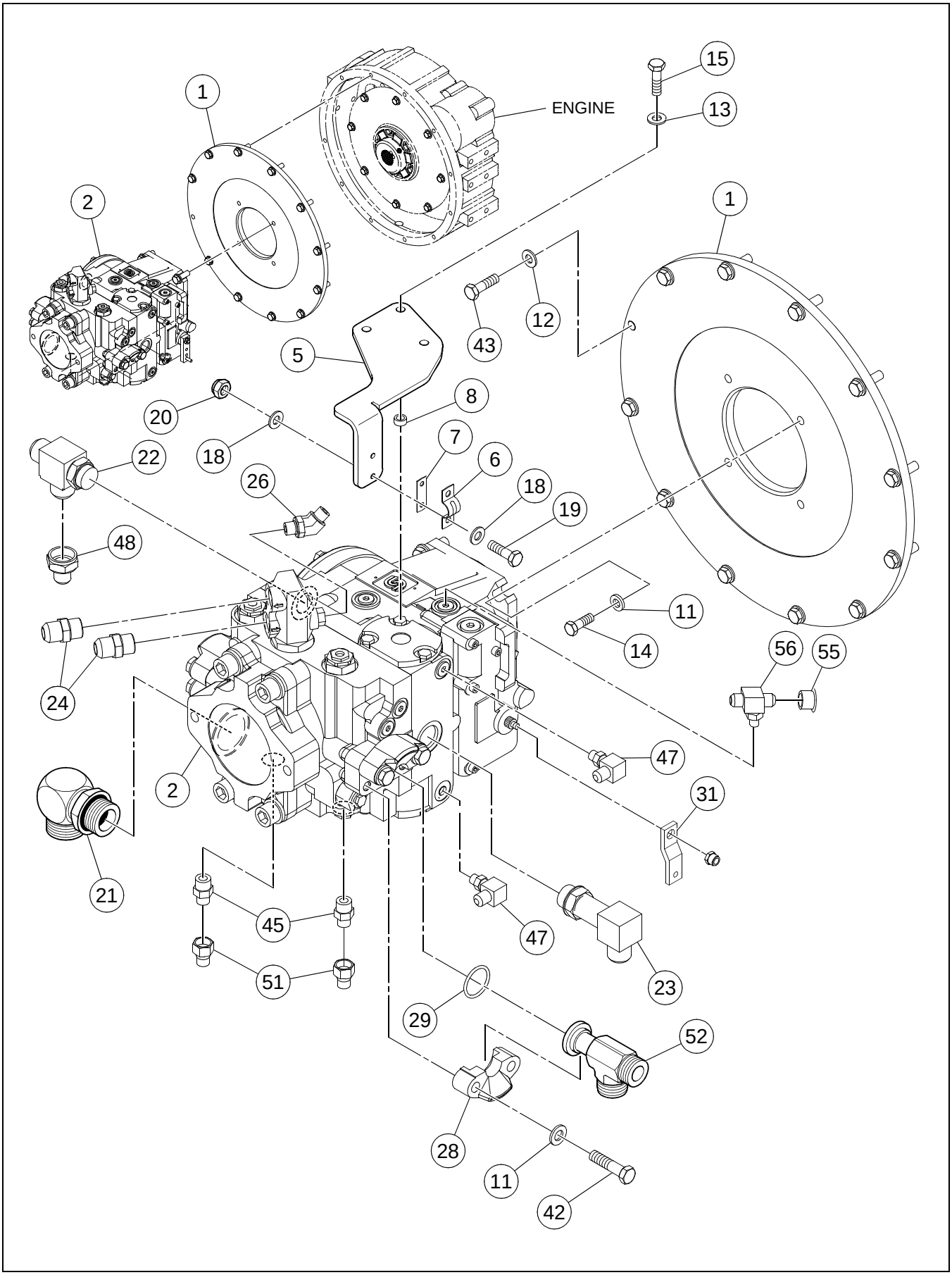

PUMP STACK ASSEMBLY - SHEET 1 OF 2

BOM 13270475, 13197116, 13197124

ITEM	COMM. NO.	DESCRIPTION	QTY	DIMENSIONS/NOTES
1	58966086	Pump Mounting Plate	1	
2	**13197454**	**Propulsion Pump**	**1**	**See Breakdown C - 12.**
-	13284856	ARC - Propulsion Pump	1	
5	43862994	Cable Mounting Bracket (Eff S/N 195698, including S/N 195291, 195438, 195678, 195679, 195680 and 195681)	1	
-	13413828	Propulsion Cable Mounting Bracket (Prior to S/N 195698, excluding S/N 195291, 195438, 195678, 195679, 195680 and 195681)	1	
6	59580571	Clamp	1	
7	59617985	Shim	1	
8	59329979	Spacer	3	
11	96738596	Flatwasher, Zinc Plated	14	M12 Hardened Cl 200
12	96741046	Flatwasher, Zinc Plated	14	M10 Cl 200
13	96741038	Flatwasher	3	M8 x 1.25 Cl 200
14	96702329	HHCS, Fully Threaded, Zinc Plated	4	M12 x 1.75 x 35 Cl 8.8
15	96705587	HHCS, Fully Threaded, Zinc Plated	3	M8 x 1.25 x 30 Cl 8.8
18	96738554	Flatwasher, Zinc Plated	4	M5 Hardened Cl 200
19	96705736	HHCS, Fully Threaded, Zinc Plated	2	M5 x 0.8 x 20 Cl 8.8
20	96704580	Hex Locknut, Zinc Plated	2	M5 x 0.8 Cl 8
21	95280194	Adapter	1	
22	95829263	Tee	1	
23	59847798	Adapter, 90°	1	
24	95303384	Adapter	2	
26	59922211	Adapter, 45°	1	
28	58901653	Split Flange Clamp	4	
29	59993881	O-ring	2	
31	43838556	Pump Lever (Eff S/N 195698, inc S/N 195291, 195438, 195678, 195679, 195680 and 195681)	1	
-	13217294	Pump Lever (Prior to S/N 195698, excluding S/N 195291, 195438, 195678, 195679, 195680 and 195681)	1	
32	96701461	HHCS, Fully Threaded, Zinc Plated (Prior to S/N 195698, excluding S/N 195291, 195438, 195678, 195679, 195680 and 195681)	2	M6 x 1 x 25 Cl 8.8 (Not Shown)
33	96704598	Hex Locknut, Zinc Plated (Prior to S/N 195698, excluding S/N 195291, 195438, 195678, 195679, 195680 and 195681)	2	M6 Cl 8 (Not Shown)
42	96705595	HHCS, Fully Threaded, Zinc Plated	8	M12 x 1.75 x 50 Cl 8.8
43	96704309	HHCS, Fully Threaded, Zinc Plated	12	M10 x 1.5 x 35 Cl 8.8
45	59919670	Adapter, Straight	2	
47	95329975	Adapter	2	
48	59672709	Adapter	1	
51	59158881	Reducer	2	
52	59980482	Adapter	2	
55	95257341	Tube Cap Nut	1	
56	95431284	Tee	1	

PUMP STACK ASSEMBLY - SHEET 2 OF 2

Dwg 13217104/0h/02

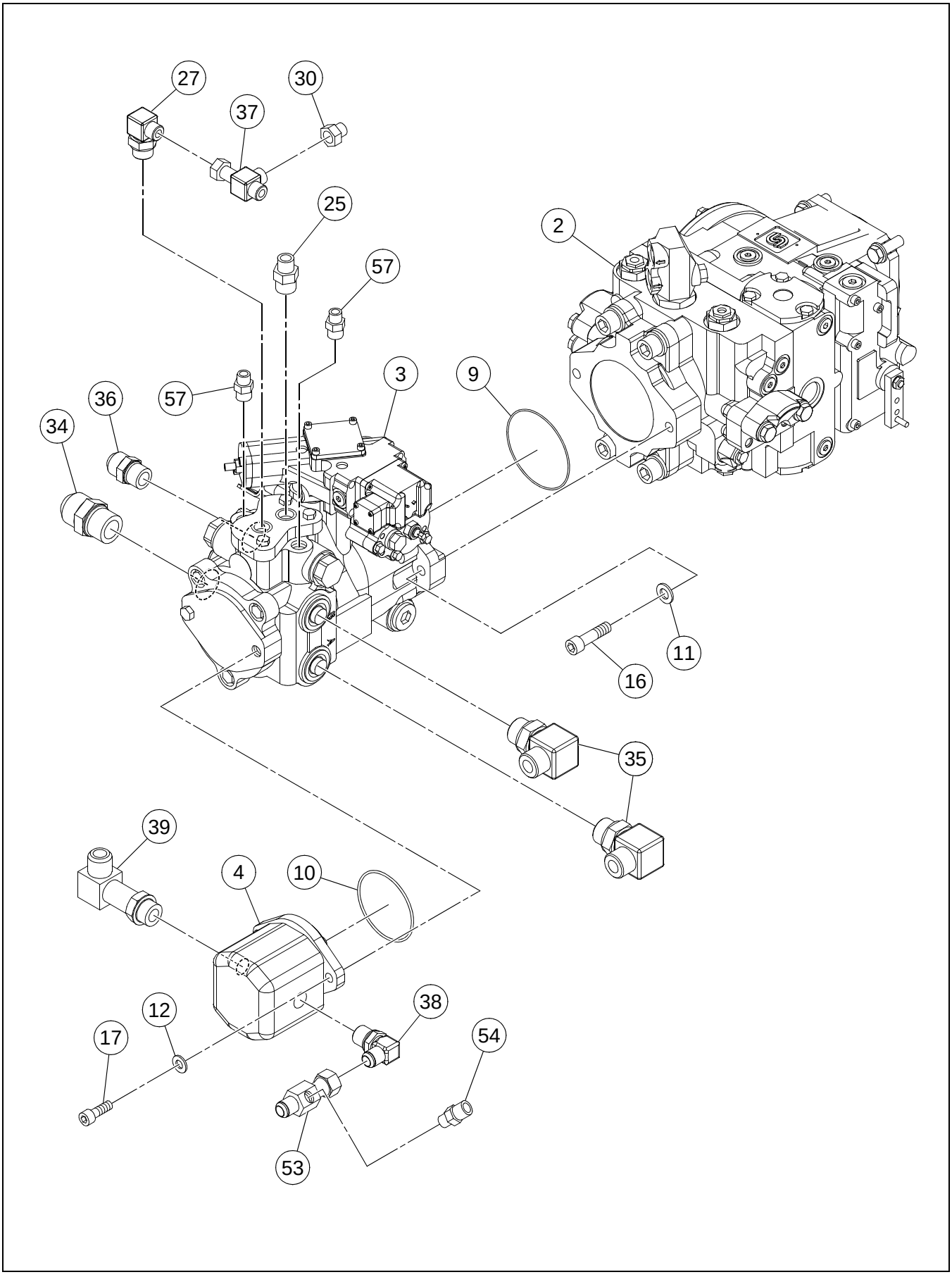

PUMP STACK ASSEMBLY - SHEET 2 OF 2

BOM 13270475, 13197116, 13197124

ITEM	COMM. NO.	DESCRIPTION	QTY	DIMENSIONS/NOTES
2	**13197454**	**Propulsion Pump**	**1**	**See Breakdown C - 12.**
-	13284856	ARC - Propulsion Pump	1	
3	**13289947**	**Vibration Pump - SD-70D/70F -Effective with S/N 178653**	**1**	**See Breakdown C - 18.**
-	19291400	ARC - Vibration Pump - SD-70D/70F - Effective with S/N 178653	1	
-	**13223904**	**Vibration Pump - SD-70D/70F - Prior to S/N 178653**	**1**	**See Breakdown C - 22.**
-	13284864	ARC - Vibration Pump - SD-70D/70F - Prior to S/N 178653	1	
-	**13304753**	**Vibration Pump - SD-77DX/77F -Effective with S/N 178653**	**1**	**See Breakdown C - 26.**
-	19291426	ARC - Vibration Pump - SD-77DX/77F - Effective with S/N 178653	1	
-	**13223912**	**Vibration Pump - SD-77DX/77F - Prior to S/N 178653**	**1**	**See Breakdown C - 30.**
-	13284872	ARC - Vibration Pump - SD-77DX/77F - Prior to S/N 178653	1	
4	58858820	Steering Pump	1	
-	58898677	- Seal Kit	1	
9	95988721	O-ring	1	
10	95988796	O-ring	1	
11	96738596	Flatwasher, Zinc Plated	14	M12 Hardened Cl 200
12	96741046	Flatwasher, Zinc Plated	14	M10 Cl 200
16	96708300	Allen Screw	2	
17	96702162	SHCS	2	M10 x 1.5 x 30, Cl 8.8
25	95285946	Adapter, Straight (Effective with S/N 178653)	1	
27	59922906	Adapter, 90° (Effective with S/N 178653)	1	
30	59923961	Adapter, Reducer (Effective with S/N 178653)	1	
34	95469128	Adapter, 45° (Effective with S/N 178653)	1	
-	95329983	Adapter (Prior to S/N 178653)	1	
35	59922989	Adapter	2	
36	95356960	Adapter	1	
37	59923797	Adapter, Run Tee (Effective with S/N 178653)	1	
38	95303350	Adapter	1	
39	95359410	Elbow, 45°	1	
53	13208004	Adapter	1	
54	59929182	Adapter, Straight	1	
57	59922419	Adapter, Straight (Effective with S/N 178653)	2	
-	59922419	Adapter, Straight (Prior to S/N 178653)	3	

PROPULSION PUMP (13197454) - INTERNAL BREAKDOWN - SHEET 1 OF 3

Dwg D59200246/03/01

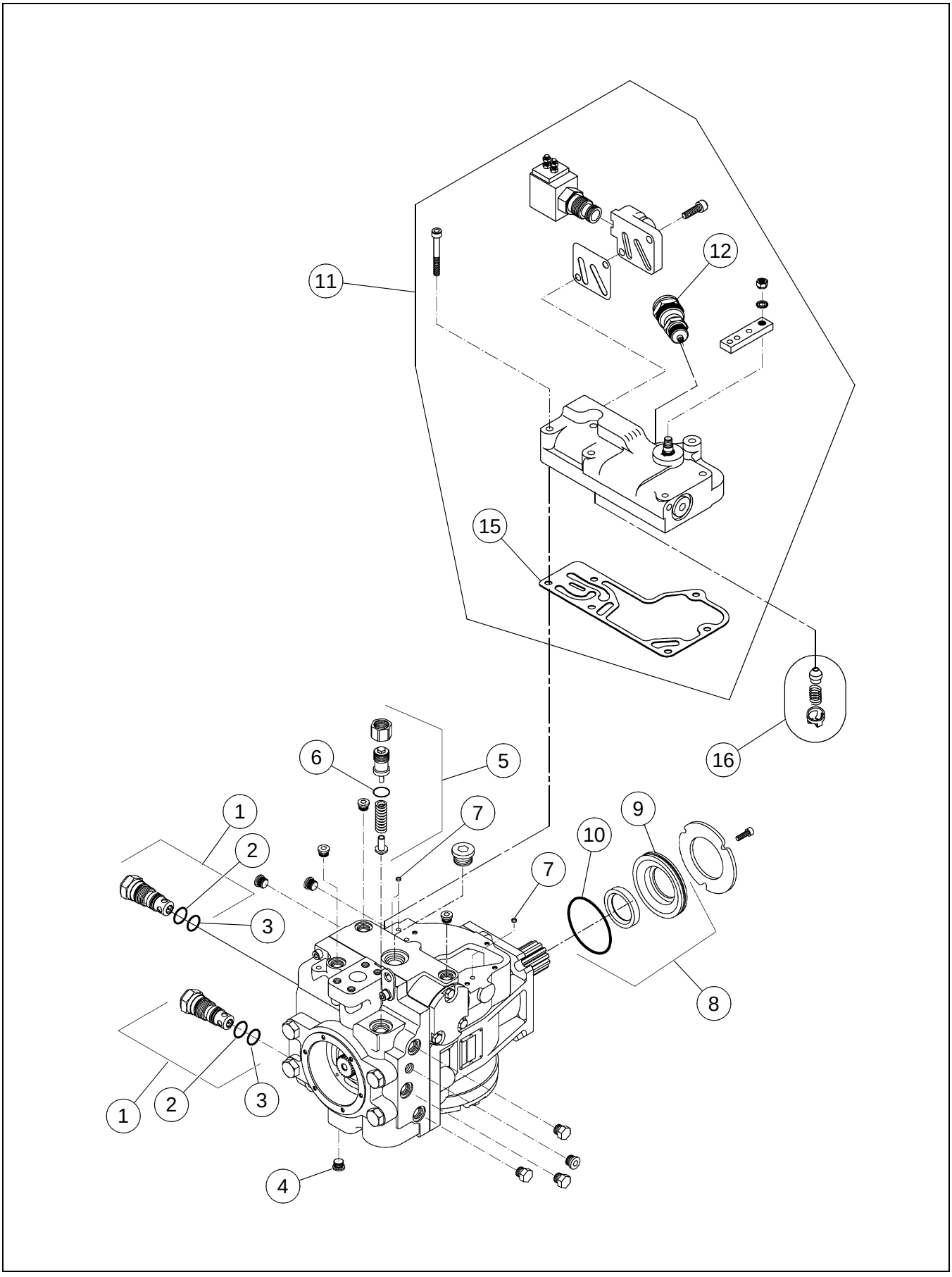

PROPULSION PUMP (13197454) - INTERNAL BREAKDOWN - SHEET 1 OF 3

BOM 13197454

ITEM	COMM. NO.	DESCRIPTION	QTY	DIMENSIONS/NOTES
1	58921495	Multi-Function Valve	1	
2	95210258	- O-ring	2	
3	59360735	- O-ring	2	
4	59933622	Plug	2	
5	59446138	Charge Relief Valve Kit	1	
6	50278019	- O-ring	1	
7	58795766	Control Filter Screen	3	
8	19281252	Shaft Seal Assembly	1	
9	19282987	- Seal	1	
10	59369504	- O-ring	1	
11	13248000	Control Assembly	1	
12	13228994	- Netural Start Switch	1	
15	59360685	- Gasket	1	
16	59360776	Orifice Kit	1	

PROPULSION PUMP (13197454) - INTERNAL BREAKDOWN - SHEET 2 OF 3

Dwg D59200246/03/02

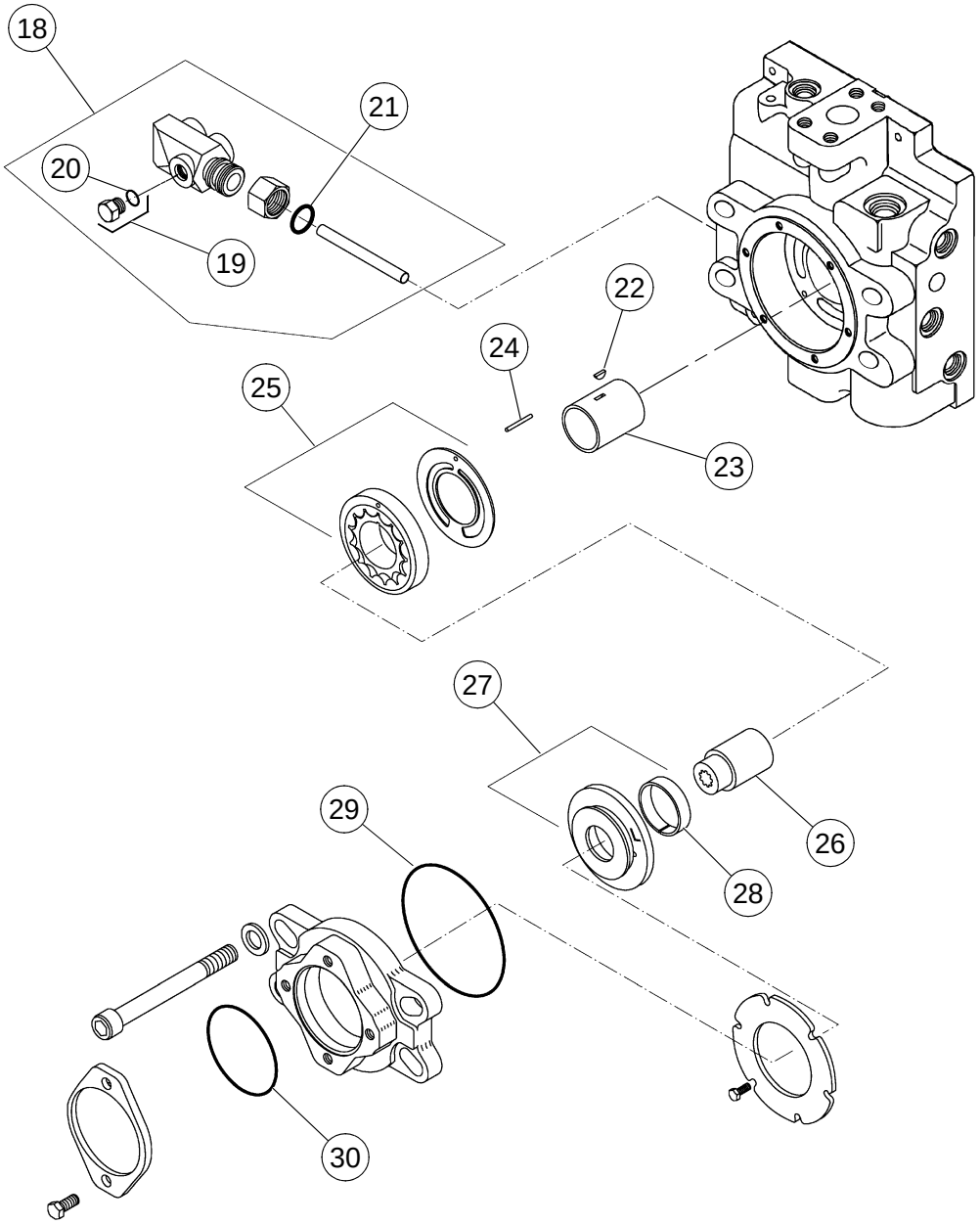

PROPULSION PUMP (13197454) - INTERNAL BREAKDOWN - SHEET 2 OF 3

BOM 13197454

ITEM	COMM. NO.	DESCRIPTION	QTY	DIMENSIONS/NOTES
18	59476895	Manifold Kit	1	
19	59933622	- Plug	2	
20	59698811	- O-ring	1	
21	59360941	- O-ring	1	
22	59360487	Key	1	
23	13228960	Charge Pump Shaft	1	
24	59369637	Pin	1	
25	13461264	Charge Relief Plug Assembly	1	
26	59360511	Coupling	1	
27	58918590	Charge Pump Cover Assembly	1	
28	59360354	- Bushing	1	
29	59360552	O-ring	1	
30	59218693	O-ring	1	

PROPULSION PUMP (13197454) - INTERNAL BREAKDOWN - SHEET 3 OF 3

Dwg D59200246/03/03

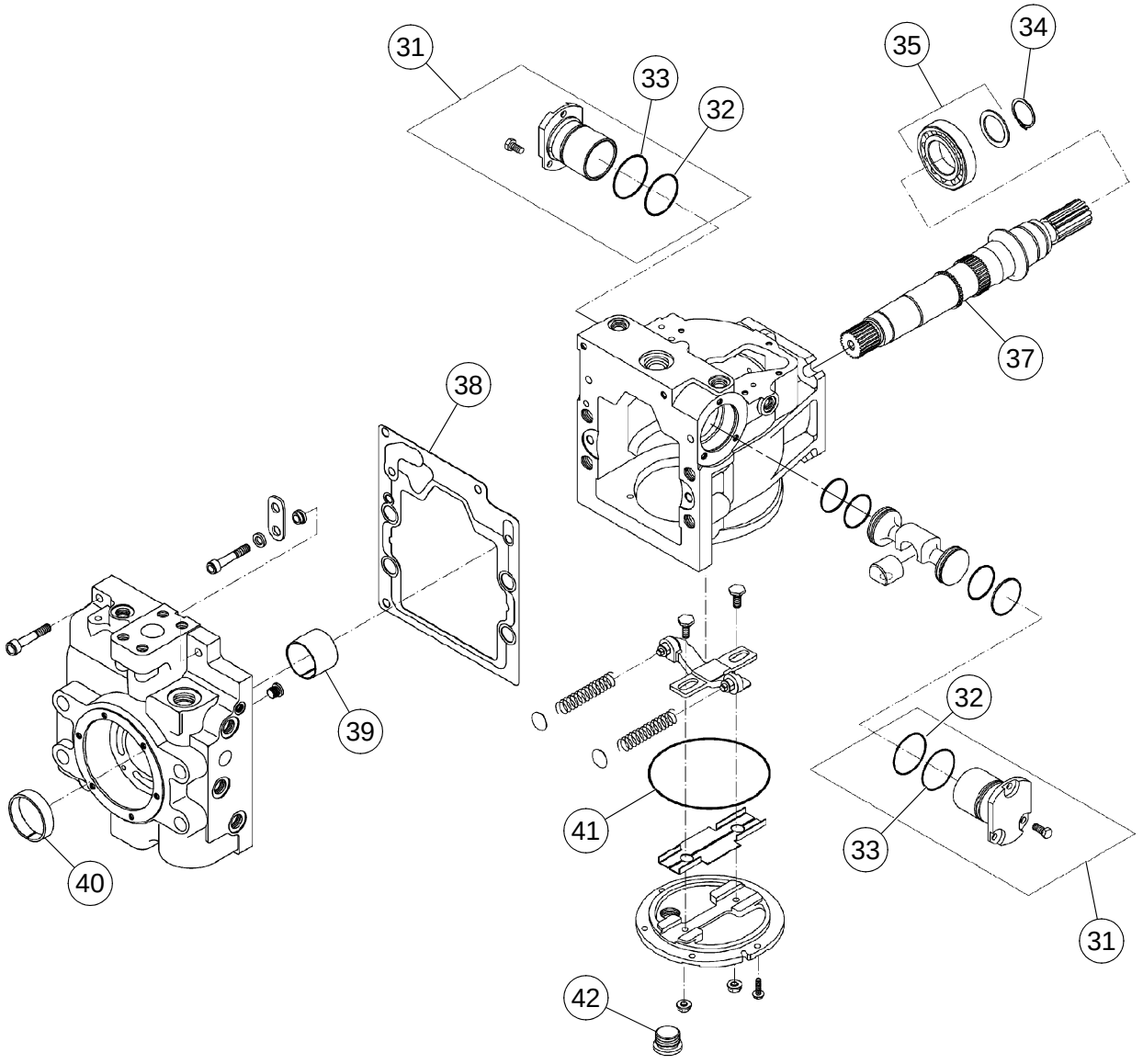

PROPULSION PUMP (13197454) - INTERNAL BREAKDOWN - SHEET 3 OF 3

BOM 13197454

ITEM	COMM. NO.	DESCRIPTION	QTY	DIMENSIONS/NOTES
31	58763491	Sleeve Kit	2	
32	59369454	- O-ring	2	
33	58769209	- O-ring	2	
34	59369470	Retaining Pin	2	
35	59369462	Bearing	1	
37	59369694	Shaft	1	
38	59369561	Gasket	1	
39	59369603	Bearing	1	
40	59360354	Bushing	1	
41	59369371	O-ring	1	
42	59949461	Plug	1	

VIBRATION PUMP (13289947) - SD-70D/70F - EFFECTIVE WITH S/N 178653 - INTERNAL BREAKDOWN - SHEET 1 OF 2

Dwg 13289947/00/01

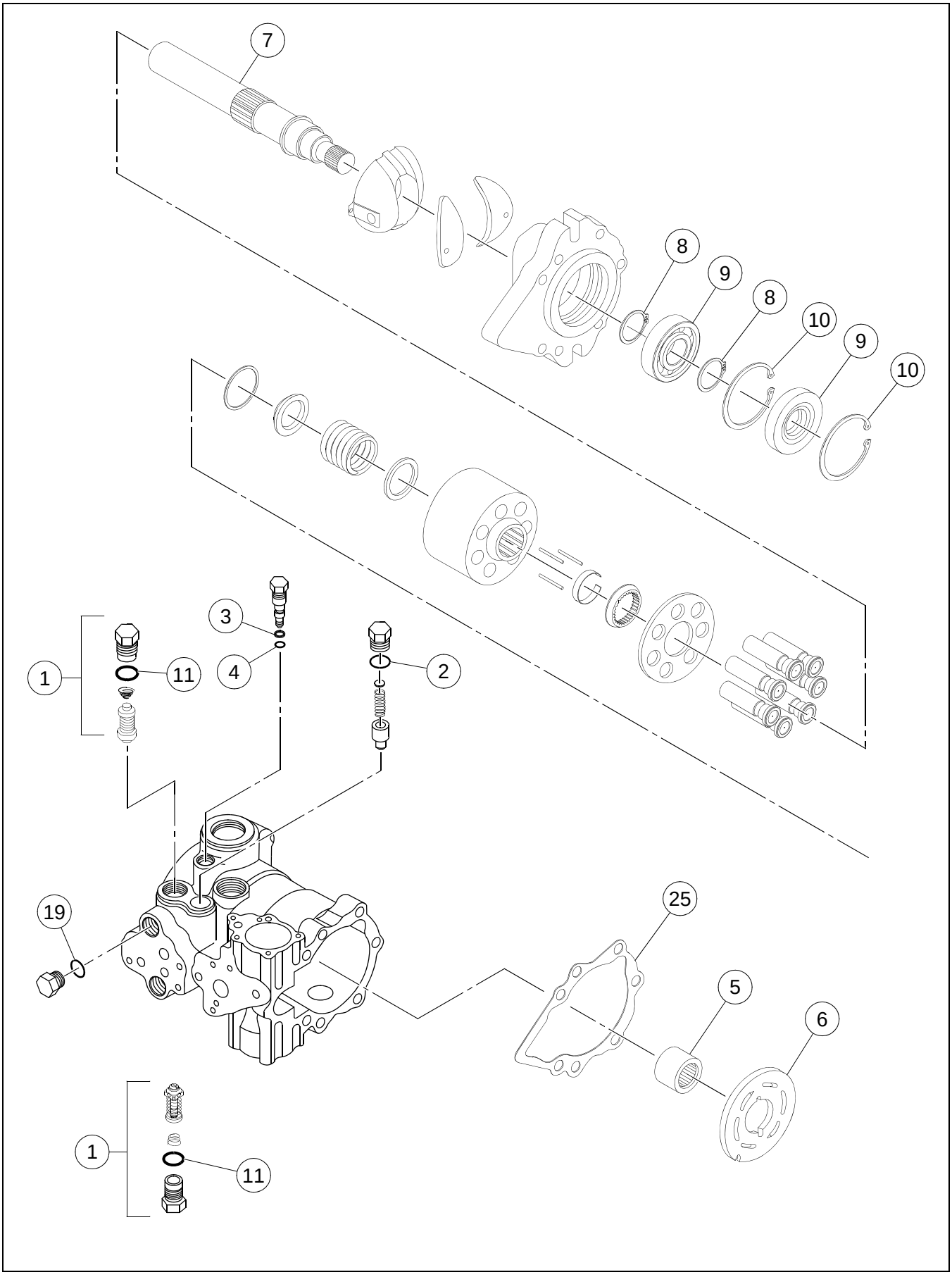

VIBRATION PUMP (13289947) - SD-70D/70F - EFFECTIVE WITH S/N 178653 - INTERNAL BREAKDOWN - SHEET 1 OF 2

BOM 13289947

ITEM	COMM. NO.	DESCRIPTION	QTY	DIMENSIONS/NOTES
1	59337097	Valve Kit (Includes Item 11)	2	
2	50278019	O-ring	1	
3	59986422	Backup Ring	1	
4	13247358	O-ring	1	
5	59785303	Bearing	1	
6	59123802	Valve Plate, RH	1	
7	59933713	Pump Shaft	1	
8	59785519	Ring	2	
9	95200648	Ball Bearing	1	
10	59861872	Ring	2	
11	58220567	O-ring	2	
19	59698811	O-ring	4	
25	59949511	Front Gasket	1	

VIBRATION PUMP (13289947) - SD-70D/70F - EFFECTIVE
WITH S/N 178653 - INTERNAL BREAKDOWN - SHEET 2 OF 2

Dwg 13289947/00/02

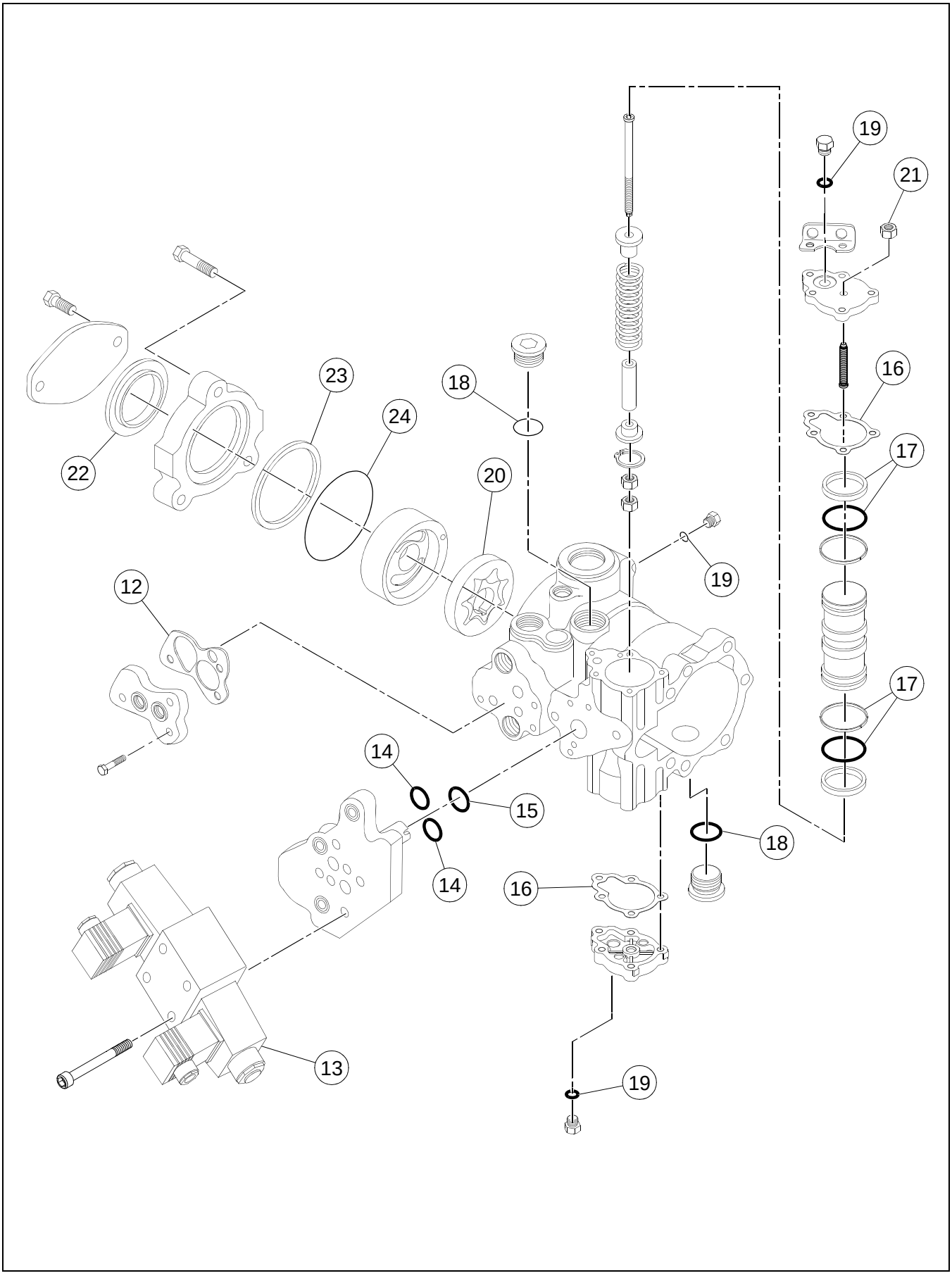

VIBRATION PUMP (13289947) - SD-70D/70F - EFFECTIVE WITH S/N 178653 - INTERNAL BREAKDOWN - SHEET 2 OF 2

BOM 13289947

ITEM	COMM. NO.	DESCRIPTION	QTY	DIMENSIONS/NOTES
12	13090097	Filter Adapter Seal	1	
13	54766399	Solenoid Valve	1	
14	95097663	O-ring	2	
15	95210258	O-ring	1	
16	59938373	Servo Gasket	2	
17	59972877	O-ring Kit	1	
18	58220567	O-ring	2	
19	59698811	O-ring	4	
20	59785246	Gerotor Assembly	1	
21	54766381	Servo Stop	1	
22	59102749	Seal	1	
23	59785642	Ring	1	
24	58903741	O-ring	1	
26	58813791	Seal Kit (Not Shown)	1	

VIBRATION PUMP (13223904) - SD-70D/70F - PRIOR TO S/N 178653 - INTERNAL BREAKDOWN - SHEET 1 OF 2

Dwg D13244561/02/01

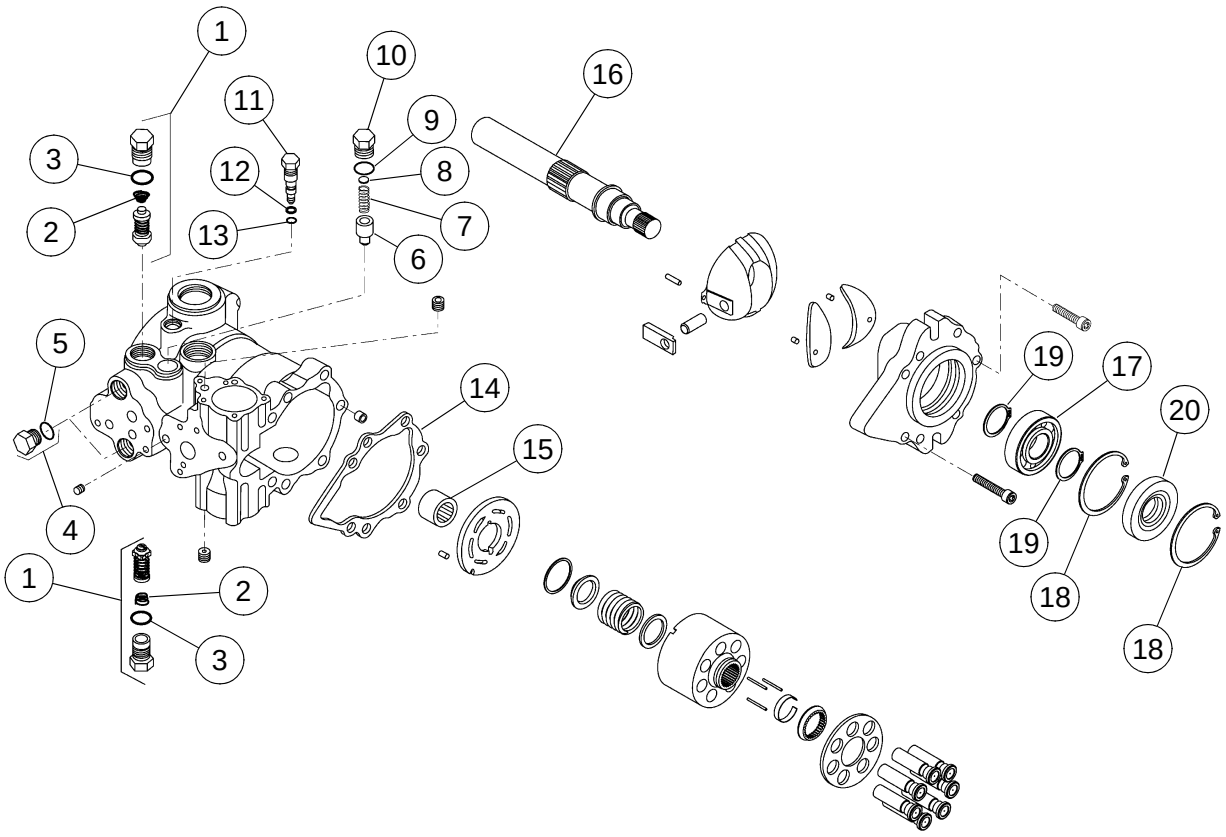

VIBRATION PUMP (13223904) - SD-70D/70F - PRIOR TO S/N 178653 - INTERNAL BREAKDOWN - SHEET 1 OF 2

BOM 13223904

ITEM	COMM. NO.	DESCRIPTION	QTY	DIMENSIONS/NOTES
1	58784281	Check Valve Kit	2	
2	54492541	- Spring	2	
3	58220567	- O-ring	2	
4	59933622	Plug	1	
5	59698811	O-ring	1	
6	58220633	Charge Relief Valve	1	
7	59034348	Charge Valve Spring	1	
8	58220583	Shim Pack	1	
9	50278019	O-ring	1	
10	59933614	Plug	1	
11	59779918	Valve	1	
12	59986422	Back-up Ring	1	
13	59949339	MDC O-ring	1	
14	59949511	Front Gasket	1	
15	59785303	Bearing	1	
16	59933713	Pump Shaft	1	
17	95200648	Ball Bearing	1	
18	59861872	Ring	2	
19	59785519	Ring	2	
20	59941203	Seal	1	

VIBRATION PUMP (13223904) - SD-70D/70F - PRIOR TO S/N 178653 - INTERNAL BREAKDOWN - SHEET 2 OF 2

Dwg D13244561/02/02

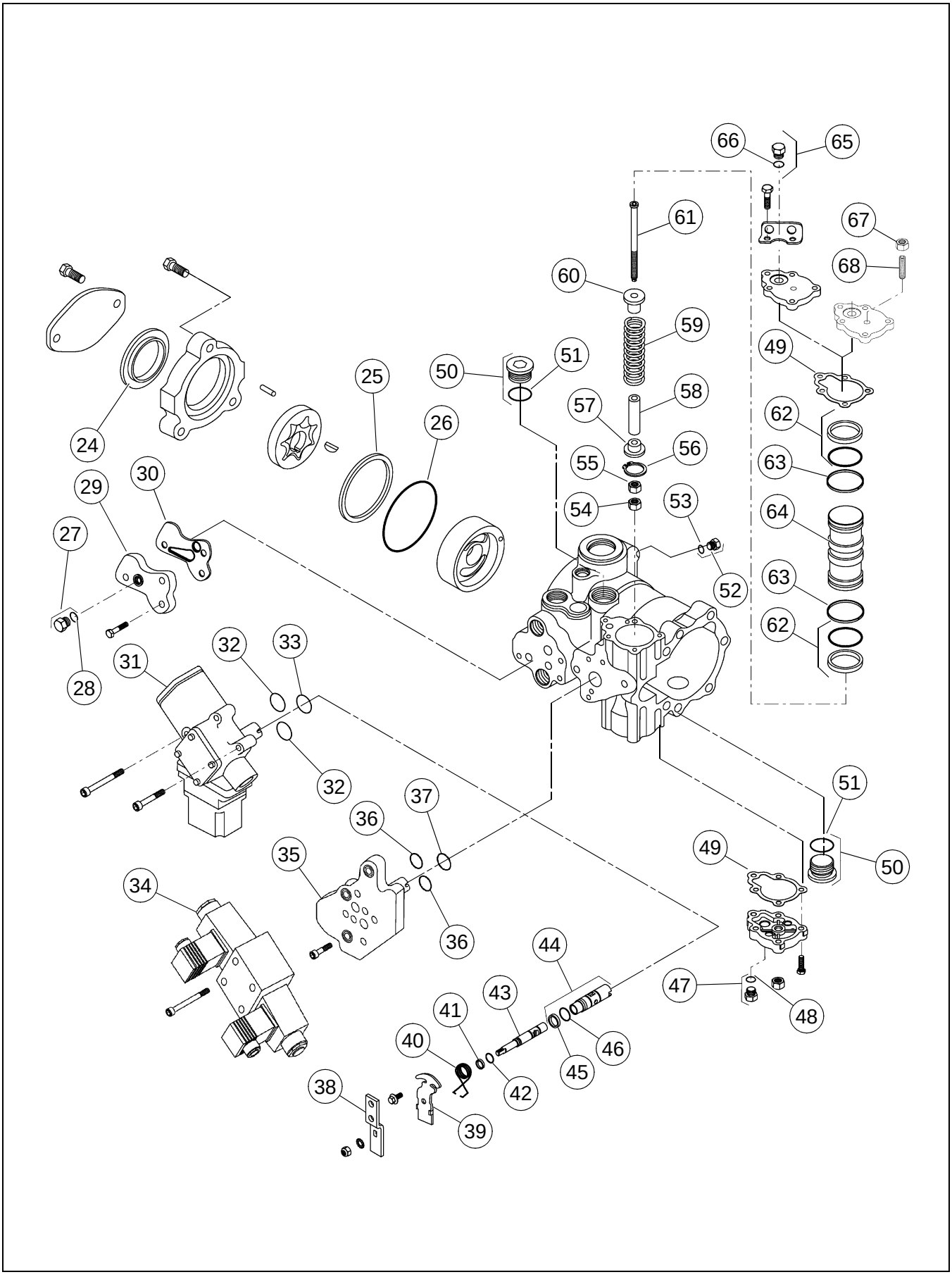

VIBRATION PUMP (13223904) - SD-70D/70F - PRIOR TO S/N 178653 - INTERNAL BREAKDOWN - SHEET 2 OF 2

BOM 13223904

ITEM	COMM. NO.	DESCRIPTION	QTY	DIMENSIONS/NOTES
24	59102749	Seal	1	
25	59785642	Ring	1	
26	58903741	O-ring	1	
27	59933622	Plug	1	
28	59698811	- O-ring	1	
29	58815614	Suction Filter Adapter	1	
30	58815622	Gasket	1	
31		This Item Not Used With This Assembly		
32		This Item Not Used With This Assembly		
33		This Item Not Used With This Assembly		
34	54766399	Solenoid Valve	1	
35	54766415	Manifold	1	
36	95097663	O-ring	2	
37	95086062	O-ring	1	
38		This Item Not Used With This Assembly		
39		This Item Not Used With This Assembly		
40		This Item Not Used With This Assembly		
41		This Item Not Used With This Assembly		
42		This Item Not Used With This Assembly		
43		This Item Not Used With This Assembly		
44		This Item Not Used With This Assembly		
45		This Item Not Used With This Assembly		
46		This Item Not Used With This Assembly		
47	59933622	Plug	1	
48	59698811	O-ring	1	
49	59938373	Gasket	2	
50	59949461	Plug	2	
51	58220567	- O-ring	2	
52	58950783	Plug	1	
53	59698811	O-ring	1	
54	54474713	Nut	1	
55	59431684	Nut	1	
56	58950627	Retainer Ring	1	
57	59871731	Spring Guide	1	
58	59947580	Servo Stop	1	
59	59785121	Spring	1	
60	59210658	Guide Spring	1	
61	59210641	Servo Screw	1	
62	59972877	O-ring Kit	1	
63	59422907	Piston Ring	2	
64	59431726	Piston	1	
65	59933622	Plug	1	
66	59698811	- O-ring	1	
67		This Item Not Used With This Assembly		
68		This Item Not Used With This Assembly		

VIBRATION PUMP (13304753) - SD-77DX/77F - EFFECTIVE WITH S/N 178653 - INTERNAL BREAKDOWN - SHEET 1 OF 2

Dwg 13304753/00/01

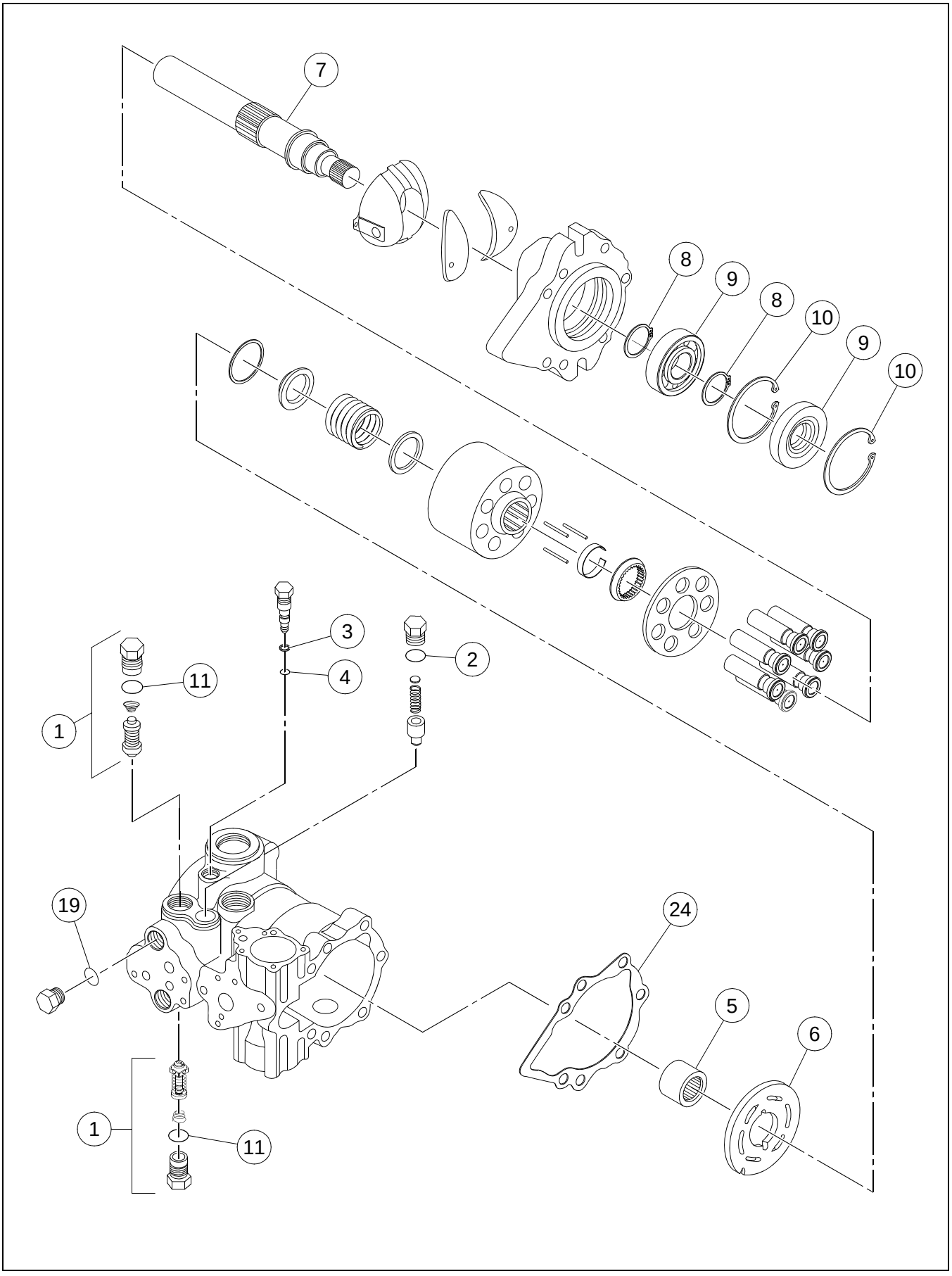

VIBRATION PUMP (13304753) - SD-77DX/77F - EFFECTIVE WITH S/N 178653 - INTERNAL BREAKDOWN - SHEET 1 OF 2

BOM 13304753

ITEM	COMM. NO.	DESCRIPTION	QTY	DIMENSIONS/NOTES
1	59337097	Valve Kit (Includes Item 11)	2	
2	50278019	O-ring	1	
3	59986422	Backup Ring	1	
4	59949339	MDC O-ring	1	
5	59785303	Bearing	1	
6	59123802	Valve Plate, RH	1	
7	59933713	Pump Shaft	1	
8	59785519	Ring	2	
9	95200648	Ball Bearing	1	
10	59861872	Ring	2	
11	58220567	O-ring	2	
19	59698811	O-ring	4	
24	59949511	Front Gasket	1	

VIBRATION PUMP (13304753) - SD-77DX/77F - EFFECTIVE
WITH S/N 178653 - INTERNAL BREAKDOWN - SHEET 2 OF 2

Dwg 13304753/00/02

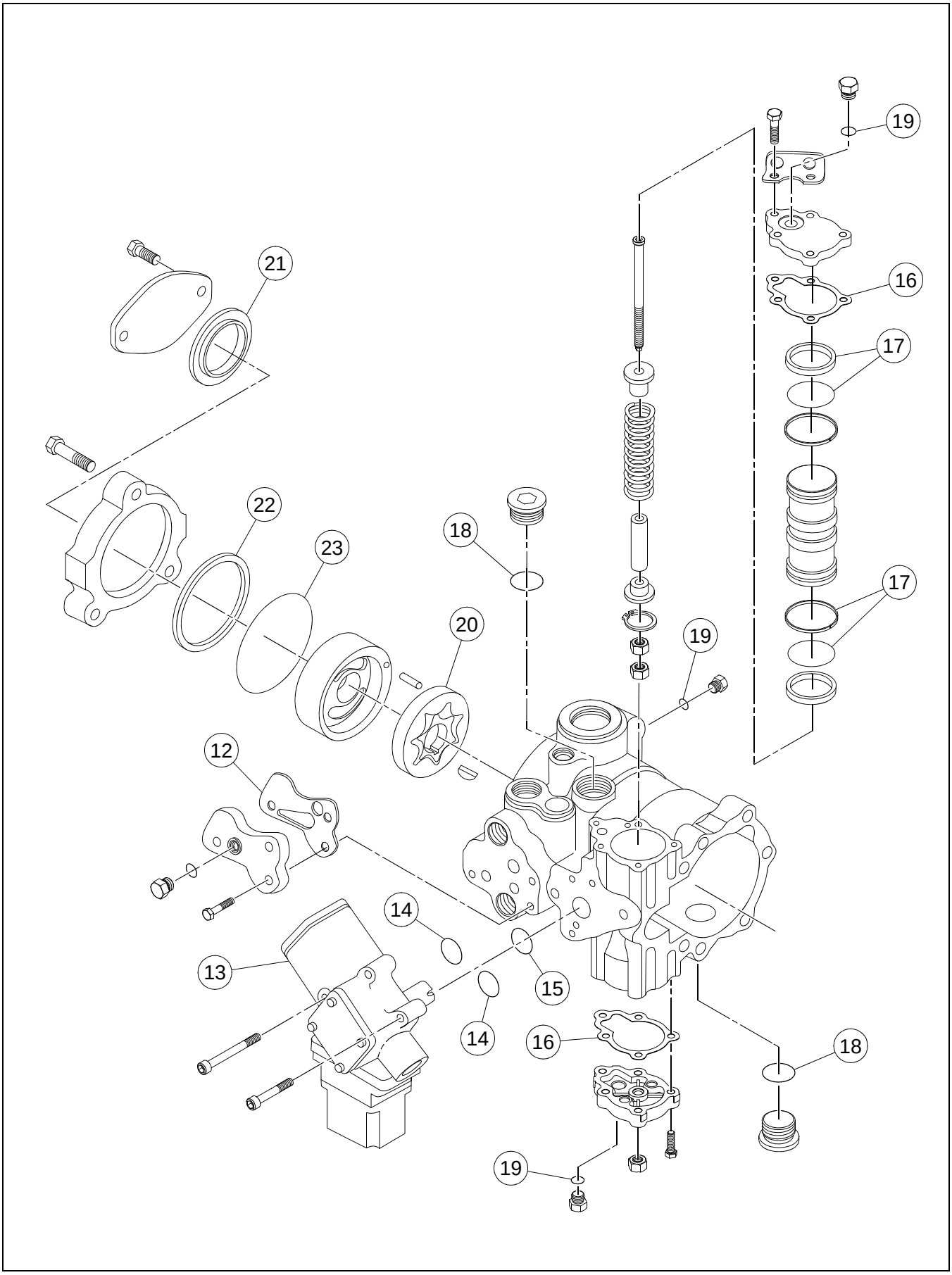

BOM 13304753

ITEM	COMM. NO.	DESCRIPTION	QTY	DIMENSIONS/NOTES
12	13090097	Filter Adapter Seal	1	
13	13247341	EDC Valve	1	
14	95097663	O-ring	2	
15	95086062	O-ring	1	
16	59938373	Servo Gasket	2	
17	59972877	O-ring Kit	1	
18	58220567	O-ring	2	
19	59698811	O-ring	4	
20	59785246	Gerotor Assembly	1	
21	59102749	Seal	1	
22	59785642	Ring	1	
23	58903741	O-ring	1	
25	58813791	Seal Kit (Not Shown)	1	

VIBRATION PUMP (13223912) - SD-77DX/77F - PRIOR TO S/N 178653 - INTERNAL BREAKDOWN - SHEET 1 OF 2

Dwg D13244561/02/01

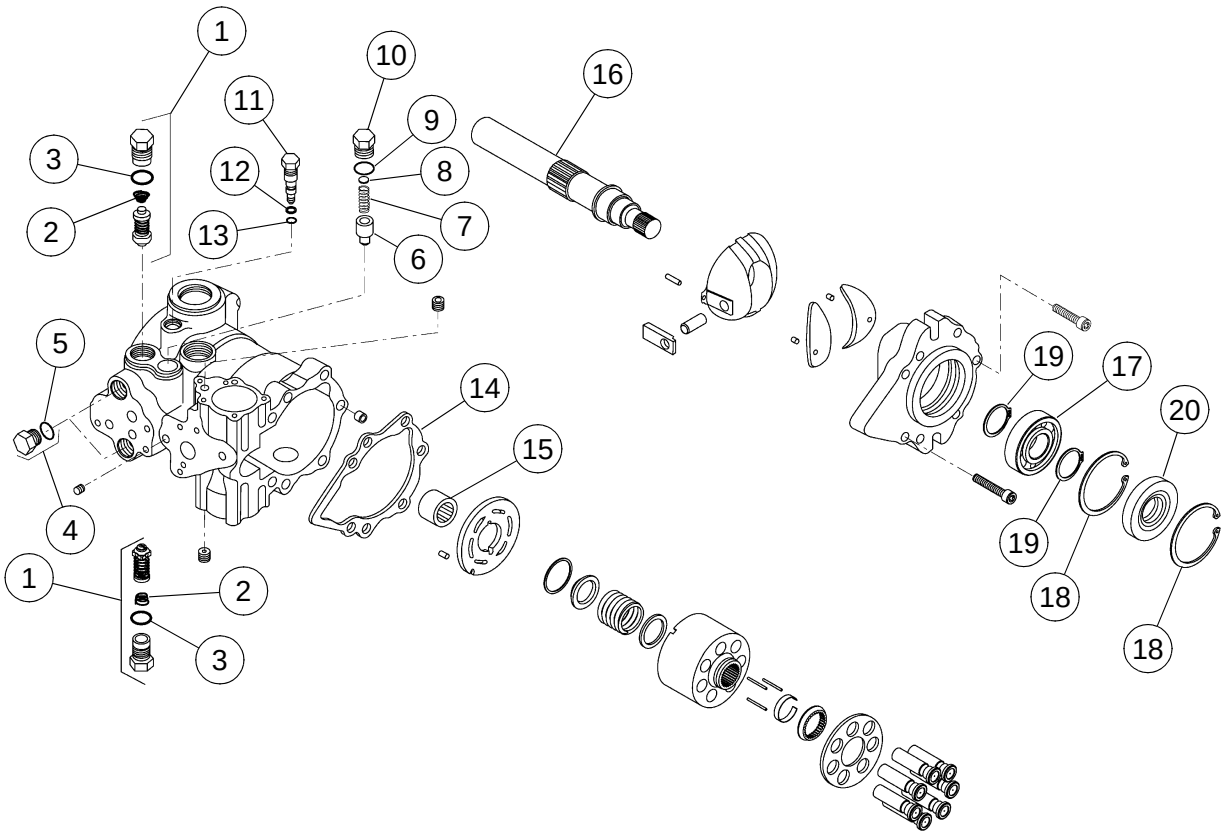

VIBRATION PUMP (13223912) - SD-77DX/77F - PRIOR TO S/N 178653 - INTERNAL BREAKDOWN - SHEET 1 OF 2

BOM 13223912

ITEM	COMM. NO.	DESCRIPTION	QTY	DIMENSIONS/NOTES
1	59337097	Check Valve Kit	2	
2	54492541	- Spring	2	
3	58220567	- O-ring	2	
4	59933622	Plug	1	
5	59698811	O-ring	1	
6	58220633	Charge Relief Valve	1	
7	59034348	Charge Valve Spring	1	
8	58220583	Shim Pack	1	
9	50278019	O-ring	1	
10	59933614	Plug	1	
11	59779918	Valve	1	
12	59986422	Back-up Ring	1	
13	13247358	O-ring	1	
14	59949511	Front Gasket	1	
15	59785303	Bearing	1	
16	59933713	Pump Shaft	1	
17	95200648	Ball Bearing	1	
18	59861872	Ring	2	
19	59785519	Ring	2	
20	59941203	Seal	1	

VIBRATION PUMP (13223912) - SD-77DX/77F - PRIOR TO S/N 178653 - INTERNAL BREAKDOWN - SHEET 2 OF 2

Dwg D13244561/02/02

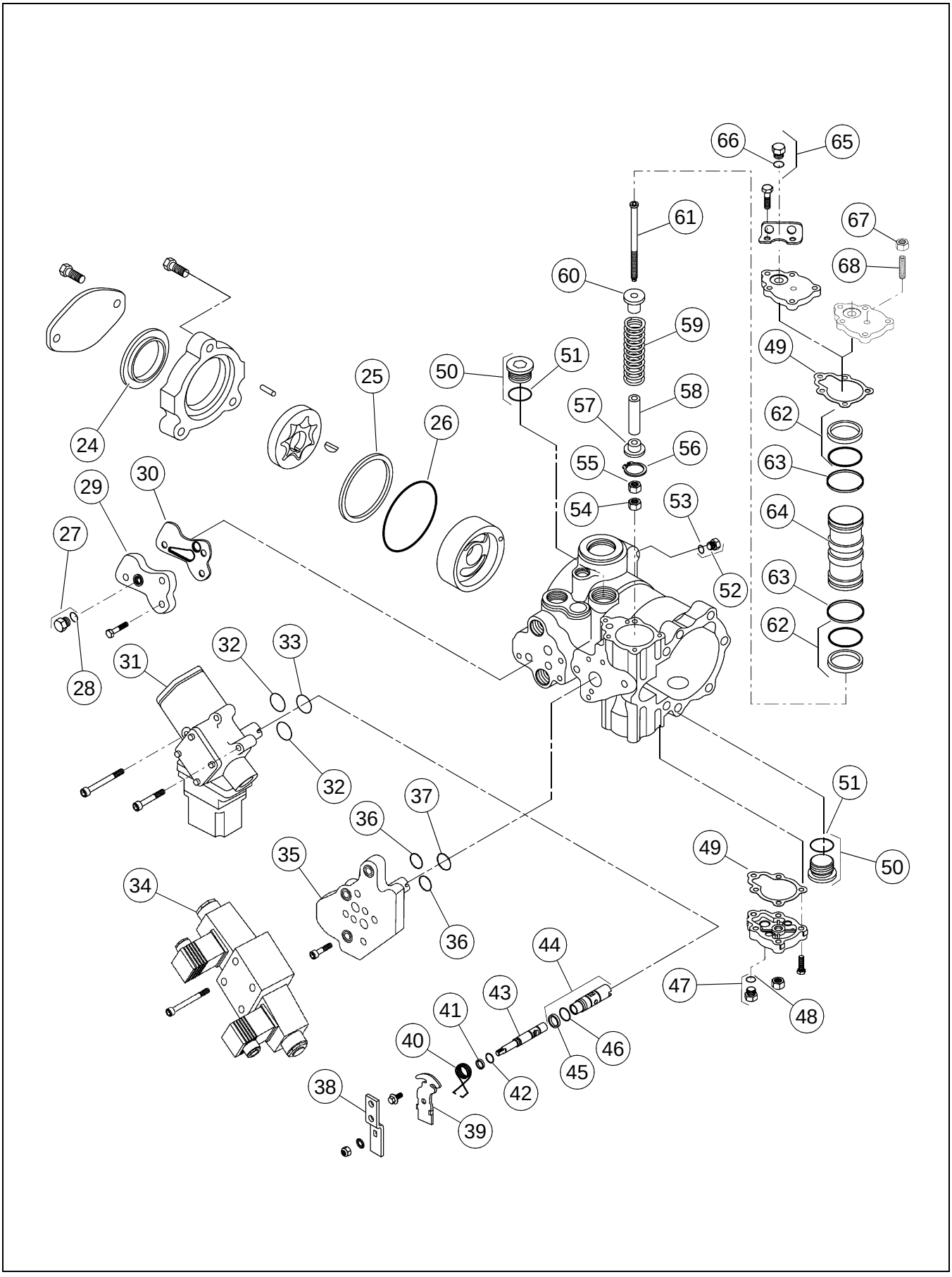

VIBRATION PUMP (13223912) - SD-77DX/77F - PRIOR TO S/N 178653 - INTERNAL BREAKDOWN - SHEET 2 OF 2

BOM 13223912

ITEM	COMM. NO.	DESCRIPTION	QTY	DIMENSIONS/NOTES
24	59102749	Seal	1	
25	59785642	Ring	1	
26	58903741	O-ring	1	
27	59933622	Plug	1	
28	59698811	- O-ring	1	
29	58815614	Suction Filter Adapter	1	
30	58815622	Gasket	1	
31	13247341	EDC Valve	1	
32	95097663	O-ring	2	
33	95086062	O-ring	1	
34		This Item Not Used With This Assembly		
35		This Item Not Used With This Assembly		
36		This Item Not Used With This Assembly		
37		This Item Not Used With This Assembly		
38		This Item Not Used With This Assembly		
39		This Item Not Used With This Assembly		
40		This Item Not Used With This Assembly		
41		This Item Not Used With This Assembly		
42		This Item Not Used With This Assembly		
43		This Item Not Used With This Assembly		
44		This Item Not Used With This Assembly		
45		This Item Not Used With This Assembly		
46		This Item Not Used With This Assembly		
47	59933622	Plug	1	
48	59698811	- O-ring	1	
49	59938373	Gasket	2	
50	59949461	Plug	2	
51	58220567	- O-ring	2	
52	58950783	Plug	1	
53	59698811	- O-ring	1	
54	54474713	Nut	1	
55	59431684	Nut	1	
56	58950627	Retainer Ring	1	
57	59871731	Spring Guide	1	
58	59947580	Servo Stop	1	
59	59785121	Spring	1	
60	59210658	Guide Spring	1	
61	59210641	Servo Screw	1	
62	59972877	O-ring Kit	1	
63	59422907	Piston Ring	2	
64	59431726	Piston	1	
65	59933622	Plug	1	
66	59698811	- O-ring	1	
67	59871772	Nut	1	
68	54766381	Servo Stop	1	

RADIATOR AND OIL COOLER INSTALLATION

Dwg D13238183/01

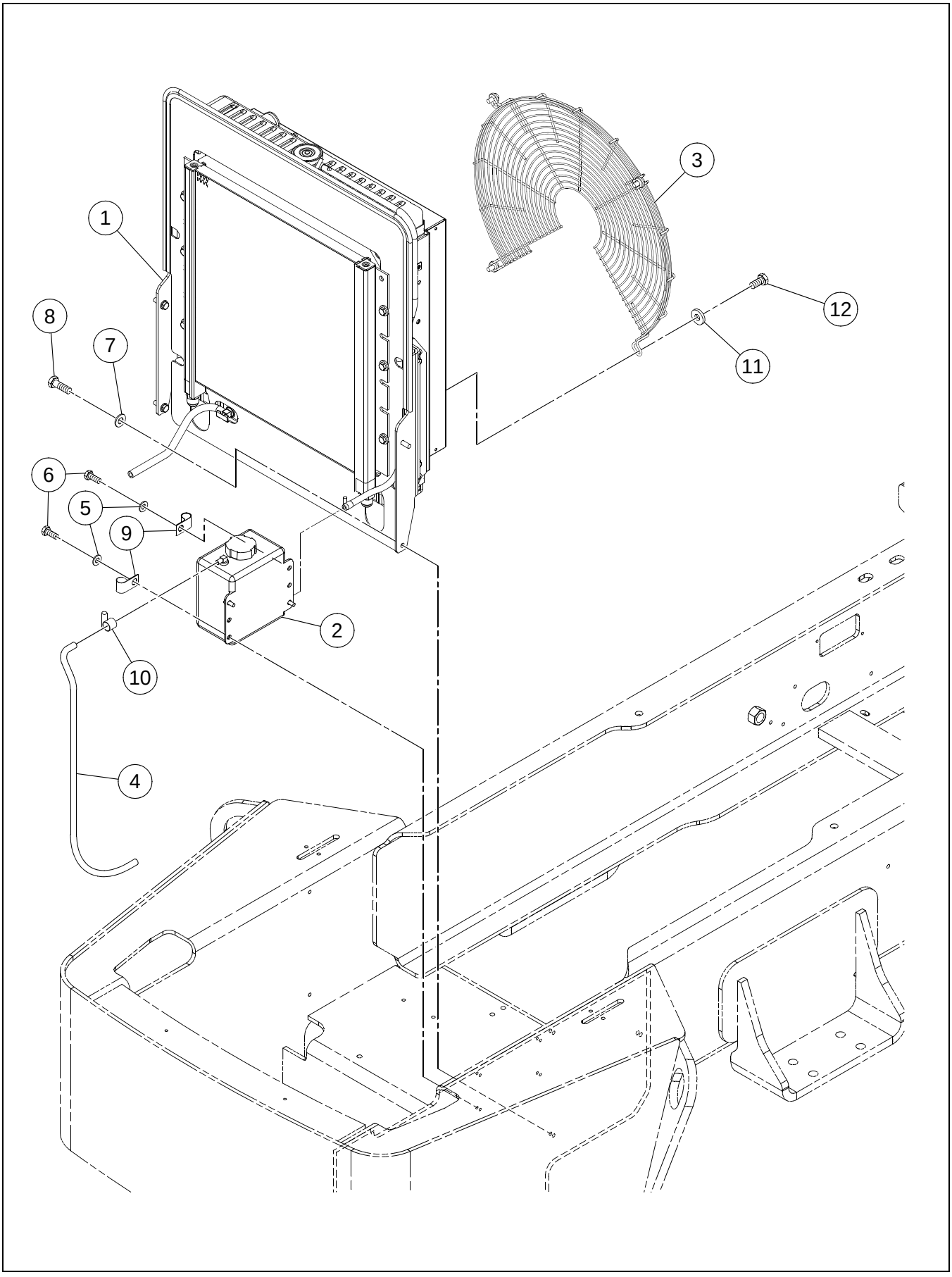

BOM 13218219

ITEM	COMM. NO.	DESCRIPTION	QTY	DIMENSIONS/NOTES
1	**NSVA**	**Radiator And Oil Cooler Assembly**	**1**	**See Page C - 36.**
2	58802851	Coolant Recovery Bottle	1	
-	59154807	- Coolant Recovery Bottle Cap	1	
3	59133918	Fan Guard	1	
4	13216734	Hose Assembly	1	33.0"
5	96741038	Flatwasher	4	M8 x 1.25 Cl 200
6	96702824	HHCS, Fully Threaded, Zinc Plated	4	M8 x 1.25 x 20 Cl 8.8
7	96741046	Flatwasher, Zinc Plated	4	M10 Cl 200
8	96702279	HHCS, Fully Threaded, Zinc Plated	4	M10 x 1.5 x 20 Cl 8.8
9	59103598	Clamp	2	
10	50274299	Hose Clamp	2	
11	96711833	Flatwasher, Zinc Plated	4	M10 Cl 10
12	96702279	HHCS, Fully Threaded, Zinc Plated	4	M10 x 1.5 x 20 Cl 8.8

RADIATOR AND OIL COOLER ASSEMBLY

Dwg 13238092/0e

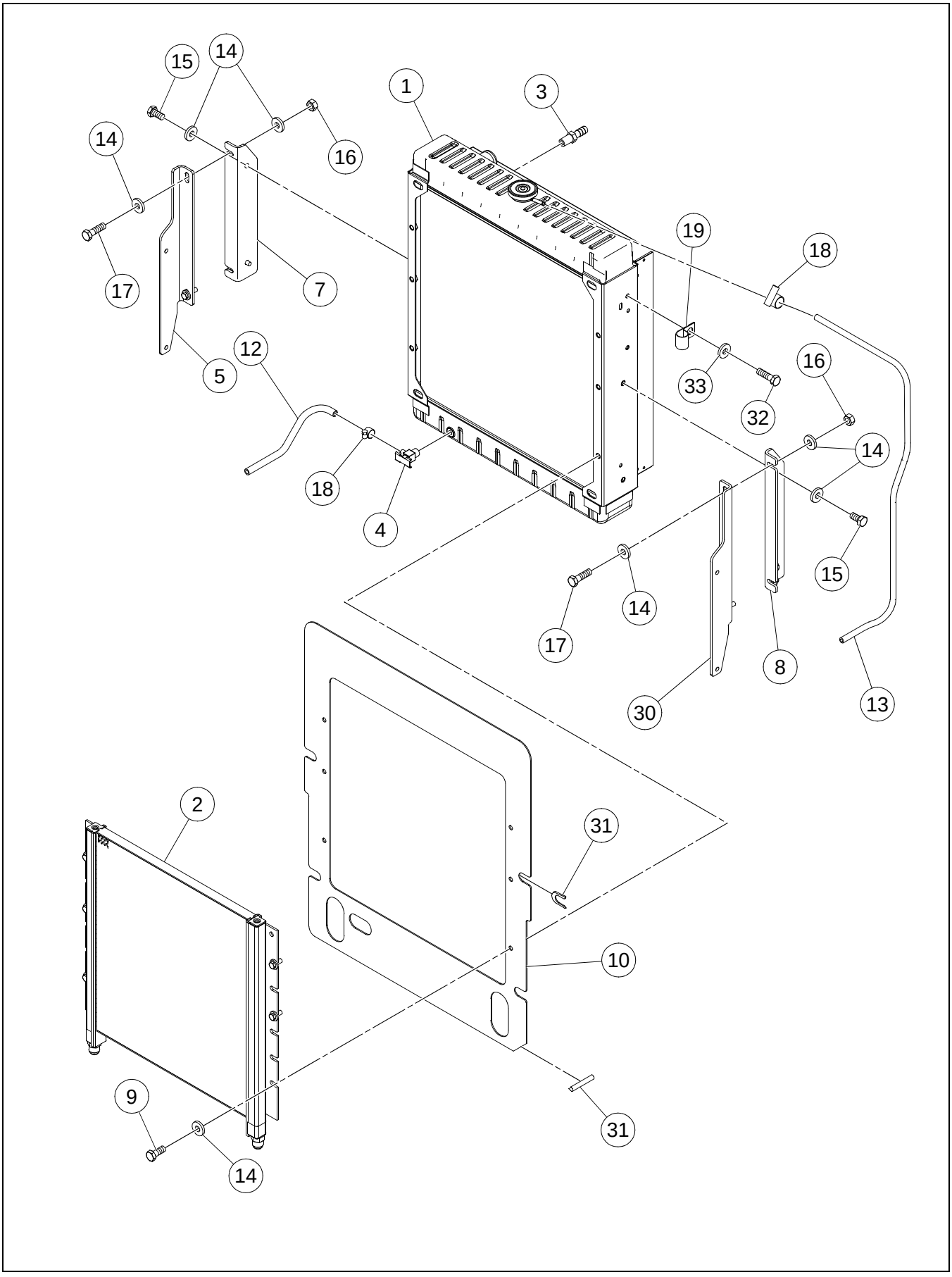

RADIATOR AND OIL COOLER ASSEMBLY

BOM 13175070

ITEM	COMM. NO.	DESCRIPTION	QTY	DIMENSIONS/NOTES
1	13425160	Radiator	1	
-	59498790	- Radiator Cap	1	
2	13225040	Oil Cooler	1	
3	59331934	Adapter	1	
4	58848920	Drain Assembly	1	
5	13233911	Radiator Frame, LH	1	
7	13215702	Radiator Bracket, LH	1	
8	13215710	Radiator Bracket, RH	1	
9	96702287	HHCS, Fully Threaded, Zinc Plated	6	M10 x 1.5 x 25 Cl 8.8
10	13274477	Baffle Plate	1	
12	59321687	Hose Assembly	1	13.0"
13	59122549	Hose Assembly	1	45.0"
14	96711833	Flatwasher, Zinc Plated	18	M10 Cl 10
15	96702279	HHCS, Fully Threaded, Zinc Plated	4	M10 x 1.5 x 20 Cl 8.8
16	96704812	Hex Nut, Zinc Plated	4	M10 x 1.5 Cl 8
17	96704309	HHCS, Fully Threaded, Zinc Plated	4	M10 x 1.5 x 35 Cl 8.8
18	50274299	Hose Clamp	2	
19	59103598	Clamp	1	
30	13233903	Radiator Frame, RH	1	
31	13062518	Trim	1	
32	96702816	HHCS, Fully Threaded, Zinc Plated	1	M8 x 1.25 x 16 Cl 8.8
33	96741038	Flatwasher	1	M8 x 1.25 Cl 200

EXHAUST INSTALLATION

Dwg D13272083/01

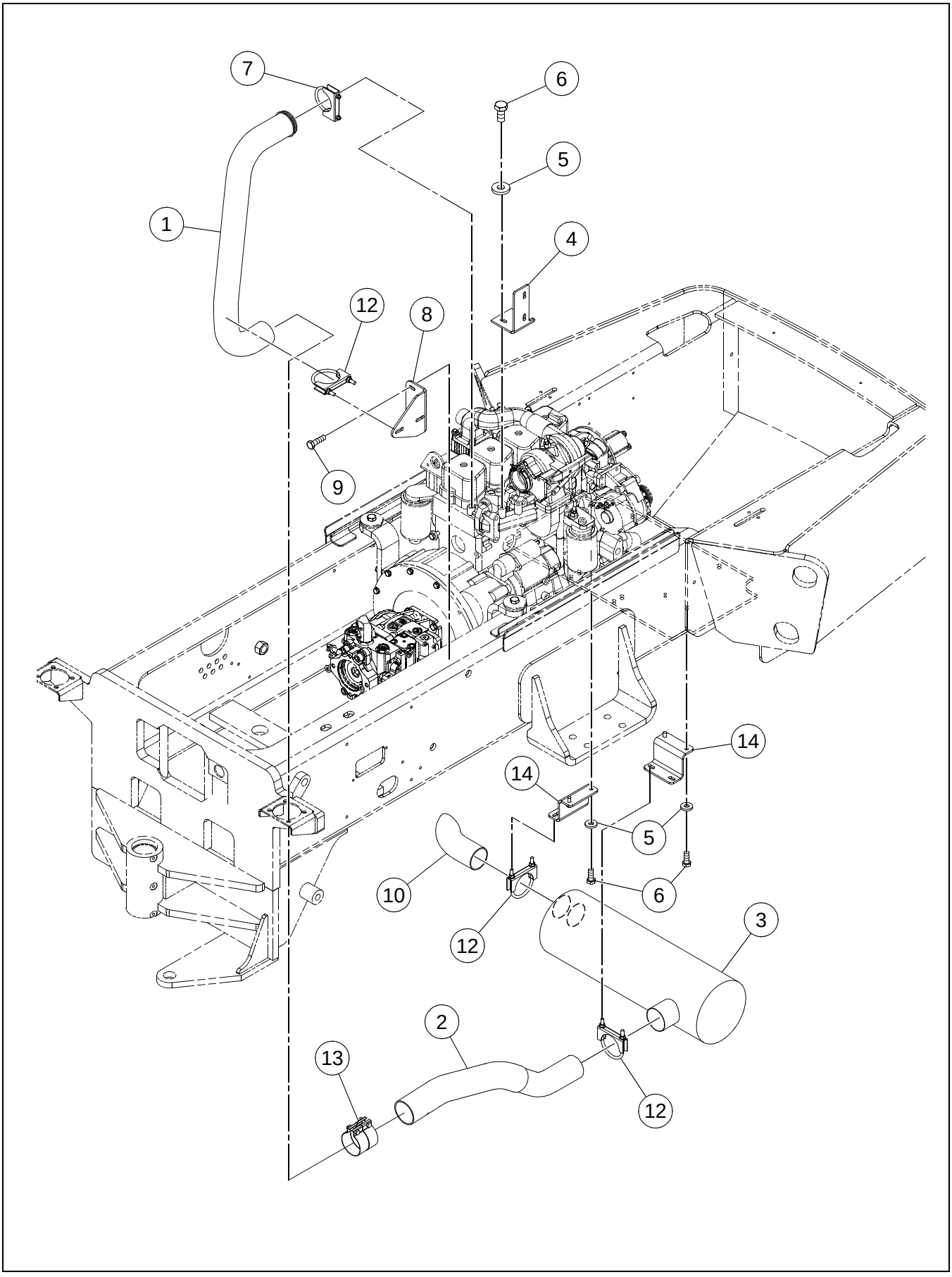

BOM 13188446

ITEM	COMM. NO.	DESCRIPTION	QTY	DIMENSIONS/NOTES
1	13239959	Exhaust Pipe	1	
2	13188602	Exhaust Pipe	1	
3	13188438	Muffler	1	
4	59104257	Support Bracket	1	
5	96711833	Flatwasher, Zinc Plated	6	M10 Cl 10
6	96702279	HHCS, Fully Threaded, Zinc Plated	6	M10 x 1.5 x 20 Cl 8.8
7	59495028	Clamp	1	
8	43863000	Exhaust Bracket	1	
9	96704309	HHCS, Fully Threaded, Zinc Plated	2	M10 x 1.5 x 35 Cl 8.8
10	13188628	Tail Pipe	1	
12	59179218	Exhaust Clamp	3	
13	13093075	Seal Clamp	1	
14	13188651	Support Bracket	2	

AIR PRE-CLEANER INSTALLATION - OPTIONAL

Dwg 43853068/00

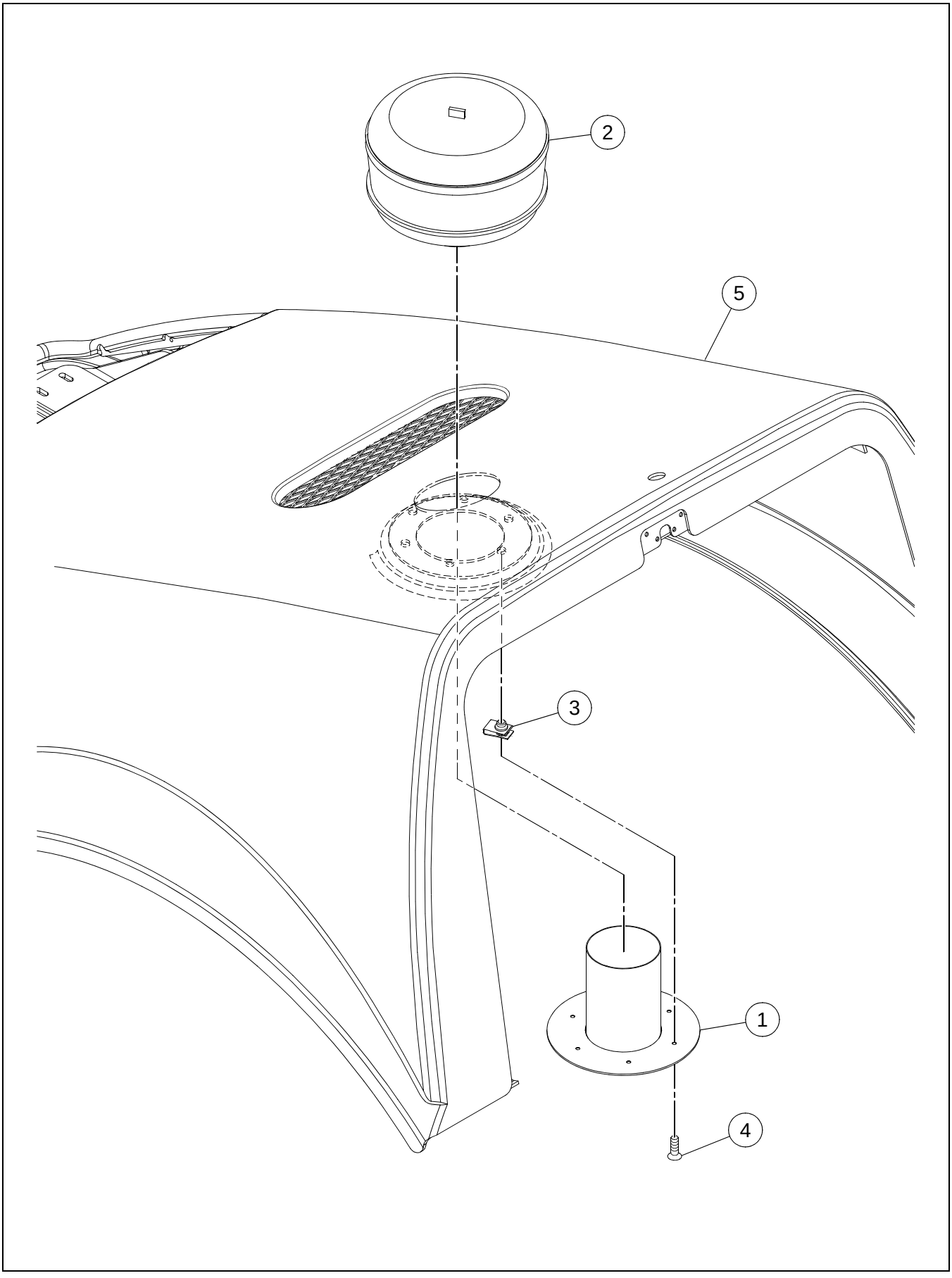

AIR PRE-CLEANER INSTALLATION - OPTIONAL

BOM 13176557, 43853068

ITEM	COMM. NO.	DESCRIPTION	QTY	DIMENSIONS/NOTES
1	13273339	Air Pre-cleaner Stack	1	
2	59081323	Air Pre-cleaner	1	
-	59103259	- Cover Assembly	1	
-	58938275	- Bowl	1	
-	59103267	- Sleeve Assembly	1	
-	59103275	- Clamp	1	
3	13186598	U-nut	6	
4	96728506	HHCS, Zinc Plated	6	M6 x 1.0 x 20 Cl 8.8
5	43853050	Hood W/Pre-Cleaner - Effective S/N 190000	1	
-	**NSVA**	- Hood Assembly	**1**	**See Page C - 42.**
-	13275581	Hood W/Pre-Cleaner - Prior to S/N 190000	1	

HOOD ASSEMBLY - SHEET 1 OF 2

Dwg 43888155/00/01

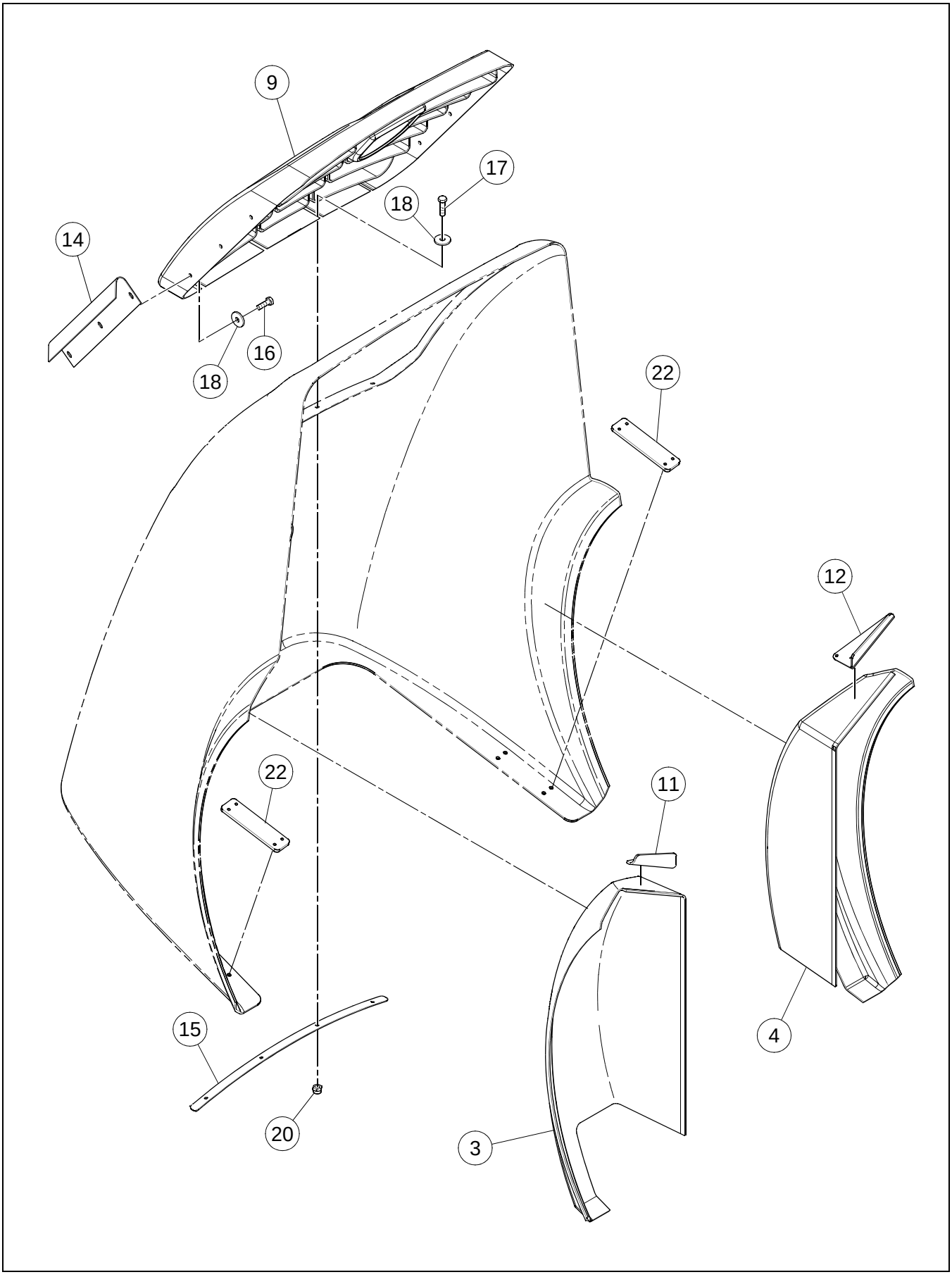

HOOD ASSEMBLY - SHEET 1 OF 2

BOM 43888155

ITEM	COMM. NO.	DESCRIPTION	QTY	DIMENSIONS/NOTES
3	13230081	Fender, LH	1	
4	13231337	Fender, RH	1	
9	13882550	Grill	1	
11	13233606	Supt Plate, LH	1	
12	13233622	Supt Plate, RH	1	
14	13889480	Grill Support Bar	2	
15	13238084	Top Grill Supt	1	
16	96702659	HHCS, Zinc Plated	6	M8 x 1.25 x 25 Cl 8.8
17	96702261	HHCS, Zinc Plated	4	M8 x 1.25 x 35 Cl 8.8
18	96740188	Washer	10	M8 x 3
20	96704606	Locknut	4	M8
22	13883442	Backing Plate	2	

HOOD ASSEMBLY - SHEET 2 OF 2

Dwg 43888155/00/02

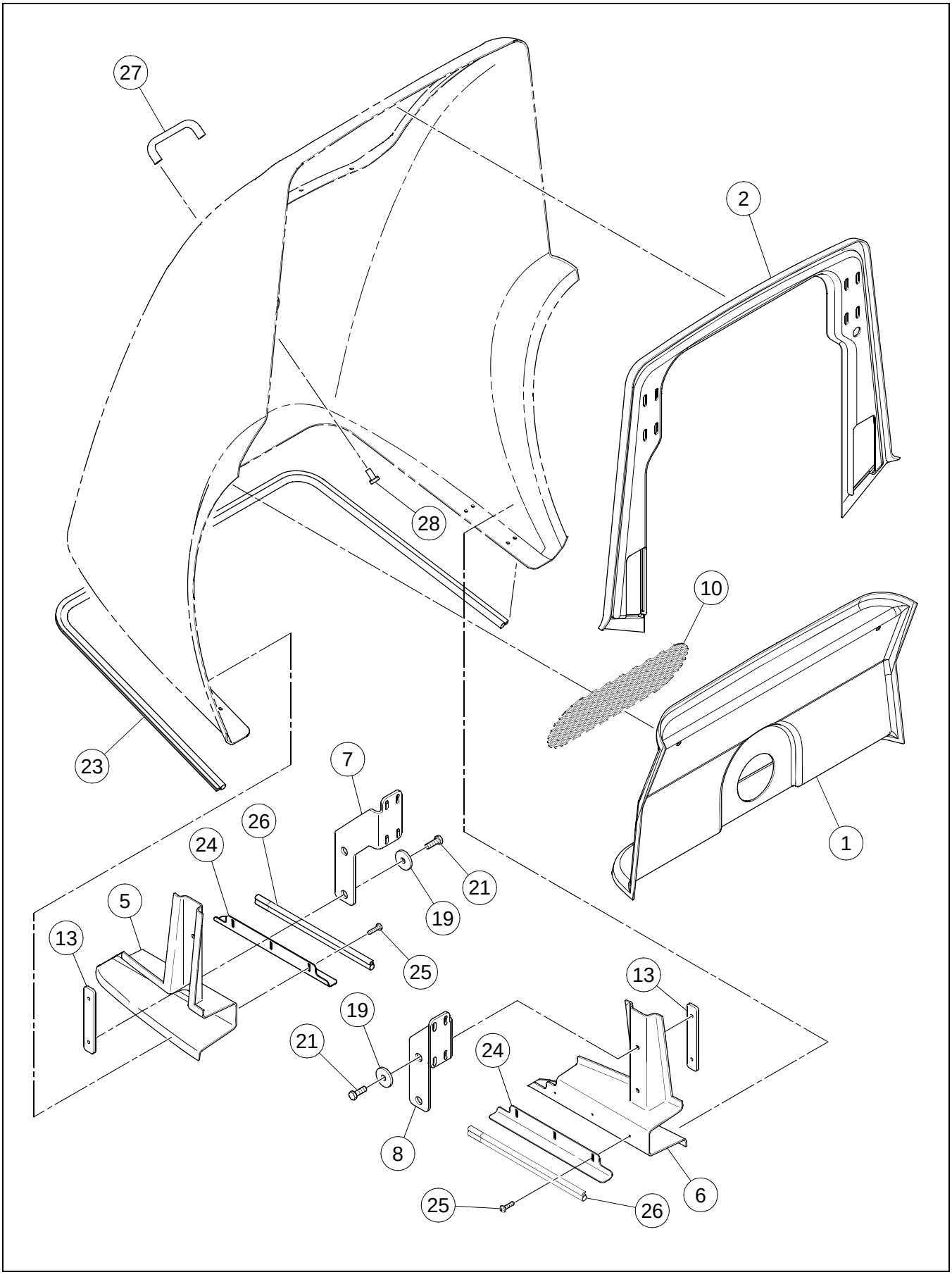

HOOD ASSEMBLY - SHEET 2 OF 2

BOM 43888155

ITEM	COMM. NO.	DESCRIPTION	QTY	DIMENSIONS/NOTES
1	13219001	Airduct	1	
2	13219019	Hood Supt Bottom	1	
5	13230602	Side Panel, LH	1	
6	13230933	Side Panel	1	
7	13230586	Hinge Supt	1	
8	13231873	Hinge Plate	1	
10	13212543	Airscreen	1	
13	13238035	Backing Plate	2	
19	50264860	Washer	4	
21	96701917	HHCS, Fully Threaded, Zinc Plated	4	M10 x 1.5 x 30 Cl 8.8
23	13883376	Seal Trim	1	
24	13278478	Seal Angle	2	
25	54487517	Tapping Screw	6	14 x 1
26	13270632	Seal Trim	2	
27	13883418	Hood Handle	1	
28	96702816	HHCS, Fully Threaded, Zinc Plated	2	M8 x 1.25 x 16 Cl 8.8

BLOCK HEATER INSTALLATION - OPTIONAL

Dwg D59118539/01

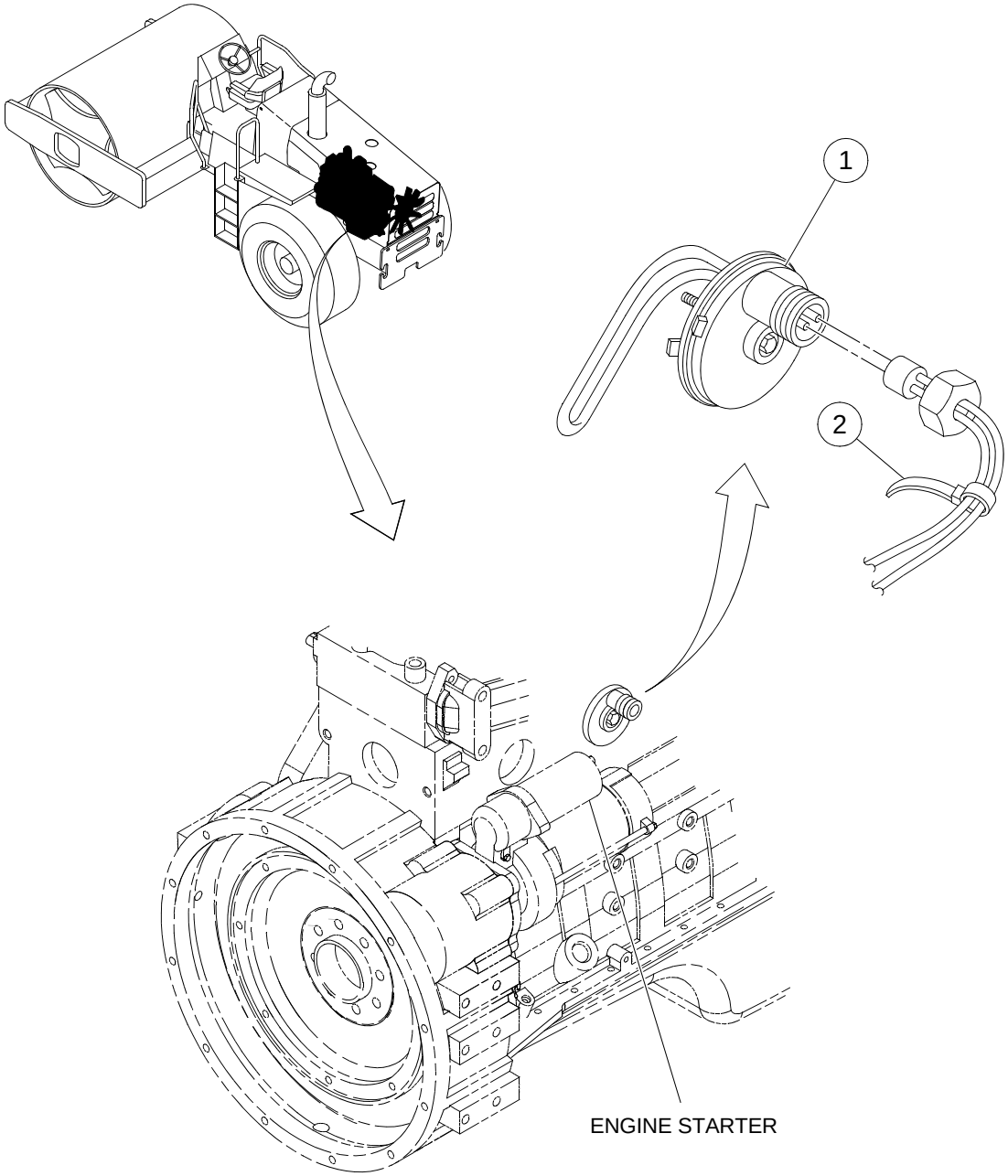

(ENGINE ROTATED 90 DEGREES C.C.W. FOR CLARITY)

BLOCK HEATER INSTALLATION - OPTIONAL

BOM 59118539

ITEM	COMM. NO.	DESCRIPTION	QTY	DIMENSIONS/NOTES
1	59118521	Block Heater	1	
-	59144394	- Cord	1	
2	95373973	Wire Tie	A/R	

COLD START INSTALLATION - OPTIONAL

Dwg 13334164/0c

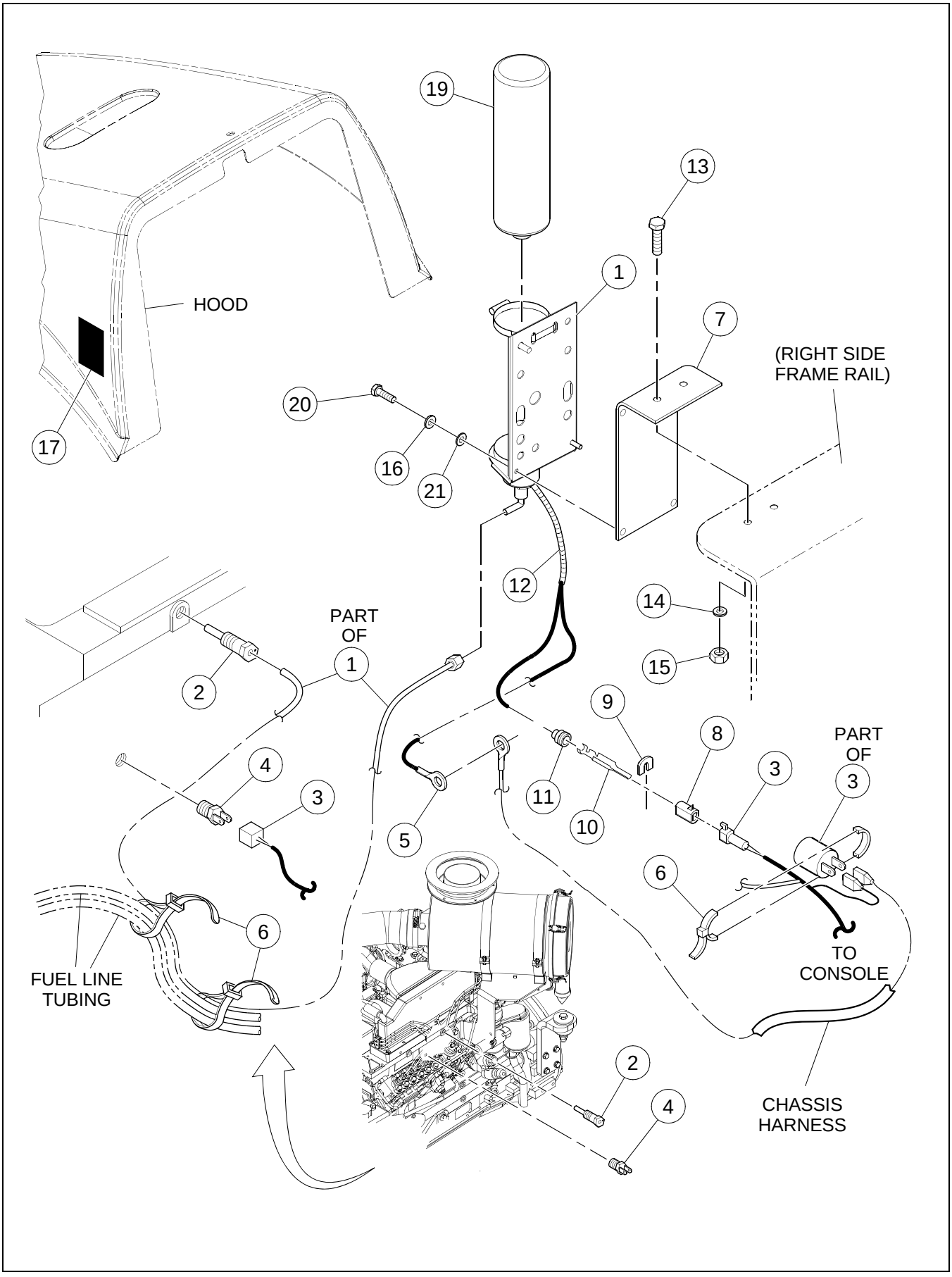

BOM 13174347

ITEM	COMM. NO.	DESCRIPTION	QTY	DIMENSIONS/NOTES
1	59398925	Starting Kit	1	
2	35309558	Atomizer Kit	1	
3	13205430	Wire Harness	1	
4	59035675	Thermo Switch	1	
5	95386587	Ring	1	
6	95373973	Wire Tie	A/R	
7	13353867	Ether Bottle Bracket	1	
8	58814971	Connector	1	
9	58814997	Lock	1	
10	58814492	Electrical Terminal	1	
11	59854877	Cable Seal	1	
12	59396366	Loom	3	
13	96705587	HHCS, Fully Threaded, Zinc Plated	2	M8 x 1.25 x 30 Cl 8.8
14	96741038	Flatwasher	2	M8 x 1.25 Cl 200
15	96705009	Locknut, Zinc Plated	2	M8 x 1.25 Cl 8
16	96741053	Flatwasher, Zinc Plated	3	M6 Cl 200
17		This Item Not Used With This Assembly		
19	59866970	Ether Cylinder	1	
20	96704564	HHCS, Fully Threaded, Zinc Plated	3	M6 x 1.0 x 20 Cl 8.8
21	96704663	Flatwasher	3	M6

Always use Manufacturer Replacement parts!*

Section D - OPERATORS COMPARTMENT

OPERATORS PLATFORM INSTALLATION - SHEET 1 OF 2

Dwg 13169198/Ac/01

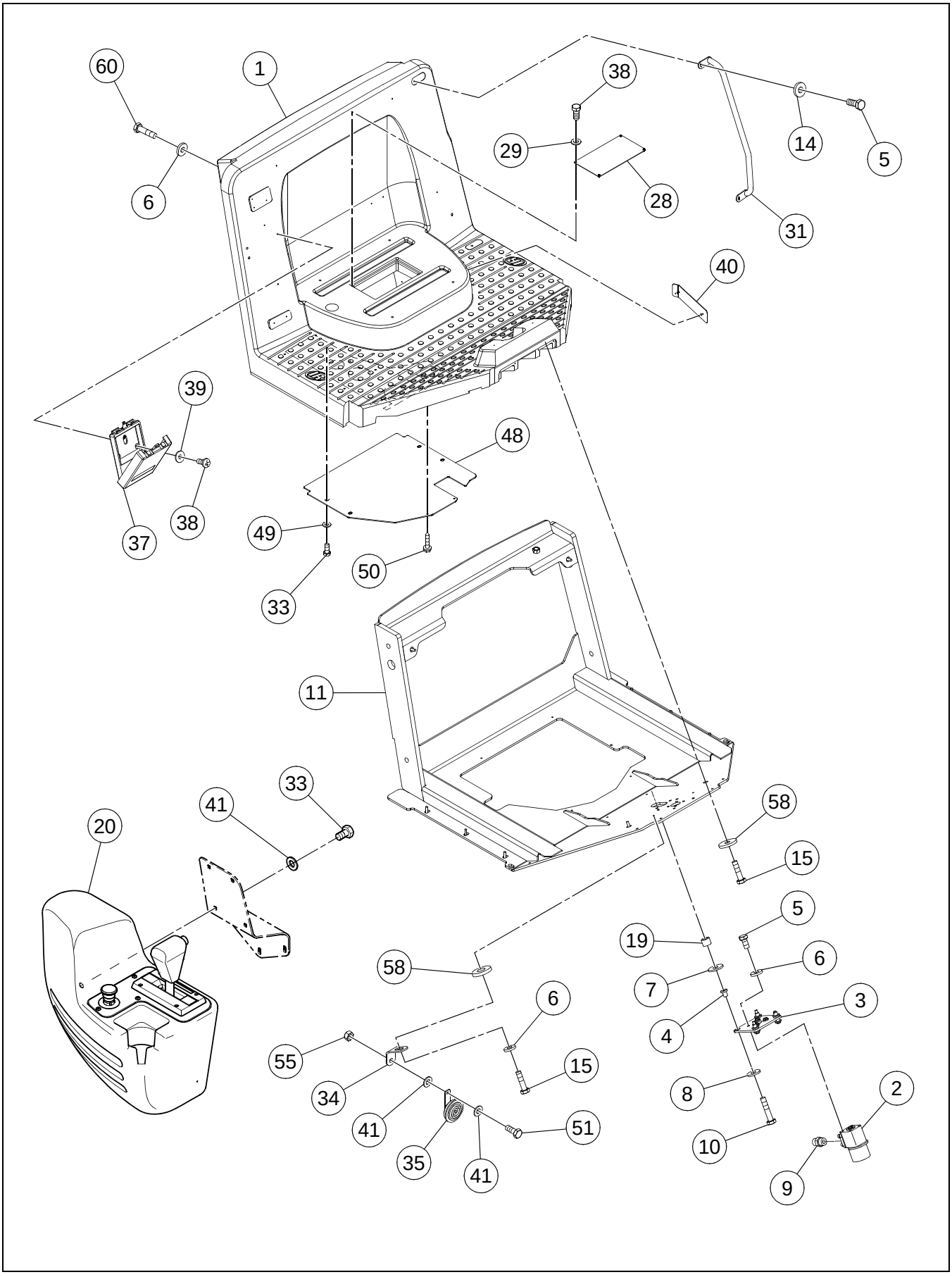

OPERATORS PLATFORM INSTALLATION - SHEET 1 OF 2

BOM 13232236, 80811755

ITEM	COMM. NO.	DESCRIPTION	QTY	DIMENSIONS/NOTES
1	43891605	Operators Platform	1	
2	13218987	Steering Valve	1	
-	54747340	- Seal Kit	1	
3	13167721	Mounting Plate	1	
4	59424309	Shock Mount	4	
5	96702279	HHCS, Fully Threaded, Zinc Plated	7	M10 x 1.5 x 20 Cl 8.8
6	96741046	Flatwasher, Zinc Plated	5	M10 Cl 200
7	59437079	Head Washer	4	
8	59437087	Tail Washer	4	
9	95303368	Adapter	4	
10	96705116	HHCS, Fully Threaded, Zinc Plated	4	M10 x 1.5 x 50 Cl 8.8
11	43865294	Rops Supt Platform - Effective S/N 191508	1	
-	13236427	Rops Supt Platform - Prior to S/N 191508	1	
14	96711833	Flatwasher, Zinc Plated	4	M10 Cl 10
15	96704309	HHCS, Fully Threaded, Zinc Plated	8	M10 x 1.5 x 35 Cl 8.8
19	13167812	Spacer	4	
20	**NSVA**	**Control Console Assembly**	**1**	**See Page D - 6.**
28	43869262	Cover Plate	1	
29	96738554	Flatwasher, Zinc Plated	4	M5 Hardened Cl 200
31	13233309	Handrail	1	
33	96702824	HHCS, Fully Threaded, Zinc Plated	13	M8 x 1.25 x 20 Cl 8.8
34	13237490	Horn Bracket	1	
35	13469010	Horn	1	
37	59185074	Manual Case	1	
38	96728548	Self-tapping Pan Head Screw	7	
39	96704663	Washer, Zinc Plated	2	M6 Large
40	**NSVA**	**Fuse Cover Assembly**	**1**	**See Page D - 10.**
41	96741038	Flatwasher	7	M8 x 1.25 Cl 200
48	43851203	Cover Plate - Effective with S/N 189841	1	
-	13481262	Cover Plate - Prior to S/N 189841	1	
49	96740204	Washer	8	M8 x 25
50	96728548	Self-tapping Screw, Zinc Plated	2	1.6
51	96702659	HHCS, Fully Threaded, Zinc Plated	1	M8 x 1.25 x 25 Cl 8.8
55	96704606	Hex Locknut	3	M8
58	50264860	Washer	8	
59	59214650	U-nut	1	
60	96705124	HHCS, Fully Threaded, Zinc Plated	2	M10 x 1.5 x 45 Cl 8.8

OPERATORS PLATFORM INSTALLATION - SHEET 2 OF 2

Dwg 13169198/Ac/02

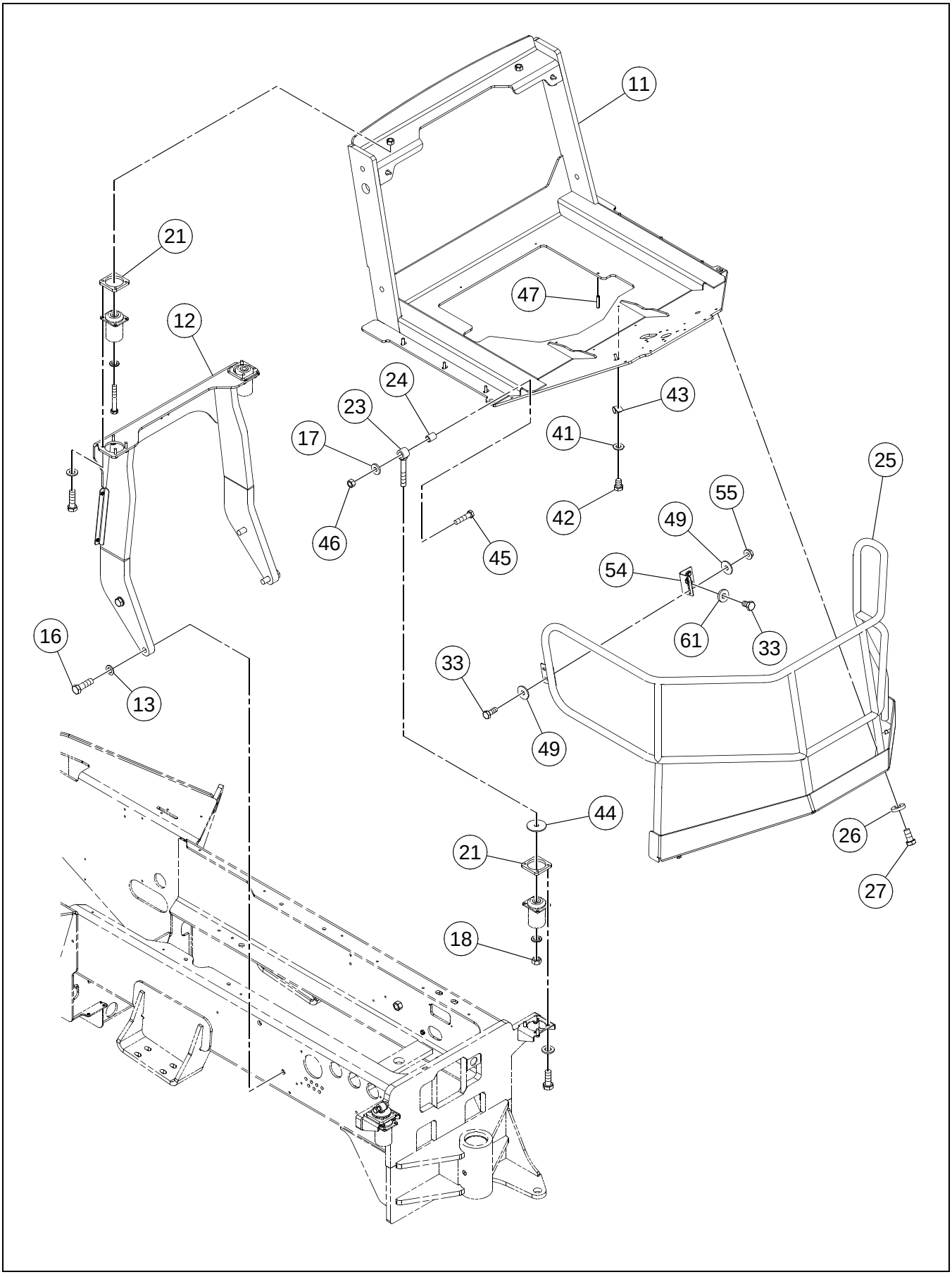

OPERATORS PLATFORM INSTALLATION - SHEET 2 OF 2

BOM 13232236, 80811755

ITEM	COMM. NO.	DESCRIPTION	QTY	DIMENSIONS/NOTES
11	43865294	Rops Supt Platform - Effective S/N 191508	1	
-	13236427	Rops Supt Platform - Prior to S/N 191508	1	
12	13239157	ROPS Support Plate	1	
13	96738646	Flatwasher, Zinc Plated	4	M24 Hardened Cl 200
16	96746235	HHCS, Fully Threaded, Zinc Plated	4	M24 x 3 x 70 Cl 10.9
17	59565044	Flatwasher	2	3/4 Hardened
18	96703665	Nut, Zinc Plated	2	M20 x 2.5 Cl 10
21	13412648	Steel Platform Spacer	4	
22	96738596	Flatwasher, Zinc Plated - Prior to S/N 189841 (Not Shown)	16	M12 Hardened Cl 200
23	13214804	Eyebolt	2	
24	13217450	Sleeve	2	
25	13413158	Railing	1	
26	96712237	Flatwasher, Zinc Plated	6	M12 Hardened Cl 10
27	96701495	HHCS, Fully Threaded, Zinc Plated	6	M12 x 1.75 x 25 Cl 8.8
33	96702824	HHCS, Fully Threaded, Zinc Plated	13	M8 x 1.25 x 20 Cl 8.8
41	96741038	Flatwasher	7	M8 x 1.25 Cl 200
42	96705041	HHCS, Fully Threaded, Zinc Plated	2	M8 x 1.25 x 12 Cl 8.8
43	95301834	Clamp	2	
44	13225339	Washer	2	
45	96738208	HHCS, Zinc Plated	2	M16 x 2.0 x 70 Cl 10.9
46	96711882	Hex Nut, Zinc Plated	2	M16 x 2.0 Cl 8
47	96701594	Spring Pin	1	
49	96740204	Washer	8	M8 x 25
54	13231394	Support Bracket	1	
55	96704804	Locknut, Zinc Plated	3	M8 x 1.25, Cl 10
57	96702808	HHCS, Fully Threaded, Zinc Plated (Not Shown)	8	M12 x 1.75 x 30 Cl 10.9
61	96740188	Washer	2	M8 X 3

CONTROL CONSOLE ASSEMBLY

Dwg 13169743/0f

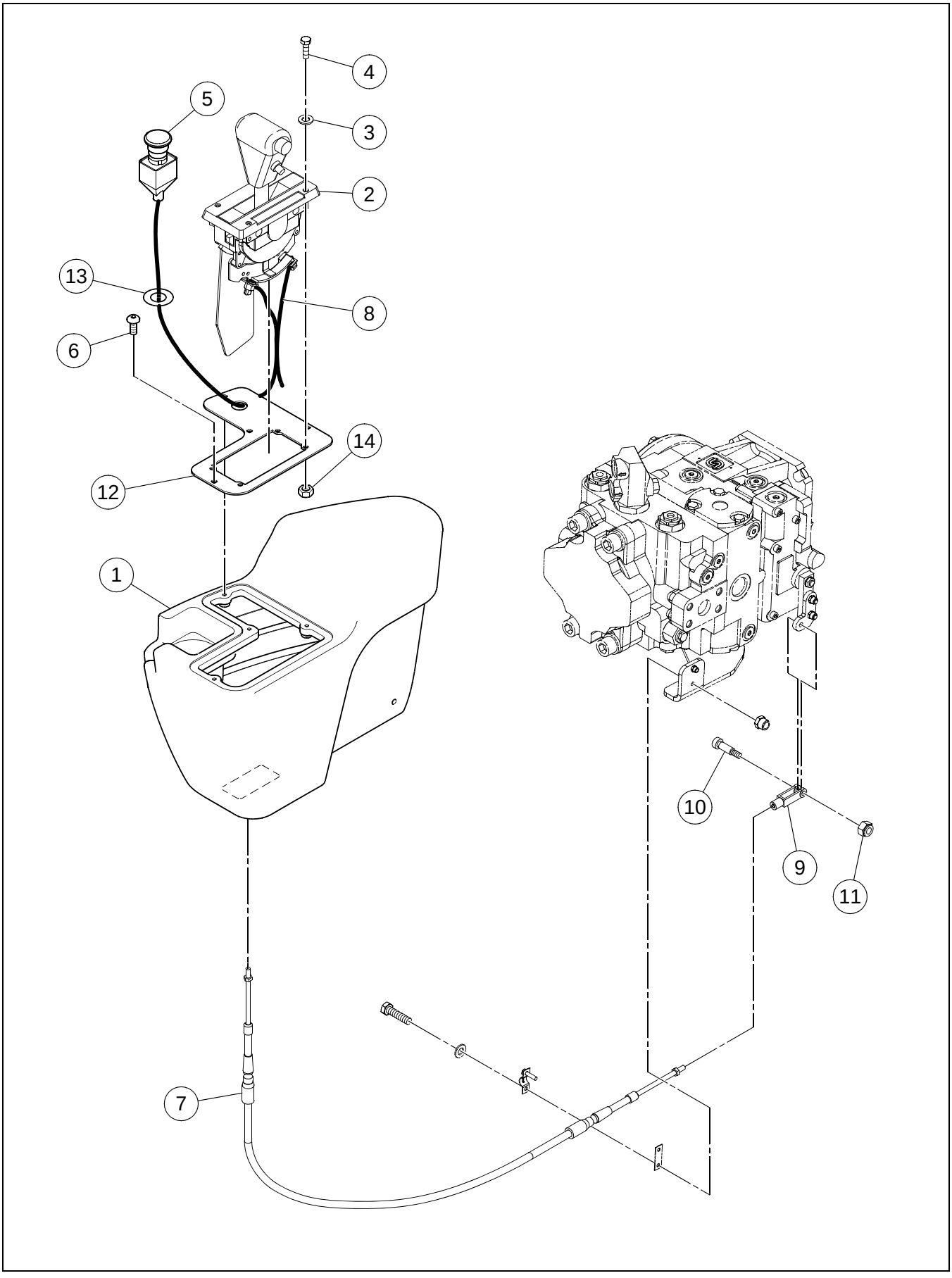

CONTROL CONSOLE ASSEMBLY

BOM 13166053

ITEM	COMM. NO.	DESCRIPTION	QTY	DIMENSIONS/NOTES
1	13880794	FSR Control Box - Effective S/N 189840	1	
-	NSS	Side Console Assembly - Prior S/N 189840	1	
-	13186242	- Side Console	1	
-	13186390	- Side Console Pocket	1	
-	13186374	- Side Console Cover	1	
2	13289921	F-Stop-R Control	1	
-	13382445	- F-Stop-R Control Switch	1	
3	96738554	Flatwasher, Zinc Plated	4	M5 Hardened Cl 200
4	96702386	HHCS, Fully Threaded, Zinc Plated	4	M5 x 0.8 x 12 Cl 8.8
5	**NSVA**	**Emergency Stop Assembly**	**1**	**See Page D - 8.**
6	59148569	HSBHCS - Effective S/N 189840	4	M5 x 0.8 x 12
-	59148569	HSBHCS - Prior to S/N 189840	2	M5 x 0.8 x 12
7	13320841	F-Stop-R Cable	1	
8	13304944	Side Console Wire Harness	1	
9	59929059	Clevis	1	
10	95860052	Screw	1	10 x 24 x 0.375
11	95943346	Locknut, Zinc Plated	1	#10 x 24
12	13884408	Panel Side Console - Effective S/N 189840	1	
13	59239897	Decal Stop - Effective S/N 189840	1	
14	96704580	Hex Locknut - Effective S/N 189840	4	M5

EMERGENCY STOP ASSEMBLY

Dwg 13169735/0a

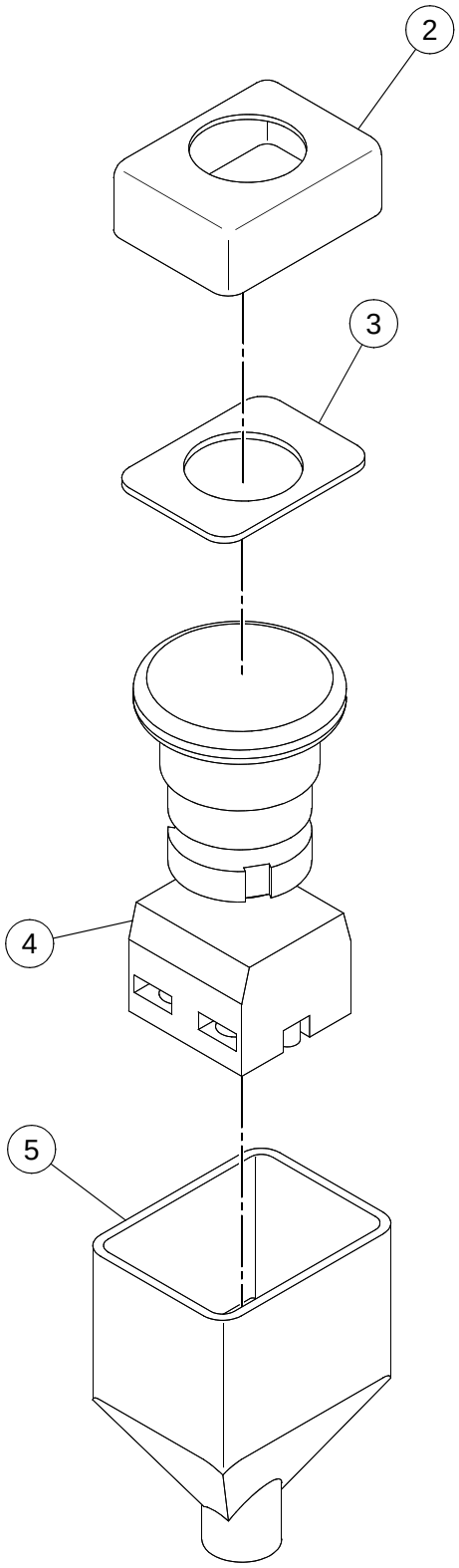

EMERGENCY STOP ASSEMBLY

BOM 13166087

ITEM	COMM. NO.	DESCRIPTION	QTY	DIMENSIONS/NOTES
1	13166079	Mounting Plate - Prior to S/N 189840 (Not Shown)	1	
2	59108100	Top Dust Boot	1	
3	59109116	Washer	1	
4	59111450	Emergency Stop Switch	1	
-	58917543	- Emergency Stop Switch Bulb	1	
5	59108605	Bottom Dust Boot	1	
6	59239897	Decal: Stop (Not Shown)	1	

FUSE COVER ASSEMBLY

Dwg D13215207/00

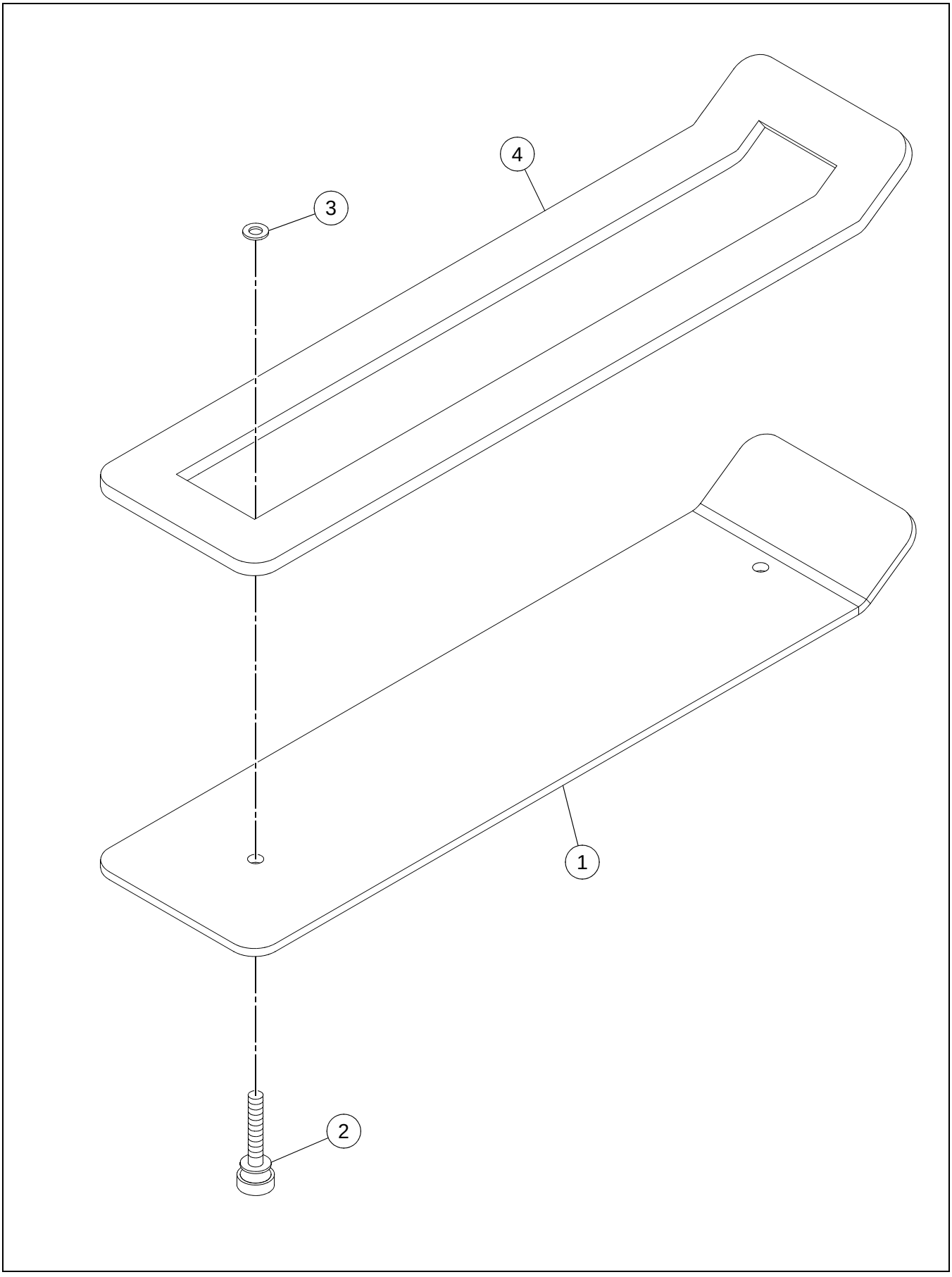

FUSE COVER ASSEMBLY

BOM 13214325

ITEM	COMM. NO.	DESCRIPTION	QTY	DIMENSIONS/NOTES
1	13214259	Fuse Cover	1	
2	13214317	Knurled Head Screw	2	
3	13214333	Split Washer	2	
4	13256193	Weather Strip	2	

PEDESTAL AND SEAT INSTALLATION - SD-70D/F

Dwg 13239041/0e

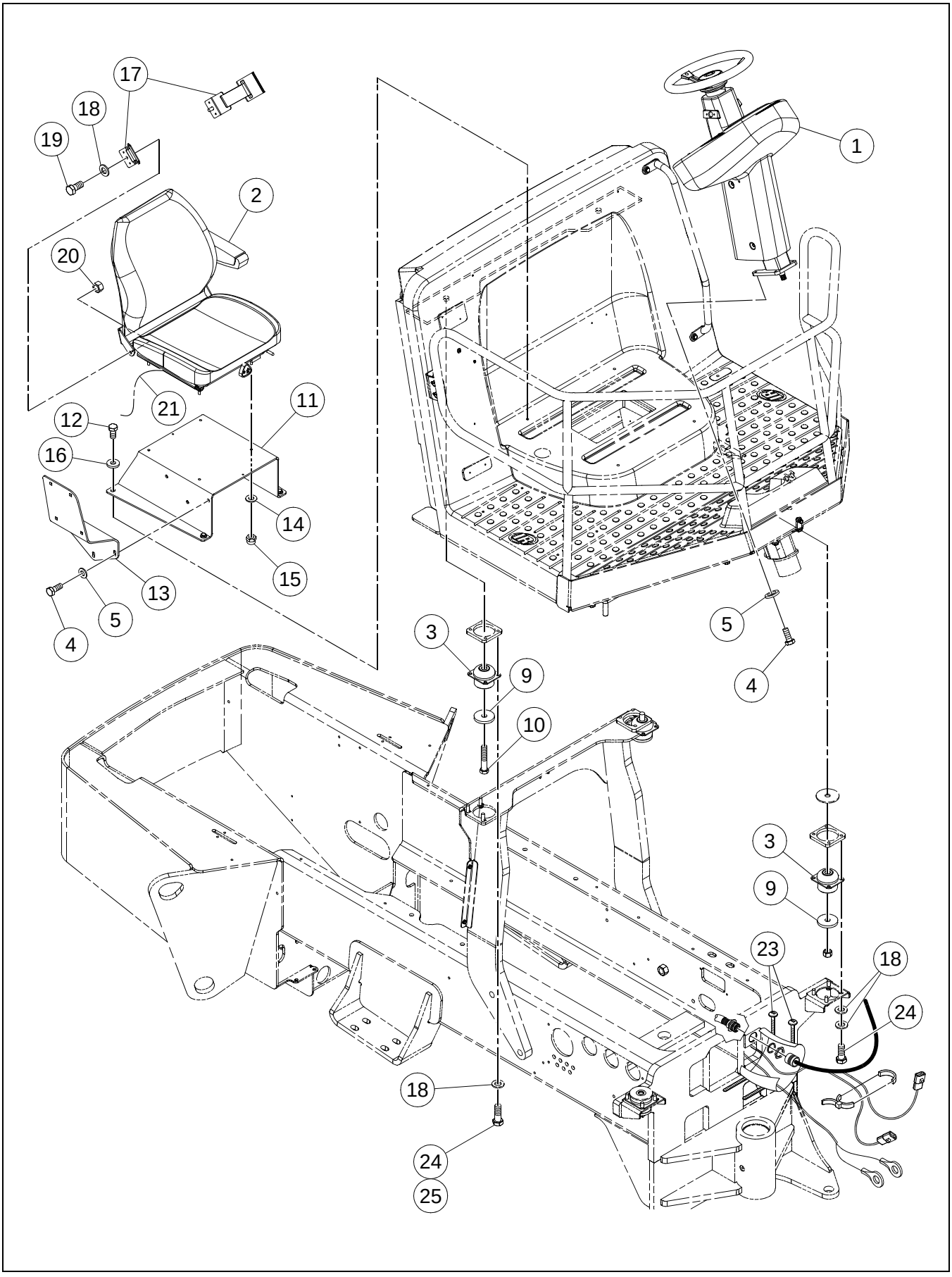

BOM 13321294, 59283952, 13193404, 13830757

ITEM	COMM. NO.	DESCRIPTION	QTY	DIMENSIONS/NOTES
1	**NSVA**	**Pedestal Assembly - SD-70D/F (Effective with S/N 194400)**	**1**	**See Page D - 24.**
-	**NSVA**	**Pedestal Assembly - SD-70D/F (Prior to S/N 194400)**	**1**	**See Page D - 26.**
2	**54670302**	**Seat**	**1**	**See Page D - 16.**
3	59299164	Isolator	4	
-	13225503	Isolator (Optional)	4	
4	96702287	HHCS, Fully Threaded, Zinc Plated	7	M10 x 1.5 x 25 Cl 8.8
5	96741046	Flatwasher, Zinc Plated	11	M10 Cl 200
9	13225347	Washer	4	
-	96701560	Flatwasher, Zinc Plated (Optional)	2	M20 Hardened
10	96700927	HHCS, Zinc Plated	2	M20 x 2.5 x 110 Cl 8.8
-	96741442	BHCS, Zinc Plated (Optional)	2	M20 x 2.5 x 140 Cl 8.8
11	13236039	Seat Base	1	
12	96702287	HHCS, Fully Threaded, Zinc Plated	4	M10 x 1.5 x 25 Cl 8.8
13	13886981	Side Console Support - Eff S/N 189840	1	
-	13237508	Side Console Support - Prior to S/N 189840	1	
14	96741038	Flatwasher	4	M8 x 1.25 Cl 200
15	96704606	Hex Locknut, Zinc Plated	4	M8 x 1.25 Cl 8
16	96711833	Flatwasher, Zinc Plated	1	M10 Cl 10
17	59227561	Seat Belt	1	
18	96738596	Flatwasher, Zinc Plated	18	M12 Hardened Cl 200
19	96702790	HHCS, Fully Threaded, Zinc Plated	2	M12 x 1.75 x 25 Cl 10.9
20	96702857	Nut, Zinc Plated	2	M12 x 1.75 Cl 10
21	13165071	Seat Switch Wire Harness	1	
22	13270749	Wire Guard (Not Shown)	1	
23	95373973	Wire Tie	A/R	
24	96702808	HHCS	16	M12 x 1.75 x 30 Cl 10.9
25		This item not used with this Assembly		

PEDESTAL AND SEAT INSTALLATION - SD-77DX/F

Dwg 13169925/0g

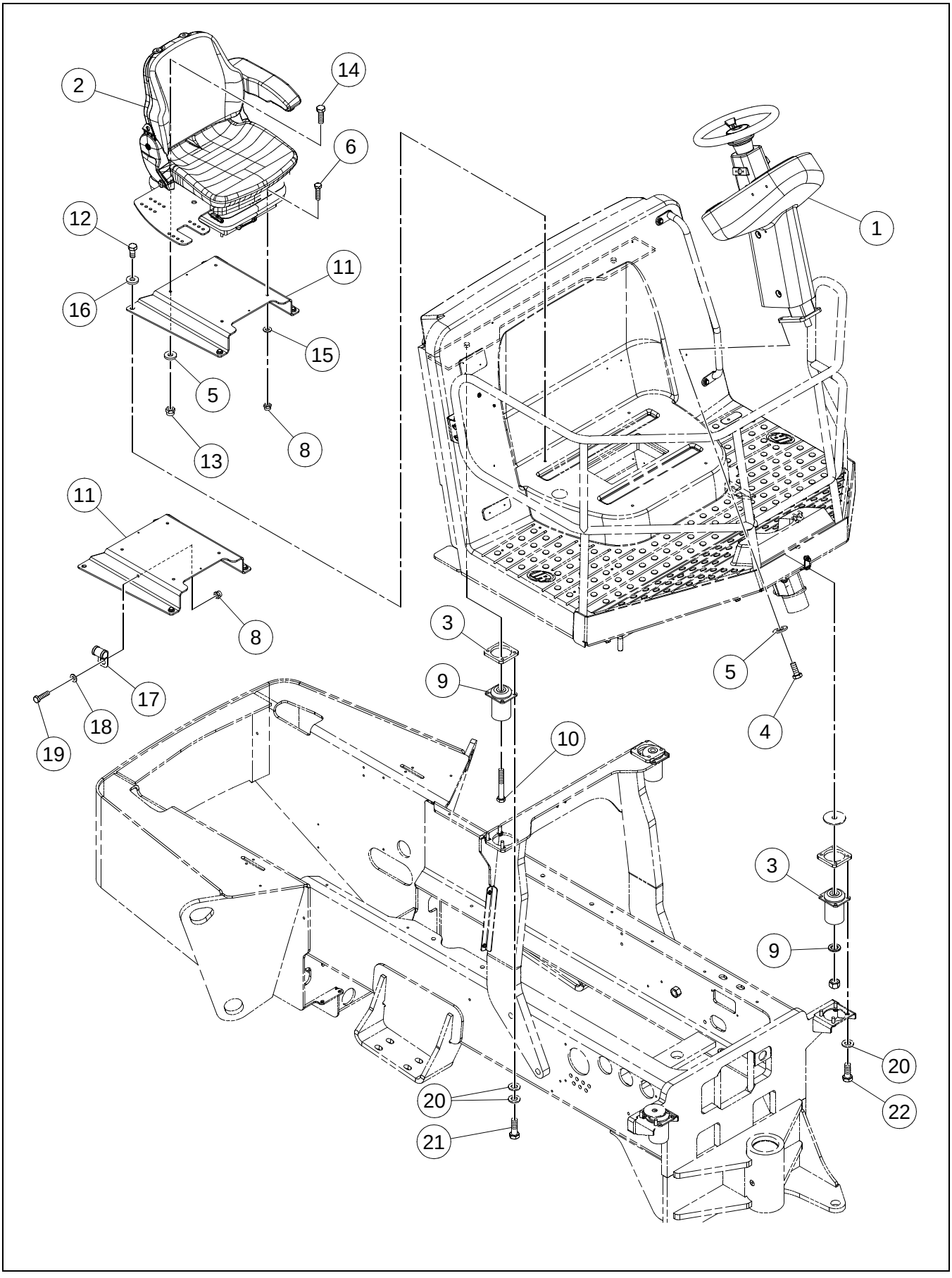

PEDESTAL AND SEAT INSTALLATION - SD-77DX/F

BOM 13193404, 13321286

ITEM	COMM. NO.	DESCRIPTION	QTY	DIMENSIONS/NOTES
1	**NSVA**	**Pedestal Assembly - SD-77DX/F**	**1**	**See Page D - 28.**
2	**54655360**	**Seat**	**1**	**See Breakdown D - 18.**
-	13884770	Seat (EEC)	1	
-	13886999	- Side Console Mount Plate	1	
-	13263041	- Bellows	1	
-	13263090	- Handle	1	
-	13262910	- Switch	1	
-	13462650	- Tension Spring	2	
-	13462668	- Bumper Set	1	
3	13225503	Isolator	4	
4	96702287	HHCS, Fully Threaded, Zinc Plated	4	M10 x 1.5 x 25 Cl 8.8
5	96741046	Flatwasher, Zinc Plated	6	M10 Cl 200
6	96705587	HHCS, Fully Threaded, Zinc Plated	2	M8 x 1.25 x 30 Cl 8.8
8	96704606	Hex Locknut, Zinc Plated	2	M8 x 1.25 Cl 8
9	96701560	Flatwasher, Zinc Plated	2	M20 Hardened
10	96741442	BHCS, Zinc Plated	2	M20 x 2.5 x 140 Cl 8.8
11	13235981	Seat Base	1	
12	96702287	HHCS, Fully Threaded, Zinc Plated	4	M10 x 1.5 x 25 Cl 8.8
13	96704614	Nut, Zinc Plated	2	M10 x 1.5 Cl 8
14	96701917	HHCS, Fully Threaded, Zinc Plated	2	M10 x 1.5 x 30 Cl 8.8
15	96741038	Flatwasher	2	M8 x 1.25 Cl 200
16	96711833	Flatwasher, Zinc Plated	4	M10 Cl 10
17	59117317	Clamp	1	
18	96740204	Washer	1	M8 x 25
19	96702824	HHCS, Fully Threaded, Zinc Plated	1	M8 x 1.25 x 20 Cl 8.8
20	96738596	Flatwasher	24	M12 Hardened
21	96703111	HHCS, Fully Threaded, Zinc Plated	8	M12 x 1.75 x 35 Cl 10.9
22	96702808	HHCS	8	M12 x 1.75 x 30 Cl 10.9

SEAT (54670302) - SD-70D/70F - INTERNAL BREAKDOWN

Dwg D13244504/01

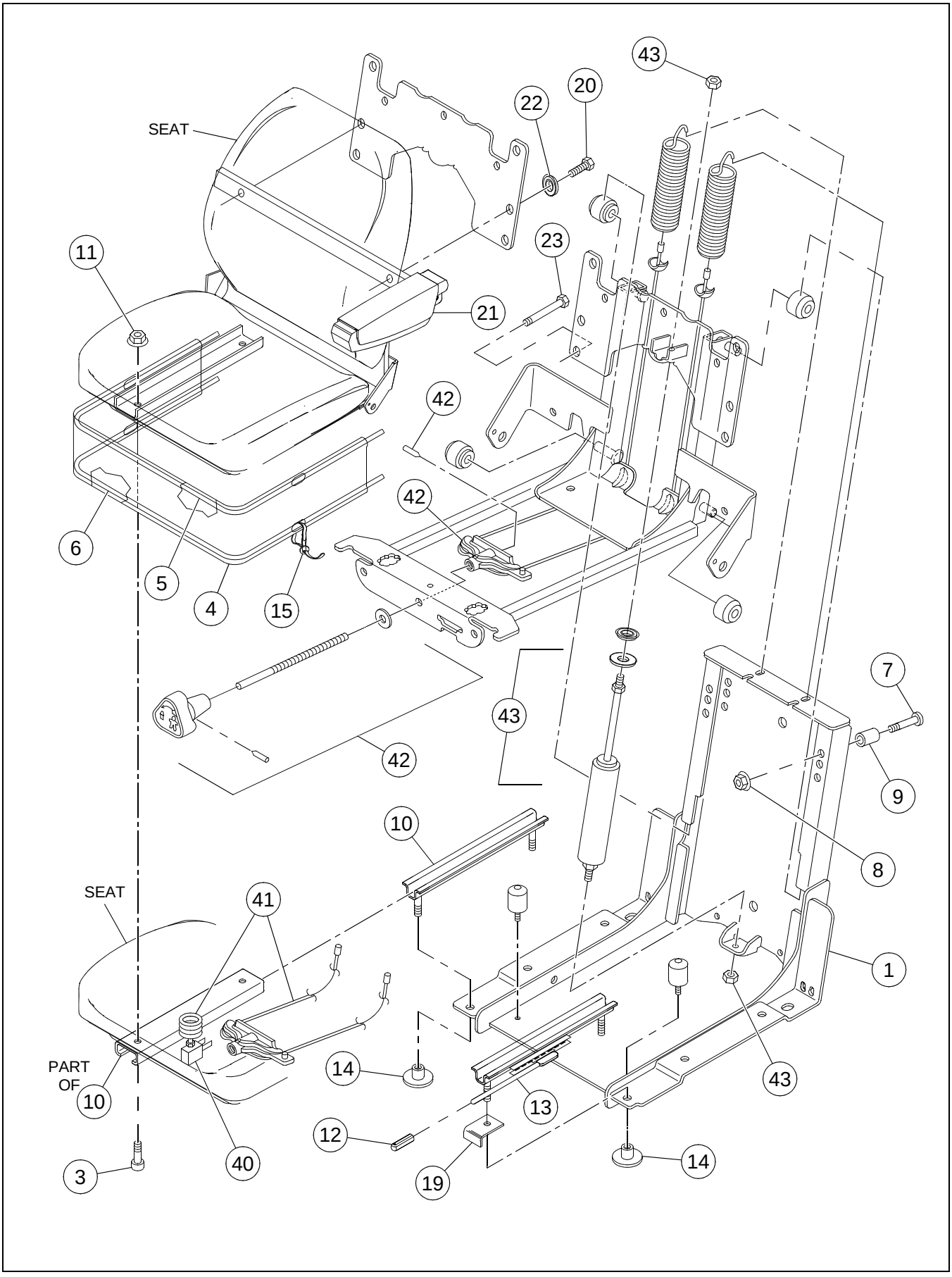

SEAT (54670302) - SD-70D/70F - INTERNAL BREAKDOWN

BOM 54670302

ITEM	COMM. NO.	DESCRIPTION	QTY	DIMENSIONS/NOTES
1	59154450	Suspension Assembly	1	
3	13228820	Capscrew	4	
4	13228838	Boot	1	
5	59154492	Wire	1	
6	59154500	Wire	2	
7	59154518	Pin	2	
8	59154526	Nut	2	
9	13228846	Spacer	2	
10	13247473	Adjuster	1	
11	59154542	Nut	3	
12	13228853	Tip	1	
13	13247481	Adjuster - Latcher W/Handle	1	
14	13228861	Stud Protector	4	
15	59145821	Wire Tie	A/R	
19	59154393	Bracket	1	
20	13247549	Screw	2	
21	54531629	Arm Rest Assembly	1	
22	13247556	Washer	2	
23	43827625	Screw	4	
40	13137945	Cushion and Switch Kit	1	
-	13281332	- Seat Pan And Cushion	1	
-	13198270	- Dual Switch Seat Kit	1	
-	13281365	- Compression Switch	1	
-	13281373	- Screw	1	
41	13258934	Spring Cable Kit (Includes items 24, 34)t	1	
42	54496385	Knob Kit (Includes items 35,36,37,38,39)	1	
43	54496377	Damper Kit (Includes items 30,31,32,33)	1	

SEAT (54655360) - INTERNAL BREAKDOWN - SHEET 1 OF 3

Dwg 54655360/00/01

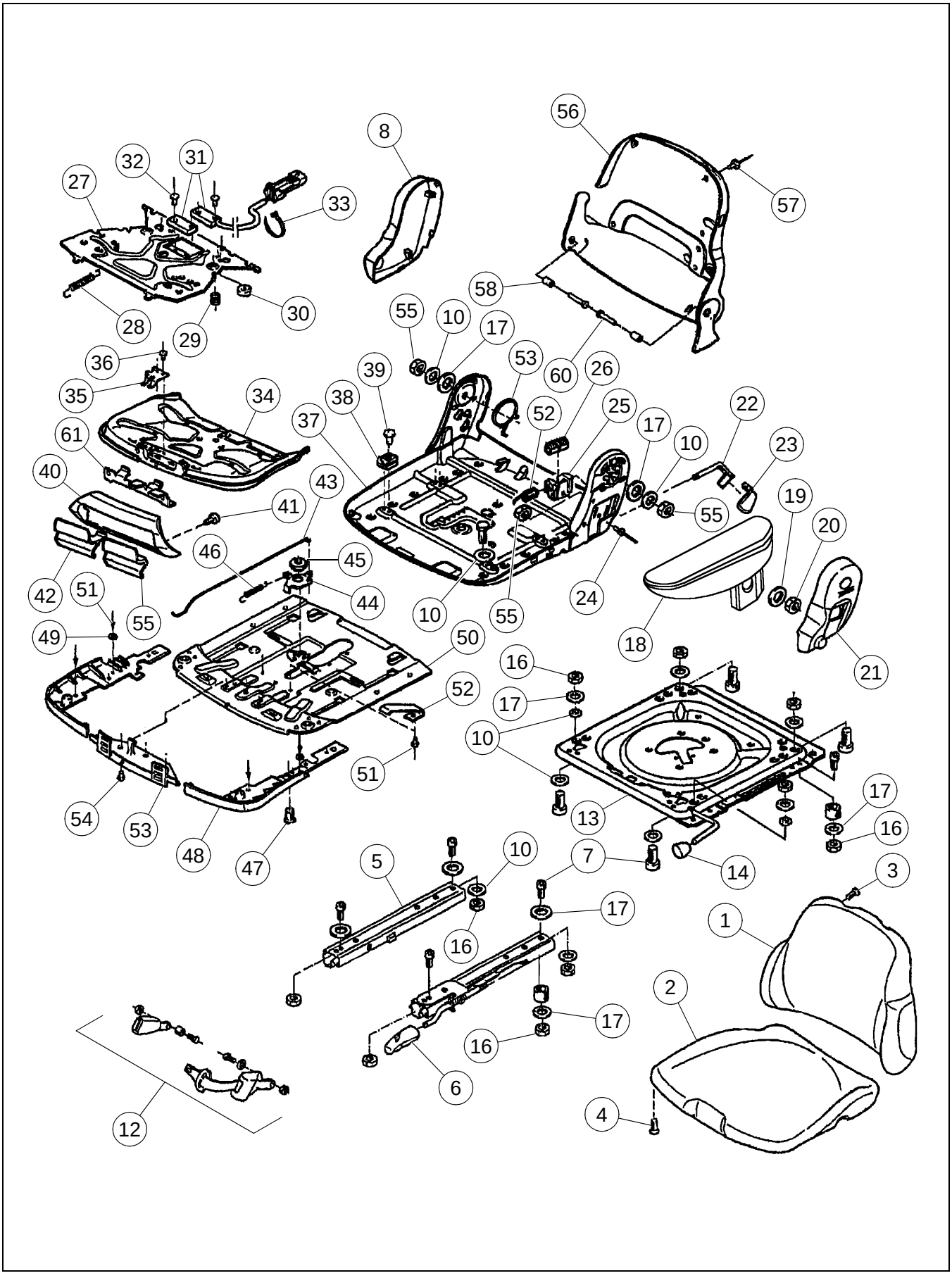

SEAT (54655360) - INTERNAL BREAKDOWN - SHEET 1 OF 3

BOM 54655360, 13884747

ITEM	COMM. NO.	DESCRIPTION	QTY	DIMENSIONS/NOTES
1	13886999	Side Console Mount Plate - Eff S/N 189841	1	
-	13264221	Backrest Cushion - Prior S/N 189841	1	
2	13264239	Seat Cushion	1	
3	NSS	- Not sold separately	4	
4	NSS	- Not sold separately	4	
5	13262803	Adjustment Rails	1	
6	NSS	- Not sold separately	1	
7	13262811	Screw	6	
8	13262829	Cover	1	
10	58845868	Washer	8	
12	13262837	Seat Belt	1	
13	13262845	Swivel	1	
14	NSS	- Not sold separately	1	
16	58845835	Nut	9	
17	13262852	Washer	14	
18	13262860	Arm Rest	1	
19	NSS	- Not sold separately	1	
20	NSS	- Not sold separately	1	
21	13262878	Cover	1	
22	13262886	Lever	1	
23	NSS	- Not sold separately	1	
24	NSS	- Not sold separately	1	
25	13262894	Bearing Kit	1	
26	NSS	- Not sold separately	1	
27	13262902	Switch (Includes item 31)	1	
28	NSS	- Not sold separately	1	
29	NSS	- Not sold separately	1	
30	NSS	- Not sold separately	2	
31	13262910	Switch	1	
32	NSS	- Not sold separately	4	
33	NSS	- Not sold separately	1	
34	13262928	Seat Angle Adjustment Cover	1	
35	NSS	- Not sold separately	1	
36	NSS	- Not sold separately	1	
37	13262936	Seat Panel	1	
38	NSS	- Not sold separately	1	
39	NSS	- Not sold separately	5	
40	13262944	Seat Cover	1	
41	NSS	- Not sold separately	2	
42	NSS	- Not sold separately	1	
43	13262951	Rod	1	
44	13262969	Lever	1	
45	NSS	- Not sold separately	1	
46	NSS	- Not sold separately	2	
47	NSS	- Not sold separately	1	

SEAT (54655360) - INTERNAL BREAKDOWN - SHEET 2 OF 3

Dwg 54655360/00/01

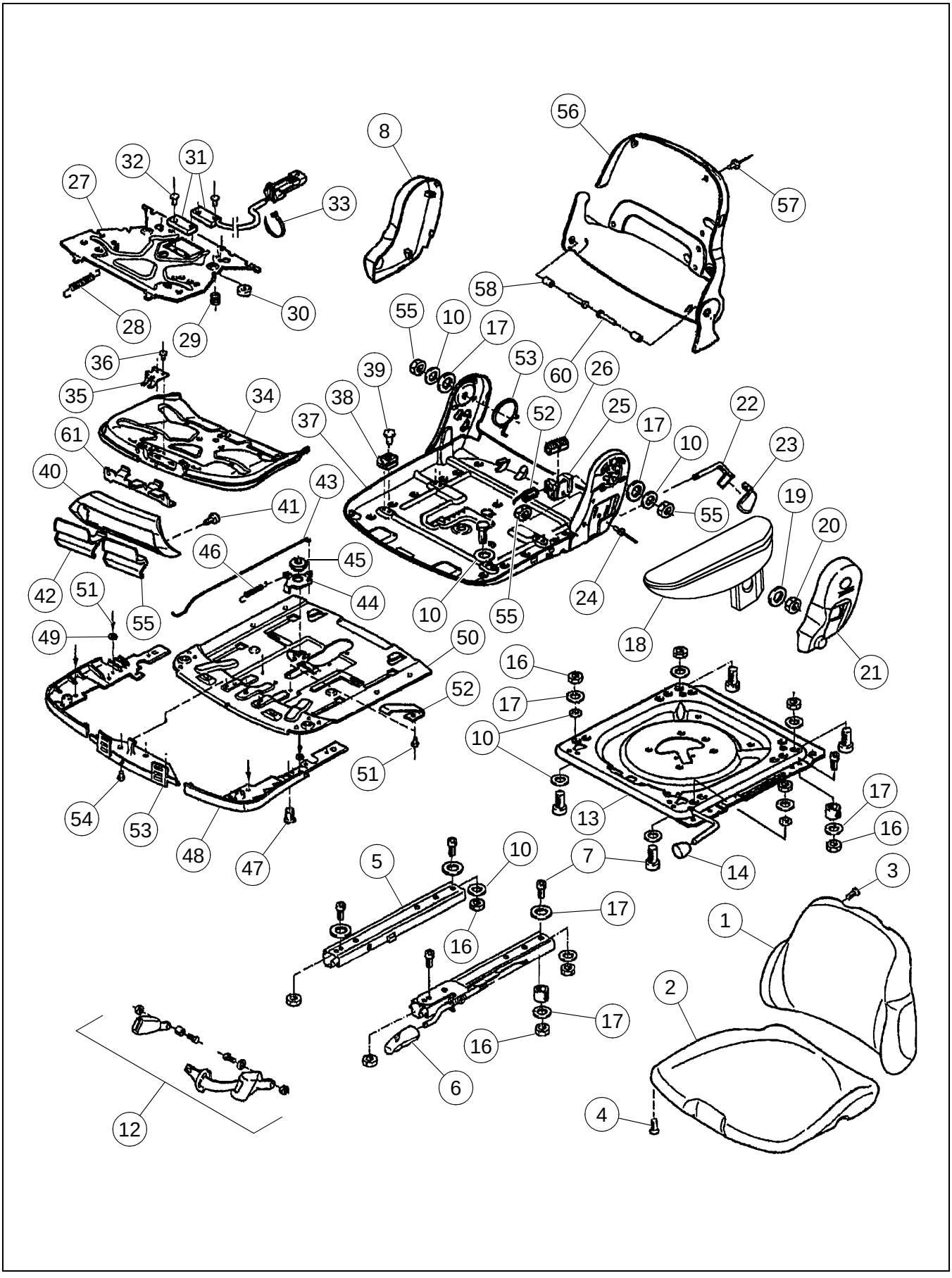

BOM 54655360

ITEM	COMM. NO.	DESCRIPTION	QTY	DIMENSIONS/NOTES
48	13262977	Cover	1	
49	NSS	- Not sold separately	2	
50	NSS	- Not sold separately	1	
51	NSS	- Not sold separately	2	
52	NSS	- Not sold separately	1	
53	13262985	Leg Spring	1	
54	NSS	- Not sold separately	1	
55	13262993	Nut	2	
56	13263009	Backrest	1	
57	NSS	- Not sold separately	4	
58	NSS	- Not sold separately	4	
60	NSS	- Not sold separately	2	
61	13263017	Latch	1	
199	13264221	Backrest Cushion - Eff S/N 189841 (Not Shown)	1	

SEAT (54655360) - INTERNAL BREAKDOWN - SHEET 3 OF 3

Dwg 54655360/00/02

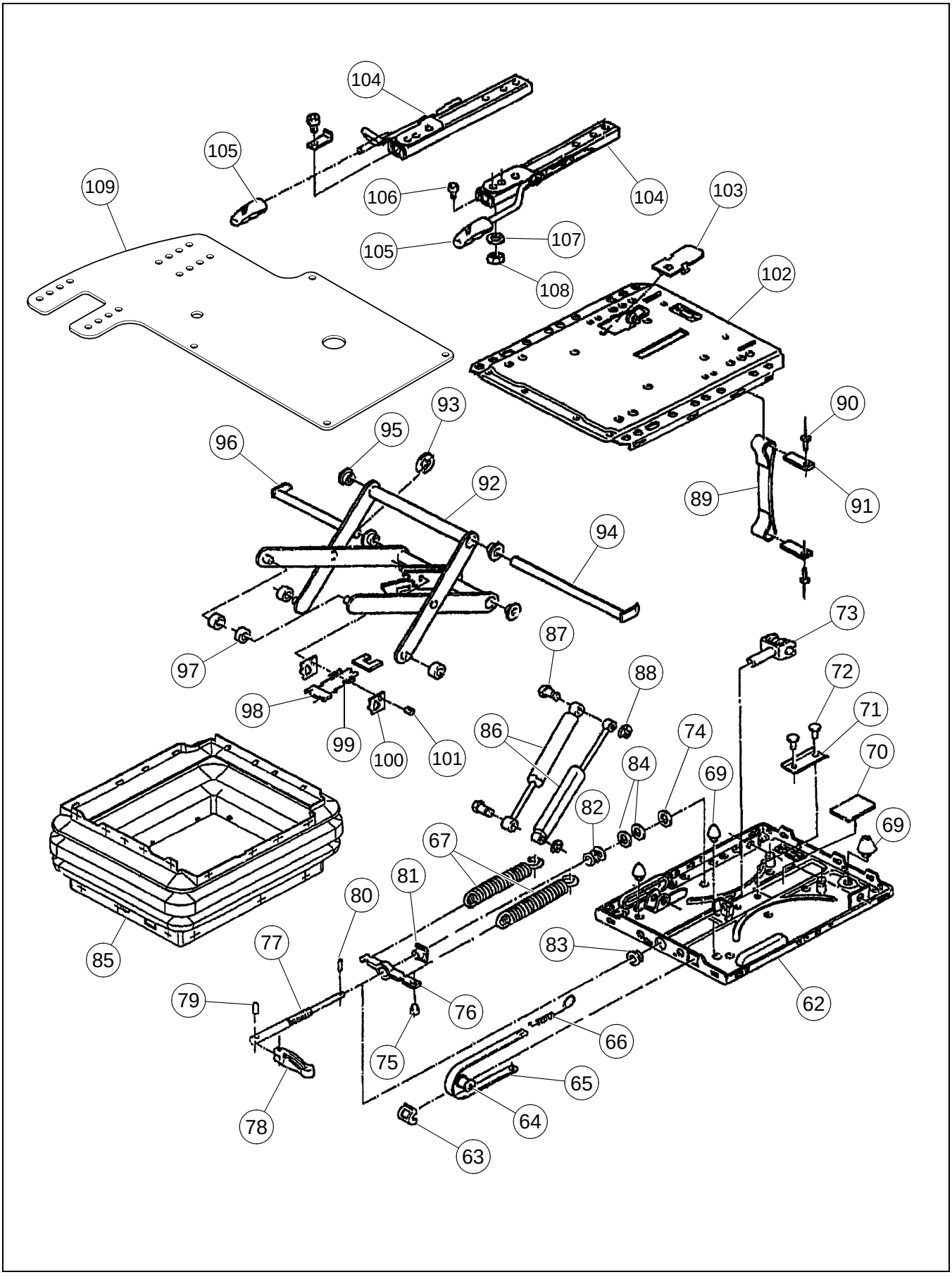

BOM 54655360

ITEM	COMM. NO.	DESCRIPTION	QTY	DIMENSIONS/NOTES
62	13263025	Lower Suspension	1	
63	NSS	- Not sold separately	1	
64	NSS	- Not sold separately	1	
65	NSS	- Not sold separately	1	
66	NSS	- Not sold separately	1	
67	NSS	- Not sold separately	2	
69	NSS	- Not sold separately	1	
70	NSS	- Not sold separately	1	
71	NSS	- Not sold separately	1	
72	NSS	- Not sold separately	2	
73	NSS	- Not sold separately	1	
74	NSS	- Not sold separately	1	
75	NSS	- Not sold separately	1	
76	NSS	- Not sold separately	1	
77	13263033	Adjustment Spindle	1	
78	NSS	- Not sold separately	1	
79	NSS	- Not sold separately	1	
80	NSS	- Not sold separately	1	
81	NSS	- Not sold separately	1	
82	NSS	- Not sold separately	1	
83	NSS	- Not sold separately	1	
84	NSS	- Not sold separately	1	
85	13263041	Bellows	1	
86	NSS	- Not sold separately	2	
87	NSS	- Not sold separately	1	
88	NSS	- Not sold separately	2	
89	13263058	Webbing	1	
90	NSS	- Not sold separately	2	
91	NSS	- Not sold separately	2	
92	13263066	Swing Arm	1	
93	NSS	- Not sold separately	1	
94	NSS	- Not sold separately	1	
95	NSS	- Not sold separately	1	
96	NSS	- Not sold separately	1	
97	NSS	- Not sold separately	4	
98	NSS	- Not sold separately	1	
99	NSS	- Not sold separately	2	
100	NSS	- Not sold separately	2	
101	NSS	- Not sold separately	1	
102	13263074	Upper Suspension	1	
103	13263082	Cover	1	
104	13262803	Adjustment Rail	1	
105	13263090	Handle	1	
106	58845876	Screw	4	
107	13262852	Washer	4	
108	58845835	Nut	4	
109	13884465	Side Console Mount Plate - Eff S/N 189841	1	
-	13184916	Side Console Support - Prior S/N 189841	1	

PEDESTAL ASSEMBLY - EFFECTIVE WITH S/N 194400 - SD-70D/70F

Dwg 43818871/00

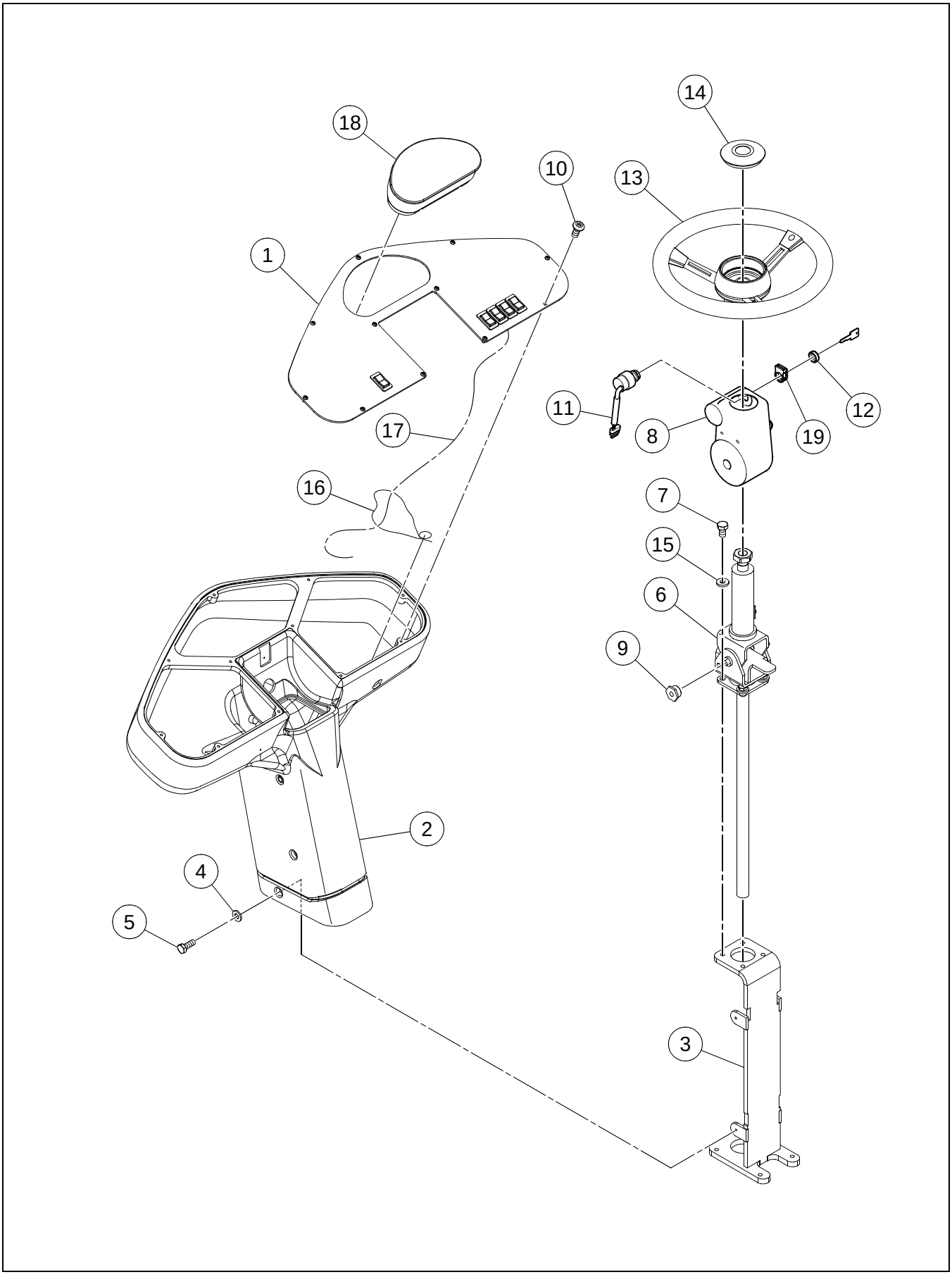

PEDESTAL ASSEMBLY - EFFECTIVE WITH S/N 194400 - SD-70D/70F

BOM 43818871, 80837008, 43819614

ITEM	COMM. NO.	DESCRIPTION	QTY	DIMENSIONS/NOTES
1	**NSVA**	**Gauge Panel Assembly**	**1**	**See Page D - 30.**
2	43818855	Pedestal Cover	1	
3	13880612	Pedestal	1	
4	96741053	Flatwasher, Zinc Plated	4	M6 Cl 200
5	96701958	HHCS, Fully Threaded, Zinc Plated	4	M6 x 16 Cl 8.8
6	13236864	Straight Steering Column	1	
-	59972919	- Nut	1	
-	13258686	- Wire	1	
-	13319942	Tilt Steering Column (Optional)	1	
7	96701479	HHCS, Fully Threaded, Zinc Plated	4	M10 x 1.5 x 16 Cl 8.8
8	13411889	Straight Column Cover	1	
-	43818830	Tilt Column Cover (Optional)	1	
9	13236872	Pivot Nut	2	
10	59148569	HSBHCS	11	M5 x 0.8 x 12
11	13459474	Ignition Switch	1	
12	59126961	Ignition Switch Nut	1	
13	13158647	Steering Wheel	1	
14	59159558	Horn Button	1	
15	96711833	Flatwasher, Zinc Plated	4	M10 Cl 10
16	58820168	Wire Tie	A/R	
17	43818863	Pedestal Wire Harness	1	
18	43893445	Instrument Panel	1	
19	58892902	Ignition Switch Cover	1	

PEDESTAL ASSEMBLY - PRIOR TO S/N 194400 - SD-70D/ 70F

Dwg 13324843/01

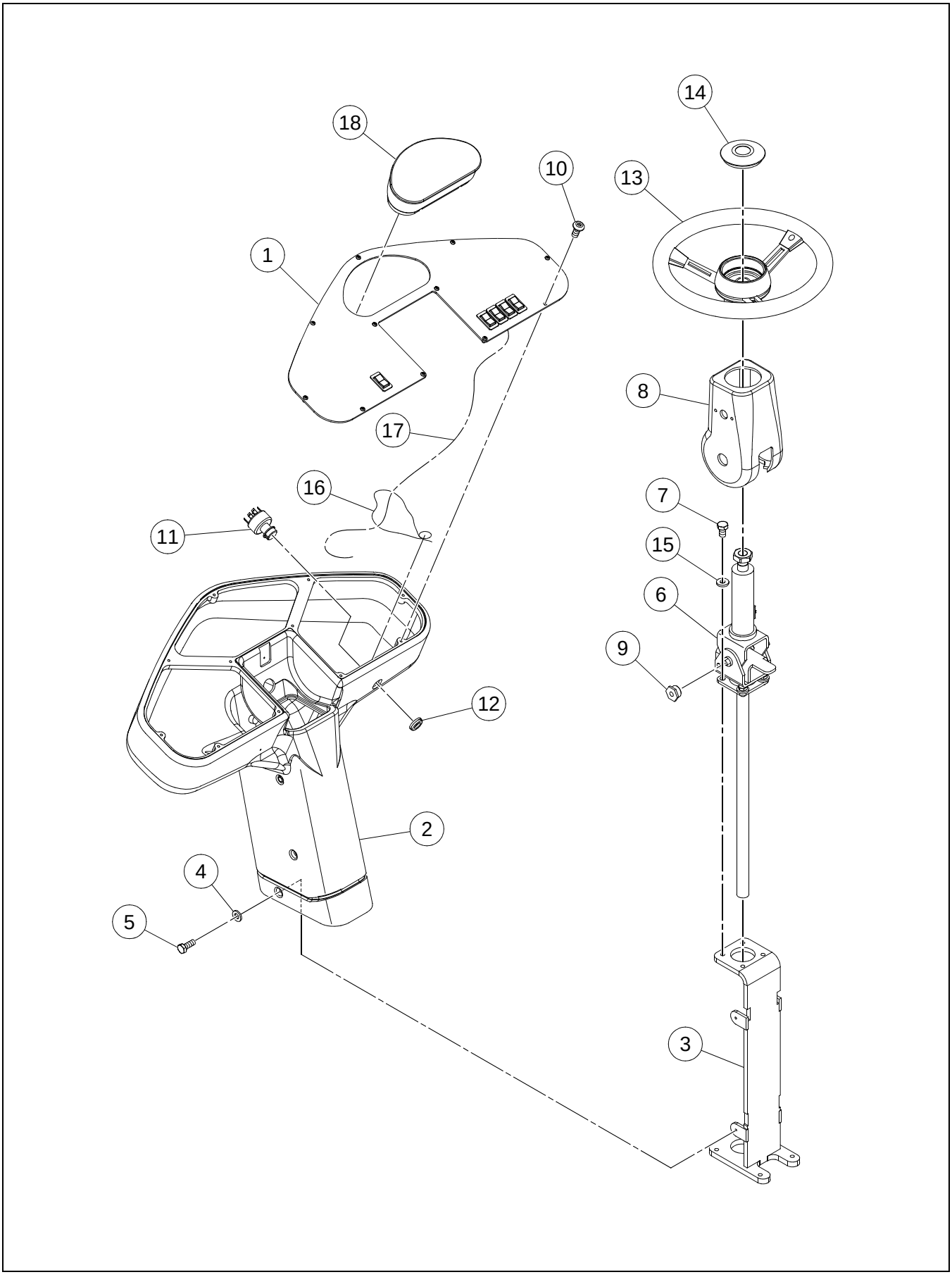

PEDESTAL ASSEMBLY - PRIOR TO S/N 194400 - SD-70D/70F

BOM 13321302, 59293613

ITEM	COMM. NO.	DESCRIPTION	QTY	DIMENSIONS/NOTES
1	**NSVA**	**Gauge Panel Assembly**	**1**	**See Page D - 30.**
2	13276548	Pedestal Cover	1	
3	13880612	Pedestal	1	
4	96741053	Flatwasher, Zinc Plated	4	M6 Cl 200
5	96701958	HHCS, Fully Threaded, Zinc Plated	4	M6 x 16 Cl 8.8
6	13236864	Straight Steering Column	1	
-	59972919	- Nut	1	
-	13258686	- Wire	1	
-	13319942	Tilt Steering Column (Optional)	1	
7	96701479	HHCS, Fully Threaded, Zinc Plated	4	M10 x 1.5 x 16 Cl 8.8
8	13270731	Straight Column Cover	1	
-	13235478	Tilt Column Cover (Optional)	1	
9	13236872	Pivot Nut	2	
10	59148569	HSBHCS	11	M5 x 0.8 x 12
11	54461090	Ignition Switch	1	
-	58917261	- Ignition Key	1	
-	13284690	- Key Tag	1	
12	58924333	Ignition Switch Nut	1	
13	13158647	Steering Wheel	1	
14	59159558	Horn Button	1	
15	96711833	Flatwasher, Zinc Plated	4	M10 Cl 10
16	58820168	Wire Tie	A/R	
17	43809912	Pedestal Wire Harness	1	
18	43893445	Instrument Panel	1	

PEDESTAL ASSEMBLY - SD-77DX/77F

Dwg 13324843/01

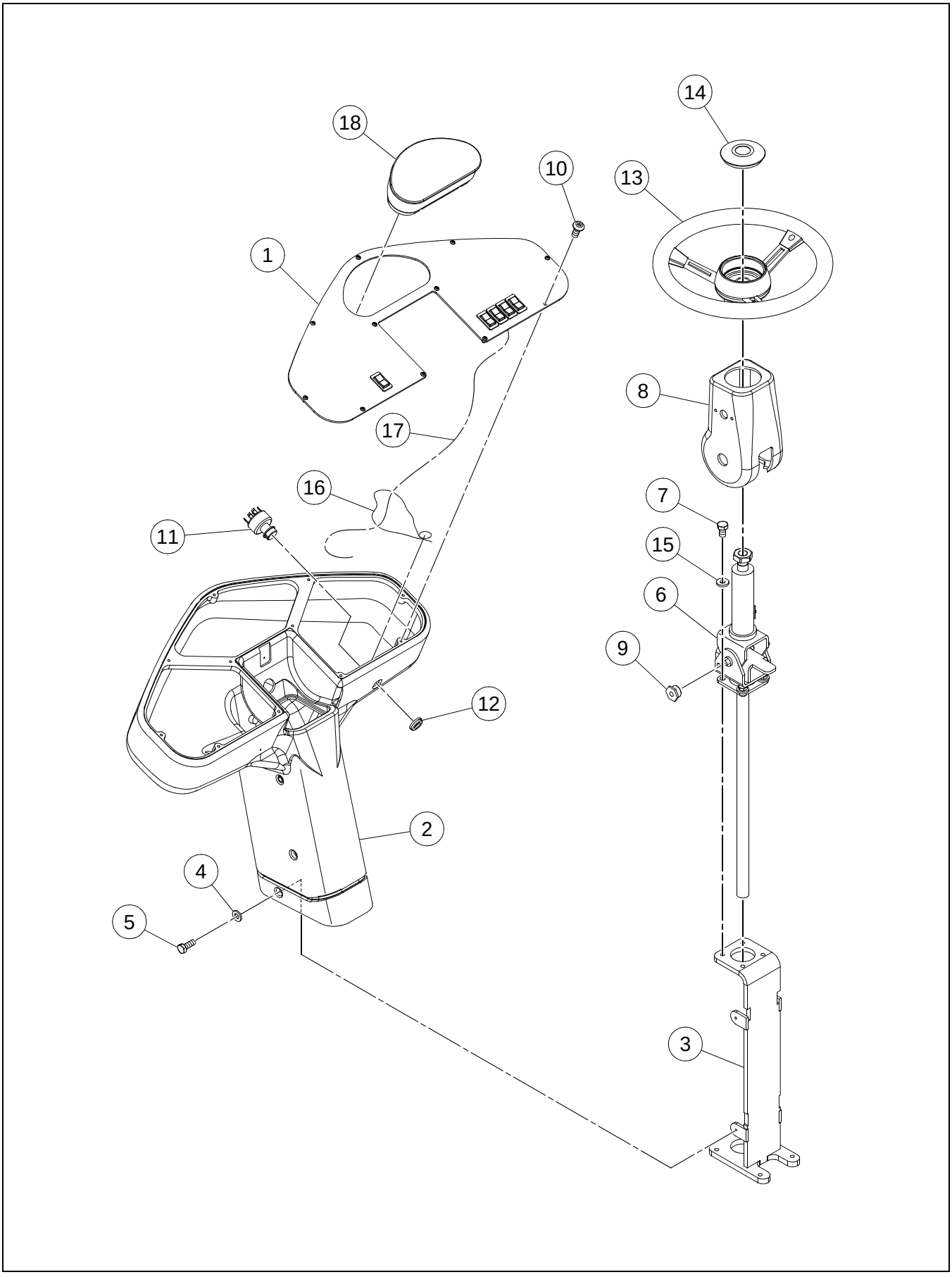

PEDESTAL ASSEMBLY - SD-77DX/77F

BOM 13276555

ITEM	COMM. NO.	DESCRIPTION	QTY	DIMENSIONS/NOTES
1	**NSVA**	**Gauge Panel Assembly**	**1**	**See Page D - 30.**
2	13276548	Pedestal Cover	1	
3	13880612	Pedestal	1	
4	96741053	Flatwasher, Zinc Plated	4	M6 Cl 200
5	96701958	HHCS, Fully Threaded, Zinc Plated	4	M6 x 16 Cl 8.8
6	13319942	Tilt Steering Column	1	
7	96701479	HHCS, Fully Threaded, Zinc Plated	4	M10 x 1.5 x 16 Cl 8.8
8	13235478	Tilt Column Cover	1	
9	13236872	Pivot Nut	2	
10	59148569	HSBHCS	11	M5 x 0.8 x 12
11	54461090	Ignition Switch	1	
-	58917261	- Ignition Key	1	
-	13284690	- Key Tag	1	
12	58924333	Ignition Switch Nut	1	
13	13158647	Steering Wheel	1	
14	59159558	Horn Button	1	
15	96711833	Flatwasher, Zinc Plated	4	M10 Cl 10
16	58820168	Wire Tie	A/R	
17	43809912	Pedestal Wire Harness	1	
18	13309521	Instrument Panel	1	

GAUGE PANEL ASSEMBLY

Dwg D13324827/00

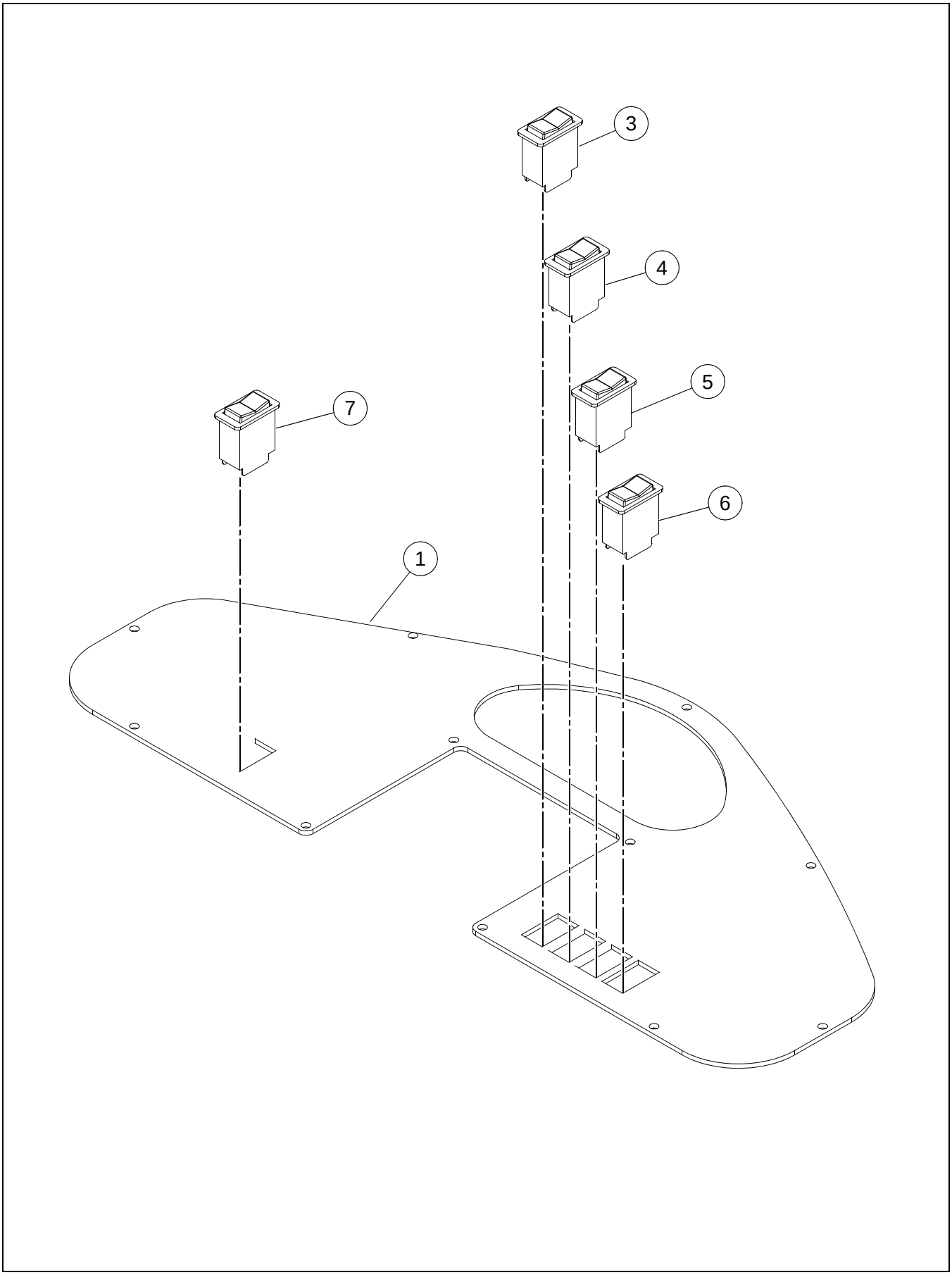

GAUGE PANEL ASSEMBLY

BOM 13276621

ITEM	COMM. NO.	DESCRIPTION	QTY	DIMENSIONS/NOTES
1	13355912	Instrument Panel	1	
3	54666102	Brake Test Switch	1	
4	54666094	Park Brake Switch	1	
5	54666086	Hi/Low Travel Switch	1	
6	54666078	Hi/Low RPM Switch	1	
7	54666060	Hi/Low Amp Switch	1	

GAUGE INSTALLATION - OPTIONAL

Dwg D13235270/04

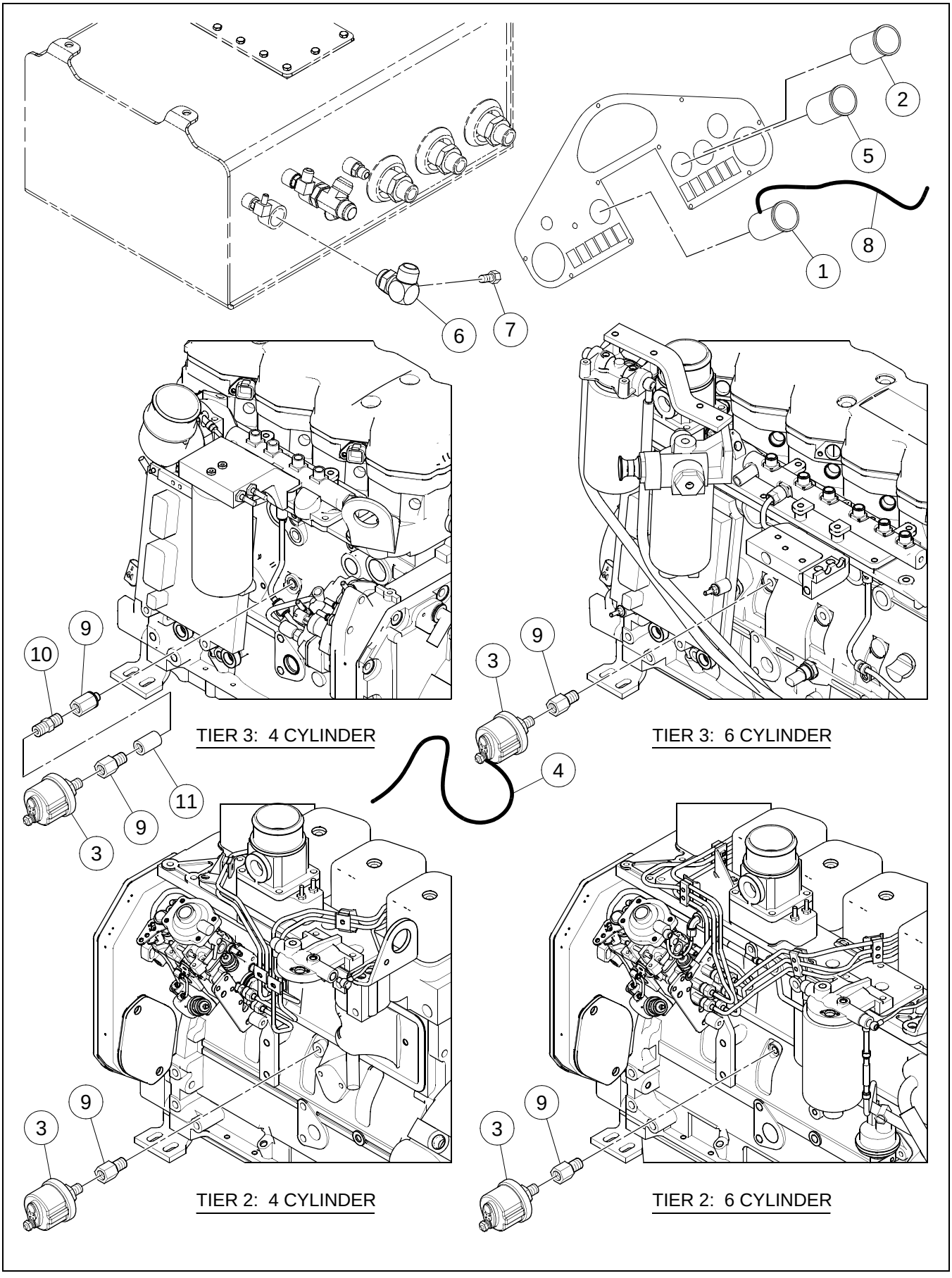

GAUGE INSTALLATION - OPTIONAL

BOM 13176755, 13313747, 13307699

ITEM	COMM. NO.	DESCRIPTION	QTY	DIMENSIONS/NOTES
1	58877796	Voltmeter	1	
2	58822313	Engine Oil Pressure Gauge	1	
3	58878000	Oil Pressure Sender	1	
4	13493556	Gauge Wire Harness	1	
5	58893983	Hydraulic Oil Temperature Gauge	1	
6	13188958	Adapter	1	
7	58913856	Hydraulic Oil Temperature Sender	1	
8	13493515	Gauge Lights Wire Harness (For Gauge Installation with Worklights Only)	1	
9	59118513	Adapter	1	
10		This item not used with this Assembly		
11		This item not used with this Assembly		

SUSPENSION SEAT INSTALLATION - SD-70D/70F - OPTIONAL

Dwg 13169925/0j

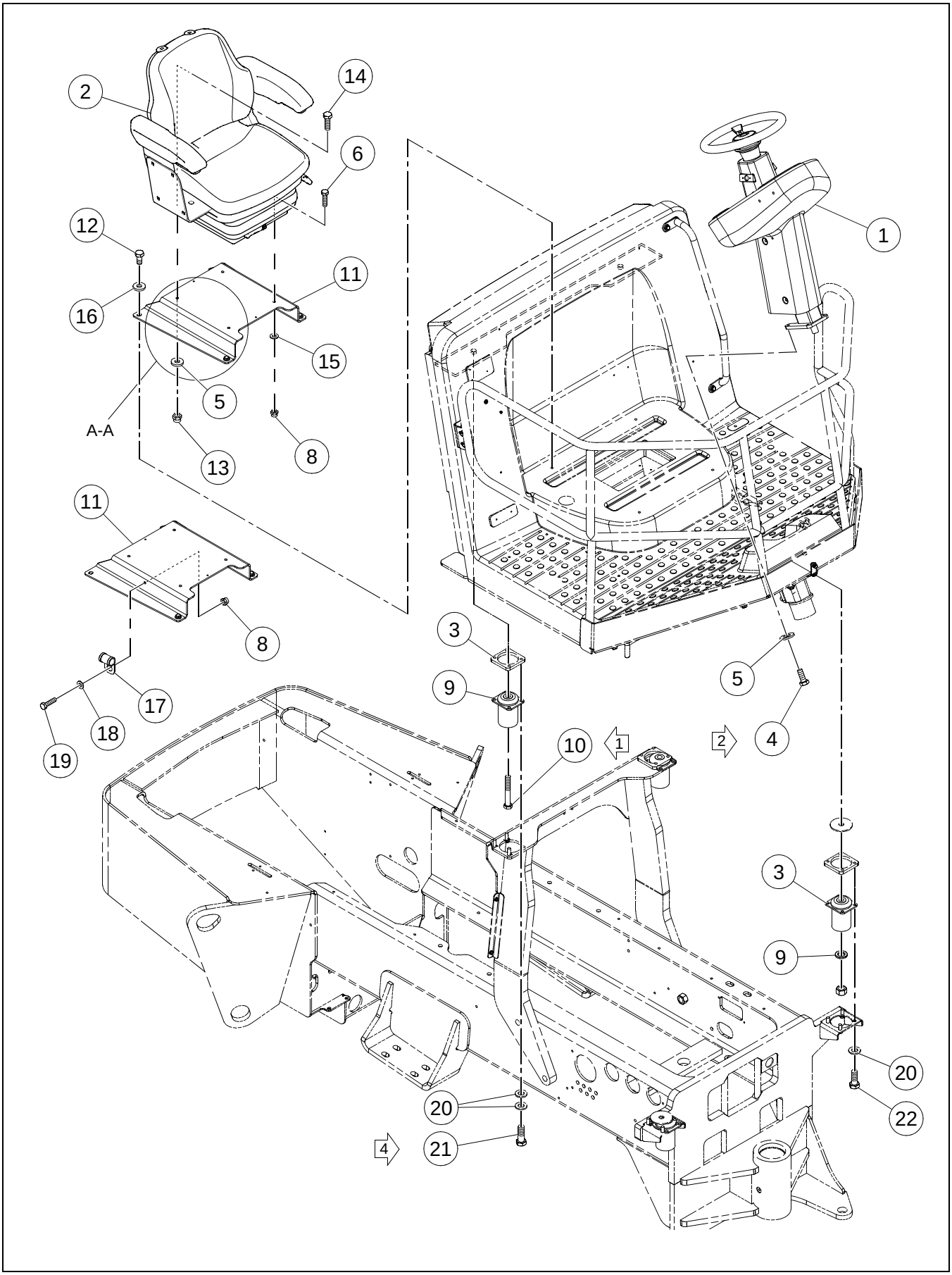

SUSPENSION SEAT INSTALLATION - SD-70D/70F - OPTIONAL

BOM 59287268, 13869557

ITEM	COMM. NO.	DESCRIPTION	QTY	DIMENSIONS/NOTES
1		This Item Not Used With This Assembly		
2	**13884747**	**Seat - Effective with S/N 189841**	**1**	**See Breakdown D - 18.**
-	**54655360**	**Seat - Prior to S/N 189841**	**1**	**See Breakdown D - 18.**
-	13294400	Seat (EEC)	1	
3		This Item Not Used With This Assembly		
4		This Item Not Used With This Assembly		
5		This Item Not Used With This Assembly		
6	96705587	HHCS, Fully Threaded, Zinc Plated	2	M8 x 1.25 x 30 Cl 8.8
8		This Item Not Used With This Assembly		
9		This Item Not Used With This Assembly		
10		This Item Not Used With This Assembly		
11	13235981	Seat Base	1	
12		This Item Not Used With This Assembly		
13	96704614	Nut, Zinc Plated	2	M10 x 1.5 Cl 8
14	96701917	HHCS, Fully Threaded, Zinc Plated	2	M10 x 1.5 x 30 Cl 8.8
15		This Item Not Used With This Assembly		
16		This Item Not Used With This Assembly		
17		This Item Not Used With This Assembly		
18		This Item Not Used With This Assembly		
19		This Item Not Used With This Assembly		
20		This Item Not Used With This Assembly		
21		This Item Not Used With This Assembly		
22		This Item Not Used With This Assembly		

Dwg D59292730/00

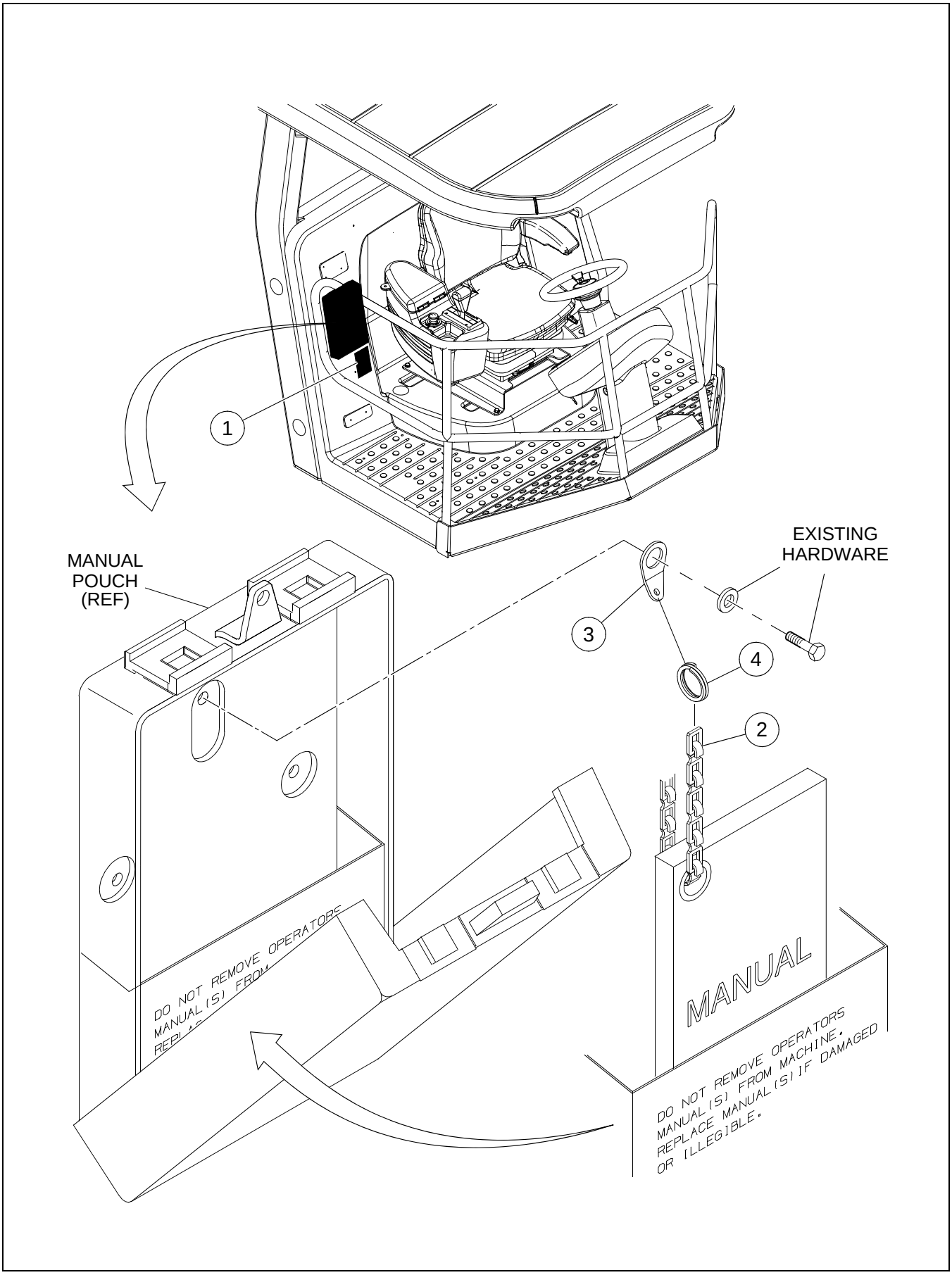

BOM 13174248

ITEM	COMM. NO.	DESCRIPTION	QTY	DIMENSIONS/NOTES
1	13367792	Safety Label Manual	1	
2	58874389	Plumb Chain	1	
3	58874397	Formed Washer	1	
4	58880303	Split Ring	1	

STEERING KNOB INSTALLATION - OPTIONAL

Dwg D59288548/00

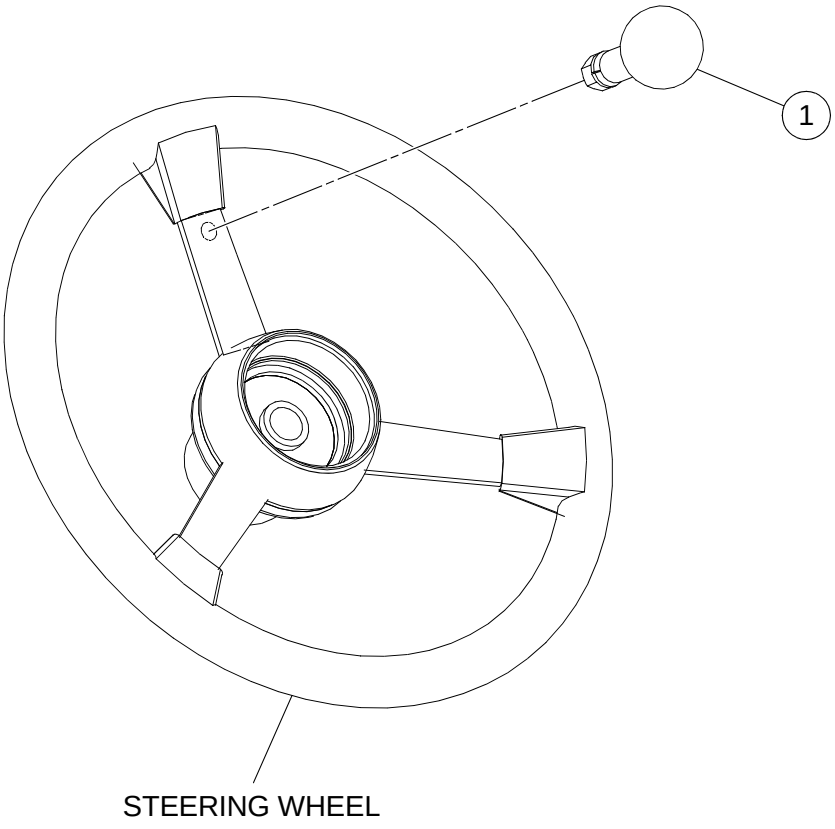

STEERING KNOB INSTALLATION - OPTIONAL

BOM 59199141

ITEM	COMM. NO.	DESCRIPTION	QTY	DIMENSIONS/NOTES
1	59199141	Spinner Kit	1	

Always use Manufacturer Replacement parts!*

Section E - ELECTRICAL

Dwg 19292192/0c/01

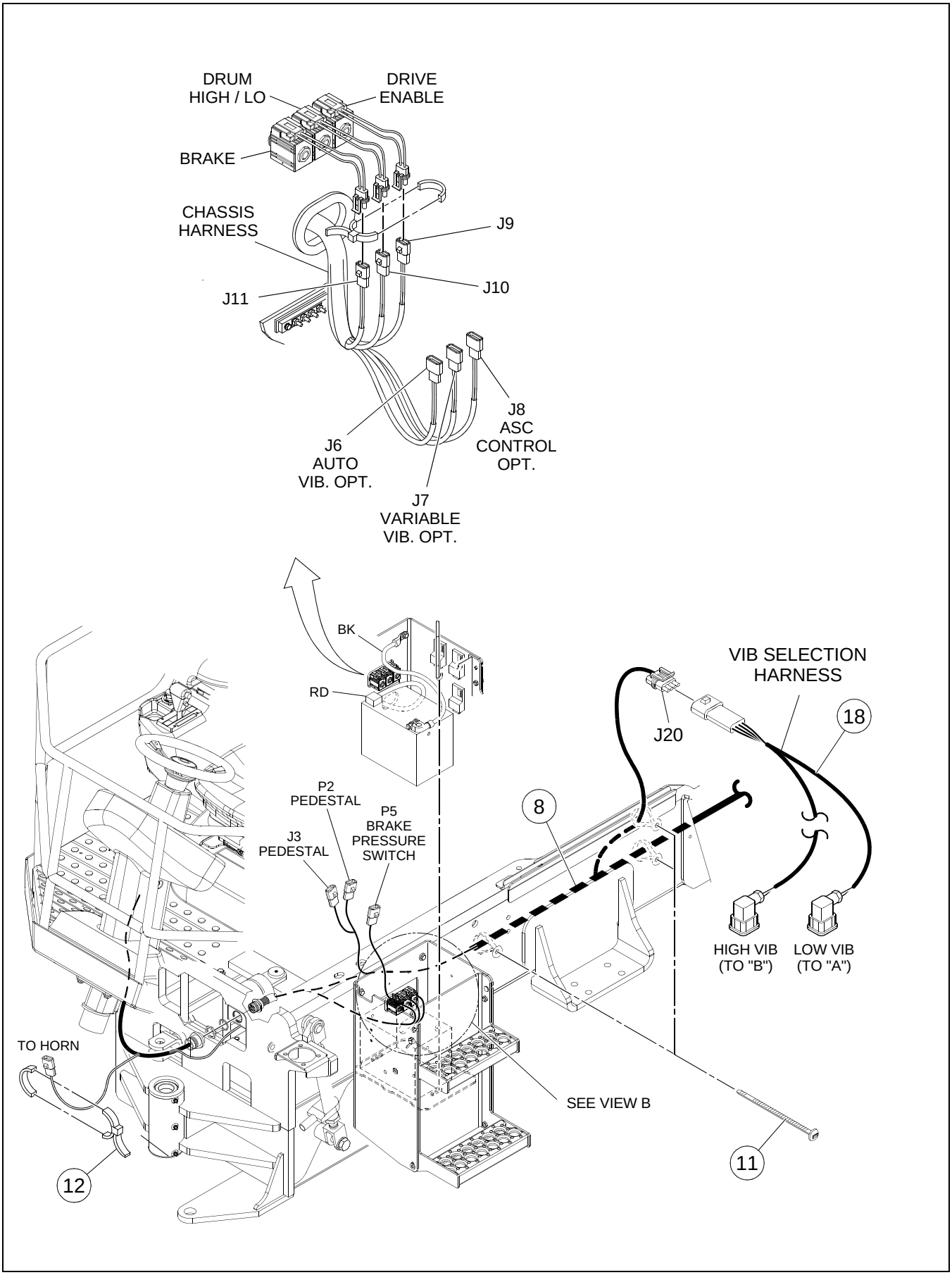

BOM 13174131, 80818107

ITEM	COMM. NO.	DESCRIPTION	QTY	DIMENSIONS/NOTES
7	43813724	Bracket	1	
8	43824812	Chassis Harness	1	
11	58820168	Wire Tie	A/R	
12	95373973	Wire Tie	A/R	
18	13493499	Vibration Selector Wire Harness - Two-speed	1	

Dwg 19292192/0c/02

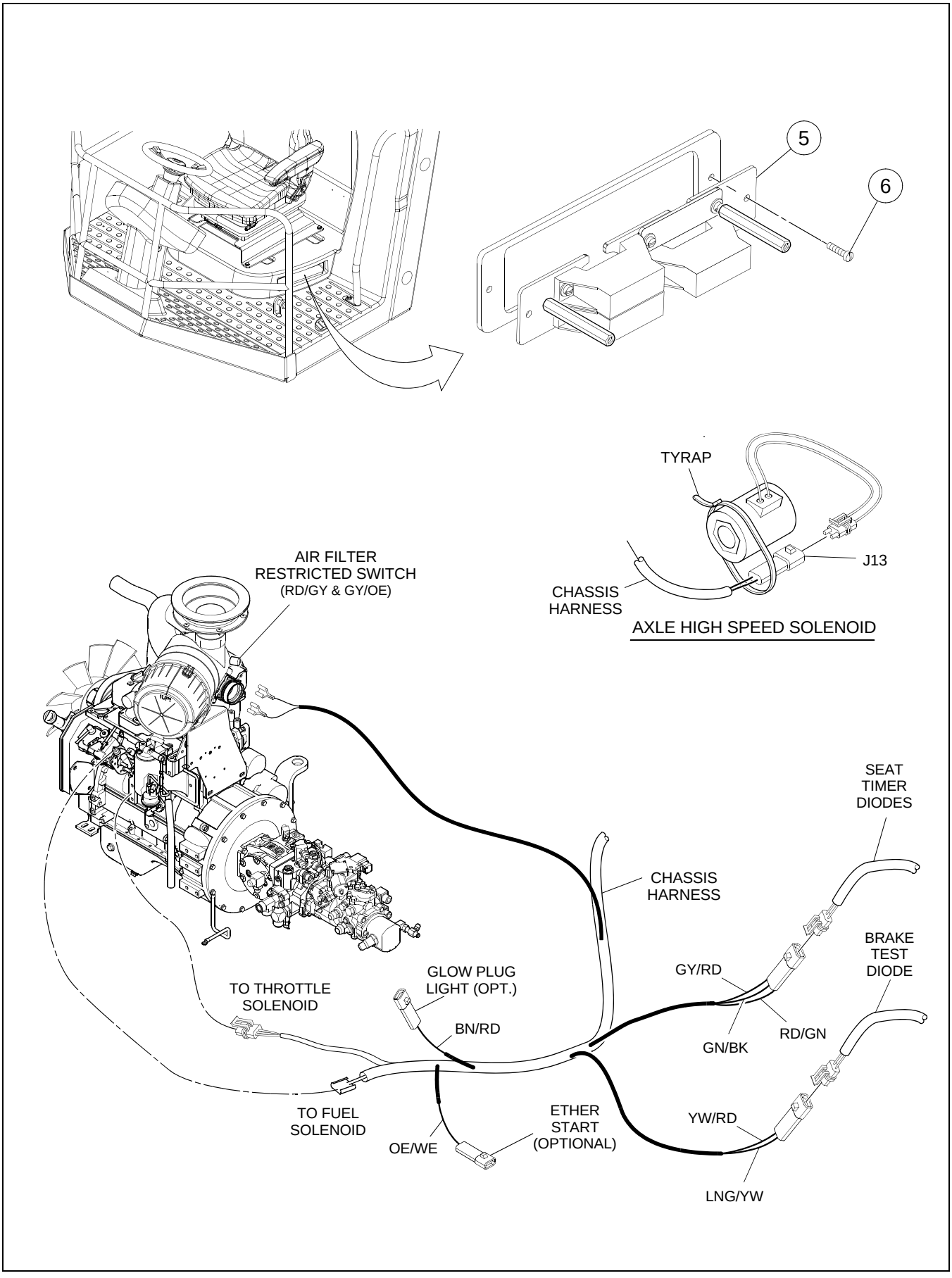

BOM 13174131, 80818107

ITEM	COMM. NO.	DESCRIPTION	QTY	DIMENSIONS/NOTES
1	13313655	Delay Timer Rework	1	
2	96702659	HHCS, Fully Threaded, Zinc Plated	1	M8 x 1.25 x 25 Cl 8.8
3	59121855	Clamp	3	M8 x 1.25 Cl 200
4	59103598	Clamp	4	M8 x 1.25 Cl 8

Dwg 19292192/0c/03

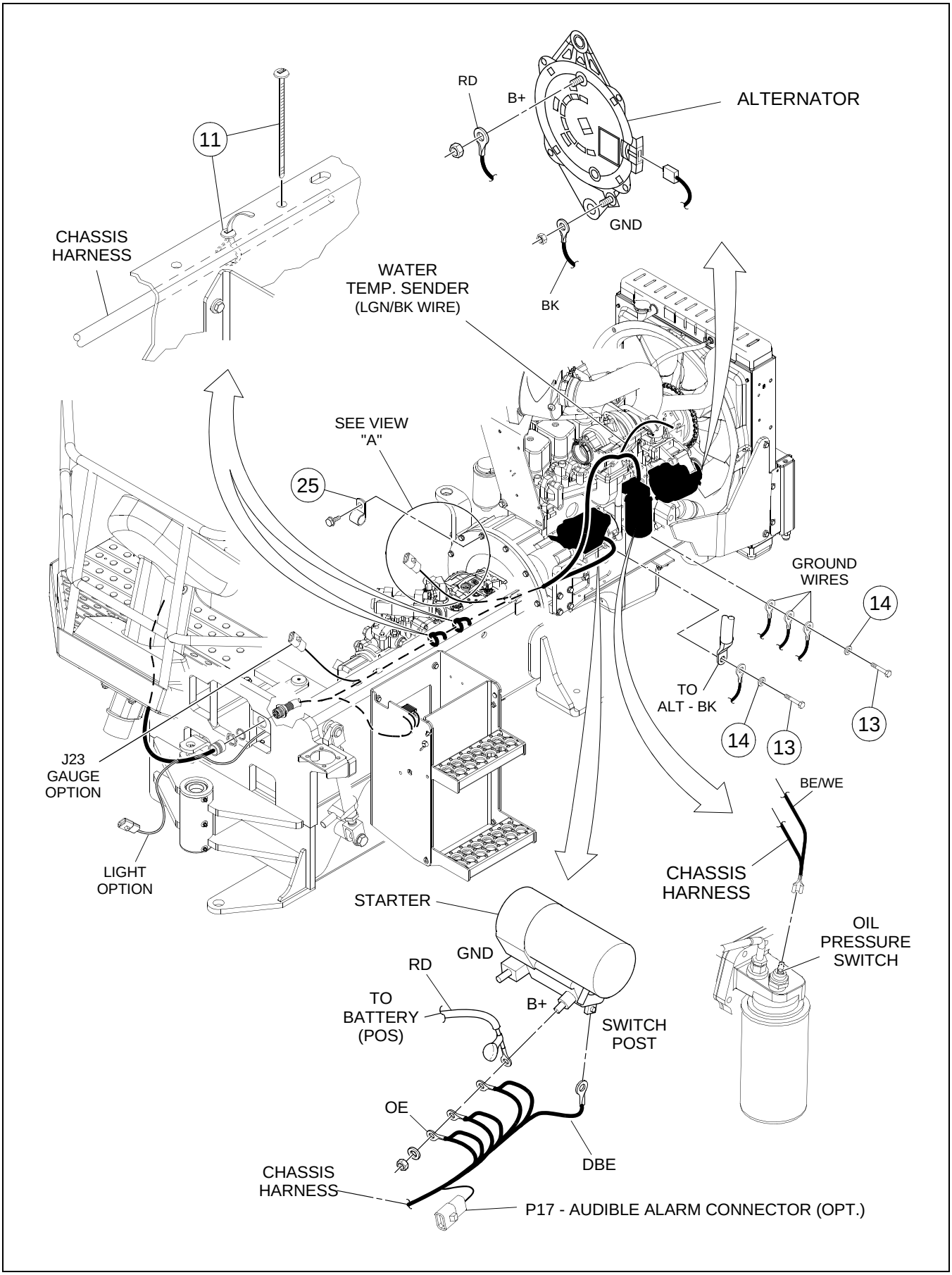

BOM 13174131, 80818107

ITEM	COMM. NO.	DESCRIPTION	QTY	DIMENSIONS/NOTES
11	58820168	Wire Tie	A/R	
13		This item not used with this Assembly		
14	96712674	Washer, Zinc Plated	2	M8 Hardened Cl 10
25	59465641	Clamp	1	

Dwg 19292192/0c/04

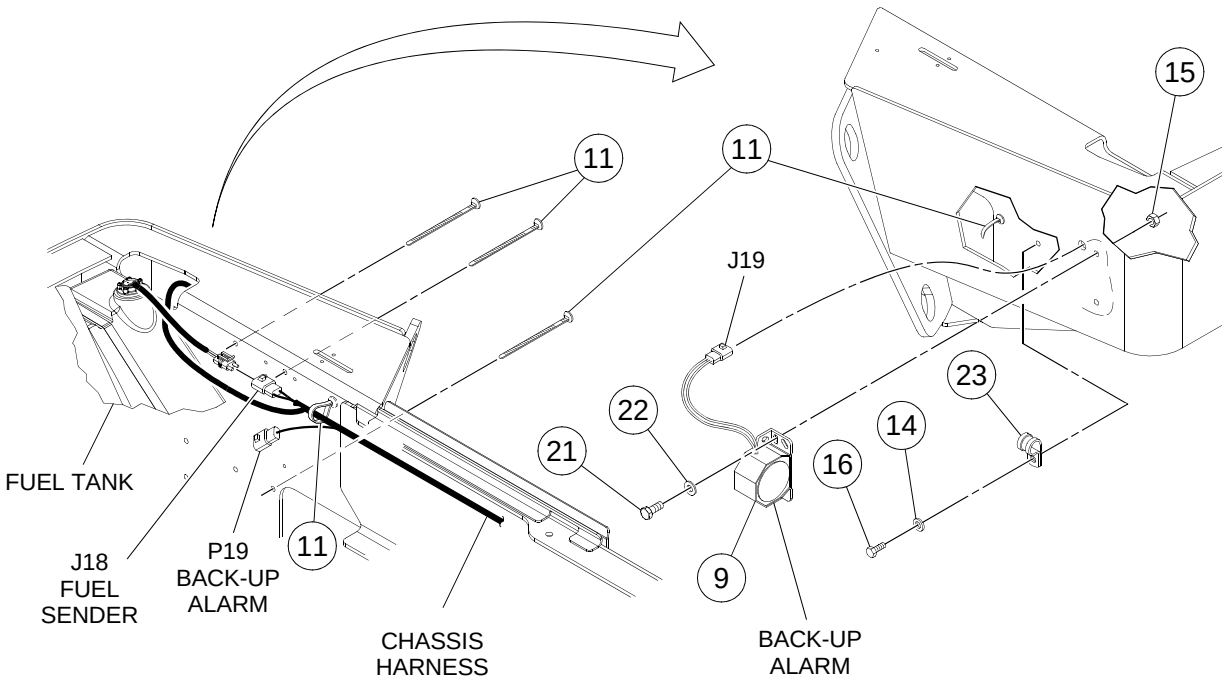

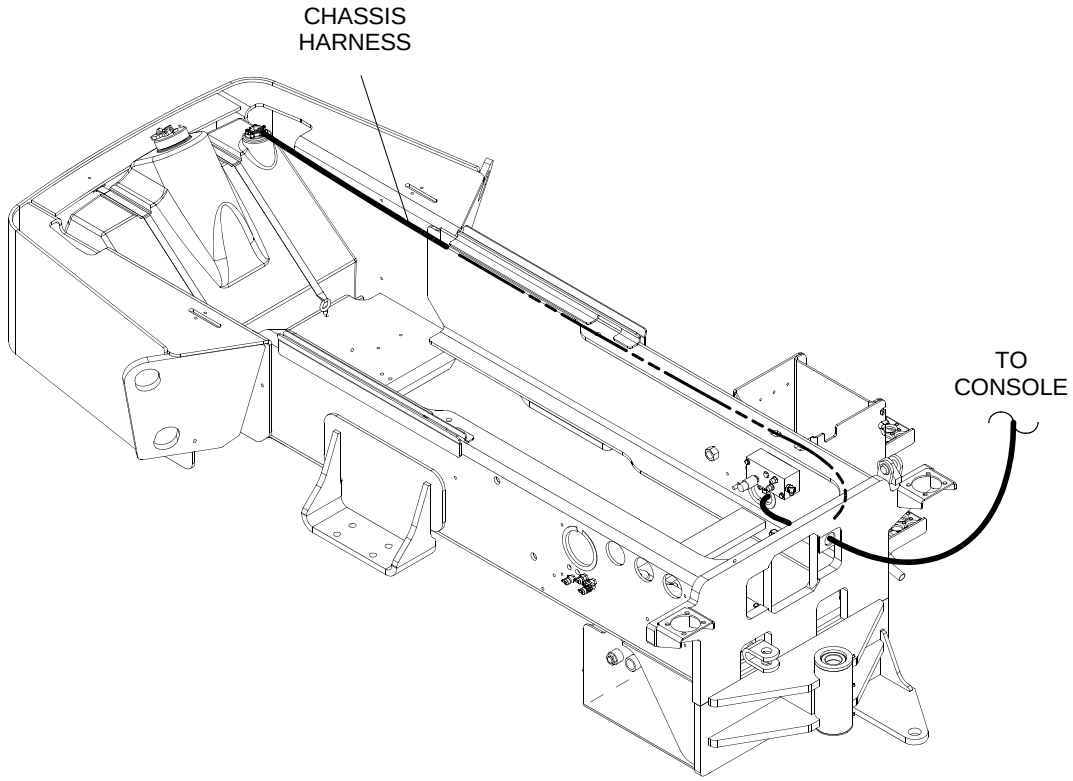

BOM 13174131, 80818107

ITEM	COMM. NO.	DESCRIPTION	QTY	DIMENSIONS/NOTES
9	13273362	Backup Alarm	1	
11	58820168	Wire Tie	A/R	
14	96712674	Washer, Zinc Plated	2	M8 Hardened Cl 10
15	96704598	Hex Locknut	8	M6
16	96705041	HHCS, Fully Threaded, Zinc Plated	1	M8 x 1.25 x 12 Cl 8.8
21	96702394	HHCS, Fully Threaded, Zinc Plated	2	M6 x 1 x 12 Cl 8.8
22	96704663	Washer, Zinc Plated	8	M6 Large
23		This item not used with this Assembly		

Dwg 19292192/0c/05

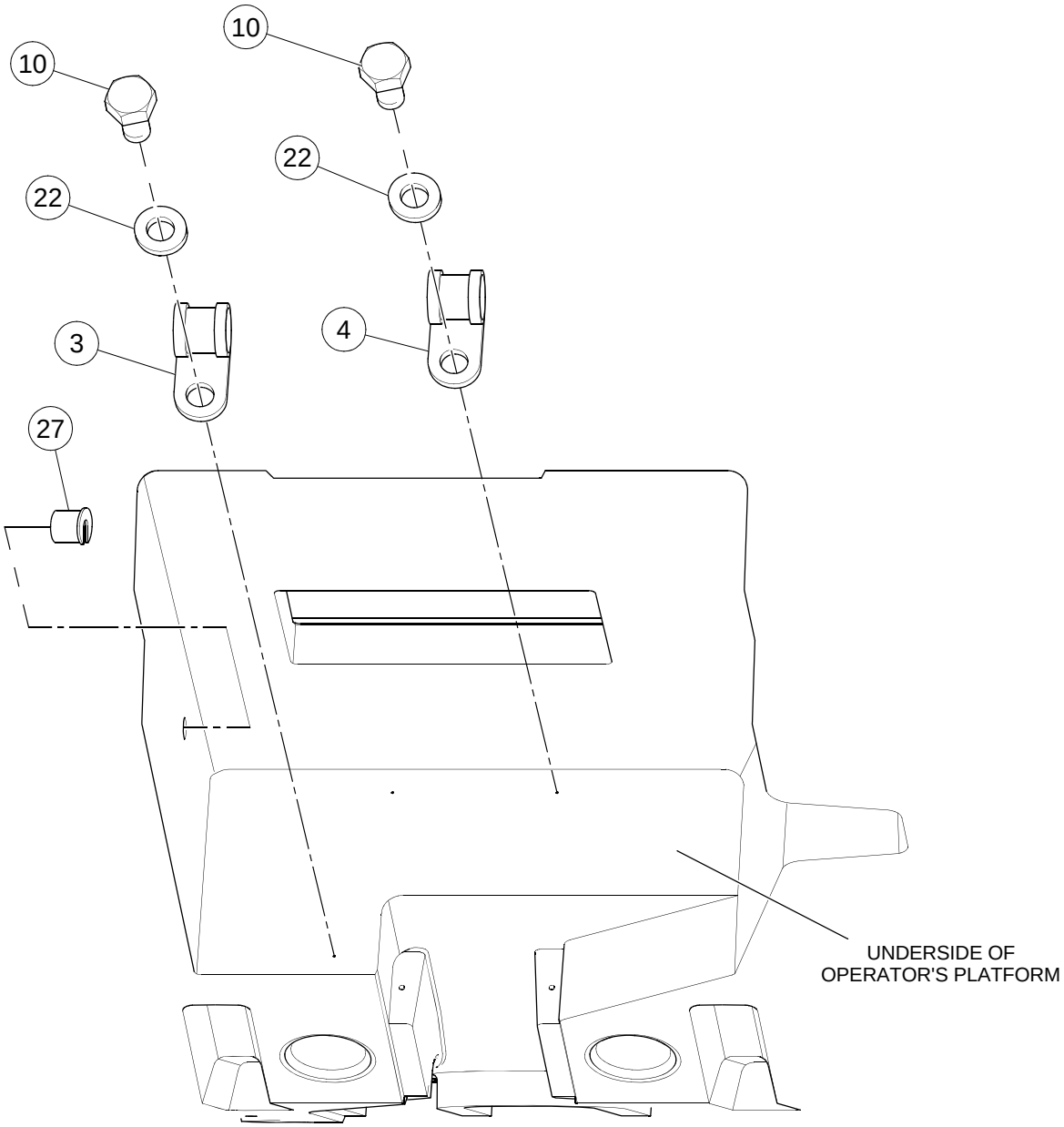

BOM 13174131, 80818107

ITEM	COMM. NO.	DESCRIPTION	QTY	DIMENSIONS/NOTES
3	59121855	Clamp	3	M8 x 1.25 Cl 200
4	59103598	Clamp	4	M8 x 1.25 Cl 8
10	96728548	Self Tapping Screw	6	
22	96704663	Washer, Zinc Plated	8	M6 Large
27	96701461	HHCS, Fully Threaded, Zinc Plated	1	M6 x 1 x 25 Cl 8.8

Dwg 19292192/0c/06

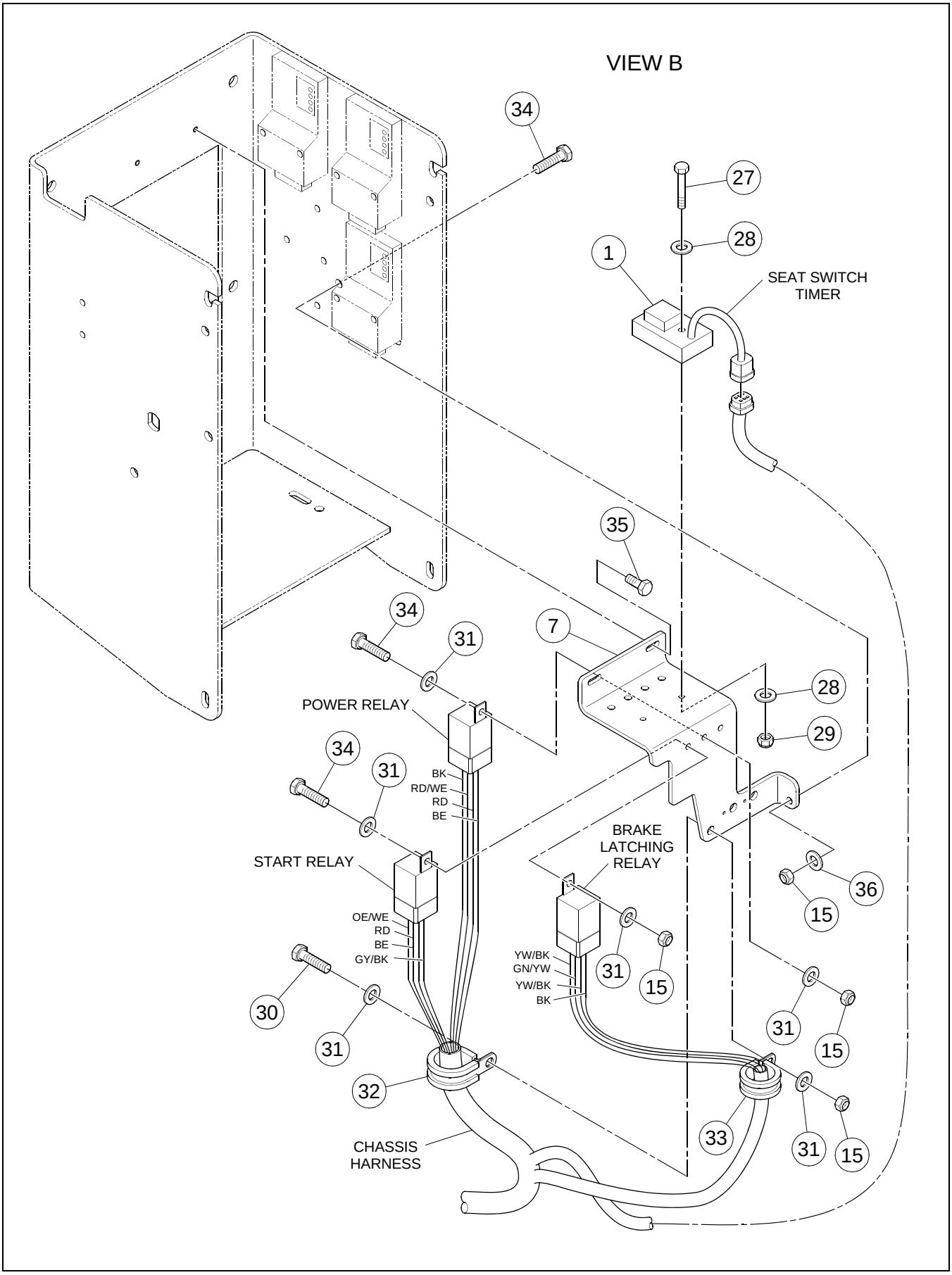

BOM 13174131, 80818107

ITEM	COMM. NO.	DESCRIPTION	QTY	DIMENSIONS/NOTES
1	13313655	Delay Timer Rework	1	
5	**NSVA**	**Fuse Block Assembly (Effective with S/N 192955) (Not Shown)**	**1**	**See Page E - 14.**
-	**NSVA**	**Fuse Block Assembly (Prior to S/N 192955) (Not Shown)**	**1**	**See Page E - 14.**
6	59148569	BHCS (Not Shown)	2	M5 x 0.8 x 12
7	59117317	Clamp	2	
15	96704598	Hex Locknut	8	M6
20	13270749	Wire Guard (Not Shown)	1	
24	95301875	Hose Clamp (Not Shown)	1	
26	59661413	Loop Clamp (Not Shown)	1	
27	96701461	HHCS, Fully Threaded, Zinc Plated	1	M6 x 1 x 25 Cl 8.8
28	96741038	Flatwasher	2	M8 x 16.0
29	96704598	Hex Locknut	1	M6
30	96701461	HHCS, Fully Threaded, Zinc Plated	1	M6 x 1 x 25 Cl 8.8
31	96741038	Flatwasher	8	M8 x 16.0
32	58879891	Clamp	1	
33	59465658	Clamp	1	
34	96704564	HHCS, Zinc Plated	3	M6 x 1 x 20 Cl 8.8
35	96702394	HHCS, Fully Threaded, Zinc Plated	2	M6 x 1 x 12 Cl 8.8
36	96741053	Flatwasher	1	M6 x 12.0

FUSE BLOCK ASSEMBLY

Dwg D13209986/02

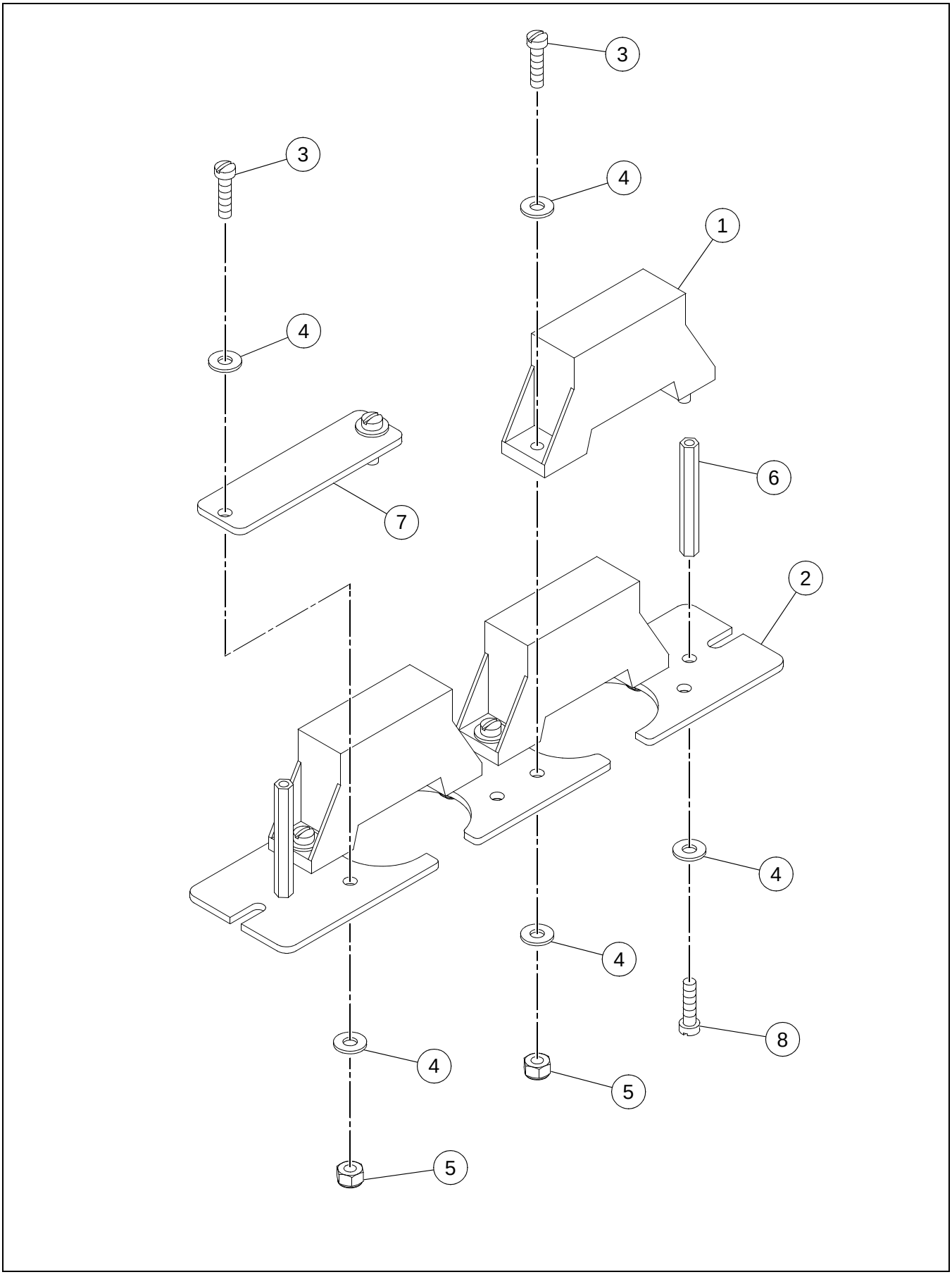

FUSE BLOCK ASSEMBLY

BOM 43827559, 13501499

ITEM	COMM. NO.	DESCRIPTION	QTY	DIMENSIONS/NOTES
1	43827575	Fuse Block/Wire Harness - Effective S/N 192955	1	
-	19281930	Fuse Block/Wire Harness - Prior S/N 192955	1	
2	13233440	Fuse Mounting Plate	1	
3	95922134	Round Slotted Head Machine Screw	8	
4	95922332	Flatwasher, Zinc Plated	18	#10
5	95943346	Locknut, Zinc Plated	8	#10 x 24
6	13214267	Standoff	2	
7	13209135	Fuse Cover Plate	1	
8	95932141	Screw, Zinc Plated	2	#10 x 0.75 x 32 Grd B

BATTERY INSTALLATION

Dwg 13848940/0a

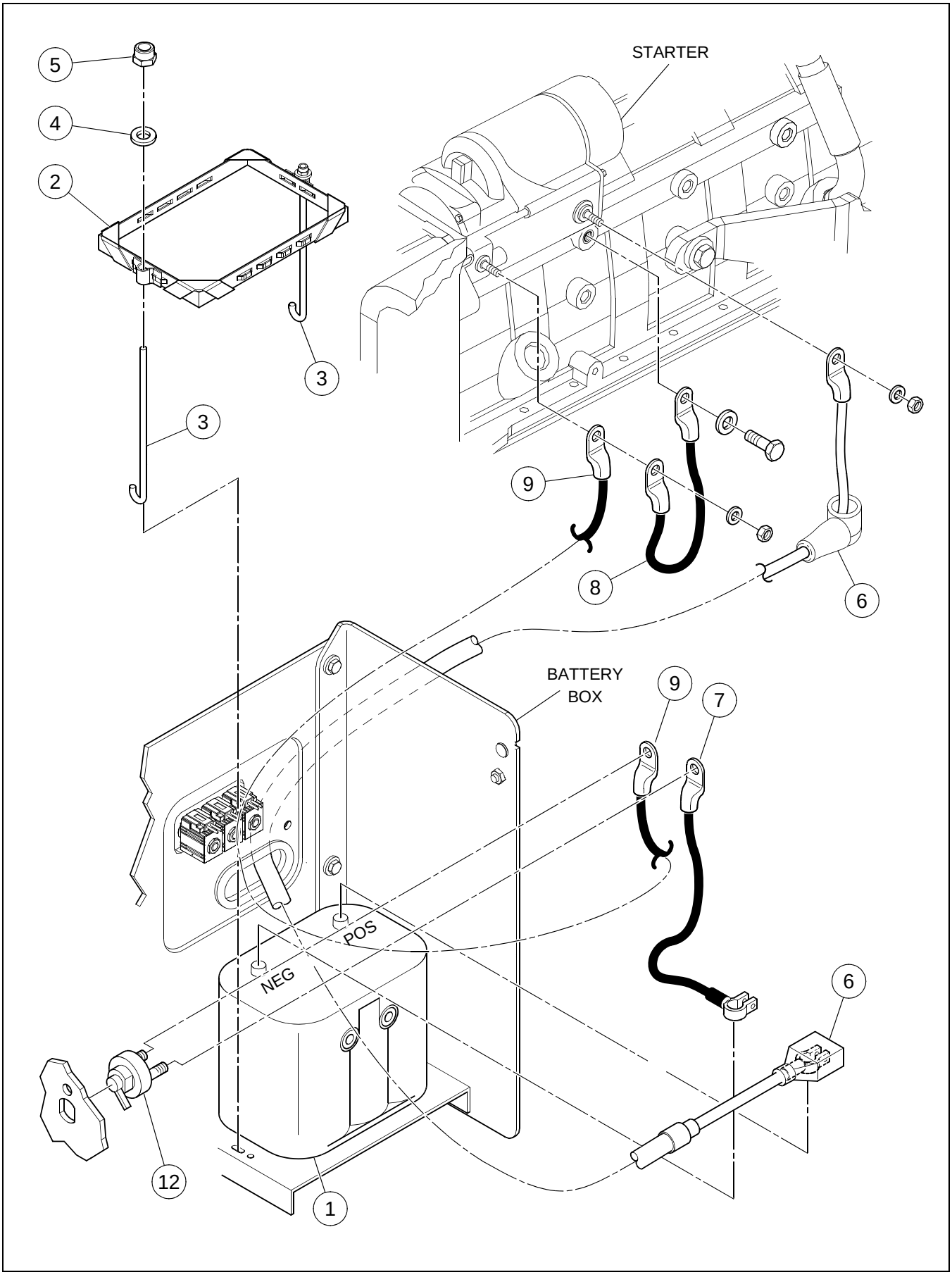

BATTERY INSTALLATION

BOM 13426705

ITEM	COMM. NO.	DESCRIPTION	QTY	DIMENSIONS/NOTES
1	54616081	Battery	1	
2	19295492	Battery Holddown	1	
3	13323274	J-hook	2	
4	96712674	Washer, Zinc Plated	2	M8 Hardened Cl 10
5	96704606	Hex Locknut, Zinc Plated	2	M8 x 1.25 Cl 8
6	13463393	Positive Battery Cable	1	
7	13207758	Ground Cable	1	
8	13306519	Ground Jumper Cable	1	
9	13465422	Negative Battery Cable	1	
12	13209648	Battery Master Switch	1	

AUDIBLE ALARM INSTALLATION - OPTIONAL - SHEET 1 OF 2

Dwg 13255344/0d/01

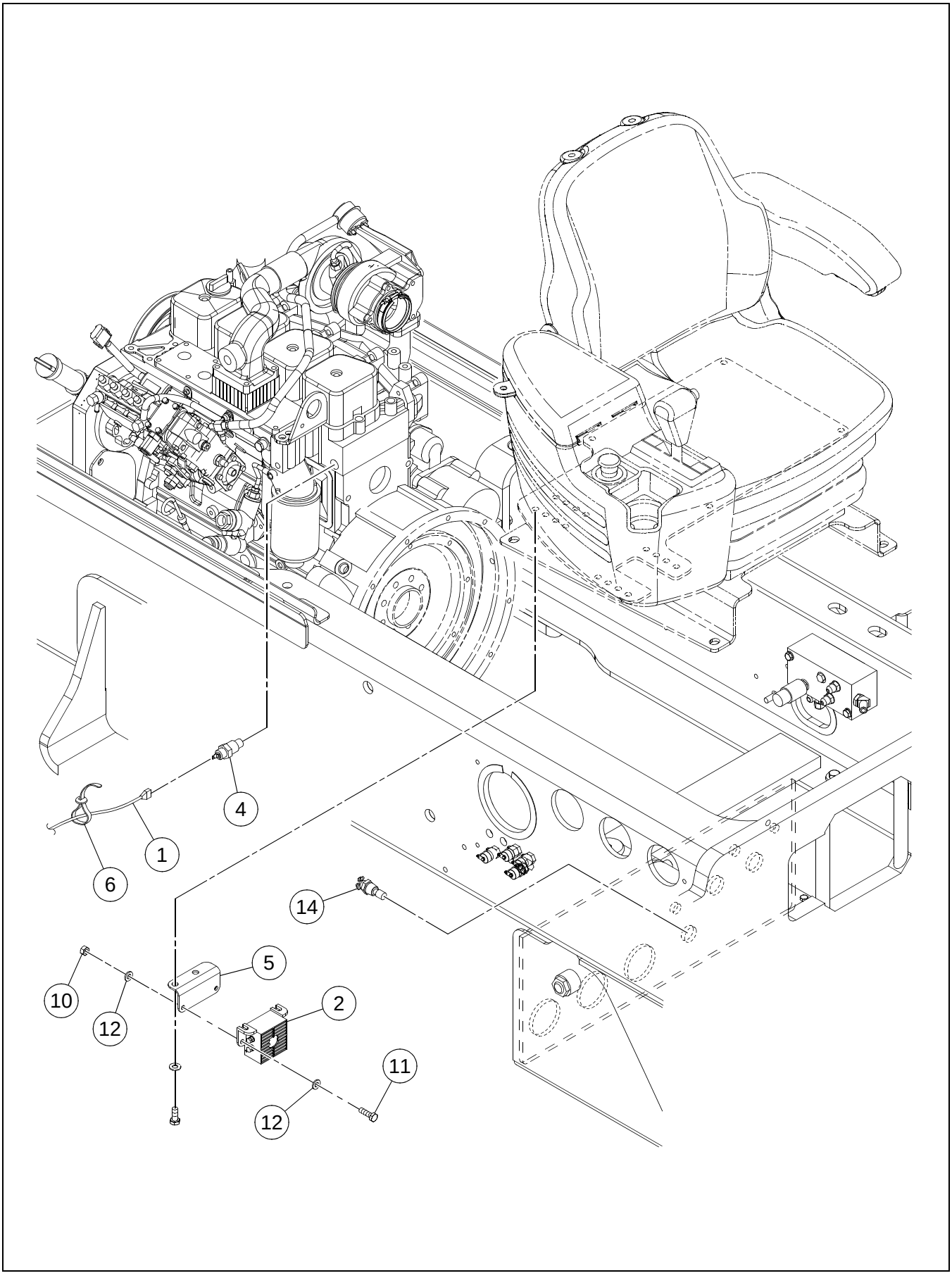

AUDIBLE ALARM INSTALLATION - OPTIONAL - SHEET 1 OF 2

BOM 13255344

ITEM	COMM. NO.	DESCRIPTION	QTY	DIMENSIONS/NOTES
1	19313667	Audible Alarm Wire Harness - Eff S/N 190740	1	
-	13426606	Audible Alarm Wire Harness - Prior S/N 190740	1	
-	13426622	- Audible Alarm Main Wire Harness	1	
-	13248901	- Audible Alarm Jumper Harness	1	
2	58870924	Audible Alarm	1	
4	59636738	Water Switch	1	
-	**NSVA**	- Water Temperature Gauge Kit	**1**	**See Page E - 22.**
5	13214028	Bracket	1	
6	95373973	Wire Tie	A/R	
10	96704234	Nut, Zinc Plated	2	M6 x 1.0 Cl 8
11	96714472	HHCS, Fully Threaded, Zinc Plated	2	M6 x 1.0 x 20 Cl 10.9
12	96741053	Flatwasher, Zinc Plated	4	M6 Cl 200
14	13406780	Water Temperature Switch	1	

AUDIBLE ALARM INSTALLATION - OPTIONAL - SHEET 2 OF 2

Dwg 13255344/0d/02

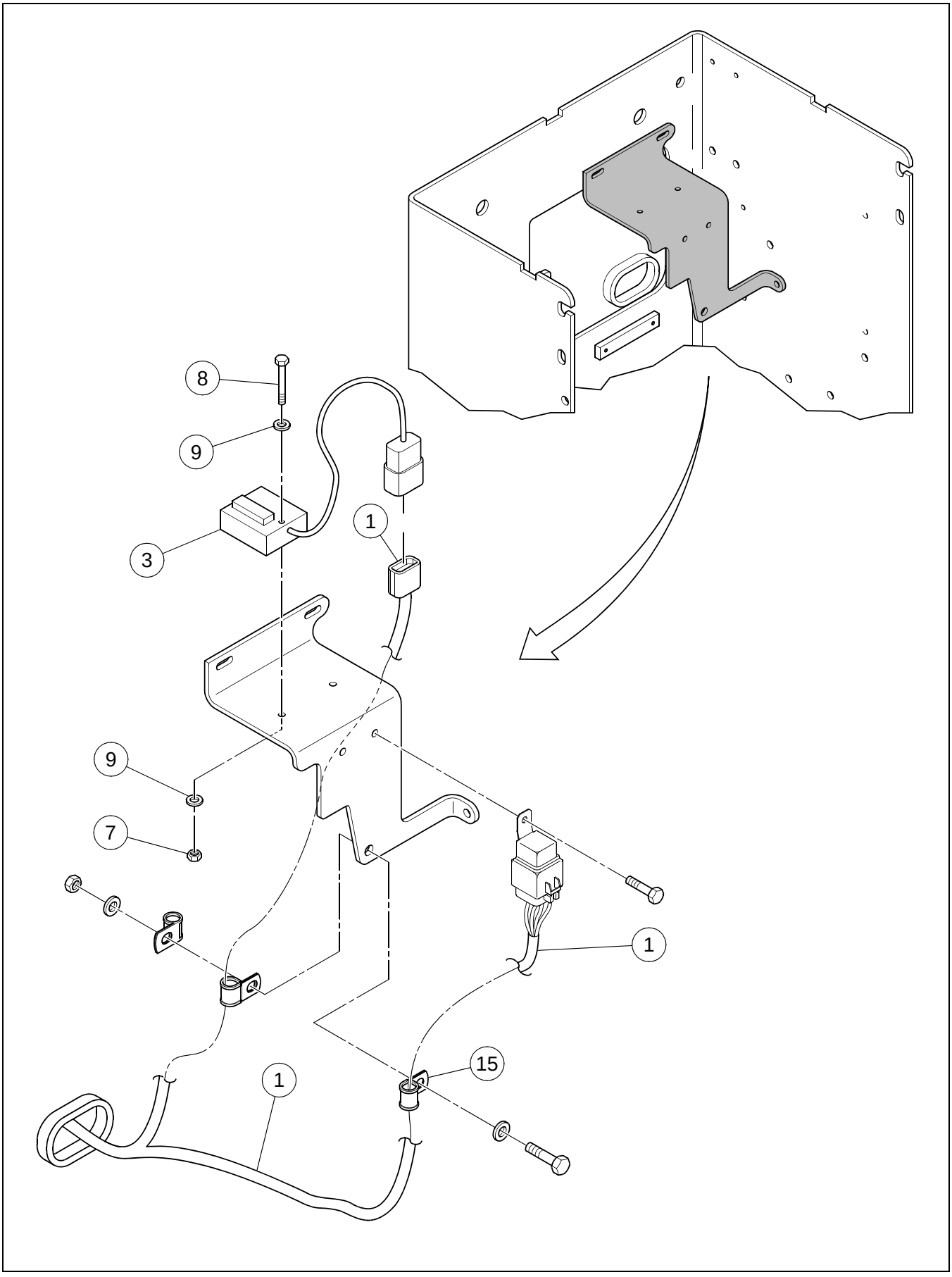

AUDIBLE ALARM INSTALLATION - OPTIONAL - SHEET 2 OF 2

BOM 13255344

ITEM	COMM. NO.	DESCRIPTION	QTY	DIMENSIONS/NOTES
1	19313667	Audible Alarm Wire Harness - Eff S/N 190740	1	
-	13426606	Audible Alarm Wire Harness - Prior S/N 190740	1	
-	13426622	- Audible Alarm Main Wire Harness	1	
-	13248901	- Audible Alarm Jumper Harness	1	
3	13313648	Timer	1	
7	96704598	Hex Nut, Zinc Plated	1	M6
8	96701461	HHCS, Fully Threaded, Zinc Plated	1	M6 x 1 x 25 Cl 8.8
9	96741038	Flatwasher, Zinc Plated	2	M8 x 16.0
15	58879891	Clamp	1	

Dwg D59128983/02

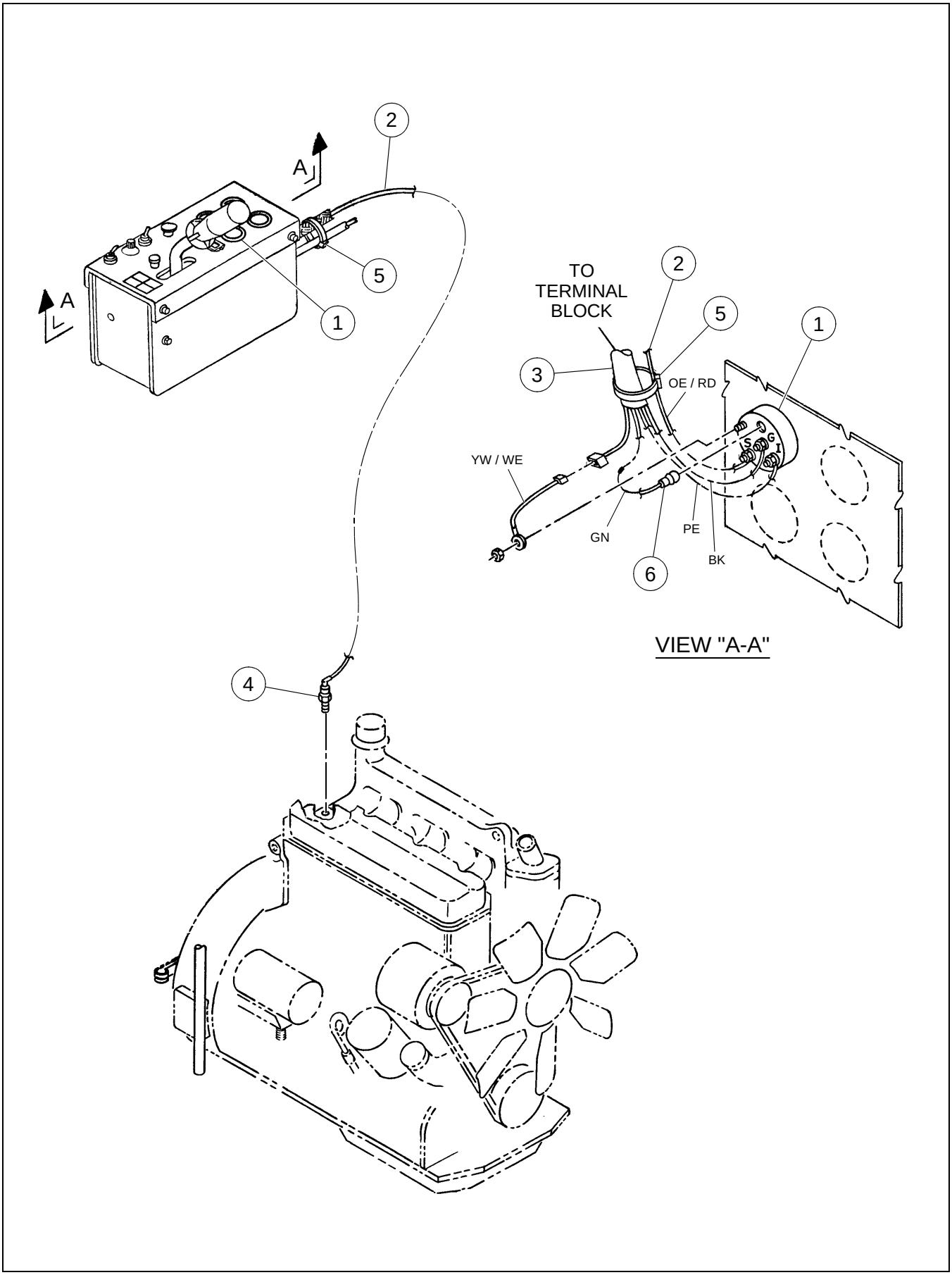

WATER TEMPERATURE GAUGE KIT

BOM 59134205

ITEM	COMM. NO.	DESCRIPTION	QTY	DIMENSIONS/NOTES
1	59128991	Water Temperature Gauge	1	
2	59128942	Water Temperature Gauge Wire Harness	1	
3	59128959	Wire Assembly	1	
4	59128934	Water Temperature Gauge Sender	1	
5	95424586	Wire Tie	A/R	
6	58955923	Gauge Wire Harness	1	
-	59824250	- Light Kit	1	
-	59608570	- Connector	1	

AIR CLEANER RESTRICTION INDICATOR INSTALLATION - OPTIONAL

Dwg D13212238/01

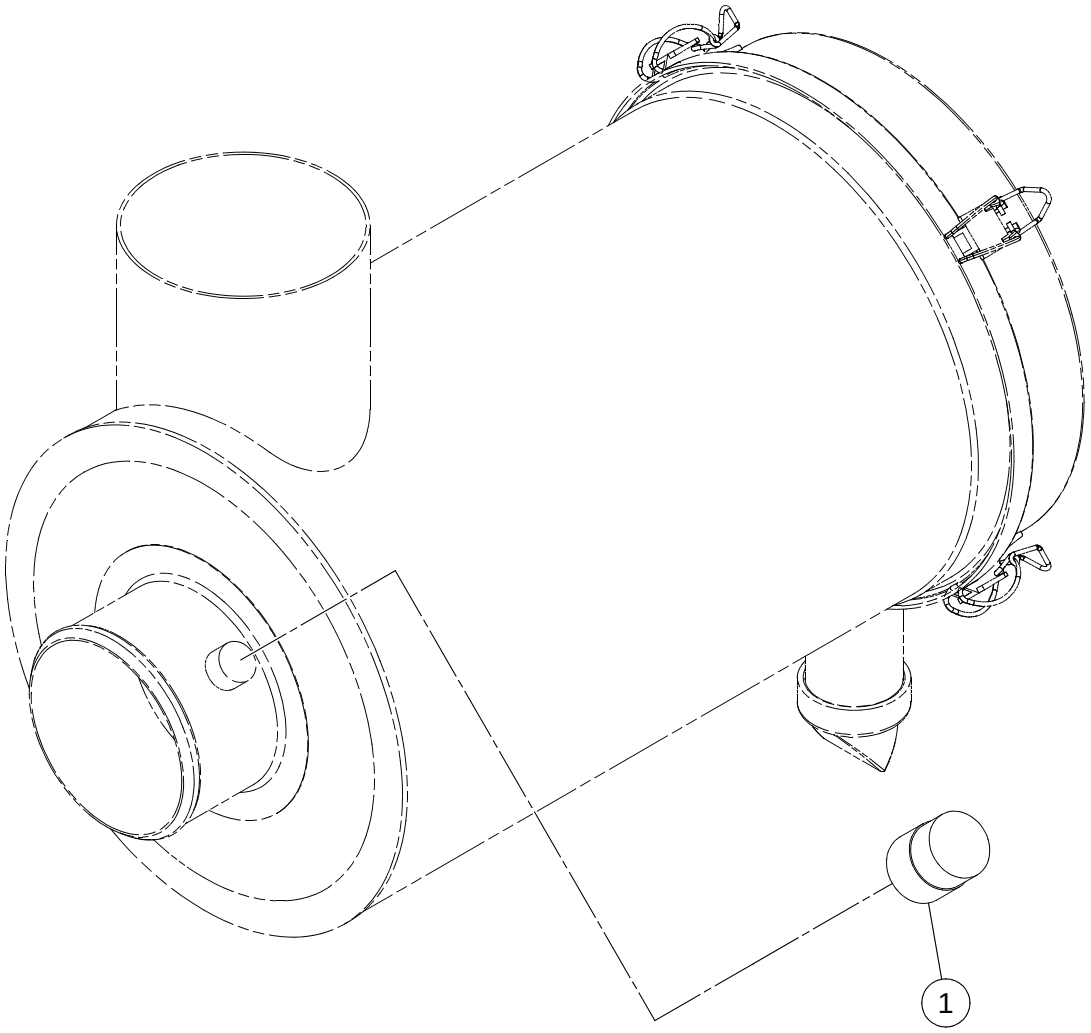

AIR CLEANER RESTRICTION INDICATOR INSTALLATION - OPTIONAL

BOM 59287912, 59289728

ITEM	COMM. NO.	DESCRIPTION	QTY	DIMENSIONS/NOTES
1	59873984	Air Cleaner Restriction Indicator Switch	1	

POWER SOCKET INSTALLATION - OPTIONAL

Dwg 13212360/02

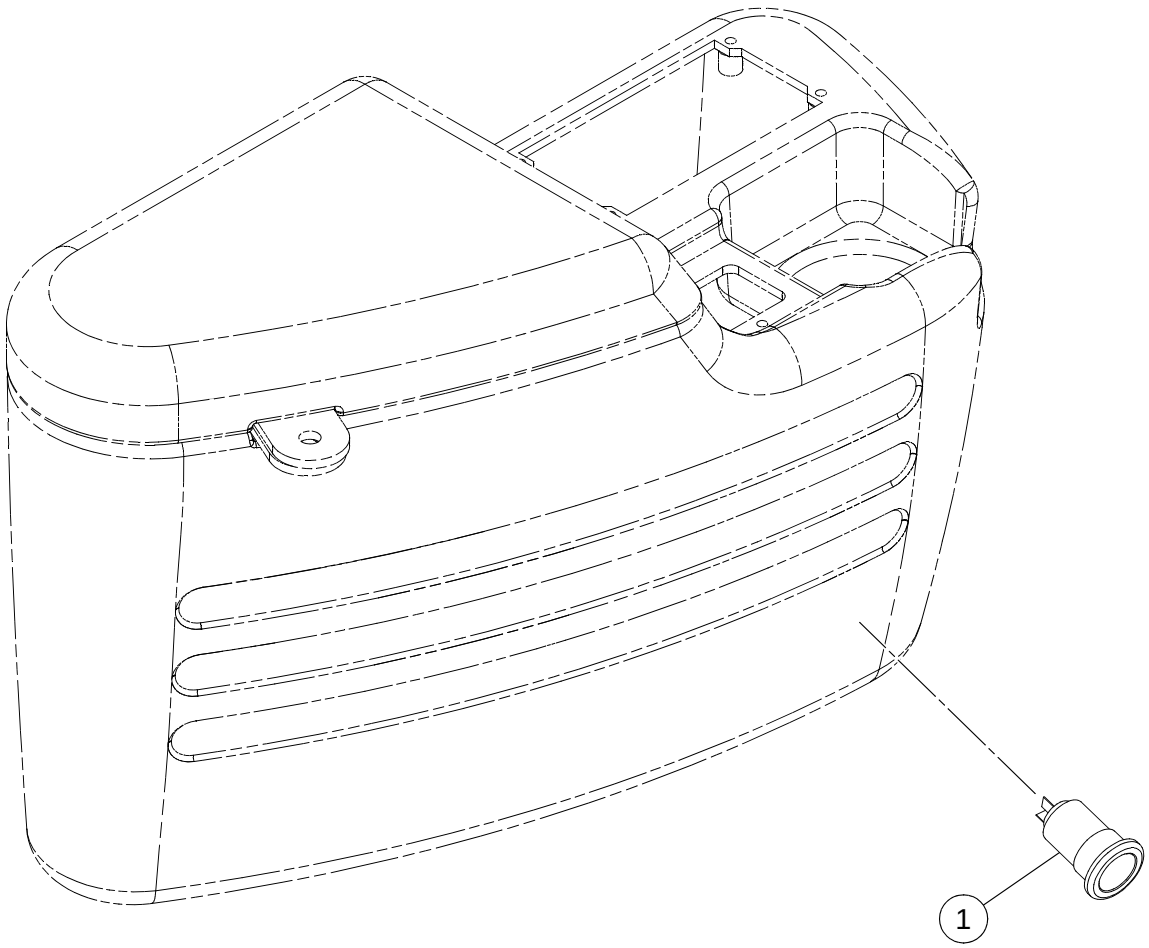

POWER SOCKET INSTALLATION - OPTIONAL

BOM 13179429

ITEM	COMM. NO.	DESCRIPTION	QTY	DIMENSIONS/NOTES
1	19282102	Power Port	1	

BEACON LIGHT INSTALLATION - OPTIONAL

Dwg 43821131/0a

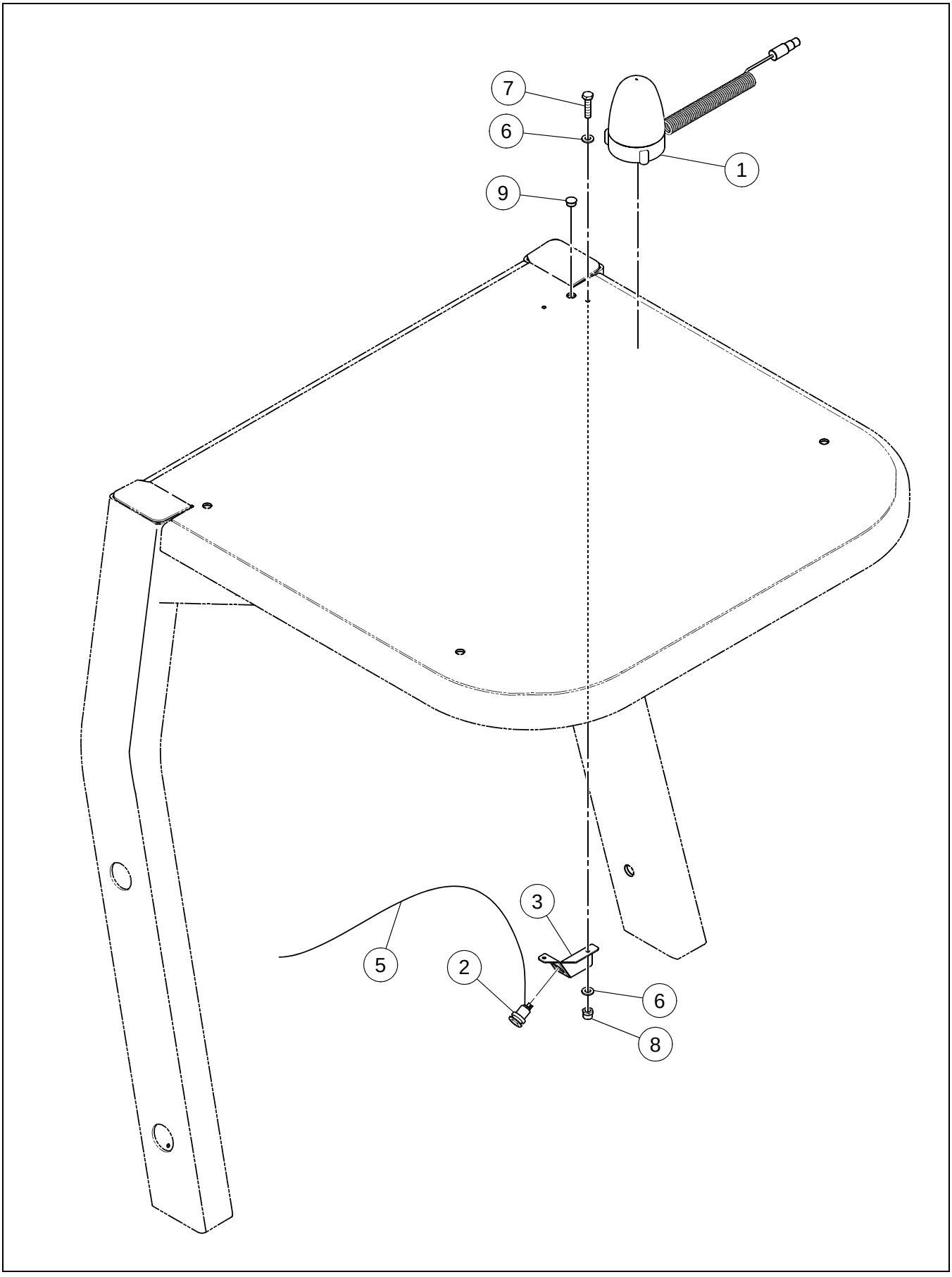

BEACON LIGHT INSTALLATION - OPTIONAL

BOM 59287300, 13256086, 43821131, 43821164, 18000992

ITEM	COMM. NO.	DESCRIPTION	QTY	DIMENSIONS/NOTES
1	13176797	Rotating Beacon Light	1	
-	13259098	- Beacon Light Bulb	1	
2	19282102	Power Port	1	
3	13278007	Power Port Mounting Bracket	1	
5	13225115	Beacon Light Wire Harness (Non-Cab Only)	1	
6	96741053	Flatwasher	4	M6 x 12.0
7	96701461	HHCS, Fully Threaded, Zinc Plated	2	M6 x 1 x 25 Cl 8.8
8	96704598	Hex Locknut	2	M6
9	59326827	Domed Plug	1	

SPEEDOMETER/VPM METER INSTALLATION - OPTIONAL

Dwg 13235585/05

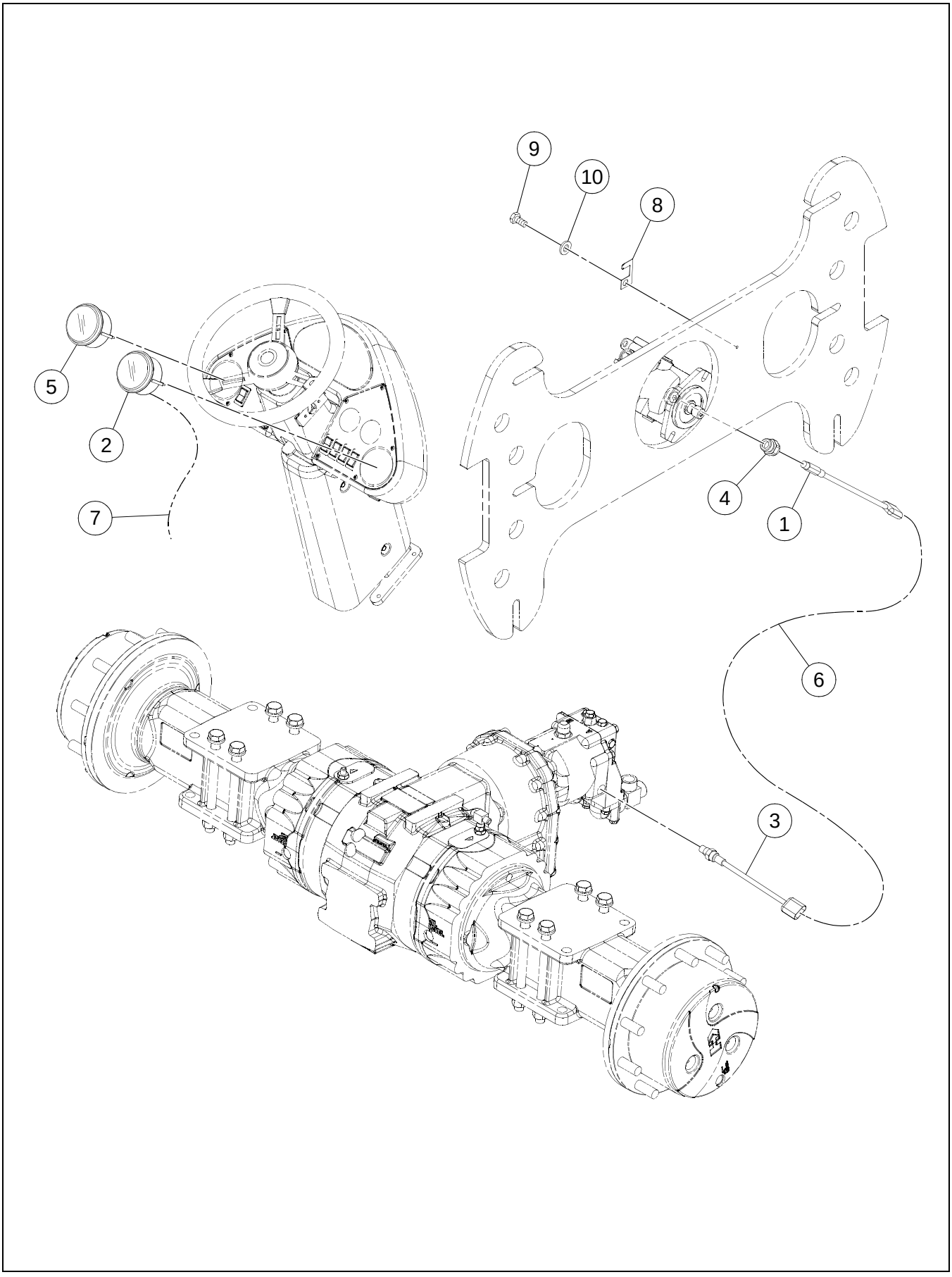

SPEEDOMETER/VPM METER INSTALLATION - OPTIONAL

BOM 13205034, 13205059

ITEM	COMM. NO.	DESCRIPTION	QTY	DIMENSIONS/NOTES
1	13254503	Speed Sensor (SD-70D/70F Only)	1	
2	13179445	Speedometer Gauge	1	
3	59249284	Speed Sensor (SD-70D/70F Only)	1	
4	13176789	Speed Sensor Adapter (SD-70D/70F Only)	1	
5	13179452	VPM Gauge	1	
6	13493523	Vibration Sensor Wire Harness (SD-70D70/F Only)	1	
7	13493507	Gauge Light Wire Harness	1	
8	59050740	Connector Clip	1	
9	96705041	HHCS, Fully Threaded, Zinc Plated	1	M8 x 1.25 x 12 Cl 8.8
10	96741038	Flatwasher	1	M8 x 1.25 Cl 200

IMPACTOMETER/AUTOVIBRATION METER INSTALLATION - OPTIONAL

Dwg 13233432/0c

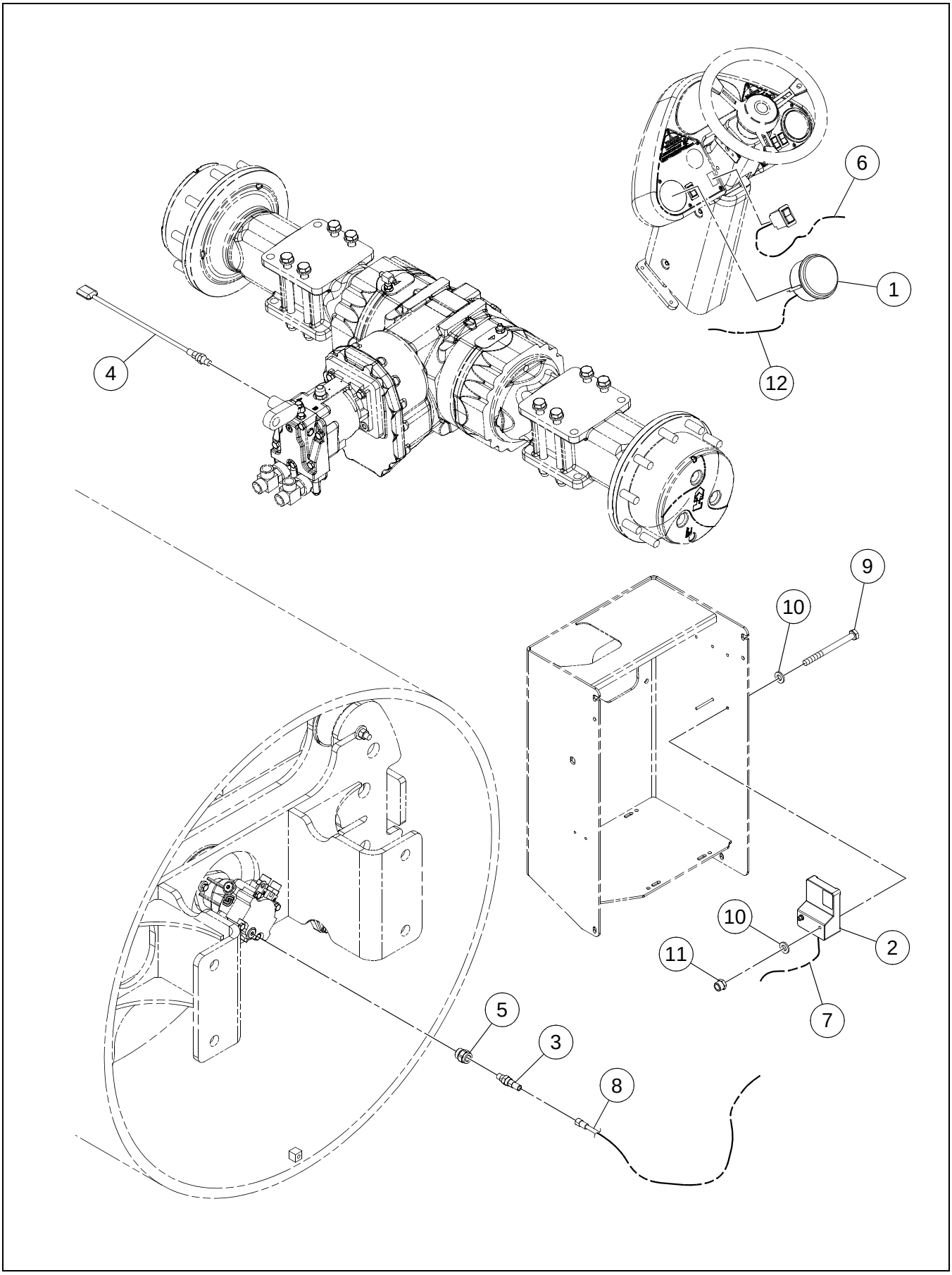

IMPACTOMETER/AUTOVIBRATION METER INSTALLATION - OPTIONAL

BOM 13271226, 13369970

ITEM	COMM. NO.	DESCRIPTION	QTY	DIMENSIONS/NOTES
1	13169404	Impactometer Gauge	1	
2	18008417	Impactometer/Autovibration Controller	1	
3	13254503	Speed Sensor (SD-70D/70F Only)	1	
4	59249284	Speed Sensor (SD-70D/70F Only)	1	
5	13176789	Speed Sensor Adapter (SD-70D/70F Only)	1	
6	13205075	Auto/Manual Vibration Switch/Wire Harness Assembly	1	
-	13198916	- Auto/Manual Vibration Selector Wire Harness	1	
-	13190772	- Auto Vibration Switch	1	
7	13493481	Auto/Manual Module Wire Harness	1	
8	13493523	Vibration Sensor Wire Harness (SD-70D/70F Only)	1	
9	96706825	Bolt, Zinc Plated	2	M6 x 1.0 Cl 8.8
10	96741053	Flatwasher, Zinc Plated	4	M6 Cl 200
11	96702873	Locknut, Zinc Plated	2	M6 Cl 10
12	13225123	Gauge Light Wire Harness	1	
13	59121855	Clamp (Not Shown)	1	
14	96704663	Flatwasher (Not Shown)	1	M6 Large

VARIABLE FREQUENCY/DUAL AMPLITUDE INSTALLATION - OPTIONAL

Dwg 43836311/00

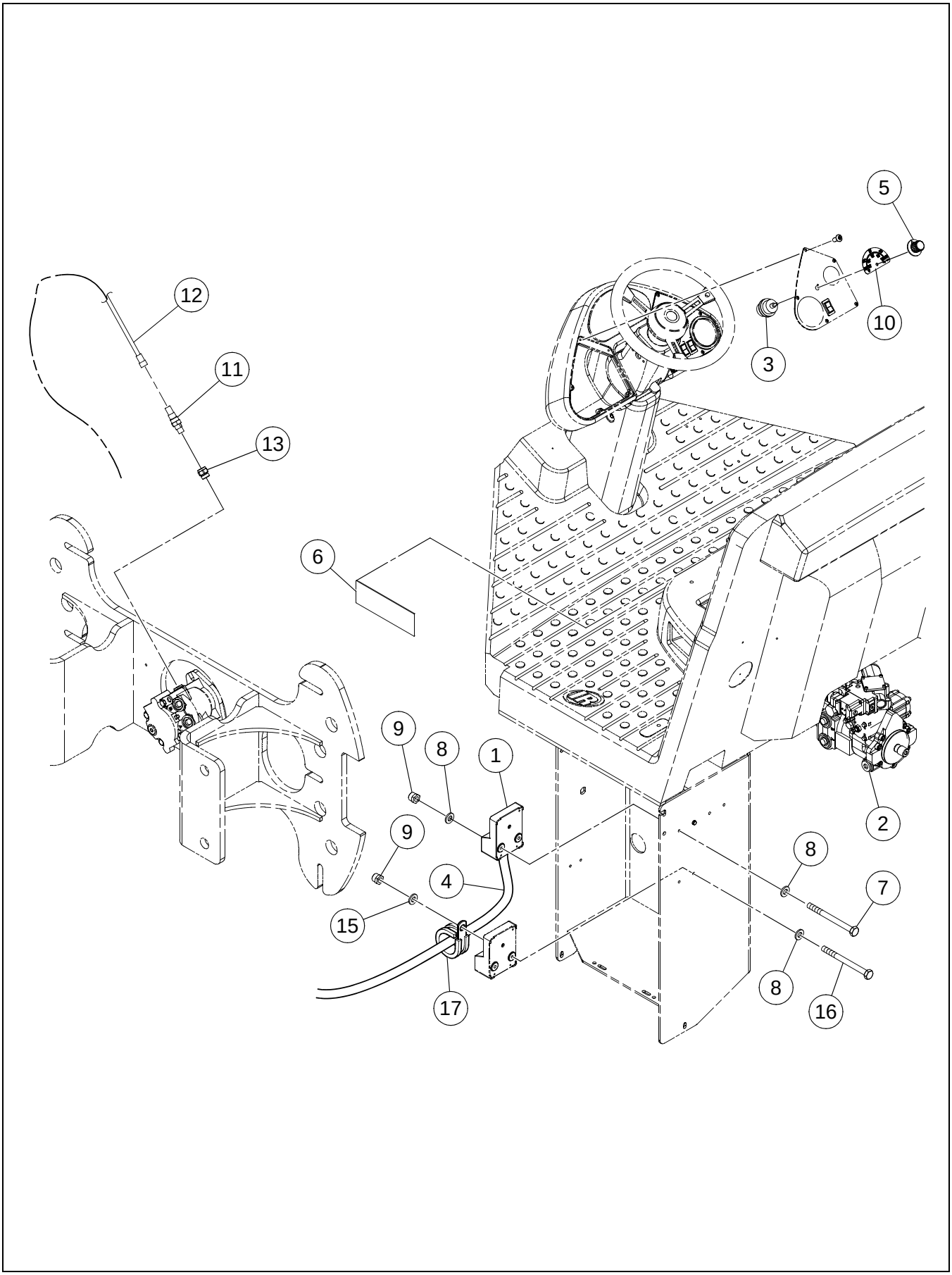

VARIABLE FREQUENCY/DUAL AMPLITUDE INSTALLATION - OPTIONAL

BOM 13313762, 13313770, 13313788, 13474523, 80818156

ITEM	COMM. NO.	DESCRIPTION	QTY	DIMENSIONS/NOTES
1	43821024	Variable Vibe Control (SD-70D/77DX) - Effective S/N 192960	1	
-	13863733	Variable Vibe Control (SD-70D/77DX) - Prior to S/N 192960	1	
-	43821032	Variable Vibe Control (SD-70F/77F) - Effective S/N 192960	1	
-	13864111	Variable Vibe Control (SD-70F/77F) - Prior to S/N 192960	1	
2	**13304753**	**Vibration Pump - Eff S/N 178653**	**1**	**See Breakdown E - 36.**
-	19291426	ARC - Vibration Pump - Effective S/N 178653	1	
-	**13223912**	**Vibration Pump - Prior to S/N 178653**	**1**	**See Breakdown E - 40.**
-	13284872	ARC - Vibration Pump - Prior to S/N 178653	1	
3	13205083	Vibration Variation Switch/Wire Harness Assembly	1	
-	13198908	- Vibration Variation Selection Wire Harness	1	
-	58878562	- Vibration Variation Selection Switch	1	
4	13492681	Variable Vibration Wire Harness	1	
5	59047019	Frequency Dial Knob	1	
6	58877549	Decal: Natural Frequency	1	
7	96706825	Bolt, Zinc Plated	2	M6 x 1.0 Cl 8.8
8	96741053	Flatwasher, Zinc Plated	4	M6 Cl 200
9	96702873	Locknut, Zinc Plated	2	M6 Cl 10
10	13313796	Decal: Variable Frequency (SD-70D/77DX)	1	
-	13313820	Decal: Variable Frequency (SD-70F/77F)	1	
11	13254503	Speed Sensor	1	
12	13493523	Speed Sensor Wire Harness	1	
13	13176789	Adapter	1	
15	96704663	Flatwasher	1	M6 Large
16	96704564	HHCS, Zinc Plated	1	M6 x 1 x 20 Cl 8.8
17	59121855	Clamp	1	

VIBRATION PUMP (13304753) - EFFECTIVE WITH S/N 178653 - INTERNAL BREAKDOWN - SHEET 1 OF 2

Dwg 13304753/00/01

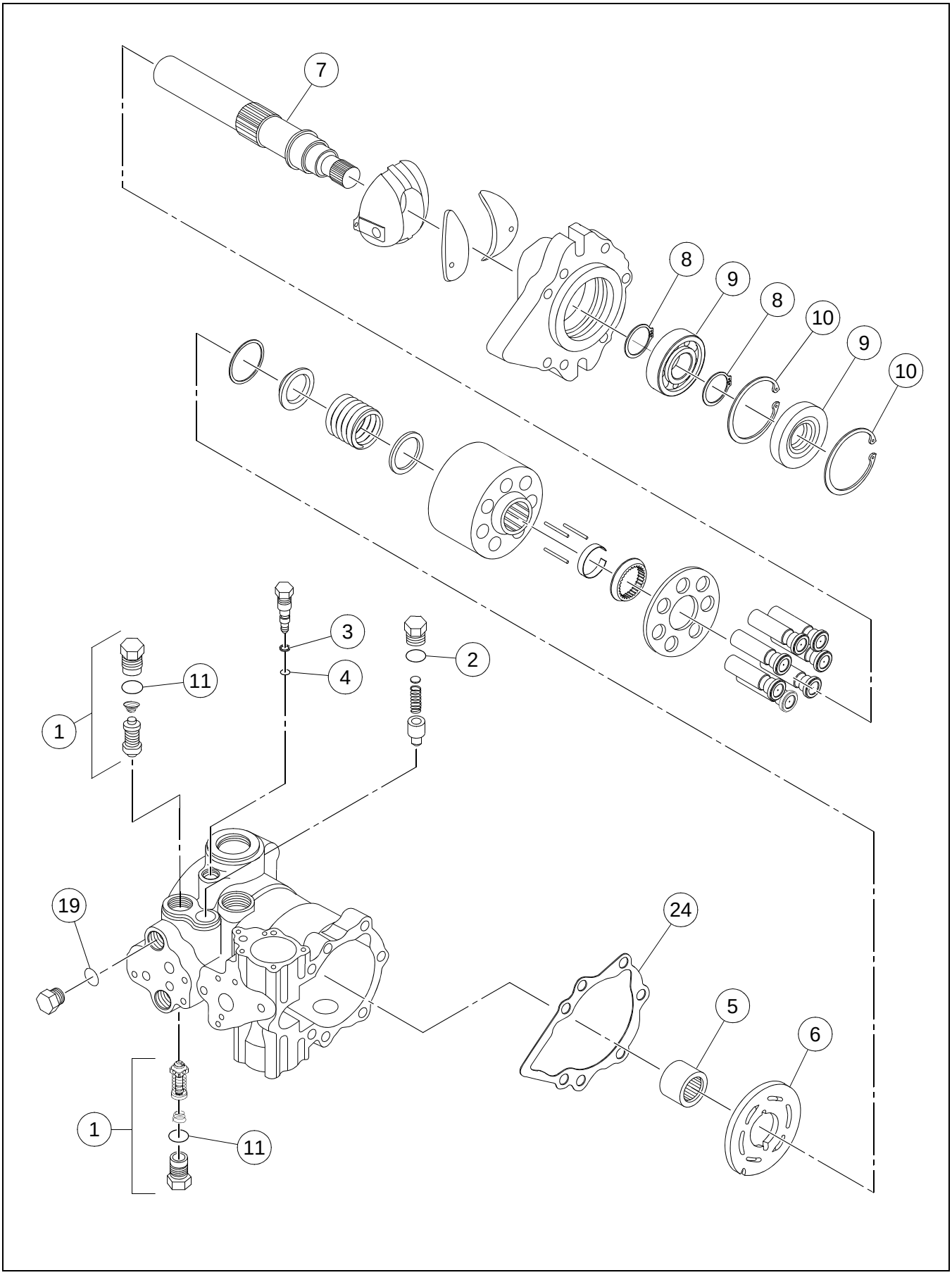

VIBRATION PUMP (13304753) - EFFECTIVE WITH S/N 178653 - INTERNAL BREAKDOWN - SHEET 1 OF 2

BOM 13304753

ITEM	COMM. NO.	DESCRIPTION	QTY	DIMENSIONS/NOTES
1	59337097	Valve Kit (Includes Item 11)	2	
2	50278019	O-ring	1	
3	59986422	Backup Ring	1	
4	59949339	MDC O-ring	1	
5	59785303	Bearing	1	
6	59123802	Valve Plate, RH	1	
7	59933713	Pump Shaft	1	
8	59785519	Ring	2	
9	95200648	Ball Bearing	1	
10	59861872	Ring	2	
11	58220567	O-ring	2	
19	59698811	O-ring	4	
24	59949511	Front Gasket	1	

VIBRATION PUMP (13304753) - EFFECTIVE WITH S/N 178653 - INTERNAL BREAKDOWN - SHEET 2 OF 2

Dwg 13304753/00/02

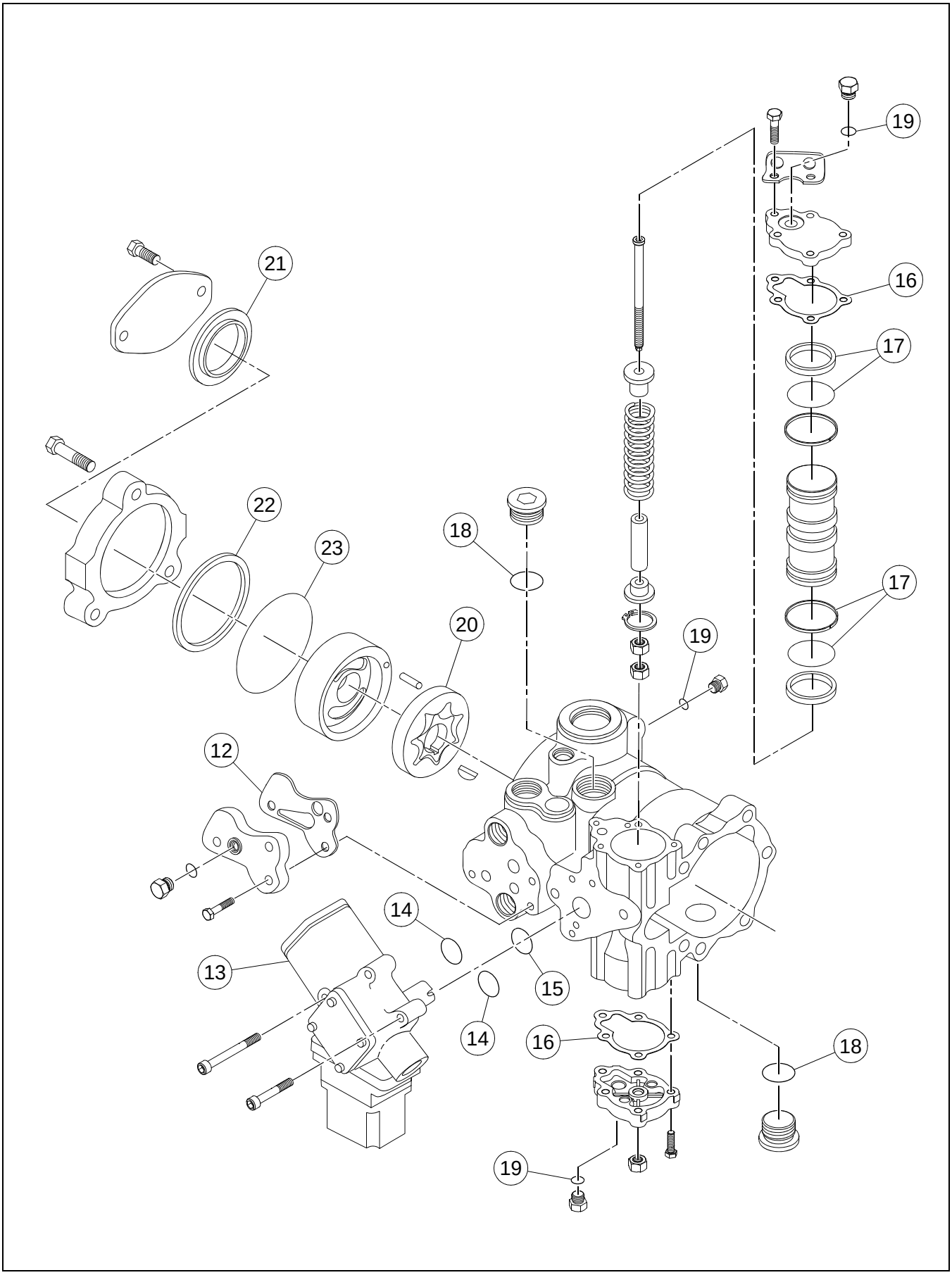

VIBRATION PUMP (13304753) - EFFECTIVE WITH S/N 178653 - INTERNAL BREAKDOWN - SHEET 2 OF 2

BOM 13304753

ITEM	COMM. NO.	DESCRIPTION	QTY	DIMENSIONS/NOTES
12	13090097	Filter Adapter Seal	1	
13	13247341	EDC Valve	1	
14	95097663	O-ring	2	
15	95086062	O-ring	1	
16	59938373	Servo Gasket	2	
17	59972877	O-ring Kit	1	
18	58220567	O-ring	2	
19	59698811	O-ring	4	
20	59785246	Gerotor Assembly	1	
21	59102749	Seal	1	
22	59785642	Ring	1	
23	58903741	O-ring	1	
25	58813791	Seal Kit (Not Shown)	1	

VIBRATION PUMP (13223912) - PRIOR TO S/N 178653 -
INTERNAL BREAKDOWN - SHEET 1 OF 2

Dwg D13244561/02/01

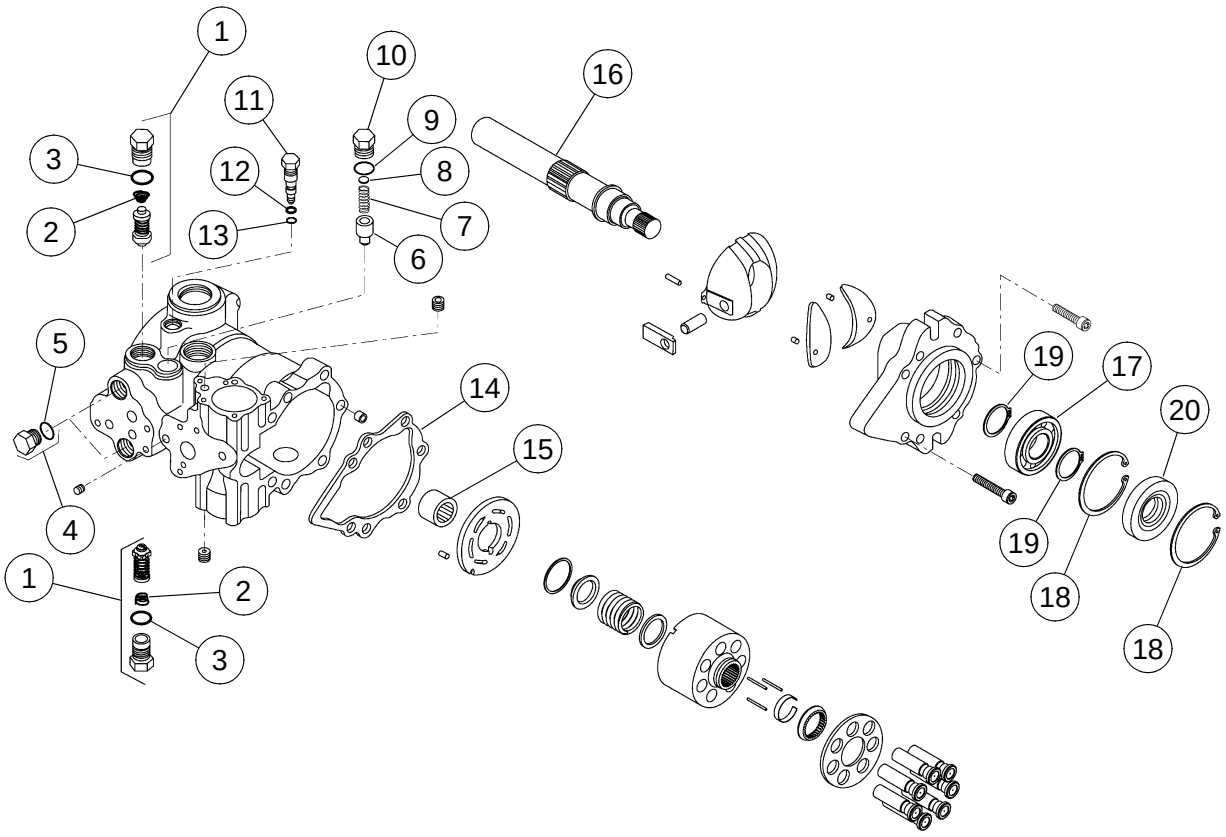

VIBRATION PUMP (13223912) - PRIOR TO S/N 178653 - INTERNAL BREAKDOWN - SHEET 1 OF 2

BOM 13223912

ITEM	COMM. NO.	DESCRIPTION	QTY	DIMENSIONS/NOTES
1	59337097	Check Valve Kit	2	
2	54492541	- Spring	2	
3	58220567	- O-ring	2	
4	59933622	Plug	1	
5	59698811	O-ring	1	
6	58220633	Charge Relief Valve	1	
7	59034348	Charge Valve Spring	1	
8	58220583	Shim Pack	1	
9	50278019	O-ring	1	
10	59933614	Plug	1	
11	59779918	Valve	1	
12	59986422	Back-up Ring	1	
13	13247358	O-ring	1	
14	59949511	Front Gasket	1	
15	59785303	Bearing	1	
16	59933713	Pump Shaft	1	
17	95200648	Ball Bearing	1	
18	59861872	Ring	2	
19	59785519	Ring	2	
20	59941203	Seal	1	

VIBRATION PUMP (13223912) - PRIOR TO S/N 178653 - INTERNAL BREAKDOWN - SHEET 2 OF 2

Dwg D13244561/02/02

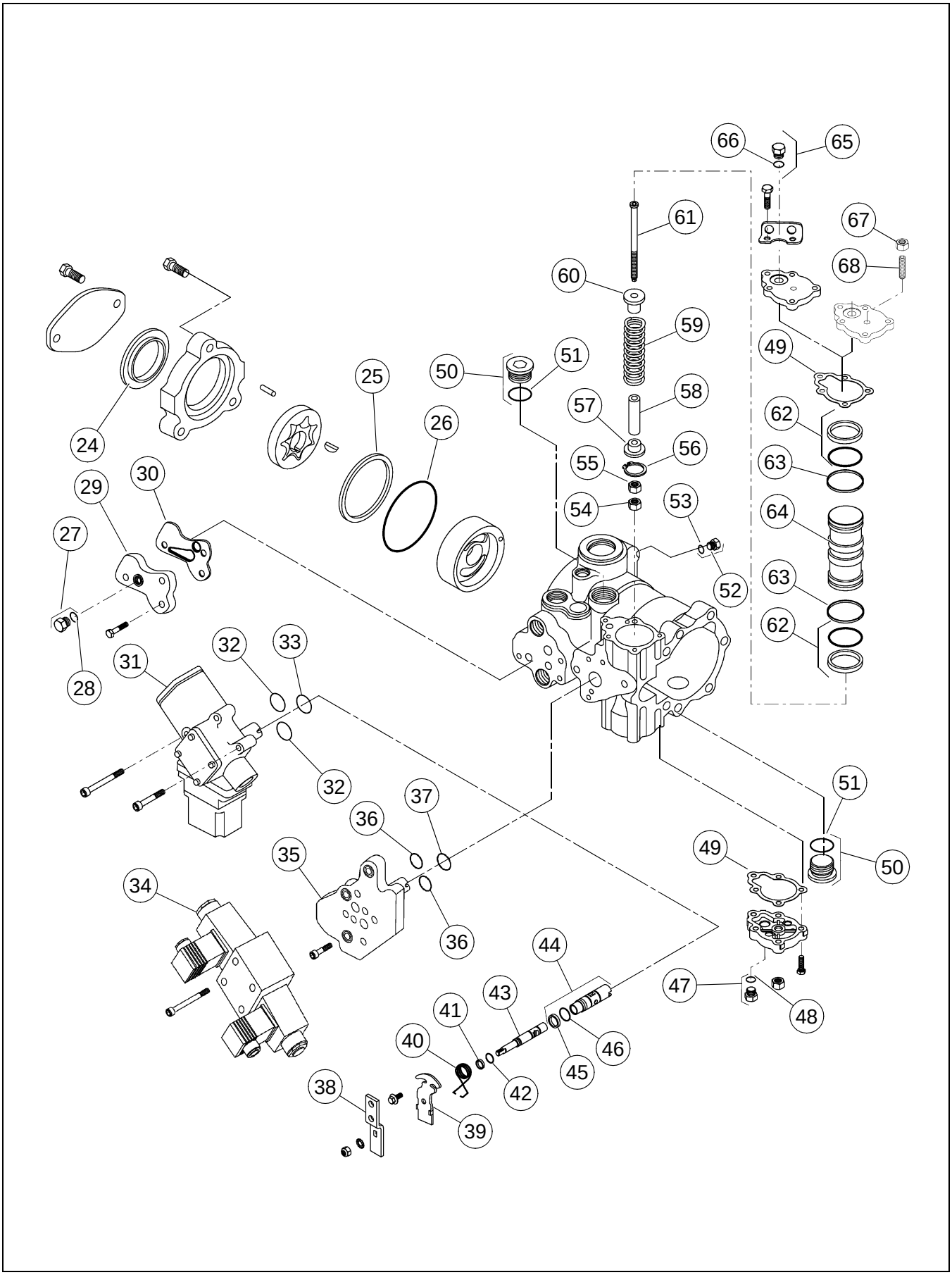

VIBRATION PUMP (13223912) - PRIOR TO S/N 178653 -
INTERNAL BREAKDOWN - SHEET 2 OF 2

BOM 13223912

ITEM	COMM. NO.	DESCRIPTION	QTY	DIMENSIONS/NOTES
24	59102749	Seal	1	
25	59785642	Ring	1	
26	58903741	O-ring	1	
27	59933622	Plug	1	
28	59698811	- O-ring	1	
29	58815614	Suction Filter Adapter	1	
30	58815622	Gasket	1	
31	13247341	EDC Valve	1	
32	95097663	O-ring	2	
33	95086062	O-ring	1	
34		This item not used with this Assembly		
35		This item not used with this Assembly		
36		This item not used with this Assembly		
37		This item not used with this Assembly		
38		This item not used with this Assembly		
39		This item not used with this Assembly		
40		This item not used with this Assembly		
41		This item not used with this Assembly		
42		This item not used with this Assembly		
43		This item not used with this Assembly		
44		This item not used with this Assembly		
45		This item not used with this Assembly		
46		This item not used with this Assembly		
47	59933622	Plug	1	
48	59698811	O-ring	1	
49	59938373	Gasket	2	
50	59949461	Plug	2	
51	58220567	- O-ring	2	
52	58950783	Plug	1	
53	59698811	O-ring	1	
54	54474713	Nut	1	
55	59431684	Nut	1	
56	58950627	Retainer Ring	1	
57	59871731	Spring Guide	1	
58	59947580	Servo Stop	1	
59	59785121	Spring	1	
60	59210658	Guide Spring	1	
61	59210641	Servo Screw	1	
62	59972877	O-ring Kit	1	
63	59422907	Piston Ring	2	
64	59431726	Piston	1	
65	59933622	Plug	1	
66	59698811	- O-ring	1	
67	59871772	Nut	1	
68	54766381	Servo Stop	1	

COMPACTOMETER INSTALLATION - OPTIONAL

Dwg D13294160/01

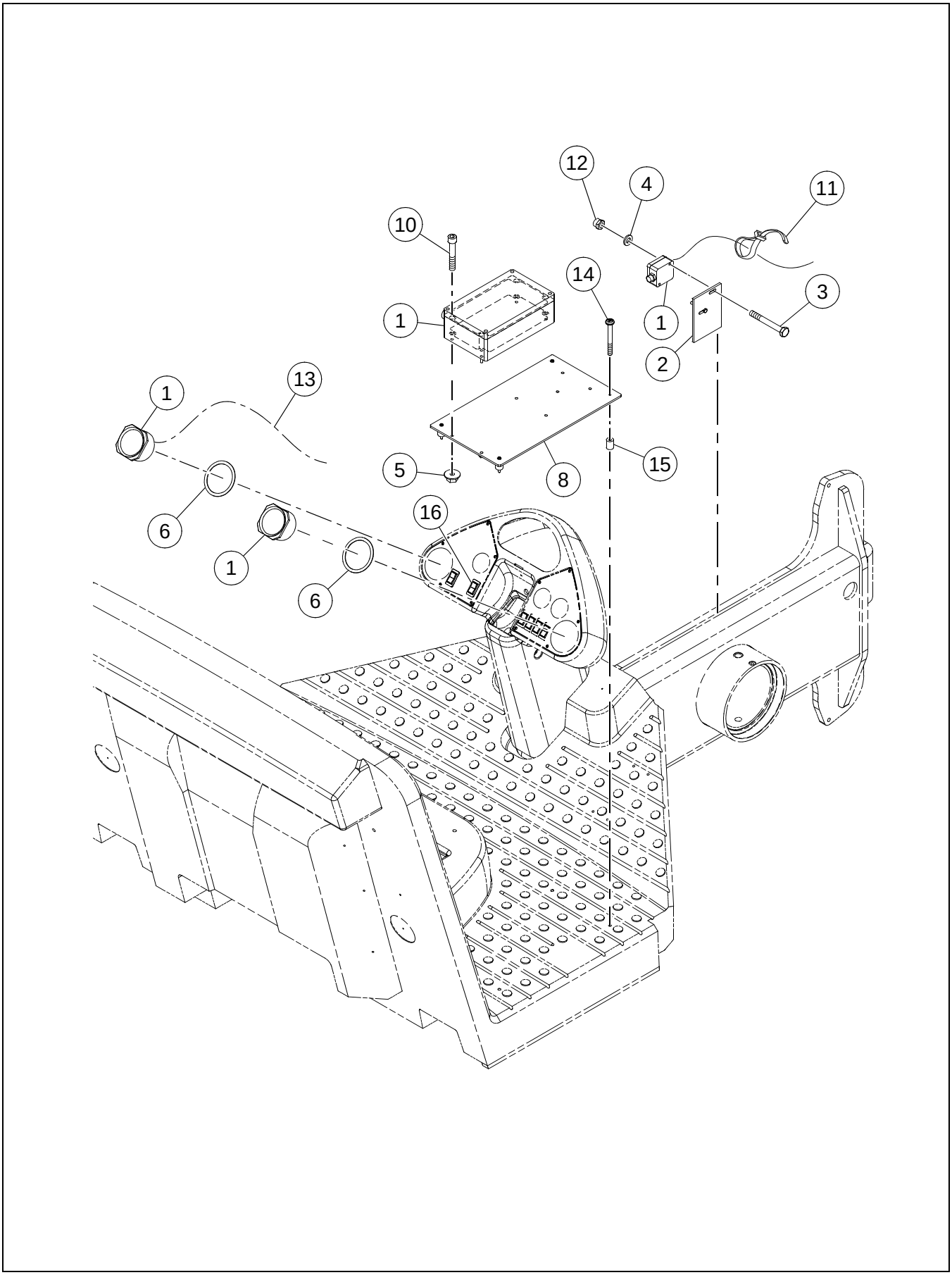

COMPACTOMETER INSTALLATION - OPTIONAL

BOM 59287177

ITEM	COMM. NO.	DESCRIPTION	QTY	DIMENSIONS/NOTES
1	NSS	Compactometer Assembly	1	
-	**59181735**	**Compactometer Kit**	**1**	**See Breakdown E - 46.**
2	13159843	Plate	1	
3	96705546	HHCS, Zinc Plated	2	M6 x 1.0 x 50 Cl 8.8
4	96741053	Flatwasher, Zinc Plated	2	M6 Cl 200
5	59941682	Locknut	4	1/4 x 20
6	13293006	Ring Plate	4	
8	13292982	Mounting Plate	1	
10	95067658	Hex Screw	4	1/4 x 20 x 1.5
11	95373973	Wire Tie	A/R	
12	96704598	Hex Locknut, Zinc Plated	2	M6 Cl 8
13	13255930	Compactometer Wire Harness	1	
14	96715180	Self-tapping Screw	4	1.6
15	13157961	Spacer	4	
16	13342878	Density Meter Switch	1	

COMPACTOMETER KIT (59181735) - INTERNAL BREAKDOWN

Dwg D13244892/00

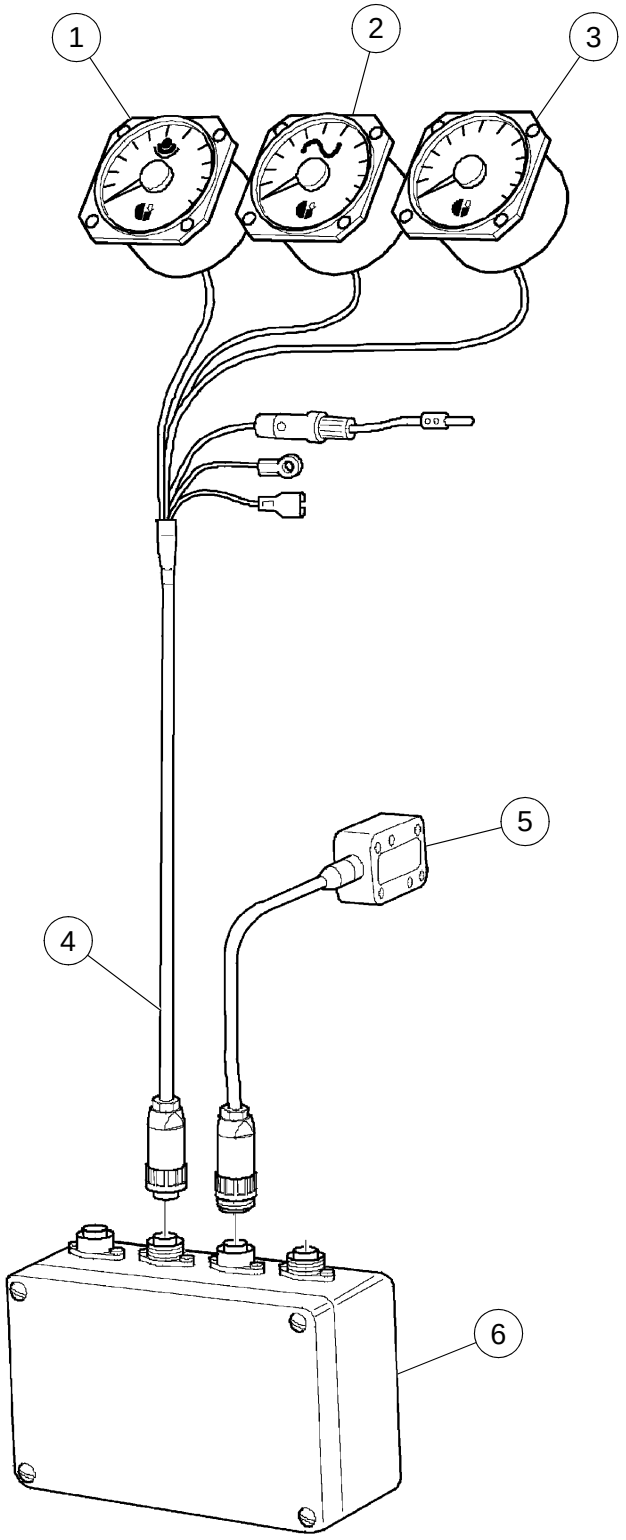

COMPACTOMETER KIT (59181735) - INTERNAL BREAKDOWN

BOM 59181735

ITEM	COMM. NO.	DESCRIPTION	QTY	DIMENSIONS/NOTES
1	13263918	CMV Dial	1	
2	13263926	F Dial	1	
3	13220777	RMV Dial	1	
4	58951419	Cable	1	
5	14202907	Cable Sensor	1	
6	13220769	Digital Processor	1	

ROADLIGHT INSTALLATION - OPTIONAL - SHEET 1 OF 3

Dwg 13389317/03/01

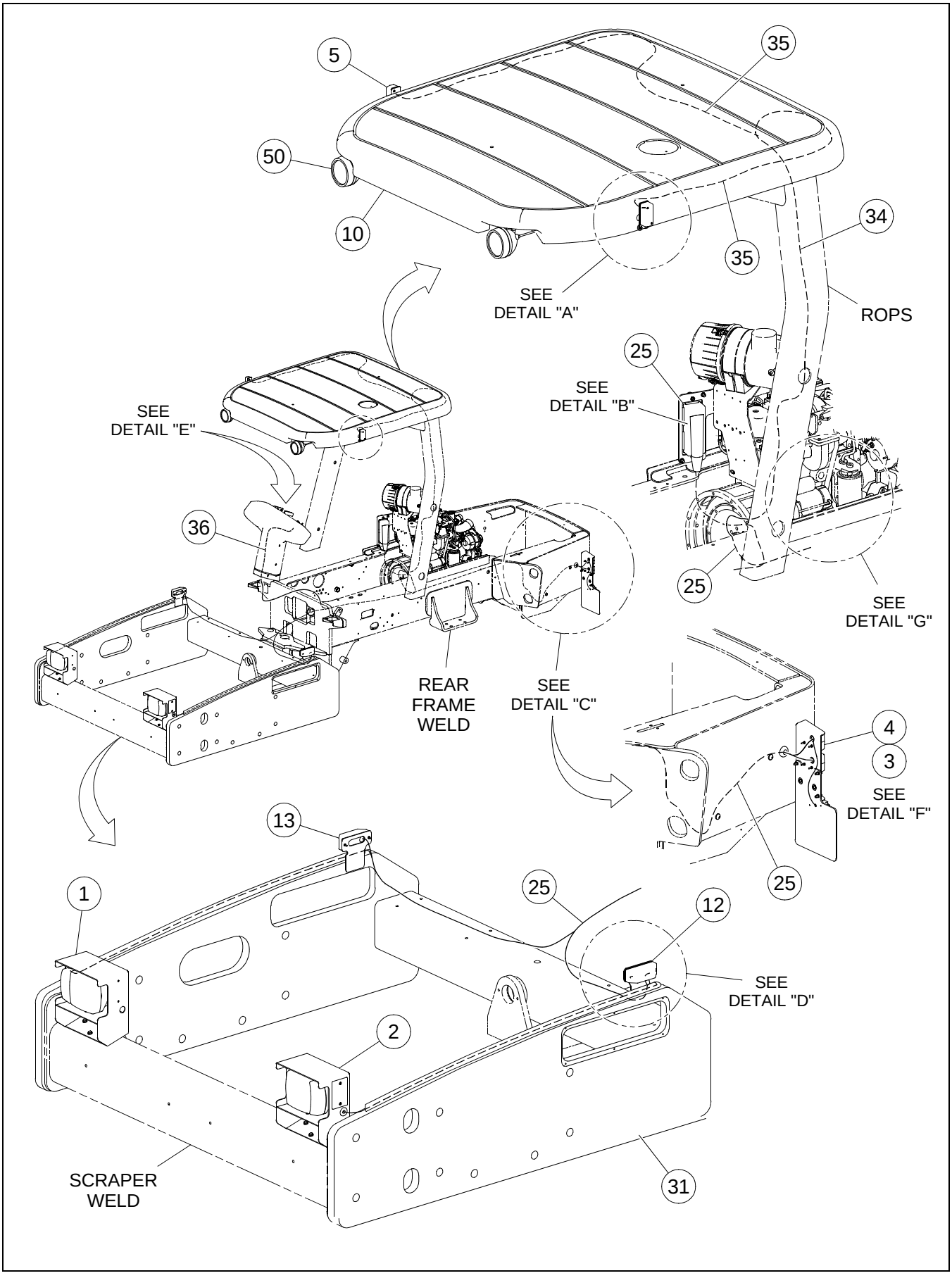

BOM 13389317, 13427265, 43819606

ITEM	COMM. NO.	DESCRIPTION	QTY	DIMENSIONS/NOTES
1	**NSVA**	**Right Front Roadlight Assembly**	**1**	**See Page E - 54.**
2	**NSVA**	**Left Front Roadlight Assembly**	**1**	**See Page E - 56.**
3	**NSVA**	**Right Rear Signal Assembly**	**1**	**See Page E - 58.**
4	**NSVA**	**Left Rear Signal Assembly**	**1**	**See Page E - 60.**
5	59291088	Marker Lamp	2	
10		This item not used with this Assembly		
12	13216775	Repeater Flasher Lamp, LH	1	
13	13216783	Repeater Flasher Lamp, RH	1	
25	13426549	Road Light Chassis Wire Harness	1	
31	43817576	Drum Frame	1	
34	13382247	Rops Position Light Wire Harness	1	
35	13346739	Side Marker Jump Wire Harness	2	
36	43819598	Road Light Wire Harness (Effective with S/N 194400)	1	
36	13382262	Road Light Wire Harness (Prior to S/N 194400)	1	
50	**NSVA**	**Worklight Installation - Effective with S/N 191508**	**1**	**See Page E - 64.**
-	**NSVA**	**Worklight Installation - Prior to S/N 191508**	**1**	**See Page E - 72.**

Dwg 13389317/03/02

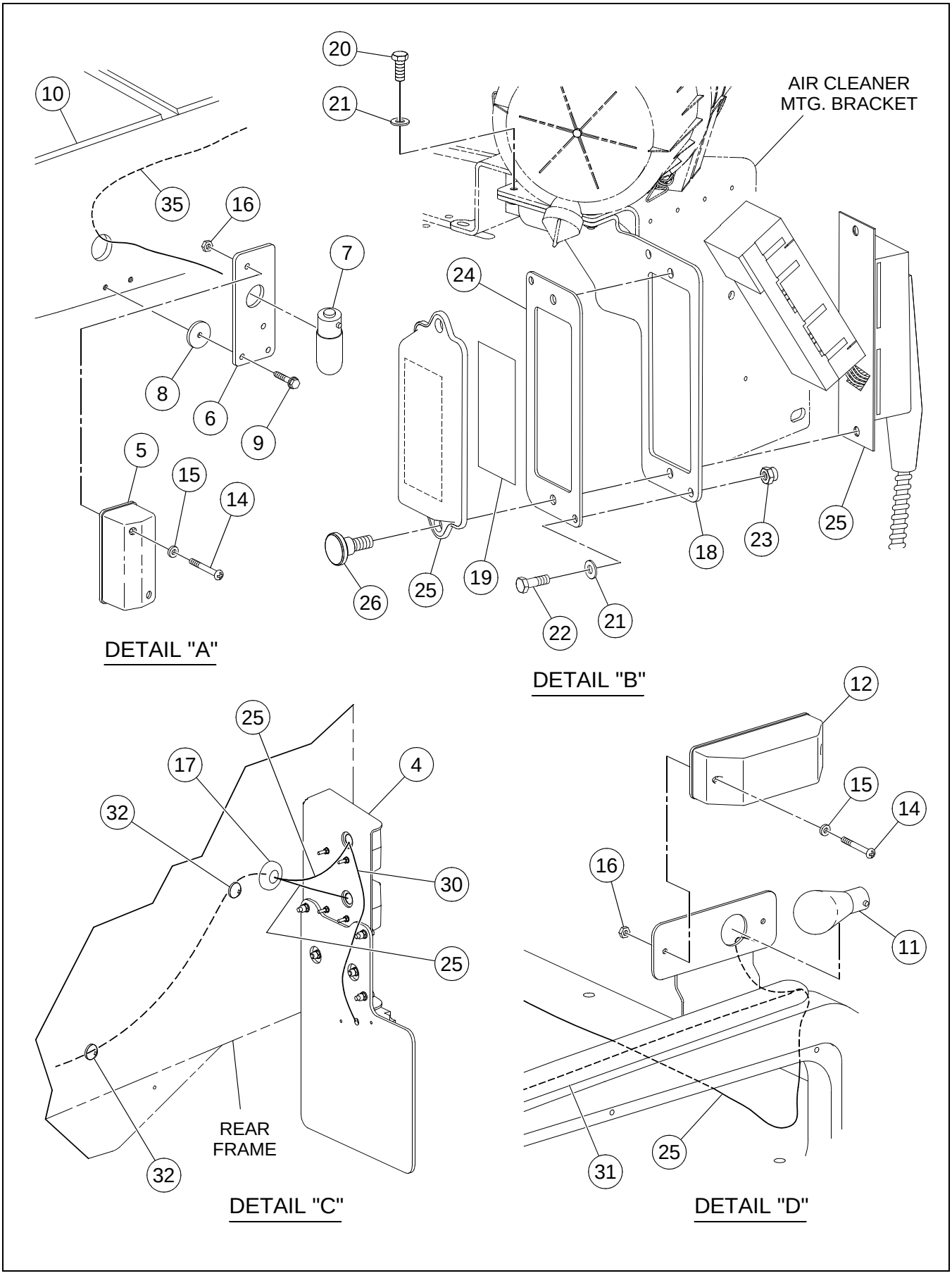

BOM 13389317, 13427265, 43819606

ITEM	COMM. NO.	DESCRIPTION	QTY	DIMENSIONS/NOTES
4	**NSVA**	**Left Rear Signal Assembly**	**1**	**See Page E - 60.**
5	59291088	Marker Lamp	2	
6	43804756	Marker Light Bracket	2	
7	13354014	Bulb	2	
8	54601299	Rubber Reinforced Washer	4	
9	96741053	Flatwasher	4	M6
10		This item not used with this Assembly		
11	13250386	Light Bulb	2	
12	13216775	Repeater Flasher Lamp, LH	1	
14	96720974	BHCS	8	M4 x 0.7 x 20 Grd A2
15	96738547	Flatwasher, Zinc Plated	8	M4 Hardened Cl 200
16	96703756	Hex Nut, Zinc Plated	8	M4 x 0.7 Cl 8
17	59849661	Grommet	2	
18	13389325	Harness Bracket	1	
19	13403647	Decal: Fuse	1	
20	96702824	HHCS, Fully Threaded, Zinc Plated	2	M8 x 1.25 x 20 Cl 8.8
21	96741038	Flatwasher	6	M8 x 1.25 Cl 200
22	96702659	HHCS, Fully Threaded, Zinc Plated	2	M8 x 1.25 x 25 Cl 8.8
23	96704606	Hex Locknut, Zinc Plated	2	M8 x 1.25 Cl 8
24	13322177	Adapter Plate	1	
25	13426549	Road Light Chassis Wire Harness	1	
26	96745518	Screw, Zinc Plated	2	M8 x 1.25
30	13382122	License Plate Light Wire Harness	1	
31	43817576	Drum Frame	1	
32	58820168	Wire Tie	A/R	
35	13346739	Side Marker Jump Wire Harness	2	

Dwg 13389317/03/03

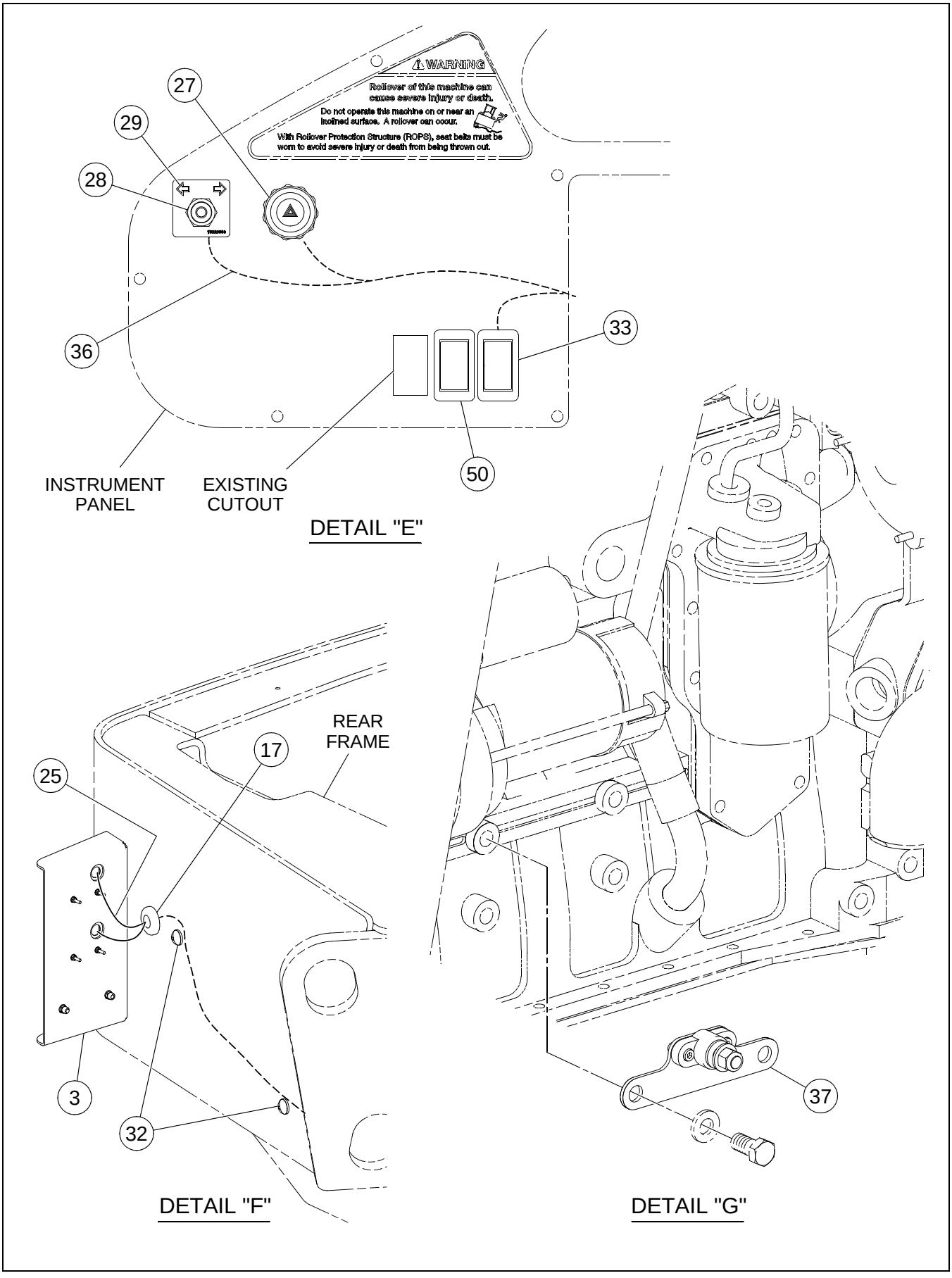

BOM 13389317, 13427265, 43819606

ITEM	COMM. NO.	DESCRIPTION	QTY	DIMENSIONS/NOTES
3	**NSVA**	**Right Rear Signal Assembly**	**1**	**See Page E - 58.**
17	59849661	Grommet	2	
25	13426549	Road Light Chassis Wire Harness	1	
27	13230024	Hazard Warning Switch	1	
28	58834086	Switch	1	
29	13229638	Decal: Turn Signal	1	
32	58820168	Wire Tie	A/R	
33	13346762	Road Light Switch	1	
36	13382262	Road Light Wire Harness	1	
37	**NSVA**	**Insulated Stud Assembly**	**1**	**See Page E - 62.**
50	**NSVA**	**Worklight Installation - Effective with S/N 194400**	**1**	**See Page E - 64.**
-	**NSVA**	**Worklight Installation - Effective S/N 191508 thru 194399**	**1**	**See Page E - 68.**
-	**NSVA**	**Worklight Installation - Prior to S/N 191508**	**1**	**See Page E - 72.**

RIGHT FRONT ROADLIGHT ASSEMBLY

Dwg 13389093/00

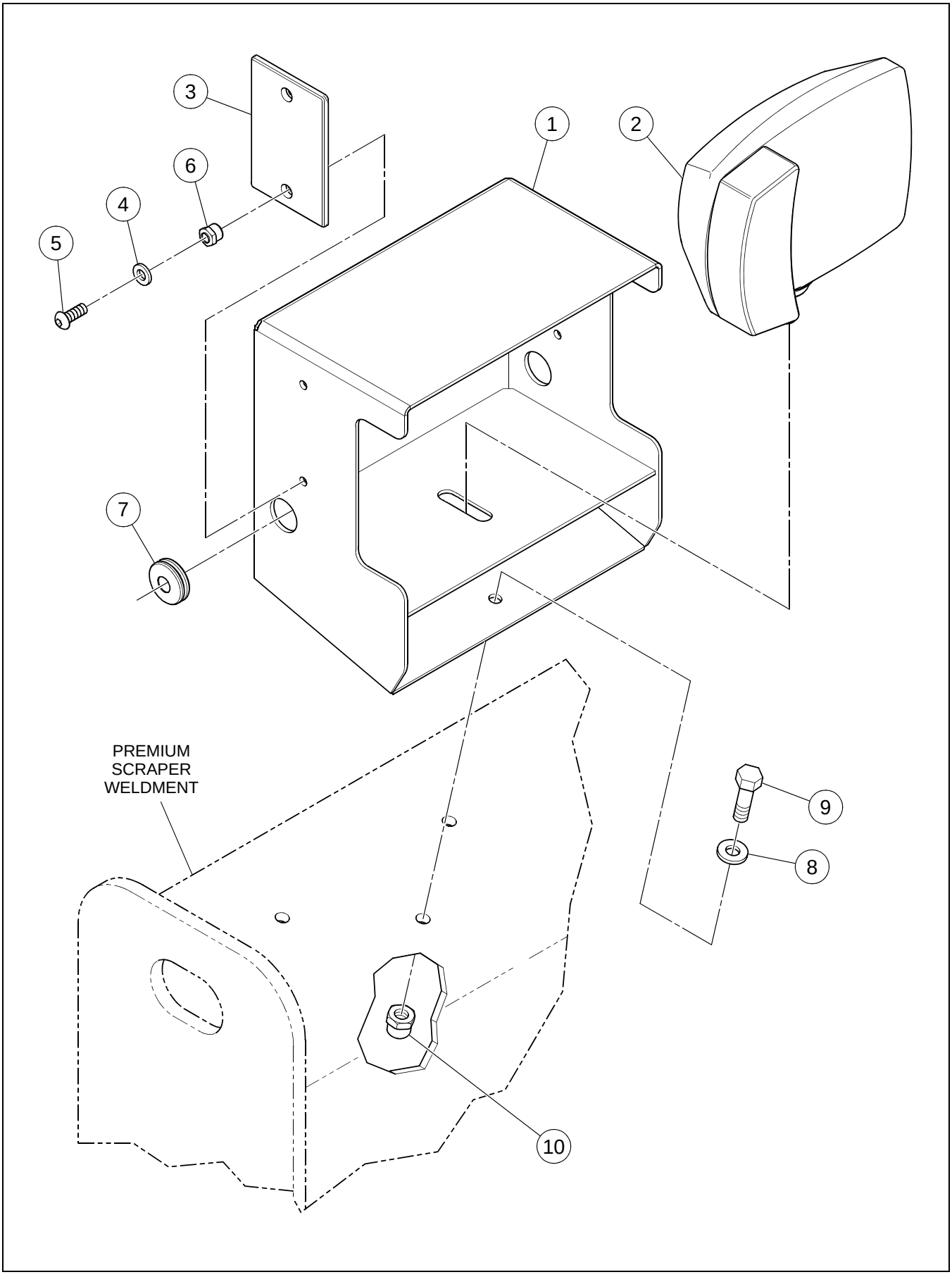

RIGHT FRONT ROADLIGHT ASSEMBLY

BOM 13389093

ITEM	COMM. NO.	DESCRIPTION	QTY	DIMENSIONS/NOTES
1	13389127	Light Housing	1	
2	13352174	Road Light, RH	1	
3	59291070	Amber Reflector	1	
4	96741053	Flatwasher, Zinc Plated	2	M6 Cl 200
5	96727987	BHCS	2	M6 x 1 x 16 Grd A2
6	96704598	Hex Locknut, Zinc Plated	2	M6 Cl 8
7	58893108	Grommet	1	
8	96741038	Flatwasher	6	M8 x 1.25 Cl 200
9	96719786	HHCS, Zinc Plated	3	M8 x 1.25 x 40 Cl 8.8
10	96704606	Hex Locknut, Zinc Plated	3	M8 x 1.25 Cl 8

LEFT FRONT ROADLIGHT ASSEMBLY

Dwg 13389101/00

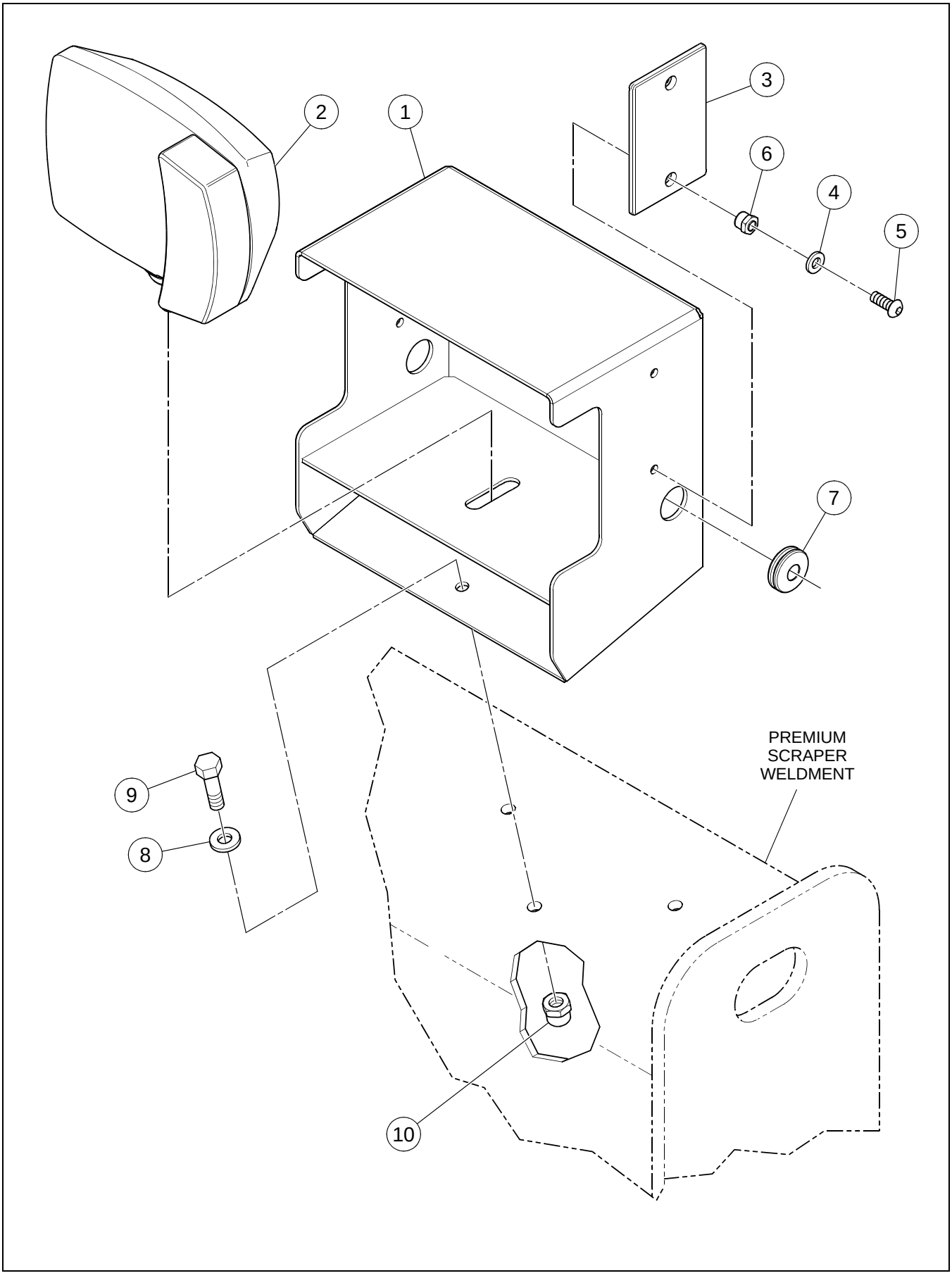

LEFT FRONT ROADLIGHT ASSEMBLY

BOM 13389101

ITEM	COMM. NO.	DESCRIPTION	QTY	DIMENSIONS/NOTES
1	13389127	Light Housing	1	
2	13351887	Road Light, LH	1	
3	59291070	Amber Reflector	1	
4	96741053	Flatwasher, Zinc Plated	2	M6 Cl 200
5	96727987	BHCS	2	M6 x 1 x 16 Grd A2
6	96704598	Hex Locknut, Zinc Plated	2	M6 Cl 8
7	58893108	Grommet	1	
8	96741038	Flatwasher	6	M8 x 1.25 Cl 200
9	96719786	HHCS, Zinc Plated	3	M8 x 1.25 x 40 Cl 8.8
10	96704606	Hex Locknut, Zinc Plated	3	M8 x 1.25 Cl 8

RIGHT REAR SIGNAL ASSEMBLY

Dwg C13358700/00

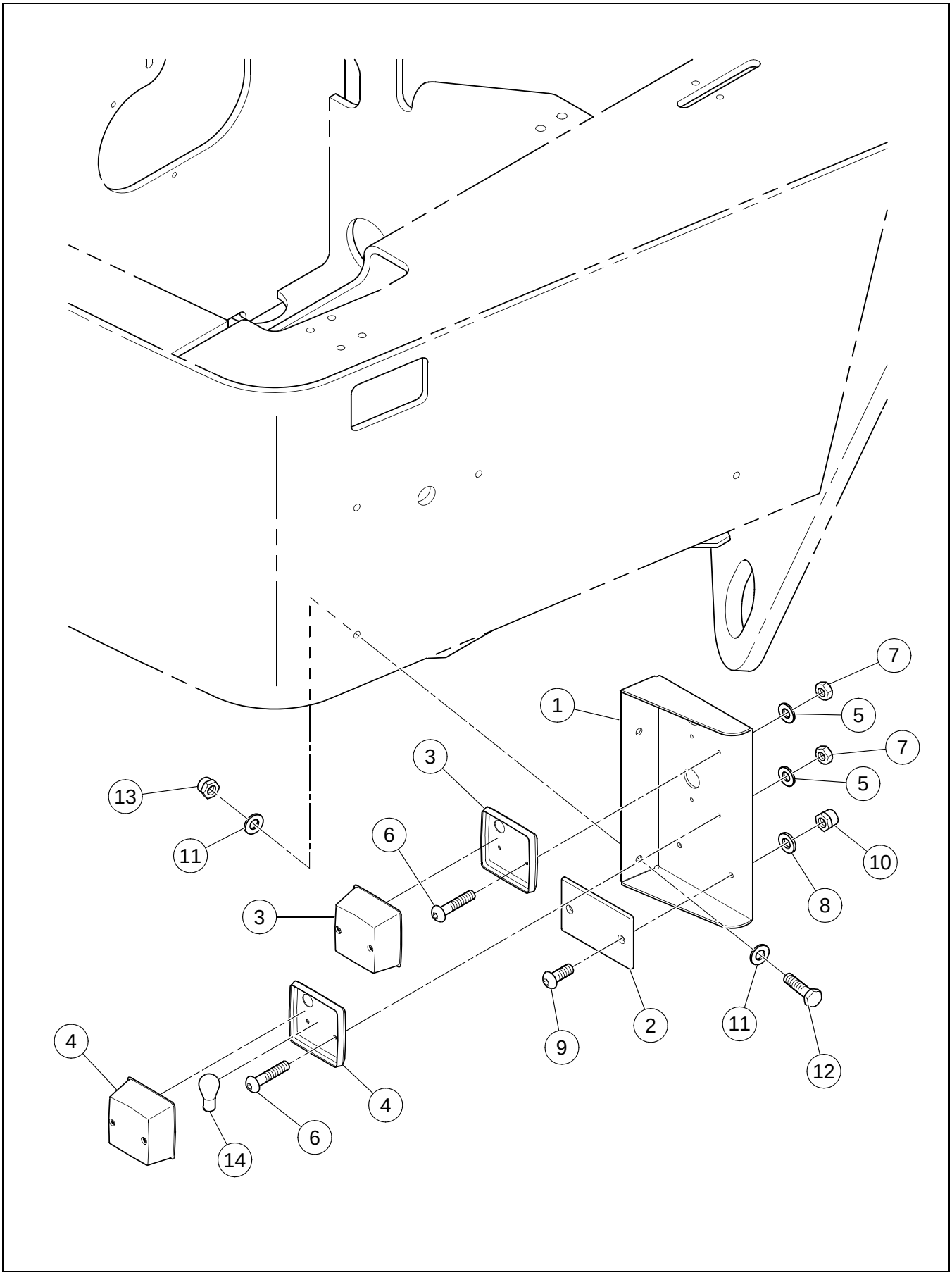

RIGHT REAR SIGNAL ASSEMBLY

BOM 13358700

ITEM	COMM. NO.	DESCRIPTION	QTY	DIMENSIONS/NOTES
1	13352505	Rear Lamp Bracket, RH	1	
2	59291062	Red Reflector	1	
3	13929328	Rear Lamp	1	
-	13247366	- Rear Lamp Bulb	1	
-	13247374	- Rear Lamp Bulb	1	5 Watt
4	13250733	Brake Lamp	1	
5	96738547	Flatwasher, Zinc Plated	4	M4 Hardened Cl 200
6	96720974	HSBHCS	4	M4 x 0.7 x 20 Grd A2
7	96703756	Hex Nut, Zinc Plated	4	M4 x 0.7 Cl 8
8	96741053	Flatwasher, Zinc Plated	2	M6 Cl 200
9	96727987	BHCS	2	M6 x 1 x 16 Grd A2
10	96704598	Hex Locknut, Zinc Plated	2	M6 Cl 8
11	96741038	Flatwasher	4	M8 x 1.25 Cl 200
12	96705587	HHCS, Fully Threaded, Zinc Plated	2	M8 x 1.25 x 30 Cl 8.8
13	96704606	Hex Locknut, Zinc Plated	2	M8 x 1.25 Cl 8
14	13250386	Light Bulb	1	

LEFT REAR SIGNAL ASSEMBLY

Dwg D13358684/01

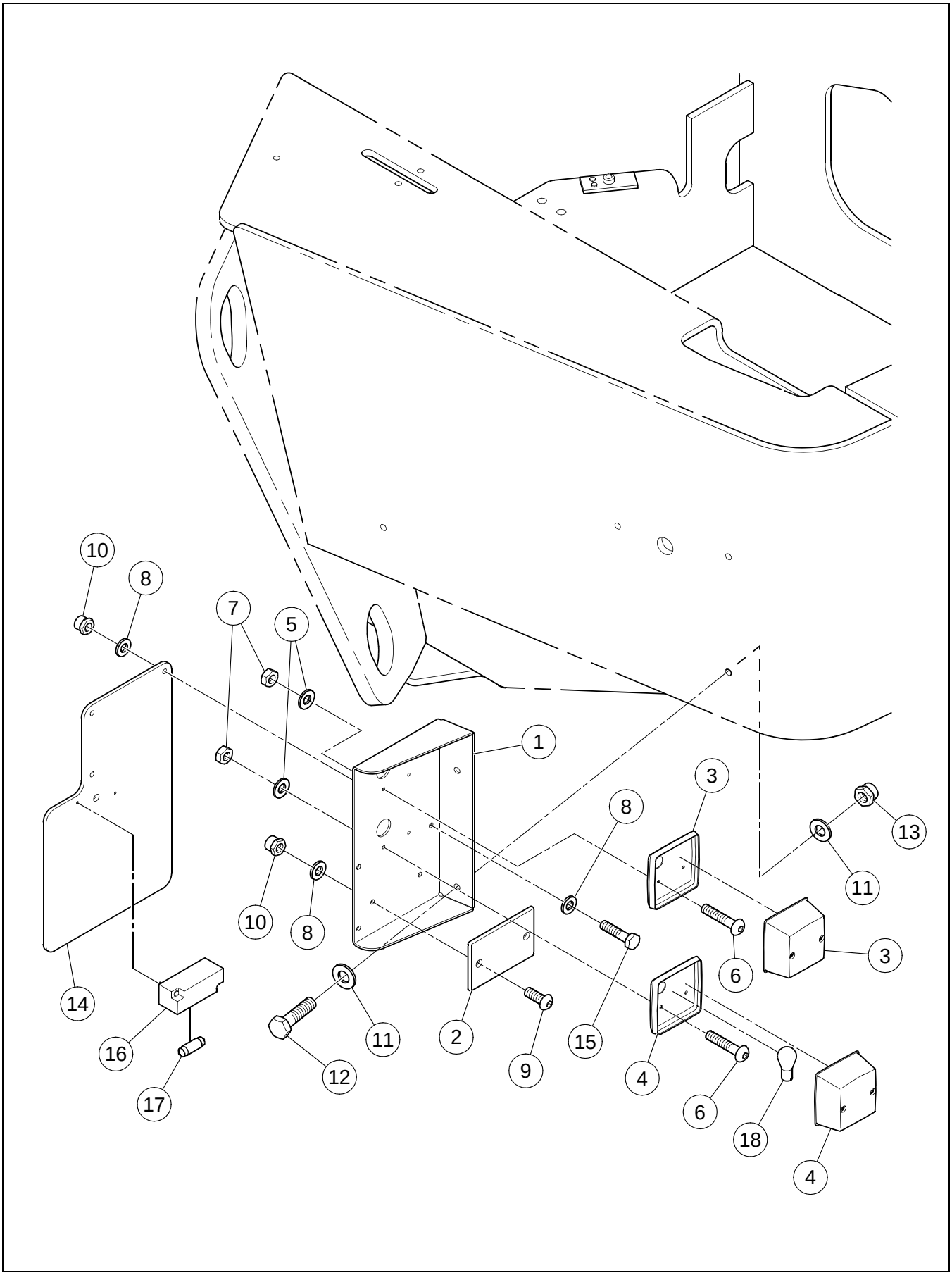

LEFT REAR SIGNAL ASSEMBLY

BOM 13358684

ITEM	COMM. NO.	DESCRIPTION	QTY	DIMENSIONS/NOTES
1	13352489	Rear Lamp Bracket, LH	1	
2	59291062	Red Reflector	1	
3	13929328	Rear Lamp	1	
-	13247366	- Rear Lamp Bulb	1	
-	13247374	- Rear Lamp Bulb	1	5 Watt
4	13250733	Brake Lamp	1	
5	96738547	Flatwasher, Zinc Plated	4	M4 Hardened Cl 200
6	96720974	BHCS	4	M4 x 0.7 x 20 Grd A2
7	96703756	Hex Nut, Zinc Plated	4	M4 x 0.7 Cl 8
8	96741053	Flatwasher, Zinc Plated	8	M6 Cl 200
9	96727987	BHCS	2	M6 x 1 x 16 Grd A2
10	96704598	Hex Locknut, Zinc Plated	5	M6 Cl 8
11	96741038	Flatwasher	4	M8 x 1.25 Cl 200
12	96705587	HHCS, Fully Threaded, Zinc Plated	2	M8 x 1.25 x 30 Cl 8.8
13	96704606	Hex Locknut, Zinc Plated	2	M8 x 1.25 Cl 8
14	13413661	License Plate Mounting Bracket	1	
15	96701461	HHCS, Fully Threaded, Zinc Plated	3	M6 x 1 x 25 Cl 8.8
16	14262083	License Plate Light	1	
17	58863176	Light Bulb	1	
18	13250386	Light Bulb	1	

INSULATED STUD ASSEMBLY

Dwg D13322821/00

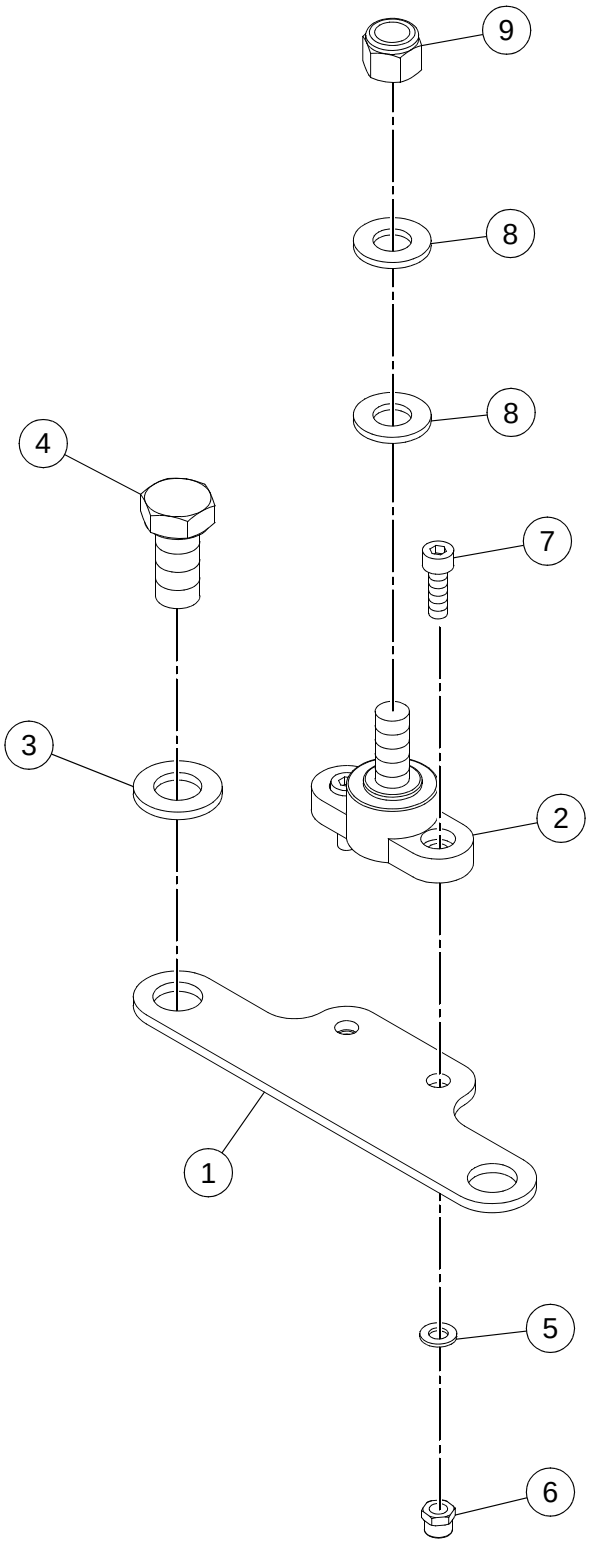

INSULATED STUD ASSEMBLY

BOM 13321963

ITEM	COMM. NO.	DESCRIPTION	QTY	DIMENSIONS/NOTES
1	13321955	Insulated Stud Bracket	1	
2	13321864	Insulated Stud	1	
3	96738596	Flatwasher, Zinc Plated	2	M12 Hardened Cl 200
4	96701495	HHCS, Fully Threaded, Zinc Plated	2	M12 x 1.75 x 25 Cl 8.8
5	96738554	Flatwasher, Zinc Plated	2	M5 Hardened Cl 200
6	96704580	Hex Locknut, Zinc Plated	2	M5 x 0.8 Cl 8
7	96720115	HHCS, Zinc Plated	2	M5 x 0.8 Cl 8.8
8	96741046	Flatwasher, Zinc Plated	2	M10 Cl 200
9	95923322	Locknut, Zinc Plated	1	3/8 x 16

WORKLIGHTS INSTALLATION - EFFECTIVE WITH S/N 194400 - SHEET 1 OF 2

Dwg 43818897/00/01

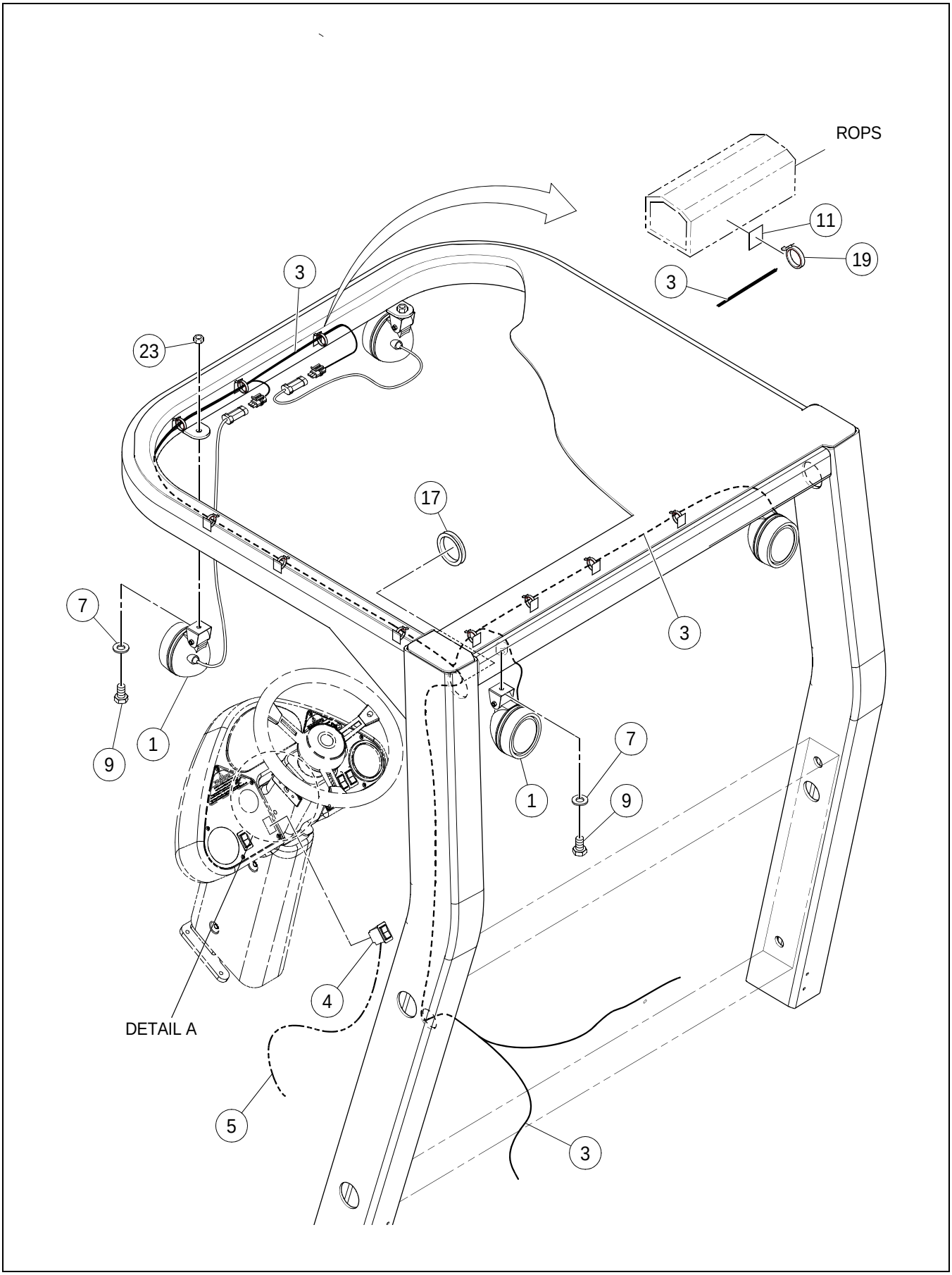

WORKLIGHTS INSTALLATION - EFFECTIVE WITH S/N 194400 - SHEET 1 OF 2

BOM 43818897, 43819549

ITEM	COMM. NO.	DESCRIPTION	QTY	DIMENSIONS/NOTES
1	13359815	Worklights Assembly	4	
-	13406764	Worklights	4	
-	13468137	- Worklights Bulb	1	
-	13230735	- Connector	4	
-	13230776	- Secondary Lock	4	
-	58965427	- Terminal	8	
-	59388199	- Electrical Seal	8	
-	13855200	- Light Bracket	4	
-	95924239	- Lockwasher	8	5/16
-	96728522	- HHCS, Zinc Plated	4	M8 x 1.25 x 60 Cl 8.8
-	96704606	- Hex Locknut	4	M8
3	13492665	Worklight Harness	1	
4	13197108	F/R Worklights Switch	1	
5	43818848	Work Lights Harness	1	
7	96741046	Flatwasher	4	M10
9	96702279	HHCS, Zinc Plated	4	M10 x 1.5 x 20 Cl 8.8
11	43850692	Wire Tie Base	A/R	
17	59896613	Grommet	1	
19	95373973	Wire Tie	A/R	
23	96704812	Hex Nut	2	

WORKLIGHTS INSTALLATION - EFFECTIVE WITH S/N 194400 - SHEET 2 OF 2

Dwg 43818897/00/02

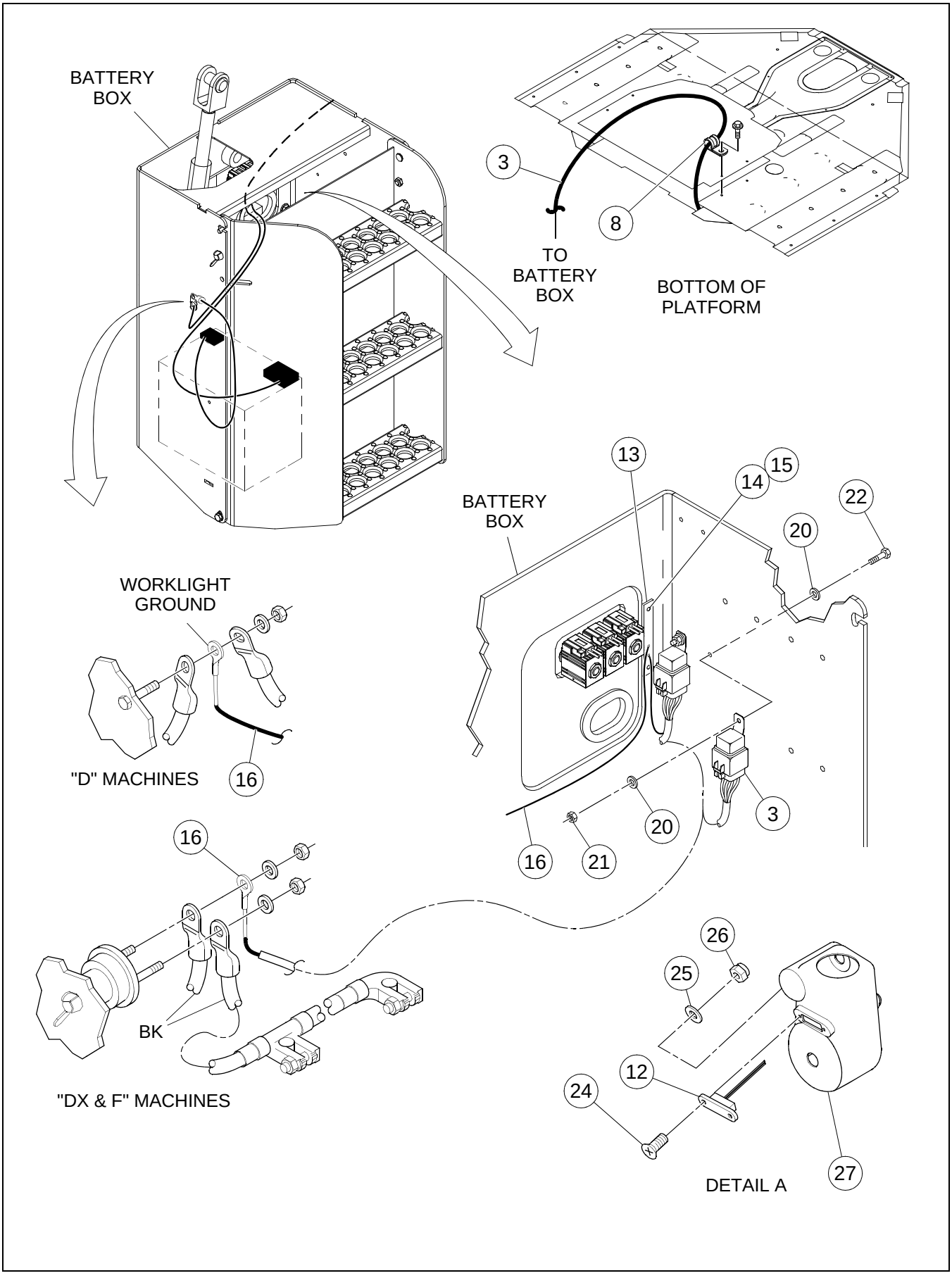

BOM 43818897, 43819549

ITEM	COMM. NO.	DESCRIPTION	QTY	DIMENSIONS/NOTES
3	13492665	Worklight Harness	1	
8	95301826	Clamp	1	
12	13322102	Light Assembly Panel	2	
-	13321443	- Lamp Led	4	
13	13322060	Terminal Block	1	
14	96705165	Flatwasher	2	M4 Cl 140
15	96705173	HHCS, Zinc Plated	2	M4 x 0.7 x 16 Cl 8.8
16	13307749	Terminal Block Cable	1	
20	96738554	Flatwasher	4	M5 Cl 200
21	96704580	Hex Locknut	2	M5
22	96705728	HHCS, Zinc Plated	2	M5 x 0.8 x 16 Cl 8.8
24	96745492	Screw	4	M4 x .07 x 20
25	96738547	Flatwasher, Zinc Plated	4	M4 Cl 200
26	13236906	Locknut	4	M4
27	13335484	Fixed Cover Column	1	
-	13335492	Tilt Cover Column	1	

WORKLIGHTS INSTALLATION - EFFECTIVE WITH S/N 191508 THRU 194399 - SHEET 1 OF 2

Dwg 43805449/0b/01

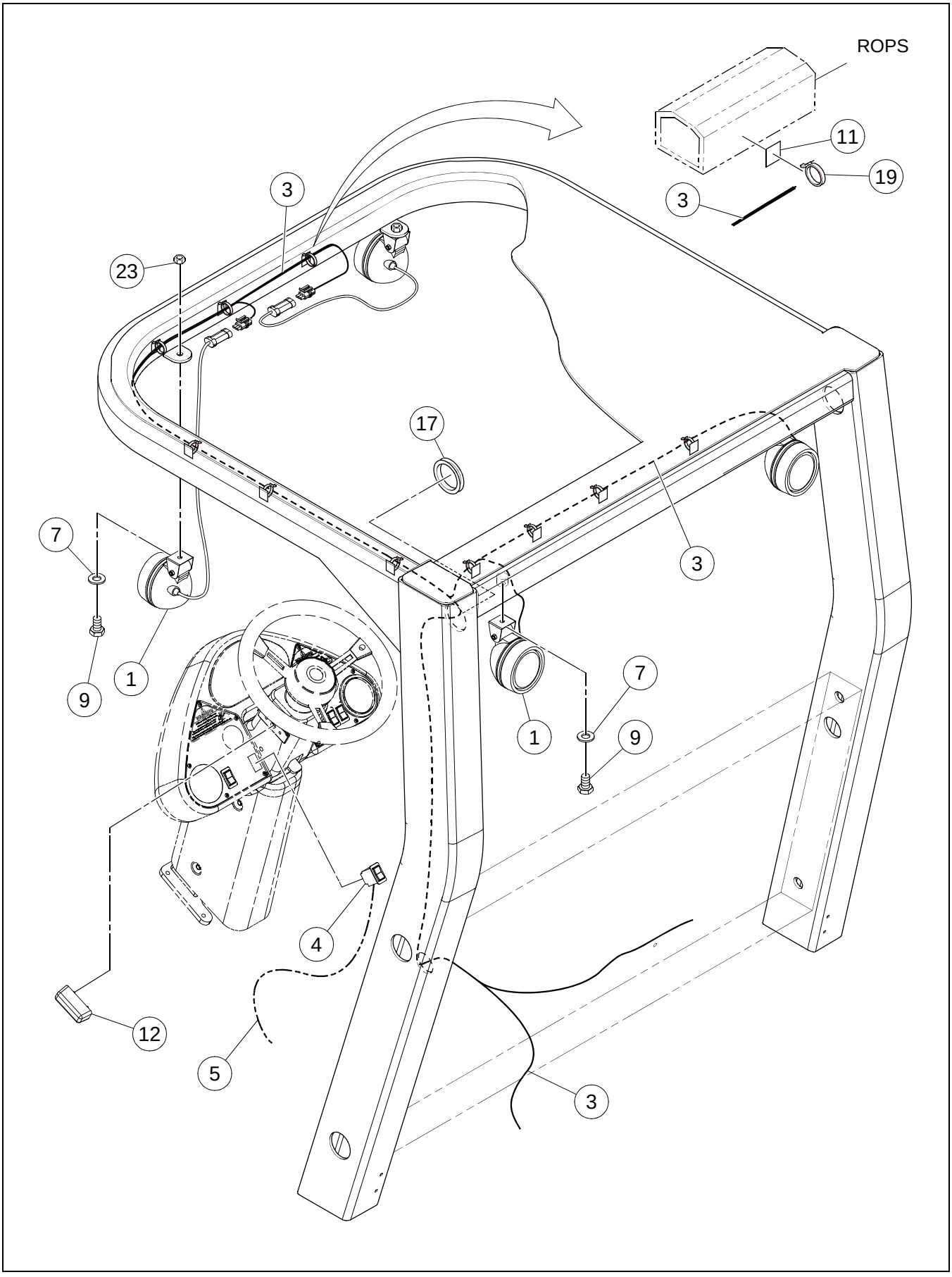

WORKLIGHTS INSTALLATION - EFFECTIVE WITH S/N 191508 THRU 194399 - SHEET 1 OF 2

BOM 43805449

ITEM	COMM. NO.	DESCRIPTION	QTY	DIMENSIONS/NOTES
1	13359815	Worklights Assembly	4	
-	13406764	Worklights	4	
-	13468137	- Worklights Bulb	1	
-	13230735	- Connector	4	
-	13230776	- Secondary Lock	4	
-	58965427	- Terminal	8	
-	59388199	- Electrical Seal	8	
-	13855200	- Light Bracket	4	
-	95924239	- Lockwasher	8	5/16
-	96728522	- HHCS, Zinc Plated	4	M8 x 1.25 x 60 Cl 8.8
-	96704606	- Hex Locknut	4	M8
3	13492665	Worklight Harness	1	
4	13197108	F/R Worklights Switch	1	
5	13225560	Worklights Harness	1	
7	96741046	Flatwasher	4	M10
9	96702279	HHCS, Zinc Plated	4	M10 x 1.5 x 20 Cl 8.8
11	43850692	Wire Tie	A/R	
12	13248935	Dash Lights	2	
17	59896613	Grommet	1	
19	95373973	Wire Tie	A/R	
23	96704812	Hex Nut	2	

WORKLIGHTS INSTALLATION - EFFECTIVE WITH S/N 191508 THRU 194399 - SHEET 2 OF 2

Dwg 43805449/0b/02

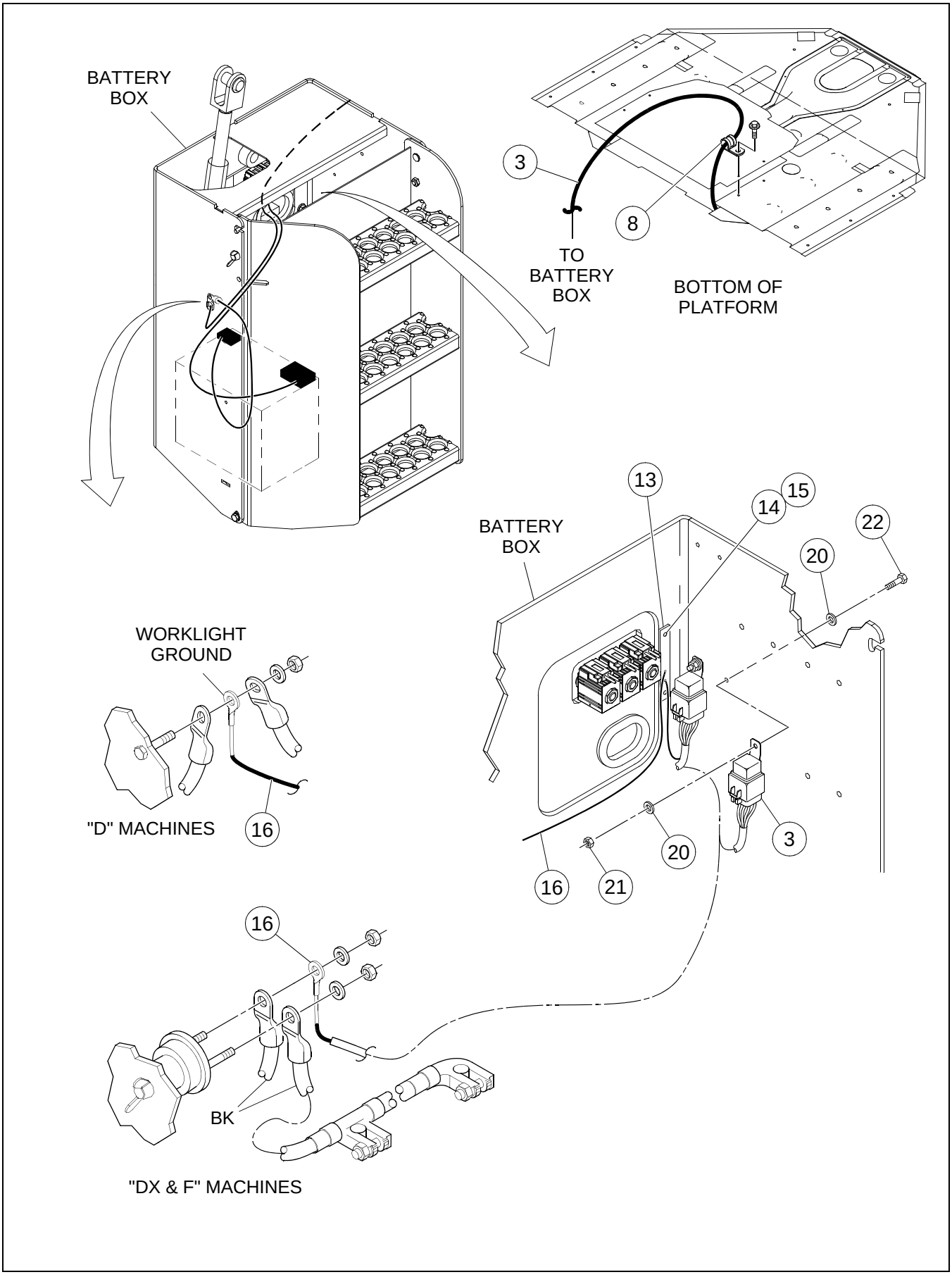

BOM 43805449

ITEM	COMM. NO.	DESCRIPTION	QTY	DIMENSIONS/NOTES
3	13492665	Worklight Harness	1	
8	95301826	Clamp	1	
13	13322060	Terminal Block	1	
14	96705165	Flatwasher	2	M4
15	96705173	HHCS, Zinc Plated	2	M4 x 0.7 x 16 Cl 8.8
16	13307749	Terminal Block Cable	1	
20	96738554	Flatwasher	4	M5 Hardened
21	96704580	Hex Locknut	2	M5
22	96705728	HHCS, Zinc Plated	2	M5 x 0.8 x 16 Cl 8.8

WORKLIGHTS INSTALLATION - PRIOR TO S/N 191508 - SHEET 1 OF 2

Dwg 13236021/0e/01

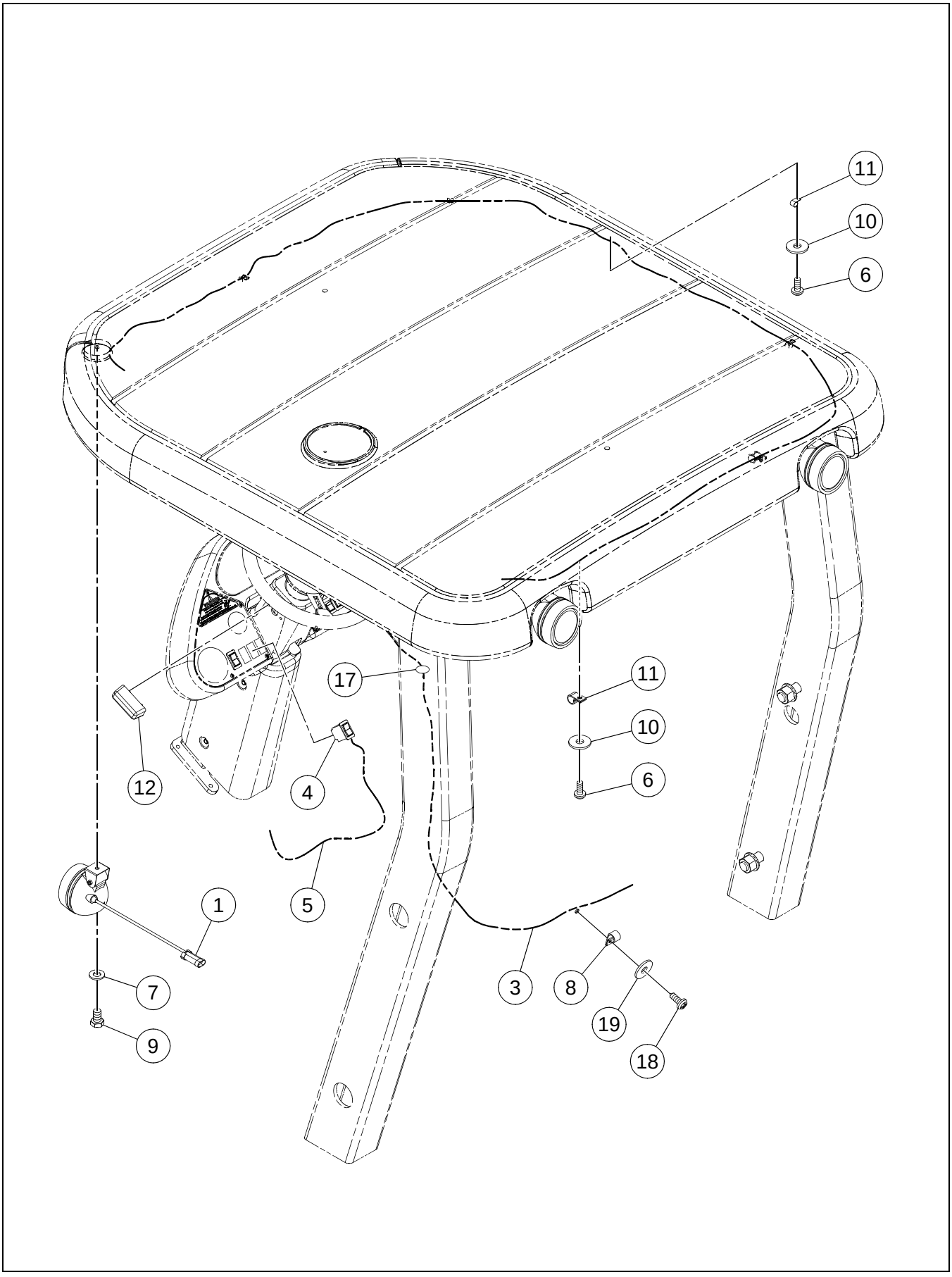

WORKLIGHTS INSTALLATION - PRIOR TO S/N 191508 -
SHEET 1 OF 2

BOM 59289710

ITEM	COMM. NO.	DESCRIPTION	QTY	DIMENSIONS/NOTES
1	13359815	Worklights Assembly	4	
-	13406764	Worklights	4	
-	13468137	- Worklights Bulb	1	
-	13230735	- Connector	4	
-	13230776	- Secondary Lock	4	
-	58965427	- Terminal	8	
-	59388199	- Electrical Seal	8	
-	13855200	- Light Bracket	4	
-	95924239	- Lockwasher	8	5/16
-	96728522	- HHCS, Zinc Plated	4	M8 x 1.25 x 60 Cl 8.8
-	96704606	- Hex Locknut	4	M8
3	13492665	Worklight ROPS Wire Harness	1	
4	13197108	Front/Rear Worklights Switch	1	
5	13225560	Worklights Wire Harness	1	
6	96740444	Self-tapping Pan Head Screw, Zinc Plated	9	4.8 x 1.6 x 13
7	96741046	Flatwasher, Zinc Plated	4	M10 Cl 200
8	95301826	Hose Clamp	1	
9	96701479	HHCS, Fully Threaded, Zinc Plated	4	M10 x 1.5 x 16 Cl 8.8
10	96704663	Washer, Zinc Plated	9	M6 Large
11	95301842	Clamp	9	
12	13248935	Dash Lights	2	
17	59896613	Grommet	1	
18	96702816	HHCS, Fully Threaded, Zinc Plated	1	M8 x 1.25 x 16 Cl 8.8
19	96741038	Flatwasher	1	M8

WORKLIGHTS INSTALLATION - PRIOR TO S/N 191508 - SHEET 2 OF 2

Dwg 13236021/0e/02

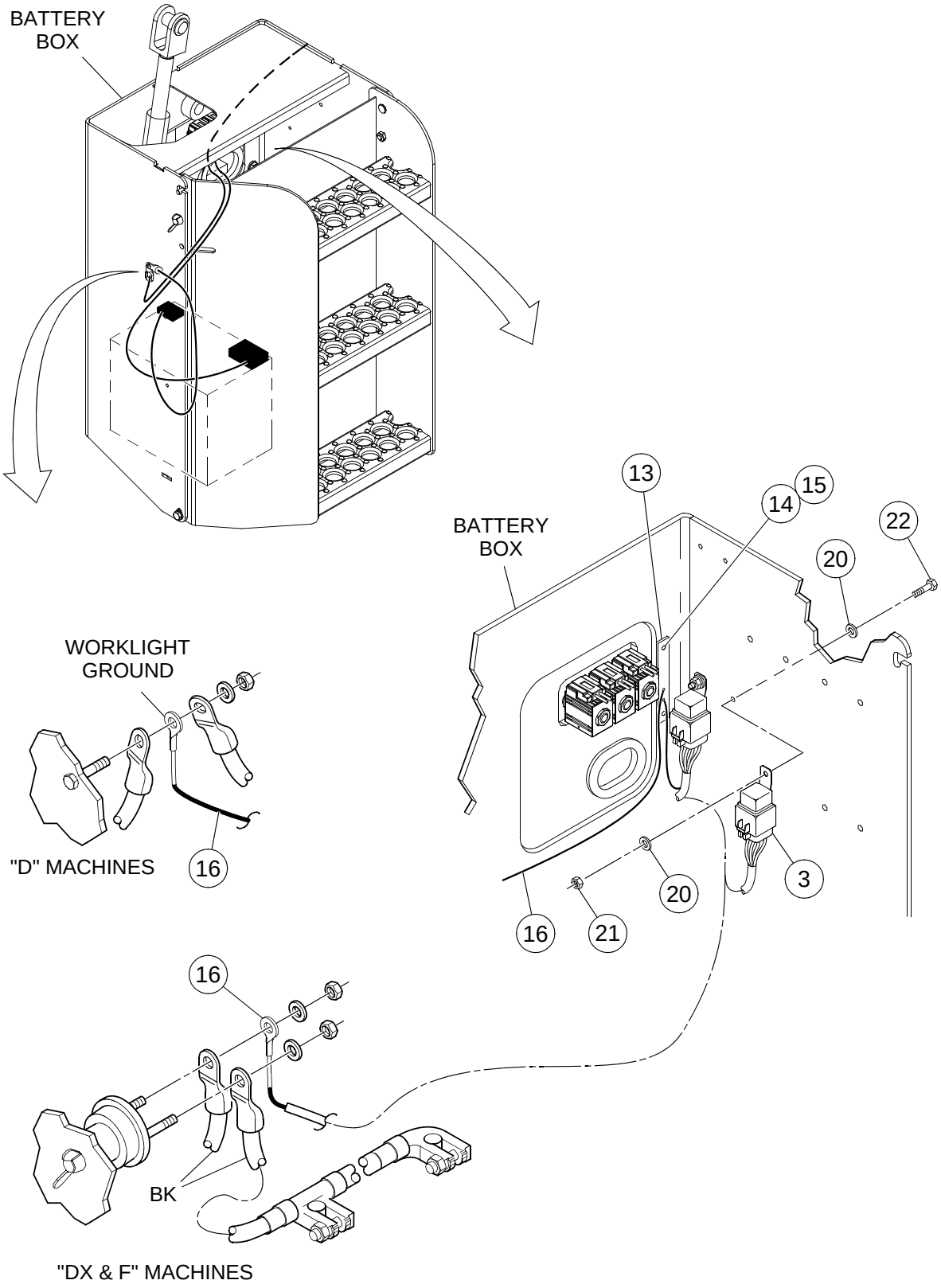

WORKLIGHTS INSTALLATION - PRIOR TO S/N 191508 -
SHEET 2 OF 2

BOM 59289710

ITEM	COMM. NO.	DESCRIPTION	QTY	DIMENSIONS/NOTES
3	13492665	Worklight ROPS Wire Harness	1	
13	13322060	Terminal Block	1	
14	96705165	Flatwasher	2	M4
15	96705173	HHCS, Zinc Plated	2	M4 x 0.7 x 16 Cl 8.8
16	13307749	Terminal Block Cable	1	
20	96738554	Flatwasher	4	M5 Hardened
21	96704580	Hex Locknut	2	M5
22	96705728	HHCS, Zinc Plated	2	M5 x 0.8 x 16 Cl 8.8

Dwg 13429543/00

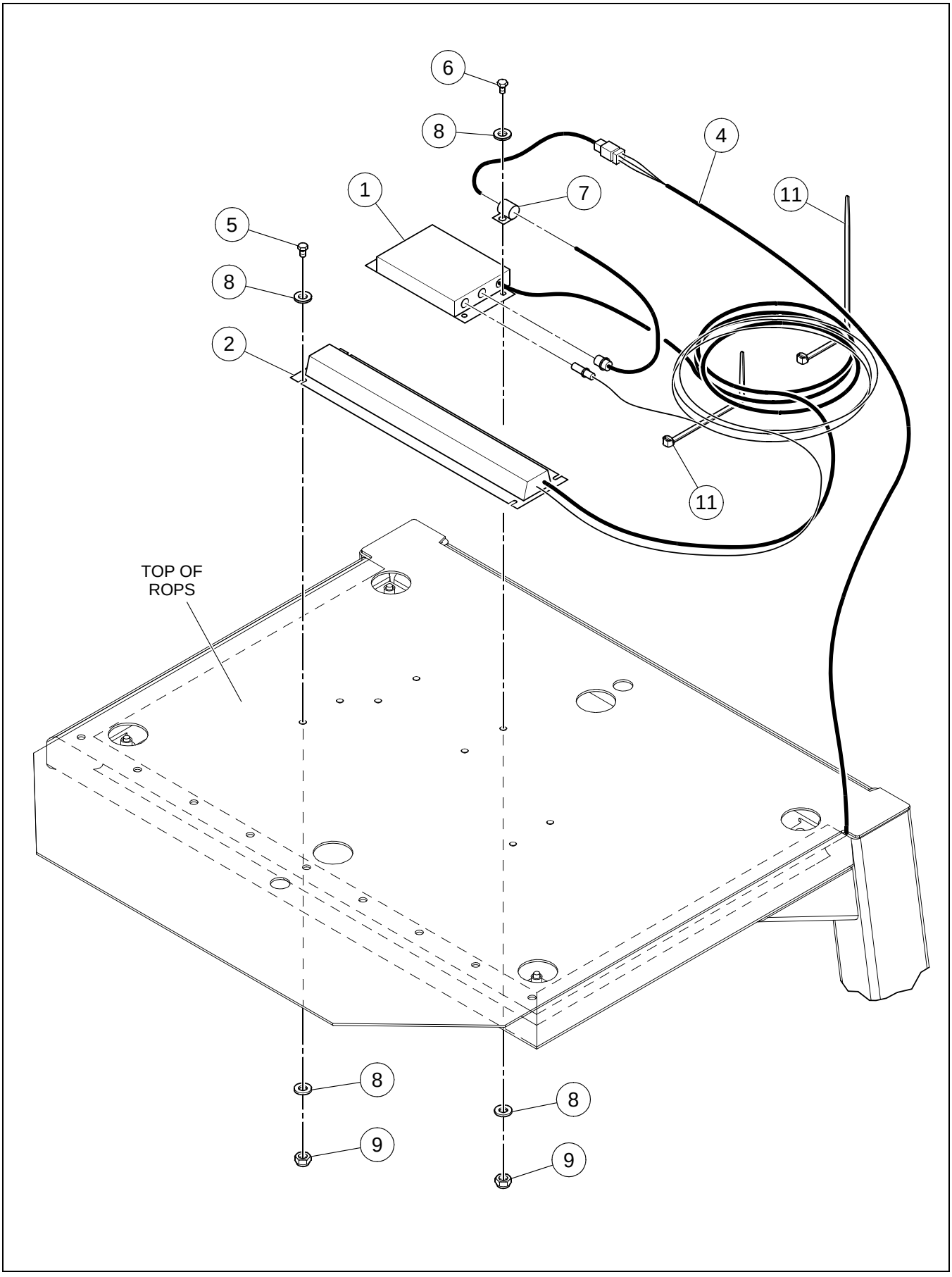

BOM 13429543

ITEM	COMM. NO.	DESCRIPTION	QTY	DIMENSIONS/NOTES
1		This item not used with this Assembly		
2		This item not used with this Assembly		
3	13429931	Trakpak w/Antenna (Not Shown)	1	
-	13429535	- Trakpak	1	
-	13429519	- Bar Antenna	1	
4	13425608	GPS Mobile Net Wire Harness	1	
5	96705793	HHCS, Fully Threaded, Zinc Plated	4	M6 x 1 x 30 Cl 8.8
6	96704564	HHCS, Fully Threaded, Zinc Plated	4	M6 x 1.0 x 20 Cl 8.8
7	58754458	Clamp	1	
8	96741053	Flatwasher, Zinc Plated	16	M6 Cl 200
9	96704598	Hex Locknut, Zinc Plated	8	M6 Cl 8
10	95424586	Wire Tie (Not Shown)	A/R	
11	95373973	Wire Tie	A/R	

LOST STEERING PRESSURE SWITCH

Dwg 19290477/00

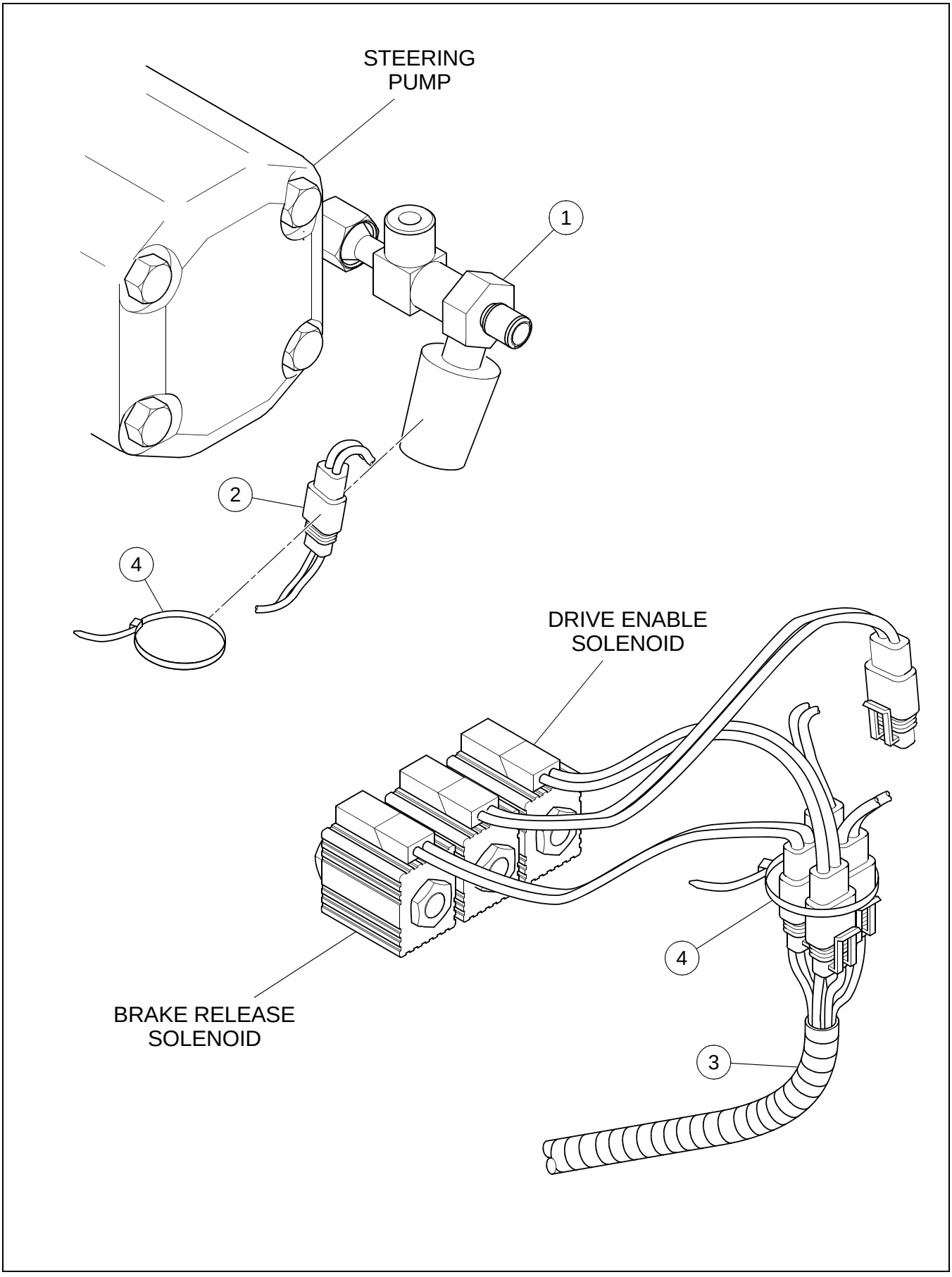

LOST STEERING PRESSURE SWITCH

BOM 19290477

ITEM	COMM. NO.	DESCRIPTION	QTY	DIMENSIONS/NOTES
1	19287564	Pressure Switch	1	
2	13498795	Steering Pressure Harness	1	
3	13208004	Adapter	1	
4	95373973	Wire Tie	A/R	

Always use Manufacturer Replacement parts!*

Section G - DECALS AND PAINT

DECAL INSTALLATION - U.S. - SHEET 1 OF 2

Dwg 13855697/0b/01

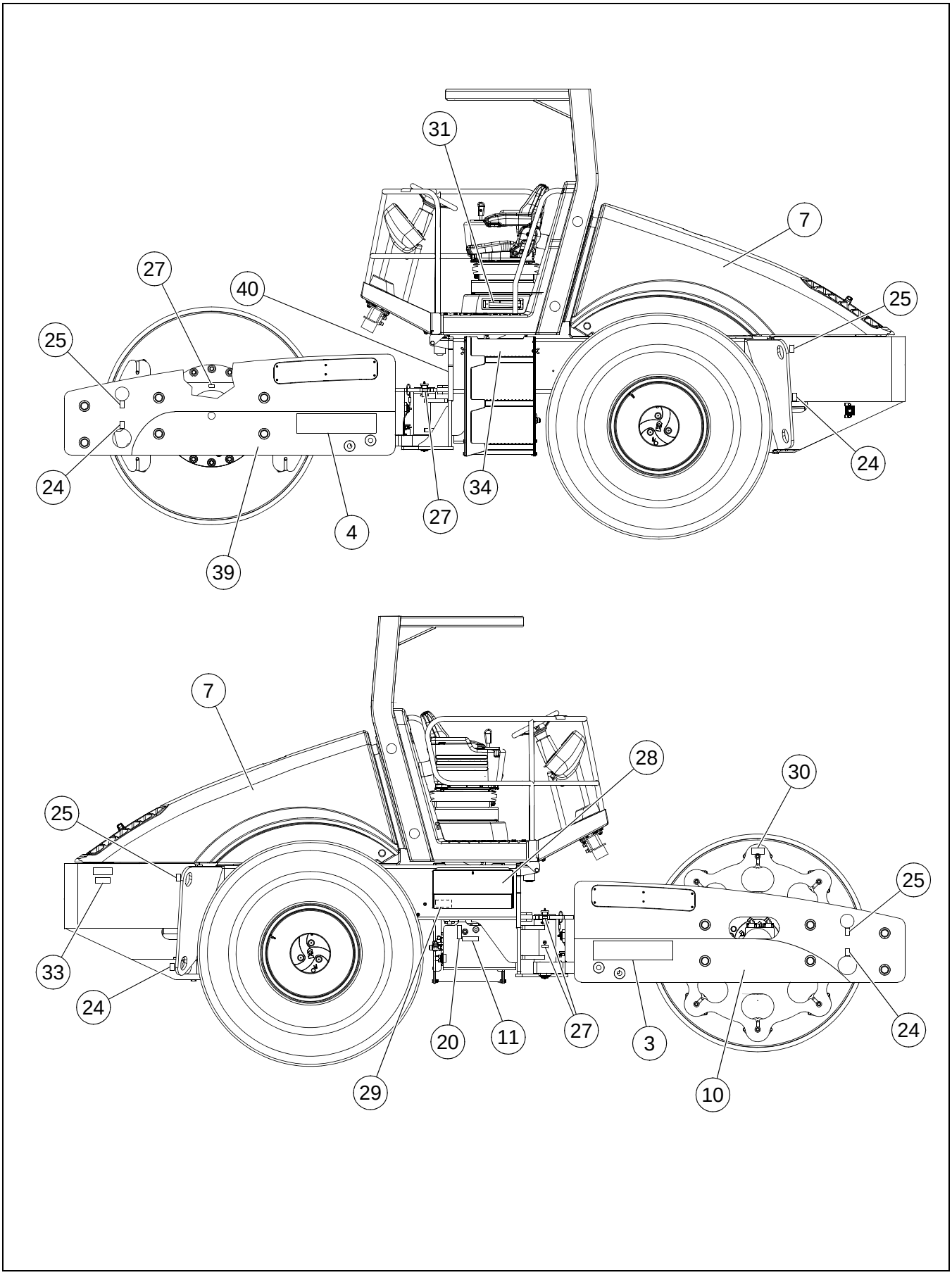

DECAL INSTALLATION - U.S. - SHEET 1 OF 2

BOM 13174206, 13197173, 13409214, 13197165, 13197157

ITEM	COMM. NO.	DESCRIPTION	QTY	DIMENSIONS/NOTES
3	59290460	Decal: SD-70D, RH	1	
-	13409255	Decal: SD-70F, RH	1	
-	59290486	Decal: SD-77DX, RH	1	
-	13248711	Decal: SD-77F, RH	1	
4	59290478	Decal: SD-70D, LH	1	
-	13409263	Decal: SD-70D, LH	1	
-	59290494	Decal: SD-77DX, LH	1	
-	13248729	Decal: SD-77F, LH	1	
7	13855572	Decal: Signature	3	
10	13447560	Decal: Stripe	1	10.0"
11	13199344	Decal: Hydraulic Oil	1	
20	58978255	Decal: Hydraulic Oil Level	1	
24	59246603	Decal: Tie Down	4	
25	59246611	Decal: Lift Point	4	
27	59605915	Decal: Grease	4	
28	13451695	Decal: Lube Chart - Effective With S/N 176885	1	
-	13304449	Decal:Lube Chart - Prior to S/N 176885	1	
29	59290858	Decal: Hydraulic Pressure Test	1	
30	13208038	Decal: Missing Shock	2	
31	13480116	Decal: Fuse Chart	1	
33	13325378	Decal: Hood Release	1	
34		This item not used with this Assembly		
39	13447628	Decal: Curved Stripe	1	
40	13208012	Decal: Master Disconnect	1	

DECAL INSTALLATION - U.S.- SHEET 2 OF 2

Dwg 13855697/0b/02

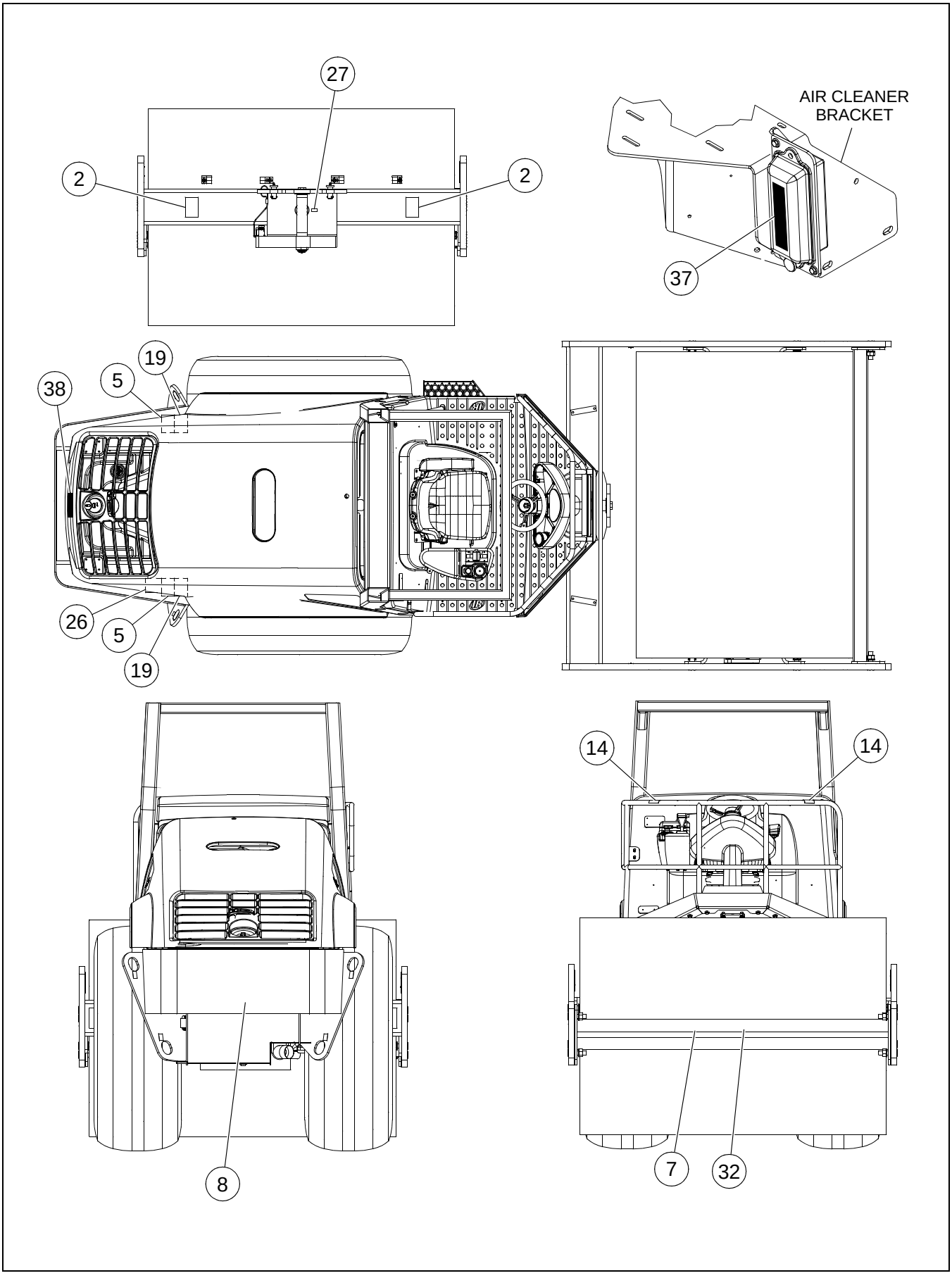

DECAL INSTALLATION - U.S.- SHEET 2 OF 2

BOM 13174206, 13197173, 13409214, 13197165, 13197157

ITEM	COMM. NO.	DESCRIPTION	QTY	DIMENSIONS/NOTES
2	58965542	Decal: Crush Area	2	
5	59020040	Decal: Pressure Hazard Warning	2	
7	13855572	Decal: Signature	3	
8	13855655	Decal: Corporate Monogram	1	
14	59667287	Decal: Warning Rail	2	
19	59051151	Decal: Warning	1	
26	59087999	Decal: Radiator Fill	1	
27	59605915	Decal: Grease	4	
32	13163324	Decal: Signature	1	
36	59579094	Pop Rivet (Not Shown)	4	
37		This Item Not Used With This Assembly		
38	13855671	Decal: Warning - Hood Crush	1	
50	13285002	Decal: Warning - Buckle Up (Not Shown)	1	
51	13285010	Decal: Warning Tag - ROPS (Not Shown)	1	
52	13285028	Decal: Warning Tag - ROPS Installation (Not Shown)	1	
		Optional Decals:		
-	59162982	Decal: Biodegradable Oil	1	
*	13227087	Decal Kit (Includes Items 2, 5, 8 thru 29, 30, 31, 33, 34, 38, 50, 51 and 52; order Items 3,4, 7, 28, 32 and 36 separately)	1	
**	59947507	Beige Paint	1	Gallon
**	35304286	Beige Paint	1	Spray Can

Dwg 18007740/0d/01

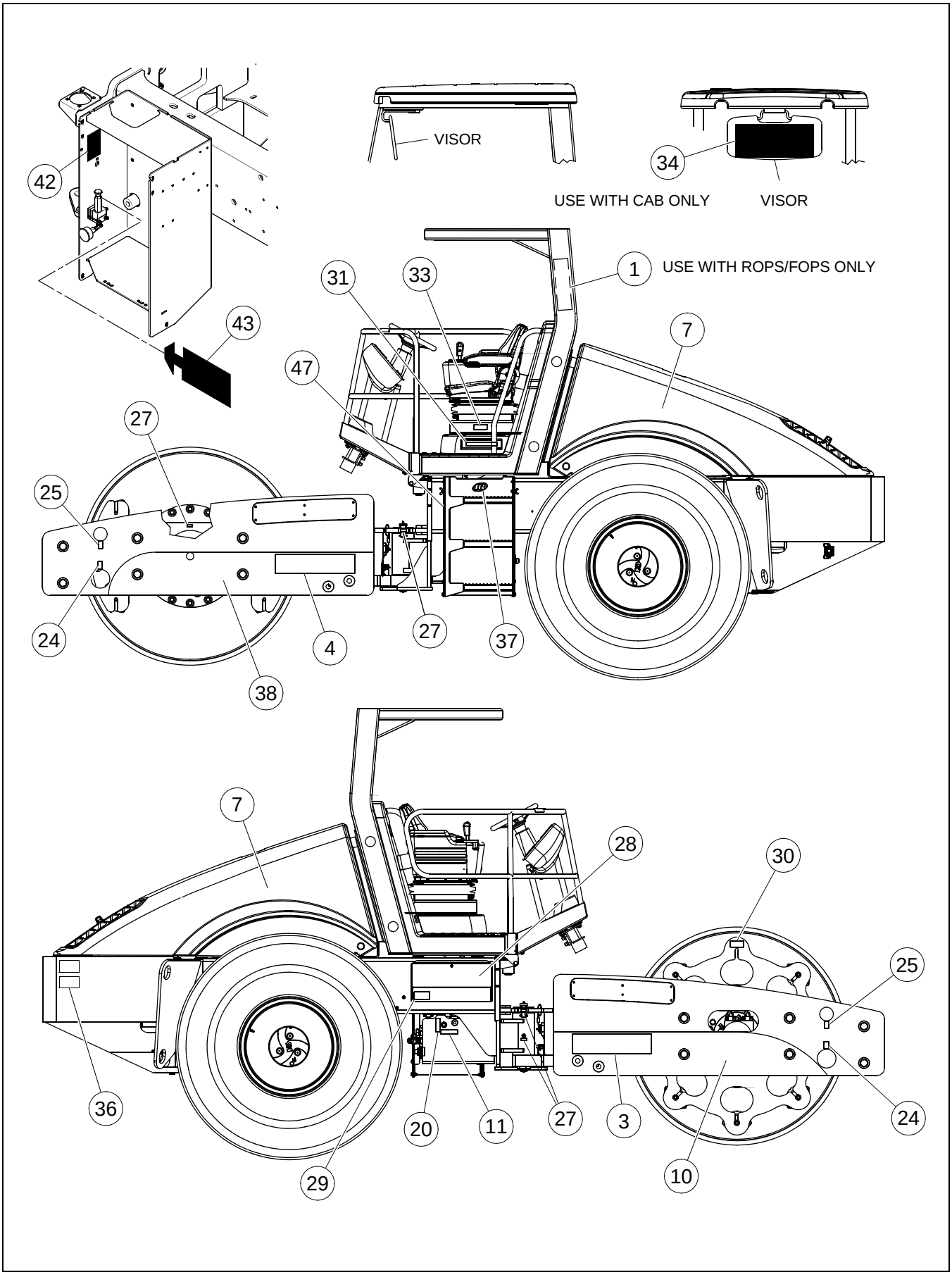

DECAL INSTALLATION - EEC - SHEET 1 OF 4

BOM 13225842, 13175385, 13175401, 13175427, 13175443, 13175468, 18007740, 13457221, 13850912, 13850938, 43829167

ITEM	COMM. NO.	DESCRIPTION	QTY	DIMENSIONS/NOTES
1	13225552	Decal: Checklist (German)	1	
-	13226055	Decal: Checklist (French)	1	
-	13226071	Decal: Checklist (Spanish)	1	
-	13226097	Decal: Checklist (Portuguese)	1	
-	13197306	Decal: Checklist (UK)	1	
3		This item not used with this Assembly		
4		This item not used with this Assembly		
7	13855572	Decal: Signature	3	
10	13447560	Decal: Stripe	1	
11	58978222	Decal: Hydraulic Oil	1	
20	58978255	Decal: Hydraulic Oil Level	1	
24	58978289	Decal: Tie Down	4	
25	58992603	Decal: Lift Point	4	
27	59605915	Decal: Grease	5	
28	13458872	Decal: Lubechart (German)	1	
-	43843408	Decal: Lubechart (French)	1	
-	43843416	Decal: Lubechart (Spanish)	1	
-	13458906	Decal: Lubechart (Portuguese)	1	
-	13451695	Decal: Lubechart (UK) - Eff S/N 176885	1	
-	13304449	Decal: Lubechart (UK) - Prior to S/N 176885	1	
29	59290858	Decal: Hydraulic Pressure Test	1	
30	13225875	Decal: Missing Shock (German)	1	
-	13225909	Decal: Missing Shock (French)	1	
-	13225933	Decal: Missing Shock (Spanish)	1	
-	13225966	Decal: Missing Shock (Portuguese)	1	
-	13208038	Decal: Missing Shock (UK)	1	
31	13226006	Decal: Fuse (German)	1	
-	13226014	Decal: Fuse (French)	1	
-	13226022	Decal: Fuse (Spanish)	1	
-	13226030	Decal: Fuse (Portuguese)	1	
-	13480116	Decal: Fuse (UK)	1	
33	58952466	Decal: Natural Frequency (German)	1	
-	13255054	Decal: Natural Frequency (French)	1	
-	13255062	Decal: Natural Frequency (Spanish)	1	
-	13255070	Decal: Natural Frequency (Portuguese)	1	
-	58877549	Decal: Natural Frequency (UK)	1	
34	13225545	Decal: Checklist (German)	1	
-	13226063	Decal: Checklist (French)	1	
-	13226089	Decal: Checklist (Spanish)	1	
-	13255005	Decal: Checklist (Portuguese)	1	
-	13197314	Decal: Checklist (UK)	1	
36	13325378	Decal: Lower Hood	1	
37	13198353	Decal: Genuine Parts	1	
38	13447628	Decal: Curved Stripe	1	

Dwg 18007740/0d/01

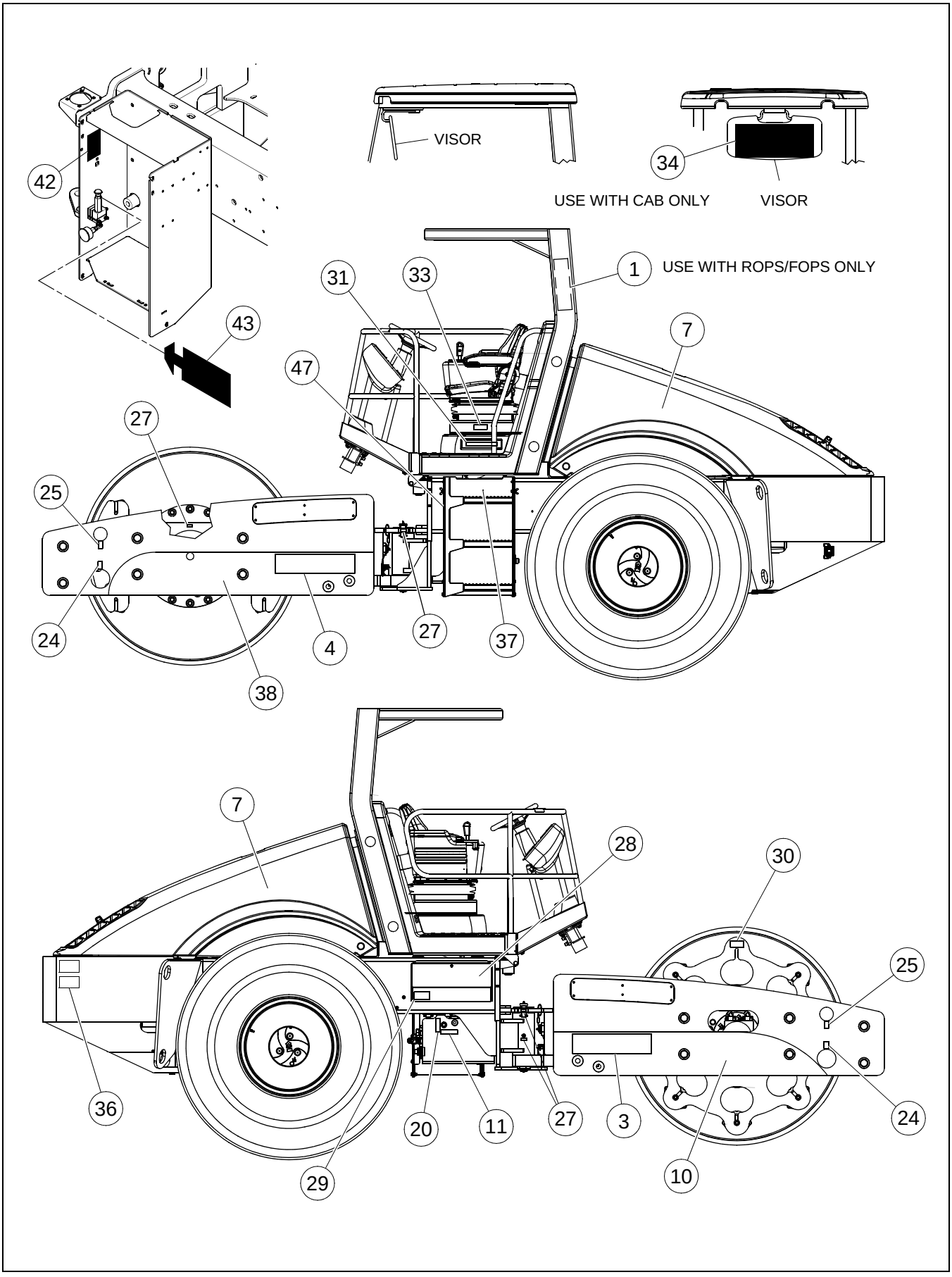

BOM 13225842, 13175385, 13175401, 13175427, 13175443, 13175468, 18007740, 13457221, 13850912, 13850938, 43829167

ITEM	COMM. NO.	DESCRIPTION	QTY	DIMENSIONS/NOTES
42	13366075	Decal: Warning Runaway	1	
-	13385323	Decal: Warning Runaway - German	1	
-	13385349	Decal: Warning Runaway - French	1	
-	13385364	Decal: Warning Runaway - Spanish	1	
-	13385380	Decal: Warning Runaway - Portuguese	1	
43	13366067	Decal: Tow Tag	3	
-	13385331	Decal: Tow Tag - German	3	
-	13385356	Decal: Tow Tag - French	3	
-	13385372	Decal: Tow Tag - Spanish	3	
-	13385398	Decal: Tow Tag - Portuguese	3	
47	13208012	Decal: Master Disconnect	1	

DECAL INSTALLATION - EEC - SHEET 3 OF 4

Dwg 18007740/0d/02

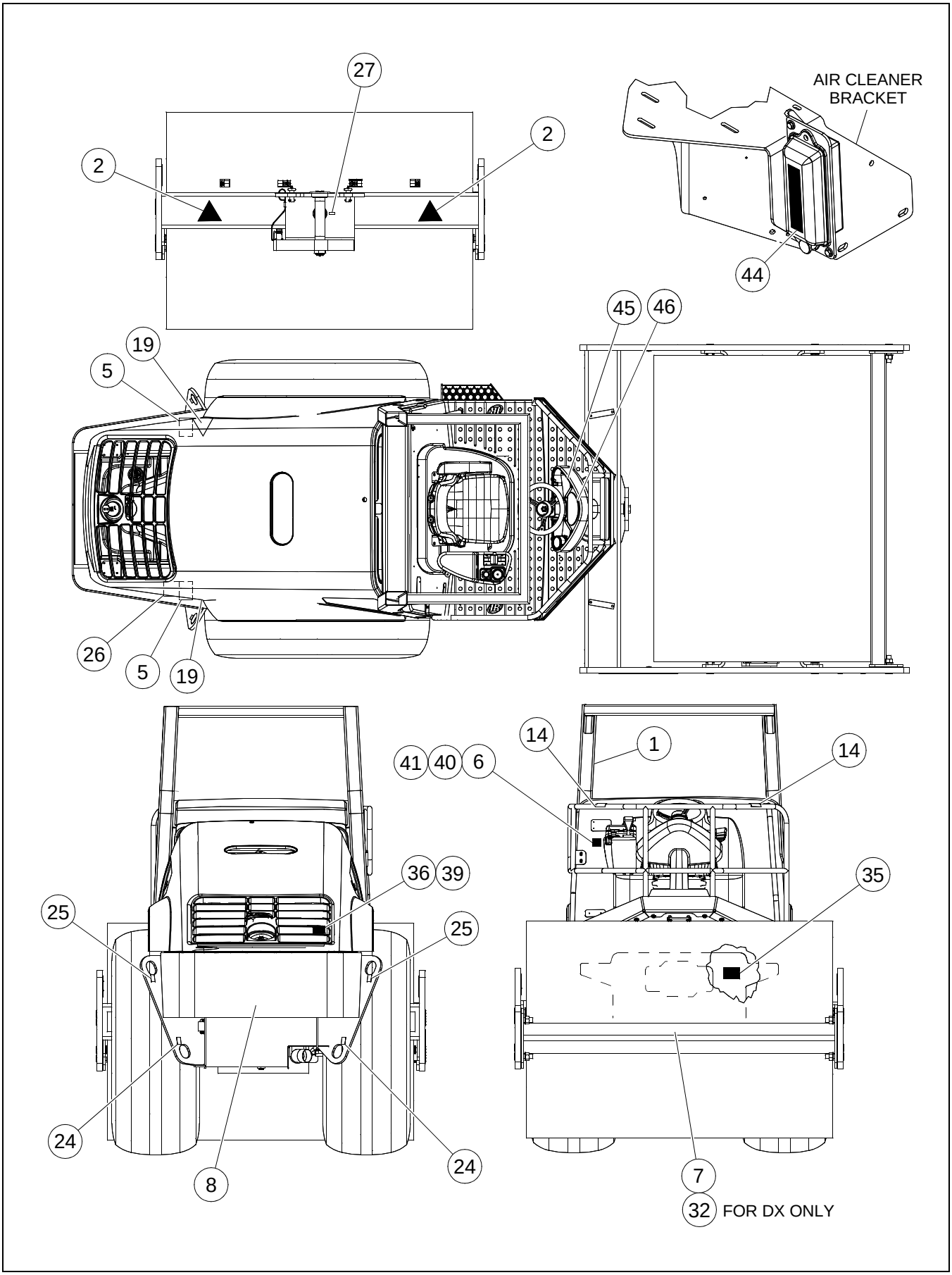

BOM 13225842, 13175385, 13175401, 13175427, 13175443, 13175468, 18007740, 13457221, 13850912, 13850938, 43829167

ITEM	COMM. NO.	DESCRIPTION	QTY	DIMENSIONS/NOTES
1	13225552	Decal: Checklist (German)	1	
-	13226055	Decal: Checklist (French)	1	
-	13226071	Decal: Checklist (Spanish)	1	
-	13226097	Decal: Checklist (Portuguese)	1	
-	13197306	Decal: Checklist (UK)	1	
2	58918947	Decal: Warning	2	
5	59050948	Decal: Pressure Hazard Warning	2	
6	58978271	Decal: Read Manual	1	
7	13855572	Decal: Signature	3	
8	13855655	Decal: IR	1	
14	58978248	Decal: Railing Warning	2	
19	58978198	Decal: Rotating Fan	2	
24	58978289	Decal: Tie Down	4	
25	58992603	Decal: Lift Point	4	
26	59131920	Decal: Radiator Fill (German)	1	
-	59131912	Decal: Radiator Fill (French)	1	
-	59131946	Decal: Radiator Fill (Spanish)	1	
-	59131938	Decal: Radiator Fill (Portuguese)	1	
-	59087999	Decal: Radiator Fill (UK)	1	
27	59605915	Decal: Grease	5	
32		This item not used with this Assembly		
35	13394549	Decal: Sound Power 109db	1	
36	13325378	Decal: Lower Hood	1	
39	59579094	Pop Rivet	4	
40	13878186	Ops/Maintenance (German)	1	
-	13878178	Ops/Maintenance (French)	1	
-	13878194	Ops/Maintenance (Spanish)	1	
-	13878202	Ops/Maintenance (Portuguese)	1	
-	13878210	Ops/Maintenance (Italian)	1	
-	13458005	Ops/Maintenance (Turkish)	1	
-	13457999	Ops/Maintenance (Estonian)	1	
-	13878616	Ops/Maintenance (Polish)	1	
41		This item not used with this Assembly		
44	13396486	Decal: Fuse - German	1	
-	13396478	Decal: Fuse - French	1	
-	13396494	Decal: Fuse - Spanish	1	
-	13437603	Decal: Fuse - Portuguese	1	
45	13437983	Decal: Read Manual	1	
46	13437991	Decal: Rollover	1	
50	13285002	Decal: Warning - Buckle Up	1	(Not Shown)
51	13285010	Decal: Warning Tag - ROPS	1	(Not Shown)
52	13285028	Decal: Warning Tag - ROPS Installation	1	(Not Shown)

DECAL INSTALLATION - EEC - SHEET 4 OF 4

Dwg 18007740/0d/02

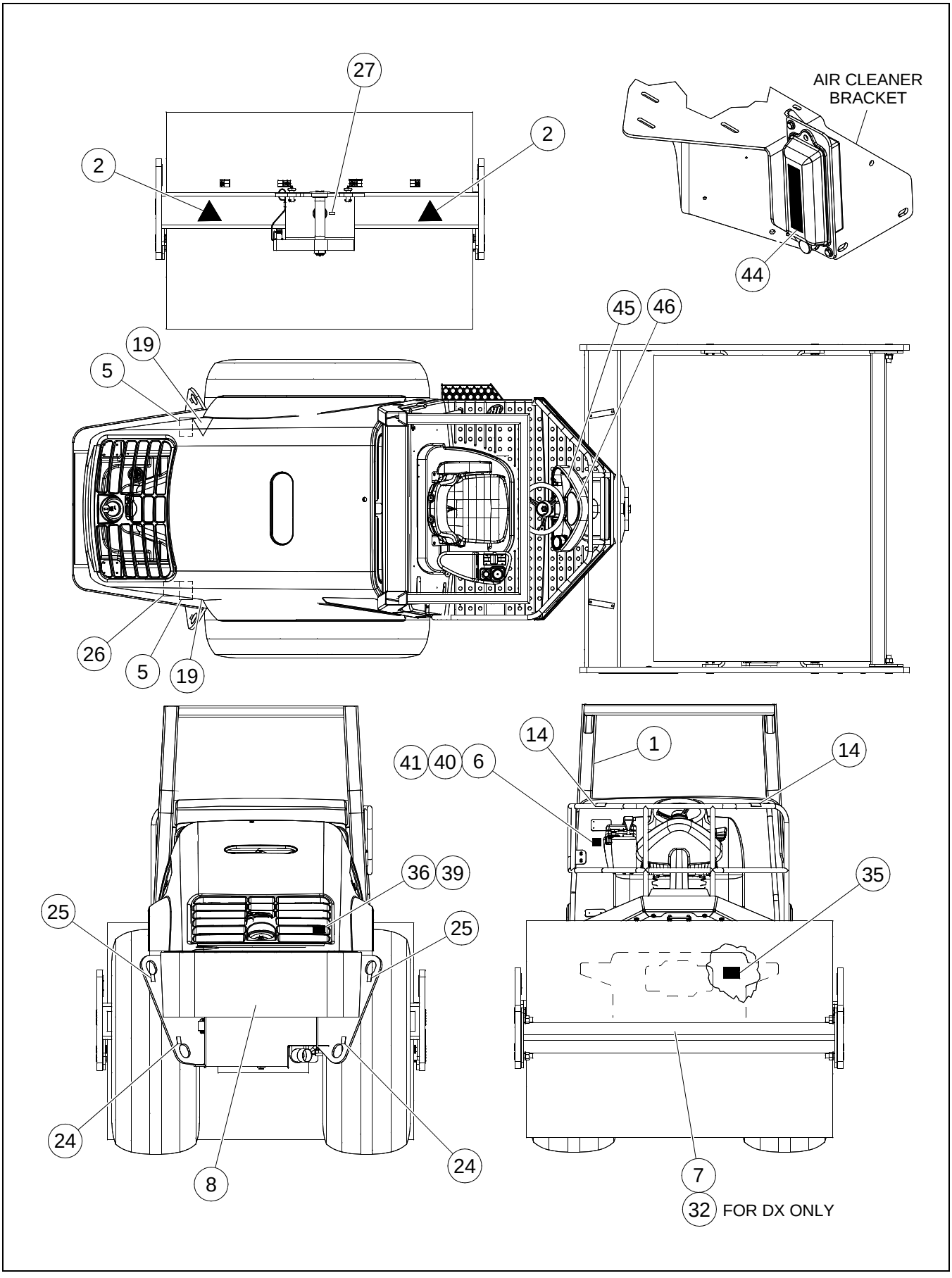

BOM 13225842, 13175385, 13175401, 13175427, 13175443, 13175468, 18007740, 13457221, 13850912, 13850938, 43829167

ITEM	COMM. NO.	DESCRIPTION	QTY	DIMENSIONS/NOTES
*	13302633	Decal Kit (Includes Items 2, 5 thru 25, 27, 29, 36, 37, 45, 46 and 50 thru 52; order Items 1, 26, 28, 30, 31, 33, 34, 35, 39, 42, 43 and 44 separately)		
**	59947507	Beige Paint	1	
**	35304286	Beige Paint	1	

Always use Manufacturer Replacement parts!*

Section H - HYDRAULICS

HOSING INSTALLATION - SHEET 1 OF 6

Dwg 13174230/0m/01

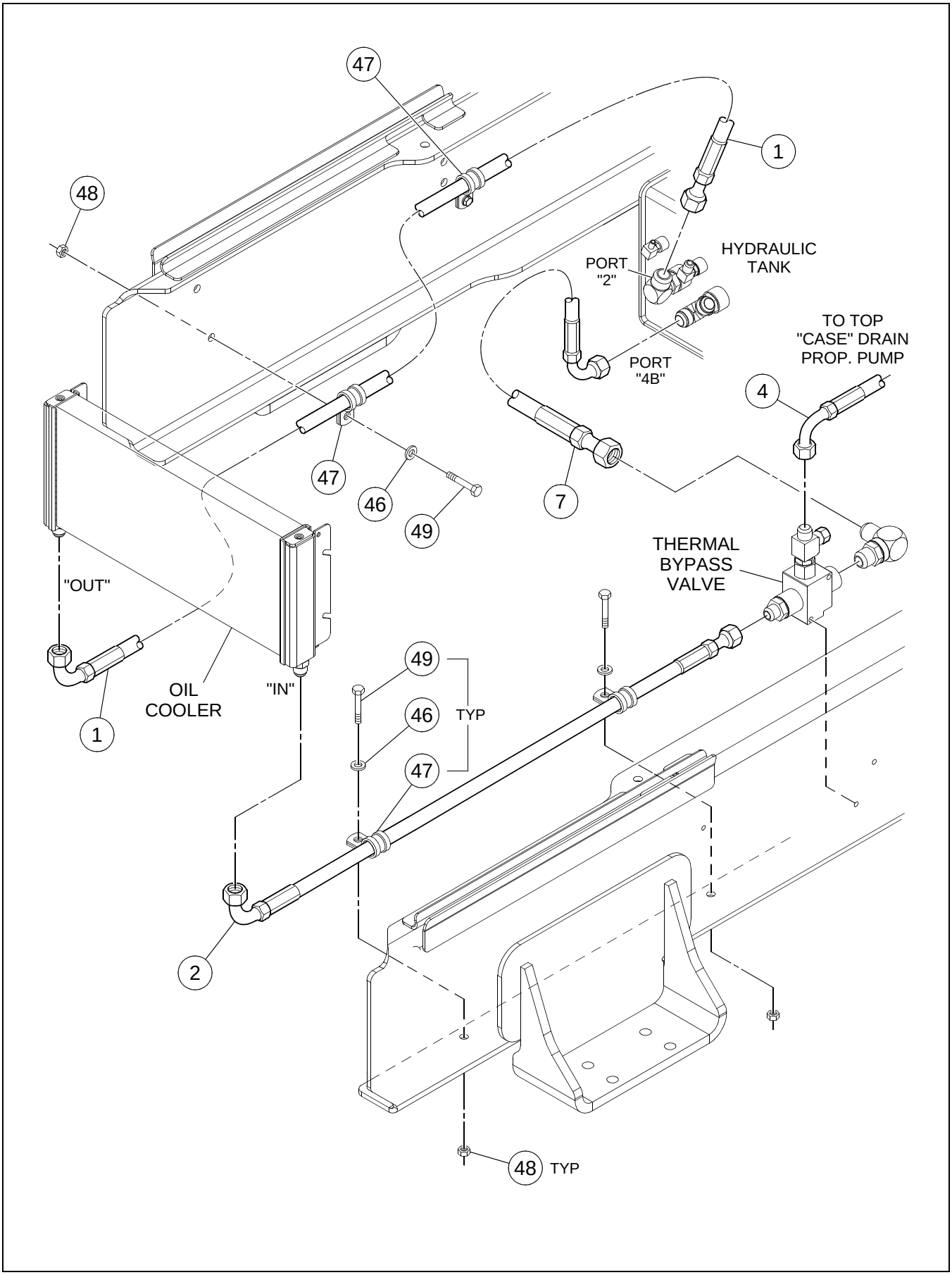

HOSING INSTALLATION - SHEET 1 OF 6

BOM 13255203, 43808724, 43808732, 80818016, 80818115

ITEM	COMM. NO.	DESCRIPTION	QTY	DIMENSIONS/NOTES
1	13207840	Hose Assembly	1	74.5"
2	13207865	Hose Assembly	1	57.5"
4	13207873	Hose Assembly	2	17.5"
7	59203406	Hose Assembly	1	25.0"
46	96713979	Hardened Washer	4	
47	95457586	Clamp	4	
48	96701370	Nut, Zinc Plated	4	M8 x 1.25 Cl 8
49	96705587	HHCS, Fully Threaded, Zinc Plated	4	M8 x 1.25 x 30 Cl 8.8

Dwg 13174230/0m/02

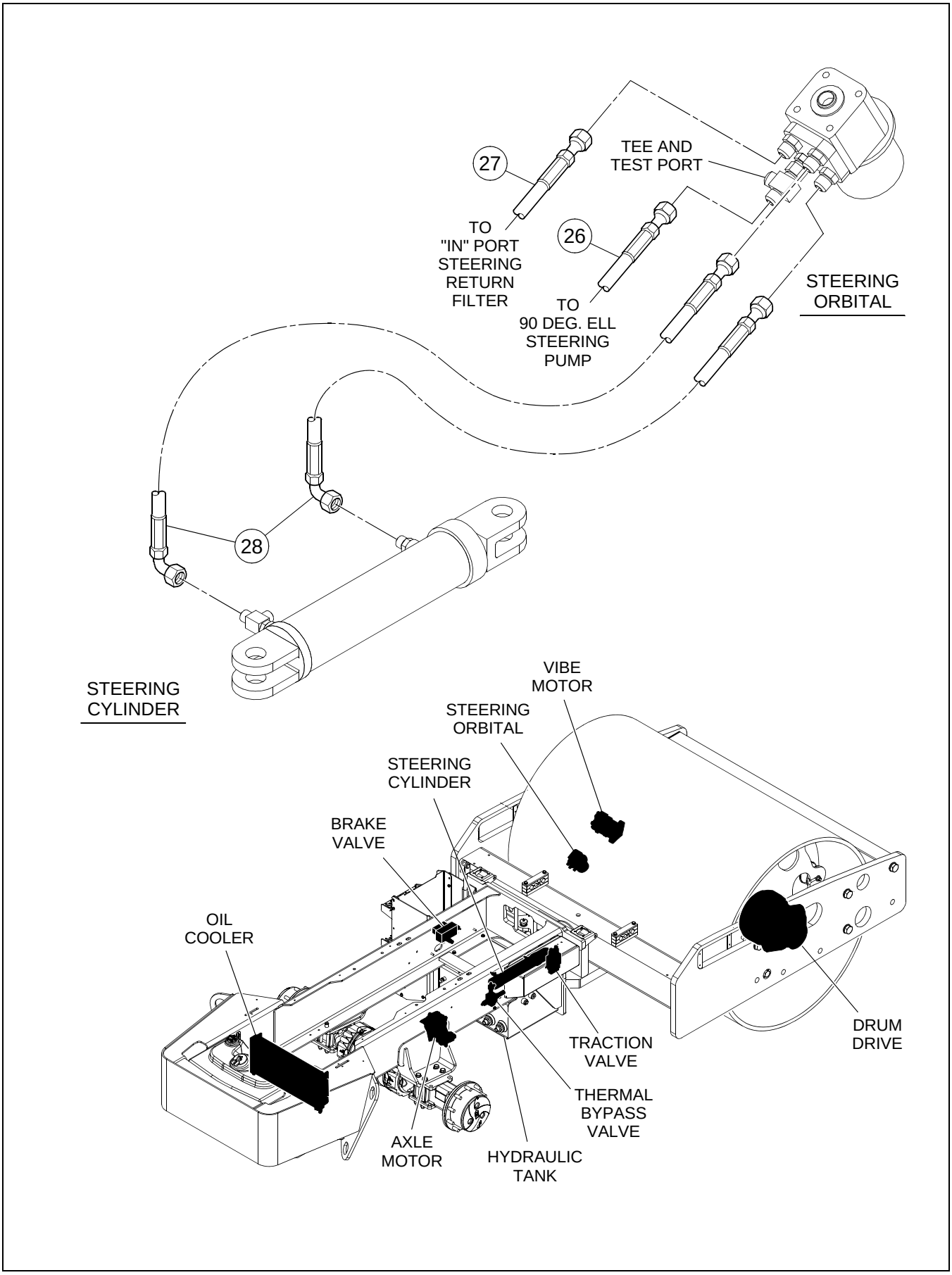

BOM 13255203, 43808724, 43808732, 80818016, 80818115

ITEM	COMM. NO.	DESCRIPTION	QTY	DIMENSIONS/NOTES
26	13207790	Hose Assembly	1	35.0"
27	13204359	Hose Assembly	1	44.0”
28	13199062	Hose Assembly	2	40.0"

Dwg 13174230/0m/03

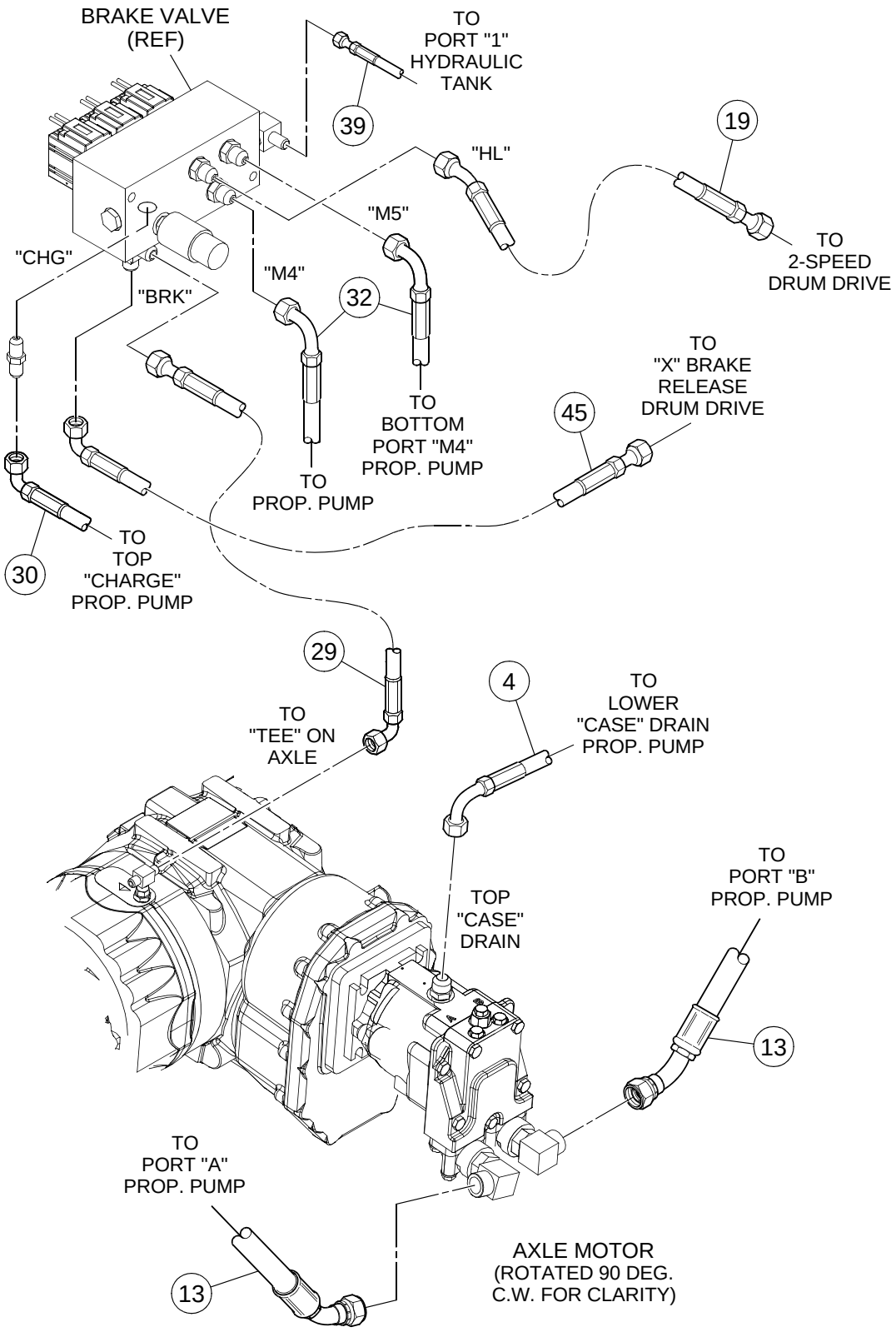

BOM 13255203, 43808724, 43808732, 80818016, 80818115

ITEM	COMM. NO.	DESCRIPTION	QTY	DIMENSIONS/NOTES
4	13207873	Hose Assembly	2	17.5"
13	13207774	Hose Assembly	2	22.5"
19	13464045	Hose Assembly - Eff S/N 176885 thru 191508	1	122.0”
-	13464045	Hose Assembly (SD-77 Unique)	1	122.0”
29	13207899	Hose Assembly	1	48.0"
30	13106497	Hose Assembly	1	25.0"
32	13199047	Hose Assembly	2	18.0"
39	13204755	Hose Assembly	1	14.0"
45	13333901	Hose Assembly	1	107.0”

Dwg 13174230/0m/04

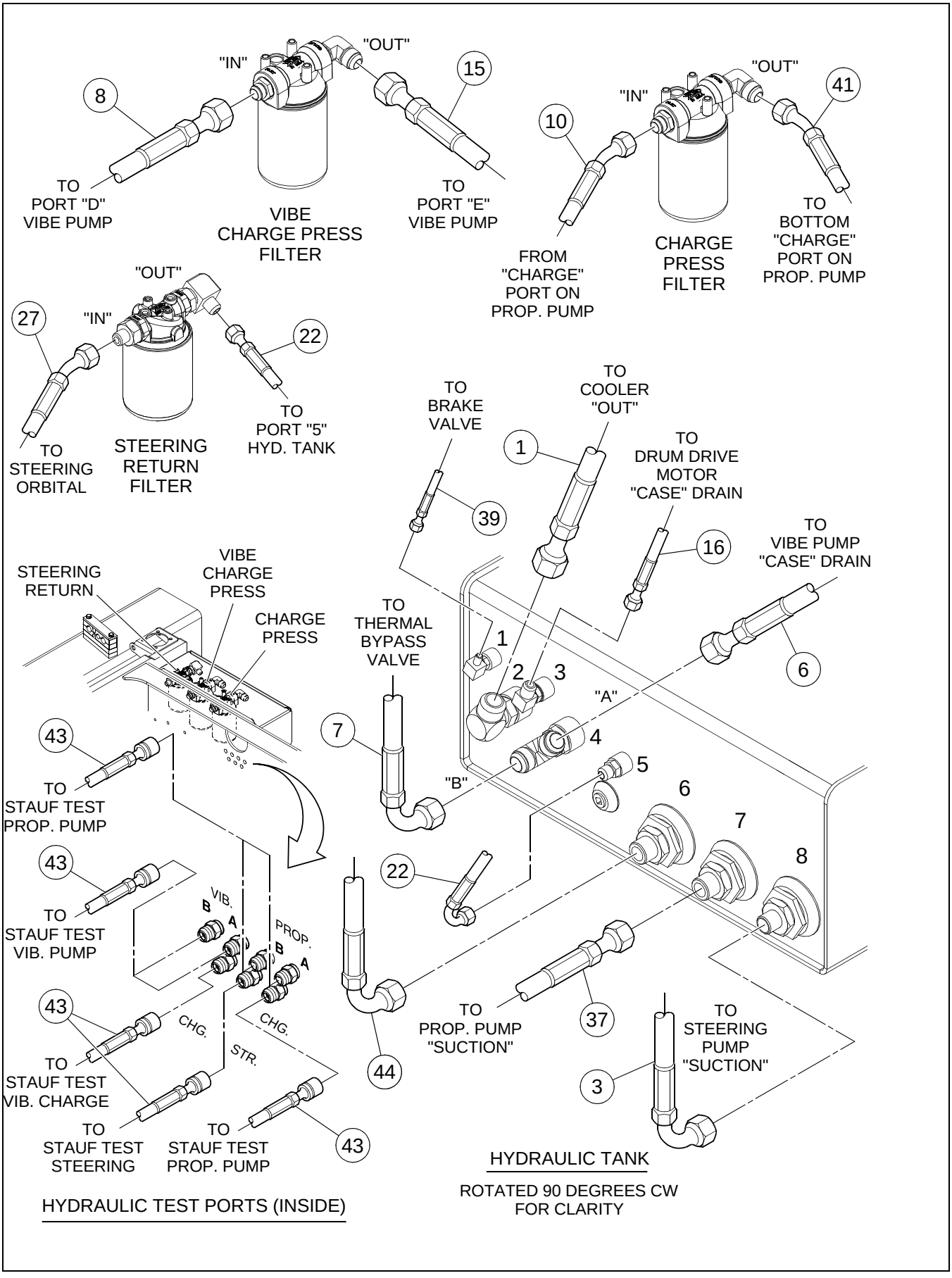

BOM 13255203, 43808724, 43808732, 80818016, 80818115

ITEM	COMM. NO.	DESCRIPTION	QTY	DIMENSIONS/NOTES
1	13207840	Hose Assembly	1	74.5"
3	13204383	Hose Assembly	1	26.0"
6	13204441	Hose Assembly	1	22.5"
7	59203406	Hose Assembly	1	25.0"
8	59106757	Hose Assembly - Effective with S/N 178653	1	20.0"
-	58946591	Hose Assembly - Prior to S/N 178653	1	38.0"
10	13207824	Hose Assembly	1	22.0"
15	54537097	Hose Assembly - Effective with S/N 178653	1	33.0"
-	13207543	Hose Assembly - Prior to S/N 178653	1	26.0"
16	13460795	Hose Assembly - Effective with S/N 176885	1	120.0”
-	13207782	Hose Assembly - Prior to S/N 176885	1	113.0"
22	13199120	Hose Assembly	1	47.0"
27	13204359	Hose Assembly	1	44.0"
37	59546275	Hose Assembly	1	29.0"
39	13204755	Hose Assembly	1	14.0"
41	13207832	Hose Assembly	1	26.5"
43	13255179	Hose Assembly	7	40.0"
44	59203406	Hose Assembly - Effective with S/N 178653	1	25.0”

Dwg 13174230/0m/05

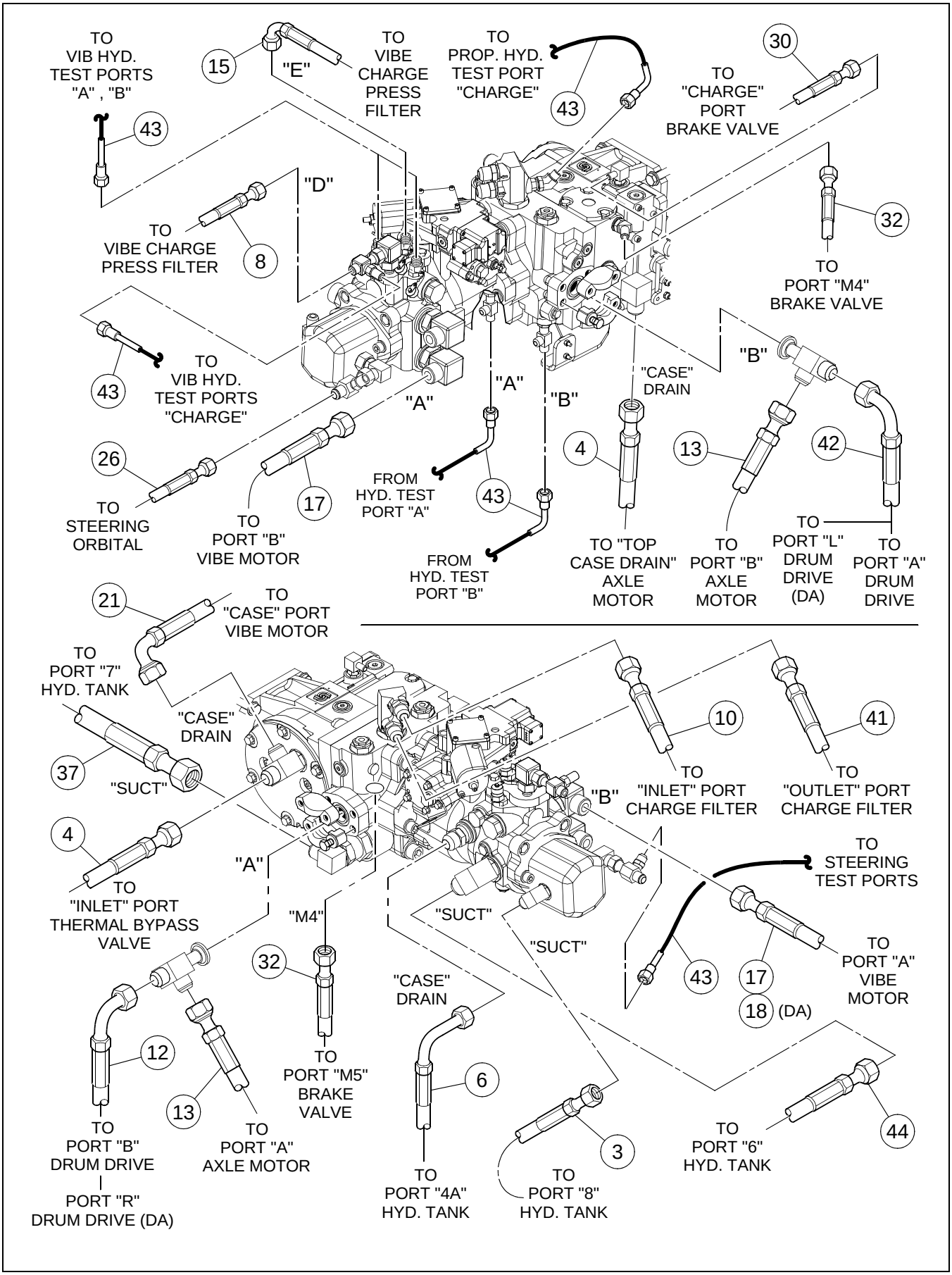

BOM 13255203, 43808724, 43808732, 80818016, 80818115

ITEM	COMM. NO.	DESCRIPTION	QTY	DIMENSIONS/NOTES
3	13204383	Hose Assembly	1	26.0"
4	13207873	Hose Assembly	2	17.5"
6	13204441	Hose Assembly	1	22.5"
8	59106757	Hose Assembly - Effective with S/N 178653	1	20.0"
-	58946591	Hose Assembly - Prior to S/N 178653	1	38.0"
10	13207824	Hose Assembly	1	22.0"
12	13460787	Hose Assembly - Effective with S/N 176885	1	113.0
-	13207808	Hose Assembly - Prior to S/N 176885	1	111.0"
13	13207774	Hose Assembly	2	22.5"
15	54537097	Hose Assembly - Effective with S/N 178653	1	33.0"
-	13207543	Hose Assembly - Prior to S/N 178653	1	26.0"
17	13207915	Hose Assembly	2	100.0"
18		This Item Not Used With This Assembly		
21	13207907	Hose Assembly	1	130.0"
26	13207790	Hose Assembly	1	35.0"
30	13106497	Hose Assembly	1	25.0"
32	13199047	Hose Assembly	2	18.0"
37	13207881	Hose Assembly	1	27.5"
41	13207832	Hose Assembly	1	26.5"
42	13429881	Hose Assembly - Eff S/N 176885 thru 191508	1	125.5”
-	13207816	Hose Assembly - Prior to S/N 176885	1	116.5"
-	13319314	Hose Assembly - (SD-70/EU Unique)	1	115.0"
-	13429881	Hose Assembly - (SD-77 Unique)	1	125.5”
43	13255179	Hose Assembly	7	40.0"
44	59203406	Hose Assembly - Effective with S/N 178653	1	25.0”

HOSING INSTALLATION - SHEET 6 OF 6

Dwg 13174230/0m/06

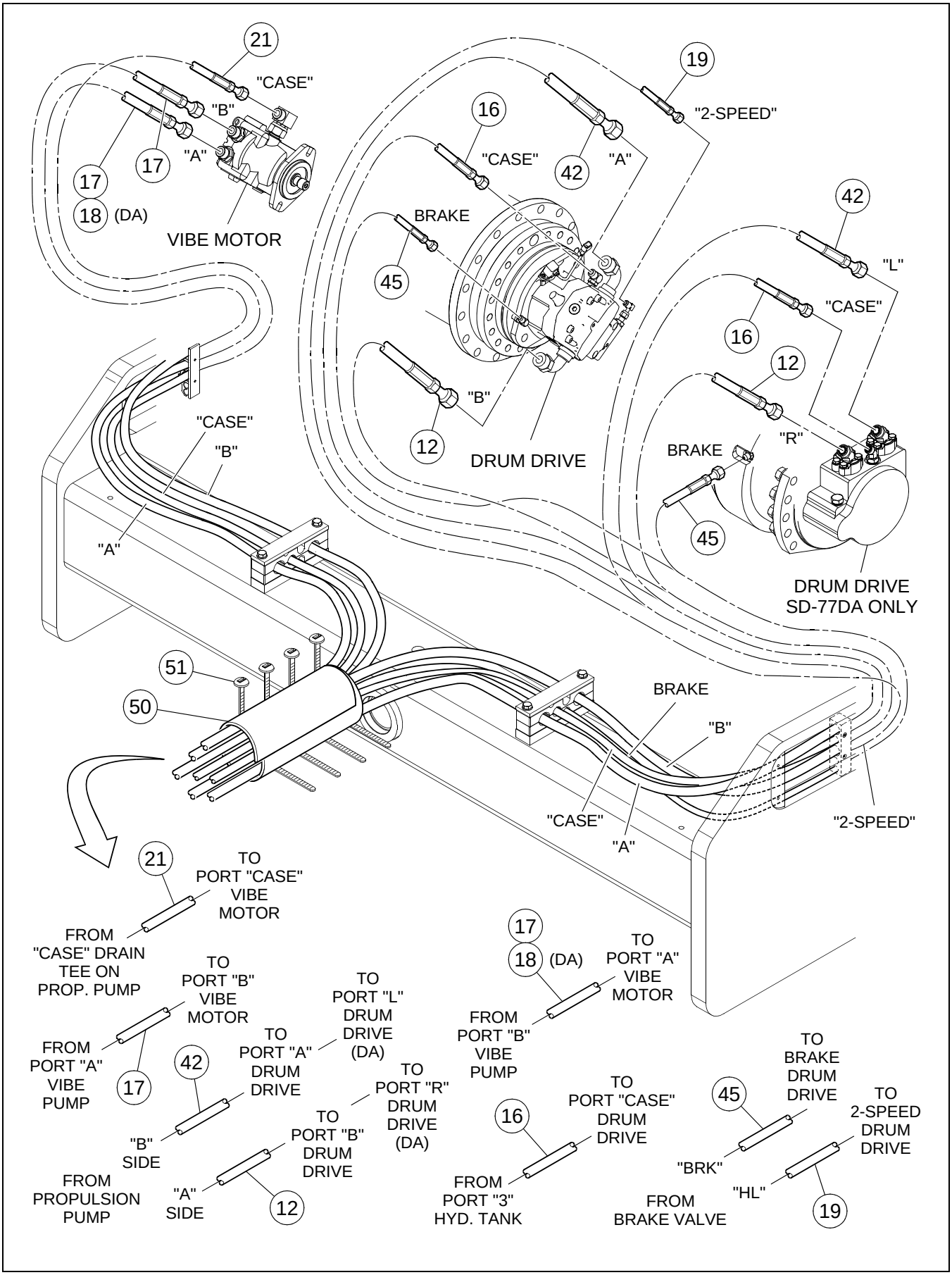

BOM 13255203, 43808724, 43808732, 80818016, 80818115

ITEM	COMM. NO.	DESCRIPTION	QTY	DIMENSIONS/NOTES
12	13460787	Hose Assembly - Effective with S/N 176885	1	113.0
-	13207808	Hose Assembly - Prior to S/N 176885	1	111.0"
16	13460795	Hose Assembly - Effective with S/N 176885	1	120.0”
-	13207782	Hose Assembly - Prior to S/N 176885	1	113.0"
17	13207915	Hose Assembly	2	100.0"
18		This Item Not Used With This Assembly		
19	13464045	Hose Assembly - Eff S/N 176885 thru 191508	1	122.0”
-	13464045	Hose Assembly (SD-77 Unique)	1	122.0”
21	13207907	Hose Assembly	1	130.0"
42	13429881	Hose Assembly - Eff S/N 176885 thru 191508	1	125.5”
-	13207816	Hose Assembly - Prior to S/N 176885	1	116.5"
-	13319314	Hose Assembly - (SD-70 Unique)	1	115.0"
-	13429881	Hose Assembly - (SD-77 Unique)	1	125.5”
45	13333901	Hose Assembly	1	107.0”
50	59672733	Hose Guard	1	
51	95424586	Wire Tie	A/R	
52	95323366	Plug (SD-70 Unique) (Not Shown)	1	#4

HYDRAULIC FILTER INSTALLATION - EFFECTIVE WITH S/N 178653

Dwg D13185723/05

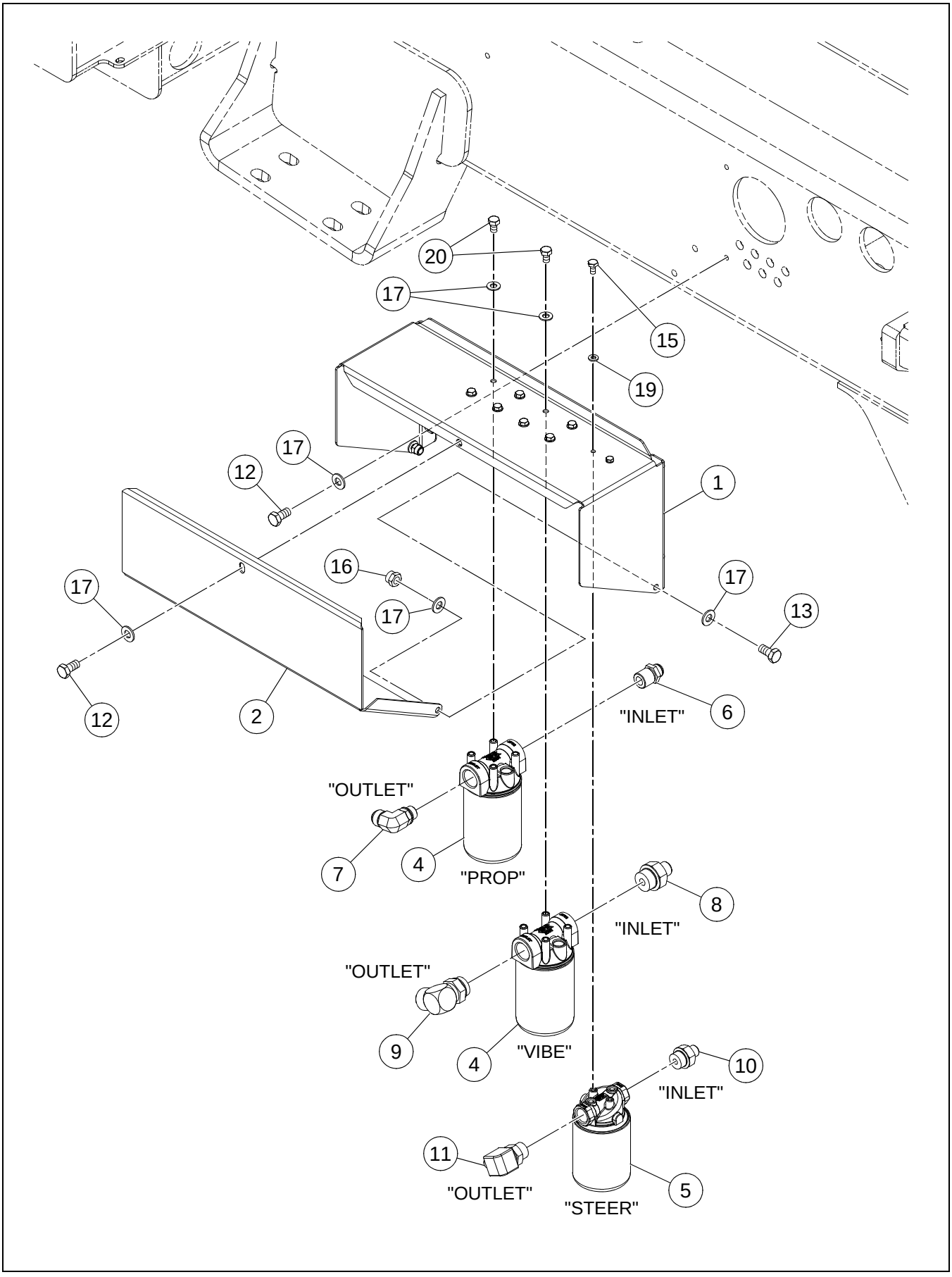

HYDRAULIC FILTER INSTALLATION - EFFECTIVE WITH S/N 178653

BOM 13174172

ITEM	COMM. NO.	DESCRIPTION	QTY	DIMENSIONS/NOTES
1	13295639	Hydraulic Filter Bracket	1	
2	13215405	Filter Door	1	
4	13408240	Charge Filter	2	
-	13467774	- Charge Filter Element	2	
5	13190723	Return Filter	1	
-	59764498	- Return Filter Element	1	
6	95416277	Fitting	1	
7	13303805	Adapter	1	
8	59922526	Adapter	1	
9	95341673	Adapter	1	
10	95357570	Adapter, Straight	1	
11	95330692	Adapter, 90°	1	
12	96702279	HHCS, Fully Threaded, Zinc Plated	5	M10 x 1.5 x 20 Cl 8.8
13	96702287	HHCS, Fully Threaded, Zinc Plated	2	M10 x 1.5 x 25 Cl 8.8
15	95919528	HHCS, Zinc Plated	1	1/4 x 20 x 0.625 Grd 8
16	96704614	Nut, Zinc Plated	2	M10 x 1.5 Cl 8
17	96741046	Flatwasher, Zinc Plated	17	M10 Cl 200
19	96741053	Flatwasher, Zinc Plated	2	M6 Cl 200
20	96701479	HHCS, Fully Threaded, Zinc Plated	8	M10 x 1.5 x 16 Cl 8.8

HYDRAULIC FILTER INSTALLATION - PRIOR TO S/N 178653

Dwg D13185723/04

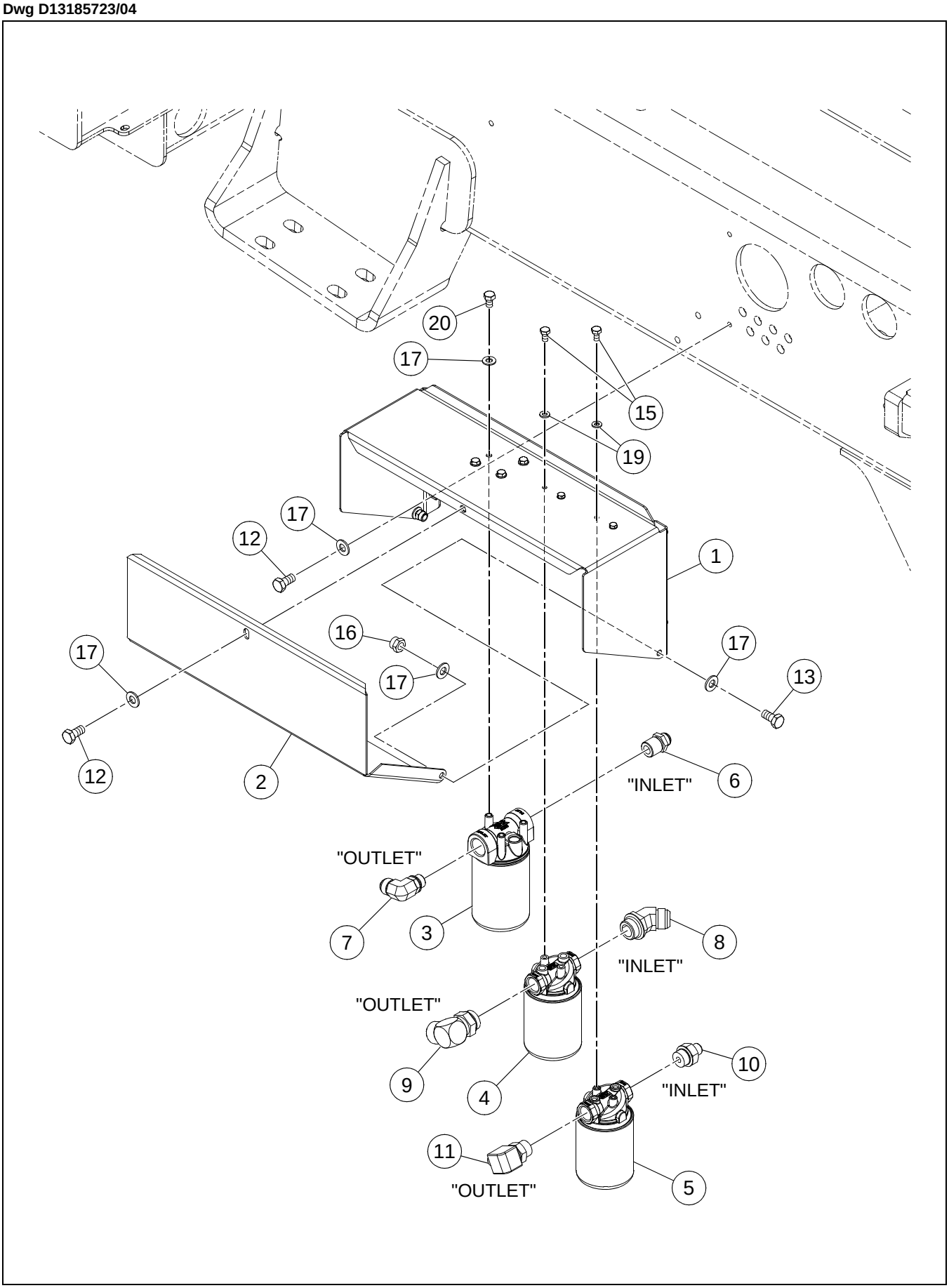

HYDRAULIC FILTER INSTALLATION - PRIOR TO S/N 178653

BOM 13174172

ITEM	COMM. NO.	DESCRIPTION	QTY	DIMENSIONS/NOTES
1	13295274	Filter Bracket	1	
2	13215405	Filter Door	1	
3	58979048	Charge Pressure Filter	1	
-	58887936	- Charge Pressure Filter Element	1	
4	13190715	Suction Filter	1	
-	59764498	- Suction Filter Element	1	
5	13190723	Return Filter	1	
-	59764498	- Return Filter Element	1	
6	95416277	Fitting	1	
7	13303805	Adapter	1	
8	95469128	Adapter	1	
9	95280194	Adapter	1	
10	95357570	Adapter, Straight	1	
11	95330692	Adapter, 90°	1	
12	96702279	HHCS, Fully Threaded, Zinc Plated	5	M10 x 1.5 x 20 Cl 8.8
13	96702287	HHCS, Fully Threaded, Zinc Plated	2	M10 x 1.5 x 25 Cl 8.8
15	95920401	HHCS, Zinc Plated	4	5/16 x 18 x 0.625, Gr 8
16	96704614	Nut, Zinc Plated	2	M10 x 1.5 Cl 8
17	96741046	Flatwasher, Zinc Plated	14	M10 Cl 200
19	96741053	Flatwasher, Zinc Plated	4	M6 Cl 200
20	96701479	HHCS, Fully Threaded, Zinc Plated	4	M10 x 1.5 x 16 Cl 8.8

TOW VALVE INSTALLATION - OPTIONAL

Dwg 13233838/0e

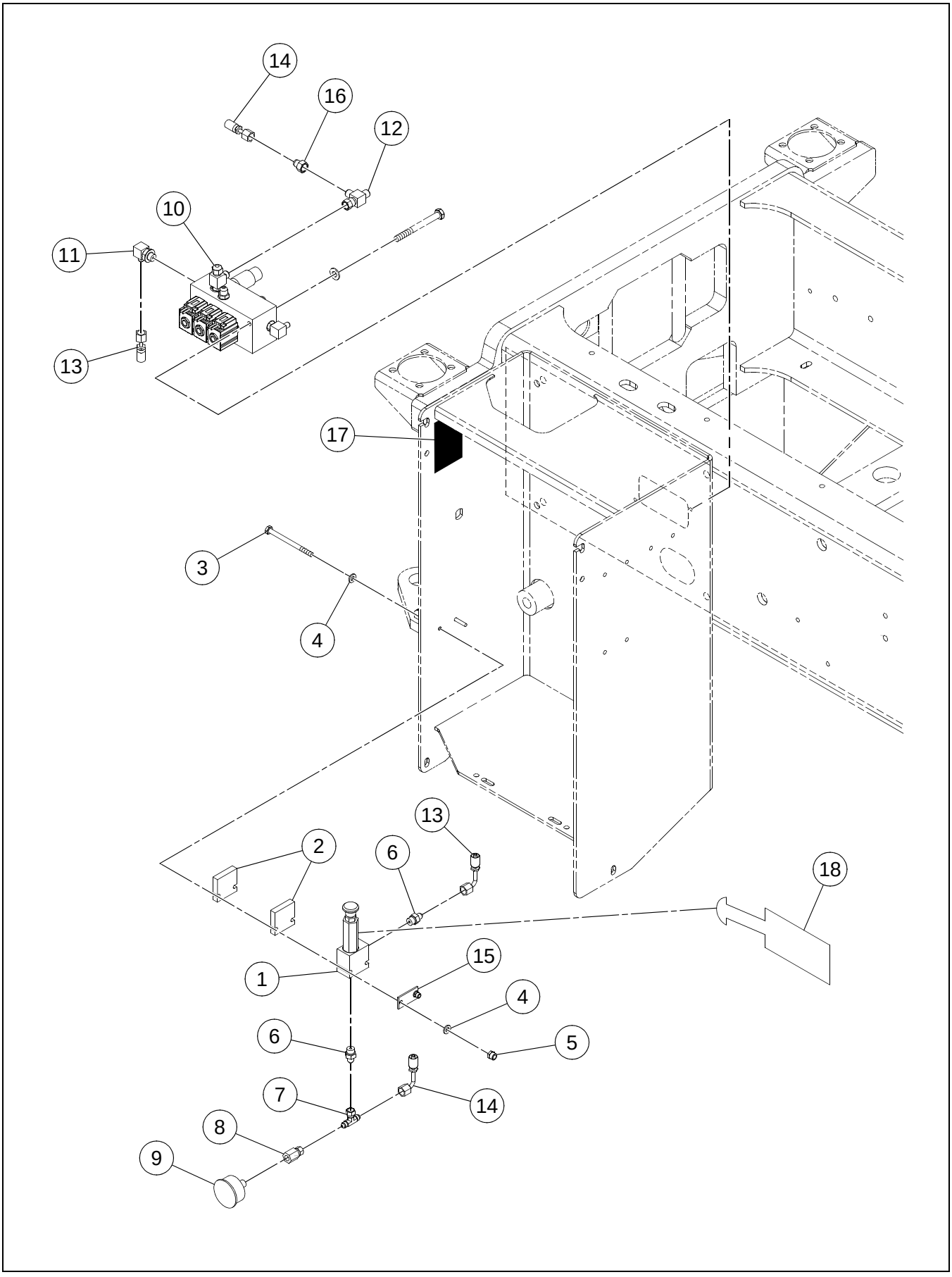

TOW VALVE INSTALLATION - OPTIONAL

BOM 59287359, 13277413, 80817984

ITEM	COMM. NO.	DESCRIPTION	QTY	DIMENSIONS/NOTES
1	13205513	Hand Pump	1	
2	13214812	Spacer Block	2	
3	96720156	HHCS, Zinc Plated	2	M6 x 1.0 x 80 Cl 8.8
4	96741053	Flatwasher, Zinc Plated	4	M6 Cl 200
5	96704598	Hex Locknut, Zinc Plated	2	M6 Cl 8
6	95371258	Adapter	2	
7	95649844	Adapter	1	
8	59665877	Adapter	1	
9	59197012	Dial Pressure Gauge	1	
10	**80817992**	**Manifold Assembly**	**1**	**See Breakdown H - 20.**
11	95365094	Adapter	1	
12	95415667	Swivel Tee	1	
13	59959080	Hose Assembly	1	36.0"
14	13225529	Hose Assembly	1	42.0"
15	13235320	Retaining Plate	1	
16	59742890	Reducer	1	
17	13366075	Decal: Warning-Runaway Machine	1	
18	13366067	Decal: Tow Tag	3	

MANIFOLD ASSEMBLY (80817992) - INTERNAL BREAKDOWN

Dwg 13217559/04

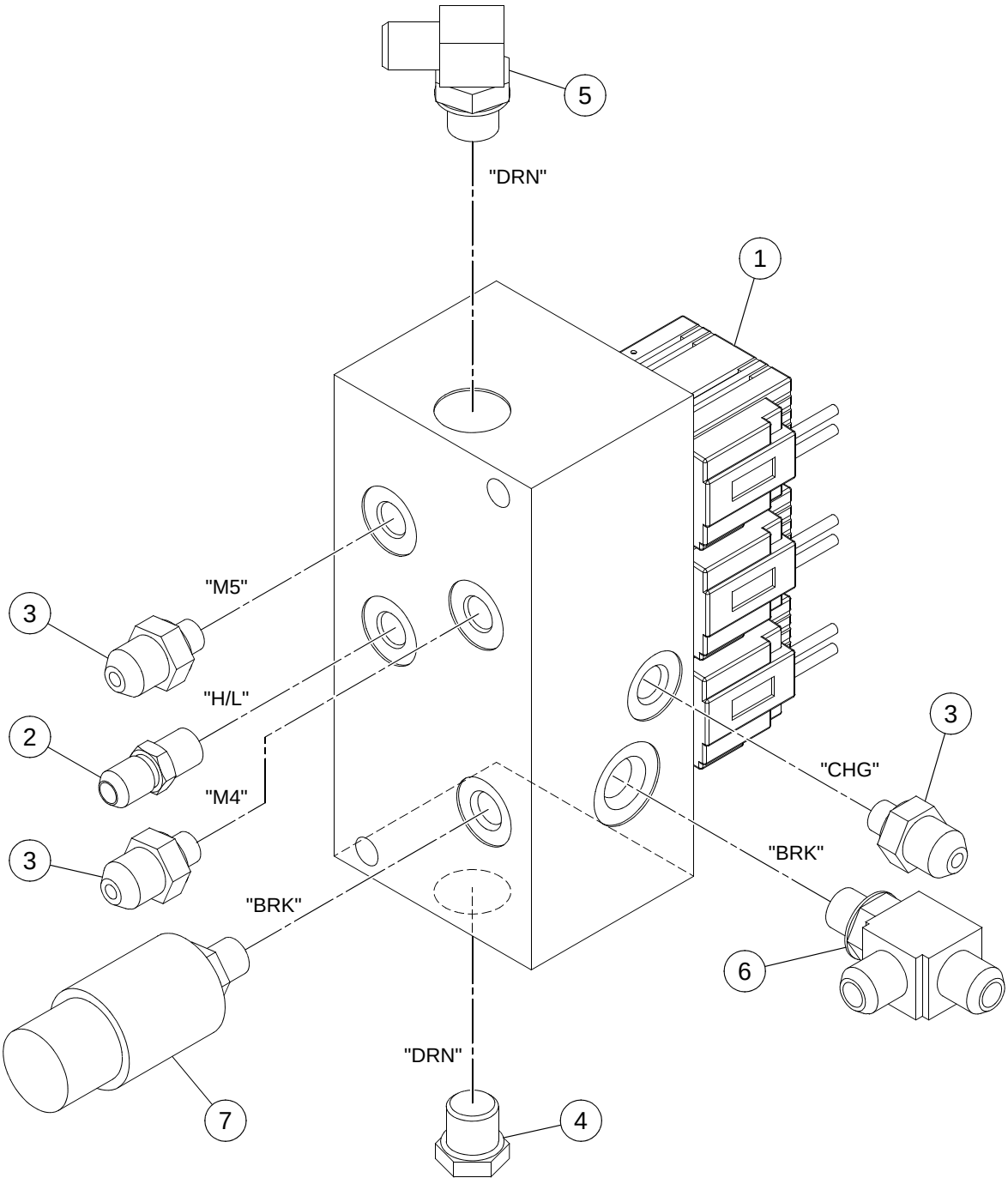

MANIFOLD ASSEMBLY (80817992) - INTERNAL BREAKDOWN

BOM 80817992

ITEM	COMM. NO.	DESCRIPTION	QTY	DIMENSIONS/NOTES
1	13304878	Three Section Valve	1	
-	13258603	- Drive Enable Valve	1	
-	13258611	- DHS Drive Hi/Low Valve	1	
-	13269436	- Seal Kit	1	
-	13429782	- Brake Release Valve	1	
-	13258629	- Coil	3	
2	95323366	Plug	1	
3	95402806	Adapter, Straight	3	
4	95343596	Plug	1	
5	95329975	Adapter, 90°	1	
6	95188710	Run Tee	1	
7	59110312	Pressure Switch	1	

HYDRAULIC TEST PORT INSTALLATION - OPTIONAL

Dwg D59289702/02

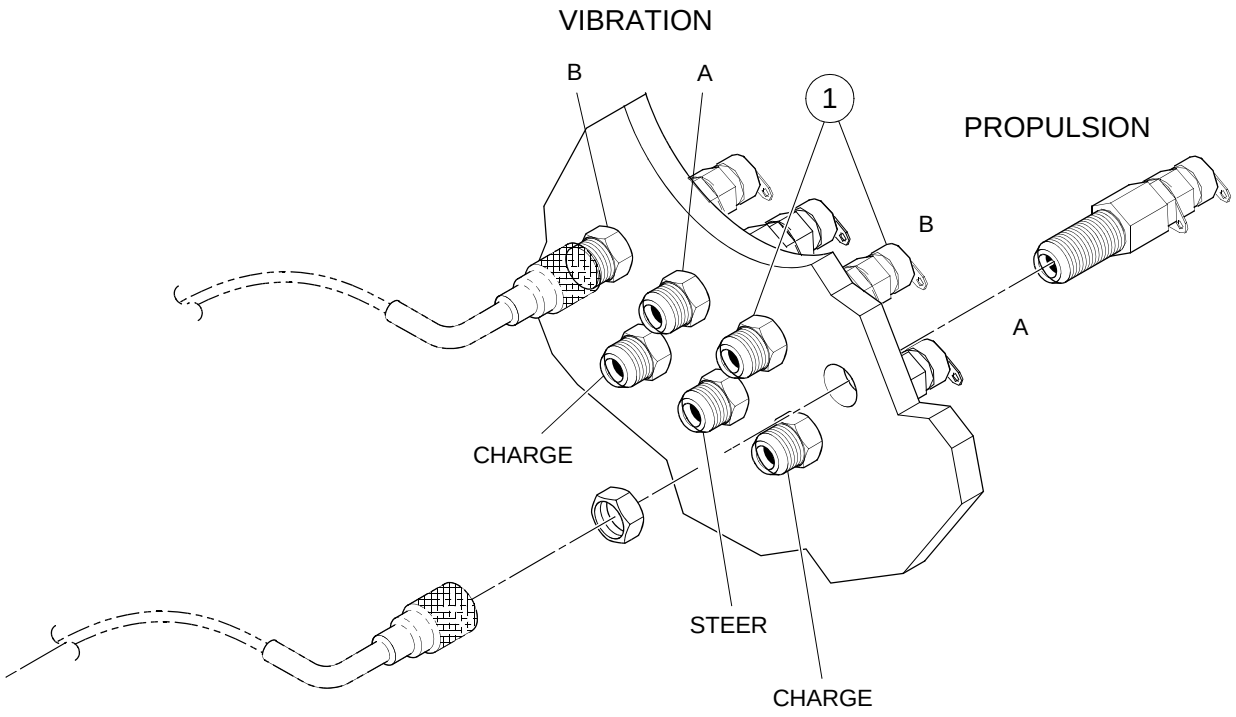

HYDRAULIC TEST PORTS

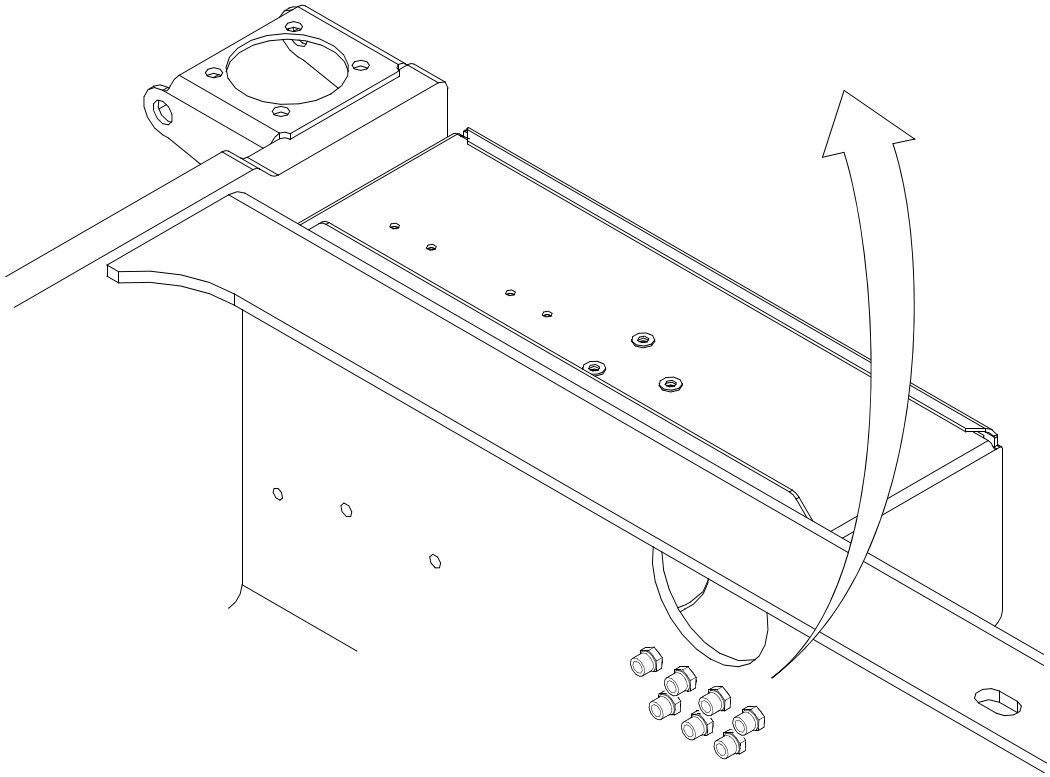

HYDRAULIC TEST PORT INSTALLATION - OPTIONAL

BOM 13255211

ITEM	COMM. NO.	DESCRIPTION	QTY	DIMENSIONS/NOTES
1	13239785	Bulkhead Fitting	7	

TRACTION ENHANCEMENT INSTALLATION - OPTIONAL - SHEET 1 OF 2

Dwg 13271127/0e/01

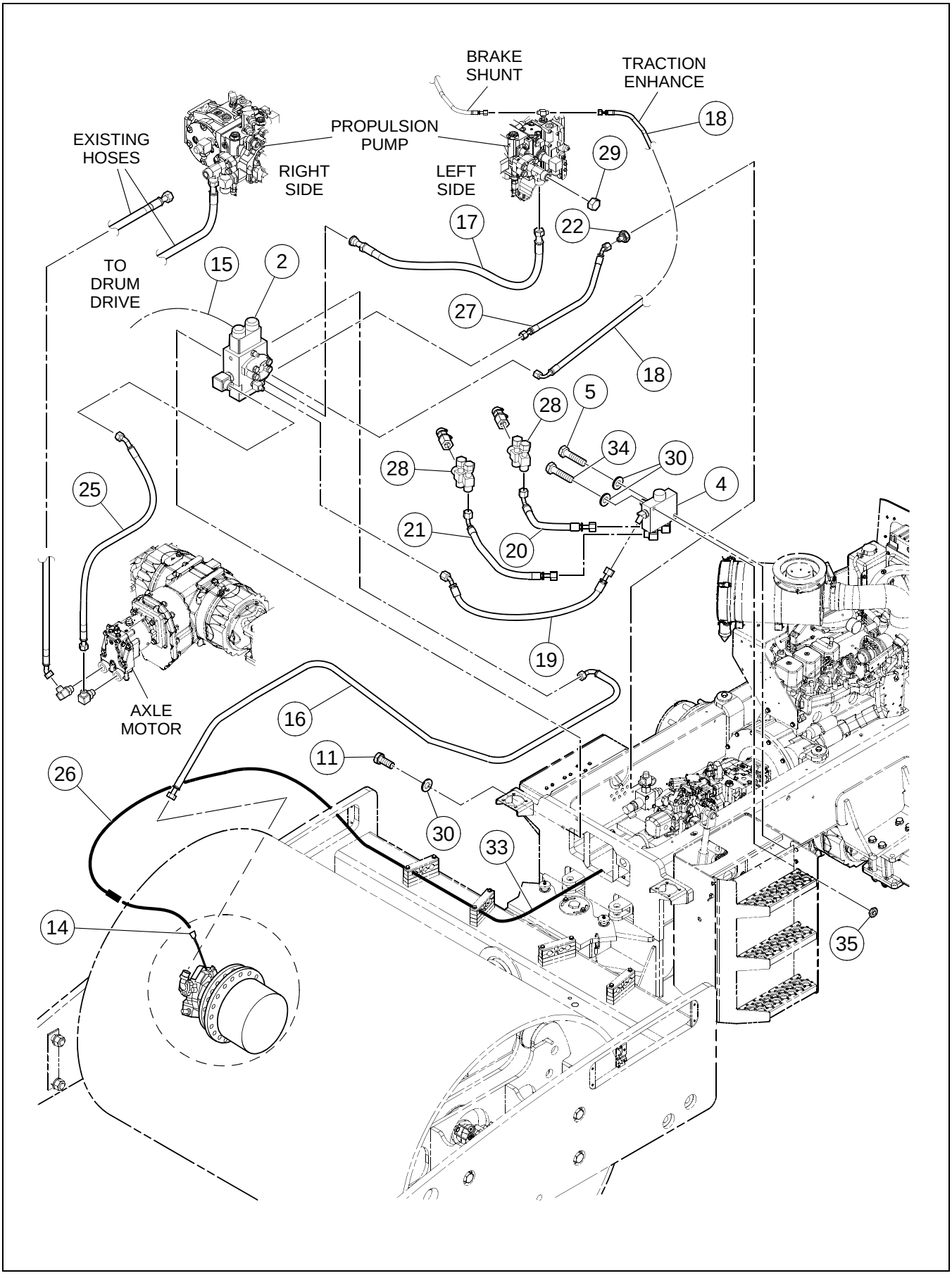

TRACTION ENHANCEMENT INSTALLATION - OPTIONAL -
SHEET 1 OF 2

BOM 13271127, 80818164

ITEM	COMM. NO.	DESCRIPTION	QTY	DIMENSIONS/NOTES
1	13375753	Traction Micro-Controller - Effective S/N 176885 (Not Shown)	1	
-	13307350	Traction Micro-Controller - Prior to S/N 176885	1	
2	**NSVA**	**Traction Control Valve Assembly**	**1**	**See Page H - 28.**
4	**NSVA**	**Loop Flushing Valve Assembly**	**1**	**See Page H - 30.**
5	96702428	HHCS, Zinc Plated	1	M10 x 1.5 x 45 Cl 8.8
6	96741046	Flatwasher, Zinc Plated (Not Shown)	4	M10 Cl 200
11	96702287	HHCS, Fully Threaded, Zinc Plated	2	M10 x 1.5 x 25 Cl 8.8
14	13375548	Speed Sensor - Effective with S/N 176885	1	
-	59140384	Speed Sensor - Prior to S/N 176885	1	
15	13492699	Traction Control Wire Harness	1	
-	13460779	Hose Assembly - Effective with S/N 176885	1	112.0”
16	13225297	Hose Assembly - Prior to S/N 176885	1	103.0"
17	13225032	Hose Assembly	1	17.0"
18	13199088	Hose Assembly	1	42.0"
19	13225016	Hose Assembly	1	35.0"
20	13208186	Hose Assembly	1	13.5"
21	13208194	Hose Assembly	1	18.5"
22	59743013	Reducer	1	
25	13225024	Hose Assembly	1	40.0"
26	13493473	Speed Sensor Wire Harness - Eff S/N 176885	1	
-	13205414	Speed Sensor Wire Harness - Prior to S/N 176885	1	
-	13248919	- Resistor Assembly Harness	1	
-	13248927	- Sensor Cable	1	
27	13225008	Hose Assembly	1	17.0"
28	59918540	Adapter, Tee	2	
29	59924092	ORS Cap	1	
30	96741046	Flatwasher, Zinc Plated	2	M10 Cl 200
33	13248919	Resistor Assembly Wire Harness -Eff S/N 176885	1	
34	96715552	HHCS, Zinc Plated	1	M10 x 1.5 x 65 Cl 8.8
35	96704846	Locknut	1	M10 x 1

TRACTION ENHANCEMENT INSTALLATION - OPTIONAL - SHEET 2 OF 2

Dwg 13271127/0e/02

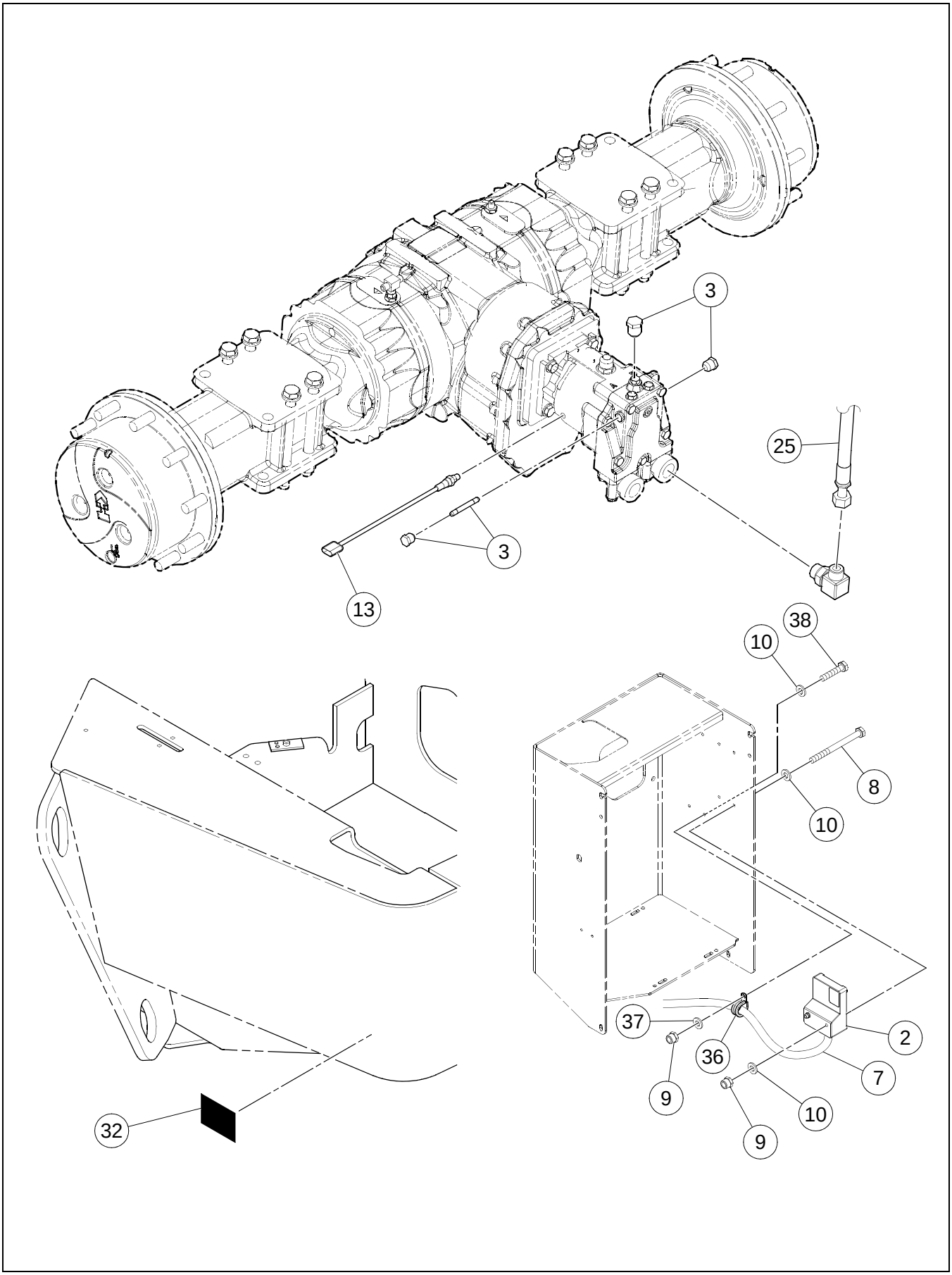

BOM 13271127, 80818164

ITEM	COMM. NO.	DESCRIPTION	QTY	DIMENSIONS/NOTES
2	**NSVA**	**Traction Control Valve Assembly**	**1**	**See Page H - 28.**
3	58869587	Valve Kit	1	
7		This item not used with this Assembly		
8	96706825	Bolt, Zinc Plated	2	M6 x 1.0 x 80 Cl 8.8
9	96702873	Locknut, Zinc Plated	3	M6 Cl 10
10	96741053	Flatwasher, Zinc Plated	4	M6 Cl 200
13	59249284	Speed Sensor	1	
25	13225024	Hose Assembly	1	40.0"
32	13304266	Decal: Ultra Grade	1	
36	59121855	Clamp	1	
37	96704663	Flatwasher	1	M6 Large
38	96704564	HHCS, Zinc Plated	1	M6 x 1 x 20 Cl 8.8

TRACTION CONTROL VALVE ASSEMBLY

Dwg D13188727/05

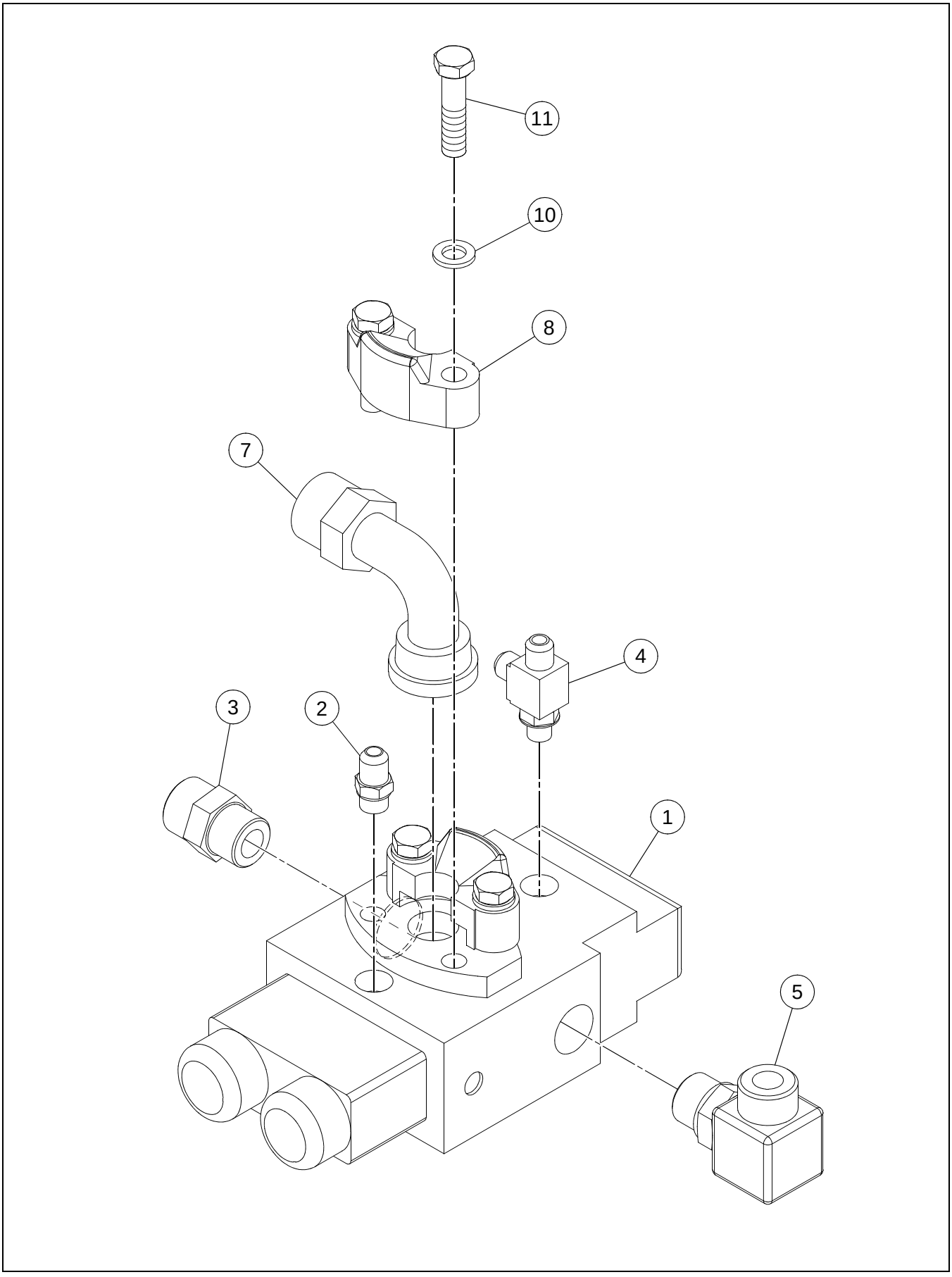

TRACTION CONTROL VALVE ASSEMBLY

BOM 13409677

ITEM	COMM. NO.	DESCRIPTION	QTY	DIMENSIONS/NOTES
1	13165659	Traction Control Valve	1	
-	13263934	- Solenoid	2	
2	95365078	Adapter	1	
3	59922591	Adapter	1	
4	95188710	Tee, Run	1	
5	59922971	Fitting	1	
7		This Item Not Used With This Assembly		
8	58901653	Split Flange Clamp	2	
10	95922381	Flatwasher, Zinc Plated	4	7/16
11	95919460	HHCS	4	7/16 x 14 x 1.75 Grd 8

LOOP FLUSHING VALVE ASSEMBLY

Dwg D13188693/00

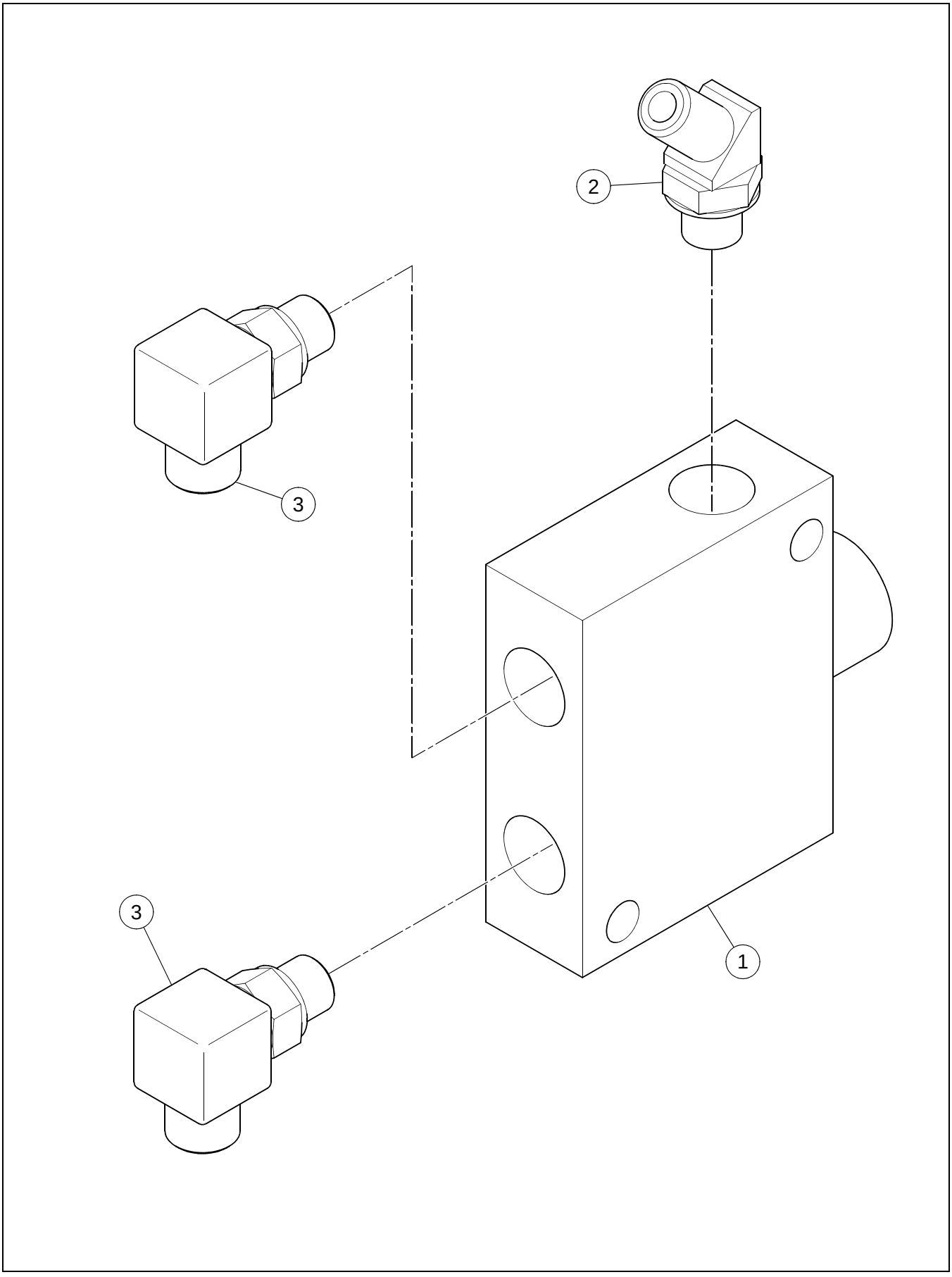

LOOP FLUSHING VALVE ASSEMBLY

BOM 13187000

ITEM	COMM. NO.	DESCRIPTION	QTY	DIMENSIONS/NOTES
1	**59077602**	**Loop Flushing Valve**	**1**	**See Breakdown H - 32.**
2	95866687	Adapter	1	
3	59922864	Adapter 90°	2	

LOOP FLUSHING VALVE (59077602) - INTERNAL BREAKDOWN

Dwg D13303318/00

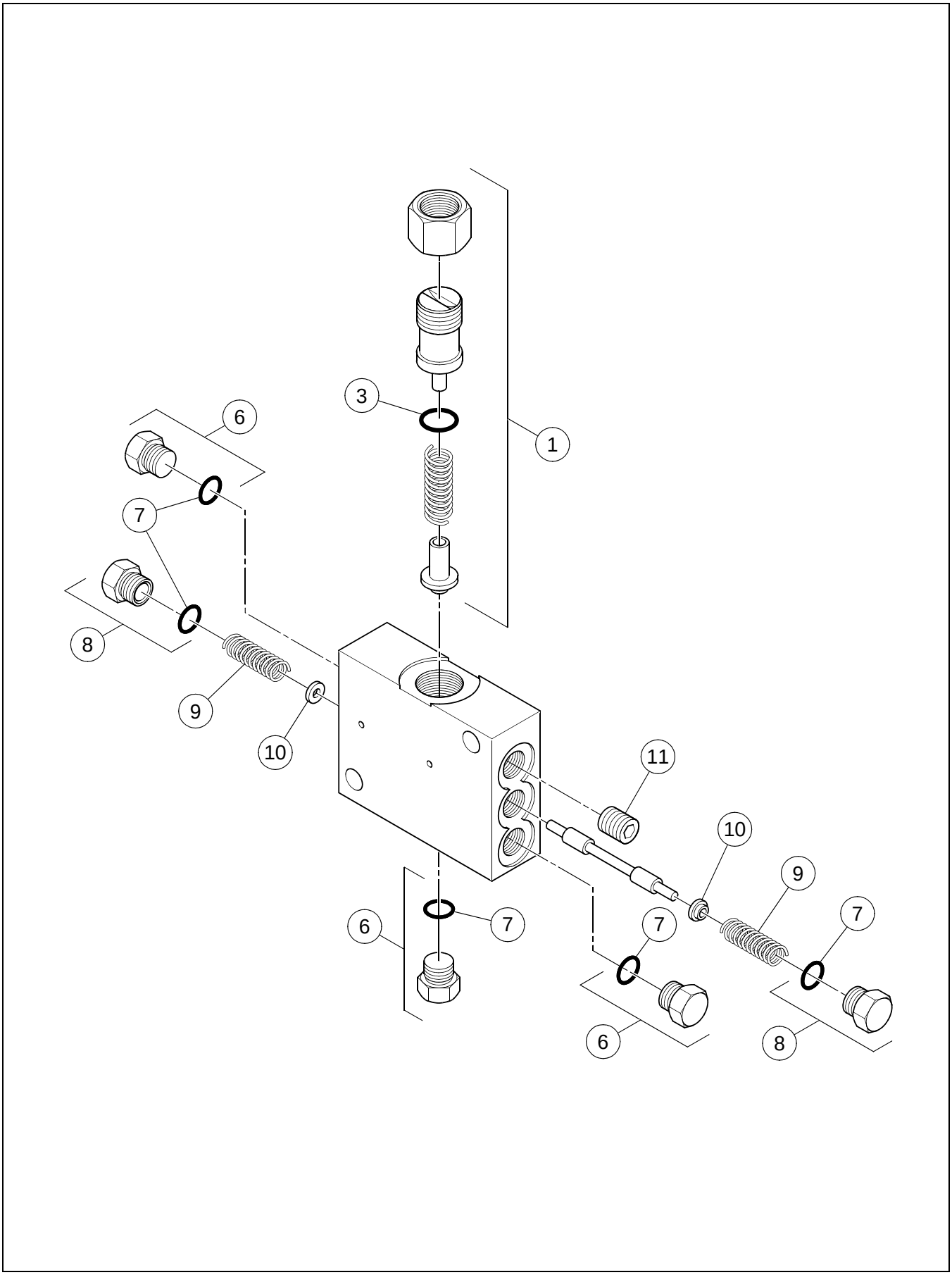

LOOP FLUSHING VALVE (59077602) - INTERNAL BREAKDOWN

BOM 59077602

ITEM	COMM. NO.	DESCRIPTION	QTY	DIMENSIONS/NOTES
1	59040923	Relief Valve Kit	1	
3	50278019	O-ring	1	
6	59933622	Plug (Includes one item 7)	3	
7	59698811	- O-ring	5	
8	58799784	Special Plug	2	
9	58799768	Spring	2	
10	58799750	Spring Guide	2	
11	59102913	Orifice Plug	1	

HOSE COVER INSTALLATION - OPTIONAL

Dwg D13233382/01

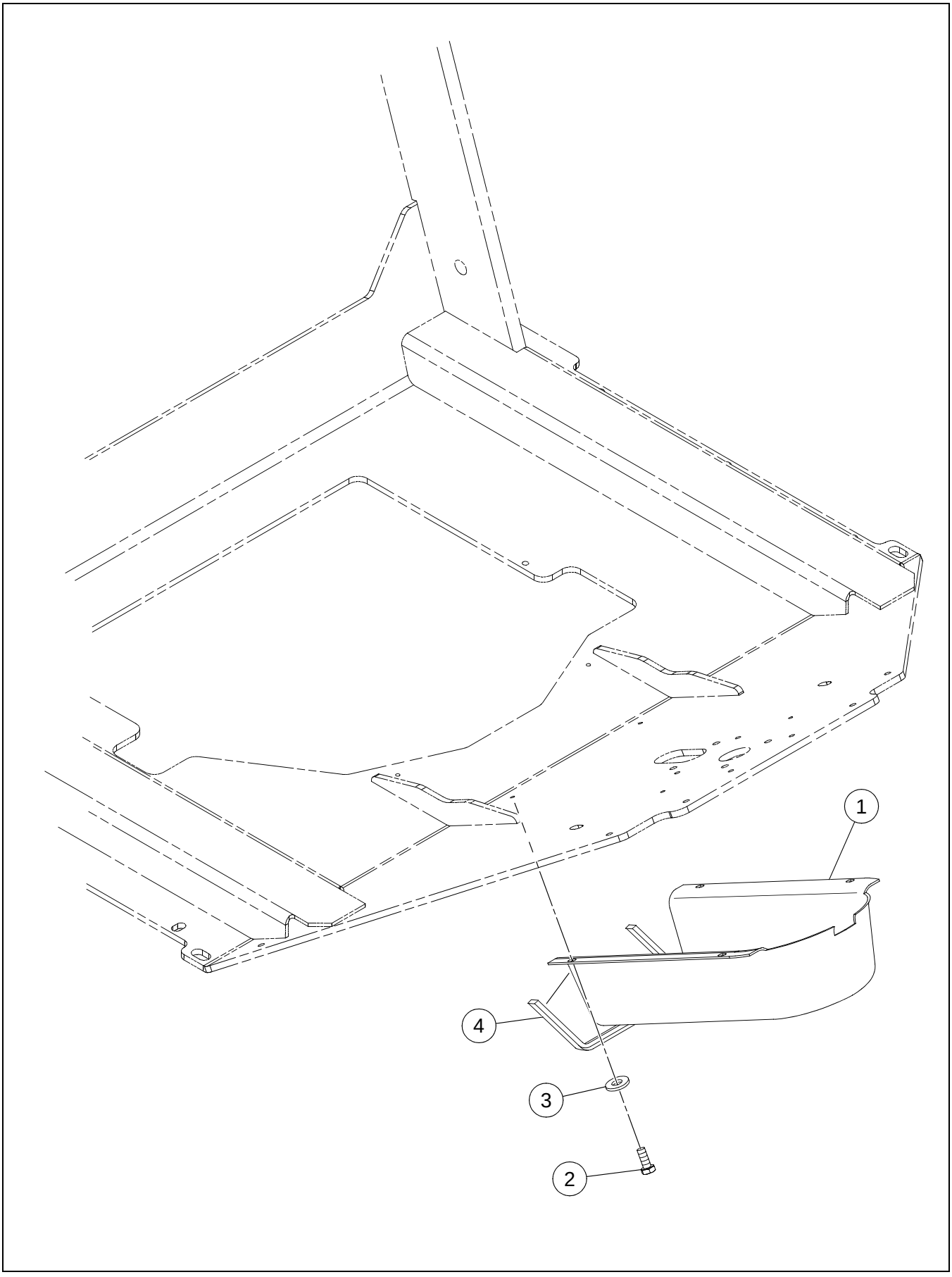

HOSE COVER INSTALLATION - OPTIONAL

BOM 13224027

ITEM	COMM. NO.	DESCRIPTION	QTY	DIMENSIONS/NOTES
1	13188669	Hose Cover	1	
2	96702824	HHCS, Fully Threaded, Zinc Plated	4	M8 x 1.25 x 20 Cl 8.8
3	96741038	Flatwasher	4	M8 x 1.25 Cl 200
4	50829654	Trim	2	

LEVELING BLADE INSTALLATION - EFFECTIVE WITH S/N 176885 - SHEET 1 OF 2 - OPTIONAL

Dwg 13389515/03/01

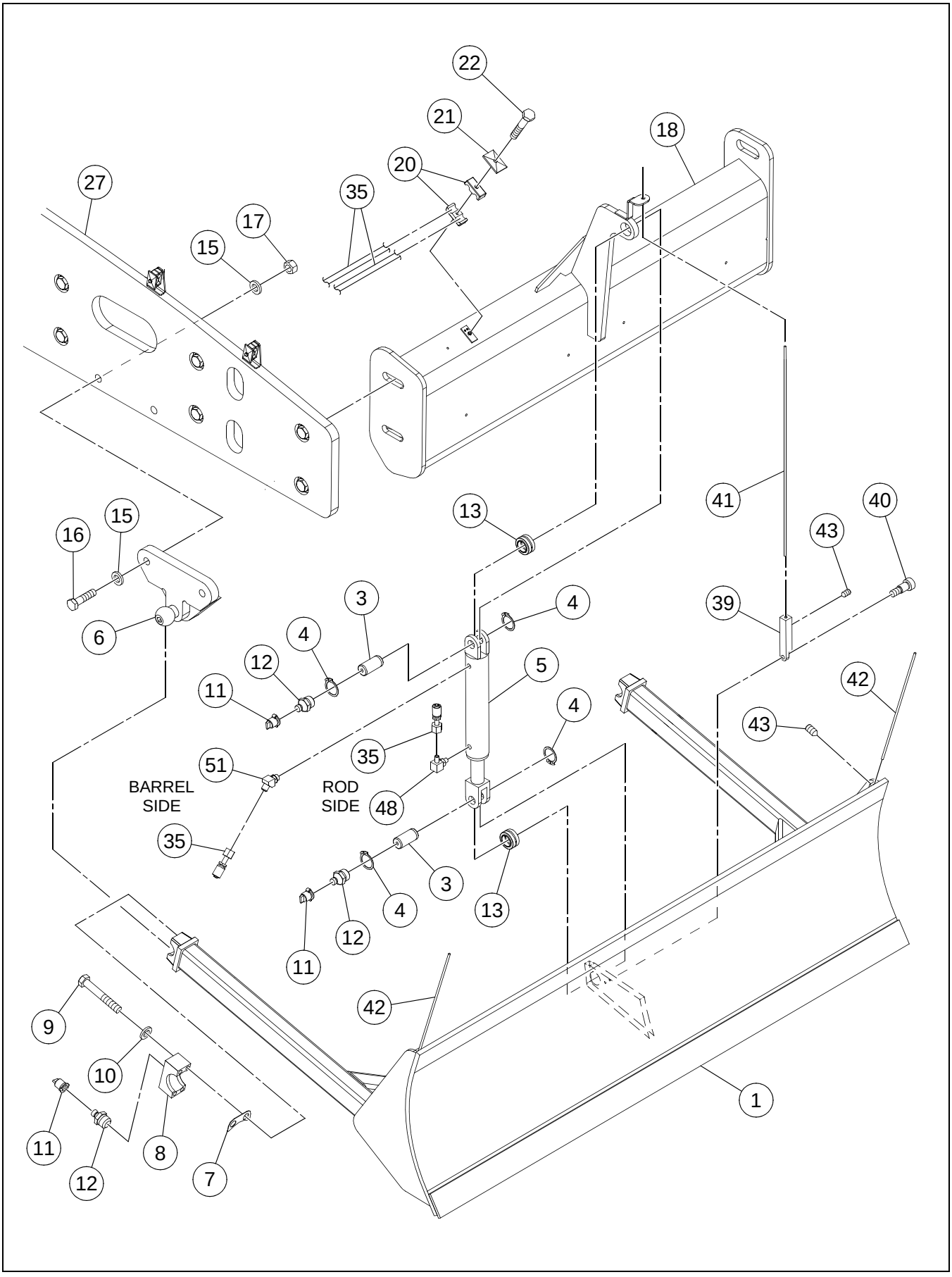

LEVELING BLADE INSTALLATION - EFFECTIVE WITH S/N 176885 - SHEET 1 OF 2 - OPTIONAL

BOM 13389515, 13831706

ITEM	COMM. NO.	DESCRIPTION	QTY	DIMENSIONS/NOTES
1	13295142	Leveling Blade	1	
3	59683805	Pivot Pin	2	
4	95223384	VPM Ring	4	
5	13515283	Leveling Blade Cylinder	1	
-	54577838	- Locknut	1	
-	13515770	- Seal Kit	1	
6	13213012	Blade Bracket	2	
7	58895079	Shim	40	
8	59631606	Cap	2	
9	95919643	HHCS, Zinc Plated	8	1/2 x 13 x 3.25 Grd 8
10	59673137	Washer	8	
11	50270248	Cap	4	
12	95201547	Fitting	4	
13	50273986	Bearing	2	
15	96701578	Flatwasher, Zinc Plated	8	M30 Hardened
16	96713987	HHCS, Zinc Plated	4	M30 x 3.5 x 130 Cl 10.9
17	96703699	Hex Nut, Zinc Plated	4	M30 x 3.5 Cl 10
18	13388582	Scraper Blade	1	
20	59587014	Insert Clamp	10	
21	59583500	Cover PLate	5	
22	96705553	HHCS, Zinc Plated	2	M8 x 1.25 x 45 Cl 8.8
27	13295886	Front Frame	1	
35	13255997	Hose Assembly	2	194.0"
39	13294756	Mounting Block	1	
40	96739388	Bolt	1	1.5 Cl 12.9
41	13294806	Reflective Marker	1	
42	13296231	Reflective Marker	2	
43	96708722	Screw	6	Cl 45H
48	95329975	Adapter, 90°	1	
51	95363339	Elbow, 45°	1	

LEVELING BLADE INSTALLATION - EFFECTIVE WITH S/N 176885 - SHEET 2 OF 2 - OPTIONAL

Dwg 13389515/03/02

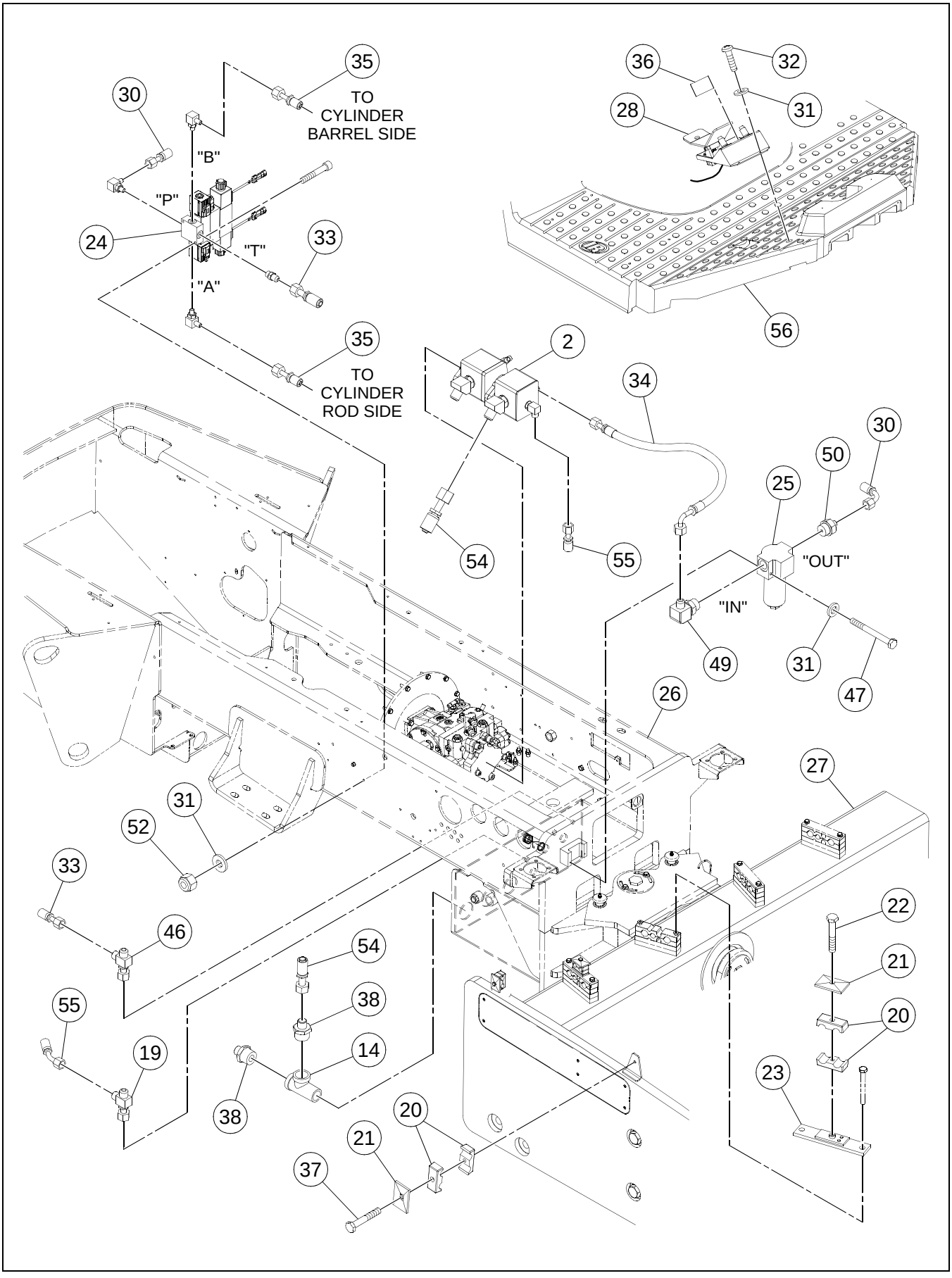

LEVELING BLADE INSTALLATION - EFFECTIVE WITH S/N 176885 - SHEET 2 OF 2 - OPTIONAL

BOM 13389515, 13831706

ITEM	COMM. NO.	DESCRIPTION	QTY	DIMENSIONS/NOTES
2	**NSVA**	**Leveling Blade Pump Assembly**	**1**	**See Page H - 40.**
14	95280087	Tee	1	
19	95416731	Swivel Tee	1	
20	59587014	Insert Clamp	10	
21	59583500	Cover PLate	5	
22	96705553	HHCS, Zinc Plated	2	M8 x 1.25 x 45 Cl 8.8
23	13238969	Cover Plate	1	
24	NSS	Leveling Blade Valve Assembly	1	
-	13293923	- Directional Valve	1	
-	13293402	- Meter Valve	1	
-	13254776	- Side Ported Subplate	1	
-	13277710	- Flow Valve	1	
-	95329975	- Adapter, 90°	3	
-	95365078	- Adapter, Straight	1	
-	96708987	- SHCS	1	M6 x 35 Cl 10.9
25	13254784	Pressure Filter	1	
-	13461645	- Pressure Filter Element	1	
26	13504865	Rear Frame	1	
27	13295886	Front Frame	1	
28	**NSVA**	**Foot Pedal Assembly**	**1**	**See Page H - 48.**
29	13289871	Blade Control Wire Harness (Not Shown)	1	
30	13199104	Hose Assembly	1	51.0"
31	96741053	Flatwasher, Zinc Plated	8	M6 Cl 200
32	54487517	Tapping Screw	4	14 x 1
33	13289913	Hose Assembly	1	41.0"
34	59007955	Hose Assembly	1	16.5"
35	13255997	Hose Assembly	2	194.0"
36	13340096	Decal: Blade Control	1	
37	96728142	HHCS, Zinc Plated	3	M8 x 1.25 x 55 Cl 10.9
38	95279337	Adapter	2	
45	58820168	Wire Tie (Not Shown)	A/R	
46	95415667	Swivel Tee	1	
47	96704887	HHCS, Fully Threaded, Zinc Plated	2	M6 x 60 Cl 8.8
49	95330692	Adapter, 90°	1	
50	59328575	Adapter	1	
52	96704598	Hex Locknut, Zinc Plated	2	M6 Cl 8
54	59845594	Hose Assembly	1	25.0"
55	54537097	Hose Assembly	1	33.0”
56	13887039	Operators Platform	1	

LEVELING BLADE PUMP ASSEMBLY

Dwg 13234299/06

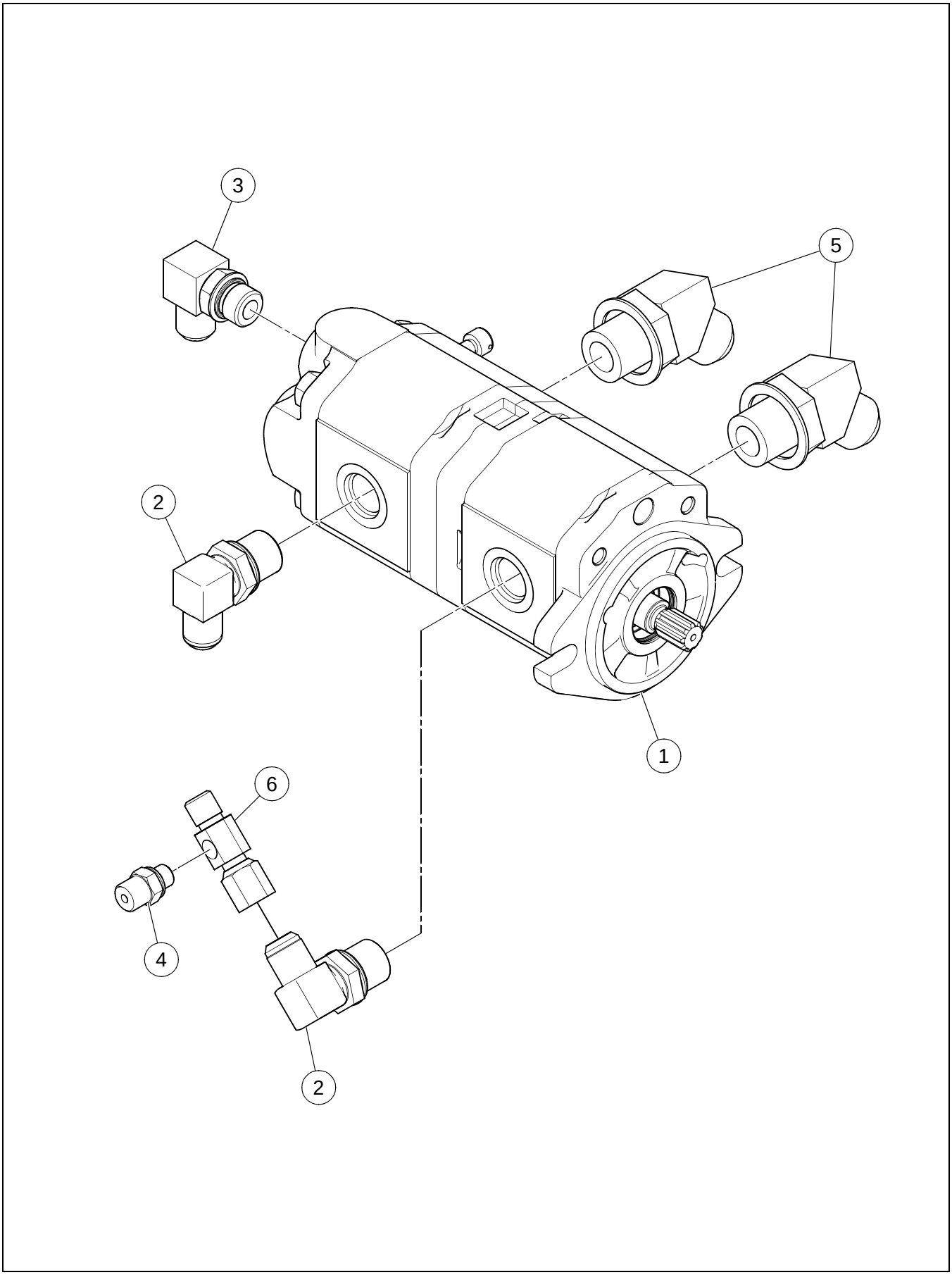

LEVELING BLADE PUMP ASSEMBLY

BOM 13234299

ITEM	COMM. NO.	DESCRIPTION	QTY	DIMENSIONS/NOTES
1	13205497	Pump	1	
-	13461033	- Seal Kit	1	
2	95303350	Adapter	2	
3	95303335	Elbow	1	
4		This Item Not Used With This Assembly		
5	95359410	Elbow, 45°	2	
6	13208004	Adapter	1	

STRIKE-OFF BLADE INSTALLATION - PRIOR TO S/N 176885
- SHEET 1 OF 2 - OPTIONAL

Dwg D13320973/03/01

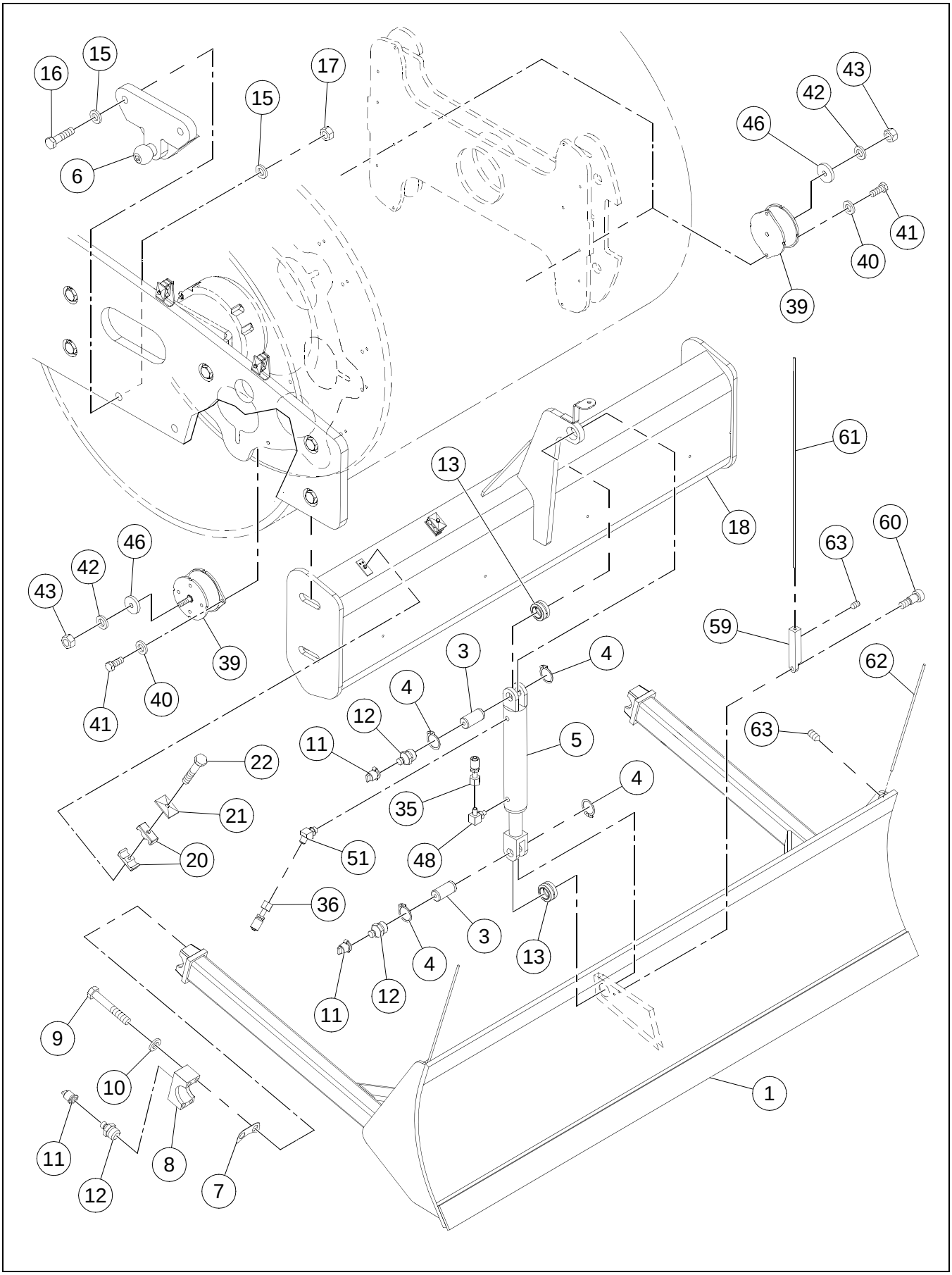

STRIKE-OFF BLADE INSTALLATION - PRIOR TO S/N 176885
- SHEET 1 OF 2 - OPTIONAL

BOM 13176151

ITEM	COMM. NO.	DESCRIPTION	QTY	DIMENSIONS/NOTES
1	13295142	Strike-Off-Blade	1	
3	59683805	Pivot Pin	2	
4	95223384	VPM Ring	4	
5	59195008	Strike-Off Blade Cylinder	1	
-	59725051	- Nut	1	
-	59221309	- Seal Kit	1	
6	13213012	Blade Bracket	2	
7	58895079	Shim	40	
8	59631606	Cap	2	
9	95919643	HHCS, Zinc Plated	8	1/2 x 13 x 3.25 Grd 8
10	59673137	Washer	8	
11	50270248	Cap	4	
12	95201547	Fitting	4	
13	50273986	Bearing	2	
15	96701578	Flatwasher, Zinc Plated	8	M30 Hardened
16	96713987	HHCS, Zinc Plated	4	M30 x 3.5 x 130 Cl 10.9
17	96703699	Hex Nut, Zinc Plated	4	M30 x 3.5 Cl 10
18	13388582	Scraper Blade	1	
20	59587014	Insert Clamp	16	
21	96738596	Flatwasher, Zinc Plated	8	M12 Hardened Cl 200
22	96705553	HHCS, Zinc Plated	4	M8 x 1.25 x 45 Cl 8.8
35	13255997	Hose Assembly	1	194.0"
36		This Item Not Used With This Assembly		
39	13304787	Shock Mount	2	
40	96738596	Flatwasher, Zinc Plated	4	M12 Hardened Cl 200
41	96702790	HHCS, Fully Threaded, Zinc Plated	4	M12 x 1.75 x 25 Cl 10.9
42	59565044	Washer	2	3/4 Hardened
43	96703657	Nut, Zinc Plated	2	M16 Cl 10
46	13351408	Washer	2	
48	95329975	Adapter	4	
51	95363339	Elbow, 45°	1	
59	13294756	Mounting Block	1	
60	96739388	Bolt	1	1.5 Cl 12.9
61	13294806	Reflective Marker	1	
62	13296231	Reflective Marker	2	
63	96708722	Screw	6	Cl 45H

STRIKE-OFF BLADE INSTALLATION - PRIOR TO S/N 176885 - SHEET 2 OF 2 - OPTIONAL

Dwg D13320973/03/02

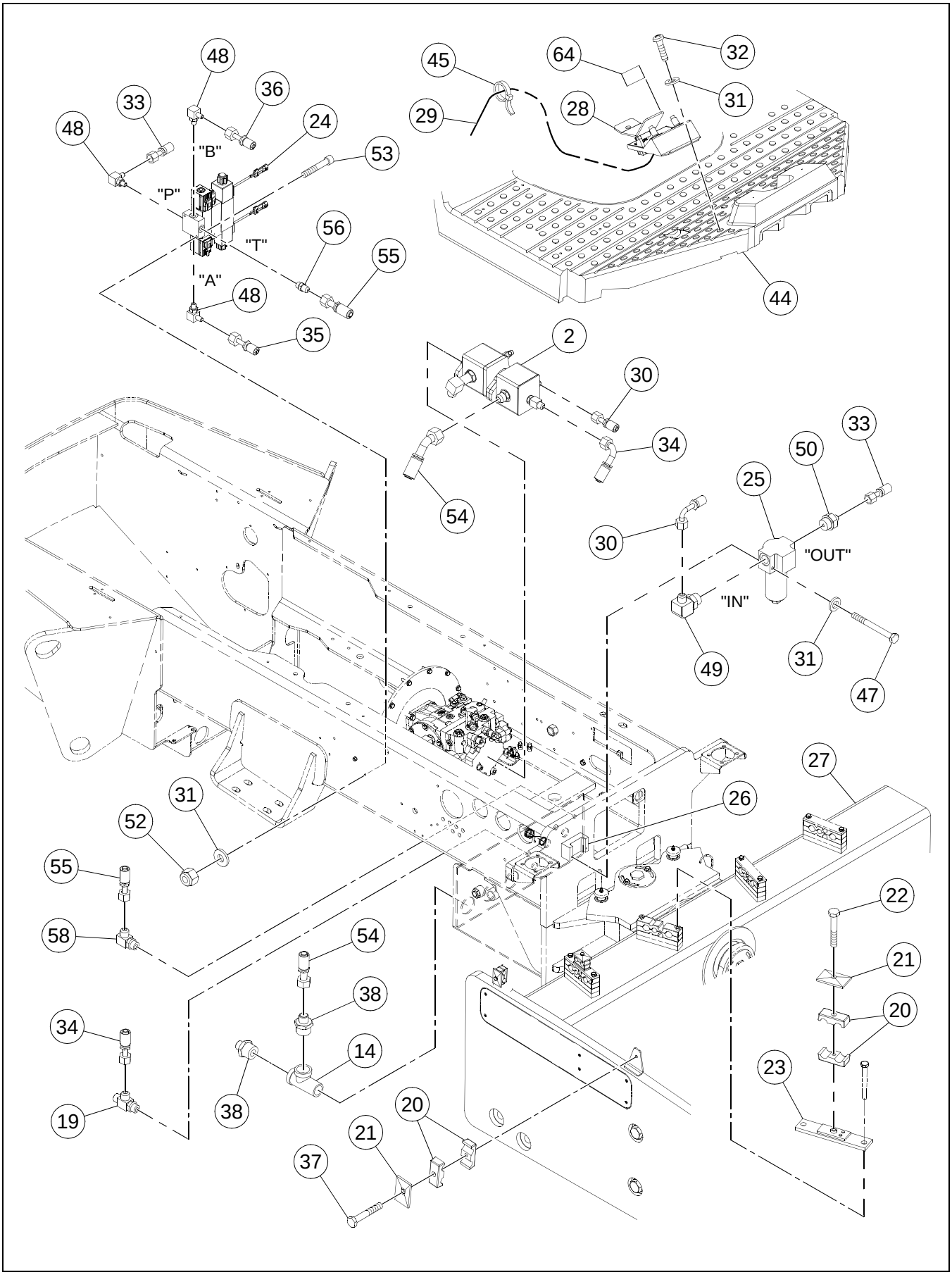

STRIKE-OFF BLADE INSTALLATION - PRIOR TO S/N 176885
- SHEET 2 OF 2 - OPTIONAL

BOM 13176151

ITEM	COMM. NO.	DESCRIPTION	QTY	DIMENSIONS/NOTES
2	**NSVA**	**Strike-Off Blade Pump Assembly**	**1**	**See Page H - 46.**
14	95280087	Tee	1	
19	95488250	Tee	1	
20	59587014	Insert Clamp	16	
21	96738596	Flatwasher, Zinc Plated	8	M12 Hardened Cl 200
22	96705553	HHCS, Zinc Plated	4	M8 x 1.25 x 45 Cl 8.8
23	13238969	Cover Plate	2	
24	NSS	Strike-Off Blade Valve Assembly	1	
-	13293923	- Directional Valve	1	
-	13293402	- Meter Valve	1	
-	13254776	- Side Ported Subplate	1	
-	13277710	- Flow Valve	1	
25	13254784	Pressure Filter	1	
-	13461645	- Pressure Filter Element	1	
26	13293626	Filter Mount	1	
27	13295886	Front Frame	1	
28	**NSVA**	**Foot Pedal Assembly**	**1**	**See Page H - 48.**
29	13289871	Blade Control Wire Harness	1	
30	13199104	Hose Assembly	1	51.0"
31	96741053	Flatwasher, Zinc Plated	6	M6 Cl 200
32	54487517	Tapping Screw	4	14 x 1
33	13289913	Hose Assembly	1	41.0"
34	59007955	Hose Assembly	1	16.5"
35	13255997	Hose Assembly	1	194.0"
36		This Item Not Used With This Assembly		
37	96728142	HHCS, Zinc Plated	3	M8 x 1.25 x 55 Cl 10.9
38	95279337	Adapter	2	
44	13273313	Operators Platform	1	
45	58820168	Wire Tie	A/R	
47	96704887	HHCS, Fully Threaded, Zinc Plated	2	M6 x 60 Cl 8.8
48	95329975	Adapter	4	
49	95330692	Adapter, 90°	1	
50	59328575	Adapter	1	
52	95923199	Locknut, Zinc Plated	2	1/4 x 20
53	95067658	SHCS	2	1/4 x 20 x 1.5
54	59845594	Hose Assembly	1	25.0"
55	13204342	Hose Assembly	1	36.0"
56	95365078	Adapter	1	
58	95415667	Swivel Tee	1	
64	13340096	Decal: Blade Control	1	

STRIKE-OFF BLADE PUMP ASSEMBLY

Dwg 13224050/04

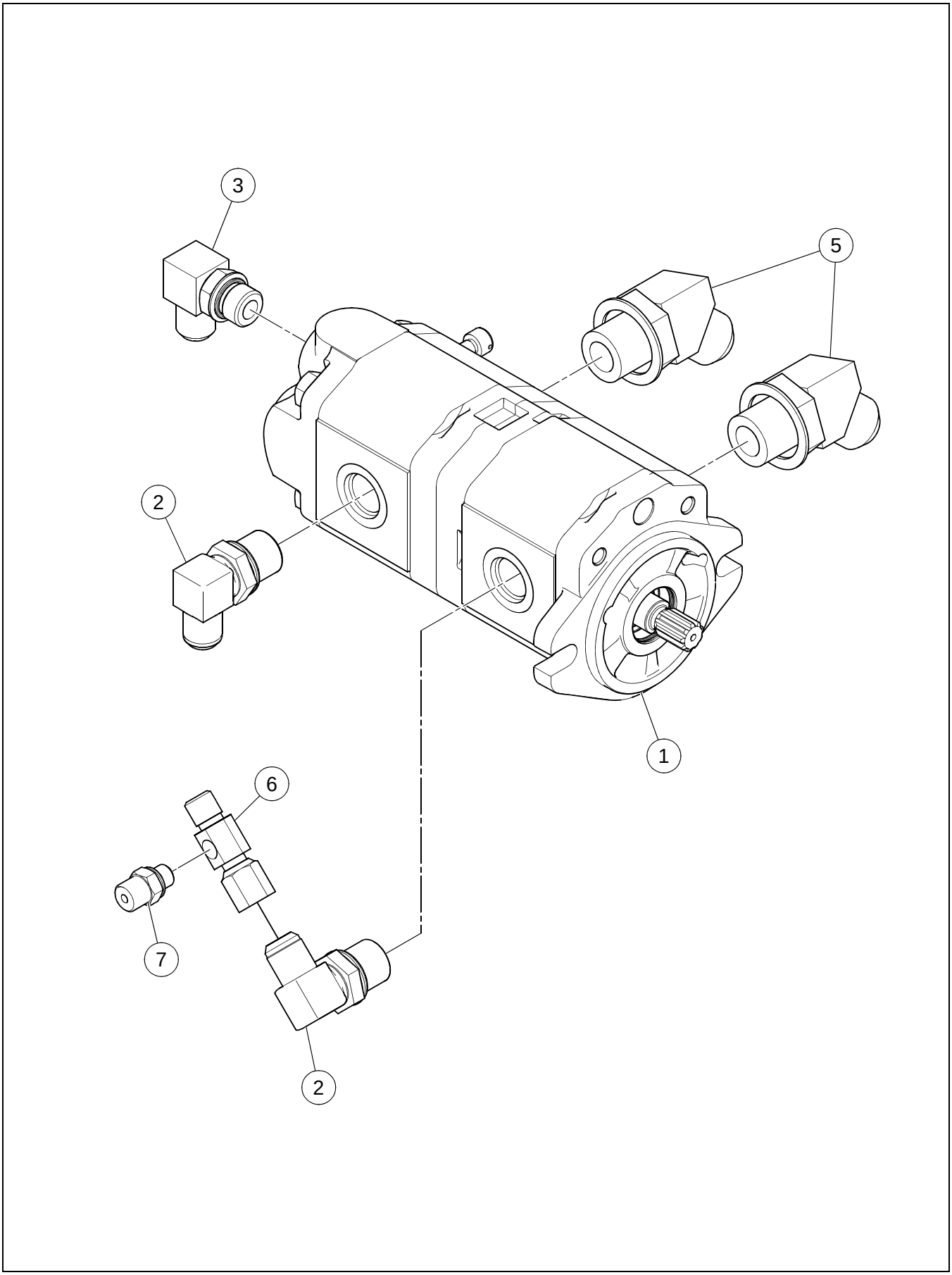

STRIKE-OFF BLADE PUMP ASSEMBLY

BOM 13224050

ITEM	COMM. NO.	DESCRIPTION	QTY	DIMENSIONS/NOTES
1	13205497	Pump	1	
-	13461033	- Seal Kit	1	
2	95303350	Adapter	2	
3	95303335	Elbow	1	
5	95359410	Elbow, 45°	2	
6	13208004	Adapter	1	
7	59929182	Adapter, Straight	1	

FOOT PEDAL ASSEMBLY

Dwg 13271440/01

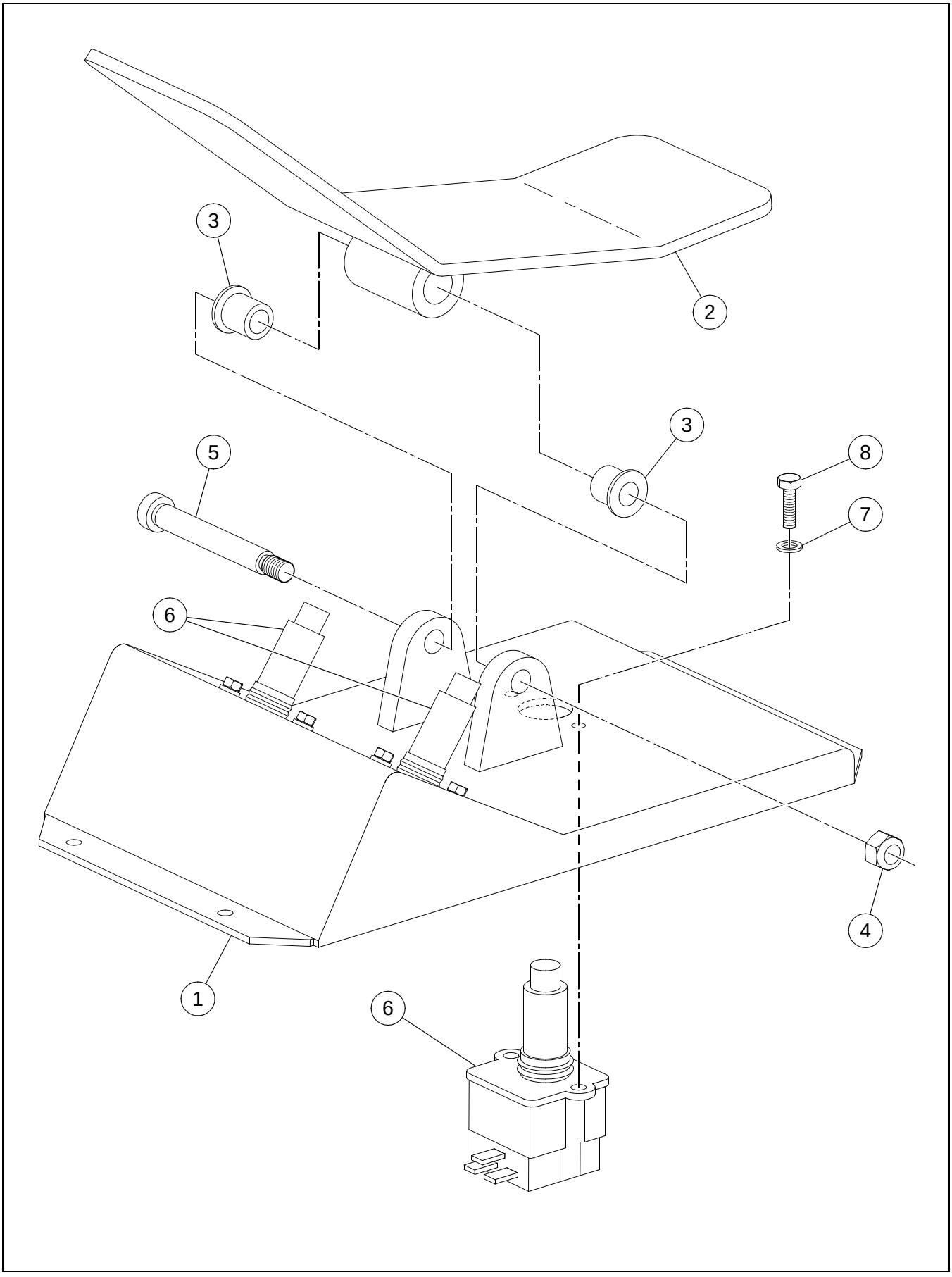

FOOT PEDAL ASSEMBLY

BOM 13271440

ITEM	COMM. NO.	DESCRIPTION	QTY	DIMENSIONS/NOTES
1	13271903	Foot Pedal Mount	1	
2	13271762	Foot Pedal	1	
3	58920216	Flanged Bushing	2	
4	95923314	Locknut	1	5/16 x 18 UNJC
5	95944260	Bolt	1	
6	58788852	Dump Switch	3	
7	96741053	Flatwasher, Zinc Plated	6	M6 Cl 200
8	96701958	HHCS, Fully Threaded, Zinc Plated	6	M6 x 16 Cl 8.8

Always use Manufacturer Replacement parts!*

HOW TO USE THIS INDEX

When the Description is Known - Use the Word Index:

- Volvo's Word Index makes **any** item easy to locate.
- Use any of the **functional** words in the item description to locate the desired item. The items listed are in alphabetical order in the first column of the index and may be **repeated** several times depending on their **functional descriptions**.

> If searching for the *Air Cleaner Primary Filter Element*, the first listing in the **Word Index** is:
>
> *Air Cleaner Primary Filter Element*
>
> The item is also listed as:
>
> *Element, Air Cleaner Primary Filter*
> *Filter Element, Air Cleaner Primary*
> *Primary Filter Element, Air Cleaner*

- The alpha-numeric listing in the second column of the index is the location of the item in the manual. The location is identified as; the **Functional Group, Section Number**, and **Parts List Page Number**. Example: C-5 would be Functional Group C, Page 5.

> The index shows the filter will be found on page C-5 which is the **Parts List** page number for the
>
> *Engine Assembly*

Always use Manufacturer Replacement parts!

WORD INDEX

A

Adhesive A-67, A-117
Adjuster - Latcher W/Handle A-211, D-17
Adjuster A-211, D-17
Adjustment Arm A-77, A-131, A-185
Adjustment Rail D-19, D-23
Adjustment Spindle D-23
Air Cleaner C-5
Air Cleaner Bracket C-7
Air Cleaner Primary Filter Element C-5
Air Cleaner Restriction Indicator Switch E-25
Air Cleaner Safety Filter Element C-5
Air Conditioner On/Off Switch . . . A-69, A-123, A-177
Air Filter A-45, A-69, A-95, A-123, A-153, A-177
Air Intake Bellows C-5
Air Intake Hose C-5
Air Precleaner A-223
Air Pre-cleaner C-41
Air Pre-cleaner Stack C-41
Air Recirculation Filter A-45, A-69, A-95, A-123, A-153, A-177
Air Recirculation Filter Assembly . . A-45, A-69, A-95, A-123, A-153, A-177
Air Valve A-15
Airduct A-21, A-221, A-231, C-45
Airscreen A-21, A-221, A-231, C-45
Alternator C-5, C-7
Amber Reflector E-55, E-57
Angle Hood Spring A-17
Angular Contact Bearing B-45
ARC - Axle A-3
ARC - Axle Drive Motor A-3
ARC - Drum Drive Motor w/Brake B-23
ARC - Propulsion Pump C-9, C-11
ARC - Vibration Motor B-5
ARC - Vibration Pump C-11, E-35
ARC Starter C-5
Arm Rest D-19
Arm Rest Assembly A-211, D-17
Arm Wiper A-145, A-169
Arm Wiper Rear A-63
Articulation Lockpin B-3
Articulation/Oscillation Pin B-3
Atomizer Kit C-49
Audible Alarm E-19
Audible Alarm Jumper Harness E-19, E-21
Audible Alarm Main Wire Harness E-19, E-21
Audible Alarm Wire Harness E-19, E-21
Auto Vibration Switch E-33
Auto/Manual Module Wire Harness E-33
Auto/Manual Vibration Selector Wire Harness . . E-33
Auto/Manual Vibration Switch/Wire Harness Assembly E-33
Axle A-3
Axle Drive Motor A-3

B

Back Plate B-27
Back Up Plate B-19
Back Up Ring A-11
Backrest D-21
Backrest Cushion D-19, D-21
Backup Alarm E-9
Backup Ring C-19, C-27, E-37
Back-up Ring C-23, C-31, E-41
Baffle Plate C-37
Baffle Wiper A-17
Ball Bearing B-13, C-19, C-23, C-27, C-31, E-37, E-41
Bar Antenna E-77
Battery E-17
Battery Box B-29, B-45
Battery Holddown E-17
Battery Master Switch E-17
Beacon Light Bulb E-29
Beacon Light Switch A-145, A-169
Beacon Light Wire Harness E-29
Bearing Housing Drive B-5
Bearing Housing Spindle B-5
Bearing Kit D-19
Beige Paint G-5, G-13
Bellows D-15, D-23
Belt B-33
Bevel Gear Set A-7
Blade Bracket H-37, H-43
Blade Control Wire Harness H-39, H-45
Blank Plug A-91, A-107
Blank Switch A-151, A-175
Block Heater C-47
Block Valve A-75, A-129, A-183
Blower Wheel A-49, A-75, A-99, A-129, A-157, A-183
Blower, 12V . A-49, A-75, A-99, A-129, A-157, A-183
Bolt-On Shell B-51, B-55
Bolt-On Shell Scraper Assembly - SD-70D - Optional B-51
Boot A-211, D-17
Bottom Duct Hose . . A-45, A-69, A-95, A-123, A-153, A-177
Bottom Dust Boot D-9
Bottom Fresh Air Duct Hose A-45, A-69, A-95, A-123, A-153, A-177
Bowl C-41
Brake Lamp E-59, E-61
Brake Piston B-25, B-27
Brake Release Valve H-21
Brake Test Switch D-31
Brake/Shunt and Tow Valve Assembly B-45
Brake/Shunt Two Speed Valve Assembly B-49
Brake/Shunt Two-Speed Manifold B-37
Brake/Shunt Two-Speed Manifold Assembly . . B-29
Breather Filtered Vent B-11, B-31, B-47
Bulb A-143, A-145, A-167, A-169, E-51
Bulk Hose A-71, A-125, A-179
Bulk Trim B-45

Bulkhead Fitting H-23
Bumper Set D-15

C

Cab Assembly A-43, A-53, A-91, A-93, A-107, A-109, A-141, A-165
Cab Bracket A-81, A-135
Cab Door A-143, A-167
Cab Door Key A-113
Cab Glass Assembly - Light Tint A-111, A-115
Cab Glass Assembly A-111, A-113, A-115
Cab Heater And A/C Assembly - Optional A-107
Cab Heater And A/C Wire Harness A-107
Cab Heater and A/C Wire Harness A-73, A-127, A-181
Cab Heater And Air Conditioning Assembly A-53
Cab Heater Assembly - Optional A-91
Cab Heater Assembly A-43, A-87, A-151, A-175
Cab Heating And Air Conditioning Harness . . A-151, A-175
Cab Key A-147, A-171
Cab Latch Bracket, LH A-149, A-173
Cab Latch Bracket, RH A-149, A-173
Cab Wire Harness A-67, . A-91, A-117, A-145, A-169
Cab with Heat and Air Conditioning Assembly . A-163
Cab with Heater Assembly A-139
Cab/Hood Draw Latch Installation A-43, A-53, A-141, A-165
Cable A-201, A-203, B-3, E-47
Cable Mounting Bracket C-9
Cable Seal C-49
Cable Sensor E-47
Cable Sleeve B-3
Cacl 35% A-15
Cam B-25, B-27
Carrier Assembly B-5
Carrier Gear Kit A-9
Carrier Plate B-11
Catch Recess A-143, A-147, A-167, A-171
Center Headliner A-117
Charge Filter H-15
Charge Filter Element H-15
Charge Pressure Filter H-17
Charge Pressure Filter Element H-17
Charge Pump Cover Assembly C-15
Charge Pump Shaft C-15
Charge Relief Plug Assembly C-15
Charge Relief Valve C-23, C-31, E-41
Charge Relief Valve Kit C-13
Charge Valve Spring C-23, C-31, E-41
Chassis Harness E-3
Check Valve Kit C-23, C-31, E-41
Checklist Decal A-29, A-191
Circlip A-5, A-9
Clamp Plate B-3
Clip C-5
Clip Ring B-5
CMV Dial E-47
Coil Cover . . A-49, A-75, A-99, A-129, A-157, A-183
Compactometer Assembly E-45
Compactometer Kit E-45
Compactometer Wire Harness E-45
Complete Bearing B-25, B-27
Complete Valving Cover B-25, B-27
Compression Spring A-11, A-147, A-171
Compression Switch A-211, D-17
Compressor A-77, A-131, A-185
Compressor Assembly A-71, A-125, A-179
Compressor Belt A-71, A-125, A-179
Compressor Pulley A-71, A-125, A-179
Condensor A-79, A-133, A-187
Condensor Assembly A-73, A-127, A-181
Condensor Bracket, LH A-79, A-133, A-187
Condensor Bracket, RH A-79, A-133, A-187
Connecting Rod A-147, A-171
Connection Stud B-19
Connector Hose . . . A-45, A-69, A-95, A-123, A-153, A-177
Control - Complete B-19
Control Assembly C-13
Control Bushing B-19
Control Console Assembly D-3
Control Filter Screen C-13
Control Panel . A-43, A-53, A-87, A-91, A-107, A-151, A-175
Control Panel Plug A-45, A-95, A-153
Control Piston B-19
Coolant Hose #1 . . A-71, A-73, A-125, A-127, A-179, A-181
Coolant Hose #2 . . . . . A-73, A-127, A-181
Coolant Hose #3 . . . . . A-73, A-127, A-181
Coolant Hose #4 . . . . . A-71, A-125, A-179
Coolant Recovery Bottle C-35
Coolant Recovery Bottle Cap C-35
Cord C-47
Coupler B-21
Cover Assembly C-41
Cover Plate. D-3
Cowling Wrapper A-17
Cushion and Switch Kit A-211, D-17
Cylinder A-147, A-171, B-45
Cylinder Block B-25, B-27
Cylinder Bolt A-5, A-7, A-9
Cylindrical Bearing B-21

D

Damper Kit A-211, D-17
Dash Lights A-43, A-53, A-87, E-69, E-73
Decal Kit G-13
Decal: Biodegradable Oil G-5
Decal: Blade Control H-39, H-45
Decal: Checklist A-31
Decal: Emergency Exit A-91, A-107
Decal: First Aid A-207

Decal: Fuse E-51
Decal: Natural Frequency E-35
Decal: Refridgerant Charge A-71, A-125, A-179
Decal: Stop D-7, D-9
Decal: Tow Tag H-19
Decal: Turn Signal E-53
Decal: Ultra Grade H-27
Decal: Variable Frequency. E-35
Decal: Warning-Runaway Machine H-19
Deck Side Filler Strip A-63, A-65
Defrost Fan A-117
Defroster Fan A-61
Delay Timer Rework E-5, E-13
Density Meter Switch E-45
DHS Drive Hi/Low Valve H-21
Dial Pressure Gauge H-19
Differential A-7
Differential Kit. A-7
Digital Processor E-47
Directional Valve H-39, H-45
Disc A-9
Disc Brake A-9
Disk Brake Kit B-21
Domed Plug A-43, A-53, A-91, A-107, E-29
Door A-113
Door Assembly A-55
Door Bottom Glass A-55
Door Bottom Window Glass A-119
Door Bottom Window Light Tint Glass A-121
Door Exterior Latch Kit A-55, A-57
Door Frame Weatherstrip A-111
Door Front Top Glass A-55
Door Gas Shock A-113, A-115
Door Handle w/Cylinder A-147, A-171
Door Inside Latch Kit A-57
Door Latch Bell Crank A-113
Door Latch Cable A-113
Door Latch Cable Rod Coupler A-113
Door Latch Cover A-113
Door Latch Cover Mounting Plate A-57
Door Latch Handle, RH A-113
Door Latch Pivot Plate A-113
Door Latch Pivot Plate Kit A-55, A-57
Door Latch Pivot Spacer A-113
Door Latch Profile Cover A-57
Door Pane, Lower LH A-147, A-171
Door Pane, Upper LH A-147, A-171
Door Rear Top Glass A-55
Door Seal A-65, A-143, A-147, A-167, A-171
Door Shock 350 N 15.94" A-63
Door Strap A-113
Door Strap 6.5" A-55
Door Strap Metal Clamp A-113
Door Strapmetal Clamp A-55
Door Top Window Glass A-119
Door Top Window Light Tint Glass A-121
Double Break Off Pin B-19
Drain Assembly C-37
Drain Boss B-31, B-47
Drain Hose Clamp A-49, A-99, A-157
Drain Port B-35
Drain Valve . A-49, A-75, A-99, A-129, A-157, A-183
Drive Coupling C-5
Drive Enable Valve H-21
Drive Motor Mounting Bracket B-15, B-17
Drive Side Journal B-9
Drop Pane, LH A-147, A-171
Drop Pane, RH A-143, A-167
Drum Assembly B-3
Drum Drive Assembly. B-5
Drum Drive Motor B-15, B-17
Drum Drive Motor w/Brake B-23, B-69
Drum Frame B-3, E-49, E-51
Drum Motor Mounting Bracket B-23
Drum. B-5
Dryer Mounting Bracket A-73, A-127, A-181
Dryer/Binary Bracket A-73, A-127, A-181
Dual Switch Seat Kit A-211, D-17
Dump Switch H-49
Dust Ejector Valve C-5
Dust Seal B-3, B-29, B-45

E

Eccentric Assembly B-5
Eccentric Shaft B-9
EDC Valve C-29, C-33, E-39, E-43
Electrical Seal E-65, E-69, E-73
Electrical Terminal C-49
Element, Air Cleaner Primary Filter C-5
Element, Air Cleaner Safety Filter C-5
Emergency Stop Assembly D-7
Emergency Stop Switch D-9
Emergency Stop Switch Bulb D-9
Enclosed Rops A-111
End Cap Gasket B-13
Engine C-5, C-7
Engine Assembly C-3
Engine Fan C-7
Engine Mount C-3
Engine Oil Filter C-5, C-7
Engine Oil Pressure Gauge D-33
Escape Hammer A-91, A-107
Ether Bottle Bracket C-49
Ether Cylinder C-49
Evaporator Coil A-75, A-129, A-183
Exhaust Bracket C-39
Exhaust Clamp C-39
Exhaust Pipe C-39
Extension Tube C-5
Exterior Mirror A-111
Exterior Mirror Assembly A-67
Eye Bolt A-17, A-213, A-223
Eyebolt D-5

F

F Dial E-47
F/R Worklights Switch A-43, A-53, A-87, A-151, A-175, E-65, E-69
Face Seal B-21
Fan Belt C-5, C-7
Fan Guard C-35
Fender, LH A-19, A-219, A-229, C-43
Fender, RH A-19, A-219, A-229, C-43
Ferrule A-201, A-203, B-3
Filter Adapter Seal C-21, C-29, E-39
Filter Bracket H-17
Filter Door H-15, H-17
Filter Element, Air Cleaner Primary C-5
Filter Element, Air Cleaner Safety C-5
Filter Mount H-45
First Aid Strap A-207
Fixed Cover Column A-43, A-87, E-67
Flange B-31, B-47
Flange Cover B-19
Flanged Bushing H-49
Flanged Elbow A-3
Flat Flange B-31
Flow Valve H-39, H-45
Foam . A-45, A-69, A-95, A-123, A-153, A-177, A-223
Foam Seal A-49, A-99, A-157
Foam Strip A-141, A-165
Foam Tape A-31
Foamtape . . . A-45, A-69, A-95, A-123, A-153, A-177
Foot Pedal H-49
Foot Pedal Assembly H-39, H-45
Foot Pedal Mount H-49
Frequency Dial Knob E-35
Fresh Air Filter A-45, A-95, A-153
Fresh Air Filter Assembly A-69, A-123, A-177
Front Center Window Glass A-65, A-67, A-119
Front Center Window Light Tint Glass A-121
Front Frame H-37, H-39, H-45
Front Gasket . . . C-19, C-23, C-27, C-31, E-37, E-41
Front Left Side Window Glass A-119
Front Left Side Window Light Tint Glass A-121
Front Right Side Window Glass A-119
Front Right Side Window Light Tint Glass A-121
Front Window Lower Center Skirt A-65, A-67
Front Window Lower Mount A-111
Front Window Lower Side Skirt A-67
Front Window Lower Skirt A-111
Front Wiper Arm A-115
Front Wiper Arm-22""Pano A-67
Front Wiper Blade A-115
Front Wiper Blade -28"" A-67
Front Wiper Cover A-61
Front Wiper Cover Headliner A-117
Front Wiper Switch . A-43, A-53, A-91, A-107, A-151, A-175
Front/Rear Worklights Switch E-73
FSR Control Box D-7
F-Stop-R Cable D-7
F-Stop-R Control D-7
F-Stop-R Control Switch D-7
Fuel Level Sender B-35
Fuel Strainer B-71
Fuel Tank B-35
Fuel Tank Assembly B-33
Fuel Tank Installation B-29, B-45
Fuel Throttle Solenoid C-7
Fuse Block Assembly E-13
Fuse Block/Wire Harness E-15
Fuse Cover D-11
Fuse Cover Assembly D-3
Fuse Cover Plate E-15
Fuse Mounting Plate E-15

G

Gas Shock Ball Mount A-63, A-113
Gasket Cover A-13
Gasket End Cap A-11
Gauge Dial Pressure B-49
Gauge Light Wire Harness D-33, E-31, E-33
Gauge Panel Assembly D-25, D-27, D-29
Gauge Wire Harness D-33, E-23
Gear Ring A-9
Gerotor Assembly C-21, C-29, E-39
GPS Mobile Net Wire Harness E-77
Grill A-19, A-219, A-229, C-43
Grill Support Bar A-19, A-219, A-229, C-43
Grooved Headless Pin B-43
Ground Cable E-17
Ground Jumper Cable E-17
Guide Spring C-25, C-33, E-43

H

Hair Pin Clip B-43
Half Shaft A-9
Hand Pump B-49, H-19
Handle D-15, D-23
Handle Plastic Pull A-41, A-105
Handrail D-3
Hanger Kit A-25, A-217, A-227
Hardened Washer H-3
Harness Bracket E-51
Harness Cab And Hvac A-43, A-53, A-87
Hazard Warning Switch E-53
Head Plug A-41, A-105
Headliner - Center Pc W/Tri A-61
Heater A-45, A-47, A-95, A-97, A-153, A-155
Heater Coil . A-49, A-75, A-99, A-129, A-157, A-183
Heater Control Panel A-45, A-95, A-153
Heater Hose A-47, A-97, A-155
Heater Hose Assembly A-49, A-75, A-99, A-129, A-157, A-183
Heater Valve . A-47, A-51, A-71, A-97, A-101, A-125, A-155, A-159, A-179, A-189
Heater/AC Control Panel A-69, A-123, A-177

Heater/Evaporator/AC A-69, A-71, A-123, A-125, A-177, A-179
Hi/Low Amp Switch D-31
Hi/Low RPM Switch D-31
Hi/Low Travel Switch D-31
Hinge Joint A-143, A-147, A-167, A-171
Hinge Plate A-21, A-221, A-231, C-45
Hinge Supt A-21, A-221, A-231, C-45
Hinge, LH A-17
Hinge, RH A-17
Hitch Pin B-3
Hood Assembly A-17, A-25, A-217, A-227, C-41
Hood Bracket A-37, A-39, A-81, A-89, A-103, A-135, A-161, A-195
Hood Cab Draw Latch Installation A-93, A-109
Hood Cowling A-17
Hood Draw Latch Installation A-31
Hood Handle A-21, A-221, A-231, C-45
Hood Handle A-17
Hood Latch Bracket, LH A-149, A-173
Hood Latch Bracket, RH A-149, A-173
Hood Sound Spikes Pre-Cleaner A-225
Hood Supt Bottom A-21, A-221, A-231, C-45
Hood w/Foam And Pre-cleaner Assembly A-223
Hood w/Pre-Cleaner A-227, C-41
Hood w/Sound Foam A-213
Hood w/Sound Foam Assembly (EU) A-17
Hood w/Sound Spikes (EU) A-23, A-215
Horn D-3
Horn Bracket D-3
Horn Button D-25, D-27, D-29
Hose Adapter A-49, A-75, A-99, A-129, A-157, A-183
Hose Clamp C-37, E-13
Hose Cover H-35
Hose Cover Plate B-3
Hose Mounting Plate B-73
Hose Winds Fitting Washer A-63, A-67
Hydraulic Filter Bracket H-15
Hydraulic Hose Clamp B-3
Hydraulic Oil Temperature Gauge D-33
Hydraulic Oil Temperature Sender D-33
Hydraulic Tank B-31, B-47
Hydraulic Tank Assembly B-29, B-45
Hydraulic Tank Clean Out Lid B-31
Hydraulic Tank Filter B-31
Hydraulic Tank Gasket B-31
Hystec Isolator A-87

I

Ignition Key D-27, D-29
Ignition Switch D-25, D-27, D-29
Ignition Switch Cover D-25
Ignition Switch Nut D-25, D-27, D-29
Impactometer Gauge E-33
Impactometer/Autovibration Controller E-33
Injector Bracket C-5
Input Shaft B-21
Inside Light A-145, A-169
Inside Mirror A-145, A-169
Instrument Panel D-25, D-27, D-29, D-31
Insulated Stud E-63
Insulated Stud Assembly E-53
Insulated Stud Bracket E-63
Interior Cover A-145, A-169
Interior Light A-61, A-117
Interior Mirror A-61, A-117
Intermediate Brake Disc A-9
Key Tag D-27, D-29
Isolator A-91, A-107, D-13, D-15
Isolator Hystec A-43, A-53

J

J-hook E-17
Journal Bearing A-11

K

Key C-15
Knob Kit A-211, D-17

L

Lamp Led E-67
Latch . A-37, A-39, A-81, A-89, A-103, A-135, A-147, A-149, A-161, A-171, A-173, A-195, D-21
Left Foam A-23, A-215, A-225
Left Front Roadlight Assembly E-49
Left Rear Signal Assembly E-49, E-51
Left Rear Window Grab Handle A-115
Leg Spring D-21
Leveling Blade H-37
Leveling Blade Cylinder H-37
Leveling Blade Pump Assembly H-39
Leveling Blade Valve Assembly H-39
Lever B-43, D-19
License Plate Light E-61
License Plate Light Wire Harness E-51
License Plate Mounting Bracket E-61
Lid Clean Out B-47
Lifting Bracket B-13
Light Assembly Panel A-151, A-175, E-67
Light Bracket E-65, E-69, E-73
Light Bulb E-51, E-59, E-61
Light Housing E-55, E-57
Light Kit E-23
Light Panel Assembly A-43, A-53, A-87
Lip Seal B-13
Lock . . A-37, A-39, A-81, A-89, A-103, A-135, A-149, A-161, A-173, A-195, C-49
Lock Tab, RH A-37, A-39, A-81, A-89, A-103, A-135, A-149, A-161, A-173, A-195
Locking Plate A-9, A-201, A-203
Loom C-49
Loop Clamp E-13
Loop Flushing Valve H-31

Loop Flushing Valve Assembly H-25
Louver A-45, A-69, A-95, A-123, A-153, A-177
Louver Adapter A-45, A-69, A-95, A-123, A-153, A-177
Lower Door Latch Cover Kit A-57
Lower Radiator Hose C-5
Lower Side Duct Hose A-45, A-69, A-95, A-123, A-153, A-177
Lower Suspension D-23

M

Magnetic Drain Plug. B-31
Main Frame B-29, B-45
Manifold B-39, C-25
Manifold Assembly H-19
Manifold Kit C-15
Manual Case D-3
Marker Lamp E-49, E-51
Marker Light Bracket E-51
MDC O-ring C-23, C-27, E-37
Meter Valve H-39, H-45
Mirror Arm A-143, A-167
Motor A-75, A-129, A-183
Motor Adaptor A-51, A-101, A-159, A-189
Motor Mount .A-49, A-75, A-99, A-129, A-157, A-183
Motor Wiper A-61
Motor, 12V A-49, A-99, A-157
Motor, Complete B-19
Mounting Block H-37, H-43
Mounting Collar A-203
Mounting Plate. D-9
Muffler C-39
Multi-Function Valve C-13

N

Needle Bearing B-13
Negative Battery Cable E-17
Netural Start Switch C-13
Neutral Return Spring A-11
No ROPS Mounting Bracket A-89, A-161
No ROPS/Hood Draw Latch Installation A-87, A-151, A-175
Non-Drive Side Journal B-9
Nut Seal A-11

O

Oil Cooler C-37
Oil Pressure Sender D-33
Oil Pressure Switch C-5
Oilite Bearing B-9
Operators Platform . A-45, A-69, A-95, A-123, A-153, A-177, A-197, D-3, H-39, H-45
Optional GPS System Window A-59
Orifice Kit C-13
Orifice Plug A-11, H-33
O-ring Kit C-21, C-25, C-29, C-33, E-39, E-43
ORS Cap B-29, H-25
Outside Door Handle A-113
Outside Mirror A-143, A-167

P

Pad A-147, A-171
Pane, Front A-143, A-167
Pane, LH A-143, A-167
Pane, Rear A-143, A-167
Pane, RH A-143, A-167
Panel Side Console D-7
Pantagraph Mount A-67, A-115
Park Brake Switch D-31
Pebble Cloth. A-67
Pedestal D-25, D-27, D-29
Pedestal Assembly. D-13, D-15
Pedestal Cover D-25, D-27, D-29
Pedestal Wire Harness D-25, D-27, D-29
Pin A-27, A-211, C-15, D-17
Pinion A-9
Piston A-9, B-19, C-25, C-33, E-43
Piston Ring C-25, C-33, E-43
Piston Seal Ring A-11
Pivot Nut D-25, D-27, D-29
Pivot Pin B-3, B-29, B-45, H-37, H-43
Planet Gear A-9
Plastic Bolt Cover Ir Logo A-57, A-59
Plastic Cover Washer A-57, A-59
Plastic Plug A-61, A-67, A-111, A-117
Plastic Plug-2.5 Inch A-67
Plastite Screw A-51, A-101, A-159, A-189
Plate E-45
Plate Seal A-71, A-125, A-179
Plate, Front A-143, A-167
Plate, Left Front A-143, A-167
Plate, LH A-143, A-167
Plate, RH A-143, A-167
Plate, Right Front A-143, A-167
Plenum A-45, A-69, A-95, A-123, A-153, A-177
Plenum Hose A-45, A-69, A-95, A-123, A-153, A-177
Plumb Chain D-37
Pop Rivet G-5
Port Plate B-19
Positive Battery Cable E-17
Power Port A-61, E-27, E-29
Power Port Mounting Bracket E-29
Pre-Cab w/Heat and Air Conditioning Assembly A-163
Pre-Cab w/Heater Option A-139
Precleaner Bowl A-223
Precleaner Stack A-223
Pre-fuel Filter C-5, C-7
Pressure Filter H-39, H-45
Pressure Filter Element H-39, H-45
Pressure Spring B-19
Pressure Switch A-73, A-127, A-181, B-37, E-79, H-21
Primary Filter Element, Air Cleaner C-5

Prop Block A-27
Prop Pin Block Assembly A-17
Propulsion Cable Mounting Bracket. C-9
Propulsion Pump C-9, C-11
Pump A-87, H-41, H-47
Pump Lever C-9
Pump Mounting Plate C-9
Pump Shaft C-19, C-23, C-27, C-31, E-37, E-41
Pump Stack Assembly C-5, C-7

R

R/D Mounting Bracket A-73, A-127, A-181
Racket Jack B-43
Radiator C-37
Radiator And Oil Cooler Assembly C-35
Radiator Bracket, LH C-37
Radiator Bracket, RH C-37
Radiator Cap C-37
Radiator Frame, LH C-37
Radiator Frame, RH C-37
Railing A-199, D-5
Ratchet Jack B-29, B-45
Rear Bottom Window Glass A-119
Rear Bottom Window Light Tint Glass A-121
Rear Engine Mount C-5, C-7
Rear Foam A-23, A-215, A-225
Rear Frame H-39
Rear Lamp E-59, E-61
Rear Lamp Bracket, LH E-61
Rear Lamp Bracket, RH E-59
Rear Lamp Bulb E-59, E-61
Rear Window Connector Plate A-115
Rear Window Glass A-59, A-119
Rear Window Light Tint Glass A-121
Rear Wiper Arm A-115
Rear Wiper Blade A-115
Rear Wiper Cover A-61
Rear Wiper Cover Headliner A-117
Rear Wiper Switch . A-43, A-53, A-91, A-107, A-151, A-175
Receiver Drier A-73, A-127, A-181
Recirculation Filter Cover . . A-45, A-69, A-95, A-123, A-153, A-177
Recirculation Filter Grill A-45, A-69, A-95, A-123, A-153, A-177
Red Reflector E-59, E-61
Reducer B-49, C-9, H-19, H-25
Reflective Marker H-37, H-43
Reinforced Cover Plate Kit B-25
Relief Cartridge A-11
Relief Valve Kit H-33
Repair Kit B-25, B-27
Repeater Flasher Lamp, LH E-49, E-51
Repeater Flasher Lamp, RH E-49
Resistor A-49, A-99, A-157
Resistor 12V A-75, A-129, A-183
Resistor Assembly Harness H-25
Retainer Ring C-25, C-33, E-43
Retaining Pin C-17
Retaining Plate B-49, H-19
Retractable Seatbelt A-33, A-83, A-137, A-193
Retractable Seatbelt Installation A-29, A-191
Return Filter H-15, H-17
Return Filter Element H-15, H-17
Return Port B-35
RH Lock Tab A-149, A-173
Right Bottom Window Glass A-119
Right Bottom Window Light Tint Glass A-121
Right Foam A-23, A-215, A-225
Right Front Roadlight Assembly E-49
Right Rear Signal Assembly E-49, E-53
Right Rear Window Grab Handle A-115
Ring Gear Support A-9
Ring Nut A-7
Ring Plate E-45
Rivet Tree C-5
RMV Dial E-47
Road Light Chassis Wire Harness . E-49, E-51, E-53
Road Light Switch E-53
Road Light Wire Harness E-49, E-53
Road Light, LH E-57
Road Light, RH E-55
Rod A-27, D-19
Rod End C-7
Roller Bearing A-13
Roof A-143, A-167
Roof (FOPS) A-31, A-111
ROPS A-31
ROPS Bracket, LH . A-37, A-39, A-89, A-103, A-161, A-195
ROPS Bracket, RH . A-37, A-39, A-89, A-103, A-161, A-195
Rops Position Light Wire Harness E-49
ROPS Support Plate D-5
ROPS Support Platform A-43, A-53
ROPS Supt Platform A-87
Rops Supt Platform D-3, D-5
Rops/Fops A-29, A-191
Rops/Hood Bracket Installation A-29, A-191
Rotary Group B-19
Rotary Group Hydraulic Section B-19
Rotating Beacon Light E-29
Rubber Boot C-7
Rubber Grommet A-63, A-115
Rubber Plug A-119, A-121
Rubber Reinforced Washer E-51
Rubber Seal A-43, A-53, A-55, A-59, A-65, A-67, A-87
Rubber Seal Washer A-57, A-59

S

S.F. Clamp B-15, B-17
Safety Filter Element, Air Cleaner C-5
Safety Label Manual D-37
Scraper B-51, B-53, B-57, B-59, B-61, B-63

Scraper Bar B-59, B-65, B-67
Scraper Blade H-37, H-43
Scraper Tooth B-53, B-55, B-61, B-67
Screen Filter A-11
Screw Plug B-21
Seal Angle A-17, A-21, A-221, A-231, C-45
Seal Clamp C-39
Seal Kit. C-21, C-29, E-39
Seal Lip A-13
Seal Ring B-21
Seal Shaft B-25, B-27
Seal Trim A-17, A-93, A-107
Seal Washer A-5, A-9, A-67
Seat A-209, D-13, D-15, D-35
Seat (EEC) D-15, D-35
Seat Angle Adjustment Cover D-19
Seat Base A-209, D-13, D-15, D-35
Seat Belt - Optional A-93
Seat Belt A-35, D-13, D-19
Seat Belt Installation A-43, A-53
Seat Belt Option A-31
Seat Belt Optional A-109
Seat Cover D-19
Seat Cushion D-19
Seat Pan And Cushion A-211, D-17
Seat Panel D-19
Seat Switch Wire Harness A-209, D-13
Secondary Lock E-65, E-69, E-73
Sensor Cable H-25
Servo Gasket C-21, C-29, E-39
Servo Piston Assembly A-11
Servo Screw C-25, C-33, E-43
Servo Stop C-21, C-25, C-33, E-43
Set Screw A-11
Shaft Adapter A-51, A-101, A-159, A-189
Shaft Nut B-19
Shaft Seal Assembly A-13, C-13
Shaft Seal Ring B-19
Shift Rate Kit A-11
Shim Pack C-23, C-31, E-41
Shock Mount B-5, B-11, D-3, H-43
Shock Mount Plate B-11
Shut off Valve A-71, A-125, A-179
Shut-off Valve A-47, A-71, A-97, A-125, A-155, A-179
Side Bottom Glass, RH A-59, A-67
Side Console D-7
Side Console Assembly D-7
Side Console Cover D-7
Side Console Mount Plate D-15, D-19, D-23
Side Console Pocket D-7
Side Console Support A-209, D-13, D-23
Side Console Wire Harness D-7
Side Front Glass, LH A-67
Side Front Glass, RH A-59, A-67
Side Marker Jump Wire Harness E-49, E-51
Side Pane, Lower RH A-143, A-167
Side Pane, Upper RH A-143, A-167
Side Panel A-21, A-221, A-231, C-45
Side Panel, LH A-21, A-221, A-231, C-45
Side Ported Subplate H-39, H-45
Side Top Front Glass, RH A-59, A-67
Side Top Rear Glass, RH A-59, A-67
Side Window Bumper Mount A-113, A-117
Side Window Grab Handle A-113, A-117
Side Window Grab Handle Kit A-57
Sight Gauge B-5, B-31, B-47
Sika A-67
Sleeve A-223, D-5
Sleeve Assembly C-41
Sleeve Kit C-17
Snap Ring B-21
Snubbing Washer C-3
Socket Head Plug A-11, B-13
Solenoid H-29
Solenoid Stop C-7
Solenoid Valve A-11, C-21, C-25
Spacer Bar B-3
Special Plug H-33
Speed Sensor B-19, E-35, H-25, H-27
Speed Sensor Adapter E-31, E-33
Speed Sensor Wire Harness E-35, H-25
Speed Sensor. E-31, E-33
Speedometer Gauge E-31
Spherical Roller Bearing B-5
Spinner Kit D-39
Spline Coupling B-9
Spline Shaft B-5
Split Clamp B-15, B-17, B-23
Split Flange B-15
Split Flange Adapter B-23
Split Washer D-11
Spring Cable Kit A-211, D-17
Spring Guide A-11, C-25, C-33, E-43, H-33
Spring Pin A-17, D-5
Spring Pivot A-17
Spring Washer A-9, B-25, B-27
Standoff E-15
Starting Kit C-49
Starting Motor C-5, C-7
Steel Platform Spacer D-5
Steering Bearing B-29, B-45
Steering Cylinder B-29
Steering Pressure Harness E-79
Steering Pump C-11
Steering Valve D-3
Steering Wheel D-25, D-27, D-29
Step B-29
Step Door A-43, A-53, B-45
Straight Column Cover D-25, D-27
Straight Steering Column D-25, D-27
Strike-Off Blade Cylinder H-43
Strike-Off Blade Pump Assembly H-45
Strike-Off Blade Valve Assembly H-45
Strike-Off-Blade H-43

Striker Bolt A-57, A-113
Stud A-9
Stud Protector A-211, D-17
Suction Filter H-17
Suction Filter Adapter C-25, C-33, E-43
Suction Filter Element H-17
Sun Visor A-61
Sunshade A-145, A-169
Sunshade Cover A-145, A-169
Supply Port B-35
Support Bracket A-199, C-39, D-5
Support Panel A-17
Supt Plate, LH A-19, A-219, A-229, C-43
Supt Plate, RH A-19, A-219, A-229, C-43
Suspension Assembly A-211, D-17
Swing Arm D-23
Switch . A-43, A-53, A-87, A-151, A-175, D-15, D-19, E-53
Switch Blank A-43, A-53, A-87
Swivel B-3, D-19
Swivel Elbow B-17
Swivel Tee B-49, H-19, H-39, H-45

T

Tail Pipe C-39
Tail Washer D-3
Tank Bottom Wrapper B-31, B-47
Tank Cover Gasket B-47
Tank Filter B-47
Tank Guard B-33
Tank Guard Base B-33
Tank Top Wrapper B-31, B-47
Tape B-33
Tapping Screw A-21, A-221, A-231, C-45, H-39, H-45
T-bolt Spring Clamp C-5
Tee, Run H-29
Temperature Sender C-5
Tension Spring D-15
Terminal E-65, E-69, E-73
Terminal Block E-67, E-71, E-75
Terminal Block Cable E-67, E-71, E-75
T-Handle A-27
Thermal Bypass Valve B-41
Thermal Bypass Valve Installation B-29, B-45
Thermo Switch C-49
Thermostat A-75, A-129, A-183
Threaded Pin B-19
Three Section Valve H-21
Throttle Mounting Bracket C-7
Throttle Pin B-19
Throttle Spur B-19
Throwout Arm w/Pin A-113, A-117
Thrust Button B-19
Thrust Ring B-25, B-27
Tilt Column Cover A-85, ... D-25, D-27, D-29, E-67
Tilt Steering Column A-85, D-29
Tilt Steering Column (Optional) D-25, D-27
Tilt Steering Wheel (Cab) A-53
Timer E-21
Tip A-211, D-17
Tire A-15
Tire And Wheel Assembly A-15
Tire Tube A-15
Top Dust Boot D-9
Top Foam A-23, A-215, A-225
Top Fresh Air Duct Hose . . . A-45, A-69, A-95, A-123, A-153, A-177
Top Front Window Glass, RH A-119
Top Front Window Light Tint Glass, RH A-121
Top Grill Supt A-19, A-219, A-229, C-43
Top Rear Window Glass A-119
Top Rear Window Glass, RH A-119
Top Rear Window Light Tint Glass A-121
Top Rear Window Light Tint Glass, RH A-121
Traction Control Valve H-29
Traction Control Valve Assembly H-25, H-27
Traction Control Wire Harness H-25
Traction Micro-Controller H-25
Trakpak E-77
Trakpak w/Antenna E-77
Trunnion B-19
Tube Cap Nut C-9

U

U-bolt Clamp C-5
Unifilar Bulb A-145, A-169
Upper Radiator Hose C-5
Upper Side Duct Hose A-45, A-69, A-95, A-123, A-153, A-177
Upper Suspension D-23

V

Valve . . . A-47, A-97, A-155, B-39, C-23, C-31, E-41
Valve Bracket A-75, A-129, A-183
Valve Cap A-15
Valve Kit C-19, C-27, E-37, H-27
Valve Lever Arm A-51, A-101, A-159, A-189
Valve Pin B-19
Valve Plate, RH C-19, C-27, E-37
Vandal Cover A-201, A-203
Variable Vibe Control E-35
Variable Vibration Wire Harness E-35
V-block B-29
V-Block B-45
Vent A-9
Vented Fuel Cap B-35
Venturi A-49, A-75, A-99, A-129, A-157, A-183
Vibration Motor B-5
Vibration Pump C-11, E-35
Vibration Selector Wire Harness - Two-speed . . E-3
Vibration Sensor Wire Harness E-31, E-33
Vibration Variation Selection Switch E-35
Vibration Variation Selection Wire Harness . . . E-35

Vibration Variation Switch/Wire Harness Assembly . E-35
Voltmeter D-33
VPM Gauge E-31
VPM Ring H-37, H-43
V-ring Seal B-5

W

Washer Bottle A-43, A-53, A-87, A-91, A-107, A-151, A-175
Washer Bottle Cap . A-43, A-53, A-91, A-107, A-151, A-175
Washer Bottle Pump A-43, A-53, A-91, A-107, A-151, A-175
Washer Hose 5/32" A-63
Washer Plain A-151, A-175
Washer Switch A-91, A-107
Water Switch E-19
Water Temperature Gauge E-23
Water Temperature Gauge Kit E-19
Water Temperature Gauge Sender E-23
Water Temperature Gauge Wire Harness E-23
Water Temperature Switch E-19
Water Wiper A-145, A-169
Water/Fuel Separator Filter C-5, C-7
Weather Strip D-11
Weatherstrip Door Frame A-63
Webbing D-23
Wet Arm Kit A-63, A-67, A-115
Wheel Nut A-15
Wheel Rim A-15
Wheel Stud A-9
Window Bumper A-113, A-117
Window Bumper Kit A-59
Window Gas Shock A-115
Window Handle, LH A-147, A-171
Window Handle, RH A-143, A-167
Window Hinge A-115
Window Hinge Clevis Pin A-113, A-117
Window Hinge Pad A-115
Window Hinge Pin Clip A-113, A-117
Window Hinge Pin Kit A-57, A-59
Window Hinge, LH A-57, A-59, A-113, A-117
Window Hinge, RH A-57, A-59, A-113, A-117
Window Hold Back . A-55, A-57, A-59, A-113, A-117
Window Holdout Handle A-115
Window Holdout Pad A-115
Window Holdout Plate A-115
Window Latch A-143, A-147, A-167, A-171
Window Latch Kit . . A-55, A-57, A-59, A-113, A-117
Window Seal A-113, A-143, A-167
Windshield Washer Hose Fitting A-115
Wiper Blade Rear 20" A-63
Wiper Cover A-145, A-169
Wiper Motor A-115
Wiper Motor 12v 68 Degree A-67
Wiper Motor w/Fastening Mount A-145, A-169
Wiper Switch, Front A-87
Wiper Switch, Rear A-87
Wire A-211, D-17, D-25, D-27
Wire Assembly E-23
Wire Harness C-49
Wiring Harness A-45, A-49, A-75, A-95, A-99, A-129, A-153, A-157, A-183
Work Lights A-67
Work Lights Harness A-43, A-53, A-87, E-65
Work Lights Selector Harness A-151, A-175
Working Light A-143, A-167
Worklight Harness E-65, E-67, E-69, E-71
Worklight Installation E-49, E-53
Worklight ROPS Wire Harness E-73, E-75
Worklights E-65, E-69, E-73
Worklights Assembly E-65, E-69, E-73
Worklights Bulb E-65, E-69, E-73
Worklights Harness E-69
Worklights Wire Harness E-73

Y

Y-Splicer . . . A-45, A-69, A-95, A-123, A-153, A-177

NUMERICAL INDEX

COMM.NO. PAGE	COMM.NO. PAGE	COMM.NO. PAGE	COMM.NO. PAGE
13062518 .....C-37	13167390 .....B-5	13184700 .....A-17	13197108 .....A-43
13064282 .....C-5	13167499 .....C-5	13184742 .....A-17	.....A-53
.....C-7	13167721 ..... D-3	13184833 .....A-213	.....A-87
13066220 ..... A-11	13167812 ..... D-3	.....A-223	.....A-151
13090097 .....C-21	13168851 .....C-5	13184916 .....D-23	.....A-175
.....C-29	13169404 .....E-33	13184932 .....B-33	.....E-65
.....E-39	13176508 ..... A-45	13185376 .....B-11	.....E-69
13093075 .....C-39	..... A-69	13185384 .....B-31	.....E-73
13106497 ..... H-7	..... A-95	.....B-47	13197306 .....A-29
..... H-11	..... A-123	13186242 .....D-7	.....A-31
13137945 ..... A-211	..... A-153	13186374 .....D-7	.....A-191
..... D-17	..... A-177	13186390 .....D-7	.....G-7
13156963 ..... A-69	13176516 ..... A-45	13186473 .....B-47	.....G-11
..... A-123	..... A-69	13186598 .....A-223	13197314 .....G-7
..... A-177	..... A-95	.....C-41	13197447 .....B-5
13156997 ..... A-45	..... A-123	13187240 .....A-15	13197454 .....C-9
..... A-95	..... A-153	13187257 .....A-15	.....C-11
..... A-153	..... A-177	13187398 .....A-15	13198064 .....A-15
13157565 ..... A-3	13176532 ..... A-45	13187612 .....A-119	13198270 .....A-211
13157961 ..... A-205	..... A-69	13187620 .....A-119	.....D-17
.....E-45	..... A-95	13187638 .....A-119	13198353 .....G-7
13158647 ..... D-25	..... A-123	13187646 .....A-119	13198908 .....E-35
..... D-27	..... A-153	13187653 .....A-119	13198916 .....E-33
..... D-29	..... A-177	13187661 .....A-119	13199047 .....H-7
13159843 .....E-45	13176789 .....E-31	13187679 .....A-119	.....H-11
13161724 ..... A-45	.....E-33	13187687 .....A-119	13199062 .....H-5
..... A-69	.....E-35	13187695 .....A-119	13199088 .....H-25
..... A-95	13176797 .....E-29	13187703 .....A-119	13199104 .....H-39
..... A-123	13179122 .....B-23	13187877 .....B-3	.....H-45
..... A-153	.....B-69	.....B-29	13199120 .....H-9
..... A-177	13179148 .....B-23	.....B-45	13199344 .....G-3
13161732 ..... A-45	13179197 ..... A-45	13187968 .....B-3	13200001 .....A-45
..... A-69	..... A-69	.....B-29	.....A-69
..... A-95	..... A-95	.....B-45	.....A-95
..... A-123	..... A-123	13187976 .....B-3	.....A-123
..... A-153	..... A-153	.....B-29	.....A-153
..... A-177	..... A-177	.....B-45	.....A-177
13161757 ..... A-45	13179205 .....B-9	13188198 .....B-29	13200019 .....A-45
..... A-69	13179239 .....B-9	.....B-45	.....A-69
..... A-95	13179247 .....B-9	13188263 .....B-3	.....A-95
..... A-123	13179403 ..... A-45	13188271 .....B-3	.....A-123
..... A-153	..... A-69	13188347 .....C-5	.....A-153
..... A-177	..... A-95	13188438 .....C-39	.....A-177
13162094 ..... A-45	..... A-123	13188602 .....C-39	13200027 .....A-47
..... A-69	..... A-153	13188628 .....C-39	.....A-71
..... A-95	..... A-177	13188651 .....C-39	.....A-97
..... A-123	13179445 .....E-31	13188669 .....H-35	.....A-125
..... A-153	13179452 .....E-31	13188958 .....D-33	.....A-155
..... A-177	13179577 .....B-5	13190715 .....H-17	.....A-179
13163324 ..... G-5	13182308 .....B-5	13190723 .....H-15	
13165071 ..... A-209	13184072 .....B-5	.....H-17	
..... D-13	13184445 .....B-15	13190772 .....E-33	
13165659 ..... H-29	.....B-17		
13166079 ..... D-9	.....B-23		

NUMERICAL INDEX

COMM.NO. PAGE	COMM.NO. PAGE	COMM.NO. PAGE	COMM.NO. PAGE
13200035 ..... A-45	13207915 ..... H-11	13214317 .....D-11	13224217 .....A-67
..... A-73	..... H-13	13214333 .....D-11	.....A-115
..... A-95	13208004 .....C-11	13214804 .....D-5	13224225 .....A-67
..... A-127	.....E-79	13214812 .....B-49	.....A-115
..... A-153	..... H-41	.....H-19	13224233 .....A-115
..... A-181	..... H-47	13215405 .....H-15	13224241 .....A-63
13204342 ..... H-45	13208012 ..... G-3	.....H-17	.....A-67
13204359 ..... H-5	..... G-9	13215702 .....C-37	.....A-115
..... H-9	13208038 ..... G-3	13215710 .....C-37	13224258 .....A-115
13204383 ..... H-9	..... G-7	13215769 .....A-43	13224266 .....A-115
..... H-11	13208186 ..... H-25	.....A-53	13224274 .....A-115
13204441 ..... H-9	13208194 ..... H-25	.....A-87	13224282 .....A-113
..... H-11	13209135 .....E-15	.....A-91	13224290 .....A-113
13204755 ..... H-7	13209168 .....B-3	.....A-107	13224308 .....A-113
..... H-9	13209648 .....E-17	.....A-151	13224316 .....A-113
13205075 .....E-33	13209663 .....B-29	.....A-175	13224324 .....A-113
13205083 .....E-35	.....B-45	13216007 .....B-23	13224332 .....A-55
13205125 ..... A-119	13209887 ..... A-45	13216734 .....C-35	.....A-113
13205364 .....B-41	..... A-69	13216775 .....E-49	13224340 .....A-57
13205414 ..... H-25	..... A-95	.....E-51	.....A-59
13205430 .....C-49	..... A-123	13216783 .....E-49	.....A-113
13205497 ..... H-41	..... A-153	13217195 .....A-17	.....A-117
..... H-47	..... A-177	13217294 .....C-9	13224357 .....A-57
13205513 .....B-49	13209903 .....B-29	13217450 .....D-5	.....A-59
..... H-19	.....B-45	13218128 .....B-9	.....A-113
13207543 ..... H-9	13212501 .....C-5	13218136 .....B-9	.....A-117
..... H-11	13212543 ..... A-21	13218144 .....B-9	13224365 .....A-113
13207691 .....B-69	..... A-221	13218177 .....B-5	.....A-117
13207758 .....E-17	..... A-231	13218987 .....D-3	13224373 .....A-113
13207774 ..... H-7	.....C-45	13219001 .....A-21	.....A-117
..... H-11	13212576 ..... A-43	.....A-221	13224381 .....A-55
13207782 ..... H-9	..... A-53	.....A-231	.....A-57
..... H-13	..... A-87	.....C-45	.....A-59
13207790 ..... H-5	..... A-91	13219019 .....A-21	.....A-113
..... H-11	..... A-107	.....A-221	.....A-117
13207808 ..... H-11	..... A-151	.....A-231	13224399 .....A-113
..... H-13	..... A-175	.....C-45	.....A-117
13207816 ..... H-11	13212832 .....B-57	13219142 .....B-3	13224407 .....A-113
..... H-13	13213012 ..... H-37	13220769 .....E-47	.....A-117
13207824 ..... H-9	..... H-43	13220777 .....E-47	13224415 .....A-115
..... H-11	13213509 .....B-3	13220835 .....A-63	13224423 .....A-113
13207832 ..... H-9	13213525 .....B-3	.....A-67	.....A-115
..... H-11	13213574 .....B-35	.....A-115	13224431 .....A-63
13207840 ..... H-3	13213624 .....B-35	13223904 .....C-11	.....A-113
..... H-9	13213632 .....B-35	13223912 .....C-11	13224449 .....A-61
13207865 ..... H-3	13213681 .....B-35	.....E-35	.....A-117
13207873 ..... H-3	13213699 .....B-35	13223961 .....A-117	13224456 .....A-67
..... H-7	13213749 .....B-35	13223979 .....A-117	.....A-111
..... H-11	13213764 .....B-35	13223987 .....A-117	13224464 .....A-63
13207881 ..... H-11	13213947 .....C-5	13224175 .....A-111	.....A-115
13207899 ..... H-7	.....C-7	13224183 .....A-115	13224472 .....A-117
13207907 ..... H-11	13214028 .....E-19	13224191 .....A-113	13224480 .....A-61
..... H-13	13214259 ..... D-11	.....A-117	.....A-117
	13214267 .....E-15	13224209 .....A-115	13224498 .....A-117

NUMERICAL INDEX

COMM.NO. PAGE	COMM.NO. PAGE	COMM.NO. PAGE	COMM.NO. PAGE
13225008 ..... H-25	13228242 ..... A-43	13231337 .....A-19	13236864 .....D-25
13225016 ..... H-25	..... A-53	.....A-219	.....D-27
13225024 ..... H-25	..... A-87	.....A-229	13236872 .....D-25
..... H-27	..... A-91	.....C-43	.....D-27
13225032 ..... H-25	..... A-107	13231394 .....A-199	.....D-29
13225040 .....C-37	..... A-151	.....D-5	13236906 ..... E-67
13225115 ..... E-29	..... A-175	13231873 .....A-21	13237219 .....A-31
13225123 ..... E-33	13228259 ..... A-43	.....A-221	13237326 .....A-45
13225297 ..... H-25	..... A-53	.....A-231	.....A-69
13225339 ..... D-5	..... A-87	.....C-45	.....A-95
13225347 ..... D-13	..... A-91	13232616 .....B-11	.....A-123
13225503 ..... A-43	..... A-107	13233218 .....A-31	.....A-153
..... A-53	..... A-151	.....A-111	.....A-177
..... A-87	..... A-175	13233309 .....D-3	13237367 .....A-69
..... A-91	13228820 ..... A-211	13233440 ..... E-15	.....A-71
..... A-107	..... D-17	13233606 .....A-19	.....A-123
..... D-13	13228838 ..... A-211	.....A-219	.....A-125
..... D-15	..... D-17	.....A-229	.....A-177
13225529 .....B-49	13228846 ..... A-211	.....C-43	.....A-179
..... H-19	..... D-17	13233622 .....A-19	13237490 .....D-3
13225545 ..... G-7	13228853 ..... A-211	.....A-219	13237508 .....A-209
13225552 ..... G-7	..... D-17	.....A-229	.....D-13
..... G-11	13228861 ..... A-211	.....C-43	13237888 .....A-45
13225560 ..... A-43	..... D-17	13233903 .....C-37	.....A-47
..... A-53	13228937 .....B-29	13233911 .....C-37	.....A-95
..... A-87	13228960 ..... A-211	13234075 .....A-31	.....A-97
..... A-151	.....C-15	13234893 .....A-45	.....A-153
..... A-175	13228994 .....C-13	.....A-69	.....A-155
.....E-69	13229083 ..... A-9	.....A-95	13238035 .....A-21
.....E-73	13229190 ..... A-9	.....A-123	.....A-221
13225875 ..... G-7	13229638 ..... E-53	.....A-153	.....A-231
13225909 ..... G-7	13230024 ..... E-53	.....A-177	.....C-45
13225933 ..... G-7	13230081 ..... A-19	13235007 .....B-71	13238084 .....A-19
13225966 ..... G-7	..... A-219	13235320 .....B-49	.....A-219
13226006 ..... G-7	..... A-229	.....H-19	.....A-229
13226014 ..... G-7	.....C-43	13235478 .....D-27	.....C-43
13226022 ..... G-7	13230586 ..... A-21	.....D-29	13238134 .....B-33
13226030 ..... G-7	..... A-221	13235874 .....B-51	13238217 .....A-17
13226055 ..... G-7	..... A-231	.....B-59	13238969 .....H-39
..... G-11	.....C-45	.....B-65	.....H-45
13226063 ..... G-7	13230602 ..... A-21	.....B-67	13239157 .....D-5
13226071 ..... G-7	..... A-221	13235981 .....D-15	13239785 .....H-23
..... G-11	..... A-231	.....D-35	13239959 .....C-39
13226089 ..... G-7	.....C-45	13236039 .....A-209	13239967 .....B-3
13226097 ..... G-7	13230735 .....E-65	.....D-13	13243753 .....A-5
..... G-11	.....E-69	13236054 .....B-73	13247267 .....A-11
13227087 ..... G-5	.....E-73	13236377 .....A-17	13247275 .....A-11
13228200 .....B-13	13230776 .....E-65	13236427 .....D-3	13247309 .....A-13
	.....E-69	.....D-5	13247341 .....C-29
	.....E-73	13236633 .....A-17	.....C-33
	13230933 ..... A-21	13236666 .....A-71	.....E-39
	..... A-221	.....A-125	.....E-43
	..... A-231	.....A-179	
	.....C-45		

NUMERICAL INDEX

COMM.NO. PAGE	COMM.NO. PAGE	COMM.NO. PAGE	COMM.NO. PAGE
13247358 .....C-19	13254784 ..... H-39	13258736 .....A-49	13258843 .....A-49
.....C-31	..... H-45	.....A-75	.....A-75
.....E-41	13254909 ..... A-47	.....A-99	.....A-99
13247366 .....E-59	..... A-71	.....A-129	.....A-129
.....E-61	..... A-97	.....A-157	.....A-157
13247374 .....E-59	..... A-125	.....A-183	.....A-183
.....E-61	..... A-155	13258744 .....A-49	13258868 .....A-75
13247382 .....B-35	..... A-179	.....A-75	.....A-129
13247390 .....B-35	13255005 ..... G-7	.....A-99	.....A-183
13247416 ..... A-9	13255054 ..... G-7	.....A-129	13258876 .....A-75
13247473 ..... A-211	13255062 ..... G-7	.....A-157	.....A-129
..... D-17	13255070 ..... G-7	.....A-183	.....A-183
13247481 ..... A-211	13255179 ..... H-9	13258751 .....A-49	13258884 .....A-75
..... D-17	..... H-11	.....A-75	.....A-129
13247549 ..... A-211	13255443 .....C-5	.....A-99	.....A-183
..... D-17	13255450 .....C-5	.....A-129	13258892 .....A-75
13247556 ..... A-211	13255930 .....E-45	.....A-157	.....A-129
..... D-17	13255997 ..... H-37	.....A-183	.....A-183
13247937 .....B-43	..... H-39	13258769 .....A-49	13258900 .....A-75
13247945 .....B-43	..... H-43	.....A-75	.....A-129
13247952 .....B-43	..... H-45	.....A-99	.....A-183
13247960 .....B-43	13256193 ..... D-11	.....A-129	13258918 .....A-75
13247978 .....B-43	13258603 ..... H-21	.....A-157	.....A-129
13248000 .....C-13	13258611 ..... H-21	.....A-183	.....A-183
13248711 ..... G-3	13258629 ..... H-21	13258777 .....A-49	13258926 .....A-75
13248729 ..... G-3	13258686 ..... D-25	.....A-75	.....A-129
13248901 .....E-19	..... D-27	.....A-99	.....A-183
.....E-21	13258694 ..... A-49	.....A-129	13258934 .....A-211
13248919 ..... H-25	..... A-75	.....A-157	.....D-17
13248927 ..... H-25	..... A-99	.....A-183	13258942 .....A-51
13248935 ..... A-43	..... A-129	13258785 .....A-49	.....A-101
..... A-53	..... A-157	.....A-99	.....A-159
..... A-87	..... A-183	.....A-157	.....A-189
..... A-151	13258702 ..... A-49	13258793 .....A-49	13258959 .....A-51
..... A-175	..... A-75	.....A-75	.....A-101
.....E-69	..... A-99	.....A-99	.....A-159
.....E-73	..... A-129	.....A-129	.....A-189
13250386 .....E-51	..... A-157	.....A-157	13258967 .....A-51
.....E-59	..... A-183	.....A-183	.....A-101
.....E-61	13258710 ..... A-49	13258801 .....A-49	.....A-159
13250733 .....E-59	..... A-75	.....A-99	.....A-189
.....E-61	..... A-99	.....A-157	13258975 .....A-51
13251707 .....C-5	..... A-129	13258819 .....A-49	.....A-101
13254503 .....E-31	..... A-157	.....A-99	.....A-159
.....E-33	..... A-183	.....A-157	.....A-189
.....E-35	13258728 ..... A-49	13258827 .....A-49	13258983 .....A-51
13254644 ..... A-45	..... A-75	.....A-99	.....A-101
..... A-69	..... A-99	.....A-157	.....A-159
..... A-95	..... A-129	13258835 .....A-49	.....A-189
..... A-123	..... A-157	.....A-75	13258991 .....A-51
..... A-153	..... A-183	.....A-99	.....A-101
..... A-177		.....A-129	.....A-159
13254776 ..... H-39		.....A-157	.....A-189
..... H-45		.....A-183	

NUMERICAL INDEX

COMM.NO. PAGE	COMM.NO. PAGE	COMM.NO. PAGE	COMM.NO. PAGE
13259007 ..... A-51	13263074 ..... D-23	13266929 .....A-73	13274535 .....A-77
..... A-101	13263082 ..... D-23	.....A-127	.....A-131
..... A-159	13263090 ..... D-15	.....A-181	.....A-185
..... A-189	..... D-23	13266937 .....A-73	13274618 .....C-5
13259015 ..... A-51	13263199 .....B-25	.....A-127	13274832 .....A-201
..... A-101	.....B-27	.....A-181	.....A-203
..... A-159	13263207 .....B-25	13268263 .....B-19	13275342 .....B-23
..... A-189	.....B-27	13268974 .....B-19	13275581 .....C-41
13259023 ..... A-51	13263215 .....B-25	13269436 .....H-21	13275953 .....B-29
..... A-101	.....B-27	13269774 .....B-19	.....B-45
..... A-159	13263223 .....B-25	13269782 .....B-19	13276027 .....A-23
..... A-189	.....B-27	13269790 .....B-19	.....A-215
13259098 .....E-29	13263231 .....B-25	13269808 .....B-19	.....A-225
13262464 ..... A-45	.....B-27	13269816 .....B-19	13276035 .....A-23
..... A-69	13263314 ..... A-7	13269824 .....B-19	.....A-215
..... A-95	13263322 ..... A-7	13269832 .....B-19	.....A-225
..... A-123	13263330 ..... A-7	13269840 .....B-19	13276043 .....A-23
..... A-153	13263355 ..... A-7	13269857 .....B-19	.....A-215
..... A-177	13263371 ..... A-5	13269865 .....B-19	.....A-225
13262670 .....B-25	13263389 ..... A-5	13269873 .....B-19	13276068 .....A-23
.....B-27	13263397 .....B-25	13269881 .....B-19	.....A-215
13262761 .....B-25	.....B-27	13269907 .....B-19	.....A-225
.....B-27	13263405 ..... A-9	13270632 .....A-17	13276225 .....B-5
13262803 ..... D-19	13263413 ..... A-9	.....A-21	13276241 .....B-5
..... D-23	13263421 .....B-25	.....A-221	13276548 .....D-27
13262811 ..... D-19	13263439 ..... A-9	.....A-231	.....D-29
13262829 ..... D-19	.....B-27	.....C-45	13277710 .....H-39
13262837 ..... D-19	13263447 ..... A-9	13270731 .....D-27	.....H-45
13262845 ..... D-19	13263454 ..... A-9	13270749 .....D-13	13278007 .....E-29
13262852 ..... D-19	13263462 ..... A-9	.....E-13	13278478 .....A-17
..... D-23	13263470 ..... A-5	13271762 .....H-49	.....A-21
13262860 ..... D-19	..... A-9	13271903 .....H-49	.....A-221
13262878 ..... D-19	13263488 ..... A-9	13273230 .....A-79	.....A-231
13262886 ..... D-19	13263496 ..... A-9	.....A-133	.....C-45
13262894 ..... D-19	13263504 ..... A-9	.....A-187	13279385 .....B-29
13262902 ..... D-19	13263512 ..... A-9	13273313 .....H-45	.....B-45
13262910 ..... D-15	13263520 .....B-27	13273339 .....A-223	13279476 .....A-71
..... D-19	13263918 .....E-47	.....C-41	.....A-125
13262928 ..... D-19	13263926 .....E-47	13273362 .....E-9	.....A-179
13262936 ..... D-19	13263934 ..... H-29	13273818 .....A-47	13279922 .....B-65
13262944 ..... D-19	13264221 ..... D-19	.....A-71	.....B-67
13262951 ..... D-19	..... D-21	.....A-97	13281043 .....B-49
13262969 ..... D-19	13264239 ..... D-19	.....A-125	13281332 .....A-211
13262977 ..... D-21	13266846 ..... A-5	.....A-155	.....D-17
13262985 ..... D-21	13266903 ..... A-71	.....A-179	13281365 .....A-211
13262993 ..... D-21	..... A-73	13274386 .....A-73	.....D-17
13263009 ..... D-21	..... A-125	.....A-127	13281373 .....A-211
13263017 ..... D-21	..... A-127	.....A-181	.....D-17
13263025 ..... D-23	..... A-179	13274477 .....C-37	13284419 .....B-25
13263033 ..... D-23	..... A-181	13274485 .....A-79	13284427 .....B-25
13263041 ..... D-15	13266911 ..... A-71	.....A-133	13284500 .....A-57
..... D-23	..... A-125	.....A-187	13284518 .....A-117
13263058 ..... D-23	..... A-179		13284567 .....A-61
13263066 ..... D-23			

NUMERICAL INDEX

COMM.NO.	PAGE
13284690	D-27
	D-29
13284716	C-5
	C-7
13284849	B-5
13284856	C-9
	C-11
13284864	C-11
13284872	C-11
	E-35
13284955	A-3
13285002	G-5
	G-11
13285010	G-5
	G-11
13285028	G-5
	G-11
13285440	A-55
	A-59
	A-67
13285473	A-57
	A-59
13285481	A-57
	A-59
13285598	A-3
13289871	H-39
	H-45
13289913	H-39
	H-45
13289921	D-7
13289947	C-11
13290879	B-3
13292982	A-205
	E-45
13293006	E-45
13293402	H-39
	H-45
13293626	H-45
13293923	H-39
	H-45
13294400	D-35
13294756	H-37
	H-43
13294806	H-37
	H-43
13295142	H-37
	H-43
13295274	H-17
13295340	A-17
13295639	H-15
13295712	A-45
	A-69
	A-95
	A-123
	A-153
	A-177
13295829	B-3
13295886	H-37
	H-39
	H-45
13296231	H-37
	H-43
13299581	A-27
13299946	C-5
13302633	G-13
13303805	H-15
	H-17
13304126	A-119
	A-121
13304266	H-27
13304449	G-3
	G-7
13304753	C-11
	E-35
13304787	B-5
	B-11
	H-43
13304878	H-21
13304944	D-7
13305099	B-31
	B-47
13306519	E-17
13307350	H-25
13307749	E-67
	E-71
	E-75
13309521	D-29
13309877	A-29
	A-31
	A-43
	A-53
	A-91
	A-107
	A-191
13313648	E-21
13313655	E-5
	E-13
13313796	E-35
13313820	E-35
13316419	B-25
13319264	C-7
13319314	H-11
	H-13
13319942	A-85
	D-25
	D-27
	D-29
13320841	D-7
13321443	E-67
13321864	E-63
13321955	E-63
13322060	E-67
	E-71
	E-75
13322102	A-43
	A-53
	A-87
	E-67
13322177	E-51
13323274	E-17
13323936	B-53
	B-59
	B-61
13324090	A-201
	A-203
13324116	A-203
13325378	G-3
	G-7
	G-11
13333901	H-7
	H-13
13335484	A-43
	A-87
	E-67
13335492	A-85
	E-67
13340096	H-39
	H-45
13342720	A-33
	A-83
	A-137
	A-193
13342878	E-45
13346739	E-49
	E-51
13346762	E-53
13349212	A-37
	A-39
	A-81
	A-89
	A-103
	A-135
	A-149
	A-161
	A-173
	A-195
13351408	B-7
	B-11
	H-43
13351887	E-57
13352174	E-55
13352489	E-61
13352505	E-59
13353867	C-49
13354014	E-51
13355003	A-71
	A-125
	A-179
13355912	D-31
13356134	A-77
	A-131
	A-185
13356712	A-79
	A-133
	A-187
13357702	B-15
	B-17
13359740	C-7
13359815	E-65
	E-69
	E-73
13360284	B-17
13360516	C-7
13360730	C-5
	C-7
13360920	B-23
13360979	B-23
13366067	G-9
	H-19
13366075	G-9
	H-19
13367792	D-37
13375548	H-25
13375753	H-25
13382122	E-51
13382247	E-49
13382262	E-49
	E-53
13382445	D-7
13382726	A-65
	A-67
13382734	A-67
13382742	A-59
	A-67
13382759	A-55
	A-57
	A-59
13382783	A-57
	A-59
13382916	A-57

NUMERICAL INDEX

COMM.NO. PAGE	COMM.NO. PAGE	COMM.NO. PAGE	COMM.NO. PAGE
13382924 ..... A-55	13413893 .....B-15	13461447 .....B-19	13491691 .....C-5
..... A-57	.....B-17	13461645 .....H-39	13492665 .....E-65
13382932 ..... A-57	13416458 .....B-63	.....H-45	.....E-67
13382940 ..... A-55	13425160 .....C-37	13461991 .....B-19	.....E-69
..... A-57	13425608 .....E-77	13462007 .....B-21	.....E-71
13382957 ..... A-57	13426549 .....E-49	13462015 .....B-21	.....E-73
13382965 ..... A-59	.....E-51	13462023 .....B-21	.....E-75
13385323 ..... G-9	.....E-53	13462031 .....B-21	13492681 .....E-35
13385331 ..... G-9	13426606 .....E-19	13462049 .....B-21	13492699 .....H-25
13385349 ..... G-9	.....E-21	13462056 .....B-21	13492822 .....A-43
13385356 ..... G-9	13426622 .....E-19	13462064 .....B-21	.....A-53
13385364 ..... G-9	.....E-21	13462072 .....B-21	.....A-87
13385372 ..... G-9	13429030 .....C-5	13462098 .....B-21	.....A-91
13385380 ..... G-9	.....C-7	13462106 .....B-21	.....A-107
13385398 ..... G-9	13429519 .....E-77	13462114 .....B-21	.....A-151
13388582 ..... H-37	13429535 .....E-77	13462122 .....B-21	.....A-175
..... H-43	13429782 ..... H-21	13462130 .....B-21	13493473 .....H-25
13389127 .....E-55	13429881 ..... H-11	13462148 .....B-21	13493481 .....E-33
.....E-57	..... H-13	13462155 .....B-21	13493499 .....E-3
13389325 .....E-51	13429931 .....E-77	13462163 .....B-19	13493507 .....E-31
13394549 ..... G-11	13437603 ..... G-11	.....B-21	13493515 .....D-33
13396007 .....B-29	13437983 ..... G-11	13462171 .....B-21	13493523 .....E-31
.....B-45	13437991 ..... G-11	13462205 .....B-21	.....E-33
13396015 .....B-47	13438023 .....B-53	13462239 .....B-19	.....E-35
13396023 .....B-47	.....B-55	13462247 .....B-19	13493556 .....D-33
13396452 ..... A-91	.....B-61	13462254 .....B-19	13494547 .....B-19
..... A-107	.....B-67	13462262 .....B-19	13494554 .....B-19
13396478 ..... G-11	13447560 ..... G-3	13462270 .....B-19	13494562 .....B-19
13396486 ..... G-11	..... G-7	13462288 .....B-19	13494570 .....B-19
13396494 ..... G-11	13447628 ..... G-3	13462296 .....B-19	13494588 .....B-19
13403647 .....E-51	..... G-7	13462304 .....B-19	13494596 .....B-19
13406764 .....E-65	13447743 .....B-5	13462320 .....B-19	13494604 .....B-19
.....E-69	13451273 .....B-5	13462338 .....B-19	13494612 .....B-19
.....E-73	13451695 ..... G-3	13462650 .....D-15	13494620 .....B-19
13406780 .....E-19	..... G-7	13462668 .....D-15	13494638 .....B-19
13408240 ..... H-15	13457999 ..... G-11	13463393 .....E-17	13498795 .....E-79
13409255 ..... G-3	13458005 ..... G-11	13464045 .....H-7	13501366 .....C-7
13409263 ..... G-3	13458872 ..... G-7	.....H-13	13501374 .....C-7
13410956 ..... A-91	13458906 ..... G-7	13464862 .....B-19	13501390 .....C-7
..... A-93	13459375 ..... A-27	13465422 .....E-17	13501697 .....C-7
..... A-107	13459383 ..... A-27	13467485 .....A-45	13501713 .....C-7
..... A-109	13459391 ..... A-27	.....A-69	13502083 .....A-45
13410964 ..... A-91	13459409 ..... A-27	.....A-95	.....A-69
..... A-107	13459417 ..... A-17	.....A-123	.....A-95
13411640 ..... A-43	13459474 ..... D-25	.....A-153	.....A-123
..... A-53	13460365 ..... A-17	.....A-177	.....A-153
13411889 ..... D-25	13460779 ..... H-25	13467774 .....H-15	.....A-177
13412069 .....B-5	13460787 ..... H-11	13468137 .....E-65	13503412 .....B-19
13412648 ..... D-5	..... H-13	.....E-69	13504667 .....B-45
13413158 ..... A-199	13460795 ..... H-9	.....E-73	13504865 .....H-39
..... D-5	..... H-13	13469010 .....D-3	13515283 .....H-37
13413661 .....E-61	13461033 ..... H-41	13480116 .....G-3	13515770 .....H-37
13413828 .....C-9	..... H-47	.....G-7	13519343 .....A-59
	13461264 .....C-15	13481262 .....D-3	13519350 .....A-55

NUMERICAL INDEX

COMM.NO. PAGE	COMM.NO. PAGE	COMM.NO. PAGE	COMM.NO. PAGE
13519368 ..... A-55	13881537 ..... A-37	13885827 .....A-121	19331024 .....B-33
13519376 ..... A-55	..... A-39	13885835 .....A-121	22067607 .....A-67
13519384 ..... A-59	..... A-89	13885843 .....A-121	22085088 .....A-63
..... A-67	..... A-161	13885850 .....A-121	22088009 .....A-67
13519392 ..... A-59	..... A-195	13885868 .....A-121	22112007 .....A-111
..... A-67	13881545 ..... A-37	13885876 .....A-121	22112015 .....A-113
13519400 ..... A-59	..... A-39	13886676 .....A-149	22112023 .....A-113
..... A-67	..... A-89	.....A-173	22112031 .....A-113
13519434 ..... A-59	..... A-103	13886684 .....A-149	22112049 .....A-113
13845136 .....C-5	..... A-161	.....A-173	22112056 .....A-113
13845367 ..... A-67	..... A-195	13886692 .....A-149	22112064 .....A-115
..... A-117	13881560 ..... A-39	.....A-173	22112072 .....A-113
13852256 .....C-5	..... A-103	13886700 .....A-149	.....A-117
13855200 .....E-65	13881628 ..... A-89	.....A-173	22112080 .....A-111
.....E-69	..... A-161	13886981 .....D-13	22125512 .....A-111
.....E-73	13881784 ..... A-103	13886999 .....D-15	35304286 .....G-5
13855572 ..... G-3	13881792 ..... A-103	.....D-19	.....G-13
..... G-5	13882550 ..... A-19	13887039 .....H-39	35309558 .....C-49
..... G-7	..... A-219	13889480 .....A-19	35393669 .....C-5
..... G-11	..... A-229	.....A-219	35393677 .....C-5
13855655 ..... G-5	.....C-43	.....A-229	35898477 .....A-31
..... G-11	13882618 ..... A-17	.....C-43	.....A-45
13855671 ..... G-5	13882626 ..... A-17	13929328 .....E-59	.....A-69
13863733 .....E-35	13882634 ..... A-17	.....E-61	.....A-95
13863915 .....B-19	13883376 ..... A-21	14050439 .....A-141	.....A-123
13863923 .....B-19	..... A-221	.....A-165	.....A-153
13864111 .....E-35	..... A-231	14110183 .....A-145	.....A-177
13870720 .....B-31	.....C-45	.....A-169	43804756 .....E-51
.....B-47	13883418 ..... A-17	14202907 .....E-47	43806165 .....A-67
13870936 ..... A-17	..... A-21	14262083 .....E-61	43809086 .....A-81
13871660 ..... A-61	..... A-221	18000489 .....A-43	.....A-135
13878178 ..... G-11	..... A-231	.....A-53	43809094 .....A-81
13878186 ..... G-11	.....C-45	18002154 .....B-15	.....A-135
13878194 ..... G-11	13883442 ..... A-19	18007690 .....C-5	43809102 .....A-81
13878202 ..... G-11	..... A-219	18008417 .....E-33	.....A-135
13878210 ..... G-11	..... A-229	19281252 .....C-13	43809912 .....D-27
13878616 ..... G-11	.....C-43	19281930 .....E-15	.....D-29
13880612 ..... D-25	13884408 ..... D-7	19282102 .....E-27	43813724 .....E-3
..... D-27	13884465 ..... D-23	.....E-29	43814474 .....B-29
..... D-29	13884747 ..... D-35	19282987 .....C-13	43817576 .....E-49
13880794 ..... D-7	13884770 ..... D-15	19287036 .....B-37	.....E-51
13881370 ..... A-81	13885355 ..... A-37	.....B-39	43818830 .....D-25
..... A-103	..... A-39	19287051 .....B-39	43818848 .....A-43
..... A-135	..... A-81	19287093 .....B-39	.....A-53
..... A-149	..... A-89	19287101 .....B-39	.....A-87
..... A-173	..... A-103	19287564 .....E-79	.....E-65
13881529 ..... A-37	..... A-135	19291400 .....C-11	43818855 .....D-25
..... A-39	..... A-161	19291426 .....C-11	43818863 .....D-25
..... A-89	..... A-195	.....E-35	43819598 .....E-49
..... A-161	13885777 ..... A-121	19295492 .....E-17	43819713 .....B-3
..... A-195	13885785 ..... A-121	19297993 .....A-29	43821024 .....E-35
	13885793 ..... A-121	.....A-191	43821032 .....E-35
	13885801 ..... A-121	19313667 .....E-19	43824291 .....B-29
	13885819 ..... A-121	.....E-21	.....B-45

NUMERICAL INDEX

COMM.NO. PAGE	COMM.NO. PAGE	COMM.NO. PAGE	COMM.NO. PAGE
43824812 .....E-3	43850692 .....E-65	50278894 .....A-11	54666094 .....D-31
43827575 .....E-15	..... E-69	50829647 .....B-29	54666102 .....D-31
43827625 ..... D-17	43851203 ..... A-197	.....B-45	54670302 .....A-209
43830728 .....C-5	..... D-3	50829654 .....H-35	.....D-13
43830736 .....C-5	43853050 ..... A-227	54415393 .....C-5	54680087 .....C-5
43835206 ..... A-55	.....C-41	54461090 .....D-27	54680103 .....C-5
43835214 ..... A-57	43862994 .....C-9	.....D-29	54705447 .....A-9
43835222 ..... A-63	43863000 .....C-39	54474713 .....C-25	54720156 .....A-115
..... A-65	43865294 ..... D-3	.....C-33	54726948 .....C-7
43835230 ..... A-67	..... D-5	.....E-43	54747340 .....D-3
43835248 ..... A-65	43868710 ..... A-43	54487517 .....A-17	54766381 .....C-21
..... A-67	..... A-53	.....A-21	.....C-33
43835255 ..... A-57	..... A-87	.....A-45	.....E-43
43835263 ..... A-61	43869262 ..... A-197	.....A-69	54766399 .....C-21
43835271 ..... A-67	..... D-3	.....A-95	.....C-25
43835289 ..... A-63	43876242 ..... A-73	.....A-123	54766415 .....C-25
43835297 ..... A-55	..... A-127	.....A-153	56998610 .....B-13
43835305 ..... A-63	..... A-181	.....A-177	57588162 .....A-75
43835313 ..... A-67	43876259 ..... A-73	.....A-221	.....A-129
43835321 ..... A-65	..... A-127	.....A-231	.....A-183
43835339 ..... A-65	..... A-181	.....C-45	57607814 .....A-73
43835347 ..... A-63	43876267 ..... A-73	.....H-39	.....A-127
43835354 ..... A-67	..... A-127	.....H-45	.....A-181
43835362 ..... A-67	..... A-181	54492541 .....C-23	58220567 .....C-19
43835370 ..... A-67	43891605 ..... A-197	.....C-31	.....C-21
43835388 ..... A-61	..... D-3	.....E-41	.....C-23
43835396 ..... A-61	43893445 ..... D-25	54496377 .....A-211	.....C-25
43835404 ..... A-61	..... D-27	.....D-17	.....C-27
43835412 ..... A-61	50264860 ..... A-21	54496385 .....A-211	.....C-29
43835420 ..... A-67	..... A-221	.....D-17	.....C-31
43835438 ..... A-67	..... A-231	54516034 .....A-115	.....C-33
43835446 ..... A-57	.....C-45	54531629 .....A-211	.....E-37
..... A-59	..... D-3	.....D-17	.....E-39
43836451 ..... A-43	50269984 .....B-5	54537097 .....H-9	.....E-41
..... A-53	50270248 .....B-3	.....H-11	.....E-43
..... A-87	.....B-29	.....H-39	58220583 .....C-23
43837715 ..... A-73	.....B-45	54563408 .....B-25	.....C-31
..... A-127	..... H-37	.....B-27	.....E-41
..... A-181	..... H-43	54577838 .....B-29	58220633 .....C-23
43838556 .....C-9	50273986 ..... H-37	.....H-37	.....C-31
43843408 ..... G-7	..... H-43	54578117 .....C-7	.....E-41
43843416 ..... G-7	50274299 .....C-7	54584776 .....B-11	58754458 .....E-77
43843564 ..... A-45	.....C-35	54601299 .....E-51	58763491 .....C-17
..... A-69	.....C-37	54616081 .....E-17	58769209 .....C-17
..... A-95	50278019 ..... A-11	54628326 .....A-63	58784281 .....C-23
..... A-123	.....B-13	.....A-111	58788852 .....H-49
..... A-153	.....C-13	54632781 .....A-7	58790296 .....A-115
..... A-177	.....C-19	54633185 .....A-9	58795766 .....C-13
43850320 .....B-31	.....C-23	54651088 .....C-7	58799750 .....A-11
.....B-47	.....C-27	54655360 .....D-15	.....H-33
43850346 .....B-31	.....C-31	.....D-35	58799768 .....A-11
43850353 .....B-31	.....E-37	54666060 .....D-31	.....H-33
43850361 .....B-31	.....E-41	54666078 .....D-31	58799784 .....H-33
43850460 ..... A-17	..... H-33	54666086 .....D-31	58802851 .....C-35

NUMERICAL INDEX

COMM.NO. PAGE	COMM.NO. PAGE	COMM.NO. PAGE	COMM.NO. PAGE
58804592 .....B-25	58874397 ..... D-37	58917261 .....A-113	59007955 .....H-39
.....B-27	58877549 .....E-35	.....D-27	.....H-45
58813791 .....C-21	..... G-7	.....D-29	59009134 .....C-7
.....C-29	58877796 ..... D-33	58917543 .....D-9	59019539 .....A-11
.....E-39	58878000 ..... D-33	58918590 .....C-15	59020040 .....G-5
58814492 .....C-49	58878562 .....E-35	58918947 .....G-11	59025270 .....B-51
58814971 .....C-49	58879768 .....C-3	58920216 .....H-49	.....B-55
58814997 .....C-49	58879891 .....E-13	58921495 .....C-13	59027060 .....B-17
58815614 .....C-25	.....E-21	58924333 .....D-27	59034348 .....C-23
.....C-33	58880303 ..... D-37	.....D-29	.....C-31
.....E-43	58880501 .....B-3	58938275 .....A-223	.....E-41
58815622 .....C-25	58887936 ..... H-17	.....C-41	59035675 .....C-49
.....C-33	58891540 ..... A-11	58946591 .....H-9	59040923 .....H-33
.....E-43	.....B-13	.....H-11	59047019 .....E-35
58820168 .....B-29	58891599 ..... A-11	58950627 .....C-25	59050740 .....E-31
.....B-45	58891623 ..... A-11	.....C-33	59050948 .....G-11
..... D-25	58891631 ..... A-11	.....E-43	59051151 .....G-5
..... D-27	58891649 ..... A-11	58950783 .....C-25	59067538 .....A-13
..... D-29	58891656 ..... A-11	.....C-33	59072694 .....A-63
.....E-3	58891672 ..... A-11	.....E-43	.....A-115
.....E-7	58891755 ..... A-13	58951419 .....E-47	59072702 .....A-65
.....E-9	58891771 ..... A-11	58952466 .....G-7	59077602 .....H-31
.....E-51	58891789 ..... A-11	58954694 .....A-3	59080309 .....B-25
.....E-53	58891797 ..... A-11	58955923 .....E-23	.....B-27
..... H-39	58891805 ..... A-13	58962226 .....A-47	59081323 .....A-223
..... H-45	58891854 ..... A-11	.....A-73	.....C-41
58822313 ..... D-33	58892902 ..... D-25	.....A-97	59087999 .....G-5
58834086 .....E-53	58893108 .....E-55	.....A-127	.....G-11
58835398 ..... A-43	.....E-57	.....A-155	59092924 .....A-201
..... A-53	58893983 ..... D-33	.....A-181	.....A-203
..... A-87	58895079 ..... H-37	58962812 .....A-67	59093351 .....B-31
..... A-91	..... H-43	.....A-115	.....B-47
..... A-107	58896218 ..... A-3	58962846 .....A-115	59097162 .....C-3
..... A-151	58896580 .....B-15	58962887 .....A-61	59098764 .....C-7
..... A-175	.....B-17	58965427 .....E-65	59102749 .....C-21
58844556 ..... A-67	58896952 .....B-15	.....E-69	.....C-25
58845835 ..... D-19	.....B-17	.....E-73	.....C-29
..... D-23	58898677 .....C-11	58965542 .....G-5	.....C-33
58845868 ..... D-19	58901653 .....C-9	58966086 .....C-9	.....E-39
58845876 ..... D-23	..... H-29	58974155 .....A-9	.....E-43
58848920 .....C-37	58903741 .....C-21	58978198 .....G-11	59102913 .....H-33
58855099 .....B-31	.....C-25	58978222 .....G-7	59103259 .....A-223
.....B-47	.....C-29	58978248 .....G-11	.....C-41
58858820 .....C-11	.....C-33	58978255 .....G-3	59103267 .....A-223
58861980 ..... A-143	.....E-39	.....G-7	.....C-41
..... A-167	.....E-43	58978271 .....G-11	59103275 .....A-223
58861998 ..... A-145	58910662 ..... A-71	58978289 .....G-7	.....C-41
..... A-169	..... A-125	.....G-11	59103598 .....C-35
58863176 .....E-61	..... A-179	58979048 .....H-17	.....C-37
58867052 ..... A-197	58913856 ..... D-33	58979964 .....A-3	.....E-5
..... A-199	58916628 ..... A-5	58992603 .....G-7	.....E-11
58869587 ..... H-27	58917014 ..... A-9	.....G-11	59104257 .....C-39
58870924 .....E-19		59004762 .....A-11	59106757 .....H-9
58874389 ..... D-37			.....H-11

NUMERICAL INDEX

COMM.NO. PAGE	COMM.NO. PAGE	COMM.NO. PAGE	COMM.NO. PAGE
59108100 ..... D-9	59147991 ..... A-77	59162149 .....A-37	59196451 .....A-43
59108605 ..... D-9	..... A-131	.....A-39	.....A-53
59109116 ..... D-9	..... A-185	.....A-81	.....A-87
59109819 .....B-3	59148007 ..... A-77	.....A-89	.....A-91
59110312 .....B-37	..... A-131	.....A-103	.....A-107
..... H-21	..... A-185	.....A-135	.....A-151
59111450 ..... D-9	59148569 ..... D-7	.....A-149	.....A-175
59117317 ..... D-15	..... D-25	.....A-161	59197012 .....B-49
.....E-13	..... D-27	.....A-173	.....H-19
59118513 ..... D-33	..... D-29	.....A-195	59199141 .....D-39
59118521 .....C-47	.....E-13	59162982 .....G-5	59203406 .....H-3
59121855 .....C-7	59153601 ..... A-9	59163220 .....A-149	.....H-9
.....E-5	59153619 ..... A-9	.....A-173	.....H-11
.....E-11	59153627 ..... A-9	59163238 .....A-37	59208512 .....B-5
.....E-33	59153650 ..... A-9	.....A-39	59210641 .....C-25
.....E-35	59153759 ..... A-9	.....A-81	.....C-33
..... H-27	59153858 ..... A-9	.....A-89	.....E-43
59122549 .....C-37	59153866 ..... A-9	.....A-103	59210658 .....C-25
59123802 .....C-19	59154120 ..... A-7	.....A-135	.....C-33
.....C-27	59154138 ..... A-7	.....A-149	.....E-43
.....E-37	59154146 ..... A-7	.....A-161	59214650 .....A-199
59126961 ..... D-25	59154153 ..... A-7	.....A-173	.....D-3
59128934 .....E-23	59154179 ..... A-7	.....A-195	59214775 .....B-3
59128942 .....E-23	59154187 ..... A-7	59163758 .....A-15	59218321 .....A-7
59128959 .....E-23	59154195 ..... A-7	59177915 .....B-15	59218461 .....A-9
59128991 .....E-23	59154393 ..... A-211	.....B-23	59218693 .....C-15
59131912 ..... G-11	..... D-17	59179218 .....C-39	59221309 .....H-43
59131920 ..... G-11	59154450 ..... A-211	59181735 .....E-45	59227561 .....A-35
59131938 ..... G-11	..... D-17	59185074 .....D-3	.....D-13
59131946 ..... G-11	59154492 ..... A-211	59187799 .....A-41	59234518 .....B-27
59133918 .....C-35	..... D-17	.....A-105	59239897 .....D-7
59138925 .....C-7	59154500 ..... A-211	59190975 .....B-3	.....D-9
59140384 ..... H-25	..... D-17	.....B-29	59241505 .....B-25
59142018 ..... A-11	59154518 ..... A-211	.....B-45	.....B-27
59142208 ..... A-113	..... D-17	59195008 .....H-43	59241554 .....B-25
59144394 .....C-47	59154526 ..... A-211	59195727 .....A-11	.....B-27
59144428 .....B-5	..... D-17	59195909 .....A-113	59241562 .....B-25
.....B-31	59154542 ..... A-211	59195925 .....A-43	.....B-27
.....B-33	..... D-17	.....A-53	59241570 .....B-25
59145821 ..... A-211	59154658 ..... A-113	.....A-87	.....B-27
..... D-17	..... A-117	.....A-91	59241828 .....B-25
59146233 ..... A-9	59154682 ..... A-115	.....A-107	.....B-27
59146241 ..... A-5	59154807 .....C-35	.....A-151	59241851 .....B-25
..... A-9	59155192 ..... A-13	.....A-175	59242834 .....A-9
59146274 ..... A-7	59155739 ..... A-11	59196444 .....A-43	59242842 .....A-9
59146282 ..... A-9	59158881 .....C-9	.....A-53	59242867 .....A-9
59146290 ..... A-7	59159558 ..... D-25	.....A-87	59243162 .....A-9
59146381 ..... A-7	..... D-27	.....A-91	59245209 .....B-13
59146605 ..... A-9	..... D-29	.....A-107	59246603 .....G-3
59146613 ..... A-9		.....A-151	59246611 .....G-3
59146654 ..... A-9		.....A-175	59246835 .....A-9
59146662 ..... A-9			59249284 .....E-31
59146670 ..... A-9			.....E-33
			.....H-27

NUMERICAL INDEX

COMM.NO.	PAGE
59249292	A-11
59266726	B-35
59268854	A-25
	A-217
	A-227
59275917	A-207
59275990	A-207
59277756	B-5
59277764	B-11
59277772	B-5
	B-31
	B-47
59286336	C-5
59289025	A-207
59290114	A-3
59290460	G-3
59290478	G-3
59290486	G-3
59290494	G-3
59290726	B-33
59290734	A-45
	A-69
	A-95
	A-123
	A-153
	A-177
59290742	A-45
	A-69
	A-95
	A-123
	A-153
	A-177
59290767	A-45
	A-69
	A-95
	A-123
	A-153
	A-177
59290783	A-45
	A-69
	A-95
	A-123
	A-153
	A-177
59290817	A-45
	A-69
	A-95
	A-123
	A-153
	A-177
	A-223
59290858	G-3
	G-7
59291062	E-59
	E-61
59291070	E-55
	E-57
59291088	E-49
	E-51
59296632	B-9
59298208	B-3
59299164	D-13
59299545	B-3
59309104	C-7
59309385	A-9
59309393	A-9
59321687	C-37
59326827	A-43
	A-53
	A-91
	A-107
	E-29
59328575	H-39
	H-45
59329979	C-9
59331934	C-37
59337097	C-19
	C-27
	C-31
	E-37
	E-41
59344176	C-5
59360354	C-15
	C-17
59360487	C-15
59360511	C-15
59360552	C-15
59360685	C-13
59360735	C-13
59360776	C-13
59360941	C-15
59360966	B-13
59366401	A-15
59368837	A-13
59368845	A-13
59368886	A-11
59369371	C-17
59369454	C-17
59369462	C-17
59369470	C-17
59369504	C-13
59369561	C-17
59369603	C-17
59369637	C-15
59369694	C-17
59387498	B-13
59387605	B-13
59388199	E-65
	E-69
	E-73
59396366	C-49
59398925	C-49
59422907	C-25
	C-33
	E-43
59424309	D-3
59430694	A-5
59431494	B-31
	B-47
59431684	C-25
	C-33
	E-43
59431726	C-25
	C-33
	E-43
59436741	B-3
59437079	D-3
59437087	D-3
59446138	C-13
59450528	B-3
59465641	E-7
59465658	E-13
59465674	A-47
	A-71
	A-73
	A-97
	A-125
	A-127
	A-155
	A-179
	A-181
59476895	C-15
59495028	C-39
59498790	C-37
59510065	B-15
	B-17
59524447	A-15
59546275	H-9
59565044	B-5
	B-11
	D-5
	H-43
59565051	A-3
59579094	G-5
	G-11
59580571	C-9
59583500	H-37
	H-39
59586511	C-7
59587014	H-37
	H-39
	H-43
	H-45
59600593	B-11
59605915	G-3
	G-5
	G-7
	G-11
59607853	A-201
	A-203
	B-3
59607861	A-201
	A-203
	B-3
59608570	E-23
59613612	B-5
59617985	C-9
59626051	A-15
59631606	H-37
	H-43
59636738	E-19
59661413	E-13
59665877	B-49
	H-19
59667287	G-5
59670554	A-117
59672709	C-9
59672733	H-13
59673137	H-37
	H-43
59683805	H-37
	H-43
59698811	A-11
	C-15
	C-19
	C-21
	C-23
	C-25
	C-27
	C-29
	C-31
	C-33
	E-37
	E-39
	E-41
	E-43
	H-33
59725051	H-43
59726075	C-7
59742890	B-49
	H-19
59743013	H-25

NUMERICAL INDEX

COMM.NO.	PAGE
59764498	H-15
	H-17
59769661	A-7
59779918	C-23
	C-31
	E-41
59785121	C-25
	C-33
	E-43
59785246	C-21
	C-29
	E-39
59785303	C-19
	C-23
	C-27
	C-31
	E-37
	E-41
59785519	A-13
	B-13
	C-19
	C-23
	C-27
	C-31
	E-37
	E-41
59785642	C-21
	C-25
	C-29
	C-33
	E-39
	E-43
59787879	B-15
	B-17
59790824	A-5
59793752	A-9
59793786	A-7
59794115	A-5
	A-9
59794123	A-5
	A-9
59794149	A-7
59816322	C-5
59819292	C-7
59824250	E-23
59827261	C-5
59845594	H-39
	H-45
59847798	C-9
59849661	E-51
	E-53
59854877	C-49
59861872	B-13
	C-19
	C-23
	C-27
	C-31
	E-37
	E-41
59866970	C-49
59869008	A-15
59871731	C-25
	C-33
	E-43
59871772	C-33
	E-43
59873984	E-25
59876219	A-41
	A-105
59887182	B-33
59896613	E-65
	E-69
	E-73
59902668	B-25
	B-27
59902676	B-25
	B-27
59902684	B-25
	B-27
59902841	B-27
59918540	H-25
59919670	C-9
59922211	C-9
59922419	C-11
59922526	H-15
59922591	B-5
	H-29
59922864	H-31
59922906	C-11
59922971	H-29
59922989	A-3
	C-11
59923797	C-11
59923961	C-11
59924043	B-29
	B-45
59924092	H-25
59924241	A-47
	A-71
	A-97
	A-125
	A-155
	A-179
59924472	B-41
59929059	D-7
59929182	C-11
	H-47
59929711	A-15
59933614	C-23
	C-31
	E-41
59933622	A-11
	C-13
	C-15
	C-23
	C-25
	C-31
	C-33
	E-41
	E-43
	H-33
59933713	C-19
	C-23
	C-27
	C-31
	E-37
	E-41
59938373	C-21
	C-25
	C-29
	C-33
	E-39
	E-43
59941203	B-13
	C-23
	C-31
	E-41
59941682	E-45
59946863	A-93
	A-107
	A-151
	A-175
59947507	G-5
	G-13
59947580	C-25
	C-33
	E-43
59949339	C-23
	C-27
	E-37
59949461	C-17
	C-25
	C-33
	E-43
59949511	C-19
	C-23
	C-27
	C-31
	E-37
	E-41
59959080	B-49
	H-19
59961821	B-29
	B-45
59972877	C-21
	C-25
	C-29
	C-33
	E-39
	E-43
59972919	D-25
	D-27
59980482	C-9
59986422	C-19
	C-23
	C-27
	C-31
	E-37
	E-41
59990010	B-15
	B-17
	B-23
59992081	B-31
	B-47
59992099	B-31
	B-47
59993881	A-3
	C-9
59995019	B-31
	B-47
80789621	A-143
	A-167
80789639	A-143
	A-167
80789647	A-143
	A-167
80789654	A-143
	A-167
80789662	A-147
	A-171
80789670	A-147
	A-171
80789688	A-147
	A-171
80789696	A-143
	A-167
80789704	A-143
	A-167

NUMERICAL INDEX

COMM.NO. PAGE	COMM.NO. PAGE	COMM.NO. PAGE	COMM.NO. PAGE
80789712 ..... A-143	80809064 ..... A-145	95049359 .....B-29	95280194 .....B-31
..... A-167	..... A-169	.....B-45	.....B-41
80793201 ..... A-141	80809080 ..... A-145	95067658 .....E-45	.....B-47
..... A-165	..... A-169	.....H-45	.....C-9
80808801 ..... A-143	80809098 ..... A-145	95086062 .....C-25	.....H-17
..... A-167	..... A-169	.....C-29	95285144 .....A-47
80808819 ..... A-143	80809106 ..... A-143	.....C-33	.....A-71
..... A-167	..... A-167	.....E-39	.....A-97
80808827 ..... A-145	80809114 ..... A-143	.....E-43	.....A-125
..... A-169	..... A-167	95097663 .....C-21	.....A-155
80808835 ..... A-145	80809122 ..... A-143	.....C-25	.....A-179
..... A-169	..... A-167	.....C-29	95285946 .....C-11
80808843 ..... A-145	80809130 ..... A-143	.....C-33	95286266 .....C-5
..... A-169	..... A-167	.....E-39	95301826 .....E-67
80808850 ..... A-145	80809148 ..... A-143	.....E-43	.....E-71
..... A-169	..... A-167	95098679 .....B-3	.....E-73
80808868 ..... A-145	80809155 ..... A-143	.....B-29	95301834 .....D-5
..... A-169	..... A-167	.....B-45	95301842 .....E-73
80808876 ..... A-145	80809163 ..... A-143	95188710 .....B-37	95301867 .....B-29
..... A-169	..... A-167	.....H-21	.....B-45
80808884 ..... A-143	80809171 ..... A-143	.....H-29	95301875 .....E-13
..... A-167	..... A-147	95200648 .....B-13	95302709 .....C-5
80808892 ..... A-143	..... A-167	.....C-19	95303335 .....B-31
..... A-147	..... A-171	.....C-23	.....B-47
..... A-167	80809189 ..... A-143	.....C-27	.....H-41
..... A-171	..... A-147	.....C-31	.....H-47
80808900 ..... A-147	..... A-167	.....E-37	95303350 .....B-5
..... A-171	..... A-171	.....E-41	.....C-11
80808918 ..... A-143	80809197 ..... A-143	95201273 .....A-113	.....H-41
..... A-167	..... A-167	.....A-117	.....H-47
80808926 ..... A-147	80809205 ..... A-147	95201547 .....B-3	95303368 .....B-23
..... A-171	..... A-171	.....B-29	.....B-29
80808934 ..... A-147	80809213 ..... A-143	.....B-45	.....B-31
..... A-171	..... A-147	.....H-37	.....B-45
80808942 ..... A-147	..... A-167	.....H-43	.....B-47
..... A-171	..... A-171	95208971 .....A-27	.....D-3
80808959 ..... A-147	80811409 ..... A-145	95210258 .....C-13	95303384 .....C-9
..... A-171	..... A-169	.....C-21	95303392 .....A-3
80808975 ..... A-147	80816465 ..... A-145	95219713 .....B-35	95316956 .....B-31
..... A-171	..... A-169	95220893 .....C-5	.....B-47
80808983 ..... A-147	80816499 ..... A-141	95223384 .....H-37	95323366 .....B-37
..... A-171	..... A-165	.....H-43	.....H-13
80808991 ..... A-147	80817992 ..... H-19	95231163 .....A-203	.....H-21
..... A-171	90502592 ..... A-3	95257341 .....C-9	95326930 .....B-17
80809007 ..... A-145	..... A-5	95278008 .....C-5	95326955 .....B-31
..... A-169	90502816 ..... A-9	95279337 .....B-31	.....B-47
80809015 ..... A-145	90502949 ..... A-5	.....B-47	95329215 .....B-31
..... A-169	95011060 .....B-31	.....H-39	.....B-47
80809023 ..... A-145	.....B-47	.....H-45	
..... A-169	95018719 .....B-3	95280087 .....H-39	
80809031 ..... A-145	95043238 .....B-31	.....H-45	
..... A-169	.....B-47		
80809056 ..... A-145	95048393 .....B-31		
..... A-169	.....B-47		

NUMERICAL INDEX

COMM.NO. PAGE	COMM.NO. PAGE	COMM.NO. PAGE	COMM.NO. PAGE
95329975 .....B-31	95378873 ..... A-45	95919643 .....H-37	96701461 .....A-113
.....B-33	..... A-69	.....H-43	.....A-115
.....B-37	..... A-95	95920401 .....H-17	.....A-117
.....B-47	..... A-123	95922134 .....E-15	.....A-201
.....C-9	..... A-153	95922274 .....A-115	.....A-203
..... H-21	..... A-177	95922324 .....A-27	.....C-9
..... H-37	.....C-7	95922332 .....A-37	.....E-11
..... H-39	95383980 ..... A-203	.....A-39	.....E-13
..... H-43	95386587 .....C-49	.....A-81	.....E-21
..... H-45	95387890 .....B-41	.....A-89	.....E-29
95329983 .....C-11	95402806 .....B-37	.....A-103	.....E-61
95330692 ..... H-15	..... H-21	.....A-135	96701479 .....D-25
..... H-17	95403515 .....B-31	.....A-149	.....D-27
..... H-39	.....B-47	.....A-161	.....D-29
..... H-45	95412946 .....B-3	.....A-173	.....E-73
95341673 ..... H-15	95415667 .....B-49	.....A-195	.....H-15
95343596 .....B-37	..... H-19	.....E-15	.....H-17
..... H-21	..... H-39	95922381 .....H-29	96701495 .....B-73
95356960 .....C-11	..... H-45	95923058 .....C-7	.....C-7
95356978 .....B-41	95415824 .....B-15	95923199 .....H-45	.....D-5
95357570 ..... H-15	95416277 ..... H-15	95923314 .....H-49	.....E-63
..... H-17	..... H-17	95923322 .....B-33	96701560 .....A-43
95359410 .....C-11	95416731 ..... H-39	.....E-63	.....A-53
..... H-41	95424586 .....E-23	95923348 .....A-17	.....A-87
..... H-47	.....E-77	95924239 .....E-65	.....A-91
95363339 ..... H-37	..... H-13	.....E-69	.....A-107
..... H-43	95431284 .....C-9	.....E-73	.....A-151
95365078 ..... H-29	95439006 .....B-5	95929782 .....A-113	.....A-175
..... H-39	95457586 ..... H-3	.....A-117	.....B-23
..... H-45	95469128 .....C-11	95931564 .....A-27	.....D-13
95365086 .....B-37	..... H-17	.....A-201	.....D-15
95365094 .....B-49	95480117 ..... A-3	95932141 .....E-15	96701578 .....B-3
..... H-19	95488110 .....B-31	95943346 .....D-7	.....H-37
95371258 .....B-49	.....B-47	.....E-15	.....H-43
..... H-19	95488250 ..... H-45	95944260 .....H-49	96701594 .....D-5
95372173 .....B-69	95649844 .....B-49	95988093 .....A-43	96701883 .....B-31
95373973 ..... A-45	..... H-19	.....A-53	.....B-47
..... A-73	95650339 .....B-23	.....A-87	96701917 .....A-21
..... A-95	95671285 ..... A-47	.....A-91	.....A-47
..... A-117	..... A-71	.....A-107	.....A-71
..... A-127	..... A-97	.....A-151	.....A-73
..... A-153	..... A-125	.....A-175	.....A-97
..... A-181	..... A-155	95988721 .....C-11	.....A-125
.....C-47	..... A-179	95988739 .....B-5	.....A-127
.....C-49	95720256 .....B-5	95988796 .....C-11	.....A-155
..... D-13	95829263 .....B-41	96700927 .....D-13	.....A-179
.....E-3	.....C-9	96701370 .....A-113	.....A-181
.....E-19	95860052 ..... D-7	.....A-115	.....A-221
.....E-45	95866687 ..... H-31	.....C-3	.....A-231
.....E-65	95887303 .....B-71	.....C-5	.....C-45
.....E-69	95919254 .....C-5	.....H-3	.....D-15
.....E-77	95919304 ..... A-201		.....D-35
.....E-79	95919460 ..... H-29		
	95919528 ..... H-15		

NUMERICAL INDEX

COMM.NO. PAGE	COMM.NO. PAGE	COMM.NO. PAGE	COMM.NO. PAGE
96701958 ..... A-111	96702444 ..... A-31	96702816 .....A-17	96703640 .....C-7
..... A-113	.....B-73	.....A-21	96703657 .....B-5
..... A-117	.....C-5	.....A-73	.....B-11
.....B-3	.....C-7	.....A-127	.....H-43
.....B-29	96702469 ..... A-41	.....A-181	96703665 .....A-3
.....B-45	..... A-105	.....A-221	.....D-5
.....C-7	96702642 ..... A-29	.....A-231	96703699 .....H-37
..... D-25	..... A-31	.....C-37	.....H-43
..... D-27	..... A-43	.....C-45	96703756 .....E-51
..... D-29	..... A-53	.....E-73	.....E-59
..... H-49	..... A-91	96702824 .....A-17	.....E-61
96702162 .....C-11	..... A-107	.....A-43	96704234 .....A-113
96702261 ..... A-19	..... A-191	.....A-45	.....A-115
..... A-219	96702659 ..... A-19	.....A-53	.....A-117
..... A-229	..... A-37	.....A-69	.....E-19
.....C-43	..... A-39	.....A-73	96704291 .....A-113
96702279 .....C-35	..... A-45	.....A-87	96704309 .....B-29
.....C-37	..... A-69	.....A-89	.....B-45
.....C-39	..... A-73	.....A-91	.....C-9
..... D-3	..... A-89	.....A-95	.....C-37
.....E-65	..... A-95	.....A-107	.....C-39
.....E-69	..... A-123	.....A-123	.....D-3
..... H-15	..... A-127	.....A-127	96704358 .....A-77
..... H-17	..... A-149	.....A-151	.....A-131
96702287 ..... A-17	..... A-153	.....A-153	.....A-185
..... A-209	..... A-161	.....A-161	96704481 .....B-15
.....B-29	..... A-173	.....A-175	.....B-17
.....B-45	..... A-177	.....A-177	96704556 .....A-43
.....C-37	..... A-181	.....A-181	.....A-53
..... D-13	..... A-195	.....B-31	.....A-71
..... D-15	..... A-219	.....B-47	.....A-87
..... H-15	..... A-229	.....C-5	.....A-125
..... H-17	.....C-3	.....C-35	.....A-151
..... H-25	.....C-43	.....D-3	.....A-175
96702311 ..... A-111	..... D-3	.....D-5	.....A-179
96702329 ..... A-3	.....E-5	.....D-15	.....B-15
.....B-7	.....E-51	.....E-51	.....B-17
.....B-51	96702709 .....B-11	.....H-35	.....B-29
.....C-7	96702774 .....B-29	96702857 .....A-17	.....B-45
.....C-9	.....B-45	.....A-35	.....C-3
96702386 ..... D-7	96702790 ..... A-35	.....D-13	96704564 .....A-79
96702394 ..... A-45	.....B-5	96702873 .....E-33	.....A-111
..... A-69	..... D-13	.....E-35	.....A-113
..... A-95	..... H-43	.....H-27	.....A-115
..... A-123	96702808 .....B-5	96703111 .....A-43	.....A-117
..... A-153	.....B-11	.....A-53	.....A-133
..... A-177	..... D-5	.....A-87	.....A-187
.....E-9	..... D-13	.....D-15	.....C-7
.....E-13	..... D-15	96703152 .....A-43	.....C-49
96702428 .....B-9		.....A-53	.....E-13
..... H-25		96703178 .....A-91	.....E-35
96702436 .....B-9		.....A-107	.....E-77
		96703442 .....A-17	.....H-27
		96703459 .....A-17	

NUMERICAL INDEX

COMM.NO. PAGE	COMM.NO. PAGE	COMM.NO. PAGE	COMM.NO. PAGE
96704580 ..... A-37	96704606 ..... A-19	96704663 .....A-45	96705272 .....B-29
..... A-39	..... A-41	.....A-69	.....B-45
..... A-81	..... A-73	.....A-79	96705546 .....B-3
..... A-89	..... A-105	.....A-95	.....E-45
..... A-103	..... A-127	.....A-123	96705553 .....H-37
..... A-135	..... A-181	.....A-133	.....H-39
..... A-149	..... A-209	.....A-153	.....H-43
..... A-161	..... A-219	.....A-177	.....H-45
..... A-173	..... A-229	.....A-187	96705587 .....A-17
..... A-195	.....C-43	.....A-201	.....A-37
.....C-9	..... D-3	.....A-203	.....A-39
..... D-7	..... D-13	.....C-7	.....A-73
.....E-63	..... D-15	.....C-49	.....A-81
.....E-67	.....E-17	.....D-3	.....A-89
.....E-71	.....E-51	.....E-9	.....A-103
.....E-75	.....E-55	.....E-11	.....A-113
96704598 ..... A-79	.....E-57	.....E-33	.....A-127
..... A-133	.....E-59	.....E-35	.....A-135
..... A-187	.....E-61	.....E-73	.....A-161
..... A-201	.....E-65	.....H-27	.....A-181
..... A-203	.....E-69	96704739 .....B-3	.....A-195
.....B-49	.....E-73	96704804 .....D-5	.....B-33
.....C-9	96704614 ..... A-47	96704812 .....A-77	.....C-9
.....E-9	..... A-71	.....A-131	.....C-49
.....E-13	..... A-97	.....A-185	.....D-15
.....E-21	..... A-125	.....B-29	.....D-35
.....E-29	..... A-155	.....B-45	.....E-59
.....E-45	..... A-179	.....C-3	.....E-61
.....E-55	.....B-29	.....C-5	.....H-3
.....E-57	.....B-45	.....C-37	96705595 .....A-17
.....E-59	..... D-15	.....E-65	.....C-9
.....E-61	..... D-35	.....E-69	96705728 .....A-37
.....E-77	..... H-15	96704846 .....H-25	.....A-39
..... H-19	..... H-17	96704887 .....H-39	.....A-81
..... H-39	96704630 .....C-3	.....H-45	.....A-89
		96704952 .....C-3	.....A-103
		96704978 .....B-51	.....A-135
		96705009 .....C-49	.....A-149
		96705041 .....D-5	.....A-161
		.....E-9	.....A-173
		.....E-31	.....A-195
		96705116 .....A-77	.....E-67
		.....A-131	.....E-71
		.....A-185	.....E-75
		.....D-3	
		96705124 .....D-3	
		96705132 .....C-5	
		96705165 .....E-67	
		.....E-71	
		.....E-75	
		96705173 .....E-67	
		.....E-71	
		.....E-75	

NUMERICAL INDEX

COMM.NO. PAGE	COMM.NO. PAGE	COMM.NO. PAGE	COMM.NO. PAGE
96705736 ..... A-37	96712237 ..... A-3	96715081 .....B-53	96726377 .....A-143
..... A-39	.....B-5	.....B-55	.....A-167
..... A-81	.....B-29	.....B-59	96726435 .....C-7
..... A-89	.....B-45	.....B-61	96727458 .....A-17
..... A-103	.....B-51	.....B-65	96727532 .....A-29
..... A-135	.....B-53	.....B-67	.....A-31
..... A-149	.....B-55	96715180 .....A-205	.....A-43
..... A-161	.....B-59	.....E-45	.....A-53
..... A-173	.....B-61	96715552 .....H-25	.....A-91
..... A-195	.....B-65	96718671 .....B-23	.....A-107
.....C-9	.....B-67	96718689 .....A-115	.....A-191
96705793 ..... A-113	.....B-73	96718838 .....A-197	96727987 .....A-113
..... A-117	.....C-7	96718861 .....A-141	.....E-55
.....E-77	..... D-5	.....A-165	.....E-57
96706825 .....E-33	96712674 ..... A-17	96718978 .....B-29	.....E-59
.....E-35	..... A-41	.....B-45	.....E-61
..... H-27	..... A-43	96719513 .....A-199	96728142 .....H-39
96707906 ..... A-117	..... A-45	96719786 .....A-17	.....H-45
96708300 .....C-11	..... A-53	.....A-81	96728464 .....B-29
96708425 .....B-15	..... A-69	.....A-135	.....B-45
.....B-17	..... A-87	.....A-149	96728506 .....A-223
96708722 ..... H-37	..... A-91	.....A-173	.....C-41
..... H-43	..... A-95	.....E-55	96728522 .....E-65
96708987 ..... H-39	..... A-105	.....E-57	.....E-69
96710983 .....B-5	..... A-107	96720032 .....A-31	.....E-73
96711411 .....B-5	..... A-123	.....A-91	96728548 .....A-45
96711510 .....B-5	..... A-151	.....A-107	.....A-69
96711833 ..... A-17	..... A-153	96720115 .....E-63	.....A-95
.....B-3	..... A-175	96720131 .....A-141	.....A-123
.....B-29	..... A-177	.....A-165	.....A-153
.....B-45	.....B-33	96720149 .....A-141	.....A-177
.....C-3	.....C-7	.....A-165	.....D-3
.....C-35	.....E-7	96720156 .....B-49	.....E-11
.....C-37	.....E-9	.....H-19	96728704 .....A-103
.....C-39	.....E-17	96720438 .....B-3	96728803 .....B-3
..... D-3	96712716 .....B-29	96720446 .....B-23	96736822 .....B-5
..... D-13	.....B-45	.....B-51	96737069 .....B-7
..... D-15	96712849 ..... A-197	.....B-55	96738208 .....D-5
..... D-25	96713979 ..... A-73	96720594 .....C-7	96738547 .....E-51
..... D-27	..... A-127	96720636 .....A-199	.....E-59
..... D-29	..... A-181	96720909 .....A-141	.....E-61
96711882 ..... D-5	..... H-3	.....A-165	.....E-67
96712146 .....B-3	96713987 ..... H-37	96720933 .....A-141	
	..... H-43	.....A-165	
	96714019 .....B-15	96720974 .....E-51	
	.....B-17	.....E-59	
	96714043 ..... A-3	.....E-61	
	96714365 ..... A-91	96720990 .....B-9	
	..... A-107	96721923 .....A-141	
	96714399 .....B-3	.....A-165	
	96714407 .....B-33	96722228 .....A-141	
	96714472 .....E-19	.....A-143	
	96714910 .....B-29	.....A-165	
	.....B-45	.....A-167	

NUMERICAL INDEX

COMM.NO. PAGE	COMM.NO. PAGE	COMM.NO. PAGE	COMM.NO. PAGE
96738554 ..... A-45	96740188 ..... A-17	96741038 .....A-17	96741046 .....A-47
..... A-69	..... A-19	.....A-37	.....A-71
..... A-95	..... A-45	.....A-39	.....A-73
..... A-113	..... A-69	.....A-73	.....A-77
..... A-123	..... A-95	.....A-81	.....A-89
..... A-153	..... A-123	.....A-89	.....A-97
..... A-177	..... A-153	.....A-103	.....A-125
..... A-207	..... A-177	.....A-113	.....A-127
.....C-9	..... A-219	.....A-115	.....A-131
..... D-3	..... A-229	.....A-127	.....A-155
..... D-7	.....C-43	.....A-135	.....A-161
.....E-63	..... D-5	.....A-149	.....A-179
.....E-67	96740204 ..... D-3	.....A-161	.....A-181
.....E-71	..... D-5	.....A-173	.....A-185
.....E-75	..... D-15	.....A-181	.....A-209
96738596 ..... A-3	96740444 ..... A-207	.....A-195	.....B-9
..... A-17	.....E-73	.....A-209	.....B-29
..... A-31	96740998 .....B-23	.....B-29	.....B-45
..... A-35		.....B-45	.....C-5
..... A-113		.....C-3	.....C-7
.....B-5		.....C-5	.....C-9
.....B-11		.....C-9	.....C-11
.....C-5		.....C-35	.....C-35
.....C-7		.....C-37	.....D-3
.....C-9		.....C-49	.....D-13
.....C-11		.....D-3	.....D-15
..... D-5		.....D-5	.....E-63
..... D-13		.....D-13	.....E-65
..... D-15		.....D-15	.....E-69
.....E-63		.....E-13	.....E-73
..... H-43		.....E-21	.....H-15
..... H-45		.....E-31	.....H-17
96738612 ..... A-17		.....E-51	.....H-25
..... A-43		.....E-55	
..... A-53		.....E-57	
..... A-91		.....E-59	
..... A-107		.....E-61	
.....B-5		.....E-73	
.....C-3		.....H-35	
96738620 .....B-15			
.....B-17			
.....B-51			
.....B-55			
96738646 .....B-29			
.....B-45			
..... D-5			
96739388 ..... H-37			
..... H-43			
96739990 .....B-5			

COMM.NO. PAGE	COMM.NO. PAGE	COMM.NO. PAGE	COMM.NO. PAGE
96741053 ..... A-111	96745518 .....E-51		
..... A-113	96746235 ..... A-29		
..... A-115	..... A-43		
..... A-117	..... A-53		
..... A-201	..... A-191		
..... A-203	..... D-5		
.....B-3	96746417 ..... A-43		
.....B-29	..... A-53		
.....B-45	..... A-87		
.....B-49	..... A-91		
.....C-7	..... A-107		
.....C-49	..... A-151		
..... D-25	..... A-175		
..... D-27	96753025 ..... A-141		
..... D-29	..... A-165		
.....E-13			
.....E-19			
.....E-29			
.....E-33			
.....E-35			
.....E-45			
.....E-51			
.....E-55			
.....E-57			
.....E-59			
.....E-61			
.....E-77			
..... H-15			
..... H-17			
..... H-19			
..... H-27			
..... H-39			
..... H-45			
..... H-49			
96741442 ..... A-43			
..... A-53			
..... A-87			
..... A-91			
..... A-107			
..... A-151			
..... A-175			
..... D-13			
..... D-15			
96741863 ..... A-3			
96743240 ..... A-117			
96743257 ..... A-111			
96743265 ..... A-113			
96743273 ..... A-111			
96743281 ..... A-113			
..... A-115			
96743299 ..... A-113			
96743653 ..... A-91			
96743851 .....B-5			
96745492 .....E-67			

The warranty statement is provided within the manual kit shipped with the machine.

VOLVO

Volvo Construction Equipment
www.volvo.com

Ref. No. VOE21A9920176 English
CPN 43931443
Printed in USA 2007-09 CST
Volvo, Shippensburg