RUTHZIL TRATOR COMERCIAL DE PEÇAS LTDA 11 97083-6812 ROLANDO

VOLVO CONSTRUCTION EQUIPMENT

PARTS CATALOG

SD-70D

S/N 199398

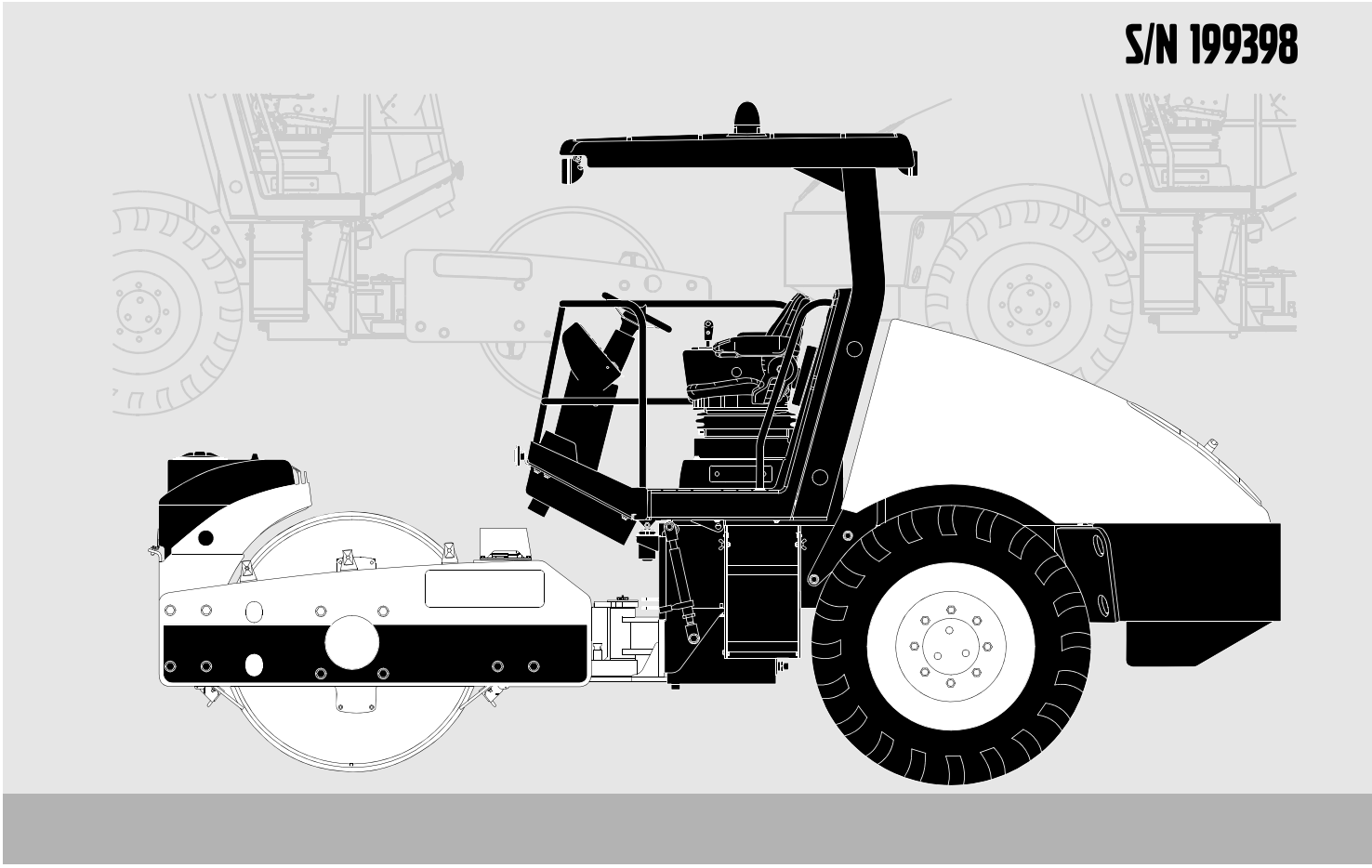

MORE CARE. BUILT IN.

HOW TO USE THIS MANUAL

This Parts Manual applies to all SD-70D Series VIBRATORY COMPACTOR

When the Comm. # is not Known - Use the Word Index:

- Volvo's Word Index will make this item easy to locate. The Word Index is found in the very back of the book. The items listed are in alphabetical order and may be repeated several times depending on their functional descriptions.

- Let's assume you need to replace the PRIMARY AIR CLEANER FILTER ELEMENT.

Use any of the functional words in the item description to locate the desired item. Example: The first listing for the Primary Air Cleaner Filter Element in the **Word Index** is: Air Cleaner Primary Filter Element. The index shows the component will be found on page C.4.3 that is the **Parts List** page number for the Air Cleaner Assembly.

A
Air Cleaner Primary Filter Element _____ C.4.3
Air Cleaner Safety Filter Element _____ C.4.3
Air Cleaner _____ C.4.3
Air Valve _____ A.2.3
Alarm, Backup _____ B.5.3
Alternator Belt Guard _____ C.2.5
Alternator _____ C.2.3
Arch ROPS _____ A.5.3
Articulation Pin _____ B.1.3
Audible Alarm Wiring Harness _____ E.6.3
Axle Drive Motor _____ A.1.3

- The item is also listed as:

Element, Air Cleaner Primary Filter
Filter Element, Air Cleaner Primary
Primary Filter Element, Air Cleaner

Using the Parts Identification Pages:

- The **PARTS IDENTIFICATION PAGES** consist of the **PARTS ILLUSTRATION** (even numbered pages) and the **PARTS LIST** (odd numbered pages).

- The **Parts Illustration** shows the assembly with its component parts identified by I**tem Numbers.**

- On the **Parts List**, the components are listed in **Item Number** order as found in the **ITEM** column. Other information provided by the **Parts List** is the **Comm. Number** which will be required to order Genuine VolvoVolvo Replacement Parts, a **functional description**, the **quantity** required to assemble one complete assembly, and any additional **notes/ dimensions** required to help place your parts order.

- **For the example: The Air Cleaner** Primary Filter Element is listed under the Air Cleaner (Item 1), Comm. Number 13277983, Quantity of 1.

When the Comm. # is <u>not</u> known - Use the Table of Contents:

- Turn to the **TABLE OF CONTENTS** pages in the front of this manual. These pages show the major systems of the machine divided into **FUNCTIONAL GROUPS** (identified by capital letters).
- Find the **Functional Group** that best describes the area of the machine you are interested in. For example: Air Cleaner Assembly
- See the sample **Table of Contents** shown below:

ENGINE

C

Engine Installation C.1.2
Engine Assembly C.2.2
Pump Stack Assembly.....C.3.2
Air Cleaner Assembly C.4.2
Exhaust Assembly.....C.5.2
Remote Oil Drain Assembly C.6.2

Listed under the **Functional Group** of Engine are **SECTIONS** (identified by numbers that describe major repairable components of that group. Find the listing that refers to the Engine Assembly.

- Since the Air Cleaner **Primary Filter Element** is what needs to be replaced, refer to the parts listing for the Air Cleaner Assembly. The Air Cleaner used on your machine is found in **Functional Group C.; Section 4,** this makes up the first part of the page number. Turn to that section of the parts manual and find the parts listing on page **C.4.3** for the Air Cleaner **(13277983)**.

When the Comm. # <u>is</u> Known - Use the Numerical Index:

- If you already know the **Comm. Number** (part number) for the item required, a **NUMERICAL INDEX** is provided in the back of the manual to assist you. Look up the **Comm. Number** desired and the **Numerical Index** will show the **Functional Group, Section, and Page Number** where the item can be found.

For our Primary Air Cleaner Filter Element Example: The **Comm. Number** 13255443 is found in the **Numerical Index**, it shows that component will be found on pages C.4.3 that is the Parts List page for the Engine Assembly.

TABLE OF CONTENTS
SD-70D

TITLE **PAGE**

Section A - AXLE AND MAIN FRAME

AXLE INSTALLATION A-2
DIAMETER TREAD W/BALLAST INSTALLATION A-4
FRAME INSTALLATION - SHEET 1 OF 2 . . . . . A-6
FRAME INSTALLATION - SHEET 2 OF 2 . . . . . A-8
HYDRAULIC TANK ASSEMBLY A-10
FUEL TANK INSTALLATION A-12
FUEL TANK ASSEMBLY A-14
BRAKE SHUNT MANIFOLD ASSEMBLY A-16
THERMAL BYPASS VALVE INSTALLATION A-18
UNIQUE FRONT FRAME ASSEMBLY A-20
HOOD INSTALLATION A-22
HOOD ASSEMBLY - SHEET 1 OF 2 . . . . . A-24
HOOD ASSEMBLY - SHEET 2 OF 2 . . . . . A-26
PROP PIN BLOCK ASSEMBLY A-28
NO ROPS/HOOD DRAW LATCH INSTALLATION A-30
ROPS/FOPS INSTALLATION A-32
SEATBELT INSTALLATION A-34
ROPS/HOOD BRACKET INSTALLATION A-36
SHIP ROPS LOOSE OPTION A-38

Section B - DRUM

DRUM ASSEMBLY B-2
ECCENTRIC ASSEMBLY B-4
CARRIER ASSEMBLY B-6
DRUM DRIVE ASSY B-8
FRONT FRAME INSTALLATION B-10
DRUM SCRAPER INSTALLATION B-12
SMOOTH DRUM SCRAPER INSTALLATION B-14

Section C - ENGINE

ENGINE INSTALLATION C-2
ENGINE ASSEMBLY - TIER II - SHEET 1 OF 2 . . . . . C-4
ENGINE ASSEMBLY - TIER II - SHEET 2 OF 2 . . . . . C-6
PUMP STACK ASSEMBLY - SHEET 1 OF 2 . . . . . C-8
PUMP STACK ASSEMBLY - SHEET 2 OF 2 . . . . . C-10
EXHAUST INSTALLATION C-12
COOLING INSTALLATION C-14
RADIATOR/OIL COOLER ASSEMBLY C-16
UNIQUE AIR CLEANER RESTRICTION INSTALLATION - OPTION C-18

TABLE OF CONTENTS
SD-70D

TITLE **PAGE**

Section D - OPERATORS COMPARTMENT

OPERATORS PLATFORM INSTALLATION - SHEET 1 OF 2 . . . . . D-2
OPERATORS PLATFORM INSTALLATION - SHEET 2 OF 2 . . . . . D-4
CONTROL PANEL ASSEMBLY D-6
EMERGENCY STOP ASSEMBLY D-8
FUSE COVER ASSEMBLY D-10
UNIQUE NO ROPS OPERATORS PLATFORM INSTALLATION D-12
PEDESTAL ASSEMBLY D-14
GAUGE PANEL ASSEMBLY D-16
SEAT ASSEMBLY D-18

Section E - ELECTRICAL

WIRING INSTALLATION - SHEET 1 OF 7 . . . . . E-2
WIRING INSTALLATION - SHEET 2 OF 7 . . . . . E-4
WIRING INSTALLATION - SHEET 3 OF 7 . . . . . E-6
WIRING INSTALLATION - SHEET 4 OF 7 . . . . . E-8
WIRING INSTALLATION - SHEET 5 OF 7 . . . . . E-10
WIRING INSTALLATION - SHEET 6 OF 7 . . . . . E-12
WIRING INSTALLATION - SHEET 7 OF 7 . . . . . E-14
FUSE BLOCK ASSEMBLY E-16
BATTERY INSTALLATION E-18
AUDIBLE ALARM INSTALLATION - SHEET 1 OF 2. . . . . E-20
AUDIBLE ALARM INSTALLATION - SHEET 2 OF 2. . . . . E-22
ENGINE COOLANT TEMPERATURE SENDER INSTALLATION E-24

Section F - DECALS AND PAINT

DECAL INSTALLATION - SHEET 1 OF 2 . . . . . F-2
DECAL INSTALLATION - SHEET 2 OF 2 . . . . . F-4

Section G - HYDRAULICS

REAR FRAME HOSING INSTALLATION - SHEET 1 OF 6. . . . . G-2
REAR FRAME HOSING INSTALLATION - SHEET 2 OF 6. . . . . G-4
REAR FRAME HOSING INSTALLATION - SHEET 3 OF 6. . . . . G-6
REAR FRAME HOSING INSTALLATION - SHEET 4 OF 6. . . . . G-8
REAR FRAME HOSING INSTALLATION - SHEET 5 OF 6. . . . . G-10
REAR FRAME HOSING INSTALLATION - SHEET 6 OF 6. . . . . G-12
UNIQUE HOSE INSTALLATION G-14
HYDRAULIC FILTER INSTALLATION G-16

Section I - SCHEMATICS

Electrical Schematic I-3
Hydraulic Schematic I-6

STANDARD ABBREVIATIONS

AC	Alternating Current
A/R	As Required
ARC	Authorized Rebuilt Component
Assy	Assembly
BHCS	Button Head Cap Screw
Cu Yd	Cubic Yard
Cyl	Cylinder
DC	Direct Current
Dia	Diameter
Eff	Effective
FHCS	Flat Head Cap Screw
F-N-R	Forward-Neutral-Reverse
FOPS	Falling Object Protection System
F/P	Fork Positioning
Gr	Grade
HHCS	Hex Head Cap Screw
HHMS	Hex Head Machine Screw
HSBHCS	Hex Socket Button Head Cap Screw
HSCHCS	Hex Socket Countersunk Head Cap Screw
ID	Inside Diameter
LH	Left Hand
M	Metric
MIK	Maintenance Interval Kit
mm	Millimeter
Nat Asp	Naturally Aspirated
Neg	Negative
NI	Not Ilustrated
NSS	Not Sold Separately
NSVA	Non Serviceable Assembly
OD	Outside Diameter
Pos	Positive
PSI	Pounds per Square Inch
Q/A	Quick-Attach
Ref	Reference
RH	Right Hand
RHSS	Round Head SelfTapping Screw
ROPS	Roll-Over Protection System
RPM	Revolutions Per Minute
SAE	Society of Automotive Engineers
Sec	Section
SFH	Slotted Fillister Head
SHCS	Socket Head Cap Screw
SMV	Slow Moving Vehicle
S/N	Serial Number
SPST	Single Pole/Single Throw
S.T.	Self-Tapping
Std	Standard
Str	Straight
Sw	Swivel
Tach	Tachometer
Temp	Temperature
Thd	Thread
Thk	Thick
Typ	Typical
UNC	Unified Coarse
UNF	Unified Fine
Univ	Universal
Var	Variable
V	Volt
VPM	Vibrations Per Minute
Wgt	Weight
w/	With
w/o	Without
Wp	Weatherproof

Recommended Service Parts

Description	Yr 1 QTY	Yr 2 QTY	Yr 3 QTY	CPN
AXLE INSTALLATION				
O-RING	2	2	0	59993881
SHAFT SEAL ASSEMBLY	0	0	1	59155192
O-RING	3	3	3	50278019
WIRING INSTALLATION				
BACKUP ALARM	0	1	0	13273362
ELECTRICAL CONNECTOR	0	0	1	59436865
NUT	0	8	0	95943346
FRONT FRAME INSTALLATION				
HITCH PIN	0	0	1	59299545
SWIVEL	0	1	0	13290879
BEARING	0	2	0	13187877
CABLE	0	0	1	59436741
ROLL PIN	1	1	0	95098679
CABLE	0	0	1	59607861
GREASE FITTING CAP	0	0	2	50270248
PIVOT PIN	1	1	0	59190975
BUSHING	0	1	0	59450528
FERRULE	0	0	2	59607853
FRAME INSTALLATION				
SIGHT GAUGE	0	1	0	59277772
BEARING	0	2	0	13187877
BREATHER, FILTERED VENT	1	1	0	59093351
FUEL SENDER	0	0	1	13213764
SWITCH, PRESSURE	0	0	1	59110312
GASKET	0	0	1	13305099
ROLL PIN	1	1	0	95098679
SEAT BELT	0	0	2	13238134
GREASE FITTING CAP	0	0	3	50270248
MAGNETIC PLUG	0	0	1	59144428
PIVOT PIN	1	1	0	59190975
BATTERY INSTALLATION				
COVER PLATE	0	0	4	59583450
SWITCH, BATTERY MASTER	0	0	1	13209648
GROUND CABLE	0	0	1	13207758
BATTERY	1	1	0	54616081
OPERATORS PLATFORM INSTALLATION				
CLEVIS	0	1	0	59929059
SCREW	0	1	0	95860052
SEAL KIT	0	0	1	54747340

+Designates parts that are to be replaced within the specified time intervals as stated in the maintenance schedule.

Description	Yr 1 QTY	Yr 2 QTY	Yr 3 QTY	CPN
DUST BOOT	0	1	0	59108605
HORN	1	1	1	13469010
NUT	0	1	0	95943346
DUST BOOT	0	1	0	59108100
EXHAUST INSTALLATION				
CLAMP	0	0	1	59495028
EXHAUST	0	0	3	59179218
EXHAUST PIPE	0	0	1	13239959
CLAMP SEAL	0	0	1	13093075
COOLING INSTALLATION				
CAP	0	1	0	59154807
RECOVERY BOTTLE	0	0	1	58802851
NO ROPS/HOOD DRAW LATCH INSTALLATION				
LATCH	0	2	0	59162149
UNIQUE AIR CLEANER RESTRICTION INSTALLATION - OPTION				
INDICATOR SWITCH	0	0	1	59873984
UNIQUE NO ROPS OPERATORS PLATFORM INSTALLATION				
SWITCH, HI/LOW AMPLITUDE	0	0	1	54666060
SWITCH, HI/LOW TRAVEL	0	0	1	54666086
SWITCH, PARK BRAKE TEST	0	0	1	54666102
SWITCH, HI/LOW RPM	0	0	1	54666078
COVER	0	1	0	58892902
SEAT SWITCH HARNESS	0	0	1	13165071
NUT	0	1	0	59126961
HORN BUTTON	1	1	0	59159558
DUAL SWITCH SEAT KIT	0	0	1	13167945
SWITCH, PARK BRAKE	0	1	0	54666094
STEERING WHEEL	0	1	0	13158647
DUAL SWITCH SEAT KIT	0	0	1	13198270
DRUM ASSEMBLY				
SIGHT GAUGE	0	1	0	59277772
BEARING	0	0	2	59208512
O-RING	5	5	5	50278019
BEARING HOUSING SPINDLE	0	0	1	13218177
GREASE FITTING	0	0	1	96702709
SEAL	0	0	1	59941203
OIL SEAL	0	0	1	59277764
BEARING HOUSING DRIVE	0	0	1	13184072
PIPE PLUG	2	2	0	59600593

+Designates parts that are to be replaced within the specified time intervals as stated in the maintenance schedule.

Description	Yr 1 QTY	Yr 2 QTY	Yr 3 QTY	CPN
SHOCK MOUNT	0	10	0	13304787
WEAR SLEEVE	0	0	1	59277756
MAGNETIC PLUG	0	0	2	59144428
BALL BEARING	0	0	2	50269984
COUPLING	1	1	0	59613612
V-RING SEAL	0	0	1	13167390
UNIQUE PUMP STACK ASSEMBLY				
OVERHAUL GASKET/SEAL KIT	0	0	1	58813791
O-RING KIT	0	0	1	59972877
O-RING	1	1	1	50278019
DIAMETER TREAD W/BALLAST INSTALLATION				
NUT	0	20	0	59163758
VALVE	0	2	0	59524447
VALVE CAP	2	2	2	59929711
ENGINE INSTALLATION				
UPPER	0	0	1	13168851
O-RING	2	2	0	59993881
ENGINE OIL FILTER	1	1	1	13284716
ENGINE FAN	0	1	0	59819292
IN-LINE FUEL FILTER	1	1	1	13064282
CENTER BONDED MOUNT	0	2	0	59097162
SEAL KIT	0	0	1	58898677
LOWER RADIATOR HOSE	0	0	1	13251707
FAN BELT	0	1	0	59309104
TEMPERATURE SENDER	0	1	0	59816322
THROTTLE SOLENOID	1	1	0	59009134
COUPLING	0	1	0	59286336
DUST EJECTOR VALVE	1	1	0	35393677
ROPS/FOPS INSTALLATION				
LATCH	0	2	0	59162149
AUDIBLE ALARM INSTALLATION				
WATER TEMPERATURE SWITCH	0	0	1	59636738
WATER TEMPERATURE GUAGE	0	0	1	59128991
ENGINE COOLANT TEMPERATURE SENDER INSTAL-LATION	0	0	1	59134205
SWITCH, TEMPERATURE	0	1	0	13406780
LIGHT KIT	0	0	1	59824250
HIGH TEMPERATURE ALARM	0	0	1	58870924

+Designates parts that are to be replaced within the specified time intervals as stated in the maintenance schedule.

Section A - AXLE AND MAIN FRAME

AXLE INSTALLATION

13217567 REV 0C

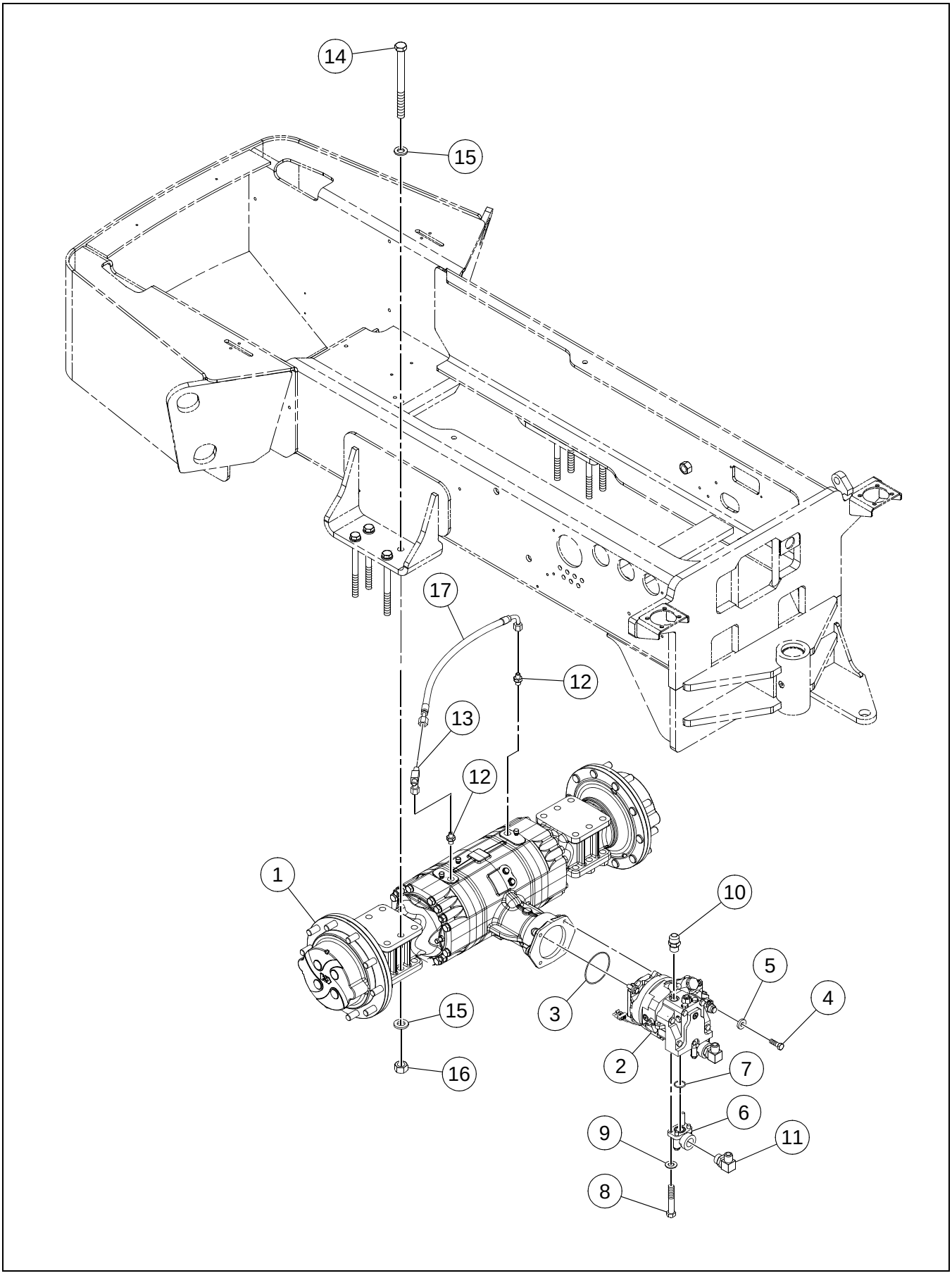

AXLE INSTALLATION

****Only Offered Parts Listed****

BOM 13175781

ITEM	COMM. NO.	DESCRIPTION	QTY	DIMENSIONS/NOTES
1	43840271	AXLE	1	
3	90502592	O-RING	1	
4	96702329	HHCS CL 8.8,YEL ZN	4	M12-1.75X35
5	96712237	FLATWASHER	4	
6	58979964	ELBOW	2	
7	59993881	O-RING	2	
8	96714043	HHCS CL 8.8,YEL ZN	8	M12-1.75X65
9	96738596	FLATWASHER	8	
10	95303392	ADAPTER	1	
11	59922989	ADAPTER	2	
12	58954694	STRAIGHT ADAPTER	2	
13	95480117	TEE	1	
14	96741863	HHCS CL 10.9,YEL ZN HR	8	M20-2.5X220
15	59565051	FLATWASHER	16	
16	96703665	NUT,HEX CL 10,YEL ZN HR	8	M20-2.5
17	58896218	HOSE ASSEMBLY	1	

DIAMETER TREAD W/BALLAST INSTALLATION

13175294 REV 00

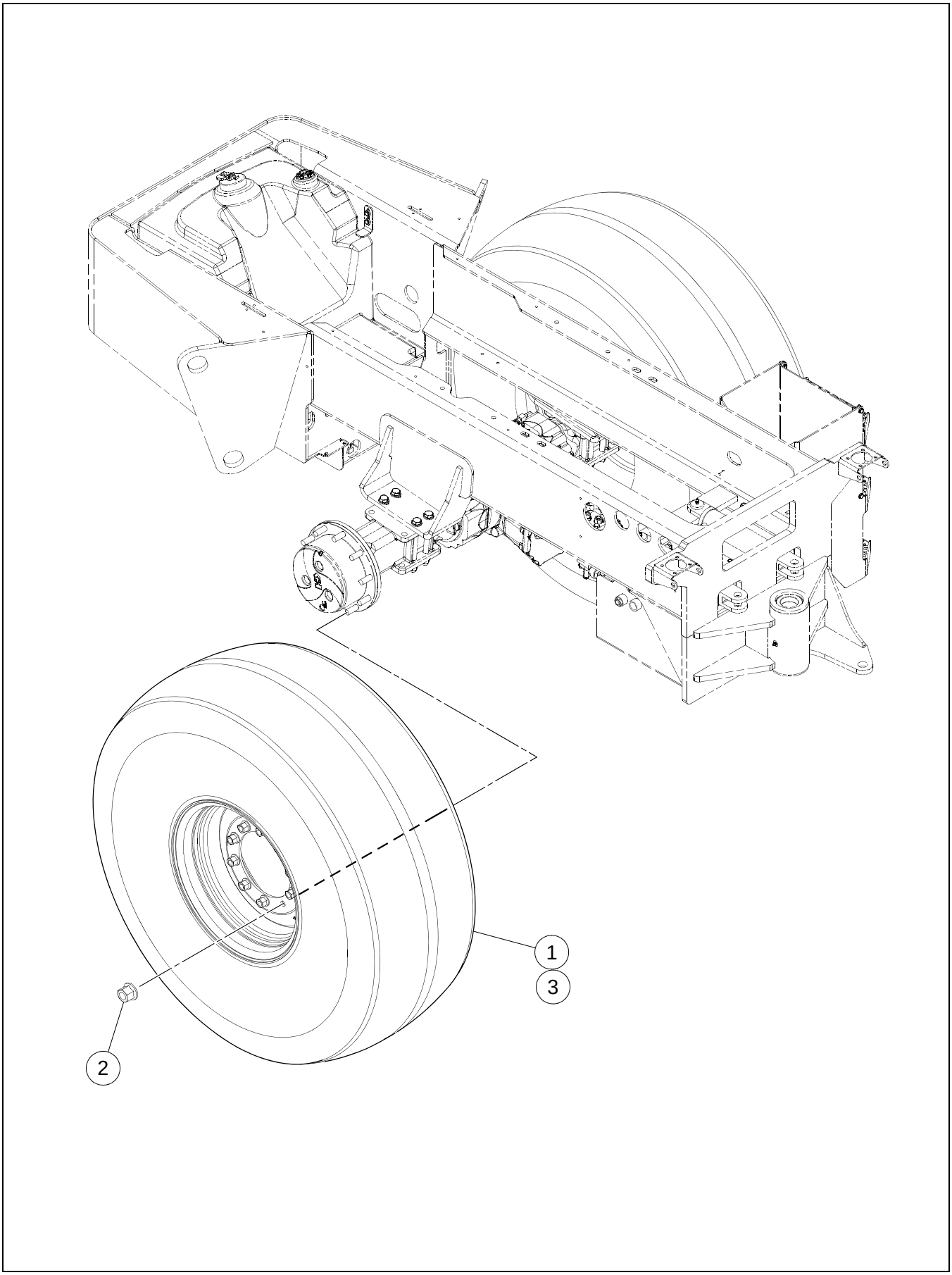

DIAMETER TREAD W/BALLAST INSTALLATION

****Only Offered Parts Listed****

BOM 13175294

ITEM	COMM. NO.	DESCRIPTION	QTY	DIMENSIONS/NOTES
1	13187240	TIRE AND WHEEL ASSEMBLY	2	
-	13187257	- WHEEL RIM	2	
-	59626051	- TIRE	2	
-	59366401	- TUBE	4	
-	59524447	- VALVE	2	
-	59929711	- VALVE CAP	2	
2	59163758	NUT	20	M22X1.5
3	59869008	30% LIQUID CALC	90	

FRAME INSTALLATION - SHEET 1 OF 2

13216700 REV 09

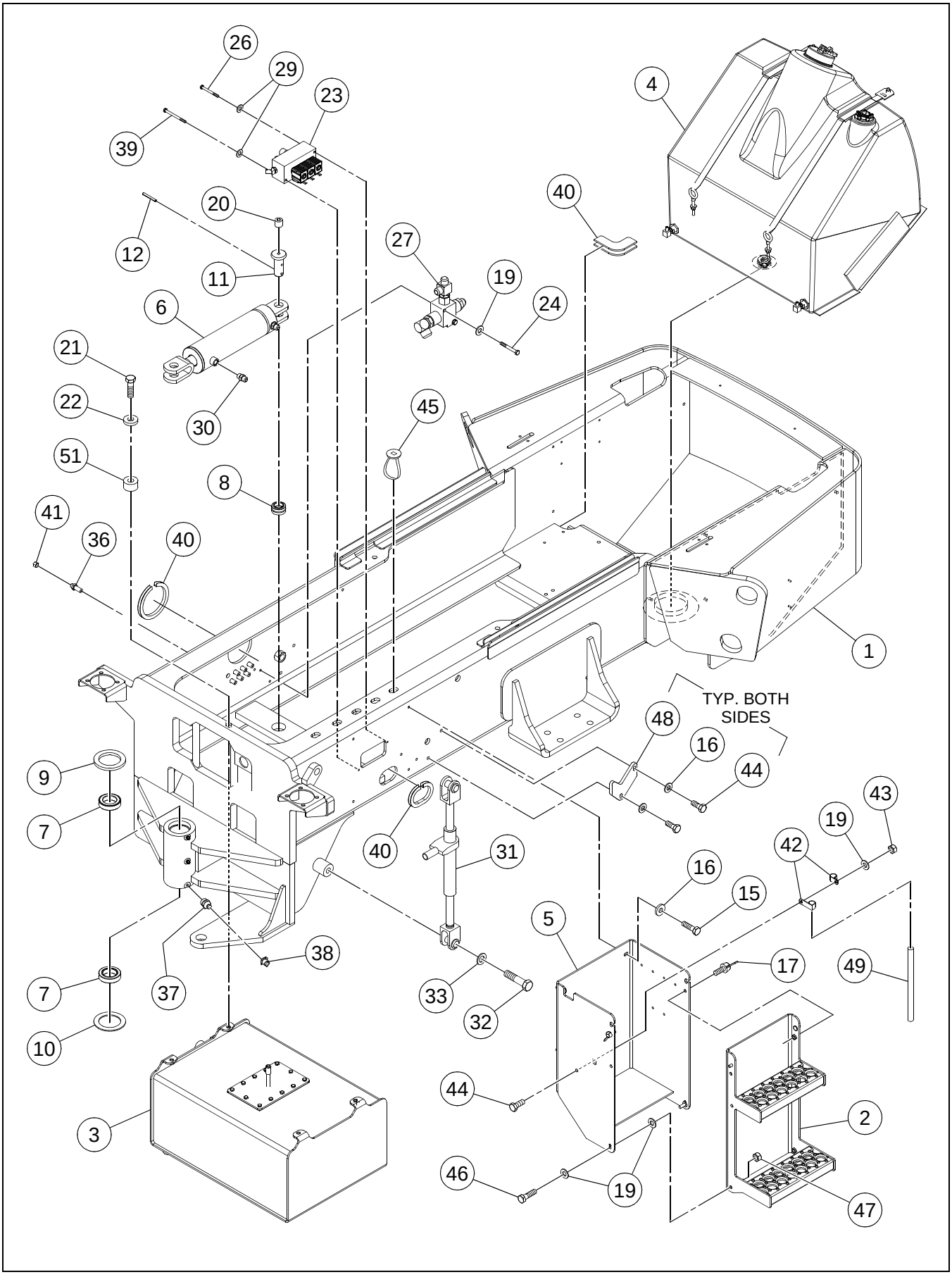

FRAME INSTALLATION - SHEET 1 OF 2

****Only Offered Parts Listed****

BOM 13504824

ITEM	COMM. NO.	DESCRIPTION	QTY	DIMENSIONS/NOTES
1	43926104	SD77TF MAIN FRAME ***	1	
-	13274261	- SD77 TF BASE PLATE MACH. ***	1	
-	43926047	- SD77 LH MF RAIL	1	
-	13238357	- FENDER GUARD RH	1	
-	13238340	- FENDER GUARD LH	1	
-	13238647	- FENDER GUARD	2	
2	13279385	STEP	1	
3	**NSVA**	**HYDRAULIC TANK ASSEMBLY**	**1**	**See Page A - 10.**
4	**NSVA**	**FUEL TANK INSTALLATION**	**1**	**See Page A - 12.**
5	43824291	BATTERY BOX WELDMENT	1	
6	43922509	CYLINDER ***	1	
7	13187877	BEARING	2	
8	13209903	BEARING	1	
9	13187968	DUST SEAL	1	
10	13187976	DUST SEAL	1	
11	59190975	PIVOT PIN	1	
12	95098679	ROLL PIN	1	
15	96704309	HHCS CL 8.8,YEL ZN	4	M10-1.5X35
16	96711833	WASHER	8	M10
17	96702287	HHCS CL 8.8,YEL ZN	2	M10-1.5X25
19	96741046	FLATWASHER, CL 200,YEL ZN	7	
20	95049359	PLUG	1	
21	96714910	HHCS CL 10.9,YEL ZN HR	4	M12-1.75X60
22	96712237	FLATWASHER	4	
23	**NSVA**	**BRAKE SHUNT MANIFOLD ASSEMBLY**	**1**	**See Page A - 16.**
24	96705272	HHCS CL 8.8,YEL ZN	2	M10-1.5X80
26	96718978	HHCS CL 8.8,YEL ZN	1	M8-1.25X80
27	**NSVA**	**THERMAL BYPASS VALVE INSTALLATION**	**1**	**See Page A - 18.**
29	96741038	WASHER, FLAT CL 200,YEL ZN	2	ID-8.4,OD-16.0X1.6THK
30	95303368	ADAPTER	2	
31	13209663	RATCHET JACK ASSEMBLY	1	
-	13247978	- RACKET JACK	1	
-	13247937	- LEVER	1	
-	13247945	- COARIALER PIN	1	
-	13247952	- GROOVED HEADLESS PIN	2	
-	13247960	- HAIR PIN CLIP	4	
32	96712716	HHCS CL 8.8,YEL ZN	1	M24-3.0X100
33	96738646	FLATWASHER	1	
34	96701958	HHCS CL 8.8,YEL ZN	2	M6-1X16
35	96741053	FLATWASHER, CL 200,YEL ZN	2	
36	59961821	ADAPTER	7	
37	95201547	GREASE FITTING	3	

FRAME INSTALLATION - SHEET 2 OF 2

13216700 REV 09

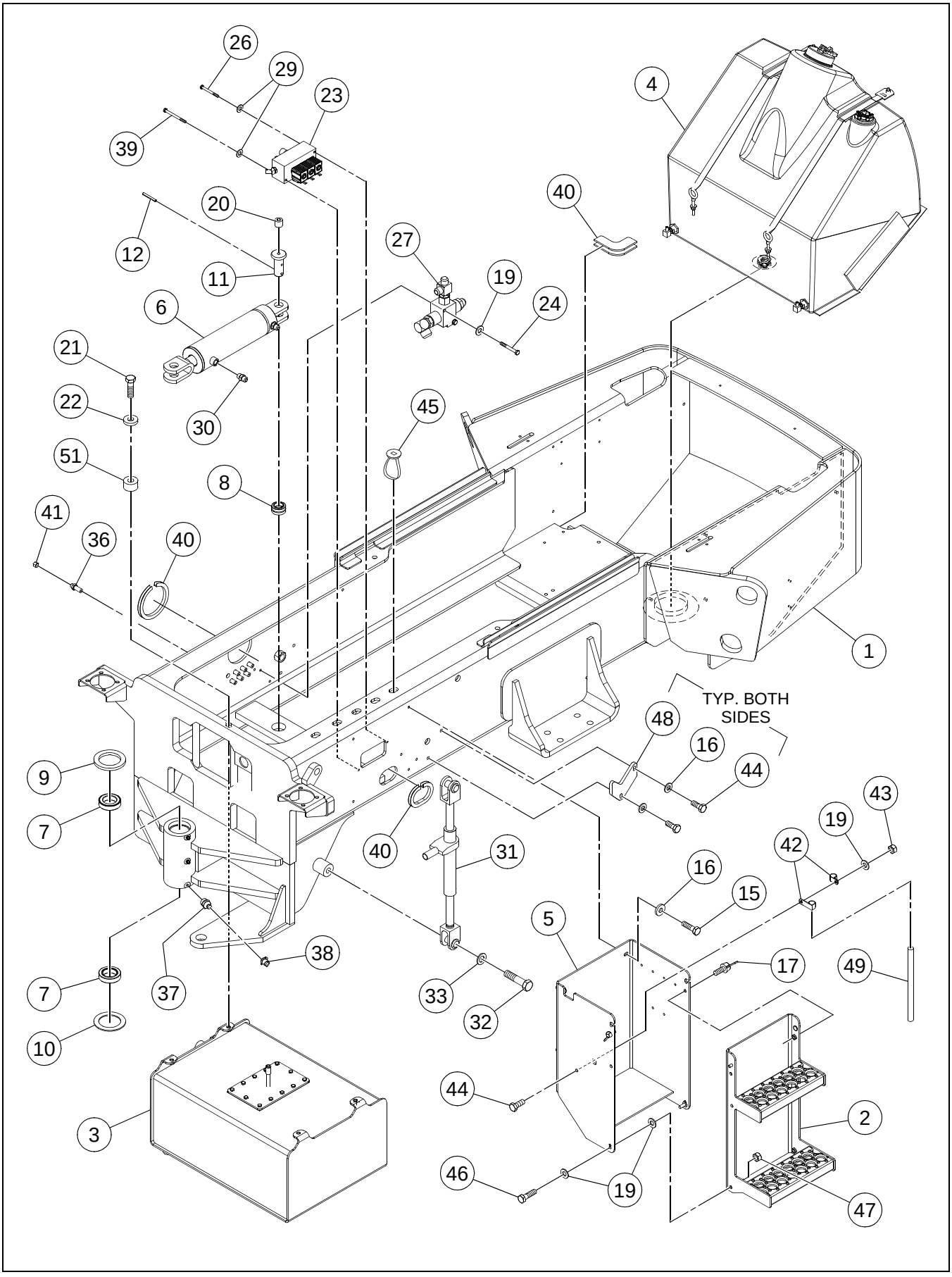

FRAME INSTALLATION - SHEET 2 OF 2

****Only Offered Parts Listed****

BOM 13504824

ITEM	COMM. NO.	DESCRIPTION	QTY	DIMENSIONS/NOTES
38	50270248	GREASE FITTING CAP	3	
39	96728464	HHCS CL 8.8,YEL ZN	1	M8-1.25X100
40	50829647	TRIM	4	
41	59924043	CAP	7	
42	95301867	CLAMP	1	
43	96704614	NUT	1	M10X1.5
44	96702774	HHCS CL 10.9,YEL ZN HR	5	M10-1.5X25
45	58820168	WIRE TIE	3	
46	96704556	HHCS CL 8.8,YEL ZN	2	M10-1.5X40
47	96704812	HEX NUT CL 8 ,YEL ZN	2	M10-1.5
48	13275953	V-BLOCK	2	
49	NOT-USED	THIS ITEM NOT USED W/THIS BOM	1	
50	NOT-USED	THIS ITEM NOT USED W/THIS BOM	1	
51	13396007	SPACER	4	

HYDRAULIC TANK ASSEMBLY

13166285 REV 010

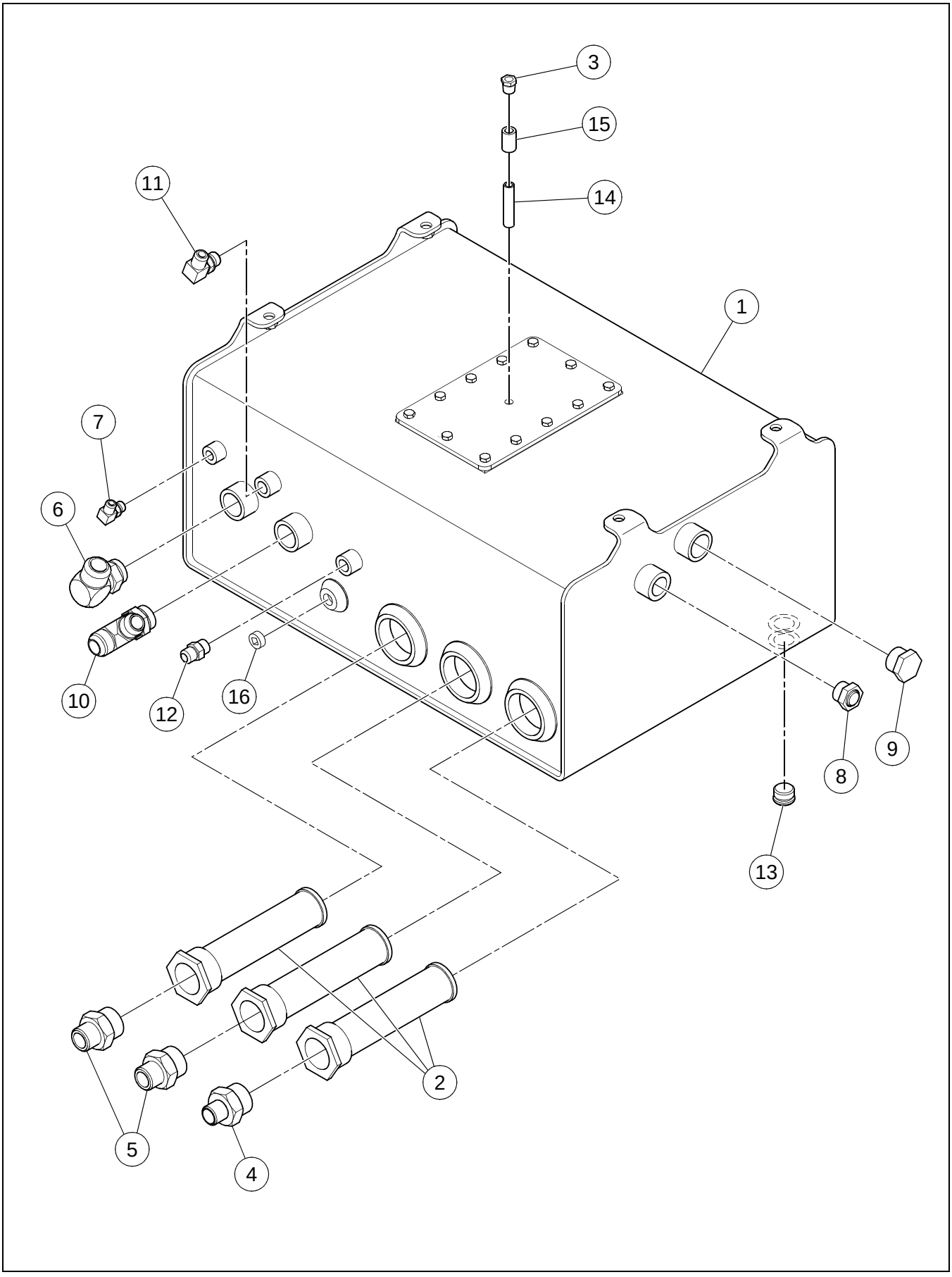

HYDRAULIC TANK ASSEMBLY

****Only Offered Parts Listed****

BOM 43850379

ITEM	COMM. NO.	DESCRIPTION	QTY	DIMENSIONS/NOTES
1	43850346	HYDRAULIC TANK	1	
-	13305099	- GASKET	1	
-	13185384	- CLEAN OUT LID	1	
-	96702824	- HHCS CL 8.8,YEL ZN	12	M8-1.25X20
-	43850320	- PLUG	1	
2	43913821	TANK FILTER	3	
3	59093351	BREATHER, FILTERED VENT	1	
4	95279337	ADAPTER	1	
5	95316956	ADAPTER	2	
6	95280194	ADAPTER	1	
7	95329975	ADAPTER	1	
8	59277772	SIGHT GAUGE	1	
9	95326955	PLUG	1	
10	95488110	ADAPTER	1	
11	95303335	ADAPTER	1	
12	95303368	ADAPTER	1	
14	95048393	NIPPLE	1	
15	95011060	COUPLING PIPE	1	
16	95043238	PIPE PLUG	1	

FUEL TANK INSTALLATION

13216817 REV 03

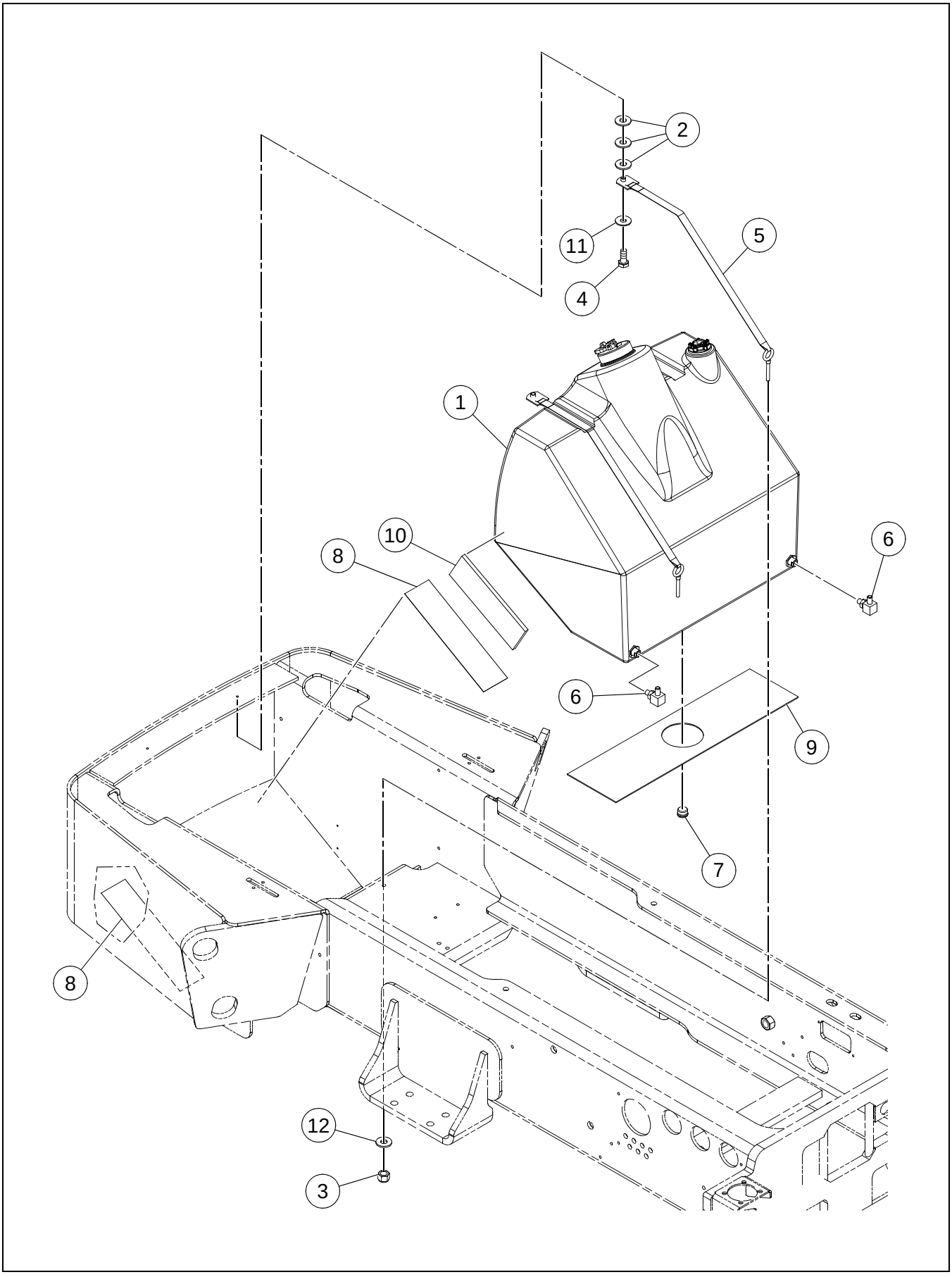

FUEL TANK INSTALLATION

****Only Offered Parts Listed****

BOM 13213780

ITEM	COMM. NO.	DESCRIPTION	QTY	DIMENSIONS/NOTES
1	**NSVA**	**FUEL TANK ASSEMBLY**	**1**	**See Page A - 14.**
2	96712674	FLATWASHER	6	
3	95923322	LOCKNUT	2	3/8-16
4	96705587	HHCS CL 8.8,YEL ZN	2	M8-1.25X30
5	13238134	SEAT BELT	2	
6	95329975	ADAPTER	2	
7	59144428	MAGNETIC PLUG	1	
8	59290726	TAPE	2	
9	19331024	TANK BASE GUARD	1	
10	13184932	TANK GUARD	2	
11	59887182	HARDENED WASHER	2	
12	96714407	FLATWASHER	2	M10

FUEL TANK ASSEMBLY

43845841 REV 00

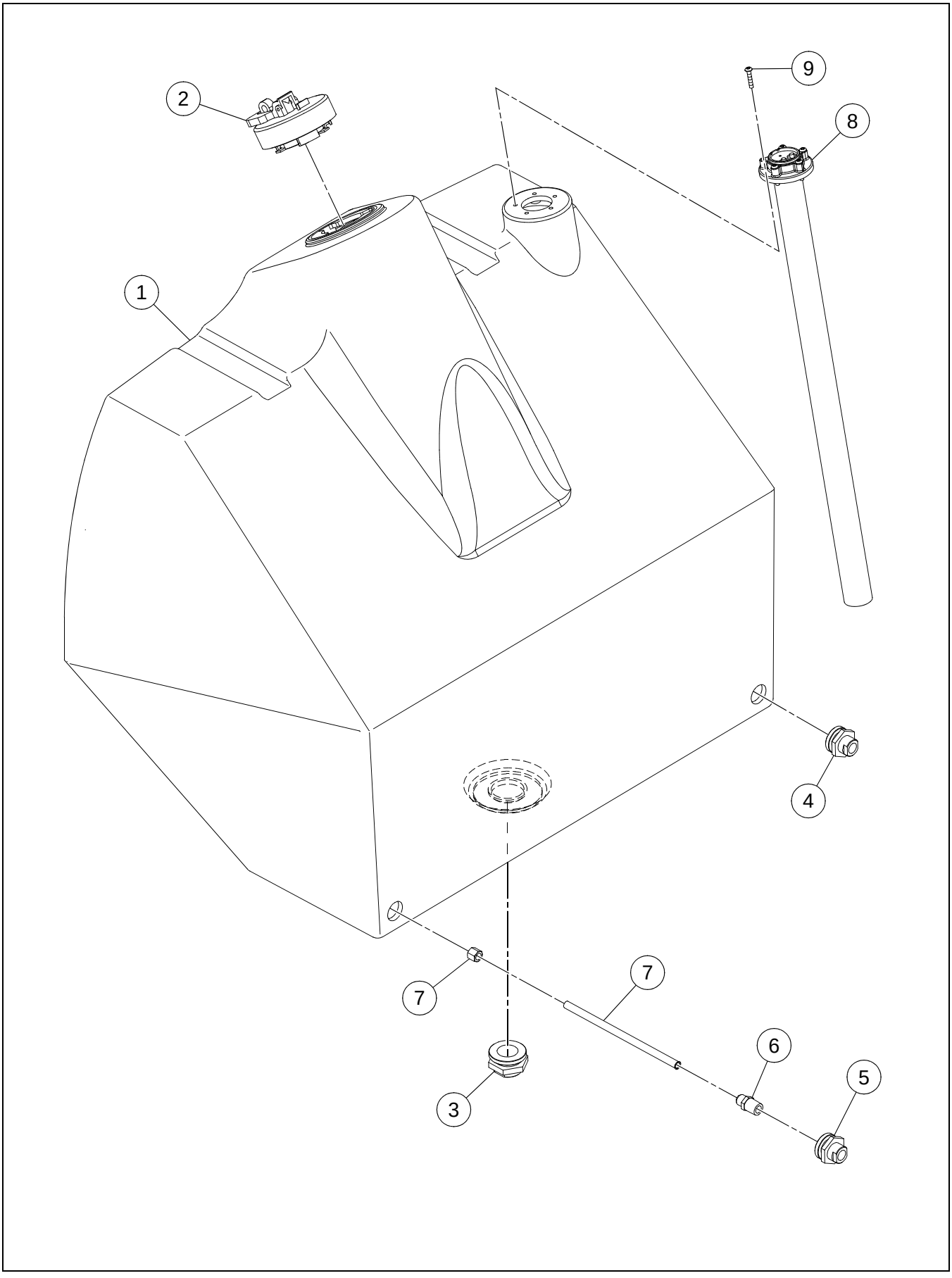

FUEL TANK ASSEMBLY

****Only Offered Parts Listed****

BOM 43845841

ITEM	COMM. NO.	DESCRIPTION	QTY	DIMENSIONS/NOTES
1	43906247	FUEL TANK	1	
2	43843622	FUEL CAP	1	
3	13213624	DRAIN PORT	1	
4	13213632	RETURN PORT	1	
5	13213681	SUPPLY PORT	1	
6	95219713	ADAPTER	1	
7	13213699	TUBE ASSEMBLY	1	
8	13213764	FUEL SENDER	1	
9	59266726	CAPSCREW	5	

BRAKE SHUNT MANIFOLD ASSEMBLY

13217559 REV 04

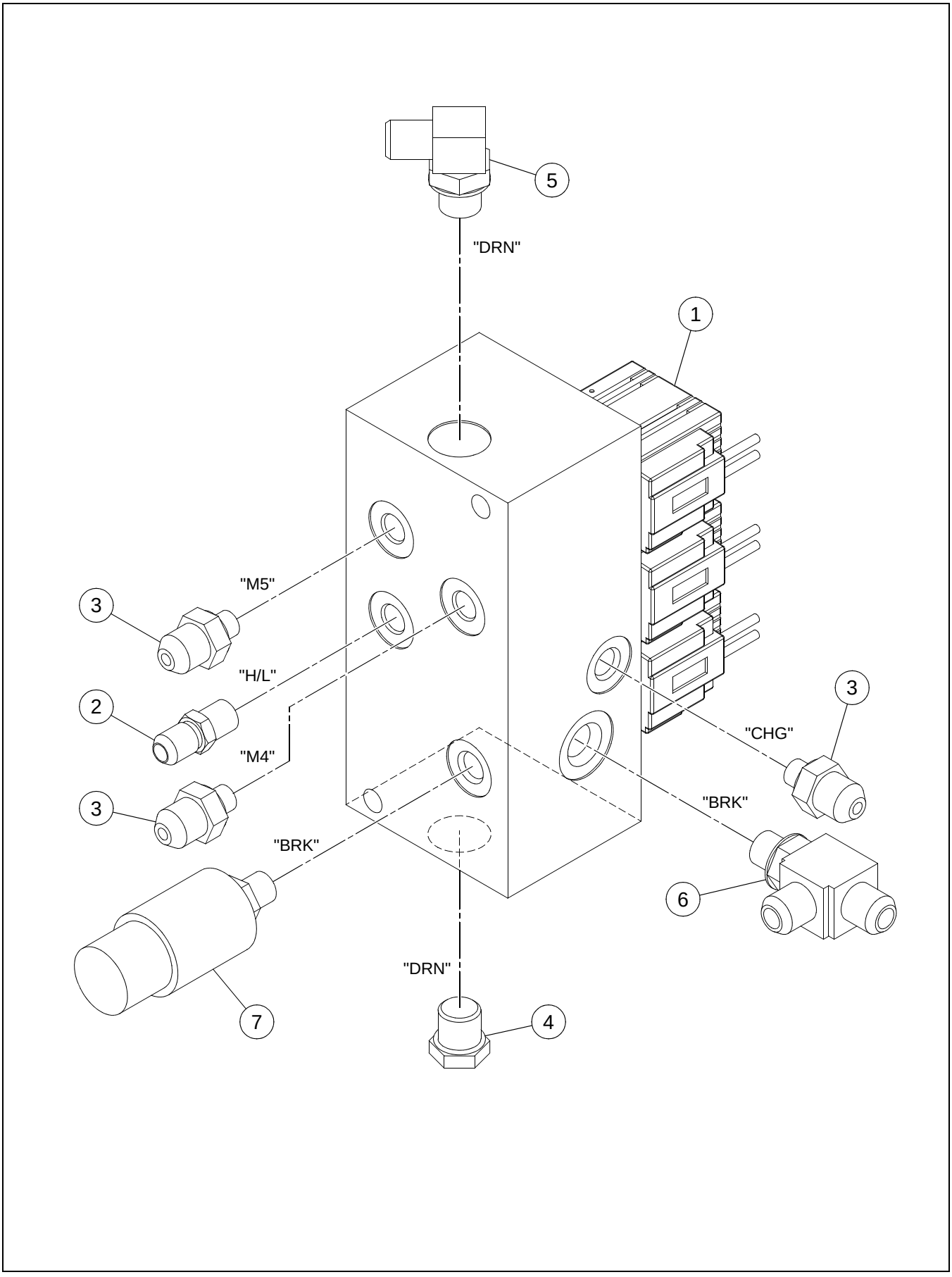

BRAKE SHUNT MANIFOLD ASSEMBLY

****Only Offered Parts Listed****

BOM 13217047

ITEM	COMM. NO.	DESCRIPTION	QTY	DIMENSIONS/NOTES
1	19287036	BRAKE SHUNT 2 SPEED MANIFOLD	1	
-	19287051	- VALVE	1	
-	19287093	- VALVE	2	
-	19287101	- COIL	3	
2	95365086	ADAPTER	1	
3	95402806	ADAPTER	3	
4	95343596	PLUG	1	
5	95329975	ADAPTER	1	
6	95188710	TEE	1	
7	59110312	SWITCH, PRESSURE	1	

THERMAL BYPASS VALVE INSTALLATION

13185855 REV 03

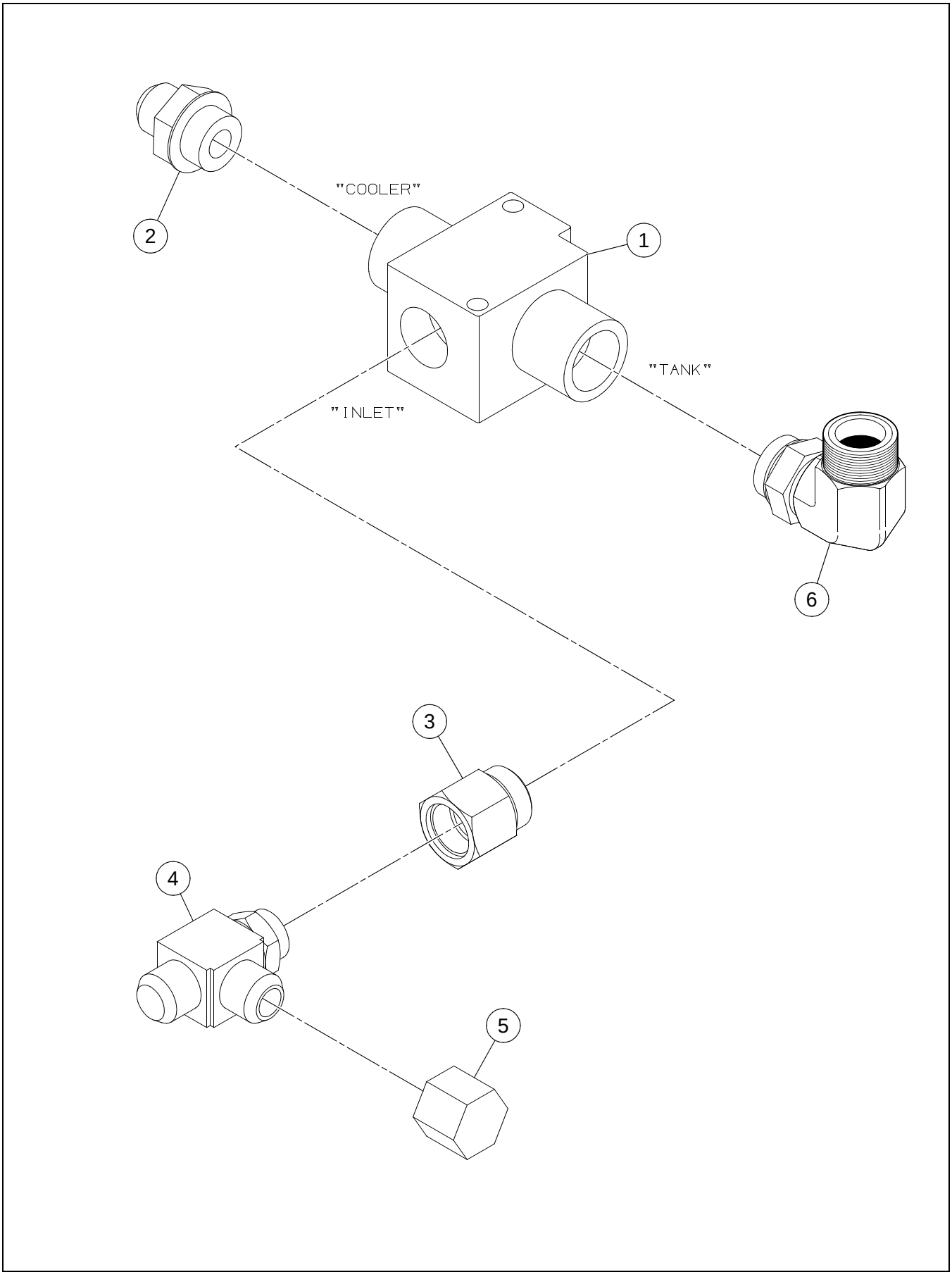

THERMAL BYPASS VALVE INSTALLATION

****Only Offered Parts Listed****

BOM 13162656

ITEM	COMM. NO.	DESCRIPTION	QTY	DIMENSIONS/NOTES
1	13205364	THERMAL BYPASS VALVE	1	
2	95356978	ADAPTER	1	
3	59924472	ADAPTER	1	
4	95829263	TEE	1	
5	95387890	CAP	1	
6	95280194	ADAPTER	1	

UNIQUE FRONT FRAME ASSEMBLY

13271069 REV 00

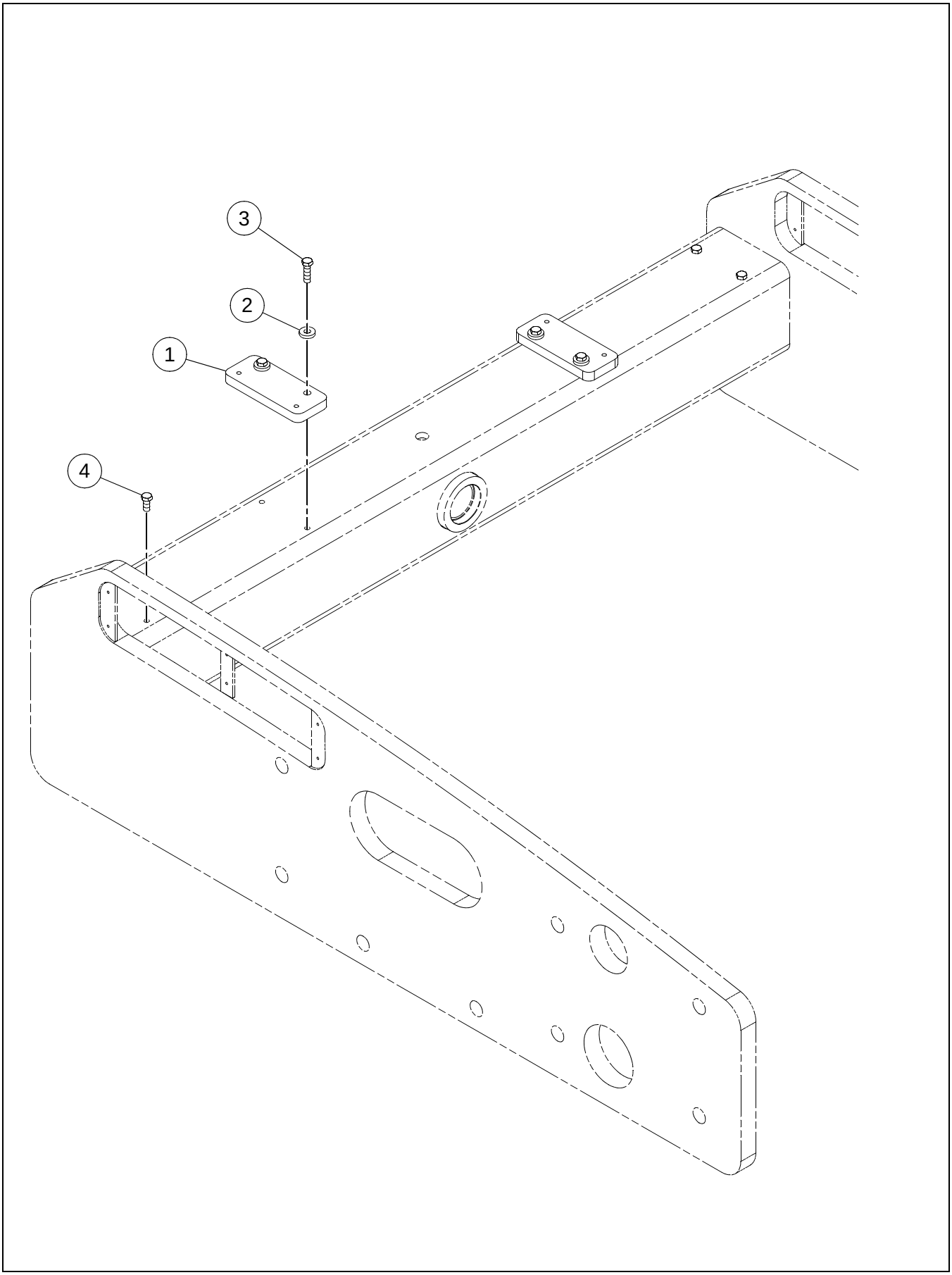

UNIQUE FRONT FRAME ASSEMBLY

****Only Offered Parts Listed****

BOM 13236062

ITEM	COMM. NO.	DESCRIPTION	QTY	DIMENSIONS/NOTES
1	13236054	HOSE MOUNTING PLATE	2	
2	96712237	FLATWASHER	4	
3	96702444	HHCS CL 8.8,YEL ZN	4	M12-1.75X40
4	96701495	HHCS CL 8.8,YEL ZN	4	M12-1.75X25

43853118 REV 0A

No Drawing Required

HOOD INSTALLATION

****Only Offered Parts Listed****

BOM 43853118

ITEM	COMM. NO.	DESCRIPTION	QTY	DIMENSIONS/NOTES
1	**NSVA**	**HOOD ASSEMBLY**	**1**	**See Page A - 24.**
2	13236633	HINGE, LH	1	
3	13459417	HINGE, RH	1	
4	**NSVA**	**PROP PIN BLOCK ASSEMBLY**	**1**	**See Page A - 28.**
5	96741038	WASHER, FLAT CL 200,YEL ZN	4	ID-8.4,OD-16.0X1.6THK
6	96702659	HHCS CL 8.8,YEL ZN	4	M8-1.25X25
7	96727458	HSHS	2	M12X30
8	96738612	FLATWASHER	2	
10	96719786	HHCS CL 8.8,YEL ZN	8	M8-1.25X40
11	96711833	WASHER	4	M10
12	96702287	HHCS CL 8.8,YEL ZN	4	M10-1.5X25
13	13295340	HOOD SHIM	2	
14	13882618	HOOD COWLING	1	
15	13238217	BAFFLE WIPER	1	
16	96740188	WASHER	4	M8X3
17	96702824	HHCS CL 8.8,YEL ZN	4	M8-1.25X20
18	13184700	HOOD SPRING ANGLE	2	
19	13184742	SPRING PIVOT	2	
20	43850460	EYEBOLT	2	
21	96738596	FLATWASHER	2	
22	95923348	LOCKNUT	2	
23	13236377	SPRING PIN	2	
24	96705595	HHCS CL 8.8,YEL ZN	2	M12-1.75X50
25	13870936	SEAL TRIM	1	
26	13460365	SPRING	2	
27	96712674	FLATWASHER	8	

HOOD ASSEMBLY - SHEET 1 OF 2

43920560 REV 00

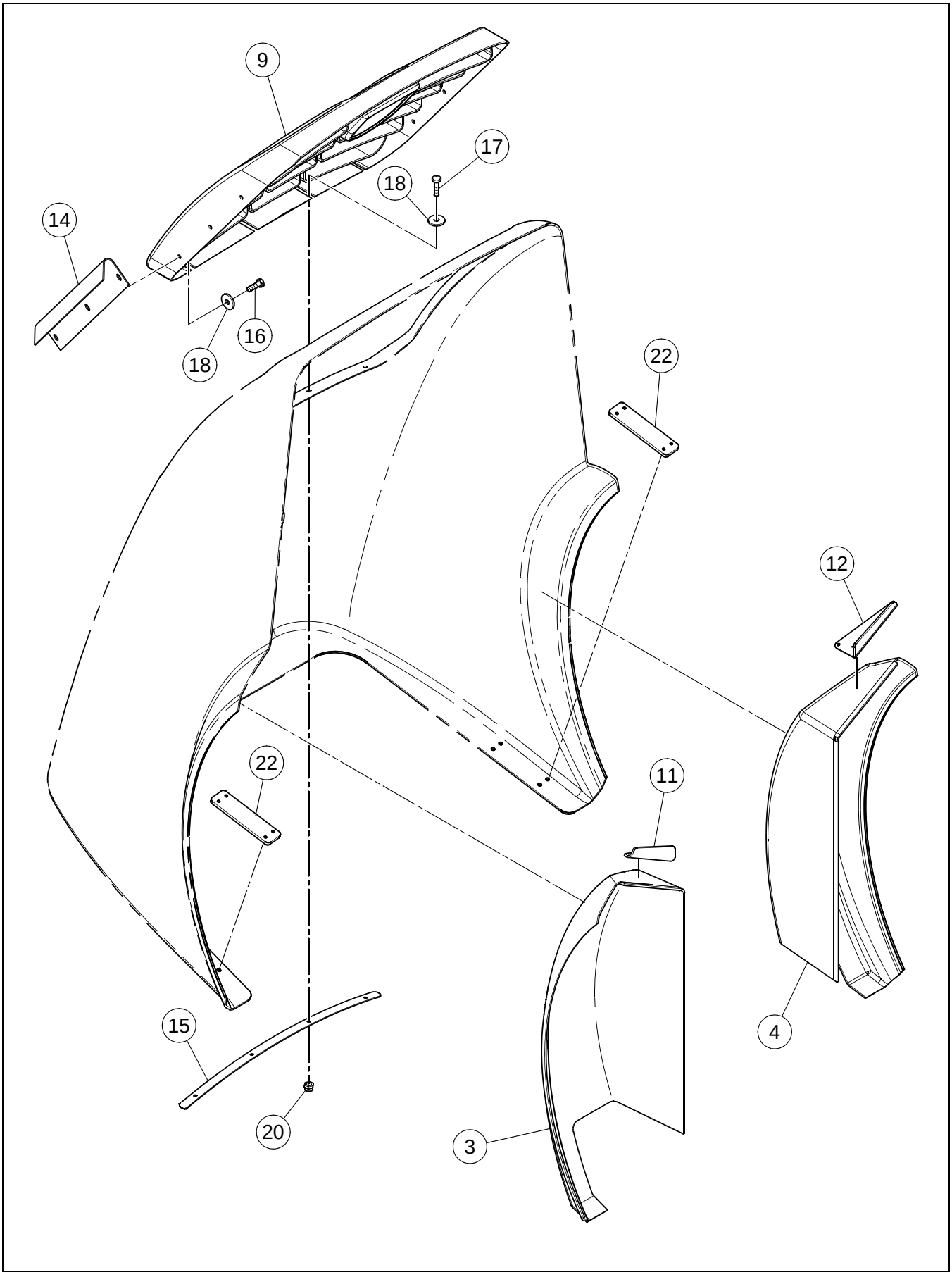

HOOD ASSEMBLY - SHEET 1 OF 2

****Only Offered Parts Listed****

BOM 43920560

ITEM	COMM. NO.	DESCRIPTION	QTY	DIMENSIONS/NOTES
9	43920552	GRILL	1	
10	43920644	AIRSCREEN	1	
14	13889480	GRILL SUPPORT BAR	2	
15	13238084	TOP GRILL SUPT	1	
16	96705587	HHCS CL 8.8,YEL ZN	6	M8-1.25X30
17	96702261	HHCS CL 8.8,YEL ZN	4	M8-1.25X35
18	96740188	WASHER	12	M8X3
20	96704606	ESNA NUT	4	M8
21	96701917	HHCS CL 8.8,YEL ZN	4	M10-1.5X30
23	13883376	SEAL TRIM	1	
24	13278478	ANGLE SEAL	2	
25	54487517	TAPPING SCREW	6	
26	13270632	SEAL TRIM	2	
27	13883418	HOOD HANDLE	1	
28	96702816	HHCS CL 8.8,YEL ZN	2	M8-1.25X16

HOOD ASSEMBLY - SHEET 2 OF 2

43920560 REV 00

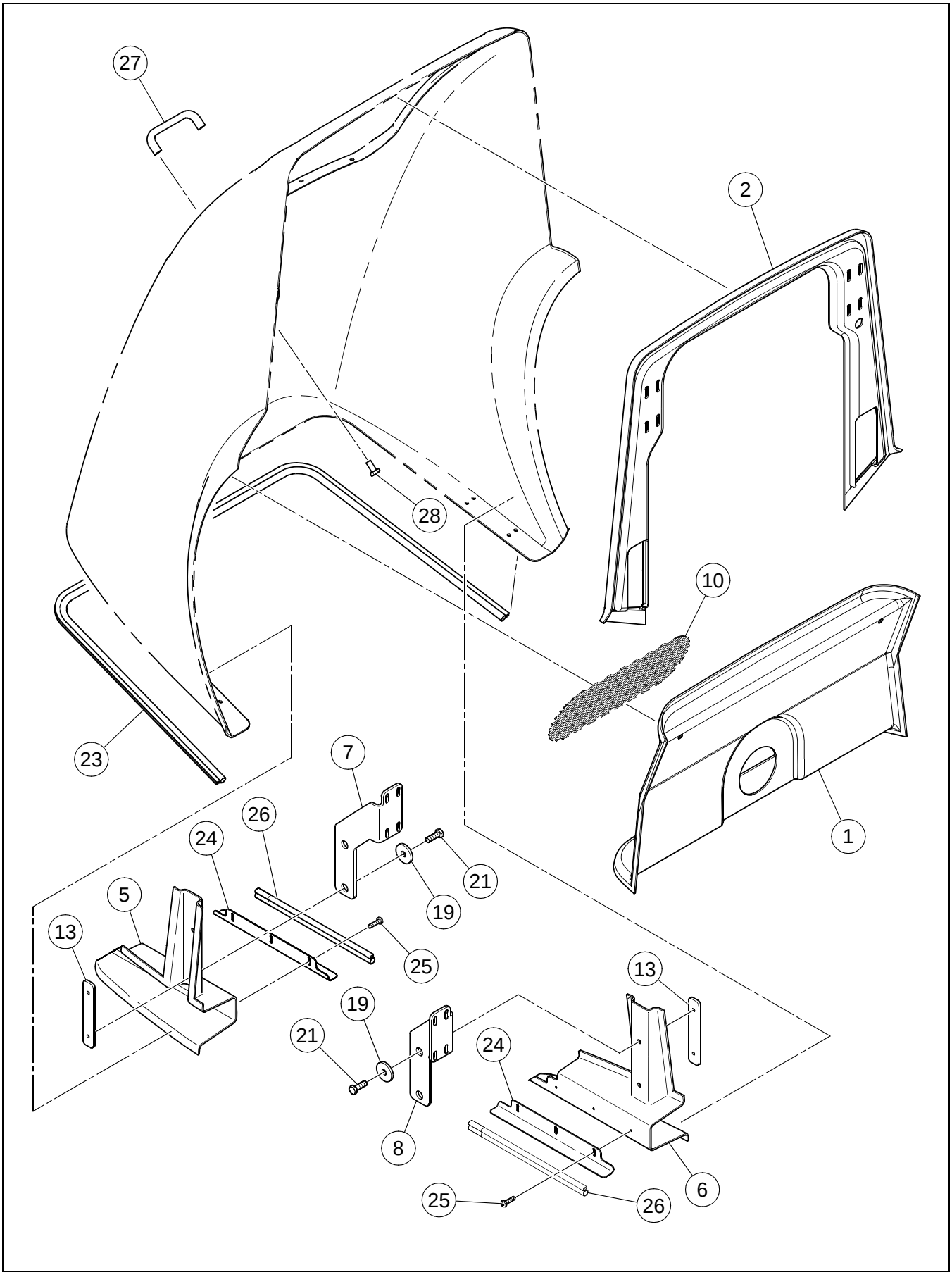

HOOD ASSEMBLY - SHEET 2 OF 2

****Only Offered Parts Listed****

BOM 43920560

ITEM	COMM. NO.	DESCRIPTION	QTY	DIMENSIONS/NOTES
9	43920552	GRILL	1	
10	43920644	AIRSCREEN	1	
14	13889480	GRILL SUPPORT BAR	2	
15	13238084	TOP GRILL SUPT	1	
16	96705587	HHCS CL 8.8,YEL ZN	6	M8-1.25X30
17	96702261	HHCS CL 8.8,YEL ZN	4	M8-1.25X35
18	96740188	WASHER	12	M8X3
20	96704606	ESNA NUT	4	M8
21	96701917	HHCS CL 8.8,YEL ZN	4	M10-1.5X30
23	13883376	SEAL TRIM	1	
24	13278478	ANGLE SEAL	2	
25	54487517	TAPPING SCREW	6	
26	13270632	SEAL TRIM	2	
27	13883418	HOOD HANDLE	1	
28	96702816	HHCS CL 8.8,YEL ZN	2	M8-1.25X16

PROP PIN BLOCK ASSEMBLY

13459367 REV 01

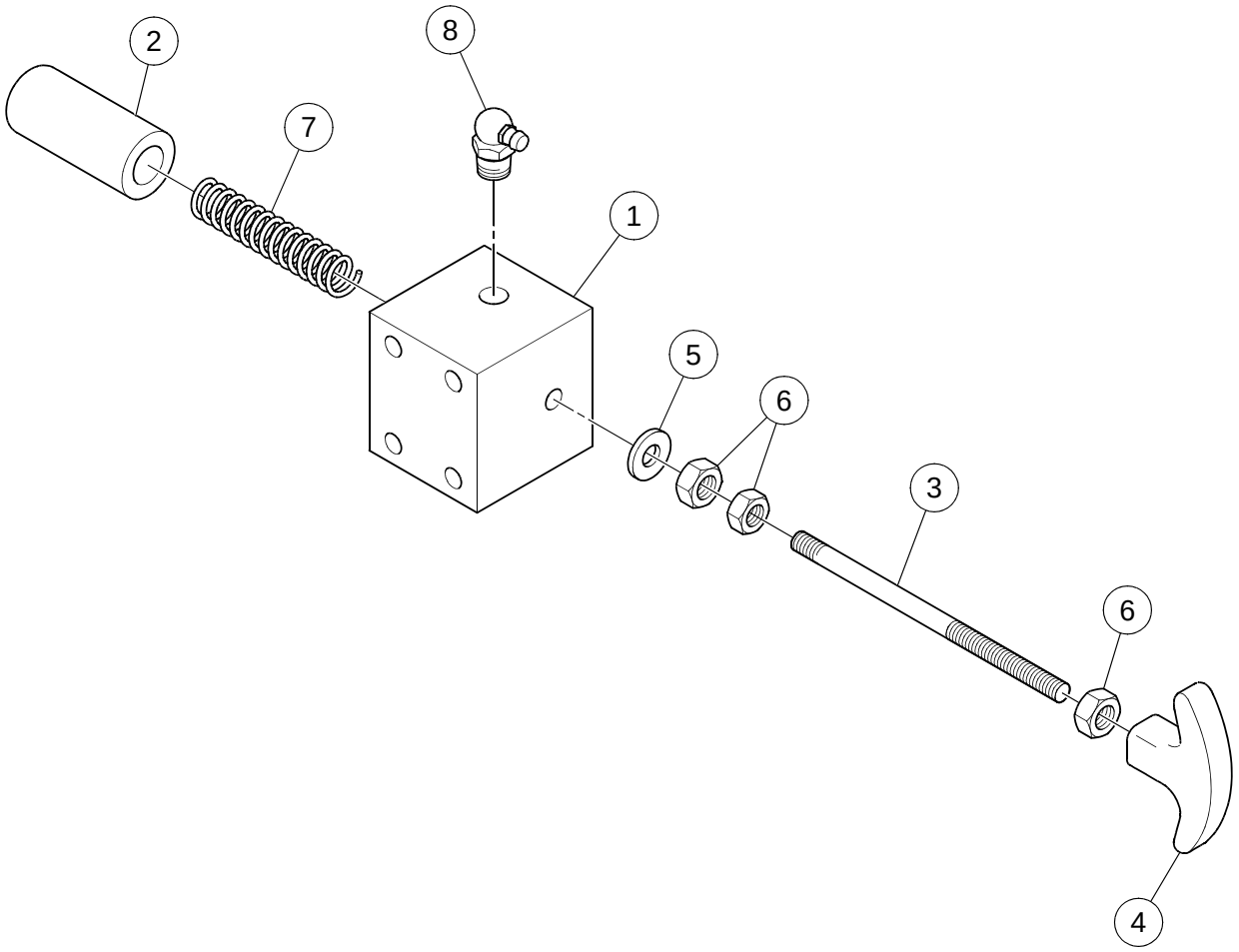

PROP PIN BLOCK ASSEMBLY

****Only Offered Parts Listed****

BOM 13459367

ITEM	COMM. NO.	DESCRIPTION	QTY	DIMENSIONS/NOTES
1	13459375	PROP BLOCK	1	
2	13459383	PIN	1	
3	13459391	ROD	1	
5	95922324	FLATWASHER	1	
6	95931564	HEX NUT	3	1/4-20
7	13459409	SPRING	1	
8	95208971	FITTING	1	

NO ROPS/HOOD DRAW LATCH INSTALLATION

13882907 REV 00

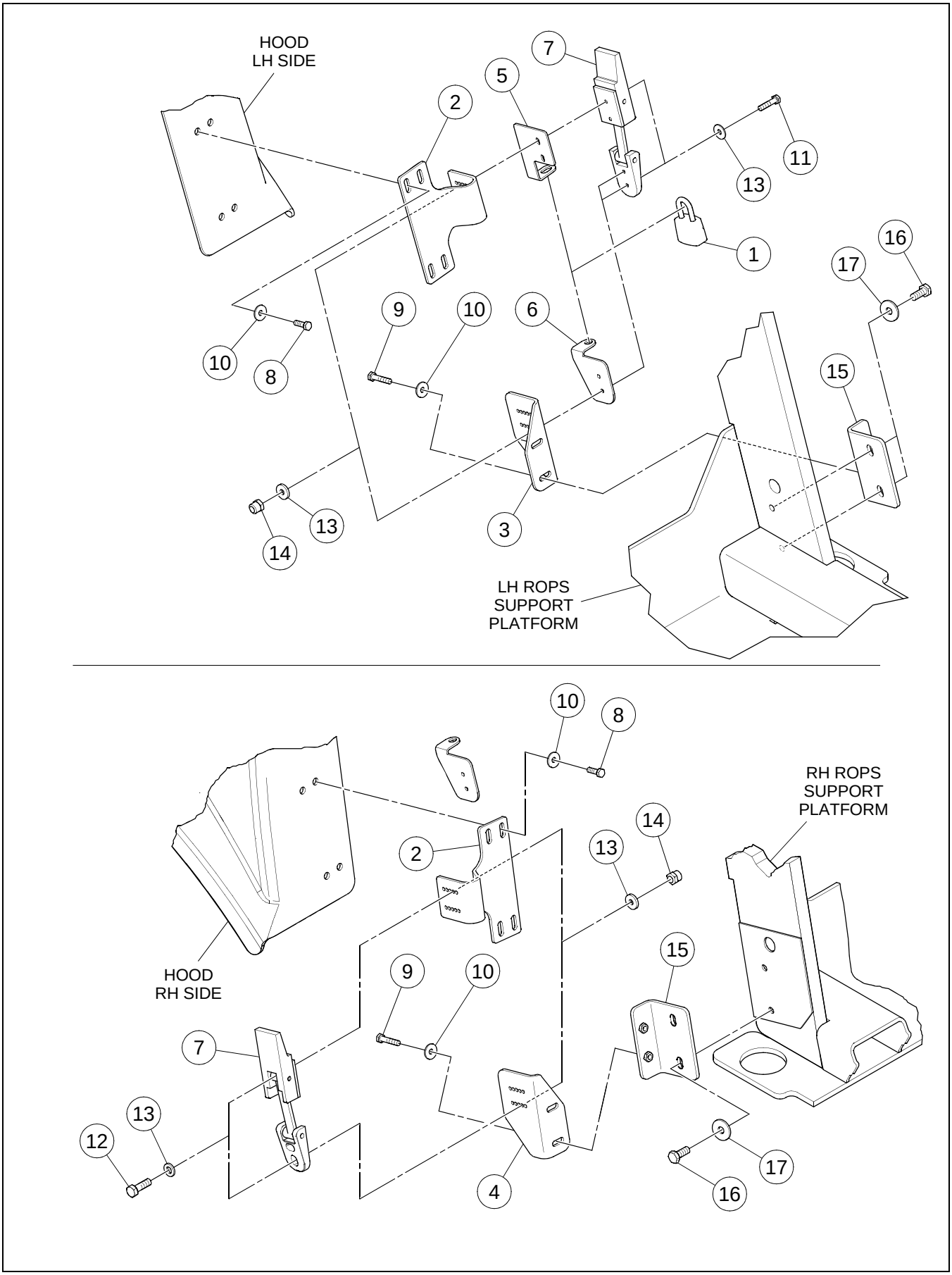

NO ROPS/HOOD DRAW LATCH INSTALLATION

****Only Offered Parts Listed****

BOM 13882907

ITEM	COMM. NO.	DESCRIPTION	QTY	DIMENSIONS/NOTES
1	43907906	LOCK	1	
2	13881545	HOOD BRACKET	2	
3	13881537	ROPS BRACKET LH	1	
4	13881529	ROPS BRACKET RH	1	
5	13885355	RH LOCK TAB	1	
6	59163238	RH LOCK TAB	1	
7	59162149	LATCH	2	
8	96705587	HHCS CL 8.8,YEL ZN	8	M8-1.25X30
9	96702659	HHCS CL 8.8,YEL ZN	4	M8-1.25X25
10	96741038	WASHER, FLAT CL 200,YEL ZN	12	ID-8.4,OD-16.0X1.6THK
11	96705736	HHCS CL 8.8,YEL ZN	4	M5-0.8X20
12	96705728	HHCS CL 8.8,YEL ZN	4	M5-0.8X16
13	95922332	FLATWASHER	16	
14	96704580	LOCKNUT	8	M5
15	13881628	BRACKET, NO ROPS MOUNTING	2	
16	96702824	HHCS CL 8.8,YEL ZN	4	M8-1.25X20
17	96741046	FLATWASHER, CL 200,YEL ZN	4	

13169842 REV 0M

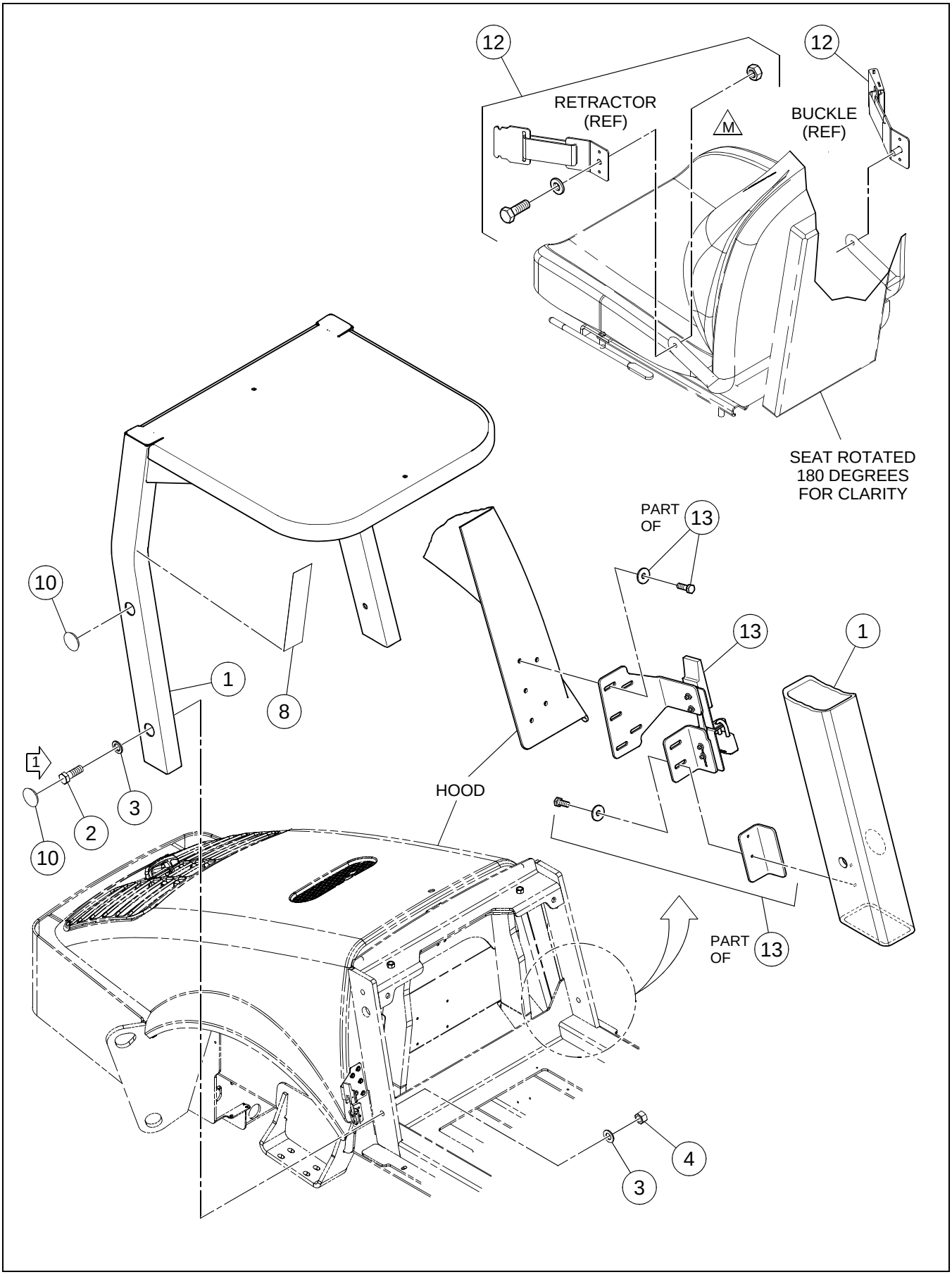

****Only Offered Parts Listed****

BOM 13882527

ITEM	COMM. NO.	DESCRIPTION	QTY	DIMENSIONS/NOTES
1	19297993	ROPS/FOPS ***	1	
2	96746235	HHCS CL 10.9,YEL ZN HR	4	M24-3X70
3	96702642	WASHER	8	M24
8	13197306	DECAL: CHECKLIST	1	
10	13309877	PLASTIC PLUG	4	
12	**NSVA**	**SEATBELT INSTALLATION**	**1**	**See Page A - 34.**
13	**NSVA**	**ROPS/HOOD BRACKET INSTALLATION**	**1**	**See Page A - 36.**

43803394 REV 00

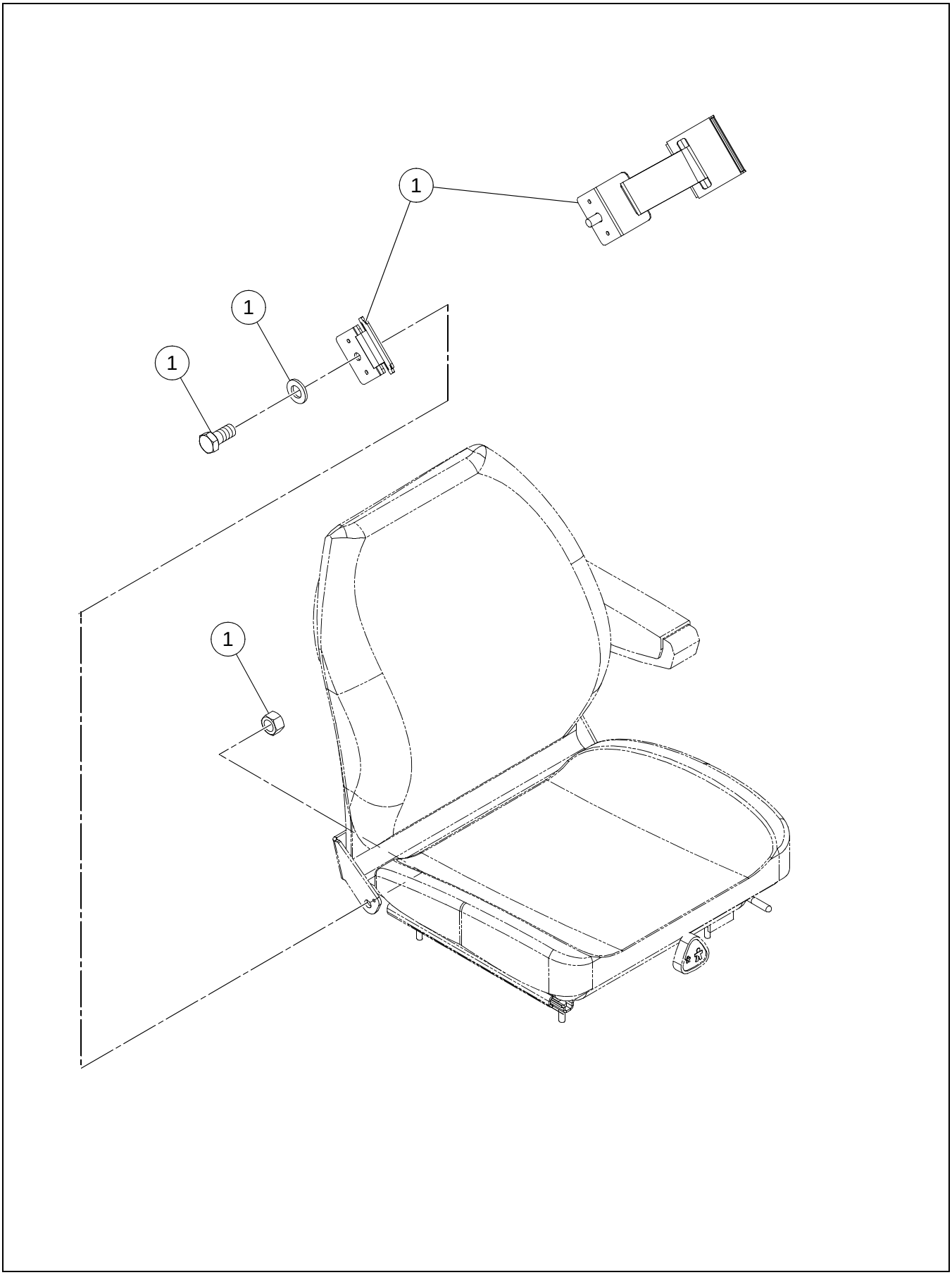

SEATBELT INSTALLATION

****Only Offered Parts Listed****

BOM 43803394

ITEM	COMM. NO.	DESCRIPTION	QTY	DIMENSIONS/NOTES
1	43834977	SEATBELT 3" RETRACTABLE	1	

ROPS/HOOD BRACKET INSTALLATION

13883152 REV 00

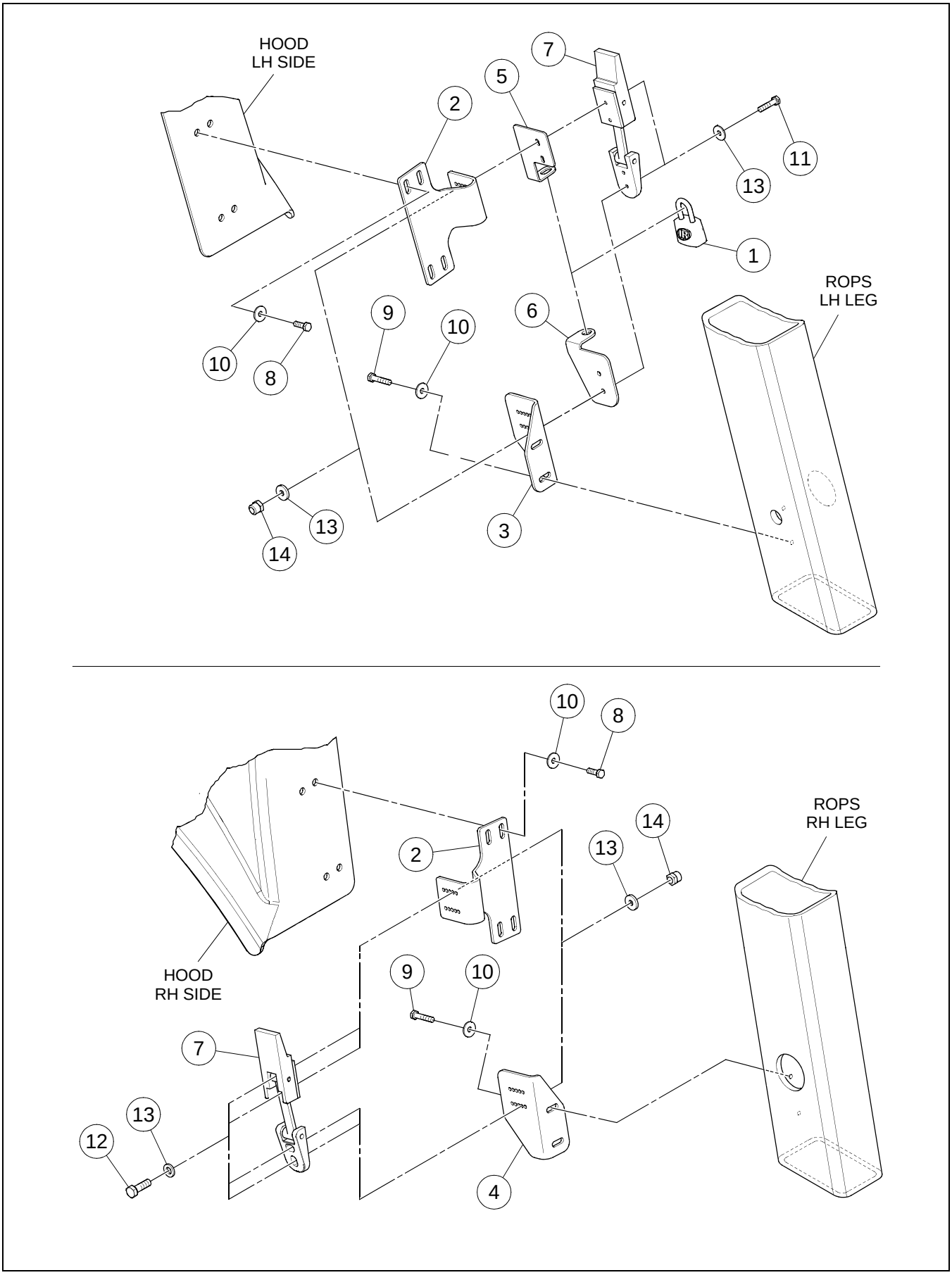

ROPS/HOOD BRACKET INSTALLATION

****Only Offered Parts Listed****

BOM 13883152

ITEM	COMM. NO.	DESCRIPTION	QTY	DIMENSIONS/NOTES
1	43907906	LOCK	1	
2	13881545	HOOD BRACKET	2	
3	13881537	ROPS BRACKET LH	1	
4	13881529	ROPS BRACKET RH	1	
5	13885355	RH LOCK TAB	1	
6	59163238	RH LOCK TAB	1	
7	59162149	LATCH	2	
8	96705587	HHCS CL 8.8,YEL ZN	8	M8-1.25X30
9	96702659	HHCS CL 8.8,YEL ZN	4	M8-1.25X25
10	96741038	WASHER, FLAT CL 200,YEL ZN	12	ID-8.4,OD-16.0X1.6THK
11	96705736	HHCS CL 8.8,YEL ZN	4	M5-0.8X20
12	96705728	HHCS CL 8.8,YEL ZN	4	M5-0.8X16
13	95922332	FLATWASHER	16	
14	96704580	LOCKNUT	8	M5

13882899 REV 00

No Drawing Required

SHIP ROPS LOOSE OPTION

****Only Offered Parts Listed****

BOM 13882899

ITEM	COMM. NO.	DESCRIPTION	QTY	DIMENSIONS/NOTES
1	13882709	BRACKET NO ROPS MOUNTING	2	
2	96741046	FLATWASHER, CL 200,YEL ZN	4	
3	96702287	HHCS CL 8.8,YEL ZN	4	M10-1.5X25

Section B - DRUM

DRUM ASSEMBLY

13329362 REV 0B

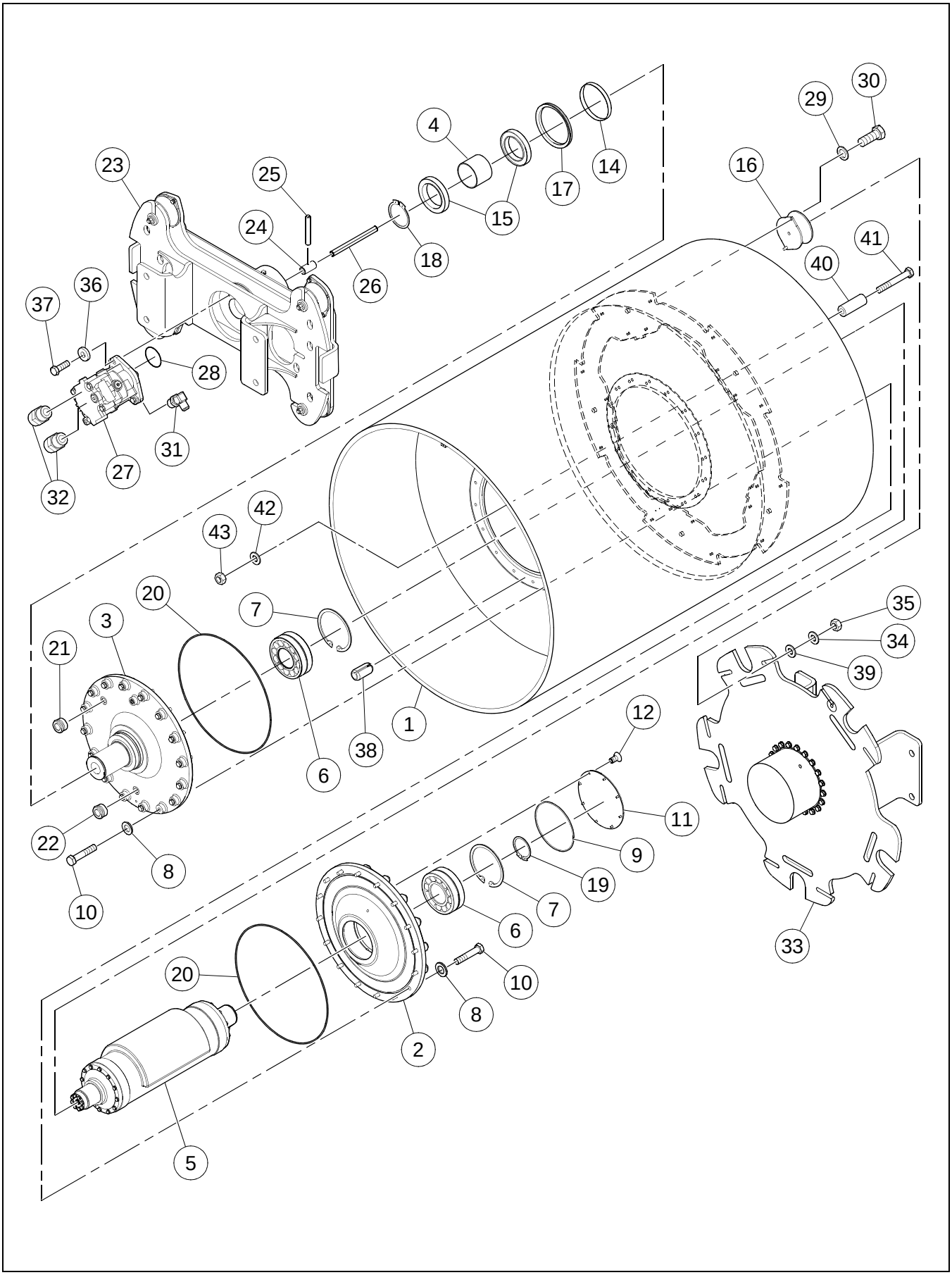

DRUM ASSEMBLY

****Only Offered Parts Listed****

BOM 18006361

ITEM	COMM. NO.	DESCRIPTION	QTY	DIMENSIONS/NOTES
1	13447743	DRUM	1	
2	13184072	BEARING HOUSING DRIVE	1	
3	13218177	BEARING HOUSING SPINDLE	1	
4	13179577	SPACER	1	
5	**NSVA**	**ECCENTRIC ASSEMBLY**	**1**	**See Page B - 4.**
6	59208512	BEARING	2	
7	96710983	RETAINING RING	2	
8	96738612	FLATWASHER	16	
9	95720256	O-RING	1	
10	96739990	HHCS CL 10.9,YEL ZN HR	16	M16-2.0X90
11	13412069	COVER	1	
12	96743851	FHCS CL 8.8,YEL ZN	8	M8-1.25X16
14	59277756	WEAR SLEEVE	1	
15	50269984	BALL BEARING	2	
16	13304787	SHOCK MOUNT	6	
17	13167390	V-RING SEAL	1	
18	96711510	RETAINING RING	1	
19	96711411	RETAINING RING	1	
20	95439006	O-RING	2	
21	59144428	MAGNETIC PLUG	2	
22	59277772	SIGHT GAUGE	1	
23	**NSVA**	**CARRIER ASSEMBLY**	**1**	**See Page B - 6.**
24	59613612	COUPLING	1	
25	96736822	ROLL PIN	1	
26	13182308	SPLINE SHAFT	1	
28	95988739	O-RING	1	
29	96738596	FLATWASHER	12	
30	96702790	HHCS CL 10.9,YEL ZN HR	12	M12-1.75X25
31	95303350	ELBOW	1	
32	59922591	ADAPTER	2	
33	**NSVA**	**DRUM DRIVE ASSY**	**1**	**See Page B - 8.**
34	59565044	FLATWASHER, HARDENED	6	
35	96703657	NUT,HEX CL 10,YEL ZN HR	6	M16-2
36	96712237	FLATWASHER	2	
37	96702329	HHCS CL 8.8,YEL ZN	2	M12-1.75X35
38	96737069	ROLL PIN	1	
39	13351408	WASHER	6	

ECCENTRIC ASSEMBLY

43866508 REV 00

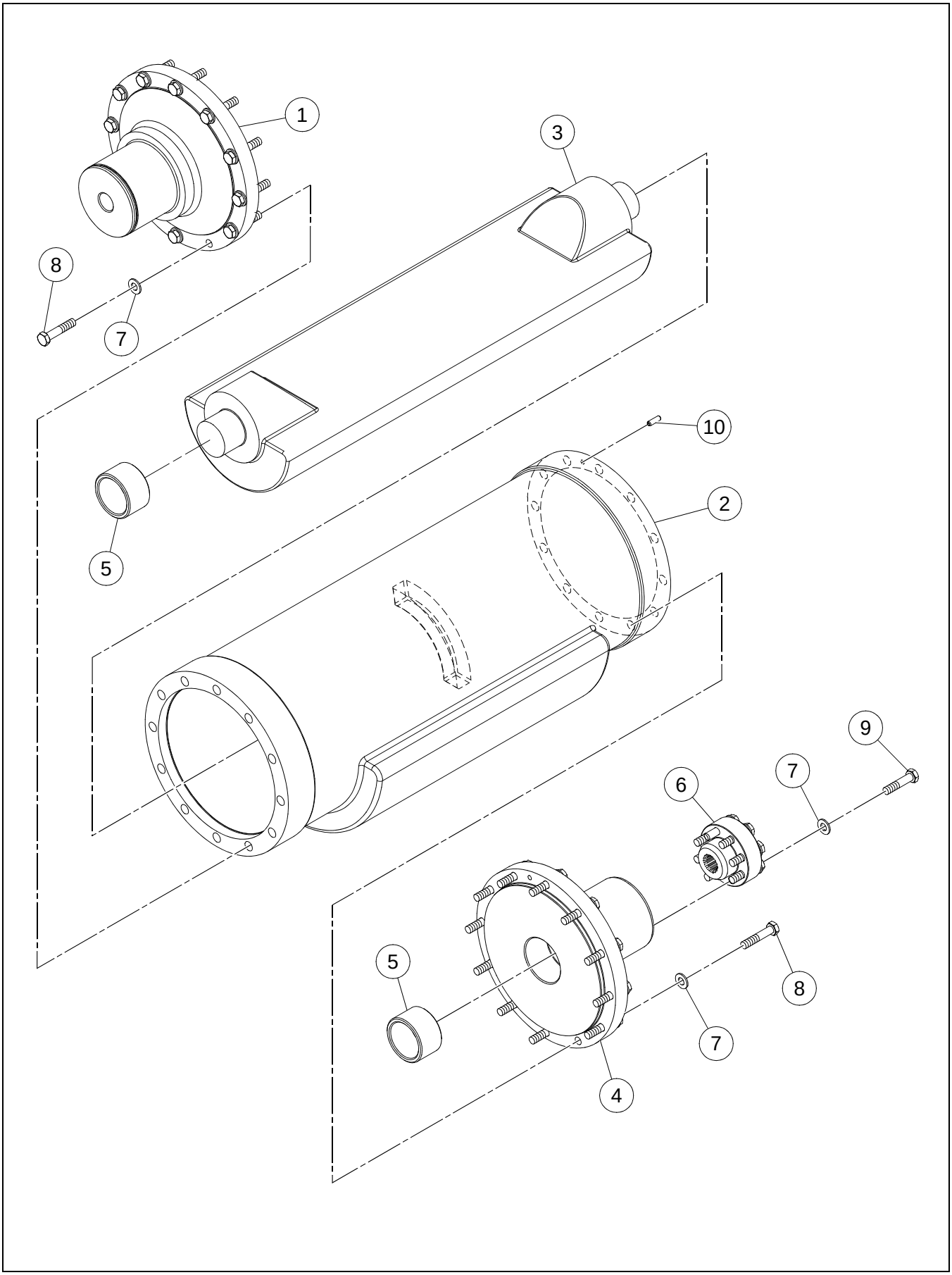

ECCENTRIC ASSEMBLY

****Only Offered Parts Listed****

BOM 13179254

ITEM	COMM. NO.	DESCRIPTION	QTY	DIMENSIONS/NOTES
1	13179239	DRIVE SIDE JOURNAL	1	
2	13218128	ECCENTRIC SHAFT	1	
3	13179205	ECCENTRIC SHAFT	1	
4	13218136	NON-DRIVE SIDE JOURNAL	1	
5	59296632	OILITE BEARING	2	
6	13179247	SPLINE COUPLING	1	
7	96741046	FLATWASHER, CL 200,YEL ZN	30	
8	96702436	HHCS CL 10.9,YEL ZN HR	24	M10-1.5X50
9	96702428	HHCS CL 8.8,YEL ZN	6	M10-1.5X45
10	96720990	ROLL PIN	1	M6X20

13184528 REV 02

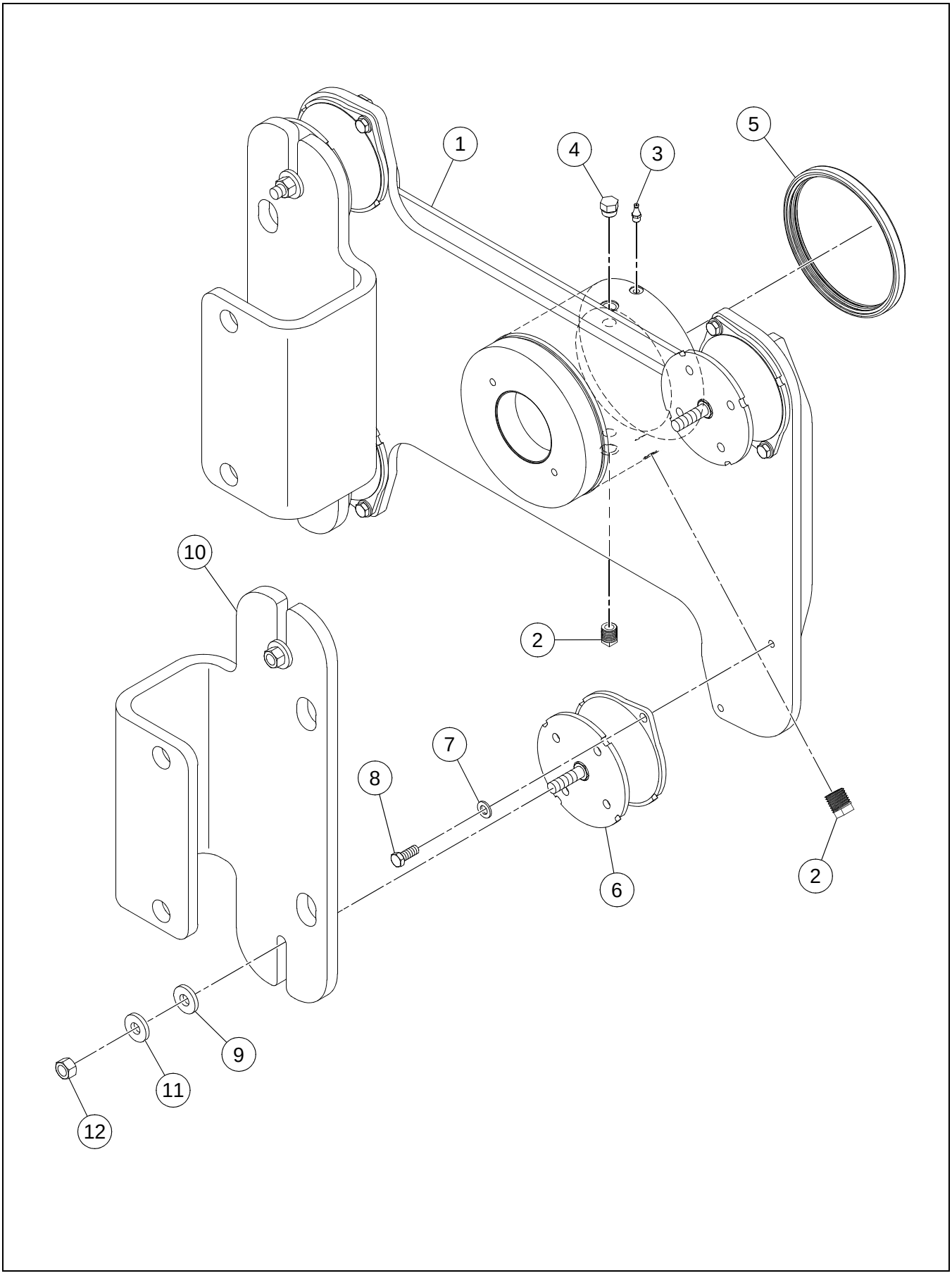

CARRIER ASSEMBLY

****Only Offered Parts Listed****

BOM 13179551

ITEM	COMM. NO.	DESCRIPTION	QTY	DIMENSIONS/NOTES
1	13185376	CARRIER PLATE	1	
2	59600593	PIPE PLUG	2	
3	96702709	GREASE FITTING	1	
4	54584776	BREATHER, FILTERED VENT	1	
5	59277764	OIL SEAL	1	
6	13304787	SHOCK MOUNT	4	
7	96738596	FLATWASHER	8	
8	96702808	HHCS CL 10.9,YEL ZN HR	8	M12-1.75X30
9	13351408	WASHER	4	
10	13232616	SHOCK MOUNT PLATE	2	
11	59565044	FLATWASHER, HARDENED	4	
12	96703657	NUT,HEX CL 10,YEL ZN HR	4	M16-2

43858059 REV 00

No Drawing Required

DRUM DRIVE ASSY

****Only Offered Parts Listed****

BOM 43858059

ITEM	COMM. NO.	DESCRIPTION	QTY	DIMENSIONS/NOTES
1	43858042	MOTOR, DRUM DRIVE	1	
2	13413893	DRIVE PLATE MACHINING	1	
3	13357702	DRIVE MOTOR MOUNTING BRACKET	1	
4	96738620	FLATWASHER	16	
5	96704481	HHCS CL 8.8,YEL ZN	16	M20-2.5X50
6	96714019	FLATWASHER, HARDENED	16	M16
7	96708425	SHCS CL 8.8	16	M16-2X60
8	13184445	SPLIT CLAMP	2	
-	58896952	- SPLIT FLANGE CLAMP	4	
-	96704556	- HHCS CL 8.8,YEL ZN	8	M10-1.5X40
-	59510065	- LOCKWASHER	8	
-	59990010	- O-RING	2	
9	58896580	ELBOW	1	
10	59177915	SPLIT FLANGE	2	
11	59787879	ADAPTER	1	
12	95418166	FITTING	1	
13	95415824	ADAPTER	1	

FRONT FRAME INSTALLATION

13218201 REV 0K

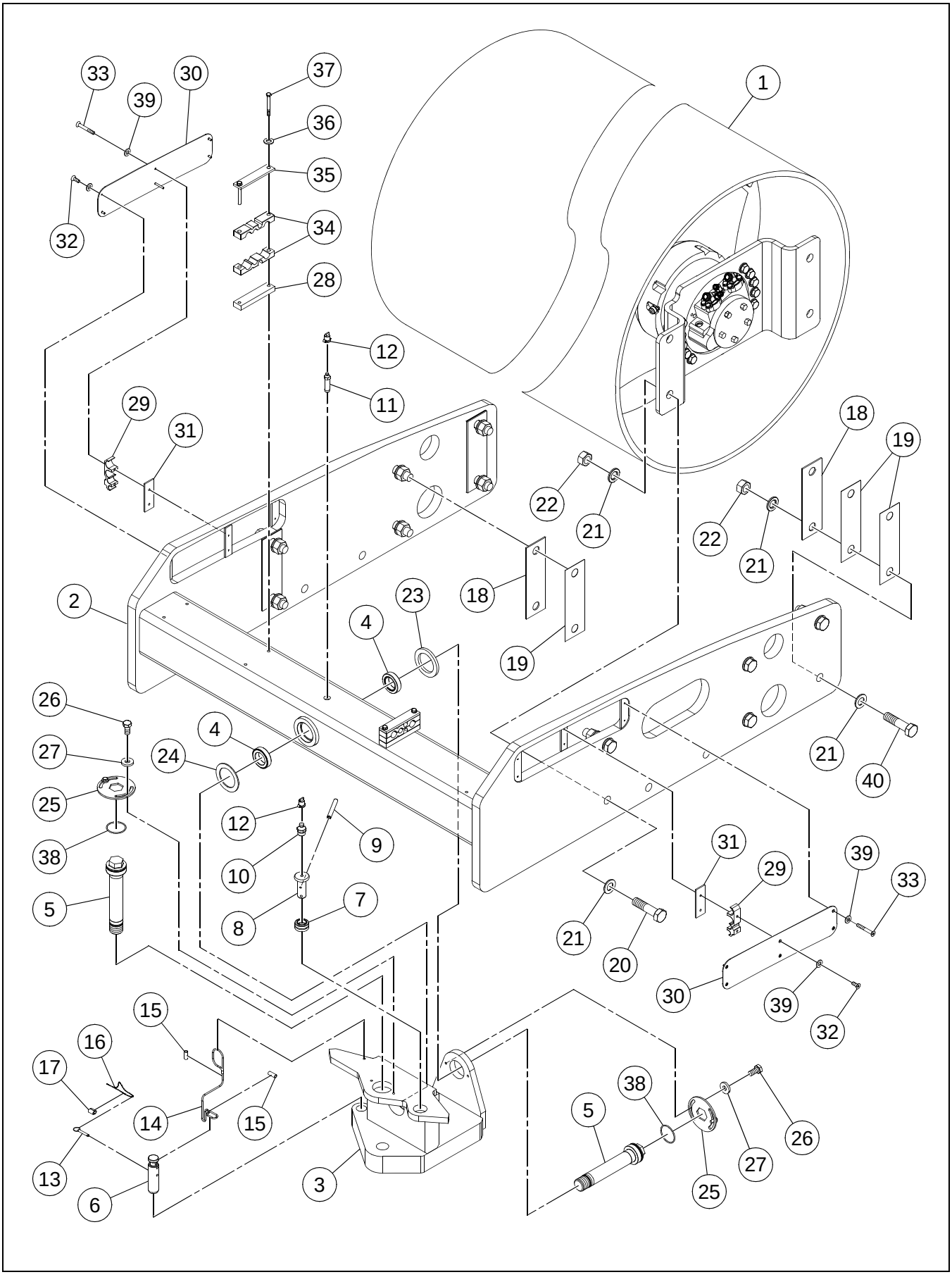

FRONT FRAME INSTALLATION

****Only Offered Parts Listed****

BOM 13174149

ITEM	COMM. NO.	DESCRIPTION	QTY	DIMENSIONS/NOTES
1	UNIQUE	THIS PART IN UNIQUE PARTS GROUP	1	
2	43819713	SD77 DRUM FRAME WELD	1	
-	43819705	- SD77 CROSSMEMBER MACH.	1	
3	13290879	SWIVEL	1	
4	13187877	BEARING	2	
5	13219142	ARTICULATION/OSCILLATION PIN	2	
6	59298208	ARTICULATION PIN	1	
7	59450528	BUSHING	1	
8	59190975	PIVOT PIN	1	
9	95098679	ROLL PIN	1	
10	95201547	GREASE FITTING	1	
11	95412946	FITTING	1	
12	50270248	GREASE FITTING CAP	2	
13	59299545	HITCH PIN	1	
14	59607861	CABLE	1	
15	59607853	FERRULE	2	
16	59436741	CABLE	1	
17	59214775	SLEEVE	1	
18	13188263	SHIM	4	
19	13188271	SHIM	6	
20	96728803	HHCS CL 10.9,YEL ZN HR	8	M30-3.5X110
21	96701578	WASHER	24	
22	96720438	NUT,HEX CL 8 ,YEL ZN	12	M30-3.5
23	13187968	DUST SEAL	1	
24	13187976	DUST SEAL	1	
25	59109819	LOCK PLATE	2	
26	96712146	HHCS CL 10.9,YEL ZN HR	4	M10-1.5X20
27	96711833	WASHER	4	M10
28	13209168	SPACER BAR	2	
29	13213509	HOSE CLAMP	2	
30	13295829	HOSE COVER PLATE	2	
31	13213525	CLAMP PLATE	2	
32	96701958	HHCS CL 8.8,YEL ZN	12	M6-1X16
33	96705546	HHCS CL 8.8,YEL ZN	4	M6-1.0X50
34	13239967	HOSE CLAMP	4	
35	58880501	CLAMP PLATE	2	
36	96714399	FLATWASHER,140,YEL ZN	4	
37	96704739	HHCS CL 8.8,YEL ZN	4	M10-1.5X90
38	95018719	O-RING	2	
39	96741053	FLATWASHER, CL 200,YEL ZN	16	
40	96728803	HHCS CL 10.9,YEL ZN HR	4	M30-3.5X110

13519764 REV 00

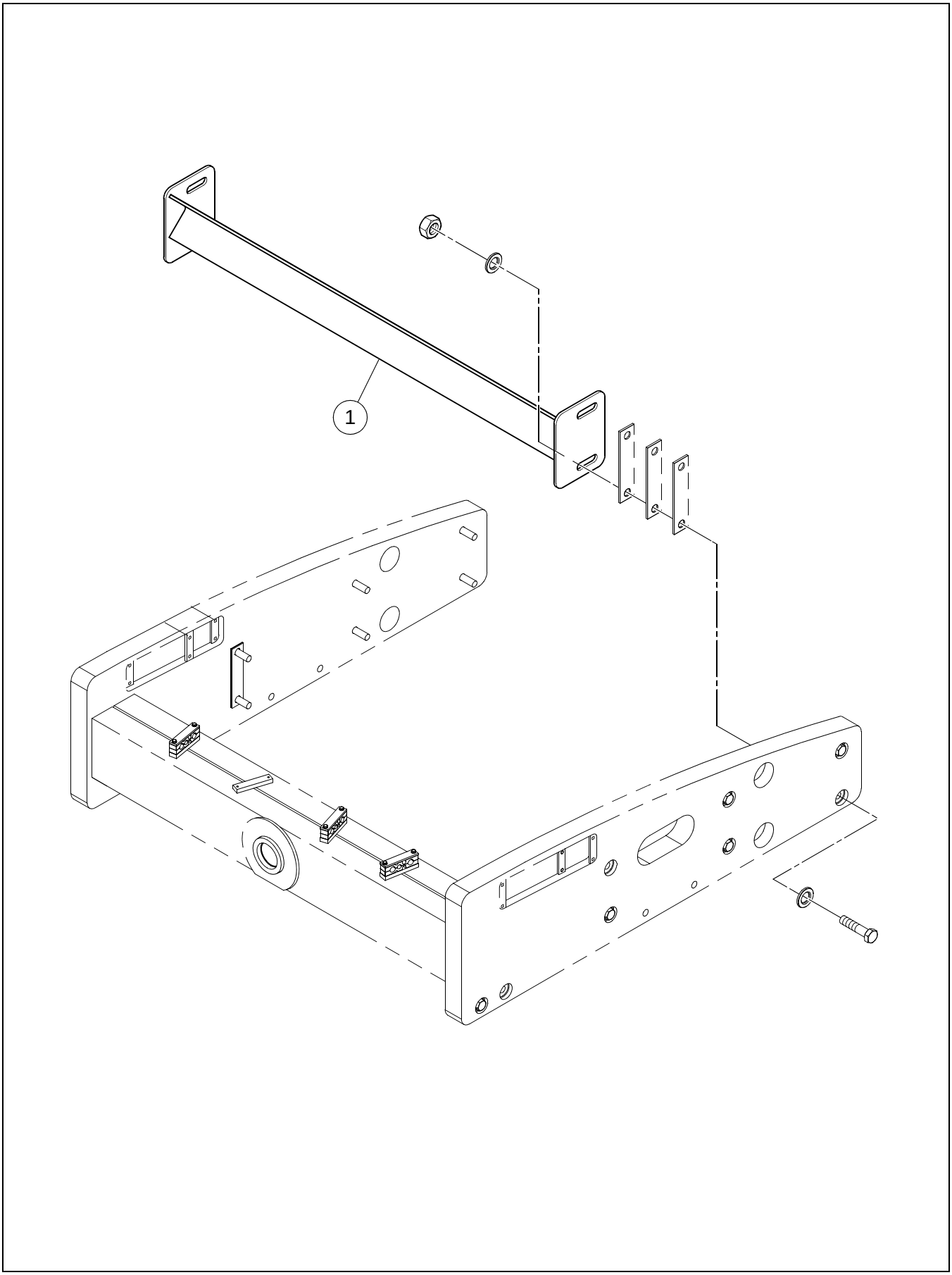

DRUM SCRAPER INSTALLATION

****Only Offered Parts Listed****

BOM 13528211

ITEM	COMM. NO.	DESCRIPTION	QTY	DIMENSIONS/NOTES
1	13416458	SCRAPER	1	

13271002 REV 01

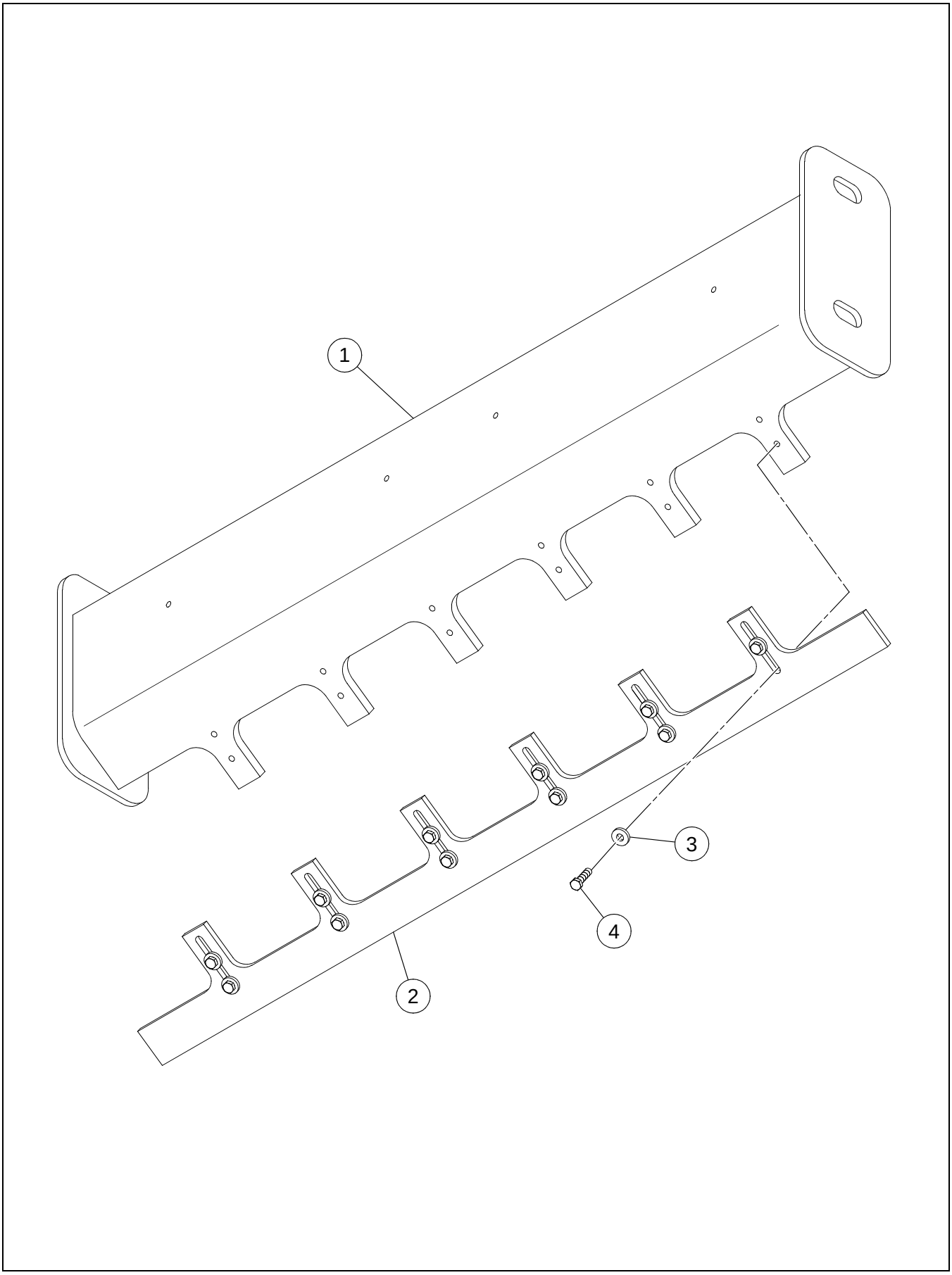

SMOOTH DRUM SCRAPER INSTALLATION

****Only Offered Parts Listed****

BOM 13175666

ITEM	COMM. NO.	DESCRIPTION	QTY	DIMENSIONS/NOTES
1	13323936	SCRAPER	1	
2	13235874	SCRAPER BAR	1	
3	96712237	FLATWASHER	12	
4	96715081	HHCS CL 8.8,YEL ZN	12	M12-1.75X45

Section C - ENGINE

13238514 REV 02

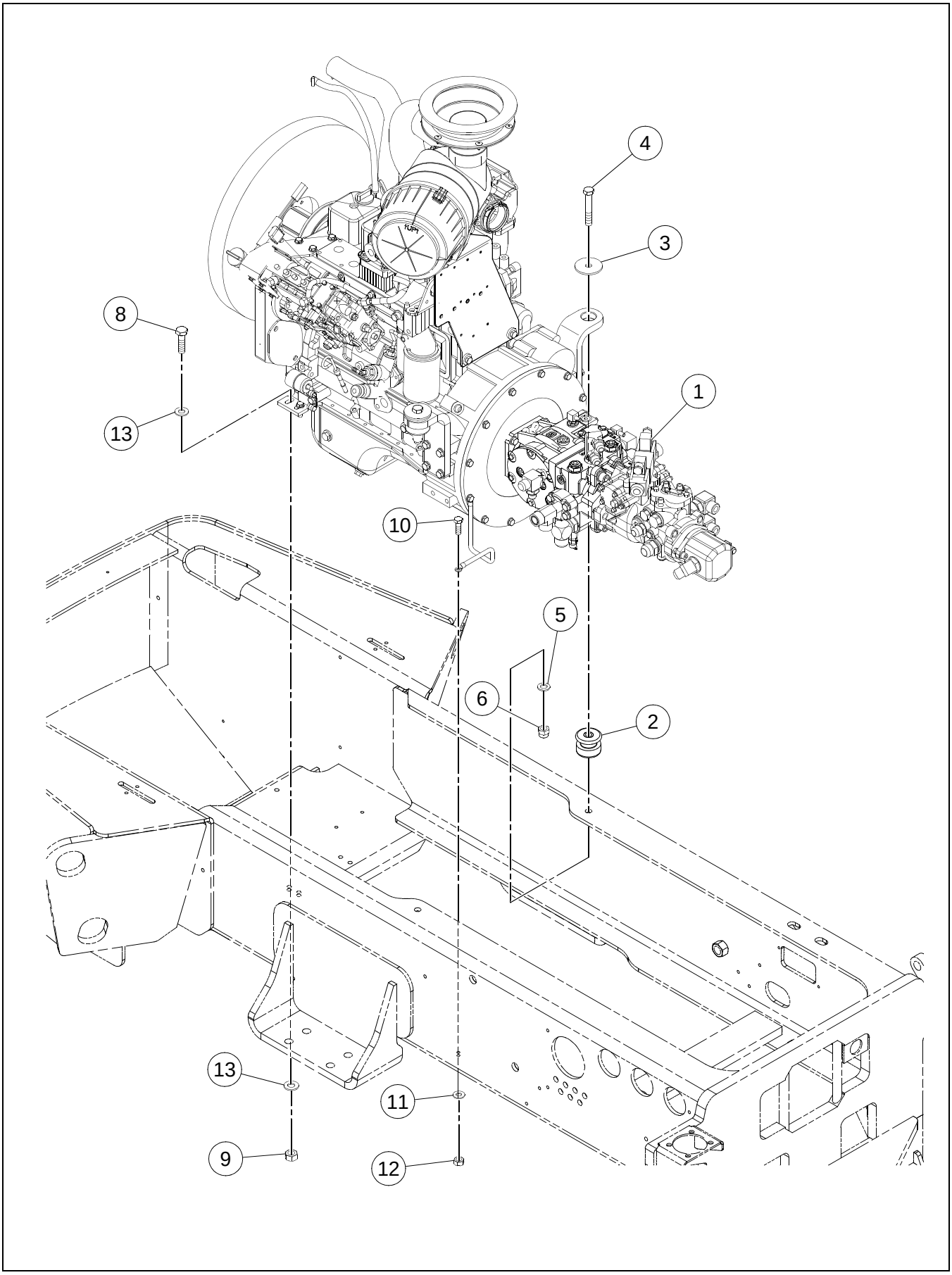

****Only Offered Parts Listed****

BOM 13175054

ITEM	COMM. NO.	DESCRIPTION	QTY	DIMENSIONS/NOTES
1	**NSVA**	**ENGINE ASSEMBLY - TIER II**	**1**	**See Page C - 4.**
2	59097162	CENTER BONDED MOUNT	2	
3	58879768	SNUBBING WASHER	2	
4	96704952	HHCS CL 8.8,YEL ZN	2	M16-2X100
5	96738612	FLATWASHER	2	
6	96704630	STOP NUT	2	
8	96704556	HHCS CL 8.8,YEL ZN	4	M10-1.5X40
9	96704812	HEX NUT CL 8 ,YEL ZN	4	M10-1.5
10	96702659	HHCS CL 8.8,YEL ZN	1	M8-1.25X25
11	96741038	WASHER, FLAT CL 200,YEL ZN	5	ID-8.4,OD-16.0X1.6THK
12	96701370	NUT,HEX CL 8 ,YEL ZN	1	M8-1.25
13	96711833	WASHER	8	M10

ENGINE ASSEMBLY - TIER II - SHEET 1 OF 2

13238332 REV 00U

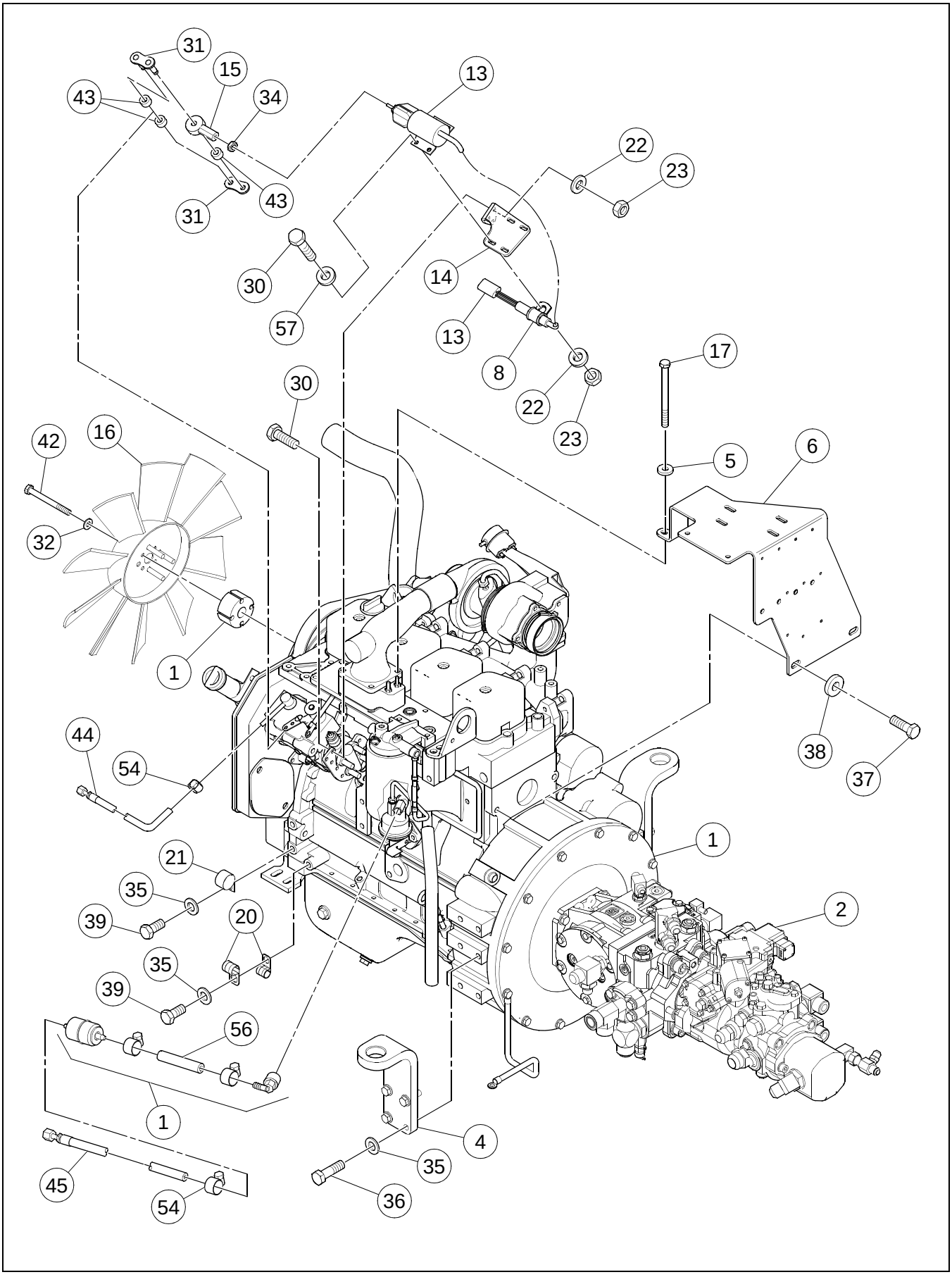

ENGINE ASSEMBLY - TIER II - SHEET 1 OF 2

****Only Offered Parts Listed****

BOM 13251962

ITEM	COMM. NO.	DESCRIPTION	QTY	DIMENSIONS/NOTES
1	13845136	ENGINE	1	
-	13284716	- ENGINE OIL FILTER	1	
-	13064282	- IN-LINE FUEL FILTER	1	
-	43924463	- FUEL FILTER	1	FS19608JM
-	13429030	- FAN BELT	1	
-	13852256	- ALTERNATOR	1	
-	43830728	- STARTER	1	DEE-246-25165
-	43830736	- REMAN STARTER	1	
2	**NSVA**	**PUMP STACK ASSEMBLY**	**1**	**See Page C - 8.**
3	59286336	COUPLING	1	
4	13213947	REAR ENGINE MOUNT	2	
5	96712674	FLATWASHER	2	
6	13359740	AIR CLEANER BRACKET	1	
-	13182027	- AIR CLEANER BRACKET SPACER	1	
8	59121855	CLAMP	1	
9	43840156	AIR CLEANER-8"	1	
-	43904200	- ELEMENT:PRIMARY AIR	1	
-	43904218	- ELEMENT:SAFETY AIR	1	
-	54415393	- COVER ASSEMBLY	1	
-	35393677	- DUST EJECTOR VALVE	1	
-	35393669	- CLIP	3	
10	13188347	AIR INTAKE HOSE	1	
11	54680087	CLAMP	1	
12	54680103	BAND CLAMP	1	
13	59009134	THROTTLE SOLENOID	1	
-	54651088	- SOLENOID	1	
-	54578117	- RUBBER BOOT	1	
14	43943448	MOUNTING BRACKET	1	
15	13501390	ROD END	1	
16	59819292	ENGINE FAN	1	
-	59309104	- FAN BELT	1	
17	96726435	HHCS CL 8.8,YEL ZN	2	M8-1.25X100
18	13491691	SWITCH, OIL PRESSURE	1	
19	59816322	TEMPERATURE SENDER	1	
20	59726075	CLAMP	2	
21	95378873	CLAMP	1	
22	96741053	FLATWASHER, CL 200,YEL ZN	3	
23	96703640	NUT,HEX CL 10,YEL ZN HR	6	M6-1
25	13251707	LOWER RADIATOR HOSE	1	
26	13168851	UPPER	1	
27	95286266	CLAMP	1	
28	95278008	CLAMP	1	

ENGINE ASSEMBLY - TIER II - SHEET 2 OF 2

13238332 REV 00U

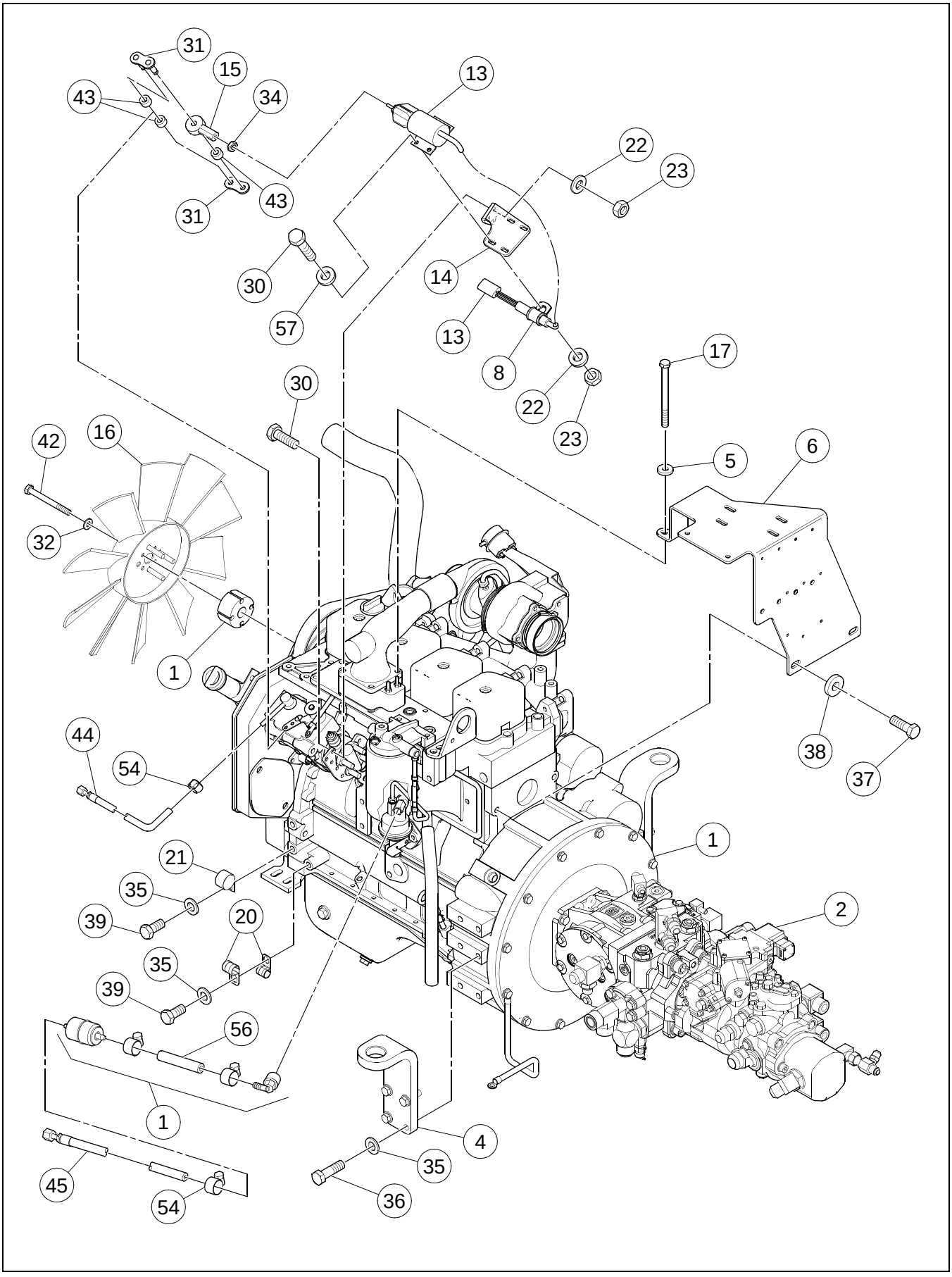

****Only Offered Parts Listed****

BOM 13251962

ITEM	COMM. NO.	DESCRIPTION	QTY	DIMENSIONS/NOTES
29	95220893	CLAMP	2	
30	96704564	HHCS CL 8.8,YEL ZN	7	M6-1X20
31	13501697	CHAIN LINK	1	
32	96741046	FLATWASHER, CL 200,YEL ZN	14	
33	95919254	HHCS	8	3/8-16X1.50
34	95923058	JAM NUT	1	
35	96738596	FLATWASHER	10	
36	96702444	HHCS CL 8.8,YEL ZN	10	M12-1.75X40
37	96702329	HHCS CL 8.8,YEL ZN	2	M12-1.75X35
38	96712237	FLATWASHER	4	
39	96701495	HHCS CL 8.8,YEL ZN	2	M12-1.75X25
40	96704812	HEX NUT CL 8 ,YEL ZN	1	M10-1.5
41	96702824	HHCS CL 8.8,YEL ZN	4	M8-1.25X20
42	96720594	HHCS CL 8.8,YEL ZN	4	M10-1.5X100
43	13501366	SPACER	3	
44	59098764	HOSE ASSEMBLY	1	
45	59138925	HOSE ASSEMBLY	1	
46	13167499	AIR INTAKE BELLOWS	1	
47	13274618	EXTENSION TUBE	1	
48	13212501	RIVET	6	
49	59344176	CLAMP	1	
50	96705132	NUT,HEX CL 8 ,YEL ZN	3	M5-0.8
51	96701370	NUT,HEX CL 8 ,YEL ZN	1	M8-1.25
52	96741038	WASHER, FLAT CL 200,YEL ZN	6	ID-8.4,OD-16.0X1.6THK
53	59827261	HOSE	1	
54	50274299	HOSE CLAMP	2	
55	95302709	CLAMP	2	
56	59586511	HOSE	1	
57	96704663	FLATWASHER	8	M6
58	18007690	INJECTOR BRACKET	1	
60	96715602	HHCS CL 8.8,YEL ZN	1	M10-1.5X110
61	96704614	NUT	1	M10X1.5
62	96728704	HHCS CL 8.8,YEL ZN	1	M8-1.25X40
63	96704606	ESNA NUT	1	M8
64	43855626	GUARD, ALTERNATOR	1	

PUMP STACK ASSEMBLY - SHEET 1 OF 2

13217104 REV 0J

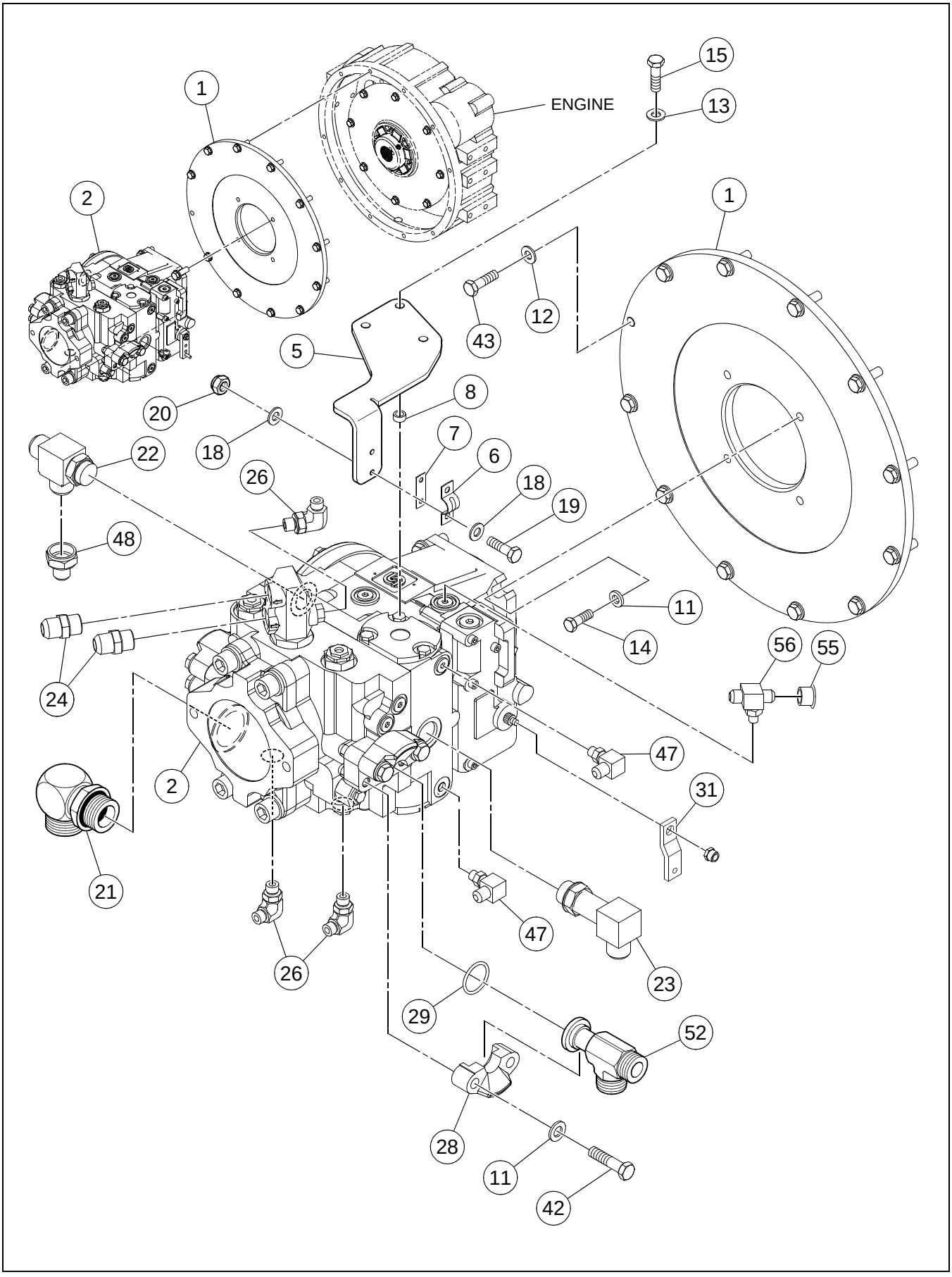

PUMP STACK ASSEMBLY - SHEET 1 OF 2

****Only Offered Parts Listed****

BOM 13270475

ITEM	COMM. NO.	DESCRIPTION	QTY	DIMENSIONS/NOTES
1	58966086	PLATE, PUMP MOUNTING	1	
3	NOT-USED	THIS ITEM NOT USED W/THIS BOM	1	
5	43862994	BRACKET CABLE MOUNTING	1	
6	59580571	CLAMP	1	
7	59617985	SHIM	1	
8	59329979	SPACER	3	
9	95988804	"O"RING	1	
10	95988796	O-RING	1	
11	96738596	FLATWASHER	14	
12	96741046	FLATWASHER, CL 200,YEL ZN	14	
13	96741038	WASHER, FLAT CL 200,YEL ZN	3	ID-8.4,OD-16.0X1.6THK
14	96702329	HHCS CL 8.8,YEL ZN	4	M12-1.75X35
15	96705587	HHCS CL 8.8,YEL ZN	3	M8-1.25X30
16	96708300	SHCS CL 8.8	2	M12-1.75X45
17	96702162	SHCS CL 8.8	2	M10-1.5X30
18	96738554	FLATWASHER	4	
19	96705736	HHCS CL 8.8,YEL ZN	2	M5-0.8X20
20	96704580	LOCKNUT	2	M5
21	95280194	ADAPTER	1	
22	95829263	TEE	1	
23	59847798	ADAPTER	1	
24	95303384	ADAPTER	2	
25	95285946	ADAPTER	1	
26	59922823	ADAPTER	3	
27	59922906	ADAPTER	1	
28	58901653	SPLIT FLANGE CLAMP	4	
29	59993881	O-RING	2	
30	59923961	ADAPTER	1	
31	43838556	PUMP LEVER	1	
34	95469128	ADAPTER	1	
35	59922989	ADAPTER	2	
36	95356960	ADAPTER	1	
37	59923797	ADAPTER	1	
38	95303350	ELBOW	1	
39	95359410	ADAPTER	1	
42	96705595	HHCS CL 8.8,YEL ZN	8	M12-1.75X50
43	96704309	HHCS CL 8.8,YEL ZN	12	M10-1.5X35
47	95329975	ADAPTER	2	
48	59672709	REDUCER	1	
52	59980482	ADAPTER	2	
53	13208004	ADAPTER	1	
54	59929182	ADAPTER	1	

PUMP STACK ASSEMBLY - SHEET 2 OF 2

13217104 REV 0J

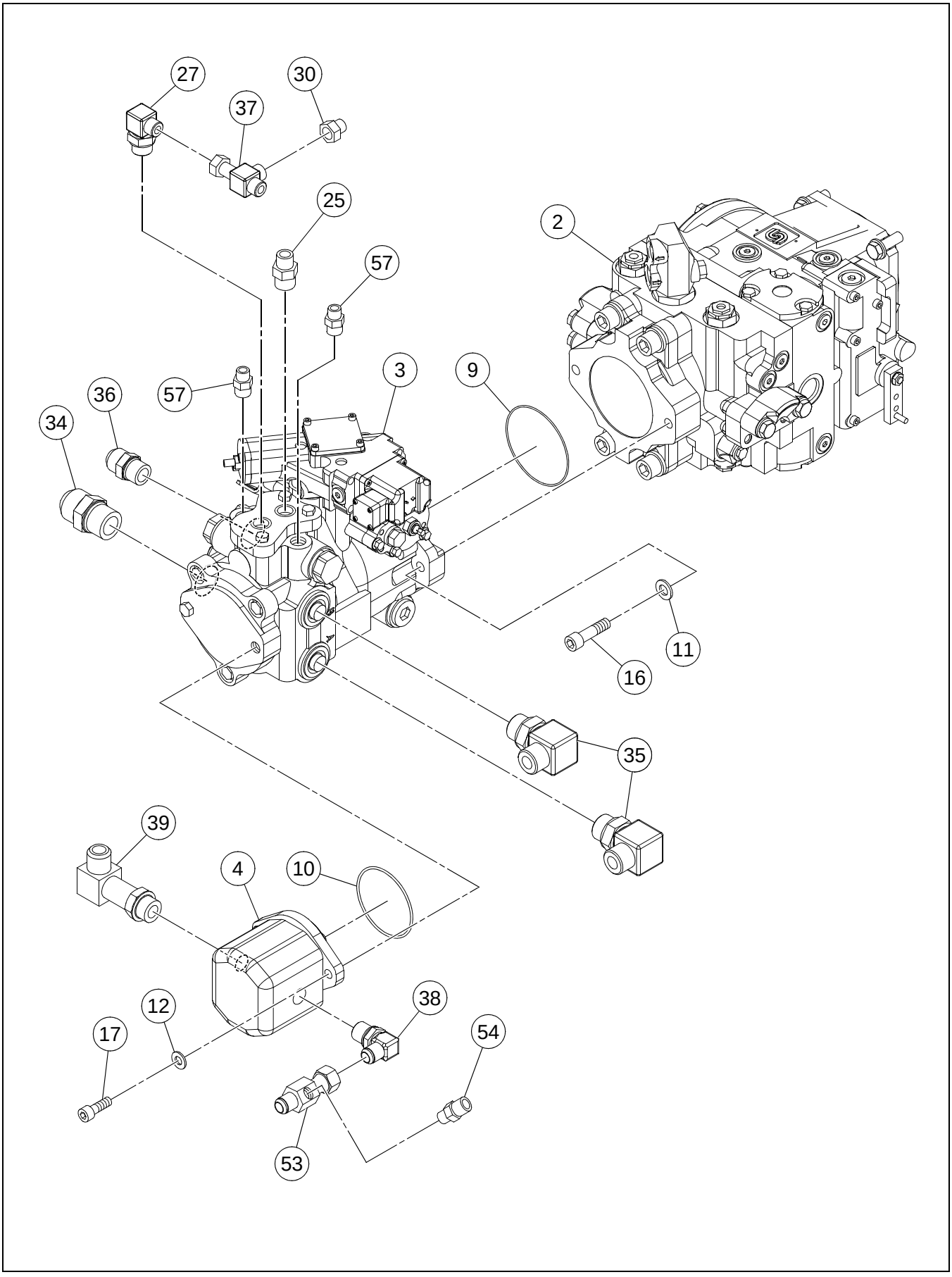

PUMP STACK ASSEMBLY - SHEET 2 OF 2

****Only Offered Parts Listed****

BOM 13270475

ITEM	COMM. NO.	DESCRIPTION	QTY	DIMENSIONS/NOTES
55	95257341	CAP	1	
56	95431284	CROSS, PRESSURE	1	
57	59922419	ADAPTER	2	

EXHAUST INSTALLATION

13272083 REV 001

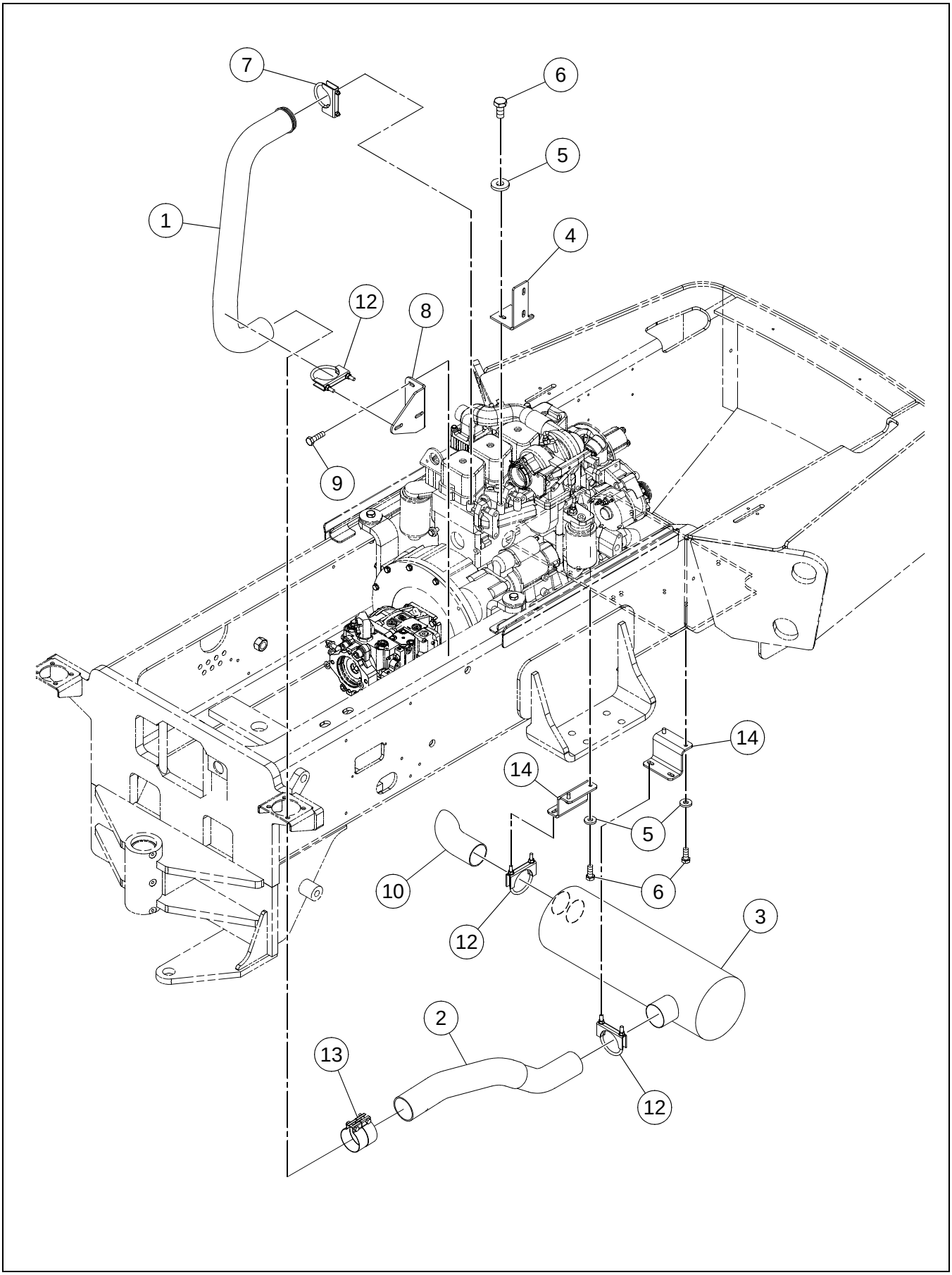

EXHAUST INSTALLATION

****Only Offered Parts Listed****

BOM 13188446

ITEM	COMM. NO.	DESCRIPTION	QTY	DIMENSIONS/NOTES
1	13239959	EXHAUST PIPE	1	
3	43936053	MUFFLER 8.5"	1	
4	59104257	SUPPORT BRACKET	1	
5	96711833	WASHER	6	M10
6	96702279	HHCS CL 8.8,YEL ZN	6	M10-1.5X20
7	59495028	CLAMP	1	
8	43863000	BRACKET, EXHAUST	1	
9	96704309	HHCS CL 8.8,YEL ZN	2	M10-1.5X35
10	13188628	TAIL PIPE	1	
12	59179218	EXHAUST	3	
13	13093075	CLAMP SEAL	1	
14	13188651	SUPPORT BRACKET	2	

13238183 REV 0B

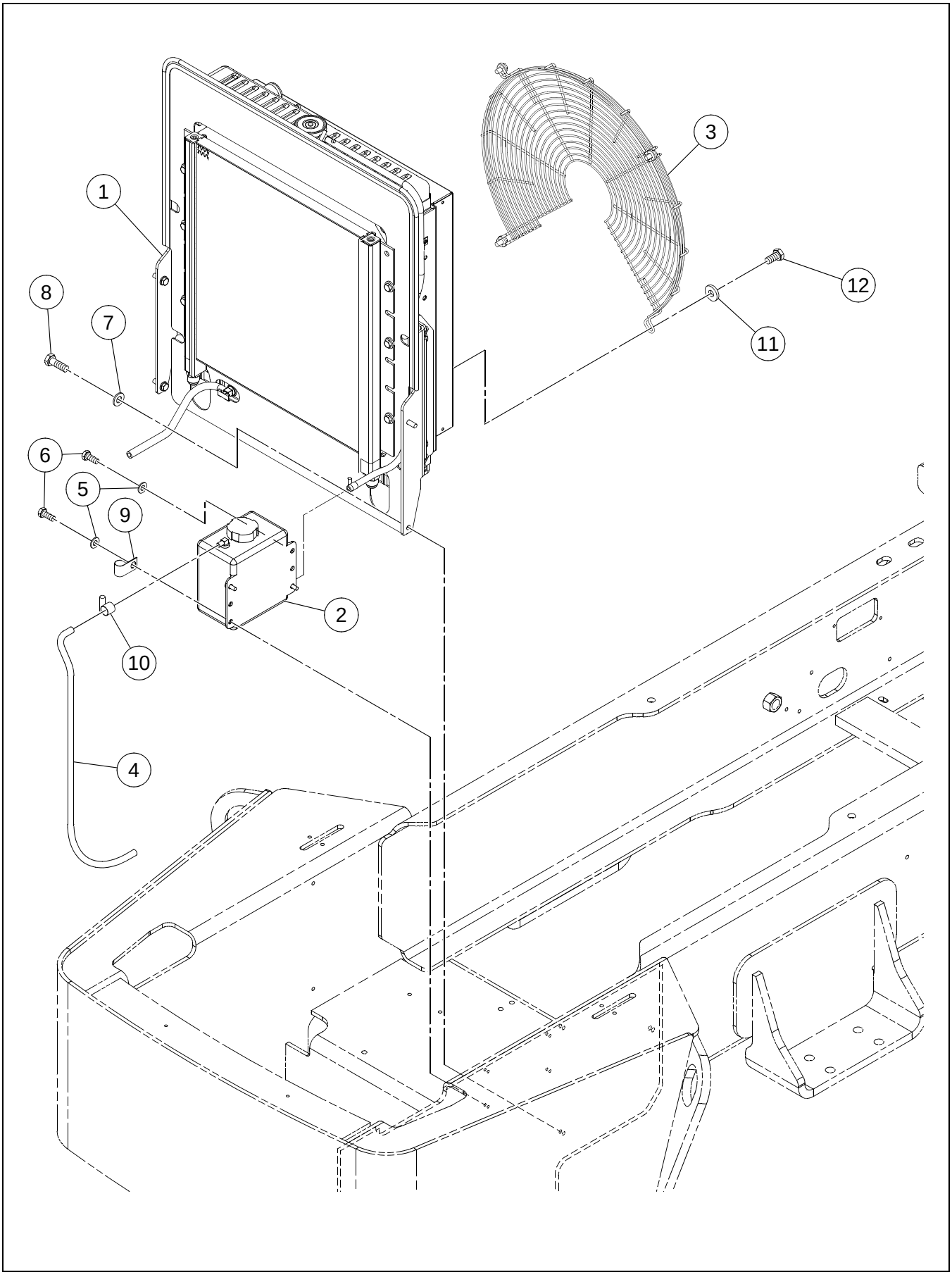

****Only Offered Parts Listed****

BOM 13218219

ITEM	COMM. NO.	DESCRIPTION	QTY	DIMENSIONS/NOTES
1	**NSVA**	**RADIATOR/OIL COOLER ASSEMBLY**	**1**	**See Page C - 16.**
2	58802851	RECOVERY BOTTLE	1	
-	59154807	- CAP	1	
3	43856517	FAN GUARD	1	
4	13216734	HOSE ASSEMBLY	1	
5	96741038	WASHER, FLAT CL 200,YEL ZN	4	ID-8.4,OD-16.0X1.6THK
6	96702824	HHCS CL 8.8,YEL ZN	4	M8-1.25X20
7	96741046	FLATWASHER, CL 200,YEL ZN	4	
8	96702279	HHCS CL 8.8,YEL ZN	4	M10-1.5X20
9	59103598	CLAMP	1	
10	50274299	HOSE CLAMP	2	
11	96711833	WASHER	4	M10
12	96702279	HHCS CL 8.8,YEL ZN	4	M10-1.5X20

RADIATOR/OIL COOLER ASSEMBLY

13238092 REV 0E

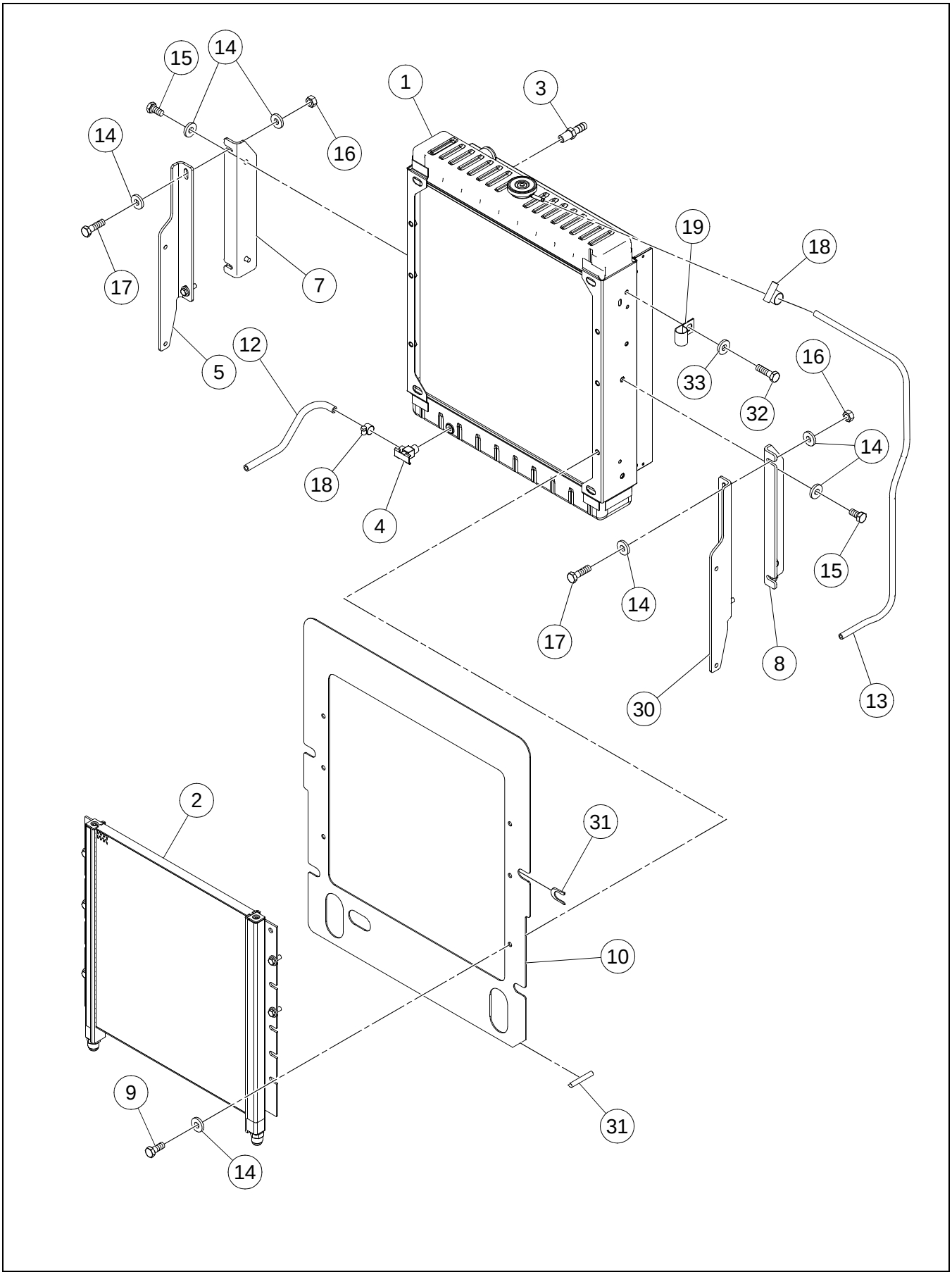

RADIATOR/OIL COOLER ASSEMBLY

****Only Offered Parts Listed****

BOM 13175070

ITEM	COMM. NO.	DESCRIPTION	QTY	DIMENSIONS/NOTES
1	43840149	RADIATOR TIER 11 SD77	1	
2	43908904	OIL COOLER SD77 LOUVER FIN ***	1	
3	59331934	ADAPTER	1	
4	58848920	DRAIN ASSEMBLY	1	
5	13233911	RADIATOR FRAME	1	
7	13215702	RADIATOR BRACKET	1	
8	13215710	RADIATOR BRACKET	1	
9	96702287	HHCS CL 8.8,YEL ZN	6	M10-1.5X25
10	13274477	BAFFLE PLATE	1	
12	59321687	HOSE	1	
13	59122549	HOSE ASSEMBLY	1	
14	96711833	WASHER	18	M10
15	96702279	HHCS CL 8.8,YEL ZN	4	M10-1.5X20
16	96704812	HEX NUT CL 8 ,YEL ZN	4	M10-1.5
17	96704309	HHCS CL 8.8,YEL ZN	4	M10-1.5X35
18	50274299	HOSE CLAMP	2	
19	59103598	CLAMP	1	
30	13233903	RADIATOR FRAME	1	
31	13062518	TRIM	1	
32	96702816	HHCS CL 8.8,YEL ZN	1	M8-1.25X16
33	96741038	WASHER, FLAT CL 200,YEL ZN	1	ID-8.4,OD-16.0X1.6THK

UNIQUE AIR CLEANER RESTRICTION INSTALLATION - OPTION

13212238 REV 01

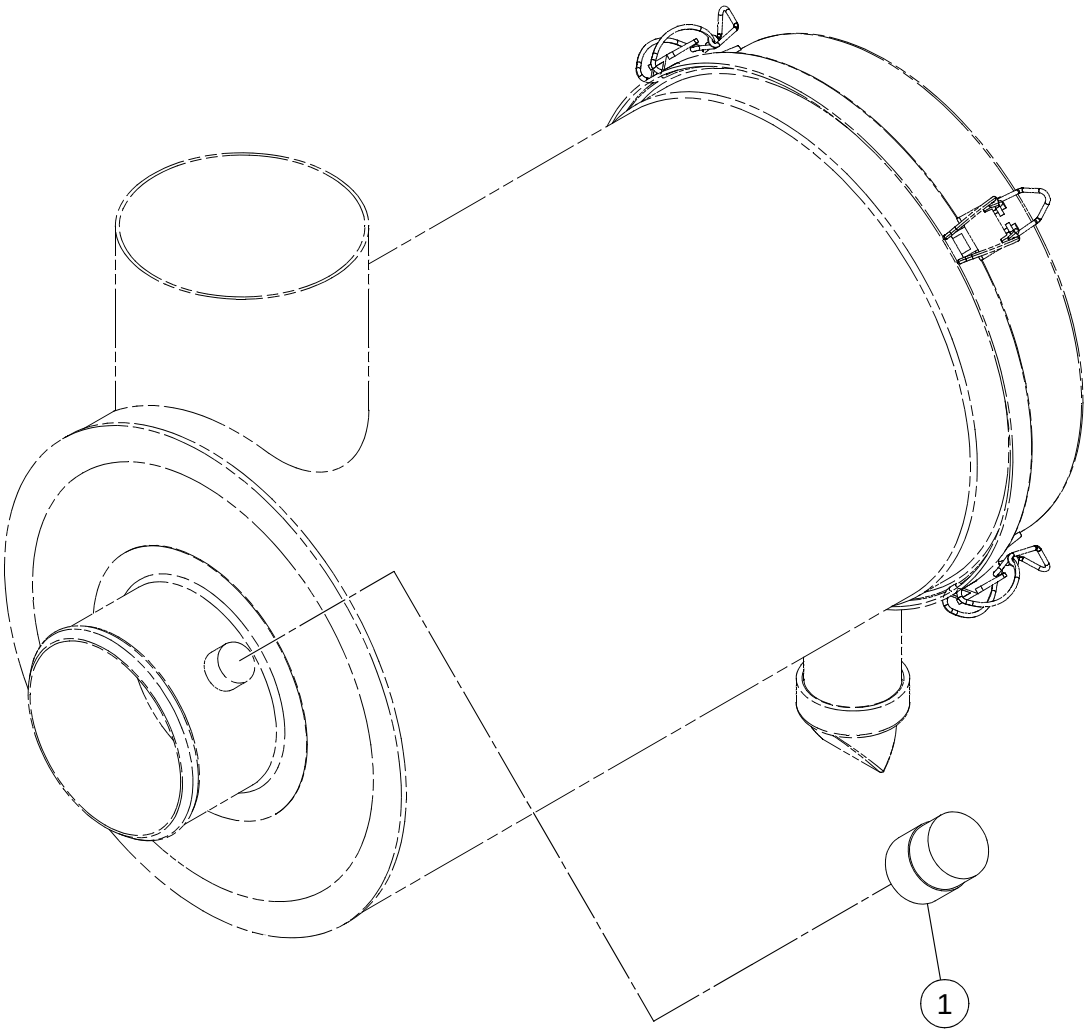

UNIQUE AIR CLEANER RESTRICTION INSTALLATION - OPTION

****Only Offered Parts Listed****

BOM 59287912

ITEM	COMM. NO.	DESCRIPTION	QTY	DIMENSIONS/NOTES
1	59873984	INDICATOR SWITCH	1	
2	NOT-USED	THIS ITEM NOT USED W/THIS BOM	1	

Section D - OPERATORS COMPARTMENT

OPERATORS PLATFORM INSTALLATION - SHEET 1 OF 2

13169198 REV AC

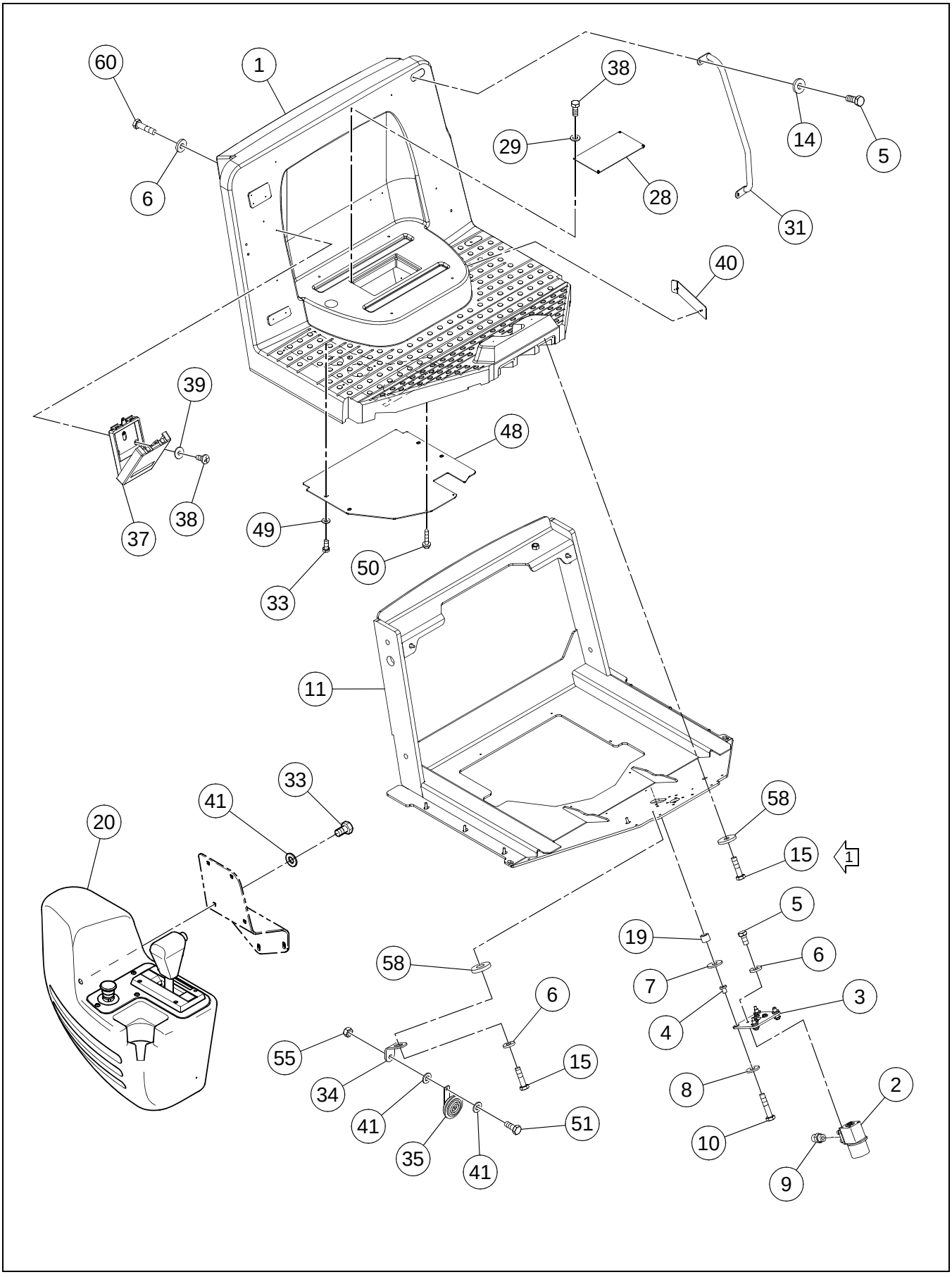

OPERATORS PLATFORM INSTALLATION - SHEET 1 OF 2

****Only Offered Parts Listed**** **BOM 13232236**

ITEM	COMM. NO.	DESCRIPTION	QTY	DIMENSIONS/NOTES
1	43845767	PLATFORM, OPERATORS	1	
3	13167721	MOUNTING PLATE	1	
4	59424309	SHOCK MOUNT	4	
5	96702279	HHCS CL 8.8,YEL ZN	7	M10-1.5X20
6	96741046	FLATWASHER, CL 200,YEL ZN	5	
7	59437079	HEAD WASHER	4	
8	59437087	WASHER	4	
9	95303368	ADAPTER	4	
10	96705116	HHCS CL 8.8,YEL ZN	4	M10-1.5X50
11	43919265	ROPS SUPPORT PLATFORM	1	
12	13239157	ROPS SUPPORT	1	
13	96738646	FLATWASHER	4	
14	96711833	WASHER	4	M10
15	96704309	HHCS CL 8.8,YEL ZN	6	M10-1.5X35
16	96746235	HHCS CL 10.9,YEL ZN HR	4	M24-3X70
17	59565044	FLATWASHER, HARDENED	2	
18	96703665	NUT,HEX CL 10,YEL ZN HR	2	M20-2.5
19	13167812	SPACER	4	
20	**NSVA**	**CONTROL PANEL ASSEMBLY**	**1**	**See Page D - 6.**
21	13412648	SPACER	4	
23	13214804	EYEBOLT	2	
24	13217450	SLEEVE	2	
25	13413158	RAILING	1	
26	96712237	FLATWASHER	6	
27	96701495	HHCS CL 8.8,YEL ZN	6	M12-1.75X25
28	43869262	COVER PLATE	1	
29	96738554	FLATWASHER	4	
31	13233309	HAND RAIL	1	
32	96702287	HHCS CL 8.8,YEL ZN	4	M10-1.5X25
33	96702824	HHCS CL 8.8,YEL ZN	13	M8-1.25X20
34	13237490	HORN BRACKET	1	
35	13469010	HORN	1	
37	59185074	MANUAL BOX	1	
38	96728548	SELF TAPPING SCREW	7	
39	96704663	FLATWASHER	2	M6
40	**NSVA**	**FUSE COVER ASSEMBLY**	**1**	**See Page D - 10.**
41	96741038	WASHER, FLAT CL 200,YEL ZN	7	ID-8.4,OD-16.0X1.6THK
42	96705041	HHCS CL 8.8,YEL ZN	2	M8-1.25X12
43	95301834	CLAMP	2	
44	13225339	WASHER	2	
45	96738208	HHCS CL 10.9,YEL ZN HR	2	M16-2.0X70
46	96711882	NUT,HEX CL 8 ,YEL ZN	2	M16-2

OPERATORS PLATFORM INSTALLATION - SHEET 2 OF 2

13169198 REV AC

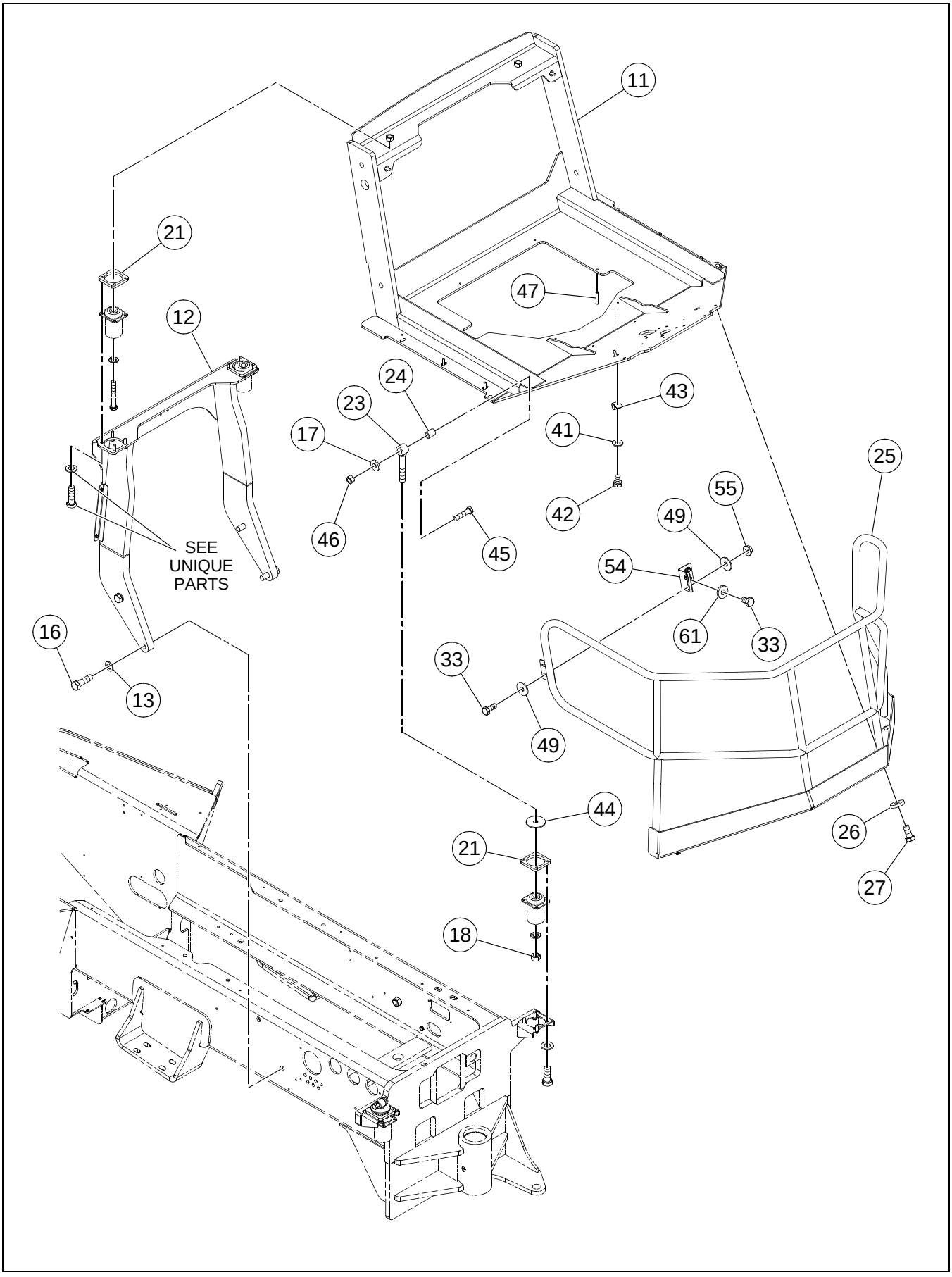

OPERATORS PLATFORM INSTALLATION - SHEET 2 OF 2

****Only Offered Parts Listed****

BOM 13232236

ITEM	COMM. NO.	DESCRIPTION	QTY	DIMENSIONS/NOTES
47	96701594	SPRING PIN	1	
48	43851203	COVER PLATE	1	
50	96728548	SELF TAPPING SCREW	2	
51	96702659	HHCS CL 8.8,YEL ZN	1	M8-1.25X25
54	13231394	SUPPORT BRACKET	1	
55	96704606	ESNA NUT	3	M8
60	96705124	HHCS CL 8.8,YEL ZN	2	M10-1.5X45
61	96740188	WASHER	2	M8X3

CONTROL PANEL ASSEMBLY

13169743 REV 0F

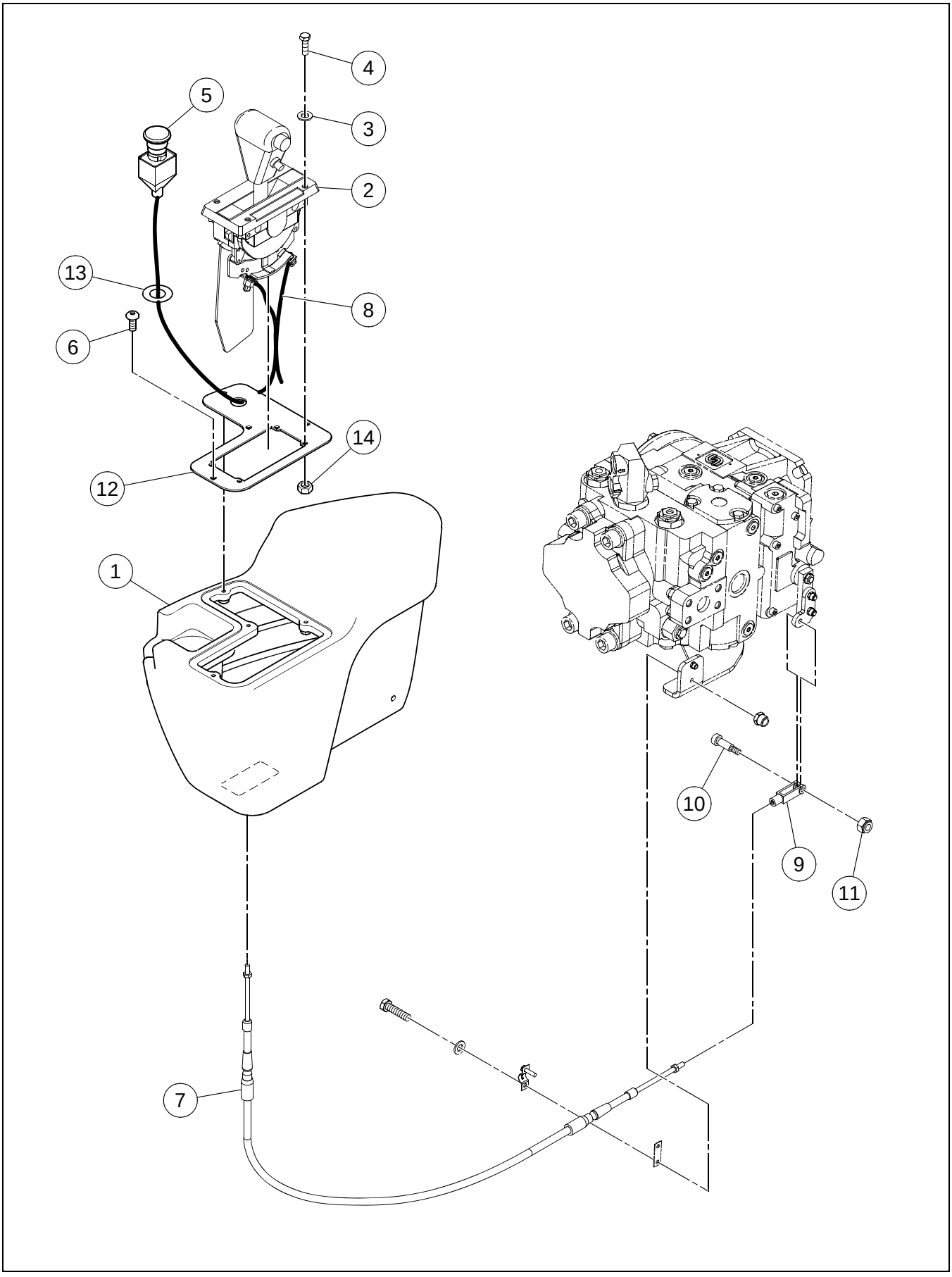

CONTROL PANEL ASSEMBLY

****Only Offered Parts Listed****

BOM 13166053

ITEM	COMM. NO.	DESCRIPTION	QTY	DIMENSIONS/NOTES
1	43908573	FSR CONTROL BOX	1	
2	43843556	F STOP R CONTROL	1	
3	96738554	FLATWASHER	4	
4	96705728	HHCS CL 8.8,YEL ZN	4	M5-0.8X16
5	**NSVA**	**EMERGENCY STOP ASSEMBLY**	**1**	**See Page D - 8.**
6	59148569	BHCS	4	
7	13320841	F-STOP-R CABLE	1	
8	13304944	HARNESS, SIDE CONSOLE	1	
9	59929059	CLEVIS	1	
10	95860052	SCREW	1	
11	95943346	NUT	1	
12	13884408	PANEL SIDE CONSOLE	1	
13	59239897	DECAL: STOP	1	
14	96704580	LOCKNUT	4	M5

EMERGENCY STOP ASSEMBLY

13169735 REV 0A

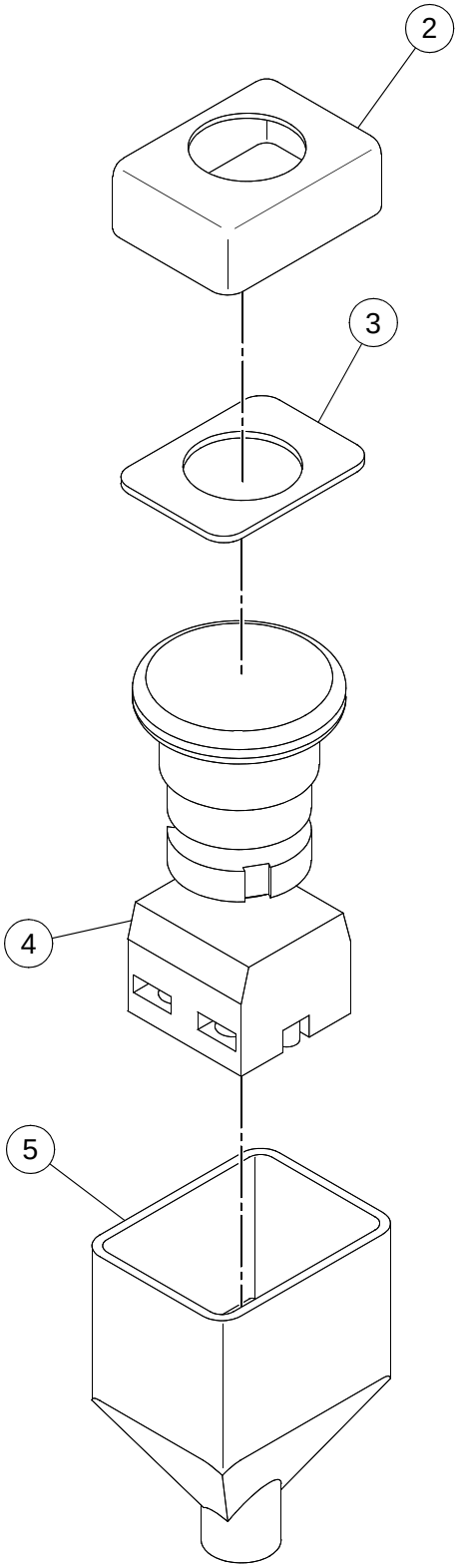

EMERGENCY STOP ASSEMBLY

****Only Offered Parts Listed****

BOM 13166087

ITEM	COMM. NO.	DESCRIPTION	QTY	DIMENSIONS/NOTES
2	59108100	DUST BOOT	1	
3	43910587	WASHER	1	
4	43910579	STOP SWITCH EMERGENCY	1	
5	59108605	DUST BOOT	1	

FUSE COVER ASSEMBLY

13215207 REV 00

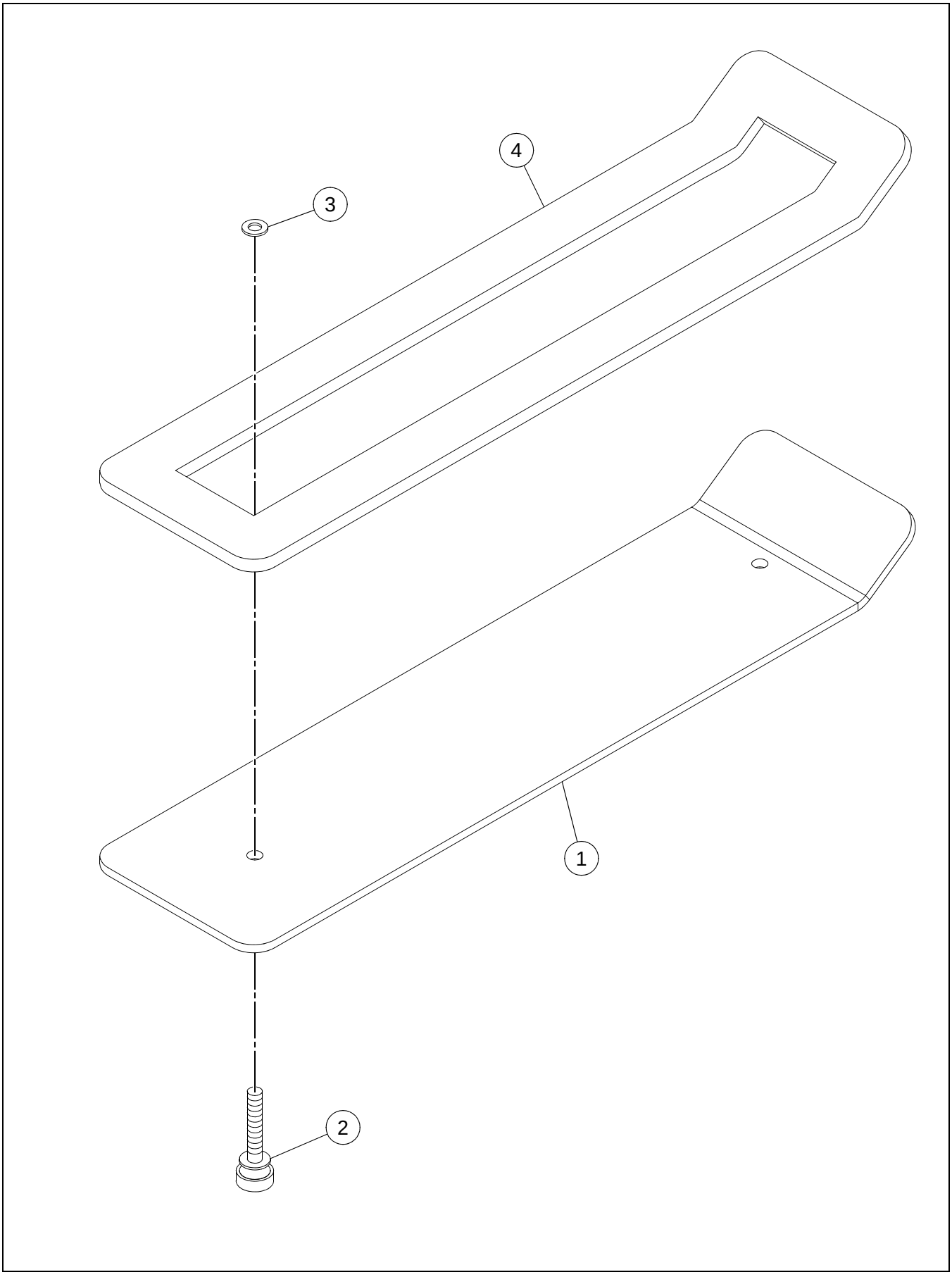

FUSE COVER ASSEMBLY

****Only Offered Parts Listed****

BOM 13214325

ITEM	COMM. NO.	DESCRIPTION	QTY	DIMENSIONS/NOTES
1	13214259	FUSE COVER	1	
2	13214317	KNURLED HEAD SCREW	2	
3	13214333	SPLIT WASHER	2	

UNIQUE NO ROPS OPERATORS PLATFORM INSTALLATION

13239041 REV 0E

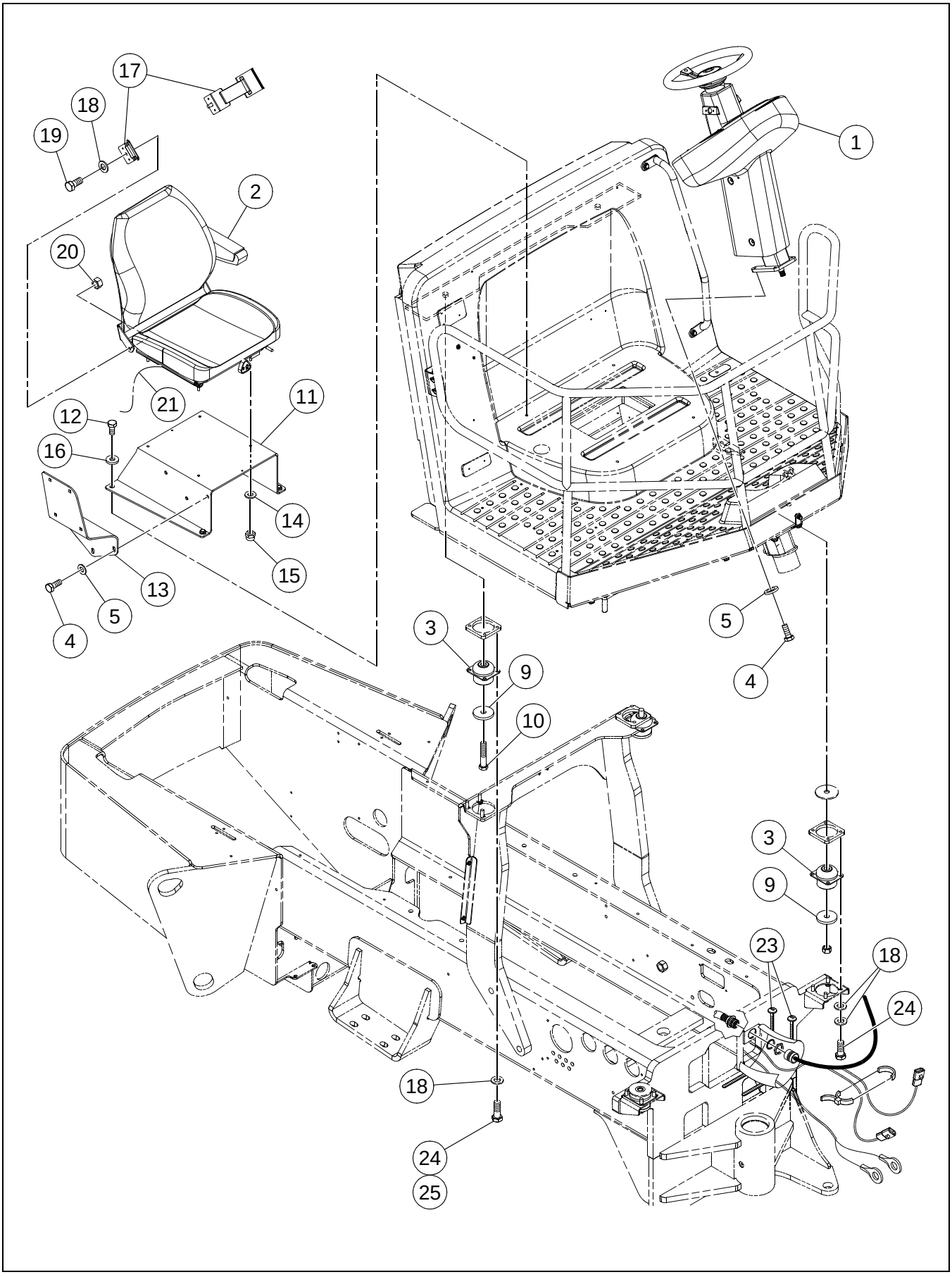

UNIQUE NO ROPS OPERATORS PLATFORM INSTALLATION

****Only Offered Parts Listed**** **BOM 13830757**

ITEM	COMM. NO.	DESCRIPTION	QTY	DIMENSIONS/NOTES
1	**NSVA**	**PEDESTAL ASSEMBLY**	**1**	**See Page D - 14.**
2	**NSVA**	**SEAT ASSEMBLY**	**1**	**See Page D - 18.**
3	59299164	ISOLATOR	4	
4	96702287	HHCS CL 8.8,YEL ZN	7	M10-1.5X25
5	96741046	FLATWASHER, CL 200,YEL ZN	7	
9	13225347	WASHER	4	
10	96700927	HHCS CL 8.8,YEL ZN	2	M20-2.5X110
11	43916725	SEAT BASE	1	
12	96702287	HHCS CL 8.8,YEL ZN	4	M10-1.5X25
13	13886981	SIDE CONSOLE SUPPORT	1	
14	96741038	WASHER, FLAT CL 200,YEL ZN	4	ID-8.4,OD-16.0X1.6THK
15	96704606	ESNA NUT	4	M8
16	96711833	WASHER	4	M10
17	NOT-USED	THIS ITEM NOT USED W/THIS BOM	1	
18	96738596	FLATWASHER	24	
19	NOT-USED	THIS ITEM NOT USED W/THIS BOM	1	
20	NOT-USED	THIS ITEM NOT USED W/THIS BOM	1	
21	13165071	SEAT SWITCH HARNESS	1	
24	96702808	HHCS CL 10.9,YEL ZN HR	16	M12-1.75X30
25	NOT-USED	THIS ITEM NOT USED W/THIS BOM	1	

PEDESTAL ASSEMBLY

43818871 REV 00

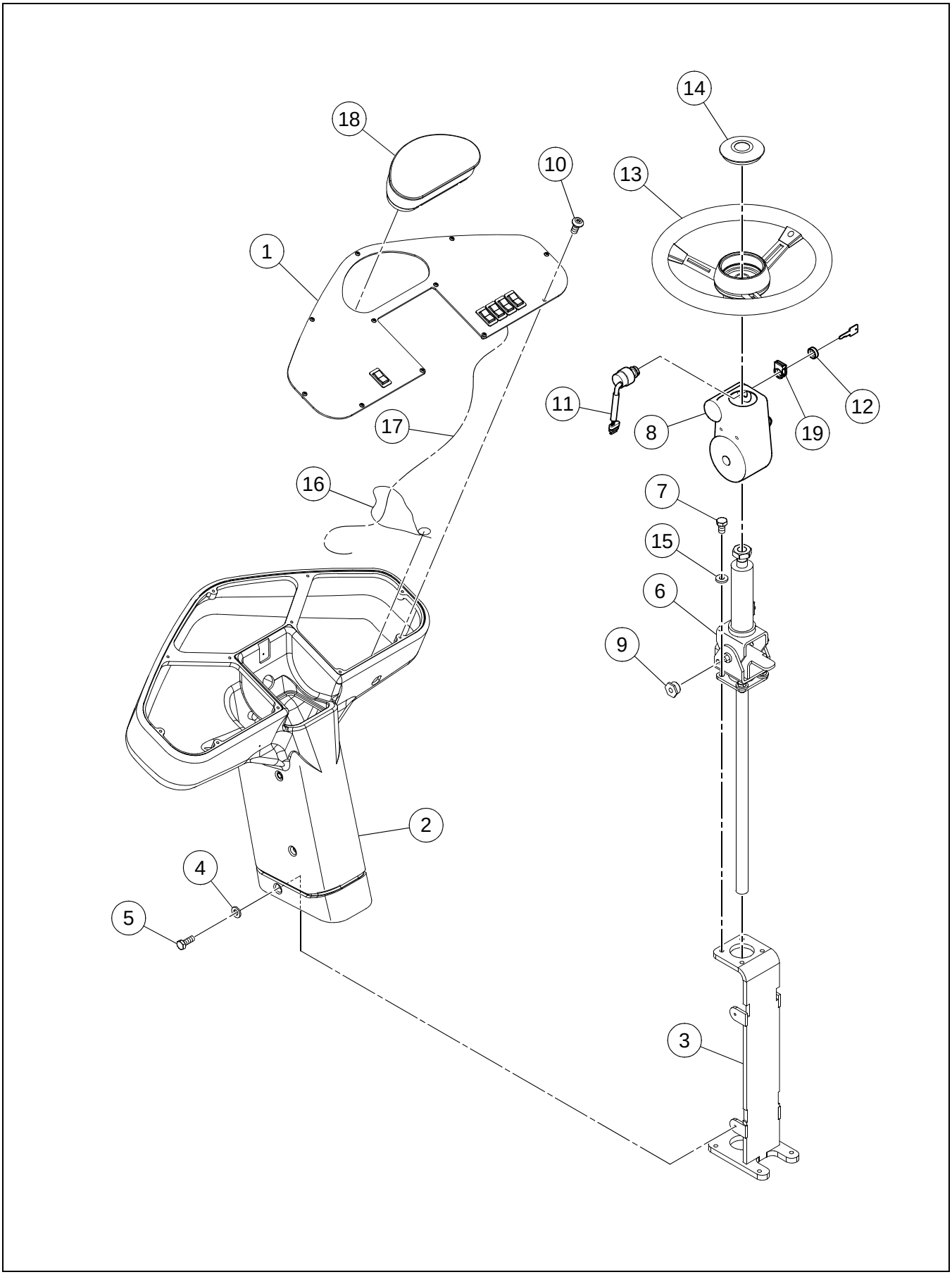

PEDESTAL ASSEMBLY

****Only Offered Parts Listed****

BOM 43818871

ITEM	COMM. NO.	DESCRIPTION	QTY	DIMENSIONS/NOTES
1	**NSVA**	**GAUGE PANEL ASSEMBLY**	**1**	**See Page D - 16.**
2	43845874	PEDESTAL COVER	1	
3	13880612	PEDESTAL	1	
4	96741053	FLATWASHER, CL 200,YEL ZN	4	
5	96701958	HHCS CL 8.8,YEL ZN	4	M6-1X16
6	43844604	STEERING COLUMN, STRAIGHT	1	
7	96701479	HHCS CL 8.8,YEL ZN	4	M10-1.5X16
8	43845890	COVER COLUMN FIXED NO SIDE LTS	1	
9	13236872	NUT	2	
10	59148569	BHCS	11	
11	13459474	IGNITION SWITCH;NON RE-START	1	
12	59126961	NUT	1	
13	13158647	STEERING WHEEL	1	
14	59159558	HORN BUTTON	1	
15	96711833	WASHER	4	M10
16	58820168	WIRE TIE	1	
17	43867555	PEDESTAL HARNESS ***	1	GDB#10739
18	43893445	MULTIPLE INSTRUMENT PANEL	1	
19	58892902	COVER	1	

GAUGE PANEL ASSEMBLY

13324827 REV 00

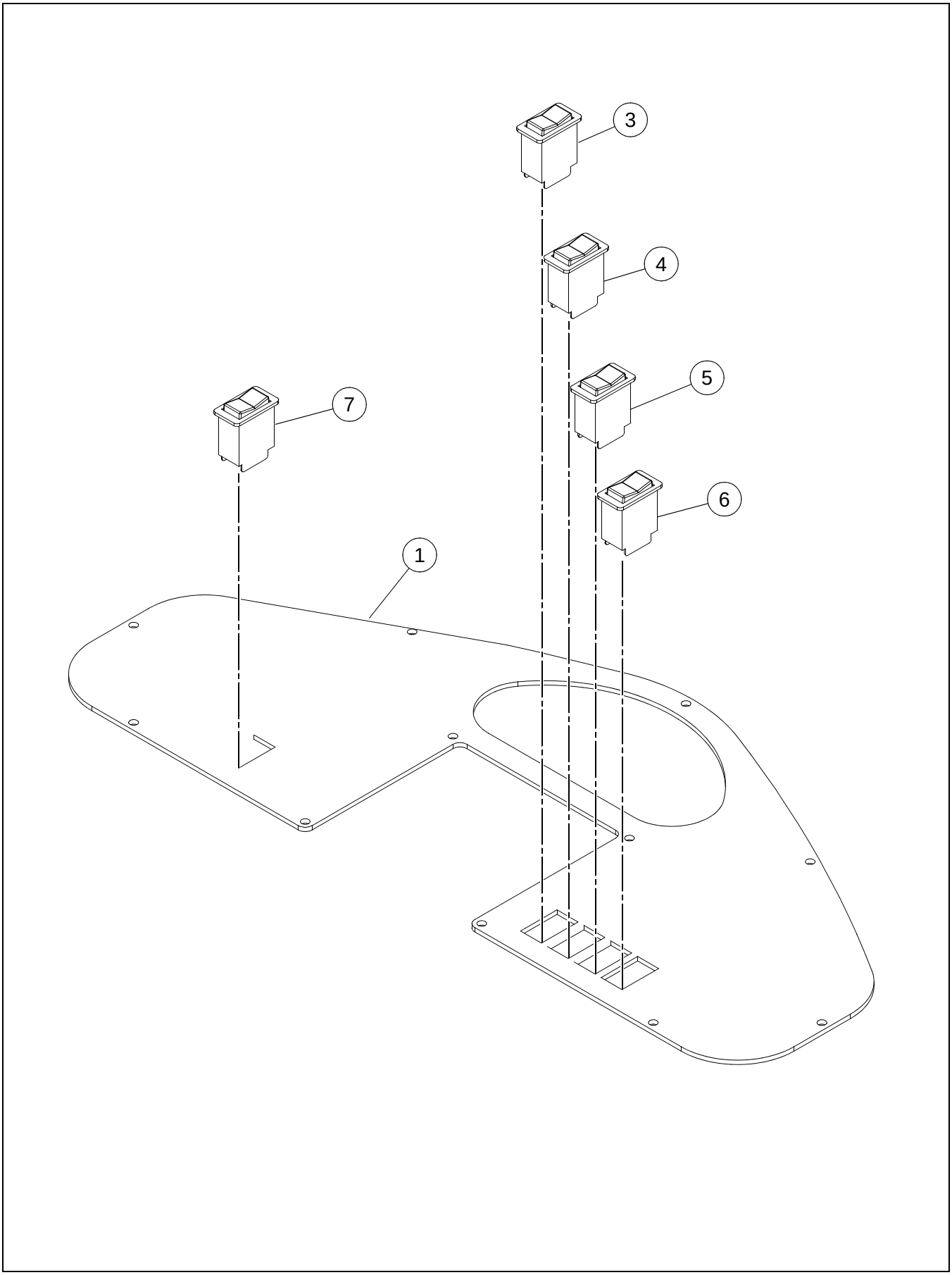

GAUGE PANEL ASSEMBLY

****Only Offered Parts Listed****

BOM 13276621

ITEM	COMM. NO.	DESCRIPTION	QTY	DIMENSIONS/NOTES
1	13355912	INSTRUMENT PANEL	1	
3	54666102	SWITCH, PARK BRAKE TEST	1	
4	54666094	SWITCH, PARK BRAKE	1	
5	54666086	SWITCH, HI/LOW TRAVEL	1	
6	54666078	SWITCH, HI/LOW RPM	1	
7	54666060	SWITCH, HI/LOW AMPLITUDE	1	

SEAT ASSEMBLY

43922392 REV 00

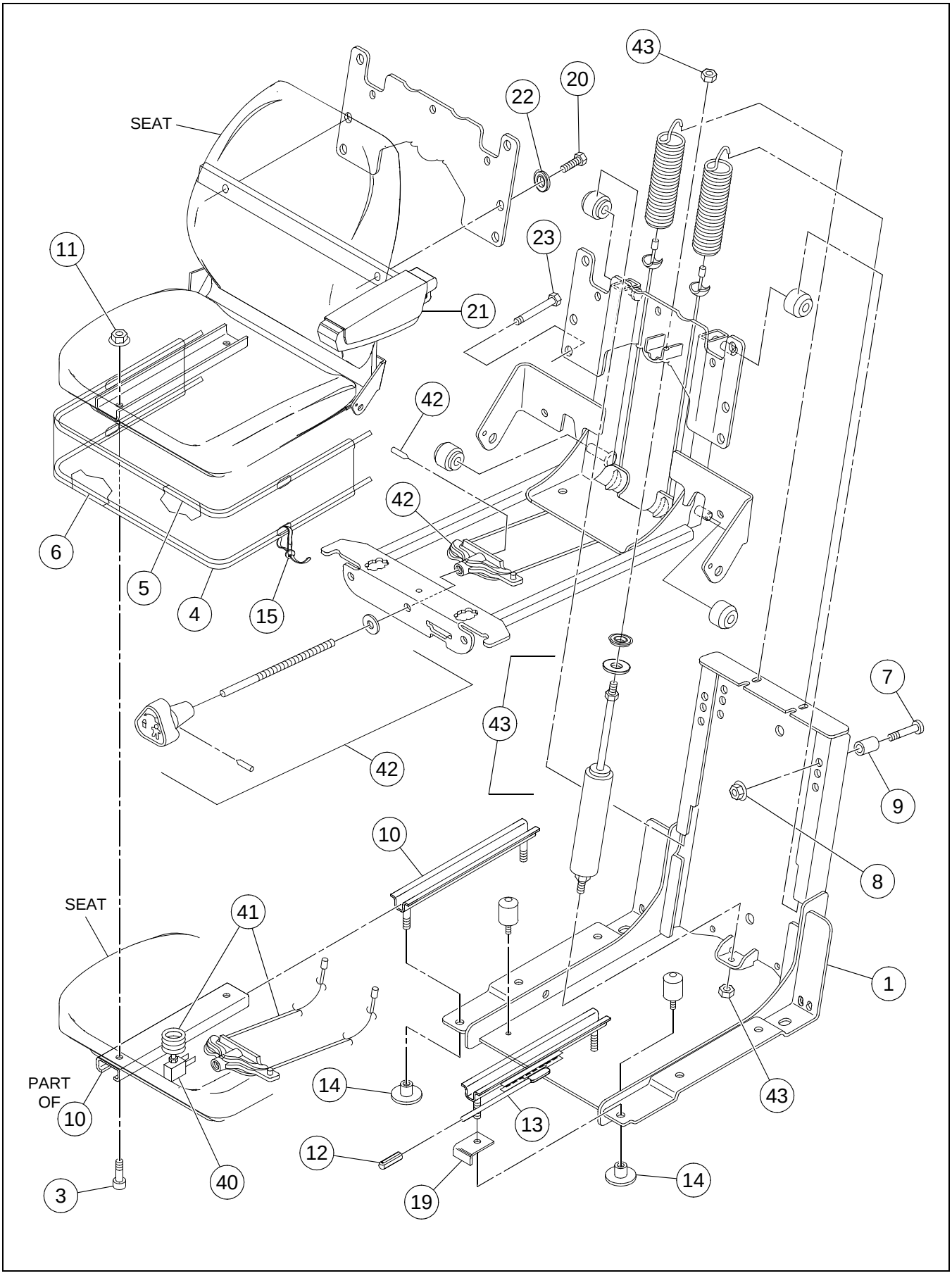

SEAT ASSEMBLY

****Only Offered Parts Listed****

BOM 43922392

ITEM	COMM. NO.	DESCRIPTION	QTY	DIMENSIONS/NOTES
1	59154450	SUSPENSION	1	
3	13228820	CAP SCREW	4	
4	13228838	SEWN BOOT	1	
5	59154492	WIRE FORM	1	
6	59154500	WIRE FORM	2	
7	59154518	CLEVIS PIN	2	
8	59154526	NUT	2	
9	13228846	SPACER	2	
10	13247473	ADJUSTER	1	
11	59154542	FLANGE LOCK NUT	3	
12	13228853	TIP	1	
13	13247481	ADJUSTER	1	
14	13228861	STUD PROTECTOR	4	
15	59145821	TIE WRAP	2	
19	59154393	BRACKET	1	
20	13247549	SCREW	2	
21	54531629	ARM W/TUBE	1	
22	13247556	WASHER	2	
23	43827625	TAPPING SCREW	4	
40	13167945	DUAL SWITCH SEAT KIT	1	
-	13281332	- SEAT PAN AND CUSHION	1	
-	13198270	- DUAL SWITCH SEAT KIT	1	
-	13281365	- COMPRESSION SWITCH	1	
-	13281373	- SCREW	1	
41	13258934	SPRING CABLE KIT	1	
42	54496385	KNOB KIT	1	
43	54496377	DAMPER KIT	1	

Section E - ELECTRICAL

19292192 REV 0D

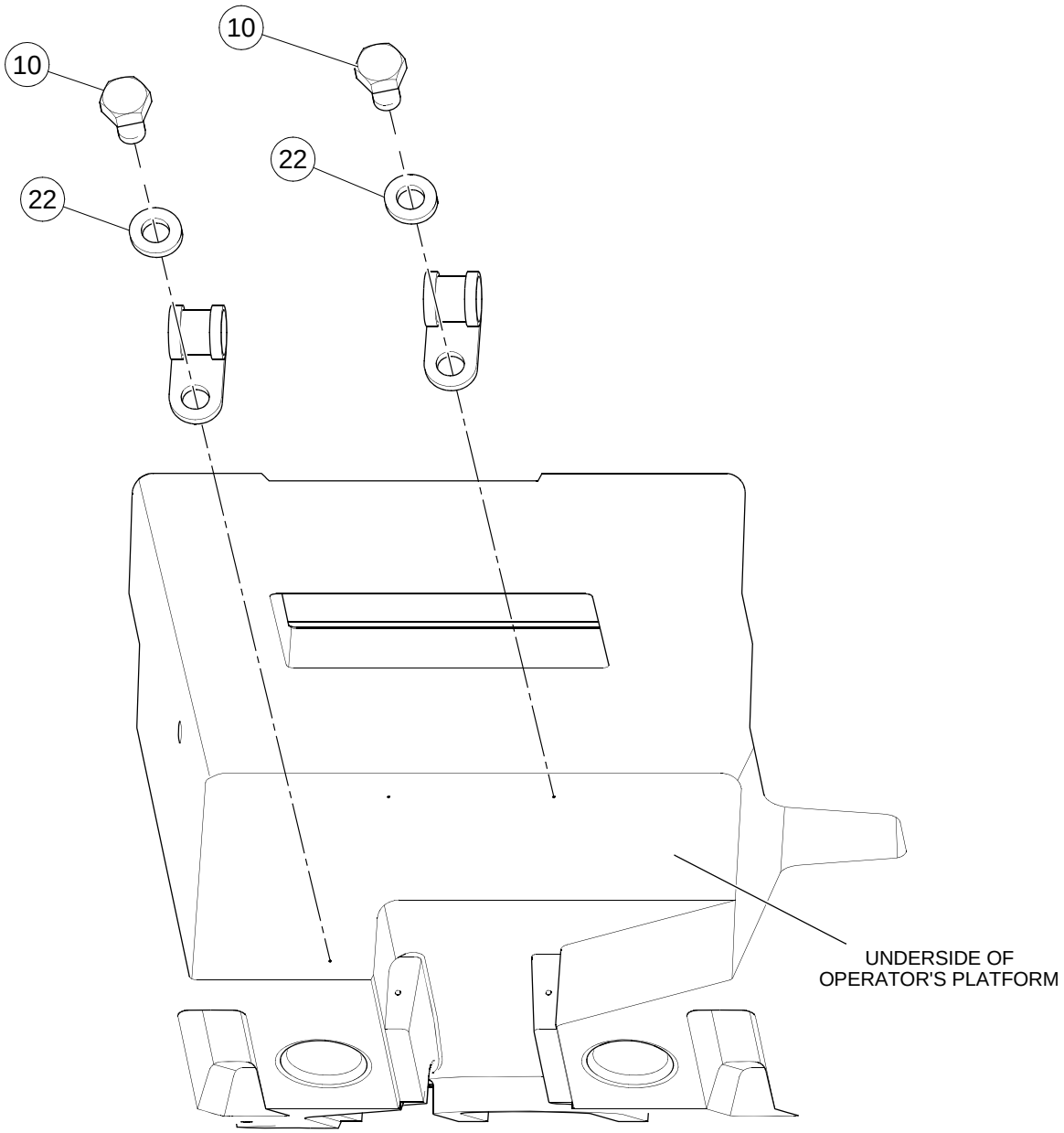

****Only Offered Parts Listed****

BOM 13174131

ITEM	COMM. NO.	DESCRIPTION	QTY	DIMENSIONS/NOTES
1	13313655	DELAY TIMER	1	
-	13313630	- 5 SEC TIMER MODULE	1	
3	59121855	CLAMP	4	
4	59103598	CLAMP	4	
5	**NSVA**	**FUSE BLOCK ASSEMBLY**	**1**	**See Page E - 16.**
6	59148569	BHCS	2	
7	43813724	BRACKET	1	
8	43869684	CHASSIS HARNESS ***	1	
9	13273362	BACKUP ALARM	1	
10	96728548	SELF TAPPING SCREW	6	
11	58820168	WIRE TIE	10	
14	96712674	FLATWASHER	3	
15	96704598	ESNA NUT	6	M6
16	96705041	HHCS CL 8.8,YEL ZN	5	M8-1.25X12
18	13493499	HARNESS, 2 SPEED VIBRATION SELECTOR	1	
21	96702394	HHCS CL 8.8,YEL ZN	2	M6-1X12
22	96704663	FLATWASHER	8	M6
25	59465641	CLAMP	1	
27	96701461	HHCS CL 8.8,YEL ZN	1	M6-1X25
28	96741038	WASHER, FLAT CL 200,YEL ZN	6	ID-8.4,OD-16.0X1.6THK
29	96704598	ESNA NUT	2	M6
30	96701461	HHCS CL 8.8,YEL ZN	1	M6-1X25
31	96741038	WASHER, FLAT CL 200,YEL ZN	10	ID-8.4,OD-16.0X1.6THK
32	58879891	CLAMP	1	
33	59465658	INSULATED CLAMP	3	
34	96704564	HHCS CL 8.8,YEL ZN	4	M6-1X20
35	96702394	HHCS CL 8.8,YEL ZN	2	M6-1X12
36	96741053	FLATWASHER, CL 200,YEL ZN	1	
38	43927680	MOUNT BRACKET	1	

19292192 REV 0D

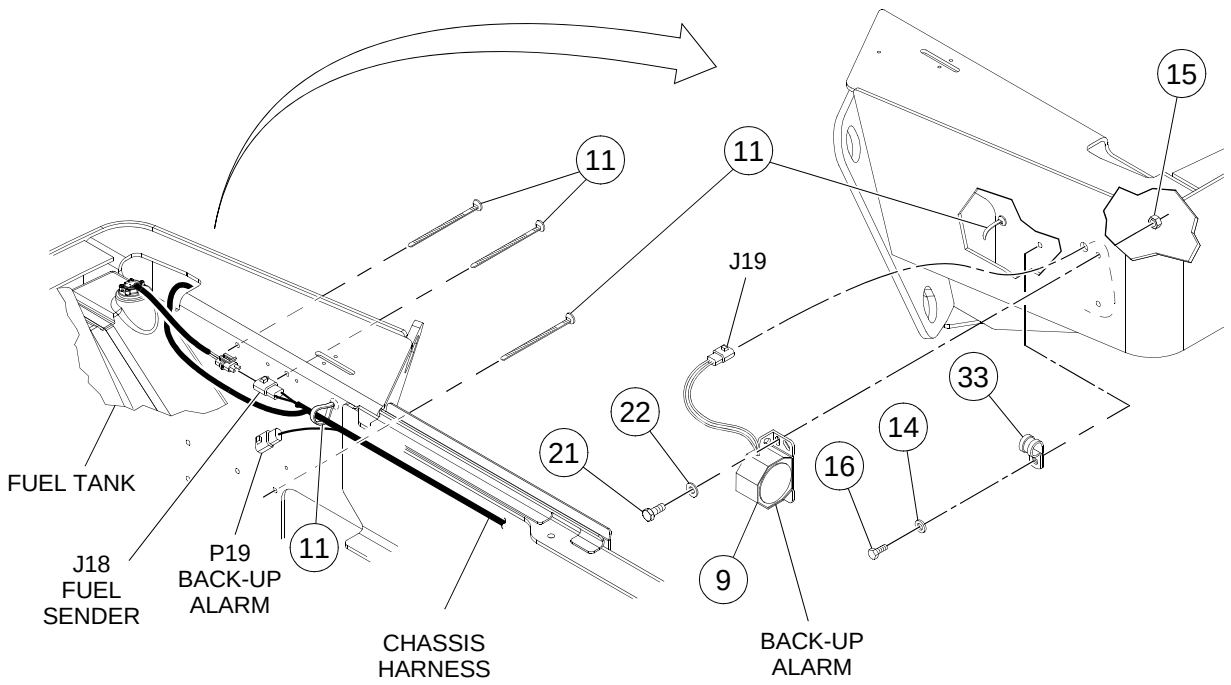

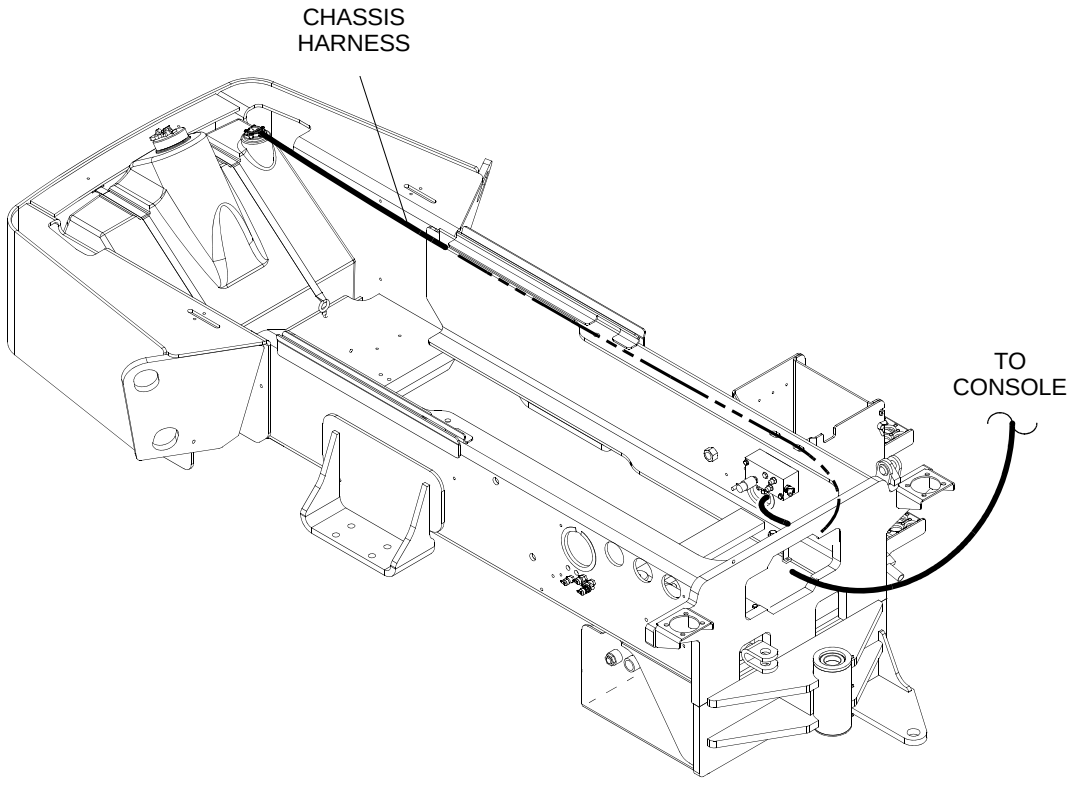

****Only Offered Parts Listed****

BOM 13174131

ITEM	COMM. NO.	DESCRIPTION	QTY	DIMENSIONS/NOTES
1	13313655	DELAY TIMER	1	
-	13313630	- 5 SEC TIMER MODULE	1	
3	59121855	CLAMP	4	
4	59103598	CLAMP	4	
5	**NSVA**	**FUSE BLOCK ASSEMBLY**	**1**	**See Page E - 16.**
6	59148569	BHCS	2	
7	43813724	BRACKET	1	
8	43869684	CHASSIS HARNESS ***	1	
9	13273362	BACKUP ALARM	1	
10	96728548	SELF TAPPING SCREW	6	
11	58820168	WIRE TIE	10	
14	96712674	FLATWASHER	3	
15	96704598	ESNA NUT	6	M6
16	96705041	HHCS CL 8.8,YEL ZN	5	M8-1.25X12
18	13493499	HARNESS, 2 SPEED VIBRATION SELECTOR	1	
21	96702394	HHCS CL 8.8,YEL ZN	2	M6-1X12
22	96704663	FLATWASHER	8	M6
25	59465641	CLAMP	1	
27	96701461	HHCS CL 8.8,YEL ZN	1	M6-1X25
28	96741038	WASHER, FLAT CL 200,YEL ZN	6	ID-8.4,OD-16.0X1.6THK
29	96704598	ESNA NUT	2	M6
30	96701461	HHCS CL 8.8,YEL ZN	1	M6-1X25
31	96741038	WASHER, FLAT CL 200,YEL ZN	10	ID-8.4,OD-16.0X1.6THK
32	58879891	CLAMP	1	
33	59465658	INSULATED CLAMP	3	
34	96704564	HHCS CL 8.8,YEL ZN	4	M6-1X20
35	96702394	HHCS CL 8.8,YEL ZN	2	M6-1X12
36	96741053	FLATWASHER, CL 200,YEL ZN	1	
38	43927680	MOUNT BRACKET	1	

19292192 REV 0D

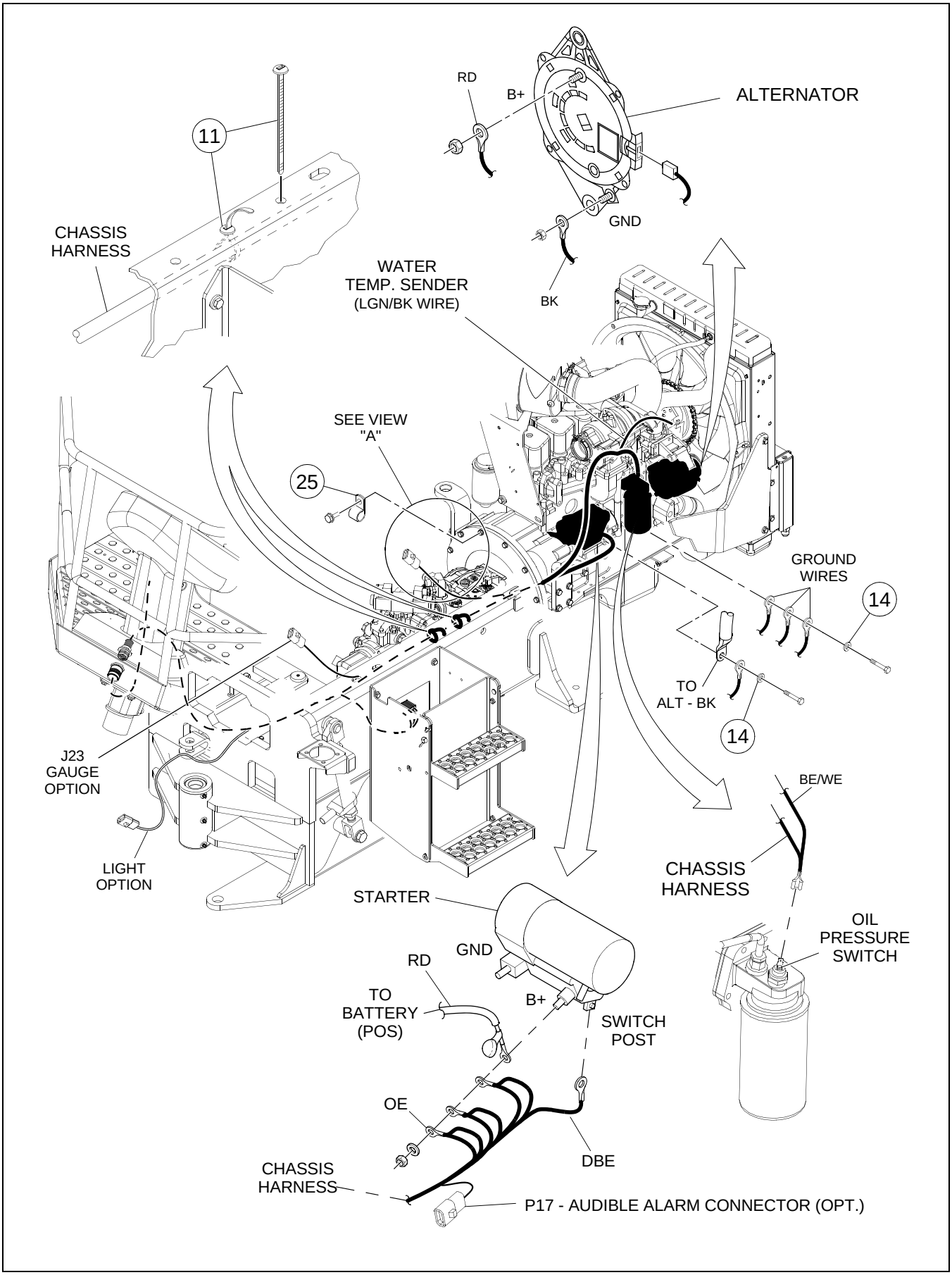

****Only Offered Parts Listed****

BOM 13174131

ITEM	COMM. NO.	DESCRIPTION	QTY	DIMENSIONS/NOTES
1	13313655	DELAY TIMER	1	
-	13313630	- 5 SEC TIMER MODULE	1	
3	59121855	CLAMP	4	
4	59103598	CLAMP	4	
5	**NSVA**	**FUSE BLOCK ASSEMBLY**	**1**	**See Page E - 16.**
6	59148569	BHCS	2	
7	43813724	BRACKET	1	
8	43869684	CHASSIS HARNESS ***	1	
9	13273362	BACKUP ALARM	1	
10	96728548	SELF TAPPING SCREW	6	
11	58820168	WIRE TIE	10	
14	96712674	FLATWASHER	3	
15	96704598	ESNA NUT	6	M6
16	96705041	HHCS CL 8.8,YEL ZN	5	M8-1.25X12
18	13493499	HARNESS, 2 SPEED VIBRATION SELECTOR	1	
21	96702394	HHCS CL 8.8,YEL ZN	2	M6-1X12
22	96704663	FLATWASHER	8	M6
25	59465641	CLAMP	1	
27	96701461	HHCS CL 8.8,YEL ZN	1	M6-1X25
28	96741038	WASHER, FLAT CL 200,YEL ZN	6	ID-8.4,OD-16.0X1.6THK
29	96704598	ESNA NUT	2	M6
30	96701461	HHCS CL 8.8,YEL ZN	1	M6-1X25
31	96741038	WASHER, FLAT CL 200,YEL ZN	10	ID-8.4,OD-16.0X1.6THK
32	58879891	CLAMP	1	
33	59465658	INSULATED CLAMP	3	
34	96704564	HHCS CL 8.8,YEL ZN	4	M6-1X20
35	96702394	HHCS CL 8.8,YEL ZN	2	M6-1X12
36	96741053	FLATWASHER, CL 200,YEL ZN	1	
38	43927680	MOUNT BRACKET	1	

19292192 REV 0D

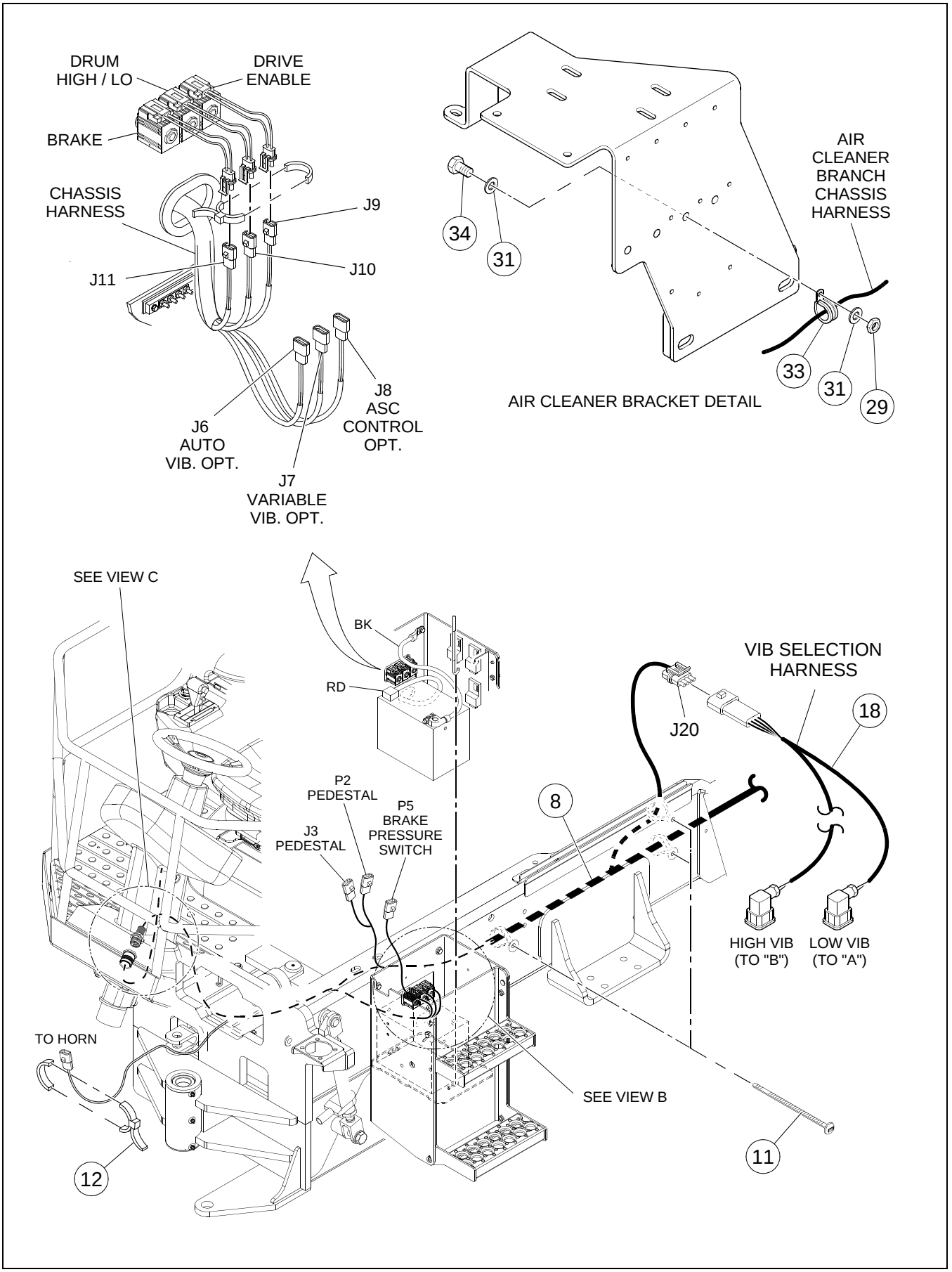

****Only Offered Parts Listed**** **BOM 13174131**

ITEM	COMM. NO.	DESCRIPTION	QTY	DIMENSIONS/NOTES
1	13313655	DELAY TIMER	1	
-	13313630	- 5 SEC TIMER MODULE	1	
3	59121855	CLAMP	4	
4	59103598	CLAMP	4	
5	**NSVA**	**FUSE BLOCK ASSEMBLY**	**1**	**See Page E - 16.**
6	59148569	BHCS	2	
7	43813724	BRACKET	1	
8	43869684	CHASSIS HARNESS ***	1	
9	13273362	BACKUP ALARM	1	
10	96728548	SELF TAPPING SCREW	6	
11	58820168	WIRE TIE	10	
14	96712674	FLATWASHER	3	
15	96704598	ESNA NUT	6	M6
16	96705041	HHCS CL 8.8,YEL ZN	5	M8-1.25X12
18	13493499	HARNESS, 2 SPEED VIBRATION SELECTOR	1	
21	96702394	HHCS CL 8.8,YEL ZN	2	M6-1X12
22	96704663	FLATWASHER	8	M6
25	59465641	CLAMP	1	
27	96701461	HHCS CL 8.8,YEL ZN	1	M6-1X25
28	96741038	WASHER, FLAT CL 200,YEL ZN	6	ID-8.4,OD-16.0X1.6THK
29	96704598	ESNA NUT	2	M6
30	96701461	HHCS CL 8.8,YEL ZN	1	M6-1X25
31	96741038	WASHER, FLAT CL 200,YEL ZN	10	ID-8.4,OD-16.0X1.6THK
32	58879891	CLAMP	1	
33	59465658	INSULATED CLAMP	3	
34	96704564	HHCS CL 8.8,YEL ZN	4	M6-1X20
35	96702394	HHCS CL 8.8,YEL ZN	2	M6-1X12
36	96741053	FLATWASHER, CL 200,YEL ZN	1	
38	43927680	MOUNT BRACKET	1	

19292192 REV 0D

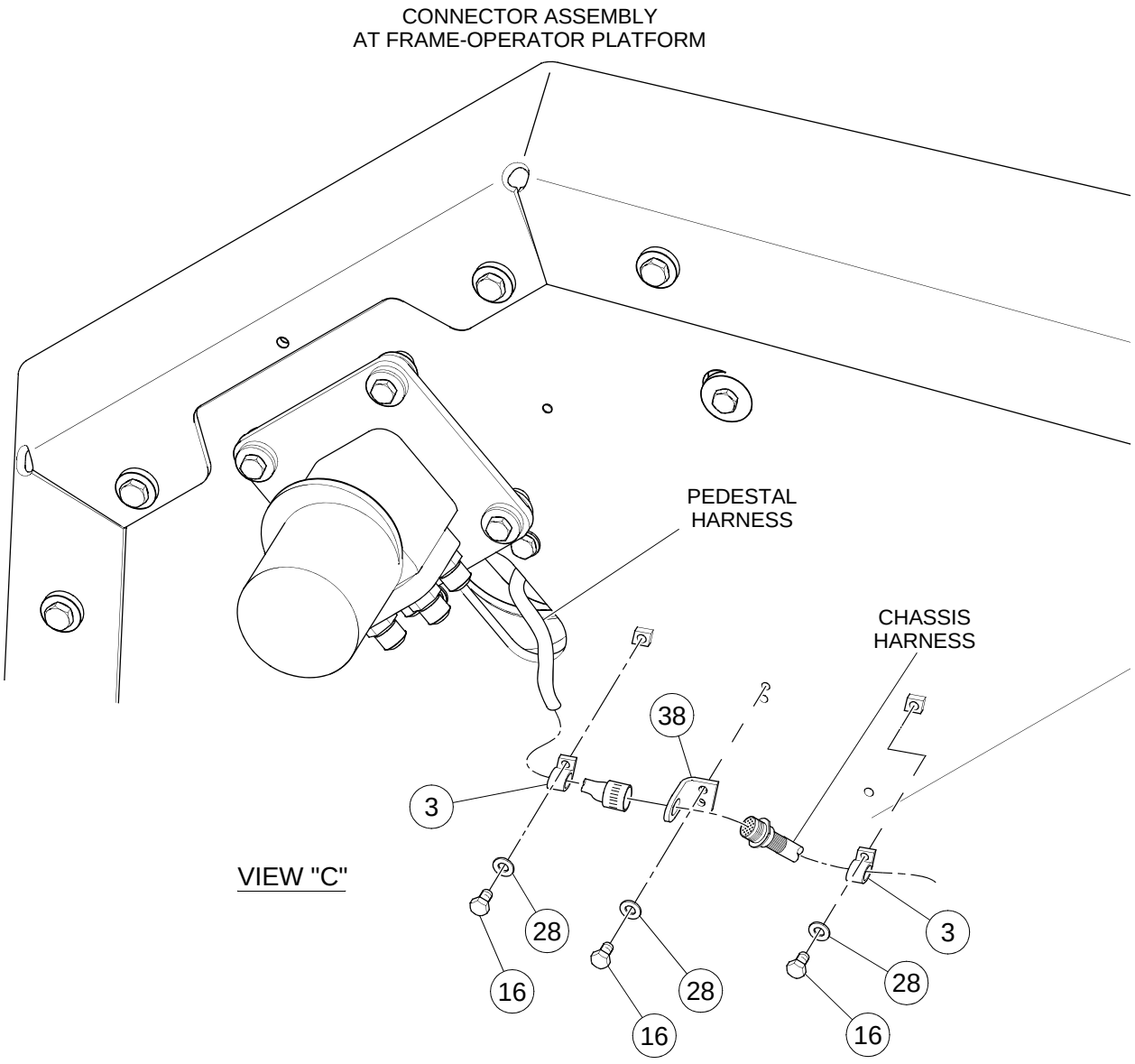

****Only Offered Parts Listed****

BOM 13174131

ITEM	COMM. NO.	DESCRIPTION	QTY	DIMENSIONS/NOTES
1	13313655	DELAY TIMER	1	
-	13313630	- 5 SEC TIMER MODULE	1	
3	59121855	CLAMP	4	
4	59103598	CLAMP	4	
5	**NSVA**	**FUSE BLOCK ASSEMBLY**	**1**	**See Page E - 16.**
6	59148569	BHCS	2	
7	43813724	BRACKET	1	
8	43869684	CHASSIS HARNESS ***	1	
9	13273362	BACKUP ALARM	1	
10	96728548	SELF TAPPING SCREW	6	
11	58820168	WIRE TIE	10	
14	96712674	FLATWASHER	3	
15	96704598	ESNA NUT	6	M6
16	96705041	HHCS CL 8.8,YEL ZN	5	M8-1.25X12
18	13493499	HARNESS, 2 SPEED VIBRATION SELECTOR	1	
21	96702394	HHCS CL 8.8,YEL ZN	2	M6-1X12
22	96704663	FLATWASHER	8	M6
25	59465641	CLAMP	1	
27	96701461	HHCS CL 8.8,YEL ZN	1	M6-1X25
28	96741038	WASHER, FLAT CL 200,YEL ZN	6	ID-8.4,OD-16.0X1.6THK
29	96704598	ESNA NUT	2	M6
30	96701461	HHCS CL 8.8,YEL ZN	1	M6-1X25
31	96741038	WASHER, FLAT CL 200,YEL ZN	10	ID-8.4,OD-16.0X1.6THK
32	58879891	CLAMP	1	
33	59465658	INSULATED CLAMP	3	
34	96704564	HHCS CL 8.8,YEL ZN	4	M6-1X20
35	96702394	HHCS CL 8.8,YEL ZN	2	M6-1X12
36	96741053	FLATWASHER, CL 200,YEL ZN	1	
38	43927680	MOUNT BRACKET	1	

19292192 REV 0D

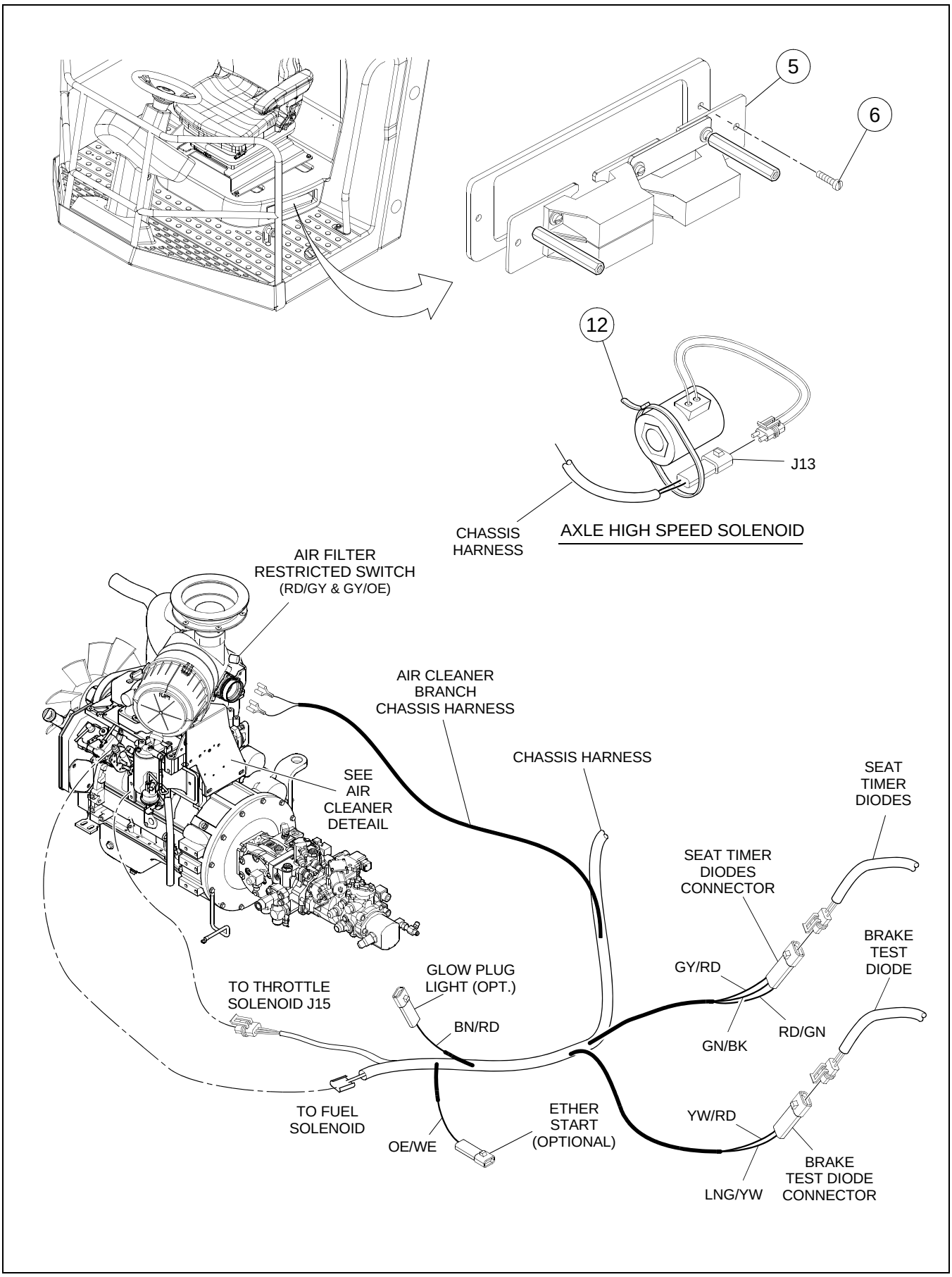

****Only Offered Parts Listed****

BOM 13174131

ITEM	COMM. NO.	DESCRIPTION	QTY	DIMENSIONS/NOTES
1	13313655	DELAY TIMER	1	
-	13313630	- 5 SEC TIMER MODULE	1	
3	59121855	CLAMP	4	
4	59103598	CLAMP	4	
5	**NSVA**	**FUSE BLOCK ASSEMBLY**	**1**	**See Page E - 16.**
6	59148569	BHCS	2	
7	43813724	BRACKET	1	
8	43869684	CHASSIS HARNESS ***	1	
9	13273362	BACKUP ALARM	1	
10	96728548	SELF TAPPING SCREW	6	
11	58820168	WIRE TIE	10	
14	96712674	FLATWASHER	3	
15	96704598	ESNA NUT	6	M6
16	96705041	HHCS CL 8.8,YEL ZN	5	M8-1.25X12
18	13493499	HARNESS, 2 SPEED VIBRATION SELECTOR	1	
21	96702394	HHCS CL 8.8,YEL ZN	2	M6-1X12
22	96704663	FLATWASHER	8	M6
25	59465641	CLAMP	1	
27	96701461	HHCS CL 8.8,YEL ZN	1	M6-1X25
28	96741038	WASHER, FLAT CL 200,YEL ZN	6	ID-8.4,OD-16.0X1.6THK
29	96704598	ESNA NUT	2	M6
30	96701461	HHCS CL 8.8,YEL ZN	1	M6-1X25
31	96741038	WASHER, FLAT CL 200,YEL ZN	10	ID-8.4,OD-16.0X1.6THK
32	58879891	CLAMP	1	
33	59465658	INSULATED CLAMP	3	
34	96704564	HHCS CL 8.8,YEL ZN	4	M6-1X20
35	96702394	HHCS CL 8.8,YEL ZN	2	M6-1X12
36	96741053	FLATWASHER, CL 200,YEL ZN	1	
38	43927680	MOUNT BRACKET	1	

19292192 REV 0D

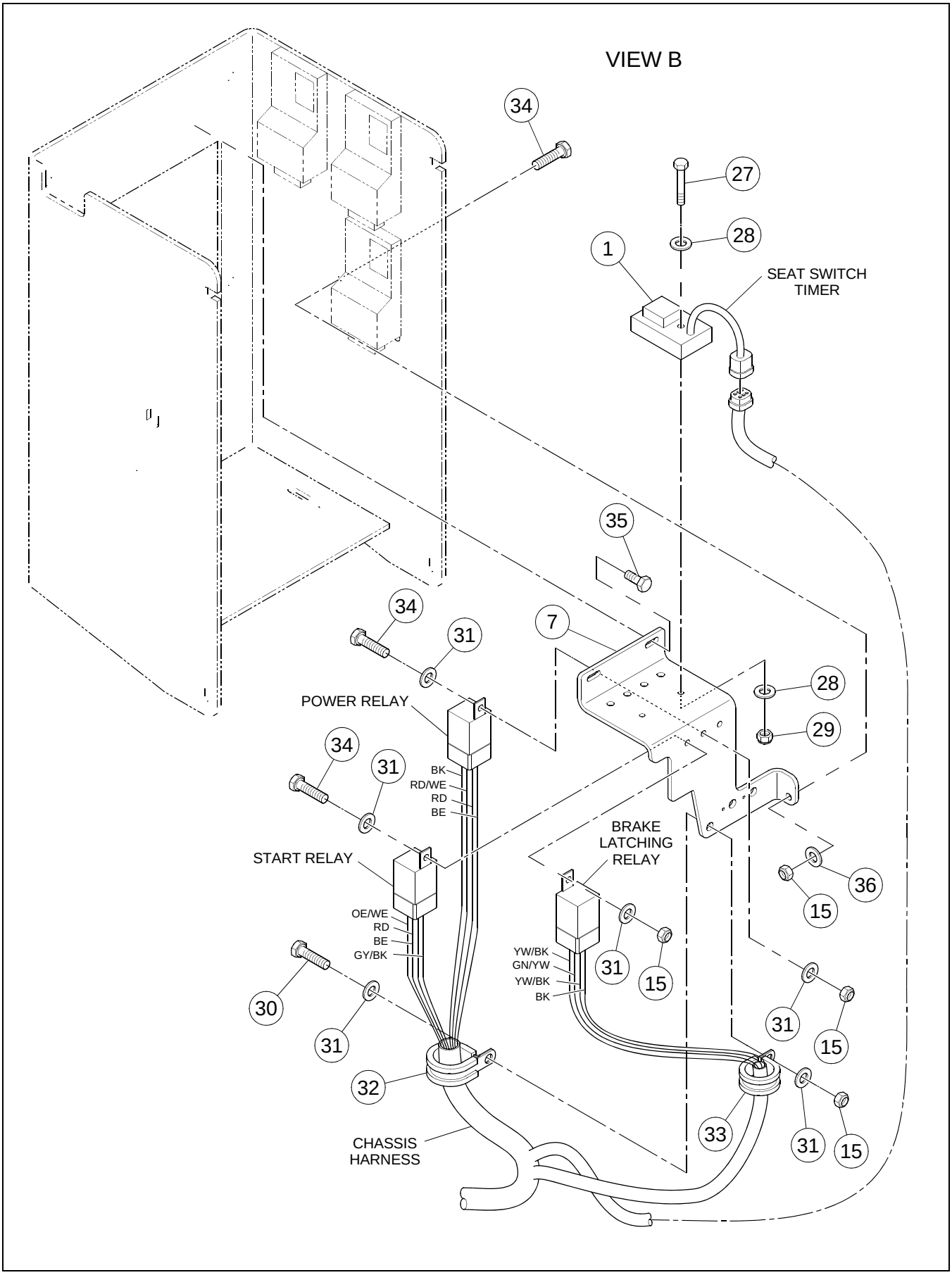

****Only Offered Parts Listed****

BOM 13174131

ITEM	COMM. NO.	DESCRIPTION	QTY	DIMENSIONS/NOTES
1	13313655	DELAY TIMER	1	
-	13313630	- 5 SEC TIMER MODULE	1	
3	59121855	CLAMP	4	
4	59103598	CLAMP	4	
5	**NSVA**	**FUSE BLOCK ASSEMBLY**	**1**	**See Page E - 16.**
6	59148569	BHCS	2	
7	43813724	BRACKET	1	
8	43869684	CHASSIS HARNESS ***	1	
9	13273362	BACKUP ALARM	1	
10	96728548	SELF TAPPING SCREW	6	
11	58820168	WIRE TIE	10	
14	96712674	FLATWASHER	3	
15	96704598	ESNA NUT	6	M6
16	96705041	HHCS CL 8.8,YEL ZN	5	M8-1.25X12
18	13493499	HARNESS, 2 SPEED VIBRATION SELECTOR	1	
21	96702394	HHCS CL 8.8,YEL ZN	2	M6-1X12
22	96704663	FLATWASHER	8	M6
25	59465641	CLAMP	1	
27	96701461	HHCS CL 8.8,YEL ZN	1	M6-1X25
28	96741038	WASHER, FLAT CL 200,YEL ZN	6	ID-8.4,OD-16.0X1.6THK
29	96704598	ESNA NUT	2	M6
30	96701461	HHCS CL 8.8,YEL ZN	1	M6-1X25
31	96741038	WASHER, FLAT CL 200,YEL ZN	10	ID-8.4,OD-16.0X1.6THK
32	58879891	CLAMP	1	
33	59465658	INSULATED CLAMP	3	
34	96704564	HHCS CL 8.8,YEL ZN	4	M6-1X20
35	96702394	HHCS CL 8.8,YEL ZN	2	M6-1X12
36	96741053	FLATWASHER, CL 200,YEL ZN	1	
38	43927680	MOUNT BRACKET	1	

FUSE BLOCK ASSEMBLY

13209986 REV 02

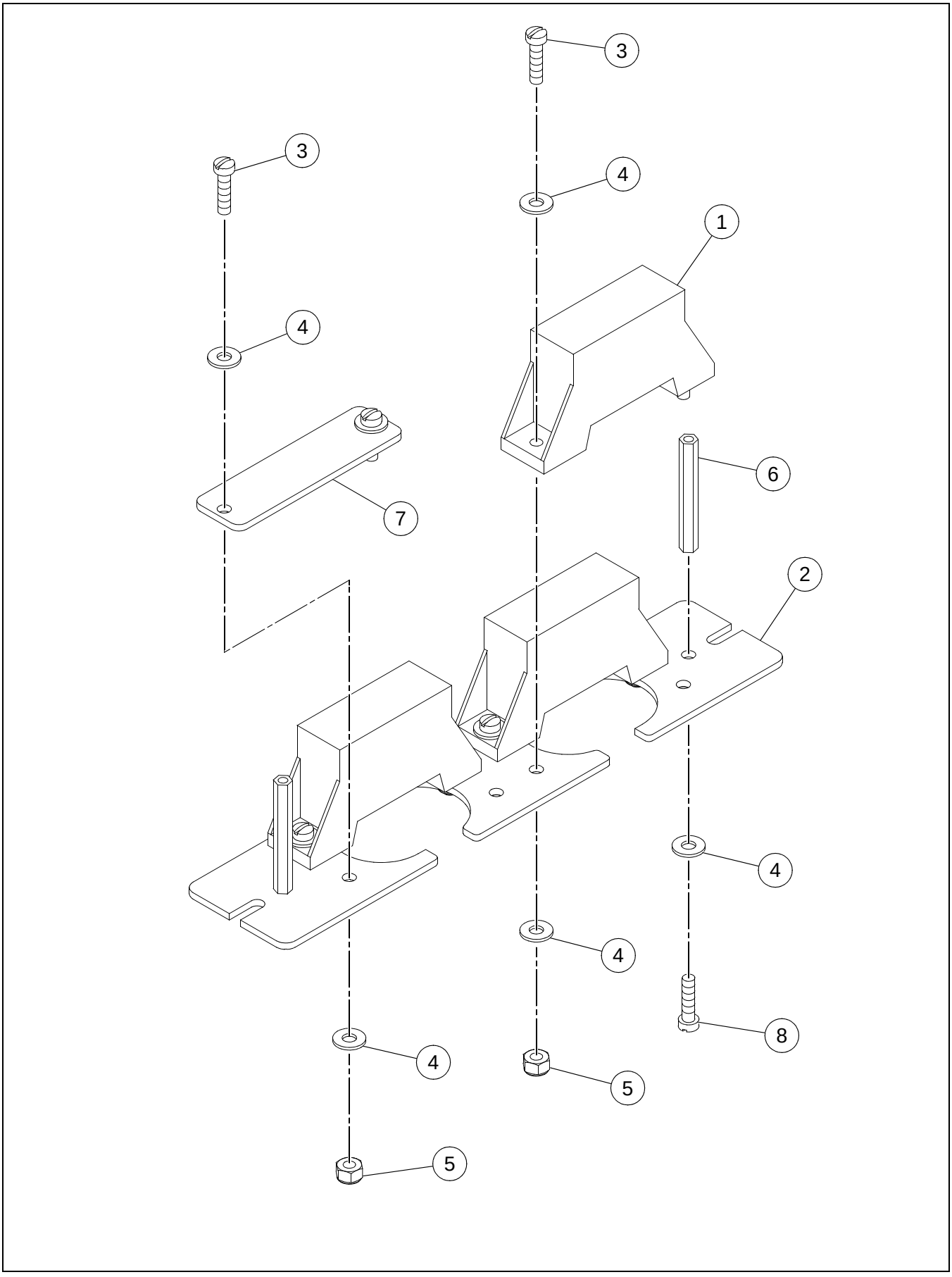

FUSE BLOCK ASSEMBLY

****Only Offered Parts Listed****

BOM 43827559

ITEM	COMM. NO.	DESCRIPTION	QTY	DIMENSIONS/NOTES
1	43827575	FUSE HARNESS	1	
2	13233440	FUSE MOUNTING PLATE	1	
3	95922134	SCREW	8	
4	95922332	FLATWASHER	18	
5	95943346	NUT	8	
6	13214267	STANDOFF	2	
7	13209135	FUSE COVER PLATE	1	
8	95932141	SCREW	2	10-32X.75

13848940 REV 00A

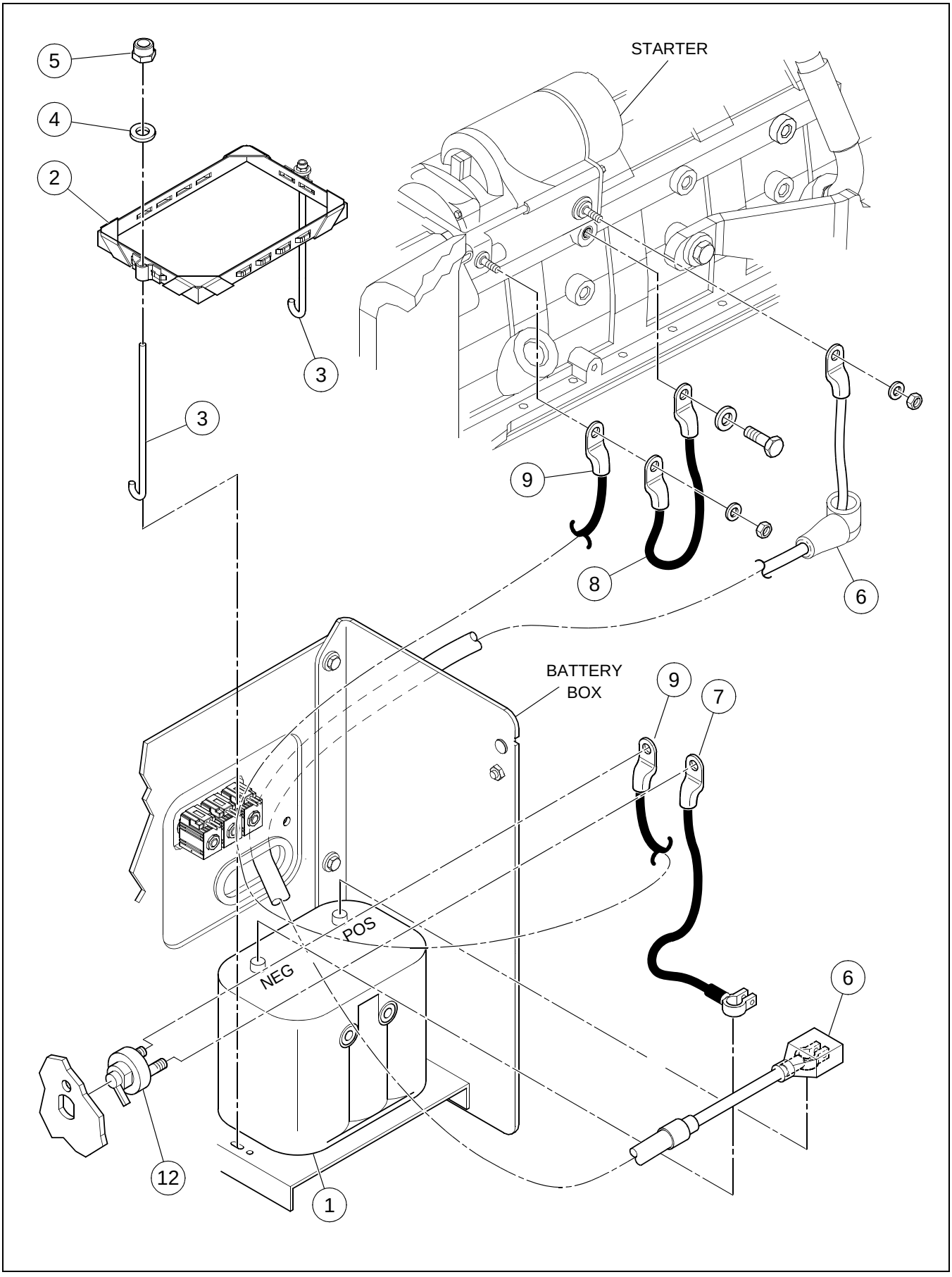

BATTERY INSTALLATION

****Only Offered Parts Listed****

BOM 13426705

ITEM	COMM. NO.	DESCRIPTION	QTY	DIMENSIONS/NOTES
1	54616081	BATTERY	1	
2	19295492	BATTERY HOLD DOWN	1	
3	13323274	HOOK	2	
4	96712674	FLATWASHER	2	
5	96704606	ESNA NUT	2	M8
7	13207758	GROUND CABLE	1	
8	13306519	GROUND CABLE JUMPER	1	
9	13465422	BATTERY CABLE, NEGATIVE	1	
12	13209648	SWITCH, BATTERY MASTER	1	
13	59583468	CLAMP INSERT	8	
14	59583450	COVER PLATE	4	
15	96705553	HHCS CL 8.8,YEL ZN	4	M8-1.25X45
16	96704606	ESNA NUT	4	M8
17	96712674	FLATWASHER	2	

AUDIBLE ALARM INSTALLATION - SHEET 1 OF 2

13255344 REV 00C

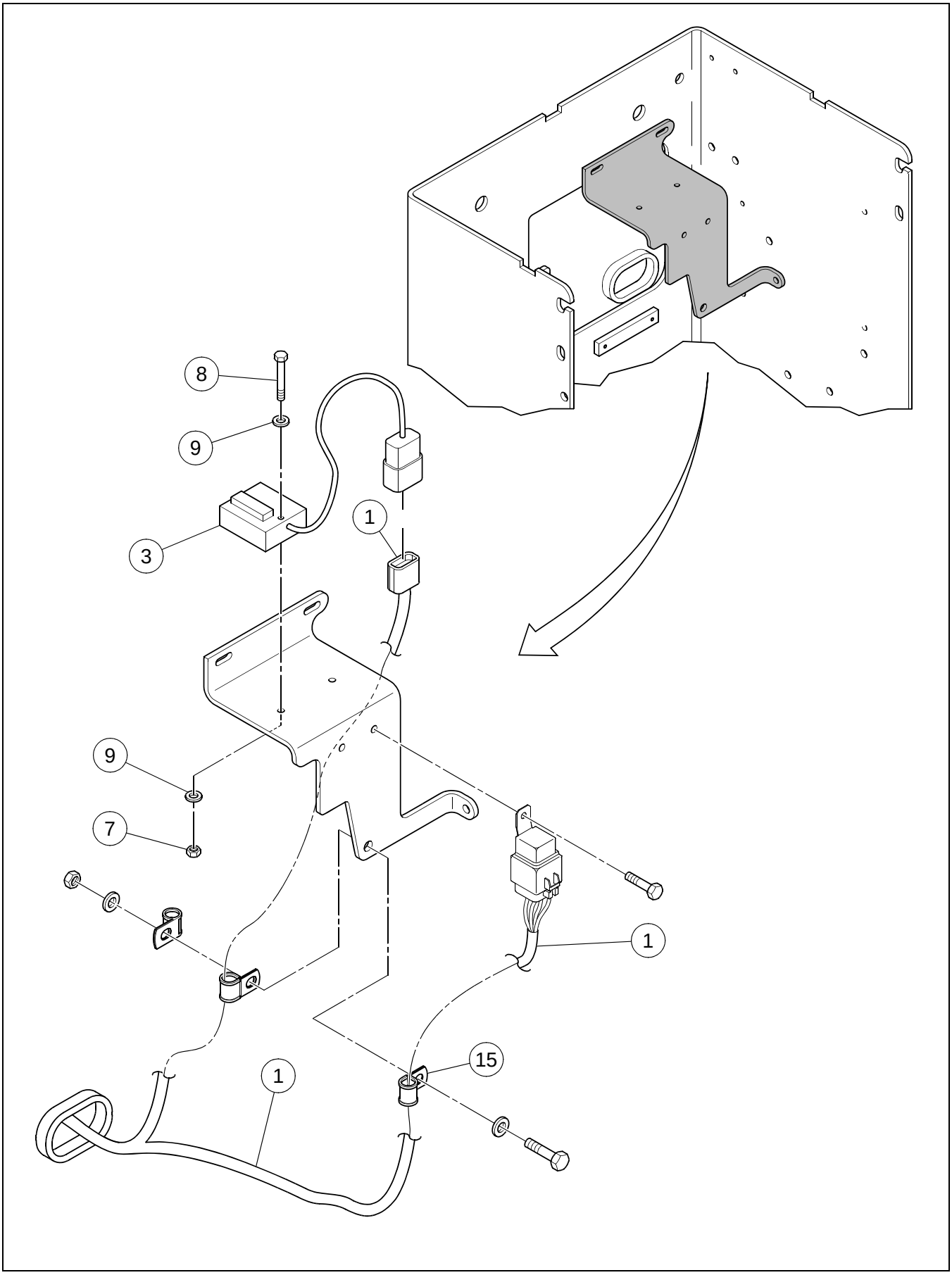

AUDIBLE ALARM INSTALLATION - SHEET 1 OF 2

****Only Offered Parts Listed****

BOM 13255344

ITEM	COMM. NO.	DESCRIPTION	QTY	DIMENSIONS/NOTES
1	19313667	AUDIBLE ALARM HARNESS SD77 ***	1	
2	58870924	HIGH TEMPERATURE ALARM	1	
3	13313648	DELAY TIMER	1	
-	13313622	- 20 SEC TIMER MODULE	1	841B-21-C/205GXL
4	59636738	WATER TEMPERATURE SWITCH	1	
-	**NSVA**	- ENGINE COOLANT TEMPERATURE SENDER INSTALLATION	**1**	**See Page E - 24.**
5	13214028	BRACKET	1	
7	96704598	ESNA NUT	1	M6
8	96701461	HHCS CL 8.8,YEL ZN	1	M6-1X25
9	96741038	WASHER, FLAT CL 200,YEL ZN	2	ID-8.4,OD-16.0X1.6THK
10	96704234	HEX NUT CL 8 ,YEL ZN	2	M6-1
11	96714472	HHCS CL 10.9,YEL ZN HR	2	M6-1X20
12	96741053	FLATWASHER, CL 200,YEL ZN	4	
14	13406780	SWITCH, TEMPERATURE	1	
15	58879891	CLAMP	1	

AUDIBLE ALARM INSTALLATION - SHEET 2 OF 2

13255344 REV 00C

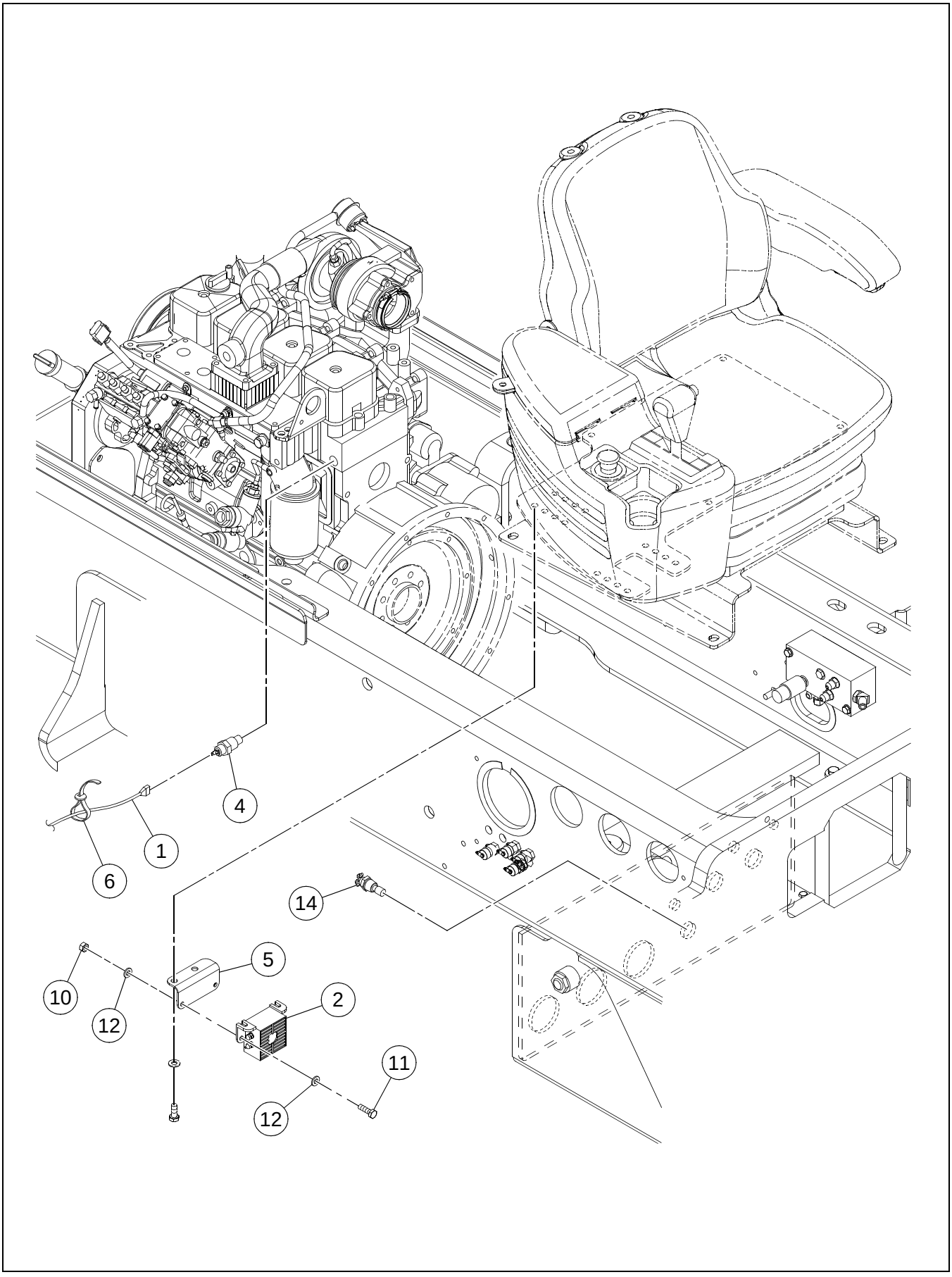

AUDIBLE ALARM INSTALLATION - SHEET 2 OF 2

****Only Offered Parts Listed****

BOM 13255344

ITEM	COMM. NO.	DESCRIPTION	QTY	DIMENSIONS/NOTES
1	19313667	AUDIBLE ALARM HARNESS SD77 ***	1	
2	58870924	HIGH TEMPERATURE ALARM	1	
3	13313648	DELAY TIMER	1	
-	13313622	- 20 SEC TIMER MODULE	1	841B-21-C/205GXL
4	59636738	WATER TEMPERATURE SWITCH	1	
-	**NSVA**	- ENGINE COOLANT TEMPERATURE SENDER INSTALLATION	**1**	**See Page E - 24.**
5	13214028	BRACKET	1	
7	96704598	ESNA NUT	1	M6
8	96701461	HHCS CL 8.8,YEL ZN	1	M6-1X25
9	96741038	WASHER, FLAT CL 200,YEL ZN	2	ID-8.4,OD-16.0X1.6THK
10	96704234	HEX NUT CL 8 ,YEL ZN	2	M6-1
11	96714472	HHCS CL 10.9,YEL ZN HR	2	M6-1X20
12	96741053	FLATWASHER, CL 200,YEL ZN	4	
14	13406780	SWITCH, TEMPERATURE	1	
15	58879891	CLAMP	1	

ENGINE COOLANT TEMPERATURE SENDER INSTALLATION

59128983 REV 02

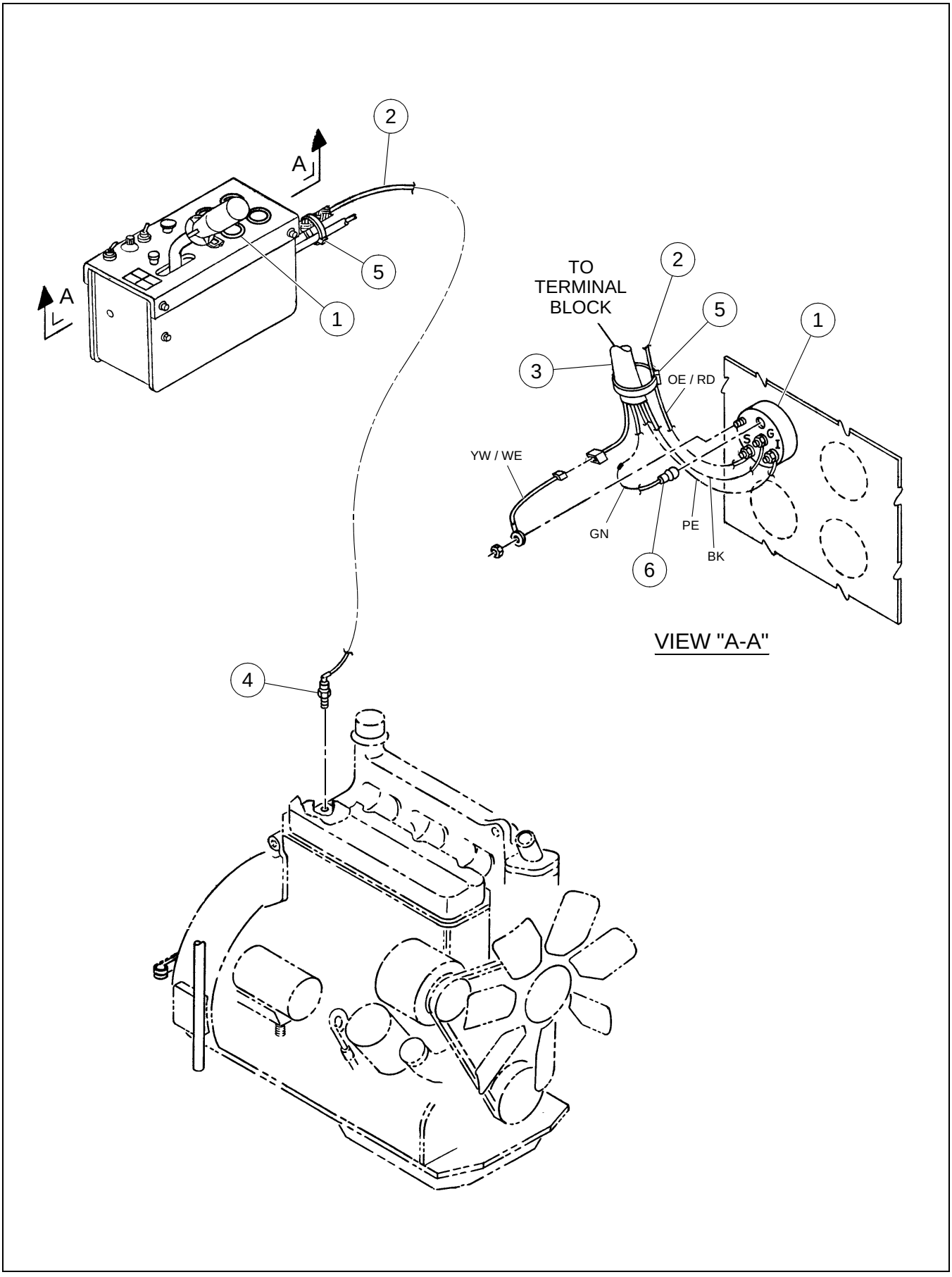

ENGINE COOLANT TEMPERATURE SENDER INSTALLATION

****Only Offered Parts Listed****

BOM 59134205

ITEM	COMM. NO.	DESCRIPTION	QTY	DIMENSIONS/NOTES
1	59128991	WATER TEMPERATURE GUAGE	1	
2	59128942	WATER TEMPERATURE GUAGE HARNESS	1	
3	59128959	WIRING HARNESS	1	
4	59128934	WATER TEMPERATURE GAUGE SENDER	1	
5	95424586	TYRAP	6	
6	58955923	HARNESS, GAUGE	1	
-	59824250	- LIGHT KIT	1	

Section F - DECALS AND PAINT

DECAL INSTALLATION - SHEET 1 OF 2

43914449 REV 000

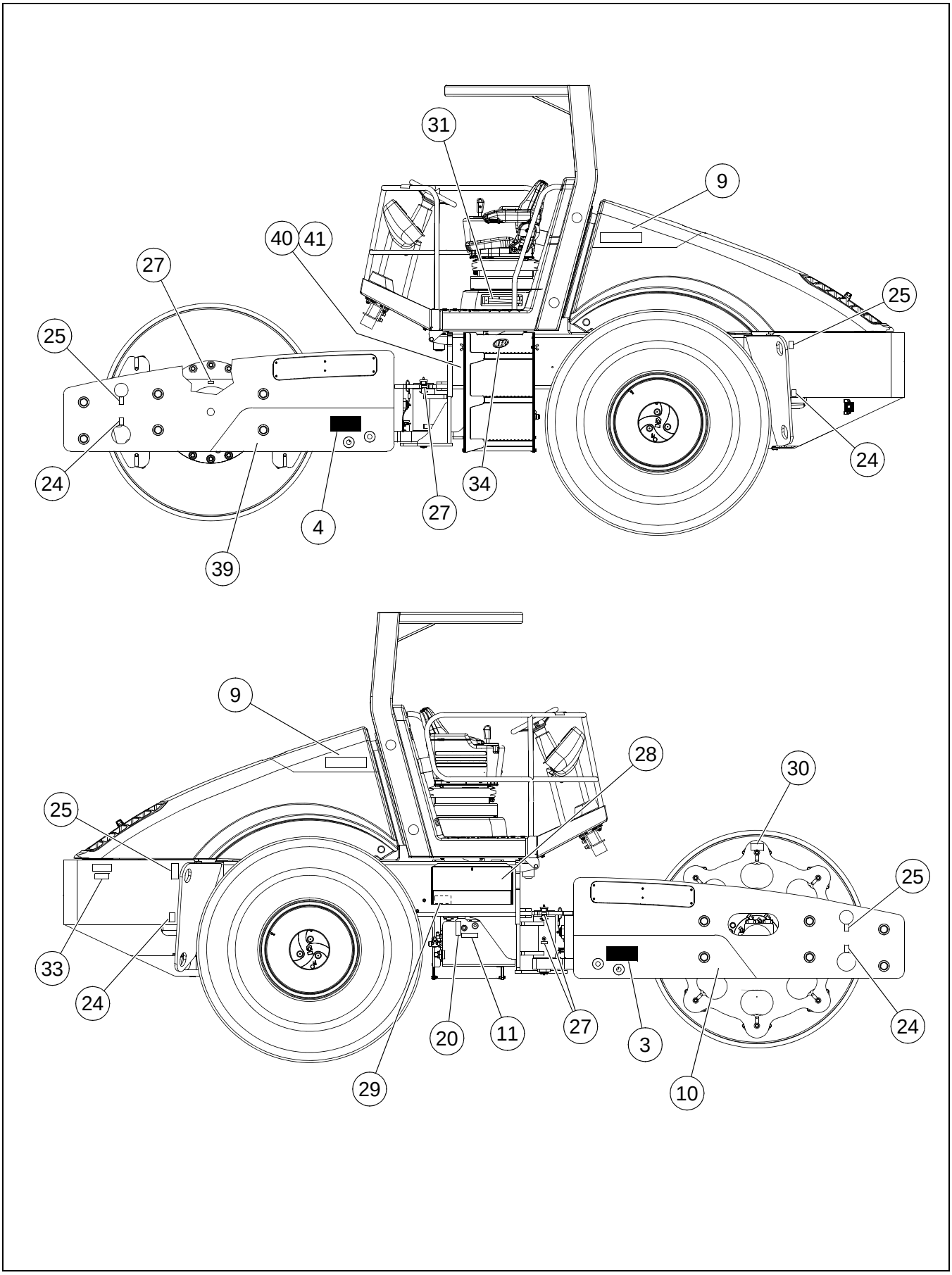

DECAL INSTALLATION - SHEET 1 OF 2

****Only Offered Parts Listed****

BOM 43914894

ITEM	COMM. NO.	DESCRIPTION	QTY	DIMENSIONS/NOTES
2	58965542	DECAL: CRUSH AREA	2	
3	43916790	DECAL: SD70D	2	
5	59020040	DECAL: WARNING - PRESSURE HAZARD	2	
7	43912013	DECAL, VOLVO SIGNATURE; 750MM	1	
8	43911239	DECAL, VOLVO SIGNATURE; 550MM	1	
9	43911171	DECAL, VOLVO SIGNATURE; 380MM	1	
10	43918515	DECAL: STRIPE	1	
11	13199344	DECAL: HYDRAULIC OIL	1	
14	59667287	DECAL: WARNING DO NOT SIT ON RAIL	2	
19	59051151	DECAL: WARNING	2	
20	58978255	DECAL: HYDRAULIC OIL LEVEL	1	
21	43921501	DECAL: FIELD	1	
22	43921519	DECAL: FIELD	1	
23	43921527	DECAL: FIELD	1	
24	59246603	DECAL: TIE DOWN	4	
25	59246611	DECAL: LIFT POINT	4	
26	59087999	DECAL: RADIATOR FILL	1	
27	59605915	DECAL: GREASE	5	
28	43819986	DECAL LUBE CHART SD70/77	1	
29	59290858	DECAL: HYDRAULIC PRESSURE TEST	1	
30	13208038	DECAL: MISSING SHOCK	2	
31	13480116	DECAL: FUSE CHART	1	
33	43924802	DECAL: HOOD,LOWER	1	
36	59579094	POP RIVET	4	
38	13855671	DECAL: WARNING-HOOD CRUSH AREA	1	
39	43918531	DECAL: STRIPE	1	
40	43936681	DECAL:MASTER DISCONNECT	1	
41	NOT-USED	THIS ITEM NOT USED W/THIS BOM	1	
42	43925775	DECAL: IGNITION	1	
43	59211474	SCREW	4	

DECAL INSTALLATION - SHEET 2 OF 2

43914449 REV 000

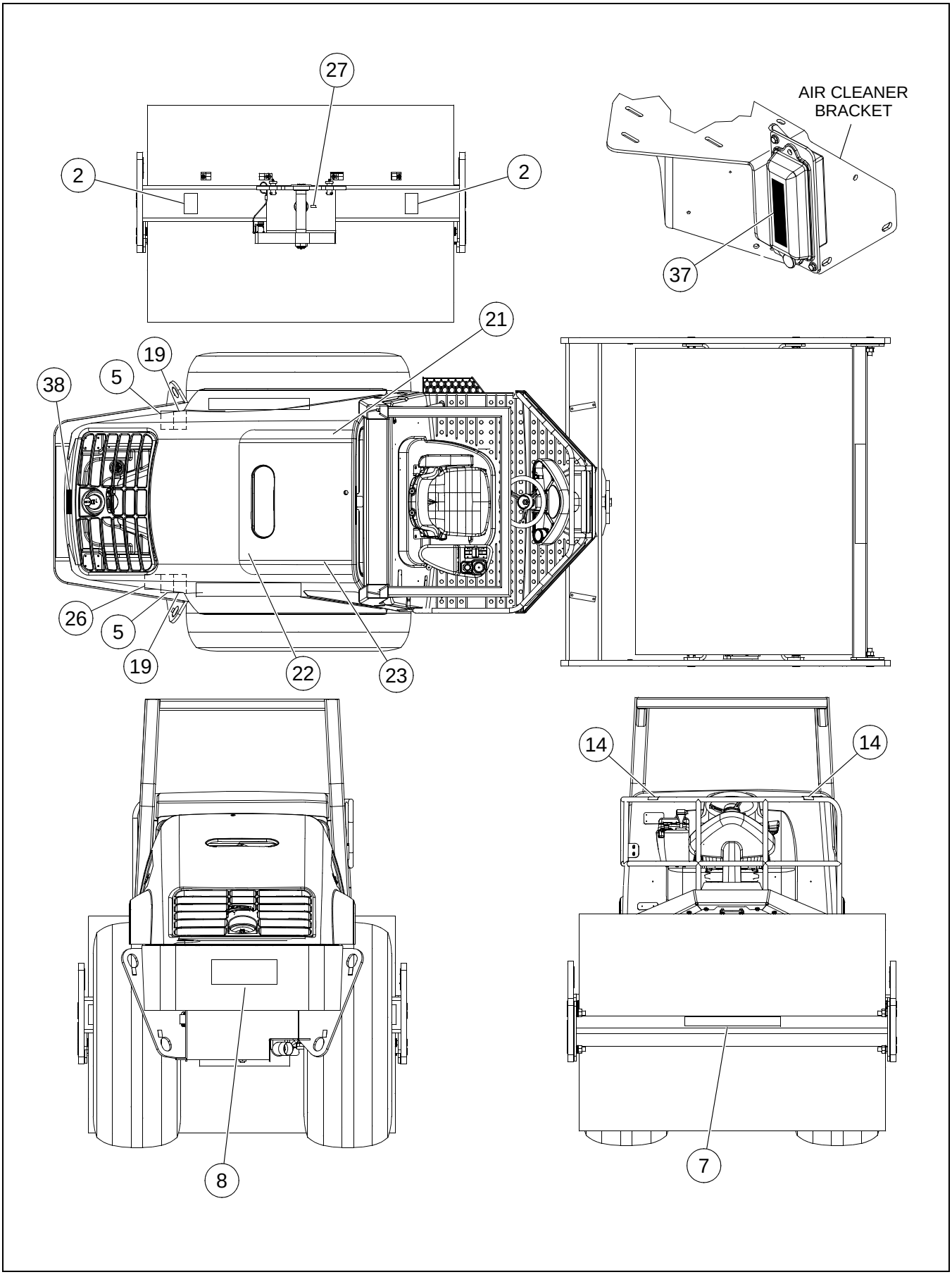

DECAL INSTALLATION - SHEET 2 OF 2

****Only Offered Parts Listed****

BOM 43914894

ITEM	COMM. NO.	DESCRIPTION	QTY	DIMENSIONS/NOTES
2	58965542	DECAL: CRUSH AREA	2	
3	43916790	DECAL: SD70D	2	
5	59020040	DECAL: WARNING - PRESSURE HAZARD	2	
7	43912013	DECAL, VOLVO SIGNATURE; 750MM	1	
8	43911239	DECAL, VOLVO SIGNATURE; 550MM	1	
9	43911171	DECAL, VOLVO SIGNATURE; 380MM	1	
10	43918515	DECAL: STRIPE	1	
11	13199344	DECAL: HYDRAULIC OIL	1	
14	59667287	DECAL: WARNING DO NOT SIT ON RAIL	2	
19	59051151	DECAL: WARNING	2	
20	58978255	DECAL: HYDRAULIC OIL LEVEL	1	
21	43921501	DECAL: FIELD	1	
22	43921519	DECAL: FIELD	1	
23	43921527	DECAL: FIELD	1	
24	59246603	DECAL: TIE DOWN	4	
25	59246611	DECAL: LIFT POINT	4	
26	59087999	DECAL: RADIATOR FILL	1	
27	59605915	DECAL: GREASE	5	
28	43819986	DECAL LUBE CHART SD70/77	1	
29	59290858	DECAL: HYDRAULIC PRESSURE TEST	1	
30	13208038	DECAL: MISSING SHOCK	2	
31	13480116	DECAL: FUSE CHART	1	
33	43924802	DECAL: HOOD,LOWER	1	
36	59579094	POP RIVET	4	
38	13855671	DECAL: WARNING-HOOD CRUSH AREA	1	
39	43918531	DECAL: STRIPE	1	
40	43936681	DECAL:MASTER DISCONNECT	1	
41	NOT-USED	THIS ITEM NOT USED W/THIS BOM	1	
42	43925775	DECAL: IGNITION	1	
43	59211474	SCREW	4	

Section G - HYDRAULICS

13174230 REV 011

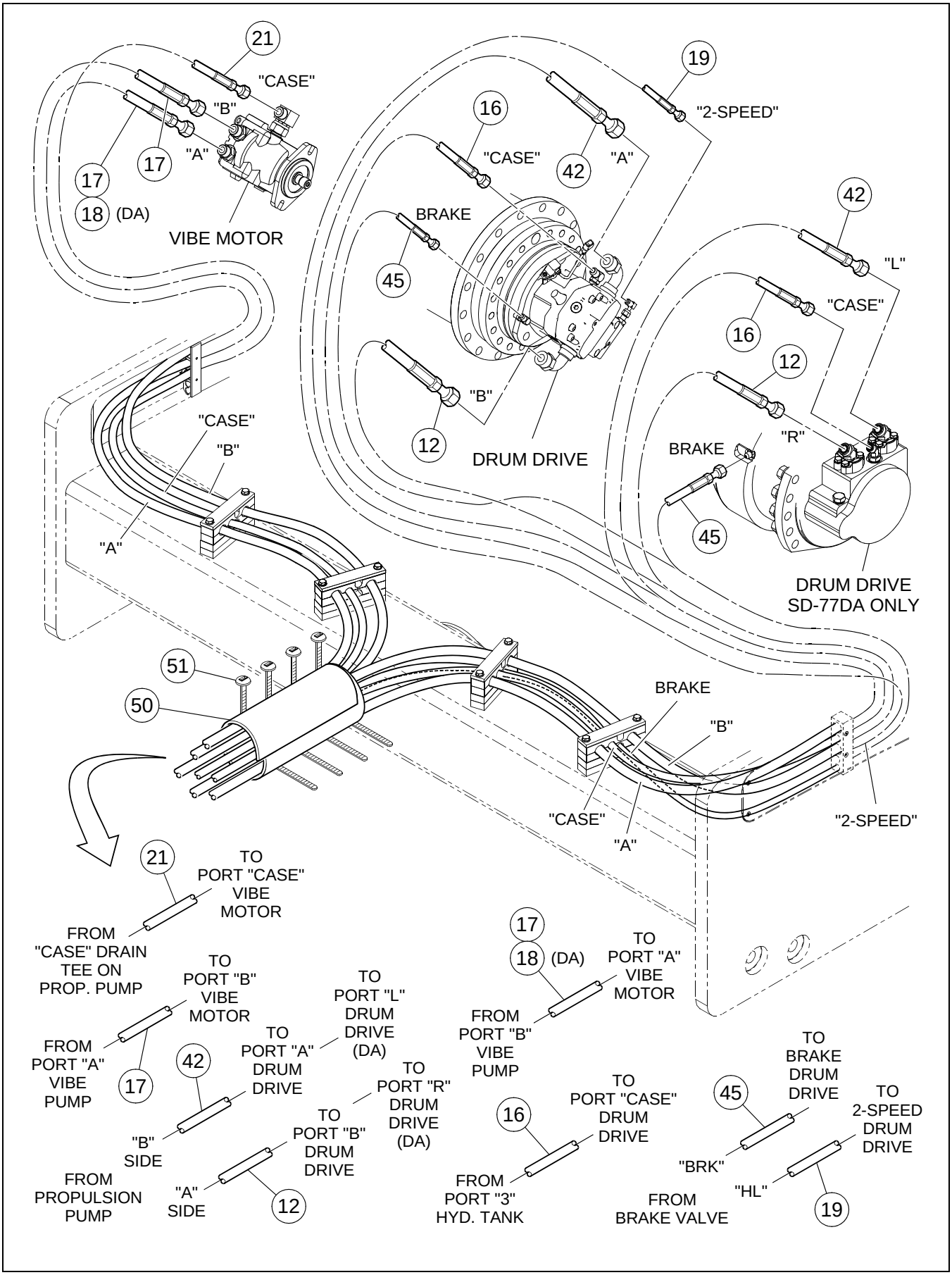

REAR FRAME HOSING INSTALLATION - SHEET 1 OF 6

****Only Offered Parts Listed****

BOM 13255203

ITEM	COMM. NO.	DESCRIPTION	QTY	DIMENSIONS/NOTES
1	13207840	HOSE	1	
2	13207865	HOSE ASSEMBLY	1	
3	13204383	HOSE	1	
4	13207873	HOSE ASSEMBLY	2	
6	13204441	HOSE ASSEMBLY	1	
7	59203406	HOSE ASSEMBLY	1	
8	59106757	HOSE ASSEMBLY	1	
10	13207824	HOSE	1	
12	13460787	HOSE ASSEMBLY	1	113"
13	13207774	HOSE ASSEMBLY	2	
15	54537097	HOSE ASSEMBLY	1	
16	13460795	HOSE ASSEMBLY	1	120"
17	13207915	HOSE ASSEMBLY	2	
19	NOT-USED	THIS ITEM NOT USED W/THIS BOM	1	
21	13207907	HOSE ASSEMBLY	1	
22	13199120	HOSE	1	
26	13207790	HOSE ASSEMBLY	1	
27	13204359	HOSE ASSEMBLY	1	
28	13199062	HOSE ASSEMBLY	2	
29	13207899	HOSE ASSEMBLY	1	
30	13106497	HOSE ASSEMBLY	1	
32	13199047	HOSE ASSEMBLY	2	
37	59546275	HOSE ASSEMBLY	1	
39	13204755	HOSE	1	
41	13207832	HOSE ASSEMBLY	1	
42	NOT-USED	THIS ITEM NOT USED W/THIS BOM	1	
43	43871995	HOSE 16"	1	
44	59203406	HOSE ASSEMBLY	1	
45	13333901	HOSE ASSEMBLY	1	
46	96713979	HARD WASHER	4	
47	95457586	CLAMP	4	
48	96701370	NUT,HEX CL 8 ,YEL ZN	4	M8-1.25
49	96705587	HHCS CL 8.8,YEL ZN	4	M8-1.25X30
50	59672733	HOSE GUARD	1	
51	95424586	TYRAP	8	
52	43878479	HOSE	1	
53	43871987	HOSE 23"	3	
54	43904473	HOSE 16"	1	
55	43878503	HOSE	1	

REAR FRAME HOSING INSTALLATION - SHEET 2 OF 6

13174230 REV 011

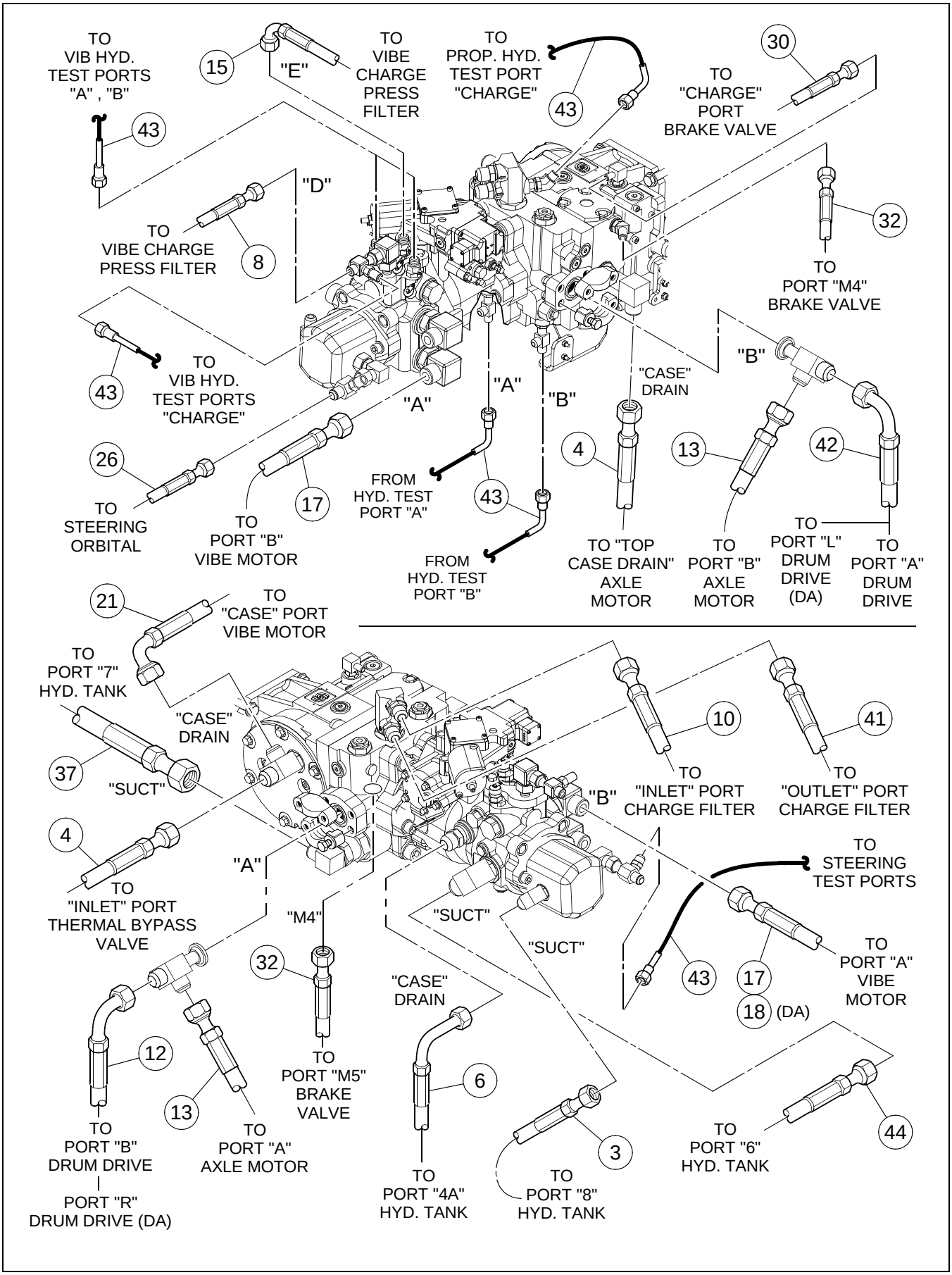

REAR FRAME HOSING INSTALLATION - SHEET 2 OF 6

****Only Offered Parts Listed****

BOM 13255203

ITEM	COMM. NO.	DESCRIPTION	QTY	DIMENSIONS/NOTES
1	13207840	HOSE	1	
2	13207865	HOSE ASSEMBLY	1	
3	13204383	HOSE	1	
4	13207873	HOSE ASSEMBLY	2	
6	13204441	HOSE ASSEMBLY	1	
7	59203406	HOSE ASSEMBLY	1	
8	59106757	HOSE ASSEMBLY	1	
10	13207824	HOSE	1	
12	13460787	HOSE ASSEMBLY	1	113"
13	13207774	HOSE ASSEMBLY	2	
15	54537097	HOSE ASSEMBLY	1	
16	13460795	HOSE ASSEMBLY	1	120"
17	13207915	HOSE ASSEMBLY	2	
19	NOT-USED	THIS ITEM NOT USED W/THIS BOM	1	
21	13207907	HOSE ASSEMBLY	1	
22	13199120	HOSE	1	
26	13207790	HOSE ASSEMBLY	1	
27	13204359	HOSE ASSEMBLY	1	
28	13199062	HOSE ASSEMBLY	2	
29	13207899	HOSE ASSEMBLY	1	
30	13106497	HOSE ASSEMBLY	1	
32	13199047	HOSE ASSEMBLY	2	
37	59546275	HOSE ASSEMBLY	1	
39	13204755	HOSE	1	
41	13207832	HOSE ASSEMBLY	1	
42	NOT-USED	THIS ITEM NOT USED W/THIS BOM	1	
43	43871995	HOSE 16"	1	
44	59203406	HOSE ASSEMBLY	1	
45	13333901	HOSE ASSEMBLY	1	
46	96713979	HARD WASHER	4	
47	95457586	CLAMP	4	
48	96701370	NUT,HEX CL 8 ,YEL ZN	4	M8-1.25
49	96705587	HHCS CL 8.8,YEL ZN	4	M8-1.25X30
50	59672733	HOSE GUARD	1	
51	95424586	TYRAP	8	
52	43878479	HOSE	1	
53	43871987	HOSE 23"	3	
54	43904473	HOSE 16"	1	
55	43878503	HOSE	1	

REAR FRAME HOSING INSTALLATION - SHEET 3 OF 6

13174230 REV 011

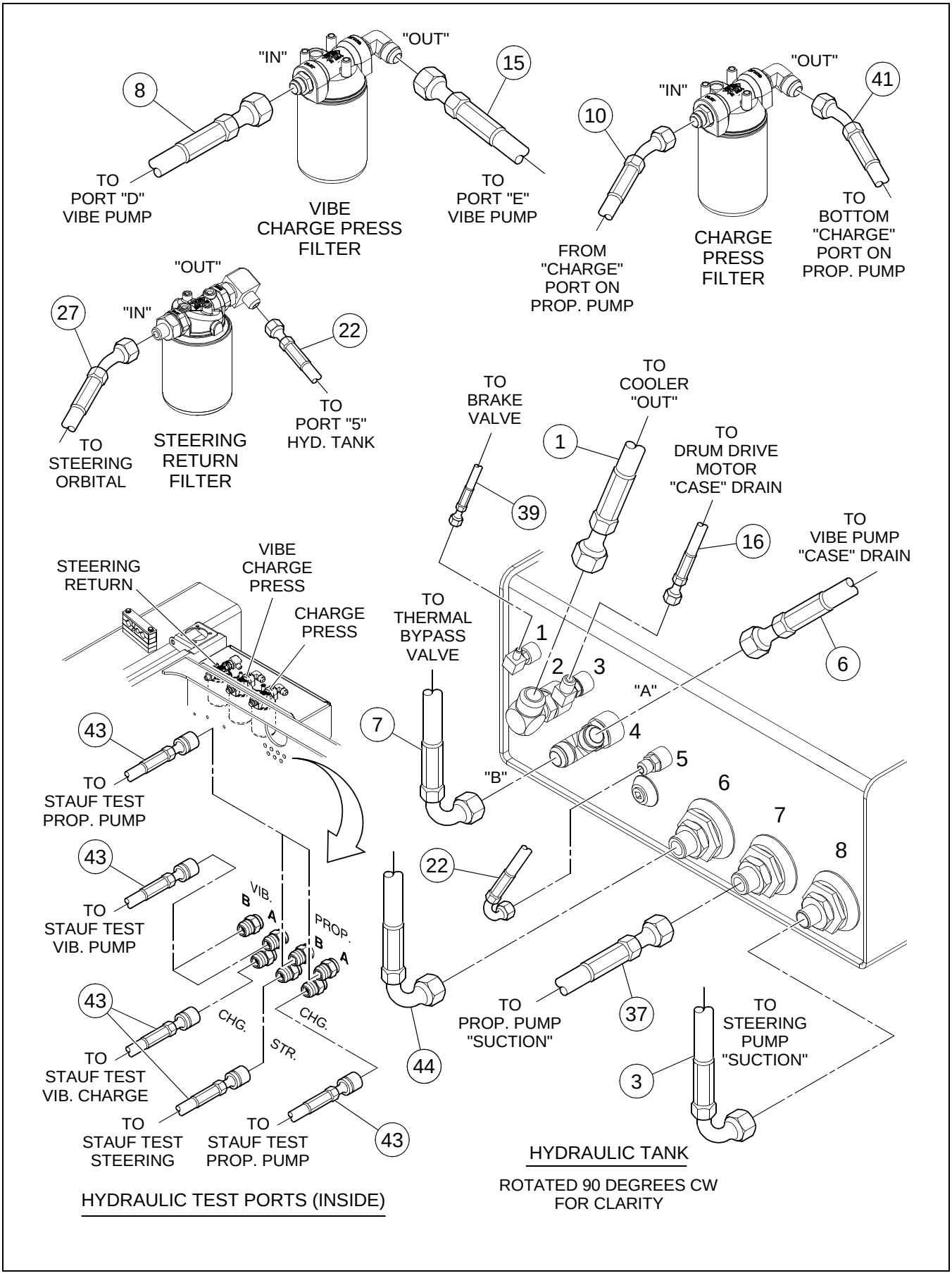

REAR FRAME HOSING INSTALLATION - SHEET 3 OF 6

****Only Offered Parts Listed****

BOM 13255203

ITEM	COMM. NO.	DESCRIPTION	QTY	DIMENSIONS/NOTES
1	13207840	HOSE	1	
2	13207865	HOSE ASSEMBLY	1	
3	13204383	HOSE	1	
4	13207873	HOSE ASSEMBLY	2	
6	13204441	HOSE ASSEMBLY	1	
7	59203406	HOSE ASSEMBLY	1	
8	59106757	HOSE ASSEMBLY	1	
10	13207824	HOSE	1	
12	13460787	HOSE ASSEMBLY	1	113"
13	13207774	HOSE ASSEMBLY	2	
15	54537097	HOSE ASSEMBLY	1	
16	13460795	HOSE ASSEMBLY	1	120"
17	13207915	HOSE ASSEMBLY	2	
19	NOT-USED	THIS ITEM NOT USED W/THIS BOM	1	
21	13207907	HOSE ASSEMBLY	1	
22	13199120	HOSE	1	
26	13207790	HOSE ASSEMBLY	1	
27	13204359	HOSE ASSEMBLY	1	
28	13199062	HOSE ASSEMBLY	2	
29	13207899	HOSE ASSEMBLY	1	
30	13106497	HOSE ASSEMBLY	1	
32	13199047	HOSE ASSEMBLY	2	
37	59546275	HOSE ASSEMBLY	1	
39	13204755	HOSE	1	
41	13207832	HOSE ASSEMBLY	1	
42	NOT-USED	THIS ITEM NOT USED W/THIS BOM	1	
43	43871995	HOSE 16"	1	
44	59203406	HOSE ASSEMBLY	1	
45	13333901	HOSE ASSEMBLY	1	
46	96713979	HARD WASHER	4	
47	95457586	CLAMP	4	
48	96701370	NUT,HEX CL 8 ,YEL ZN	4	M8-1.25
49	96705587	HHCS CL 8.8,YEL ZN	4	M8-1.25X30
50	59672733	HOSE GUARD	1	
51	95424586	TYRAP	8	
52	43878479	HOSE	1	
53	43871987	HOSE 23"	3	
54	43904473	HOSE 16"	1	
55	43878503	HOSE	1	

13174230 REV 011

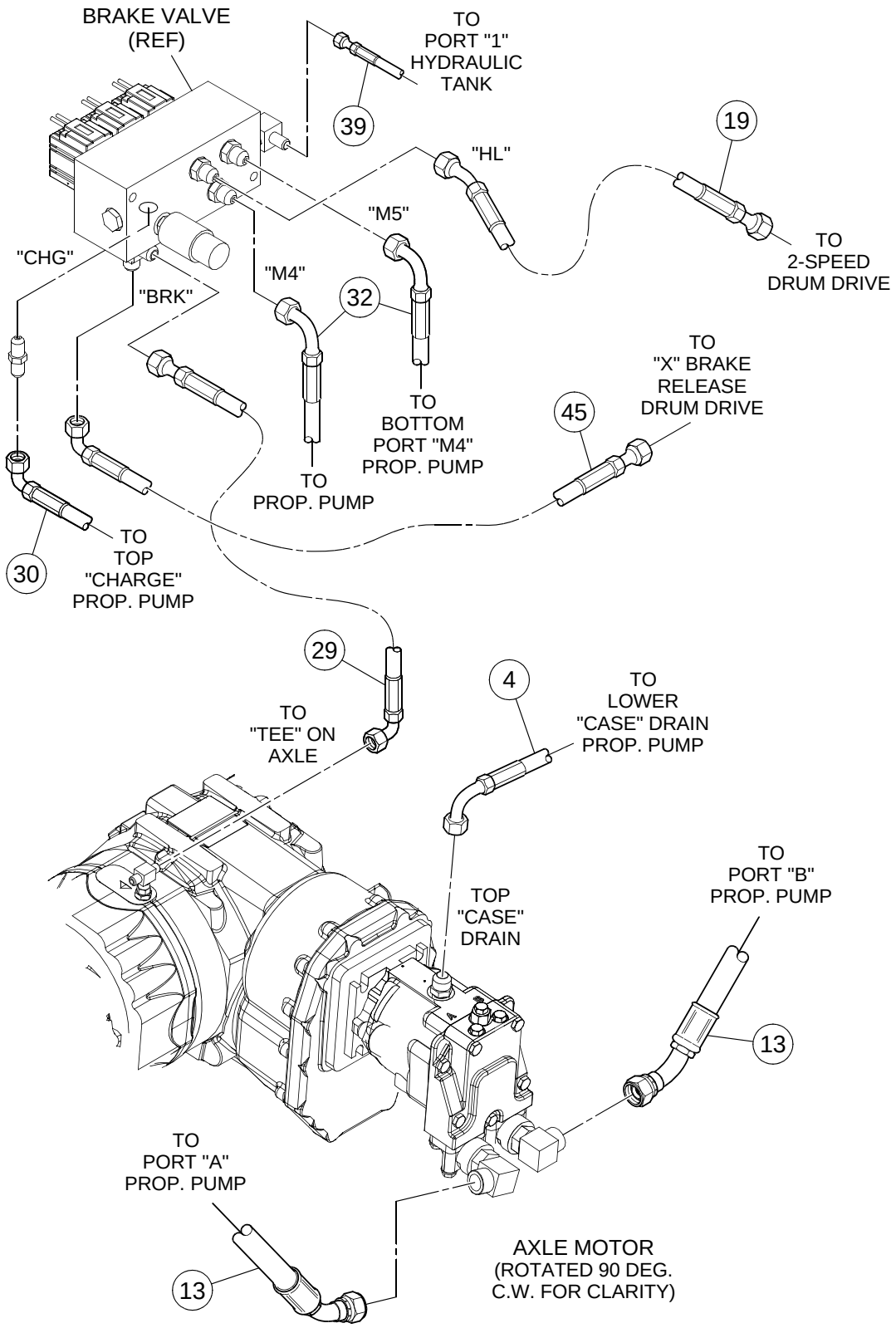

REAR FRAME HOSING INSTALLATION - SHEET 4 OF 6

****Only Offered Parts Listed****

BOM 13255203

ITEM	COMM. NO.	DESCRIPTION	QTY	DIMENSIONS/NOTES
1	13207840	HOSE	1	
2	13207865	HOSE ASSEMBLY	1	
3	13204383	HOSE	1	
4	13207873	HOSE ASSEMBLY	2	
6	13204441	HOSE ASSEMBLY	1	
7	59203406	HOSE ASSEMBLY	1	
8	59106757	HOSE ASSEMBLY	1	
10	13207824	HOSE	1	
12	13460787	HOSE ASSEMBLY	1	113"
13	13207774	HOSE ASSEMBLY	2	
15	54537097	HOSE ASSEMBLY	1	
16	13460795	HOSE ASSEMBLY	1	120"
17	13207915	HOSE ASSEMBLY	2	
19	NOT-USED	THIS ITEM NOT USED W/THIS BOM	1	
21	13207907	HOSE ASSEMBLY	1	
22	13199120	HOSE	1	
26	13207790	HOSE ASSEMBLY	1	
27	13204359	HOSE ASSEMBLY	1	
28	13199062	HOSE ASSEMBLY	2	
29	13207899	HOSE ASSEMBLY	1	
30	13106497	HOSE ASSEMBLY	1	
32	13199047	HOSE ASSEMBLY	2	
37	59546275	HOSE ASSEMBLY	1	
39	13204755	HOSE	1	
41	13207832	HOSE ASSEMBLY	1	
42	NOT-USED	THIS ITEM NOT USED W/THIS BOM	1	
43	43871995	HOSE 16"	1	
44	59203406	HOSE ASSEMBLY	1	
45	13333901	HOSE ASSEMBLY	1	
46	96713979	HARD WASHER	4	
47	95457586	CLAMP	4	
48	96701370	NUT,HEX CL 8 ,YEL ZN	4	M8-1.25
49	96705587	HHCS CL 8.8,YEL ZN	4	M8-1.25X30
50	59672733	HOSE GUARD	1	
51	95424586	TYRAP	8	
52	43878479	HOSE	1	
53	43871987	HOSE 23"	3	
54	43904473	HOSE 16"	1	
55	43878503	HOSE	1	

13174230 REV 011

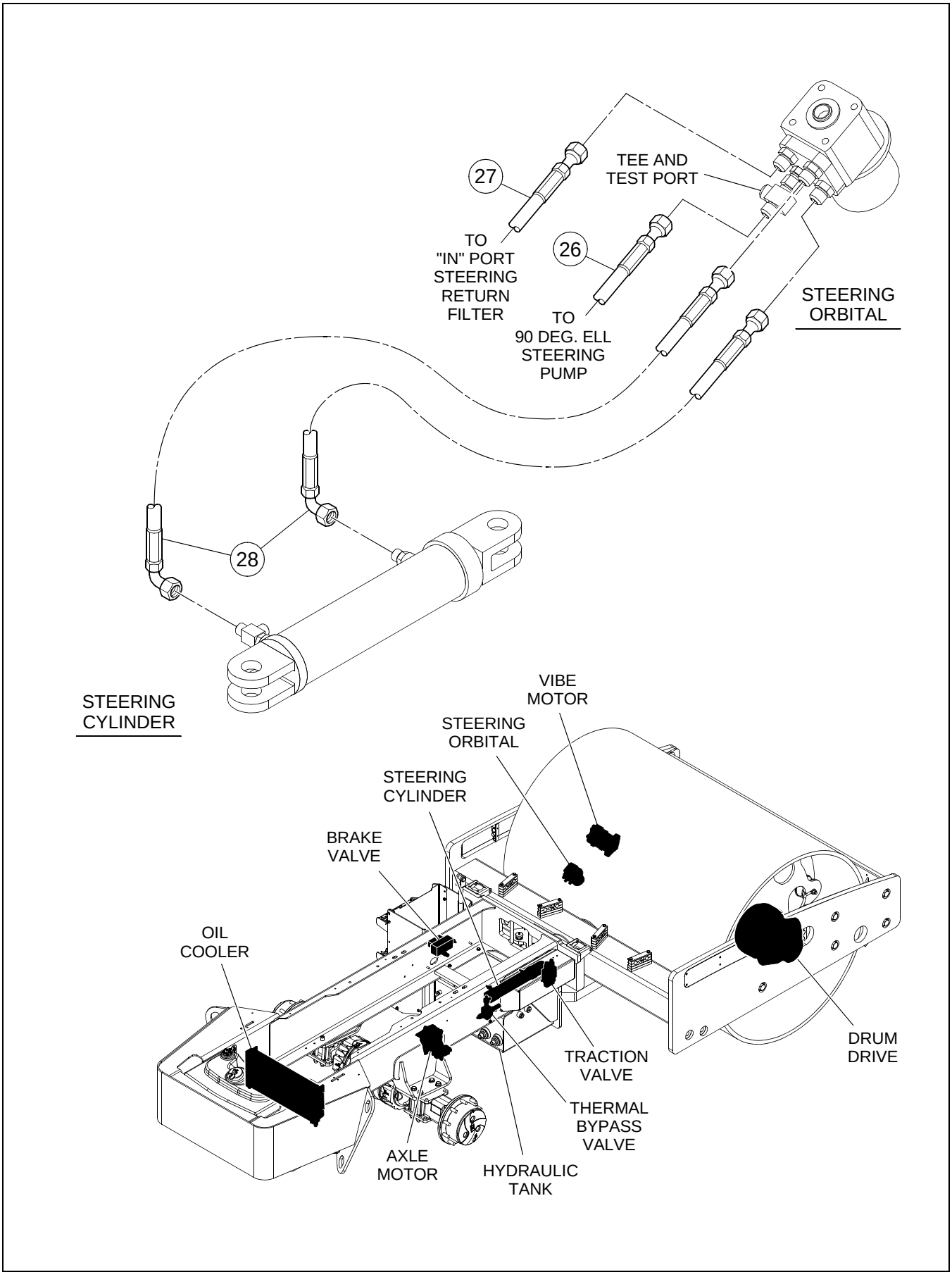

REAR FRAME HOSING INSTALLATION - SHEET 5 OF 6

****Only Offered Parts Listed****

BOM 13255203

ITEM	COMM. NO.	DESCRIPTION	QTY	DIMENSIONS/NOTES
1	13207840	HOSE	1	
2	13207865	HOSE ASSEMBLY	1	
3	13204383	HOSE	1	
4	13207873	HOSE ASSEMBLY	2	
6	13204441	HOSE ASSEMBLY	1	
7	59203406	HOSE ASSEMBLY	1	
8	59106757	HOSE ASSEMBLY	1	
10	13207824	HOSE	1	
12	13460787	HOSE ASSEMBLY	1	113"
13	13207774	HOSE ASSEMBLY	2	
15	54537097	HOSE ASSEMBLY	1	
16	13460795	HOSE ASSEMBLY	1	120"
17	13207915	HOSE ASSEMBLY	2	
19	NOT-USED	THIS ITEM NOT USED W/THIS BOM	1	
21	13207907	HOSE ASSEMBLY	1	
22	13199120	HOSE	1	
26	13207790	HOSE ASSEMBLY	1	
27	13204359	HOSE ASSEMBLY	1	
28	13199062	HOSE ASSEMBLY	2	
29	13207899	HOSE ASSEMBLY	1	
30	13106497	HOSE ASSEMBLY	1	
32	13199047	HOSE ASSEMBLY	2	
37	59546275	HOSE ASSEMBLY	1	
39	13204755	HOSE	1	
41	13207832	HOSE ASSEMBLY	1	
42	NOT-USED	THIS ITEM NOT USED W/THIS BOM	1	
43	43871995	HOSE 16"	1	
44	59203406	HOSE ASSEMBLY	1	
45	13333901	HOSE ASSEMBLY	1	
46	96713979	HARD WASHER	4	
47	95457586	CLAMP	4	
48	96701370	NUT,HEX CL 8 ,YEL ZN	4	M8-1.25
49	96705587	HHCS CL 8.8,YEL ZN	4	M8-1.25X30
50	59672733	HOSE GUARD	1	
51	95424586	TYRAP	8	
52	43878479	HOSE	1	
53	43871987	HOSE 23"	3	
54	43904473	HOSE 16"	1	
55	43878503	HOSE	1	

REAR FRAME HOSING INSTALLATION - SHEET 6 OF 6

13174230 REV 011

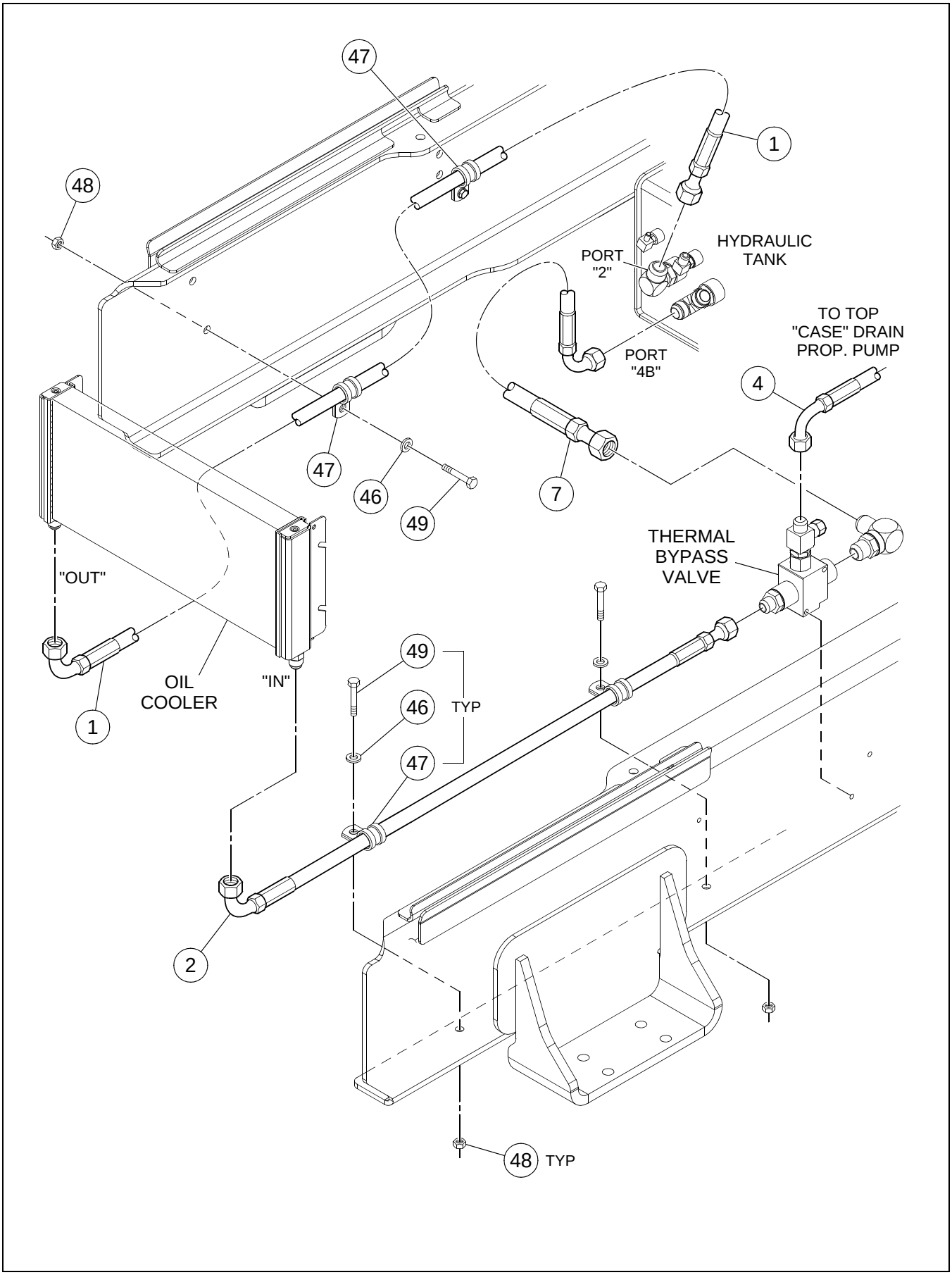

REAR FRAME HOSING INSTALLATION - SHEET 6 OF 6

****Only Offered Parts Listed****

BOM 13255203

ITEM	COMM. NO.	DESCRIPTION	QTY	DIMENSIONS/NOTES
1	13207840	HOSE	1	
2	13207865	HOSE ASSEMBLY	1	
3	13204383	HOSE	1	
4	13207873	HOSE ASSEMBLY	2	
6	13204441	HOSE ASSEMBLY	1	
7	59203406	HOSE ASSEMBLY	1	
8	59106757	HOSE ASSEMBLY	1	
10	13207824	HOSE	1	
12	13460787	HOSE ASSEMBLY	1	113"
13	13207774	HOSE ASSEMBLY	2	
15	54537097	HOSE ASSEMBLY	1	
16	13460795	HOSE ASSEMBLY	1	120"
17	13207915	HOSE ASSEMBLY	2	
19	NOT-USED	THIS ITEM NOT USED W/THIS BOM	1	
21	13207907	HOSE ASSEMBLY	1	
22	13199120	HOSE	1	
26	13207790	HOSE ASSEMBLY	1	
27	13204359	HOSE ASSEMBLY	1	
28	13199062	HOSE ASSEMBLY	2	
29	13207899	HOSE ASSEMBLY	1	
30	13106497	HOSE ASSEMBLY	1	
32	13199047	HOSE ASSEMBLY	2	
37	59546275	HOSE ASSEMBLY	1	
39	13204755	HOSE	1	
41	13207832	HOSE ASSEMBLY	1	
42	NOT-USED	THIS ITEM NOT USED W/THIS BOM	1	
43	43871995	HOSE 16"	1	
44	59203406	HOSE ASSEMBLY	1	
45	13333901	HOSE ASSEMBLY	1	
46	96713979	HARD WASHER	4	
47	95457586	CLAMP	4	
48	96701370	NUT,HEX CL 8 ,YEL ZN	4	M8-1.25
49	96705587	HHCS CL 8.8,YEL ZN	4	M8-1.25X30
50	59672733	HOSE GUARD	1	
51	95424586	TYRAP	8	
52	43878479	HOSE	1	
53	43871987	HOSE 23"	3	
54	43904473	HOSE 16"	1	
55	43878503	HOSE	1	

UNIQUE HOSE INSTALLATION

43808724 REV 00A

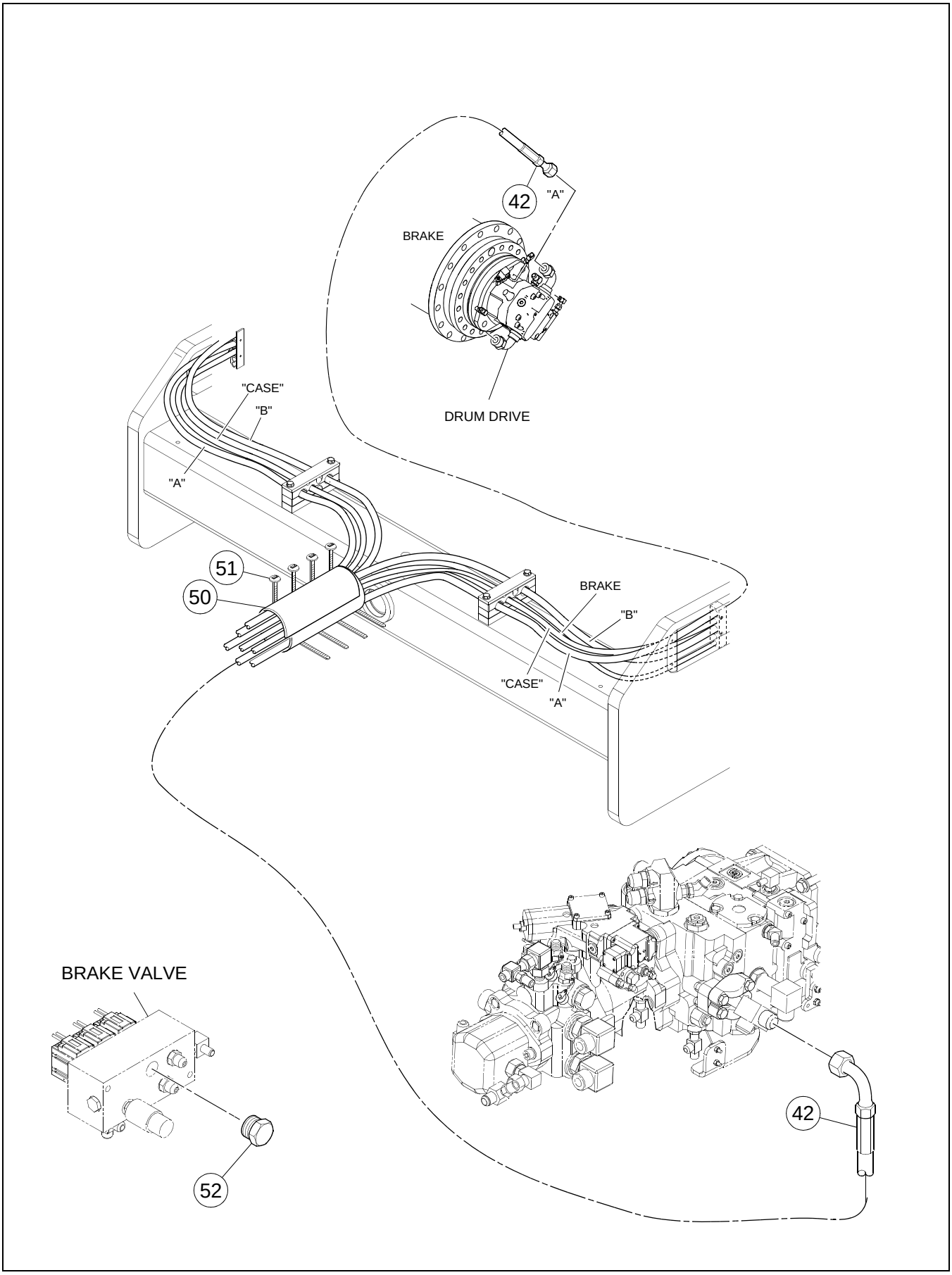

UNIQUE HOSE INSTALLATION

****Only Offered Parts Listed****

BOM 43808724

ITEM	COMM. NO.	DESCRIPTION	QTY	DIMENSIONS/NOTES
42	13319314	HOSE ASSEMBLY	1	
52	95323366	PLUG	1	

HYDRAULIC FILTER INSTALLATION

13185723 REV 05

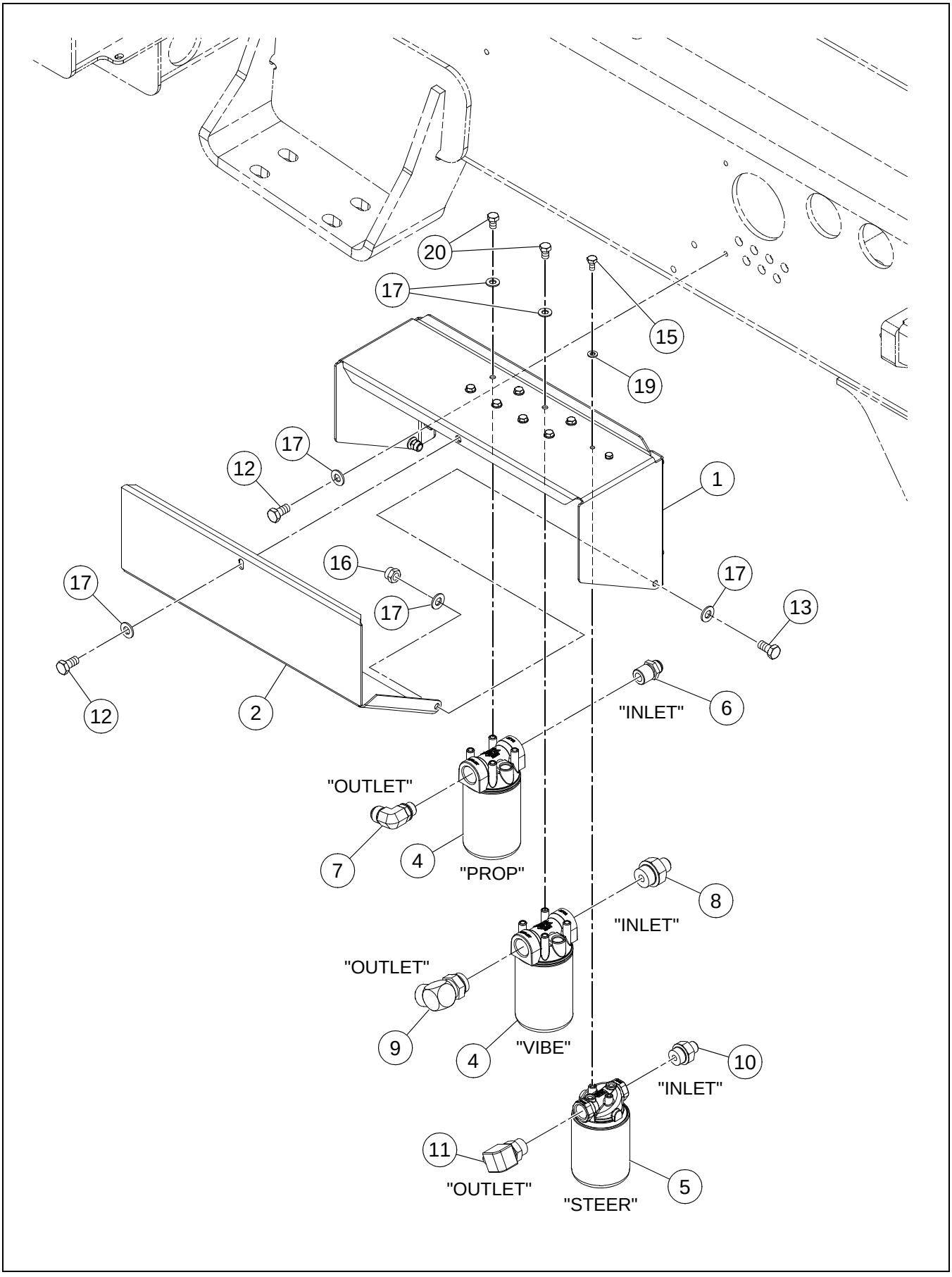

HYDRAULIC FILTER INSTALLATION

****Only Offered Parts Listed****

BOM 13174172

ITEM	COMM. NO.	DESCRIPTION	QTY	DIMENSIONS/NOTES
1	13295639	FILTER BRACKET	1	
2	13215405	FILTER DOOR	1	
4	43846054	HYDRAULIC PRESSURE FILTER	2	
-	43846062	- FILTER, ELEMENT	2	
5	43907989	RETURN FILTER	1	
-	43919976	- FILTER ELEMENT HYDRAULIC	1	
6	95416277	FITTING	1	
7	13303805	ADAPTER	1	
8	59922526	ADAPTER	1	
9	95341673	ADAPTER	1	
10	95357570	ADAPTER	1	
11	95330692	ELBOW	1	
12	96702279	HHCS CL 8.8,YEL ZN	5	M10-1.5X20
13	96702287	HHCS CL 8.8,YEL ZN	2	M10-1.5X25
15	95919528	HHCS	2	1/4-20X.625
16	96704614	NUT	2	M10X1.5
17	96741046	FLATWASHER, CL 200,YEL ZN	17	
19	96741053	FLATWASHER, CL 200,YEL ZN	2	
20	96701479	HHCS CL 8.8,YEL ZN	8	M10-1.5X16

Section I - SCHEMATICS

SCHEMATICS

GENERAL INFORMATION

Hydraulic and electrical schematics are included here for the convenience of the owner/operator. Additional copies of the schematics are available by contacting the Volvo Road Machinery. See your authorized Volvo dealer for assistance if required.

For ultimate machine life and maximum performance, we recommend the use of genuine Volvo brand parts.

The electrical and hydraulic schematics included herein are applicable to the SD-70D VIBRATORY COMPACTOR

Electrical Schematics

- Electrical Schematic - Drawing No. 13421383

Hydraulic Schematics

- Hydraulic Schematic - Drawing No. 13461439

Electrical Schematic

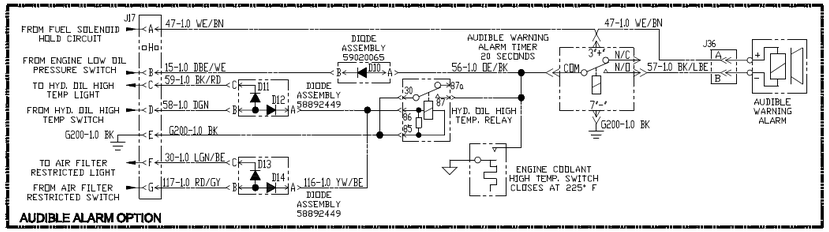

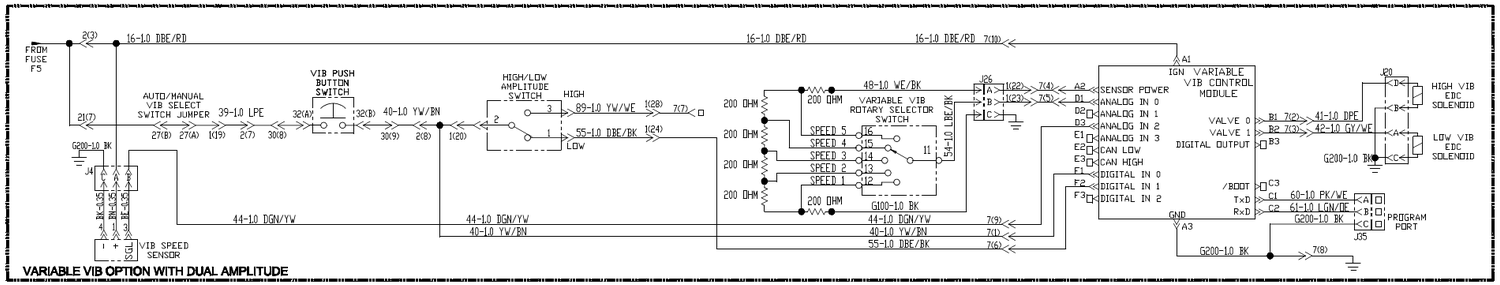

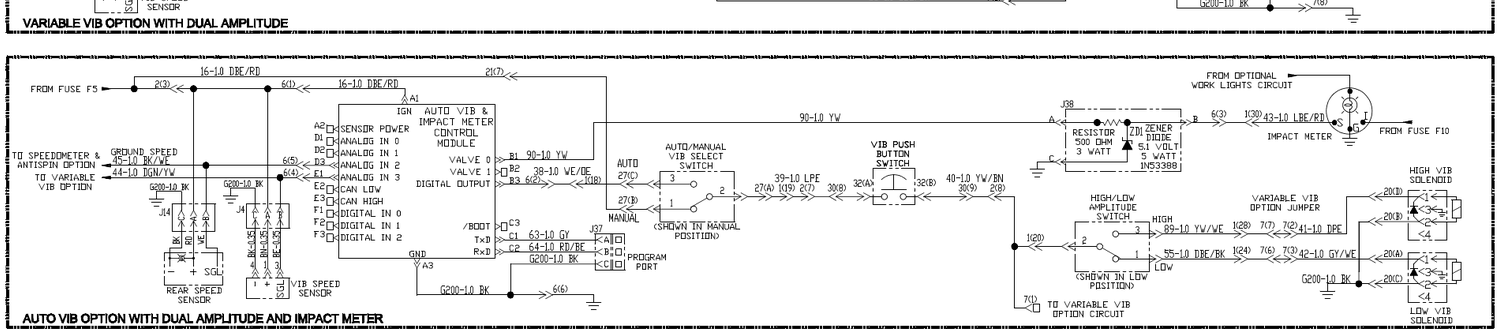

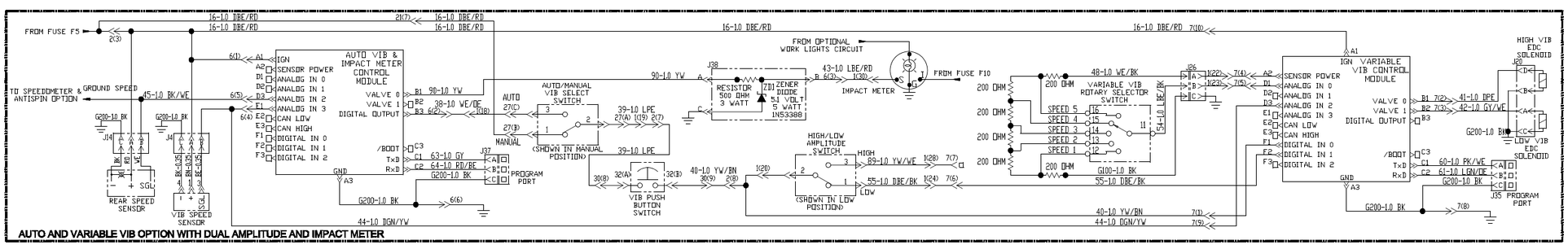

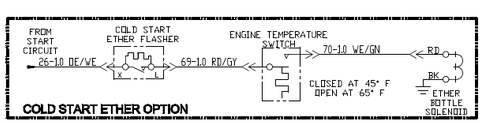

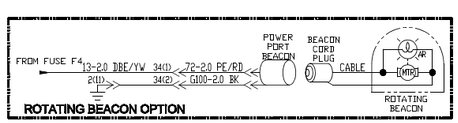

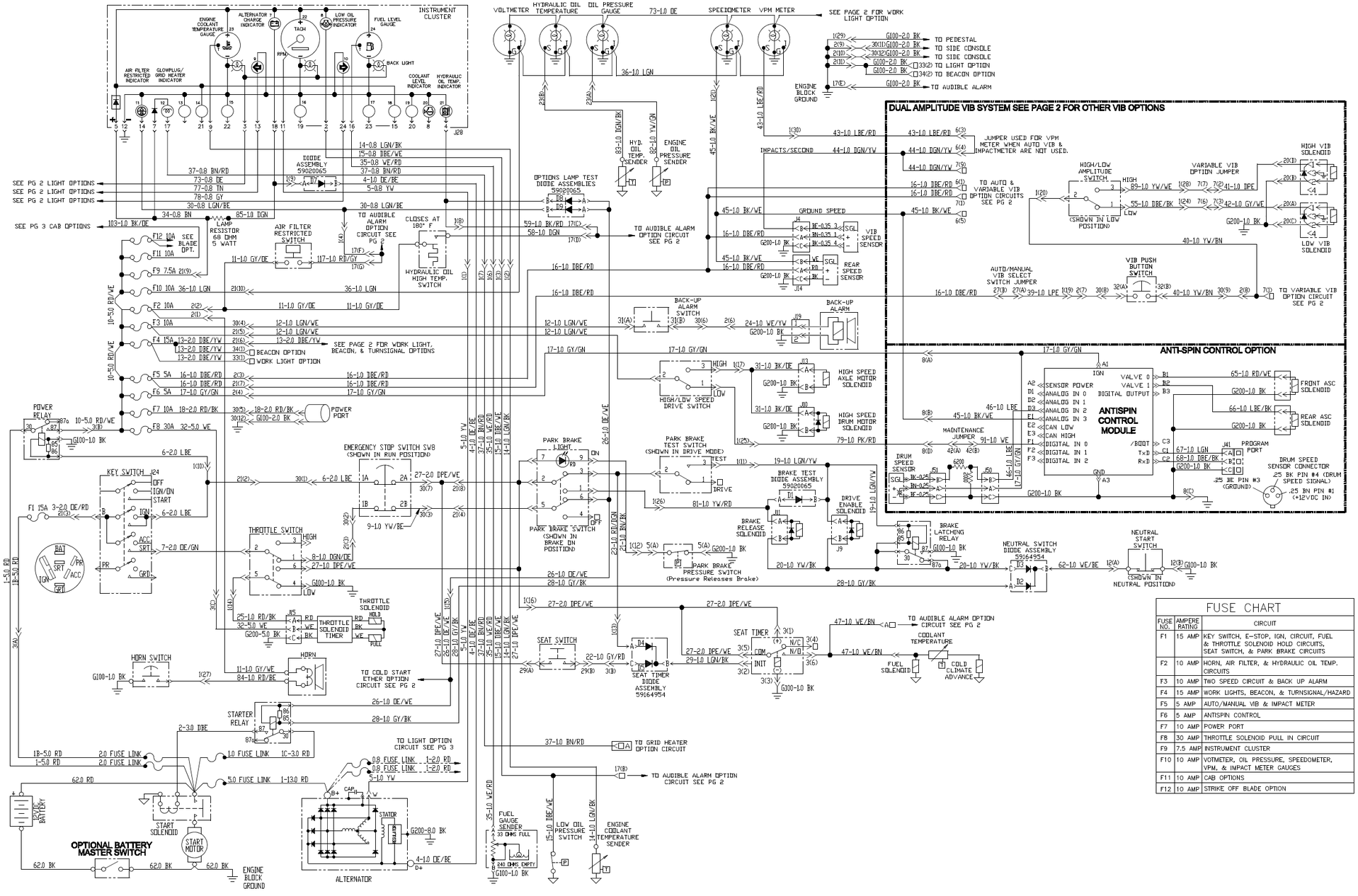

FUSE CHART

FUSE NO.	AMPERE RATING	CIRCUIT
F1	15 AMP	KEY SWITCH, E-STOP, IGN, CIRCUIT, FUEL & THROTTLE SOLENOID HOLD CIRCUITS, SEAT SWITCH, & PARK BRAKE CIRCUITS
F2	10 AMP	HORN, AIR FILTER, & HYDRAULIC OIL TEMP. CIRCUITS
F3	10 AMP	TWO SPEED CIRCUIT & BACK UP ALARM
F4	15 AMP	WORK LIGHTS, BEACON, & TURNSIGNAL/HAZARD
F5	5 AMP	AUTO/MANUAL VIB & IMPACT METER
F6	5 AMP	ANTISPIN CONTROL
F7	10 AMP	POWER PORT
F8	30 AMP	THROTTLE SOLENOID PULL IN CIRCUIT
F9	7.5 AMP	INSTRUMENT CLUSTER
F10	10 AMP	VOTMETER, OIL PRESSURE, SPEEDOMETER, VPM, & IMPACT METER GAUGES
F11	10 AMP	CAB OPTIONS
F12	10 AMP	STRIKE OFF BLADE OPTION

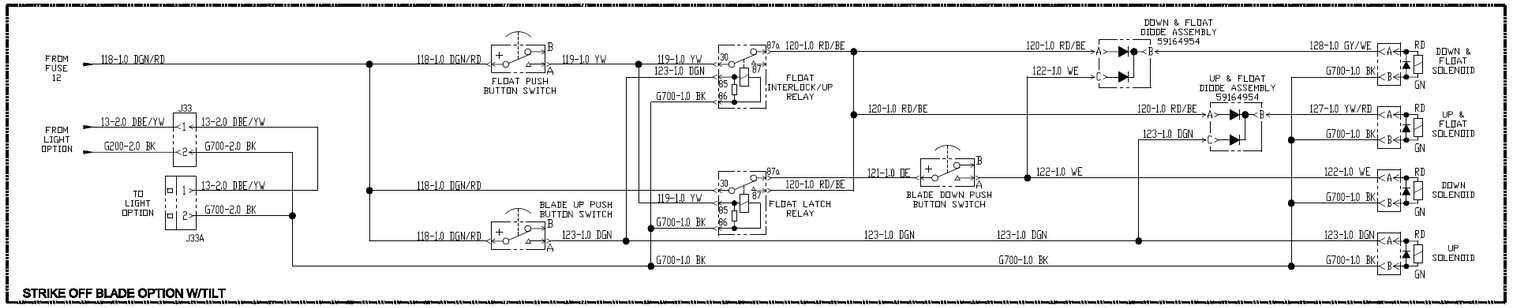

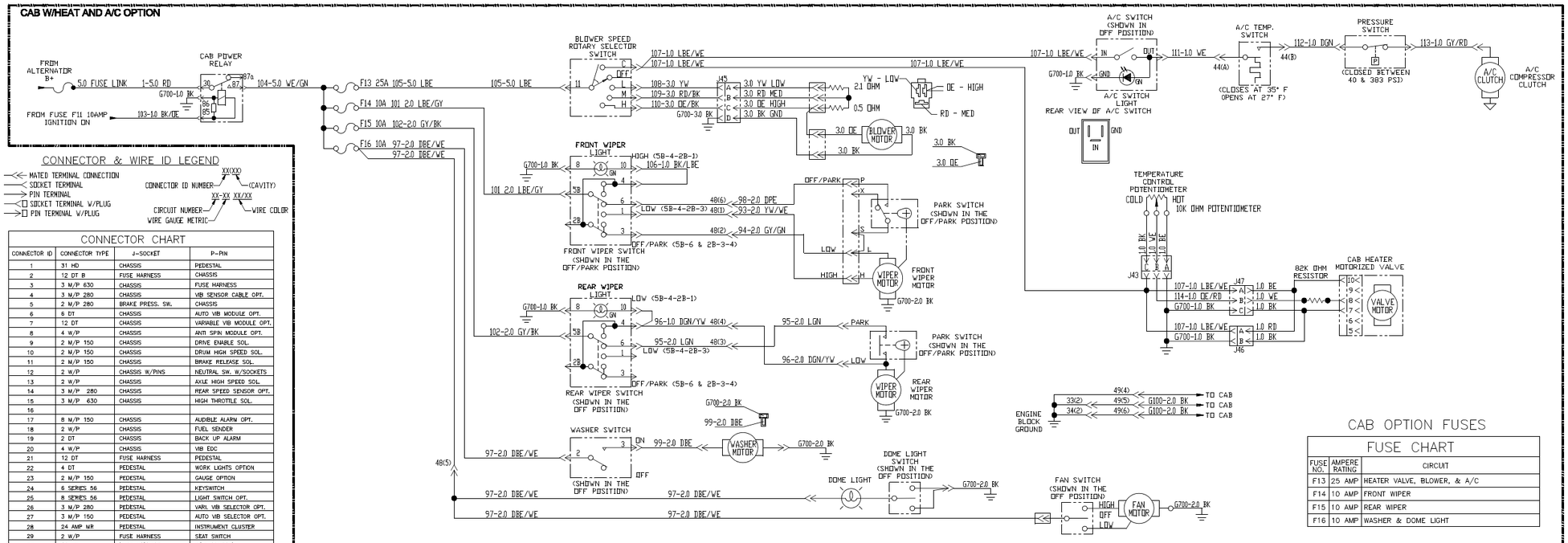

CONNECTOR ID	CONNECTOR TYPE	J-SOCKET	P-PIN
1	31 HD	CHASSIS	PEDESTAL
2	12 DT B	FUSE HARNESS	CHASSIS
3	3 M/P 630	CHASSIS	FUSE HARNESS
4	3 M/P 280	CHASSIS	VIB SENSOR CABLE OPT.
5	2 M/P 280	BRAKE PRESS. SW.	CHASSIS
6	6 DT	CHASSIS	AUTO VIB MODULE OPT.
7	12 DT	CHASSIS	VARIABLE VIB MODULE OPT.
8	4 W/P	CHASSIS	ANTI SPIN MODULE OPT.
9	2 M/P 150	CHASSIS	DRIVE ENABLE SOL.
10	2 M/P 150	CHASSIS	DRUM HIGH SPEED SOL.
11	2 M/P 150	CHASSIS	BRAKE RELEASE SOL.
12	2 W/P	CHASSIS W/PINS	NEUTRAL SW. W/SOCKETS
13	2 W/P	CHASSIS	AXLE HIGH SPEED SOL.
14	3 M/P 280	CHASSIS	REAR SPEED SENSOR OPT.
15	3 M/P 630	CHASSIS	HIGH THROTTLE SOL.
16			
17	8 M/P 150	CHASSIS	AUDIBLE ALARM OPT.
18	2 W/P	CHASSIS	FUEL SENDER
19	2 DT	CHASSIS	BACK UP ALARM
20	4 W/P	CHASSIS	VIB ECC
21	12 DT	FUSE HARNESS	PEDESTAL
22	4 DT	PEDESTAL	WORK LIGHTS OPTION
23	2 M/P 150	PEDESTAL	GAUGE OPTION
24	6 SERIES 56	PEDESTAL	KEYSWITCH
25	8 SERIES 56	PEDESTAL	LIGHT SWITCH OPT.
26	3 M/P 280	PEDESTAL	VARI. VIB SELECTOR OPT.
27	3 M/P 150	PEDESTAL	AUTO VIB SELECTOR OPT.
28	24 AMP MR	PEDESTAL	INSTRUMENT CLUSTER
29	2 W/P	FUSE HARNESS	SEAT SWITCH
30	12 DT	FUSE HARNESS	SIDE CONSOLE
31	2 W/P	SIDE CONSOLE W/PINS	FSR BACK UP SW. W/SOC
32	2 M/P 150	SIDE CONSOLE	FSR VIB SWITCH
33	2 DT	FUSE HARNESS	WORK LIGHT OPT.
34	2 DT	FUSE HARNESS	BEACON OPT.
35	3 W/P	VARI. VIB MODULE OPT.	PROGRAM PORT
36	2 M/P 280	AUDIBLE ALARM OPT.	AUDIBLE ALARM DECK OPT.
37	3 W/P	AUTO/IMPACTMETER OPT.	PROGRAM PORT
38	3 M/P 150	AUTO/IMPACTMETER OPT.	IMPACT METER DIODE
39	2 DT	COLUMN LIGHT OPT.	WORK LIGHT SELECTOR OPT.
40	2 DT	COLUMN LIGHT OPT.	WORK LIGHT SELECTOR OPT.
41	3 W/P	ANTI SPIN CONTROL OPT.	PROGRAM PORT
42	2 M/P 150	ANTI SPIN CONTROL OPT.	MAINTENANCE CONNECTOR
43	3 M/P 150	CAB HARNESS OPT.	TEMPERATURE CONTROL
44	2 W/P	CAB HARNESS OPT.	AC TEMPERATURE SWITCH
45	4 W/P	CAB HARNESS OPT.	FAN MOTOR
46	2 W/P	CAB HARNESS OPT.	HEATER VALVE
47	3 W/P	HEATER VALVE	CAB HARNESS OPT.
48	6 DT	CAB HARNESS OPT.	CAB
49	6 DT	CAB HARNESS OPT.	CAB
50	3 M/P 280	ANTI SPIN CONTROL OPT.	RESISTOR
51	3 M/P 150	RESISTOR	DRUM SPEED SENSOR

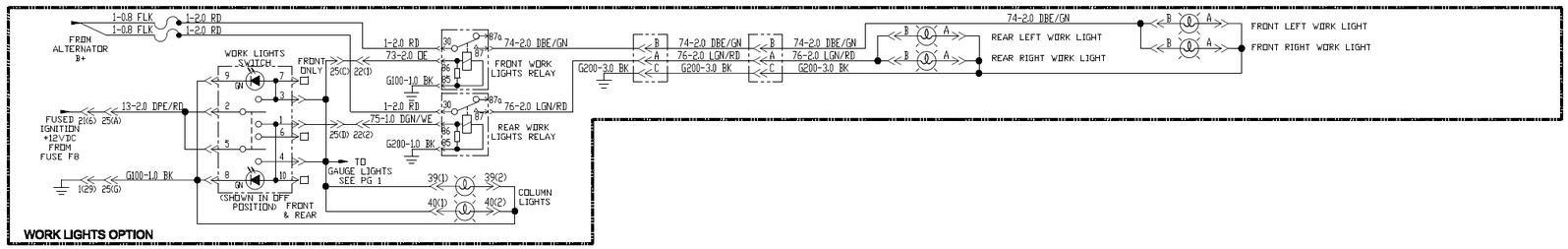

Hydraulic Schematic

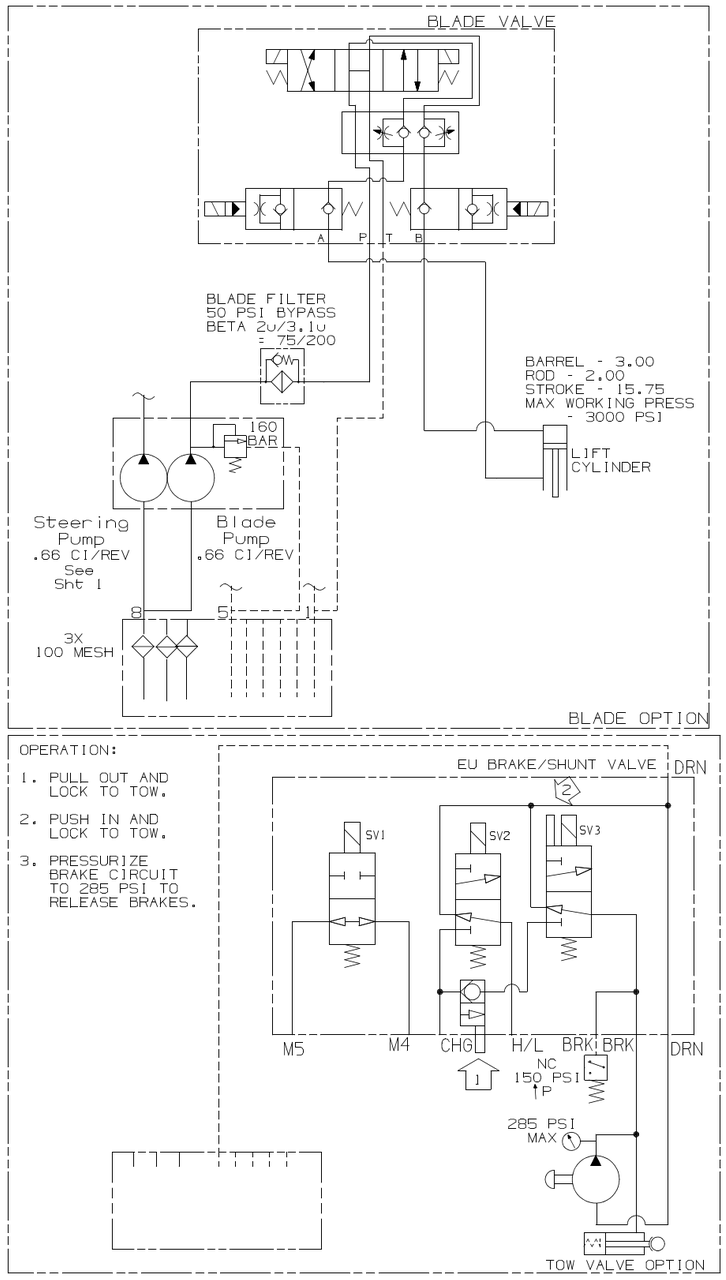

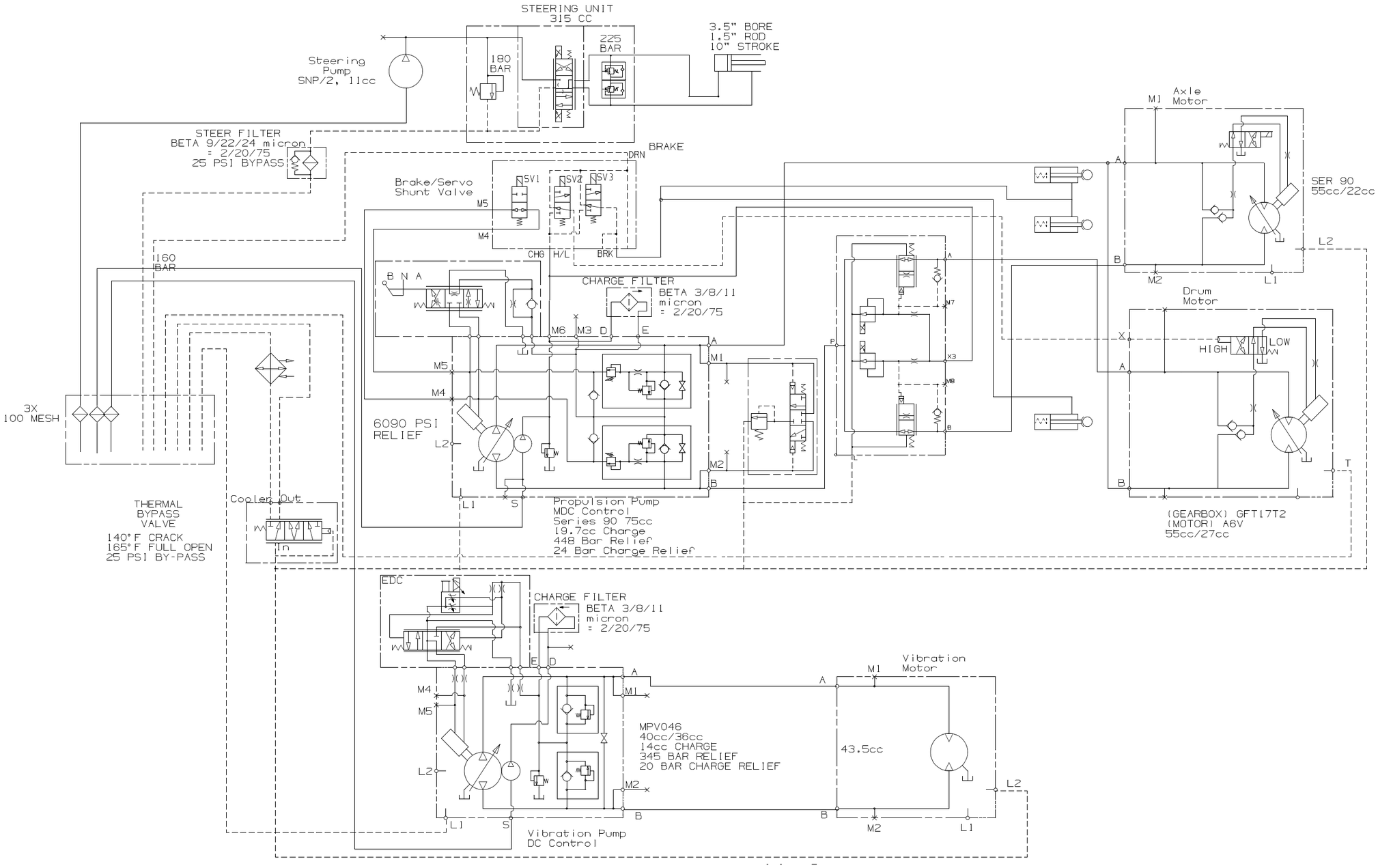
STEERING UNIT
315 CC
Steering
Pump
SNP/2, 11cc
180
BAR
225
BAR
3.5" BORE
1.5" ROD
10" STROKE
STEER FILTER
BETA 9/22/24 micron
= 2/20/75
25 PSI BYPASS
BRAKE
DRN
Brake/Servo
Shunt Valve
SV1
SV2
SV3
M5
M4
CHG H/L
BRK
160
BAR
B N A
CHARGE FILTER
BETA 3/8/11
micron
= 2/20/75
M6 M3 D
E
A
M1
M7
X3
M8
B
P
L
M5
M4
6090 PSI
RELIEF
L2
M2
L1
S
Propulsion Pump
MDC Control
Series 90 75cc
19.7cc Charge
448 Bar Relief
24 Bar Charge Relief
Axle
M1 Motor
SER 90
55cc/22cc
M2
L1
Drum
Motor
HIGH
LOW
X
T
(GEARBOX) GFT17T2
(MOTOR) A6V
55cc/27cc
3X
100 MESH
THERMAL
BYPASS
VALVE
140° F CRACK
165° F FULL OPEN
25 PSI BY-PASS
Cooler Out
In
EDC
CHARGE FILTER
BETA 3/8/11
micron
= 2/20/75
MPV046
40cc/36cc
14cc CHARGE
345 BAR RELIEF
20 BAR CHARGE RELIEF
Vibration
Motor
43.5cc
Vibration Pump
DC Control

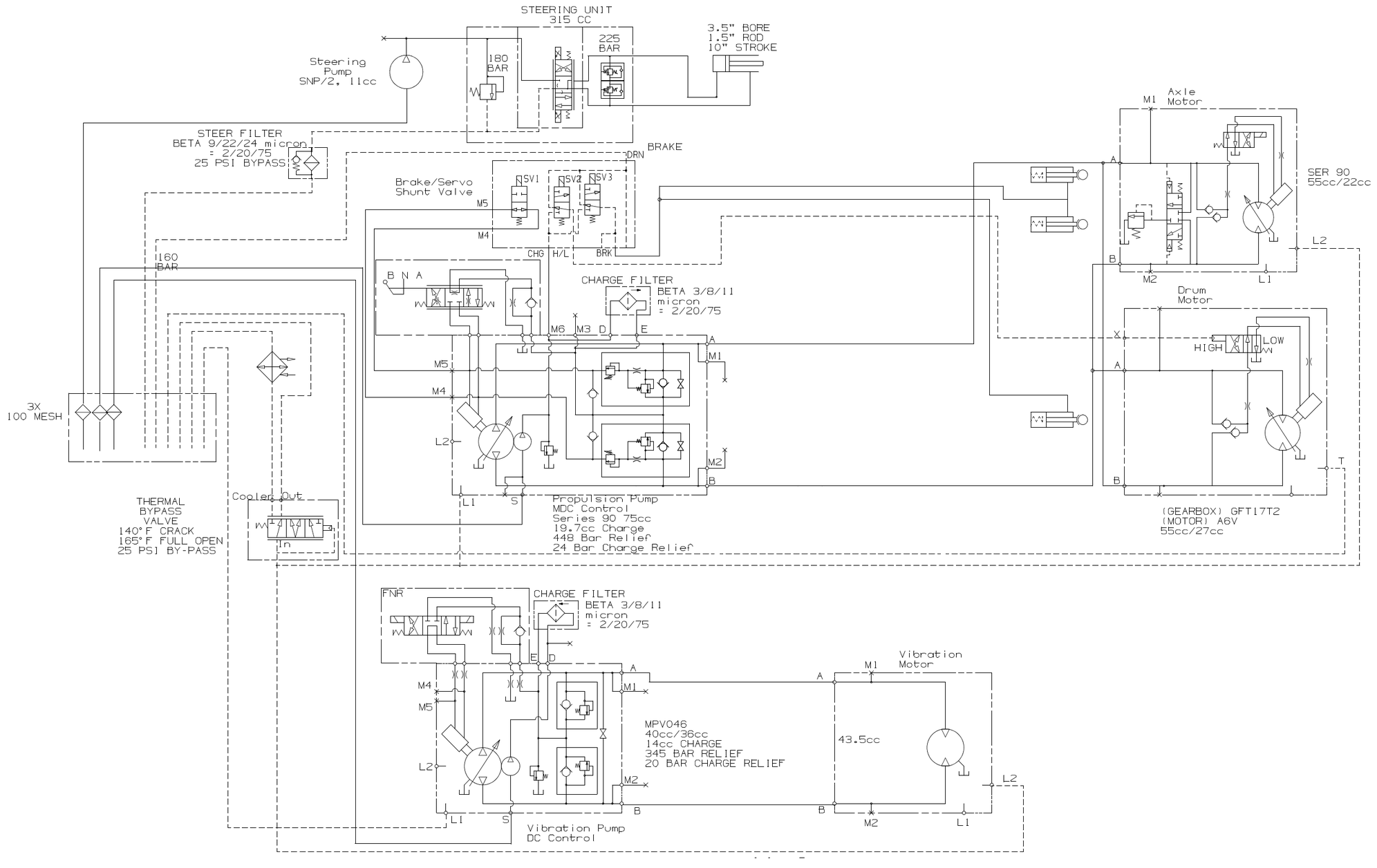
STEERING UNIT
315 CC
Steering
Pump
SNP/2, 11cc
180
BAR
225
BAR
3.5" BORE
1.5" ROD
10" STROKE
STEER FILTER
BETA 9/22/24 micron
= 2/20/75
25 PSI BYPASS
BRAKE
DRN
Brake/Servo
Shunt Valve
SV1
SV2
SV3
M5
M4
CHG
H/L
BRK
160
BAR
B N A
CHARGE FILTER
BETA 3/8/11
micron
= 2/20/75
M6
M3
D
E
A
M1
M5
M4
L2
M2
B
L1
S
Propulsion Pump
MDC Control
Series 90 75cc
19.7cc Charge
448 Bar Relief
24 Bar Charge Relief
3X
100 MESH
THERMAL
BYPASS
VALVE
140° F CRACK
165° F FULL OPEN
25 PSI BY-PASS
Cooler Out
In
M1
Axle
Motor
SER 90
55cc/22cc
L2
M2
L1
Drum
Motor
HIGH
LOW
T
(GEARBOX) GFT17T2
(MOTOR) A6V
55cc/27cc
FNR
CHARGE FILTER
BETA 3/8/11
micron
= 2/20/75
Vibration
Motor
MPV046
40cc/36cc
14cc CHARGE
345 BAR RELIEF
20 BAR CHARGE RELIEF
43.5cc
Vibration Pump
DC Control

WORD INDEX

CPN

20 SEC TIMER MODULE E-21, E-23
30% LIQUID CALC A-5
380MM F-3, F-5
5 SEC TIMER MODULE . . . E-3, E-5, E-7, E-9, E-11, E-13, E-15
550MM F-3, F-5
750MM F-3, F-5

A

ADJUSTER D-19
AIR CLEANER-8" C-5
AIR INTAKE BELLOWS C-7
AIRSCREEN A-25, A-27
ALTERNATOR C-5
ARM W/TUBE D-19
AUDIBLE ALARM HARNESS SD77 *** . . E-21, E-23
AXLE A-3

B

BACKUP ALARM E-3, E-5, E-7, E-9, E-11, E-13, E-15
BAFFLE WIPER A-23
BATTERY E-19
BATTERY BOX WELDMENT A-7
BATTERY CABLE
NEGATIVE E-19
BATTERY HOLD DOWN E-19
BRAKE SHUNT 2 SPEED MANIFOLD A-17
BRAKE SHUNT MANIFOLD ASSEMBLY A-7
BREATHER
FILTERED VENT A-11, B-7

C

CABLE B-11
CARRIER ASSEMBLY B-3
CHASSIS HARNESS *** . . . E-3, E-5, E-7, E-9, E-11, E-13, E-15
CLEAN OUT LID A-11
COMPRESSION SWITCH D-19
CROSS
PRESSURE C-11
CYLINDER *** A-7

D

DAMPER KIT D-19
DECAL
VOLVO SIGNATURE F-3, F-5
DECAL CHECKLIST A-33
DECAL CRUSH AREA F-3, F-5
DECAL FIELD F-3, F-5
DECAL FUSE CHART F-3, F-5
DECAL GREASE F-3, F-5
DECAL HOOD
LOWER F-3, F-5
DECAL HYDRAULIC OIL F-3, F-5
DECAL HYDRAULIC OIL LEVEL F-3, F-5
DECAL HYDRAULIC PRESSURE TEST . . . F-3, F-5
DECAL IGNITION F-3, F-5
DECAL LIFT POINT F-3, F-5
DECAL LUBE CHART SD70/77 . . . . . F-3, F-5
DECAL MASTER DISCONNECT F-3, F-5
DECAL MISSING SHOCK F-3, F-5
DECAL RADIATOR FILL F-3, F-5
DECAL SD70D F-3, F-5
DECAL STOP D-7
DECAL STRIPE F-3, F-5
DECAL TIE DOWN F-3, F-5
DECAL WARNING F-3, F-5
DECAL WARNING - PRESSURE HAZARD . F-3, F-5
DECAL WARNING DO NOT SIT ON RAIL . . F-3, F-5
DECAL WARNING-HOOD CRUSH AREA . . F-3, F-5
DELAY TIMER E-3, E-5, E-7, E-9, E-11, E-13, E-15, E-21, E-23
DRAIN ASSEMBLY C-17
DRAIN PORT A-15
DRIVE SIDE JOURNAL B-5
DRUM B-3
DRUM DRIVE ASSY B-3
DUAL SWITCH SEAT KIT D-19
DUST BOOT D-9

E

ECCENTRIC ASSEMBLY B-3
ELEMENT PRIMARY AIR C-5
ELEMENT SAFETY AIR C-5
EMERGENCY STOP ASSEMBLY D-7
ENGINE C-5
ENGINE ASSEMBLY - TIER II C-3
ENGINE COOLANT TEMPERATURE SENDER INSTALLATION E-21, E-23
ENGINE FAN C-5
ENGINE OIL FILTER C-5
EXHAUST C-13
EXHAUST PIPE C-13
EXTENSION TUBE C-7

F

FAN BELT C-5
FERRULE B-11
FILTER
ELEMENT G-17
FILTER DOOR G-17
FILTER ELEMENT HYDRAULIC G-17
F-STOP-R CABLE D-7
FUEL FILTER C-5
FUEL SENDER A-15
FUEL TANK A-15
FUEL TANK ASSEMBLY A-13
FUEL TANK INSTALLATION A-7
FUSE BLOCK ASSEMBLY E-3, E-5, E-7, E-9, E-11, E-13, E-15
FUSE HARNESS E-17

G

GRILL A-25, A-27
GRILL SUPPORT BAR A-25, A-27
GROUND CABLE E-19
GROUND CABLE JUMPER E-19

H

HAND RAIL D-3
HARNESS
2 SPEED VIBRATION SELECTOR E-3, E-5, E-7, E-9, E-11, E-13, E-15
GAUGE E-25
SIDE CONSOLE D-7
HIGH TEMPERATURE ALARM E-21, E-23
HINGE
LH A-23
RH A-23
HOOD ASSEMBLY A-23
HOOD COWLING A-23
HOOD HANDLE A-25, A-27
HOOD SPRING ANGLE A-23
HOOK E-19
HORN D-3
HORN BUTTON D-15
HSHS A-23
HYDRAULIC PRESSURE FILTER G-17
HYDRAULIC TANK A-11
HYDRAULIC TANK ASSEMBLY A-7

I

IGNITION SWITCH D-15
INDICATOR SWITCH C-19
IN-LINE FUEL FILTER C-5
ISOLATOR D-13

K

KNOB KIT D-19

L

LATCH A-31, A-37
LEVER A-7
LIGHT KIT E-25
LOCK A-31, A-37
LOCKNUT A-13, A-23, A-31, A-37, C-9, D-7
LOCKWASHER B-9

M

MANUAL BOX D-3
MOTOR
DRUM DRIVE B-9
MUFFLER 8.5" C-13

N

NON RE-START D-15
NON-DRIVE SIDE JOURNAL B-5

O

OIL COOLER SD77 LOUVER FIN *** C-17

P

PEDESTAL D-15
PEDESTAL ASSEMBLY D-13
PEDESTAL HARNESS *** D-15
PLATFORM
OPERATORS D-3
PROP BLOCK A-29
PUMP LEVER C-9
PUMP STACK ASSEMBLY C-5

R

RACKET JACK A-7
RADIATOR FRAME C-17
RADIATOR TIER 11 SD77 . . . . . C-17
RADIATOR/OIL COOLER ASSEMBLY C-15
RAILING D-3
RECOVERY BOTTLE C-15
REMAN STARTER C-5
RETURN FILTER G-17
RETURN PORT A-15
RH LOCK TAB A-31, A-37
ROD A-29
ROD END C-5
ROPS SUPPORT D-3
ROPS SUPPORT PLATFORM D-3
ROPS/FOPS *** A-33
RUBBER BOOT C-5

S

SCRAPER B-13, B-15
SCRAPER BAR B-15
SD77 CROSSMEMBER MACH. B-11
SD77 DRUM FRAME WELD B-11
SD77 LH MF RAIL A-7
SD77TF MAIN FRAME *** A-7
SEAT ASSEMBLY D-13
SEAT BASE D-13
SEAT BELT A-13
SEAT PAN AND CUSHION D-19
SEAT SWITCH HARNESS D-13
SEATBELT 3" RETRACTABLE A-35
SEATBELT INSTALLATION A-33
SEWN BOOT D-19
SIDE CONSOLE SUPPORT D-13
SIGHT GAUGE A-11, B-3
SLEEVE B-11, D-3
SOLENOID C-5
SPRING A-23, A-29
SPRING CABLE KIT D-19
SPRING PIVOT A-23
STANDOFF E-17
STARTER C-5

STEERING COLUMN
STRAIGHT D-15
STEERING WHEEL D-15
STEP A-7
STOP SWITCH EMERGENCY D-9
STUD PROTECTOR D-19
SUPPLY PORT A-15
SUSPENSION D-19
SWITCH
BATTERY MASTER E-19
HI/LOW AMPLITUDE D-17
HI/LOW RPM D-17
HI/LOW TRAVEL D-17
OIL PRESSURE C-5
PARK BRAKE D-17
PARK BRAKE TEST D-17
PRESSURE A-17
TEMPERATURE E-21, E-23
SWIVEL B-11

T

TAIL PIPE C-13
TANK FILTER A-11
TEMPERATURE SENDER C-5
THIS ITEM NOT USED W/THIS BOM A-9, C-9, C-19, D-13, F-3, F-5, G-3, G-5, G-7, G-9, G-11, G-13
THROTTLE SOLENOID C-5
TIE WRAP D-19
TIP D-19
TIRE A-5
TIRE AND WHEEL ASSEMBLY A-5
TOP GRILL SUPT A-25, A-27
TUBE A-5
TUBE ASSEMBLY A-15
TYRAP E-25, G-3, G-5, G-7, G-9, G-11, G-13

U

UPPER C-5

V

V-BLOCK A-9

W

WATER TEMPERATURE GAUGE SENDER . . . E-25
WATER TEMPERATURE GUAGE E-25
WATER TEMPERATURE GUAGE HARNESS . E-25
WATER TEMPERATURE SWITCH E-21, E-23
WHEEL RIM A-5
WIRE FORM D-19
WIRING HARNESS E-25

NUMERICAL INDEX

COMM.NO. PAGE	COMM.NO. PAGE	COMM.NO. PAGE	COMM.NO. PAGE
13062518 .....C-17	13199062 ..... G-3	13207824 .....G-3	13212501 .....C-7
13064282 .....C-5	..... G-5	.....G-5	13213509 .....B-11
13093075 .....C-13	..... G-7	.....G-7	13213525 .....B-11
13106497 ..... G-3	..... G-9	.....G-9	13213624 .....A-15
..... G-5	..... G-11	.....G-11	13213632 .....A-15
..... G-7	..... G-13	.....G-13	13213681 .....A-15
..... G-9	13199120 ..... G-3	13207832 .....G-3	13213699 .....A-15
..... G-11	..... G-5	.....G-5	13213764 .....A-15
..... G-13	..... G-7	.....G-7	13213947 .....C-5
13158647 ..... D-15	..... G-9	.....G-9	13214028 .....E-21
13165071 ..... D-13	..... G-11	.....G-11	.....E-23
13167390 .....B-3	..... G-13	.....G-13	13214259 .....D-11
13167499 .....C-7	13199344 ..... F-3	13207840 .....G-3	13214267 .....E-17
13167721 ..... D-3	..... F-5	.....G-5	13214317 .....D-11
13167812 ..... D-3	13204359 ..... G-3	.....G-7	13214333 .....D-11
13167945 ..... D-19	..... G-5	.....G-9	13214804 .....D-3
13168851 .....C-5	..... G-7	.....G-11	13215405 .....G-17
13179205 .....B-5	..... G-9	.....G-13	13215702 .....C-17
13179239 .....B-5	..... G-11	13207865 .....G-3	13215710 .....C-17
13179247 .....B-5	..... G-13	.....G-5	13216734 .....C-15
13179577 .....B-3	13204383 ..... G-3	.....G-7	13217450 .....D-3
13182027 .....C-5	..... G-5	.....G-9	13218128 .....B-5
13182308 .....B-3	..... G-7	.....G-11	13218136 .....B-5
13184072 .....B-3	..... G-9	.....G-13	13218177 .....B-3
13184445 .....B-9	..... G-11	13207873 .....G-3	13219142 .....B-11
13184700 ..... A-23	..... G-13	.....G-5	13225339 .....D-3
13184742 ..... A-23	13204441 ..... G-3	.....G-7	13225347 .....D-13
13184932 ..... A-13	..... G-5	.....G-9	13228820 .....D-19
13185376 .....B-7	..... G-7	.....G-11	13228838 .....D-19
13185384 ..... A-11	..... G-9	.....G-13	13228846 .....D-19
13187240 ..... A-5	..... G-11	13207899 .....G-3	13228853 .....D-19
13187257 ..... A-5	..... G-13	.....G-5	13228861 .....D-19
13187877 ..... A-7	13204755 ..... G-3	.....G-7	13231394 .....D-5
.....B-11	..... G-5	.....G-9	13232616 .....B-7
13187968 ..... A-7	..... G-7	.....G-11	13233309 .....D-3
.....B-11	..... G-9	.....G-13	13233440 .....E-17
13187976 ..... A-7	..... G-11	13207907 .....G-3	13233903 .....C-17
.....B-11	..... G-13	.....G-5	13233911 .....C-17
13188263 .....B-11	13205364 ..... A-19	.....G-7	13235874 .....B-15
13188271 .....B-11	13207758 .....E-19	.....G-9	13236054 .....A-21
13188347 .....C-5	13207774 ..... G-3	.....G-11	13236377 .....A-23
13188628 .....C-13	..... G-5	.....G-13	13236633 .....A-23
13188651 .....C-13	..... G-7	13207915 .....G-3	13236872 .....D-15
13197306 ..... A-33	..... G-9	.....G-5	13237490 .....D-3
13198270 ..... D-19	..... G-11	.....G-7	13238084 .....A-25
13199047 ..... G-3	..... G-13	.....G-9	.....A-27
..... G-5	13207790 ..... G-3	.....G-11	13238134 .....A-13
..... G-7	..... G-5	.....G-13	13238217 .....A-23
..... G-9	..... G-7	13208004 .....C-9	13238340 .....A-7
..... G-11	..... G-9	13208038 ..... F-3	13238357 .....A-7
..... G-13	..... G-11	..... F-5	13238647 .....A-7
	..... G-13	13209135 .....E-17	13239157 .....D-3
		13209168 .....B-11	13239959 .....C-13
		13209648 .....E-19	13239967 .....B-11
		13209663 .....A-7	13247473 .....D-19
		13209903 .....A-7	13247481 .....D-19

NUMERICAL INDEX

COMM.NO.	PAGE
13247549	D-19
13247556	D-19
13247937	A-7
13247945	A-7
13247952	A-7
13247960	A-7
13247978	A-7
13251707	C-5
13258934	D-19
13270632	A-25
	A-27
13273362	E-3
	E-5
	E-7
	E-9
	E-11
	E-13
	E-15
13274261	A-7
13274477	C-17
13274618	C-7
13275953	A-9
13278478	A-25
	A-27
13279385	A-7
13281332	D-19
13281365	D-19
13281373	D-19
13284716	C-5
13290879	B-11
13295340	A-23
13295639	G-17
13295829	B-11
13303805	G-17
13304787	B-3
	B-7
13304944	D-7
13305099	A-11
13306519	E-19
13309877	A-33
13313622	E-21
	E-23
13313630	E-3
	E-5
	E-7
	E-9
	E-11
	E-13
	E-15
13313648	E-21
	E-23
13313655	E-3
	E-5
	E-7
	E-9
	E-11
	E-13
	E-15
13319314	G-15
13320841	D-7
13323274	E-19
13323936	B-15
13333901	G-3
	G-5
	G-7
	G-9
	G-11
	G-13
13351408	B-3
	B-7
13355912	D-17
13357702	B-9
13359740	C-5
13396007	A-9
13406780	E-21
	E-23
13412069	B-3
13412648	D-3
13413158	D-3
13413893	B-9
13416458	B-13
13429030	C-5
13447743	B-3
13459375	A-29
13459383	A-29
13459391	A-29
13459409	A-29
13459417	A-23
13459474	D-15
13460365	A-23
13460787	G-3
	G-5
	G-7
	G-9
	G-11
	G-13
13460795	G-3
	G-5
	G-7
	G-9
	G-11
	G-13
13465422	E-19
13469010	D-3
13480116	F-3
	F-5
13491691	C-5
13493499	E-3
	E-5
	E-7
	E-9
	E-11
	E-13
	E-15
13501366	C-7
13501390	C-5
13501697	C-7
13845136	C-5
13852256	C-5
13855671	F-3
	F-5
13870936	A-23
13880612	D-15
13881529	A-31
	A-37
13881537	A-31
	A-37
13881545	A-31
	A-37
13881628	A-31
13882618	A-23
13882709	A-39
13883376	A-25
	A-27
13883418	A-25
	A-27
13884408	D-7
13885355	A-31
	A-37
13886981	D-13
13889480	A-25
	A-27
18007690	C-7
19287036	A-17
19287051	A-17
19287093	A-17
19287101	A-17
19295492	E-19
19297993	A-33
19313667	E-21
	E-23
19331024	A-13
35393669	C-5
35393677	C-5
43813724	E-3
	E-5
	E-7
	E-9
	E-11
	E-13
	E-15
43819705	B-11
43819713	B-11
43819986	F-3
	F-5
43824291	A-7
43827575	E-17
43827625	D-19
43830728	C-5
43830736	C-5
43834977	A-35
43838556	C-9
43840149	C-17
43840156	C-5
43840271	A-3
43843556	D-7
43843622	A-15
43844604	D-15
43845767	D-3
43845874	D-15
43845890	D-15
43846054	G-17
43846062	G-17
43850320	A-11
43850346	A-11
43850460	A-23
43851203	D-5
43855626	C-7
43856517	C-15
43858042	B-9
43862994	C-9
43863000	C-13
43867555	D-15
43869262	D-3
43869684	E-3
	E-5
	E-7
	E-9
	E-11
	E-13
	E-15
43871987	G-3
	G-5
	G-7
	G-9
	G-11
	G-13
43871995	G-3
	G-5
	G-7
	G-9
	G-11
	G-13
43878479	G-3
	G-5
	G-7
	G-9
	G-11
	G-13

NUMERICAL INDEX

COMM.NO.	PAGE
43878503	G-3
	G-5
	G-7
	G-9
	G-11
	G-13
43893445	D-15
43904200	C-5
43904218	C-5
43904473	G-3
	G-5
	G-7
	G-9
	G-11
	G-13
43906247	A-15
43907906	A-31
	A-37
43907989	G-17
43908573	D-7
43908904	C-17
43910579	D-9
43910587	D-9
43911171	F-3
	F-5
43911239	F-3
	F-5
43912013	F-3
	F-5
43913821	A-11
43916725	D-13
43916790	F-3
	F-5
43918515	F-3
	F-5
43918531	F-3
	F-5
43919265	D-3
43919976	G-17
43920552	A-25
	A-27
43920644	A-25
	A-27
43921501	F-3
	F-5
43921519	F-3
	F-5
43921527	F-3
	F-5
43922509	A-7
43924463	C-5
43924802	F-3
	F-5
43925775	F-3
	F-5
43926047	A-7
43926104	A-7
43927680	E-3
	E-5
	E-7
	E-9
	E-11
	E-13
	E-15
43936053	C-13
43936681	F-3
	F-5
43943448	C-5
50269984	B-3
50270248	A-9
	B-11
50274299	C-7
	C-15
	C-17
50829647	A-9
54415393	C-5
54487517	A-25
	A-27
54496377	D-19
54496385	D-19
54531629	D-19
54537097	G-3
	G-5
	G-7
	G-9
	G-11
	G-13
54578117	C-5
54584776	B-7
54616081	E-19
54651088	C-5
54666060	D-17
54666078	D-17
54666086	D-17
54666094	D-17
54666102	D-17
54680087	C-5
54680103	C-5
58802851	C-15
58820168	A-9
	D-15
	E-3
	E-5
	E-7
	E-9
	E-11
	E-13
	E-15
58848920	C-17
58870924	E-21
	E-23
58879768	C-3
58879891	E-3
	E-5
	E-7
	E-9
	E-11
	E-13
	E-15
	E-21
	E-23
58880501	B-11
58892902	D-15
58896218	A-3
58896580	B-9
58896952	B-9
58901653	C-9
58954694	A-3
58955923	E-25
58965542	F-3
	F-5
58966086	C-9
58978255	F-3
	F-5
58979964	A-3
59009134	C-5
59020040	F-3
	F-5
59051151	F-3
	F-5
59087999	F-3
	F-5
59093351	A-11
59097162	C-3
59098764	C-7
59103598	C-15
	C-17
	E-3
	E-5
	E-7
	E-9
	E-11
	E-13
	E-15
59104257	C-13
59106757	G-3
	G-5
	G-7
	G-9
	G-11
	G-13
59108100	D-9
59108605	D-9
59109819	B-11
59110312	A-17
59121855	C-5
	E-3
	E-5
	E-7
	E-9
	E-11
	E-13
	E-15
59122549	C-17
59126961	D-15
59128934	E-25
59128942	E-25
59128959	E-25
59128991	E-25
59138925	C-7
59144428	A-13
	B-3
59145821	D-19
59148569	D-7
	D-15
	E-3
	E-5
	E-7
	E-9
	E-11
	E-13
	E-15
59154393	D-19
59154450	D-19
59154492	D-19
59154500	D-19
59154518	D-19
59154526	D-19
59154542	D-19
59154807	C-15
59159558	D-15
59162149	A-31
	A-37
59163238	A-31
	A-37
59163758	A-5
59177915	B-9
59179218	C-13
59185074	D-3
59190975	A-7
	B-11
59203406	G-3
	G-5
	G-7
	G-9
	G-11
	G-13
59208512	B-3
59211474	F-3
	F-5
59214775	B-11

NUMERICAL INDEX

COMM.NO.	PAGE
59239897	D-7
59246603	F-3
	F-5
59246611	F-3
	F-5
59266726	A-15
59277756	B-3
59277764	B-7
59277772	A-11
	B-3
59286336	C-5
59290726	A-13
59290858	F-3
	F-5
59296632	B-5
59298208	B-11
59299164	D-13
59299545	B-11
59309104	C-5
59321687	C-17
59329979	C-9
59331934	C-17
59344176	C-7
59366401	A-5
59424309	D-3
59436741	B-11
59437079	D-3
59437087	D-3
59450528	B-11
59465641	E-3
	E-5
	E-7
	E-9
	E-11
	E-13
	E-15
59465658	E-3
	E-5
	E-7
	E-9
	E-11
	E-13
	E-15
59495028	C-13
59510065	B-9
59524447	A-5
59546275	G-3
	G-5
	G-7
	G-9
	G-11
	G-13
59565044	B-3
	B-7
	D-3
59565051	A-3
59579094	F-3
	F-5
59580571	C-9
59583450	E-19
59583468	E-19
59586511	C-7
59600593	B-7
59605915	F-3
	F-5
59607853	B-11
59607861	B-11
59613612	B-3
59617985	C-9
59626051	A-5
59636738	E-21
	E-23
59667287	F-3
	F-5
59672709	C-9
59672733	G-3
	G-5
	G-7
	G-9
	G-11
	G-13
59726075	C-5
59787879	B-9
59816322	C-5
59819292	C-5
59824250	E-25
59827261	C-7
59847798	C-9
59869008	A-5
59873984	C-19
59887182	A-13
59922419	C-11
59922526	G-17
59922591	B-3
59922823	C-9
59922906	C-9
59922989	A-3
	C-9
59923797	C-9
59923961	C-9
59924043	A-9
59924472	A-19
59929059	D-7
59929182	C-9
59929711	A-5
59961821	A-7
59980482	C-9
59990010	B-9
59993881	A-3
	C-9
90502592	A-3
95011060	A-11
95018719	B-11
95043238	A-11
95048393	A-11
95049359	A-7
95098679	A-7
	B-11
95188710	A-17
95201547	A-7
	B-11
95208971	A-29
95219713	A-15
95220893	C-7
95257341	C-11
95278008	C-5
95279337	A-11
95280194	A-11
	A-19
	C-9
95285946	C-9
95286266	C-5
95301834	D-3
95301867	A-9
95302709	C-7
95303335	A-11
95303350	B-3
	C-9
95303368	A-7
	A-11
	D-3
95303384	C-9
95303392	A-3
95316956	A-11
95323366	G-15
95326955	A-11
95329975	A-11
	A-13
	A-17
	C-9
95330692	G-17
95341673	G-17
95343596	A-17
95356960	C-9
95356978	A-19
95357570	G-17
95359410	C-9
95365086	A-17
95378873	C-5
95387890	A-19
95402806	A-17
95412946	B-11
95415824	B-9
95416277	G-17
95418166	B-9
95424586	E-25
	G-3
	G-5
	G-7
	G-9
	G-11
	G-13
95431284	C-11
95439006	B-3
95457586	G-3
	G-5
	G-7
	G-9
	G-11
	G-13
95469128	C-9
95480117	A-3
95488110	A-11
95720256	B-3
95829263	A-19
	C-9
95860052	D-7
95919254	C-7
95919528	G-17
95922134	E-17
95922324	A-29
95922332	A-31
	A-37
	E-17
95923058	C-7
95923322	A-13
95923348	A-23
95931564	A-29
95932141	E-17
95943346	D-7
	E-17
95988739	B-3
95988796	C-9
95988804	C-9
96700927	D-13
96701370	C-3
	C-7
	G-3
	G-5
	G-7
	G-9
	G-11
	G-13

NUMERICAL INDEX

COMM.NO. PAGE	COMM.NO. PAGE	COMM.NO. PAGE	COMM.NO. PAGE
96701461 ..... E-3	96702659 ..... A-23	96704606 ..... A-25	96705736 ..... A-31
..... E-5	..... A-31	..... A-27	..... A-37
..... E-7	..... A-37	..... C-7	..... C-9
..... E-9	..... C-3	..... D-5	96708300 ..... C-9
..... E-11	..... D-5	..... D-13	96708425 ..... B-9
..... E-13	96702709 ..... B-7	..... E-19	96710983 ..... B-3
..... E-15	96702774 ..... A-9	96704614 ..... A-9	96711411 ..... B-3
..... E-21	96702790 ..... B-3	..... C-7	96711510 ..... B-3
..... E-23	96702808 ..... B-7	..... G-17	96711833 ..... A-7
96701479 ..... D-15	..... D-13	96704630 ..... C-3	..... A-23
..... G-17	96702816 ..... A-25	96704663 ..... C-7	..... B-11
96701495 ..... A-21	..... A-27	..... D-3	..... C-3
..... C-7	..... C-17	..... E-3	..... C-13
..... D-3	96702824 ..... A-11	..... E-5	..... C-15
96701578 ..... B-11	..... A-23	..... E-7	..... C-17
96701594 ..... D-5	..... A-31	..... E-9	..... D-3
96701917 ..... A-25	..... C-7	..... E-11	..... D-13
..... A-27	..... C-15	..... E-13	..... D-15
96701958 ..... A-7	..... D-3	..... E-15	96711882 ..... D-3
..... B-11	96703640 ..... C-5	96704739 ..... B-11	96712146 ..... B-11
..... D-15	96703657 ..... B-3	96704812 ..... A-9	96712237 ..... A-3
96702162 ..... C-9	..... B-7	..... C-3	..... A-7
96702261 ..... A-25	96703665 ..... A-3	..... C-7	..... A-21
..... A-27	..... D-3	..... C-17	..... B-3
96702279 ..... C-13	96704234 ..... E-21	96704952 ..... C-3	..... B-15
..... C-15	..... E-23	96705041 ..... D-3	..... C-7
..... C-17	96704309 ..... A-7	..... E-3	..... D-3
..... D-3	..... C-9	..... E-5	96712674 ..... A-13
..... G-17	..... C-13	..... E-7	..... A-23
96702287 ..... A-7	..... C-17	..... E-9	..... C-5
..... A-23	..... D-3	..... E-11	..... E-3
..... A-39	96704481 ..... B-9	..... E-13	..... E-5
..... C-17	96704556 ..... A-9	..... E-15	..... E-7
..... D-3	..... B-9	96705116 ..... D-3	..... E-9
..... D-13	..... C-3	96705124 ..... D-5	..... E-11
..... G-17	96704564 ..... C-7	96705132 ..... C-7	..... E-13
96702329 ..... A-3	..... E-3	96705272 ..... A-7	..... E-15
..... B-3	..... E-5	96705546 ..... B-11	..... E-19
..... C-7	..... E-7	96705553 ..... E-19	96712716 ..... A-7
..... C-9	..... E-9	96705587 ..... A-13	96713979 ..... G-3
96702394 ..... E-3	..... E-11	..... A-25	..... G-5
..... E-5	..... E-13	..... A-27	..... G-7
..... E-7	..... E-15	..... A-31	..... G-9
..... E-9	96704580 ..... A-31	..... A-37	..... G-11
..... E-11	..... A-37	..... C-9	..... G-13
..... E-13	..... C-9	..... G-3	96714019 ..... B-9
..... E-15	..... D-7	..... G-5	96714043 ..... A-3
96702428 ..... B-5	96704598 ..... E-3	..... G-7	96714399 ..... B-11
96702436 ..... B-5	..... E-5	..... G-9	96714407 ..... A-13
96702444 ..... A-21	..... E-7	..... G-11	96714472 ..... E-21
..... C-7	..... E-9	..... G-13	..... E-23
96702642 ..... A-33	..... E-11	96705595 ..... A-23	96714910 ..... A-7
	..... E-13	..... C-9	96715081 ..... B-15
	..... E-15	96705728 ..... A-31	96715602 ..... C-7
	..... E-21	..... A-37	96718978 ..... A-7
	..... E-23	..... D-7	96719786 ..... A-23

NUMERICAL INDEX

COMM.NO. PAGE	COMM.NO. PAGE	COMM.NO. PAGE	COMM.NO. PAGE
96720438 .....B-11	96741038 ..... A-7	NOT-USED A-9	
96720594 .....C-7	..... A-23	.....C-9	
96720990 .....B-5	..... A-31	.....C-19	
96726435 .....C-5	..... A-37	.....D-13	
96727458 ..... A-23	.....C-3	..... F-3	
96728464 ..... A-9	.....C-7	..... F-5	
96728548 ..... D-3	.....C-9	.....G-3	
..... D-5	.....C-15	.....G-5	
.....E-3	.....C-17	.....G-7	
.....E-5	..... D-3	.....G-9	
.....E-7	..... D-13	.....G-11	
.....E-9	.....E-3	.....G-13	
.....E-11	.....E-5	UNIQUE B-11	
.....E-13	.....E-7		
.....E-15	.....E-9		
96728704 .....C-7	.....E-11		
96728803 .....B-11	.....E-13		
96736822 .....B-3	.....E-15		
96737069 .....B-3	.....E-21		
96738208 ..... D-3	.....E-23		
96738554 .....C-9	96741046 ..... A-7		
..... D-3	..... A-31		
..... D-7	..... A-39		
96738596 ..... A-3	.....B-5		
..... A-23	.....C-7		
.....B-3	.....C-9		
.....B-7	.....C-15		
.....C-7	..... D-3		
.....C-9	..... D-13		
..... D-13	..... G-17		
96738612 ..... A-23	96741053 ..... A-7		
.....B-3	.....B-11		
.....C-3	.....C-5		
96738620 .....B-9	..... D-15		
96738646 ..... A-7	.....E-3		
..... D-3	.....E-5		
96739990 .....B-3	.....E-7		
96740188 ..... A-23	.....E-9		
..... A-25	.....E-11		
..... A-27	.....E-13		
..... D-5	.....E-15		
	.....E-21		
	.....E-23		
	..... G-17		
	96741863 ..... A-3		
	96743851 .....B-3		
	96746235 ..... A-33		
	..... D-3		

The warranty statement is provided within the manual kit shipped with the machine.

VOLVO

Volvo Construction Equipment
www.volvo.com

13525761 English

Printed in USA June 20, 2008 CST
Volvo, Shippensburg