RUTHZIL TRATOR COMERCIAL DE PEÇAS LTDA 11 97083-6812 ROLANDO CITRANGULO

CASE CONSTRUCTION

SR200

AGOSTO 2011

MINI PÁ CARRETADEIRA

GENERAL
GENERAL
GENERAL

ENGINE
MOTOR
MOTEUR

FUEL
COMBUSTIBLE
CARBURANT

ELECTRICAL SYSTEM
SISTEMA ELECTRICO
SYSTEME ELECTRIQUE

STEERING
DIRECCION
DIRECTION

TRANSMISSION
TRANSMISION
TRANSMISSION

BRAKES
FRENOS
FREINS

HYDRAULIC SYSTEM
SISTEMA HIDRAULICO
SYSTEME HIDRAULIQUE

CHASSIS
BASTIDOR
CHASSIS

NUMERICAL INDEX
INDICE NUMERICO
INDEX NUMERIQUE

71114408 08/2011

SR200
SKID STEER LOADER
Parts Catalog nº 71114408

GENERAL
GENERAL
GENERAL

SR200
MINI CARGADORA
Catálogo de Repuestos nº 71114408

SR200
MINI CARREGADEIRA
Catálogo de Peças nº 71114408



Issued 08/2011 Edición 08/2011 Edição 08/2011

Todos os direitos são reservados à **CNH LATIN AMERICA LTDA.**.
Os dados contidos neste catálogo são fornecidos a título de indicação somente. A qualquer momento, a **CNH LATIN AMERICA LTDA.** poderá introduzir, por razões de ordem técnica ou comerciais, modificações nos produtos descritos neste catálogo. Para informações mais detalhadas e atualizadas, solicitamos ao usuário consultar o concessionário **CNH LATIN AMERICA LTDA.** mais próximo.
O sistema de numeração das peças utilizado neste catálogo não pode ser copiado ou utilizado sem autorização por escrito da **CNH LATIN AMERICA LTDA.**.

All rights reserved by Soc. **CNH LATIN AMERICA LTDA.**.
The information contained in this catalogue is intended to be of a general nature only. The **CNH LATIN AMERICA LTDA.** may at any time and from time to time, for technical or other necessary reasons, modify any of the details or specifications of the product described in this catalogue. To be sure of getting accurate, detailed and up-to-date information, an intending buyer should consult his nearest **CNH LATIN AMERICA LTDA.** dealer or distributor.
Single item numeration method used in this catalogue may not be used without written consent by Soc. **CNH LATIN AMERICA LTDA.**.

Reservados todos los derechos para Soc. **CNH LATIN AMERICA LTDA.**.
Los datos contenidos en este catálogo se facilitan a titulo indicativo. **CNH LATIN AMERICA LTDA.** podrá introducir, en cualquier momento, por razones de naturaleza tanto técnica como comercial, modificaciones en los modelos descritos en este catálogo. Para mayor información rogamos al cliente se dirija al Concesionario o Filiale **CNH LATIN AMERICA LTDA.** más próximo.
El sistema de numeración de las piezas reseñadas en el catálogo no puede ser objeto de imitación o copia en ningun caso sin autorización por escrito de Soc. **CNH LATIN AMERICA LTDA.**.

Tutti i diritti sono riservati alla Soc. **CNH LATIN AMERICA LTDA.**.
Il sistema di numerazione che individua is ingoli particolare elencati nel presente calatogo non può essere adottato in alcun caso senza autorizzazione scritta dalla Soc. **CNH LATIN AMERICA LTDA.**. I dati contenuti in questo catalogo sono forniti a titolo indicativo. La **CNH LATIN AMERICA LTDA.** potrà apportare in qualunque momento modifiche ai modelli descritti in questo catalogo, per ragioni di natura tecnica o commerciale.
Per ulteriore informazione, il cliente è pregato di rivolgersi al più vicino Concessionario o Sede **CNH LATIN AMERICA LTDA.**.

Alle in diesem Propekt anthaltenen Angaben sind Orientierungsdate. Es können jedoch von **CNH LATIN AMERICA LTDA.** sowohl aus technischen und Kaufmännischen Gründen als auch aus der Notwendigkeit, geänderte gesetzliche Erfordernisse der verschiedenen Lander zu berücksichtigen, Anderugen einge führt werden. Der Kunde ist gebeten, sich für weirtere information an Vertragshändler order.
CNH LATIN AMERICA LTDA.-Niederlassungen zu werden.
Alle Urheberrechte sind von der **CNH LATIN AMERICA LTDA.**-vorbehalten.
Die Benutzung des Numerierungssustems zur Kennzeichnung der im vorliegende Katalog aufgeführten Ersatzteile bedarf in jedem Falle der schriftlichen Genehmigung der **CNH LATIN AMERICA LTDA.**.

Tous droits réservés à la Soc. **CNH LATIN AMERICA LTDA.**.
Les données de cette brochure sont fournies à titre indicatif et pourraient se révéler caduques à la suite de modifications apportées par le constructeur, à n'import quel moment, pour de raisons techniques ou commerciales ainsi que pour satisfaire aux normes en vigueur dans le différents Pays. Pour toute information, nous prions le client de bien vouloir s'adresser au Concessionnaire ou à la Filiale **CNH LATIN AMERICA LTDA.** les plus proches.
Le système de numérotation des pièces en list dans ce catalogue ne peut être adopté en aucun cas, sans une autorisation écrite de la Soc. **CNH LATIN AMERICA LTDA.**.

Copyrigth by **CNH LATIN AMERICA LTDA.**
Printed in Brazil

INSTRUÇÕES PARA O PEDIDO DE PEÇAS DE SERVIÇO

“Os números de peça indicados neste catálogo estão corretos até a data da publicação. A política da New Holland de contínuo melhoramento dos produtos durante toda a vida de produção do modelo, pode dar origem às últimas alterações nas figuras e nos números de peça. Quando encomendar peças de substituição, certifique-se de confirmar suas especificações no CD atual do sistema PAL ou com a microficha do catálogo de peças no seu concessionário.”

INSTRUCTIONS FOR ORDERING SPARE PARTS

“The part numbers shown in this catalogue are correct up to the date of publication. New Holland policy of continuously improving our products during the production lifetime of the Model may result in later changes to illustrations and to part numbers. When ordering replacement parts be sure to confirm your requirements against the current CD based PAL or microfiche parts catalogue at your dealership.”

INSTRUCCIONES PARA LOS PEDIDOS DE RECAMBIOS

“Los números de pieza indicados en este catálogo son los correctos en la fecha de la publicación. La política de New Holland es de constante mejora de sus productos durante todo el período de vida de la producción del Modelo, lo que puede hacer que se produzcan cambios en las ilustraciones y en los números de pieza. Al hacer pedidos de recambios debe asegurarse de que sean de acuerdo con sus necesidades comprobando el CD actualizado en sistema PAL o bien las microfichas de catálogos existentes en la agencia.”

ISTRUZIONI PER ORDINARE I RICAMBI

“ I numeri ricambio riportati in questo catalogo si intendono corretti fino alla data della pubblicazione. La New Holland persegue una politica di continuo miglioramento del prodotto durante tutto il periodo di produzione del modello per cui può accadere che ci siano modifiche successive alle illustrazioni e ai numeri ricambio. Al momento di ordinare un particolare di ricambio, verificare accuratamente i dati utilizzando il CD PAL o il catalogo ricambi su microfiche presente presso la Concessionaria.

ANLEITUNG ZUM BESTELLEN VON ERSATZTEILEN

“Die in diesem Katalog aufgeführten Teilnummern sind am Tag der Veröffentlichung korrekt. Die Firmenpolitik von New Holland sieht während der Produktionsdauer dieses Modells dessen kontinuierliche Verbesserung vor; dies kann zu späteren Änderungen an Abbildungen und Teilnummern führen. Stellen Sie vor der Bestellung von Ersatzteilen sicher, daß Sie bei Ihrem Händlerbetrieb die von Ihnen benötigten Teile mit dem aktuellen PAL auf der Grundlag e von CDs oder dem aktuellen Microfiche-Ersatzteilkatalog abgeglichen haben.”

INSTRUCTIONS POUR COMMANDE PIECES DETACHEES

Les références de pièces détachées notées dans ce catalogue sont correctes à la date de publication.La politique New Holland pour l’amélioration constante des produits durant la durée de vie des modèles peut changer les illustrations et les références des pièces détachées.Quand l’ordre de remplacement de pièces est confirmé, il est nécessaire de mettre à jour l’actuel CD base PAL ou microfiches de pièces détachées chez votre concessionnaire.

REGRAS PARA PEDIDO DE PEÇAS

Este catálogo está dividido em seções principais correspondendo a áreas específicas do produto. Cada seção está representada através de figuras detalhadas (desenhos) para auxiliar na localização e identificação de peças. As peças disponíveis para serviço estão indicadas ao lado da figura e, para a correta identificação das peças necessárias proceder da seguinte forma:

1) Consultar a figura da seção principal na página 16 para identificar a seção em questão.

2) Em seguida, consultar as páginas 17 a 36 para encontrar a figura à qual pertence o número de peça necessário.

3) Consultar o índice do número de peça na página 44. Este índice apresenta todos os números de peça que aparecem no catálogo.

ORDERING RULES

This catalogue is divided into main sections corresponding to specific areas of the product. Each section is represented by detailed figures (illustrations) to assist in locating and identifying parts. Parts released for service are indicated alongside the figure, hence, for the correct identification of parts required proceed as follows:

1) Consult the main section illustration on page 16 to identify the section in question.

2) Then consult pages 17 to 36 to find the figure to which the required part number belongs.

3) Refer to the part number index on page 44. This index lists all part numbers appearing in the catalogue.

NORMATIVA DE PEDIDOS

Este catálogo se divide en tres secciones principales correspondientes a áreas específicas del producto. Cada sección se representa con figuras detalladas (ilustraciones) para facilitar la localización e identificación de las piezas. Las piezas disponibles para el servicio se encuentran indicadas al lado de la figura, de aquí, que para la identificación correcta de las piezas necesarias, deba seguirse este orden:

1) Consultar la sección principal en la ilustración de la página 16 para identificar la sección en cuestión.

2) Seguidamente consultar las páginas 17 to 36 para localizar la figura a la que pertenece el número de pieza buscada.

3) Ver el índica de números de pieza en la página 44. Este índica contiene todos los números de pieza del catálogo.

NORME PER L'ORDINAZIONE

Questo catalogo è suddiviso in sezioni principali corrispondenti alle aree specifiche della macchina. Ogni sezione è composta da figure tecniche dettagliate che agevolano l'individuazione e l'identificazione dei particolari. I particolari disponibili per l'assistenza sono indicati unitamente alla figura, per cui per la corretta identificazione degli stess i è necessario procedere come segue:

1) Consultare l'illustrazione delle sezioni principali a pag. 16 per individuare la sezione che interessa.

2) Consultare poi le pagine da 17 a 36 per trovare la figura alla quale appartiene il numero del ricambio necessario.

3) Fare riferimento all'indice dei numeri ricambio a pag. 44, che elenca tutti i numeri ricambio che appaiono nel catalogo.

BESTELLREGELN

Dieser Katalog ist in Hauptabschnitte aufgeteilt, die speziellen Baugruppen des Produkts entsprechen. Jeder Abschnitt wird durch detaillierte Abbildungen veranschaulicht, die das Auffinden und Identifizieren von Teilen erleichtern. Für den Service freigegebene Teile sind neben der Abbildung aufgeführt; um erforderliche Teile richtig zuzuordnen, gehen Sie somit wie folgt vor:

1) Stellen Sie mit Hilfe der auf Seite 16 veranschaulichten Hauptabschnitte fest, zu welcher Baugruppe bzw. welchem Abschnitt das Teil gehört.

2) Suchen Sie dann auf den Seiten 17 bis 36 die Abbildung, zu der die Nu mmer des benötigten Teils gehört.

3) Suchen Sie die Nummer im Teilnummer-Verzeichnis auf Seite 44. In diesem Verzeichnis sind alle im Katalog enthaltenen Teilnummern zusammengefaßt.

REGLES DE COMMANDES

Ce catalogue est divisé en sections principales correspondant aux aires spécifiques de production. Chaques sections est représentées par des figures détaillées (illustrations) pour aider à la localisation et à l'identification des pièces détachées. Les pièces nécessaires pour le service sont indiquées sur le côté de la figure, pour l'identification correcte de la pièce requise procédez comme ci dessous

1) Consultez l'illustration de la section principale page 16 pour identifier la section en question

2) Consulter les pages de 17 à 36 pour trouver la figure qui contient la référence demandée

3) Se référer à l'index de la référence pièce à la page 44 .Cet index indique toutes les références pièces apparaissant dans le catalogue.

01.01	01	p6	02/03

CHASSI
MAIN FRAME
BASTIDOR
TELAIO
GESTELL
CHASSI

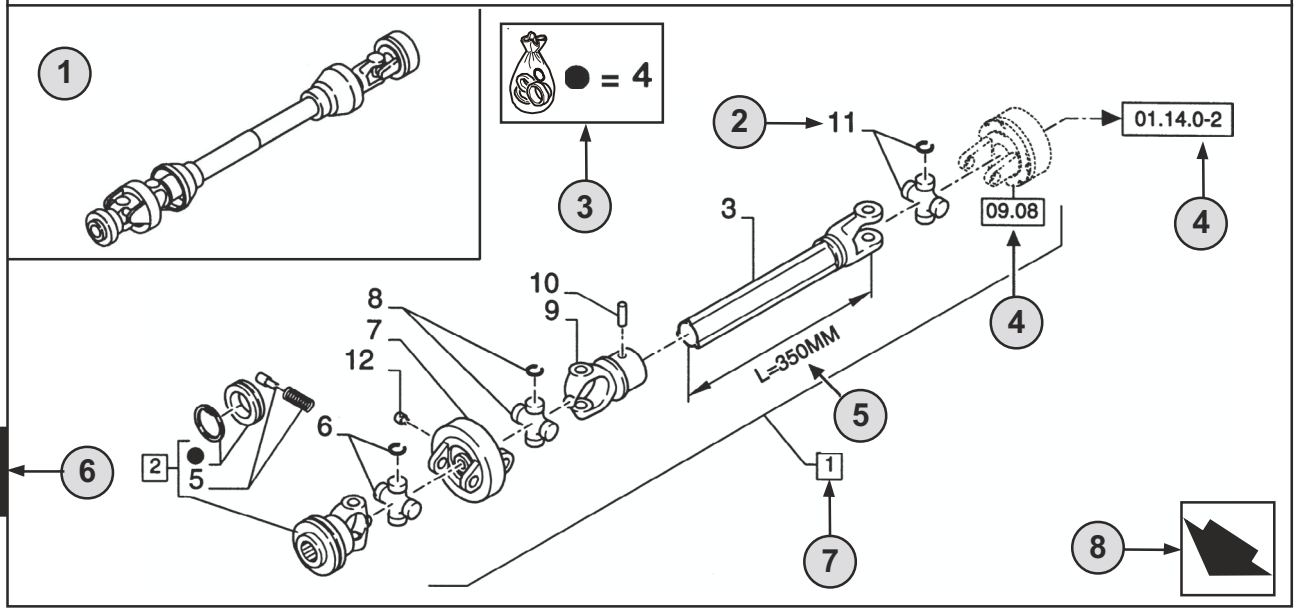

1

9 10

01.01	01	p6	02/03
11	12	13	14

CHASSI - D0200
MAIN FRAME
BASTIDOR
TELAIO
GESTELL
CHASSI

R	N	P.N.	MOD	Q	Descrição	Description	Descripción	L.C.
	A	**86529340**		1	TOMADA DE FORÇA **(2 AO 11)**	SHAFT, PTO	TOMA DE FUERZA	207P
2		**84014007**		1	GARFO **(4,5)**	YOKE	HORQUILLA	085F
3		**NSS**		1	EIXO, **L=350MM**	SHAFT	EJE	016A
4		**84004292**	C0204	1	KIT	KIT	EQUIPO	305C
		[84058743]	D0500	1	KIT	KIT	EQUIPO	305C

15 16 7 2 18 19 20 21 17 22 22 23

(A) SOMENTE BRASIL 24

1

STANDARD 25

26 **MODELOS**

PORTUGUÊS

1 **Posição** da “Figura” na máquina.

2 Referência - figura chamar pelo n° de peça.

3 Peças fornecidas nos kits de reparação por referência de símbolo.

4 01.14.0-2 Peça indicada na **Página** ou no **Figura**, ou chamadas para **Variações** ou **Detalhes**. Indicam componentes que se mostram em detalhe em um outro local do catálogo com o número da figura indicado.

5 Especificações técnicas relacionadas com a peça indicada.

6 Número da **Seção**.

7 2 Inclui os item(s) .....

8 Orientação (A seta indica a frente da máquina). 

9 Descrição da figura.

10 Informação geral da figura.

11 Código do **Conjunto**.

12 Código de **Seqüência** no conjunto.

13 Número da página no código de seqüência.

14 **Data** da impressão ou da atualização da página (mês-ano).

15 **Nota** - Em relação ao n°. de peça. Existe uma chave para os símbolos e abreviaturas na parte inferior da página.

16 Peças que não são disponibilizadas (ver a Página 42).

17 Descrição adicional da peça para auxiliar a confirmar a identificação.
Consultar a página 42 para explicação dos símbolos usados.

18 Não disponível como peça de serviço.

19 Número de Peça.

20 Modificação.
C 0201 = Peça válida **ATÉ 0201** mudar.
D 0300 = Peça válida **A PARTIR** de **0300** mudar.
F 0202 = Peça válida **A PARTIR do N°. de Série.... até ao N°. de Série....**

Implementação da mudança. N° de série a partir do qual a alteração tem início. Os números são indicados na plaqueta de identificação do modelo (ver a página 38).
Ex.: **D0300 N° de Série 2503001** significa que a peça foi montada **“A PARTIR”** do n°. de série **2503001.**
Como conseqüência, as peças marcadas por **C0201**, foram montadas **“ATÉ”** ao n°. de série **2501999.**
Ver a tabela de códigos na página 41.

21 **Quantidade** total de peças referenciadas na página. A quantidade pode ser substituída pelas seguintes indicações:
M = fornecido em metros. **AR** = Quantidade consoante ao pedido.

22 **Descrição** da peça.

23 **L.C. - Código Léxico** para a identificação dos nomes das peças (ver página 45).

24 Referências de rodapé.

25 Notas das figuras.

26 Número do modelo.

01.01	01	p8	02/03

CHASSI
MAIN FRAME
BASTIDOR
TELAIO
GESTELL
CHASSI

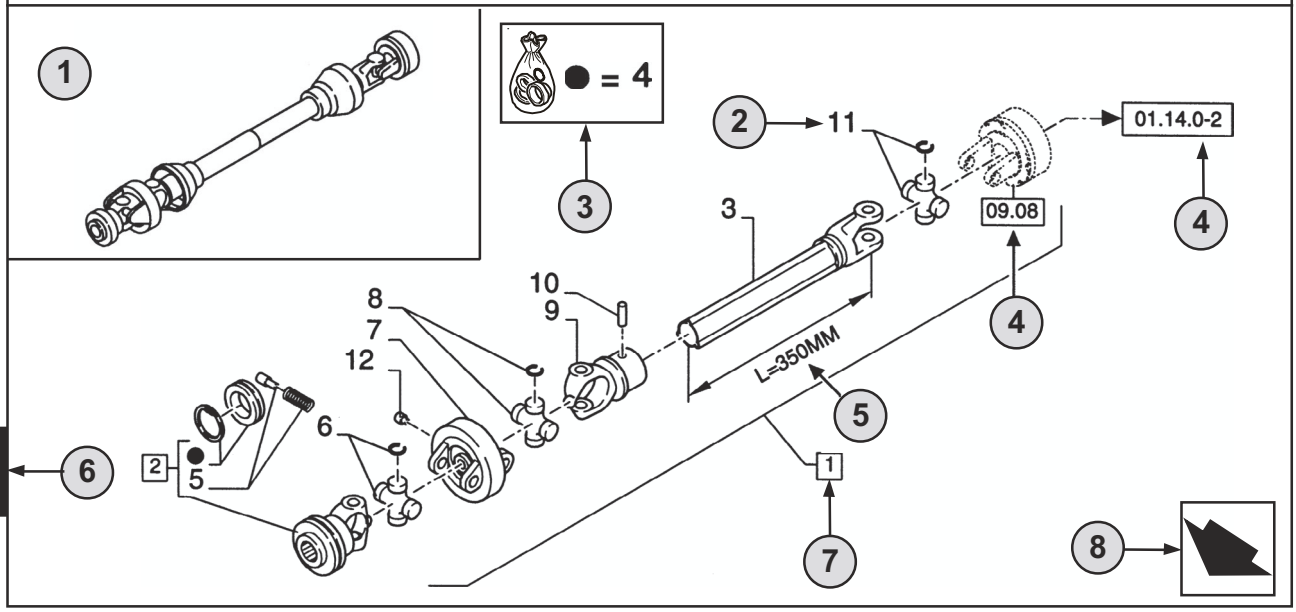

9 10

01.01	01	p8	02/03
11	12	13	14

CHASSI - D0200
MAIN FRAME
BASTIDOR
TELAIO
GESTELL
CHASSI

R	N	P.N.	MOD	Q	Descrição	Description	Descripción	L.C.
	A	**86529340**		1	TOMADA DE FORÇA **(2 AO 11)**	SHAFT, PTO	TOMA DE FUERZA	207P
2		**84014007**		1	GARFO **(4,5)**	YOKE	HORQUILLA	085F
3		**NSS**		1	EIXO, **L=350MM**	SHAFT	EJE	016A
4		**84004292**	C0204	1	KIT	KIT	EQUIPO	305C
		[84058743]	D0500	1	KIT	KIT	EQUIPO	305C

15 16 7 2 18 19 20 21 17 22 22 23

(A) SOMENTE BRASIL 24

STANDARD 25

26 **MODELOS**

1

ENGLISH

1 **Position** of the “Figure” on the machine.

2 Reference - Figure call-out of the partnumber.

3 Parts supplied in repair kits per symbol reference.

4 01.14.0-2 Part illustrated on the **Page** or in the **Figure** indicated, or calls for **Variations** or **Details**. Indicates components shown in detail elsewhere in the catalogue under the figure number shown.

5 Technical specifications relating to the Part indicated.

6 **Section** number.

7 2 Includes item(s) .....

8 Orientation. (Arrow indicates front of the machine). 

9 Figure description.

10 General information of the figure.

11 **Assembly** code.

12 **Sequence** code within the assembly.

13 Page number within the sequence code.

14 **Date** of printing or updating of page (month-year).

15 **Note** - Relating to the Part Number. There is a key to symbols and abbreviations at the bottom of the text page.

16 Non-serviced parts. (see page 42).

17 Further description of the part to help confirm identification. Refer to page 42 for explanation of symbols used.

18 Not available as service part.

19 Part Number.

20 Modification.
C 0201 = Part valid **UNTIL 0201** change.
D 0300 = Part valid **FROM 0300** change.
F 0202 = Part valid **FROM Serial N.... to Serial N....**

Implementation of change. Serial number from which the change starts.
The numbers are indicated on the identification plate of the model (see page 38).
E.g.: **D0300 Serial n° 2503001** means that the part has been installed **“FROM”** serial number **2503001**. Consequently, the parts marked by C0201, were installed **“UP TO”** serial number **2501999**.
See code table page 41.

21 Total **Quantity** of the Part referred to in the page.
The quantity can be replaced by the following indications:
M = supplied in metres. **AR** = quantity as requested.

22 Part **Description**.

23 **L.C. - Lexicon code** for the identification of Part names (see page 45).

24 Footnote references.

25 Figure notes.

26 Model number.

01.01	01	p10	02/03

CHASSI
MAIN FRAME
BASTIDOR
TELAIO
GESTELL
CHASSI

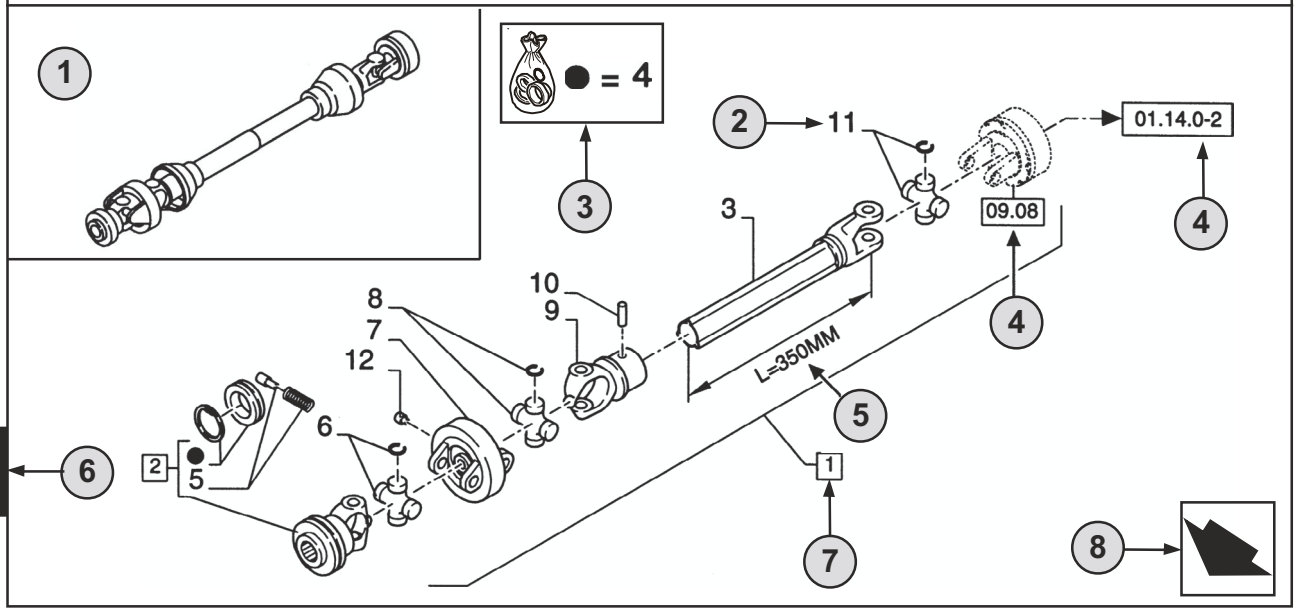

1

9 10

01.01	01	p10	02/03
11	12	13	14

CHASSI - D0200
MAIN FRAME
BASTIDOR
TELAIO
GESTELL
CHASSI

R	N	P.N.	MOD	Q	Descrição	Description	Descripción	L.C.
	A	**86529340**		1	TOMADA DE FORÇA **(2 AO 11)**	SHAFT, PTO	TOMA DE FUERZA	207P
2		**84014007**		1	GARFO **(4,5)**	YOKE	HORQUILLA	085F
3		**NSS**		1	EIXO, **L=350MM**	SHAFT	EJE	016A
4		**84004292**	C0204	1	KIT	KIT	EQUIPO	305C
		[84058743]	D0500	1	KIT	KIT	EQUIPO	305C

15 16 7 2 18 19 20 21 17 22 22 23

(A) SOMENTE BRASIL 24

1

STANDARD 25

26 **MODELOS**

ESPAÑOL

1 **Posición** de la “Figura” en la máquina.

2 Referencia - Figura correspondiente del número de pieza.

3 Piezas suministradas en juegos de reparación por símbolo de referencia.

4 01.14.0-2 Pieza ilustrada en la **Página** o en la **Figura** indicado, o indicaciones por **Variaciones** o **Detalles.** Señala componentes mostrados en detalle en algún lugar del catálogo bajo este número de figura.

5 Especificaciones técnicas relacionadas con la pieza indicada.

6 Número de **Sección**.

7 2 Incluye punto(s) .....

8 Orientación (La flecha indica la parte delantera de la máquina). 

9 Descripción de la figura.

10 Información general de la figura.

11 Código de **Conjunto.**

12 Código de **Secuencia dentro del conjunto.**

13 Número de pieza dentro del código de secuencia.

14 **Fecha** de impresión o puesta al día de la página (mes-año).

15 **Nota -** Relacionada con el Número de Pieza.Hay una clave de símbolos y abreviaciones al final de la página de texto.

16 Piezas que no se suministran en servicio (ver página 42).

17 Descripción ulterior de la pieza para facilitar su identificación. Ver la explicación de los símbolos utilizados en la página 42.

18 No disponible como pieza de servicio.

19 Número de pieza.

20 Modificación.
C 0201 = Pieza válida **HASTA** el cambio **0201**.
D 0300 = Pieza válida **DESDE** el cambio **0300**.
F 0202 = Pieza válida **DESDE el N° de Serie.... al N° de Serie....**

Implementación del cambio. Número de serie a partir del cual comienza el cambio. Los números se indican en la placa de identificación del modelo (ver página 38).
P.e.: **D0300 Serie n° 2503001** significa que las piezas se han instalado **“DESDE”** el número de serie **2503001**.
En consecuencia, las piezas marcadas con **C0201**, fueron montadas **“HASTA”** el número de serie **2501999**.
Ver tabla de códigos en la página 41.

21 **Cantidad** total de las piezas referenciadas en la página.
La cantidad puede ser sustituida por cualquiera de las siguientes indicaciones:
M = suministrada por metros. **AR** = cantidad según sea necesario.

22 **Descripción** de la pieza.

23 **L.C. - Código Léxico** para la identificación de los nombres de piezas (ver página 45).

24 Notas de pié de página.

25 Notas de figura.

26 Número de modelo.

01.01	01	p12	02/03

CHASSI
MAIN FRAME
BASTIDOR
TELAIO
GESTELL
CHASSI

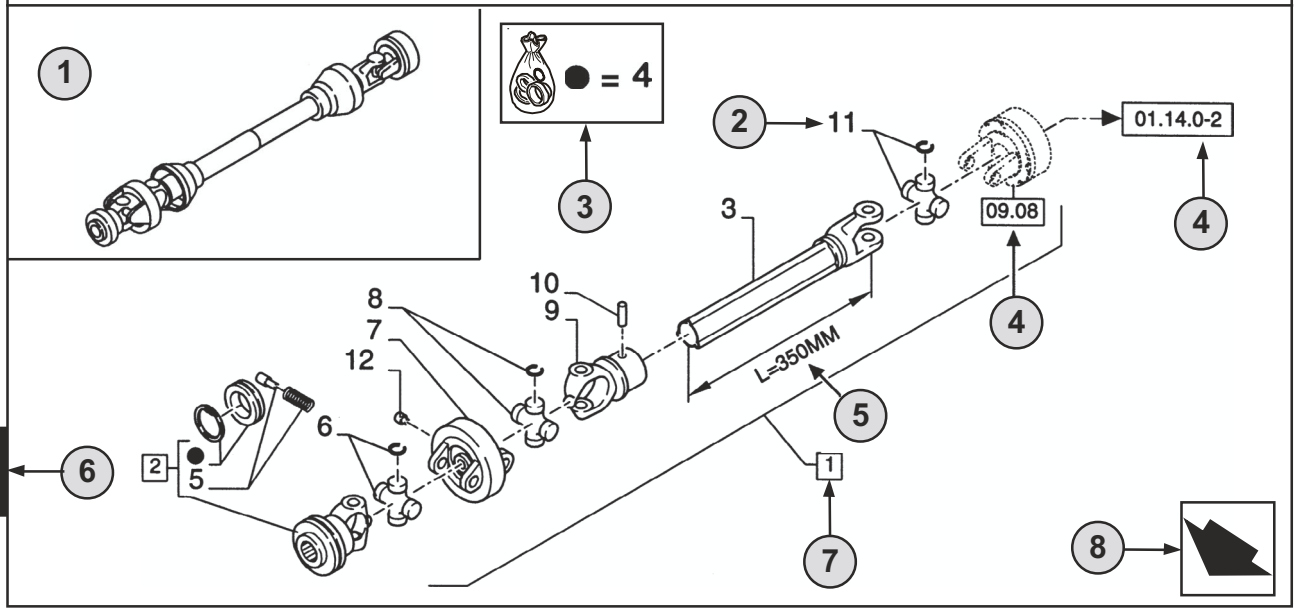

1

9 10

01.01	01	p12	02/03
11	12	13	14

CHASSI - D0200
MAIN FRAME
BASTIDOR
TELAIO
GESTELL
CHASSI

R	N	P.N.	MOD	Q	Descrição	Description	Descripción	L.C.
	A	**86529340**		1	TOMADA DE FORÇA **(2 AO 11)**	SHAFT, PTO	TOMA DE FUERZA	207P
2		**84014007**		1	GARFO **(4,5)**	YOKE	HORQUILLA	085F
3		**NSS**		1	EIXO, **L=350MM**	SHAFT	EJE	016A
4		**84004292**	C0204	1	KIT	KIT	EQUIPO	305C
		[84058743]	D0500	1	KIT	KIT	EQUIPO	305C

15 16 7 2 18 19 20 21 17 22 22 23

(A) SOMENTE BRASIL 24

1

STANDARD 25

26 **MODELOS**

1 **Posizione** della “Figura” sulla macchina.

2 Riferimento del Numero ricambio nella figura.

3 Particolari forniti nei corredi di riparazione per riferimento simbolico.

4 01.14.0-2 Particolare illustrato alla **Pagina** o nella **Figura** indicata, oppure richiamo per **Variazioni** o **Dettagli.** Indica i componenti illustrati in dettaglio in un’altra parte nel catalogo sotto il numero di figura riportato.

5 Dati tecnici relativi al particolare indicato.

6 Numero **Sezione**.

7 2 Comprende il/i pezzo/i .....

8 Orientamento (la freccia indica la parte anteriore della macchina). 

9 Descrizione figura.

10 Informazioni generali sulla figura.

11 Codice **complessivo**.

12 Codice **sequenza** nel complessivo.

13 Numero pagina nel codice sequenza.

14 **Data** di stampa o di aggiornamento della pagina (mese-anno).

15 **Nota** - Si riferisce al numero ricambio. In fondo alla pagina di testo è riportato la legenda dei simboli e delle abbreviazioni.

16 Particolari non soggetti a manutenzione (vedi pag.42).

17 Ulteriore descrizione del particolare per confermare definitivamente l’indentificazione.Fare riferimento a pag.42 per la spiegazione dei simboli utilizzati.

18 Non disponibile come particolare per l’assistenza.

19 Numero ricambio.

20 Modifica.
C 0201 = Particolare valido **FINO alla modifica 0201**.
D 0300 = Particolare valido **A PARTIRE dalla modifica 0300**.
F 0202 = Particolare valido **A PARTIRE dal telaio n. .... fino al telaio n. ....**

Introduzione della modifica. Numero telaio a partire dal quale la modifica è stata adottata.
I numeri sono indicati sulla targhetta di identificazione del modello (vedi pag. 38).
E.s.: **D0300 telaio n. 2503001** significa che il particolare è stato installato **“A PARTIRE DAL”** talaio n. **2503001**. Per cui, i particolari marcati **C0201**, sono stati installati **“FINO AL”** telaio n. **2501999**.
Vedere tabella codici a pag. 41.

21 **Quantità** totale del particolare indicato nella pagina.
La quantità può essere sostituita dalle indicazioni seguenti:
M = fornito a metri. **AR** = quantità come necessario (‘as required’).

22 **Descrizione particolare**.

23 **L.C. - Codice Lessico** per l’identificazione dei nomi dei particolari (vedi pag.45).

24 Riferimenti note a piè di pagina.

25 Note figura**.**

26 Numero modello.

01.01	01	p14	02/03

CHASSI
MAIN FRAME
BASTIDOR
TELAIO
GESTELL
CHASSI

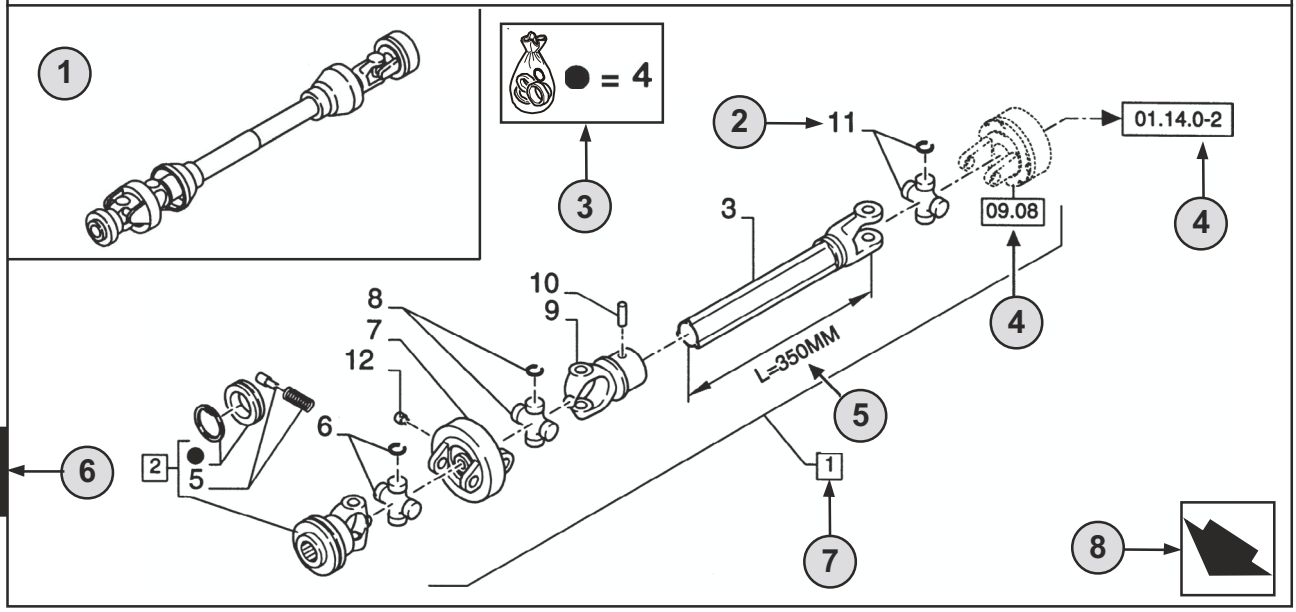

1

9 10

01.01	01	p14	02/03
11	12	13	14

CHASSI - D0200
MAIN FRAME
BASTIDOR
TELAIO
GESTELL
CHASSI

R	N	P.N.	MOD	Q	Descrição	Description	Descripción	L.C.
	A	**86529340**		1	TOMADA DE FORÇA **(2 AO 11)**	SHAFT, PTO	TOMA DE FUERZA	207P
2		**84014007**		1	GARFO **(4,5)**	YOKE	HORQUILLA	085F
3		**NSS**		1	EIXO, **L=350MM**	SHAFT	EJE	016A
4		**84004292**	C0204	1	KIT	KIT	EQUIPO	305C
		[84058743]	D0500	1	KIT	KIT	EQUIPO	305C

15 16 7 2 18 19 20 21 17 22 22 23

(A) SOMENTE BRASIL 24

1

STANDARD 25

26 **MODELOS**

DEUTSCH

1 **Position** der “Abbildung” an der Maschine.

2 Bezug - Abbilding, auf der die Teilnummer aufgeführt ist.

3 Teile, die gemäß der Bezeichnung durch das Symbol in Reparatursätzen geliefert werden.

4 01.14.0-2 Teil, das auf der angegebenen **Seite** oder **Abbildung** veranschaulicht ist, oder Verweis auf **Änderungen** oder **dataillierte Angaben**. Angabe von Teilen, die an anderer Stelle innerhalb des Katalogs unter der dargestellten Abbildungsnummer detailliert dargestellt sind.

5 Technische Daten zum angegebenen Teil.

6 **Abschnitts**nummer.

7 2 I Umfaßt Teil(e) .....

8 Orientierung (der Pfeil weist zur Vorderseite der Maschine). 

9 Beschreibung der Abbildung.

10 Allgemeine Information zur Abbildung.

11 **Montage**code.

12 **Folge**code innerhalb der Baugruppe.

13 Seitennummer innerhalb des Folgecodes.

14 **Datum** des Drucks oder der Aktualisierung der Seite (Monat-Jahr).

15 **Hinweis -** Bezieht sich auf die Teilnummer. Ein Schlüssel für die Symbole und Abkürzungen befindet sich unten auf der Textseite.

16 Kein gewartetes Teil. (Siehe Seite 42).

17 Weitere Beschreibung des Teils; dient als Hilfe bei der Identifizierung des Teils. Beachten Sie Seite 42 mit einer Erläuterung der verwendeten Symbole.

18 Nicht als Service-Teil erhältlich

19 Teilnummer.

20 Modifizierung.
C 0201 = Teil gültig **BIS** zur Änderung **0201**.
D 0300 = Teil gültig **AB** der Änderung **0300**.
F 0202 = Teil gültig **AB Serien-N.... bis Serien-N....**

Einführung der Änderung. Serienummer, von der an die Änderung erfolgte. Die Nummern sind auf dem Typenschild des Modells aufgeführt (siehe Seite 38).
Beispiel: **D0300 Serienummer 2503001** bedeutet, daß das Teil “**AB**” Serienummer **2503001** montiert wurde. Folglich wurden Teile, die mit **C0201** markiert sind, **“BIS”** Serienummer **2501999** montiert.Es sei auf die Code-Tabelle auf Seite 41 verwiesen.

21 **Gesamtzahl** des auf der Seite Aufgeführten Teils.Diese Zahl kann durch die folgenden Angaben ersetzt sein:
M = Lieferung in Meter. **AR** = Anzahl nach Bedarf.

22 **Beschreibung** von Teilen.

23 **L.C. - Lexikon-Code** zur Identifizierung von Bezeichnungen für Teile (siehe Seite 45).

24 Fußnotenverzeichnisse.

25 Hinweise zu Abbildungen.

26 Modellnummer.

01.01	01	p16	02/03

CHASSI
MAIN FRAME
BASTIDOR
TELAIO
GESTELL
CHASSI

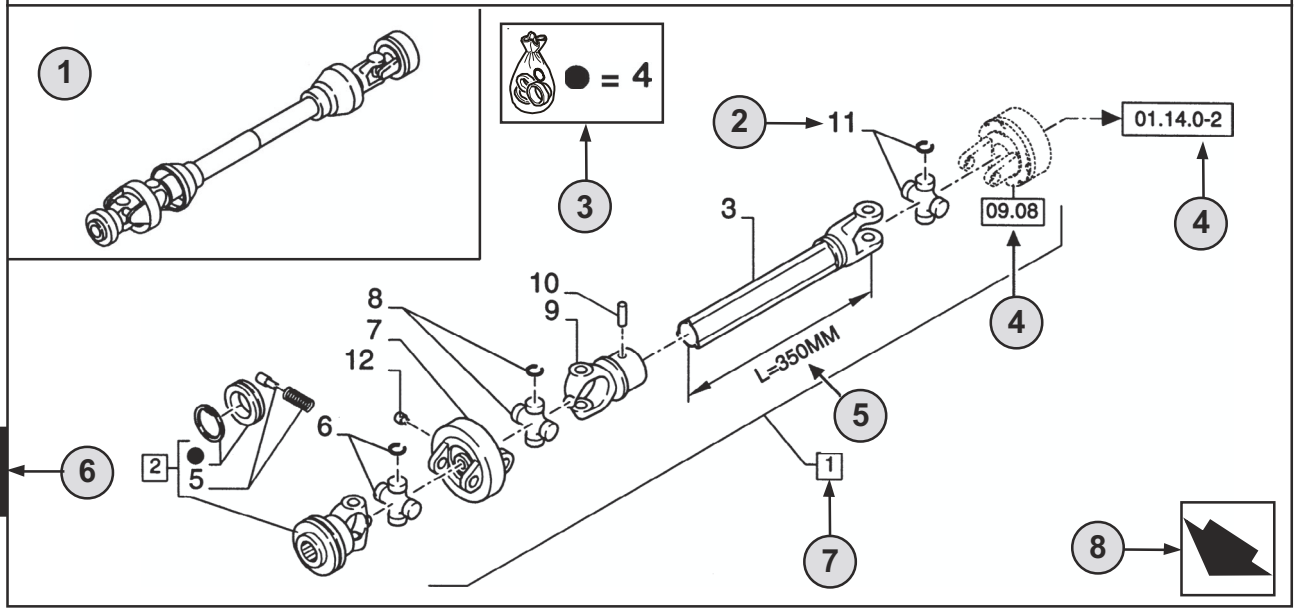

1

9 10

01.01	01	p16	02/03

11 12 13 14

CHASSI - D0200
MAIN FRAME
BASTIDOR
TELAIO
GESTELL
CHASSI

R	N	P.N.	MOD	Q	Descrição	Description	Descripción	L.C.
	A	**86529340**		1	TOMADA DE FORÇA **(2 AO 11)**	SHAFT, PTO	TOMA DE FUERZA	207P
2		**84014007**		1	GARFO **(4,5)**	YOKE	HORQUILLA	085F
3		**NSS**		1	EIXO, **L=350MM**	SHAFT	EJE	016A
4		**84004292**	C0204	1	KIT	KIT	EQUIPO	305C
		[84058743]	D0500	1	KIT	KIT	EQUIPO	305C

15 16 7

2 18 19 20 21 17 22 22 23

(A) SOMENTE BRASIL 24

1

STANDARD 25

26 **MODELOS**

1 Position du “Chiffre” sur la machine.

2 Référence-Chiffre de terminaison de la référence**.**

3 Pièces détachées approvisionnées en kit de réparation par symbole de référence.

4 01.14.0-2 Pièce illustrée dans la **page** ou sur la **figure** indiquée, pour des **variations** ou des **détails**. Montre les composants détaillés par ailleurs dans le catalogue sous le numéro de la figure.

5 Spécifications techniques relatif à la pièce indiquée.

6 Numérotation des sections.

7 2 ITEM inclus .....

8 Orientation (la Flèche indique l’avant de la machine). 

9 Description de la figure.

10 Information générale de la figure.

11 Code d’assemblage.

12 Code de séquence sans l’assemblage.

13 Numéro de page sans le code de séquence.

14 Date d’impression ou mise à jour de la page (mois-année).

15 Note-relatif à la référence. Ceci est la clé des symboles et abréviations en bas de la page suivante.

16 Pièces non servies (voir page 42).

17 Description supplémentaire de la pièces pour aider à la confirmation de l’identification.
Se reporter à la page 42 pour l’explication des symboles utilisés.

18 Ne concerne pas le service pièces détachées.

19 Référence.

20 Modification.
C 0201 = Pièce valable **JUSQU’A 0201** Changement.
D 0300 = Pièce valable **A PARTIR DE 0300** Changement.
F 0202 = Pièce valable **A PARTIR DU** N° de série **.... Jusqu’au** N° de série**....**

Mise en oeuvre de changement.Les numéro de série qui démarrent.Les numéros sont indiqués sur la plaque d’identification du modèles (voir page 38).
Ex.: **D0300** N° de série **2503001** indique que la pièce a été installée à partir du N° de série **2503001**.
En conséquence la pièce marquée **C0201** serait installée après le N° de série **2501999**.
Voir la table - codes page 41.

21 Total du nombre de pièces référencées dans la page.
La quantité peut être remplacée par l’indications suivante:
M = Vendu au mètres. **AR** = Quantité à la demande.

22 Description de la pièce.

23 L.C. - Code Lexique ou Glossaire pour l’identification du nom des pièces (voir page 45).

24 Référence en bas de page.

25 Annotation des chiffres.

26 Numéro du modèle.

TABLE OF CONTENTS

00.100.01		INITIAL STOCKING LIST (ISL) SR200
05.100.01		FILTERS AND CAPACITIES (SR200)
10.000.10	01	PICTORIAL INDEX - ENGINE
10.000.10	02	PICTORIAL INDEX - ENGINE
10.001.01		ENGINE ASSY (504387946)
10.001.02		CYLINDER BLOCK & RELATED PARTS (504181441)
10.012.01		ENGINE MOUNTING (SR200-TV380)
10.012.01	02	REMOTE DIPSTICK (SR200-TV380)
10.012.01	03	REMOTE OIL DRAIN (SR200-TV380)
10.012.01	04	REMOTE ENGINE OIL (SR200-TV380)
10.012.04		HOOKS - ENGINE (504154713)
10.101.01		CYLINDER HEAD & RELATED PARTS (504385845)
10.101.02	01	ROCKER SHAFT (504335547)
10.101.02	02	CYLINDER HEAD COVERS (504191694)
10.101.03		ENGINE BREATHERS (504245734)
10.102.01		OIL SUMP & RELATED PARTS (504179441)
10.102.02		ENGINE BLOCK FRONT COVER (5801361473)
10.102.03		FLYWHEEL CASE (504380467)
10.103.01		CRANKSHAFT (504178873)
10.103.02		ENGINE, FLYWHEEL (504221728)
10.103.03		BELT PULLEY DRIVE & COVER (504388092)
10.103.04		PULLEY - CRANKSHAFT (504388089)
10.105.01		PISTON - ENGINE (504254748)
10.105.02		CONNECTING ROD (504245120)
10.106.01		CAMSHAFT - TIMING CONTROL (504228067)
10.202.01		AIR CLEANER ASSY NA 8IN (SR200-SR250,TR270,TR320)
10.206.02		FILTER ENGINE OIL (504245481 - 504332922)
10.216.01		FUEL SYSTEM F5C (SR200,TR270)
10.218.01		INJECTION EQUIPMENT - PIPING (504207272)
10.218.01	02	INJECTION EQUIPMENT - PIPING (504207949)
10.218.01	03	INJECTION EQUIPMENT - PIPING (504207956)
10.218.02	02	INJECTION EQUIPMENT - INJECTOR (504385855)
10.220.01		THROTTLE HAND FOOT MECHANICAL (SR200)
10.220.02		THROTTLE HAND FOOT EH (SR200,TR270)
10.240.01	01	INJECTION PUMP (504385876)
10.250.02		TURBOCHARGING (504183274)
10.254.01		BLOCK HEATER (SR200-TV380)
10.254.02		BLOCK HEATER EU (SR200-TV380)
10.254.03		ENGINE EXHAUST MED F5C (SR200,TR270)
10.254.04		INTAKE MANIFOLD (504385851 - 504385860)
10.254.05		EXHAUST MANIFOLD (504183273)
10.304.01	01	PUMP, ENGINE OIL & RELATED PARTS (504154680)
10.304.02		ENGINE OIL DIPSTICK (504183276)
10.304.03		OIL PUMP PIPING (504154691)
10.400.01		COOLING COMPONENTS (SR200,TR270)
10.402.01		TEMPERATURE CONTROL (THERMOSTAT) - (504216813)
10.402.02		WATER PUMP & RELATED PARTS (504154685)
10.402.03		PIPING - ENGINE COOLING SYSTEM (504191839)
10.406.02		MODULE, RADIATOR AND COOLING MED (SR175,SV185,SR200,TR270)
10.408.01		HEAT EXCHANGER - ENGINE - EGR GROUP (504385853)
10.408.02		HEAT EXCHANGER (504154694)
29.200.01		LEVEL 100 CASE CONTROL HANDLES (SR130-SV300)
29.200.02		LEVEL 200 CASE CONTROL HANDLES (SR130-SV300)
29.200.03		LEVEL 250 CASE CONTROL HANDLES (ALL CASE)
29.200.04		LEVEL 300 CASE CONTROL HANDLES (SR175-SV300)

TABLE OF CONTENTS

29.200.05		LEVEL 350 CASE CONTROL HANDLES (ALL CASE)
29.212.01		TRAVEL SPEED 1SPD (SR200)
29.212.02		TRAVEL SPEED 2SPD (SR200)
29.212.03		TRAVEL SPEED E-H (SR200)
29.212.04	01	MOTOR, REXROTH DRIVE MOTOR 2SPD (SR200-SV300)
29.212.04	01	MOTOR, REXROTH DRIVE MOTOR 1SPD (SR200-SV300)
29.212.04	02	MOTOR, REXROTH DRIVE MOTOR 2SPD (SR200-SV300)
29.212.04	02	MOTOR, REXROTH DRIVE MOTOR 1SPD (SR200-SV300)
29.212.05	01	VALVE, BRAKE (SR130-SV300)
29.212.05	02	VALVE, BRAKE 2SPD (SR175-SV300)
29.212.05	04	VALVE, BRAKE EH 2SPD (SR175-SV300)
29.212.06	01	PUMP, HYDROSTATIC TANDEM 46CC MDC FRONT (SR200,SR220,SV250)
29.212.06	02	PUMP, HYDROSTATC TANDEM 46CC MDC FRONT (SR200,SR220,SV250)
29.212.06	03	PUMP, HYDROSTATC TANDEM 46CC MDC FRONT (SR200,SR220,SV250)
29.212.06	04	PUMP, HYDROSTATC TANDEM 46CC MDC REAR (SR200,SR220,SV250)
29.212.06	05	PUMP, HYDROSTATC TANDEM 46CC MDC REAR (SR200,SR220,SV250)
29.212.06	06	PUMP, HYDROSTATC TANDEM 46CC MDC REAR (SR200.SR220,SV250)
29.212.07		PUMP, HYDROSTATIC EH 46CC A20VG ET (SR200,TR320-TV380)(SR220-SV300)
35.100.01		CHASSIS HYDRAULICS (SR200,TR270)
35.101.02		SELF LEVELING - NONE MED LG (SR175-TV380)
35.102.01		RIDE CONTROL (SR175-TV380)
35.102.02		RIDE CONTROL - NONE (SR175-TV380)
35.204.01		MANUAL COUPLER, TAN (SR175-TV380)
35.204.02	01	HYDRAULIC COUPLER, ARM PLUMBING (SR175,SR200,TR270)
35.204.02	02	HYDRAULIC COUPLER (SR175,SR200)
35.204.02	02	HYDRAULIC COUPLER - BASIC GRAY (SR175-TV380)
35.204.02	03	HYDRAULIC COUPLER CHASSIS PLUMBING - BASIC(SR175-TV380)
35.220.01		AUX HYD, STD FLOW (SR200)
35.220.01	01	AUX HYD, STD C.U.P. (SR200)
35.220.01	02	AUX HYD, STD, GEAR PUMP (SR200)
35.220.01	03	AUX HYD, STD, CHASSIS PLUMBING (SR175)(SR200)
35.220.01	04	AUX HYD, STD, ARM PLUMBING (SR175)(SR200)(SR220,SR250,TR320)
35.220.01	04	AUX HYD, STD C.U.P. ARM PLUMBING (SR175)(SR200)
35.220.02	01	AUX HYD, HIGH FLOW (SR200)
35.220.02	02	AUX HYD, HIGH FLOW, GEAR PUMP (SR200)
35.220.02	03	AUX HYD, HIGH FLOW (SR175)(SR200)
35.220.02	04	AUX HYD, HIGH FLOW, ARM PLUMBING (SR175)(SR200)
35.359.01	01	PUMP, EH AND CONTROL VALVE (SR200)
35.359.01	02	PUMP, EH AND CONTROL VALVE (SR200)
35.359.02	01	PUMP, MECHANICAL (SR130-SR220)
35.359.02	01	PUMP, MECHANICAL AND HAND CONTROL VALVE (SR200)
35.359.02	02	PUMP, MECHANICAL AND HAND CONTROL VALVE (SR200)
35.359.03		CONTROL VALVE, EH W/ HARNESS (ALL CASE)
35.359.04		CONTROL VALVE, MECHANICAL HAND EH AUX (SR130-SV300)
35.701.01		LOADER HYDRAULICS (SR175,SR200,SR220,SR250,TR270,TR320)
35.701.02		LOADER VALVE PLUMBING (SR175,SR200,TR270)
35.701.03		SUPPLY PLUMBING (LOADER VALVE) (SR200,TR270)
35.701.04		RETURN PLUMBING (LOADER VALVE) (SR175,SV185,SR200,TR270)
35.701.05		2SPD PLUMBING (SR200)
35.701.06		BRAKE PLUMBING (SR200)
35.701.06	02	BRAKE PLUMBING (SR130 - SV300)
35.730.01		HYDRAULIC CYLINDER (SR200,TR270)
35.730.02		BUCKET CYLINDER (SR175,SR200,TR270)
35.750.01		TANK, HYDRAULIC (SR130,SR150,SR175,SR200,SR220,SR250,TR270,TR320)
37.140.01		COUNTERWEIGHT (SR200)

TABLE OF CONTENTS

39.100.01		CHASSIS HOODS AND COVERS (SR200)
39.105.01		LOADER ARM (SR200,TR270)
39.105.01	01	COUPLER BASIC TAN (SR175,TR270,SR200)
44.106.01		POWER TRAIN (SR200)
44.106.02		AXLE ASSY, HD (SR200-SV300)
44.511/520	01	WHEELS (SR175-SV300)
44.511/520	01	WHEELS (SR200-SV300)
44.511/520	01	WHEELS (SR175,SV185,SR200)
50.200.01		OPEN CAB, NO HEAT OR HVAC (SR200,TR270)
50.200.01		OPEN CAB, NO HEAT OR HVAC (SR200-TV380)
50.200.02		HVAC, MEDIUM FRAME F5C (SR200,TR270)
50.200.02		HEATER, MEDIUM FRAME F5C (SR200,TR270)
50.200.02	01	HVAC, MEDIUM FRAME F5C (SR200-TV380)
50.200.02	02	HVAC, LARGE FRAME F5C (SR200, TR270)
50.200.02	03	HEATER PLUMBING BASIC (SR200,TR270)
50.200.03		HVAC, MEDIUM FRAME F5C (SR200,TR270)
50.200.03	01	HEATER PLUMBING BASIC (SR200,TR270)
50.200.03	02	AC PLUMBING BASIC (SR200,TR270)
50.200.03	03	HVAC, LARGE FRAME F5C (SR200-TV380)
50.200.05		HEATER (ALL CASE)
50.200.06		HEATER W/AC (SR175-TV380)
55.100.01		CHASSIS OPTIONS HARNESS, MECH MD (SR175-SR200)
55.100.05		CONNECTIONS CABLE FOR ENGINE INJECTION - PLUG GLOW (504385861 - 504385863)
55.100.05	01	ELECTRICAL MECH MED (SR175-SR200)
55.100.05	02	ELECTRICAL MECH MED OPEN CAB (SR175-SR200)
55.100.06	01	ELECTRICAL EH MED (SR175-SR200,TR270)
55.100.06	02	ELECTRICAL EH MED OPEN CAB (SR175-SR200,TR270)
55.100.07	01	BATTERY DISCONNECT MED F5C (SR200)
55.100.07	02	NO BATTERY DISCONNECT MED F5C (SR200)
55.100.08		MULTIFUNCTION ELECTRICAL (SR175,SR200,SR220,SR250,TR270,TR320)
55.100.09		NO MULTIFUNCTION ELECTRICAL (ALL CASE)
55.100.10		ELECTRICAL ASSEMBLY SOCKET NA (ALL CASE)
55.100.10		ELECTRICAL ASSEMBLY SOCKET EU (ALL CASE)
55.101.01		ENGINE ELECTRICAL (SR200,TR270)
55.101.02		BATTERY RETENTION MED (ALL CASE)
55.301.02		ENGINE, ALTERNATOR MOUNTING (504388098)
55.414.01	02	DIAGNOSTIC SENSOR (504308864)
55.418.01		INSTRUMENTS AND ELECTRICAL (SR175,SR200,SR220,SR250,TR270,TR320)
55.418.01	01	COMMON INSTRUMENTS AND ELEC (ALL CASE)
55.418.02		LIGHT ASSY, 90 DEGREE (SR130-SR175,SR200-SR250,TR270,TR320)
55.512.01		IGNITION AND DISPLAY, KEYED/KEYLESS CASE (ALL CASE)
55.514.01		EU ROAD LIGHTS MED RAD CASE (SR175,SR200)
55.514.02		NO ROAD LIGHTS OR TURN SIGNAL (ALL CASE)
55.514.05		LIGHT ASSEMBLY REAR ROAD (ALL CASE)
82.100.01	01	BUCKETS - LOADER, DIRT / FOUNDRY
82.100.01	02	BUCKETS - LOADER, LOW PROFILE, EXTENDED LOW PROFILE
82.100.01	03	BUCKETS - LOADER, UTILITY / LIGHT MATERIAL
82.100.01	04	BUCKETS - LOADER, HEAVY DUTY DIRT
82.100.01	05	BUCKETS - LOADER, MANURE / SLURRY
82.100.02		BUCKET, BOLT ON CUTTING EDGE (B.O.C.E.) (ALL CASE)
82.100.03		PALLET FORK 48 TINE (ALL CASE)
82.100.04	01	SPILL GUARD 66 TAN (SR130-SR200)
82.100.04	02	SPILL GUARD 72 TAN (SR130-TR270)
82.100.04	03	SPILL GUARD 78 TAN (SR175-TV380)

TABLE OF CONTENTS

88.010.04	DIA KIT, ASPIRATOR (SR200,TR270)
88.010.08	DIA KIT, BLOCK HEATER 120V USA (SR200-TV380)
88.010.09	DIA KIT, BLOCK HEATER 220V - ROW (SR200-TV380)
88.035.02	DIA KIT, SELF-LEVEL 65 (SR175,SR200-SR250,TR270,TR320)
88.035.07	DIA KIT, RIDE CONTROL CASE MED/LG (SR175-SV300,TR270,TR320,TV380)
88.035.09	DIA KIT, HYDRAULIC COUPLER MED/LG RAD (SR175,SR200-SR250,TR270,TR320)
88.035.11	DIA KIT, HIGH FLOW AUX - MED RADIAL (SR175,SR200,TR270)
88.035.15	DIA KIT, 2ND FRONT HYD AUX - MED VERT (SR175,SR200,TR270)
88.035.22	DIA KIT, MED FRM FOOT CONTROLS, SERVO (SR200)
88.037.05	DIA KIT, COUNTERWEIGHT MF CASE (SR175-SR200,TR270)
88.050.03	DIA KIT, MED FRM F5C HVAC (SR200,TR270)
88.050.11	DIA KIT, F5C HEAT KIT (SR200-TV380)
88.055.01	DIA KIT, BEACON (ALL CASE)
88.055.02	DIA KIT, STROBE (ALL CASE)
88.055.07	DIA KIT, MULTI-FUNCTION ELEC MECH CS RAD (SR175,SR200-SR250,TR270, TR320)
88.055.11	DIA KIT, MULTI-FUNCTION ELEC EH CS RAD (SR175,SR200-SR250,TR270,TR320)
88.055.15	DIA KIT, EU ROAD LIGHTS MED RAD CASE (SR175,SR200,TR270)
88.055.27	DIA KIT, MECH CHASS OPT HARNESS, MED (SR175-SR200)
88.055.29	DIA KIT, SIDE LAMP (ALL CASE)
88.082.01	DIA KIT, PALLET FORK 48IN TINES (ALL CASE)
88.082.02	DIA KIT, 66IN SPILL GUARD TAN (SR130-SR200)
88.082.03	DIA KIT, 72IN SPILL GUARD TAN (SR130-TR270)
88.082.04	DIA KIT, 78IN SPILL GUARD TAN (SR175-TV380)
88.082.05	DIA KIT, 84IN SPILL GUARD (SR220-SR300,TR320,TV380)
88.082.07	DIA KIT, 66IN B.O.C.E. (SR130-SR200)
88.082.08	DIA KIT, 72IN B.O.C.E. (SR130-TR270)
88.082.09	DIA KIT, 78IN B.O.C.E. (SR175-TV380)
88.082.10	DIA KIT, 84IN B.O.C.E. (SR175-TV380)
88.082.11	DIA KIT, BUCKET TEETH (ALL CASE)
88.082.12	DIA KIT, BUCKETS - FIELD (ALL CASE)
88.088.02	DIA KIT, SINGLE POINT LIFT HOOK (SR175,SR200,TR270)
88.088.06	DIA KIT, RADIO (ALL CASE)
88.088.07	DIA KIT, 4 POINT LIFT HOOK (SR175-SR200,TR270)
88.088.09	DIA KIT, FOPS LEVEL 2 MODS (ALL CASE)
88.088.10	DIA KIT, MIRROR (ALL CASE)
88.088.13	DIA KIT, DRAW BAR MED GRAY (SR175-SR200,TR270)
88.088.15	DIA KIT, FIRE EXTINGUISHER (ALL CASE)
88.090.01	DIA KIT, DEMO REAR DOOR (ALL CASE)
88.090.02	DIA KIT, GLASS FRONT DOOR (ALL CASE)
88.090.03	DIA KIT, DEMO FRONT DOOR (ALL CASE)
88.090.04	DIA KIT, CAB SIDE WINDOWS (ALL CASE)
88.090.05	DIA KIT, REAR EXT ACCESS WINDOW (ALL CASE)
88.090.06	DIA KIT, 3IN LAP BELT (ALL CASE)
88.090.08	DIA KIT, REMOVABLE TOP WINDOW (ALL CASE)
88.090.09	DIA KIT, RH, SIDE SCREEN (ALL CASE)
88.090.10	DIA KIT, LH, SIDE SCREEN (ALL CASE)
88.090.12	DIA KIT, HANDLE 300/400 (ALL CASE)
88.090.14	DIA KIT, HANDLE 350/450 (ALL CASE)
88.100.01	ENGINE ACCESSORIES EU/OPEN EU (SR200)
88.100.01	ENGINE ACCESSORIES NA (SR200,TR270)
88.100.01	ENGINE ACCESSORIES EU/OPEN EU (SR200,TR270)
88.120.01	SEAL PACKAGE, FOAM (ALL CASE)
88.120.02	FUSE COVER, MED-LG CHASSIS (SR175-TV380)
90.100.01	HOODS AND COVERS (SR175,SR200)

TABLE OF CONTENTS

90.112.01		HAND CONTROLS, MANUAL MD FRAME (SR175-TV380)
90.112.01		HAND CONTROLS, MD FRAME SERVO (SR200)
90.112.01	01	FLOORPLATE, NO PEDAL (ALL CASE)
90.112.01	02	HAND CONTROLS, INTERLINK (SR130-SV300)
90.112.01	03	HANDLE MOUNTING, MD-LG FRAME HC (SR175-SV300)
90.112.01	04	HAND CONTROLS, HANDLE LH (SR130-SV300)
90.112.01	05	HAND CONTROLS, HANDLE RH (SR130-SV300)
90.112.01	06	DAMPENING & CENTERING CONTROL (SR200-SV300)
90.112.02		ELEC-HYDRAULIC CONTROLS MD-LG FRM (SR175-TV380)
90.112.02	02	HANDLE MOUNTING EH (SR175-TV380)
90.112.02	03	HANDLE, ELECTRONIC CONTROL CASE (ALL CASE)
90.116.01		LOADER STOP 50MM (SR175,SR200,SR220,SR250)
90.116.02		LOADER STOP 23MM (SR175,SR200,SR220,SR250,TR270,TR320)
90.120.01		SEAT, NON SUSPENSION (ALL CASE)
90.120.02		SEAT, SUSPENSION (ALL CASE)
90.120.03		SEAT AIR SUSPENSION (ALL CASE)
90.120.04	01	SEAT BELT, 2 PT RETRACTOR 2 IN WEB (ALL CASE)
90.120.04	02	SEAT BELT, 3 PT (ALL CASE)
90.120.05		LAP BAR (ALL CASE)
90.120.06		SEAT ASSEMBLY, SUSPENSION (ALL CASE)
90.120.07		SEAT ASSEMBLY, STANDARD (ALL CASE)
90.150.01	01	CAB CASE (SR175-TV380)
90.150.01	02	CAB CASE (SR175-TV380)
90.150.01	03	CAB, GAS STRUT ASSY (ALL CASE)
90.150.02		CAB SEALING (ALL CASE)
90.150.03		FLOOR MAT, MECHANICAL HAND CONTROL (ALL CASE)
90.150.05		FLOOR MAT, EH CONTROLS (SR130-SV300)
90.154.00		FRONT DOOR, GLASS (ALL CASE)
90.154.01	01	DOOR ASSY, FRONT (ALL CASE)
90.154.01	02	DOOR ASSY, FRONT (ALL CASE)
90.154.01	03	NO FRONT DOOR (ALL CASE)
90.154.01	04	DOOR ASSY, FRONT DEMO (ALL CASE)
90.154.01	05	DOOR ASSY, FRONT DEMO (ALL CASE)
90.154.01	06	FRONT DEMO, DOOR (ALL CASE)
90.154.02		SIDE WINDOW ASSY (ALL CASE)
90.154.03	02	DOOR ASSY, REAR (ALL CASE)
90.154.04		REAR WINDOW NA (ALL CASE)
90.154.04		REAR WINDOW EU (ALL CASE)
90.154.05	01	WASHER BOTTLE, FRONT (ALL CASE)
90.154.05	02	WASHER BOTTLE, REAR (ALL CASE)
90.154.05	03	WASHER BOTTLE, FRONT & REAR (ALL CASE)
90.160.01	01	INTERIOR TRIM CASE (ALL CASE)
90.160.01	02	INTERIOR TRIM CASE (ALL CASE)
90.160.01	03	CAB SEALING (ALL CASE)
90.160.02		SEAL PACKAGE (SR175-TV380)
90.160.03	01	CAB HEADLINER, NO RADIO (ALL CASE)
90.160.03	02	CAB HEADLINER, WITH RADIO (ALL CASE)
90.180.01	01	DECALS (SR200)
90.180.01	02	DECALS - WARNING (ALL CASE)
90.180.01	03	DECALS (ALL CASE)
90.180.01	04	DECALS (SR200)

SECTION INDEX
00 - Manutenção

00.100.01 INITIAL STOCKING LIST (ISL) SR200

00.100.01		p1	03/11

INITIAL STOCKING LIST (ISL) SR200
INITIAL STOCKING LIST (ISL) SR200
INITIAL STOCKING LIST (ISL) SR200
INITIAL STOCKING LIST (ISL) SR200

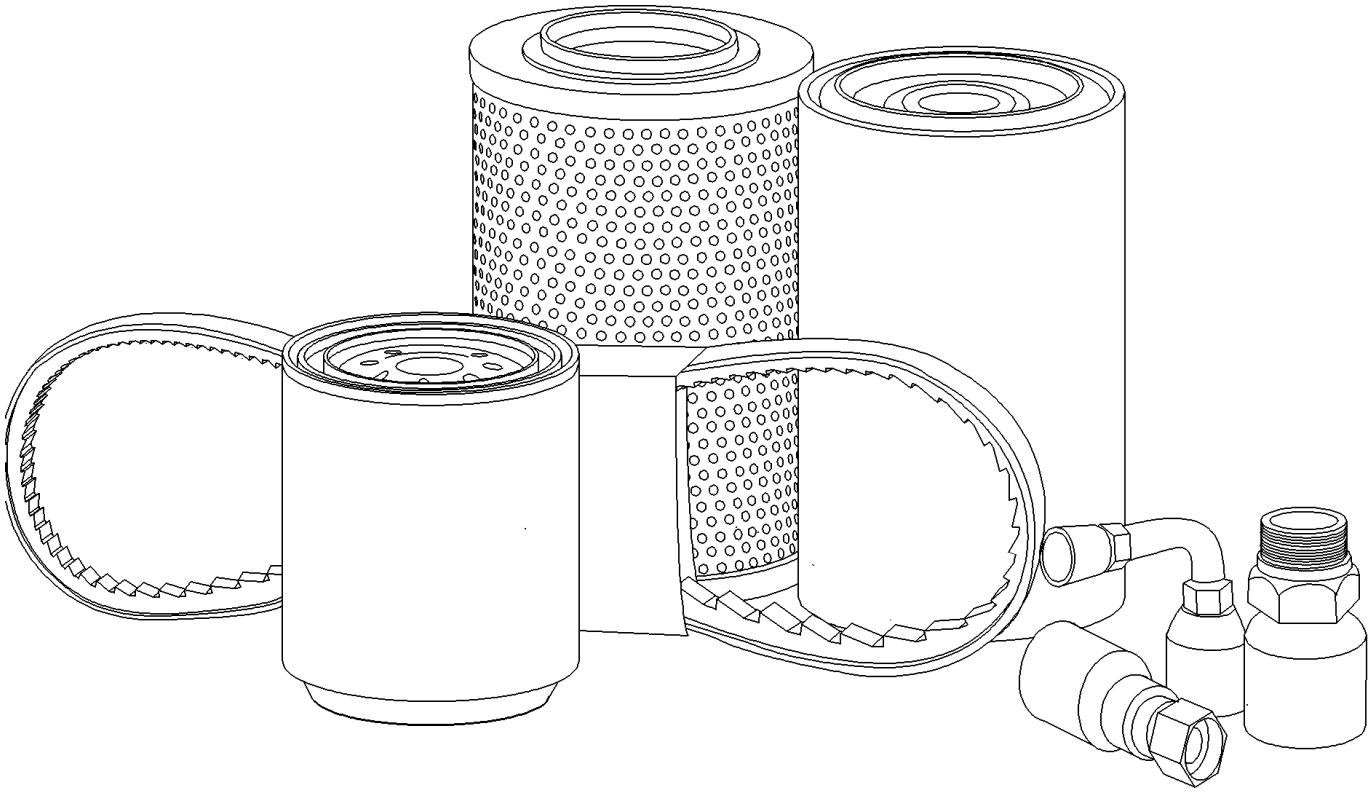

INITIAL STOCKING LIST (ISL) SR200
INITIAL STOCKING LIST (ISL) SR200
INITIAL STOCKING LIST (ISL) SR200
INITIAL STOCKING LIST (ISL) SR200

R	N	P.N.	MOD	Q	Denominação Description	Description Bezeichnung	Denominacion Beskrivelse	Descrizione Beschrijving	L.C.
		{LIST A}			Parts required for Preventative Maintenance				
1		**87679496**		1	FILTRO DE ÓLEO DO MOTOR, F5C				
						ENGINE OIL FILTER	FILTRO DE ACEITE DE M	FILTRO OLIO MOTORE	067F
					FILTRE A HUILE MOTEU	MOTORÖLFILTER	MOTOROLIEFILTER	MOTOROLIEFILTER	
2		**84278070**		1	ELEMENTO, Hyd Filter	ELEMENT	ELEMENTO	ELEMENTO	020E
					ELEMENT	ELEMENT	ELEMENT	ELEMENT	
3		**84299977**		1	ELEMENTO, Fuel Filter - Main (Door)				
						ELEMENT	ELEMENTO	ELEMENTO	020E
					ELEMENT	ELEMENT	ELEMENT	ELEMENT	
4		**87548612**		1	FILTRO DE COMBUSTÍVEL, Inline F5C				
						FUEL FILTER	FILTRO DE COMBUSTIBI	FILTRO CARBURANTE	064F
					FILTRE A CARBURANT	KRAFTSTOFFFILTER	BRÆNDSTOFFILTER	BRANDSTOFFILTER	
5		**84217229**		1	FILTRO DE AR, Primary F5C				
						AIR FILTER	FILTRO DE AIRE	FILTRO ARIA	066F
					FILTRE A AIR	LUFTFILTER	LUFTFILTER	LUCHTFILTER	
6		**87682999**		1	FILTRO DE AR, Secondary F5C				
						AIR FILTER	FILTRO DE AIRE	FILTRO ARIA	066F
					FILTRE A AIR	LUFTFILTER	LUFTFILTER	LUCHTFILTER	
7		**84331239**		1	CORREIA, V-Ribbed, F5C, 296 FC				
						BELT	CORREA	CINGHIA	174C
					COURROIE	RIEMEN	REM	RIEM	
8		**84317961**		1	CORREIA, A/C F5C	BELT	CORREA	CINGHIA	174C
					COURROIE	RIEMEN	REM	RIEM	
		{LIST B}			Parts required for Preventative Maintenance and Basic Repair				
10		**9712608**		1	EMISSOR DE TEMPERATURA, Water (F5C ECU)				
						TEMPERATURE SENDEF	EMISOR DE TEMPERATU	TRASMETT. TEMPERATU	Z366
					TRANSMETTEUR TEMPE	TEMPERATURGEBER	TEMPERATURSENDER	TEMPERATUURSENSOR	
11		**2856350**		1	SENSOR, Switch (F5C KSB)				
						SENSOR	SENSOR	SENSORE	608S
					CAPTEUR	SENSOR	FØLER	SENSOR	
12		**504245257**		1	SENSOR, Air Pressure and Temp (Turbo-burst)				
						SENSOR	SENSOR	SENSORE	608S
					CAPTEUR	SENSOR	FØLER	SENSOR	
13		**SBA185246060**		1	TRANSMISSOR, Oil Pressure Switch				
						SENDER UNIT	UNIDAD EMISORA	TRASMETTITORE	160T
					ENS. TRANSMETTEUR	SIGNALGEBER	SENDER	SENSOREENHEID	
14		**279492A1**		1	INTERRUPTOR DE RESTRIÇÃO, Air				
						RESTRICTION SWITCH	INT. DE RESTRICCIÓN	INTERR. DI LIMITAZIONE	C037
					COMM. RESTRICTION	VERSTOPFUNGSSCHAL	KONTAKT, BEGRÆNSNI	BEGRENZINGSSCHAKEL	
15		**87668736**		1	INTERRUPTOR, AuxProportional Hyd handle (mechanical)				
						SWITCH	INTERRUPTOR	INTERRUTTORE	075I
					CONTACTEUR	SCHALTER	KONTAKT	SCHAKELAAR	
16		**84282677**		1	INTERRUPTOR, AuxProportional Hyd handle				
						SWITCH	INTERRUPTOR	INTERRUTTORE	075I
					CONTACTEUR	SCHALTER	KONTAKT	SCHAKELAAR	

INITIAL STOCKING LIST (ISL) SR200
INITIAL STOCKING LIST (ISL) SR200
INITIAL STOCKING LIST (ISL) SR200
INITIAL STOCKING LIST (ISL) SR200

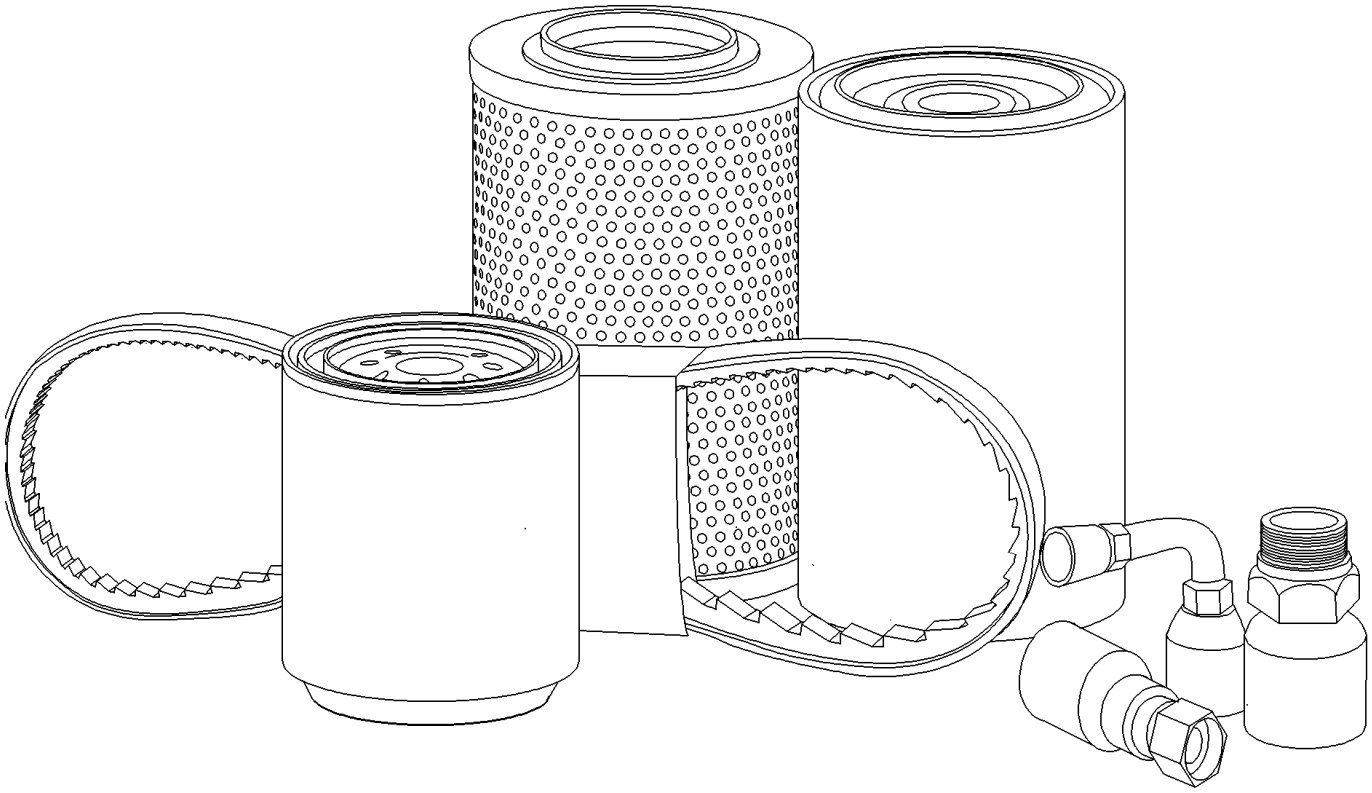

INITIAL STOCKING LIST (ISL) SR200
INITIAL STOCKING LIST (ISL) SR200
INITIAL STOCKING LIST (ISL) SR200
INITIAL STOCKING LIST (ISL) SR200

R	N	P.N.	MOD	Q	Denominação Description	Description Bezeichnung	Denominacion Beskrivelse	Descrizione Beschrijving	L.C.
17		87427686		1	INTERRUPTOR, Hyd MOM 2 (Front Elect Handle Switch)				
						SWITCH	INTERRUPTOR	COMMUTATORE	8850
					INTERRUPTEUR	SCHALTER	SWITCH	SWITCH	
18		87630127		1	INTERRUPTOR, Park Brake MOM				
						SWITCH	INTERRUPTOR	INTERRUTTORE	075I
					CONTACTEUR	SCHALTER	KONTAKT	SCHAKELAAR	
19		87427685		1	INTERRUPTOR, Hyd MOM 1				
						SWITCH	INTERRUPTOR	COMMUTATORE	8850
					INTERRUPTEUR	SCHALTER	SWITCH	SWITCH	
20		282775A1		1	COMUTADOR, w/ Padded Keys - key 1964831C2				
						IGNITION SWITCH	CONMUTADOR DE ARR/	INTERRUTTORE ACCEN	P654
					CONTACTEUR DE DEMA	ZÜNDSCHALTER	KONTAKT, TÆNDING	CONTACTSCHAKELAAR	
21		84311814		1	INTERRUPTOR DE PRESSÃO, Brake				
						PRESSURE SWITCH	INTERRUPTOR DE PRES	PRESSOSTATO	079I
					PRESSOSTAT	DRUCKSCHALTER	KONTAKT, TRYK	DRUKSCHAKELAAR	
22		84311813		1	INTERRUPTOR DE PRESSÃO, Charge				
						PRESSURE SWITCH	INTERRUPTOR DE PRES	PRESSOSTATO	079I
					PRESSOSTAT	DRUCKSCHALTER	KONTAKT, TRYK	DRUKSCHAKELAAR	
23		84239537		1	INTERRUPTOR, Backup Alarm				
						SWITCH	INTERRUPTOR	INTERRUTTORE	075I
					CONTACTEUR	SCHALTER	KONTAKT	SCHAKELAAR	
24		87392235		1	INTERRUPTOR INTERMITENTE, Lap Bar/Door				
						SWITCH ASSY	CONJUNTO DE INTERRU	COMPLESSIVO INTERRU	067I
					ENSEMBLE COMMUTATI	SCHALTERBAUGRUPPE	KONTAKT, KPL.	SCHAKELAAREENHEID	
25		84257183		1	CONEXÃO, Quick Coupling (5/8-Male)				
						FITTING	ACOPLAMIENTO	RACCORDO	3300
					RACCORD	ARMATUR	FITTING	AANSLUITING	
26		84257182		1	CONEXÃO, Quick Coupling (5/8-Female)				
						FITTING	ACOPLAMIENTO	RACCORDO	3300
					RACCORD	ARMATUR	FITTING	AANSLUITING	
27		84390117		1	ENGATE, Quick Coupler	COUPLING	ACOPLAMIENTO	GIUNTO	Z321
					RACCORD	KUPPLUNG	KOBLING	KOPPELING	
28		84390118		1	ENGATE, Quick Coupler	COUPLING	ACOPLAMIENTO	GIUNTO	Z321
					RACCORD	KUPPLUNG	KOBLING	KOPPELING	
29		84390119		1	ENGATE, Quick Coupler	COUPLING	ACOPLAMIENTO	GIUNTO	Z321
					RACCORD	KUPPLUNG	KOBLING	KOPPELING	
30		44995162		1	LÂMPADA, Lamp 888-12V	BULB	BOMBILLA	LAMPADINA	030L
					AMPOULE	GLÜHLAMPE	PÆRE	LAMP	
31		9847313		1	LÂMPADA, #894, 12V, 37.5W, Halogen				
						BULB	BOMBILLA	LAMPADINA	030L
					AMPOULE	GLÜHLAMPE	PÆRE	LAMP	
32		84277826		1	MANGUEIRA, Lower Radiator F5C				
						HOSE	TUBO	TUBO FLESSIBILE	030M
					FLEXIBLE	SCHLAUCH	SLANGE	SLANG	
33		84332751		1	MANGUEIRA DO RADIADOR, Upper Radiator F5C				
						RADIATOR HOSE	TUBO DE RADIADOR	TUBO FLESSIBILE RADI/	A060
					FLEXIBLE DE RADIATEU	KÜHLERSCHLAUCH	SLANGE, KØLER	RADIATEURSLANG	
34		257448A1		1	CAPA, Eng Oil F5C	CAP	TAPA	CAPPUCCIO	1380
					CHAPEAU	KAPPE	CAP	CAP	

INITIAL STOCKING LIST (ISL) SR200
INITIAL STOCKING LIST (ISL) SR200
INITIAL STOCKING LIST (ISL) SR200
INITIAL STOCKING LIST (ISL) SR200

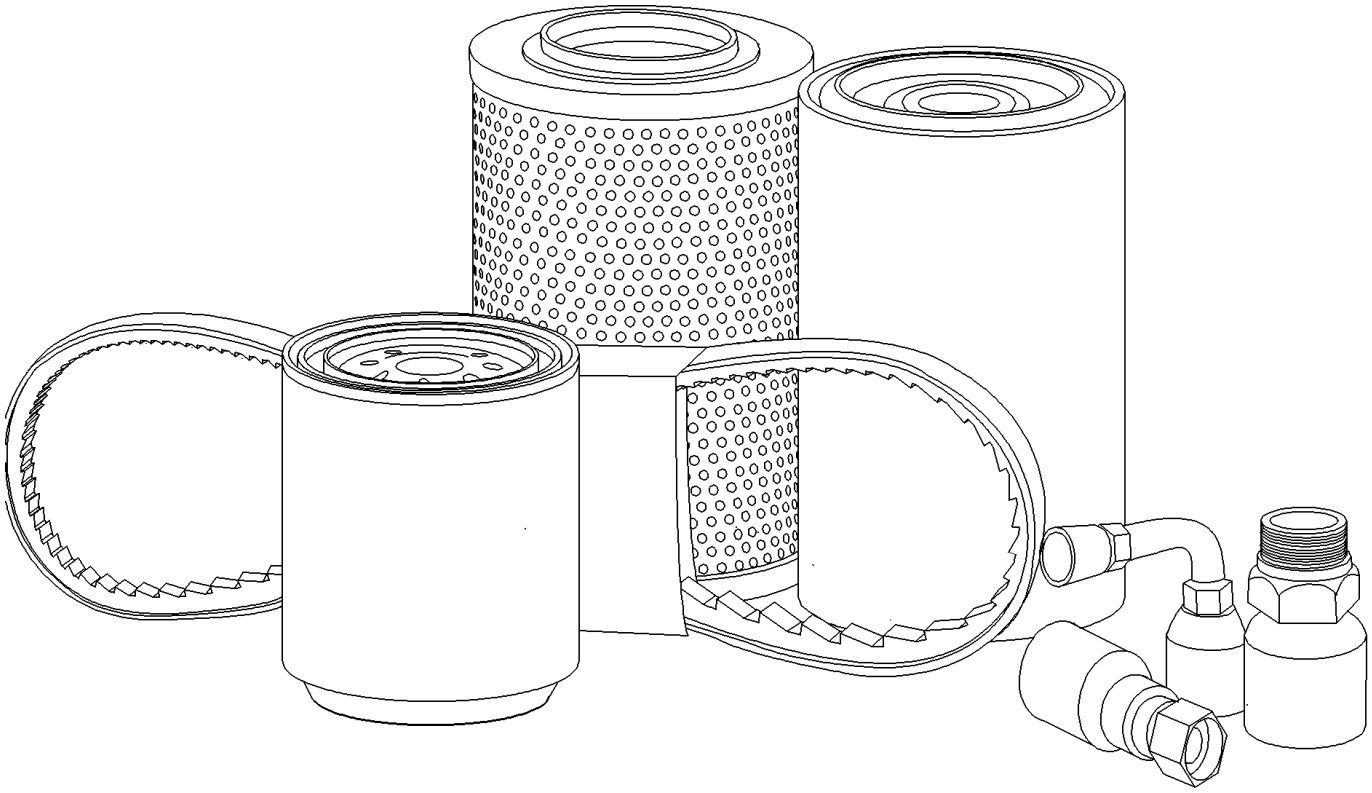

INITIAL STOCKING LIST (ISL) SR200
INITIAL STOCKING LIST (ISL) SR200
INITIAL STOCKING LIST (ISL) SR200
INITIAL STOCKING LIST (ISL) SR200

R	N	P.N.	MOD	Q	Denominação Description Bezeichnung	Description Bezeichnung	Denominacion Beskrivelse	Descrizione Beschrijving	L.C.
35		257884A1		1	BUJAO, Hyd Reservoir Cap BOUCHON	PLUG STOPFEN	TAPON PLUG	TAPPO PLUG	6400
36		87687375		1	TAMPA DO RADIADOR BOUCHON DU RADIATE	RADIATOR CAP KÜHLERVERSCHLUSSK	TAPÓN DE RADIADOR KØLERDÆKSEL	TAPPO DEL RADIATORE RADIATEURDOP	039T
37		2852531		1	RESPIRO, F5C RENIFLARD	BREATHER ENTLÜFTER	RESPIRADERO UDLUFTNINGSSKRUE	SFIATO ONTLUCHTER	145S
38		504209127		1	TERMOSTATO, F5C THERMOSTAT	THERMOSTAT THERMOSTAT	TERMOSTATO TERMOSTAT	TERMOSTATO THERMOSTAAT	096T
39		84200822		1	CORRENTE, Assy 100/50P CHAINE	CHAIN KETTE	CADENA KÆDE	CATENA KETTING	095C
40		84200824		1	CORRENTE, Assy 100/62P CHAINE	CHAIN KETTE	CADENA KÆDE	CATENA KETTING	095C
41		84259684		1	PINHÃO, Assy 30T PIGNON MENE	DRIVEN SPROCKET ABTRIEBSZAHNRAD	CONTROL CON PIÑÓN KÆDEHJUL	PIGNONE CONDOTTO AANGEDREVEN KETTIN	122P
42		84347514		1	BRAÇO LIMPADOR, Front BRAS D'ESSUIE-GLACE	WIPER ARM WISCHERARM	BRAZO LIMPIAPARABRIS VISKERARM	BRACCIO TERGICRISTA ARM VAN RUITENWISSE	134B
43		84347625		1	PALHETA LIMPADOR, Front LAME D'ESSUIE-GLACE	WIPER BLADE WISCHERBLATT	RASQUETA LIMPIAPARA VISKERBLAD	SPAZZOLA TERGICRIST. RUITENWISSERBLAD	175S
44		84323115		1	BRAÇO LIMPADOR, Rear (EU) BRAS D'ESSUIE-GLACE	WIPER ARM WISCHERARM	BRAZO LIMPIAPARABRIS VISKERARM	BRACCIO TERGICRISTA ARM VAN RUITENWISSE	134B
45		84323116		1	LIMPADOR DO PARA-BRISA, Rear (EU) ESSUIE-GLACE	WINDSHIELD WIPER FRONTSCHEIBENWISCH	LIMPIAPARABRISAS FORRUDEVISKER	TERGICRISTALLI RUITENWISSER VÓÓR	Z493
46		87355337		1	RELE, A/C RELAIS	RELAY RELAIS	RELE RELAY	REL RELAY	7025
47		87638510		1	MOTOR DE PARTIDA, F5C DEMARREUR	STARTER MOTOR ANLASSERMOTOR	MOTOR DE ARRANQUE STARTMOTOR	MOTORINO DI AVVIAME STARTMOTOR	133M
48		84254290		1	ALTERNADOR, F5C ALTERNATEUR	ALTERNATOR LICHTMASCHINE	ALTERNADOR GENERATOR	ALTERNATORE DYNAMO	025A
49		84389760		1	BOBINA, Proportional Solenoid BOBINE	COIL SPULE	BOBINA SPOLE	BOBINA SPOEL	083B
50		84386295		1	SENSOR, Loader Control Valve Spool Position (EH) CAPTEUR	SENSOR SENSOR	SENSOR FØLER	SENSORE SENSOR	608S
51		86503942		1	FUSÍVEL, Chart Autofuse FUSIBLE	FUSE SICHERUNG	FUSIBLE SIKRING	FUSIBILE ZEKERING	110F
52		10395890		1	FUSÍVEL, Mini 5 AMP FUSIBLE	FUSE SICHERUNG	FUSIBLE SIKRING	FUSIBILE ZEKERING	110F
53		87522597		1	FUSÍVEL, Mini 10 AMP FUSIBLE	FUSE SICHERUNG	FUSIBLE SIKRING	FUSIBILE ZEKERING	110F
54		87524877		1	FUSÍVEL, Mini 15 AMP FUSIBLE	FUSE SICHERUNG	FUSIBLE SIKRING	FUSIBILE ZEKERING	110F
55		10401190		1	FUSÍVEL, Mini 20 AMP FUSIBLE	FUSE SICHERUNG	FUSIBLE SIKRING	FUSIBILE ZEKERING	110F
56		10401290		1	FUSÍVEL, Mini 25 AMP FUSIBLE	FUSE SICHERUNG	FUSIBLE SIKRING	FUSIBILE ZEKERING	110F

INITIAL STOCKING LIST (ISL) SR200
INITIAL STOCKING LIST (ISL) SR200
INITIAL STOCKING LIST (ISL) SR200
INITIAL STOCKING LIST (ISL) SR200

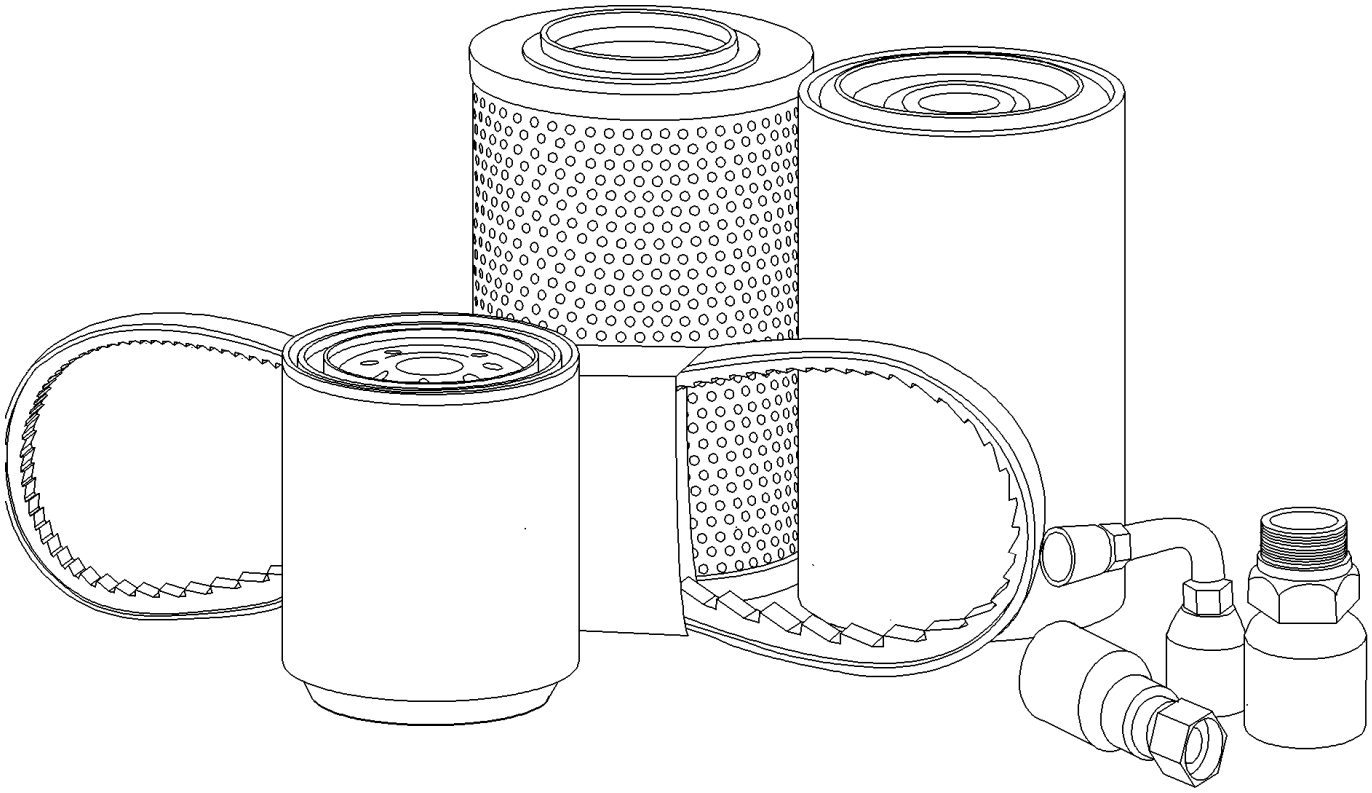

INITIAL STOCKING LIST (ISL) SR200
INITIAL STOCKING LIST (ISL) SR200
INITIAL STOCKING LIST (ISL) SR200
INITIAL STOCKING LIST (ISL) SR200

R	N	P.N.	MOD	Q	Denominação Description	Description Bezeichnung	Denominacion Beskrivelse	Descrizione Beschrijving	L.C.
57		**87472238**		1	FUSÍVEL, 60 AMP	FUSE	FUSIBLE	FUSIBILE	110F
					FUSIBLE	SICHERUNG	SIKRING	ZEKERING	
58		**87655334**		1	RELÉ, 35A N.O. ISO280 Micro				
						RELAY	RELÉ	RELÈ	011R
					RELAIS	RELAIS	RELÆ	RELAIS	
59		**84389262**		1	KIT DE VEDAÇÃO, (Shimadzu Single Gear Pump)				
						SEAL KIT	KIT DE JUNTAS	KIT GUARNIZIONI	630S
					KIT DE JOINTS	DICHTUNGSSATZ	PAKNINGSSÆT	KIT MET AFDICHTINGEN	
60		**140008A1**		1	KIT DE GAXETAS, Seal Overhaul M46				
						GASKET KIT	KIT DE JUNTAS	KIT GUARNIZIONI	3740
					KIT DE JOINTS	DICHTUNGSSATZ	PAKNINGSSÆT	KIT MET PAKKINGEN	
61		**84174264**		1	CINTO DE SEGURANÇA, Case 2 PT 2 Inch Wide				
						SEAT BELT	CINTURÓN DE SEGURID	CINTURA DI SICUREZZA	182C
					CEINTURE DE SECURIT	SICHERHEITSGURT	SIKKERHEDSBÆLTE	VEILIGHEIDSGORDEL	
62		**84174267**		1	CINTO DE SEGURANÇA, Case 2 PT 3 Inch Wide				
						SEAT BELT	CINTURÓN DE SEGURID	CINTURA DI SICUREZZA	182C
					CEINTURE DE SECURIT	SICHERHEITSGURT	SIKKERHEDSBÆLTE	VEILIGHEIDSGORDEL	
63		**84354487**		1	CINTO DE SEGURANÇA, Case 3 PT				
						SEAT BELT	CINTURÓN DE SEGURID	CINTURA DI SICUREZZA	182C
					CEINTURE DE SECURIT	SICHERHEITSGURT	SIKKERHEDSBÆLTE	VEILIGHEIDSGORDEL	

SECTION INDEX
05 - Acabamento da máquina e equipamento

05.100.01 FILTERS AND CAPACITIES (SR200)

FILTERS AND CAPACITIES (SR200)
FILTERS AND CAPACITIES (SR200)
FILTERS AND CAPACITIES (SR200)
FILTERS AND CAPACITIES (SR200)

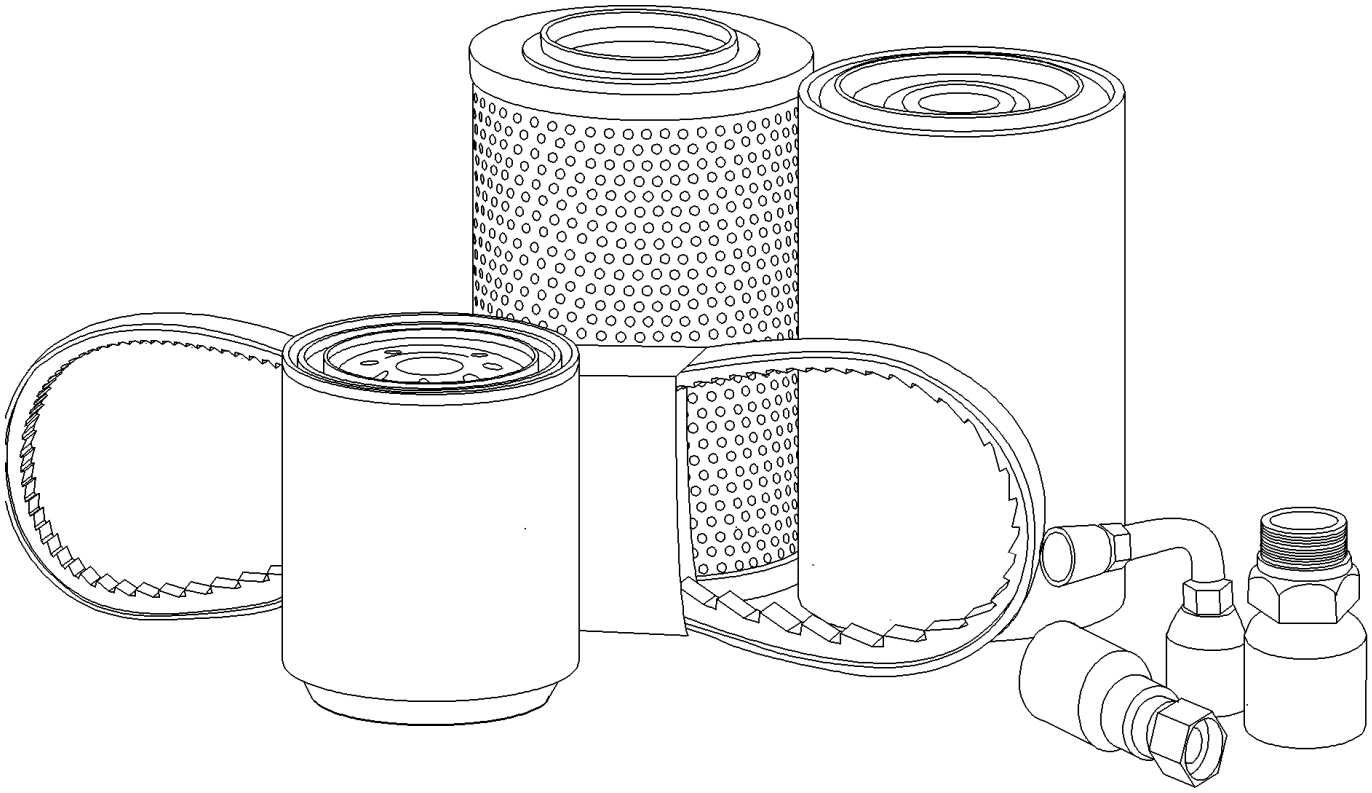

FILTERS AND CAPACITIES (SR200)
FILTERS AND CAPACITIES (SR200)
FILTERS AND CAPACITIES (SR200)
FILTERS AND CAPACITIES (SR200)

R	N	P.N.	MOD	Q	Denominação Description	Description Bezeichnung	Denominacion Beskrivelse	Descrizione Beschrijving	L.C.
		87679496		1	FILTRO DE ÓLEO DO MOTOR, F5C				
						ENGINE OIL FILTER	FILTRO DE ACEITE DE M	FILTRO OLIO MOTORE	067F
					FILTRE A HUILE MOTEU	MOTORÖLFILTER	MOTOROLIEFILTER	MOTOROLIEFILTER	
		{}			Engine Crank case oil capacity: with filter change 9.5 l (10.0 US qt)				
		{}			Specifications: 10W30 Engine Oil 7-28				
		{}			Cooling System capacity: 17.1 l (4.4 US gal)				
		{}			Specifications: 50% distilled water and 50% ethylene glycol				
		84278070		1	ELEMENTO, Hyd Filter	ELEMENT	ELEMENTO	ELEMENTO	020E
					ELEMENT	ELEMENT	ELEMENT	ELEMENT	
		{}			Hydraulic System capacity: 32.1 l, (8.5 US gal)				
		{}			Hydraulic Reservoir capacity: 15.0 l (3.96 US gal)				
		{}			Specificaions: CNH MAT 3509				
		84299977		1	ELEMENTO, Fuel Filter - Main (Door)				
						ELEMENT	ELEMENTO	ELEMENTO	020E
					ELEMENT	ELEMENT	ELEMENT	ELEMENT	
		87548612		1	FILTRO DE COMBUSTÍVEL, Inline F5C				
						FUEL FILTER	FILTRO DE COMBUSTIBI	FILTRO CARBURANTE	064F
					FILTRE A CARBURANT	KRAFTSTOFFFILTER	BRÆNDSTOFFILTER	BRANDSTOFFILTER	
		{}			Fuel Tank capacity: 75.5 l (20.0 US gal)				
		{}			#2 Diesel				
		84217229		1	FILTRO DE AR, Primary F5C				
						AIR FILTER	FILTRO DE AIRE	FILTRO ARIA	066F
					FILTRE A AIR	LUFTFILTER	LUFTFILTER	LUCHTFILTER	
		87682999		1	FILTRO DE AR, Secondary F5C				
						AIR FILTER	FILTRO DE AIRE	FILTRO ARIA	066F
					FILTRE A AIR	LUFTFILTER	LUFTFILTER	LUCHTFILTER	
		{}			Grease Fittings: quantity - As Required				
		{}			Specifications: Molydisulfide grease				

SECTION INDEX
10 - Motor

10.000.10	01	PICTORIAL INDEX - ENGINE
10.000.10	02	PICTORIAL INDEX - ENGINE
10.001.01		ENGINE ASSY (504387946)
10.001.02		CYLINDER BLOCK & RELATED PARTS (504181441)
10.012.01		ENGINE MOUNTING (SR200-TV380)
10.012.01	02	REMOTE DIPSTICK (SR200-TV380)
10.012.01	03	REMOTE OIL DRAIN (SR200-TV380)
10.012.01	04	REMOTE ENGINE OIL (SR200-TV380)
10.012.04		HOOKS - ENGINE (504154713)
10.101.01		CYLINDER HEAD & RELATED PARTS (504385845)
10.101.02	01	ROCKER SHAFT (504335547)
10.101.02	02	CYLINDER HEAD COVERS (504191694)
10.101.03		ENGINE BREATHERS (504245734)
10.102.01		OIL SUMP & RELATED PARTS (504179441)
10.102.02		ENGINE BLOCK FRONT COVER (5801361473)
10.102.03		FLYWHEEL CASE (504380467)
10.103.01		CRANKSHAFT (504178873)
10.103.02		ENGINE, FLYWHEEL (504221728)
10.103.03		BELT PULLEY DRIVE & COVER (504388092)
10.103.04		PULLEY - CRANKSHAFT (504388089)
10.105.01		PISTON - ENGINE (504254748)
10.105.02		CONNECTING ROD (504245120)
10.106.01		CAMSHAFT - TIMING CONTROL (504228067)
10.202.01		AIR CLEANER ASSY NA 8IN (SR200-SR250,TR270,TR320)
10.206.02		FILTER ENGINE OIL (504245481 - 504332922)
10.216.01		FUEL SYSTEM F5C (SR200,TR270)
10.218.01		INJECTION EQUIPMENT - PIPING (504207272)
10.218.01	02	INJECTION EQUIPMENT - PIPING (504207949)
10.218.01	03	INJECTION EQUIPMENT - PIPING (504207956)
10.218.02	02	INJECTION EQUIPMENT - INJECTOR (504385855)
10.220.01		THROTTLE HAND FOOT MECHANICAL (SR200)
10.220.02		THROTTLE HAND FOOT EH (SR200,TR270)
10.240.01	01	INJECTION PUMP (504385876)
10.250.02		TURBOCHARGING (504183274)
10.254.01		BLOCK HEATER (SR200-TV380)
10.254.02		BLOCK HEATER EU (SR200-TV380)
10.254.03		ENGINE EXHAUST MED F5C (SR200,TR270)
10.254.04		INTAKE MANIFOLD (504385851 - 504385860)
10.254.05		EXHAUST MANIFOLD (504183273)
10.304.01	01	PUMP, ENGINE OIL & RELATED PARTS (504154680)
10.304.02		ENGINE OIL DIPSTICK (504183276)
10.304.03		OIL PUMP PIPING (504154691)
10.400.01		COOLING COMPONENTS (SR200,TR270)
10.402.01		TEMPERATURE CONTROL (THERMOSTAT) - (504216813)
10.402.02		WATER PUMP & RELATED PARTS (504154685)
10.402.03		PIPING - ENGINE COOLING SYSTEM (504191839)
10.406.02		MODULE, RADIATOR AND COOLING MED (SR175,SV185,SR200,TR270)
10.408.01		HEAT EXCHANGER - ENGINE - EGR GROUP (504385853)
10.408.02		HEAT EXCHANGER (504154694)

PICTORIAL INDEX - ENGINE
PICTORIAL INDEX - ENGINE
ÍNDICE GRÁFICO - MOTOR
INDICE ILLUSTRATO - MOTORE

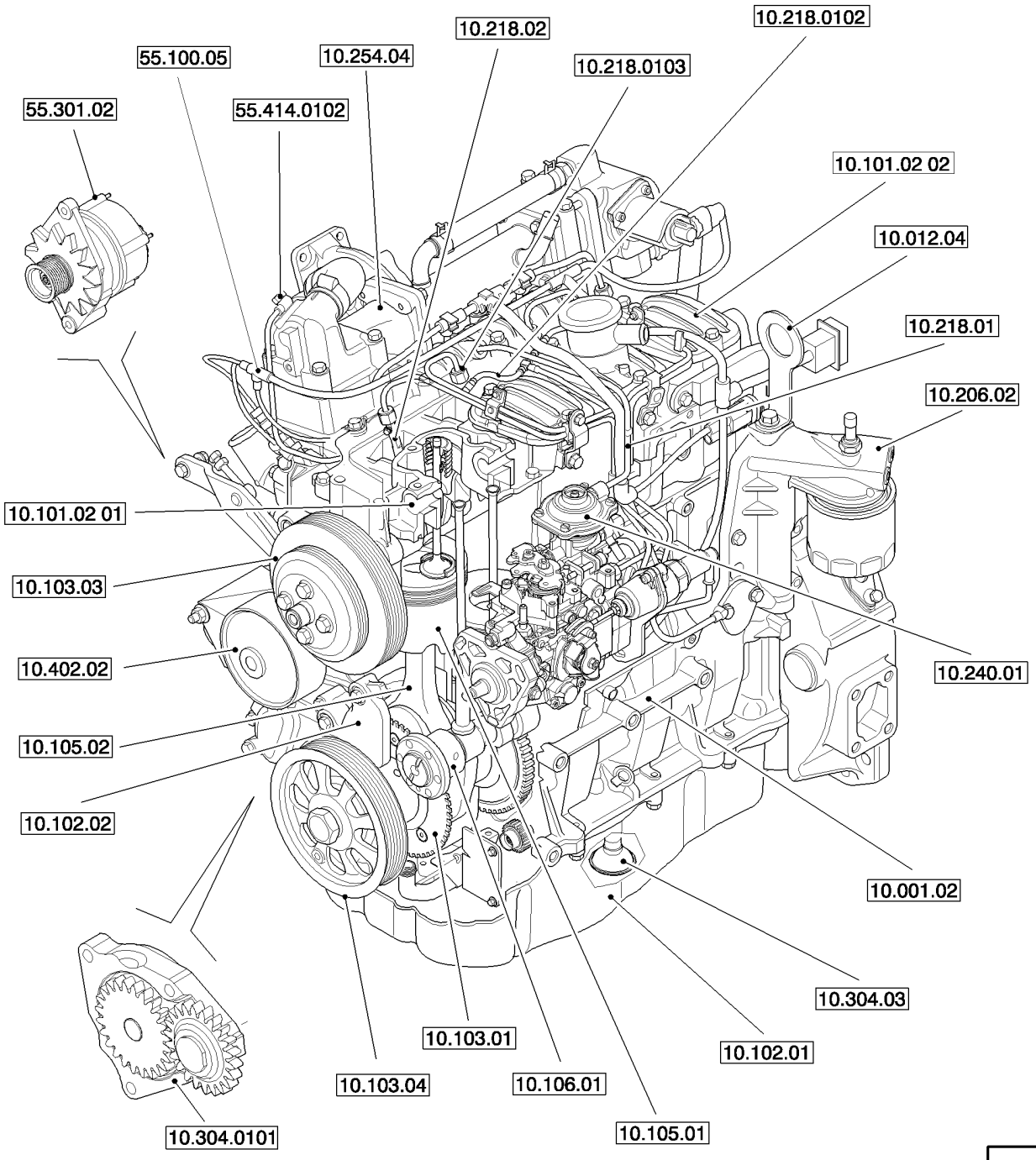

INDEX VISUEL - MOTEUR
ABBILDUNGSINDEX - MOTOR
BILLEDINDEKS - MOTOR
GRAFISCHE INDEXMOTOR

R	N	P.N.	MOD	Q	Denominação Description	Description Bezeichnung	Denominacion Beskrivelse	Descrizione Beschrijving	L.C.

PICTORIAL INDEX - ENGINE
PICTORIAL INDEX - ENGINE
ÍNDICE GRÁFICO - MOTOR
INDICE ILLUSTRATO - MOTORE

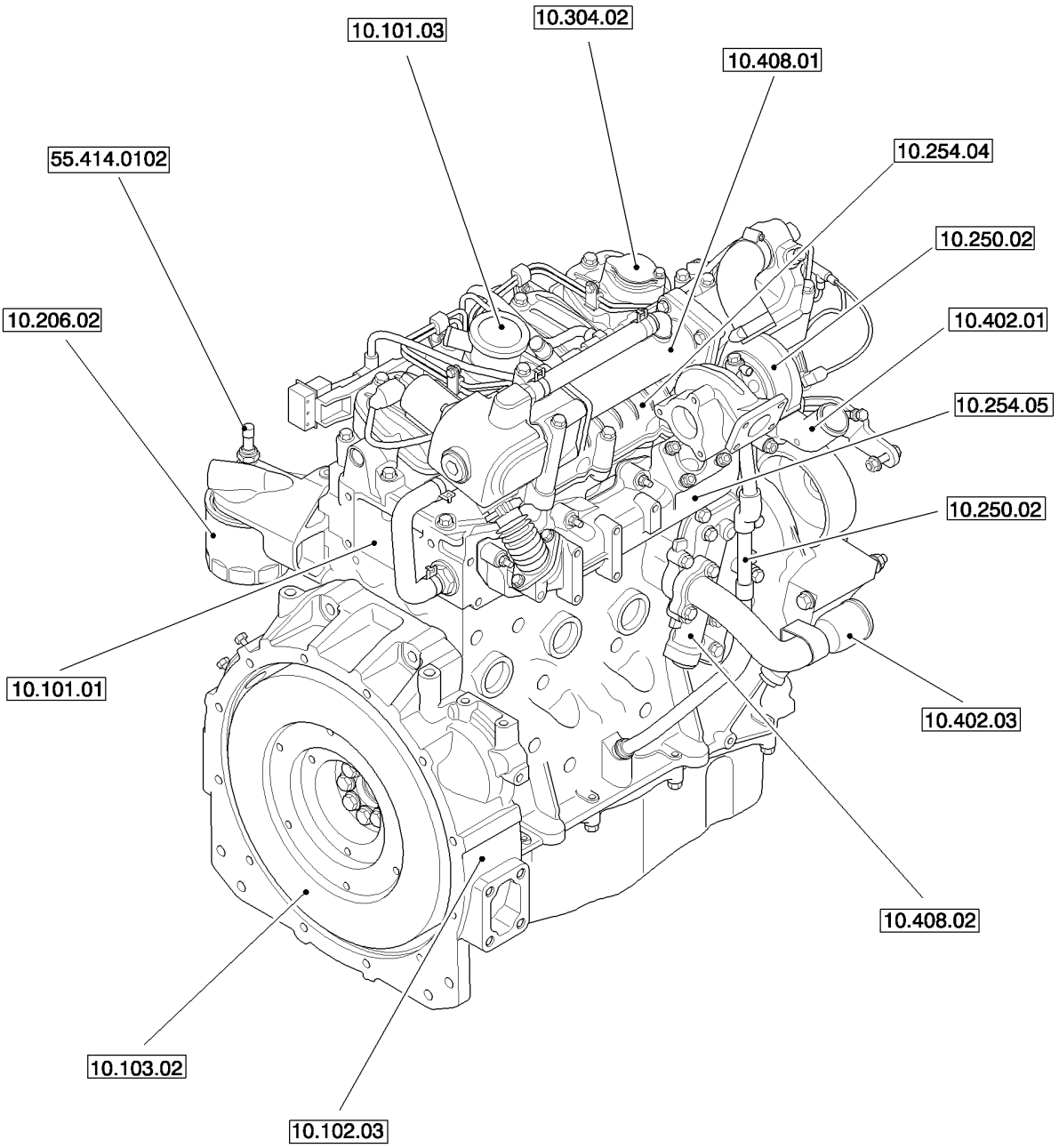

INDEX VISUEL - MOTEUR
ABBILDUNGSINDEX - MOTOR
BILLEDINDEKS - MOTOR
GRAFISCHE INDEXMOTOR

R	N	P.N.	MOD	Q	Denominação Description	Description Bezeichnung	Denominacion Beskrivelse	Descrizione Beschrijving	L.C.

10.001.01		p1	05/11

ENGINE ASSY (504387946)
ENGINE ASSY (504387946)
MOTOR (504387946)
MOTORE COMPLETO (504387946)

KIT KIT 2
3

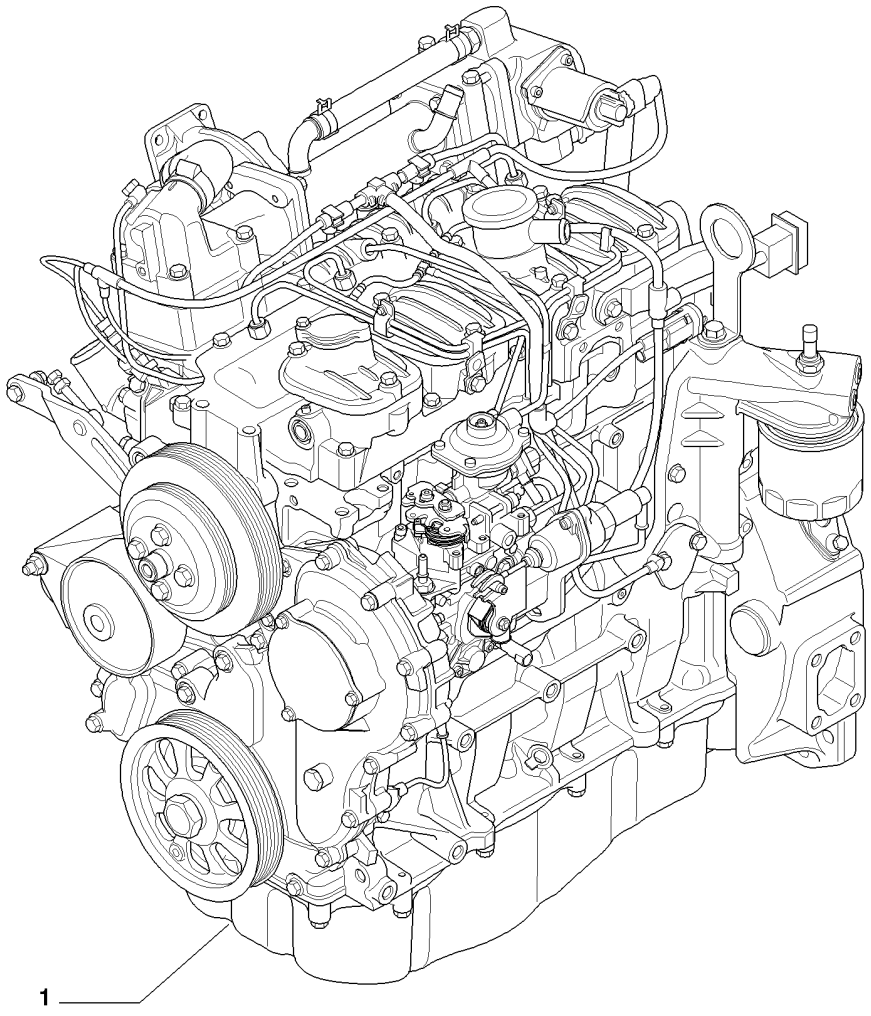

MOTEUR (504387946)
MOTOR (504387946)
MOTOR (504387946)
MOTOR (504387946)

R	N	P.N.	MOD	Q	Denominação Description	Description Bezeichnung	Denominacion Beskrivelse	Descrizione Beschrijving	L.C.
1		84230115		1	MOTOR, - ASSY (F5CE5454G*A001) - 55KW				
						ENGINE	MOTOR	MOTORE	130M
					MOTEUR	MOTOR	MOTOR	MOTOR	
2		8097550		1	KIT DE REVISÃO DO MOTOR				
						ENGINE OVERHAUL KIT	KIT DE REVISIÓN DEL M	KIT REVISIONE MOTORE	002K
					KIT DE REVISION MOTE	MOTORÜBERHOLUNGSS	MOTORREVISIONSSÆT	REVISIEKIT VOOR MOTO	
3		8097551		1	KIT DE GAXETAS SUP MOTOR				
						ENGINE TOP GASKETS I	KIT DE JUNTAS SUP. MO	KIT GUARN. SUPER. MO	318S
					KIT JOINTS SUP. MOTEU	SATZ OBERE MOTORDI(	VENTILSLIBESÆT	KIT MET BOVENPAKKIN(	

SR200

CYLINDER BLOCK & RELATED PARTS (504181441)
CYLINDER BLOCK & RELATED PARTS (504181441)
BLOQUE DE CILINDROS Y PIEZAS RELACIONADAS (504181441)
BASAMENTO MOTORE E PARTICOLARI RELATIVI (504181441)

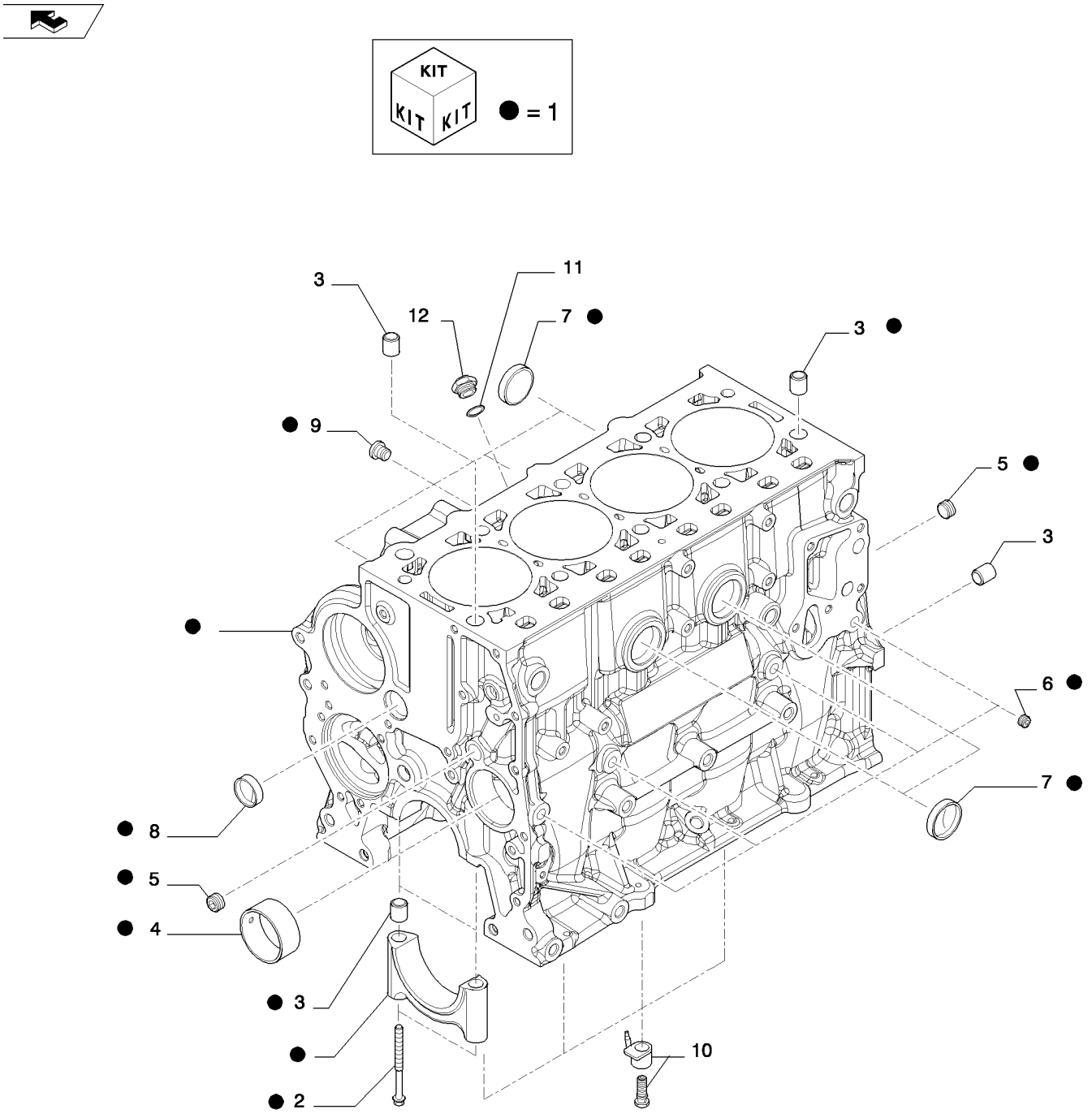

BLOC-MOTEUR ET PIÈCES ANNEXES (504181441)
KURBELGEHÄUSE UND DAZUGEHÖRIGE TEILE (504181441)
KRUMTAPHUS OG TILHØRENDE DELE (504181441)
MOTORBLOK EN DESBETREFFENDE DETAILS (504181441)

R	N	P.N.	MOD	Q	Denominação Description	Description Bezeichnung	Denominacion Beskrivelse	Descrizione Beschrijving	L.C.
1		504189766		1	BLOCO DE CILINDROS, - ASSY				
						CYLINDER BLOCK	BLOQUE DE CILINDRO	MONOBLOCCO	020B
					BLOC-CYLINDRES	ZYLINDERBLOCK	KRUMTAPHUS	CILINDERBLOK	
2		4891353		10	PARAFUSO, Flg Hd, M12 x 1.5 x 120				
						SCREW	TORNILLO	VITE	040V
					VIS	SCHRAUBE	SKRUE	SCHROEF	
3		7300019		14	GUIA	DOWEL	BULÓN	PERNO	090G
					GOUJON	PASSSTIFT	DYVEL	PASPEN	
4		4895040		1	BUCHA	BUSHING	CASQUILLO	BOCCOLA	095B
					BAGUE	BUCHSE	BØSNING	BUS	
5		504051238		3	BUJÃO, D. 3/8"	PLUG	TAPÓN	TAPPO	050T
					BOUCHON	STOPFEN	PROP	PLUG	
6		504051236		4	BUJÃO, D. 1/8"	PLUG	TAPÓN	TAPPO	050T
					BOUCHON	STOPFEN	PROP	PLUG	
7		16989101		6	BUJÃO	PLUG	TAPÓN	TAPPO	050T
					BOUCHON	STOPFEN	PROP	PLUG	
8		16988701		1	BUJÃO, D. 30 mm	PLUG	TAPÓN	TAPPO	050T
					BOUCHON	STOPFEN	PROP	PLUG	
9		504016052		1	BUJÃO, M14X1,5	PLUG	TAPÓN	TAPPO	050T
					BOUCHON	STOPFEN	PROP	PLUG	
10		504156515		4	PULVERIZADOR DE ÓLEO	LUBE OIL JET NOZZLE	BOQ. INYEC. ACEITE LU	UGELLO OLIO LUBRIFIC	020U
					GICLEUR D'HUILE	SCHMIERÖLSPRITZDÜS	DYSE, SMØREOLIE	SMEEROLIESPROEIER	
11		504077652		1	VEDAÇÃO	SEAL	ANILLO DE CIERRE	GUARNIZIONE; TENUTA	132A
					JOINT	DICHTUNG	PAKNING	AFDICHTING	
12				1					

10.012.01		p1	07/11

ENGINE MOUNTING (SR200-TV380)
ENGINE MOUNTING (SR200-TV380)
ENGINE MOUNTING (SR200-TV380)
ENGINE MOUNTING (SR200-TV380)

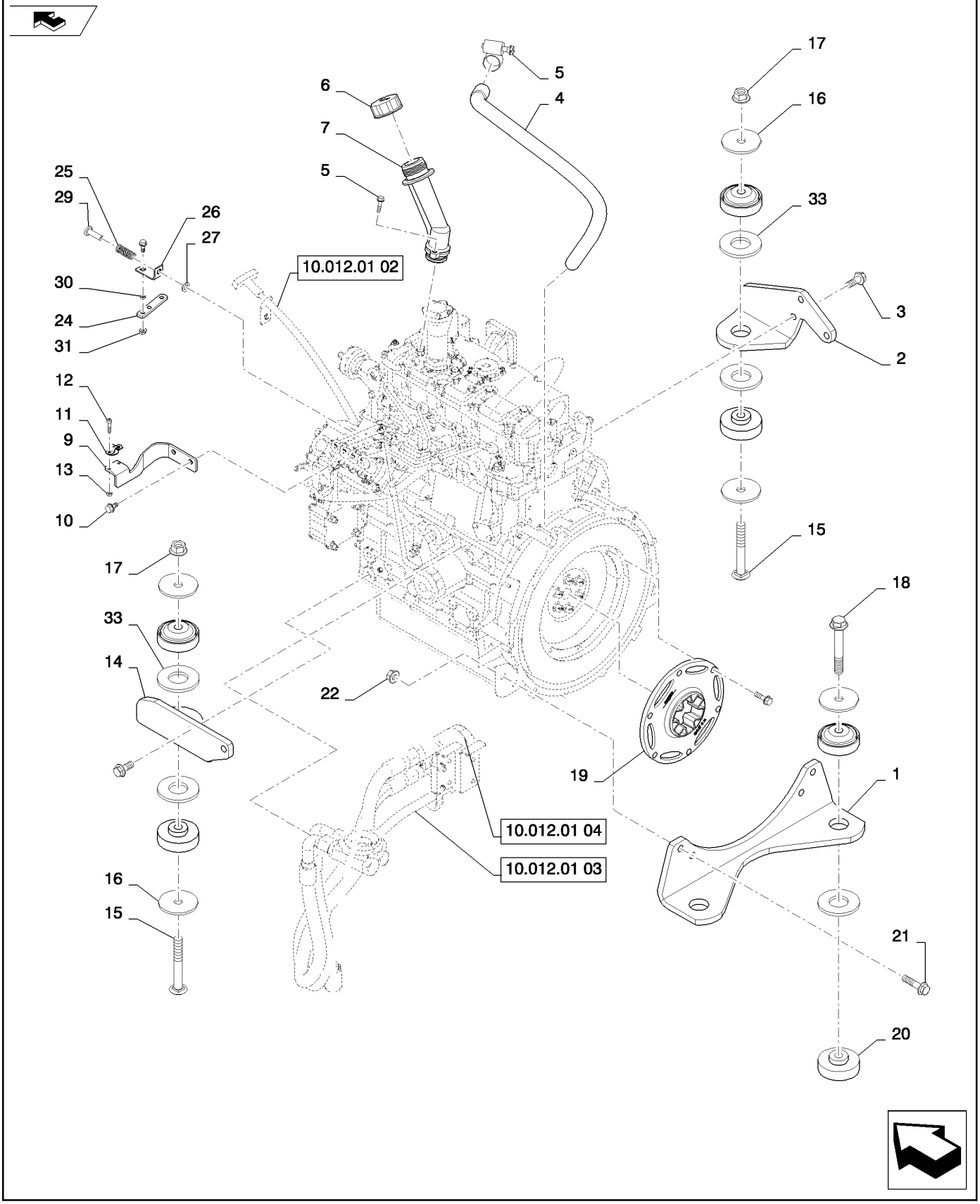

ENGINE MOUNTING (SR200-TV380)
ENGINE MOUNTING (SR200-TV380)
ENGINE MOUNTING (SR200-TV380)
ENGINE MOUNTING (SR200-TV380)

R	N	P.N.	MOD	Q	Denominação Description	Description Bezeichnung	Denominacion Beskrivelse	Descrizione Beschrijving	L.C.
1		84239651		1	PLACA DE MONTAGEM, F5C Pump, Gray				
						MOUNTING PLATE	PLACA DE MONTAJE	PIASTRA DI MONTAGGIO	109P
					PLAQUE DE MONTAGE	MONTAGEPLATTE	MONTERINGSPLADE	BEVESTIGINGSPLAAT	
2		84239653		1	PLACA DE MONTAGEM, F5C Fan, LH, Gray				
						MOUNTING PLATE	PLACA DE MONTAJE	PIASTRA DI MONTAGGIO	109P
					PLAQUE DE MONTAGE	MONTAGEPLATTE	MONTERINGSPLADE	BEVESTIGINGSPLAAT	
3		87030508		5	PARAFUSO, Hex Flg, M12 x 30, 10.9, Full Thd				
						BOLT	PERNO	BULLONE	140B
					VIS	SCHRAUBE	BOLT	BOUT	
4		84204223		1	MANGUEIRA ADMISSÃO DE AR, CCV				
						INTAKE AIR HOSE	TUBO DE ADMISIÓN DE	TUBO FLESS. ARIA ASPI	A059
					DURIT D'ADMISSION D'A	LUFTEINLASSSCHLAUCH	SLANGE, LUFTINDSUGN	INLAATLUCHTSLANG	
5		86625021		1	BRAÇADEIRA MANGUEIRA, #12, 0.69/1.25 Type F Worm				
						HOSE CLAMP	ABRAZADERA DE MANG	FASCETTA STRINGITUB	P729
					COLLIER POUR FLEXIBL	SCHLAUCHSCHELLE	SLANGEKLEMME	SLANGKLEM	
6		87674802		1	TAMPA, Oil Fill	CAP	TAPÓN	TAPPO	052T
					CAPUCHON	KAPPE	TANKDÆKSEL	DOP	
7		87680042		1	GARGALO, Neck A, Oil	NECK FILLER	BOCA DE LLENADO	BOCCHETTONE RIEMPII	5720
					GOULOT DE REMPLISSA	EINFÜLLSTUTZEN	HALSFILLER	VULHALS	
8		9804257		2	PARAFUSO, Hex Flg, M6 x 25, 8.8				
						BOLT	PERNO	BULLONE	140B
					VIS	SCHRAUBE	BOLT	BOUT	
9		84259542		1	SUPORTE, Throttle Cable	BRACKET	SOPORTE	STAFFA	225S
					SUPPORT	HALTERUNG	BESLAG	STEUN	
10		86511841		2	PARAFUSO, Hex Flg, M8 x 16, 8.8				
						BOLT	PERNO	BULLONE	140B
					VIS	SCHRAUBE	BOLT	BOUT	
11		84200938		1	BRAÇADEIRA, Throttle Cable				
						CLAMP	ABRAZADERA	MORSETTO	120M
					COLLIER	KLEMME	SPÆNDEBÅND	KLEM	
12		86639294		2	PARAFUSO, Hex Soc Hd, M4 x 20, 8.8				
						SCREW	TORNILLO	VITE	040V
					VIS	SCHRAUBE	SKRUE	SCHROEF	
13		100012		2	PORCA, M4, Cl 8	NUT	TUERCA	DADO	010D
					ECROU	MUTTER	MØTRIK	MOER	
14		84239654		1	PLACA DE MONTAGEM, F5C Fan, RH, Gray				
						MOUNTING PLATE	PLACA DE MONTAJE	PIASTRA DI MONTAGGIO	109P
					PLAQUE DE MONTAGE	MONTAGEPLATTE	MONTERINGSPLADE	BEVESTIGINGSPLAAT	
15		300663		2	PARAFUSO, Short NK, M16 x 120, Cl8.8				
						CARRIAGE BOLT	PERNO ALOMADO	BULLONE A TESTA TON	P123
					VIS A TETE BOMBEE	SCHLOSSSCHRAUBE	BRÆDDEBOLT	SLOTBOUT	
16		87630175		6	ARRUELA PLANA	WASHER	ARANDELA	RONDELLA	131R
					RONDELLE	UNTERLEGSCHEIBE	FLADSKIVE	SLUITRING	
17		86512498		2	PORCA, M16 x 2, Flg, Cl 10	NUT	TUERCA	DADO	010D
					ECROU	MUTTER	MØTRIK	MOER	
18		87015923		2	PARAFUSO, Hex Flg, M16 x 110, 10.9, Full Thd				
						BOLT	PERNO	BULLONE	140B
					VIS	SCHRAUBE	BOLT	BOUT	

10.012.01		p2	07/11

ENGINE MOUNTING (SR200-TV380)
ENGINE MOUNTING (SR200-TV380)
ENGINE MOUNTING (SR200-TV380)
ENGINE MOUNTING (SR200-TV380)

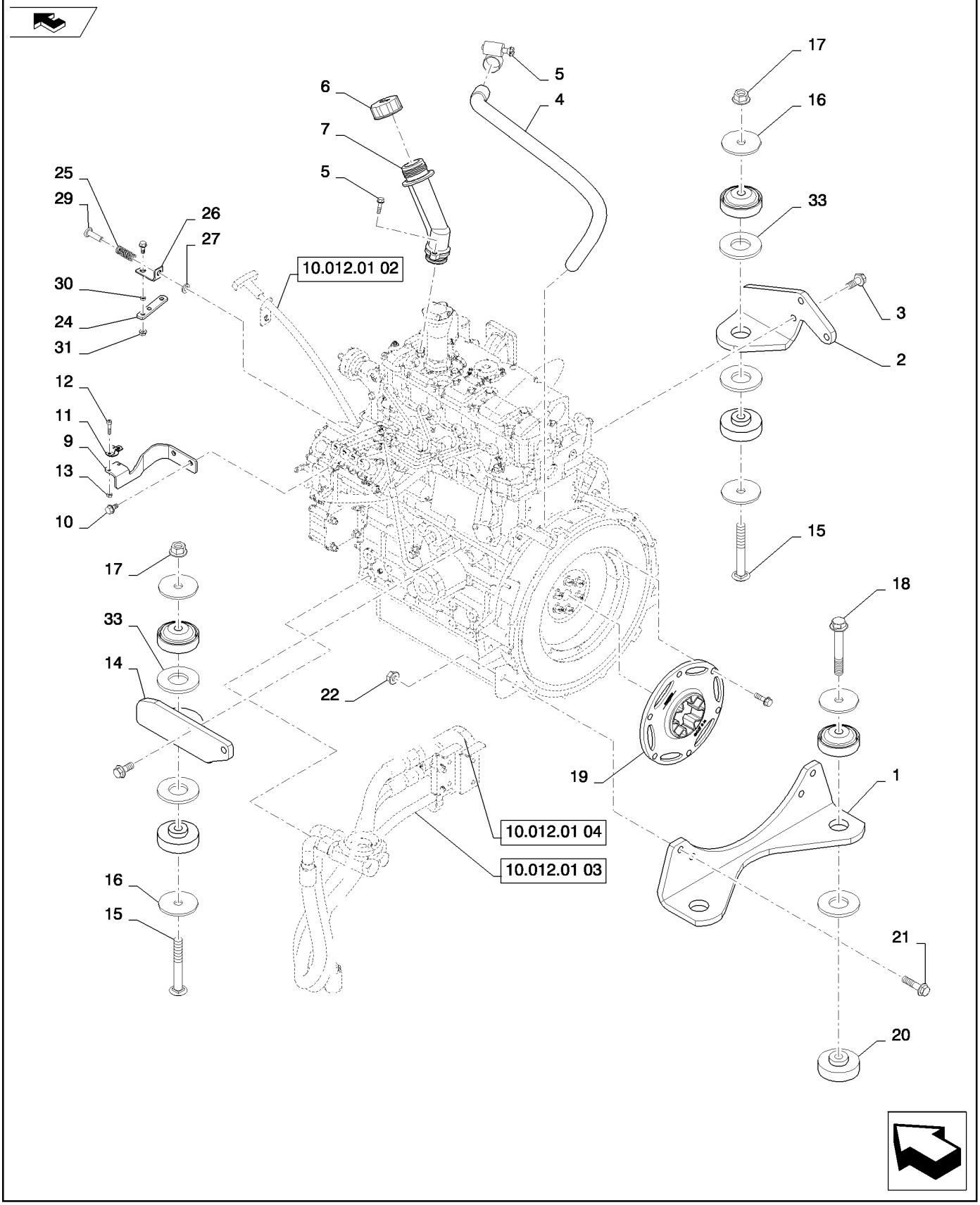

ENGINE MOUNTING (SR200-TV380)
ENGINE MOUNTING (SR200-TV380)
ENGINE MOUNTING (SR200-TV380)
ENGINE MOUNTING (SR200-TV380)

R	N	P.N.	MOD	Q	Denominação Description	Description Bezeichnung	Denominacion Beskrivelse	Descrizione Beschrijving	L.C.
19		87692685		1	ENGATE, Flexible	COUPLING	ACOPLAMIENTO	GIUNTO	Z321
					RACCORD	KUPPLUNG	KOBLING	KOPPELING	
20		84201266		8	ISOLADOR, Mount, ISO Engine				
						ISOLATOR	AISLADOR	ISOLATORE	Z082
					ISOLANT	ISOLATOR	ISOLATOR	ISOLATIE	
21		87670764		4	PARAFUSO, M12 X 50	BOLT	PERNO	BULLONE	140B
					VIS	SCHRAUBE	BOLT	BOUT	
22		86512497		4	PORCA, M12 x 1.75, Flg, Cl 10				
						NUT	TUERCA	DADO	010D
					ECROU	MUTTER	MØTRIK	MOER	
23		9804260		6	PARAFUSO, Hex Flg, M8 x 30, 8.8, Full Thd				
						BOLT	PERNO	BULLONE	140B
					VIS	SCHRAUBE	BOLT	BOUT	
24		84276430		1	SUPORTE, Throttle	BRACKET	SOPORTE	STAFFA	225S
					SUPPORT	HALTERUNG	BESLAG	STEUN	
25		84380082		1	MOLA, Throttle	SPRING	RESORTE	MOLLA	100M
					RESSORT	FEDER	FJEDER	VEER	
26		9844532		1	SUPORTE	BRACKET	SOPORTE	STAFFA	225S
					SUPPORT	HALTERUNG	BESLAG	STEUN	
27		86588450		1	ARRUELA PLANA, M6 x 12 x 1.6 Thk				
						WASHER	ARANDELA	RONDELLA	131R
					RONDELLE	UNTERLEGSCHEIBE	FLADSKIVE	SLUITRING	
28		9804255		3	PARAFUSO, Hex Flg, M6 x 16, 8.8				
						BOLT	PERNO	BULLONE	140B
					VIS	SCHRAUBE	BOLT	BOUT	
29		9860169		1	REBITE, Drilled	RIVET	REMACHE	RIVETTO	055R
					RIVET	NIET	NITTE	KLINKNAGEL	
30		13734		1	ESPAÇADOR	SPACER	SEPARADOR	DISTANZIALE	075D
					ENTRETOISE	DISTANZSTÜCK	AFSTANDSSTYKKE	AFSTANDSSTUK	
31		9804276		1	PORCA, M6 x 1, Flg, Cl 8	NUT	TUERCA	DADO	010D
					ECROU	MUTTER	MØTRIK	MOER	
32		L11541		1	PRENDEDOR DE CABOS, Tie				
						CABLE STRAP	BANDA DE CABLE	FASCETTA PER CAVO	P716
					BRIDE DE CABLE	KABELBINDER	KABELSTROP	BUNDELBAND	
33		3562		2	ARRUELA PLANA, Engine Mount				
						WASHER	ARANDELA	RONDELLA	131R
					RONDELLE	UNTERLEGSCHEIBE	FLADSKIVE	SLUITRING	

10.012.01	02	p1	05/11

REMOTE DIPSTICK (SR200-TV380)
REMOTE DIPSTICK (SR200-TV380)
REMOTE DIPSTICK (SR200-TV380)
REMOTE DIPSTICK (SR200-TV380)

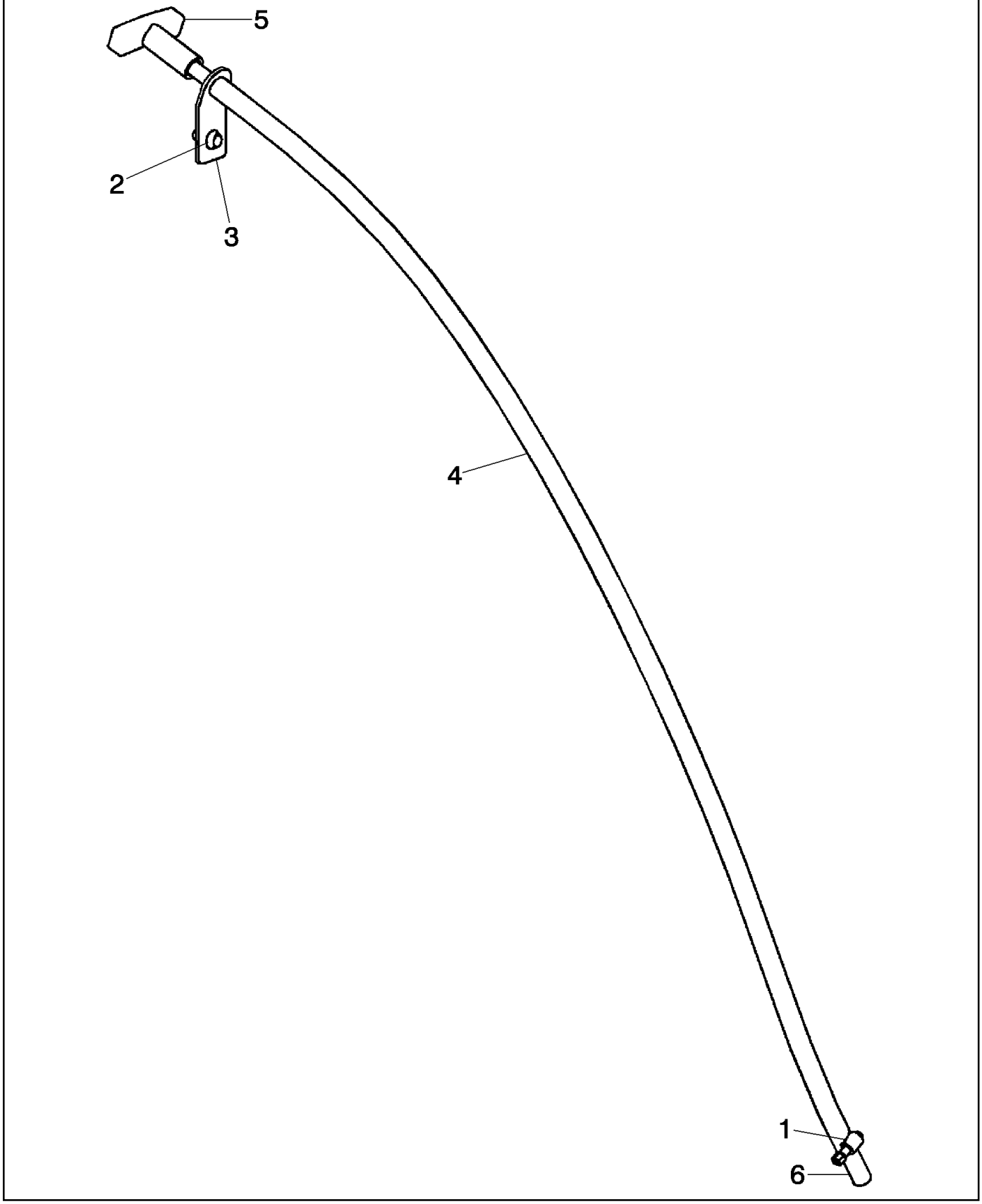

REMOTE DIPSTICK (SR200-TV380)
REMOTE DIPSTICK (SR200-TV380)
REMOTE DIPSTICK (SR200-TV380)
REMOTE DIPSTICK (SR200-TV380)

R	N	P.N.	MOD	Q	Denominação Description	Description Bezeichnung	Denominacion Beskrivelse	Descrizione Beschrijving	L.C.
1		574518		1	BRAÇADEIRA MANGUEIRA, #4, 0.25/0.62 Type M Worm				
						HOSE CLAMP	ABRAZADERA DE MANG	FASCETTA STRINGITUB	P729
					COLLIER POUR FLEXIBL	SCHLAUCHSCHELLE	SLANGEKLEMME	SLANGKLEM	
2		84163981		1	PARAFUSO, M6x15	SCREW	TORNILLO	VITE	040V
					VIS	SCHRAUBE	SKRUE	SCHROEF	
3		84259455		1	SUPORTE, Dipstick Tube	BRACKET	SOPORTE	STAFFA	225S
					SUPPORT	HALTERUNG	BESLAG	STEUN	
4		84259456		1	TUBO PLÁSTICO, 9.55 mm OD x 886 mm L, Dipstick				
						PLASTIC-RUBBER TUBE	TUBO DE GOMA DE PLÁ	TUBO IN PLASTICA-GOM	Z192
					GAINE PLASTIQUE	KUNSTSTOFF-/GUMMI-R	PLASTIKGUMMISLANGE	KUNSTSTOF-RUBBERLE	
5		84280441		1	HASTE DE NÍVEL, Engine	DIPSTICK	VARILLA DE NIVEL	ASTINA DI LIVELLO	091A
					JAUGE DE NIVEAU	MESSSTAB	MÅLEPIND	PEILSTOK	
6		87578147		1	ADAPTADOR, F5C Block To Dipstick				
						ADAPTER	ADAPTADOR	ADATTATORE	001A
					ADAPTATEUR	ADAPTER	ADAPTER	ADAPTER	
7		86632601		1	TRAVA DA ARRUELA, Ext Tooth, M8, (Not Shown) Use to mount Ref. 3				
						LOCK WASHER	ARANDELA DE BLOQUE	RONDELLA DI SICUREZ	132R
					RONDELLE FREIN	SICHERUNGSSCHEIBE	LÅSESKIVE	BORGRING	

SR200

10.012.01	03	p1	02/11

REMOTE OIL DRAIN (SR200-TV380)
REMOTE OIL DRAIN (SR200-TV380)
REMOTE OIL DRAIN (SR200-TV380)
REMOTE OIL DRAIN (SR200-TV380)

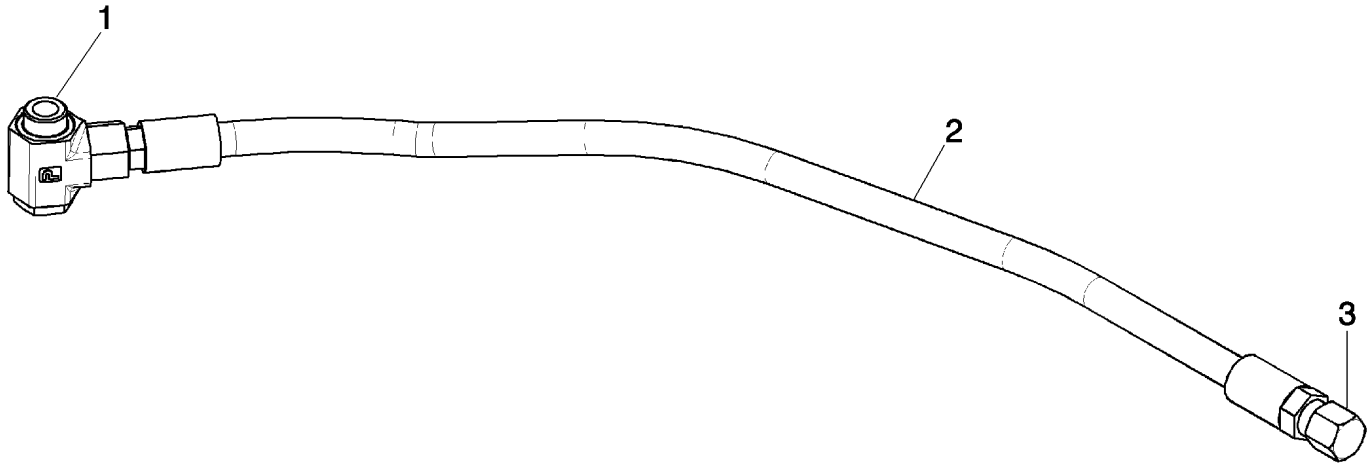

REMOTE OIL DRAIN (SR200-TV380)
REMOTE OIL DRAIN (SR200-TV380)
REMOTE OIL DRAIN (SR200-TV380)
REMOTE OIL DRAIN (SR200-TV380)

R	N	P.N.	MOD	Q	Denominação Description Bezeichnung Beskrivelse Descrizione Beschrijving	L.C.
1		87742610		1	CONEXÃO, Oil Pan FITTING ACOPLAMIENTO RACCORDO RACCORD ARMATUR FITTING AANSLUITING	3300
2		84201423		1	MANGUEIRA, Remote Oil Drain HOSE TUBO TUBO FLESSIBILE FLEXIBLE SCHLAUCH SLANGE SLANG	030M
3		262159		1	TAMPA, 37°, 3/4"-16 CAP TAPÓN TAPPO CAPUCHON KAPPE TANKDÆKSEL DOP	052T

10.012.01	04	p1	02/11

REMOTE ENGINE OIL (SR200-TV380)
REMOTE ENGINE OIL (SR200-TV380)
REMOTE ENGINE OIL (SR200-TV380)
REMOTE ENGINE OIL (SR200-TV380)

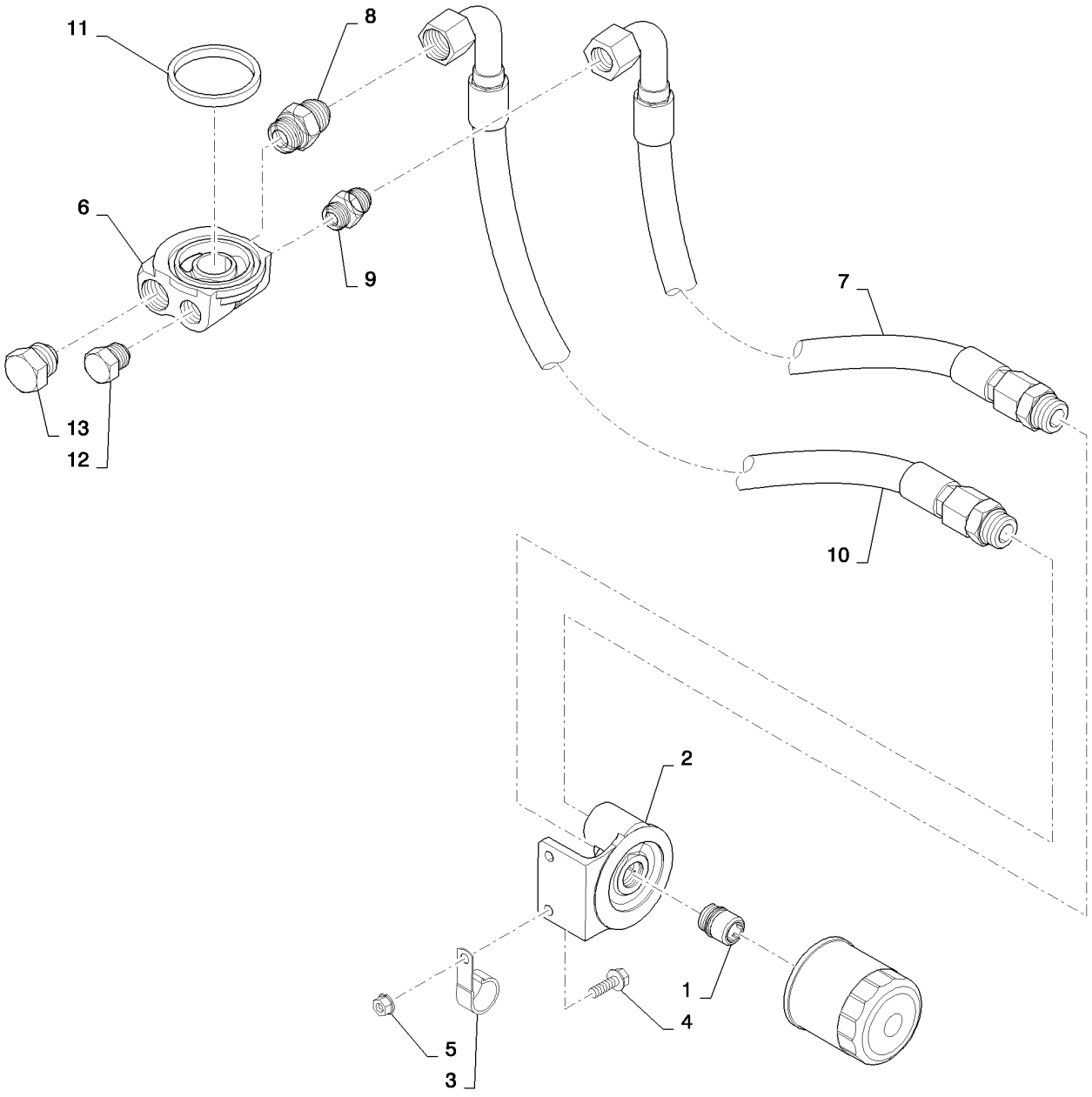

REMOTE ENGINE OIL (SR200-TV380)
REMOTE ENGINE OIL (SR200-TV380)
REMOTE ENGINE OIL (SR200-TV380)
REMOTE ENGINE OIL (SR200-TV380)

R	N	P.N.	MOD	Q	Denominação Description Bezeichnung	Denominacion Beskrivelse	Descrizione Beschrijving	L.C.
1		84297794		1	ADAPTADOR, Filter Head, F5C Engine ADAPTER ADAPTATEUR ADAPTER	ADAPTADOR ADAPTER	ADATTATORE ADAPTER	001A
2		84296830		1	ADAPTADOR, Oil Filter ADAPTER ADAPTATEUR ADAPTER	ADAPTADOR ADAPTER	ADATTATORE ADAPTER	001A
3		87313351		1	GRAMPO, J, 25.4mm CLIP COLLIER KLAMMER	ABRAZADERA KLIPS	FERMO KLEM	045F
4		9671714		2	PARAFUSO, Hex Flg, M8 x 25, 8.8 BOLT VIS SCHRAUBE	PERNO BOLT	BULLONE BOUT	140B
5		9804277		2	PORCA, M8 x 1.25, Flg, Cl 8 NUT ECROU MUTTER	TUERCA MØTRIK	DADO MOER	010D
6		84296854		1	ADAPTADOR, Oil Filter, F5C ADAPTER ADAPTATEUR ADAPTER	ADAPTADOR ADAPTER	ADATTATORE ADAPTER	001A
7		84269293		1	MANGUEIRA HIDRÁULICA, Remote Oil Filter HYDRAULIC HOSE FLEXIBLE HYDRAULIQUI HYDRAULIKSCHLAUCH	TUBO HIDRÁULICO SLANGE, HYDRAULIK	TUBO FLESSIBILE IDRAU HYDRAULISCHE SLANG	A058
8		322896		2	CONECTOR HIDRÁUL, 1 1/16"-12, 37º x 1 1/16"-12, O-Ring HYD CONNECTOR CONNECTEUR HYDRAU HYDR STECKVERBINDE	CONECTOR HIDRÁULIC HYDRAULIKSTIK	CONNETTORE IDRAULIC HYDRAULISCHE AANSLI	020R
9		87301330		2	CONECTOR HIDRÁUL HYD CONNECTOR CONNECTEUR HYDRAU HYDR STECKVERBINDE	CONECTOR HIDRÁULIC HYDRAULIKSTIK	CONNETTORE IDRAULIC HYDRAULISCHE AANSLI	020R
10		84305911		1	MANGUEIRA HIDRÁULICA, Remote Oil Filter HYDRAULIC HOSE FLEXIBLE HYDRAULIQUI HYDRAULIKSCHLAUCH	TUBO HIDRÁULICO SLANGE, HYDRAULIK	TUBO FLESSIBILE IDRAU HYDRAULISCHE SLANG	A058
11		84303971		1	VEDADOR DE ÓLEO, Ring OIL SEAL JOINT ETANCHEITE D'HI ÖLDICHTUNG	JUNTA DE ACEITE OLIESEGL	PARAOLIO OLIEAFDICHTING	P278
12		86512512		1	BUJÃO, Hex Hd, 7/8"-14 ORB PLUG BOUCHON STOPFEN	TAPÓN PROP	TAPPO PLUG	050T
13		163410		1	BUJÃO, Hex Hd, 1 1/16"-12 ORB PLUG BOUCHON STOPFEN	TAPÓN PROP	TAPPO PLUG	050T
14		84353803		1	GUARNIÇÃO, 290 mm; Not Shown TRIM GARNITURE VERKLEIDUNG	GUARNICIÓN INDTRÆK	RIVESTIMENTO BEKLEDING	C046

10.012.04		p1	02/11

HOOKS - ENGINE (504154713)
HOOKS - ENGINE (504154713)
GANCHOS DE MANOIBRA - MOTOR (504154713)
GANCI MANOVRA - MOTORE (504154713)

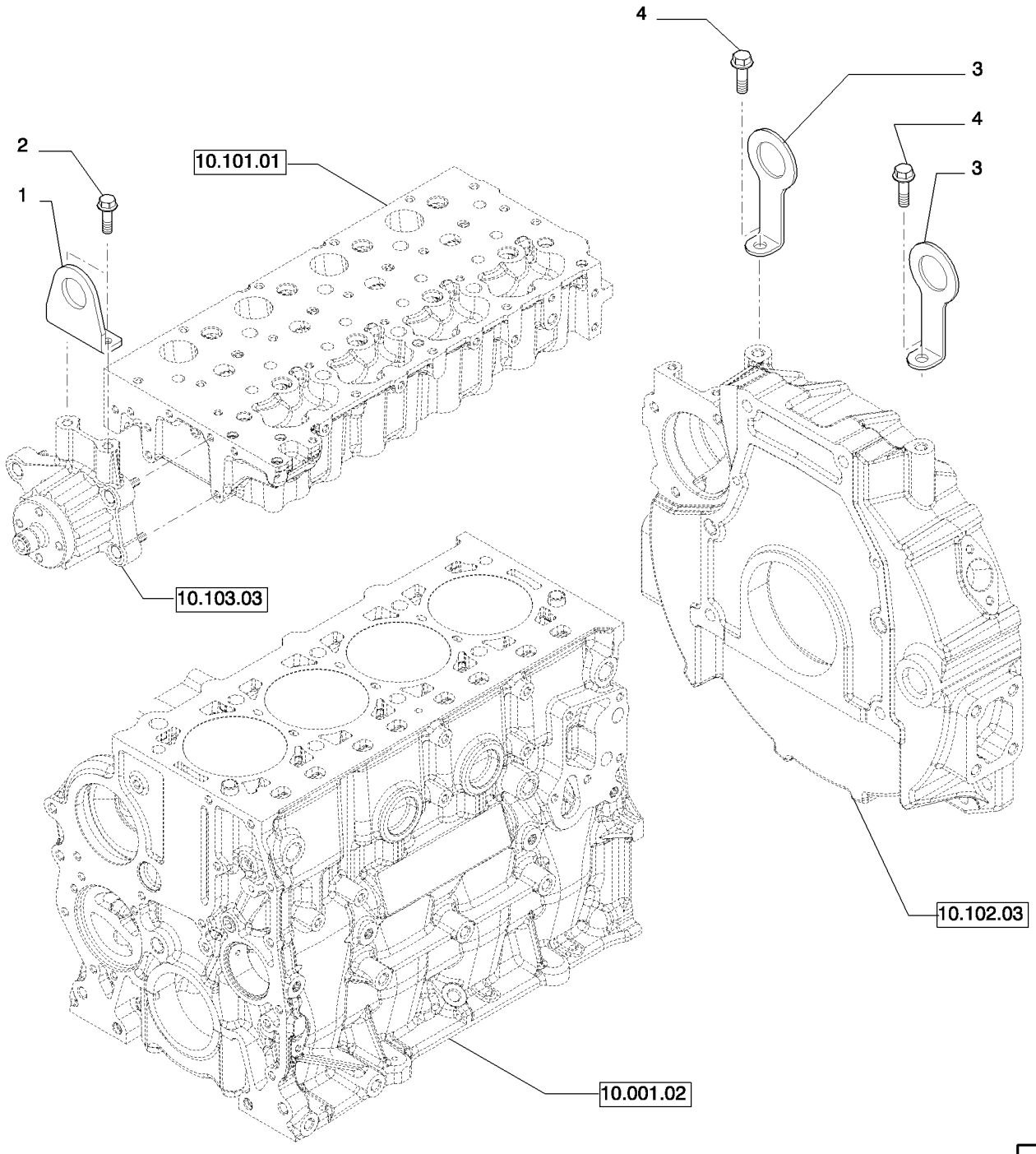

CROCHETS DE MANOEUVRE - MOTEUR (504154713)
ANKERHAKEN - MOTOR (504154713)
MANØVREKROGE - MOTOR (504154713)
HEFHAKEN - MOTOR (504154713)

R	N	P.N.	MOD	Q	Denominação Description	Description Bezeichnung	Denominacion Beskrivelse	Descrizione Beschrijving	L.C.
1		504082370		1	GANCHO CROCHET	HOOK HAKEN	GANCHO KROG	GANCIO HAAK	030G
2		18139424		2	PARAFUSO, M10 x 20 VIS	SCREW SCHRAUBE	TORNILLO SKRUE	VITE SCHROEF	040V
3		504239237		2	GANCHO CROCHET	HOOK HAKEN	GANCHO KROG	GANCIO HAAK	030G
4		16587925		2	PARAFUSO VIS	BOLT SCHRAUBE	PERNO BOLT	BULLONE BOUT	140B

CYLINDER HEAD & RELATED PARTS (504385845)
CYLINDER HEAD & RELATED PARTS (504385845)
CULATA Y PARTES RELACIONADAS (504385845)
TESTA CILINDRI E PARTICOLARI RELATIVI (504385845)

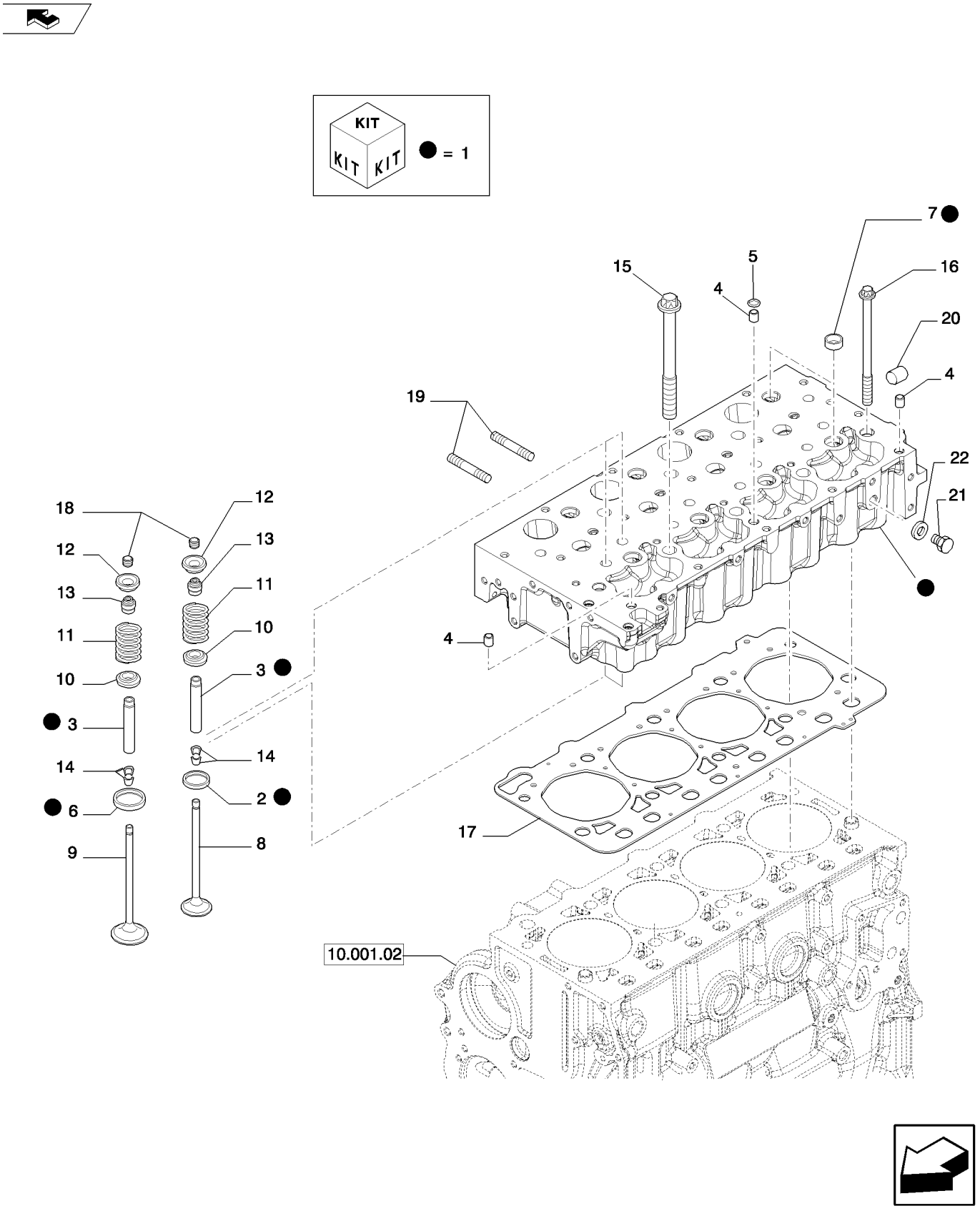

CULASSE ET PIECES ANNEXES (504385845)
ZYLINDERKOPF UND DAZUGEHÖRIGE TEILE (504385845)
CYLINDERHOVED OG TILHØRENDE DELE (504385845)
CYLINDERKOP EN DESBETREFFENDE DETAILS (504385845)

R	N	P.N.	MOD	Q	Denominação Description	Description Bezeichnung	Denominacion Beskrivelse	Descrizione Beschrijving	L.C.
1		504385846		1	CABEÇOTE, - ASSY Include Ref 2,3,6,7				
						CYLINDER HEAD	CULATA	TESTATA	113T
					CULASSE	ZYLINDERKOPF	CYLINDERHOVED	CILINDERKOP	
2		504162949		4	SEDE DE VÁLVULA	VALVE SEAT	ASIENTO DE VÁLVULA	SEDE VALVOLA	074S
					SIEGE DE SOUPAPE	VENTILSITZ	VENTIL, SÆDE	KLEPZITTING	
3		4749397		8	GUIA DE VÁLVULA, +0,05 mm				
						VALVE GUIDE	GUÍA DE VÁLVULA	GUIDA DELLA VALVOLA	150G
					GUIDE-SOUPAPE	VENTILFÜHRUNG	VENTILSTYR	KLEPGELEIDER	
3		4749398		8	GUIA DE VÁLVULA, +0,1 mm				
						VALVE GUIDE	GUÍA DE VÁLVULA	GUIDA DELLA VALVOLA	150G
					GUIDE-SOUPAPE	VENTILFÜHRUNG	VENTILSTYR	KLEPGELEIDER	
3		4749399		8	GUIA DE VÁLVULA, +0,25 mm				
						VALVE GUIDE	GUÍA DE VÁLVULA	GUIDA DELLA VALVOLA	150G
					GUIDE-SOUPAPE	VENTILFÜHRUNG	VENTILSTYR	KLEPGELEIDER	
4		99435557		3	GUIA, D. 8,5 mm	DOWEL	BULÓN	PERNO	090G
					GOUJON	PASSSTIFT	DYVEL	PASPEN	
5		17281481		1	O-RING, 10.7mm ID x 2.6mm Width, D. 10,7 mm SP=2,6 mm				
						O-RING	JUNTA TÓRICA	ANELLO TOROIDALE	055A
					JOINT TORIQUE	O-RING	O-RING	O-RING	
6		504254094		4	SEDE DE VÁLVULA	VALVE SEAT	ASIENTO DE VÁLVULA	SEDE VALVOLA	074S
					SIEGE DE SOUPAPE	VENTILSITZ	VENTIL, SÆDE	KLEPZITTING	
7		16988301		8	BUJÃO, D. 20 mm	PLUG	TAPÓN	TAPPO	050T
					BOUCHON	STOPFEN	PROP	PLUG	
8		504162958		4	VÁLVULA DE ADMISSÃO	STD ENGINE INLET VALV	VALV. ADM. DE MOTOR	VALV. ASPIR. MOTORE S	111V
					SOUP. ADMISSION MOT	STANDARD-MOTOREINL	INDSUGNINGSVENTIL, S	STANDAARDINLAATKLEI	
9		504162959		4	VÁLVULA DE ESCAPE	STD ENGINE EXHAUST V	VALV. ESCAPE MOTOR I	VALV. SCARICO MOTOR	112V
					SOUP. ECHAPPEMENT M	STANDARD-MOTORAUS	UDSTØDNINGSVENTIL, S	STANDAARDUITLAATKLI	
10		504178119		8	COPO RETENTOR	RETAINER CUP	COPA DE RETENCIÓN	SCODELLINO DI RITEGN	061S
					COUPELLE DE RETENUI	HALTEKAPPE	TALLERKENFORMET BÆ	OPVANGBAK	
11		4812347		8	MOLA	SPRING	RESORTE	MOLLA	100M
					RESSORT	FEDER	FJEDER	VEER	
12		4780558		8	COPO	CUP	TAZA	SCODELLINO	060S
					CUVETTE	TASSE	LEJESKÅL	SCHOTEL	
13		40101574		8	JUNTA	GASKET	JUNTA	GUARNIZIONE	123G
					JOINT	DICHTUNG	PAKNING	PAKKING	
14		14196670		16	TRAVA CÔNICA, D. 7,85 mm				
						ROCKER ARM COTTER	ALETA DE BALANCÍN	COPPIGLIA BILANCIERE	100S
					GOUPILLE BRAS CULBU	KIPPHEBELSTIFT	HALVKILE TIL VENTILLØ	TUIMELAARSPIE	
15		504081521		6	PARAFUSO, M15X1,5X193 mm				
						SCREW	TORNILLO	VITE	040V
					VIS	SCHRAUBE	SKRUE	SCHROEF	
16		504081533		4	PARAFUSO, M12X1,5X165 mm				
						SCREW	TORNILLO	VITE	040V
					VIS	SCHRAUBE	SKRUE	SCHROEF	
17		504190831		1	JUNTA DO CABEÇOTE, SP 0,8				
						CYLINDER HEAD GASKE	JUNTA DE CULATA	GUARNIZIONE TESTATA	129G
					JOINT DE CULASSE	ZYLINDERKOPFDICHTUI	TOPPAKNING	CILINDERKOPPAKKING	
18		4838680		8	TAMPA	CAP	TAPÓN	TAPPO	052T
					CAPUCHON	KAPPE	TANKDÆKSEL	DOP	

CYLINDER HEAD & RELATED PARTS (504385845)
CYLINDER HEAD & RELATED PARTS (504385845)
CULATA Y PARTES RELACIONADAS (504385845)
TESTA CILINDRI E PARTICOLARI RELATIVI (504385845)

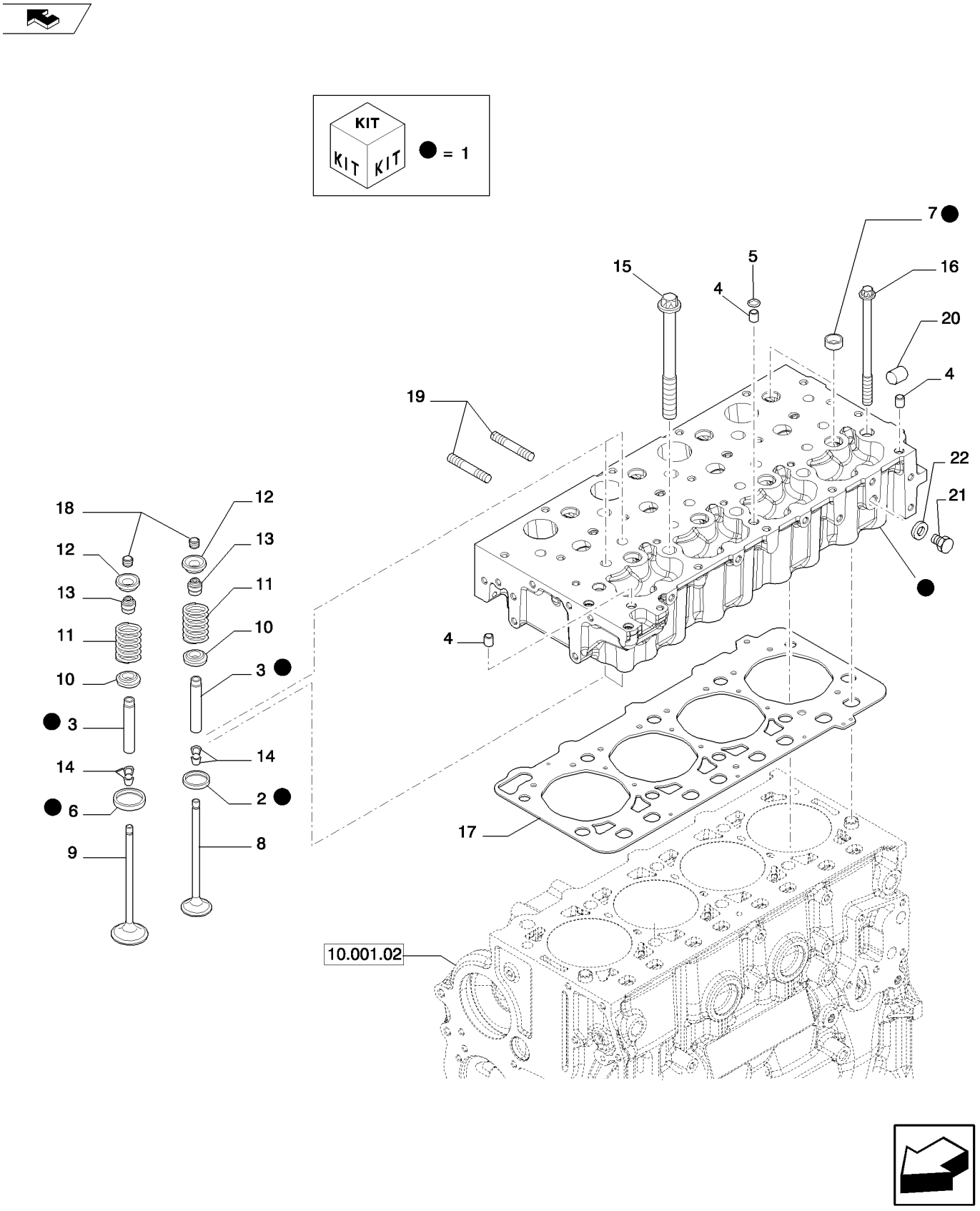

CULASSE ET PIECES ANNEXES (504385845)
ZYLINDERKOPF UND DAZUGEHÖRIGE TEILE (504385845)
CYLINDERHOVED OG TILHØRENDE DELE (504385845)
CYLINDERKOP EN DESBETREFFENDE DETAILS (504385845)

R	N	P.N.	MOD	Q	Denominação Description Bezeichnung	Description Bezeichnung Beskrivelse	Denominacion Beskrivelse Beschrijving	Descrizione Beschrijving	L.C.
19		**500380521**		8	PRISIONEIRO, M8 x 1.25 x 45				
					STUD	PRISIONERO	PRIGIONIERO		210P
					GOUJON	GEWINDEBOLZEN	STØTTEBOLT	TAPEIND	
20		**16990970**		1	BUJÃO	PLUG	TAPÓN	TAPPO	050T
					BOUCHON	STOPFEN	PROP	PLUG	
21		**10300511**		1	BUJÃO, M12 x 1.5 x 12, Cl5.8				
					PLUG		TAPÓN	TAPPO	050T
					BOUCHON	STOPFEN	PROP	PLUG	
22		**10298460**		1	ARRUELA DE COBRE, M12.2 x 18 x 1.5, Copper				
					COPPER WASHER		ARANDELA DE COBRE	RONDELLA IN RAME	P674
					RONDELLE CUIVRE	KUPFERUNTERLEGSCH	KOBBERSKIVE	KOPEREN SLUITRING	

10.101.02	01	p1	02/11

ROCKER SHAFT (504335547)
ROCKER SHAFT (504335547)
EJE BALANCINES (504335547)
ALBERO BILANCIERE (504335547)

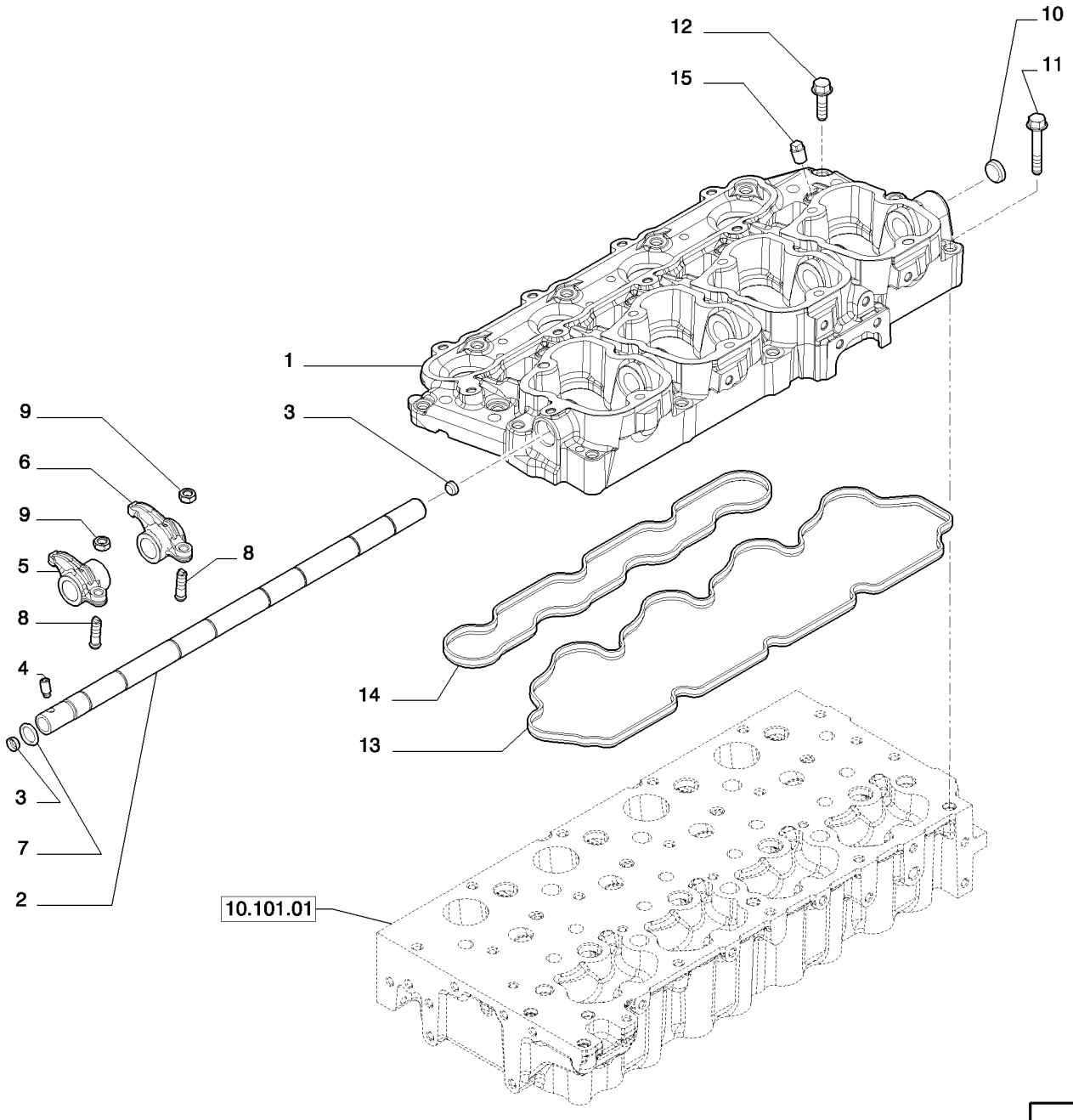

AXE DE CULBUTEUR (504335547)
KIPPHEBELWELLE (504335547)
VIPPEAKSEL (504335547)
TUIMELAARAS (504335547)

R	N	P.N.	MOD	Q	Denominação Description	Description Bezeichnung	Denominacion Beskrivelse	Descrizione Beschrijving	L.C.
1		504345342		1	TAMPA VÁLVULA COUVERCLE DE SOUPA	VALVE COVER VENTILDECKEL	TAPA DE VÁLVULA VENTILDÆKSEL	COPERCHIO VALVOLA KLEPPENDEKSEL	P889
2		504250345		1	EIXO ARBRE	SHAFT WELLE	EJE AKSEL	ALBERO AS	016A
3		16987801		2	BUJÃO, D. 12 mm BOUCHON	PLUG STOPFEN	TAPÓN PROP	TAPPO PLUG	050T
4		99454296		1	PARAFUSO VIS	SCREW SCHRAUBE	TORNILLO SKRUE	VITE SCHROEF	040V
5		504221915		4	BALANCIM BRAS DE CULBUTEUR	ROCKER ARM KIPPHEBELARM	BRAZO DE BALANCÍN VIPPEARM	BILANCIERE TUIMELAARARM	055B
6		504221914		4	BALANCIM BRAS DE CULBUTEUR	ROCKER ARM KIPPHEBELARM	BRAZO DE BALANCÍN VIPPEARM	BILANCIERE TUIMELAARARM	055B
7		17281681		1	O-RING, 13.9mm ID x 2.6mm Width, D. 13,9 mm SP=2,6 mm JOINT TORIQUE	O-RING O-RING	JUNTA TÓRICA O-RING	ANELLO TOROIDALE O-RING	055A
8		4699783		8	PARAFUSO VIS	SCREW SCHRAUBE	TORNILLO SKRUE	VITE SCHROEF	040V
9		4338920		8	PORCA ECROU	NUT MUTTER	TUERCA MØTRIK	DADO MOER	010D
10		16988401		1	BUJÃO, D. 22 mm BOUCHON	PLUG STOPFEN	TAPÓN PROP	TAPPO PLUG	050T
11		16586524		9	PARAFUSO, Hex, Flg Hd, M8 x 30, 8.8, M8 x 50 VIS	SCREW SCHRAUBE	TORNILLO SKRUE	VITE SCHROEF	040V
12		16673835		11	PARAFUSO, M8 x 30 VIS	SCREW SCHRAUBE	TORNILLO SKRUE	VITE SCHROEF	040V
13		504163121		1	JUNTA JOINT	GASKET DICHTUNG	JUNTA PAKNING	GUARNIZIONE PAKKING	123G
14		504177226		1	JUNTA JOINT	GASKET DICHTUNG	JUNTA PAKNING	GUARNIZIONE PAKKING	123G
15		504273002		4	BUJÃO, M12X1,5 mm BOUCHON	PLUG STOPFEN	TAPÓN PROP	TAPPO PLUG	050T

10.101.02	02	p1	02/11

CYLINDER HEAD COVERS (504191694)
CYLINDER HEAD COVERS (504191694)
TAPAS CULATA (504191694)
COPERCHI TESTA CILINDRI (504191694)

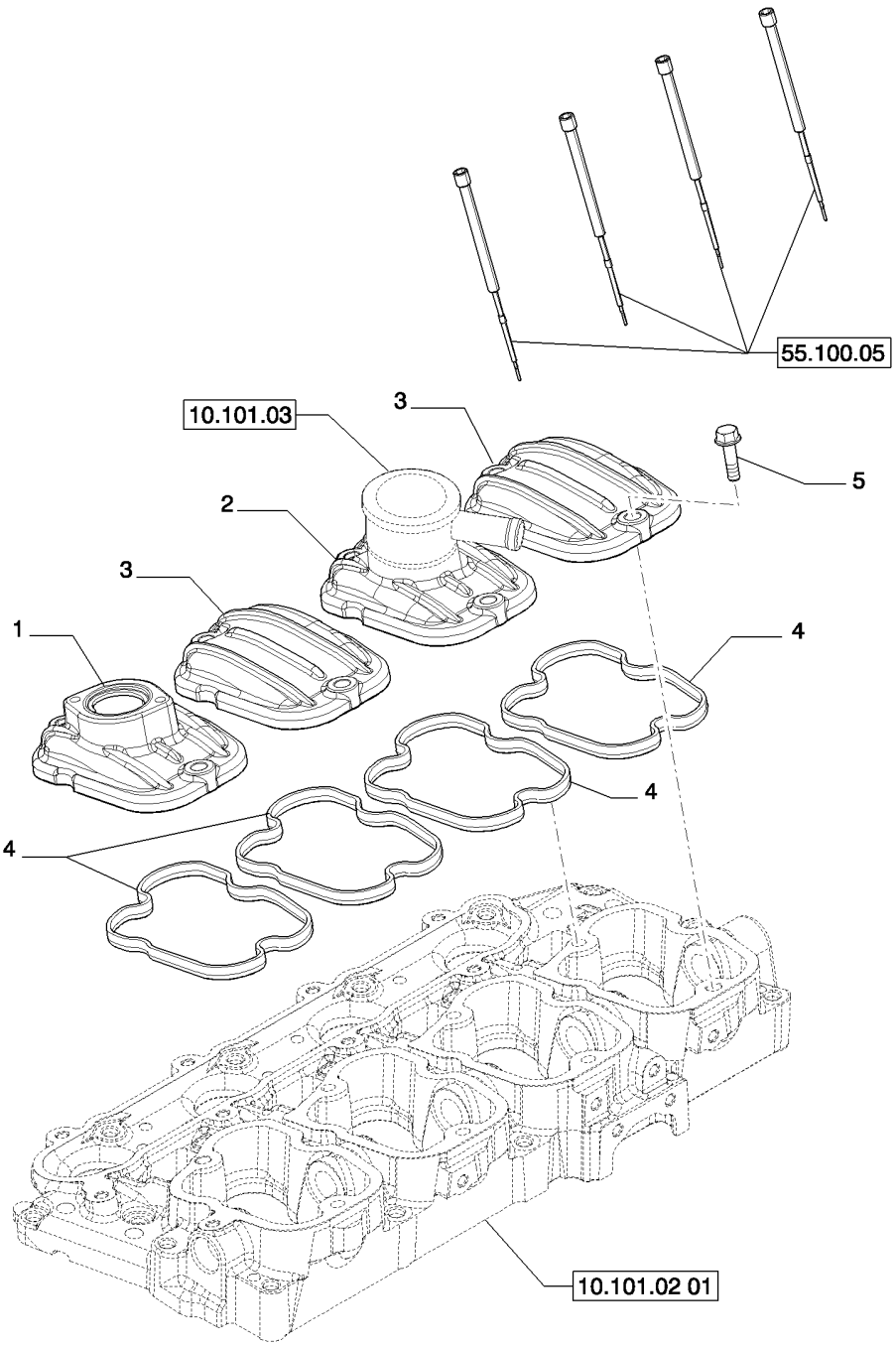

COUVERCLES CULASSE (504191694)
VENTILDECKEL (504191694)
TOPSTYKSDÆKSEL (504191694)
DEKSELS CILINDERKOPPEN (504191694)

R	N	P.N.	MOD	Q	Denominação Description	Description Bezeichnung	Denominacion Beskrivelse	Descrizione Beschrijving	L.C.
1		504245566		1	TAMPA VÁLVULA COUVERCLE DE SOUPA	VALVE COVER VENTILDECKEL	TAPA DE VÁLVULA VENTILDÆKSEL	COPERCHIO VALVOLA KLEPPENDEKSEL	P889
2		504349057		1	TAMPA VÁLVULA COUVERCLE DE SOUPA	VALVE COVER VENTILDECKEL	TAPA DE VÁLVULA VENTILDÆKSEL	COPERCHIO VALVOLA KLEPPENDEKSEL	P889
3		504221916		2	TAMPA VÁLVULA COUVERCLE DE SOUPA	VALVE COVER VENTILDECKEL	TAPA DE VÁLVULA VENTILDÆKSEL	COPERCHIO VALVOLA KLEPPENDEKSEL	P889
4		504173590		4	JUNTA JOINT	GASKET DICHTUNG	JUNTA PAKNING	GUARNIZIONE PAKKING	123G
5		16586624		8	PARAFUSO, M8X30 mm VIS	SCREW SCHRAUBE	TORNILLO SKRUE	VITE SCHROEF	040V

10.101.03		p1	02/11

ENGINE BREATHERS (504245734)
ENGINE BREATHERS (504245734)
RESPIRADEROS MOTOR (504245734)
SFIATI MOTORE (504245734)

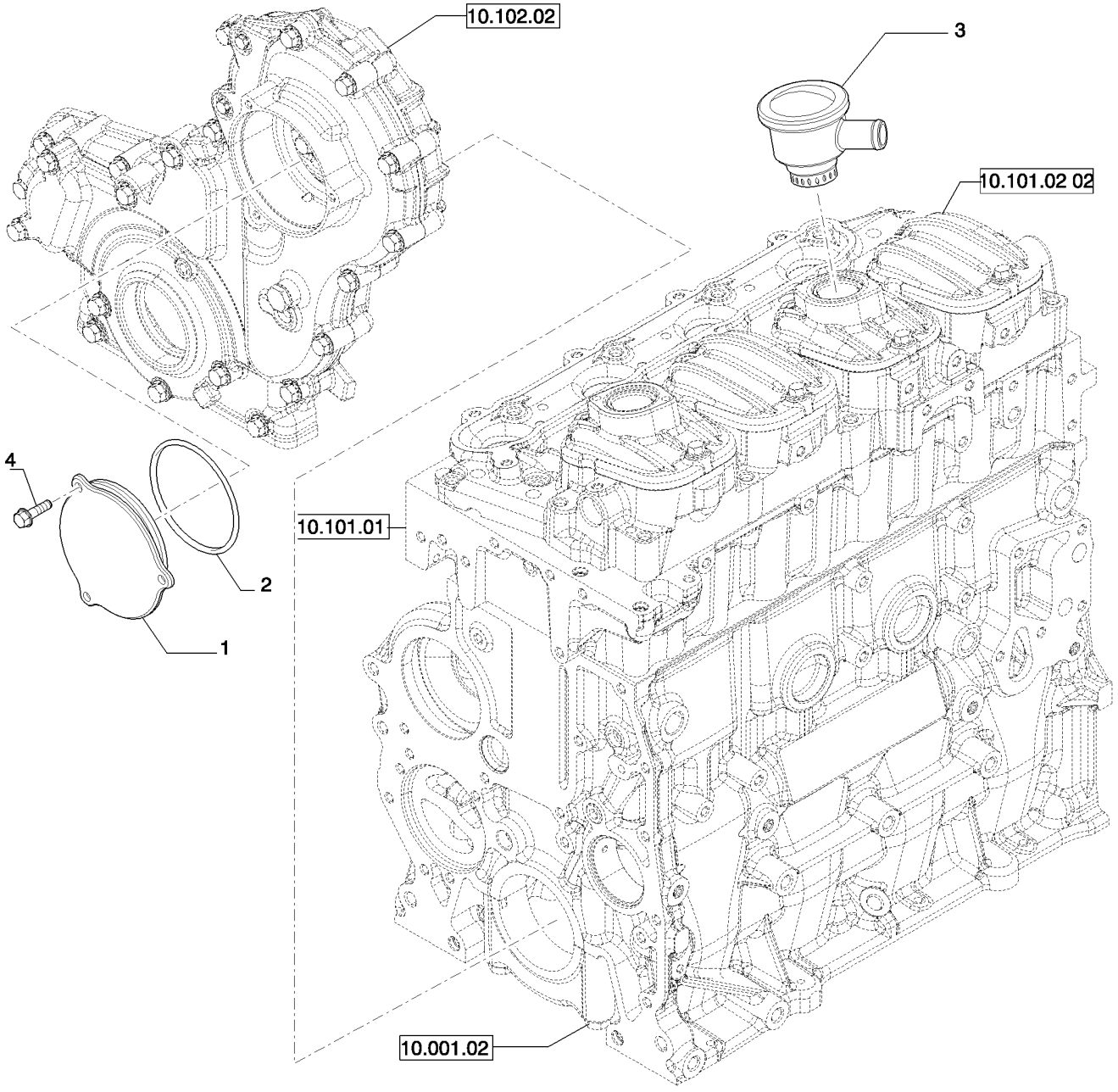

RENIFLARD MOTEUR (504245734)
MOTORENTLÜFTER (504245734)
MOTORÅNDERØR (504245734)
UITLATEN MOTOR (504245734)

R	N	P.N.	MOD	Q	Denominação Description	Description Bezeichnung	Denominacion Beskrivelse	Descrizione Beschrijving	L.C.
1		**504216814**		1	COBERTURA COUVERCLE	COVER ABDECKUNG	CUBIERTA DÆKSEL	COPERCHIO AFSCHERMING	265C
2		**17291280**		1	O-RING, 98.84mm ID x 3.53mm Width, M98.84 Dia x 3.53 SP JOINT TORIQUE	O-RING O-RING	JUNTA TÓRICA O-RING	ANELLO TOROIDALE O-RING	055A
3		**504372247**		1	RESPIRO RENIFLARD	BREATHER ENTLÜFTER	RESPIRADERO UDLUFTNINGSSKRUE	SFIATO ONTLUCHTER	145S
4		**16597224**		3	PARAFUSO, M6 x 18 VIS	SCREW SCHRAUBE	TORNILLO SKRUE	VITE SCHROEF	040V

10.102.01		p1	02/11

OIL SUMP & RELATED PARTS (504179441)
OIL SUMP & RELATED PARTS (504179441)
CARTER DE ACEITE Y PARTES RELACIONADAS (504179441)
COPPA OLIO E PARTICOLARI RELATIVI (504179441)

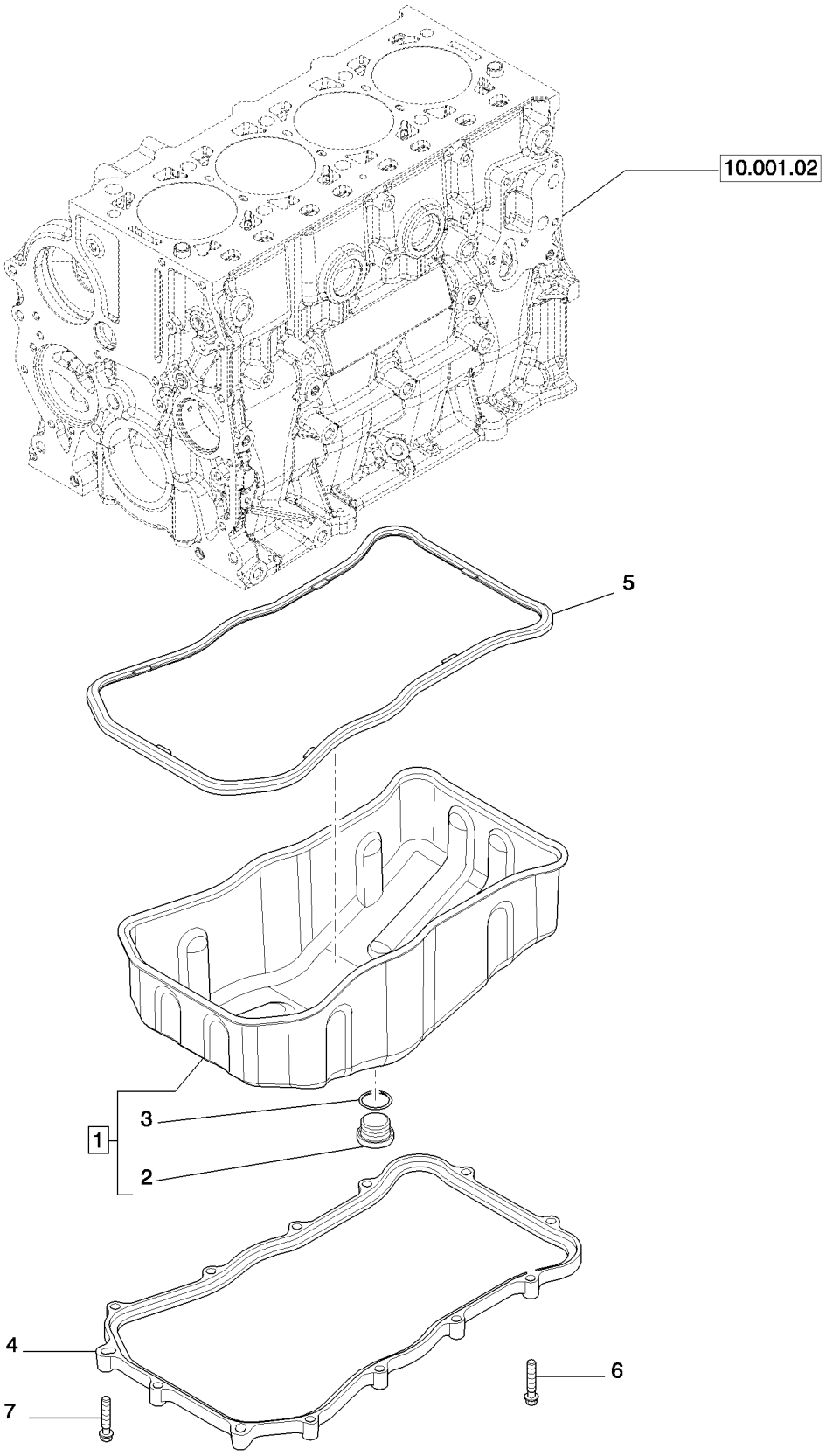

CARTER À HUILE ET PIÈCES ANNEXES (504179441)
ÖLWANNE UND DAZUGEHÖRIGE TEILE (504179441)
OLIEBUNDKAR OG TILHØRENDE DELE (504179441)
OLIECARTER EN DESBETREFFENDE DETAILS (504179441)

R	N	P.N.	MOD	Q	Denominação Description	Description Bezeichnung	Denominacion Beskrivelse	Descrizione Beschrijving	L.C.
1		504179445		1	CÁRTER DE ÓLEO DO MOTOR, - ASSY CARTER D'HUILE MOTE	ENGINE OIL PAN MOTORÖLWANNE	CUBETA DE ACEITE DE BUNDKAR	COPPA DELL'OLIO MOT(MOTOROLIECARTER	274C
2		4894139		1	BUJÃO, Hex Soc, M22 x 1.5 BOUCHON	PLUG STOPFEN	TAPÓN PROP	TAPPO PLUG	050T
3		17282280		1	JUNTA JOINT	GASKET DICHTUNG	JUNTA PAKNING	GUARNIZIONE PAKKING	123G
4		504179442		1	ESPAÇADOR ENTRETOISE	SPACER DISTANZSTÜCK	SEPARADOR AFSTANDSSTYKKE	DISTANZIALE AFSTANDSSTUK	075D
5		504179443		1	JUNTA JOINT	GASKET DICHTUNG	JUNTA PAKNING	GUARNIZIONE PAKKING	123G
6		16586625		11	PARAFUSO, M8 x 35 mm VIS	SCREW SCHRAUBE	TORNILLO SKRUE	VITE SCHROEF	040V
7		504049517		2	PARAFUSO, M10 x 1,5 x 9(VIS	SCREW SCHRAUBE	TORNILLO SKRUE	VITE SCHROEF	040V

10.102.02		p1	02/11

ENGINE BLOCK FRONT COVER (5801361473)
ENGINE BLOCK FRONT COVER (5801361473)
TAPA DELANTERA BASE MOTOR (5801361473)
COPERCHIO ANTERIORE BASAMENTO MOTORE (5801361473)

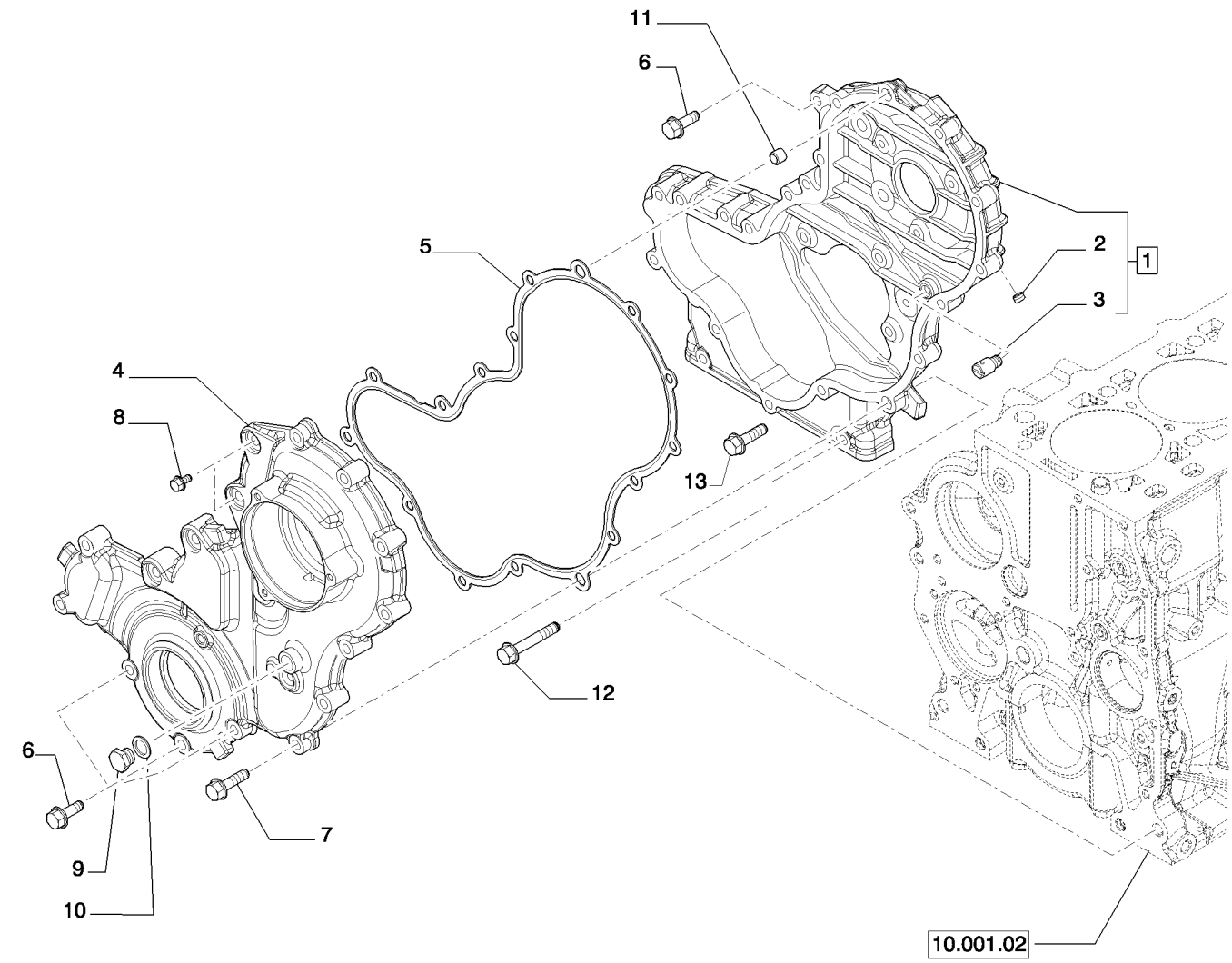

COUVERCLE AVANT CARTER MOTEUR (5801361473)
VORDERER DECKEL MOTORGEHÄUSE (5801361473)
FORRESTE DÆKSEL TIL KRUMTAPHUS (5801361473)
VOORDEKSEL MOTORBASIS (5801361473)

R	N	P.N.	MOD	Q	Denominação Description	Description Bezeichnung	Denominacion Beskrivelse	Descrizione Beschrijving	L.C.
1		504244214		1	COBERTURA, - ASSY COUVERCLE	COVER ABDECKUNG	CUBIERTA DÆKSEL	COPERCHIO AFSCHERMING	265C
2		504051236		1	BUJÃO, D.=1/8" BOUCHON	PLUG STOPFEN	TAPÓN PROP	TAPPO PLUG	050T
3		504204989		1	PULVERIZADOR DE ÓLEO GICLEUR D'HUILE	LUBE OIL JET NOZZLE SCHMIERÖLSPRITZDÜS	BOQ. INYEC. ACEITE LU DYSE, SMØREOLIE	UGELLO OLIO LUBRIFIC SMEEROLIESPROEIER	020U
4				1					
5		504244287		1	JUNTA JOINT	GASKET DICHTUNG	JUNTA PAKNING	GUARNIZIONE PAKKING	123G
6		16586424		3	PARAFUSO, M8 x 25 VIS	SCREW SCHRAUBE	TORNILLO SKRUE	VITE SCHROEF	040V
6		16586624		2	PARAFUSO, M8 x 35 VIS	SCREW SCHRAUBE	TORNILLO SKRUE	VITE SCHROEF	040V
7		16586625		11	PARAFUSO, M8 x 35 VIS	SCREW SCHRAUBE	TORNILLO SKRUE	VITE SCHROEF	040V
8		4798845		2	PARAFUSO VIS	SCREW SCHRAUBE	TORNILLO SKRUE	VITE SCHROEF	040V
9		10300611		1	BUJÃO, M14 x 1.5 x 14, Cl5.8 BOUCHON	PLUG STOPFEN	TAPÓN PROP	TAPPO PLUG	050T
10		4858608		1	VEDAÇÃO, D. 14X20X1,5 mm JOINT	SEAL DICHTUNG	ANILLO DE CIERRE PAKNING	GUARNIZIONE; TENUTA AFDICHTING	132A
11		99435557		4	GUIA, D. 8,5 mm GOUJON	DOWEL PASSSTIFT	BULÓN DYVEL	PERNO PASPEN	090G
12		16586924		6	PARAFUSO, M8 x 50 VIS	SCREW SCHRAUBE	TORNILLO SKRUE	VITE SCHROEF	040V
13		98401723		5	PARAFUSO VIS	SCREW SCHRAUBE	TORNILLO SKRUE	VITE SCHROEF	040V
14		2995644		1	SELANTE, - NOT ILLUSTRATED PATE A JOINT	SEALANT DICHTMITTEL	SELLADOR TÆTNINGSMASSE	MATERIALE DI TENUTA; KIT	405S

FLYWHEEL CASE (504380467)
FLYWHEEL CASE (504380467)
CÁRTER VOLANTE MOTOR (504380467)
CARTER VOLANO MOTORE (504380467)

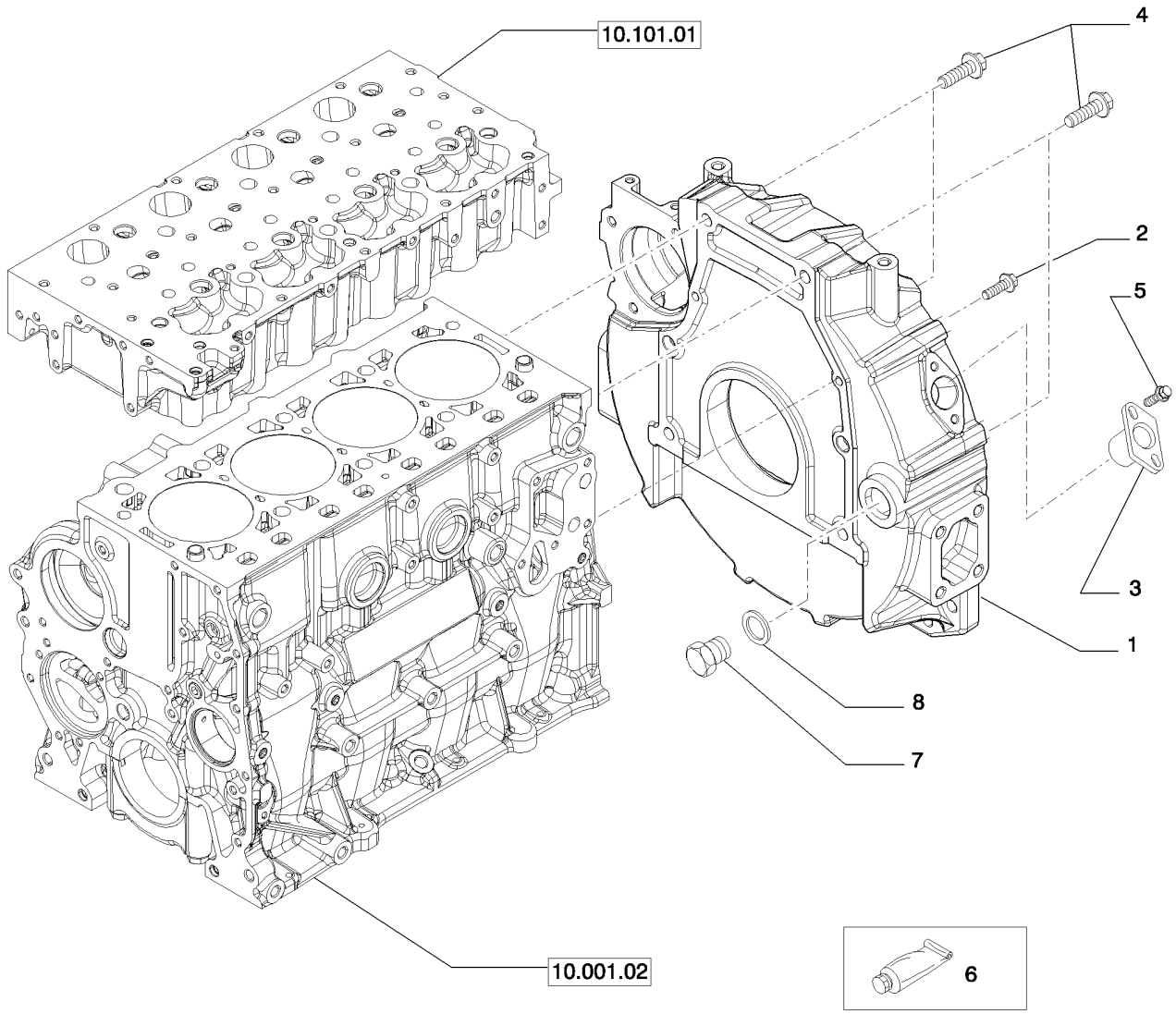

CARTER VOLANT MOTEUR (504380467)
SCHWUNGRADGEHÄUSE (504380467)
MOTOR-SVINGHJULSKASSE (504380467)
CARTER VLIEGWIEL MOTOR (504380467)

R	N	P.N.	MOD	Q	Denominação Description	Description Bezeichnung	Denominacion Beskrivelse	Descrizione Beschrijving	L.C.
1		504380468		1	ALOJAMENTO CARTER	HOUSING GEHÄUSE	ALOJAMIENTO HUS	ALLOGGIAMENTO HUIS	014V
2		16673935		2	PARAFUSO, M8 x 35 mm VIS	SCREW SCHRAUBE	TORNILLO SKRUE	VITE SCHROEF	040V
3		504268669		1	PLACA PLAQUE	PLATE PLATTE	PLACA PLADE	PIASTRA PLAAT	105P
4		16678435		6	PARAFUSO, M12 x 60 mm VIS	SCREW SCHRAUBE	TORNILLO SKRUE	VITE SCHROEF	040V
5		504351177		2	PARAFUSO, M8 x 1,25 VIS	SCREW SCHRAUBE	TORNILLO SKRUE	VITE SCHROEF	040V
6		2995644		1	SELANTE PATE A JOINT	SEALANT DICHTMITTEL	SELLADOR TÆTNINGSMASSE	MATERIALE DI TENUTA; KIT	405S
7		4895378		1	BUJÃO TIPO BOTÃO, M29.2 BOUCHON BOUTON	BUTTON PLUG KNOPFFÖRMIGER STOF	TAPÓN DE BOTÓN KNAPPROP	TAPPO A PRESSIONE PLUG MET PLATTE KOP	A082
8		4895379		1	O-RING, 21.82mm ID x 3.53mm Width JOINT TORIQUE	O-RING O-RING	JUNTA TÓRICA O-RING	ANELLO TOROIDALE O-RING	055A

CRANKSHAFT (504178873)
CRANKSHAFT (504178873)
CIGUENAL (504178873)
ALBERO MOTORE (504178873)

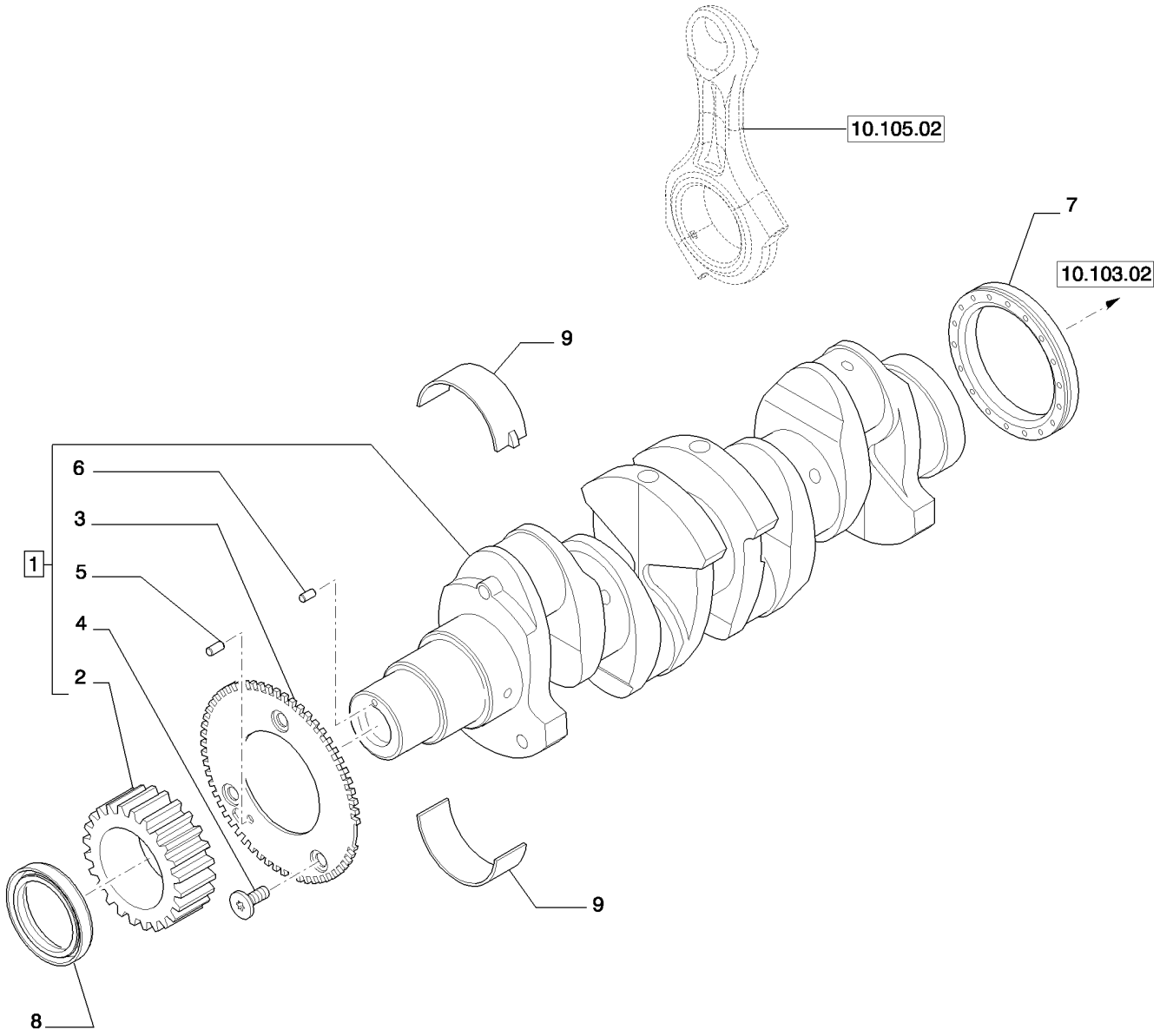

VILEBREQUIN (504178873)
KURBELWELLE (504178873)
KRUMTAPAKSEL (504178873)
AANDRIJFAS (504178873)

R	N	P.N.	MOD	Q	Denominação Description	Description Bezeichnung	Denominacion Beskrivelse	Descrizione Beschrijving	L.C.
1		504213230		1	VIRABREQUIM, - ASSY VILEBREQUIN	CRANKSHAFT KURBELWELLE	CIGÜEÑAL KRUMTAPAKSEL	ALBERO MOTORE KRUKAS	018A
2		504240426		1	ENGRENAGEM PIGNON	GEAR ZAHNRAD	ENGRANAJE TANDHJUL	INGRANAGGIO TANDWIEL	050I
3		504023782		1	ENGRENAGEM PIGNON	GEAR ZAHNRAD	ENGRANAJE TANDHJUL	INGRANAGGIO TANDWIEL	050I
4		500374310		3	PARAFUSO, M6X1 VIS	SCREW SCHRAUBE	TORNILLO SKRUE	VITE SCHROEF	040V
5		504006981		1	CONTRA PINO, D. 5,5 mm GOUPILLE FENDUE	COTTER PIN SPLINT	PASADOR SPLITBOLT	COPPIGLIA SPLITPEN	270C
6		17236324		1	ANEL ELÁSTICO GOUPILLE FENDUE	SPLIT PIN SPANNHÜLSE	PASADOR DIVIDIDO SPLIT	COPPIGLIA SPLITPEN	Z512
7		504014232		1	VEDAÇÃO DO EIXO JOINT D'ARBRE	SHAFT SEAL WELLENDICHTUNG	JUNTA DE EJE AKSELSTÆTNINGSRING	GUARNIZIONE DELL'ALE ASAFDICHTING	Z102
8		504056152		1	VEDAÇÃO DO EIXO JOINT D'ARBRE	SHAFT SEAL WELLENDICHTUNG	JUNTA DE EJE AKSELSTÆTNINGSRING	GUARNIZIONE DELL'ALE ASAFDICHTING	Z102
9		2995574		1	JOGO SEMI-BRONZINAS, -0,0 JEU PALIERS PRINC. ST	SET OF STD MAIN BRGS SATZ STANDARDHAUPT	JUEGO BRGS PRIN. SEF HOVEDLEJESÆT, STD.	KIT CUSCINETTI PRINC. SET STANDAARDHOOFI	102S
9		2995575		1	JOGO SEMI-BRONZ -0,254, -0,2 JEU PALIERS PRINC. -0,	SET OF MAIN BRGS -0. HAUPTLAGERSATZ -0,2	JUEGO BRGS PRIN. -0,2 SÆT M/ HOVEDLEJER -(	KIT CUSC. PRINC. -0,2 SET HOOFDLAGERS -0,2	332S
9		2995576		1	JOGO SEMI-BRONZ -0,762, -0,5 JEU PALIERS PRINC. -0,	SET OF MAIN BRGS -0. HAUPTLAGERSATZ -0,7	JUEGO BRGS PRIN. -0,7 SÆT M/ HOVEDLEJER -(	KIT CUSC. PRINC. -0,76 SET HOOFDLAGERS -0,7	334S

ENGINE, FLYWHEEL (504221728)
ENGINE, FLYWHEEL (504221728)
VOLANTE (504221728)
VOLANO (504221728)

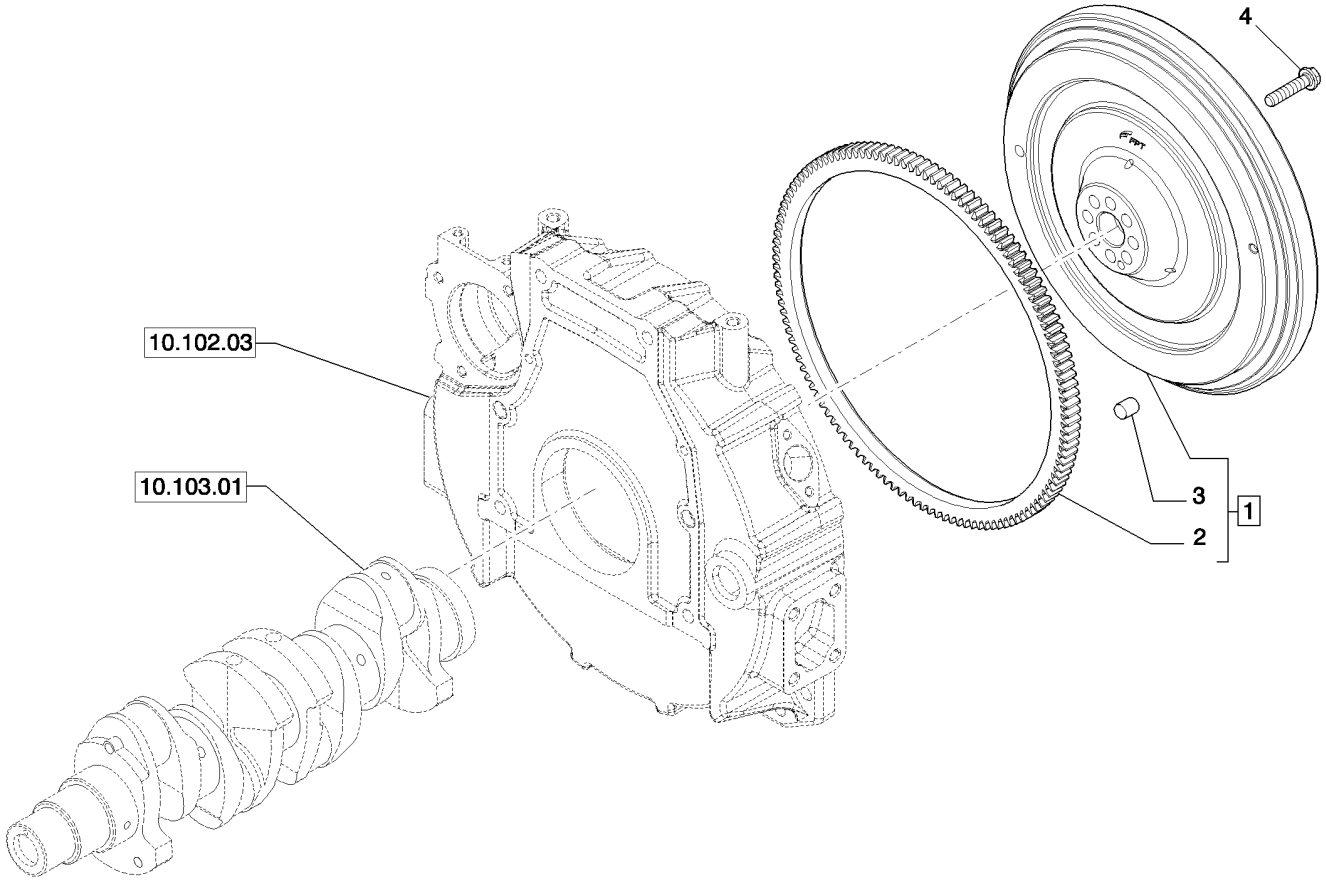

VOLANT (504221728)
SCHWUNGMASSE (504221728)
SVINGHJUL (504221728)
VLIEGWIEL (504221728)

R	N	P.N.	MOD	Q	Denominação Description Bezeichnung	Description Bezeichnung	Denominacion Beskrivelse	Descrizione Beschrijving	L.C.
1		504221729		1	VOLANTE DE MOTOR, - ASSY VOLANT MOTEUR	ENGINE FLYWHEEL MOTORSCHWUNGRAD	VOLANTE DE MOTOR MOTOR SVINGHJUL	VOLANO MOTORE MOTORVLIEGWIEL	048V
2		4897821		1	COROA DENTADA COURONNE DENTEE	RING GEAR ZAHNKRANZ	CORONA DENTADA TANDKRANS	CORONA DENTATA RINGWIEL	297C
3		17275410		1	GUIA GOUJON	DOWEL PASSSTIFT	BULÓN DYVEL	PERNO PASPEN	090G
4		504027865		8	PARAFUSO, M12X1,25 mm VIS	SCREW SCHRAUBE	TORNILLO SKRUE	VITE SCHROEF	040V

BELT PULLEY DRIVE & COVER (504388092)
BELT PULLEY DRIVE & COVER (504388092)
CAJA Y TAPAS TOMA DE GIRO (504388092)
SCATOLE E COPERHI PRESA DI MOTO (504388092)



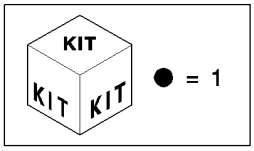

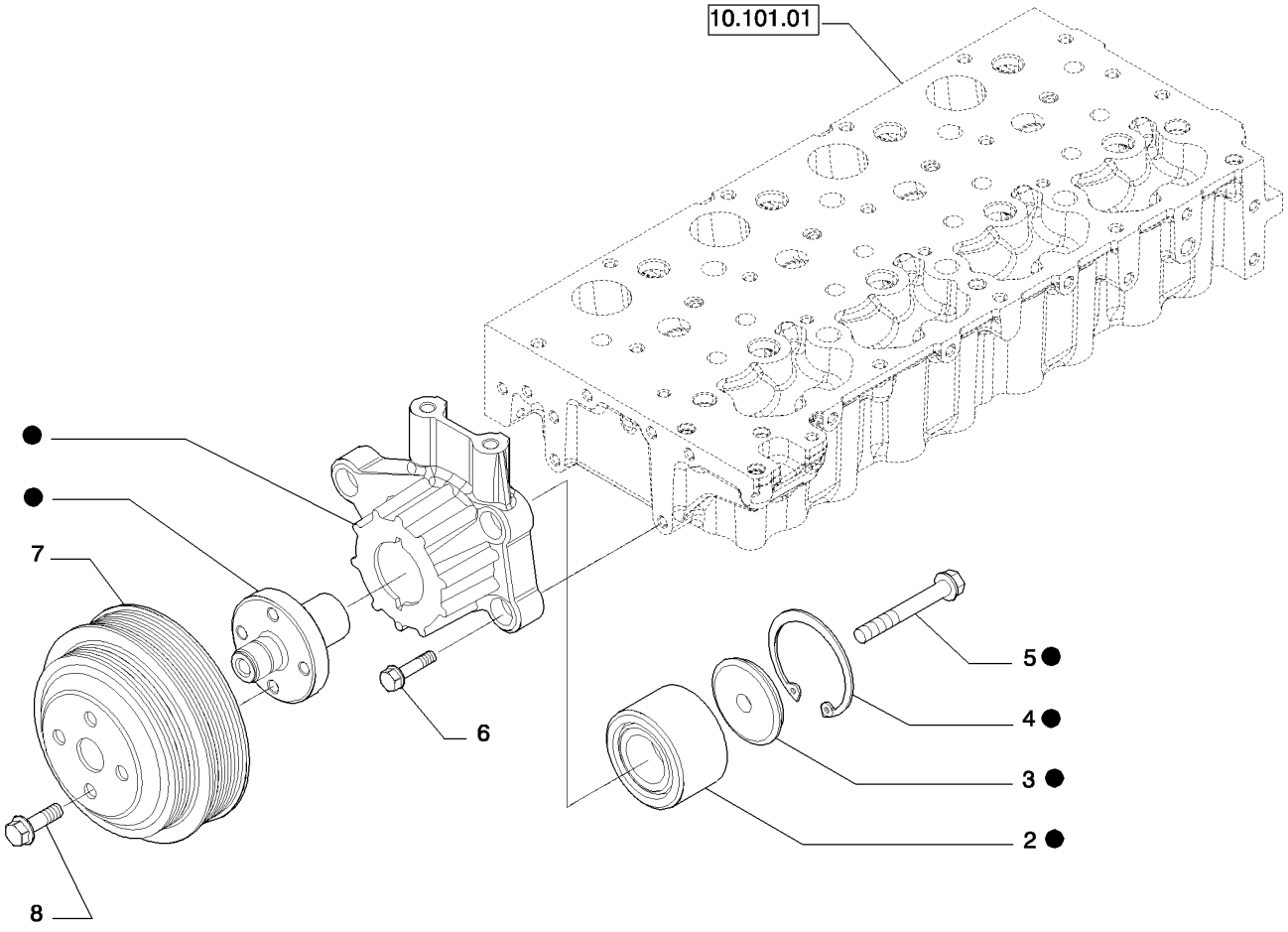



PRISE DE MOUVEMENT ET COUVERCLE (504388092)
ANTRIEBGEHÄUSE UND DECKELN (504388092)
HUSE OF DAEKSLER TIL DRIVAKSEL (504388092)
KASTEN EN DEKSELS VAN HET IN GANG BRENGEN (504388092)

R	N	P.N.	MOD	Q	Denominação Description	Description Bezeichnung	Denominacion Beskrivelse	Descrizione Beschrijving	L.C.
1		504255374		1	CAIXA VENTILADORA, - ASSY				
						FAN HOUSING	ALOJAMIENTO DE VENT	ALLOGGIAMENTO VENT	610C
					CARTER DU VENTILATE	GEBLÄSEGEHÄUSE	BLÆSERHUS	VENTILATORHUIS	
2		4892732		1	ROLAMENTO ESFÉRICO, 34 mm ID x 64 mm OD x 37 mm				
						BALL BEARING	RODAMIENTO DE BOLA	CUSCINETTO A SFERE	343C
					ROULEMENT A BILLES	KUGELLAGER	KUGLELEJE	KOGELLAGER	
3		4890732		1	RETENTOR	RETAINER	RETENEDOR	FERMO	109R
					DISPOSITIF DE RETENU	HALTERUNG	HOLDER	HOUDER	
4		500395697		1	ANEL DE PRESSÃO, M68.2, Int				
						SNAP RING	ANILLO DE RESORTE	ANELLO ELASTICO	054A
					ANNEAU D'ARRET	SPRENGRING	LÅSERING	VEERRING	
5		16676834		1	PARAFUSO FLANGEADO, Hex, M10 x 70, M10 x 70				
						FLANGE BOLT	PERNO DE CORONA	BULLONE FLANGIATO	A027
					VIS A EMBASE	FLANSCHSCHRAUBE	FLANGEBOLT	FLENSBOUT	
6		16673735		5	PARAFUSO, M8X30 mm	SCREW	TORNILLO	VITE	040V
					VIS	SCHRAUBE	SKRUE	SCHROEF	
7				1					
8		18139424		4	PARAFUSO, M10 x 20	SCREW	TORNILLO	VITE	040V
					VIS	SCHRAUBE	SKRUE	SCHROEF	

10.103.04		p1	02/11

PULLEY - CRANKSHAFT (504388089)
PULLEY - CRANKSHAFT (504388089)
POLEA - CIGUENAL (504388089)
PULEGGIA - ALBERO MOTORE (504388089)

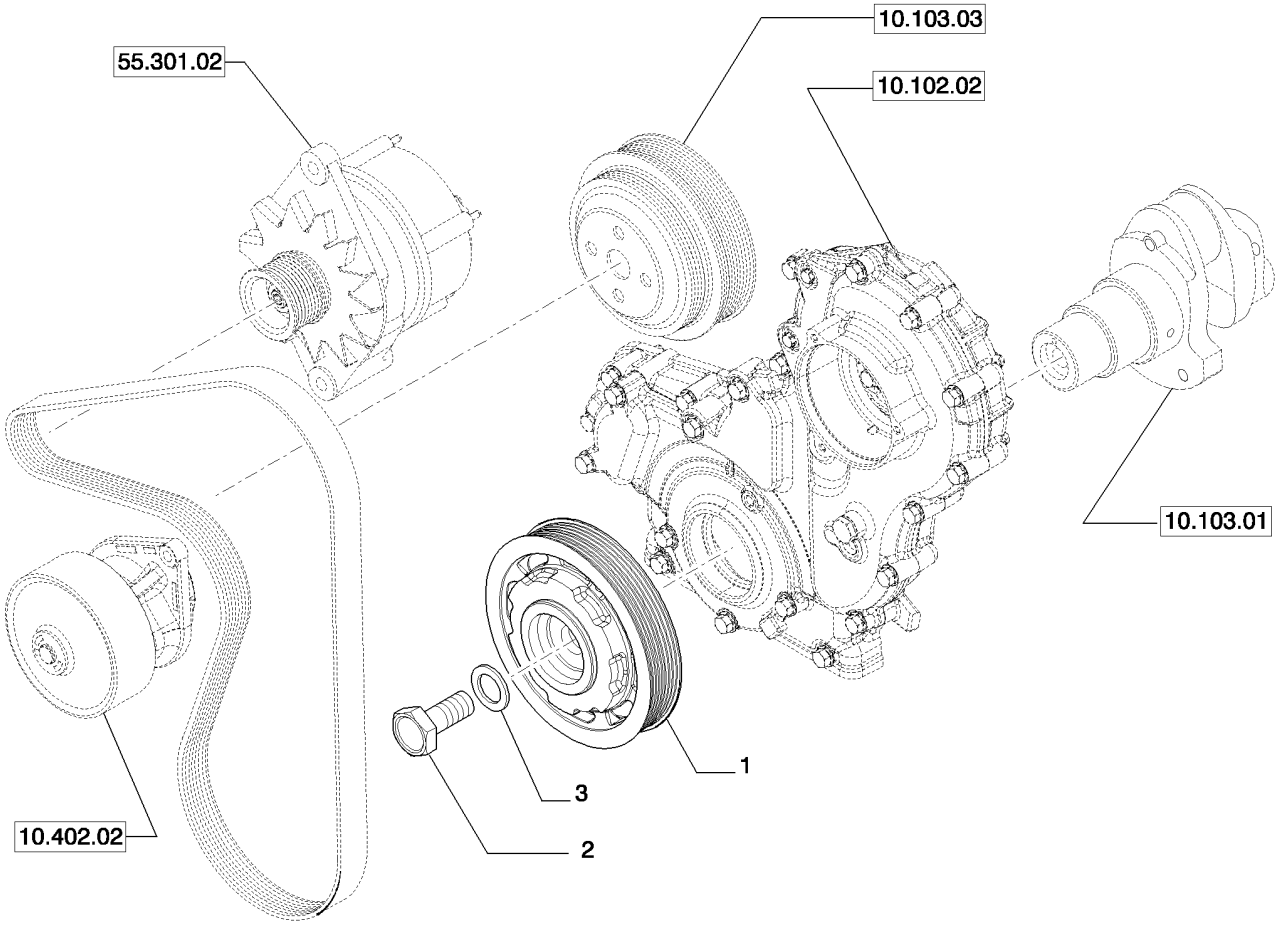

POULIE - VILEBREQUIN (504388089)
RIEMENSCHEIBE - KURBELWELLE (504388089)
REMSKIVE - KRUMTAPAKSEL (504388089)
RIEMSCHIJF - AANDRIJFAS (504388089)

R	N	P.N.	MOD	Q	Denominação Description	Description Bezeichnung	Denominacion Beskrivelse	Descrizione Beschrijving	L.C.
1		504273736		1	POLIA POULIE	PULLEY RIEMENSCHEIBE	POLEA REMSKIVE	PULEGGIA RIEMSCHIJF	230P
2		98419203		1	PARAFUSO, M20X1,5X58 mm VIS	SCREW SCHRAUBE	TORNILLO SKRUE	VITE SCHROEF	040V
3		17092874		1	ANEL DE ENCOSTO ANNEAU DE BUTEE	THRUST WASHER DRUCKSCHEIBE	ARANDELA DE EMPUJE TRYKSKIVE	RONDELLA REGGISPINT DRUKRING	023R

10.105.01		p1	02/11

PISTON - ENGINE (504254748)
PISTON - ENGINE (504254748)
EMBOLO - MOTOR (504254748)
STANTUFFO - MOTORE (504254748)

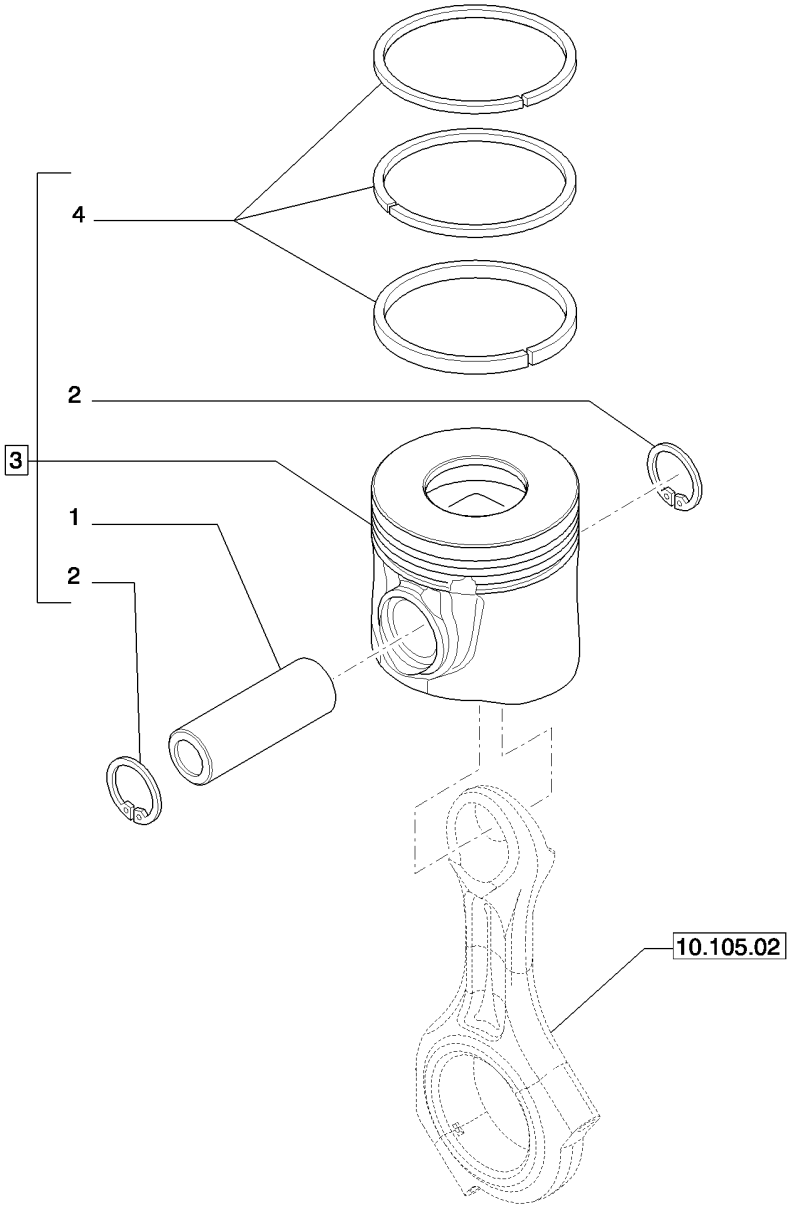

PISTON - MOTEUR (504254748)
KOLBEN - MOTOR (504254748)
STEMPEL - MOTOR (504254748)
ZUIGER - MOTOR (504254748)

R	N	P.N.	MOD	Q	Denominação Description	Description Bezeichnung	Denominacion Beskrivelse	Descrizione Beschrijving	L.C.
1		504047720		4	PINO DE PISTÃO AXE DE PISTON	PISTON PIN KOLBENBOLZEN	BULÓN DEL PISTÓN STEMPELPIND	PERNO DEL PISTONE ZUIGERPEN	084P
2		504051611		8	TRAVA DA ARRUELA RONDELLE FREIN	LOCK WASHER SICHERUNGSSCHEIBE	ARANDELA DE BLOQUE LÅSESKIVE	RONDELLA DI SICUREZ BORGRING	132R
3		8097546		4	CONJ PISTÃO, + 0,0 ENS. PISTON	PISTON ASSY KOLBENBAUGRUPPE	CONJUNTO DE PISTÓN STEMPEL KOMPLET	COMPLESSIVO PISTONE ZUIGEREENHEID	245S
3		8097548		4	CONJ PISTÃO +0,4 ENS. PISTON +0,4	PISTON ASSY +0.4 KOLBENBAUGRUPPE +	CONJUNTO DE PISTÓN STEMPEL KOMPLET +0.4	COMPLESSIVO PISTONE ZUIGEREENHEID +0,4	247S
4		8097545		4	JOGO DE PISTÃO, + 0,0 JEU SEGM. DE PISTONS	PISTON RING SET KOLBENRINGSATZ	JUEGO ANILLOS PISTÓN STEMPELRINGSSÆT	KIT FASCIA ELAST. PIST SET ZUIGERVEREN	Z307
4		8097547		4	JOGO ANÉIS PISTÃO +0,4 JEU SEGMENTS PISTON	SET OF PISTON RINGS KOLBENRINGSATZ +0,4	JUEGO AN. DE PISTÓN - SÆT M/ STEMPELRINGE	KIT FASCE EL. PIST. +0. SET ZUIGERVEREN +0,4	343S

CONNECTING ROD (504245120)
CONNECTING ROD (504245120)
BIELA PISTON (504245120)
BIELLA MOTORE (504245120)

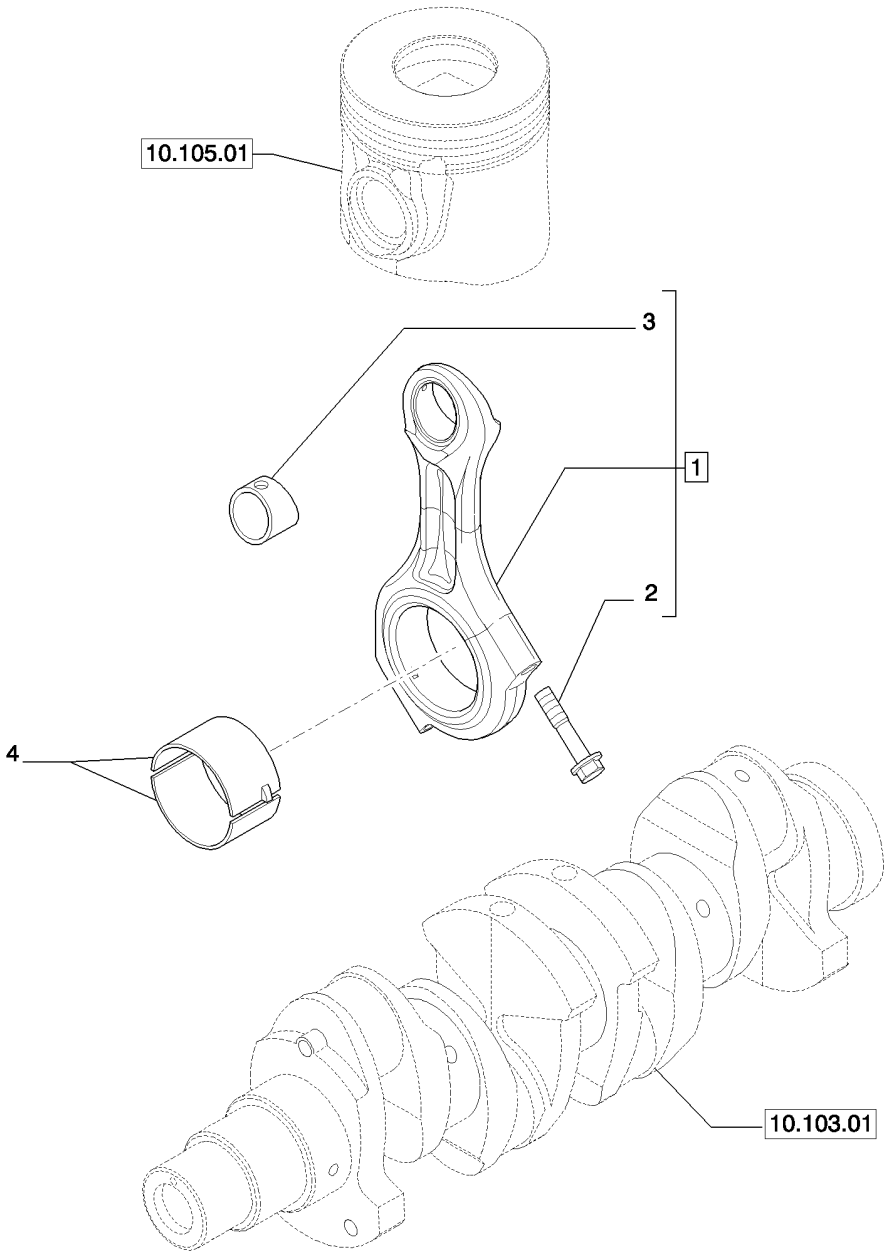

BIELLE (504245120)
PLEUEL (504245120)
PLEJLSTANG (504245120)
DRIJFSTANG MOTOR (504245120)

R	N	P.N.	MOD	Q	Denominação Description Bezeichnung	Description Bezeichnung	Denominacion Beskrivelse	Descrizione Beschrijving	L.C.
1		504341496		4	HASTE DE CONEXÃO BIELLE	CONNECTING ROD PLEUELSTANGE	BIELA PLEJLSTANG	BIELLA DRIJFSTANG	051B
2		504015229		8	PARAFUSO, M11X1,25X51 mm VIS	SCREW SCHRAUBE	TORNILLO SKRUE	VITE SCHROEF	040V
3		NSS		4	SEM SERVIÇO EM SEPARADO NON FORUNI SEPAREM	NOT SERVICED SEPARA NICHT A SEP ERS-T LIEI	NO SE REPARA POR SE SERVICERES IKKE SEPA	NON FORNITO SEPARAT NIET LOS VERKRIJGBAA	064N
4		2995577		4	SEMI-BRONZINA BIELA MIN., -0,000 JEU COUSSIN. BIELLE R	SET OF CONN ROD BRG SATZ PLEUELLAGER UN	JUEGO DE ROD. BRGS U LEJEPANDESÆT T/PLEJ	KIT CUSCIN. BIELLA U/S SET ONDERMT. DRFST.I	307S
4		2995578		4	SEMI-BRONZINA BIELA MIN., -2,254 JEU COUSSIN. BIELLE R	SET OF CONN ROD BRG SATZ PLEUELLAGER UN	JUEGO DE ROD. BRGS U LEJEPANDESÆT T/PLEJ	KIT CUSCIN. BIELLA U/S SET ONDERMT. DRFST.I	307S
4		2995579		4	SEMI-BRONZINA BIELA MIN., -5,508 JEU COUSSIN. BIELLE R	SET OF CONN ROD BRG SATZ PLEUELLAGER UN	JUEGO DE ROD. BRGS U LEJEPANDESÆT T/PLEJ	KIT CUSCIN. BIELLA U/S SET ONDERMT. DRFST.I	307S

CAMSHAFT - TIMING CONTROL (504228067)
CAMSHAFT - TIMING CONTROL (504228067)
ARBOL DE LEVAS - PINONES DE LA DISTRIBUCION (504228067)
ALBERO AD ECCENTRICI - COMANDO DISTRIBUZIONE (504228067)

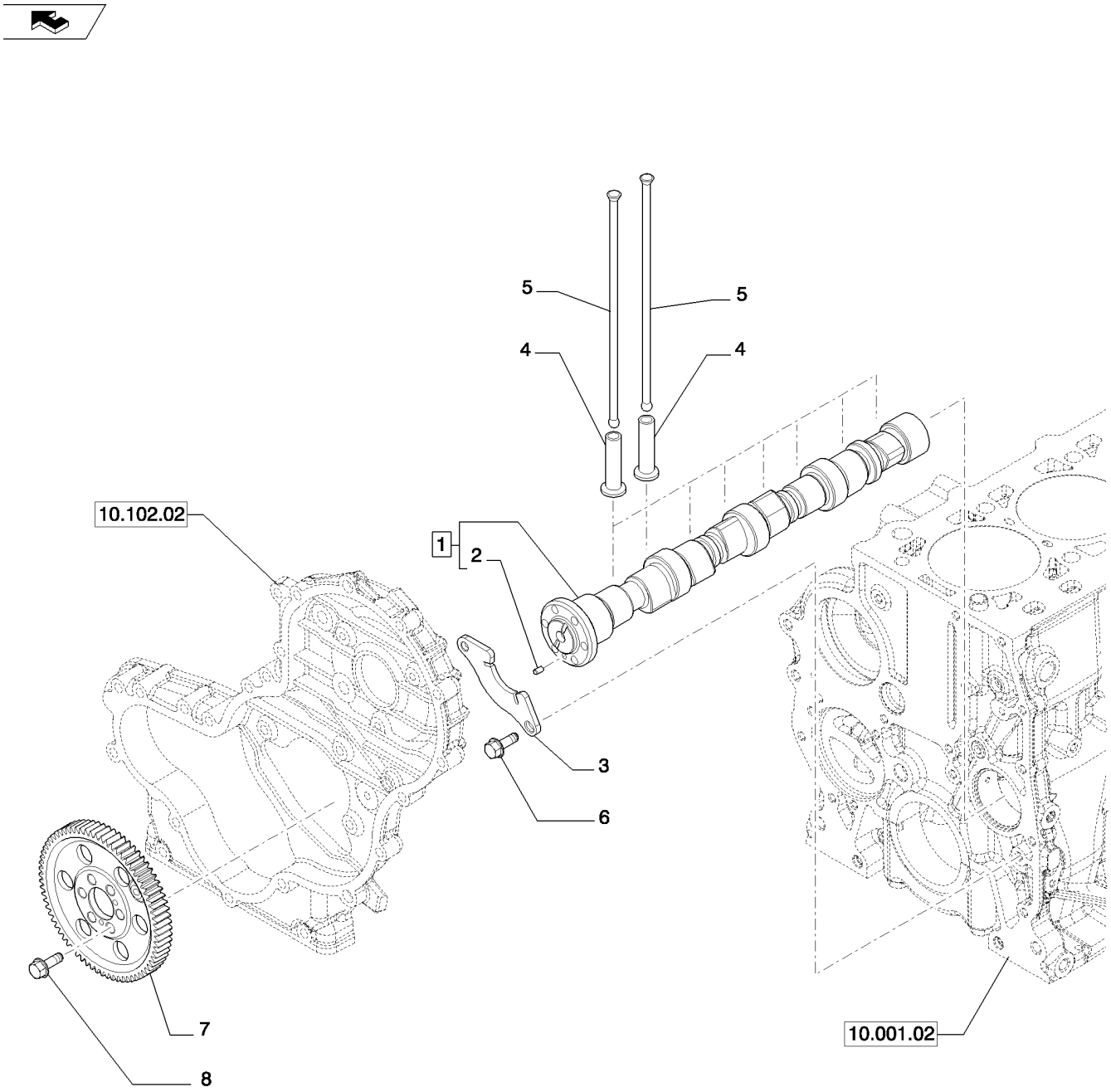

ARBRE A CAMES - COMMANDE DE DISTRIBUTION (504228067)
EXZENTERWELLE - STEUERUNGSANTRIEB (504228067)
KNASTAKSEL - TAKTHJUL (504228067)
AS NAAR NOKKEN - DISTRIBUTIEBESTURING (504228067)

R	N	P.N.	MOD	Q	Denominação Description	Description Bezeichnung	Denominacion Beskrivelse	Descrizione Beschrijving	L.C.
1		504272265		1	EIXO EXCÊNTRICO, - ASSY				
						CAMSHAFT	ÁRBOL DE LEVAS	ALBERO A CAMME	017A
					ARBRE A CAMES	NOCKENWELLE	KNASTAKSEL	NOKKENAS	
2		17275310		1	GUIA	DOWEL	BULÓN	PERNO	090G
					GOUJON	PASSSTIFT	DYVEL	PASPEN	
3		4897457		1	SUPORTE	SUPPORT	SOPORTE	SUPPORTO	300S
					SUPPORT	STÜTZE	BESLAG	STEUN	
4		98471524		8	PLATINADO, +0,0	TAPPET	LEVA	PUNTERIA	240P
					POUSSOIR DE SOUPAPI	STÖSSEL	VENTILLØFTER	KLEPSTOTER	
5		504163240		8	HASTE DE IMPULSO	PUSH ROD	VÁSTAGO DE EMPUJE	ASTA DI SPINTA	P307
					TIGE DE POUSSEE	STÖSSELSTANGE	SKUBBESTANG	STOTERSTANG	
6		16673635		2	PARAFUSO, M8 x 20	BOLT	PERNO	BULLONE	140B
					VIS	SCHRAUBE	BOLT	BOUT	
7		504240396		1	ENGRENAGEM	GEAR	ENGRANAJE	INGRANAGGIO	050I
					PIGNON	ZAHNRAD	TANDHJUL	TANDWIEL	
8		16673635		6	PARAFUSO, M8 x 20	BOLT	PERNO	BULLONE	140B
					VIS	SCHRAUBE	BOLT	BOUT	

10.202.01		p1	01/11

AIR CLEANER ASSY NA 8IN (SR200-SR250,TR270,TR320)
AIR CLEANER ASSY NA 8IN (SR200-SR250,TR270,TR320)
AIR CLEANER ASSY NA 8IN (SR200-SR250,TR270,TR320)
AIR CLEANER ASSY NA 8IN (SR200-SR250,TR270,TR320)

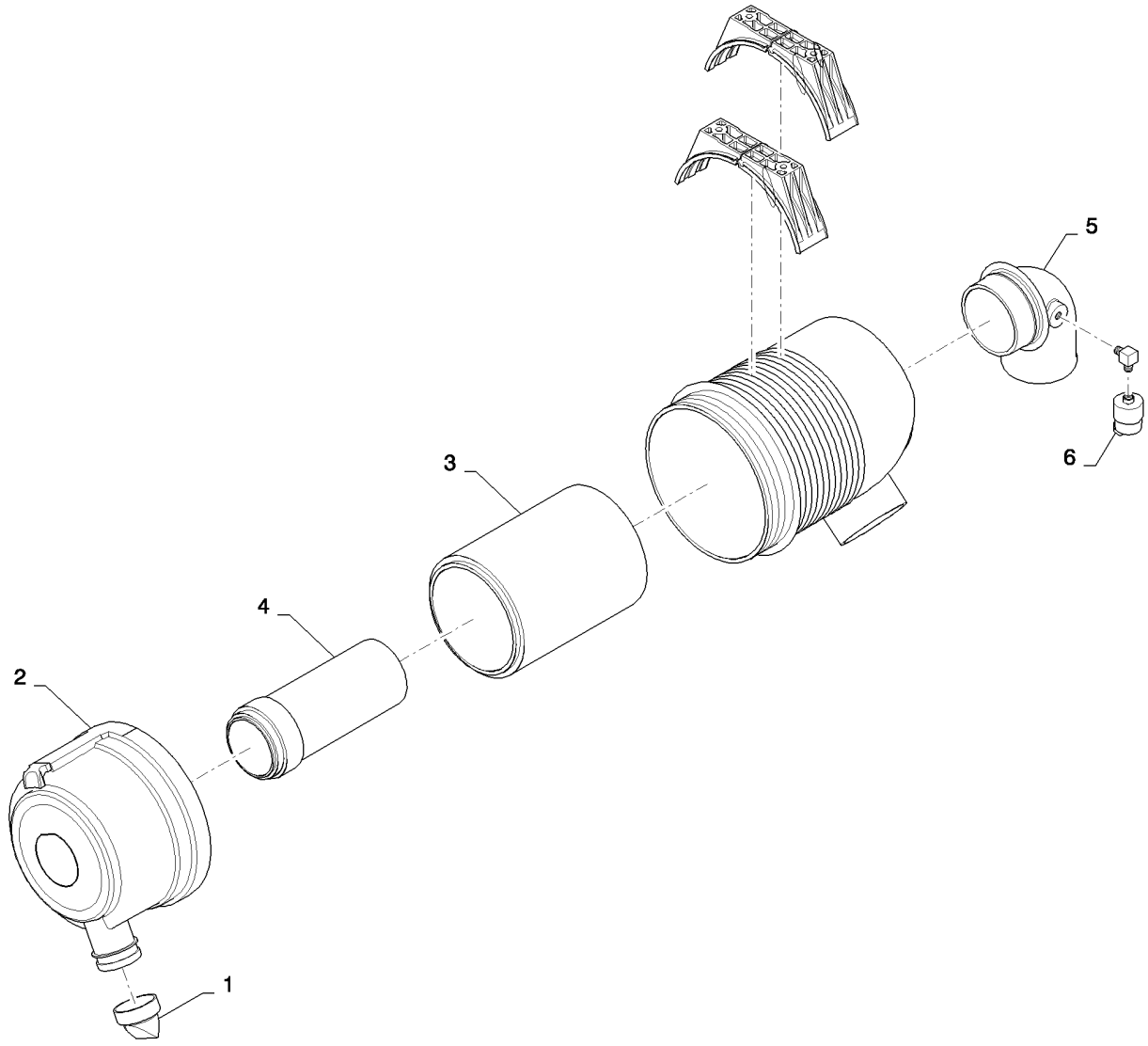

AIR CLEANER ASSY NA 8IN (SR200-SR250,TR270,TR320)
AIR CLEANER ASSY NA 8IN (SR200-SR250,TR270,TR320)
AIR CLEANER ASSY NA 8IN (SR200-SR250,TR270,TR320)
AIR CLEANER ASSY NA 8IN (SR200-SR250,TR270,TR320)

R	N	P.N.	MOD	Q	Denominação Description Description Bezeichnung	Denominacion Beskrivelse	Descrizione Beschrijving	L.C.
1		A184597		1	VÁLVULA DO OBTURADOR, Vacuator VALVE POPPET	RESORTE DE VÁLVULA	VALVOLA A FUNGO	P048
					CLAPET A RESSORT VENTILTELLER	DOKVENTIL	KLEPSCHOTEL	
2		395792A1		1	CONJUNTO DA TAMPA COVER ASSY	CONJUNTO DE FUNDAS	COPERCHIO, COMPL	P426
					COUVERCLE ABDECKUNGSBAUGRUF	DÆKSELENHED	AFSCHERMEENHEID	
3		222421A1		1	FILTRO DE AR, Primary AIR FILTER	FILTRO DE AIRE	FILTRO ARIA	066F
					FILTRE A AIR LUFTFILTER	LUFTFILTER	LUCHTFILTER	
4		222422A1		1	ELEMENTO FILTRO, Secondary ELEMENT, FILTER	ELEMENTO DE FILTRO	ELEMENTO DEL FILTRO	2960
					ELEMENT FILTRANT FILTERELEMENT	ELEMENT, FILTER	ELEMENT, FILTER	
5		217-1227		1	COTOVELO, 90º, 1/8"-27 Male ELBOW	CODO	GOMITO	085G
					COUDE KNIESTÜCK	VINKELRØR	KNIESTUK	
6		279492A1		1	INTERRUPTOR DE RESTRIÇÃO RESTRICTION SWITCH	INT. DE RESTRICCIÓN	INTERR. DI LIMITAZIONE	C037
					COMM. RESTRICTION VERSTOPFUNGSSCHAL	KONTAKT, BEGRÆNSNI	BEGRENZINGSSCHAKEL	

10.206.02		p1	05/11

FILTER ENGINE OIL (504245481 - 504332922)
FILTER ENGINE OIL (504245481 - 504332922)
FILTRO ACEITE (504245481 - 504332922)
FILTRO OLIO (504245481 - 504332922)

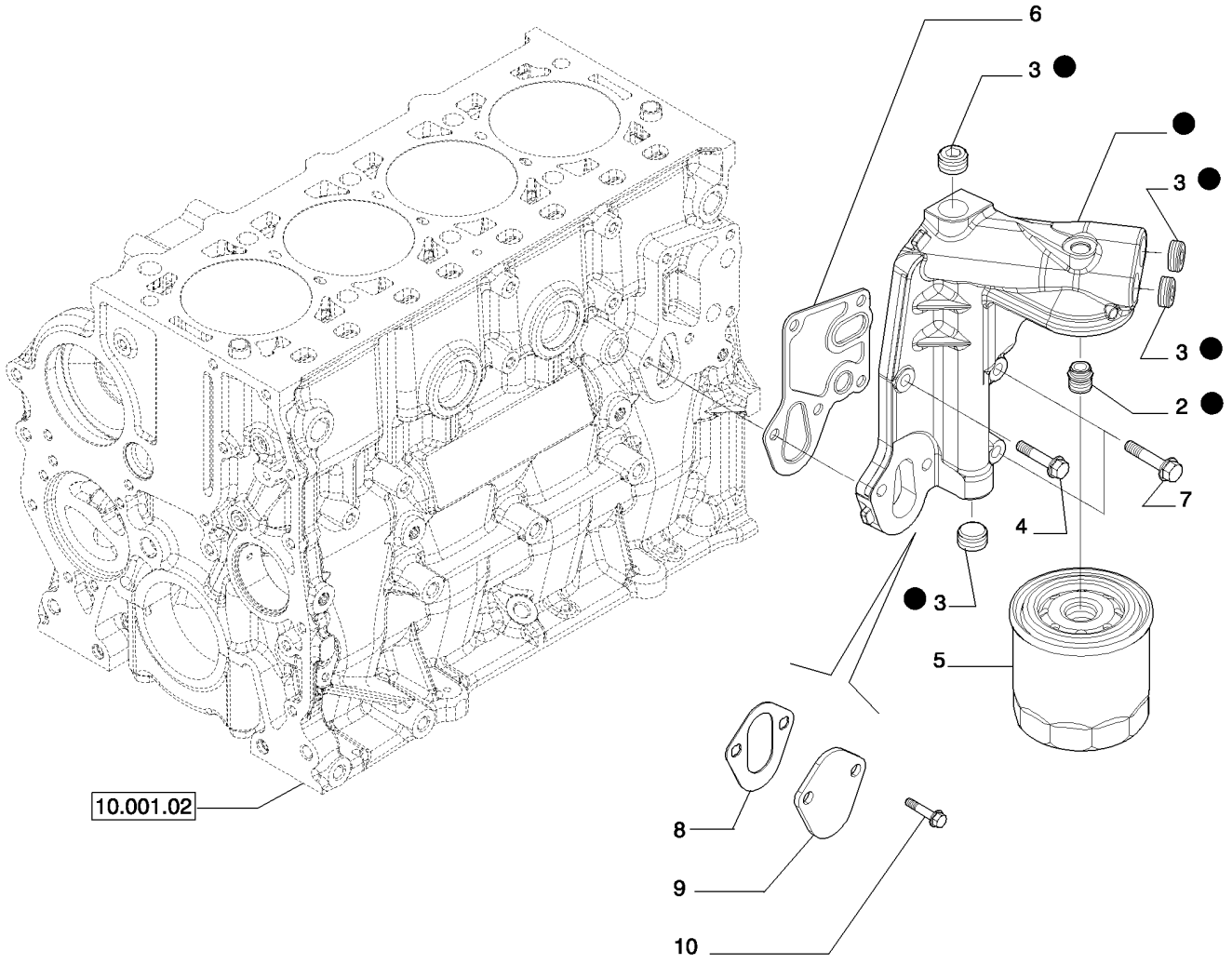

FILTRE HUILE (504245481 - 504332922)
ÖLFILTER (504245481 - 504332922)
OLIEFILTER (504245481 - 504332922)
OLIEFILTER (504245481 - 504332922)

R	N	P.N.	MOD	Q	Denominação Description	Description Bezeichnung	Denominacion Beskrivelse	Descrizione Beschrijving	L.C.
1		504271928		1	FILTRO DE ÓLEO DO MOTOR, - ASSY				
						ENGINE OIL FILTER	FILTRO DE ACEITE DE M	FILTRO OLIO MOTORE	067F
					FILTRE A HUILE MOTEU	MOTORÖLFILTER	MOTOROLIEFILTER	MOTOROLIEFILTER	
2		504289002		1	UNIÃO	UNION	UNIÓN	RACCORDO	9560
					UNION	VERSCHRAUBUNG	FORSKRUNING	KOPPELING	
3		504113860		4	BUJÃO	PLUG	TAPÓN	TAPPO	050T
					BOUCHON	STOPFEN	PROP	PLUG	
4		16673835		1	PARAFUSO, M8 x 30	SCREW	TORNILLO	VITE	040V
					VIS	SCHRAUBE	SKRUE	SCHROEF	
5		87679496		1	FILTRO DE ÓLEO DO MOTOR				
						ENGINE OIL FILTER	FILTRO DE ACEITE DE M	FILTRO OLIO MOTORE	067F
					FILTRE A HUILE MOTEU	MOTORÖLFILTER	MOTOROLIEFILTER	MOTOROLIEFILTER	
6		504235816		1	VEDAÇÃO	SEAL	ANILLO DE CIERRE	GUARNIZIONE; TENUTA	132A
					JOINT	DICHTUNG	PAKNING	AFDICHTING	
7		16592225		2	PARAFUSO	SCREW	TORNILLO	VITE	040V
					VIS	SCHRAUBE	SKRUE	SCHROEF	
8		504332889		1	JUNTA	GASKET	JUNTA	GUARNIZIONE	123G
					JOINT	DICHTUNG	PAKNING	PAKKING	
9		504332869		1	COBERTURA	COVER	CUBIERTA	COPERCHIO	265C
					COUVERCLE	ABDECKUNG	DÆKSEL	AFSCHERMING	
10		16586524		2	PARAFUSO, Hex, Flg Hd, M8 x 30, 8.8				
						SCREW	TORNILLO	VITE	040V
					VIS	SCHRAUBE	SKRUE	SCHROEF	

10.216.01		p1	07/11

FUEL SYSTEM F5C (SR200,TR270)
FUEL SYSTEM F5C (SR200,TR270)
FUEL SYSTEM F5C (SR200,TR270)
FUEL SYSTEM F5C (SR200,TR270)

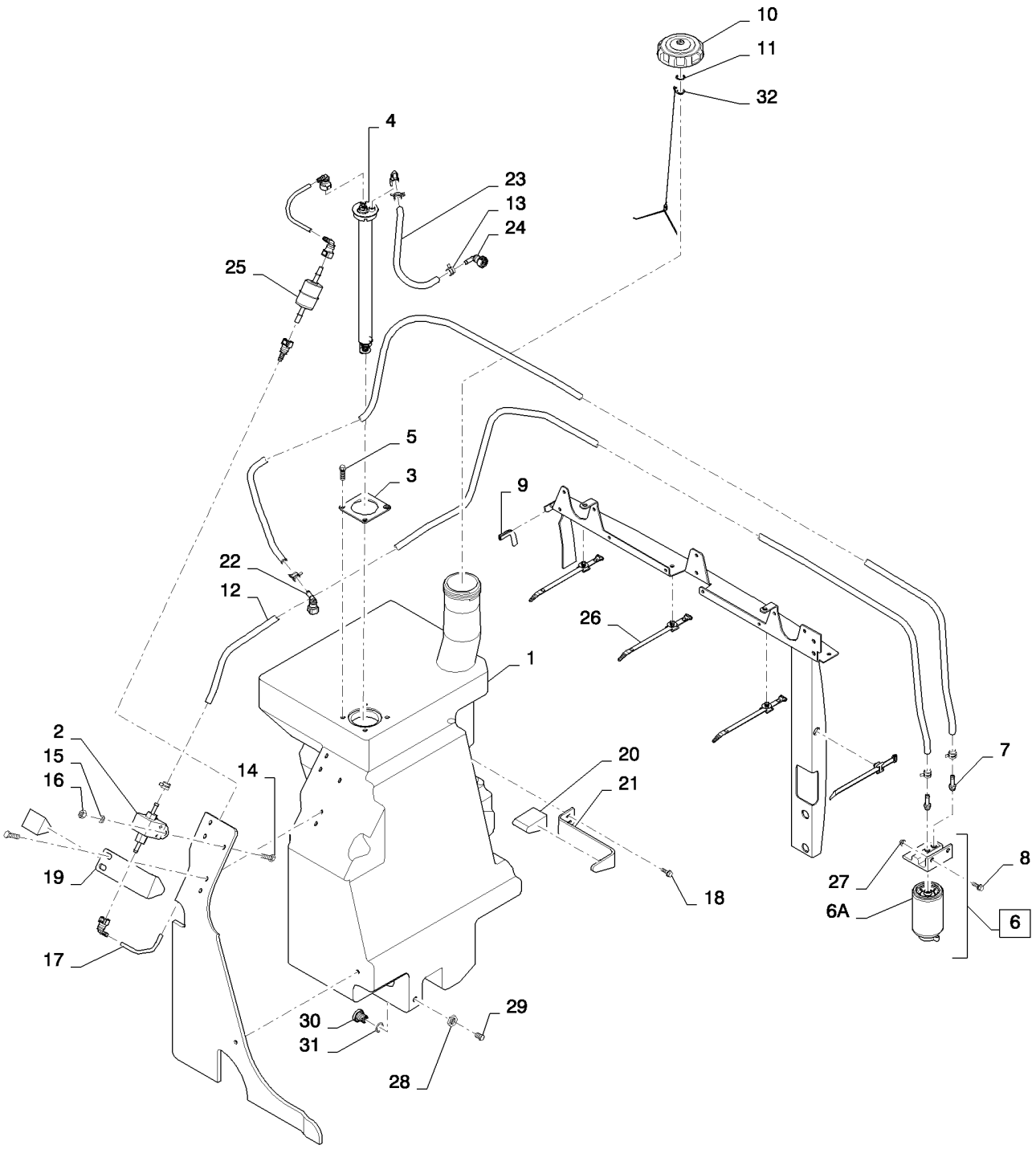

FUEL SYSTEM F5C (SR200,TR270)
FUEL SYSTEM F5C (SR200,TR270)
FUEL SYSTEM F5C (SR200,TR270)
FUEL SYSTEM F5C (SR200,TR270)

R	N	P.N.	MOD	Q	Denominação Description Bezeichnung	Denominacion Beskrivelse	Descrizione Beschrijving	L.C.
1		84239312		1	TANQUE DE COMBUSTÍVEL, Fuel FUEL TANK RESERVOIR DE CARBUI KRAFTSTOFFTANK	DEPÓSITO DE COMBUS BRÆNDSTOFTANK	SERBATOIO CARBURAN BRANDSTOFTANK	P550
2		84306974		1	BOMBA DE COMBUSTÍVEL, Electric Lift FUEL PUMP POMPE A CARBURANT KRAFTSTOFFPUMPE	BOMBA DE COMBUSTIBI BRÆNDSTOFPUMPE	POMPA CARBURANTE BRANDSTOFPOMP	154P
3		84338049		1	PLACA DE MONTAGEM, Sender, Retaining MOUNTING PLATE PLAQUE DE MONTAGE MONTAGEPLATTE	PLACA DE MONTAJE MONTERINGSPLADE	PIASTRA DI MONTAGGI(BEVESTIGINGSPLAAT	109P
4		84268571		1	TRANSMISSOR, Fuel SENDER UNIT ENS. TRANSMETTEUR SIGNALGEBER	UNIDAD EMISORA SENDER	TRASMETTITORE SENSOREENHEID	160T
5		9804257		4	PARAFUSO, Hex Flg, M6 x 25, 8.8 BOLT VIS SCHRAUBE	PERNO BOLT	BULLONE BOUT	140B
6		84299976		1	FILTRO DE COMBUSTÍVEL, Assembly, Incl. 6A FUEL FILTER FILTRE A CARBURANT KRAFTSTOFFFILTER	FILTRO DE COMBUSTIBI BRÆNDSTOFFILTER	FILTRO CARBURANTE BRANDSTOFFILTER	064F
6A		84299977		1	ELEMENTO, Fuel Filter ELEMENT ELEMENT ELEMENT	ELEMENTO ELEMENT	ELEMENTO ELEMENT	020E
7		9844342		2	CONEXÃO, Assembly FITTING RACCORD ARMATUR	ACOPLAMIENTO FITTING	RACCORDO AANSLUITING	3300
8		9804256		2	PARAFUSO, Hex Flg, M6 x 20, 8.8 BOLT VIS SCHRAUBE	PERNO BOLT	BULLONE BOUT	140B
9		NSS		1	SEM SERVIÇO EM SEPARADO, Edge, Channel, 85.3mm NOT SERVICED SEPARA NON FORUNI SEPAREM NICHT A SEP ERS-T LIEI	NO SE REPARA POR SE SERVICERES IKKE SEPA	NON FORNITO SEPARAT NIET LOS VERKRIJGBAA	064N
10		87700725		1	TAMPA DE RESERVATÓRIO, W/Check Valve FILLER CAP BOUCHON DE REMPLIS EINFÜLLKAPPE	TAPÓN DE DEPÓSITO PÅFYLDNINGSDÆKSEL	TAPPO BOCCHETT. RIF(VULDOP	P676
11		84367737		1	TRAVA DA ARRUELA, Fuel Cap Locking LOCK WASHER RONDELLE FREIN SICHERUNGSSCHEIBE	ARANDELA DE BLOQUE LÅSESKIVE	RONDELLA DI SICUREZ BORGRING	132R
12		290323		1	MANGUEIRA, 0.31" ID, SAE 30R7, Fuel Line HOSE FLEXIBLE SCHLAUCH	TUBO SLANGE	TUBO FLESSIBILE SLANG	030M
13		87436932		6	BRAÇADEIRA, CTB CLAMP COLLIER KLEMME	ABRAZADERA SPÆNDEBÅND	MORSETTO KLEM	120M
14		120100		2	PARAFUSO, Hex, M6 x 20, 8.8 BOLT VIS SCHRAUBE	PERNO BOLT	BULLONE BOUT	140B
15		87655041		2	ARRUELA ESPECIAL, M6, 6.85 X 12.75 X 1.8 SPECIAL WASHER RONDELLE SPECIALE SPEZIALUNTERLEGSCH	ARANDELA ESPECIAL SPECIALSKIVE	RONDELLA SPECIALE SPECIALE RING	Z333
16		9804276		2	PORCA, M6 x 1, Flg, Cl 8 NUT ECROU MUTTER	TUERCA MØTRIK	DADO MOER	010D
17		84305876		1	TUBO DE COMBUSTÍVEL, Plastic FUEL TUBE TUYAU D'ALIM. CARBUR KRAFTSTOFFLEITUNG	TUBO DE COMBUSTIBLE BRÆNDSTOFRØR	TUBO CARBURANTE BRANDSTOFLEIDING	A133

SR200

10.216.01		p2	07/11

FUEL SYSTEM F5C (SR200,TR270)
FUEL SYSTEM F5C (SR200,TR270)
FUEL SYSTEM F5C (SR200,TR270)
FUEL SYSTEM F5C (SR200,TR270)

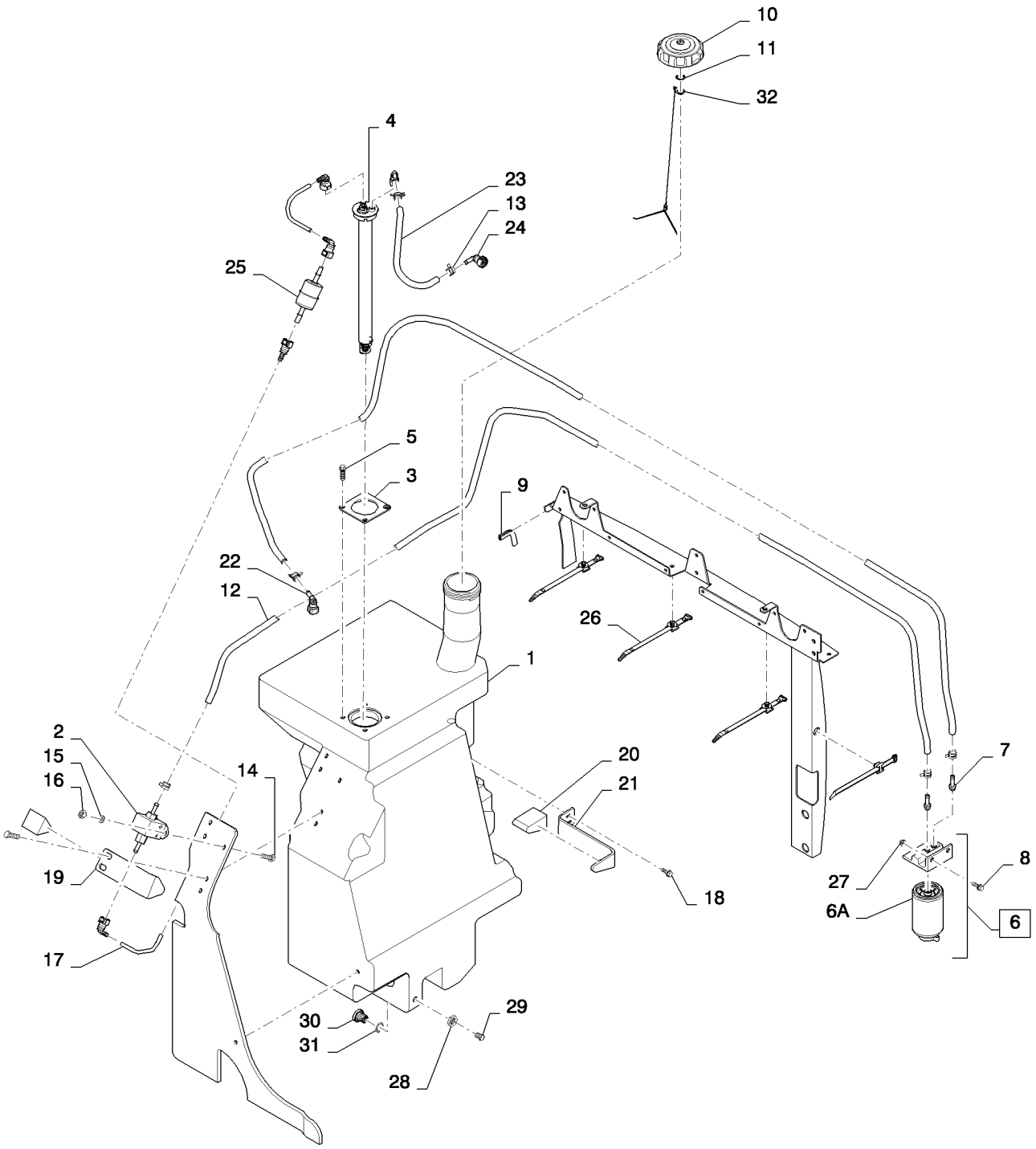

FUEL SYSTEM F5C (SR200,TR270)
FUEL SYSTEM F5C (SR200,TR270)
FUEL SYSTEM F5C (SR200,TR270)
FUEL SYSTEM F5C (SR200,TR270)

R	N	P.N.	MOD	Q	Denominação Description	Description Bezeichnung	Denominacion Beskrivelse	Descrizione Beschrijving	L.C.
18		280476		4	PARAFUSO, Hex Wash Hd, 3/8" x 1"				
						SELF-TAP SCREW	TORNILLO AUTORROSC	VITE AUTOFILETTANTE	062V
					VIS AUTOTARAUDEUSE	SELBSTSCHN SCHRAUE	SELVLÅSENDE BOLT	ZELFTAPPENDE SCHRO	
19		84273624		1	SUPORTE, Fuel Tank	BRACKET	SOPORTE	STAFFA	225S
					SUPPORT	HALTERUNG	BESLAG	STEUN	
20		84373790		2	ESPUMA, Pad	FOAM	ESPUMA	SCHIUMA	P033
					MOUSSE	SCHAUM	SKUM	SCHUIM	
21		87054825		1	SUPORTE, Tank	SUPPORT	SOPORTE	SUPPORTO	300S
					SUPPORT	STÜTZE	BESLAG	STEUN	
22		84350217		2	CONECTOR HIDRÁUL, Fuel, 5/16				
						HYD CONNECTOR	CONECTOR HIDRÁULIC	CONNETTORE IDRAULIC	020R
					CONNECTEUR HYDRAU	HYDR STECKVERBINDE	HYDRAULIKSTIK	HYDRAULISCHE AANSLI	
23		84305872		1	TUBO DE COMBUSTÍVEL, Plastic, Above Inline Fuel Filter				
						FUEL TUBE	TUBO DE COMBUSTIBLE	TUBO CARBURANTE	A133
					TUYAU D'ALIM. CARBUR	KRAFTSTOFFLEITUNG	BRÆNDSTOFRØR	BRANDSTOFLEIDING	
24		84350218		1	CONECTOR HIDRÁUL, Fitting, 3/8				
						HYD CONNECTOR	CONECTOR HIDRÁULIC	CONNETTORE IDRAULIC	020R
					CONNECTEUR HYDRAU	HYDR STECKVERBINDE	HYDRAULIKSTIK	HYDRAULISCHE AANSLI	
25		87548612		1	FILTRO DE COMBUSTÍVEL, Inline				
						FUEL FILTER	FILTRO DE COMBUSTIBI	FILTRO CARBURANTE	064F
					FILTRE A CARBURANT	KRAFTSTOFFFILTER	BRÆNDSTOFFILTER	BRANDSTOFFILTER	
26		84259663		4	CORREIA DE FIXAÇÃO, Tie				
						SECURING STRAP	BANDA DE SEGURIDAD	FASCETTA DI FISSAGGI	172C
					SANGLE DE FIXATION	SICHERUNGSBAND	FASTSPÆNDINGSSTRO	BORGRIEM	
27		86619800		2	CONTRA PORCA, M6 x 1, Flg, Cl 8				
						LOCK NUT	TUERCA DE BLOQUEO	DADO DI BLOCCAGGIO	P263
					CONTRE-ECROU	SICHERUNGSMUTTER	LÅSEMØTRIK	BORGMOER	
28		1251791C1		1	PORCA, Fuel Tank Drain Fitting				
						NUT	TUERCA	DADO	010D
					ECROU	MUTTER	MØTRIK	MOER	
29		87694594		1	PARAFUSO, Fuel Tank Drain Fitting				
						BOLT	PERNO	BULLONE	140B
					VIS	SCHRAUBE	BOLT	BOUT	
30		9576801		1	BUJÃO	PLUG	TAPÓN	TAPPO	050T
					BOUCHON	STOPFEN	PROP	PLUG	
31		238-5210		1	O-RING, -210, 70 Duro, .734" ID x .139" Thk				
						O-RING	JUNTA TÓRICA	ANELLO TOROIDALE	055A
					JOINT TORIQUE	O-RING	O-RING	O-RING	
32		84370069		1	CORRENTE (CONSTR), Fuel Cap				
						CHAIN (CE)	CADENA (CE)	CATENA (CE)	P458
					CHAINE (TP)	KETTE (BAUMASCHINEN	KÆDE (CE)	KETTING (CE)	

10.218.01		p1	02/11

INJECTION EQUIPMENT - PIPING (504207272)
INJECTION EQUIPMENT - PIPING (504207272)
GRUPO DE INYECCION - TUBERIAS (504207272)
GRUPPO INIEZIONE - TUBAZIONI (504207272)

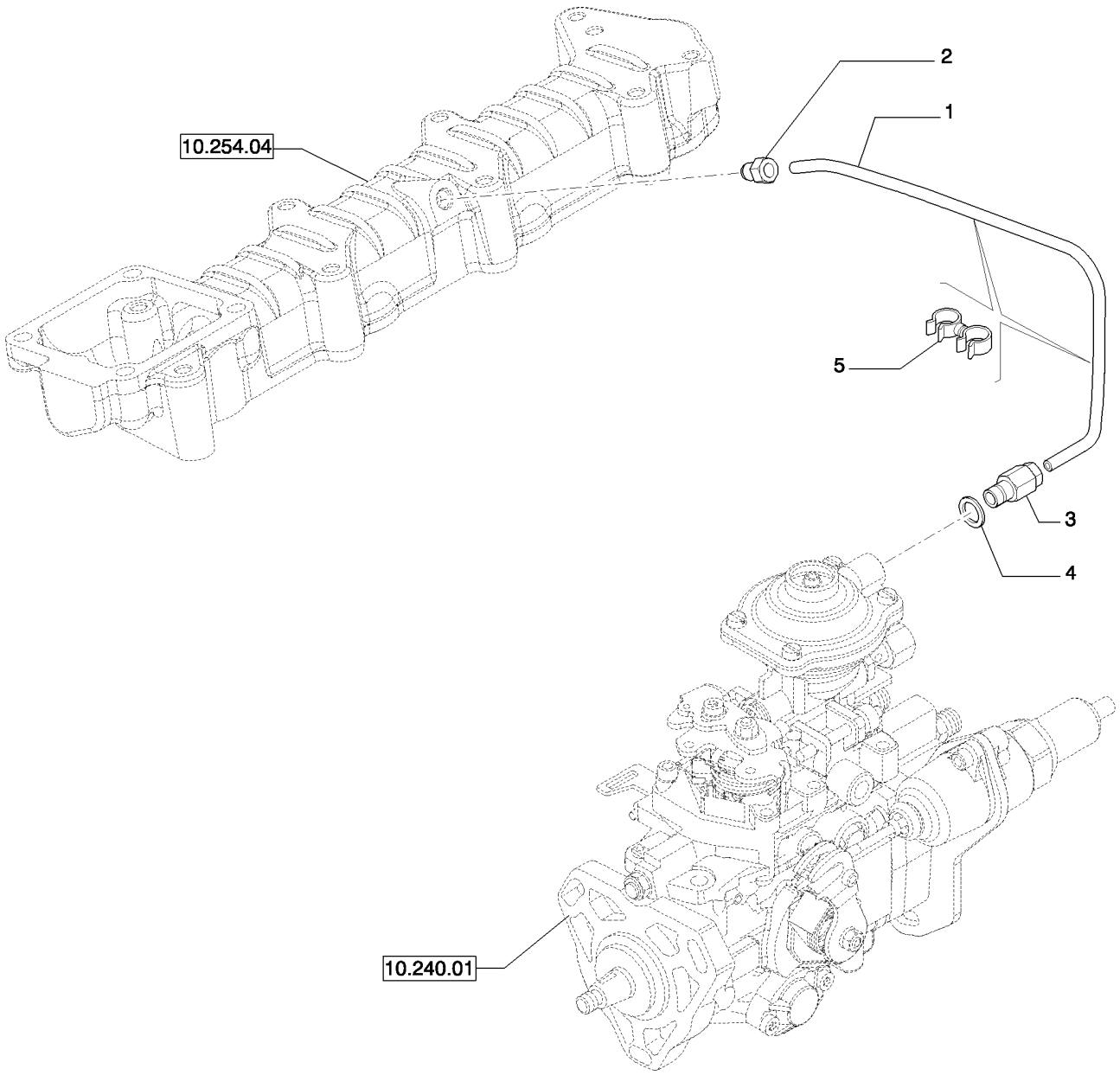

GROUPE D'INJECTION - TUYAUTERIE (504207272)
EINSPRITZAUSRUESTUNG - LEITUNGEN (504207272)
INDSPRØJTNINGSGRUPPE - RØRLEDNINGER (504207272)
INSPUITGROEP - LEIDINGEN (504207272)

R	N	P.N.	MOD	Q	Denominação Description	Description Bezeichnung	Denominacion Beskrivelse	Descrizione Beschrijving	L.C.
1		504341138		1	TUBO TUYAU	PIPE ROHR	TUBO PÅFYLDNINGSSTUDS	TUBO BUIS	200T
2		4896770		1	CONEXÃO, M10 x 1 RACCORD	FITTING ARMATUR	ACOPLAMIENTO FITTING	RACCORDO AANSLUITING	3300
3		4893518		1	CONEXÃO, M8 x 1 x 29.5 L RACCORD	FITTING ARMATUR	ACOPLAMIENTO FITTING	RACCORDO AANSLUITING	3300
4		4858605		1	VEDAÇÃO, D. 8X12 mm JOINT	SEAL DICHTUNG	ANILLO DE CIERRE PAKNING	GUARNIZIONE; TENUTA AFDICHTING	132A
5		98429625		2	BRAÇADEIRA COLLIER	CLAMP KLEMME	ABRAZADERA SPÆNDEBÅND	MORSETTO KLEM	120M

10.218.01	02	p1	07/11

INJECTION EQUIPMENT - PIPING (504207949)
INJECTION EQUIPMENT - PIPING (504207949)
GRUPO DE INYECCION - TUBERIAS - (504207949)
GRUPPO INIEZIONE - TUBAZIONI - (504207949)

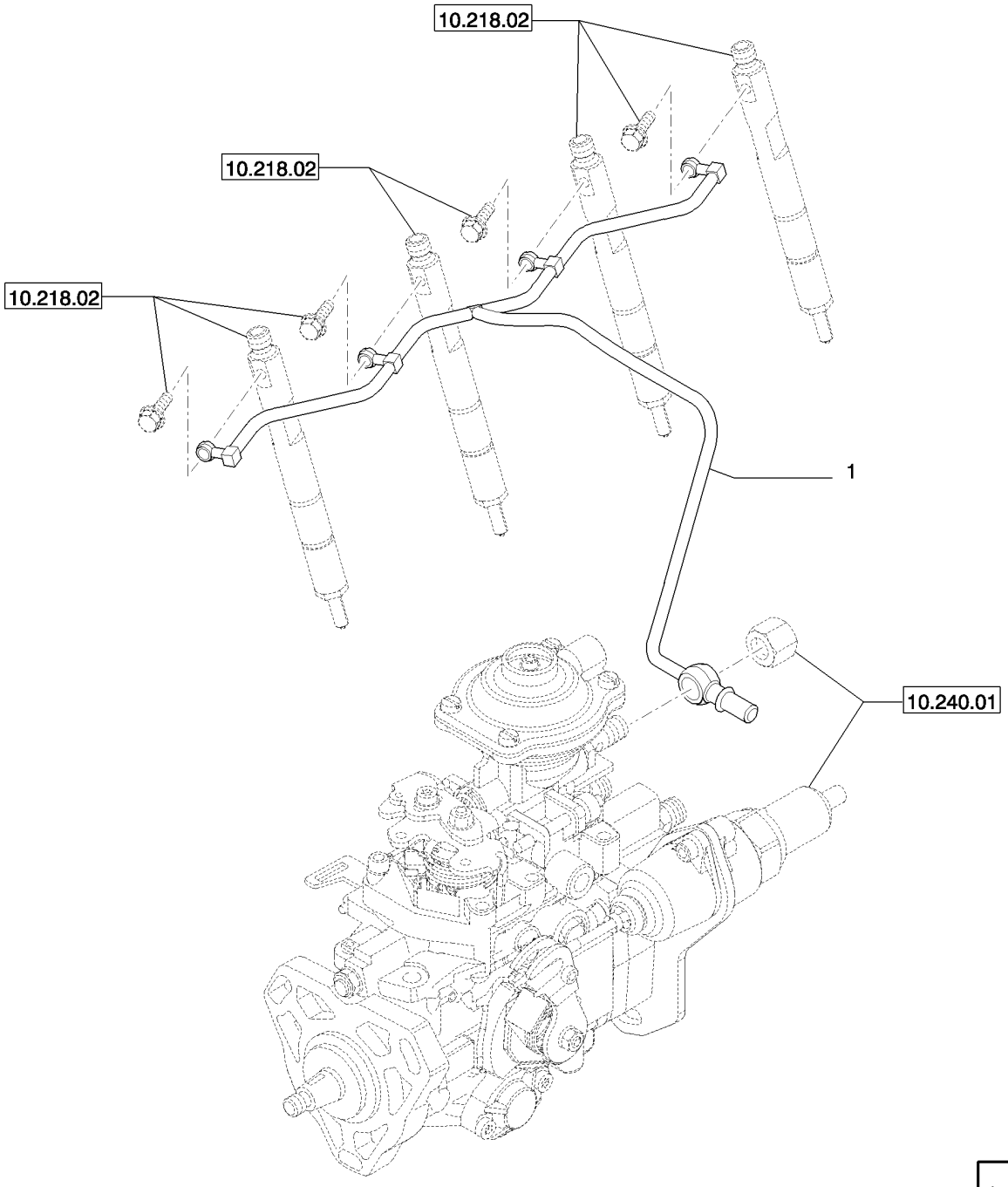

GROUPE D'INJECTION - TUYAUTERIE - (504207949)
EINSPRITZAUSRUESTUNG - LEITUNGEN - (504207949)
INDSPRØJTNINGSGRUPPE - RØRLEDNINGER - (504207949)
INSPUITGROEP - LEIDINGEN - (504207949)

R	N	P.N.	MOD	Q	Denominação Description Bezeichnung	Description Bezeichnung	Denominacion Beskrivelse	Descrizione Beschrijving	L.C.
1		504207952		1	TUBO DE RETORNO, Injection Piping TUYAU DE RETOUR	RETURN PIPE RÜCKLAUFROHR	TUBO DE RETORNO RETURRØR	TUBO DI RITORNO TERUGVOERLEIDING	P840

10.218.01	03	p1	02/11

INJECTION EQUIPMENT - PIPING (504207956)
INJECTION EQUIPMENT - PIPING (504207956)
GRUPO DE INYECCION - TUBERIAS (504207956)
GRUPPO INIEZIONE - TUBAZION (504207956)

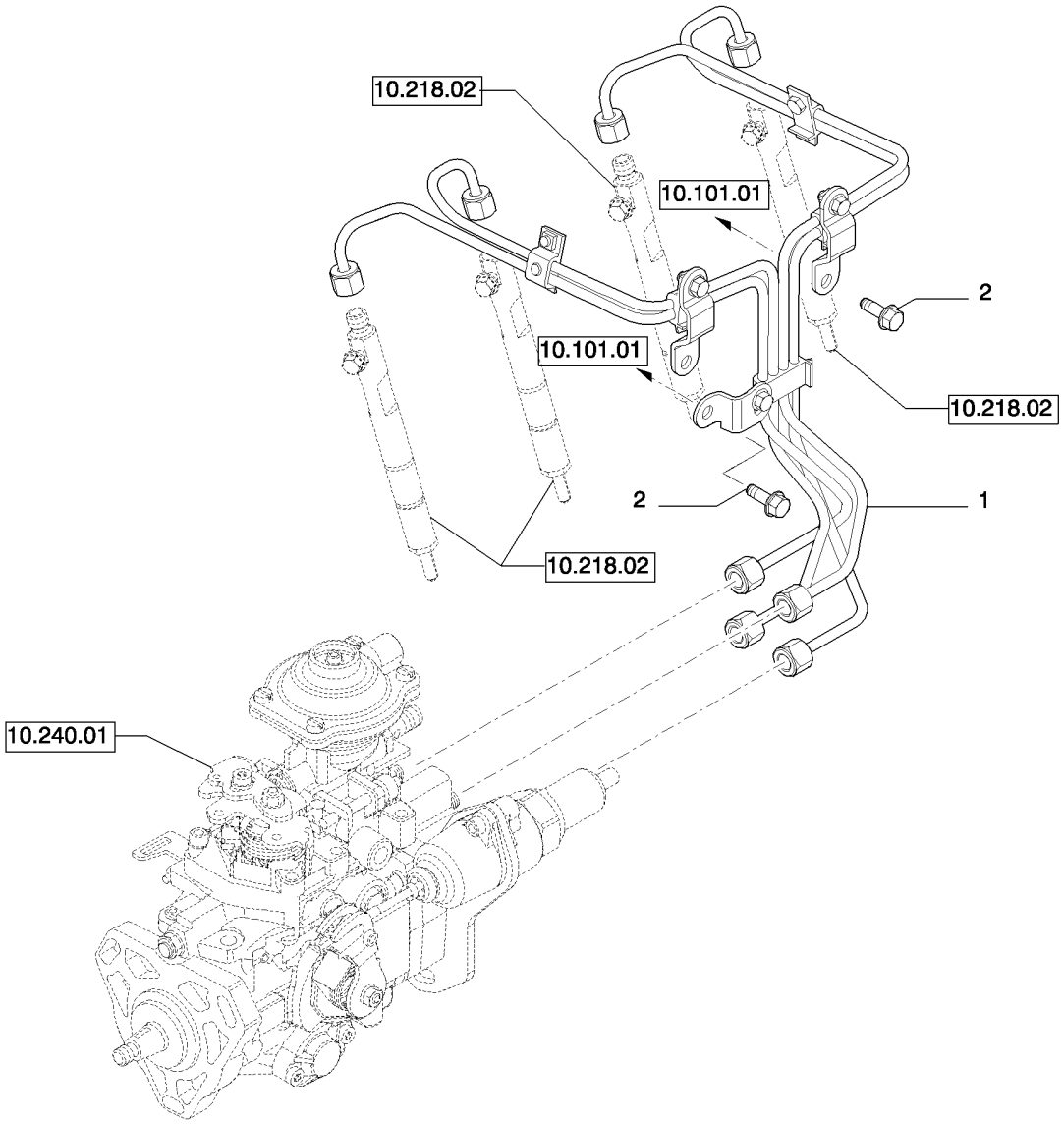

GROUPE D'INJECTION - TUYAUTERIE (504207956)
EINSPRITZAUSRUESTUNG - LEITUNGEN (504207956)
INDSPRØJTNINGSGRUPPE - RØRLEDNINGER (504207956)
INSPUITGROEP - LEIDINGEN (504207956)

R	N	P.N.	MOD	Q	Denominação Description	Description Bezeichnung	Denominacion Beskrivelse	Descrizione Beschrijving	L.C.
1		504216298		1	TUBO INJEÇÃO TUYAU D'INJECTION	INJECTION PIPE EINSPRITZLEITUNG	TUBO DE INYECCIÓN INDSPRØJTNINGSRØR	TUBO DI INIEZIONE INSPUITLEIDING	Z050
2		16597924		3	PARAFUSO, M8X14 mm VIS	SCREW SCHRAUBE	TORNILLO SKRUE	VITE SCHROEF	040V

10.218.02	02	p1	06/11

INJECTION EQUIPMENT - INJECTOR (504385855)
INJECTION EQUIPMENT - INJECTOR (504385855)
GRUPO DE INYECCION - INYECTOR (504385855)
GRUPPO INIEZIONE - INIETTORE (504385855)

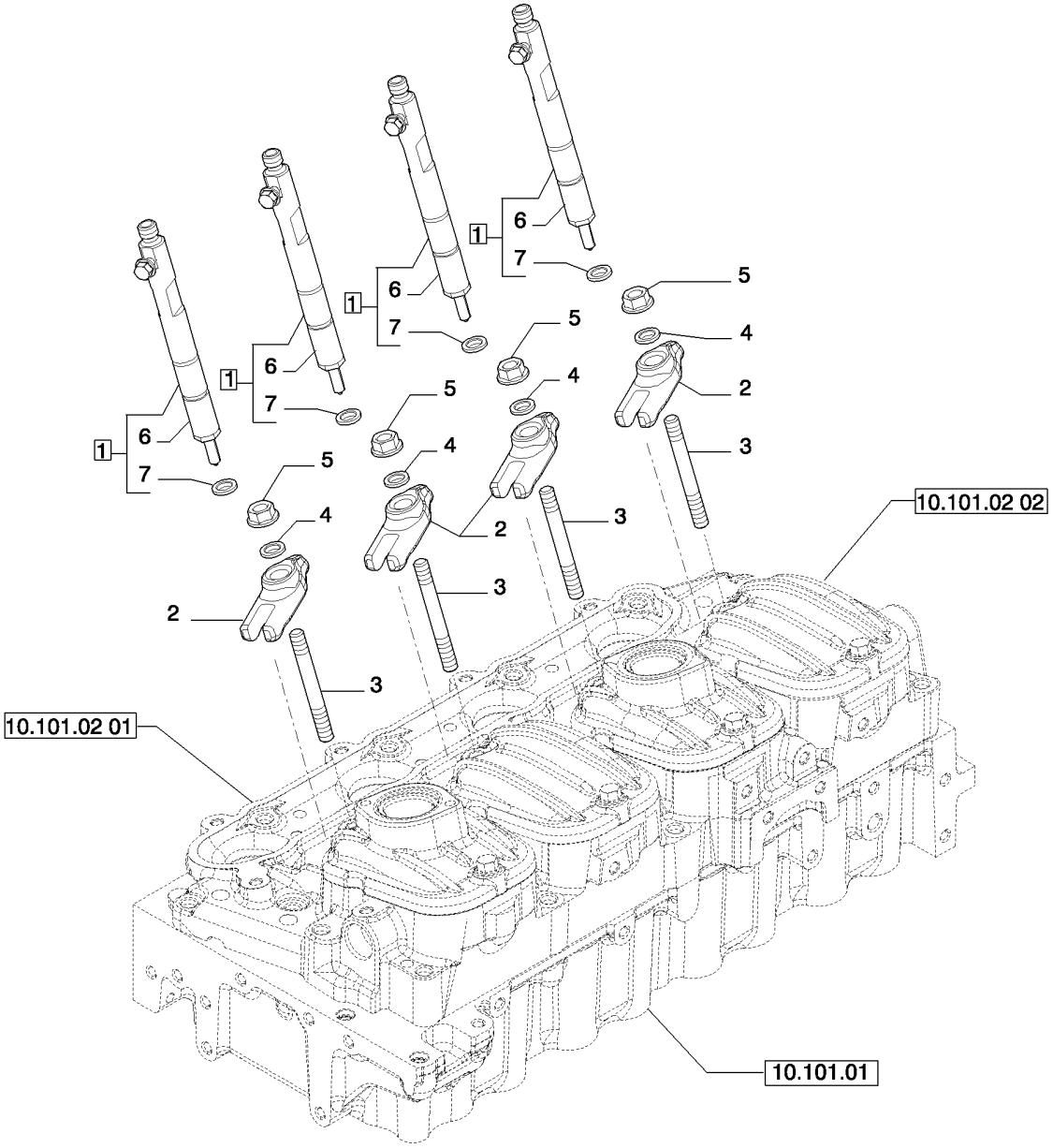

GROUPE D'INJECTION - INJECTEUR (504385855)
EINSPRITZAUSRUESTUNG - EINSPRITZDUESE (504385855)
INDSPRØJTNINGSGRUPPE - INDSPRØJTNINGSDYSE (504385855)
INSPUITGROEP - INSPUITSTUK (504385855)

R	N	P.N.	MOD	Q	Denominação Description	Description Bezeichnung	Denominacion Beskrivelse	Descrizione Beschrijving	L.C.
1		504385978		4	INJETOR SIST COMBUSTÍVEL	FUEL SYSTEM INJECTO	INYECTOR DE SIST. COI	INIETT. SISTEMA CARBU	089I
					INJECTEUR DE CARBUR	KRAFTSTOFFEINSPRITZ	BRÆNDSTOFPUMPE	VERSTUIVER	
2		504385832		4	SUPORTE	BRACKET	SOPORTE	STAFFA	225S
					SUPPORT	HALTERUNG	BESLAG	STEUN	
3		504315404		4	PRISIONEIRO, M8X16X60	STUD	PRISIONERO	PRIGIONIERO	210P
					GOUJON	GEWINDEBOLZEN	STØTTEBOLT	TAPEIND	
4		500353601		4	ARRUELA PLANA	WASHER	ARANDELA	RONDELLA	131R
					RONDELLE	UNTERLEGSCHEIBE	FLADSKIVE	SLUITRING	
5		17044735		4	PORCA, M8	NUT	TUERCA	DADO	010D
					ECROU	MUTTER	MØTRIK	MOER	
6		8097807		4	INJETOR	NOZZLE	BOQUILLA	UGELLO	148P
					GICLEUR	DÜSE	DYSE	MONDSTUK	
7		4899689		4	VEDAÇÃO DA ARRUELA, D = 14 MM SP = 1,78 MM	SEALING WASHER	ARANDELA HERMÉTICA	ROSETTA DI TENUTA	133R
					RONDELLE D'ETANCHEI	DICHTSCHEIBE	TÆTNINGSSKIVE	AFDICHTRING	

10.220.01		p1	02/11

THROTTLE HAND FOOT MECHANICAL (SR200)
THROTTLE HAND FOOT MECHANICAL (SR200)
THROTTLE HAND FOOT MECHANICAL (SR200)
THROTTLE HAND FOOT MECHANICAL (SR200)

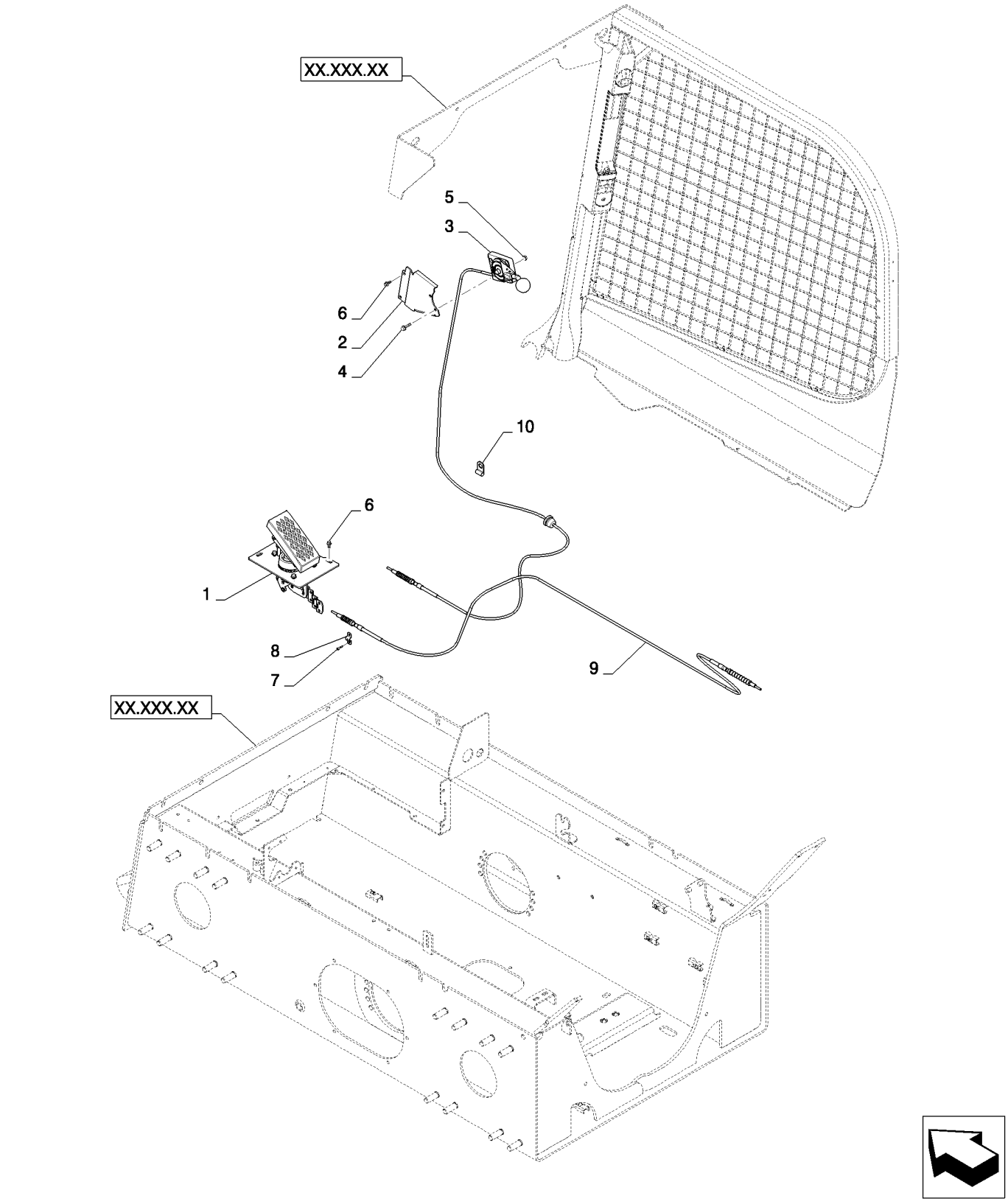

THROTTLE HAND FOOT MECHANICAL (SR200)
THROTTLE HAND FOOT MECHANICAL (SR200)
THROTTLE HAND FOOT MECHANICAL (SR200)
THROTTLE HAND FOOT MECHANICAL (SR200)

R	N	P.N.	MOD	Q	Denominação Description	Description Bezeichnung	Denominacion Beskrivelse	Descrizione Beschrijving	L.C.
1		84374767		1	COMANDO DO ACELERADOR, Mechanical, Foot				
						THROTTLE CONTROL	CONTROL DE REGULAD	COMANDO ACCELERAT(	197C
					COMMANDE D'ACCELEF	DROSSELKLAPPENZUG	GASREGULERINGSKABE	GASBEDIENINGSKABEL	
2		84333202		1	FIXADOR, Hand Throttle, CE Gray				
						MOUNT	SOPORTE	SUPPORTO	C022
					MONTAGE	GESTELL	BESLAG	BEVESTIGING	
3		84258153		1	EMPUNHADURA, Throttle to Pedal				
						HANDLE GRIP	PERILLA	IMPUGNATURA	025I
					POIGNEE DE MAINTIEN	HANDGRIFF	HÅNDGREB	HANDGREEP	
4		86511839		2	PARAFUSO, Hex Flg, M6 x 30, 8.8				
						BOLT	PERNO	BULLONE	140B
					VIS	SCHRAUBE	BOLT	BOUT	
5		9804276		2	PORCA, M6 x 1, Flg, Cl 8	NUT	TUERCA	DADO	010D
					ECROU	MUTTER	MØTRIK	MOER	
6		84305556		2	PARAFUSO, RDW-HD M6x25 TORX				
						SCREW	TORNILLO	VITE	040V
					VIS	SCHRAUBE	SKRUE	SCHROEF	
7		84200938		2	BRAÇADEIRA, Throttle Cable				
						CLAMP	ABRAZADERA	MORSETTO	120M
					COLLIER	KLEMME	SPÆNDEBÅND	KLEM	
8		86624126		4	PARAFUSO, Hex Soc Hd, M4 x 16, 8.8				
						SCREW	TORNILLO	VITE	040V
					VIS	SCHRAUBE	SKRUE	SCHROEF	
9		84258154		1	CABO, Pedal to Governor, MD FRM F5C				
						CABLE	CABLE	CAVO	650C
					CABLE	KABEL	KABEL	KABEL	
10		86639010		1	BRAÇADEIRA, 3/8", Insul, 1/2" Bolt				
						CLAMP	ABRAZADERA	MORSETTO	120M
					COLLIER	KLEMME	SPÆNDEBÅND	KLEM	
11		84272827		2	REBITE, M6x1.0 (Not Shown)				
						RIVET	REMACHE	RIVETTO	055R
					RIVET	NIET	NITTE	KLINKNAGEL	

10.220.02		p1	05/11

THROTTLE HAND FOOT EH (SR200,TR270)
THROTTLE HAND FOOT EH (SR200,TR270)
THROTTLE HAND FOOT EH (SR200,TR270)
THROTTLE HAND FOOT EH (SR200,TR270)

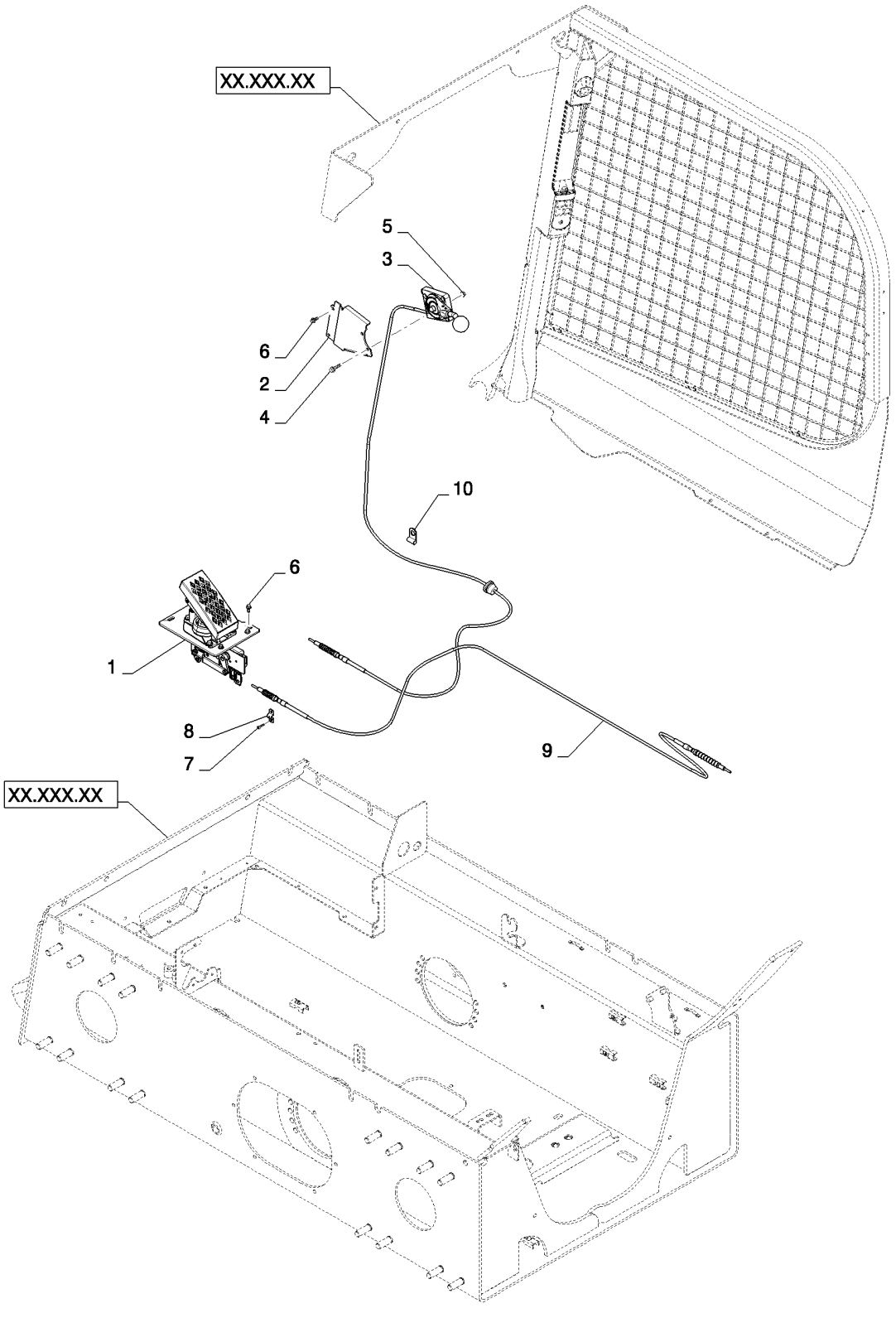

THROTTLE HAND FOOT EH (SR200,TR270)
THROTTLE HAND FOOT EH (SR200,TR270)
THROTTLE HAND FOOT EH (SR200,TR270)
THROTTLE HAND FOOT EH (SR200,TR270)

R	N	P.N.	MOD	Q	Denominação Description	Description Bezeichnung	Denominacion Beskrivelse	Descrizione Beschrijving	L.C.
1		84374768		1	REGULADOR PRESSÃO, EH, Foot				
						THROTTLE	REGULADOR	ACCELERATORE	P070
					PAPIL. GAZ ; ACCELERA	DROSSEL; GASPEDAL	GASPEDAL	GASKLEP	
2		84333202		1	FIXADOR, Hand Throttle, CE Gray				
						MOUNT	SOPORTE	SUPPORTO	C022
					MONTAGE	GESTELL	BESLAG	BEVESTIGING	
3		84258153		1	EMPUNHADURA, Throttle to Pedal				
						HANDLE GRIP	PERILLA	IMPUGNATURA	025I
					POIGNEE DE MAINTIEN	HANDGRIFF	HÅNDGREB	HANDGREEP	
4		86511839		2	PARAFUSO, Hex Flg, M6 x 30, 8.8				
						BOLT	PERNO	BULLONE	140B
					VIS	SCHRAUBE	BOLT	BOUT	
5		9804276		2	PORCA, M6 x 1, Flg, Cl 8	NUT	TUERCA	DADO	010D
					ECROU	MUTTER	MØTRIK	MOER	
6		84305556		5	PARAFUSO, RDW-HD M6x25 TORX				
						SCREW	TORNILLO	VITE	040V
					VIS	SCHRAUBE	SKRUE	SCHROEF	
7		84200938		2	BRAÇADEIRA, Throttle Cable				
						CLAMP	ABRAZADERA	MORSETTO	120M
					COLLIER	KLEMME	SPÆNDEBÅND	KLEM	
8		86624126		4	PARAFUSO, Hex Soc Hd, M4 x 16, 8.8				
						SCREW	TORNILLO	VITE	040V
					VIS	SCHRAUBE	SKRUE	SCHROEF	
9		84258154		1	CABO, Pedal to Governor, MD FRM				
						CABLE	CABLE	CAVO	650C
					CABLE	KABEL	KABEL	KABEL	
10		86639010		1	BRAÇADEIRA, 3/8", Insul, 1/2" Bolt				
						CLAMP	ABRAZADERA	MORSETTO	120M
					COLLIER	KLEMME	SPÆNDEBÅND	KLEM	
11		84272827		2	REBITE, M6x1.0 (Not Shown)				
						RIVET	REMACHE	RIVETTO	055R
					RIVET	NIET	NITTE	KLINKNAGEL	

10.240.01	01	p1	06/11

INJECTION PUMP (504385876)
INJECTION PUMP (504385876)
BOMBA DE INYECCION (504385876)
POMPA INIEZIONE (504385876)

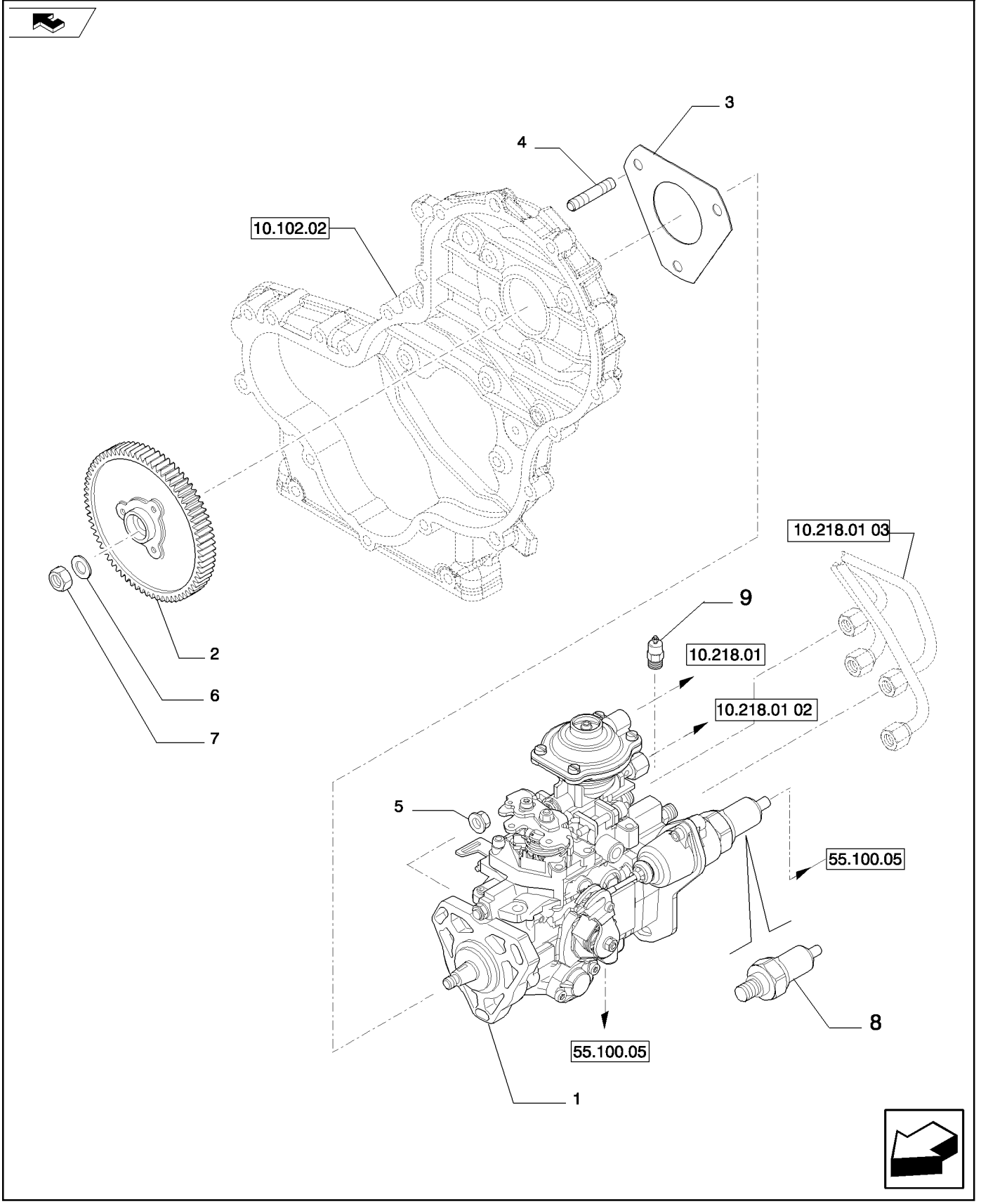

POMPE D'INJECTION (504385876)
EINSPRITZPUMPE (504385876)
INDSPRØJTNINGSPUMPE (504385876)
INSPUITPOMP (504385876)

R	N	P.N.	MOD	Q	Denominação Description	Description Bezeichnung	Denominacion Beskrivelse	Descrizione Beschrijving	L.C.
1		504385873		1	BOMBA INJEÇÃO COMBUSTÍVEL, 55 KW				
						FUEL INJECTION PUMP	BOMBA DE INY. DE COM	POMPA INIEZ. CARBURA	158P
					POMPE INJECT. CARBUI	KRAFTSTOFFEINPRITZP	INDSPRØJTNINGSPUMP	INSPUITPOMP	
2		504240405		1	ENGRENAGEM	GEAR	ENGRANAJE	INGRANAGGIO	050I
					PIGNON	ZAHNRAD	TANDHJUL	TANDWIEL	
3		504083433		1	JUNTA	GASKET	JUNTA	GUARNIZIONE	123G
					JOINT	DICHTUNG	PAKNING	PAKKING	
4		504315405		3	PRISIONEIRO	STUD	PRISIONERO	PRIGIONIERO	210P
					GOUJON	GEWINDEBOLZEN	STØTTEBOLT	TAPEIND	
5		500368408		3	PORCA, M8X1,25	NUT	TUERCA	DADO	010D
					ECROU	MUTTER	MØTRIK	MOER	
6		17095401		1	ARRUELA PLANA	WASHER	ARANDELA	RONDELLA	131R
					RONDELLE	UNTERLEGSCHEIBE	FLADSKIVE	SLUITRING	
7		16980331		1	PORCA, M14X1,5	NUT	TUERCA	DADO	010D
					ECROU	MUTTER	MØTRIK	MOER	
8		93160151		1	TRANSMISSOR	SENDER UNIT	UNIDAD EMISORA	TRASMETTITORE	160T
					ENS. TRANSMETTEUR	SIGNALGEBER	SENDER	SENSOREENHEID	
9		42533181		1	VÁLVULA DE PARADA	SHUT-OFF VALVE	VÁLVULA DE CIERRE	VALVOLA DI ARRESTO	P337
					VANNE D'ARRET	ABSPERRVENTIL	AFSPÆRRINGSVENTIL	UITSCHAKELKLEP	

10.250.02		p1	02/11

TURBOCHARGING (504183274)
TURBOCHARGING (504183274)
TURBOCOMPRESOR (504183274)
TURBOCOMPRESSORE (504183274)

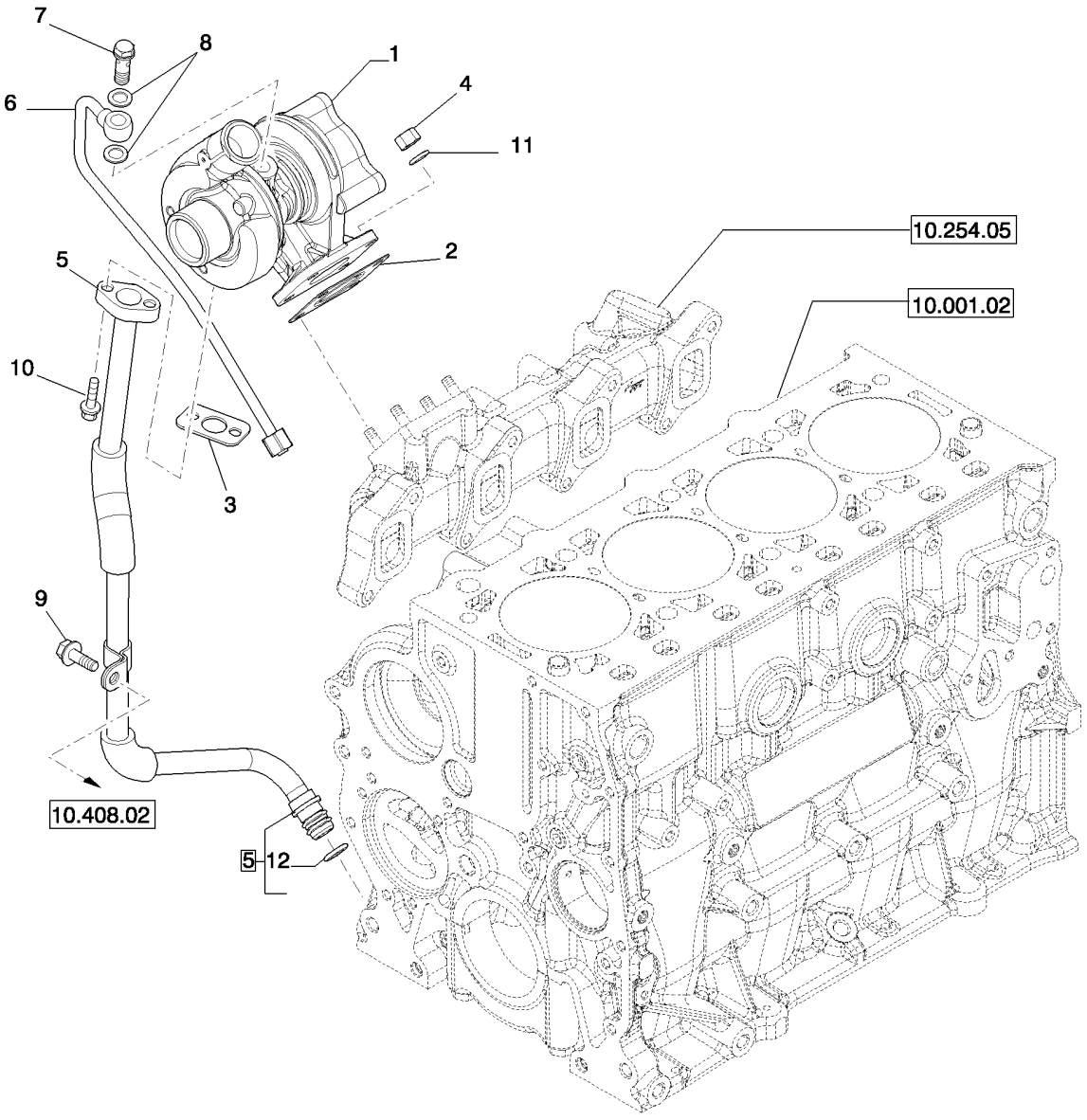

TURBOCOMPRESSEUR (504183274)
TURBOLADER (504183274)
TURBOLADER (504183274)
TURBOCOMPRESSOR (504183274)

R	N	P.N.	MOD	Q	Denominação Description	Description Bezeichnung	Denominacion Beskrivelse	Descrizione Beschrijving	L.C.
1		**504242763**		1	TURBO-COMPRESSOR TURBOCOMPRESSEUR	TURBOCHARGER TURBOLADER	TURBOCOMPRESOR TURBOLADER	TURBOCOMPRESSORE TURBOCOMPRESSOR	210T
2		**4899343**		1	JUNTA JOINT	GASKET DICHTUNG	JUNTA PAKNING	GUARNIZIONE PAKKING	123G
3		**500370706**		1	JUNTA JOINT	GASKET DICHTUNG	JUNTA PAKNING	GUARNIZIONE PAKKING	123G
4		**500322677**		4	PORCA FLANGEADA, M8 ECROU A EMBASE	FLANGE NUT FLANSCHMUTTER	TUERCA DE BRIDA FLANGEMØTRIK	DADO FLANGIATO FLENSMOER	A069
5		**504164226**		1	TUBO TUYAU	PIPE ROHR	TUBO PÅFYLDNINGSSTUDS	TUBO BUIS	200T
6		**504164224**		1	TUBO TUYAU	PIPE ROHR	TUBO PÅFYLDNINGSSTUDS	TUBO BUIS	200T
7		**4864080**		1	PARAFUSO DE BANJO, M10X1,25 VIS BANJO	BANJO BOLT HOHLSCHRAUBE	PERNO BANJO BANJOBOLT	BULLONE MASCHIO BANJOBOUT	090B
8		**17750480**		2	JUNTA JOINT	GASKET DICHTUNG	JUNTA PAKNING	GUARNIZIONE PAKKING	123G
9		**16586225**		1	PARAFUSO, M8 x 16 VIS	SCREW SCHRAUBE	TORNILLO SKRUE	VITE SCHROEF	040V
10		**18137825**		2	PARAFUSO, M6 x 20 VIS	SCREW SCHRAUBE	TORNILLO SKRUE	VITE SCHROEF	040V
11		**17094914**		4	ARRUELA PLANA, 8,4X16 mm RONDELLE	WASHER UNTERLEGSCHEIBE	ARANDELA FLADSKIVE	RONDELLA SLUITRING	131R
12		**17281681**		1	O-RING, 13.9mm ID x 2.6mm Width JOINT TORIQUE	O-RING O-RING	JUNTA TÓRICA O-RING	ANELLO TOROIDALE O-RING	055A

BLOCK HEATER (SR200-TV380)
BLOCK HEATER (SR200-TV380)
BLOCK HEATER (SR200-TV380)
BLOCK HEATER (SR200-TV380)

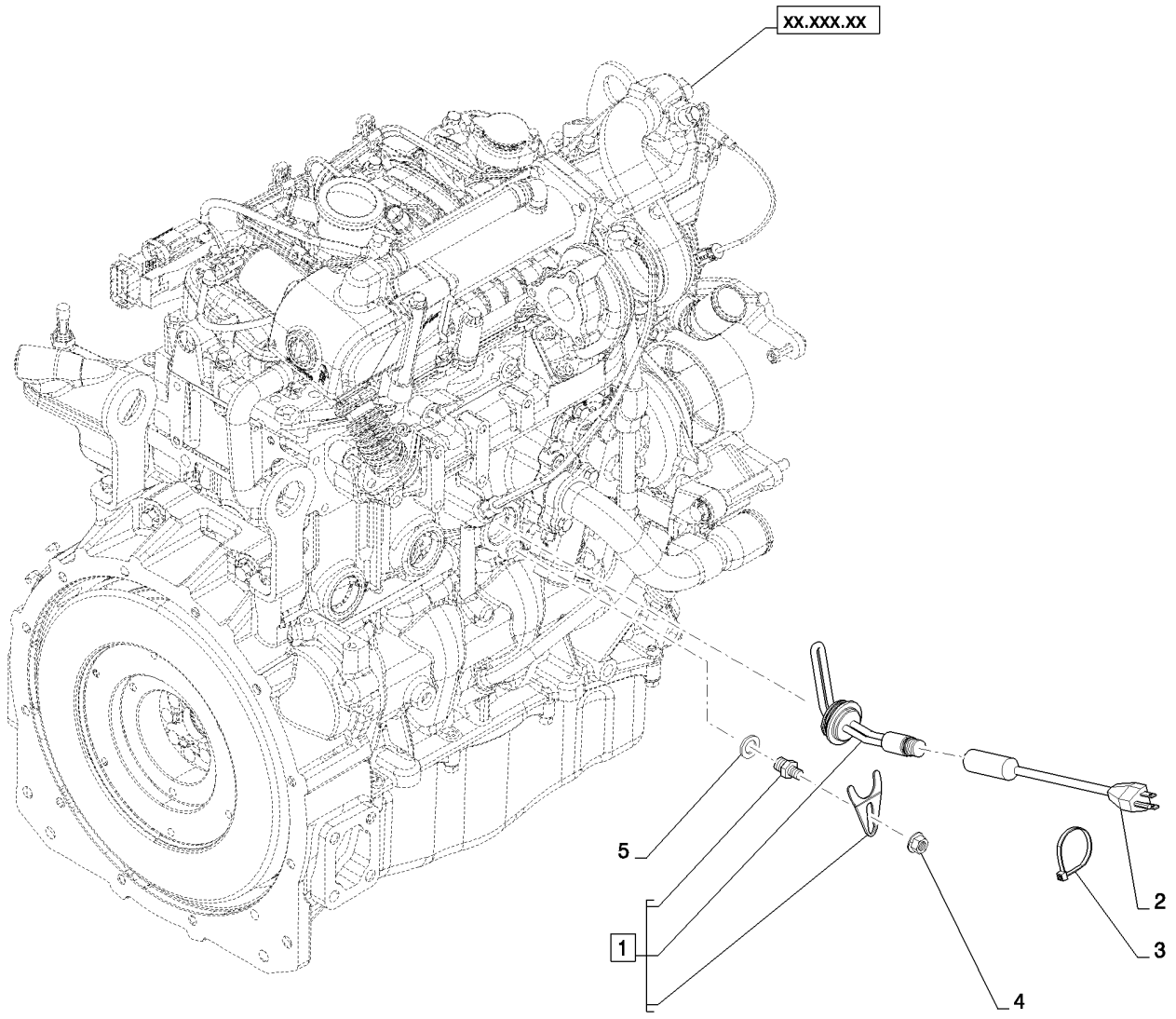

BLOCK HEATER (SR200-TV380)
BLOCK HEATER (SR200-TV380)
BLOCK HEATER (SR200-TV380)
BLOCK HEATER (SR200-TV380)

R	N	P.N.	MOD	Q	Denominação Description	Description Bezeichnung	Denominacion Beskrivelse	Descrizione Beschrijving	L.C.
1		87693857		1	UNIDADE DE AQUECIMENTO, Assembly				
						UNIT HEATER	APARATO DE CALEFAC(	RISCALDATORE UNITÀ	Z375
					APPAREIL DE CHAUFFA	HEIZUNGSEINHEIT	RADIATORENHED	VERWARMING	
2		87693858		1	CABO, Block Heater	CABLE	CABLE	CAVO	650C
					CABLE	KABEL	KABEL	KABEL	
3		L11541		1	PRENDEDOR DE CABOS,	Nylon Tie 7-8in			
						CABLE STRAP	BANDA DE CABLE	FASCETTA PER CAVO	P716
					BRIDE DE CABLE	KABELBINDER	KABELSTROP	BUNDELBAND	
4		86050279		1	PORCA, M10 x 1.5, Flg, Cl	10			
						NUT	TUERCA	DADO	010D
					ECROU	MUTTER	MØTRIK	MOER	
5		12646001		1	ARRUELA PLANA, M14 x 24 x 2				
						WASHER	ARANDELA	RONDELLA	131R
					RONDELLE	UNTERLEGSCHEIBE	FLADSKIVE	SLUITRING	

10.254.02		p1	01/11

BLOCK HEATER EU (SR200-TV380)
BLOCK HEATER EU (SR200-TV380)
BLOCK HEATER EU (SR200-TV380)
BLOCK HEATER EU (SR200-TV380)

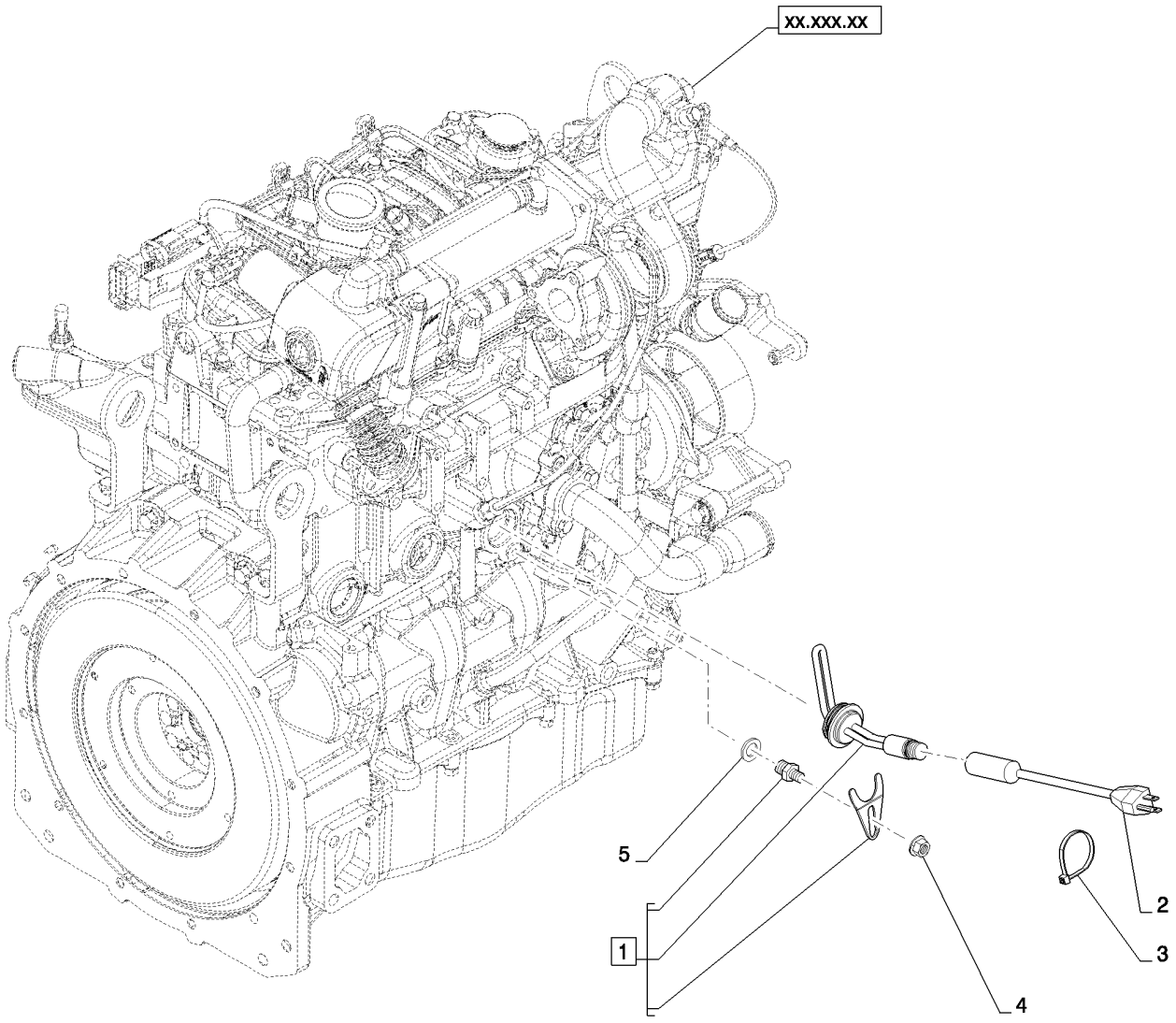

BLOCK HEATER EU (SR200-TV380)
BLOCK HEATER EU (SR200-TV380)
BLOCK HEATER EU (SR200-TV380)
BLOCK HEATER EU (SR200-TV380)

R	N	P.N.	MOD	Q	Denominação Description	Description Bezeichnung	Denominacion Beskrivelse	Descrizione Beschrijving	L.C.
1		87719400		1	AQUECEDOR, Assembly	HEATER	CALENTADOR	RISCALDATORE	105R
					CHAUFFAGE	HEIZUNG	VARMEAPPARAT	VERWARMING	
2		87693858		1	CABO, Block Heater	CABLE	CABLE	CAVO	650C
					CABLE	KABEL	KABEL	KABEL	
3		L11541		1	PRENDEDOR DE CABOS,	Nylon Tie 7-8in			
						CABLE STRAP	BANDA DE CABLE	FASCETTA PER CAVO	P716
					BRIDE DE CABLE	KABELBINDER	KABELSTROP	BUNDELBAND	
4		86050279		1	PORCA, M10 x 1.5, Flg, Cl	10			
						NUT	TUERCA	DADO	010D
					ECROU	MUTTER	MØTRIK	MOER	
5		12646001		1	ARRUELA PLANA, M14 x 24 x 2				
						WASHER	ARANDELA	RONDELLA	131R
					RONDELLE	UNTERLEGSCHEIBE	FLADSKIVE	SLUITRING	

10.254.03		p1	01/11

ENGINE EXHAUST MED F5C (SR200,TR270)
ENGINE EXHAUST MED F5C (SR200,TR270)
ENGINE EXHAUST MED F5C (SR200,TR270)
ENGINE EXHAUST MED F5C (SR200,TR270)

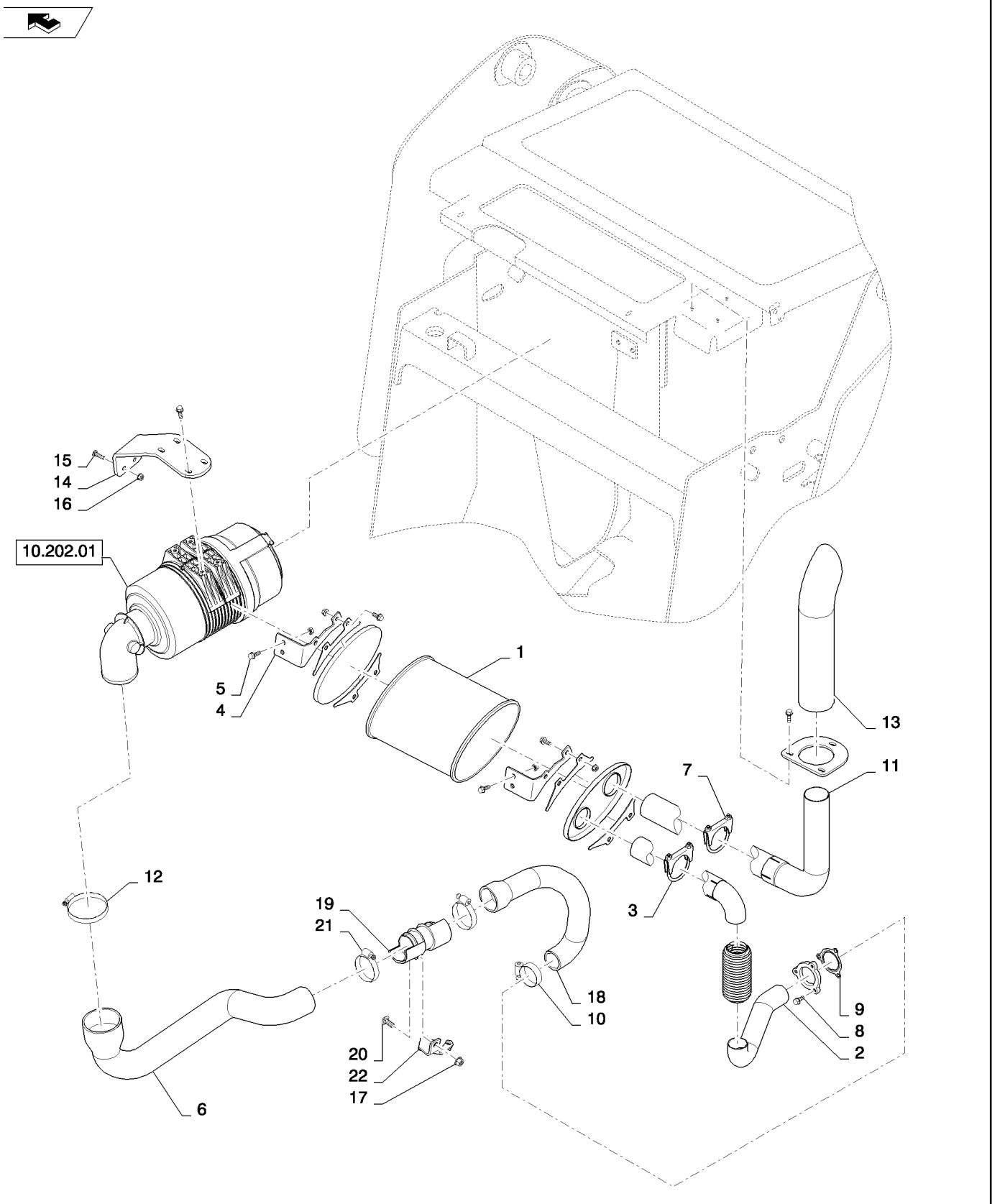

ENGINE EXHAUST MED F5C (SR200,TR270)
ENGINE EXHAUST MED F5C (SR200,TR270)
ENGINE EXHAUST MED F5C (SR200,TR270)
ENGINE EXHAUST MED F5C (SR200,TR270)

R	N	P.N.	MOD	Q	Denominação Description	Description Bezeichnung	Denominacion Beskrivelse	Descrizione Beschrijving	L.C.
1		84287182		1	SILENCIOSO, Bilen F5C	MUFFLER	SILENCIADOR	MARMITTA	160S
					SILENCIEUX	SCHALLDÄMPFER	LYDDÆMPER	UITLAATDEMPER	
2		84287181		1	TUBO DE ADMISSÃO DE AR, Flexible				
						AIR INTAKE TUBE	TUBO DE ADMISIÓN DE	TUBO DI ASPIRAZIONE /	P089
					TUBE D'ADMISSION D'AI	LUFTEINLASSROHR	LUFTINDSUGNINGSSLAI	LUCHTINLAATLEIDING	
3		83910871		1	BRAÇADEIRA, Muffler	CLAMP	ABRAZADERA	MORSETTO	120M
					COLLIER	KLEMME	SPÆNDEBÅND	KLEM	
4		84365650		2	SUPORTE, Muffler	BRACKET	SOPORTE	STAFFA	225S
					SUPPORT	HALTERUNG	BESLAG	STEUN	
5		9671714		11	PARAFUSO, Hex Flg, M8 x 25, 8.8				
						BOLT	PERNO	BULLONE	140B
					VIS	SCHRAUBE	BOLT	BOUT	
6		84318536		1	MANGUEIRA AR CONDICIONADO, Air Cleaner to Coupler				
						A/C HOSE	TUBO A/A	TUBO FLESSIBILE A/C	A054
					FLEXIBLE CLIMATISATIC	KLIMAANLAGENSCHLAU	SLANGE, AIRCONDITION	SLANG VOOR AIRCO	
7		87461995		1	BRAÇADEIRA, Muffler	CLAMP	ABRAZADERA	MORSETTO	120M
					COLLIER	KLEMME	SPÆNDEBÅND	KLEM	
8		9804258		7	PARAFUSO, Hex Flg, M8 x 20, 8.8				
						BOLT	PERNO	BULLONE	140B
					VIS	SCHRAUBE	BOLT	BOUT	
9		87611895		1	JUNTA, Muffler	GASKET	JUNTA	GUARNIZIONE	123G
					JOINT	DICHTUNG	PAKNING	PAKKING	
10		86050197		1	BRAÇADEIRA MANGUEIRA, #32 Type F				
						HOSE CLAMP	ABRAZADERA DE MANG	FASCETTA STRINGITUB	P729
					COLLIER POUR FLEXIBL	SCHLAUCHSCHELLE	SLANGEKLEMME	SLANGKLEM	
11		84287183		1	TUBO DE ADMISSÃO DE AR, Exhaust Tailpipe				
						AIR INTAKE TUBE	TUBO DE ADMISIÓN DE	TUBO DI ASPIRAZIONE /	P089
					TUBE D'ADMISSION D'AI	LUFTEINLASSROHR	LUFTINDSUGNINGSSLAI	LUCHTINLAATLEIDING	
12		381144		1	BRAÇADEIRA MANGUEIRA, #60, 3.31/4.25 Type F Worm, #60 Type F				
						HOSE CLAMP	ABRAZADERA DE MANG	FASCETTA STRINGITUB	P729
					COLLIER POUR FLEXIBL	SCHLAUCHSCHELLE	SLANGEKLEMME	SLANGKLEM	
13		84340478		1	TUBO ESCAPE, Extension	EXHAUST SYSTEM PIPE	TUBO DE SISTEMA DE E	TUBO SISTEMA DI SCAR	198T
					TUYAU D'ECHAPPEMEN	AUSPUFFROHR	RØRUDSTØDNINGSSYS	PIJP VAN UITLAATSYSTI	
14		84309314		1	SUPORTE, Air Cleaner, Radial				
						BRACKET	SOPORTE	STAFFA	225S
					SUPPORT	HALTERUNG	BESLAG	STEUN	
15		120038		3	PARAFUSO, Short NK, M8 x 30, Cl8.8, Full Thd				
						CARRIAGE BOLT	PERNO ALOMADO	BULLONE A TESTA TONI	P123
					VIS A TETE BOMBEE	SCHLOSSSCHRAUBE	BRÆDDEBOLT	SLOTBOUT	
16		9804277		7	PORCA, M8 x 1.25, Flg, Cl 8				
						NUT	TUERCA	DADO	010D
					ECROU	MUTTER	MØTRIK	MOER	
17		9804278		1	PORCA, M10 x 1.5, Flg, Cl 8				
						NUT	TUERCA	DADO	010D
					ECROU	MUTTER	MØTRIK	MOER	
18		84335246		1	TUBO, Coupler to Turbo	TUBE	TUBO	TUBO	195T
					TUBE	ROHR	RØR	LEIDING	

SR200

10.254.03		p2	01/11

ENGINE EXHAUST MED F5C (SR200,TR270)
ENGINE EXHAUST MED F5C (SR200,TR270)
ENGINE EXHAUST MED F5C (SR200,TR270)
ENGINE EXHAUST MED F5C (SR200,TR270)

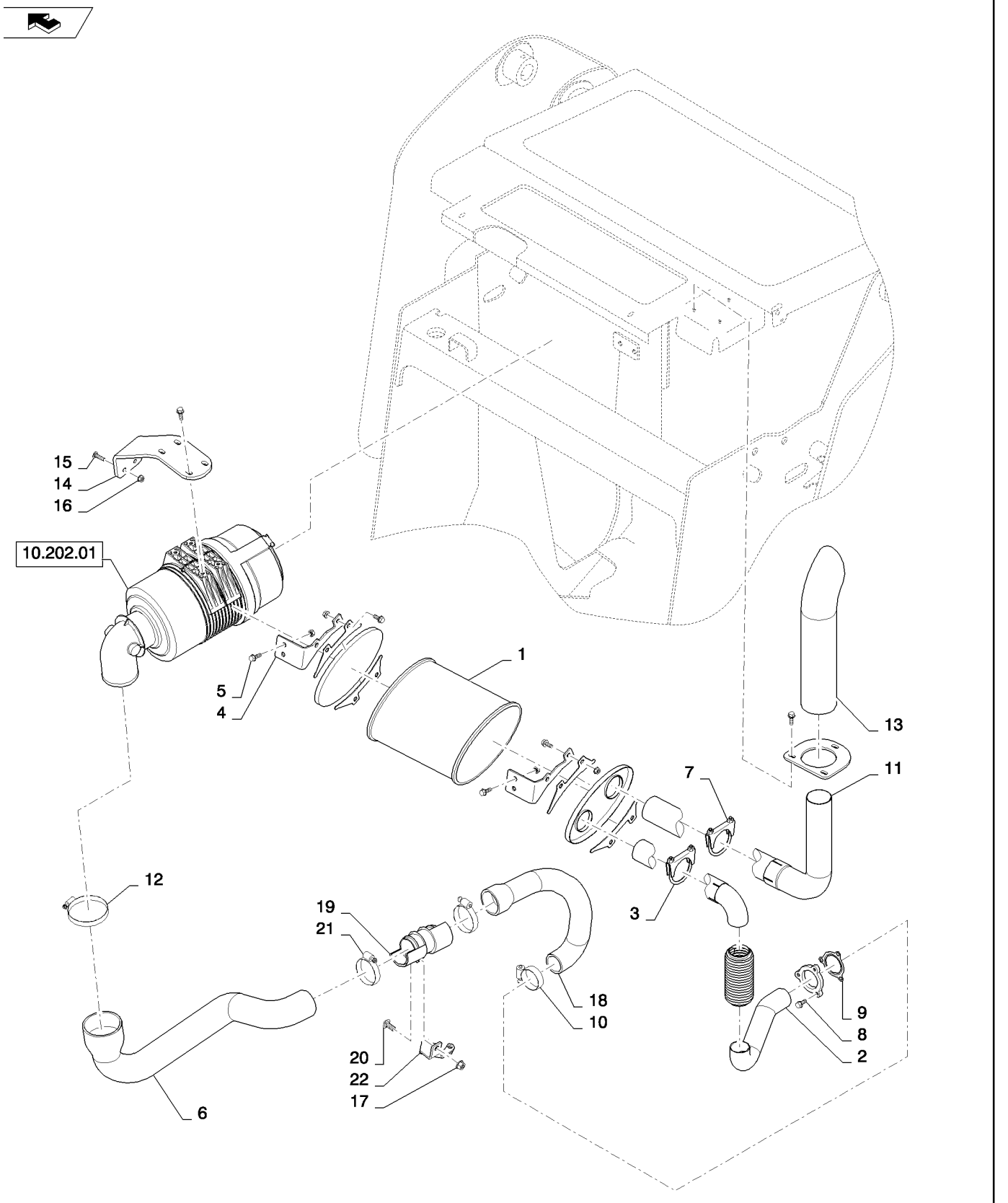

ENGINE EXHAUST MED F5C (SR200,TR270)
ENGINE EXHAUST MED F5C (SR200,TR270)
ENGINE EXHAUST MED F5C (SR200,TR270)
ENGINE EXHAUST MED F5C (SR200,TR270)

R	N	P.N.	MOD	Q	Denominação Description	Description Bezeichnung	Denominacion Beskrivelse	Descrizione Beschrijving	L.C.
19		**84198602**		1	ENGATE PARA TUBO, Intake Hose				
						PIPE COUPLING	TUBO DE ACOPLAMIENT	RACCORDO TUBO	A035
					RACCORD DE TUYAU	ROHRKUPPLUNG	RØRKOBLING	BUISKOPPELING	
20		**86633356**		1	PARAFUSO, Short NK, M10 x 25, Cl8.8, Full Thd				
						CARRIAGE BOLT	PERNO ALOMADO	BULLONE A TESTA TON	P123
					VIS A TETE BOMBEE	SCHLOSSSCHRAUBE	BRÆDDEBOLT	SLOTBOUT	
21		**86050197**		2	BRAÇADEIRA MANGUEIRA	HOSE CLAMP	ABRAZADERA DE MANG	FASCETTA STRINGITUB	P729
					COLLIER POUR FLEXIBL	SCHLAUCHSCHELLE	SLANGEKLEMME	SLANGKLEM	
22		**87471945**		1	SUPORTE, Air Cleaner Coupler				
						BRACKET	SOPORTE	STAFFA	225S
					SUPPORT	HALTERUNG	BESLAG	STEUN	

10.254.04		p1	06/11

INTAKE MANIFOLD (504385851 - 504385860)
INTAKE MANIFOLD (504385851 - 504385860)
COLLECTOR DE ASPIRACION (504385851 - 504385860)
COLLETTORE ASPIRAZIONE (504385851 - 504385860)

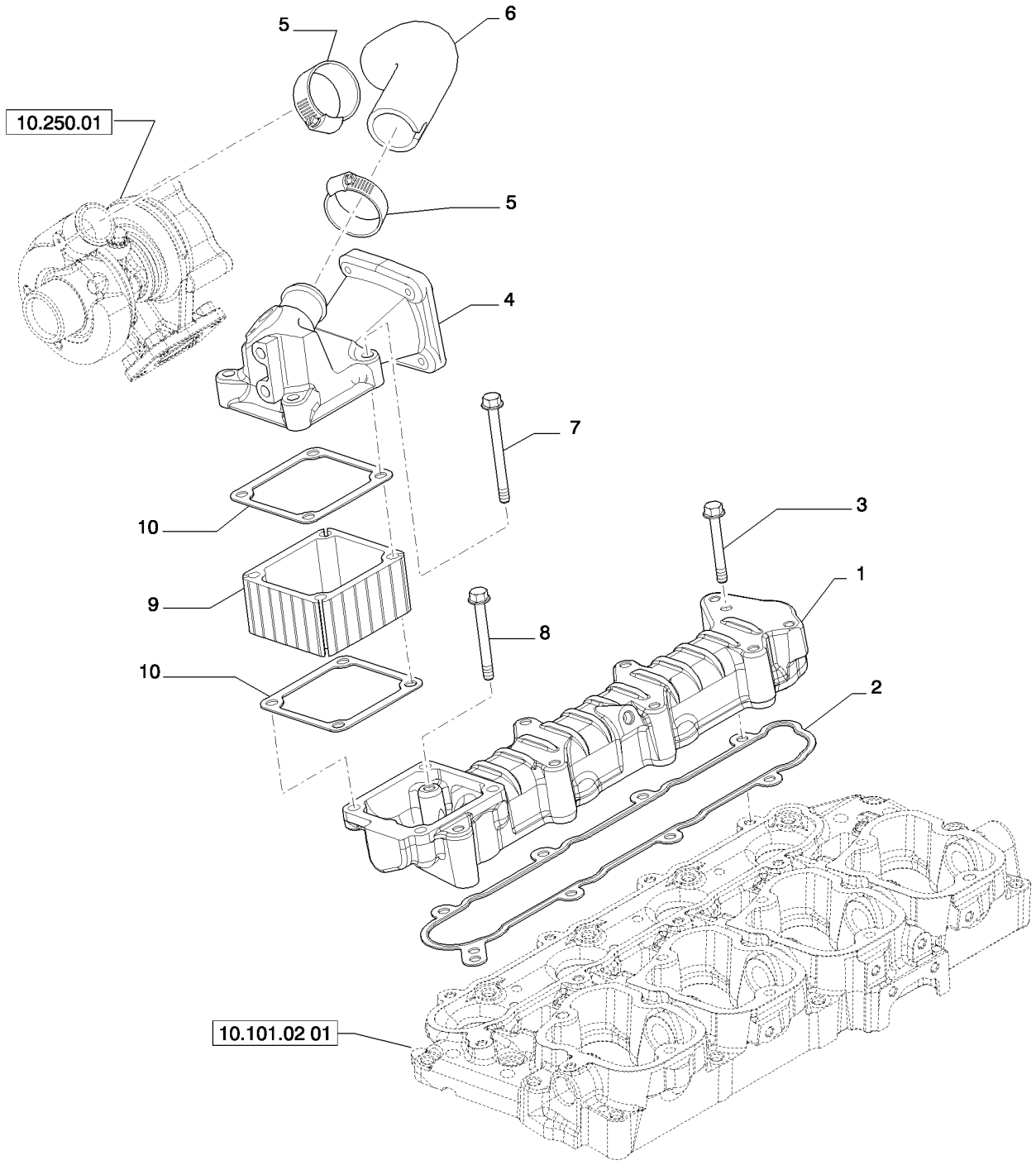

CONDUIT D'ADMISSION (504385851 - 504385860)
ANSAUGROHR (504385851 - 504385860)
INDSUGNINGSMANIFOLD (504385851 - 504385860)
SPRUITSTUK AANZUIGING (504385851 - 504385860)

R	N	P.N.	MOD	Q	Denominação Description	Description Bezeichnung	Denominacion Beskrivelse	Descrizione Beschrijving	L.C.
1		504385836		1	COLETOR DE ADMISSÃO COLLECTEUR D'ADMISS	INLET MANIFOLD EINLASSKRÜMMER	COLECTOR DE ADMISIÓ INDSUGNINGSMANIFOL	COLLETTORE DI ASPIRA INLAATSPRUITSTUK	225C
2		504171144		1	JUNTA DO COLETOR JOINT DE COLLECTEUR	MANIFOLD GASKET KRÜMMERDICHTUNG	JUNTA DE COLECTOR PAKNING, MANIFOLD	GUARNIZIONE COLLETT SPRUITSTUKPAKKING	125G
3		16592324		7	PARAFUSO VIS	SCREW SCHRAUBE	TORNILLO SKRUE	VITE SCHROEF	040V
4		504308861		1	DUTO DE AR CONDUITE D'AIR	AIR DUCT LUFTKANAL	CONDUCTO DE AIRE LUFTKANAL	CONDOTTO ARIA LUCHTKANAAL	224C
5		4899693		2	BRAÇADEIRA MANGUEIR COLLIER POUR FLEXIBL	HOSE CLAMP SCHLAUCHSCHELLE	ABRAZADERA DE MANG SLANGEKLEMME	FASCETTA STRINGITUB SLANGKLEM	P729
6		504249196		1	LUVA DE BORRACHA MANCHON EN CAOUTCI	RUBBER SLEEVE GUMMITÜLLE	MANGUITO DE GOMA GUMMIMANCHET	MANICOTTO DI GOMMA RUBBEREN MOF	Z548
7		16598224		4	PARAFUSO VIS	SCREW SCHRAUBE	TORNILLO SKRUE	VITE SCHROEF	040V
8		504315406		1	PARAFUSO, M8X55 mm VIS	SCREW SCHRAUBE	TORNILLO SKRUE	VITE SCHROEF	040V
9		504385856		1	PEÇA DE REPOSIÇÃO, Engine Air Intake (Spacer) PIECE DETACHEE	SPARE PART ERSATZTEIL	PIEZA DE REPUESTO RESERVEDEL	PARTE DI RICAMBIO RESERVEONDERDEEL	8888
10		504385842		2	PEÇA DE REPOSIÇÃO, Air Intake Gasket PIECE DETACHEE	SPARE PART ERSATZTEIL	PIEZA DE REPUESTO RESERVEDEL	PARTE DI RICAMBIO RESERVEONDERDEEL	8888

10.254.05		p1	02/11

EXHAUST MANIFOLD (504183273)
EXHAUST MANIFOLD (504183273)
COLLECTOR DE ESCAPE (504183273)
COLLETTORE DI SCARICO (504183273)

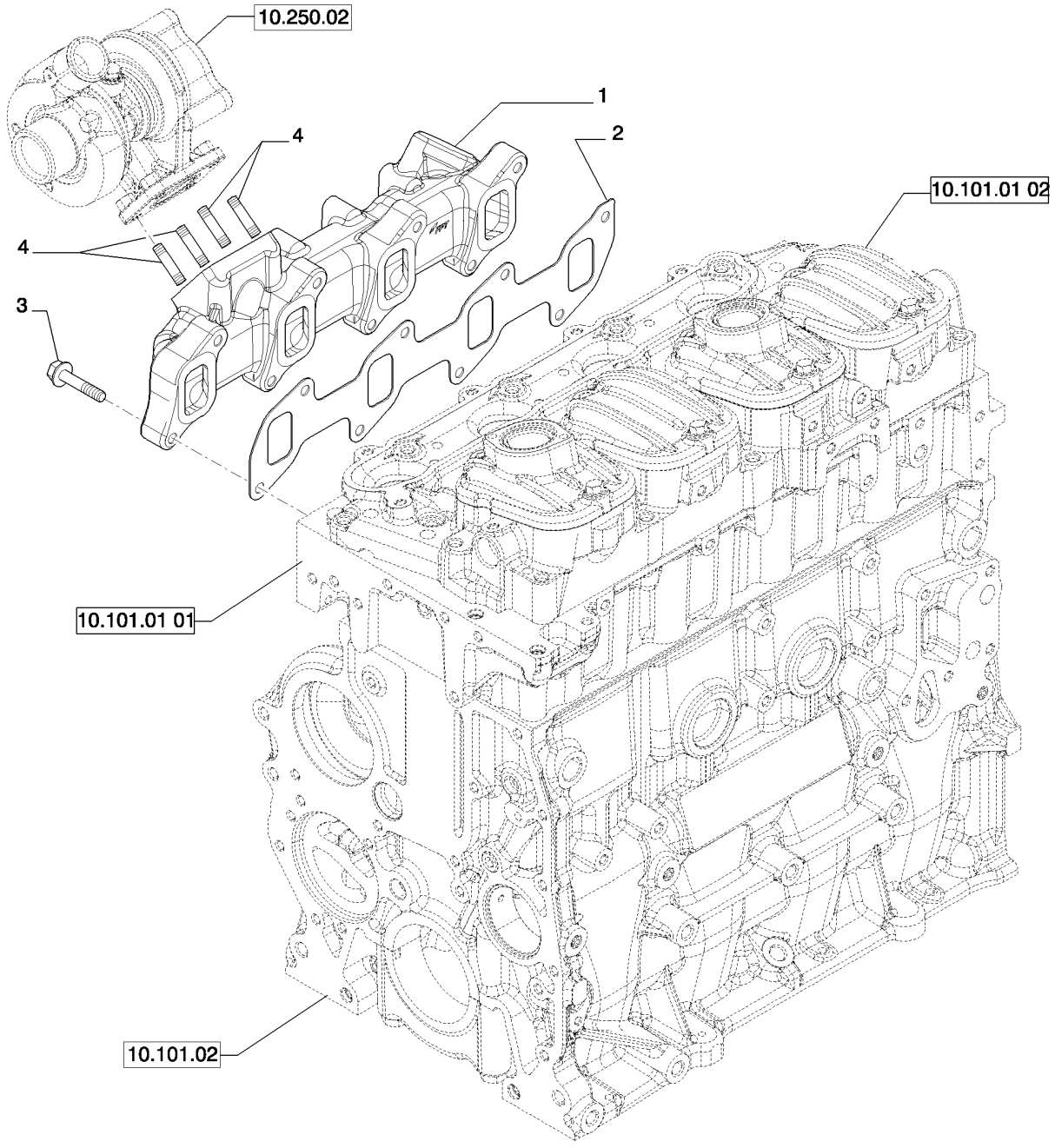

CONDUIT D'ECHAPPEMENT (504183273)
AUSPUFFKRUEMMER (504183273)
UDSTØDNINGSMANIFOLD (504183273)
SPRUITSTUK UITLAAT (504183273)

R	N	P.N.	MOD	Q	Denominação Description	Description Bezeichnung	Denominacion Beskrivelse	Descrizione Beschrijving	L.C.
1		504250944		1	COLETOR DE EXAUSTÃO COLLECTEUR D'ECHAPI	EXHAUST MANIFOLD AUSPUFFKRÜMMER	COLECTOR DE ESCAPE UDSTØDNINGSMANIFOL	COLLETTORE DI SCARIC UITLAATSPRUITSTUK	230C
2		504170332		1	JUNTA JOINT	GASKET DICHTUNG	JUNTA PAKNING	GUARNIZIONE PAKKING	123G
3		504294819		8	PARAFUSO VIS	BOLT SCHRAUBE	PERNO BOLT	BULLONE BOUT	140B
4		16729334		4	PRISIONEIRO, M8X20 mm GOUJON	STUD GEWINDEBOLZEN	PRISIONERO STØTTEBOLT	PRIGIONIERO TAPEIND	210P

10.304.01	01	p1	02/11

PUMP, ENGINE OIL & RELATED PARTS (504154680)
PUMP, ENGINE OIL & RELATED PARTS (504154680)
BOMBA DE ACEITE Y PIEZAS RELACIONADAS (504154680)
POMPA OLIO MOTORE E PARTICOLARI RELATIVI (504154680)

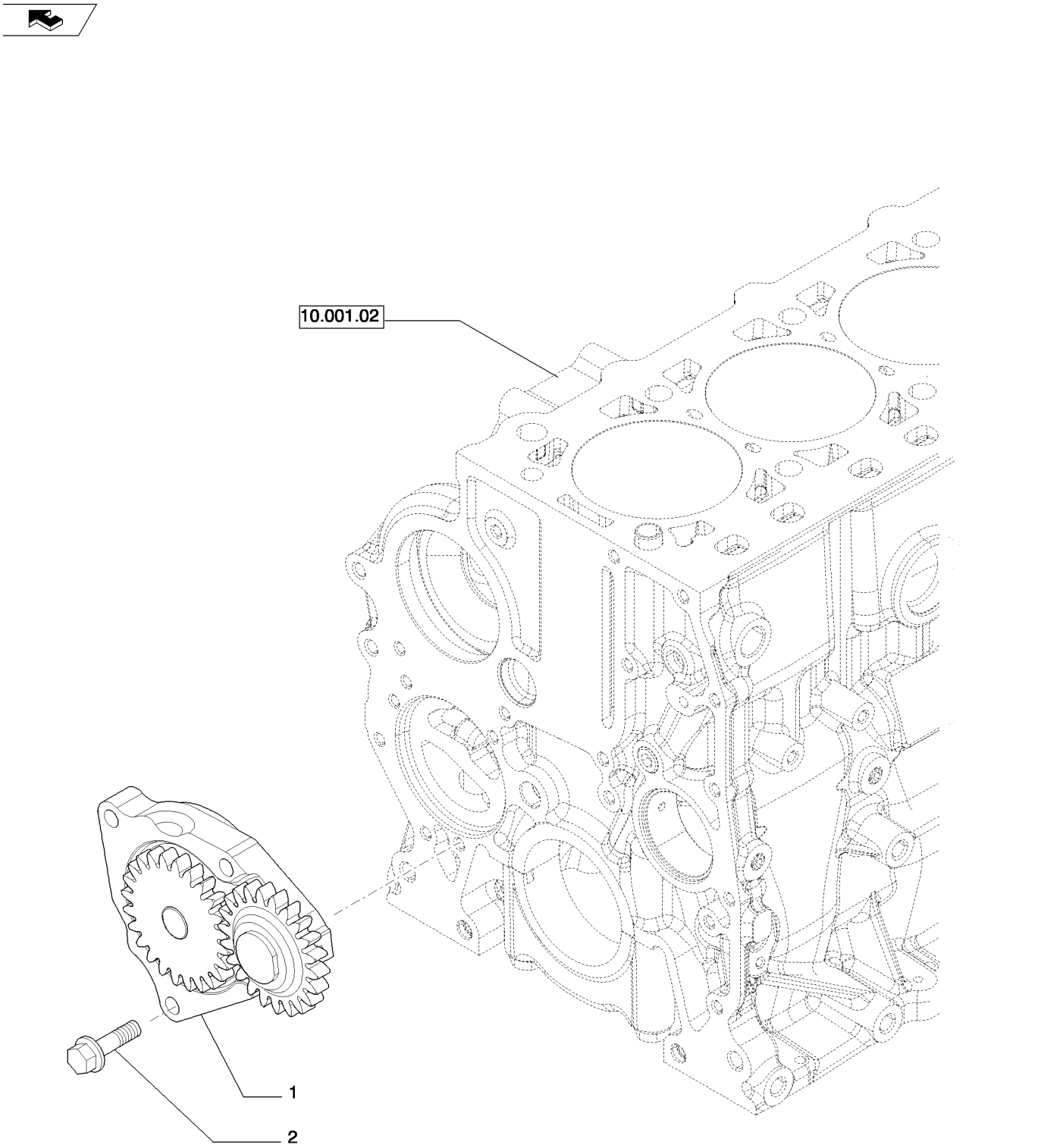

POMPE À HUILE ET PIÈCES ANNEXES (504154680)
MOTORÖLPUMPE UND DAZUGEHÖRIGE TEILE (504154680)
MOTOROLIEPUMPE OG TILHØRENDE DELE (504154680)
OLIEPOMP EN DESBETREFFENDE DETAILS (504154680)

R	N	P.N.	MOD	Q	Denominação Description Bezeichnung	Description Bezeichnung	Denominacion Beskrivelse	Descrizione Beschrijving	L.C.
1		504241684		1	BOMBA DE ÓLEO DO MOTOR, O.M.P				
						ENGINE OIL PUMP	BOMBA DE ACEITE DE M	POMPA OLIO MOTORE	153P
					POMPE A HUILE MOTEU	MOTORÖLPUMPE	MOTOROLIEPUMPE	MOTOROLIEPOMP	
1		504258833		1	BOMBA DE ÓLEO DO MOTOR, AUTOLEC				
						ENGINE OIL PUMP	BOMBA DE ACEITE DE M	POMPA OLIO MOTORE	153P
					POMPE A HUILE MOTEU	MOTORÖLPUMPE	MOTOROLIEPUMPE	MOTOROLIEPOMP	
2		4794007		3	PARAFUSO	SCREW	TORNILLO	VITE	040V
					VIS	SCHRAUBE	SKRUE	SCHROEF	

10.304.02		p1	05/11

ENGINE OIL DIPSTICK (504183276)
ENGINE OIL DIPSTICK (504183276)
VARILLA DE NIVEL - ACEITE DEL MOTOR (504183276)
ASTA LIVELLO OLIO MOTORE (504183276)

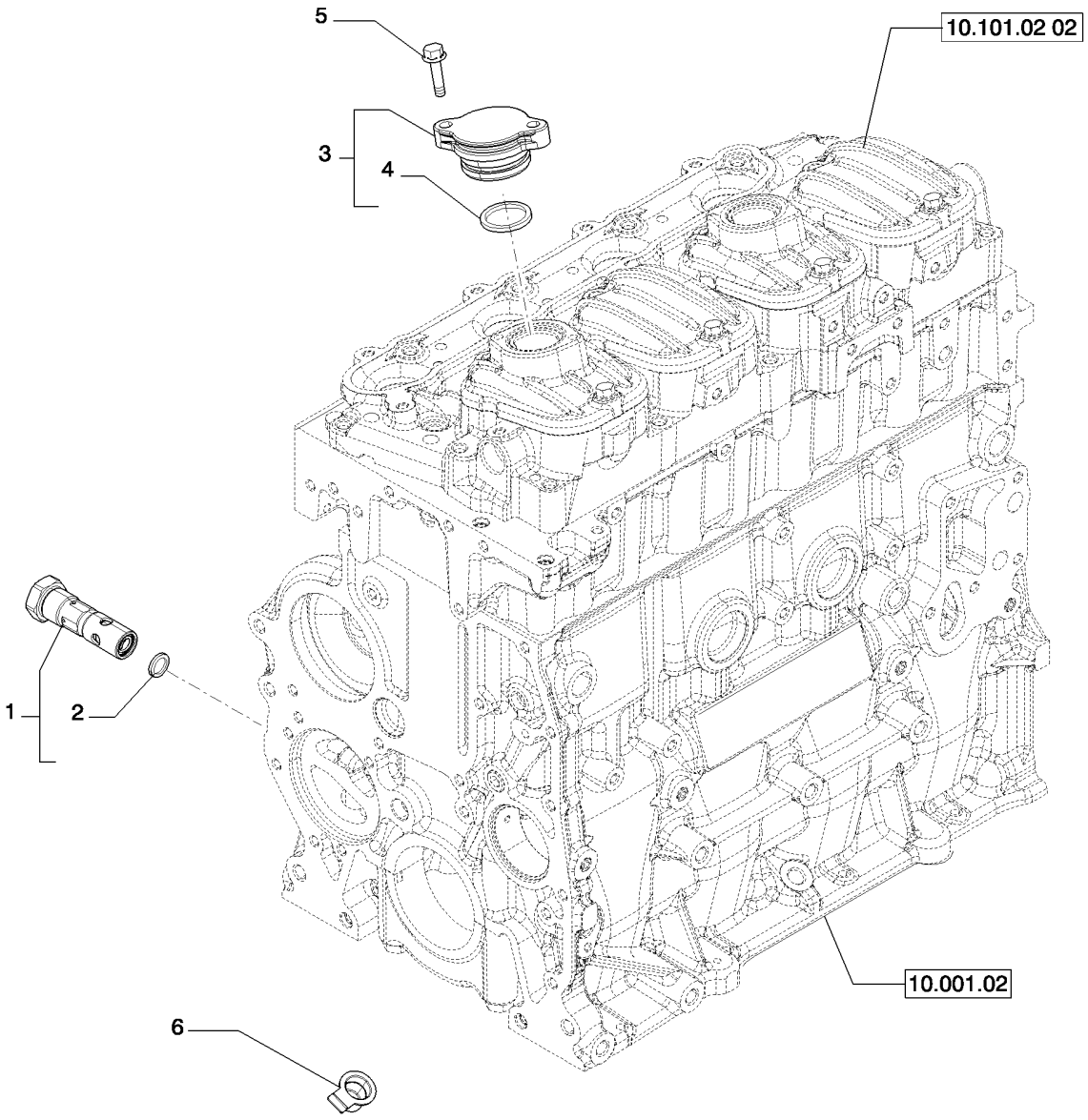

JAUGE DE NIVEAU - HUILE MOTEUR (504183276)
MOTORÖLMEßSTAB (504183276)
OLIEPIND (504183276)
PEILSTOK MOTOROLIE (504183276)

R	N	P.N.	MOD	Q	Denominação Description Bezeichnung	Description Bezeichnung Beschrijving	Denominacion Beskrivelse	Descrizione Beschrijving	L.C.
1		504357733		1	VÁLVULA SOUPAPE	VALVE VENTIL	VÁLVULA VENTIL	VALVOLA KLEP	9620
2		99489022		1	VEDAÇÃO DA ARRUELA RONDELLE D'ETANCHEI	SEALING WASHER DICHTSCHEIBE	ARANDELA HERMÉTICA TÆTNINGSSKIVE	ROSETTA DI TENUTA AFDICHTRING	133R
3		504285788		1	TAMPA DE RESERVATÓRIO BOUCHON DE REMPLIS	FILLER CAP EINFÜLLKAPPE	TAPÓN DE DEPÓSITO PÅFYLDNINGSDÆKSEL	TAPPO BOCCHETT. RIF VULDOP	P676
4		17283081		1	O-RING JOINT TORIQUE	O-RING O-RING	JUNTA TÓRICA O-RING	ANELLO TOROIDALE O-RING	055A
5		16585925		1	PARAFUSO VIS	SCREW SCHRAUBE	TORNILLO SKRUE	VITE SCHROEF	040V
6		NS		1	SEM SERVIÇO NON FOURNI	NOT SERVICED NICHT ALS ERS-T LIEFE	NO SE REPARA SERVICERES IKKE	NON SOTTOPOSTO A M NIET VERKRIJGBAAR	061N

10.304.03		p1	02/11

OIL PUMP PIPING (504154691)
OIL PUMP PIPING (504154691)
TUBERÍAS BOMBA DE ACEITE (504154691)
TUBAZIONI POMPA OLIO (504154691)

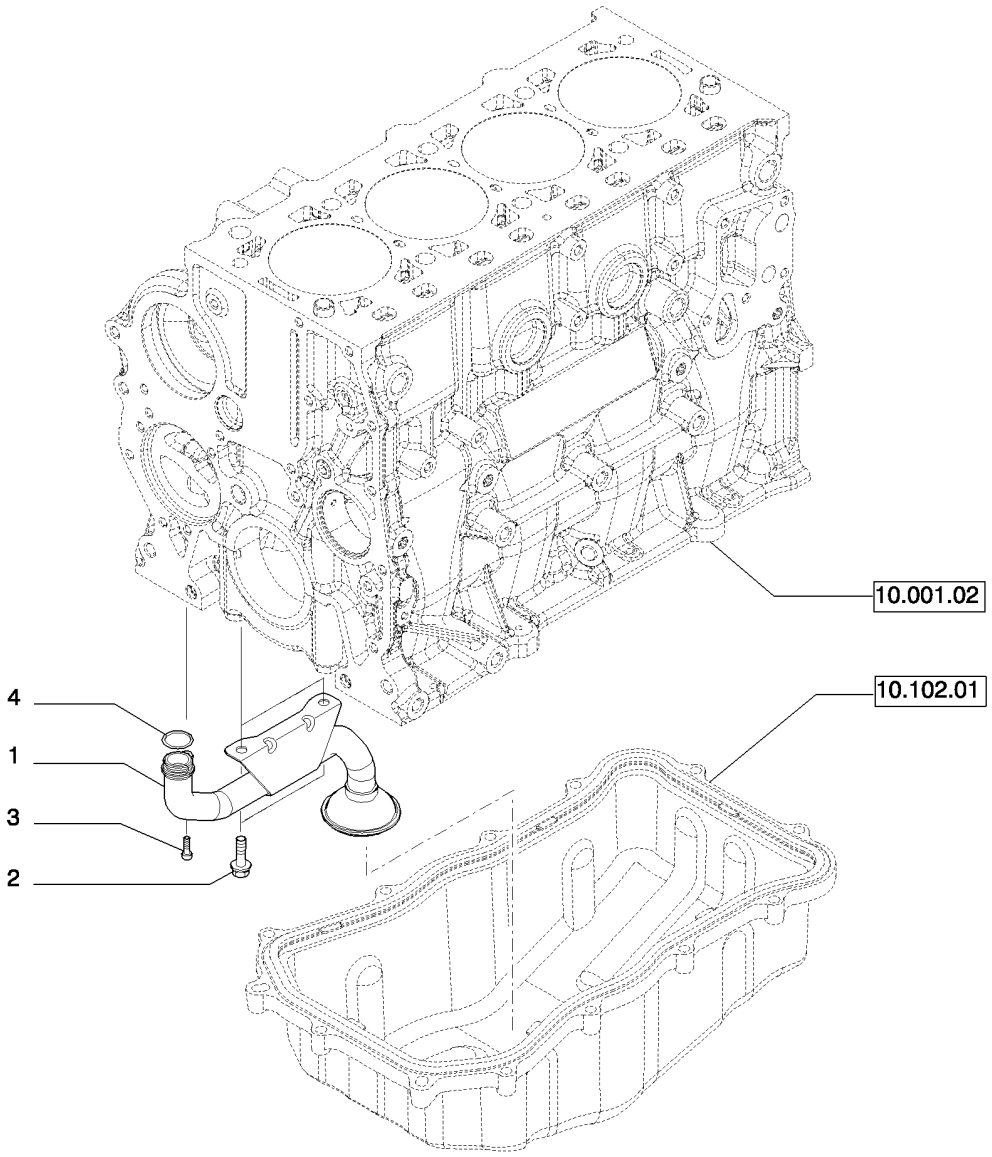

TUBULURES POMPE HUILE (504154691)
LEITUNGEN ÖLPUMPE (504154691)
SLANGER TIL OLIEPUMPE (504154691)
BUIZEN OLIEPOMP (504154691)

R	N	P.N.	MOD	Q	Denominação Description Bezeichnung Beskrivelse Descrizione Beschrijving	L.C.
1		504179050		1	REDE PARA FILTROS CREPINE FILTRANTE FILTER STRAINER FILTERSIEB COLADOR FILTERNET RETICELLA DEL FILTRO FILTERZEEF	043R
2		18139424		2	PARAFUSO VIS SCREW SCHRAUBE TORNILLO SKRUE VITE SCHROEF	040V
3		16689024		1	PARAFUSO VIS SCREW SCHRAUBE TORNILLO SKRUE VITE SCHROEF	040V
4		17282281		1	O-RING, D. 23,4 mm SP=2,6 mm JOINT TORIQUE O-RING O-RING JUNTA TÓRICA O-RING ANELLO TOROIDALE O-RING	055A

COOLING COMPONENTS (SR200,TR270)
COOLING COMPONENTS (SR200,TR270)
COOLING COMPONENTS (SR200,TR270)
COOLING COMPONENTS (SR200,TR270)

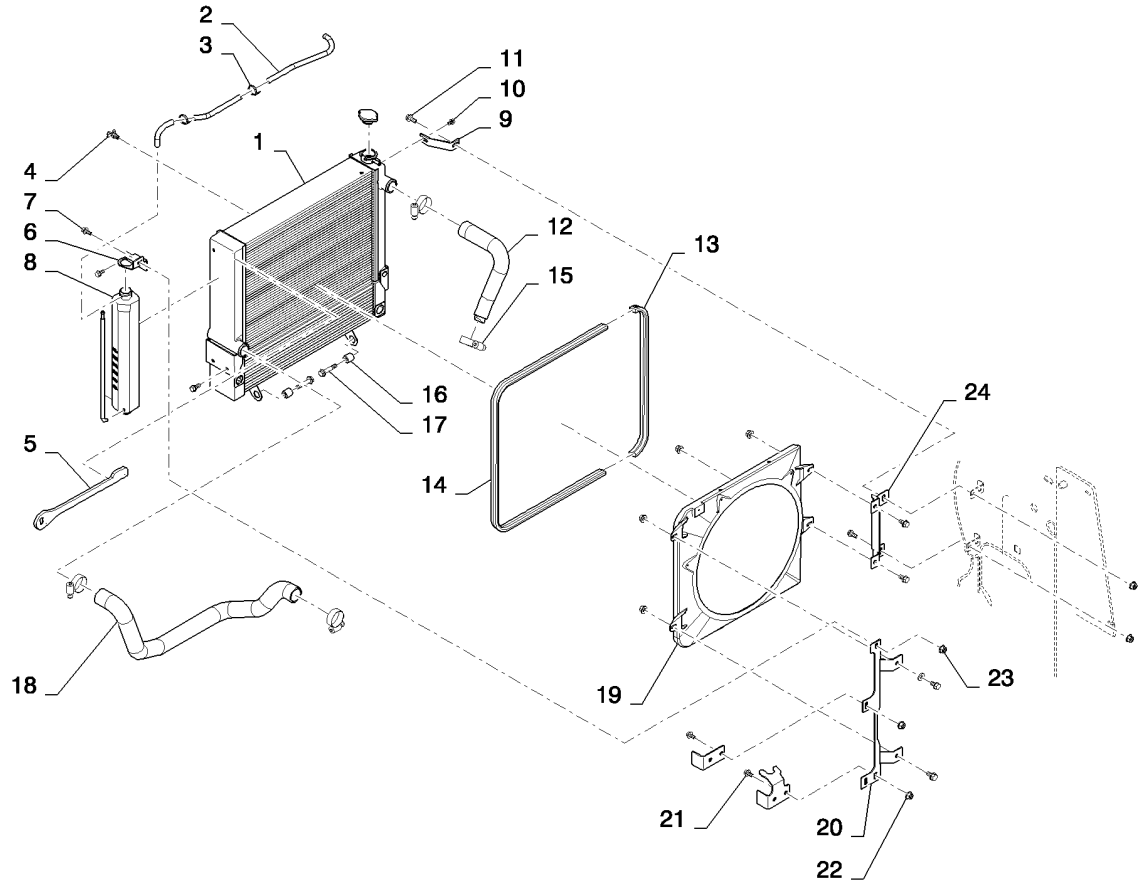

COOLING COMPONENTS (SR200,TR270)
COOLING COMPONENTS (SR200,TR270)
COOLING COMPONENTS (SR200,TR270)
COOLING COMPONENTS (SR200,TR270)

R	N	P.N.	MOD	Q	Denominação Description	Description Bezeichnung	Denominacion Beskrivelse	Descrizione Beschrijving	L.C.
1		84201142		1	MÓDULO, Radiator and Cooling, Medium				
						MODULE	MÓDULO	MODULO	T102
					MODULE	MODUL	MODUL	MODULE	
2		84268809		1	MANGUEIRA, Coolant Recovery				
						HOSE	TUBO	TUBO FLESSIBILE	030M
					FLEXIBLE	SCHLAUCH	SLANGE	SLANG	
3		L11541		2	PRENDEDOR DE CABOS, Nylon Tie, 7-8in				
						CABLE STRAP	BANDA DE CABLE	FASCETTA PER CAVO	P716
					BRIDE DE CABLE	KABELBINDER	KABELSTROP	BUNDELBAND	
4		86625234		1	TORNEIRA, Drain	COCK	LLAVE DE PASO	RUBINETTO	P148
					ROBINET	HAHN	HANE	KRAAN	
5		84350590		1	SUPORTE, Coolant Recovery Hose				
						SUPPORT	SOPORTE	SUPPORTO	300S
					SUPPORT	STÜTZE	BESLAG	STEUN	
6		84254071		1	SUPORTE, Coolant Bottle, Upper				
						BRACKET	SOPORTE	STAFFA	225S
					SUPPORT	HALTERUNG	BESLAG	STEUN	
7		9804258		1	PARAFUSO, Hex Flg, M8 x 20, 8.8				
						BOLT	PERNO	BULLONE	140B
					VIS	SCHRAUBE	BOLT	BOUT	
8		87020980		1	RESERVAT EXPANS LÍQ ARREF, Recovery				
						COOLANT EXPANSION F	DEP. EXP. REFRIGERAN	SERB. ESPANS. LIQ. RAI	117S
					RESERV. EXP. LIQ. REFI	KÜHLM-AUSGLEICHSBE	VAKUMTANK	EXPANSIETANK KOELSY	
9		84259564		1	SUPORTE, Radiator Mount	BRACKET	SOPORTE	STAFFA	225S
					SUPPORT	HALTERUNG	BESLAG	STEUN	
10		86511841		2	PARAFUSO, Hex Flg, M8 x 16, 8.8				
						BOLT	PERNO	BULLONE	140B
					VIS	SCHRAUBE	BOLT	BOUT	
11		9804261		1	PARAFUSO, Hex Flg, M10 x 25, 8.8				
						BOLT	PERNO	BULLONE	140B
					VIS	SCHRAUBE	BOLT	BOUT	
12		84332751		1	MANGUEIRA DO RADIADOR, Radiator				
						RADIATOR HOSE	TUBO DE RADIADOR	TUBO FLESSIBILE RADI/	A060
					FLEXIBLE DE RADIATEU	KÜHLERSCHLAUCH	SLANGE, KØLER	RADIATEURSLANG	
13		84277010		1	VEDAÇÃO, Bulb	SEAL	ANILLO DE CIERRE	GUARNIZIONE; TENUTA	132A
					JOINT	DICHTUNG	PAKNING	AFDICHTING	
14		84277011		1	VEDAÇÃO, Bulb	SEAL	ANILLO DE CIERRE	GUARNIZIONE; TENUTA	132A
					JOINT	DICHTUNG	PAKNING	AFDICHTING	
15		84674		4	BRAÇADEIRA MANGUEIRA, #28, 1.31/2.25 Type F Worm				
						HOSE CLAMP	ABRAZADERA DE MANG	FASCETTA STRINGITUB	P729
					COLLIER POUR FLEXIBL	SCHLAUCHSCHELLE	SLANGEKLEMME	SLANGKLEM	
16		87626729		2	ESPAÇADOR, Hinge, Pivot	SPACER	SEPARADOR	DISTANZIALE	075D
					ENTRETOISE	DISTANZSTÜCK	AFSTANDSSTYKKE	AFSTANDSSTUK	
17		87301277		2	PARAFUSO	BOLT	PERNO	BULLONE	140B
					VIS	SCHRAUBE	BOLT	BOUT	
18		84277826		1	MANGUEIRA, Lower, Coolant				
						HOSE	TUBO	TUBO FLESSIBILE	030M
					FLEXIBLE	SCHLAUCH	SLANGE	SLANG	

COOLING COMPONENTS (SR200,TR270)
COOLING COMPONENTS (SR200,TR270)
COOLING COMPONENTS (SR200,TR270)
COOLING COMPONENTS (SR200,TR270)

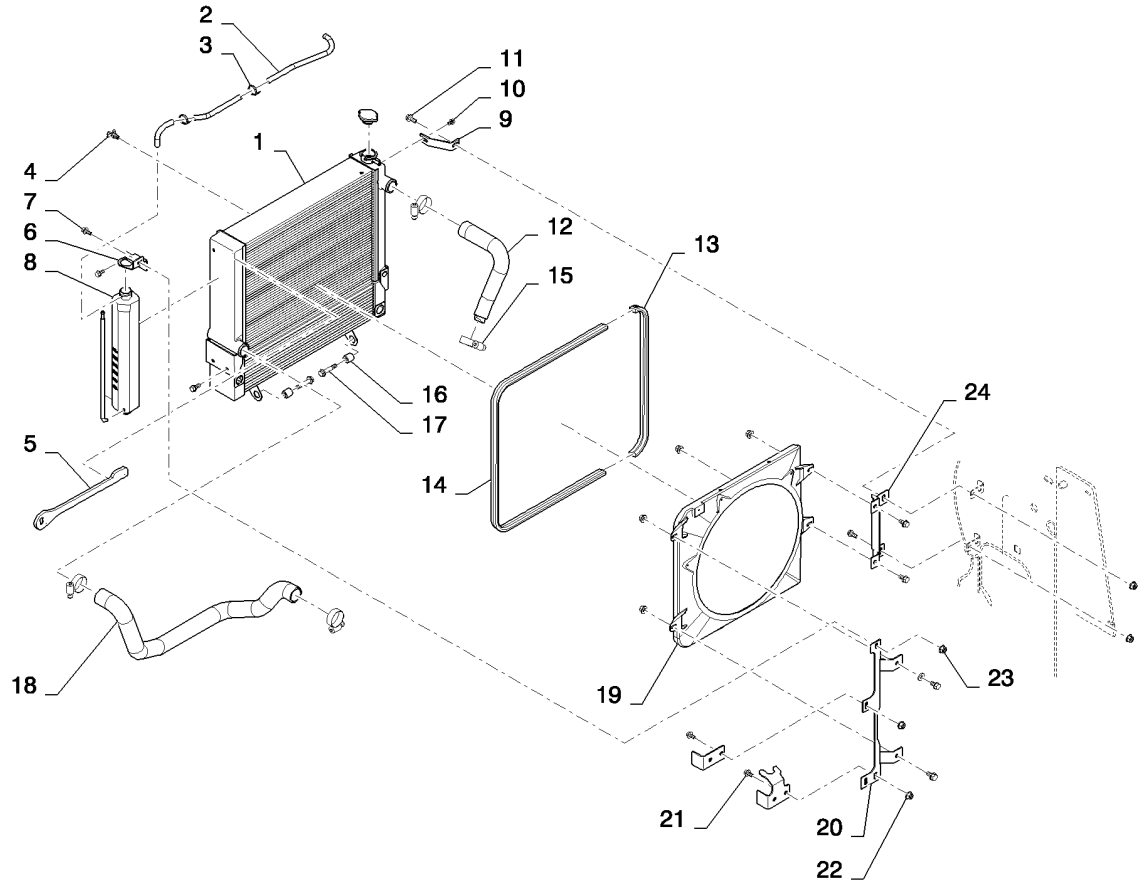

COOLING COMPONENTS (SR200,TR270)
COOLING COMPONENTS (SR200,TR270)
COOLING COMPONENTS (SR200,TR270)
COOLING COMPONENTS (SR200,TR270)

R	N	P.N.	MOD	Q	Denominação Description	Description Bezeichnung	Denominacion Beskrivelse	Descrizione Beschrijving	L.C.
19		**84201419**		1	COBERTURA, Fan PROTECTION	SHROUD VERKLEIDUNG	PROTECTOR DÆKKE	RIPARO MANTEL	7830
20		**84259396**		1	SUPORTE, Fan Shroud, RH SUPPORT	BRACKET HALTERUNG	SOPORTE BESLAG	STAFFA STEUN	225S
21		**86050286**		7	PARAFUSO FLANGEADO, Hex, M10 x 20, 8.8, Full Thd VIS A EMBASE	FLANGE BOLT FLANSCHSCHRAUBE	PERNO DE CORONA FLANGEBOLT	BULLONE FLANGIATO FLENSBOUT	A027
22		**43435**		4	PORCA, M10, Flg Ser ECROU	NUT MUTTER	TUERCA MØTRIK	DADO MOER	010D
22		**86619802**		4	CONTRA PORCA, M10 CONTRE-ECROU	LOCK NUT SICHERUNGSMUTTER	TUERCA DE BLOQUEO LÅSEMØTRIK	DADO DI BLOCCAGGIO BORGMOER	P263
23		**86505868**		1	PORCA, M8, Flg Ser ECROU	NUT MUTTER	TUERCA MØTRIK	DADO MOER	010D
24		**84259397**		1	SUPORTE, Fan Shroud, LH SUPPORT	BRACKET HALTERUNG	SOPORTE BESLAG	STAFFA STEUN	225S

TEMPERATURE CONTROL (THERMOSTAT) - (504216813)
TEMPERATURE CONTROL (THERMOSTAT) - (504216813)
REGULADOR DE TEMPERATURE - (504216813)
REGOLATORE DI TEMPERATURA - (504216813)

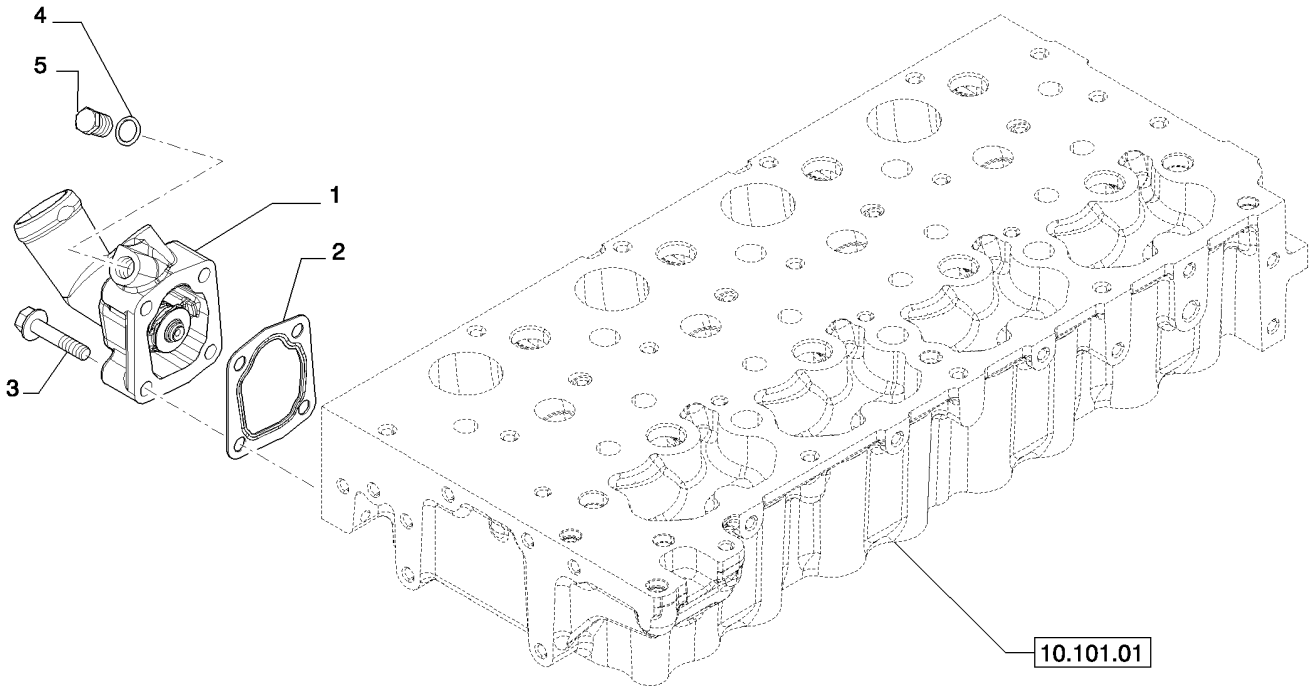

RÉGULATEUR DE TEMPÉRATURE - (504216813)
TEMPERATURREGLER (THERMOSTAT) - (504216813)
TEMPERATURREGULATOR - (504216813)
TEMPERATURREGELAAR - (504216813)

R	N	P.N.	MOD	Q	Denominação Description	Description Bezeichnung	Denominacion Beskrivelse	Descrizione Beschrijving	L.C.
1		504209127		1	TERMOSTATO THERMOSTAT	THERMOSTAT THERMOSTAT	TERMOSTATO TERMOSTAT	TERMOSTATO THERMOSTAAT	096T
2		504164205		1	JUNTA JOINT	GASKET DICHTUNG	JUNTA PAKNING	GUARNIZIONE PAKKING	123G
3		16586725		4	PARAFUSO, M8 x 1.25 x 4(VIS	SCREW SCHRAUBE	TORNILLO SKRUE	VITE SCHROEF	040V
4		4858606		1	JUNTA JOINT	GASKET DICHTUNG	JUNTA PAKNING	GUARNIZIONE PAKKING	123G
5		16992115		1	BUJÃO BOUCHON	PLUG STOPFEN	TAPÓN PROP	TAPPO PLUG	050T

WATER PUMP & RELATED PARTS (504154685)
WATER PUMP & RELATED PARTS (504154685)
BOMBA DE AGUA Y PIEZAS RELACIONADAS (504154685)
POMPA ACQUA E PARTICOLARI RELATIVI (504154685)

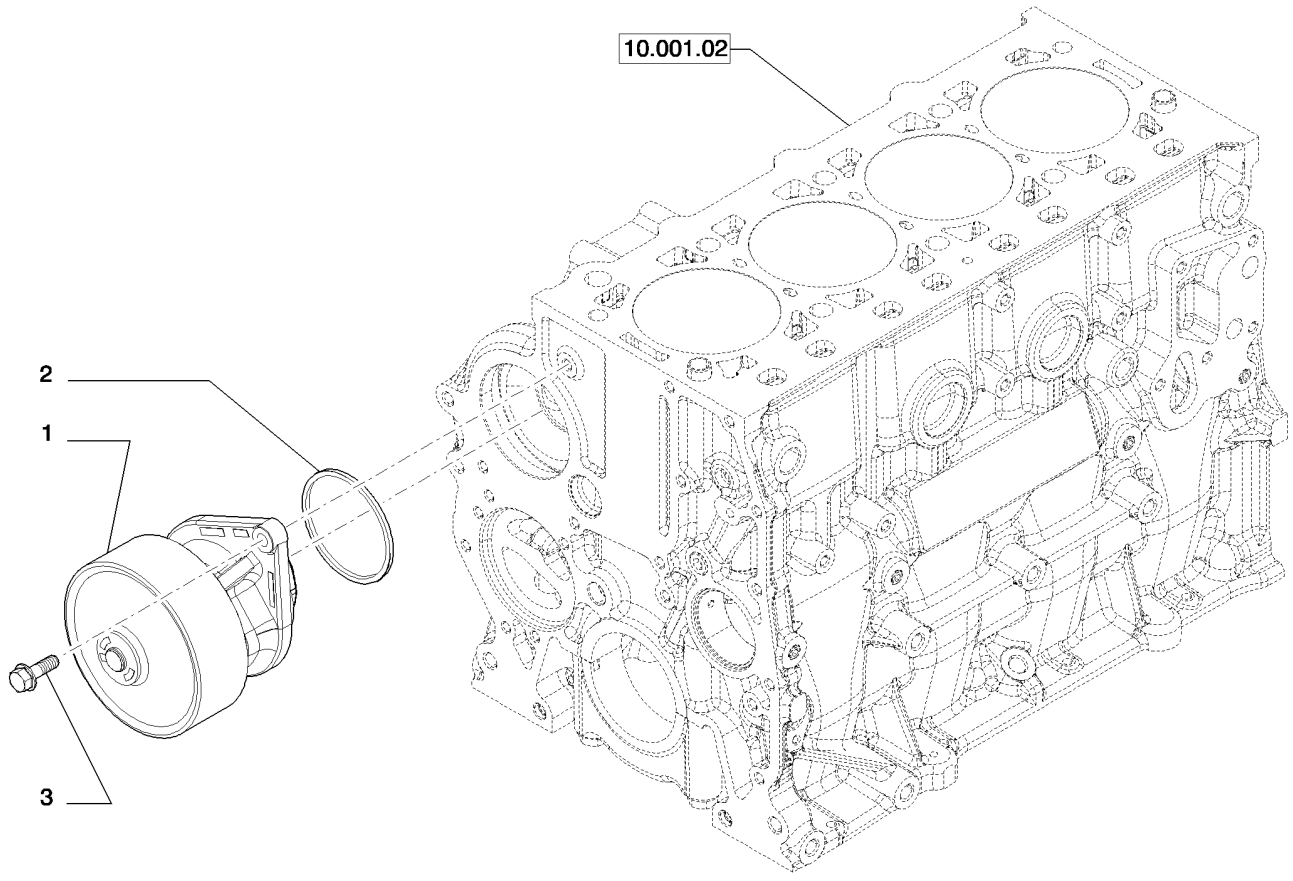

POMPE À EAU ET PIÈCES ANNEXES (504154685)
WASSERPUMPE UND DAZUGEHÖRIGE TEILE (504154685)
VANDPUMPE OG TILHØRENDE DELE (504154685)
WATERPOMP EN DESBETREFFENDE DETAILS (504154685)

R	N	P.N.	MOD	Q	Denominação Description	Description Bezeichnung	Denominacion Beskrivelse	Descrizione Beschrijving	L.C.
1		504216828		1	BOMBA DE ÁGUA POMPE A EAU	WATER PUMP WASSERPUMPE	BOMBA DE AGUA VANDPUMPE	POMPA ACQUA WATERPOMP	152P
2		504062856		1	JUNTA JOINT	GASKET DICHTUNG	JUNTA PAKNING	GUARNIZIONE PAKKING	123G
3		16586424		2	PARAFUSO, M8 x 25 VIS	SCREW SCHRAUBE	TORNILLO SKRUE	VITE SCHROEF	040V

PIPING - ENGINE COOLING SYSTEM (504191839)
PIPING - ENGINE COOLING SYSTEM (504191839)
TUBERIAS - REFRIGERACION DEL MOTOR (504191839)
TUBAZIONI - RAFFREDDAMENTO MOTORE (504191839)

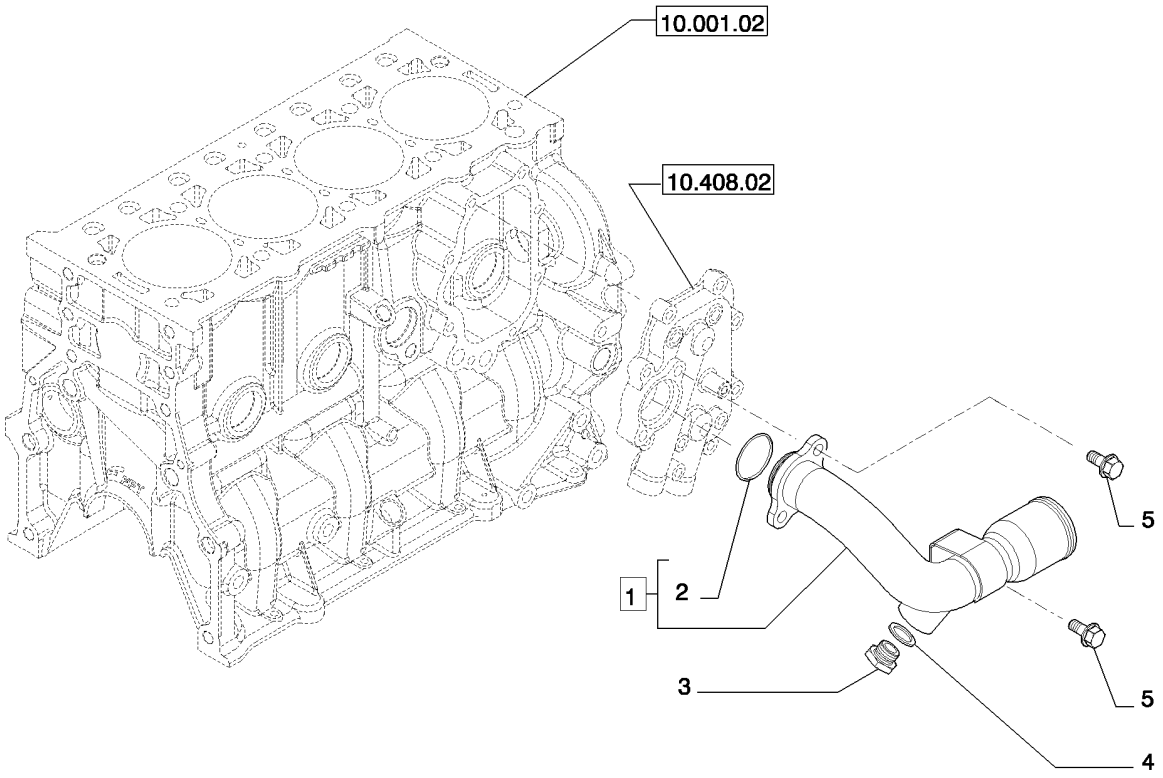

TUYAUTERIES - REFROIDISSEMENT MOTEUR (504191839)
LEITUNGEN - KUEHLUNG DES MOTORS (504191839)
RØRLEDNINGER - MOTORKØLING (504191839)
LEIDING - MOTORAFKOELING (504191839)

R	N	P.N.	MOD	Q	Denominação Description	Description Bezeichnung	Denominacion Beskrivelse	Descrizione Beschrijving	L.C.
1		504182961		1	TUBO, - ASSY TUYAU	PIPE ROHR	TUBO PÅFYLDNINGSSTUDS	TUBO BUIS	200T
2		17289081		1	O-RING, 31.34mm ID x 3.53mm Width, D. 31,34X3,53 mm JOINT TORIQUE	O-RING O-RING	JUNTA TÓRICA O-RING	ANELLO TOROIDALE O-RING	055A
3		16992415		1	BUJÃO, M16 x 1.5 BOUCHON	PLUG STOPFEN	TAPÓN PROP	TAPPO PLUG	050T
4		16508260		1	JUNTA, D = 16 x 20 JOINT	GASKET DICHTUNG	JUNTA PAKNING	GUARNIZIONE PAKKING	123G
5		16600224		1	PARAFUSO, M8X1,25X18 mm VIS	SCREW SCHRAUBE	TORNILLO SKRUE	VITE SCHROEF	040V

10.406.02		p1	08/11

MODULE, RADIATOR AND COOLING MED (SR175,SV185,SR200,TR270)
MODULE, RADIATOR AND COOLING MED (SR175,SV185,SR200,TR270)
MODULE, RADIATOR AND COOLING MED (SR175,SV185,SR200,TR270)
MODULE, RADIATOR AND COOLING MED (SR175,SV185,SR200,TR270)

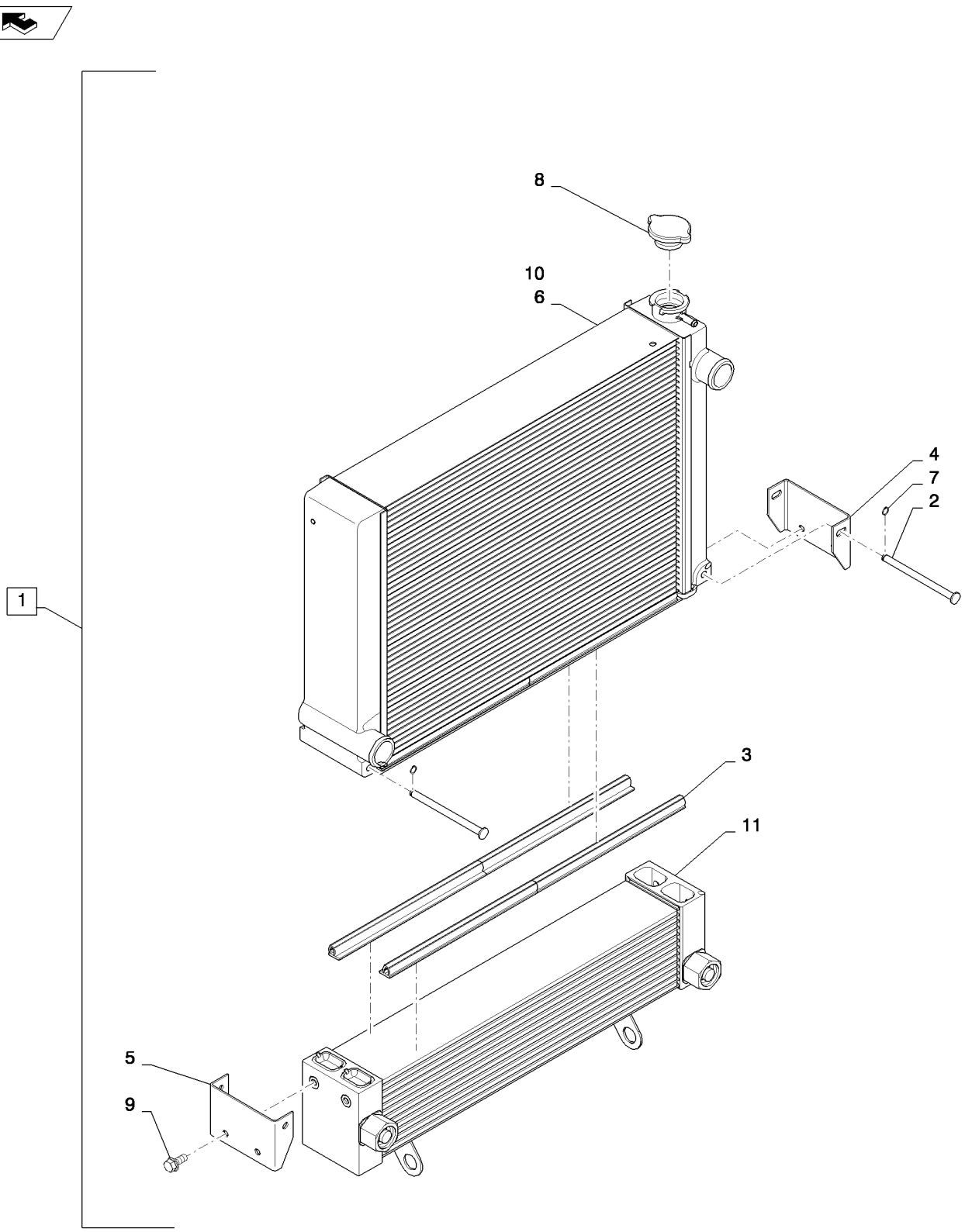

MODULE, RADIATOR AND COOLING MED (SR175,SV185,SR200,TR270)
MODULE, RADIATOR AND COOLING MED (SR175,SV185,SR200,TR270)
MODULE, RADIATOR AND COOLING MED (SR175,SV185,SR200,TR270)
MODULE, RADIATOR AND COOLING MED (SR175,SV185,SR200,TR270)

R	N	P.N.	MOD	Q	Denominação Description	Description Bezeichnung	Denominacion Beskrivelse	Descrizione Beschrijving	L.C.
1		84201142		1	MÓDULO, Assembly, Includes Oil Cooler and Radiator				
						MODULE	MÓDULO	MODULO	T102
					MODULE	MODUL	MODUL	MODULE	
2		84379138		1	PINO, ATS 815875	PIN	PASADOR	PERNO	080P
					BROCHE	PIN	STIFT	PEN	
3		84379140		1	VEDAÇÃO, ATS 824371	SEAL	ANILLO DE CIERRE	GUARNIZIONE; TENUTA	132A
					JOINT	DICHTUNG	PAKNING	AFDICHTING	
4		84379148		1	CANAL, Mounting	CHANNEL	CANAL	CANALE	050C
					CANAL	RINNE	KANAL	KANAAL	
5		84379149		1	CANAL, Mounting	CHANNEL	CANAL	CANALE	050C
					CANAL	RINNE	KANAL	KANAAL	
6		84379153		1	RADIADOR, W/Decals	RADIATOR	RADIADOR	RADIATORE	025R
					RADIATEUR	KÜHLER	KØLER	RADIATEUR	
7		87687374		1	GRAMPO, ATS 812837	CLIP	ABRAZADERA	FERMO	045F
					COLLIER	KLAMMER	KLIPS	KLEM	
8		87687375		1	TAMPA DO RADIADOR, ATS 816525				
						RADIATOR CAP	TAPÓN DE RADIADOR	TAPPO DEL RADIATORE	039T
					BOUCHON DU RADIATE	KÜHLERVERSCHLUSSK	KØLERDÆKSEL	RADIATEURDOP	
9		86511841		1	PARAFUSO, Hex Flg, M8 x 16, 8.8				
						BOLT	PERNO	BULLONE	140B
					VIS	SCHRAUBE	BOLT	BOUT	
10		84475176		1	RADIADOR, W/Decals, Low Fin Density, Applications With Significant Air-Born Debris, Not For Use In Hot Environments Or In High Engine Load Applications				
						RADIATOR	RADIADOR	RADIATORE	025R
					RADIATEUR	KÜHLER	KØLER	RADIATEUR	
11		84475178		1	RESFRIADOR DO ÓLEO, Low Fin Density, Applications With Significant Air-Born Debris, Not For Use In Hot Environments Or In High Engine Load Applications				
						OIL COOLER	REFRIGERADOR DE ACI	RADIATORE OLIO	026R
					REFROIDISSEUR D'HUIL	ÖLKÜHLER	OLIEKØLER	OLIEKOELER	
11		84379132		1	RESFRIADOR DO ÓLEO, ATS 22547				
						OIL COOLER	REFRIGERADOR DE ACI	RADIATORE OLIO	026R
					REFROIDISSEUR D'HUIL	ÖLKÜHLER	OLIEKØLER	OLIEKOELER	
12		84259482		1	CONEXÃO EM T, 16-16-16 Check Valve (Not Shown)				
						UNION TEE	RACOR EN T	RACCORDO A T	A134
					RACCORD EN T	T-VERSCHRAUBUNG	T-FORSKRUNING	KOPPEL-T-STUK	
13		268277		1	COTOVELO, 90º, 1 5/16"-12, 37º x 1 5/16"-12, O-Ring, (Not Shown)				
						ELBOW	CODO	GOMITO	085G
					COUDE	KNIESTÜCK	VINKELRØR	KNIESTUK	

10.408.01		p1	06/11

HEAT EXCHANGER - ENGINE - EGR GROUP (504385853)
HEAT EXCHANGER - ENGINE - EGR GROUP (504385853)
CAMBIADOR DE CALOR - MOTOR (504385853)
SCAMBIATORE DI CALORE - MOTORE - GRUPPO EGR (504385853)

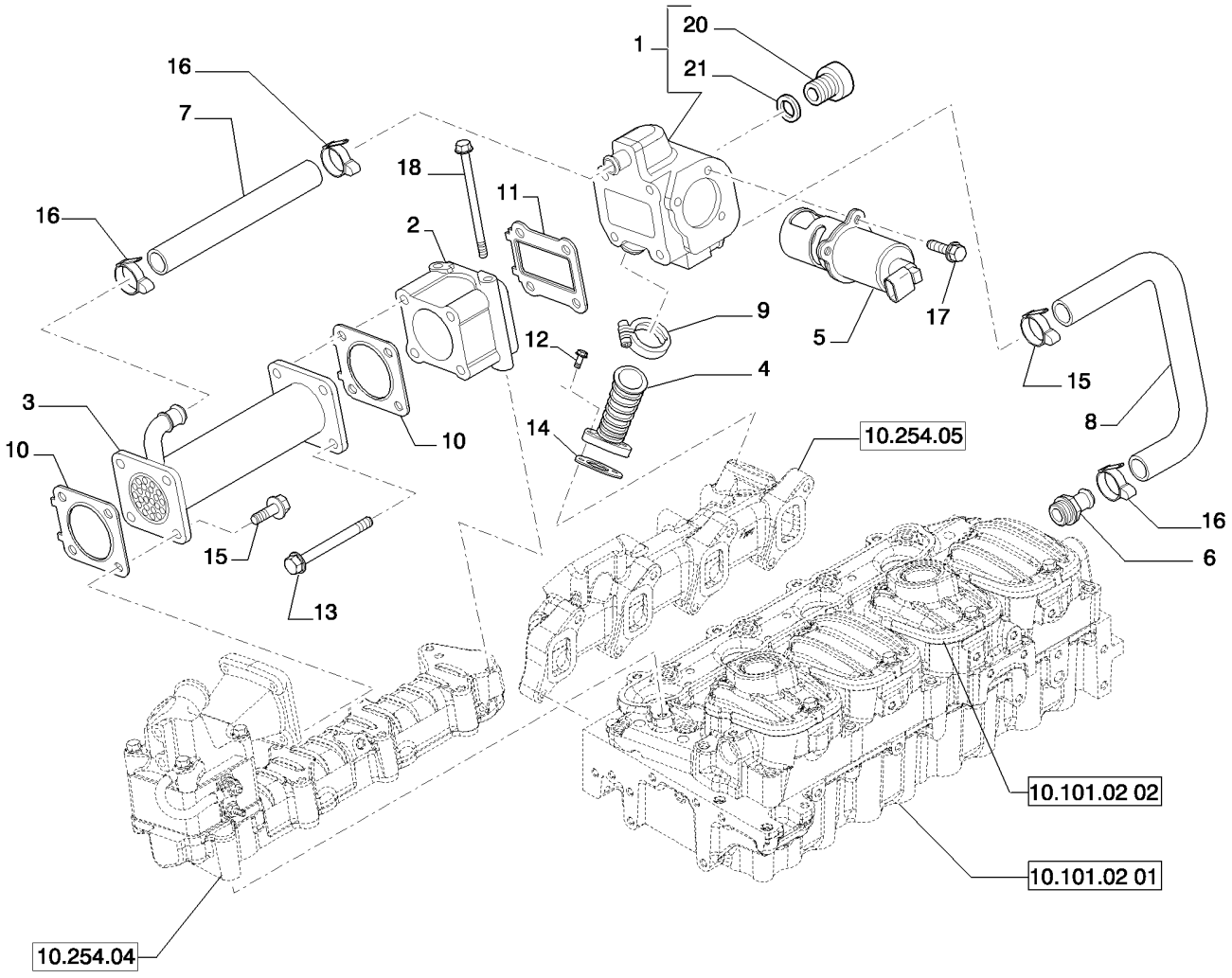

EXCHANGEUR DE TEMPERATURE - MOTEUR (504385853)
WAERMETAUSCHER - MOTOR (504385853)
OLIEKOLER - MOTOR (504385853)
WARMTEREGELAAR - MOTOR (504385853)

R	N	P.N.	MOD	Q	Denominação Description	Description Bezeichnung	Denominacion Beskrivelse	Descrizione Beschrijving	L.C.
1		504357765		1	SUPORTE SUPPORT	BRACKET HALTERUNG	SOPORTE BESLAG	STAFFA STEUN	225S
2		504385854		1	SUPORTE SUPPORT	BRACKET HALTERUNG	SOPORTE BESLAG	STAFFA STEUN	225S
3		504250954		1	TROCADOR DE CALOR ECHANGEUR THERMIQU	HEAT EXCHANGER WÄRMETAUSCHER	CAMBIADOR DE CALOR VARMEVEKSLER	SCAMBIATORE DI CALO WARMTEWISSELAAR	025S
4		504220149		1	CONEXÃO JONCTION	JUNCTION VERBINDUNG	CONEXIÓN SAMLING	CONNESSIONE KOPPELSTUK	P235
5		504365099		1	VÁLVULA DE DESVIO SOUPAPE DE DERIVATI(	BY-PASS VALVE BYPASS-VENTIL	VÁLVULA DE DERIVACIÓ OMLØBSVENTIL	VALVOLA DI BYPASS BYPASSKLEP	P673
6		504249332		1	CONEXÃO RACCORD	FITTING ARMATUR	ACOPLAMIENTO FITTING	RACCORDO AANSLUITING	3300
7		504357767		1	LUVA CHEMISE	SLEEVE BUCHSE	MANGUITO TRYKLEJE, KOBLING	MANICOTTO MOF; BUS	031M
8		504357768		1	LUVA CHEMISE	SLEEVE BUCHSE	MANGUITO TRYKLEJE, KOBLING	MANICOTTO MOF; BUS	031M
9		504196032		1	ARGOLA DE FIXAÇÃO COLLIER-DE-FIXATION	MOUNTING CLIP BEFESTIGUNGSKLEMME	ABRAZADERA DE MONT MONTERINGSKLEMME	GRAFFA DI MONTAGGIC BEVESTIGINGSKLEM	Z445
10		504221516		2	JUNTA JOINT	GASKET DICHTUNG	JUNTA PAKNING	GUARNIZIONE PAKKING	123G
11		504221515		1	JUNTA JOINT	GASKET DICHTUNG	JUNTA PAKNING	GUARNIZIONE PAKKING	123G
12		4798845		2	PARAFUSO VIS	SCREW SCHRAUBE	TORNILLO SKRUE	VITE SCHROEF	040V
13		16598224		4	PARAFUSO, M8X90 mm VIS	SCREW SCHRAUBE	TORNILLO SKRUE	VITE SCHROEF	040V
14		504341194		1	JUNTA JOINT	GASKET DICHTUNG	JUNTA PAKNING	GUARNIZIONE PAKKING	123G
15		16673735		4	PARAFUSO, M8X25 mm VIS	SCREW SCHRAUBE	TORNILLO SKRUE	VITE SCHROEF	040V
16		4893234		4	BRAÇADEIRA MANGUEIR/ COLLIER POUR FLEXIBL	HOSE CLAMP SCHLAUCHSCHELLE	ABRAZADERA DE MANG SLANGEKLEMME	FASCETTA STRINGITUB SLANGKLEM	P729
17		504367631		3	PARAFUSO, M6X18 mm VIS	SCREW SCHRAUBE	TORNILLO SKRUE	VITE SCHROEF	040V
18		16598524		2	PARAFUSO, M8X120 mm VIS	SCREW SCHRAUBE	TORNILLO SKRUE	VITE SCHROEF	040V
19		504225741		1	JUNTA JOINT	GASKET DICHTUNG	JUNTA PAKNING	GUARNIZIONE PAKKING	123G
20		16993511		1	BUJÃO, M28 x 1.5 BOUCHON	PLUG STOPFEN	TAPÓN PROP	TAPPO PLUG	050T
21		99432291		1	VEDAÇÃO DA ARRUELA, D=28 mm RONDELLE D'ETANCHEI	SEALING WASHER DICHTSCHEIBE	ARANDELA HERMÉTICA TÆTNINGSSKIVE	ROSETTA DI TENUTA AFDICHTRING	133R
22		504363071		1	RASPADOR LAME DE RACLEUR	SCRAPER BLADE SCHABERKLINGE	HOJA DE RASCADOR AFSTRYGER	LAMA RASCHIATORE SCHRAPERBLAD	176R

HEAT EXCHANGER (504154694)
HEAT EXCHANGER (504154694)
CAMBIADOR DE CALOR (504154694)
SCAMBIATORE DI CALORE (504154694)

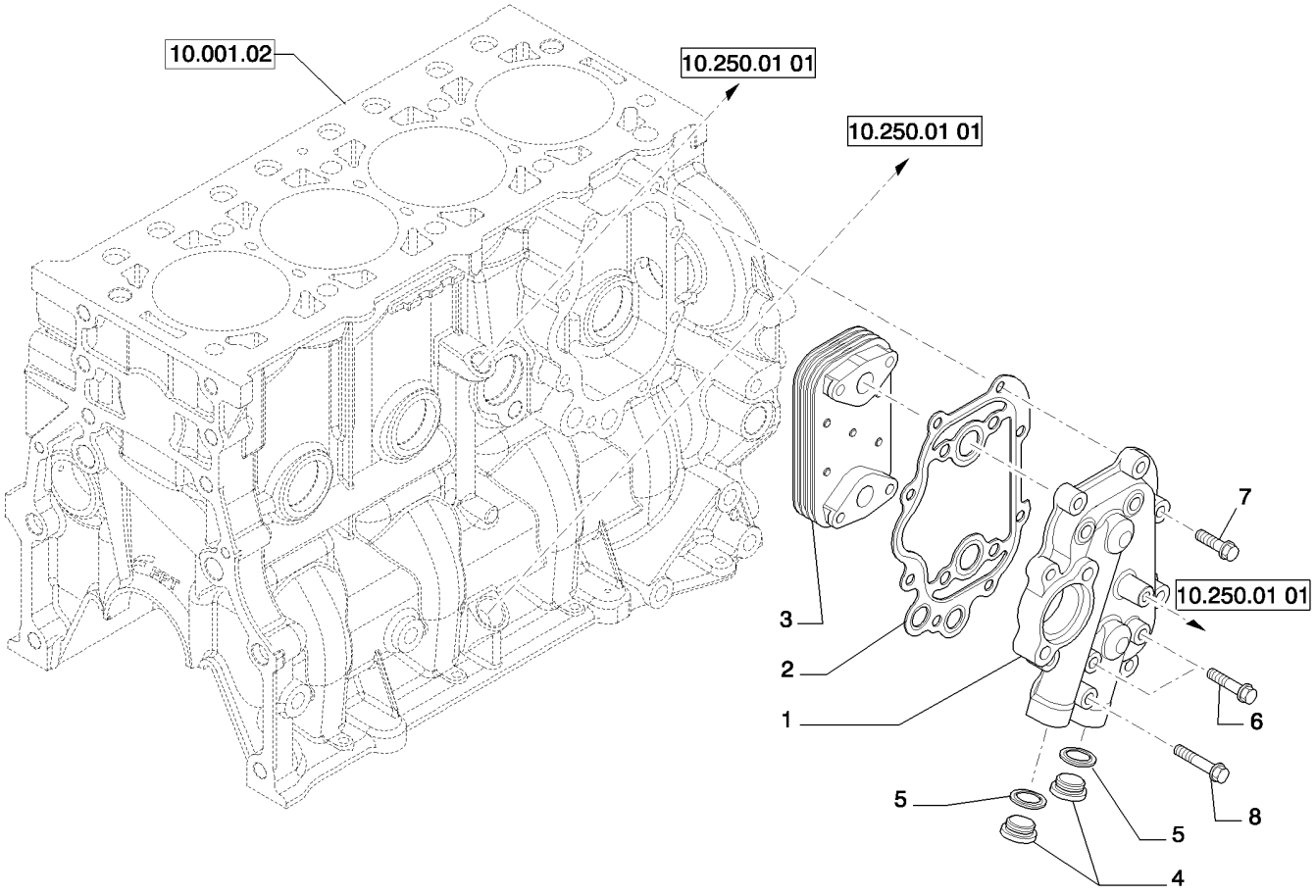

ECHANGEUR DE TEMPERATURE (504154694)
WÄRMETAUSCHER (ÖLKÜHLER) (504154694)
SCAMBIATORE DI CALORE (504154694)
WARMTEREGELAAR (504154694)

R	N	P.N.	MOD	Q	Denominação Description	Description Bezeichnung	Denominacion Beskrivelse	Descrizione Beschrijving	L.C.
1		504155542		1	CORPO CORPS	BODY KAROSSERIE	CUERPO HUS	CORPO HUIS	300C
2		504155544		1	JUNTA JOINT	GASKET DICHTUNG	JUNTA PAKNING	GUARNIZIONE PAKKING	123G
3		504164307		1	RESFRIADOR DO ÓLEO REFROIDISSEUR D'HUIL	OIL COOLER ÖLKÜHLER	REFRIGERADOR DE ACI OLIEKØLER	RADIATORE OLIO OLIEKOELER	026R
4		16993411		2	BUJÃO, M22X1,5 mm BOUCHON	PLUG STOPFEN	TAPÓN PROP	TAPPO PLUG	050T
5		99489022		2	VEDAÇÃO DA ARRUELA, D. 22 mm RONDELLE D'ETANCHEI	SEALING WASHER DICHTSCHEIBE	ARANDELA HERMÉTICA TÆTNINGSSKIVE	ROSETTA DI TENUTA AFDICHTRING	133R
6		16586725		2	PARAFUSO, M8 x 1.25 x 4(VIS	SCREW SCHRAUBE	TORNILLO SKRUE	VITE SCHROEF	040V
7		16673835		9	PARAFUSO, M8 x 30 VIS	SCREW SCHRAUBE	TORNILLO SKRUE	VITE SCHROEF	040V
8		16586925		1	PARAFUSO, M8 x 50 VIS	SCREW SCHRAUBE	TORNILLO SKRUE	VITE SCHROEF	040V

SECTION INDEX

29 - Transmissão hidrostática

29.200.01		LEVEL 100 CASE CONTROL HANDLES (SR130-SV300)
29.200.02		LEVEL 200 CASE CONTROL HANDLES (SR130-SV300)
29.200.03		LEVEL 250 CASE CONTROL HANDLES (ALL CASE)
29.200.04		LEVEL 300 CASE CONTROL HANDLES (SR175-SV300)
29.200.05		LEVEL 350 CASE CONTROL HANDLES (ALL CASE)
29.212.01		TRAVEL SPEED 1SPD (SR200)
29.212.02		TRAVEL SPEED 2SPD (SR200)
29.212.03		TRAVEL SPEED E-H (SR200)
29.212.04	01	MOTOR, REXROTH DRIVE MOTOR 2SPD (SR200-SV300)
29.212.04	01	MOTOR, REXROTH DRIVE MOTOR 1SPD (SR200-SV300)
29.212.04	02	MOTOR, REXROTH DRIVE MOTOR 2SPD (SR200-SV300)
29.212.04	02	MOTOR, REXROTH DRIVE MOTOR 1SPD (SR200-SV300)
29.212.05	01	VALVE, BRAKE (SR130-SV300)
29.212.05	02	VALVE, BRAKE 2SPD (SR175-SV300)
29.212.05	04	VALVE, BRAKE EH 2SPD (SR175-SV300)
29.212.06	01	PUMP, HYDROSTATIC TANDEM 46CC MDC FRONT (SR200,SR220,SV250)
29.212.06	02	PUMP, HYDROSTATC TANDEM 46CC MDC FRONT (SR200,SR220,SV250)
29.212.06	03	PUMP, HYDROSTATC TANDEM 46CC MDC FRONT (SR200,SR220,SV250)
29.212.06	04	PUMP, HYDROSTATC TANDEM 46CC MDC REAR (SR200,SR220,SV250)
29.212.06	05	PUMP, HYDROSTATC TANDEM 46CC MDC REAR (SR200,SR220,SV250)
29.212.06	06	PUMP, HYDROSTATC TANDEM 46CC MDC REAR (SR200.SR220,SV250)
29.212.07		PUMP, HYDROSTATIC EH 46CC A20VG ET (SR200,TR320-TV380)(SR220-SV300)

29.200.01		p1	06/11

LEVEL 100 CASE CONTROL HANDLES (SR130-SV300)
LEVEL 100 CASE CONTROL HANDLES (SR130-SV300)
LEVEL 100 CASE CONTROL HANDLES (SR130-SV300)
LEVEL 100 CASE CONTROL HANDLES (SR130-SV300)

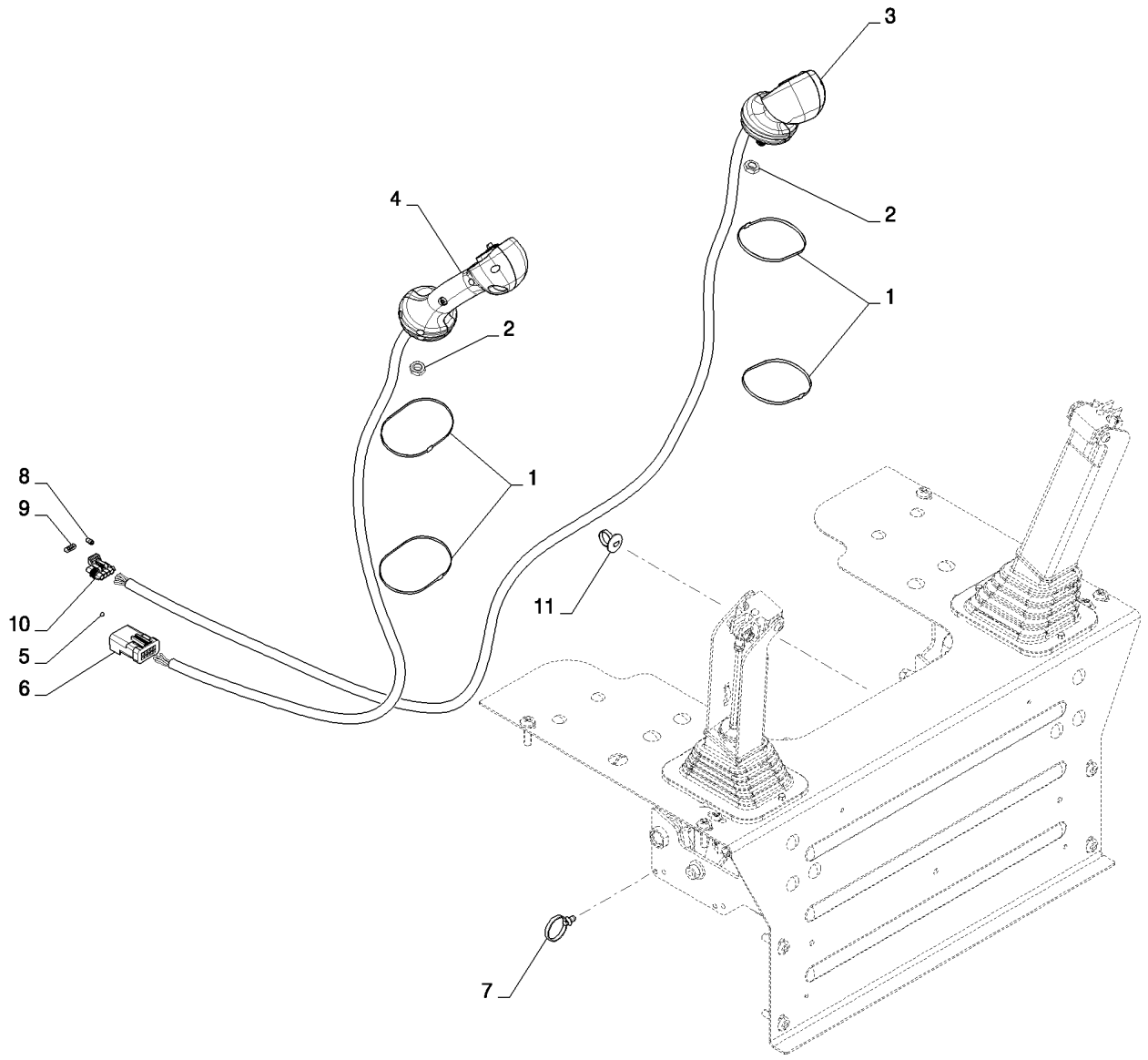

LEVEL 100 CASE CONTROL HANDLES (SR130-SV300)
LEVEL 100 CASE CONTROL HANDLES (SR130-SV300)
LEVEL 100 CASE CONTROL HANDLES (SR130-SV300)
LEVEL 100 CASE CONTROL HANDLES (SR130-SV300)

R	N	P.N.	MOD	Q	Denominação Description	Description Bezeichnung	Denominacion Beskrivelse	Descrizione Beschrijving	L.C.
1		263117		4	PRENDEDOR DE CABOS, .14" x 11 1/2"				
						CABLE STRAP	BANDA DE CABLE	FASCETTA PER CAVO	P716
					BRIDE DE CABLE	KABELBINDER	KABELSTROP	BUNDELBAND	
2		323238		2	PORCA, Thin, M12 x 1.75, Cl 05				
						NUT	TUERCA	DADO	010D
					ECROU	MUTTER	MØTRIK	MOER	
3		84201270		1	EMPUNHADURA, Case Level 100 LH				
						HANDLE GRIP	PERILLA	IMPUGNATURA	025I
					POIGNEE DE MAINTIEN	HANDGRIFF	HÅNDGREB	HANDGREEP	
4		84201273		1	EMPUNHADURA, Case Level 100 RH, Includes Ref. 12 & 13				
						HANDLE GRIP	PERILLA	IMPUGNATURA	025I
					POIGNEE DE MAINTIEN	HANDGRIFF	HÅNDGREB	HANDGREEP	
5		84279937		5	BUJÃO, Cavity Plug Apex 2.8MM				
						PLUG	TAPÓN	TAPPO	050T
					BOUCHON	STOPFEN	PROP	PLUG	
6		87382923		1	CONECTOR ELÉTR, 87382923, FCI Apex 2.8MM 10-Way Tab HSG				
						ELEC CONNECTOR	CONECTOR ELÉCTRICC	CONNETTORE ELETTRI(	235C
					CONNECTEUR ELECTRI	ELEKTR STECKVERBINI	EL-STIK	CONNECTOR	
7		87668737		5	TIRA, Fir Tree Assembly	STRAP	BANDA	FASCETTA	532B
					BRIDE	BAND	STROP	RIEM	
8		87689636		2	BUJÃO, Dark Red Cable Cavity Plug				
						PLUG	TAPÓN	TAPPO	050T
					BOUCHON	STOPFEN	PROP	PLUG	
9		87689643		1	GRAMPO, Black Secondary Lock				
						CLIP	ABRAZADERA	FERMO	045F
					COLLIER	KLAMMER	KLIPS	KLEM	
10		87697724		1	CONECTOR ELÉTR, Packard Metri-Pack 150 4-Way Female				
						ELEC CONNECTOR	CONECTOR ELÉCTRICC	CONNETTORE ELETTRI(	235C
					CONNECTEUR ELECTRI	ELEKTR STECKVERBINI	EL-STIK	CONNECTOR	
11		378884A2		3	TIRA, Panel Wire Tie	STRAP	CORREA	CINGHIA	8630
					SANGLE	HALTEBAND	STRAP	STRAP	
12		84296544		1	INTERRUPTOR, Proportional Switch				
						SWITCH	INTERRUPTOR	INTERRUTTORE	075I
					CONTACTEUR	SCHALTER	KONTAKT	SCHAKELAAR	
13		87630127		1	INTERRUPTOR, Parking Brake				
						SWITCH	INTERRUPTOR	INTERRUTTORE	075I
					CONTACTEUR	SCHALTER	KONTAKT	SCHAKELAAR	
14		84296542		1	INTERRUPTOR INTERMITENTE, Horn				
						SWITCH ASSY	CONJUNTO DE INTERRU	COMPLESSIVO INTERRU	067I
					ENSEMBLE COMMUTATI	SCHALTERBAUGRUPPE	KONTAKT, KPL.	SCHAKELAAREENHEID	

29.200.02		p1	06/11

LEVEL 200 CASE CONTROL HANDLES (SR130-SV300)
LEVEL 200 CASE CONTROL HANDLES (SR130-SV300)
LEVEL 200 CASE CONTROL HANDLES (SR130-SV300)
LEVEL 200 CASE CONTROL HANDLES (SR130-SV300)

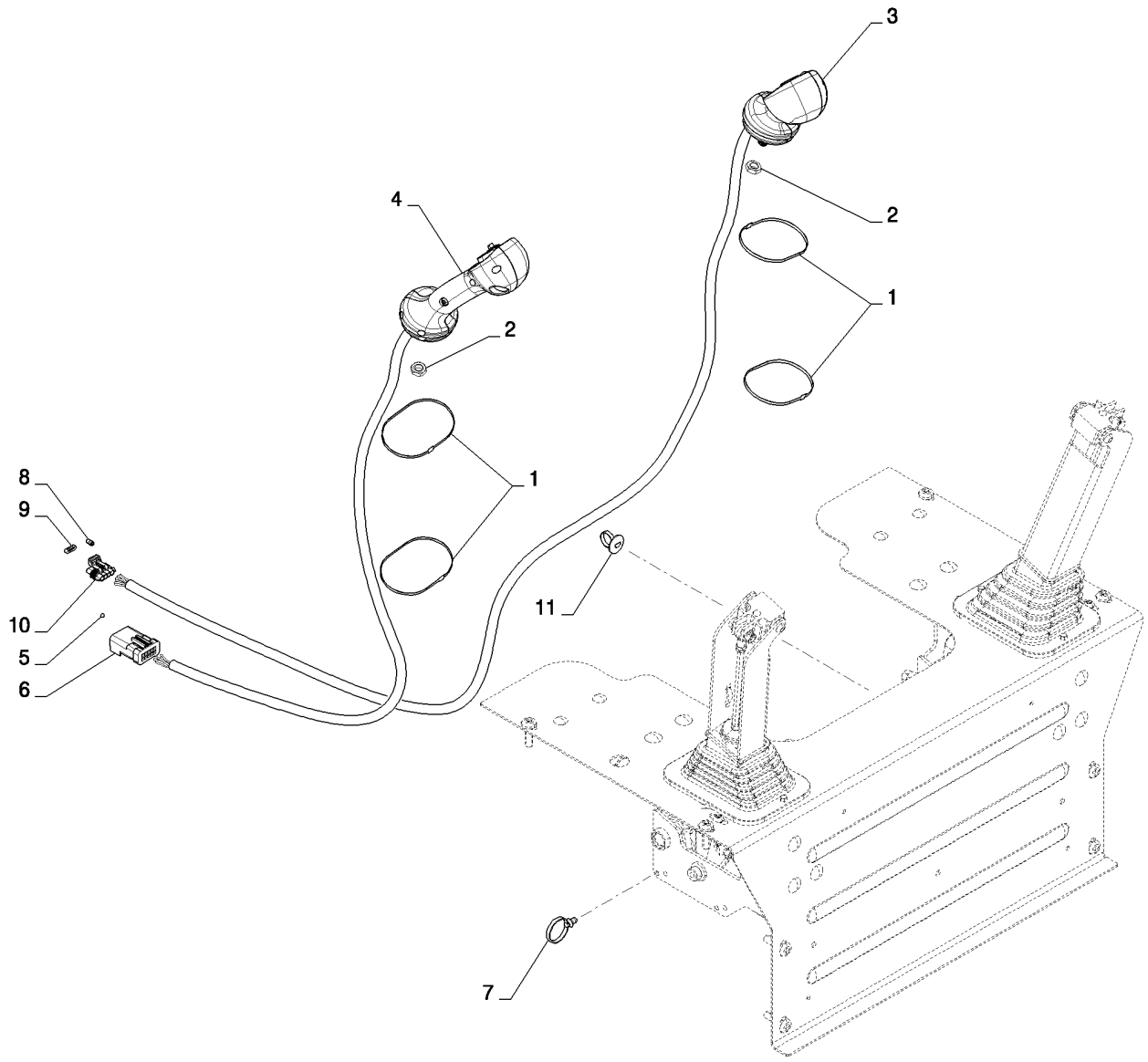

LEVEL 200 CASE CONTROL HANDLES (SR130-SV300)
LEVEL 200 CASE CONTROL HANDLES (SR130-SV300)
LEVEL 200 CASE CONTROL HANDLES (SR130-SV300)
LEVEL 200 CASE CONTROL HANDLES (SR130-SV300)

R	N	P.N.	MOD	Q	Denominação Description	Description Bezeichnung	Denominacion Beskrivelse	Descrizione Beschrijving	L.C.
1		263117		4	PRENDEDOR DE CABOS, .14" x 11 1/2"				
						CABLE STRAP	BANDA DE CABLE	FASCETTA PER CAVO	P716
					BRIDE DE CABLE	KABELBINDER	KABELSTROP	BUNDELBAND	
2		323238		2	PORCA, Thin, M12 x 1.75, Cl 05				
						NUT	TUERCA	DADO	010D
					ECROU	MUTTER	MØTRIK	MOER	
3		84201271		1	EMPUNHADURA, Case Level 200 LH				
						HANDLE GRIP	PERILLA	IMPUGNATURA	025I
					POIGNEE DE MAINTIEN	HANDGRIFF	HÅNDGREB	HANDGREEP	
4		84201274		1	EMPUNHADURA, Case Level 200 RH				
						HANDLE GRIP	PERILLA	IMPUGNATURA	025I
					POIGNEE DE MAINTIEN	HANDGRIFF	HÅNDGREB	HANDGREEP	
5		84279937		3	BUJÃO, Cavity Plug Apex 2.8MM				
						PLUG	TAPÓN	TAPPO	050T
					BOUCHON	STOPFEN	PROP	PLUG	
6		87382923		1	CONECTOR ELÉTR, 87382923, FCI Apex 2.8MM 10-Way Tab HSG				
						ELEC CONNECTOR	CONECTOR ELÉCTRICC	CONNETTORE ELETTRI(	235C
					CONNECTEUR ELECTRI	ELEKTR STECKVERBINI	EL-STIK	CONNECTOR	
7		87668737		5	TIRA, Fir Tree Assembly	STRAP	BANDA	FASCETTA	532B
					BRIDE	BAND	STROP	RIEM	
8		87689636		1	BUJÃO, Dark Red Cable Cavity Plug				
						PLUG	TAPÓN	TAPPO	050T
					BOUCHON	STOPFEN	PROP	PLUG	
9		87689643		1	GRAMPO, Black Secondary Lock				
						CLIP	ABRAZADERA	FERMO	045F
					COLLIER	KLAMMER	KLIPS	KLEM	
10		87697724		1	CONECTOR ELÉTR, Packard Metri-Pack 150 4-Way Female				
						ELEC CONNECTOR	CONECTOR ELÉCTRICC	CONNETTORE ELETTRI(	235C
					CONNECTEUR ELECTRI	ELEKTR STECKVERBINI	EL-STIK	CONNECTOR	
11		378884A2		3	TIRA, Panel Wire Tie	STRAP	CORREA	CINGHIA	8630
					SANGLE	HALTEBAND	STRAP	STRAP	
12		84296544		1	INTERRUPTOR, Proportional Switch				
						SWITCH	INTERRUPTOR	INTERRUTTORE	075I
					CONTACTEUR	SCHALTER	KONTAKT	SCHAKELAAR	
13		87630127		1	INTERRUPTOR, Parking Brake				
						SWITCH	INTERRUPTOR	INTERRUTTORE	075I
					CONTACTEUR	SCHALTER	KONTAKT	SCHAKELAAR	
14		87673088		1	INTERRUPTOR, 2 Speed	SWITCH	INTERRUPTOR	INTERRUTTORE	075I
					CONTACTEUR	SCHALTER	KONTAKT	SCHAKELAAR	
15		84296542		1	INTERRUPTOR INTERMITENTE, Horn				
						SWITCH ASSY	CONJUNTO DE INTERRU	COMPLESSIVO INTERRU	067I
					ENSEMBLE COMMUTAT	SCHALTERBAUGRUPPE	KONTAKT, KPL.	SCHAKELAAREENHEID	
16		87673089		1	INTERRUPTOR, Ride Control				
						SWITCH	INTERRUPTOR	INTERRUTTORE	075I
					CONTACTEUR	SCHALTER	KONTAKT	SCHAKELAAR	

29.200.03		p1	06/11

LEVEL 250 CASE CONTROL HANDLES (ALL CASE)
LEVEL 250 CASE CONTROL HANDLES (ALL CASE)
LEVEL 250 CASE CONTROL HANDLES (ALL CASE)
LEVEL 250 CASE CONTROL HANDLES (ALL CASE)

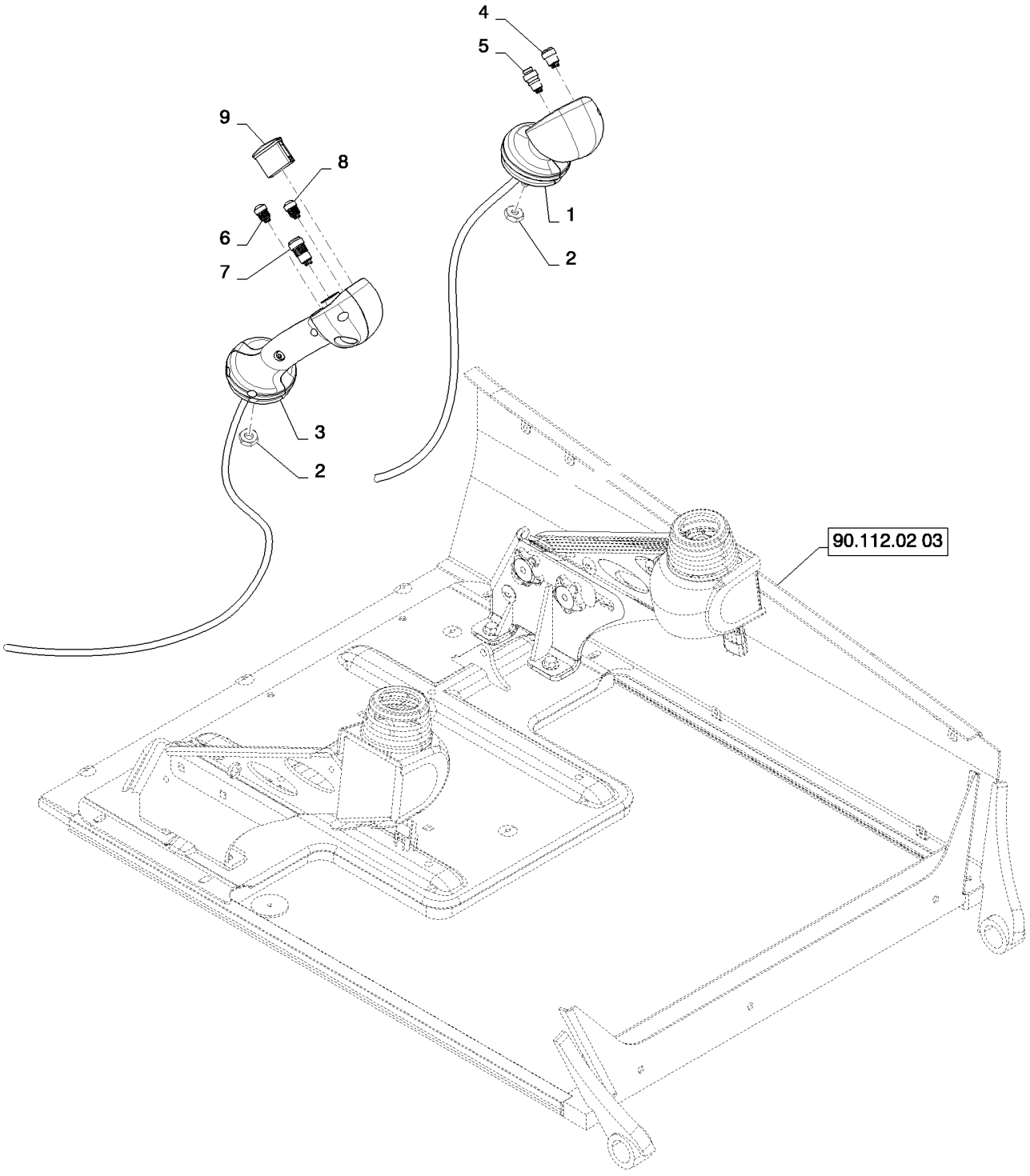

LEVEL 250 CASE CONTROL HANDLES (ALL CASE)
LEVEL 250 CASE CONTROL HANDLES (ALL CASE)
LEVEL 250 CASE CONTROL HANDLES (ALL CASE)
LEVEL 250 CASE CONTROL HANDLES (ALL CASE)

R	N	P.N.	MOD	Q	Denominação Description Bezeichnung	Description Bezeichnung	Denominacion Beskrivelse	Descrizione Beschrijving	L.C.
1		84280471		1	EMPUNHADURA, Case Level 250 LH				
						HANDLE GRIP	PERILLA	IMPUGNATURA	025I
					POIGNEE DE MAINTIEN	HANDGRIFF	HÅNDGREB	HANDGREEP	
2		323238		2	PORCA, Thin, M12 x 1.75, Cl 05				
						NUT	TUERCA	DADO	010D
					ECROU	MUTTER	MØTRIK	MOER	
3		84201275		1	EMPUNHADURA, Case Level 250 RH				
						HANDLE GRIP	PERILLA	IMPUGNATURA	025I
					POIGNEE DE MAINTIEN	HANDGRIFF	HÅNDGREB	HANDGREEP	
4		84296542		1	INTERRUPTOR INTERMITENTE, Horn				
						SWITCH ASSY	CONJUNTO DE INTERRU	COMPLESSIVO INTERRU	067I
					ENSEMBLE COMMUTATI	SCHALTERBAUGRUPPE	KONTAKT, KPL.	SCHAKELAAREENHEID	
5		87673088		1	INTERRUPTOR, 2 Speed	SWITCH	INTERRUPTOR	INTERRUTTORE	075I
					CONTACTEUR	SCHALTER	KONTAKT	SCHAKELAAR	
6		87673089		1	INTERRUPTOR, Ride Control				
						SWITCH	INTERRUPTOR	INTERRUTTORE	075I
					CONTACTEUR	SCHALTER	KONTAKT	SCHAKELAAR	
7		87630127		1	INTERRUPTOR, Park Brake				
						SWITCH	INTERRUPTOR	INTERRUTTORE	075I
					CONTACTEUR	SCHALTER	KONTAKT	SCHAKELAAR	
8		84296543		1	INTERRUPTOR, Float	SWITCH	INTERRUPTOR	INTERRUTTORE	075I
					CONTACTEUR	SCHALTER	KONTAKT	SCHAKELAAR	
9		84282677		1	INTERRUPTOR, Proportional Hydraulics				
						SWITCH	INTERRUPTOR	INTERRUTTORE	075I
					CONTACTEUR	SCHALTER	KONTAKT	SCHAKELAAR	

29.200.04		p1	06/11

LEVEL 300 CASE CONTROL HANDLES (SR175-SV300)
LEVEL 300 CASE CONTROL HANDLES (SR175-SV300)
LEVEL 300 CASE CONTROL HANDLES (SR175-SV300)
LEVEL 300 CASE CONTROL HANDLES (SR175-SV300)

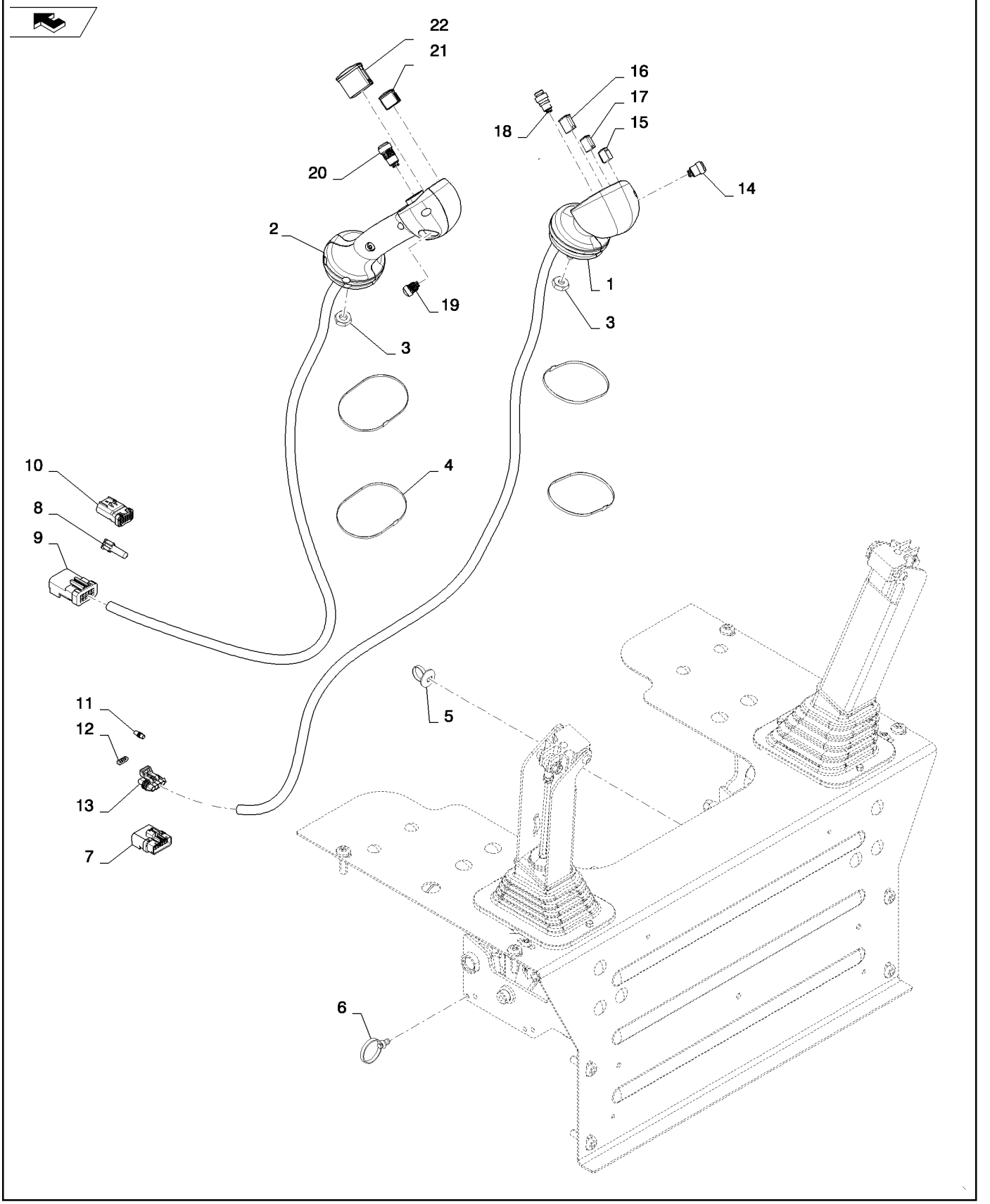

LEVEL 300 CASE CONTROL HANDLES (SR175-SV300)
LEVEL 300 CASE CONTROL HANDLES (SR175-SV300)
LEVEL 300 CASE CONTROL HANDLES (SR175-SV300)
LEVEL 300 CASE CONTROL HANDLES (SR175-SV300)

R	N	P.N.	MOD	Q	Denominação Description	Description Bezeichnung	Denominacion Beskrivelse	Descrizione Beschrijving	L.C.
1		84201272		1	EMPUNHADURA, Case Level 300 LH				
						HANDLE GRIP	PERILLA	IMPUGNATURA	025I
					POIGNEE DE MAINTIEN	HANDGRIFF	HÅNDGREB	HANDGREEP	
2		84201276		1	EMPUNHADURA, Case Level 300 RH				
						HANDLE GRIP	PERILLA	IMPUGNATURA	025I
					POIGNEE DE MAINTIEN	HANDGRIFF	HÅNDGREB	HANDGREEP	
3		323238		2	PORCA, Thin, M12 x 1.75, Cl 05				
						NUT	TUERCA	DADO	010D
					ECROU	MUTTER	MØTRIK	MOER	
4		263117		4	PRENDEDOR DE CABOS, .14" x 11 1/2"				
						CABLE STRAP	BANDA DE CABLE	FASCETTA PER CAVO	P716
					BRIDE DE CABLE	KABELBINDER	KABELSTROP	BUNDELBAND	
5		378884A2		3	TIRA, Panel Wire Tie	STRAP	CORREA	CINGHIA	8630
					SANGLE	HALTEBAND	STRAP	STRAP	
6		87668737		5	TIRA, Fir Tree Assembly	STRAP	BANDA	FASCETTA	532B
					BRIDE	BAND	STROP	RIEM	
7		87382919		1	CONECTOR ELÉTR, 87382919, 6 Cavity Plug Black				
						ELEC CONNECTOR	CONECTOR ELÉCTRICC	CONNETTORE ELETTRI(	235C
					CONNECTEUR ELECTRI	ELEKTR STECKVERBIND	EL-STIK	CONNECTOR	
8		84279937		11	BUJÃO, Cavity Plug Apex 2.8MM				
						PLUG	TAPÓN	TAPPO	050T
					BOUCHON	STOPFEN	PROP	PLUG	
9		87382923		1	CONECTOR ELÉTR, 87382923, FCI Apex 2.8MM 10-Way Tab HSG				
						ELEC CONNECTOR	CONECTOR ELÉCTRICC	CONNETTORE ELETTRI(	235C
					CONNECTEUR ELECTRI	ELEKTR STECKVERBIND	EL-STIK	CONNECTOR	
10		87382927		1	CONECTOR ELÉTR, 87382927, FCI Apex 2.8MM 14-Way Tab HSG				
						ELEC CONNECTOR	CONECTOR ELÉCTRICC	CONNETTORE ELETTRI(	235C
					CONNECTEUR ELECTRI	ELEKTR STECKVERBIND	EL-STIK	CONNECTOR	
11		87689636		1	BUJÃO, Dark Red Cable Cavity Plug				
						PLUG	TAPÓN	TAPPO	050T
					BOUCHON	STOPFEN	PROP	PLUG	
12		87689643		1	GRAMPO, Black Secondary Lock				
						CLIP	ABRAZADERA	FERMO	045F
					COLLIER	KLAMMER	KLIPS	KLEM	
13		87697724		1	CONECTOR ELÉTR, Packard Metri-Pack 150 4-Way Female				
						ELEC CONNECTOR	CONECTOR ELÉCTRICC	CONNETTORE ELETTRI(	235C
					CONNECTEUR ELECTRI	ELEKTR STECKVERBIND	EL-STIK	CONNECTOR	
14		87673088		1	INTERRUPTOR, 2 Speed	SWITCH	INTERRUPTOR	INTERRUTTORE	075I
					CONTACTEUR	SCHALTER	KONTAKT	SCHAKELAAR	
15		84398133		1	INTERRUPTOR, Multi-Function 4				
						SWITCH	INTERRUPTOR	INTERRUTTORE	075I
					CONTACTEUR	SCHALTER	KONTAKT	SCHAKELAAR	
16		{84296547}		1	Multi-Function 3				
17		{84296546}		1	Multi-Function 2				
18		84296542		1	INTERRUPTOR INTERMITENTE, Horn				
						SWITCH ASSY	CONJUNTO DE INTERRU	COMPLESSIVO INTERRU	067I
					ENSEMBLE COMMUTAT	SCHALTERBAUGRUPPE	KONTAKT, KPL.	SCHAKELAAREENHEID	

29.200.04		p2	06/11

LEVEL 300 CASE CONTROL HANDLES (SR175-SV300)
LEVEL 300 CASE CONTROL HANDLES (SR175-SV300)
LEVEL 300 CASE CONTROL HANDLES (SR175-SV300)
LEVEL 300 CASE CONTROL HANDLES (SR175-SV300)

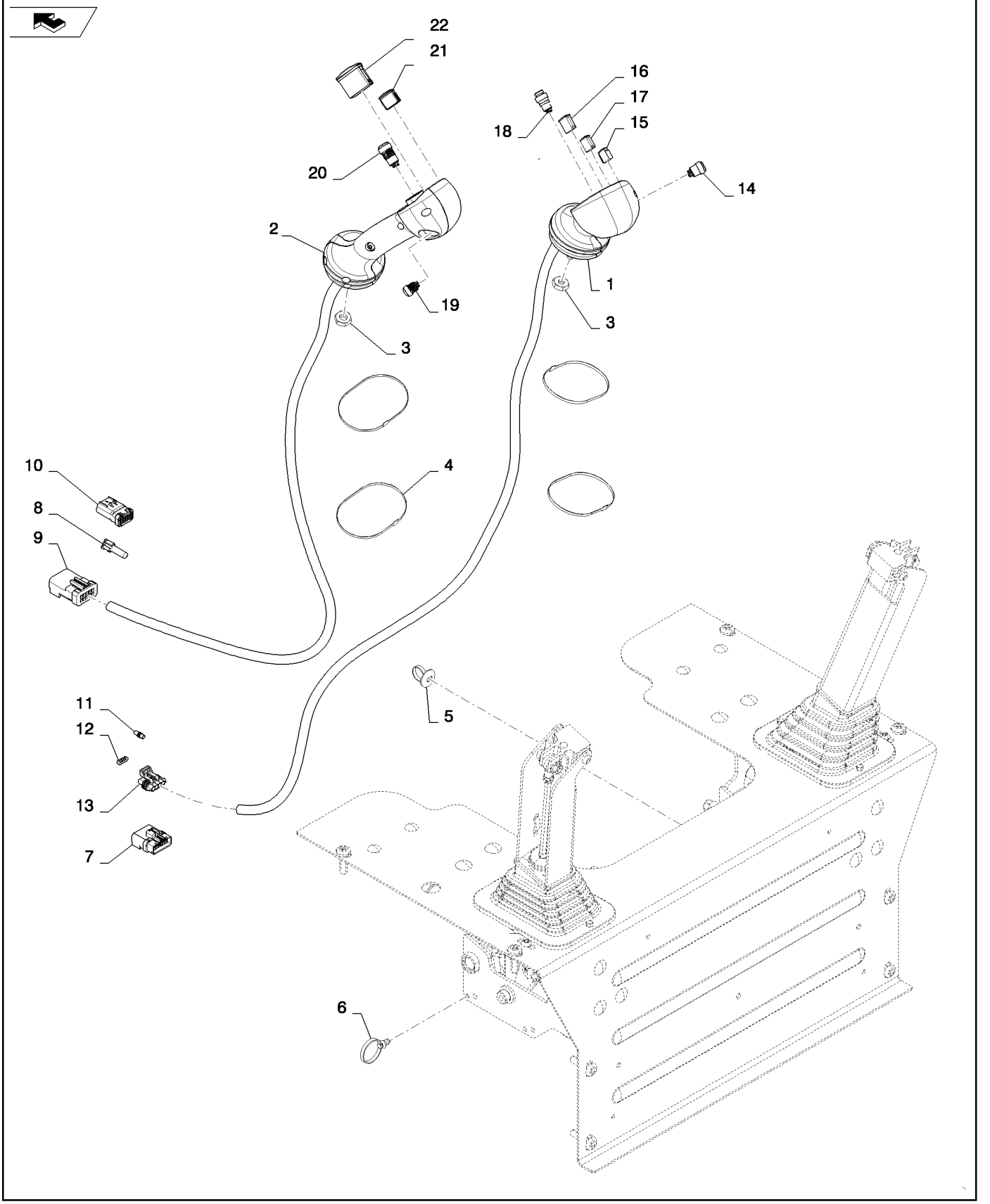

LEVEL 300 CASE CONTROL HANDLES (SR175-SV300)
LEVEL 300 CASE CONTROL HANDLES (SR175-SV300)
LEVEL 300 CASE CONTROL HANDLES (SR175-SV300)
LEVEL 300 CASE CONTROL HANDLES (SR175-SV300)

R	N	P.N.	MOD	Q	Denominação Description Description Bezeichnung	Denominacion Beskrivelse	Descrizione Beschrijving	L.C.
19		**87673089**		1	INTERRUPTOR, Ride Control SWITCH CONTACTEUR SCHALTER	INTERRUPTOR KONTAKT	INTERRUTTORE SCHAKELAAR	075I
20		**87630127**		1	INTERRUPTOR, Park Brake SWITCH CONTACTEUR SCHALTER	INTERRUPTOR KONTAKT	INTERRUTTORE SCHAKELAAR	075I
21		**{84296545}**		1	Multi-Function 1			
22		**84296544**		1	INTERRUPTOR, Proportional Hydraulic SWITCH CONTACTEUR SCHALTER	INTERRUPTOR KONTAKT	INTERRUTTORE SCHAKELAAR	075I

29.200.05		p1	06/11

LEVEL 350 CASE CONTROL HANDLES (ALL CASE)
LEVEL 350 CASE CONTROL HANDLES (ALL CASE)
LEVEL 350 CASE CONTROL HANDLES (ALL CASE)
LEVEL 350 CASE CONTROL HANDLES (ALL CASE)

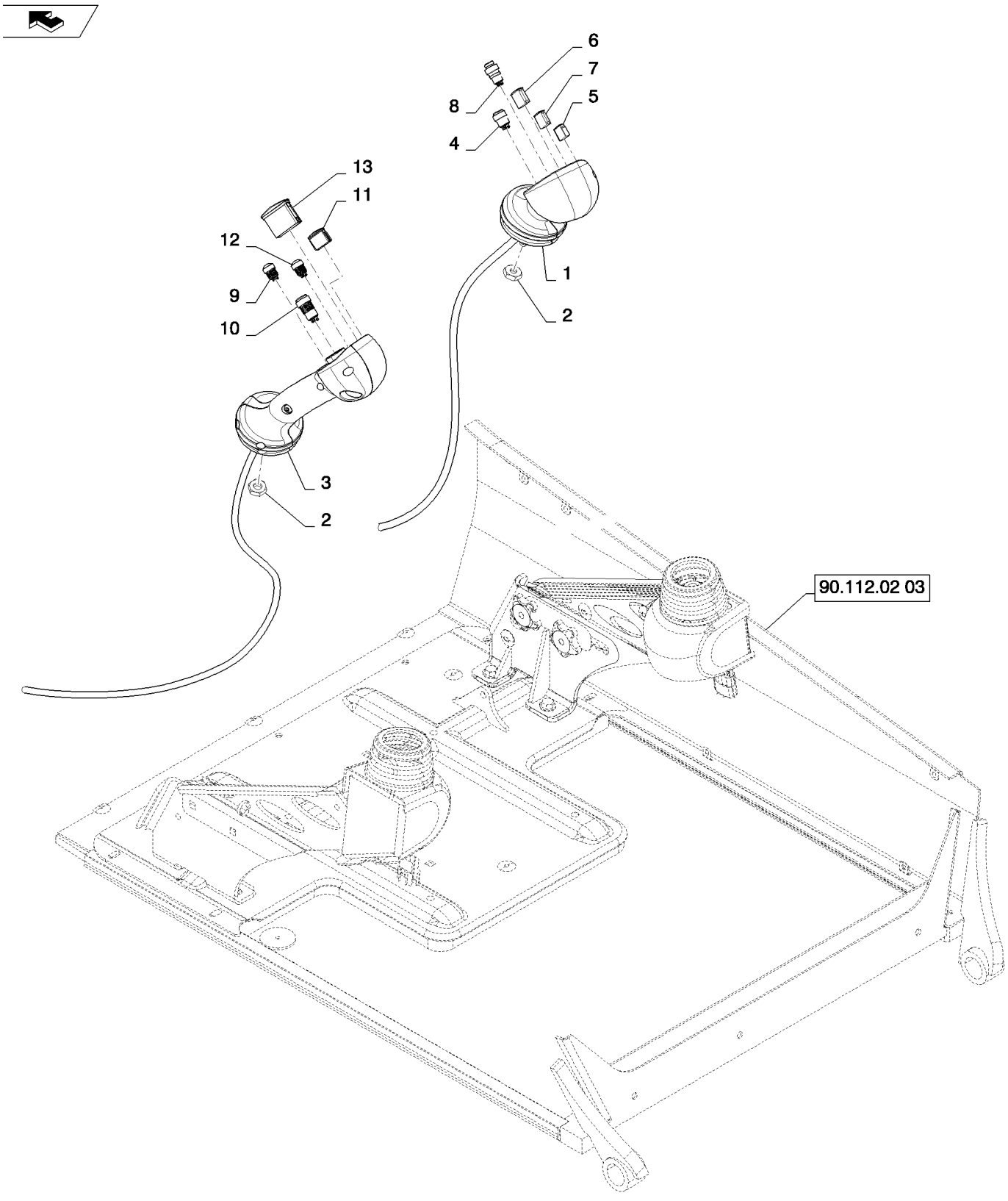

LEVEL 350 CASE CONTROL HANDLES (ALL CASE)
LEVEL 350 CASE CONTROL HANDLES (ALL CASE)
LEVEL 350 CASE CONTROL HANDLES (ALL CASE)
LEVEL 350 CASE CONTROL HANDLES (ALL CASE)

R	N	P.N.	MOD	Q	Denominação Description	Description Bezeichnung	Denominacion Beskrivelse	Descrizione Beschrijving	L.C.
1		84280472		1	EMPUNHADURA, Case Level 350 LH				
						HANDLE GRIP	PERILLA	IMPUGNATURA	025I
					POIGNEE DE MAINTIEN	HANDGRIFF	HÅNDGREB	HANDGREEP	
2		323238		2	PORCA, Thin, M12 x 1.75, Cl 05				
						NUT	TUERCA	DADO	010D
					ECROU	MUTTER	MØTRIK	MOER	
3		84201277		1	EMPUNHADURA, Case Level 350 RH				
						HANDLE GRIP	PERILLA	IMPUGNATURA	025I
					POIGNEE DE MAINTIEN	HANDGRIFF	HÅNDGREB	HANDGREEP	
4		87673088		1	INTERRUPTOR, 2 Speed	SWITCH	INTERRUPTOR	INTERRUTTORE	075I
					CONTACTEUR	SCHALTER	KONTAKT	SCHAKELAAR	
5		84398133		1	INTERRUPTOR, Multi-Function 4				
						SWITCH	INTERRUPTOR	INTERRUTTORE	075I
					CONTACTEUR	SCHALTER	KONTAKT	SCHAKELAAR	
6		{84296547}		1	Multi-Function 3				
7		{84296546}		1	Multi-Function 2				
8		84296542		1	INTERRUPTOR INTERMITENTE, Horn				
						SWITCH ASSY	CONJUNTO DE INTERRU	COMPLESSIVO INTERRU	067I
					ENSEMBLE COMMUTATI	SCHALTERBAUGRUPPE	KONTAKT, KPL.	SCHAKELAAREENHEID	
9		87673089		1	INTERRUPTOR, Ride Control				
						SWITCH	INTERRUPTOR	INTERRUTTORE	075I
					CONTACTEUR	SCHALTER	KONTAKT	SCHAKELAAR	
10		87630127		1	INTERRUPTOR, Park Brake				
						SWITCH	INTERRUPTOR	INTERRUTTORE	075I
					CONTACTEUR	SCHALTER	KONTAKT	SCHAKELAAR	
11		{84296545}		1	Multi-Function 1				
12		84296543		1	INTERRUPTOR, Float	SWITCH	INTERRUPTOR	INTERRUTTORE	075I
					CONTACTEUR	SCHALTER	KONTAKT	SCHAKELAAR	
13		84282677		1	INTERRUPTOR, Proportional Hydraulic				
						SWITCH	INTERRUPTOR	INTERRUTTORE	075I
					CONTACTEUR	SCHALTER	KONTAKT	SCHAKELAAR	

29.212.01		p1	01/11

TRAVEL SPEED 1SPD (SR200)
TRAVEL SPEED 1SPD (SR200)
TRAVEL SPEED 1SPD (SR200)
TRAVEL SPEED 1SPD (SR200)

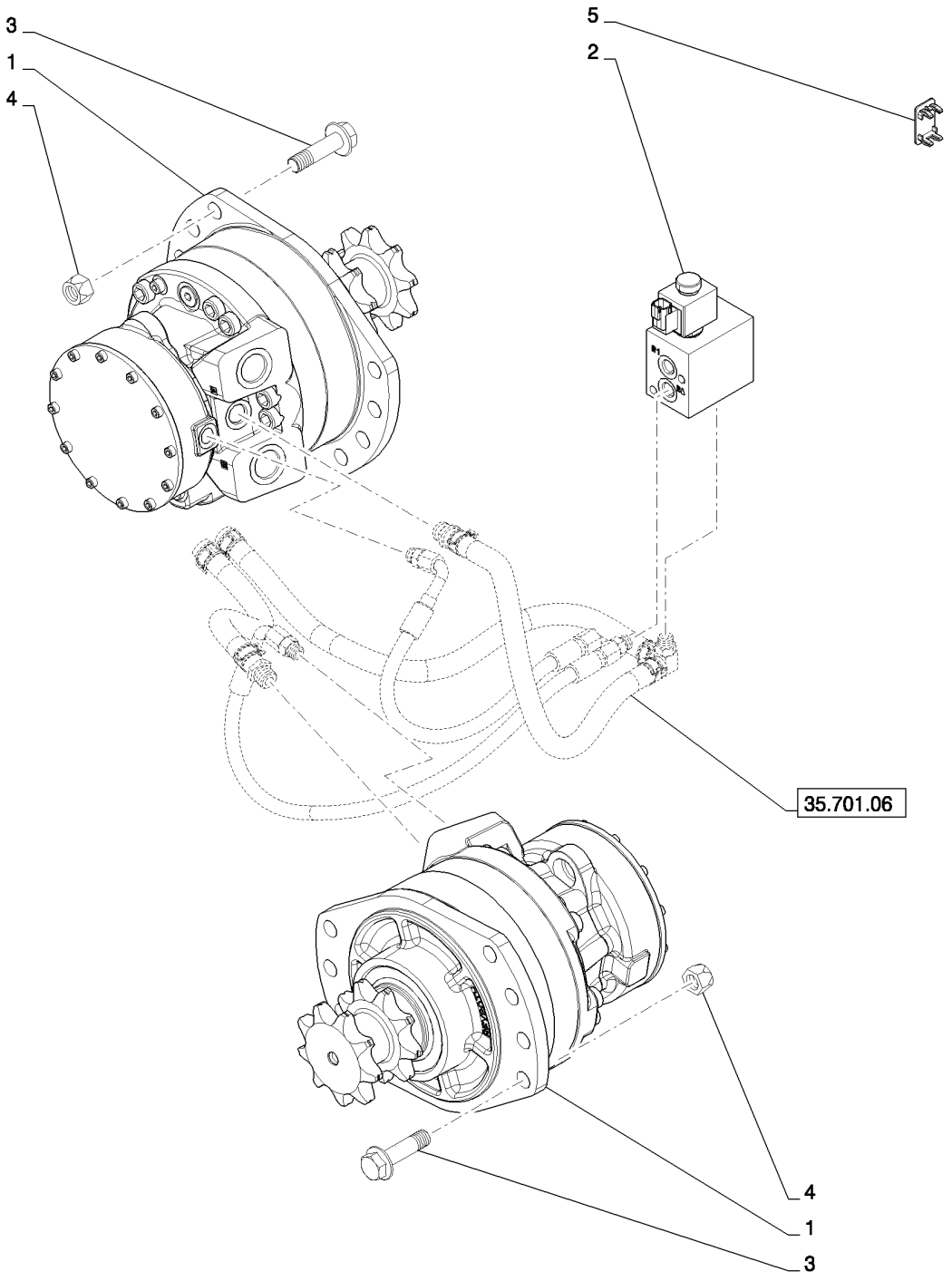

TRAVEL SPEED 1SPD (SR200)
TRAVEL SPEED 1SPD (SR200)
TRAVEL SPEED 1SPD (SR200)
TRAVEL SPEED 1SPD (SR200)

R	N	P.N.	MOD	Q	Denominação Description Bezeichnung	Denominacion Beskrivelse	Descrizione Beschrijving	L.C.
1		84256616		2	MOTOR HIDRÁULICO, 470cc, 1Spd, W/Seal HYDRAULIC MOTOR MOTEUR HYDRAULIQUE HYDRAULIKMOTOR	MOTOR HIDRÁULICO HYDRAULIKMOTOR	MOTORE IDRAULICO HYDRAULISCHE MOTOR	900M
2		84256530		1	VÁLVULA DE FREIO BRAKE VALVE SOUPAPE DE FREIN BREMSVENTIL	VÁLVULA DE FRENO BREMSEVENTIL	VALVOLA DI COMANDO REMVENTIEL	017V
3		87675533		12	PARAFUSO, Flange, M16x60 BOLT VIS SCHRAUBE	PERNO BOLT	BULLONE BOUT	140B
4		86512555		12	CONTRA PORCA, M16 x 2, Cl 10 LOCK NUT CONTRE-ECROU SICHERUNGSMUTTER	TUERCA DE BLOQUEO LÅSEMØTRIK	DADO DI BLOCCAGGIO BORGMOER	P263
5		126844A1		1	BUJÃO, Switch Hole Cover PLUG BOUCHON STOPFEN	TAPÓN PROP	TAPPO PLUG	050T

SR200

TRAVEL SPEED 2SPD (SR200)
TRAVEL SPEED 2SPD (SR200)
TRAVEL SPEED 2SPD (SR200)
TRAVEL SPEED 2SPD (SR200)

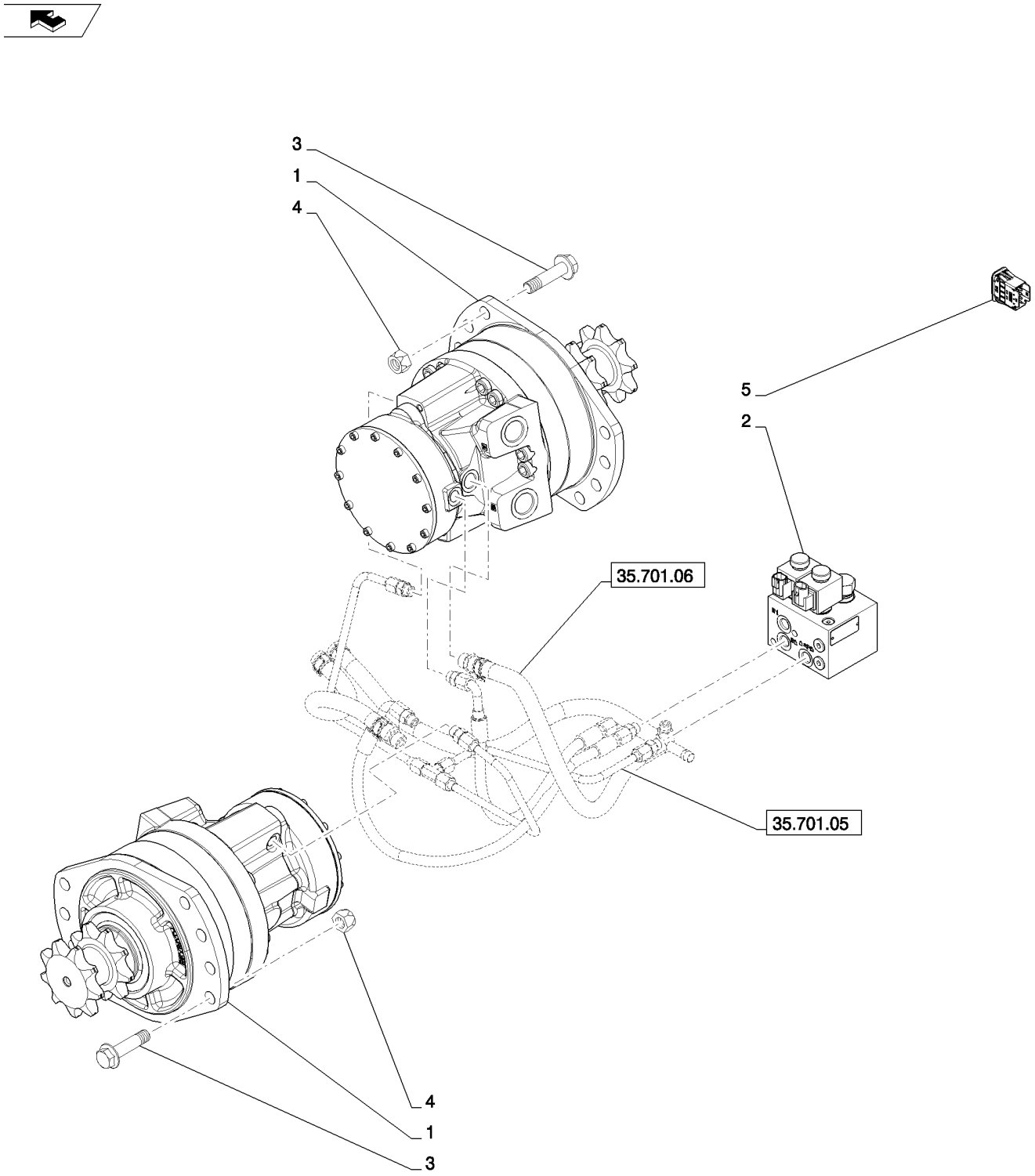

TRAVEL SPEED 2SPD (SR200)
TRAVEL SPEED 2SPD (SR200)
TRAVEL SPEED 2SPD (SR200)
TRAVEL SPEED 2SPD (SR200)

R	N	P.N.	MOD	Q	Denominação Description Bezeichnung	Denominacion Beskrivelse	Descrizione Beschrijving	L.C.
1		84256617		2	MOTOR HIDRÁULICO, 470cc, 2Spd, W/Seal HYDRAULIC MOTOR MOTEUR HYDRAULIQUE HYDRAULIKMOTOR	MOTOR HIDRÁULICO HYDRAULIKMOTOR	MOTORE IDRAULICO HYDRAULISCHE MOTOR	900M
2		84256531		1	VÁLVULA DE FREIO, 2Spd Brake BRAKE VALVE SOUPAPE DE FREIN BREMSVENTIL	VÁLVULA DE FRENO BREMSEVENTIL	VALVOLA DI COMANDO REMVENTIEL	017V
3		87675533		12	PARAFUSO, M16x60 VIS	BOLT SCHRAUBE	PERNO BOLT	BULLONE BOUT	140B
4		86512555		12	CONTRA PORCA, M16 x 2, Cl 10 LOCK NUT CONTRE-ECROU SICHERUNGSMUTTER	TUERCA DE BLOQUEO LÅSEMØTRIK	DADO DI BLOCCAGGIO BORGMOER	P263
5		84388282		1	INDICADOR, High Speed Indicator INDICATOR INDICATEUR ANZEIGE	INDICADOR INDIKATOR	INDICATORE INDICATOR	087S

SR200

29.212.03		p1	01/11

TRAVEL SPEED E-H (SR200)
TRAVEL SPEED E-H (SR200)
TRAVEL SPEED E-H (SR200)
TRAVEL SPEED E-H (SR200)

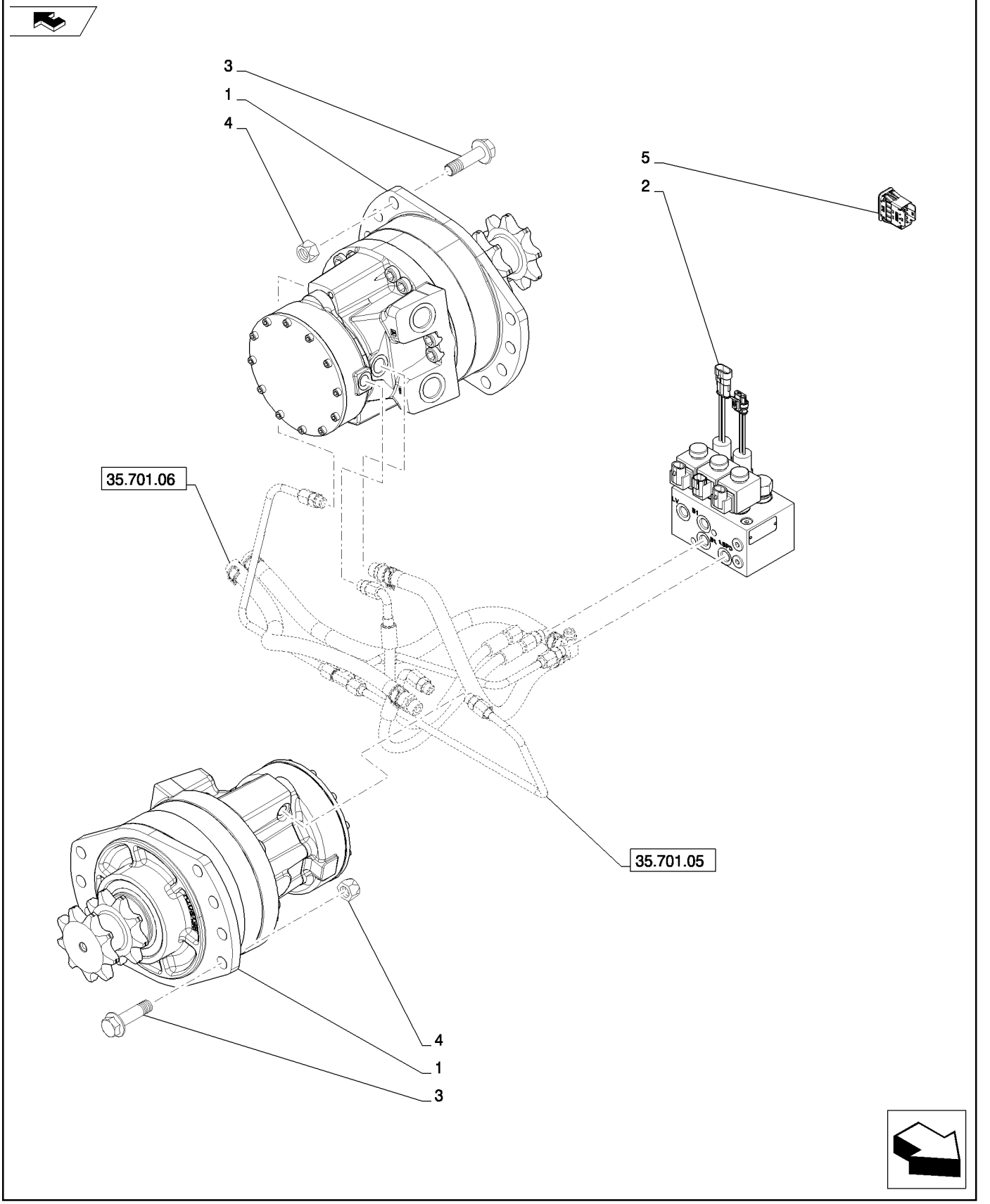

TRAVEL SPEED E-H (SR200)
TRAVEL SPEED E-H (SR200)
TRAVEL SPEED E-H (SR200)
TRAVEL SPEED E-H (SR200)

R	N	P.N.	MOD	Q	Denominação Description	Description Bezeichnung	Denominacion Beskrivelse	Descrizione Beschrijving	L.C.
1		84256617		2	MOTOR HIDRÁULICO, 470cc, 2Spd, W/Seal				
						HYDRAULIC MOTOR	MOTOR HIDRÁULICO	MOTORE IDRAULICO	900M
					MOTEUR HYDRAULIQUE	HYDRAULIKMOTOR	HYDRAULIKMOTOR	HYDRAULISCHE MOTOR	
2		84256533		1	VÁLVULA DE FREIO, EH 2Spd Brake				
						BRAKE VALVE	VÁLVULA DE FRENO	VALVOLA DI COMANDO	017V
					SOUPAPE DE FREIN	BREMSVENTIL	BREMSEVENTIL	REMVENTIEL	
3		87675533		12	PARAFUSO, M16x60	BOLT	PERNO	BULLONE	140B
					VIS	SCHRAUBE	BOLT	BOUT	
4		86512555		12	CONTRA PORCA, M16 x 2, Cl 10				
						LOCK NUT	TUERCA DE BLOQUEO	DADO DI BLOCCAGGIO	P263
					CONTRE-ECROU	SICHERUNGSMUTTER	LÅSEMØTRIK	BORGMOER	
5		84388282		1	INDICADOR, Indicator, High Speed				
						INDICATOR	INDICADOR	INDICATORE	087S
					INDICATEUR	ANZEIGE	INDIKATOR	INDICATOR	

29.212.04	01	p1	07/11

MOTOR, REXROTH DRIVE MOTOR 2SPD (SR200-SV300)
MOTOR, REXROTH DRIVE MOTOR 2SPD (SR200-SV300)
MOTOR, REXROTH DRIVE MOTOR 2SPD (SR200-SV300)
MOTOR, REXROTH DRIVE MOTOR 2SPD (SR200-SV300)

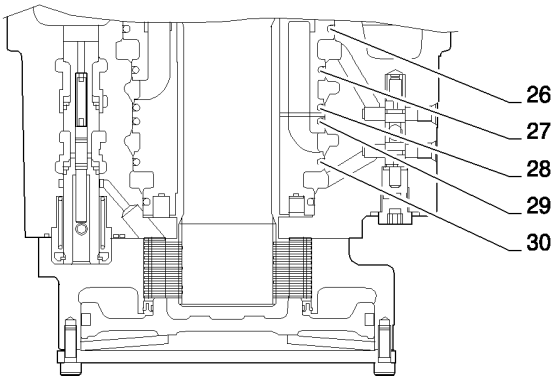

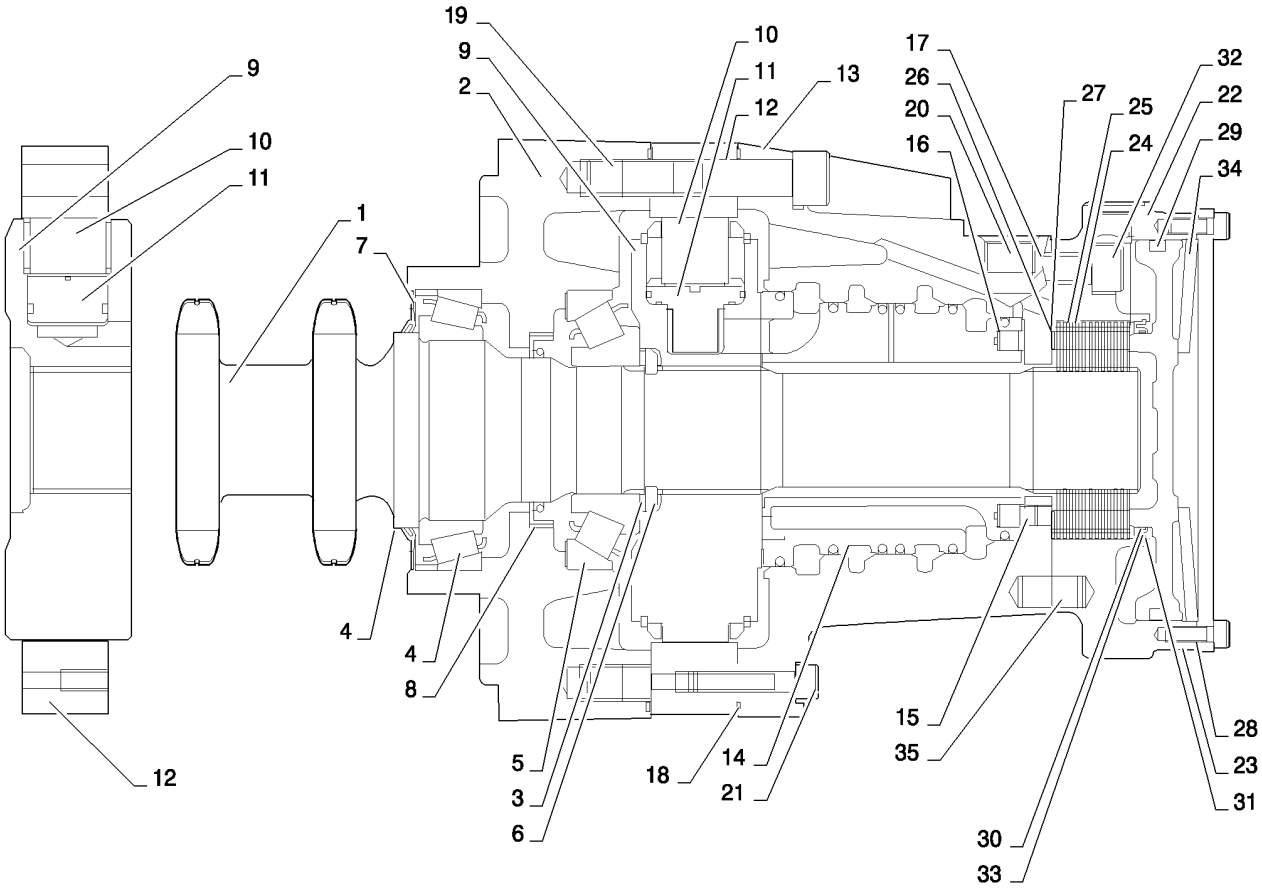

MOTOR, REXROTH DRIVE MOTOR 2SPD (SR200-SV300)
MOTOR, REXROTH DRIVE MOTOR 2SPD (SR200-SV300)
MOTOR, REXROTH DRIVE MOTOR 2SPD (SR200-SV300)
MOTOR, REXROTH DRIVE MOTOR 2SPD (SR200-SV300)

R	N	P.N.	MOD	Q	Denominação Description	Description Bezeichnung	Denominacion Beskrivelse	Descrizione Beschrijving	L.C.
		84256617		1	MOTOR HIDRÁULICO, Rexroth 2 Speed Drive Motor, Includes Ref. 1-35				
						HYDRAULIC MOTOR	MOTOR HIDRÁULICO	MOTORE IDRAULICO	900M
					MOTEUR HYDRAULIQUE	HYDRAULIKMOTOR	HYDRAULIKMOTOR	HYDRAULISCHE MOTOR	
1		**84293371**		1	EIXO COMANDO, MCR5 2 Speed ASM				
						DRIVE SHAFT	EJE DE TRANSMISIÓN	ALBERO DI TRASMISSIC	P754
					ARBRE D'ENTRAINEMEN	ANTRIEBSWELLE	DRIVAKSEL	AANDRIJFAS	
2		**84293380**		1	CARCAÇA MOTOR, ASM MCR5 Front W Seal				
						MOTOR HOUSING	ALOJAMIENTO DEL MOT	ALLOGGIAMENTO MOTC	P650
					CARTER DU MOTEUR	MOTORGEHÄUSE	MOTORHUS	MOTORHUIS	
3		**87042903**		1	KIT, Abutment Washer	KIT	KIT	KIT	305C
					KIT	SATZ	SÆT	KIT	
4		**87042904**		1	ROLAMENTO ESFÉRICO, 70 mm ID x 110 mm OD x 25 mm, 70 X 110 X 25				
						BALL BEARING	RODAMIENTO DE BOLAS	CUSCINETTO A SFERE	343C
					ROULEMENT A BILLES	KUGELLAGER	KUGLELEJE	KOGELLAGER	
5		**87042905**		1	ROLAMENTO ESFÉRICO, 50 mm ID x 110 mm OD x 29.25 mm, 50 X 110 X 29.25				
						BALL BEARING	RODAMIENTO DE BOLAS	CUSCINETTO A SFERE	343C
					ROULEMENT A BILLES	KUGELLAGER	KUGLELEJE	KOGELLAGER	
6		**87042906**		1	ANEL, MCR5 Split Ring	RING	ANILLO	ANELLO	045A
					ANNEAU	RING	RING	RING	
7		**NSS**		1	SEM SERVIÇO EM SEPARADO, Face Seal 78 X 110 X 12.2 NBR80				
						NOT SERVICED SEPARA	NO SE REPARA POR SE	NON FORNITO SEPARAT	064N
					NON FORUNI SEPAREM	NICHT A SEP ERS-T LIEF	SERVICERES IKKE SEPA	NIET LOS VERKRIJGBAA	
8		**87042907**		1	VEDAÇÃO DO EIXO, 57.15 X 76.2 X 9.53 VITON				
						SHAFT SEAL	JUNTA DE EJE	GUARNIZIONE DELL'ALB	Z102
					JOINT D'ARBRE	WELLENDICHTUNG	AKSELSTÆTNINGSRING	ASAFDICHTING	
9		**NSS**		1	SEM SERVIÇO EM SEPARADO, Cylinder Block 2 W				
						NOT SERVICED SEPARA	NO SE REPARA POR SE	NON FORNITO SEPARAT	064N
					NON FORUNI SEPAREM	NICHT A SEP ERS-T LIEF	SERVICERES IKKE SEPA	NIET LOS VERKRIJGBAA	
10		**NSS**		8	SEM SERVIÇO EM SEPARADO, Roll LD				
						NOT SERVICED SEPARA	NO SE REPARA POR SE	NON FORNITO SEPARAT	064N
					NON FORUNI SEPAREM	NICHT A SEP ERS-T LIEF	SERVICERES IKKE SEPA	NIET LOS VERKRIJGBAA	
11		**NSS**		8	SEM SERVIÇO EM SEPARADO, Pison S/A				
						NOT SERVICED SEPARA	NO SE REPARA POR SE	NON FORNITO SEPARAT	064N
					NON FORUNI SEPAREM	NICHT A SEP ERS-T LIEF	SERVICERES IKKE SEPA	NIET LOS VERKRIJGBAA	
12		**87042908**		1	EXCÊNTRICO, MCR5 Cam 680/470 W 2S				
						CAM	LEVA	CAMMA	040C
					CAME	NOCKE	KAM	NOK	
13		**87042909**		1	ESTOJO, MCR5 R/Case D/2W/S0465				
						CASE	ESTUCHE	CASSA; SCATOLA	101A
					CARTER	GEHÄUSE	KASSE	HUIS	
14		**87042910**		1	DISTRIBUIDOR, MCR5 Distributor 2WL				
						DISTRIBUTOR	DISTRIBUIDOR	DISTRIBUTORE	080D
					DISTRIBUTEUR	VERTEILER	STRØMFORDELER	VERDELER	
15		**87042911**		1	PINO, MCR5 Stop Pin S0471				
						PIN	PASADOR	PERNO	080P
					BROCHE	PIN	STIFT	PEN	
16		**87042912**		16	MOLA, MCR3 Spring	SPRING	RESORTE	MOLLA	100M
					RESSORT	FEDER	FJEDER	VEER	

29.212.04	01	p2	07/11

MOTOR, REXROTH DRIVE MOTOR 2SPD (SR200-SV300)
MOTOR, REXROTH DRIVE MOTOR 2SPD (SR200-SV300)
MOTOR, REXROTH DRIVE MOTOR 2SPD (SR200-SV300)
MOTOR, REXROTH DRIVE MOTOR 2SPD (SR200-SV300)

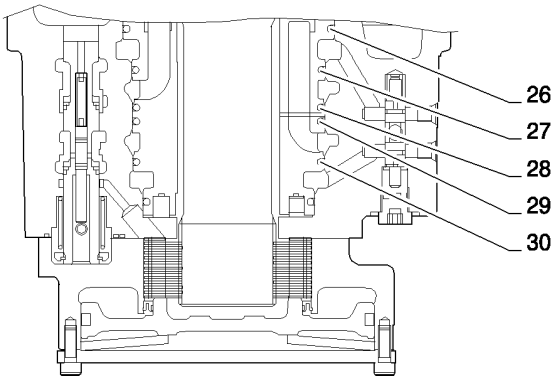

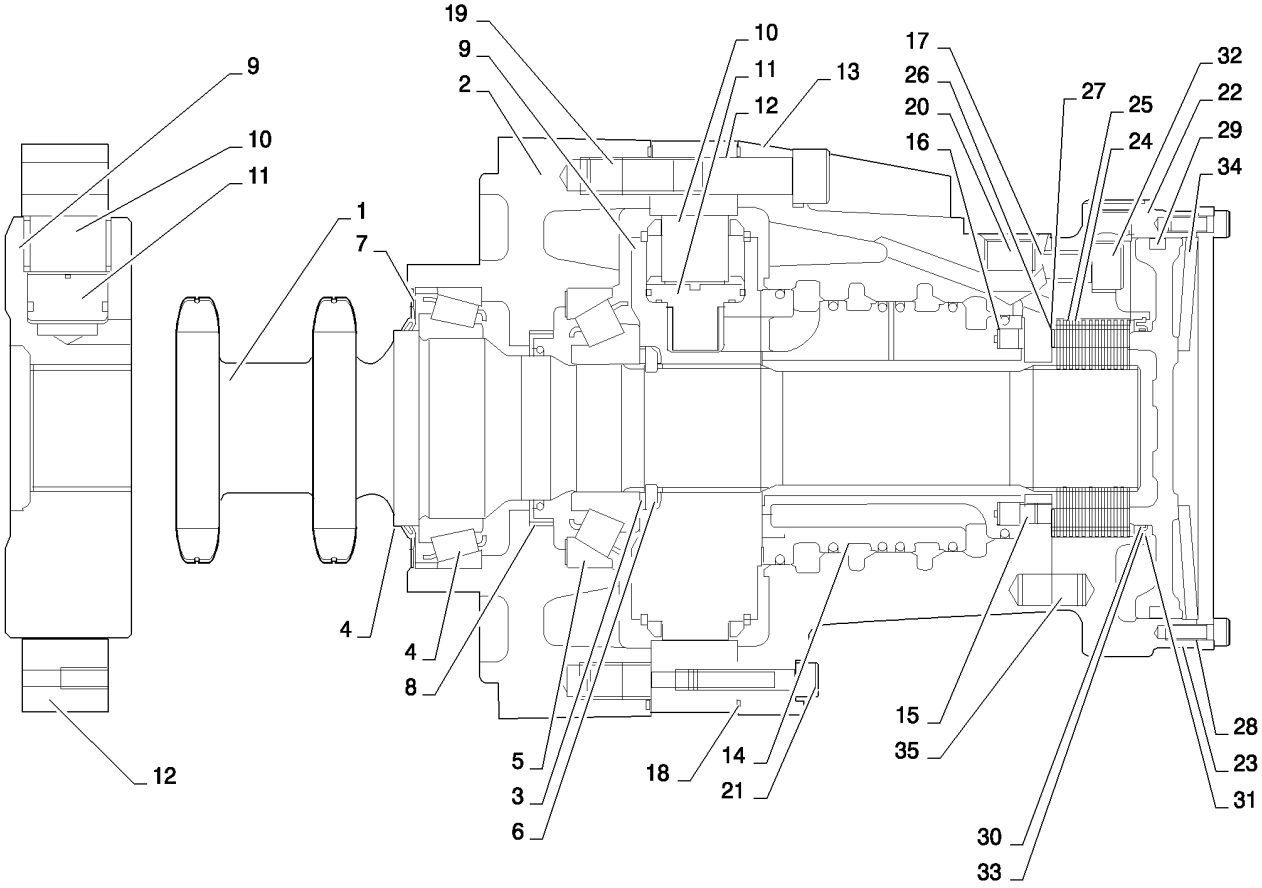

MOTOR, REXROTH DRIVE MOTOR 2SPD (SR200-SV300)
MOTOR, REXROTH DRIVE MOTOR 2SPD (SR200-SV300)
MOTOR, REXROTH DRIVE MOTOR 2SPD (SR200-SV300)
MOTOR, REXROTH DRIVE MOTOR 2SPD (SR200-SV300)

R	N	P.N.	MOD	Q	Denominação Description	Description Bezeichnung	Denominacion Beskrivelse	Descrizione Beschrijving	L.C.
17		**87042919**		1	O-RING, 107.67MM ID x 1.78MM Width, Sq. Ring 107.67 X 1.68 VITON FMK 70/80				
						O-RING	JUNTA TÓRICA	ANELLO TOROIDALE	055A
					JOINT TORIQUE	O-RING	O-RING	O-RING	
18		**NSS**		2	SEM SERVIÇO EM SEPARADO, Sq. Ring 213 X 2.51 VITON FMK90				
						NOT SERVICED SEPARA	NO SE REPARA POR SE	NON FORNITO SEPARAT	064N
					NON FORUNI SEPAREM	NICHT A SEP ERS-T LIEI	SERVICERES IKKE SEPA	NIET LOS VERKRIJGBAA	
19		**{87605313}**		10	Screw SH Cap M14 X 80 12.9				
20		**NSS**		1	SEM SERVIÇO EM SEPARADO, Shipping Plug 3/4 - 16 UNF				
						NOT SERVICED SEPARA	NO SE REPARA POR SE	NON FORNITO SEPARAT	064N
					NON FORUNI SEPAREM	NICHT A SEP ERS-T LIEI	SERVICERES IKKE SEPA	NIET LOS VERKRIJGBAA	
21		**{87602944}**		2	Screw SH Cap M8 X 40 12.9				
22		**87042921**		1	ALOJAMENTO, MCR5 Brake Housing B2/2W/12				
						HOUSING	ALOJAMIENTO	ALLOGGIAMENTO	014V
					CARTER	GEHÄUSE	HUS	HUIS	
23		**87042922**		1	PISTÃO, MCR3/5 Brake Piston				
						PISTON	PISTÓN	PISTONE	235S
					PISTON	KOLBEN	STEMPEL	ZUIGER	
24		**NSS**		16	SEM SERVIÇO EM SEPARADO, MCR3 Outer Plate				
						NOT SERVICED SEPARA	NO SE REPARA POR SE	NON FORNITO SEPARAT	064N
					NON FORUNI SEPAREM	NICHT A SEP ERS-T LIEI	SERVICERES IKKE SEPA	NIET LOS VERKRIJGBAA	
25		**NSS**		14	SEM SERVIÇO EM SEPARADO, MCR5 Inner Plate				
						NOT SERVICED SEPARA	NO SE REPARA POR SE	NON FORNITO SEPARAT	064N
					NON FORUNI SEPAREM	NICHT A SEP ERS-T LIEI	SERVICERES IKKE SEPA	NIET LOS VERKRIJGBAA	
26		**NSS**		1	SEM SERVIÇO EM SEPARADO, Shim 80 X 63 X 0.1				
						NOT SERVICED SEPARA	NO SE REPARA POR SE	NON FORNITO SEPARAT	064N
					NON FORUNI SEPAREM	NICHT A SEP ERS-T LIEI	SERVICERES IKKE SEPA	NIET LOS VERKRIJGBAA	
27		**NSS**		1	SEM SERVIÇO EM SEPARADO, Shim 80 X 63 X 0.3				
						NOT SERVICED SEPARA	NO SE REPARA POR SE	NON FORNITO SEPARAT	064N
					NON FORUNI SEPAREM	NICHT A SEP ERS-T LIEI	SERVICERES IKKE SEPA	NIET LOS VERKRIJGBAA	
28		**NSS**		1	SEM SERVIÇO EM SEPARADO, MCR3 Gasket B2M 0.5				
						NOT SERVICED SEPARA	NO SE REPARA POR SE	NON FORNITO SEPARAT	064N
					NON FORUNI SEPAREM	NICHT A SEP ERS-T LIEI	SERVICERES IKKE SEPA	NIET LOS VERKRIJGBAA	
29		**NSS**		1	SEM SERVIÇO EM SEPARADO, Sq. Ring 139.07 X 5.16 VITON FMK70				
						NOT SERVICED SEPARA	NO SE REPARA POR SE	NON FORNITO SEPARAT	064N
					NON FORUNI SEPAREM	NICHT A SEP ERS-T LIEI	SERVICERES IKKE SEPA	NIET LOS VERKRIJGBAA	
30		**87042924**		1	ANEL, MCR3 Brake Seal Ring B2M				
						RING	ANILLO	ANELLO	045A
					ANNEAU	RING	RING	RING	
31		**87042925**		1	GRAMPO, MCR3 Circlip Int DIA 87				
						CLIP	ABRAZADERA	FERMO	045F
					COLLIER	KLAMMER	KLIPS	KLEM	
32		**86512142**		5	PARAFUSO, Hex Soc Hd, M12 x 30, 12.9				
						SCREW	TORNILLO	VITE	040V
					VIS	SCHRAUBE	SKRUE	SCHROEF	

MOTOR, REXROTH DRIVE MOTOR 2SPD (SR200-SV300)
MOTOR, REXROTH DRIVE MOTOR 2SPD (SR200-SV300)
MOTOR, REXROTH DRIVE MOTOR 2SPD (SR200-SV300)
MOTOR, REXROTH DRIVE MOTOR 2SPD (SR200-SV300)

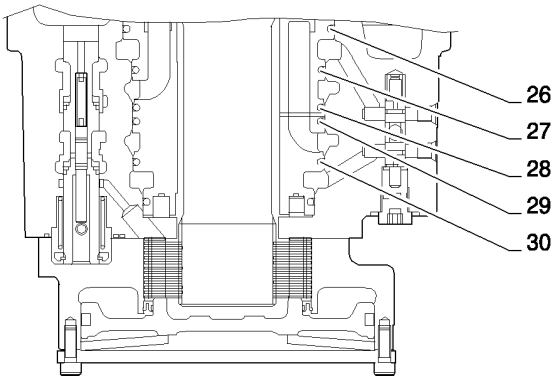

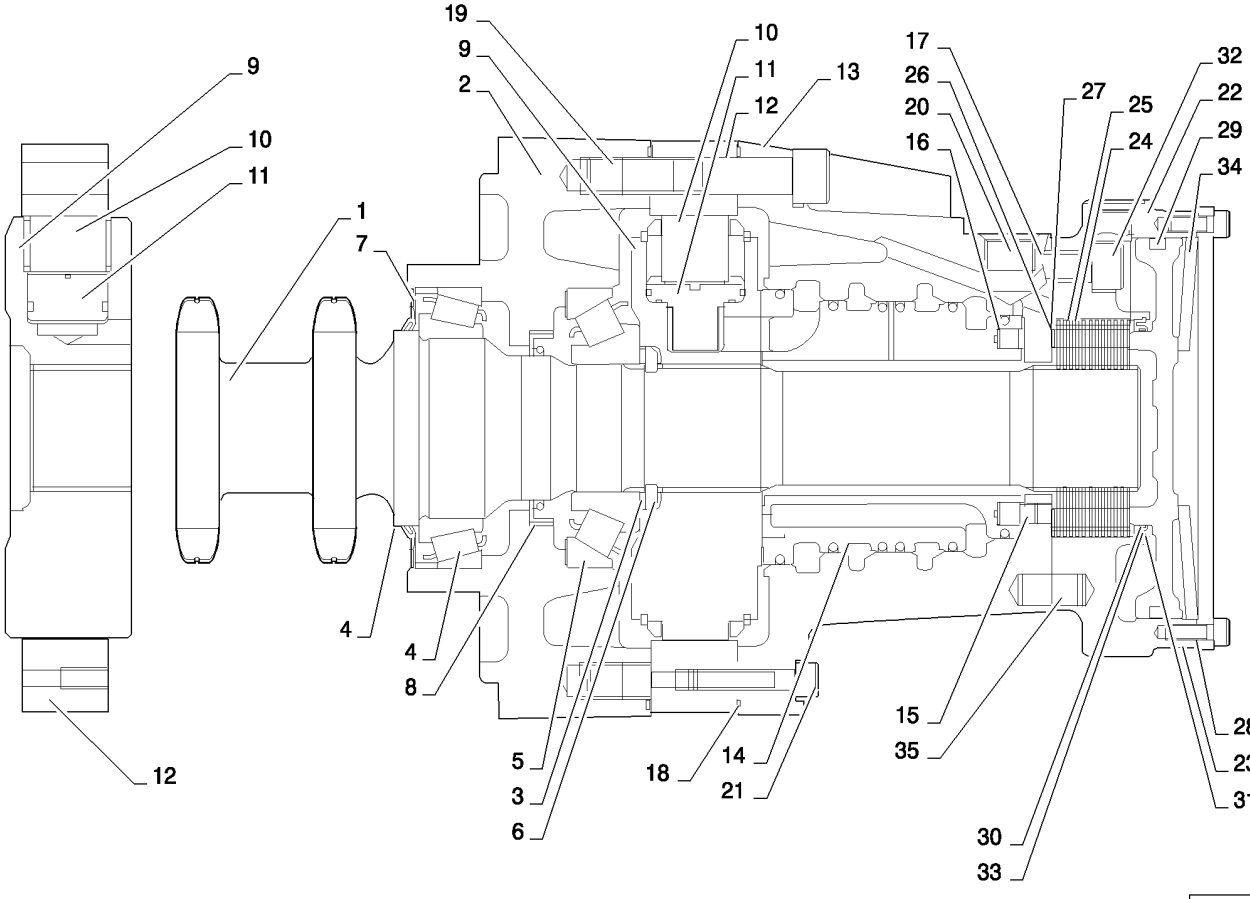

MOTOR, REXROTH DRIVE MOTOR 2SPD (SR200-SV300)
MOTOR, REXROTH DRIVE MOTOR 2SPD (SR200-SV300)
MOTOR, REXROTH DRIVE MOTOR 2SPD (SR200-SV300)
MOTOR, REXROTH DRIVE MOTOR 2SPD (SR200-SV300)

R	N	P.N.	MOD	Q	Denominação Description Bezeichnung	Description Bezeichnung	Denominacion Beskrivelse	Descrizione Beschrijving	L.C.
33		**NSS**		1	SEM SERVIÇO EM SEPARADO, O-Ring 75.92 X 1.78 VITON FMK 70/80				
						NOT SERVICED SEPARA	NO SE REPARA POR SE	NON FORNITO SEPARAT	064N
					NON FORUNI SEPAREM	NICHT A SEP ERS-T LIEI	SERVICERES IKKE SEPA	NIET LOS VERKRIJGBAA	
34		**87042926**		1	MOLA, Disc Spring	SPRING	RESORTE	MOLLA	100M
					RESSORT	FEDER	FJEDER	VEER	
35		**87042927**		3	PINO, Dowel Pin 12 X 25	PIN	PASADOR	PERNO	080P
					BROCHE	PIN	STIFT	PEN	

29.212.04	01	p1	01/11

MOTOR, REXROTH DRIVE MOTOR 1SPD (SR200-SV300)
MOTOR, REXROTH DRIVE MOTOR 1SPD (SR200-SV300)
MOTOR, REXROTH DRIVE MOTOR 1SPD (SR200-SV300)
MOTOR, REXROTH DRIVE MOTOR 1SPD (SR200-SV300)

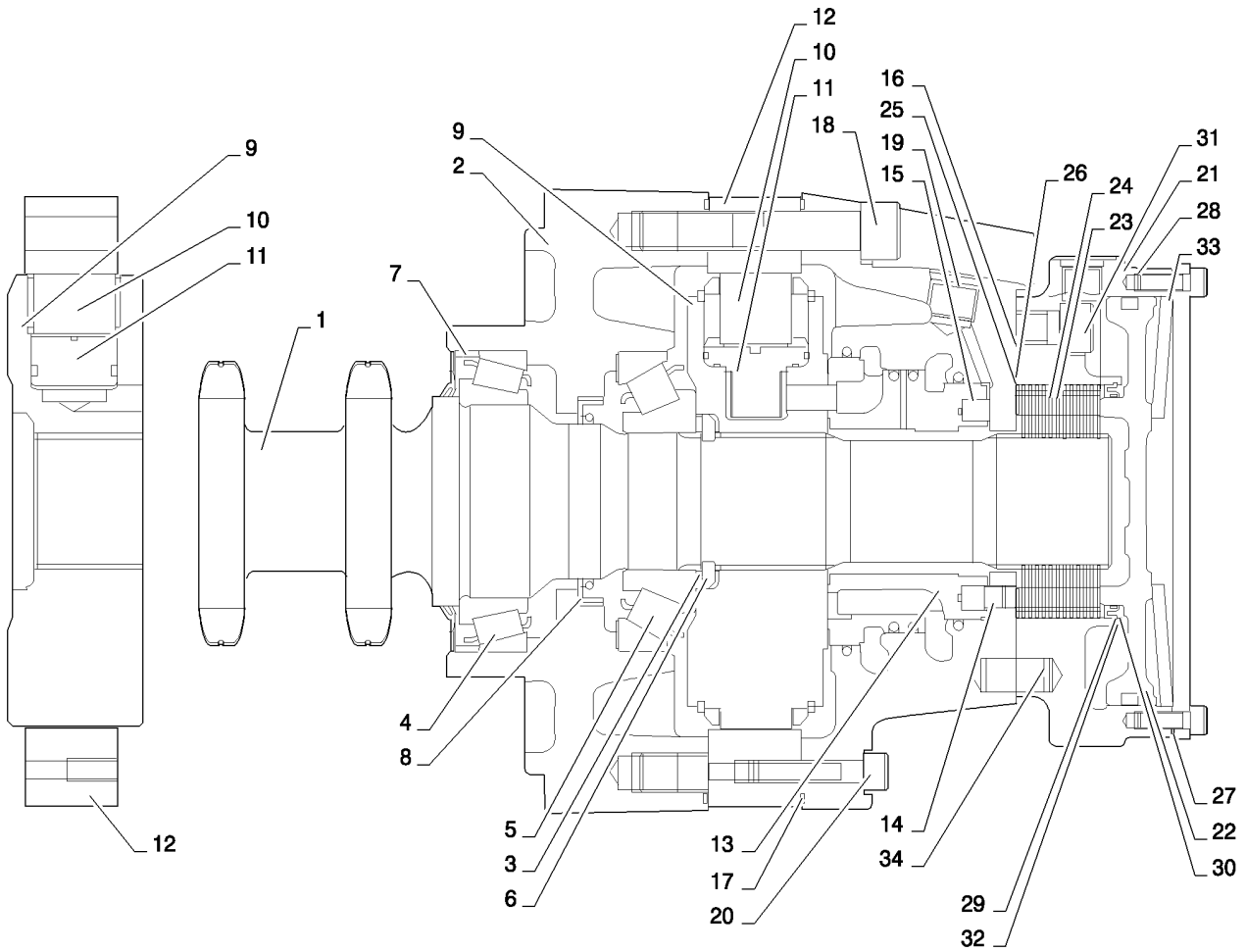

MOTOR, REXROTH DRIVE MOTOR 1SPD (SR200-SV300)
MOTOR, REXROTH DRIVE MOTOR 1SPD (SR200-SV300)
MOTOR, REXROTH DRIVE MOTOR 1SPD (SR200-SV300)
MOTOR, REXROTH DRIVE MOTOR 1SPD (SR200-SV300)

R	N	P.N.	MOD	Q	Denominação Description	Description Bezeichnung	Denominacion Beskrivelse	Descrizione Beschrijving	L.C.
1		84293370		1	EIXO COMANDO, MCR5 1 SPD				
						DRIVE SHAFT	EJE DE TRANSMISIÓN	ALBERO DI TRASMISSIC	P754
					ARBRE D'ENTRAINEMEN	ANTRIEBSWELLE	DRIVAKSEL	AANDRIJFAS	
2		84293380		1	CARCAÇA MOTOR, ASM MCR5 Front W Seal				
						MOTOR HOUSING	ALOJAMIENTO DEL MOT	ALLOGGIAMENTO MOTC	P650
					CARTER DU MOTEUR	MOTORGEHÄUSE	MOTORHUS	MOTORHUIS	
3		87042903		1	KIT, Abutment Washer	KIT	KIT	KIT	305C
					KIT	SATZ	SÆT	KIT	
4		87042904		1	ROLAMENTO ESFÉRICO, 70 mm ID x 110 mm OD x 25 mm, 70 X 110 X 25				
						BALL BEARING	RODAMIENTO DE BOLAS	CUSCINETTO A SFERE	343C
					ROULEMENT A BILLES	KUGELLAGER	KUGLELEJE	KOGELLAGER	
5		87042905		1	ROLAMENTO ESFÉRICO, 50 mm ID x 110 mm OD x 29.25 mm, 50 X 110 X 29.25				
						BALL BEARING	RODAMIENTO DE BOLAS	CUSCINETTO A SFERE	343C
					ROULEMENT A BILLES	KUGELLAGER	KUGLELEJE	KOGELLAGER	
6		87042906		1	ANEL, MCR5 Split Ring	RING	ANILLO	ANELLO	045A
					ANNEAU	RING	RING	RING	
7		NSS		1	SEM SERVIÇO EM SEPARADO, FACE SEAL 78 X 110 X 12.2 NBR80				
						NOT SERVICED SEPARA	NO SE REPARA POR SE	NON FORNITO SEPARAT	064N
					NON FORUNI SEPAREM	NICHT A SEP ERS-T LIEI	SERVICERES IKKE SEPA	NIET LOS VERKRIJGBAA	
8		87042907		1	VEDAÇÃO DO EIXO, 57.15 X 76.2 X 9.53 VITON				
						SHAFT SEAL	JUNTA DE EJE	GUARNIZIONE DELL'ALE	Z102
					JOINT D'ARBRE	WELLENDICHTUNG	AKSELSTÆTNINGSRING	ASAFDICHTING	
9		NSS		1	SEM SERVIÇO EM SEPARADO, Cylinder Block 1 SPD				
						NOT SERVICED SEPARA	NO SE REPARA POR SE	NON FORNITO SEPARAT	064N
					NON FORUNI SEPAREM	NICHT A SEP ERS-T LIEI	SERVICERES IKKE SEPA	NIET LOS VERKRIJGBAA	
10		NSS		8	SEM SERVIÇO EM SEPARADO, Roll LD				
						NOT SERVICED SEPARA	NO SE REPARA POR SE	NON FORNITO SEPARAT	064N
					NON FORUNI SEPAREM	NICHT A SEP ERS-T LIEI	SERVICERES IKKE SEPA	NIET LOS VERKRIJGBAA	
11		NSS		8	SEM SERVIÇO EM SEPARADO, Piston S/A				
						NOT SERVICED SEPARA	NO SE REPARA POR SE	NON FORNITO SEPARAT	064N
					NON FORUNI SEPAREM	NICHT A SEP ERS-T LIEI	SERVICERES IKKE SEPA	NIET LOS VERKRIJGBAA	
12		87042908		1	EXCÊNTRICO, MCR5 Cam 680/470 W 2S				
						CAM	LEVA	CAMMA	040C
					CAME	NOCKE	KAM	NOK	
13		87042954		1	ANEL, MCR5 Dist. Ring 1S	RING	ANILLO	ANELLO	045A
					ANNEAU	RING	RING	RING	
14		87042911		1	PINO, MCR5 Stop Pin S0471A				
						PIN	PASADOR	PERNO	080P
					BROCHE	PIN	STIFT	PEN	
15		87042912		9	MOLA, MCR3	SPRING	RESORTE	MOLLA	100M
					RESSORT	FEDER	FJEDER	VEER	
16		87042919		1	O-RING, 107.67MM ID x 1.78MM Width, SQ-Ring 107.67 X 1.68 VITON				
						O-RING	JUNTA TÓRICA	ANELLO TOROIDALE	055A
					JOINT TORIQUE	O-RING	O-RING	O-RING	
17		NSS		2	SEM SERVIÇO EM SEPARADO, SQ. Ring 213 X 2.51 VITON				
						NOT SERVICED SEPARA	NO SE REPARA POR SE	NON FORNITO SEPARAT	064N
					NON FORUNI SEPAREM	NICHT A SEP ERS-T LIEI	SERVICERES IKKE SEPA	NIET LOS VERKRIJGBAA	

29.212.04	01	p2	01/11

MOTOR, REXROTH DRIVE MOTOR 1SPD (SR200-SV300)
MOTOR, REXROTH DRIVE MOTOR 1SPD (SR200-SV300)
MOTOR, REXROTH DRIVE MOTOR 1SPD (SR200-SV300)
MOTOR, REXROTH DRIVE MOTOR 1SPD (SR200-SV300)

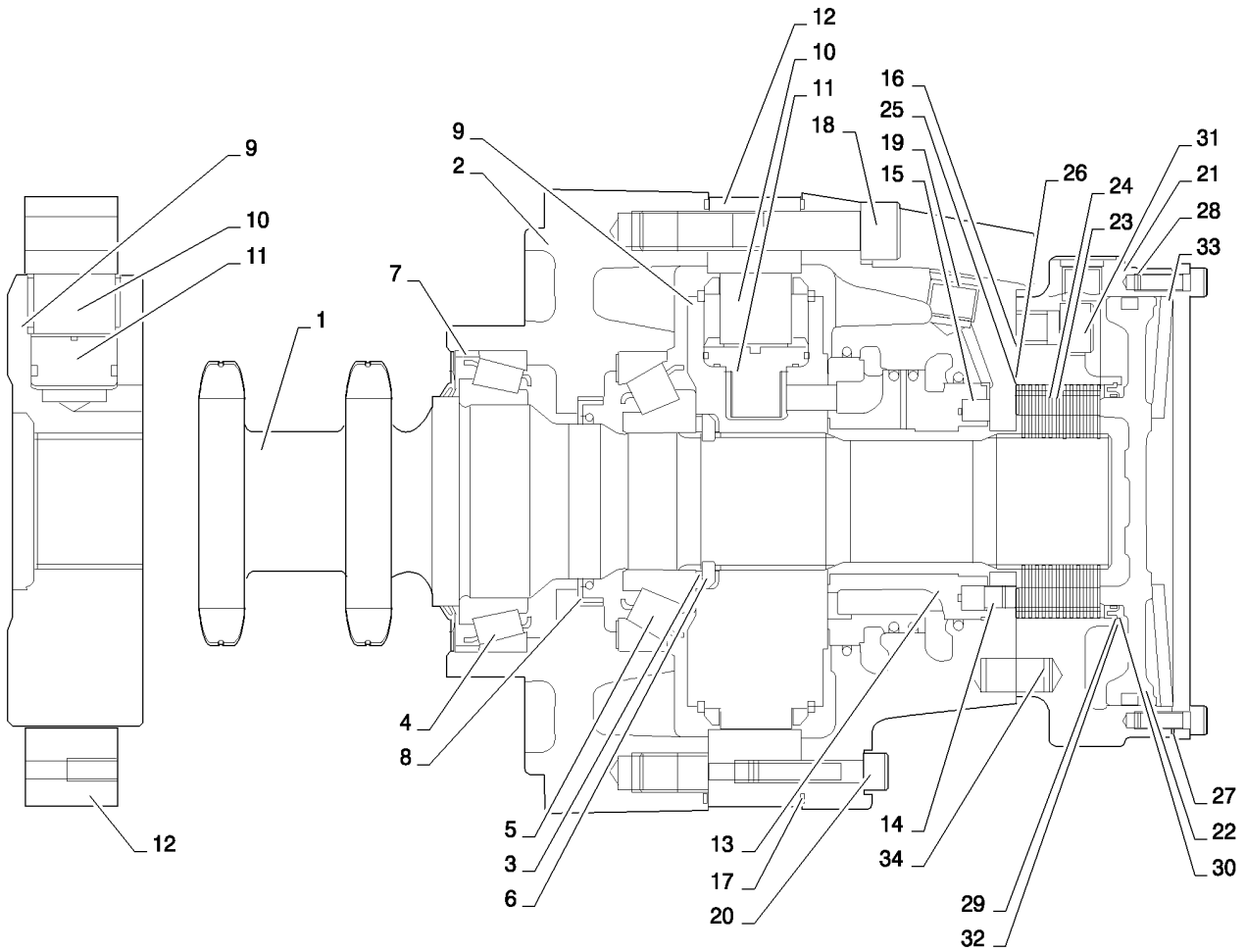

MOTOR, REXROTH DRIVE MOTOR 1SPD (SR200-SV300)
MOTOR, REXROTH DRIVE MOTOR 1SPD (SR200-SV300)
MOTOR, REXROTH DRIVE MOTOR 1SPD (SR200-SV300)
MOTOR, REXROTH DRIVE MOTOR 1SPD (SR200-SV300)

R	N	P.N.	MOD	Q	Denominação Description	Description Bezeichnung	Denominacion Beskrivelse	Descrizione Beschrijving	L.C.
18		{87605313}		10	Screw SH Cap M14 X 80 12.9				
19		NSS		1	SEM SERVIÇO EM SEPARADO, Shipping Plug 3/4 - 16 UNF				
						NOT SERVICED SEPARA	NO SE REPARA POR SE	NON FORNITO SEPARAT	064N
					NON FORUNI SEPAREM	NICHT A SEP ERS-T LIEI	SERVICERES IKKE SEPA	NIET LOS VERKRIJGBAA	
20		{87602944}		2	Screw SH Cap M8 X 40 12.9				
21		87042921		1	ALOJAMENTO, MCR5 Brake Housing S0465				
						HOUSING	ALOJAMIENTO	ALLOGGIAMENTO	014V
					CARTER	GEHÄUSE	HUS	HUIS	
22		87042922		1	PISTÃO, MCR 3/5 Brake Piston				
						PISTON	PISTÓN	PISTONE	235S
					PISTON	KOLBEN	STEMPEL	ZUIGER	
23		NSS		16	SEM SERVIÇO EM SEPARADO, MCR3 Outer Plate				
						NOT SERVICED SEPARA	NO SE REPARA POR SE	NON FORNITO SEPARAT	064N
					NON FORUNI SEPAREM	NICHT A SEP ERS-T LIEI	SERVICERES IKKE SEPA	NIET LOS VERKRIJGBAA	
24		NSS		14	SEM SERVIÇO EM SEPARADO, MCR5 Inner Plate				
						NOT SERVICED SEPARA	NO SE REPARA POR SE	NON FORNITO SEPARAT	064N
					NON FORUNI SEPAREM	NICHT A SEP ERS-T LIEI	SERVICERES IKKE SEPA	NIET LOS VERKRIJGBAA	
25		NSS		1	SEM SERVIÇO EM SEPARADO, Shim 80 X 63 X 0.1				
						NOT SERVICED SEPARA	NO SE REPARA POR SE	NON FORNITO SEPARAT	064N
					NON FORUNI SEPAREM	NICHT A SEP ERS-T LIEI	SERVICERES IKKE SEPA	NIET LOS VERKRIJGBAA	
26		NSS		1	SEM SERVIÇO EM SEPARADO, Shim 80 X 63 X 0.3				
						NOT SERVICED SEPARA	NO SE REPARA POR SE	NON FORNITO SEPARAT	064N
					NON FORUNI SEPAREM	NICHT A SEP ERS-T LIEI	SERVICERES IKKE SEPA	NIET LOS VERKRIJGBAA	
27		NSS		1	SEM SERVIÇO EM SEPARADO, MCR3 Brake Gasket B2/0.5				
						NOT SERVICED SEPARA	NO SE REPARA POR SE	NON FORNITO SEPARAT	064N
					NON FORUNI SEPAREM	NICHT A SEP ERS-T LIEI	SERVICERES IKKE SEPA	NIET LOS VERKRIJGBAA	
28		NSS		1	SEM SERVIÇO EM SEPARADO, SQ. Ring 139.07 x 5.16 VITON				
						NOT SERVICED SEPARA	NO SE REPARA POR SE	NON FORNITO SEPARAT	064N
					NON FORUNI SEPAREM	NICHT A SEP ERS-T LIEI	SERVICERES IKKE SEPA	NIET LOS VERKRIJGBAA	
29		87042924		1	ANEL, MCR3 Brake Seal Ring B2M				
						RING	ANILLO	ANELLO	045A
					ANNEAU	RING	RING	RING	
30		87042925		1	GRAMPO, MCR3 Circlip INT DIA 87				
						CLIP	ABRAZADERA	FERMO	045F
					COLLIER	KLAMMER	KLIPS	KLEM	
31		86512142		5	PARAFUSO, Hex Soc Hd, M12 x 30, 12.9				
						SCREW	TORNILLO	VITE	040V
					VIS	SCHRAUBE	SKRUE	SCHROEF	
32		NSS		1	SEM SERVIÇO EM SEPARADO, O-Ring 75.92 x 1.78 VITON				
						NOT SERVICED SEPARA	NO SE REPARA POR SE	NON FORNITO SEPARAT	064N
					NON FORUNI SEPAREM	NICHT A SEP ERS-T LIEI	SERVICERES IKKE SEPA	NIET LOS VERKRIJGBAA	
33		87042926		1	MOLA, Disc Spring	SPRING	RESORTE	MOLLA	100M
					RESSORT	FEDER	FJEDER	VEER	
34		87042927		3	PINO, Dowel Pin 12 X 25	PIN	PASADOR	PERNO	080P
					BROCHE	PIN	STIFT	PEN	

MOTOR, REXROTH DRIVE MOTOR 2SPD (SR200-SV300)
MOTOR, REXROTH DRIVE MOTOR 2SPD (SR200-SV300)
MOTOR, REXROTH DRIVE MOTOR 2SPD (SR200-SV300)
MOTOR, REXROTH DRIVE MOTOR 2SPD (SR200-SV300)

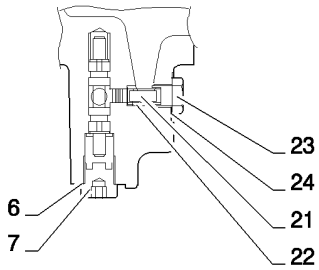

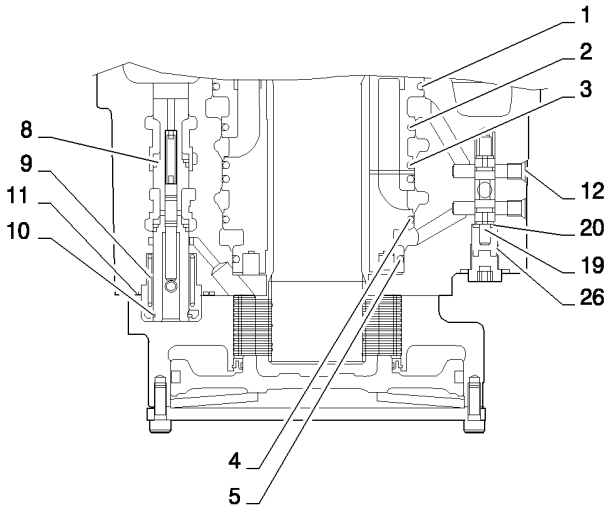

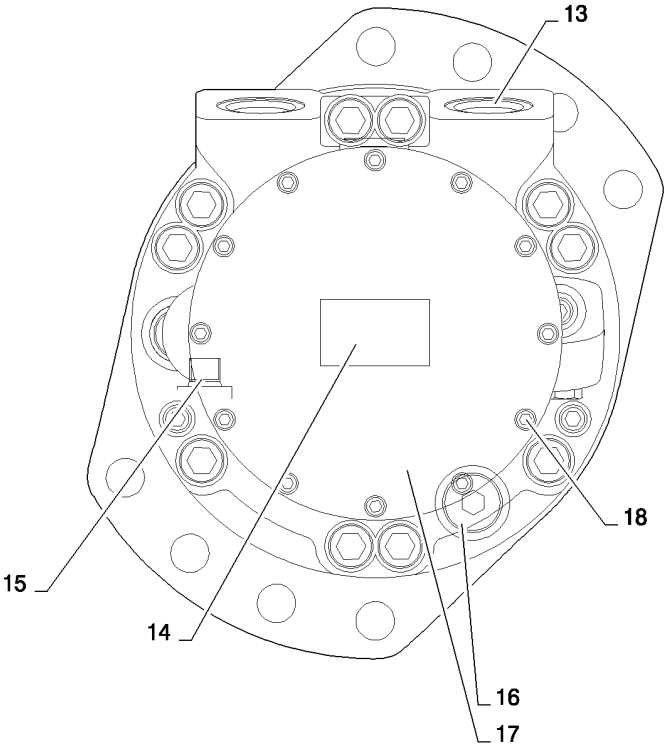

MOTOR, REXROTH DRIVE MOTOR 2SPD (SR200-SV300)
MOTOR, REXROTH DRIVE MOTOR 2SPD (SR200-SV300)
MOTOR, REXROTH DRIVE MOTOR 2SPD (SR200-SV300)
MOTOR, REXROTH DRIVE MOTOR 2SPD (SR200-SV300)

R	N	P.N.	MOD	Q	Denominação Description	Description Bezeichnung	Denominacion Beskrivelse	Descrizione Beschrijving	L.C.
		84256617		1	MOTOR HIDRÁULICO, Rexroth 2 Speed Drive Motor, Includes Ref. 1-30				
						HYDRAULIC MOTOR	MOTOR HIDRÁULICO	MOTORE IDRAULICO	900M
					MOTEUR HYDRAULIQUE	HYDRAULIKMOTOR	HYDRAULIKMOTOR	HYDRAULISCHE MOTOR	
1		**NSS**		1	SEM SERVIÇO EM SEPARADO, Piston Seal 107.125				
						NOT SERVICED SEPARA	NO SE REPARA POR SE	NON FORNITO SEPARAT	064N
					NON FORUNI SEPAREM	NICHT A SEP ERS-T LIEI	SERVICERES IKKE SEPA	NIET LOS VERKRIJGBAA	
2		**NSS**		1	SEM SERVIÇO EM SEPARADO, Piston Seal 98.725				
						NOT SERVICED SEPARA	NO SE REPARA POR SE	NON FORNITO SEPARAT	064N
					NON FORUNI SEPAREM	NICHT A SEP ERS-T LIEI	SERVICERES IKKE SEPA	NIET LOS VERKRIJGBAA	
3		**NSS**		2	SEM SERVIÇO EM SEPARADO, Piston Seal 97.725				
						NOT SERVICED SEPARA	NO SE REPARA POR SE	NON FORNITO SEPARAT	064N
					NON FORUNI SEPAREM	NICHT A SEP ERS-T LIEI	SERVICERES IKKE SEPA	NIET LOS VERKRIJGBAA	
4		**NSS**		1	SEM SERVIÇO EM SEPARADO, Piston Seal 96.725				
						NOT SERVICED SEPARA	NO SE REPARA POR SE	NON FORNITO SEPARAT	064N
					NON FORUNI SEPAREM	NICHT A SEP ERS-T LIEI	SERVICERES IKKE SEPA	NIET LOS VERKRIJGBAA	
5		**NSS**		1	SEM SERVIÇO EM SEPARADO, Piston Seal 87.25				
						NOT SERVICED SEPARA	NO SE REPARA POR SE	NON FORNITO SEPARAT	064N
					NON FORUNI SEPAREM	NICHT A SEP ERS-T LIEI	SERVICERES IKKE SEPA	NIET LOS VERKRIJGBAA	
6		**NSS**		1	SEM SERVIÇO EM SEPARADO, O-Ring 11.90 X 1.98 90 SH				
						NOT SERVICED SEPARA	NO SE REPARA POR SE	NON FORNITO SEPARAT	064N
					NON FORUNI SEPAREM	NICHT A SEP ERS-T LIEI	SERVICERES IKKE SEPA	NIET LOS VERKRIJGBAA	
7		**76349**		1	BUJÃO, Hex Hd, 9/16"-18 ORB				
						PLUG	TAPÓN	TAPPO	050T
					BOUCHON	STOPFEN	PROP	PLUG	
8		**NSS**		1	SEM SERVIÇO EM SEPARADO, MCR5 2-Speed Spool 12 Bar				
						NOT SERVICED SEPARA	NO SE REPARA POR SE	NON FORNITO SEPARAT	064N
					NON FORUNI SEPAREM	NICHT A SEP ERS-T LIEI	SERVICERES IKKE SEPA	NIET LOS VERKRIJGBAA	
9		**NSS**		1	SEM SERVIÇO EM SEPARADO, 2 Speed Washer & Spring 12 Bar				
						NOT SERVICED SEPARA	NO SE REPARA POR SE	NON FORNITO SEPARAT	064N
					NON FORUNI SEPAREM	NICHT A SEP ERS-T LIEI	SERVICERES IKKE SEPA	NIET LOS VERKRIJGBAA	
10		**NSS**		1	SEM SERVIÇO EM SEPARADO, Circlip EXT H/Duty 18 DIA				
						NOT SERVICED SEPARA	NO SE REPARA POR SE	NON FORNITO SEPARAT	064N
					NON FORUNI SEPAREM	NICHT A SEP ERS-T LIEI	SERVICERES IKKE SEPA	NIET LOS VERKRIJGBAA	
11		**NSS**		1	SEM SERVIÇO EM SEPARADO, O-Ring 33.05 X 1.78 VITON				
						NOT SERVICED SEPARA	NO SE REPARA POR SE	NON FORNITO SEPARAT	064N
					NON FORUNI SEPAREM	NICHT A SEP ERS-T LIEI	SERVICERES IKKE SEPA	NIET LOS VERKRIJGBAA	
12		**NSS**		2	SEM SERVIÇO EM SEPARADO, Shear Plug M8				
						NOT SERVICED SEPARA	NO SE REPARA POR SE	NON FORNITO SEPARAT	064N
					NON FORUNI SEPAREM	NICHT A SEP ERS-T LIEI	SERVICERES IKKE SEPA	NIET LOS VERKRIJGBAA	
13		**NSS**		2	SEM SERVIÇO EM SEPARADO, Shipping Plug 1-1/16 - 12				
						NOT SERVICED SEPARA	NO SE REPARA POR SE	NON FORNITO SEPARAT	064N
					NON FORUNI SEPAREM	NICHT A SEP ERS-T LIEI	SERVICERES IKKE SEPA	NIET LOS VERKRIJGBAA	
14		**NSS**		1	SEM SERVIÇO EM SEPARADO, CNH Label Bar Coded				
						NOT SERVICED SEPARA	NO SE REPARA POR SE	NON FORNITO SEPARAT	064N
					NON FORUNI SEPAREM	NICHT A SEP ERS-T LIEI	SERVICERES IKKE SEPA	NIET LOS VERKRIJGBAA	
15		**NSS**		2	SEM SERVIÇO EM SEPARADO, Shipping Plug 9/16 - 18 UNF				
						NOT SERVICED SEPARA	NO SE REPARA POR SE	NON FORNITO SEPARAT	064N
					NON FORUNI SEPAREM	NICHT A SEP ERS-T LIEI	SERVICERES IKKE SEPA	NIET LOS VERKRIJGBAA	

MOTOR, REXROTH DRIVE MOTOR 2SPD (SR200-SV300)
MOTOR, REXROTH DRIVE MOTOR 2SPD (SR200-SV300)
MOTOR, REXROTH DRIVE MOTOR 2SPD (SR200-SV300)
MOTOR, REXROTH DRIVE MOTOR 2SPD (SR200-SV300)

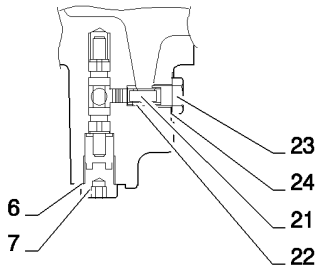

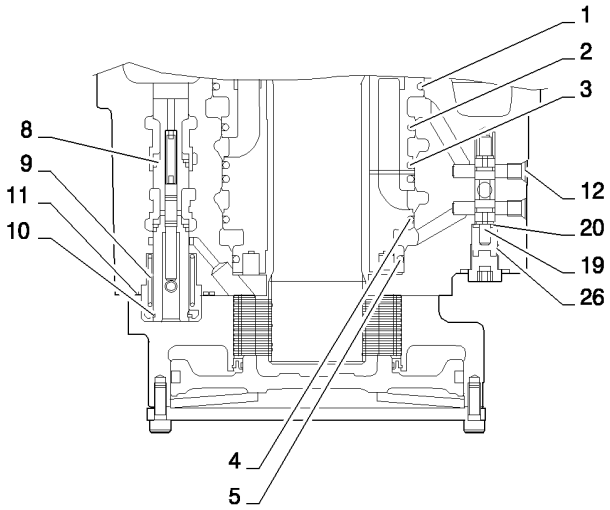

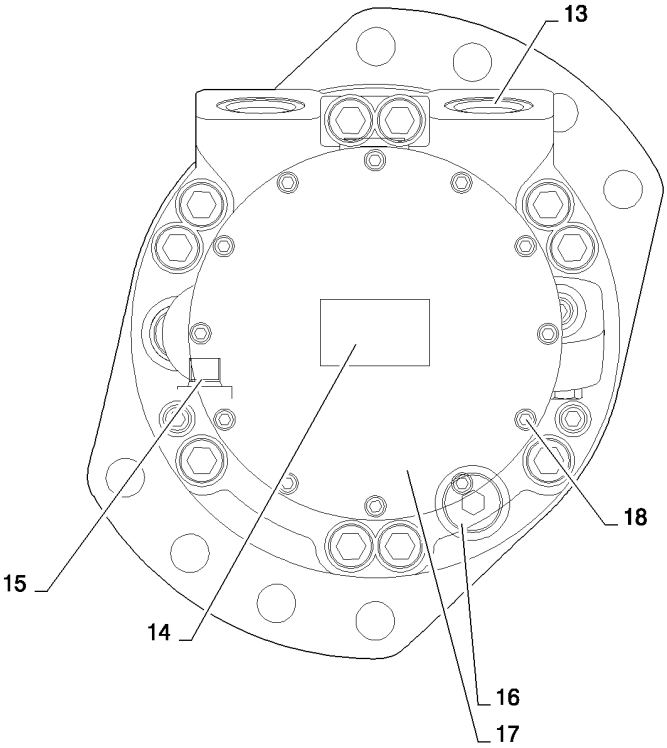

MOTOR, REXROTH DRIVE MOTOR 2SPD (SR200-SV300)
MOTOR, REXROTH DRIVE MOTOR 2SPD (SR200-SV300)
MOTOR, REXROTH DRIVE MOTOR 2SPD (SR200-SV300)
MOTOR, REXROTH DRIVE MOTOR 2SPD (SR200-SV300)

R	N	P.N.	MOD	Q	Denominação Description	Description Bezeichnung	Denominacion Beskrivelse	Descrizione Beschrijving	L.C.
16		**214389**		1	BUJÃO, Hex Hd, 3/4"-16 ORB				
						PLUG	TAPÓN	TAPPO	050T
					BOUCHON	STOPFEN	PROP	PLUG	
17		**87042923**		1	COBERTURA, MCR3 End Cover				
						COVER	CUBIERTA	COPERCHIO	265C
					COUVERCLE	ABDECKUNG	DÆKSEL	AFSCHERMING	
18		**86512134**		12	PARAFUSO, Hex Soc Hd, M6 x 16, 12.9				
						SCREW	TORNILLO	VITE	040V
					VIS	SCHRAUBE	SKRUE	SCHROEF	
19		**87042928**		1	CARRETO, Spool Flushing	SPOOL	BOBINA	STELO	134P
					TIROIR	KOLBENSCHIEBER	SPOLE	SPOEL	
20		**87042929**		1	ARRUELA PLANA, 1.5 TH	KWASHER	ARANDELA	RONDELLA	131R
					RONDELLE	UNTERLEGSCHEIBE	FLADSKIVE	SLUITRING	
21		**87042931**		1	OBTURADOR, Flushing, 1.7 Orifice				
						POPPET	RESORTE	PISTONCINO	012V
					CLAPET	KEGELVENTIL	POPNITTE	KLEP	
22		**87042932**		1	MOLA, Flushing R. V.	SPRING	RESORTE	MOLLA	100M
					RESSORT	FEDER	FJEDER	VEER	
23		**87042933**		1	OBTURADOR, Plug 7/16 SAE				
						POPPET	RESORTE	PISTONCINO	012V
					CLAPET	KEGELVENTIL	POPNITTE	KLEP	
24		**NSS**		1	SEM SERVIÇO EM SEPARADO, O-Ring 8.92 X 1.83 VITON FMK90				
						NOT SERVICED SEPARA	NO SE REPARA POR SE	NON FORNITO SEPARAT	064N
					NON FORUNI SEPAREM	NICHT A SEP ERS-T LIEI	SERVICERES IKKE SEPA	NIET LOS VERKRIJGBAA	
25		**87042934**		1	MOLA, Flushing (10 Bar) Side A				
						SPRING	RESORTE	MOLLA	100M
					RESSORT	FEDER	FJEDER	VEER	
26		**87042935**		1	MOLA, Flushing (10 Bar) Side B				
						SPRING	RESORTE	MOLLA	100M
					RESSORT	FEDER	FJEDER	VEER	
27		**87039369**		1	KIT, Rotating MCR5, 2 Spd	KIT	KIT	KIT	305C
					KIT	SATZ	SÆT	KIT	
28		**84293532**		1	KIT DE VEDAÇÃO, MCR5 2 Speed				
						SEAL KIT	KIT DE JUNTAS	KIT GUARNIZIONI	630S
					KIT DE JOINTS	DICHTUNGSSATZ	PAKNINGSSÆT	KIT MET AFDICHTINGEN	
29		**87039372**		1	KIT, Brake MCR5	KIT	KIT	KIT	305C
					KIT	SATZ	SÆT	KIT	
30		**84281323**		1	KIT DE SERVIÇO, 2 Speed Spool 12 Bar MCR5				
						SERVICE KIT	KIT DE SERVICIO	KIT DI MANUTENZIONE	021K
					KIT D'ENTRETIEN	SERVICE-SATZ	SERVICESÆT	SERVICEKIT	

29.212.04	02	p1	01/11

MOTOR, REXROTH DRIVE MOTOR 1SPD (SR200-SV300)
MOTOR, REXROTH DRIVE MOTOR 1SPD (SR200-SV300)
MOTOR, REXROTH DRIVE MOTOR 1SPD (SR200-SV300)
MOTOR, REXROTH DRIVE MOTOR 1SPD (SR200-SV300)

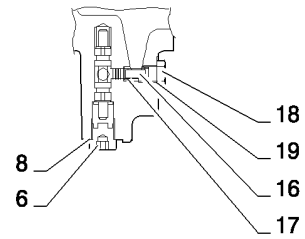

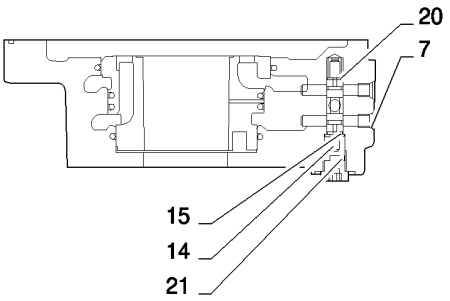

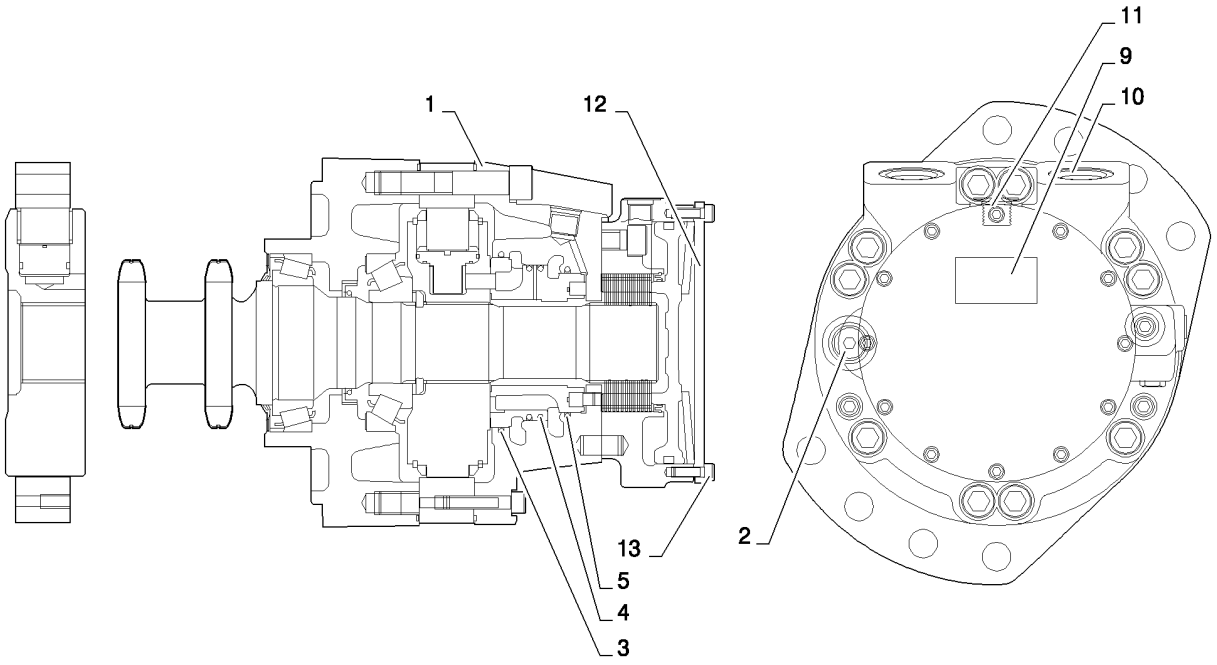

MOTOR, REXROTH DRIVE MOTOR 1SPD (SR200-SV300)
MOTOR, REXROTH DRIVE MOTOR 1SPD (SR200-SV300)
MOTOR, REXROTH DRIVE MOTOR 1SPD (SR200-SV300)
MOTOR, REXROTH DRIVE MOTOR 1SPD (SR200-SV300)

R	N	P.N.	MOD	Q	Denominação Description	Description Bezeichnung	Denominacion Beskrivelse	Descrizione Beschrijving	L.C.
1		87042953		1	ESTOJO, MCR5 Rear Case 1 S S0471A				
						CASE	ESTUCHE	CASSA; SCATOLA	101A
					CARTER	GEHÄUSE	KASSE	HUIS	
2		214389		1	BUJÃO, Hex Hd, 3/4"-16 ORB				
						PLUG	TAPÓN	TAPPO	050T
					BOUCHON	STOPFEN	PROP	PLUG	
3		NSS		1	SEM SERVIÇO EM SEPARADO, Distributor Rod Seal 105.0				
						NOT SERVICED SEPARA	NO SE REPARA POR SE	NON FORNITO SEPARAT	064N
					NON FORUNI SEPAREM	NICHT A SEP ERS-T LIEI	SERVICERES IKKE SEPA	NIET LOS VERKRIJGBAA	
4		NSS		2	SEM SERVIÇO EM SEPARADO, Distributor Piston Seal 96.5				
						NOT SERVICED SEPARA	NO SE REPARA POR SE	NON FORNITO SEPARAT	064N
					NON FORUNI SEPAREM	NICHT A SEP ERS-T LIEI	SERVICERES IKKE SEPA	NIET LOS VERKRIJGBAA	
5		NSS		1	SEM SERVIÇO EM SEPARADO, Distributor Rod Seal 87.15				
						NOT SERVICED SEPARA	NO SE REPARA POR SE	NON FORNITO SEPARAT	064N
					NON FORUNI SEPAREM	NICHT A SEP ERS-T LIEI	SERVICERES IKKE SEPA	NIET LOS VERKRIJGBAA	
6		76349		1	BUJÃO, Hex Hd, 9/16"-18 ORB				
						PLUG	TAPÓN	TAPPO	050T
					BOUCHON	STOPFEN	PROP	PLUG	
7		NSS		2	SEM SERVIÇO EM SEPARADO, Shear Plug M8				
						NOT SERVICED SEPARA	NO SE REPARA POR SE	NON FORNITO SEPARAT	064N
					NON FORUNI SEPAREM	NICHT A SEP ERS-T LIEI	SERVICERES IKKE SEPA	NIET LOS VERKRIJGBAA	
8		NSS		1	SEM SERVIÇO EM SEPARADO, O-Ring 11.90 x 1.98 90 SH				
						NOT SERVICED SEPARA	NO SE REPARA POR SE	NON FORNITO SEPARAT	064N
					NON FORUNI SEPAREM	NICHT A SEP ERS-T LIEI	SERVICERES IKKE SEPA	NIET LOS VERKRIJGBAA	
9		NSS		1	SEM SERVIÇO EM SEPARADO, Label Standard Motor				
						NOT SERVICED SEPARA	NO SE REPARA POR SE	NON FORNITO SEPARAT	064N
					NON FORUNI SEPAREM	NICHT A SEP ERS-T LIEI	SERVICERES IKKE SEPA	NIET LOS VERKRIJGBAA	
10		NSS		2	SEM SERVIÇO EM SEPARADO, Shipping Plug 1-1/16 - 12				
						NOT SERVICED SEPARA	NO SE REPARA POR SE	NON FORNITO SEPARAT	064N
					NON FORUNI SEPAREM	NICHT A SEP ERS-T LIEI	SERVICERES IKKE SEPA	NIET LOS VERKRIJGBAA	
11		NSS		2	SEM SERVIÇO EM SEPARADO, Shipping Plug 9/16 - 18 UNF				
						NOT SERVICED SEPARA	NO SE REPARA POR SE	NON FORNITO SEPARAT	064N
					NON FORUNI SEPAREM	NICHT A SEP ERS-T LIEI	SERVICERES IKKE SEPA	NIET LOS VERKRIJGBAA	
12		87042923		1	COBERTURA, MCR3 End Cover				
						COVER	CUBIERTA	COPERCHIO	265C
					COUVERCLE	ABDECKUNG	DÆKSEL	AFSCHERMING	
13		86512134		12	PARAFUSO, Hex Soc Hd, M6 x 16, 12.9				
						SCREW	TORNILLO	VITE	040V
					VIS	SCHRAUBE	SKRUE	SCHROEF	
14		87042928		1	CARRETO, Spool Flushing	SPOOL	BOBINA	STELO	134P
					TIROIR	KOLBENSCHIEBER	SPOLE	SPOEL	
15		87042929		1	ARRUELA PLANA, Washer 1.5 THK				
						WASHER	ARANDELA	RONDELLA	131R
					RONDELLE	UNTERLEGSCHEIBE	FLADSKIVE	SLUITRING	
16		87042931		1	OBTURADOR, Flushing Poppet F4 (1.7 Orifice)				
						POPPET	RESORTE	PISTONCINO	012V
					CLAPET	KEGELVENTIL	POPNITTE	KLEP	

MOTOR, REXROTH DRIVE MOTOR 1SPD (SR200-SV300)
MOTOR, REXROTH DRIVE MOTOR 1SPD (SR200-SV300)
MOTOR, REXROTH DRIVE MOTOR 1SPD (SR200-SV300)
MOTOR, REXROTH DRIVE MOTOR 1SPD (SR200-SV300)

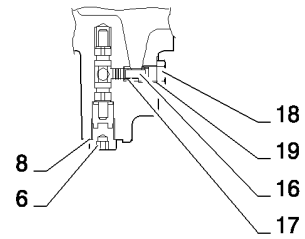

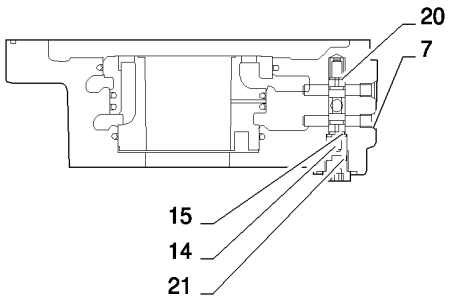

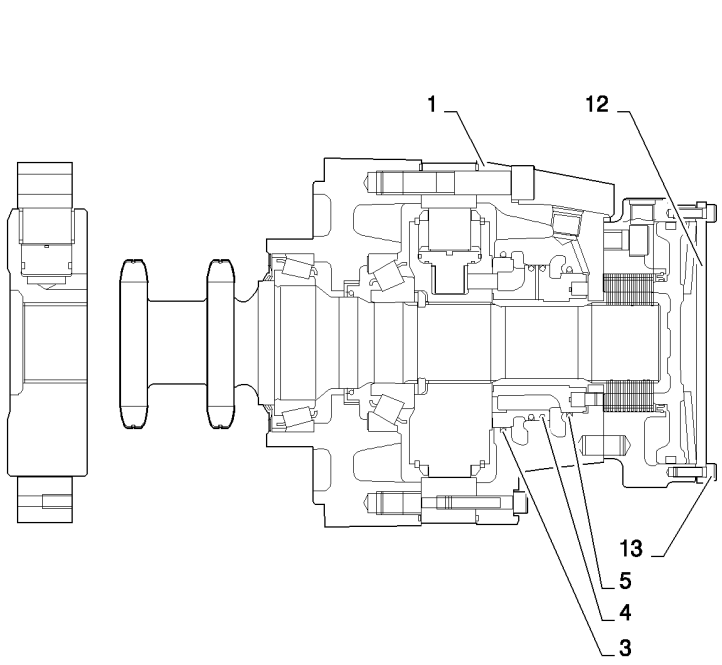

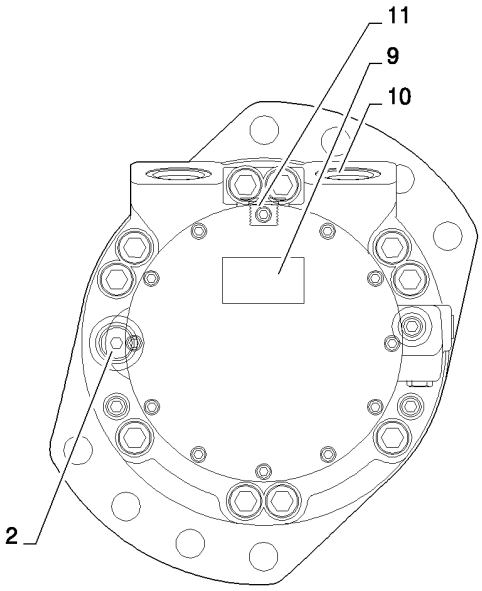

MOTOR, REXROTH DRIVE MOTOR 1SPD (SR200-SV300)
MOTOR, REXROTH DRIVE MOTOR 1SPD (SR200-SV300)
MOTOR, REXROTH DRIVE MOTOR 1SPD (SR200-SV300)
MOTOR, REXROTH DRIVE MOTOR 1SPD (SR200-SV300)

R	N	P.N.	MOD	Q	Denominação Description	Description Bezeichnung	Denominacion Beskrivelse	Descrizione Beschrijving	L.C.
17		87042932		1	MOLA, Spring Flushing Poppet				
						SPRING	RESORTE	MOLLA	100M
					RESSORT	FEDER	FJEDER	VEER	
18		87042933		1	OBTURADOR, Poppet Plug 7/16 SAE				
						POPPET	RESORTE	PISTONCINO	012V
					CLAPET	KEGELVENTIL	POPNITTE	KLEP	
19		NSS		1	SEM SERVIÇO EM SEPARADO, O-Ring 8.92 x 1.83 VITON				
						NOT SERVICED SEPARA	NO SE REPARA POR SE	NON FORNITO SEPARAT	064N
					NON FORUNI SEPAREM	NICHT A SEP ERS-T LIEI	SERVICERES IKKE SEPA	NIET LOS VERKRIJGBAA	
20		87042934		1	MOLA, Spring Flushing (10 BAR) Side A				
						SPRING	RESORTE	MOLLA	100M
					RESSORT	FEDER	FJEDER	VEER	
21		87042935		1	MOLA, Spring Flushing (10 BAR) Side B				
						SPRING	RESORTE	MOLLA	100M
					RESSORT	FEDER	FJEDER	VEER	
22		87039368		1	KIT, Rotating MCR5, 1 SPD	KIT	KIT	KIT	305C
					KIT	SATZ	SÆT	KIT	
23		84293531		1	KIT DE VEDAÇÃO, MCR5 1 SPD				
						SEAL KIT	KIT DE JUNTAS	KIT GUARNIZIONI	630S
					KIT DE JOINTS	DICHTUNGSSATZ	PAKNINGSSÆT	KIT MET AFDICHTINGEN	
24		87039372		1	KIT, Brake MCR5	KIT	KIT	KIT	305C
					KIT	SATZ	SÆT	KIT	

29.212.05	01	p1	01/11

VALVE, BRAKE (SR130-SV300)
VALVE, BRAKE (SR130-SV300)
VALVE, BRAKE (SR130-SV300)
VALVE, BRAKE (SR130-SV300)

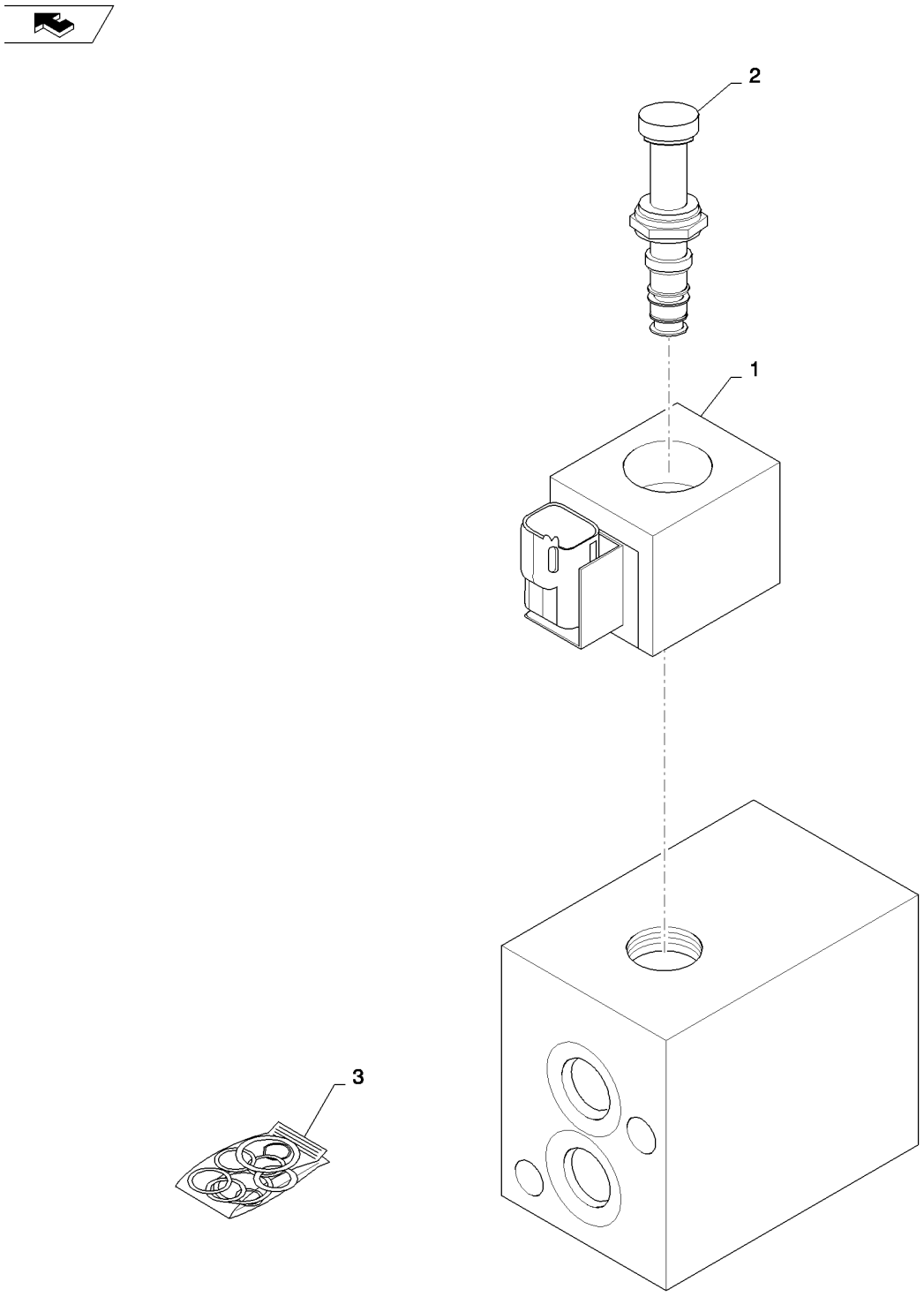

VALVE, BRAKE (SR130-SV300)
VALVE, BRAKE (SR130-SV300)
VALVE, BRAKE (SR130-SV300)
VALVE, BRAKE (SR130-SV300)

R	N	P.N.	MOD	Q	Denominação Description	Description Bezeichnung	Denominacion Beskrivelse	Descrizione Beschrijving	L.C.
1		**84390141**		1	BOBINA, Brake	COIL	BOBINA	BOBINA	083B
					BOBINE	SPULE	SPOLE	SPOEL	
2		**84311808**		1	VÁLVULA HIDRÁULICA, 2 Spd Interlock Brake 3W2P Spool				
						HYDRAULIC VALVE	VÁLVULA HIDRÁULICA	DISTRIBUTORE IDRAULI	010V
					SOUPAPE HYDRAULIQU	HYDRAULIKVENTIL	HYDRAULIKVENTIL	HYDRAULISCHE KLEP	
3		**84311809**		1	KIT DE VEDAÇÃO, Seal Kit, 2 Spd Interlock Brake				
						SEAL KIT	KIT DE JUNTAS	KIT GUARNIZIONI	630S
					KIT DE JOINTS	DICHTUNGSSATZ	PAKNINGSSÆT	KIT MET AFDICHTINGEN	

29.212.05	02	p1	07/11

VALVE, BRAKE 2SPD (SR175-SV300)
VALVE, BRAKE 2SPD (SR175-SV300)
VALVE, BRAKE 2SPD (SR175-SV300)
VALVE, BRAKE 2SPD (SR175-SV300)

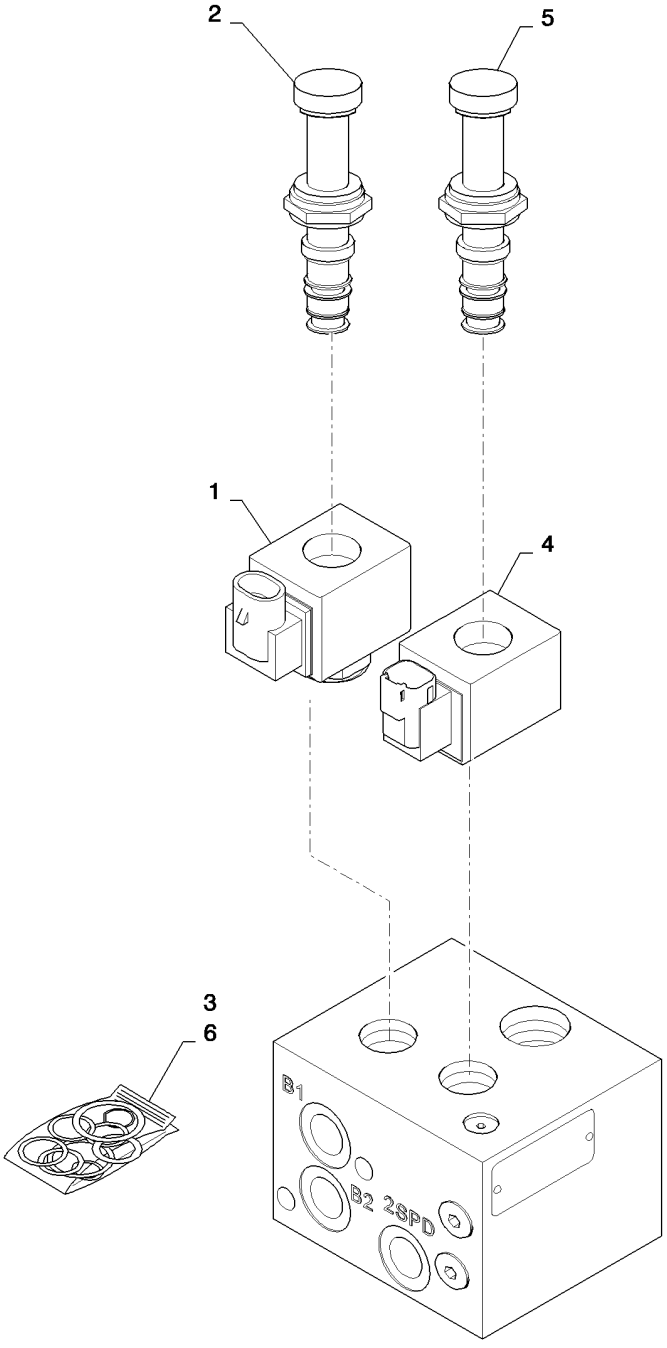

VALVE, BRAKE 2SPD (SR175-SV300)
VALVE, BRAKE 2SPD (SR175-SV300)
VALVE, BRAKE 2SPD (SR175-SV300)
VALVE, BRAKE 2SPD (SR175-SV300)

R	N	P.N.	MOD	Q	Denominação Description	Description Bezeichnung	Denominacion Beskrivelse	Descrizione Beschrijving	L.C.
1		84390141		1	BOBINA, Brake	COIL	BOBINA	BOBINA	083B
					BOBINE	SPULE	SPOLE	SPOEL	
2		84311808		2	VÁLVULA HIDRÁULICA, 2 Spd Brake Interlock 3W2P Spool				
						HYDRAULIC VALVE	VÁLVULA HIDRÁULICA	DISTRIBUTORE IDRAULI	010V
					SOUPAPE HYDRAULIQU	HYDRAULIKVENTIL	HYDRAULIKVENTIL	HYDRAULISCHE KLEP	
3		84311809		2	KIT DE VEDAÇÃO, Seal Kit, 2 Spd Brake Interlock				
						SEAL KIT	KIT DE JUNTAS	KIT GUARNIZIONI	630S
					KIT DE JOINTS	DICHTUNGSSATZ	PAKNINGSSÆT	KIT MET AFDICHTINGEN	
4		84390142		1	BOBINA, 2 Spd	COIL	BOBINA	BOBINA	083B
					BOBINE	SPULE	SPOLE	SPOEL	
5		84311811		1	VÁLVULA HIDRÁULICA, 2 Spd Sequence				
						HYDRAULIC VALVE	VÁLVULA HIDRÁULICA	DISTRIBUTORE IDRAULI	010V
					SOUPAPE HYDRAULIQU	HYDRAULIKVENTIL	HYDRAULIKVENTIL	HYDRAULISCHE KLEP	
6		84311809		1	KIT DE VEDAÇÃO, Seal Kit, 2 Spd Sequence				
						SEAL KIT	KIT DE JUNTAS	KIT GUARNIZIONI	630S
					KIT DE JOINTS	DICHTUNGSSATZ	PAKNINGSSÆT	KIT MET AFDICHTINGEN	

29.212.05	04	p1	07/11

VALVE, BRAKE EH 2SPD (SR175-SV300)
VALVE, BRAKE EH 2SPD (SR175-SV300)
VALVE, BRAKE EH 2SPD (SR175-SV300)
VALVE, BRAKE EH 2SPD (SR175-SV300)

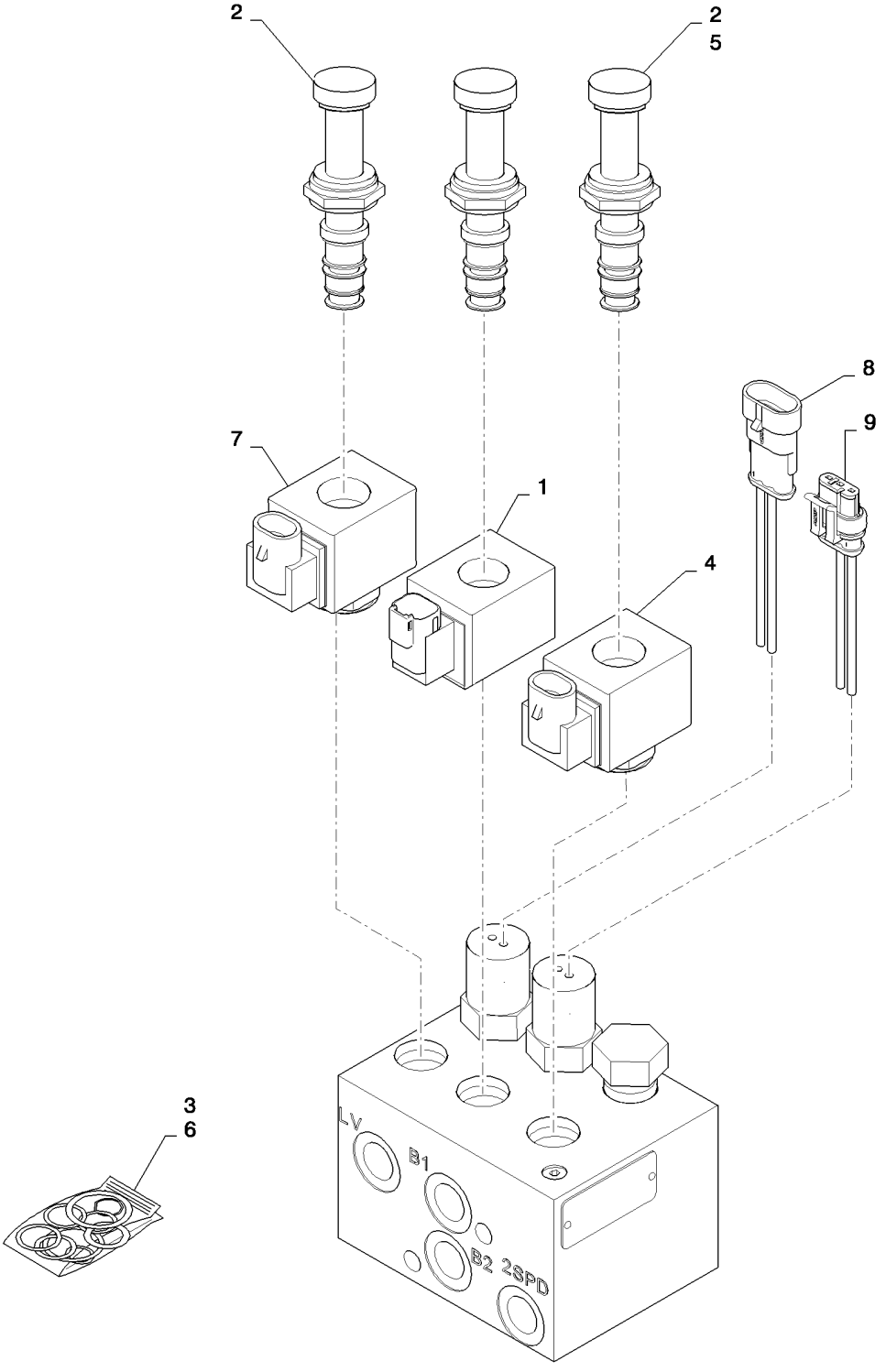

VALVE, BRAKE EH 2SPD (SR175-SV300)
VALVE, BRAKE EH 2SPD (SR175-SV300)
VALVE, BRAKE EH 2SPD (SR175-SV300)
VALVE, BRAKE EH 2SPD (SR175-SV300)

R	N	P.N.	MOD	Q	Denominação Description	Description Bezeichnung	Denominacion Beskrivelse	Descrizione Beschrijving	L.C.
1		84390141		1	BOBINA, Brake	COIL	BOBINA	BOBINA	083B
					BOBINE	SPULE	SPOLE	SPOEL	
2		84311808		3	VÁLVULA HIDRÁULICA, 2 Spd Brake Interlock 3W2P Spool				
						HYDRAULIC VALVE	VÁLVULA HIDRÁULICA	DISTRIBUTORE IDRAULI	010V
					SOUPAPE HYDRAULIQU	HYDRAULIKVENTIL	HYDRAULIKVENTIL	HYDRAULISCHE KLEP	
3		84311809		3	KIT DE VEDAÇÃO, Seal Kit, 2 Spd Brake Interlock				
						SEAL KIT	KIT DE JUNTAS	KIT GUARNIZIONI	630S
					KIT DE JOINTS	DICHTUNGSSATZ	PAKNINGSSÆT	KIT MET AFDICHTINGEN	
4		84390142		1	BOBINA, 2 Spd	COIL	BOBINA	BOBINA	083B
					BOBINE	SPULE	SPOLE	SPOEL	
5		84311811		1	VÁLVULA HIDRÁULICA, 2 Spd Sequence				
						HYDRAULIC VALVE	VÁLVULA HIDRÁULICA	DISTRIBUTORE IDRAULI	010V
					SOUPAPE HYDRAULIQU	HYDRAULIKVENTIL	HYDRAULIKVENTIL	HYDRAULISCHE KLEP	
6		84311809		1	KIT DE VEDAÇÃO, Seal Kit, 2 Spd Sequence				
						SEAL KIT	KIT DE JUNTAS	KIT GUARNIZIONI	630S
					KIT DE JOINTS	DICHTUNGSSATZ	PAKNINGSSÆT	KIT MET AFDICHTINGEN	
7		84390140		1	BOBINA, Interlock	COIL	BOBINA	BOBINA	083B
					BOBINE	SPULE	SPOLE	SPOEL	
8		84311813		1	INTERRUPTOR DE PRESSÃO, Charge Pressure				
						PRESSURE SWITCH	INTERRUPTOR DE PRES	PRESSOSTATO	079I
					PRESSOSTAT	DRUCKSCHALTER	KONTAKT, TRYK	DRUKSCHAKELAAR	
9		84311814		1	INTERRUPTOR DE PRESSÃO, Brake Pressure				
						PRESSURE SWITCH	INTERRUPTOR DE PRES	PRESSOSTATO	079I
					PRESSOSTAT	DRUCKSCHALTER	KONTAKT, TRYK	DRUKSCHAKELAAR	

29.212.06	01	p1	02/11

PUMP, HYDROSTATIC TANDEM 46CC MDC FRONT (SR200,SR220,SV250)
PUMP, HYDROSTATIC TANDEM 46CC MDC FRONT (SR200,SR220,SV250)
PUMP, HYDROSTATIC TANDEM 46CC MDC FRONT (SR200,SR220,SV250)
PUMP, HYDROSTATIC TANDEM 46CC MDC FRONT (SR200,SR220,SV250)

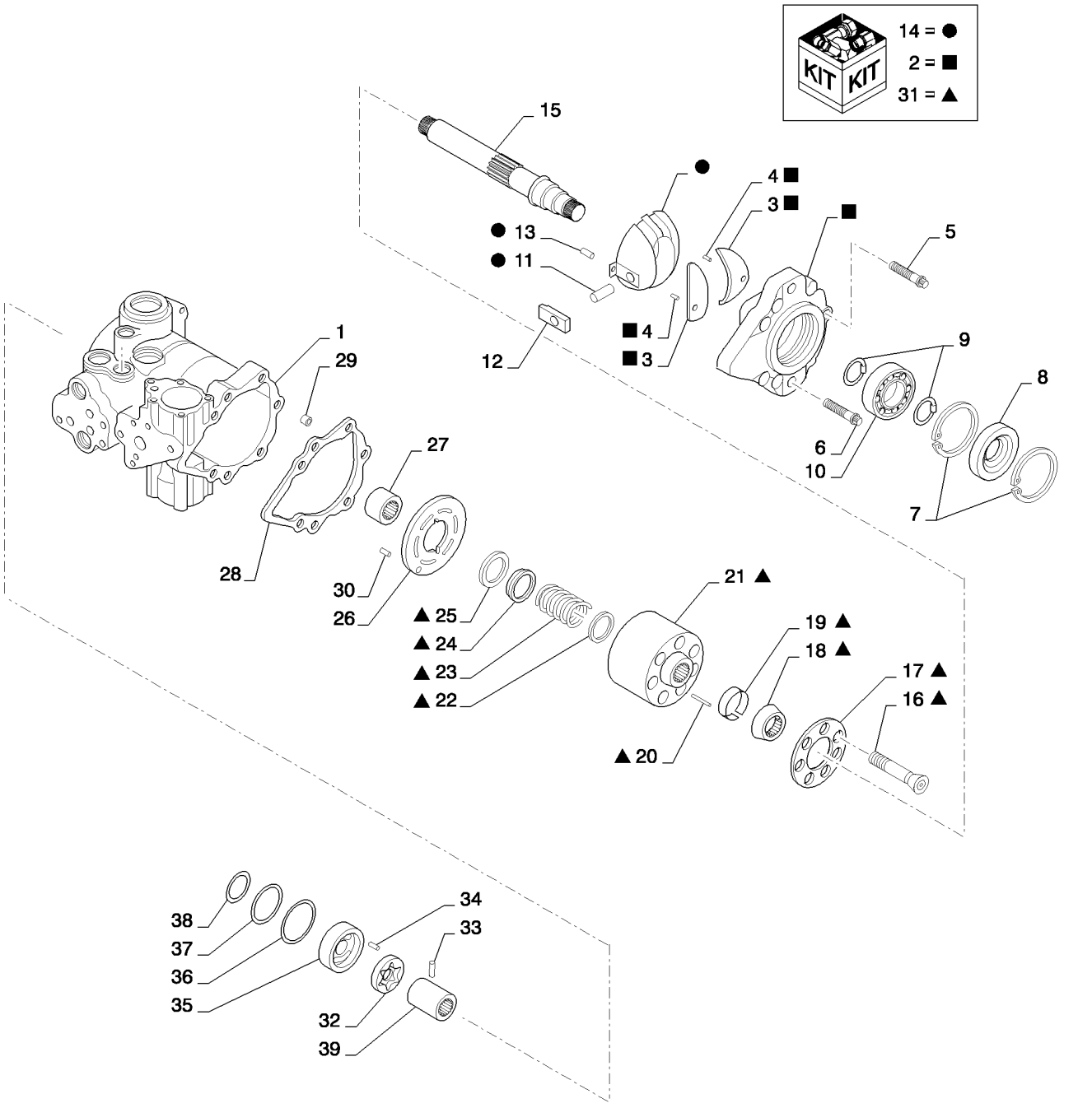

PUMP, HYDROSTATIC TANDEM 46CC MDC FRONT (SR200,SR220,SV250)
PUMP, HYDROSTATIC TANDEM 46CC MDC FRONT (SR200,SR220,SV250)
PUMP, HYDROSTATIC TANDEM 46CC MDC FRONT (SR200,SR220,SV250)
PUMP, HYDROSTATIC TANDEM 46CC MDC FRONT (SR200,SR220,SV250)

R	N	P.N.	MOD	Q	Denominação Description	Description Bezeichnung	Denominacion Beskrivelse	Descrizione Beschrijving	L.C.
1		402364A1		1	CARCACA, Front	HOUSING	CARCASA	ALLOGGIAMENTO	4540
					CARTER	GEHAEUSE	HOUSING	HOUSING	
2		84383828		1	CONJUNTO DA TAMPA, Pump, Front				
						COVER ASSY	CONJUNTO DE FUNDAS	COPERCHIO, COMPL	P426
					COUVERCLE	ABDECKUNGSBAUGRUF	DÆKSELENHED	AFSCHERMEENHEID	
3		193488A1		2	CAMISA DO ROLAMENTO, Journal				
						BEARING LINER	FORRO INTER. DE COJI	CANNA CUSCINETTO	P114
					COUSSINET	LAGERBUCHSE	LEJEFORING	LAGERVOERING	
4		193494A1		4	PINO ELASTICO	PIN, ROLL	PASADOR RODANTE	SPINA ELASTICA	P613
					GOUPILLE-ELASTIQUE	SPANNHUELSE	PIN, ROLL	PIN, ROLL	
5		223680A1		2	PARAFUSO ESPECIAL, Screw				
						SPECIAL BOLT	PERNO ESPECIAL	BULLONE SPECIALE	P698
					VIS SPECIALE	SPEZIALSCHRAUBE	SPECIALBOLT	SPECIALE BOUT	
6		223677A1		12	PARAFUSO	SCREW	TORNILLO	VITE	7450
					VIS	SCHRAUBE	SCREW	SCREW	
7		F61018		3	ANEL DE PRESSÃO, 2.812", Int, #281				
						SNAP RING	ANILLO DE RESORTE	ANELLO ELASTICO	054A
					ANNEAU D'ARRET	SPRENGRING	LÅSERING	VEERRING	
8		N14103		1	VEDADOR DE RETENCAO	SEAL	SELLO/RETEN	GUARNIZIONE TENUTA	7460
					JOINT-D'ETANCHEITE	DICHTRING	SEAL	SEAL	
9		100-11137		3	ANEL DE PRESSÃO, #137, Ext				
						SNAP RING	ANILLO DE RESORTE	ANELLO ELASTICO	054A
					ANNEAU D'ARRET	SPRENGRING	LÅSERING	VEERRING	
10		A29183		1	ROLAMENTO ESFÉRICO, 34.994 mm ID x 71.9935 mm OD x 16.94 mm				
						BALL BEARING	RODAMIENTO DE BOLA	CUSCINETTO A SFERE	343C
					ROULEMENT A BILLES	KUGELLAGER	KUGLELEJE	KOGELLAGER	
11		N13254		2	PINO	PIN	BOTADOR	SPINA	6200
					BROCHE	STIFT	PIN	PIN	
12		N13224		2	CAMISA	SLEEVE	CAMISA	MANICOTTO	8000
					CHEMISE	HUELSE	SLEEVE	SLEEVE	
13		324610A1		2	PINO	PIN	PASADOR	PERNO	080P
					BROCHE	PIN	STIFT	PEN	
14		87050523		1	PLACA CONJUNTO, Variable				
						PLATE ASSY.	PLACA (CONJUNTO)	PIASTRA, COMPLESSIV	P433
					PLAQUE (ASSEMBLEE)	PLATTE (KPLT.)	PLATE ASSY.	PLATE ASSY.	
15		N13244		1	EIXO	SHAFT	ARBOL	ALBERO	7590
					ARBRE	WELLE	SHAFT	SHAFT	
16		NSS		14	SEM SERVIÇO EM SEPARADO, Piston Assembly				
						NOT SERVICED SEPARA	NO SE REPARA POR SE	NON FORNITO SEPARAT	064N
					NON FORUNI SEPAREM	NICHT A SEP ERS-T LIEF	SERVICERES IKKE SEPA	NIET LOS VERKRIJGBAA	
17		NSS		2	SEM SERVIÇO EM SEPARADO, Slipper Guide				
						NOT SERVICED SEPARA	NO SE REPARA POR SE	NON FORNITO SEPARAT	064N
					NON FORUNI SEPAREM	NICHT A SEP ERS-T LIEF	SERVICERES IKKE SEPA	NIET LOS VERKRIJGBAA	
18		115942A1		2	GUIA	GUIDE	GUIA	GUIDA	4060
					GUIDE	FUEHRUNG	GUIDE	GUIDE	
19		115943A1		2	ANEL-TRAVA	LOCKING RING	ANILLO DE BLOQUEO	ANELLO DI BLOCCAGGI	051A
					BAGUE DE BLOCAGE	SICHERUNGSRING	LÅSESKIVE	BORGRING	
20		110873A1		6	PINO, Slipper Hold-down	PIN	PASADOR	PERNO	080P
					BROCHE	PIN	STIFT	PEN	

SR200

29.212.06	01	p2	02/11

PUMP, HYDROSTATIC TANDEM 46CC MDC FRONT (SR200,SR220,SV250)
PUMP, HYDROSTATIC TANDEM 46CC MDC FRONT (SR200,SR220,SV250)
PUMP, HYDROSTATIC TANDEM 46CC MDC FRONT (SR200,SR220,SV250)
PUMP, HYDROSTATIC TANDEM 46CC MDC FRONT (SR200,SR220,SV250)

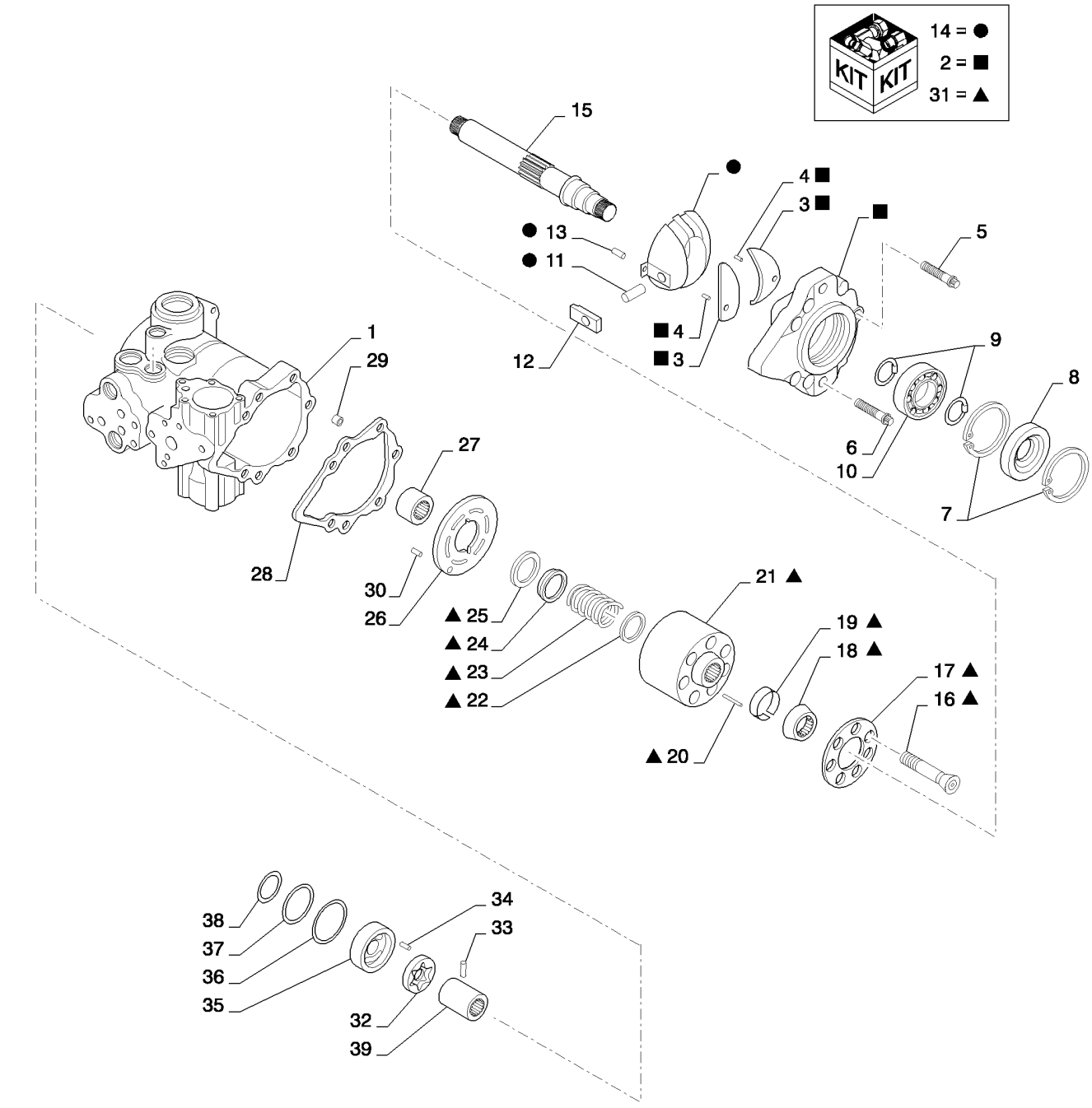

PUMP, HYDROSTATIC TANDEM 46CC MDC FRONT (SR200,SR220,SV250)
PUMP, HYDROSTATIC TANDEM 46CC MDC FRONT (SR200,SR220,SV250)
PUMP, HYDROSTATIC TANDEM 46CC MDC FRONT (SR200,SR220,SV250)
PUMP, HYDROSTATIC TANDEM 46CC MDC FRONT (SR200,SR220,SV250)

R	N	P.N.	MOD	Q	Denominação Description	Description Bezeichnung	Denominacion Beskrivelse	Descrizione Beschrijving	L.C.
21		NSS		2	SEM SERVIÇO EM SEPARADO, Cylinder Block, Non-Bushed				
						NOT SERVICED SEPARA	NO SE REPARA POR SE	NON FORNITO SEPARAT	064N
					NON FORUNI SEPAREM	NICHT A SEP ERS-T LIEI	SERVICERES IKKE SEPA	NIET LOS VERKRIJGBAA	
22		115946A1		2	DISCO, Washer	DISC	DISCO	DISCO	2700
					DISQUE	SCHEIBE	DISC	DISC	
23		115948A1		2	MOLA	SPRING	MUELLE	MOLLA	8315
					RESSORT	FEDER	SPRING	SPRING	
24		115950A1		2	DISCO, Washer	DISC	DISCO	DISCO	2700
					DISQUE	SCHEIBE	DISC	DISC	
25		NSS		2	SEM SERVIÇO EM SEPARADO, Retaining Ring				
						NOT SERVICED SEPARA	NO SE REPARA POR SE	NON FORNITO SEPARAT	064N
					NON FORUNI SEPAREM	NICHT A SEP ERS-T LIEI	SERVICERES IKKE SEPA	NIET LOS VERKRIJGBAA	
26		128928A1		1	PLACA ESPESSA, RH	PLATE, LARGE	PLACA	PIASTRA, LARGA	Z308
					PLAQUE	PLATTE, GROSS	PLATE, LARGE	PLATE, LARGE	
27		1277297C1		1	ROLAMENTO, Needle	BEARING	COJINETE	CUSCINETTO	0600
					ROULEMENT	LAGER	LEJE	LAGER	
28		H436704		2	JUNTA	GASKET	JUNTA	GUARNIZIONE	3720
					JOINT	DICHTUNG	GASKET	GASKET	
29		N13994		2	ESPACADOR	SPACER	ESPACIADOR	DISTANZIALE	8090
					ENTRETOISE	ABSTANDSSTUECK	SPACER	SPACER	
30		138-217		1	PINO DE FIXAÇÃO, 3/16" x 7/16", Slotted				
						LOCK PIN	PASADOR DE BLOQUEO	PERNO DI BLOCCAGGIC	081P
					GOUPILLE DE BLOCAGE	VERRIEGELUNGSSTIFT	LÅSETAP	BORGPEN	
31		N13234		1	ACOPLAMENTO	COUPLING, BREAK AWA	ACOPLAMIENTO	ATTACCO, CONTROFAS	2220
					ACCOUPLEMENT HYDR.	ABREISSKUPPLUNG	COUPLING, BREAK AWA	COUPLING, BREAK AWA	
32		N13247		1	JOGO ENGRENAGENS, Rotor				
						GEAR-SET	JUEGO DE PINONES	INGRANAGGIO, SET DI	3840
					JEU-DE-PIGNONS	ZAHNRADSATZ	GEAR-SET	GEAR-SET	
33		N13262		1	PINO	PIN	BOTADOR	SPINA	6200
					BROCHE	STIFT	PIN	PIN	
34		181680A1		1	PINO	PIN	PASADOR	PERNO	080P
					BROCHE	PIN	STIFT	PEN	
35		N13999		1	PLACA, Cover	PLATE	PLACA	PIASTRA	6360
					PLAQUE	PLATTE	PLATE	PLATE	
36		H437190		1	ANEL O	O-RING	ANILLO/ARO CAUCHO	ANELLO TOROIDALE	7176
					JOINT TORIQUE	O-RING	O-RING	O-RING	
37		A36405		1	O-RING, 3.484" ID x 3.762" OD x 0.139"				
						O-RING	JUNTA TÓRICA	ANELLO TOROIDALE	055A
					JOINT TORIQUE	O-RING	O-RING	O-RING	
38		H435776		1	ANEL O, 1.734" ID	O-RING	ANILLO/ARO CAUCHO	ANELLO TOROIDALE	7176
					JOINT TORIQUE	O-RING	O-RING	O-RING	
39		N13234		1	ACOPLAMENTO	COUPLING, BREAK AWA	ACOPLAMIENTO	ATTACCO, CONTROFAS	2220
					ACCOUPLEMENT HYDR.	ABREISSKUPPLUNG	COUPLING, BREAK AWA	COUPLING, BREAK AWA	

SR200

29.212.06	02	p1	02/11

PUMP, HYDROSTATC TANDEM 46CC MDC FRONT (SR200,SR220,SV250)
PUMP, HYDROSTATC TANDEM 46CC MDC FRONT (SR200,SR220,SV250)
PUMP, HYDROSTATC TANDEM 46CC MDC FRONT (SR200,SR220,SV250)
PUMP, HYDROSTATC TANDEM 46CC MDC FRONT (SR200,SR220,SV250)

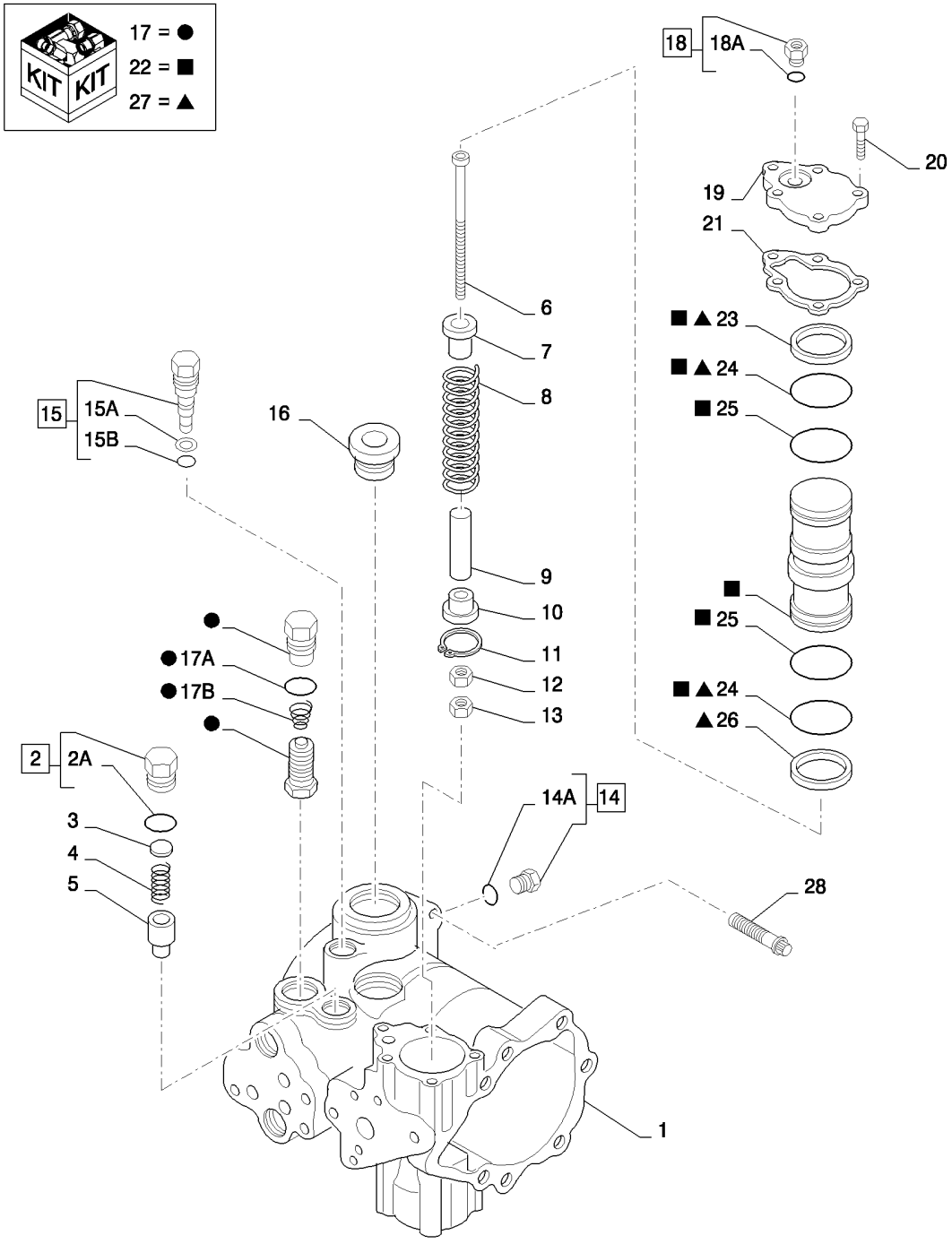

PUMP, HYDROSTATC TANDEM 46CC MDC FRONT (SR200,SR220,SV250)
PUMP, HYDROSTATC TANDEM 46CC MDC FRONT (SR200,SR220,SV250)
PUMP, HYDROSTATC TANDEM 46CC MDC FRONT (SR200,SR220,SV250)
PUMP, HYDROSTATC TANDEM 46CC MDC FRONT (SR200,SR220,SV250)

R	N	P.N.	MOD	Q	Denominação Description	Description Bezeichnung	Denominacion Beskrivelse	Descrizione Beschrijving	L.C.
1		402364A1		1	CARCACA, Front	HOUSING	CARCASA	ALLOGGIAMENTO	4540
					CARTER	GEHAEUSE	HOUSING	HOUSING	
2		87039611		1	BUJAO, Charge Relief	PLUG	TAPON	TAPPO	6400
					BOUCHON	STOPFEN	PLUG	PLUG	
2A		237-6010		1	O-RING, 0.239" ID x 0.379" OD x 0.07"				
						O-RING	JUNTA TÓRICA	ANELLO TOROIDALE	055A
					JOINT TORIQUE	O-RING	O-RING	O-RING	
3		H407767		1	JOGO, Shim	KIT	JEUGO	KIT	4830
					POCHETTE	PACKUNG	KIT	KIT	
4		244898A1		1	MOLA	SPRING	MUELLE	MOLLA	8315
					RESSORT	FEDER	SPRING	SPRING	
5		V38371		1	VÁLVULA, Poppet	VALVE	VÁLVULA	VALVOLA	9620
					SOUPAPE	VENTIL	VENTIL	KLEP	
6		370531A1		1	PARAFUSO	SCREW	TORNILLO	VITE	7450
					VIS	SCHRAUBE	SCREW	SCREW	
7		N14666		1	GUIA	GUIDE	GUIA	GUIDA	4060
					GUIDE	FUEHRUNG	GUIDE	GUIDE	
8		N13226		1	MOLA	SPRING	MUELLE	MOLLA	8315
					RESSORT	FEDER	SPRING	SPRING	
9		N13242		1	CAMISA, Stop	SLEEVE	CAMISA	MANICOTTO	8000
					CHEMISE	HUELSE	SLEEVE	SLEEVE	
10		N13241		1	GUIA	GUIDE	GUIA	GUIDA	4060
					GUIDE	FUEHRUNG	GUIDE	GUIDE	
11		N13255		1	ANEL	RING	ANILLO	ANELLO	7175
					BAGUE	RING	RING	RING	
12		425-116		1	PORCA, 3/8"-24, G5	NUT	TUERCA	DADO	010D
					ECROU	MUTTER	MØTRIK	MOER	
13		324604A1		1	PORCA	NUT	TUERCA	DADO	5780
					ECROU	MUTTER	NUT	NUT	
14		218-5153		1	BUJÃO, Hex Hd, 7/16"-20 ORB				
						PLUG	TAPÓN	TAPPO	050T
					BOUCHON	STOPFEN	PROP	PLUG	
14A		165202		1	O-RING, 0.351" ID x 0.072" Width				
						O-RING	JUNTA TÓRICA	ANELLO TOROIDALE	055A
					JOINT TORIQUE	O-RING	O-RING	O-RING	
15		87039612		1	VÁLVULA DE DESVIO, Assembly				
						BY-PASS VALVE	VÁLVULA DE DERIVACIÓ	VALVOLA DI BYPASS	P673
					SOUPAPE DE DERIVATI(	BYPASS-VENTIL	OMLØBSVENTIL	BYPASSKLEP	
15A		S99877		2	ANEL, Backup	RING	ANILLO	ANELLO	7175
					BAGUE	RING	RING	RING	
15B		86993475		2	O-RING	O-RING	JUNTA TÓRICA	ANELLO TOROIDALE	055A
					JOINT TORIQUE	O-RING	O-RING	O-RING	
16		{}							
17		105720A1		1	VALVULA	VALVE	VALVULA	VALVOLA	P468
					VALVE	VENTIL	VALVE	VALVE	
17A		237-6012		4	O-RING, 0.364" ID x 0.504" OD x 0.07"				
						O-RING	JUNTA TÓRICA	ANELLO TOROIDALE	055A
					JOINT TORIQUE	O-RING	O-RING	O-RING	

SR200

29.212.06	02	p2	02/11

PUMP, HYDROSTATC TANDEM 46CC MDC FRONT (SR200,SR220,SV250)
PUMP, HYDROSTATC TANDEM 46CC MDC FRONT (SR200,SR220,SV250)
PUMP, HYDROSTATC TANDEM 46CC MDC FRONT (SR200,SR220,SV250)
PUMP, HYDROSTATC TANDEM 46CC MDC FRONT (SR200,SR220,SV250)

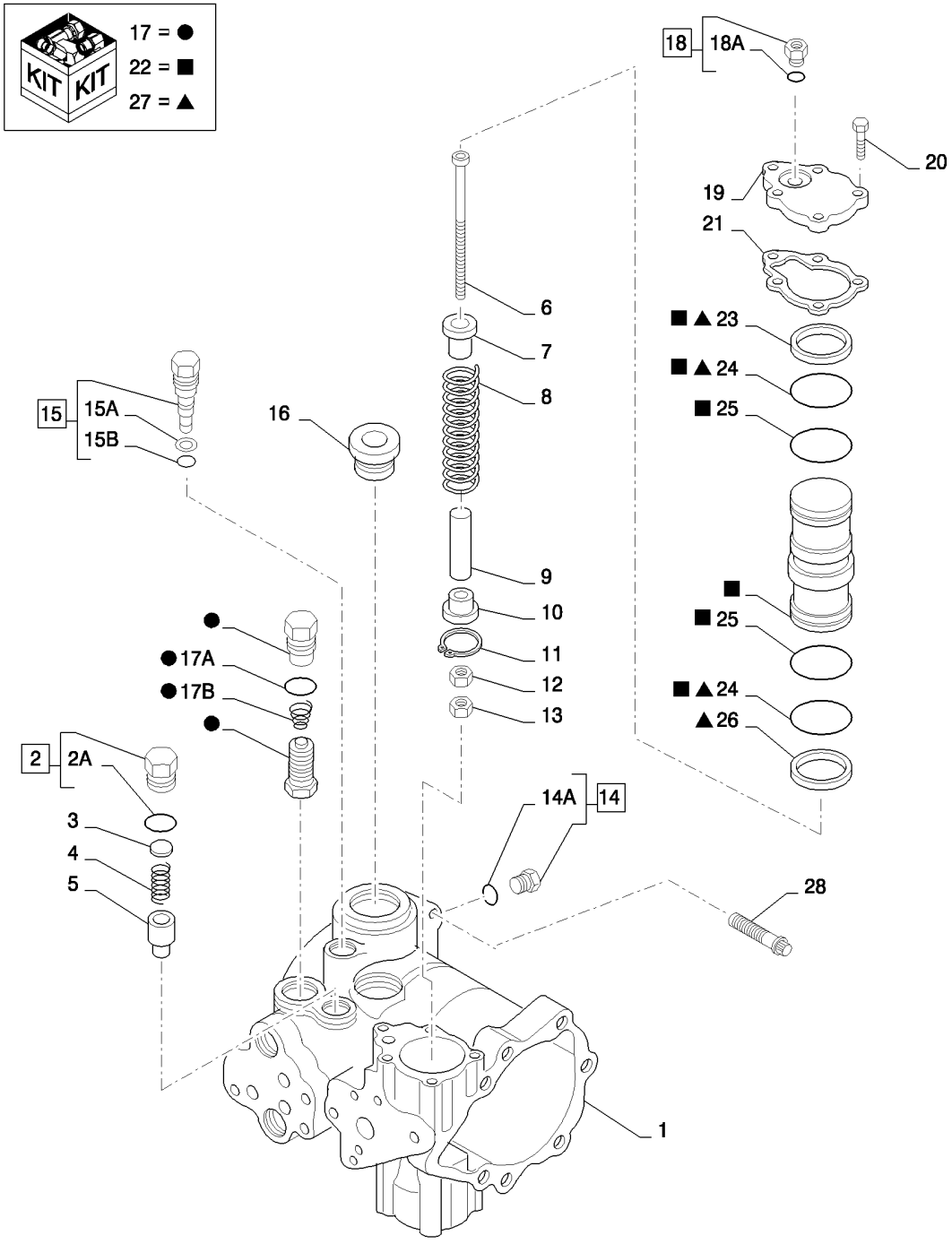

PUMP, HYDROSTATC TANDEM 46CC MDC FRONT (SR200,SR220,SV250)
PUMP, HYDROSTATC TANDEM 46CC MDC FRONT (SR200,SR220,SV250)
PUMP, HYDROSTATC TANDEM 46CC MDC FRONT (SR200,SR220,SV250)
PUMP, HYDROSTATC TANDEM 46CC MDC FRONT (SR200,SR220,SV250)

R	N	P.N.	MOD	Q	Denominação Description	Description Bezeichnung	Denominacion Beskrivelse	Descrizione Beschrijving	L.C.
17B		86993468		4	MOLA RESSORT	SPRING FEDER	RESORTE FJEDER	MOLLA VEER	100M
18		218-5155		1	BUJÃO, Hex Hd, 9/16"-18 ORB BOUCHON	PLUG STOPFEN	TAPÓN PROP	TAPPO PLUG	050T
18A		237-6006		1	O-RING, 0.114" ID x 0.254" OD x 0.07" JOINT TORIQUE	O-RING O-RING	JUNTA TÓRICA O-RING	ANELLO TOROIDALE O-RING	055A
19		H436053		1	TAMPA COUVERCLE	COVER DECKEL	TAPA COVER	COPERCHIO COVER	2250
20		87269453		5	PARAFUSO VIS	SCREW SCHRAUBE	TORNILLO SKRUE	VITE SCHROEF	040V
21		N14063		1	JUNTA JOINT	GASKET DICHTUNG	JUNTA GASKET	GUARNIZIONE GASKET	3720
22		87039622		2	CONJ PISTÃO, Servo ENS. PISTON	PISTON ASSY KOLBENBAUGRUPPE	CONJUNTO DE PISTÓN STEMPEL KOMPLET	COMPLESSIVO PISTONE ZUIGEREENHEID	245S
23		N14668		2	ANEL PISTAO SEGMENT DE PISTON	RING, PISTON KOLBENRING	ARO DE PISTON RING, PISTON	ANELLO, PISTONE RING, PISTON	P292
24		238-5131		4	O-RING, -131, 70 Duro, 1.674" ID x .103" Thk JOINT TORIQUE	O-RING O-RING	JUNTA TÓRICA O-RING	ANELLO TOROIDALE O-RING	055A
25		100536A1		4	FLANGE DE ROLAMENTO, 1.86" ID x 1.982" OD x 0.122" RONDELLE DE ROULEM	BEARING WASHER LAGERSCHEIBE	ARANDELA DE COJINET LEJESPÆNDSKIVE	RONDELLA CUSCINETT LAGERRING	A142
26		N14668		2	ANEL PISTAO SEGMENT DE PISTON	RING, PISTON KOLBENRING	ARO DE PISTON RING, PISTON	ANELLO, PISTONE RING, PISTON	P292
27		H673773		1	JOGO, Repair, Pump POCHETTE	KIT PACKUNG	JEUGO KIT	KIT KIT	4830
28		166-89		2	PARAFUSO, 12 Pt Flg, 1/2"-13 x 2", G8 VIS	SCREW SCHRAUBE	TORNILLO SKRUE	VITE SCHROEF	040V

29.212.06	03	p1	02/11

PUMP, HYDROSTATC TANDEM 46CC MDC FRONT (SR200,SR220,SV250)
PUMP, HYDROSTATC TANDEM 46CC MDC FRONT (SR200,SR220,SV250)
PUMP, HYDROSTATC TANDEM 46CC MDC FRONT (SR200,SR220,SV250)
PUMP, HYDROSTATC TANDEM 46CC MDC FRONT (SR200,SR220,SV250)

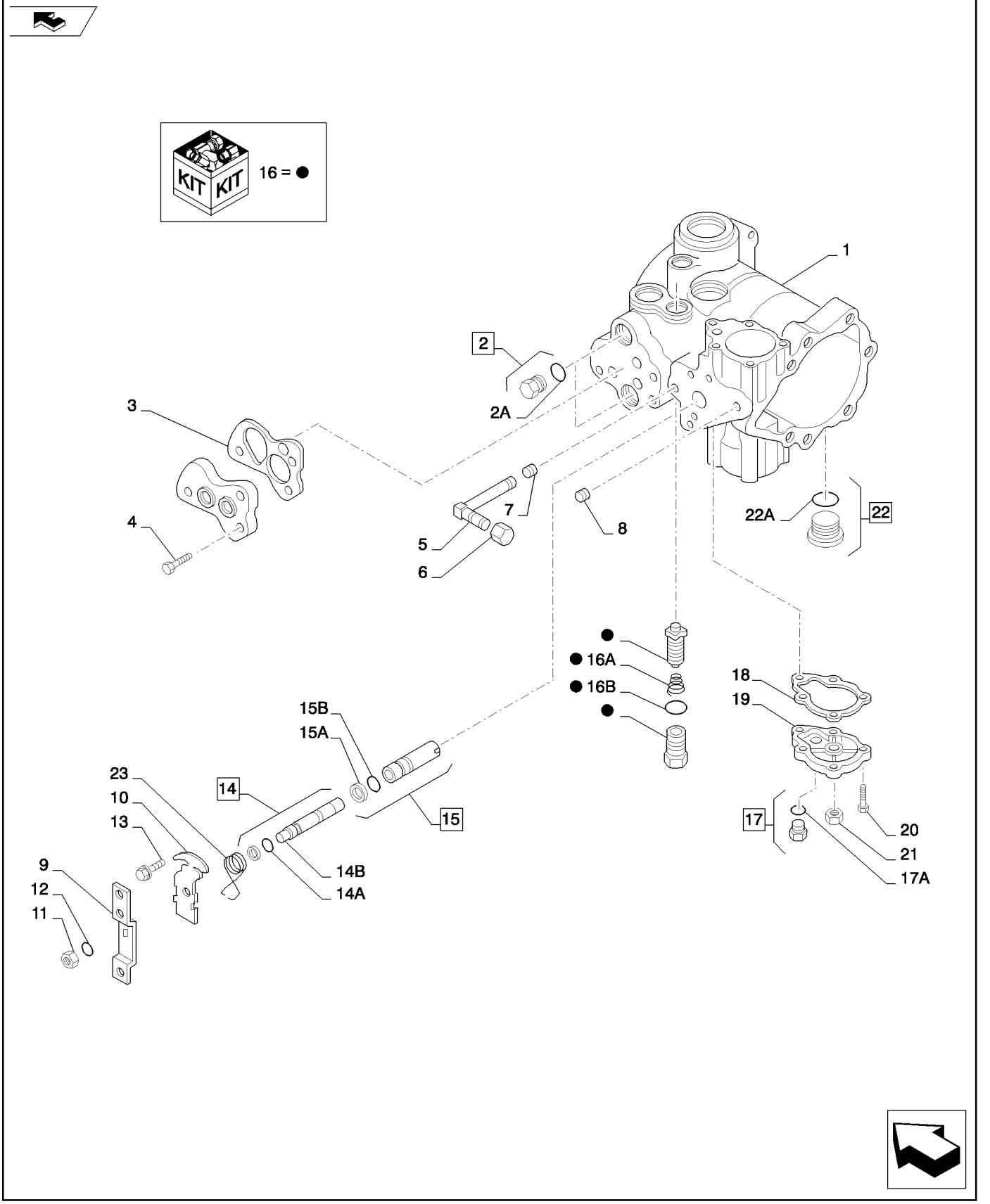

PUMP, HYDROSTATC TANDEM 46CC MDC FRONT (SR200,SR220,SV250)
PUMP, HYDROSTATC TANDEM 46CC MDC FRONT (SR200,SR220,SV250)
PUMP, HYDROSTATC TANDEM 46CC MDC FRONT (SR200,SR220,SV250)
PUMP, HYDROSTATC TANDEM 46CC MDC FRONT (SR200,SR220,SV250)

R	N	P.N.	MOD	Q	Denominação Description	Description Bezeichnung	Denominacion Beskrivelse	Descrizione Beschrijving	L.C.
1		402364A1		1	CARCACA, Front	HOUSING	CARCASA	ALLOGGIAMENTO	4540
					CARTER	GEHAEUSE	HOUSING	HOUSING	
2		218-5155		2	BUJÃO, Hex Hd, 9/16"-18 ORB				
						PLUG	TAPÓN	TAPPO	050T
					BOUCHON	STOPFEN	PROP	PLUG	
2A		237-6006		2	O-RING, 0.114" ID x 0.254" OD x 0.07"				
						O-RING	JUNTA TÓRICA	ANELLO TOROIDALE	055A
					JOINT TORIQUE	O-RING	O-RING	O-RING	
3		303709A1		1	VEDADOR DE RETENCAO	SEAL	SELLO/RETEN	GUARNIZIONE TENUTA	7460
					JOINT-D'ETANCHEITE	DICHTRING	SEAL	SEAL	
4		26-516		3	PARAFUSO, Hex, 5/16"-18 x 1", G8, Full Thd				
						BOLT	PERNO	BULLONE	140B
					VIS	SCHRAUBE	BOLT	BOUT	
5		218-506		1	COTOVELO, 90º, 7/16"-20, 37º x 1/8"-27, NPTF, XLG				
						ELBOW	CODO	GOMITO	085G
					COUDE	KNIESTÜCK	VINKELRØR	KNIESTUK	
6		86993467		1	TAMPA, Tube, 37 Degree Flare				
						CAP	TAPÓN	TAPPO	052T
					CAPUCHON	KAPPE	TANKDÆKSEL	DOP	
7		86993479		1	BUJÃO, Pipe	PLUG	TAPÓN	TAPPO	050T
					BOUCHON	STOPFEN	PROP	PLUG	
8		F23137		1	BUJAO	PLUG	TAPON	TAPPO	6400
					BOUCHON	STOPFEN	PLUG	PLUG	
9		100713A1		1	ALAVANCA, Handle	LEVER	PALANCA	LEVA	5110
					LEVIER	HEBEL	LEVER	LEVER	
10		N13250		1	SUPORTE	BRACKET	SOPORTE	STAFFA	1010
					CONSOLE	HALTER	BRACKET	BRACKET	
11		H436054		1	PORCA	NUT	TUERCA	DADO	5780
					ECROU	MUTTER	NUT	NUT	
12		493-41033		1	TRAVA DA ARRUELA, Ext Tooth, 5/16"				
						LOCK WASHER	ARANDELA DE BLOQUE	RONDELLA DI SICUREZ	132R
					RONDELLE FREIN	SICHERUNGSSCHEIBE	LÅSESKIVE	BORGRING	
13		H435770		2	PARAFUSO	SCREW	TORNILLO	VITE	7450
					VIS	SCHRAUBE	SCREW	SCREW	
14		87042542		1	CARRETO, Assembly, Sauer				
						SPOOL	BOBINA	STELO	134P
					TIROIR	KOLBENSCHIEBER	SPOLE	SPOEL	
14A		86993484		2	ANEL, Backup, .390	RING	ANILLO	ANELLO	045A
					ANNEAU	RING	RING	RING	
14B		86993475		2	O-RING	O-RING	JUNTA TÓRICA	ANELLO TOROIDALE	055A
					JOINT TORIQUE	O-RING	O-RING	O-RING	
15		87039615		1	LUVA, Assembly	SLEEVE	MANGUITO	MANICOTTO	145B
					CHEMISE	BUCHSE	BØSNING	HOES; HULS	
15A		86993483		2	ANEL, Backup, .643	RING	ANILLO	ANELLO	045A
					ANNEAU	RING	RING	RING	
15B		{}		2	O-Ring				
16		105720A1		1	VALVULA	VALVE	VALVULA	VALVOLA	P468
					VALVE	VENTIL	VALVE	VALVE	

SR200

29.212.06	03	p2	02/11

PUMP, HYDROSTATC TANDEM 46CC MDC FRONT (SR200,SR220,SV250)
PUMP, HYDROSTATC TANDEM 46CC MDC FRONT (SR200,SR220,SV250)
PUMP, HYDROSTATC TANDEM 46CC MDC FRONT (SR200,SR220,SV250)
PUMP, HYDROSTATC TANDEM 46CC MDC FRONT (SR200,SR220,SV250)

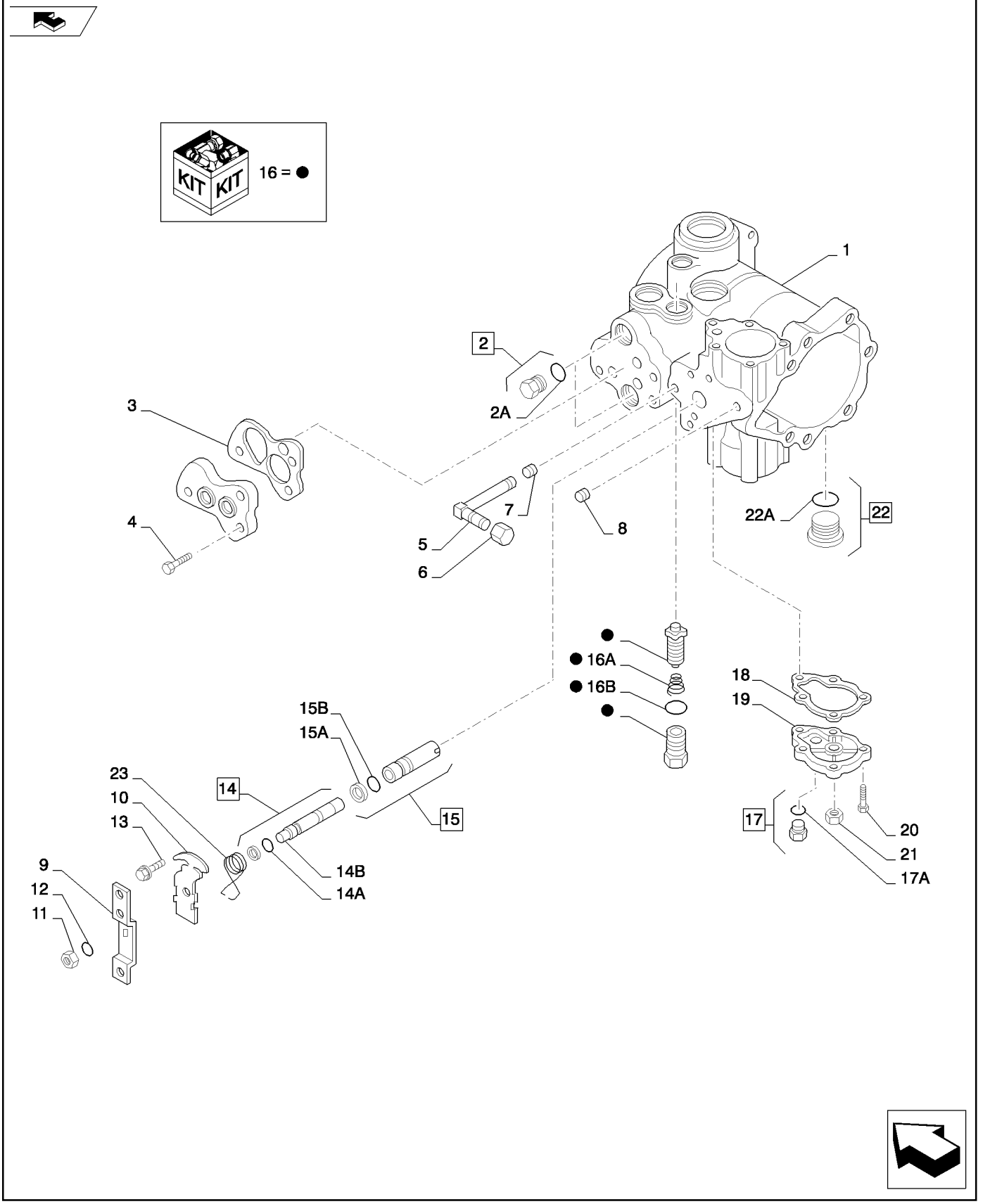

PUMP, HYDROSTATC TANDEM 46CC MDC FRONT (SR200,SR220,SV250)
PUMP, HYDROSTATC TANDEM 46CC MDC FRONT (SR200,SR220,SV250)
PUMP, HYDROSTATC TANDEM 46CC MDC FRONT (SR200,SR220,SV250)
PUMP, HYDROSTATC TANDEM 46CC MDC FRONT (SR200,SR220,SV250)

R	N	P.N.	MOD	Q	Denominação Description	Description Bezeichnung	Denominacion Beskrivelse	Descrizione Beschrijving	L.C.
16A		86993468		4	MOLA RESSORT	SPRING FEDER	RESORTE FJEDER	MOLLA VEER	100M
16B		237-6012		4	O-RING, 0.364" ID x 0.504" OD x 0.07" JOINT TORIQUE	O-RING O-RING	JUNTA TÓRICA O-RING	ANELLO TOROIDALE O-RING	055A
17		218-5155		1	BUJÃO, Hex Hd, 9/16"-18 ORB BOUCHON	PLUG STOPFEN	TAPÓN PROP	TAPPO PLUG	050T
17A		237-6006		1	O-RING, 0.114" ID x 0.254" OD x 0.07" JOINT TORIQUE	O-RING O-RING	JUNTA TÓRICA O-RING	ANELLO TOROIDALE O-RING	055A
18		N14063		1	JUNTA JOINT	GASKET DICHTUNG	JUNTA GASKET	GUARNIZIONE GASKET	3720
19		H436065		1	TAMPA COUVERCLE	COVER DECKEL	TAPA COVER	COPERCHIO COVER	2250
20		87269453		5	PARAFUSO VIS	SCREW SCHRAUBE	TORNILLO SKRUE	VITE SCHROEF	040V
21		N13260		2	PORCA ECROU	NUT MUTTER	TUERCA NUT	DADO NUT	5780
22		218-5212		3	BUJÃO, Hex Soc, 1 1/16"-12 ORB BOUCHON	PLUG STOPFEN	TAPÓN PROP	TAPPO PLUG	050T
22A		237-6012		3	O-RING, 0.364" ID x 0.504" OD x 0.07" JOINT TORIQUE	O-RING O-RING	JUNTA TÓRICA O-RING	ANELLO TOROIDALE O-RING	055A
23		N13248		1	MOLA RESSORT	SPRING FEDER	MUELLE SPRING	MOLLA SPRING	8315

29.212.06	04	p1	02/11

PUMP, HYDROSTATC TANDEM 46CC MDC REAR (SR200,SR220,SV250)
PUMP, HYDROSTATC TANDEM 46CC MDC REAR (SR200,SR220,SV250)
PUMP, HYDROSTATC TANDEM 46CC MDC REAR (SR200,SR220,SV250)
PUMP, HYDROSTATC TANDEM 46CC MDC REAR (SR200,SR220,SV250)

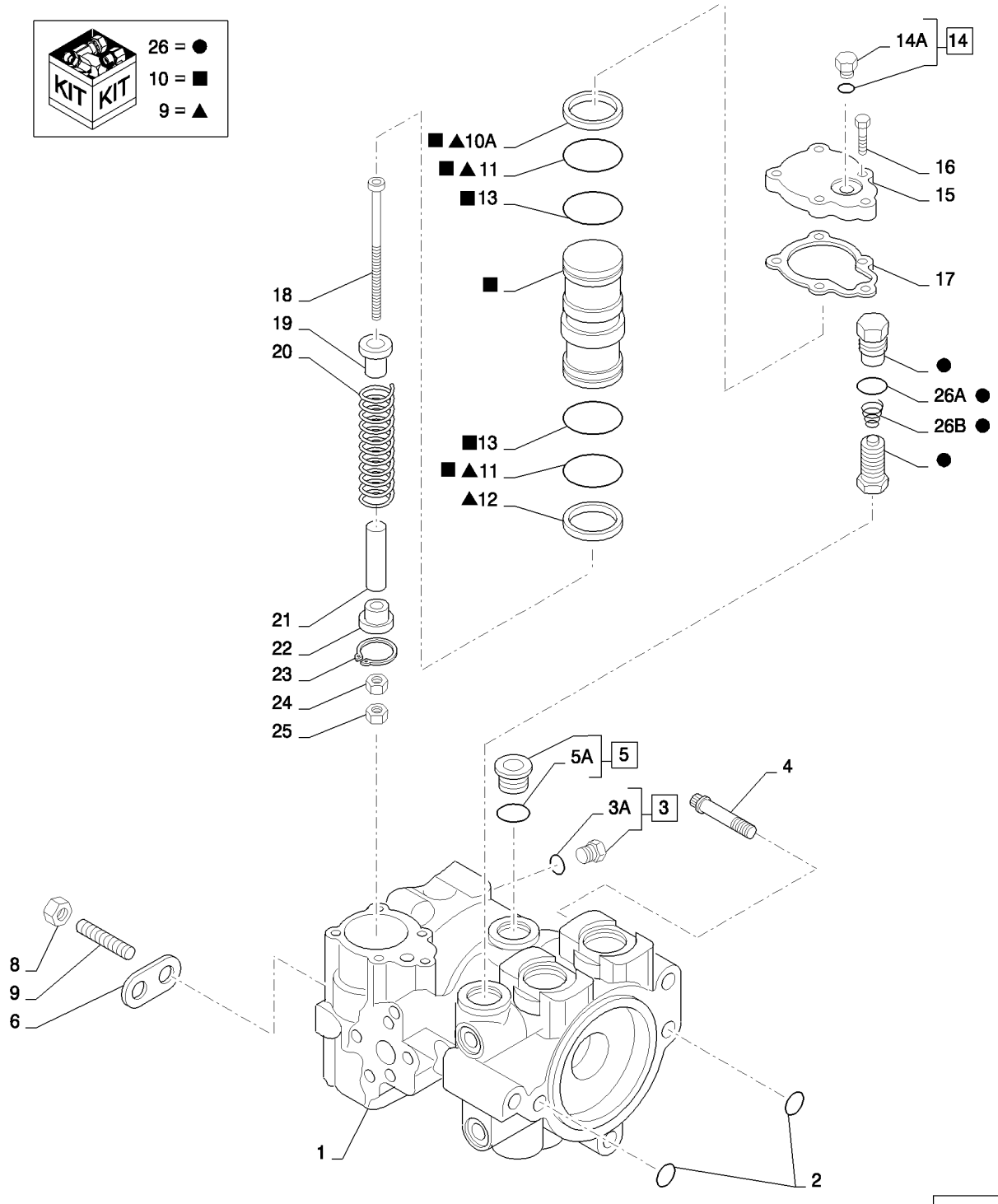

PUMP, HYDROSTATC TANDEM 46CC MDC REAR (SR200,SR220,SV250)
PUMP, HYDROSTATC TANDEM 46CC MDC REAR (SR200,SR220,SV250)
PUMP, HYDROSTATC TANDEM 46CC MDC REAR (SR200,SR220,SV250)
PUMP, HYDROSTATC TANDEM 46CC MDC REAR (SR200,SR220,SV250)

R	N	P.N.	MOD	Q	Denominação Description	Description Bezeichnung	Denominacion Beskrivelse	Descrizione Beschrijving	L.C.
1		402365A1		1	CARCACA, Rear	HOUSING	CARCASA	ALLOGGIAMENTO	4540
					CARTER	GEHAEUSE	HOUSING	HOUSING	
2		238-6116		2	O-RING, -116, 90 Duro, .737" ID x .103" Thk				
						O-RING	JUNTA TÓRICA	ANELLO TOROIDALE	055A
					JOINT TORIQUE	O-RING	O-RING	O-RING	
3		218-5153		1	BUJÃO, Hex Hd, 7/16"-20 ORB				
						PLUG	TAPÓN	TAPPO	050T
					BOUCHON	STOPFEN	PROP	PLUG	
3A		165202		1	O-RING, 0.351" ID x 0.072" Width				
						O-RING	JUNTA TÓRICA	ANELLO TOROIDALE	055A
					JOINT TORIQUE	O-RING	O-RING	O-RING	
4		166-89		2	PARAFUSO, 12 Pt Flg, 1/2"-13 x 2", G8				
						SCREW	TORNILLO	VITE	040V
					VIS	SCHRAUBE	SKRUE	SCHROEF	
5		218-5212		3	BUJÃO, Hex Soc, 1 1/16"-12 ORB				
						PLUG	TAPÓN	TAPPO	050T
					BOUCHON	STOPFEN	PROP	PLUG	
5A		237-6012		3	O-RING, 0.364" ID x 0.504" OD x 0.07"				
						O-RING	JUNTA TÓRICA	ANELLO TOROIDALE	055A
					JOINT TORIQUE	O-RING	O-RING	O-RING	
6		NSS			SEM SERVIÇO EM SEPARADO				
						NOT SERVICED SEPARA	NO SE REPARA POR SE	NON FORNITO SEPARAT	064N
					NON FORUNI SEPAREM	NICHT A SEP ERS-T LIEI	SERVICERES IKKE SEPA	NIET LOS VERKRIJGBAA	
7		K608432		1	PRISIONEIRO	STUD	ESPARREGO	PRIGIONIERO	8720
					GOUJON	STIFTSCHRAUBE	STUD	STUD	
8		425-108		1	PORCA, 1/2"-13, G5	NUT	TUERCA	DADO	010D
					ECROU	MUTTER	MØTRIK	MOER	
9		H673773		1	JOGO, Repair, Pump	KIT	JEUGO	KIT	4830
					POCHETTE	PACKUNG	KIT	KIT	
10		87039622		2	CONJ PISTÃO, Servo	PISTON ASSY	CONJUNTO DE PISTÓN	COMPLESSIVO PISTONE	245S
					ENS. PISTON	KOLBENBAUGRUPPE	STEMPEL KOMPLET	ZUIGEREENHEID	
10A		N14668		2	ANEL PISTAO	RING, PISTON	ARO DE PISTON	ANELLO, PISTONE	P292
					SEGMENT DE PISTON	KOLBENRING	RING, PISTON	RING, PISTON	
11		238-5131		4	O-RING, -131, 70 Duro, 1.674" ID x .103" Thk				
						O-RING	JUNTA TÓRICA	ANELLO TOROIDALE	055A
					JOINT TORIQUE	O-RING	O-RING	O-RING	
12		N14668		2	ANEL PISTAO	RING, PISTON	ARO DE PISTON	ANELLO, PISTONE	P292
					SEGMENT DE PISTON	KOLBENRING	RING, PISTON	RING, PISTON	
13		100536A1		4	FLANGE DE ROLAMENTO, 1.86" ID x 1.982" OD x 0.122"				
						BEARING WASHER	ARANDELA DE COJINET	RONDELLA CUSCINETT	A142
					RONDELLE DE ROULEM	LAGERSCHEIBE	LEJESPÆNDSKIVE	LAGERRING	
14		218-5155		1	BUJÃO, Hex Hd, 9/16"-18 ORB				
						PLUG	TAPÓN	TAPPO	050T
					BOUCHON	STOPFEN	PROP	PLUG	
14A		237-6006		1	O-RING, 0.114" ID x 0.254" OD x 0.07"				
						O-RING	JUNTA TÓRICA	ANELLO TOROIDALE	055A
					JOINT TORIQUE	O-RING	O-RING	O-RING	
15		H436053		1	TAMPA	COVER	TAPA	COPERCHIO	2250
					COUVERCLE	DECKEL	COVER	COVER	

SR200

PUMP, HYDROSTATC TANDEM 46CC MDC REAR (SR200,SR220,SV250)
PUMP, HYDROSTATC TANDEM 46CC MDC REAR (SR200,SR220,SV250)
PUMP, HYDROSTATC TANDEM 46CC MDC REAR (SR200,SR220,SV250)
PUMP, HYDROSTATC TANDEM 46CC MDC REAR (SR200,SR220,SV250)

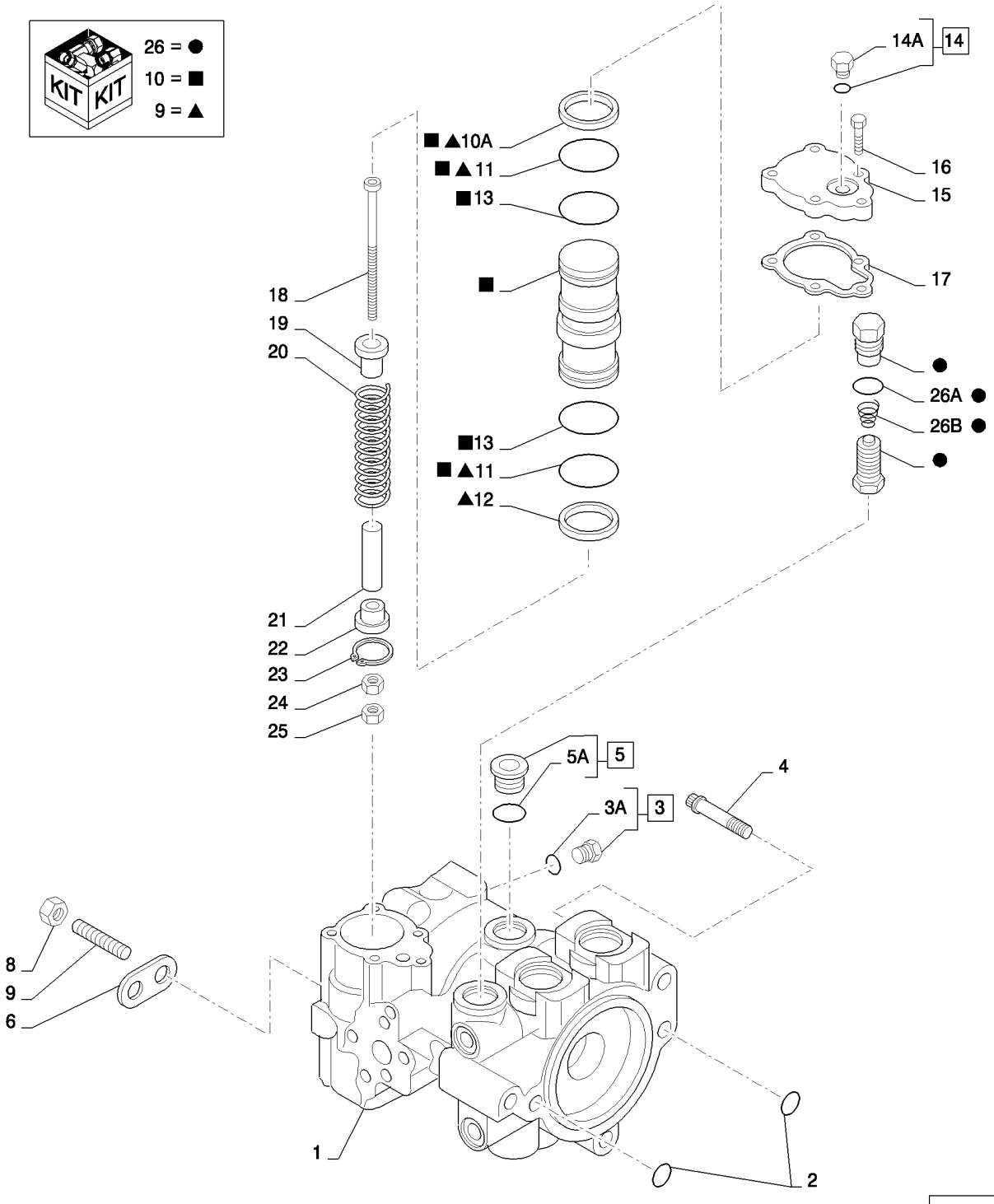

PUMP, HYDROSTATC TANDEM 46CC MDC REAR (SR200,SR220,SV250)
PUMP, HYDROSTATC TANDEM 46CC MDC REAR (SR200,SR220,SV250)
PUMP, HYDROSTATC TANDEM 46CC MDC REAR (SR200,SR220,SV250)
PUMP, HYDROSTATC TANDEM 46CC MDC REAR (SR200,SR220,SV250)

R	N	P.N.	MOD	Q	Denominação Description	Description Bezeichnung	Denominacion Beskrivelse	Descrizione Beschrijving	L.C.
16		87269453		5	PARAFUSO VIS	SCREW SCHRAUBE	TORNILLO SKRUE	VITE SCHROEF	040V
17		N14063		1	JUNTA JOINT	GASKET DICHTUNG	JUNTA GASKET	GUARNIZIONE GASKET	3720
18		370531A1		1	PARAFUSO VIS	SCREW SCHRAUBE	TORNILLO SCREW	VITE SCREW	7450
19		N14666		1	GUIA GUIDE	GUIDE FUEHRUNG	GUIA GUIDE	GUIDA GUIDE	4060
20		N13226		1	MOLA RESSORT	SPRING FEDER	MUELLE SPRING	MOLLA SPRING	8315
21		N13242		1	CAMISA, Stop CHEMISE	SLEEVE HUELSE	CAMISA SLEEVE	MANICOTTO SLEEVE	8000
22		N13241		1	GUIA GUIDE	GUIDE FUEHRUNG	GUIA GUIDE	GUIDA GUIDE	4060
23		N13255		1	ANEL BAGUE	RING RING	ANILLO RING	ANELLO RING	7175
24		425-116		1	PORCA, 3/8"-24, G5 ECROU	NUT MUTTER	TUERCA MØTRIK	DADO MOER	010D
25		324604A1		1	PORCA ECROU	NUT MUTTER	TUERCA NUT	DADO NUT	5780
26		105720A1		1	VALVULA VALVE	VALVE VENTIL	VALVULA VALVE	VALVOLA VALVE	P468
26A		237-6012		4	O-RING, 0.364" ID x 0.504" OD x 0.07" JOINT TORIQUE	O-RING O-RING	JUNTA TÓRICA O-RING	ANELLO TOROIDALE O-RING	055A
26B		86993468		4	MOLA RESSORT	SPRING FEDER	RESORTE FJEDER	MOLLA VEER	100M

SR200

29.212.06	05	p1	02/11

PUMP, HYDROSTATC TANDEM 46CC MDC REAR (SR200,SR220,SV250)
PUMP, HYDROSTATC TANDEM 46CC MDC REAR (SR200,SR220,SV250)
PUMP, HYDROSTATC TANDEM 46CC MDC REAR (SR200,SR220,SV250)
PUMP, HYDROSTATC TANDEM 46CC MDC REAR (SR200,SR220,SV250)

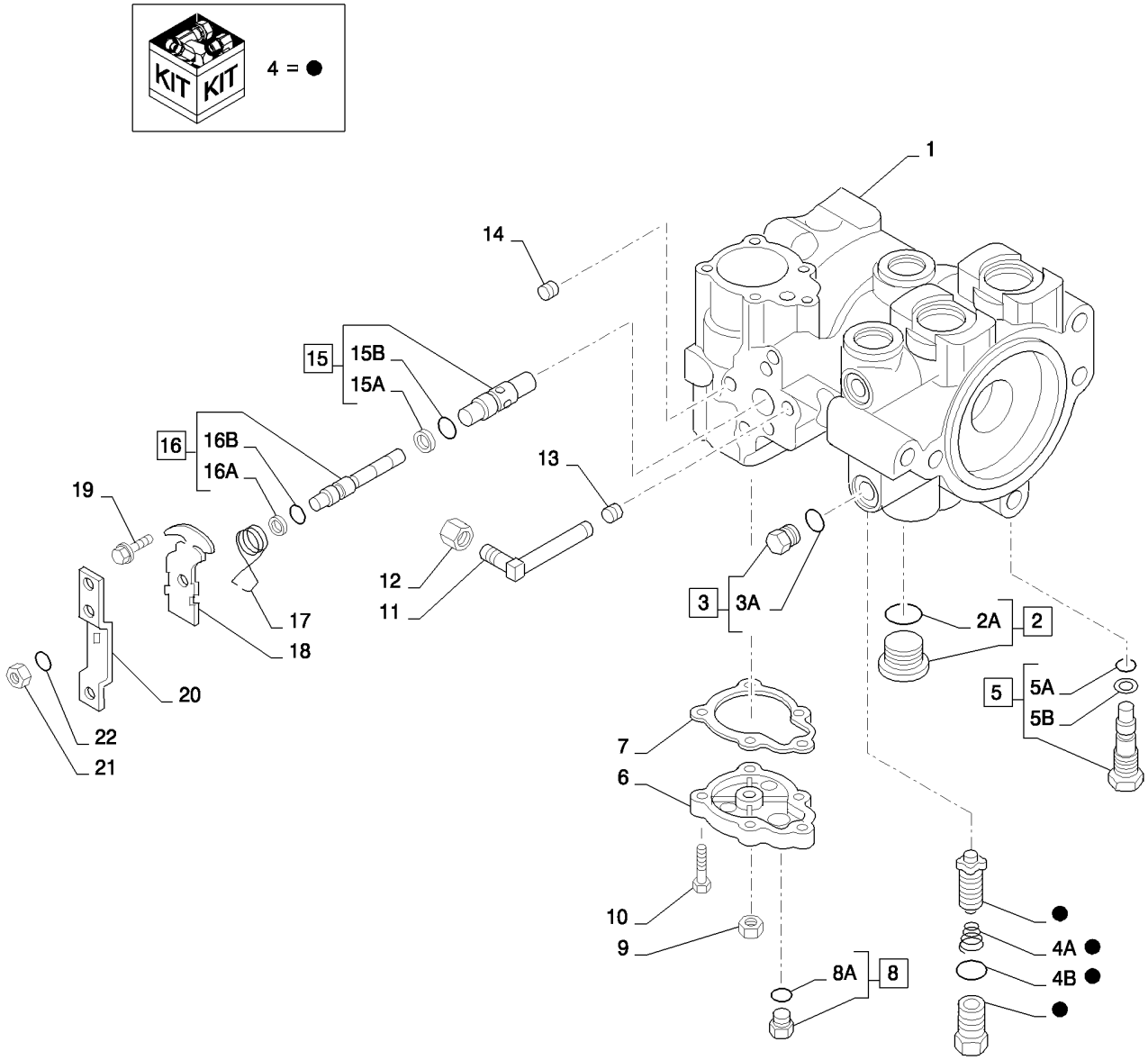

PUMP, HYDROSTATC TANDEM 46CC MDC REAR (SR200,SR220,SV250)
PUMP, HYDROSTATC TANDEM 46CC MDC REAR (SR200,SR220,SV250)
PUMP, HYDROSTATC TANDEM 46CC MDC REAR (SR200,SR220,SV250)
PUMP, HYDROSTATC TANDEM 46CC MDC REAR (SR200,SR220,SV250)

R	N	P.N.	MOD	Q	Denominação Description	Description Bezeichnung	Denominacion Beskrivelse	Descrizione Beschrijving	L.C.
1		402365A1		1	CARCACA, Rear	HOUSING	CARCASA	ALLOGGIAMENTO	4540
					CARTER	GEHAEUSE	HOUSING	HOUSING	
2		218-5212		3	BUJÃO, Hex Soc, 1 1/16"-12 ORB				
						PLUG	TAPÓN	TAPPO	050T
					BOUCHON	STOPFEN	PROP	PLUG	
2A		237-6012		3	O-RING, 0.364" ID x 0.504" OD x 0.07"				
						O-RING	JUNTA TÓRICA	ANELLO TOROIDALE	055A
					JOINT TORIQUE	O-RING	O-RING	O-RING	
3		218-5155		2	BUJÃO, Hex Hd, 9/16"-18 ORB				
						PLUG	TAPÓN	TAPPO	050T
					BOUCHON	STOPFEN	PROP	PLUG	
3A		237-6006		2	O-RING, 0.114" ID x 0.254" OD x 0.07"				
						O-RING	JUNTA TÓRICA	ANELLO TOROIDALE	055A
					JOINT TORIQUE	O-RING	O-RING	O-RING	
4		105720A1		1	VALVULA	VALVE	VALVULA	VALVOLA	P468
					VALVE	VENTIL	VALVE	VALVE	
4A		86993468		4	MOLA	SPRING	RESORTE	MOLLA	100M
					RESSORT	FEDER	FJEDER	VEER	
4B		237-6012		4	O-RING, 0.364" ID x 0.504" OD x 0.07"				
						O-RING	JUNTA TÓRICA	ANELLO TOROIDALE	055A
					JOINT TORIQUE	O-RING	O-RING	O-RING	
5		87039612		1	VÁLVULA DE DESVIO, Assembly				
						BY-PASS VALVE	VÁLVULA DE DERIVACIÓ	VALVOLA DI BYPASS	P673
					SOUPAPE DE DERIVATI(	BYPASS-VENTIL	OMLØBSVENTIL	BYPASSKLEP	
5A		86993475		2	O-RING	O-RING	JUNTA TÓRICA	ANELLO TOROIDALE	055A
					JOINT TORIQUE	O-RING	O-RING	O-RING	
5B		S99877		2	ANEL, Backup	RING	ANILLO	ANELLO	7175
					BAGUE	RING	RING	RING	
6		H436065		1	TAMPA	COVER	TAPA	COPERCHIO	2250
					COUVERCLE	DECKEL	COVER	COVER	
7		N14063		1	JUNTA	GASKET	JUNTA	GUARNIZIONE	3720
					JOINT	DICHTUNG	GASKET	GASKET	
8		218-5155		1	BUJÃO, Hex Hd, 9/16"-18 ORB				
						PLUG	TAPÓN	TAPPO	050T
					BOUCHON	STOPFEN	PROP	PLUG	
8A		237-6006		1	O-RING, 0.114" ID x 0.254" OD x 0.07"				
						O-RING	JUNTA TÓRICA	ANELLO TOROIDALE	055A
					JOINT TORIQUE	O-RING	O-RING	O-RING	
9		N13260		2	PORCA	NUT	TUERCA	DADO	5780
					ECROU	MUTTER	NUT	NUT	
10		87269453		5	PARAFUSO	SCREW	TORNILLO	VITE	040V
					VIS	SCHRAUBE	SKRUE	SCHROEF	
11		218-506		1	COTOVELO, 90º, 7/16"-20, 37º x 1/8"-27, NPTF, XLG				
						ELBOW	CODO	GOMITO	085G
					COUDE	KNIESTÜCK	VINKELRØR	KNIESTUK	
12		86993467		1	TAMPA, Tube, 37 Degree Flare				
						CAP	TAPÓN	TAPPO	052T
					CAPUCHON	KAPPE	TANKDÆKSEL	DOP	

SR200

29.212.06	05	p2	02/11

PUMP, HYDROSTATC TANDEM 46CC MDC REAR (SR200,SR220,SV250)
PUMP, HYDROSTATC TANDEM 46CC MDC REAR (SR200,SR220,SV250)
PUMP, HYDROSTATC TANDEM 46CC MDC REAR (SR200,SR220,SV250)
PUMP, HYDROSTATC TANDEM 46CC MDC REAR (SR200,SR220,SV250)

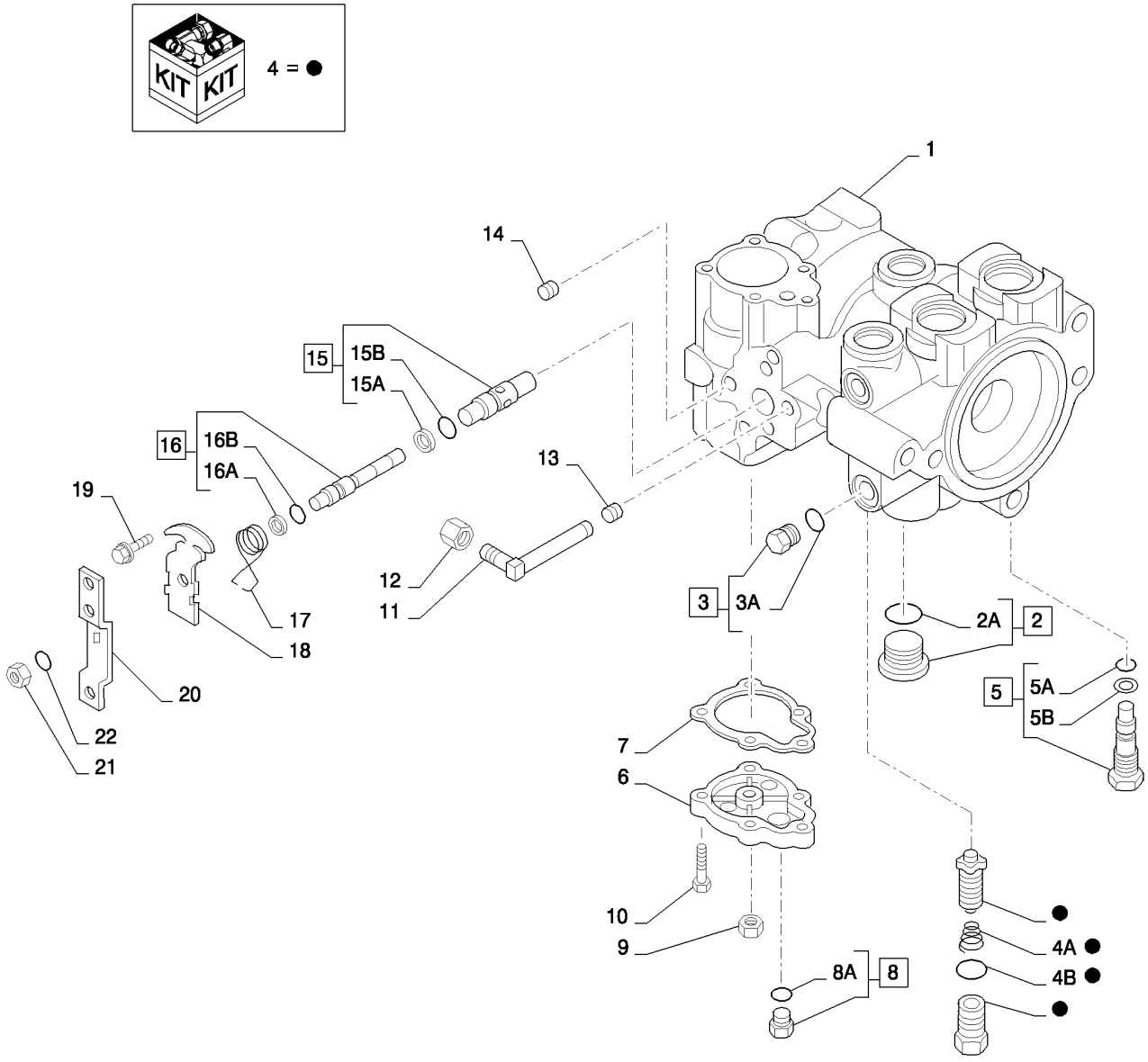

PUMP, HYDROSTATC TANDEM 46CC MDC REAR (SR200,SR220,SV250)
PUMP, HYDROSTATC TANDEM 46CC MDC REAR (SR200,SR220,SV250)
PUMP, HYDROSTATC TANDEM 46CC MDC REAR (SR200,SR220,SV250)
PUMP, HYDROSTATC TANDEM 46CC MDC REAR (SR200,SR220,SV250)

R	N	P.N.	MOD	Q	Denominação Description	Description Bezeichnung	Denominacion Beskrivelse	Descrizione Beschrijving	L.C.
13		86993479		1	BUJÃO, Pipe	PLUG	TAPÓN	TAPPO	050T
					BOUCHON	STOPFEN	PROP	PLUG	
14		F23137		1	BUJAO	PLUG	TAPON	TAPPO	6400
					BOUCHON	STOPFEN	PLUG	PLUG	
15		87039615		1	LUVA, Assembly	SLEEVE	MANGUITO	MANICOTTO	145B
					CHEMISE	BUCHSE	BØSNING	HOES; HULS	
15A		86993483		2	ANEL, Backup, .643	RING	ANILLO	ANELLO	045A
					ANNEAU	RING	RING	RING	
15B		NSS			SEM SERVIÇO EM SEPARADO, O-Ring				
						NOT SERVICED SEPARA	NO SE REPARA POR SE	NON FORNITO SEPARAT	064N
					NON FORUNI SEPAREM	NICHT A SEP ERS-T LIEI	SERVICERES IKKE SEPA	NIET LOS VERKRIJGBAA	
16		87042542		1	CARRETO, Assembly	SPOOL	BOBINA	STELO	134P
					TIROIR	KOLBENSCHIEBER	SPOLE	SPOEL	
16A		86993484		2	ANEL	RING	ANILLO	ANELLO	045A
					ANNEAU	RING	RING	RING	
16B		86993475		2	O-RING	O-RING	JUNTA TÓRICA	ANELLO TOROIDALE	055A
					JOINT TORIQUE	O-RING	O-RING	O-RING	
17		N13248		1	MOLA	SPRING	MUELLE	MOLLA	8315
					RESSORT	FEDER	SPRING	SPRING	
18		N13250		1	SUPORTE	BRACKET	SOPORTE	STAFFA	1010
					CONSOLE	HALTER	BRACKET	BRACKET	
19		H435770		2	PARAFUSO	SCREW	TORNILLO	VITE	7450
					VIS	SCHRAUBE	SCREW	SCREW	
20		100713A1		1	ALAVANCA, Handle	LEVER	PALANCA	LEVA	5110
					LEVIER	HEBEL	LEVER	LEVER	
21		H436054		1	PORCA	NUT	TUERCA	DADO	5780
					ECROU	MUTTER	NUT	NUT	
22		493-41033		1	TRAVA DA ARRUELA, Ext Tooth, 5/16"				
						LOCK WASHER	ARANDELA DE BLOQUE	RONDELLA DI SICUREZ	132R
					RONDELLE FREIN	SICHERUNGSSCHEIBE	LÅSESKIVE	BORGRING	

29.212.06	06	p1	02/11

PUMP, HYDROSTATC TANDEM 46CC MDC REAR (SR200.SR220,SV250)
PUMP, HYDROSTATC TANDEM 46CC MDC REAR (SR200.SR220,SV250)
PUMP, HYDROSTATC TANDEM 46CC MDC REAR (SR200.SR220,SV250)
PUMP, HYDROSTATC TANDEM 46CC MDC REAR (SR200.SR220,SV250)

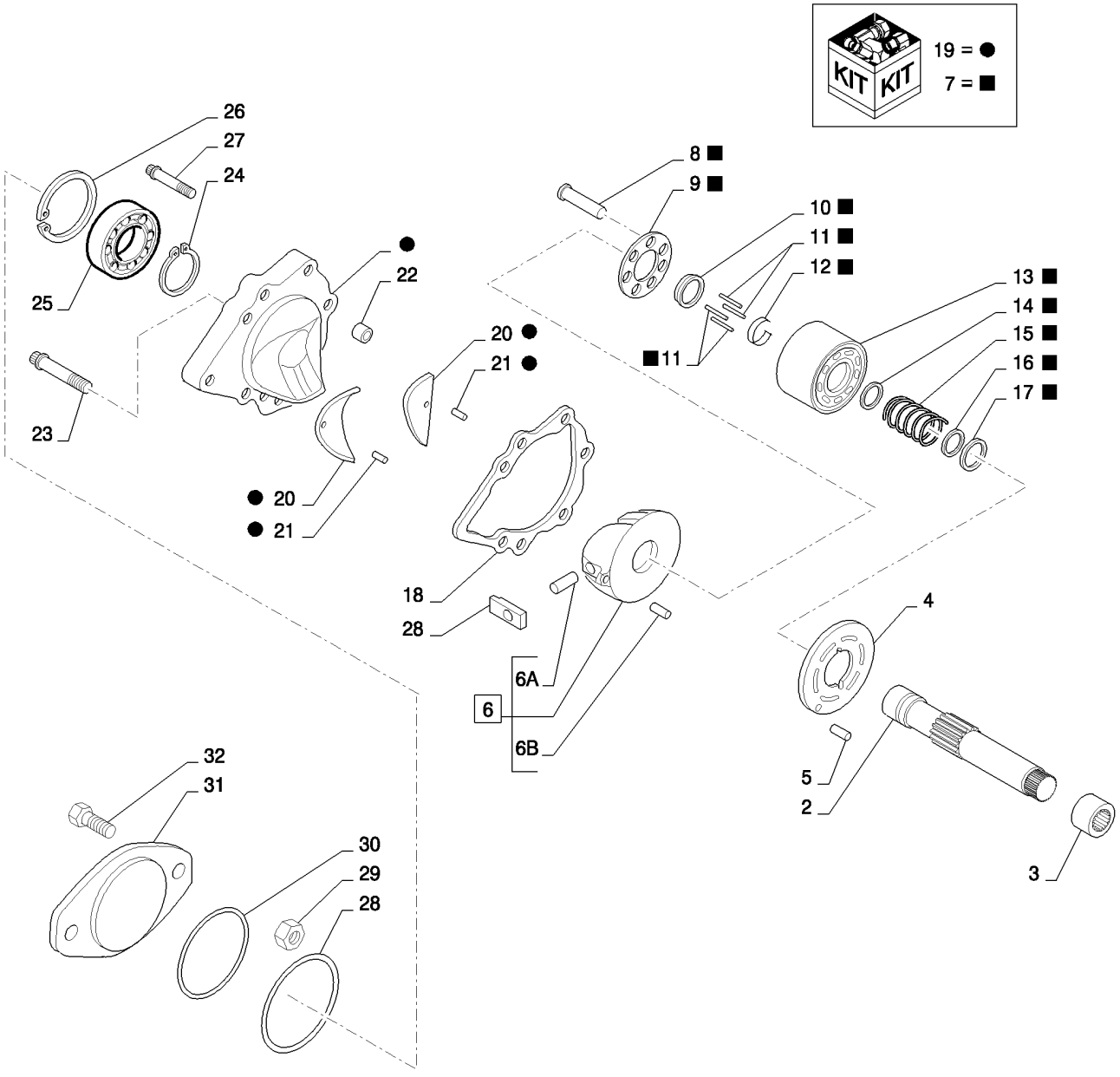

PUMP, HYDROSTATC TANDEM 46CC MDC REAR (SR200.SR220,SV250)
PUMP, HYDROSTATC TANDEM 46CC MDC REAR (SR200.SR220,SV250)
PUMP, HYDROSTATC TANDEM 46CC MDC REAR (SR200.SR220,SV250)
PUMP, HYDROSTATC TANDEM 46CC MDC REAR (SR200.SR220,SV250)

R	N	P.N.	MOD	Q	Denominação Description	Description Bezeichnung	Denominacion Beskrivelse	Descrizione Beschrijving	L.C.
1		402365A1		1	CARCACA, Rear CARTER	HOUSING GEHAEUSE	CARCASA HOUSING	ALLOGGIAMENTO HOUSING	4540
2		87039623		1	EIXO, Pump ARBRE	SHAFT WELLE	ARBOL SHAFT	ALBERO SHAFT	7590
3		1277297C1		1	ROLAMENTO, Needle ROULEMENT	BEARING LAGER	COJINETE LEJE	CUSCINETTO LAGER	0600
4		128929A1		1	PLACA ESPESSA, LH PLAQUE	PLATE, LARGE PLATTE, GROSS	PLACA PLATE, LARGE	PIASTRA, LARGA PLATE, LARGE	Z308
5		138-217		1	PINO DE FIXAÇÃO, 3/16" x 7/16", Slotted GOUPILLE DE BLOCAGE	LOCK PIN VERRIEGELUNGSSTIFT	PASADOR DE BLOQUEO LÅSETAP	PERNO DI BLOCCAGGIC BORGPEN	081P
6		87050523		1	PLACA CONJUNTO, Variable PLAQUE (ASSEMBLEE)	PLATE ASSY. PLATTE (KPLT.)	PLACA (CONJUNTO) PLATE ASSY.	PIASTRA, COMPLESSIVO PLATE ASSY.	P433
6A		N13254		2	PINO BROCHE	PIN STIFT	BOTADOR PIN	SPINA PIN	6200
6B		324610A1		2	PINO BROCHE	PIN PIN	PASADOR STIFT	PERNO PEN	080P
7		87039625		1	KIT, Cylinder Block KIT	KIT SATZ	KIT SÆT	KIT KIT	305C
8		NSS		14	SEM SERVIÇO EM SEPARADO, Piston Assembly NON FORUNI SEPAREM	NOT SERVICED SEPARA NICHT A SEP ERS-T LIEI	NO SE REPARA POR SE SERVICERES IKKE SEPA	NON FORNITO SEPARAT NIET LOS VERKRIJGBAA	064N
9		NSS		2	SEM SERVIÇO EM SEPARADO, Slipper Guide NON FORUNI SEPAREM	NOT SERVICED SEPARA NICHT A SEP ERS-T LIEI	NO SE REPARA POR SE SERVICERES IKKE SEPA	NON FORNITO SEPARAT NIET LOS VERKRIJGBAA	064N
10		115942A1		2	GUIA GUIDE	GUIDE FUEHRUNG	GUIA GUIDE	GUIDA GUIDE	4060
11		110873A1		6	PINO, Slipper, Hold-down BROCHE	PIN PIN	PASADOR STIFT	PERNO PEN	080P
12		115943A1		2	ANEL-TRAVA BAGUE DE BLOCAGE	LOCKING RING SICHERUNGSRING	ANILLO DE BLOQUEO LÅSESKIVE	ANELLO DI BLOCCAGGI BORGRING	051A
13		NSS		2	SEM SERVIÇO EM SEPARADO, Cylinder Block, Non-Bushed NON FORUNI SEPAREM	NOT SERVICED SEPARA NICHT A SEP ERS-T LIEI	NO SE REPARA POR SE SERVICERES IKKE SEPA	NON FORNITO SEPARAT NIET LOS VERKRIJGBAA	064N
14		115946A1		2	DISCO, Washer DISQUE	DISC SCHEIBE	DISCO DISC	DISCO DISC	2700
15		115948A1		2	MOLA RESSORT	SPRING FEDER	MUELLE SPRING	MOLLA SPRING	8315
16		115950A1		2	DISCO, Washer DISQUE	DISC SCHEIBE	DISCO DISC	DISCO DISC	2700
17		NSS		2	SEM SERVIÇO EM SEPARADO, Retaining Ring NON FORUNI SEPAREM	NOT SERVICED SEPARA NICHT A SEP ERS-T LIEI	NO SE REPARA POR SE SERVICERES IKKE SEPA	NON FORNITO SEPARAT NIET LOS VERKRIJGBAA	064N
18		H436704		2	JUNTA JOINT	GASKET DICHTUNG	JUNTA GASKET	GUARNIZIONE GASKET	3720
19		84383829		1	CONJUNTO DA TAMPA, Pump, Rear COUVERCLE	COVER ASSY ABDECKUNGSBAUGRUP	CONJUNTO DE FUNDAS DÆKSELENHED	COPERCHIO, COMPL AFSCHERMEENHEID	P426

29.212.06	06	p2	02/11

PUMP, HYDROSTATC TANDEM 46CC MDC REAR (SR200.SR220,SV250)
PUMP, HYDROSTATC TANDEM 46CC MDC REAR (SR200.SR220,SV250)
PUMP, HYDROSTATC TANDEM 46CC MDC REAR (SR200.SR220,SV250)
PUMP, HYDROSTATC TANDEM 46CC MDC REAR (SR200.SR220,SV250)

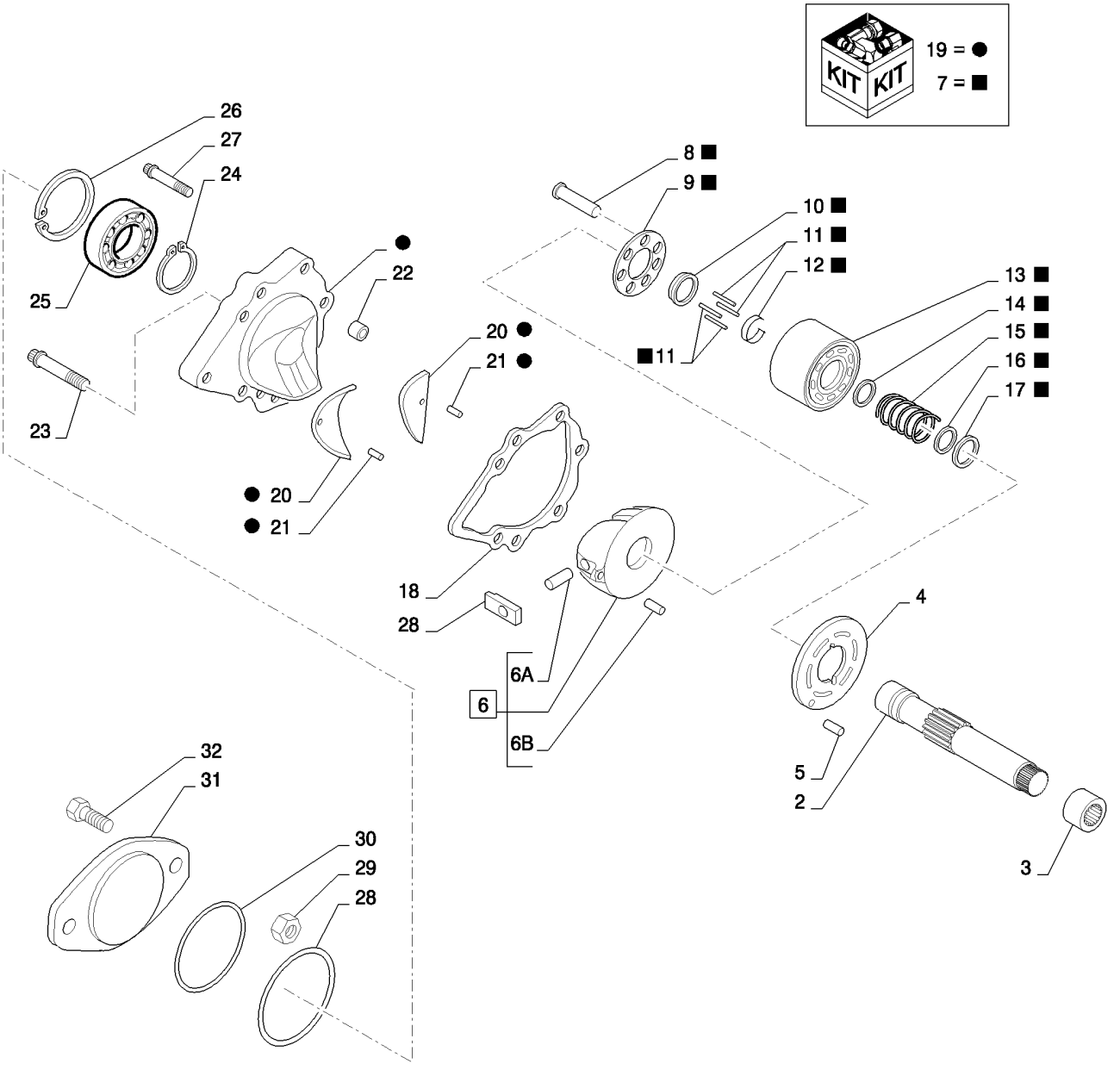

PUMP, HYDROSTATC TANDEM 46CC MDC REAR (SR200.SR220,SV250)
PUMP, HYDROSTATC TANDEM 46CC MDC REAR (SR200.SR220,SV250)
PUMP, HYDROSTATC TANDEM 46CC MDC REAR (SR200.SR220,SV250)
PUMP, HYDROSTATC TANDEM 46CC MDC REAR (SR200.SR220,SV250)

R	N	P.N.	MOD	Q	Denominação Description	Description Bezeichnung	Denominacion Beskrivelse	Descrizione Beschrijving	L.C.
20		193488A1		2	CAMISA DO ROLAMENTO, Journal				
						BEARING LINER	FORRO INTER. DE COJI	CANNA CUSCINETTO	P114
					COUSSINET	LAGERBUCHSE	LEJEFORING	LAGERVOERING	
21		193494A1		4	PINO ELASTICO	PIN, ROLL	PASADOR RODANTE	SPINA ELASTICA	P613
					GOUPILLE-ELASTIQUE	SPANNHUELSE	PIN, ROLL	PIN, ROLL	
22		N13994		2	ESPACADOR	SPACER	ESPACIADOR	DISTANZIALE	8090
					ENTRETOISE	ABSTANDSSTUECK	SPACER	SPACER	
23		223677A1		12	PARAFUSO	SCREW	TORNILLO	VITE	7450
					VIS	SCHRAUBE	SCREW	SCREW	
24		100-11137		3	ANEL DE PRESSÃO, #137, Ext				
						SNAP RING	ANILLO DE RESORTE	ANELLO ELASTICO	054A
					ANNEAU D'ARRET	SPRENGRING	LÅSERING	VEERRING	
25		A29183		1	ROLAMENTO ESFÉRICO, 34.994 mm ID x 71.9935 mm OD x 16.94 mm				
						BALL BEARING	RODAMIENTO DE BOLA	CUSCINETTO A SFERE	343C
					ROULEMENT A BILLES	KUGELLAGER	KUGLELEJE	KOGELLAGER	
26		F61018		3	ANEL DE PRESSÃO, 2.812", Int, #281				
						SNAP RING	ANILLO DE RESORTE	ANELLO ELASTICO	054A
					ANNEAU D'ARRET	SPRENGRING	LÅSERING	VEERRING	
27		223680A1		2	PARAFUSO ESPECIAL, Screw				
						SPECIAL BOLT	PERNO ESPECIAL	BULLONE SPECIALE	P698
					VIS SPECIALE	SPEZIALSCHRAUBE	SPECIALBOLT	SPECIALE BOUT	
28		N13224		2	CAMISA	SLEEVE	CAMISA	MANICOTTO	8000
					CHEMISE	HUELSE	SLEEVE	SLEEVE	
29		425-108		2	PORCA, 1/2"-13, G5	NUT	TUERCA	DADO	010D
					ECROU	MUTTER	MØTRIK	MOER	
30		87013729		1	O-RING, 3.739" ID x 3.879" OD x 0.07"				
						O-RING	JUNTA TÓRICA	ANELLO TOROIDALE	055A
					JOINT TORIQUE	O-RING	O-RING	O-RING	
31		NSS		1	SEM SERVIÇO EM SEPARADO, Cover Plate				
						NOT SERVICED SEPARA	NO SE REPARA POR SE	NON FORNITO SEPARAT	064N
					NON FORUNI SEPAREM	NICHT A SEP ERS-T LIEF	SERVICERES IKKE SEPA	NIET LOS VERKRIJGBAA	
32		13-836		2	PARAFUSO, Hex, 1/2"-13 x 2 1/4", G5				
						BOLT	PERNO	BULLONE	140B
					VIS	SCHRAUBE	BOLT	BOUT	

29.212.07		p1	02/11

PUMP, HYDROSTATIC EH 46CC A20VG ET (SR200,TR320-TV380)(SR220-SV300)
PUMP, HYDROSTATIC EH 46CC A20VG ET (SR200,TR320-TV380)(SR220-SV300)
PUMP, HYDROSTATIC EH 46CC A20VG ET (SR200,TR320-TV380)(SR220-SV300)
PUMP, HYDROSTATIC EH 46CC A20VG ET (SR200,TR320-TV380)(SR220-SV300)

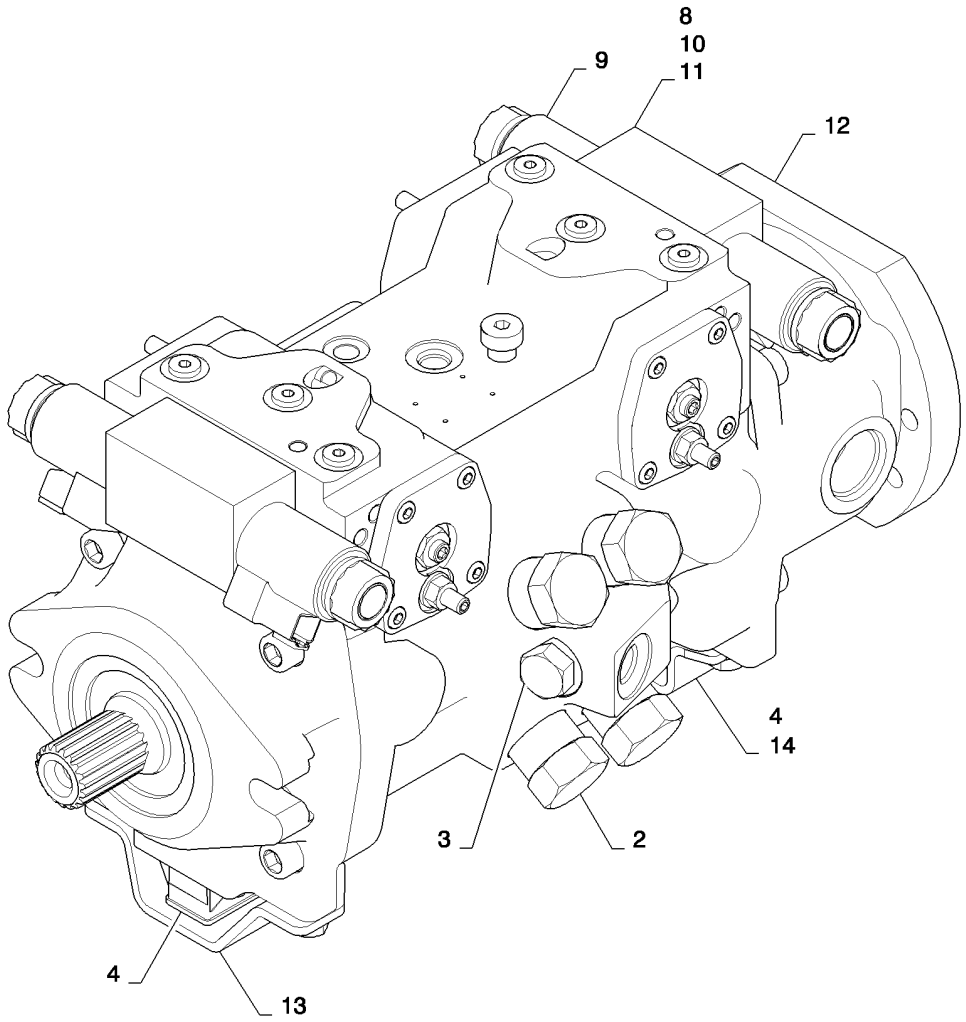

PUMP, HYDROSTATIC EH 46CC A20VG ET (SR200,TR320-TV380)(SR220-SV300)
PUMP, HYDROSTATIC EH 46CC A20VG ET (SR200,TR320-TV380)(SR220-SV300)
PUMP, HYDROSTATIC EH 46CC A20VG ET (SR200,TR320-TV380)(SR220-SV300)
PUMP, HYDROSTATIC EH 46CC A20VG ET (SR200,TR320-TV380)(SR220-SV300)

R	N	P.N.	MOD	Q	Denominação Description Bezeichnung	Denominacion Beskrivelse	Descrizione Beschrijving	L.C.
1		87627399		4	TAMPA, Set of Service Caps CAP CAPUCHON KAPPE	TAPÓN TANKDÆKSEL	TAPPO DOP	052T
2		87614031		4	VÁLVULA ALÍVIO DA PRESSÃO, 360 Bar PRESSURE RELIEF VALV CLAPET DECHARGE PRI DRUCKENTLASTUNGSV	VÁLV. ALIVIO DE PRESI(SIKKERHEDSVENTIL	VALV. LIMITATRICE PRE OVERDRUKKLEP	007V
3		87553604		1	VÁLVULA ALÍVIO DA PRESSÃO PRESSURE RELIEF VALV CLAPET DECHARGE PRI DRUCKENTLASTUNGSV	VÁLV. ALIVIO DE PRESI(SIKKERHEDSVENTIL	VALV. LIMITATRICE PRE OVERDRUKKLEP	007V
4		84356794		2	SENSOR, Angle, A20 PumpSENSOR CAPTEUR SENSOR	SENSOR FØLER	SENSORE SENSOR	608S
5		84389755		2	VEDAÇÃO, V-Ring (Not Shown) SEAL JOINT DICHTUNG	ANILLO DE CIERRE PAKNING	GUARNIZIONE; TENUTA AFDICHTING	132A
6		84389757		1	VEDAÇÃO, Shaft (Not Shown) SEAL JOINT DICHTUNG	ANILLO DE CIERRE PAKNING	GUARNIZIONE; TENUTA AFDICHTING	132A
7		84389758		4	PORCA, Seal Lock (Not Shown) NUT ECROU MUTTER	TUERCA MØTRIK	DADO MOER	010D
8		84389759		1	MÓDULO, A20ET Control Complete; Incl. Ref. 9, 10, 11 MODULE MODULE MODUL	MÓDULO MODUL	MODULO MODULE	T102
9		84389760		4	BOBINA, Proportional Solenoid COIL BOBINE SPULE	BOBINA SPOLE	BOBINA SPOEL	083B
10		84389762		1	MÓDULO, A20 ET Control w/o Coils MODULE MODULE MODUL	MÓDULO MODUL	MODULO MODULE	T102
11		84389763		1	JUNTA, A20 ET Control Module GASKET JOINT DICHTUNG	JUNTA PAKNING	GUARNIZIONE PAKKING	123G
12		84389765		1	BOMBA HIDRÁULICA, A20 Charge HYDRAULIC PUMP POMPE HYDRAULIQUE HYDRAULIKPUMPE	BOMBA HIDRÁULICO HYDRAULIKPUMPE	POMPA IDRAULICA HYDRAULISCHE POMP	155P
13		84389781		1	PROTEÇÃO, A20 Front Angle Sensor SHIELD PROTECTION SCHILD	PROTECCIÓN BESKYTTELSESKÆRM	PROTEZIONE AFSCHERMING	224P
14		84389782		1	PROTEÇÃO, A20 Rear Angle Sensor SHIELD PROTECTION SCHILD	PROTECCIÓN BESKYTTELSESKÆRM	PROTEZIONE AFSCHERMING	224P

SR200

SECTION INDEX
35 - Sistemas hidráulicos

35.100.01		CHASSIS HYDRAULICS (SR200,TR270)
35.101.02		SELF LEVELING - NONE MED LG (SR175-TV380)
35.102.01		RIDE CONTROL (SR175-TV380)
35.102.02		RIDE CONTROL - NONE (SR175-TV380)
35.204.01		MANUAL COUPLER, TAN (SR175-TV380)
35.204.02	01	HYDRAULIC COUPLER, ARM PLUMBING (SR175,SR200,TR270)
35.204.02	02	HYDRAULIC COUPLER (SR175,SR200)
35.204.02	02	HYDRAULIC COUPLER - BASIC GRAY (SR175-TV380)
35.204.02	03	HYDRAULIC COUPLER CHASSIS PLUMBING - BASIC(SR175-TV380)
35.220.01		AUX HYD, STD FLOW (SR200)
35.220.01	01	AUX HYD, STD C.U.P. (SR200)
35.220.01	02	AUX HYD, STD, GEAR PUMP (SR200)
35.220.01	03	AUX HYD, STD, CHASSIS PLUMBING (SR175)(SR200)
35.220.01	04	AUX HYD, STD, ARM PLUMBING (SR175)(SR200)(SR220,SR250,TR320)
35.220.01	04	AUX HYD, STD C.U.P. ARM PLUMBING (SR175)(SR200)
35.220.02	01	AUX HYD, HIGH FLOW (SR200)
35.220.02	02	AUX HYD, HIGH FLOW, GEAR PUMP (SR200)
35.220.02	03	AUX HYD, HIGH FLOW (SR175)(SR200)
35.220.02	04	AUX HYD, HIGH FLOW, ARM PLUMBING (SR175)(SR200)
35.359.01	01	PUMP, EH AND CONTROL VALVE (SR200)
35.359.01	02	PUMP, EH AND CONTROL VALVE (SR200)
35.359.02	01	PUMP, MECHANICAL (SR130-SR220)
35.359.02	01	PUMP, MECHANICAL AND HAND CONTROL VALVE (SR200)
35.359.02	02	PUMP, MECHANICAL AND HAND CONTROL VALVE (SR200)
35.359.03		CONTROL VALVE, EH W/ HARNESS (ALL CASE)
35.359.04		CONTROL VALVE, MECHANICAL HAND EH AUX (SR130-SV300)
35.701.01		LOADER HYDRAULICS (SR175,SR200,SR220,SR250,TR270,TR320)
35.701.02		LOADER VALVE PLUMBING (SR175,SR200,TR270)
35.701.03		SUPPLY PLUMBING (LOADER VALVE) (SR200,TR270)
35.701.04		RETURN PLUMBING (LOADER VALVE) (SR175,SV185,SR200,TR270)
35.701.05		2SPD PLUMBING (SR200)
35.701.06		BRAKE PLUMBING (SR200)
35.701.06	02	BRAKE PLUMBING (SR130 - SV300)
35.730.01		HYDRAULIC CYLINDER (SR200,TR270)
35.730.02		BUCKET CYLINDER (SR175,SR200,TR270)
35.750.01		TANK, HYDRAULIC (SR130,SR150,SR175,SR200,SR220,SR250,TR270,TR320)

35.100.01		p1	01/11

CHASSIS HYDRAULICS (SR200,TR270)
CHASSIS HYDRAULICS (SR200,TR270)
CHASSIS HYDRAULICS (SR200,TR270)
CHASSIS HYDRAULICS (SR200,TR270)

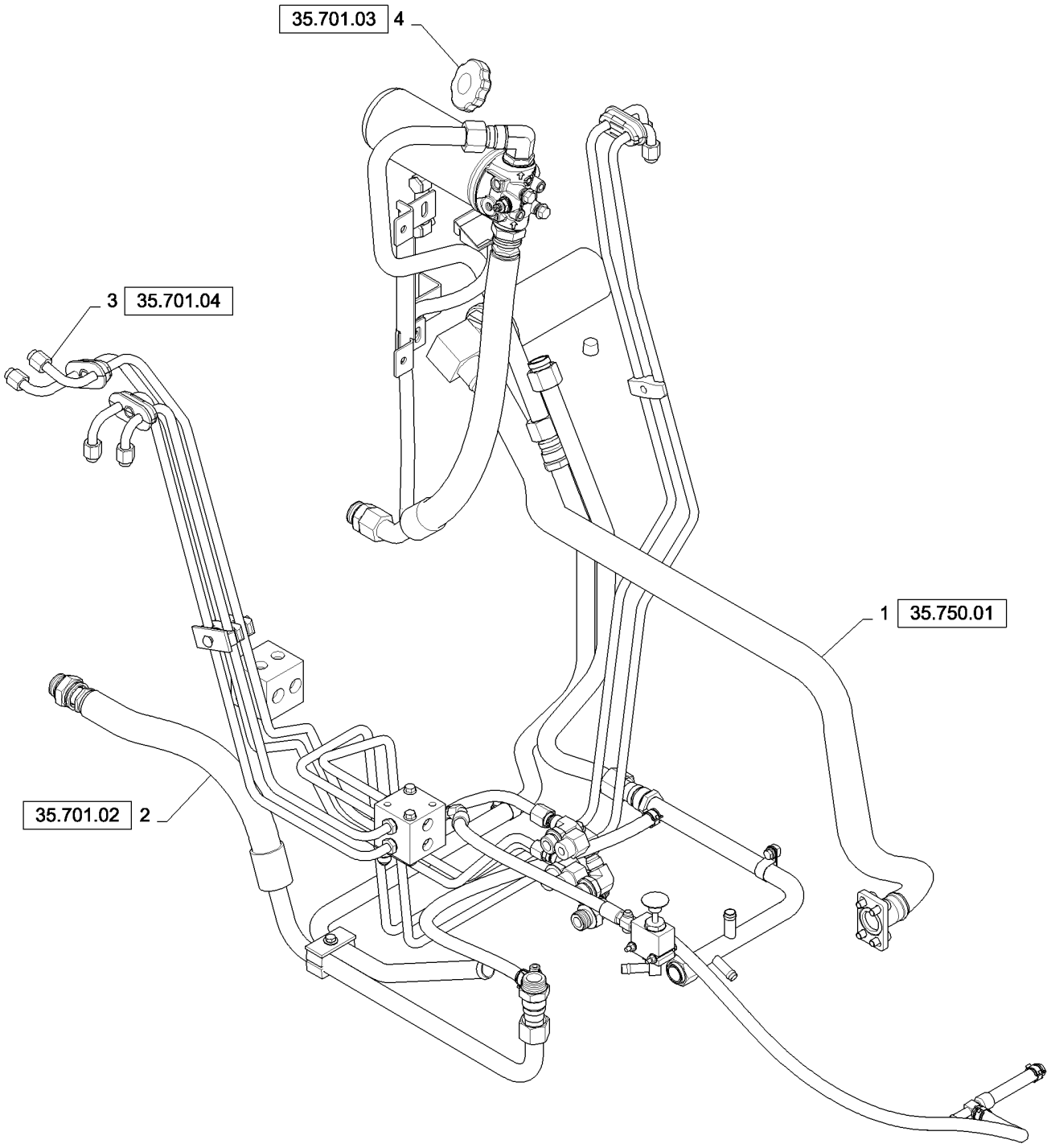

CHASSIS HYDRAULICS (SR200,TR270)
CHASSIS HYDRAULICS (SR200,TR270)
CHASSIS HYDRAULICS (SR200,TR270)
CHASSIS HYDRAULICS (SR200,TR270)

R	N	P.N.	MOD	Q	Denominação Description Bezeichnung Beschrijving	Description Denominacion Beskrivelse Descrizione	L.C.
1		NSS		1	SEM SERVIÇO EM SEPARADO, Loader Valve Plumbing NOT SERVICED SEPARA NO SE REPARA POR SE NON FORNITO SEPARAT NON FORUNI SEPAREM NICHT A SEP ERS-T LIEI SERVICERES IKKE SEPA NIET LOS VERKRIJGBAA	064N
2		NSS		1	SEM SERVIÇO EM SEPARADO, Supply Plumbing NOT SERVICED SEPARA NO SE REPARA POR SE NON FORNITO SEPARAT NON FORUNI SEPAREM NICHT A SEP ERS-T LIEI SERVICERES IKKE SEPA NIET LOS VERKRIJGBAA	064N
3		NSS		1	SEM SERVIÇO EM SEPARADO, Return Plumbing NOT SERVICED SEPARA NO SE REPARA POR SE NON FORNITO SEPARAT NON FORUNI SEPAREM NICHT A SEP ERS-T LIEI SERVICERES IKKE SEPA NIET LOS VERKRIJGBAA	064N
4		NSS		1	SEM SERVIÇO EM SEPARADO, Hydraulic Tank NOT SERVICED SEPARA NO SE REPARA POR SE NON FORNITO SEPARAT NON FORUNI SEPAREM NICHT A SEP ERS-T LIEI SERVICERES IKKE SEPA NIET LOS VERKRIJGBAA	064N

SELF LEVELING - NONE MED LG (SR175-TV380)
SELF LEVELING - NONE MED LG (SR175-TV380)
SELF LEVELING - NONE MED LG (SR175-TV380)
SELF LEVELING - NONE MED LG (SR175-TV380)

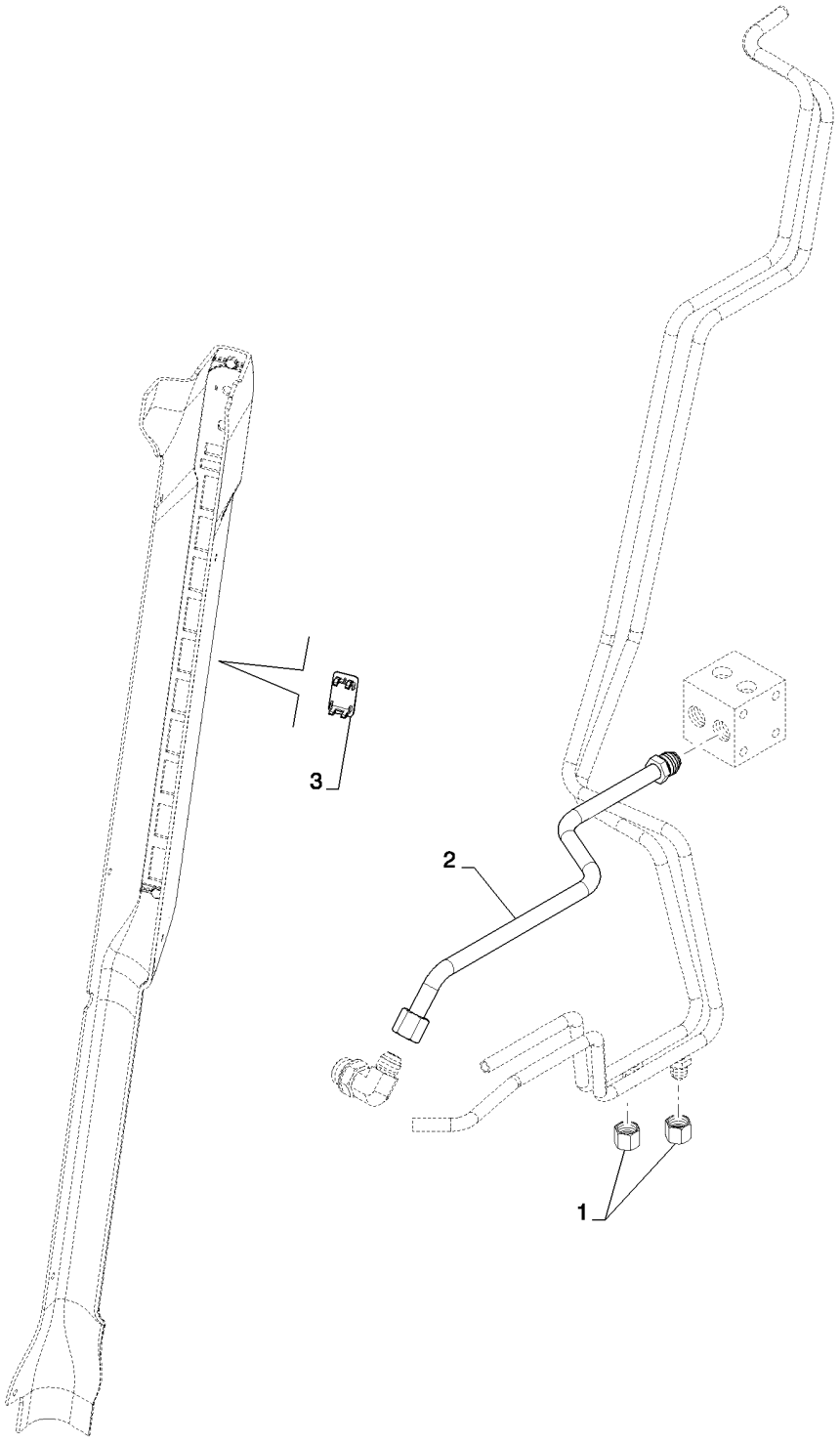

SELF LEVELING - NONE MED LG (SR175-TV380)
SELF LEVELING - NONE MED LG (SR175-TV380)
SELF LEVELING - NONE MED LG (SR175-TV380)
SELF LEVELING - NONE MED LG (SR175-TV380)

R	N	P.N.	MOD	Q	Denominação Description	Description Bezeichnung	Denominacion Beskrivelse	Descrizione Beschrijving	L.C.
1		262159		2	TAMPA, 37º, 3/4"-16 CAPUCHON	CAP KAPPE	TAPÓN TANKDÆKSEL	TAPPO DOP	052T
2		84186149		1	TUBO RÍGIDO, Assembly, Lower, LDR Valve to Manifold TUYAU RIGIDE	RIGID TUBE ROHR	TUBO RÍGIDO STIFT RØR	TUBO RIGIDO VASTE LEIDING	193T
3		126844A1		1	BUJÃO, Cover BOUCHON	PLUG STOPFEN	TAPÓN PROP	TAPPO PLUG	050T

35.102.01		p1	01/11

RIDE CONTROL (SR175-TV380)
RIDE CONTROL (SR175-TV380)
RIDE CONTROL (SR175-TV380)
RIDE CONTROL (SR175-TV380)

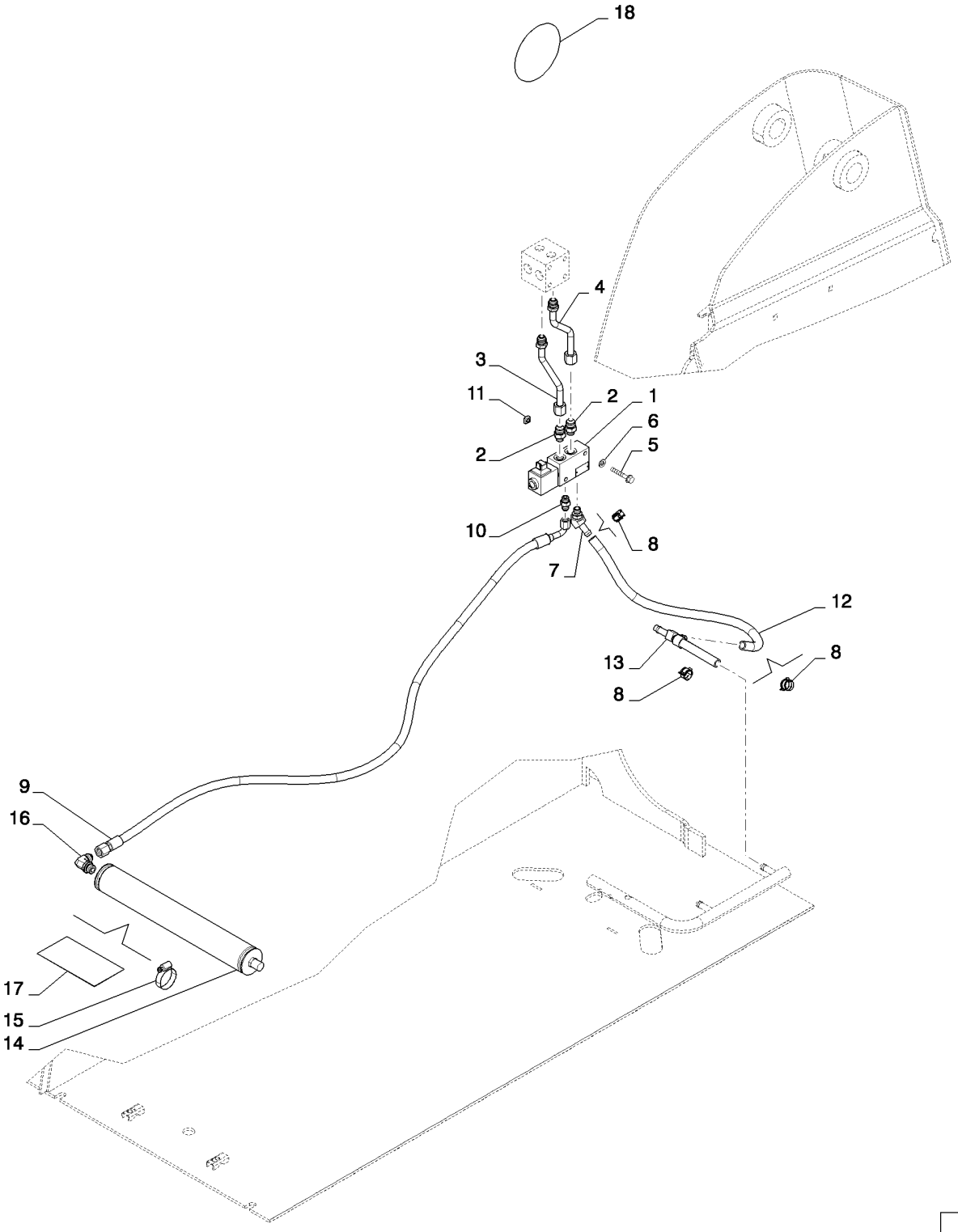

RIDE CONTROL (SR175-TV380)
RIDE CONTROL (SR175-TV380)
RIDE CONTROL (SR175-TV380)
RIDE CONTROL (SR175-TV380)

R	N	P.N.	MOD	Q	Denominação Description Description Bezeichnung Denominacion Beskrivelse Descrizione Beschrijving	L.C.
1		84256404		1	VÁLVULA HIDRÁULICA, Ride Control HYDRAULIC VALVE / VÁLVULA HIDRÁULICA / DISTRIBUTORE IDRAULI SOUPAPE HYDRAULIQU / HYDRAULIKVENTIL / HYDRAULIKVENTIL / HYDRAULISCHE KLEP	010V
2		86509028		2	CONECTOR HIDRÁUL, 3/4"-16, 37º x 9/16"-18, O-Ring HYD CONNECTOR / CONECTOR HIDRÁULIC / CONNETTORE IDRAULI CONNECTEUR HYDRAU / HYDR STECKVERBINDE / HYDRAULIKSTIK / HYDRAULISCHE AANSLU	020R
3		84375899		1	TUBO RÍGIDO, Hydraulic, Ride Control to Manifold RIGID TUBE / TUBO RÍGIDO / TUBO RIGIDO TUYAU RIGIDE / ROHR / STIFT RØR / VASTE LEIDING	193T
4		84375901		1	TUBO RÍGIDO, Hydraulic, Ride Control to Manifold RIGID TUBE / TUBO RÍGIDO / TUBO RIGIDO TUYAU RIGIDE / ROHR / STIFT RØR / VASTE LEIDING	193T
5		86511481		2	PARAFUSO, Hex Flg, M8 x 50, 8.8 BOLT / PERNO / BULLONE VIS / SCHRAUBE / BOLT / BOUT	140B
6		87655042		2	ARRUELA ESPECIAL, M8, 8.80 X 17.5 X 2.2 HTS SPECIAL WASHER / ARANDELA ESPECIAL / RONDELLA SPECIALE RONDELLE SPECIALE / SPEZIALUNTERLEGSCH / SPECIALSKIVE / SPECIALE RING	Z333
7		87302140		1	CONEXÃO, 45º, 1/2" Hose x 9/16"-18 ORB Beaded FITTING / ACOPLAMIENTO / RACCORDO RACCORD / ARMATUR / FITTING / AANSLUITING	3300
8		87443510		3	BRAÇADEIRA MANGUEIRA, M20 HOSE CLAMP / ABRAZADERA DE MANG / FASCETTA STRINGITUB COLLIER POUR FLEXIBL / SCHLAUCHSCHELLE / SLANGEKLEMME / SLANGKLEM	P729
9		84331280		1	MANGUEIRA, Assembly, RC Valve to ACC HOSE / TUBO / TUBO FLESSIBILE FLEXIBLE / SCHLAUCH / SLANGE / SLANG	030M
10		76350		1	CONECTOR HIDRÁUL, 9/16"-18, 37º x 9/16"-18, O-Ring HYD CONNECTOR / CONECTOR HIDRÁULIC / CONNETTORE IDRAULI CONNECTEUR HYDRAU / HYDR STECKVERBINDE / HYDRAULIKSTIK / HYDRAULISCHE AANSLU	020R
11		229197A1		2	PORCA, Square / NUT / TUERCA / DADO ECROU / MUTTER / NUT / NUT	5780
12		84259548		1	MANGUEIRA, LOL, Ride Control Drain HOSE / TUBO / TUBO FLESSIBILE FLEXIBLE / SCHLAUCH / SLANGE / SLANG	030M
13		84259682		1	CONEXÃO EM T, Assembly, Option UNION TEE / RACOR EN T / RACCORDO A T RACCORD EN T / T-VERSCHRAUBUNG / T-FORSKRUNING / KOPPEL-T-STUK	A134
14		87403797		1	ACUMULADOR, Hydraulic / ACCUMULATOR / ACUMULADOR / ACCUMULATORE ACCUMULATEUR / DRUCKSPEICHER / AKKUMULATOR / ACCUMULATOR	037A
15		86624194		2	BRAÇADEIRA MANGUEIRA, #36, 1.81/2.75 Type F Worm HOSE CLAMP / ABRAZADERA DE MANG / FASCETTA STRINGITUB COLLIER POUR FLEXIBL / SCHLAUCHSCHELLE / SLANGEKLEMME / SLANGKLEM	P729
16		128830		1	COTOVELO, 90º, 3/4"-16, 37º x 3/4"-16, O-Ring ELBOW / CODO / GOMITO COUDE / KNIESTÜCK / VINKELRØR / KNIESTUK	085G

35.102.01		p2	01/11

RIDE CONTROL (SR175-TV380)
RIDE CONTROL (SR175-TV380)
RIDE CONTROL (SR175-TV380)
RIDE CONTROL (SR175-TV380)

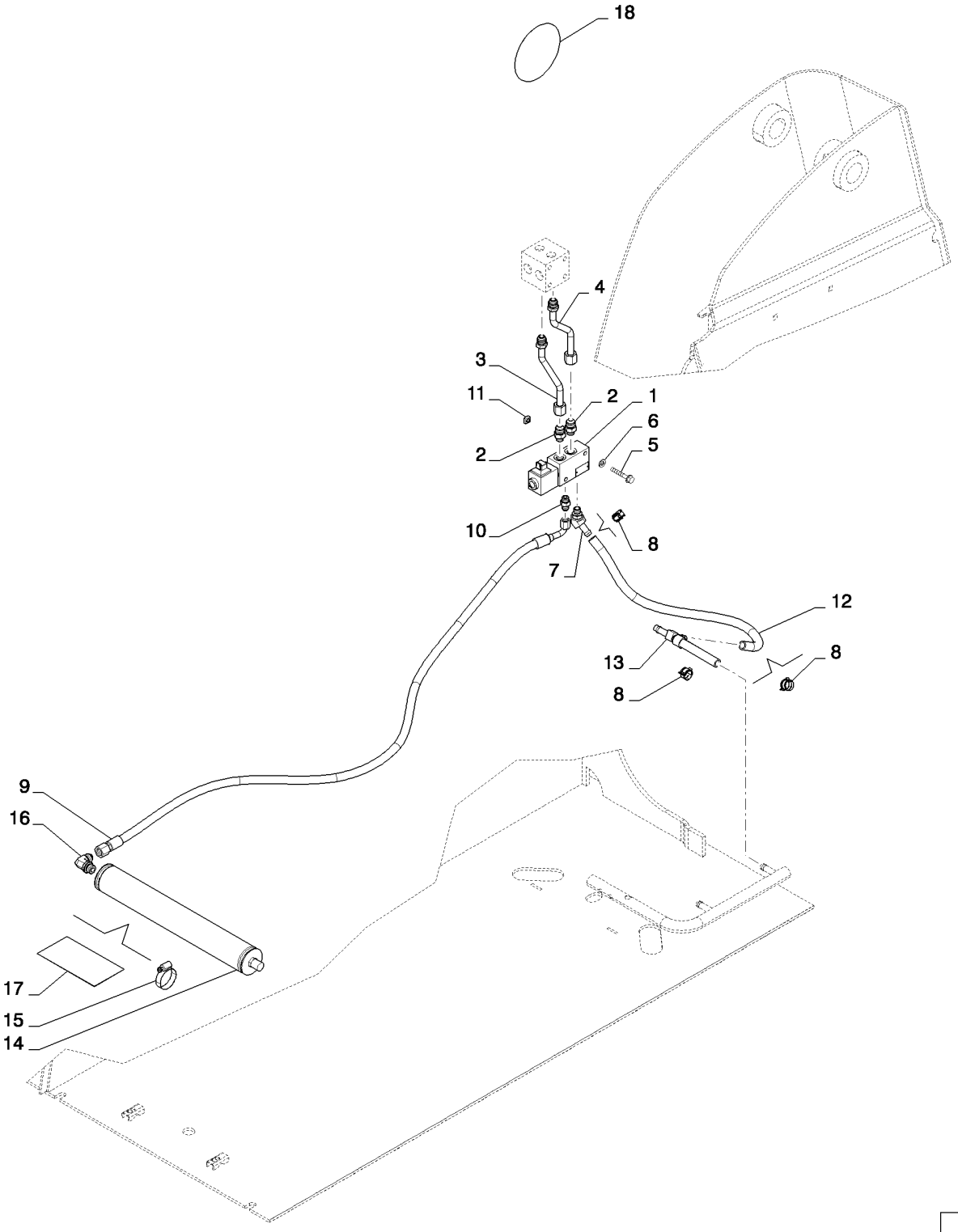

RIDE CONTROL (SR175-TV380)
RIDE CONTROL (SR175-TV380)
RIDE CONTROL (SR175-TV380)
RIDE CONTROL (SR175-TV380)

R	N	P.N.	MOD	Q	Denominação Description Bezeichnung Denominacion Beskrivelse Descrizione Beschrijving	L.C.
17		**328903A1**		1	DECALCOMANIA, Warning - Pressurized System DECAL CALCOMANIA AUTOADESIVO DECALCOMANIE ABZIEHBILD DECAL DECAL	P903
18		**304083A1**		2	DECALCOMANIA, Ride Control Option DECAL CALCOMANIA AUTOADESIVO DECALCOMANIE ABZIEHBILD DECAL DECAL	P903

RIDE CONTROL - NONE (SR175-TV380)
RIDE CONTROL - NONE (SR175-TV380)
RIDE CONTROL - NONE (SR175-TV380)
RIDE CONTROL - NONE (SR175-TV380)

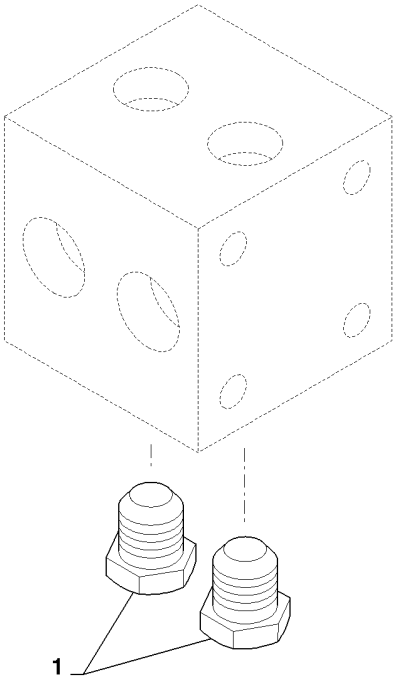

RIDE CONTROL - NONE (SR175-TV380)
RIDE CONTROL - NONE (SR175-TV380)
RIDE CONTROL - NONE (SR175-TV380)
RIDE CONTROL - NONE (SR175-TV380)

R	N	P.N.	MOD	Q	Denominação Description	Description Bezeichnung	Denominacion Beskrivelse	Descrizione Beschrijving	L.C.
1		86511868		2	BUJÃO, 3/4"-16, 37° BOUCHON	PLUG STOPFEN	TAPÓN PROP	TAPPO PLUG	050T

35.204.01		p1	03/11

MANUAL COUPLER, TAN (SR175-TV380)
MANUAL COUPLER, TAN (SR175-TV380)
MANUAL COUPLER, TAN (SR175-TV380)
MANUAL COUPLER, TAN (SR175-TV380)

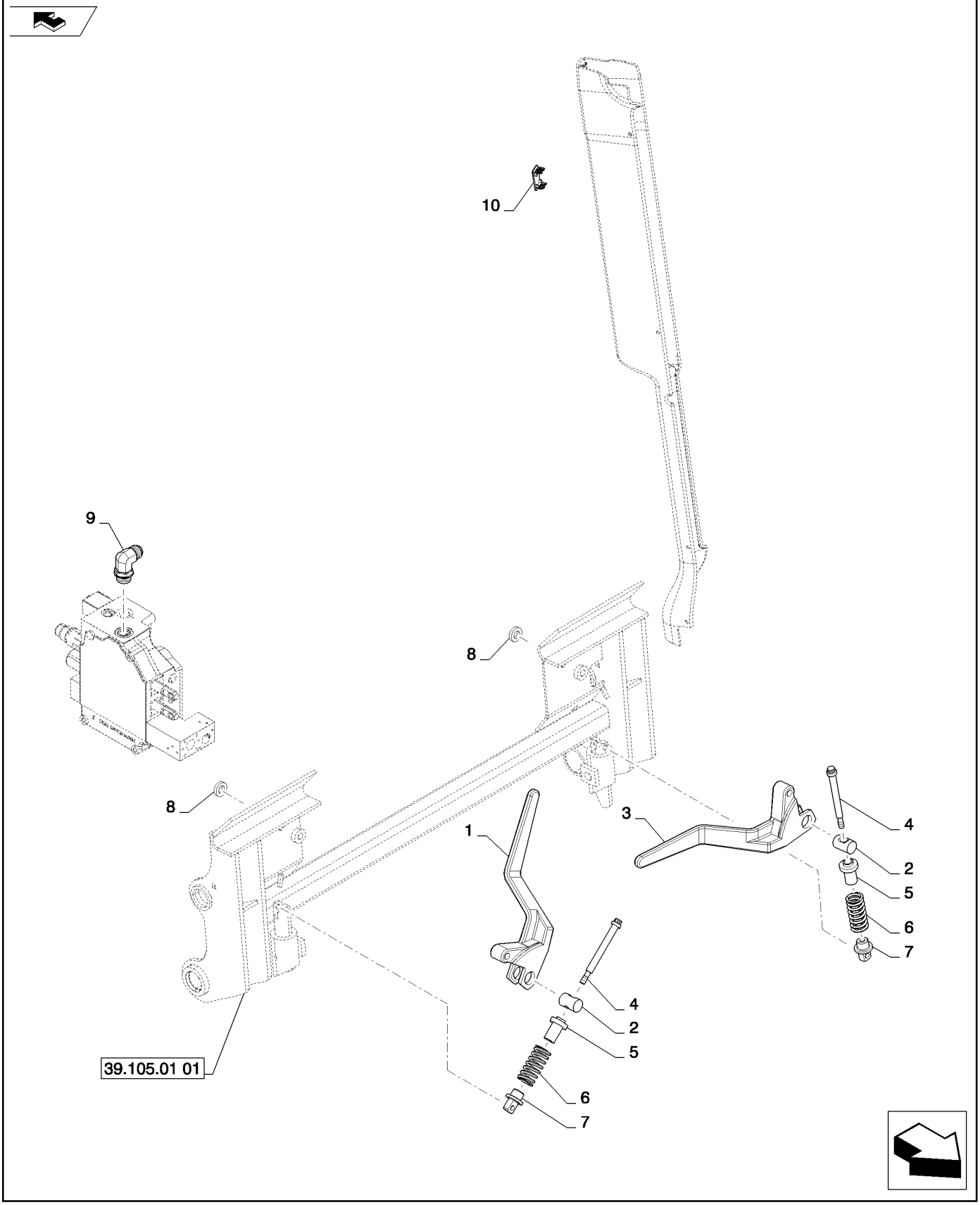

MANUAL COUPLER, TAN (SR175-TV380)
MANUAL COUPLER, TAN (SR175-TV380)
MANUAL COUPLER, TAN (SR175-TV380)
MANUAL COUPLER, TAN (SR175-TV380)

R	N	P.N.	MOD	Q	Denominação Description	Description Bezeichnung	Denominacion Beskrivelse	Descrizione Beschrijving	L.C.
1		86633196		1	MANILHA, RH Painted, CE Gray				
						HANDLE	MANECILLA	MANIGLIA	020M
					POIGNEE	GRIFF	HÅNDTAG	HENDEL	
2		9829733		2	PINO	PIN	PASADOR	PERNO	080P
					BROCHE	PIN	STIFT	PEN	
3		86633195		1	MANILHA, LH Painted, CE Gray				
						HANDLE	MANECILLA	MANIGLIA	020M
					POIGNEE	GRIFF	HÅNDTAG	HENDEL	
4		87533223		2	PINO, 12PT, 1/2in Shank, 3/8in Thread				
						PIN	PASADOR	PERNO	080P
					BROCHE	PIN	STIFT	PEN	
5		86610166		2	GUIA	GUIDE	GUÍA	GUIDA	145G
					GUIDE	FÜHRUNG	STYR	GELEIDER	
6		84218843		2	MOLA DE COMPRESSÃO	COMPRESSION SPRING	RESORTE DE COMPRES	MOLLA A COMPRESSIOI	Z641
					RESSORT DE COMPRES	DRUCKFEDER	TRYKFJEDER	COMPRESSIEVEER	
7		87579303		2	PINO, NH	PIN	PASADOR	PERNO	080P
					BROCHE	PIN	STIFT	PEN	
8		87655046		2	ARRUELA ESPECIAL, M10, 10.65 X 23.0 X 2.2MM HTS				
						SPECIAL WASHER	ARANDELA ESPECIAL	RONDELLA SPECIALE	Z333
					RONDELLE SPECIALE	SPEZIALUNTERLEGSCH	SPECIALSKIVE	SPECIALE RING	
9		322894		1	COTOVELO, 90º, 1 1/16"-12, 37º x 1 1/16"-12, O-Ring				
						ELBOW	CODO	GOMITO	085G
					COUDE	KNIESTÜCK	VINKELRØR	KNIESTUK	
10		126844A1		1	BUJÃO, Cover	PLUG	TAPÓN	TAPPO	050T
					BOUCHON	STOPFEN	PROP	PLUG	
11		87412041		2	ESPAÇADOR, Bushing (Not Shown)				
						SPACER	SEPARADOR	DISTANZIALE	075D
					ENTRETOISE	DISTANZSTÜCK	AFSTANDSSTYKKE	AFSTANDSSTUK	

35.204.02	01	p1	07/11

HYDRAULIC COUPLER, ARM PLUMBING (SR175,SR200,TR270)
HYDRAULIC COUPLER, ARM PLUMBING (SR175,SR200,TR270)
HYDRAULIC COUPLER, ARM PLUMBING (SR175,SR200,TR270)
HYDRAULIC COUPLER, ARM PLUMBING (SR175,SR200,TR270)

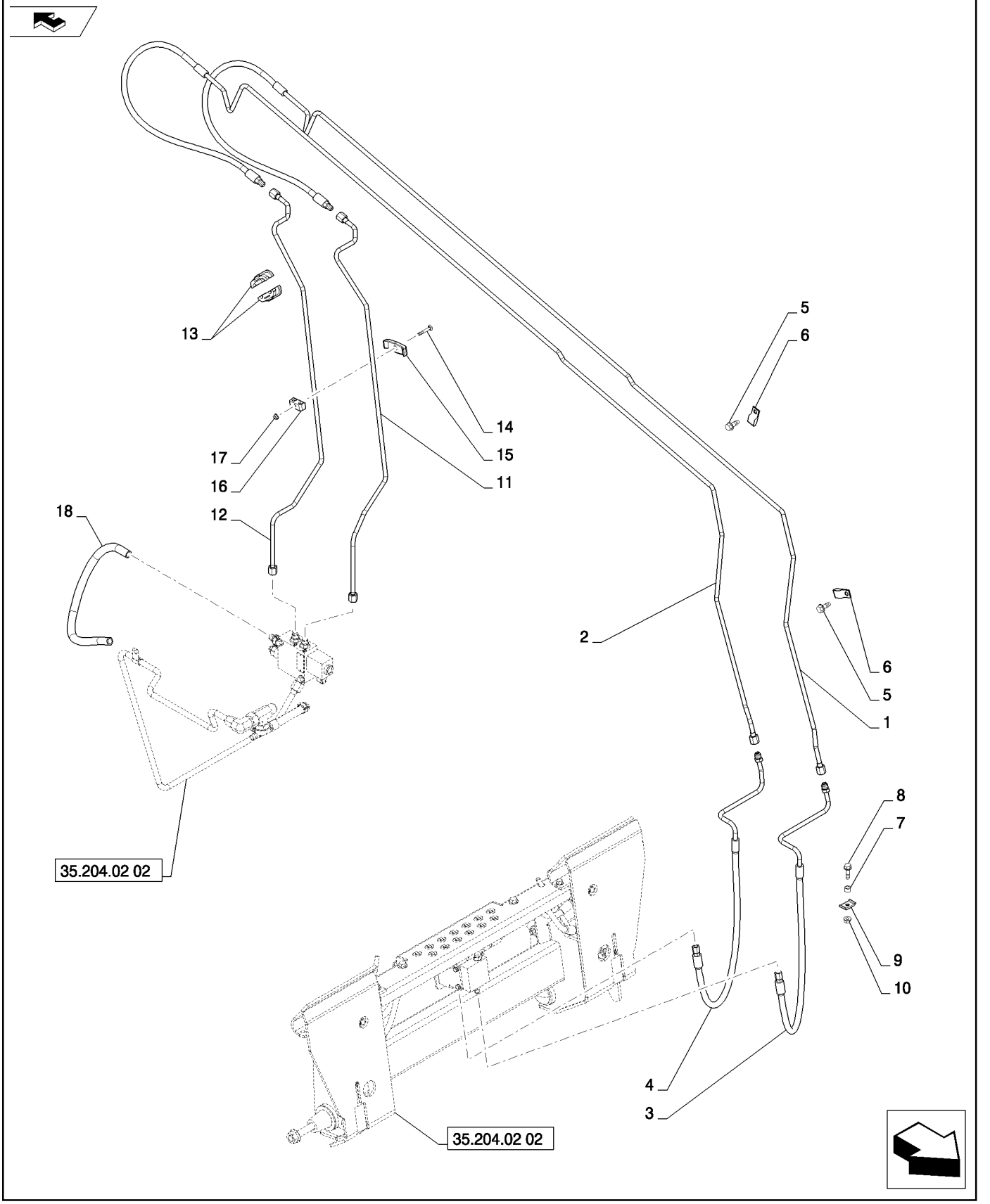

HYDRAULIC COUPLER, ARM PLUMBING (SR175,SR200,TR270)
HYDRAULIC COUPLER, ARM PLUMBING (SR175,SR200,TR270)
HYDRAULIC COUPLER, ARM PLUMBING (SR175,SR200,TR270)
HYDRAULIC COUPLER, ARM PLUMBING (SR175,SR200,TR270)

R	N	P.N.	MOD	Q	Denominação Description	Description Bezeichnung	Denominacion Beskrivelse	Descrizione Beschrijving	L.C.
1		84338470		1	TUBO HIDRÁULICO, Hydraulic Coupler				
						HYD. TUBE	TUBO HIDRÁULICO	TUBO IDRAULICO	190T
					TUYAU HYDRAULIQUE	HYDRAULIKLEITUNG	HYD. RØR	HYDRAULISCHE LEIDIN(	
2		84338472		1	TUBO HIDRÁULICO, Hydraulic Coupler				
						HYD. TUBE	TUBO HIDRÁULICO	TUBO IDRAULICO	190T
					TUYAU HYDRAULIQUE	HYDRAULIKLEITUNG	HYD. RØR	HYDRAULISCHE LEIDIN(	
3		84351545		1	TUBO HIDRÁULICO, Step to Coupler				
						HYD. TUBE	TUBO HIDRÁULICO	TUBO IDRAULICO	190T
					TUYAU HYDRAULIQUE	HYDRAULIKLEITUNG	HYD. RØR	HYDRAULISCHE LEIDIN(	
4		84351547		1	TUBO HIDRÁULICO, Step to Coupler				
						HYD. TUBE	TUBO HIDRÁULICO	TUBO IDRAULICO	190T
					TUYAU HYDRAULIQUE	HYDRAULIKLEITUNG	HYD. RØR	HYDRAULISCHE LEIDIN(	
5		280476		2	PARAFUSO, Hex Wash Hd, 3/8" x 1"				
						SELF-TAP SCREW	TORNILLO AUTORROSC	VITE AUTOFILETTANTE	062V
					VIS AUTOTARAUDEUSE	SELBSTSCHN SCHRAUE	SELVLÅSENDE BOLT	ZELFTAPPENDE SCHRO	
6		605025		2	BRAÇADEIRA, Insulated	CLAMP	ABRAZADERA	MORSETTO	120M
					COLLIER	KLEMME	SPÆNDEBÅND	KLEM	
7		87342191		1	ARRUELA PLANA, Spacer	WASHER	ARANDELA	RONDELLA	131R
					RONDELLE	UNTERLEGSCHEIBE	FLADSKIVE	SLUITRING	
8		9804260		1	PARAFUSO, Hex Flg, M8 x 30, 8.8, Full Thd				
						BOLT	PERNO	BULLONE	140B
					VIS	SCHRAUBE	BOLT	BOUT	
9		84254052		1	BRAÇADEIRA MANGUEIRA, Tube				
						HOSE CLAMP	ABRAZADERA DE MANG	FASCETTA STRINGITUB	P729
					COLLIER POUR FLEXIBL	SCHLAUCHSCHELLE	SLANGEKLEMME	SLANGKLEM	
10		9804277		1	PORCA, M8 x 1.25, Flg, Cl 8				
						NUT	TUERCA	DADO	010D
					ECROU	MUTTER	MØTRIK	MOER	
11		84259529		1	TUBO RÍGIDO, Hydraulic Coupler				
						RIGID TUBE	TUBO RÍGIDO	TUBO RIGIDO	193T
					TUYAU RIGIDE	ROHR	STIFT RØR	VASTE LEIDING	
12		84259531		1	TUBO RÍGIDO, Hydraulic Coupler				
						RIGID TUBE	TUBO RÍGIDO	TUBO RIGIDO	193T
					TUYAU RIGIDE	ROHR	STIFT RØR	VASTE LEIDING	
13		84277054		2	PEGA DE SUPORTE, Hydraulic Tube				
						BRACKET, SUPPORTING	PIEZA DE APOYO	SQUADRETTA	215S
					EQUERRE	TRAGER, STUTZ	BRACKET, SUPPORTING	BRACKET, SUPPORTING	
14		412327		1	PARAFUSO, Short NK, M6 x 40, Cl8.8				
						CARRIAGE BOLT	PERNO ALOMADO	BULLONE A TESTA TONI	P123
					VIS A TETE BOMBEE	SCHLOSSSCHRAUBE	BRÆDDEBOLT	SLOTBOUT	
15		D120614		1	BRACADEIRA, Tube	CLAMP	COLLAR	MORSETTO	1640
					COLLIER	SCHELLE	CLAMP	CLAMP	
16		604896		1	BRAÇADEIRA, Double	CLAMP	ABRAZADERA	MORSETTO	120M
					COLLIER	KLEMME	SPÆNDEBÅND	KLEM	
17		9804276		1	PORCA, M6 x 1, Flg, Cl 8	NUT	TUERCA	DADO	010D
					ECROU	MUTTER	MØTRIK	MOER	
18		84292314		1	MANGUEIRA, Hydraulic Coupler Drain				
						HOSE	TUBO	TUBO FLESSIBILE	030M
					FLEXIBLE	SCHLAUCH	SLANGE	SLANG	

SR200

35.204.02	02	p1	07/11

HYDRAULIC COUPLER (SR175,SR200)
HYDRAULIC COUPLER (SR175,SR200)
HYDRAULIC COUPLER (SR175,SR200)
HYDRAULIC COUPLER (SR175,SR200)

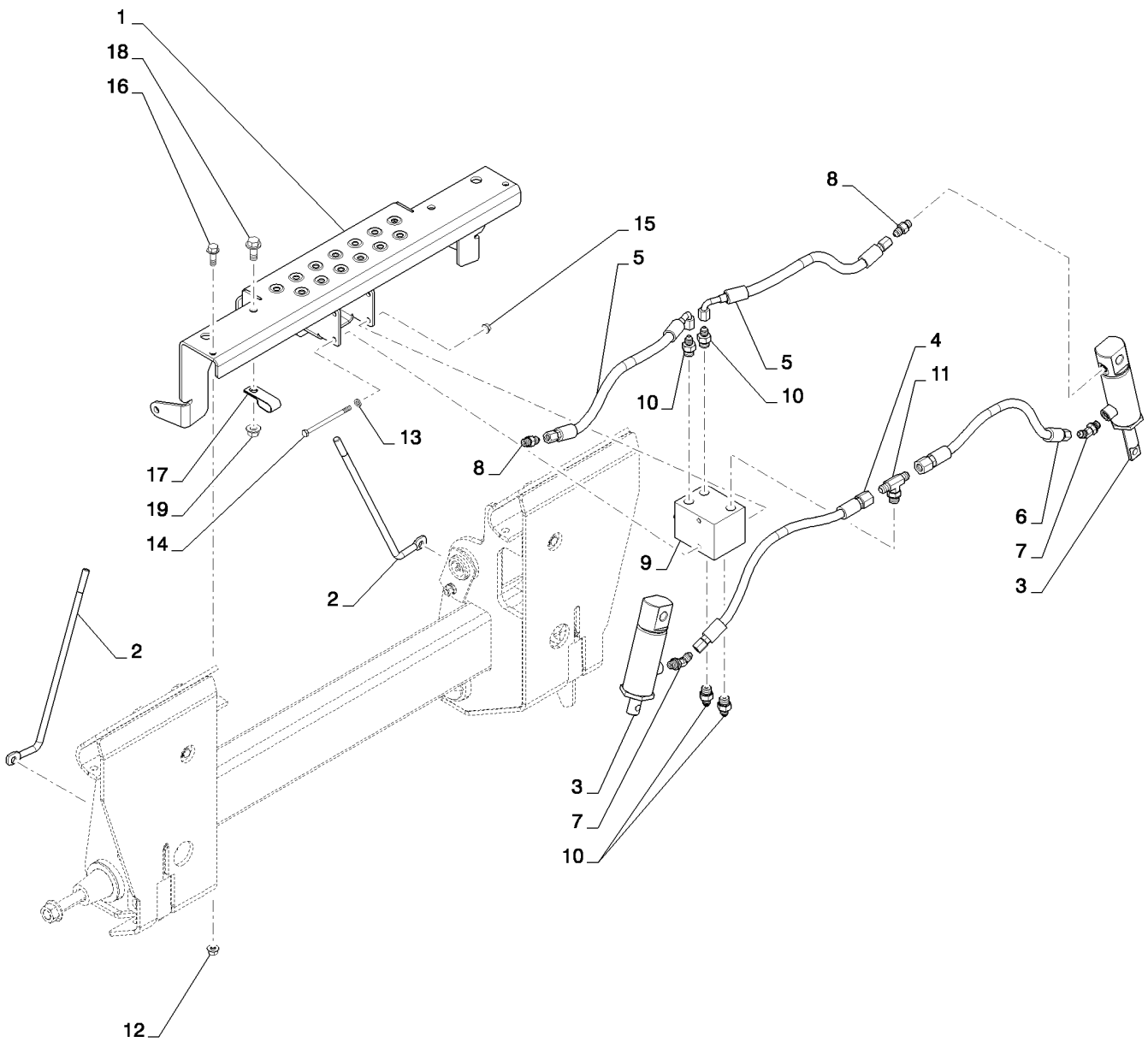

HYDRAULIC COUPLER (SR175,SR200)
HYDRAULIC COUPLER (SR175,SR200)
HYDRAULIC COUPLER (SR175,SR200)
HYDRAULIC COUPLER (SR175,SR200)

R	N	P.N.	MOD	Q	Denominação Description	Description Bezeichnung	Denominacion Beskrivelse	Descrizione Beschrijving	L.C.
1		84338470		1	TUBO HIDRÁULICO, Assembly, Coupler				
						HYD. TUBE	TUBO HIDRÁULICO	TUBO IDRAULICO	190T
					TUYAU HYDRAULIQUE	HYDRAULIKLEITUNG	HYD. RØR	HYDRAULISCHE LEIDIN(	
2		84338472		1	TUBO HIDRÁULICO, Assembly, Coupler				
						HYD. TUBE	TUBO HIDRÁULICO	TUBO IDRAULICO	190T
					TUYAU HYDRAULIQUE	HYDRAULIKLEITUNG	HYD. RØR	HYDRAULISCHE LEIDIN(	
3		84351545		1	TUBO HIDRÁULICO, Assembly, Step to Coupler				
						HYD. TUBE	TUBO HIDRÁULICO	TUBO IDRAULICO	190T
					TUYAU HYDRAULIQUE	HYDRAULIKLEITUNG	HYD. RØR	HYDRAULISCHE LEIDIN(	
4		84351547		1	TUBO HIDRÁULICO, Assembly, Step to Coupler				
						HYD. TUBE	TUBO HIDRÁULICO	TUBO IDRAULICO	190T
					TUYAU HYDRAULIQUE	HYDRAULIKLEITUNG	HYD. RØR	HYDRAULISCHE LEIDIN(	
5		280476		2	PARAFUSO, Hex Wash Hd, 3/8" x 1"				
						SELF-TAP SCREW	TORNILLO AUTORROSC	VITE AUTOFILETTANTE	062V
					VIS AUTOTARAUDEUSE	SELBSTSCHN SCHRAUE	SELVLÅSENDE BOLT	ZELFTAPPENDE SCHRO	
6		605025		2	BRAÇADEIRA	CLAMP	ABRAZADERA	MORSETTO	120M
					COLLIER	KLEMME	SPÆNDEBÅND	KLEM	
7		87342191		1	ARRUELA PLANA, Spacer	WASHER	ARANDELA	RONDELLA	131R
					RONDELLE	UNTERLEGSCHEIBE	FLADSKIVE	SLUITRING	
8		9804260		1	PARAFUSO, Hex Flg, M8 x 30, 8.8, Full Thd				
						BOLT	PERNO	BULLONE	140B
					VIS	SCHRAUBE	BOLT	BOUT	
9		84254052		1	BRAÇADEIRA MANGUEIRA, Tube				
						HOSE CLAMP	ABRAZADERA DE MANG	FASCETTA STRINGITUB	P729
					COLLIER POUR FLEXIBL	SCHLAUCHSCHELLE	SLANGEKLEMME	SLANGKLEM	
10		9804277		1	PORCA, M8 x 1.25, Flg, Cl 8				
						NUT	TUERCA	DADO	010D
					ECROU	MUTTER	MØTRIK	MOER	
11		84259531		1	TUBO RÍGIDO, Assembly, Coupler				
						RIGID TUBE	TUBO RÍGIDO	TUBO RIGIDO	193T
					TUYAU RIGIDE	ROHR	STIFT RØR	VASTE LEIDING	
12		84259529		1	TUBO RÍGIDO, Assembly, Coupler				
						RIGID TUBE	TUBO RÍGIDO	TUBO RIGIDO	193T
					TUYAU RIGIDE	ROHR	STIFT RØR	VASTE LEIDING	
13		84277054		2	PEGA DE SUPORTE, PA, Hydraulic Tube				
						BRACKET, SUPPORTING	PIEZA DE APOYO	SQUADRETTA	215S
					EQUERRE	TRAGER, STUTZ	BRACKET, SUPPORTING	BRACKET, SUPPORTING	
14		84292314		1	MANGUEIRA, Hydraulic Coupler - Drain				
						HOSE	TUBO	TUBO FLESSIBILE	030M
					FLEXIBLE	SCHLAUCH	SLANGE	SLANG	
15		D120614		1	BRACADEIRA	CLAMP	COLLAR	MORSETTO	1640
					COLLIER	SCHELLE	CLAMP	CLAMP	
16		604896		1	BRAÇADEIRA	CLAMP	ABRAZADERA	MORSETTO	120M
					COLLIER	KLEMME	SPÆNDEBÅND	KLEM	
17		412327		1	PARAFUSO, Short NK, M6 x 40, Cl8.8				
						CARRIAGE BOLT	PERNO ALOMADO	BULLONE A TESTA TON	P123
					VIS A TETE BOMBEE	SCHLOSSSCHRAUBE	BRÆDDEBOLT	SLOTBOUT	
18		9804276		1	PORCA, M6 x 1, Flg, Cl 8	NUT	TUERCA	DADO	010D
					ECROU	MUTTER	MØTRIK	MOER	

SR200

35.204.02	02	p1	02/11

HYDRAULIC COUPLER - BASIC GRAY (SR175-TV380)
HYDRAULIC COUPLER - BASIC GRAY (SR175-TV380)
HYDRAULIC COUPLER - BASIC GRAY (SR175-TV380)
HYDRAULIC COUPLER - BASIC GRAY (SR175-TV380)

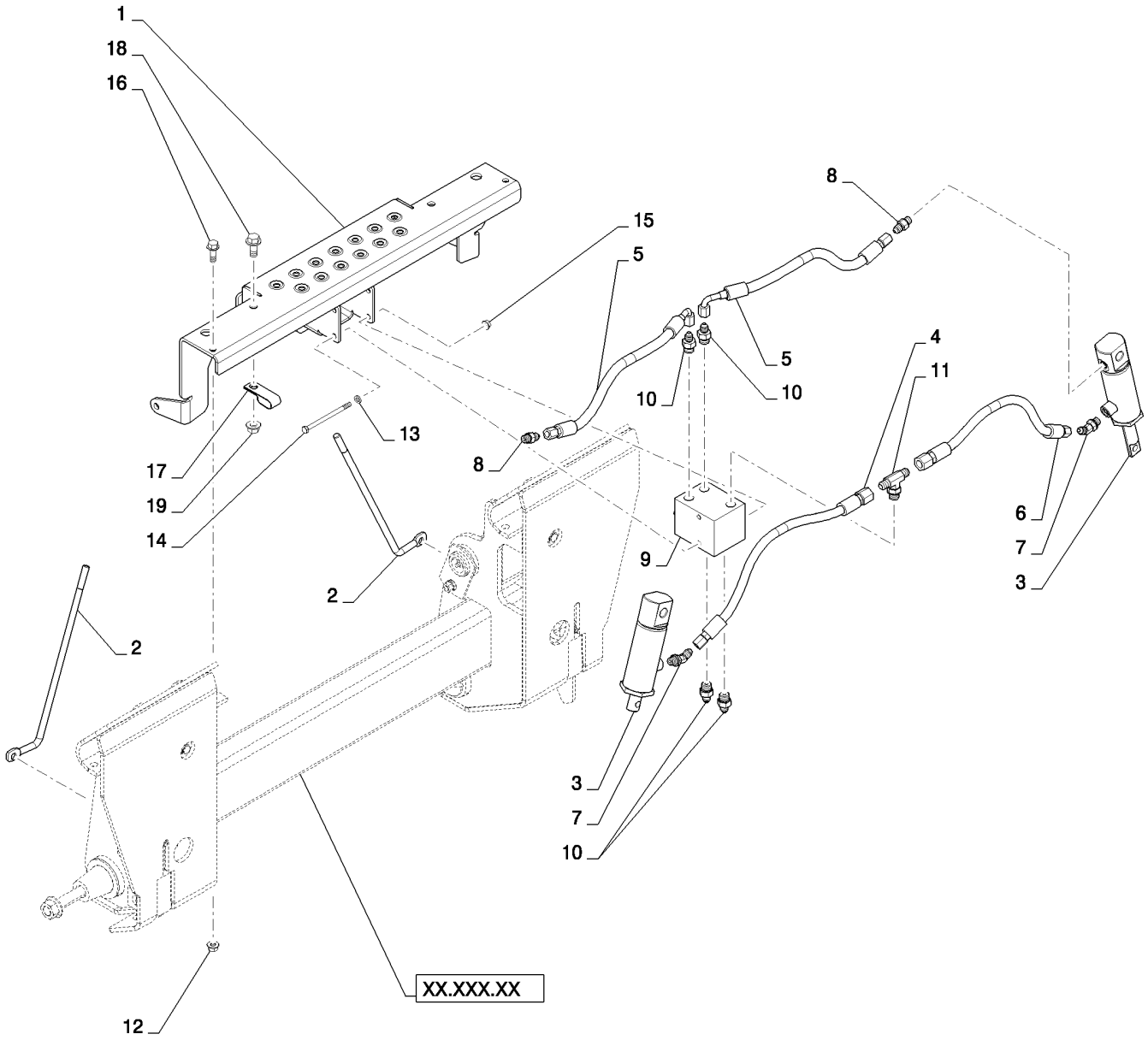

HYDRAULIC COUPLER - BASIC GRAY (SR175-TV380)
HYDRAULIC COUPLER - BASIC GRAY (SR175-TV380)
HYDRAULIC COUPLER - BASIC GRAY (SR175-TV380)
HYDRAULIC COUPLER - BASIC GRAY (SR175-TV380)

R	N	P.N.	MOD	Q	Denominação Description	Description Bezeichnung	Denominacion Beskrivelse	Descrizione Beschrijving	L.C.
1		84339847		1	ESTRIBO, Hydraulic Coupler, Gray				
						STEP	PELDAÑO	GRADINO	116M
					MARCHE-PIED	SCHRITT	TRINPLADE	TREDE	
1		84339845		1	ESTRIBO, Hydraulic Coupler, Power Tan				
						STEP	PELDAÑO	GRADINO	116M
					MARCHE-PIED	SCHRITT	TRINPLADE	TREDE	
2		84387739		2	HASTE, Hydraulic Coupler Position Indicator				
						ROD	VARILLA	ASTA	090A
					TIGE	STANGE	STANG	STANG	
3		87442337		2	CILINDRO, Hydraulic Coupler				
						CYLINDER	CILINDRO	CILINDRO	2480
					CYLINDRE	ZYLINDER	CYLINDER	CYLINDER	
4		84345506		1	MANGUEIRA, Coupler Cylinder				
						HOSE	TUBO	TUBO FLESSIBILE	030M
					FLEXIBLE	SCHLAUCH	SLANGE	SLANG	
5		84345496		2	MANGUEIRA, Coupler Cylinder				
						HOSE	TUBO	TUBO FLESSIBILE	030M
					FLEXIBLE	SCHLAUCH	SLANGE	SLANG	
6		84345532		1	MANGUEIRA, Coupler Cylinder				
						HOSE	TUBO	TUBO FLESSIBILE	030M
					FLEXIBLE	SCHLAUCH	SLANGE	SLANG	
7		86512993		2	COTOVELO, 45º, 7/16"-20, 37º x 7/16"-20, O-Ring				
						ELBOW	CODO	GOMITO	085G
					COUDE	KNIESTÜCK	VINKELRØR	KNIESTUK	
8		265235		2	CONECTOR HIDRÁUL, 7/16"-20, 37º x 7/16"-20, O-Ring				
						HYD CONNECTOR	CONECTOR HIDRÁULIC	CONNETTORE IDRAULIC	020R
					CONNECTEUR HYDRAU	HYDR STECKVERBINDE	HYDRAULIKSTIK	HYDRAULISCHE AANSLI	
9		294741A1		1	VÁLVULA CHECAGEM	CHECK VALVE	VÁLVULA DE COMPROB.	VALVOLA DI RITEGNO	P394
					CLAPET ANTI-RETOUR	RÜCKSCHLAGVENTIL	KONTRAVENTIL	TERUGSLAGKLEP	
10		139398		4	CONECTOR HIDRÁUL, 7/16"-20, 37º x 9/16"-18, O-Ring				
						HYD CONNECTOR	CONECTOR HIDRÁULIC	CONNETTORE IDRAULIC	020R
					CONNECTEUR HYDRAU	HYDR STECKVERBINDE	HYDRAULIKSTIK	HYDRAULISCHE AANSLI	
11		163335		1	T, 9/16"-18, 37º x 9/16"-18, O-Ring Br				
						TEE	RACOR EN T	PEZZO A T	9020
					RACCORD EN T	T-STÜCK	T-STYKKE	T-STUK	
12		9804277		2	PORCA, M8 x 1.25, Flg, Cl 8				
						NUT	TUERCA	DADO	010D
					ECROU	MUTTER	MØTRIK	MOER	
13		86588450		2	ARRUELA PLANA, M6 x 12 x 1.6 Thk				
						WASHER	ARANDELA	RONDELLA	131R
					RONDELLE	UNTERLEGSCHEIBE	FLADSKIVE	SLUITRING	
14		9850685		2	PARAFUSO, Hex, M6 x 90, 8.8				
						BOLT	PERNO	BULLONE	140B
					VIS	SCHRAUBE	BOLT	BOUT	
15		9804276		2	PORCA, M6 x 1, Flg, Cl 8	NUT	TUERCA	DADO	010D
					ECROU	MUTTER	MØTRIK	MOER	
16		9671714		2	PARAFUSO, Hex Flg, M8 x 25, 8.8				
						BOLT	PERNO	BULLONE	140B
					VIS	SCHRAUBE	BOLT	BOUT	

SR200

35.204.02	02	p2	02/11

HYDRAULIC COUPLER - BASIC GRAY (SR175-TV380)
HYDRAULIC COUPLER - BASIC GRAY (SR175-TV380)
HYDRAULIC COUPLER - BASIC GRAY (SR175-TV380)
HYDRAULIC COUPLER - BASIC GRAY (SR175-TV380)

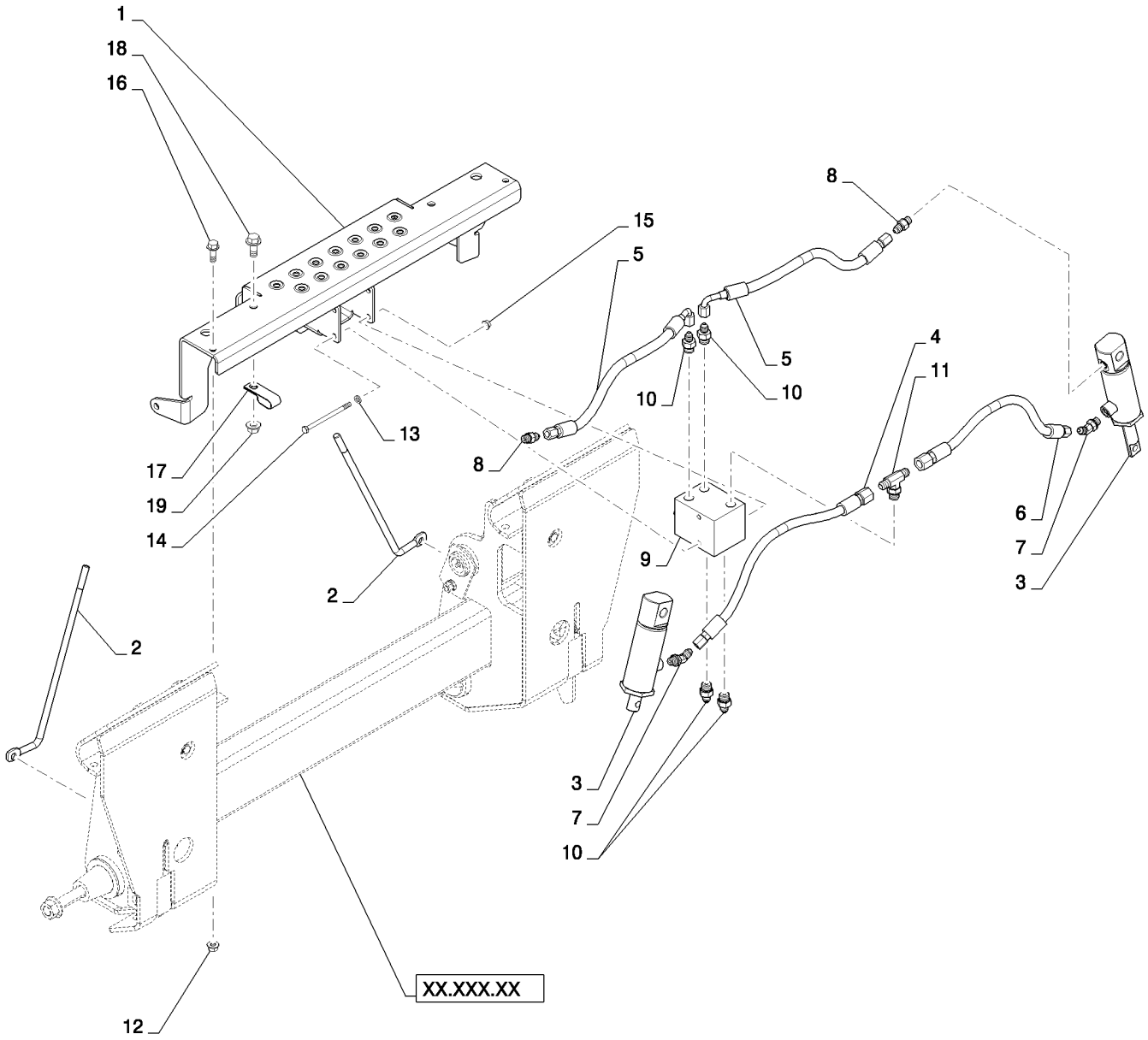

HYDRAULIC COUPLER - BASIC GRAY (SR175-TV380)
HYDRAULIC COUPLER - BASIC GRAY (SR175-TV380)
HYDRAULIC COUPLER - BASIC GRAY (SR175-TV380)
HYDRAULIC COUPLER - BASIC GRAY (SR175-TV380)

R	N	P.N.	MOD	Q	Denominação Description	Description Bezeichnung	Denominacion Beskrivelse	Descrizione Beschrijving	L.C.
17		**577927**		2	BRAÇADEIRA	CLAMP	ABRAZADERA	MORSETTO	120M
					COLLIER	KLEMME	SPÆNDEBÅND	KLEM	
18		**9804261**		2	PARAFUSO, Hex Flg, M10 x 25, 8.8				
						BOLT	PERNO	BULLONE	140B
					VIS	SCHRAUBE	BOLT	BOUT	
19		**9804278**		2	PORCA, M10 x 1.5, Flg, Cl 8				
						NUT	TUERCA	DADO	010D
					ECROU	MUTTER	MØTRIK	MOER	

35.204.02	03	p1	02/11

HYDRAULIC COUPLER CHASSIS PLUMBING - BASIC(SR175-TV380)
HYDRAULIC COUPLER CHASSIS PLUMBING - BASIC(SR175-TV380)
HYDRAULIC COUPLER CHASSIS PLUMBING - BASIC(SR175-TV380)
HYDRAULIC COUPLER CHASSIS PLUMBING - BASIC(SR175-TV380)

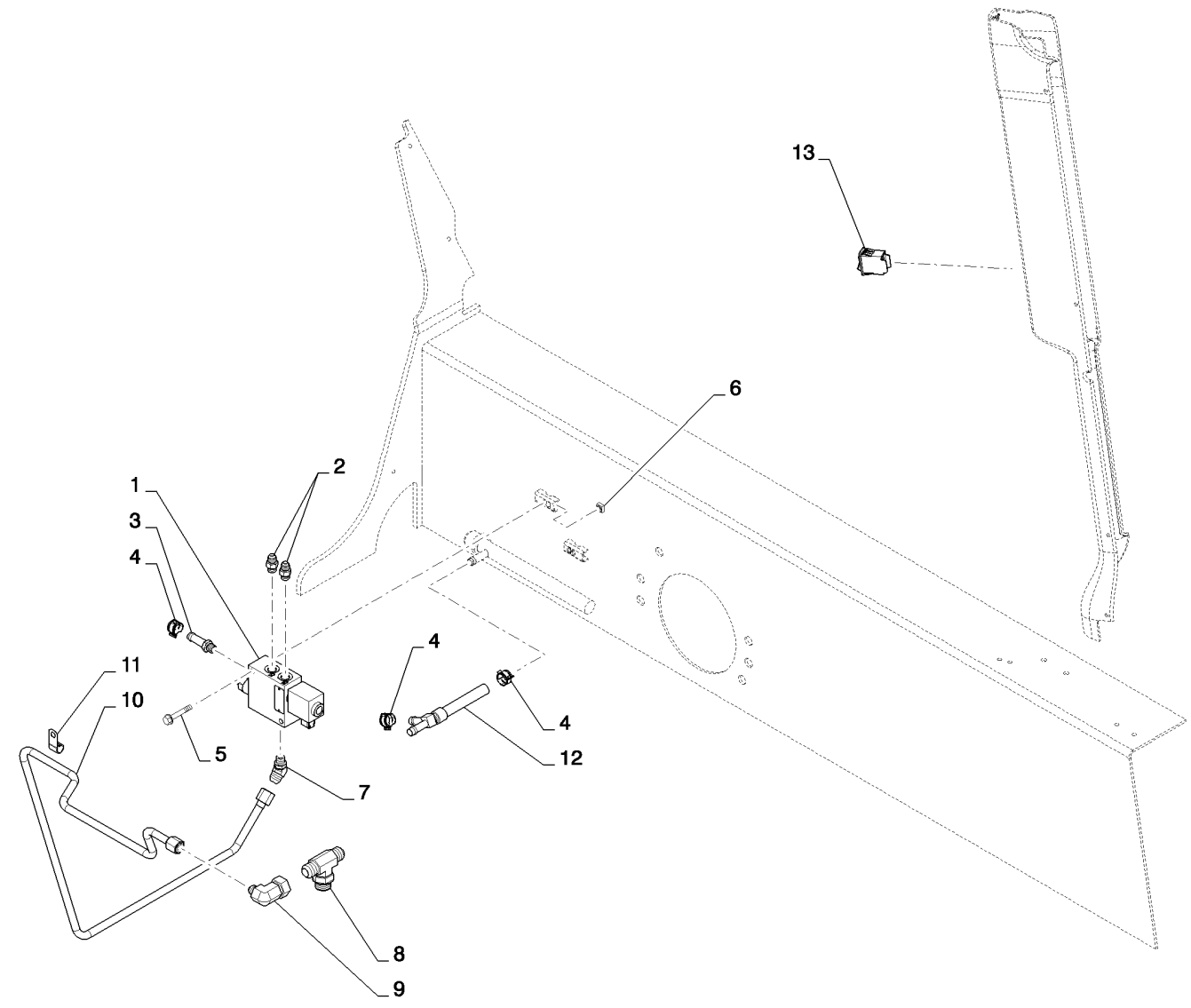

HYDRAULIC COUPLER CHASSIS PLUMBING - BASIC(SR175-TV380)
HYDRAULIC COUPLER CHASSIS PLUMBING - BASIC(SR175-TV380)
HYDRAULIC COUPLER CHASSIS PLUMBING - BASIC(SR175-TV380)
HYDRAULIC COUPLER CHASSIS PLUMBING - BASIC(SR175-TV380)

R	N	P.N.	MOD	Q	Denominação Description Bezeichnung Denominacion Beskrivelse Descrizione Beschrijving	L.C.
1		84256406		1	VÁLVULA HIDRÁULICA, Coupler HYDRAULIC VALVE / VÁLVULA HIDRÁULICA / DISTRIBUTORE IDRAULI SOUPAPE HYDRAULIQU / HYDRAULIKVENTIL / HYDRAULIKVENTIL / HYDRAULISCHE KLEP	010V
2		76350		2	CONECTOR HIDRÁUL, 9/16"-18, 37º x 9/16"-18, O-Ring HYD CONNECTOR / CONECTOR HIDRÁULIC / CONNETTORE IDRAULIC CONNECTEUR HYDRAU / HYDR STECKVERBINDE / HYDRAULIKSTIK / HYDRAULISCHE AANSLU	020R
3		86705988		1	CONEXÃO, 1/2" Hose x 9/16"-18 ORB, Beaded FITTING / ACOPLAMIENTO / RACCORDO RACCORD / ARMATUR / FITTING / AANSLUITING	3300
4		87443510		3	BRAÇADEIRA MANGUEIRA, M20 HOSE CLAMP / ABRAZADERA DE MANG / FASCETTA STRINGITUB COLLIER POUR FLEXIBL / SCHLAUCHSCHELLE / SLANGEKLEMME / SLANGKLEM	P729
5		86511481		2	PARAFUSO, Hex Flg, M8 x 50, 8.8 BOLT / PERNO / BULLONE VIS / SCHRAUBE / BOLT / BOUT	140B
6		229197A1		2	PORCA, Square / NUT / TUERCA / DADO ECROU / MUTTER / NUT / NUT	5780
7		87301276		1	CONECTOR HIDRÁUL, 45 Adj, Elbow, 37FL 1/2in X 3/8in HYD CONNECTOR / CONECTOR HIDRÁULIC / CONNETTORE IDRAULIC CONNECTEUR HYDRAU / HYDR STECKVERBINDE / HYDRAULIKSTIK / HYDRAULISCHE AANSLU	020R
8		87622774		1	CONEXÃO, Hydraulic Tee / FITTING / ACOPLAMIENTO / RACCORDO RACCORD / ARMATUR / FITTING / AANSLUITING	3300
9		86624011		1	COTOVELO, 90º, 3/4"-16, 37º x 1 1/16"-12, 37º Fem Sw ELBOW / CODO / GOMITO COUDE / KNIESTÜCK / VINKELRØR / KNIESTUK	085G
10		84291016		1	TUBO RÍGIDO, Assembly, Hydraulic Coupler RIGID TUBE / TUBO RÍGIDO / TUBO RIGIDO TUYAU RIGIDE / ROHR / STIFT RØR / VASTE LEIDING	193T
11		87301490		1	BRAÇADEIRA, J, 12.7MM Insul 3/8in Bolt CLAMP / ABRAZADERA / MORSETTO COLLIER / KLEMME / SPÆNDEBÅND / KLEM	120M
12		84259682		1	CONEXÃO EM T, Assembly, Option UNION TEE / RACOR EN T / RACCORDO A T RACCORD EN T / T-VERSCHRAUBUNG / T-FORSKRUNING / KOPPEL-T-STUK	A134
13		84251346		1	INTERRUPTOR, Rocker, Hydraulic Coupler SWITCH / INTERRUPTOR / INTERRUTTORE CONTACTEUR / SCHALTER / KONTAKT / SCHAKELAAR	075I

AUX HYD, STD FLOW (SR200)
AUX HYD, STD FLOW (SR200)
AUX HYD, STD FLOW (SR200)
AUX HYD, STD FLOW (SR200)

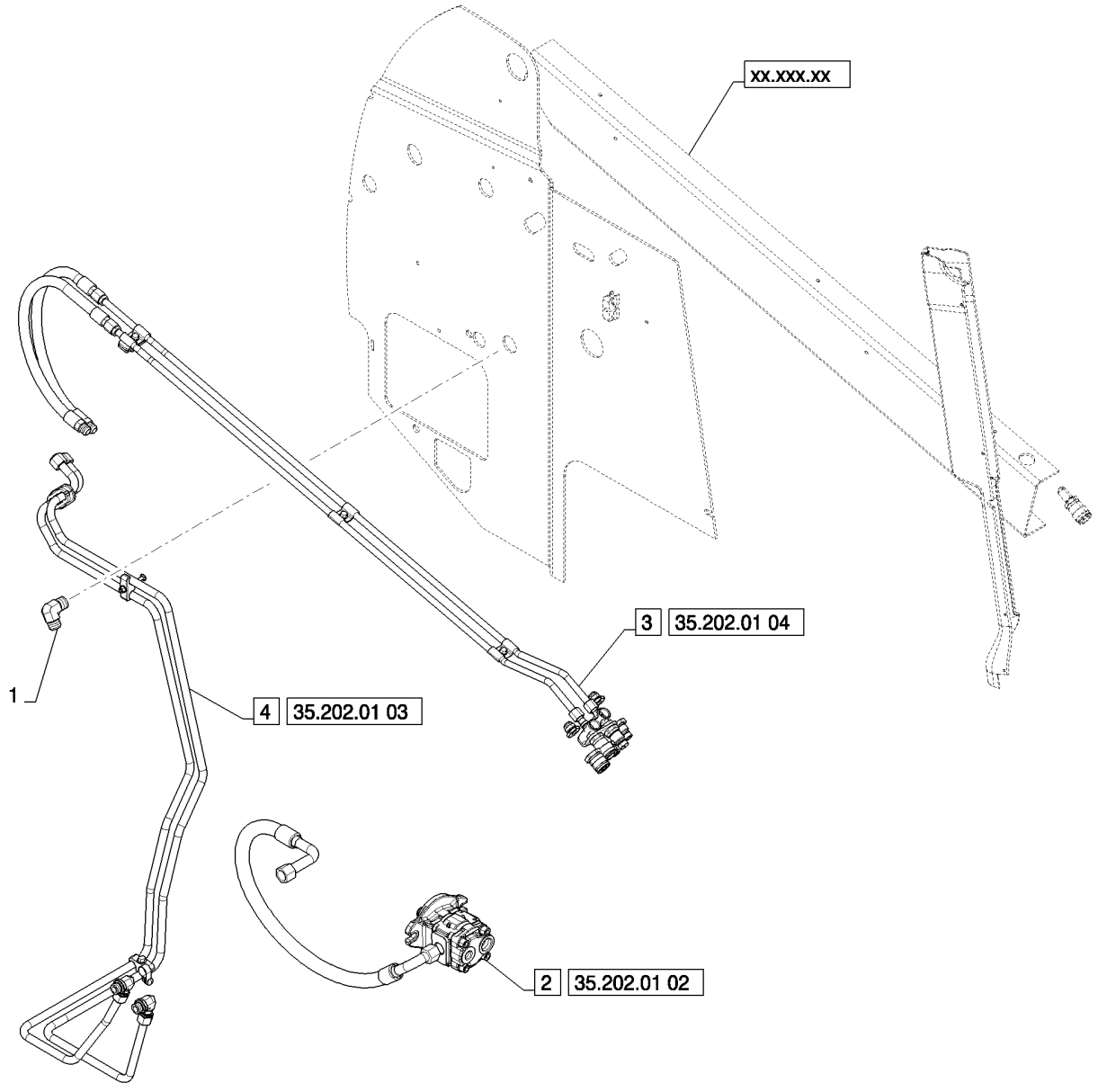

AUX HYD, STD FLOW (SR200)
AUX HYD, STD FLOW (SR200)
AUX HYD, STD FLOW (SR200)
AUX HYD, STD FLOW (SR200)

R	N	P.N.	MOD	Q	Denominação Description	Description Bezeichnung	Denominacion Beskrivelse	Descrizione Beschrijving	L.C.
1		86512952		1	COTOVELO, 90º, 1 5/16"-12, 37º x 1"-11 1/2, NPTF				
						ELBOW	CODO	GOMITO	085G
					COUDE	KNIESTÜCK	VINKELRØR	KNIESTUK	
2		NSS		1	SEM SERVIÇO EM SEPARADO, Gear Pump				
						NOT SERVICED SEPARA	NO SE REPARA POR SE	NON FORNITO SEPARAT	064N
					NON FORUNI SEPAREM	NICHT A SEP ERS-T LIEI	SERVICERES IKKE SEPA	NIET LOS VERKRIJGBAA	
3		NSS		1	SEM SERVIÇO EM SEPARADO, Std Aux, Arm Plumbing				
						NOT SERVICED SEPARA	NO SE REPARA POR SE	NON FORNITO SEPARAT	064N
					NON FORUNI SEPAREM	NICHT A SEP ERS-T LIEI	SERVICERES IKKE SEPA	NIET LOS VERKRIJGBAA	
4		NSS		1	SEM SERVIÇO EM SEPARADO, Std Aux, Chassis Plumbing				
						NOT SERVICED SEPARA	NO SE REPARA POR SE	NON FORNITO SEPARAT	064N
					NON FORUNI SEPAREM	NICHT A SEP ERS-T LIEI	SERVICERES IKKE SEPA	NIET LOS VERKRIJGBAA	

AUX HYD, STD C.U.P. (SR200)
AUX HYD, STD C.U.P. (SR200)
AUX HYD, STD C.U.P. (SR200)
AUX HYD, STD C.U.P. (SR200)

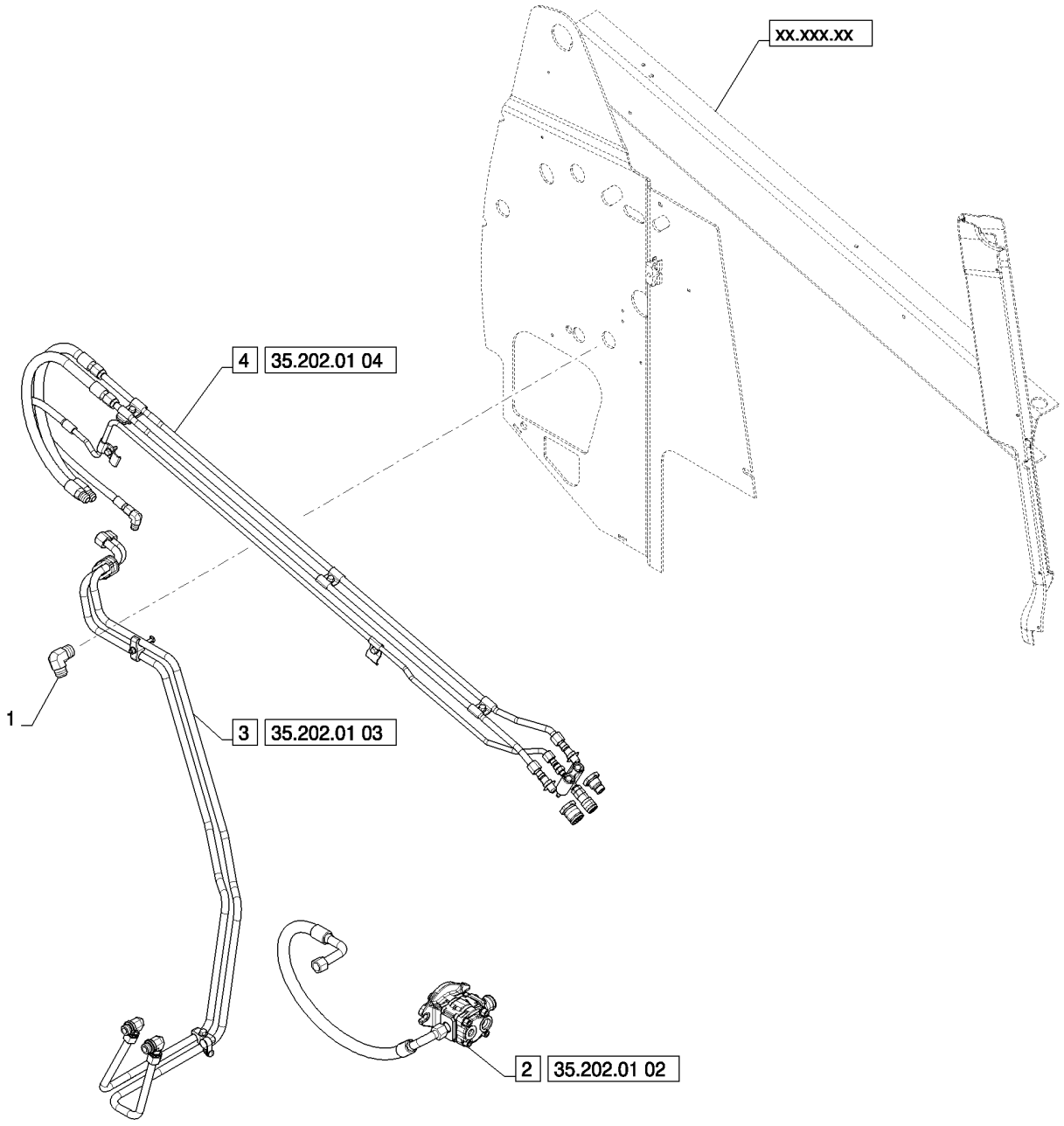

AUX HYD, STD C.U.P. (SR200)
AUX HYD, STD C.U.P. (SR200)
AUX HYD, STD C.U.P. (SR200)
AUX HYD, STD C.U.P. (SR200)

R	N	P.N.	MOD	Q	Denominação Description	Description Bezeichnung	Denominacion Beskrivelse	Descrizione Beschrijving	L.C.
1		86512952		1	COTOVELO, 90º, 1 5/16"-12, 37º x 1"-11 1/2, NPTF				
						ELBOW	CODO	GOMITO	085G
					COUDE	KNIESTÜCK	VINKELRØR	KNIESTUK	
2		NSS		1	SEM SERVIÇO EM SEPARADO, Gear Pump				
						NOT SERVICED SEPARA	NO SE REPARA POR SE	NON FORNITO SEPARAT	064N
					NON FORUNI SEPAREM	NICHT A SEP ERS-T LIEI	SERVICERES IKKE SEPA	NIET LOS VERKRIJGBAA	
3		NSS		1	SEM SERVIÇO EM SEPARADO, Std Aux, Chassis Plumbing				
						NOT SERVICED SEPARA	NO SE REPARA POR SE	NON FORNITO SEPARAT	064N
					NON FORUNI SEPAREM	NICHT A SEP ERS-T LIEI	SERVICERES IKKE SEPA	NIET LOS VERKRIJGBAA	
4		NSS		1	SEM SERVIÇO EM SEPARADO, Std Aux, C.U.P., Arm Plumbing				
						NOT SERVICED SEPARA	NO SE REPARA POR SE	NON FORNITO SEPARAT	064N
					NON FORUNI SEPAREM	NICHT A SEP ERS-T LIEI	SERVICERES IKKE SEPA	NIET LOS VERKRIJGBAA	

35.220.01	02	p1	01/11

AUX HYD, STD, GEAR PUMP (SR200)
AUX HYD, STD, GEAR PUMP (SR200)
AUX HYD, STD, GEAR PUMP (SR200)
AUX HYD, STD, GEAR PUMP (SR200)

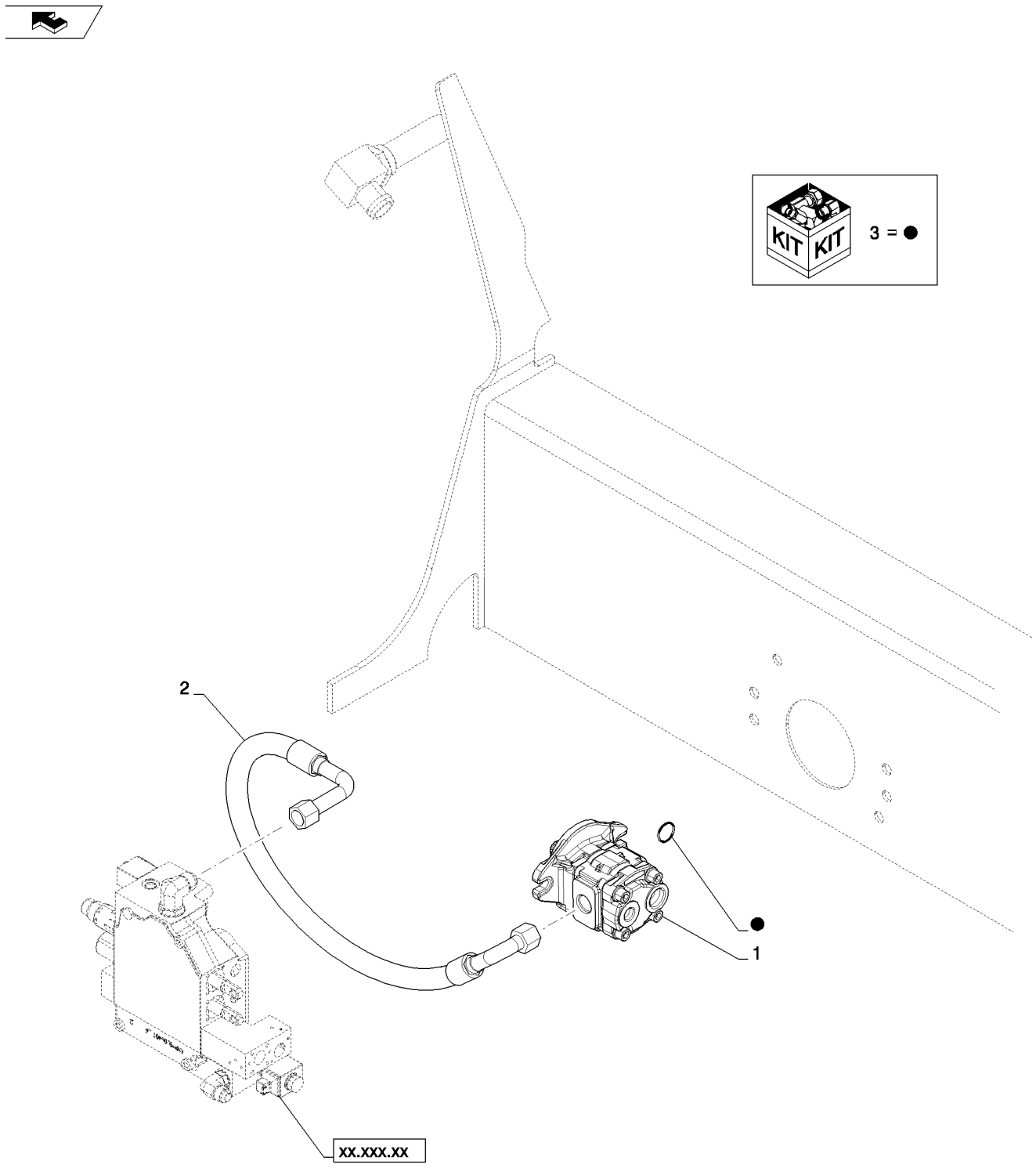

AUX HYD, STD, GEAR PUMP (SR200)
AUX HYD, STD, GEAR PUMP (SR200)
AUX HYD, STD, GEAR PUMP (SR200)
AUX HYD, STD, GEAR PUMP (SR200)

R	N	P.N.	MOD	Q	Denominação Description	Description Bezeichnung	Denominacion Beskrivelse	Descrizione Beschrijving	L.C.
1		84256247		1	BOMBA, 34.1CC, Gear POMPE	PUMP PUMPE	BOMBA PUMPE	POMPA POMP	6570
2		84291249		1	CONJ. MANGUEIRA, Valve Supply ENSEMBLE DE FLEXIBLE	HOSE ASSY. SCHLAUCHBAUGRUPPE	CONJUNTO DE TUBOS SLANGEENHED	COMPLESS. TUBO FLES SLANGEENHEID	P457
3		84389261		1	KIT DE VEDAÇÃO, Single Pump KIT DE JOINTS	SEAL KIT DICHTUNGSSATZ	KIT DE JUNTAS PAKNINGSSÆT	KIT GUARNIZIONI KIT MET AFDICHTINGEN	630S

35.220.01	03	p1	01/11

AUX HYD, STD, CHASSIS PLUMBING (SR175)(SR200)
AUX HYD, STD, CHASSIS PLUMBING (SR175)(SR200)
AUX HYD, STD, CHASSIS PLUMBING (SR175)(SR200)
AUX HYD, STD, CHASSIS PLUMBING (SR175)(SR200)

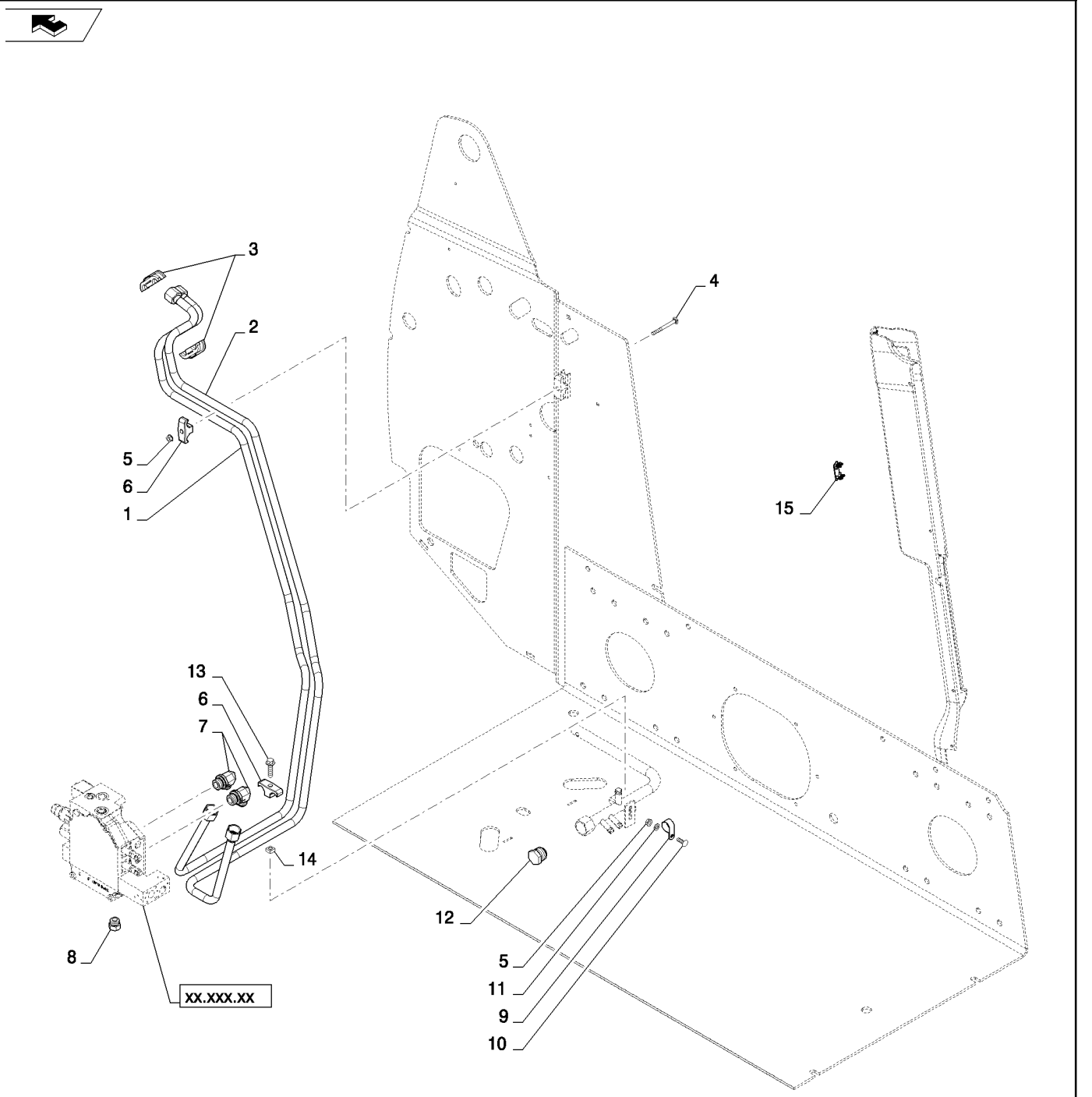

AUX HYD, STD, CHASSIS PLUMBING (SR175)(SR200)
AUX HYD, STD, CHASSIS PLUMBING (SR175)(SR200)
AUX HYD, STD, CHASSIS PLUMBING (SR175)(SR200)
AUX HYD, STD, CHASSIS PLUMBING (SR175)(SR200)

R	N	P.N.	MOD	Q	Denominação Description	Description Bezeichnung	Denominacion Beskrivelse	Descrizione Beschrijving	L.C.
1		84186144		1	TUBO, Assembly, Aux, LDR Valve to Lft Arm				
						TUBE	TUBO	TUBO	195T
					TUBE	ROHR	RØR	LEIDING	
2		84186142		1	TUBO, Assembly, Aux, LDR Valve to Lft Arm				
						TUBE	TUBO	TUBO	195T
					TUBE	ROHR	RØR	LEIDING	
3		84362112		2	SUPORTE, Hyd Tube	SUPPORT	SOPORTE	SUPPORTO	300S
					SUPPORT	STÜTZE	BESLAG	STEUN	
4		366046		1	PARAFUSO, SSQ M8 X 80	CARRIAGE BOLT	PERNO ALOMADO	BULLONE A TESTA TONI	P123
					VIS A TETE BOMBEE	SCHLOSSSCHRAUBE	BRÆDDEBOLT	SLOTBOUT	
5		9804277		2	PORCA, M8 x 1.25, Flg, Cl 8				
						NUT	TUERCA	DADO	010D
					ECROU	MUTTER	MØTRIK	MOER	
6		D124301		2	BRACADEIRA	CLAMP	COLLAR	MORSETTO	1640
					COLLIER	SCHELLE	CLAMP	CLAMP	
7		322894		2	COTOVELO, 90º, 1 1/16"-12, 37º x 1 1/16"-12, O-Ring				
						ELBOW	CODO	GOMITO	085G
					COUDE	KNIESTÜCK	VINKELRØR	KNIESTUK	
8		86512512		1	BUJÃO, Hex Hd, 7/8"-14 ORB				
						PLUG	TAPÓN	TAPPO	050T
					BOUCHON	STOPFEN	PROP	PLUG	
9		86637977		1	BRAÇADEIRA, 1", Insul, 5/16" Bolt				
						CLAMP	ABRAZADERA	MORSETTO	120M
					COLLIER	KLEMME	SPÆNDEBÅND	KLEM	
10		308761		1	PARAFUSO, Short NK, M8 x 25, Cl8.8, Full Thd				
						CARRIAGE BOLT	PERNO ALOMADO	BULLONE A TESTA TONI	P123
					VIS A TETE BOMBEE	SCHLOSSSCHRAUBE	BRÆDDEBOLT	SLOTBOUT	
11		87655042		1	ARRUELA ESPECIAL, M8, 8.80 X 17.5 X 2.2 HTS				
						SPECIAL WASHER	ARANDELA ESPECIAL	RONDELLA SPECIALE	Z333
					RONDELLE SPECIALE	SPEZIALUNTERLEGSCH	SPECIALSKIVE	SPECIALE RING	
12		9790527		1	BUJÃO, 1 5/16"-12, 37º	PLUG	TAPÓN	TAPPO	050T
					BOUCHON	STOPFEN	PROP	PLUG	
13		9804263		1	PARAFUSO, Hex Flg, M10 x 40, 8.8				
						BOLT	PERNO	BULLONE	140B
					VIS	SCHRAUBE	BOLT	BOUT	
14		230427A1		1	PORCA	NUT	TUERCA	DADO	5780
					ECROU	MUTTER	NUT	NUT	
15		126844A1		1	BUJÃO, Cover	PLUG	TAPÓN	TAPPO	050T
					BOUCHON	STOPFEN	PROP	PLUG	

SR200

35.220.01	04	p1	01/11

AUX HYD, STD, ARM PLUMBING (SR175)(SR200)(SR220,SR250,TR320)
AUX HYD, STD, ARM PLUMBING (SR175)(SR200)(SR220,SR250,TR320)
AUX HYD, STD, ARM PLUMBING (SR175)(SR200)(SR220,SR250,TR320)
AUX HYD, STD, ARM PLUMBING (SR175)(SR200)(SR220,SR250,TR320)

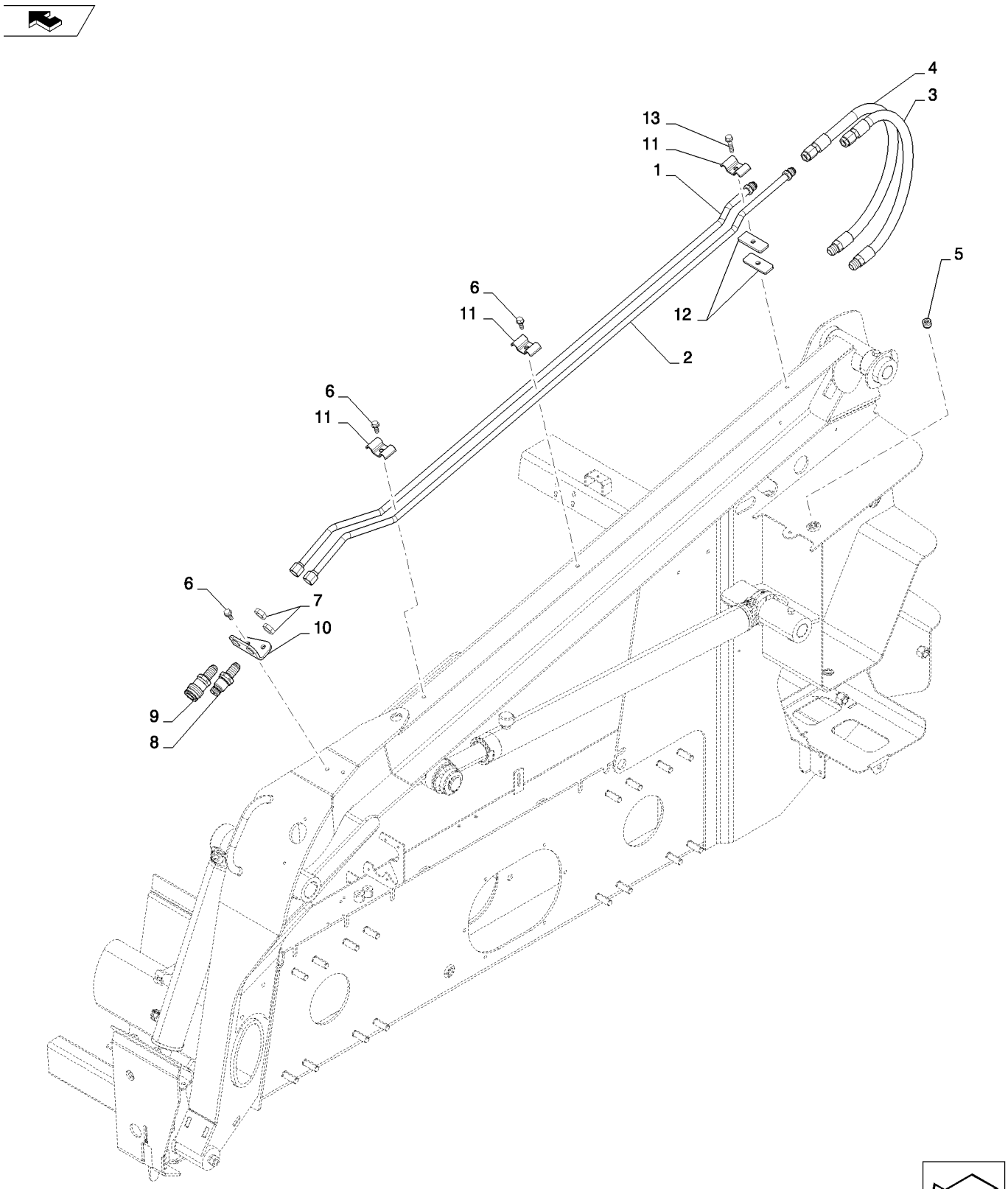

AUX HYD, STD, ARM PLUMBING (SR175)(SR200)(SR220,SR250,TR320)
AUX HYD, STD, ARM PLUMBING (SR175)(SR200)(SR220,SR250,TR320)
AUX HYD, STD, ARM PLUMBING (SR175)(SR200)(SR220,SR250,TR320)
AUX HYD, STD, ARM PLUMBING (SR175)(SR200)(SR220,SR250,TR320)

R	N	P.N.	MOD	Q	Denominação Description	Description Bezeichnung	Denominacion Beskrivelse	Descrizione Beschrijving	L.C.
1		84322559		1	TUBO HIDRÁULICO, Assembly, Aux, Std Female				
						HYD. TUBE	TUBO HIDRÁULICO	TUBO IDRAULICO	190T
					TUYAU HYDRAULIQUE	HYDRAULIKLEITUNG	HYD. RØR	HYDRAULISCHE LEIDIN(	
2		84322556		1	TUBO HIDRÁULICO, Assembly, Aux, Std Male				
						HYD. TUBE	TUBO HIDRÁULICO	TUBO IDRAULICO	190T
					TUYAU HYDRAULIQUE	HYDRAULIKLEITUNG	HYD. RØR	HYDRAULISCHE LEIDIN(	
3		84322558		1	TUBO FLEXÍVEL, Assembly, Std Aux, Male				
						FLEXIBLE HOSE	TUBO FLEXIBLE	TUBO FLESSIBILE	192T
					TUYAU FLEXIBLE	BIEGSAMER SCHLAUCH	FLEKSIBEL SLANGE	FLEXIBELE SLANG	
4		84322561		1	TUBO FLEXÍVEL, Assembly, Std Aux, Female				
						FLEXIBLE HOSE	TUBO FLEXIBLE	TUBO FLESSIBILE	192T
					TUYAU FLEXIBLE	BIEGSAMER SCHLAUCH	FLEKSIBEL SLANGE	FLEXIBELE SLANG	
5		647429		1	BUJÃO DE DRENO, Pipe	DRAIN PLUG	TAPÓN DE VACIADO	TAPPO DI SCARICO	056T
					BOUCHON DE VIDANGE	ABLASSSCHRAUBE	AFTAPNINGSPROP	AFTAPPLUG	
6		280476		4	PARAFUSO, Hex Wash Hd, 3/8" x 1"				
						SELF-TAP SCREW	TORNILLO AUTORROSC	VITE AUTOFILETTANTE	062V
					VIS AUTOTARAUDEUSE	SELBSTSCHN SCHRAUE	SELVLÅSENDE BOLT	ZELFTAPPENDE SCHRO	
7		595460		2	CONTRA PORCA, Blkhd, 7/8"-14				
						LOCK NUT	TUERCA DE BLOQUEO	DADO DI BLOCCAGGIO	P263
					CONTRE-ECROU	SICHERUNGSMUTTER	LÅSEMØTRIK	BORGMOER	
8		87741500		1	ENGATE RÁPIDO MACHO	QUICK MALE COUPLING	ACOPLAMIENTO RÁPID(	ATTACCO RAPIDO MAS(	115A
					ACCOUPLEMENT RAP. M	SCHNELLKUPPLUNGSS"	LYNKOBLING	SNELKOPPELINGSPEN	
9		87741499		1	ENGATE RÁPIDO FÊMEA	QUICK FEMALE COUPLII	ACOPL. RÁPIDO HEMBR	ATTACCO RAPIDO FEM	540A
					ACCOUPLEMENT RAPID	SCHNELLKUPPLUNGSM	KOBLINGSSKIVE	SNELKOPPELINGSBUS	
10		84252821		1	SUPORTE, Aux Coupler	BRACKET	SOPORTE	STAFFA	225S
					SUPPORT	HALTERUNG	BESLAG	STEUN	
11		84252828		3	BRAÇADEIRA, Butterfly Tube				
						CLAMP	ABRAZADERA	MORSETTO	120M
					COLLIER	KLEMME	SPÆNDEBÅND	KLEM	
12		87023483		2	PLACA	PLATE	PLACA	PIASTRA	105P
					PLAQUE	PLATTE	PLADE	PLAAT	
13		87030530		1	PARAFUSO, 3/8 X 1.75 TT	HW ZND			
						SCREW	TORNILLO	VITE	040V
					VIS	SCHRAUBE	SKRUE	SCHROEF	

SR200

35.220.01	04	p1	08/11

AUX HYD, STD C.U.P. ARM PLUMBING (SR175)(SR200)
AUX HYD, STD C.U.P. ARM PLUMBING (SR175)(SR200)
AUX HYD, STD C.U.P. ARM PLUMBING (SR175)(SR200)
AUX HYD, STD C.U.P. ARM PLUMBING (SR175)(SR200)

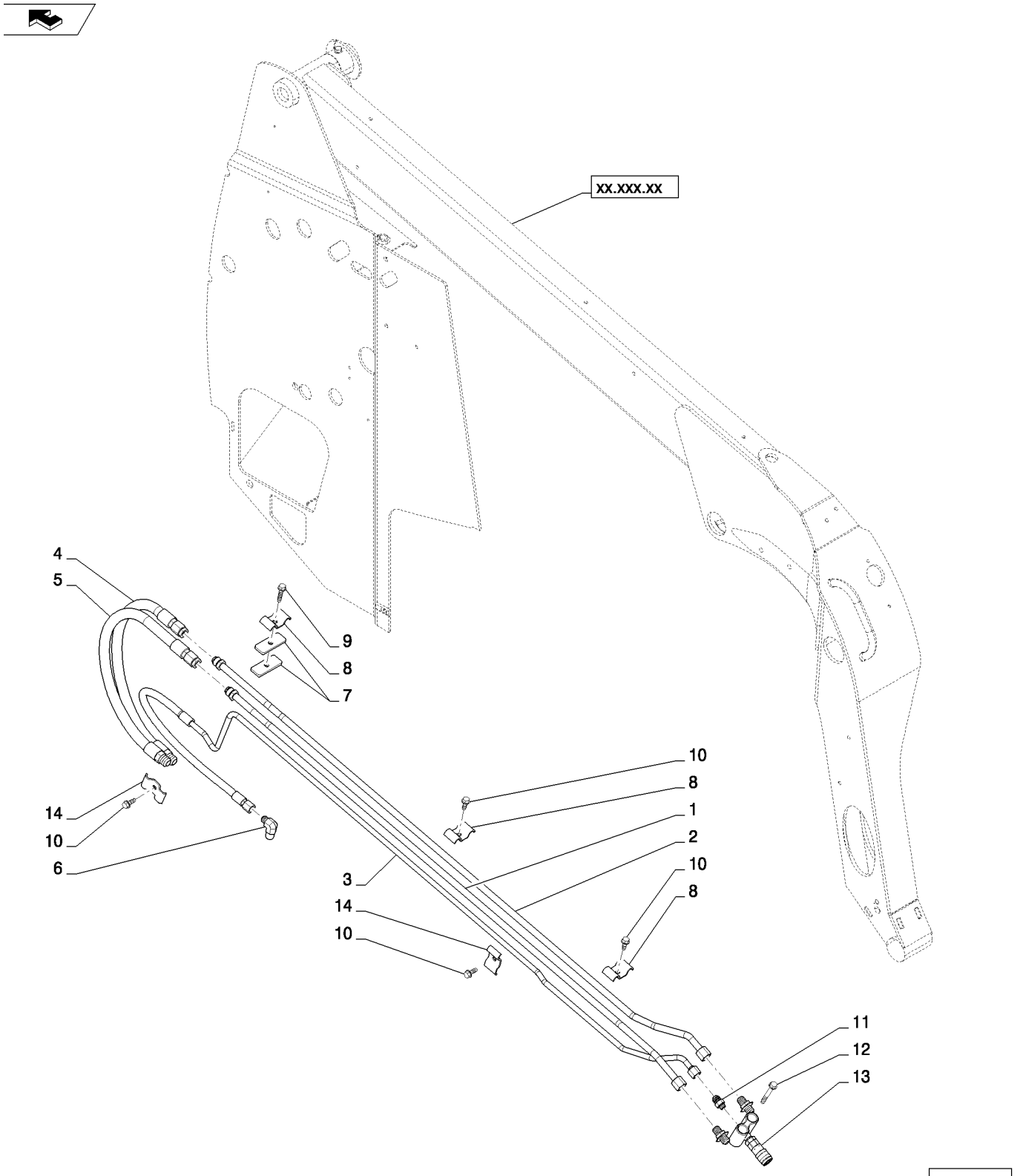

AUX HYD, STD C.U.P. ARM PLUMBING (SR175)(SR200)
AUX HYD, STD C.U.P. ARM PLUMBING (SR175)(SR200)
AUX HYD, STD C.U.P. ARM PLUMBING (SR175)(SR200)
AUX HYD, STD C.U.P. ARM PLUMBING (SR175)(SR200)

R	N	P.N.	MOD	Q	Denominação Description	Description Bezeichnung	Denominacion Beskrivelse	Descrizione Beschrijving	L.C.
1		84322567		1	TUBO HIDRÁULICO, Assembly, Aux C.U.P. Female				
						HYD. TUBE	TUBO HIDRÁULICO	TUBO IDRAULICO	190T
					TUYAU HYDRAULIQUE	HYDRAULIKLEITUNG	HYD. RØR	HYDRAULISCHE LEIDIN(	
2		84322562		1	TUBO HIDRÁULICO, Assembly, Aux C.U.P. Male				
						HYD. TUBE	TUBO HIDRÁULICO	TUBO IDRAULICO	190T
					TUYAU HYDRAULIQUE	HYDRAULIKLEITUNG	HYD. RØR	HYDRAULISCHE LEIDIN(	
3		84338474		1	TUBO HIDRÁULICO, Assembly, Case Drain				
						HYD. TUBE	TUBO HIDRÁULICO	TUBO IDRAULICO	190T
					TUYAU HYDRAULIQUE	HYDRAULIKLEITUNG	HYD. RØR	HYDRAULISCHE LEIDIN(	
4		84322558		1	TUBO FLEXÍVEL, Assembly, Std Aux Male				
						FLEXIBLE HOSE	TUBO FLEXIBLE	TUBO FLESSIBILE	192T
					TUYAU FLEXIBLE	BIEGSAMER SCHLAUCH	FLEKSIBEL SLANGE	FLEXIBELE SLANG	
5		84322561		1	TUBO FLEXÍVEL, Assembly, Std Aux Female				
						FLEXIBLE HOSE	TUBO FLEXIBLE	TUBO FLESSIBILE	192T
					TUYAU FLEXIBLE	BIEGSAMER SCHLAUCH	FLEKSIBEL SLANGE	FLEXIBELE SLANG	
6		76352		1	COTOVELO, 90º, 3/4"-16, 37º x 1/2"-14, NPTF				
						ELBOW	CODO	GOMITO	085G
					COUDE	KNIESTÜCK	VINKELRØR	KNIESTUK	
7		87023483		2	PLACA	PLATE	PLACA	PIASTRA	105P
					PLAQUE	PLATTE	PLADE	PLAAT	
8		84252828		3	BRAÇADEIRA, Butterfly Tube				
						CLAMP	ABRAZADERA	MORSETTO	120M
					COLLIER	KLEMME	SPÆNDEBÅND	KLEM	
9		87030530		1	PARAFUSO, 3/8 X 1.75 TT HW ZND				
						SCREW	TORNILLO	VITE	040V
					VIS	SCHRAUBE	SKRUE	SCHROEF	
10		280476		4	PARAFUSO, Hex Wash Hd, 3/8" x 1"				
						SELF-TAP SCREW	TORNILLO AUTORROSC	VITE AUTOFILETTANTE	062V
					VIS AUTOTARAUDEUSE	SELBSTSCHN SCHRAUE	SELVLÅSENDE BOLT	ZELFTAPPENDE SCHRO	
11		86509028		1	CONECTOR HIDRÁUL, 3/4"-16, 37º x 9/16"-18, O-Ring				
						HYD CONNECTOR	CONECTOR HIDRÁULIC(	CONNETTORE IDRAULIC	020R
					CONNECTEUR HYDRAU	HYDR STECKVERBINDE	HYDRAULIKSTIK	HYDRAULISCHE AANSLI	
12		84331287		2	PARAFUSO, Tapping, 3/8-16 X 3 TT				
						SCREW	TORNILLO	VITE	040V
					VIS	SCHRAUBE	SKRUE	SCHROEF	
13		84173613		1	VÁLVULA, Quick Attach, Includes Ref. 15-17				
						VALVE	VÁLVULA	VALVOLA	9620
					SOUPAPE	VENTIL	VENTIL	KLEP	
14		84254056		2	BRAÇADEIRA MANGUEIRA, Butterfly Tube				
						HOSE CLAMP	ABRAZADERA DE MANG	FASCETTA STRINGITUB	P729
					COLLIER POUR FLEXIBL	SCHLAUCHSCHELLE	SLANGEKLEMME	SLANGKLEM	
15		84390117		1	ENGATE, 1/2" Male (Not Shown)				
						COUPLING	ACOPLAMIENTO	GIUNTO	Z321
					RACCORD	KUPPLUNG	KOBLING	KOPPELING	
16		84390118		1	ENGATE, 1/2" Female (Not Shown)				
						COUPLING	ACOPLAMIENTO	GIUNTO	Z321
					RACCORD	KUPPLUNG	KOBLING	KOPPELING	

35.220.01	04	p2	08/11

AUX HYD, STD C.U.P. ARM PLUMBING (SR175)(SR200)
AUX HYD, STD C.U.P. ARM PLUMBING (SR175)(SR200)
AUX HYD, STD C.U.P. ARM PLUMBING (SR175)(SR200)
AUX HYD, STD C.U.P. ARM PLUMBING (SR175)(SR200)

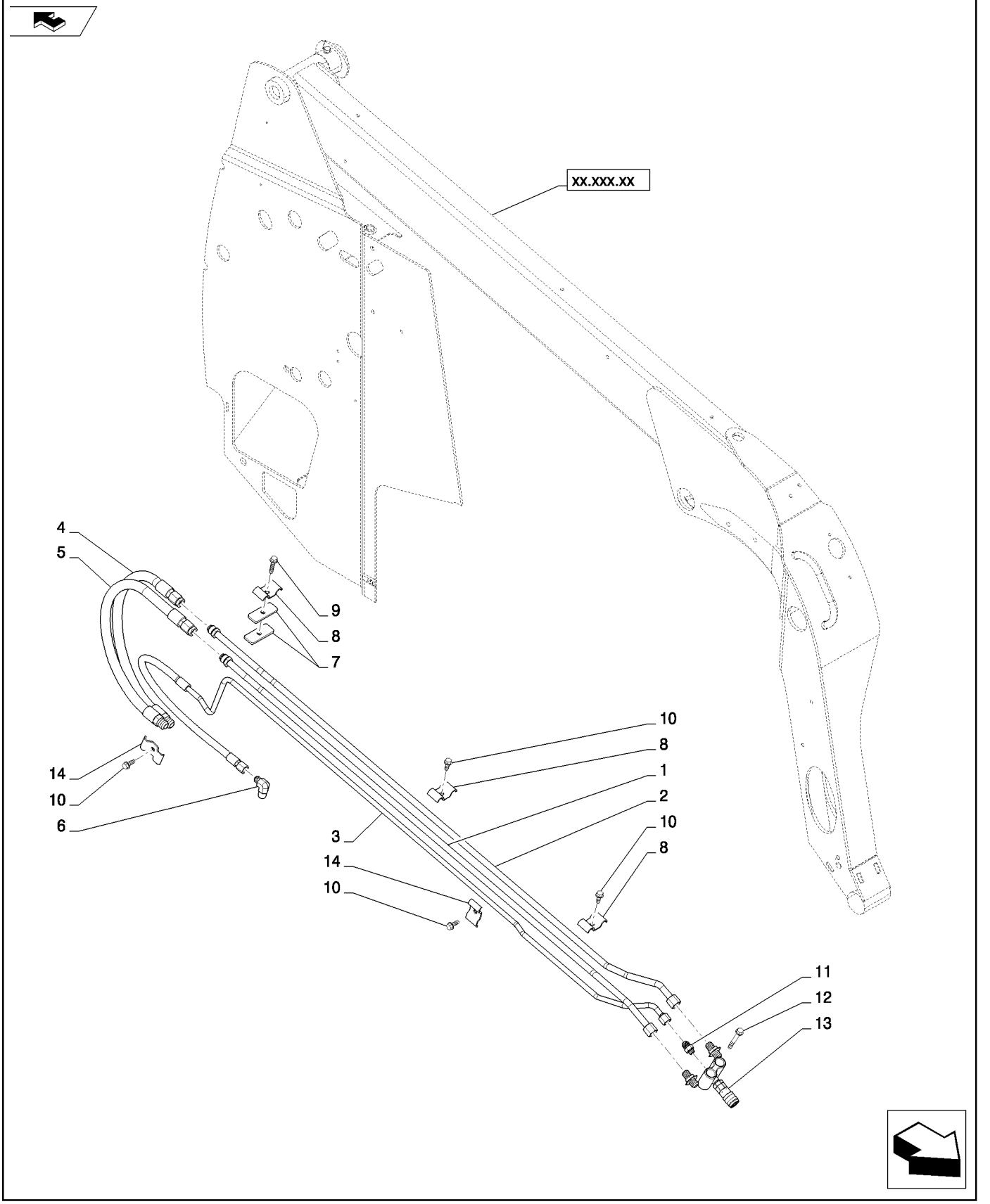

AUX HYD, STD C.U.P. ARM PLUMBING (SR175)(SR200)
AUX HYD, STD C.U.P. ARM PLUMBING (SR175)(SR200)
AUX HYD, STD C.U.P. ARM PLUMBING (SR175)(SR200)
AUX HYD, STD C.U.P. ARM PLUMBING (SR175)(SR200)

R	N	P.N.	MOD	Q	Denominação Description Bezeichnung	Description Bezeichnung	Denominacion Beskrivelse	Descrizione Beschrijving	L.C.
17		**84390119**		1	ENGATE, 3/8" Male (Not Shown)				
						COUPLING	ACOPLAMIENTO	GIUNTO	Z321
					RACCORD	KUPPLUNG	KOBLING	KOPPELING	

35.220.02	01	p1	01/11

AUX HYD, HIGH FLOW (SR200)
AUX HYD, HIGH FLOW (SR200)
AUX HYD, HIGH FLOW (SR200)
AUX HYD, HIGH FLOW (SR200)

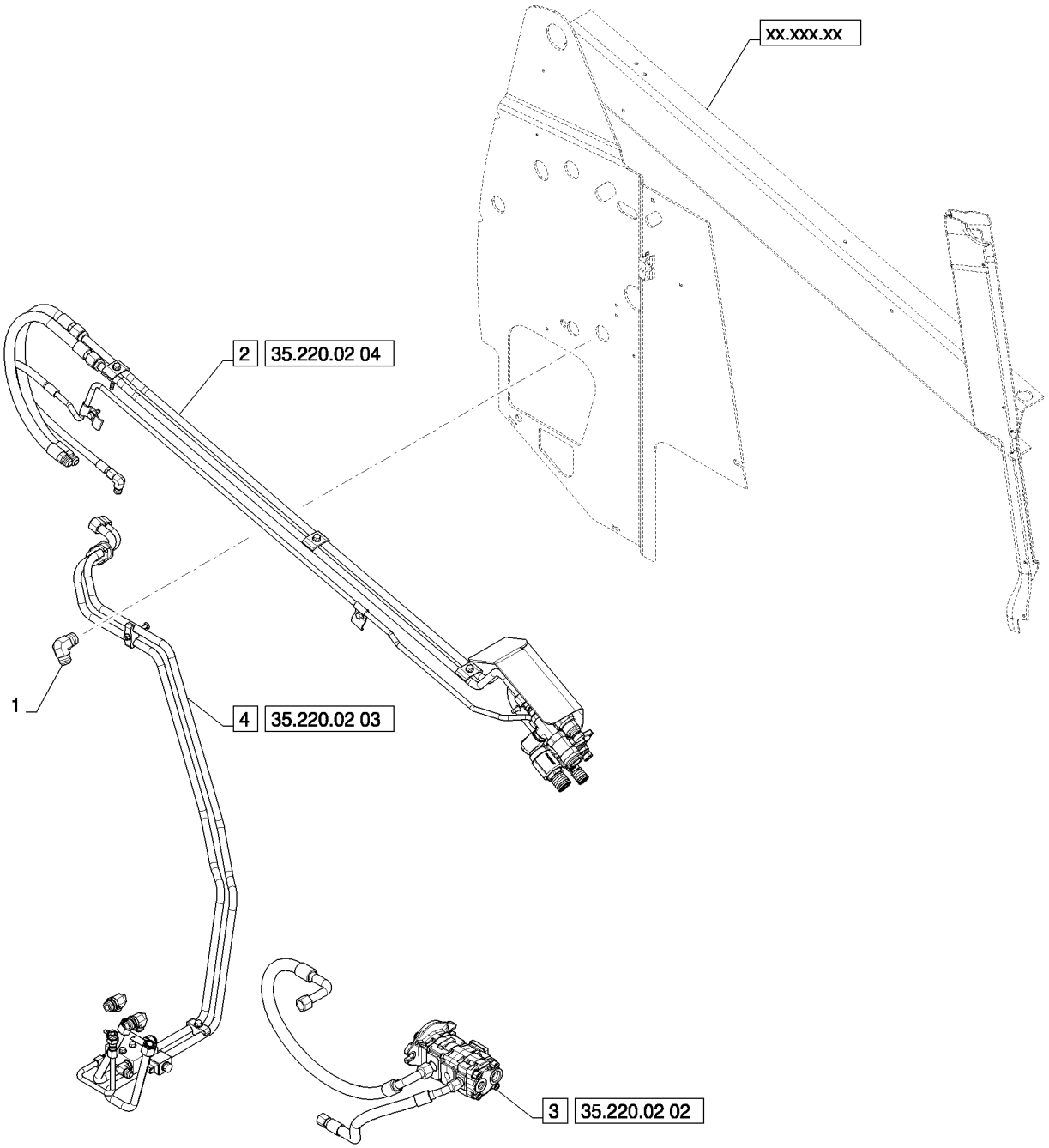

AUX HYD, HIGH FLOW (SR200)
AUX HYD, HIGH FLOW (SR200)
AUX HYD, HIGH FLOW (SR200)
AUX HYD, HIGH FLOW (SR200)

R	N	P.N.	MOD	Q	Denominação Description	Description Bezeichnung	Denominacion Beskrivelse	Descrizione Beschrijving	L.C.
1		86512952		1	COTOVELO, 90º, 1 5/16"-12, 37º x 1"-11 1/2, NPTF				
						ELBOW	CODO	GOMITO	085G
					COUDE	KNIESTÜCK	VINKELRØR	KNIESTUK	
2		NSS		1	SEM SERVIÇO EM SEPARADO, High Flow Aux, Arm Plumbing				
						NOT SERVICED SEPARA	NO SE REPARA POR SE	NON FORNITO SEPARAT	064N
					NON FORUNI SEPAREM	NICHT A SEP ERS-T LIEI	SERVICERES IKKE SEPA	NIET LOS VERKRIJGBAA	
3		NSS		1	SEM SERVIÇO EM SEPARADO, High Flow, Gear Pump				
						NOT SERVICED SEPARA	NO SE REPARA POR SE	NON FORNITO SEPARAT	064N
					NON FORUNI SEPAREM	NICHT A SEP ERS-T LIEI	SERVICERES IKKE SEPA	NIET LOS VERKRIJGBAA	
4		NSS		1	SEM SERVIÇO EM SEPARADO, High Flow Aux, Chassis Plumbing				
						NOT SERVICED SEPARA	NO SE REPARA POR SE	NON FORNITO SEPARAT	064N
					NON FORUNI SEPAREM	NICHT A SEP ERS-T LIEI	SERVICERES IKKE SEPA	NIET LOS VERKRIJGBAA	

35.220.02	02	p1	01/11

AUX HYD, HIGH FLOW, GEAR PUMP (SR200)
AUX HYD, HIGH FLOW, GEAR PUMP (SR200)
AUX HYD, HIGH FLOW, GEAR PUMP (SR200)
AUX HYD, HIGH FLOW, GEAR PUMP (SR200)

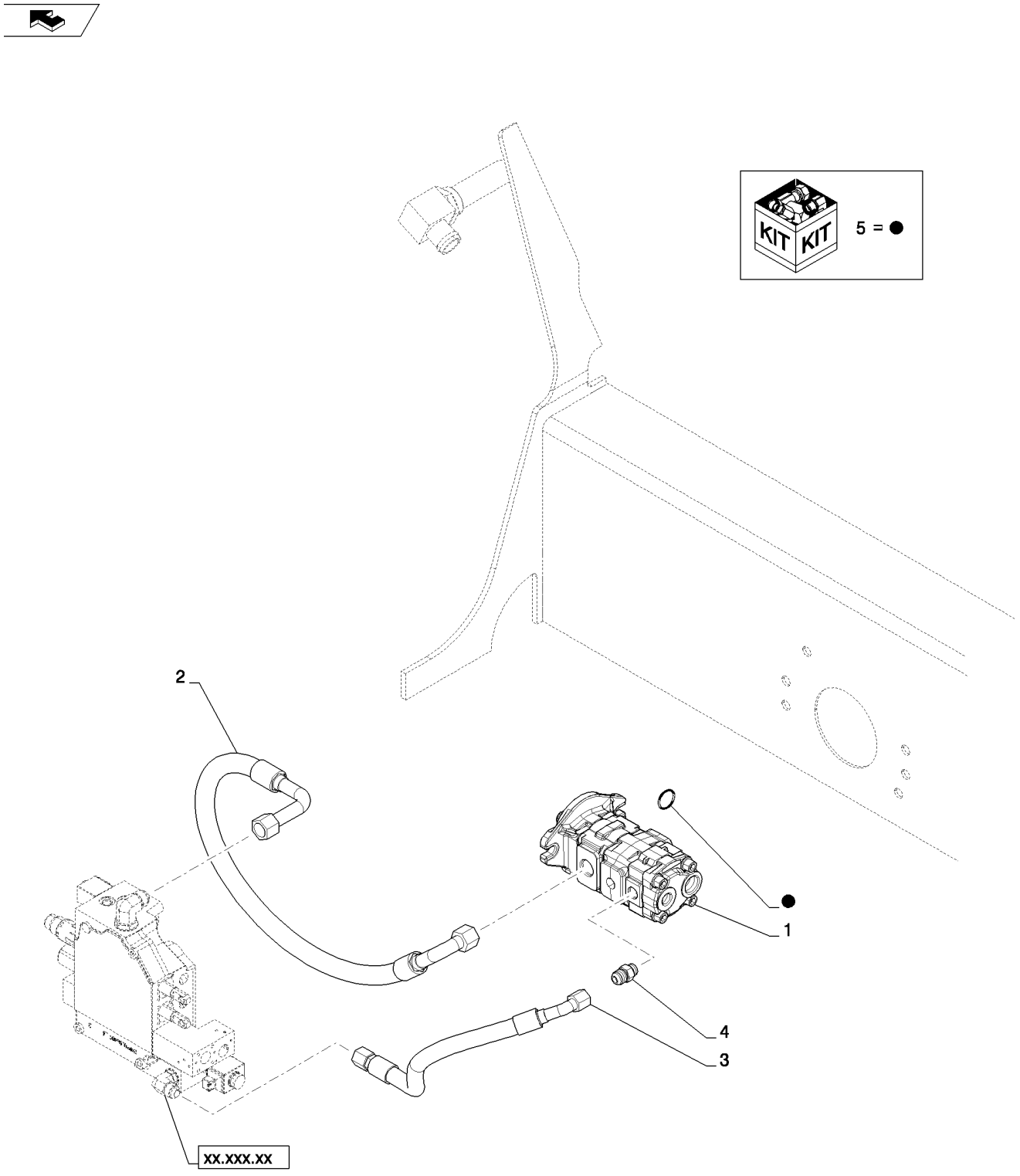

AUX HYD, HIGH FLOW, GEAR PUMP (SR200)
AUX HYD, HIGH FLOW, GEAR PUMP (SR200)
AUX HYD, HIGH FLOW, GEAR PUMP (SR200)
AUX HYD, HIGH FLOW, GEAR PUMP (SR200)

R	N	P.N.	MOD	Q	Denominação Description	Description Bezeichnung	Denominacion Beskrivelse	Descrizione Beschrijving	L.C.
1		84256248		1	BOMBA, 34.1/12.5CC, Gear				
						PUMP	BOMBA	POMPA	6570
					POMPE	PUMPE	PUMPE	POMP	
2		84291249		1	CONJ. MANGUEIRA, Valve Supply				
						HOSE ASSY.	CONJUNTO DE TUBOS	COMPLESS. TUBO FLES	P457
					ENSEMBLE DE FLEXIBLE	SCHLAUCHBAUGRUPPE	SLANGEENHED	SLANGEENHEID	
3		84329005		1	MANGUEIRA, Assembly, High Flow Supply				
						HOSE	TUBO	TUBO FLESSIBILE	030M
					FLEXIBLE	SCHLAUCH	SLANGE	SLANG	
4		86071		1	CONECTOR HIDRÁUL, 7/8"-14, 37º x 3/4"-16, O-Ring				
						HYD CONNECTOR	CONECTOR HIDRÁULIC	CONNETTORE IDRAULIC	020R
					CONNECTEUR HYDRAU	HYDR STECKVERBINDE	HYDRAULIKSTIK	HYDRAULISCHE AANSLI	
5		84389262		1	KIT DE VEDAÇÃO, Double Pump				
						SEAL KIT	KIT DE JUNTAS	KIT GUARNIZIONI	630S
					KIT DE JOINTS	DICHTUNGSSATZ	PAKNINGSSÆT	KIT MET AFDICHTINGEN	

35.220.02	03	p1	01/11

AUX HYD, HIGH FLOW (SR175)(SR200)
AUX HYD, HIGH FLOW (SR175)(SR200)
AUX HYD, HIGH FLOW (SR175)(SR200)
AUX HYD, HIGH FLOW (SR175)(SR200)

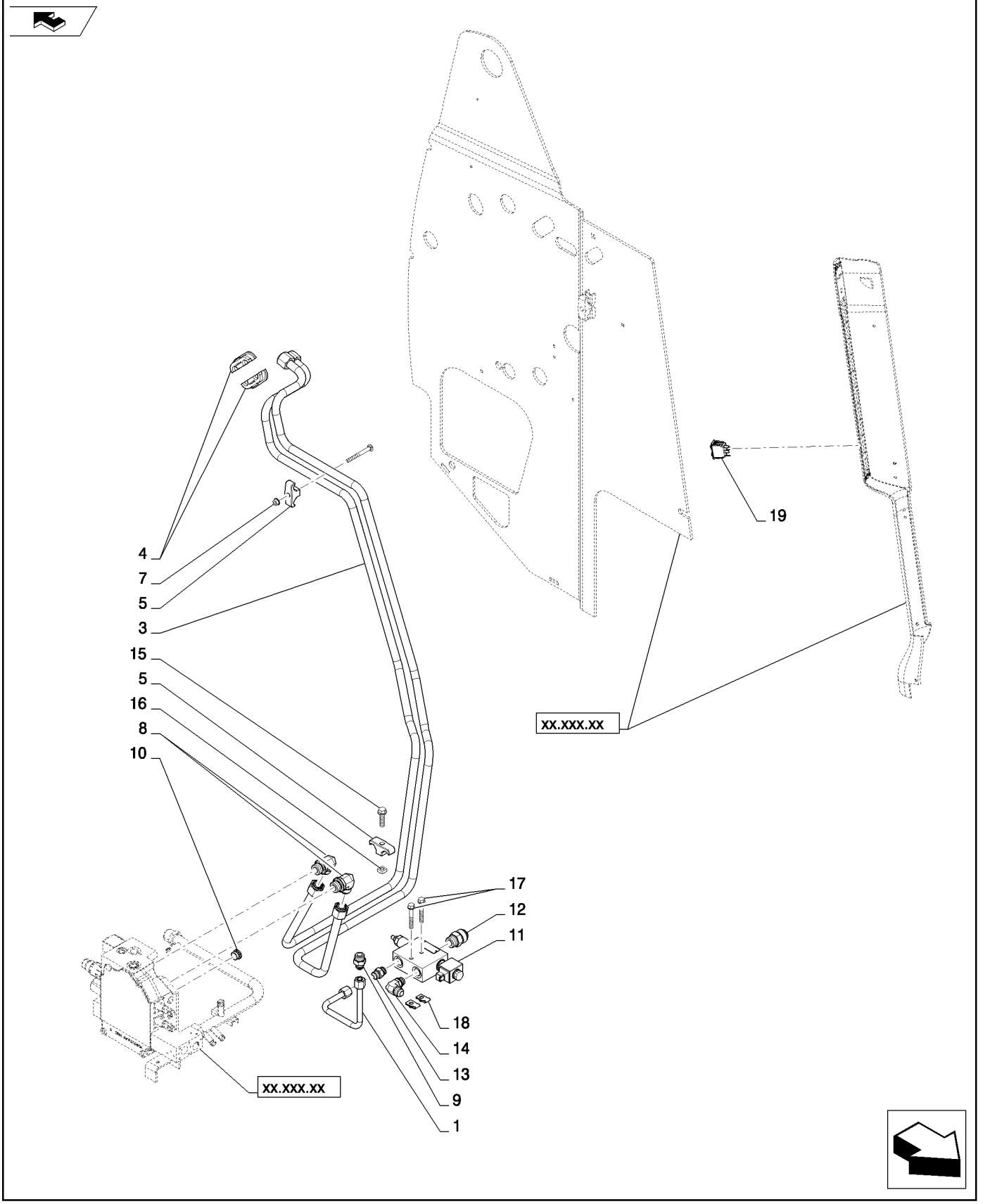

AUX HYD, HIGH FLOW (SR175)(SR200)
AUX HYD, HIGH FLOW (SR175)(SR200)
AUX HYD, HIGH FLOW (SR175)(SR200)
AUX HYD, HIGH FLOW (SR175)(SR200)

R	N	P.N.	MOD	Q	Denominação Description	Description Bezeichnung	Denominacion Beskrivelse	Descrizione Beschrijving	L.C.
1		84186146		1	TUBO, Assembly, HF Valve to LDR Valve				
						TUBE	TUBO	TUBO	195T
					TUBE	ROHR	RØR	LEIDING	
2		84186142		1	TUBO, Assembly, Aux, LDR Valve to LFT Arm				
						TUBE	TUBO	TUBO	195T
					TUBE	ROHR	RØR	LEIDING	
3		84186144		1	TUBO, Assembly, Aux, LDR Valve to LFT Arm				
						TUBE	TUBO	TUBO	195T
					TUBE	ROHR	RØR	LEIDING	
4		84362112		2	SUPORTE, Hyd Tube	SUPPORT	SOPORTE	SUPPORTO	300S
					SUPPORT	STÜTZE	BESLAG	STEUN	
5		D124301		2	BRACADEIRA	CLAMP	COLLAR	MORSETTO	1640
					COLLIER	SCHELLE	CLAMP	CLAMP	
6		366046		1	PARAFUSO, SSQ M8 X 80	CARRIAGE BOLT	PERNO ALOMADO	BULLONE A TESTA TONI	P123
					VIS A TETE BOMBEE	SCHLOSSSCHRAUBE	BRÆDDEBOLT	SLOTBOUT	
7		9804277		1	PORCA, M8 x 1.25, Flg, Cl 8				
						NUT	TUERCA	DADO	010D
					ECROU	MUTTER	MØTRIK	MOER	
8		322894		2	COTOVELO, 90º, 1 1/16"-12, 37º x 1 1/16"-12, O-Ring				
						ELBOW	CODO	GOMITO	085G
					COUDE	KNIESTÜCK	VINKELRØR	KNIESTUK	
9		128819		1	CONECTOR HIDRÁUL, 3/4"-16, 37º x 7/8"-14, O-Ring				
						HYD CONNECTOR	CONECTOR HIDRÁULIC	CONNETTORE IDRAULIC	020R
					CONNECTEUR HYDRAU	HYDR STECKVERBINDE	HYDRAULIKSTIK	HYDRAULISCHE AANSLI	
10		84373460		1	BUJÃO, Load Check	PLUG	TAPÓN	TAPPO	050T
					BOUCHON	STOPFEN	PROP	PLUG	
11		84256405		1	VÁLVULA HIDRÁULICA, HF Combiner				
						HYDRAULIC VALVE	VÁLVULA HIDRÁULICA	DISTRIBUTORE IDRAULI	010V
					SOUPAPE HYDRAULIQU	HYDRAULIKVENTIL	HYDRAULIKVENTIL	HYDRAULISCHE KLEP	
12		86512926		1	CONECTOR HIDRÁUL, 1 5/16"-12, 37º x 1 1/16"-12, O-Ring				
						HYD CONNECTOR	CONECTOR HIDRÁULIC	CONNETTORE IDRAULIC	020R
					CONNECTEUR HYDRAU	HYDR STECKVERBINDE	HYDRAULIKSTIK	HYDRAULISCHE AANSLI	
13		128818		1	CONECTOR HIDRÁUL, 3/4"-16, 37º x 3/4"-16, O-Ring				
						HYD CONNECTOR	CONECTOR HIDRÁULIC	CONNETTORE IDRAULIC	020R
					CONNECTEUR HYDRAU	HYDR STECKVERBINDE	HYDRAULIKSTIK	HYDRAULISCHE AANSLI	
14		86527		1	COTOVELO, 90º, 7/8"-14, 37º x 3/4"-16, O-Ring				
						ELBOW	CODO	GOMITO	085G
					COUDE	KNIESTÜCK	VINKELRØR	KNIESTUK	
15		9804263		1	PARAFUSO, Hex Flg, M10 x 40, 8.8				
						BOLT	PERNO	BULLONE	140B
					VIS	SCHRAUBE	BOLT	BOUT	
16		230427A1		1	PORCA	NUT	TUERCA	DADO	5780
					ECROU	MUTTER	NUT	NUT	
17		86511843		2	PARAFUSO, Hex Flg, M8 x 60, 8.8				
						BOLT	PERNO	BULLONE	140B
					VIS	SCHRAUBE	BOLT	BOUT	
18		87016586		2	PORCA, M8, U	NUT	TUERCA	DADO	010D
					ECROU	MUTTER	MØTRIK	MOER	

SR200

35.220.02	03	p2	01/11

AUX HYD, HIGH FLOW (SR175)(SR200)
AUX HYD, HIGH FLOW (SR175)(SR200)
AUX HYD, HIGH FLOW (SR175)(SR200)
AUX HYD, HIGH FLOW (SR175)(SR200)

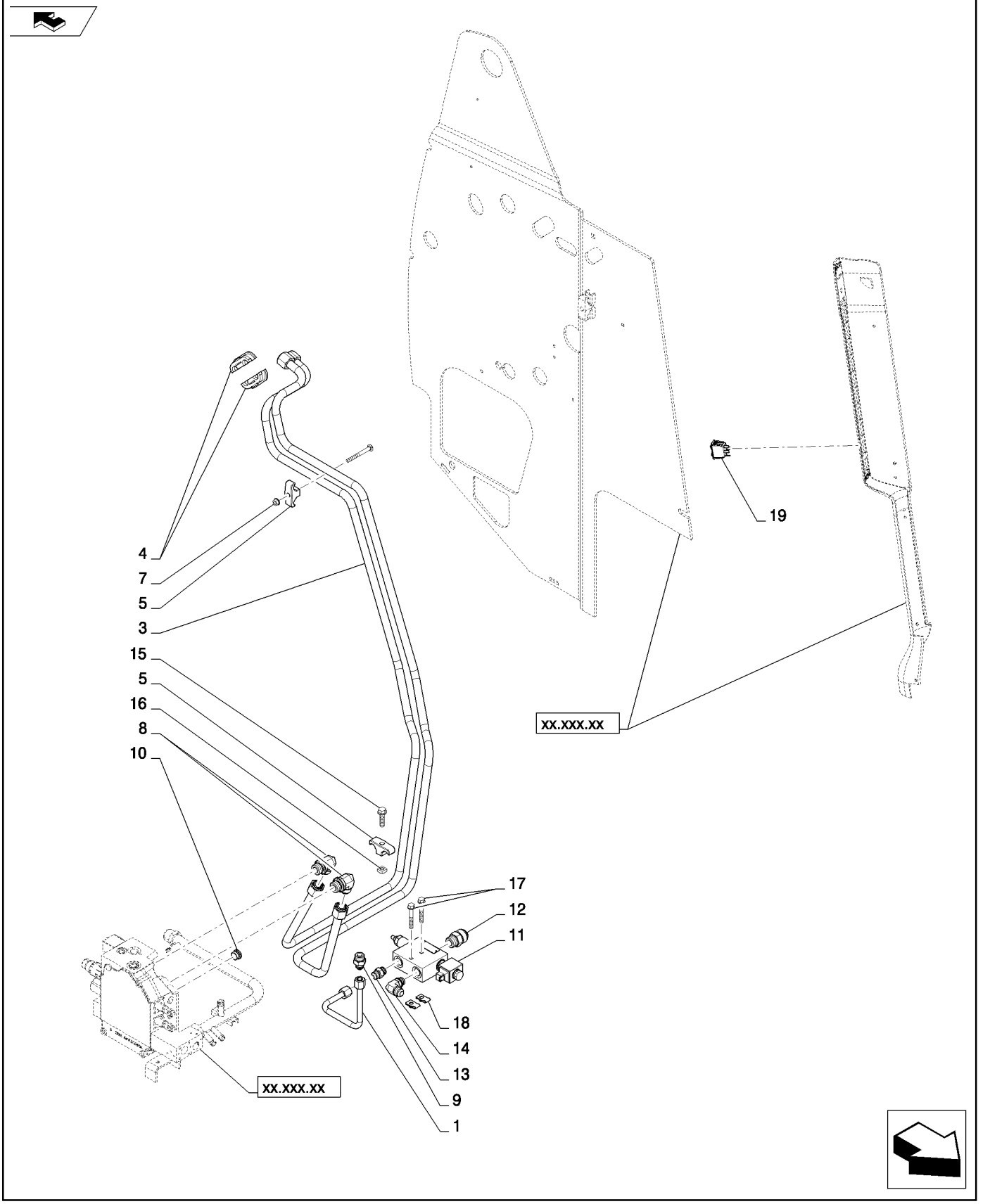

AUX HYD, HIGH FLOW (SR175)(SR200)
AUX HYD, HIGH FLOW (SR175)(SR200)
AUX HYD, HIGH FLOW (SR175)(SR200)
AUX HYD, HIGH FLOW (SR175)(SR200)

R	N	P.N.	MOD	Q	Denominação Description	Description Bezeichnung	Denominacion Beskrivelse	Descrizione Beschrijving	L.C.
19		84251427		1	INTERRUPTOR, Rocker, High Flow				
						SWITCH	INTERRUPTOR	INTERRUTTORE	075I
					CONTACTEUR	SCHALTER	KONTAKT	SCHAKELAAR	

35.220.02	04	p1	01/11

AUX HYD, HIGH FLOW, ARM PLUMBING (SR175)(SR200)
AUX HYD, HIGH FLOW, ARM PLUMBING (SR175)(SR200)
AUX HYD, HIGH FLOW, ARM PLUMBING (SR175)(SR200)
AUX HYD, HIGH FLOW, ARM PLUMBING (SR175)(SR200)

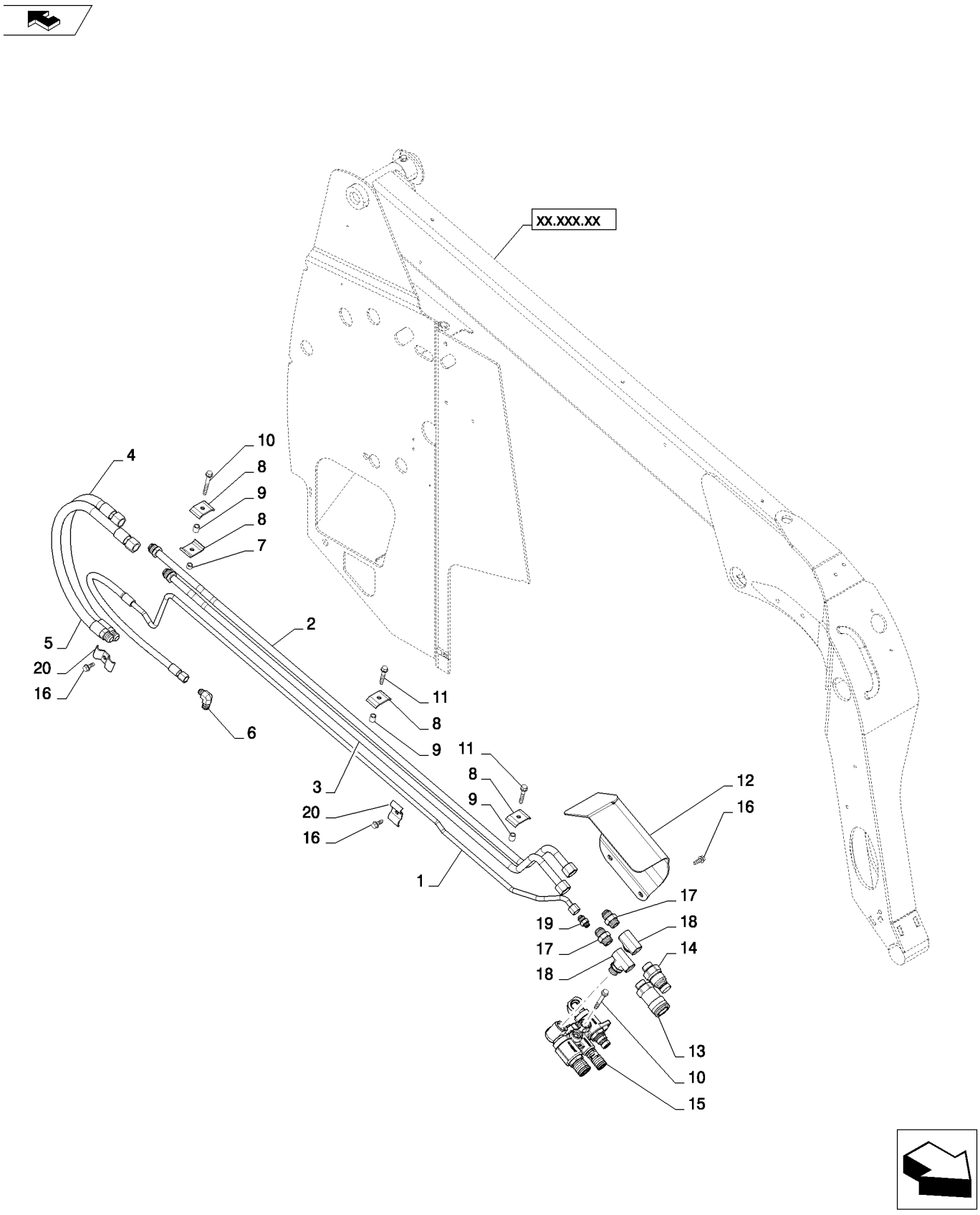

AUX HYD, HIGH FLOW, ARM PLUMBING (SR175)(SR200)
AUX HYD, HIGH FLOW, ARM PLUMBING (SR175)(SR200)
AUX HYD, HIGH FLOW, ARM PLUMBING (SR175)(SR200)
AUX HYD, HIGH FLOW, ARM PLUMBING (SR175)(SR200)

R	N	P.N.	MOD	Q	Denominação Description	Description Bezeichnung	Denominacion Beskrivelse	Descrizione Beschrijving	L.C.
1		84338474		1	TUBO HIDRÁULICO, Assembly, Case Drain				
						HYD. TUBE	TUBO HIDRÁULICO	TUBO IDRAULICO	190T
					TUYAU HYDRAULIQUE	HYDRAULIKLEITUNG	HYD. RØR	HYDRAULISCHE LEIDIN(	
2		84322573		1	TUBO HIDRÁULICO, Assembly, HF Male				
						HYD. TUBE	TUBO HIDRÁULICO	TUBO IDRAULICO	190T
					TUYAU HYDRAULIQUE	HYDRAULIKLEITUNG	HYD. RØR	HYDRAULISCHE LEIDIN(	
3		84322576		1	TUBO HIDRÁULICO, Assembly, HF Female				
						HYD. TUBE	TUBO HIDRÁULICO	TUBO IDRAULICO	190T
					TUYAU HYDRAULIQUE	HYDRAULIKLEITUNG	HYD. RØR	HYDRAULISCHE LEIDIN(	
4		84322575		1	TUBO FLEXÍVEL, Assembly, HF Aux Male				
						FLEXIBLE HOSE	TUBO FLEXIBLE	TUBO FLESSIBILE	192T
					TUYAU FLEXIBLE	BIEGSAMER SCHLAUCH	FLEKSIBEL SLANGE	FLEXIBELE SLANG	
5		84322578		1	TUBO FLEXÍVEL, Assembly, HF Aux Female				
						FLEXIBLE HOSE	TUBO FLEXIBLE	TUBO FLESSIBILE	192T
					TUYAU FLEXIBLE	BIEGSAMER SCHLAUCH	FLEKSIBEL SLANGE	FLEXIBELE SLANG	
6		76352		1	COTOVELO, 90º, 3/4"-16, 37º x 1/2"-14, NPTF				
						ELBOW	CODO	GOMITO	085G
					COUDE	KNIESTÜCK	VINKELRØR	KNIESTUK	
7		84306875		1	ESPAÇADOR	SPACER	SEPARADOR	DISTANZIALE	075D
					ENTRETOISE	DISTANZSTÜCK	AFSTANDSSTYKKE	AFSTANDSSTUK	
8		84277076		4	BRAÇADEIRA TUBO, Tube	PIPE CLAMP	ABRAZADERA DE TUBO	FERMO TUBO	Z430
					COLLIER DE TUYAU	ROHRSCHELLE	RØRKLEMME	LEIDINGKLEM	
9		84277083		3	ESPAÇADOR TUBO	TUBE SPACER	ESPACIADOR DE TUBO	DISTANZIALE TUBO	Z038
					TUBE ENTRETOISE	DISTANZROHR	SLANGE, AFSTANDSSTY	AFSTANDSSTUK V. LEID	
10		84331287		3	PARAFUSO, Tapping, 3/8-16 X 3 TT				
						SCREW	TORNILLO	VITE	040V
					VIS	SCHRAUBE	SKRUE	SCHROEF	
11		87030530		2	PARAFUSO, Tapping, 3/8 X 1.75 TT HW ZND				
						SCREW	TORNILLO	VITE	040V
					VIS	SCHRAUBE	SKRUE	SCHROEF	
12		84306937		1	PLACA DE COBERTURA, Hydraulic Tan				
						COVER PLATE	PLACA DE CUBIERTA	PIASTRA DI COPERTUR/	110P
					COUVERCLE	ABDECKPLATTE	DÆKPLADE	AFSCHERMPLAAT	
13		84257182		1	CONEXÃO, Female Quick Coupler				
						FITTING	ACOPLAMIENTO	RACCORDO	3300
					RACCORD	ARMATUR	FITTING	AANSLUITING	
14		84257183		1	CONEXÃO, Male Quick Coupler				
						FITTING	ACOPLAMIENTO	RACCORDO	3300
					RACCORD	ARMATUR	FITTING	AANSLUITING	
15		84259689		1	VÁLVULA, Quick Attach HF	VALVE	VÁLVULA	VALVOLA	9620
					SOUPAPE	VENTIL	VENTIL	KLEP	
16		280476		4	PARAFUSO, Hex Wash Hd, 3/8" x 1"				
						SELF-TAP SCREW	TORNILLO AUTORROSC	VITE AUTOFILETTANTE	062V
					VIS AUTOTARAUDEUSE	SELBSTSCHN SCHRAUE	SELVLÅSENDE BOLT	ZELFTAPPENDE SCHRO	
17		322896		2	CONECTOR HIDRÁUL, 1 1/16"-12, 37º x 1 1/16"-12, O-Ring				
						HYD CONNECTOR	CONECTOR HIDRÁULIC(	CONNETTORE IDRAULIC	020R
					CONNECTEUR HYDRAU	HYDR STECKVERBINDE	HYDRAULIKSTIK	HYDRAULISCHE AANSLI	

SR200

35.220.02	04	p2	01/11

AUX HYD, HIGH FLOW, ARM PLUMBING (SR175)(SR200)
AUX HYD, HIGH FLOW, ARM PLUMBING (SR175)(SR200)
AUX HYD, HIGH FLOW, ARM PLUMBING (SR175)(SR200)
AUX HYD, HIGH FLOW, ARM PLUMBING (SR175)(SR200)

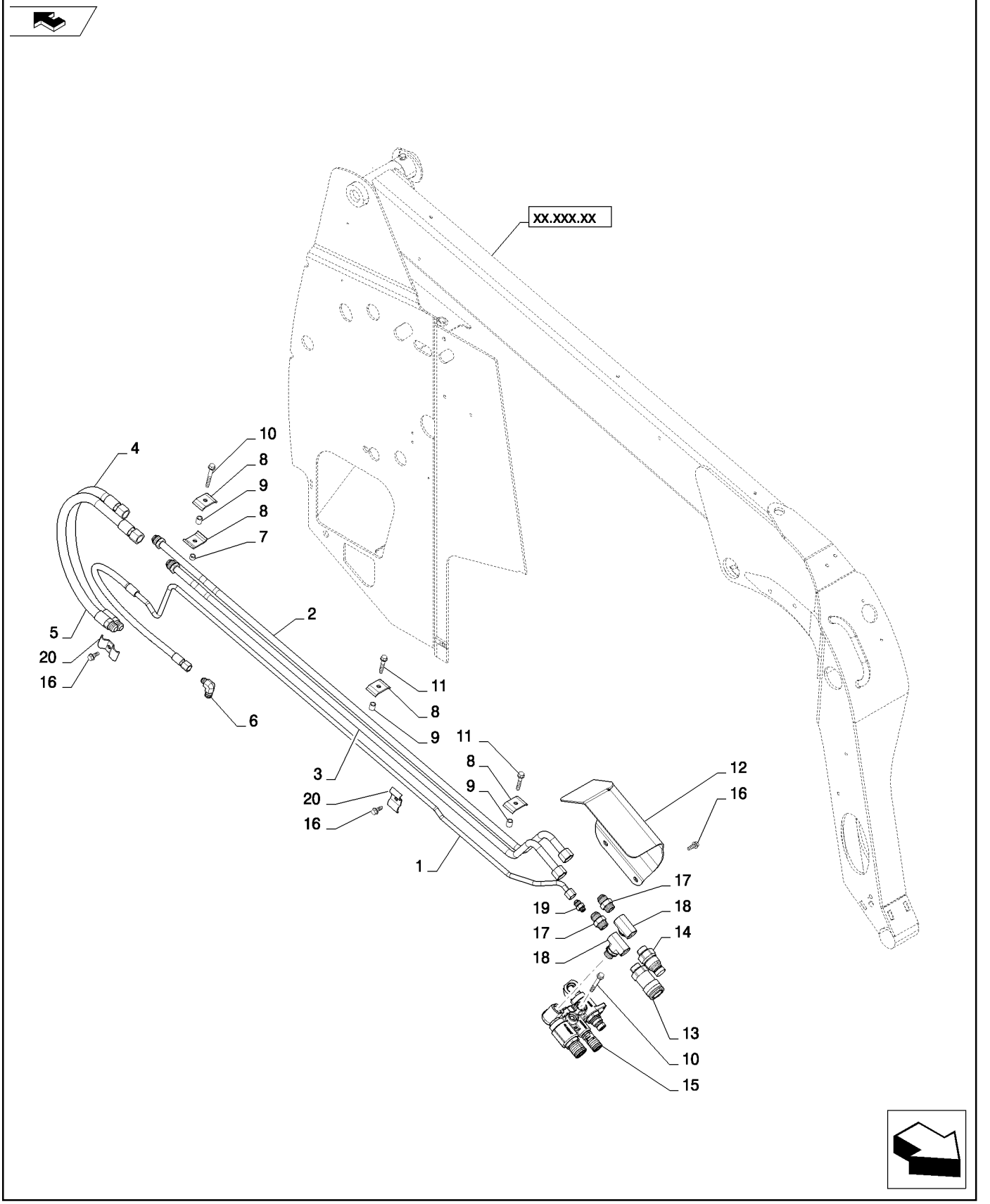

AUX HYD, HIGH FLOW, ARM PLUMBING (SR175)(SR200)
AUX HYD, HIGH FLOW, ARM PLUMBING (SR175)(SR200)
AUX HYD, HIGH FLOW, ARM PLUMBING (SR175)(SR200)
AUX HYD, HIGH FLOW, ARM PLUMBING (SR175)(SR200)

R	N	P.N.	MOD	Q	Denominação Description Bezeichnung	Description Bezeichnung	Denominacion Beskrivelse	Descrizione Beschrijving	L.C.
18		**84255994**		2	CONEXÃO, Tee Adj -12 ORB				
						FITTING	ACOPLAMIENTO	RACCORDO	3300
					RACCORD	ARMATUR	FITTING	AANSLUITING	
19		**86509028**		1	CONECTOR HIDRÁUL, 3/4"-16, 37° x 9/16"-18, O-Ring				
						HYD CONNECTOR	CONECTOR HIDRÁULIC	CONNETTORE IDRAULIC	020R
					CONNECTEUR HYDRAU	HYDR STECKVERBINDE	HYDRAULIKSTIK	HYDRAULISCHE AANSLU	
20		**84254056**		2	BRAÇADEIRA MANGUEIRA, Butterfly Tube				
						HOSE CLAMP	ABRAZADERA DE MANG	FASCETTA STRINGITUB	P729
					COLLIER POUR FLEXIBL	SCHLAUCHSCHELLE	SLANGEKLEMME	SLANGKLEM	

35.359.01	01	p1	08/11

PUMP, EH AND CONTROL VALVE (SR200)
PUMP, EH AND CONTROL VALVE (SR200)
PUMP, EH AND CONTROL VALVE (SR200)
PUMP, EH AND CONTROL VALVE (SR200)

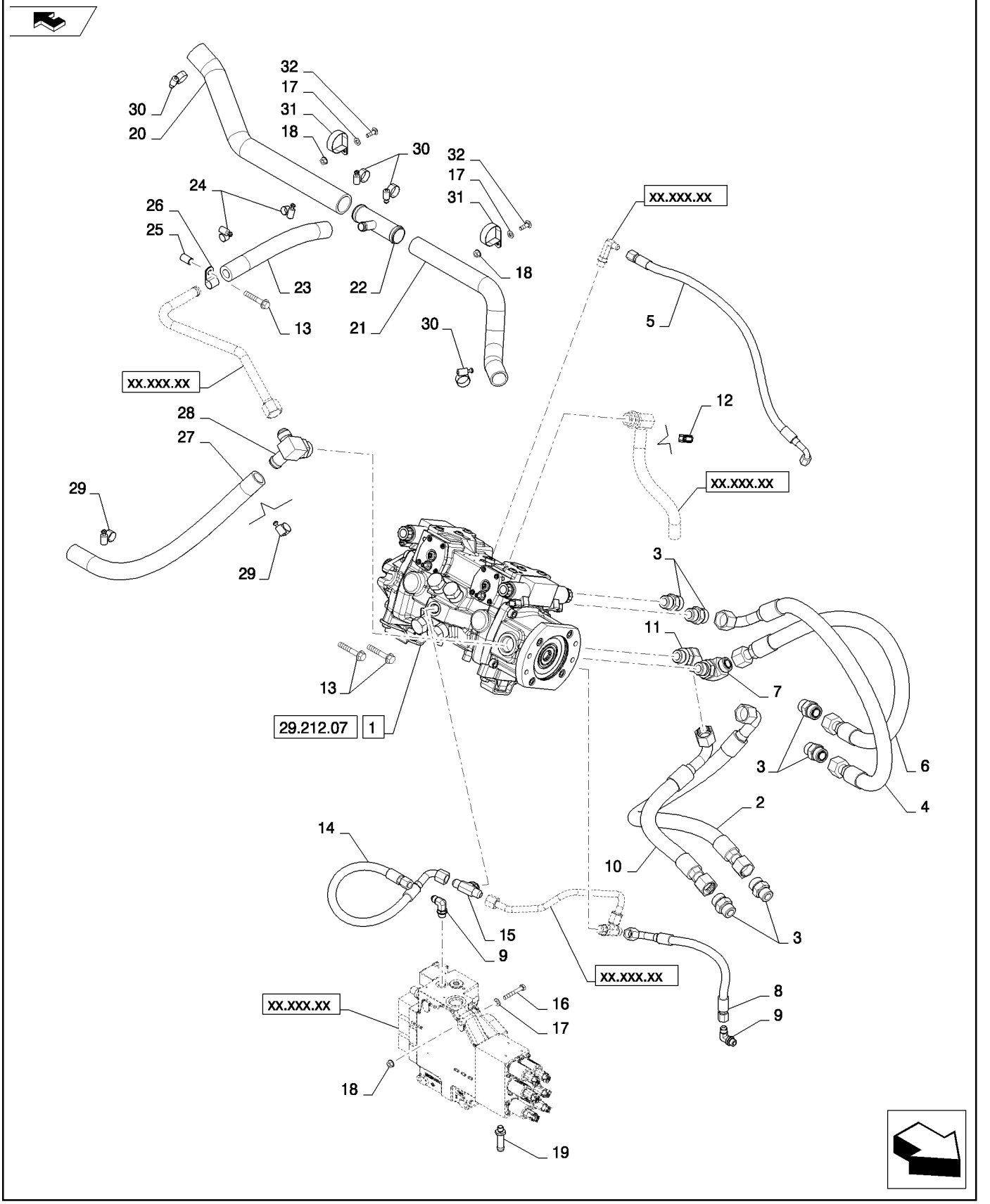

PUMP, EH AND CONTROL VALVE (SR200)
PUMP, EH AND CONTROL VALVE (SR200)
PUMP, EH AND CONTROL VALVE (SR200)
PUMP, EH AND CONTROL VALVE (SR200)

R	N	P.N.	MOD	Q	Denominação Description Description Bezeichnung Denominacion Beskrivelse Descrizione Beschrijving	L.C.
1		84295013		1	BOMBA HIDRÁULICA, EH, 46cc, 360BAR HYDRAULIC PUMP / BOMBA HIDRÁULICO / POMPA IDRAULICA POMPE HYDRAULIQUE / HYDRAULIKPUMPE / HYDRAULIKPUMPE / HYDRAULISCHE POMP	155P
2		84258849		1	TUBO FLEXÍVEL, Assembly, Loop FLEXIBLE HOSE / TUBO FLEXIBLE / TUBO FLESSIBILE TUYAU FLEXIBLE / BIEGSAMER SCHLAUCH / FLEKSIBEL SLANGE / FLEXIBELE SLANG	192T
3		9840535		6	CONECTOR HIDRÁUL, 1 3/16"-12 ORFS x 1 1/16"-12 ORB HYD CONNECTOR / CONECTOR HIDRÁULIC / CONNETTORE IDRAULIC CONNECTEUR HYDRAU / HYDR STECKVERBINDE / HYDRAULIKSTIK / HYDRAULISCHE AANSLU	020R
4		84258848		1	TUBO FLEXÍVEL, Assembly, Loop, Includes O-Ring FLEXIBLE HOSE / TUBO FLEXIBLE / TUBO FLESSIBILE TUYAU FLEXIBLE / BIEGSAMER SCHLAUCH / FLEKSIBEL SLANGE / FLEXIBELE SLANG	192T
4		9991976		2	O-RING, 0.739" ID x 0.879" OD x 0.07", 1-3/16", ORFS O-RING / JUNTA TÓRICA / ANELLO TOROIDALE JOINT TORIQUE / O-RING / O-RING / O-RING	055A
5		84309599		1	TUBO FLEXÍVEL, Assembly, EH Brake Nor FLEXIBLE HOSE / TUBO FLEXIBLE / TUBO FLESSIBILE TUYAU FLEXIBLE / BIEGSAMER SCHLAUCH / FLEKSIBEL SLANGE / FLEXIBELE SLANG	192T
6		84258856		1	TUBO FLEXÍVEL, Assembly, Loop FLEXIBLE HOSE / TUBO FLEXIBLE / TUBO FLESSIBILE TUYAU FLEXIBLE / BIEGSAMER SCHLAUCH / FLEKSIBEL SLANGE / FLEXIBELE SLANG	192T
7		9846848		1	COTOVELO 90, 1 3/16"-12 ORFS x 1 1/16"-12 ORB 90 ELBOW / CODO 90 / GOMITO A 90° COUDE A 90° / 90-GRAD-KNIESTÜCK / VINKELRØR, 90 / KNIESTUK 90°	A045
8		84299737		1	TUBO FLEXÍVEL, Assembly, EH Brake Charge FLEXIBLE HOSE / TUBO FLEXIBLE / TUBO FLESSIBILE TUYAU FLEXIBLE / BIEGSAMER SCHLAUCH / FLEKSIBEL SLANGE / FLEXIBELE SLANG	192T
9		76344		2	COTOVELO, 90º, 9/16"-18, 37º x 9/16"-18, O-Ring ELBOW / CODO / GOMITO COUDE / KNIESTÜCK / VINKELRØR / KNIESTUK	085G
10		84312284		1	TUBO FLEXÍVEL, Assembly, Loop FLEXIBLE HOSE / TUBO FLEXIBLE / TUBO FLESSIBILE TUYAU FLEXIBLE / BIEGSAMER SCHLAUCH / FLEKSIBEL SLANGE / FLEXIBELE SLANG	192T
11		9846870		1	COTOVELO, 45º, 1 3/16"-12 x 1 1/16"-12. Adj, ORFS ELBOW / CODO / GOMITO COUDE / KNIESTÜCK / VINKELRØR / KNIESTUK	085G
12		87443511		2	BRAÇADEIRA, Spring / CLAMP / ABRAZADERA / MORSETTO COLLIER / KLEMME / SPÆNDEBÅND / KLEM	120M
13		9804265		3	PARAFUSO, Hex Flg, M10 x 60, 8.8 BOLT / PERNO / BULLONE VIS / SCHRAUBE / BOLT / BOUT	140B
14		84299736		1	TUBO FLEXÍVEL, Assembly, EH LV Interlock FLEXIBLE HOSE / TUBO FLEXIBLE / TUBO FLESSIBILE TUYAU FLEXIBLE / BIEGSAMER SCHLAUCH / FLEKSIBEL SLANGE / FLEXIBELE SLANG	192T
15		86513024		1	T, 3/4"-16, 37º x 3/4"-16, O-Ring Br TEE / RACOR EN T / PEZZO A T RACCORD EN T / T-STÜCK / T-STYKKE / T-STUK	9020

35.359.01	01	p2	08/11

PUMP, EH AND CONTROL VALVE (SR200)
PUMP, EH AND CONTROL VALVE (SR200)
PUMP, EH AND CONTROL VALVE (SR200)
PUMP, EH AND CONTROL VALVE (SR200)

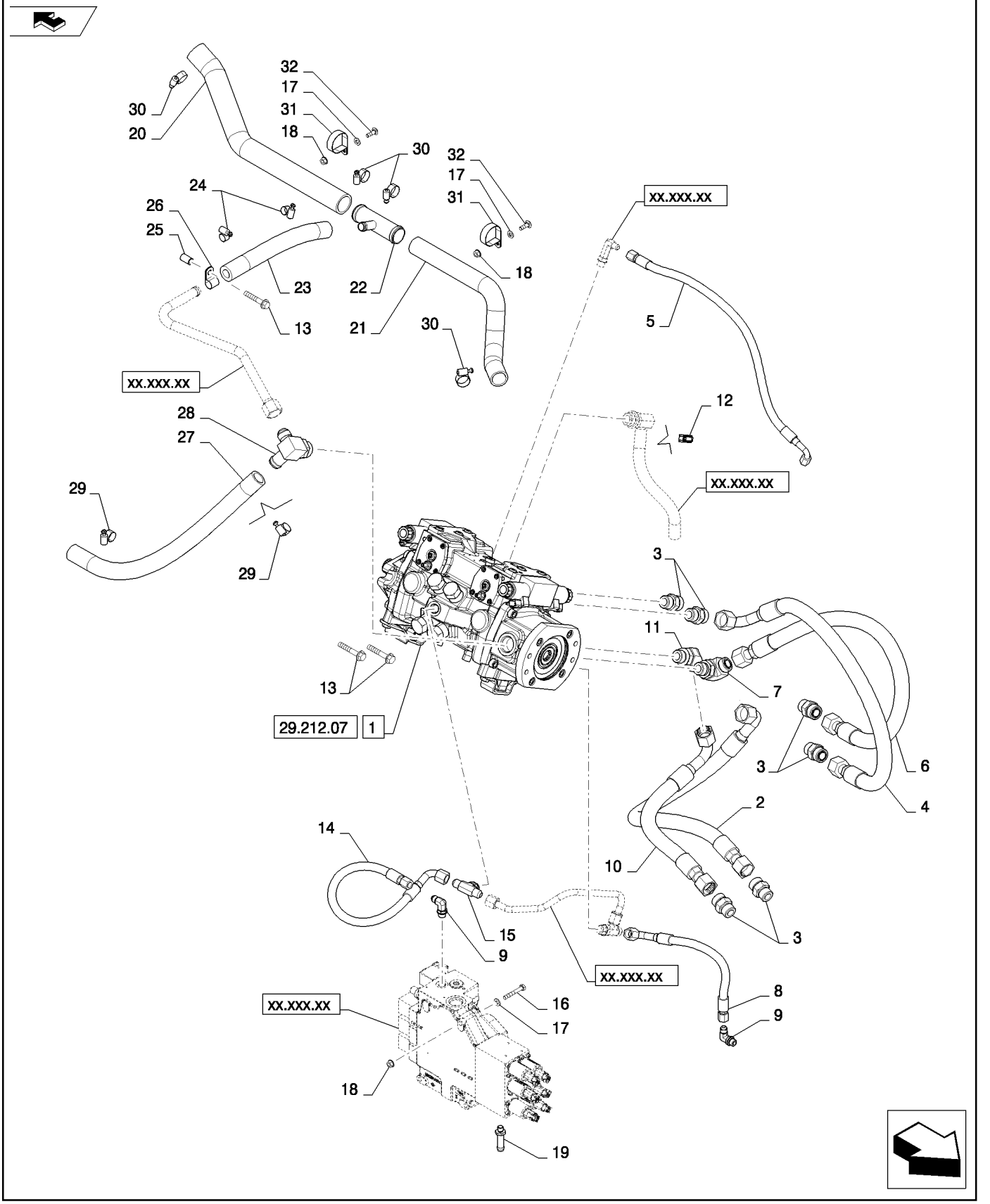

PUMP, EH AND CONTROL VALVE (SR200)
PUMP, EH AND CONTROL VALVE (SR200)
PUMP, EH AND CONTROL VALVE (SR200)
PUMP, EH AND CONTROL VALVE (SR200)

R	N	P.N.	MOD	Q	Denominação Description	Description Bezeichnung	Denominacion Beskrivelse	Descrizione Beschrijving	L.C.
16		**16044321**		3	PARAFUSO, Hex, M8 x 55, 8.8				
						SCREW	TORNILLO	VITE	040V
					VIS	SCHRAUBE	SKRUE	SCHROEF	
17		**87655042**		5	ARRUELA ESPECIAL, M8, 8.80 X 17.5 X 2.2 HTS				
						SPECIAL WASHER	ARANDELA ESPECIAL	RONDELLA SPECIALE	Z333
					RONDELLE SPECIALE	SPEZIALUNTERLEGSCH	SPECIALSKIVE	SPECIALE RING	
18		**9804277**		3	PORCA, M8 x 1.25, Flg, Cl 8				
						NUT	TUERCA	DADO	010D
					ECROU	MUTTER	MØTRIK	MOER	
19		**87314487**		2	CONECTOR HIDRÁUL, Bead, Hose, 1/2in				
						HYD CONNECTOR	CONECTOR HIDRÁULIC(	CONNETTORE IDRAULIC	020R
					CONNECTEUR HYDRAU	HYDR STECKVERBINDE	HYDRAULIKSTIK	HYDRAULISCHE AANSLI	
20		**84349293**		1	MANGUEIRA, Gear Pump, Suction				
						HOSE	TUBO	TUBO FLESSIBILE	030M
					FLEXIBLE	SCHLAUCH	SLANGE	SLANG	
21		**84387463**		1	MANGUEIRA, Gear Pump, Suction				
						HOSE	TUBO	TUBO FLESSIBILE	030M
					FLEXIBLE	SCHLAUCH	SLANGE	SLANG	
22		**84344919**		1	T, -24 Bead, -24 Bead, -12 Bead				
						TEE	RACOR EN T	PEZZO A T	9020
					RACCORD EN T	T-STÜCK	T-STYKKE	T-STUK	
23		**84344942**		1	MANGUEIRA, Tandem Supply				
						HOSE	TUBO	TUBO FLESSIBILE	030M
					FLEXIBLE	SCHLAUCH	SLANGE	SLANG	
24		**86625021**		2	BRAÇADEIRA MANGUEIRA, #12, 0.69/1.25 Type F Worm				
						HOSE CLAMP	ABRAZADERA DE MANG	FASCETTA STRINGITUB	P729
					COLLIER POUR FLEXIBL	SCHLAUCHSCHELLE	SLANGEKLEMME	SLANGKLEM	
25		**87022737**		1	ESPACADOR	SPACER	ESPACIADOR	DISTANZIALE	8090
					ENTRETOISE	ABSTANDSSTUECK	SPACER	SPACER	
26		**86637999**		1	BRAÇADEIRA, 3/4", Insul, 7/16" Bolt				
						CLAMP	ABRAZADERA	MORSETTO	120M
					COLLIER	KLEMME	SPÆNDEBÅND	KLEM	
27		**84303515**		1	TUBO FLEXÍVEL, Assembly, Charge Supply				
						FLEXIBLE HOSE	TUBO FLEXIBLE	TUBO FLESSIBILE	192T
					TUYAU FLEXIBLE	BIEGSAMER SCHLAUCH	FLEKSIBEL SLANGE	FLEXIBELE SLANG	
28		**84344924**		1	COTOVELO 90, Fitting, -16MB, -16 Bead, -12MJ				
						90 ELBOW	CODO 90	GOMITO A 90°	A045
					COUDE A 90°	90-GRAD-KNIESTÜCK	VINKELRØR, 90	KNIESTUK 90º	
29		**507586**		2	BRAÇADEIRA MANGUEIRA, #20, 0.81/1.75 Type F Worm				
						HOSE CLAMP	ABRAZADERA DE MANG	FASCETTA STRINGITUB	P729
					COLLIER POUR FLEXIBL	SCHLAUCHSCHELLE	SLANGEKLEMME	SLANGKLEM	
30		**513309**		4	BRAÇADEIRA MANGUEIRA, #24, 1.06/2.00 Type F Worm				
						HOSE CLAMP	ABRAZADERA DE MANG	FASCETTA STRINGITUB	P729
					COLLIER POUR FLEXIBL	SCHLAUCHSCHELLE	SLANGEKLEMME	SLANGKLEM	
31		**84265306**		2	BRAÇADEIRA, 47.6MM M8 Bolt ZND				
						CLAMP	ABRAZADERA	MORSETTO	120M
					COLLIER	KLEMME	SPÆNDEBÅND	KLEM	

35.359.01	01	p3	08/11

PUMP, EH AND CONTROL VALVE (SR200)
PUMP, EH AND CONTROL VALVE (SR200)
PUMP, EH AND CONTROL VALVE (SR200)
PUMP, EH AND CONTROL VALVE (SR200)

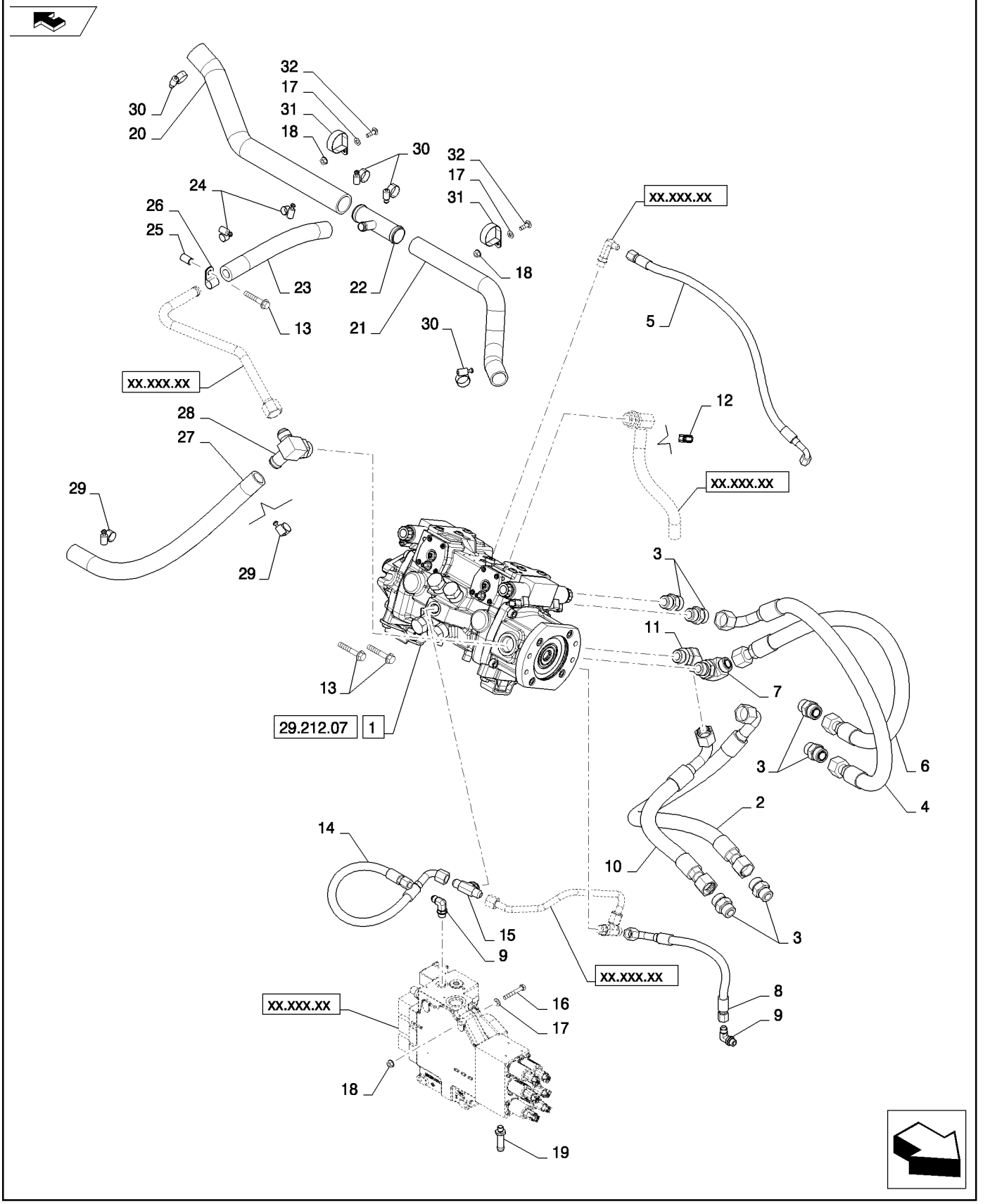

PUMP, EH AND CONTROL VALVE (SR200)
PUMP, EH AND CONTROL VALVE (SR200)
PUMP, EH AND CONTROL VALVE (SR200)
PUMP, EH AND CONTROL VALVE (SR200)

R	N	P.N.	MOD	Q	Denominação Description	Description Bezeichnung	Denominacion Beskrivelse	Descrizione Beschrijving	L.C.
32		308761		2	PARAFUSO, Short NK, M8 x 25, Cl8.8, Full Thd VIS A TETE BOMBEE	CARRIAGE BOLT SCHLOSSSCHRAUBE	PERNO ALOMADO BRÆDDEBOLT	BULLONE A TESTA TONI SLOTBOUT	P123

35.359.01	02	p1	02/11

PUMP, EH AND CONTROL VALVE (SR200)
PUMP, EH AND CONTROL VALVE (SR200)
PUMP, EH AND CONTROL VALVE (SR200)
PUMP, EH AND CONTROL VALVE (SR200)

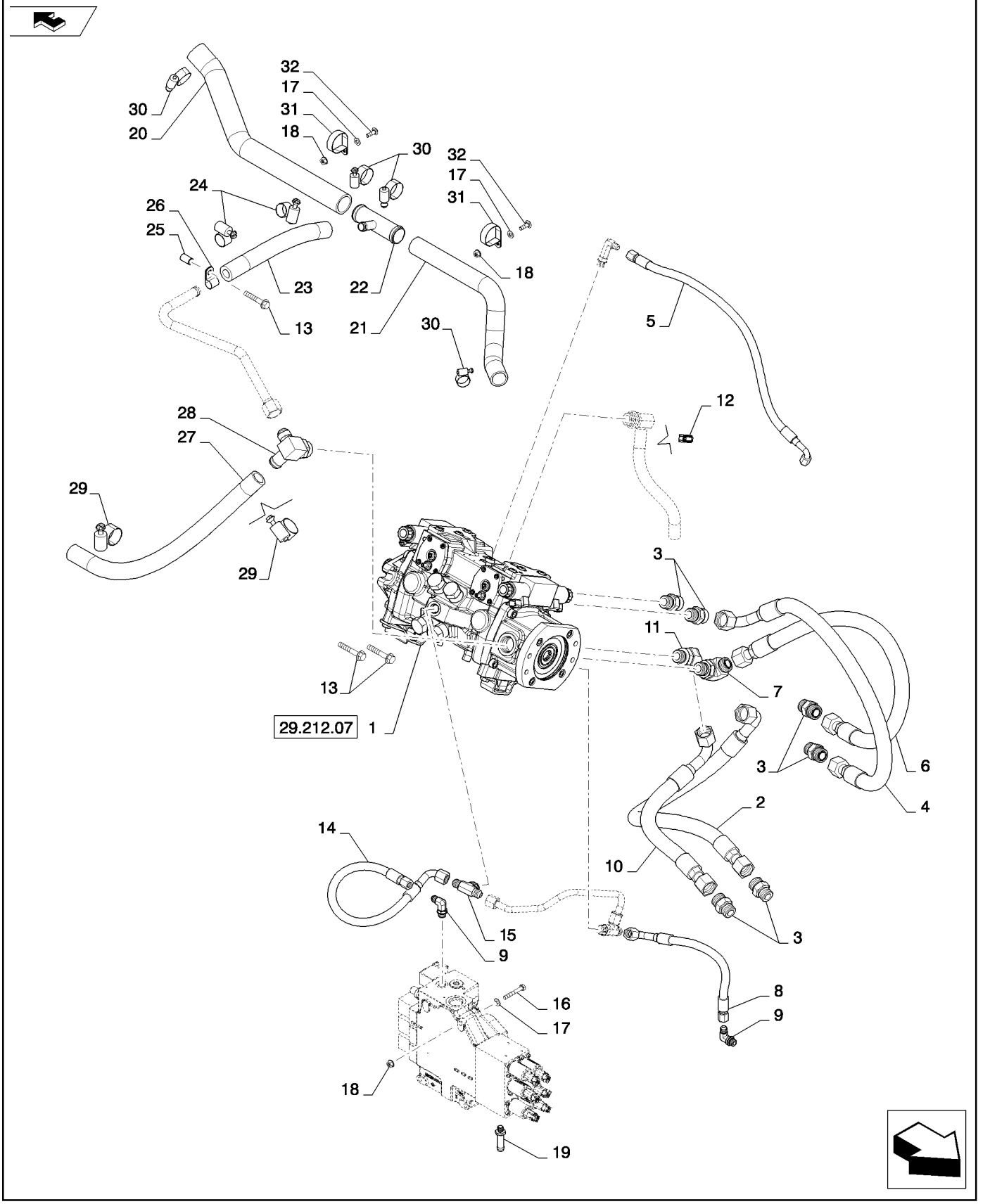

PUMP, EH AND CONTROL VALVE (SR200)
PUMP, EH AND CONTROL VALVE (SR200)
PUMP, EH AND CONTROL VALVE (SR200)
PUMP, EH AND CONTROL VALVE (SR200)

R	N	P.N.	MOD	Q	Denominação Description Bezeichnung	Description Denominacion Beskrivelse	Denominacion Descrizione Beschrijving	Descrizione Beschrijving	L.C.
1		84295013		1	BOMBA HIDRÁULICA, EH, 46cc, 360BAR; See Figure 29.212.07				
					HYDRAULIC PUMP	BOMBA HIDRÁULICO	POMPA IDRAULICA		155P
					POMPE HYDRAULIQUE	HYDRAULIKPUMPE	HYDRAULIKPUMPE	HYDRAULISCHE POMP	
2		84349300		1	TUBO RÍGIDO, Hydraulic, EH, Charge Supply				
					RIGID TUBE	TUBO RÍGIDO	TUBO RIGIDO		193T
					TUYAU RIGIDE	ROHR	STIFT RØR	VASTE LEIDING	
3		86526		2	COTOVELO, 90º, 9/16"-18, 37º x 9/16"-18, LG				
					ELBOW	CODO	GOMITO		085G
					COUDE	KNIESTÜCK	VINKELRØR	KNIESTUK	
4		87670		2	PARAFUSO, Hex, 1/2"-13 x 1 1/4", G5, Full Thd				
					BOLT	PERNO	BULLONE		140B
					VIS	SCHRAUBE	BOLT	BOUT	
5		86625255		2	ARRUELA PLANA, M13.5 x 24.5 x 3, HT				
					WASHER	ARANDELA	RONDELLA		131R
					RONDELLE	UNTERLEGSCHEIBE	FLADSKIVE	SLUITRING	
6		84312508		1	VÁLVULA HIDRÁULICA, EH, Control				
					HYDRAULIC VALVE	VÁLVULA HIDRÁULICA	DISTRIBUTORE IDRAULI		010V
					SOUPAPE HYDRAULIQU	HYDRAULIKVENTIL	HYDRAULIKVENTIL	HYDRAULISCHE KLEP	
7		265808		1	T, 3/4"-16, 37º x 3/4"-18, O-Ring Run				
					TEE	RACOR EN T	PEZZO A T		9020
					RACCORD EN T	T-STÜCK	T-STYKKE	T-STUK	
8		84288343		1	TUBO FLEXÍVEL, Assembly, EH, Control to Brake				
					FLEXIBLE HOSE	TUBO FLEXIBLE	TUBO FLESSIBILE		192T
					TUYAU FLEXIBLE	BIEGSAMER SCHLAUCH	FLEKSIBEL SLANGE	FLEXIBELE SLANG	
9		86512936		1	COTOVELO, 90º, 9/16"-18, 37º x 7/16"-20, O-Ring				
					ELBOW	CODO	GOMITO		085G
					COUDE	KNIESTÜCK	VINKELRØR	KNIESTUK	
10		84373394		1	MANGUEIRA, EH Aux to EH Aux Drain				
					HOSE	TUBO	TUBO FLESSIBILE		030M
					FLEXIBLE	SCHLAUCH	SLANGE	SLANG	
11		87443510		2	BRAÇADEIRA MANGUEIRA, M20				
					HOSE CLAMP	ABRAZADERA DE MANG	FASCETTA STRINGITUB		P729
					COLLIER POUR FLEXIBL	SCHLAUCHSCHELLE	SLANGEKLEMME	SLANGKLEM	
12		9790095		2	PARAFUSO, Hex, 1/2"-13 x 1 3/4", G8				
					BOLT	PERNO	BULLONE		140B
					VIS	SCHRAUBE	BOLT	BOUT	
13		65319		2	ARRUELA PLANA, M13 x 25 x 3.5, HT				
					WASHER	ARANDELA	RONDELLA		131R
					RONDELLE	UNTERLEGSCHEIBE	FLADSKIVE	SLUITRING	

SR200

35.359.02	01	p1	02/11

PUMP, MECHANICAL (SR130-SR220)
PUMP, MECHANICAL (SR130-SR220)
PUMP, MECHANICAL (SR130-SR220)
PUMP, MECHANICAL (SR130-SR220)

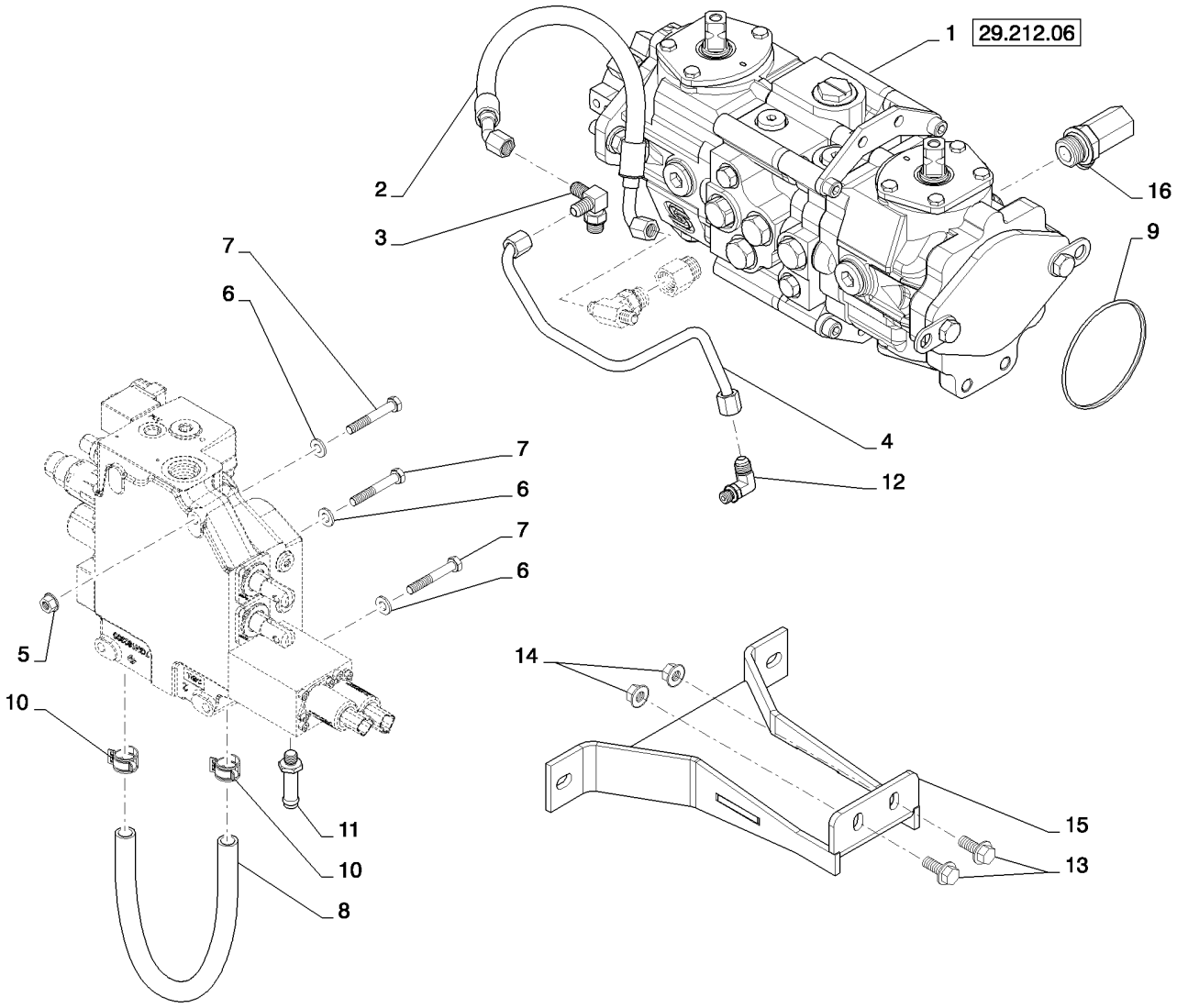

PUMP, MECHANICAL (SR130-SR220)
PUMP, MECHANICAL (SR130-SR220)
PUMP, MECHANICAL (SR130-SR220)
PUMP, MECHANICAL (SR130-SR220)

R	N	P.N.	MOD	Q	Denominação Description	Description Bezeichnung	Denominacion Beskrivelse	Descrizione Beschrijving	L.C.
1		84256059		1	BOMBA, Tandem, 35cc, DDC				
						PUMP	BOMBA	POMPA	6570
					POMPE	PUMPE	PUMPE	POMP	
2		84412421		1	CONJ. MANGUEIRA, Loop Test				
						HOSE ASSY.	CONJUNTO DE TUBOS	COMPLESS. TUBO FLES	P457
					ENSEMBLE DE FLEXIBLE	SCHLAUCHBAUGRUPPE	SLANGEENHED	SLANGEENHEID	
3		L104616		1	COTOVELO 90, 9/16"-18 x 9/16"-18 ORB				
						90 ELBOW	CODO 90	GOMITO A 90°	A045
					COUDE A 90°	90-GRAD-KNIESTÜCK	VINKELRØR, 90	KNIESTUK 90º	
4		84373389		1	TUBO RÍGIDO, Assembly, EH, Aux Charge				
						RIGID TUBE	TUBO RÍGIDO	TUBO RIGIDO	193T
					TUYAU RIGIDE	ROHR	STIFT RØR	VASTE LEIDING	
5		9804277		3	PORCA, M8 x 1.25, Flg, Cl 8				
						NUT	TUERCA	DADO	010D
					ECROU	MUTTER	MØTRIK	MOER	
6		87655042		5	ARRUELA ESPECIAL, M8, 8.80 X 17.5 X 2.2 HTS				
						SPECIAL WASHER	ARANDELA ESPECIAL	RONDELLA SPECIALE	Z333
					RONDELLE SPECIALE	SPEZIALUNTERLEGSCH	SPECIALSKIVE	SPECIALE RING	
7		16044321		3	PARAFUSO, Hex, M8 x 55, 8.8				
						SCREW	TORNILLO	VITE	040V
					VIS	SCHRAUBE	SKRUE	SCHROEF	
8		84373394		1	MANGUEIRA, EH Aux to EH Aux Drain				
						HOSE	TUBO	TUBO FLESSIBILE	030M
					FLEXIBLE	SCHLAUCH	SLANGE	SLANG	
9		9828498		1	O-RING, 3.987" ID x 4.193" OD x 0.103"				
						O-RING	JUNTA TÓRICA	ANELLO TOROIDALE	055A
					JOINT TORIQUE	O-RING	O-RING	O-RING	
10		87443510		2	BRAÇADEIRA MANGUEIRA, M20				
						HOSE CLAMP	ABRAZADERA DE MANG	FASCETTA STRINGITUB	P729
					COLLIER POUR FLEXIBL	SCHLAUCHSCHELLE	SLANGEKLEMME	SLANGKLEM	
11		87314487		1	CONECTOR HIDRÁUL, Bead, Hose, 1/2in				
						HYD CONNECTOR	CONECTOR HIDRÁULIC	CONNETTORE IDRAULIC	020R
					CONNECTEUR HYDRAU	HYDR STECKVERBINDE	HYDRAULIKSTIK	HYDRAULISCHE AANSLI	
12		86512936		1	COTOVELO, 90º, 9/16"-18, 37º x 7/16"-20, O-Ring				
						ELBOW	CODO	GOMITO	085G
					COUDE	KNIESTÜCK	VINKELRØR	KNIESTUK	
13		9804261		2	PARAFUSO, Hex Flg, M10 x 25, 8.8				
						BOLT	PERNO	BULLONE	140B
					VIS	SCHRAUBE	BOLT	BOUT	
14		9804278		2	PORCA, M10 x 1.5, Flg, Cl 8				
						NUT	TUERCA	DADO	010D
					ECROU	MUTTER	MØTRIK	MOER	
15		84254080		1	PLACA, Support, Pump	PLATE	PLACA	PIASTRA	105P
					PLAQUE	PLATTE	PLADE	PLAAT	
16		84273629		1	CONEXÃO, M10 X 1	FITTING	ACOPLAMIENTO	RACCORDO	3300
					RACCORD	ARMATUR	FITTING	AANSLUITING	

SR200

35.359.02	01	p1	02/11

PUMP, MECHANICAL AND HAND CONTROL VALVE (SR200)
PUMP, MECHANICAL AND HAND CONTROL VALVE (SR200)
PUMP, MECHANICAL AND HAND CONTROL VALVE (SR200)
PUMP, MECHANICAL AND HAND CONTROL VALVE (SR200)

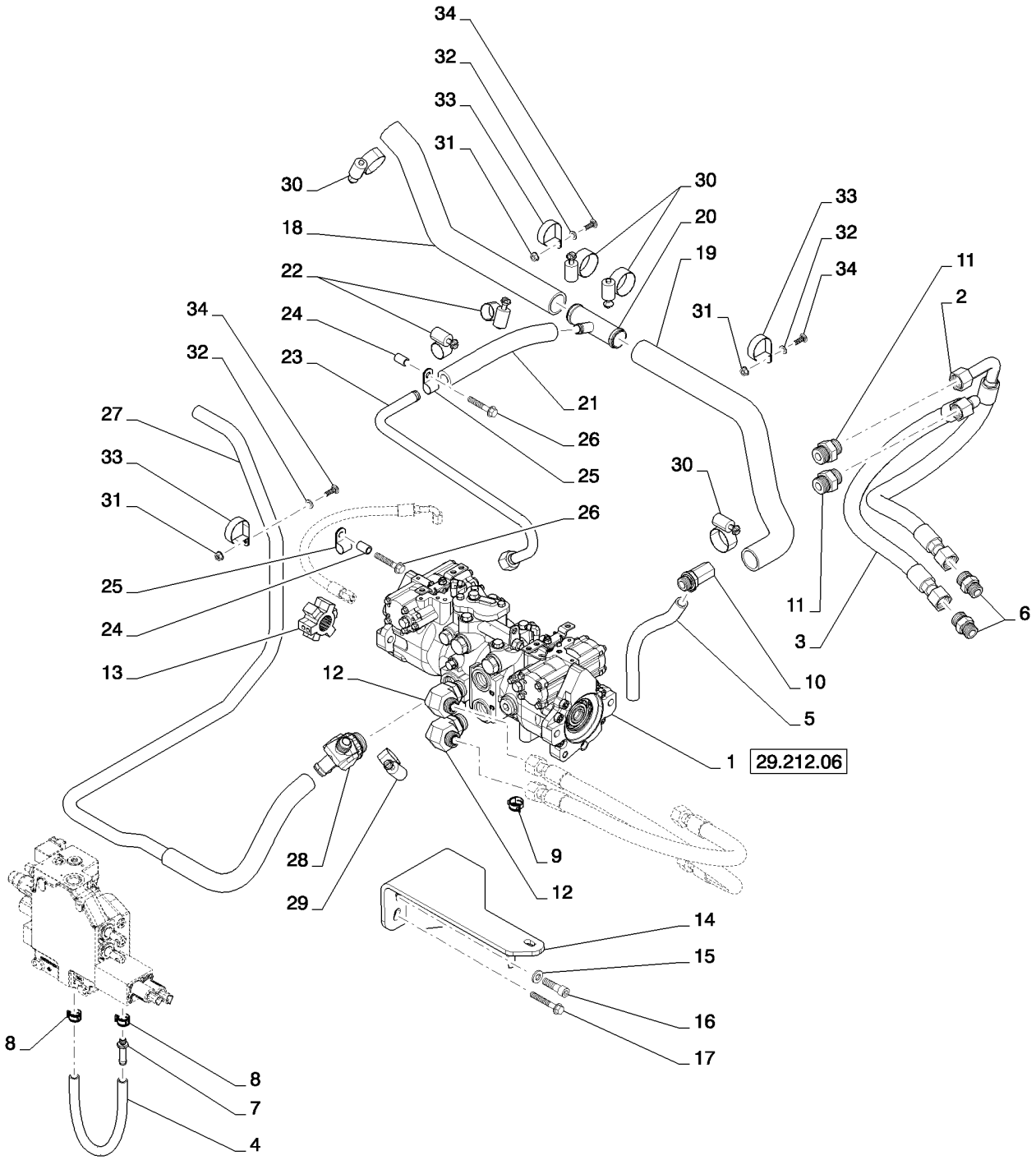

PUMP, MECHANICAL AND HAND CONTROL VALVE (SR200)
PUMP, MECHANICAL AND HAND CONTROL VALVE (SR200)
PUMP, MECHANICAL AND HAND CONTROL VALVE (SR200)
PUMP, MECHANICAL AND HAND CONTROL VALVE (SR200)

R	N	P.N.	MOD	Q	Denominação Description	Description Bezeichnung	Denominacion Beskrivelse	Descrizione Beschrijving	L.C.
1		84322471		1	BOMBA HIDROSTÁTICA, Tandem, 48cc MDC; See Figure 29.212.06				
						HYDROSTATIC PUMP	BOMBA HIDROSTÁTICO	POMPA IDROSTATICA	156P
					POMPE HYDROSTATIQU	HYDROSTATIKPUMPE	HYDROSTATISK PUMPE	HYDROSTATISCHE POM	
2		84258850		1	TUBO FLEXÍVEL, Assembly, Loop				
						FLEXIBLE HOSE	TUBO FLEXIBLE	TUBO FLESSIBILE	192T
					TUYAU FLEXIBLE	BIEGSAMER SCHLAUCH	FLEKSIBEL SLANGE	FLEXIBELE SLANG	
3		84258849		1	TUBO FLEXÍVEL, Assembly, Loop				
						FLEXIBLE HOSE	TUBO FLEXIBLE	TUBO FLESSIBILE	192T
					TUYAU FLEXIBLE	BIEGSAMER SCHLAUCH	FLEKSIBEL SLANGE	FLEXIBELE SLANG	
4		84373394		1	MANGUEIRA, EH Aux to EH Aux Drain				
						HOSE	TUBO	TUBO FLESSIBILE	030M
					FLEXIBLE	SCHLAUCH	SLANGE	SLANG	
5		84273645		1	MANGUEIRA, Pump Drain	HOSE	TUBO	TUBO FLESSIBILE	030M
					FLEXIBLE	SCHLAUCH	SLANGE	SLANG	
6		9840535		4	CONECTOR HIDRÁUL, 1 3/16"-12 ORFS x 1 1/16"-12 ORB				
						HYD CONNECTOR	CONECTOR HIDRÁULIC	CONNETTORE IDRAULIC	020R
					CONNECTEUR HYDRAU	HYDR STECKVERBINDE	HYDRAULIKSTIK	HYDRAULISCHE AANSLI	
7		87314487		1	CONECTOR HIDRÁUL, Bead, Hose, 1/2in				
						HYD CONNECTOR	CONECTOR HIDRÁULIC	CONNETTORE IDRAULIC	020R
					CONNECTEUR HYDRAU	HYDR STECKVERBINDE	HYDRAULIKSTIK	HYDRAULISCHE AANSLI	
8		87443510		2	BRAÇADEIRA MANGUEIRA, M20				
						HOSE CLAMP	ABRAZADERA DE MANG	FASCETTA STRINGITUB	P729
					COLLIER POUR FLEXIBL	SCHLAUCHSCHELLE	SLANGEKLEMME	SLANGKLEM	
9		87443511		2	BRAÇADEIRA, Spring	CLAMP	ABRAZADERA	MORSETTO	120M
					COLLIER	KLEMME	SPÆNDEBÅND	KLEM	
10		84273629		1	CONEXÃO, M10 X 1	FITTING	ACOPLAMIENTO	RACCORDO	3300
					RACCORD	ARMATUR	FITTING	AANSLUITING	
11		87359470		2	CONECTOR HIDRÁUL	HYD CONNECTOR	CONECTOR HIDRÁULIC	CONNETTORE IDRAULIC	020R
					CONNECTEUR HYDRAU	HYDR STECKVERBINDE	HYDRAULIKSTIK	HYDRAULISCHE AANSLI	
12		87326965		2	COTOVELO	ELBOW	CODO	GOMITO	085G
					COUDE	KNIESTÜCK	VINKELRØR	KNIESTUK	
13		87711337		1	ENGATE, Drive, Star	COUPLING	ACOPLAMIENTO	GIUNTO	Z321
					RACCORD	KUPPLUNG	KOBLING	KOPPELING	
14		84201132		1	FIXADOR, Pump Support	MOUNT	SOPORTE	SUPPORTO	C022
					MONTAGE	GESTELL	BESLAG	BEVESTIGING	
15		65319		4	ARRUELA PLANA, M13 x 25 x 3.5, HT				
						WASHER	ARANDELA	RONDELLA	131R
					RONDELLE	UNTERLEGSCHEIBE	FLADSKIVE	SLUITRING	
16		15734		4	PARAFUSO, Hex Soc Hd, 1/2"-13 x 1 3/4"				
						SCREW	TORNILLO	VITE	040V
					VIS	SCHRAUBE	SKRUE	SCHROEF	
17		86011090		2	PARAFUSO, Hex Flg, M10 x 70, 8.8				
						BOLT	PERNO	BULLONE	140B
					VIS	SCHRAUBE	BOLT	BOUT	
18		84349293		1	MANGUEIRA, Gear Pump, Suction				
						HOSE	TUBO	TUBO FLESSIBILE	030M
					FLEXIBLE	SCHLAUCH	SLANGE	SLANG	

35.359.02	01	p2	02/11

PUMP, MECHANICAL AND HAND CONTROL VALVE (SR200)
PUMP, MECHANICAL AND HAND CONTROL VALVE (SR200)
PUMP, MECHANICAL AND HAND CONTROL VALVE (SR200)
PUMP, MECHANICAL AND HAND CONTROL VALVE (SR200)

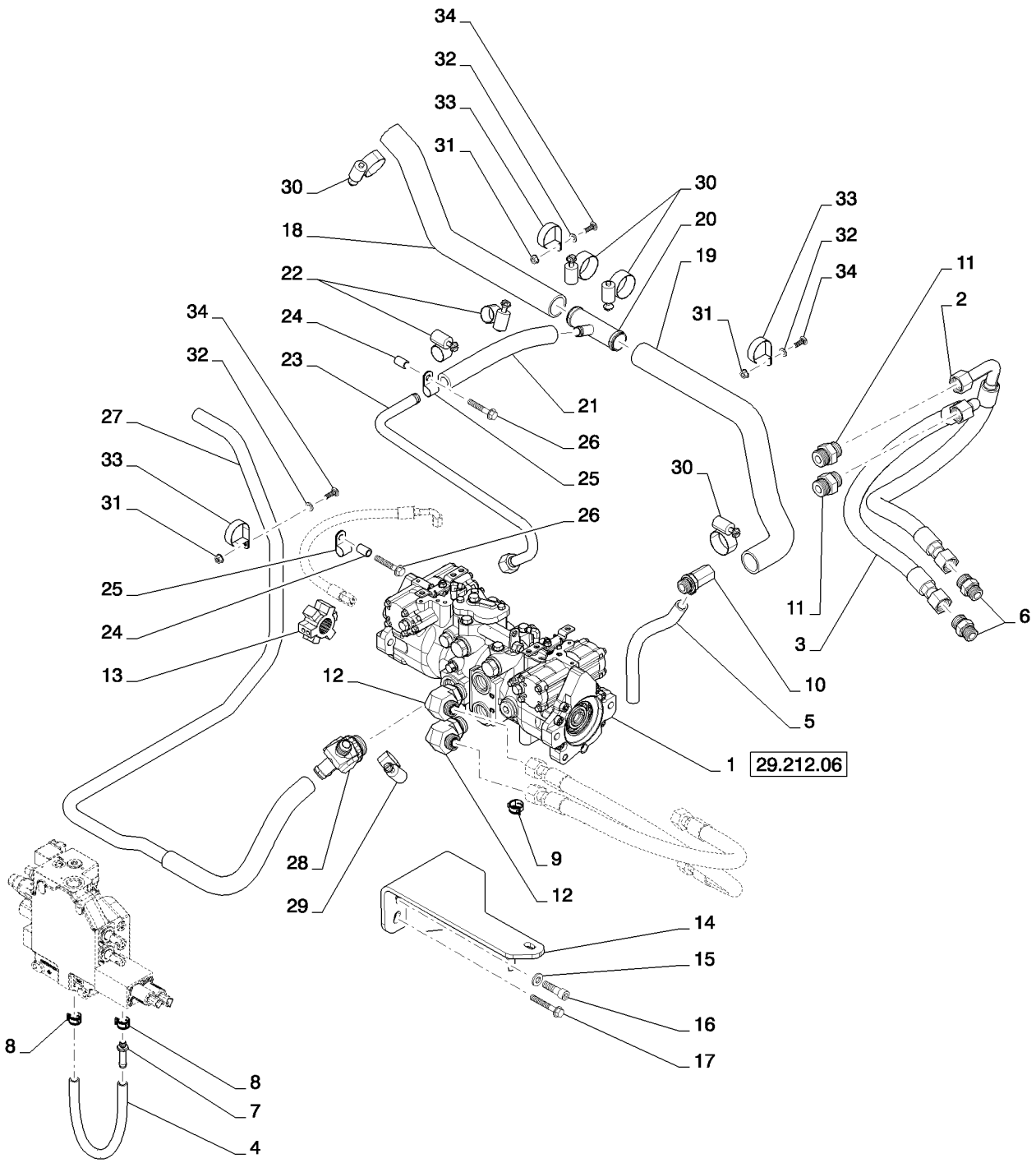

PUMP, MECHANICAL AND HAND CONTROL VALVE (SR200)
PUMP, MECHANICAL AND HAND CONTROL VALVE (SR200)
PUMP, MECHANICAL AND HAND CONTROL VALVE (SR200)
PUMP, MECHANICAL AND HAND CONTROL VALVE (SR200)

R	N	P.N.	MOD	Q	Denominação Description	Description Bezeichnung	Denominacion Beskrivelse	Descrizione Beschrijving	L.C.
19		84387451		1	MANGUEIRA, Gear Pump, Suction				
						HOSE	TUBO	TUBO FLESSIBILE	030M
					FLEXIBLE	SCHLAUCH	SLANGE	SLANG	
20		84344919		1	T, -24 Bead, -24 Bead, -12 Bead				
						TEE	RACOR EN T	PEZZO A T	9020
					RACCORD EN T	T-STÜCK	T-STYKKE	T-STUK	
21		84344942		1	MANGUEIRA, Tandem Supply				
						HOSE	TUBO	TUBO FLESSIBILE	030M
					FLEXIBLE	SCHLAUCH	SLANGE	SLANG	
22		86625021		2	BRAÇADEIRA MANGUEIRA, #12, 0.69/1.25 Type F Worm				
						HOSE CLAMP	ABRAZADERA DE MANG	FASCETTA STRINGITUB	P729
					COLLIER POUR FLEXIBL	SCHLAUCHSCHELLE	SLANGEKLEMME	SLANGKLEM	
23		84420270		1	TUBO HIDRÁULICO, Hydraulic, Tandem Supply				
						HYD. TUBE	TUBO HIDRÁULICO	TUBO IDRAULICO	190T
					TUYAU HYDRAULIQUE	HYDRAULIKLEITUNG	HYD. RØR	HYDRAULISCHE LEIDIN(	
24		87022737		1	ESPACADOR	SPACER	ESPACIADOR	DISTANZIALE	8090
					ENTRETOISE	ABSTANDSSTUECK	SPACER	SPACER	
25		86637999		1	BRAÇADEIRA, 3/4", Insul, 7/16" Bolt				
						CLAMP	ABRAZADERA	MORSETTO	120M
					COLLIER	KLEMME	SPÆNDEBÅND	KLEM	
26		9804265		1	PARAFUSO, Hex Flg, M10 x 60, 8.8				
						BOLT	PERNO	BULLONE	140B
					VIS	SCHRAUBE	BOLT	BOUT	
27		84280437		1	TUBO FLEXÍVEL, Assembly, Charge Supply				
						FLEXIBLE HOSE	TUBO FLEXIBLE	TUBO FLESSIBILE	192T
					TUYAU FLEXIBLE	BIEGSAMER SCHLAUCH	FLEKSIBEL SLANGE	FLEXIBELE SLANG	
28		84420269		1	CONEXÃO, Fitting, 45 -20MB -16BEAD -12M				
						FITTING	ACOPLAMIENTO	RACCORDO	3300
					RACCORD	ARMATUR	FITTING	AANSLUITING	
29		507586		2	BRAÇADEIRA MANGUEIRA, #20, 0.81/1.75 Type F Worm				
						HOSE CLAMP	ABRAZADERA DE MANG	FASCETTA STRINGITUB	P729
					COLLIER POUR FLEXIBL	SCHLAUCHSCHELLE	SLANGEKLEMME	SLANGKLEM	
30		513309		4	BRAÇADEIRA MANGUEIRA, #24, 1.06/2.00 Type F Worm				
						HOSE CLAMP	ABRAZADERA DE MANG	FASCETTA STRINGITUB	P729
					COLLIER POUR FLEXIBL	SCHLAUCHSCHELLE	SLANGEKLEMME	SLANGKLEM	
31		9804277		3	PORCA, M8 x 1.25, Flg, Cl 8				
						NUT	TUERCA	DADO	010D
					ECROU	MUTTER	MØTRIK	MOER	
32		87655042		5	ARRUELA ESPECIAL, 8.80 X 17.5 X 2.2 HTS				
						SPECIAL WASHER	ARANDELA ESPECIAL	RONDELLA SPECIALE	Z333
					RONDELLE SPECIALE	SPEZIALUNTERLEGSCH	SPECIALSKIVE	SPECIALE RING	
33		84265306		2	BRAÇADEIRA, 47.6MM M8 Bolt ZND				
						CLAMP	ABRAZADERA	MORSETTO	120M
					COLLIER	KLEMME	SPÆNDEBÅND	KLEM	
34		308761		2	PARAFUSO, Short NK, M8 x 25, Cl8.8, Full Thd				
						CARRIAGE BOLT	PERNO ALOMADO	BULLONE A TESTA TON	P123
					VIS A TETE BOMBEE	SCHLOSSSCHRAUBE	BRÆDDEBOLT	SLOTBOUT	

35.359.02	02	p1	02/11

PUMP, MECHANICAL AND HAND CONTROL VALVE (SR200)
PUMP, MECHANICAL AND HAND CONTROL VALVE (SR200)
PUMP, MECHANICAL AND HAND CONTROL VALVE (SR200)
PUMP, MECHANICAL AND HAND CONTROL VALVE (SR200)

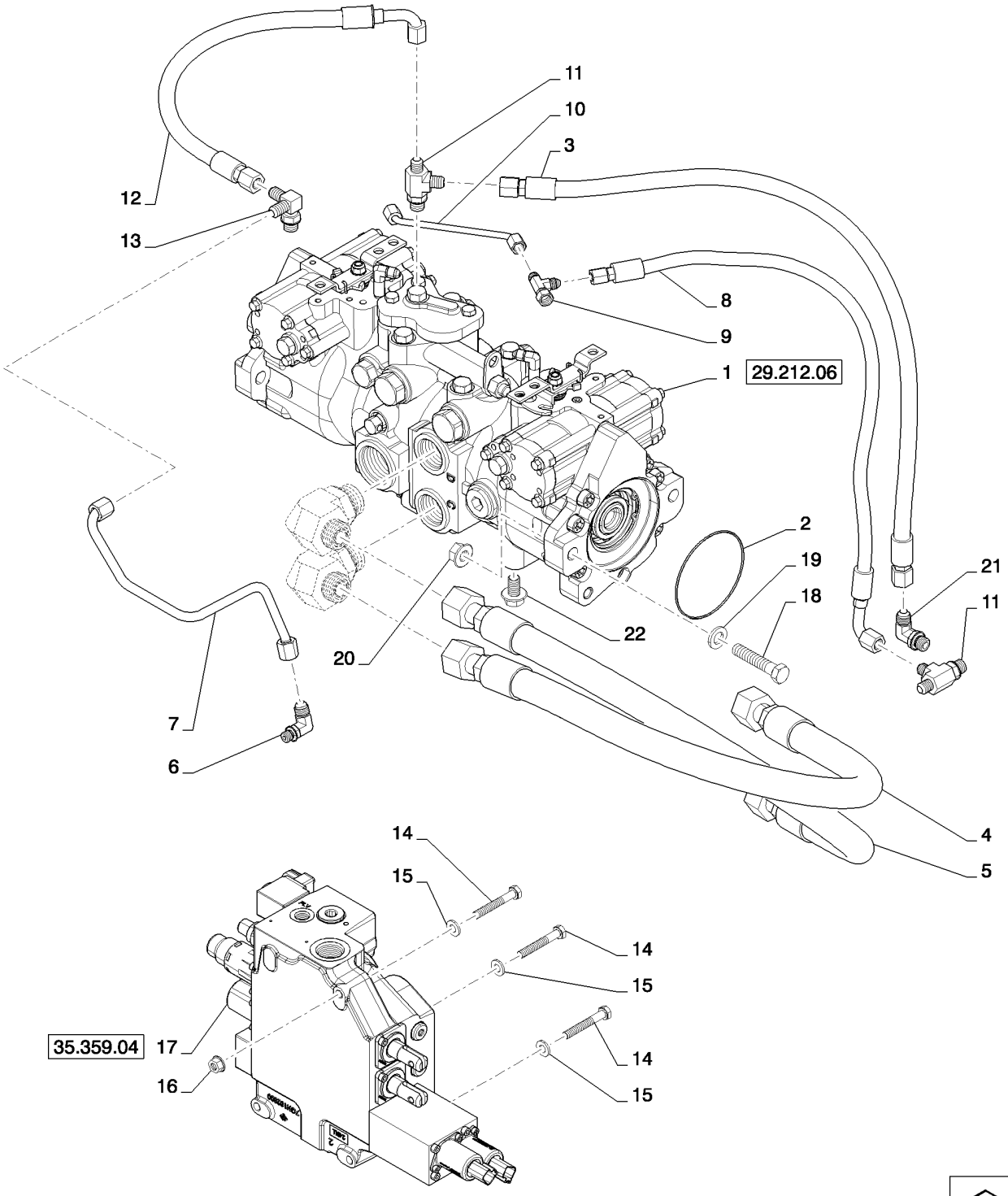

PUMP, MECHANICAL AND HAND CONTROL VALVE (SR200)
PUMP, MECHANICAL AND HAND CONTROL VALVE (SR200)
PUMP, MECHANICAL AND HAND CONTROL VALVE (SR200)
PUMP, MECHANICAL AND HAND CONTROL VALVE (SR200)

R	N	P.N.	MOD	Q	Denominação Description Bezeichnung Beskrivelse Descrizione Beschrijving	L.C.
1		84322471		1	BOMBA HIDROSTÁTICA, Tandem, 48cc MDC; See figures 29.212.06 HYDROSTATIC PUMP BOMBA HIDROSTÁTICO POMPA IDROSTATICA POMPE HYDROSTATIQU HYDROSTATIKPUMPE HYDROSTATISK PUMPE HYDROSTATISCHE POM	156P
2		87013729		1	O-RING, 3.739" ID x 3.879" OD x 0.07" O-RING JUNTA TÓRICA ANELLO TOROIDALE JOINT TORIQUE O-RING O-RING O-RING	055A
3		84257174		1	CONJ. MANGUEIRA, Charge to Brake HOSE ASSY. CONJUNTO DE TUBOS COMPLESS. TUBO FLES ENSEMBLE DE FLEXIBLE SCHLAUCHBAUGRUPPE SLANGEENHED SLANGEENHEID	P457
4		84258856		1	TUBO FLEXÍVEL, Assembly, Loop FLEXIBLE HOSE TUBO FLEXIBLE TUBO FLESSIBILE TUYAU FLEXIBLE BIEGSAMER SCHLAUCH FLEKSIBEL SLANGE FLEXIBELE SLANG	192T
5		84258846		1	TUBO FLEXÍVEL, Assembly, Loop FLEXIBLE HOSE TUBO FLEXIBLE TUBO FLESSIBILE TUYAU FLEXIBLE BIEGSAMER SCHLAUCH FLEKSIBEL SLANGE FLEXIBELE SLANG	192T
6		86512936		1	COTOVELO, 90º, 9/16"-18, 37º x 7/16"-20, O-Ring ELBOW CODO GOMITO COUDE KNIESTÜCK VINKELRØR KNIESTUK	085G
7		84373389		1	TUBO RÍGIDO, Assembly, EH, Aux Charge RIGID TUBE TUBO RÍGIDO TUBO RIGIDO TUYAU RIGIDE ROHR STIFT RØR VASTE LEIDING	193T
8		84257175		1	CONJ. MANGUEIRA, BrakeHOSE ASSY. CONJUNTO DE TUBOS COMPLESS. TUBO FLES ENSEMBLE DE FLEXIBLE SCHLAUCHBAUGRUPPE SLANGEENHED SLANGEENHEID	P457
9		86513653		1	T, 37º, 7/16"-20 x 7/16"-20, Fem Sw Run TEE RACOR EN T PEZZO A T RACCORD EN T T-STÜCK T-STYKKE T-STUK	9020
10		87021277		1	TUBO CONJUNTO, 6.35 mm OD x 105.4, 124.9 mm L TUBE ASSY. TUBO (CONJUNTO) TUBO, COMPLESSIVO TUYAUTERIE ROHRLEITUNG TUBE ASSY. TUBE ASSY.	P465
11		86513020		2	T, 9/16"-18, 37º x 9/16"-18, O-Ring Run TEE RACOR EN T PEZZO A T RACCORD EN T T-STÜCK T-STYKKE T-STUK	9020
12		84259516		1	TUBO FLEXÍVEL, Assembly, LV, Interlock FLEXIBLE HOSE TUBO FLEXIBLE TUBO FLESSIBILE TUYAU FLEXIBLE BIEGSAMER SCHLAUCH FLEKSIBEL SLANGE FLEXIBELE SLANG	192T
13		L104616		1	COTOVELO 90, 9/16"-18 x 9/16"-18 ORB 90 ELBOW CODO 90 GOMITO A 90° COUDE A 90° 90-GRAD-KNIESTÜCK VINKELRØR, 90 KNIESTUK 90º	A045
14		16044321		3	PARAFUSO, Hex, M8 x 55, 8.8 SCREW TORNILLO VITE VIS SCHRAUBE SKRUE SCHROEF	040V
15		87655042		5	ARRUELA ESPECIAL, M8, 8.80 X 17.5 X 2.2 HTS SPECIAL WASHER ARANDELA ESPECIAL RONDELLA SPECIALE RONDELLE SPECIALE SPEZIALUNTERLEGSCH SPECIALSKIVE SPECIALE RING	Z333
16		9804277		3	PORCA, M8 x 1.25, Flg, Cl 8 NUT TUERCA DADO ECROU MUTTER MØTRIK MOER	010D

35.359.02	02	p2	02/11

PUMP, MECHANICAL AND HAND CONTROL VALVE (SR200)
PUMP, MECHANICAL AND HAND CONTROL VALVE (SR200)
PUMP, MECHANICAL AND HAND CONTROL VALVE (SR200)
PUMP, MECHANICAL AND HAND CONTROL VALVE (SR200)

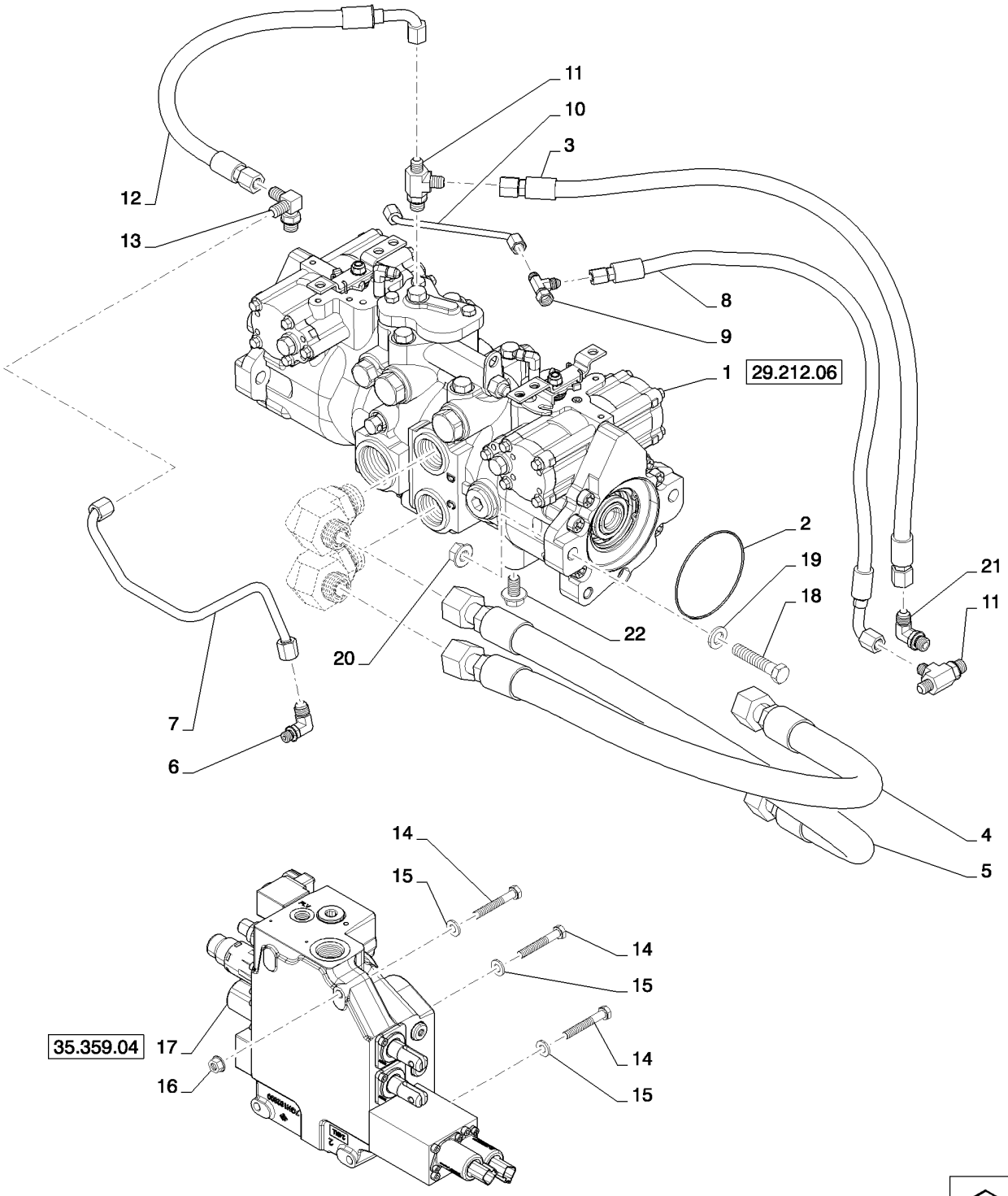

PUMP, MECHANICAL AND HAND CONTROL VALVE (SR200)
PUMP, MECHANICAL AND HAND CONTROL VALVE (SR200)
PUMP, MECHANICAL AND HAND CONTROL VALVE (SR200)
PUMP, MECHANICAL AND HAND CONTROL VALVE (SR200)

R	N	P.N.	MOD	Q	Denominação Description	Description Bezeichnung	Denominacion Beskrivelse	Descrizione Beschrijving	L.C.
17		**84279514**		1	VÁLVULA HIDRÁULICA, Mech Control, EH, Aux; See Figure 35.359.04				
						HYDRAULIC VALVE	VÁLVULA HIDRÁULICA	DISTRIBUTORE IDRAULI	010V
					SOUPAPE HYDRAULIQU	HYDRAULIKVENTIL	HYDRAULIKVENTIL	HYDRAULISCHE KLEP	
18		**9706693**		2	PARAFUSO, Hex, M12 x 60, 8.8				
						BOLT	PERNO	BULLONE	140B
					VIS	SCHRAUBE	BOLT	BOUT	
19		**86625255**		2	ARRUELA PLANA, M13.5 x 24.5 x 3, HT				
						WASHER	ARANDELA	RONDELLA	131R
					RONDELLE	UNTERLEGSCHEIBE	FLADSKIVE	SLUITRING	
20		**9804279**		2	PORCA, M12 x 1.75, Flg, Cl 8				
						NUT	TUERCA	DADO	010D
					ECROU	MUTTER	MØTRIK	MOER	
21		**76344**		1	COTOVELO, 90º, 9/16"-18, 37º x 9/16"-18, O-Ring				
						ELBOW	CODO	GOMITO	085G
					COUDE	KNIESTÜCK	VINKELRØR	KNIESTUK	
22		**87698844**		1	PARAFUSO, Flange, M12 X 20 Full				
						BOLT	PERNO	BULLONE	140B
					VIS	SCHRAUBE	BOLT	BOUT	

35.359.03		p1	08/11

CONTROL VALVE, EH W/ HARNESS (ALL CASE)
CONTROL VALVE, EH W/ HARNESS (ALL CASE)
CONTROL VALVE, EH W/ HARNESS (ALL CASE)
CONTROL VALVE, EH W/ HARNESS (ALL CASE)

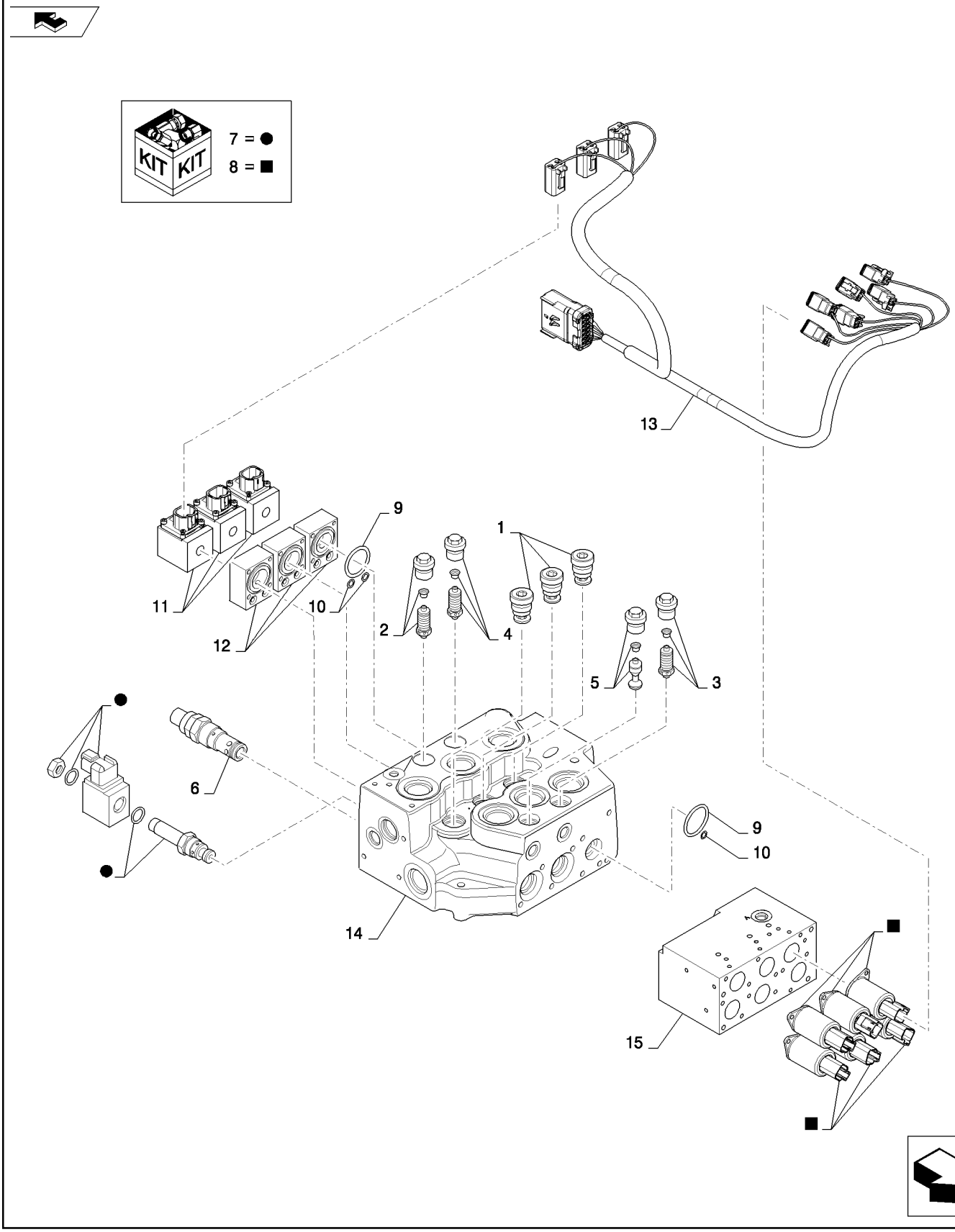

CONTROL VALVE, EH W/ HARNESS (ALL CASE)
CONTROL VALVE, EH W/ HARNESS (ALL CASE)
CONTROL VALVE, EH W/ HARNESS (ALL CASE)
CONTROL VALVE, EH W/ HARNESS (ALL CASE)

R	N	P.N.	MOD	Q	Denominação Description	Description Bezeichnung	Denominacion Beskrivelse	Descrizione Beschrijving	L.C.
1		84386281		3	VÁLVULA CHECAGEM, Load				
						CHECK VALVE	VÁLVULA DE COMPROB.	VALVOLA DI RITEGNO	P394
					CLAPET ANTI-RETOUR	RÜCKSCHLAGVENTIL	KONTRAVENTIL	TERUGSLAGKLEP	
2		84386282		1	VÁLVULA ALÍVIO DA PRESSÃO, 225 BAR Port Relief				
						PRESSURE RELIEF VAL\	VÁLV. ALIVIO DE PRESI(	VALV. LIMITATRICE PRE	007V
					CLAPET DECHARGE PRI	DRUCKENTLASTUNGSV	SIKKERHEDSVENTIL	OVERDRUKKLEP	
3		84386283		1	VÁLVULA ALÍVIO DA PRESSÃO, 230 BAR Port Relief				
						PRESSURE RELIEF VAL\	VÁLV. ALIVIO DE PRESI(	VALV. LIMITATRICE PRE	007V
					CLAPET DECHARGE PRI	DRUCKENTLASTUNGSV	SIKKERHEDSVENTIL	OVERDRUKKLEP	
4		84386284		1	VÁLVULA ALÍVIO DA PRESSÃO, 240 BAR Port Relief				
						PRESSURE RELIEF VAL\	VÁLV. ALIVIO DE PRESI(	VALV. LIMITATRICE PRE	007V
					CLAPET DECHARGE PRI	DRUCKENTLASTUNGSV	SIKKERHEDSVENTIL	OVERDRUKKLEP	
5		84386285		1	VÁLVULA HIDRÁULICA, Anti-Cavitation				
						HYDRAULIC VALVE	VÁLVULA HIDRÁULICA	DISTRIBUTORE IDRAULI	010V
					SOUPAPE HYDRAULIQU	HYDRAULIKVENTIL	HYDRAULIKVENTIL	HYDRAULISCHE KLEP	
6		84386287		1	VÁLVULA ALÍVIO DA PRESSÃO, 207 BAR Port Relief				
						PRESSURE RELIEF VAL\	VÁLV. ALIVIO DE PRESI(	VALV. LIMITATRICE PRE	007V
					CLAPET DECHARGE PRI	DRUCKENTLASTUNGSV	SIKKERHEDSVENTIL	OVERDRUKKLEP	
7		84386288		1	VÁLVULA HIDRÁULICA, PLV Cartridge				
						HYDRAULIC VALVE	VÁLVULA HIDRÁULICA	DISTRIBUTORE IDRAULI	010V
					SOUPAPE HYDRAULIQU	HYDRAULIKVENTIL	HYDRAULIKVENTIL	HYDRAULISCHE KLEP	
8		84386289		6	VÁLVULA CONTR. PRESSÃO, Reducing				
						PRESSURE CONTROL V	VÁLV. CONTROL DE PRI	VALVOLA CONTROLLO F	A140
					DISTRIBUTEUR DE PRE:	DRUCKSTEUERVENTIL	TRYKSTYRINGSVENTIL	DRUKREGELKLEP	
9		84386293		6	O-RING, EH Spool Cap	O-RING	JUNTA TÓRICA	ANELLO TOROIDALE	055A
					JOINT TORIQUE	O-RING	O-RING	O-RING	
10		84386294		9	O-RING, EH Passage	O-RING	JUNTA TÓRICA	ANELLO TOROIDALE	055A
					JOINT TORIQUE	O-RING	O-RING	O-RING	
11		84386295		3	SENSOR, Spool Position	SENSOR	SENSOR	SENSORE	608S
					CAPTEUR	SENSOR	FØLER	SENSOR	
12		84386296		3	TAMPA, Spool Position Sensor End				
						CAP	TAPÓN	TAPPO	052T
					CAPUCHON	KAPPE	TANKDÆKSEL	DOP	
13		84484220		1	CHICOTE, EH Control Valve				
						WIRE HARNESS	GRUPO DE CABLES	CABLAGGIO	070I
					FAISCEAU ELECTRIQUE	KABELBAUM	KABELNET	KABELBOOM	
14		84250154		1	VÁLVULA CONTROLE, Directional Control, Electro-Hydraulic, Includes Ref. 1-12				
						CONTROL VALVE	VÁLVULA DE CONTROL	DISTRIBUTORE IDRAULI	083D
					DISTRIBUTEUR	STEUERVENTIL	STYREVENTIL	REGELKLEP	

CONTROL VALVE, MECHANICAL HAND EH AUX (SR130-SV300)
CONTROL VALVE, MECHANICAL HAND EH AUX (SR130-SV300)
CONTROL VALVE, MECHANICAL HAND EH AUX (SR130-SV300)
CONTROL VALVE, MECHANICAL HAND EH AUX (SR130-SV300)

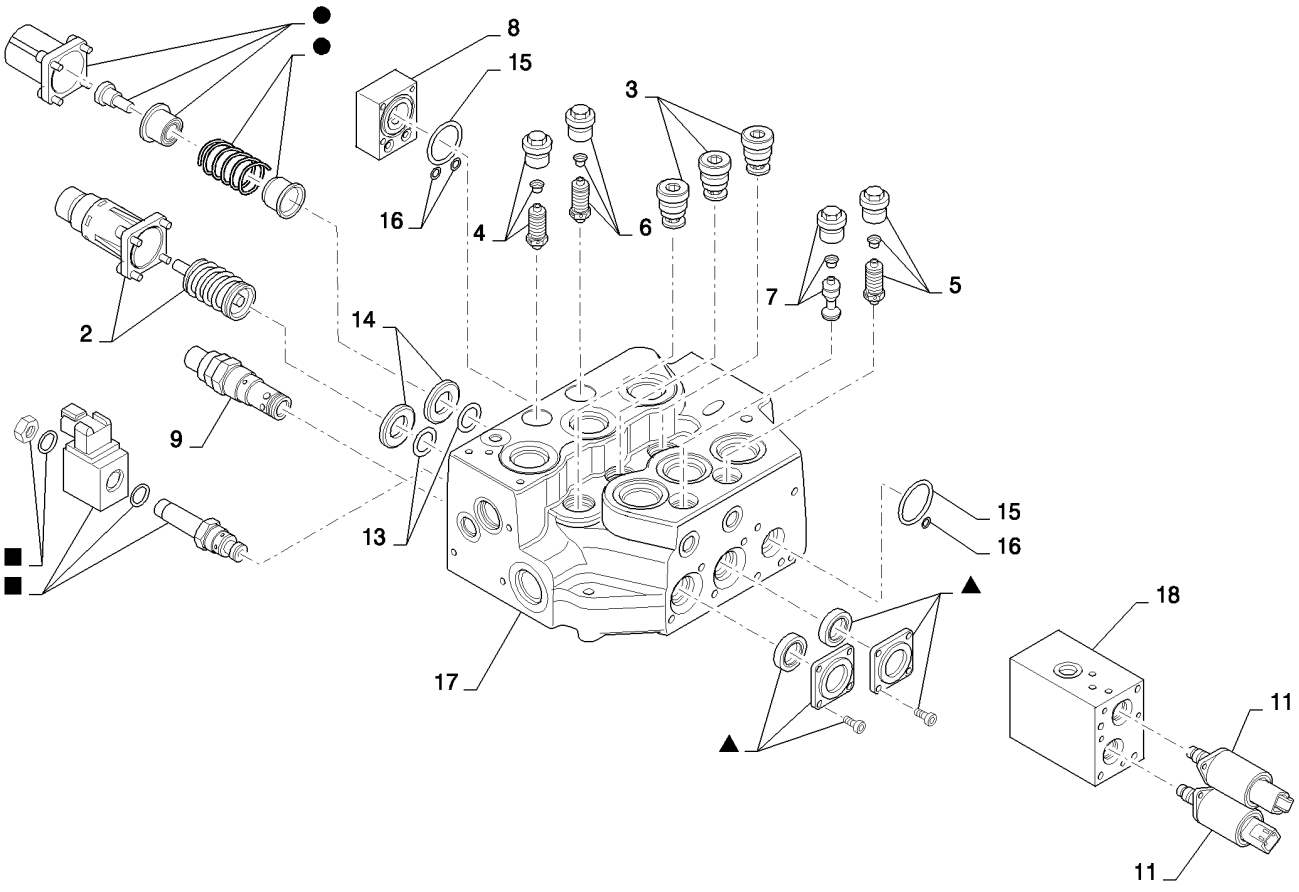

CONTROL VALVE, MECHANICAL HAND EH AUX (SR130-SV300)
CONTROL VALVE, MECHANICAL HAND EH AUX (SR130-SV300)
CONTROL VALVE, MECHANICAL HAND EH AUX (SR130-SV300)
CONTROL VALVE, MECHANICAL HAND EH AUX (SR130-SV300)

R	N	P.N.	MOD	Q	Denominação Description	Description Bezeichnung	Denominacion Beskrivelse	Descrizione Beschrijving	L.C.
1		84386277		1	JOGO, Hand Bucket Spring POCHETTE	KIT PACKUNG	JEUGO KIT	KIT KIT	4830
2		84386278		1	JOGO, Hand Boom Spring POCHETTE	KIT PACKUNG	JEUGO KIT	KIT KIT	4830
3		84386281		3	VÁLVULA CHECAGEM, Load CLAPET ANTI-RETOUR	CHECK VALVE RÜCKSCHLAGVENTIL	VÁLVULA DE COMPROB. KONTRAVENTIL	VALVOLA DI RITEGNO TERUGSLAGKLEP	P394
4		84386282		1	VÁLVULA ALÍVIO DA PRESSÃO, 225 BAR Port Relief CLAPET DECHARGE PRI	PRESSURE RELIEF VAL\ DRUCKENTLASTUNGSV	VÁLV. ALIVIO DE PRESI(SIKKERHEDSVENTIL	VALV. LIMITATRICE PRE OVERDRUKKLEP	007V
5		84386283		1	VÁLVULA ALÍVIO DA PRESSÃO, 230 BAR Port Relief CLAPET DECHARGE PRI	PRESSURE RELIEF VAL\ DRUCKENTLASTUNGSV	VÁLV. ALIVIO DE PRESI(SIKKERHEDSVENTIL	VALV. LIMITATRICE PRE OVERDRUKKLEP	007V
6		84386284		1	VÁLVULA ALÍVIO DA PRESSÃO, 240 BAR Port Relief CLAPET DECHARGE PRI	PRESSURE RELIEF VAL\ DRUCKENTLASTUNGSV	VÁLV. ALIVIO DE PRESI(SIKKERHEDSVENTIL	VALV. LIMITATRICE PRE OVERDRUKKLEP	007V
7		84386285		1	VÁLVULA HIDRÁULICA, Anti-Cavitation SOUPAPE HYDRAULIQU	HYDRAULIC VALVE HYDRAULIKVENTIL	VÁLVULA HIDRÁULICA HYDRAULIKVENTIL	DISTRIBUTORE IDRAULI HYDRAULISCHE KLEP	010V
8		84386286		1	TAMPA, EH Aux End CAPUCHON	CAP KAPPE	TAPÓN TANKDÆKSEL	TAPPO DOP	052T
9		84386287		1	VÁLVULA ALÍVIO DA PRESSÃO, 207 BAR Port Relief CLAPET DECHARGE PRI	PRESSURE RELIEF VAL\ DRUCKENTLASTUNGSV	VÁLV. ALIVIO DE PRESI(SIKKERHEDSVENTIL	VALV. LIMITATRICE PRE OVERDRUKKLEP	007V
10		84386288		1	VÁLVULA HIDRÁULICA, PLV Cartridge SOUPAPE HYDRAULIQU	HYDRAULIC VALVE HYDRAULIKVENTIL	VÁLVULA HIDRÁULICA HYDRAULIKVENTIL	DISTRIBUTORE IDRAULI HYDRAULISCHE KLEP	010V
11		84386289		2	VÁLVULA CONTR. PRESSÃO, Reducing DISTRIBUTEUR DE PRES	PRESSURE CONTROL V DRUCKSTEUERVENTIL	VÁLV. CONTROL DE PRE TRYKSTYRINGSVENTIL	VALVOLA CONTROLLO F DRUKREGELKLEP	A140
12		84386290		3	JOGO, Spool Wiper POCHETTE	KIT PACKUNG	JEUGO KIT	KIT KIT	4830
13		84386291		4	O-RING, Spool JOINT TORIQUE	O-RING O-RING	JUNTA TÓRICA O-RING	ANELLO TOROIDALE O-RING	055A
14		84386292		4	ANEL DE SEGURANÇA, Spool BAGUE ANTI-EXTRUSIOI	BACK-UP RING STÜTZRING	ANILLO DE SEGURIDAD RESERVERING	ANELLO DI SOSTEGNO ONDERLEGRING	Z334
15		84386293		2	O-RING, EH Spool Cap JOINT TORIQUE	O-RING O-RING	JUNTA TÓRICA O-RING	ANELLO TOROIDALE O-RING	055A
16		84386294		3	O-RING, EH Passage JOINT TORIQUE	O-RING O-RING	JUNTA TÓRICA O-RING	ANELLO TOROIDALE O-RING	055A
17		84279514		1	VÁLVULA HIDRÁULICA, Mechanical Hand Control/Electro-Hydraulic Aux SOUPAPE HYDRAULIQU	HYDRAULIC VALVE HYDRAULIKVENTIL	VÁLVULA HIDRÁULICA HYDRAULIKVENTIL	DISTRIBUTORE IDRAULI HYDRAULISCHE KLEP	010V

35.701.01		p1	06/11

LOADER HYDRAULICS (SR175,SR200,SR220,SR250,TR270,TR320)
LOADER HYDRAULICS (SR175,SR200,SR220,SR250,TR270,TR320)
LOADER HYDRAULICS (SR175,SR200,SR220,SR250,TR270,TR320)
LOADER HYDRAULICS (SR175,SR200,SR220,SR250,TR270,TR320)

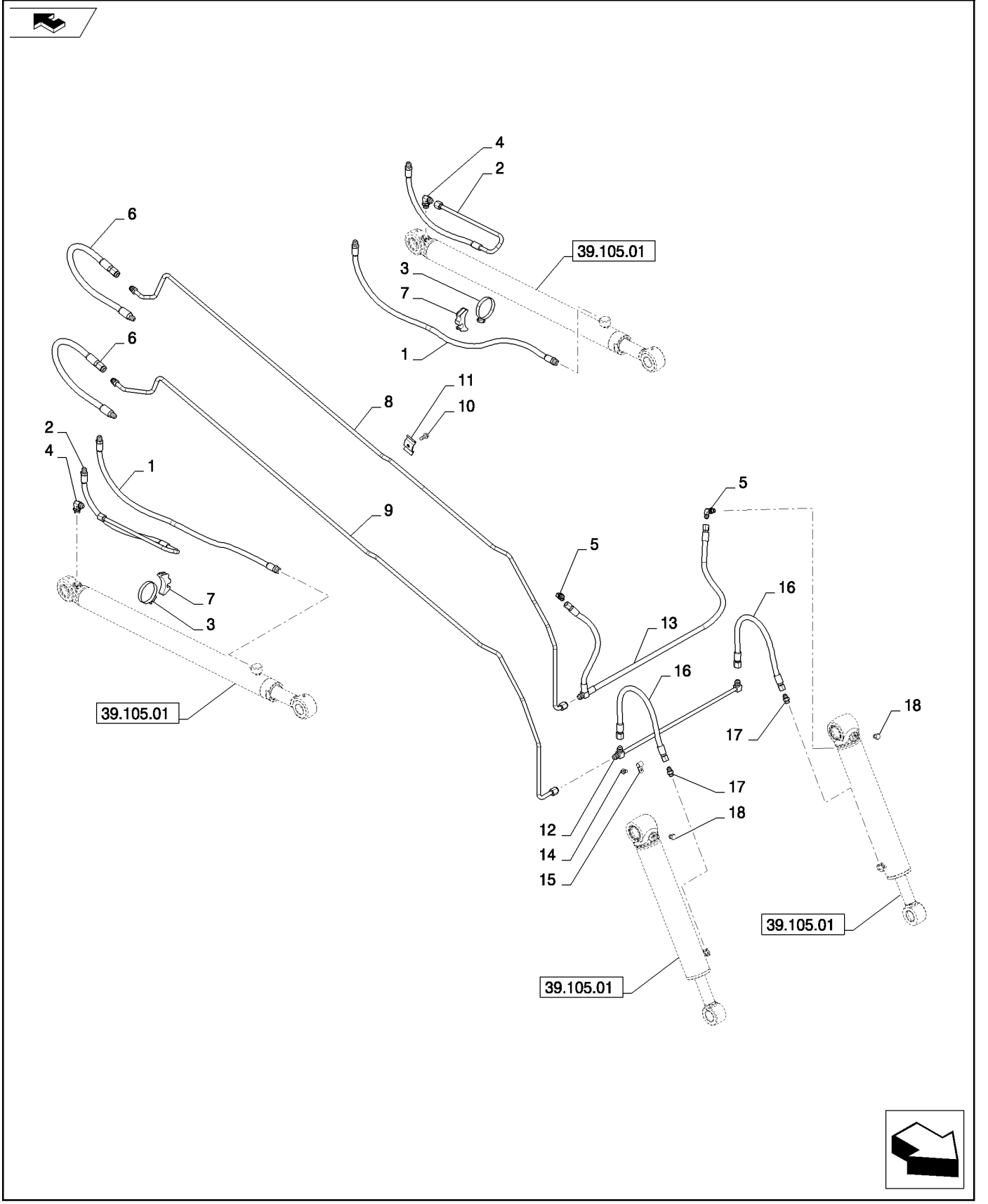

LOADER HYDRAULICS (SR175,SR200,SR220,SR250,TR270,TR320)
LOADER HYDRAULICS (SR175,SR200,SR220,SR250,TR270,TR320)
LOADER HYDRAULICS (SR175,SR200,SR220,SR250,TR270,TR320)
LOADER HYDRAULICS (SR175,SR200,SR220,SR250,TR270,TR320)

R	N	P.N.	MOD	Q	Denominação Description	Description Bezeichnung	Denominacion Beskrivelse	Descrizione Beschrijving	L.C.
1		84255974		2	MANGUEIRA, Lift Cylinder Rod				
						HOSE	TUBO	TUBO FLESSIBILE	030M
					FLEXIBLE	SCHLAUCH	SLANGE	SLANG	
2		84255975		2	CONJ. MANGUEIRA, Lift Cylinder Base				
						HOSE ASSY.	CONJUNTO DE TUBOS	COMPLESS. TUBO FLES	P457
					ENSEMBLE DE FLEXIBLE	SCHLAUCHBAUGRUPPE	SLANGEENHED	SLANGEENHEID	
3		86625033		2	BRAÇADEIRA MANGUEIRA, #56, 3.06/4.00 Type F Worm				
						HOSE CLAMP	ABRAZADERA DE MANG	FASCETTA STRINGITUB	P729
					COLLIER POUR FLEXIBL	SCHLAUCHSCHELLE	SLANGEKLEMME	SLANGKLEM	
4		128830		2	COTOVELO, 90º, 3/4"-16, 37º x 3/4"-16, O-Ring				
						ELBOW	CODO	GOMITO	085G
					COUDE	KNIESTÜCK	VINKELRØR	KNIESTUK	
5		76344		1	COTOVELO, 90º, 9/16"-18, 37º x 9/16"-18, O-Ring				
						ELBOW	CODO	GOMITO	085G
					COUDE	KNIESTÜCK	VINKELRØR	KNIESTUK	
6		84322590		2	TUBO FLEXÍVEL, Assembly, Tip Cylinder				
						FLEXIBLE HOSE	TUBO FLEXIBLE	TUBO FLESSIBILE	192T
					TUYAU FLEXIBLE	BIEGSAMER SCHLAUCH	FLEKSIBEL SLANGE	FLEXIBELE SLANG	
7		84255986		2	BRAÇADEIRA MANGUEIRA, Cylinder Saddle				
						HOSE CLAMP	ABRAZADERA DE MANG	FASCETTA STRINGITUB	P729
					COLLIER POUR FLEXIBL	SCHLAUCHSCHELLE	SLANGEKLEMME	SLANGKLEM	
8		84352352		1	TUBO HIDRÁULICO, Assembly, Tip Cylinder				
						HYD. TUBE	TUBO HIDRÁULICO	TUBO IDRAULICO	190T
					TUYAU HYDRAULIQUE	HYDRAULIKLEITUNG	HYD. RØR	HYDRAULISCHE LEIDIN(	
9		84352341		1	TUBO HIDRÁULICO, Assembly, Tip Cylinder				
						HYD. TUBE	TUBO HIDRÁULICO	TUBO IDRAULICO	190T
					TUYAU HYDRAULIQUE	HYDRAULIKLEITUNG	HYD. RØR	HYDRAULISCHE LEIDIN(	
10		280476		4	PARAFUSO, Hex Wash Hd, 3/8" x 1"				
						SELF-TAP SCREW	TORNILLO AUTORROSC	VITE AUTOFILETTANTE	062V
					VIS AUTOTARAUDEUSE	SELBSTSCHN SCHRAUE	SELVLÅSENDE BOLT	ZELFTAPPENDE SCHRO	
11		86501706		4	BRAÇADEIRA, Double Tube				
						CLAMP	ABRAZADERA	MORSETTO	120M
					COLLIER	KLEMME	SPÆNDEBÅND	KLEM	
12		84346785		1	TUBO HIDRÁULICO, Tip Crossover				
						HYD. TUBE	TUBO HIDRÁULICO	TUBO IDRAULICO	190T
					TUYAU HYDRAULIQUE	HYDRAULIKLEITUNG	HYD. RØR	HYDRAULISCHE LEIDIN(	
13		84346682		1	CONJ. MANGUEIRA, Tip Cylinder Base				
						HOSE ASSY.	CONJUNTO DE TUBOS	COMPLESS. TUBO FLES	P457
					ENSEMBLE DE FLEXIBLE	SCHLAUCHBAUGRUPPE	SLANGEENHED	SLANGEENHEID	
14		84285339		2	PARAFUSO, M8 X 15	SELF-TAP SCREW	TORNILLO AUTORROSC	VITE AUTOFILETTANTE	062V
					VIS AUTOTARAUDEUSE	SELBSTSCHN SCHRAUE	SELVLÅSENDE BOLT	ZELFTAPPENDE SCHRO	
15		86625036		2	BRAÇADEIRA, 1/2", Insul, 5/16" Bolt				
						CLAMP	ABRAZADERA	MORSETTO	120M
					COLLIER	KLEMME	SPÆNDEBÅND	KLEM	
16		84346755		2	CONJ. MANGUEIRA, Tip Cylinder				
						HOSE ASSY.	CONJUNTO DE TUBOS	COMPLESS. TUBO FLES	P457
					ENSEMBLE DE FLEXIBLE	SCHLAUCHBAUGRUPPE	SLANGEENHED	SLANGEENHEID	

LOADER HYDRAULICS (SR175,SR200,SR220,SR250,TR270,TR320)
LOADER HYDRAULICS (SR175,SR200,SR220,SR250,TR270,TR320)
LOADER HYDRAULICS (SR175,SR200,SR220,SR250,TR270,TR320)
LOADER HYDRAULICS (SR175,SR200,SR220,SR250,TR270,TR320)

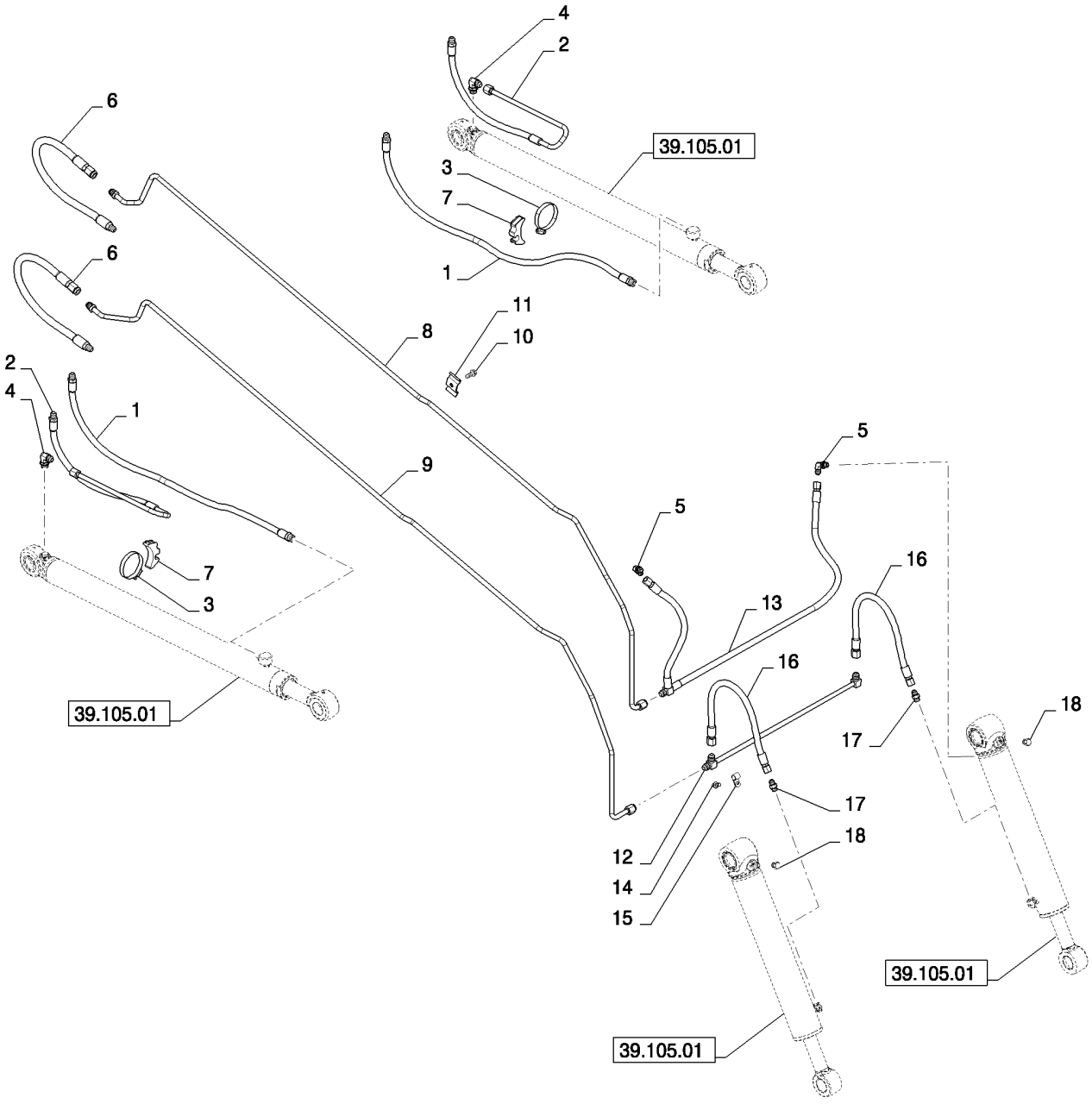

LOADER HYDRAULICS (SR175,SR200,SR220,SR250,TR270,TR320)
LOADER HYDRAULICS (SR175,SR200,SR220,SR250,TR270,TR320)
LOADER HYDRAULICS (SR175,SR200,SR220,SR250,TR270,TR320)
LOADER HYDRAULICS (SR175,SR200,SR220,SR250,TR270,TR320)

R	N	P.N.	MOD	Q	Denominação Description Bezeichnung	Description Bezeichnung Beschreibung	Denominacion Beskrivelse Beskrivning	Descrizione Beschrijving Beskrivning	L.C.
17		76350		2	CONECTOR HIDRÁUL, 9/16"-18, 37º x 9/16"-18, O-Ring				
						HYD CONNECTOR	CONECTOR HIDRÁULIC	CONNETTORE IDRAULIC	020R
					CONNECTEUR HYDRAU	HYDR STECKVERBINDE	HYDRAULIKSTIK	HYDRAULISCHE AANSLU	
18		76349		2	BUJÃO, Hex Hd, 9/16"-18 ORB				
						PLUG	TAPÓN	TAPPO	050T
					BOUCHON	STOPFEN	PROP	PLUG	

35.701.02		p1	02/11

LOADER VALVE PLUMBING (SR175,SR200,TR270)
LOADER VALVE PLUMBING (SR175,SR200,TR270)
LOADER VALVE PLUMBING (SR175,SR200,TR270)
LOADER VALVE PLUMBING (SR175,SR200,TR270)

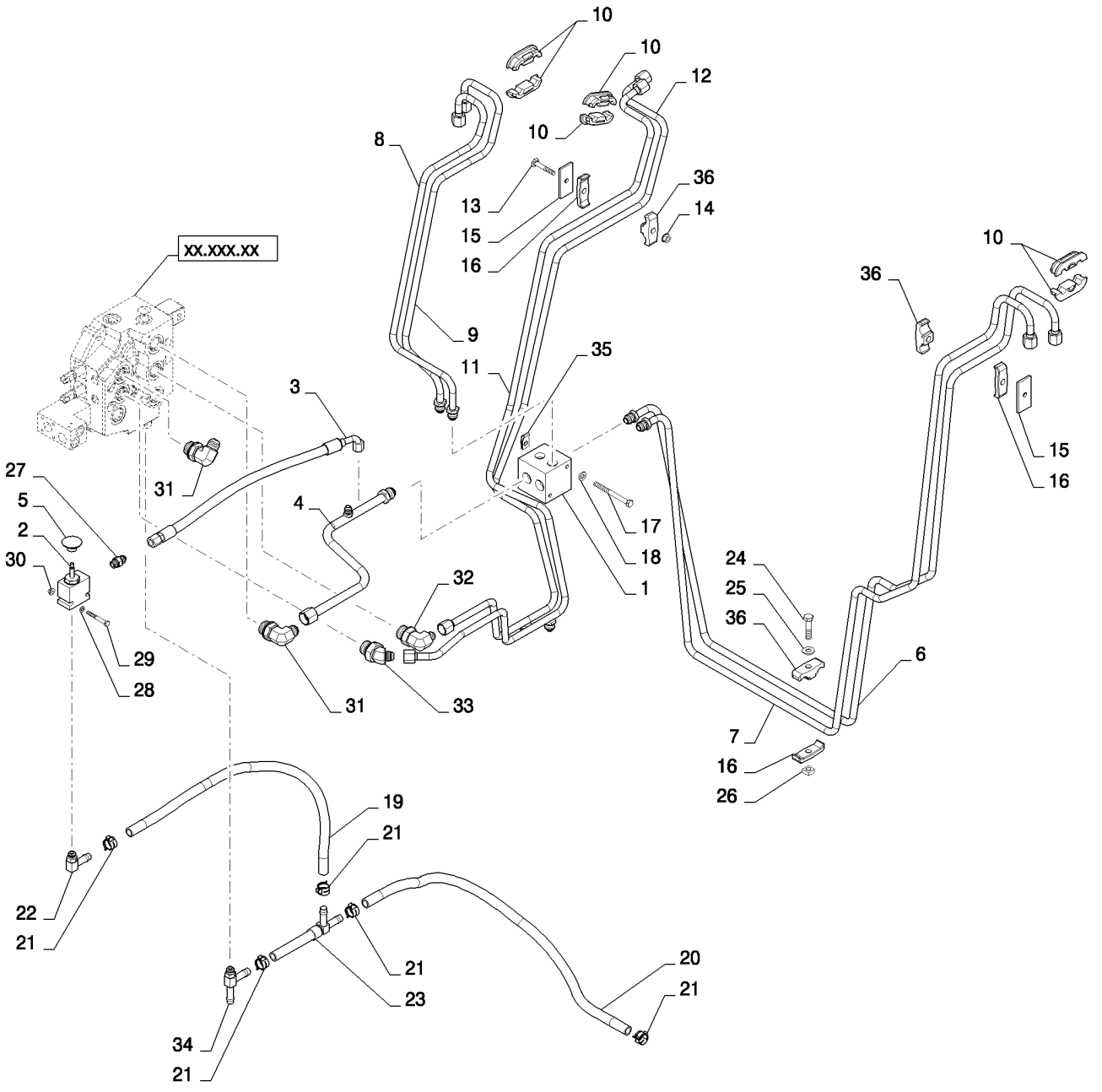

LOADER VALVE PLUMBING (SR175,SR200,TR270)
LOADER VALVE PLUMBING (SR175,SR200,TR270)
LOADER VALVE PLUMBING (SR175,SR200,TR270)
LOADER VALVE PLUMBING (SR175,SR200,TR270)

R	N	P.N.	MOD	Q	Denominação Description	Description Bezeichnung	Denominacion Beskrivelse	Descrizione Beschrijving	L.C.
1		84258823		1	COLETOR HIDRÁULICO COLLECTEUR HYDRAUL	HYDRAULIC MANIFOLD HYDRAULIKVERTEILER	COLECTOR HIDRÁULIC(HYDRAULISK MANIFOLD	COLLETTORE IDRAULIC HYDRAULISCH VERDEE	A063
2		84294239		1	VÁLVULA, Boom Override SOUPAPE	VALVE VENTIL	VÁLVULA VENTIL	VALVOLA KLEP	9620
3		84201224		1	MANGUEIRA HIDRÁULICA, Override FLEXIBLE HYDRAULIQUI	HYDRAULIC HOSE HYDRAULIKSCHLAUCH	TUBO HIDRÁULICO SLANGE, HYDRAULIK	TUBO FLESSIBILE IDRAU HYDRAULISCHE SLANG	A058
4		84181021		1	TUBO RÍGIDO, Lift, Valve to Manifold TUYAU RIGIDE	RIGID TUBE ROHR	TUBO RÍGIDO STIFT RØR	TUBO RIGIDO VASTE LEIDING	193T
5		87522292		1	MAÇANETA, Knob, Override Valve BOUTON	KNOB RUNDGRIFF	MANDO GREB	MANOPOLA KNOP	150P
6		84258841		1	TUBO RÍGIDO, Lift, Manifold to Lft Arm TUYAU RIGIDE	RIGID TUBE ROHR	TUBO RÍGIDO STIFT RØR	TUBO RIGIDO VASTE LEIDING	193T
7		84258858		1	TUBO RÍGIDO, Lower, Manifold to Lft Arm TUYAU RIGIDE	RIGID TUBE ROHR	TUBO RÍGIDO STIFT RØR	TUBO RIGIDO VASTE LEIDING	193T
8		84258829		1	TUBO RÍGIDO, Lower, Manifold to Rt Arm TUYAU RIGIDE	RIGID TUBE ROHR	TUBO RÍGIDO STIFT RØR	TUBO RIGIDO VASTE LEIDING	193T
9		84258833		1	TUBO RÍGIDO, Lift, Manifold to Rt Arm TUYAU RIGIDE	RIGID TUBE ROHR	TUBO RÍGIDO STIFT RØR	TUBO RIGIDO VASTE LEIDING	193T
10		376523A2		6	SUPORTE, 72 mm Length, Hyd Tube SUPPORT	SUPPORT STUETZE	APOYADERO SUPPORT	SUPPORTO SUPPORT	8790
11		84181028		1	TUBO RÍGIDO, Tip, Loader Valve to Rt Arm TUYAU RIGIDE	RIGID TUBE ROHR	TUBO RÍGIDO STIFT RØR	TUBO RIGIDO VASTE LEIDING	193T
12		84181031		1	TUBO RÍGIDO, Tip, Loader Valve to Rt Arm TUYAU RIGIDE	RIGID TUBE ROHR	TUBO RÍGIDO STIFT RØR	TUBO RIGIDO VASTE LEIDING	193T
13		120039		1	PARAFUSO, Short NK, M8 x 50, Cl8.8, Full Thd VIS A TETE BOMBEE	CARRIAGE BOLT SCHLOSSSCHRAUBE	PERNO ALOMADO BRÆDDEBOLT	BULLONE A TESTA TON SLOTBOUT	P123
14		9804277		1	PORCA, M8 x 1.25, Flg, Cl 8 ECROU	NUT MUTTER	TUERCA MØTRIK	DADO MOER	010D
15		257859A1		2	PLACA ESPACADORA, Bar Clamp Top PLAQUETTE	PLATE,SPACER PLAETTCHEN	PLAQUETA PLATE,SPACER	DISTANZ PIASTRA PLATE,SPACER	Z324
16		D120614		3	BRACADEIRA COLLIER	CLAMP SCHELLE	COLLAR CLAMP	MORSETTO CLAMP	1640
17		86508571		2	PARAFUSO, Hex, M8 x 90, 8.8 VIS	BOLT SCHRAUBE	PERNO BOLT	BULLONE BOUT	140B

SR200

35.701.02		p2	02/11

LOADER VALVE PLUMBING (SR175,SR200,TR270)
LOADER VALVE PLUMBING (SR175,SR200,TR270)
LOADER VALVE PLUMBING (SR175,SR200,TR270)
LOADER VALVE PLUMBING (SR175,SR200,TR270)

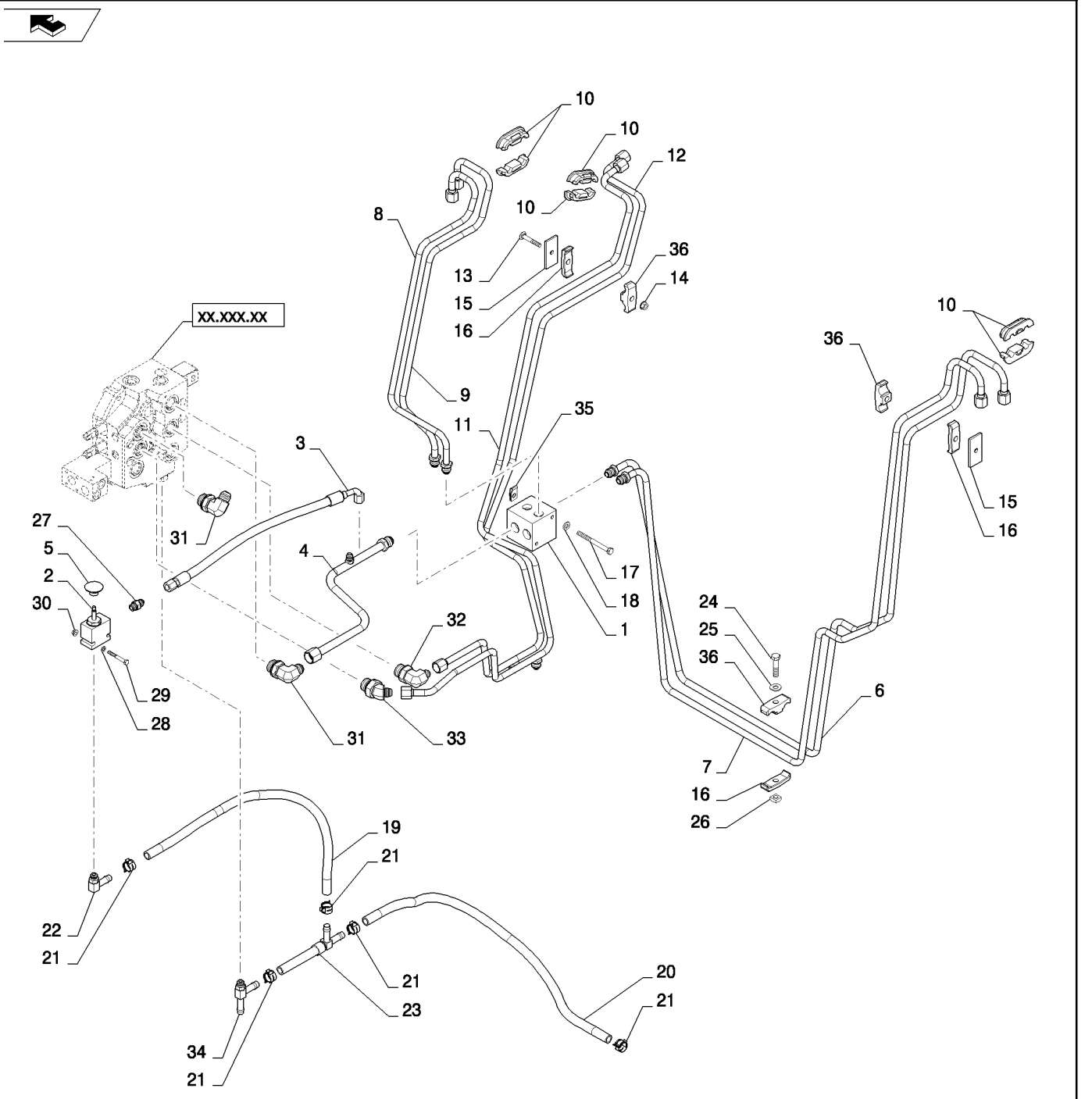

LOADER VALVE PLUMBING (SR175,SR200,TR270)
LOADER VALVE PLUMBING (SR175,SR200,TR270)
LOADER VALVE PLUMBING (SR175,SR200,TR270)
LOADER VALVE PLUMBING (SR175,SR200,TR270)

R	N	P.N.	MOD	Q	Denominação Description	Description Bezeichnung	Denominacion Beskrivelse	Descrizione Beschrijving	L.C.
18		87655042		2	ARRUELA ESPECIAL RONDELLE SPECIALE	SPECIAL WASHER SPEZIALUNTERLEGSCH	ARANDELA ESPECIAL SPECIALSKIVE	RONDELLA SPECIALE SPECIALE RING	Z333
19		84299733		1	MANGUEIRA, Override to EH Aux Drive				
						HOSE	TUBO	TUBO FLESSIBILE	030M
					FLEXIBLE	SCHLAUCH	SLANGE	SLANG	
20		84299735		1	MANGUEIRA, EH Aux Drain to Drain Man				
						HOSE	TUBO	TUBO FLESSIBILE	030M
					FLEXIBLE	SCHLAUCH	SLANGE	SLANG	
21		87443510		5	BRAÇADEIRA MANGUEIRA, M20				
						HOSE CLAMP	ABRAZADERA DE MANG	FASCETTA STRINGITUB	P729
					COLLIER POUR FLEXIBL	SCHLAUCHSCHELLE	SLANGEKLEMME	SLANGKLEM	
22		86705580		1	CONEXÃO, 90º, 1/2" Hose x 9/16"-18 ORB Beaded				
						FITTING	ACOPLAMIENTO	RACCORDO	3300
					RACCORD	ARMATUR	FITTING	AANSLUITING	
23		84259682		1	CONEXÃO EM T	UNION TEE	RACOR EN T	RACCORDO A T	A134
					RACCORD EN T	T-VERSCHRAUBUNG	T-FORSKRUNING	KOPPEL-T-STUK	
24		325829		1	PARAFUSO, Hex, M10 x 45, 8.8				
						BOLT	PERNO	BULLONE	140B
					VIS	SCHRAUBE	BOLT	BOUT	
25		87655046		1	ARRUELA ESPECIAL RONDELLE SPECIALE	SPECIAL WASHER SPEZIALUNTERLEGSCH	ARANDELA ESPECIAL SPECIALSKIVE	RONDELLA SPECIALE SPECIALE RING	Z333
26		230427A1		1	PORCA	NUT	TUERCA	DADO	5780
					ECROU	MUTTER	NUT	NUT	
27		73650		27	PARAFUSO	SCREW	TORNILLO	VITE	7450
					VIS	SCHRAUBE	SCREW	SCREW	
28		86588450		2	ARRUELA PLANA, M6 x 12 x 1.6 Thk				
						WASHER	ARANDELA	RONDELLA	131R
					RONDELLE	UNTERLEGSCHEIBE	FLADSKIVE	SLUITRING	
29		120056		2	PARAFUSO, Hex, M6 x 50, 8.8				
						BOLT	PERNO	BULLONE	140B
					VIS	SCHRAUBE	BOLT	BOUT	
30		9804276		2	PORCA, M6 x 1, Flg, Cl 8	NUT	TUERCA	DADO	010D
					ECROU	MUTTER	MØTRIK	MOER	
31		84570		2	COTOVELO, 90º, 7/8"-14, 37º x 1 1/16"-12, O-Ring				
						ELBOW	CODO	GOMITO	085G
					COUDE	KNIESTÜCK	VINKELRØR	KNIESTUK	
32		87329785		1	COTOVELO, 90º, 3/4"-16, 37º x 1 1/16"-12, O-Ring				
						ELBOW	CODO	GOMITO	085G
					COUDE	KNIESTÜCK	VINKELRØR	KNIESTUK	
33		84289681		1	COTOVELO 45	45 ELBOW	CODO 45	GOMITO A 45°	A044
					COUDE A 45°	45-GRAD-KNIESTÜCK	VINKELRØR, 45	KNIESTUK 45º	
34		84299732		1	CONEXÃO	FITTING	ACOPLAMIENTO	RACCORDO	3300
					RACCORD	ARMATUR	FITTING	AANSLUITING	
35		87016586		2	PORCA, M8, U	NUT	TUERCA	DADO	010D
					ECROU	MUTTER	MØTRIK	MOER	
36		D120679		3	BRACADEIRA	CLAMP	COLLAR	MORSETTO	1640
					COLLIER	SCHELLE	CLAMP	CLAMP	

SR200

35.701.03		p1	01/11

SUPPLY PLUMBING (LOADER VALVE) (SR200,TR270)
SUPPLY PLUMBING (LOADER VALVE) (SR200,TR270)
SUPPLY PLUMBING (LOADER VALVE) (SR200,TR270)
SUPPLY PLUMBING (LOADER VALVE) (SR200,TR270)

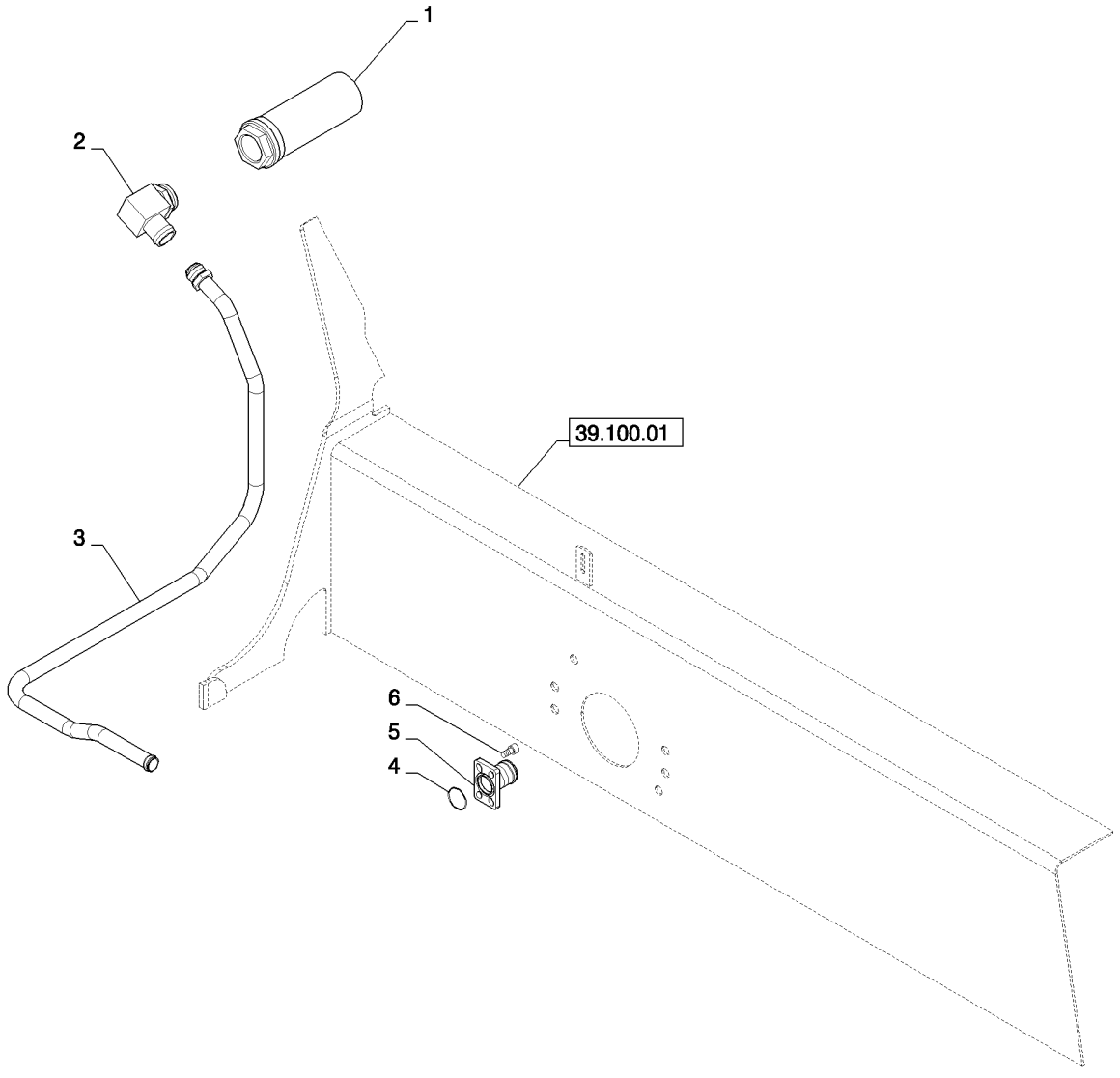

SUPPLY PLUMBING (LOADER VALVE) (SR200,TR270)
SUPPLY PLUMBING (LOADER VALVE) (SR200,TR270)
SUPPLY PLUMBING (LOADER VALVE) (SR200,TR270)
SUPPLY PLUMBING (LOADER VALVE) (SR200,TR270)

R	N	P.N.	MOD	Q	Denominação Description	Description Bezeichnung	Denominacion Beskrivelse	Descrizione Beschrijving	L.C.
1		84344918		1	REDE PARA FILTROS CREPINE FILTRANTE	FILTER STRAINER FILTERSIEB	COLADOR FILTERNET	RETICELLA DEL FILTRO FILTERZEEF	043R
2		84344944		1	COTOVELO 90 COUDE A 90°	90 ELBOW 90-GRAD-KNIESTÜCK	CODO 90 VINKELRØR, 90	GOMITO A 90° KNIESTUK 90º	A045
3		84344911		1	TUBO RÍGIDO TUYAU RIGIDE	RIGID TUBE ROHR	TUBO RÍGIDO STIFT RØR	TUBO RIGIDO VASTE LEIDING	193T
4		274754		1	O-RING, -220, 70 Duro, 1.359" ID x .139" Thk O-RING JOINT TORIQUE	O-RING O-RING	JUNTA TÓRICA O-RING	ANELLO TOROIDALE O-RING	055A
5		84269151		1	CONEXÃO RACCORD	FITTING ARMATUR	ACOPLAMIENTO FITTING	RACCORDO AANSLUITING	3300
6		14307321		4	PARAFUSO VIS	SCREW SCHRAUBE	TORNILLO SKRUE	VITE SCHROEF	040V

35.701.04		p1	08/11

RETURN PLUMBING (LOADER VALVE) (SR175,SV185,SR200,TR270)
RETURN PLUMBING (LOADER VALVE) (SR175,SV185,SR200,TR270)
RETURN PLUMBING (LOADER VALVE) (SR175,SV185,SR200,TR270)
RETURN PLUMBING (LOADER VALVE) (SR175,SV185,SR200,TR270)

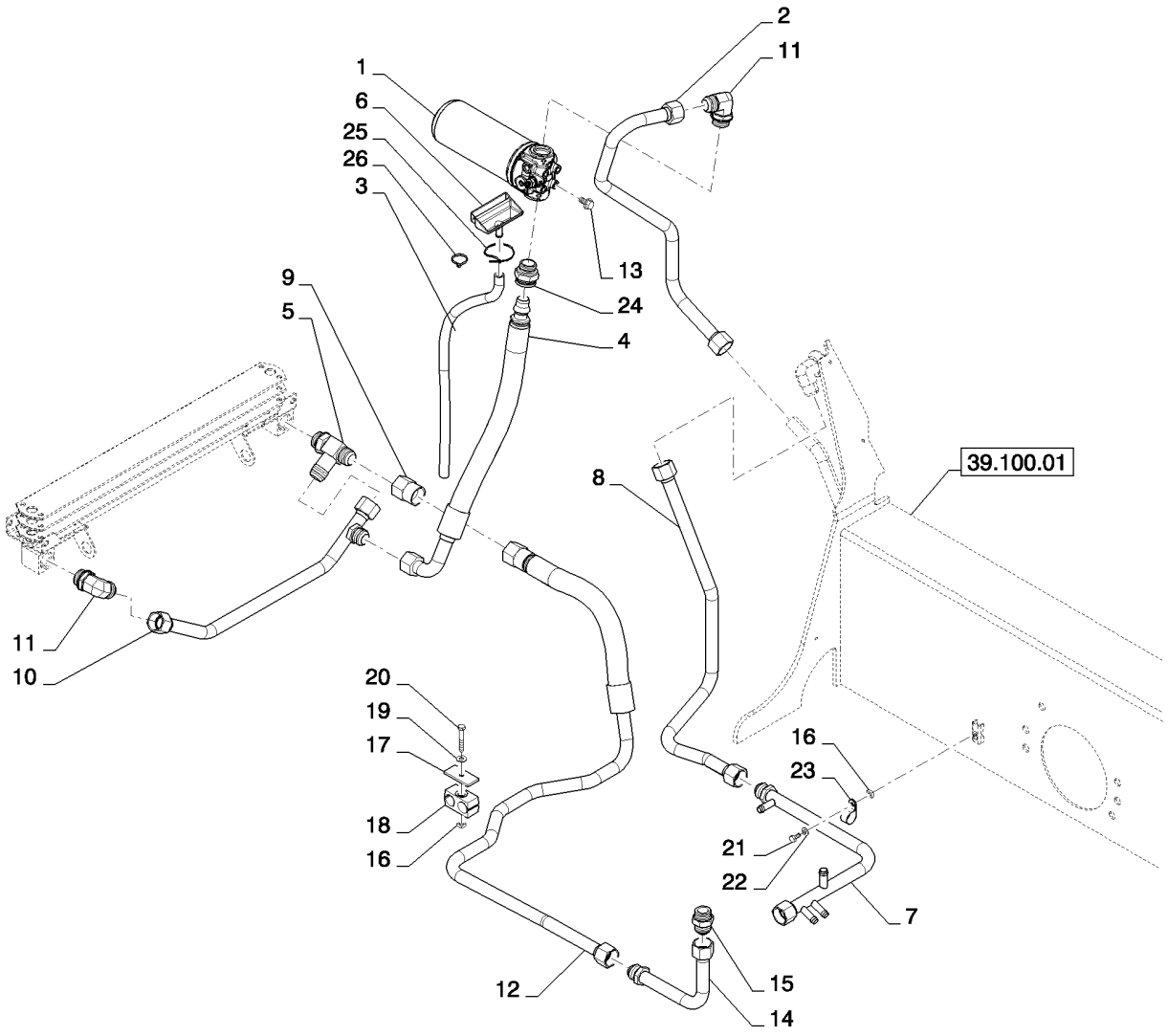

RETURN PLUMBING (LOADER VALVE) (SR175,SV185,SR200,TR270)
RETURN PLUMBING (LOADER VALVE) (SR175,SV185,SR200,TR270)
RETURN PLUMBING (LOADER VALVE) (SR175,SV185,SR200,TR270)
RETURN PLUMBING (LOADER VALVE) (SR175,SV185,SR200,TR270)

R	N	P.N.	MOD	Q	Denominação Description	Description Bezeichnung	Denominacion Beskrivelse	Descrizione Beschrijving	L.C.
1		84278071		1	FILTRO DE ÓLEO HIDRÁULICO, Filter, Assembly, Includes Element				
						HYDRAULIC OIL FILTER	FILTRO DE ACEITE HIDF	FILTRO OLIO IDRAULICO	074F
					FILTRE A HUILE HYDR.	HYDRAULIKÖLFILTER	HYDRAULIKOLIEFILTER	HYDRAULISCHE-OLIEFIL	
1		84274694		1	ANEL DE DESGASTE, Friction				
						WEAR RING	ANILLO DE DESGASTE	ANELLO ANTIUSURA	A012
					BAGUE D'USURE	VERSCHLEISSRING	SLIDRING	SLIJTRING	
1		84278070		1	ELEMENTO, Hydraulic Oil Filter Assembly				
						ELEMENT	ELEMENTO	ELEMENTO	020E
					ELEMENT	ELEMENT	ELEMENT	ELEMENT	
2		84344916		1	TUBO HIDRÁULICO, Hyd Filter Return				
						HYD. TUBE	TUBO HIDRÁULICO	TUBO IDRAULICO	190T
					TUYAU HYDRAULIQUE	HYDRAULIKLEITUNG	HYD. RØR	HYDRAULISCHE LEIDIN(	
3		93963		1	TUBO PLÁSTICO, 0.50" ID x 0.75" OD, 2.0 Feet				
						PLASTIC-RUBBER TUBE	TUBO DE GOMA DE PLÁ	TUBO IN PLASTICA-GOM	Z192
					GAINE PLASTIQUE	KUNSTSTOFF-/GUMMI-R	PLASTIKGUMMISLANGE	KUNSTSTOF-RUBBERLE	
4		84269601		1	CONJ. MANGUEIRA, Oil Cooler Outlet				
						HOSE ASSY.	CONJUNTO DE TUBOS	COMPLESS. TUBO FLES	P457
					ENSEMBLE DE FLEXIBLE	SCHLAUCHBAUGRUPPE	SLANGEENHED	SLANGEENHEID	
5		84259482		1	CONEXÃO EM T	UNION TEE	RACOR EN T	RACCORDO A T	A134
					RACCORD EN T	T-VERSCHRAUBUNG	T-FORSKRUNING	KOPPEL-T-STUK	
6		87455867		1	FUNIL, Oil Filter	FUNNEL	EMBUDO	IMBUTO	020I
					ENTONNOIR	TRICHTER	TRAGT	TRECHTER	
7		84259538		1	TUBO RÍGIDO, Case Drain Manifold				
						RIGID TUBE	TUBO RÍGIDO	TUBO RIGIDO	193T
					TUYAU RIGIDE	ROHR	STIFT RØR	VASTE LEIDING	
8		84269657		1	TUBO RÍGIDO, Case Drain Return				
						RIGID TUBE	TUBO RÍGIDO	TUBO RIGIDO	193T
					TUYAU RIGIDE	ROHR	STIFT RØR	VASTE LEIDING	
9		84259489		1	ADAPTADOR	ADAPTER	ADAPTADOR	ADATTATORE	001A
					ADAPTATEUR	ADAPTER	ADAPTER	ADAPTER	
10		84375905		1	TUBO RÍGIDO, Tube Assy, Oil Cooler Outlet				
						RIGID TUBE	TUBO RÍGIDO	TUBO RIGIDO	193T
					TUYAU RIGIDE	ROHR	STIFT RØR	VASTE LEIDING	
11		268277		2	COTOVELO, 90º, 1 5/16"-12, 37º x 1 5/16"-12, O-Ring				
						ELBOW	CODO	GOMITO	085G
					COUDE	KNIESTÜCK	VINKELRØR	KNIESTUK	
12		84310715		1	TUBO RÍGIDO, Loader Valve Outlet				
						RIGID TUBE	TUBO RÍGIDO	TUBO RIGIDO	193T
					TUYAU RIGIDE	ROHR	STIFT RØR	VASTE LEIDING	
13		86050286		2	PARAFUSO FLANGEADO, Hex, M10 x 20, 8.8, Full Thd				
						FLANGE BOLT	PERNO DE CORONA	BULLONE FLANGIATO	A027
					VIS A EMBASE	FLANSCHSCHRAUBE	FLANGEBOLT	FLENSBOUT	
14		84310722		1	TUBO RÍGIDO, Loader Valve Outlet				
						RIGID TUBE	TUBO RÍGIDO	TUBO RIGIDO	193T
					TUYAU RIGIDE	ROHR	STIFT RØR	VASTE LEIDING	
15		378970		1	CONECTOR HIDRÁUL, 1 5/16"-12, 37º x 1 5/16"-12, O-Ring				
						HYD CONNECTOR	CONECTOR HIDRÁULIC	CONNETTORE IDRAULIC	020R
					CONNECTEUR HYDRAU	HYDR STECKVERBINDE	HYDRAULIKSTIK	HYDRAULISCHE AANSLI	

SR200

RETURN PLUMBING (LOADER VALVE) (SR175,SV185,SR200,TR270)
RETURN PLUMBING (LOADER VALVE) (SR175,SV185,SR200,TR270)
RETURN PLUMBING (LOADER VALVE) (SR175,SV185,SR200,TR270)
RETURN PLUMBING (LOADER VALVE) (SR175,SV185,SR200,TR270)

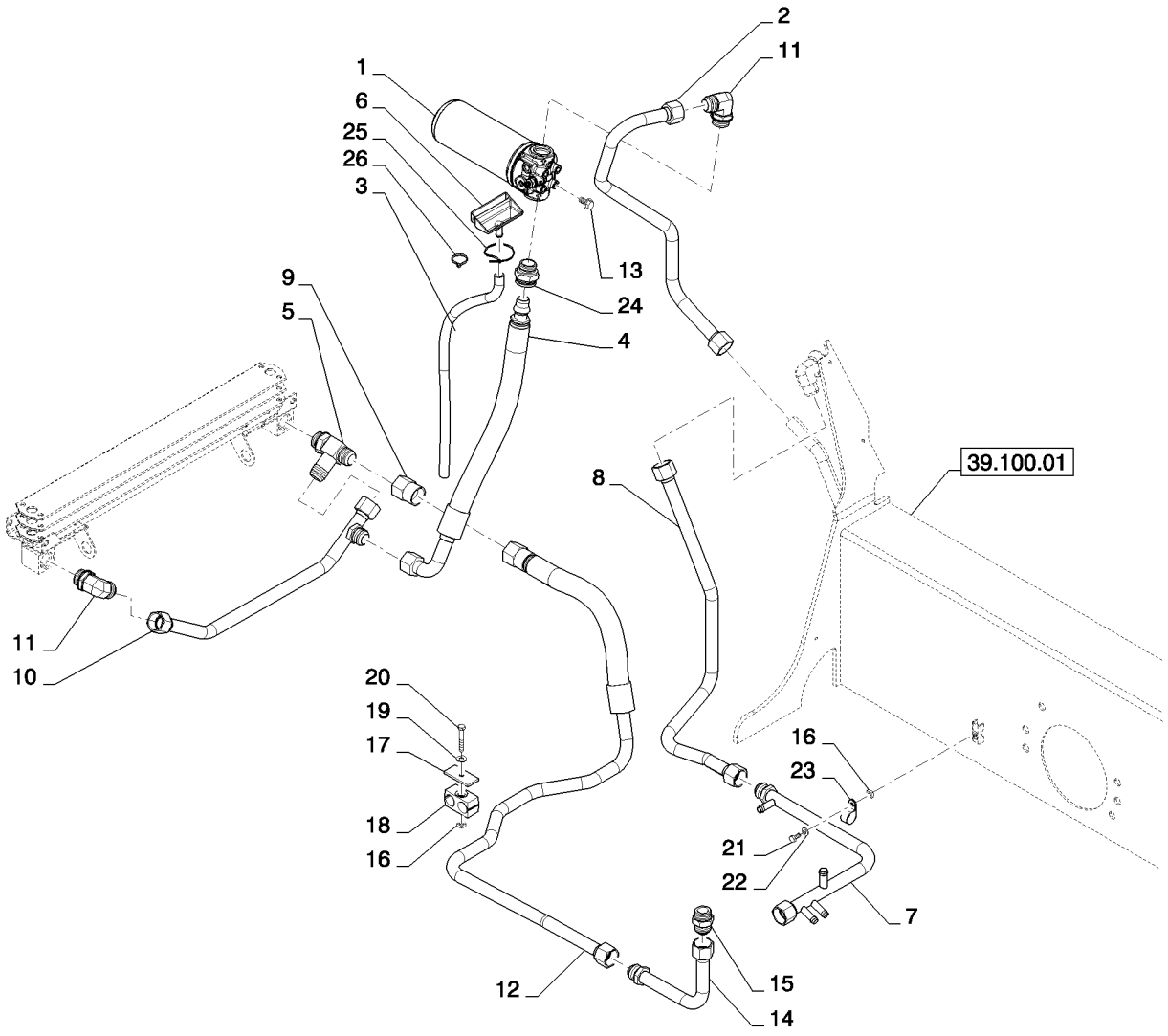

RETURN PLUMBING (LOADER VALVE) (SR175,SV185,SR200,TR270)
RETURN PLUMBING (LOADER VALVE) (SR175,SV185,SR200,TR270)
RETURN PLUMBING (LOADER VALVE) (SR175,SV185,SR200,TR270)
RETURN PLUMBING (LOADER VALVE) (SR175,SV185,SR200,TR270)

R	N	P.N.	MOD	Q	Denominação Description	Description Bezeichnung	Denominacion Beskrivelse	Descrizione Beschrijving	L.C.
16		**229197A1**		3	PORCA	NUT	TUERCA	DADO	5780
					ECROU	MUTTER	NUT	NUT	
17		**257859A1**		2	PLACA ESPACADORA, Bar Clamp Top				
						PLATE,SPACER	PLAQUETA	DISTANZ PIASTRA	Z324
					PLAQUETTE	PLAETTCHEN	PLATE,SPACER	PLATE,SPACER	
18		**225529A1**		2	CONEXÃO	FITTING	ACOPLAMIENTO	RACCORDO	3300
					RACCORD	ARMATUR	FITTING	AANSLUITING	
19		**86625263**		2	ARRUELA PLANA, M8 x 20 x 1.6				
						WASHER	ARANDELA	RONDELLA	131R
					RONDELLE	UNTERLEGSCHEIBE	FLADSKIVE	SLUITRING	
20		**16044321**		2	PARAFUSO, Hex, M8 x 55, 8.8				
						SCREW	TORNILLO	VITE	040V
					VIS	SCHRAUBE	SKRUE	SCHROEF	
21		**120103**		1	PARAFUSO, Hex, M8 x 16, 8.8				
						BOLT	PERNO	BULLONE	140B
					VIS	SCHRAUBE	BOLT	BOUT	
22		**87655042**		1	ARRUELA ESPECIAL	SPECIAL WASHER	ARANDELA ESPECIAL	RONDELLA SPECIALE	Z333
					RONDELLE SPECIALE	SPEZIALUNTERLEGSCH	SPECIALSKIVE	SPECIALE RING	
23		**86637977**		1	BRAÇADEIRA, 1", Insul, 5/16" Bolt				
						CLAMP	ABRAZADERA	MORSETTO	120M
					COLLIER	KLEMME	SPÆNDEBÅND	KLEM	
24		**84259488**		1	ADAPTADOR, -16MB-16 FQLL				
						ADAPTER	ADAPTADOR	ADATTATORE	001A
					ADAPTATEUR	ADAPTER	ADAPTER	ADAPTER	
25		**646223**		1	TIRA, .19" x 8 1/2", Cable Tie; Not Shown				
						STRAP	BANDA	FASCETTA	532B
					BRIDE	BAND	STROP	RIEM	
26		**87642915**		1	PRENDEDOR DE CABOS, Not Shown				
						CABLE STRAP	BANDA DE CABLE	FASCETTA PER CAVO	P716
					BRIDE DE CABLE	KABELBINDER	KABELSTROP	BUNDELBAND	

2SPD PLUMBING (SR200)
2SPD PLUMBING (SR200)
2SPD PLUMBING (SR200)
2SPD PLUMBING (SR200)

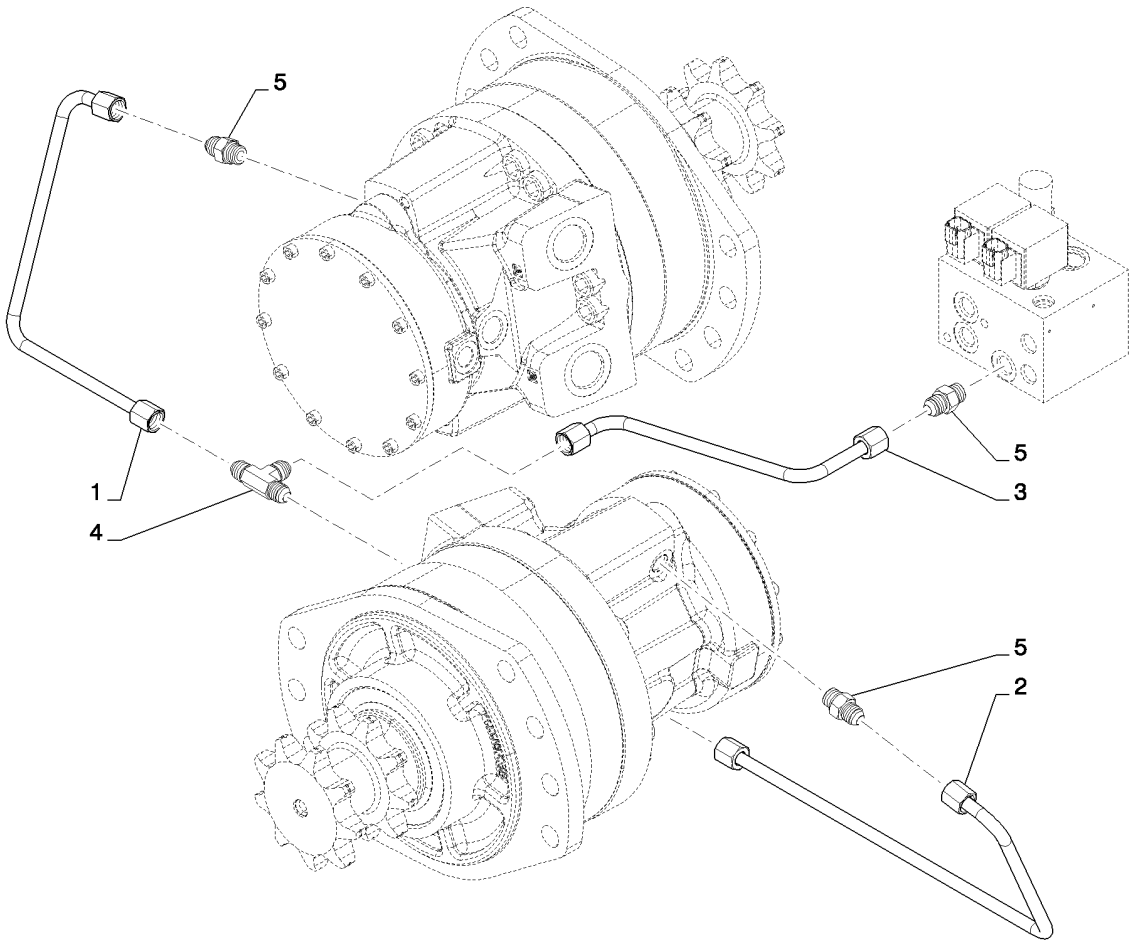

2SPD PLUMBING (SR200)
2SPD PLUMBING (SR200)
2SPD PLUMBING (SR200)
2SPD PLUMBING (SR200)

R	N	P.N.	MOD	Q	Denominação Description Bezeichnung	Description Denominacion Beskrivelse	Denominacion Descrizione Beschrijving	L.C.
1		84258811		1	TUBO RÍGIDO, Assy, Two Speed			
					RIGID TUBE	TUBO RÍGIDO	TUBO RIGIDO	193T
					TUYAU RIGIDE	ROHR	STIFT RØR	VASTE LEIDING
2		84258811		1	TUBO RÍGIDO, Assy, Two Speed			
					RIGID TUBE	TUBO RÍGIDO	TUBO RIGIDO	193T
					TUYAU RIGIDE	ROHR	STIFT RØR	VASTE LEIDING
3		84258810		1	TUBO RÍGIDO, Assy, Two Speed Common			
					RIGID TUBE	TUBO RÍGIDO	TUBO RIGIDO	193T
					TUYAU RIGIDE	ROHR	STIFT RØR	VASTE LEIDING
4		76355		1	T, 9/16"-18, 37º	TEE	RACOR EN T	PEZZO A T	9020
					RACCORD EN T	T-STÜCK	T-STYKKE	T-STUK	
5		76350		3	CONECTOR HIDRÁUL, 9/16"-18, 37º x 9/16"-18, O-Ring			
					HYD CONNECTOR	CONECTOR HIDRÁULIC	CONNETTORE IDRAULIC	020R
					CONNECTEUR HYDRAU	HYDR STECKVERBINDE	HYDRAULIKSTIK	HYDRAULISCHE AANSLI	

SR200

BRAKE PLUMBING (SR200)
BRAKE PLUMBING (SR200)
BRAKE PLUMBING (SR200)
BRAKE PLUMBING (SR200)

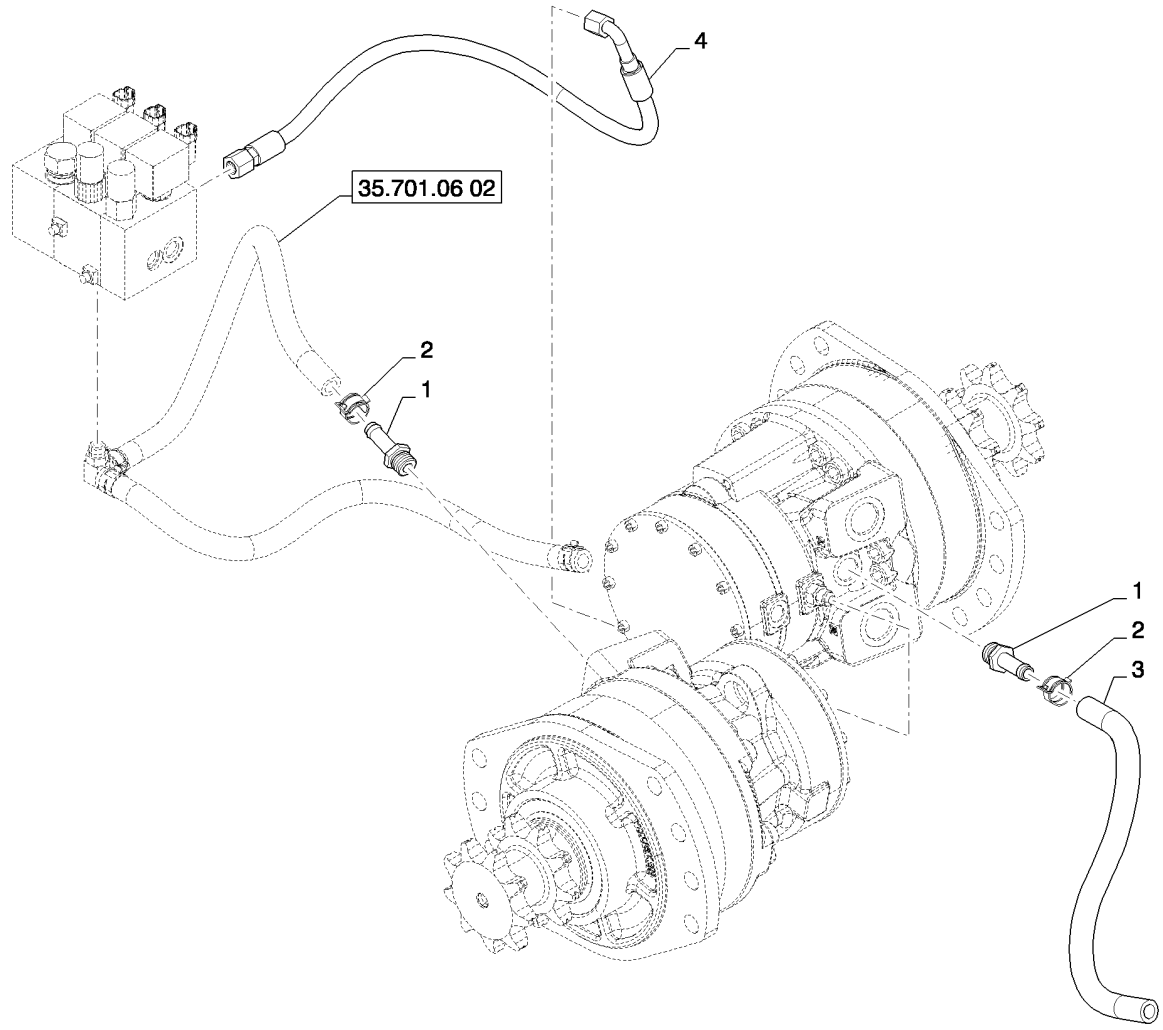

BRAKE PLUMBING (SR200)
BRAKE PLUMBING (SR200)
BRAKE PLUMBING (SR200)
BRAKE PLUMBING (SR200)

R	N	P.N.	MOD	Q	Denominação Description	Description Bezeichnung	Denominacion Beskrivelse	Descrizione Beschrijving	L.C.
1		87010108		2	CONEXÃO, 1/2" Hose x 3/4"-16 ORB, Beaded RACCORD	FITTING ARMATUR	ACOPLAMIENTO FITTING	RACCORDO AANSLUITING	3300
2		87443510		2	BRAÇADEIRA MANGUEIRA, M20 COLLIER POUR FLEXIBL	HOSE CLAMP SCHLAUCHSCHELLE	ABRAZADERA DE MANG SLANGEKLEMME	FASCETTA STRINGITUB SLANGKLEM	P729
3		84259527		1	MANGUEIRA, Case Drain FLEXIBLE	HOSE SCHLAUCH	TUBO SLANGE	TUBO FLESSIBILE SLANG	030M
4		84257176		1	CONJ. MANGUEIRA, Brake ENSEMBLE DE FLEXIBLE	HOSE ASSY. SCHLAUCHBAUGRUPPE	CONJUNTO DE TUBOS SLANGEENHED	COMPLESS. TUBO FLES SLANGEENHEID	P457

SR200

35.701.06	02	p1	02/11

BRAKE PLUMBING (SR130 - SV300)
BRAKE PLUMBING (SR130 - SV300)
BRAKE PLUMBING (SR130 - SV300)
BRAKE PLUMBING (SR130 - SV300)

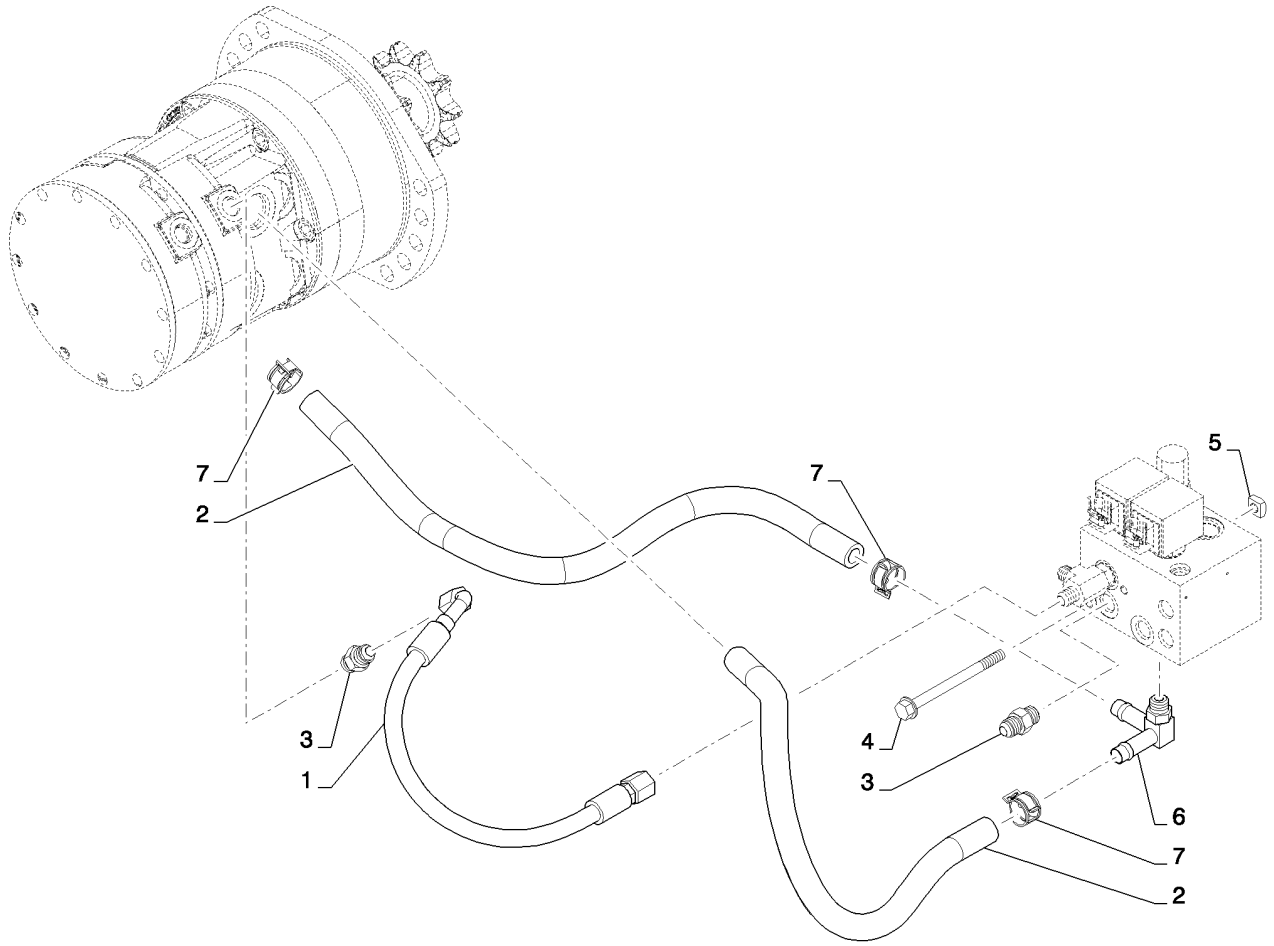

BRAKE PLUMBING (SR130 - SV300)
BRAKE PLUMBING (SR130 - SV300)
BRAKE PLUMBING (SR130 - SV300)
BRAKE PLUMBING (SR130 - SV300)

R	N	P.N.	MOD	Q	Denominação Description	Description Bezeichnung	Denominacion Beskrivelse	Descrizione Beschrijving	L.C.
1		84257177		1	CONJ. MANGUEIRA, Brake ENSEMBLE DE FLEXIBLE	HOSE ASSY. SCHLAUCHBAUGRUPPE	CONJUNTO DE TUBOS SLANGEENHED	COMPLESS. TUBO FLES SLANGEENHEID	P457
2		84257173		2	MANGUEIRA, Drain FLEXIBLE	HOSE SCHLAUCH	TUBO SLANGE	TUBO FLESSIBILE SLANG	030M
3		76350		3	CONECTOR HIDRÁUL, 9/16"-18, 37º x 9/16"-18, O-Ring CONNECTEUR HYDRAU	HYD CONNECTOR HYDR STECKVERBINDE	CONECTOR HIDRÁULIC HYDRAULIKSTIK	CONNETTORE IDRAULIC HYDRAULISCHE AANSLU	020R
4		86511844		2	PARAFUSO, Flange, M8x100 VIS	BOLT SCHRAUBE	PERNO BOLT	BULLONE BOUT	140B
5		229197A1		2	PORCA, Square, M8-1.25 ECROU	NUT MUTTER	TUERCA NUT	DADO NUT	5780
6		84187294		1	ADAPTADOR, Fitting ADAPTATEUR	ADAPTER ADAPTER	ADAPTADOR ADAPTER	ADATTATORE ADAPTER	001A
7		87443510		4	BRAÇADEIRA MANGUEIRA, M20 COLLIER POUR FLEXIBL	HOSE CLAMP SCHLAUCHSCHELLE	ABRAZADERA DE MANG SLANGEKLEMME	FASCETTA STRINGITUB SLANGKLEM	P729

SR200

35.730.01		p1	05/11

HYDRAULIC CYLINDER (SR200,TR270)
HYDRAULIC CYLINDER (SR200,TR270)
HYDRAULIC CYLINDER (SR200,TR270)
HYDRAULIC CYLINDER (SR200,TR270)

LEVANTAMENTO

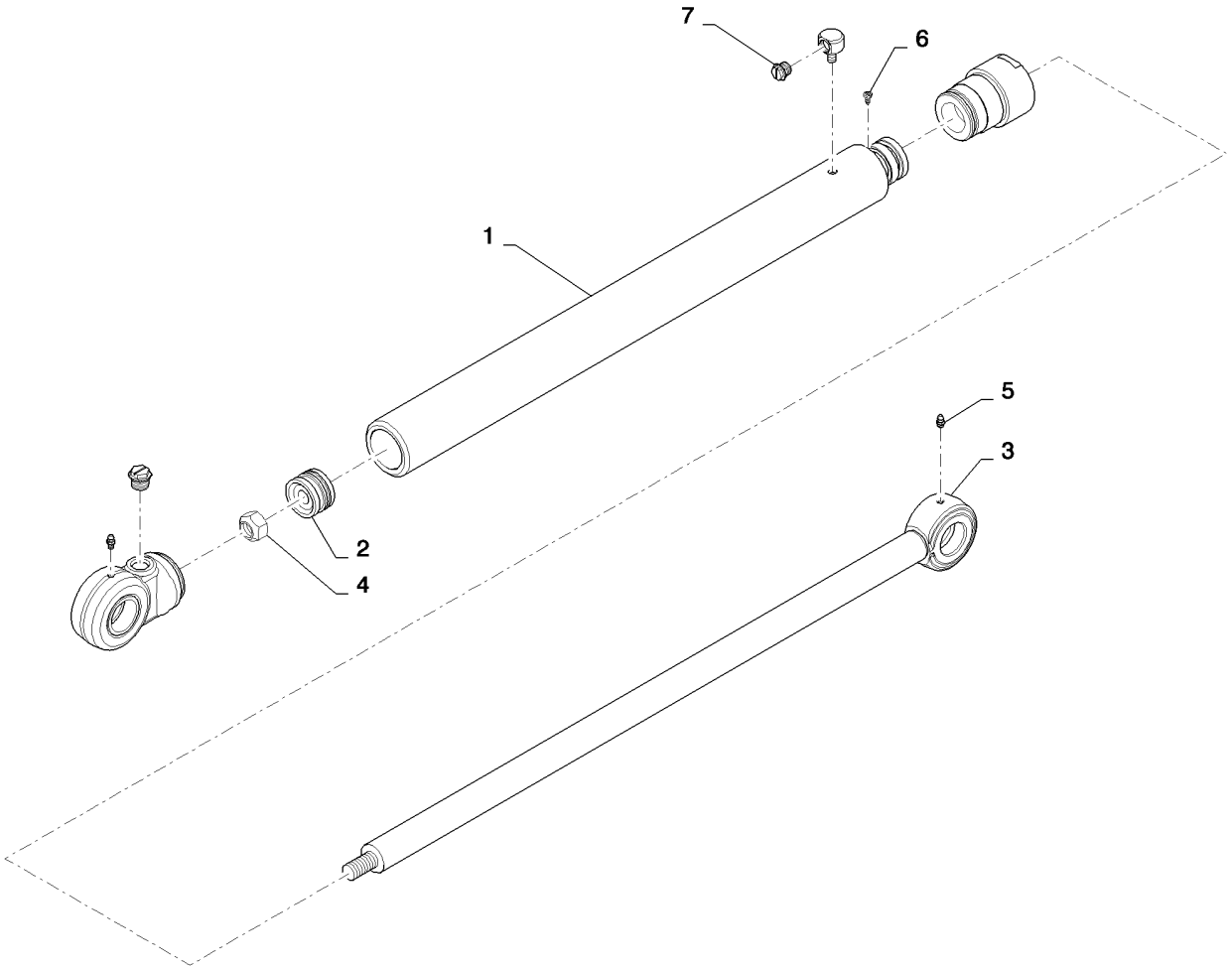

HYDRAULIC CYLINDER (SR200,TR270)
HYDRAULIC CYLINDER (SR200,TR270)
HYDRAULIC CYLINDER (SR200,TR270)
HYDRAULIC CYLINDER (SR200,TR270)

R	N	P.N.	MOD	Q	Denominação Description	Description Bezeichnung	Denominacion Beskrivelse	Descrizione Beschrijving	L.C.
		84231611			CILINDRO LEVANTAMENTO, Hydraulic, Power Tan, Incl. 1-7				
						LIFT CYLINDER	CILINDRO DE ELEVADOI	CILINDRO DI SOLLEVAM	133C
					VERIN DE RELEVAGE	HUBZYLINDER	LØFTECYLINDER	HEFCILINDER	
1		**84232901**		1	TUBO, W	TUBE	TUBO	TUBO	195T
					TUBE	ROHR	RØR	LEIDING	
2		**87705819**		1	KIT DE SERVIÇO, Package, Piston-Gland				
						SERVICE KIT	KIT DE SERVICIO	KIT DI MANUTENZIONE	021K
					KIT D'ENTRETIEN	SERVICE-SATZ	SERVICESÆT	SERVICEKIT	
3		**84232829**		1	HASTE/GAXETA PISTÃO, \	PISTON ROD/GLAND	VÁSTAGO DE PISTÓN/GI	BIELLA/PREMISTOPPA	Z642
					TIGE DE PISTON/ETOUF	KOLBENSTANGENFÜHR	STEMPELSTANG/DÅSE	DRIJFSTANG/ZUIGERPA	
4		**280724**		1	CONTRA PORCA, 3/4"-16, GC				
						LOCK NUT	TUERCA DE BLOQUEO	DADO DI BLOCCAGGIO	P263
					CONTRE-ECROU	SICHERUNGSMUTTER	LÅSEMØTRIK	BORGMOER	
5		**87414**		2	GRAXEIRA, 1/4"-28 x .56" lg, Self-Tap				
						LUBE NIPPLE	BOQUILLA DE LUBRICAC	INGRASSATORE	060I
					GRAISSEUR	SCHMIERNIPPEL	SMØRENIPPEL	SMEERNIPPEL	
6		**G109395**		1	PARAFUSO, Locking	SELF-TAP SCREW	TORNILLO AUTORROSC	VITE AUTOFILETTANTE	062V
					VIS AUTOTARAUDEUSE	SELBSTSCHN SCHRAUE	SELVLÅSENDE BOLT	ZELFTAPPENDE SCHRO	
7		**86625120**		2	BUJÃO, 3/4-16	PLUG	TAPÓN	TAPPO	050T
					BOUCHON	STOPFEN	PROP	PLUG	
8		**87705824**			KIT DE VEDAÇÃO, (Not Shown) Cylinder Repair Kit				
						SEAL KIT	KIT DE JUNTAS	KIT GUARNIZIONI	630S
					KIT DE JOINTS	DICHTUNGSSATZ	PAKNINGSSÆT	KIT MET AFDICHTINGEN	

35.730.02		p1	05/11

BUCKET CYLINDER (SR175,SR200,TR270)
BUCKET CYLINDER (SR175,SR200,TR270)
BUCKET CYLINDER (SR175,SR200,TR270)
BUCKET CYLINDER (SR175,SR200,TR270)

BASCULAMENTO

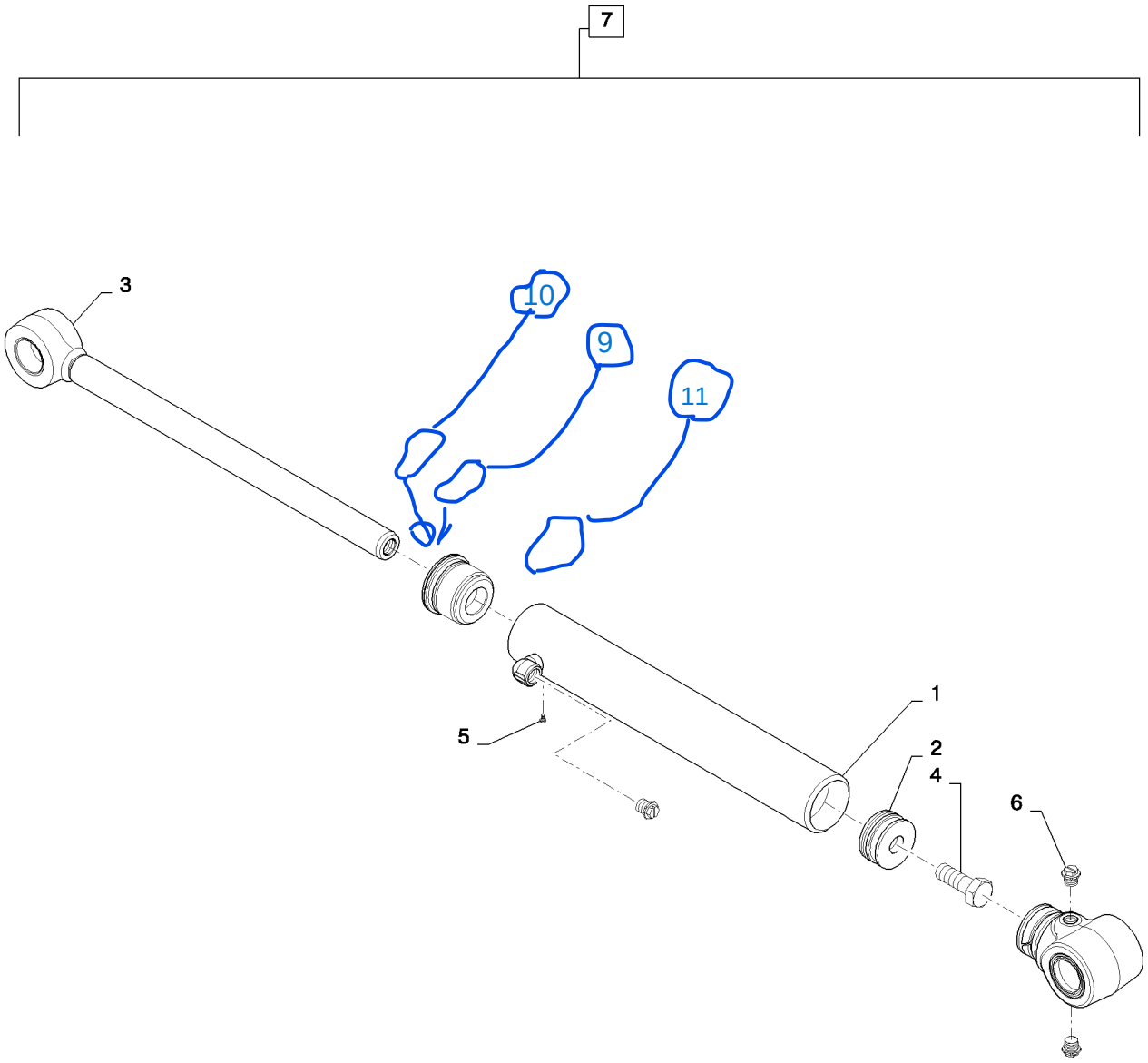

BUCKET CYLINDER (SR175,SR200,TR270)
BUCKET CYLINDER (SR175,SR200,TR270)
BUCKET CYLINDER (SR175,SR200,TR270)
BUCKET CYLINDER (SR175,SR200,TR270)

BASCULAMENTO

R	N	P.N.	MOD	Q	Denominação Description Bezeichnung	Description Denominacion Beskrivelse	Denominacion Descrizione Beschrijving	Descrizione L.C. Beschrijving	L.C.
7		84290567			CILINDRO LEVANTAMENTO, Assembly, Bucket, Tan, Incl. 1-6 LIFT CYLINDER VERIN DE RELEVAGE	CILINDRO DE ELEVADOI HUBZYLINDER LØFTECYLINDER	CILINDRO DI SOLLEVAM HEFCILINDER		133C
1		84295112		1	TUBO, Hydraulic TUBE TUBE	TUBE ROHR RØR	TUBO LEIDING	TUBO	195T
2		NSS			SEM SERVIÇO EM SEPARADO, Package, Piston-Gland NOT SERVICED SEPARA NON FORUNI SEPAREM	NO SE REPARA POR SE NICHT A SEP ERS-T LIEI	NON FORNITO SEPARAT SERVICERES IKKE SEPA	NIET LOS VERKRIJGBAA	064N
3		NSS			SEM SERVIÇO EM SEPARADO, Rod, W NOT SERVICED SEPARA NON FORUNI SEPAREM	NO SE REPARA POR SE NICHT A SEP ERS-T LIEI	NON FORNITO SEPARAT SERVICERES IKKE SEPA	NIET LOS VERKRIJGBAA	064N
4		86982436		1	PARAFUSO ESPECIAL, SEMS/A, 7/8 X 2.50 SPECIAL BOLT VIS SPECIALE	PERNO ESPECIAL SPEZIALSCHRAUBE	BULLONE SPECIALE SPECIALBOLT	SPECIALE BOUT	P698
5		G109395		1	PARAFUSO VIS AUTOTARAUDEUSE	SELF-TAP SCREW SELBSTSCHN SCHRAUE	TORNILLO AUTORROSC SELVLÅSENDE BOLT	VITE AUTOFILETTANTE ZELFTAPPENDE SCHRO	062V
6		86625122		3	BUJÃO, 9/16-18 BOUCHON	PLUG STOPFEN	TAPÓN PROP	TAPPO PLUG	050T
8		84480953			KIT DE VEDAÇÃO, (Not Shown) Cylinder Repair Kit SEAL KIT KIT DE JOINTS	KIT DE JUNTAS DICHTUNGSSATZ	KIT GUARNIZIONI PAKNINGSSÆT	KIT MET AFDICHTINGEN	630S

09 CLA 5209760 GAXETA DE POLIURETANO

10 HWBD901547 RETENTOR RASPADOR

11 CASD 036092 ANEL DE ENCOSTO

ARRUELA DE NYLON 34,00 X 50,00 X 3,30

35.750.01		p1	02/11

TANK, HYDRAULIC (SR130,SR150,SR175,SR200,SR220,SR250,TR270,TR320)
TANK, HYDRAULIC (SR130,SR150,SR175,SR200,SR220,SR250,TR270,TR320)
TANK, HYDRAULIC (SR130,SR150,SR175,SR200,SR220,SR250,TR270,TR320)
TANK, HYDRAULIC (SR130,SR150,SR175,SR200,SR220,SR250,TR270,TR320)

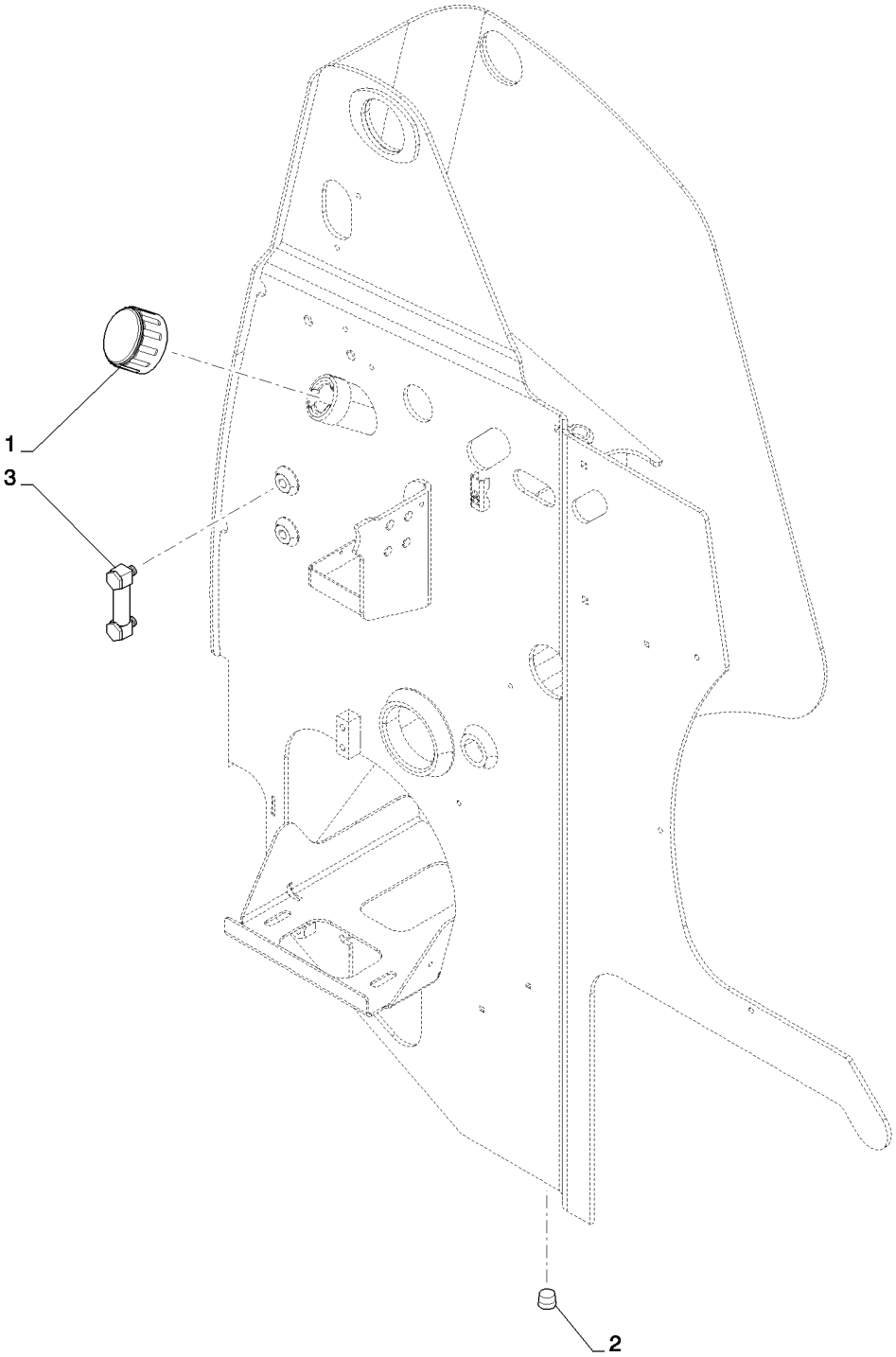

TANK, HYDRAULIC (SR130,SR150,SR175,SR200,SR220,SR250,TR270,TR320)
TANK, HYDRAULIC (SR130,SR150,SR175,SR200,SR220,SR250,TR270,TR320)
TANK, HYDRAULIC (SR130,SR150,SR175,SR200,SR220,SR250,TR270,TR320)
TANK, HYDRAULIC (SR130,SR150,SR175,SR200,SR220,SR250,TR270,TR320)

R	N	P.N.	MOD	Q	Denominação Description	Description Bezeichnung	Denominacion Beskrivelse	Descrizione Beschrijving	L.C.
1		**84344624**		1	MEDIDOR, Liquid Level Gauge				
						GAUGE	INDICADOR	INDICATORE	Z211
					JAUGE	ANZEIGE	MANOMETER	METER	
2		**647429**		1	BUJÃO DE DRENO	DRAIN PLUG	TAPÓN DE VACIADO	TAPPO DI SCARICO	056T
					BOUCHON DE VIDANGE	ABLASSSCHRAUBE	AFTAPNINGSPROP	AFTAPPLUG	
3		**257448A1**		1	CAPA, Hydraulic Fill	CAP	TAPA	CAPPUCCIO	1380
					CHAPEAU	KAPPE	CAP	CAP	

SECTION INDEX
37 - Ganchos de reboque e lastro

37.140.01 COUNTERWEIGHT (SR200)

37.140.01		p1	07/11

COUNTERWEIGHT (SR200)
COUNTERWEIGHT (SR200)
COUNTERWEIGHT (SR200)
COUNTERWEIGHT (SR200)



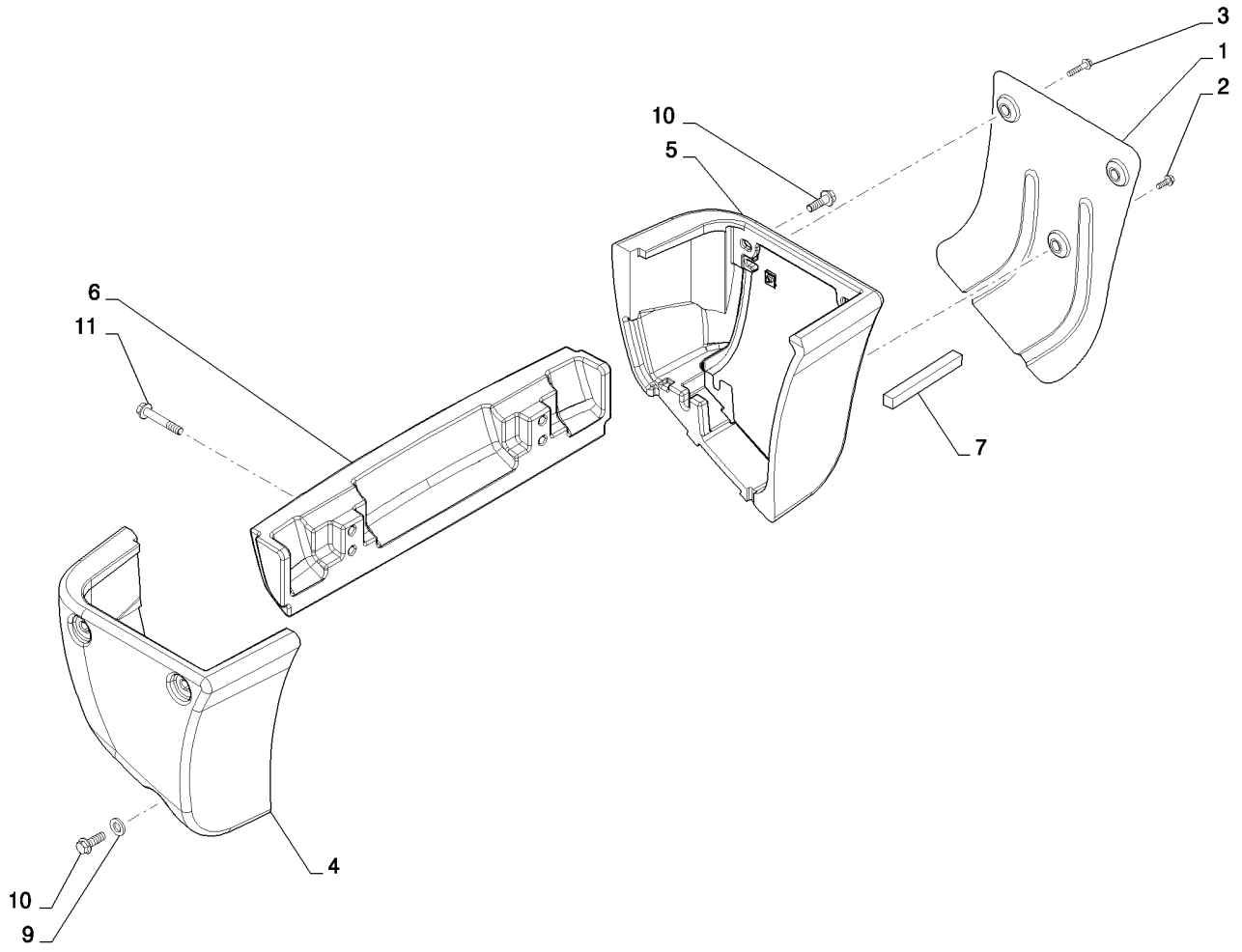



COUNTERWEIGHT (SR200)
COUNTERWEIGHT (SR200)
COUNTERWEIGHT (SR200)
COUNTERWEIGHT (SR200)

R	N	P.N.	MOD	Q	Denominação Description	Description Bezeichnung	Denominacion Beskrivelse	Descrizione Beschrijving	L.C.
1		84273170		1	PLACA DE COBERTURA COUVERCLE	COVER PLATE ABDECKPLATTE	PLACA DE CUBIERTA DÆKPLADE	PIASTRA DI COPERTUR AFSCHERMPLAAT	110P
2		9804262		1	PARAFUSO, Hex Flg, M10 x 30, 8.8 VIS	BOLT SCHRAUBE	PERNO BOLT	BULLONE BOUT	140B
3		9804264		2	PARAFUSO, Hex Flg, M10 x 50, 8.8 VIS	BOLT SCHRAUBE	PERNO BOLT	BULLONE BOUT	140B
4		84274252		1	ESTRUTURA CHASSIS	FRAME RAHMEN	BASTIDOR FRAME	TELAIO FRAME	077T
5		84274254		1	ESTRUTURA CHASSIS	FRAME RAHMEN	BASTIDOR FRAME	TELAIO FRAME	077T
6		84274281		1	ESTRUTURA CHASSIS	FRAME RAHMEN	BASTIDOR FRAME	TELAIO FRAME	077T
7		84355546		1	ESPUMA ISOLANTE MOUSSE ISOLANTE	FOAM INSULATION SCHAUMSTOFFISOLIER	ESPUMA AISLANTE SKUM ISOLERING	ISOLANTE IN SCHIUMA SCHUIMISOLATIE	051S
8		86625071		3	PORCA, M10, U ECROU	NUT MUTTER	TUERCA MØTRIK	DADO MOER	010D
9		87655047		1	ARRUELA ESPECIAL RONDELLE SPECIALE	SPECIAL WASHER SPEZIALUNTERLEGSCH	ARANDELA ESPECIAL SPECIALSKIVE	RONDELLA SPECIALE SPECIALE RING	Z333
10		87698849		6	PARAFUSO VIS	BOLT SCHRAUBE	PERNO BOLT	BULLONE BOUT	140B
11		87698850		4	PARAFUSO VIS	BOLT SCHRAUBE	PERNO BOLT	BULLONE BOUT	140B

SECTION INDEX
39 - Estruturas

39.100.01		CHASSIS HOODS AND COVERS (SR200)
39.105.01		LOADER ARM (SR200,TR270)
39.105.01	01	COUPLER BASIC TAN (SR175,TR270,SR200)

39.100.01		p1	02/11

CHASSIS HOODS AND COVERS (SR200)
CHASSIS HOODS AND COVERS (SR200)
CHASSIS HOODS AND COVERS (SR200)
CHASSIS HOODS AND COVERS (SR200)

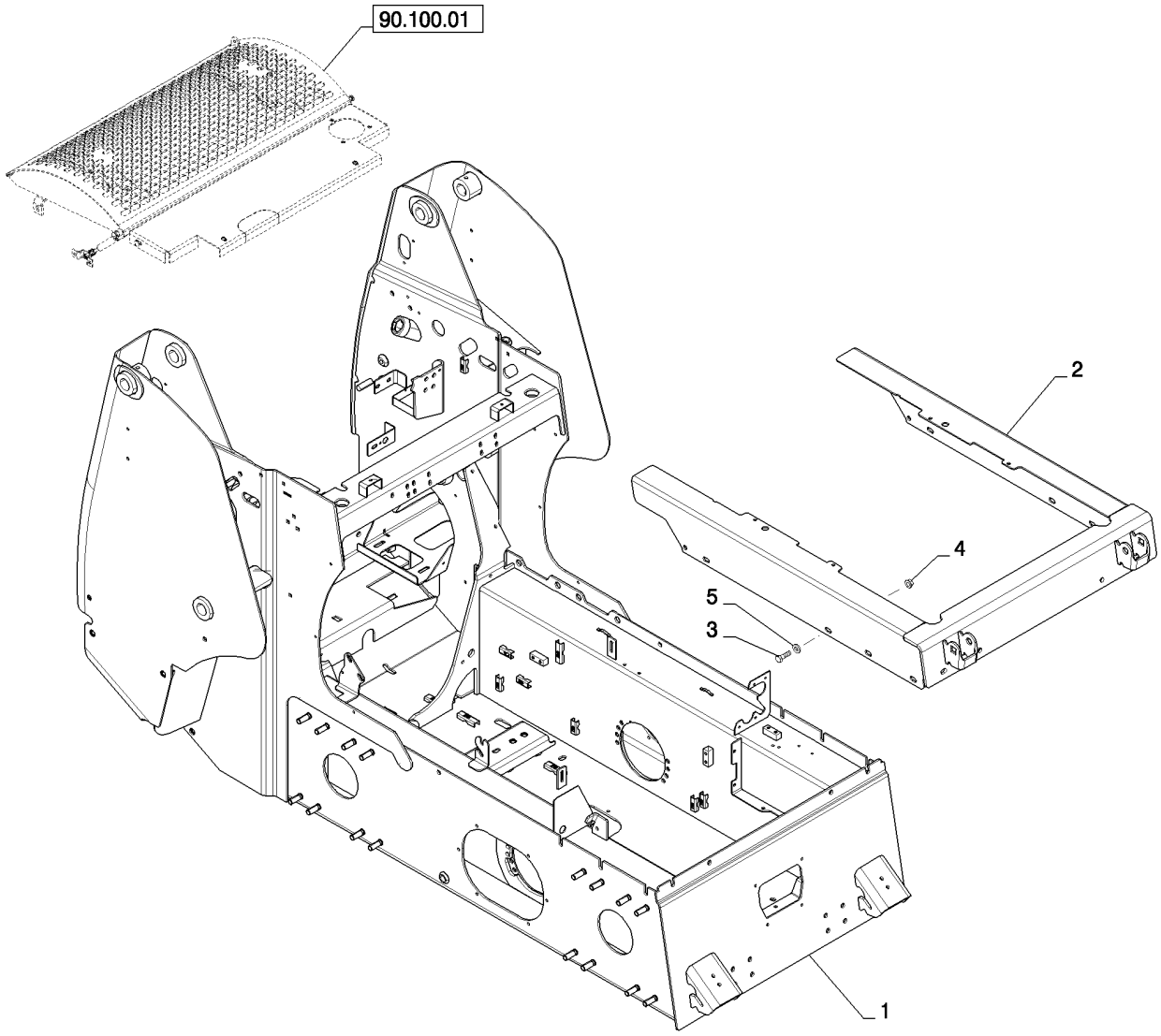

CHASSIS HOODS AND COVERS (SR200)
CHASSIS HOODS AND COVERS (SR200)
CHASSIS HOODS AND COVERS (SR200)
CHASSIS HOODS AND COVERS (SR200)

R	N	P.N.	MOD	Q	Denominação Description Bezeichnung Denominacion Beskrivelse Descrizione Beschrijving	L.C.
1		NSS		1	SEM SERVIÇO EM SEPARADO, Chassis NOT SERVICED SEPARA / NO SE REPARA POR SE / NON FORNITO SEPARAT NON FORUNI SEPAREM / NICHT A SEP ERS-T LIEI / SERVICERES IKKE SEPA / NIET LOS VERKRIJGBAA	064N
2		84309634		1	TRAVESSA PARA REBOQUE DRAWBAR FRAME / BAST. BARRA DE ENGAI / TELAIO BARRA DI TRAIN TRAVERSE D'ATTELAGE / ZUGSTANGENRAHMEN / TRÆKBOMSRAMME / TREKSTANGFRAME	181T
3		337563		12	PARAFUSO, Hex, M12 x 40, 10.9, Full Thd BOLT / PERNO / BULLONE VIS / SCHRAUBE / BOLT / BOUT	140B
4		86512497		12	PORCA, M12 x 1.75, Flg, Cl 10 NUT / TUERCA / DADO ECROU / MUTTER / MØTRIK / MOER	010D
5		86625256		13	ARRUELA PLANA, M12 x 28.5 x 4, HT WASHER / ARANDELA / RONDELLA RONDELLE / UNTERLEGSCHEIBE / FLADSKIVE / SLUITRING	131R

39.105.01		p1	07/11

LOADER ARM (SR200,TR270)
LOADER ARM (SR200,TR270)
LOADER ARM (SR200,TR270)
LOADER ARM (SR200,TR270)

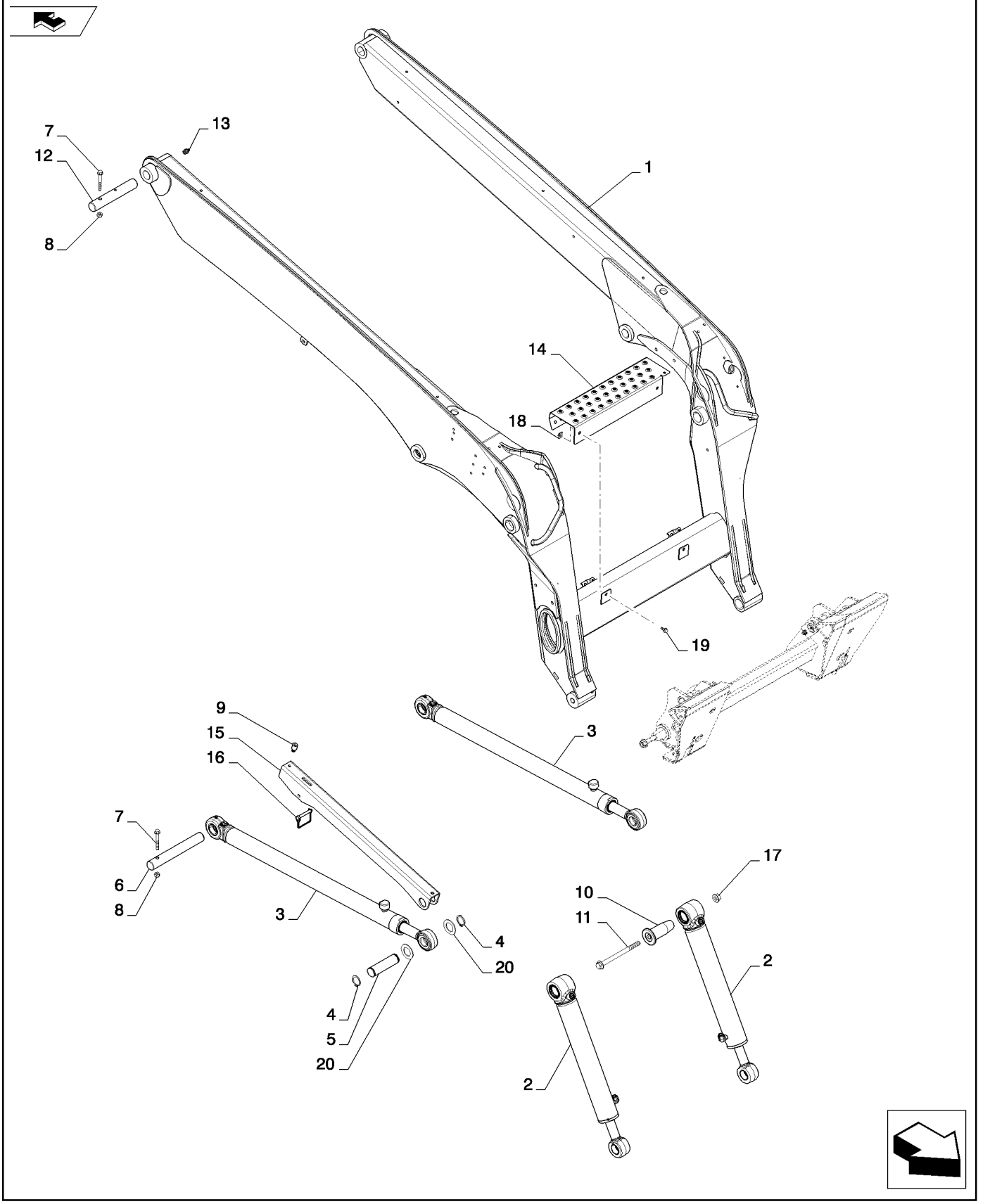

LOADER ARM (SR200,TR270)
LOADER ARM (SR200,TR270)
LOADER ARM (SR200,TR270)
LOADER ARM (SR200,TR270)

R	N	P.N.	MOD	Q	Denominação Description	Description Bezeichnung	Denominacion Beskrivelse	Descrizione Beschrijving	L.C.
1		84279575		1	LANÇA DA CARREGADEIRA				
						LOADER BOOM	BRAZO DE CARGADOR	BRACCIO DEL CARICAT(	C008
					FLECHE DE CHARGEUR	LADERAUSLEGER	LÆSSERARM	LAADARM	
2		84290567		2	CILINDRO LEVANTAMENTO, Bucket Cylinder				
						LIFT CYLINDER	CILINDRO DE ELEVADOI	CILINDRO DI SOLLEVAM	133C
					VERIN DE RELEVAGE	HUBZYLINDER	LØFTECYLINDER	HEFCILINDER	
3		84231611		2	CILINDRO LEVANTAMENTO, Lift Cylinder				
						LIFT CYLINDER	CILINDRO DE ELEVADOI	CILINDRO DI SOLLEVAM	133C
					VERIN DE RELEVAGE	HUBZYLINDER	LØFTECYLINDER	HEFCILINDER	
4		86632531		4	ANEL DE PRESSÃO, #150, Ext, Circlip, Ext. Hvy.				
						SNAP RING	ANILLO DE RESORTE	ANELLO ELASTICO	054A
					ANNEAU D'ARRET	SPRENGRING	LÅSERING	VEERRING	
5		84248603		2	PINO, Lift Cyl.	PIN	PASADOR	PERNO	080P
					BROCHE	PIN	STIFT	PEN	
6		84308025		2	PINO, Chassis to Lift Cyl.	PIN	PASADOR	PERNO	080P
					BROCHE	PIN	STIFT	PEN	
7		86507311		4	PARAFUSO, Hex Flg, M10 x 80, 8.8				
						BOLT	PERNO	BULLONE	140B
					VIS	SCHRAUBE	BOLT	BOUT	
8		86512554		4	CONTRA PORCA, M10 x 1.5, Cl 10				
						LOCK NUT	TUERCA DE BLOQUEO	DADO DI BLOCCAGGIO	P263
					CONTRE-ECROU	SICHERUNGSMUTTER	LÅSEMØTRIK	BORGMOER	
9		85802403		1	BUJÃO, Pad, Loader Prop	PLUG	TAPÓN	TAPPO	050T
					BOUCHON	STOPFEN	PROP	PLUG	
10		84319704		2	PINO, Boom to Tip Cyl.	PIN	PASADOR	PERNO	080P
					BROCHE	PIN	STIFT	PEN	
11		84238749		2	PARAFUSO	BOLT	PERNO	BULLONE	140B
					VIS	SCHRAUBE	BOLT	BOUT	
12		84341462		2	PINO, Boom to Chassis	PIN	PASADOR	PERNO	080P
					BROCHE	PIN	STIFT	PEN	
13		80710		2	GRAXEIRA, 1/8"-27 x .66 lg	LUBE NIPPLE	BOQUILLA DE LUBRICA(	INGRASSATORE	060I
					GRAISSEUR	SCHMIERNIPPEL	SMØRENIPPEL	SMEERNIPPEL	
14		84346854		1	ESTRIBO, Loader	STEP	PELDAÑO	GRADINO	116M
					MARCHE-PIED	SCHRITT	TRINPLADE	TREDE	
15		84255103		1	ESCORA ESTABILIZADORA, Channel Safety Red				
						STRUT	COLUMNA	AMMORTIZZATORE	245P
					JAMBE	STREBE	STØDDÆMPERARME	GASVEER	
16		84467349		1	PINO, Snapper	PIN	PASADOR	PERNO	080P
					BROCHE	PIN	STIFT	PEN	
17		87016581		2	CONTRA PORCA, M16 x 2, Flg, Cl 10				
						LOCK NUT	TUERCA DE BLOQUEO	DADO DI BLOCCAGGIO	P263
					CONTRE-ECROU	SICHERUNGSMUTTER	LÅSEMØTRIK	BORGMOER	
18		86625074		4	PORCA	NUT	TUERCA	DADO	010D
					ECROU	MUTTER	MØTRIK	MOER	
19		9804258		4	PARAFUSO, Hex Flg, M8 x 20, 8.8				
						BOLT	PERNO	BULLONE	140B
					VIS	SCHRAUBE	BOLT	BOUT	
20		86632586		10	ARRUELA PLANA	WASHER	ARANDELA	RONDELLA	131R
					RONDELLE	UNTERLEGSCHEIBE	FLADSKIVE	SLUITRING	

39.105.01	01	p1	07/11

COUPLER BASIC TAN (SR175,TR270,SR200)
COUPLER BASIC TAN (SR175,TR270,SR200)
COUPLER BASIC TAN (SR175,TR270,SR200)
COUPLER BASIC TAN (SR175,TR270,SR200)

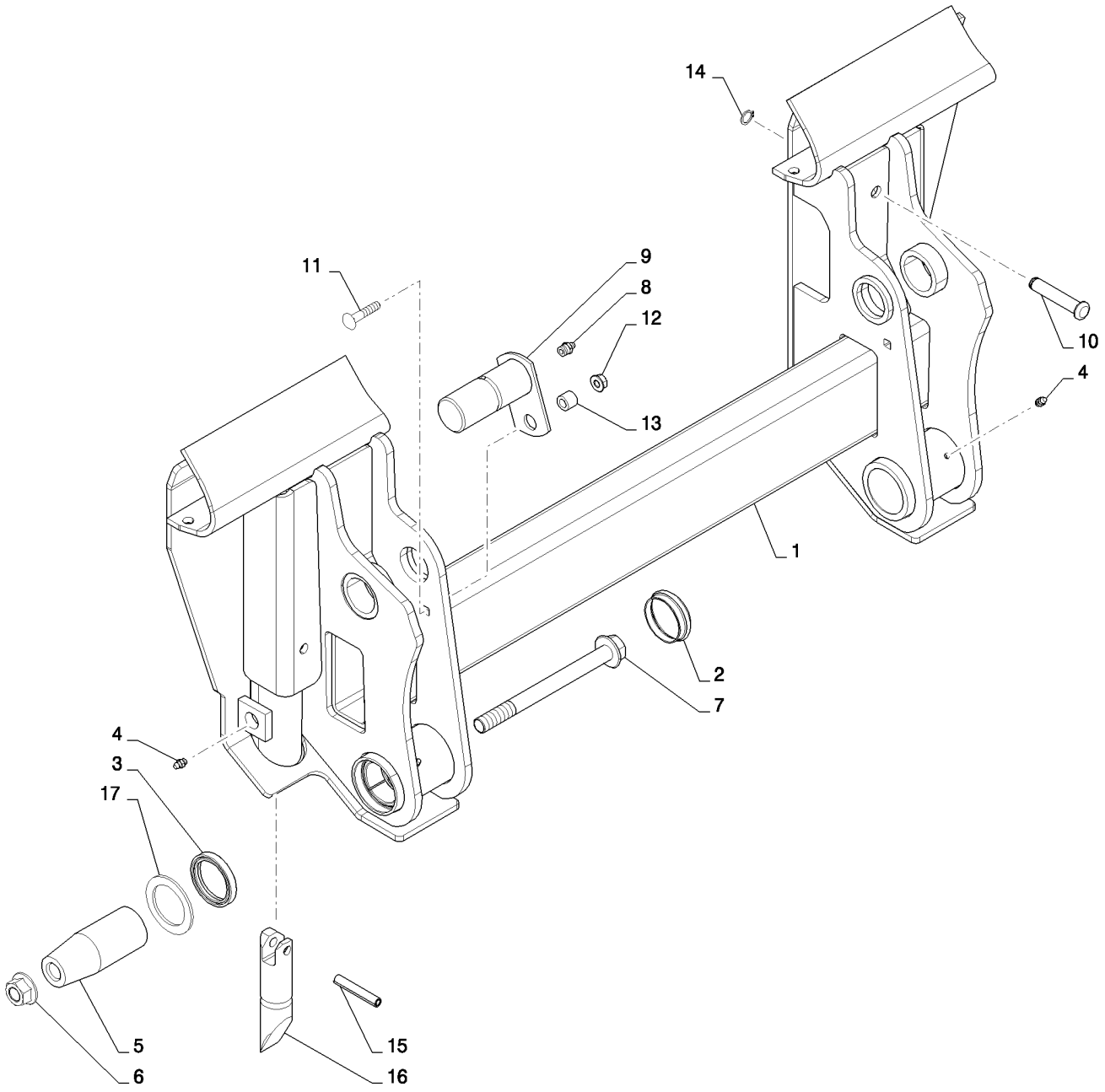

COUPLER BASIC TAN (SR175,TR270,SR200)
COUPLER BASIC TAN (SR175,TR270,SR200)
COUPLER BASIC TAN (SR175,TR270,SR200)
COUPLER BASIC TAN (SR175,TR270,SR200)

R	N	P.N.	MOD	Q	Denominação Description	Description Bezeichnung	Denominacion Beskrivelse	Descrizione Beschrijving	L.C.
1		84291892		1	FIXADOR, Plate CE Gray, Order W/Kit 84390420				
						MOUNT	SOPORTE	SUPPORTO	C022
					MONTAGE	GESTELL	BESLAG	BEVESTIGING	
2		86561087		2	GUARDA PÓ, Hub Cap	DUST CAP	CAPUCHÓN ANTIPOLVO	CAPPUCCIO PARAPOLV	066C
					CACHE-POUSSIERE	STAUBKAPPE	STØVHÆTTE	STOFKAP	
3		D95143		2	VEDAÇÃO, Wiper Rod	SEAL	ANILLO DE CIERRE	GUARNIZIONE; TENUTA	132A
					JOINT	DICHTUNG	PAKNING	AFDICHTING	
4		87414		4	GRAXEIRA, 1/4"-28 x .56" lg, Self-Tap				
						LUBE NIPPLE	BOQUILLA DE LUBRICA(	INGRASSATORE	060I
					GRAISSEUR	SCHMIERNIPPEL	SMØRENIPPEL	SMEERNIPPEL	
5		84201514		2	PINO	PIN	PASADOR	PERNO	080P
					BROCHE	PIN	STIFT	PEN	
6		86512498		2	PORCA, M16 x 2, Flg, Cl 10	NUT	TUERCA	DADO	010D
					ECROU	MUTTER	MØTRIK	MOER	
7		87015924		2	PARAFUSO, Hex Flg, M16 x 180, 8.8				
						BOLT	PERNO	BULLONE	140B
					VIS	SCHRAUBE	BOLT	BOUT	
8		80710		2	GRAXEIRA, 1/8"-27 x .66 lg	LUBE NIPPLE	BOQUILLA DE LUBRICA(	INGRASSATORE	060I
					GRAISSEUR	SCHMIERNIPPEL	SMØRENIPPEL	SMEERNIPPEL	
9		9614349		2	PINO	PIN	PASADOR	PERNO	080P
					BROCHE	PIN	STIFT	PEN	
10		87387540		2	RETENTOR, Pin Handle Pivot				
						RETAINER	RETENEDOR	FERMO	109R
					DISPOSITIF DE RETENU	HALTERUNG	HOLDER	HOUDER	
11		86512443		2	PARAFUSO, Short NK, M8 x 35, Cl8.8, Full Thd				
						CARRIAGE BOLT	PERNO ALOMADO	BULLONE A TESTA TON	P123
					VIS A TETE BOMBEE	SCHLOSSSCHRAUBE	BRÆDDEBOLT	SLOTBOUT	
12		9804277		2	PORCA, M8 x 1.25, Flg, Cl 8				
						NUT	TUERCA	DADO	010D
					ECROU	MUTTER	MØTRIK	MOER	
13		86589143		2	ESPAÇADOR	SPACER	SEPARADOR	DISTANZIALE	075D
					ENTRETOISE	DISTANZSTÜCK	AFSTANDSSTYKKE	AFSTANDSSTUK	
14		87612753		2	RETENTOR, Circlip, Ext. Hvy. #50 Plain				
						RETAINER	RETENEDOR	FERMO	109R
					DISPOSITIF DE RETENU	HALTERUNG	HOLDER	HOUDER	
15		87610718		2	PINO, Coiled Spring	PIN	PASADOR	PERNO	080P
					BROCHE	PIN	STIFT	PEN	
16		87758365		2	PINO, Latch	PIN	PASADOR	PERNO	080P
					BROCHE	PIN	STIFT	PEN	
17		87613204		2	ARRUELA PLANA, 1.781 X 2.5 X 0.1195 CST				
						WASHER	ARANDELA	RONDELLA	131R
					RONDELLE	UNTERLEGSCHEIBE	FLADSKIVE	SLUITRING	

SR200

SECTION INDEX
44 - Eixos e rodas

44.106.01		POWER TRAIN (SR200)
44.106.02		AXLE ASSY, HD (SR200-SV300)
44.511/520	01	WHEELS (SR175-SV300)
44.511/520	01	WHEELS (SR200-SV300)
44.511/520	01	WHEELS (SR175,SV185,SR200)

POWER TRAIN (SR200)
POWER TRAIN (SR200)
POWER TRAIN (SR200)
POWER TRAIN (SR200)

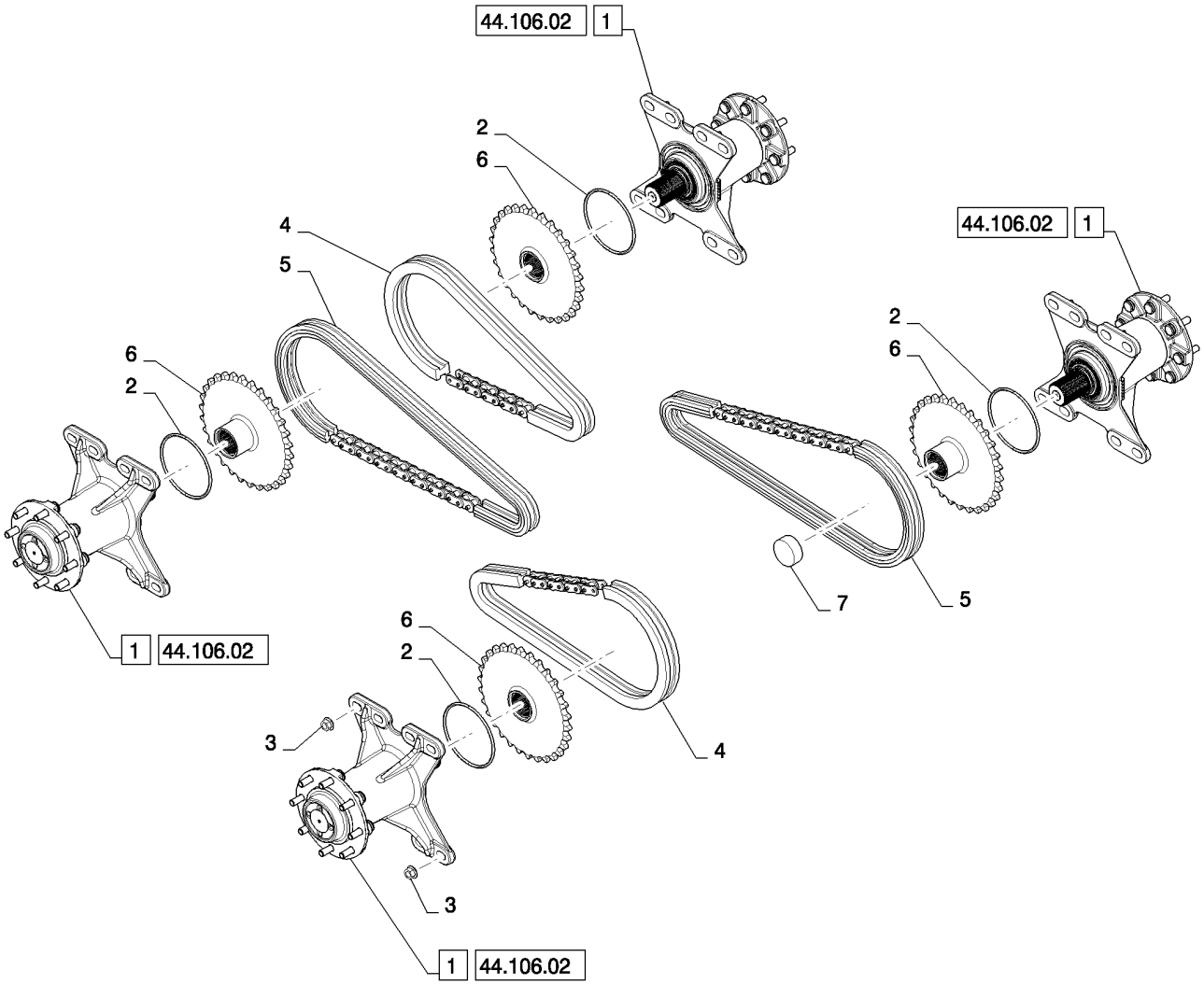

POWER TRAIN (SR200)
POWER TRAIN (SR200)
POWER TRAIN (SR200)
POWER TRAIN (SR200)

R	N	P.N.	MOD	Q	Denominação Description	Description Bezeichnung	Denominacion Beskrivelse	Descrizione Beschrijving	L.C.
1		84350580		4	CONJUNTO EIXO 4WD, Md., CE Power Tan				
						4WD AXLE ASSY	CONJUNTO DE EJE 4WI	COMPLESSIVO ASSALE	P569
					ESSIEU 4RM	4WD AXLE ASSY	4WD AKSELSAMLING	COMPLETE 4WD-AS	
2		70923606		4	O-RING	O-RING	JUNTA TÓRICA	ANELLO TOROIDALE	055A
					JOINT TORIQUE	O-RING	O-RING	O-RING	
3		86512498		32	PORCA, M16 x 2, Flg, Cl 10	NUT	TUERCA	DADO	010D
					ECROU	MUTTER	MØTRIK	MOER	
4		84200822		4	CORRENTE, 100/50P	CHAIN	CADENA	CATENA	095C
					CHAINE	KETTE	KÆDE	KETTING	
5		84200824		4	CORRENTE, 100/62P	CHAIN	CADENA	CATENA	095C
					CHAINE	KETTE	KÆDE	KETTING	
6		84259684		4	PINHÃO, Driven 30 tooth 100				
						DRIVEN SPROCKET	CONTROL CON PIÑÓN	PIGNONE CONDOTTO	122P
					PIGNON MENE	ABTRIEBSZAHNRAD	KÆDEHJUL	AANGEDREVEN KETTIN	
7		84298060		4	PARA-CHOQUE, Nylon	BUMPER	PARACHOQUES	PARAURTI	036P
					PARE-CHOC	STOSSFÄNGER	STØDVÆRN	BUMPER	

AXLE ASSY, HD (SR200-SV300)
AXLE ASSY, HD (SR200-SV300)
AXLE ASSY, HD (SR200-SV300)
AXLE ASSY, HD (SR200-SV300)

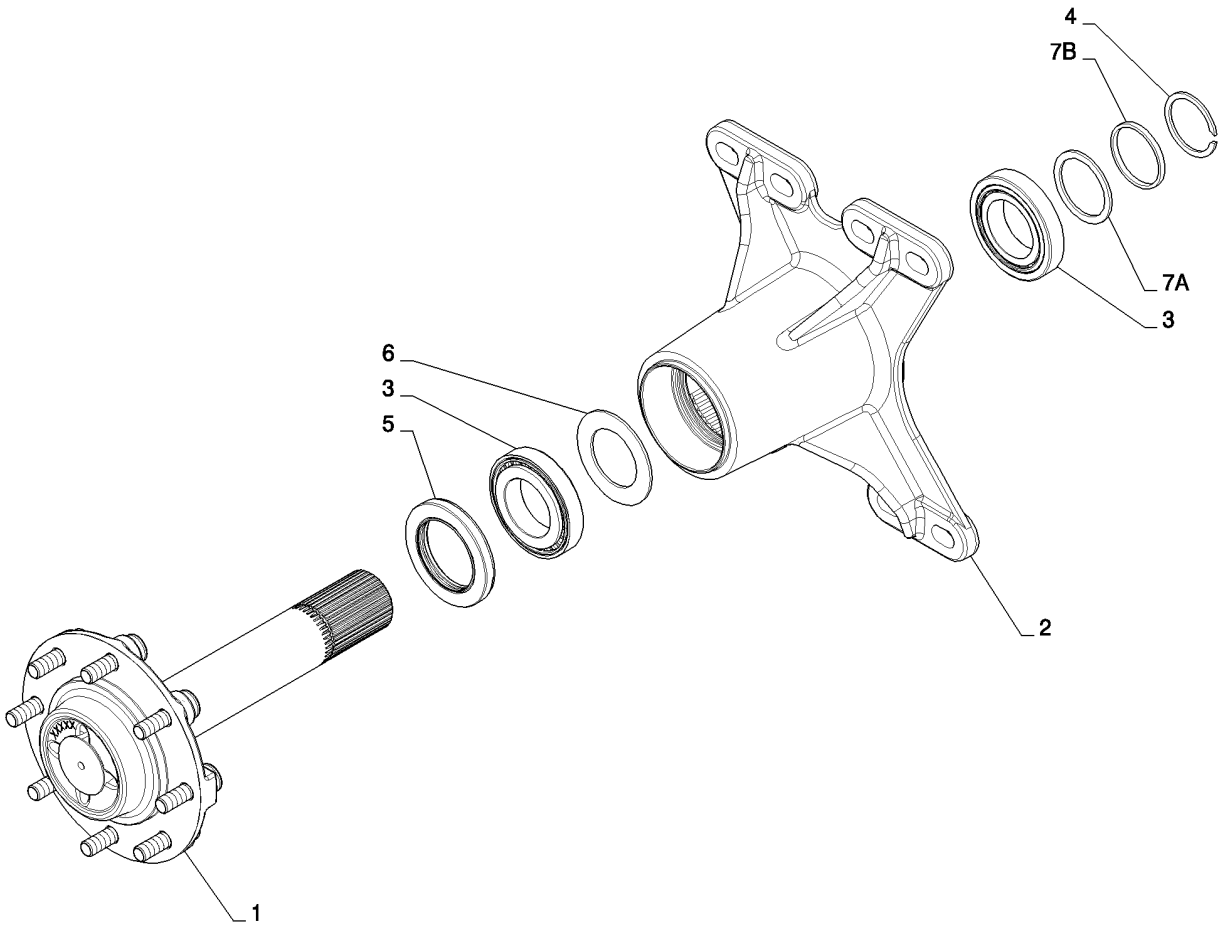

AXLE ASSY, HD (SR200-SV300)
AXLE ASSY, HD (SR200-SV300)
AXLE ASSY, HD (SR200-SV300)
AXLE ASSY, HD (SR200-SV300)

R	N	P.N.	MOD	Q	Denominação Description	Description Bezeichnung	Denominacion Beskrivelse	Descrizione Beschrijving	L.C.
1		84354076		1	EIXO, HD Axle, Incl. Ref. 8	AXLE	EJE	ASSALE	087A
					ESSIEU	ACHSE	AKSEL	AS	
2		84354066		1	ALOJAMENTO DO EIXO, HD, CE Gray				
						AXLE HOUSING	ALOJAMIENTO DE EJE	ALLOGGIAMENTO ASSA	Z161
					CARTER D'ESSIEU	ACHSGEHÄUSE	AKSELHUS	ASHUIS	
3		496536C1		2	ROLAMENTO, RLR TPR, TM#392-394A				
						BEARING	COJINETE	CUSCINETTO	0600
					ROULEMENT	LAGER	LEJE	LAGER	
4		84239398		1	ANEL DE PRESSÃO, Ext. Heavy, 61.9MM Shaft				
						SNAP RING	ANILLO DE RESORTE	ANELLO ELASTICO	054A
					ANNEAU D'ARRET	SPRENGRING	LÅSERING	VEERRING	
5		341841A2		1	VEDADOR DE RETENCAO, Axle				
						SEAL	SELLO/RETEN	GUARNIZIONE TENUTA	7460
					JOINT-D'ETANCHEITE	DICHTRING	SEAL	SEAL	
6		84356906		1	DISCO, 63.00 X 98.90 X 3.20				
						DISC	DISCO	DISCO	060D
					DISQUE	SCHEIBE	NAV	SCHIJF	
7A		84393418		1	ESPAÇADOR, 62.25 X 69 X 5.3/Use one 7A				
						SPACER	SEPARADOR	DISTANZIALE	075D
					ENTRETOISE	DISTANZSTÜCK	AFSTANDSSTYKKE	AFSTANDSSTUK	
7A		84393419		1	ESPAÇADOR, 62.25 X 69 X 5.8/Use one 7A				
						SPACER	SEPARADOR	DISTANZIALE	075D
					ENTRETOISE	DISTANZSTÜCK	AFSTANDSSTYKKE	AFSTANDSSTUK	
7A		84393420		1	ESPAÇADOR, 62.25 X 69 X 6.3/Use one 7A				
						SPACER	SEPARADOR	DISTANZIALE	075D
					ENTRETOISE	DISTANZSTÜCK	AFSTANDSSTYKKE	AFSTANDSSTUK	
7A		84393421		1	ESPAÇADOR, 62.25 X 69 X 6.8/Use one 7A				
						SPACER	SEPARADOR	DISTANZIALE	075D
					ENTRETOISE	DISTANZSTÜCK	AFSTANDSSTYKKE	AFSTANDSSTUK	
7B		84404996		1	ESPAÇADOR, Shim, 61.94 Shft, 1.6 T/Use one 7B				
						SPACER	SEPARADOR	DISTANZIALE	075D
					ENTRETOISE	DISTANZSTÜCK	AFSTANDSSTYKKE	AFSTANDSSTUK	
7B		84405003		1	ESPAÇADOR, Shim, 61.94 Shft, 1.7 T/Use one 7B				
						SPACER	SEPARADOR	DISTANZIALE	075D
					ENTRETOISE	DISTANZSTÜCK	AFSTANDSSTYKKE	AFSTANDSSTUK	
7B		84393466		1	ESPAÇADOR, Shim, 61.94 Shft, 1.8 T/Use one 7B				
						SPACER	SEPARADOR	DISTANZIALE	075D
					ENTRETOISE	DISTANZSTÜCK	AFSTANDSSTYKKE	AFSTANDSSTUK	
7B		84393470		1	ESPAÇADOR, Shim, 61.94 Shft, 1.9 T/Use one 7B				
						SPACER	SEPARADOR	DISTANZIALE	075D
					ENTRETOISE	DISTANZSTÜCK	AFSTANDSSTYKKE	AFSTANDSSTUK	
7B		84393472		1	ESPAÇADOR, Shim, 61.94 Shft, 2.0 T/Use one 7B				
						SPACER	SEPARADOR	DISTANZIALE	075D
					ENTRETOISE	DISTANZSTÜCK	AFSTANDSSTYKKE	AFSTANDSSTUK	
8		84249319		8	PRISIONEIRO, Wheel, M16 X 2 X 60				
						STUD	PRISIONERO	PRIGIONIERO	210P
					GOUJON	GEWINDEBOLZEN	STØTTEBOLT	TAPEIND	

AXLE ASSY, HD (SR200-SV300)
AXLE ASSY, HD (SR200-SV300)
AXLE ASSY, HD (SR200-SV300)
AXLE ASSY, HD (SR200-SV300)

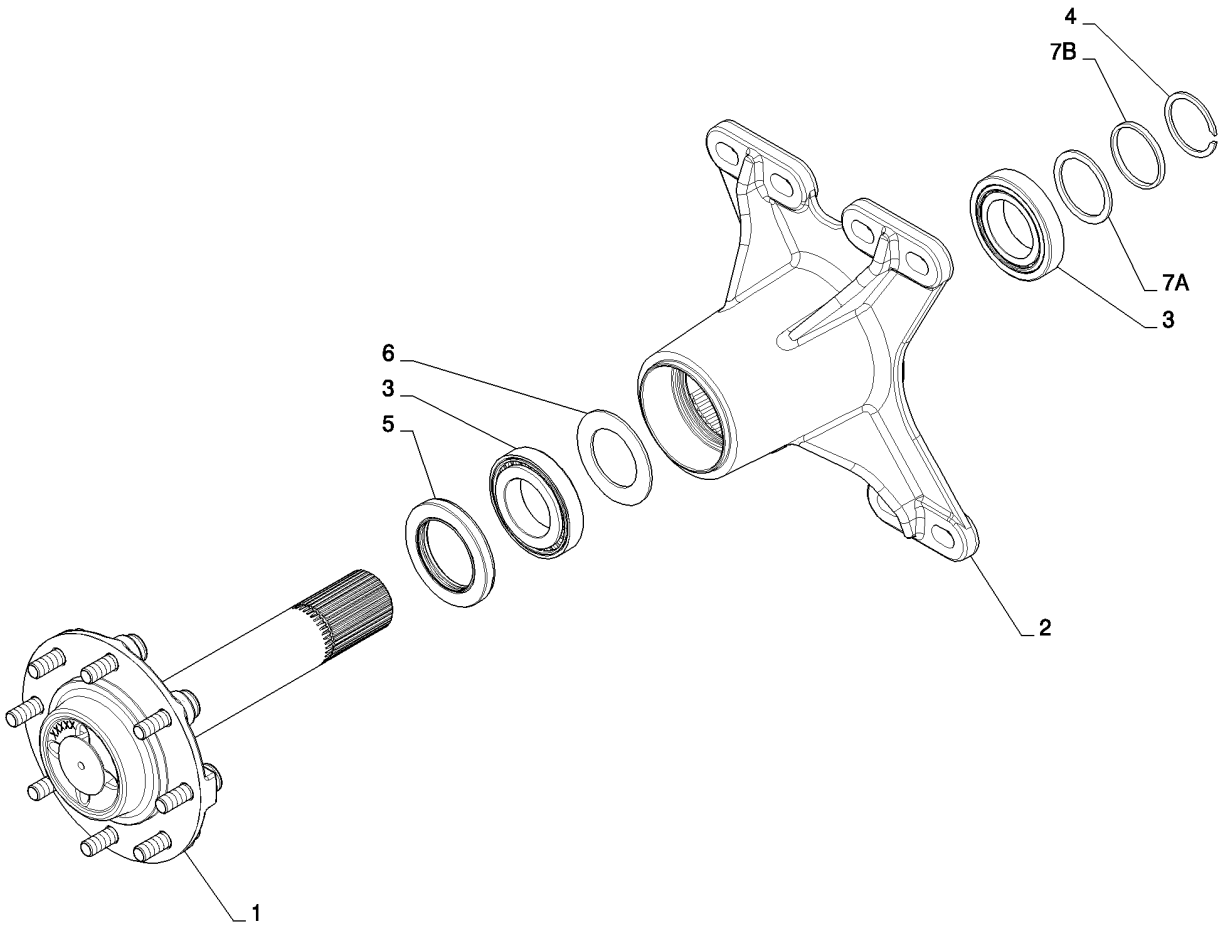

AXLE ASSY, HD (SR200-SV300)
AXLE ASSY, HD (SR200-SV300)
AXLE ASSY, HD (SR200-SV300)
AXLE ASSY, HD (SR200-SV300)

R	N	P.N.	MOD	Q	Denominação Description	Description Bezeichnung	Denominacion Beskrivelse	Descrizione Beschrijving	L.C.
9		**408127A1**		32	PORCA, M16 X 2, 90 Degree Taper (Not Shown)				
						NUT	TUERCA	DADO	5780
					ECROU	MUTTER	NUT	NUT	
9		**86512498**		32	PORCA, M16 x 2, Flg, Cl 10, (Not Shown)				
						NUT	TUERCA	DADO	010D
					ECROU	MUTTER	MØTRIK	MOER	

WHEELS (SR175-SV300)
WHEELS (SR175-SV300)
WHEELS (SR175-SV300)
WHEELS (SR175-SV300)

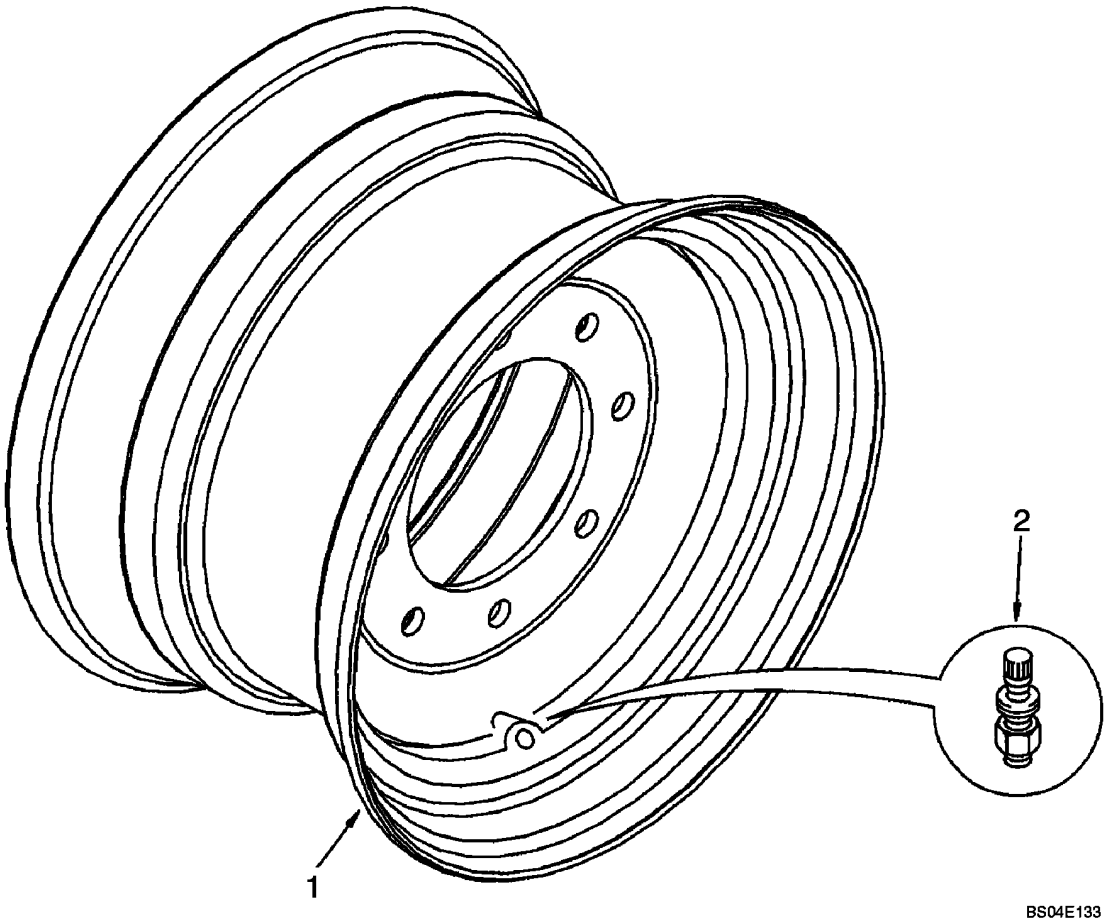

WHEELS (SR175-SV300)
WHEELS (SR175-SV300)
WHEELS (SR175-SV300)
WHEELS (SR175-SV300)

R	N	P.N.	MOD	Q	Denominação Description	Description Bezeichnung	Denominacion Beskrivelse	Descrizione Beschrijving	L.C.
1		84239414		4	ARO, 16.5x9.75 Stamped Center, Hvy Duty 70 OTW Tan LH & RH; Uses Ref. 2 & 3				
						RIM	LLANTA	CERCHIONE	135C
					JANTE	FELGE	FÆLG	VELG	
1		84239417		4	ARO, 16.5x9.75 Full Center, Premium 70 OTW Tan LH & RH; Uses Ref. 2 & 3				
						RIM	LLANTA	CERCHIONE	135C
					JANTE	FELGE	FÆLG	VELG	
2		512083		4	HASTE DA VÁLVULA	VALVE STEM	VÁSTAGO DE VÁLVULA	STELO DELLA VALVOLA	P397
					TIGE DE SOUPAPE	VENTILSCHAFT	STILKVENTIL	KLEPSTEEL	
3		408127A1		32	PORCA, M16 X 2, 90 Deg Taper, Not Shown				
						NUT	TUERCA	DADO	5780
					ECROU	MUTTER	NUT	NUT	

WHEELS (SR200-SV300)
WHEELS (SR200-SV300)
WHEELS (SR200-SV300)
WHEELS (SR200-SV300)

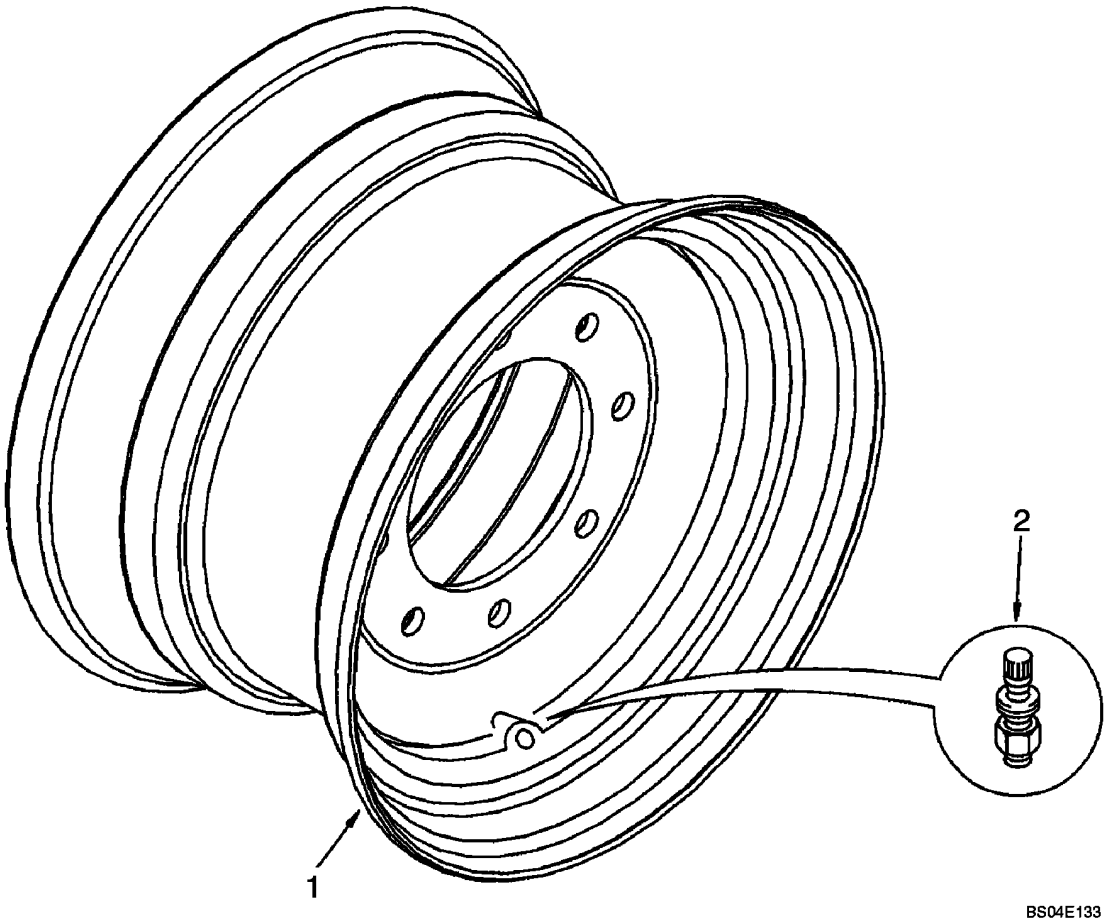

WHEELS (SR200-SV300)
WHEELS (SR200-SV300)
WHEELS (SR200-SV300)
WHEELS (SR200-SV300)

R	N	P.N.	MOD	Q	Denominação Description	Description Bezeichnung	Denominacion Beskrivelse	Descrizione Beschrijving	L.C.
1		84239421		4	ARO, 12x16.5x33 Full Center, Flotation 76 OTW Tan LH & RH; Uses Ref. 2 & 3				
						RIM	LLANTA	CERCHIONE	135C
					JANTE	FELGE	FÆLG	VELG	
2		512083		4	HASTE DA VÁLVULA	VALVE STEM	VÁSTAGO DE VÁLVULA	STELO DELLA VALVOLA	P397
					TIGE DE SOUPAPE	VENTILSCHAFT	STILKVENTIL	KLEPSTEEL	
3		408127A1		32	PORCA, M16 X 2, 90 Deg Taper, Not Shown				
						NUT	TUERCA	DADO	5780
					ECROU	MUTTER	NUT	NUT	

WHEELS (SR175,SV185,SR200)
WHEELS (SR175,SV185,SR200)
WHEELS (SR175,SV185,SR200)
WHEELS (SR175,SV185,SR200)

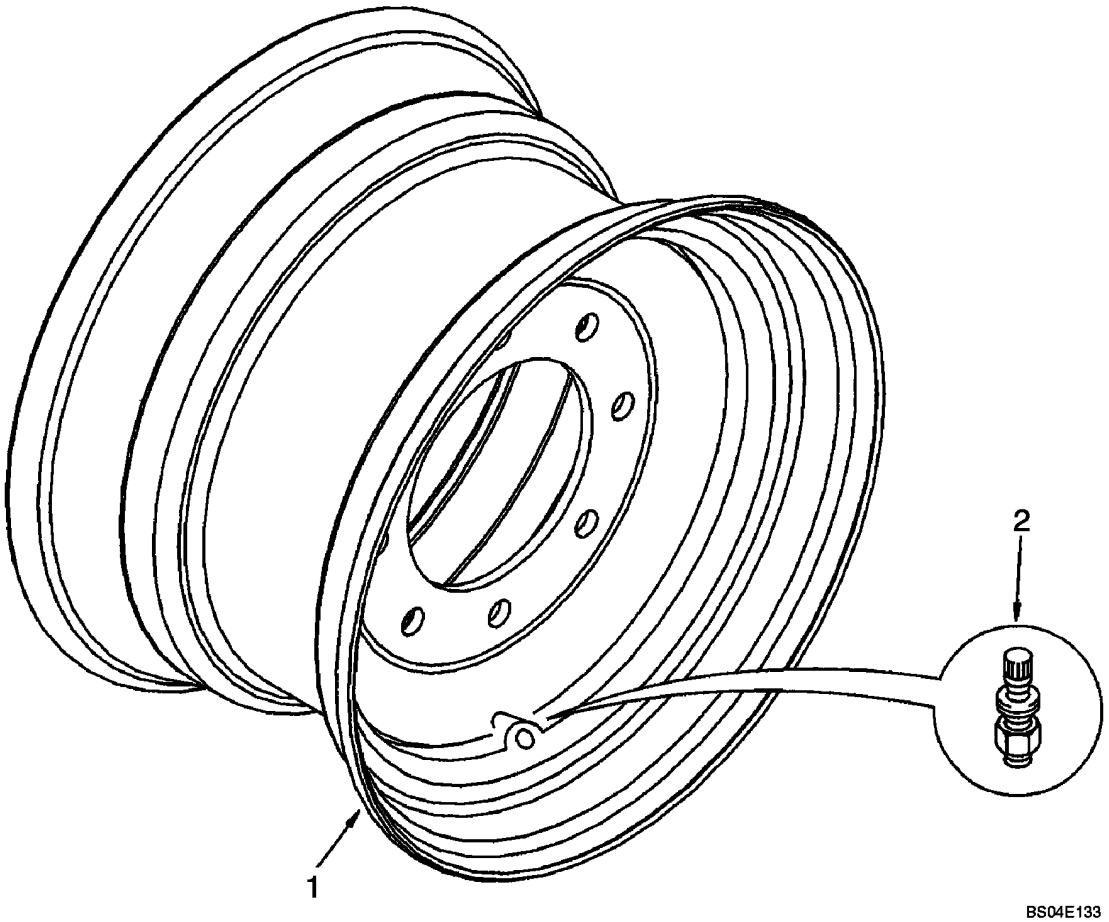

WHEELS (SR175,SV185,SR200)
WHEELS (SR175,SV185,SR200)
WHEELS (SR175,SV185,SR200)
WHEELS (SR175,SV185,SR200)

R	N	P.N.	MOD	Q	Denominação Description	Description Bezeichnung	Denominacion Beskrivelse	Descrizione Beschrijving	L.C.
1		84239411		4	ARO, 16.5x8.25 Stamped Center, Severe Duty 64 OTW Tan LH & RH; Uses Ref. 2 & 3				
						RIM	LLANTA	CERCHIONE	135C
					JANTE	FELGE	FÆLG	VELG	
2		512083		4	HASTE DA VÁLVULA	VALVE STEM	VÁSTAGO DE VÁLVULA	STELO DELLA VALVOLA	P397
					TIGE DE SOUPAPE	VENTILSCHAFT	STILKVENTIL	KLEPSTEEL	
3		408127A1		32	PORCA, M16 X 2, 90 Deg Taper, Not Shown				
						NUT	TUERCA	DADO	5780
					ECROU	MUTTER	NUT	NUT	

SECTION INDEX

50 - Controle de climatização da cabine

50.200.01		OPEN CAB, NO HEAT OR HVAC (SR200,TR270)
50.200.01		OPEN CAB, NO HEAT OR HVAC (SR200-TV380)
50.200.02		HVAC, MEDIUM FRAME F5C (SR200,TR270)
50.200.02		HEATER, MEDIUM FRAME F5C (SR200,TR270)
50.200.02	01	HVAC, MEDIUM FRAME F5C (SR200-TV380)
50.200.02	02	HVAC, LARGE FRAME F5C (SR200, TR270)
50.200.02	03	HEATER PLUMBING BASIC (SR200,TR270)
50.200.03		HVAC, MEDIUM FRAME F5C (SR200,TR270)
50.200.03	01	HEATER PLUMBING BASIC (SR200,TR270)
50.200.03	02	AC PLUMBING BASIC (SR200,TR270)
50.200.03	03	HVAC, LARGE FRAME F5C (SR200-TV380)
50.200.05		HEATER (ALL CASE)
50.200.06		HEATER W/AC (SR175-TV380)

50.200.01		p1	02/11

OPEN CAB, NO HEAT OR HVAC (SR200,TR270)
OPEN CAB, NO HEAT OR HVAC (SR200,TR270)
OPEN CAB, NO HEAT OR HVAC (SR200,TR270)
OPEN CAB, NO HEAT OR HVAC (SR200,TR270)

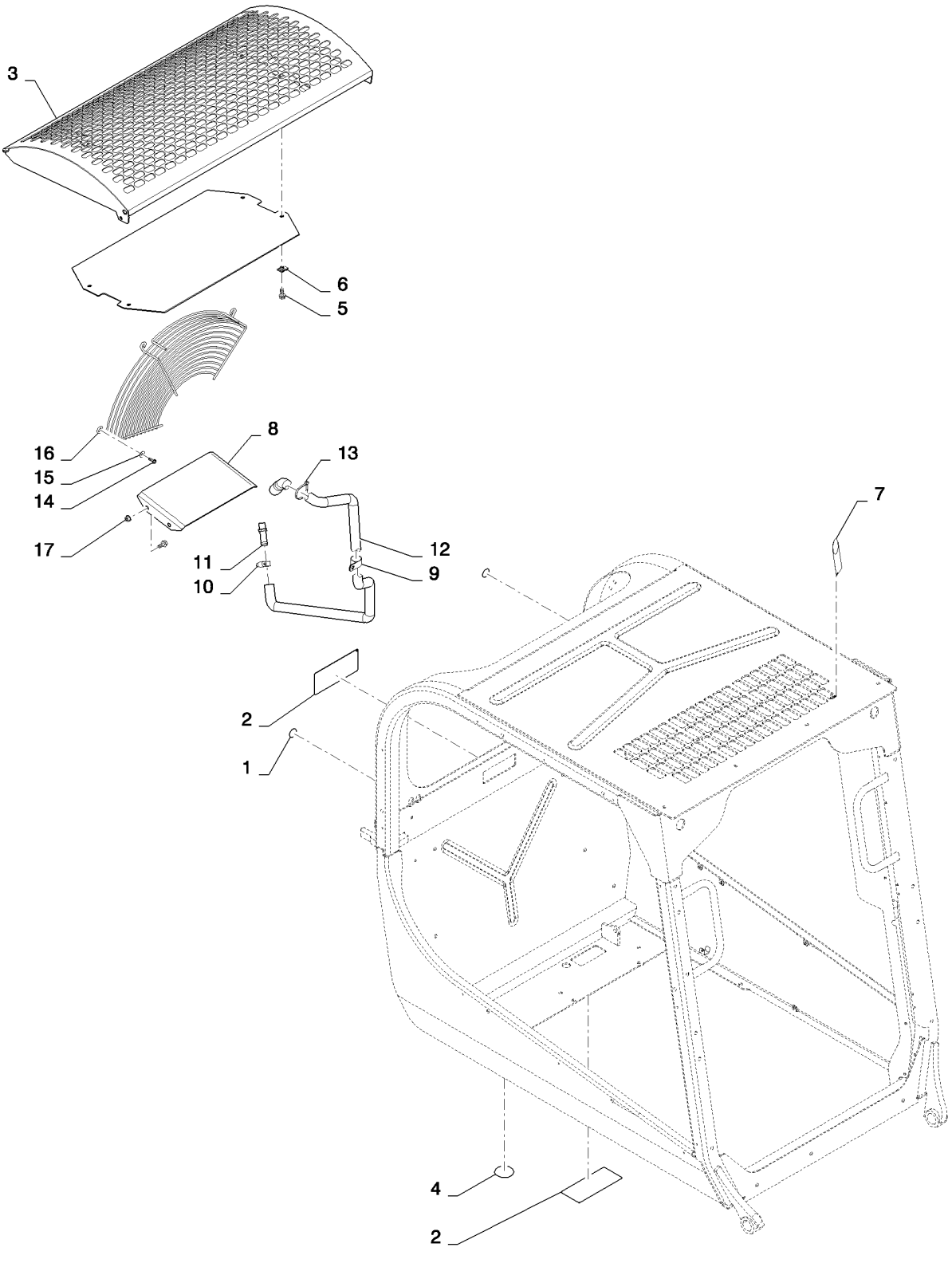

OPEN CAB, NO HEAT OR HVAC (SR200,TR270)
OPEN CAB, NO HEAT OR HVAC (SR200,TR270)
OPEN CAB, NO HEAT OR HVAC (SR200,TR270)
OPEN CAB, NO HEAT OR HVAC (SR200,TR270)

R	N	P.N.	MOD	Q	Denominação Description	Description Bezeichnung	Denominacion Beskrivelse	Descrizione Beschrijving	L.C.
1		414635A1		2	TAMPA, Lexan Gray	COVER	TAPA	COPERCHIO	2250
					COUVERCLE	DECKEL	COVER	COVER	
2		84312310		2	COBERTURA, Plate, Gray	COVER	CUBIERTA	COPERCHIO	265C
					COUVERCLE	ABDECKUNG	DÆKSEL	AFSCHERMING	
3		84331307		1	TELA, No AC, Tilt Hood, Gray				
						SCREEN	PANTALLA	FILTRO; SCHERMO	047S
					TAMIS	GITTER; ABSCHIRMUNG	SKÆRM	SCHERM	
4		84357636		1	ADESIVO, Plug	DECAL	CALCOMANÍA	DECALCOMANIA	012D
					AUTOCOLLANT	AUFKLEBER	TRANSFER	STICKER	
5		86511841		8	PARAFUSO, Hex Flg, M8 x 16, 8.8				
						BOLT	PERNO	BULLONE	140B
					VIS	SCHRAUBE	BOLT	BOUT	
6		86625074		4	PORCA	NUT	TUERCA	DADO	010D
					ECROU	MUTTER	MØTRIK	MOER	
7		84353623		1	ADESIVO, HVAC Blank	DECAL	CALCOMANÍA	DECALCOMANIA	012D
					AUTOCOLLANT	AUFKLEBER	TRANSFER	STICKER	
8		84366054		1	SUPORTE, Heat Shield	BRACKET	SOPORTE	STAFFA	225S
					SUPPORT	HALTERUNG	BESLAG	STEUN	
9		86637995		1	BRAÇADEIRA, 1 1/16", Insul, 3/8" Bolt				
						CLAMP	ABRAZADERA	MORSETTO	120M
					COLLIER	KLEMME	SPÆNDEBÅND	KLEM	
10		86625021		2	BRAÇADEIRA MANGUEIRA, #12, 0.69/1.25 Type F Worm				
						HOSE CLAMP	ABRAZADERA DE MANG	FASCETTA STRINGITUB	P729
					COLLIER POUR FLEXIBL	SCHLAUCHSCHELLE	SLANGEKLEMME	SLANGKLEM	
11		642560		1	CONEXÃO, 5/8" Hose X 3/8" NPTF Beaded				
						FITTING	ACOPLAMIENTO	RACCORDO	3300
					RACCORD	ARMATUR	FITTING	AANSLUITING	
12		84333356		1	TUBO, Heater, Loop	TUBE	TUBO	TUBO	195T
					TUBE	ROHR	RØR	LEIDING	
13		L11541		1	PRENDEDOR DE CABOS, Nylon Tie, 7-8in				
						CABLE STRAP	BANDA DE CABLE	FASCETTA PER CAVO	P716
					BRIDE DE CABLE	KABELBINDER	KABELSTROP	BUNDELBAND	
14		84137412		3	PARAFUSO, Bosscrew, M6 X 18				
						SCREW	TORNILLO	VITE	040V
					VIS	SCHRAUBE	SKRUE	SCHROEF	
15		86624182		3	ARRUELA PLANA, M6 x 18 x 1.6				
						WASHER	ARANDELA	RONDELLA	131R
					RONDELLE	UNTERLEGSCHEIBE	FLADSKIVE	SLUITRING	
16		84335903		1	PROTEÇÃO, Fan	GUARD	DEFENSA	PROTEZIONE	070R
					PROTECTION	SCHUTZABDECKUNG	BESKYTTELSESSKÆRM	AFSCHERMING	
17		9804277		4	PORCA, M8 x 1.25, Flg, Cl 8				
						NUT	TUERCA	DADO	010D
					ECROU	MUTTER	MØTRIK	MOER	

50.200.01		p1	02/11

OPEN CAB, NO HEAT OR HVAC (SR200-TV380)
OPEN CAB, NO HEAT OR HVAC (SR200-TV380)
OPEN CAB, NO HEAT OR HVAC (SR200-TV380)
OPEN CAB, NO HEAT OR HVAC (SR200-TV380)

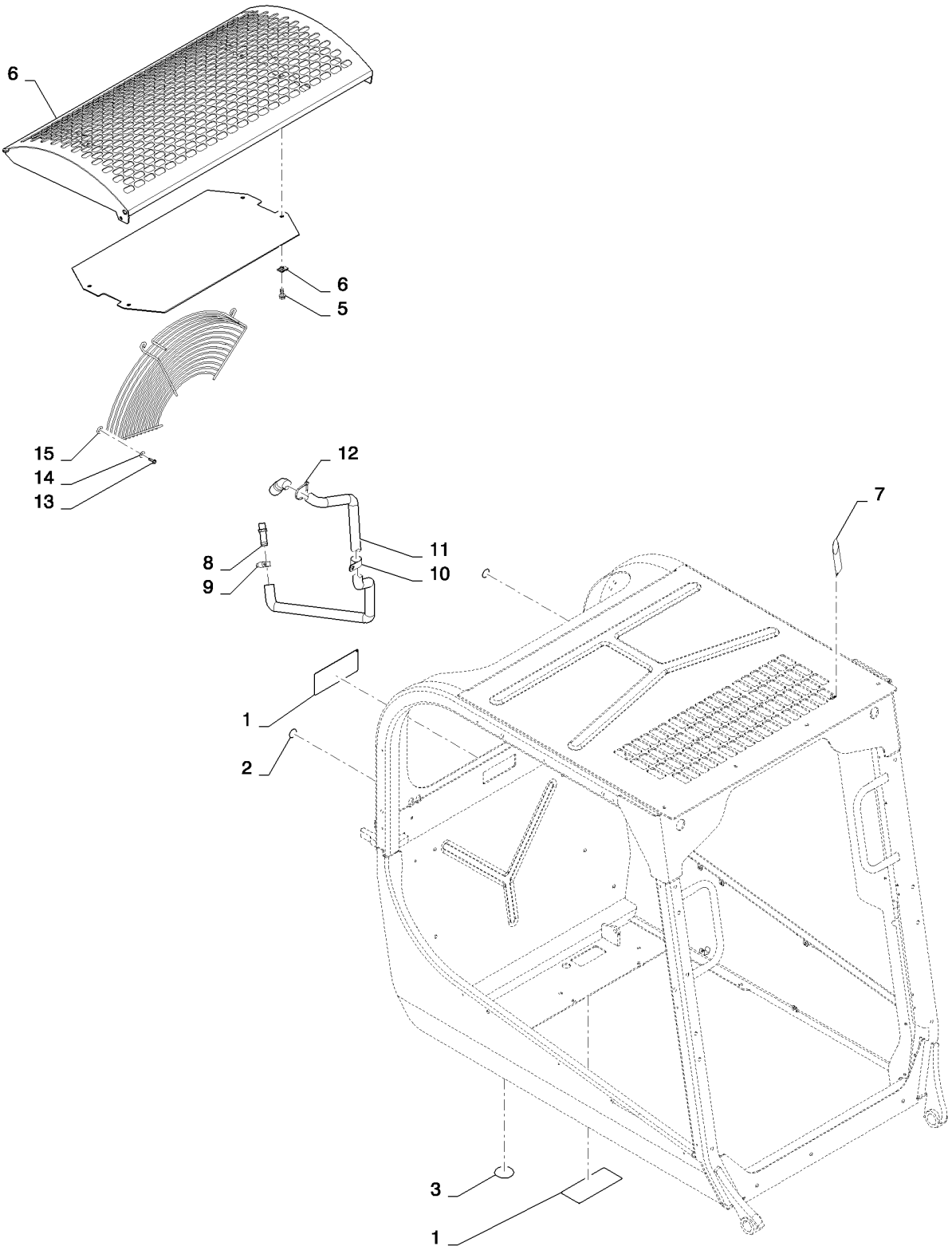

OPEN CAB, NO HEAT OR HVAC (SR200-TV380)
OPEN CAB, NO HEAT OR HVAC (SR200-TV380)
OPEN CAB, NO HEAT OR HVAC (SR200-TV380)
OPEN CAB, NO HEAT OR HVAC (SR200-TV380)

R	N	P.N.	MOD	Q	Denominação Description	Description Bezeichnung	Denominacion Beskrivelse	Descrizione Beschrijving	L.C.
1		84312310		2	COBERTURA, Plate, Gray	COVER	CUBIERTA	COPERCHIO	265C
					COUVERCLE	ABDECKUNG	DÆKSEL	AFSCHERMING	
2		414635A1		2	TAMPA, Lexan Gray	COVER	TAPA	COPERCHIO	2250
					COUVERCLE	DECKEL	COVER	COVER	
3		84357636		1	ADESIVO, Plug	DECAL	CALCOMANÍA	DECALCOMANIA	012D
					AUTOCOLLANT	AUFKLEBER	TRANSFER	STICKER	
4		86511841		4	PARAFUSO, Hex Flg, M8 x 16, 8.8				
						BOLT	PERNO	BULLONE	140B
					VIS	SCHRAUBE	BOLT	BOUT	
5		86625074		4	PORCA	NUT	TUERCA	DADO	010D
					ECROU	MUTTER	MØTRIK	MOER	
6		84331307		1	TELA, No AC, Tilt Hood, Gray				
						SCREEN	PANTALLA	FILTRO; SCHERMO	047S
					TAMIS	GITTER; ABSCHIRMUNG	SKÆRM	SCHERM	
7		84353623		1	ADESIVO, HVAC Blank	DECAL	CALCOMANÍA	DECALCOMANIA	012D
					AUTOCOLLANT	AUFKLEBER	TRANSFER	STICKER	
8		642560		1	CONEXÃO, 5/8" Hose X 3/8" NPTF Beaded				
						FITTING	ACOPLAMIENTO	RACCORDO	3300
					RACCORD	ARMATUR	FITTING	AANSLUITING	
9		86625021		2	BRAÇADEIRA MANGUEIRA, #12, 0.69/1.25 Type F Worm				
						HOSE CLAMP	ABRAZADERA DE MANG	FASCETTA STRINGITUB	P729
					COLLIER POUR FLEXIBL	SCHLAUCHSCHELLE	SLANGEKLEMME	SLANGKLEM	
10		86637995		1	BRAÇADEIRA, 1 1/16", Insul, 3/8" Bolt				
						CLAMP	ABRAZADERA	MORSETTO	120M
					COLLIER	KLEMME	SPÆNDEBÅND	KLEM	
11		84333356		1	TUBO, Heater, Loop	TUBE	TUBO	TUBO	195T
					TUBE	ROHR	RØR	LEIDING	
12		L11541		1	PRENDEDOR DE CABOS, Nylon Tie, 7-8in				
						CABLE STRAP	BANDA DE CABLE	FASCETTA PER CAVO	P716
					BRIDE DE CABLE	KABELBINDER	KABELSTROP	BUNDELBAND	
13		84137412		3	PARAFUSO, Bosscrew, M6 X 18				
						SCREW	TORNILLO	VITE	040V
					VIS	SCHRAUBE	SKRUE	SCHROEF	
14		86624182		3	ARRUELA PLANA, M6 x 18 x 1.6				
						WASHER	ARANDELA	RONDELLA	131R
					RONDELLE	UNTERLEGSCHEIBE	FLADSKIVE	SLUITRING	
15		84335903		1	PROTEÇÃO, Fan	GUARD	DEFENSA	PROTEZIONE	070R
					PROTECTION	SCHUTZABDECKUNG	BESKYTTELSESSKÆRM	AFSCHERMING	

50.200.02		p1	02/11

HVAC, MEDIUM FRAME F5C (SR200,TR270)
HVAC, MEDIUM FRAME F5C (SR200,TR270)
HVAC, MEDIUM FRAME F5C (SR200,TR270)
HVAC, MEDIUM FRAME F5C (SR200,TR270)

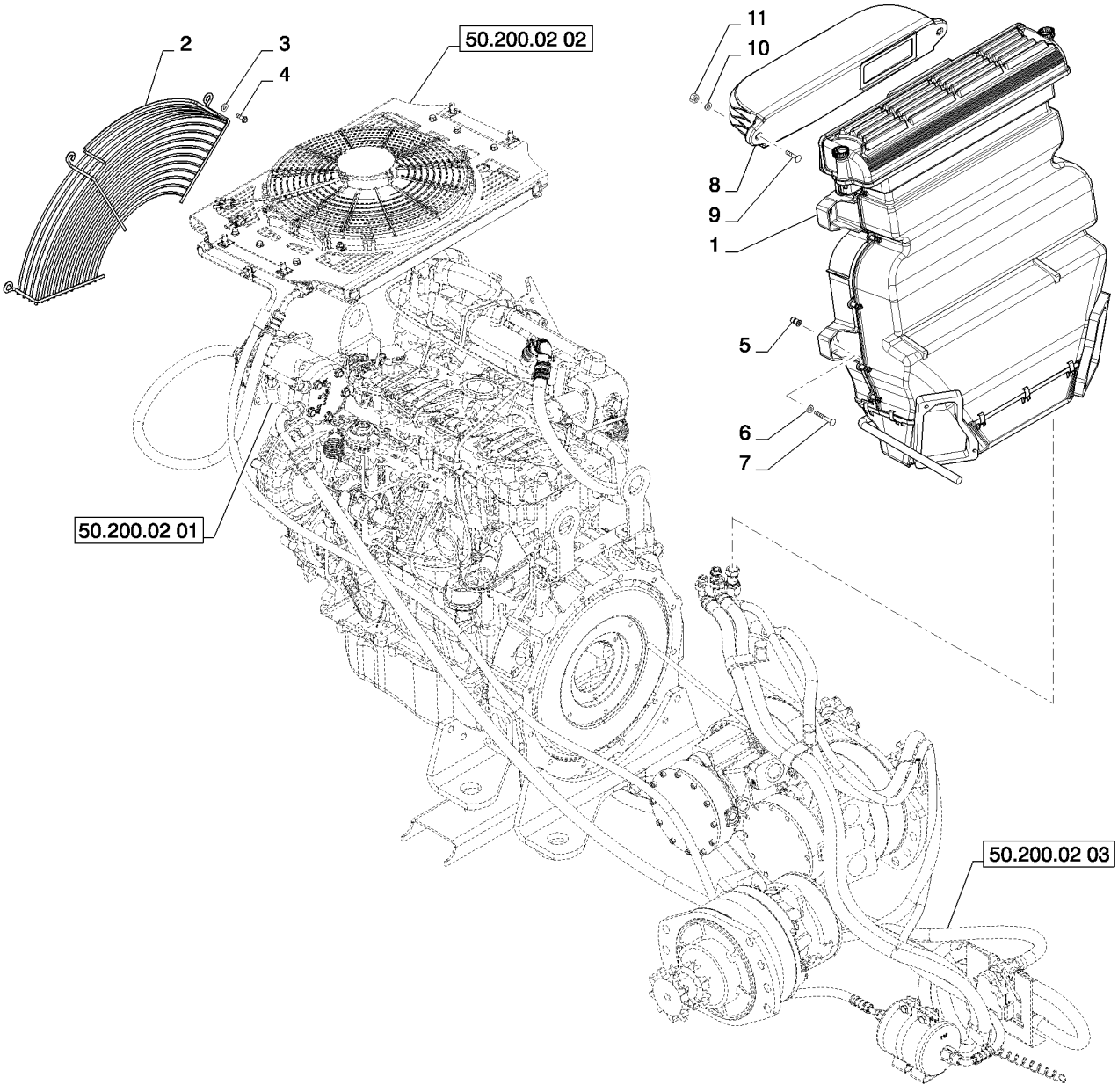

HVAC, MEDIUM FRAME F5C (SR200,TR270)
HVAC, MEDIUM FRAME F5C (SR200,TR270)
HVAC, MEDIUM FRAME F5C (SR200,TR270)
HVAC, MEDIUM FRAME F5C (SR200,TR270)

R	N	P.N.	MOD	Q	Denominação Description Bezeichnung	Description Bezeichnung	Denominacion Beskrivelse	Descrizione Beschrijving	L.C.
1		84267544		1	UNIDADE DE AQUECIMENTO, Heater w/AC				
						UNIT HEATER	APARATO DE CALEFAC(	RISCALDATORE UNITÀ	Z375
					APPAREIL DE CHAUFFA	HEIZUNGSEINHEIT	RADIATORENHED	VERWARMING	
2		84335904		1	PROTEÇÃO, Fan	GUARD	DEFENSA	PROTEZIONE	070R
					PROTECTION	SCHUTZABDECKUNG	BESKYTTELSESSKÆRM	AFSCHERMING	
3		86624182		3	ARRUELA PLANA, M6 x 18 x 1.6				
						WASHER	ARANDELA	RONDELLA	131R
					RONDELLE	UNTERLEGSCHEIBE	FLADSKIVE	SLUITRING	
4		84137412		3	PARAFUSO	SCREW	TORNILLO	VITE	040V
					VIS	SCHRAUBE	SKRUE	SCHROEF	
5		87436247		4	ENCHIMENTO ROSCADO	THREADED INSERT	PIEZA DE INS. ROSCAD/	INSERTO FILETTATO	054I
					INSERT FILETE	GEWINDEEINSATZ	GEVINDINDSATS	INZETST. MET SCHROEI	
6		86624183		4	ARRUELA PLANA, M6 x 25 x 1.6				
						WASHER	ARANDELA	RONDELLA	131R
					RONDELLE	UNTERLEGSCHEIBE	FLADSKIVE	SLUITRING	
7		86511833		4	PARAFUSO, Cross Pan Hd, M6 x 40				
						SCREW	TORNILLO	VITE	040V
					VIS	SCHRAUBE	SKRUE	SCHROEF	
8		84280313		1	DUTO DE AR, External	AIR DUCT	CONDUCTO DE AIRE	CONDOTTO ARIA	224C
					CONDUITE D'AIR	LUFTKANAL	LUFTKANAL	LUCHTKANAAL	
9		86512441		2	PARAFUSO, Short NK, M6 x 30, Cl8.8, Full Thd				
						CARRIAGE BOLT	PERNO ALOMADO	BULLONE A TESTA TON	P123
					VIS A TETE BOMBEE	SCHLOSSSCHRAUBE	BRÆDDEBOLT	SLOTBOUT	
10		87655042		2	ARRUELA ESPECIAL	SPECIAL WASHER	ARANDELA ESPECIAL	RONDELLA SPECIALE	Z333
					RONDELLE SPECIALE	SPEZIALUNTERLEGSCH	SPECIALSKIVE	SPECIALE RING	
11		9804276		2	PORCA, M6 x 1, Flg, Cl 8	NUT	TUERCA	DADO	010D
					ECROU	MUTTER	MØTRIK	MOER	

SR200

HEATER, MEDIUM FRAME F5C (SR200,TR270)
HEATER, MEDIUM FRAME F5C (SR200,TR270)
HEATER, MEDIUM FRAME F5C (SR200,TR270)
HEATER, MEDIUM FRAME F5C (SR200,TR270)

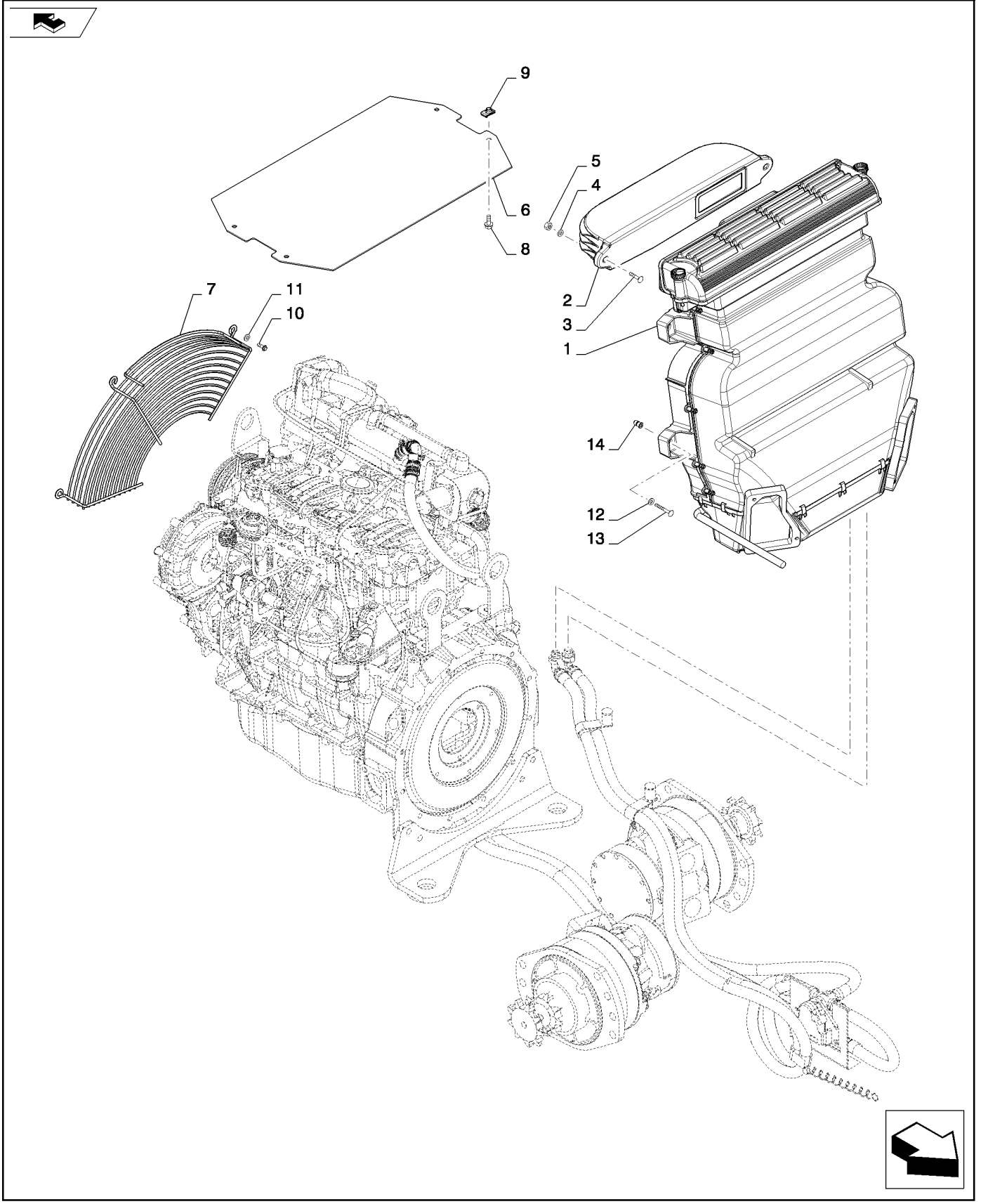

HEATER, MEDIUM FRAME F5C (SR200,TR270)
HEATER, MEDIUM FRAME F5C (SR200,TR270)
HEATER, MEDIUM FRAME F5C (SR200,TR270)
HEATER, MEDIUM FRAME F5C (SR200,TR270)

R	N	P.N.	MOD	Q	Denominação Description	Description Bezeichnung	Denominacion Beskrivelse	Descrizione Beschrijving	L.C.
1		84267543		1	AQUECEDOR CHAUFFAGE	HEATER HEIZUNG	CALENTADOR VARMEAPPARAT	RISCALDATORE VERWARMING	105R
2		84280313		1	DUTO DE AR, Intake CONDUITE D'AIR	AIR DUCT LUFTKANAL	CONDUCTO DE AIRE LUFTKANAL	CONDOTTO ARIA LUCHTKANAAL	224C
3		86512441		2	PARAFUSO, Short NK, M6 x 30, Cl8.8, Full Thd VIS A TETE BOMBEE	CARRIAGE BOLT SCHLOSSSCHRAUBE	PERNO ALOMADO BRÆDDEBOLT	BULLONE A TESTA TONI SLOTBOUT	P123
4		87655042		2	ARRUELA ESPECIAL, M8, 8.80 X 17.5 X 2.2 HTS RONDELLE SPECIALE	SPECIAL WASHER SPEZIALUNTERLEGSCH	ARANDELA ESPECIAL SPECIALSKIVE	RONDELLA SPECIALE SPECIALE RING	Z333
5		9804276		2	PORCA, M6 x 1, Flg, Cl 8 ECROU	NUT MUTTER	TUERCA MØTRIK	DADO MOER	010D
6		84331307		1	TELA, No AC, Tilt Hood, Gray TAMIS	SCREEN GITTER; ABSCHIRMUNG	PANTALLA SKÆRM	FILTRO; SCHERMO SCHERM	047S
7		84335903		1	PROTEÇÃO, Fan PROTECTION	GUARD SCHUTZABDECKUNG	DEFENSA BESKYTTELSESSKÆRM	PROTEZIONE AFSCHERMING	070R
8		86511841		4	PARAFUSO, Hex Flg, M8 x 16, 8.8 VIS	BOLT SCHRAUBE	PERNO BOLT	BULLONE BOUT	140B
9		86625074		4	PORCA ECROU	NUT MUTTER	TUERCA MØTRIK	DADO MOER	010D
10		84137412		3	PARAFUSO, Bosscrew M6 X 18 VIS	SCREW SCHRAUBE	TORNILLO SKRUE	VITE SCHROEF	040V
11		86624182		3	ARRUELA PLANA, M6 x 18 x 1.6 RONDELLE	WASHER UNTERLEGSCHEIBE	ARANDELA FLADSKIVE	RONDELLA SLUITRING	131R
12		86624183		4	ARRUELA PLANA, M6 x 25 x 1.6 RONDELLE	WASHER UNTERLEGSCHEIBE	ARANDELA FLADSKIVE	RONDELLA SLUITRING	131R
13		86511833		4	PARAFUSO, Cross Pan Hd, M6 x 40 VIS	SCREW SCHRAUBE	TORNILLO SKRUE	VITE SCHROEF	040V
14		87436247		4	ENCHIMENTO ROSCADO INSERT FILETE	THREADED INSERT GEWINDEEINSATZ	PIEZA DE INS. ROSCAD/ GEVINDINDSATS	INSERTO FILETTATO INZETST. MET SCHROEI	054I

HVAC, MEDIUM FRAME F5C (SR200-TV380)
HVAC, MEDIUM FRAME F5C (SR200-TV380)
HVAC, MEDIUM FRAME F5C (SR200-TV380)
HVAC, MEDIUM FRAME F5C (SR200-TV380)

ART
NOT
AVAILABLE

HVAC, MEDIUM FRAME F5C (SR200-TV380)
HVAC, MEDIUM FRAME F5C (SR200-TV380)
HVAC, MEDIUM FRAME F5C (SR200-TV380)
HVAC, MEDIUM FRAME F5C (SR200-TV380)

R	N	P.N.	MOD	Q	Denominação Description	Description Bezeichnung	Denominacion Beskrivelse	Descrizione Beschrijving	L.C.
1		84321961		1	COMPRESSOR AR COND. COMPRESSEUR CLIMAT	AIRCOND. COMPRESSO KLIMAANLAGENKOMPRI	COMPRESOR DE A/C AIRCONDITION KOMPRE	COMPRESSORE ARIA C AIRCOCOMPRESSOR	217C
2		87711926		1	SUPORTE, Tensioner SUPPORT	BRACKET HALTERUNG	SOPORTE BESLAG	STAFFA STEUN	225S
3		9804261		2	PARAFUSO, Hex Flg, M10 x 25, 8.8 VIS	BOLT SCHRAUBE	PERNO BOLT	BULLONE BOUT	140B
4		9804278		2	PORCA, M10 x 1.5, Flg, Cl 8 ECROU	NUT MUTTER	TUERCA MØTRIK	DADO MOER	010D
5		9804262		1	PARAFUSO, Hex Flg, M10 x 30, 8.8 VIS	BOLT SCHRAUBE	PERNO BOLT	BULLONE BOUT	140B
6		86511845		2	PARAFUSO, Hex Flg, M10 x 35, 8.8 VIS	BOLT SCHRAUBE	PERNO BOLT	BULLONE BOUT	140B
7		9706690		1	PORCA, M8, Cl 8 ECROU	NUT MUTTER	TUERCA MØTRIK	DADO MOER	010D
8		87649979		1	PARAFUSO VIS	BOLT SCHRAUBE	PERNO BOLT	BULLONE BOUT	140B
9		87649945		1	SUPORTE, Air Conditioning Compressor SUPPORT	BRACKET HALTERUNG	SOPORTE BESLAG	STAFFA STEUN	225S
10		86511843		2	PARAFUSO, Hex Flg, M8 x 60, 8.8 VIS	BOLT SCHRAUBE	PERNO BOLT	BULLONE BOUT	140B
11		86705425		1	PARAFUSO, Hex Flg, M8 x 80, 8.8 VIS	BOLT SCHRAUBE	PERNO BOLT	BULLONE BOUT	140B
12		87622384		1	BUCHA, F5C A/C Mounting BAGUE	BUSHING BUCHSE	CASQUILLO BØSNING	BOCCOLA BUS	095B
13		84317961		1	CORREIA, V-belt, A/C Drive COURROIE	BELT RIEMEN	CORREA REM	CINGHIA RIEM	174C
14		84315532		1	CHICOTE, Wire Harness HVAC Jumper FAISCEAU ELECTRIQUE	WIRE HARNESS KABELBAUM	GRUPO DE CABLES KABELNET	CABLAGGIO KABELBOOM	070I

SR200

50.200.02	02	p1	02/11

HVAC, LARGE FRAME F5C (SR200, TR270)
HVAC, LARGE FRAME F5C (SR200, TR270)
HVAC, LARGE FRAME F5C (SR200, TR270)
HVAC, LARGE FRAME F5C (SR200, TR270)

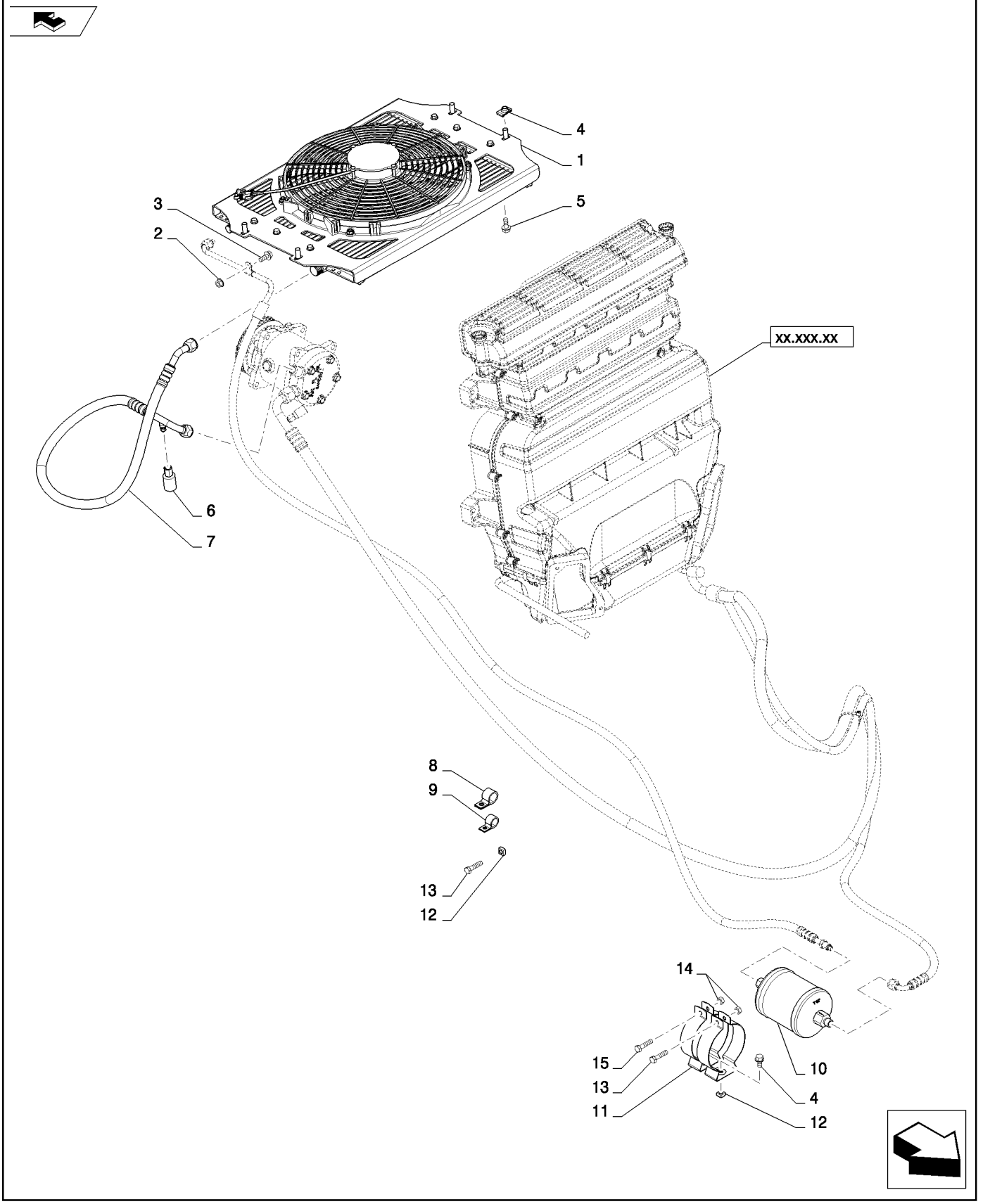

HVAC, LARGE FRAME F5C (SR200, TR270)
HVAC, LARGE FRAME F5C (SR200, TR270)
HVAC, LARGE FRAME F5C (SR200, TR270)
HVAC, LARGE FRAME F5C (SR200, TR270)

R	N	P.N.	MOD	Q	Denominação Description	Description Bezeichnung	Denominacion Beskrivelse	Descrizione Beschrijving	L.C.
1		84312881		1	CONDENSADOR CONDENSATEUR	CONDENSER KONDENSATOR	CONDENSADOR KONDENSATOR	CONDENSATORE CONDENSOR	220C
2		9804277		4	PORCA, M8 x 1.25, Flg, Cl 8 NUT ECROU	TUERCA MUTTER	DADO MØTRIK	MOER	010D
3		9804258		4	PARAFUSO, Hex Flg, M8 x 20, 8.8 BOLT VIS	PERNO SCHRAUBE	BULLONE BOLT	BOUT	140B
4		86511841		6	PARAFUSO, Hex Flg, M8 x 16, 8.8 BOLT VIS	PERNO SCHRAUBE	BULLONE BOLT	BOUT	140B
5		86625074		4	PORCA ECROU	NUT MUTTER	TUERCA MØTRIK	DADO MOER	010D
6		369798A2		1	INTERRUPTOR INTERRUPTEUR	SWITCH SCHALTER	INTERRUPTOR SWITCH	COMMUTATORE SWITCH	8850
7		84317965		1	MANGUEIRA AR CONDICIONADO, Discharge A/C HOSE FLEXIBLE CLIMATISATIC	TUBO A/A KLIMAANLAGENSCHLAU	TUBO A/A SLANGE, AIRCONDITION	TUBO FLESSIBILE A/C SLANG VOOR AIRCO	A054
8		9706748		2	BRAÇADEIRA, 5/8", Insul, 5/16" Bolt CLAMP COLLIER	ABRAZADERA KLEMME	MORSETTO SPÆNDEBÅND	MORSETTO KLEM	120M
9		86637978		3	BRAÇADEIRA, 3/8", Insul, 5/16" Bolt CLAMP COLLIER	ABRAZADERA KLEMME	MORSETTO SPÆNDEBÅND	MORSETTO KLEM	120M
10		87105840		1	DESIDRATADOR RESERVOIR DESHYDRA	RECEIVER-DRYER TROCKNERPATRONE	RECEPTOR-SECADOR VANDUDSKILLER	SERBATOIO-ESSICCATC FILTERDROGER	058D
11		87105841		2	SUPORTE SUPPORT	BRACKET HALTERUNG	SOPORTE BESLAG	STAFFA STEUN	225S
12		229197A1		4	PORCA ECROU	NUT MUTTER	TUERCA NUT	DADO NUT	5780
13		87015934		2	PARAFUSO VIS	BOLT SCHRAUBE	PERNO BOLT	BULLONE BOUT	140B
14		86505868		2	PORCA, M8, Flg Ser ECROU	NUT MUTTER	TUERCA MØTRIK	DADO MOER	010D
15		412479		1	PARAFUSO, Hex, M8 x 35, 8.8 BOLT VIS	PERNO SCHRAUBE	BULLONE BOLT	BOUT	140B
16		L11541		1	PRENDEDOR DE CABOS BRIDE DE CABLE	CABLE STRAP KABELBINDER	BANDA DE CABLE KABELSTROP	FASCETTA PER CAVO BUNDELBAND	P716

SR200

50.200.02	03	p1	02/11

HEATER PLUMBING BASIC (SR200,TR270)
HEATER PLUMBING BASIC (SR200,TR270)
HEATER PLUMBING BASIC (SR200,TR270)
HEATER PLUMBING BASIC (SR200,TR270)

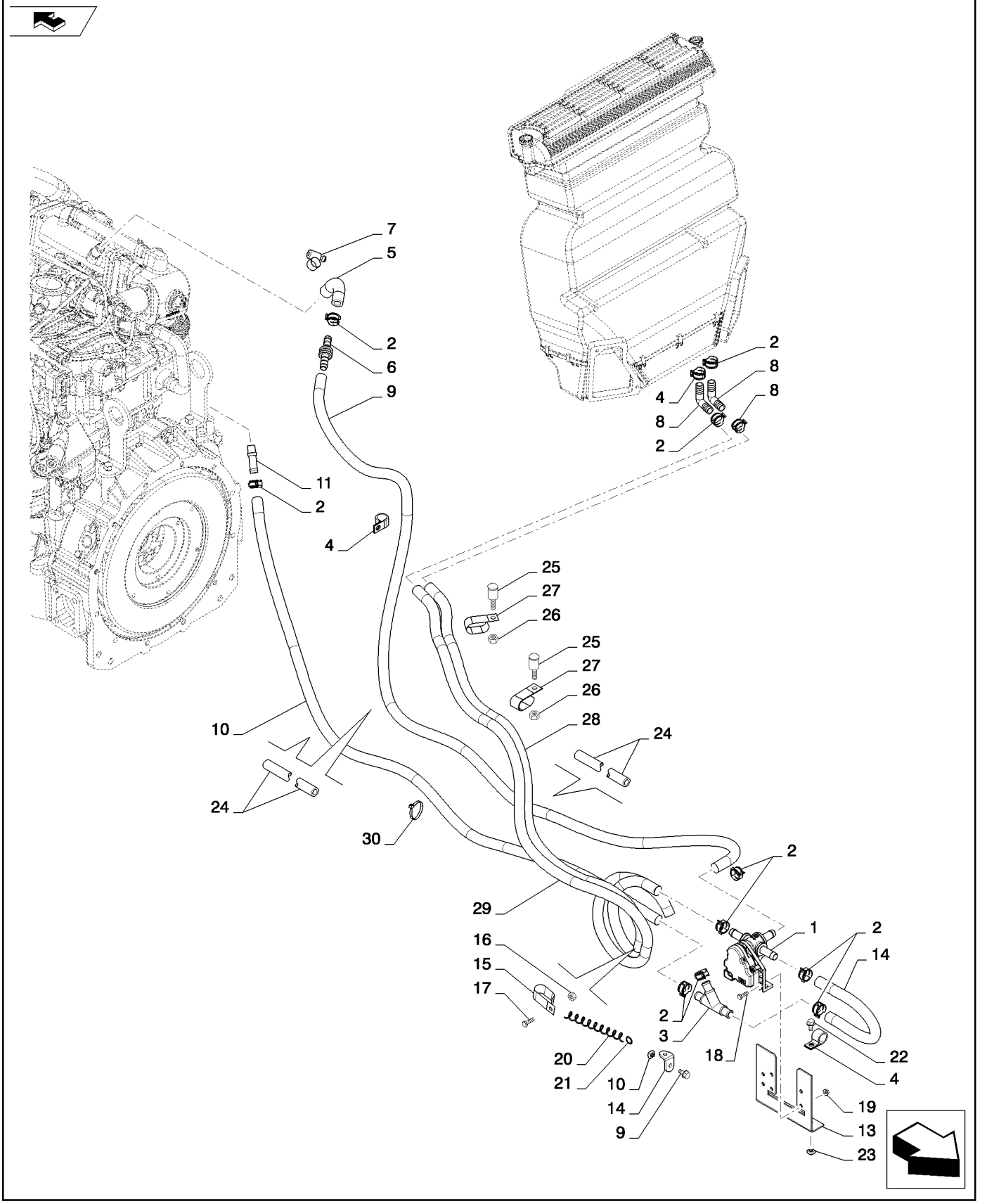

HEATER PLUMBING BASIC (SR200,TR270)
HEATER PLUMBING BASIC (SR200,TR270)
HEATER PLUMBING BASIC (SR200,TR270)
HEATER PLUMBING BASIC (SR200,TR270)

R	N	P.N.	MOD	Q	Denominação Description	Description Bezeichnung	Denominacion Beskrivelse	Descrizione Beschrijving	L.C.
1		84245940		1	VÁLVULA, Water Supply - 3 Way				
						VALVE	VÁLVULA	VALVOLA	9620
					SOUPAPE	VENTIL	VENTIL	KLEP	
2		87443511		13	BRAÇADEIRA, CTB	CLAMP	ABRAZADERA	MORSETTO	120M
					COLLIER	KLEMME	SPÆNDEBÅND	KLEM	
3		86530043		1	CONEXÃO, Y Hose	FITTING	ACOPLAMIENTO	RACCORDO	3300
					RACCORD	ARMATUR	FITTING	AANSLUITING	
4		619284		3	BRAÇADEIRA, 15/16", Insul, 3/8" Bolt				
						CLAMP	ABRAZADERA	MORSETTO	120M
					COLLIER	KLEMME	SPÆNDEBÅND	KLEM	
5		87617163		1	MANGUEIRA DO AQUECEDOR, 15.00 mm ID, 18.00 mm ID x 73.00 mm, SAE 20R4, Formed, Heater Supply				
						HEATER HOSE	TUBO DE CALENTADOR	TUBO FLESS. RISCALDA	A057
					FLEXIBLE DE CHAUFFA(	HEIZUNGSSCHLAUCH	SLANGE, VARMEAPPAR/	VERWARMINGSSLANG	
6		87617165		1	ADAPTADOR, Hose Barb Splice Connector				
						ADAPTER	ADAPTADOR	ADATTATORE	001A
					ADAPTATEUR	ADAPTER	ADAPTER	ADAPTER	
7		86625021		1	BRAÇADEIRA MANGUEIRA, #12, 0.69/1.25 Type F Worm				
						HOSE CLAMP	ABRAZADERA DE MANG	FASCETTA STRINGITUB	P729
					COLLIER POUR FLEXIBL	SCHLAUCHSCHELLE	SLANGEKLEMME	SLANGKLEM	
8		127083A1		2	COTOVELO	ELBOW	CODO	GOMITO	085G
					COUDE	KNIESTÜCK	VINKELRØR	KNIESTUK	
9		84317964		1	MANGUEIRA, Heater Supply				
						HOSE	TUBO	TUBO FLESSIBILE	030M
					FLEXIBLE	SCHLAUCH	SLANGE	SLANG	
10		3401766R2		1	MANGUEIRA DO AQUECEDOR, 15.50 mm ID x 1656.00 mm, Heater Return				
						HEATER HOSE	TUBO DE CALENTADOR	TUBO FLESS. RISCALDA	A057
					FLEXIBLE DE CHAUFFA(	HEIZUNGSSCHLAUCH	SLANGE, VARMEAPPAR/	VERWARMINGSSLANG	
11		642560		1	CONEXÃO, 5/8" Hose X 3/8" NPTF Beaded				
						FITTING	ACOPLAMIENTO	RACCORDO	3300
					RACCORD	ARMATUR	FITTING	AANSLUITING	
12		84269627		1	SUPORTE	BRACKET	SOPORTE	STAFFA	225S
					SUPPORT	HALTERUNG	BESLAG	STEUN	
13		84247845		1	SUPORTE, Water Valve and Dryer				
						BRACKET	SOPORTE	STAFFA	225S
					SUPPORT	HALTERUNG	BESLAG	STEUN	
14		84326457		1	MANGUEIRA, Heater Return				
						HOSE	TUBO	TUBO FLESSIBILE	030M
					FLEXIBLE	SCHLAUCH	SLANGE	SLANG	
15		H434289		3	ARGOLA DE FIXAÇÃO, Clamp Insulated				
						MOUNTING CLIP	ABRAZADERA DE MONT	GRAFFA DI MONTAGGIC	Z445
					COLLIER-DE-FIXATION	BEFESTIGUNGSKLEMME	MONTERINGSKLEMME	BEVESTIGINGSKLEM	
16		86619801		1	CONTRA PORCA, M8 x 1.25, Flg, Cl 8				
						LOCK NUT	TUERCA DE BLOQUEO	DADO DI BLOCCAGGIO	P263
					CONTRE-ECROU	SICHERUNGSMUTTER	LÅSEMØTRIK	BORGMOER	
17		9671714		1	PARAFUSO, Hex Flg, M8 x 25, 8.8				
						BOLT	PERNO	BULLONE	140B
					VIS	SCHRAUBE	BOLT	BOUT	

SR200

50.200.02	03	p2	02/11

HEATER PLUMBING BASIC (SR200,TR270)
HEATER PLUMBING BASIC (SR200,TR270)
HEATER PLUMBING BASIC (SR200,TR270)
HEATER PLUMBING BASIC (SR200,TR270)

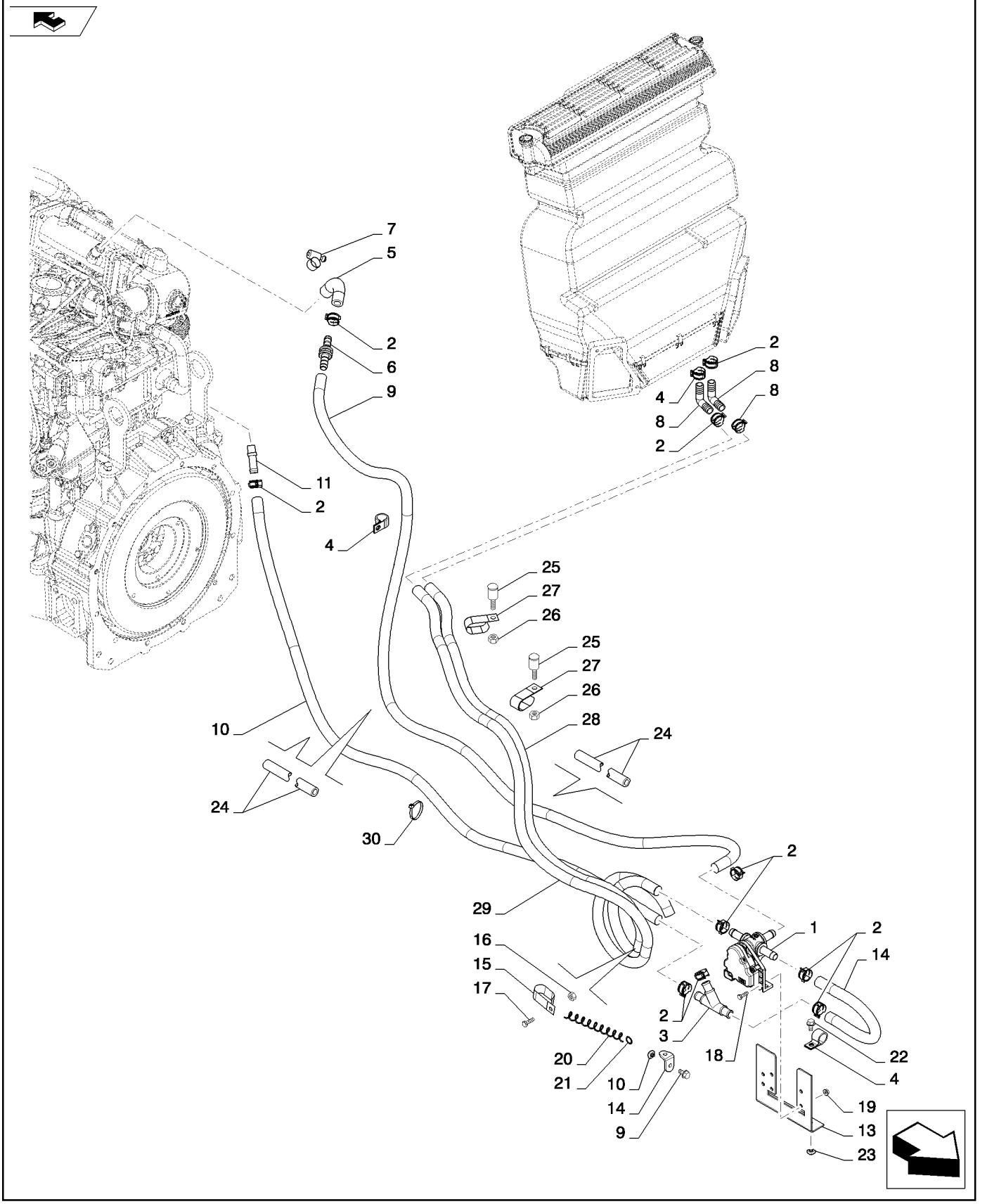

HEATER PLUMBING BASIC (SR200,TR270)
HEATER PLUMBING BASIC (SR200,TR270)
HEATER PLUMBING BASIC (SR200,TR270)
HEATER PLUMBING BASIC (SR200,TR270)

R	N	P.N.	MOD	Q	Denominação Description	Description Bezeichnung	Denominacion Beskrivelse	Descrizione Beschrijving	L.C.
18		9804257		4	PARAFUSO, Hex Flg, M6 x 25, 8.8				
						BOLT	PERNO	BULLONE	140B
					VIS	SCHRAUBE	BOLT	BOUT	
19		9804276		4	PORCA, M6 x 1, Flg, Cl 8	NUT	TUERCA	DADO	010D
					ECROU	MUTTER	MØTRIK	MOER	
20		412679A2		1	MOLA, Extension	SPRING	MUELLE	MOLLA	8315
					RESSORT	FEDER	SPRING	SPRING	
21		86511841		3	PARAFUSO, Hex Flg, M8 x 16, 8.8				
						BOLT	PERNO	BULLONE	140B
					VIS	SCHRAUBE	BOLT	BOUT	
22		86511841		3	PARAFUSO, Hex Flg, M8 x 16, 8.8				
						BOLT	PERNO	BULLONE	140B
					VIS	SCHRAUBE	BOLT	BOUT	
23		229197A1		3	PORCA, Spuare, M8-1.25	NUT	TUERCA	DADO	5780
					ECROU	MUTTER	NUT	NUT	
24		87441006		2	PROTEÇÃO, Hose	GUARD	DEFENSA	PROTEZIONE	070R
					PROTECTION	SCHUTZABDECKUNG	BESKYTTELSESSKÆRM	AFSCHERMING	
25		86512447		2	PARAFUSO, Short NK, M10 x 60, Cl8.8				
						CARRIAGE BOLT	PERNO ALOMADO	BULLONE A TESTA TONI	P123
					VIS A TETE BOMBEE	SCHLOSSSCHRAUBE	BRÆDDEBOLT	SLOTBOUT	
26		86619802		2	CONTRA PORCA	LOCK NUT	TUERCA DE BLOQUEO	DADO DI BLOCCAGGIO	P263
					CONTRE-ECROU	SICHERUNGSMUTTER	LÅSEMØTRIK	BORGMOER	
27		87013910		2	ESPAÇADOR, 1/2" Pipe x 1"				
						SPACER	SEPARADOR	DISTANZIALE	075D
					ENTRETOISE	DISTANZSTÜCK	AFSTANDSSTYKKE	AFSTANDSSTUK	
28		84326468		1	MANGUEIRA, Heater Supply				
						HOSE	TUBO	TUBO FLESSIBILE	030M
					FLEXIBLE	SCHLAUCH	SLANGE	SLANG	
29		84326469		1	MANGUEIRA, Heater Return				
						HOSE	TUBO	TUBO FLESSIBILE	030M
					FLEXIBLE	SCHLAUCH	SLANGE	SLANG	
30		L11541		2	PRENDEDOR DE CABOS, Tie, Black 7-8 Inch				
						CABLE STRAP	BANDA DE CABLE	FASCETTA PER CAVO	P716
					BRIDE DE CABLE	KABELBINDER	KABELSTROP	BUNDELBAND	

50.200.03		p1	02/11

HVAC, MEDIUM FRAME F5C (SR200,TR270)
HVAC, MEDIUM FRAME F5C (SR200,TR270)
HVAC, MEDIUM FRAME F5C (SR200,TR270)
HVAC, MEDIUM FRAME F5C (SR200,TR270)

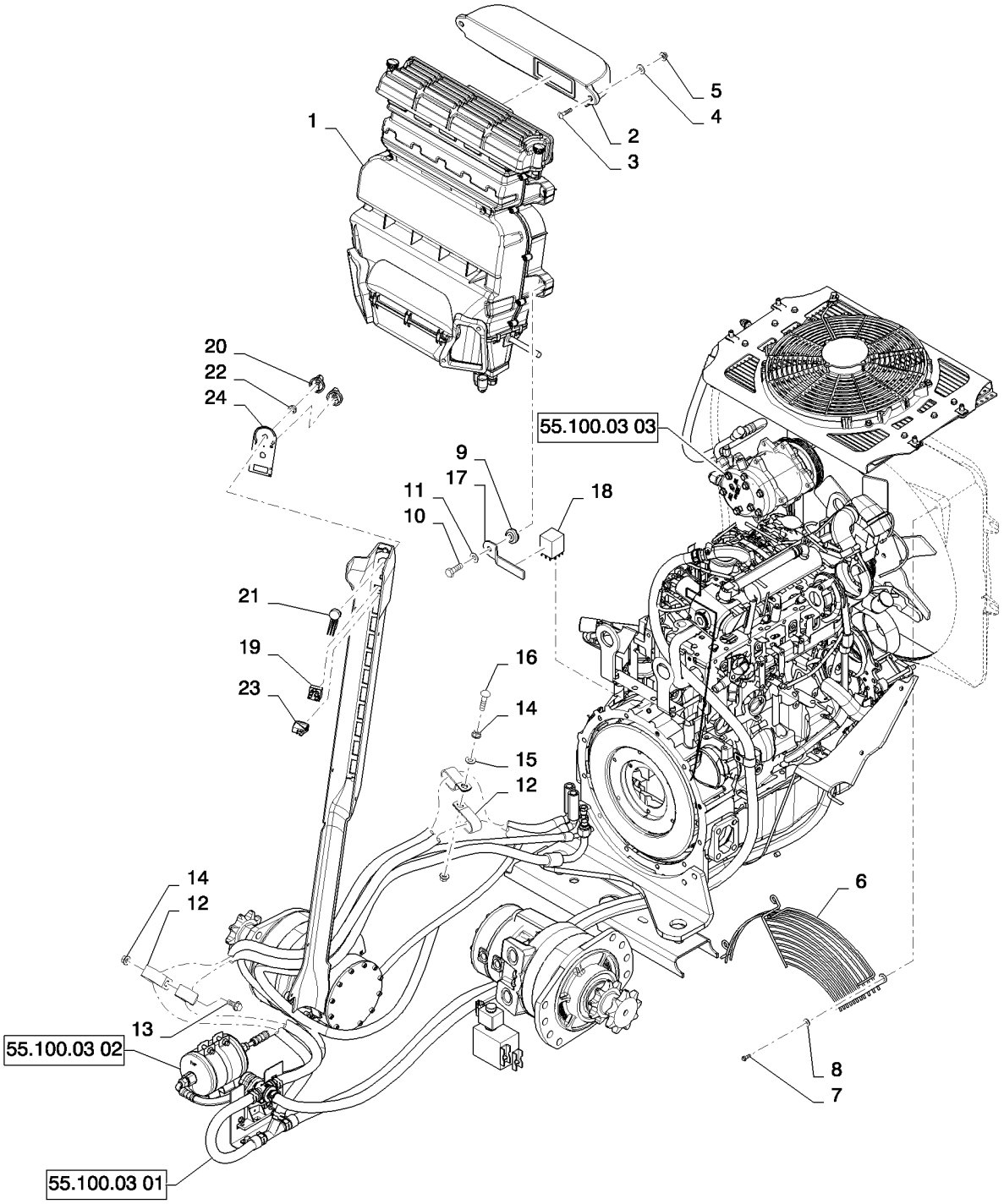

HVAC, MEDIUM FRAME F5C (SR200,TR270)
HVAC, MEDIUM FRAME F5C (SR200,TR270)
HVAC, MEDIUM FRAME F5C (SR200,TR270)
HVAC, MEDIUM FRAME F5C (SR200,TR270)

R	N	P.N.	MOD	Q	Denominação Description Bezeichnung	Denominacion Beskrivelse	Descrizione Beschrijving	L.C.
1		84267544		1	UNIDADE DE AQUECIMENTO, w/AC, Cab UNIT HEATER APPAREIL DE CHAUFFA HEIZUNGSEINHEIT	APARATO DE CALEFAC(RADIATORENHED	RISCALDATORE UNITÀ VERWARMING	Z375
2		84280313		1	DUTO DE AR, Intake AIR DUCT CONDUITE D'AIR LUFTKANAL	CONDUCTO DE AIRE LUFTKANAL	CONDOTTO ARIA LUCHTKANAAL	224C
3		86512441		2	PARAFUSO, Short NK, M6 x 30, Cl8.8, Full Thd CARRIAGE BOLT VIS A TETE BOMBEE SCHLOSSSCHRAUBE	PERNO ALOMADO BRÆDDEBOLT	BULLONE A TESTA TONI SLOTBOUT	P123
4		87655042		2	ARRUELA ESPECIAL, M8, 8.80 X 17.5 X 2.2 HTS SPECIAL WASHER RONDELLE SPECIALE SPEZIALUNTERLEGSCH	ARANDELA ESPECIAL SPECIALSKIVE	RONDELLA SPECIALE SPECIALE RING	Z333
5		86619800		2	CONTRA PORCA, M6 x 1, Flg, Cl 8 LOCK NUT CONTRE-ECROU SICHERUNGSMUTTER	TUERCA DE BLOQUEO LÅSEMØTRIK	DADO DI BLOCCAGGIO BORGMOER	P263
6		84335904		1	PROTEÇÃO, Fan GUARD PROTECTION SCHUTZABDECKUNG	DEFENSA BESKYTTELSESSKÆRM	PROTEZIONE AFSCHERMING	070R
7		84137412		3	PARAFUSO, Bosscrew, M6 X 18 SCREW VIS SCHRAUBE	TORNILLO SKRUE	VITE SCHROEF	040V
8		86624182		3	ARRUELA PLANA, M6 x 18 x 1.6 WASHER RONDELLE UNTERLEGSCHEIBE	ARANDELA FLADSKIVE	RONDELLA SLUITRING	131R
9		87436247		4	ENCHIMENTO ROSCADO, M6, Blind Threaded THREADED INSERT INSERT FILETE GEWINDEEINSATZ	PIEZA DE INS. ROSCAD/ GEVINDINDSATS	INSERTO FILETTATO INZETST. MET SCHROEI	054I
10		86511833		4	PARAFUSO, Cross Pan Hd, M6 x 40 SCREW VIS SCHRAUBE	TORNILLO SKRUE	VITE SCHROEF	040V
11		86624183		3	ARRUELA PLANA, M6 x 25 x 1.6 WASHER RONDELLE UNTERLEGSCHEIBE	ARANDELA FLADSKIVE	RONDELLA SLUITRING	131R
12		D39696		4	BRACADEIRA CLAMP COLLIER SCHELLE	COLLAR CLAMP	MORSETTO CLAMP	1640
13		9804261		1	PARAFUSO, Hex Flg, M10 x 25, 8.8 BOLT VIS SCHRAUBE	PERNO BOLT	BULLONE BOUT	140B
14		9804278		3	PORCA, M10 x 1.5, Flg, Cl 8 NUT ECROU MUTTER	TUERCA MØTRIK	DADO MOER	010D
15		87655046		1	ARRUELA ESPECIAL, M10, 10.65 X 23.0 X 2.2 HTS SPECIAL WASHER RONDELLE SPECIALE SPEZIALUNTERLEGSCH	ARANDELA ESPECIAL SPECIALSKIVE	RONDELLA SPECIALE SPECIALE RING	Z333
16		350459		1	PARAFUSO, Short NK, M10 x 50, Cl8.8, Full Thd SCREW VIS SCHRAUBE	TORNILLO SKRUE	VITE SCHROEF	040V
17		84380240		1	SUPORTE, Relay BRACKET SUPPORT HALTERUNG	SOPORTE BESLAG	STAFFA STEUN	225S
18		87355337		1	RELE, Heavy Duty, 45 Amp RELAY RELAIS RELAIS	RELE RELAY	REL RELAY	7025

SR200

HVAC, MEDIUM FRAME F5C (SR200,TR270)
HVAC, MEDIUM FRAME F5C (SR200,TR270)
HVAC, MEDIUM FRAME F5C (SR200,TR270)
HVAC, MEDIUM FRAME F5C (SR200,TR270)

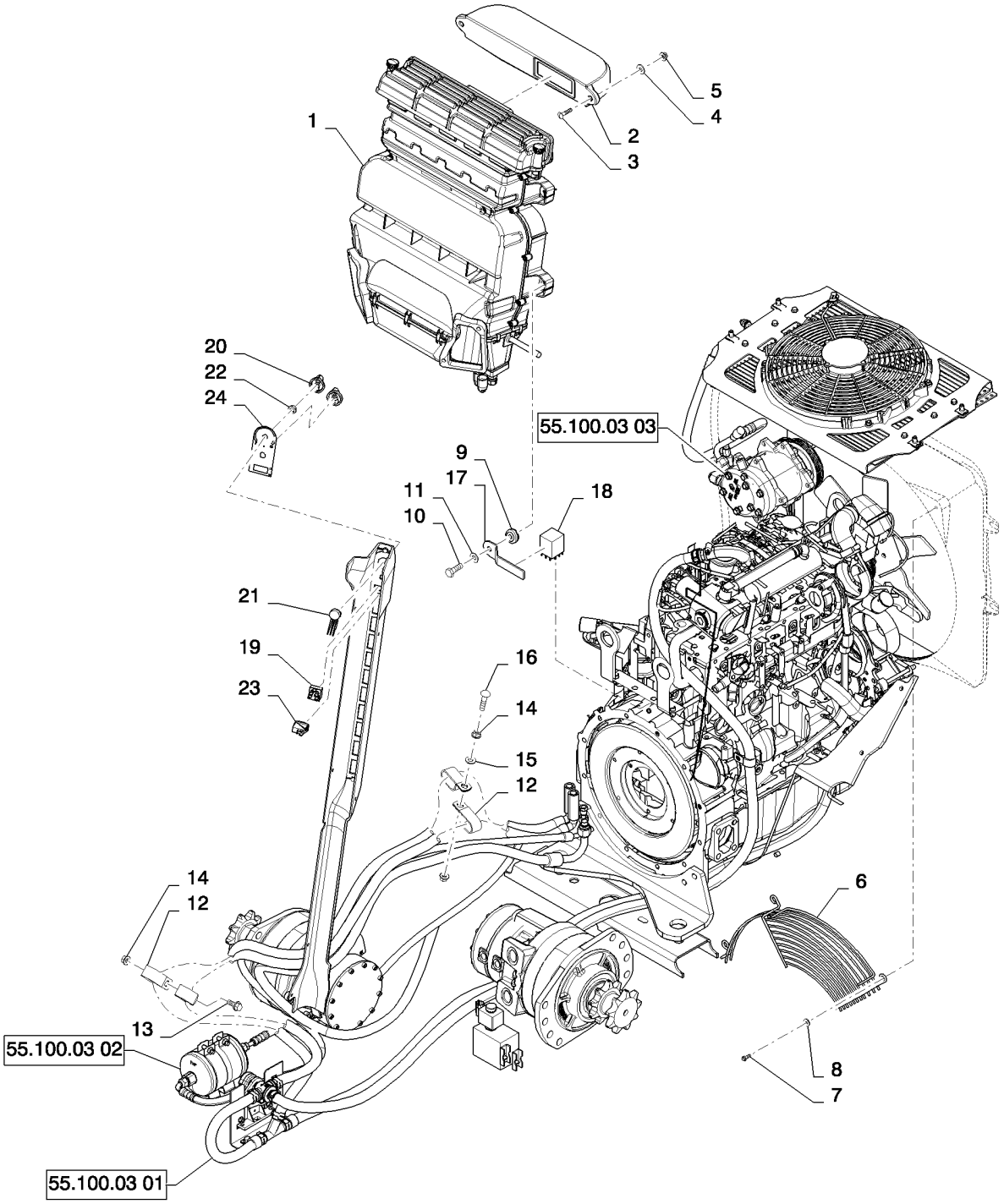

HVAC, MEDIUM FRAME F5C (SR200,TR270)
HVAC, MEDIUM FRAME F5C (SR200,TR270)
HVAC, MEDIUM FRAME F5C (SR200,TR270)
HVAC, MEDIUM FRAME F5C (SR200,TR270)

R	N	P.N.	MOD	Q	Denominação Description	Description Bezeichnung	Denominacion Beskrivelse	Descrizione Beschrijving	L.C.
19		**86729669**		1	INTERRUPTOR, Blower/Light SWITCH CONTACTEUR	SCHALTER	INTERRUPTOR KONTAKT	INTERRUTTORE SCHAKELAAR	075I
20		**86729670**		2	MAÇANETA BOUTON	KNOB RUNDGRIFF	MANDO GREB	MANOPOLA KNOP	150P
21		**86729675**		1	POTENCIÔMETRO, Switch POTENTIOMETRE	POTENTIOMETER POTENTIOMETER	POTENCIÓMETRO POTENTIOMETER	POTENZIOMETRO POTENTIOMETER	550P
22		**87310592**		2	PORCA, Jam, 7/16"-28, G5 ECROU	NUT MUTTER	TUERCA MØTRIK	DADO MOER	010D
23		**87555249**		1	INTERRUPTOR, A/C Switch SWITCH CONTACTEUR	SCHALTER	INTERRUPTOR KONTAKT	INTERRUTTORE SCHAKELAAR	075I
24		**84347258**		1	ADESIVO, HVAC, Heat AC AUTOCOLLANT	DECAL AUFKLEBER	CALCOMANÍA TRANSFER	DECALCOMANIA STICKER	012D

50.200.03	01	p1	02/11

HEATER PLUMBING BASIC (SR200,TR270)
HEATER PLUMBING BASIC (SR200,TR270)
HEATER PLUMBING BASIC (SR200,TR270)
HEATER PLUMBING BASIC (SR200,TR270)

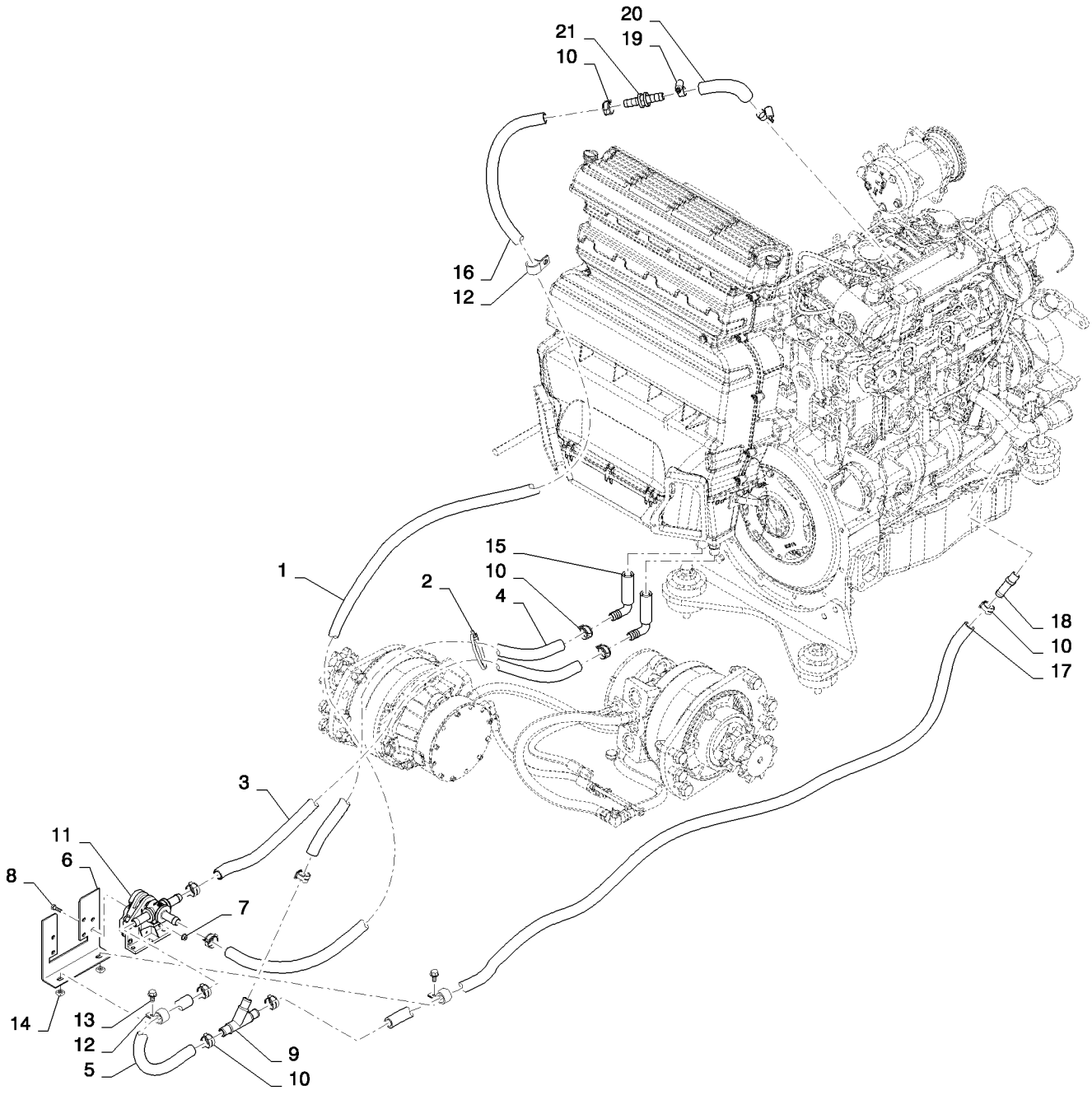

HEATER PLUMBING BASIC (SR200,TR270)
HEATER PLUMBING BASIC (SR200,TR270)
HEATER PLUMBING BASIC (SR200,TR270)
HEATER PLUMBING BASIC (SR200,TR270)

R	N	P.N.	MOD	Q	Denominação Description	Description Bezeichnung	Denominacion Beskrivelse	Descrizione Beschrijving	L.C.
1		87441006		1	PROTEÇÃO, AC Hose PROTECTION	GUARD SCHUTZABDECKUNG	DEFENSA BESKYTTELSESSKÆRM	PROTEZIONE AFSCHERMING	070R
2		L11541		1	PRENDEDOR DE CABOS, Nylon Tie, 7-8in BRIDE DE CABLE	CABLE STRAP KABELBINDER	BANDA DE CABLE KABELSTROP	FASCETTA PER CAVO BUNDELBAND	P716
3		84359308		1	MANGUEIRA, Heater Return, Guarded FLEXIBLE	HOSE SCHLAUCH	TUBO SLANGE	TUBO FLESSIBILE SLANG	030M
4		84357678		1	MANGUEIRA, Heater Supply, Guarded FLEXIBLE	HOSE SCHLAUCH	TUBO SLANGE	TUBO FLESSIBILE SLANG	030M
5		84359205		1	MANGUEIRA, Heater Return, Guarded FLEXIBLE	HOSE SCHLAUCH	TUBO SLANGE	TUBO FLESSIBILE SLANG	030M
6		84247845		1	SUPORTE, Water Valve and Dryer SUPPORT	BRACKET HALTERUNG	SOPORTE BESLAG	STAFFA STEUN	225S
7		9804276		4	PORCA, M6 x 1, Flg, Cl 8 ECROU	NUT MUTTER	TUERCA MØTRIK	DADO MOER	010D
8		120100		4	PARAFUSO, Hex, M6 x 20, 8.8 VIS	BOLT SCHRAUBE	PERNO BOLT	BULLONE BOUT	140B
9		86530043		1	CONEXÃO, Hose RACCORD	FITTING ARMATUR	ACOPLAMIENTO FITTING	RACCORDO AANSLUITING	3300
10		87443511		13	BRAÇADEIRA, Spring COLLIER	CLAMP KLEMME	ABRAZADERA SPÆNDEBÅND	MORSETTO KLEM	120M
11		84245940		1	VÁLVULA, Water Supply, 3 Way SOUPAPE	VALVE VENTIL	VÁLVULA VENTIL	VALVOLA KLEP	9620
12		619284		3	BRAÇADEIRA, 15/16", Insul, 3/8" Bolt COLLIER	CLAMP KLEMME	ABRAZADERA SPÆNDEBÅND	MORSETTO KLEM	120M
13		86511841		2	PARAFUSO, Hex Flg, M8 x 16, 8.8 VIS	BOLT SCHRAUBE	PERNO BOLT	BULLONE BOUT	140B
14		229197A1		2	PORCA, Square ECROU	NUT MUTTER	TUERCA NUT	DADO NUT	5780
15		127083A1		2	COTOVELO COUDE	ELBOW KNIESTÜCK	CODO VINKELRØR	GOMITO KNIESTUK	085G
16		87567192		1	MANGUEIRA, Heater Supply, 2250mm FLEXIBLE	HOSE SCHLAUCH	TUBO SLANGE	TUBO FLESSIBILE SLANG	030M
17		87567191		1	MANGUEIRA, Heater Return, 1656mm FLEXIBLE	HOSE SCHLAUCH	TUBO SLANGE	TUBO FLESSIBILE SLANG	030M
18		642560		1	CONEXÃO, 5/8" Hose X 3/8" NPTF Beaded RACCORD	FITTING ARMATUR	ACOPLAMIENTO FITTING	RACCORDO AANSLUITING	3300

SR200

50.200.03	01	p2	02/11

HEATER PLUMBING BASIC (SR200,TR270)
HEATER PLUMBING BASIC (SR200,TR270)
HEATER PLUMBING BASIC (SR200,TR270)
HEATER PLUMBING BASIC (SR200,TR270)

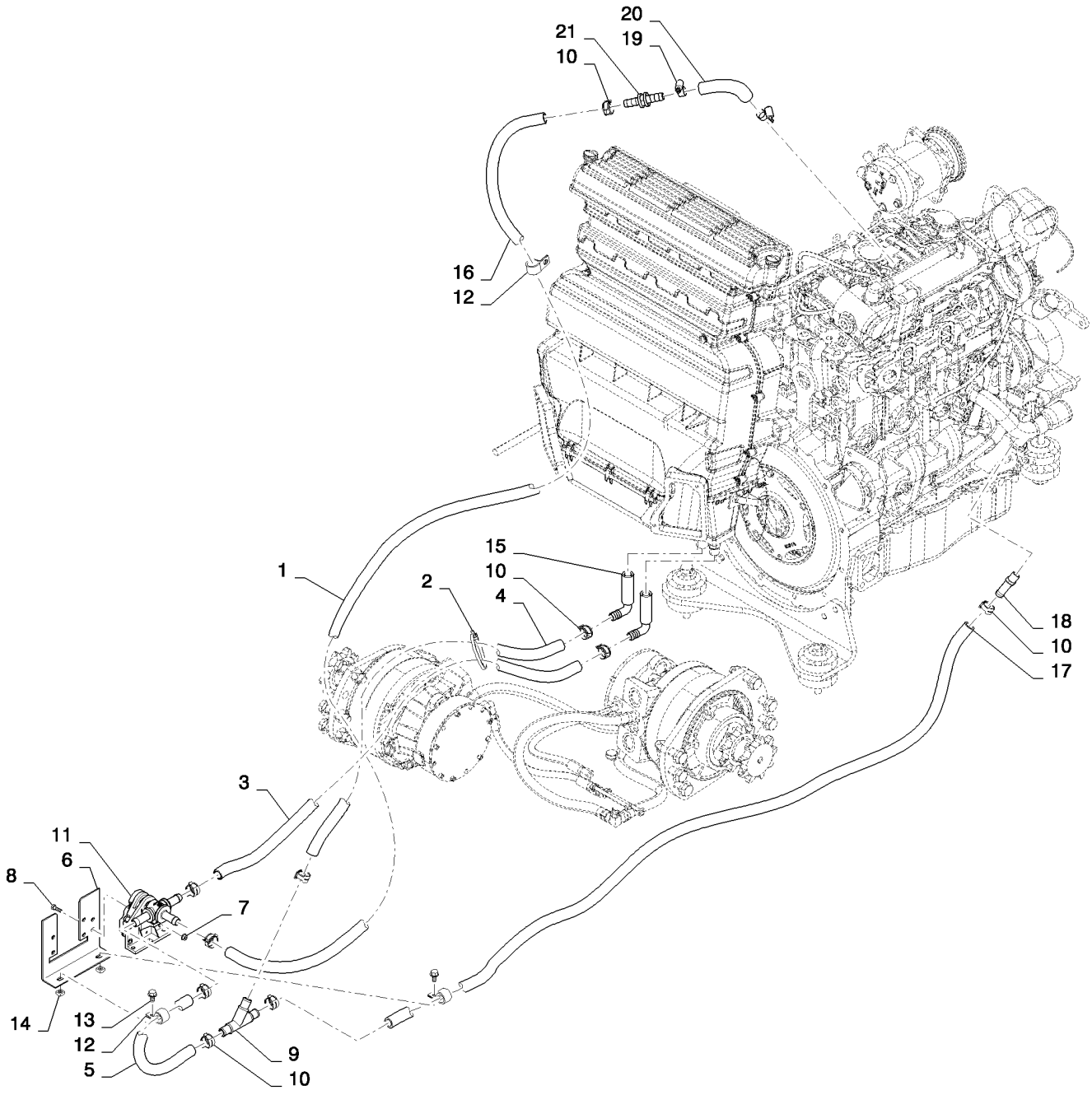

HEATER PLUMBING BASIC (SR200,TR270)
HEATER PLUMBING BASIC (SR200,TR270)
HEATER PLUMBING BASIC (SR200,TR270)
HEATER PLUMBING BASIC (SR200,TR270)

R	N	P.N.	MOD	Q	Denominação Description	Description Bezeichnung	Denominacion Beskrivelse	Descrizione Beschrijving	L.C.
19		**86625021**		1	BRAÇADEIRA MANGUEIRA, #12, 0.69/1.25 Type F Worm				
						HOSE CLAMP	ABRAZADERA DE MANG	FASCETTA STRINGITUB	P729
					COLLIER POUR FLEXIBL	SCHLAUCHSCHELLE	SLANGEKLEMME	SLANGKLEM	
20		**87617163**		1	MANGUEIRA DO AQUECEDOR, 15.00 mm ID, 18.00 mm ID x 73.00 mm, SAE 20R4, Heater Supply, Formed				
						HEATER HOSE	TUBO DE CALENTADOR	TUBO FLESS. RISCALDA	A057
					FLEXIBLE DE CHAUFFA(	HEIZUNGSSCHLAUCH	SLANGE, VARMEAPPAR/	VERWARMINGSSLANG	
21		**87617165**		1	ADAPTADOR, Hose, Barb Splice, Connector				
						ADAPTER	ADAPTADOR	ADATTATORE	001A
					ADAPTATEUR	ADAPTER	ADAPTER	ADAPTER	

50.200.03	02	p1	02/11

AC PLUMBING BASIC (SR200,TR270)
AC PLUMBING BASIC (SR200,TR270)
AC PLUMBING BASIC (SR200,TR270)
AC PLUMBING BASIC (SR200,TR270)

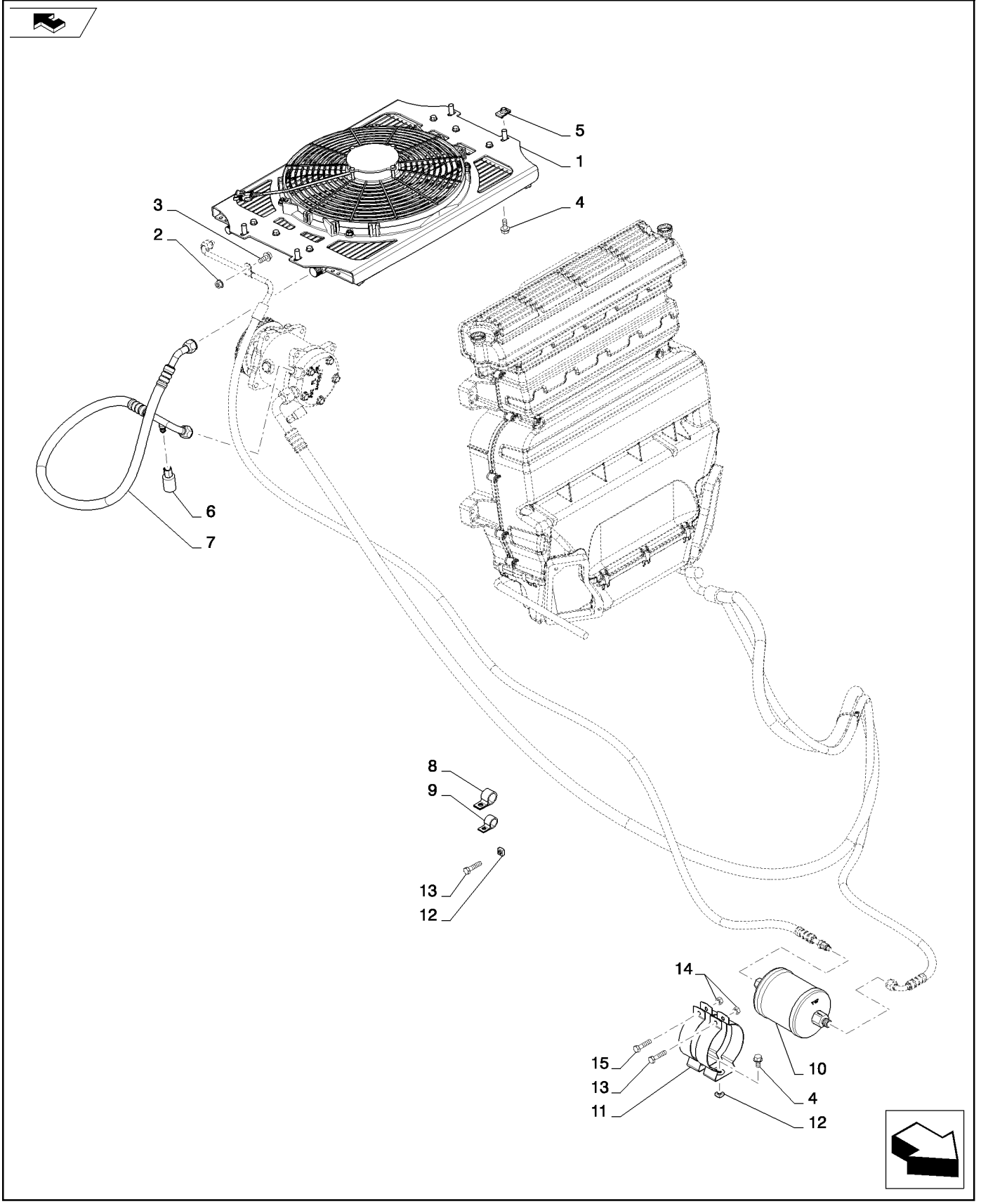

AC PLUMBING BASIC (SR200,TR270)
AC PLUMBING BASIC (SR200,TR270)
AC PLUMBING BASIC (SR200,TR270)
AC PLUMBING BASIC (SR200,TR270)

R	N	P.N.	MOD	Q	Denominação Description Bezeichnung	Denominacion Beskrivelse	Descrizione Beschrijving	L.C.
1		84312881		1	CONDENSADOR, Assembly, w/Fan CONDENSER CONDENSATEUR KONDENSATOR	CONDENSADOR KONDENSATOR	CONDENSATORE CONDENSOR	220C
2		84317965		1	MANGUEIRA AR CONDICIONADO, AC Discharge A/C HOSE FLEXIBLE CLIMATISATIC KLIMAANLAGENSCHLAU	TUBO A/A SLANGE, AIRCONDITION	TUBO FLESSIBILE A/C SLANG VOOR AIRCO	A054
3		87000227		1	INTERRUP ALTA PRESSÃO AC A/C HIGH PRESSURE SV PRESSOSTAT HP CLIMA HOCHDR-SCHALTER KL	INT. PRESIÓN ALTA A/A KONTAKT, A/C HØJTRYK	INTERR. ALTA PRESS. A HOGEDRUKSCHAKELAA	A102
4		86637978		1	BRAÇADEIRA, 3/8", Insul, 5/16" Bolt CLAMP COLLIER KLEMME	ABRAZADERA SPÆNDEBÅND	MORSETTO KLEM	120M
5		9804277		1	PORCA, M8 x 1.25, Flg, Cl 8 NUT ECROU MUTTER	TUERCA MØTRIK	DADO MOER	010D
6		9804258		5	PARAFUSO, Hex Flg, M8 x 20, 8.8 BOLT VIS SCHRAUBE	PERNO BOLT	BULLONE BOUT	140B
7		86625074		4	PORCA NUT ECROU MUTTER	TUERCA MØTRIK	DADO MOER	010D
8		86511841		2	PARAFUSO, Hex Flg, M8 x 16, 8.8 BOLT VIS SCHRAUBE	PERNO BOLT	BULLONE BOUT	140B
9		84352508		1	MANGUEIRA, Assembly, AC Liquid HOSE FLEXIBLE SCHLAUCH	TUBO SLANGE	TUBO FLESSIBILE SLANG	030M
10		84403037		1	CONJ. MANGUEIRA, AC Discharge HOSE ASSY. ENSEMBLE DE FLEXIBLE SCHLAUCHBAUGRUPPE	CONJUNTO DE TUBOS SLANGEENHED	COMPLESS. TUBO FLES SLANGEENHEID	P457
11		84372625		1	CONJ. MANGUEIRA, AC Suction HOSE ASSY. ENSEMBLE DE FLEXIBLE SCHLAUCHBAUGRUPPE	CONJUNTO DE TUBOS SLANGEENHED	COMPLESS. TUBO FLES SLANGEENHEID	P457
12		L11541		1	PRENDEDOR DE CABOS, Nylon Tie, 7-8in CABLE STRAP BRIDE DE CABLE KABELBINDER	BANDA DE CABLE KABELSTROP	FASCETTA PER CAVO BUNDELBAND	P716
13		229197A1		2	PORCA, Square NUT ECROU MUTTER	TUERCA NUT	DADO NUT	5780
14		87105841		2	SUPORTE, HVAC BRACKET SUPPORT HALTERUNG	SOPORTE BESLAG	STAFFA STEUN	225S
15		87105840		1	DESIDRATADOR RECEIVER-DRYER RESERVOIR DESHYDRA TROCKNERPATRONE	RECEPTOR-SECADOR VANDUDSKILLER	SERBATOIO-ESSICCATC FILTERDROGER	058D
16		412479		2	PARAFUSO, Hex, M8 x 35, 8.8 BOLT VIS SCHRAUBE	PERNO BOLT	BULLONE BOUT	140B
17		9706690		2	PORCA, M8, Cl 8 NUT ECROU MUTTER	TUERCA MØTRIK	DADO MOER	010D

SR200

50.200.03	03	p1	02/11

HVAC, LARGE FRAME F5C (SR200-TV380)
HVAC, LARGE FRAME F5C (SR200-TV380)
HVAC, LARGE FRAME F5C (SR200-TV380)
HVAC, LARGE FRAME F5C (SR200-TV380)

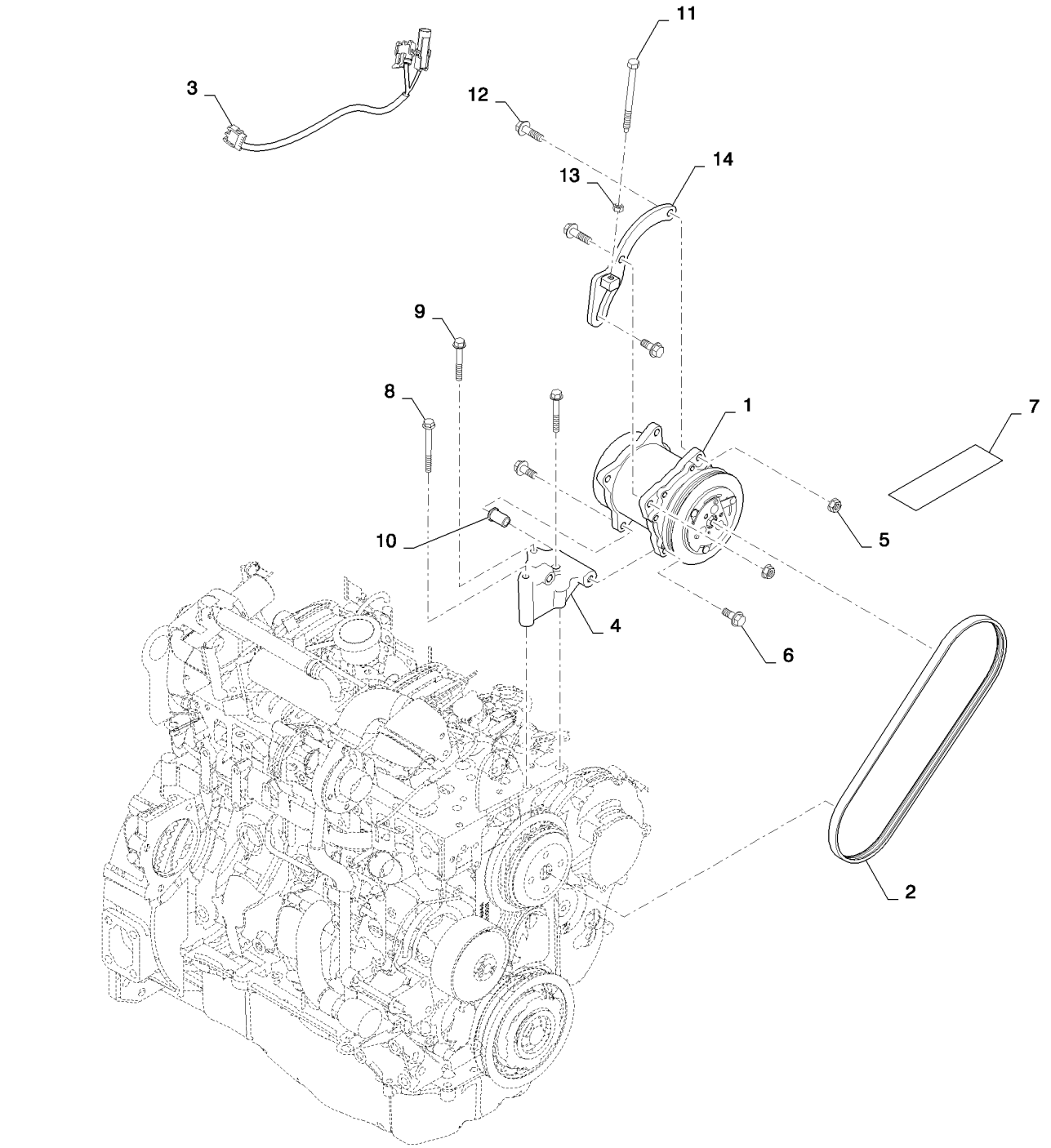

HVAC, LARGE FRAME F5C (SR200-TV380)
HVAC, LARGE FRAME F5C (SR200-TV380)
HVAC, LARGE FRAME F5C (SR200-TV380)
HVAC, LARGE FRAME F5C (SR200-TV380)

R	N	P.N.	MOD	Q	Denominação Description	Description Bezeichnung	Denominacion Beskrivelse	Descrizione Beschrijving	L.C.
1		84321961		1	COMPRESSOR AR COND. COMPRESSEUR CLIMAT	AIRCOND. COMPRESSO KLIMAANLAGENKOMPRI	COMPRESOR DE A/C AIRCONDITION KOMPRE	COMPRESSORE ARIA C AIRCOCOMPRESSOR	217C
2		84317961		1	CORREIA, V-Belt, AC Drive COURROIE	BELT RIEMEN	CORREA REM	CINGHIA RIEM	174C
3		84315532		1	CHICOTE, HVAC Jumper FAISCEAU ELECTRIQUE	WIRE HARNESS KABELBAUM	GRUPO DE CABLES KABELNET	CABLAGGIO KABELBOOM	070I
4		87649945		1	SUPORTE, Compressor, AC SUPPORT	BRACKET HALTERUNG	SOPORTE BESLAG	STAFFA STEUN	225S
5		9804278		2	PORCA, M10 x 1.5, Flg, Cl 8 ECROU	NUT MUTTER	TUERCA MØTRIK	DADO MOER	010D
6		9804261		3	PARAFUSO, Hex Flg, M10 x 25, 8.8 VIS	BOLT SCHRAUBE	PERNO BOLT	BULLONE BOUT	140B
7		86639409		1	ADESIVO AUTOCOLLANT	DECAL AUFKLEBER	CALCOMANÍA TRANSFER	DECALCOMANIA STICKER	012D
8		86705425		1	PARAFUSO, Hex Flg, M8 x 80, 8.8 VIS	BOLT SCHRAUBE	PERNO BOLT	BULLONE BOUT	140B
9		86511843		2	PARAFUSO, Hex Flg, M8 x 60, 8.8 VIS	BOLT SCHRAUBE	PERNO BOLT	BULLONE BOUT	140B
10		87622384		1	BUCHA, F5C AC Bracket BAGUE	BUSHING BUCHSE	CASQUILLO BØSNING	BOCCOLA BUS	095B
11		87649979		1	PARAFUSO, Tensioner VIS	BOLT SCHRAUBE	PERNO BOLT	BULLONE BOUT	140B
12		86511845		2	PARAFUSO, Hex Flg, M10 x 35, 8.8 VIS	BOLT SCHRAUBE	PERNO BOLT	BULLONE BOUT	140B
13		9706690		1	PORCA, M8, Cl 8 ECROU	NUT MUTTER	TUERCA MØTRIK	DADO MOER	010D
14		87711926		1	SUPORTE, Tensioner, WA SUPPORT	BRACKET HALTERUNG	SOPORTE BESLAG	STAFFA STEUN	225S

50.200.05		p1	08/11

HEATER (ALL CASE)
HEATER (ALL CASE)
HEATER (ALL CASE)
HEATER (ALL CASE)

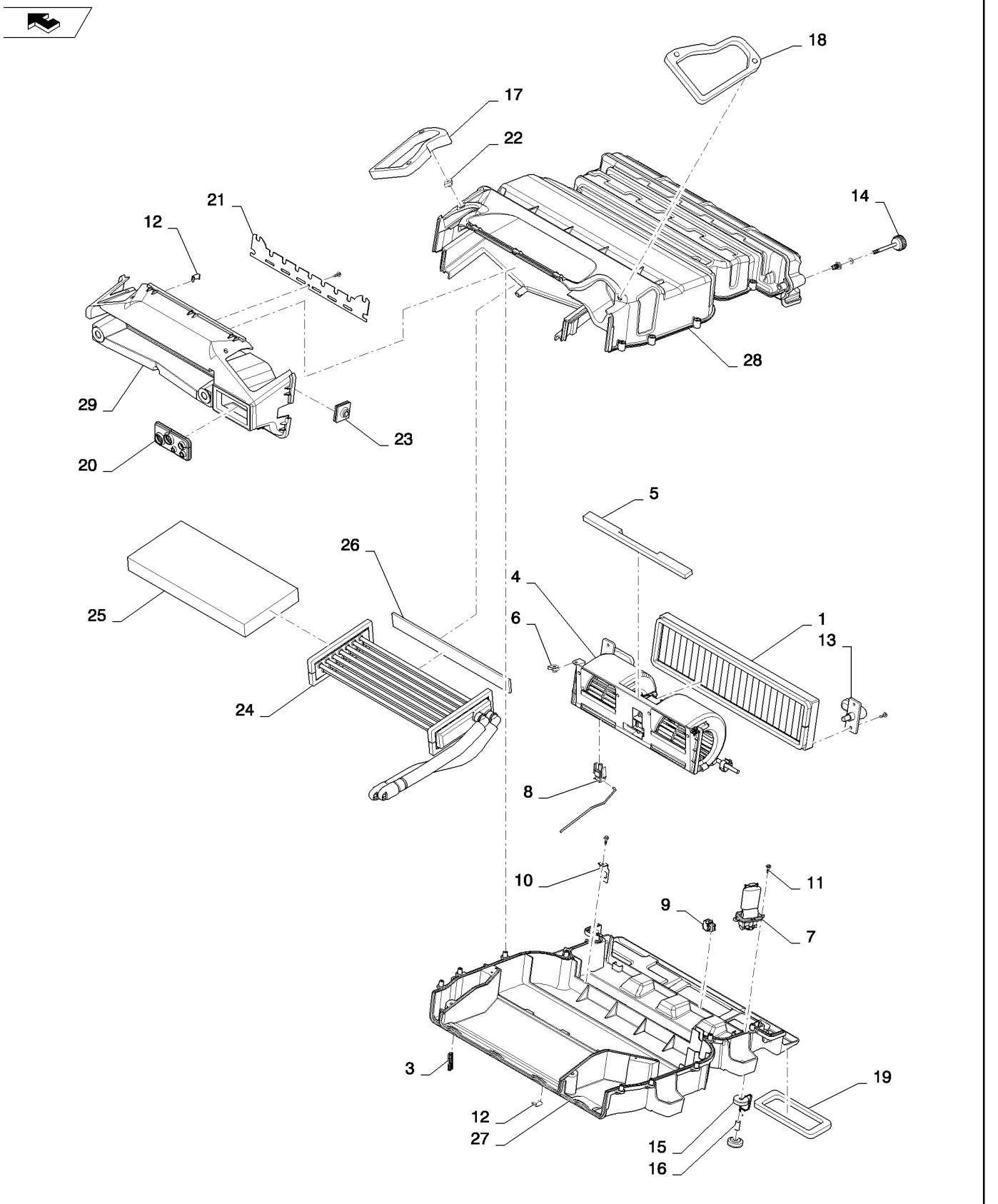

HEATER (ALL CASE)
HEATER (ALL CASE)
HEATER (ALL CASE)
HEATER (ALL CASE)

R	N	P.N.	MOD	Q	Denominação Description	Description Bezeichnung	Denominacion Beskrivelse	Descrizione Beschrijving	L.C.
1		84376814		1	FILTRO DA CABINE, Air, Service				
						CAB FILTER	FILTRO DE CABINA	FILTRO CABINA	063F
					FILTRE DE LA CABINE	KABINENFILTER	KABINEFILTER	CABINEFILTER	
2		84376815		1	FILTRO DA CABINE, Air, Charcoal, Service, Not Shown				
						CAB FILTER	FILTRO DE CABINA	FILTRO CABINA	063F
					FILTRE DE LA CABINE	KABINENFILTER	KABINEFILTER	CABINEFILTER	
3		84380586		1	ESTOJO, Filter	CASE	ESTUCHE	CASSA; SCATOLA	101A
					CARTER	GEHÄUSE	KASSE	HUIS	
4		84380587		1	MOTOR ELÉTRICO, Blower				
						ELECTRIC MOTOR	MOTOR ELÉCTRICO	MOTORE ELETTRICO	128M
					MOTEUR ELECTRIQUE	ELEKTROMOTOR	EL-MOTOR	ELEKTROMOTOR	
5		84380588		1	JUNTA, Blower	GASKET	JUNTA	GUARNIZIONE	123G
					JOINT	DICHTUNG	PAKNING	PAKKING	
6		84380589		2	GRAMPO DO CABO, Spring, Blower				
						CABLE CLIP	ABRAZADERA DE CABLE	FERMO PER CAVO	P656
					ATTACHE-CABLE	KABELSCHELLE	KABELKLEMME	KABELKLEM	
7		84380590		1	RESISTOR	RESISTOR	RESISTENCIA	RESISTORE	040R
					RESISTANCE	WIDERSTAND	MODSTAND	WEERSTAND	
8		84380592		1	CHICOTE, W/ Relay	WIRE HARNESS	GRUPO DE CABLES	CABLAGGIO	070I
					FAISCEAU ELECTRIQUE	KABELBAUM	KABELNET	KABELBOOM	
9		84380593		3	GRAMPO DO CABO, Harness				
						CABLE CLIP	ABRAZADERA DE CABLE	FERMO PER CAVO	P656
					ATTACHE-CABLE	KABELSCHELLE	KABELKLEMME	KABELKLEM	
10		84380594		1	SUPORTE, Relay	BRACKET	SOPORTE	STAFFA	225S
					SUPPORT	HALTERUNG	BESLAG	STEUN	
11		84380596		23	PARAFUSO, 4 X 16	SCREW	TORNILLO	VITE	040V
					VIS	SCHRAUBE	SKRUE	SCHROEF	
12		84380597		11	ESTOJO, Cup, Condensate	CASE	ESTUCHE	CASSA; SCATOLA	101A
					CARTER	GEHÄUSE	KASSE	HUIS	
13		84380598		2	TRINCO, Filter, Closing	LATCH HOOK	GANCHO DE PESTILLO	GANCIO DISPOS. CHIUS	Z305
					CROCHET DE VERROUI	VERRIEGELUNGSHAKEN	SMÆKKROG	VERGRENDELHAAK	
14		84380599		2	MAÇANETA, Closing	KNOB	MANDO	MANOPOLA	150P
					BOUTON	RUNDGRIFF	GREB	KNOP	
15		5192101		8	BLOCO, Anti-vibration	BLOCK	BLOQUE	BLOCCO	074B
					BLOC	BLOCK	MOTORBLOK	BLOK	
16		84380601		4	ESPAÇADOR, Washer, Silent, Block				
						SPACER	SEPARADOR	DISTANZIALE	075D
					ENTRETOISE	DISTANZSTÜCK	AFSTANDSSTYKKE	AFSTANDSSTUK	
17		84380602		1	JUNTA, Left, Air Outlet	GASKET	JUNTA	GUARNIZIONE	123G
					JOINT	DICHTUNG	PAKNING	PAKKING	
18		84380603		1	JUNTA, Right, Air Outlet	GASKET	JUNTA	GUARNIZIONE	123G
					JOINT	DICHTUNG	PAKNING	PAKKING	
19		84380604		1	JUNTA, Air Inlet	GASKET	JUNTA	GUARNIZIONE	123G
					JOINT	DICHTUNG	PAKNING	PAKKING	
20		84380608		1	JUNTA, Hose Interface	GASKET	JUNTA	GUARNIZIONE	123G
					JOINT	DICHTUNG	PAKNING	PAKKING	
21		84380609		1	PLACA, Plate, Water Condensate				
						PLATE	PLACA	PIASTRA	105P
					PLAQUE	PLATTE	PLADE	PLAAT	

50.200.05		p2	08/11

HEATER (ALL CASE)
HEATER (ALL CASE)
HEATER (ALL CASE)
HEATER (ALL CASE)

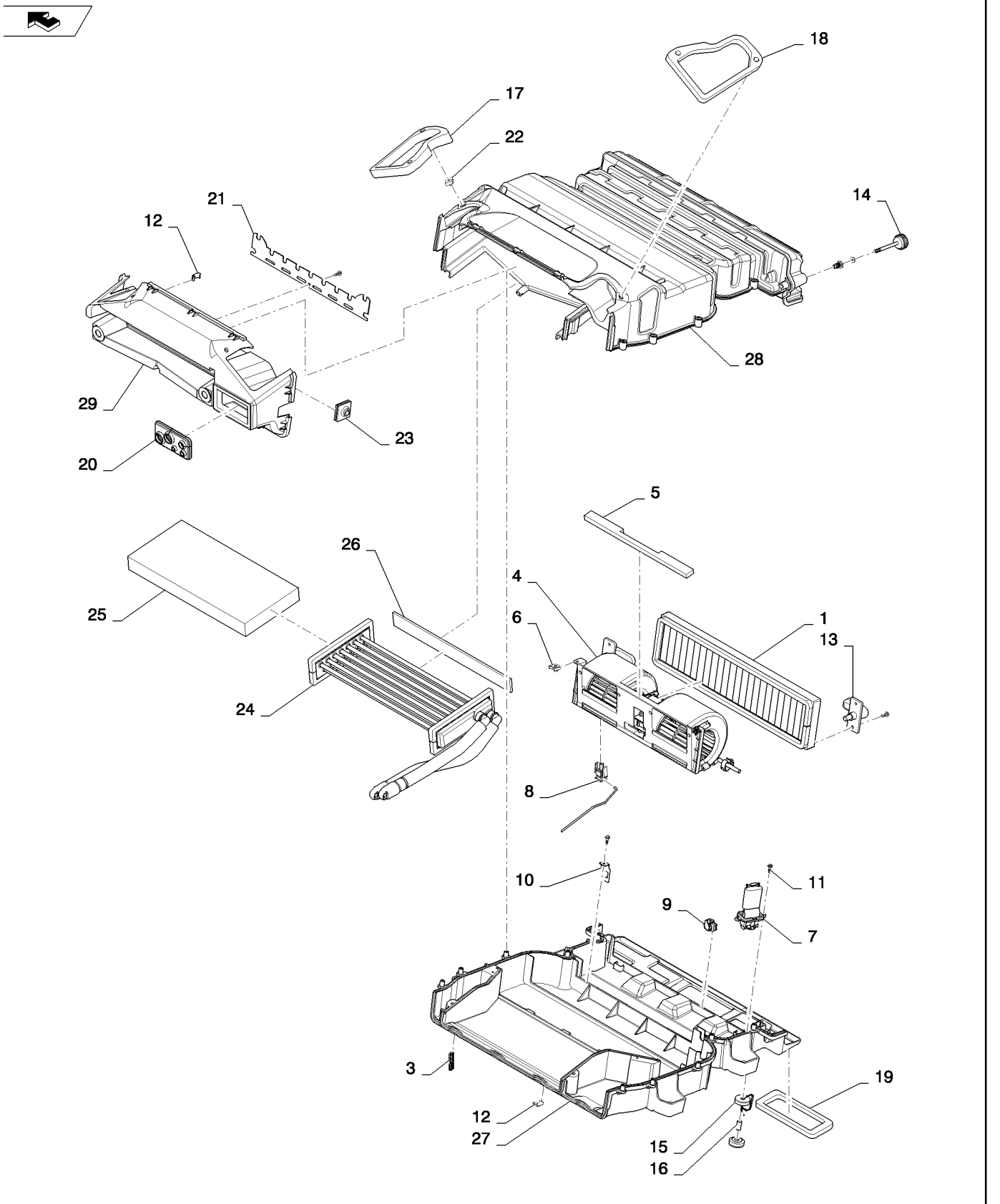

HEATER (ALL CASE)
HEATER (ALL CASE)
HEATER (ALL CASE)
HEATER (ALL CASE)

R	N	P.N.	MOD	Q	Denominação Description Bezeichnung	Description Bezeichnung	Denominacion Beskrivelse	Descrizione Beschrijving	L.C.
22		**84380611**		4	GRAMPO, Spring, M6 for Ducts				
						CLIP	ABRAZADERA	FERMO	045F
					COLLIER	KLAMMER	KLIPS	KLEM	
23		**84380612**		1	JUNTA, Harness	GASKET	JUNTA	GUARNIZIONE	123G
					JOINT	DICHTUNG	PAKNING	PAKKING	
24		**84380613**		1	AQUECEDOR	HEATER	CALENTADOR	RISCALDATORE	105R
					CHAUFFAGE	HEIZUNG	VARMEAPPARAT	VERWARMING	
25		**84380614**		1	JUNTA, Heater Core	GASKET	JUNTA	GUARNIZIONE	123G
					JOINT	DICHTUNG	PAKNING	PAKKING	
26		**84380615**		1	JUNTA, Heater, Lateral	GASKET	JUNTA	GUARNIZIONE	123G
					JOINT	DICHTUNG	PAKNING	PAKKING	
27		**84381032**		1	CAIXA, Lower	BOX	CAJA	CASSA; SCATOLA	035S
					BOITIER	KASTEN; OFF KASTENAI	KASSE	DOOS	
28		**84381034**		1	CAIXA, Upper	BOX	CAJA	CASSA; SCATOLA	035S
					BOITIER	KASTEN; OFF KASTENAI	KASSE	DOOS	
29		**84381035**		1	CAIXA, Bottom	BOX	CAJA	CASSA; SCATOLA	035S
					BOITIER	KASTEN; OFF KASTENAI	KASSE	DOOS	

50.200.06		p1	08/11

HEATER W/AC (SR175-TV380)
HEATER W/AC (SR175-TV380)
HEATER W/AC (SR175-TV380)
HEATER W/AC (SR175-TV380)

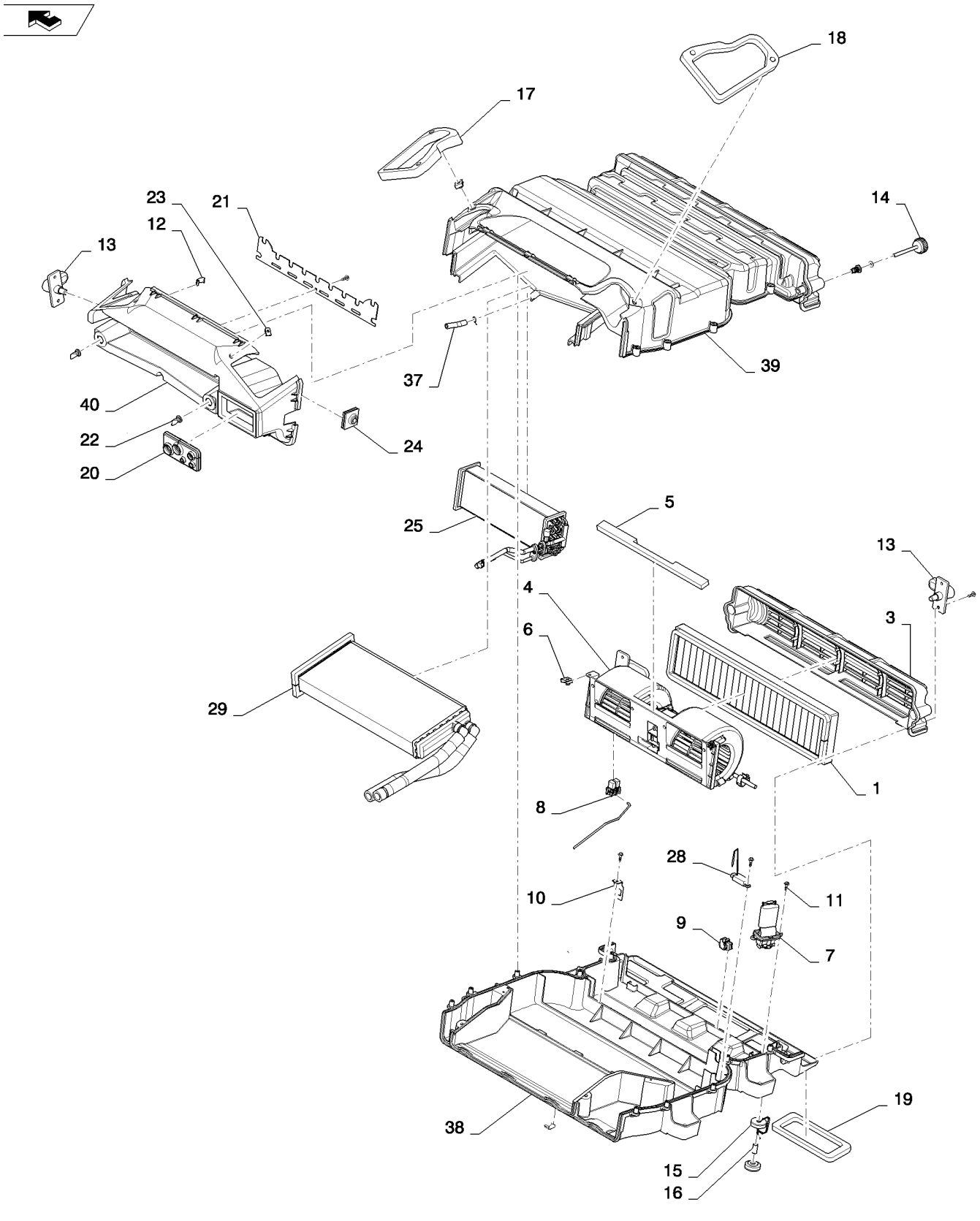

HEATER W/AC (SR175-TV380)
HEATER W/AC (SR175-TV380)
HEATER W/AC (SR175-TV380)
HEATER W/AC (SR175-TV380)

R	N	P.N.	MOD	Q	Denominação Description	Description Bezeichnung	Denominacion Beskrivelse	Descrizione Beschrijving	L.C.
1		84376814		1	FILTRO DA CABINE, Air, Service				
						CAB FILTER	FILTRO DE CABINA	FILTRO CABINA	063F
					FILTRE DE LA CABINE	KABINENFILTER	KABINEFILTER	CABINEFILTER	
2		84376815		1	FILTRO DA CABINE, Air, Charcoal, Service (Not Shown)				
						CAB FILTER	FILTRO DE CABINA	FILTRO CABINA	063F
					FILTRE DE LA CABINE	KABINENFILTER	KABINEFILTER	CABINEFILTER	
3		84380586		1	ESTOJO, Filter	CASE	ESTUCHE	CASSA; SCATOLA	101A
					CARTER	GEHÄUSE	KASSE	HUIS	
4		84380587		1	MOTOR ELÉTRICO, Blower				
						ELECTRIC MOTOR	MOTOR ELÉCTRICO	MOTORE ELETTRICO	128M
					MOTEUR ELECTRIQUE	ELEKTROMOTOR	EL-MOTOR	ELEKTROMOTOR	
5		84380588		1	JUNTA, Blower	GASKET	JUNTA	GUARNIZIONE	123G
					JOINT	DICHTUNG	PAKNING	PAKKING	
6		84380589		2	GRAMPO DO CABO, Spring, Blower				
						CABLE CLIP	ABRAZADERA DE CABLE	FERMO PER CAVO	P656
					ATTACHE-CABLE	KABELSCHELLE	KABELKLEMME	KABELKLEM	
7		84380590		1	RESISTOR	RESISTOR	RESISTENCIA	RESISTORE	040R
					RESISTANCE	WIDERSTAND	MODSTAND	WEERSTAND	
8		84380592		1	CHICOTE, W/ Relay	WIRE HARNESS	GRUPO DE CABLES	CABLAGGIO	070I
					FAISCEAU ELECTRIQUE	KABELBAUM	KABELNET	KABELBOOM	
9		84380593		3	GRAMPO DO CABO, Harness				
						CABLE CLIP	ABRAZADERA DE CABLE	FERMO PER CAVO	P656
					ATTACHE-CABLE	KABELSCHELLE	KABELKLEMME	KABELKLEM	
10		84380594		1	SUPORTE, Relay	BRACKET	SOPORTE	STAFFA	225S
					SUPPORT	HALTERUNG	BESLAG	STEUN	
11		84380596		23	PARAFUSO, 4 X 16	SCREW	TORNILLO	VITE	040V
					VIS	SCHRAUBE	SKRUE	SCHROEF	
12		84380597		11	ESTOJO, Cup, Condensate	CASE	ESTUCHE	CASSA; SCATOLA	101A
					CARTER	GEHÄUSE	KASSE	HUIS	
13		84380598		2	TRINCO, Filter Closing	LATCH HOOK	GANCHO DE PESTILLO	GANCIO DISPOS. CHIUS	Z305
					CROCHET DE VERROUI	VERRIEGELUNGSHAKEN	SMÆKKROG	VERGRENDELHAAK	
14		84380599		2	MAÇANETA, Closing	KNOB	MANDO	MANOPOLA	150P
					BOUTON	RUNDGRIFF	GREB	KNOP	
15		5192101		8	BLOCO, Anti-vibration	BLOCK	BLOQUE	BLOCCO	074B
					BLOC	BLOCK	MOTORBLOK	BLOK	
16		84380601		4	ESPAÇADOR, Silent Block	SPACER	SEPARADOR	DISTANZIALE	075D
					ENTRETOISE	DISTANZSTÜCK	AFSTANDSSTYKKE	AFSTANDSSTUK	
17		84380602		1	JUNTA, Left, Air Outlet	GASKET	JUNTA	GUARNIZIONE	123G
					JOINT	DICHTUNG	PAKNING	PAKKING	
18		84380603		1	JUNTA, Right, Air Outlet	GASKET	JUNTA	GUARNIZIONE	123G
					JOINT	DICHTUNG	PAKNING	PAKKING	
19		84380604		1	JUNTA, Air Inlet	GASKET	JUNTA	GUARNIZIONE	123G
					JOINT	DICHTUNG	PAKNING	PAKKING	
20		84380608		1	JUNTA, Hose Interface	GASKET	JUNTA	GUARNIZIONE	123G
					JOINT	DICHTUNG	PAKNING	PAKKING	
21		84380609		1	PLACA, Water Condensate	PLATE	PLACA	PIASTRA	105P
					PLAQUE	PLATTE	PLADE	PLAAT	

50.200.06		p2	08/11

HEATER W/AC (SR175-TV380)
HEATER W/AC (SR175-TV380)
HEATER W/AC (SR175-TV380)
HEATER W/AC (SR175-TV380)

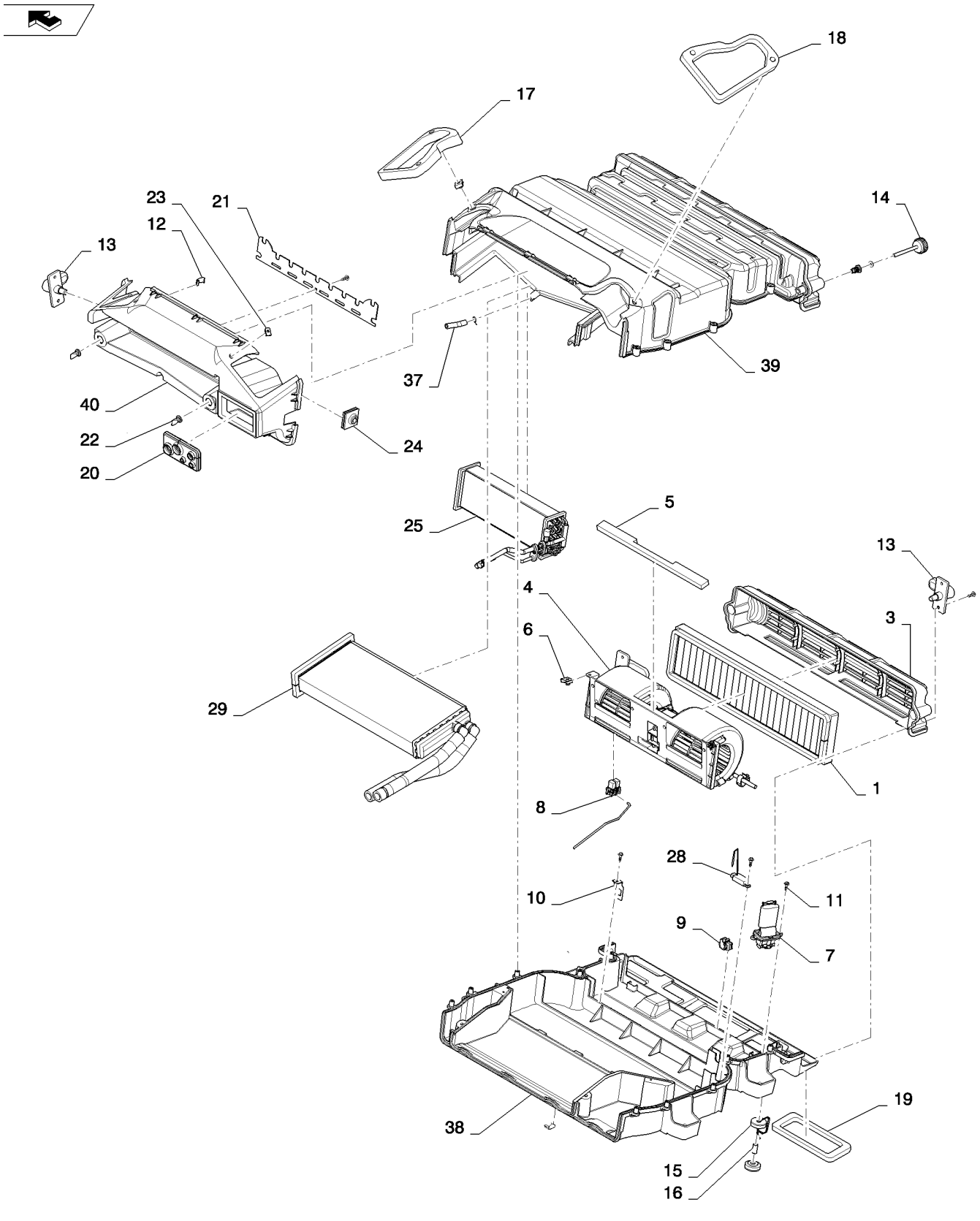

HEATER W/AC (SR175-TV380)
HEATER W/AC (SR175-TV380)
HEATER W/AC (SR175-TV380)
HEATER W/AC (SR175-TV380)

R	N	P.N.	MOD	Q	Denominação Description	Description Bezeichnung	Denominacion Beskrivelse	Descrizione Beschrijving	L.C.
22		**84380610**		2	VÁLVULA, Water Condensate				
						VALVE	VÁLVULA	VALVOLA	9620
					SOUPAPE	VENTIL	VENTIL	KLEP	
23		**84380611**		4	GRAMPO, Spring, M6 for Ducts				
						CLIP	ABRAZADERA	FERMO	045F
					COLLIER	KLAMMER	KLIPS	KLEM	
24		**84380612**		1	JUNTA, Harness	GASKET	JUNTA	GUARNIZIONE	123G
					JOINT	DICHTUNG	PAKNING	PAKKING	
25		**84380613**		1	AQUECEDOR	HEATER	CALENTADOR	RISCALDATORE	105R
					CHAUFFAGE	HEIZUNG	VARMEAPPARAT	VERWARMING	
26		**84380614**		1	JUNTA, Heater Core	GASKET	JUNTA	GUARNIZIONE	123G
					JOINT	DICHTUNG	PAKNING	PAKKING	
27		**84380615**		1	JUNTA, Heater Lateral	GASKET	JUNTA	GUARNIZIONE	123G
					JOINT	DICHTUNG	PAKNING	PAKKING	
28		**84380616**		1	TERMOSTATO, Electronic	THERMOSTAT	TERMOSTATO	TERMOSTATO	096T
					THERMOSTAT	THERMOSTAT	TERMOSTAT	THERMOSTAAT	
29		**84380617**		1	EVAPORADOR, Incl. Ref. 30 thru 36				
						EVAPORATOR	EVAPORADOR	EVAPORATORE	064E
					EVAPORATEUR	VERDAMPFER	FORDAMPER	VERDAMPER	
30		**84380618**		1	EVAPORADOR, Pipe, Inlet/Outlet Freon (Not Shown)				
						EVAPORATOR	EVAPORADOR	EVAPORATORE	064E
					EVAPORATEUR	VERDAMPFER	FORDAMPER	VERDAMPER	
31		**84380619**		1	JUNTA, Evaporator Core (Not Shown)				
						GASKET	JUNTA	GUARNIZIONE	123G
					JOINT	DICHTUNG	PAKNING	PAKKING	
32		**84380620**		1	JUNTA, Evaporator Lateral (Not Shown)				
						GASKET	JUNTA	GUARNIZIONE	123G
					JOINT	DICHTUNG	PAKNING	PAKKING	
33		**84380621**		1	VÁLVULA, Expansion (Not Shown)				
						VALVE	VÁLVULA	VALVOLA	9620
					SOUPAPE	VENTIL	VENTIL	KLEP	
34		**84380622**		1	PARAFUSO, M6 X 55, For Expansion Valve (Not Shown)				
						SCREW	TORNILLO	VITE	040V
					VIS	SCHRAUBE	SKRUE	SCHROEF	
35		**84380623**		1	TAMPA, Freon Inlet Cover, 5/8-18 (Not Shown)				
						CAP	TAPÓN	TAPPO	052T
					CAPUCHON	KAPPE	TANKDÆKSEL	DOP	
36		**84380624**		1	TAMPA, Freon Outlet Cover, 7/8-14 (Not Shown)				
						CAP	TAPÓN	TAPPO	052T
					CAPUCHON	KAPPE	TANKDÆKSEL	DOP	
37		**84380625**		1	MANGUEIRA, Tube, Condensate				
						HOSE	TUBO	TUBO FLESSIBILE	030M
					FLEXIBLE	SCHLAUCH	SLANGE	SLANG	
38		**84381032**		1	CAIXA, Lower	BOX	CAJA	CASSA; SCATOLA	035S
					BOITIER	KASTEN; OFF KASTENAI	KASSE	DOOS	
39		**84381034**		1	CAIXA, Upper	BOX	CAJA	CASSA; SCATOLA	035S
					BOITIER	KASTEN; OFF KASTENAI	KASSE	DOOS	
40		**84381035**		1	CAIXA, Bottom	BOX	CAJA	CASSA; SCATOLA	035S
					BOITIER	KASTEN; OFF KASTENAI	KASSE	DOOS	

SECTION INDEX
55 - Sistemas elétricos

55.100.01		CHASSIS OPTIONS HARNESS, MECH MD (SR175-SR200)
55.100.05		CONNECTIONS CABLE FOR ENGINE INJECTION - PLUG GLOW (504385861 - 504385863)
55.100.05	01	ELECTRICAL MECH MED (SR175-SR200)
55.100.05	02	ELECTRICAL MECH MED OPEN CAB (SR175-SR200)
55.100.06	01	ELECTRICAL EH MED (SR175-SR200,TR270)
55.100.06	02	ELECTRICAL EH MED OPEN CAB (SR175-SR200,TR270)
55.100.07	01	BATTERY DISCONNECT MED F5C (SR200)
55.100.07	02	NO BATTERY DISCONNECT MED F5C (SR200)
55.100.08		MULTIFUNCTION ELECTRICAL (SR175,SR200,SR220,SR250,TR270,TR320)
55.100.09		NO MULTIFUNCTION ELECTRICAL (ALL CASE)
55.100.10		ELECTRICAL ASSEMBLY SOCKET NA (ALL CASE)
55.100.10		ELECTRICAL ASSEMBLY SOCKET EU (ALL CASE)
55.101.01		ENGINE ELECTRICAL (SR200,TR270)
55.101.02		BATTERY RETENTION MED (ALL CASE)
55.301.02		ENGINE, ALTERNATOR MOUNTING (504388098)
55.414.01	02	DIAGNOSTIC SENSOR (504308864)
55.418.01		INSTRUMENTS AND ELECTRICAL (SR175,SR200,SR220,SR250,TR270,TR320)
55.418.01	01	COMMON INSTRUMENTS AND ELEC (ALL CASE)
55.418.02		LIGHT ASSY, 90 DEGREE (SR130-SR175,SR200-SR250,TR270,TR320)
55.512.01		IGNITION AND DISPLAY, KEYED/KEYLESS CASE (ALL CASE)
55.514.01		EU ROAD LIGHTS MED RAD CASE (SR175,SR200)
55.514.02		NO ROAD LIGHTS OR TURN SIGNAL (ALL CASE)
55.514.05		LIGHT ASSEMBLY REAR ROAD (ALL CASE)

CHASSIS OPTIONS HARNESS, MECH MD (SR175-SR200)
CHASSIS OPTIONS HARNESS, MECH MD (SR175-SR200)
CHASSIS OPTIONS HARNESS, MECH MD (SR175-SR200)
CHASSIS OPTIONS HARNESS, MECH MD (SR175-SR200)

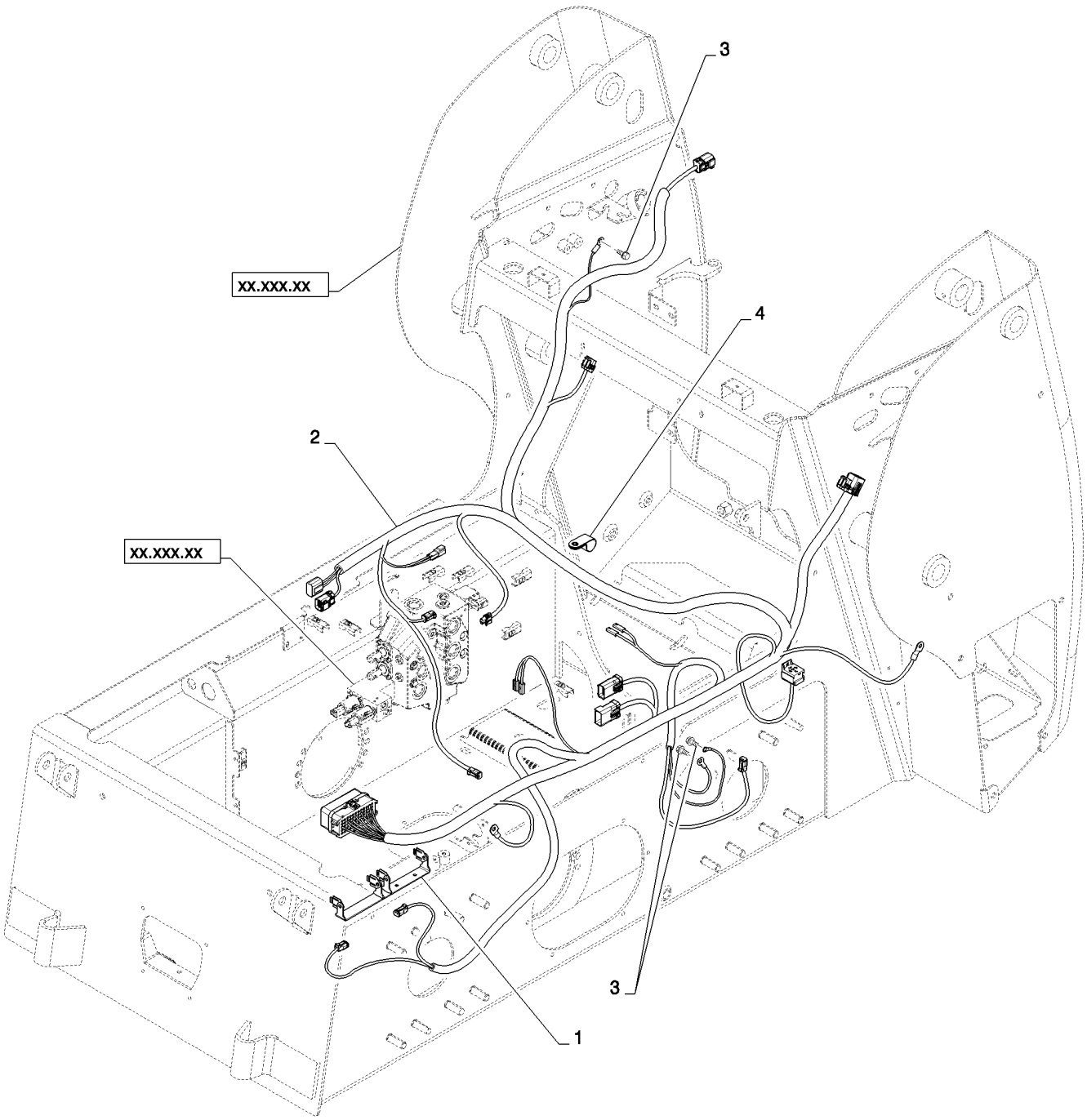

CHASSIS OPTIONS HARNESS, MECH MD (SR175-SR200)
CHASSIS OPTIONS HARNESS, MECH MD (SR175-SR200)
CHASSIS OPTIONS HARNESS, MECH MD (SR175-SR200)
CHASSIS OPTIONS HARNESS, MECH MD (SR175-SR200)

R	N	P.N.	MOD	Q	Denominação Description Bezeichnung Denominacion Beskrivelse Descrizione Beschrijving	L.C.
1		84285504		1	PEGA DE SUPORTE, Double Fuse Box BRACKET, SUPPORTING / PIEZA DE APOYO / SQUADRETTA EQUERRE / TRAGER, STUTZ / BRACKET, SUPPORTING / BRACKET, SUPPORTING	215S
2		84315528		1	CHICOTE, Chassis WIRE HARNESS / GRUPO DE CABLES / CABLAGGIO FAISCEAU ELECTRIQUE / KABELBAUM / KABELNET / KABELBOOM	070I
3		86511841		3	PARAFUSO, Hex Flg, M8 x 16, 8.8 BOLT / PERNO / BULLONE VIS / SCHRAUBE / BOLT / BOUT	140B
4		86000810		1	BRAÇADEIRA CLAMP / ABRAZADERA / MORSETTO COLLIER / KLEMME / SPÆNDEBÅND / KLEM	120M

SR200

55.100.05		p1	06/11

CONNECTIONS CABLE FOR ENGINE INJECTION - PLUG GLOW (504385861 - 504385863)
CONNECTIONS CABLE FOR ENGINE INJECTION - PLUG GLOW (504385861 - 504385863)
CABLE DE CONEXIÓN PARA INYECCIÓN DEL MOTOR (504385861 - 504385863)
CAVO DEI COLLEGAMENTI PER INIEZIONE MOTORE - CANDELETTE PRERISCALDO (504385861 - 504385863)

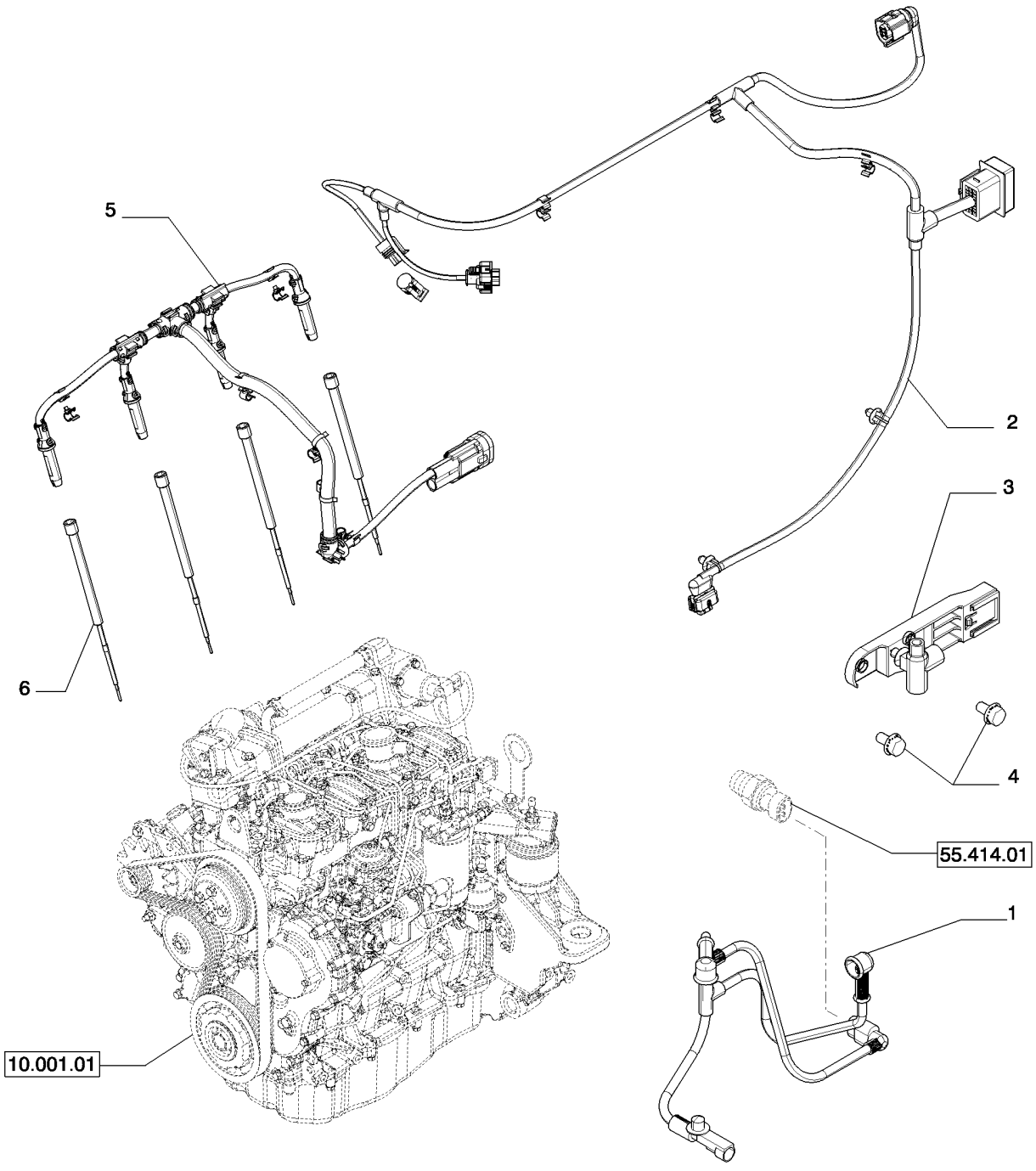

CÂBLE DE CONNEXION POUR INJECTION MOTEUR (504385861 - 504385863)
KABELBAUM FÜR MOTOREINSPRITZUNG (504385861 - 504385863)
TILSLUTNINGSKABEL TIL MOTORINDSPRØJTNING (504385861 - 504385863)
KABELAANSLUITINGEN VOOR MOTORINSPUITING (504385861 - 504385863)

R	N	P.N.	MOD	Q	Denominação Description Bezeichnung	Description Bezeichnung Beskrivelse	Denominacion Beskrivelse Descrizione	Descrizione Beschrijving Beschrijving	L.C.
1		504264648		1	CHICOTE FAISCEAU	HARNESS KABELBAUM	MAZO DE CABLES LEDNINGSNET	CABLAGGIO KABELBOOM	4160
2		5801366188		1	CHICOTE FAISCEAU	HARNESS KABELBAUM	MAZO DE CABLES LEDNINGSNET	CABLAGGIO KABELBOOM	4160
3		504284210		1	BRAÇADEIRA DE FIO SERRE-CABLES	WIRE CLAMP KABELSCHELLE	ABRAZADERA DE CABLE KABELKLEMME	SERRAFILO DRAADKLEM	118S
4		16597925		2	PARAFUSO, M8X14 mm VIS	SCREW SCHRAUBE	TORNILLO SKRUE	VITE SCHROEF	040V
5		{504385864}		1					
6		{504385468}		4					

55.100.05	01	p1	05/11

ELECTRICAL MECH MED (SR175-SR200)
ELECTRICAL MECH MED (SR175-SR200)
ELECTRICAL MECH MED (SR175-SR200)
ELECTRICAL MECH MED (SR175-SR200)

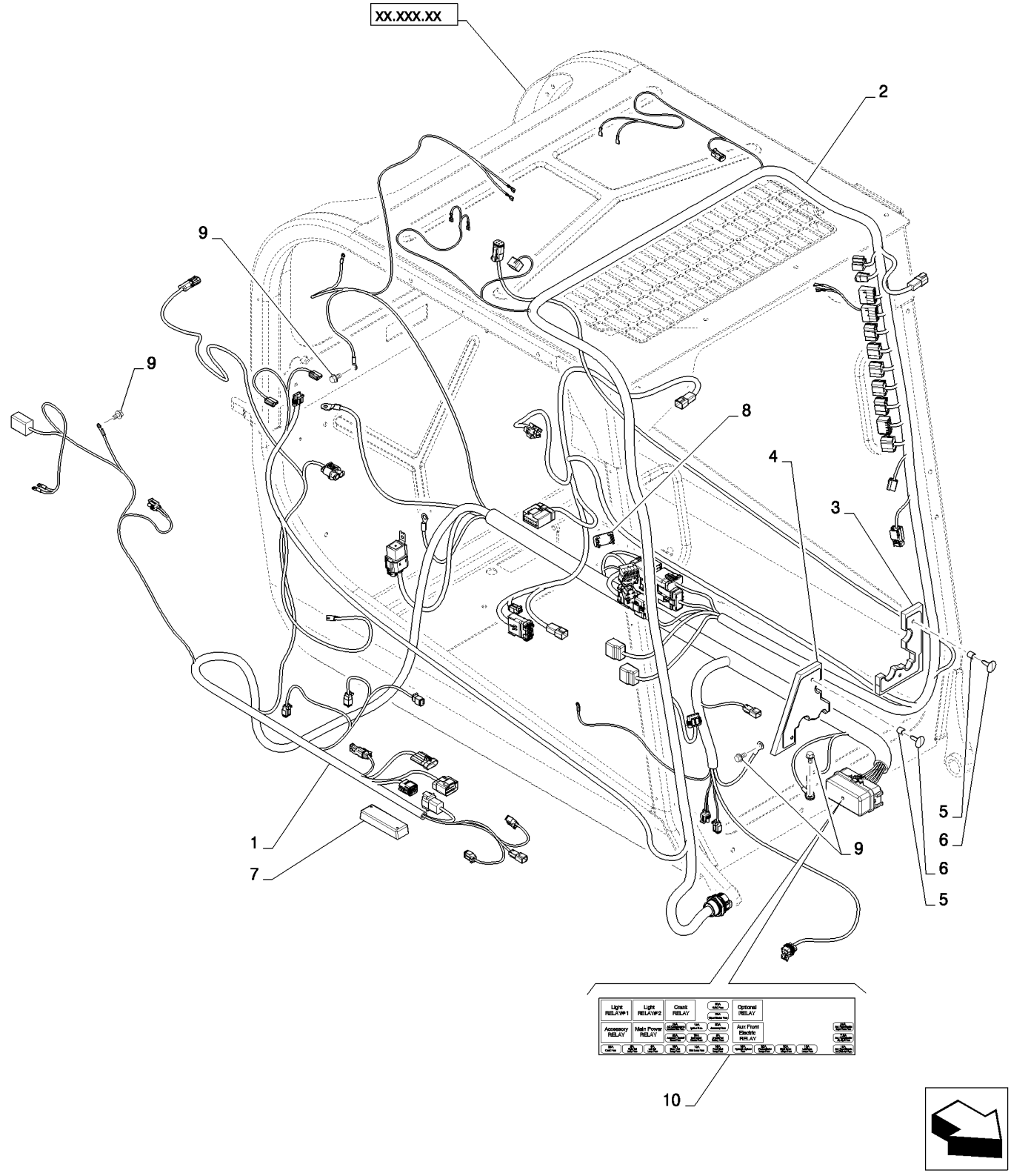

ELECTRICAL MECH MED (SR175-SR200)
ELECTRICAL MECH MED (SR175-SR200)
ELECTRICAL MECH MED (SR175-SR200)
ELECTRICAL MECH MED (SR175-SR200)

R	N	P.N.	MOD	Q	Denominação Description	Description Bezeichnung	Denominacion Beskrivelse	Descrizione Beschrijving	L.C.
1		84352396		1	CHICOTE, Chassis Mechanical MD				
						WIRE HARNESS	GRUPO DE CABLES	CABLAGGIO	070I
					FAISCEAU ELECTRIQUE	KABELBAUM	KABELNET	KABELBOOM	
2		84352394		1	CHICOTE, Cab Mechanical	WIRE HARNESS	GRUPO DE CABLES	CABLAGGIO	070I
					FAISCEAU ELECTRIQUE	KABELBAUM	KABELNET	KABELBOOM	
3		84309935		1	VEDAÇÃO, Assy, LH	SEAL	ANILLO DE CIERRE	GUARNIZIONE; TENUTA	132A
					JOINT	DICHTUNG	PAKNING	AFDICHTING	
4		84309934		1	VEDAÇÃO, Assy, LH	SEAL	ANILLO DE CIERRE	GUARNIZIONE; TENUTA	132A
					JOINT	DICHTUNG	PAKNING	AFDICHTING	
5		87035448		4	ESPAÇADOR, 1/2" Tube x 1/2"				
						SPACER	SEPARADOR	DISTANZIALE	075D
					ENTRETOISE	DISTANZSTÜCK	AFSTANDSSTYKKE	AFSTANDSSTUK	
6		86620930		4	BOTÃO DE IMPULSO	FASTENER	SUJETADOR	DISPOSITIVO DI FISSAG	123B
					ATTACHE	BEFESTIGUNGSELEMEN	LUKKER	BEVESTIGING	
7		84131374		1	VÁLVULA, Driver, PWM Prop Aux				
						VALVE	VÁLVULA	VALVOLA	9620
					SOUPAPE	VENTIL	VENTIL	KLEP	
8		126844A1		1	BUJÃO, Cover	PLUG	TAPÓN	TAPPO	050T
					BOUCHON	STOPFEN	PROP	PLUG	
9		86511841		6	PARAFUSO, Hex Flg, M8 x 16, 8.8				
						BOLT	PERNO	BULLONE	140B
					VIS	SCHRAUBE	BOLT	BOUT	
10		84380451		1	ADESIVO, Fuse Box Layout Mechanical				
						DECAL	CALCOMANÍA	DECALCOMANIA	012D
					AUTOCOLLANT	AUFKLEBER	TRANSFER	STICKER	
11		84420768		10	BOTÃO DE IMPULSO, Push-in Fastener (Not Shown)				
						FASTENER	SUJETADOR	DISPOSITIVO DI FISSAG	123B
					ATTACHE	BEFESTIGUNGSELEMEN	LUKKER	BEVESTIGING	
12		84420746		10	TIRA, Tie (Not Shown)	STRAP	BANDA	FASCETTA	532B
					BRIDE	BAND	STROP	RIEM	

55.100.05	02	p1	06/11

ELECTRICAL MECH MED OPEN CAB (SR175-SR200)
ELECTRICAL MECH MED OPEN CAB (SR175-SR200)
ELECTRICAL MECH MED OPEN CAB (SR175-SR200)
ELECTRICAL MECH MED OPEN CAB (SR175-SR200)

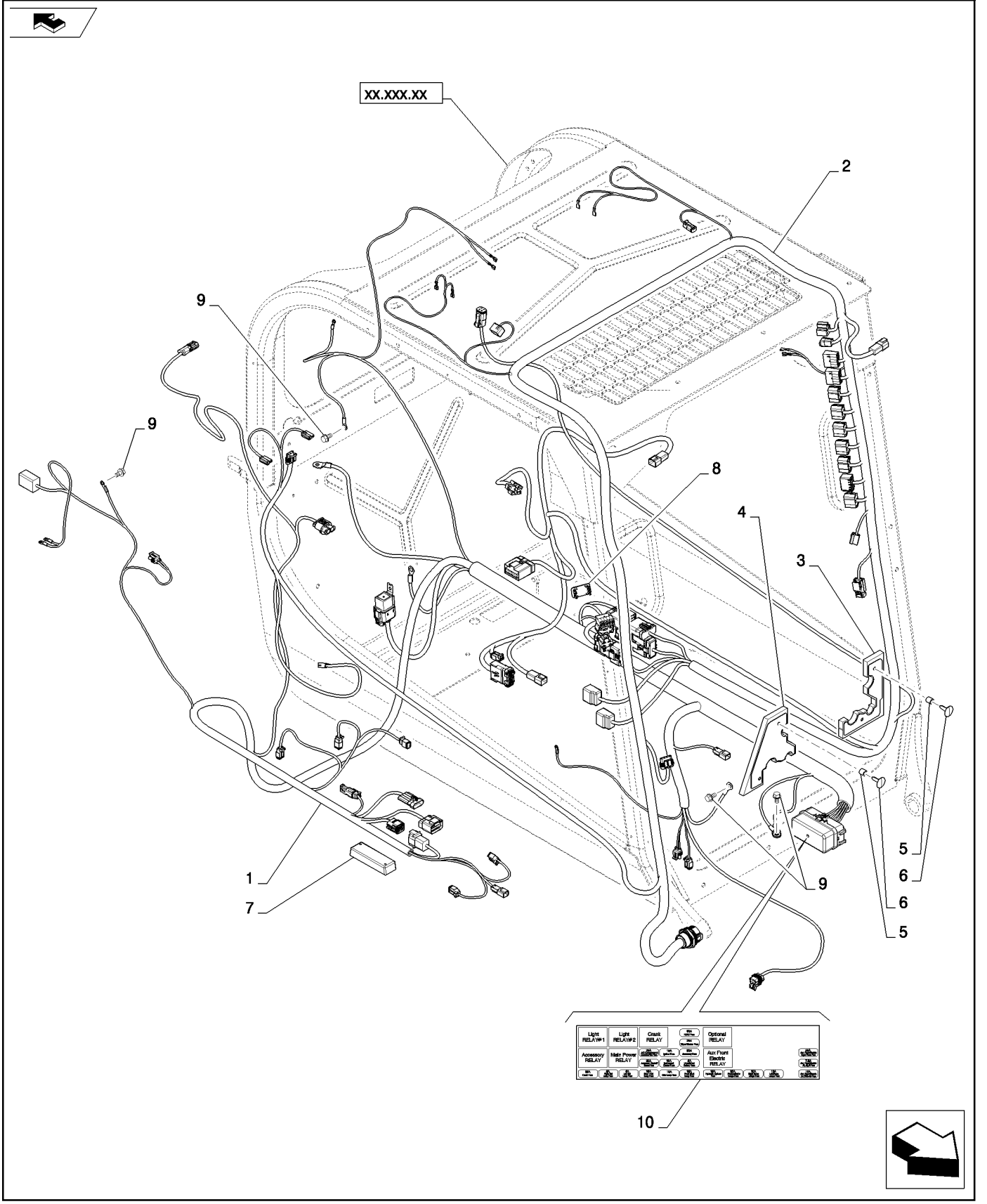

ELECTRICAL MECH MED OPEN CAB (SR175-SR200)
ELECTRICAL MECH MED OPEN CAB (SR175-SR200)
ELECTRICAL MECH MED OPEN CAB (SR175-SR200)
ELECTRICAL MECH MED OPEN CAB (SR175-SR200)

R	N	P.N.	MOD	Q	Denominação Description	Description Bezeichnung	Denominacion Beskrivelse	Descrizione Beschrijving	L.C.
1		84352396		1	CHICOTE, Chassis Mechanical MD				
						WIRE HARNESS	GRUPO DE CABLES	CABLAGGIO	070I
					FAISCEAU ELECTRIQUE	KABELBAUM	KABELNET	KABELBOOM	
2		84353936		1	CHICOTE, Cab Mechanical	WIRE HARNESS	GRUPO DE CABLES	CABLAGGIO	070I
					FAISCEAU ELECTRIQUE	KABELBAUM	KABELNET	KABELBOOM	
3		84309935		1	VEDAÇÃO, Assy, LH	SEAL	ANILLO DE CIERRE	GUARNIZIONE; TENUTA	132A
					JOINT	DICHTUNG	PAKNING	AFDICHTING	
4		84309934		1	VEDAÇÃO, Assy, LH	SEAL	ANILLO DE CIERRE	GUARNIZIONE; TENUTA	132A
					JOINT	DICHTUNG	PAKNING	AFDICHTING	
5		87035448		4	ESPAÇADOR, 1/2" Tube x 1/2"				
						SPACER	SEPARADOR	DISTANZIALE	075D
					ENTRETOISE	DISTANZSTÜCK	AFSTANDSSTYKKE	AFSTANDSSTUK	
6		86620930		4	BOTÃO DE IMPULSO	FASTENER	SUJETADOR	DISPOSITIVO DI FISSAG	123B
					ATTACHE	BEFESTIGUNGSELEMEN	LUKKER	BEVESTIGING	
7		84131374		1	VÁLVULA, Driver, PWM Prop Aux				
						VALVE	VÁLVULA	VALVOLA	9620
					SOUPAPE	VENTIL	VENTIL	KLEP	
8		126844A1		1	BUJÃO, Cover	PLUG	TAPÓN	TAPPO	050T
					BOUCHON	STOPFEN	PROP	PLUG	
9		86511841		6	PARAFUSO, Hex Flg, M8 x 16, 8.8				
						BOLT	PERNO	BULLONE	140B
					VIS	SCHRAUBE	BOLT	BOUT	
10		84380451		1	ADESIVO, Fuse Box Layout Mechanical				
						DECAL	CALCOMANÍA	DECALCOMANIA	012D
					AUTOCOLLANT	AUFKLEBER	TRANSFER	STICKER	
11		87313351		1	GRAMPO, J-clip, Insul. M8 (Not Shown)				
						CLIP	ABRAZADERA	FERMO	045F
					COLLIER	KLAMMER	KLIPS	KLEM	
12		84420768		10	BOTÃO DE IMPULSO, Push-in Fastener (Not Shown)				
						FASTENER	SUJETADOR	DISPOSITIVO DI FISSAG	123B
					ATTACHE	BEFESTIGUNGSELEMEN	LUKKER	BEVESTIGING	
13		84420746		10	TIRA, Tie (Not Shown)	STRAP	BANDA	FASCETTA	532B
					BRIDE	BAND	STROP	RIEM	

55.100.06	01	p1	06/11

ELECTRICAL EH MED (SR175-SR200,TR270)
ELECTRICAL EH MED (SR175-SR200,TR270)
ELECTRICAL EH MED (SR175-SR200,TR270)
ELECTRICAL EH MED (SR175-SR200,TR270)

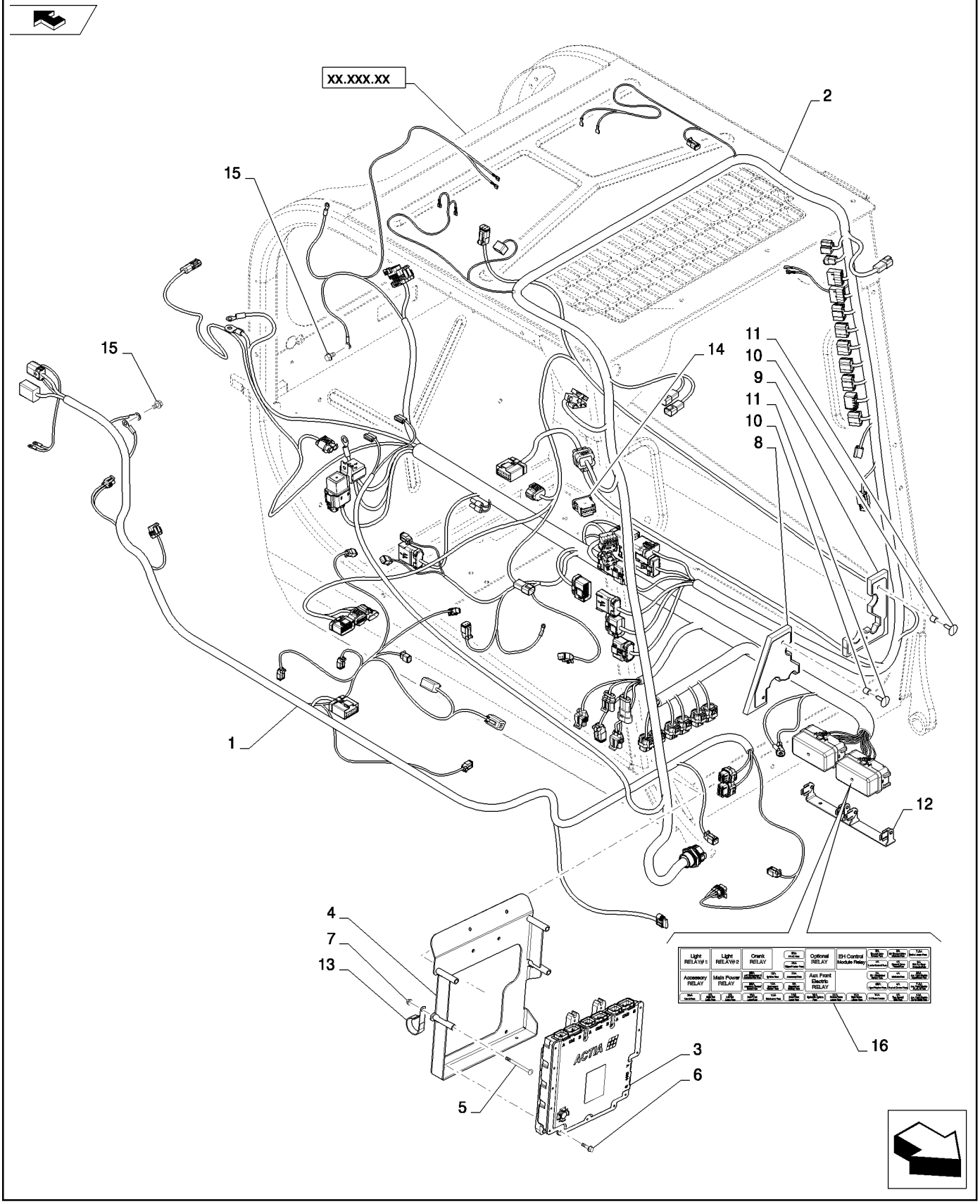

ELECTRICAL EH MED (SR175-SR200,TR270)
ELECTRICAL EH MED (SR175-SR200,TR270)
ELECTRICAL EH MED (SR175-SR200,TR270)
ELECTRICAL EH MED (SR175-SR200,TR270)

R	N	P.N.	MOD	Q	Denominação Description	Description Bezeichnung	Denominacion Beskrivelse	Descrizione Beschrijving	L.C.
1		84352399		1	CHICOTE, Chassis EH MD FAISCEAU ELECTRIQUE	WIRE HARNESS KABELBAUM	GRUPO DE CABLES KABELNET	CABLAGGIO KABELBOOM	070I
2		84352401		1	CHICOTE, Cab EH FAISCEAU ELECTRIQUE	WIRE HARNESS KABELBAUM	GRUPO DE CABLES KABELNET	CABLAGGIO KABELBOOM	070I
3		84348127		1	CENTRAL ELETRÔNICA, UCM SSL UNITE CMDE ELECTRON	ELECTRONIC CONTROL ELEKTRON STEUERGER	UNIDAD DE CONTROL E ELEKTRONIKBOKS	CENTRALINA ELETTRON ELEKTRON. REGELEENH	655C
4		84332287		1	SUPORTE, ECM Black SUPPORT	BRACKET HALTERUNG	SOPORTE BESLAG	STAFFA STEUN	225S
5		86512442		4	PARAFUSO, Carriage 8.8 P M6 X 80 VIS	BOLT SCHRAUBE	PERNO BOLT	BULLONE BOUT	140B
6		9804257		4	PARAFUSO, Hex Flg, M6 x 25, 8.8 VIS	BOLT SCHRAUBE	PERNO BOLT	BULLONE BOUT	140B
7		9804276		4	PORCA, M6 x 1, Flg, Cl 8 ECROU	NUT MUTTER	TUERCA MØTRIK	DADO MOER	010D
8		84309937		1	VEDAÇÃO, Assy, LH JOINT	SEAL DICHTUNG	ANILLO DE CIERRE PAKNING	GUARNIZIONE; TENUTA AFDICHTING	132A
9		84309938		1	VEDAÇÃO, Assy, LH JOINT	SEAL DICHTUNG	ANILLO DE CIERRE PAKNING	GUARNIZIONE; TENUTA AFDICHTING	132A
10		87035448		4	ESPAÇADOR, 1/2" Tube x 1/2" ENTRETOISE	SPACER DISTANZSTÜCK	SEPARADOR AFSTANDSSTYKKE	DISTANZIALE AFSTANDSSTUK	075D
11		86620930		4	BOTÃO DE IMPULSO ATTACHE	FASTENER BEFESTIGUNGSELEMEN	SUJETADOR LUKKER	DISPOSITIVO DI FISSAG BEVESTIGING	123B
12		84285504		1	PEGA DE SUPORTE, Double Fuse Box EQUERRE	BRACKET, SUPPORTING TRAGER, STUTZ	PIEZA DE APOYO BRACKET, SUPPORTING	SQUADRETTA BRACKET, SUPPORTING	215S
13		87313355		2	BRAÇADEIRA, 38.1MM J Insul 5/16 Bolt COLLIER	CLAMP KLEMME	ABRAZADERA SPÆNDEBÅND	MORSETTO KLEM	120M
14		84251343		1	INTERRUPTOR, Rocker, Drive Pattern CONTACTEUR	SWITCH SCHALTER	INTERRUPTOR KONTAKT	INTERRUTTORE SCHAKELAAR	075I
15		86511841		4	PARAFUSO, Hex Flg, M8 x 16, 8.8 VIS	BOLT SCHRAUBE	PERNO BOLT	BULLONE BOUT	140B
16		84380452		1	ADESIVO, Fuse Box Layout EH AUTOCOLLANT	DECAL AUFKLEBER	CALCOMANÍA TRANSFER	DECALCOMANIA STICKER	012D
17		84420768		10	BOTÃO DE IMPULSO, Push-in Fastener (Not Shown) ATTACHE	FASTENER BEFESTIGUNGSELEMEN	SUJETADOR LUKKER	DISPOSITIVO DI FISSAG BEVESTIGING	123B
18		84420746		10	TIRA, Tie (Not Shown) BRIDE	STRAP BAND	BANDA STROP	FASCETTA RIEM	532B

55.100.06	02	p1	06/11

ELECTRICAL EH MED OPEN CAB (SR175-SR200,TR270)
ELECTRICAL EH MED OPEN CAB (SR175-SR200,TR270)
ELECTRICAL EH MED OPEN CAB (SR175-SR200,TR270)
ELECTRICAL EH MED OPEN CAB (SR175-SR200,TR270)

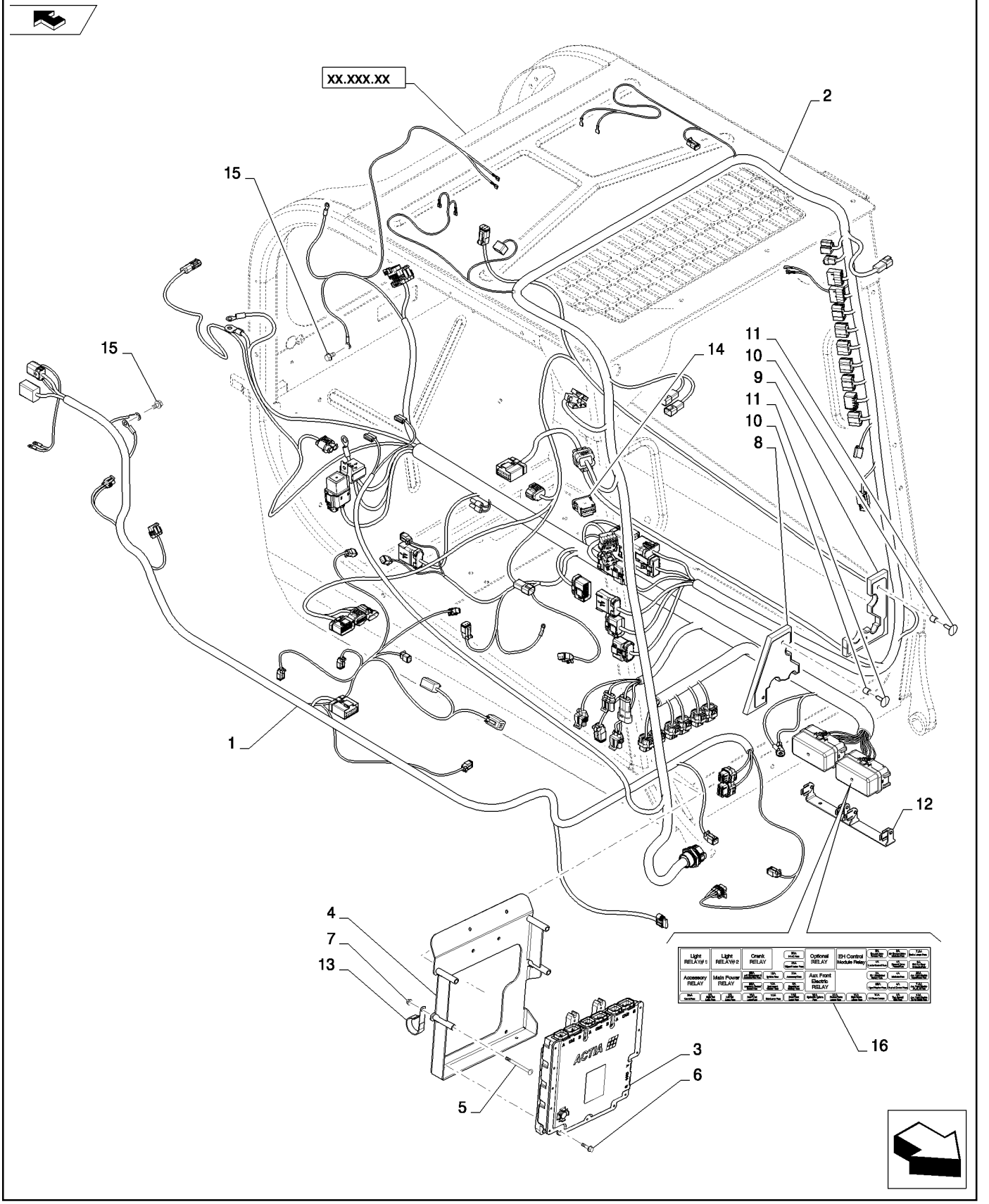

ELECTRICAL EH MED OPEN CAB (SR175-SR200,TR270)
ELECTRICAL EH MED OPEN CAB (SR175-SR200,TR270)
ELECTRICAL EH MED OPEN CAB (SR175-SR200,TR270)
ELECTRICAL EH MED OPEN CAB (SR175-SR200,TR270)

R	N	P.N.	MOD	Q	Denominação Description	Description Bezeichnung	Denominacion Beskrivelse	Descrizione Beschrijving	L.C.
1		84352399		1	CHICOTE, Chassis EH MD	WIRE HARNESS	GRUPO DE CABLES	CABLAGGIO	070I
					FAISCEAU ELECTRIQUE	KABELBAUM	KABELNET	KABELBOOM	
2		84352385		1	CHICOTE, Cab EH Basic	WIRE HARNESS	GRUPO DE CABLES	CABLAGGIO	070I
					FAISCEAU ELECTRIQUE	KABELBAUM	KABELNET	KABELBOOM	
3		84348127		1	CENTRAL ELETRÔNICA, UCM SSL				
						ELECTRONIC CONTROL	UNIDAD DE CONTROL E	CENTRALINA ELETTRON	655C
					UNITE CMDE ELECTRON	ELEKTRON STEUERGER	ELEKTRONIKBOKS	ELEKTRON. REGELEENH	
4		84332287		1	SUPORTE, ECM Black	BRACKET	SOPORTE	STAFFA	225S
					SUPPORT	HALTERUNG	BESLAG	STEUN	
5		86512442		4	PARAFUSO, Carriage 8.8 P M6 X 80				
						BOLT	PERNO	BULLONE	140B
					VIS	SCHRAUBE	BOLT	BOUT	
6		9804257		4	PARAFUSO, Hex Flg, M6 x 25, 8.8				
						BOLT	PERNO	BULLONE	140B
					VIS	SCHRAUBE	BOLT	BOUT	
7		9804276		4	PORCA, M6 x 1, Flg, Cl 8	NUT	TUERCA	DADO	010D
					ECROU	MUTTER	MØTRIK	MOER	
8		84309937		1	VEDAÇÃO, Assy, LH	SEAL	ANILLO DE CIERRE	GUARNIZIONE; TENUTA	132A
					JOINT	DICHTUNG	PAKNING	AFDICHTING	
9		84309938		1	VEDAÇÃO, Assy, LH	SEAL	ANILLO DE CIERRE	GUARNIZIONE; TENUTA	132A
					JOINT	DICHTUNG	PAKNING	AFDICHTING	
10		87035448		4	ESPAÇADOR, 1/2" Tube x 1/2"				
						SPACER	SEPARADOR	DISTANZIALE	075D
					ENTRETOISE	DISTANZSTÜCK	AFSTANDSSTYKKE	AFSTANDSSTUK	
11		86620930		4	BOTÃO DE IMPULSO	FASTENER	SUJETADOR	DISPOSITIVO DI FISSAG	123B
					ATTACHE	BEFESTIGUNGSELEMEN	LUKKER	BEVESTIGING	
12		84285504		1	PEGA DE SUPORTE, Double Fuse Box				
						BRACKET, SUPPORTING	PIEZA DE APOYO	SQUADRETTA	215S
					EQUERRE	TRAGER, STUTZ	BRACKET, SUPPORTING	BRACKET, SUPPORTING	
13		87313355		2	BRAÇADEIRA, 38.1MM J Insul 5/16 Bolt				
						CLAMP	ABRAZADERA	MORSETTO	120M
					COLLIER	KLEMME	SPÆNDEBÅND	KLEM	
14		84251343		1	INTERRUPTOR, Rocker, Drive Pattern				
						SWITCH	INTERRUPTOR	INTERRUTTORE	075I
					CONTACTEUR	SCHALTER	KONTAKT	SCHAKELAAR	
15		86511841		4	PARAFUSO, Hex Flg, M8 x 16, 8.8				
						BOLT	PERNO	BULLONE	140B
					VIS	SCHRAUBE	BOLT	BOUT	
16		84380452		1	ADESIVO, Fuse Box Layout EH				
						DECAL	CALCOMANÍA	DECALCOMANIA	012D
					AUTOCOLLANT	AUFKLEBER	TRANSFER	STICKER	
17		87313351		1	GRAMPO, J-clip Insul. M8; Not Shown				
						CLIP	ABRAZADERA	FERMO	045F
					COLLIER	KLAMMER	KLIPS	KLEM	
18		84420768		10	BOTÃO DE IMPULSO, Push-in Fastener (Not Shown)				
						FASTENER	SUJETADOR	DISPOSITIVO DI FISSAG	123B
					ATTACHE	BEFESTIGUNGSELEMEN	LUKKER	BEVESTIGING	
19		84420746		10	TIRA, Tie (Not Shown)	STRAP	BANDA	FASCETTA	532B
					BRIDE	BAND	STROP	RIEM	

SR200

55.100.07	01	p1	02/11

BATTERY DISCONNECT MED F5C (SR200)
BATTERY DISCONNECT MED F5C (SR200)
BATTERY DISCONNECT MED F5C (SR200)
BATTERY DISCONNECT MED F5C (SR200)

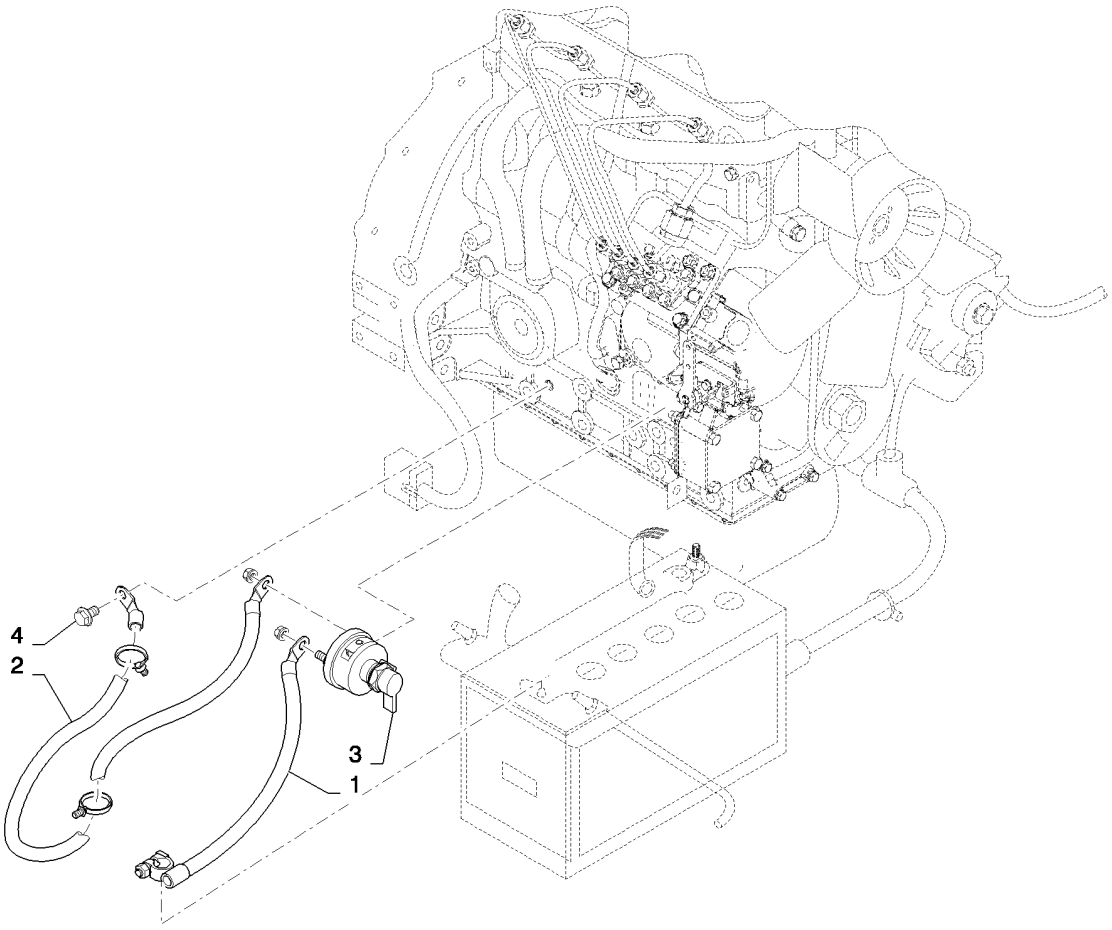

BATTERY DISCONNECT MED F5C (SR200)
BATTERY DISCONNECT MED F5C (SR200)
BATTERY DISCONNECT MED F5C (SR200)
BATTERY DISCONNECT MED F5C (SR200)

R	N	P.N.	MOD	Q	Denominação Description	Description Bezeichnung	Denominacion Beskrivelse	Descrizione Beschrijving	L.C.
1		84284996		1	CABO BATERIA NEG	NEG BATTERY CABLE	CABLE NEG. DE LA BATI	CAVO NEGATIVO DELLA	Z221
					CABLE DE BATTERIE - N	NEGATIVES BATTERIEK.	BATTERIKABEL - NEG	ACCUKABEL - MIN	
2		84283238		1	CABO DO TERRA	GROUND CABLE	CABLE DE MASA	CAVO DI TERRA	112C
					CABLE DE MASSE	MASSEKABEL	STELKABEL	MASSAKABEL	
3		87458467		1	INTERRUPTOR, Master Disconnect				
						SWITCH	INTERRUPTOR	COMMUTATORE	8850
					INTERRUPTEUR	SCHALTER	SWITCH	SWITCH	
4		87698844		1	PARAFUSO, Flange M12 X 20 Full				
						BOLT	PERNO	BULLONE	140B
					VIS	SCHRAUBE	BOLT	BOUT	
5		176332A1		1	DECALCOMANIA, Not Shown				
						DECAL	CALCOMANIA	AUTOADESIVO	P903
					DECALCOMANIE	ABZIEHBILD	DECAL	DECAL	

55.100.07	02	p1	01/11

NO BATTERY DISCONNECT MED F5C (SR200)
NO BATTERY DISCONNECT MED F5C (SR200)
NO BATTERY DISCONNECT MED F5C (SR200)
NO BATTERY DISCONNECT MED F5C (SR200)

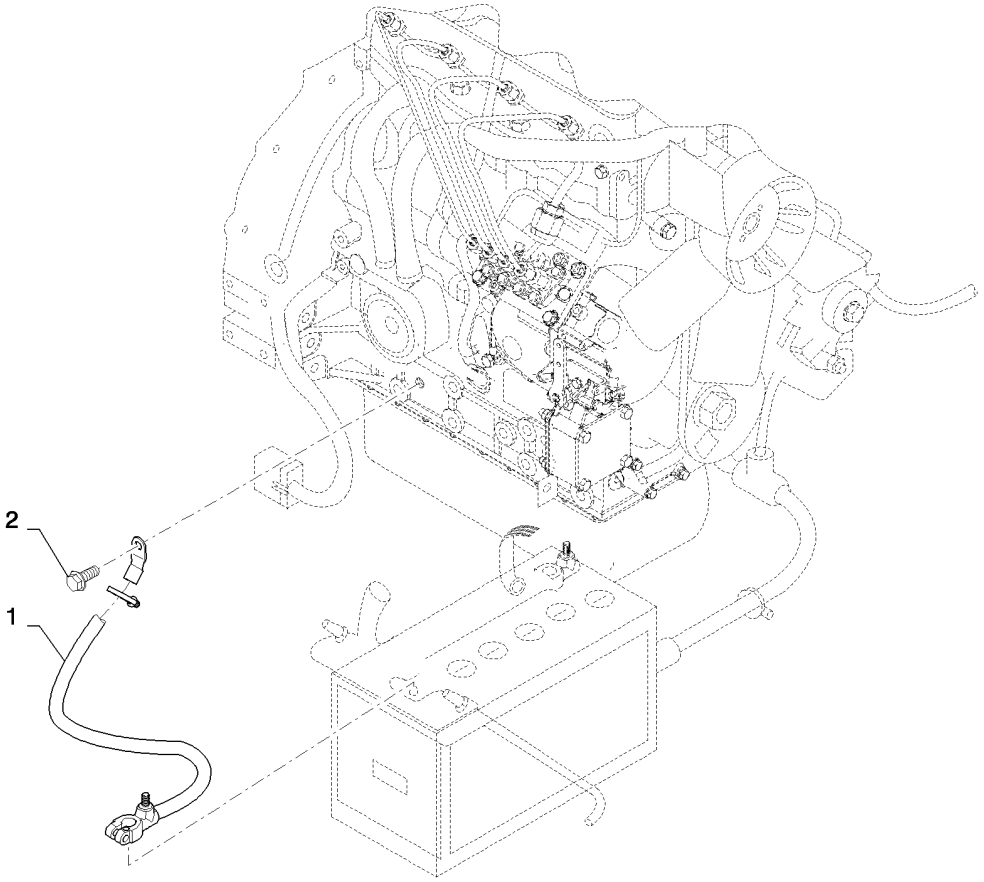

NO BATTERY DISCONNECT MED F5C (SR200)
NO BATTERY DISCONNECT MED F5C (SR200)
NO BATTERY DISCONNECT MED F5C (SR200)
NO BATTERY DISCONNECT MED F5C (SR200)

R	N	P.N.	MOD	Q	Denominação Description	Description Bezeichnung	Denominacion Beskrivelse	Descrizione Beschrijving	L.C.
1		84298931		1	CABO BATERIA NEG CABLE DE BATTERIE - N	NEG BATTERY CABLE NEGATIVES BATTERIEK	CABLE NEG. DE LA BATI BATTERIKABEL - NEG	CAVO NEGATIVO DELLA ACCUKABEL - MIN	Z221
2		87698844		1	PARAFUSO, Flange, M12 X 20 Full BOLT VIS	 PERNO SCHRAUBE	 BULLONE BOLT	 BULLONE BOUT	 140B

SR200

55.100.08		p1	07/11

MULTIFUNCTION ELECTRICAL (SR175,SR200,SR220,SR250,TR270,TR320)
MULTIFUNCTION ELECTRICAL (SR175,SR200,SR220,SR250,TR270,TR320)
MULTIFUNCTION ELECTRICAL (SR175,SR200,SR220,SR250,TR270,TR320)
MULTIFUNCTION ELECTRICAL (SR175,SR200,SR220,SR250,TR270,TR320)

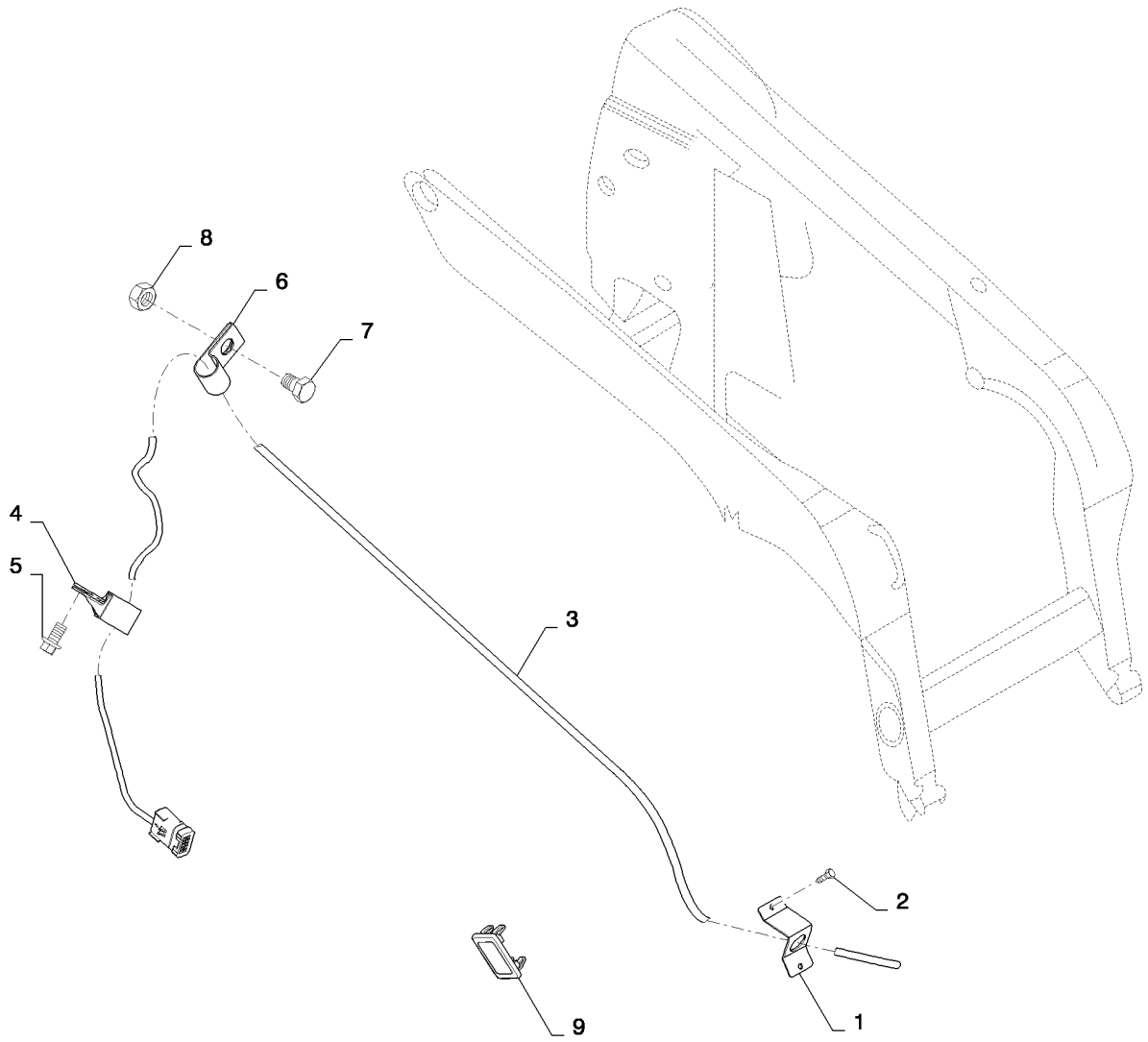

MULTIFUNCTION ELECTRICAL (SR175,SR200,SR220,SR250,TR270,TR320)
MULTIFUNCTION ELECTRICAL (SR175,SR200,SR220,SR250,TR270,TR320)
MULTIFUNCTION ELECTRICAL (SR175,SR200,SR220,SR250,TR270,TR320)
MULTIFUNCTION ELECTRICAL (SR175,SR200,SR220,SR250,TR270,TR320)

R	N	P.N.	MOD	Q	Denominação Description	Description Bezeichnung	Denominacion Beskrivelse	Descrizione Beschrijving	L.C.
1		84293533		1	PEGA DE SUPORTE, Front Aux, Electrical				
						BRACKET, SUPPORTING	PIEZA DE APOYO	SQUADRETTA	215S
					EQUERRE	TRAGER, STUTZ	BRACKET, SUPPORTING	BRACKET, SUPPORTING	
2		87030531		2	PARAFUSO, ST8 X 19	SCREW	TORNILLO	VITE	040V
					VIS	SCHRAUBE	SKRUE	SCHROEF	
3		84251321		1	CHICOTE, Front Electric Boom Radial				
						WIRE HARNESS	GRUPO DE CABLES	CABLAGGIO	070I
					FAISCEAU ELECTRIQUE	KABELBAUM	KABELNET	KABELBOOM	
		84286588		1	BRAÇADEIRA DE FIO, 90 Twist				
						WIRE CLAMP	ABRAZADERA DE CABLE	SERRAFILO	118S
					SERRE-CABLES	KABELSCHELLE	KABELKLEMME	DRAADKLEM	
5		84285339		1	PARAFUSO, M8 X 15	SELF-TAP SCREW	TORNILLO AUTORROSC	VITE AUTOFILETTANTE	062V
					VIS AUTOTARAUDEUSE	SELBSTSCHN SCHRAUE	SELVLÅSENDE BOLT	ZELFTAPPENDE SCHRO	
6		86625035		2	BRAÇADEIRA, 1/2", Insul, 1/4" Bolt				
						CLAMP	ABRAZADERA	MORSETTO	120M
					COLLIER	KLEMME	SPÆNDEBÅND	KLEM	
7		9804255		2	PARAFUSO, Hex Flg, M6 x 16, 8.8				
						BOLT	PERNO	BULLONE	140B
					VIS	SCHRAUBE	BOLT	BOUT	
8		9804276		2	PORCA, M6 x 1, Flg, Cl 8	NUT	TUERCA	DADO	010D
					ECROU	MUTTER	MØTRIK	MOER	
9		126844A1		1	BUJÃO, Switch Hole Cover	PLUG	TAPÓN	TAPPO	050T
					BOUCHON	STOPFEN	PROP	PLUG	

SR200

55.100.09		p1	01/11

NO MULTIFUNCTION ELECTRICAL (ALL CASE)
NO MULTIFUNCTION ELECTRICAL (ALL CASE)
NO MULTIFUNCTION ELECTRICAL (ALL CASE)
NO MULTIFUNCTION ELECTRICAL (ALL CASE)

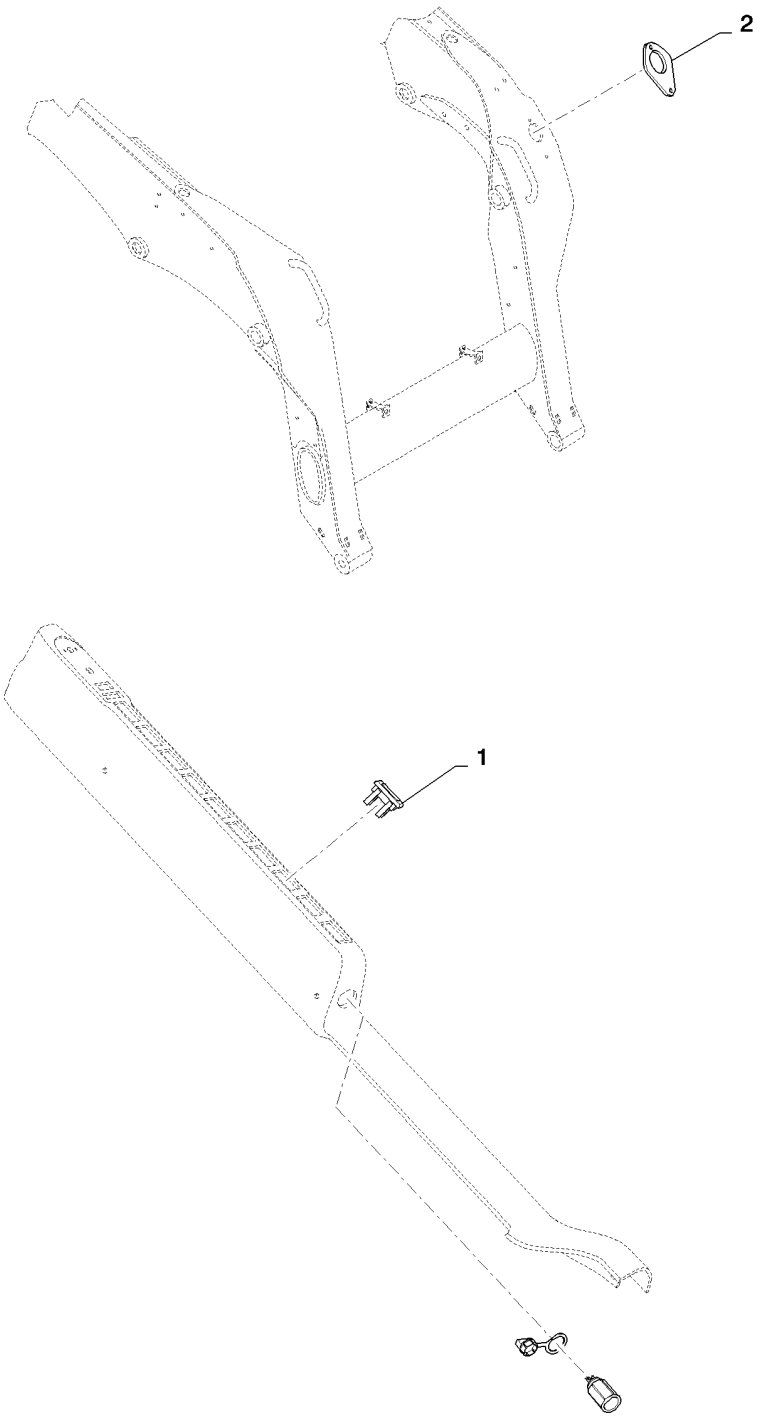

NO MULTIFUNCTION ELECTRICAL (ALL CASE)
NO MULTIFUNCTION ELECTRICAL (ALL CASE)
NO MULTIFUNCTION ELECTRICAL (ALL CASE)
NO MULTIFUNCTION ELECTRICAL (ALL CASE)

R	N	P.N.	MOD	Q	Denominação Description Bezeichnung	Description Bezeichnung	Denominacion Beskrivelse	Descrizione Beschrijving	L.C.
1		**126844A1**		1	BUJÃO, Cover BOUCHON	PLUG STOPFEN	TAPÓN PROP	TAPPO PLUG	050T
2		**84300911**		1	TAMPA DE ACESSO, Lexan Aux Electrical, Power Tan PANNEAU D'ACCES	ACCESS COVER ZUGANGSABDECKUNG	CUBIERTA DE ACCESO ADGANGSDÆKSEL	COPERCHIO, DI ACCES TOEGANGSAFSCHERMI	A036

ELECTRICAL ASSEMBLY SOCKET NA (ALL CASE)
ELECTRICAL ASSEMBLY SOCKET NA (ALL CASE)
ELECTRICAL ASSEMBLY SOCKET NA (ALL CASE)
ELECTRICAL ASSEMBLY SOCKET NA (ALL CASE)

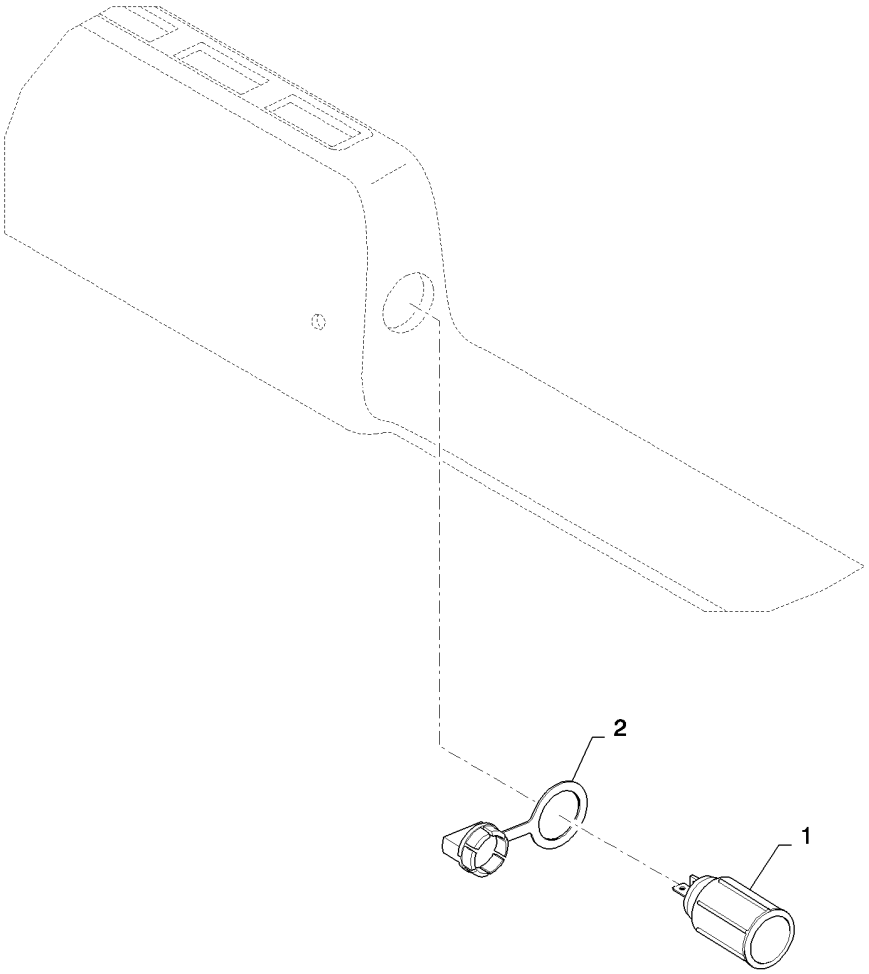

ELECTRICAL ASSEMBLY SOCKET NA (ALL CASE)
ELECTRICAL ASSEMBLY SOCKET NA (ALL CASE)
ELECTRICAL ASSEMBLY SOCKET NA (ALL CASE)
ELECTRICAL ASSEMBLY SOCKET NA (ALL CASE)

R	N	P.N.	MOD	Q	Denominação Description Bezeichnung	Description Bezeichnung Beskrivelse	Denominacion Beskrivelse Descrizione	Descrizione Beschrijving Beschrijving	L.C.
1		283779A1		1	TOMADA ELÉTRICA, Outlet Assembly POWER SOCKET PRISE DE COURANT	ZÓCALO DE CORRIENTE STECKDOSE	PRESA DI CORRENTE STRØMUDTAG	CONTACTDOOS	205P
2		283781A1		1	CAPA, Outlet, Power CHAPEAU	CAP KAPPE	TAPA CAP	CAPPUCCIO CAP	1380

55.100.10		p1	02/11

ELECTRICAL ASSEMBLY SOCKET EU (ALL CASE)
ELECTRICAL ASSEMBLY SOCKET EU (ALL CASE)
ELECTRICAL ASSEMBLY SOCKET EU (ALL CASE)
ELECTRICAL ASSEMBLY SOCKET EU (ALL CASE)

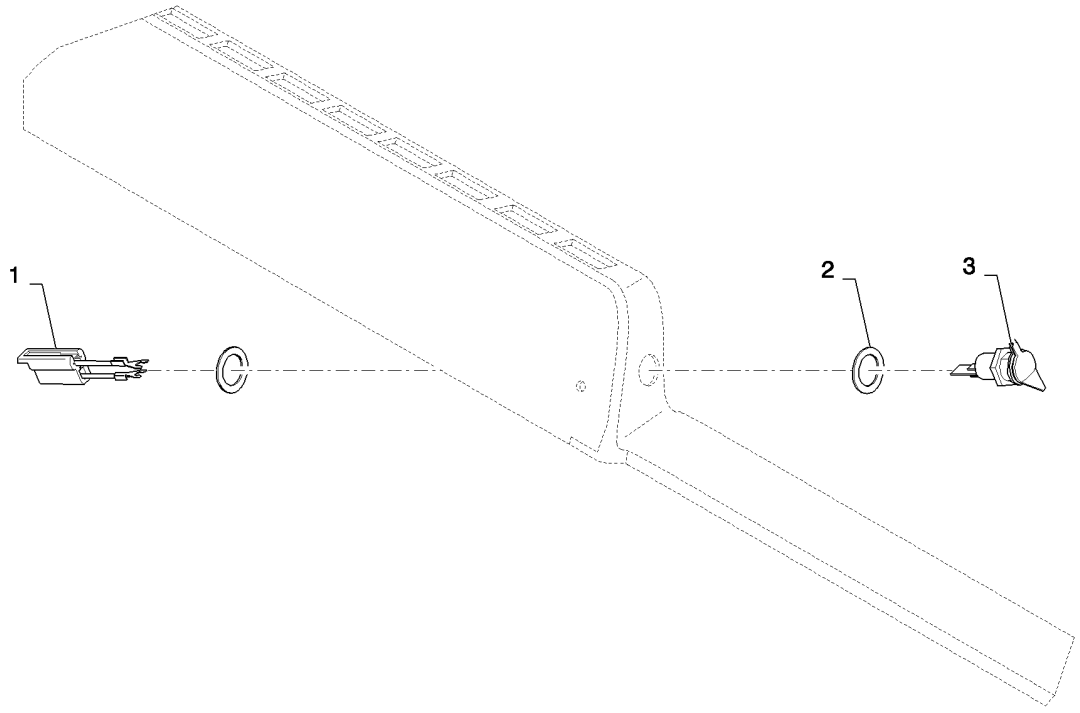

ELECTRICAL ASSEMBLY SOCKET EU (ALL CASE)
ELECTRICAL ASSEMBLY SOCKET EU (ALL CASE)
ELECTRICAL ASSEMBLY SOCKET EU (ALL CASE)
ELECTRICAL ASSEMBLY SOCKET EU (ALL CASE)

R	N	P.N.	MOD	Q	Denominação Description Bezeichnung	Description Bezeichnung Beskrivelse	Denominacion Beskrivelse Descrizione	Descrizione Beschrijving	L.C.
1		**445092A1**		1	CHICOTE, Accessory Socket WIRE HARNESS FAISCEAU ELECTRIQUE	GRUPO DE CABLES KABELBAUM	CABLAGGIO KABELNET	CABLAGGIO KABELBOOM	070I
2		**87644538**		2	ESPAÇADOR, Washer Plated SPACER ENTRETOISE	SEPARADOR DISTANZSTÜCK	DISTANZIALE AFSTANDSSTYKKE	AFSTANDSSTUK	075D
3		**142211A1**		1	SOQUETE, Receptacle SOCKET DOUILLE	LLAVE DE CUBO FASSUNG	PRESA; CHIAVE A BUSS FATNING	AANSLUITING	P483

55.101.01		p1	03/11

ENGINE ELECTRICAL (SR200,TR270)
ENGINE ELECTRICAL (SR200,TR270)
ENGINE ELECTRICAL (SR200,TR270)
ENGINE ELECTRICAL (SR200,TR270)

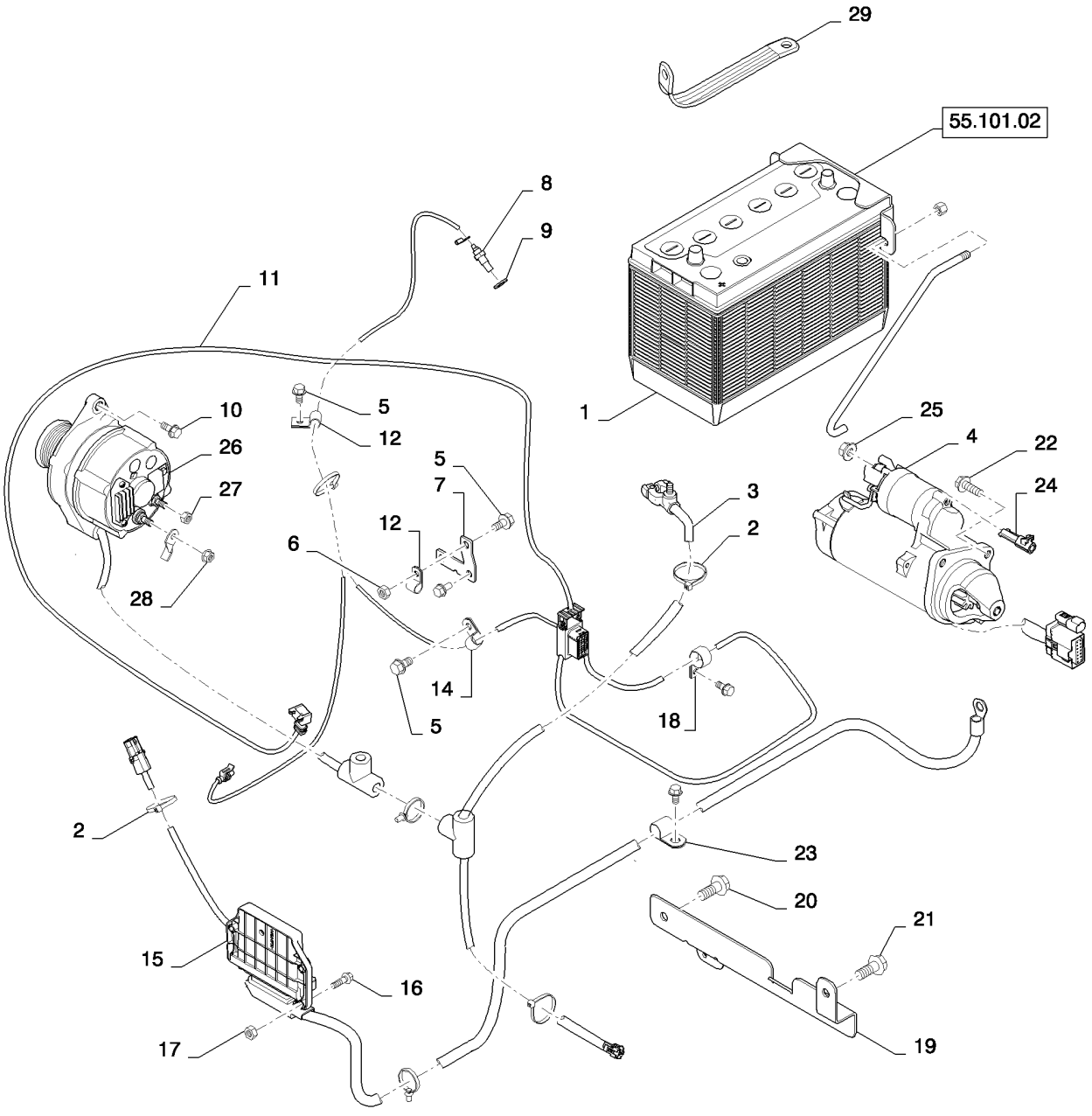

ENGINE ELECTRICAL (SR200,TR270)
ENGINE ELECTRICAL (SR200,TR270)
ENGINE ELECTRICAL (SR200,TR270)
ENGINE ELECTRICAL (SR200,TR270)

R	N	P.N.	MOD	Q	Denominação Description	Description Bezeichnung	Denominacion Beskrivelse	Descrizione Beschrijving	L.C.
1		84183281		1	BATERIA, 12V, 1000cca	BATTERY	BATERIA	BATTERIA	0560
					BATTERIE	BATTERIE	BATTERI	ACCU	
2		L11541		4	PRENDEDOR DE CABOS,	Nylon Tie, 7-8in			
						CABLE STRAP	BANDA DE CABLE	FASCETTA PER CAVO	P716
					BRIDE DE CABLE	KABELBINDER	KABELSTROP	BUNDELBAND	
3		84298939		1	CABO BATERIA POSITIVO	POS BATTERY CABLE	CABLE POS. DE LA BATE	CAVO POSITIVO DELLA	N51C
					CABLE DE BATTERIE - P	POSITIVES BATTERIEKA	BATTERIKABEL - POS	ACCUKABEL - PLUS	
4		504357110		1	MOTOR DE PARTIDA, 3 KW,	Bosch			
						STARTER MOTOR	MOTOR DE ARRANQUE	MOTORINO DI AVVIAME	133M
					DEMARREUR	ANLASSERMOTOR	STARTMOTOR	STARTMOTOR	
5		86511841		6	PARAFUSO, Hex Flg, M8 x 16, 8.8				
						BOLT	PERNO	BULLONE	140B
					VIS	SCHRAUBE	BOLT	BOUT	
6		9706690		1	PORCA, M8, Cl 8	NUT	TUERCA	DADO	010D
					ECROU	MUTTER	MØTRIK	MOER	
7		87591549		1	SUPORTE, Grid Heater	BRACKET	SOPORTE	STAFFA	225S
					SUPPORT	HALTERUNG	BESLAG	STEUN	
8		87688409		1	EMISSOR DE TEMPERATURA				
						TEMPERATURE SENDER	EMISOR DE TEMPERATU	TRASMETT. TEMPERATU	Z366
					TRANSMETTEUR TEMPE	TEMPERATURGEBER	TEMPERATURSENDER	TEMPERATUURSENSOR	
9		86624176		1	ARRUELA PLANA, M10 x 20 x 2				
						WASHER	ARANDELA	RONDELLA	131R
					RONDELLE	UNTERLEGSCHEIBE	FLADSKIVE	SLUITRING	
10		9804258		1	PARAFUSO, Hex Flg, M8 x 20, 8.8				
						BOLT	PERNO	BULLONE	140B
					VIS	SCHRAUBE	BOLT	BOUT	
11		84375316		1	CHICOTE, Engine, F5C	WIRE HARNESS	GRUPO DE CABLES	CABLAGGIO	070I
					FAISCEAU ELECTRIQUE	KABELBAUM	KABELNET	KABELBOOM	
12		86010402		1	BRAÇADEIRA, 1/2", Insul,	3/8" Bolt			
						CLAMP	ABRAZADERA	MORSETTO	120M
					COLLIER	KLEMME	SPÆNDEBÅND	KLEM	
13		86625035		1	BRAÇADEIRA, 1/2", Insul,	1/4" Bolt			
						CLAMP	ABRAZADERA	MORSETTO	120M
					COLLIER	KLEMME	SPÆNDEBÅND	KLEM	
14		86594406		1	BRAÇADEIRA, 5/8", Insul,	3/8" Bolt			
						CLAMP	ABRAZADERA	MORSETTO	120M
					COLLIER	KLEMME	SPÆNDEBÅND	KLEM	
15		84420643		1	CONTROLADOR, F5C, EGR				
						CONTROLLER	CONTROLADOR	CENTRALINA	N67C
					CONTROLEUR	STEUERGERÄT	STYREENHED	CONTROLLER	
16		374891		3	PARAFUSO, Short NK, M6 x 25, Cl8.8, Full Thd				
						CARRIAGE BOLT	PERNO ALOMADO	BULLONE A TESTA TON	P123
					VIS A TETE BOMBEE	SCHLOSSSCHRAUBE	BRÆDDEBOLT	SLOTBOUT	
17		9804276		3	PORCA, M6 x 1, Flg, Cl 8	NUT	TUERCA	DADO	010D
					ECROU	MUTTER	MØTRIK	MOER	
18		700514		1	BRAÇADEIRA	CLAMP	ABRAZADERA	MORSETTO	120M
					COLLIER	KLEMME	SPÆNDEBÅND	KLEM	
19		84273652		1	SUPORTE, Battery Cable	BRACKET	SOPORTE	STAFFA	225S
					SUPPORT	HALTERUNG	BESLAG	STEUN	

SR200

55.101.01		p2	03/11

ENGINE ELECTRICAL (SR200,TR270)
ENGINE ELECTRICAL (SR200,TR270)
ENGINE ELECTRICAL (SR200,TR270)
ENGINE ELECTRICAL (SR200,TR270)

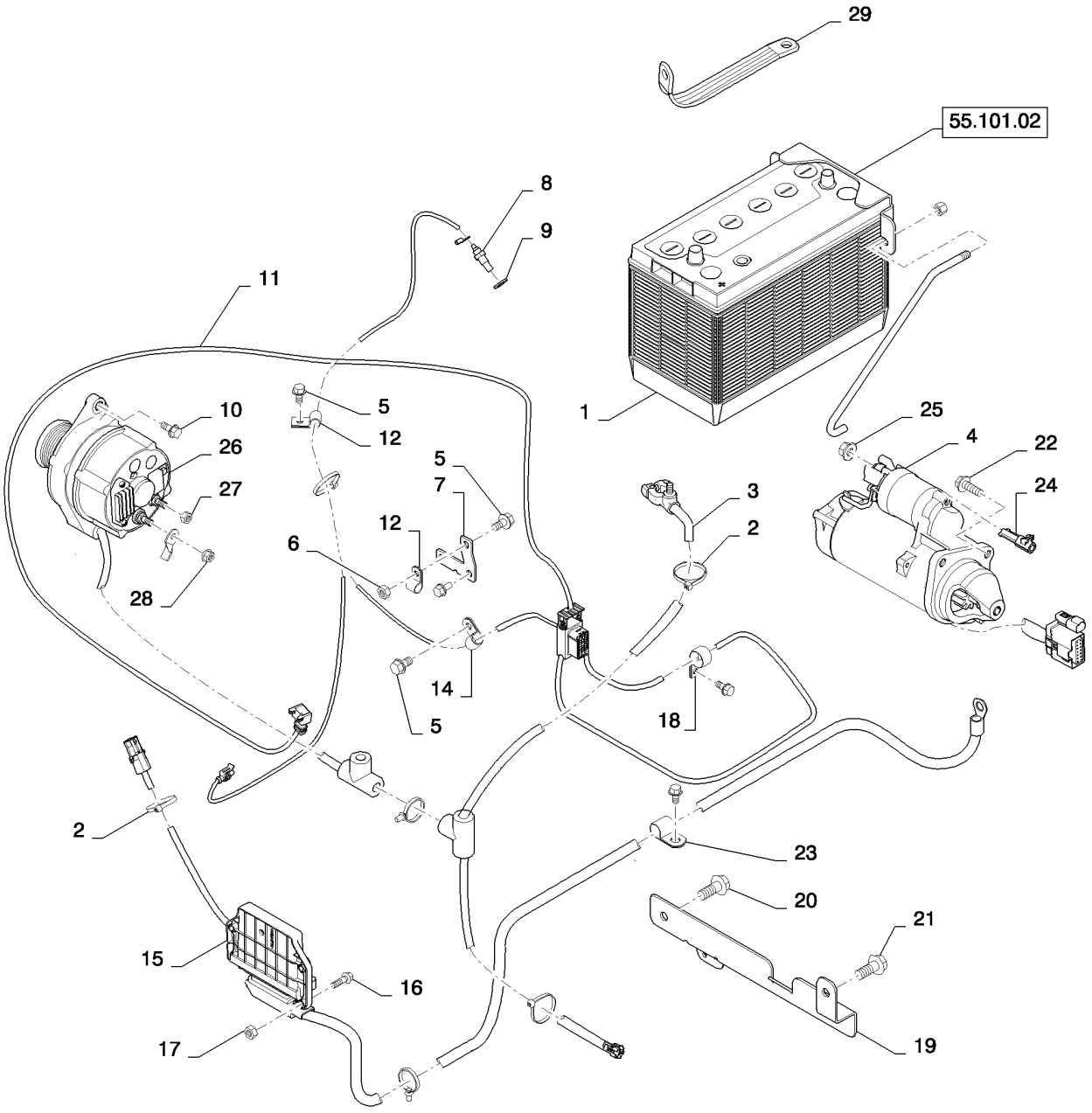

ENGINE ELECTRICAL (SR200,TR270)
ENGINE ELECTRICAL (SR200,TR270)
ENGINE ELECTRICAL (SR200,TR270)
ENGINE ELECTRICAL (SR200,TR270)

R	N	P.N.	MOD	Q	Denominação Description	Description Bezeichnung	Denominacion Beskrivelse	Descrizione Beschrijving	L.C.
20		**87030508**		1	PARAFUSO, Hex Flg, M12 x 30, 10.9, Full Thd				
						BOLT	PERNO	BULLONE	140B
					VIS	SCHRAUBE	BOLT	BOUT	
21		**87698844**		1	PARAFUSO, Flange, M12 X 20				
						BOLT	PERNO	BULLONE	140B
					VIS	SCHRAUBE	BOLT	BOUT	
22		**9804262**		3	PARAFUSO, Hex Flg, M10 x 30, 8.8				
						BOLT	PERNO	BULLONE	140B
					VIS	SCHRAUBE	BOLT	BOUT	
23		**86598598**		1	BRAÇADEIRA, 3/4", Insul, 1/2" Bolt				
						CLAMP	ABRAZADERA	MORSETTO	120M
					COLLIER	KLEMME	SPÆNDEBÅND	KLEM	
24		**87053083**		1	CHICOTE, Starter, Jumper	HARNESS	MAZO DE CABLES	CABLAGGIO	4160
					FAISCEAU	KABELBAUM	LEDNINGSNET	KABELBOOM	
25		**86050279**		1	PORCA, M10 x 1.5, Flg, Cl 10				
						NUT	TUERCA	DADO	010D
					ECROU	MUTTER	MØTRIK	MOER	
26		**84254290**		1	ALTERNADOR	ALTERNATOR	ALTERNADOR	ALTERNATORE	025A
					ALTERNATEUR	LICHTMASCHINE	GENERATOR	DYNAMO	
27		**86508813**		1	PORCA, M5, Cl 8	NUT	TUERCA	DADO	010D
					ECROU	MUTTER	MØTRIK	MOER	
28		**9804277**		1	PORCA, M8 x 1.25, Flg, Cl 8				
						NUT	TUERCA	DADO	010D
					ECROU	MUTTER	MØTRIK	MOER	
29		**D140369**		1	CABO PUXADOR, Strap	CABLE PULLING GRIP	MANGO DE TRACC. DEL	TESTA DI TIRO PER CA\	Z646
					TIRE-CABLE	KABELZIEHGRIFF	KABELTRÆK	TREKHANDGREEP VAN	

55.101.02		p1	02/11

BATTERY RETENTION MED (ALL CASE)
BATTERY RETENTION MED (ALL CASE)
BATTERY RETENTION MED (ALL CASE)
BATTERY RETENTION MED (ALL CASE)

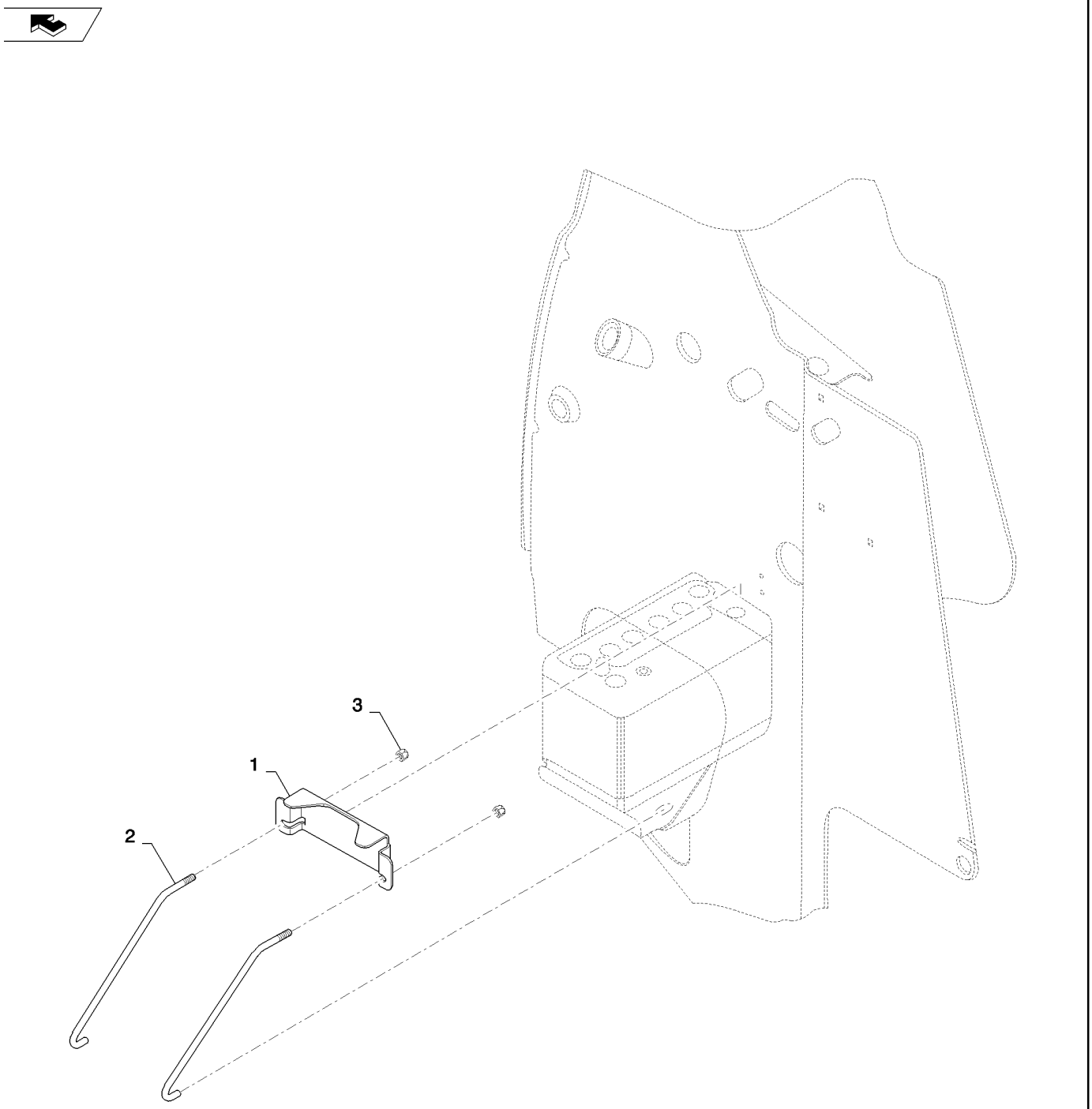

BATTERY RETENTION MED (ALL CASE)
BATTERY RETENTION MED (ALL CASE)
BATTERY RETENTION MED (ALL CASE)
BATTERY RETENTION MED (ALL CASE)

R	N	P.N.	MOD	Q	Denominação Description	Description Bezeichnung	Denominacion Beskrivelse	Descrizione Beschrijving	L.C.
1		84420303		1	TIRA, Battery Mount BRIDE	STRAP BAND	BANDA STROP	FASCETTA RIEM	532B
2		84381823		2	GANCHO, Battery Tie Dowr CROCHET	HOOK HAKEN	GANCHO KROG	GANCIO HAAK	030G
3		9637692		2	CONTRA PORCA, 3/8"-16, GB CONTRE-ECROU	LOCK NUT SICHERUNGSMUTTER	TUERCA DE BLOQUEO LÅSEMØTRIK	DADO DI BLOCCAGGIO BORGMOER	P263

ENGINE, ALTERNATOR MOUNTING (504388098)
ENGINE, ALTERNATOR MOUNTING (504388098)
ALTERNATOR (504388098)
ALTERNATORE (504388098)

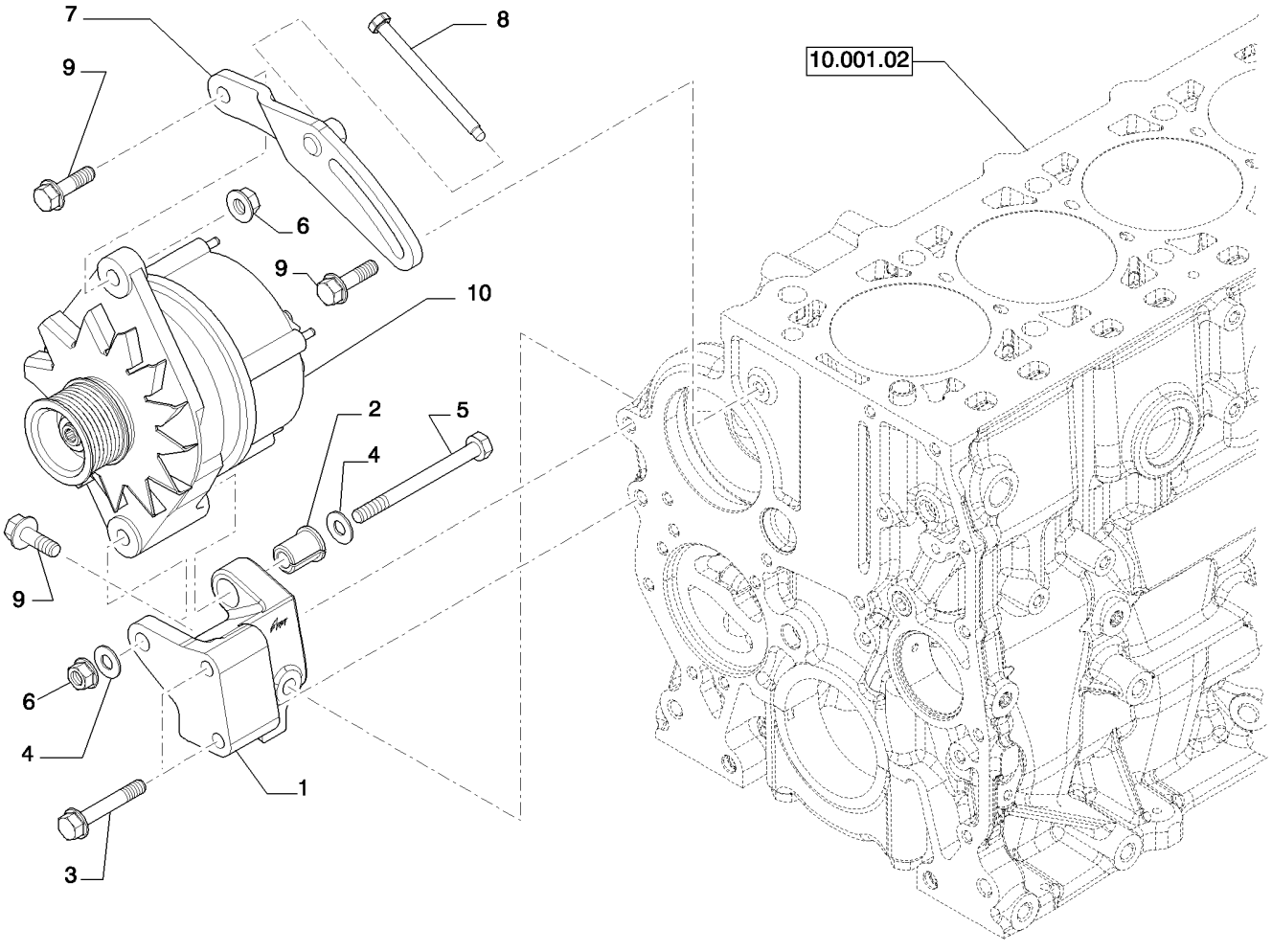

ALTERNATEUR (504388098)
WECHSELSTROMGENERATOR (504388098)
VEKSELSTROMSGENERATOR (504388098)
WISSELSTROOMDYNAMO (504388098)

R	N	P.N.	MOD	Q	Denominação Description	Description Bezeichnung	Denominacion Beskrivelse	Descrizione Beschrijving	L.C.
1		504276997		1	PEGA DE SUPORTE EQUERRE	BRACKET, SUPPORTING TRAGER, STUTZ	PIEZA DE APOYO BRACKET, SUPPORTING	SQUADRETTA BRACKET, SUPPORTING	215S
2		504060839		1	ESPAÇADOR ENTRETOISE	SPACER DISTANZSTÜCK	SEPARADOR AFSTANDSSTYKKE	DISTANZIALE AFSTANDSSTUK	075D
3		16587824		2	PARAFUSO, M10 x 1.5 x 6(VIS	SCREW SCHRAUBE	TORNILLO SKRUE	VITE SCHROEF	040V
4		17095104		2	ARRUELA PLANA, D. 10X21X2 mm RONDELLE	WASHER UNTERLEGSCHEIBE	ARANDELA FLADSKIVE	RONDELLA SLUITRING	131R
5		16609024		1	PARAFUSO VIS	SCREW SCHRAUBE	TORNILLO SKRUE	VITE SCHROEF	040V
6		17044821		1	PORCA, M10 ECROU	NUT MUTTER	TUERCA MØTRIK	DADO MOER	010D
6		17037921		1	PORCA ECROU	NUT MUTTER	TUERCA MØTRIK	DADO MOER	010D
7		504243953		1	TENSOR DE CORREIA TENDEUR DE COURROI	BELT TENSIONER GURTSTRAFFER	TENSOR DE CORREA REMSTRAMMER	TENDICINGHIA RIEMSPANNER	087T
8		504302206		1	PARAFUSO VIS	BOLT SCHRAUBE	PERNO BOLT	BULLONE BOUT	140B
9		16587325		3	PARAFUSO, M10 x 35 VIS	SCREW SCHRAUBE	TORNILLO SKRUE	VITE SCHROEF	040V
10				1	- ASSY 95 AMP 12V				

55.414.01	02	p1	02/11

DIAGNOSTIC SENSOR (504308864)
DIAGNOSTIC SENSOR (504308864)
SENSORES DIAGNOSIS (504308864)
SENSORI DIAGNOSTICA (504308864)

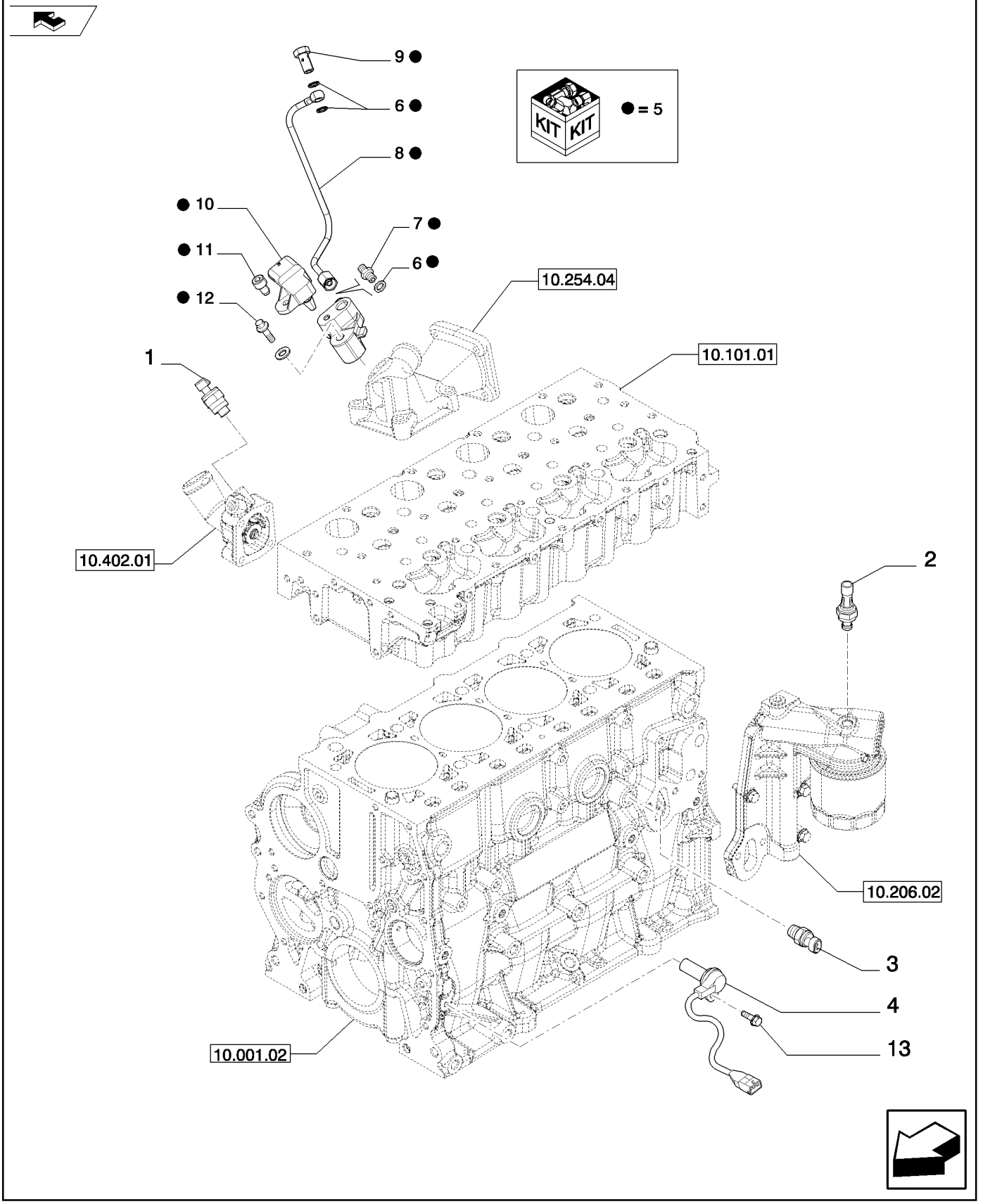

CAPTEURS DIADNOSTIC (504308864)
DIAGNOSE-SENSORE (504308864)
DIAGNOSTISKE FØLERE (504308864)
DIAGNOSE-SENSOREN (504308864)

R	N	P.N.	MOD	Q	Denominação Description	Description Bezeichnung	Denominacion Beskrivelse	Descrizione Beschrijving	L.C.
1		504025599		1	EMISSOR DE TEMPERATURA, Water				
						TEMPERATURE SENDEF	EMISOR DE TEMPERATU	TRASMETT. TEMPERATU	Z366
					TRANSMETTEUR TEMPE	TEMPERATURGEBER	TEMPERATURSENDER	TEMPERATUURSENSOR	
2		504084983		1	INTERRUPTOR DE PRESSÃO				
						PRESSURE SWITCH	INTERRUPTOR DE PRES	PRESSOSTATO	079I
					PRESSOSTAT	DRUCKSCHALTER	KONTAKT, TRYK	DRUKSCHAKELAAR	
3		504273290		1	SENSOR, Water temperature KSB				
						SENSOR	SENSOR	SENSORE	608S
					CAPTEUR	SENSOR	FØLER	SENSOR	
4		500374763		1	TRANSMISSOR, Crankshaft				
						TRANSMITTER	TRANSMISOR	TRASMETTITORE	9250
					EMETTEUR	TRANSMITTER	SENDER	ZENDER	
5				1	Air press. & temperature				
6		10260150		3	VEDAÇÃO DA ARRUELA, M10.2 x 14 x 1, Alum				
						SEALING WASHER	ARANDELA HERMÉTICA	ROSETTA DI TENUTA	133R
					RONDELLE D'ETANCHEI	DICHTSCHEIBE	TÆTNINGSSKIVE	AFDICHTRING	
7		41905549		1	CONECTOR HIDRÁUL	HYD CONNECTOR	CONECTOR HIDRÁULIC	CONNETTORE IDRAULIC	020R
					CONNECTEUR HYDRAU	HYDR STECKVERBINDE	HYDRAULIKSTIK	HYDRAULISCHE AANSLI	
8				1					
9		16511111		1	PARAFUSO DE BANJO	BANJO BOLT	PERNO BANJO	BULLONE MASCHIO	090B
					VIS BANJO	HOHLSCHRAUBE	BANJOBOLT	BANJOBOUT	
10		504245257		1	SENSOR	SENSOR	SENSOR	SENSORE	608S
					CAPTEUR	SENSOR	FØLER	SENSOR	
11		16689121		1	PARAFUSO, M6 x 16	SCREW	TORNILLO	VITE	040V
					VIS	SCHRAUBE	SKRUE	SCHROEF	
12		16592625		1	PARAFUSO	SCREW	TORNILLO	VITE	040V
					VIS	SCHRAUBE	SKRUE	SCHROEF	
13		16585625		1	PARAFUSO, M6X12 mm	SCREW	TORNILLO	VITE	040V
					VIS	SCHRAUBE	SKRUE	SCHROEF	

55.418.01		p1	03/11

INSTRUMENTS AND ELECTRICAL (SR175,SR200,SR220,SR250,TR270,TR320)
INSTRUMENTS AND ELECTRICAL (SR175,SR200,SR220,SR250,TR270,TR320)
INSTRUMENTS AND ELECTRICAL (SR175,SR200,SR220,SR250,TR270,TR320)
INSTRUMENTS AND ELECTRICAL (SR175,SR200,SR220,SR250,TR270,TR320)

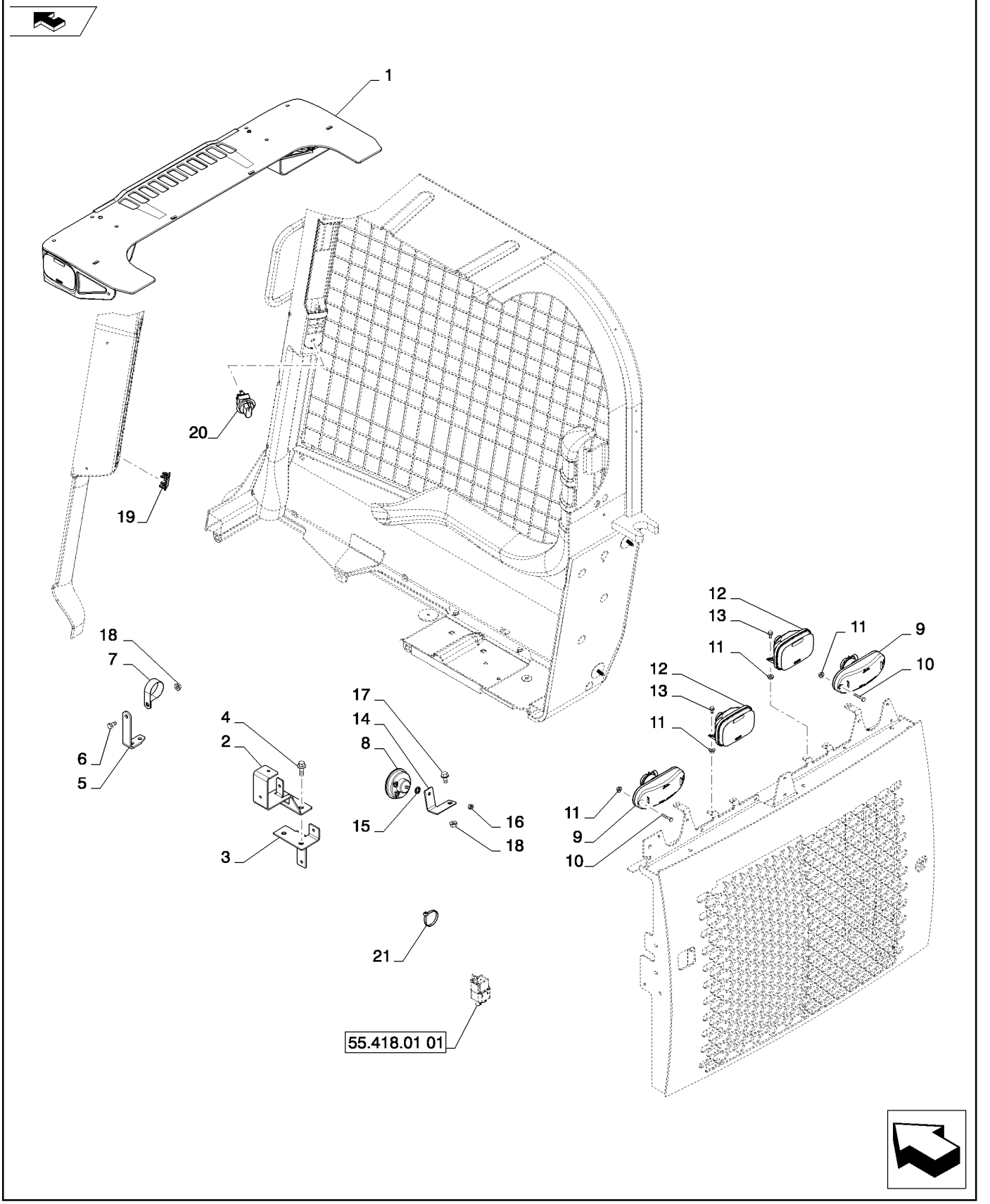

INSTRUMENTS AND ELECTRICAL (SR175,SR200,SR220,SR250,TR270,TR320)
INSTRUMENTS AND ELECTRICAL (SR175,SR200,SR220,SR250,TR270,TR320)
INSTRUMENTS AND ELECTRICAL (SR175,SR200,SR220,SR250,TR270,TR320)
INSTRUMENTS AND ELECTRICAL (SR175,SR200,SR220,SR250,TR270,TR320)

R	N	P.N.	MOD	Q	Denominação Description	Description Bezeichnung	Denominacion Beskrivelse	Descrizione Beschrijving	L.C.
1		NSS		1	SEM SERVIÇO EM SEPARADO, Light Housings, Lamps - See Figure 55.418.02				
						NOT SERVICED SEPARA	NO SE REPARA POR SE	NON FORNITO SEPARAT	064N
					NON FORUNI SEPAREM	NICHT A SEP ERS-T LIEI	SERVICERES IKKE SEPA	NIET LOS VERKRIJGBAA	
2		84296194		1	PEGA DE SUPORTE, FCI Connector Support				
						BRACKET, SUPPORTING	PIEZA DE APOYO	SQUADRETTA	215S
					EQUERRE	TRAGER, STUTZ	BRACKET, SUPPORTING	BRACKET, SUPPORTING	
3		84296250		1	PEGA DE SUPORTE, FCI Connector Support				
						BRACKET, SUPPORTING	PIEZA DE APOYO	SQUADRETTA	215S
					EQUERRE	TRAGER, STUTZ	BRACKET, SUPPORTING	BRACKET, SUPPORTING	
4		87550233		2	PARAFUSO	SCREW	TORNILLO	VITE	040V
					VIS	SCHRAUBE	SKRUE	SCHROEF	
5		84323563		1	CANTONEIRA	ANGLE	ÁNGULO	ANGOLARE	057C
					CORNIERE	WINKEL	VINKELBESLAG	HOEKSTUK	
6		120104		1	PARAFUSO, Hex, M8 x 20, 8.8				
						SCREW	TORNILLO	VITE	040V
					VIS	SCHRAUBE	SKRUE	SCHROEF	
7		603022		1	BRAÇADEIRA, 1 3/4", Insul, 3/8" Bolt				
						CLAMP	ABRAZADERA	MORSETTO	120M
					COLLIER	KLEMME	SPÆNDEBÅND	KLEM	
8		87714969		1	BUZINA, W/Breather	HORN	BOCINA	AVVISATORE ACUSTICC	105A
					AVERTISSEUR SONORE	HUPE	HORN	CLAXON	
9		87627854		2	FAROL CONJUNTO, Tail/Stop - Incand.				
						LIGHT ASSY.	FARO (CONJ)	LUCE, COMPLESSIVO	P478
					FEU (ASSEMBLE)	LAMPE (KPLT.)	LIGHT ASSY.	LIGHT ASSY.	
10		86502967		4	PARAFUSO, Cross Pan Hd, M5 x 30				
						SCREW	TORNILLO	VITE	040V
					VIS	SCHRAUBE	SKRUE	SCHROEF	
11		86512495		8	PORCA, M5 x .8, Flg, Cl 8	NUT	TUERCA	DADO	010D
					ECROU	MUTTER	MØTRIK	MOER	
12		84306337		2	LÂMPADA DE TRABALHO, 37.5W				
						WORK LAMP	LÁMPARA DE TRABAJO	LUCE DI LAVORO	219P
					FEU DE TRAVAIL	ARBEITSLEUCHTE	ARBEJDSLAMPE	WERKLAMP	
13		86511838		4	PARAFUSO, Hex Flg, M5 x 12, 8.8, Full Thd				
						BOLT	PERNO	BULLONE	140B
					VIS	SCHRAUBE	BOLT	BOUT	
14		84331854		1	PEGA DE SUPORTE	BRACKET, SUPPORTING	PIEZA DE APOYO	SQUADRETTA	215S
					EQUERRE	TRAGER, STUTZ	BRACKET, SUPPORTING	BRACKET, SUPPORTING	
15		86625253		1	ARRUELA PLANA, M11 x 24 x 2				
						WASHER	ARANDELA	RONDELLA	131R
					RONDELLE	UNTERLEGSCHEIBE	FLADSKIVE	SLUITRING	
16		9804276		1	PORCA, M6 x 1, Flg, Cl 8	NUT	TUERCA	DADO	010D
					ECROU	MUTTER	MØTRIK	MOER	
17		86511841		1	PARAFUSO, Hex Flg, M8 x 16, 8.8				
						BOLT	PERNO	BULLONE	140B
					VIS	SCHRAUBE	BOLT	BOUT	
18		9804277		2	PORCA, M8 x 1.25, Flg, Cl 8				
						NUT	TUERCA	DADO	010D
					ECROU	MUTTER	MØTRIK	MOER	

55.418.01		p2	03/11

INSTRUMENTS AND ELECTRICAL (SR175,SR200,SR220,SR250,TR270,TR320)
INSTRUMENTS AND ELECTRICAL (SR175,SR200,SR220,SR250,TR270,TR320)
INSTRUMENTS AND ELECTRICAL (SR175,SR200,SR220,SR250,TR270,TR320)
INSTRUMENTS AND ELECTRICAL (SR175,SR200,SR220,SR250,TR270,TR320)

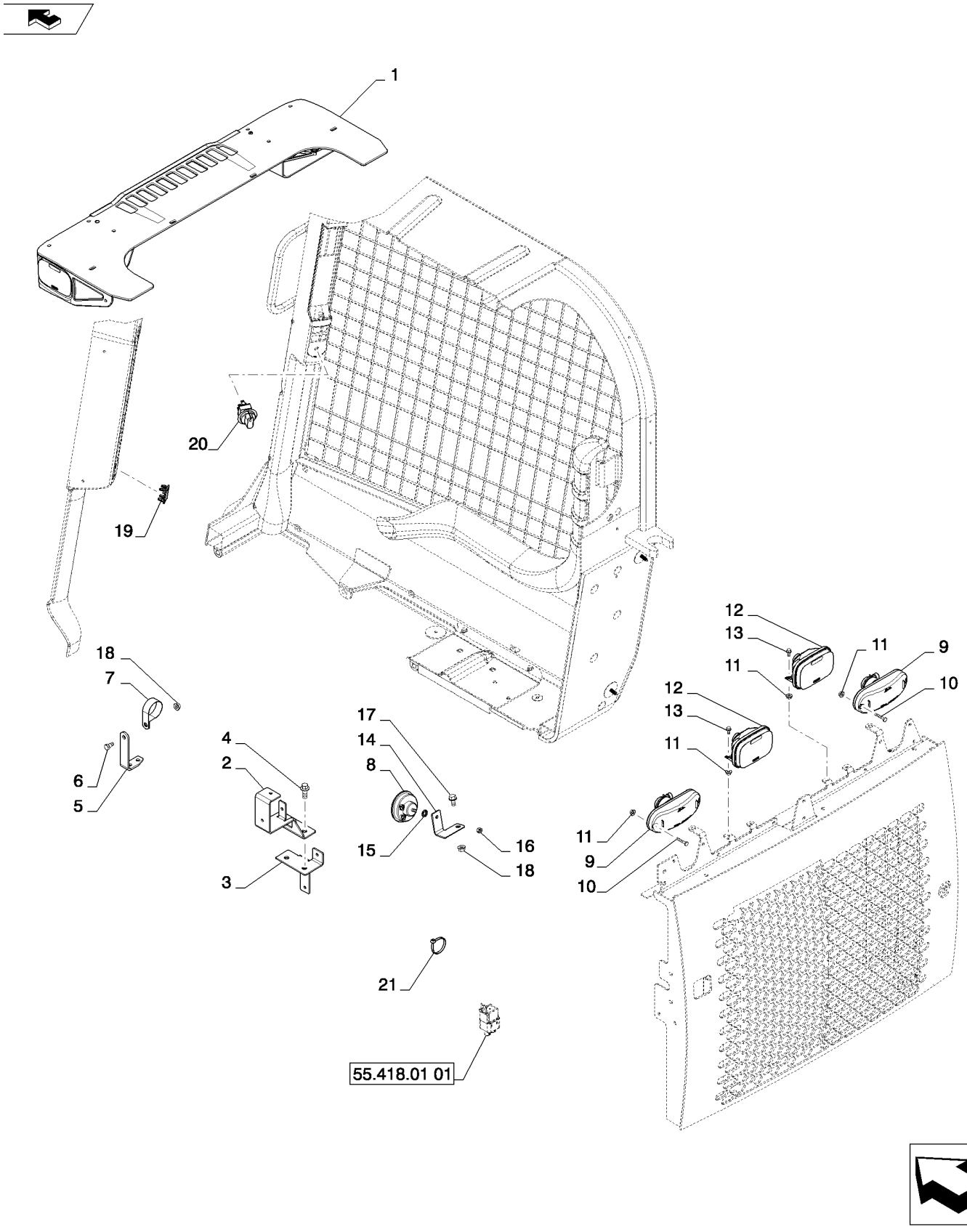

INSTRUMENTS AND ELECTRICAL (SR175,SR200,SR220,SR250,TR270,TR320)
INSTRUMENTS AND ELECTRICAL (SR175,SR200,SR220,SR250,TR270,TR320)
INSTRUMENTS AND ELECTRICAL (SR175,SR200,SR220,SR250,TR270,TR320)
INSTRUMENTS AND ELECTRICAL (SR175,SR200,SR220,SR250,TR270,TR320)

R	N	P.N.	MOD	Q	Denominação Description	Description Bezeichnung	Denominacion Beskrivelse	Descrizione Beschrijving	L.C.
19		126844A1		1	BUJÃO BOUCHON	PLUG STOPFEN	TAPÓN PROP	TAPPO PLUG	050T
20		84412290		1	ADESIVO, Light Switch Case AUTOCOLLANT	DECAL AUFKLEBER	CALCOMANÍA TRANSFER	DECALCOMANIA STICKER	012D
21		L11541		10	PRENDEDOR DE CABOS BRIDE DE CABLE	CABLE STRAP KABELBINDER	BANDA DE CABLE KABELSTROP	FASCETTA PER CAVO BUNDELBAND	P716
22		9804255		1	PARAFUSO, Hex Flg, M6 x 16, 8.8, (Not Shown) Ref. 14 mounting VIS	BOLT SCHRAUBE	PERNO BOLT	BULLONE BOUT	140B
23		9804276		1	PORCA, M6 x 1, Flg, Cl 8, (Not Shown) Ref. 14 mounting ECROU	NUT MUTTER	TUERCA MØTRIK	DADO MOER	010D
24		86588450		4	ARRUELA PLANA, M6 x 12 x 1.6 Thk, (Not Shown) Ref. 14 mounting RONDELLE	WASHER UNTERLEGSCHEIBE	ARANDELA FLADSKIVE	RONDELLA SLUITRING	131R
25		86625264		4	TRAVA DA ARRUELA, Ext Tooth, M5, (Not Shown) Ref. 12 mounting RONDELLE FREIN	LOCK WASHER SICHERUNGSSCHEIBE	ARANDELA DE BLOQUE LÅSESKIVE	RONDELLA DI SICUREZ BORGRING	132R

55.418.01	01	p1	05/11

COMMON INSTRUMENTS AND ELEC (ALL CASE)
COMMON INSTRUMENTS AND ELEC (ALL CASE)
COMMON INSTRUMENTS AND ELEC (ALL CASE)
COMMON INSTRUMENTS AND ELEC (ALL CASE)

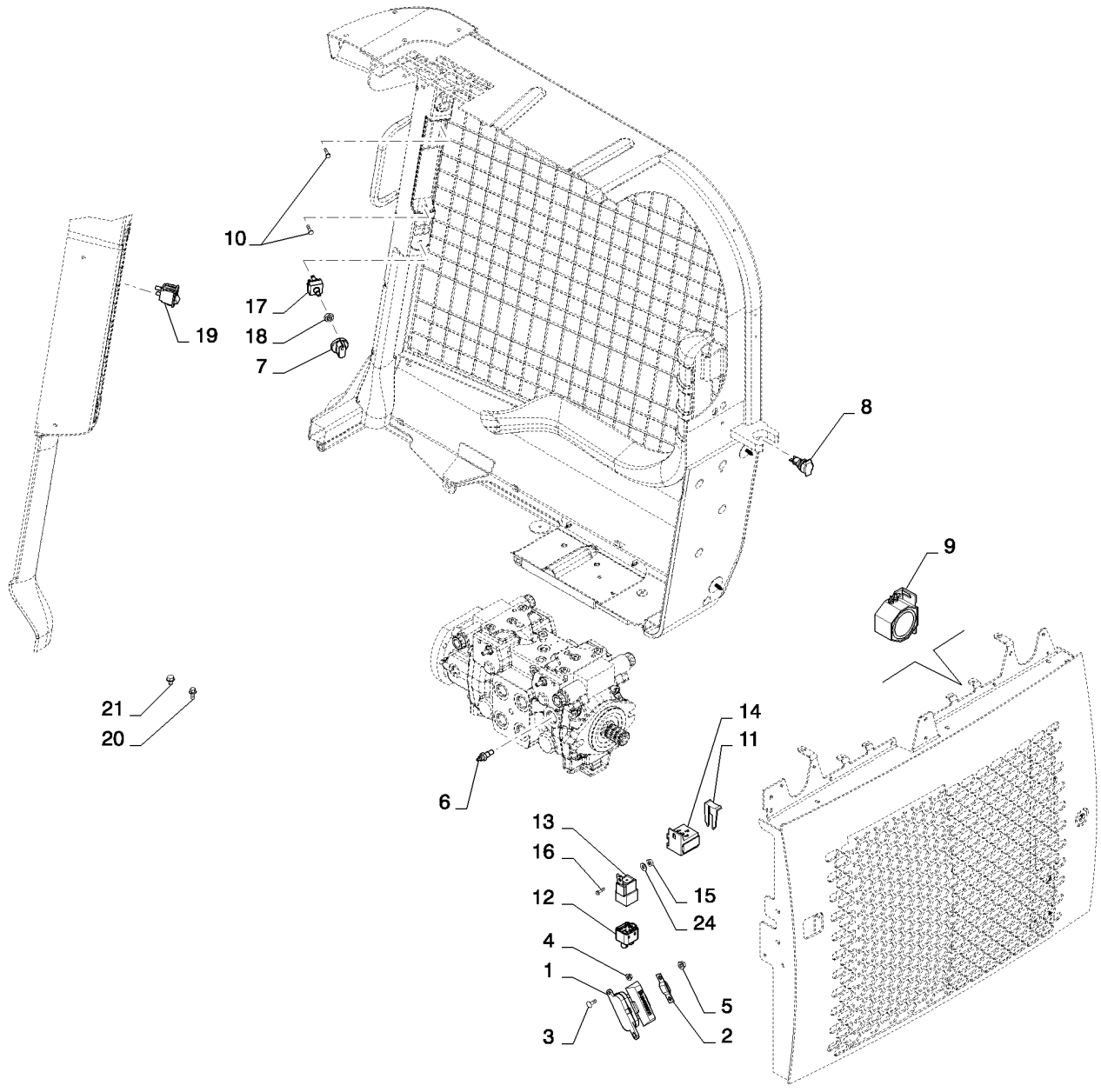

COMMON INSTRUMENTS AND ELEC (ALL CASE)
COMMON INSTRUMENTS AND ELEC (ALL CASE)
COMMON INSTRUMENTS AND ELEC (ALL CASE)
COMMON INSTRUMENTS AND ELEC (ALL CASE)

R	N	P.N.	MOD	Q	Denominação Description	Description Bezeichnung	Denominacion Beskrivelse	Descrizione Beschrijving	L.C.
1		440038A1		1	BLOCO DE JUNÇÃO, Fuse Block				
						JUNCTION BLOCK	BLOQUE DE CONEXIÓN	BASETTA DI GIUNZIONE	Z398
					BLOC DE JONCTION	ANSCHLUSSBLOCK	FORBINDELSESBLOK	VERDEELBLOK	
2		87472238		1	FUSÍVEL, 60 Amp	FUSE	FUSIBLE	FUSIBILE	110F
					FUSIBLE	SICHERUNG	SIKRING	ZEKERING	
3		9706703		2	PARAFUSO, Short NK, M6 x 20, Cl8.8, Full Thd				
						CARRIAGE BOLT	PERNO ALOMADO	BULLONE A TESTA TONI	P123
					VIS A TETE BOMBEE	SCHLOSSSCHRAUBE	BRÆDDEBOLT	SLOTBOUT	
4		9804276		2	PORCA, M6 x 1, Flg, Cl 8	NUT	TUERCA	DADO	010D
					ECROU	MUTTER	MØTRIK	MOER	
5		9804277		2	PORCA, M8 x 1.25, Flg, Cl 8				
						NUT	TUERCA	DADO	010D
					ECROU	MUTTER	MØTRIK	MOER	
6		87688409		1	EMISSOR DE TEMPERATURA, Water				
						TEMPERATURE SENDER	EMISOR DE TEMPERATU	TRASMETT. TEMPERATU	Z366
					TRANSMETTEUR TEMPE	TEMPERATURGEBER	TEMPERATURSENDER	TEMPERATUURSENSOR	
7		86729670		1	MAÇANETA	KNOB	MANDO	MANOPOLA	150P
					BOUTON	RUNDGRIFF	GREB	KNOP	
8		82002966		1	TOMADA ELÉTRICA	POWER SOCKET	ZÓCALO DE CORRIENTE	PRESA DI CORRENTE	205P
					PRISE DE COURANT	STECKDOSE	STRØMUDTAG	CONTACTDOOS	
9		325258A1		1	KIT DE SERVIÇO, Backup Alarm Assembly				
						SERVICE KIT	KIT DE SERVICIO	KIT DI MANUTENZIONE	021K
					KIT D'ENTRETIEN	SERVICE-SATZ	SERVICESÆT	SERVICEKIT	
10		86511042		2	PARAFUSO, Cross Pan Hd, M4 x 16				
						SCREW	TORNILLO	VITE	040V
					VIS	SCHRAUBE	SKRUE	SCHROEF	
11		84352550		1	CONECTOR ELÉTR	ELEC CONNECTOR	CONECTOR ELÉCTRICO	CONNETTORE ELETTRI(	235C
					CONNECTEUR ELECTRI	ELEKTR STECKVERBIND	EL-STIK	CONNECTOR	
12		84359805		1	CONECTOR ELÉTR, Relay Socket 8W				
						ELEC CONNECTOR	CONECTOR ELÉCTRICO	CONNETTORE ELETTRI(	235C
					CONNECTEUR ELECTRI	ELEKTR STECKVERBIND	EL-STIK	CONNECTOR	
13		84297432		1	RELÉ	RELAY	RELÉ	RELÈ	011R
					RELAIS	RELAIS	RELÆ	RELAIS	
14		NSS		1	SEM SERVIÇO EM SEPARADO, Packard Metri-Pack Female 5-Way				
						NOT SERVICED SEPARA	NO SE REPARA POR SE	NON FORNITO SEPARAT	064N
					NON FORUNI SEPAREM	NICHT A SEP ERS-T LIEF	SERVICERES IKKE SEPA	NIET LOS VERKRIJGBAA	
15		87825		1	PORCA, #10-32	NUT	TUERCA	DADO	010D
					ECROU	MUTTER	MØTRIK	MOER	
16		87308282		1	PARAFUSO, Hex Hd, #10-32 x 3/4"				
						SCREW	TORNILLO	VITE	040V
					VIS	SCHRAUBE	SKRUE	SCHROEF	
17		86729669		1	INTERRUPTOR, Blower	SWITCH	INTERRUPTOR	INTERRUTTORE	075I
					CONTACTEUR	SCHALTER	KONTAKT	SCHAKELAAR	
18		87310592		1	PORCA, Jam, 7/16"-28, G5	NUT	TUERCA	DADO	010D
					ECROU	MUTTER	MØTRIK	MOER	
19		133714A1		1	INTERRUPTOR, Rocker, Beacon				
						SWITCH	INTERRUPTOR	COMMUTATORE	8850
					INTERRUPTEUR	SCHALTER	SWITCH	SWITCH	

55.418.01	01	p2	05/11

COMMON INSTRUMENTS AND ELEC (ALL CASE)
COMMON INSTRUMENTS AND ELEC (ALL CASE)
COMMON INSTRUMENTS AND ELEC (ALL CASE)
COMMON INSTRUMENTS AND ELEC (ALL CASE)

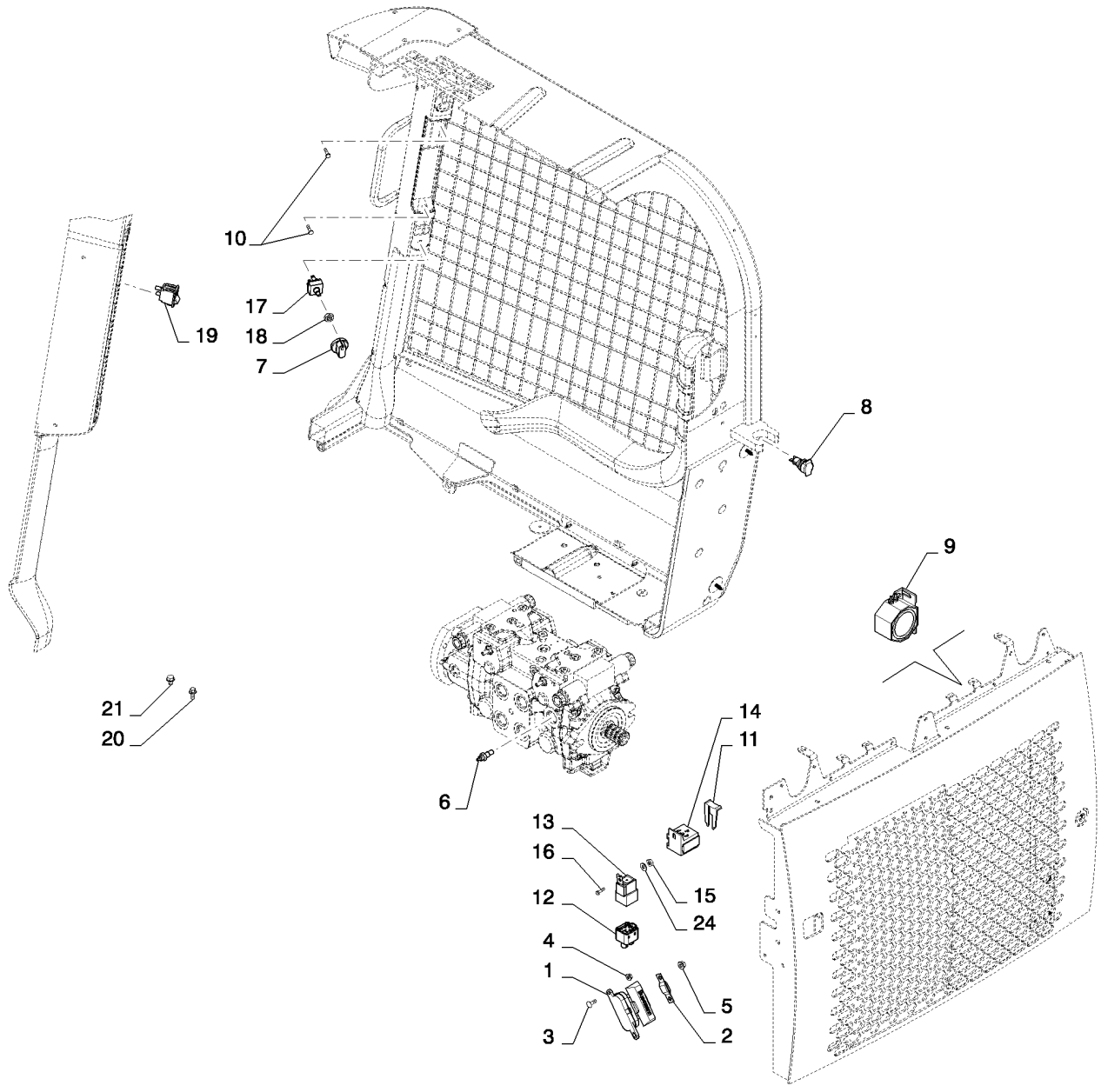

COMMON INSTRUMENTS AND ELEC (ALL CASE)
COMMON INSTRUMENTS AND ELEC (ALL CASE)
COMMON INSTRUMENTS AND ELEC (ALL CASE)
COMMON INSTRUMENTS AND ELEC (ALL CASE)

R	N	P.N.	MOD	Q	Denominação Description	Description Bezeichnung	Denominacion Beskrivelse	Descrizione Beschrijving	L.C.
20		**86625199**		1	PARAFUSO, Hex Flg Hd, M6 x 13				
						SELF-TAP SCREW	TORNILLO AUTORROSC	VITE AUTOFILETTANTE	062V
					VIS AUTOTARAUDEUSE	SELBSTSCHN SCHRAUE	SELVLÅSENDE BOLT	ZELFTAPPENDE SCHRO	
21		**380426**		1	PARAFUSO	SCREW	TORNILLO	VITE	040V
					VIS	SCHRAUBE	SKRUE	SCHROEF	
22		**84360112**		1	SUPORTE, (Not shown)	BRACKET	SOPORTE	STAFFA	225S
					SUPPORT	HALTERUNG	BESLAG	STEUN	
23		**84409478**		1	ADESIVO, LH Post Console (Not shown)				
						DECAL	CALCOMANÍA	DECALCOMANIA	012D
					AUTOCOLLANT	AUFKLEBER	TRANSFER	STICKER	
24		**80707**		2	ARRUELA PLANA, 3/16"	WASHER	ARANDELA	RONDELLA	131R
					RONDELLE	UNTERLEGSCHEIBE	FLADSKIVE	SLUITRING	

55.418.02		p1	05/11

LIGHT ASSY, 90 DEGREE (SR130-SR175,SR200-SR250,TR270,TR320)
LIGHT ASSY, 90 DEGREE (SR130-SR175,SR200-SR250,TR270,TR320)
LIGHT ASSY, 90 DEGREE (SR130-SR175,SR200-SR250,TR270,TR320)
LIGHT ASSY, 90 DEGREE (SR130-SR175,SR200-SR250,TR270,TR320)

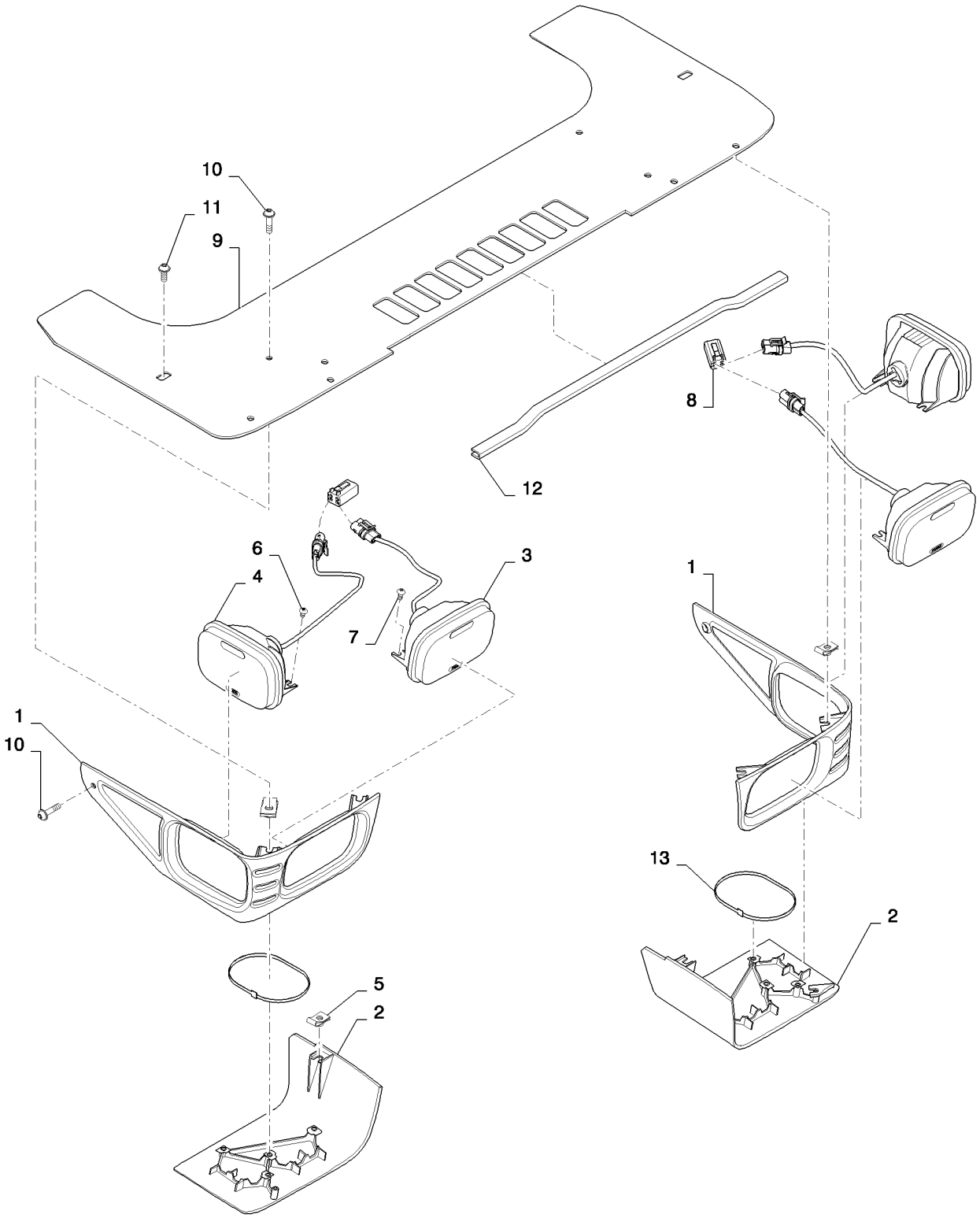

LIGHT ASSY, 90 DEGREE (SR130-SR175,SR200-SR250,TR270,TR320)
LIGHT ASSY, 90 DEGREE (SR130-SR175,SR200-SR250,TR270,TR320)
LIGHT ASSY, 90 DEGREE (SR130-SR175,SR200-SR250,TR270,TR320)
LIGHT ASSY, 90 DEGREE (SR130-SR175,SR200-SR250,TR270,TR320)

R	N	P.N.	MOD	Q	Denominação Description	Description Bezeichnung	Denominacion Beskrivelse	Descrizione Beschrijving	L.C.
1		84339369		1	ALOJAMENTO, Light, Face LH				
						HOUSING	ALOJAMIENTO	ALLOGGIAMENTO	014V
					CARTER	GEHÄUSE	HUS	HUIS	
1		84339371		1	ALOJAMENTO, Light, Face RH				
						HOUSING	ALOJAMIENTO	ALLOGGIAMENTO	014V
					CARTER	GEHÄUSE	HUS	HUIS	
2		84339368		1	ALOJAMENTO, Light Bottom LH				
						HOUSING	ALOJAMIENTO	ALLOGGIAMENTO	014V
					CARTER	GEHÄUSE	HUS	HUIS	
2		84339372		1	ALOJAMENTO, LIght Bottom RH				
						HOUSING	ALOJAMIENTO	ALLOGGIAMENTO	014V
					CARTER	GEHÄUSE	HUS	HUIS	
3		84306268		2	LÂMPADA DE TRABALHO, 50 W				
						WORK LAMP	LÁMPARA DE TRABAJO	LUCE DI LAVORO	219P
					FEU DE TRAVAIL	ARBEITSLEUCHTE	ARBEJDSLAMPE	WERKLAMP	
4		84306271		2	LÂMPADA DE TRABALHO, 37.5 W				
						WORK LAMP	LÁMPARA DE TRABAJO	LUCE DI LAVORO	219P
					FEU DE TRAVAIL	ARBEITSLEUCHTE	ARBEJDSLAMPE	WERKLAMP	
5		86625073		6	PORCA, M6, U, Spring	NUT	TUERCA	DADO	010D
					ECROU	MUTTER	MØTRIK	MOER	
6		529942		4	PARAFUSO, Cross Pan Hd, #10 x 5/16"				
						SELF-TAP SCREW	TORNILLO AUTORROSC	VITE AUTOFILETTANTE	062V
					VIS AUTOTARAUDEUSE	SELBSTSCHN SCHRAUE	SELVLÅSENDE BOLT	ZELFTAPPENDE SCHRO	
7		87564728		8	PARAFUSO, Tapping PNH XREC #10 x .5				
						SCREW	TORNILLO	VITE	040V
					VIS	SCHRAUBE	SKRUE	SCHROEF	
8		84306340		2	CHICOTE, Lamp Jumper Front				
						WIRE HARNESS	GRUPO DE CABLES	CABLAGGIO	070I
					FAISCEAU ELECTRIQUE	KABELBAUM	KABELNET	KABELBOOM	
9		84339366		1	PEGA DE SUPORTE, Brow	BRACKET, SUPPORTING	PIEZA DE APOYO	SQUADRETTA	215S
					EQUERRE	TRAGER, STUTZ	BRACKET, SUPPORTING	BRACKET, SUPPORTING	
10		84305556		8	PARAFUSO, RWH M6x25 TORX				
						SCREW	TORNILLO	VITE	040V
					VIS	SCHRAUBE	SKRUE	SCHROEF	
11		87682398		4	PARAFUSO, RWH M6x16 TORX				
						SCREW	TORNILLO	VITE	040V
					VIS	SCHRAUBE	SKRUE	SCHROEF	
12		84353803		1	GUARNIÇÃO, Edge 376 mn	TRIM	GUARNICIÓN	RIVESTIMENTO	C046
					GARNITURE	VERKLEIDUNG	INDTRÆK	BEKLEDING	
13		263117		2	PRENDEDOR DE CABOS, .14" x 11 1/2"				
						CABLE STRAP	BANDA DE CABLE	FASCETTA PER CAVO	P716
					BRIDE DE CABLE	KABELBINDER	KABELSTROP	BUNDELBAND	
14		86624182		4	ARRUELA PLANA, M6 x 18 x 1.6, (Not Shown) Use 2 with Ref. 10, 2x				
						WASHER	ARANDELA	RONDELLA	131R
					RONDELLE	UNTERLEGSCHEIBE	FLADSKIVE	SLUITRING	

55.512.01		p1	05/11

IGNITION AND DISPLAY, KEYED/KEYLESS CASE (ALL CASE)
IGNITION AND DISPLAY, KEYED/KEYLESS CASE (ALL CASE)
IGNITION AND DISPLAY, KEYED/KEYLESS CASE (ALL CASE)
IGNITION AND DISPLAY, KEYED/KEYLESS CASE (ALL CASE)

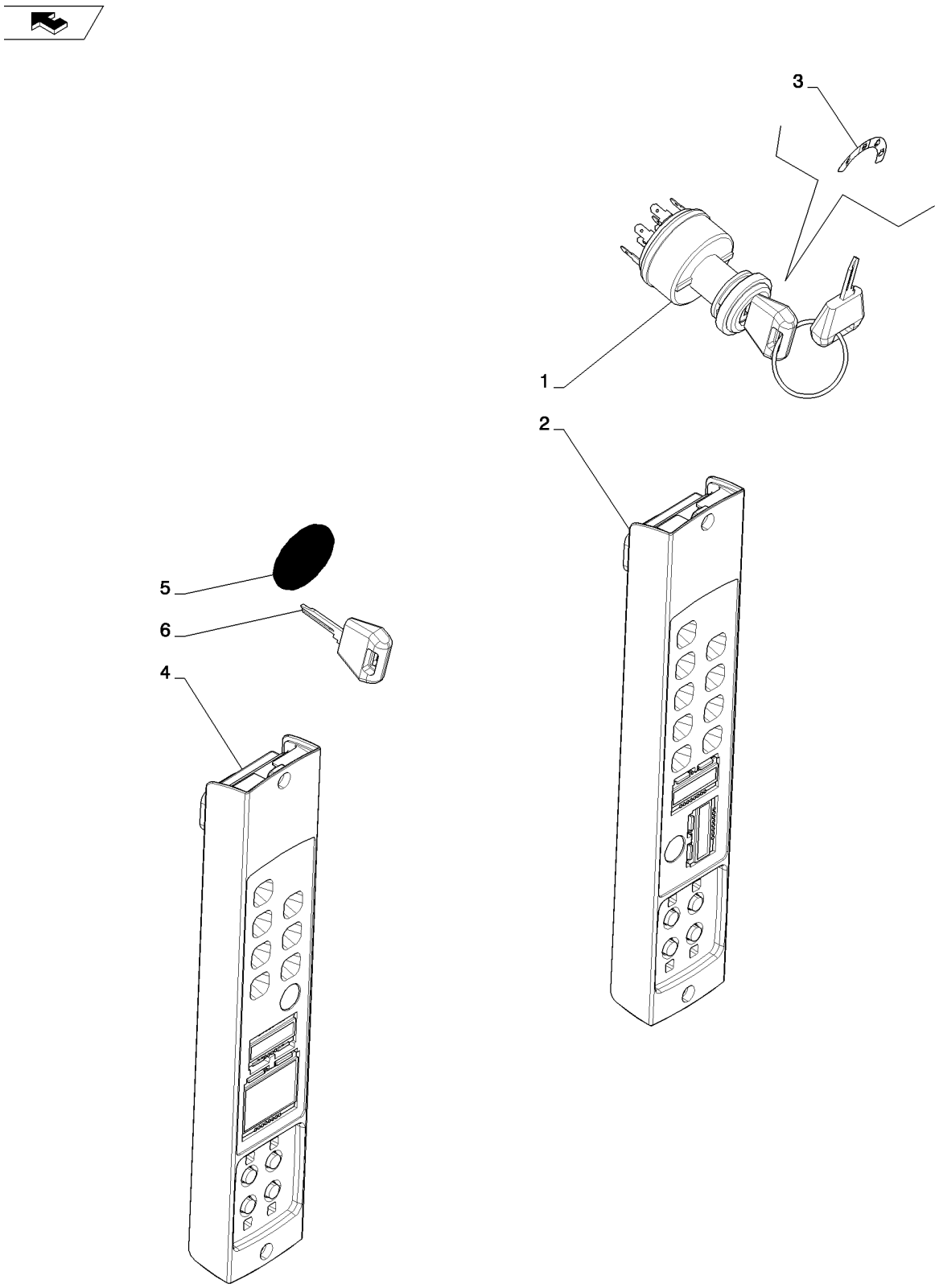

IGNITION AND DISPLAY, KEYED/KEYLESS CASE (ALL CASE)
IGNITION AND DISPLAY, KEYED/KEYLESS CASE (ALL CASE)
IGNITION AND DISPLAY, KEYED/KEYLESS CASE (ALL CASE)
IGNITION AND DISPLAY, KEYED/KEYLESS CASE (ALL CASE)

R	N	P.N.	MOD	Q	Denominação Description Bezeichnung Beskrivelse Descrizione Beschrijving	L.C.
1		282775A1		1	COMUTADOR, W/Padded Key IGNITION SWITCH / CONMUTADOR DE ARR / INTERRUTTORE ACCEN CONTACTEUR DE DEM / ZÜNDSCHALTER / KONTAKT, TÆNDING / CONTACTSCHAKELAAR	P654
2		84384712		1	CONJUNTO DE INSTRUMENTOS, Instrument Cluster, Case Standard INSTRUMENT CLUSTER / GRUPO DE INSTRUMEN / QUADRO STRUMENTI TABLEAU DE BORD / KOMBIINSTRUMENT / KOMBIINSTRUMENT / INSTRUMENTENPANEEL	288S
3		84377886		1	ADESIVO, Key Switch Case DECAL / CALCOMANÍA / DECALCOMANIA AUTOCOLLANT / AUFKLEBER / TRANSFER / STICKER	012D
4		84239241		1	CONJ INSTRUMEN MILHAGEM, Instrument Cluster, Case Deluxe, Keyless MILES INSTRUMENT CL / GRUPO DE INSTR. DE M / QUADRO STRUM. CONT TABLEAU DE BORD (MIL / KOMBIINSTRUMENT (ME / INSTRUMENTBRÆT, MIL / INSTRUM.PANEEL V. MI	287S
5		84270680		1	ADESIVO, Key Blank DECAL / CALCOMANÍA / DECALCOMANIA AUTOCOLLANT / AUFKLEBER / TRANSFER / STICKER	012D
6		1964831C2		1	JOGO 2 CHAVES, Padded Case Logo SET OF 2 KEYS / JUEGO DE 2 LLAVES / KIT DI 2 CHIAVI JEU DE 2 CLES / SATZ 2 SCHLÜSSEL / SKRUENØGLESÆT / SET VAN 2 SLEUTELS	Z524

55.514.01		p1	05/11

EU ROAD LIGHTS MED RAD CASE (SR175,SR200)
EU ROAD LIGHTS MED RAD CASE (SR175,SR200)
EU ROAD LIGHTS MED RAD CASE (SR175,SR200)
EU ROAD LIGHTS MED RAD CASE (SR175,SR200)

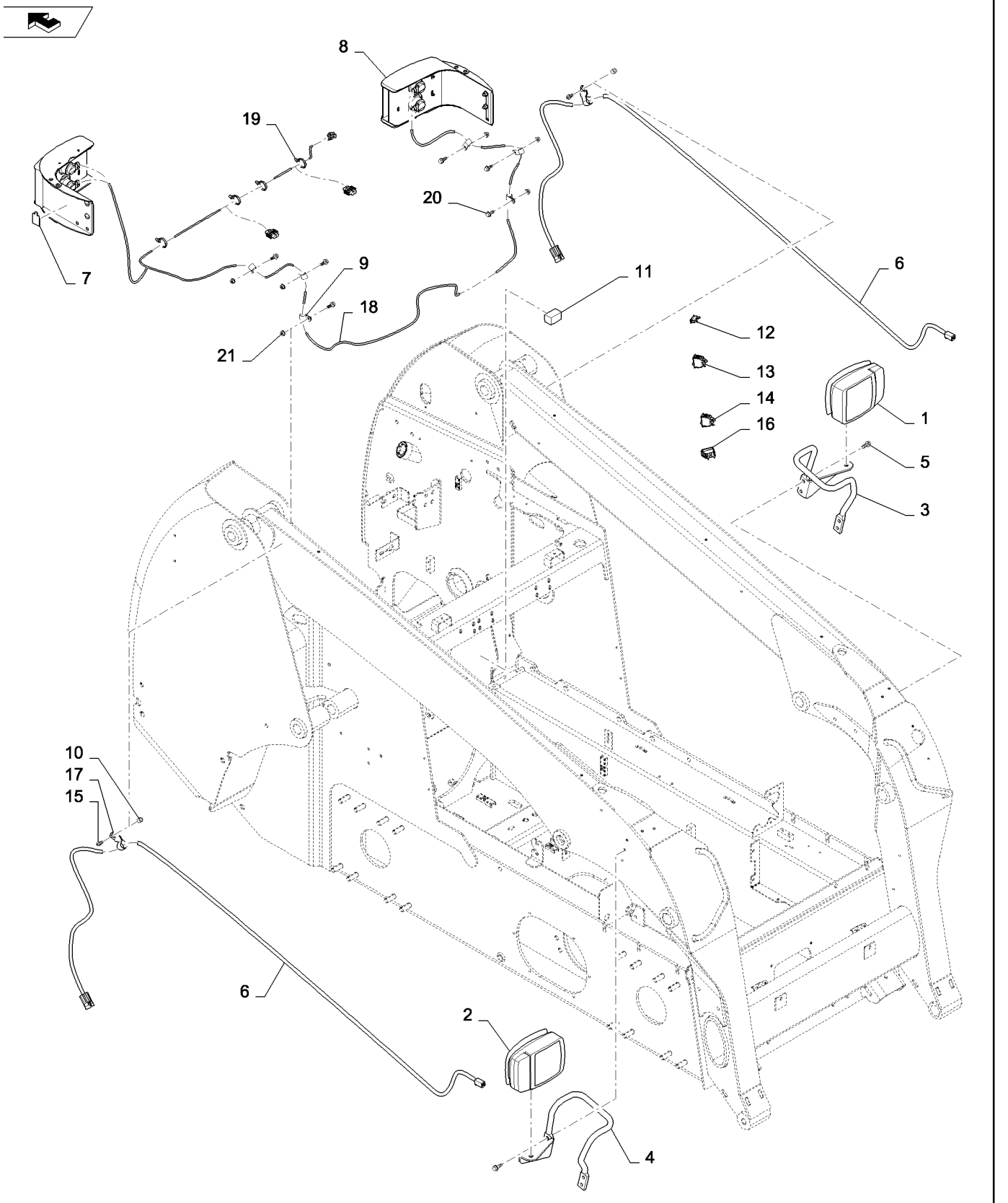

EU ROAD LIGHTS MED RAD CASE (SR175,SR200)
EU ROAD LIGHTS MED RAD CASE (SR175,SR200)
EU ROAD LIGHTS MED RAD CASE (SR175,SR200)
EU ROAD LIGHTS MED RAD CASE (SR175,SR200)

R	N	P.N.	MOD	Q	Denominação Description	Description Bezeichnung	Denominacion Beskrivelse	Descrizione Beschrijving	L.C.
1		87572860		1	LÂMPADA, EU Boom, Left	LAMP	LÁMPARA	SPIA	009F
					LAMPE	LEUCHTE	LYGTE	LAMP	
2		87572859		1	LÂMPADA, EU Boom, Right				
						LAMP	LÁMPARA	SPIA	009F
					LAMPE	LEUCHTE	LYGTE	LAMP	
3		84306583		1	SUPORTE, Light, LH, Tan	BRACKET	SOPORTE	STAFFA	225S
					SUPPORT	HALTERUNG	BESLAG	STEUN	
4		84306585		1	SUPORTE, Light, RH, Tan	BRACKET	SOPORTE	STAFFA	225S
					SUPPORT	HALTERUNG	BESLAG	STEUN	
5		280476		4	PARAFUSO, Hex Wash Hd, 3/8" x 1"				
						SELF-TAP SCREW	TORNILLO AUTORROSC	VITE AUTOFILETTANTE	062V
					VIS AUTOTARAUDEUSE	SELBSTSCHN SCHRAUE	SELVLÅSENDE BOLT	ZELFTAPPENDE SCHRO	
6		84262451		2	CHICOTE, Front End, Boom RD				
						WIRE HARNESS	GRUPO DE CABLES	CABLAGGIO	070I
					FAISCEAU ELECTRIQUE	KABELBAUM	KABELNET	KABELBOOM	
7		84416164		2	ESPUMA ISOLANTE, Upper Chassis Short				
						FOAM INSULATION	ESPUMA AISLANTE	ISOLANTE IN SCHIUMA	051S
					MOUSSE ISOLANTE	SCHAUMSTOFFISOLIER	SKUM ISOLERING	SCHUIMISOLATIE	
8		84384439		1	FAROL DE RÉ, Work, Rear Assy				
						REVERSING LAMP ASSY	CONJ. LÁMP. MARCHA A	COMPL. LUCE RETROM/	015F
					FEU DE MARCHE ARRIE	RÜCKFAHRSCHEINW-BA	BAKLYGTE, KPL.	ACHTERUITRIJLAMP	
9		86625035		8	BRAÇADEIRA, 1/2", Insul, 1/4" Bolt				
						CLAMP	ABRAZADERA	MORSETTO	120M
					COLLIER	KLEMME	SPÆNDEBÅND	KLEM	
10		86589143		2	ESPAÇADOR	SPACER	SEPARADOR	DISTANZIALE	075D
					ENTRETOISE	DISTANZSTÜCK	AFSTANDSSTYKKE	AFSTANDSSTUK	
11		9821783		1	LÂMPADA INTERMITENTE, Assembly				
						FLASHER UNIT	UNIDAD INTERMITENTE	UNITÀ LAMPEGGIATORE	035L
					CENTRALE CLIGNOTAN	BLINKEREINHEIT	BLINKLAMPE	KNIPPERAUTOMAAT	
12		86604657		1	INDICADOR DE DIREÇÃO	TURN SIGNAL INDICATC	INDIC. DE SEÑAL DE GIF	INDICATORE DI DIREZIC	029I
					CLIGNOTANT	FAHRTRICHTUNGSANZE	RETNINGSVISER	RICHTINGAANWIJZER	
13		87634133		1	INTERRUPTOR, Hazard Lights				
						SWITCH	INTERRUPTOR	INTERRUTTORE	075I
					CONTACTEUR	SCHALTER	KONTAKT	SCHAKELAAR	
14		84263153		1	INTERRUPTOR, Rocker, Loader Lockout				
						SWITCH	INTERRUPTOR	INTERRUTTORE	075I
					CONTACTEUR	SCHALTER	KONTAKT	SCHAKELAAR	
15		87016557		2	PARAFUSO, Hex Flg Hd, M8 x 25				
						SELF-TAP SCREW	TORNILLO AUTORROSC	VITE AUTOFILETTANTE	062V
					VIS AUTOTARAUDEUSE	SELBSTSCHN SCHRAUE	SELVLÅSENDE BOLT	ZELFTAPPENDE SCHRO	
16		131691A1		1	INTERRUPTOR, Turn Signal				
						SWITCH	INTERRUPTOR	COMMUTATORE	8850
					INTERRUPTEUR	SCHALTER	SWITCH	SWITCH	
18		84262455		1	CHICOTE, Rear, Road Jumper				
						WIRE HARNESS	GRUPO DE CABLES	CABLAGGIO	070I
					FAISCEAU ELECTRIQUE	KABELBAUM	KABELNET	KABELBOOM	
19		87668737		4	TIRA, W/Push-in Fastener	STRAP	BANDA	FASCETTA	532B
					BRIDE	BAND	STROP	RIEM	

SR200

55.514.01		p2	05/11

EU ROAD LIGHTS MED RAD CASE (SR175,SR200)
EU ROAD LIGHTS MED RAD CASE (SR175,SR200)
EU ROAD LIGHTS MED RAD CASE (SR175,SR200)
EU ROAD LIGHTS MED RAD CASE (SR175,SR200)

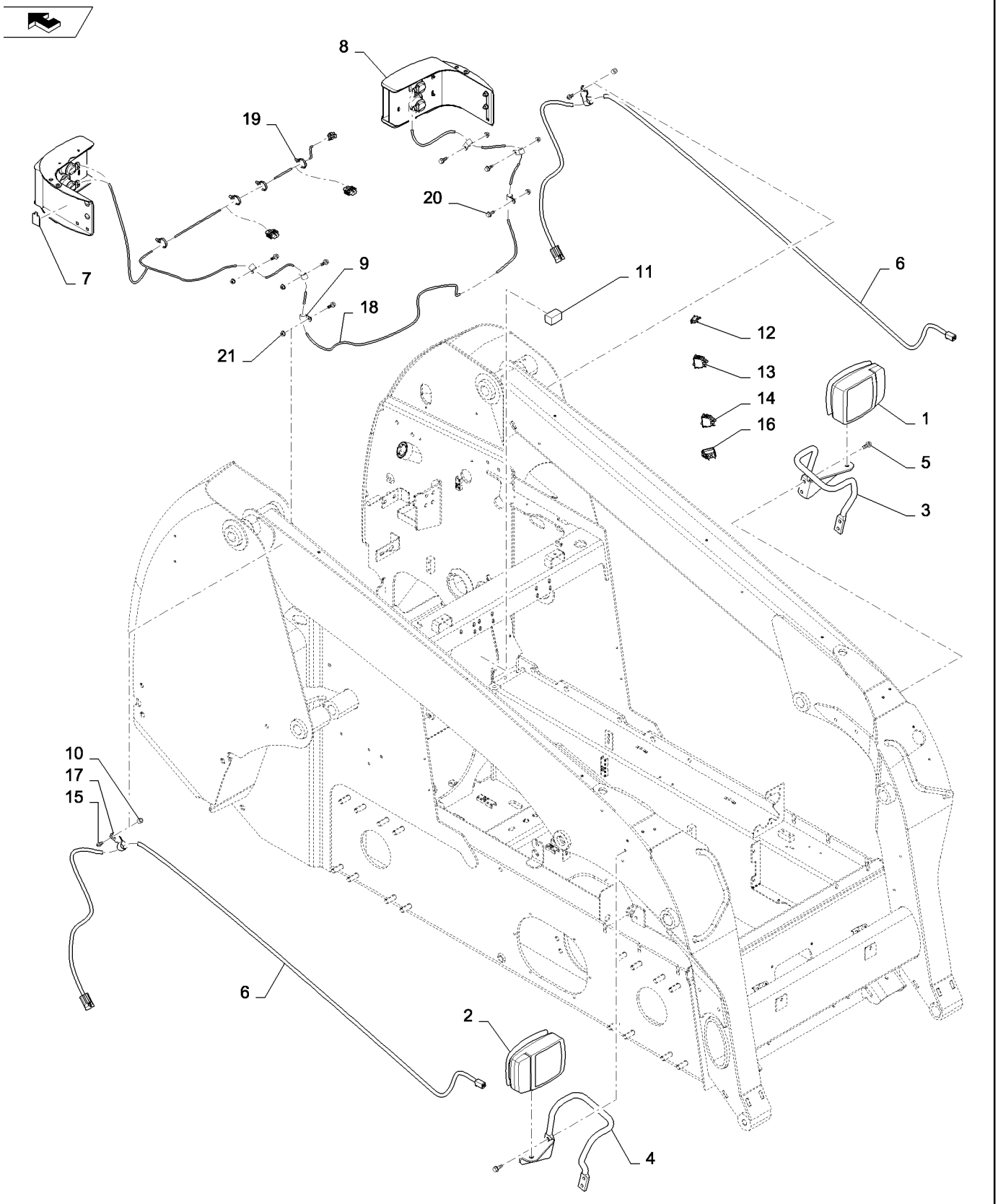

EU ROAD LIGHTS MED RAD CASE (SR175,SR200)
EU ROAD LIGHTS MED RAD CASE (SR175,SR200)
EU ROAD LIGHTS MED RAD CASE (SR175,SR200)
EU ROAD LIGHTS MED RAD CASE (SR175,SR200)

R	N	P.N.	MOD	Q	Denominação Description	Description Bezeichnung	Denominacion Beskrivelse	Descrizione Beschrijving	L.C.
20		**9804255**		6	PARAFUSO, Hex Flg, M6 x 16, 8.8				
						BOLT	PERNO	BULLONE	140B
					VIS	SCHRAUBE	BOLT	BOUT	
21		**9804276**		6	PORCA, M6 x 1, Flg, Cl 8	NUT	TUERCA	DADO	010D
					ECROU	MUTTER	MØTRIK	MOER	

55.514.02		p1	01/11

NO ROAD LIGHTS OR TURN SIGNAL (ALL CASE)
NO ROAD LIGHTS OR TURN SIGNAL (ALL CASE)
NO ROAD LIGHTS OR TURN SIGNAL (ALL CASE)
NO ROAD LIGHTS OR TURN SIGNAL (ALL CASE)

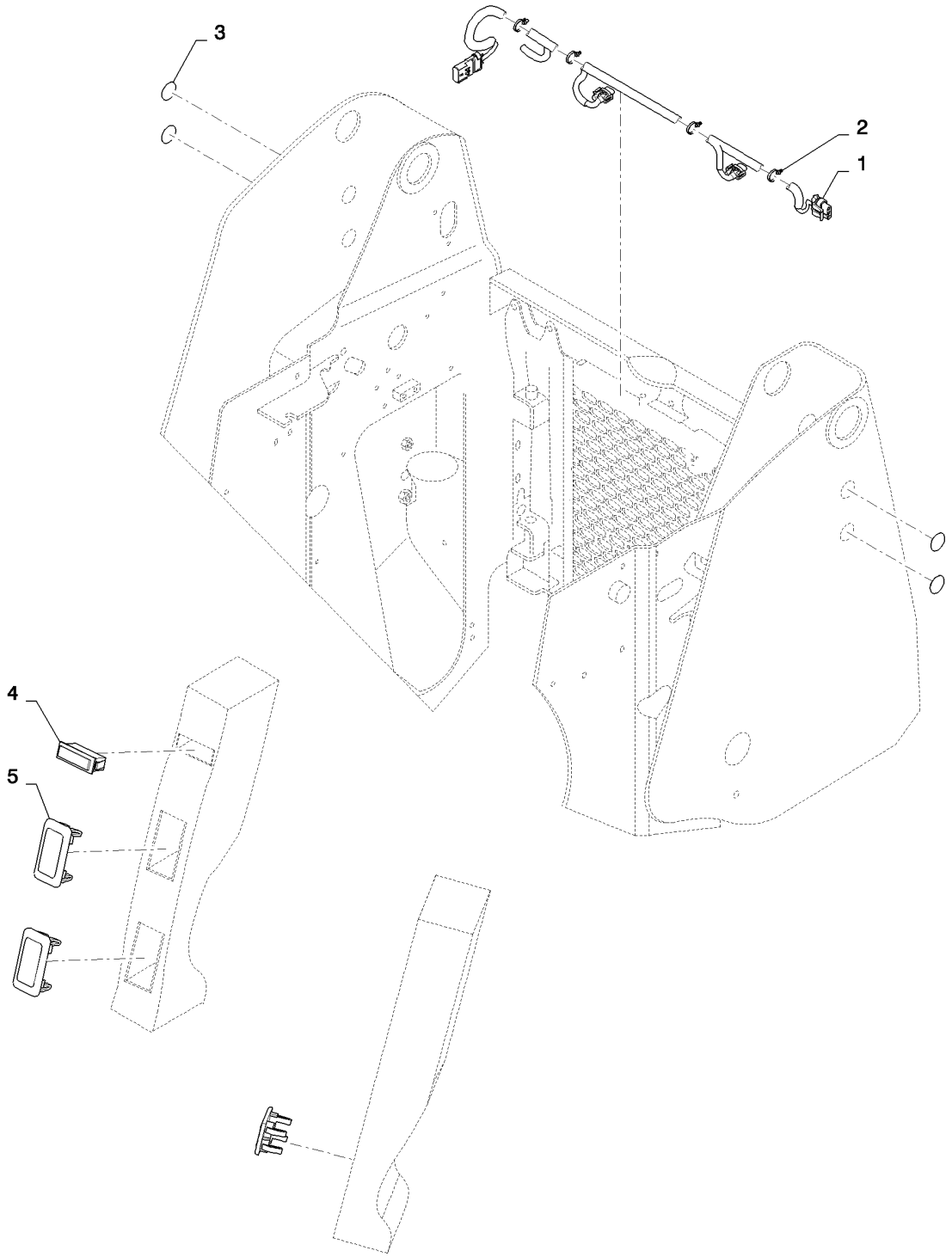

NO ROAD LIGHTS OR TURN SIGNAL (ALL CASE)
NO ROAD LIGHTS OR TURN SIGNAL (ALL CASE)
NO ROAD LIGHTS OR TURN SIGNAL (ALL CASE)
NO ROAD LIGHTS OR TURN SIGNAL (ALL CASE)

R	N	P.N.	MOD	Q	Denominação Description Bezeichnung	Description Bezeichnung Beskrivelse	Denominacion Beskrivelse Descrizione	Descrizione Beschrijving Beschrijving	L.C.
1		84251331		1	CHICOTE, Rear, Lamp Jumper WIRE HARNESS FAISCEAU ELECTRIQUE	WIRE HARNESS KABELBAUM	GRUPO DE CABLES KABELNET	CABLAGGIO KABELBOOM	070I
2		87668737		4	TIRA, Fir Tree Assembly BRIDE	STRAP BAND	BANDA STROP	FASCETTA RIEM	532B
3		299274A2		4	TAMPA, Lexan COUVERCLE	COVER DECKEL	TAPA COVER	COPERCHIO COVER	2250
4		86627432		1	BUJÃO DE PLÁSTICO BOUCHON EN PLASTIQU	PLASTIC PLUG KUNSTSTOFFSTOPFEN	TAPÓN DE PLÁSTICO PLASTPROP	TAPPO IN PLASTICA KUNSTSTOFPLUG	Z412
5		126844A1		3	BUJÃO, Cover BOUCHON	PLUG STOPFEN	TAPÓN PROP	TAPPO PLUG	050T

55.514.05		p1	01/11

LIGHT ASSEMBLY REAR ROAD (ALL CASE)
LIGHT ASSEMBLY REAR ROAD (ALL CASE)
LIGHT ASSEMBLY REAR ROAD (ALL CASE)
LIGHT ASSEMBLY REAR ROAD (ALL CASE)

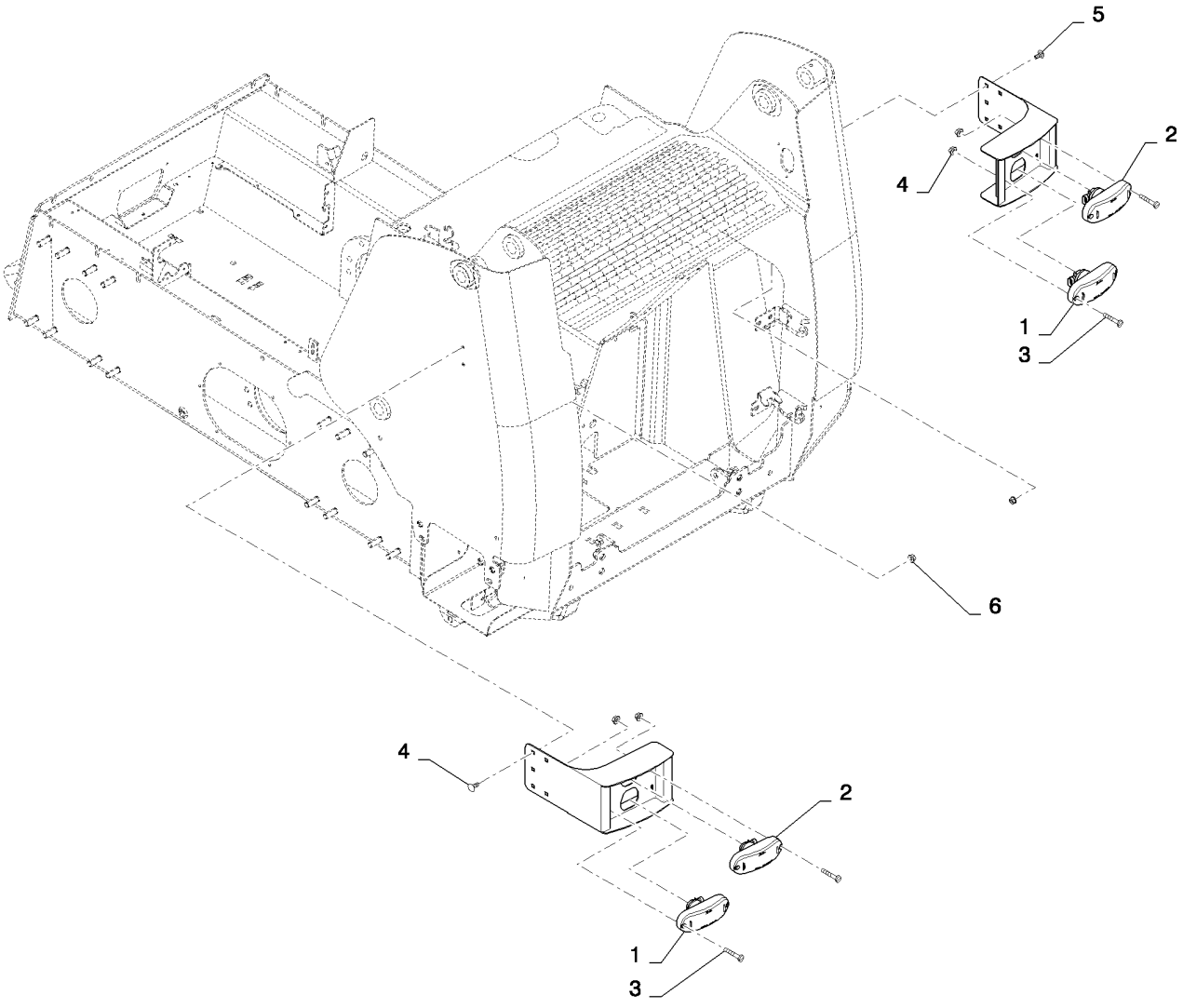

LIGHT ASSEMBLY REAR ROAD (ALL CASE)
LIGHT ASSEMBLY REAR ROAD (ALL CASE)
LIGHT ASSEMBLY REAR ROAD (ALL CASE)
LIGHT ASSEMBLY REAR ROAD (ALL CASE)

R	N	P.N.	MOD	Q	Denominação Description	Description Bezeichnung	Denominacion Beskrivelse	Descrizione Beschrijving	L.C.
1		87629587		2	FAROL CONJUNTO, Warning Lamp				
						LIGHT ASSY.	FARO (CONJ)	LUCE, COMPLESSIVO	P478
					FEU (ASSEMBLE)	LAMPE (KPLT.)	LIGHT ASSY.	LIGHT ASSY.	
2		87627854		2	FAROL CONJUNTO, Rear Stop, Tail Lamp				
						LIGHT ASSY.	FARO (CONJ)	LUCE, COMPLESSIVO	P478
					FEU (ASSEMBLE)	LAMPE (KPLT.)	LIGHT ASSY.	LIGHT ASSY.	
3		86502967		8	PARAFUSO, Cross Pan Hd, M5 x 30				
						SCREW	TORNILLO	VITE	040V
					VIS	SCHRAUBE	SKRUE	SCHROEF	
4		86512495		8	PORCA, M5 x .8, Flg, Cl 8	NUT	TUERCA	DADO	010D
					ECROU	MUTTER	MØTRIK	MOER	
5		86512420		4	PARAFUSO, Short NK, M8 x 20, Cl8.8, Full Thd				
						CARRIAGE BOLT	PERNO ALOMADO	BULLONE A TESTA TONI	P123
					VIS A TETE BOMBEE	SCHLOSSSCHRAUBE	BRÆDDEBOLT	SLOTBOUT	
6		9804277		4	PORCA, M8 x 1.25, Flg, Cl 8				
						NUT	TUERCA	DADO	010D
					ECROU	MUTTER	MØTRIK	MOER	

SECTION INDEX

82 - Pá carregadeira dianteira

82.100.01	01	BUCKETS - LOADER, DIRT / FOUNDRY
82.100.01	02	BUCKETS - LOADER, LOW PROFILE, EXTENDED LOW PROFILE
82.100.01	03	BUCKETS - LOADER, UTILITY / LIGHT MATERIAL
82.100.01	04	BUCKETS - LOADER, HEAVY DUTY DIRT
82.100.01	05	BUCKETS - LOADER, MANURE / SLURRY
82.100.02		BUCKET, BOLT ON CUTTING EDGE (B.O.C.E.) (ALL CASE)
82.100.03		PALLET FORK 48 TINE (ALL CASE)
82.100.04	01	SPILL GUARD 66 TAN (SR130-SR200)
82.100.04	02	SPILL GUARD 72 TAN (SR130-TR270)
82.100.04	03	SPILL GUARD 78 TAN (SR175-TV380)

82.100.01	01	p1	08/11

BUCKETS - LOADER, DIRT / FOUNDRY
BUCKETS - LOADER, DIRT / FOUNDRY
CUCHARON - CARGADORA, SUCIEDAD/FUNDICIÓN
BENNE - CARICATORE

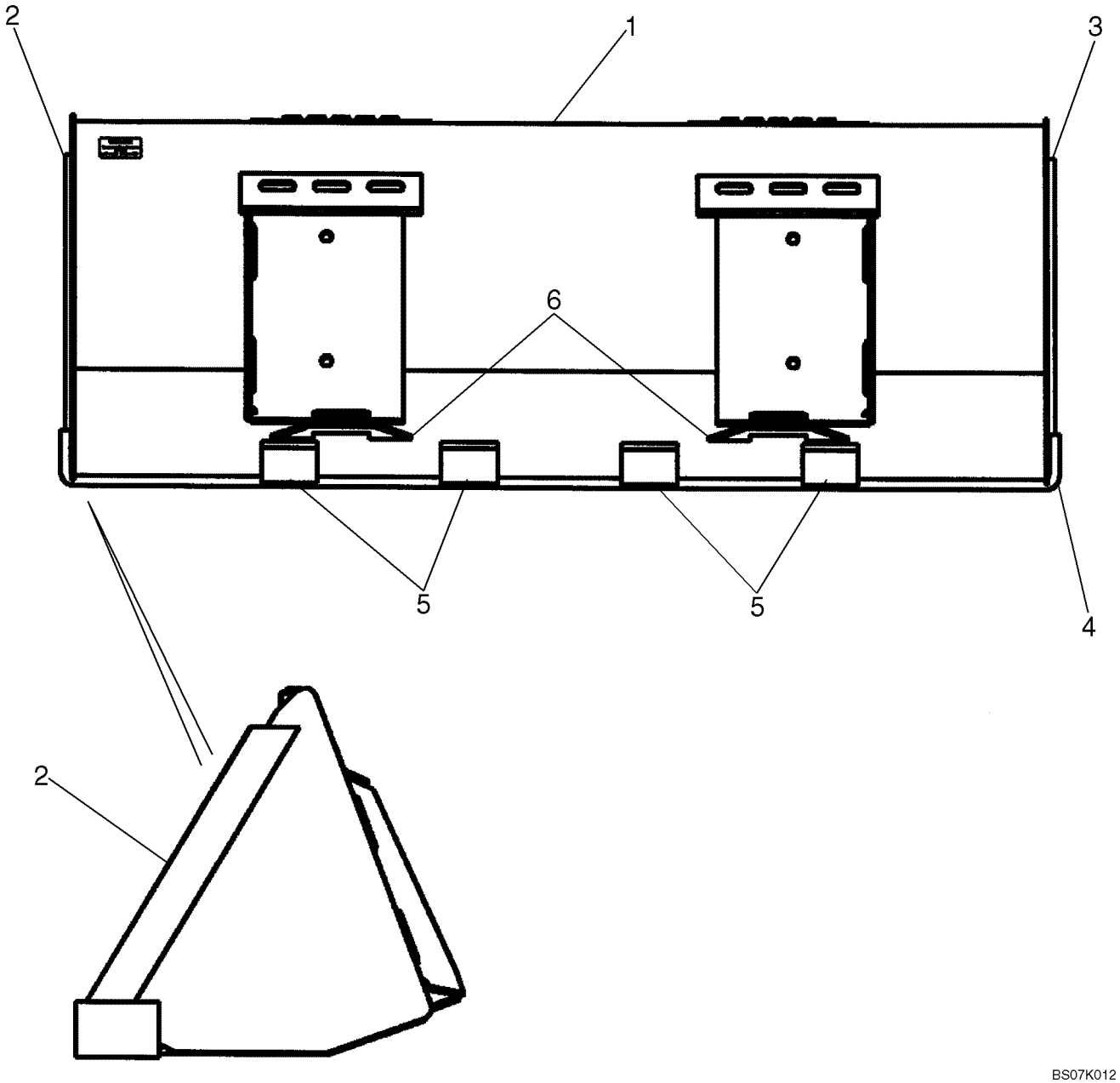

GODETS - CHARGEUSE, POUSSIÈRE/FONDERIE
LADESCHAUFELN - LADER
SKOVLE - LÆSSER
GRAAFBAKKEN - LADER

R	N	P.N.	MOD	Q	Denominação Description	Description Bezeichnung	Denominacion Beskrivelse	Descrizione Beschrijving	L.C.
		REF			INSTRUÇÃO, DIRT / FOUNDRY				
						INSTRUCTION	INSTRUCCIÓN	ISTRUZIONI	Z571
					INSTRUCTION	ANLEITUNG	INSTRUKTION	INSTRUCTIE	
1		**86618349**		1	CAÇAMBA, 60 Inch; Order From Machinery Price List; Incl. 2 - 6				
						BUCKET	CUCHARA	BENNA	035B
					GODET	LÖFFEL	SKOVL	GRAAFBAK	
2		**9841636**		1	BORDA CORTANTE, LH Cutter				
						CUTTING EDGE	BORDE DE CORTE	BORDO TAGLIENTE	018T
					BORD TRANCHANT	SCHNEIDKANTE	SKÆREKANT	SNIJRAND	
3		**9841637**		1	BORDA CORTANTE, RH Cutter				
						CUTTING EDGE	BORDE DE CORTE	BORDO TAGLIENTE	018T
					BORD TRANCHANT	SCHNEIDKANTE	SKÆREKANT	SNIJRAND	
4		**86577164**		1	BORDA CORTANTE, Weld On Blade 60 in				
						CUTTING EDGE	BORDE DE CORTE	BORDO TAGLIENTE	018T
					BORD TRANCHANT	SCHNEIDKANTE	SKÆREKANT	SNIJRAND	
5		**86501841**		3	BARRA, Skid Bar	BAR	BARRA	BARRA	530B
					BARRE	BAR	BJÆLKE	STANG	
6		**9822175**		2	PLACA	PLATE	PLACA	PIASTRA	105P
					PLAQUE	PLATTE	PLADE	PLAAT	
1A		**86618350**		1	CAÇAMBA, 66 Inch; Order From Machinery Price List; Incl. 2A - 6A				
						BUCKET	CUCHARA	BENNA	035B
					GODET	LÖFFEL	SKOVL	GRAAFBAK	
2A		**87014505**		1	LÂMINA DE CORTE, LH Cutter				
						CUTTING BLADE	HOJA DE CORTE	LAMA DI TAGLIO	600L
					LAME DE COUPE	SCHNEIDMESSER	KNIVBLAD	MAAIBLAD	
3A		**87014504**		1	LÂMINA DE CORTE, RH Cutter				
						CUTTING BLADE	HOJA DE CORTE	LAMA DI TAGLIO	600L
					LAME DE COUPE	SCHNEIDMESSER	KNIVBLAD	MAAIBLAD	
4A		**86577166**		1	BORDA CORTANTE, Weld On Blade 66 in				
						CUTTING EDGE	BORDE DE CORTE	BORDO TAGLIENTE	018T
					BORD TRANCHANT	SCHNEIDKANTE	SKÆREKANT	SNIJRAND	
5A		**87016983**		3	BARRA, Skid Bar	BAR	BARRA	BARRA	530B
					BARRE	BAR	BJÆLKE	STANG	
6A		**9822175**		2	PLACA	PLATE	PLACA	PIASTRA	105P
					PLAQUE	PLATTE	PLADE	PLAAT	
1B		**86618351**		1	CAÇAMBA, 72 Inch; Order From Machinery Price List; Incl. 2B - 6B				
						BUCKET	CUCHARA	BENNA	035B
					GODET	LÖFFEL	SKOVL	GRAAFBAK	
2B		**87014505**		1	LÂMINA DE CORTE, LH Cutter				
						CUTTING BLADE	HOJA DE CORTE	LAMA DI TAGLIO	600L
					LAME DE COUPE	SCHNEIDMESSER	KNIVBLAD	MAAIBLAD	
3B		**87014504**		1	LÂMINA DE CORTE, RH Cutter				
						CUTTING BLADE	HOJA DE CORTE	LAMA DI TAGLIO	600L
					LAME DE COUPE	SCHNEIDMESSER	KNIVBLAD	MAAIBLAD	
4B		**86577168**		1	BORDA CORTANTE, Weld On Blade 72 in				
						CUTTING EDGE	BORDE DE CORTE	BORDO TAGLIENTE	018T
					BORD TRANCHANT	SCHNEIDKANTE	SKÆREKANT	SNIJRAND	
5B		**87016983**		4	BARRA, Skid Bar	BAR	BARRA	BARRA	530B
					BARRE	BAR	BJÆLKE	STANG	

BUCKETS - LOADER, DIRT / FOUNDRY
BUCKETS - LOADER, DIRT / FOUNDRY
CUCHARON - CARGADORA, SUCIEDAD/FUNDICIÓN
BENNE - CARICATORE

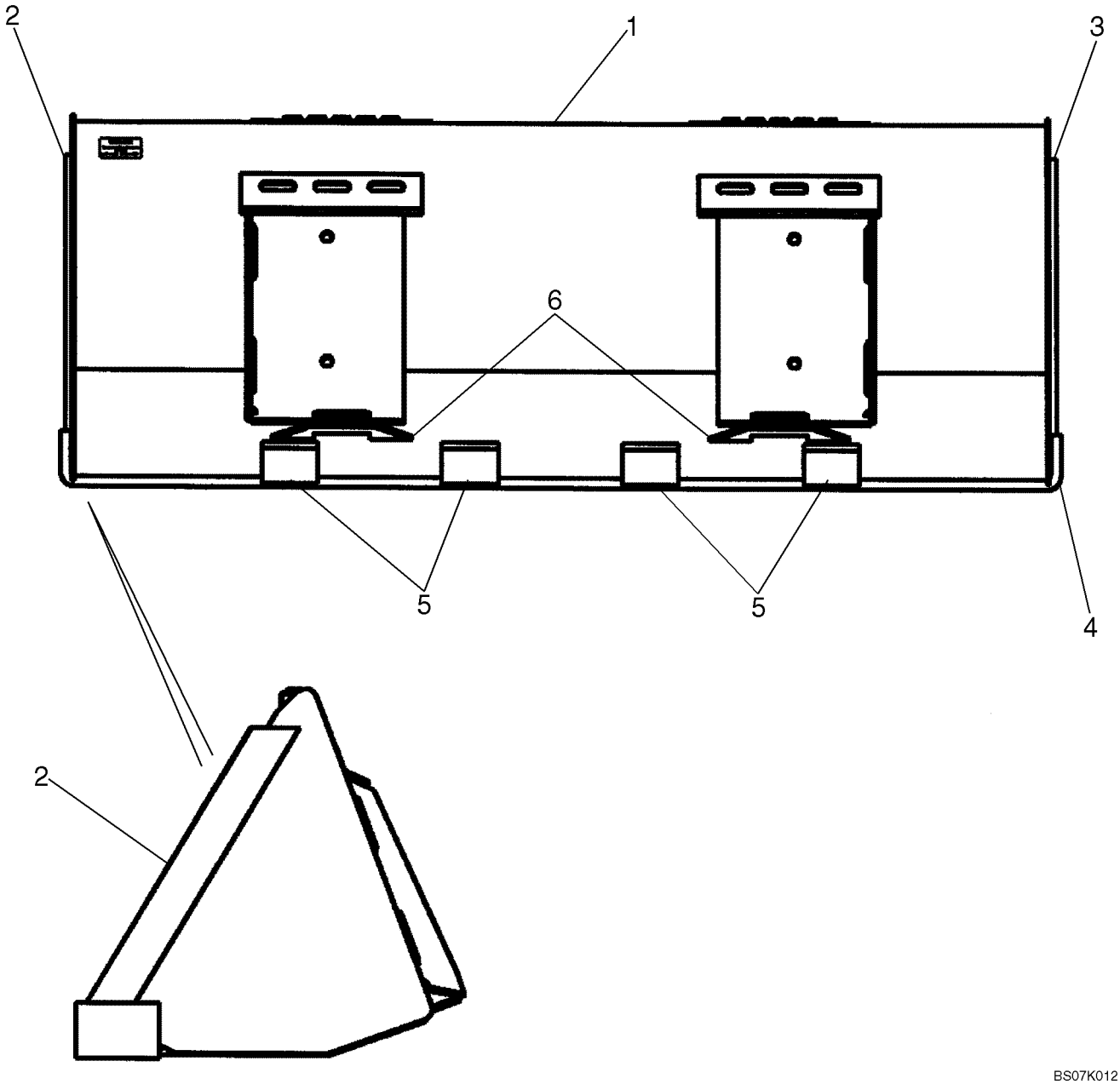

GODETS - CHARGEUSE, POUSSIÈRE/FONDERIE
LADESCHAUFELN - LADER
SKOVLE - LÆSSER
GRAAFBAKKEN - LADER

R	N	P.N.	MOD	Q	Denominação Description	Description Bezeichnung	Denominacion Beskrivelse	Descrizione Beschrijving	L.C.
6B		9822175		2	PLACA PLAQUE	PLATE PLATTE	PLACA PLADE	PIASTRA PLAAT	105P
1C		{86633060}		1	Bucket; 78 Inch; Order From Machinery Price List; Incl. 2C - 6C				
2C		87014505		1	LÂMINA DE CORTE, LH Cutter LAME DE COUPE	CUTTING BLADE SCHNEIDMESSER	HOJA DE CORTE KNIVBLAD	LAMA DI TAGLIO MAAIBLAD	600L
3C		87014504		1	LÂMINA DE CORTE, RH Cutter LAME DE COUPE	CUTTING BLADE SCHNEIDMESSER	HOJA DE CORTE KNIVBLAD	LAMA DI TAGLIO MAAIBLAD	600L
4C		86577170		1	BORDA CORTANTE, Weld On Blade 78 in BORD TRANCHANT	CUTTING EDGE SCHNEIDKANTE	BORDE DE CORTE SKÆREKANT	BORDO TAGLIENTE SNIJRAND	018T
5C		87016983		4	BARRA, Skid Bar BARRE	BAR BAR	BARRA BJÆLKE	BARRA STANG	530B
6C		9822175		2	PLACA PLAQUE	PLATE PLATTE	PLACA PLADE	PIASTRA PLAAT	105P

82.100.01	02	p1	03/11

BUCKETS - LOADER, LOW PROFILE, EXTENDED LOW PROFILE
BUCKETS - LOADER, LOW PROFILE, EXTENDED LOW PROFILE
CUCHARON - CARGADORA, PERFIL BAJO
BENNE - CARICATORE

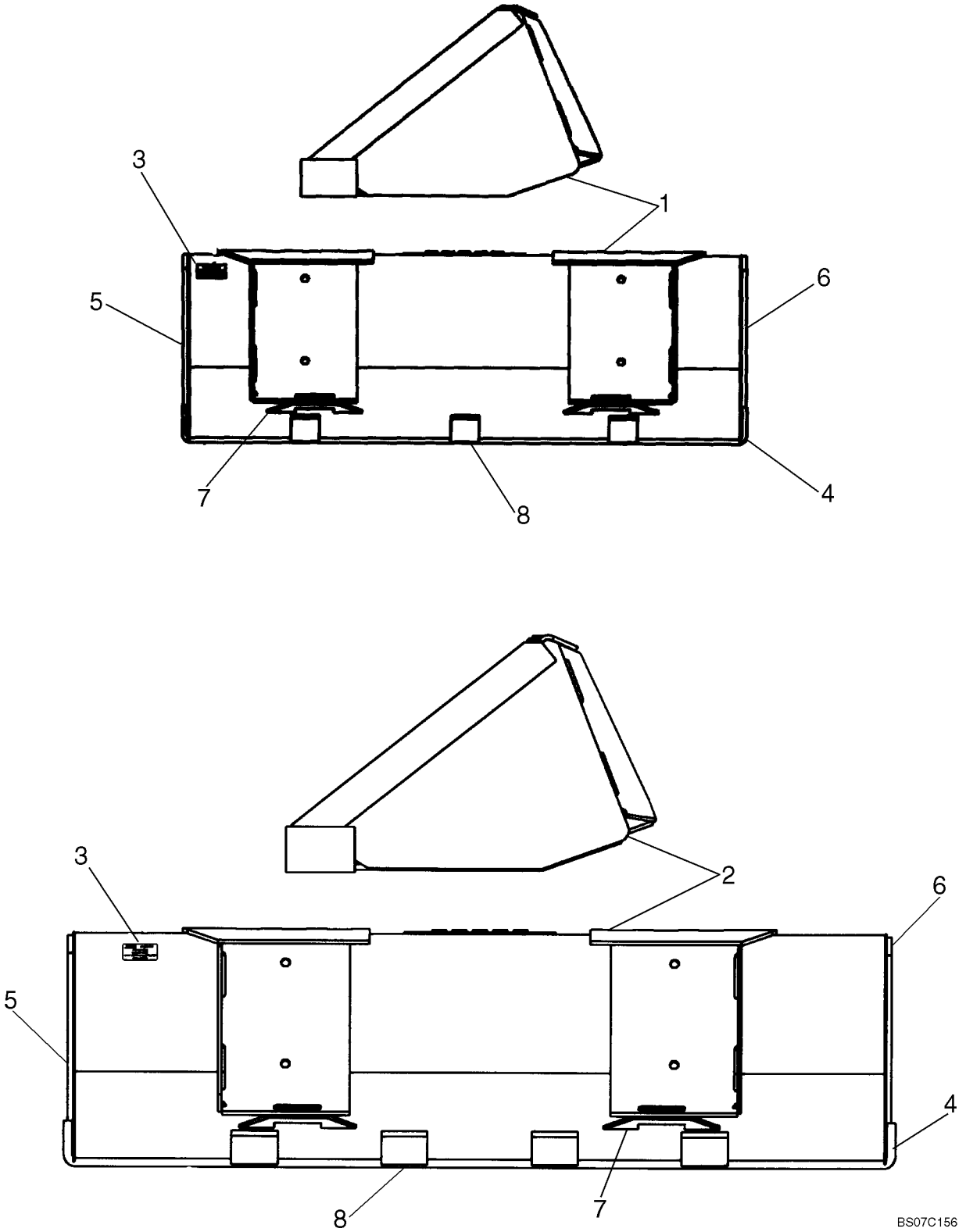

GODETS - CHARGEUSE, PROFIL BAS
LADESCHAUFELN - LADER
SKOVLE - LÆSSER
GRAAFBAKKEN - LADER

R	N	P.N.	MOD	Q	Denominação Description Bezeichnung	Denominacion Beskrivelse	Descrizione Beschrijving	L.C.
		REF			INSTRUÇÃO, LOW PROFILE, EXTENDED LOW PROFILE INSTRUCTION INSTRUCTION ANLEITUNG	INSTRUCCIÓN INSTRUKTION	ISTRUZIONI INSTRUCTIE	Z571
1		**87010190**		1	CAÇAMBA, Low Profile; 60 Inch; Order From Machinery Price List; Incl. 3 - 8 BUCKET GODET LÖFFEL	CUCHARA SKOVL	BENNA GRAAFBAK	035B
3		**NSS**		1	SEM SERVIÇO EM SEPARADO, Decal NOT SERVICED SEPARA NON FORUNI SEPAREM NICHT A SEP ERS-T LIEI	NO SE REPARA POR SE SERVICERES IKKE SEPA	NON FORNITO SEPARAT NIET LOS VERKRIJGBAA	064N
4		**86577164**		1	BORDA CORTANTE, Weld On Blade CUTTING EDGE BORD TRANCHANT SCHNEIDKANTE	BORDE DE CORTE SKÆREKANT	BORDO TAGLIENTE SNIJRAND	018T
5		**9829784**		1	BORDA CORTANTE, Cutter Left Hand CUTTING EDGE BORD TRANCHANT SCHNEIDKANTE	BORDE DE CORTE SKÆREKANT	BORDO TAGLIENTE SNIJRAND	018T
6		**9829783**		1	BORDA CORTANTE, Cutter Right Hand CUTTING EDGE BORD TRANCHANT SCHNEIDKANTE	BORDE DE CORTE SKÆREKANT	BORDO TAGLIENTE SNIJRAND	018T
7		**9822175**		2	PLACA PLAQUE	PLATE PLATTE	PLACA PLADE	PIASTRA PLAAT	105P
8		**86501840**		3	BARRA, Skid BARRE	BAR BAR	BARRA BJÆLKE	BARRA STANG	530B
1A		**86618363**		1	CAÇAMBA, Low Profile; 66 Inch; Order From Machinery Price List; Incl. 3A - 8A BUCKET GODET LÖFFEL	CUCHARA SKOVL	BENNA GRAAFBAK	035B
3A		**NSS**		1	SEM SERVIÇO EM SEPARADO, Decal NOT SERVICED SEPARA NON FORUNI SEPAREM NICHT A SEP ERS-T LIEI	NO SE REPARA POR SE SERVICERES IKKE SEPA	NON FORNITO SEPARAT NIET LOS VERKRIJGBAA	064N
4A		**86577166**		1	BORDA CORTANTE, Weld On Blade CUTTING EDGE BORD TRANCHANT SCHNEIDKANTE	BORDE DE CORTE SKÆREKANT	BORDO TAGLIENTE SNIJRAND	018T
5A		**9829784**		1	BORDA CORTANTE, Cutter Left Hand CUTTING EDGE BORD TRANCHANT SCHNEIDKANTE	BORDE DE CORTE SKÆREKANT	BORDO TAGLIENTE SNIJRAND	018T
6A		**9829783**		1	BORDA CORTANTE, Cutter Right Hand CUTTING EDGE BORD TRANCHANT SCHNEIDKANTE	BORDE DE CORTE SKÆREKANT	BORDO TAGLIENTE SNIJRAND	018T
7A		**9822175**		2	PLACA PLAQUE	PLATE PLATTE	PLACA PLADE	PIASTRA PLAAT	105P
8A		**9829786**		3	BARRA, Skid BARRE	BAR BAR	BARRA BJÆLKE	BARRA STANG	530B
1B		**86618364**		1	CAÇAMBA, Low Profile; 72 Inch; Order From Machinery Price List; Incl. 3B - 8B BUCKET GODET LÖFFEL	CUCHARA SKOVL	BENNA GRAAFBAK	035B
3B		**NSS**		1	SEM SERVIÇO EM SEPARADO, Decal NOT SERVICED SEPARA NON FORUNI SEPAREM NICHT A SEP ERS-T LIEI	NO SE REPARA POR SE SERVICERES IKKE SEPA	NON FORNITO SEPARAT NIET LOS VERKRIJGBAA	064N

82.100.01	02	p2	03/11

BUCKETS - LOADER, LOW PROFILE, EXTENDED LOW PROFILE
BUCKETS - LOADER, LOW PROFILE, EXTENDED LOW PROFILE
CUCHARON - CARGADORA, PERFIL BAJO
BENNE - CARICATORE

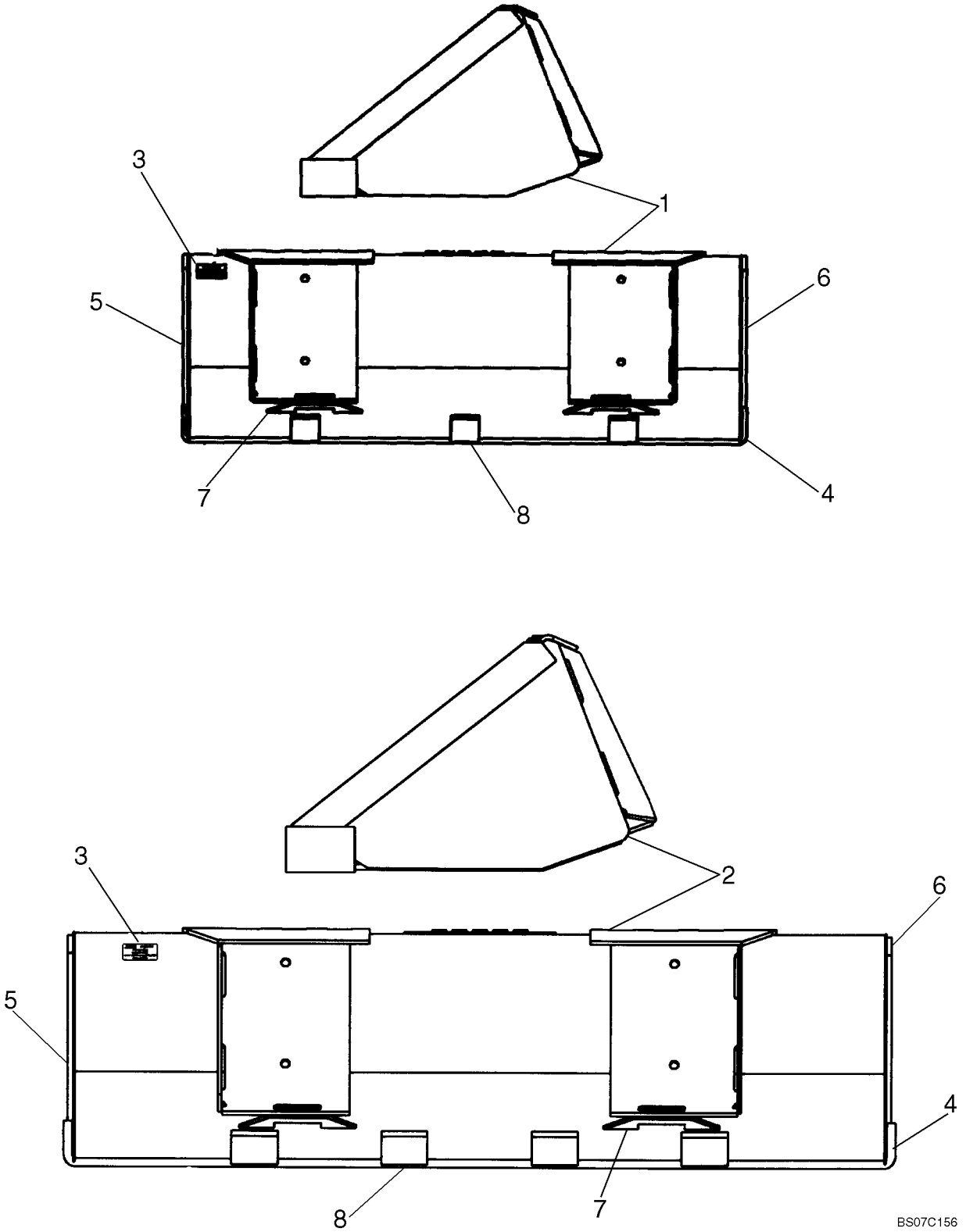

GODETS - CHARGEUSE, PROFIL BAS
LADESCHAUFELN - LADER
SKOVLE - LÆSSER
GRAAFBAKKEN - LADER

R	N	P.N.	MOD	Q	Denominação Description	Description Bezeichnung	Denominacion Beskrivelse	Descrizione Beschrijving	L.C.
4B		86577168		1	BORDA CORTANTE, Weld On Blade				
						CUTTING EDGE	BORDE DE CORTE	BORDO TAGLIENTE	018T
					BORD TRANCHANT	SCHNEIDKANTE	SKÆREKANT	SNIJRAND	
5B		9829784		1	BORDA CORTANTE, Cutter Left Hand				
						CUTTING EDGE	BORDE DE CORTE	BORDO TAGLIENTE	018T
					BORD TRANCHANT	SCHNEIDKANTE	SKÆREKANT	SNIJRAND	
6B		9829783		1	BORDA CORTANTE, Cutter Right Hand				
						CUTTING EDGE	BORDE DE CORTE	BORDO TAGLIENTE	018T
					BORD TRANCHANT	SCHNEIDKANTE	SKÆREKANT	SNIJRAND	
7B		9822175		2	PLACA	PLATE	PLACA	PIASTRA	105P
					PLAQUE	PLATTE	PLADE	PLAAT	
8B		9829786		4	BARRA, Skid	BAR	BARRA	BARRA	530B
					BARRE	BAR	BJÆLKE	STANG	
2		86618353		1	CAÇAMBA, Extended Low Profile; 60 Inch; Order From Machinery Price List; Incl. 3C - 8C				
						BUCKET	CUCHARA	BENNA	035B
					GODET	LÖFFEL	SKOVL	GRAAFBAK	
3C		NSS		1	SEM SERVIÇO EM SEPARADO, Decal				
						NOT SERVICED SEPARA	NO SE REPARA POR SE	NON FORNITO SEPARAT	064N
					NON FORUNI SEPAREM	NICHT A SEP ERS-T LIEI	SERVICERES IKKE SEPA	NIET LOS VERKRIJGBAA	
4C		86577164		1	BORDA CORTANTE, Weld On Blade				
						CUTTING EDGE	BORDE DE CORTE	BORDO TAGLIENTE	018T
					BORD TRANCHANT	SCHNEIDKANTE	SKÆREKANT	SNIJRAND	
5C		86510316		1	BORDA CORTANTE, Cutter Left Hand				
						CUTTING EDGE	BORDE DE CORTE	BORDO TAGLIENTE	018T
					BORD TRANCHANT	SCHNEIDKANTE	SKÆREKANT	SNIJRAND	
6C		86510315		1	BORDA CORTANTE, Cutter Right Hand				
						CUTTING EDGE	BORDE DE CORTE	BORDO TAGLIENTE	018T
					BORD TRANCHANT	SCHNEIDKANTE	SKÆREKANT	SNIJRAND	
7C		9822175		2	PLACA	PLATE	PLACA	PIASTRA	105P
					PLAQUE	PLATTE	PLADE	PLAAT	
8C		86510313		3	BARRA, Skid	BAR	BARRA	BARRA	530B
					BARRE	BAR	BJÆLKE	STANG	
2A		86618354		1	CAÇAMBA, Extended Low Profile; 66 Inch; Order From Machinery Price List; Incl. 3D - 8D				
						BUCKET	CUCHARA	BENNA	035B
					GODET	LÖFFEL	SKOVL	GRAAFBAK	
3D		NSS		1	SEM SERVIÇO EM SEPARADO, Decal				
						NOT SERVICED SEPARA	NO SE REPARA POR SE	NON FORNITO SEPARAT	064N
					NON FORUNI SEPAREM	NICHT A SEP ERS-T LIEI	SERVICERES IKKE SEPA	NIET LOS VERKRIJGBAA	
4D		86577166		1	BORDA CORTANTE, Weld On Blade				
						CUTTING EDGE	BORDE DE CORTE	BORDO TAGLIENTE	018T
					BORD TRANCHANT	SCHNEIDKANTE	SKÆREKANT	SNIJRAND	
5D		9829784		1	BORDA CORTANTE, Cutter Left Hand				
						CUTTING EDGE	BORDE DE CORTE	BORDO TAGLIENTE	018T
					BORD TRANCHANT	SCHNEIDKANTE	SKÆREKANT	SNIJRAND	
6D		9829783		1	BORDA CORTANTE, Cutter Right Hand				
						CUTTING EDGE	BORDE DE CORTE	BORDO TAGLIENTE	018T
					BORD TRANCHANT	SCHNEIDKANTE	SKÆREKANT	SNIJRAND	
7D		9822175		2	PLACA	PLATE	PLACA	PIASTRA	105P
					PLAQUE	PLATTE	PLADE	PLAAT	

BUCKETS - LOADER, LOW PROFILE, EXTENDED LOW PROFILE
BUCKETS - LOADER, LOW PROFILE, EXTENDED LOW PROFILE
CUCHARON - CARGADORA, PERFIL BAJO
BENNE - CARICATORE

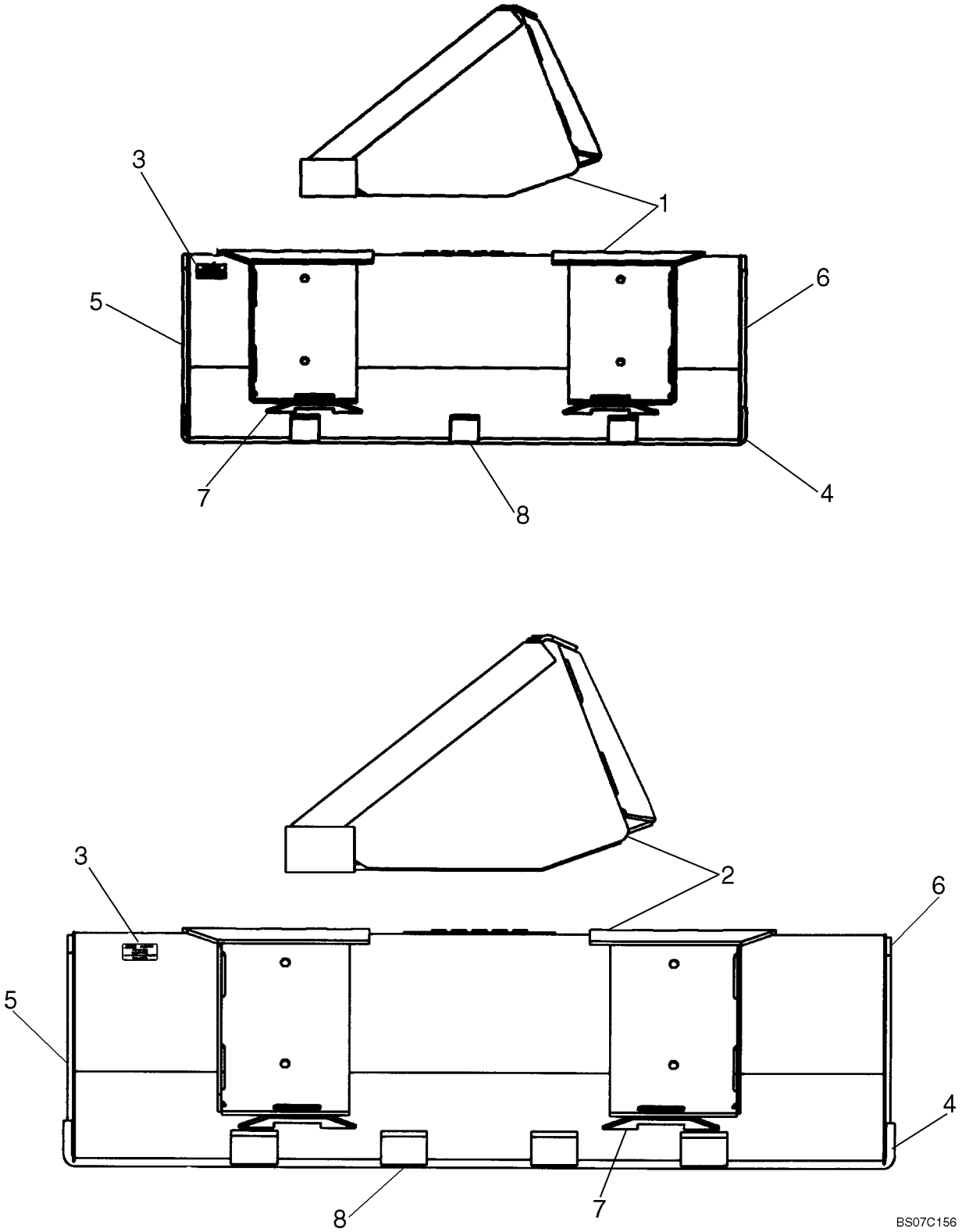

GODETS - CHARGEUSE, PROFIL BAS
LADESCHAUFELN - LADER
SKOVLE - LÆSSER
GRAAFBAKKEN - LADER

R	N	P.N.	MOD	Q	Denominação Description	Description Bezeichnung	Denominacion Beskrivelse	Descrizione Beschrijving	L.C.
8D		9829786		3	BARRA, Skid	BAR	BARRA	BARRA	530B
					BARRE	BAR	BJÆLKE	STANG	
2B		86618355		1	CAÇAMBA, Extended Low Profile; 72 Inch; Order From Machinery Price List; Incl. 3E - 8E				
						BUCKET	CUCHARA	BENNA	035B
					GODET	LÖFFEL	SKOVL	GRAAFBAK	
3E		NSS		1	SEM SERVIÇO EM SEPARADO, Decal				
						NOT SERVICED SEPARA	NO SE REPARA POR SE	NON FORNITO SEPARAT	064N
					NON FORUNI SEPAREM	NICHT A SEP ERS-T LIEF	SERVICERES IKKE SEPA	NIET LOS VERKRIJGBAA	
4E		86577168		1	BORDA CORTANTE, Weld On Blade				
						CUTTING EDGE	BORDE DE CORTE	BORDO TAGLIENTE	018T
					BORD TRANCHANT	SCHNEIDKANTE	SKÆREKANT	SNIJRAND	
5E		86510316		1	BORDA CORTANTE, Cutter Left Hand				
						CUTTING EDGE	BORDE DE CORTE	BORDO TAGLIENTE	018T
					BORD TRANCHANT	SCHNEIDKANTE	SKÆREKANT	SNIJRAND	
6E		86510315		1	BORDA CORTANTE, Cutter Right Hand				
						CUTTING EDGE	BORDE DE CORTE	BORDO TAGLIENTE	018T
					BORD TRANCHANT	SCHNEIDKANTE	SKÆREKANT	SNIJRAND	
7E		9822175		2	PLACA	PLATE	PLACA	PIASTRA	105P
					PLAQUE	PLATTE	PLADE	PLAAT	
8E		86510314		3	BARRA, Skid	BAR	BARRA	BARRA	530B
					BARRE	BAR	BJÆLKE	STANG	
2C		{86633059}		1	Extended Low Profile; 78 Inch; Order From Machinery Price List; Incl. 3F - 8F				
3F		NSS		1	SEM SERVIÇO EM SEPARADO, Decal				
						NOT SERVICED SEPARA	NO SE REPARA POR SE	NON FORNITO SEPARAT	064N
					NON FORUNI SEPAREM	NICHT A SEP ERS-T LIEF	SERVICERES IKKE SEPA	NIET LOS VERKRIJGBAA	
4F		86577170		1	BORDA CORTANTE, Weld On Blade				
						CUTTING EDGE	BORDE DE CORTE	BORDO TAGLIENTE	018T
					BORD TRANCHANT	SCHNEIDKANTE	SKÆREKANT	SNIJRAND	
5F		86510316		1	BORDA CORTANTE, Cutter Left Hand				
						CUTTING EDGE	BORDE DE CORTE	BORDO TAGLIENTE	018T
					BORD TRANCHANT	SCHNEIDKANTE	SKÆREKANT	SNIJRAND	
6F		86510315		1	BORDA CORTANTE, Cutter Right Hand				
						CUTTING EDGE	BORDE DE CORTE	BORDO TAGLIENTE	018T
					BORD TRANCHANT	SCHNEIDKANTE	SKÆREKANT	SNIJRAND	
7F		9822175		2	PLACA	PLATE	PLACA	PIASTRA	105P
					PLAQUE	PLATTE	PLADE	PLAAT	
8F		86510314		4	BARRA, Skid	BAR	BARRA	BARRA	530B
					BARRE	BAR	BJÆLKE	STANG	
2D		{86618356}		1	Extended Low Profile; 84 Inch; Order From Machinery Price List; Incl. 3G - 8G				
3G		NSS		1	SEM SERVIÇO EM SEPARADO, Decal				
						NOT SERVICED SEPARA	NO SE REPARA POR SE	NON FORNITO SEPARAT	064N
					NON FORUNI SEPAREM	NICHT A SEP ERS-T LIEF	SERVICERES IKKE SEPA	NIET LOS VERKRIJGBAA	
4G		86577172		1	BORDA CORTANTE, Weld On Blade				
						CUTTING EDGE	BORDE DE CORTE	BORDO TAGLIENTE	018T
					BORD TRANCHANT	SCHNEIDKANTE	SKÆREKANT	SNIJRAND	

BUCKETS - LOADER, LOW PROFILE, EXTENDED LOW PROFILE
BUCKETS - LOADER, LOW PROFILE, EXTENDED LOW PROFILE
CUCHARON - CARGADORA, PERFIL BAJO
BENNE - CARICATORE

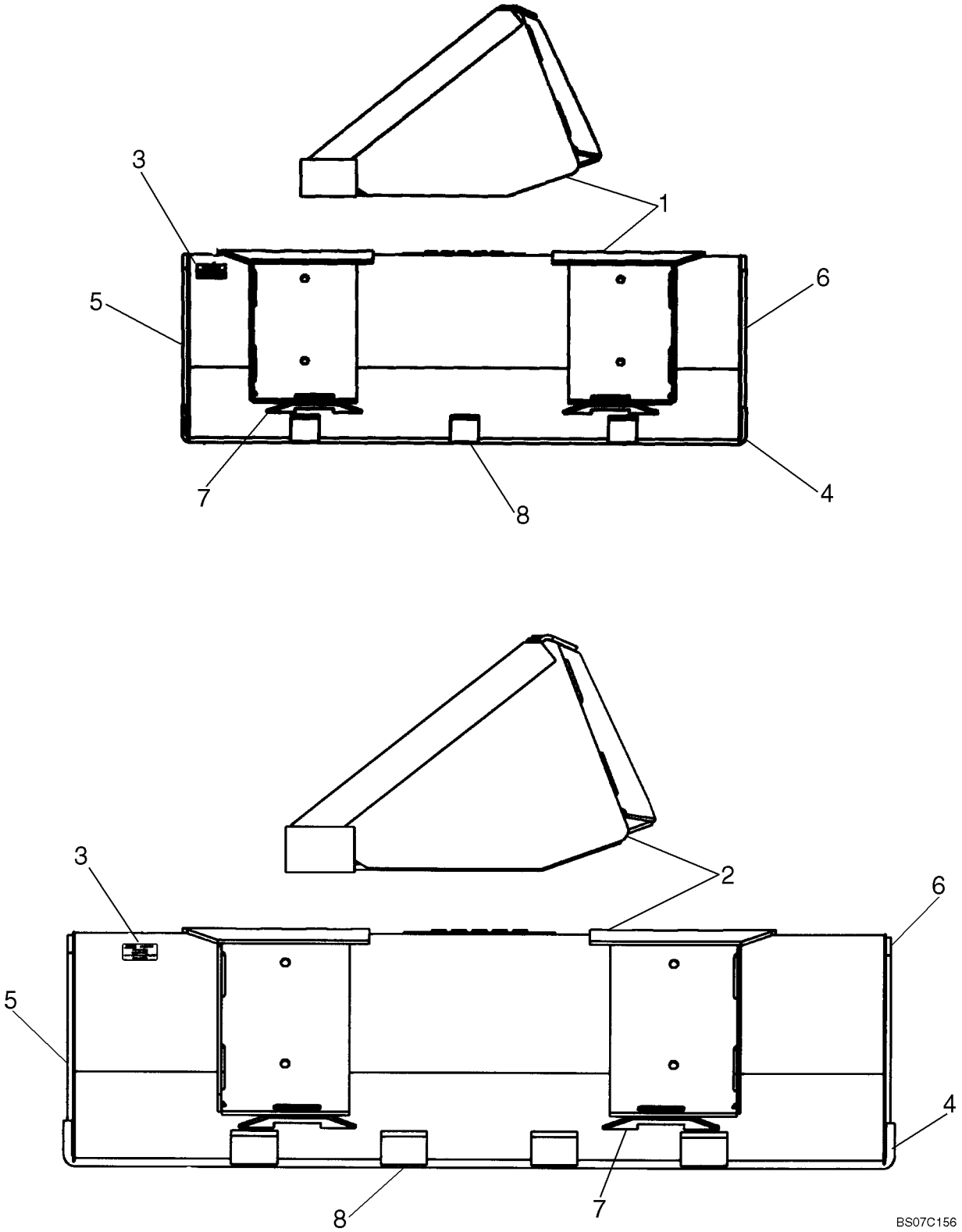

GODETS - CHARGEUSE, PROFIL BAS
LADESCHAUFELN - LADER
SKOVLE - LÆSSER
GRAAFBAKKEN - LADER

R	N	P.N.	MOD	Q	Denominação Description Bezeichnung	Description Bezeichnung Beschrijving	Denominacion Beskrivelse Descrizione	Descrizione Beschrijving L.C.	L.C.
5G		86510316		1	BORDA CORTANTE, Cutter Left Hand CUTTING EDGE BORD TRANCHANT	BORDE DE CORTE SCHNEIDKANTE SKÆREKANT	BORDO TAGLIENTE SNIJRAND	018T	
6G		86510315		1	BORDA CORTANTE, Cutter Right Hand CUTTING EDGE BORD TRANCHANT	BORDE DE CORTE SCHNEIDKANTE SKÆREKANT	BORDO TAGLIENTE SNIJRAND	018T	
7G		9822175		2	PLACA PLAQUE	PLATE PLATTE	PLACA PLADE	PIASTRA PLAAT	105P
8G		86554088		5	BARRA, SKid Bar BARRE	BAR BAR	BARRA BJÆLKE	BARRA STANG	530B

BUCKETS - LOADER, UTILITY / LIGHT MATERIAL
BUCKETS - LOADER, UTILITY / LIGHT MATERIAL
CUCHARON - CARGADORA, SERVICIO PÚBLICO/MATERIAL LIGERO
BENNE - CARICATORE

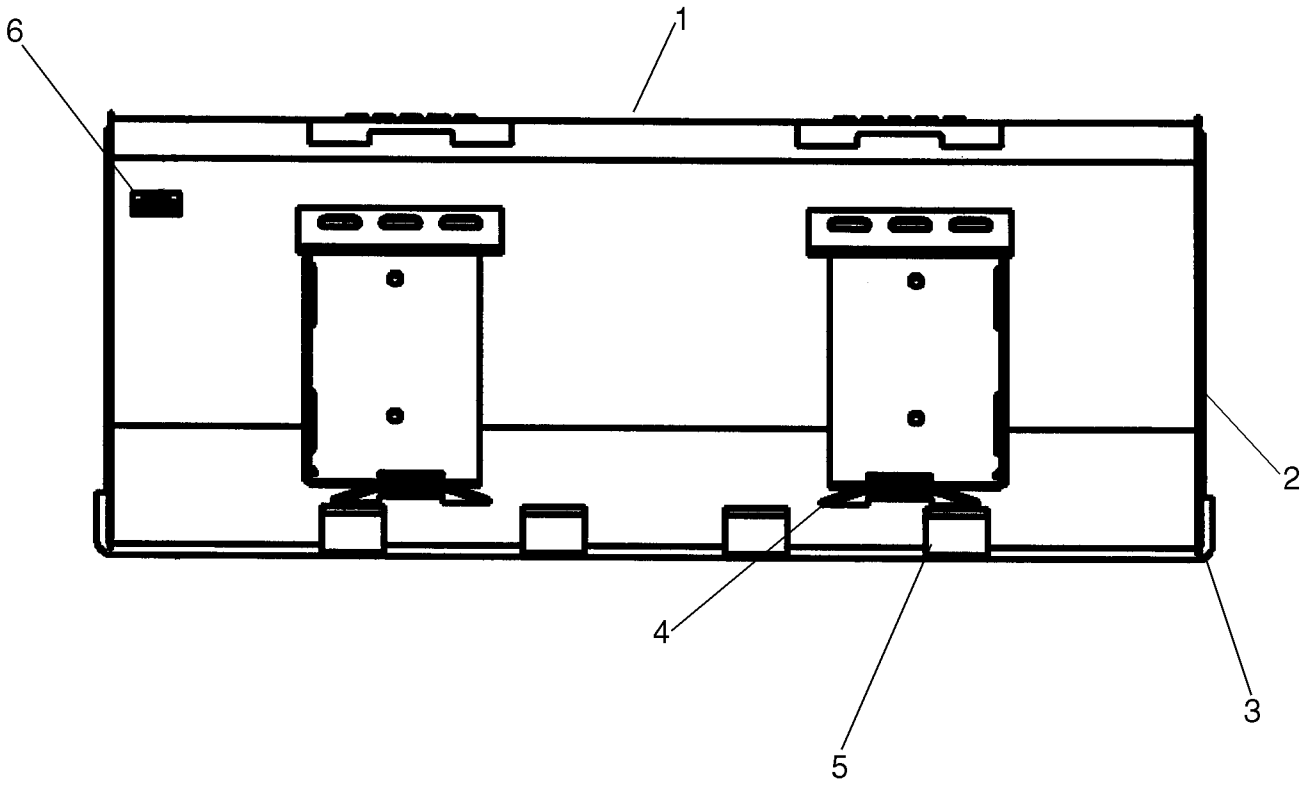

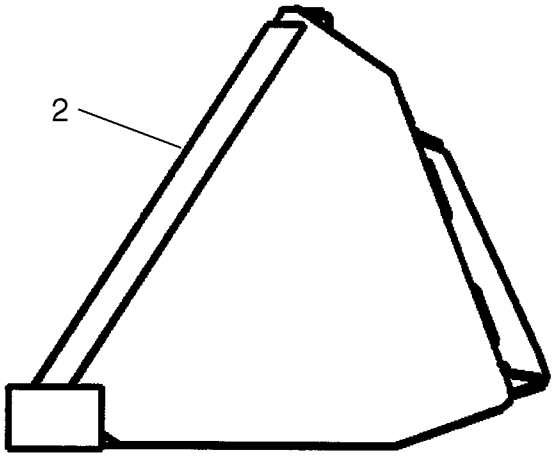

BS07K013

GODETS - CHARGEUSE, MATÉRIEL LÉGER/UTILITAIRE
LADESCHAUFELN - LADER
SKOVLE - LÆSSER
GRAAFBAKKEN - LADER

R	N	P.N.	MOD	Q	Denominação Description	Description Bezeichnung	Denominacion Beskrivelse	Descrizione Beschrijving	L.C.
		REF			INSTRUÇÃO, UTILITY / LIGHT MATERIAL				
						INSTRUCTION	INSTRUCCIÓN	ISTRUZIONI	Z571
					INSTRUCTION	ANLEITUNG	INSTRUKTION	INSTRUCTIE	
1		**{87010187}**		1	BUCKET, 60 Inch; Order From Machinery Price List; Incl 2 - 6				
2		**86501801**		2	BORDA CORTANTE	CUTTING EDGE	BORDE DE CORTE	BORDO TAGLIENTE	018T
					BORD TRANCHANT	SCHNEIDKANTE	SKÆREKANT	SNIJRAND	
3		**86577164**		1	BORDA CORTANTE, 60 in	CUTTING EDGE	BORDE DE CORTE	BORDO TAGLIENTE	018T
					BORD TRANCHANT	SCHNEIDKANTE	SKÆREKANT	SNIJRAND	
4		**9822175**		2	PLACA	PLATE	PLACA	PIASTRA	105P
					PLAQUE	PLATTE	PLADE	PLAAT	
5		**86501839**		3	BARRA, Skid Bar	BAR	BARRA	BARRA	530B
					BARRE	BAR	BJÆLKE	STANG	
6		**NSS**		1	SEM SERVIÇO EM SEPARADO, Decal				
						NOT SERVICED SEPARA	NO SE REPARA POR SE	NON FORNITO SEPARAT	064N
					NON FORUNI SEPAREM	NICHT A SEP ERS-T LIEI	SERVICERES IKKE SEPA	NIET LOS VERKRIJGBAA	
1A		**{87010188}**		1	BUCKET, 72 Inch; Order From Machinery Price List; Incl 2A - 6A				
2A		**86501801**		2	BORDA CORTANTE	CUTTING EDGE	BORDE DE CORTE	BORDO TAGLIENTE	018T
					BORD TRANCHANT	SCHNEIDKANTE	SKÆREKANT	SNIJRAND	
3A		**86577168**		1	BORDA CORTANTE, 72 in	CUTTING EDGE	BORDE DE CORTE	BORDO TAGLIENTE	018T
					BORD TRANCHANT	SCHNEIDKANTE	SKÆREKANT	SNIJRAND	
4A		**9822175**		2	PLACA	PLATE	PLACA	PIASTRA	105P
					PLAQUE	PLATTE	PLADE	PLAAT	
5A		**86501815**		4	BARRA, Skid Bar	BAR	BARRA	BARRA	530B
					BARRE	BAR	BJÆLKE	STANG	
6A		**NSS**		1	SEM SERVIÇO EM SEPARADO, Decal				
						NOT SERVICED SEPARA	NO SE REPARA POR SE	NON FORNITO SEPARAT	064N
					NON FORUNI SEPAREM	NICHT A SEP ERS-T LIEI	SERVICERES IKKE SEPA	NIET LOS VERKRIJGBAA	
1B		**{87010189}**		1	BUCKET, 84 Inch; Order From Machinery Price List; Incl 2B - 6B				
2B		**86501801**		2	BORDA CORTANTE	CUTTING EDGE	BORDE DE CORTE	BORDO TAGLIENTE	018T
					BORD TRANCHANT	SCHNEIDKANTE	SKÆREKANT	SNIJRAND	
3B		**86900574**		1	BORDA CORTANTE, 84 in	CUTTING EDGE	BORDE DE CORTE	BORDO TAGLIENTE	018T
					BORD TRANCHANT	SCHNEIDKANTE	SKÆREKANT	SNIJRAND	
4B		**9822175**		2	PLACA	PLATE	PLACA	PIASTRA	105P
					PLAQUE	PLATTE	PLADE	PLAAT	
5B		**86501815**		5	BARRA, Skid Bar	BAR	BARRA	BARRA	530B
					BARRE	BAR	BJÆLKE	STANG	
6B		**NSS**		1	SEM SERVIÇO EM SEPARADO, Decal				
						NOT SERVICED SEPARA	NO SE REPARA POR SE	NON FORNITO SEPARAT	064N
					NON FORUNI SEPAREM	NICHT A SEP ERS-T LIEI	SERVICERES IKKE SEPA	NIET LOS VERKRIJGBAA	

BUCKETS - LOADER, HEAVY DUTY DIRT
BUCKETS - LOADER, HEAVY DUTY DIRT
BUCKETS - LOADER, HEAVY DUTY DIRT
BUCKETS - LOADER, HEAVY DUTY DIRT

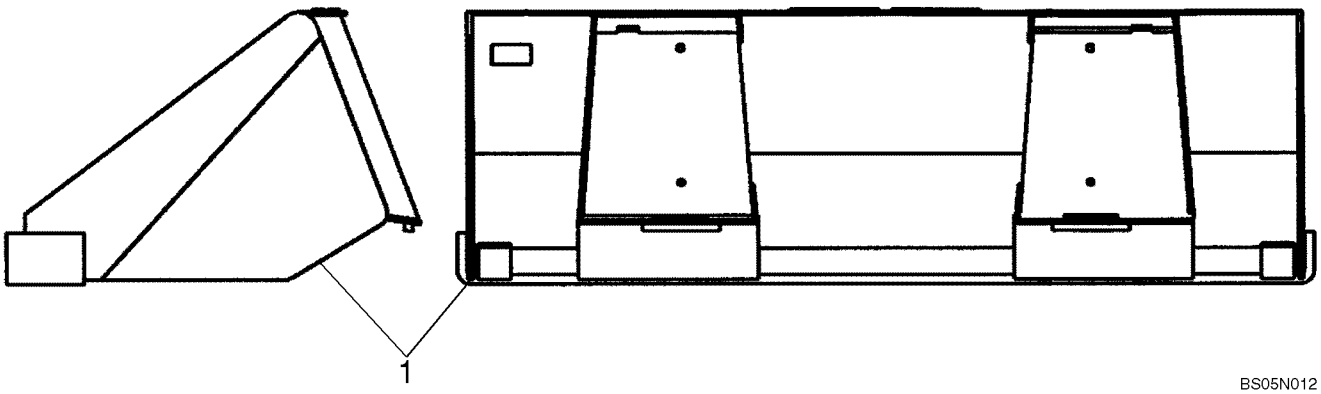

BUCKETS - LOADER, HEAVY DUTY DIRT
BUCKETS - LOADER, HEAVY DUTY DIRT
BUCKETS - LOADER, HEAVY DUTY DIRT
BUCKETS - LOADER, HEAVY DUTY DIRT

R	N	P.N.	MOD	Q	Denominação Description	Description Bezeichnung	Denominacion Beskrivelse	Descrizione Beschrijving	L.C.
1		**84285098**		1	CAÇAMBA, 66 Inch Heavy Duty Dirt Tan; Order from Whole Goods; Incl. 84296997 & 84285096				
					BUCKET	CUCHARA	BENNA		035B
					GODET	LÖFFEL	SKOVL	GRAAFBAK	
		84296997		1	ADESIVO, Not Shown	DECAL	CALCOMANÍA	DECALCOMANIA	012D
					AUTOCOLLANT	AUFKLEBER	TRANSFER	STICKER	
		84285096		1	CAÇAMBA, 66 Inch	BUCKET	CUCHARA	BENNA	035B
					GODET	LÖFFEL	SKOVL	GRAAFBAK	
1A		**84285101**		1	CAÇAMBA, 72 Inch Heavy Duty Dirt Tan; Order from Whole Goods; Incl. 84296999 & 84285099				
					BUCKET	CUCHARA	BENNA		035B
					GODET	LÖFFEL	SKOVL	GRAAFBAK	
		84296999		1	ADESIVO, Not Shown	DECAL	CALCOMANÍA	DECALCOMANIA	012D
					AUTOCOLLANT	AUFKLEBER	TRANSFER	STICKER	
		84285099		1	CAÇAMBA, 72 Inch	BUCKET	CUCHARA	BENNA	035B
					GODET	LÖFFEL	SKOVL	GRAAFBAK	
1B		**84285104**		1	CAÇAMBA, 78 Inch Heavy Duty Dirt Tan; Order from Whole Goods; Incl. 84297001 & 84285102				
					BUCKET	CUCHARA	BENNA		035B
					GODET	LÖFFEL	SKOVL	GRAAFBAK	
		84297001		1	ADESIVO, Not Shown	DECAL	CALCOMANÍA	DECALCOMANIA	012D
					AUTOCOLLANT	AUFKLEBER	TRANSFER	STICKER	
		84285102		1	CAÇAMBA, 78 Inch	BUCKET	CUCHARA	BENNA	035B
					GODET	LÖFFEL	SKOVL	GRAAFBAK	
1C		**84285107**		1	CAÇAMBA, 84 Inch Heavy Duty Dirt Tan; Order from Whole Goods; Incl. 84297003 & 84285105				
					BUCKET	CUCHARA	BENNA		035B
					GODET	LÖFFEL	SKOVL	GRAAFBAK	
		84297003		1	ADESIVO, Not Shown	DECAL	CALCOMANÍA	DECALCOMANIA	012D
					AUTOCOLLANT	AUFKLEBER	TRANSFER	STICKER	
		84285105		1	CAÇAMBA, 84 Inch	BUCKET	CUCHARA	BENNA	035B
					GODET	LÖFFEL	SKOVL	GRAAFBAK	

82.100.01	05	p1	03/11

BUCKETS - LOADER, MANURE / SLURRY
BUCKETS - LOADER, MANURE / SLURRY
BUCKETS - LOADER, MANURE / SLURRY
BUCKETS - LOADER, MANURE / SLURRY

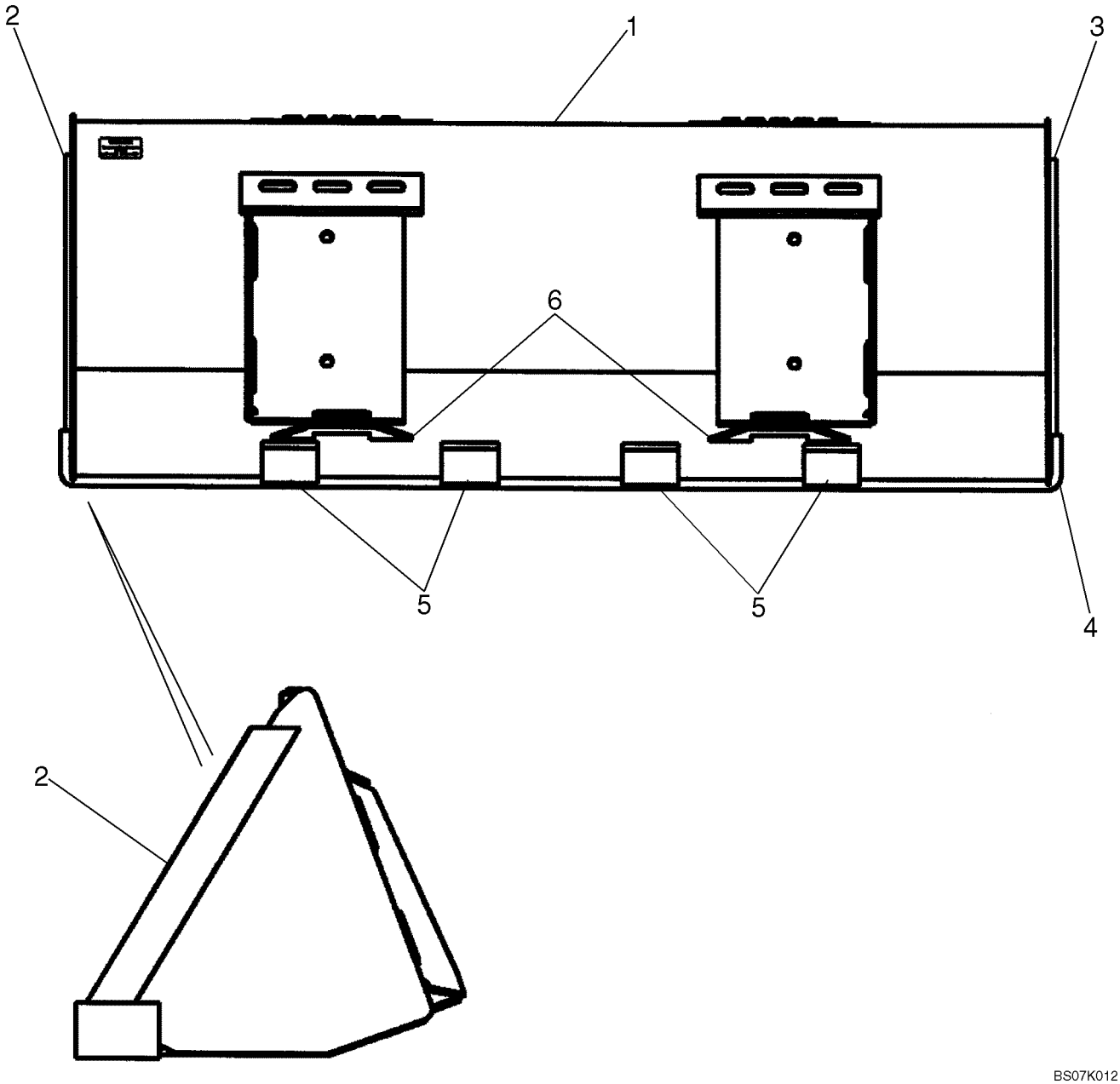

BUCKETS - LOADER, MANURE / SLURRY
BUCKETS - LOADER, MANURE / SLURRY
BUCKETS - LOADER, MANURE / SLURRY
BUCKETS - LOADER, MANURE / SLURRY

R	N	P.N.	MOD	Q	Denominação Description	Description Bezeichnung	Denominacion Beskrivelse	Descrizione Beschrijving	L.C.
1		84304961		1	CAÇAMBA, Manure/Slurry; 60 Inch Tan; Order from Whole Goods; Incl. 84304978, 2 - 6				
					BUCKET	CUCHARA	BENNA		035B
					GODET	LÖFFEL	SKOVL	GRAAFBAK	
		84304978		1	ADESIVO	DECAL	CALCOMANÍA	DECALCOMANIA	012D
					AUTOCOLLANT	AUFKLEBER	TRANSFER	STICKER	
2		86501789		1	BORDA CORTANTE, Cutting Edge, LH				
					CUTTING EDGE	BORDE DE CORTE	BORDO TAGLIENTE		018T
					BORD TRANCHANT	SCHNEIDKANTE	SKÆREKANT	SNIJRAND	
3		86501789		1	BORDA CORTANTE, Cutting Edge, RH				
					CUTTING EDGE	BORDE DE CORTE	BORDO TAGLIENTE		018T
					BORD TRANCHANT	SCHNEIDKANTE	SKÆREKANT	SNIJRAND	
4		86577164		1	BORDA CORTANTE, Weld On Blade, 60 Inch				
					CUTTING EDGE	BORDE DE CORTE	BORDO TAGLIENTE		018T
					BORD TRANCHANT	SCHNEIDKANTE	SKÆREKANT	SNIJRAND	
5		86501838		3	BARRA, Skid Bar	BAR	BARRA	BARRA	530B
					BARRE	BAR	BJÆLKE	STANG	
6		9822175		2	PLACA, LH & RH	PLATE	PLACA	PIASTRA	105P
					PLAQUE	PLATTE	PLADE	PLAAT	
1A		84304965		1	CAÇAMBA, Manure/Slurry; 72 Inch Tan; Order from Whole Goods; Incl. 84304982, 2A - 6A				
					BUCKET	CUCHARA	BENNA		035B
					GODET	LÖFFEL	SKOVL	GRAAFBAK	
		84304982		1	ADESIVO	DECAL	CALCOMANÍA	DECALCOMANIA	012D
					AUTOCOLLANT	AUFKLEBER	TRANSFER	STICKER	
2A		86501789		1	BORDA CORTANTE, Cutting Edge, LH				
					CUTTING EDGE	BORDE DE CORTE	BORDO TAGLIENTE		018T
					BORD TRANCHANT	SCHNEIDKANTE	SKÆREKANT	SNIJRAND	
3A		86501789		1	BORDA CORTANTE, Cutting Edge, RH				
					CUTTING EDGE	BORDE DE CORTE	BORDO TAGLIENTE		018T
					BORD TRANCHANT	SCHNEIDKANTE	SKÆREKANT	SNIJRAND	
4A		86577168		1	BORDA CORTANTE, Weld On Blade, 72 Inch				
					CUTTING EDGE	BORDE DE CORTE	BORDO TAGLIENTE		018T
					BORD TRANCHANT	SCHNEIDKANTE	SKÆREKANT	SNIJRAND	
5A		86501816		4	BARRA, Skid Bar	BAR	BARRA	BARRA	530B
					BARRE	BAR	BJÆLKE	STANG	
6A		9822175		2	PLACA, LH & RH	PLATE	PLACA	PIASTRA	105P
					PLAQUE	PLATTE	PLADE	PLAAT	
1B		84304969		1	CAÇAMBA, Manure/Slurry; 84 Inch Tan; Order from Whole Goods; Incl. 84304986, 2B - 6B				
					BUCKET	CUCHARA	BENNA		035B
					GODET	LÖFFEL	SKOVL	GRAAFBAK	
		84304986		1	ADESIVO	DECAL	CALCOMANÍA	DECALCOMANIA	012D
					AUTOCOLLANT	AUFKLEBER	TRANSFER	STICKER	
2B		86501789		1	BORDA CORTANTE, Cutting Edge, LH				
					CUTTING EDGE	BORDE DE CORTE	BORDO TAGLIENTE		018T
					BORD TRANCHANT	SCHNEIDKANTE	SKÆREKANT	SNIJRAND	
3B		86501789		1	BORDA CORTANTE, Cutting Edge, RH				
					CUTTING EDGE	BORDE DE CORTE	BORDO TAGLIENTE		018T
					BORD TRANCHANT	SCHNEIDKANTE	SKÆREKANT	SNIJRAND	

BUCKETS - LOADER, MANURE / SLURRY
BUCKETS - LOADER, MANURE / SLURRY
BUCKETS - LOADER, MANURE / SLURRY
BUCKETS - LOADER, MANURE / SLURRY

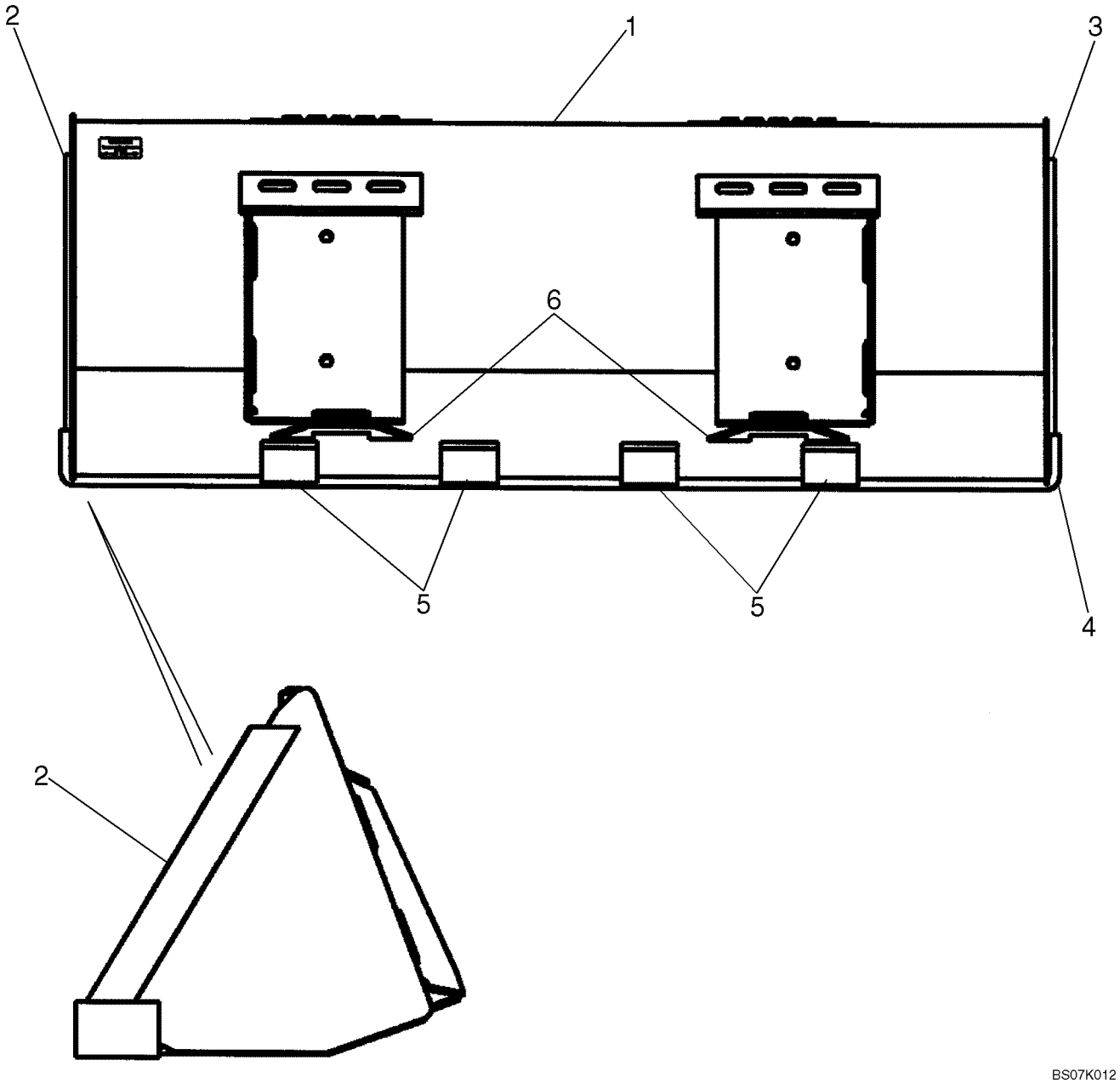

BUCKETS - LOADER, MANURE / SLURRY
BUCKETS - LOADER, MANURE / SLURRY
BUCKETS - LOADER, MANURE / SLURRY
BUCKETS - LOADER, MANURE / SLURRY

R	N	P.N.	MOD	Q	Denominação Description	Description Bezeichnung	Denominacion Beskrivelse	Descrizione Beschrijving	L.C.
4B		**86900574**		1	BORDA CORTANTE, Weld On Blade, 84 Inch				
						CUTTING EDGE	BORDE DE CORTE	BORDO TAGLIENTE	018T
					BORD TRANCHANT	SCHNEIDKANTE	SKÆREKANT	SNIJRAND	
5B		**86501816**		5	BARRA, Skid Bar	BAR	BARRA	BARRA	530B
					BARRE	BAR	BJÆLKE	STANG	
6B		**9822175**		2	PLACA, LH & RH	PLATE	PLACA	PIASTRA	105P
					PLAQUE	PLATTE	PLADE	PLAAT	

82.100.02		p1	05/11

BUCKET, BOLT ON CUTTING EDGE (B.O.C.E.) (ALL CASE)
BUCKET, BOLT ON CUTTING EDGE (B.O.C.E.) (ALL CASE)
BUCKET, BOLT ON CUTTING EDGE (B.O.C.E.) (ALL CASE)
BUCKET, BOLT ON CUTTING EDGE (B.O.C.E.) (ALL CASE)

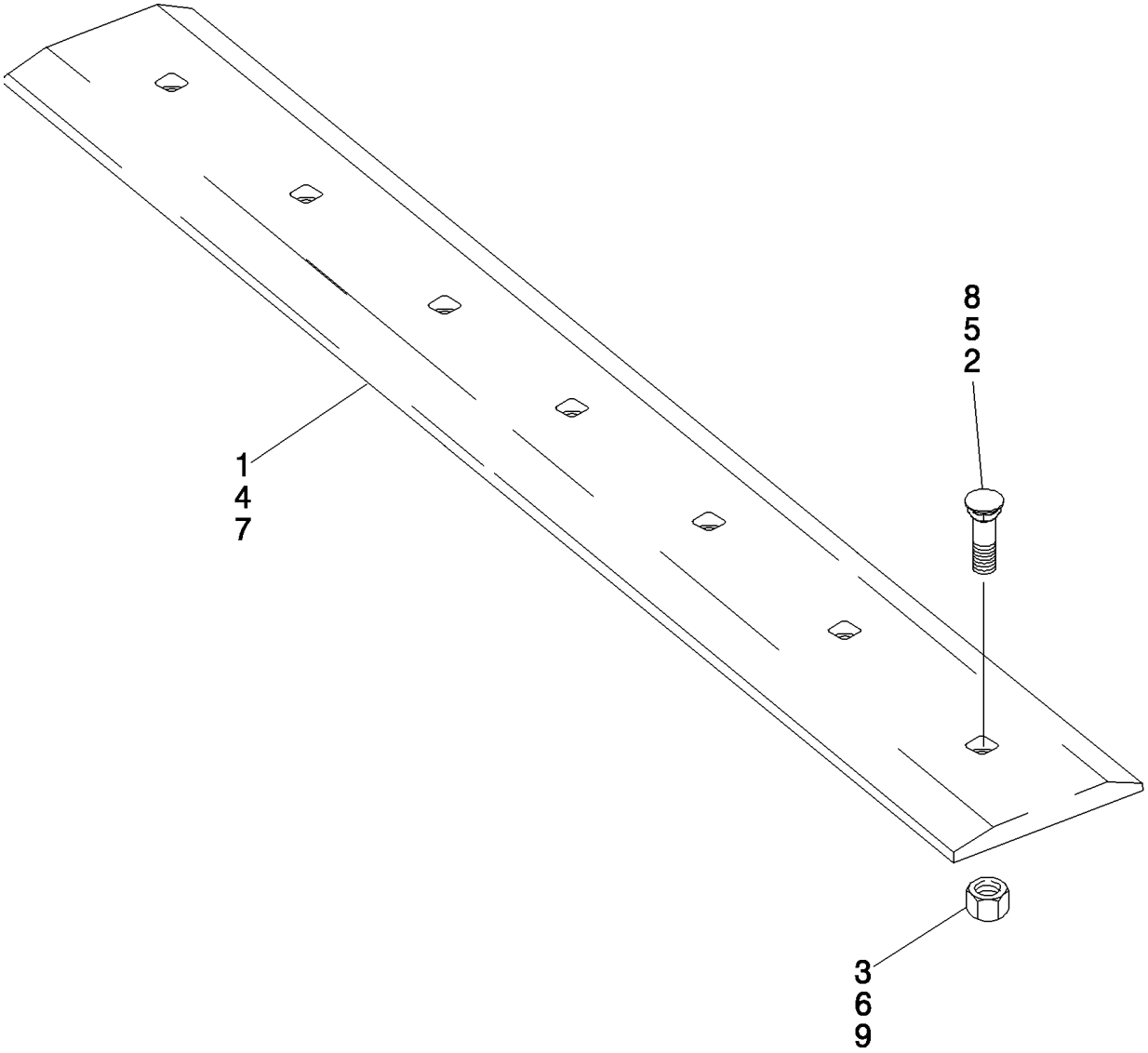

BUCKET, BOLT ON CUTTING EDGE (B.O.C.E.) (ALL CASE)
BUCKET, BOLT ON CUTTING EDGE (B.O.C.E.) (ALL CASE)
BUCKET, BOLT ON CUTTING EDGE (B.O.C.E.) (ALL CASE)
BUCKET, BOLT ON CUTTING EDGE (B.O.C.E.) (ALL CASE)

R	N	P.N.	MOD	Q	Denominação Description	Description Bezeichnung	Denominacion Beskrivelse	Descrizione Beschrijving	L.C.
1		86576801		1	BORDA CORTANTE, 54 in; Bolt-on; 6 Hole				
						CUTTING EDGE	BORDE DE CORTE	BORDO TAGLIENTE	018T
					BORD TRANCHANT	SCHNEIDKANTE	SKÆREKANT	SNIJRAND	
		430497A1		1	LAMINA DE CORTE, Kit; 60 Inch; Incl. Ref 1 - 3; Order Components				
						EDGE, CUTTING	CUCHILLA	BORDO, TAGLIO	Z114
					LAME D'ATTAQUE	SCHNEIDKANTE	EDGE, CUTTING	EDGE, CUTTING	
1		86576801		1	BORDA CORTANTE, 54 in; Bolt-on; 7 Hole				
						CUTTING EDGE	BORDE DE CORTE	BORDO TAGLIENTE	018T
					BORD TRANCHANT	SCHNEIDKANTE	SKÆREKANT	SNIJRAND	
1		87454489		1	BORDA CORTANTE, 1524 mm (60 inch); Power Tan				
						CUTTING EDGE	BORDE DE CORTE	BORDO TAGLIENTE	018T
					BORD TRANCHANT	SCHNEIDKANTE	SKÆREKANT	SNIJRAND	
1		86577165		1	BORDA CORTANTE, 1524 mm (60 inch); Gray				
						CUTTING EDGE	BORDE DE CORTE	BORDO TAGLIENTE	018T
					BORD TRANCHANT	SCHNEIDKANTE	SKÆREKANT	SNIJRAND	
2		86548338		7	PARAFUSO DE ARADO, 5/8"-11 x 2", G5				
						PLOW BOLT	PERNO DE ARADO	BULLONE SCANALATO	P128
					BOULON DE CHARRUE	PFLUGSCHRAUBE	PLOVRIGEL	PLOEGBOUT	
3		425-1010		7	PORCA, 5/8"-11, G5	NUT	TUERCA	DADO	010D
					ECROU	MUTTER	MØTRIK	MOER	
		430498A1		1	LAMINA DE CORTE, Kit; 66 Inch; Incl. Ref 4 - 6; Order Components				
						EDGE, CUTTING	CUCHILLA	BORDO, TAGLIO	Z114
					LAME D'ATTAQUE	SCHNEIDKANTE	EDGE, CUTTING	EDGE, CUTTING	
4		87454483		1	BORDA CORTANTE, 1676 mm (66 inch); Power Tan				
						CUTTING EDGE	BORDE DE CORTE	BORDO TAGLIENTE	018T
					BORD TRANCHANT	SCHNEIDKANTE	SKÆREKANT	SNIJRAND	
4		86577167		1	BORDA CORTANTE, 1676 mm (66 inch); Gray				
						CUTTING EDGE	BORDE DE CORTE	BORDO TAGLIENTE	018T
					BORD TRANCHANT	SCHNEIDKANTE	SKÆREKANT	SNIJRAND	
5		86548338		7	PARAFUSO DE ARADO, 5/8"-11 x 2", G5				
						PLOW BOLT	PERNO DE ARADO	BULLONE SCANALATO	P128
					BOULON DE CHARRUE	PFLUGSCHRAUBE	PLOVRIGEL	PLOEGBOUT	
6		425-1010		7	PORCA, 5/8"-11, G5	NUT	TUERCA	DADO	010D
					ECROU	MUTTER	MØTRIK	MOER	
		430499A1		1	LAMINA DE CORTE, Kit; 72 Inch; Incl. Ref 7 - 9; Order Components				
						EDGE, CUTTING	CUCHILLA	BORDO, TAGLIO	Z114
					LAME D'ATTAQUE	SCHNEIDKANTE	EDGE, CUTTING	EDGE, CUTTING	
7		87454488		1	BORDA CORTANTE, 1829 mm (72 inch); Power Tan				
						CUTTING EDGE	BORDE DE CORTE	BORDO TAGLIENTE	018T
					BORD TRANCHANT	SCHNEIDKANTE	SKÆREKANT	SNIJRAND	
7		86577169		1	BORDA CORTANTE, 1829 mm (72 inch); Gray				
						CUTTING EDGE	BORDE DE CORTE	BORDO TAGLIENTE	018T
					BORD TRANCHANT	SCHNEIDKANTE	SKÆREKANT	SNIJRAND	
8		86548338		7	PARAFUSO DE ARADO, 5/8"-11 x 2", G5				
						PLOW BOLT	PERNO DE ARADO	BULLONE SCANALATO	P128
					BOULON DE CHARRUE	PFLUGSCHRAUBE	PLOVRIGEL	PLOEGBOUT	
9		425-1010		7	PORCA, 5/8"-11, G5	NUT	TUERCA	DADO	010D
					ECROU	MUTTER	MØTRIK	MOER	

BUCKET, BOLT ON CUTTING EDGE (B.O.C.E.) (ALL CASE)
BUCKET, BOLT ON CUTTING EDGE (B.O.C.E.) (ALL CASE)
BUCKET, BOLT ON CUTTING EDGE (B.O.C.E.) (ALL CASE)
BUCKET, BOLT ON CUTTING EDGE (B.O.C.E.) (ALL CASE)

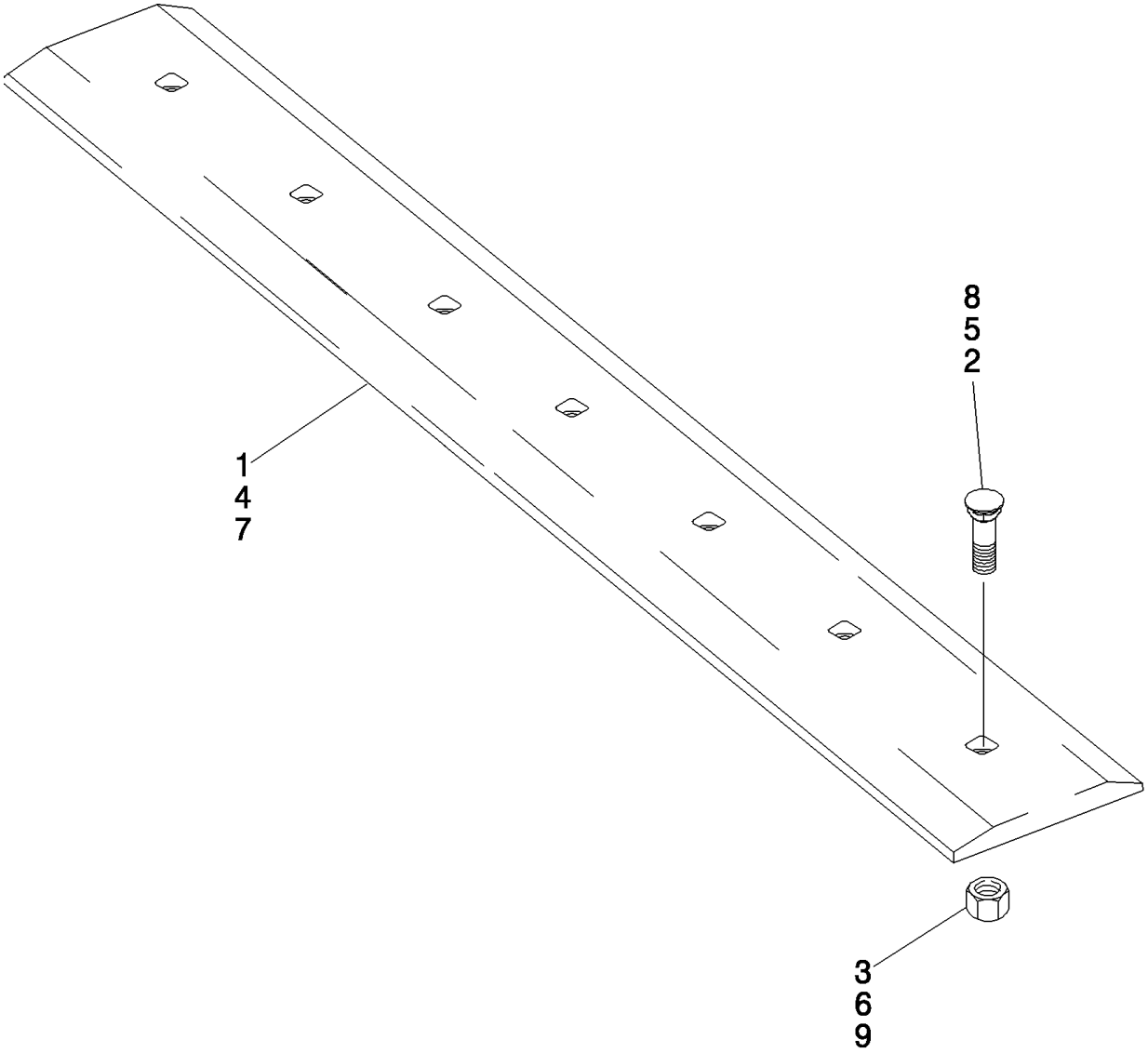

BUCKET, BOLT ON CUTTING EDGE (B.O.C.E.) (ALL CASE)
BUCKET, BOLT ON CUTTING EDGE (B.O.C.E.) (ALL CASE)
BUCKET, BOLT ON CUTTING EDGE (B.O.C.E.) (ALL CASE)
BUCKET, BOLT ON CUTTING EDGE (B.O.C.E.) (ALL CASE)

R	N	P.N.	MOD	Q	Denominação Description	Description Bezeichnung	Denominacion Beskrivelse	Descrizione Beschrijving	L.C.
		434817A1		1	LAMINA DE CORTE, Kit; 78 Inch; Incl. Ref 7 - 9; Order Components				
						EDGE, CUTTING	CUCHILLA	BORDO, TAGLIO	Z114
					LAME D'ATTAQUE	SCHNEIDKANTE	EDGE, CUTTING	EDGE, CUTTING	
7		**86577171**		1	BORDA CORTANTE, 1981 mm (78 inch); Gray				
						CUTTING EDGE	BORDE DE CORTE	BORDO TAGLIENTE	018T
					BORD TRANCHANT	SCHNEIDKANTE	SKÆREKANT	SNIJRAND	
8		**86548338**		9	PARAFUSO DE ARADO, 5/8"-11 x 2", G5				
						PLOW BOLT	PERNO DE ARADO	BULLONE SCANALATO	P128
					BOULON DE CHARRUE	PFLUGSCHRAUBE	PLOVRIGEL	PLOEGBOUT	
9		**425-1010**		9	PORCA, 5/8"-11, G5	NUT	TUERCA	DADO	010D
					ECROU	MUTTER	MØTRIK	MOER	
		430500A1		1	LAMINA DE CORTE, Kit; 84 Inch; Incl. Ref 7 - 9; Order Components				
						EDGE, CUTTING	CUCHILLA	BORDO, TAGLIO	Z114
					LAME D'ATTAQUE	SCHNEIDKANTE	EDGE, CUTTING	EDGE, CUTTING	
7		**86577173**		1	BORDA CORTANTE, 2134 mm (84 inch); Gray				
						CUTTING EDGE	BORDE DE CORTE	BORDO TAGLIENTE	018T
					BORD TRANCHANT	SCHNEIDKANTE	SKÆREKANT	SNIJRAND	
8		**86548338**		7	PARAFUSO DE ARADO, 5/8"-11 x 2", G5				
						PLOW BOLT	PERNO DE ARADO	BULLONE SCANALATO	P128
					BOULON DE CHARRUE	PFLUGSCHRAUBE	PLOVRIGEL	PLOEGBOUT	
9		**280374**		7	PORCA, 5/8"-11, G5	NUT	TUERCA	DADO	010D
					ECROU	MUTTER	MØTRIK	MOER	

PALLET FORK 48 TINE (ALL CASE)
PALLET FORK 48 TINE (ALL CASE)
PALLET FORK 48 TINE (ALL CASE)
PALLET FORK 48 TINE (ALL CASE)

ART

NOT

AVAILABLE

PALLET FORK 48 TINE (ALL CASE)
PALLET FORK 48 TINE (ALL CASE)
PALLET FORK 48 TINE (ALL CASE)
PALLET FORK 48 TINE (ALL CASE)

R	N	P.N.	MOD	Q	Denominação Description	Description Bezeichnung	Denominacion Beskrivelse	Descrizione Beschrijving	L.C.
1		84332182		1	ESTRUTURA, Pallet Forks CHASSIS	FRAME RAHMEN	BASTIDOR FRAME	TELAIO FRAME	077T
2		86574055		2	GARFO DA CAÇAMBA, A-48 FOURCHE A GODET	BUCKET FORK GABELSCHAUFEL	HORQUILLA DE CUCHAI SKOVLGAFFEL	FORCA PER BENNA VORK VOOR GRAAFBAK	127F
3		84476692		1	ADESIVO, Pallet Fork, Case AUTOCOLLANT	DECAL AUFKLEBER	CALCOMANÍA TRANSFER	DECALCOMANIA STICKER	012D

82.100.04	01	p1	01/11

SPILL GUARD 66 TAN (SR130-SR200)
SPILL GUARD 66 TAN (SR130-SR200)
SPILL GUARD 66 TAN (SR130-SR200)
SPILL GUARD 66 TAN (SR130-SR200)

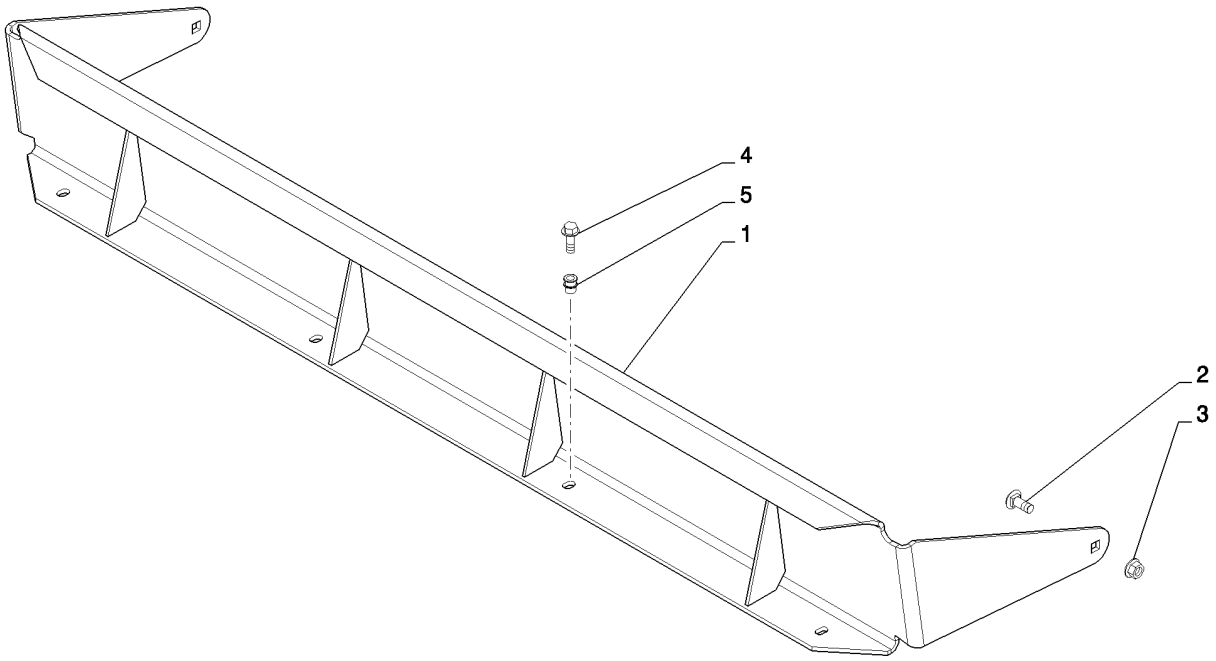

SPILL GUARD 66 TAN (SR130-SR200)
SPILL GUARD 66 TAN (SR130-SR200)
SPILL GUARD 66 TAN (SR130-SR200)
SPILL GUARD 66 TAN (SR130-SR200)

R	N	P.N.	MOD	Q	Denominação Description Bezeichnung	Description Bezeichnung	Denominacion Beskrivelse	Descrizione Beschrijving	L.C.
1		84263252		1	EXTENSÃO, 66 Spill Guard, Tan				
						EXTENSION	EXTENSIÓN	PROLUNGA	226P
					RALLONGE	ERWEITERUNG	FORLÆNGNING	VERLENGSTUK	
2		120044		2	PARAFUSO, Short NK, M12 x 30, Cl8.8, Full Thd				
						CARRIAGE BOLT	PERNO ALOMADO	BULLONE A TESTA TONI	P123
					VIS A TETE BOMBEE	SCHLOSSSCHRAUBE	BRÆDDEBOLT	SLOTBOUT	
3		86512497		2	PORCA, M12 x 1.75, Flg, Cl 10				
						NUT	TUERCA	DADO	010D
					ECROU	MUTTER	MØTRIK	MOER	
4		9804262		4	PARAFUSO, Hex Flg, M10 x 30, 8.8				
						BOLT	PERNO	BULLONE	140B
					VIS	SCHRAUBE	BOLT	BOUT	
5		390618A1		4	PORCA DE INSERCAO	INSERT	TUERCA DE INSERCION	INSERTO	4675
					DOUILLE RAPPORTEE	EINSATZ	INSERT	INSERT	

SR200

SPILL GUARD 72 TAN (SR130-TR270)
SPILL GUARD 72 TAN (SR130-TR270)
SPILL GUARD 72 TAN (SR130-TR270)
SPILL GUARD 72 TAN (SR130-TR270)

ART

NOT

AVAILABLE

SPILL GUARD 72 TAN (SR130-TR270)
SPILL GUARD 72 TAN (SR130-TR270)
SPILL GUARD 72 TAN (SR130-TR270)
SPILL GUARD 72 TAN (SR130-TR270)

R	N	P.N.	MOD	Q	Denominação Description Bezeichnung	Description Bezeichnung	Denominacion Beskrivelse	Descrizione Beschrijving	L.C.
1		84263254		1	EXTENSÃO, 72 Spill Guard, Tan				
						EXTENSION	EXTENSIÓN	PROLUNGA	226P
					RALLONGE	ERWEITERUNG	FORLÆNGNING	VERLENGSTUK	
2		120044		2	PARAFUSO, Short NK, M12 x 30, Cl8.8, Full Thd				
						CARRIAGE BOLT	PERNO ALOMADO	BULLONE A TESTA TONI	P123
					VIS A TETE BOMBEE	SCHLOSSSCHRAUBE	BRÆDDEBOLT	SLOTBOUT	
3		86512497		2	PORCA, M12 x 1.75, Flg, Cl 10				
						NUT	TUERCA	DADO	010D
					ECROU	MUTTER	MØTRIK	MOER	
4		9804262		4	PARAFUSO, Hex Flg, M10 x 30, 8.8				
						BOLT	PERNO	BULLONE	140B
					VIS	SCHRAUBE	BOLT	BOUT	
5		390618A1		4	PORCA DE INSERCAO	INSERT	TUERCA DE INSERCION	INSERTO	4675
					DOUILLE RAPPORTEE	EINSATZ	INSERT	INSERT	

SR200

SPILL GUARD 78 TAN (SR175-TV380)
SPILL GUARD 78 TAN (SR175-TV380)
SPILL GUARD 78 TAN (SR175-TV380)
SPILL GUARD 78 TAN (SR175-TV380)

ART
NOT
AVAILABLE

SPILL GUARD 78 TAN (SR175-TV380)
SPILL GUARD 78 TAN (SR175-TV380)
SPILL GUARD 78 TAN (SR175-TV380)
SPILL GUARD 78 TAN (SR175-TV380)

R	N	P.N.	MOD	Q	Denominação Description Bezeichnung	Description Bezeichnung	Denominacion Beskrivelse	Descrizione Beschrijving	L.C.
1		84263256		1	EXTENSÃO, 78 Spill Guard, Tan				
						EXTENSION	EXTENSIÓN	PROLUNGA	226P
					RALLONGE	ERWEITERUNG	FORLÆNGNING	VERLENGSTUK	
2		120044		2	PARAFUSO, Short NK, M12 x 30, Cl8.8, Full Thd				
						CARRIAGE BOLT	PERNO ALOMADO	BULLONE A TESTA TON	P123
					VIS A TETE BOMBEE	SCHLOSSSCHRAUBE	BRÆDDEBOLT	SLOTBOUT	
3		86512497		2	PORCA, M12 x 1.75, Flg, Cl 10				
						NUT	TUERCA	DADO	010D
					ECROU	MUTTER	MØTRIK	MOER	
4		9804262		4	PARAFUSO, Hex Flg, M10 x 30, 8.8				
						BOLT	PERNO	BULLONE	140B
					VIS	SCHRAUBE	BOLT	BOUT	
5		390618A1		4	PORCA DE INSERCAO	INSERT	TUERCA DE INSERCION	INSERTO	4675
					DOUILLE RAPPORTEE	EINSATZ	INSERT	INSERT	

SECTION INDEX
88 - Acessórios

88.010.04	DIA KIT, ASPIRATOR (SR200,TR270)
88.010.08	DIA KIT, BLOCK HEATER 120V USA (SR200-TV380)
88.010.09	DIA KIT, BLOCK HEATER 220V - ROW (SR200-TV380)
88.035.02	DIA KIT, SELF-LEVEL 65 (SR175,SR200-SR250,TR270,TR320)
88.035.07	DIA KIT, RIDE CONTROL CASE MED/LG (SR175-SV300,TR270,TR320,TV380)
88.035.09	DIA KIT, HYDRAULIC COUPLER MED/LG RAD (SR175,SR200-SR250,TR270,TR320)
88.035.11	DIA KIT, HIGH FLOW AUX - MED RADIAL (SR175,SR200,TR270)
88.035.15	DIA KIT, 2ND FRONT HYD AUX - MED VERT (SR175,SR200,TR270)
88.035.22	DIA KIT, MED FRM FOOT CONTROLS, SERVO (SR200)
88.037.05	DIA KIT, COUNTERWEIGHT MF CASE (SR175-SR200,TR270)
88.050.03	DIA KIT, MED FRM F5C HVAC (SR200,TR270)
88.050.11	DIA KIT, F5C HEAT KIT (SR200-TV380)
88.055.01	DIA KIT, BEACON (ALL CASE)
88.055.02	DIA KIT, STROBE (ALL CASE)
88.055.07	DIA KIT, MULTI-FUNCTION ELEC MECH CS RAD (SR175,SR200-SR250,TR270, TR320)
88.055.11	DIA KIT, MULTI-FUNCTION ELEC EH CS RAD (SR175,SR200-SR250,TR270,TR320)
88.055.15	DIA KIT, EU ROAD LIGHTS MED RAD CASE (SR175,SR200,TR270)
88.055.27	DIA KIT, MECH CHASS OPT HARNESS, MED (SR175-SR200)
88.055.29	DIA KIT, SIDE LAMP (ALL CASE)
88.082.01	DIA KIT, PALLET FORK 48IN TINES (ALL CASE)
88.082.02	DIA KIT, 66IN SPILL GUARD TAN (SR130-SR200)
88.082.03	DIA KIT, 72IN SPILL GUARD TAN (SR130-TR270)
88.082.04	DIA KIT, 78IN SPILL GUARD TAN (SR175-TV380)
88.082.05	DIA KIT, 84IN SPILL GUARD (SR220-SR300,TR320,TV380)
88.082.07	DIA KIT, 66IN B.O.C.E. (SR130-SR200)
88.082.08	DIA KIT, 72IN B.O.C.E. (SR130-TR270)
88.082.09	DIA KIT, 78IN B.O.C.E. (SR175-TV380)
88.082.10	DIA KIT, 84IN B.O.C.E. (SR175-TV380)
88.082.11	DIA KIT, BUCKET TEETH (ALL CASE)
88.082.12	DIA KIT, BUCKETS - FIELD (ALL CASE)
88.088.02	DIA KIT, SINGLE POINT LIFT HOOK (SR175,SR200,TR270)
88.088.06	DIA KIT, RADIO (ALL CASE)
88.088.07	DIA KIT, 4 POINT LIFT HOOK (SR175-SR200,TR270)
88.088.09	DIA KIT, FOPS LEVEL 2 MODS (ALL CASE)
88.088.10	DIA KIT, MIRROR (ALL CASE)
88.088.13	DIA KIT, DRAW BAR MED GRAY (SR175-SR200,TR270)
88.088.15	DIA KIT, FIRE EXTINGUISHER (ALL CASE)
88.090.01	DIA KIT, DEMO REAR DOOR (ALL CASE)
88.090.02	DIA KIT, GLASS FRONT DOOR (ALL CASE)
88.090.03	DIA KIT, DEMO FRONT DOOR (ALL CASE)
88.090.04	DIA KIT, CAB SIDE WINDOWS (ALL CASE)
88.090.05	DIA KIT, REAR EXT ACCESS WINDOW (ALL CASE)
88.090.06	DIA KIT, 3IN LAP BELT (ALL CASE)
88.090.08	DIA KIT, REMOVABLE TOP WINDOW (ALL CASE)
88.090.09	DIA KIT, RH, SIDE SCREEN (ALL CASE)
88.090.10	DIA KIT, LH, SIDE SCREEN (ALL CASE)
88.090.12	DIA KIT, HANDLE 300/400 (ALL CASE)
88.090.14	DIA KIT, HANDLE 350/450 (ALL CASE)
88.100.01	ENGINE ACCESSORIES EU/OPEN EU (SR200)
88.100.01	ENGINE ACCESSORIES NA (SR200,TR270)
88.100.01	ENGINE ACCESSORIES EU/OPEN EU (SR200,TR270)
88.120.01	SEAL PACKAGE, FOAM (ALL CASE)
88.120.02	FUSE COVER, MED-LG CHASSIS (SR175-TV380)

DIA KIT, ASPIRATOR (SR200,TR270)
DIA KIT, ASPIRATOR (SR200,TR270)
DIA KIT, ASPIRATOR (SR200,TR270)
DIA KIT, ASPIRATOR (SR200,TR270)



DIA KIT, ASPIRATOR (SR200,TR270)
DIA KIT, ASPIRATOR (SR200,TR270)
DIA KIT, ASPIRATOR (SR200,TR270)
DIA KIT, ASPIRATOR (SR200,TR270)

R	N	P.N.	MOD	Q	Denominação Description	Description Bezeichnung	Denominacion Beskrivelse	Descrizione Beschrijving	L.C.
		84396763			JOGO, DIA Kit, Aspirator, Incl. 1-14				
						KIT	JEUGO	KIT	4830
					POCHETTE	PACKUNG	KIT	KIT	
1		**84674**		2	BRAÇADEIRA MANGUEIRA, #28, 1.31/2.25 Type F Worm				
						HOSE CLAMP	ABRAZADERA DE MANG	FASCETTA STRINGITUB	P729
					COLLIER POUR FLEXIBL	SCHLAUCHSCHELLE	SLANGEKLEMME	SLANGKLEM	
2		**507586**		1	BRAÇADEIRA MANGUEIRA, #20, 0.81/1.75 Type F Worm				
						HOSE CLAMP	ABRAZADERA DE MANG	FASCETTA STRINGITUB	P729
					COLLIER POUR FLEXIBL	SCHLAUCHSCHELLE	SLANGEKLEMME	SLANGKLEM	
3		**9804277**		1	PORCA, M8 x 1.25, Flg, Cl 8				
						NUT	TUERCA	DADO	010D
					ECROU	MUTTER	MØTRIK	MOER	
4		**84137995**		1	BRAÇADEIRA MANGUEIRA, Turn Key Grip				
						HOSE CLAMP	ABRAZADERA DE MANG	FASCETTA STRINGITUB	P729
					COLLIER POUR FLEXIBL	SCHLAUCHSCHELLE	SLANGEKLEMME	SLANGKLEM	
5		**84314770**		1	MANGUEIRA, Tail Pipe to Aspirator				
						HOSE	TUBO	TUBO FLESSIBILE	030M
					FLEXIBLE	SCHLAUCH	SLANGE	SLANG	
6		**84314771**		1	MANGUEIRA, Air Cleaner to Aspirator				
						HOSE	TUBO	TUBO FLESSIBILE	030M
					FLEXIBLE	SCHLAUCH	SLANGE	SLANG	
7		**84359085**		1	TUBO RÍGIDO, Exhaust Tail Pipe				
						RIGID TUBE	TUBO RÍGIDO	TUBO RIGIDO	193T
					TUYAU RIGIDE	ROHR	STIFT RØR	VASTE LEIDING	
8		**84396234**		1	SUPORTE, Aspirator Mounting				
						BRACKET	SOPORTE	STAFFA	225S
					SUPPORT	HALTERUNG	BESLAG	STEUN	
9		**86511842**		1	PARAFUSO, Hex Flg, M8 x 40, 8.8				
						BOLT	PERNO	BULLONE	140B
					VIS	SCHRAUBE	BOLT	BOUT	
10		**86512445**		1	PARAFUSO, Short NK, M8 x 60, Cl8.8				
						CARRIAGE BOLT	PERNO ALOMADO	BULLONE A TESTA TONI	P123
					VIS A TETE BOMBEE	SCHLOSSSCHRAUBE	BRÆDDEBOLT	SLOTBOUT	
11		**87036415**		1	ESPAÇADOR, 1/4" Pipe x 3/4"				
						SPACER	SEPARADOR	DISTANZIALE	075D
					ENTRETOISE	DISTANZSTÜCK	AFSTANDSSTYKKE	AFSTANDSSTUK	
12		**406089A2**		1	VALVULA, Aspirator Check VALVE		VALVULA	VALVOLA	P468
					VALVE	VENTIL	VALVE	VALVE	
13		**L11541**		1	PRENDEDOR DE CABOS, Cable Tie				
						CABLE STRAP	BANDA DE CABLE	FASCETTA PER CAVO	P716
					BRIDE DE CABLE	KABELBINDER	KABELSTROP	BUNDELBAND	
14		**84396771**		1	INSTRUÇÃO, Sheet, Aspirator				
						INSTRUCTION	INSTRUCCIÓN	ISTRUZIONI	Z571
					INSTRUCTION	ANLEITUNG	INSTRUKTION	INSTRUCTIE	

SR200

DIA KIT, BLOCK HEATER 120V USA (SR200-TV380)
DIA KIT, BLOCK HEATER 120V USA (SR200-TV380)
DIA KIT, BLOCK HEATER 120V USA (SR200-TV380)
DIA KIT, BLOCK HEATER 120V USA (SR200-TV380)



DIA KIT, BLOCK HEATER 120V USA (SR200-TV380)
DIA KIT, BLOCK HEATER 120V USA (SR200-TV380)
DIA KIT, BLOCK HEATER 120V USA (SR200-TV380)
DIA KIT, BLOCK HEATER 120V USA (SR200-TV380)

R	N	P.N.	MOD	Q	Denominação Description Bezeichnung	Description Denominacion Beskrivelse	Denominacion Descrizione Beschrijving	L.C.
		84395706			KIT DE SERVIÇO, DIA Kit, Block Heater, 120V, Incl. 1-6			
					SERVICE KIT	KIT DE SERVICIO	KIT DI MANUTENZIONE	021K
					KIT D'ENTRETIEN	SERVICE-SATZ	SERVICESÆT	SERVICEKIT
1		**86050279**		1	PORCA, M10 x 1.5, Flg, Cl 10			
					NUT	TUERCA	DADO	010D
					ECROU	MUTTER	MØTRIK	MOER
2		**87693857**		1	UNIDADE DE AQUECIMENTO, Assembly			
					UNIT HEATER	APARATO DE CALEFAC(	RISCALDATORE UNITÀ	Z375
					APPAREIL DE CHAUFFA	HEIZUNGSEINHEIT	RADIATORENHED	VERWARMING
3		**87693858**		1	CABO, Block Heater	CABLE	CABLE	CAVO	650C
					CABLE	KABEL	KABEL	KABEL
4		**L11541**		1	PRENDEDOR DE CABOS, Nylon Tie, 7-8in			
					CABLE STRAP	BANDA DE CABLE	FASCETTA PER CAVO	P716
					BRIDE DE CABLE	KABELBINDER	KABELSTROP	BUNDELBAND
5		**84395716**		1	INSTRUÇÃO, Installation, F5C, 120V			
					INSTRUCTION	INSTRUCCIÓN	ISTRUZIONI	Z571
					INSTRUCTION	ANLEITUNG	INSTRUKTION	INSTRUCTIE
6		**12646001**		1	ARRUELA PLANA, M14 x 24 x 2			
					WASHER	ARANDELA	RONDELLA	131R
					RONDELLE	UNTERLEGSCHEIBE	FLADSKIVE	SLUITRING

SR200

88.010.09		p1	03/11

DIA KIT, BLOCK HEATER 220V - ROW (SR200-TV380)
DIA KIT, BLOCK HEATER 220V - ROW (SR200-TV380)
DIA KIT, BLOCK HEATER 220V - ROW (SR200-TV380)
DIA KIT, BLOCK HEATER 220V - ROW (SR200-TV380)



DIA KIT, BLOCK HEATER 220V - ROW (SR200-TV380)
DIA KIT, BLOCK HEATER 220V - ROW (SR200-TV380)
DIA KIT, BLOCK HEATER 220V - ROW (SR200-TV380)
DIA KIT, BLOCK HEATER 220V - ROW (SR200-TV380)

R	N	P.N.	MOD	Q	Denominação Description Bezeichnung	Description Bezeichnung Beschrijving	Denominacion Beskrivelse Descrizione	Descrizione Beschrijving L.C.
		84465561			KIT DE SERVIÇO, DIA Kit, Block Heater, 220V, Incl. 1-6			
					SERVICE KIT	KIT DE SERVICIO	KIT DI MANUTENZIONE	021K
					KIT D'ENTRETIEN	SERVICE-SATZ	SERVICESÆT	SERVICEKIT
1		**86050279**		1	PORCA, M10 x 1.5, Flg, Cl 10			
					NUT	TUERCA	DADO	010D
					ECROU	MUTTER	MØTRIK	MOER
2		**87693858**		1	CABO, Block Heater	CABLE	CABLE	CAVO 650C
					CABLE	KABEL	KABEL	KABEL
3		**87719400**		1	AQUECEDOR, Assembly	HEATER	CALENTADOR	RISCALDATORE 105R
					CHAUFFAGE	HEIZUNG	VARMEAPPARAT	VERWARMING
4		**435437A1**		1	PRENDEDOR DE CABOS, 3/16" x 7 1/4"			
					CABLE STRAP	BANDA DE CABLE	FASCETTA PER CAVO	P716
					BRIDE DE CABLE	KABELBINDER	KABELSTROP	BUNDELBAND
5		**{84470983}**		1	Installation, F5C, 220V			
6		**12646001**		1	ARRUELA PLANA, M14 x 24 x 2			
					WASHER	ARANDELA	RONDELLA	131R
					RONDELLE	UNTERLEGSCHEIBE	FLADSKIVE	SLUITRING

88.035.02		p1	03/11

DIA KIT, SELF-LEVEL 65 (SR175,SR200-SR250,TR270,TR320)
DIA KIT, SELF-LEVEL 65 (SR175,SR200-SR250,TR270,TR320)
DIA KIT, SELF-LEVEL 65 (SR175,SR200-SR250,TR270,TR320)
DIA KIT, SELF-LEVEL 65 (SR175,SR200-SR250,TR270,TR320)



DIA KIT, SELF-LEVEL 65 (SR175,SR200-SR250,TR270,TR320)
DIA KIT, SELF-LEVEL 65 (SR175,SR200-SR250,TR270,TR320)
DIA KIT, SELF-LEVEL 65 (SR175,SR200-SR250,TR270,TR320)
DIA KIT, SELF-LEVEL 65 (SR175,SR200-SR250,TR270,TR320)

R	N	P.N.	MOD	Q	Denominação Description Bezeichnung	Denominacion Beskrivelse	Descrizione Beschrijving	L.C.
		84417335			JOGO, DIA Kit, Self-Level 65, Incl. 1-12			
					KIT	JEUGO	KIT	4830
					POCHETTE	PACKUNG	KIT	KIT
1		**84326481**		1	VÁLVULA, 65, Self-Level	VALVE	VÁLVULA	VALVOLA 9620
					SOUPAPE	VENTIL	VENTIL	KLEP
2		**128819**		2	CONECTOR HIDRÁUL, 3/4"-16, 37º x 7/8"-14, O-Ring			
					HYD CONNECTOR	CONECTOR HIDRÁULIC(	CONNETTORE IDRAULIC	020R
					CONNECTEUR HYDRAU	HYDR STECKVERBINDE	HYDRAULIKSTIK	HYDRAULISCHE AANSLI
3		**164910**		1	COTOVELO, 90º, 7/8"-14, 37º x 7/8"-14, O-Ring			
					ELBOW	CODO	GOMITO	085G
					COUDE	KNIESTÜCK	VINKELRØR	KNIESTUK
4		**84186140**		1	TUBO RÍGIDO, Assembly, Lower, LDR Valve to SL			
					RIGID TUBE	TUBO RÍGIDO	TUBO RIGIDO	193T
					TUYAU RIGIDE	ROHR	STIFT RØR	VASTE LEIDING
5		**84258865**		1	TUBO RÍGIDO, Assembly, Lower, SL to Manifold			
					RIGID TUBE	TUBO RÍGIDO	TUBO RIGIDO	193T
					TUYAU RIGIDE	ROHR	STIFT RØR	VASTE LEIDING
6		**84258866**		2	TUBO RÍGIDO, Assembly, SL Valve to TIP			
					RIGID TUBE	TUBO RÍGIDO	TUBO RIGIDO	193T
					TUYAU RIGIDE	ROHR	STIFT RØR	VASTE LEIDING
7		**84271904**		1	INTERRUPTOR, Rocker, Self-Leveling			
					SWITCH	INTERRUPTOR	INTERRUTTORE	075I
					CONTACTEUR	SCHALTER	KONTAKT	SCHAKELAAR
8		**86511843**		2	PARAFUSO, Hex Flg, M8 x 60, 8.8			
					BOLT	PERNO	BULLONE	140B
					VIS	SCHRAUBE	BOLT	BOUT
9		**87301330**		1	CONECTOR HIDRÁUL, 37FL -ORB 5/8			
					HYD CONNECTOR	CONECTOR HIDRÁULIC(	CONNETTORE IDRAULIC	020R
					CONNECTEUR HYDRAU	HYDR STECKVERBINDE	HYDRAULIKSTIK	HYDRAULISCHE AANSLI
10		**87655042**		4	ARRUELA ESPECIAL, M8, 8.80 X 17.5 X 2.2 HTS			
					SPECIAL WASHER	ARANDELA ESPECIAL	RONDELLA SPECIALE	Z333
					RONDELLE SPECIALE	SPEZIALUNTERLEGSCH	SPECIALSKIVE	SPECIALE RING
11		**229197A1**		2	PORCA, Square	NUT	TUERCA	DADO 5780
					ECROU	MUTTER	NUT	NUT
12		**84417336**		1	INSTRUÇÃO, Installation	INSTRUCTION	INSTRUCCIÓN	ISTRUZIONI Z571
					INSTRUCTION	ANLEITUNG	INSTRUKTION	INSTRUCTIE

SR200

DIA KIT, RIDE CONTROL CASE MED/LG (SR175-SV300,TR270,TR320,TV380)
DIA KIT, RIDE CONTROL CASE MED/LG (SR175-SV300,TR270,TR320,TV380)
DIA KIT, RIDE CONTROL CASE MED/LG (SR175-SV300,TR270,TR320,TV380)
DIA KIT, RIDE CONTROL CASE MED/LG (SR175-SV300,TR270,TR320,TV380)



DIA KIT, RIDE CONTROL CASE MED/LG (SR175-SV300,TR270,TR320,TV380)
DIA KIT, RIDE CONTROL CASE MED/LG (SR175-SV300,TR270,TR320,TV380)
DIA KIT, RIDE CONTROL CASE MED/LG (SR175-SV300,TR270,TR320,TV380)
DIA KIT, RIDE CONTROL CASE MED/LG (SR175-SV300,TR270,TR320,TV380)

R	N	P.N.	MOD	Q	Denominação Description Bezeichnung	Denominacion Beskrivelse	Descrizione Beschrijving	L.C.
		84391580			JOGO, DIA Kit, Ride Control, Case Med/LG, Incl. 1-19			
					KIT	JEUGO	KIT	4830
					POCHETTE	PACKUNG	KIT	KIT
1		**76350**		1	CONECTOR HIDRÁUL, 9/16"-18, 37° x 9/16"-18, O-Ring			
					HYD CONNECTOR	CONECTOR HIDRÁULIC	CONNETTORE IDRAULIC	020R
					CONNECTEUR HYDRAU	HYDR STECKVERBINDE	HYDRAULIKSTIK	HYDRAULISCHE AANSLU
2		**128830**		1	COTOVELO, 90°, 3/4"-16, 37° x 3/4"-16, O-Ring			
					ELBOW	CODO	GOMITO	085G
					COUDE	KNIESTÜCK	VINKELRØR	KNIESTUK
3		**84256404**		1	VÁLVULA HIDRÁULICA, Ride Control			
					HYDRAULIC VALVE	VÁLVULA HIDRÁULICA	DISTRIBUTORE IDRAULI	010V
					SOUPAPE HYDRAULIQU	HYDRAULIKVENTIL	HYDRAULIKVENTIL	HYDRAULISCHE KLEP
4		**84375899**		1	TUBO RÍGIDO, Hydraulic, Assembly, Ride Control to Manifold			
					RIGID TUBE	TUBO RÍGIDO	TUBO RIGIDO	193T
					TUYAU RIGIDE	ROHR	STIFT RØR	VASTE LEIDING
5		**84375901**		1	TUBO RÍGIDO, Hydraulic, Assembly, Ride Control to Manifold			
					RIGID TUBE	TUBO RÍGIDO	TUBO RIGIDO	193T
					TUYAU RIGIDE	ROHR	STIFT RØR	VASTE LEIDING
6		**84259548**		1	MANGUEIRA, LOL, Ride Control, Drain			
					HOSE	TUBO	TUBO FLESSIBILE	030M
					FLEXIBLE	SCHLAUCH	SLANGE	SLANG
7		**84259682**		1	CONEXÃO EM T, Assembly, Option			
					UNION TEE	RACOR EN T	RACCORDO A T	A134
					RACCORD EN T	T-VERSCHRAUBUNG	T-FORSKRUNING	KOPPEL-T-STUK
8		**84331280**		1	MANGUEIRA, Assembly, Valve to Accumulator			
					HOSE	TUBO	TUBO FLESSIBILE	030M
					FLEXIBLE	SCHLAUCH	SLANGE	SLANG
9		**86509028**		2	CONECTOR HIDRÁUL, 3/4"-16, 37° x 9/16"-18, O-Ring			
					HYD CONNECTOR	CONECTOR HIDRÁULIC	CONNETTORE IDRAULIC	020R
					CONNECTEUR HYDRAU	HYDR STECKVERBINDE	HYDRAULIKSTIK	HYDRAULISCHE AANSLU
10		**86511481**		2	PARAFUSO, Hex Flg, M8 x 50, 8.8			
					BOLT	PERNO	BULLONE	140B
					VIS	SCHRAUBE	BOLT	BOUT
11		**86624194**		2	BRAÇADEIRA MANGUEIRA, #36, 1.81/2.75 Type F Worm			
					HOSE CLAMP	ABRAZADERA DE MANG	FASCETTA STRINGITUB	P729
					COLLIER POUR FLEXIBL	SCHLAUCHSCHELLE	SLANGEKLEMME	SLANGKLEM
12		**87302140**		1	CONEXÃO, 45°, 1/2" Hose x 9/16"-18 ORB Beaded			
					FITTING	ACOPLAMIENTO	RACCORDO	3300
					RACCORD	ARMATUR	FITTING	AANSLUITING
13		**87403797**		1	ACUMULADOR, Hydraulic	ACCUMULATOR	ACUMULADOR	ACCUMULATORE	037A
					ACCUMULATEUR	DRUCKSPEICHER	AKKUMULATOR	ACCUMULATOR
14		**87443510**		3	BRAÇADEIRA MANGUEIRA, M20			
					HOSE CLAMP	ABRAZADERA DE MANG	FASCETTA STRINGITUB	P729
					COLLIER POUR FLEXIBL	SCHLAUCHSCHELLE	SLANGEKLEMME	SLANGKLEM
15		**87655042**		2	ARRUELA ESPECIAL, M8, 8.80 X 17.5 X 2.2 HTS			
					SPECIAL WASHER	ARANDELA ESPECIAL	RONDELLA SPECIALE	Z333
					RONDELLE SPECIALE	SPEZIALUNTERLEGSCH	SPECIALSKIVE	SPECIALE RING
16		**229197A1**		2	PORCA, Square	NUT	TUERCA	DADO	5780
					ECROU	MUTTER	NUT	NUT

DIA KIT, RIDE CONTROL CASE MED/LG (SR175-SV300,TR270,TR320,TV380)
DIA KIT, RIDE CONTROL CASE MED/LG (SR175-SV300,TR270,TR320,TV380)
DIA KIT, RIDE CONTROL CASE MED/LG (SR175-SV300,TR270,TR320,TV380)
DIA KIT, RIDE CONTROL CASE MED/LG (SR175-SV300,TR270,TR320,TV380)



DIA KIT, RIDE CONTROL CASE MED/LG (SR175-SV300,TR270,TR320,TV380)
DIA KIT, RIDE CONTROL CASE MED/LG (SR175-SV300,TR270,TR320,TV380)
DIA KIT, RIDE CONTROL CASE MED/LG (SR175-SV300,TR270,TR320,TV380)
DIA KIT, RIDE CONTROL CASE MED/LG (SR175-SV300,TR270,TR320,TV380)

R	N	P.N.	MOD	Q	Denominação Description	Description Bezeichnung	Denominacion Beskrivelse	Descrizione Beschrijving	L.C.
17		**328903A1**		1	DECALCOMANIA DECALCOMANIE	DECAL ABZIEHBILD	CALCOMANIA DECAL	AUTOADESIVO DECAL	P903
18		**304083A1**		2	DECALCOMANIA, Ride Control Option DECALCOMANIE	DECAL ABZIEHBILD	CALCOMANIA DECAL	AUTOADESIVO DECAL	P903
19		**84391583**		1	INSTRUÇÃO, Sheet, Ride Control, Case Med/LG INSTRUCTION	INSTRUCTION ANLEITUNG	INSTRUCCIÓN INSTRUKTION	ISTRUZIONI INSTRUCTIE	Z571

DIA KIT, HYDRAULIC COUPLER MED/LG RAD (SR175,SR200-SR250,TR270,TR320)
DIA KIT, HYDRAULIC COUPLER MED/LG RAD (SR175,SR200-SR250,TR270,TR320)
DIA KIT, HYDRAULIC COUPLER MED/LG RAD (SR175,SR200-SR250,TR270,TR320)
DIA KIT, HYDRAULIC COUPLER MED/LG RAD (SR175,SR200-SR250,TR270,TR320)



DIA KIT, HYDRAULIC COUPLER MED/LG RAD (SR175,SR200-SR250,TR270,TR320)
DIA KIT, HYDRAULIC COUPLER MED/LG RAD (SR175,SR200-SR250,TR270,TR320)
DIA KIT, HYDRAULIC COUPLER MED/LG RAD (SR175,SR200-SR250,TR270,TR320)
DIA KIT, HYDRAULIC COUPLER MED/LG RAD (SR175,SR200-SR250,TR270,TR320)

R	N	P.N.	MOD	Q	Denominação Description Bezeichnung	Description Bezeichnung	Denominacion Beskrivelse	Descrizione Beschrijving	L.C.
		84392554			JOGO, DIA Kit, Hydraulic Coupler, MED/LG RAD, Incl. 1-54				
						KIT	JEUGO	KIT	4830
					POCHETTE	PACKUNG	KIT	KIT	
1		**280476**		4	PARAFUSO, Hex Wash Hd, 3/8" x 1"				
						SELF-TAP SCREW	TORNILLO AUTORROSC	VITE AUTOFILETTANTE	062V
					VIS AUTOTARAUDEUSE	SELBSTSCHN SCHRAUE	SELVLÅSENDE BOLT	ZELFTAPPENDE SCHRO	
2		**605025**		2	BRAÇADEIRA	CLAMP	ABRAZADERA	MORSETTO	120M
					COLLIER	KLEMME	SPÆNDEBÅND	KLEM	
3		**9804260**		1	PARAFUSO, Hex Flg, M8 x 30, 8.8, Full Thd				
						BOLT	PERNO	BULLONE	140B
					VIS	SCHRAUBE	BOLT	BOUT	
4		**9804277**		1	PORCA, M8 x 1.25, Flg, Cl 8				
						NUT	TUERCA	DADO	010D
					ECROU	MUTTER	MØTRIK	MOER	
5		**84254052**		1	BRAÇADEIRA MANGUEIRA, Tube				
						HOSE CLAMP	ABRAZADERA DE MANG	FASCETTA STRINGITUB	P729
					COLLIER POUR FLEXIBL	SCHLAUCHSCHELLE	SLANGEKLEMME	SLANGKLEM	
6		**84254056**		2	BRAÇADEIRA MANGUEIRA, Butterfly Tube				
						HOSE CLAMP	ABRAZADERA DE MANG	FASCETTA STRINGITUB	P729
					COLLIER POUR FLEXIBL	SCHLAUCHSCHELLE	SLANGEKLEMME	SLANGKLEM	
7		**84338470**		1	TUBO HIDRÁULICO, Assembly, Hydraulic Coupler				
						HYD. TUBE	TUBO HIDRÁULICO	TUBO IDRAULICO	190T
					TUYAU HYDRAULIQUE	HYDRAULIKLEITUNG	HYD. RØR	HYDRAULISCHE LEIDIN(	
8		**84338472**		1	TUBO HIDRÁULICO, Assembly, Hydraulic Coupler				
						HYD. TUBE	TUBO HIDRÁULICO	TUBO IDRAULICO	190T
					TUYAU HYDRAULIQUE	HYDRAULIKLEITUNG	HYD. RØR	HYDRAULISCHE LEIDIN(	
9		**84351545**		1	TUBO HIDRÁULICO, Assembly, Step to Coupler				
						HYD. TUBE	TUBO HIDRÁULICO	TUBO IDRAULICO	190T
					TUYAU HYDRAULIQUE	HYDRAULIKLEITUNG	HYD. RØR	HYDRAULISCHE LEIDIN(	
10		**84351547**		1	TUBO HIDRÁULICO, Assembly, Step to Coupler				
						HYD. TUBE	TUBO HIDRÁULICO	TUBO IDRAULICO	190T
					TUYAU HYDRAULIQUE	HYDRAULIKLEITUNG	HYD. RØR	HYDRAULISCHE LEIDIN(	
11		**87342191**		1	ARRUELA PLANA, Spacer	WASHER	ARANDELA	RONDELLA	131R
					RONDELLE	UNTERLEGSCHEIBE	FLADSKIVE	SLUITRING	
12		**139398**		4	CONECTOR HIDRÁUL, 7/16"-20, 37º x 9/16"-18, O-Ring				
						HYD CONNECTOR	CONECTOR HIDRÁULIC(	CONNETTORE IDRAULIC	020R
					CONNECTEUR HYDRAU	HYDR STECKVERBINDE	HYDRAULIKSTIK	HYDRAULISCHE AANSLI	
13		**163335**		1	T, 9/16"-18, 37º x 9/16"-18, O-Ring Br				
						TEE	RACOR EN T	PEZZO A T	9020
					RACCORD EN T	T-STÜCK	T-STYKKE	T-STUK	
14		**265235**		2	CONECTOR HIDRÁUL, 7/16"-20, 37º x 7/16"-20, O-Ring				
						HYD CONNECTOR	CONECTOR HIDRÁULIC(	CONNETTORE IDRAULIC	020R
					CONNECTEUR HYDRAU	HYDR STECKVERBINDE	HYDRAULIKSTIK	HYDRAULISCHE AANSLI	
15		**577927**		2	BRAÇADEIRA	CLAMP	ABRAZADERA	MORSETTO	120M
					COLLIER	KLEMME	SPÆNDEBÅND	KLEM	
16		**9671714**		2	PARAFUSO, Hex Flg, M8 x 25, 8.8				
						BOLT	PERNO	BULLONE	140B
					VIS	SCHRAUBE	BOLT	BOUT	

SR200

DIA KIT, HYDRAULIC COUPLER MED/LG RAD (SR175,SR200-SR250,TR270,TR320)
DIA KIT, HYDRAULIC COUPLER MED/LG RAD (SR175,SR200-SR250,TR270,TR320)
DIA KIT, HYDRAULIC COUPLER MED/LG RAD (SR175,SR200-SR250,TR270,TR320)
DIA KIT, HYDRAULIC COUPLER MED/LG RAD (SR175,SR200-SR250,TR270,TR320)



DIA KIT, HYDRAULIC COUPLER MED/LG RAD (SR175,SR200-SR250,TR270,TR320)
DIA KIT, HYDRAULIC COUPLER MED/LG RAD (SR175,SR200-SR250,TR270,TR320)
DIA KIT, HYDRAULIC COUPLER MED/LG RAD (SR175,SR200-SR250,TR270,TR320)
DIA KIT, HYDRAULIC COUPLER MED/LG RAD (SR175,SR200-SR250,TR270,TR320)

R	N	P.N.	MOD	Q	Denominação Description	Description Bezeichnung	Denominacion Beskrivelse	Descrizione Beschrijving	L.C.
17		9804261		2	PARAFUSO, Hex Flg, M10 x 25, 8.8				
						BOLT	PERNO	BULLONE	140B
					VIS	SCHRAUBE	BOLT	BOUT	
18		9804276		2	PORCA, M6 x 1, Flg, Cl 8	NUT	TUERCA	DADO	010D
					ECROU	MUTTER	MØTRIK	MOER	
19		9804277		2	PORCA, M8 x 1.25, Flg, Cl 8				
						NUT	TUERCA	DADO	010D
					ECROU	MUTTER	MØTRIK	MOER	
20		9804278		2	PORCA, M10 x 1.5, Flg, Cl 8				
						NUT	TUERCA	DADO	010D
					ECROU	MUTTER	MØTRIK	MOER	
21		9850685		2	PARAFUSO, Hex, M6 x 90, 8.8				
						BOLT	PERNO	BULLONE	140B
					VIS	SCHRAUBE	BOLT	BOUT	
22		84387739		2	HASTE, Hydraulic Coupler, Position Indicator				
						ROD	VARILLA	ASTA	090A
					TIGE	STANGE	STANG	STANG	
23		84339845		1	ESTRIBO, Hydraulic Coupler, Power Tan				
						STEP	PELDAÑO	GRADINO	116M
					MARCHE-PIED	SCHRITT	TRINPLADE	TREDE	
24		84345496		2	MANGUEIRA, Coupler Cylinder				
						HOSE	TUBO	TUBO FLESSIBILE	030M
					FLEXIBLE	SCHLAUCH	SLANGE	SLANG	
25		84345506		1	MANGUEIRA, Coupler Cylinder				
						HOSE	TUBO	TUBO FLESSIBILE	030M
					FLEXIBLE	SCHLAUCH	SLANGE	SLANG	
26		84345532		1	MANGUEIRA, Coupler Cylinder				
						HOSE	TUBO	TUBO FLESSIBILE	030M
					FLEXIBLE	SCHLAUCH	SLANGE	SLANG	
27		86512993		2	COTOVELO, 45º, 7/16"-20, 37º x 7/16"-20, O-Ring				
						ELBOW	CODO	GOMITO	085G
					COUDE	KNIESTÜCK	VINKELRØR	KNIESTUK	
28		86588450		2	ARRUELA PLANA, M6 x 12 x 1.6 Thk				
						WASHER	ARANDELA	RONDELLA	131R
					RONDELLE	UNTERLEGSCHEIBE	FLADSKIVE	SLUITRING	
29		87442337		2	CILINDRO, Hydraulic Coupler				
						CYLINDER	CILINDRO	CILINDRO	2480
					CYLINDRE	ZYLINDER	CYLINDER	CYLINDER	
30		294741A1		1	VÁLVULA CHECAGEM	CHECK VALVE	VÁLVULA DE COMPROB.	VALVOLA DI RITEGNO	P394
					CLAPET ANTI-RETOUR	RÜCKSCHLAGVENTIL	KONTRAVENTIL	TERUGSLAGKLEP	
31		84339847		1	ESTRIBO, Hydraulic Coupler, Gray				
						STEP	PELDAÑO	GRADINO	116M
					MARCHE-PIED	SCHRITT	TRINPLADE	TREDE	
32		412327		1	PARAFUSO, Short NK, M6 x 40, Cl8.8				
						CARRIAGE BOLT	PERNO ALOMADO	BULLONE A TESTA TONI	P123
					VIS A TETE BOMBEE	SCHLOSSSCHRAUBE	BRÆDDEBOLT	SLOTBOUT	
33		604896		1	BRAÇADEIRA	CLAMP	ABRAZADERA	MORSETTO	120M
					COLLIER	KLEMME	SPÆNDEBÅND	KLEM	

SR200

DIA KIT, HYDRAULIC COUPLER MED/LG RAD (SR175,SR200-SR250,TR270,TR320)
DIA KIT, HYDRAULIC COUPLER MED/LG RAD (SR175,SR200-SR250,TR270,TR320)
DIA KIT, HYDRAULIC COUPLER MED/LG RAD (SR175,SR200-SR250,TR270,TR320)
DIA KIT, HYDRAULIC COUPLER MED/LG RAD (SR175,SR200-SR250,TR270,TR320)



DIA KIT, HYDRAULIC COUPLER MED/LG RAD (SR175,SR200-SR250,TR270,TR320)
DIA KIT, HYDRAULIC COUPLER MED/LG RAD (SR175,SR200-SR250,TR270,TR320)
DIA KIT, HYDRAULIC COUPLER MED/LG RAD (SR175,SR200-SR250,TR270,TR320)
DIA KIT, HYDRAULIC COUPLER MED/LG RAD (SR175,SR200-SR250,TR270,TR320)

R	N	P.N.	MOD	Q	Denominação Description	Description Bezeichnung	Denominacion Beskrivelse	Descrizione Beschrijving	L.C.
34		**9804276**		1	PORCA, M6 x 1, Flg, Cl 8	NUT	TUERCA	DADO	010D
					ECROU	MUTTER	MØTRIK	MOER	
35		**84259529**		1	TUBO RÍGIDO, Assembly, Hydraulic Coupler				
						RIGID TUBE	TUBO RÍGIDO	TUBO RIGIDO	193T
					TUYAU RIGIDE	ROHR	STIFT RØR	VASTE LEIDING	
36		**84259531**		1	TUBO RÍGIDO, Assembly, Hydraulic Coupler				
						RIGID TUBE	TUBO RÍGIDO	TUBO RIGIDO	193T
					TUYAU RIGIDE	ROHR	STIFT RØR	VASTE LEIDING	
37		**84277054**		2	PEGA DE SUPORTE, PA, Hydraulic Tube				
						BRACKET, SUPPORTING	PIEZA DE APOYO	SQUADRETTA	215S
					EQUERRE	TRAGER, STUTZ	BRACKET, SUPPORTING	BRACKET, SUPPORTING	
38		**84292314**		1	MANGUEIRA, Hydraulic Coupler, Drain				
						HOSE	TUBO	TUBO FLESSIBILE	030M
					FLEXIBLE	SCHLAUCH	SLANGE	SLANG	
39		**D120614**		1	BRACADEIRA	CLAMP	COLLAR	MORSETTO	1640
					COLLIER	SCHELLE	CLAMP	CLAMP	
40		**84201227**		1	MANGUEIRA, Hydraulic Coupler, Drain				
						HOSE	TUBO	TUBO FLESSIBILE	030M
					FLEXIBLE	SCHLAUCH	SLANGE	SLANG	
41		**76350**		2	CONECTOR HIDRÁUL, 9/16"-18, 37º x 9/16"-18, O-Ring				
						HYD CONNECTOR	CONECTOR HIDRÁULIC	CONNETTORE IDRAULIC	020R
					CONNECTEUR HYDRAU	HYDR STECKVERBINDE	HYDRAULIKSTIK	HYDRAULISCHE AANSLI	
42		**84251346**		1	INTERRUPTOR, Rocker, Hydraulic Coupler				
						SWITCH	INTERRUPTOR	INTERRUTTORE	075I
					CONTACTEUR	SCHALTER	KONTAKT	SCHAKELAAR	
43		**84256406**		1	VÁLVULA HIDRÁULICA, Coupler				
						HYDRAULIC VALVE	VÁLVULA HIDRÁULICA	DISTRIBUTORE IDRAULI	010V
					SOUPAPE HYDRAULIQU	HYDRAULIKVENTIL	HYDRAULIKVENTIL	HYDRAULISCHE KLEP	
44		**84259682**		1	CONEXÃO EM T, Assembly, Option				
						UNION TEE	RACOR EN T	RACCORDO A T	A134
					RACCORD EN T	T-VERSCHRAUBUNG	T-FORSKRUNING	KOPPEL-T-STUK	
45		**84291016**		1	TUBO RÍGIDO, Assembly, Hydraulic Coupler				
						RIGID TUBE	TUBO RÍGIDO	TUBO RIGIDO	193T
					TUYAU RIGIDE	ROHR	STIFT RØR	VASTE LEIDING	
46		**86511481**		2	PARAFUSO, Hex Flg, M8 x 50, 8.8				
						BOLT	PERNO	BULLONE	140B
					VIS	SCHRAUBE	BOLT	BOUT	
47		**86624011**		1	COTOVELO, 90º, 3/4"-16, 37º x 1 1/16"-12, 37º Fem Sw				
						ELBOW	CODO	GOMITO	085G
					COUDE	KNIESTÜCK	VINKELRØR	KNIESTUK	
48		**86705988**		1	CONEXÃO, 1/2" Hose x 9/16"-18 ORB, Beaded				
						FITTING	ACOPLAMIENTO	RACCORDO	3300
					RACCORD	ARMATUR	FITTING	AANSLUITING	
49		**87301276**		1	CONECTOR HIDRÁUL, 37FL X ORB 8-6 Elbow				
						HYD CONNECTOR	CONECTOR HIDRÁULIC	CONNETTORE IDRAULIC	020R
					CONNECTEUR HYDRAU	HYDR STECKVERBINDE	HYDRAULIKSTIK	HYDRAULISCHE AANSLI	
50		**87301490**		1	BRAÇADEIRA, J, 12.7mm	CLAMP	ABRAZADERA	MORSETTO	120M
					COLLIER	KLEMME	SPÆNDEBÅND	KLEM	

SR200

DIA KIT, HYDRAULIC COUPLER MED/LG RAD (SR175,SR200-SR250,TR270,TR320)
DIA KIT, HYDRAULIC COUPLER MED/LG RAD (SR175,SR200-SR250,TR270,TR320)
DIA KIT, HYDRAULIC COUPLER MED/LG RAD (SR175,SR200-SR250,TR270,TR320)
DIA KIT, HYDRAULIC COUPLER MED/LG RAD (SR175,SR200-SR250,TR270,TR320)



DIA KIT, HYDRAULIC COUPLER MED/LG RAD (SR175,SR200-SR250,TR270,TR320)
DIA KIT, HYDRAULIC COUPLER MED/LG RAD (SR175,SR200-SR250,TR270,TR320)
DIA KIT, HYDRAULIC COUPLER MED/LG RAD (SR175,SR200-SR250,TR270,TR320)
DIA KIT, HYDRAULIC COUPLER MED/LG RAD (SR175,SR200-SR250,TR270,TR320)

R	N	P.N.	MOD	Q	Denominação Description Bezeichnung	Description Bezeichnung	Denominacion Beskrivelse	Descrizione Beschrijving	L.C.
51		87443510		3	BRAÇADEIRA MANGUEIRA, M20				
						HOSE CLAMP	ABRAZADERA DE MANG	FASCETTA STRINGITUB	P729
					COLLIER POUR FLEXIBL	SCHLAUCHSCHELLE	SLANGEKLEMME	SLANGKLEM	
52		87622774		1	CONEXÃO, Hydraulic Tee	FITTING	ACOPLAMIENTO	RACCORDO	3300
					RACCORD	ARMATUR	FITTING	AANSLUITING	
53		229197A1		2	PORCA, Square	NUT	TUERCA	DADO	5780
					ECROU	MUTTER	NUT	NUT	
54		84392557		1	INSTRUÇÃO, Sheet, Hydraulic Coupler, RAD				
						INSTRUCTION	INSTRUCCIÓN	ISTRUZIONI	Z571
					INSTRUCTION	ANLEITUNG	INSTRUKTION	INSTRUCTIE	

88.035.11		p1	03/11

DIA KIT, HIGH FLOW AUX - MED RADIAL (SR175,SR200,TR270)
DIA KIT, HIGH FLOW AUX - MED RADIAL (SR175,SR200,TR270)
DIA KIT, HIGH FLOW AUX - MED RADIAL (SR175,SR200,TR270)
DIA KIT, HIGH FLOW AUX - MED RADIAL (SR175,SR200,TR270)



DIA KIT, HIGH FLOW AUX - MED RADIAL (SR175,SR200,TR270)
DIA KIT, HIGH FLOW AUX - MED RADIAL (SR175,SR200,TR270)
DIA KIT, HIGH FLOW AUX - MED RADIAL (SR175,SR200,TR270)
DIA KIT, HIGH FLOW AUX - MED RADIAL (SR175,SR200,TR270)

R	N	P.N.	MOD	Q	Denominação Description	Description Bezeichnung	Denominacion Beskrivelse	Descrizione Beschrijving	L.C.
		84305871			JOGO, DIA Kit, High Flow Aux, Med Radial, Incl. 1-51				
						KIT	JEUGO	KIT	4830
					POCHETTE	PACKUNG	KIT	KIT	
1		**86527**		1	COTOVELO, 90º, 7/8"-14, 37º x 3/4"-16, O-Ring				
						ELBOW	CODO	GOMITO	085G
					COUDE	KNIESTÜCK	VINKELRØR	KNIESTUK	
2		**128818**		1	CONECTOR HIDRÁUL, 3/4"-16, 37º x 3/4"-16, O-Ring				
						HYD CONNECTOR	CONECTOR HIDRÁULIC	CONNETTORE IDRAULIC	020R
					CONNECTEUR HYDRAU	HYDR STECKVERBINDE	HYDRAULIKSTIK	HYDRAULISCHE AANSLU	
3		**128819**		1	CONECTOR HIDRÁUL, 3/4"-16, 37º x 7/8"-14, O-Ring				
						HYD CONNECTOR	CONECTOR HIDRÁULIC	CONNETTORE IDRAULIC	020R
					CONNECTEUR HYDRAU	HYDR STECKVERBINDE	HYDRAULIKSTIK	HYDRAULISCHE AANSLU	
4		**322894**		2	COTOVELO, 90º, 1 1/16"-12, 37º x 1 1/16"-12, O-Ring				
						ELBOW	CODO	GOMITO	085G
					COUDE	KNIESTÜCK	VINKELRØR	KNIESTUK	
5		**366046**		1	PARAFUSO, M8 X 80	CARRIAGE BOLT	PERNO ALOMADO	BULLONE A TESTA TON	P123
					VIS A TETE BOMBEE	SCHLOSSSCHRAUBE	BRÆDDEBOLT	SLOTBOUT	
6		**9804263**		1	PARAFUSO, Hex Flg, M10 x 40, 8.8				
						BOLT	PERNO	BULLONE	140B
					VIS	SCHRAUBE	BOLT	BOUT	
7		**9804277**		1	PORCA, M8 x 1.25, Flg, Cl 8				
						NUT	TUERCA	DADO	010D
					ECROU	MUTTER	MØTRIK	MOER	
8		**84186142**		1	TUBO, Assembly, Aux, LDR Valve to Lift Arm				
						TUBE	TUBO	TUBO	195T
					TUBE	ROHR	RØR	LEIDING	
9		**84186144**		1	TUBO, Assembly, Aux, LDR Valve to Lift Arm				
						TUBE	TUBO	TUBO	195T
					TUBE	ROHR	RØR	LEIDING	
10		**84186146**		1	TUBO, Assembly, HF Valve to LDR Valve				
						TUBE	TUBO	TUBO	195T
					TUBE	ROHR	RØR	LEIDING	
11		**84251427**		1	INTERRUPTOR, Rocker, High Flow				
						SWITCH	INTERRUPTOR	INTERRUTTORE	075I
					CONTACTEUR	SCHALTER	KONTAKT	SCHAKELAAR	
12		**84256405**		1	VÁLVULA HIDRÁULICA, High Flow Combiner				
						HYDRAULIC VALVE	VÁLVULA HIDRÁULICA	DISTRIBUTORE IDRAULI	010V
					SOUPAPE HYDRAULIQU	HYDRAULIKVENTIL	HYDRAULIKVENTIL	HYDRAULISCHE KLEP	
13		**84362112**		2	SUPORTE, Hydraulic Tube	SUPPORT	SOPORTE	SUPPORTO	300S
					SUPPORT	STÜTZE	BESLAG	STEUN	
14		**86511843**		2	PARAFUSO, Hex Flg, M8 x 60, 8.8				
						BOLT	PERNO	BULLONE	140B
					VIS	SCHRAUBE	BOLT	BOUT	
15		**86512926**		1	CONECTOR HIDRÁUL, 1 5/16"-12, 37º x 1 1/16"-12, O-Ring				
						HYD CONNECTOR	CONECTOR HIDRÁULIC	CONNETTORE IDRAULIC	020R
					CONNECTEUR HYDRAU	HYDR STECKVERBINDE	HYDRAULIKSTIK	HYDRAULISCHE AANSLU	
16		**87016586**		2	PORCA, M8, U	NUT	TUERCA	DADO	010D
					ECROU	MUTTER	MØTRIK	MOER	

SR200

DIA KIT, HIGH FLOW AUX - MED RADIAL (SR175,SR200,TR270)
DIA KIT, HIGH FLOW AUX - MED RADIAL (SR175,SR200,TR270)
DIA KIT, HIGH FLOW AUX - MED RADIAL (SR175,SR200,TR270)
DIA KIT, HIGH FLOW AUX - MED RADIAL (SR175,SR200,TR270)



DIA KIT, HIGH FLOW AUX - MED RADIAL (SR175,SR200,TR270)
DIA KIT, HIGH FLOW AUX - MED RADIAL (SR175,SR200,TR270)
DIA KIT, HIGH FLOW AUX - MED RADIAL (SR175,SR200,TR270)
DIA KIT, HIGH FLOW AUX - MED RADIAL (SR175,SR200,TR270)

R	N	P.N.	MOD	Q	Denominação Description	Description Bezeichnung	Denominacion Beskrivelse	Descrizione Beschrijving	L.C.
17		230427A1		1	PORCA	NUT	TUERCA	DADO	5780
					ECROU	MUTTER	NUT	NUT	
18		D124301		2	BRACADEIRA, 3/4	CLAMP	COLLAR	MORSETTO	1640
					COLLIER	SCHELLE	CLAMP	CLAMP	
19		86071		1	CONECTOR HIDRÁUL, 7/8"-14, 37º x 3/4"-16, O-Ring				
						HYD CONNECTOR	CONECTOR HIDRÁULIC(	CONNETTORE IDRAULIC	020R
					CONNECTEUR HYDRAU	HYDR STECKVERBINDE	HYDRAULIKSTIK	HYDRAULISCHE AANSLU	
20		84256518		1	BOMBA, 24.9/12.5cc, Gear	PUMP	BOMBA	POMPA	6570
					POMPE	PUMPE	PUMPE	POMP	
21		84329004		1	MANGUEIRA, Assembly, High Flow, Supply				
						HOSE	TUBO	TUBO FLESSIBILE	030M
					FLEXIBLE	SCHLAUCH	SLANGE	SLANG	
22		84330502		1	MANGUEIRA, Assembly, Valve Supply				
						HOSE	TUBO	TUBO FLESSIBILE	030M
					FLEXIBLE	SCHLAUCH	SLANGE	SLANG	
23		86507102		1	CONECTOR HIDRÁUL, 7/8"-14, 37º x 1 1/16"-12, O-Ring				
						HYD CONNECTOR	CONECTOR HIDRÁULIC(	CONNETTORE IDRAULIC	020R
					CONNECTEUR HYDRAU	HYDR STECKVERBINDE	HYDRAULIKSTIK	HYDRAULISCHE AANSLU	
24		86071		1	CONECTOR HIDRÁUL, 7/8"-14, 37º x 3/4"-16, O-Ring				
						HYD CONNECTOR	CONECTOR HIDRÁULIC(	CONNETTORE IDRAULIC	020R
					CONNECTEUR HYDRAU	HYDR STECKVERBINDE	HYDRAULIKSTIK	HYDRAULISCHE AANSLU	
25		322896		1	CONECTOR HIDRÁUL, 1 1/16"-12, 37º x 1 1/16"-12, O-Ring				
						HYD CONNECTOR	CONECTOR HIDRÁULIC(	CONNETTORE IDRAULIC	020R
					CONNECTEUR HYDRAU	HYDR STECKVERBINDE	HYDRAULIKSTIK	HYDRAULISCHE AANSLU	
26		84256248		1	BOMBA, 34.1/12.5cc, Gear	PUMP	BOMBA	POMPA	6570
					POMPE	PUMPE	PUMPE	POMP	
27		84306939		1	COBERTURA, Hydraulic, Gray				
						COVER	COBERTURA	COPERTURA	271C
					COUVERTURE	ABDECKUNG	COVER	COVER	
28		84329005		1	MANGUEIRA, Assembly, High Flow, Supply				
						HOSE	TUBO	TUBO FLESSIBILE	030M
					FLEXIBLE	SCHLAUCH	SLANGE	SLANG	
29		76352		1	COTOVELO, 90º, 3/4"-16, 37º x 1/2"-14, NPTF				
						ELBOW	CODO	GOMITO	085G
					COUDE	KNIESTÜCK	VINKELRØR	KNIESTUK	
30		280476		2	PARAFUSO, Hex Wash Hd, 3/8" x 1"				
						SELF-TAP SCREW	TORNILLO AUTORROSC	VITE AUTOFILETTANTE	062V
					VIS AUTOTARAUDEUSE	SELBSTSCHN SCHRAUE	SELVLÅSENDE BOLT	ZELFTAPPENDE SCHRO	
31		322896		2	CONECTOR HIDRÁUL, 1 1/16"-12, 37º x 1 1/16"-12, O-Ring				
						HYD CONNECTOR	CONECTOR HIDRÁULIC(	CONNETTORE IDRAULIC	020R
					CONNECTEUR HYDRAU	HYDR STECKVERBINDE	HYDRAULIKSTIK	HYDRAULISCHE AANSLU	
32		84255994		2	CONEXÃO, Tee Adj -12 ORB				
						FITTING	ACOPLAMIENTO	RACCORDO	3300
					RACCORD	ARMATUR	FITTING	AANSLUITING	
33		84257182		1	CONEXÃO, Female, Quick Coupler				
						FITTING	ACOPLAMIENTO	RACCORDO	3300
					RACCORD	ARMATUR	FITTING	AANSLUITING	

DIA KIT, HIGH FLOW AUX - MED RADIAL (SR175,SR200,TR270)
DIA KIT, HIGH FLOW AUX - MED RADIAL (SR175,SR200,TR270)
DIA KIT, HIGH FLOW AUX - MED RADIAL (SR175,SR200,TR270)
DIA KIT, HIGH FLOW AUX - MED RADIAL (SR175,SR200,TR270)



DIA KIT, HIGH FLOW AUX - MED RADIAL (SR175,SR200,TR270)
DIA KIT, HIGH FLOW AUX - MED RADIAL (SR175,SR200,TR270)
DIA KIT, HIGH FLOW AUX - MED RADIAL (SR175,SR200,TR270)
DIA KIT, HIGH FLOW AUX - MED RADIAL (SR175,SR200,TR270)

R	N	P.N.	MOD	Q	Denominação Description	Description Bezeichnung	Denominacion Beskrivelse	Descrizione Beschrijving	L.C.
34		84257183		1	CONEXÃO, Male, Quick Coupler				
						FITTING	ACOPLAMIENTO	RACCORDO	3300
					RACCORD	ARMATUR	FITTING	AANSLUITING	
35		84259689		1	VÁLVULA, Quick Attach, High Flow				
						VALVE	VÁLVULA	VALVOLA	9620
					SOUPAPE	VENTIL	VENTIL	KLEP	
36		84277076		4	BRAÇADEIRA TUBO, Tube	PIPE CLAMP	ABRAZADERA DE TUBO	FERMO TUBO	Z430
					COLLIER DE TUYAU	ROHRSCHELLE	RØRKLEMME	LEIDINGKLEM	
37		84277083		3	ESPAÇADOR TUBO	TUBE SPACER	ESPACIADOR DE TUBO	DISTANZIALE TUBO	Z038
					TUBE ENTRETOISE	DISTANZROHR	SLANGE, AFSTANDSSTY	AFSTANDSSTUK V. LEID	
38		84306875		1	ESPAÇADOR	SPACER	SEPARADOR	DISTANZIALE	075D
					ENTRETOISE	DISTANZSTÜCK	AFSTANDSSTYKKE	AFSTANDSSTUK	
39		84306937		1	PLACA DE COBERTURA, Hydraulic, Tan				
						COVER PLATE	PLACA DE CUBIERTA	PIASTRA DI COPERTUR/	110P
					COUVERCLE	ABDECKPLATTE	DÆKPLADE	AFSCHERMPLAAT	
40		84322573		1	TUBO HIDRÁULICO, Assembly, High Flow, Male				
						HYD. TUBE	TUBO HIDRÁULICO	TUBO IDRAULICO	190T
					TUYAU HYDRAULIQUE	HYDRAULIKLEITUNG	HYD. RØR	HYDRAULISCHE LEIDIN(	
41		84322575		1	TUBO FLEXÍVEL, Assembly, High Flow, Aux				
						FLEXIBLE HOSE	TUBO FLEXIBLE	TUBO FLESSIBILE	192T
					TUYAU FLEXIBLE	BIEGSAMER SCHLAUCH	FLEKSIBEL SLANGE	FLEXIBELE SLANG	
42		84322576		1	TUBO HIDRÁULICO, Assembly, High Flow, Female				
						HYD. TUBE	TUBO HIDRÁULICO	TUBO IDRAULICO	190T
					TUYAU HYDRAULIQUE	HYDRAULIKLEITUNG	HYD. RØR	HYDRAULISCHE LEIDIN(	
43		84322578		1	TUBO FLEXÍVEL, Assembly, High Flow, Aux				
						FLEXIBLE HOSE	TUBO FLEXIBLE	TUBO FLESSIBILE	192T
					TUYAU FLEXIBLE	BIEGSAMER SCHLAUCH	FLEKSIBEL SLANGE	FLEXIBELE SLANG	
44		84331287		3	PARAFUSO, Tapping, 3/8-16 X 3				
						SCREW	TORNILLO	VITE	040V
					VIS	SCHRAUBE	SKRUE	SCHROEF	
45		84338474		1	TUBO HIDRÁULICO, Assembly, Case Drain				
						HYD. TUBE	TUBO HIDRÁULICO	TUBO IDRAULICO	190T
					TUYAU HYDRAULIQUE	HYDRAULIKLEITUNG	HYD. RØR	HYDRAULISCHE LEIDIN(	
46		86509028		1	CONECTOR HIDRÁUL, 3/4"-16, 37° x 9/16"-18, O-Ring				
						HYD CONNECTOR	CONECTOR HIDRÁULIC(	CONNETTORE IDRAULIC	020R
					CONNECTEUR HYDRAU	HYDR STECKVERBINDE	HYDRAULIKSTIK	HYDRAULISCHE AANSLI	
47		87030530		2	PARAFUSO, 3/8 X 1.75	SCREW	TORNILLO	VITE	040V
					VIS	SCHRAUBE	SKRUE	SCHROEF	
48		84254056		2	BRAÇADEIRA MANGUEIRA, Butterfly Tube				
						HOSE CLAMP	ABRAZADERA DE MANG	FASCETTA STRINGITUB	P729
					COLLIER POUR FLEXIBL	SCHLAUCHSCHELLE	SLANGEKLEMME	SLANGKLEM	
49		280476		2	PARAFUSO, Hex Wash Hd, 3/8" x 1"				
						SELF-TAP SCREW	TORNILLO AUTORROSC	VITE AUTOFILETTANTE	062V
					VIS AUTOTARAUDEUSE	SELBSTSCHN SCHRAUE	SELVLÅSENDE BOLT	ZELFTAPPENDE SCHRO	
50		84344589		1	INSTRUÇÃO, Installation	INSTRUCTION	INSTRUCCIÓN	ISTRUZIONI	Z571
					INSTRUCTION	ANLEITUNG	INSTRUKTION	INSTRUCTIE	

SR200

DIA KIT, 2ND FRONT HYD AUX - MED VERT (SR175,SR200,TR270)
DIA KIT, 2ND FRONT HYD AUX - MED VERT (SR175,SR200,TR270)
DIA KIT, 2ND FRONT HYD AUX - MED VERT (SR175,SR200,TR270)
DIA KIT, 2ND FRONT HYD AUX - MED VERT (SR175,SR200,TR270)



DIA KIT, 2ND FRONT HYD AUX - MED VERT (SR175,SR200,TR270)
DIA KIT, 2ND FRONT HYD AUX - MED VERT (SR175,SR200,TR270)
DIA KIT, 2ND FRONT HYD AUX - MED VERT (SR175,SR200,TR270)
DIA KIT, 2ND FRONT HYD AUX - MED VERT (SR175,SR200,TR270)

R	N	P.N.	MOD	Q	Denominação Description	Description Bezeichnung	Denominacion Beskrivelse	Descrizione Beschrijving	L.C.
		84402924			JOGO, DIA Kit, 2nd Front Hydraulic Aux, Med Vert, Incl. 1-37				
						KIT	JEUGO	KIT	4830
					POCHETTE	PACKUNG	KIT	KIT	
1		**84569**		1	COTOVELO, Hydraulic, L	ELBOW	CODO	GOMITO	085G
					COUDE	KNIESTÜCK	VINKELRØR	KNIESTUK	
2		**280476**		4	PARAFUSO, Hex Wash Hd, 3/8" x 1"				
						SELF-TAP SCREW	TORNILLO AUTORROSC	VITE AUTOFILETTANTE	062V
					VIS AUTOTARAUDEUSE	SELBSTSCHN SCHRAUE	SELVLÅSENDE BOLT	ZELFTAPPENDE SCHRO	
3		**322894**		1	COTOVELO, 90º, 1 1/16"-12, 37º x 1 1/16"-12, O-Ring				
						ELBOW	CODO	GOMITO	085G
					COUDE	KNIESTÜCK	VINKELRØR	KNIESTUK	
4		**366046**		1	PARAFUSO, M8 X 80	CARRIAGE BOLT	PERNO ALOMADO	BULLONE A TESTA TONI	P123
					VIS A TETE BOMBEE	SCHLOSSSCHRAUBE	BRÆDDEBOLT	SLOTBOUT	
5		**595460**		2	CONTRA PORCA, Blkhd, 7/8"-14				
						LOCK NUT	TUERCA DE BLOQUEO	DADO DI BLOCCAGGIO	P263
					CONTRE-ECROU	SICHERUNGSMUTTER	LÅSEMØTRIK	BORGMOER	
6		**9804277**		2	PORCA, M8 x 1.25, Flg, Cl 8				
						NUT	TUERCA	DADO	010D
					ECROU	MUTTER	MØTRIK	MOER	
7		**81827427**		2	CONECTOR HIDRÁUL, 3/4-16 SAE				
						HYD CONNECTOR	CONECTOR HIDRÁULIC	CONNETTORE IDRAULIC	020R
					CONNECTEUR HYDRAU	HYDR STECKVERBINDE	HYDRAULIKSTIK	HYDRAULISCHE AANSLI	
8		**84252828**		2	BRAÇADEIRA, Butterfly Tube				
						CLAMP	ABRAZADERA	MORSETTO	120M
					COLLIER	KLEMME	SPÆNDEBÅND	KLEM	
9		**84292198**		1	VÁLVULA, EH Secondary Aux				
						VALVE	VÁLVULA	VALVOLA	9620
					SOUPAPE	VENTIL	VENTIL	KLEP	
10		**84299740**		1	TUBO RÍGIDO, 2nd Aux Control				
						RIGID TUBE	TUBO RÍGIDO	TUBO RIGIDO	193T
					TUYAU RIGIDE	ROHR	STIFT RØR	VASTE LEIDING	
11		**84322489**		1	SUPORTE, 2nd Aux Valve	SUPPORT	SOPORTE	SUPPORTO	300S
					SUPPORT	STÜTZE	BESLAG	STEUN	
12		**84322490**		1	CASQUILHO ISOLADOR, Hydraulic Tube, SAE -8				
						GROMMET	PASACABLES	ANELLO PASSACAVO	131A
					PASSE-FIL	TÜLLE	RING	DOORVOERTULE	
13		**84327653**		1	TUBO RÍGIDO, 2nd Aux Arm, B1				
						RIGID TUBE	TUBO RÍGIDO	TUBO RIGIDO	193T
					TUYAU RIGIDE	ROHR	STIFT RØR	VASTE LEIDING	
14		**84327655**		1	TUBO RÍGIDO, 2nd Aux Arm, A1				
						RIGID TUBE	TUBO RÍGIDO	TUBO RIGIDO	193T
					TUYAU RIGIDE	ROHR	STIFT RØR	VASTE LEIDING	
15		**84327656**		1	CONJ. MANGUEIRA, 2nd Aux Arm, A1				
						HOSE ASSY.	CONJUNTO DE TUBOS	COMPLESS. TUBO FLES	P457
					ENSEMBLE DE FLEXIBLE	SCHLAUCHBAUGRUPPE	SLANGEENHED	SLANGEENHEID	
16		**84327657**		1	CONJ. MANGUEIRA, 2nd Aux Arm, B1				
						HOSE ASSY.	CONJUNTO DE TUBOS	COMPLESS. TUBO FLES	P457
					ENSEMBLE DE FLEXIBLE	SCHLAUCHBAUGRUPPE	SLANGEENHED	SLANGEENHEID	

DIA KIT, 2ND FRONT HYD AUX - MED VERT (SR175,SR200,TR270)
DIA KIT, 2ND FRONT HYD AUX - MED VERT (SR175,SR200,TR270)
DIA KIT, 2ND FRONT HYD AUX - MED VERT (SR175,SR200,TR270)
DIA KIT, 2ND FRONT HYD AUX - MED VERT (SR175,SR200,TR270)



DIA KIT, 2ND FRONT HYD AUX - MED VERT (SR175,SR200,TR270)
DIA KIT, 2ND FRONT HYD AUX - MED VERT (SR175,SR200,TR270)
DIA KIT, 2ND FRONT HYD AUX - MED VERT (SR175,SR200,TR270)
DIA KIT, 2ND FRONT HYD AUX - MED VERT (SR175,SR200,TR270)

R	N	P.N.	MOD	Q	Denominação Description	Description Bezeichnung	Denominacion Beskrivelse	Descrizione Beschrijving	L.C.
17		84332288		1	TUBO RÍGIDO, 2nd Aux Valve, Return				
						RIGID TUBE	TUBO RÍGIDO	TUBO RIGIDO	193T
					TUYAU RIGIDE	ROHR	STIFT RØR	VASTE LEIDING	
18		84355404		1	CONJ. MANGUEIRA, 2nd Aux, Supply				
						HOSE ASSY.	CONJUNTO DE TUBOS	COMPLESS. TUBO FLES	P457
					ENSEMBLE DE FLEXIBLE	SCHLAUCHBAUGRUPPE	SLANGEENHED	SLANGEENHEID	
19		84392527		1	INTERRUPTOR, Rocker	SWITCH	INTERRUPTOR	INTERRUTTORE	075I
					CONTACTEUR	SCHALTER	KONTAKT	SCHAKELAAR	
20		84471598		1	INSTRUÇÃO, Installation, Med Vert				
						INSTRUCTION	INSTRUCCIÓN	ISTRUZIONI	Z571
					INSTRUCTION	ANLEITUNG	INSTRUKTION	INSTRUCTIE	
21		84474235		1	SUPORTE, Aux Coupler	BRACKET	SOPORTE	STAFFA	225S
					SUPPORT	HALTERUNG	BESLAG	STEUN	
22		84474953		1	CONJ. MANGUEIRA, 2nd Aux				
						HOSE ASSY.	CONJUNTO DE TUBOS	COMPLESS. TUBO FLES	P457
					ENSEMBLE DE FLEXIBLE	SCHLAUCHBAUGRUPPE	SLANGEENHED	SLANGEENHEID	
23		84474956		1	CONJ. MANGUEIRA, 2nd Aux				
						HOSE ASSY.	CONJUNTO DE TUBOS	COMPLESS. TUBO FLES	P457
					ENSEMBLE DE FLEXIBLE	SCHLAUCHBAUGRUPPE	SLANGEENHED	SLANGEENHEID	
24		84475145		1	CONJ. MANGUEIRA, 2nd Aux, Return				
						HOSE ASSY.	CONJUNTO DE TUBOS	COMPLESS. TUBO FLES	P457
					ENSEMBLE DE FLEXIBLE	SCHLAUCHBAUGRUPPE	SLANGEENHED	SLANGEENHEID	
25		84475164		1	TUBO HIDRÁULICO, 2nd Aux, B-2				
						HYD. TUBE	TUBO HIDRÁULICO	TUBO IDRAULICO	190T
					TUYAU HYDRAULIQUE	HYDRAULIKLEITUNG	HYD. RØR	HYDRAULISCHE LEIDIN(	
26		84475167		1	TUBO HIDRÁULICO, 2nd Aux, B-2				
						HYD. TUBE	TUBO HIDRÁULICO	TUBO IDRAULICO	190T
					TUYAU HYDRAULIQUE	HYDRAULIKLEITUNG	HYD. RØR	HYDRAULISCHE LEIDIN(	
27		84475182		1	PROTETOR DE MANGUEIRA, Guard				
						HOSE PROTECTION	PROTECCIÓN DE TUBO	PROTEZ. TUBO FLESSIE	P827
					PROTECTION DE FLEXIE	SCHLAUCHSCHUTZ	SLANGEBESKYTTELSE	SLANGBESCHERMING	
28		86589143		1	ESPAÇADOR	SPACER	SEPARADOR	DISTANZIALE	075D
					ENTRETOISE	DISTANZSTÜCK	AFSTANDSSTYKKE	AFSTANDSSTUK	
29		86636815		2	PARAFUSO, Short NK, M8 x 25, Cl8.8, Full Thd				
						CARRIAGE BOLT	PERNO ALOMADO	BULLONE A TESTA TON	P123
					VIS A TETE BOMBEE	SCHLOSSSCHRAUBE	BRÆDDEBOLT	SLOTBOUT	
30		87016586		2	PORCA, M8, U	NUT	TUERCA	DADO	010D
					ECROU	MUTTER	MØTRIK	MOER	
31		87025275		1	PARAFUSO, 3/8-16	SCREW	TORNILLO	VITE	040V
					VIS	SCHRAUBE	SKRUE	SCHROEF	
32		87329785		1	COTOVELO, 90º, 3/4"-16, 37º x 1 1/16"-12, O-Ring				
						ELBOW	CODO	GOMITO	085G
					COUDE	KNIESTÜCK	VINKELRØR	KNIESTUK	
33		87344205		2	PARAFUSO	BOLT	PERNO	BULLONE	140B
					VIS	SCHRAUBE	BOLT	BOUT	
34		87655042		2	ARRUELA ESPECIAL, M8	SPECIAL WASHER	ARANDELA ESPECIAL	RONDELLA SPECIALE	Z333
					RONDELLE SPECIALE	SPEZIALUNTERLEGSCH	SPECIALSKIVE	SPECIALE RING	
35		87741499		1	ENGATE RÁPIDO FÊMEA	QUICK FEMALE COUPLII	ACOPL. RÁPIDO HEMBR	ATTACCO RAPIDO FEMI	540A
					ACCOUPLEMENT RAPID	SCHNELLKUPPLUNGSM	KOBLINGSSKIVE	SNELKOPPELINGSBUS	

SR200

DIA KIT, 2ND FRONT HYD AUX - MED VERT (SR175,SR200,TR270)
DIA KIT, 2ND FRONT HYD AUX - MED VERT (SR175,SR200,TR270)
DIA KIT, 2ND FRONT HYD AUX - MED VERT (SR175,SR200,TR270)
DIA KIT, 2ND FRONT HYD AUX - MED VERT (SR175,SR200,TR270)



DIA KIT, 2ND FRONT HYD AUX - MED VERT (SR175,SR200,TR270)
DIA KIT, 2ND FRONT HYD AUX - MED VERT (SR175,SR200,TR270)
DIA KIT, 2ND FRONT HYD AUX - MED VERT (SR175,SR200,TR270)
DIA KIT, 2ND FRONT HYD AUX - MED VERT (SR175,SR200,TR270)

R	N	P.N.	MOD	Q	Denominação Description	Description Bezeichnung	Denominacion Beskrivelse	Descrizione Beschrijving	L.C.
36		87741500		1	ENGATE RÁPIDO MACHO ACCOUPLEMENT RAP. M	QUICK MALE COUPLING SCHNELLKUPPLUNGSST	ACOPLAMIENTO RÁPID(LYNKOBLING	ATTACCO RAPIDO MAS(SNELKOPPELINGSPEN	115A
37		D120679		2	BRACADEIRA COLLIER	CLAMP SCHELLE	COLLAR CLAMP	MORSETTO CLAMP	1640

SR200

DIA KIT, MED FRM FOOT CONTROLS, SERVO (SR200)
DIA KIT, MED FRM FOOT CONTROLS, SERVO (SR200)
DIA KIT, MED FRM FOOT CONTROLS, SERVO (SR200)
DIA KIT, MED FRM FOOT CONTROLS, SERVO (SR200)



DIA KIT, MED FRM FOOT CONTROLS, SERVO (SR200)
DIA KIT, MED FRM FOOT CONTROLS, SERVO (SR200)
DIA KIT, MED FRM FOOT CONTROLS, SERVO (SR200)
DIA KIT, MED FRM FOOT CONTROLS, SERVO (SR200)

R	N	P.N.	MOD	Q	Denominação Description	Description Bezeichnung	Denominacion Beskrivelse	Descrizione Beschrijving	L.C.
		84423361			KIT DE SERVIÇO, DIA Kit, Medium Frame, Foot Controls, Incl. 1-38				
						SERVICE KIT	KIT DE SERVICIO	KIT DI MANUTENZIONE	021K
					KIT D'ENTRETIEN	SERVICE-SATZ	SERVICESÆT	SERVICEKIT	
1		**84425014**		1	INSTRUÇÃO, Instruction, Installation, Foot Controls				
						INSTRUCTION	INSTRUCCIÓN	ISTRUZIONI	Z571
					INSTRUCTION	ANLEITUNG	INSTRUKTION	INSTRUCTIE	
2		**84201059**		1	PLACA, Pedal	PLATE	PLACA	PIASTRA	105P
					PLAQUE	PLATTE	PLADE	PLAAT	
3		**84339380**		2	DEGRAU, Block	RISER	REALCE	MONTANTE	7205
					REHAUSSE	HEBEVORRICHTUNG	STIGRØR	STAANDER	
4		**84291859**		2	ROLAMENTO ESFÉRICO, Pillow Block				
						BALL BEARING	RODAMIENTO DE BOLAS	CUSCINETTO A SFERE	343C
					ROULEMENT A BILLES	KUGELLAGER	KUGLELEJE	KOGELLAGER	
5		**14305821**		4	PARAFUSO, Hex Soc Hd, M6 x 40, 8.8				
						SCREW	TORNILLO	VITE	040V
					VIS	SCHRAUBE	SKRUE	SCHROEF	
6		**84349081**		2	TUBO, Foot Control, Handle, Gray				
						TUBE	TUBO	TUBO	195T
					TUBE	ROHR	RØR	LEIDING	
7		**294901A1**		4	PARAFUSO "U"	BOLT "U"	TORNILLO "U"	BULLONE AD "U"	P611
					BOULON "U"	SCHRAUBE "U"	BOLT "U"	BOLT "U"	
8		**9804277**		8	PORCA, M8 x 1.25, Flg, Cl 8				
						NUT	TUERCA	DADO	010D
					ECROU	MUTTER	MØTRIK	MOER	
9		**84339815**		2	PLACA, Foot Controls, Base, Gray				
						PLATE	PLACA	PIASTRA	105P
					PLAQUE	PLATTE	PLADE	PLAAT	
10		**9827590**		2	CAPA, Soft Cover	BOOT	FUNDA	PARAPOLVERE	330C
					SOUFFLET	MANSCHETTE	MANCHET	HOES	
11		**9844042**		2	ANEL	RING	ANILLO	ANELLO	045A
					ANNEAU	RING	RING	RING	
12		**86729477**		8	BOTÃO DE IMPULSO	FASTENER	SUJETADOR	DISPOSITIVO DI FISSAG	123B
					ATTACHE	BEFESTIGUNGSELEMEN	LUKKER	BEVESTIGING	
13		**84317959**		1	HASTE, Valve Lift	ROD	VARILLA	ASTA	090A
					TIGE	STANGE	STANG	STANG	
14		**84317960**		1	HASTE, Valve Tip	ROD	VARILLA	ASTA	090A
					TIGE	STANGE	STANG	STANG	
15		**84359579**		1	MOLA, Assembly, FC Boom	SPRING	RESORTE	MOLLA	100M
					RESSORT	FEDER	FJEDER	VEER	
16		**84359580**		1	MOLA, Assembly, FC Bucket				
						SPRING	RESORTE	MOLLA	100M
					RESSORT	FEDER	FJEDER	VEER	
17		**84262599**		1	EMPUNHADURA, Throttle to Governor, Medium Frame				
						HANDLE GRIP	PERILLA	IMPUGNATURA	025I
					POIGNEE DE MAINTIEN	HANDGRIFF	HÅNDGREB	HANDGREEP	
18		**84355747**		1	CAPA, Foot Controls	BOOT	FUNDA	PARAPOLVERE	330C
					SOUFFLET	MANSCHETTE	MANCHET	HOES	

SR200

DIA KIT, MED FRM FOOT CONTROLS, SERVO (SR200)
DIA KIT, MED FRM FOOT CONTROLS, SERVO (SR200)
DIA KIT, MED FRM FOOT CONTROLS, SERVO (SR200)
DIA KIT, MED FRM FOOT CONTROLS, SERVO (SR200)



DIA KIT, MED FRM FOOT CONTROLS, SERVO (SR200)
DIA KIT, MED FRM FOOT CONTROLS, SERVO (SR200)
DIA KIT, MED FRM FOOT CONTROLS, SERVO (SR200)
DIA KIT, MED FRM FOOT CONTROLS, SERVO (SR200)

R	N	P.N.	MOD	Q	Denominação Description	Description Bezeichnung	Denominacion Beskrivelse	Descrizione Beschrijving	L.C.
19		87586485		1	ADESIVO, EU Foot Controls, RH				
						DECAL	CALCOMANÍA	DECALCOMANIA	012D
					AUTOCOLLANT	AUFKLEBER	TRANSFER	STICKER	
20		87586484		1	ADESIVO, EU Foot Controls, LH				
						DECAL	CALCOMANÍA	DECALCOMANIA	012D
					AUTOCOLLANT	AUFKLEBER	TRANSFER	STICKER	
21		84353742		1	ADESIVO, Case, Level 200, RH				
						DECAL	CALCOMANÍA	DECALCOMANIA	012D
					AUTOCOLLANT	AUFKLEBER	TRANSFER	STICKER	
22		84353741		1	ADESIVO, Case, Level 200, LH				
						DECAL	CALCOMANÍA	DECALCOMANIA	012D
					AUTOCOLLANT	AUFKLEBER	TRANSFER	STICKER	
23		84353738		1	ADESIVO, Case, Level 100, RH				
						DECAL	CALCOMANÍA	DECALCOMANIA	012D
					AUTOCOLLANT	AUFKLEBER	TRANSFER	STICKER	
24		84353734		1	ADESIVO, Case, Level 100, LH				
						DECAL	CALCOMANÍA	DECALCOMANIA	012D
					AUTOCOLLANT	AUFKLEBER	TRANSFER	STICKER	
25		D131983		2	PINO, Ring	PIN	PASADOR	PERNO	080P
					BROCHE	PIN	STIFT	PEN	
26		87343114		1	PARAFUSO, 3/8 X 1.00	BOLT	PERNO	BULLONE	140B
					VIS	SCHRAUBE	BOLT	BOUT	
27		84357328		1	PEDAL, RH, Gray	PEDAL	PEDAL	PEDALE	060P
					PEDALE	PEDAL	PEDAL	PEDAAL	
28		84357323		1	PEDAL, LH, Gray	PEDAL	PEDAL	PEDALE	060P
					PEDALE	PEDAL	PEDAL	PEDAAL	
29		84317963		2	HASTE, Foot Control	ROD	VARILLA	ASTA	090A
					TIGE	STANGE	STANG	STANG	
30		84291866		2	COLAR DE FIXAÇÃO, 3/4 Shaft				
						RETAINER COLLAR	COLLAR DE RETENCIÓN	COLLARE DI FISSAGGIO	230S
					COLLIER DE RETENUE	HALTERING	RING, SPÆNDE	BORGKRAAG	
31		84291855		1	PLACA, Foot Control, EAR	PLATE	PLACA	PIASTRA	105P
					PLAQUE	PLATTE	PLADE	PLAAT	
32		84201070		1	EIXO, Pedal	SHAFT	EJE	ALBERO	016A
					ARBRE	WELLE	AKSEL	AS	
33		83980600		2	PORCA, Thin, M10 x 1.25, Cl 04				
						NUT	TUERCA	DADO	010D
					ECROU	MUTTER	MØTRIK	MOER	
34		10090811		2	PORCA, Adjusting, M10 x 1.25 x 90mm				
						NUT	TUERCA	DADO	010D
					ECROU	MUTTER	MØTRIK	MOER	
35		856800		1	PINO RANHURADO, 3/16" x 1 1/2", Type E, Hardened				
						GROOVED PIN	PASADOR RANURADO	PERNO SCANALATO	086P
					GOUPILLE CANNELEE	KERBSTIFT	TAP M/NOT	GEGROEFDE PEN	
36		600083		4	ARRUELA PLANA	WASHER	ARANDELA	RONDELLA	131R
					RONDELLE	UNTERLEGSCHEIBE	FLADSKIVE	SLUITRING	
37		234726		2	PINO DE GARFO, 1/4" x .770"				
						CLEVIS PIN	EJE CON CABEZA	PERNO A TESTA PIANA	P694
					AXE DE CHAPE	GABELBOLZEN	GAFFELBOLT	GAFFELPEN	

SR200

DIA KIT, MED FRM FOOT CONTROLS, SERVO (SR200)
DIA KIT, MED FRM FOOT CONTROLS, SERVO (SR200)
DIA KIT, MED FRM FOOT CONTROLS, SERVO (SR200)
DIA KIT, MED FRM FOOT CONTROLS, SERVO (SR200)



DIA KIT, MED FRM FOOT CONTROLS, SERVO (SR200)
DIA KIT, MED FRM FOOT CONTROLS, SERVO (SR200)
DIA KIT, MED FRM FOOT CONTROLS, SERVO (SR200)
DIA KIT, MED FRM FOOT CONTROLS, SERVO (SR200)

R	N	P.N.	MOD	Q	Denominação Description	Description Bezeichnung	Denominacion Beskrivelse	Descrizione Beschrijving	L.C.
38		**228500**		2	BUCHA BAGUE	BUSHING BUCHSE	CASQUILLO BØSNING	BOCCOLA BUS	095B

DIA KIT, COUNTERWEIGHT MF CASE (SR175-SR200,TR270)
DIA KIT, COUNTERWEIGHT MF CASE (SR175-SR200,TR270)
DIA KIT, COUNTERWEIGHT MF CASE (SR175-SR200,TR270)
DIA KIT, COUNTERWEIGHT MF CASE (SR175-SR200,TR270)



DIA KIT, COUNTERWEIGHT MF CASE (SR175-SR200,TR270)
DIA KIT, COUNTERWEIGHT MF CASE (SR175-SR200,TR270)
DIA KIT, COUNTERWEIGHT MF CASE (SR175-SR200,TR270)
DIA KIT, COUNTERWEIGHT MF CASE (SR175-SR200,TR270)

R	N	P.N.	MOD	Q	Denominação Description	Description Bezeichnung	Denominacion Beskrivelse	Descrizione Beschrijving	L.C.
		84306086			JOGO, DIA Kit, Counterweight MF, Case, Incl. 1-4				
						KIT	JEUGO	KIT	4830
					POCHETTE	PACKUNG	KIT	KIT	
1		**84332297**		4	PLACA, Counterweight, Tan	PLATE	PLACA	PIASTRA	105P
					PLAQUE	PLATTE	PLADE	PLAAT	
2		**87301277**		4	PARAFUSO, Flange, M12 X 60				
						BOLT	PERNO	BULLONE	140B
					VIS	SCHRAUBE	BOLT	BOUT	
3		**86512497**		3	PORCA, M12 x 1.75, Flg, Cl 10				
						NUT	TUERCA	DADO	010D
					ECROU	MUTTER	MØTRIK	MOER	
4		**84354545**		1	INSTRUÇÃO, Installation	INSTRUCTION	INSTRUCCIÓN	ISTRUZIONI	Z571
					INSTRUCTION	ANLEITUNG	INSTRUKTION	INSTRUCTIE	

88.050.03		p1	07/11

DIA KIT, MED FRM F5C HVAC (SR200,TR270)
DIA KIT, MED FRM F5C HVAC (SR200,TR270)
DIA KIT, MED FRM F5C HVAC (SR200,TR270)
DIA KIT, MED FRM F5C HVAC (SR200,TR270)



DIA KIT, MED FRM F5C HVAC (SR200,TR270)
DIA KIT, MED FRM F5C HVAC (SR200,TR270)
DIA KIT, MED FRM F5C HVAC (SR200,TR270)
DIA KIT, MED FRM F5C HVAC (SR200,TR270)

R	N	P.N.	MOD	Q	Denominação Description Bezeichnung	Denominacion Beskrivelse	Descrizione Beschrijving	L.C.
		84468167			KIT DE SERVIÇO, DIA Kit, Med FRM F5C HVAC, Incl. 1-93			
					SERVICE KIT	KIT DE SERVICIO	KIT DI MANUTENZIONE	021K
					KIT D'ENTRETIEN SERVICE-SATZ	SERVICESÆT	SERVICEKIT	
1		**120100**		4	PARAFUSO, Hex, M6 x 20, 8.8			
					BOLT	PERNO	BULLONE	140B
					VIS SCHRAUBE	BOLT	BOUT	
2		**350459**		1	PARAFUSO, Short NK, M10 x 50, Cl8.8, Full Thd			
					SCREW	TORNILLO	VITE	040V
					VIS SCHRAUBE	SKRUE	SCHROEF	
3		**412479**		2	PARAFUSO, Hex, M8 x 35, 8.8			
					BOLT	PERNO	BULLONE	140B
					VIS SCHRAUBE	BOLT	BOUT	
4		**619284**		3	BRAÇADEIRA, 15/16", Insul, 3/8" Bolt			
					CLAMP	ABRAZADERA	MORSETTO	120M
					COLLIER KLEMME	SPÆNDEBÅND	KLEM	
5		**642560**		1	CONEXÃO, 5/8" Hose X 3/8" NPTF Beaded			
					FITTING	ACOPLAMIENTO	RACCORDO	3300
					RACCORD ARMATUR	FITTING	AANSLUITING	
6		**9706690**		3	PORCA, M8, Cl 8 NUT	TUERCA	DADO	010D
					ECROU MUTTER	MØTRIK	MOER	
7		**9804258**		1	PARAFUSO, Hex Flg, M8 x 20, 8.8			
					BOLT	PERNO	BULLONE	140B
					VIS SCHRAUBE	BOLT	BOUT	
8		**9804261**		3	PARAFUSO, Hex Flg, M10 x 25, 8.8			
					BOLT	PERNO	BULLONE	140B
					VIS SCHRAUBE	BOLT	BOUT	
9		**9804262**		1	PARAFUSO, Hex Flg, M10 x 30, 8.8			
					BOLT	PERNO	BULLONE	140B
					VIS SCHRAUBE	BOLT	BOUT	
10		**9804276**		4	PORCA, M6 x 1, Flg, Cl 8 NUT	TUERCA	DADO	010D
					ECROU MUTTER	MØTRIK	MOER	
11		**9804277**		5	PORCA, M8 x 1.25, Flg, Cl 8			
					NUT	TUERCA	DADO	010D
					ECROU MUTTER	MØTRIK	MOER	
12		**9804278**		5	PORCA, M10 x 1.5, Flg, Cl 8			
					NUT	TUERCA	DADO	010D
					ECROU MUTTER	MØTRIK	MOER	
13		**84137412**		3	PARAFUSO, M6 X 18 SCREW	TORNILLO	VITE	040V
					VIS SCHRAUBE	SKRUE	SCHROEF	
14		**84245940**		1	VÁLVULA, Water Supply, 3-Way			
					VALVE	VÁLVULA	VALVOLA	9620
					SOUPAPE VENTIL	VENTIL	KLEP	
15		**84247845**		1	SUPORTE, Water Valve and Dryer			
					BRACKET	SOPORTE	STAFFA	225S
					SUPPORT HALTERUNG	BESLAG	STEUN	
16		**84267544**		1	UNIDADE DE AQUECIMENTO, W/AC			
					UNIT HEATER	APARATO DE CALEFAC(	RISCALDATORE UNITÀ	Z375
					APPAREIL DE CHAUFFA HEIZUNGSEINHEIT	RADIATORENHED	VERWARMING	

SR200

DIA KIT, MED FRM F5C HVAC (SR200,TR270)
DIA KIT, MED FRM F5C HVAC (SR200,TR270)
DIA KIT, MED FRM F5C HVAC (SR200,TR270)
DIA KIT, MED FRM F5C HVAC (SR200,TR270)



DIA KIT, MED FRM F5C HVAC (SR200,TR270)
DIA KIT, MED FRM F5C HVAC (SR200,TR270)
DIA KIT, MED FRM F5C HVAC (SR200,TR270)
DIA KIT, MED FRM F5C HVAC (SR200,TR270)

R	N	P.N.	MOD	Q	Denominação Description	Description Bezeichnung	Denominacion Beskrivelse	Descrizione Beschrijving	L.C.
17		84280313		1	DUTO DE AR, Intake CONDUITE D'AIR	AIR DUCT LUFTKANAL	CONDUCTO DE AIRE LUFTKANAL	CONDOTTO ARIA LUCHTKANAAL	224C
18		84285339		4	PARAFUSO, M8 X 15 VIS AUTOTARAUDEUSE	SELF-TAP SCREW SELBSTSCHN SCHRAUE	TORNILLO AUTORROSC SELVLÅSENDE BOLT	VITE AUTOFILETTANTE ZELFTAPPENDE SCHRO	062V
19		84389708		1	PAINEL, Rear Trim, Gray PANNEAU	PANEL PLATTE	PANEL PANEL	PANNELLO PANEEL	025P
20		84299751		1	DUTO DE AR, RH, Wheat CONDUITE D'AIR	AIR DUCT LUFTKANAL	CONDUCTO DE AIRE LUFTKANAL	CONDOTTO ARIA LUCHTKANAAL	224C
21		84299754		1	DUTO DE AR, RH, Wheat CONDUITE D'AIR	AIR DUCT LUFTKANAL	CONDUCTO DE AIRE LUFTKANAL	CONDOTTO ARIA LUCHTKANAAL	224C
22		84403037		1	CONJ. MANGUEIRA, A/C Discharge ENSEMBLE DE FLEXIBLE	HOSE ASSY. SCHLAUCHBAUGRUPPE	CONJUNTO DE TUBOS SLANGEENHED	COMPLESS. TUBO FLES SLANGEENHEID	P457
23		84312881		1	CONDENSADOR, Assembly, W/Fan CONDENSATEUR	CONDENSER KONDENSATOR	CONDENSADOR KONDENSATOR	CONDENSATORE CONDENSOR	220C
24		84315532		1	CHICOTE, HVAC Jumper FAISCEAU ELECTRIQUE	WIRE HARNESS KABELBAUM	GRUPO DE CABLES KABELNET	CABLAGGIO KABELBOOM	070I
25		84317961		1	CORREIA, A/C Drive COURROIE	BELT RIEMEN	CORREA REM	CINGHIA RIEM	174C
26		84317965		1	MANGUEIRA AR CONDICIONADO, Discharge FLEXIBLE CLIMATISATIC	A/C HOSE KLIMAANLAGENSCHLAU	TUBO A/A SLANGE, AIRCONDITION	TUBO FLESSIBILE A/C SLANG VOOR AIRCO	A054
27		84380551		6	BOTÃO DE IMPULSO, Pine Tree, Wheat ATTACHE	FASTENER BEFESTIGUNGSELEMEN	SUJETADOR LUKKER	DISPOSITIVO DI FISSAG BEVESTIGING	123B
28		84321961		1	COMPRESSOR AR COND. COMPRESSEUR CLIMAT	AIRCOND. COMPRESSO KLIMAANLAGENKOMPRE	COMPRESOR DE A/C AIRCONDITION KOMPRE	COMPRESSORE ARIA C AIRCOCOMPRESSOR	217C
29		84322838		1	PLACA, Cover, Tan PLAQUE	PLATE PLATTE	PLACA PLADE	PIASTRA PLAAT	105P
30		84322854		1	ESPUMA ISOLANTE, 684mm MOUSSE ISOLANTE	FOAM INSULATION SCHAUMSTOFFISOLIER	ESPUMA AISLANTE SKUM ISOLERING	ISOLANTE IN SCHIUMA SCHUIMISOLATIE	051S
31		84335904		1	PROTEÇÃO, Fan PROTECTION	GUARD SCHUTZABDECKUNG	DEFENSA BESKYTTELSESSKÆRM	PROTEZIONE AFSCHERMING	070R
32		84347258		1	ADESIVO, HVAC, Heat A/C AUTOCOLLANT	DECAL AUFKLEBER	CALCOMANÍA TRANSFER	DECALCOMANIA STICKER	012D
33		84352508		1	MANGUEIRA, A/C Liquid FLEXIBLE	HOSE SCHLAUCH	TUBO SLANGE	TUBO FLESSIBILE SLANG	030M
34		84357678		1	MANGUEIRA, Heater Supply, Guarded FLEXIBLE	HOSE SCHLAUCH	TUBO SLANGE	TUBO FLESSIBILE SLANG	030M
35		84359205		1	MANGUEIRA, Heater Return, Guarded FLEXIBLE	HOSE SCHLAUCH	TUBO SLANGE	TUBO FLESSIBILE SLANG	030M
36		84359308		1	MANGUEIRA, Heater Return, Guarded FLEXIBLE	HOSE SCHLAUCH	TUBO SLANGE	TUBO FLESSIBILE SLANG	030M

DIA KIT, MED FRM F5C HVAC (SR200,TR270)
DIA KIT, MED FRM F5C HVAC (SR200,TR270)
DIA KIT, MED FRM F5C HVAC (SR200,TR270)
DIA KIT, MED FRM F5C HVAC (SR200,TR270)



DIA KIT, MED FRM F5C HVAC (SR200,TR270)
DIA KIT, MED FRM F5C HVAC (SR200,TR270)
DIA KIT, MED FRM F5C HVAC (SR200,TR270)
DIA KIT, MED FRM F5C HVAC (SR200,TR270)

R	N	P.N.	MOD	Q	Denominação Description	Description Bezeichnung	Denominacion Beskrivelse	Descrizione Beschrijving	L.C.
37		**84410905**		1	SUPORTE, Retention Spring				
						BRACKET	SOPORTE	STAFFA	225S
					SUPPORT	HALTERUNG	BESLAG	STEUN	
38		**84362125**		1	ESPUMA ISOLANTE, Crossmember				
						FOAM INSULATION	ESPUMA AISLANTE	ISOLANTE IN SCHIUMA	051S
					MOUSSE ISOLANTE	SCHAUMSTOFFISOLIER	SKUM ISOLERING	SCHUIMISOLATIE	
39		**84362126**		1	ESPUMA ISOLANTE, Roof	FOAM INSULATION	ESPUMA AISLANTE	ISOLANTE IN SCHIUMA	051S
					MOUSSE ISOLANTE	SCHAUMSTOFFISOLIER	SKUM ISOLERING	SCHUIMISOLATIE	
40		**84370302**		1	ESPUMA, HVAC Box	FOAM	ESPUMA	SCHIUMA	P033
					MOUSSE	SCHAUM	SKUM	SCHUIM	
41		**84388261**		1	SUPORTE, Control Rod, Shield				
						BRACKET	SOPORTE	STAFFA	225S
					SUPPORT	HALTERUNG	BESLAG	STEUN	
42		**84372625**		1	CONJ. MANGUEIRA, A/C Suction				
						HOSE ASSY.	CONJUNTO DE TUBOS	COMPLESS. TUBO FLES	P457
					ENSEMBLE DE FLEXIBLE	SCHLAUCHBAUGRUPPE	SLANGEENHED	SLANGEENHEID	
43		**86511833**		4	PARAFUSO, Cross Pan Hd, M6 x 40				
						SCREW	TORNILLO	VITE	040V
					VIS	SCHRAUBE	SKRUE	SCHROEF	
44		**86511841**		8	PARAFUSO, Hex Flg, M8 x 16, 8.8				
						BOLT	PERNO	BULLONE	140B
					VIS	SCHRAUBE	BOLT	BOUT	
45		**86511843**		2	PARAFUSO, Hex Flg, M8 x 60, 8.8				
						BOLT	PERNO	BULLONE	140B
					VIS	SCHRAUBE	BOLT	BOUT	
46		**86511845**		2	PARAFUSO, Hex Flg, M10 x 35, 8.8				
						BOLT	PERNO	BULLONE	140B
					VIS	SCHRAUBE	BOLT	BOUT	
47		**86512441**		2	PARAFUSO, Short NK, M6 x 30, Cl8.8, Full Thd				
						CARRIAGE BOLT	PERNO ALOMADO	BULLONE A TESTA TONI	P123
					VIS A TETE BOMBEE	SCHLOSSSCHRAUBE	BRÆDDEBOLT	SLOTBOUT	
48		**86530043**		1	CONEXÃO, Y	FITTING	ACOPLAMIENTO	RACCORDO	3300
					RACCORD	ARMATUR	FITTING	AANSLUITING	
49		**86619800**		6	CONTRA PORCA, M6 x 1, Flg, Cl 8				
						LOCK NUT	TUERCA DE BLOQUEO	DADO DI BLOCCAGGIO	P263
					CONTRE-ECROU	SICHERUNGSMUTTER	LÅSEMØTRIK	BORGMOER	
50		**86624182**		3	ARRUELA PLANA, M6 x 18 x 1.6				
						WASHER	ARANDELA	RONDELLA	131R
					RONDELLE	UNTERLEGSCHEIBE	FLADSKIVE	SLUITRING	
51		**86624183**		4	ARRUELA PLANA, M6 x 25 x 1.6				
						WASHER	ARANDELA	RONDELLA	131R
					RONDELLE	UNTERLEGSCHEIBE	FLADSKIVE	SLUITRING	
52		**86625021**		1	BRAÇADEIRA MANGUEIRA, #12, 0.69/1.25 Type F Worm				
						HOSE CLAMP	ABRAZADERA DE MANG	FASCETTA STRINGITUB	P729
					COLLIER POUR FLEXIBL	SCHLAUCHSCHELLE	SLANGEKLEMME	SLANGKLEM	
53		**86625074**		4	PORCA, M8	NUT	TUERCA	DADO	010D
					ECROU	MUTTER	MØTRIK	MOER	

DIA KIT, MED FRM F5C HVAC (SR200,TR270)
DIA KIT, MED FRM F5C HVAC (SR200,TR270)
DIA KIT, MED FRM F5C HVAC (SR200,TR270)
DIA KIT, MED FRM F5C HVAC (SR200,TR270)



DIA KIT, MED FRM F5C HVAC (SR200,TR270)
DIA KIT, MED FRM F5C HVAC (SR200,TR270)
DIA KIT, MED FRM F5C HVAC (SR200,TR270)
DIA KIT, MED FRM F5C HVAC (SR200,TR270)

R	N	P.N.	MOD	Q	Denominação Description	Description Bezeichnung	Denominacion Beskrivelse	Descrizione Beschrijving	L.C.
54		86637978		1	BRAÇADEIRA, 3/8", Insul, 5/16" Bolt				
						CLAMP	ABRAZADERA	MORSETTO	120M
					COLLIER	KLEMME	SPÆNDEBÅND	KLEM	
55		86705425		1	PARAFUSO, Hex Flg, M8 x 80, 8.8				
						BOLT	PERNO	BULLONE	140B
					VIS	SCHRAUBE	BOLT	BOUT	
56		86729669		1	INTERRUPTOR	SWITCH	INTERRUPTOR	INTERRUTTORE	075I
					CONTACTEUR	SCHALTER	KONTAKT	SCHAKELAAR	
57		86729670		2	MAÇANETA	KNOB	MANDO	MANOPOLA	150P
					BOUTON	RUNDGRIFF	GREB	KNOP	
58		86729675		1	POTENCIÔMETRO, Switch	POTENTIOMETER	POTENCIÓMETRO	POTENZIOMETRO	550P
					POTENTIOMETRE	POTENTIOMETER	POTENTIOMETER	POTENTIOMETER	
59		87000227		1	INTERRUP ALTA PRESSÃO AC				
						A/C HIGH PRESSURE SV	INT. PRESIÓN ALTA A/A	INTERR. ALTA PRESS. A	A102
					PRESSOSTAT HP CLIMA	HOCHDR-SCHALTER KL	KONTAKT, A/C HØJTRYK	HOGEDRUKSCHAKELAA	
60		87015931		4	PARAFUSO, Hex Flg, M6 x 35, 8.8				
						BOLT	PERNO	BULLONE	140B
					VIS	SCHRAUBE	BOLT	BOUT	
61		87105840		1	DESIDRATADOR, Assembly				
						RECEIVER-DRYER	RECEPTOR-SECADOR	SERBATOIO-ESSICCATC	058D
					RESERVOIR DESHYDRA	TROCKNERPATRONE	VANDUDSKILLER	FILTERDROGER	
62		87105841		2	SUPORTE, Receiver/Dryer	BRACKET	SOPORTE	STAFFA	225S
					SUPPORT	HALTERUNG	BESLAG	STEUN	
63		87310592		2	PORCA, Jam, 7/16"-28, G5	NUT	TUERCA	DADO	010D
					ECROU	MUTTER	MØTRIK	MOER	
64		87355337		1	RELE, HD, Sealed, 45 Amp	RELAY	RELE	REL	7025
					RELAIS	RELAIS	RELAY	RELAY	
65		87443511		13	BRAÇADEIRA, Hose, 24mm	CLAMP	ABRAZADERA	MORSETTO	120M
					COLLIER	KLEMME	SPÆNDEBÅND	KLEM	
66		87555249		1	INTERRUPTOR, A/C	SWITCH	INTERRUPTOR	INTERRUTTORE	075I
					CONTACTEUR	SCHALTER	KONTAKT	SCHAKELAAR	
67		87567191		1	MANGUEIRA, 1656mm	HOSE	TUBO	TUBO FLESSIBILE	030M
					FLEXIBLE	SCHLAUCH	SLANGE	SLANG	
68		87567192		1	MANGUEIRA, 2250mm	HOSE	TUBO	TUBO FLESSIBILE	030M
					FLEXIBLE	SCHLAUCH	SLANGE	SLANG	
69		87617163		1	MANGUEIRA DO AQUECEDOR, 15.00 mm ID, 18.00 mm ID x 73.00 mm, SAE 20R4, Heater, Supply				
						HEATER HOSE	TUBO DE CALENTADOR	TUBO FLESS. RISCALDA	A057
					FLEXIBLE DE CHAUFFA(	HEIZUNGSSCHLAUCH	SLANGE, VARMEAPPAR/	VERWARMINGSSLANG	
70		87617165		1	ADAPTADOR, Barb Splice	ADAPTER	ADAPTADOR	ADATTATORE	001A
					ADAPTATEUR	ADAPTER	ADAPTER	ADAPTER	
71		87622384		1	BUCHA, F5C, A/C Bracket	BUSHING	CASQUILLO	BOCCOLA	095B
					BAGUE	BUCHSE	BØSNING	BUS	
72		87649945		1	SUPORTE, Compressor, A/C				
						BRACKET	SOPORTE	STAFFA	225S
					SUPPORT	HALTERUNG	BESLAG	STEUN	
73		87649979		1	PARAFUSO, Tensioner	BOLT	PERNO	BULLONE	140B
					VIS	SCHRAUBE	BOLT	BOUT	
74		87655042		2	ARRUELA ESPECIAL, M8	SPECIAL WASHER	ARANDELA ESPECIAL	RONDELLA SPECIALE	Z333
					RONDELLE SPECIALE	SPEZIALUNTERLEGSCH	SPECIALSKIVE	SPECIALE RING	

SR200

DIA KIT, MED FRM F5C HVAC (SR200,TR270)
DIA KIT, MED FRM F5C HVAC (SR200,TR270)
DIA KIT, MED FRM F5C HVAC (SR200,TR270)
DIA KIT, MED FRM F5C HVAC (SR200,TR270)



DIA KIT, MED FRM F5C HVAC (SR200,TR270)
DIA KIT, MED FRM F5C HVAC (SR200,TR270)
DIA KIT, MED FRM F5C HVAC (SR200,TR270)
DIA KIT, MED FRM F5C HVAC (SR200,TR270)

R	N	P.N.	MOD	Q	Denominação Description	Description Bezeichnung	Denominacion Beskrivelse	Descrizione Beschrijving	L.C.
75		**87655046**		1	ARRUELA ESPECIAL, M10	SPECIAL WASHER	ARANDELA ESPECIAL	RONDELLA SPECIALE	Z333
					RONDELLE SPECIALE	SPEZIALUNTERLEGSCH	SPECIALSKIVE	SPECIALE RING	
76		**87669161**		6	RESPIRO, Louver, Global	VENT	RESPIRADERO	BOCCHETTA	P079
					BUSE D'AERATION	AUSSTRÖMER	UDLUFTNINGSDYSE	LUCHTROOSTER	
77		**87711926**		1	SUPORTE, Tensioner	BRACKET	SOPORTE	STAFFA	225S
					SUPPORT	HALTERUNG	BESLAG	STEUN	
78		**127083A1**		2	COTOVELO, Heater, Hose	ELBOW	CODO	GOMITO	085G
					COUDE	KNIESTÜCK	VINKELRØR	KNIESTUK	
79		**229197A1**		4	PORCA, M8	NUT	TUERCA	DADO	5780
					ECROU	MUTTER	NUT	NUT	
80		**412679A2**		1	MOLA, Heater Hose	SPRING	MUELLE	MOLLA	8315
					RESSORT	FEDER	SPRING	SPRING	
81		**D39696**		4	BRACADEIRA, Double	CLAMP	COLLAR	MORSETTO	1640
					COLLIER	SCHELLE	CLAMP	CLAMP	
82		**L11541**		2	PRENDEDOR DE CABOS, Cable Tie				
						CABLE STRAP	BANDA DE CABLE	FASCETTA PER CAVO	P716
					BRIDE DE CABLE	KABELBINDER	KABELSTROP	BUNDELBAND	
83		**87441006**		1	PROTEÇÃO, A/C Hoses	GUARD	DEFENSA	PROTEZIONE	070R
					PROTECTION	SCHUTZABDECKUNG	BESKYTTELSESSKÆRM	AFSCHERMING	
84		**84483674**		1	INSTRUÇÃO, Instruction Sheet, Med FRM F5C HVAC				
						INSTRUCTION	INSTRUCCIÓN	ISTRUZIONI	Z571
					INSTRUCTION	ANLEITUNG	INSTRUKTION	INSTRUCTIE	
85		**84483262**		1	SUPORTE, Control Rod, Shield, Gray				
						BRACKET	SOPORTE	STAFFA	225S
					SUPPORT	HALTERUNG	BESLAG	STEUN	
86		**84387904**		2	MOLA DE COMPRESSÃO, Extension				
						COMPRESSION SPRING	RESORTE DE COMPRES	MOLLA A COMPRESSION	Z641
					RESSORT DE COMPRES	DRUCKFEDER	TRYKFJEDER	COMPRESSIEVEER	
87		**86507486**		4	PARAFUSO, Short NK, M8 x 20, Cl8.8, Full Thd				
						CARRIAGE BOLT	PERNO ALOMADO	BULLONE A TESTA TONI	P123
					VIS A TETE BOMBEE	SCHLOSSSCHRAUBE	BRÆDDEBOLT	SLOTBOUT	
88		**86639409**		1	ADESIVO, A/C Specs	DECAL	CALCOMANÍA	DECALCOMANIA	012D
					AUTOCOLLANT	AUFKLEBER	TRANSFER	STICKER	
89		**84411489**		1	ESPUMA ISOLANTE, Center, Upper Chassis				
						FOAM INSULATION	ESPUMA AISLANTE	ISOLANTE IN SCHIUMA	051S
					MOUSSE ISOLANTE	SCHAUMSTOFFISOLIER	SKUM ISOLERING	SCHUIMISOLATIE	
90		**84416163**		2	ESPUMA ISOLANTE, RH, Upper Chassis				
						FOAM INSULATION	ESPUMA AISLANTE	ISOLANTE IN SCHIUMA	051S
					MOUSSE ISOLANTE	SCHAUMSTOFFISOLIER	SKUM ISOLERING	SCHUIMISOLATIE	
91		**84416164**		2	ESPUMA ISOLANTE, RH, Upper Chassis				
						FOAM INSULATION	ESPUMA AISLANTE	ISOLANTE IN SCHIUMA	051S
					MOUSSE ISOLANTE	SCHAUMSTOFFISOLIER	SKUM ISOLERING	SCHUIMISOLATIE	
92		**348452A1**		10	BOTÃO DE IMPULSO, Pine Tree, 1 Inch Grip				
						FASTENER	SUJETADOR	DISPOSITIVO DI FISSAG	123B
					ATTACHE	BEFESTIGUNGSELEMEN	LUKKER	BEVESTIGING	
93		**84318533**		8	BOTÃO DE IMPULSO, Push-In, Wheat				
						FASTENER	SUJETADOR	DISPOSITIVO DI FISSAG	123B
					ATTACHE	BEFESTIGUNGSELEMEN	LUKKER	BEVESTIGING	

DIA KIT, F5C HEAT KIT (SR200-TV380)
DIA KIT, F5C HEAT KIT (SR200-TV380)
DIA KIT, F5C HEAT KIT (SR200-TV380)
DIA KIT, F5C HEAT KIT (SR200-TV380)



DIA KIT, F5C HEAT KIT (SR200-TV380)
DIA KIT, F5C HEAT KIT (SR200-TV380)
DIA KIT, F5C HEAT KIT (SR200-TV380)
DIA KIT, F5C HEAT KIT (SR200-TV380)

R	N	P.N.	MOD	Q	Denominação Description Bezeichnung	Denominacion Beskrivelse	Descrizione Beschrijving	L.C.
		84468165			KIT DE SERVIÇO, DIA Kit, F5C Heat Kit, Incl. 1-66			
					SERVICE KIT	KIT DE SERVICIO	KIT DI MANUTENZIONE	021K
					KIT D'ENTRETIEN SERVICE-SATZ	SERVICESÆT	SERVICEKIT	
1		**120100**		4	PARAFUSO, Hex, M6 x 20, 8.8			
					BOLT	PERNO	BULLONE	140B
					VIS SCHRAUBE	BOLT	BOUT	
2		**350459**		1	PARAFUSO, Short NK, M10 x 50, Cl8.8, Full Thd			
					SCREW	TORNILLO	VITE	040V
					VIS SCHRAUBE	SKRUE	SCHROEF	
3		**619284**		3	BRAÇADEIRA, 15/16", Insul, 3/8" Bolt			
					CLAMP	ABRAZADERA	MORSETTO	120M
					COLLIER KLEMME	SPÆNDEBÅND	KLEM	
4		**642560**		1	CONEXÃO, 5/8" Hose X 3/8" NPTF Beaded			
					FITTING	ACOPLAMIENTO	RACCORDO	3300
					RACCORD ARMATUR	FITTING	AANSLUITING	
5		**9804261**		1	PARAFUSO, Hex Flg, M10 x 25, 8.8			
					BOLT	PERNO	BULLONE	140B
					VIS SCHRAUBE	BOLT	BOUT	
6		**9804276**		4	PORCA, M6 x 1, Flg, Cl 8 NUT	TUERCA	DADO	010D
					ECROU MUTTER	MØTRIK	MOER	
7		**9804278**		3	PORCA, M10 x 1.5, Flg, Cl 8			
					NUT	TUERCA	DADO	010D
					ECROU MUTTER	MØTRIK	MOER	
8		**84137412**		3	PARAFUSO, M6 X 18 SCREW	TORNILLO	VITE	040V
					VIS SCHRAUBE	SKRUE	SCHROEF	
9		**84245940**		1	VÁLVULA, Water Supply, 3-Way			
					VALVE	VÁLVULA	VALVOLA	9620
					SOUPAPE VENTIL	VENTIL	KLEP	
10		**84247845**		1	SUPORTE, Water Valve and Dryer			
					BRACKET	SOPORTE	STAFFA	225S
					SUPPORT HALTERUNG	BESLAG	STEUN	
11		**84267543**		1	AQUECEDOR HEATER	CALENTADOR	RISCALDATORE	105R
					CHAUFFAGE HEIZUNG	VARMEAPPARAT	VERWARMING	
12		**84280313**		1	DUTO DE AR, Intake AIR DUCT	CONDUCTO DE AIRE	CONDOTTO ARIA	224C
					CONDUITE D'AIR LUFTKANAL	LUFTKANAL	LUCHTKANAAL	
13		**84285339**		4	PARAFUSO, M8 X 15 SELF-TAP SCREW	TORNILLO AUTORROSC	VITE AUTOFILETTANTE	062V
					VIS AUTOTARAUDEUSE SELBSTSCHN SCHRAUE	SELVLÅSENDE BOLT	ZELFTAPPENDE SCHRO	
14		**84389708**		1	PAINEL, Rear Trim, Gray PANEL	PANEL	PANNELLO	025P
					PANNEAU PLATTE	PANEL	PANEEL	
15		**84299751**		1	DUTO DE AR, RH, Wheat AIR DUCT	CONDUCTO DE AIRE	CONDOTTO ARIA	224C
					CONDUITE D'AIR LUFTKANAL	LUFTKANAL	LUCHTKANAAL	
16		**84299754**		1	DUTO DE AR, RH, Wheat AIR DUCT	CONDUCTO DE AIRE	CONDOTTO ARIA	224C
					CONDUITE D'AIR LUFTKANAL	LUFTKANAL	LUCHTKANAAL	
17		**84380551**		6	BOTÃO DE IMPULSO, Pine Tree, Wheat			
					FASTENER	SUJETADOR	DISPOSITIVO DI FISSAG	123B
					ATTACHE BEFESTIGUNGSELEMEN	LUKKER	BEVESTIGING	
18		**84322838**		1	PLACA, Cover, Tan PLATE	PLACA	PIASTRA	105P
					PLAQUE PLATTE	PLADE	PLAAT	

SR200

DIA KIT, F5C HEAT KIT (SR200-TV380)
DIA KIT, F5C HEAT KIT (SR200-TV380)
DIA KIT, F5C HEAT KIT (SR200-TV380)
DIA KIT, F5C HEAT KIT (SR200-TV380)



DIA KIT, F5C HEAT KIT (SR200-TV380)
DIA KIT, F5C HEAT KIT (SR200-TV380)
DIA KIT, F5C HEAT KIT (SR200-TV380)
DIA KIT, F5C HEAT KIT (SR200-TV380)

R	N	P.N.	MOD	Q	Denominação Description Bezeichnung	Denominacion Beskrivelse	Descrizione Beschrijving	L.C.
19		84322854		1	ESPUMA ISOLANTE, 684mm FOAM INSULATION MOUSSE ISOLANTE SCHAUMSTOFFISOLIER	ESPUMA AISLANTE SKUM ISOLERING	ISOLANTE IN SCHIUMA SCHUIMISOLATIE	051S
20		84331307		1	TELA, No A/C, Tilt Hood SCREEN TAMIS GITTER; ABSCHIRMUNG	PANTALLA SKÆRM	FILTRO; SCHERMO SCHERM	047S
21		84335903		1	PROTEÇÃO, Fan GUARD PROTECTION SCHUTZABDECKUNG	DEFENSA BESKYTTELSESSKÆRM	PROTEZIONE AFSCHERMING	070R
22		84347261		1	ADESIVO, HVAC, Heat Only DECAL AUTOCOLLANT AUFKLEBER	CALCOMANÍA TRANSFER	DECALCOMANIA STICKER	012D
23		84357678		1	MANGUEIRA, Heater Supply, Guarded HOSE FLEXIBLE SCHLAUCH	TUBO SLANGE	TUBO FLESSIBILE SLANG	030M
24		84359205		1	MANGUEIRA, Heater Return, Guarded HOSE FLEXIBLE SCHLAUCH	TUBO SLANGE	TUBO FLESSIBILE SLANG	030M
25		84359308		1	MANGUEIRA, Heater Return, Guarded HOSE FLEXIBLE SCHLAUCH	TUBO SLANGE	TUBO FLESSIBILE SLANG	030M
26		84361522		1	SUPORTE BRACKET SUPPORT HALTERUNG	SOPORTE BESLAG	STAFFA STEUN	225S
27		84362125		1	ESPUMA ISOLANTE, Crossmember FOAM INSULATION MOUSSE ISOLANTE SCHAUMSTOFFISOLIER	ESPUMA AISLANTE SKUM ISOLERING	ISOLANTE IN SCHIUMA SCHUIMISOLATIE	051S
28		84362126		1	ESPUMA ISOLANTE, Roof FOAM INSULATION MOUSSE ISOLANTE SCHAUMSTOFFISOLIER	ESPUMA AISLANTE SKUM ISOLERING	ISOLANTE IN SCHIUMA SCHUIMISOLATIE	051S
29		84370302		1	ESPUMA, HVAC Box FOAM MOUSSE SCHAUM	ESPUMA SKUM	SCHIUMA SCHUIM	P033
30		84370705		1	SUPORTE BRACKET SUPPORT HALTERUNG	SOPORTE BESLAG	STAFFA STEUN	225S
31		84388261		1	SUPORTE, Control Rod, Shield BRACKET SUPPORT HALTERUNG	SOPORTE BESLAG	STAFFA STEUN	225S
32		86511833		4	PARAFUSO, Cross Pan Hd, M6 x 40 SCREW VIS SCHRAUBE	TORNILLO SKRUE	VITE SCHROEF	040V
33		86511841		6	PARAFUSO, Hex Flg, M8 x 16, 8.8 BOLT VIS SCHRAUBE	PERNO BOLT	BULLONE BOUT	140B
34		86512441		2	PARAFUSO, Short NK, M6 x 30, Cl8.8, Full Thd CARRIAGE BOLT VIS A TETE BOMBEE SCHLOSSSCHRAUBE	PERNO ALOMADO BRÆDDEBOLT	BULLONE A TESTA TONI SLOTBOUT	P123
35		86530043		1	CONEXÃO, Y FITTING RACCORD ARMATUR	ACOPLAMIENTO FITTING	RACCORDO AANSLUITING	3300
36		86619800		6	CONTRA PORCA, M6 x 1, Flg, Cl 8 LOCK NUT CONTRE-ECROU SICHERUNGSMUTTER	TUERCA DE BLOQUEO LÅSEMØTRIK	DADO DI BLOCCAGGIO BORGMOER	P263

DIA KIT, F5C HEAT KIT (SR200-TV380)
DIA KIT, F5C HEAT KIT (SR200-TV380)
DIA KIT, F5C HEAT KIT (SR200-TV380)
DIA KIT, F5C HEAT KIT (SR200-TV380)



DIA KIT, F5C HEAT KIT (SR200-TV380)
DIA KIT, F5C HEAT KIT (SR200-TV380)
DIA KIT, F5C HEAT KIT (SR200-TV380)
DIA KIT, F5C HEAT KIT (SR200-TV380)

R	N	P.N.	MOD	Q	Denominação Description	Description Bezeichnung	Denominacion Beskrivelse	Descrizione Beschrijving	L.C.
37		86624182		3	ARRUELA PLANA, M6 x 18 x 1.6				
						WASHER	ARANDELA	RONDELLA	131R
					RONDELLE	UNTERLEGSCHEIBE	FLADSKIVE	SLUITRING	
38		86624183		4	ARRUELA PLANA, M6 x 25 x 1.6				
						WASHER	ARANDELA	RONDELLA	131R
					RONDELLE	UNTERLEGSCHEIBE	FLADSKIVE	SLUITRING	
39		86625021		1	BRAÇADEIRA MANGUEIRA, #12, 0.69/1.25 Type F Worm				
						HOSE CLAMP	ABRAZADERA DE MANG	FASCETTA STRINGITUB	P729
					COLLIER POUR FLEXIBL	SCHLAUCHSCHELLE	SLANGEKLEMME	SLANGKLEM	
40		86625074		4	PORCA, M8	NUT	TUERCA	DADO	010D
					ECROU	MUTTER	MØTRIK	MOER	
41		86729669		1	INTERRUPTOR	SWITCH	INTERRUPTOR	INTERRUTTORE	075I
					CONTACTEUR	SCHALTER	KONTAKT	SCHAKELAAR	
42		86729670		2	MAÇANETA	KNOB	MANDO	MANOPOLA	150P
					BOUTON	RUNDGRIFF	GREB	KNOP	
43		86729675		1	POTENCIÔMETRO, Switch	POTENTIOMETER	POTENCIÓMETRO	POTENZIOMETRO	550P
					POTENTIOMETRE	POTENTIOMETER	POTENTIOMETER	POTENTIOMETER	
44		87015931		4	PARAFUSO, Hex Flg, M6 x 35, 8.8				
						BOLT	PERNO	BULLONE	140B
					VIS	SCHRAUBE	BOLT	BOUT	
45		87310592		2	PORCA, Jam, 7/16"-28, G5	NUT	TUERCA	DADO	010D
					ECROU	MUTTER	MØTRIK	MOER	
46		87443511		13	BRAÇADEIRA, Hose	CLAMP	ABRAZADERA	MORSETTO	120M
					COLLIER	KLEMME	SPÆNDEBÅND	KLEM	
47		87567191		1	MANGUEIRA, 1905mm	HOSE	TUBO	TUBO FLESSIBILE	030M
					FLEXIBLE	SCHLAUCH	SLANGE	SLANG	
48		87567192		1	MANGUEIRA, 2540mm	HOSE	TUBO	TUBO FLESSIBILE	030M
					FLEXIBLE	SCHLAUCH	SLANGE	SLANG	
49		87617163		1	MANGUEIRA DO AQUECEDOR, 15.00 mm ID, 18.00 mm ID x 73.00 mm, SAE 20R4, Formed, Heater Supply				
						HEATER HOSE	TUBO DE CALENTADOR	TUBO FLESS. RISCALDA	A057
					FLEXIBLE DE CHAUFFA(	HEIZUNGSSCHLAUCH	SLANGE, VARMEAPPAR/	VERWARMINGSSLANG	
50		87617165		1	ADAPTADOR, Hose, Barb Splice				
						ADAPTER	ADAPTADOR	ADATTATORE	001A
					ADAPTATEUR	ADAPTER	ADAPTER	ADAPTER	
51		87655042		2	ARRUELA ESPECIAL, M8	SPECIAL WASHER	ARANDELA ESPECIAL	RONDELLA SPECIALE	Z333
					RONDELLE SPECIALE	SPEZIALUNTERLEGSCH	SPECIALSKIVE	SPECIALE RING	
52		87655046		1	ARRUELA ESPECIAL, M10	SPECIAL WASHER	ARANDELA ESPECIAL	RONDELLA SPECIALE	Z333
					RONDELLE SPECIALE	SPEZIALUNTERLEGSCH	SPECIALSKIVE	SPECIALE RING	
53		87669161		6	RESPIRO, Louver, Global	VENT	RESPIRADERO	BOCCHETTA	P079
					BUSE D'AERATION	AUSSTRÖMER	UDLUFTNINGSDYSE	LUCHTROOSTER	
54		127083A1		2	COTOVELO, Heater Hose	ELBOW	CODO	GOMITO	085G
					COUDE	KNIESTÜCK	VINKELRØR	KNIESTUK	
55		229197A1		2	PORCA, M8, Square	NUT	TUERCA	DADO	5780
					ECROU	MUTTER	NUT	NUT	
56		412679A2		2	MOLA, Heater Hose	SPRING	MUELLE	MOLLA	8315
					RESSORT	FEDER	SPRING	SPRING	
57		D39696		2	BRACADEIRA	CLAMP	COLLAR	MORSETTO	1640
					COLLIER	SCHELLE	CLAMP	CLAMP	

DIA KIT, F5C HEAT KIT (SR200-TV380)
DIA KIT, F5C HEAT KIT (SR200-TV380)
DIA KIT, F5C HEAT KIT (SR200-TV380)
DIA KIT, F5C HEAT KIT (SR200-TV380)



DIA KIT, F5C HEAT KIT (SR200-TV380)
DIA KIT, F5C HEAT KIT (SR200-TV380)
DIA KIT, F5C HEAT KIT (SR200-TV380)
DIA KIT, F5C HEAT KIT (SR200-TV380)

R	N	P.N.	MOD	Q	Denominação Description Bezeichnung	Description Denominacion Beskrivelse	Denominacion Descrizione Beschrijving	L.C.
58		L11541		1	PRENDEDOR DE CABOS, Cable Tie CABLE STRAP BRIDE DE CABLE	BANDA DE CABLE KABELBINDER KABELSTROP	FASCETTA PER CAVO BUNDELBAND	P716
59		87441006		1	PROTEÇÃO, A/C Hoses PROTECTION	GUARD SCHUTZABDECKUNG	DEFENSA BESKYTTELSESSKÆRM	PROTEZIONE AFSCHERMING	070R
60		84483675		1	INSTRUÇÃO, Instruction Sheet, F5C Heat Kit INSTRUCTION	INSTRUCCIÓN ANLEITUNG	INSTRUKTION ISTRUZIONI	INSTRUCTIE	Z571
61		9804277		4	PORCA, M8 x 1.25, Flg, Cl 8 NUT ECROU	TUERCA MUTTER	DADO MØTRIK	MOER	010D
62		84387904		2	MOLA DE COMPRESSÃO, Extension COMPRESSION SPRING RESSORT DE COMPRES	RESORTE DE COMPRES DRUCKFEDER	MOLLA A COMPRESSIOI TRYKFJEDER	COMPRESSIEVEER	Z641
63		84483262		1	SUPORTE, Control Rod, Shield, Gray BRACKET SUPPORT	SOPORTE HALTERUNG	STAFFA BESLAG	STEUN	225S
64		86507486		4	PARAFUSO, Short NK, M8 x 20, Cl8.8, Full Thd CARRIAGE BOLT VIS A TETE BOMBEE	PERNO ALOMADO SCHLOSSSCHRAUBE	BRÆDDEBOLT	BULLONE A TESTA TONI SLOTBOUT	P123
65		348452A1		10	BOTÃO DE IMPULSO, Pine Tree, 1 Inch Grip FASTENER ATTACHE	SUJETADOR BEFESTIGUNGSELEMEN	LUKKER	DISPOSITIVO DI FISSAG BEVESTIGING	123B
66		84318533		8	BOTÃO DE IMPULSO, Push-in, Wheat FASTENER ATTACHE	SUJETADOR BEFESTIGUNGSELEMEN	LUKKER	DISPOSITIVO DI FISSAG BEVESTIGING	123B

DIA KIT, BEACON (ALL CASE)
DIA KIT, BEACON (ALL CASE)
DIA KIT, BEACON (ALL CASE)
DIA KIT, BEACON (ALL CASE)



DIA KIT, BEACON (ALL CASE)
DIA KIT, BEACON (ALL CASE)
DIA KIT, BEACON (ALL CASE)
DIA KIT, BEACON (ALL CASE)

R	N	P.N.	MOD	Q	Denominação Description Bezeichnung	Description Bezeichnung Beschrijving	Denominacion Beskrivelse Descrizione	Descrizione Beschrijving L.C.	L.C.
		84422725			KIT DE SERVIÇO, DIA Kit, Beacon, Incl. 1-2				
					SERVICE KIT	KIT DE SERVICIO	KIT DI MANUTENZIONE	021K	
					KIT D'ENTRETIEN	SERVICE-SATZ	SERVICESÆT	SERVICEKIT	
1		**9840716**		1	LUZ DE SINALIZAÇÃO	BEACON	BALIZA	GIROFARO	080L
					GYROPHARE	RUNDUMLEUCHTE	ROTERENDE ADVARSEL	ZWAAILICHT	
2		**84422727**		1	INSTRUÇÃO, Instruction, Sheet, Beacon				
					INSTRUCTION	INSTRUCCIÓN	ISTRUZIONI	Z571	
					INSTRUCTION	ANLEITUNG	INSTRUKTION	INSTRUCTIE	

DIA KIT, STROBE (ALL CASE)
DIA KIT, STROBE (ALL CASE)
DIA KIT, STROBE (ALL CASE)
DIA KIT, STROBE (ALL CASE)



DIA KIT, STROBE (ALL CASE)
DIA KIT, STROBE (ALL CASE)
DIA KIT, STROBE (ALL CASE)
DIA KIT, STROBE (ALL CASE)

R	N	P.N.	MOD	Q	Denominação Description Bezeichnung	Description Bezeichnung Beskrivelse	Denominacion Beskrivelse Descrizione	Descrizione Beschrijving	L.C.
		84305658			KIT DE SERVIÇO, DIA Kit, Strobe, Incl. 1-13				
						SERVICE KIT	KIT DE SERVICIO	KIT DI MANUTENZIONE	021K
					KIT D'ENTRETIEN	SERVICE-SATZ	SERVICESÆT	SERVICEKIT	
1		**140024**		8	TRAVA DA ARRUELA, M4	LOCK WASHER	ARANDELA DE BLOQUE	RONDELLA DI SICUREZ	132R
					RONDELLE FREIN	SICHERUNGSSCHEIBE	LÅSESKIVE	BORGRING	
2		**9804258**		3	PARAFUSO, Hex Flg, M8 x 20, 8.8				
						BOLT	PERNO	BULLONE	140B
					VIS	SCHRAUBE	BOLT	BOUT	
3		**83990583**		3	TRAVA DA ARRUELA, M8	LOCK WASHER	ARANDELA DE BLOQUE	RONDELLA DI SICUREZ	132R
					RONDELLE FREIN	SICHERUNGSSCHEIBE	LÅSESKIVE	BORGRING	
4		**84251317**		1	CHICOTE, Strobe	WIRE HARNESS	GRUPO DE CABLES	CABLAGGIO	070I
					FAISCEAU ELECTRIQUE	KABELBAUM	KABELNET	KABELBOOM	
5		**84251538**		1	ESTRUTURA, WA Strobe, Gray				
						FRAME	BASTIDOR	TELAIO	072I
					CHASSIS	RAHMEN	RAMME	FRAME	
6		**84272827**		4	REBITE, Nut, M6 X 1.0	RIVET	REMACHE	RIVETTO	055R
					RIVET	NIET	NITTE	KLINKNAGEL	
7		**84305556**		4	PARAFUSO, M6 X 25	SCREW	TORNILLO	VITE	040V
					VIS	SCHRAUBE	SKRUE	SCHROEF	
8		**86508812**		8	PORCA, M3, Cl 8	NUT	TUERCA	DADO	010D
					ECROU	MUTTER	MØTRIK	MOER	
9		**86511818**		8	PARAFUSO, Cross Pan Hd, M3 x 30				
						SCREW	TORNILLO	VITE	040V
					VIS	SCHRAUBE	SKRUE	SCHROEF	
10		**86625036**		3	BRAÇADEIRA, 1/2", Insul, 5/16" Bolt				
						CLAMP	ABRAZADERA	MORSETTO	120M
					COLLIER	KLEMME	SPÆNDEBÅND	KLEM	
11		**86629542**		3	CONTRA PORCA, M8 x 1.25, Cl 8				
						LOCK NUT	TUERCA DE BLOQUEO	DADO DI BLOCCAGGIO	P263
					CONTRE-ECROU	SICHERUNGSMUTTER	LÅSEMØTRIK	BORGMOER	
12		**87745165**		4	LUZ, Strobe, LED Light	LIGHT	LUZ	LUCE	Z496
					FEU	LAMPE	BELYSNING	LAMP	
13		**84251531**		1	INSTRUÇÃO, Strobe Install	INSTRUCTION	INSTRUCCIÓN	ISTRUZIONI	Z571
					INSTRUCTION	ANLEITUNG	INSTRUKTION	INSTRUCTIE	

SR200

DIA KIT, MULTI-FUNCTION ELEC MECH CS RAD (SR175,SR200-SR250,TR270,TR320)
DIA KIT, MULTI-FUNCTION ELEC MECH CS RAD (SR175,SR200-SR250,TR270,TR320)
DIA KIT, MULTI-FUNCTION ELEC MECH CS RAD (SR175,SR200-SR250,TR270,TR320)
DIA KIT, MULTI-FUNCTION ELEC MECH CS RAD (SR175,SR200-SR250,TR270,TR320)



DIA KIT, MULTI-FUNCTION ELEC MECH CS RAD (SR175,SR200-SR250,TR270,TR320)
DIA KIT, MULTI-FUNCTION ELEC MECH CS RAD (SR175,SR200-SR250,TR270,TR320)
DIA KIT, MULTI-FUNCTION ELEC MECH CS RAD (SR175,SR200-SR250,TR270,TR320)
DIA KIT, MULTI-FUNCTION ELEC MECH CS RAD (SR175,SR200-SR250,TR270,TR320)

R	N	P.N.	MOD	Q	Denominação Description Bezeichnung	Description Bezeichnung	Denominacion Beskrivelse	Descrizione Beschrijving	L.C.
		84399686			JOGO, DIA Kit, Multi-Function, Elec Mech, Incl. 1-10				
						KIT	JEUGO	KIT	4830
					POCHETTE	PACKUNG	KIT	KIT	
1		**84293533**		1	PEGA DE SUPORTE, Front Aux, Elec				
						BRACKET, SUPPORTING	PIEZA DE APOYO	SQUADRETTA	215S
					EQUERRE	TRAGER, STUTZ	BRACKET, SUPPORTING	BRACKET, SUPPORTING	
2		**84251321**		1	CHICOTE, FE Boom, CS RD				
						WIRE HARNESS	GRUPO DE CABLES	CABLAGGIO	070I
					FAISCEAU ELECTRIQUE	KABELBAUM	KABELNET	KABELBOOM	
3		**84286588**		1	BRAÇADEIRA DE FIO, 90 Twist				
						WIRE CLAMP	ABRAZADERA DE CABLE	SERRAFILO	118S
					SERRE-CABLES	KABELSCHELLE	KABELKLEMME	DRAADKLEM	
4		**87030531**		2	PARAFUSO, Tapping, ST8 X 19				
						SCREW	TORNILLO	VITE	040V
					VIS	SCHRAUBE	SKRUE	SCHROEF	
5		**84285339**		1	PARAFUSO, M8 X 15	SELF-TAP SCREW	TORNILLO AUTORROSC	VITE AUTOFILETTANTE	062V
					VIS AUTOTARAUDEUSE	SELBSTSCHN SCHRAUE	SELVLÅSENDE BOLT	ZELFTAPPENDE SCHRO	
6		**86625035**		2	BRAÇADEIRA, 1/2", Insul, 1/4" Bolt				
						CLAMP	ABRAZADERA	MORSETTO	120M
					COLLIER	KLEMME	SPÆNDEBÅND	KLEM	
7		**9804255**		2	PARAFUSO, Hex Flg, M6 x 16, 8.8				
						BOLT	PERNO	BULLONE	140B
					VIS	SCHRAUBE	BOLT	BOUT	
8		**9804276**		2	PORCA, M6 x 1, Flg, Cl 8	NUT	TUERCA	DADO	010D
					ECROU	MUTTER	MØTRIK	MOER	
9		**84396783**		1	CHICOTE, Multi-Function, Jumper				
						WIRE HARNESS	GRUPO DE CABLES	CABLAGGIO	070I
					FAISCEAU ELECTRIQUE	KABELBAUM	KABELNET	KABELBOOM	
10		**84469618**		1	INSTRUÇÃO, Instruction, Installation, FE, Radial				
						INSTRUCTION	INSTRUCCIÓN	ISTRUZIONI	Z571
					INSTRUCTION	ANLEITUNG	INSTRUKTION	INSTRUCTIE	

SR200

DIA KIT, MULTI-FUNCTION ELEC EH CS RAD (SR175,SR200-SR250,TR270,TR320)
DIA KIT, MULTI-FUNCTION ELEC EH CS RAD (SR175,SR200-SR250,TR270,TR320)
DIA KIT, MULTI-FUNCTION ELEC EH CS RAD (SR175,SR200-SR250,TR270,TR320)
DIA KIT, MULTI-FUNCTION ELEC EH CS RAD (SR175,SR200-SR250,TR270,TR320)



DIA KIT, MULTI-FUNCTION ELEC EH CS RAD (SR175,SR200-SR250,TR270,TR320)
DIA KIT, MULTI-FUNCTION ELEC EH CS RAD (SR175,SR200-SR250,TR270,TR320)
DIA KIT, MULTI-FUNCTION ELEC EH CS RAD (SR175,SR200-SR250,TR270,TR320)
DIA KIT, MULTI-FUNCTION ELEC EH CS RAD (SR175,SR200-SR250,TR270,TR320)

R	N	P.N.	MOD	Q	Denominação Description	Description Bezeichnung	Denominacion Beskrivelse	Descrizione Beschrijving	L.C.
		84399683			JOGO, DIA Kit, Multi-Function Elec, EH, CS RAD, Incl. 1-10				
						KIT	JEUGO	KIT	4830
					POCHETTE	PACKUNG	KIT	KIT	
1		**84293533**		1	PEGA DE SUPORTE, Front Aux, Elec				
						BRACKET, SUPPORTING	PIEZA DE APOYO	SQUADRETTA	215S
					EQUERRE	TRAGER, STUTZ	BRACKET, SUPPORTING	BRACKET, SUPPORTING	
2		**84251321**		1	CHICOTE, FE Boom, CS RD				
						WIRE HARNESS	GRUPO DE CABLES	CABLAGGIO	070I
					FAISCEAU ELECTRIQUE	KABELBAUM	KABELNET	KABELBOOM	
3		**84286588**		1	BRAÇADEIRA DE FIO, 90 Twist				
						WIRE CLAMP	ABRAZADERA DE CABLE	SERRAFILO	118S
					SERRE-CABLES	KABELSCHELLE	KABELKLEMME	DRAADKLEM	
4		**87030531**		2	PARAFUSO, ST8 X 19	SCREW	TORNILLO	VITE	040V
					VIS	SCHRAUBE	SKRUE	SCHROEF	
5		**84285339**		1	PARAFUSO, M8 X 15	SELF-TAP SCREW	TORNILLO AUTORROSC	VITE AUTOFILETTANTE	062V
					VIS AUTOTARAUDEUSE	SELBSTSCHN SCHRAUE	SELVLÅSENDE BOLT	ZELFTAPPENDE SCHRO	
6		**86625035**		2	BRAÇADEIRA, 1/2", Insul, 1/4" Bolt				
						CLAMP	ABRAZADERA	MORSETTO	120M
					COLLIER	KLEMME	SPÆNDEBÅND	KLEM	
7		**9804255**		2	PARAFUSO, Hex Flg, M6 x 16, 8.8				
						BOLT	PERNO	BULLONE	140B
					VIS	SCHRAUBE	BOLT	BOUT	
8		**9804276**		2	PORCA, M6 x 1, Flg, Cl 8	NUT	TUERCA	DADO	010D
					ECROU	MUTTER	MØTRIK	MOER	
9		**84396781**		1	CHICOTE, Multi-Function Jumper, EH				
						WIRE HARNESS	GRUPO DE CABLES	CABLAGGIO	070I
					FAISCEAU ELECTRIQUE	KABELBAUM	KABELNET	KABELBOOM	
10		**84469619**		1	INSTRUÇÃO, Instruction, Installation				
						INSTRUCTION	INSTRUCCIÓN	ISTRUZIONI	Z571
					INSTRUCTION	ANLEITUNG	INSTRUKTION	INSTRUCTIE	

SR200

DIA KIT, EU ROAD LIGHTS MED RAD CASE (SR175,SR200,TR270)
DIA KIT, EU ROAD LIGHTS MED RAD CASE (SR175,SR200,TR270)
DIA KIT, EU ROAD LIGHTS MED RAD CASE (SR175,SR200,TR270)
DIA KIT, EU ROAD LIGHTS MED RAD CASE (SR175,SR200,TR270)



DIA KIT, EU ROAD LIGHTS MED RAD CASE (SR175,SR200,TR270)
DIA KIT, EU ROAD LIGHTS MED RAD CASE (SR175,SR200,TR270)
DIA KIT, EU ROAD LIGHTS MED RAD CASE (SR175,SR200,TR270)
DIA KIT, EU ROAD LIGHTS MED RAD CASE (SR175,SR200,TR270)

R	N	P.N.	MOD	Q	Denominação Description Bezeichnung	Description Bezeichnung	Denominacion Beskrivelse	Descrizione Beschrijving	L.C.
		84424041			KIT DE SERVIÇO, DIA Kit, EU Road Lights, Med, Rad, Case, Incl. 1-28				
						SERVICE KIT	KIT DE SERVICIO	KIT DI MANUTENZIONE	021K
					KIT D'ENTRETIEN	SERVICE-SATZ	SERVICESÆT	SERVICEKIT	
1		**280476**		4	PARAFUSO, Hex Wash Hd, 3/8" x 1"				
						SELF-TAP SCREW	TORNILLO AUTORROSC	VITE AUTOFILETTANTE	062V
					VIS AUTOTARAUDEUSE	SELBSTSCHN SCHRAUE	SELVLÅSENDE BOLT	ZELFTAPPENDE SCHRO	
2		**9804255**		6	PARAFUSO, Hex Flg, M6 x 16, 8.8				
						BOLT	PERNO	BULLONE	140B
					VIS	SCHRAUBE	BOLT	BOUT	
3		**9804276**		6	PORCA, M6 x 1, Flg, Cl 8	NUT	TUERCA	DADO	010D
					ECROU	MUTTER	MØTRIK	MOER	
4		**83982898**		1	LÂMPADA INTERMITENTE, Assembly				
						FLASHER UNIT	UNIDAD INTERMITENTE	UNITÀ LAMPEGGIATORE	035L
					CENTRALE CLIGNOTAN	BLINKEREINHEIT	BLINKLAMPE	KNIPPERAUTOMAAT	
5		**84262451**		2	CHICOTE, FE Boom RD	WIRE HARNESS	GRUPO DE CABLES	CABLAGGIO	070I
					FAISCEAU ELECTRIQUE	KABELBAUM	KABELNET	KABELBOOM	
6		**84262455**		1	CHICOTE, Rear, Road Jumper				
						WIRE HARNESS	GRUPO DE CABLES	CABLAGGIO	070I
					FAISCEAU ELECTRIQUE	KABELBAUM	KABELNET	KABELBOOM	
7		**84263153**		1	INTERRUPTOR, Rocker, Loader Lockout				
						SWITCH	INTERRUPTOR	INTERRUTTORE	075I
					CONTACTEUR	SCHALTER	KONTAKT	SCHAKELAAR	
8		**84306583**		1	SUPORTE, Light, LH Tan	BRACKET	SOPORTE	STAFFA	225S
					SUPPORT	HALTERUNG	BESLAG	STEUN	
9		**84306585**		1	SUPORTE, Light, RH Tan	BRACKET	SOPORTE	STAFFA	225S
					SUPPORT	HALTERUNG	BESLAG	STEUN	
10		**9804277**		4	PORCA, M8 x 1.25, Flg, Cl 8				
						NUT	TUERCA	DADO	010D
					ECROU	MUTTER	MØTRIK	MOER	
11		**87627854**		2	FAROL CONJUNTO, Rear, Stop-Tail				
						LIGHT ASSY.	FARO (CONJ)	LUCE, COMPLESSIVO	P478
					FEU (ASSEMBLE)	LAMPE (KPLT.)	LIGHT ASSY.	LIGHT ASSY.	
12		**86502967**		8	PARAFUSO, Cross Pan Hd, M5 x 30				
						SCREW	TORNILLO	VITE	040V
					VIS	SCHRAUBE	SKRUE	SCHROEF	
13		**86512420**		4	PARAFUSO, Short NK, M8 x 20, Cl8.8, Full Thd				
						CARRIAGE BOLT	PERNO ALOMADO	BULLONE A TESTA TON	P123
					VIS A TETE BOMBEE	SCHLOSSSCHRAUBE	BRÆDDEBOLT	SLOTBOUT	
14		**86512495**		8	PORCA, M5 x .8, Flg, Cl 8	NUT	TUERCA	DADO	010D
					ECROU	MUTTER	MØTRIK	MOER	
15		**87629587**		2	FAROL CONJUNTO, Warning				
						LIGHT ASSY.	FARO (CONJ)	LUCE, COMPLESSIVO	P478
					FEU (ASSEMBLE)	LAMPE (KPLT.)	LIGHT ASSY.	LIGHT ASSY.	
16		**84419628**		2	SUPORTE, RR, Road Light, Tan				
						BRACKET	SOPORTE	STAFFA	225S
					SUPPORT	HALTERUNG	BESLAG	STEUN	
17		**84416164**		2	ESPUMA ISOLANTE, RH Upper Chassis				
						FOAM INSULATION	ESPUMA AISLANTE	ISOLANTE IN SCHIUMA	051S
					MOUSSE ISOLANTE	SCHAUMSTOFFISOLIER	SKUM ISOLERING	SCHUIMISOLATIE	

SR200

DIA KIT, EU ROAD LIGHTS MED RAD CASE (SR175,SR200,TR270)
DIA KIT, EU ROAD LIGHTS MED RAD CASE (SR175,SR200,TR270)
DIA KIT, EU ROAD LIGHTS MED RAD CASE (SR175,SR200,TR270)
DIA KIT, EU ROAD LIGHTS MED RAD CASE (SR175,SR200,TR270)



DIA KIT, EU ROAD LIGHTS MED RAD CASE (SR175,SR200,TR270)
DIA KIT, EU ROAD LIGHTS MED RAD CASE (SR175,SR200,TR270)
DIA KIT, EU ROAD LIGHTS MED RAD CASE (SR175,SR200,TR270)
DIA KIT, EU ROAD LIGHTS MED RAD CASE (SR175,SR200,TR270)

R	N	P.N.	MOD	Q	Denominação Description	Description Bezeichnung	Denominacion Beskrivelse	Descrizione Beschrijving	L.C.
18		86589143		2	ESPAÇADOR, Assembly	SPACER	SEPARADOR	DISTANZIALE	075D
					ENTRETOISE	DISTANZSTÜCK	AFSTANDSSTYKKE	AFSTANDSSTUK	
19		86604657		1	INDICADOR DE DIREÇÃO	TURN SIGNAL INDICATC	INDIC. DE SEÑAL DE GIF	INDICATORE DI DIREZIC	029I
					CLIGNOTANT	FAHRTRICHTUNGSANZE	RETNINGSVISER	RICHTINGAANWIJZER	
20		86625035		8	BRAÇADEIRA, 1/2", Insul, 1/4" Bolt				
						CLAMP	ABRAZADERA	MORSETTO	120M
					COLLIER	KLEMME	SPÆNDEBÅND	KLEM	
21		87016557		2	PARAFUSO, Hex Flg Hd, M8 x 25				
						SELF-TAP SCREW	TORNILLO AUTORROSC	VITE AUTOFILETTANTE	062V
					VIS AUTOTARAUDEUSE	SELBSTSCHN SCHRAUE	SELVLÅSENDE BOLT	ZELFTAPPENDE SCHRO	
22		87572859		1	LÂMPADA, Head	LAMP	LÁMPARA	SPIA	009F
					LAMPE	LEUCHTE	LYGTE	LAMP	
23		87572860		1	LÂMPADA, Head	LAMP	LÁMPARA	SPIA	009F
					LAMPE	LEUCHTE	LYGTE	LAMP	
24		87634133		1	INTERRUPTOR, Hazard Lights				
						SWITCH	INTERRUPTOR	INTERRUTTORE	075I
					CONTACTEUR	SCHALTER	KONTAKT	SCHAKELAAR	
25		87668737		4	TIRA, Fir Tree Assembly	STRAP	BANDA	FASCETTA	532B
					BRIDE	BAND	STROP	RIEM	
26		131691A1		1	INTERRUPTOR, Turn Signal				
						SWITCH	INTERRUPTOR	COMMUTATORE	8850
					INTERRUPTEUR	SCHALTER	SWITCH	SWITCH	
27		R45966		2	BRACADEIRA, 90 Degree Twist				
						CLAMP	COLLAR	MORSETTO	1640
					COLLIER	SCHELLE	CLAMP	CLAMP	
28		84424220		1	INSTRUÇÃO, Instruction Sheet, Road Lights EU				
						INSTRUCTION	INSTRUCCIÓN	ISTRUZIONI	Z571
					INSTRUCTION	ANLEITUNG	INSTRUKTION	INSTRUCTIE	

DIA KIT, MECH CHASS OPT HARNESS, MED (SR175-SR200)
DIA KIT, MECH CHASS OPT HARNESS, MED (SR175-SR200)
DIA KIT, MECH CHASS OPT HARNESS, MED (SR175-SR200)
DIA KIT, MECH CHASS OPT HARNESS, MED (SR175-SR200)



DIA KIT, MECH CHASS OPT HARNESS, MED (SR175-SR200)
DIA KIT, MECH CHASS OPT HARNESS, MED (SR175-SR200)
DIA KIT, MECH CHASS OPT HARNESS, MED (SR175-SR200)
DIA KIT, MECH CHASS OPT HARNESS, MED (SR175-SR200)

R	N	P.N.	MOD	Q	Denominação Description	Description Bezeichnung	Denominacion Beskrivelse	Descrizione Beschrijving	L.C.
		84424524			JOGO, DIA Kit, Mech Chass, Opt Harness, Med, Incl. 1-5				
						KIT	JEUGO	KIT	4830
					POCHETTE	PACKUNG	KIT	KIT	
1		**84285504**		1	PEGA DE SUPORTE, Double Fuse Box				
						BRACKET, SUPPORTING	PIEZA DE APOYO	SQUADRETTA	215S
					EQUERRE	TRAGER, STUTZ	BRACKET, SUPPORTING	BRACKET, SUPPORTING	
2		**84315528**		1	CHICOTE, Chassis	WIRE HARNESS	GRUPO DE CABLES	CABLAGGIO	070I
					FAISCEAU ELECTRIQUE	KABELBAUM	KABELNET	KABELBOOM	
3		**86511841**		3	PARAFUSO, Hex Flg, M8 x 16, 8.8				
						BOLT	PERNO	BULLONE	140B
					VIS	SCHRAUBE	BOLT	BOUT	
4		**86000810**		1	BRAÇADEIRA	CLAMP	ABRAZADERA	MORSETTO	120M
					COLLIER	KLEMME	SPÆNDEBÅND	KLEM	
5		**84424525**		1	INSTRUÇÃO, Installation, Option, Harness				
						INSTRUCTION	INSTRUCCIÓN	ISTRUZIONI	Z571
					INSTRUCTION	ANLEITUNG	INSTRUKTION	INSTRUCTIE	

DIA KIT, SIDE LAMP (ALL CASE)
DIA KIT, SIDE LAMP (ALL CASE)
DIA KIT, SIDE LAMP (ALL CASE)
DIA KIT, SIDE LAMP (ALL CASE)



DIA KIT, SIDE LAMP (ALL CASE)
DIA KIT, SIDE LAMP (ALL CASE)
DIA KIT, SIDE LAMP (ALL CASE)
DIA KIT, SIDE LAMP (ALL CASE)

R	N	P.N.	MOD	Q	Denominação Description Bezeichnung	Description Bezeichnung	Denominacion Beskrivelse	Descrizione Beschrijving	L.C.
		84421496			KIT DE SERVIÇO, DIA Kit, Side Lamp, Incl. 1-6				
						SERVICE KIT	KIT DE SERVICIO	KIT DI MANUTENZIONE	021K
					KIT D'ENTRETIEN	SERVICE-SATZ	SERVICESÆT	SERVICEKIT	
1		**82002966**		1	TOMADA ELÉTRICA, Aux, Electric Power				
						POWER SOCKET	ZÓCALO DE CORRIENTE	PRESA DI CORRENTE	205P
					PRISE DE COURANT	STECKDOSE	STRØMUDTAG	CONTACTDOOS	
2		**84422958**		1	CHICOTE, Harness, Wire, Side Lamp				
						WIRE HARNESS	GRUPO DE CABLES	CABLAGGIO	070I
					FAISCEAU ELECTRIQUE	KABELBAUM	KABELNET	KABELBOOM	
3		**84384729**		2	LANTERNA LATERAL	SIDE LAMP ASSY	CONJ. DE LÁMP. LATER.	COMPLESSIVO LUCI LAT	011F
					FEU LATERAL	SEITENLEUCHTENBAUG	SIDELYGTE, KPL.	ZIJLAMP	
4		**87016557**		2	PARAFUSO, Hex Flg Hd, M8 x 25				
						SELF-TAP SCREW	TORNILLO AUTORROSC	VITE AUTOFILETTANTE	062V
					VIS AUTOTARAUDEUSE	SELBSTSCHN SCHRAUE	SELVLÅSENDE BOLT	ZELFTAPPENDE SCHRO	
5		**87668737**		4	TIRA, Fir Tree Assembly	STRAP	BANDA	FASCETTA	532B
					BRIDE	BAND	STROP	RIEM	
6		**84423012**		1	INSTRUÇÃO, Instruction, Installation, Side Lamp				
						INSTRUCTION	INSTRUCCIÓN	ISTRUZIONI	Z571
					INSTRUCTION	ANLEITUNG	INSTRUKTION	INSTRUCTIE	

SR200

DIA KIT, PALLET FORK 48IN TINES (ALL CASE)
DIA KIT, PALLET FORK 48IN TINES (ALL CASE)
DIA KIT, PALLET FORK 48IN TINES (ALL CASE)
DIA KIT, PALLET FORK 48IN TINES (ALL CASE)



DIA KIT, PALLET FORK 48IN TINES (ALL CASE)
DIA KIT, PALLET FORK 48IN TINES (ALL CASE)
DIA KIT, PALLET FORK 48IN TINES (ALL CASE)
DIA KIT, PALLET FORK 48IN TINES (ALL CASE)

R	N	P.N.	MOD	Q	Denominação Description	Description Bezeichnung	Denominacion Beskrivelse	Descrizione Beschrijving	L.C.
		84397634			JOGO, DIA Kit, Pallet Fork, 48in Tines, Incl. 1-4				
					KIT	JEUGO	KIT	4830	
					POCHETTE	PACKUNG	KIT	KIT	
1		**84332182**		1	ESTRUTURA, Pallet, Fork	FRAME	BASTIDOR	TELAIO	077T
					CHASSIS	RAHMEN	FRAME	FRAME	
2		**86574055**		2	GARFO DA CAÇAMBA, Pallet, Fork, 48				
					BUCKET FORK	HORQUILLA DE CUCHAI	FORCA PER BENNA	127F	
					FOURCHE A GODET	GABELSCHAUFEL	SKOVLGAFFEL	VORK VOOR GRAAFBAK	
3		**84368123**		1	ADESIVO, Pallet, Fork	DECAL	CALCOMANÍA	DECALCOMANIA	012D
					AUTOCOLLANT	AUFKLEBER	TRANSFER	STICKER	
4		**84397636**		1	INSTRUÇÃO, Sheet, Pallet Fork				
						INSTRUCTION	INSTRUCCIÓN	ISTRUZIONI	Z571
					INSTRUCTION	ANLEITUNG	INSTRUKTION	INSTRUCTIE	

SR200

88.082.02		p1	01/11

DIA KIT, 66IN SPILL GUARD TAN (SR130-SR200)
DIA KIT, 66IN SPILL GUARD TAN (SR130-SR200)
DIA KIT, 66IN SPILL GUARD TAN (SR130-SR200)
DIA KIT, 66IN SPILL GUARD TAN (SR130-SR200)



DIA KIT, 66IN SPILL GUARD TAN (SR130-SR200)
DIA KIT, 66IN SPILL GUARD TAN (SR130-SR200)
DIA KIT, 66IN SPILL GUARD TAN (SR130-SR200)
DIA KIT, 66IN SPILL GUARD TAN (SR130-SR200)

R	N	P.N.	MOD	Q	Denominação Description	Description Bezeichnung	Denominacion Beskrivelse	Descrizione Beschrijving	L.C.
		84344481			JOGO, DIA Kit, 66in Spill Guard, Tan, Incl. 1-6				
						KIT	JEUGO	KIT	4830
					POCHETTE	PACKUNG	KIT	KIT	
1		**84263252**		1	EXTENSÃO, 66 Spill Guard, Tan				
						EXTENSION	EXTENSIÓN	PROLUNGA	226P
					RALLONGE	ERWEITERUNG	FORLÆNGNING	VERLENGSTUK	
2		**120044**		2	PARAFUSO, Short NK, M12 x 30, Cl8.8, Full Thd				
						CARRIAGE BOLT	PERNO ALOMADO	BULLONE A TESTA TONI	P123
					VIS A TETE BOMBEE	SCHLOSSSCHRAUBE	BRÆDDEBOLT	SLOTBOUT	
3		**86512497**		2	PORCA, M12 x 1.75, Flg, Cl 10				
						NUT	TUERCA	DADO	010D
					ECROU	MUTTER	MØTRIK	MOER	
4		**9804262**		4	PARAFUSO, Hex Flg, M10 x 30, 8.8				
						BOLT	PERNO	BULLONE	140B
					VIS	SCHRAUBE	BOLT	BOUT	
5		**390618A1**		4	PORCA DE INSERCAO, M10, Threaded				
						INSERT	TUERCA DE INSERCION	INSERTO	4675
					DOUILLE RAPPORTEE	EINSATZ	INSERT	INSERT	
6		**84353935**		1	INSTRUÇÃO, Installation	INSTRUCTION	INSTRUCCIÓN	ISTRUZIONI	Z571
					INSTRUCTION	ANLEITUNG	INSTRUKTION	INSTRUCTIE	

SR200

DIA KIT, 72IN SPILL GUARD TAN (SR130-TR270)
DIA KIT, 72IN SPILL GUARD TAN (SR130-TR270)
DIA KIT, 72IN SPILL GUARD TAN (SR130-TR270)
DIA KIT, 72IN SPILL GUARD TAN (SR130-TR270)



DIA KIT, 72IN SPILL GUARD TAN (SR130-TR270)
DIA KIT, 72IN SPILL GUARD TAN (SR130-TR270)
DIA KIT, 72IN SPILL GUARD TAN (SR130-TR270)
DIA KIT, 72IN SPILL GUARD TAN (SR130-TR270)

R	N	P.N.	MOD	Q	Denominação Description	Description Bezeichnung	Denominacion Beskrivelse	Descrizione Beschrijving	L.C.
		84344505			JOGO, DIA Kit, 72in Spill Guard, Tan, Incl. 1-6				
						KIT	JEUGO	KIT	4830
					POCHETTE	PACKUNG	KIT	KIT	
1		**84263254**		1	EXTENSÃO, 72in Spill Guard, Tan				
						EXTENSION	EXTENSIÓN	PROLUNGA	226P
					RALLONGE	ERWEITERUNG	FORLÆNGNING	VERLENGSTUK	
2		**120044**		2	PARAFUSO, Short NK, M12 x 30, Cl8.8, Full Thd				
						CARRIAGE BOLT	PERNO ALOMADO	BULLONE A TESTA TONI	P123
					VIS A TETE BOMBEE	SCHLOSSSCHRAUBE	BRÆDDEBOLT	SLOTBOUT	
3		**86512497**		2	PORCA, M12 x 1.75, Flg, Cl 10				
						NUT	TUERCA	DADO	010D
					ECROU	MUTTER	MØTRIK	MOER	
4		**9804262**		4	PARAFUSO, Hex Flg, M10 x 30, 8.8				
						BOLT	PERNO	BULLONE	140B
					VIS	SCHRAUBE	BOLT	BOUT	
5		**390618A1**		4	PORCA DE INSERCAO, M10, Threaded				
						INSERT	TUERCA DE INSERCION	INSERTO	4675
					DOUILLE RAPPORTEE	EINSATZ	INSERT	INSERT	
6		**84353935**		1	INSTRUÇÃO, Installation	INSTRUCTION	INSTRUCCIÓN	ISTRUZIONI	Z571
					INSTRUCTION	ANLEITUNG	INSTRUKTION	INSTRUCTIE	

SR200

DIA KIT, 78IN SPILL GUARD TAN (SR175-TV380)
DIA KIT, 78IN SPILL GUARD TAN (SR175-TV380)
DIA KIT, 78IN SPILL GUARD TAN (SR175-TV380)
DIA KIT, 78IN SPILL GUARD TAN (SR175-TV380)



DIA KIT, 78IN SPILL GUARD TAN (SR175-TV380)
DIA KIT, 78IN SPILL GUARD TAN (SR175-TV380)
DIA KIT, 78IN SPILL GUARD TAN (SR175-TV380)
DIA KIT, 78IN SPILL GUARD TAN (SR175-TV380)

R	N	P.N.	MOD	Q	Denominação Description Description Bezeichnung	Denominacion Beskrivelse	Descrizione Beschrijving	L.C.
		84344510			JOGO, DIA Kit, 78in Spill Guard, Tan, Incl. 1-6			
					KIT	JEUGO	KIT	4830
					POCHETTE	PACKUNG	KIT	KIT
1		**84263256**		1	EXTENSÃO, 78in Spill Guard, Tan			
					EXTENSION	EXTENSIÓN	PROLUNGA	226P
					RALLONGE	ERWEITERUNG	FORLÆNGNING	VERLENGSTUK
2		**120044**		2	PARAFUSO, Short NK, M12 x 30, Cl8.8, Full Thd			
					CARRIAGE BOLT	PERNO ALOMADO	BULLONE A TESTA TONI	P123
					VIS A TETE BOMBEE	SCHLOSSSCHRAUBE	BRÆDDEBOLT	SLOTBOUT
3		**86512497**		2	PORCA, M12 x 1.75, Flg, Cl 10			
					NUT	TUERCA	DADO	010D
					ECROU	MUTTER	MØTRIK	MOER
4		**9804262**		4	PARAFUSO, Hex Flg, M10 x 30, 8.8			
					BOLT	PERNO	BULLONE	140B
					VIS	SCHRAUBE	BOLT	BOUT
5		**390618A1**		4	PORCA DE INSERCAO, M10, Threaded			
					INSERT	TUERCA DE INSERCION	INSERTO	4675
					DOUILLE RAPPORTEE	EINSATZ	INSERT	INSERT
6		**84353935**		1	INSTRUÇÃO, Installation	INSTRUCTION	INSTRUCCIÓN	ISTRUZIONI	Z571
					INSTRUCTION	ANLEITUNG	INSTRUKTION	INSTRUCTIE

SR200

88.082.05		p1	03/11

DIA KIT, 84IN SPILL GUARD (SR220-SR300,TR320,TV380)
DIA KIT, 84IN SPILL GUARD (SR220-SR300,TR320,TV380)
DIA KIT, 84IN SPILL GUARD (SR220-SR300,TR320,TV380)
DIA KIT, 84IN SPILL GUARD (SR220-SR300,TR320,TV380)



DIA KIT, 84IN SPILL GUARD (SR220-SR300,TR320,TV380)
DIA KIT, 84IN SPILL GUARD (SR220-SR300,TR320,TV380)
DIA KIT, 84IN SPILL GUARD (SR220-SR300,TR320,TV380)
DIA KIT, 84IN SPILL GUARD (SR220-SR300,TR320,TV380)

R	N	P.N.	MOD	Q	Denominação Description	Description Bezeichnung	Denominacion Beskrivelse	Descrizione Beschrijving	L.C.
		84344518			JOGO, DIA Kit, 84in Spill Guard, Tan, Incl. 1-6				
						KIT	JEUGO	KIT	4830
					POCHETTE	PACKUNG	KIT	KIT	
1		**84263258**		1	EXTENSÃO, 84in Spill Guard, Tan				
						EXTENSION	EXTENSIÓN	PROLUNGA	226P
					RALLONGE	ERWEITERUNG	FORLÆNGNING	VERLENGSTUK	
2		**120044**		2	PARAFUSO, Short NK, M12 x 30, Cl8.8, Full Thd				
						CARRIAGE BOLT	PERNO ALOMADO	BULLONE A TESTA TONI	P123
					VIS A TETE BOMBEE	SCHLOSSSCHRAUBE	BRÆDDEBOLT	SLOTBOUT	
3		**86512497**		2	PORCA, M12 x 1.75, Flg, Cl 10				
						NUT	TUERCA	DADO	010D
					ECROU	MUTTER	MØTRIK	MOER	
4		**9804262**		4	PARAFUSO, Hex Flg, M10 x 30, 8.8				
						BOLT	PERNO	BULLONE	140B
					VIS	SCHRAUBE	BOLT	BOUT	
5		**390618A1**		4	PORCA DE INSERCAO, M10, Threaded				
						INSERT	TUERCA DE INSERCION	INSERTO	4675
					DOUILLE RAPPORTEE	EINSATZ	INSERT	INSERT	
6		**84353935**		1	INSTRUÇÃO, Installation	INSTRUCTION	INSTRUCCIÓN	ISTRUZIONI	Z571
					INSTRUCTION	ANLEITUNG	INSTRUKTION	INSTRUCTIE	

88.082.07		p1	01/11

DIA KIT, 66IN B.O.C.E. (SR130-SR200)
DIA KIT, 66IN B.O.C.E. (SR130-SR200)
DIA KIT, 66IN B.O.C.E. (SR130-SR200)
DIA KIT, 66IN B.O.C.E. (SR130-SR200)



DIA KIT, 66IN B.O.C.E. (SR130-SR200)
DIA KIT, 66IN B.O.C.E. (SR130-SR200)
DIA KIT, 66IN B.O.C.E. (SR130-SR200)
DIA KIT, 66IN B.O.C.E. (SR130-SR200)

R	N	P.N.	MOD	Q	Denominação Description Bezeichnung	Description Bezeichnung	Denominacion Beskrivelse	Descrizione Beschrijving	L.C.
		84399877			JOGO, 66in B.O.C.E., Incl. 1-4				
						KIT	JEUGO	KIT	4830
					POCHETTE	PACKUNG	KIT	KIT	
1		**86577167**		1	BORDA CORTANTE, 66in, Bolt On				
						CUTTING EDGE	BORDE DE CORTE	BORDO TAGLIENTE	018T
					BORD TRANCHANT	SCHNEIDKANTE	SKÆREKANT	SNIJRAND	
2		**86548338**		7	PARAFUSO DE ARADO, 5/8"-11 x 2", G5				
						PLOW BOLT	PERNO DE ARADO	BULLONE SCANALATO	P128
					BOULON DE CHARRUE	PFLUGSCHRAUBE	PLOVRIGEL	PLOEGBOUT	
3		**280374**		7	PORCA, 5/8"-11, G5	NUT	TUERCA	DADO	010D
					ECROU	MUTTER	MØTRIK	MOER	
4		**84399871**		1	INSTRUÇÃO, Sheet, B.O.C.E.				
						INSTRUCTION	INSTRUCCIÓN	ISTRUZIONI	Z571
					INSTRUCTION	ANLEITUNG	INSTRUKTION	INSTRUCTIE	

SR200

88.082.08		p1	01/11

DIA KIT, 72IN B.O.C.E. (SR130-TR270)
DIA KIT, 72IN B.O.C.E. (SR130-TR270)
DIA KIT, 72IN B.O.C.E. (SR130-TR270)
DIA KIT, 72IN B.O.C.E. (SR130-TR270)



DIA KIT, 72IN B.O.C.E. (SR130-TR270)
DIA KIT, 72IN B.O.C.E. (SR130-TR270)
DIA KIT, 72IN B.O.C.E. (SR130-TR270)
DIA KIT, 72IN B.O.C.E. (SR130-TR270)

R	N	P.N.	MOD	Q	Denominação Description Bezeichnung	Description Bezeichnung	Denominacion Beskrivelse	Descrizione Beschrijving	L.C.
		84399878			JOGO, DIA Kit, 72in B.O.C.E., Incl. 1-4				
						KIT	JEUGO	KIT	4830
					POCHETTE	PACKUNG	KIT	KIT	
1		**86577169**		1	BORDA CORTANTE, 72in, Bolt On				
						CUTTING EDGE	BORDE DE CORTE	BORDO TAGLIENTE	018T
					BORD TRANCHANT	SCHNEIDKANTE	SKÆREKANT	SNIJRAND	
2		**86548338**		7	PARAFUSO DE ARADO, 5/8"-11 x 2", G5				
						PLOW BOLT	PERNO DE ARADO	BULLONE SCANALATO	P128
					BOULON DE CHARRUE	PFLUGSCHRAUBE	PLOVRIGEL	PLOEGBOUT	
3		**280374**		7	PORCA, 5/8"-11, G5	NUT	TUERCA	DADO	010D
					ECROU	MUTTER	MØTRIK	MOER	
4		**84399879**		1	INSTRUÇÃO, Sheet, B.O.C.E.				
						INSTRUCTION	INSTRUCCIÓN	ISTRUZIONI	Z571
					INSTRUCTION	ANLEITUNG	INSTRUKTION	INSTRUCTIE	

SR200

88.082.09		p1	02/11

DIA KIT, 78IN B.O.C.E. (SR175-TV380)
DIA KIT, 78IN B.O.C.E. (SR175-TV380)
DIA KIT, 78IN B.O.C.E. (SR175-TV380)
DIA KIT, 78IN B.O.C.E. (SR175-TV380)



DIA KIT, 78IN B.O.C.E. (SR175-TV380)
DIA KIT, 78IN B.O.C.E. (SR175-TV380)
DIA KIT, 78IN B.O.C.E. (SR175-TV380)
DIA KIT, 78IN B.O.C.E. (SR175-TV380)

R	N	P.N.	MOD	Q	Denominação Description Bezeichnung	Description Bezeichnung	Denominacion Beskrivelse	Descrizione Beschrijving	L.C.
		84402211			JOGO, DIA Kit, 78in B.O.C.E., Incl. 1-4				
						KIT	JEUGO	KIT	4830
					POCHETTE	PACKUNG	KIT	KIT	
1		**86577171**		1	BORDA CORTANTE, 78in, Bolt On				
						CUTTING EDGE	BORDE DE CORTE	BORDO TAGLIENTE	018T
					BORD TRANCHANT	SCHNEIDKANTE	SKÆREKANT	SNIJRAND	
2		**86548338**		9	PARAFUSO DE ARADO, 5/8"-11 x 2", G5				
						PLOW BOLT	PERNO DE ARADO	BULLONE SCANALATO	P128
					BOULON DE CHARRUE	PFLUGSCHRAUBE	PLOVRIGEL	PLOEGBOUT	
3		**280374**		9	PORCA, 5/8"-11, G5	NUT	TUERCA	DADO	010D
					ECROU	MUTTER	MØTRIK	MOER	
4		**84402946**		1	INSTRUÇÃO, Sheet, B.O.C.E.				
						INSTRUCTION	INSTRUCCIÓN	ISTRUZIONI	Z571
					INSTRUCTION	ANLEITUNG	INSTRUKTION	INSTRUCTIE	

SR200

88.082.10		p1	01/11

DIA KIT, 84IN B.O.C.E. (SR175-TV380)
DIA KIT, 84IN B.O.C.E. (SR175-TV380)
DIA KIT, 84IN B.O.C.E. (SR175-TV380)
DIA KIT, 84IN B.O.C.E. (SR175-TV380)



DIA KIT, 84IN B.O.C.E. (SR175-TV380)
DIA KIT, 84IN B.O.C.E. (SR175-TV380)
DIA KIT, 84IN B.O.C.E. (SR175-TV380)
DIA KIT, 84IN B.O.C.E. (SR175-TV380)

R	N	P.N.	MOD	Q	Denominação Description Description Bezeichnung	Denominacion Beskrivelse	Descrizione Beschrijving	L.C.
		84402199			JOGO, DIA Kit, 84in B.O.C.E., Incl. 1-4			
					KIT	JEUGO	KIT	4830
					POCHETTE	PACKUNG	KIT	KIT
1		**86577173**		1	BORDA CORTANTE, 84in, Bolt On			
					CUTTING EDGE	BORDE DE CORTE	BORDO TAGLIENTE	018T
					BORD TRANCHANT	SCHNEIDKANTE	SKÆREKANT	SNIJRAND
2		**86548338**		9	PARAFUSO DE ARADO, 5/8"-11 x 2", G5			
					PLOW BOLT	PERNO DE ARADO	BULLONE SCANALATO	P128
					BOULON DE CHARRUE	PFLUGSCHRAUBE	PLOVRIGEL	PLOEGBOUT
3		**280374**		9	PORCA, 5/8"-11, G5	NUT	TUERCA	DADO	010D
					ECROU	MUTTER	MØTRIK	MOER
4		**84402215**		1	INSTRUÇÃO, Sheet, B.O.C.E.			
					INSTRUCTION	INSTRUCCIÓN	ISTRUZIONI	Z571
					INSTRUCTION	ANLEITUNG	INSTRUKTION	INSTRUCTIE

SR200

DIA KIT, BUCKET TEETH (ALL CASE)
DIA KIT, BUCKET TEETH (ALL CASE)
DIA KIT, BUCKET TEETH (ALL CASE)
DIA KIT, BUCKET TEETH (ALL CASE)



DIA KIT, BUCKET TEETH (ALL CASE)
DIA KIT, BUCKET TEETH (ALL CASE)
DIA KIT, BUCKET TEETH (ALL CASE)
DIA KIT, BUCKET TEETH (ALL CASE)

R	N	P.N.	MOD	Q	Denominação Description Bezeichnung	Denominacion Beskrivelse	Descrizione Beschrijving	L.C.
		84425857			JOGO, DIA Kit, Bucket Teeth, Incl. 1-4			
					KIT	JEUGO	KIT	4830
					POCHETTE	PACKUNG	KIT	KIT
1		**84239378**		9	DENTE, Bolt On	TOOTH	DIENTE	DENTI 9130
					DENT	ZAHN	TAND	TAND
2		**280374**		18	PORCA, 5/8"-11, G5	NUT	TUERCA	DADO 010D
					ECROU	MUTTER	MØTRIK	MOER
3		**86548338**		18	PARAFUSO DE ARADO, 5/8"-11 x 2", G5			
					PLOW BOLT	PERNO DE ARADO	BULLONE SCANALATO	P128
					BOULON DE CHARRUE	PFLUGSCHRAUBE	PLOVRIGEL	PLOEGBOUT
4		**84425858**		1	INSTRUÇÃO, Sheet, Bucket Teeth			
					INSTRUCTION	INSTRUCCIÓN	ISTRUZIONI	Z571
					INSTRUCTION	ANLEITUNG	INSTRUKTION	INSTRUCTIE

SR200

DIA KIT, BUCKETS - FIELD (ALL CASE)
DIA KIT, BUCKETS - FIELD (ALL CASE)
DIA KIT, BUCKETS - FIELD (ALL CASE)
DIA KIT, BUCKETS - FIELD (ALL CASE)



DIA KIT, BUCKETS - FIELD (ALL CASE)
DIA KIT, BUCKETS - FIELD (ALL CASE)
DIA KIT, BUCKETS - FIELD (ALL CASE)
DIA KIT, BUCKETS - FIELD (ALL CASE)

R	N	P.N.	MOD	Q	Denominação Description Description Bezeichnung Denominacion Beskrivelse Descrizione Beschrijving	L.C.
1		{84363499}			DIA Kit, Bucket 60in DF, (SR130,SR150)	
2		{84363506}			DIA Kit, Bucket 66in DF, (SR130-SR200)	
3		{84363507}			DIA Kit, Bucket 72in DF, (SR130-TR270)	
4		{84363512}			DIA Kit, Bucket 78in DF, (SR175-TV380)	
5		{84363513}			DIA Kit, Bucket 60in LP, (SR130,SR150)	
6		{84363517}			DIA Kit, Bucket 66in LP, (SR130-SR200)	
7		{84363518}			DIA Kit, Bucket 72in LP, (SR130-TR270)	
8		{84363521}			DIA Kit, Bucket 60in LPE, (SR130,SR150)	
9		{84363522}			DIA Kit, Bucket 66in LPE, (SR130-SR200)	
10		{84363528}			DIA Kit, Bucket 72in LPE, (SR130-TR270)	
11		{84363529}			DIA Kit, Bucket 78in LPE, (SR175-TV380)	
12		{84363536}			DIA Kit, Bucket 84in LPE, (SR175-TV380)	
13		{84363537}			DIA Kit, Bucket 60in LM, (SR130,SR150)	
14		{84363550}			DIA Kit, Bucket 72in LM, (SR130-TR270)	
15		{84363551}			DIA Kit, Bucket 84in LM, (SR175-TV380)	
16		{84363556}			DIA Kit, Bucket 60in MS, (SR130,SR150)	

DIA KIT, BUCKETS - FIELD (ALL CASE)
DIA KIT, BUCKETS - FIELD (ALL CASE)
DIA KIT, BUCKETS - FIELD (ALL CASE)
DIA KIT, BUCKETS - FIELD (ALL CASE)



DIA KIT, BUCKETS - FIELD (ALL CASE)
DIA KIT, BUCKETS - FIELD (ALL CASE)
DIA KIT, BUCKETS - FIELD (ALL CASE)
DIA KIT, BUCKETS - FIELD (ALL CASE)

R	N	P.N.	MOD	Q	Denominação Description	Description Bezeichnung	Denominacion Beskrivelse	Descrizione Beschrijving	L.C.
17		{84363558}			DIA Kit, Bucket 72in MS, (SR130-TR270)				
18		{84363562}			DIA Kit, Bucket 84in MS, (SR175-TV380)				
19		{84363563}			DIA Kit, Bucket 66in HD, (SR130-SR200)				
20		{84363568}			DIA Kit, Bucket 72in HD, (SR130-TR270)				
21		{84363570}			DIA Kit, Bucket 78in HD, (SR175-TV380)				
22		{84363573}			DIA Kit, Bucket 84in HD, (SR220-TV380)				

88.088.02		p1	03/11

DIA KIT, SINGLE POINT LIFT HOOK (SR175,SR200,TR270)
DIA KIT, SINGLE POINT LIFT HOOK (SR175,SR200,TR270)
DIA KIT, SINGLE POINT LIFT HOOK (SR175,SR200,TR270)
DIA KIT, SINGLE POINT LIFT HOOK (SR175,SR200,TR270)



DIA KIT, SINGLE POINT LIFT HOOK (SR175,SR200,TR270)
DIA KIT, SINGLE POINT LIFT HOOK (SR175,SR200,TR270)
DIA KIT, SINGLE POINT LIFT HOOK (SR175,SR200,TR270)
DIA KIT, SINGLE POINT LIFT HOOK (SR175,SR200,TR270)

R	N	P.N.	MOD	Q	Denominação Description	Description Bezeichnung	Denominacion Beskrivelse	Descrizione Beschrijving	L.C.
		84408953			KIT DE SERVIÇO, DIA Kit, Single Point Lift Hook, Incl. 1-14				
						SERVICE KIT	KIT DE SERVICIO	KIT DI MANUTENZIONE	021K
					KIT D'ENTRETIEN	SERVICE-SATZ	SERVICESÆT	SERVICEKIT	
1		**9804277**		4	PORCA, M8 x 1.25, Flg, Cl 8				
						NUT	TUERCA	DADO	010D
					ECROU	MUTTER	MØTRIK	MOER	
2		**84362347**		1	SUPORTE, Single Point, Gray				
						CARRIER	SOPORTE	SUPPORTO	196P
					SUPPORT	TRÄGER	MEDBRINGER	DRAGER	
3		**84382183**		2	PLACA, Lift Strap, Gray	PLATE	PLACA	PIASTRA	105P
					PLAQUE	PLATTE	PLADE	PLAAT	
4		**84388634**		2	PLACA PLÁSTICA, Spacer, Nylatron Block				
						PLASTIC PLATE	PLACA DE PLÁSTICO	PIASTRA DI PLASTICA	P778
					PLAQUE EN PLASTIQUE	KUNSTSTOFFPLATTE	PLASTPLADE	KUNSTSTOFPLAAT	
5		**84408941**		1	PINO, Gray	PIN	PASADOR	PERNO	080P
					BROCHE	PIN	STIFT	PEN	
6		**84409141**		2	PLACA, Spacer	PLATE	PLACA	PIASTRA	105P
					PLAQUE	PLATTE	PLADE	PLAAT	
7		**84409170**		2	PLACA, Cover, Gray	PLATE	PLACA	PIASTRA	105P
					PLAQUE	PLATTE	PLADE	PLAAT	
8		**86625221**		4	PARAFUSO, Hex Soc Hd, M8 x 30, 8.8				
						SCREW	TORNILLO	VITE	040V
					VIS	SCHRAUBE	SKRUE	SCHROEF	
9		**87301277**		6	PARAFUSO, M12 X 60	BOLT	PERNO	BULLONE	140B
					VIS	SCHRAUBE	BOLT	BOUT	
10		**87564735**		4	PARAFUSO, M10 X 35	BOLT	PERNO	BULLONE	140B
					VIS	SCHRAUBE	BOLT	BOUT	
11		**87681209**		8	PORCA, M12	NUT	TUERCA	DADO	010D
					ECROU	MUTTER	MØTRIK	MOER	
12		**87698845**		2	PARAFUSO, M12 X 70	BOLT	PERNO	BULLONE	140B
					VIS	SCHRAUBE	BOLT	BOUT	
13		**84475165**		1	INSTRUÇÃO, Instruction, Single Point Med Radial				
						INSTRUCTION	INSTRUCCIÓN	ISTRUZIONI	Z571
					INSTRUCTION	ANLEITUNG	INSTRUKTION	INSTRUCTIE	
14		**139729A1**		2	DECALCOMANIA, Lift	DECAL	CALCOMANIA	AUTOADESIVO	P903
					DECALCOMANIE	ABZIEHBILD	DECAL	DECAL	

SR200

DIA KIT, RADIO (ALL CASE)
DIA KIT, RADIO (ALL CASE)
DIA KIT, RADIO (ALL CASE)
DIA KIT, RADIO (ALL CASE)



DIA KIT, RADIO (ALL CASE)
DIA KIT, RADIO (ALL CASE)
DIA KIT, RADIO (ALL CASE)
DIA KIT, RADIO (ALL CASE)

R	N	P.N.	MOD	Q	Denominação Description	Description Bezeichnung	Denominacion Beskrivelse	Descrizione Beschrijving	L.C.
		84420704			JOGO, DIA Kit, Radio, Incl. 1-14				
						KIT	JEUGO	KIT	4830
					POCHETTE	PACKUNG	KIT	KIT	
1		**9804258**		2	PARAFUSO, Hex Flg, M8 x 20, 8.8				
						BOLT	PERNO	BULLONE	140B
					VIS	SCHRAUBE	BOLT	BOUT	
2		**84281707**		2	SUPORTE, Sheet, Speaker Bracket, Gray				
						BRACKET	SOPORTE	STAFFA	225S
					SUPPORT	HALTERUNG	BESLAG	STEUN	
3		**84281708**		1	SUPORTE, Sheet, Radio Bracket, Gray				
						BRACKET	SOPORTE	STAFFA	225S
					SUPPORT	HALTERUNG	BESLAG	STEUN	
4		**84298557**		2	ALTO-FALANTE, 4in, Sealed HP				
						SPEAKER	ALTAVOZ	ALTOPARLANTE	039A
					HAUT-PARLEUR	LAUTSPRECHER	HØJTALER	LUIDSPREKER	
5		**84347538**		1	ESPUMA ISOLANTE, Antenna Seal				
						FOAM INSULATION	ESPUMA AISLANTE	ISOLANTE IN SCHIUMA	051S
					MOUSSE ISOLANTE	SCHAUMSTOFFISOLIER	SKUM ISOLERING	SCHUIMISOLATIE	
6		**86500939**		8	PARAFUSO, Hex Wash Hd, #10 x 3/8"				
						SELF-TAP SCREW	TORNILLO AUTORROSC	VITE AUTOFILETTANTE	062V
					VIS AUTOTARAUDEUSE	SELBSTSCHN SCHRAUE	SELVLÅSENDE BOLT	ZELFTAPPENDE SCHRO	
7		**13272611**		4	PARAFUSO	SCREW	TORNILLO	VITE	040V
					VIS	SCHRAUBE	SKRUE	SCHROEF	
8		**86624182**		4	ARRUELA PLANA, M6 x 18 x 1.6				
						WASHER	ARANDELA	RONDELLA	131R
					RONDELLE	UNTERLEGSCHEIBE	FLADSKIVE	SLUITRING	
9		**86625199**		4	PARAFUSO, Hex Flg Hd, M6 x 13				
						SELF-TAP SCREW	TORNILLO AUTORROSC	VITE AUTOFILETTANTE	062V
					VIS AUTOTARAUDEUSE	SELBSTSCHN SCHRAUE	SELVLÅSENDE BOLT	ZELFTAPPENDE SCHRO	
10		**86625241**		2	ARRUELA PLANA	WASHER	ARANDELA	RONDELLA	131R
					RONDELLE	UNTERLEGSCHEIBE	FLADSKIVE	SLUITRING	
11		**87668735**		1	ANTENA, Rubber Mast	ANTENNA	ANTENA	ANTENNA	064A
					ANTENNE	ANTENNE	ANTENNE	ANTENNE	
12		**87672223**		1	RÁDIO	RADIO	RADIO	AUTORADIO	042R
					RADIO	RADIO	RADIO	RADIO	
13		**84420705**		1	INSTRUÇÃO, Radio Kit	INSTRUCTION	INSTRUCCIÓN	ISTRUZIONI	Z571
					INSTRUCTION	ANLEITUNG	INSTRUKTION	INSTRUCTIE	
14		**84363241**		1	ESPAÇADOR, Radio Cooling				
						SPACER	SEPARADOR	DISTANZIALE	075D
					ENTRETOISE	DISTANZSTÜCK	AFSTANDSSTYKKE	AFSTANDSSTUK	

88.088.07		p1	02/11

DIA KIT, 4 POINT LIFT HOOK (SR175-SR200,TR270)
DIA KIT, 4 POINT LIFT HOOK (SR175-SR200,TR270)
DIA KIT, 4 POINT LIFT HOOK (SR175-SR200,TR270)
DIA KIT, 4 POINT LIFT HOOK (SR175-SR200,TR270)



DIA KIT, 4 POINT LIFT HOOK (SR175-SR200,TR270)
DIA KIT, 4 POINT LIFT HOOK (SR175-SR200,TR270)
DIA KIT, 4 POINT LIFT HOOK (SR175-SR200,TR270)
DIA KIT, 4 POINT LIFT HOOK (SR175-SR200,TR270)

R	N	P.N.	MOD	Q	Denominação Description	Description Bezeichnung	Denominacion Beskrivelse	Descrizione Beschrijving	L.C.
		84405090			KIT DE SERVIÇO, DIA Kit, 4 Point Lift Hook, Incl. 1-9				
						SERVICE KIT	KIT DE SERVICIO	KIT DI MANUTENZIONE	021K
					KIT D'ENTRETIEN	SERVICE-SATZ	SERVICESÆT	SERVICEKIT	
1		**87698849**		4	PARAFUSO, M16 X 50	BOLT	PERNO	BULLONE	140B
					VIS	SCHRAUBE	BOLT	BOUT	
2		**86512498**		4	PORCA, M16 x 2, Flg, Cl 10	NUT	TUERCA	DADO	010D
					ECROU	MUTTER	MØTRIK	MOER	
3		**84362131**		2	SUPORTE, Lift, Gray	BRACKET	SOPORTE	STAFFA	225S
					SUPPORT	HALTERUNG	BESLAG	STEUN	
4		**87695413**		4	PARAFUSO, Flange	BOLT	PERNO	BULLONE	140B
					VIS	SCHRAUBE	BOLT	BOUT	
5		**87533547**		4	PORCA, M12 X 1.75	NUT	TUERCA	DADO	010D
					ECROU	MUTTER	MØTRIK	MOER	
6		**139729A1**		4	DECALCOMANIA, Lift	DECAL	CALCOMANIA	AUTOADESIVO	P903
					DECALCOMANIE	ABZIEHBILD	DECAL	DECAL	
7		**84403433**		1	SUPORTE, WA, Lift, RH, Gray				
						BRACKET	SOPORTE	STAFFA	225S
					SUPPORT	HALTERUNG	BESLAG	STEUN	
8		**84403431**		1	SUPORTE, WA, Lift, LH, Gray				
						BRACKET	SOPORTE	STAFFA	225S
					SUPPORT	HALTERUNG	BESLAG	STEUN	
9		**84405093**		1	INSTRUÇÃO, 4 Point Lift Hook				
						INSTRUCTION	INSTRUCCIÓN	ISTRUZIONI	Z571
					INSTRUCTION	ANLEITUNG	INSTRUKTION	INSTRUCTIE	

DIA KIT, FOPS LEVEL 2 MODS (ALL CASE)
DIA KIT, FOPS LEVEL 2 MODS (ALL CASE)
DIA KIT, FOPS LEVEL 2 MODS (ALL CASE)
DIA KIT, FOPS LEVEL 2 MODS (ALL CASE)



DIA KIT, FOPS LEVEL 2 MODS (ALL CASE)
DIA KIT, FOPS LEVEL 2 MODS (ALL CASE)
DIA KIT, FOPS LEVEL 2 MODS (ALL CASE)
DIA KIT, FOPS LEVEL 2 MODS (ALL CASE)

R	N	P.N.	MOD	Q	Denominação Description Bezeichnung	Description Bezeichnung	Denominacion Beskrivelse	Descrizione Beschrijving	L.C.
		84350193			JOGO, DIA Kit, FOPS, Level 2, Mods, Incl. 1-3				
						KIT	JEUGO	KIT	4830
					POCHETTE	PACKUNG	KIT	KIT	
1		**84350192**		1	CHASSI DE SEGURANÇA, FOPS, Gray				
						ROPS	SIST. PROT. ANTIVUELC	TELAIO DI SICUREZZA F	078T
					PAVILLON DE SECURITE	ROPS	FØRERVÆRN	ROPS	
2		**84305556**		4	PARAFUSO, M6 X 25	SCREW	TORNILLO	VITE	040V
					VIS	SCHRAUBE	SKRUE	SCHROEF	
3		**84272827**		4	REBITE, M6 X 1.0	RIVET	REMACHE	RIVETTO	055R
					RIVET	NIET	NITTE	KLINKNAGEL	
4		**84368519**		1	INSTRUÇÃO, Installation, FOPS, Level 2				
						INSTRUCTION	INSTRUCCIÓN	ISTRUZIONI	Z571
					INSTRUCTION	ANLEITUNG	INSTRUKTION	INSTRUCTIE	

DIA KIT, MIRROR (ALL CASE)
DIA KIT, MIRROR (ALL CASE)
DIA KIT, MIRROR (ALL CASE)
DIA KIT, MIRROR (ALL CASE)



DIA KIT, MIRROR (ALL CASE)
DIA KIT, MIRROR (ALL CASE)
DIA KIT, MIRROR (ALL CASE)
DIA KIT, MIRROR (ALL CASE)

R	N	P.N.	MOD	Q	Denominação Description	Description Bezeichnung	Denominacion Beskrivelse	Descrizione Beschrijving	L.C.
		84355806			KIT DE SERVIÇO, DIA Kit, Mirror, Incl. 1-9				
						SERVICE KIT	KIT DE SERVICIO	KIT DI MANUTENZIONE	021K
					KIT D'ENTRETIEN	SERVICE-SATZ	SERVICESÆT	SERVICEKIT	
1		**84369357**		1	SUPORTE, Mirror, RH, Gray				
						BRACKET	SOPORTE	STAFFA	225S
					SUPPORT	HALTERUNG	BESLAG	STEUN	
2		**84369358**		1	SUPORTE, Mirror, LH, Gray	BRACKET	SOPORTE	STAFFA	225S
					SUPPORT	HALTERUNG	BESLAG	STEUN	
3		**3962022**		2	ESPELHO ESQUERDO	LH MIRROR	ESPEJO IZQDA	SPECCHIETTO SX	184S
					RETROVISEUR GAUCHE	LINKER SPIEGEL	SPEJL, VENSTRE	SPIEGEL LINKS	
4		**87682398**		2	PARAFUSO	SCREW	TORNILLO	VITE	040V
					VIS	SCHRAUBE	SKRUE	SCHROEF	
5		**84285339**		2	PARAFUSO, M8 X 15	SELF-TAP SCREW	TORNILLO AUTORROSC	VITE AUTOFILETTANTE	062V
					VIS AUTOTARAUDEUSE	SELBSTSCHN SCHRAUE	SELVLÅSENDE BOLT	ZELFTAPPENDE SCHRO	
6		**43646**		4	PARAFUSO, M4 X 20	SCREW	TORNILLO	VITE	040V
					VIS	SCHRAUBE	SKRUE	SCHROEF	
7		**9824840**		4	ARRUELA PLANA, M4.3 x 9 x 0.8				
						WASHER	ARANDELA	RONDELLA	131R
					RONDELLE	UNTERLEGSCHEIBE	FLADSKIVE	SLUITRING	
8		**152799**		4	PORCA	NUT	TUERCA	DADO	010D
					ECROU	MUTTER	MØTRIK	MOER	
9		**84363713**		1	INSTRUÇÃO, Mirror Install	INSTRUCTION	INSTRUCCIÓN	ISTRUZIONI	Z571
					INSTRUCTION	ANLEITUNG	INSTRUKTION	INSTRUCTIE	

DIA KIT, DRAW BAR MED GRAY (SR175-SR200,TR270)
DIA KIT, DRAW BAR MED GRAY (SR175-SR200,TR270)
DIA KIT, DRAW BAR MED GRAY (SR175-SR200,TR270)
DIA KIT, DRAW BAR MED GRAY (SR175-SR200,TR270)



DIA KIT, DRAW BAR MED GRAY (SR175-SR200,TR270)
DIA KIT, DRAW BAR MED GRAY (SR175-SR200,TR270)
DIA KIT, DRAW BAR MED GRAY (SR175-SR200,TR270)
DIA KIT, DRAW BAR MED GRAY (SR175-SR200,TR270)

R	N	P.N.	MOD	Q	Denominação Description	Description Bezeichnung	Denominacion Beskrivelse	Descrizione Beschrijving	L.C.
		84306097			JOGO, DIA Kit, Draw Bar, Medium, Gray, Incl. 1-5				
						KIT	JEUGO	KIT	4830
					POCHETTE	PACKUNG	KIT	KIT	
1		**328754**		2	PARAFUSO, Short NK, M12 x 40, Cl8.8, Full Thd				
						SCREW	TORNILLO	VITE	040V
					VIS	SCHRAUBE	SKRUE	SCHROEF	
2		**86512497**		2	PORCA, M12 x 1.75, Flg, Cl 10				
						NUT	TUERCA	DADO	010D
					ECROU	MUTTER	MØTRIK	MOER	
3		**84372085**		1	BARRA DE TRAÇÃO, Medium, Gray				
						DRAWBAR	BARRA DE ENGANCHE	BARRA DI TRAINO	013B
					BARRE D'ATTELAGE	ZUGSTANGE	TRÆKBOM	TREKSTANG	
4		**87015923**		4	PARAFUSO, Hex Flg, M16 x 110, 10.9, Full Thd				
						BOLT	PERNO	BULLONE	140B
					VIS	SCHRAUBE	BOLT	BOUT	
5		**84362180**		1	INSTRUÇÃO, Installation	INSTRUCTION	INSTRUCCIÓN	ISTRUZIONI	Z571
					INSTRUCTION	ANLEITUNG	INSTRUKTION	INSTRUCTIE	

SR200

DIA KIT, FIRE EXTINGUISHER (ALL CASE)
DIA KIT, FIRE EXTINGUISHER (ALL CASE)
DIA KIT, FIRE EXTINGUISHER (ALL CASE)
DIA KIT, FIRE EXTINGUISHER (ALL CASE)



DIA KIT, FIRE EXTINGUISHER (ALL CASE)
DIA KIT, FIRE EXTINGUISHER (ALL CASE)
DIA KIT, FIRE EXTINGUISHER (ALL CASE)
DIA KIT, FIRE EXTINGUISHER (ALL CASE)

R	N	P.N.	MOD	Q	Denominação Description	Description Bezeichnung	Denominacion Beskrivelse	Descrizione Beschrijving	L.C.
		84300931			JOGO, DIA Kit, Fire Extinguisher, Incl. 1-6				
						KIT	JEUGO	KIT	4830
					POCHETTE	PACKUNG	KIT	KIT	
1		**84300929**		1	FIXADOR, Fire Extinguisher	MOUNT	SOPORTE	SUPPORTO	C022
					MONTAGE	GESTELL	BESLAG	BEVESTIGING	
2		**9804276**		3	PORCA, M6 x 1, Flg, Cl 8	NUT	TUERCA	DADO	010D
					ECROU	MUTTER	MØTRIK	MOER	
3		**86977726**		3	PARAFUSO, Hex, M6 x 12, 8.8				
						SCREW	TORNILLO	VITE	040V
					VIS	SCHRAUBE	SKRUE	SCHROEF	
4		**86625199**		2	PARAFUSO, Hex Flg Hd, M6 x 13				
						SELF-TAP SCREW	TORNILLO AUTORROSC	VITE AUTOFILETTANTE	062V
					VIS AUTOTARAUDEUSE	SELBSTSCHN SCHRAUE	SELVLÅSENDE BOLT	ZELFTAPPENDE SCHRO	
5		**84324365**		1	FIXADOR, Fire Extinguisher	MOUNT	SOPORTE	SUPPORTO	C022
					MONTAGE	GESTELL	BESLAG	BEVESTIGING	
6		**84325028**		1	INSTRUÇÃO, Installation, Fire Extinguisher				
						INSTRUCTION	INSTRUCCIÓN	ISTRUZIONI	Z571
					INSTRUCTION	ANLEITUNG	INSTRUKTION	INSTRUCTIE	

DIA KIT, DEMO REAR DOOR (ALL CASE)
DIA KIT, DEMO REAR DOOR (ALL CASE)
DIA KIT, DEMO REAR DOOR (ALL CASE)
DIA KIT, DEMO REAR DOOR (ALL CASE)



DIA KIT, DEMO REAR DOOR (ALL CASE)
DIA KIT, DEMO REAR DOOR (ALL CASE)
DIA KIT, DEMO REAR DOOR (ALL CASE)
DIA KIT, DEMO REAR DOOR (ALL CASE)

R	N	P.N.	MOD	Q	Denominação Description Bezeichnung	Description Bezeichnung	Denominacion Beskrivelse	Descrizione Beschrijving	L.C.
		84306068			JOGO, DIA Kit, Demo Rear Door, Incl. 1-4				
						KIT	JEUGO	KIT	4830
					POCHETTE	PACKUNG	KIT	KIT	
1		**9671714**		6	PARAFUSO, Hex Flg, M8 x 25, 8.8				
						BOLT	PERNO	BULLONE	140B
					VIS	SCHRAUBE	BOLT	BOUT	
2		**84329292**		1	PORTA, Heavy Duty, Gray	DOOR	PUERTA	SPORTELLO	180P
					PORTE	TÜR	DØR	PORTIER	
3		**84365533**		1	INSTRUÇÃO, Install, Demo Rear				
						INSTRUCTION	INSTRUCCIÓN	ISTRUZIONI	Z571
					INSTRUCTION	ANLEITUNG	INSTRUKTION	INSTRUCTIE	
4		**87752089**		1	BUJÃO, Pipe, 1/4 - 18	PLUG	TAPÓN	TAPPO	050T
					BOUCHON	STOPFEN	PROP	PLUG	

SR200

DIA KIT, GLASS FRONT DOOR (ALL CASE)
DIA KIT, GLASS FRONT DOOR (ALL CASE)
DIA KIT, GLASS FRONT DOOR (ALL CASE)
DIA KIT, GLASS FRONT DOOR (ALL CASE)



DIA KIT, GLASS FRONT DOOR (ALL CASE)
DIA KIT, GLASS FRONT DOOR (ALL CASE)
DIA KIT, GLASS FRONT DOOR (ALL CASE)
DIA KIT, GLASS FRONT DOOR (ALL CASE)

R	N	P.N.	MOD	Q	Denominação Description	Description Bezeichnung	Denominacion Beskrivelse	Descrizione Beschrijving	L.C.
		84427179			KIT DE SERVIÇO, DIA Kit, Glass Front Door, Incl. 1-23				
						SERVICE KIT	KIT DE SERVICIO	KIT DI MANUTENZIONE	021K
					KIT D'ENTRETIEN	SERVICE-SATZ	SERVICESÆT	SERVICEKIT	
1		**84272826**		2	REBITE, Nut, M6 X 1.0	RIVET	REMACHE	RIVETTO	055R
					RIVET	NIET	NITTE	KLINKNAGEL	
2		**84281703**		1	MANGUEIRA DO LAVADOR, Tube, Front Windshield Washer				
						HOSE WASHER	TUBO DE LAVAPARABRI	RONDELLA FLESSIBILE	A061
					TUYAU DE LAVE-GLACE	WASCHANLAGENSCHLA	SLANGE, SPRINKLER	SLUITRING VOOR SLAN(	
3		**84285452**		1	MANGUEIRA DO LAVADOR, Tube, Rear Windshield Washer				
						HOSE WASHER	TUBO DE LAVAPARABRI	RONDELLA FLESSIBILE	A061
					TUYAU DE LAVE-GLACE	WASCHANLAGENSCHLA	SLANGE, SPRINKLER	SLUITRING VOOR SLAN(	
4		**84285453**		2	MANGUEIRA DO LAVADOR, Tube, Washer Bottle				
						HOSE WASHER	TUBO DE LAVAPARABRI	RONDELLA FLESSIBILE	A061
					TUYAU DE LAVE-GLACE	WASCHANLAGENSCHLA	SLANGE, SPRINKLER	SLUITRING VOOR SLAN(	
5		**84306335**		1	T, Barb Connector	TEE	RACOR EN T	PEZZO A T	9020
					RACCORD EN T	T-STÜCK	T-STYKKE	T-STUK	
6		**84389613**		1	GARRAFA, Washer Assembly				
						BOTTLE	BOTELLA	BOTTIGLIA	102B
					BOUTEILLE	FLASCHE	FLASKE	FLES	
7		**84326923**		2	SUPORTE, Washer Bottle, CE Gray				
						BRACKET	SOPORTE	STAFFA	225S
					SUPPORT	HALTERUNG	BESLAG	STEUN	
8		**87335499**		1	INTERRUPTOR, Wiper/Washer				
						SWITCH	INTERRUPTOR	INTERRUTTORE	075I
					CONTACTEUR	SCHALTER	KONTAKT	SCHAKELAAR	
9		**87682398**		2	PARAFUSO	SCREW	TORNILLO	VITE	040V
					VIS	SCHRAUBE	SKRUE	SCHROEF	
10		**K307050**		1	VÁLVULA, Non-Return	VALVE	VÁLVULA	VALVOLA	9620
					SOUPAPE	VENTIL	VENTIL	KLEP	
11		**L11541**		6	PRENDEDOR DE CABOS, Nylon Tie, 7-8in.				
						CABLE STRAP	BANDA DE CABLE	FASCETTA PER CAVO	P716
					BRIDE DE CABLE	KABELBINDER	KABELSTROP	BUNDELBAND	
12		**84257150**		1	PORTA, Assembly, Jamb	DOOR	PUERTA	SPORTELLO	180P
					PORTE	TÜR	DØR	PORTIER	
13		**84415694**		1	PORTA, Assembly, Front	DOOR	PUERTA	SPORTELLO	180P
					PORTE	TÜR	DØR	PORTIER	
14		**84378453**		1	COMPASSO, Spring, Gas	GAS STRUT	COLUMNA DE GAS	AMMORTIZZATORE A G/	Z331
					BEQUILLE A GAZ	GASDRUCKFEDER	CYLINDER, GASSTØDD/	GASVEER	
15		**86624468**		1	ESPAÇADOR	SPACER	SEPARADOR	DISTANZIALE	075D
					ENTRETOISE	DISTANZSTÜCK	AFSTANDSSTYKKE	AFSTANDSSTUK	
16		**87392235**		1	INTERRUPTOR INTERMITENTE, Reed, Non-Contact				
						SWITCH ASSY	CONJUNTO DE INTERRU	COMPLESSIVO INTERRU	067I
					ENSEMBLE COMMUTATI	SCHALTERBAUGRUPPE	KONTAKT, KPL.	SCHAKELAAREENHEID	
17		**84183818**		2	PARAFUSO, M4 X 20	SCREW	TORNILLO	VITE	040V
					VIS	SCHRAUBE	SKRUE	SCHROEF	
18		**100012**		2	PORCA, M4, Cl 8	NUT	TUERCA	DADO	010D
					ECROU	MUTTER	MØTRIK	MOER	
19		**84305556**		11	PARAFUSO, M6 X 25	SCREW	TORNILLO	VITE	040V
					VIS	SCHRAUBE	SKRUE	SCHROEF	

SR200

DIA KIT, GLASS FRONT DOOR (ALL CASE)
DIA KIT, GLASS FRONT DOOR (ALL CASE)
DIA KIT, GLASS FRONT DOOR (ALL CASE)
DIA KIT, GLASS FRONT DOOR (ALL CASE)



DIA KIT, GLASS FRONT DOOR (ALL CASE)
DIA KIT, GLASS FRONT DOOR (ALL CASE)
DIA KIT, GLASS FRONT DOOR (ALL CASE)
DIA KIT, GLASS FRONT DOOR (ALL CASE)

R	N	P.N.	MOD	Q	Denominação Description	Description Bezeichnung	Denominacion Beskrivelse	Descrizione Beschrijving	L.C.
20		**84359102**		4	PARAFUSO, M6 X 35 VIS	SCREW SCHRAUBE	TORNILLO SKRUE	VITE SCHROEF	040V
21		**84272827**		15	REBITE, Nut, M6 X 1.0 RIVET	RIVET NIET	REMACHE NITTE	RIVETTO KLINKNAGEL	055R
22		**84331404**		1	CONECTOR DO FIO, Jumper CONNECTEUR DU FIL	WIRE CONNECTOR KABELSTECKVERBINDE	CONECTOR DE CABLE SAMLEMUFFE	CONNETTORE DEL FILO DRAADCONNECTOR	250C
23		**84427180**		1	INSTRUÇÃO, Instruction Sheet, Glass, Front Door INSTRUCTION	INSTRUCTION ANLEITUNG	INSTRUCCIÓN INSTRUKTION	ISTRUZIONI INSTRUCTIE	Z571

DIA KIT, DEMO FRONT DOOR (ALL CASE)
DIA KIT, DEMO FRONT DOOR (ALL CASE)
DIA KIT, DEMO FRONT DOOR (ALL CASE)
DIA KIT, DEMO FRONT DOOR (ALL CASE)



DIA KIT, DEMO FRONT DOOR (ALL CASE)
DIA KIT, DEMO FRONT DOOR (ALL CASE)
DIA KIT, DEMO FRONT DOOR (ALL CASE)
DIA KIT, DEMO FRONT DOOR (ALL CASE)

R	N	P.N.	MOD	Q	Denominação Description Description Bezeichnung Denominacion Beskrivelse Descrizione Beschrijving	L.C.
		84427186			KIT DE SERVIÇO, DIA Kit, Demo Front Door, Incl. 1-23 SERVICE KIT / KIT DE SERVICIO / KIT DI MANUTENZIONE KIT D'ENTRETIEN / SERVICE-SATZ / SERVICESÆT / SERVICEKIT	021K
1		**84272826**		2	REBITE, Nut, M6 X 1.0 / RIVET / REMACHE / RIVETTO RIVET / NIET / NITTE / KLINKNAGEL	055R
2		**84281703**		1	MANGUEIRA DO LAVADOR, Tube, Front Windshield Washer HOSE WASHER / TUBO DE LAVAPARABRI / RONDELLA FLESSIBILE TUYAU DE LAVE-GLACE / WASCHANLAGENSCHLA / SLANGE, SPRINKLER / SLUITRING VOOR SLAN(	A061
3		**84285452**		1	MANGUEIRA DO LAVADOR, Tube, Rear Windshield Washer HOSE WASHER / TUBO DE LAVAPARABRI / RONDELLA FLESSIBILE TUYAU DE LAVE-GLACE / WASCHANLAGENSCHLA / SLANGE, SPRINKLER / SLUITRING VOOR SLAN(	A061
4		**84285453**		2	MANGUEIRA DO LAVADOR, Tube, Washer Bottle HOSE WASHER / TUBO DE LAVAPARABRI / RONDELLA FLESSIBILE TUYAU DE LAVE-GLACE / WASCHANLAGENSCHLA / SLANGE, SPRINKLER / SLUITRING VOOR SLAN(	A061
5		**84306335**		1	T, Barb Connector / TEE / RACOR EN T / PEZZO A T RACCORD EN T / T-STÜCK / T-STYKKE / T-STUK	9020
6		**84389613**		1	GARRAFA, Washer Assembly BOTTLE / BOTELLA / BOTTIGLIA BOUTEILLE / FLASCHE / FLASKE / FLES	102B
7		**84326923**		2	SUPORTE, Washer Bottle, CE Gray BRACKET / SOPORTE / STAFFA SUPPORT / HALTERUNG / BESLAG / STEUN	225S
8		**87335499**		1	INTERRUPTOR, Wiper/Washer SWITCH / INTERRUPTOR / INTERRUTTORE CONTACTEUR / SCHALTER / KONTAKT / SCHAKELAAR	075I
9		**87682398**		2	PARAFUSO / SCREW / TORNILLO / VITE VIS / SCHRAUBE / SKRUE / SCHROEF	040V
10		**K307050**		1	VÁLVULA, Non-Return / VALVE / VÁLVULA / VALVOLA SOUPAPE / VENTIL / VENTIL / KLEP	9620
11		**L11541**		7	PRENDEDOR DE CABOS, Nylon Tie, 7-8in CABLE STRAP / BANDA DE CABLE / FASCETTA PER CAVO BRIDE DE CABLE / KABELBINDER / KABELSTROP / BUNDELBAND	P716
12		**84323416**		1	PORTA, Assembly, Jamb / DOOR / PUERTA / SPORTELLO PORTE / TÜR / DØR / PORTIER	180P
13		**84416291**		1	PORTA, Door Assembly, Front, Demo DOOR / PUERTA / SPORTELLO PORTE / TÜR / DØR / PORTIER	180P
14		**84378453**		1	COMPASSO, Spring, Gas / GAS STRUT / COLUMNA DE GAS / AMMORTIZZATORE A G/ BEQUILLE A GAZ / GASDRUCKFEDER / CYLINDER, GASSTØDD/ / GASVEER	Z331
15		**86624468**		1	ESPAÇADOR / SPACER / SEPARADOR / DISTANZIALE ENTRETOISE / DISTANZSTÜCK / AFSTANDSSTYKKE / AFSTANDSSTUK	075D
16		**87392235**		1	INTERRUPTOR INTERMITENTE, Reed, Non-Contact SWITCH ASSY / CONJUNTO DE INTERRU / COMPLESSIVO INTERRU ENSEMBLE COMMUTATI / SCHALTERBAUGRUPPE / KONTAKT, KPL. / SCHAKELAAREENHEID	067I
17		**84183818**		2	PARAFUSO, M4 X 20 / SCREW / TORNILLO / VITE VIS / SCHRAUBE / SKRUE / SCHROEF	040V
18		**100012**		2	PORCA, M4, Cl 8 / NUT / TUERCA / DADO ECROU / MUTTER / MØTRIK / MOER	010D

SR200

DIA KIT, DEMO FRONT DOOR (ALL CASE)
DIA KIT, DEMO FRONT DOOR (ALL CASE)
DIA KIT, DEMO FRONT DOOR (ALL CASE)
DIA KIT, DEMO FRONT DOOR (ALL CASE)



DIA KIT, DEMO FRONT DOOR (ALL CASE)
DIA KIT, DEMO FRONT DOOR (ALL CASE)
DIA KIT, DEMO FRONT DOOR (ALL CASE)
DIA KIT, DEMO FRONT DOOR (ALL CASE)

R	N	P.N.	MOD	Q	Denominação Description	Description Bezeichnung	Denominacion Beskrivelse	Descrizione Beschrijving	L.C.
19		**84305556**		11	PARAFUSO, M6 X 25 VIS	SCREW SCHRAUBE	TORNILLO SKRUE	VITE SCHROEF	040V
20		**84359102**		4	PARAFUSO, M6 X 35 VIS	SCREW SCHRAUBE	TORNILLO SKRUE	VITE SCHROEF	040V
21		**84272827**		15	REBITE, Nut, M6 X 1.0 RIVET	RIVET NIET	REMACHE NITTE	RIVETTO KLINKNAGEL	055R
22		**84331404**		1	CONECTOR DO FIO, Jumper CONNECTEUR DU FIL	WIRE CONNECTOR KABELSTECKVERBINDE	CONECTOR DE CABLE SAMLEMUFFE	CONNETTORE DEL FILO DRAADCONNECTOR	250C
23		**84427187**		1	INSTRUÇÃO, Instruction Sheet, Demo Door INSTRUCTION	INSTRUCTION ANLEITUNG	INSTRUCCIÓN INSTRUKTION	ISTRUZIONI INSTRUCTIE	Z571

DIA KIT, CAB SIDE WINDOWS (ALL CASE)
DIA KIT, CAB SIDE WINDOWS (ALL CASE)
DIA KIT, CAB SIDE WINDOWS (ALL CASE)
DIA KIT, CAB SIDE WINDOWS (ALL CASE)



DIA KIT, CAB SIDE WINDOWS (ALL CASE)
DIA KIT, CAB SIDE WINDOWS (ALL CASE)
DIA KIT, CAB SIDE WINDOWS (ALL CASE)
DIA KIT, CAB SIDE WINDOWS (ALL CASE)

R	N	P.N.	MOD	Q	Denominação Description Bezeichnung	Denominacion Beskrivelse	Descrizione Beschrijving	L.C.
		84427190			KIT DE SERVIÇO, DIA Kit, Cab, Side Windows, Incl. 1-10			
					SERVICE KIT	KIT DE SERVICIO	KIT DI MANUTENZIONE	021K
					KIT D'ENTRETIEN SERVICE-SATZ	SERVICESÆT	SERVICEKIT	
1		**84272827**		12	REBITE	RIVET	REMACHE	RIVETTO	055R
					RIVET	NIET	NITTE	KLINKNAGEL	
2		**84310724**		22	REBITE	RIVET	REMACHE	RIVETTO	055R
					RIVET	NIET	NITTE	KLINKNAGEL	
3		**84473111**		8	SUPORTE, Bracket, Window, Gray			
					BRACKET	SOPORTE	STAFFA	225S
					SUPPORT HALTERUNG	BESLAG	STEUN	
4		**84473118**		1	JANELA, Window Assy, RH Side			
					WINDOW	VENTANILLA	FINESTRINO	9810
					FENETRE FENSTER	VINDUE	RUIT	
5		**84473121**		1	JANELA, Window Assy, LH Side			
					WINDOW	VENTANILLA	FINESTRINO	9810
					FENETRE FENSTER	VINDUE	RUIT	
6		**84473199**		2	SUPORTE, Bracket, Window, RH, Gray			
					BRACKET	SOPORTE	STAFFA	225S
					SUPPORT HALTERUNG	BESLAG	STEUN	
7		**84473201**		2	SUPORTE, Bracket, Window, LH, Gray			
					BRACKET	SOPORTE	STAFFA	225S
					SUPPORT HALTERUNG	BESLAG	STEUN	
8		**84481921**		1	INSTRUÇÃO, Instruction Sheet, Kit, Cab Side Window			
					INSTRUCTION	INSTRUCCIÓN	ISTRUZIONI	Z571
					INSTRUCTION ANLEITUNG	INSTRUKTION	INSTRUCTIE	
9		**87682398**		24	PARAFUSO	SCREW	TORNILLO	VITE	040V
					VIS	SCHRAUBE	SKRUE	SCHROEF	
10		**84425058**		2	ESPUMA ISOLANTE, Window			
					FOAM INSULATION	ESPUMA AISLANTE	ISOLANTE IN SCHIUMA	051S
					MOUSSE ISOLANTE SCHAUMSTOFFISOLIER	SKUM ISOLERING	SCHUIMISOLATIE	

DIA KIT, REAR EXT ACCESS WINDOW (ALL CASE)
DIA KIT, REAR EXT ACCESS WINDOW (ALL CASE)
DIA KIT, REAR EXT ACCESS WINDOW (ALL CASE)
DIA KIT, REAR EXT ACCESS WINDOW (ALL CASE)



DIA KIT, REAR EXT ACCESS WINDOW (ALL CASE)
DIA KIT, REAR EXT ACCESS WINDOW (ALL CASE)
DIA KIT, REAR EXT ACCESS WINDOW (ALL CASE)
DIA KIT, REAR EXT ACCESS WINDOW (ALL CASE)

R	N	P.N.	MOD	Q	Denominação Description Bezeichnung	Description Bezeichnung	Denominacion Beskrivelse	Descrizione Beschrijving	L.C.
		84306071			JOGO, DIA Kit, Rear Ext Access Window, Incl. 1-5				
						KIT	JEUGO	KIT	4830
					POCHETTE	PACKUNG	KIT	KIT	
1		**263117**		2	PRENDEDOR DE CABOS, .14" x 11 1/2"				
						CABLE STRAP	BANDA DE CABLE	FASCETTA PER CAVO	P716
					BRIDE DE CABLE	KABELBINDER	KABELSTROP	BUNDELBAND	
2		**84366018**		1	CHAVE, Lock	KEY	LLAVE	CHIAVE	060L
					CLE	FEDERKEIL	KILE	SPIE	
3		**84366019**		1	JUNTA, Locking	GASKET	JUNTA	GUARNIZIONE	123G
					JOINT	DICHTUNG	PAKNING	PAKKING	
4		**87026871**		2	SINAL PLÁSTICO, Exit Tag	PLASTIC SIGN	SEÑAL DE PLÁSTICO	TARGHETTA IN PLASTIC	092I
					PLAQUE SIGN. PLASTIQ	KUNSTSTOFFSCHILD	PLASTIKSKILT	KUNSTSTOF BORD	
5		**84366065**		1	INSTRUÇÃO, Installation	INSTRUCTION	INSTRUCCIÓN	ISTRUZIONI	Z571
					INSTRUCTION	ANLEITUNG	INSTRUKTION	INSTRUCTIE	

DIA KIT, 3IN LAP BELT (ALL CASE)
DIA KIT, 3IN LAP BELT (ALL CASE)
DIA KIT, 3IN LAP BELT (ALL CASE)
DIA KIT, 3IN LAP BELT (ALL CASE)



DIA KIT, 3IN LAP BELT (ALL CASE)
DIA KIT, 3IN LAP BELT (ALL CASE)
DIA KIT, 3IN LAP BELT (ALL CASE)
DIA KIT, 3IN LAP BELT (ALL CASE)

R	N	P.N.	MOD	Q	Denominação Description	Description Bezeichnung	Denominacion Beskrivelse	Descrizione Beschrijving	L.C.
		84306093			JOGO, DIA Kit, 3in Lap Belt, Incl. 1-5				
						KIT	JEUGO	KIT	4830
					POCHETTE	PACKUNG	KIT	KIT	
1		**9804262**		1	PARAFUSO, Hex Flg, M10 x 30, 8.8				
						BOLT	PERNO	BULLONE	140B
					VIS	SCHRAUBE	BOLT	BOUT	
2		**84174267**		1	CINTO DE SEGURANÇA, Case, 2 Point, 3in Wide				
						SEAT BELT	CINTURÓN DE SEGURID	CINTURA DI SICUREZZA	182C
					CEINTURE DE SECURIT	SICHERHEITSGURT	SIKKERHEDSBÆLTE	VEILIGHEIDSGORDEL	
3		**86512554**		1	CONTRA PORCA, M10 x 1.5, Cl 10				
						LOCK NUT	TUERCA DE BLOQUEO	DADO DI BLOCCAGGIO	P263
					CONTRE-ECROU	SICHERUNGSMUTTER	LÅSEMØTRIK	BORGMOER	
4		**87655046**		1	ARRUELA ESPECIAL, M10, 10.65 X 23.0 X 2.2				
						SPECIAL WASHER	ARANDELA ESPECIAL	RONDELLA SPECIALE	Z333
					RONDELLE SPECIALE	SPEZIALUNTERLEGSCH	SPECIALSKIVE	SPECIALE RING	
5		**84365636**		1	INSTRUÇÃO, Installation, Lap Belt, Kit				
						INSTRUCTION	INSTRUCCIÓN	ISTRUZIONI	Z571
					INSTRUCTION	ANLEITUNG	INSTRUKTION	INSTRUCTIE	

DIA KIT, REMOVABLE TOP WINDOW (ALL CASE)
DIA KIT, REMOVABLE TOP WINDOW (ALL CASE)
DIA KIT, REMOVABLE TOP WINDOW (ALL CASE)
DIA KIT, REMOVABLE TOP WINDOW (ALL CASE)



DIA KIT, REMOVABLE TOP WINDOW (ALL CASE)
DIA KIT, REMOVABLE TOP WINDOW (ALL CASE)
DIA KIT, REMOVABLE TOP WINDOW (ALL CASE)
DIA KIT, REMOVABLE TOP WINDOW (ALL CASE)

R	N	P.N.	MOD	Q	Denominação Description	Description Bezeichnung	Denominacion Beskrivelse	Descrizione Beschrijving	L.C.
		84306096			JOGO, DIA Kit, Removable Top Window, Incl. 1-2				
						KIT	JEUGO	KIT	4830
					POCHETTE	PACKUNG	KIT	KIT	
1		**84354564**		1	JANELA, Assembly, Removable Top				
						WINDOW	VENTANILLA	FINESTRINO	9810
					FENETRE	FENSTER	VINDUE	RUIT	
2		**84371221**		1	INSTRUÇÃO, Installation	INSTRUCTION	INSTRUCCIÓN	ISTRUZIONI	Z571
					INSTRUCTION	ANLEITUNG	INSTRUKTION	INSTRUCTIE	

DIA KIT, RH, SIDE SCREEN (ALL CASE)
DIA KIT, RH, SIDE SCREEN (ALL CASE)
DIA KIT, RH, SIDE SCREEN (ALL CASE)
DIA KIT, RH, SIDE SCREEN (ALL CASE)



DIA KIT, RH, SIDE SCREEN (ALL CASE)
DIA KIT, RH, SIDE SCREEN (ALL CASE)
DIA KIT, RH, SIDE SCREEN (ALL CASE)
DIA KIT, RH, SIDE SCREEN (ALL CASE)

R	N	P.N.	MOD	Q	Denominação Description Bezeichnung	Description Bezeichnung	Denominacion Beskrivelse	Descrizione Beschrijving	L.C.
		84374152			JOGO, DIA Kit, RH, Side Screen, Incl. 1-3				
						KIT	JEUGO	KIT	4830
					POCHETTE	PACKUNG	KIT	KIT	
1		**84200803**		1	TELA, W, Side ROPS, RH	SCREEN	PANTALLA	FILTRO; SCHERMO	047S
					TAMIS	GITTER; ABSCHIRMUNG	SKÆRM	SCHERM	
2		**84310724**		11	REBITE, Pop, 1/4 X 5/8	RIVET	REMACHE	RIVETTO	055R
					RIVET	NIET	NITTE	KLINKNAGEL	
3		**84374159**		1	INSTRUÇÃO, Sheet, Side Screen, RH				
						INSTRUCTION	INSTRUCCIÓN	ISTRUZIONI	Z571
					INSTRUCTION	ANLEITUNG	INSTRUKTION	INSTRUCTIE	

DIA KIT, LH, SIDE SCREEN (ALL CASE)
DIA KIT, LH, SIDE SCREEN (ALL CASE)
DIA KIT, LH, SIDE SCREEN (ALL CASE)
DIA KIT, LH, SIDE SCREEN (ALL CASE)



DIA KIT, LH, SIDE SCREEN (ALL CASE)
DIA KIT, LH, SIDE SCREEN (ALL CASE)
DIA KIT, LH, SIDE SCREEN (ALL CASE)
DIA KIT, LH, SIDE SCREEN (ALL CASE)

R	N	P.N.	MOD	Q	Denominação Description Bezeichnung	Description Bezeichnung	Denominacion Beskrivelse	Descrizione Beschrijving	L.C.
		84374154			JOGO, DIA Kit, LH, Side Screen, Incl. 1-3				
						KIT	JEUGO	KIT	4830
					POCHETTE	PACKUNG	KIT	KIT	
1		**84307405**		1	TELA, W, Side ROPS, LH	SCREEN	PANTALLA	FILTRO; SCHERMO	047S
					TAMIS	GITTER; ABSCHIRMUNG	SKÆRM	SCHERM	
2		**84310724**		11	REBITE, Pop, 1/4 X 5/8	RIVET	REMACHE	RIVETTO	055R
					RIVET	NIET	NITTE	KLINKNAGEL	
3		**84374160**		1	INSTRUÇÃO, Sheet, Side Screen, LH				
						INSTRUCTION	INSTRUCCIÓN	ISTRUZIONI	Z571
					INSTRUCTION	ANLEITUNG	INSTRUKTION	INSTRUCTIE	

88.090.12		p1	03/11

DIA KIT, HANDLE 300/400 (ALL CASE)
DIA KIT, HANDLE 300/400 (ALL CASE)
DIA KIT, HANDLE 300/400 (ALL CASE)
DIA KIT, HANDLE 300/400 (ALL CASE)



DIA KIT, HANDLE 300/400 (ALL CASE)
DIA KIT, HANDLE 300/400 (ALL CASE)
DIA KIT, HANDLE 300/400 (ALL CASE)
DIA KIT, HANDLE 300/400 (ALL CASE)

R	N	P.N.	MOD	Q	Denominação Description	Description Bezeichnung	Denominacion Beskrivelse	Descrizione Beschrijving	L.C.
		84428505			JOGO, DIA Kit, Handle, 300 Case LH, No 2nd Aux-Mech, Incl. 1-10				
						KIT	JEUGO	KIT	4830
					POCHETTE	PACKUNG	KIT	KIT	
1		**263117**		6	PRENDEDOR DE CABOS, .14" x 11 1/2"				
						CABLE STRAP	BANDA DE CABLE	FASCETTA PER CAVO	P716
					BRIDE DE CABLE	KABELBINDER	KABELSTROP	BUNDELBAND	
2		**323238**		1	PORCA, Thin, M12 x 1.75, Cl 05				
						NUT	TUERCA	DADO	010D
					ECROU	MUTTER	MØTRIK	MOER	
3		**84279937**		6	BUJÃO, Cavity, FCI	PLUG	TAPÓN	TAPPO	050T
					BOUCHON	STOPFEN	PROP	PLUG	
4		**84396068**		1	INTERRUPTOR, Grip, 300 LH, No 2nd Aux				
						SWITCH	INTERRUPTOR	INTERRUTTORE	075I
					CONTACTEUR	SCHALTER	KONTAKT	SCHAKELAAR	
5		**84396167**		1	ADESIVO	DECAL	CALCOMANÍA	DECALCOMANIA	012D
					AUTOCOLLANT	AUFKLEBER	TRANSFER	STICKER	
6		**87382927**		1	CONECTOR ELÉTR, 87382927, FCI				
						ELEC CONNECTOR	CONECTOR ELÉCTRICC	CONNETTORE ELETTRI(	235C
					CONNECTEUR ELECTRI	ELEKTR STECKVERBIND	EL-STIK	CONNECTOR	
7		**87689636**		1	BUJÃO, Cavity, Meri-plug	PLUG	TAPÓN	TAPPO	050T
					BOUCHON	STOPFEN	PROP	PLUG	
8		**87689643**		1	GRAMPO, Secondary Lock, Metri-pack				
						CLIP	ABRAZADERA	FERMO	045F
					COLLIER	KLAMMER	KLIPS	KLEM	
9		**87697724**		1	CONECTOR ELÉTR, Packard, Metri-pack 150 4-Way Female				
						ELEC CONNECTOR	CONECTOR ELÉCTRICC	CONNETTORE ELETTRI(	235C
					CONNECTEUR ELECTRI	ELEKTR STECKVERBIND	EL-STIK	CONNECTOR	
10		**84470439**		1	INSTRUÇÃO, Installation	INSTRUCTION	INSTRUCCIÓN	ISTRUZIONI	Z571
					INSTRUCTION	ANLEITUNG	INSTRUKTION	INSTRUCTIE	
		84428506			JOGO, DIA Kit, Handle, 300 Case RH, Mech, Incl. 1A-8A				
						KIT	JEUGO	KIT	4830
					POCHETTE	PACKUNG	KIT	KIT	
1A		**263117**		4	PRENDEDOR DE CABOS, .14" x 11 1/2"				
						CABLE STRAP	BANDA DE CABLE	FASCETTA PER CAVO	P716
					BRIDE DE CABLE	KABELBINDER	KABELSTROP	BUNDELBAND	
2A		**323238**		1	PORCA, Thin, M12 x 1.75, Cl 05				
						NUT	TUERCA	DADO	010D
					ECROU	MUTTER	MØTRIK	MOER	
3A		**84201276**		1	EMPUNHADURA, Grip, 300 RH				
						HANDLE GRIP	PERILLA	IMPUGNATURA	025I
					POIGNEE DE MAINTIEN	HANDGRIFF	HÅNDGREB	HANDGREEP	
4A		**84279937**		5	BUJÃO, Cavity, FCI	PLUG	TAPÓN	TAPPO	050T
					BOUCHON	STOPFEN	PROP	PLUG	
5A		**84353756**		1	ADESIVO	DECAL	CALCOMANÍA	DECALCOMANIA	012D
					AUTOCOLLANT	AUFKLEBER	TRANSFER	STICKER	
6A		**87382919**		1	CONECTOR ELÉTR, 87382919, Framatome, 6 Cavity				
						ELEC CONNECTOR	CONECTOR ELÉCTRICC	CONNETTORE ELETTRI(	235C
					CONNECTEUR ELECTRI	ELEKTR STECKVERBIND	EL-STIK	CONNECTOR	

DIA KIT, HANDLE 300/400 (ALL CASE)
DIA KIT, HANDLE 300/400 (ALL CASE)
DIA KIT, HANDLE 300/400 (ALL CASE)
DIA KIT, HANDLE 300/400 (ALL CASE)



DIA KIT, HANDLE 300/400 (ALL CASE)
DIA KIT, HANDLE 300/400 (ALL CASE)
DIA KIT, HANDLE 300/400 (ALL CASE)
DIA KIT, HANDLE 300/400 (ALL CASE)

R	N	P.N.	MOD	Q	Denominação Description	Description Bezeichnung	Denominacion Beskrivelse	Descrizione Beschrijving	L.C.
7A		87382923		1	CONECTOR ELÉTR, 87382923, 10 Position, Apex				
						ELEC CONNECTOR	CONECTOR ELÉCTRICC	CONNETTORE ELETTRI(	235C
					CONNECTEUR ELECTRI	ELEKTR STECKVERBIND	EL-STIK	CONNECTOR	
8A		84470439		1	INSTRUÇÃO, Installation	INSTRUCTION	INSTRUCCIÓN	ISTRUZIONI	Z571
					INSTRUCTION	ANLEITUNG	INSTRUKTION	INSTRUCTIE	
		84428509			JOGO, DIA Kit, Handle 400	Case LH, 2nd Aux-Mech, Incl. 1B-10B			
						KIT	JEUGO	KIT	4830
					POCHETTE	PACKUNG	KIT	KIT	
1B		263117		6	PRENDEDOR DE CABOS, .14" x 11 1/2"				
						CABLE STRAP	BANDA DE CABLE	FASCETTA PER CAVO	P716
					BRIDE DE CABLE	KABELBINDER	KABELSTROP	BUNDELBAND	
2B		323238		1	PORCA, Thin, M12 x 1.75, Cl 05				
						NUT	TUERCA	DADO	010D
					ECROU	MUTTER	MØTRIK	MOER	
3B		84279937		6	BUJÃO, Cavity, FCI	PLUG	TAPÓN	TAPPO	050T
					BOUCHON	STOPFEN	PROP	PLUG	
4B		84396066		1	INTERRUPTOR, Grip, 400 LH, 2nd Aux				
						SWITCH	INTERRUPTOR	INTERRUTTORE	075I
					CONTACTEUR	SCHALTER	KONTAKT	SCHAKELAAR	
5B		84396166		1	ADESIVO	DECAL	CALCOMANÍA	DECALCOMANIA	012D
					AUTOCOLLANT	AUFKLEBER	TRANSFER	STICKER	
6B		87382927		1	CONECTOR ELÉTR, 87382927, FCI				
						ELEC CONNECTOR	CONECTOR ELÉCTRICC	CONNETTORE ELETTRI(	235C
					CONNECTEUR ELECTRI	ELEKTR STECKVERBIND	EL-STIK	CONNECTOR	
7B		87689636		1	BUJÃO, Cavity, Meri-plug	PLUG	TAPÓN	TAPPO	050T
					BOUCHON	STOPFEN	PROP	PLUG	
8B		87689643		1	GRAMPO, Secondary Lock, Metri-pack				
						CLIP	ABRAZADERA	FERMO	045F
					COLLIER	KLAMMER	KLIPS	KLEM	
9B		87697724		1	CONECTOR ELÉTR, Packard, Metri-pack 150 4-Way Female				
						ELEC CONNECTOR	CONECTOR ELÉCTRICC	CONNETTORE ELETTRI(	235C
					CONNECTEUR ELECTRI	ELEKTR STECKVERBIND	EL-STIK	CONNECTOR	
10B		84470439		1	INSTRUÇÃO, Installation	INSTRUCTION	INSTRUCCIÓN	ISTRUZIONI	Z571
					INSTRUCTION	ANLEITUNG	INSTRUKTION	INSTRUCTIE	

88.090.14		p1	03/11

DIA KIT, HANDLE 350/450 (ALL CASE)
DIA KIT, HANDLE 350/450 (ALL CASE)
DIA KIT, HANDLE 350/450 (ALL CASE)
DIA KIT, HANDLE 350/450 (ALL CASE)



DIA KIT, HANDLE 350/450 (ALL CASE)
DIA KIT, HANDLE 350/450 (ALL CASE)
DIA KIT, HANDLE 350/450 (ALL CASE)
DIA KIT, HANDLE 350/450 (ALL CASE)

R	N	P.N.	MOD	Q	Denominação Description Description Bezeichnung Denominacion Beskrivelse Descrizione Beschrijving	L.C.
		84428507			JOGO, DIA Kit, Handle 350, LH-No 2nd Aux-EH, Incl. 1-5 KIT / JEUGO / KIT POCHETTE / PACKUNG / KIT / KIT	4830
1		**263117**		6	PRENDEDOR DE CABOS, .14" x 11 1/2" CABLE STRAP / BANDA DE CABLE / FASCETTA PER CAVO BRIDE DE CABLE / KABELBINDER / KABELSTROP / BUNDELBAND	P716
2		**323238**		1	PORCA, Thin, M12 x 1.75, Cl 05 NUT / TUERCA / DADO ECROU / MUTTER / MØTRIK / MOER	010D
3		**84396053**		1	INTERRUPTOR, Case, Level 350 LH, No 2nd Aux SWITCH / INTERRUPTOR / INTERRUTTORE CONTACTEUR / SCHALTER / KONTAKT / SCHAKELAAR	075I
4		**84396167**		1	ADESIVO / DECAL / CALCOMANÍA / DECALCOMANIA AUTOCOLLANT / AUFKLEBER / TRANSFER / STICKER	012D
5		**84472670**		1	INSTRUÇÃO, Installation / INSTRUCTION / INSTRUCCIÓN / ISTRUZIONI INSTRUCTION / ANLEITUNG / INSTRUKTION / INSTRUCTIE	Z571
		84428508			JOGO, DIA Kit, Handle 350, RH-EH, Incl. 1a-5a KIT / JEUGO / KIT POCHETTE / PACKUNG / KIT / KIT	4830
1a		**263117**		6	PRENDEDOR DE CABOS, .14" x 11 1/2" CABLE STRAP / BANDA DE CABLE / FASCETTA PER CAVO BRIDE DE CABLE / KABELBINDER / KABELSTROP / BUNDELBAND	P716
2a		**323238**		1	PORCA, Thin, M12 x 1.75, Cl 05 NUT / TUERCA / DADO ECROU / MUTTER / MØTRIK / MOER	010D
3a		**84201277**		1	EMPUNHADURA, Case, Level 350 RH HANDLE GRIP / PERILLA / IMPUGNATURA POIGNEE DE MAINTIEN / HANDGRIFF / HÅNDGREB / HANDGREEP	025I
4a		**84353756**		1	ADESIVO / DECAL / CALCOMANÍA / DECALCOMANIA AUTOCOLLANT / AUFKLEBER / TRANSFER / STICKER	012D
5a		**84470443**		1	INSTRUÇÃO, Installation / INSTRUCTION / INSTRUCCIÓN / ISTRUZIONI INSTRUCTION / ANLEITUNG / INSTRUKTION / INSTRUCTIE	Z571
		84428510			JOGO, DIA Kit, Handle 450, LH-2nd Aux-EH, Incl. 1b-5b KIT / JEUGO / KIT POCHETTE / PACKUNG / KIT / KIT	4830
1b		**263117**		6	PRENDEDOR DE CABOS, .14" x 11 1/2" CABLE STRAP / BANDA DE CABLE / FASCETTA PER CAVO BRIDE DE CABLE / KABELBINDER / KABELSTROP / BUNDELBAND	P716
2b		**323238**		1	PORCA, Thin, M12 x 1.75, Cl 05 NUT / TUERCA / DADO ECROU / MUTTER / MØTRIK / MOER	010D
3B		**84396062**		1	INTERRUPTOR, Case, Level 450, LH SWITCH / INTERRUPTOR / INTERRUTTORE CONTACTEUR / SCHALTER / KONTAKT / SCHAKELAAR	075I
4B		**84396166**		1	ADESIVO / DECAL / CALCOMANÍA / DECALCOMANIA AUTOCOLLANT / AUFKLEBER / TRANSFER / STICKER	012D
5B		**84470443**		1	INSTRUÇÃO, Installation Sheet, Case Grip EH INSTRUCTION / INSTRUCCIÓN / ISTRUZIONI INSTRUCTION / ANLEITUNG / INSTRUKTION / INSTRUCTIE	Z571

88.100.01		p1	05/11

ENGINE ACCESSORIES EU/OPEN EU (SR200)
ENGINE ACCESSORIES EU/OPEN EU (SR200)
ENGINE ACCESSORIES EU/OPEN EU (SR200)
ENGINE ACCESSORIES EU/OPEN EU (SR200)

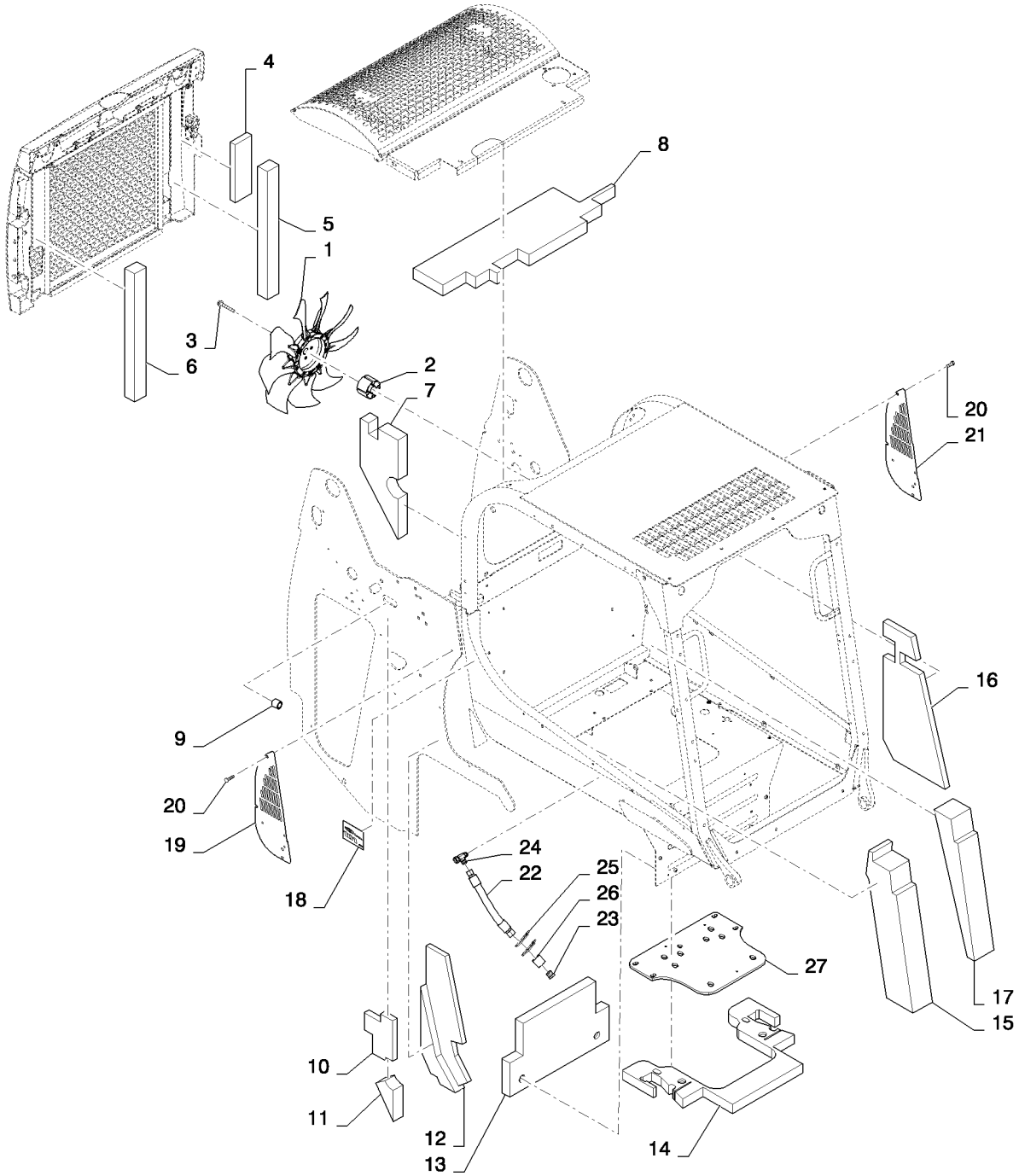

ENGINE ACCESSORIES EU/OPEN EU (SR200)
ENGINE ACCESSORIES EU/OPEN EU (SR200)
ENGINE ACCESSORIES EU/OPEN EU (SR200)
ENGINE ACCESSORIES EU/OPEN EU (SR200)

R	N	P.N.	MOD	Q	Denominação Description	Description Bezeichnung	Denominacion Beskrivelse	Descrizione Beschrijving	L.C.
1		84374546		1	VENTILADOR, Clockwise Pusher 480 EURO				
						FAN	VENTILADOR	VENTOLA	030V
					VENTILATEUR	GEBLÄSE	VENTILATOR	VENTILATOR	
2		84373345		1	ESPAÇADOR, Fan	SPACER	SEPARADOR	DISTANZIALE	075D
					ENTRETOISE	DISTANZSTÜCK	AFSTANDSSTYKKE	AFSTANDSSTUK	
3		86011090		4	PARAFUSO, Hex Flg, M10 x 70, 8.8				
						BOLT	PERNO	BULLONE	140B
					VIS	SCHRAUBE	BOLT	BOUT	
4		84372973		1	ESPUMA ISOLANTE, Fan LH				
						FOAM INSULATION	ESPUMA AISLANTE	ISOLANTE IN SCHIUMA	051S
					MOUSSE ISOLANTE	SCHAUMSTOFFISOLIER	SKUM ISOLERING	SCHUIMISOLATIE	
5		84374183		1	ESPUMA ISOLANTE, RR Door LH				
						FOAM INSULATION	ESPUMA AISLANTE	ISOLANTE IN SCHIUMA	051S
					MOUSSE ISOLANTE	SCHAUMSTOFFISOLIER	SKUM ISOLERING	SCHUIMISOLATIE	
6		84374184		1	ESPUMA ISOLANTE, RR Door RH				
						FOAM INSULATION	ESPUMA AISLANTE	ISOLANTE IN SCHIUMA	051S
					MOUSSE ISOLANTE	SCHAUMSTOFFISOLIER	SKUM ISOLERING	SCHUIMISOLATIE	
7		84374180		1	ESPUMA ISOLANTE, Tower LH				
						FOAM INSULATION	ESPUMA AISLANTE	ISOLANTE IN SCHIUMA	051S
					MOUSSE ISOLANTE	SCHAUMSTOFFISOLIER	SKUM ISOLERING	SCHUIMISOLATIE	
8		84374182		1	ESPUMA ISOLANTE, Hood	FOAM INSULATION	ESPUMA AISLANTE	ISOLANTE IN SCHIUMA	051S
					MOUSSE ISOLANTE	SCHAUMSTOFFISOLIER	SKUM ISOLERING	SCHUIMISOLATIE	
9		87461957		1	PARADA, Stop	STOP	TOPE	ARRESTO; FERMO	080A
					BUTEE	STOP	STOP	AANSLAG	
10		84374178		1	ESPUMA ISOLANTE, RH Tower Front				
						FOAM INSULATION	ESPUMA AISLANTE	ISOLANTE IN SCHIUMA	051S
					MOUSSE ISOLANTE	SCHAUMSTOFFISOLIER	SKUM ISOLERING	SCHUIMISOLATIE	
11		84374179		1	ESPUMA ISOLANTE, Tower RH Lower				
						FOAM INSULATION	ESPUMA AISLANTE	ISOLANTE IN SCHIUMA	051S
					MOUSSE ISOLANTE	SCHAUMSTOFFISOLIER	SKUM ISOLERING	SCHUIMISOLATIE	
12		84374171		1	ESPUMA ISOLANTE, Tower RH				
						FOAM INSULATION	ESPUMA AISLANTE	ISOLANTE IN SCHIUMA	051S
					MOUSSE ISOLANTE	SCHAUMSTOFFISOLIER	SKUM ISOLERING	SCHUIMISOLATIE	
13		84366353		1	ESPUMA ISOLANTE, Heel Plate Horizontal				
						FOAM INSULATION	ESPUMA AISLANTE	ISOLANTE IN SCHIUMA	051S
					MOUSSE ISOLANTE	SCHAUMSTOFFISOLIER	SKUM ISOLERING	SCHUIMISOLATIE	
14		84366352		1	ESPUMA ISOLANTE, Heel Plate Vertical				
						FOAM INSULATION	ESPUMA AISLANTE	ISOLANTE IN SCHIUMA	051S
					MOUSSE ISOLANTE	SCHAUMSTOFFISOLIER	SKUM ISOLERING	SCHUIMISOLATIE	
15		84374169		1	ESPUMA ISOLANTE, RH Tower Front				
						FOAM INSULATION	ESPUMA AISLANTE	ISOLANTE IN SCHIUMA	051S
					MOUSSE ISOLANTE	SCHAUMSTOFFISOLIER	SKUM ISOLERING	SCHUIMISOLATIE	
16		84374181		1	ESPUMA ISOLANTE, Tower LH Front				
						FOAM INSULATION	ESPUMA AISLANTE	ISOLANTE IN SCHIUMA	051S
					MOUSSE ISOLANTE	SCHAUMSTOFFISOLIER	SKUM ISOLERING	SCHUIMISOLATIE	
17		84366338		1	ESPUMA ISOLANTE, LH Tower Front				
						FOAM INSULATION	ESPUMA AISLANTE	ISOLANTE IN SCHIUMA	051S
					MOUSSE ISOLANTE	SCHAUMSTOFFISOLIER	SKUM ISOLERING	SCHUIMISOLATIE	

ENGINE ACCESSORIES EU/OPEN EU (SR200)
ENGINE ACCESSORIES EU/OPEN EU (SR200)
ENGINE ACCESSORIES EU/OPEN EU (SR200)
ENGINE ACCESSORIES EU/OPEN EU (SR200)

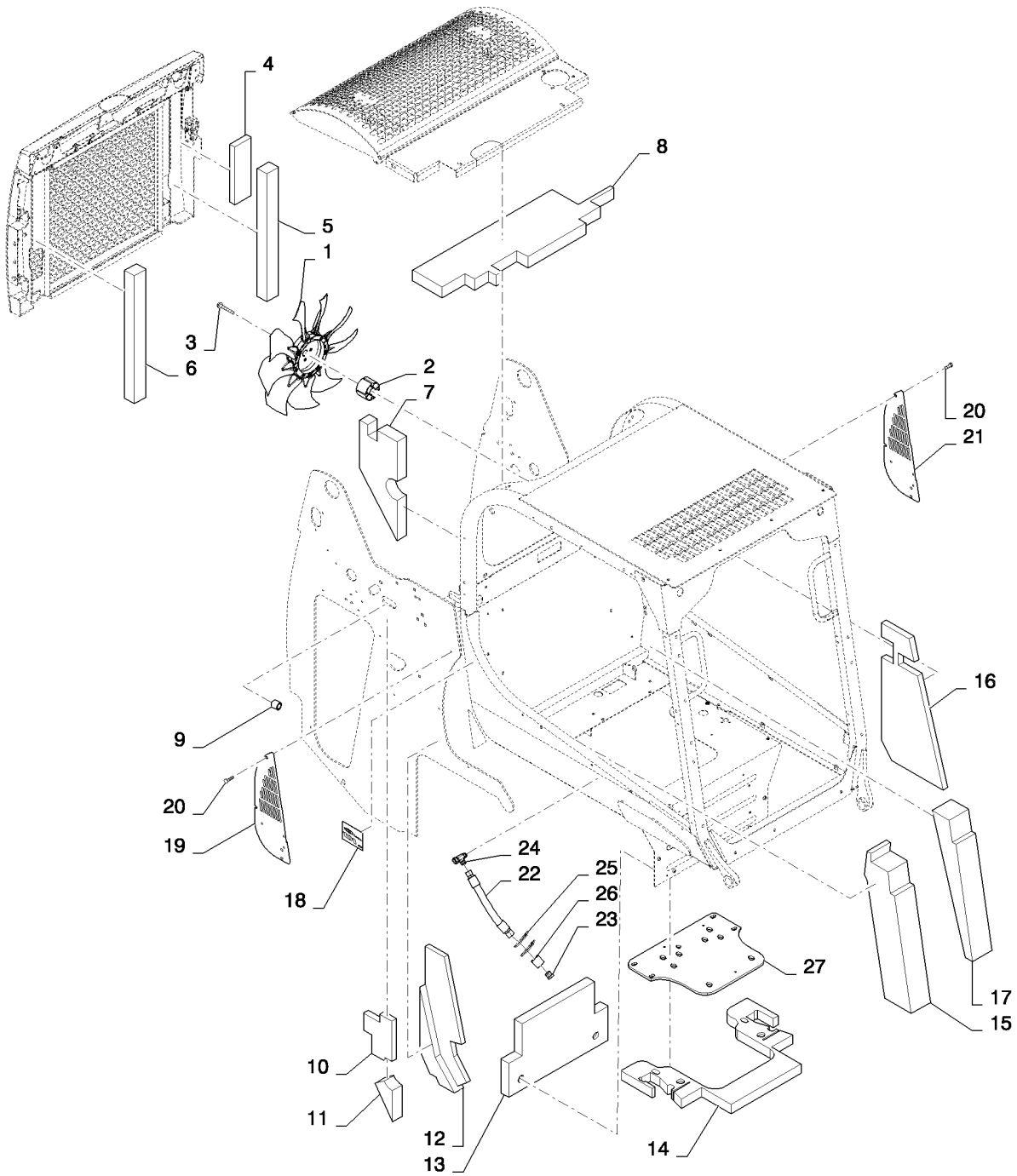

ENGINE ACCESSORIES EU/OPEN EU (SR200)
ENGINE ACCESSORIES EU/OPEN EU (SR200)
ENGINE ACCESSORIES EU/OPEN EU (SR200)
ENGINE ACCESSORIES EU/OPEN EU (SR200)

R	N	P.N.	MOD	Q	Denominação Description	Description Bezeichnung	Denominacion Beskrivelse	Descrizione Beschrijving	L.C.
18		87353967		1	ADESIVO, LWA 101DB	DECAL	CALCOMANÍA	DECALCOMANIA	012D
					AUTOCOLLANT	AUFKLEBER	TRANSFER	STICKER	
19		84383826		1	COBERTURA, Chassis Vent RH				
						COVER	CUBIERTA	COPERCHIO	265C
					COUVERCLE	ABDECKUNG	DÆKSEL	AFSCHERMING	
20		84285339		6	PARAFUSO, Flg M8x15	SELF-TAP SCREW	TORNILLO AUTORROSC	VITE AUTOFILETTANTE	062V
					VIS AUTOTARAUDEUSE	SELBSTSCHN SCHRAUE	SELVLÅSENDE BOLT	ZELFTAPPENDE SCHRO	
21		84383823		1	COBERTURA, Chassis Vent LH				
						COVER	CUBIERTA	COPERCHIO	265C
					COUVERCLE	ABDECKUNG	DÆKSEL	AFSCHERMING	
22		87351645		1	CONJ. MANGUEIRA, Resonator				
						HOSE ASSY.	CONJUNTO DE TUBOS	COMPLESS. TUBO FLES	P457
					ENSEMBLE DE FLEXIBLE	SCHLAUCHBAUGRUPPE	SLANGEENHED	SLANGEENHEID	
23		9790527		1	BUJÃO, 1 5/16"-12, 37º	PLUG	TAPÓN	TAPPO	050T
					BOUCHON	STOPFEN	PROP	PLUG	
24		87622774		1	CONEXÃO, Hyd Tee	FITTING	ACOPLAMIENTO	RACCORDO	3300
					RACCORD	ARMATUR	FITTING	AANSLUITING	
25		L18331		2	PRENDEDOR DE CABOS,	Hose Tie			
						CABLE STRAP	BANDA DE CABLE	FASCETTA PER CAVO	P716
					BRIDE DE CABLE	KABELBINDER	KABELSTROP	BUNDELBAND	
26		87595771		1	ISOLADOR, Rubber	ISOLATOR	AISLADOR	ISOLATORE	Z082
					ISOLANT	ISOLATOR	ISOLATOR	ISOLATIE	
27		84372040		1	ESPUMA, Seat Pan; Used only with Open Cab				
						FOAM	ESPUMA	SCHIUMA	P033
					MOUSSE	SCHAUM	SKUM	SCHUIM	

ENGINE ACCESSORIES NA (SR200,TR270)
ENGINE ACCESSORIES NA (SR200,TR270)
ENGINE ACCESSORIES NA (SR200,TR270)
ENGINE ACCESSORIES NA (SR200,TR270)

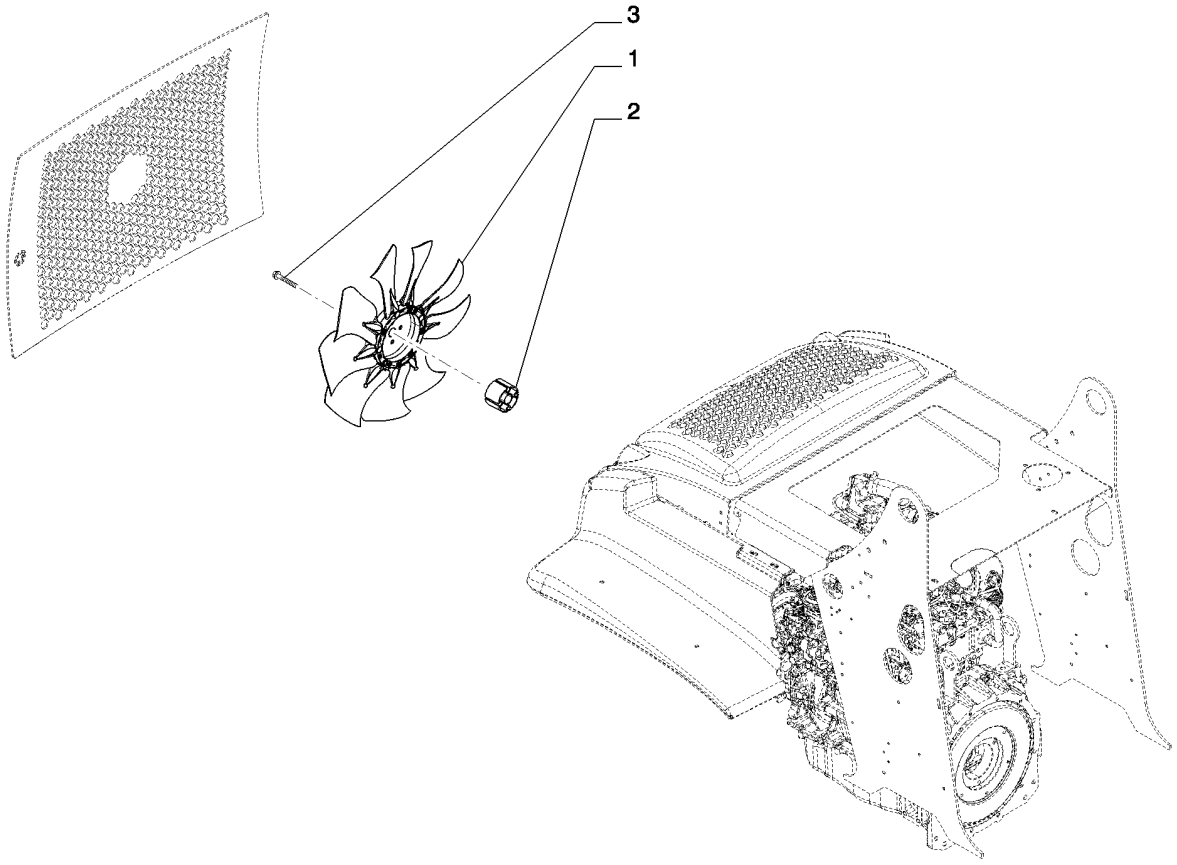

ENGINE ACCESSORIES NA (SR200,TR270)
ENGINE ACCESSORIES NA (SR200,TR270)
ENGINE ACCESSORIES NA (SR200,TR270)
ENGINE ACCESSORIES NA (SR200,TR270)

R	N	P.N.	MOD	Q	Denominação Description	Description Bezeichnung	Denominacion Beskrivelse	Descrizione Beschrijving	L.C.
1		**84371083**		1	VENTILADOR, Clockwise Pusher 480NA				
						FAN	VENTILADOR	VENTOLA	030V
					VENTILATEUR	GEBLÄSE	VENTILATOR	VENTILATOR	
2		**84373345**		1	ESPAÇADOR, Fan 32/33MM	SPACER	SEPARADOR	DISTANZIALE	075D
					ENTRETOISE	DISTANZSTÜCK	AFSTANDSSTYKKE	AFSTANDSSTUK	
3		**86507311**		4	PARAFUSO, Hex Flg, M10 x 80, 8.8				
						BOLT	PERNO	BULLONE	140B
					VIS	SCHRAUBE	BOLT	BOUT	

ENGINE ACCESSORIES EU/OPEN EU (SR200,TR270)
ENGINE ACCESSORIES EU/OPEN EU (SR200,TR270)
ENGINE ACCESSORIES EU/OPEN EU (SR200,TR270)
ENGINE ACCESSORIES EU/OPEN EU (SR200,TR270)

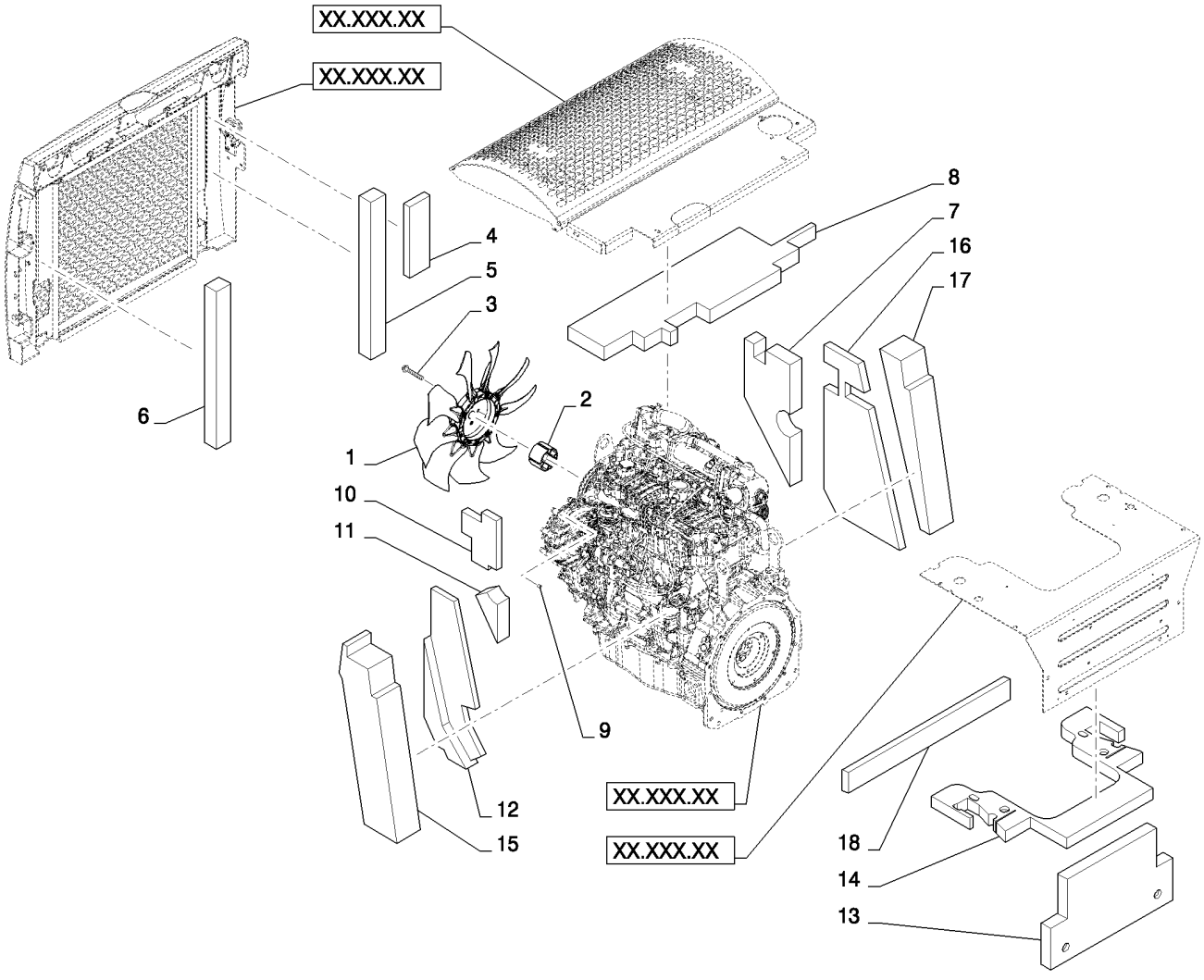

ENGINE ACCESSORIES EU/OPEN EU (SR200,TR270)
ENGINE ACCESSORIES EU/OPEN EU (SR200,TR270)
ENGINE ACCESSORIES EU/OPEN EU (SR200,TR270)
ENGINE ACCESSORIES EU/OPEN EU (SR200,TR270)

R	N	P.N.	MOD	Q	Denominação Description	Description Bezeichnung	Denominacion Beskrivelse	Descrizione Beschrijving	L.C.
1		84374546		1	VENTILADOR, Clockwise Pusher 480 EURO				
						FAN	VENTILADOR	VENTOLA	030V
					VENTILATEUR	GEBLÄSE	VENTILATOR	VENTILATOR	
2		84373345		1	ESPAÇADOR, Fan 32/33M	SPACER	SEPARADOR	DISTANZIALE	075D
					ENTRETOISE	DISTANZSTÜCK	AFSTANDSSTYKKE	AFSTANDSSTUK	
3		86507311		4	PARAFUSO, Hex Flg, M10 x 80, 8.8				
						BOLT	PERNO	BULLONE	140B
					VIS	SCHRAUBE	BOLT	BOUT	
4		84372973		1	ESPUMA ISOLANTE, Fan LH				
						FOAM INSULATION	ESPUMA AISLANTE	ISOLANTE IN SCHIUMA	051S
					MOUSSE ISOLANTE	SCHAUMSTOFFISOLIER	SKUM ISOLERING	SCHUIMISOLATIE	
5		84374183		1	ESPUMA ISOLANTE, RR Door LH				
						FOAM INSULATION	ESPUMA AISLANTE	ISOLANTE IN SCHIUMA	051S
					MOUSSE ISOLANTE	SCHAUMSTOFFISOLIER	SKUM ISOLERING	SCHUIMISOLATIE	
6		84374184		1	ESPUMA ISOLANTE, RR Door RH				
						FOAM INSULATION	ESPUMA AISLANTE	ISOLANTE IN SCHIUMA	051S
					MOUSSE ISOLANTE	SCHAUMSTOFFISOLIER	SKUM ISOLERING	SCHUIMISOLATIE	
7		84374180		1	ESPUMA ISOLANTE, Tower LH				
						FOAM INSULATION	ESPUMA AISLANTE	ISOLANTE IN SCHIUMA	051S
					MOUSSE ISOLANTE	SCHAUMSTOFFISOLIER	SKUM ISOLERING	SCHUIMISOLATIE	
8		84374182		1	ESPUMA ISOLANTE, Hood	FOAM INSULATION	ESPUMA AISLANTE	ISOLANTE IN SCHIUMA	051S
					MOUSSE ISOLANTE	SCHAUMSTOFFISOLIER	SKUM ISOLERING	SCHUIMISOLATIE	
9		87461957		1	PARADA, Stop	STOP	TOPE	ARRESTO; FERMO	080A
					BUTEE	STOP	STOP	AANSLAG	
10		84374178		1	ESPUMA ISOLANTE, RH Tower Front				
						FOAM INSULATION	ESPUMA AISLANTE	ISOLANTE IN SCHIUMA	051S
					MOUSSE ISOLANTE	SCHAUMSTOFFISOLIER	SKUM ISOLERING	SCHUIMISOLATIE	
11		84374179		1	ESPUMA ISOLANTE, Tower RH Lower				
						FOAM INSULATION	ESPUMA AISLANTE	ISOLANTE IN SCHIUMA	051S
					MOUSSE ISOLANTE	SCHAUMSTOFFISOLIER	SKUM ISOLERING	SCHUIMISOLATIE	
12		84374171		1	ESPUMA ISOLANTE, Tower RH				
						FOAM INSULATION	ESPUMA AISLANTE	ISOLANTE IN SCHIUMA	051S
					MOUSSE ISOLANTE	SCHAUMSTOFFISOLIER	SKUM ISOLERING	SCHUIMISOLATIE	
13		84366353		1	ESPUMA ISOLANTE, Heel Plate Horizontal				
						FOAM INSULATION	ESPUMA AISLANTE	ISOLANTE IN SCHIUMA	051S
					MOUSSE ISOLANTE	SCHAUMSTOFFISOLIER	SKUM ISOLERING	SCHUIMISOLATIE	
14		84366352		1	ESPUMA ISOLANTE, Heel Plate Vertical				
						FOAM INSULATION	ESPUMA AISLANTE	ISOLANTE IN SCHIUMA	051S
					MOUSSE ISOLANTE	SCHAUMSTOFFISOLIER	SKUM ISOLERING	SCHUIMISOLATIE	
15		84374169		1	ESPUMA ISOLANTE, RH Tower Front				
						FOAM INSULATION	ESPUMA AISLANTE	ISOLANTE IN SCHIUMA	051S
					MOUSSE ISOLANTE	SCHAUMSTOFFISOLIER	SKUM ISOLERING	SCHUIMISOLATIE	
16		84374181		1	ESPUMA ISOLANTE, Tower LH Front				
						FOAM INSULATION	ESPUMA AISLANTE	ISOLANTE IN SCHIUMA	051S
					MOUSSE ISOLANTE	SCHAUMSTOFFISOLIER	SKUM ISOLERING	SCHUIMISOLATIE	
17		84366338		1	ESPUMA ISOLANTE, LH Tower Front				
						FOAM INSULATION	ESPUMA AISLANTE	ISOLANTE IN SCHIUMA	051S
					MOUSSE ISOLANTE	SCHAUMSTOFFISOLIER	SKUM ISOLERING	SCHUIMISOLATIE	

ENGINE ACCESSORIES EU/OPEN EU (SR200,TR270)
ENGINE ACCESSORIES EU/OPEN EU (SR200,TR270)
ENGINE ACCESSORIES EU/OPEN EU (SR200,TR270)
ENGINE ACCESSORIES EU/OPEN EU (SR200,TR270)

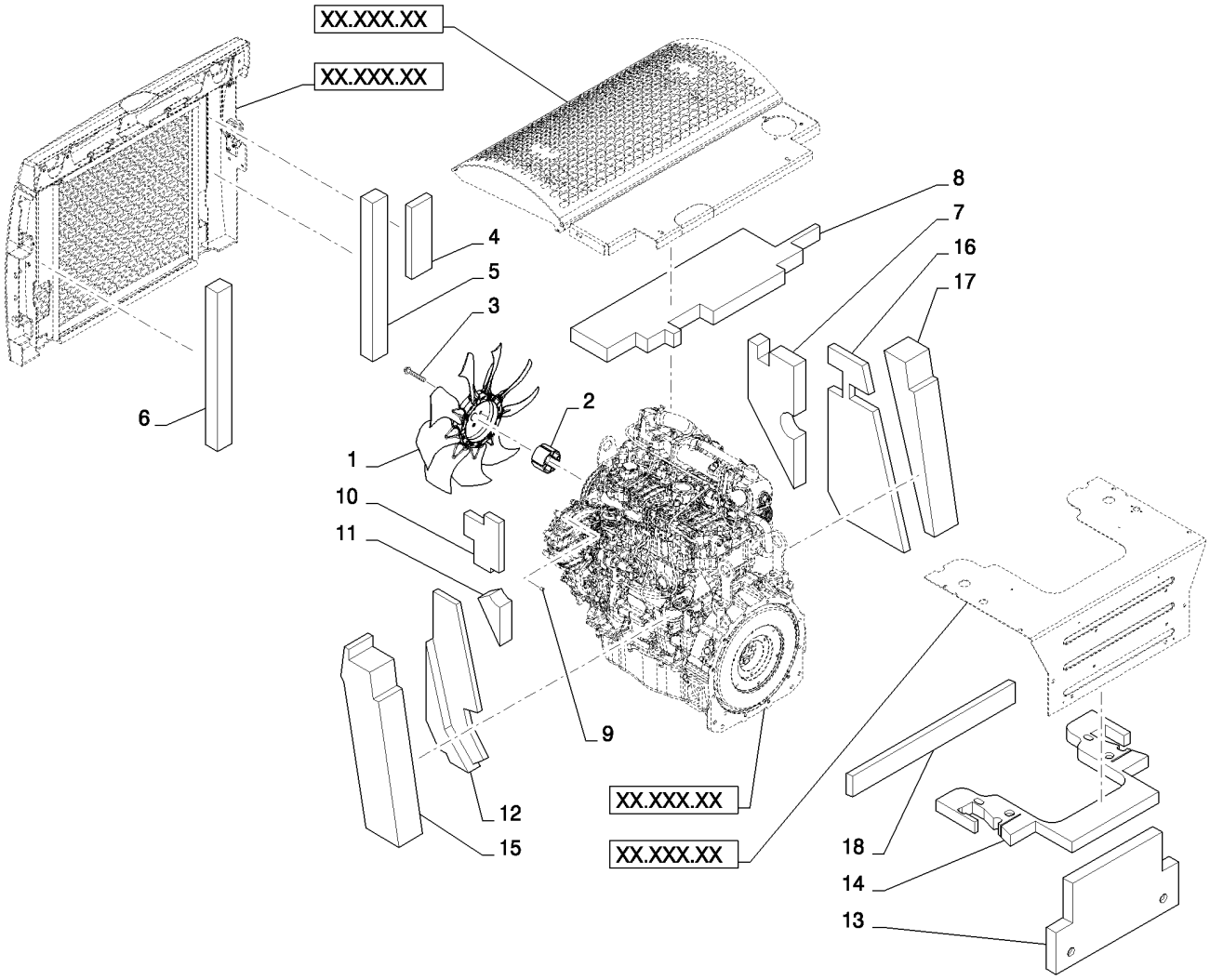

ENGINE ACCESSORIES EU/OPEN EU (SR200,TR270)
ENGINE ACCESSORIES EU/OPEN EU (SR200,TR270)
ENGINE ACCESSORIES EU/OPEN EU (SR200,TR270)
ENGINE ACCESSORIES EU/OPEN EU (SR200,TR270)

R	N	P.N.	MOD	Q	Denominação Description	Description Bezeichnung	Denominacion Beskrivelse	Descrizione Beschrijving	L.C.
18		84362125		1	ESPUMA ISOLANTE, Crossmember; Used only with Open Cab				
						FOAM INSULATION	ESPUMA AISLANTE	ISOLANTE IN SCHIUMA	051S
					MOUSSE ISOLANTE	SCHAUMSTOFFISOLIER	SKUM ISOLERING	SCHUIMISOLATIE	

SEAL PACKAGE, FOAM (ALL CASE)
SEAL PACKAGE, FOAM (ALL CASE)
SEAL PACKAGE, FOAM (ALL CASE)
SEAL PACKAGE, FOAM (ALL CASE)

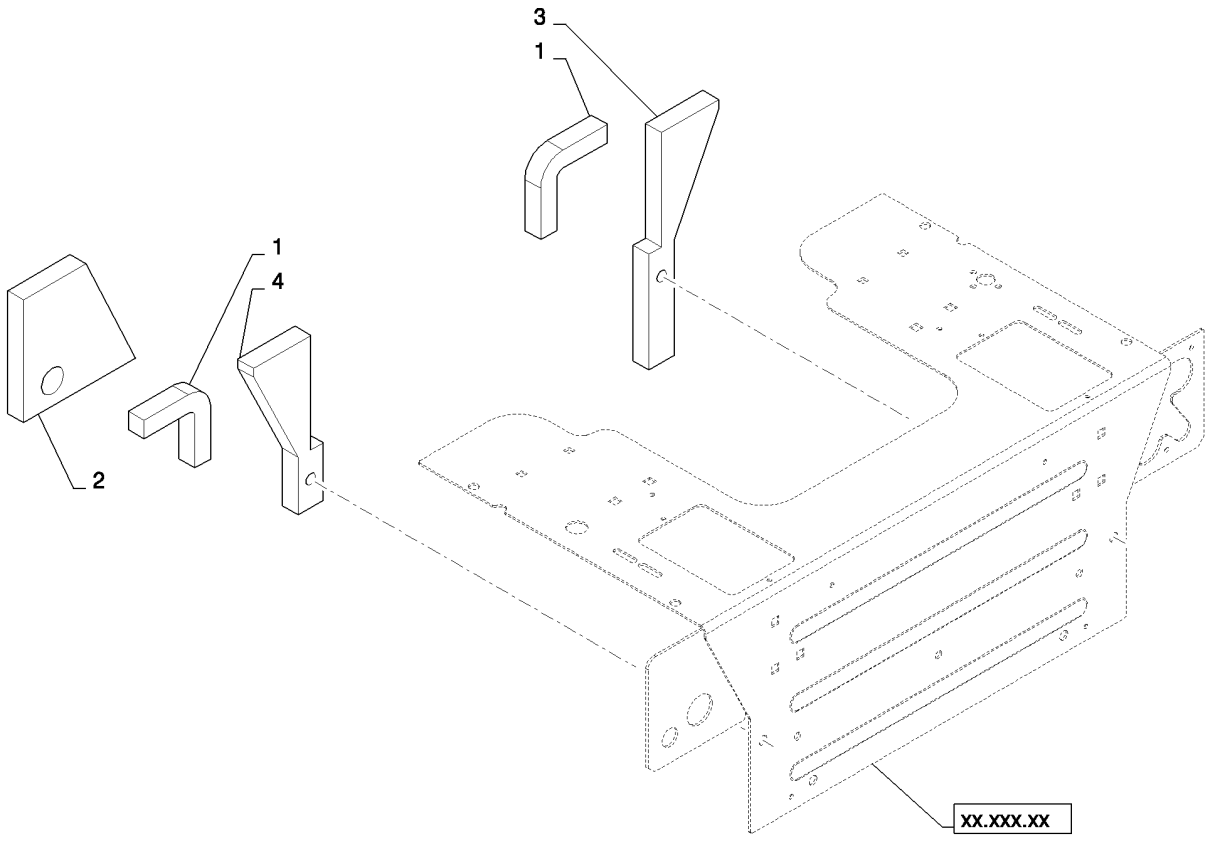

SEAL PACKAGE, FOAM (ALL CASE)
SEAL PACKAGE, FOAM (ALL CASE)
SEAL PACKAGE, FOAM (ALL CASE)
SEAL PACKAGE, FOAM (ALL CASE)

R	N	P.N.	MOD	Q	Denominação Description	Description Bezeichnung	Denominacion Beskrivelse	Descrizione Beschrijving	L.C.
1		**84342690**		2	ESPUMA ISOLANTE MOUSSE ISOLANTE	FOAM INSULATION SCHAUMSTOFFISOLIER	ESPUMA AISLANTE SKUM ISOLERING	ISOLANTE IN SCHIUMA SCHUIMISOLATIE	051S
2		**84287773**		1	ESPUMA, RH Filler MOUSSE	FOAM SCHAUM	ESPUMA SKUM	SCHIUMA SCHUIM	P033
3		**84287772**		1	ESPUMA, LH Heel Plate MOUSSE	FOAM SCHAUM	ESPUMA SKUM	SCHIUMA SCHUIM	P033
4		**84287771**		1	ESPUMA, RH Heel Plate MOUSSE	FOAM SCHAUM	ESPUMA SKUM	SCHIUMA SCHUIM	P033

88.120.02		p1	05/11

FUSE COVER, MED-LG CHASSIS (SR175-TV380)
FUSE COVER, MED-LG CHASSIS (SR175-TV380)
FUSE COVER, MED-LG CHASSIS (SR175-TV380)
FUSE COVER, MED-LG CHASSIS (SR175-TV380)

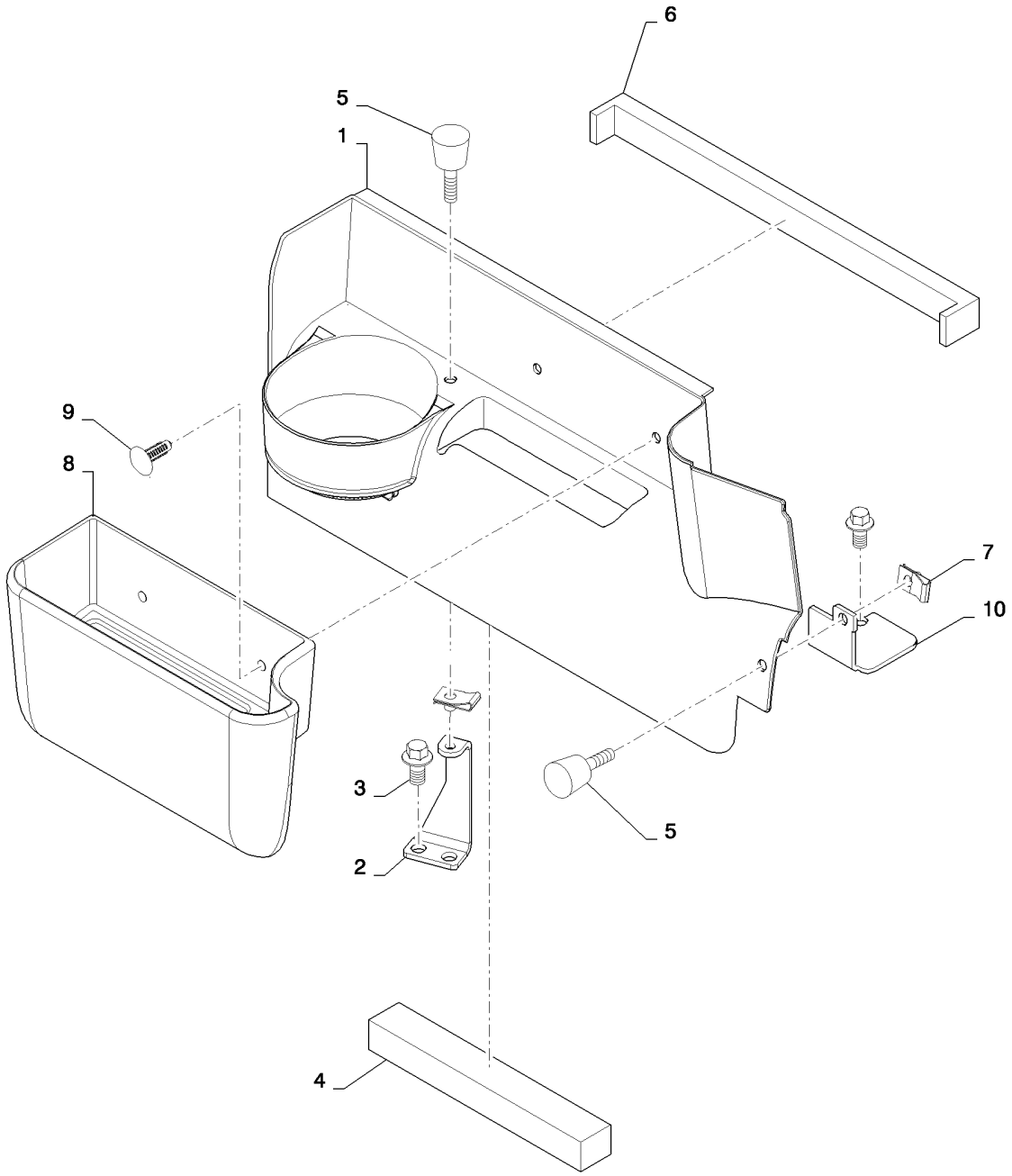

FUSE COVER, MED-LG CHASSIS (SR175-TV380)
FUSE COVER, MED-LG CHASSIS (SR175-TV380)
FUSE COVER, MED-LG CHASSIS (SR175-TV380)
FUSE COVER, MED-LG CHASSIS (SR175-TV380)

R	N	P.N.	MOD	Q	Denominação Description Bezeichnung Denominacion Beskrivelse Descrizione Beschrijving	L.C.
1		84301222		1	TAMPA DE ACESSO, Fuse Cover, Large Chassis ACCESS COVER / CUBIERTA DE ACCESO / COPERCHIO, DI ACCES PANNEAU D'ACCES / ZUGANGSABDECKUNG / ADGANGSDÆKSEL / TOEGANGSAFSCHERMI	A036
2		84481035		1	SUPORTE, Fuse Cover, Gray BRACKET / SOPORTE / STAFFA SUPPORT / HALTERUNG / BESLAG / STEUN	225S
3		84285339		2	PARAFUSO / SELF-TAP SCREW / TORNILLO AUTORROSC / VITE AUTOFILETTANTE VIS AUTOTARAUDEUSE / SELBSTSCHN SCHRAUE / SELVLÅSENDE BOLT / ZELFTAPPENDE SCHRO	062V
4		84282686		1	ESPUMA ISOLANTE, Fuse Cover FOAM INSULATION / ESPUMA AISLANTE / ISOLANTE IN SCHIUMA MOUSSE ISOLANTE / SCHAUMSTOFFISOLIER / SKUM ISOLERING / SCHUIMISOLATIE	051S
5		273890		2	MAÇANETA, Thumb Screw KNOB / MANDO / MANOPOLA BOUTON / RUNDGRIFF / GREB / KNOP	150P
6		86508457		1	PASTILHA, Foam Console, .97 ft. PAD / PASTILLA / CUSCINO; TAMPONE COUSSIN / UNTERLAGE / BREMSEKLODS / BLOK	060T
7		87301324		2	PORCA, M5, U / NUT / TUERCA / DADO ECROU / MUTTER / MØTRIK / MOER	010D
8		84362695		1	CESTO / BASKET / CESTA / CESTINO PANIER / KORB / KURV / KORF	A024
9		84318533		2	BOTÃO DE IMPULSO, Push In, Wheat FASTENER / SUJETADOR / DISPOSITIVO DI FISSAG ATTACHE / BEFESTIGUNGSELEMEN / LUKKER / BEVESTIGING	123B
10		84379555		1	SUPORTE, Fuse Cover / BRACKET / SOPORTE / STAFFA SUPPORT / HALTERUNG / BESLAG / STEUN	225S

SR200

SECTION INDEX

90 - Plataforma, cabine, lataria e adesivos

90.100.01		HOODS AND COVERS (SR175,SR200)
90.112.01		HAND CONTROLS, MANUAL MD FRAME (SR175-TV380)
90.112.01		HAND CONTROLS, MD FRAME SERVO (SR200)
90.112.01	01	FLOORPLATE, NO PEDAL (ALL CASE)
90.112.01	02	HAND CONTROLS, INTERLINK (SR130-SV300)
90.112.01	03	HANDLE MOUNTING, MD-LG FRAME HC (SR175-SV300)
90.112.01	04	HAND CONTROLS, HANDLE LH (SR130-SV300)
90.112.01	05	HAND CONTROLS, HANDLE RH (SR130-SV300)
90.112.01	06	DAMPENING & CENTERING CONTROL (SR200-SV300)
90.112.02		ELEC-HYDRAULIC CONTROLS MD-LG FRM (SR175-TV380)
90.112.02	02	HANDLE MOUNTING EH (SR175-TV380)
90.112.02	03	HANDLE, ELECTRONIC CONTROL CASE (ALL CASE)
90.116.01		LOADER STOP 50MM (SR175,SR200,SR220,SR250)
90.116.02		LOADER STOP 23MM (SR175,SR200,SR220,SR250,TR270,TR320)
90.120.01		SEAT, NON SUSPENSION (ALL CASE)
90.120.02		SEAT, SUSPENSION (ALL CASE)
90.120.03		SEAT AIR SUSPENSION (ALL CASE)
90.120.04	01	SEAT BELT, 2 PT RETRACTOR 2 IN WEB (ALL CASE)
90.120.04	02	SEAT BELT, 3 PT (ALL CASE)
90.120.05		LAP BAR (ALL CASE)
90.120.06		SEAT ASSEMBLY, SUSPENSION (ALL CASE)
90.120.07		SEAT ASSEMBLY, STANDARD (ALL CASE)
90.150.01	01	CAB CASE (SR175-TV380)
90.150.01	02	CAB CASE (SR175-TV380)
90.150.01	03	CAB, GAS STRUT ASSY (ALL CASE)
90.150.02		CAB SEALING (ALL CASE)
90.150.03		FLOOR MAT, MECHANICAL HAND CONTROL (ALL CASE)
90.150.05		FLOOR MAT, EH CONTROLS (SR130-SV300)
90.154.00		FRONT DOOR, GLASS (ALL CASE)
90.154.01	01	DOOR ASSY, FRONT (ALL CASE)
90.154.01	02	DOOR ASSY, FRONT (ALL CASE)
90.154.01	03	NO FRONT DOOR (ALL CASE)
90.154.01	04	DOOR ASSY, FRONT DEMO (ALL CASE)
90.154.01	05	DOOR ASSY, FRONT DEMO (ALL CASE)
90.154.01	06	FRONT DEMO, DOOR (ALL CASE)
90.154.02		SIDE WINDOW ASSY (ALL CASE)
90.154.03	02	DOOR ASSY, REAR (ALL CASE)
90.154.04		REAR WINDOW NA (ALL CASE)
90.154.04		REAR WINDOW EU (ALL CASE)
90.154.05	01	WASHER BOTTLE, FRONT (ALL CASE)
90.154.05	02	WASHER BOTTLE, REAR (ALL CASE)
90.154.05	03	WASHER BOTTLE, FRONT & REAR (ALL CASE)
90.160.01	01	INTERIOR TRIM CASE (ALL CASE)
90.160.01	02	INTERIOR TRIM CASE (ALL CASE)
90.160.01	03	CAB SEALING (ALL CASE)
90.160.02		SEAL PACKAGE (SR175-TV380)
90.160.03	01	CAB HEADLINER, NO RADIO (ALL CASE)
90.160.03	02	CAB HEADLINER, WITH RADIO (ALL CASE)
90.180.01	01	DECALS (SR200)
90.180.01	02	DECALS - WARNING (ALL CASE)
90.180.01	03	DECALS (ALL CASE)
90.180.01	04	DECALS (SR200)

90.100.01		p1	05/11

HOODS AND COVERS (SR175,SR200)
HOODS AND COVERS (SR175,SR200)
HOODS AND COVERS (SR175,SR200)
HOODS AND COVERS (SR175,SR200)

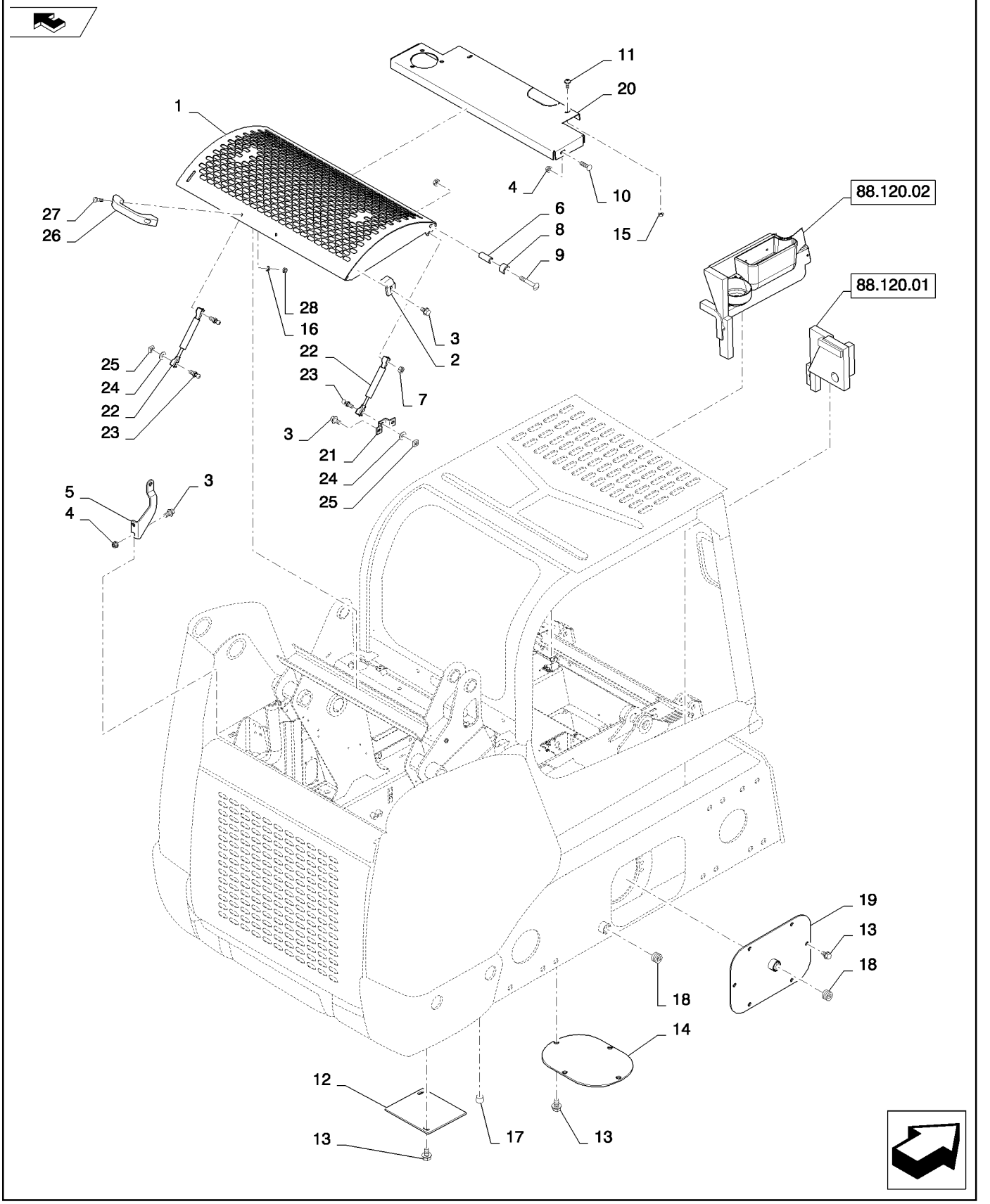

HOODS AND COVERS (SR175,SR200)
HOODS AND COVERS (SR175,SR200)
HOODS AND COVERS (SR175,SR200)
HOODS AND COVERS (SR175,SR200)

R	N	P.N.	MOD	Q	Denominação Description Bezeichnung	Description Bezeichnung Beskrivelse	Denominacion Beskrivelse Beschrijving	Descrizione Beschrijving L.C.
1		84371087		1	CAPÔ, Tilt	HOOD	CUBIERTA	COFANO 4360
					CAPOT	HAUBE	HJELMPLADE	KAP
2		84420534		2	CANTONEIRA, Angle, Hood Stop			
						ANGLE	ÁNGULO	ANGOLARE 057C
					CORNIERE	WINKEL	VINKELBESLAG	HOEKSTUK
3		84285339		6	PARAFUSO, M8 X 15	SELF-TAP SCREW	TORNILLO AUTORROSC	VITE AUTOFILETTANTE 062V
					VIS AUTOTARAUDEUSE	SELBSTSCHN SCHRAUE	SELVLÅSENDE BOLT	ZELFTAPPENDE SCHRO
4		9804277		4	PORCA, M8 x 1.25, Flg, Cl 8			
						NUT	TUERCA	DADO 010D
					ECROU	MUTTER	MØTRIK	MOER
5		84313073		1	DISPOS. DE FECHAMENTO, Angle, Hood			
						LOCKING TAB	LENGÜETA DE BLOQUE(	LINGUETTA DI BLOCCA(071D
					LANGUETTE DE BLOCA(	SICHERUNGSLASCHE	LÅSEANORDNING	BORGLIP
6		259905A1		2	ESPACADOR, 1/4 SCH 40 Pipe			
						SPACER	ESPACIADOR	DISTANZIALE 8090
					ENTRETOISE	ABSTANDSSTUECK	SPACER	SPACER
7		43362		3	PORCA, M8, Cl 10	NUT	TUERCA	DADO 010D
					ECROU	MUTTER	MØTRIK	MOER
8		87429698		2	ESPACADOR, Hood	SPACER	ESPACIADOR	DISTANZIALE 8090
					ENTRETOISE	ABSTANDSSTUECK	SPACER	SPACER
9		120039		2	PARAFUSO, Short NK, M8 x 50, Cl8.8, Full Thd, M6x16 Torx, Panel			
						CARRIAGE BOLT	PERNO ALOMADO	BULLONE A TESTA TONI P123
					VIS A TETE BOMBEE	SCHLOSSSCHRAUBE	BRÆDDEBOLT	SLOTBOUT
10		120038		2	PARAFUSO, Short NK, M8 x 30, Cl8.8, Full Thd			
						CARRIAGE BOLT	PERNO ALOMADO	BULLONE A TESTA TONI P123
					VIS A TETE BOMBEE	SCHLOSSSCHRAUBE	BRÆDDEBOLT	SLOTBOUT
11		87682398		3	PARAFUSO, M6x16 Torx, Panel			
						SCREW	TORNILLO	VITE 040V
					VIS	SCHRAUBE	SKRUE	SCHROEF
12		84299809		1	PLACA DE COBERTURA, Plumbing Access, Power Tan			
						COVER PLATE	PLACA DE CUBIERTA	PIASTRA DI COPERTUR/ 110P
					COUVERCLE	ABDECKPLATTE	DÆKPLADE	AFSCHERMPLAAT
13		87030529		18	PARAFUSO, Hex Wash Hd, 3/8"-16 x 7/8"			
						SELF-TAP SCREW	TORNILLO AUTORROSC	VITE AUTOFILETTANTE 062V
					VIS AUTOTARAUDEUSE	SELBSTSCHN SCHRAUE	SELVLÅSENDE BOLT	ZELFTAPPENDE SCHRO
14		84299800		1	PLACA DE COBERTURA, Gray			
						COVER PLATE	PLACA DE CUBIERTA	PIASTRA DI COPERTUR/ 110P
					COUVERCLE	ABDECKPLATTE	DÆKPLADE	AFSCHERMPLAAT
15		86511444		2	PORCA, M6, Flg Ser, Chassis Vent, RH			
						NUT	TUERCA	DADO 010D
					ECROU	MUTTER	MØTRIK	MOER
16		86625264		2	TRAVA DA ARRUELA, Ext Tooth, M5, Chassis Vent, LH			
						LOCK WASHER	ARANDELA DE BLOQUE(	RONDELLA DI SICUREZ/ 132R
					RONDELLE FREIN	SICHERUNGSSCHEIBE	LÅSESKIVE	BORGRING
17		236622		2	BUJÃO, Hex SKT Pipe, 3/8	PLUG	TAPÓN	TAPPO 050T
					BOUCHON	STOPFEN	PROP	PLUG
18		647429		4	BUJÃO DE DRENO, 1/2 NPTF			
						DRAIN PLUG	TAPÓN DE VACIADO	TAPPO DI SCARICO 056T
					BOUCHON DE VIDANGE	ABLASSSCHRAUBE	AFTAPNINGSPROP	AFTAPPLUG

SR200

90.100.01		p2	05/11

HOODS AND COVERS (SR175,SR200)
HOODS AND COVERS (SR175,SR200)
HOODS AND COVERS (SR175,SR200)
HOODS AND COVERS (SR175,SR200)

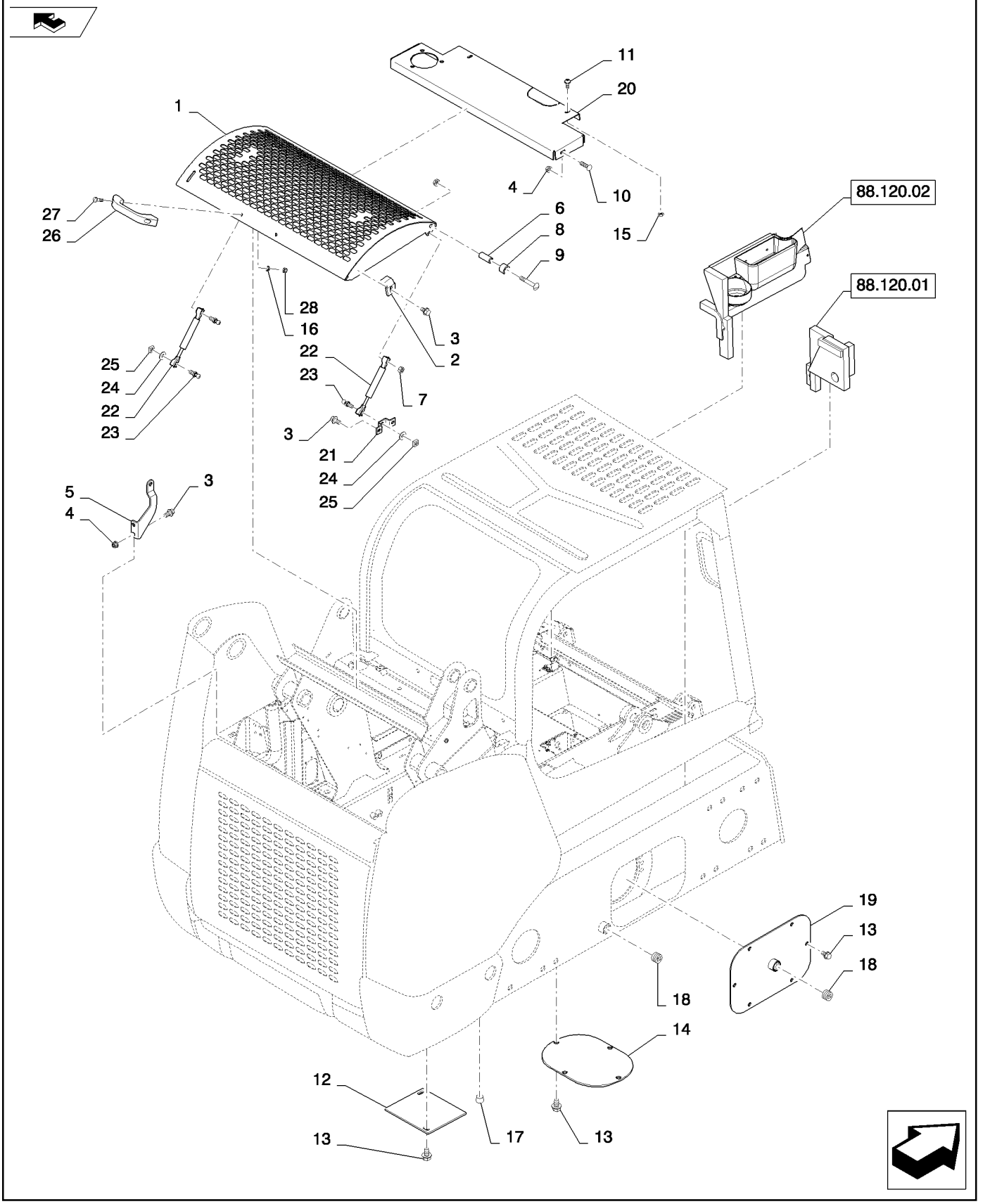

HOODS AND COVERS (SR175,SR200)
HOODS AND COVERS (SR175,SR200)
HOODS AND COVERS (SR175,SR200)
HOODS AND COVERS (SR175,SR200)

R	N	P.N.	MOD	Q	Denominação Description	Description Bezeichnung	Denominacion Beskrivelse	Descrizione Beschrijving	L.C.
19		84421075		2	PLACA DE COBERTURA, With Bung, Tan				
						COVER PLATE	PLACA DE CUBIERTA	PIASTRA DI COPERTUR/	110P
					COUVERCLE	ABDECKPLATTE	DÆKPLADE	AFSCHERMPLAAT	
20		84201355		1	PAINEL, Panel W, Rear Deck				
						PANEL	PANEL	PANNELLO	025P
					PANNEAU	PLATTE	PANEL	PANEEL	
21		84356838		1	CANTONEIRA, Angle, Strut Mounting				
						ANGLE	ÁNGULO	ANGOLARE	057C
					CORNIERE	WINKEL	VINKELBESLAG	HOEKSTUK	
22		400473A1		2	CILINDRO CONJUNTO, Hood Assist				
						CYLINDER ASSY.	CILINDRO (CONJUNTO)	CILINDRO, COMPLESS.	P477
					VERIN	ZYLINDER (KPLT.)	CYLINDER ASSY.	CYLINDER ASSY.	
23		189609A1		4	PRISIONEIRO, Ball, Metric 10mm				
						STUD	ESPARREGO	PRIGIONIERO	8720
					GOUJON	STIFTSCHRAUBE	STUD	STUD	
24		86625263		2	ARRUELA PLANA, M8 x 20 x 1.6				
						WASHER	ARANDELA	RONDELLA	131R
					RONDELLE	UNTERLEGSCHEIBE	FLADSKIVE	SLUITRING	
25		229197A1		1	PORCA, Square, M8	NUT	TUERCA	DADO	5780
					ECROU	MUTTER	NUT	NUT	
26		406256A1		1	ALAVANCA, Rear Hood	HANDLE	PALANCA	MANIGLIA	4120
					POIGNEE	GRIFF	HANDLE	HANDLE	
27		86511827		2	PARAFUSO, Cross Pan Hd, M5 x 20, Rear Hood				
						SCREW	TORNILLO	VITE	040V
					VIS	SCHRAUBE	SKRUE	SCHROEF	
28		86639241		2	CONTRA PORCA, M5 x .8, Cl 8, Rear Hood				
						LOCK NUT	TUERCA DE BLOQUEO	DADO DI BLOCCAGGIO	P263
					CONTRE-ECROU	SICHERUNGSMUTTER	LÅSEMØTRIK	BORGMOER	

90.112.01		p1	01/11

HAND CONTROLS, MANUAL MD FRAME (SR175-TV380)
HAND CONTROLS, MANUAL MD FRAME (SR175-TV380)
HAND CONTROLS, MANUAL MD FRAME (SR175-TV380)
HAND CONTROLS, MANUAL MD FRAME (SR175-TV380)

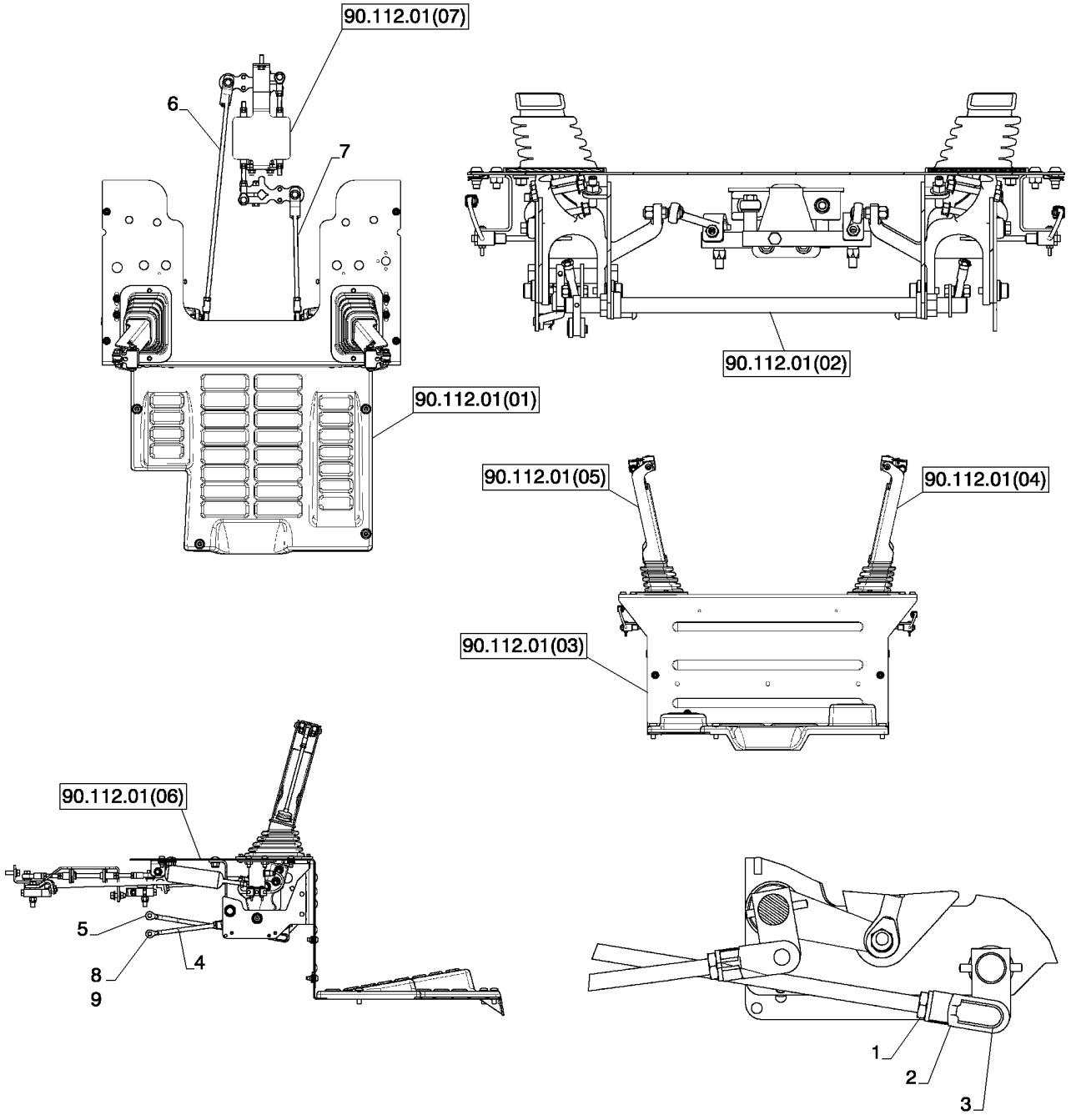

HAND CONTROLS, MANUAL MD FRAME (SR175-TV380)
HAND CONTROLS, MANUAL MD FRAME (SR175-TV380)
HAND CONTROLS, MANUAL MD FRAME (SR175-TV380)
HAND CONTROLS, MANUAL MD FRAME (SR175-TV380)

R	N	P.N.	MOD	Q	Denominação Description	Description Bezeichnung	Denominacion Beskrivelse	Descrizione Beschrijving	L.C.
1		84221258		2	PORCA FINA, M10 Class 05 ZND				
						THIN NUT	TUERCA DELGADA	DADO SOTTILE	A076
					ECROU FIN	FLACHMUTTER	MØTRIK, TYND	DUNNE MOER	
2		84299261		2	GARFO	CLEVIS	MOSQUETÓN	FORCELLA DI ATTACCO	084F
					CHAPE	SCHÄKEL	GAFFELBOLT	GAFFEL	
3		84299262		2	PINO DE GARFO	CLEVIS PIN	EJE CON CABEZA	PERNO A TESTA PIANA	P694
					AXE DE CHAPE	GABELBOLZEN	GAFFELBOLT	GAFFELPEN	
4		84300037		1	HASTE, Loader Valve Bucket				
						ROD	VARILLA	ASTA	090A
					TIGE	STANGE	STANG	STANG	
5		84300039		1	HASTE, Loader Valve Boom	ROD	VARILLA	ASTA	090A
					TIGE	STANGE	STANG	STANG	
6		84303656		1	HASTE ROSCADA, Ground Drive - Medium Frame				
						THREADED ROD	VÁSTAGO ROSCADO	ASTA FILETTATA	095A
					TIGE FILETEE	GEWINDESTANGE	GEVINDSTANG	DRAADSTANG	
7		84303657		1	HASTE ROSCADA, Ground Drive - Medium Frame				
						THREADED ROD	VÁSTAGO ROSCADO	ASTA FILETTATA	095A
					TIGE FILETEE	GEWINDESTANGE	GEVINDSTANG	DRAADSTANG	
8		234726		2	PINO DE GARFO, 1/4" x .770"				
						CLEVIS PIN	EJE CON CABEZA	PERNO A TESTA PIANA	P694
					AXE DE CHAPE	GABELBOLZEN	GAFFELBOLT	GAFFELPEN	
9		D131983		2	PINO	PIN	PASADOR	PERNO	080P
					BROCHE	PIN	STIFT	PEN	

90.112.01		p1	01/11

HAND CONTROLS, MD FRAME SERVO (SR200)
HAND CONTROLS, MD FRAME SERVO (SR200)
HAND CONTROLS, MD FRAME SERVO (SR200)
HAND CONTROLS, MD FRAME SERVO (SR200)

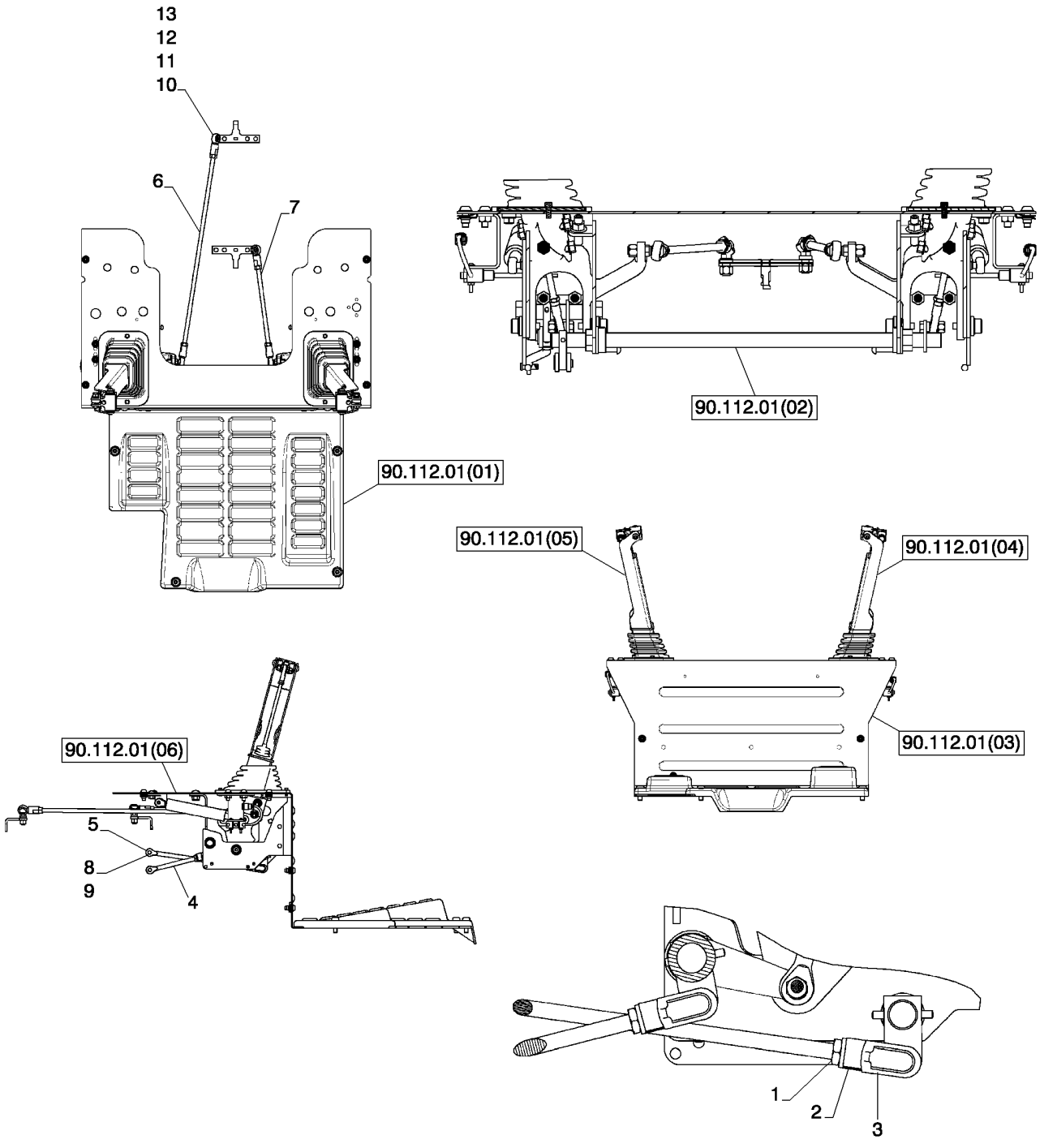

HAND CONTROLS, MD FRAME SERVO (SR200)
HAND CONTROLS, MD FRAME SERVO (SR200)
HAND CONTROLS, MD FRAME SERVO (SR200)
HAND CONTROLS, MD FRAME SERVO (SR200)

R	N	P.N.	MOD	Q	Denominação Description	Description Bezeichnung	Denominacion Beskrivelse	Descrizione Beschrijving	L.C.
1		84221258		2	PORCA FINA ECROU FIN	THIN NUT FLACHMUTTER	TUERCA DELGADA MØTRIK, TYND	DADO SOTTILE DUNNE MOER	A076
2		84299261		2	GARFO CHAPE	CLEVIS SCHÄKEL	MOSQUETÓN GAFFELBOLT	FORCELLA DI ATTACCO GAFFEL	084F
3		84299262		2	PINO DE GARFO AXE DE CHAPE	CLEVIS PIN GABELBOLZEN	EJE CON CABEZA GAFFELBOLT	PERNO A TESTA PIANA GAFFELPEN	P694
4		84300037		1	HASTE, Loader Valve Bucket TIGE	ROD STANGE	VARILLA STANG	ASTA STANG	090A
5		84300039		1	HASTE, Loader Valve Boom TIGE	ROD STANGE	VARILLA STANG	ASTA STANG	090A
6		84303979		1	HASTE ROSCADA, Ground Drive, Md Frm Servo TIGE FILETEE	THREADED ROD GEWINDESTANGE	VÁSTAGO ROSCADO GEVINDSTANG	ASTA FILETTATA DRAADSTANG	095A
7		84303981		1	HASTE ROSCADA, Ground Drive, Md Frm Servo TIGE FILETEE	THREADED ROD GEWINDESTANGE	VÁSTAGO ROSCADO GEVINDSTANG	ASTA FILETTATA DRAADSTANG	095A
8		234726		2	PINO DE GARFO, 1/4" x .770" AXE DE CHAPE	CLEVIS PIN GABELBOLZEN	EJE CON CABEZA GAFFELBOLT	PERNO A TESTA PIANA GAFFELPEN	P694
9		D131983		2	PINO BROCHE	PIN PIN	PASADOR STIFT	PERNO PEN	080P
10		80855		2	CONTRA PORCA, 3/8"-24, GC CONTRE-ECROU	LOCK NUT SICHERUNGSMUTTER	TUERCA DE BLOQUEO LÅSEMØTRIK	DADO DI BLOCCAGGIO BORGMOER	P263
11		694371		2	ESPAÇADOR ENTRETOISE	SPACER DISTANZSTÜCK	SEPARADOR AFSTANDSSTYKKE	DISTANZIALE AFSTANDSSTUK	075D
12		86509310		2	PORCA, 3/8"-24, G5 ECROU	NUT MUTTER	TUERCA MØTRIK	DADO MOER	010D
13		230425A1		2	JUNTA ESF+RICA ROTULE	BALL JOINT KUGELGELENK	JUNTA DE ROTULA KEGELED	GIUNTO SFERICO KOGELWRICHT	P009

90.112.01	01	p1	02/11

FLOORPLATE, NO PEDAL (ALL CASE)
FLOORPLATE, NO PEDAL (ALL CASE)
FLOORPLATE, NO PEDAL (ALL CASE)
FLOORPLATE, NO PEDAL (ALL CASE)

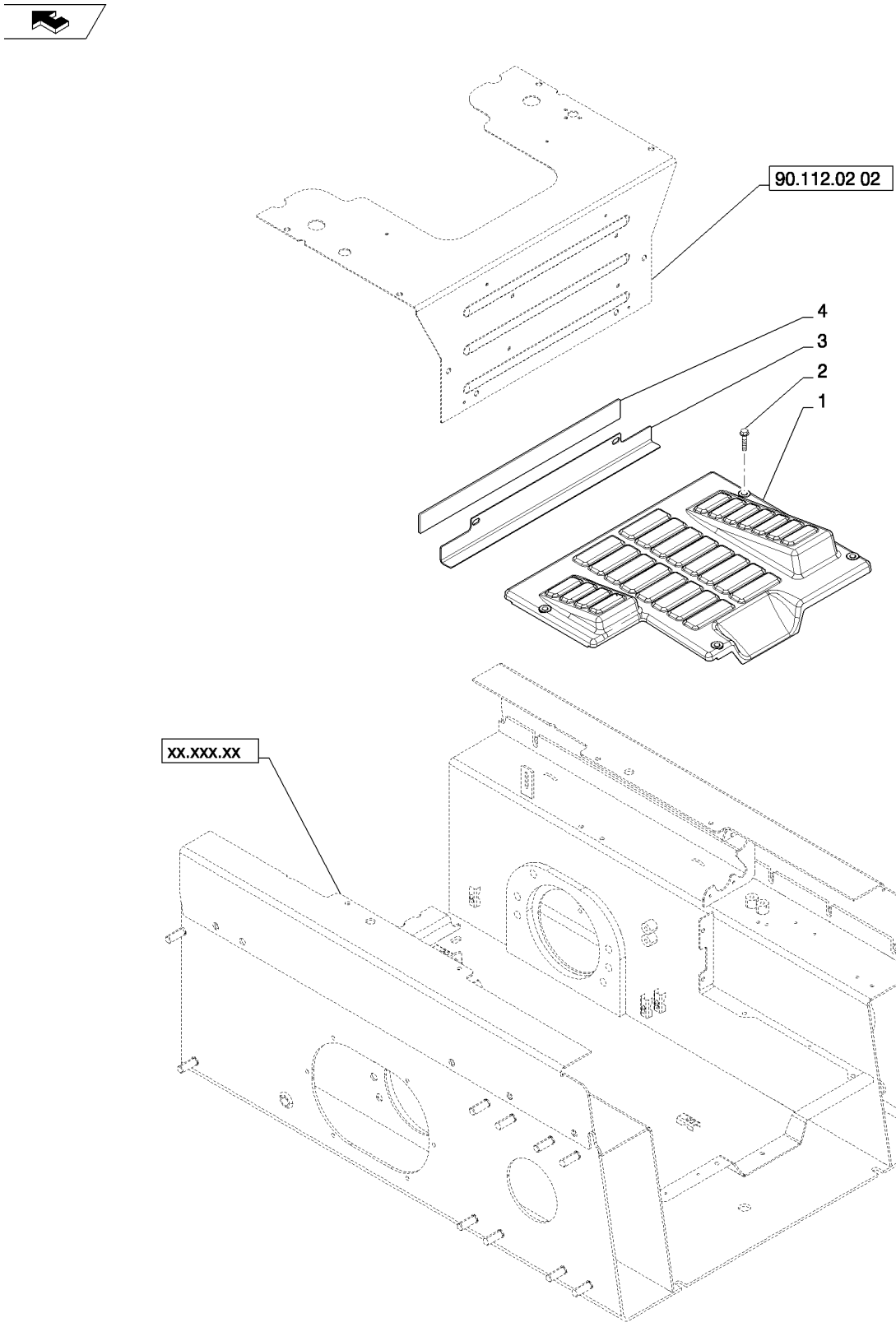

FLOORPLATE, NO PEDAL (ALL CASE)
FLOORPLATE, NO PEDAL (ALL CASE)
FLOORPLATE, NO PEDAL (ALL CASE)
FLOORPLATE, NO PEDAL (ALL CASE)

R	N	P.N.	MOD	Q	Denominação Description	Description Bezeichnung	Denominacion Beskrivelse	Descrizione Beschrijving	L.C.
1		84201060		1	PLACA PLÁSTICA PLAQUE EN PLASTIQUE	PLASTIC PLATE KUNSTSTOFFPLATTE	PLACA DE PLÁSTICO PLASTPLADE	PIASTRA DI PLASTICA KUNSTSTOFPLAAT	P778
2		84312232		4	PARAFUSO VIS AUTOTARAUDEUSE	SELF-TAP SCREW SELBSTSCHN SCHRAUE	TORNILLO AUTORROSC SELVLÅSENDE BOLT	VITE AUTOFILETTANTE ZELFTAPPENDE SCHRO	062V
3		84341453		1	CANTONEIRA CORNIERE	ANGLE WINKEL	ÁNGULO VINKELBESLAG	ANGOLARE HOEKSTUK	057C
4		87061045		2	FITA ADESIVA BANDE ADHESIVE	ADHESIVE STRIP KLEBESTREIFEN	CINTA ADHESIVA SELVKLÆBENDE STRIP	NASTRO ADESIVO KLEEFSTRIP	Z391

90.112.01	02	p1	01/11

HAND CONTROLS, INTERLINK (SR130-SV300)
HAND CONTROLS, INTERLINK (SR130-SV300)
HAND CONTROLS, INTERLINK (SR130-SV300)
HAND CONTROLS, INTERLINK (SR130-SV300)

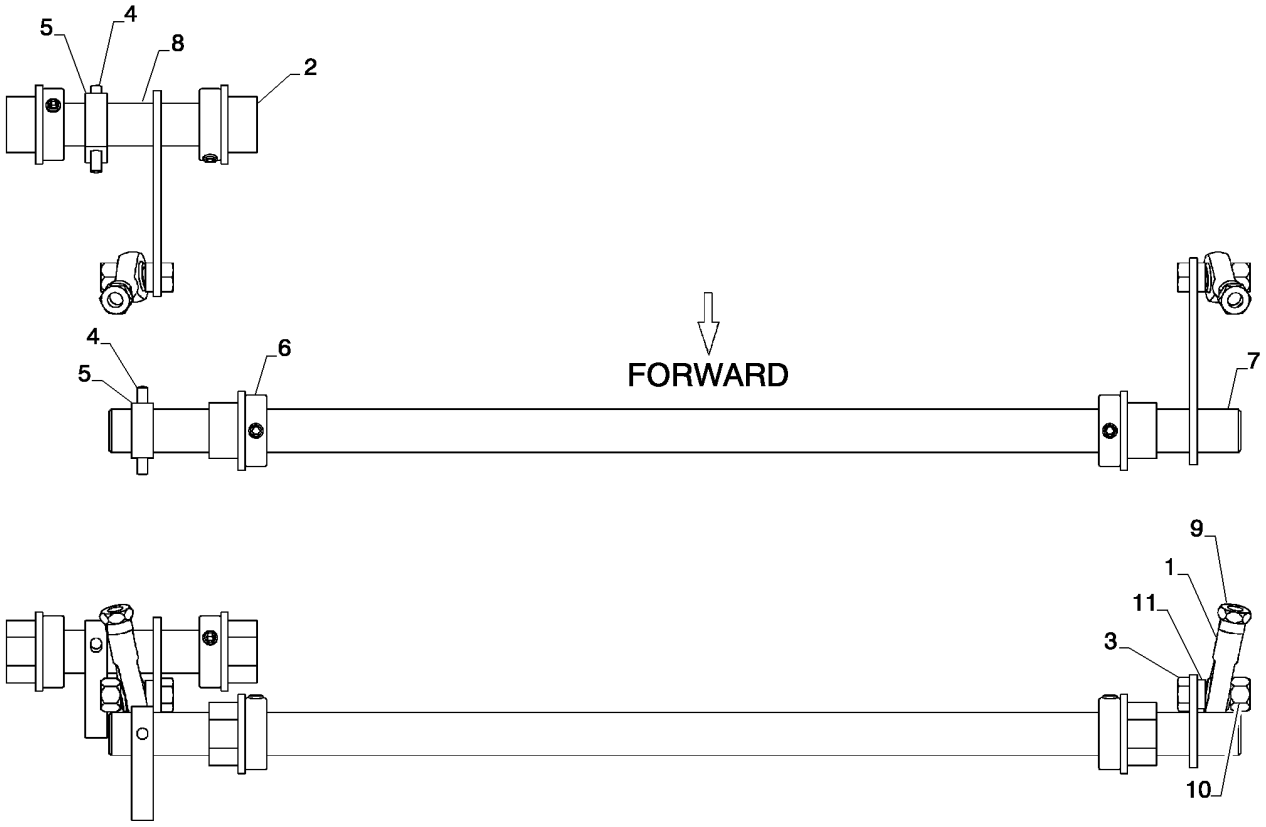

HAND CONTROLS, INTERLINK (SR130-SV300)
HAND CONTROLS, INTERLINK (SR130-SV300)
HAND CONTROLS, INTERLINK (SR130-SV300)
HAND CONTROLS, INTERLINK (SR130-SV300)

R	N	P.N.	MOD	Q	Denominação Description	Description Bezeichnung	Denominacion Beskrivelse	Descrizione Beschrijving	L.C.
1		221665		2	ROLAMENTO ESFÉRICO, 0.315" ID x 0.625" OD x 0.437"				
						SPHERICAL BEARING	COJINETE ESFÉRICO	CUSCINETTO SFERICO	A164
					ROULEMENT SPHERIQU	PENDELKUGELLAGER	SFÆRISK LEJE	KOGELLAGER	
2		228500		4	BUCHA	BUSHING	CASQUILLO	BOCCOLA	095B
					BAGUE	BUCHSE	BØSNING	BUS	
3		280483		2	PARAFUSO, Hex, 5/16"-24 x 1", G5, Full Thd				
						BOLT	PERNO	BULLONE	140B
					VIS	SCHRAUBE	BOLT	BOUT	
4		856800		2	PINO RANHURADO, 3/16" x 1 1/2", Type E, Hardened				
						GROOVED PIN	PASADOR RANURADO	PERNO SCANALATO	086P
					GOUPILLE CANNELEE	KERBSTIFT	TAP M/NOT	GEGROEFDE PEN	
5		84273628		2	PLACA, Foot Control Ear	PLATE	PLACA	PIASTRA	105P
					PLAQUE	PLATTE	PLADE	PLAAT	
6		84291866		4	COLAR DE FIXAÇÃO, 3/4" Shaft				
						RETAINER COLLAR	COLLAR DE RETENCIÓN	COLLARE DI FISSAGGIO	230S
					COLLIER DE RETENUE	HALTERING	RING, SPÆNDE	BORGKRAAG	
7		84299773		1	EIXO DE COMANDO, Hand Control, Boom				
						CONTROL SHAFT	EJE DE CONTROL	ALBERO DI COMANDO	008A
					ARBRE DE COMMANDE	STEUERWELLE	DRIVAKSEL	REGELAS	
8		84299785		1	EIXO DE COMANDO, Hand Control, Bucket				
						CONTROL SHAFT	EJE DE CONTROL	ALBERO DI COMANDO	008A
					ARBRE DE COMMANDE	STEUERWELLE	DRIVAKSEL	REGELAS	
9		86637933		2	PORCA, Jam, 5/16"-24, G5	NUT	TUERCA	DADO	010D
					ECROU	MUTTER	MØTRIK	MOER	
10		87034527		2	PORCA	NUT	TUERCA	DADO	010D
					ECROU	MUTTER	MØTRIK	MOER	
11		87360034		2	ESPAÇADOR, 1/2" Tube	SPACER	SEPARADOR	DISTANZIALE	075D
					ENTRETOISE	DISTANZSTÜCK	AFSTANDSSTYKKE	AFSTANDSSTUK	

90.112.01	03	p1	02/11

HANDLE MOUNTING, MD-LG FRAME HC (SR175-SV300)
HANDLE MOUNTING, MD-LG FRAME HC (SR175-SV300)
HANDLE MOUNTING, MD-LG FRAME HC (SR175-SV300)
HANDLE MOUNTING, MD-LG FRAME HC (SR175-SV300)

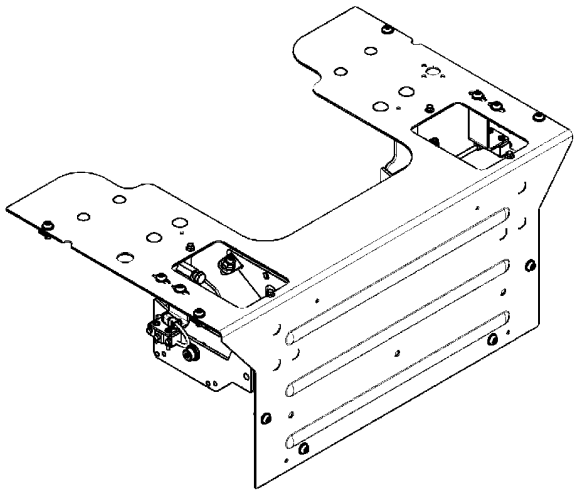

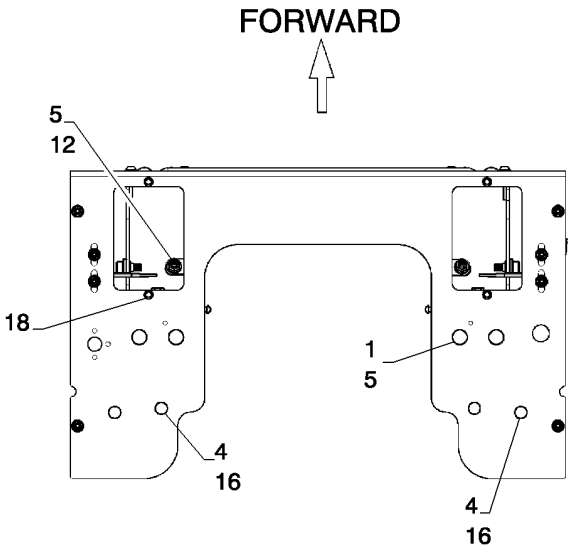

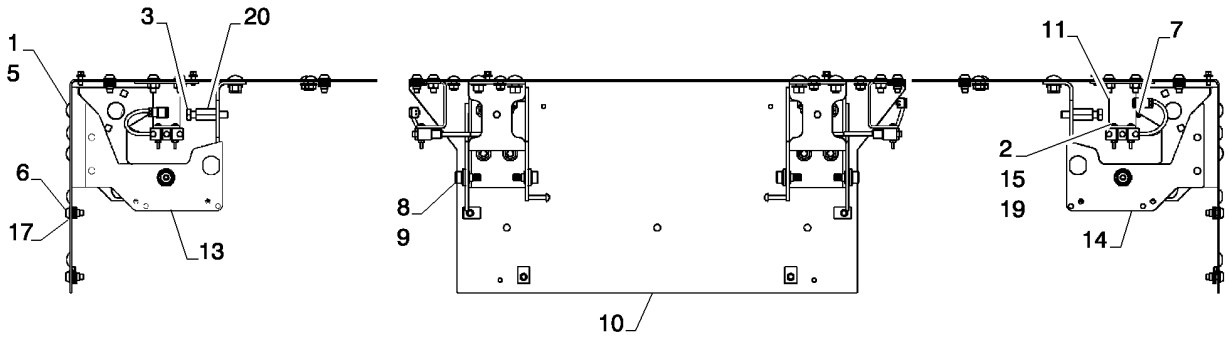

HANDLE MOUNTING, MD-LG FRAME HC (SR175-SV300)
HANDLE MOUNTING, MD-LG FRAME HC (SR175-SV300)
HANDLE MOUNTING, MD-LG FRAME HC (SR175-SV300)
HANDLE MOUNTING, MD-LG FRAME HC (SR175-SV300)

R	N	P.N.	MOD	Q	Denominação Description	Description Bezeichnung	Denominacion Beskrivelse	Descrizione Beschrijving	L.C.
1		86633356		10	PARAFUSO, Short NK, M10 x 25, Cl8.8, Full Thd				
						CARRIAGE BOLT	PERNO ALOMADO	BULLONE A TESTA TONI	P123
					VIS A TETE BOMBEE	SCHLOSSSCHRAUBE	BRÆDDEBOLT	SLOTBOUT	
2		280859		4	PORCA, Keps, w/LW,#6-32	NUT	TUERCA	DADO	010D
					ECROU	MUTTER	MØTRIK	MOER	
3		412217		2	PARAFUSO, Hex, M10 x 55, 8.8, Full Thd				
						BOLT	PERNO	BULLONE	140B
					VIS	SCHRAUBE	BOLT	BOUT	
4		9804277		4	PORCA, M8 x 1.25, Flg, Cl 8				
						NUT	TUERCA	DADO	010D
					ECROU	MUTTER	MØTRIK	MOER	
5		9804278		12	PORCA, M10 x 1.5, Flg, Cl 8				
						NUT	TUERCA	DADO	010D
					ECROU	MUTTER	MØTRIK	MOER	
6		84187826		12	PARAFUSO, RWH M8x20 Torx 8.8 Pol				
						SCREW	TORNILLO	VITE	040V
					VIS	SCHRAUBE	SKRUE	SCHROEF	
7		84239537		2	INTERRUPTOR, OMRON 2-15GNJ55				
						SWITCH	INTERRUPTOR	INTERRUTTORE	075I
					CONTACTEUR	SCHALTER	KONTAKT	SCHAKELAAR	
8		84291864		4	PARAFUSO, Custom Shoulder Pivot				
						BOLT	PERNO	BULLONE	140B
					VIS	SCHRAUBE	BOLT	BOUT	
9		84291865		4	BUCHA, Handle Pivot	BUSHING	CASQUILLO	BOCCOLA	095B
					BAGUE	BUCHSE	BØSNING	BUS	
10		84392252		1	PLACA, Heel, Removable, Med-Lg Frame				
						PLATE	PLACA	PIASTRA	105P
					PLAQUE	PLATTE	PLADE	PLAAT	
11		84407176		1	SUPORTE, Back-Up Alarm Switch, RH				
						BRACKET	SOPORTE	STAFFA	225S
					SUPPORT	HALTERUNG	BESLAG	STEUN	
11		84407179		1	SUPORTE, Back-Up Alarm Switch, LH				
						BRACKET	SOPORTE	STAFFA	225S
					SUPPORT	HALTERUNG	BESLAG	STEUN	
12		84345494		2	PARAFUSO DE AJUSTE	SET SCREW	TORNILLO DE AJUSTE	VITE DI FERMO	P327
					VIS DE REGLAGE	STELLSCHRAUBE	SÆTSKRUE	STELSCHROEF	
13		84386369		1	SUPORTE, Handle, LH Gray				
						BRACKET	SOPORTE	STAFFA	225S
					SUPPORT	HALTERUNG	BESLAG	STEUN	
14		84386372		1	SUPORTE, Handle, RH Gray				
						BRACKET	SOPORTE	STAFFA	225S
					SUPPORT	HALTERUNG	BESLAG	STEUN	
15		86511189		4	ARRUELA PLANA, #6, .156 x .375 x .049				
						WASHER	ARANDELA	RONDELLA	131R
					RONDELLE	UNTERLEGSCHEIBE	FLADSKIVE	SLUITRING	
16		308761		4	PARAFUSO, Short NK, M8 x 25, Cl8.8, Full Thd, M8x16 Cl 8.8				
						CARRIAGE BOLT	PERNO ALOMADO	BULLONE A TESTA TONI	P123
					VIS A TETE BOMBEE	SCHLOSSSCHRAUBE	BRÆDDEBOLT	SLOTBOUT	

90.112.01	03	p2	02/11

HANDLE MOUNTING, MD-LG FRAME HC (SR175-SV300)
HANDLE MOUNTING, MD-LG FRAME HC (SR175-SV300)
HANDLE MOUNTING, MD-LG FRAME HC (SR175-SV300)
HANDLE MOUNTING, MD-LG FRAME HC (SR175-SV300)

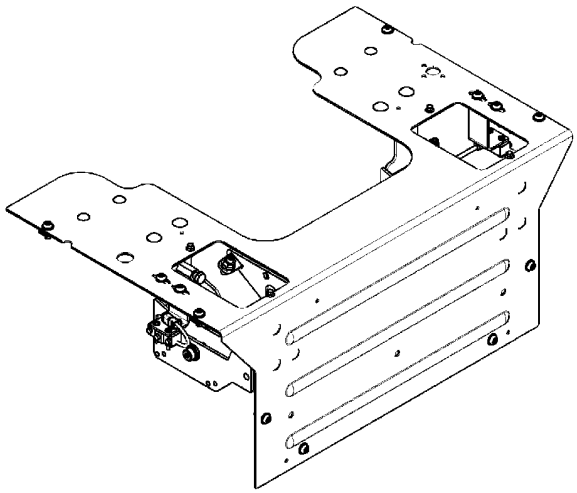

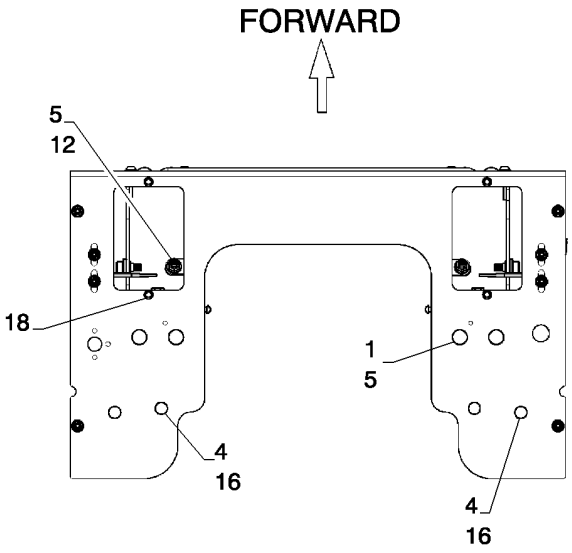

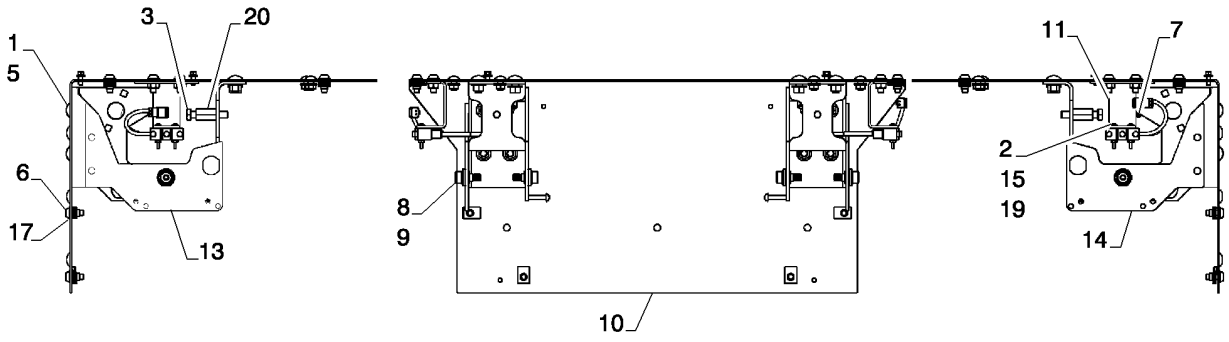

HANDLE MOUNTING, MD-LG FRAME HC (SR175-SV300)
HANDLE MOUNTING, MD-LG FRAME HC (SR175-SV300)
HANDLE MOUNTING, MD-LG FRAME HC (SR175-SV300)
HANDLE MOUNTING, MD-LG FRAME HC (SR175-SV300)

R	N	P.N.	MOD	Q	Denominação Description	Description Bezeichnung	Denominacion Beskrivelse	Descrizione Beschrijving	L.C.
17		**86625074**		8	PORCA, Spring, Multi-thread M8x1.25				
						NUT	TUERCA	DADO	010D
					ECROU	MUTTER	MØTRIK	MOER	
18		**87017606**		4	PARAFUSO, Hex Flg Hd, M6 x 20, Tapping, Flange M6x13				
						SELF-TAP SCREW	TORNILLO AUTORROSC	VITE AUTOFILETTANTE	062V
					VIS AUTOTARAUDEUSE	SELBSTSCHN SCHRAUE	SELVLÅSENDE BOLT	ZELFTAPPENDE SCHRO	
19		**87319756**		4	PARAFUSO, PHD #6-32xt .375 CST Znd				
						SCREW	TORNILLO	VITE	040V
					VIS	SCHRAUBE	SKRUE	SCHROEF	
20		**130105A1**		2	PORCA, Hex Coupling M10x1.5x38				
						NUT	TUERCA	DADO	5780
					ECROU	MUTTER	NUT	NUT	
21		**86624182**		4	ARRUELA PLANA, M6 x 18 x 1.6, (Not Shown) Used with Ref. 18				
						WASHER	ARANDELA	RONDELLA	131R
					RONDELLE	UNTERLEGSCHEIBE	FLADSKIVE	SLUITRING	
22		**87026182**		12	ARRUELA PLANA, 17/32" x 1" x .030", (Not Shown) Used with Ref. 8 & 9				
						WASHER	ARANDELA	RONDELLA	131R
					RONDELLE	UNTERLEGSCHEIBE	FLADSKIVE	SLUITRING	

90.112.01	04	p1	01/11

HAND CONTROLS, HANDLE LH (SR130-SV300)
HAND CONTROLS, HANDLE LH (SR130-SV300)
HAND CONTROLS, HANDLE LH (SR130-SV300)
HAND CONTROLS, HANDLE LH (SR130-SV300)

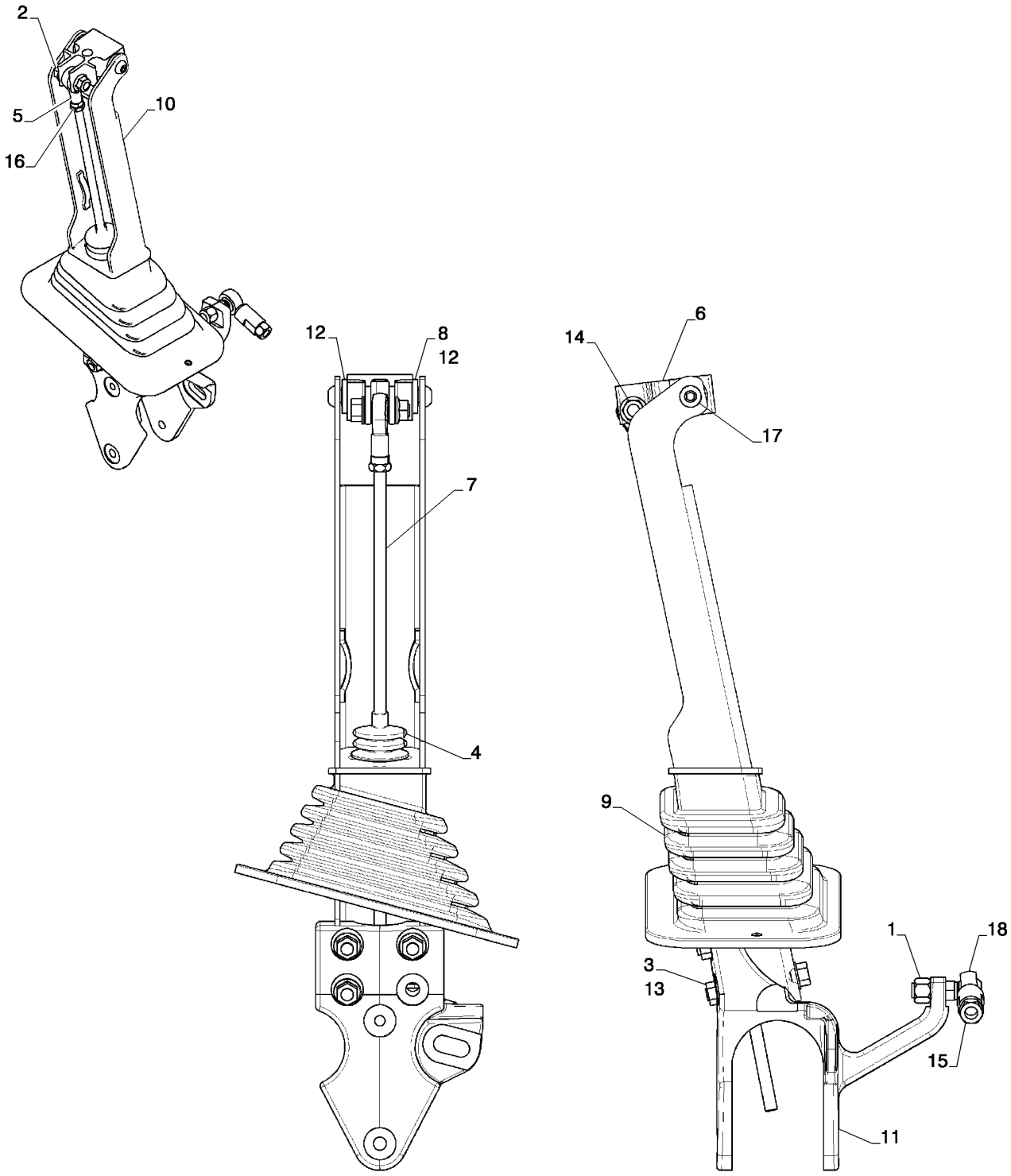

HAND CONTROLS, HANDLE LH (SR130-SV300)
HAND CONTROLS, HANDLE LH (SR130-SV300)
HAND CONTROLS, HANDLE LH (SR130-SV300)
HAND CONTROLS, HANDLE LH (SR130-SV300)

R	N	P.N.	MOD	Q	Denominação Description	Description Bezeichnung	Denominacion Beskrivelse	Descrizione Beschrijving	L.C.
1		80855		1	CONTRA PORCA, 3/8"-24, GC				
						LOCK NUT	TUERCA DE BLOQUEO	DADO DI BLOCCAGGIO	P263
					CONTRE-ECROU	SICHERUNGSMUTTER	LÅSEMØTRIK	BORGMOER	
2		9804260		1	PARAFUSO, Hex Flg, M8 x 30, 8.8, Full Thd				
						BOLT	PERNO	BULLONE	140B
					VIS	SCHRAUBE	BOLT	BOUT	
3		9804277		3	PORCA, M8 x 1.25, Flg, Cl 8				
						NUT	TUERCA	DADO	010D
					ECROU	MUTTER	MØTRIK	MOER	
4		84201371		1	CAPA, Control Rod Boot	BOOT	FUNDA	PARAPOLVERE	330C
					SOUFFLET	MANSCHETTE	MANCHET	HOES	
5		84263144		1	JUNTA ESFÉRICA, Rod End				
						BALL JOINT	RÓTULA	GIUNTO SFERICO	070G
					JOINT A ROTULE	KUGELGELENK	KUGLELED	KOGELGEWRICHT	
6		84291862		1	JUNTA ARTICULAÇÃO, Hand Control				
						KNUCKLE JOINT	JUNTA DE PIVOTE	ARTICOLAZIONE A FOR(	Z408
					ROTULE	GELENKVERBINDUNG	FORBINDELSESSPINDEI	GEWRICHTSKOPPELING	
7		84300731		1	HASTE ROSCADA, Hand Control LDH				
						THREADED ROD	VÁSTAGO ROSCADO	ASTA FILETTATA	095A
					TIGE FILETEE	GEWINDESTANGE	GEVINDSTANG	DRAADSTANG	
8		84302564		1	HASTE, Grip Pivol	ROD	VARILLA	ASTA	090A
					TIGE	STANGE	STANG	STANG	
9		84339566		1	CAPA, Control Handle SQ LH				
						BOOT	FUNDA	PARAPOLVERE	330C
					SOUFFLET	MANSCHETTE	MANCHET	HOES	
10		84348730		1	MANILHA, C Channel W Silver				
						HANDLE	MANECILLA	MANIGLIA	020M
					POIGNEE	GRIFF	HÅNDTAG	HENDEL	
11		84351110		1	FIXADOR, Handle Pivot LH	MOUNT	SOPORTE	SUPPORTO	C022
					MONTAGE	GESTELL	BESLAG	BEVESTIGING	
12		86013179		2	BUCHA, Flange Bearing	BUSHING	CASQUILLO	BOCCOLA	095B
					BAGUE	BUCHSE	BØSNING	BUS	
13		86511843		3	PARAFUSO, Hex Flg, M8 x 60, 8.8				
						BOLT	PERNO	BULLONE	140B
					VIS	SCHRAUBE	BOLT	BOUT	
14		86619801		1	CONTRA PORCA, M8 x 1.25, Flg, Cl 8				
						LOCK NUT	TUERCA DE BLOQUEO	DADO DI BLOCCAGGIO	P263
					CONTRE-ECROU	SICHERUNGSMUTTER	LÅSEMØTRIK	BORGMOER	
15		87030547		1	PORCA, 3/8"-24, G5, LH	NUT	TUERCA	DADO	010D
					ECROU	MUTTER	MØTRIK	MOER	
16		87034513		1	PORCA-TRAVA	JAM NUT	CONTRATUERCA	CONTRODADO	A070
					CONTRE-ECROU	KONTERMUTTER	KONTRAMØTRIK	CONTRAMOER	
17		87360874		2	PARAFUSO, Hex Soc Btn Hd M8x16				
						SCREW	TORNILLO	VITE	040V
					VIS	SCHRAUBE	SKRUE	SCHROEF	
18		230426A1		1	JUNTA ESF+RICA, Socket Threaded Stuc w/ Rod End				
						BALL JOINT	JUNTA DE ROTULA	GIUNTO SFERICO	P009
					ROTULE	KUGELGELENK	KEGELED	KOGELWRICHT	

SR200

90.112.01	05	p1	01/11

HAND CONTROLS, HANDLE RH (SR130-SV300)
HAND CONTROLS, HANDLE RH (SR130-SV300)
HAND CONTROLS, HANDLE RH (SR130-SV300)
HAND CONTROLS, HANDLE RH (SR130-SV300)

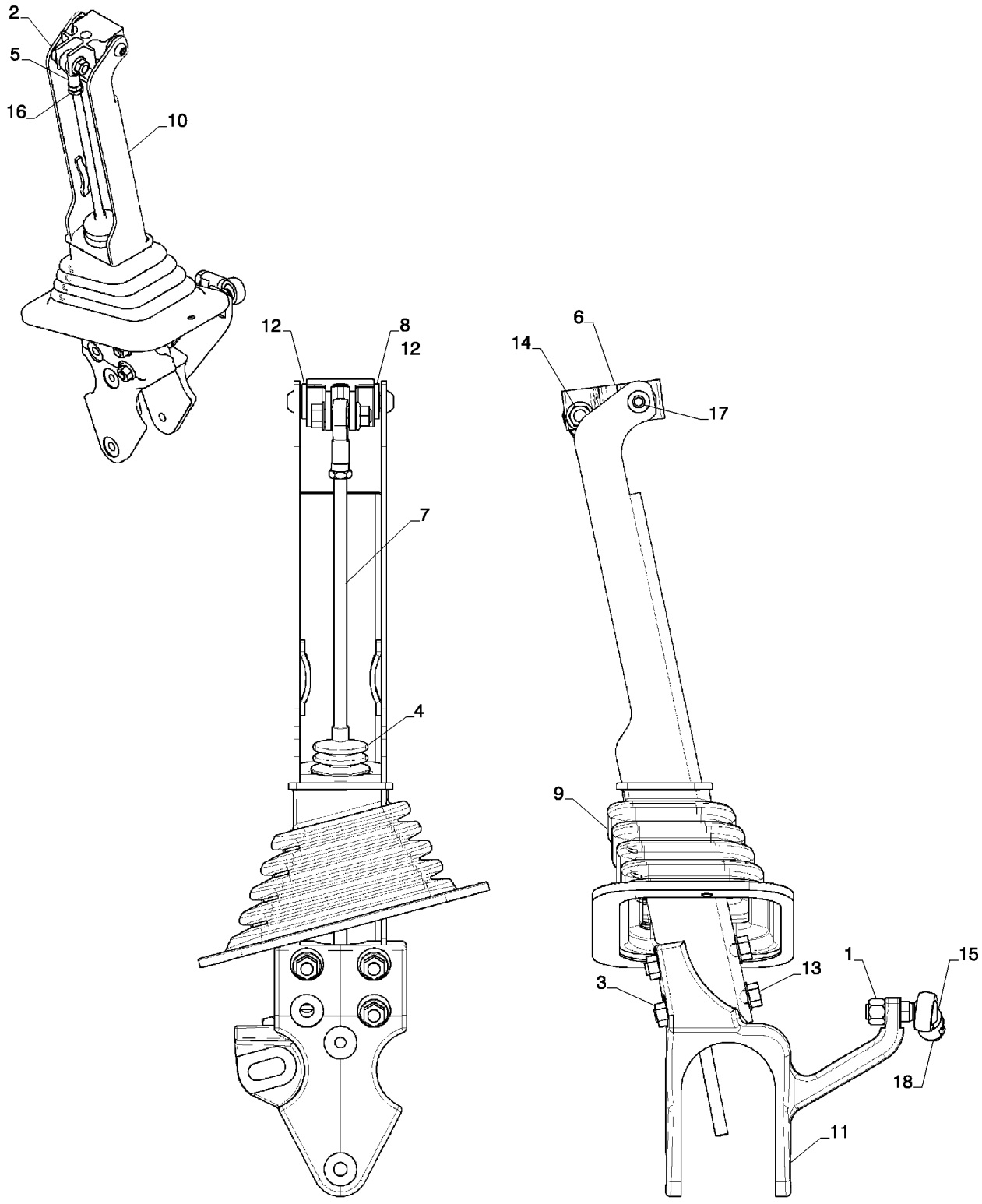

HAND CONTROLS, HANDLE RH (SR130-SV300)
HAND CONTROLS, HANDLE RH (SR130-SV300)
HAND CONTROLS, HANDLE RH (SR130-SV300)
HAND CONTROLS, HANDLE RH (SR130-SV300)

R	N	P.N.	MOD	Q	Denominação Description	Description Bezeichnung	Denominacion Beskrivelse	Descrizione Beschrijving	L.C.
1		80855		1	CONTRA PORCA, 3/8"-24, GC				
						LOCK NUT	TUERCA DE BLOQUEO	DADO DI BLOCCAGGIO	P263
					CONTRE-ECROU	SICHERUNGSMUTTER	LÅSEMØTRIK	BORGMOER	
2		9804260		1	PARAFUSO, Hex Flg, M8 x 30, 8.8, Full Thd				
						BOLT	PERNO	BULLONE	140B
					VIS	SCHRAUBE	BOLT	BOUT	
3		9804277		3	PORCA, M8 x 1.25, Flg, Cl 8				
						NUT	TUERCA	DADO	010D
					ECROU	MUTTER	MØTRIK	MOER	
4		84201371		1	CAPA, Control Rod Boot	BOOT	FUNDA	PARAPOLVERE	330C
					SOUFFLET	MANSCHETTE	MANCHET	HOES	
5		84263144		1	JUNTA ESFÉRICA, Rod End				
						BALL JOINT	RÓTULA	GIUNTO SFERICO	070G
					JOINT A ROTULE	KUGELGELENK	KUGLELED	KOGELGEWRICHT	
6		84291862		1	JUNTA ARTICULAÇÃO, Hand Control				
						KNUCKLE JOINT	JUNTA DE PIVOTE	ARTICOLAZIONE A FOR(	Z408
					ROTULE	GELENKVERBINDUNG	FORBINDELSESSPINDEI	GEWRICHTSKOPPELING	
7		84300731		1	HASTE ROSCADA, Hand Control LDH				
						THREADED ROD	VÁSTAGO ROSCADO	ASTA FILETTATA	095A
					TIGE FILETEE	GEWINDESTANGE	GEVINDSTANG	DRAADSTANG	
8		84302564		1	HASTE, Grip Pivol	ROD	VARILLA	ASTA	090A
					TIGE	STANGE	STANG	STANG	
9		84339565		1	CAPA, Control Handle SQ RH				
						BOOT	FUNDA	PARAPOLVERE	330C
					SOUFFLET	MANSCHETTE	MANCHET	HOES	
10		84348730		1	MANILHA, C Channel W Silver				
						HANDLE	MANECILLA	MANIGLIA	020M
					POIGNEE	GRIFF	HÅNDTAG	HENDEL	
11		84351111		1	FIXADOR, Handle Pivot RH	MOUNT	SOPORTE	SUPPORTO	C022
					MONTAGE	GESTELL	BESLAG	BEVESTIGING	
12		86013179		2	BUCHA, Flange Bearing	BUSHING	CASQUILLO	BOCCOLA	095B
					BAGUE	BUCHSE	BØSNING	BUS	
13		86511843		3	PARAFUSO, Hex Flg, M8 x 60, 8.8				
						BOLT	PERNO	BULLONE	140B
					VIS	SCHRAUBE	BOLT	BOUT	
14		86619801		1	CONTRA PORCA, M8 x 1.25, Flg, Cl 8				
						LOCK NUT	TUERCA DE BLOQUEO	DADO DI BLOCCAGGIO	P263
					CONTRE-ECROU	SICHERUNGSMUTTER	LÅSEMØTRIK	BORGMOER	
15		87030547		1	PORCA, 3/8"-24, G5, LH	NUT	TUERCA	DADO	010D
					ECROU	MUTTER	MØTRIK	MOER	
16		87034513		1	PORCA-TRAVA	JAM NUT	CONTRATUERCA	CONTRODADO	A070
					CONTRE-ECROU	KONTERMUTTER	KONTRAMØTRIK	CONTRAMOER	
17		87360874		2	PARAFUSO, Hex Soc Btn Hd M8x16				
						SCREW	TORNILLO	VITE	040V
					VIS	SCHRAUBE	SKRUE	SCHROEF	
18		230426A1		1	JUNTA ESF+RICA, Socket Threaded Stuc w/ Rod End				
						BALL JOINT	JUNTA DE ROTULA	GIUNTO SFERICO	P009
					ROTULE	KUGELGELENK	KEGELED	KOGELWRICHT	

90.112.01	06	p1	01/11

DAMPENING & CENTERING CONTROL (SR200-SV300)
DAMPENING & CENTERING CONTROL (SR200-SV300)
DAMPENING & CENTERING CONTROL (SR200-SV300)
DAMPENING & CENTERING CONTROL (SR200-SV300)

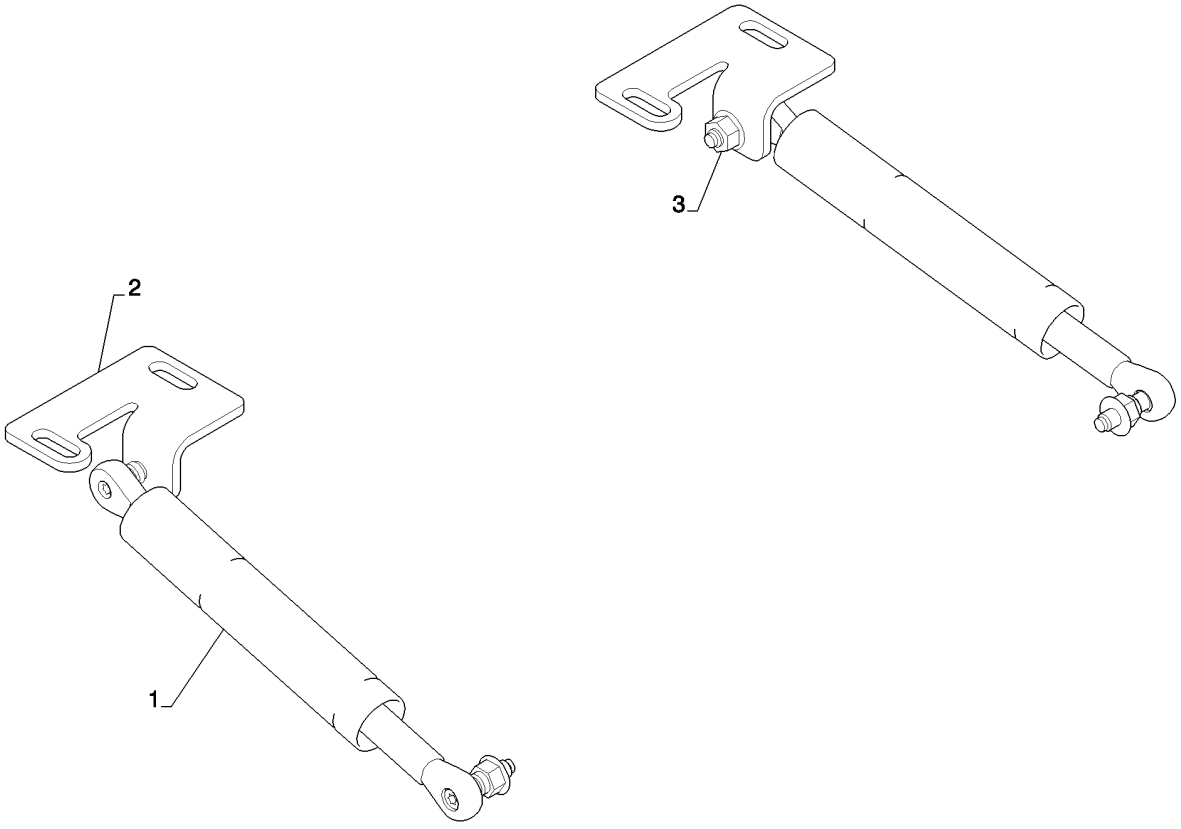

DAMPENING & CENTERING CONTROL (SR200-SV300)
DAMPENING & CENTERING CONTROL (SR200-SV300)
DAMPENING & CENTERING CONTROL (SR200-SV300)
DAMPENING & CENTERING CONTROL (SR200-SV300)

R	N	P.N.	MOD	Q	Denominação Description	Description Bezeichnung	Denominacion Beskrivelse	Descrizione Beschrijving	L.C.
1		84310789		2	AMORTECEDOR DE VIBRAÇÃO, Self-Centering				
						DAMPER	AMORTIGUADOR	AMMORTIZZATORE	164S
					AMORTISSEUR	DÄMPFER	SVINGNINGSDÆMPER	DEMPER	
2		84338477		2	PEGA DE SUPORTE, Shock Mount Gray				
						BRACKET, SUPPORTING	PIEZA DE APOYO	SQUADRETTA	215S
					EQUERRE	TRAGER, STUTZ	BRACKET, SUPPORTING	BRACKET, SUPPORTING	
3		9804277		4	PORCA, M8 x 1.25, Flg, Cl 8				
						NUT	TUERCA	DADO	010D
					ECROU	MUTTER	MØTRIK	MOER	

SR200

ELEC-HYDRAULIC CONTROLS MD-LG FRM (SR175-TV380)
ELEC-HYDRAULIC CONTROLS MD-LG FRM (SR175-TV380)
ELEC-HYDRAULIC CONTROLS MD-LG FRM (SR175-TV380)
ELEC-HYDRAULIC CONTROLS MD-LG FRM (SR175-TV380)

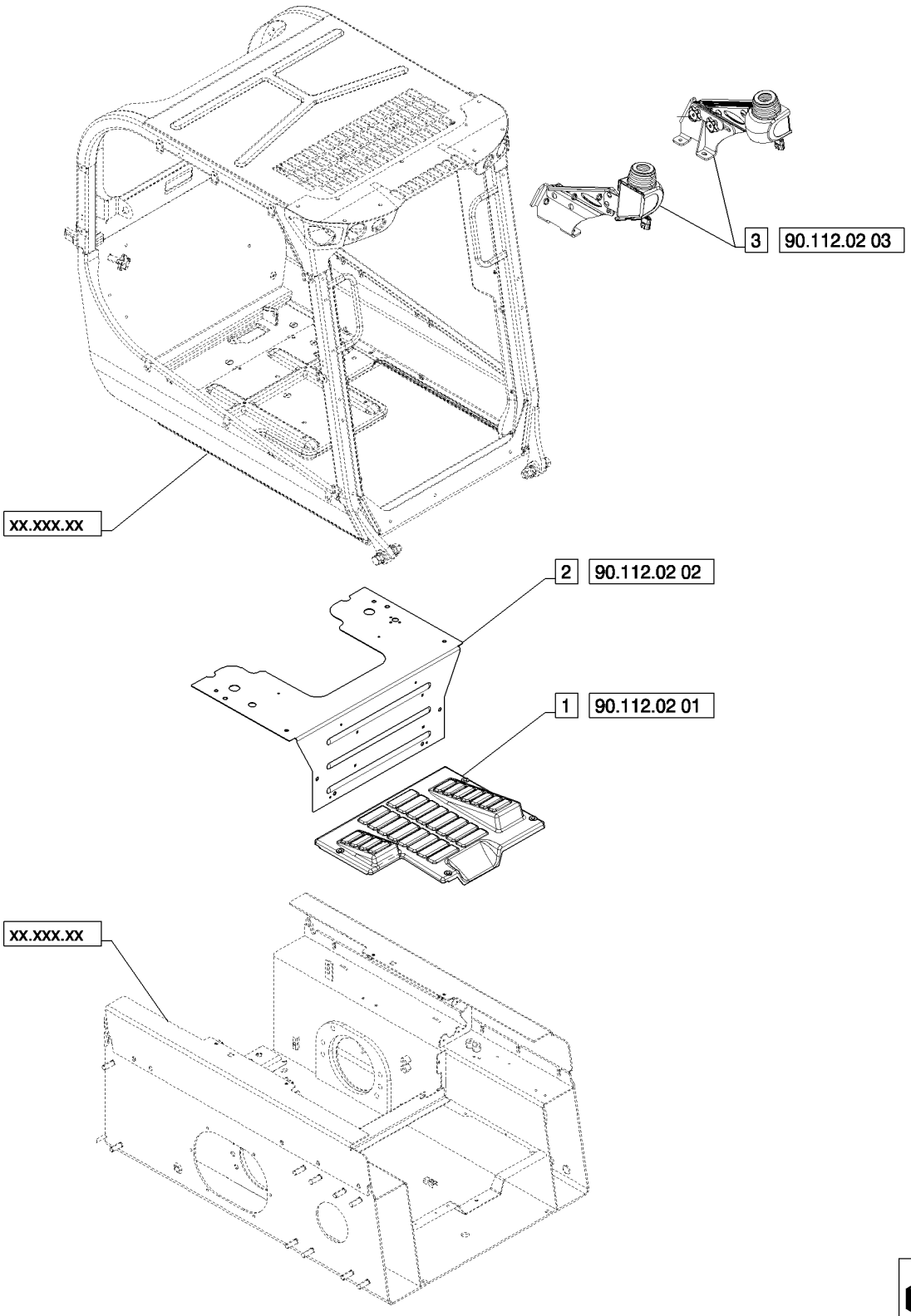

ELEC-HYDRAULIC CONTROLS MD-LG FRM (SR175-TV380)
ELEC-HYDRAULIC CONTROLS MD-LG FRM (SR175-TV380)
ELEC-HYDRAULIC CONTROLS MD-LG FRM (SR175-TV380)
ELEC-HYDRAULIC CONTROLS MD-LG FRM (SR175-TV380)

R	N	P.N.	MOD	Q	Denominação Description	Description Bezeichnung	Denominacion Beskrivelse	Descrizione Beschrijving	L.C.
1		NSS		1	SEM SERVIÇO EM SEPARADO, Floorplate, No Pedal (see 90.112.02(01)				
						NOT SERVICED SEPARA	NO SE REPARA POR SE	NON FORNITO SEPARAT	064N
					NON FORUNI SEPAREM	NICHT A SEP ERS-T LIEI	SERVICERES IKKE SEPA	NIET LOS VERKRIJGBAA	
2		NSS		1	SEM SERVIÇO EM SEPARADO, Handle Mounting EH (see 90.112.02(02)				
						NOT SERVICED SEPARA	NO SE REPARA POR SE	NON FORNITO SEPARAT	064N
					NON FORUNI SEPAREM	NICHT A SEP ERS-T LIEI	SERVICERES IKKE SEPA	NIET LOS VERKRIJGBAA	
3		NSS		1	SEM SERVIÇO EM SEPARADO, Handle, Electronic Control CASE (see 90.112.02(03)				
						NOT SERVICED SEPARA	NO SE REPARA POR SE	NON FORNITO SEPARAT	064N
					NON FORUNI SEPAREM	NICHT A SEP ERS-T LIEI	SERVICERES IKKE SEPA	NIET LOS VERKRIJGBAA	

90.112.02	02	p1	01/11

HANDLE MOUNTING EH (SR175-TV380)
HANDLE MOUNTING EH (SR175-TV380)
HANDLE MOUNTING EH (SR175-TV380)
HANDLE MOUNTING EH (SR175-TV380)

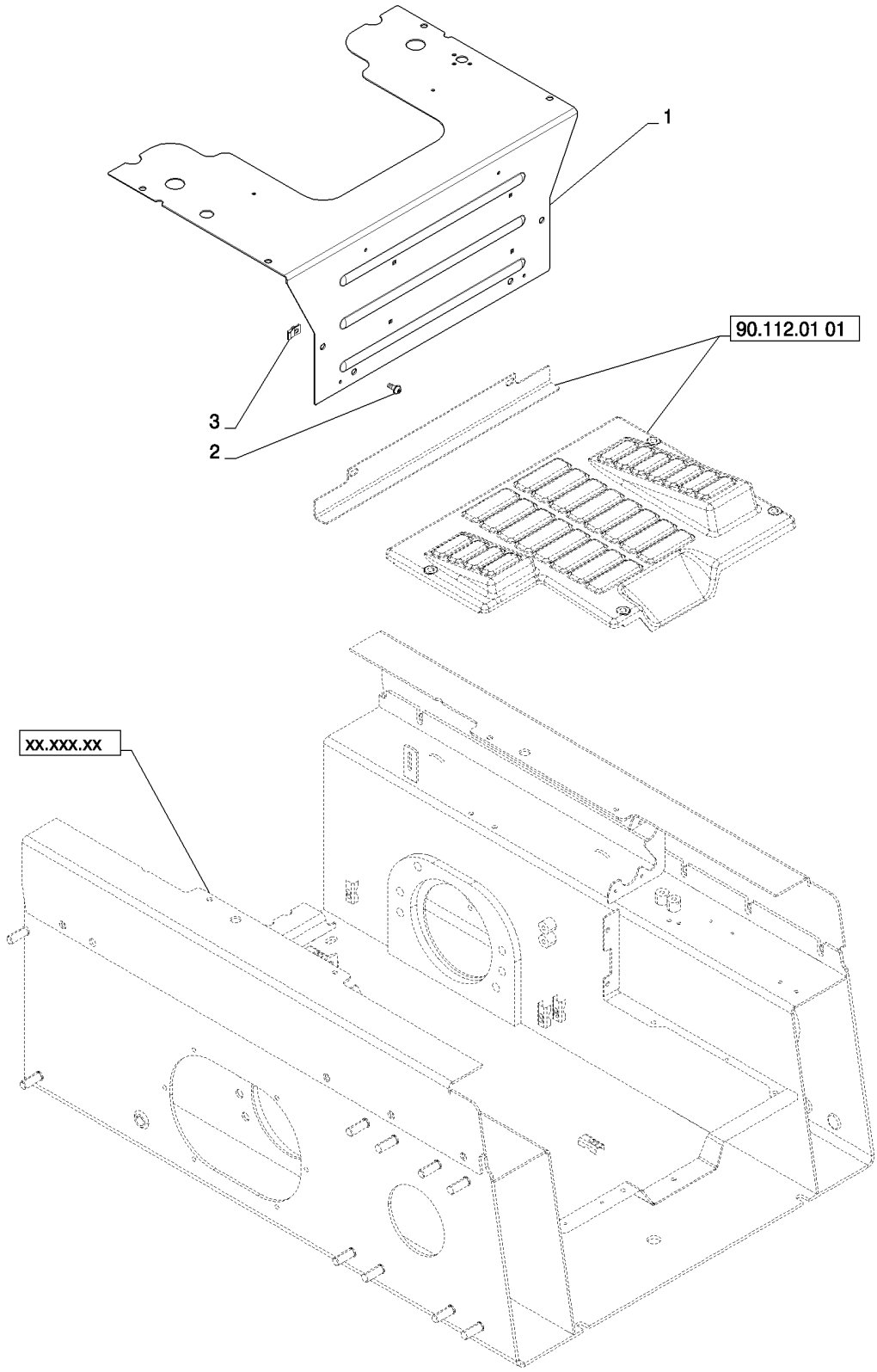

HANDLE MOUNTING EH (SR175-TV380)
HANDLE MOUNTING EH (SR175-TV380)
HANDLE MOUNTING EH (SR175-TV380)
HANDLE MOUNTING EH (SR175-TV380)

R	N	P.N.	MOD	Q	Denominação Description	Description Bezeichnung	Denominacion Beskrivelse	Descrizione Beschrijving	L.C.
1		84187826		8	PARAFUSO, RWH M8x20	SCREW	TORNILLO	VITE	040V
					VIS	SCHRAUBE	SKRUE	SCHROEF	
2		84335594		1	PLACA, Removable Heel Plate Md-Lg Frame EH				
						PLATE	PLACA	PIASTRA	105P
					PLAQUE	PLATTE	PLADE	PLAAT	
3		87016586		8	PORCA, M8, U, Spring, Multi - Thd, M8x1.25 lg				
						NUT	TUERCA	DADO	010D
					ECROU	MUTTER	MØTRIK	MOER	

90.112.02	03	p1	02/11

HANDLE, ELECTRONIC CONTROL CASE (ALL CASE)
HANDLE, ELECTRONIC CONTROL CASE (ALL CASE)
HANDLE, ELECTRONIC CONTROL CASE (ALL CASE)
HANDLE, ELECTRONIC CONTROL CASE (ALL CASE)

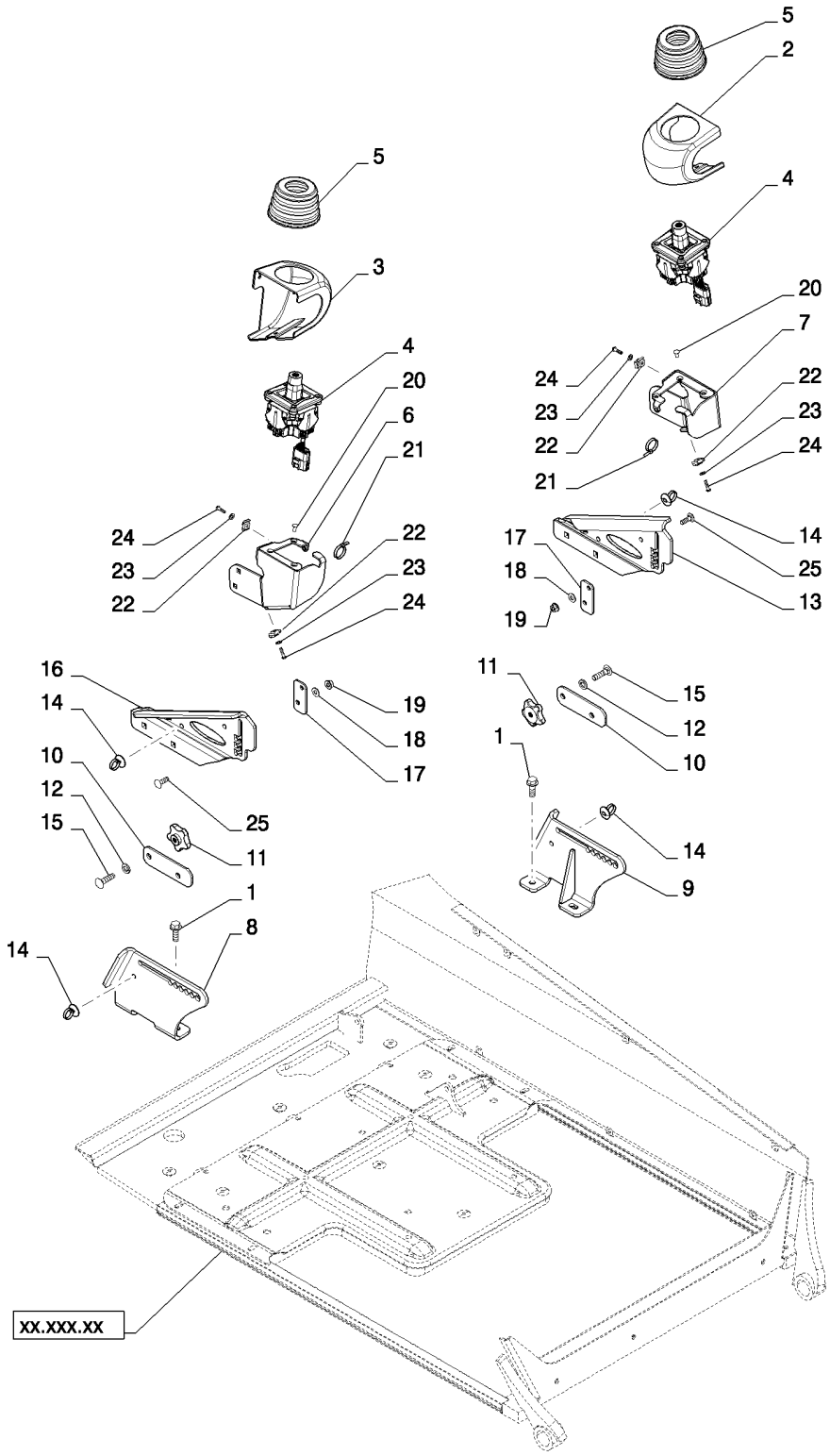

HANDLE, ELECTRONIC CONTROL CASE (ALL CASE)
HANDLE, ELECTRONIC CONTROL CASE (ALL CASE)
HANDLE, ELECTRONIC CONTROL CASE (ALL CASE)
HANDLE, ELECTRONIC CONTROL CASE (ALL CASE)

R	N	P.N.	MOD	Q	Denominação Description	Description Bezeichnung	Denominacion Beskrivelse	Descrizione Beschrijving	L.C.
1		9804262		4	PARAFUSO, Hex Flg, M10 x 30, 8.8				
						BOLT	PERNO	BULLONE	140B
					VIS	SCHRAUBE	BOLT	BOUT	
2		84201490		1	COBERTURA, LH EH Cover				
						COVER	CUBIERTA	COPERCHIO	265C
					COUVERCLE	ABDECKUNG	DÆKSEL	AFSCHERMING	
3		84201491		1	COBERTURA, RH EH Cover				
						COVER	CUBIERTA	COPERCHIO	265C
					COUVERCLE	ABDECKUNG	DÆKSEL	AFSCHERMING	
4		84249066		2	JOYSTICK, Joystick, Two-Axis Ratiometric				
						JOYSTICK	JOYSTICK	JOYSTICK	001J
					JOYSTICK	JOYSTICK	JOYSTICK	JOYSTICK	
5		84412489		2	CAPA, EH Control	BOOT	FUNDA	PARAPOLVERE	330C
					SOUFFLET	MANSCHETTE	MANCHET	HOES	
6		84410986		1	SUPORTE, RH EH Upper	BRACKET	SOPORTE	STAFFA	225S
					SUPPORT	HALTERUNG	BESLAG	STEUN	
7		84410984		1	SUPORTE, LH EH Upper	BRACKET	SOPORTE	STAFFA	225S
					SUPPORT	HALTERUNG	BESLAG	STEUN	
8		84369519		2	PEGA DE SUPORTE, RH EH Base				
						BRACKET, SUPPORTING	PIEZA DE APOYO	SQUADRETTA	215S
					EQUERRE	TRAGER, STUTZ	BRACKET, SUPPORTING	BRACKET, SUPPORTING	
9		84368998		8	TORRE, LH EH Base	TOWER	TORRECILLA	TORRE	T100
					TOURELLE	MAST	TÅRN	TOREN	
10		84368561		4	PLACA	PLATE	PLACA	PIASTRA	105P
					PLAQUE	PLATTE	PLADE	PLAAT	
11		87639912		4	MAÇANETA, Star 3/8	KNOB	MANDO	MANOPOLA	150P
					BOUTON	RUNDGRIFF	GREB	KNOP	
12		81547		4	TRAVA DA ARRUELA, 7/16"				
						LOCK WASHER	ARANDELA DE BLOQUE	RONDELLA DI SICUREZ	132R
					RONDELLE FREIN	SICHERUNGSSCHEIBE	LÅSESKIVE	BORGRING	
13		84410989		1	SUPORTE, LH	BRACKET	SOPORTE	STAFFA	225S
					SUPPORT	HALTERUNG	BESLAG	STEUN	
14		378884A2		6	TIRA, Through Panel Tie	STRAP	CORREA	CINGHIA	8630
					SANGLE	HALTEBAND	STRAP	STRAP	
15		9706752		4	PARAFUSO, Short NK, 3/8"-16 x 1 1/2", G5				
						CARRIAGE BOLT	PERNO ALOMADO	BULLONE A TESTA TON	P123
					VIS A TETE BOMBEE	SCHLOSSSCHRAUBE	BRÆDDEBOLT	SLOTBOUT	
16		84410990		1	SUPORTE, RH	BRACKET	SOPORTE	STAFFA	225S
					SUPPORT	HALTERUNG	BESLAG	STEUN	
17		84410988		2	ESPAÇADOR	SPACER	SEPARADOR	DISTANZIALE	075D
					ENTRETOISE	DISTANZSTÜCK	AFSTANDSSTYKKE	AFSTANDSSTUK	
18		322358		4	ARRUELA DE PRESSÃO, M8				
						BELLEVILLE WASHER	ARANDELA BELLEVILLE	RONDELLA BELLEVILLE	A143
					RONDELLE BELLEVILLE	TELLERFEDER	BELLEVILLE-SPÆNDSKI	SCHOTELVEER	
19		86619801		4	CONTRA PORCA, M8 x 1.25, Flg, Cl 8				
						LOCK NUT	TUERCA DE BLOQUEO	DADO DI BLOCCAGGIO	P263
					CONTRE-ECROU	SICHERUNGSMUTTER	LÅSEMØTRIK	BORGMOER	

90.112.02	03	p2	02/11

HANDLE, ELECTRONIC CONTROL CASE (ALL CASE)
HANDLE, ELECTRONIC CONTROL CASE (ALL CASE)
HANDLE, ELECTRONIC CONTROL CASE (ALL CASE)
HANDLE, ELECTRONIC CONTROL CASE (ALL CASE)

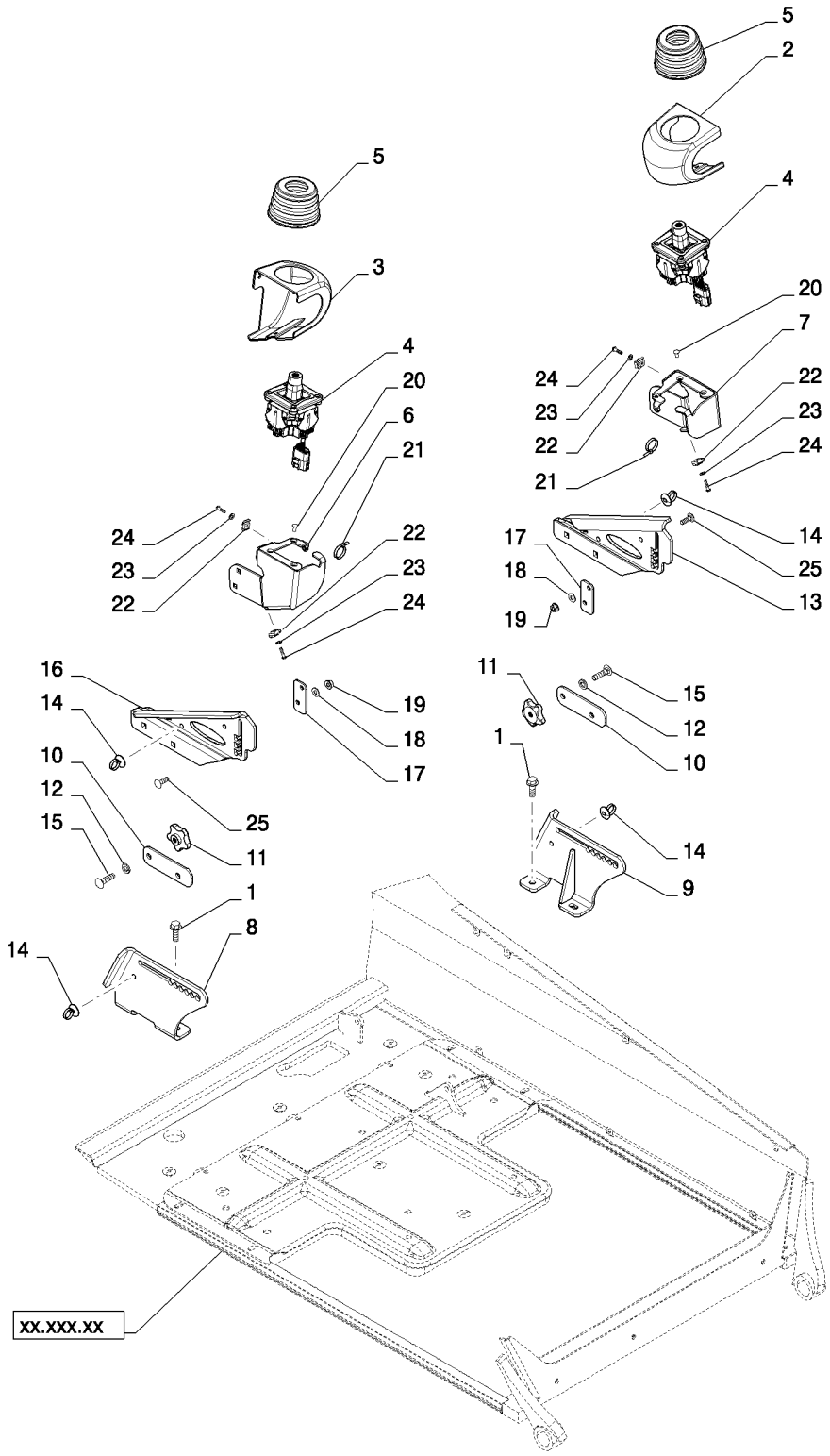

HANDLE, ELECTRONIC CONTROL CASE (ALL CASE)
HANDLE, ELECTRONIC CONTROL CASE (ALL CASE)
HANDLE, ELECTRONIC CONTROL CASE (ALL CASE)
HANDLE, ELECTRONIC CONTROL CASE (ALL CASE)

R	N	P.N.	MOD	Q	Denominação Description	Description Bezeichnung	Denominacion Beskrivelse	Descrizione Beschrijving	L.C.
20		**86511855**		6	PARAFUSO, Hex Flat Hd, M6 x 12, 4.8				
					SCREW	TORNILLO	VITE		040V
					VIS	SCHRAUBE	SKRUE	SCHROEF	
21		**263117**		2	PRENDEDOR DE CABOS, .14" x 11 1/2"				
					CABLE STRAP	BANDA DE CABLE	FASCETTA PER CAVO		P716
					BRIDE DE CABLE	KABELBINDER	KABELSTROP	BUNDELBAND	
22		**86625077**		4	PORCA, J, Ret, #10-24	NUT	TUERCA	DADO	010D
					ECROU	MUTTER	MØTRIK	MOER	
23		**86588450**		4	ARRUELA PLANA, M6 x 12 x 1.6 Thk				
					WASHER	ARANDELA	RONDELLA		131R
					RONDELLE	UNTERLEGSCHEIBE	FLADSKIVE	SLUITRING	
24		**86511922**		4	PARAFUSO, Cross Pan Hd, #10-24 x 3/4"				
					SCREW	TORNILLO	VITE		040V
					VIS	SCHRAUBE	SKRUE	SCHROEF	
25		**308761**		4	PARAFUSO, Short NK, M8 x 25, Cl8.8, Full Thd				
					CARRIAGE BOLT	PERNO ALOMADO	BULLONE A TESTA TON		P123
					VIS A TETE BOMBEE	SCHLOSSSCHRAUBE	BRÆDDEBOLT	SLOTBOUT	

90.116.01		p1	07/11

LOADER STOP 50MM (SR175,SR200,SR220,SR250)
LOADER STOP 50MM (SR175,SR200,SR220,SR250)
LOADER STOP 50MM (SR175,SR200,SR220,SR250)
LOADER STOP 50MM (SR175,SR200,SR220,SR250)

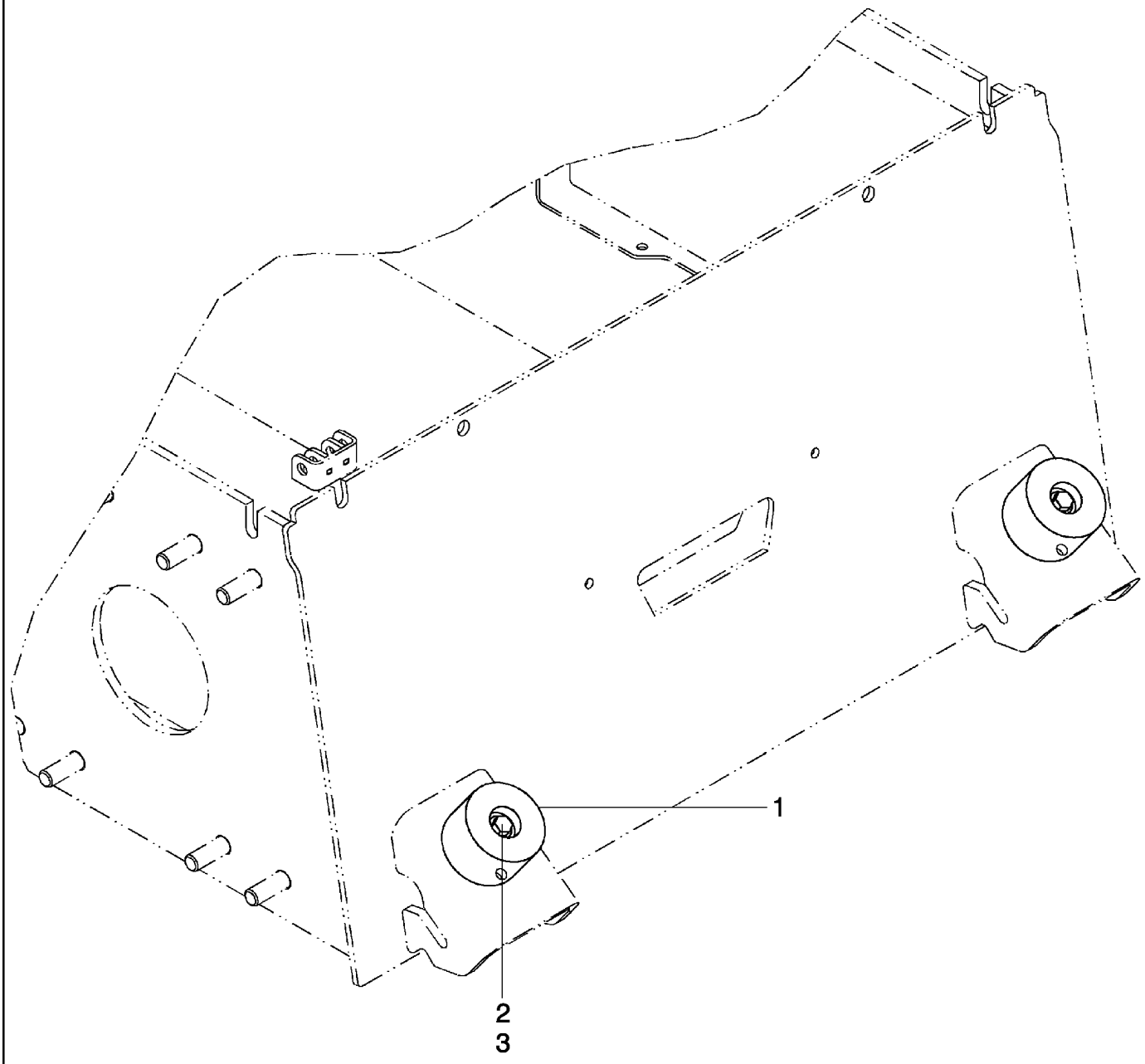

LOADER STOP 50MM (SR175,SR200,SR220,SR250)
LOADER STOP 50MM (SR175,SR200,SR220,SR250)
LOADER STOP 50MM (SR175,SR200,SR220,SR250)
LOADER STOP 50MM (SR175,SR200,SR220,SR250)

R	N	P.N.	MOD	Q	Denominação Description	Description Bezeichnung	Denominacion Beskrivelse	Descrizione Beschrijving	L.C.
1		84306052		2	BLOCO, Stop, 50mm BLOC	BLOCK BLOCK	BLOQUE MOTORBLOK	BLOCCO BLOK	074B
2		9804265		2	PARAFUSO, Hex Flg, M10 x 60, 8.8 VIS	BOLT SCHRAUBE	PERNO BOLT	BULLONE BOUT	140B
3		86619802		2	CONTRA PORCA, Flange CONTRE-ECROU	LOCK NUT SICHERUNGSMUTTER	TUERCA DE BLOQUEO LÅSEMØTRIK	DADO DI BLOCCAGGIO BORGMOER	P263

90.116.02		p1	07/11

LOADER STOP 23MM (SR175,SR200,SR220,SR250,TR270,TR320)
LOADER STOP 23MM (SR175,SR200,SR220,SR250,TR270,TR320)
LOADER STOP 23MM (SR175,SR200,SR220,SR250,TR270,TR320)
LOADER STOP 23MM (SR175,SR200,SR220,SR250,TR270,TR320)

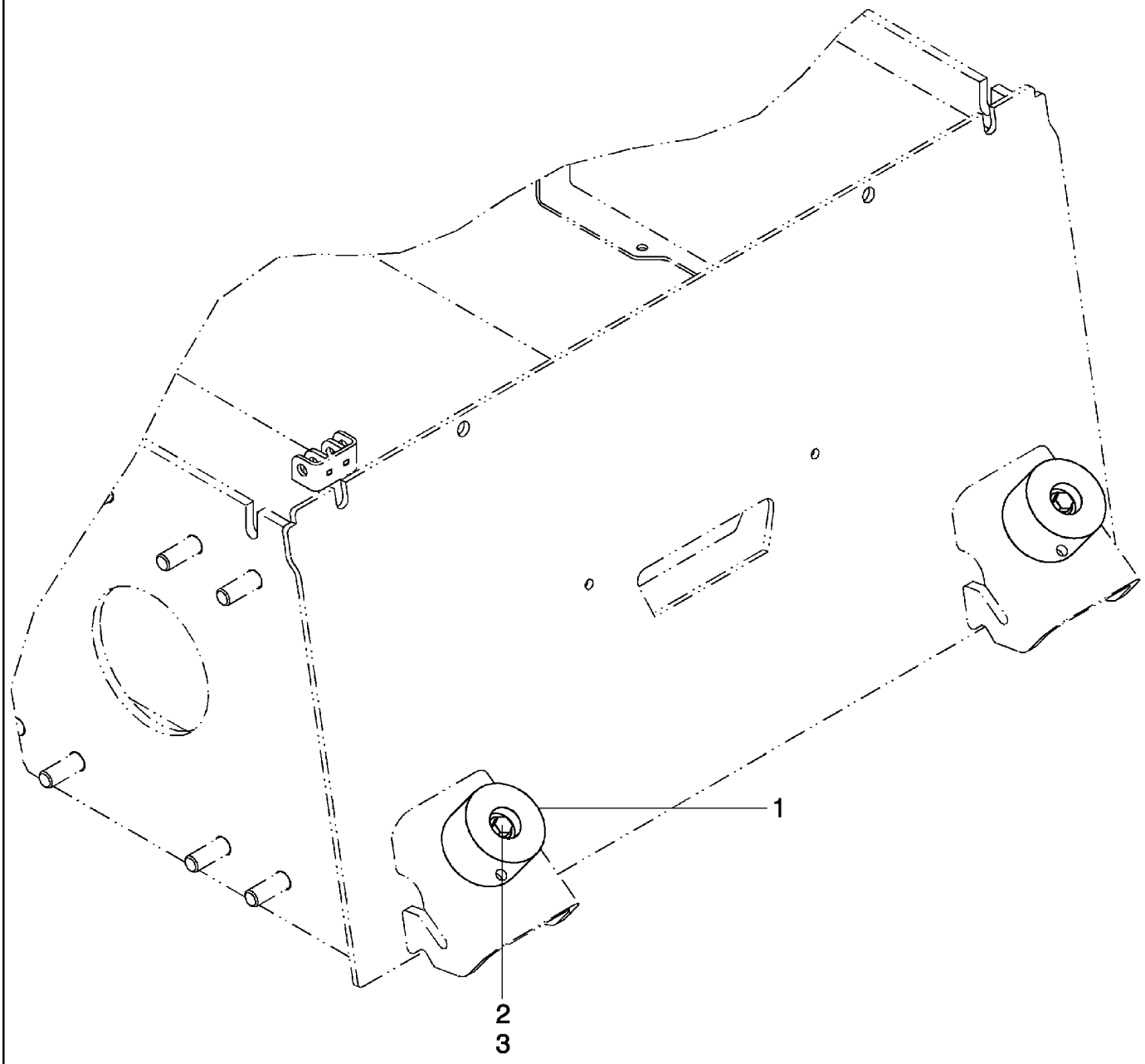

LOADER STOP 23MM (SR175,SR200,SR220,SR250,TR270,TR320)
LOADER STOP 23MM (SR175,SR200,SR220,SR250,TR270,TR320)
LOADER STOP 23MM (SR175,SR200,SR220,SR250,TR270,TR320)
LOADER STOP 23MM (SR175,SR200,SR220,SR250,TR270,TR320)

R	N	P.N.	MOD	Q	Denominação Description	Description Bezeichnung	Denominacion Beskrivelse	Descrizione Beschrijving	L.C.
1		84306049		2	BLOCO, Stop, 23mm BLOC	BLOCK BLOCK	BLOQUE MOTORBLOK	BLOCCO BLOK	074B
2		86511845		2	PARAFUSO, Hex Flg, M10 x 35, 8.8 VIS	BOLT SCHRAUBE	PERNO BOLT	BULLONE BOUT	140B
3		86619802		2	CONTRA PORCA, Flange CONTRE-ECROU	LOCK NUT SICHERUNGSMUTTER	TUERCA DE BLOQUEO LÅSEMØTRIK	DADO DI BLOCCAGGIO BORGMOER	P263

SEAT, NON SUSPENSION (ALL CASE)
SEAT, NON SUSPENSION (ALL CASE)
SEAT, NON SUSPENSION (ALL CASE)
SEAT, NON SUSPENSION (ALL CASE)



SEAT, NON SUSPENSION (ALL CASE)
SEAT, NON SUSPENSION (ALL CASE)
SEAT, NON SUSPENSION (ALL CASE)
SEAT, NON SUSPENSION (ALL CASE)

R	N	P.N.	MOD	Q	Denominação Description	Description Bezeichnung	Denominacion Beskrivelse	Descrizione Beschrijving	L.C.
1		87702543		1	ASSENTO, Non-Suspensior SIEGE	SEAT SITZ	ASIENTO SÆDE	SEDILE STOEL	7480
2		87655046		12	ARRUELA ESPECIAL RONDELLE SPECIALE	SPECIAL WASHER SPEZIALUNTERLEGSCH	ARANDELA ESPECIAL SPECIALSKIVE	RONDELLA SPECIALE SPECIALE RING	Z333
3		86629544		4	CONTRA PORCA, 5/16"-18, GB CONTRE-ECROU	LOCK NUT SICHERUNGSMUTTER	TUERCA DE BLOQUEO LÅSEMØTRIK	DADO DI BLOCCAGGIO BORGMOER	P263

SEAT, SUSPENSION (ALL CASE)
SEAT, SUSPENSION (ALL CASE)
SEAT, SUSPENSION (ALL CASE)
SEAT, SUSPENSION (ALL CASE)



SEAT, SUSPENSION (ALL CASE)
SEAT, SUSPENSION (ALL CASE)
SEAT, SUSPENSION (ALL CASE)
SEAT, SUSPENSION (ALL CASE)

R	N	P.N.	MOD	Q	Denominação Description Bezeichnung	Description Bezeichnung Beskrivelse	Denominacion Beskrivelse Descrizione	Descrizione Beschrijving L.C.	L.C.
1		**87662513**		4	ASSENTO, Suspension SIEGE	SEAT SITZ	ASIENTO SÆDE	SEDILE STOEL	7480
2		**87655046**		11	ARRUELA ESPECIAL RONDELLE SPECIALE	SPECIAL WASHER SPEZIALUNTERLEGSCH	ARANDELA ESPECIAL SPECIALSKIVE	RONDELLA SPECIALE SPECIALE RING	Z333
3		**86629544**		1	CONTRA PORCA, 5/16"-18, GB CONTRE-ECROU	LOCK NUT SICHERUNGSMUTTER	TUERCA DE BLOQUEO LÅSEMØTRIK	DADO DI BLOCCAGGIO BORGMOER	P263

SR200

SEAT AIR SUSPENSION (ALL CASE)
SEAT AIR SUSPENSION (ALL CASE)
SEAT AIR SUSPENSION (ALL CASE)
SEAT AIR SUSPENSION (ALL CASE)



SEAT AIR SUSPENSION (ALL CASE)
SEAT AIR SUSPENSION (ALL CASE)
SEAT AIR SUSPENSION (ALL CASE)
SEAT AIR SUSPENSION (ALL CASE)

R	N	P.N.	MOD	Q	Denominação Description Bezeichnung	Description Bezeichnung Beskrivelse	Denominacion Beskrivelse Descrizione	Descrizione Beschrijving L.C.	L.C.
1		**84201374**		1	ASSENTO, Air Suspension SIEGE	SEAT SITZ	ASIENTO SÆDE	SEDILE STOEL	7480
2		**87655046**		11	ARRUELA ESPECIAL RONDELLE SPECIALE	SPECIAL WASHER SPEZIALUNTERLEGSCH	ARANDELA ESPECIAL SPECIALSKIVE	RONDELLA SPECIALE SPECIALE RING	Z333
3		**86629544**		4	CONTRA PORCA, 5/16"-18, GB CONTRE-ECROU	LOCK NUT SICHERUNGSMUTTER	TUERCA DE BLOQUEO LÅSEMØTRIK	DADO DI BLOCCAGGIO BORGMOER	P263

90.120.04	01	p1	10/10

SEAT BELT, 2 PT RETRACTOR 2 IN WEB (ALL CASE)
SEAT BELT, 2 PT RETRACTOR 2 IN WEB (ALL CASE)
SEAT BELT, 2 PT RETRACTOR 2 IN WEB (ALL CASE)
SEAT BELT, 2 PT RETRACTOR 2 IN WEB (ALL CASE)

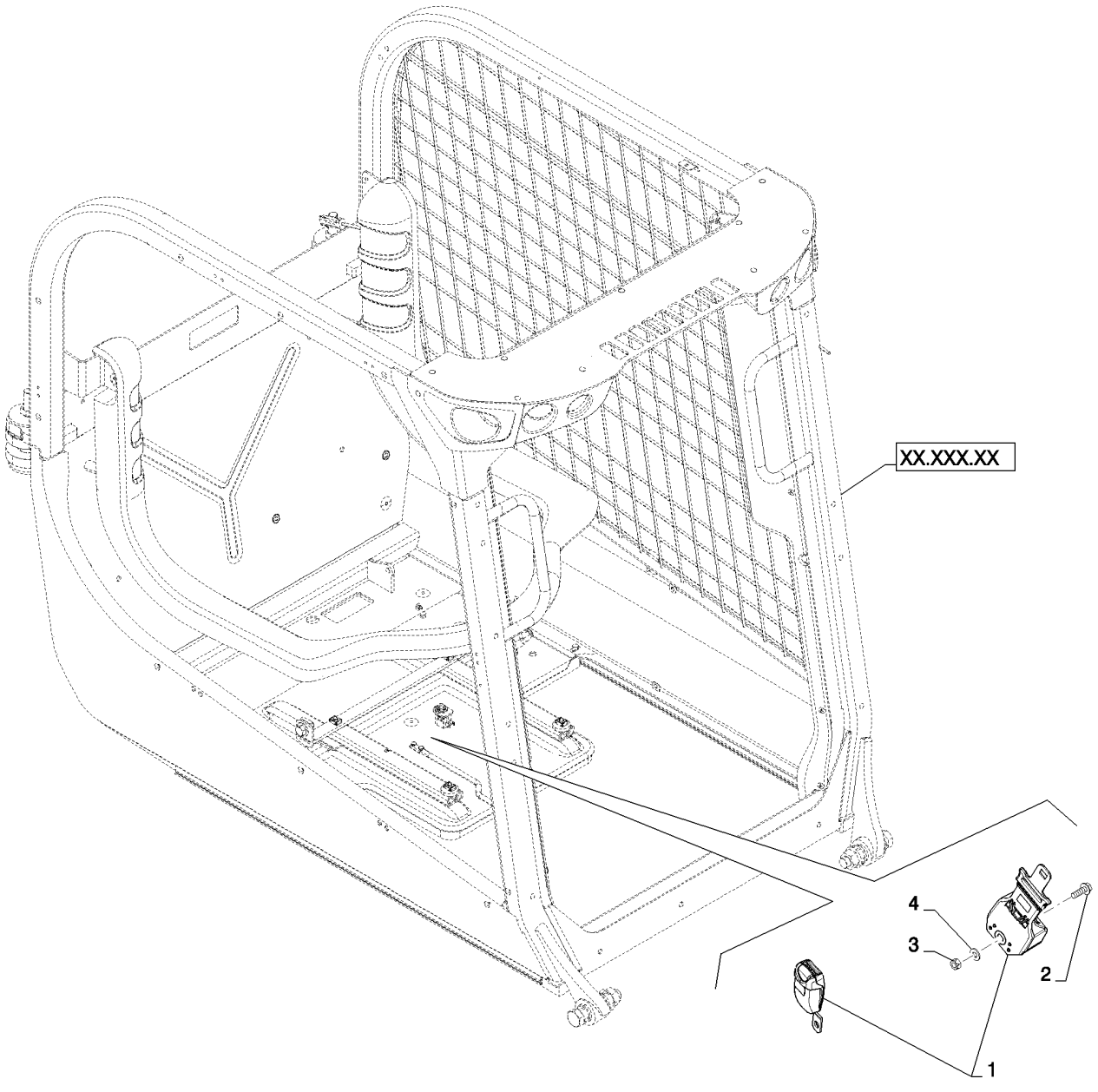

SEAT BELT, 2 PT RETRACTOR 2 IN WEB (ALL CASE)
SEAT BELT, 2 PT RETRACTOR 2 IN WEB (ALL CASE)
SEAT BELT, 2 PT RETRACTOR 2 IN WEB (ALL CASE)
SEAT BELT, 2 PT RETRACTOR 2 IN WEB (ALL CASE)

R	N	P.N.	MOD	Q	Denominação Description	Description Bezeichnung	Denominacion Beskrivelse	Descrizione Beschrijving	L.C.
1		84174264		1	CINTO DE SEGURANÇA, 2 Pt Retractor, Case 2 In Web				
						SEAT BELT	CINTURÓN DE SEGURID	CINTURA DI SICUREZZA	182C
					CEINTURE DE SECURIT	SICHERHEITSGURT	SIKKERHEDSBÆLTE	VEILIGHEIDSGORDEL	
2		9804262		1	PARAFUSO, Hex Flg, M10 x 30, 8.8				
						BOLT	PERNO	BULLONE	140B
					VIS	SCHRAUBE	BOLT	BOUT	
3		86512554		1	CONTRA PORCA, M10 x 1.5, Cl 10				
						LOCK NUT	TUERCA DE BLOQUEO	DADO DI BLOCCAGGIO	P263
					CONTRE-ECROU	SICHERUNGSMUTTER	LÅSEMØTRIK	BORGMOER	
4		87655046		1	ARRUELA ESPECIAL	SPECIAL WASHER	ARANDELA ESPECIAL	RONDELLA SPECIALE	Z333
					RONDELLE SPECIALE	SPEZIALUNTERLEGSCH	SPECIALSKIVE	SPECIALE RING	

90.120.04	02	p1	10/10

SEAT BELT, 3 PT (ALL CASE)
SEAT BELT, 3 PT (ALL CASE)
SEAT BELT, 3 PT (ALL CASE)
SEAT BELT, 3 PT (ALL CASE)

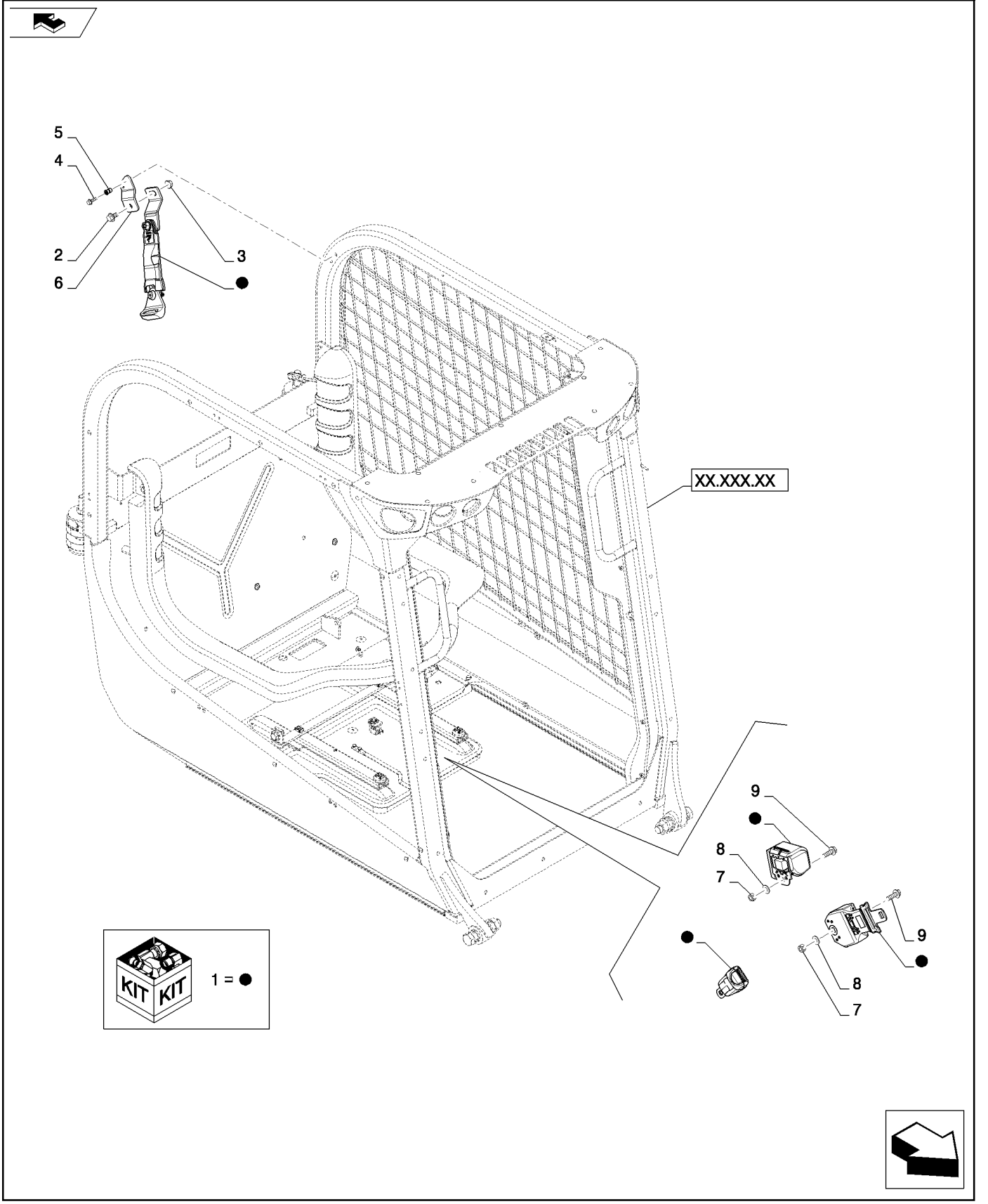

SEAT BELT, 3 PT (ALL CASE)
SEAT BELT, 3 PT (ALL CASE)
SEAT BELT, 3 PT (ALL CASE)
SEAT BELT, 3 PT (ALL CASE)

R	N	P.N.	MOD	Q	Denominação Description Bezeichnung	Description Bezeichnung	Denominacion Beskrivelse	Descrizione Beschrijving	L.C.
1		84354487		1	CINTO DE SEGURANÇA, Case 3 Pt				
						SEAT BELT	CINTURÓN DE SEGURID	CINTURA DI SICUREZZA	182C
					CEINTURE DE SECURIT	SICHERHEITSGURT	SIKKERHEDSBÆLTE	VEILIGHEIDSGORDEL	
2		86050286		1	PARAFUSO FLANGEADO, Hex, M10 x 20, 8.8, Full Thd				
						FLANGE BOLT	PERNO DE CORONA	BULLONE FLANGIATO	A027
					VIS A EMBASE	FLANSCHSCHRAUBE	FLANGEBOLT	FLENSBOUT	
3		86619802		1	CONTRA PORCA	LOCK NUT	TUERCA DE BLOQUEO	DADO DI BLOCCAGGIO	P263
					CONTRE-ECROU	SICHERUNGSMUTTER	LÅSEMØTRIK	BORGMOER	
4		9804257		2	PARAFUSO, Hex Flg, M6 x 25, 8.8				
						BOLT	PERNO	BULLONE	140B
					VIS	SCHRAUBE	BOLT	BOUT	
5		87436247		2	ENCHIMENTO ROSCADO	THREADED INSERT	PIEZA DE INS. ROSCAD/	INSERTO FILETTATO	054I
					INSERT FILETE	GEWINDEEINSATZ	GEVINDINDSATS	INZETST. MET SCHROEI	
6		84291791		1	SUPORTE, Plate, C-Belt 3 Pt Retractable				
						BRACKET	SOPORTE	STAFFA	225S
					SUPPORT	HALTERUNG	BESLAG	STEUN	
7		86512554		2	CONTRA PORCA, M10 x 1.5, Cl 10				
						LOCK NUT	TUERCA DE BLOQUEO	DADO DI BLOCCAGGIO	P263
					CONTRE-ECROU	SICHERUNGSMUTTER	LÅSEMØTRIK	BORGMOER	
8		87655046		2	ARRUELA ESPECIAL	SPECIAL WASHER	ARANDELA ESPECIAL	RONDELLA SPECIALE	Z333
					RONDELLE SPECIALE	SPEZIALUNTERLEGSCH	SPECIALSKIVE	SPECIALE RING	

90.120.05		p1	01/11

LAP BAR (ALL CASE)
LAP BAR (ALL CASE)
LAP BAR (ALL CASE)
LAP BAR (ALL CASE)

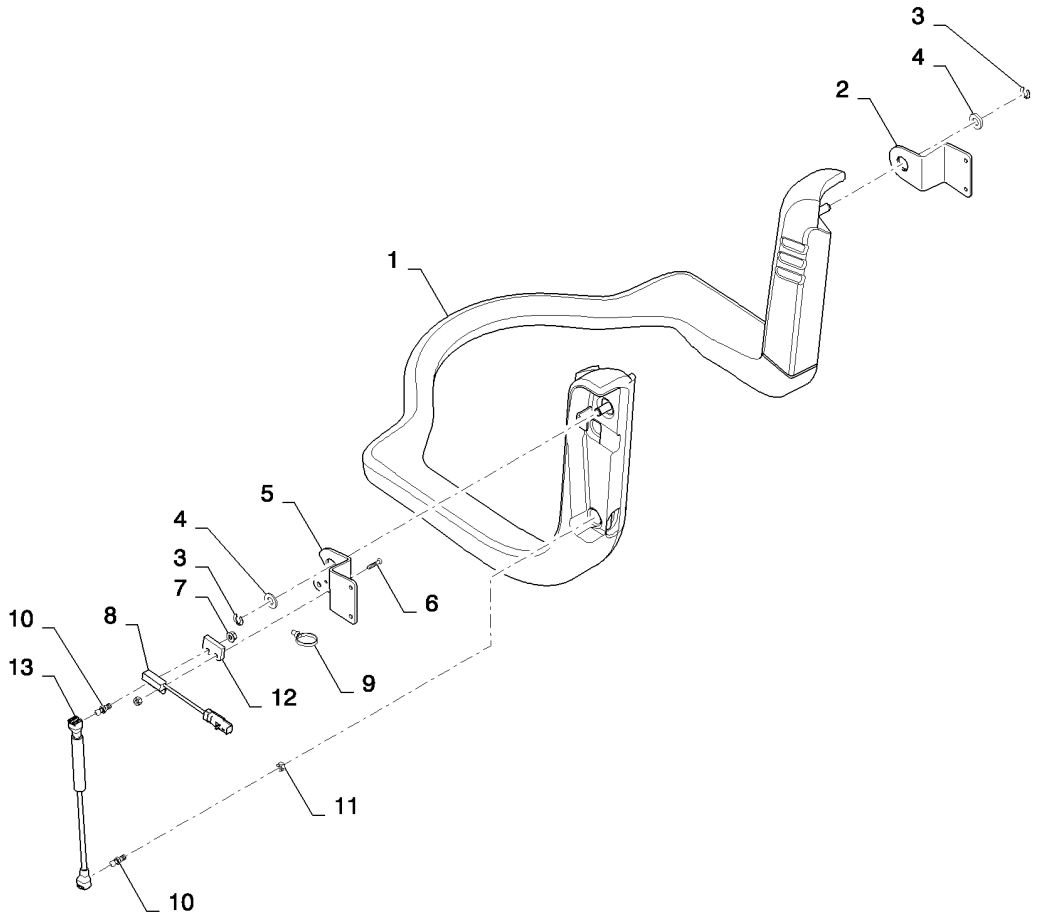

LAP BAR (ALL CASE)
LAP BAR (ALL CASE)
LAP BAR (ALL CASE)
LAP BAR (ALL CASE)

R	N	P.N.	MOD	Q	Denominação Description	Description Bezeichnung	Denominacion Beskrivelse	Descrizione Beschrijving	L.C.
1		84201339		1	ESPUMA ISOLANTE, Bar, Coating				
						FOAM INSULATION	ESPUMA AISLANTE	ISOLANTE IN SCHIUMA	051S
					MOUSSE ISOLANTE	SCHAUMSTOFFISOLIER	SKUM ISOLERING	SCHUIMISOLATIE	
2		84239191		1	SUPORTE DE PIVÔ, Seat Bar, RH				
						PIVOT BRACKET	SOPORTE DE PIVOTE	STAFFA PERNO	P817
					SUPPORT DE PIVOTEME	DREHLAGERHALTERUN	DREJEBESLAG	DRAAIGEWRICHT	
3		D143415		2	ANEL DE PRESSÃO	SNAP RING	ANILLO DE RESORTE	ANELLO ELASTICO	054A
					ANNEAU D'ARRET	SPRENGRING	LÅSERING	VEERRING	
4		86632589		2	ARRUELA PLANA	WASHER	ARANDELA	RONDELLA	131R
					RONDELLE	UNTERLEGSCHEIBE	FLADSKIVE	SLUITRING	
5		84239192		1	SUPORTE DE PIVÔ, Seat Bar, LH				
						PIVOT BRACKET	SOPORTE DE PIVOTE	STAFFA PERNO	P817
					SUPPORT DE PIVOTEME	DREHLAGERHALTERUN	DREJEBESLAG	DRAAIGEWRICHT	
6		43646		2	PARAFUSO	SCREW	TORNILLO	VITE	040V
					VIS	SCHRAUBE	SKRUE	SCHROEF	
7		385681		2	CONTRA PORCA, M4 x .7, Cl 8				
						LOCK NUT	TUERCA DE BLOQUEO	DADO DI BLOCCAGGIO	P263
					CONTRE-ECROU	SICHERUNGSMUTTER	LÅSEMØTRIK	BORGMOER	
8		87392235		1	INTERRUPTOR INTERMITENTE				
						SWITCH ASSY	CONJUNTO DE INTERRU	COMPLESSIVO INTERRU	067I
					ENSEMBLE COMMUTATI	SCHALTERBAUGRUPPE	KONTAKT, KPL.	SCHAKELAAREENHEID	
9		87668737		1	TIRA, Assy, Fir Tree	STRAP	BANDA	FASCETTA	532B
					BRIDE	BAND	STROP	RIEM	
10		189609A1		2	PRISIONEIRO, Ball, M8x1.25				
						STUD	ESPARREGO	PRIGIONIERO	8720
					GOUJON	STIFTSCHRAUBE	STUD	STUD	
11		86505868		1	PORCA, M8, Flg Ser	NUT	TUERCA	DADO	010D
					ECROU	MUTTER	MØTRIK	MOER	
12		86624468		1	ESPAÇADOR, Switch	SPACER	SEPARADOR	DISTANZIALE	075D
					ENTRETOISE	DISTANZSTÜCK	AFSTANDSSTYKKE	AFSTANDSSTUK	
13		84371064		1	COMPASSO, Lap Bar Assist				
						GAS STRUT	COLUMNA DE GAS	AMMORTIZZATORE A G/	Z331
					BEQUILLE A GAZ	GASDRUCKFEDER	CYLINDER, GASSTØDD/	GASVEER	

SEAT ASSEMBLY, SUSPENSION (ALL CASE)
SEAT ASSEMBLY, SUSPENSION (ALL CASE)
SEAT ASSEMBLY, SUSPENSION (ALL CASE)
SEAT ASSEMBLY, SUSPENSION (ALL CASE)

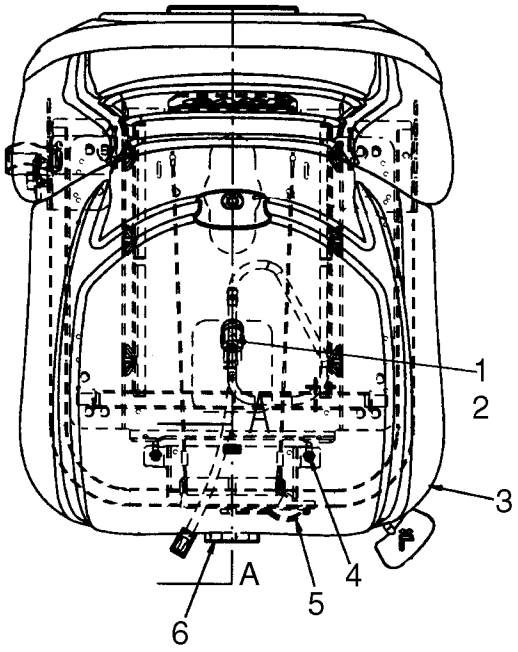

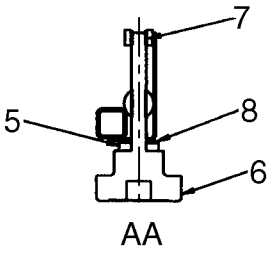

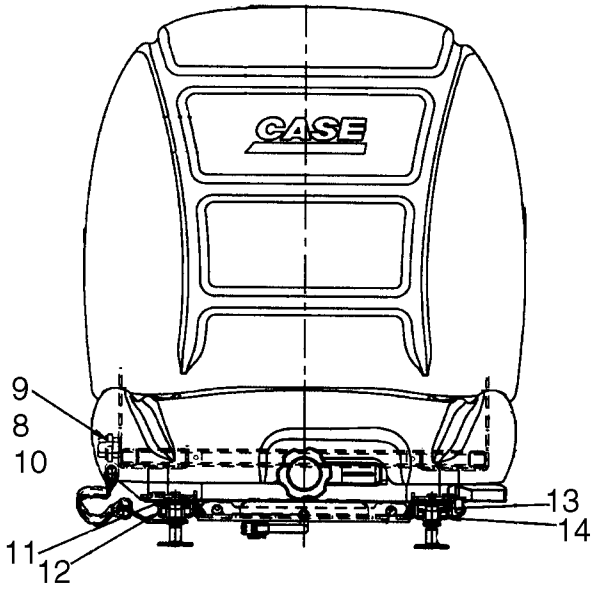

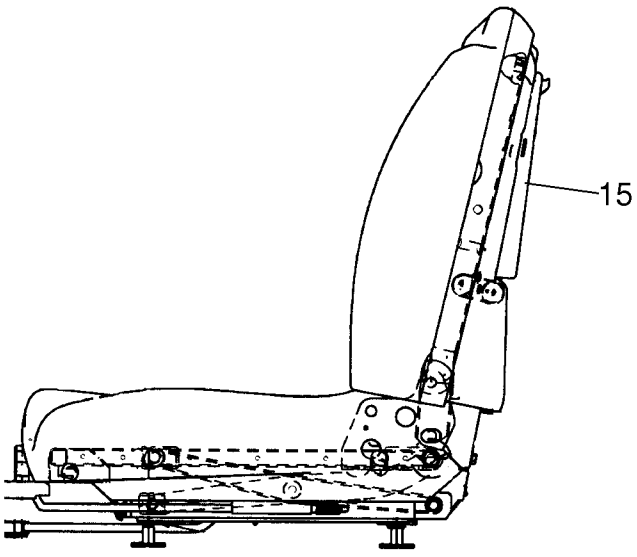

BS09A192

SEAT ASSEMBLY, SUSPENSION (ALL CASE)
SEAT ASSEMBLY, SUSPENSION (ALL CASE)
SEAT ASSEMBLY, SUSPENSION (ALL CASE)
SEAT ASSEMBLY, SUSPENSION (ALL CASE)

R	N	P.N.	MOD	Q	Denominação Description	Description Bezeichnung	Denominacion Beskrivelse	Descrizione Beschrijving	L.C.
		87662513		1	ASSENTO, Suspension Seat Assy; Incl 1 - 15				
						SEAT	ASIENTO	SEDILE	7480
					SIEGE	SITZ	SÆDE	STOEL	
1		**84130082**		1	INTERRUPTOR, Switch Operator Presence				
						SWITCH	INTERRUPTOR	INTERRUTTORE	075I
					CONTACTEUR	SCHALTER	KONTAKT	SCHAKELAAR	
2		**84130072**		1	CHICOTE, Operator Presence; Vendor Number 901217795				
						HARNESS	MAZO DE CABLES	CABLAGGIO	4160
					FAISCEAU	KABELBAUM	LEDNINGSNET	KABELBOOM	
3		**84130069**		1	COXIM	SEAT CUSHION	COJÍN DE ASIENTO	CUSCINO SEDILE	345C
					COUSSIN DE SIEGE	SITZKISSEN	SÆDEPOLSTRING	ZITKUSSEN	
4		**84130065**		2	PARAFUSO, .25-20 x .75	SCREW	TORNILLO	VITE	040V
					VIS	SCHRAUBE	SKRUE	SCHROEF	
5		**84130060**		1	MEDIDOR, Weight Indicator				
						GAUGE	INDICADOR	INDICATORE	019C
					JAUGE	ANZEIGE	MANOMETER	METER	
6		**84130064**		1	MAÇANETA, Weight Adjustment				
						KNOB	MANDO	MANOPOLA	150P
					BOUTON	RUNDGRIFF	GREB	KNOP	
7		**84130079**		1	PORCA, .3125-18	NUT	TUERCA	DADO	010D
					ECROU	MUTTER	MØTRIK	MOER	
8		**84130058**		1	ARRUELA PLANA	WASHER	ARANDELA	RONDELLA	131R
					RONDELLE	UNTERLEGSCHEIBE	FLADSKIVE	SLUITRING	
9		**NSS**		1	SEM SERVIÇO EM SEPARADO, Tether				
						NOT SERVICED SEPARA	NO SE REPARA POR SE	NON FORNITO SEPARAT	064N
					NON FORUNI SEPAREM	NICHT A SEP ERS-T LIEI	SERVICERES IKKE SEPA	NIET LOS VERKRIJGBAA	
10		**NSS**		1	SEM SERVIÇO EM SEPARADO, Hex Bolt, M12				
						NOT SERVICED SEPARA	NO SE REPARA POR SE	NON FORNITO SEPARAT	064N
					NON FORUNI SEPAREM	NICHT A SEP ERS-T LIEI	SERVICERES IKKE SEPA	NIET LOS VERKRIJGBAA	
11		**84130063**		7	ARRUELA PLANA	WASHER	ARANDELA	RONDELLA	131R
					RONDELLE	UNTERLEGSCHEIBE	FLADSKIVE	SLUITRING	
12		**84130080**		1	AJUSTADOR, Adjuster, Slave				
						ADJUSTER	REGULADOR	REGOLATORE	118A
					DISPOSITIF DE REGLAG	EINSTELLVORRICHTUN(	STILLESKRUE	AFSTELMECHANISME	
13		**84130078**		4	PARAFUSO, .3125-18 x .75	SCREW	TORNILLO	VITE	040V
					VIS	SCHRAUBE	SKRUE	SCHROEF	
14		**84130062**		1	AJUSTADOR, Assy	ADJUSTER	REGULADOR	REGOLATORE	118A
					DISPOSITIF DE REGLAG	EINSTELLVORRICHTUN(	STILLESKRUE	AFSTELMECHANISME	
15		**84130066**		1	ENCOSTO, Rear Manual, Kit Incl (5) #8-18 Screws Which Are Not Serviced Separately				
						SEAT BACK	RESPALDO	SCHIENALE	050S
					SIEGE ARRIERE	SITZRÜCKENLEHNE	SÆDE, BAG	RUGLEUNING	

90.120.07		p1	06/11

SEAT ASSEMBLY, STANDARD (ALL CASE)
SEAT ASSEMBLY, STANDARD (ALL CASE)
SEAT ASSEMBLY, STANDARD (ALL CASE)
SEAT ASSEMBLY, STANDARD (ALL CASE)

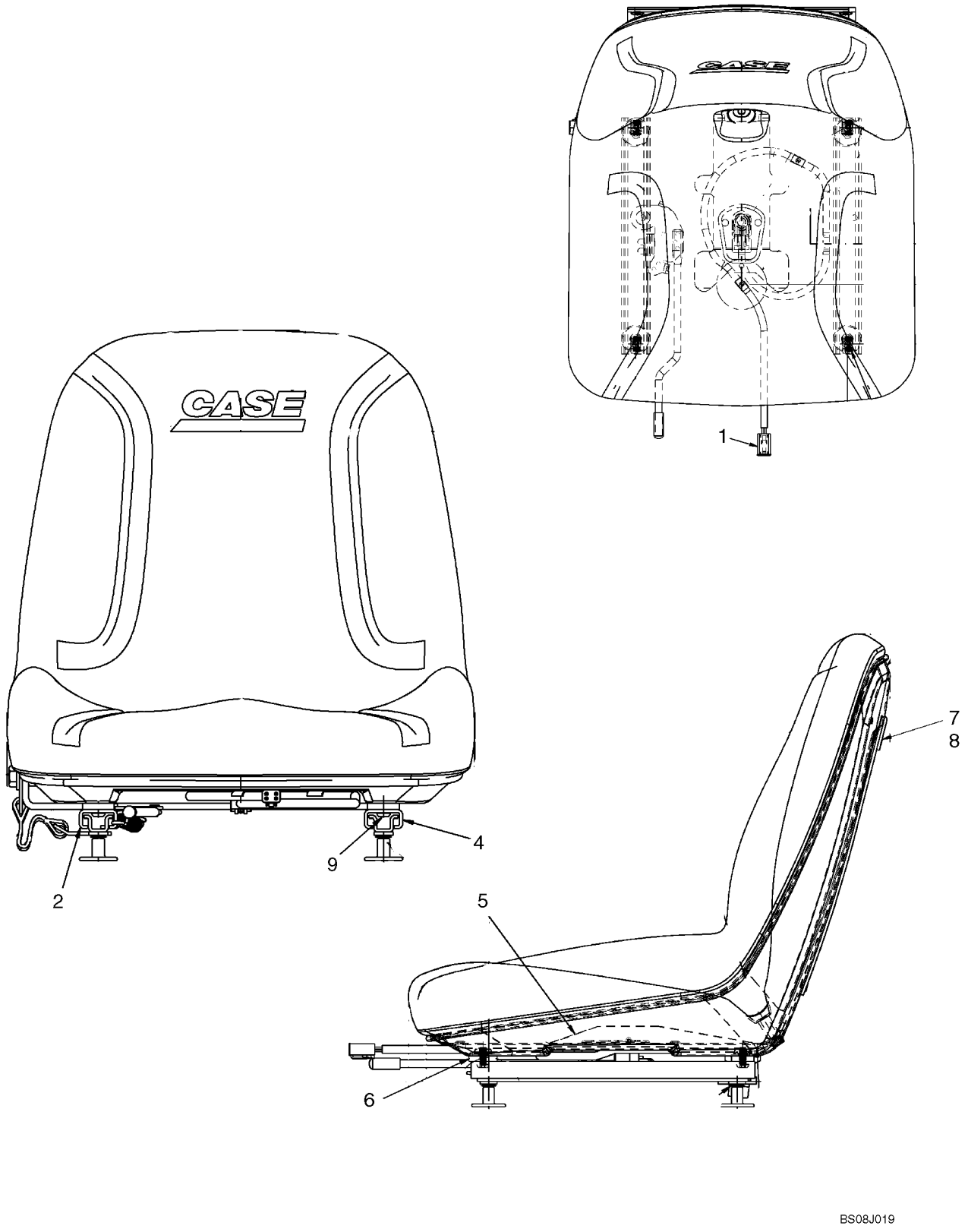

SEAT ASSEMBLY, STANDARD (ALL CASE)
SEAT ASSEMBLY, STANDARD (ALL CASE)
SEAT ASSEMBLY, STANDARD (ALL CASE)
SEAT ASSEMBLY, STANDARD (ALL CASE)

R	N	P.N.	MOD	Q	Denominação Description	Description Bezeichnung	Denominacion Beskrivelse	Descrizione Beschrijving	L.C.
		87702543		1	ASSENTO, Standard Seat, Mid-Back; Incl 1 - 8				
						SEAT	ASIENTO	SEDILE	7480
					SIEGE	SITZ	SÆDE	STOEL	
1		**84130077**		1	CHICOTE, Operator Presence				
						HARNESS	MAZO DE CABLES	CABLAGGIO	4160
					FAISCEAU	KABELBAUM	LEDNINGSNET	KABELBOOM	
2		**84130061**		1	AJUSTADOR	ADJUSTER	REGULADOR	REGOLATORE	118A
					DISPOSITIF DE REGLAG	EINSTELLVORRICHTUN(	STILLESKRUE	AFSTELMECHANISME	
3		**84130076**		4	PARAFUSO, .3125-18 x .75	SCREW	TORNILLO	VITE	040V
					VIS	SCHRAUBE	SKRUE	SCHROEF	
4		**84130080**		1	AJUSTADOR, Slave	ADJUSTER	REGULADOR	REGOLATORE	118A
					DISPOSITIF DE REGLAG	EINSTELLVORRICHTUN(	STILLESKRUE	AFSTELMECHANISME	
5		**84130082**		1	INTERRUPTOR, Operator Presence				
						SWITCH	INTERRUPTOR	INTERRUTTORE	075I
					CONTACTEUR	SCHALTER	KONTAKT	SCHAKELAAR	
6		**84130059**		2	ESPAÇADOR, Nylon	SPACER	SEPARADOR	DISTANZIALE	075D
					ENTRETOISE	DISTANZSTÜCK	AFSTANDSSTYKKE	AFSTANDSSTUK	
7		**84130075**		1	CAIXA, Manual Storage	BOX	CAJA	CASSA; SCATOLA	035S
					BOITIER	KASTEN; OFF KASTENA(	KASSE	DOOS	
8		**84130074**		4	BUJÃO, Nut	PLUG	TAPÓN	TAPPO	050T
					BOUCHON	STOPFEN	PROP	PLUG	

90.150.01	01	p1	02/11

CAB CASE (SR175-TV380)
CAB CASE (SR175-TV380)
CAB CASE (SR175-TV380)
CAB CASE (SR175-TV380)

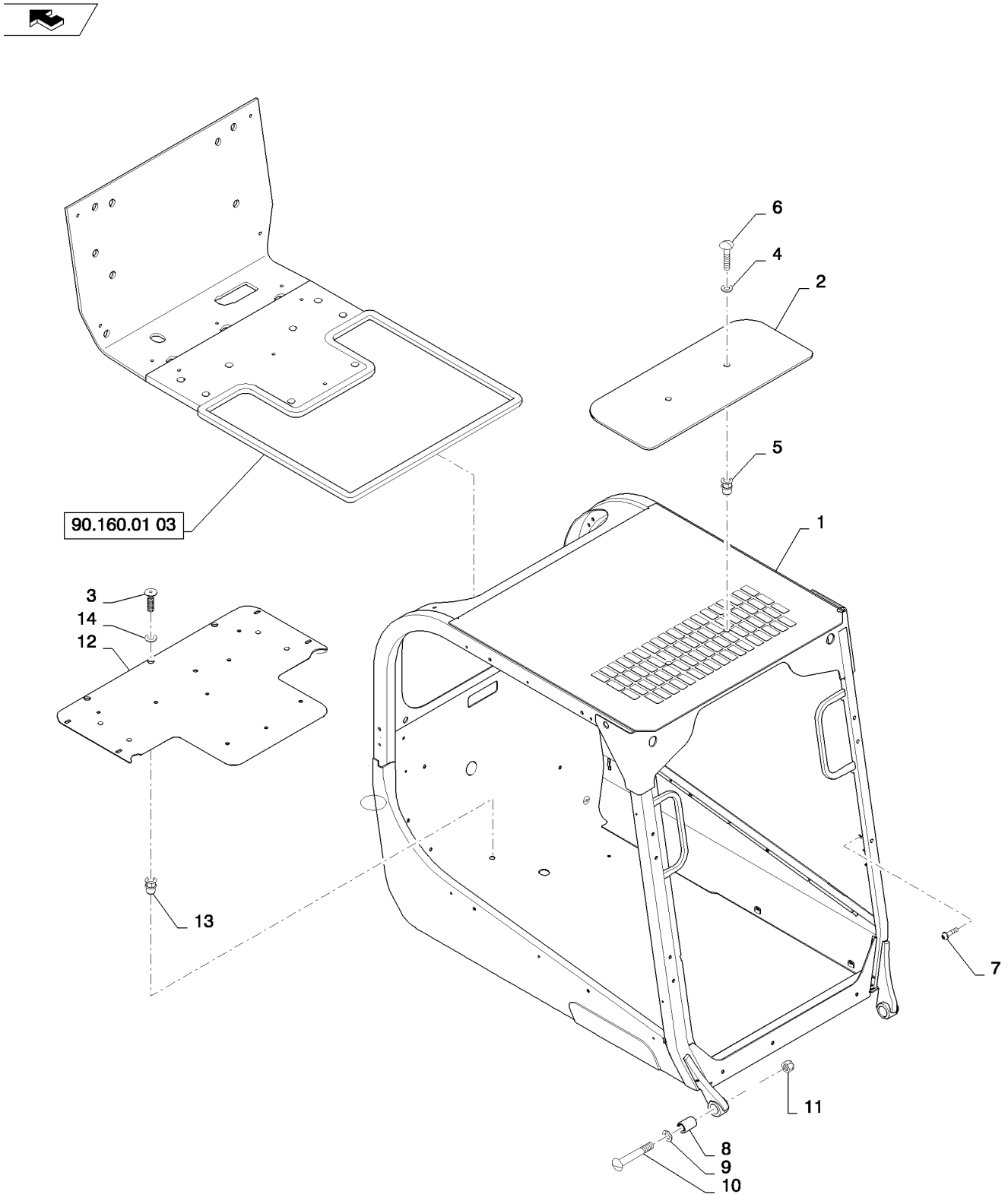

CAB CASE (SR175-TV380)
CAB CASE (SR175-TV380)
CAB CASE (SR175-TV380)
CAB CASE (SR175-TV380)

R	N	P.N.	MOD	Q	Denominação Description	Description Bezeichnung	Denominacion Beskrivelse	Descrizione Beschrijving	L.C.
1		{84200710}		1	ROPS, CNH Gray				
2		{84376784}		1	Skylight Window				
3		84305556		9	PARAFUSO VIS	SCREW SCHRAUBE	TORNILLO SKRUE	VITE SCHROEF	040V
4		394277A1		2	ARRUELA RONDELLE	WASHER UNTERLEGSCHEIBE	ARANDELA WASHER	RONDELLA WASHER	9720
5		84310724		2	REBITE RIVET	RIVET NIET	REMACHE NITTE	RIVETTO KLINKNAGEL	055R
6		84375323		2	PARAFUSO, Screw VIS	SCREW SCHRAUBE	TORNILLO SKRUE	VITE SCHROEF	040V
7		86625199		8	PARAFUSO, Hex Flg Hd, M6 x 13 VIS AUTOTARAUDEUSE	SELF-TAP SCREW SELBSTSCHN SCHRAUE	TORNILLO AUTORROSC SELVLÅSENDE BOLT	VITE AUTOFILETTANTE ZELFTAPPENDE SCHRO	062V
8		84200848		2	FIXADOR MONTAGE	MOUNT GESTELL	SOPORTE BESLAG	SUPPORTO BEVESTIGING	C022
9		{84365968}		2	Nylon Washer				
10		84370842		2	PARAFUSO VIS	BOLT SCHRAUBE	PERNO BOLT	BULLONE BOUT	140B
11		86536985		2	CONTRA PORCA, M20 x 2.5, Cl 10 CONTRE-ECROU	LOCK NUT SICHERUNGSMUTTER	TUERCA DE BLOQUEO LÅSEMØTRIK	DADO DI BLOCCAGGIO BORGMOER	P263
12		84284728		1	ASSENTO, Seat Pan, Gray SIEGE	SEAT SITZ	ASIENTO SÆDE	SEDILE STOEL	7480
13		84272826		7	REBITE RIVET	RIVET NIET	REMACHE NITTE	RIVETTO KLINKNAGEL	055R
14		86624182		4	ARRUELA PLANA, M6 x 18 x 1.6 RONDELLE	WASHER UNTERLEGSCHEIBE	ARANDELA FLADSKIVE	RONDELLA SLUITRING	131R

90.150.01	02	p1	08/11

CAB CASE (SR175-TV380)
CAB CASE (SR175-TV380)
CAB CASE (SR175-TV380)
CAB CASE (SR175-TV380)

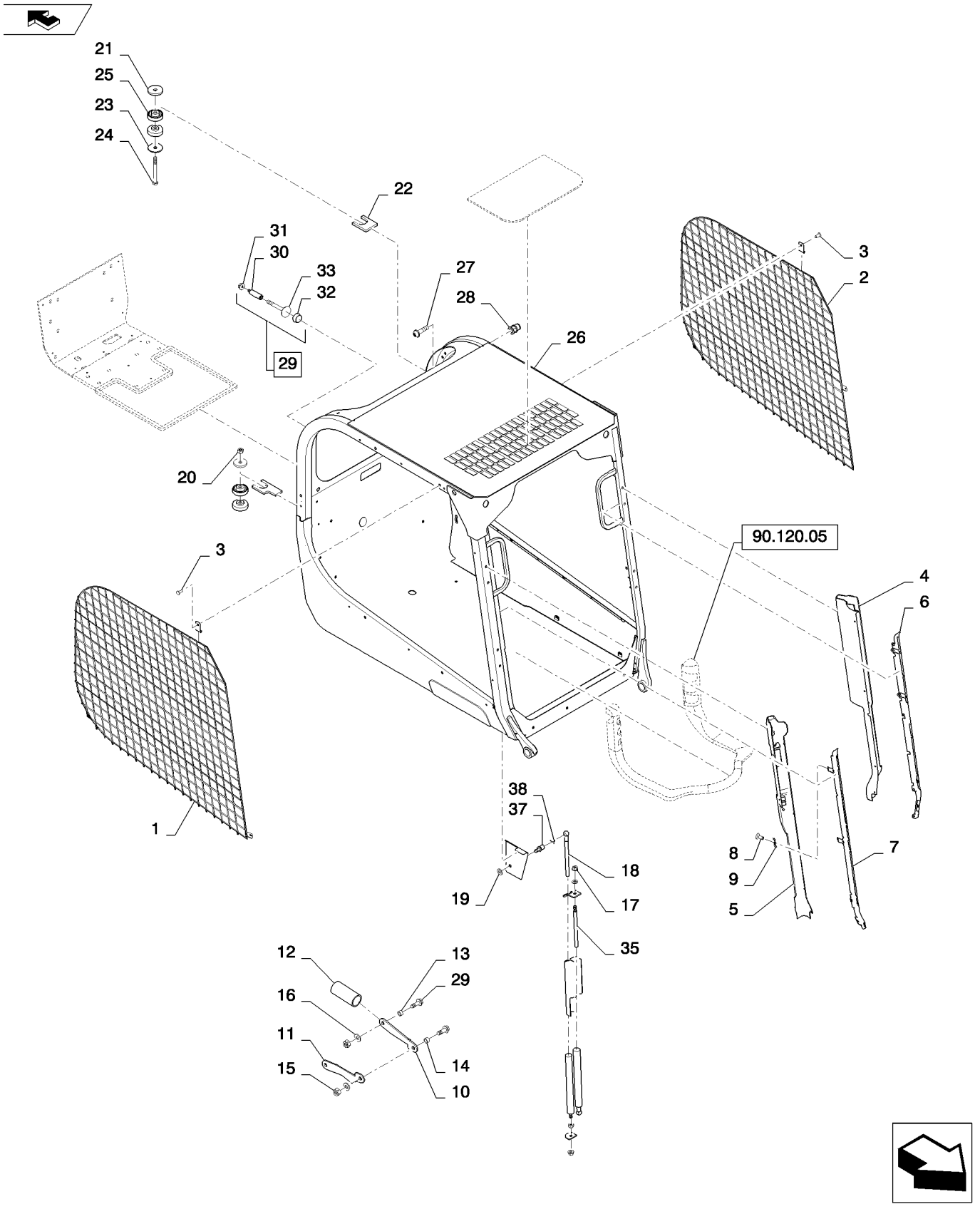

CAB CASE (SR175-TV380)
CAB CASE (SR175-TV380)
CAB CASE (SR175-TV380)
CAB CASE (SR175-TV380)

R	N	P.N.	MOD	Q	Denominação Description	Description Bezeichnung	Denominacion Beskrivelse	Descrizione Beschrijving	L.C.
1		84200803		1	TELA, ROPS Side Screen RH				
						SCREEN	PANTALLA	FILTRO; SCHERMO	047S
					TAMIS	GITTER; ABSCHIRMUNG	SKÆRM	SCHERM	
2		84307405		1	TELA, ROPS Side Screen LH				
						SCREEN	PANTALLA	FILTRO; SCHERMO	047S
					TAMIS	GITTER; ABSCHIRMUNG	SKÆRM	SCHERM	
3		84310724		22	REBITE	RIVET	REMACHE	RIVETTO	055R
					RIVET	NIET	NITTE	KLINKNAGEL	
4		84379512		1	CONSOLE, LH Case, Wheat				
						CONSOLE	CONSOLA	CONSOLE	080M
					CONSOLE	KONSOLE	KONSOL	CONSOLE	
5		84302476		1	CONSOLE, RH Case, Wheat				
						CONSOLE	CONSOLA	CONSOLE	080M
					CONSOLE	KONSOLE	KONSOL	CONSOLE	
6		84473542		1	SUPORTE, LH A-Post Console				
						BRACKET	SOPORTE	STAFFA	225S
					SUPPORT	HALTERUNG	BESLAG	STEUN	
7		84473534		1	SUPORTE, RH A-Post Console				
						BRACKET	SOPORTE	STAFFA	225S
					SUPPORT	HALTERUNG	BESLAG	STEUN	
8		84349415		12	PARAFUSO, Screw, RWH M6x12				
						SCREW	TORNILLO	VITE	040V
					VIS	SCHRAUBE	SKRUE	SCHROEF	
9		87594976		6	BOTÃO DE IMPULSO, U Nut				
						FASTENER	SUJETADOR	DISPOSITIVO DI FISSAG	123B
					ATTACHE	BEFESTIGUNGSELEMEN	LUKKER	BEVESTIGING	
10		84349494		1	PLACA, Plate, Upper Locking Arm				
						PLATE	PLACA	PIASTRA	105P
					PLAQUE	PLATTE	PLADE	PLAAT	
11		84349498		1	PLACA, Plate, Lower Locking Arm				
						PLATE	PLACA	PIASTRA	105P
					PLAQUE	PLATTE	PLADE	PLAAT	
12		84309929		1	TUBO, Tube, Locking Collar Safety				
						TUBE	TUBO	TUBO	195T
					TUBE	ROHR	RØR	LEIDING	
13		84349662		2	ESPAÇADOR, Spacer, 8 mm				
						SPACER	SEPARADOR	DISTANZIALE	075D
					ENTRETOISE	DISTANZSTÜCK	AFSTANDSSTYKKE	AFSTANDSSTUK	
14		84349661		1	ESPAÇADOR, Spacer, 16 mm				
						SPACER	SEPARADOR	DISTANZIALE	075D
					ENTRETOISE	DISTANZSTÜCK	AFSTANDSSTYKKE	AFSTANDSSTUK	
15		100037		3	PORCA, M10 x 1.5, Cl 8	NUT	TUERCA	DADO	010D
					ECROU	MUTTER	MØTRIK	MOER	
16		87655046		3	ARRUELA ESPECIAL	SPECIAL WASHER	ARANDELA ESPECIAL	RONDELLA SPECIALE	Z333
					RONDELLE SPECIALE	SPEZIALUNTERLEGSCH	SPECIALSKIVE	SPECIALE RING	
17		412141		1	CONTRA PORCA, M10 x 1.5, Cl 8				
						LOCK NUT	TUERCA DE BLOQUEO	DADO DI BLOCCAGGIO	P263
					CONTRE-ECROU	SICHERUNGSMUTTER	LÅSEMØTRIK	BORGMOER	

90.150.01	02	p2	08/11

CAB CASE (SR175-TV380)
CAB CASE (SR175-TV380)
CAB CASE (SR175-TV380)
CAB CASE (SR175-TV380)

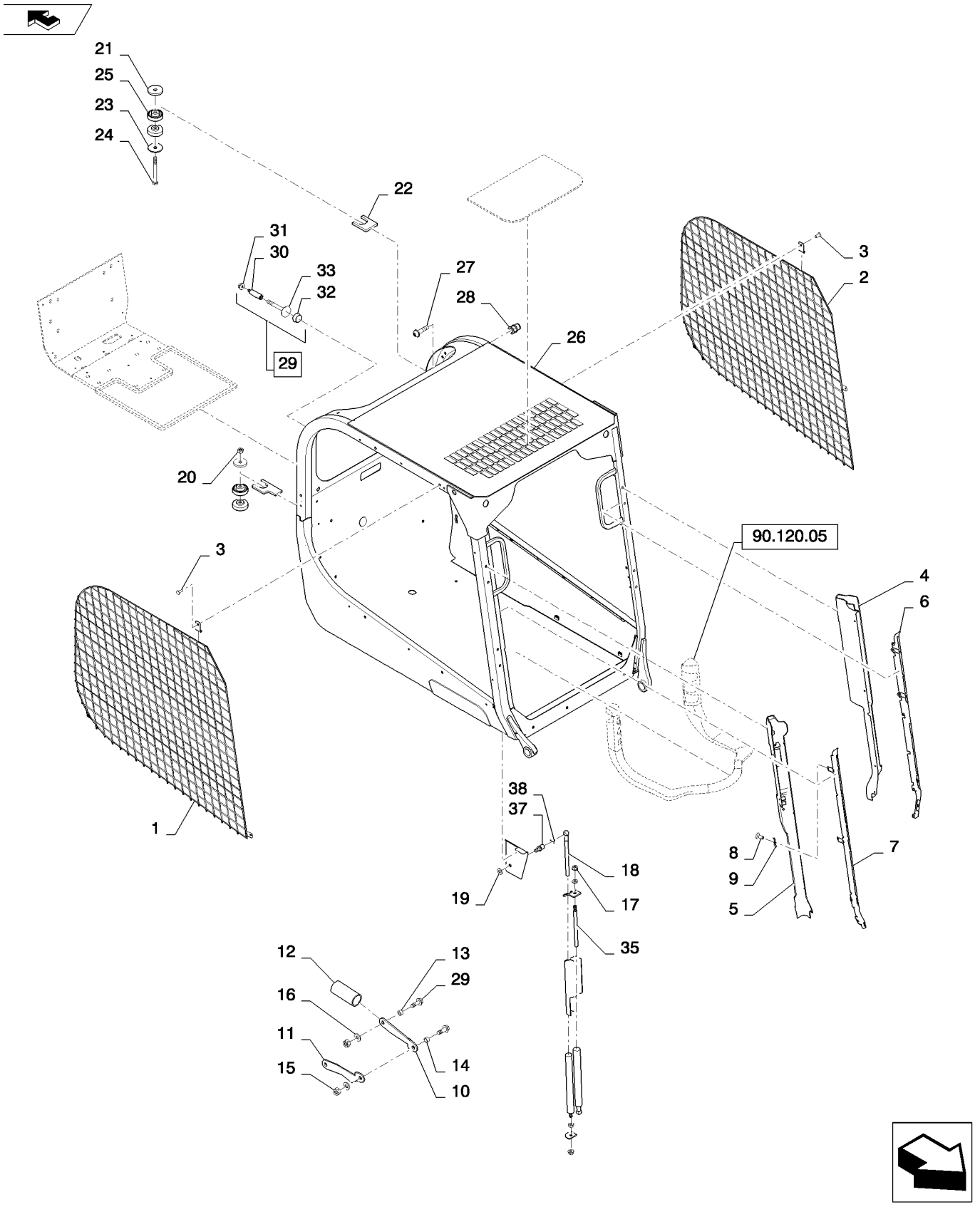

CAB CASE (SR175-TV380)
CAB CASE (SR175-TV380)
CAB CASE (SR175-TV380)
CAB CASE (SR175-TV380)

R	N	P.N.	MOD	Q	Denominação Description	Description Bezeichnung	Denominacion Beskrivelse	Descrizione Beschrijving	L.C.
18		84423628		1	COMPASSO, Strut, Gas, Assy				
						GAS STRUT	COLUMNA DE GAS	AMMORTIZZATORE A G/	Z331
					BEQUILLE A GAZ	GASDRUCKFEDER	CYLINDER, GASSTØDD/	GASVEER	
19		86624176		2	ARRUELA PLANA, M10 x 20 x 2				
						WASHER	ARANDELA	RONDELLA	131R
					RONDELLE	UNTERLEGSCHEIBE	FLADSKIVE	SLUITRING	
20		412066		2	PORCA, M16 x 2, Cl 8	NUT	TUERCA	DADO	010D
					ECROU	MUTTER	MØTRIK	MOER	
21		84298254		2	PLACA, Plate, Rear Mount	PLATE	PLACA	PIASTRA	105P
					PLAQUE	PLATTE	PLADE	PLAAT	
22		84361070		2	PLACA	PLATE	PLACA	PIASTRA	105P
					PLAQUE	PLATTE	PLADE	PLAAT	
23		87630175		2	ARRUELA PLANA	WASHER	ARANDELA	RONDELLA	131R
					RONDELLE	UNTERLEGSCHEIBE	FLADSKIVE	SLUITRING	
24		87698773		2	PARAFUSO	BOLT	PERNO	BULLONE	140B
					VIS	SCHRAUBE	BOLT	BOUT	
25		84201266		4	ISOLADOR, Engine Mount	ISOLATOR	AISLADOR	ISOLATORE	Z082
					ISOLANT	ISOLATOR	ISOLATOR	ISOLATIE	
26		{84200710}		REF	ROPS, CNH Gray				
27		84305556		3	PARAFUSO	SCREW	TORNILLO	VITE	040V
					VIS	SCHRAUBE	SKRUE	SCHROEF	
28		9804262		2	PARAFUSO, Hex Flg, M10 x 30, 8.8				
						BOLT	PERNO	BULLONE	140B
					VIS	SCHRAUBE	BOLT	BOUT	
29		{84355969}		REF	Lap Bar Stop; Incl. 30-33				
30		84355970		2	FIXADOR, Round Lap Bar Stop				
						MOUNT	SOPORTE	SUPPORTO	C022
					MONTAGE	GESTELL	BESLAG	BEVESTIGING	
31		9804276		2	PORCA, M6 x 1, Flg, Cl 8	NUT	TUERCA	DADO	010D
					ECROU	MUTTER	MØTRIK	MOER	
32		87639914		2	MAÇANETA, Pivot Lap Bar Stop				
						KNOB	MANDO	MANOPOLA	150P
					BOUTON	RUNDGRIFF	GREB	KNOP	
33		87639912		2	MAÇANETA, Star Knob 3/8"				
						KNOB	MANDO	MANOPOLA	150P
					BOUTON	RUNDGRIFF	GREB	KNOP	
34		{84466947}		1	Cab Strut Bumper (Not Shown)				
35		120112		1	PARAFUSO, Hex, M10 x 40, 8.8, Full Thd, Use with Ref. 34 (Not Shown)				
						BOLT	PERNO	BULLONE	140B
					VIS	SCHRAUBE	BOLT	BOUT	
36		254206A1		4	ESPACADOR, Black, Use with Ref. 34 (Not Shown)				
						SPACER	ESPACIADOR	DISTANZIALE	8090
					ENTRETOISE	ABSTANDSSTUECK	SPACER	SPACER	
37		84372097		2	PRISIONEIRO, Ball	STUD	PRISIONERO	PRIGIONIERO	210P
					GOUJON	GEWINDEBOLZEN	STØTTEBOLT	TAPEIND	

90.150.01	02	p3	08/11

CAB CASE (SR175-TV380)
CAB CASE (SR175-TV380)
CAB CASE (SR175-TV380)
CAB CASE (SR175-TV380)

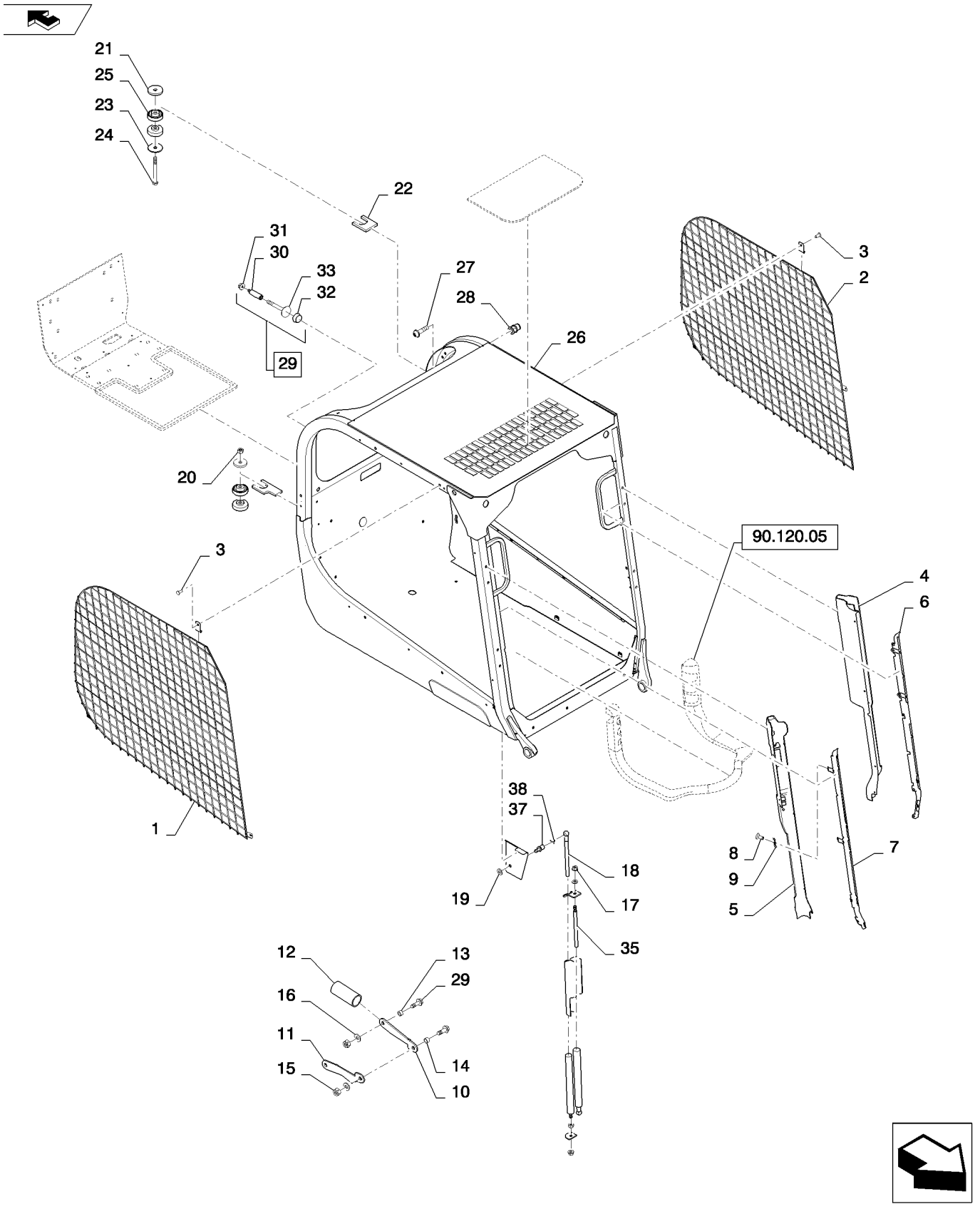

CAB CASE (SR175-TV380)
CAB CASE (SR175-TV380)
CAB CASE (SR175-TV380)
CAB CASE (SR175-TV380)

R	N	P.N.	MOD	Q	Denominação Description Bezeichnung Denominacion Beskrivelse Descrizione Beschrijving	L.C.
38		**84372099**		2	GRAMPO, Locking CLIP ABRAZADERA FERMO COLLIER KLAMMER KLIPS KLEM	045F
39		**84473525**		6	PORCA, Acorn, Console to Bracket NUT TUERCA DADO ECROU MUTTER MØTRIK MOER	010D

90.150.01	03	p1	06/11

CAB, GAS STRUT ASSY (ALL CASE)
CAB, GAS STRUT ASSY (ALL CASE)
CAB, GAS STRUT ASSY (ALL CASE)
CAB, GAS STRUT ASSY (ALL CASE)

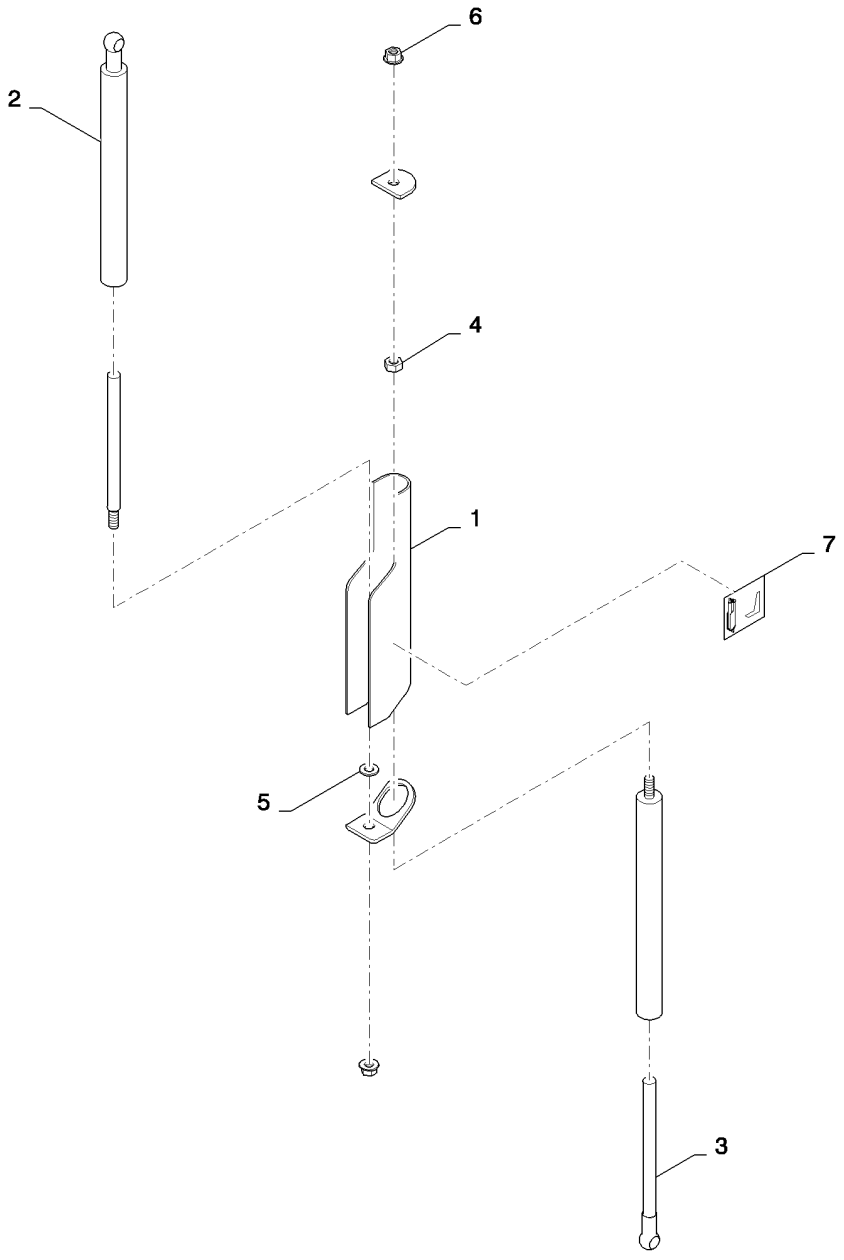

CAB, GAS STRUT ASSY (ALL CASE)
CAB, GAS STRUT ASSY (ALL CASE)
CAB, GAS STRUT ASSY (ALL CASE)
CAB, GAS STRUT ASSY (ALL CASE)

R	N	P.N.	MOD	Q	Denominação Description	Description Bezeichnung	Denominacion Beskrivelse	Descrizione Beschrijving	L.C.
1		84418681		1	ESCORA ESTABILIZADORA, Gray				
						STRUT	COLUMNA	AMMORTIZZATORE	245P
					JAMBE	STREBE	STØDDÆMPERARME	GASVEER	
		84385168		1	COMPASSO, Assembly, Incl. 1-7				
						GAS STRUT	COLUMNA DE GAS	AMMORTIZZATORE A G/	Z331
					BEQUILLE A GAZ	GASDRUCKFEDER	CYLINDER, GASSTØDD/	GASVEER	
2		84365652		1	COMPASSO, 330SN	GAS STRUT	COLUMNA DE GAS	AMMORTIZZATORE A G/	Z331
					BEQUILLE A GAZ	GASDRUCKFEDER	CYLINDER, GASSTØDD/	GASVEER	
3		84365651		1	COMPASSO, 2410 N	GAS STRUT	COLUMNA DE GAS	AMMORTIZZATORE A G/	Z331
					BEQUILLE A GAZ	GASDRUCKFEDER	CYLINDER, GASSTØDD/	GASVEER	
4		100016		1	PORCA, M10, Cl 8	NUT	TUERCA	DADO	010D
					ECROU	MUTTER	MØTRIK	MOER	
5		86625241		1	ARRUELA PLANA, .406x.812x.089 HDN				
						WASHER	ARANDELA	RONDELLA	131R
					RONDELLE	UNTERLEGSCHEIBE	FLADSKIVE	SLUITRING	
6		9804278		2	PORCA, M10 x 1.5, Flg, Cl 8				
						NUT	TUERCA	DADO	010D
					ECROU	MUTTER	MØTRIK	MOER	
7		84385641		1	ADESIVO, Gas Strut Orientation				
						DECAL	CALCOMANÍA	DECALCOMANIA	012D
					AUTOCOLLANT	AUFKLEBER	TRANSFER	STICKER	

90.150.02		p1	02/11

CAB SEALING (ALL CASE)
CAB SEALING (ALL CASE)
CAB SEALING (ALL CASE)
CAB SEALING (ALL CASE)

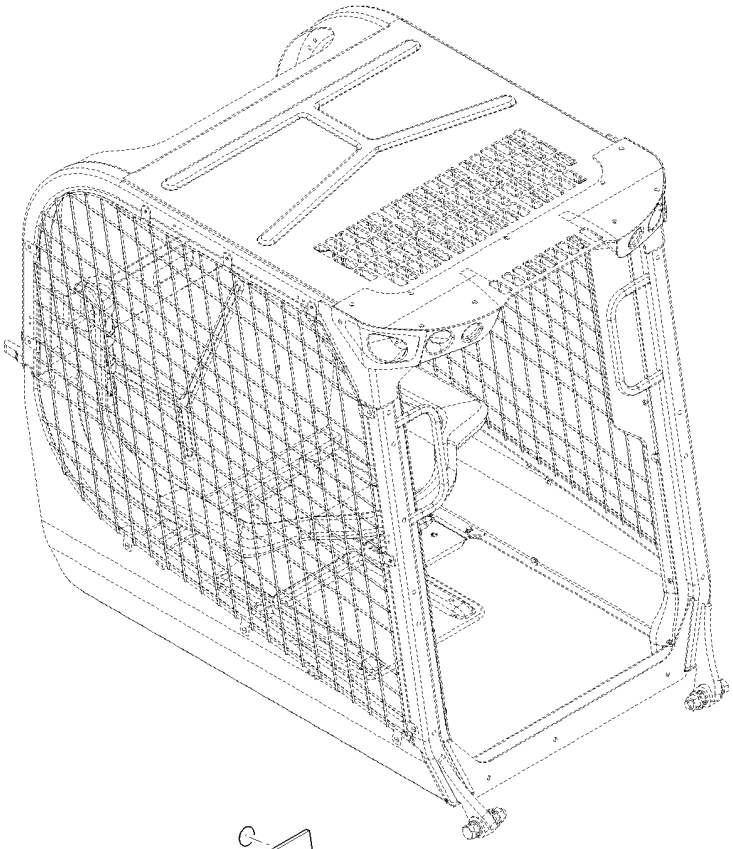

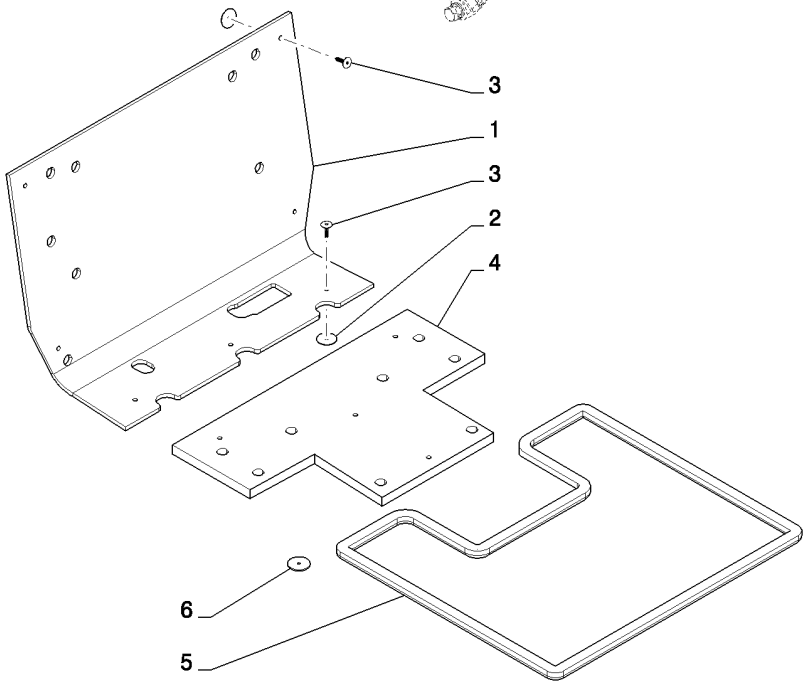

CAB SEALING (ALL CASE)
CAB SEALING (ALL CASE)
CAB SEALING (ALL CASE)
CAB SEALING (ALL CASE)

R	N	P.N.	MOD	Q	Denominação Description Bezeichnung	Description Denominacion Beskrivelse	Descrizione Beschrijving	L.C.
1		84362124		1	ESPUMA ISOLANTE, Firewall MOUSSE ISOLANTE	FOAM INSULATION SCHAUMSTOFFISOLIER	ESPUMA AISLANTE SKUM ISOLERING	ISOLANTE IN SCHIUMA SCHUIMISOLATIE	051S
2		348434A1		7	ARRUELA, Flat RONDELLE	WASHER UNTERLEGSCHEIBE	ARANDELA WASHER	RONDELLA WASHER	9720
3		348452A1		7	BOTÃO DE IMPULSO, Push-In ATTACHE	FASTENER BEFESTIGUNGSELEMEN	SUJETADOR LUKKER	DISPOSITIVO DI FISSAG BEVESTIGING	123B
4		84342684		1	ESPUMA ISOLANTE, Seat Pan MOUSSE ISOLANTE	FOAM INSULATION SCHAUMSTOFFISOLIER	ESPUMA AISLANTE SKUM ISOLERING	ISOLANTE IN SCHIUMA SCHUIMISOLATIE	051S
5		84338534		1	VEDAÇÃO, 3326 mm JOINT	SEAL DICHTUNG	ANILLO DE CIERRE PAKNING	GUARNIZIONE; TENUTA AFDICHTING	132A
6		84311384		1	ESPUMA ISOLANTE, Dump Valve MOUSSE ISOLANTE	FOAM INSULATION SCHAUMSTOFFISOLIER	ESPUMA AISLANTE SKUM ISOLERING	ISOLANTE IN SCHIUMA SCHUIMISOLATIE	051S

90.150.03		p1	01/11

FLOOR MAT, MECHANICAL HAND CONTROL (ALL CASE)
FLOOR MAT, MECHANICAL HAND CONTROL (ALL CASE)
FLOOR MAT, MECHANICAL HAND CONTROL (ALL CASE)
FLOOR MAT, MECHANICAL HAND CONTROL (ALL CASE)

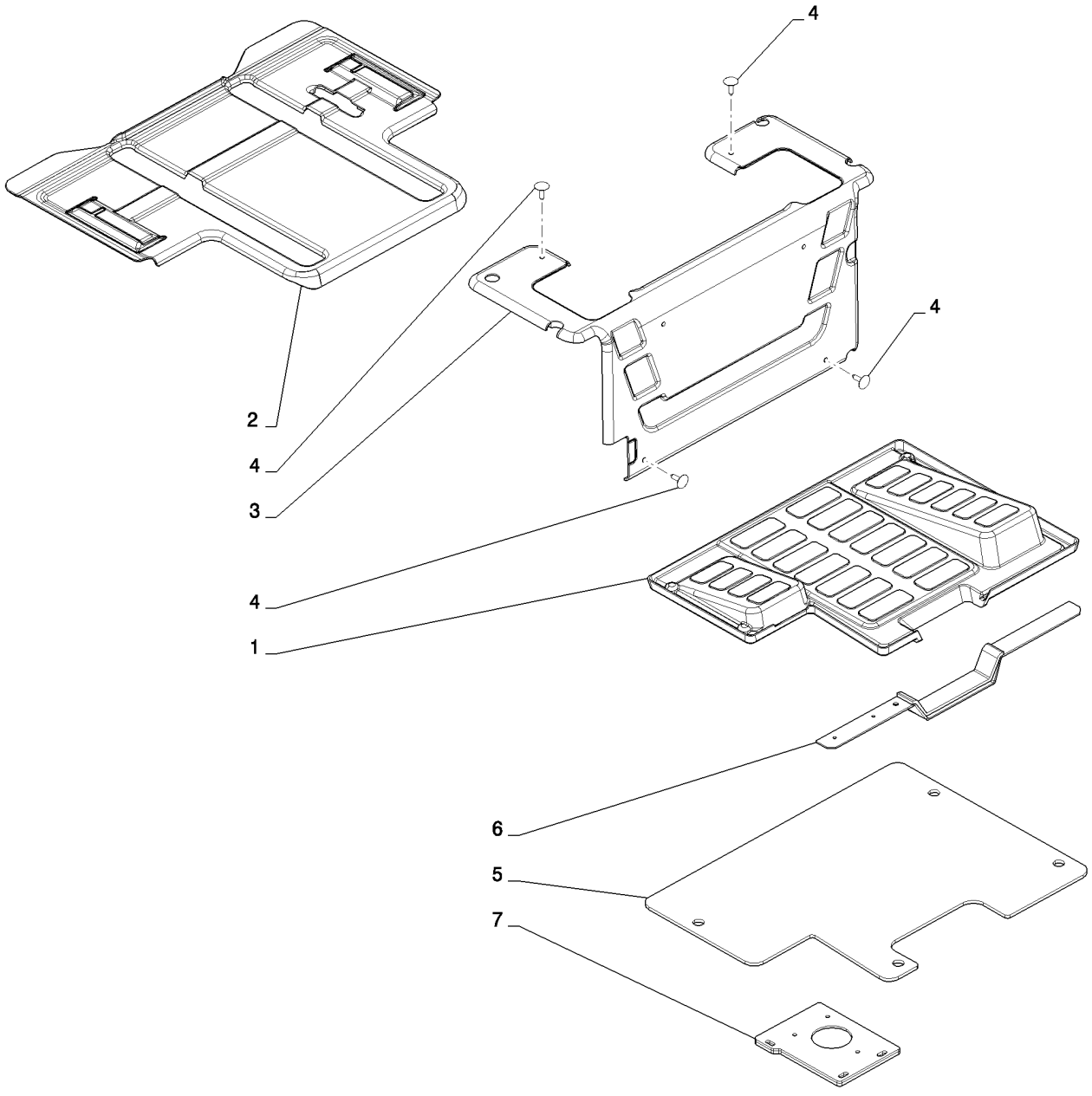

FLOOR MAT, MECHANICAL HAND CONTROL (ALL CASE)
FLOOR MAT, MECHANICAL HAND CONTROL (ALL CASE)
FLOOR MAT, MECHANICAL HAND CONTROL (ALL CASE)
FLOOR MAT, MECHANICAL HAND CONTROL (ALL CASE)

R	N	P.N.	MOD	Q	Denominação Description	Description Bezeichnung	Denominacion Beskrivelse	Descrizione Beschrijving	L.C.
1		84259690		1	TAPETE DO PISO, Trim	FLOOR MAT	ALFOMBRA	TAPPETINO	Z068
					TAPIS DE SOL	BODENMATTE	GULVMÅTTE	VLOERMAT	
2		84259693		1	TAPETE DO PISO, Seat Pan, Mechanical				
						FLOOR MAT	ALFOMBRA	TAPPETINO	Z068
					TAPIS DE SOL	BODENMATTE	GULVMÅTTE	VLOERMAT	
3		84397559		1	TAPETE, Heel Plate, Mechanical				
						MAT	ALFOMBRILLA	TAPPETINO	030T
					TAPIS	MATTE	MÅTTE	MAT	
4		86620930		6	BOTÃO DE IMPULSO, Push-In				
						FASTENER	SUJETADOR	DISPOSITIVO DI FISSAG	123B
					ATTACHE	BEFESTIGUNGSELEMEN	LUKKER	BEVESTIGING	
5		84372627		1	ESPUMA, No Pedal Floor Plate				
						FOAM	ESPUMA	SCHIUMA	P033
					MOUSSE	SCHAUM	SKUM	SCHUIM	
6		84372707		1	ESPUMA, Front Door Plate	FOAM	ESPUMA	SCHIUMA	P033
					MOUSSE	SCHAUM	SKUM	SCHUIM	
7		84372630		1	ESPUMA, Foot Throttle	FOAM	ESPUMA	SCHIUMA	P033
					MOUSSE	SCHAUM	SKUM	SCHUIM	

90.150.05		p1	02/11

FLOOR MAT, EH CONTROLS (SR130-SV300)
FLOOR MAT, EH CONTROLS (SR130-SV300)
FLOOR MAT, EH CONTROLS (SR130-SV300)
FLOOR MAT, EH CONTROLS (SR130-SV300)

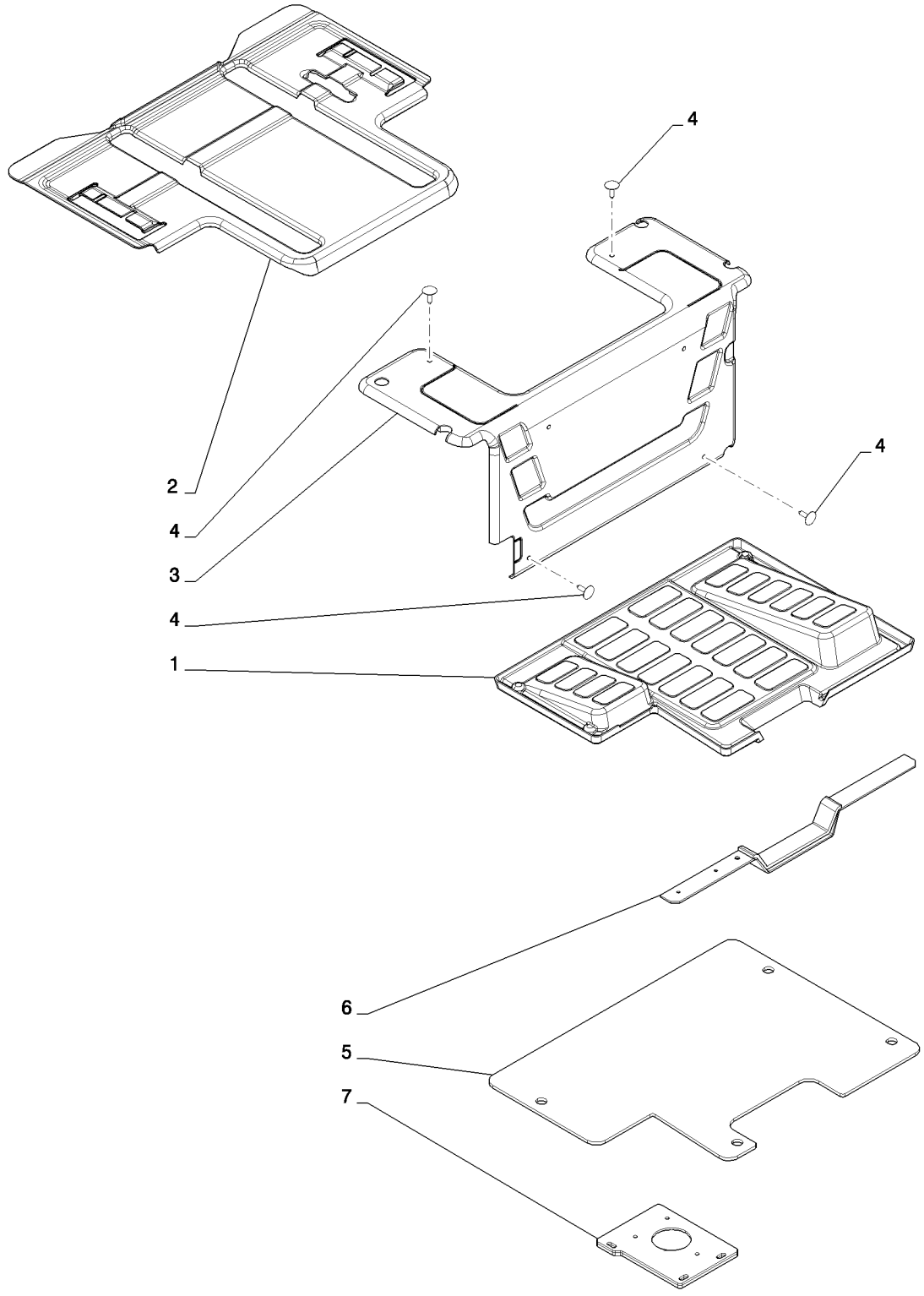

FLOOR MAT, EH CONTROLS (SR130-SV300)
FLOOR MAT, EH CONTROLS (SR130-SV300)
FLOOR MAT, EH CONTROLS (SR130-SV300)
FLOOR MAT, EH CONTROLS (SR130-SV300)

R	N	P.N.	MOD	Q	Denominação Description Bezeichnung	Description Bezeichnung	Denominacion Beskrivelse	Descrizione Beschrijving	L.C.
1		84259690		1	TAPETE DO PISO, Trim TAPIS DE SOL	FLOOR MAT BODENMATTE	ALFOMBRA GULVMÅTTE	TAPPETINO VLOERMAT	Z068
2		84271712		1	TAPETE DO PISO, Seat Pan, EH TAPIS DE SOL	FLOOR MAT BODENMATTE	ALFOMBRA GULVMÅTTE	TAPPETINO VLOERMAT	Z068
3		84397556		1	TAPETE, Heel Plate, EH TAPIS	MAT MATTE	ALFOMBRILLA MÅTTE	TAPPETINO MAT	030T
4		86620930		6	BOTÃO DE IMPULSO, Push-In ATTACHE	FASTENER BEFESTIGUNGSELEMEN	SUJETADOR LUKKER	DISPOSITIVO DI FISSAG BEVESTIGING	123B
5		84372627		1	ESPUMA, No Pedal Floor Plate MOUSSE	FOAM SCHAUM	ESPUMA SKUM	SCHIUMA SCHUIM	P033
6		84372707		1	ESPUMA, Front Door Plate MOUSSE	FOAM SCHAUM	ESPUMA SKUM	SCHIUMA SCHUIM	P033
7		84372630		1	ESPUMA, Foot Throttle MOUSSE	FOAM SCHAUM	ESPUMA SKUM	SCHIUMA SCHUIM	P033

90.154.00		p1	05/11

FRONT DOOR, GLASS (ALL CASE)
FRONT DOOR, GLASS (ALL CASE)
FRONT DOOR, GLASS (ALL CASE)
FRONT DOOR, GLASS (ALL CASE)

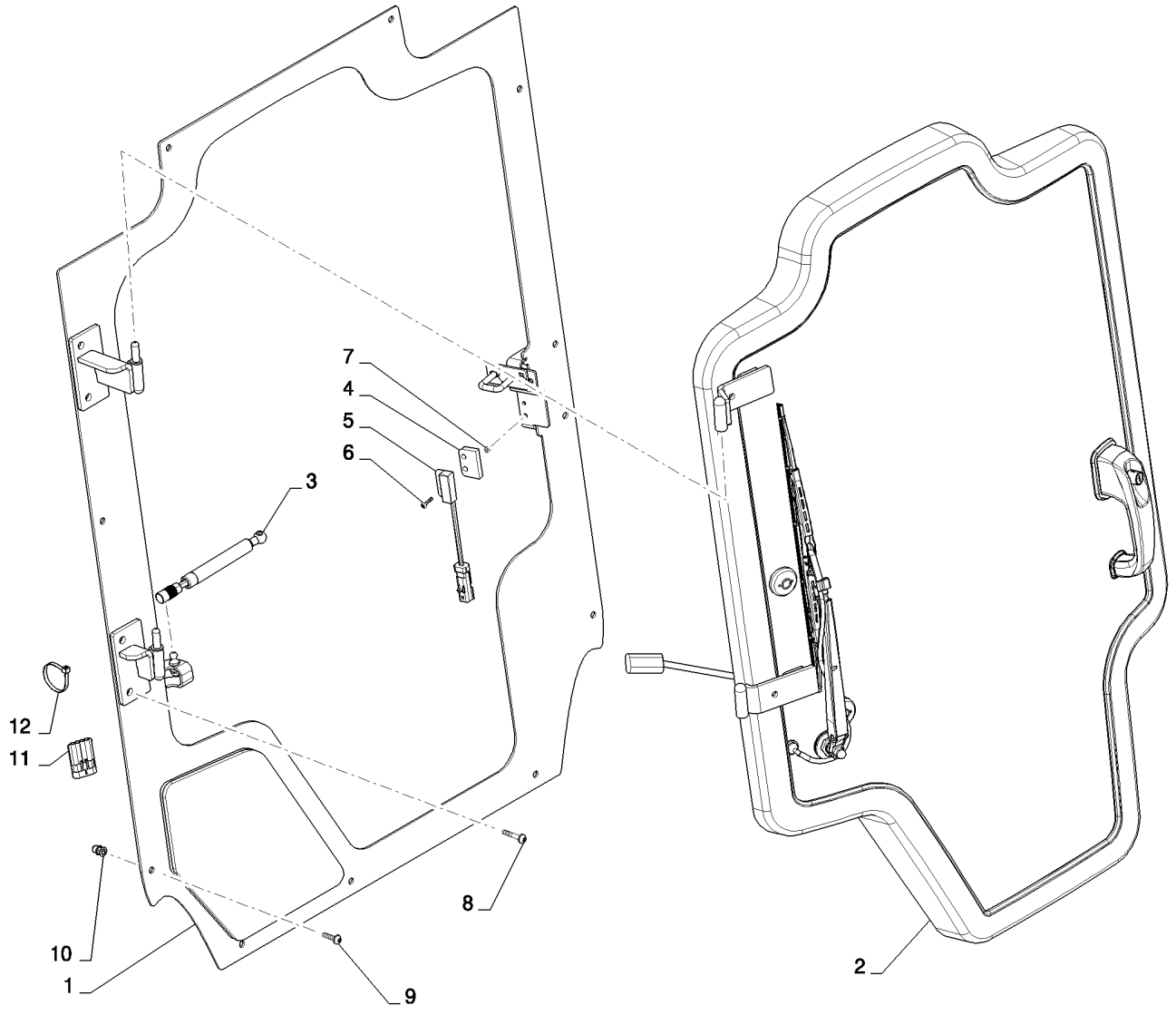

FRONT DOOR, GLASS (ALL CASE)
FRONT DOOR, GLASS (ALL CASE)
FRONT DOOR, GLASS (ALL CASE)
FRONT DOOR, GLASS (ALL CASE)

R	N	P.N.	MOD	Q	Denominação Description	Description Bezeichnung	Denominacion Beskrivelse	Descrizione Beschrijving	L.C.
1		84257150		1	PORTA, Door Assy, Jamb, Incl. 1A				
						DOOR	PUERTA	SPORTELLO	180P
					PORTE	TÜR	DØR	PORTIER	
2		84415694		1	PORTA, Assy, Front	DOOR	PUERTA	SPORTELLO	180P
					PORTE	TÜR	DØR	PORTIER	
1A		84259722		1	JANELA, Small, Lower Window				
						WINDOW	VENTANILLA	FINESTRINO	9810
					FENETRE	FENSTER	VINDUE	RUIT	
3		84378453		1	COMPASSO, Gas Spring	GAS STRUT	COLUMNA DE GAS	AMMORTIZZATORE A G/	Z331
					BEQUILLE A GAZ	GASDRUCKFEDER	CYLINDER, GASSTØDD/	GASVEER	
4		86624468		1	ESPAÇADOR, Switch	SPACER	SEPARADOR	DISTANZIALE	075D
					ENTRETOISE	DISTANZSTÜCK	AFSTANDSSTYKKE	AFSTANDSSTUK	
5		87392235		1	INTERRUPTOR INTERMITENTE, Reed, Non-Contact NO				
						SWITCH ASSY	CONJUNTO DE INTERRU	COMPLESSIVO INTERRU	067I
					ENSEMBLE COMMUTATI	SCHALTERBAUGRUPPE	KONTAKT, KPL.	SCHAKELAAREENHEID	
6		84183818		2	PARAFUSO	SCREW	TORNILLO	VITE	040V
					VIS	SCHRAUBE	SKRUE	SCHROEF	
7		100012		2	PORCA, M4, Cl 8	NUT	TUERCA	DADO	010D
					ECROU	MUTTER	MØTRIK	MOER	
8		84359102		4	PARAFUSO	SCREW	TORNILLO	VITE	040V
					VIS	SCHRAUBE	SKRUE	SCHROEF	
9		84305556		11	PARAFUSO	SCREW	TORNILLO	VITE	040V
					VIS	SCHRAUBE	SKRUE	SCHROEF	
10		84272827		15	REBITE	RIVET	REMACHE	RIVETTO	055R
					RIVET	NIET	NITTE	KLINKNAGEL	
11		84331404		1	CONECTOR DO FIO, Jumper				
						WIRE CONNECTOR	CONECTOR DE CABLE	CONNETTORE DEL FILO	250C
					CONNECTEUR DU FIL	KABELSTECKVERBINDE	SAMLEMUFFE	DRAADCONNECTOR	
12		L11541		1	PRENDEDOR DE CABOS	CABLE STRAP	BANDA DE CABLE	FASCETTA PER CAVO	P716
					BRIDE DE CABLE	KABELBINDER	KABELSTROP	BUNDELBAND	

90.154.01	01	p1	06/11

DOOR ASSY, FRONT (ALL CASE)
DOOR ASSY, FRONT (ALL CASE)
DOOR ASSY, FRONT (ALL CASE)
DOOR ASSY, FRONT (ALL CASE)

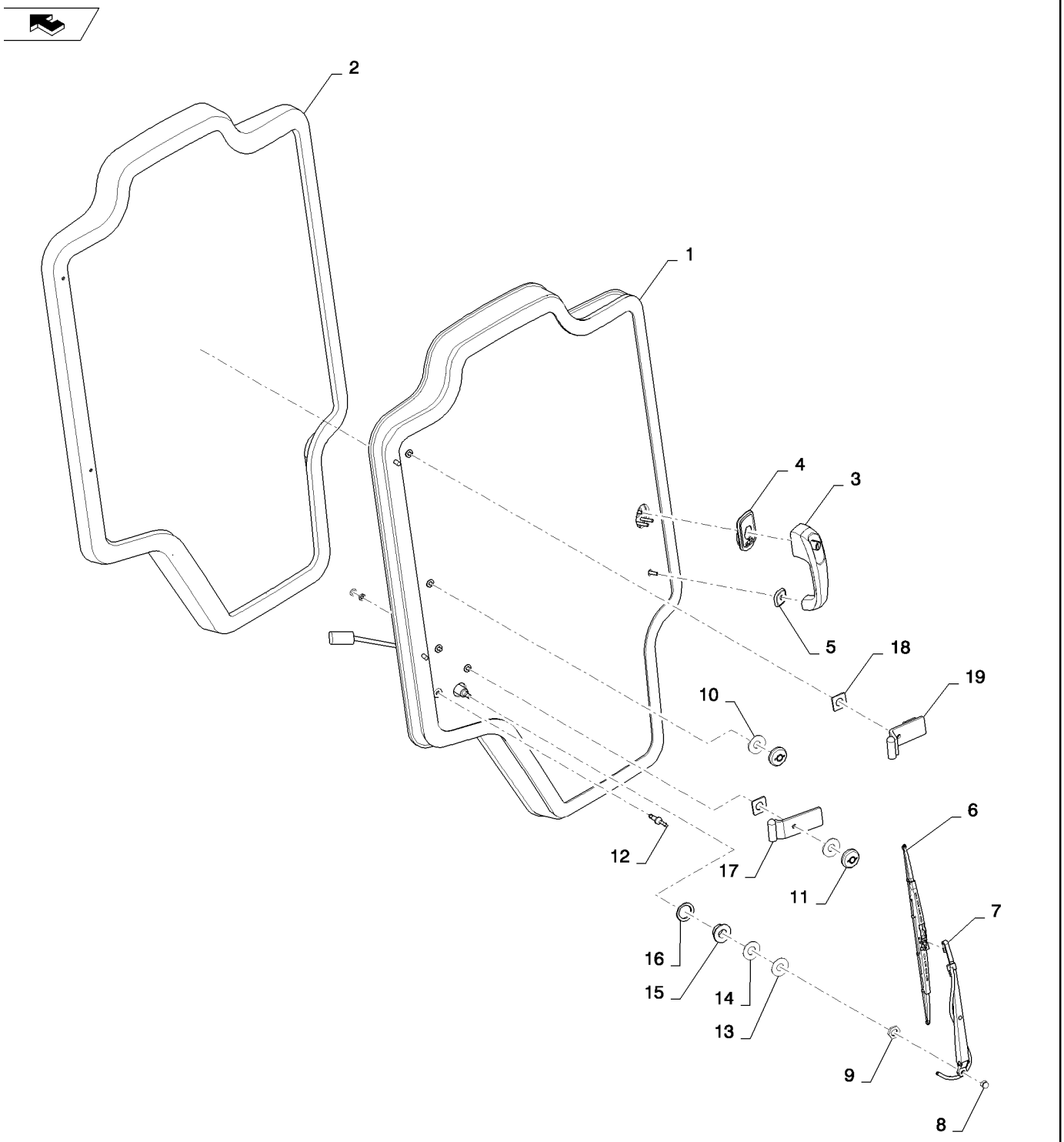

DOOR ASSY, FRONT (ALL CASE)
DOOR ASSY, FRONT (ALL CASE)
DOOR ASSY, FRONT (ALL CASE)
DOOR ASSY, FRONT (ALL CASE)

R	N	P.N.	MOD	Q	Denominação Description	Description Bezeichnung	Denominacion Beskrivelse	Descrizione Beschrijving	L.C.
1		84368761		1	VEDAÇÃO, Dust, Glass JOINT	SEAL DICHTUNG	ANILLO DE CIERRE PAKNING	GUARNIZIONE; TENUTA AFDICHTING	132A
2		84415734		1	PORTA, Assembly PORTE	DOOR TÜR	PUERTA DØR	SPORTELLO PORTIER	180P
3		84396681		1	MAÇANETA DA PORTA, Door POIGNEE DE PORTE	DOOR HANDLE TÜRGRIFF	EMPUÑADURA DE PUER DØRHÅNDTAG	MANIGLIA DELLA PORTA HANDGREEP VAN PORT	A051
4		84293060		1	VEDAÇÃO, Handle Upper JOINT	SEAL DICHTUNG	ANILLO DE CIERRE PAKNING	GUARNIZIONE; TENUTA AFDICHTING	132A
5		84293058		1	VEDAÇÃO, Handle Lower JOINT	SEAL DICHTUNG	ANILLO DE CIERRE PAKNING	GUARNIZIONE; TENUTA AFDICHTING	132A
6		84347625		1	PALHETA LIMPADOR LAME D'ESSUIE-GLACE	WIPER BLADE WISCHERBLATT	RASQUETA LIMPIAPARA VISKERBLAD	SPAZZOLA TERGICRIST. RUITENWISSERBLAD	175S
7		84347514		1	BRAÇO LIMPADOR, Arm BRAS D'ESSUIE-GLACE	WIPER ARM WISCHERARM	BRAZO LIMPIAPARABRIS VISKERARM	BRACCIO TERGICRISTA ARM VAN RUITENWISSE	134B
8		412326		2	PORCA, Dome Crown M8 ECROU	NUT MUTTER	TUERCA MØTRIK	DADO MOER	010D
9		87607505		1	PORCA, Wiper ECROU	NUT MUTTER	TUERCA MØTRIK	DADO MOER	010D
10		84415813		2	VEDAÇÃO, Washer JOINT	SEAL DICHTUNG	ANILLO DE CIERRE PAKNING	GUARNIZIONE; TENUTA AFDICHTING	132A
11		86531235		2	BUCHA, Hinge BAGUE	BUSHING BUCHSE	CASQUILLO BØSNING	BOCCOLA BUS	095B
12		84369351		1	COTOVELO 90, Assembly COUDE A 90°	90 ELBOW 90-GRAD-KNIESTÜCK	CODO 90 VINKELRØR, 90	GOMITO A 90° KNIESTUK 90º	A045
13		84346315		1	ARRUELA PLANA, Plastic RONDELLE	WASHER UNTERLEGSCHEIBE	ARANDELA FLADSKIVE	RONDELLA SLUITRING	131R
14		84346316		1	VEDAÇÃO DE BORRACHA, Wiper Motor JOINT EN CAOUTCHOU	RUBBER SEAL GUMMIDICHTUNG	JUNTA DE GOMA GUMMITÆTNING	GUARNIZIONE DI GOMM RUBBEREN AFDICHTINC	122G
15		84346317		1	ESPAÇADOR, Wiper Motor ENTRETOISE	SPACER DISTANZSTÜCK	SEPARADOR AFSTANDSSTYKKE	DISTANZIALE AFSTANDSSTUK	075D
16		84485661		1	VEDAÇÃO, Wiper Motor Foam JOINT	SEAL DICHTUNG	ANILLO DE CIERRE PAKNING	GUARNIZIONE; TENUTA AFDICHTING	132A
17		84298540		1	SEMI-DOBRADIÇA, Bottom Door, Black DEMI-CHARNIERE	HALF-HINGE SCHARNIERHÄLFTE	SEMIBISAGRA HÆNGSELHALVDEL	SEMICERNIERA SCHARNIERHELFT	413S
18		84257222		2	VEDAÇÃO DE BORRACHA, Hinge JOINT EN CAOUTCHOU	RUBBER SEAL GUMMIDICHTUNG	JUNTA DE GOMA GUMMITÆTNING	GUARNIZIONE DI GOMM RUBBEREN AFDICHTINC	122G
19		84298543		1	SEMI-DOBRADIÇA, Top Door, Black DEMI-CHARNIERE	HALF-HINGE SCHARNIERHÄLFTE	SEMIBISAGRA HÆNGSELHALVDEL	SEMICERNIERA SCHARNIERHELFT	413S

90.154.01	02	p1	06/11

DOOR ASSY, FRONT (ALL CASE)
DOOR ASSY, FRONT (ALL CASE)
DOOR ASSY, FRONT (ALL CASE)
DOOR ASSY, FRONT (ALL CASE)

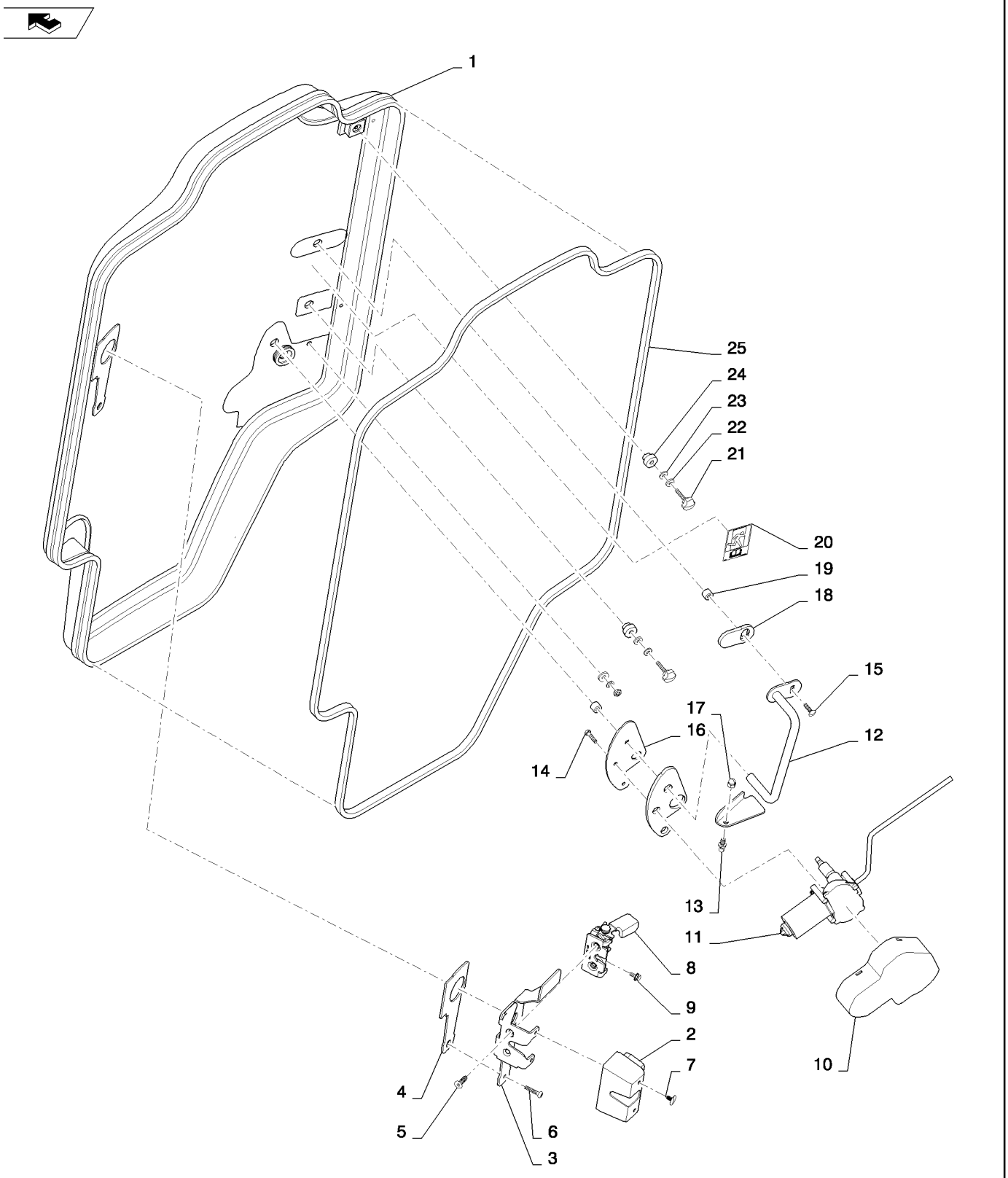

DOOR ASSY, FRONT (ALL CASE)
DOOR ASSY, FRONT (ALL CASE)
DOOR ASSY, FRONT (ALL CASE)
DOOR ASSY, FRONT (ALL CASE)

R	N	P.N.	MOD	Q	Denominação Description	Description Bezeichnung	Denominacion Beskrivelse	Descrizione Beschrijving	L.C.
1		84415734		1	PORTA, Assy, Door, Glass	DOOR	PUERTA	SPORTELLO	180P
					PORTE	TÜR	DØR	PORTIER	
2		84345556		1	COBERTURA, Latch	COVER	CUBIERTA	COPERCHIO	265C
					COUVERCLE	ABDECKUNG	DÆKSEL	AFSCHERMING	
3		84345554		1	SUPORTE, Latch	BRACKET	SOPORTE	STAFFA	225S
					SUPPORT	HALTERUNG	BESLAG	STEUN	
4		84293054		1	VEDAÇÃO, Door Latch	SEAL	ANILLO DE CIERRE	GUARNIZIONE; TENUTA	132A
					JOINT	DICHTUNG	PAKNING	AFDICHTING	
5		14442131		2	PARAFUSO, M8 X 25	SCREW	TORNILLO	VITE	040V
					VIS	SCHRAUBE	SKRUE	SCHROEF	
6		84129691		3	PARAFUSO, M6 X 30	SCREW	TORNILLO	VITE	040V
					VIS	SCHRAUBE	SKRUE	SCHROEF	
7		87712706		2	BOTÃO DE IMPULSO, Push-in Fastener				
						FASTENER	SUJETADOR	DISPOSITIVO DI FISSAG	123B
					ATTACHE	BEFESTIGUNGSELEMEN	LUKKER	BEVESTIGING	
8		84293079		1	TRINCO, Door	LATCH	PESTILLO	CHIUSURA A SCATTO	156C
					LOQUET	VERRIEGELUNG	PAL	GRENDEL	
9		86050272		1	PARAFUSO, Hex Flg, M6 x 12, 8.8				
						BOLT	PERNO	BULLONE	140B
					VIS	SCHRAUBE	BOLT	BOUT	
10		84300094		1	MOTOR DO LIMPADOR, Cover				
						WIPER MOTOR	MOTOR DE LIMPIAPARA	MOTORINO TERGICRIST	093T
					MOTEUR D'ESSUIE-GLA	WISCHERMOTOR	VISKERMOTOR	RUITENWISSERMOTOR	
11		84345627		1	MOTOR DO LIMPADOR, Motor				
						WIPER MOTOR	MOTOR DE LIMPIAPARA	MOTORINO TERGICRIST	093T
					MOTEUR D'ESSUIE-GLA	WISCHERMOTOR	VISKERMOTOR	RUITENWISSERMOTOR	
12		84347705		1	MAÇANETA DA PORTA, Black				
						DOOR HANDLE	EMPUÑADURA DE PUER	MANIGLIA DELLA PORTA	A051
					POIGNEE DE PORTE	TÜRGRIFF	DØRHÅNDTAG	HANDGREEP VAN PORT	
13		87581669		1	PRISIONEIRO, Ball	STUD	PRISIONERO	PRIGIONIERO	210P
					GOUJON	GEWINDEBOLZEN	STØTTEBOLT	TAPEIND	
14		86977786		2	PARAFUSO, Hex, M6 x 25, 8.8, Full Thd				
						BOLT	PERNO	BULLONE	140B
					VIS	SCHRAUBE	BOLT	BOUT	
15		374891		2	PARAFUSO, Short NK, M6 x 25, CI8.8, Full Thd				
						CARRIAGE BOLT	PERNO ALOMADO	BULLONE A TESTA TON	P123
					VIS A TETE BOMBEE	SCHLOSSSCHRAUBE	BRÆDDEBOLT	SLOTBOUT	
16		84293056		1	VEDAÇÃO, Wiper Motor	SEAL	ANILLO DE CIERRE	GUARNIZIONE; TENUTA	132A
					JOINT	DICHTUNG	PAKNING	AFDICHTING	
17		412326		2	PORCA, Dome Crown, M8	NUT	TUERCA	DADO	010D
					ECROU	MUTTER	MØTRIK	MOER	
18		84344562		1	VEDAÇÃO DE BORRACHA, Grab Handle				
						RUBBER SEAL	JUNTA DE GOMA	GUARNIZIONE DI GOMM	122G
					JOINT EN CAOUTCHOU	GUMMIDICHTUNG	GUMMITÆTNING	RUBBEREN AFDICHTINC	
19		84298763		2	ESPAÇADOR	SPACER	SEPARADOR	DISTANZIALE	075D
					ENTRETOISE	DISTANZSTÜCK	AFSTANDSSTYKKE	AFSTANDSSTUK	
20		84367244		1	ADESIVO, Emergency Exit	DECAL	CALCOMANÍA	DECALCOMANIA	012D
					AUTOCOLLANT	AUFKLEBER	TRANSFER	STICKER	

90.154.01	02	p2	06/11

DOOR ASSY, FRONT (ALL CASE)
DOOR ASSY, FRONT (ALL CASE)
DOOR ASSY, FRONT (ALL CASE)
DOOR ASSY, FRONT (ALL CASE)

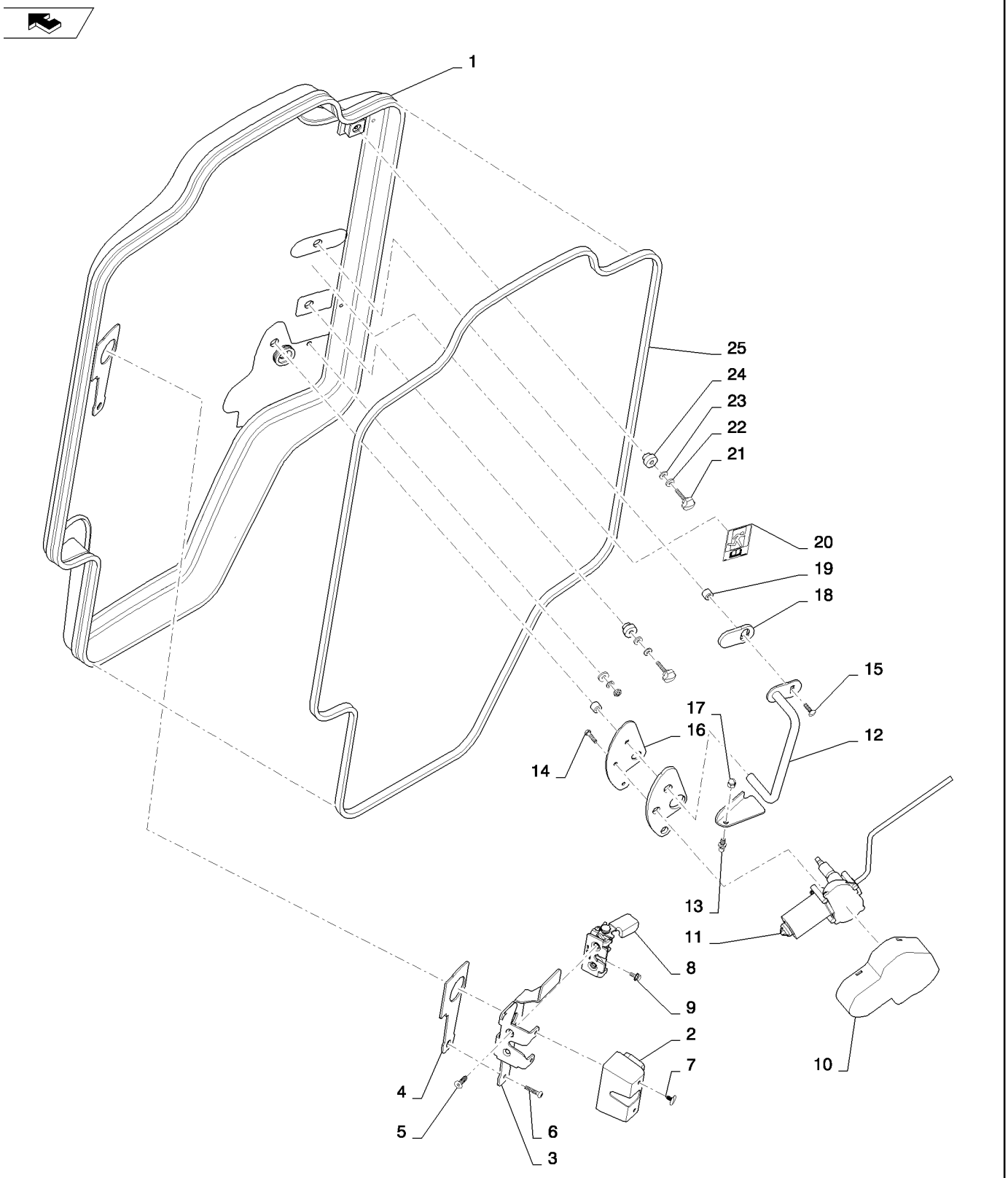

DOOR ASSY, FRONT (ALL CASE)
DOOR ASSY, FRONT (ALL CASE)
DOOR ASSY, FRONT (ALL CASE)
DOOR ASSY, FRONT (ALL CASE)

R	N	P.N.	MOD	Q	Denominação Description	Description Bezeichnung	Denominacion Beskrivelse	Descrizione Beschrijving	L.C.
21		44911647		2	MAÇANETA, M6	KNOB	MANDO	MANOPOLA	150P
					BOUTON	RUNDGRIFF	GREB	KNOP	
22		12647621		2	ARRUELA PLANA, M6 x 16 x 2				
						WASHER	ARANDELA	RONDELLA	131R
					RONDELLE	UNTERLEGSCHEIBE	FLADSKIVE	SLUITRING	
23		84385500		2	ARRUELA DE BORRACHA, 16 X 6.5 X 3				
						RUBBER WASHER	ARANDELA DE GOMA	RONDELLA IN GOMMA	Z363
					RONDELLE EN CAOUTC	GUMMIUNTERLEGSCHE	GUMMISKIVE	RUBBEREN SLUITRING	
24		84257223		2	ESPAÇADOR	SPACER	SEPARADOR	DISTANZIALE	075D
					ENTRETOISE	DISTANZSTÜCK	AFSTANDSSTYKKE	AFSTANDSSTUK	
25		84391276		1	VEDAÇÃO DE PORTA, Bulb				
						DOOR SEAL	JUNTA DE PUERTA	GUARNIZIONE SPORTEL	Z529
					JOINT DE PORTE	TÜRDICHTUNG	DØRTÆTNING	PORTIERAFDICHTING	
25		84344565		1	VIDRO, Door	GLASS	VIDRIO	CRISTALLO	038V
					VITRE	GLAS	GLAS	GLAS	

90.154.01	03	p1	04/11

NO FRONT DOOR (ALL CASE)
NO FRONT DOOR (ALL CASE)
NO FRONT DOOR (ALL CASE)
NO FRONT DOOR (ALL CASE)

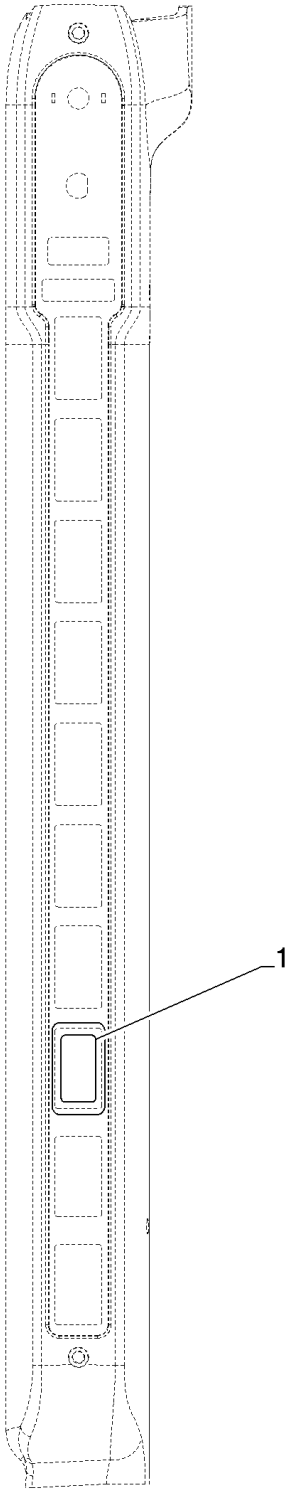

NO FRONT DOOR (ALL CASE)
NO FRONT DOOR (ALL CASE)
NO FRONT DOOR (ALL CASE)
NO FRONT DOOR (ALL CASE)

R	N	P.N.	MOD	Q	Denominação Description	Description Bezeichnung	Denominacion Beskrivelse	Descrizione Beschrijving	L.C.
1		126844A1		1	BUJÃO, Switch Hole Cover BOUCHON	PLUG STOPFEN	TAPÓN PROP	TAPPO PLUG	050T
2		84472461		1	COBERTURA, Rear Cover, NA, Gray, Not Shown COUVERTURE	COVER ABDECKUNG	COBERTURA COVER	COPERTURA COVER	271C

90.154.01	04	p1	06/11

DOOR ASSY, FRONT DEMO (ALL CASE)
DOOR ASSY, FRONT DEMO (ALL CASE)
DOOR ASSY, FRONT DEMO (ALL CASE)
DOOR ASSY, FRONT DEMO (ALL CASE)

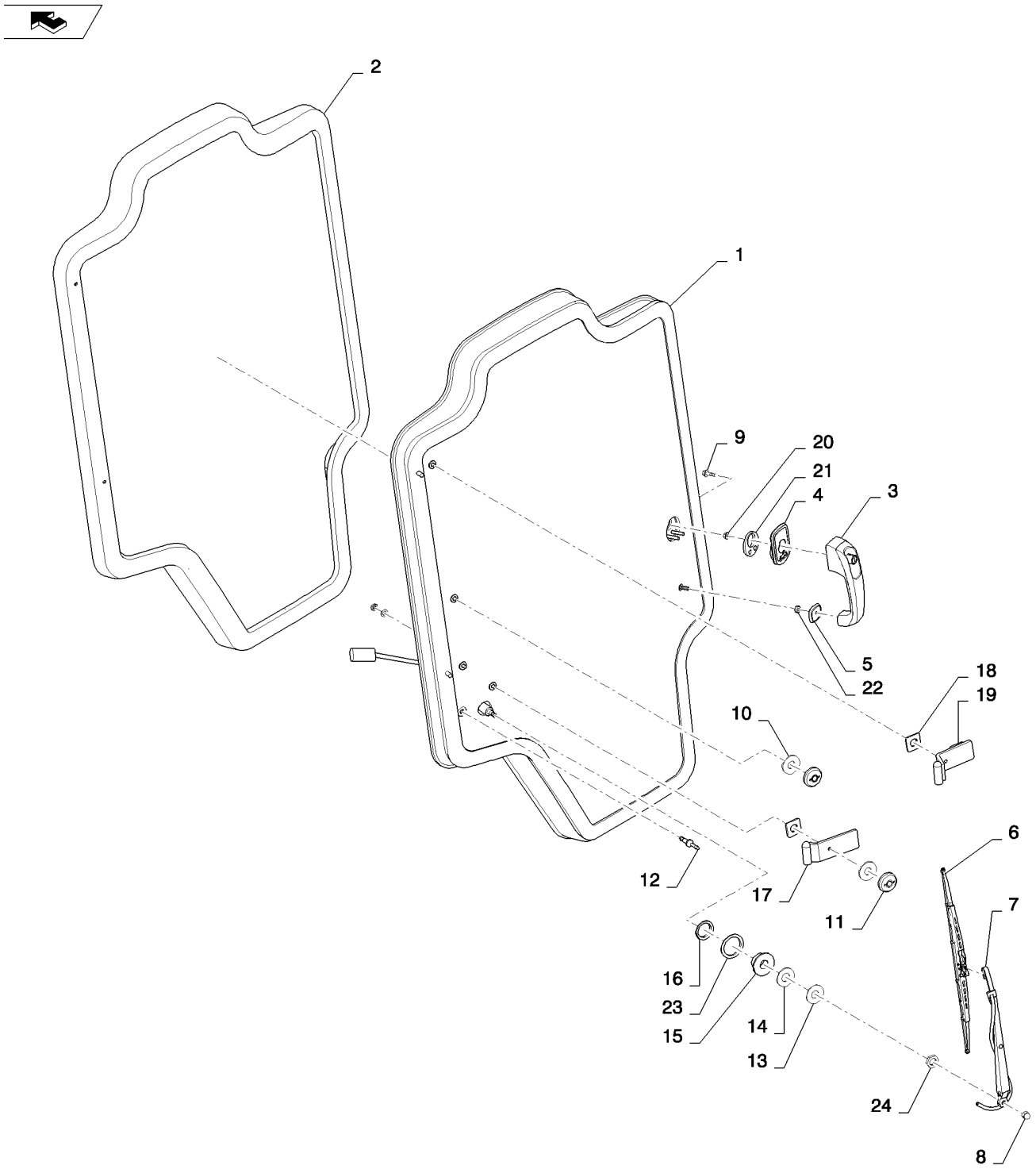

DOOR ASSY, FRONT DEMO (ALL CASE)
DOOR ASSY, FRONT DEMO (ALL CASE)
DOOR ASSY, FRONT DEMO (ALL CASE)
DOOR ASSY, FRONT DEMO (ALL CASE)

R	N	P.N.	MOD	Q	Denominação Description	Description Bezeichnung	Denominacion Beskrivelse	Descrizione Beschrijving	L.C.
1		84415734		1	PORTA, Assy, Door, Glass	DOOR	PUERTA	SPORTELLO	180P
					PORTE	TÜR	DØR	PORTIER	
2		84368761		1	VEDAÇÃO, Dust	SEAL	ANILLO DE CIERRE	GUARNIZIONE; TENUTA	132A
					JOINT	DICHTUNG	PAKNING	AFDICHTING	
3		84396681		1	MAÇANETA DA PORTA	DOOR HANDLE	EMPUÑADURA DE PUER	MANIGLIA DELLA PORTA	A051
					POIGNEE DE PORTE	TÜRGRIFF	DØRHÅNDTAG	HANDGREEP VAN PORT	
4		84293060		1	VEDAÇÃO, Handle Upper	SEAL	ANILLO DE CIERRE	GUARNIZIONE; TENUTA	132A
					JOINT	DICHTUNG	PAKNING	AFDICHTING	
5		84293058		1	VEDAÇÃO, Handle Lower	SEAL	ANILLO DE CIERRE	GUARNIZIONE; TENUTA	132A
					JOINT	DICHTUNG	PAKNING	AFDICHTING	
6		84347625		1	PALHETA LIMPADOR	WIPER BLADE	RASQUETA LIMPIAPARA	SPAZZOLA TERGICRIST.	175S
					LAME D'ESSUIE-GLACE	WISCHERBLATT	VISKERBLAD	RUITENWISSERBLAD	
7		84347514		1	BRAÇO LIMPADOR	WIPER ARM	BRAZO LIMPIAPARABRIS	BRACCIO TERGICRISTA	134B
					BRAS D'ESSUIE-GLACE	WISCHERARM	VISKERARM	ARM VAN RUITENWISSE	
8		412326		1	PORCA, Dome Crown M8	NUT	TUERCA	DADO	010D
					ECROU	MUTTER	MØTRIK	MOER	
9		86050272		1	PARAFUSO, Hex Flg, M6 x 12, 8.8				
						BOLT	PERNO	BULLONE	140B
					VIS	SCHRAUBE	BOLT	BOUT	
10		84415813		2	VEDAÇÃO, Washer, Seal	SEAL	ANILLO DE CIERRE	GUARNIZIONE; TENUTA	132A
					JOINT	DICHTUNG	PAKNING	AFDICHTING	
11		86531235		2	BUCHA	BUSHING	CASQUILLO	BOCCOLA	095B
					BAGUE	BUCHSE	BØSNING	BUS	
12		84369351		1	COTOVELO 90, Assembly	90 ELBOW	CODO 90	GOMITO A 90°	A045
					COUDE A 90°	90-GRAD-KNIESTÜCK	VINKELRØR, 90	KNIESTUK 90º	
13		84346315		1	ARRUELA PLANA, Plastic	WASHER	ARANDELA	RONDELLA	131R
					RONDELLE	UNTERLEGSCHEIBE	FLADSKIVE	SLUITRING	
14		84346316		1	VEDAÇÃO DE BORRACHA, Wiper Motor				
						RUBBER SEAL	JUNTA DE GOMA	GUARNIZIONE DI GOMM	122G
					JOINT EN CAOUTCHOU(	GUMMIDICHTUNG	GUMMITÆTNING	RUBBEREN AFDICHTINC	
15		84359052		1	ESPAÇADOR, Wiper Motor	SPACER	SEPARADOR	DISTANZIALE	075D
					ENTRETOISE	DISTANZSTÜCK	AFSTANDSSTYKKE	AFSTANDSSTUK	
16		84485661		1	VEDAÇÃO, Wiper Motor Foam				
						SEAL	ANILLO DE CIERRE	GUARNIZIONE; TENUTA	132A
					JOINT	DICHTUNG	PAKNING	AFDICHTING	
17		84298540		1	SEMI-DOBRADIÇA, Door Bottom				
						HALF-HINGE	SEMIBISAGRA	SEMICERNIERA	413S
					DEMI-CHARNIERE	SCHARNIERHÄLFTE	HÆNGSELHALVDEL	SCHARNIERHELFT	
18		84257222		2	VEDAÇÃO DE BORRACHA, Half Hinge				
						RUBBER SEAL	JUNTA DE GOMA	GUARNIZIONE DI GOMM	122G
					JOINT EN CAOUTCHOU(	GUMMIDICHTUNG	GUMMITÆTNING	RUBBEREN AFDICHTINC	
19		84298543		1	SEMI-DOBRADIÇA, Door Top				
						HALF-HINGE	SEMIBISAGRA	SEMICERNIERA	413S
					DEMI-CHARNIERE	SCHARNIERHÄLFTE	HÆNGSELHALVDEL	SCHARNIERHELFT	
20		9804276		1	PORCA, M6 x 1, Flg, Cl 8	NUT	TUERCA	DADO	010D
					ECROU	MUTTER	MØTRIK	MOER	
21		{84485291}		1	Upper Handle				

SR200

90.154.01	04	p2	06/11

DOOR ASSY, FRONT DEMO (ALL CASE)
DOOR ASSY, FRONT DEMO (ALL CASE)
DOOR ASSY, FRONT DEMO (ALL CASE)
DOOR ASSY, FRONT DEMO (ALL CASE)

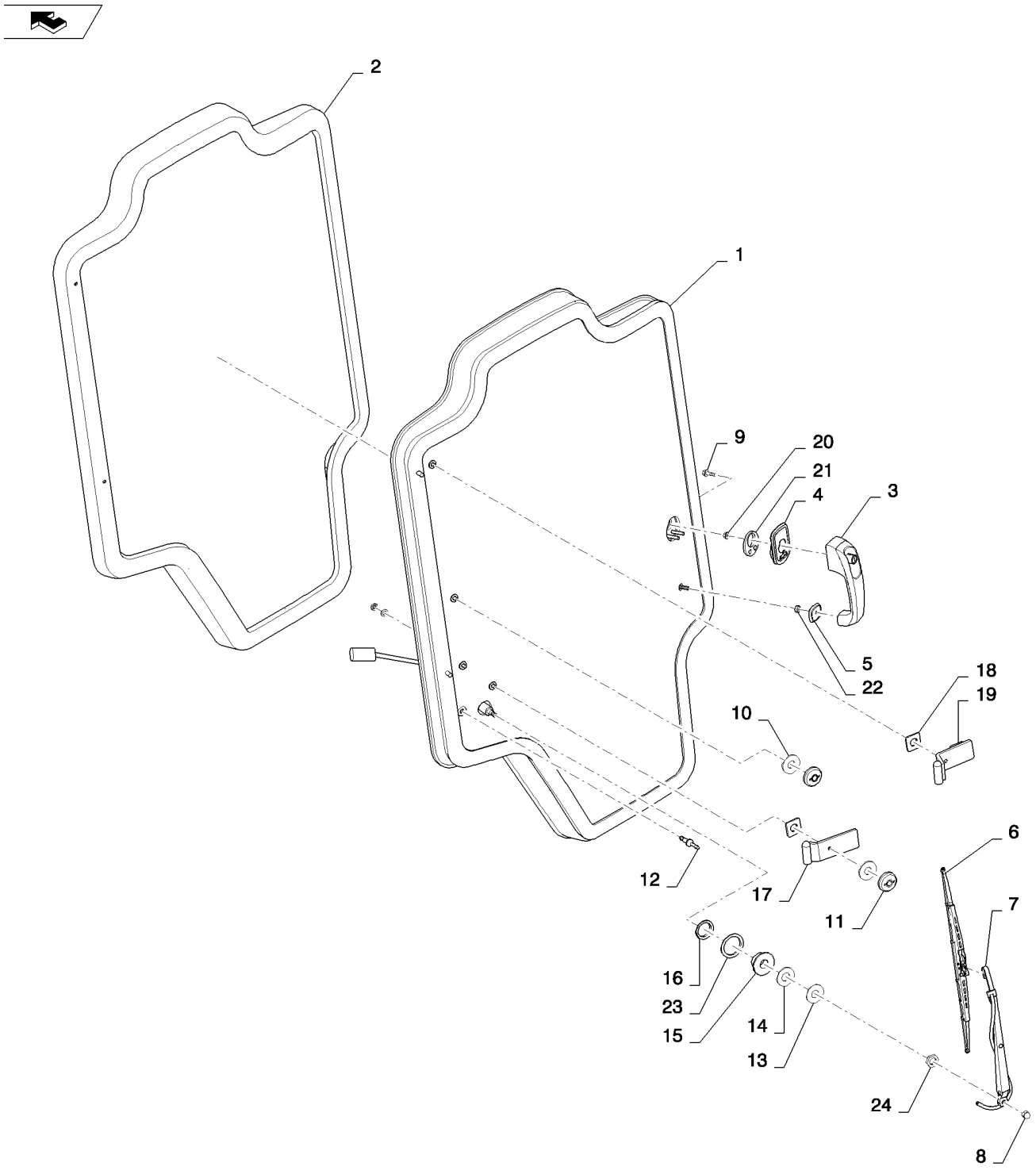

DOOR ASSY, FRONT DEMO (ALL CASE)
DOOR ASSY, FRONT DEMO (ALL CASE)
DOOR ASSY, FRONT DEMO (ALL CASE)
DOOR ASSY, FRONT DEMO (ALL CASE)

R	N	P.N.	MOD	Q	Denominação Description	Description Bezeichnung	Denominacion Beskrivelse	Descrizione Beschrijving	L.C.
22		**{84485292}**		1	Lower Handle				
23		**{84485295}**		1	Wiper Motor Foam				
24		**87607505**		1	PORCA, Wiper Arm ECROU	NUT MUTTER	TUERCA MØTRIK	DADO MOER	010D

90.154.01	05	p1	06/11

DOOR ASSY, FRONT DEMO (ALL CASE)
DOOR ASSY, FRONT DEMO (ALL CASE)
DOOR ASSY, FRONT DEMO (ALL CASE)
DOOR ASSY, FRONT DEMO (ALL CASE)

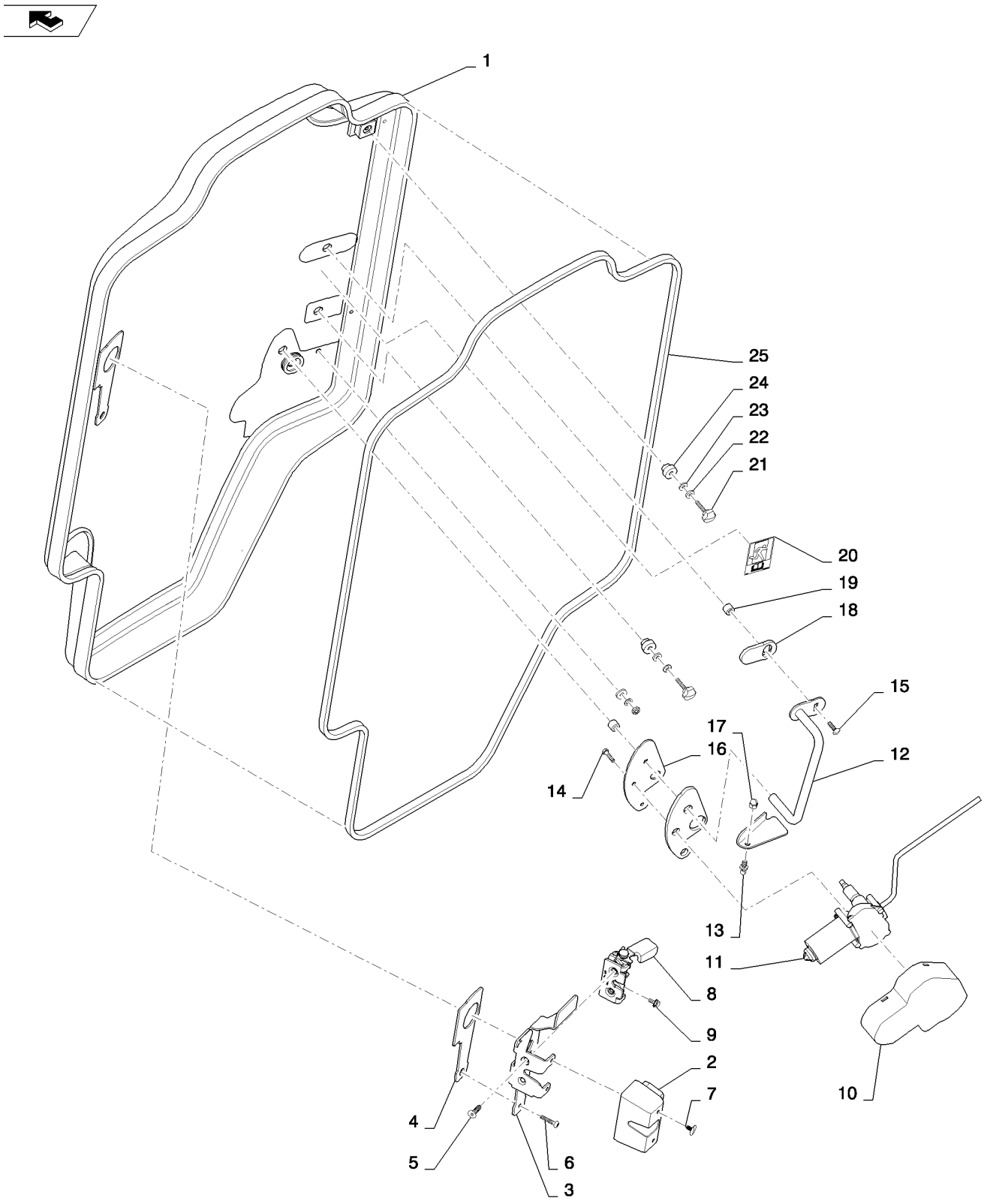

DOOR ASSY, FRONT DEMO (ALL CASE)
DOOR ASSY, FRONT DEMO (ALL CASE)
DOOR ASSY, FRONT DEMO (ALL CASE)
DOOR ASSY, FRONT DEMO (ALL CASE)

R	N	P.N.	MOD	Q	Denominação Description	Description Bezeichnung	Denominacion Beskrivelse	Descrizione Beschrijving	L.C.
1		84415734		1	PORTA, Assy, Door, Glass	DOOR	PUERTA	SPORTELLO	180P
					PORTE	TÜR	DØR	PORTIER	
2		84345556		1	COBERTURA, Latch	COVER	CUBIERTA	COPERCHIO	265C
					COUVERCLE	ABDECKUNG	DÆKSEL	AFSCHERMING	
3		84345554		1	SUPORTE, Door Latch	BRACKET	SOPORTE	STAFFA	225S
					SUPPORT	HALTERUNG	BESLAG	STEUN	
4		84293054		1	VEDAÇÃO, Door Latch	SEAL	ANILLO DE CIERRE	GUARNIZIONE; TENUTA	132A
					JOINT	DICHTUNG	PAKNING	AFDICHTING	
5		14442131		2	PARAFUSO, Hex Soc FLH	M8x25			
						SCREW	TORNILLO	VITE	040V
					VIS	SCHRAUBE	SKRUE	SCHROEF	
6		84129691		3	PARAFUSO, Pan Hd Torx	M6x30			
						SCREW	TORNILLO	VITE	040V
					VIS	SCHRAUBE	SKRUE	SCHROEF	
7		87712706		2	BOTÃO DE IMPULSO, Push-in				
						FASTENER	SUJETADOR	DISPOSITIVO DI FISSAG	123B
					ATTACHE	BEFESTIGUNGSELEMEN	LUKKER	BEVESTIGING	
8		84293079		1	TRINCO, Door	LATCH	PESTILLO	CHIUSURA A SCATTO	156C
					LOQUET	VERRIEGELUNG	PAL	GRENDEL	
9		87607505		1	PORCA, Wiper	NUT	TUERCA	DADO	010D
					ECROU	MUTTER	MØTRIK	MOER	
10		84300094		1	MOTOR DO LIMPADOR, Cover				
						WIPER MOTOR	MOTOR DE LIMPIAPARA	MOTORINO TERGICRIST	093T
					MOTEUR D'ESSUIE-GLA	WISCHERMOTOR	VISKERMOTOR	RUITENWISSERMOTOR	
11		84345627		1	MOTOR DO LIMPADOR	WIPER MOTOR	MOTOR DE LIMPIAPARA	MOTORINO TERGICRIST	093T
					MOTEUR D'ESSUIE-GLA	WISCHERMOTOR	VISKERMOTOR	RUITENWISSERMOTOR	
12		84347705		1	MAÇANETA DA PORTA	DOOR HANDLE	EMPUÑADURA DE PUEF	MANIGLIA DELLA PORTA	A051
					POIGNEE DE PORTE	TÜRGRIFF	DØRHÅNDTAG	HANDGREEP VAN PORT	
13		87581669		1	PRISIONEIRO, Ball	STUD	PRISIONERO	PRIGIONIERO	210P
					GOUJON	GEWINDEBOLZEN	STØTTEBOLT	TAPEIND	
14		86977786		2	PARAFUSO, Hex, M6 x 25, 8.8, Full Thd				
						BOLT	PERNO	BULLONE	140B
					VIS	SCHRAUBE	BOLT	BOUT	
15		374891		2	PARAFUSO, Short NK, M6 x 25, CI8.8, Full Thd				
						CARRIAGE BOLT	PERNO ALOMADO	BULLONE A TESTA TON	P123
					VIS A TETE BOMBEE	SCHLOSSSCHRAUBE	BRÆDDEBOLT	SLOTBOUT	
16		84293056		1	VEDAÇÃO, Wiper Motor	SEAL	ANILLO DE CIERRE	GUARNIZIONE; TENUTA	132A
					JOINT	DICHTUNG	PAKNING	AFDICHTING	
17		412326		1	PORCA, Dome Crown M8	NUT	TUERCA	DADO	010D
					ECROU	MUTTER	MØTRIK	MOER	
18		84344562		1	VEDAÇÃO DE BORRACHA, Grab Handle				
						RUBBER SEAL	JUNTA DE GOMA	GUARNIZIONE DI GOMM	122G
					JOINT EN CAOUTCHOU	GUMMIDICHTUNG	GUMMITÆTNING	RUBBEREN AFDICHTING	
19		84298763		2	ESPAÇADOR	SPACER	SEPARADOR	DISTANZIALE	075D
					ENTRETOISE	DISTANZSTÜCK	AFSTANDSSTYKKE	AFSTANDSSTUK	
20		84367244		1	ADESIVO, Emergency Exit	DECAL	CALCOMANÍA	DECALCOMANIA	012D
					AUTOCOLLANT	AUFKLEBER	TRANSFER	STICKER	

SR200

90.154.01	05	p2	06/11

DOOR ASSY, FRONT DEMO (ALL CASE)
DOOR ASSY, FRONT DEMO (ALL CASE)
DOOR ASSY, FRONT DEMO (ALL CASE)
DOOR ASSY, FRONT DEMO (ALL CASE)

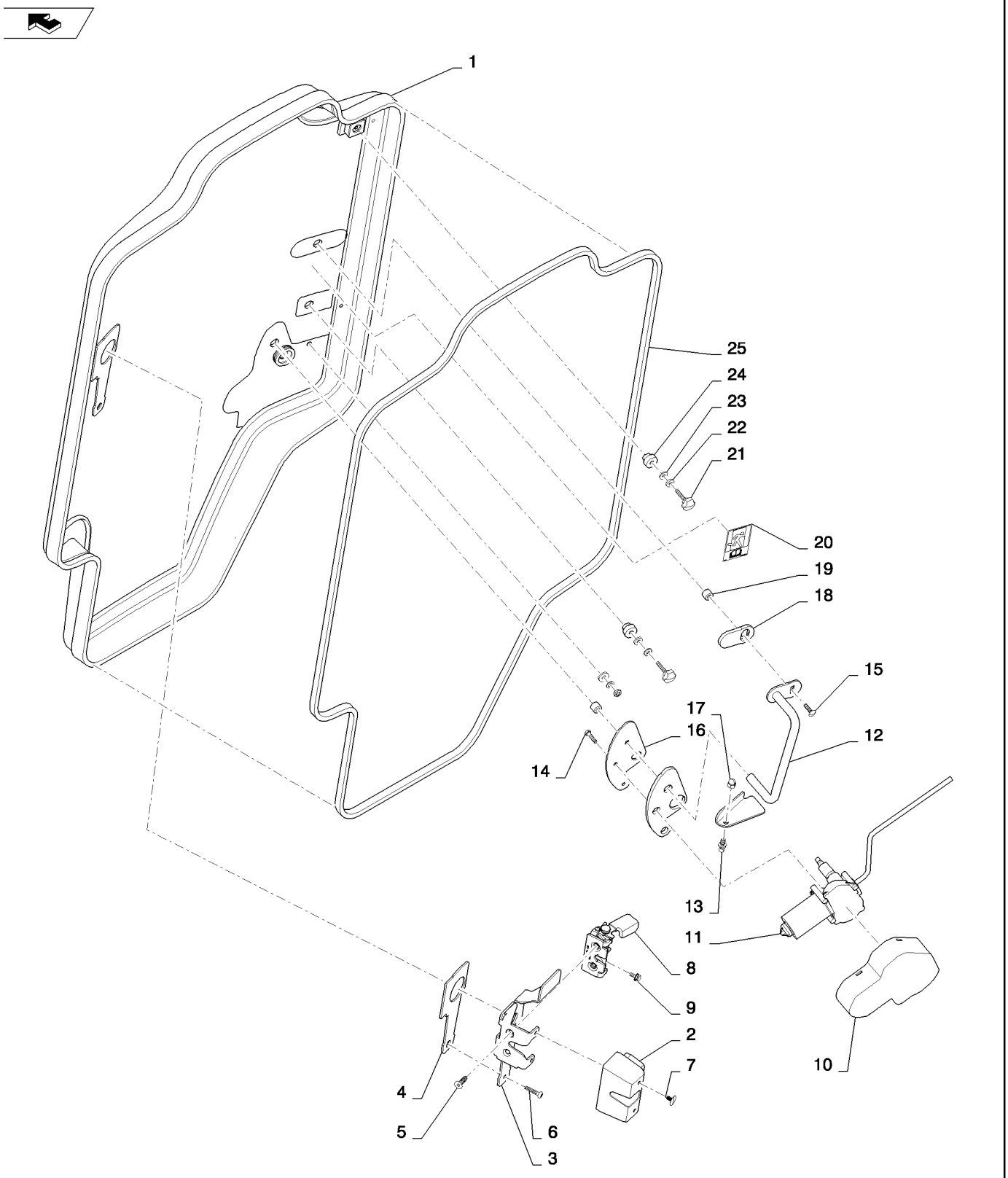

DOOR ASSY, FRONT DEMO (ALL CASE)
DOOR ASSY, FRONT DEMO (ALL CASE)
DOOR ASSY, FRONT DEMO (ALL CASE)
DOOR ASSY, FRONT DEMO (ALL CASE)

R	N	P.N.	MOD	Q	Denominação Description	Description Bezeichnung	Denominacion Beskrivelse	Descrizione Beschrijving	L.C.
21		44911647		2	MAÇANETA, M6 Thumb Screw				
						KNOB	MANDO	MANOPOLA	150P
					BOUTON	RUNDGRIFF	GREB	KNOP	
22		12647621		2	ARRUELA PLANA, M6 x 16 x 2				
						WASHER	ARANDELA	RONDELLA	131R
					RONDELLE	UNTERLEGSCHEIBE	FLADSKIVE	SLUITRING	
23		84385500		2	ARRUELA DE BORRACHA, 16x6.5x3				
						RUBBER WASHER	ARANDELA DE GOMA	RONDELLA IN GOMMA	Z363
					RONDELLE EN CAOUTC	GUMMIUNTERLEGSCHE	GUMMISKIVE	RUBBEREN SLUITRING	
24		84257223		2	ESPAÇADOR	SPACER	SEPARADOR	DISTANZIALE	075D
					ENTRETOISE	DISTANZSTÜCK	AFSTANDSSTYKKE	AFSTANDSSTUK	
25		84391276		1	VEDAÇÃO DE PORTA, Bulb				
						DOOR SEAL	JUNTA DE PUERTA	GUARNIZIONE SPORTEL	Z529
					JOINT DE PORTE	TÜRDICHTUNG	DØRTÆTNING	PORTIERAFDICHTING	
25		84344565		1	VIDRO, Demo Door	GLASS	VIDRIO	CRISTALLO	038V
					VITRE	GLAS	GLAS	GLAS	

90.154.01	06	p1	08/11

FRONT DEMO, DOOR (ALL CASE)
FRONT DEMO, DOOR (ALL CASE)
FRONT DEMO, DOOR (ALL CASE)
FRONT DEMO, DOOR (ALL CASE)

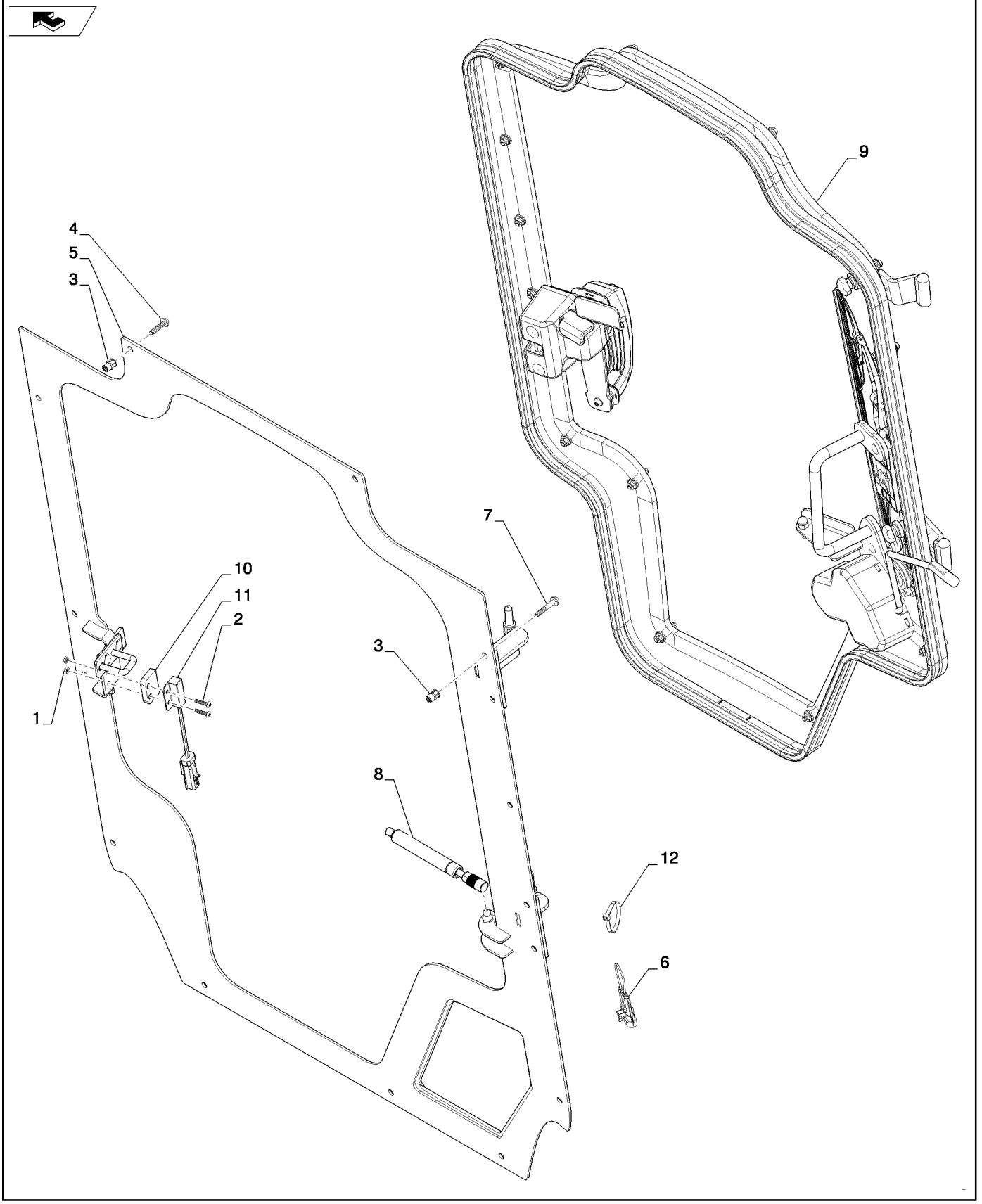

FRONT DEMO, DOOR (ALL CASE)
FRONT DEMO, DOOR (ALL CASE)
FRONT DEMO, DOOR (ALL CASE)
FRONT DEMO, DOOR (ALL CASE)

R	N	P.N.	MOD	Q	Denominação Description	Description Bezeichnung	Denominacion Beskrivelse	Descrizione Beschrijving	L.C.
1		100012		2	PORCA, M4, Cl 8	NUT	TUERCA	DADO	010D
					ECROU	MUTTER	MØTRIK	MOER	
2		84183818		2	PARAFUSO, Pan Head, M4 X 20				
						SCREW	TORNILLO	VITE	040V
					VIS	SCHRAUBE	SKRUE	SCHROEF	
3		84272827		15	REBITE, M6 X 1	RIVET	REMACHE	RIVETTO	055R
					RIVET	NIET	NITTE	KLINKNAGEL	
4		84305556		11	PARAFUSO, M6 X 25	SCREW	TORNILLO	VITE	040V
					VIS	SCHRAUBE	SKRUE	SCHROEF	
5		84323416		1	PORTA, Assembly, Jamb	DOOR	PUERTA	SPORTELLO	180P
					PORTE	TÜR	DØR	PORTIER	
6		84331404		1	CONECTOR DO FIO, Jumper				
						WIRE CONNECTOR	CONECTOR DE CABLE	CONNETTORE DEL FILO	250C
					CONNECTEUR DU FIL	KABELSTECKVERBINDE	SAMLEMUFFE	DRAADCONNECTOR	
7		84359102		4	PARAFUSO, M6 X 35	SCREW	TORNILLO	VITE	040V
					VIS	SCHRAUBE	SKRUE	SCHROEF	
8		84378453		1	COMPASSO, Spring	GAS STRUT	COLUMNA DE GAS	AMMORTIZZATORE A G/	Z331
					BEQUILLE A GAZ	GASDRUCKFEDER	CYLINDER, GASSTØDD/	GASVEER	
9		84416291		1	PORTA, Assembly, Front Demo				
						DOOR	PUERTA	SPORTELLO	180P
					PORTE	TÜR	DØR	PORTIER	
10		86624468		1	ESPAÇADOR, Switch	SPACER	SEPARADOR	DISTANZIALE	075D
					ENTRETOISE	DISTANZSTÜCK	AFSTANDSSTYKKE	AFSTANDSSTUK	
11		87392235		1	INTERRUPTOR INTERMITENTE, Reed, Normally Open				
						SWITCH ASSY	CONJUNTO DE INTERRU	COMPLESSIVO INTERRU	067I
					ENSEMBLE COMMUTATI	SCHALTERBAUGRUPPE	KONTAKT, KPL.	SCHAKELAAREENHEID	
12		L11541		1	PRENDEDOR DE CABOS, 7-8 Inch, Nylon				
						CABLE STRAP	BANDA DE CABLE	FASCETTA PER CAVO	P716
					BRIDE DE CABLE	KABELBINDER	KABELSTROP	BUNDELBAND	

90.154.02		p1	02/11

SIDE WINDOW ASSY (ALL CASE)
SIDE WINDOW ASSY (ALL CASE)
SIDE WINDOW ASSY (ALL CASE)
SIDE WINDOW ASSY (ALL CASE)

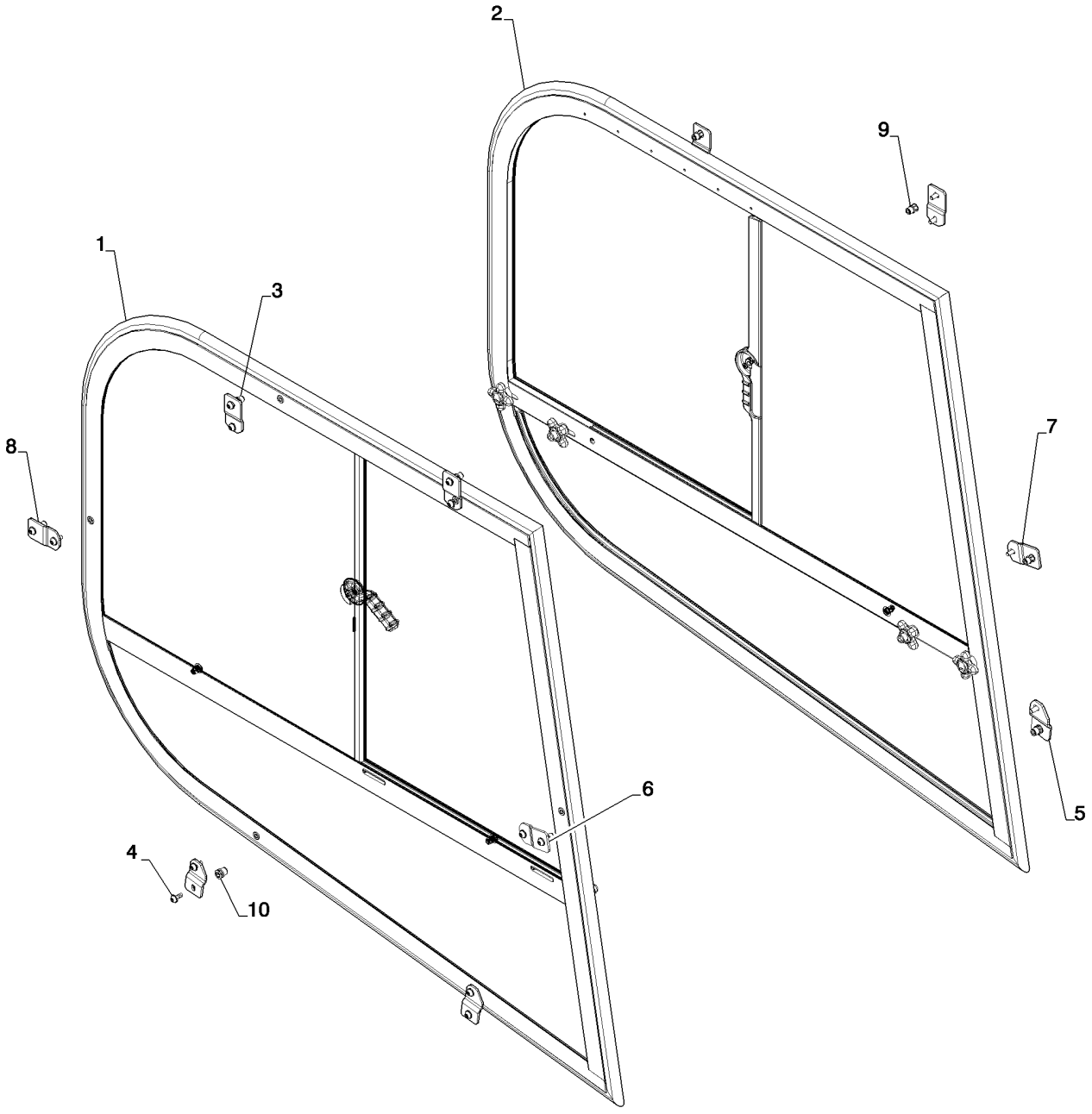

SIDE WINDOW ASSY (ALL CASE)
SIDE WINDOW ASSY (ALL CASE)
SIDE WINDOW ASSY (ALL CASE)
SIDE WINDOW ASSY (ALL CASE)

R	N	P.N.	MOD	Q	Denominação Description	Description Bezeichnung	Denominacion Beskrivelse	Descrizione Beschrijving	L.C.
1		84415735		1	JANELA, Assy, RH Side FENETRE	WINDOW FENSTER	VENTANILLA VINDUE	FINESTRINO RUIT	9810
2		84415736		1	JANELA, Assy, LH Side FENETRE	WINDOW FENSTER	VENTANILLA VINDUE	FINESTRINO RUIT	9810
3		84309360		6	SUPORTE, Window SUPPORT	BRACKET HALTERUNG	SOPORTE BESLAG	STAFFA STEUN	225S
4		84309339		2	SUPORTE, Window, RH SUPPORT	BRACKET HALTERUNG	SOPORTE BESLAG	STAFFA STEUN	225S
5		84309344		2	SUPORTE, Window, LH SUPPORT	BRACKET HALTERUNG	SOPORTE BESLAG	STAFFA STEUN	225S
6		84309356		1	SUPORTE, Window, RH SUPPORT	BRACKET HALTERUNG	SOPORTE BESLAG	STAFFA STEUN	225S
7		84309359		1	SUPORTE, Window, LH SUPPORT	BRACKET HALTERUNG	SOPORTE BESLAG	STAFFA STEUN	225S
8		87682398		24	PARAFUSO VIS	SCREW SCHRAUBE	TORNILLO SKRUE	VITE SCHROEF	040V
9		84272827		8	REBITE, Nut RIVET	RIVET NIET	REMACHE NITTE	RIVETTO KLINKNAGEL	055R
10		84272827		4	REBITE, Nut RIVET	RIVET NIET	REMACHE NITTE	RIVETTO KLINKNAGEL	055R
11		84425058		2	ESPUMA ISOLANTE, Window (Not Shown) MOUSSE ISOLANTE	FOAM INSULATION SCHAUMSTOFFISOLIER	ESPUMA AISLANTE SKUM ISOLERING	ISOLANTE IN SCHIUMA SCHUIMISOLATIE	051S

90.154.03	02	p1	05/11

DOOR ASSY, REAR (ALL CASE)
DOOR ASSY, REAR (ALL CASE)
DOOR ASSY, REAR (ALL CASE)
DOOR ASSY, REAR (ALL CASE)

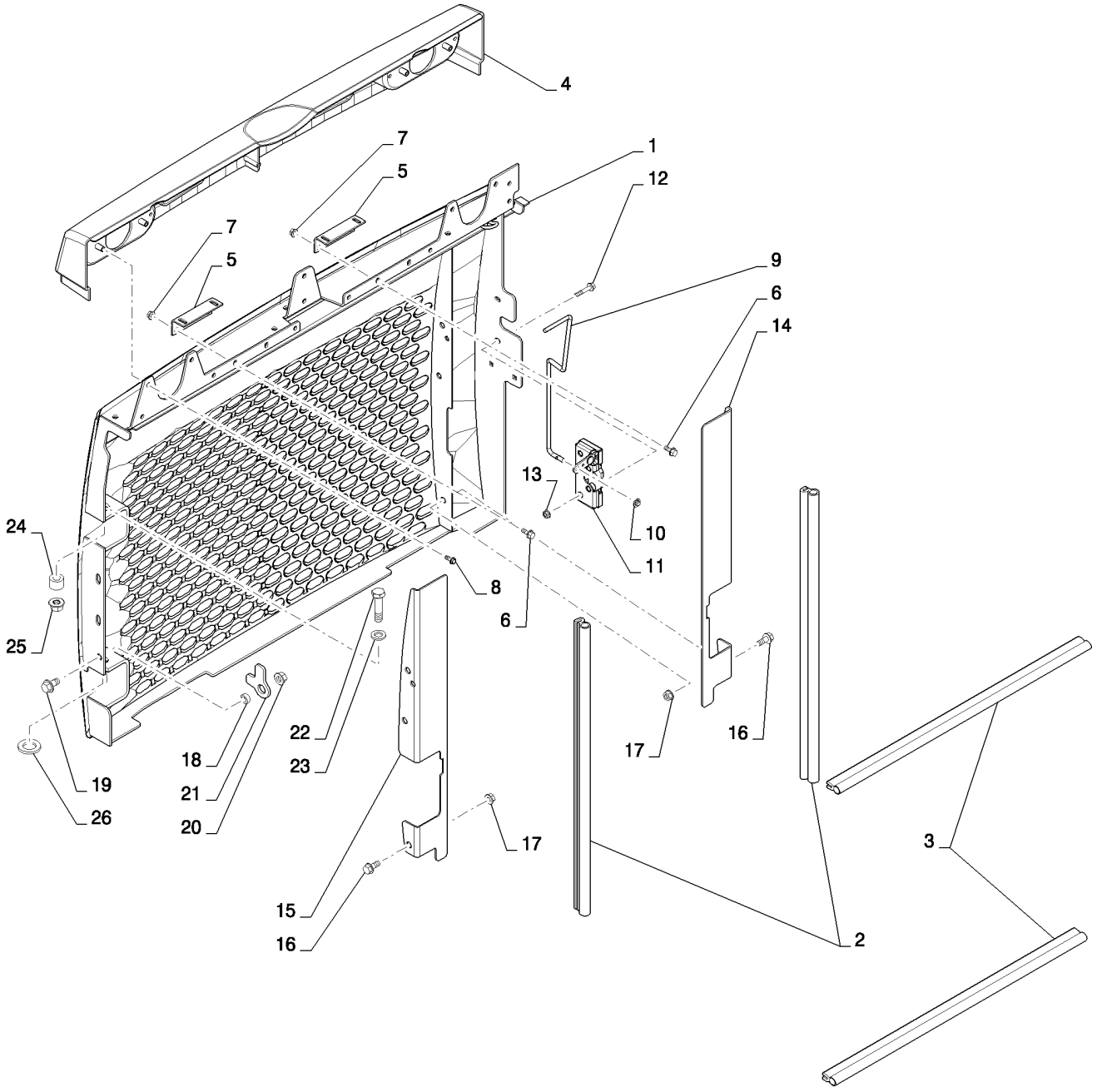

DOOR ASSY, REAR (ALL CASE)
DOOR ASSY, REAR (ALL CASE)
DOOR ASSY, REAR (ALL CASE)
DOOR ASSY, REAR (ALL CASE)

R	N	P.N.	MOD	Q	Denominação Description	Description Bezeichnung	Denominacion Beskrivelse	Descrizione Beschrijving	L.C.
1		84375772		1	PORTA, Case, Rear, Power Tan				
						DOOR	PUERTA	SPORTELLO	180P
					PORTE	TÜR	DØR	PORTIER	
2		84201450		2	VEDAÇÃO DE PORTA, Bulb, 575mm				
						DOOR SEAL	JUNTA DE PUERTA	GUARNIZIONE SPORTEL	Z529
					JOINT DE PORTE	TÜRDICHTUNG	DØRTÆTNING	PORTIERAFDICHTING	
3		84201449		2	VEDAÇÃO DE PORTA, Bulb, 580mm				
						DOOR SEAL	JUNTA DE PUERTA	GUARNIZIONE SPORTEL	Z529
					JOINT DE PORTE	TÜRDICHTUNG	DØRTÆTNING	PORTIERAFDICHTING	
4		84200915		1	ANEL, Rear Door, Upper	CAPPING	MARCO	CORNICE	295C
					MONTURE	RAHMEN	CAPPING	CAPPING	
5		84355007		2	CANTONEIRA, Light Mounting, Gray				
						ANGLE	ÁNGULO	ANGOLARE	057C
					CORNIERE	WINKEL	VINKELBESLAG	HOEKSTUK	
6		9804255		4	PARAFUSO, Hex Flg, M6 x 16, 8.8				
						BOLT	PERNO	BULLONE	140B
					VIS	SCHRAUBE	BOLT	BOUT	
7		9804276		4	PORCA, M6 x 1, Flg, Cl 8	NUT	TUERCA	DADO	010D
					ECROU	MUTTER	MØTRIK	MOER	
8		84163981		6	PARAFUSO, M6 X 15	SCREW	TORNILLO	VITE	040V
					VIS	SCHRAUBE	SKRUE	SCHROEF	
9		84350972		1	HASTE, Latch Pull	ROD	VARILLA	ASTA	090A
					TIGE	STANGE	STANG	STANG	
10		380751A1		1	PORCA, Push Cap	NUT	TUERCA	DADO	5780
					ECROU	MUTTER	NUT	NUT	
11		87437076		1	TRINCO	LATCH	PESTILLO	CHIUSURA A SCATTO	156C
					LOQUET	VERRIEGELUNG	PAL	GRENDEL	
12		87015931		2	PARAFUSO, Hex Flg, M6 x 35, 8.8				
						BOLT	PERNO	BULLONE	140B
					VIS	SCHRAUBE	BOLT	BOUT	
13		86619800		2	CONTRA PORCA, M6 x 1, Flg, Cl 8				
						LOCK NUT	TUERCA DE BLOQUEO	DADO DI BLOCCAGGIO	P263
					CONTRE-ECROU	SICHERUNGSMUTTER	LÅSEMØTRIK	BORGMOER	
14		84338540		1	CANTONEIRA, Door Seal, LH, Gray				
						ANGLE	ÁNGULO	ANGOLARE	057C
					CORNIERE	WINKEL	VINKELBESLAG	HOEKSTUK	
15		84338537		1	CANTONEIRA, Door Seal, RH, Gray				
						ANGLE	ÁNGULO	ANGOLARE	057C
					CORNIERE	WINKEL	VINKELBESLAG	HOEKSTUK	
16		9804258		6	PARAFUSO, Hex Flg, M8 x 20, 8.8				
						BOLT	PERNO	BULLONE	140B
					VIS	SCHRAUBE	BOLT	BOUT	
17		9804277		6	PORCA, M8 x 1.25, Flg, Cl 8				
						NUT	TUERCA	DADO	010D
					ECROU	MUTTER	MØTRIK	MOER	
18		87352559		1	ESPAÇADOR, Door Lock	SPACER	SEPARADOR	DISTANZIALE	075D
					ENTRETOISE	DISTANZSTÜCK	AFSTANDSSTYKKE	AFSTANDSSTUK	

90.154.03	02	p2	05/11

DOOR ASSY, REAR (ALL CASE)
DOOR ASSY, REAR (ALL CASE)
DOOR ASSY, REAR (ALL CASE)
DOOR ASSY, REAR (ALL CASE)

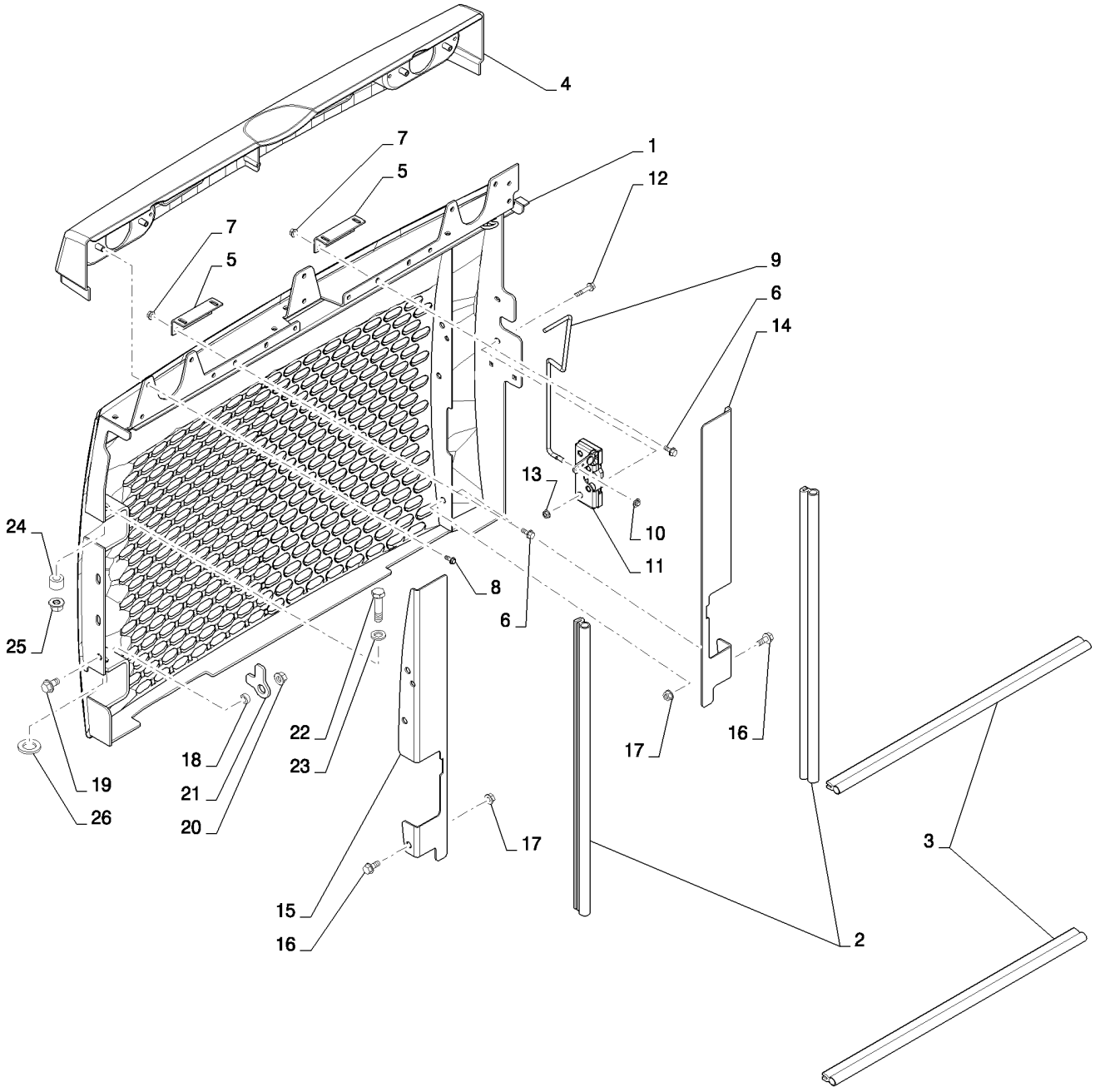

DOOR ASSY, REAR (ALL CASE)
DOOR ASSY, REAR (ALL CASE)
DOOR ASSY, REAR (ALL CASE)
DOOR ASSY, REAR (ALL CASE)

R	N	P.N.	MOD	Q	Denominação Description	Description Bezeichnung	Denominacion Beskrivelse	Descrizione Beschrijving	L.C.
19		86050286		1	PARAFUSO FLANGEADO, Hex, M10 x 20, 8.8, Full Thd				
						FLANGE BOLT	PERNO DE CORONA	BULLONE FLANGIATO	A027
					VIS A EMBASE	FLANSCHSCHRAUBE	FLANGEBOLT	FLENSBOUT	
20		9804278		1	PORCA, M10 x 1.5, Flg, Cl 8				
						NUT	TUERCA	DADO	010D
					ECROU	MUTTER	MØTRIK	MOER	
21		84306554		1	PLACA DE TRAVAMENTO, Door Lock, Arm				
						LOCKING PLATE	PLACA DE BLOQUEO	PIASTRA DI BLOCCAGGI	113P
					PLAQUE DE SURETE	SICHERUNGSPLATTE	LÅSEPLADE	BORGPLAAT	
22		337476		1	PARAFUSO, Hex, M12 x 50, 10.9				
						BOLT	PERNO	BULLONE	140B
					VIS	SCHRAUBE	BOLT	BOUT	
23		86625255		1	ARRUELA PLANA, M13.5 x 24.5 x 3, HT				
						WASHER	ARANDELA	RONDELLA	131R
					RONDELLE	UNTERLEGSCHEIBE	FLADSKIVE	SLUITRING	
24		84306545		1	BUCHA, Bushing, Door Hinge				
						BUSHING	CASQUILLO	BOCCOLA	095B
					BAGUE	BUCHSE	BØSNING	BUS	
25		87681209		1	PORCA	NUT	TUERCA	DADO	010D
					ECROU	MUTTER	MØTRIK	MOER	
26		86625260		1	ARRUELA PLANA, M20 x 37.5 x 4, HT				
						WASHER	ARANDELA	RONDELLA	131R
					RONDELLE	UNTERLEGSCHEIBE	FLADSKIVE	SLUITRING	

90.154.04		p1	05/11

REAR WINDOW NA (ALL CASE)
REAR WINDOW NA (ALL CASE)
REAR WINDOW NA (ALL CASE)
REAR WINDOW NA (ALL CASE)

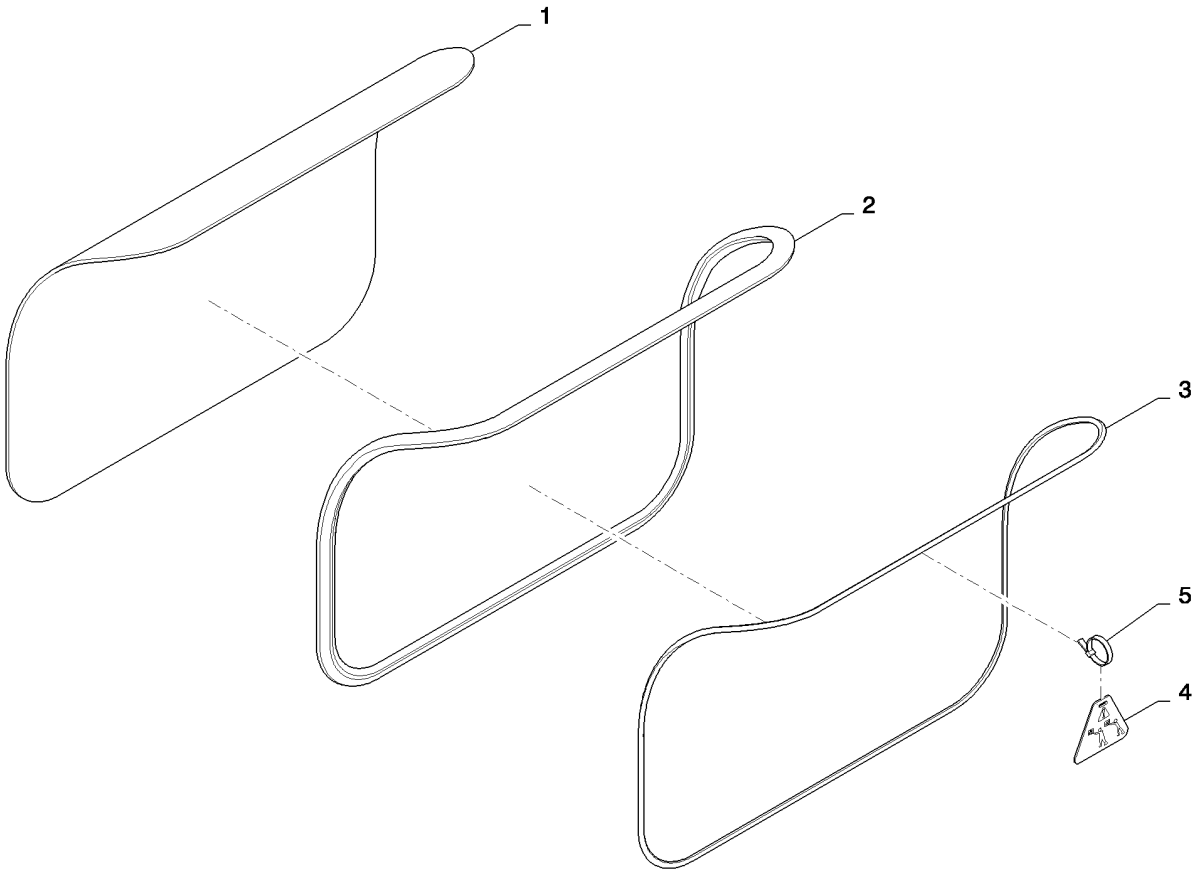

REAR WINDOW NA (ALL CASE)
REAR WINDOW NA (ALL CASE)
REAR WINDOW NA (ALL CASE)
REAR WINDOW NA (ALL CASE)

R	N	P.N.	MOD	Q	Denominação Description Bezeichnung	Description Bezeichnung Beskrivelse	Denominacion Beskrivelse Descrizione	Descrizione Beschrijving Beschrijving	L.C.
1		84254142		1	MONTAGEM VIDRO DA CABINE, Rear Window CAB GLASS ASSY VITRE DE CABINE	CONJ. CRISTALES DE C. KABINERUDE, KPL.	COMPL. CRISTALLO CAI GLASEENHEID CABINE	315C
2		84478939		1	JUNTA, Locking JOINT	GASKET DICHTUNG	JUNTA PAKNING	GUARNIZIONE PAKKING	123G
3		92626		1	ENCHIMENTO, Locking Strip 8 Ft. FILLING STRIP BANDE DE REMPLISSAG	BANDA DE GUARNICIÓN FYLDNINGSLISTE	NASTRO DI RIFORNIMEI VULSTRIP	P721
4		87026871		1	SINAL PLÁSTICO, Exit Tag PLAQUE SIGN. PLASTIQ	PLASTIC SIGN KUNSTSTOFFSCHILD	SEÑAL DE PLÁSTICO PLASTIKSKILT	TARGHETTA IN PLASTIC KUNSTSTOF BORD	092I
5		263117		1	PRENDEDOR DE CABOS, .14" x 11 1/2" CABLE STRAP BRIDE DE CABLE	BANDA DE CABLE KABELBINDER	FASCETTA PER CAVO KABELSTROP	BUNDELBAND	P716

90.154.04		p1	05/11

REAR WINDOW EU (ALL CASE)
REAR WINDOW EU (ALL CASE)
REAR WINDOW EU (ALL CASE)
REAR WINDOW EU (ALL CASE)

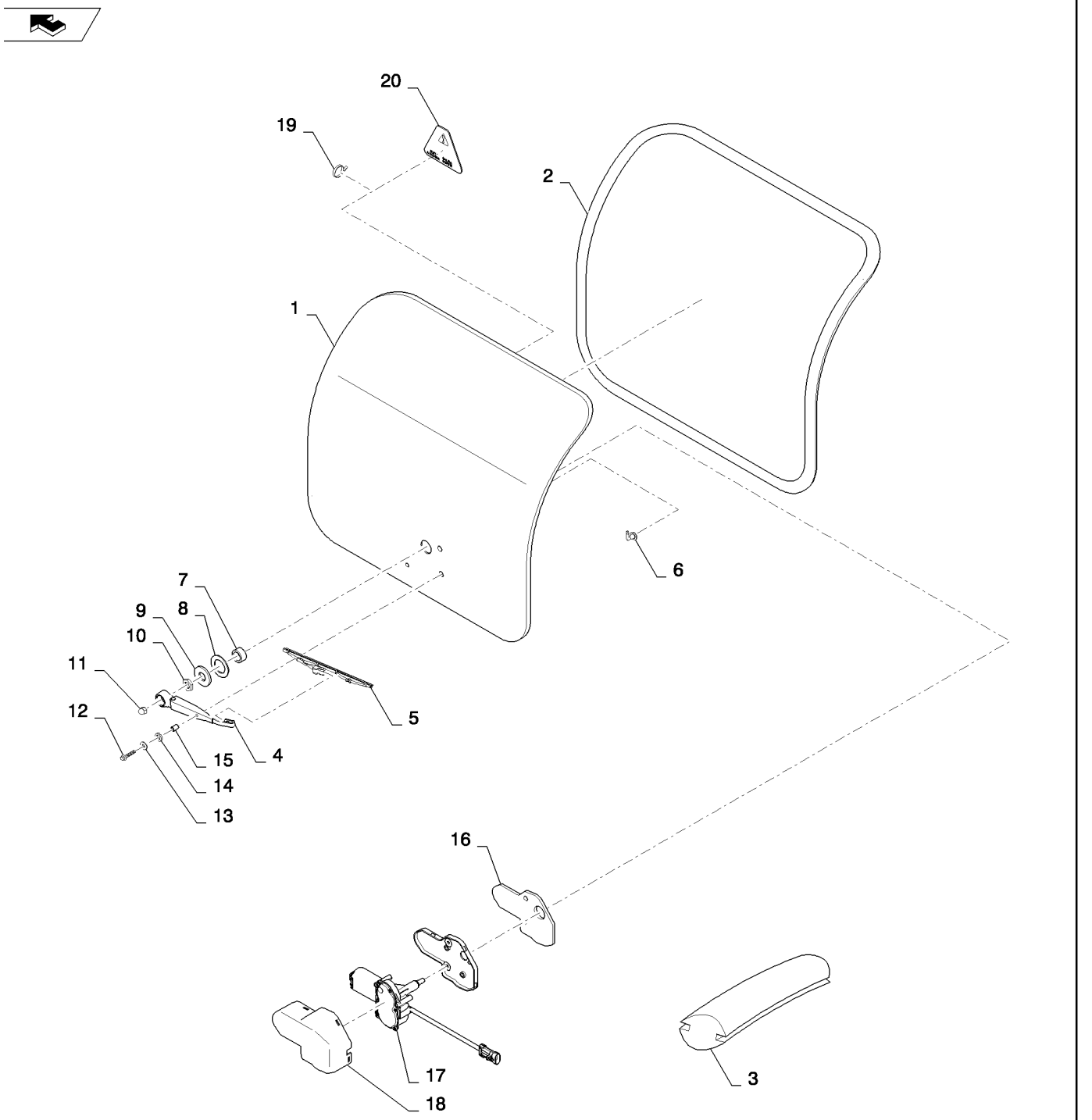

REAR WINDOW EU (ALL CASE)
REAR WINDOW EU (ALL CASE)
REAR WINDOW EU (ALL CASE)
REAR WINDOW EU (ALL CASE)

R	N	P.N.	MOD	Q	Denominação Description	Description Bezeichnung	Denominacion Beskrivelse	Descrizione Beschrijving	L.C.
1		84251333		1	VIDRO COLORIDO, Rear Window EU				
						TINTED GLASS	CRISTAL TINTADO	CRISTALLO ATERMICO	398C
					VITRE TEINTEE	GETÖNTE SCHEIBE	TONET RUDE	GETINT GLAS	
2		84478939		1	JUNTA, Locking	GASKET	JUNTA	GUARNIZIONE	123G
					JOINT	DICHTUNG	PAKNING	PAKKING	
3		92626		1	ENCHIMENTO, Locking Strip 8 Ft.				
						FILLING STRIP	BANDA DE GUARNICIÓN	NASTRO DI RIFORNIMEI	P721
					BANDE DE REMPLISSAG	FÜLLSTREIFEN	FYLDNINGSLISTE	VULSTRIP	
4		84323115		1	BRAÇO LIMPADOR	WIPER ARM	BRAZO LIMPIAPARABRIS	BRACCIO TERGICRISTA	134B
					BRAS D'ESSUIE-GLACE	WISCHERARM	VISKERARM	ARM VAN RUITENWISSE	
5		84323116		1	LIMPADOR DO PARA-BRISA				
						WINDSHIELD WIPER	LIMPIAPARABRISAS	TERGICRISTALLI	Z493
					ESSUIE-GLACE	FRONTSCHEIBENWISCH	FORRUDEVISKER	RUITENWISSER VÓÓR	
6		84369351		1	COTOVELO 90, Assy, Connector				
						90 ELBOW	CODO 90	GOMITO A 90°	A045
					COUDE A 90°	90-GRAD-KNIESTÜCK	VINKELRØR, 90	KNIESTUK 90º	
7		87642536		1	BUCHA, Wiper Motor	BUSHING	CASQUILLO	BOCCOLA	095B
					BAGUE	BUCHSE	BØSNING	BUS	
8		84297721		1	VEDAÇÃO, Washer	SEAL	ANILLO DE CIERRE	GUARNIZIONE; TENUTA	132A
					JOINT	DICHTUNG	PAKNING	AFDICHTING	
9		84156178		1	ARRUELA PLANA, .781 x 1.75 x .179"				
						WASHER	ARANDELA	RONDELLA	131R
					RONDELLE	UNTERLEGSCHEIBE	FLADSKIVE	SLUITRING	
10		87607505		1	PORCA, Wiper	NUT	TUERCA	DADO	010D
					ECROU	MUTTER	MØTRIK	MOER	
11		412326		1	PORCA, Dome Crown M8	NUT	TUERCA	DADO	010D
					ECROU	MUTTER	MØTRIK	MOER	
12		9804257		2	PARAFUSO, Hex Flg, M6 x 25, 8.8				
						BOLT	PERNO	BULLONE	140B
					VIS	SCHRAUBE	BOLT	BOUT	
13		86624182		2	ARRUELA PLANA, M6 x 18 x 1.6				
						WASHER	ARANDELA	RONDELLA	131R
					RONDELLE	UNTERLEGSCHEIBE	FLADSKIVE	SLUITRING	
14		84321136		2	VEDADOR	SEAL WASHER	JUNTA CIRCULAR	RONDELLA DELLA GUAF	Z526
					JOINT-CIRCULAIRE	DICHTUNGSSCHEIBE	SEAL WASHER	SEAL WASHER	
15		87642540		2	ESPAÇADOR, Wiper Motor	SPACER	SEPARADOR	DISTANZIALE	075D
					ENTRETOISE	DISTANZSTÜCK	AFSTANDSSTYKKE	AFSTANDSSTUK	
16		84319673		1	VEDAÇÃO DO LIMPADOR, Rear				
						WIPER SEAL	JUNTA ROZANTE	GUARNIZIONE, RASCHIA	Z350
					JOINT RACLEUR	ABSTREIFDICHTUNG	SKRABERING	RUITENWISSERAFDICH	
17		84319569		1	MOTOR DO LIMPADOR	WIPER MOTOR	MOTOR DE LIMPIAPARA	MOTORINO TERGICRIST	093T
					MOTEUR D'ESSUIE-GLA	WISCHERMOTOR	VISKERMOTOR	RUITENWISSERMOTOR	
18		84300094		1	MOTOR DO LIMPADOR, Cover				
						WIPER MOTOR	MOTOR DE LIMPIAPARA	MOTORINO TERGICRIST	093T
					MOTEUR D'ESSUIE-GLA	WISCHERMOTOR	VISKERMOTOR	RUITENWISSERMOTOR	
19		263117		1	PRENDEDOR DE CABOS, .14" x 11 1/2"				
						CABLE STRAP	BANDA DE CABLE	FASCETTA PER CAVO	P716
					BRIDE DE CABLE	KABELBINDER	KABELSTROP	BUNDELBAND	

SR200

90.154.04		p2	05/11

REAR WINDOW EU (ALL CASE)
REAR WINDOW EU (ALL CASE)
REAR WINDOW EU (ALL CASE)
REAR WINDOW EU (ALL CASE)

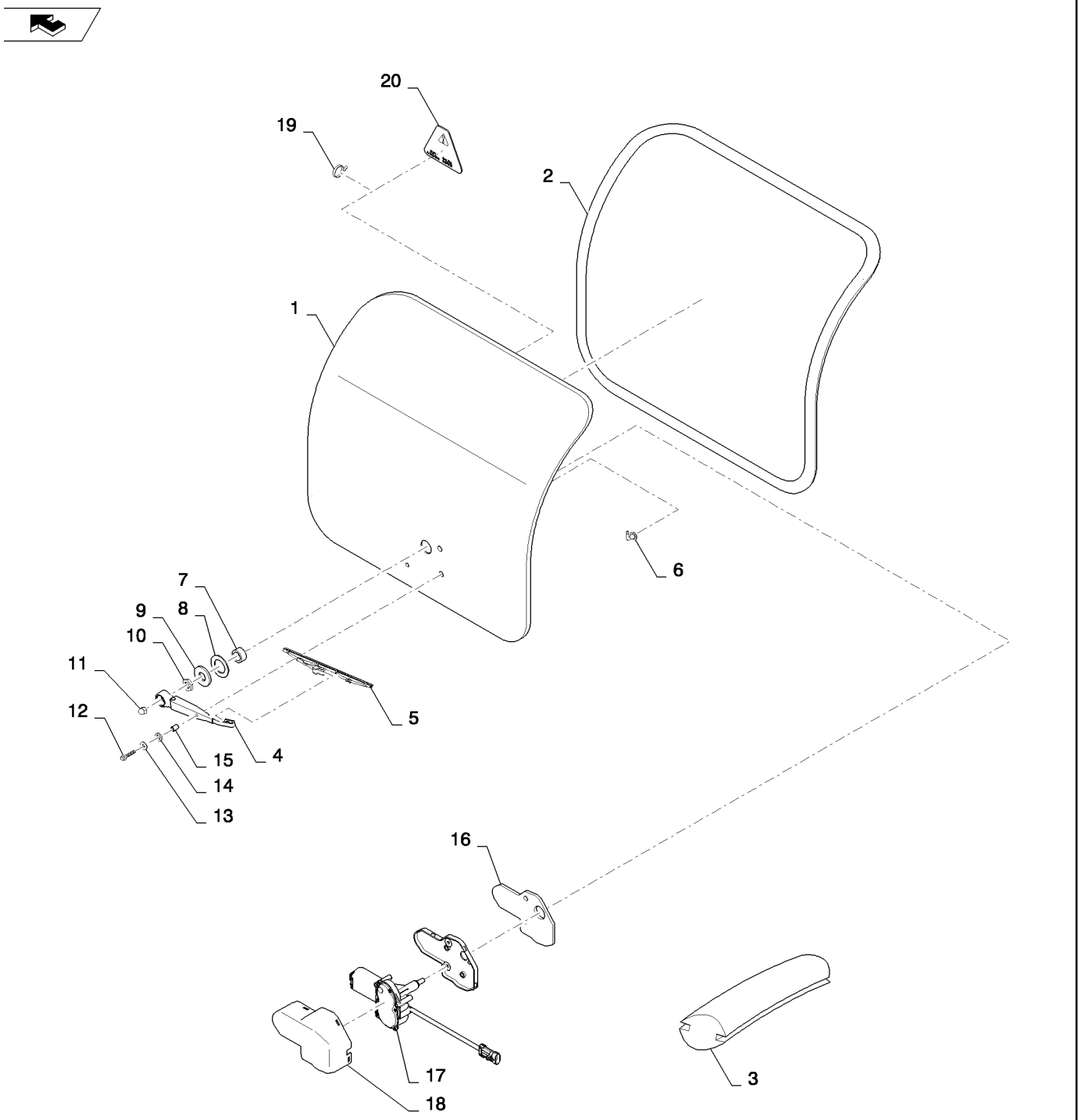

REAR WINDOW EU (ALL CASE)
REAR WINDOW EU (ALL CASE)
REAR WINDOW EU (ALL CASE)
REAR WINDOW EU (ALL CASE)

R	N	P.N.	MOD	Q	Denominação Description Description Bezeichnung Denominacion Beskrivelse Descrizione Beschrijving	L.C.
20		**87026871**		1	SINAL PLÁSTICO, Exit Tag PLAQUE SIGN. PLASTIQ PLASTIC SIGN KUNSTSTOFFSCHILD SEÑAL DE PLÁSTICO PLASTIKSKILT TARGHETTA IN PLASTIC KUNSTSTOF BORD	092I
21		**87037822**		1	PARAFUSO, Hex Flg Hd, M6 x 30, (Not Shown) SELF-TAP SCREW VIS AUTOTARAUDEUSE SELBSTSCHN SCHRAUE TORNILLO AUTORROSC SELVLÅSENDE BOLT VITE AUTOFILETTANTE ZELFTAPPENDE SCHRO	062V

90.154.05	01	p1	02/11

WASHER BOTTLE, FRONT (ALL CASE)
WASHER BOTTLE, FRONT (ALL CASE)
WASHER BOTTLE, FRONT (ALL CASE)
WASHER BOTTLE, FRONT (ALL CASE)

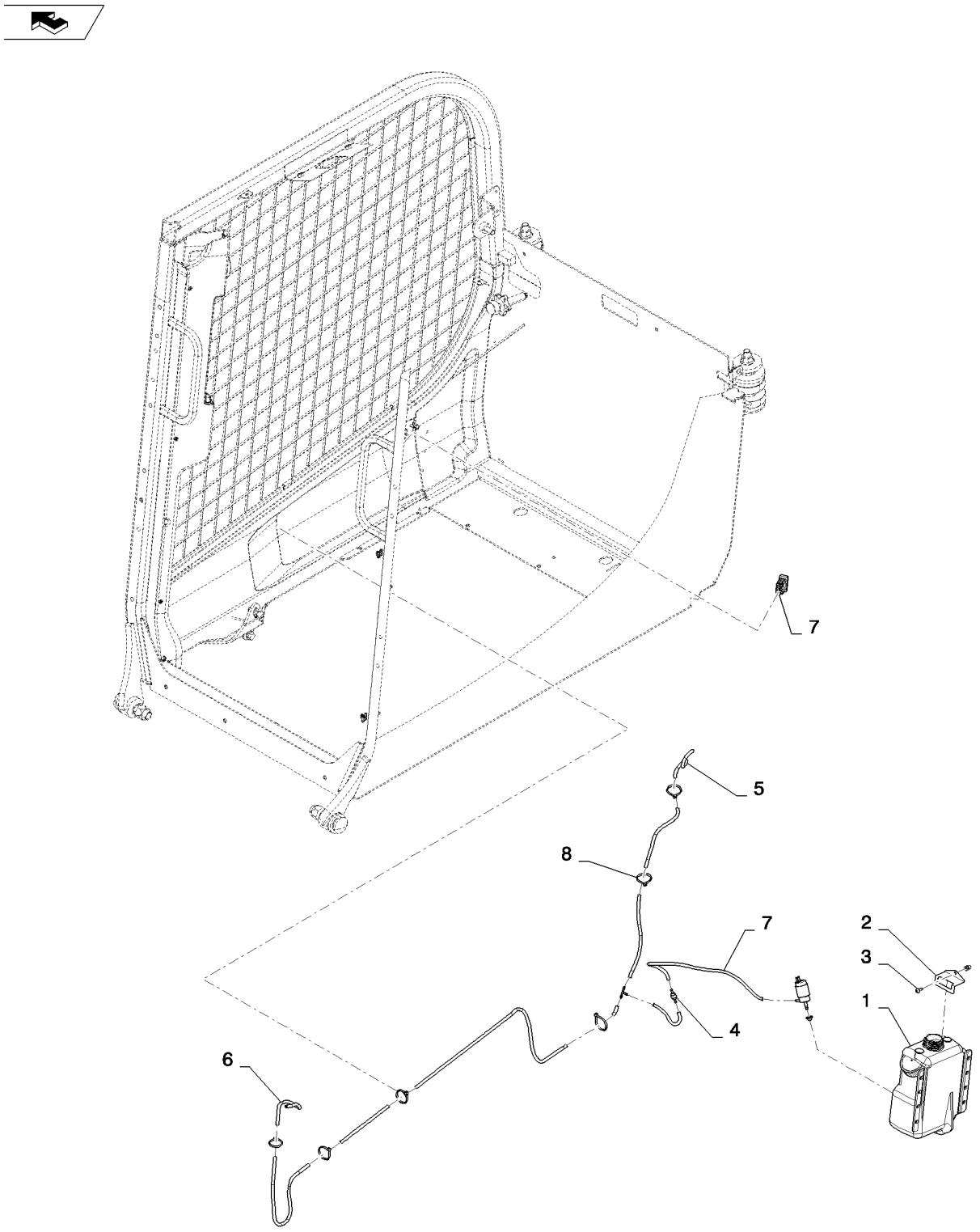

WASHER BOTTLE, FRONT (ALL CASE)
WASHER BOTTLE, FRONT (ALL CASE)
WASHER BOTTLE, FRONT (ALL CASE)
WASHER BOTTLE, FRONT (ALL CASE)

R	N	P.N.	MOD	Q	Denominação Description	Description Bezeichnung	Denominacion Beskrivelse	Descrizione Beschrijving	L.C.
1		84389613		1	GARRAFA, Windshield Washer Bottle Assy				
						BOTTLE	BOTELLA	BOTTIGLIA	102B
					BOUTEILLE	FLASCHE	FLASKE	FLES	
2		84326923		2	SUPORTE, Washer Bottle	BRACKET	SOPORTE	STAFFA	225S
					SUPPORT	HALTERUNG	BESLAG	STEUN	
3		87682398		2	PARAFUSO, M6x16	SCREW	TORNILLO	VITE	040V
					VIS	SCHRAUBE	SKRUE	SCHROEF	
4		K307050		1	VÁLVULA, Non-Return	VALVE	VÁLVULA	VALVOLA	9620
					SOUPAPE	VENTIL	VENTIL	KLEP	
5		84281703		1	MANGUEIRA DO LAVADOR, Front Windshield Washer Hose				
						HOSE WASHER	TUBO DE LAVAPARABRI	RONDELLA FLESSIBILE	A061
					TUYAU DE LAVE-GLACE	WASCHANLAGENSCHLA	SLANGE, SPRINKLER	SLUITRING VOOR SLAN(	
6		84285453		1	MANGUEIRA DO LAVADOR, Washer Bottle Hose				
						HOSE WASHER	TUBO DE LAVAPARABRI	RONDELLA FLESSIBILE	A061
					TUYAU DE LAVE-GLACE	WASCHANLAGENSCHLA	SLANGE, SPRINKLER	SLUITRING VOOR SLAN(	
7		87335499		1	INTERRUPTOR, Rocker, Windshield Wiper/Washer				
						SWITCH	INTERRUPTOR	INTERRUTTORE	075I
					CONTACTEUR	SCHALTER	KONTAKT	SCHAKELAAR	
8		L11541		4	PRENDEDOR DE CABOS	CABLE STRAP	BANDA DE CABLE	FASCETTA PER CAVO	P716
					BRIDE DE CABLE	KABELBINDER	KABELSTROP	BUNDELBAND	

90.154.05	02	p1	04/11

WASHER BOTTLE, REAR (ALL CASE)
WASHER BOTTLE, REAR (ALL CASE)
WASHER BOTTLE, REAR (ALL CASE)
WASHER BOTTLE, REAR (ALL CASE)

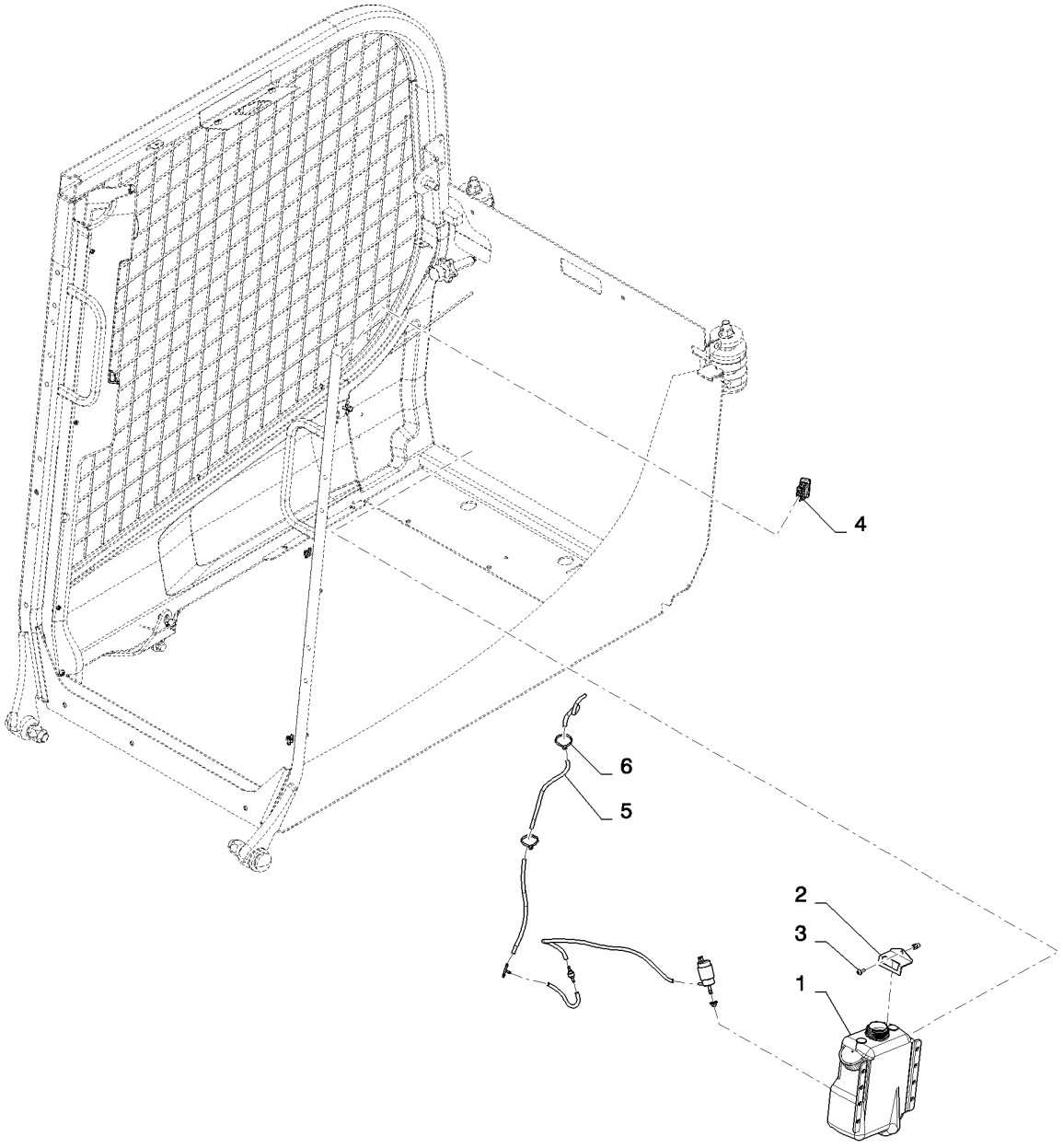

WASHER BOTTLE, REAR (ALL CASE)
WASHER BOTTLE, REAR (ALL CASE)
WASHER BOTTLE, REAR (ALL CASE)
WASHER BOTTLE, REAR (ALL CASE)

R	N	P.N.	MOD	Q	Denominação Description	Description Bezeichnung	Denominacion Beskrivelse	Descrizione Beschrijving	L.C.
1		84389613		1	GARRAFA, Windshield Washer Bottle Assy				
						BOTTLE	BOTELLA	BOTTIGLIA	102B
					BOUTEILLE	FLASCHE	FLASKE	FLES	
2		84326923		2	SUPORTE, Washer Bottle	BRACKET	SOPORTE	STAFFA	225S
					SUPPORT	HALTERUNG	BESLAG	STEUN	
3		87682398		2	PARAFUSO, M6x16	SCREW	TORNILLO	VITE	040V
					VIS	SCHRAUBE	SKRUE	SCHROEF	
4		87335499		1	INTERRUPTOR, Rocker, Windshield Wiper/Washer				
						SWITCH	INTERRUPTOR	INTERRUTTORE	075I
					CONTACTEUR	SCHALTER	KONTAKT	SCHAKELAAR	
5		84285452		1	MANGUEIRA DO LAVADOR, Washer, Rear Windshield				
						HOSE WASHER	TUBO DE LAVAPARABRI	RONDELLA FLESSIBILE	A061
					TUYAU DE LAVE-GLACE	WASCHANLAGENSCHLA	SLANGE, SPRINKLER	SLUITRING VOOR SLAN(	
6		L11541		2	PRENDEDOR DE CABOS	CABLE STRAP	BANDA DE CABLE	FASCETTA PER CAVO	P716
					BRIDE DE CABLE	KABELBINDER	KABELSTROP	BUNDELBAND	
7		84472462		1	COBERTURA, Rear Cover, Euro, Gray, Not Shown				
						COVER	COBERTURA	COPERTURA	271C
					COUVERTURE	ABDECKUNG	COVER	COVER	
8		84272827		2	REBITE, Nut, M6 X 1.0, Not Shown				
						RIVET	REMACHE	RIVETTO	055R
					RIVET	NIET	NITTE	KLINKNAGEL	

90.154.05	03	p1	02/11

WASHER BOTTLE, FRONT & REAR (ALL CASE)
WASHER BOTTLE, FRONT & REAR (ALL CASE)
WASHER BOTTLE, FRONT & REAR (ALL CASE)
WASHER BOTTLE, FRONT & REAR (ALL CASE)

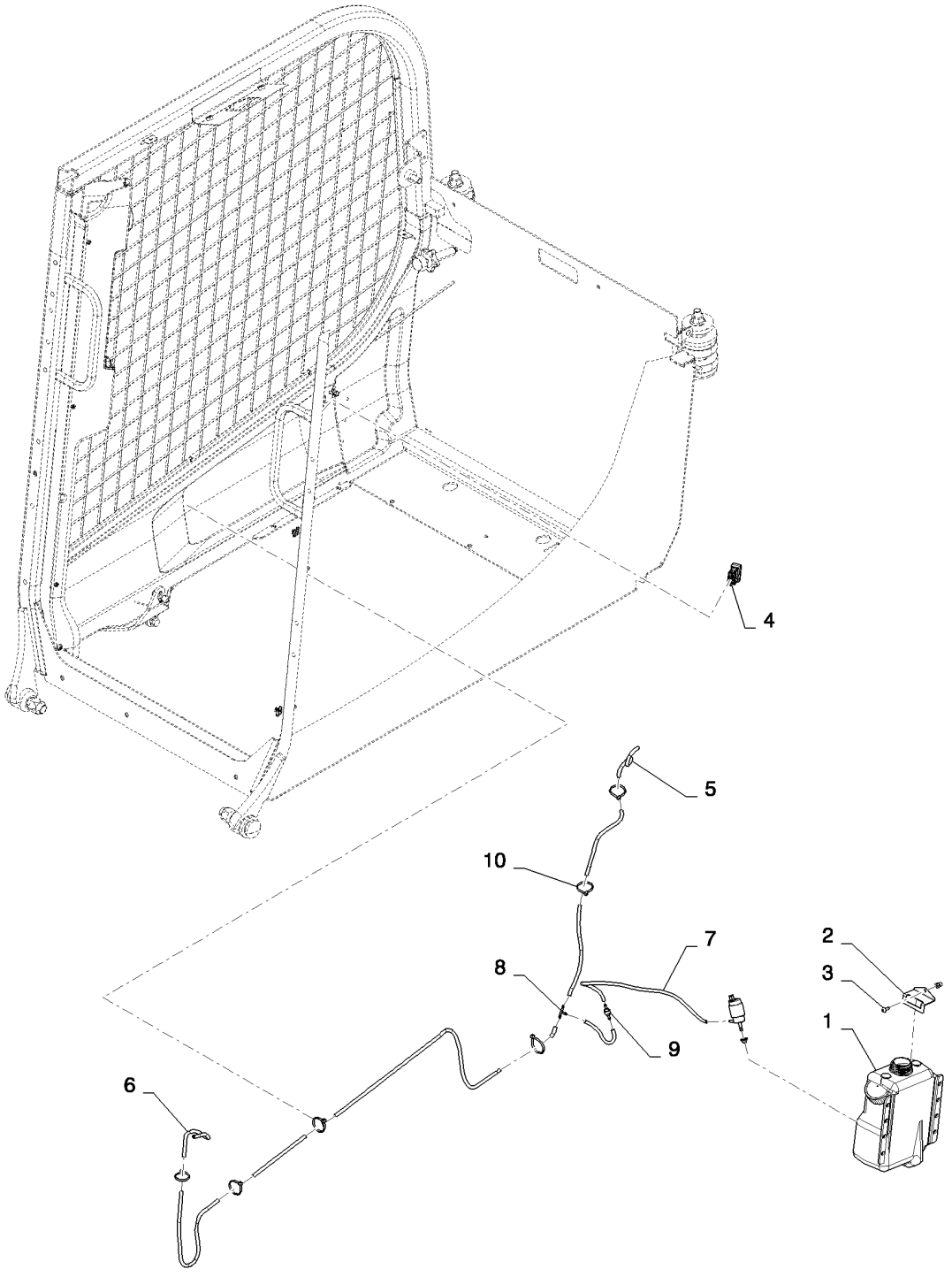

WASHER BOTTLE, FRONT & REAR (ALL CASE)
WASHER BOTTLE, FRONT & REAR (ALL CASE)
WASHER BOTTLE, FRONT & REAR (ALL CASE)
WASHER BOTTLE, FRONT & REAR (ALL CASE)

R	N	P.N.	MOD	Q	Denominação Description Bezeichnung	Description Bezeichnung	Denominacion Beskrivelse	Descrizione Beschrijving	L.C.
1		84389613		1	GARRAFA, Windshield Washer Bottle Assy				
						BOTTLE	BOTELLA	BOTTIGLIA	102B
					BOUTEILLE	FLASCHE	FLASKE	FLES	
2		84326923		2	SUPORTE, Washer Bottle	BRACKET	SOPORTE	STAFFA	225S
					SUPPORT	HALTERUNG	BESLAG	STEUN	
3		87682398		2	PARAFUSO, M6x16	SCREW	TORNILLO	VITE	040V
					VIS	SCHRAUBE	SKRUE	SCHROEF	
4		87335498		1	INTERRUPTOR, Rocker, Windshield Wiper/Washer				
						LIGHT SWITCH	INTERRUPTOR DE LUZ	INTERRUTTORE LUCI	228S
					COMM. LUMIERES	LICHTSCHALTER	KONTAKT, LYS	VERLICHTINGSSCHAKEI	
5		84281703		1	MANGUEIRA DO LAVADOR, Windshield Washer, Front Door				
						HOSE WASHER	TUBO DE LAVAPARABRI	RONDELLA FLESSIBILE	A061
					TUYAU DE LAVE-GLACE	WASCHANLAGENSCHLA	SLANGE, SPRINKLER	SLUITRING VOOR SLAN(	
6		84285452		1	MANGUEIRA DO LAVADOR, Windshield Washer, Rear Window				
						HOSE WASHER	TUBO DE LAVAPARABRI	RONDELLA FLESSIBILE	A061
					TUYAU DE LAVE-GLACE	WASCHANLAGENSCHLA	SLANGE, SPRINKLER	SLUITRING VOOR SLAN(	
7		84285453		2	MANGUEIRA DO LAVADOR, Washer Bottle				
						HOSE WASHER	TUBO DE LAVAPARABRI	RONDELLA FLESSIBILE	A061
					TUYAU DE LAVE-GLACE	WASCHANLAGENSCHLA	SLANGE, SPRINKLER	SLUITRING VOOR SLAN(	
8		84306335		1	T, Barb Connector	TEE	RACOR EN T	PEZZO A T	9020
					RACCORD EN T	T-STÜCK	T-STYKKE	T-STUK	
9		K307050		1	VÁLVULA, Non-Return	VALVE	VÁLVULA	VALVOLA	9620
					SOUPAPE	VENTIL	VENTIL	KLEP	
10		L11541		6	PRENDEDOR DE CABOS	CABLE STRAP	BANDA DE CABLE	FASCETTA PER CAVO	P716
					BRIDE DE CABLE	KABELBINDER	KABELSTROP	BUNDELBAND	
11		84272827		2	REBITE, M6 X 1.0	RIVET	REMACHE	RIVETTO	055R
					RIVET	NIET	NITTE	KLINKNAGEL	

90.160.01	01	p1	07/11

INTERIOR TRIM CASE (ALL CASE)
INTERIOR TRIM CASE (ALL CASE)
INTERIOR TRIM CASE (ALL CASE)
INTERIOR TRIM CASE (ALL CASE)

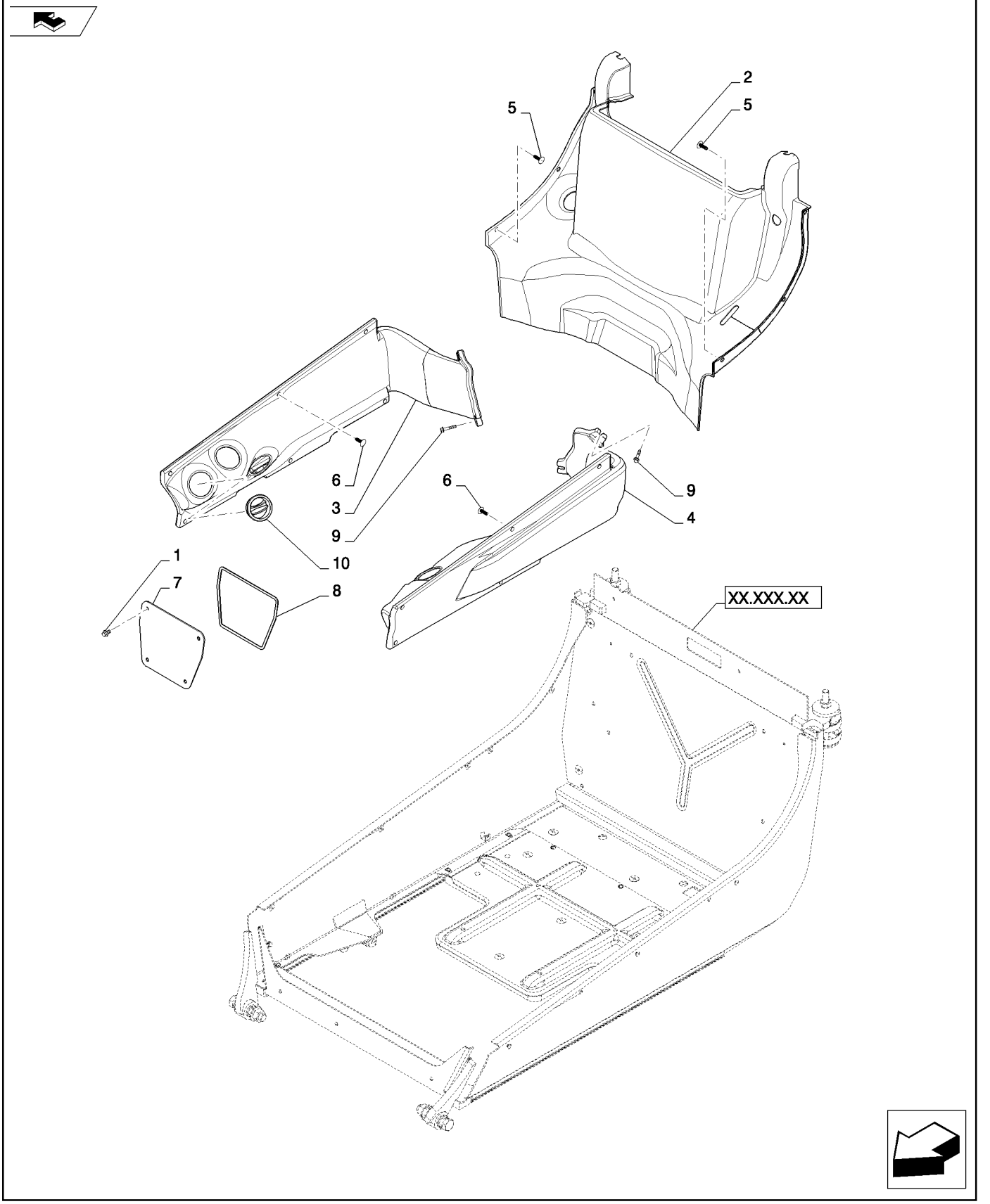

INTERIOR TRIM CASE (ALL CASE)
INTERIOR TRIM CASE (ALL CASE)
INTERIOR TRIM CASE (ALL CASE)
INTERIOR TRIM CASE (ALL CASE)

R	N	P.N.	MOD	Q	Denominação Description	Description Bezeichnung	Denominacion Beskrivelse	Descrizione Beschrijving	L.C.
1		84285339		4	PARAFUSO VIS AUTOTARAUDEUSE	SELF-TAP SCREW SELBSTSCHN SCHRAUE	TORNILLO AUTORROSC SELVLÅSENDE BOLT	VITE AUTOFILETTANTE ZELFTAPPENDE SCHRO	062V
2		84389708		1	PAINEL, Rear Trim, Gray PANNEAU	PANEL PLATTE	PANEL PANEL	PANNELLO PANEEL	025P
3		84299751		1	DUTO DE AR CONDUITE D'AIR	AIR DUCT LUFTKANAL	CONDUCTO DE AIRE LUFTKANAL	CONDOTTO ARIA LUCHTKANAAL	224C
4		84299754		1	DUTO DE AR CONDUITE D'AIR	AIR DUCT LUFTKANAL	CONDUCTO DE AIRE LUFTKANAL	CONDOTTO ARIA LUCHTKANAAL	224C
5		84380551		6	BOTÃO DE IMPULSO, Push-In, Wheat ATTACHE	FASTENER BEFESTIGUNGSELEMEN	SUJETADOR LUKKER	DISPOSITIVO DI FISSAG BEVESTIGING	123B
6		348452A1		14	BOTÃO DE IMPULSO, Push-In ATTACHE	FASTENER BEFESTIGUNGSELEMEN	SUJETADOR LUKKER	DISPOSITIVO DI FISSAG BEVESTIGING	123B
7		84322838		1	PLACA, Cover PLAQUE	PLATE PLATTE	PLACA PLADE	PIASTRA PLAAT	105P
8		84322854		1	ESPUMA ISOLANTE, Sealing Strip; 891mm MOUSSE ISOLANTE	FOAM INSULATION SCHAUMSTOFFISOLIER	ESPUMA AISLANTE SKUM ISOLERING	ISOLANTE IN SCHIUMA SCHUIMISOLATIE	051S
9		87015931		4	PARAFUSO, Hex Flg, M6 x 35, 8.8 VIS	BOLT SCHRAUBE	PERNO BOLT	BULLONE BOUT	140B
10		87669161		6	RESPIRO, Louver Global BUSE D'AERATION	VENT AUSSTRÖMER	RESPIRADERO UDLUFTNINGSDYSE	BOCCHETTA LUCHTROOSTER	P079

90.160.01	02	p1	10/10

INTERIOR TRIM CASE (ALL CASE)
INTERIOR TRIM CASE (ALL CASE)
INTERIOR TRIM CASE (ALL CASE)
INTERIOR TRIM CASE (ALL CASE)

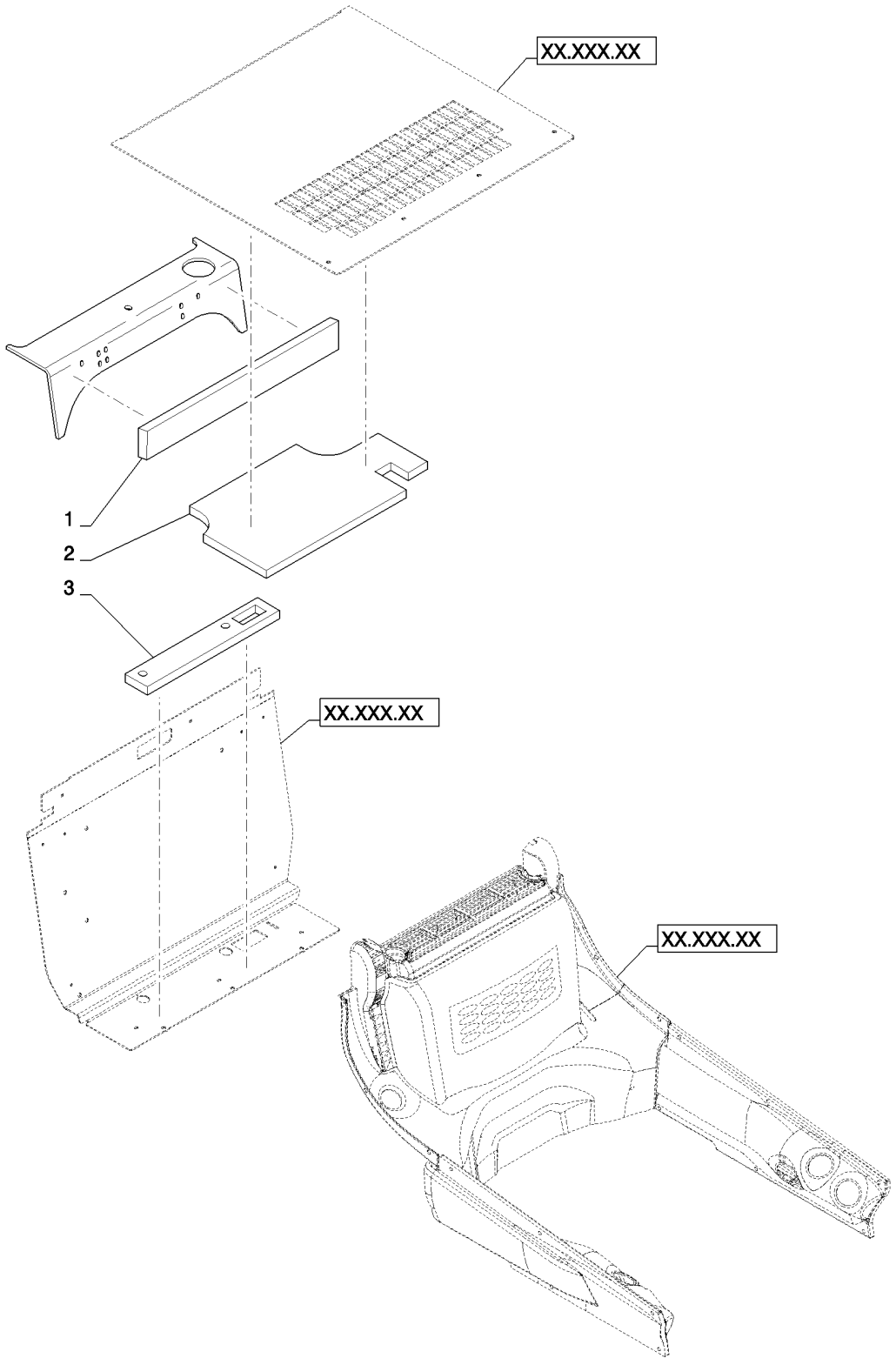

INTERIOR TRIM CASE (ALL CASE)
INTERIOR TRIM CASE (ALL CASE)
INTERIOR TRIM CASE (ALL CASE)
INTERIOR TRIM CASE (ALL CASE)

R	N	P.N.	MOD	Q	Denominação Description	Description Bezeichnung	Denominacion Beskrivelse	Descrizione Beschrijving	L.C.
1		**84362125**		1	ESPUMA ISOLANTE, Crossmember				
						FOAM INSULATION	ESPUMA AISLANTE	ISOLANTE IN SCHIUMA	051S
					MOUSSE ISOLANTE	SCHAUMSTOFFISOLIER	SKUM ISOLERING	SCHUIMISOLATIE	
2		**84362126**		1	ESPUMA ISOLANTE, Roof	FOAM INSULATION	ESPUMA AISLANTE	ISOLANTE IN SCHIUMA	051S
					MOUSSE ISOLANTE	SCHAUMSTOFFISOLIER	SKUM ISOLERING	SCHUIMISOLATIE	
3		**84370302**		1	ESPUMA, HVAC Box	FOAM	ESPUMA	SCHIUMA	P033
					MOUSSE	SCHAUM	SKUM	SCHUIM	

90.160.01	03	p1	02/11

CAB SEALING (ALL CASE)
CAB SEALING (ALL CASE)
CAB SEALING (ALL CASE)
CAB SEALING (ALL CASE)

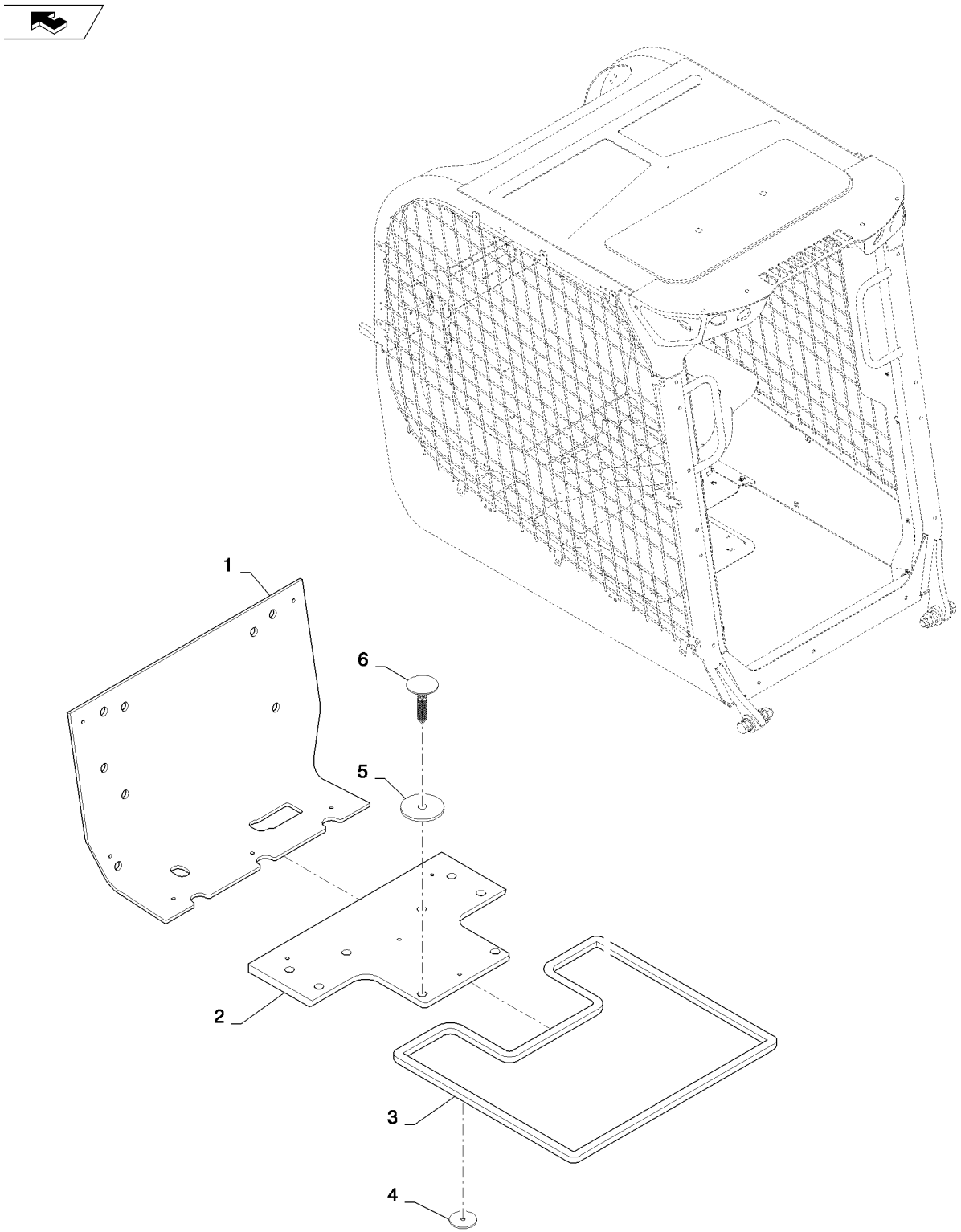

CAB SEALING (ALL CASE)
CAB SEALING (ALL CASE)
CAB SEALING (ALL CASE)
CAB SEALING (ALL CASE)

R	N	P.N.	MOD	Q	Denominação Description Bezeichnung	Denominacion Beskrivelse	Descrizione Beschrijving	L.C.
1		84362124		1	ESPUMA ISOLANTE, Firewall FOAM INSULATION MOUSSE ISOLANTE SCHAUMSTOFFISOLIER	ESPUMA AISLANTE SKUM ISOLERING	ISOLANTE IN SCHIUMA SCHUIMISOLATIE	051S
2		84338534		1	VEDAÇÃO, 3326 mm SEAL JOINT DICHTUNG	ANILLO DE CIERRE PAKNING	GUARNIZIONE; TENUTA AFDICHTING	132A
3		84311384		1	ESPUMA ISOLANTE, Dump Valve FOAM INSULATION MOUSSE ISOLANTE SCHAUMSTOFFISOLIER	ESPUMA AISLANTE SKUM ISOLERING	ISOLANTE IN SCHIUMA SCHUIMISOLATIE	051S
4		348434A1		7	ARRUELA, Flat WASHER RONDELLE UNTERLEGSCHEIBE	ARANDELA WASHER	RONDELLA WASHER	9720
5		348452A1		7	BOTÃO DE IMPULSO, Push-In FASTENER ATTACHE BEFESTIGUNGSELEMEN	SUJETADOR LUKKER	DISPOSITIVO DI FISSAG BEVESTIGING	123B

SEAL PACKAGE (SR175-TV380)
SEAL PACKAGE (SR175-TV380)
SEAL PACKAGE (SR175-TV380)
SEAL PACKAGE (SR175-TV380)

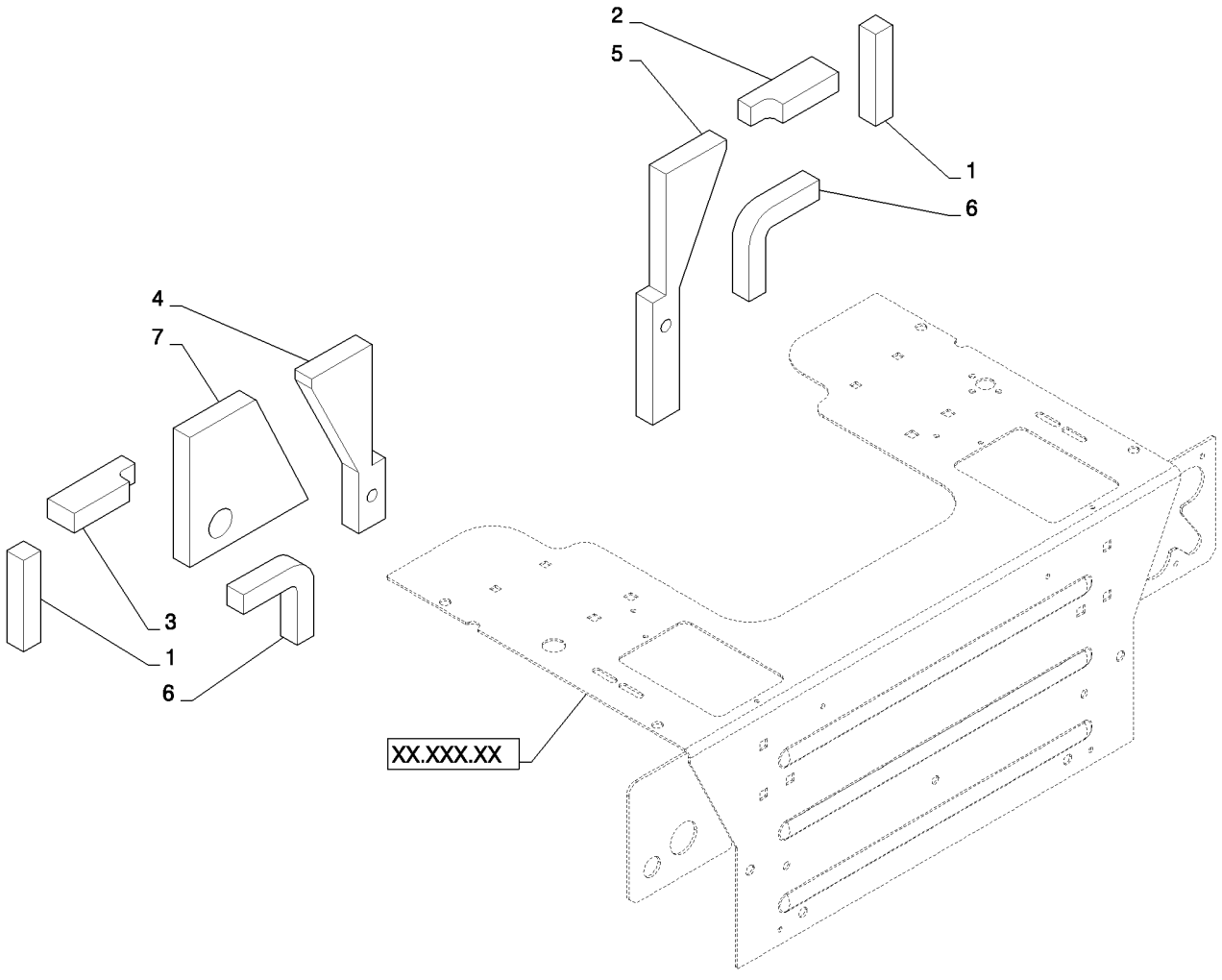

SEAL PACKAGE (SR175-TV380)
SEAL PACKAGE (SR175-TV380)
SEAL PACKAGE (SR175-TV380)
SEAL PACKAGE (SR175-TV380)

R	N	P.N.	MOD	Q	Denominação Description	Description Bezeichnung	Denominacion Beskrivelse	Descrizione Beschrijving	L.C.
1		{84379232}		2	Chassis Filler				
2		84372899		1	ESPUMA, LH Upper Chassis Filler				
						FOAM	ESPUMA	SCHIUMA	P033
					MOUSSE	SCHAUM	SKUM	SCHUIM	
3		84372898		1	ESPUMA, RH Upper Chassis Filler				
						FOAM	ESPUMA	SCHIUMA	P033
					MOUSSE	SCHAUM	SKUM	SCHUIM	
4		84372629		1	ESPUMA, RH Heel Plate	FOAM	ESPUMA	SCHIUMA	P033
					MOUSSE	SCHAUM	SKUM	SCHUIM	
5		84372628		1	ESPUMA, LH Heel Plate	FOAM	ESPUMA	SCHIUMA	P033
					MOUSSE	SCHAUM	SKUM	SCHUIM	
6		84342690		2	ESPUMA ISOLANTE	FOAM INSULATION	ESPUMA AISLANTE	ISOLANTE IN SCHIUMA	051S
					MOUSSE ISOLANTE	SCHAUMSTOFFISOLIER	SKUM ISOLERING	SCHUIMISOLATIE	
7		84287773		1	ESPUMA, RH Filler	FOAM	ESPUMA	SCHIUMA	P033
					MOUSSE	SCHAUM	SKUM	SCHUIM	

90.160.03	01	p1	02/11

CAB HEADLINER, NO RADIO (ALL CASE)
CAB HEADLINER, NO RADIO (ALL CASE)
CAB HEADLINER, NO RADIO (ALL CASE)
CAB HEADLINER, NO RADIO (ALL CASE)

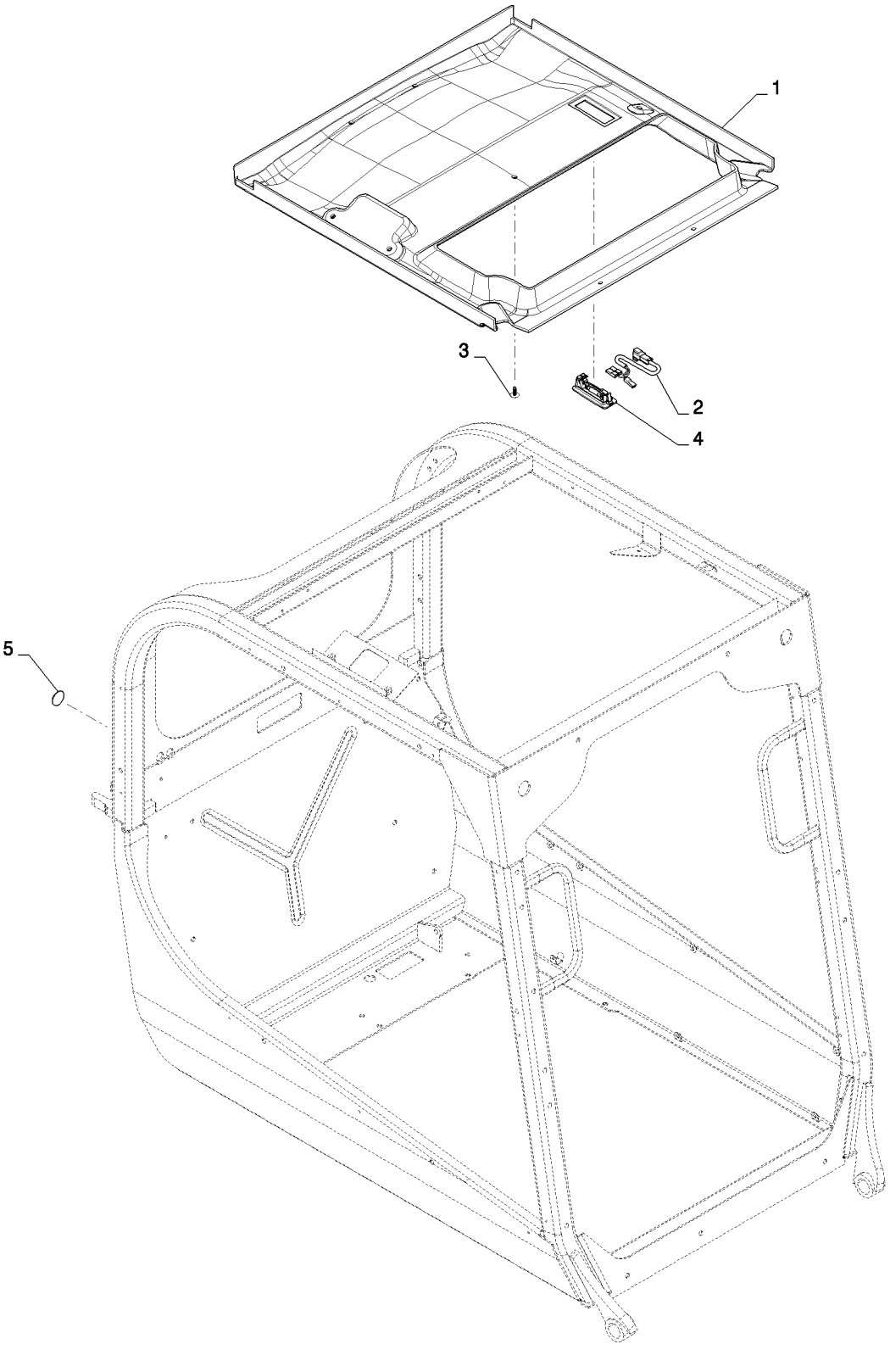

CAB HEADLINER, NO RADIO (ALL CASE)
CAB HEADLINER, NO RADIO (ALL CASE)
CAB HEADLINER, NO RADIO (ALL CASE)
CAB HEADLINER, NO RADIO (ALL CASE)

R	N	P.N.	MOD	Q	Denominação Description	Description Bezeichnung	Denominacion Beskrivelse	Descrizione Beschrijving	L.C.
1		84259658		1	PAINEL, Headliner W/Dome (Case)				
						PANEL	PANEL	PANNELLO	025P
					PANNEAU	PLATTE	PANEL	PANEEL	
2		84297137		1	CHICOTE, Dome Lamp	WIRE HARNESS	GRUPO DE CABLES	CABLAGGIO	070I
					FAISCEAU ELECTRIQUE	KABELBAUM	KABELNET	KABELBOOM	
3		84318533		8	BOTÃO DE IMPULSO, Push in, Wheat				
						FASTENER	SUJETADOR	DISPOSITIVO DI FISSAG	123B
					ATTACHE	BEFESTIGUNGSELEMEN	LUKKER	BEVESTIGING	
4		1983391C1		1	LÂMPADA, Light Dome	LAMP	LÁMPARA	SPIA	009F
					LAMPE	LEUCHTE	LYGTE	LAMP	
5		NSS			SEM SERVIÇO EM SEPARADO				
						NOT SERVICED SEPARA	NO SE REPARA POR SE	NON FORNITO SEPARAT	064N
					NON FORUNI SEPAREM	NICHT A SEP ERS-T LIEI	SERVICERES IKKE SEPA	NIET LOS VERKRIJGBAA	
6		353-425		1	BUJAO, Flat Face (Not Shown)				
						PLUG	TAPON	TAPPO	6400
					BOUCHON	STOPFEN	PLUG	PLUG	

90.160.03	02	p1	02/11

CAB HEADLINER, WITH RADIO (ALL CASE)
CAB HEADLINER, WITH RADIO (ALL CASE)
CAB HEADLINER, WITH RADIO (ALL CASE)
CAB HEADLINER, WITH RADIO (ALL CASE)

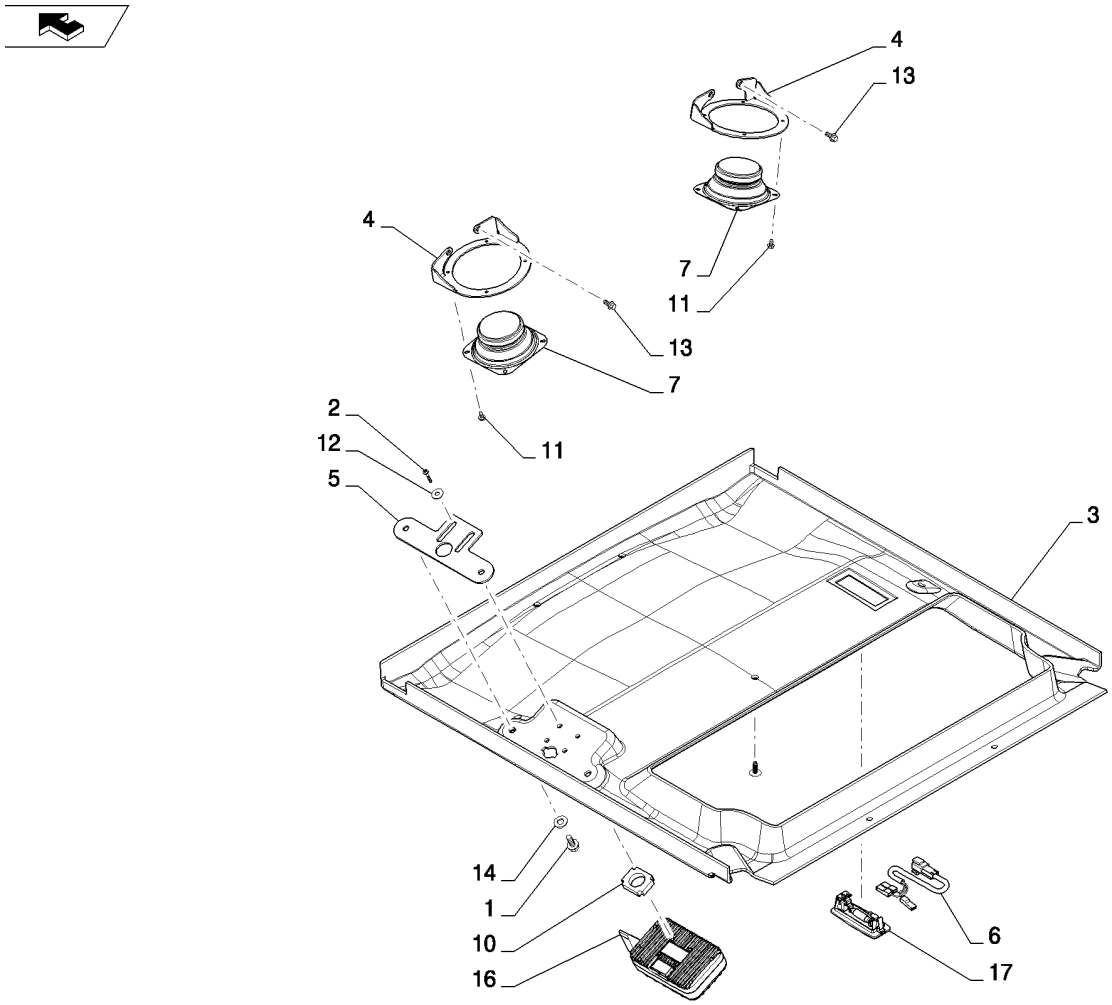

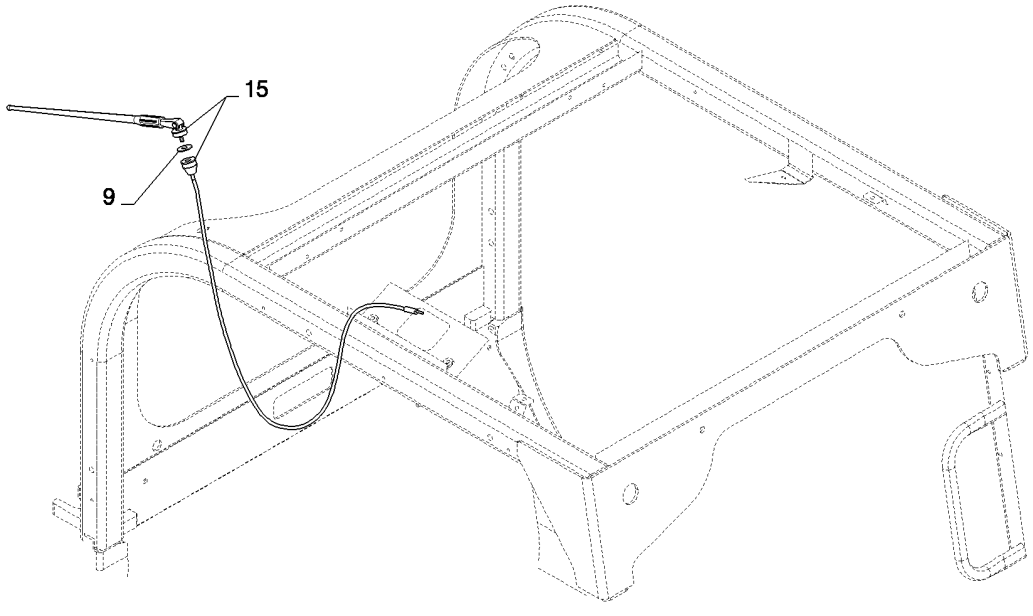

CAB HEADLINER, WITH RADIO (ALL CASE)
CAB HEADLINER, WITH RADIO (ALL CASE)
CAB HEADLINER, WITH RADIO (ALL CASE)
CAB HEADLINER, WITH RADIO (ALL CASE)

R	N	P.N.	MOD	Q	Denominação Description	Description Bezeichnung	Denominacion Beskrivelse	Descrizione Beschrijving	L.C.
1		9804258		2	PARAFUSO, Hex Flg, M8 x 20, 8.8				
						BOLT	PERNO	BULLONE	140B
					VIS	SCHRAUBE	BOLT	BOUT	
2		13272611		4	PARAFUSO, M4 X 25 P/HD C/R-Z 5.8 ZND				
						SCREW	TORNILLO	VITE	040V
					VIS	SCHRAUBE	SKRUE	SCHROEF	
3		84259665		1	PAINEL, Headliner Radio Dome (CASE)				
						PANEL	PANEL	PANNELLO	025P
					PANNEAU	PLATTE	PANEL	PANEEL	
4		84281707		2	SUPORTE, Sheet, Speaker Bracket, Gray				
						BRACKET	SOPORTE	STAFFA	225S
					SUPPORT	HALTERUNG	BESLAG	STEUN	
5		84281708		1	SUPORTE, Sheet, Radio Bracket, Gray				
						BRACKET	SOPORTE	STAFFA	225S
					SUPPORT	HALTERUNG	BESLAG	STEUN	
6		84297137		1	CHICOTE, Dome Lamp	WIRE HARNESS	GRUPO DE CABLES	CABLAGGIO	070I
					FAISCEAU ELECTRIQUE	KABELBAUM	KABELNET	KABELBOOM	
7		84298557		2	ALTO-FALANTE, 4 in. Sealed HP				
						SPEAKER	ALTAVOZ	ALTOPARLANTE	039A
					HAUT-PARLEUR	LAUTSPRECHER	HØJTALER	LUIDSPREKER	
8		84318533		6	BOTÃO DE IMPULSO, Push in, Wheat				
						FASTENER	SUJETADOR	DISPOSITIVO DI FISSAG	123B
					ATTACHE	BEFESTIGUNGSELEMEN	LUKKER	BEVESTIGING	
9		84347538		1	ESPUMA ISOLANTE, Antenna Seal				
						FOAM INSULATION	ESPUMA AISLANTE	ISOLANTE IN SCHIUMA	051S
					MOUSSE ISOLANTE	SCHAUMSTOFFISOLIER	SKUM ISOLERING	SCHUIMISOLATIE	
10		84363241		1	ESPAÇADOR, Radio Cooling				
						SPACER	SEPARADOR	DISTANZIALE	075D
					ENTRETOISE	DISTANZSTÜCK	AFSTANDSSTYKKE	AFSTANDSSTUK	
11		86500939		8	PARAFUSO, Hex Wash Hd, #10 x 3/8"				
						SELF-TAP SCREW	TORNILLO AUTORROSC	VITE AUTOFILETTANTE	062V
					VIS AUTOTARAUDEUSE	SELBSTSCHN SCHRAUE	SELVLÅSENDE BOLT	ZELFTAPPENDE SCHRO	
12		86624182		4	ARRUELA PLANA, M6 x 18 x 1.6				
						WASHER	ARANDELA	RONDELLA	131R
					RONDELLE	UNTERLEGSCHEIBE	FLADSKIVE	SLUITRING	
13		86625199		4	PARAFUSO, Hex Flg Hd, M6 x 13				
						SELF-TAP SCREW	TORNILLO AUTORROSC	VITE AUTOFILETTANTE	062V
					VIS AUTOTARAUDEUSE	SELBSTSCHN SCHRAUE	SELVLÅSENDE BOLT	ZELFTAPPENDE SCHRO	
14		86625241		2	ARRUELA PLANA, 0.406 X 0.812 X 0.089 IN HDN ZND				
						WASHER	ARANDELA	RONDELLA	131R
					RONDELLE	UNTERLEGSCHEIBE	FLADSKIVE	SLUITRING	
15		87668735		1	ANTENA, Rubber Mast	ANTENNA	ANTENA	ANTENNA	064A
					ANTENNE	ANTENNE	ANTENNE	ANTENNE	
16		87672223		1	RÁDIO, Mini WP AM/FM/WX Band				
						RADIO	RADIO	AUTORADIO	042R
					RADIO	RADIO	RADIO	RADIO	
17		1983391C1		1	LÂMPADA, Light Dome	LAMP	LÁMPARA	SPIA	009F
					LAMPE	LEUCHTE	LYGTE	LAMP	

90.180.01	01	p1	03/11

DECALS (SR200)
DECALS (SR200)
DECALS (SR200)
DECALS (SR200)

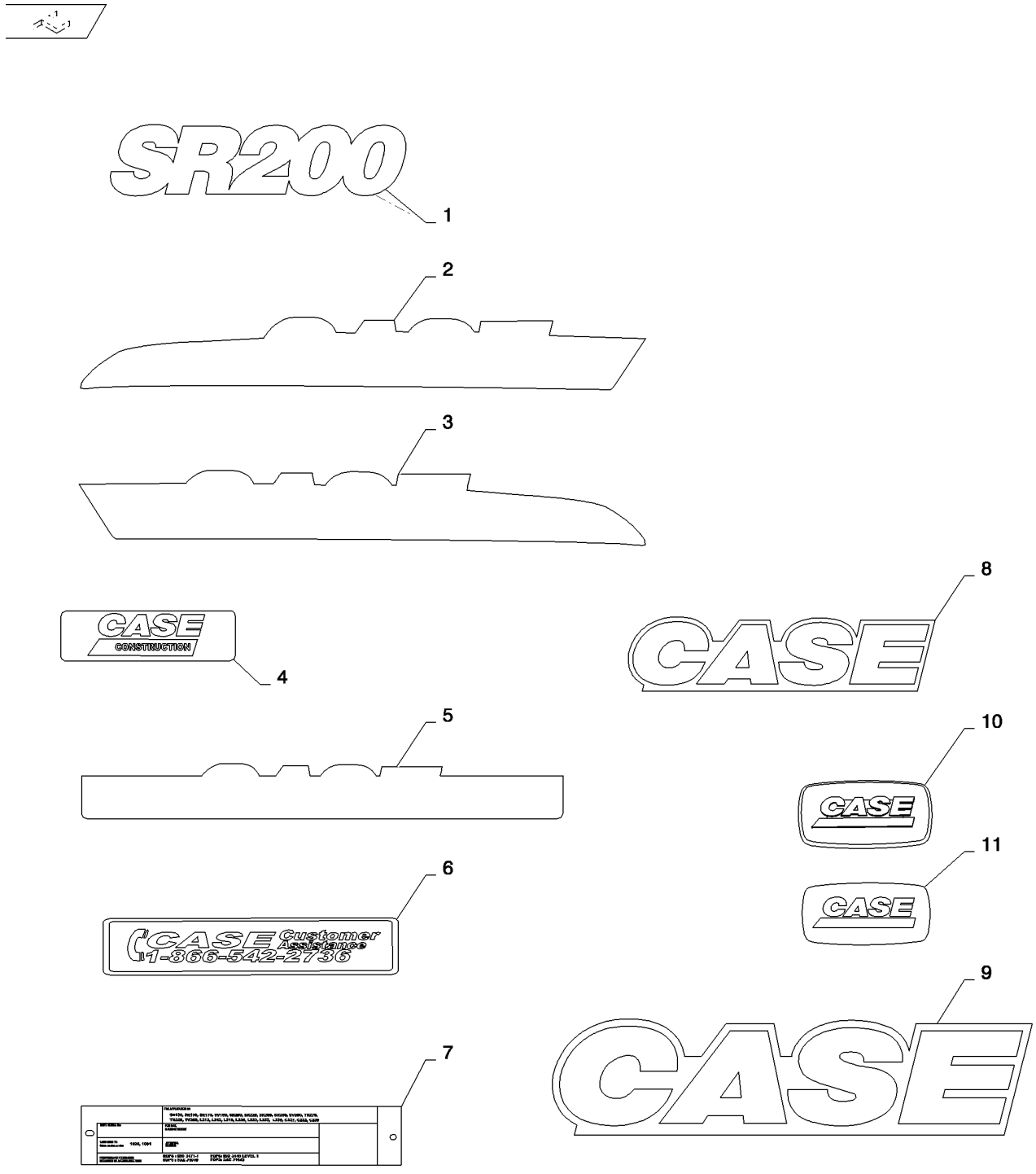

DECALS (SR200)
DECALS (SR200)
DECALS (SR200)
DECALS (SR200)

R	N	P.N.	MOD	Q	Denominação Description	Description Bezeichnung	Denominacion Beskrivelse	Descrizione Beschrijving	L.C.
1		84312458		2	ADESIVO, SR200, Model Designation				
						DECAL	CALCOMANÍA	DECALCOMANIA	012D
					AUTOCOLLANT	AUFKLEBER	TRANSFER	STICKER	
2		84312460		1	ADESIVO, LH, Med/Large, Radial Stripe				
						DECAL	CALCOMANÍA	DECALCOMANIA	012D
					AUTOCOLLANT	AUFKLEBER	TRANSFER	STICKER	
3		84312462		1	ADESIVO, RH, Med/Large, Radial Stripe				
						DECAL	CALCOMANÍA	DECALCOMANIA	012D
					AUTOCOLLANT	AUFKLEBER	TRANSFER	STICKER	
4		84385194		1	ADESIVO, Case Logo, Front				
						DECAL	CALCOMANÍA	DECALCOMANIA	012D
					AUTOCOLLANT	AUFKLEBER	TRANSFER	STICKER	
5		84350219		1	ADESIVO, Rear, Case Logo, Background				
						DECAL	CALCOMANÍA	DECALCOMANIA	012D
					AUTOCOLLANT	AUFKLEBER	TRANSFER	STICKER	
6		84311902		1	ADESIVO, Customer Assistance, Case				
						DECAL	CALCOMANÍA	DECALCOMANIA	012D
					AUTOCOLLANT	AUFKLEBER	TRANSFER	STICKER	
7		NSS			SEM SERVIÇO EM SEPARADO				
						NOT SERVICED SEPARA	NO SE REPARA POR SE	NON FORNITO SEPARAT	064N
					NON FORUNI SEPAREM	NICHT A SEP ERS-T LIEI	SERVICERES IKKE SEPA	NIET LOS VERKRIJGBAA	
8		84383722		2	ADESIVO, Rear, Case Logo	DECAL	CALCOMANÍA	DECALCOMANIA	012D
					AUTOCOLLANT	AUFKLEBER	TRANSFER	STICKER	
9		87389374		1	DECALCOMANIA, Case Logo				
						DECAL	CALCOMANIA	AUTOADESIVO	P903
					DECALCOMANIE	ABZIEHBILD	DECAL	DECAL	
10		87429186		1	SÍMBOLO, Case, Engine	EMBLEM	EMBLEMA	STEMMA	157S
					SYMBOLE	ZEICHEN	SYMBOL	EMBLEEM	
11		87415931		1	ADESIVO, Case, Engine	DECAL	CALCOMANÍA	DECALCOMANIA	012D
					AUTOCOLLANT	AUFKLEBER	TRANSFER	STICKER	

90.180.01	02	p1	02/11

DECALS - WARNING (ALL CASE)
DECALS - WARNING (ALL CASE)
DECALS - WARNING (ALL CASE)
DECALS - WARNING (ALL CASE)

1

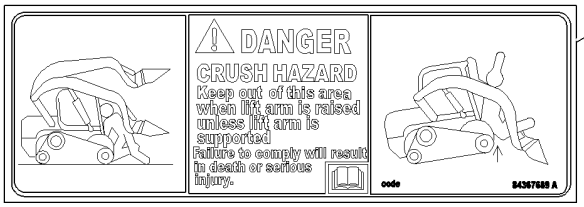

2



3

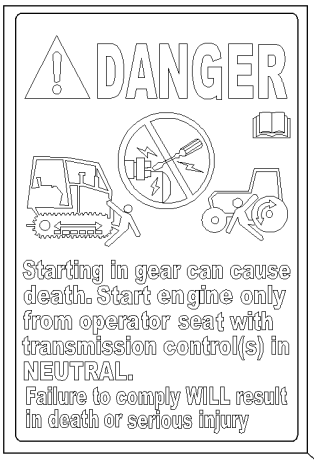

4

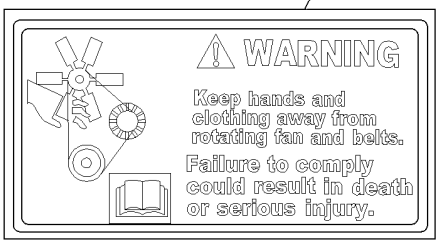

5



6



7

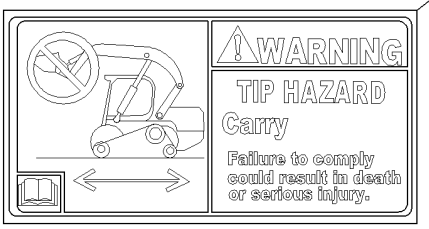

8

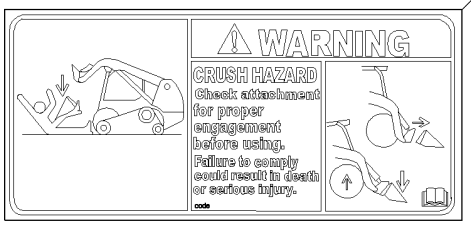

9

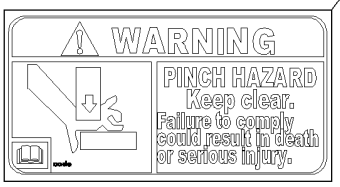

10

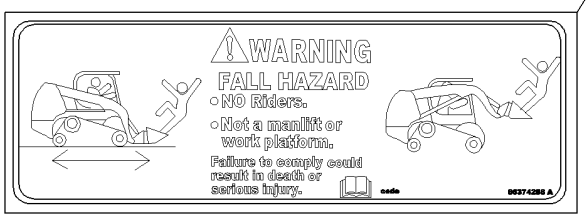

DECALS - WARNING (ALL CASE)
DECALS - WARNING (ALL CASE)
DECALS - WARNING (ALL CASE)
DECALS - WARNING (ALL CASE)

R	N	P.N.	MOD	Q	Denominação Description	Description Bezeichnung	Denominacion Beskrivelse	Descrizione Beschrijving	L.C.
1		84367563		1	ADESIVO DE PERIGO, Boom Crush Hazard				
						DANGER DECAL	RÓTULO DE PELIGRO	DECALCOMANIA PERIC(	A038
					AUTOCOLLANT DANGEF	AUFKLEBER GEFAHR	MÆRKAT, FARE	STICKER: GEVAAR	
2		84367570		1	ADESIVO DE ADVERTÊNCIA, Combination				
						WARNING DECAL	RÓTULO DE ADVERTEN	DECALCOMANIA AVVER	A040
					AUTOCOLLANT AVERTIS	AUFKLEBER WARNUNG	MÆRKAT, ADVARSEL	STICKER: WAARSCHUW	
3		84135011		1	ADESIVO, Warning, Engine Start				
						DECAL	CALCOMANÍA	DECALCOMANIA	012D
					AUTOCOLLANT	AUFKLEBER	TRANSFER	STICKER	
4		9828825		1	ADESIVO DE ADVERTÊNCIA, Fan				
						WARNING DECAL	RÓTULO DE ADVERTEN	DECALCOMANIA AVVER	A040
					AUTOCOLLANT AVERTIS	AUFKLEBER WARNUNG	MÆRKAT, ADVARSEL	STICKER: WAARSCHUW	
5		8603092		1	ADESIVO DE ADVERTÊNCIA, Ether				
						WARNING DECAL	RÓTULO DE ADVERTEN	DECALCOMANIA AVVER	A040
					AUTOCOLLANT AVERTIS	AUFKLEBER WARNUNG	MÆRKAT, ADVARSEL	STICKER: WAARSCHUW	
6		84316983		1	ADESIVO, Warning, Radiator Cap				
						DECAL	CALCOMANÍA	DECALCOMANIA	012D
					AUTOCOLLANT	AUFKLEBER	TRANSFER	STICKER	
7		84367572		1	ADESIVO DE PERIGO, Tip Hazard				
						DANGER DECAL	RÓTULO DE PELIGRO	DECALCOMANIA PERIC(	A038
					AUTOCOLLANT DANGEF	AUFKLEBER GEFAHR	MÆRKAT, FARE	STICKER: GEVAAR	
8		84367561		1	ADESIVO DE ADVERTÊNCIA, Crush Hazard				
						WARNING DECAL	RÓTULO DE ADVERTEN	DECALCOMANIA AVVER	A040
					AUTOCOLLANT AVERTIS	AUFKLEBER WARNUNG	MÆRKAT, ADVARSEL	STICKER: WAARSCHUW	
9		84394350		2	ADESIVO DE ADVERTÊNCIA, Pinch Point				
						WARNING DECAL	RÓTULO DE ADVERTEN	DECALCOMANIA AVVER	A040
					AUTOCOLLANT AVERTIS	AUFKLEBER WARNUNG	MÆRKAT, ADVARSEL	STICKER: WAARSCHUW	
10		84374298		1	ADESIVO DE ADVERTÊNCIA, No Rider, Manlift				
						WARNING DECAL	RÓTULO DE ADVERTEN	DECALCOMANIA AVVER	A040
					AUTOCOLLANT AVERTIS	AUFKLEBER WARNUNG	MÆRKAT, ADVARSEL	STICKER: WAARSCHUW	

DECALS (ALL CASE)
DECALS (ALL CASE)
DECALS (ALL CASE)
DECALS (ALL CASE)

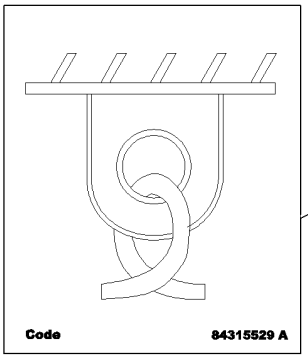

1

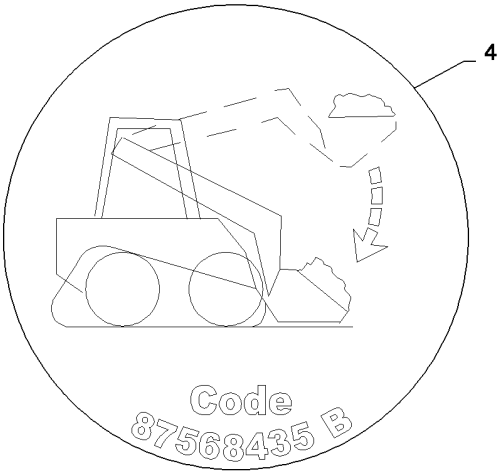

4

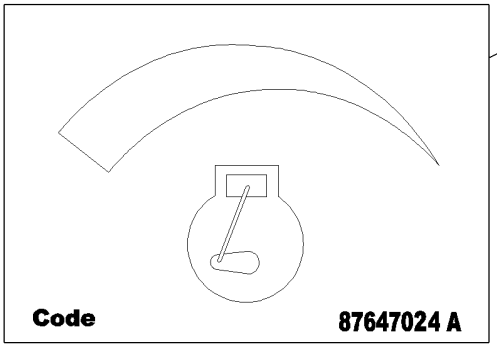

2

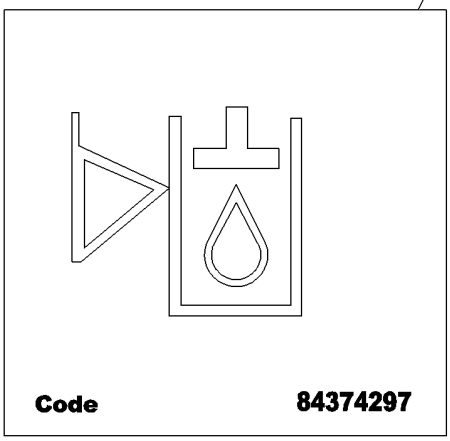

5

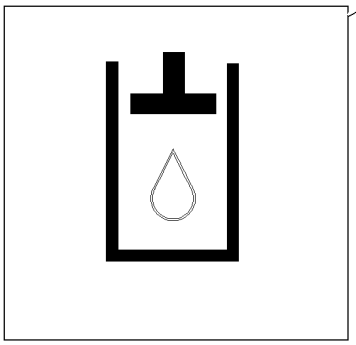

3

DECALS (ALL CASE)
DECALS (ALL CASE)
DECALS (ALL CASE)
DECALS (ALL CASE)

R	N	P.N.	MOD	Q	Denominação Description Bezeichnung	Description Bezeichnung	Denominacion Beskrivelse	Descrizione Beschrijving	L.C.
1		**84315529**		4	ADESIVO, Tie Down AUTOCOLLANT	DECAL AUFKLEBER	CALCOMANÍA TRANSFER	DECALCOMANIA STICKER	012D
2		**87647024**		1	ADESIVO, Throttle AUTOCOLLANT	DECAL AUFKLEBER	CALCOMANÍA TRANSFER	DECALCOMANIA STICKER	012D
3		**251753A1**		1	ADESIVO, Hydraulic Fluid AUTOCOLLANT	DECAL AUFKLEBER	CALCOMANÍA TRANSFER	DECALCOMANIA STICKER	012D
4		**87568435**		1	ADESIVO, Boom Override AUTOCOLLANT	DECAL AUFKLEBER	CALCOMANÍA TRANSFER	DECALCOMANIA STICKER	012D
5		**84374297**		1	ADESIVO, Hydraulic Oil Level AUTOCOLLANT	DECAL AUFKLEBER	CALCOMANÍA TRANSFER	DECALCOMANIA STICKER	012D
6		**84469201**		2	ADESIVO, Tie Down (Not Shown) AUTOCOLLANT	DECAL AUFKLEBER	CALCOMANÍA TRANSFER	DECALCOMANIA STICKER	012D

90.180.01	04	p1	02/11

DECALS (SR200)
DECALS (SR200)
DECALS (SR200)
DECALS (SR200)

1

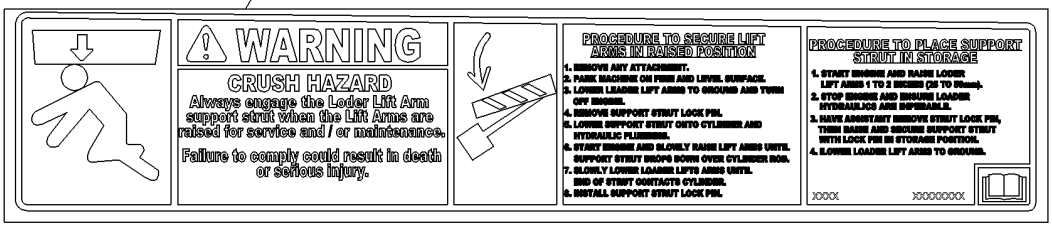

2

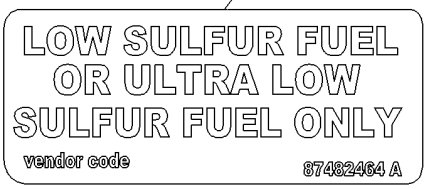

3

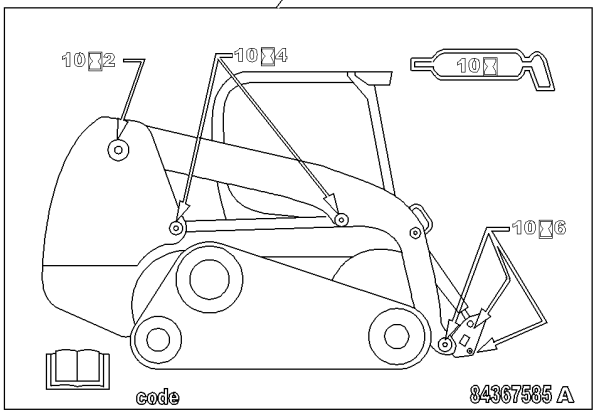

4

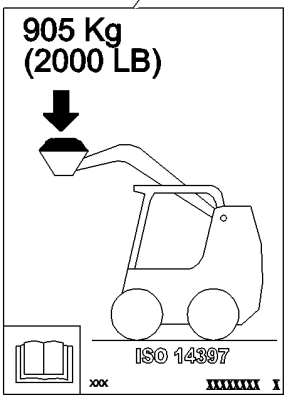

5

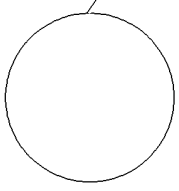

6

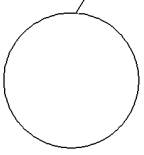

DECALS (SR200)
DECALS (SR200)
DECALS (SR200)
DECALS (SR200)

R	N	P.N.	MOD	Q	Denominação Description Bezeichnung	Description Bezeichnung	Denominacion Beskrivelse	Descrizione Beschrijving	L.C.
1		84367429		1	ADESIVO DE ADVERTÊNCIA, Crush Hazard				
						WARNING DECAL	RÓTULO DE ADVERTEN	DECALCOMANIA AVVER	A040
					AUTOCOLLANT AVERTIS	AUFKLEBER WARNUNG	MÆRKAT, ADVARSEL	STICKER: WAARSCHUW	
2		87482464		1	ADESIVO, Low Sulfur Fuel	DECAL	CALCOMANÍA	DECALCOMANIA	012D
					AUTOCOLLANT	AUFKLEBER	TRANSFER	STICKER	
3		84367585		1	ADESIVO, Lubrication, Radial				
						DECAL	CALCOMANÍA	DECALCOMANIA	012D
					AUTOCOLLANT	AUFKLEBER	TRANSFER	STICKER	
4		84350658		1	ADESIVO, Operating Capacity				
						DECAL	CALCOMANÍA	DECALCOMANIA	012D
					AUTOCOLLANT	AUFKLEBER	TRANSFER	STICKER	
5		84357636		1	ADESIVO, Plug	DECAL	CALCOMANÍA	DECALCOMANIA	012D
					AUTOCOLLANT	AUFKLEBER	TRANSFER	STICKER	
6		299274A2		4	TAMPA, Lexan	COVER	TAPA	COPERCHIO	2250
					COUVERCLE	DECKEL	COVER	COVER	