RUTHZIL TRATOR COMERCIAL DE PEÇAS LTDA 11 97083-6812 ROLANDO CITRANGULO

AGOSTO 2011

CASE CONSTRUCTION

SV185

MINI PÁ CARREGADEIRA

GENERAL
GENERAL
GENERAL

ENGINE
MOTOR
MOTEUR

FUEL
COMBUSTIBLE
CARBURANT

ELECTRICAL SYSTEM
SISTEMA ELECTRICO
SYSTEME ELECTRIQUE

STEERING
DIRECCION
DIRECTION

TRANSMISSION
TRANSMISION
TRANSMISSION

BRAKES
FRENOS
FREINS

HYDRAULIC SYSTEM
SISTEMA HIDRAULICO
SYSTEME HIDRAULIQUE

CHASSIS
BASTIDOR
CHASSIS

NUMERICAL INDEX
INDICE NUMERICO
INDEX NUMERIQUE

71114407 08/2011

SV185
SKID STEER LOADER
Parts Catalog nº 71114407

GENERAL
GENERAL
GENERAL
1

SV185
MINI CARGADORA
Catálogo de Repuestos nº 71114407

SV185
MINI CARREGADEIRA
Catálogo de Peças nº 71114407



Issued 08/2011 Edición 08/2011 Edição 08/2011

Todos os direitos são reservados à **CNH LATIN AMERICA LTDA.**.
Os dados contidos neste catálogo são fornecidos a título de indicação somente. A qualquer momento, a **CNH LATIN AMERICA LTDA.** poderá introduzir, por razões de ordem técnica ou comerciais, modificações nos produtos descritos neste catálogo. Para informações mais detalhadas e atualizadas, solicitamos ao usuário consultar o concessionário **CNH LATIN AMERICA LTDA.** mais próximo.
O sistema de numeração das peças utilizado neste catálogo não pode ser copiado ou utilizado sem autorização por escrito da **CNH LATIN AMERICA LTDA.**.

All rights reserved by Soc. **CNH LATIN AMERICA LTDA.**.
The information contained in this catalogue is intended to be of a general nature only. The **CNH LATIN AMERICA LTDA.** may at any time and from time to time, for technical or other necessary reasons, modify any of the details or specifications of the product described in this catalogue. To be sure of getting accurate, detailed and up-to-date information, an intending buyer should consult his nearest **CNH LATIN AMERICA LTDA.** dealer or distributor.
Single item numeration method used in this catalogue may not be used without written consent by Soc. **CNH LATIN AMERICA LTDA.**.

Reservados todos los derechos para Soc. **CNH LATIN AMERICA LTDA.**.
Los datos contenidos en este catálogo se facilitan a titulo indicativo. **CNH LATIN AMERICA LTDA.** podrá introducir, en cualquier momento, por razones de naturaleza tanto técnica como comercial, modificaciones en los modelos descritos en este catálogo. Para mayor información rogamos al cliente se dirija al Concesionario o Filiale **CNH LATIN AMERICA LTDA.** más próximo.
El sistema de numeración de las piezas reseñadas en el catálogo no puede ser objeto de imitación o copia en ningun caso sin autorización por escrito de Soc. **CNH LATIN AMERICA LTDA.**.

Tutti i diritti sono riservati alla Soc. **CNH LATIN AMERICA LTDA.**.
Il sistema di numerazione che individua is ingoli particolare elencati nel presente calatogo non può essere adottato in alcun caso senza autorizzazione scritta dalla Soc. **CNH LATIN AMERICA LTDA.**. I dati contenuti in questo catalogo sono forniti a titolo indicativo. La **CNH LATIN AMERICA LTDA.** potrà apportare in qualunque momento modifiche ai modelli descritti in questo catalogo, per ragioni di natura tecnica o commerciale.
Per ulteriore informazione, il cliente è pregato di rivolgersi al più vicino Concessionario o Sede **CNH LATIN AMERICA LTDA.**.

Alle in diesem Propekt anthaltenen Angaben sind Orientierungsdate. Es können jedoch von **CNH LATIN AMERICA LTDA.** sowohl aus technischen und Kaufmännischen Gründen als auch aus der Notwendigkeit, geänderte gesetzliche Erfordernisse der verschiedenen Lander zu berücksichtigen, Anderugen einge führt werden. Der Kunde ist gebeten, sich für weirtere information an Vertragshändler order.
CNH LATIN AMERICA LTDA.-Niederlassungen zu werden.
Alle Urheberrechte sind von der **CNH LATIN AMERICA LTDA.**-vorbehalten.
Die Benutzung des Numerierungssustems zur Kennzeichnung der im vorliegende Katalog aufgeführten Ersatzteile bedarf in jedem Falle der schriftlichen Genehmigung der **CNH LATIN AMERICA LTDA.**.

Tous droits réservés à la Soc. **CNH LATIN AMERICA LTDA.**.
Les données de cette brochure sont fournies à titre indicatif et pourraient se révéler caduques à la suite de modifications apportées par le constructeur, à n'import quel moment, pour de raisons techniques ou commerciales ainsi que pour satisfaire aux normes en vigueur dans le différents Pays. Pour toute information, nous prions le client de bien vouloir s'adresser au Concessionnaire ou à la Filiale **CNH LATIN AMERICA LTDA.** les plus proches.
Le système de numérotation des pièces en list dans ce catalogue ne peut être adopté en aucun cas, sans une autorisation écrite de la Soc. **CNH LATIN AMERICA LTDA.**.

Copyrigth by **CNH LATIN AMERICA LTDA.**
Printed in Brazil

INSTRUÇÕES PARA O PEDIDO DE PEÇAS DE SERVIÇO

“Os números de peça indicados neste catálogo estão corretos até a data da publicação. A política da New Holland de contínuo melhoramento dos produtos durante toda a vida de produção do modelo, pode dar origem às últimas alterações nas figuras e nos números de peça. Quando encomendar peças de substituição, certifique-se de confirmar suas especificações no CD atual do sistema PAL ou com a microficha do catálogo de peças no seu concessionário.”

INSTRUCTIONS FOR ORDERING SPARE PARTS

“The part numbers shown in this catalogue are correct up to the date of publication. New Holland policy of continuously improving our products during the production lifetime of the Model may result in later changes to illustrations and to part numbers. When ordering replacement parts be sure to confirm your requirements against the current CD based PAL or microfiche parts catalogue at your dealership.”

INSTRUCCIONES PARA LOS PEDIDOS DE RECAMBIOS

“Los números de pieza indicados en este catálogo son los correctos en la fecha de la publicación. La política de New Holland es de constante mejora de sus productos durante todo el período de vida de la producción del Modelo, lo que puede hacer que se produzcan cambios en las ilustraciones y en los números de pieza. Al hacer pedidos de recambios debe asegurarse de que sean de acuerdo con sus necesidades comprobando el CD actualizado en sistema PAL o bien las microfichas de catálogos existentes en la agencia.”

ISTRUZIONI PER ORDINARE I RICAMBI

“ I numeri ricambio riportati in questo catalogo si intendono corretti fino alla data della pubblicazione. La New Holland persegue una politica di continuo miglioramento del prodotto durante tutto il periodo di produzione del modello per cui può accadere che ci siano modifiche successive alle illustrazioni e ai numeri ricambio. Al momento di ordinare un particolare di ricambio, verificare accuratamente i dati utilizzando il CD PAL o il catalogo ricambi su microfiche presente presso la Concessionaria.

ANLEITUNG ZUM BESTELLEN VON ERSATZTEILEN

“Die in diesem Katalog aufgeführten Teilnummern sind am Tag der Veröffentlichung korrekt. Die Firmenpolitik von New Holland sieht während der Produktionsdauer dieses Modells dessen kontinuierliche Verbesserung vor; dies kann zu späteren Änderungen an Abbildungen und Teilnummern führen. Stellen Sie vor der Bestellung von Ersatzteilen sicher, daß Sie bei Ihrem Händlerbetrieb die von Ihnen benötigten Teile mit dem aktuellen PAL auf der Grundlag e von CDs oder dem aktuellen Microfiche-Ersatzteilkatalog abgeglichen haben.”

INSTRUCTIONS POUR COMMANDE PIECES DETACHEES

Les références de pièces détachées notées dans ce catalogue sont correctes à la date de publication.La politique New Holland pour l’amélioration constante des produits durant la durée de vie des modèles peut changer les illustrations et les références des pièces détachées.Quand l’ordre de remplacement de pièces est confirmé, il est nécessaire de mettre à jour l’actuel CD base PAL ou microfiches de pièces détachées chez votre concessionnaire.

REGRAS PARA PEDIDO DE PEÇAS

Este catálogo está dividido em seções principais correspondendo a áreas específicas do produto. Cada seção está representada através de figuras detalhadas (desenhos) para auxiliar na localização e identificação de peças. As peças disponíveis para serviço estão indicadas ao lado da figura e, para a correta identificação das peças necessárias proceder da seguinte forma:

1) Consultar a figura da seção principal na página 16 para identificar a seção em questão.

2) Em seguida, consultar as páginas 17 a 36 para encontrar a figura à qual pertence o número de peça necessário.

3) Consultar o índice do número de peça na página 44. Este índice apresenta todos os números de peça que aparecem no catálogo.

ORDERING RULES

This catalogue is divided into main sections corresponding to specific areas of the product. Each section is represented by detailed figures (illustrations) to assist in locating and identifying parts. Parts released for service are indicated alongside the figure, hence, for the correct identification of parts required proceed as follows:

1) Consult the main section illustration on page 16 to identify the section in question.

2) Then consult pages 17 to 36 to find the figure to which the required part number belongs.

3) Refer to the part number index on page 44. This index lists all part numbers appearing in the catalogue.

NORMATIVA DE PEDIDOS

Este catálogo se divide en tres secciones principales correspondientes a áreas específicas del producto. Cada sección se representa con figuras detalladas (ilustraciones) para facilitar la localización e identificación de las piezas. Las piezas disponibles para el servicio se encuentran indicadas al lado de la figura, de aquí, que para la identificación correcta de las piezas necesarias, deba seguirse este orden:

1) Consultar la sección principal en la ilustración de la página 16 para identificar la sección en cuestión.

2) Seguidamente consultar las páginas 17 to 36 para localizar la figura a la que pertenece el número de pieza buscada.

3) Ver el índica de números de pieza en la página 44. Este índica contiene todos los números de pieza del catálogo.

NORME PER L'ORDINAZIONE

Questo catalogo è suddiviso in sezioni principali corrispondenti alle aree specifiche della macchina. Ogni sezione è composta da figure tecniche dettagliate che agevolano l'individuazione e l'identificazione dei particolari. I particolari disponibili per l'assistenza sono indicati unitamente alla figura, per cui per la corretta identificazione degli stess i è necessario procedere come segue:

1) Consultare l'illustrazione delle sezioni principali a pag. 16 per individuare la sezione che interessa.

2) Consultare poi le pagine da 17 a 36 per trovare la figura alla quale appartiene il numero del ricambio necessario.

3) Fare riferimento all'indice dei numeri ricambio a pag. 44, che elenca tutti i numeri ricambio che appaiono nel catalogo.

BESTELLREGELN

Dieser Katalog ist in Hauptabschnitte aufgeteilt, die speziellen Baugruppen des Produkts entsprechen. Jeder Abschnitt wird durch detaillierte Abbildungen veranschaulicht, die das Auffinden und Identifizieren von Teilen erleichtern. Für den Service freigegebene Teile sind neben der Abbildung aufgeführt; um erforderliche Teile richtig zuzuordnen, gehen Sie somit wie folgt vor:

1) Stellen Sie mit Hilfe der auf Seite 16 veranschaulichten Hauptabschnitte fest, zu welcher Baugruppe bzw. welchem Abschnitt das Teil gehört.

2) Suchen Sie dann auf den Seiten 17 bis 36 die Abbildung, zu der die Nu mmer des benötigten Teils gehört.

3) Suchen Sie die Nummer im Teilnummer-Verzeichnis auf Seite 44. In diesem Verzeichnis sind alle im Katalog enthaltenen Teilnummern zusammengefaßt.

REGLES DE COMMANDES

Ce catalogue est divisé en sections principales correspondant aux aires spécifiques de production. Chaques sections est représentées par des figures détaillées (illustrations) pour aider à la localisation et à l'identification des pièces détachées. Les pièces nécessaires pour le service sont indiquées sur le côté de la figure, pour l'identification correcte de la pièce requise procédez comme ci dessous

1) Consultez l'illustration de la section principale page 16 pour identifier la section en question

2) Consulter les pages de 17 à 36 pour trouver la figure qui contient la référence demandée

3) Se référer à l'index de la référence pièce à la page 44 .Cet index indique toutes les références pièces apparaissant dans le catalogue.

01.01	01	p6	02/03

CHASSI
MAIN FRAME
BASTIDOR
TELAIO
GESTELL
CHASSI

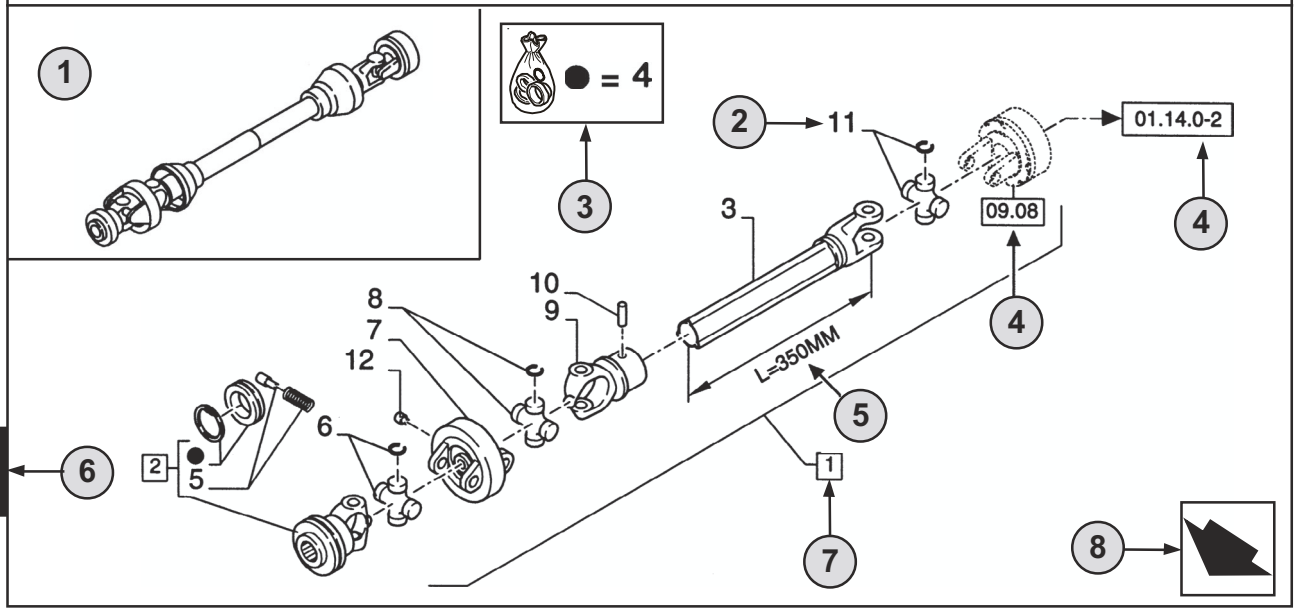

1

9 10

01.01	01	p6	02/03
11	12	13	14

CHASSI - D0200
MAIN FRAME
BASTIDOR
TELAIO
GESTELL
CHASSI

R	N	P.N.	MOD	Q	Descrição	Description	Descripción	L.C.
	A	**86529340**		1	TOMADA DE FORÇA **(2 AO 11)**	SHAFT, PTO	TOMA DE FUERZA	207P
2		**84014007**		1	GARFO **(4,5)**	YOKE	HORQUILLA	085F
3		**NSS**		1	EIXO, **L=350MM**	SHAFT	EJE	016A
4		**84004292**	C0204	1	KIT	KIT	EQUIPO	305C
		[84058743]	D0500	1	KIT	KIT	EQUIPO	305C

15 16 7 2 18 19 20 21 17 22 22 23

(A) SOMENTE BRASIL 24

1

STANDARD 25

26 **MODELOS**

PORTUGUÊS

1 **Posição** da “Figura” na máquina.

2 Referência - figura chamar pelo n° de peça.

3 Peças fornecidas nos kits de reparação por referência de símbolo.

4 01.14.0-2 Peça indicada na **Página** ou no **Figura**, ou chamadas para **Variações** ou **Detalhes**. Indicam componentes que se mostram em detalhe em um outro local do catálogo com o número da figura indicado.

5 Especificações técnicas relacionadas com a peça indicada.

6 Número da **Seção**.

7 2 Inclui os item(s) .....

8 Orientação (A seta indica a frente da máquina). 

9 Descrição da figura.

10 Informação geral da figura.

11 Código do **Conjunto**.

12 Código de **Seqüência** no conjunto.

13 Número da página no código de seqüência.

14 **Data** da impressão ou da atualização da página (mês-ano).

15 **Nota** - Em relação ao n°. de peça. Existe uma chave para os símbolos e abreviaturas na parte inferior da página.

16 Peças que não são disponibilizadas (ver a Página 42).

17 Descrição adicional da peça para auxiliar a confirmar a identificação.
Consultar a página 42 para explicação dos símbolos usados.

18 Não disponível como peça de serviço.

19 Número de Peça.

20 Modificação.
C 0201 = Peça válida **ATÉ 0201** mudar.
D 0300 = Peça válida **A PARTIR** de **0300** mudar.
F 0202 = Peça válida **A PARTIR do N°. de Série.... até ao N°. de Série....**

Implementação da mudança. N° de série a partir do qual a alteração tem início. Os números são indicados na plaqueta de identificação do modelo (ver a página 38).
Ex.: **D0300 N° de Série 2503001** significa que a peça foi montada **“A PARTIR”** do n°. de série **2503001.**
Como conseqüência, as peças marcadas por **C0201**, foram montadas **“ATÉ”** ao n°. de série **2501999.**
Ver a tabela de códigos na página 41.

21 **Quantidade** total de peças referenciadas na página. A quantidade pode ser substituída pelas seguintes indicações:
M = fornecido em metros. **AR** = Quantidade consoante ao pedido.

22 **Descrição** da peça.

23 **L.C. - Código Léxico** para a identificação dos nomes das peças (ver página 45).

24 Referências de rodapé.

25 Notas das figuras.

26 Número do modelo.

01.01	01	p8	02/03

CHASSI
MAIN FRAME
BASTIDOR
TELAIO
GESTELL
CHASSI

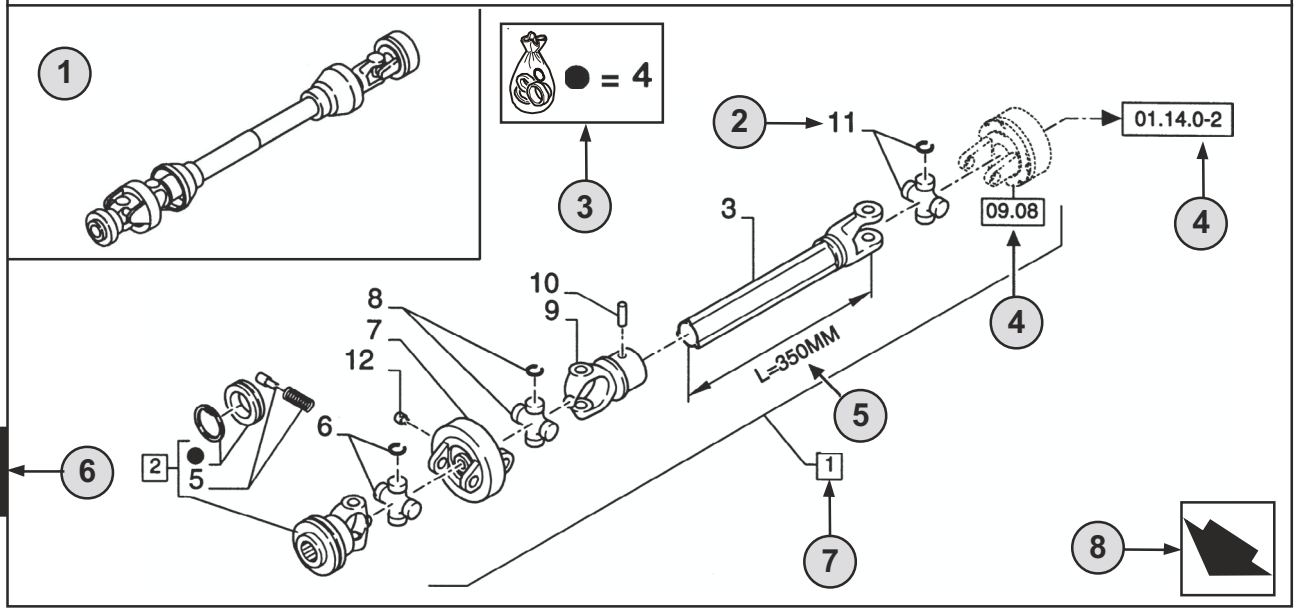

9 10

01.01	01	p8	02/03
11	12	13	14

CHASSI - D0200
MAIN FRAME
BASTIDOR
TELAIO
GESTELL
CHASSI

R	N	P.N.	MOD	Q	Descrição	Description	Descripción	L.C.
	A	**86529340**		1	TOMADA DE FORÇA **(2 AO 11)**	SHAFT, PTO	TOMA DE FUERZA	207P
2		**84014007**		1	GARFO **(4,5)**	YOKE	HORQUILLA	085F
3		**NSS**		1	EIXO, **L=350MM**	SHAFT	EJE	016A
4		**84004292**	C0204	1	KIT	KIT	EQUIPO	305C
		[84058743]	D0500	1	KIT	KIT	EQUIPO	305C

15 16 7 2 18 19 20 21 17 22 22 23

(A) SOMENTE BRASIL 24

STANDARD 25

26 **MODELOS**

1

ENGLISH

1 **Position** of the “Figure” on the machine.

2 Reference - Figure call-out of the partnumber.

3 Parts supplied in repair kits per symbol reference.

4 01.14.0-2 Part illustrated on the **Page** or in the **Figure** indicated, or calls for **Variations** or **Details**. Indicates components shown in detail elsewhere in the catalogue under the figure number shown.

5 Technical specifications relating to the Part indicated.

6 **Section** number.

7 2 Includes item(s) .....

8 Orientation. (Arrow indicates front of the machine). 

9 Figure description.

10 General information of the figure.

11 **Assembly** code.

12 **Sequence** code within the assembly.

13 Page number within the sequence code.

14 **Date** of printing or updating of page (month-year).

15 **Note** - Relating to the Part Number. There is a key to symbols and abbreviations at the bottom of the text page.

16 Non-serviced parts. (see page 42).

17 Further description of the part to help confirm identification. Refer to page 42 for explanation of symbols used.

18 Not available as service part.

19 Part Number.

20 Modification.
C 0201 = Part valid **UNTIL 0201** change.
D 0300 = Part valid **FROM 0300** change.
F 0202 = Part valid **FROM Serial N.... to Serial N....**

Implementation of change. Serial number from which the change starts.
The numbers are indicated on the identification plate of the model (see page 38).
E.g.: **D0300 Serial n° 2503001** means that the part has been installed **“FROM”** serial number **2503001**. Consequently, the parts marked by C0201, were installed **“UP TO”** serial number **2501999**.
See code table page 41.

21 Total **Quantity** of the Part referred to in the page.
The quantity can be replaced by the following indications:
M = supplied in metres. **AR** = quantity as requested.

22 Part **Description**.

23 **L.C. - Lexicon code** for the identification of Part names (see page 45).

24 Footnote references.

25 Figure notes.

26 Model number.

01.01	01	p10	02/03

CHASSI
MAIN FRAME
BASTIDOR
TELAIO
GESTELL
CHASSI

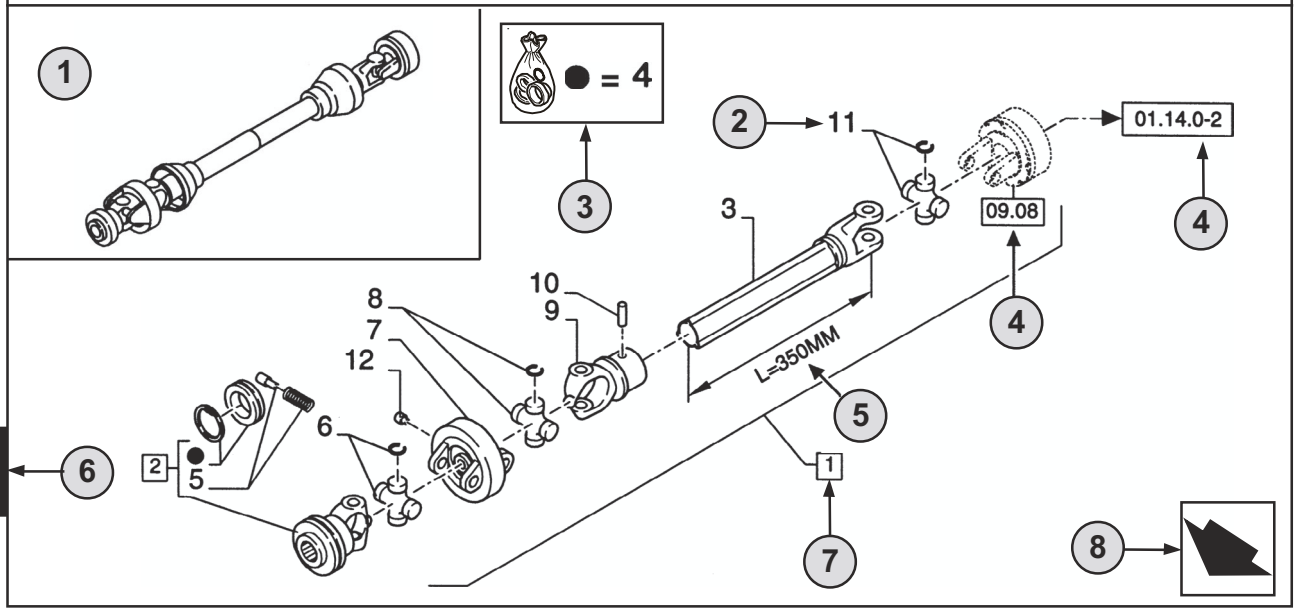

1

9 10

01.01	01	p10	02/03
11	12	13	14

CHASSI - D0200
MAIN FRAME
BASTIDOR
TELAIO
GESTELL
CHASSI

R	N	P.N.	MOD	Q	Descrição	Description	Descripción	L.C.
	A	**86529340**		1	TOMADA DE FORÇA **(2 AO 11)**	SHAFT, PTO	TOMA DE FUERZA	207P
2		**84014007**		1	GARFO **(4,5)**	YOKE	HORQUILLA	085F
3		**NSS**		1	EIXO, **L=350MM**	SHAFT	EJE	016A
4		**84004292**	C0204	1	KIT	KIT	EQUIPO	305C
		[84058743]	D0500	1	KIT	KIT	EQUIPO	305C

15 16 7 2 18 19 20 21 17 22 22 23

(A) SOMENTE BRASIL 24

1

STANDARD 25

26 **MODELOS**

ESPAÑOL

1 **Posición** de la “Figura” en la máquina.

2 Referencia - Figura correspondiente del número de pieza.

3 Piezas suministradas en juegos de reparación por símbolo de referencia.

4 01.14.0-2 Pieza ilustrada en la **Página** o en la **Figura** indicado, o indicaciones por **Variaciones** o **Detalles.** Señala componentes mostrados en detalle en algún lugar del catálogo bajo este número de figura.

5 Especificaciones técnicas relacionadas con la pieza indicada.

6 Número de **Sección**.

7 2 Incluye punto(s) .....

8 Orientación (La flecha indica la parte delantera de la máquina). 

9 Descripción de la figura.

10 Información general de la figura.

11 Código de **Conjunto.**

12 Código de **Secuencia dentro del conjunto.**

13 Número de pieza dentro del código de secuencia.

14 **Fecha** de impresión o puesta al día de la página (mes-año).

15 **Nota -** Relacionada con el Número de Pieza.Hay una clave de símbolos y abreviaciones al final de la página de texto.

16 Piezas que no se suministran en servicio (ver página 42).

17 Descripción ulterior de la pieza para facilitar su identificación. Ver la explicación de los símbolos utilizados en la página 42.

18 No disponible como pieza de servicio.

19 Número de pieza.

20 Modificación.
C 0201 = Pieza válida **HASTA** el cambio **0201**.
D 0300 = Pieza válida **DESDE** el cambio **0300**.
F 0202 = Pieza válida **DESDE el N° de Serie.... al N° de Serie....**

Implementación del cambio. Número de serie a partir del cual comienza el cambio. Los números se indican en la placa de identificación del modelo (ver página 38).
P.e.: **D0300 Serie n° 2503001** significa que las piezas se han instalado **“DESDE”** el número de serie **2503001**.
En consecuencia, las piezas marcadas con **C0201**, fueron montadas **“HASTA”** el número de serie **2501999**.
Ver tabla de códigos en la página 41.

21 **Cantidad** total de las piezas referenciadas en la página.
La cantidad puede ser sustituida por cualquiera de las siguientes indicaciones:
M = suministrada por metros. **AR** = cantidad según sea necesario.

22 **Descripción** de la pieza.

23 **L.C. - Código Léxico** para la identificación de los nombres de piezas (ver página 45).

24 Notas de pié de página.

25 Notas de figura.

26 Número de modelo.

01.01	01	p12	02/03

CHASSI
MAIN FRAME
BASTIDOR
TELAIO
GESTELL
CHASSI

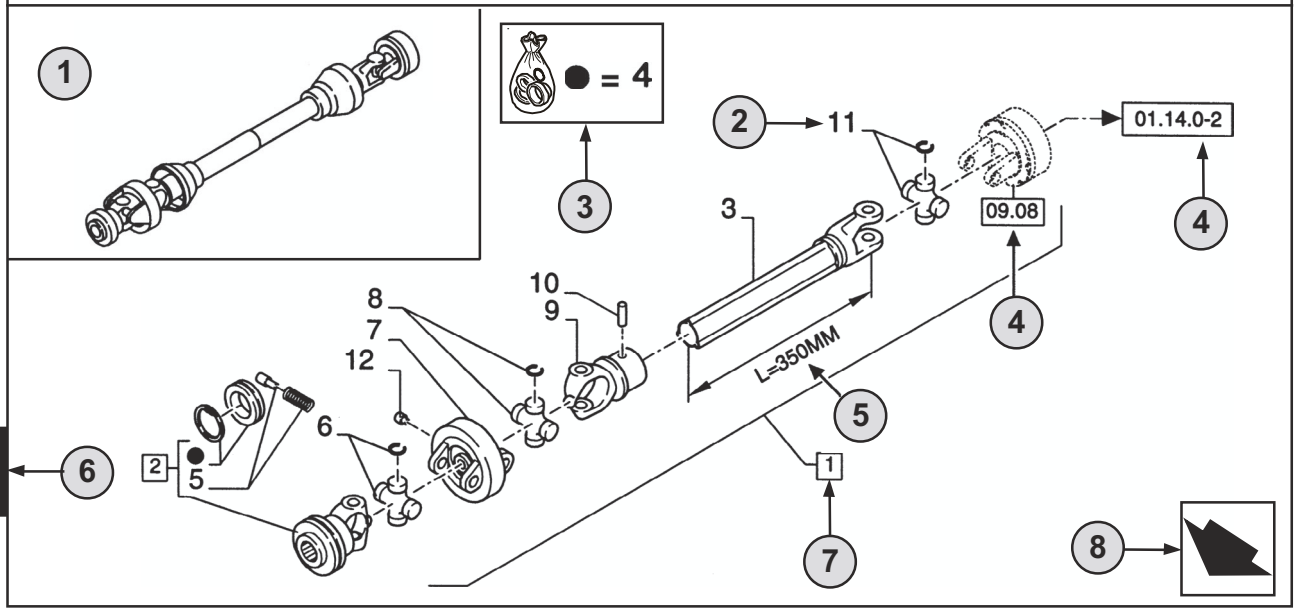

1

9 10

01.01	01	p12	02/03
11	12	13	14

CHASSI - D0200
MAIN FRAME
BASTIDOR
TELAIO
GESTELL
CHASSI

R	N	P.N.	MOD	Q	Descrição	Description	Descripción	L.C.
	A	**86529340**		1	TOMADA DE FORÇA **(2 AO 11)**	SHAFT, PTO	TOMA DE FUERZA	207P
2		**84014007**		1	GARFO **(4,5)**	YOKE	HORQUILLA	085F
3		**NSS**		1	EIXO, **L=350MM**	SHAFT	EJE	016A
4		**84004292**	C0204	1	KIT	KIT	EQUIPO	305C
		[84058743]	D0500	1	KIT	KIT	EQUIPO	305C

15 16 7 2 18 19 20 21 17 22 22 23

(A) SOMENTE BRASIL 24

1

STANDARD 25

26 **MODELOS**

1 **Posizione** della “Figura” sulla macchina.

2 Riferimento del Numero ricambio nella figura.

3 Particolari forniti nei corredi di riparazione per riferimento simbolico.

4 01.14.0-2 Particolare illustrato alla **Pagina** o nella **Figura** indicata, oppure richiamo per **Variazioni** o **Dettagli.** Indica i componenti illustrati in dettaglio in un’altra parte nel catalogo sotto il numero di figura riportato.

5 Dati tecnici relativi al particolare indicato.

6 Numero **Sezione**.

7 2 Comprende il/i pezzo/i .....

8 Orientamento (la freccia indica la parte anteriore della macchina). 

9 Descrizione figura.

10 Informazioni generali sulla figura.

11 Codice **complessivo**.

12 Codice **sequenza** nel complessivo.

13 Numero pagina nel codice sequenza.

14 **Data** di stampa o di aggiornamento della pagina (mese-anno).

15 **Nota** - Si riferisce al numero ricambio. In fondo alla pagina di testo è riportato la legenda dei simboli e delle abbreviazioni.

16 Particolari non soggetti a manutenzione (vedi pag.42).

17 Ulteriore descrizione del particolare per confermare definitivamente l’indentificazione.Fare riferimento a pag.42 per la spiegazione dei simboli utilizzati.

18 Non disponibile come particolare per l’assistenza.

19 Numero ricambio.

20 Modifica.
C 0201 = Particolare valido **FINO alla modifica 0201**.
D 0300 = Particolare valido **A PARTIRE dalla modifica 0300**.
F 0202 = Particolare valido **A PARTIRE dal telaio n. .... fino al telaio n. ....**

Introduzione della modifica. Numero telaio a partire dal quale la modifica è stata adottata.
I numeri sono indicati sulla targhetta di identificazione del modello (vedi pag. 38).
E.s.: **D0300 telaio n. 2503001** significa che il particolare è stato installato **“A PARTIRE DAL”** talaio n. **2503001**. Per cui, i particolari marcati **C0201**, sono stati installati **“FINO AL”** telaio n. **2501999**.
Vedere tabella codici a pag. 41.

21 **Quantità** totale del particolare indicato nella pagina.
La quantità può essere sostituita dalle indicazioni seguenti:
M = fornito a metri. **AR** = quantità come necessario (‘as required’).

22 **Descrizione particolare**.

23 **L.C. - Codice Lessico** per l’identificazione dei nomi dei particolari (vedi pag.45).

24 Riferimenti note a piè di pagina.

25 Note figura**.**

26 Numero modello.

01.01	01	p14	02/03

CHASSI
MAIN FRAME
BASTIDOR
TELAIO
GESTELL
CHASSI

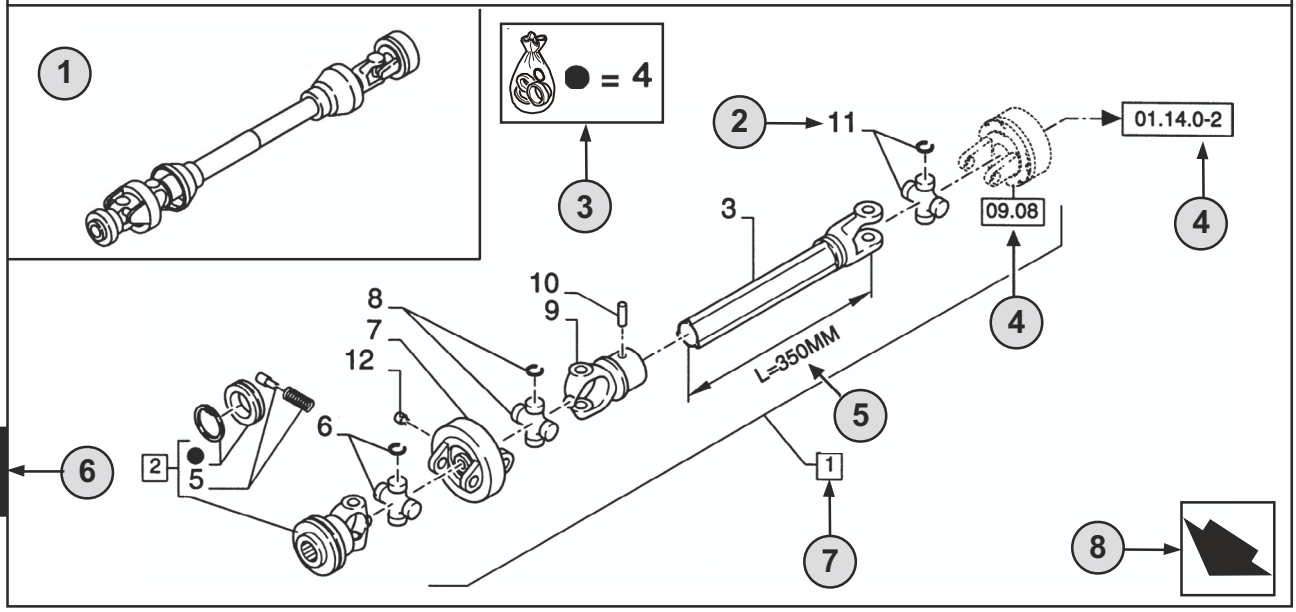

1

9 10

01.01	01	p14	02/03
11	12	13	14

CHASSI - D0200
MAIN FRAME
BASTIDOR
TELAIO
GESTELL
CHASSI

R	N	P.N.	MOD	Q	Descrição	Description	Descripción	L.C.
	A	**86529340**		1	TOMADA DE FORÇA **(2 AO 11)**	SHAFT, PTO	TOMA DE FUERZA	207P
2		**84014007**		1	GARFO **(4,5)**	YOKE	HORQUILLA	085F
3		**NSS**		1	EIXO, **L=350MM**	SHAFT	EJE	016A
4		**84004292**	C0204	1	KIT	KIT	EQUIPO	305C
		[84058743]	D0500	1	KIT	KIT	EQUIPO	305C

15 16 7 2 18 19 20 21 17 22 22 23

(A) SOMENTE BRASIL 24

1

STANDARD 25

26 **MODELOS**

DEUTSCH

1 **Position** der “Abbildung” an der Maschine.

2 Bezug - Abbilding, auf der die Teilnummer aufgeführt ist.

3 Teile, die gemäß der Bezeichnung durch das Symbol in Reparatursätzen geliefert werden.

4 01.14.0-2 Teil, das auf der angegebenen **Seite** oder **Abbildung** veranschaulicht ist, oder Verweis auf **Änderungen** oder **dataillierte Angaben**. Angabe von Teilen, die an anderer Stelle innerhalb des Katalogs unter der dargestellten Abbildungsnummer detailliert dargestellt sind.

5 Technische Daten zum angegebenen Teil.

6 **Abschnitts**nummer.

7 2 I Umfaßt Teil(e) .....

8 Orientierung (der Pfeil weist zur Vorderseite der Maschine). 

9 Beschreibung der Abbildung.

10 Allgemeine Information zur Abbildung.

11 **Montage**code.

12 **Folge**code innerhalb der Baugruppe.

13 Seitennummer innerhalb des Folgecodes.

14 **Datum** des Drucks oder der Aktualisierung der Seite (Monat-Jahr).

15 **Hinweis -** Bezieht sich auf die Teilnummer. Ein Schlüssel für die Symbole und Abkürzungen befindet sich unten auf der Textseite.

16 Kein gewartetes Teil. (Siehe Seite 42).

17 Weitere Beschreibung des Teils; dient als Hilfe bei der Identifizierung des Teils. Beachten Sie Seite 42 mit einer Erläuterung der verwendeten Symbole.

18 Nicht als Service-Teil erhältlich

19 Teilnummer.

20 Modifizierung.
C 0201 = Teil gültig **BIS** zur Änderung **0201**.
D 0300 = Teil gültig **AB** der Änderung **0300**.
F 0202 = Teil gültig **AB Serien-N.... bis Serien-N....**

Einführung der Änderung. Serienummer, von der an die Änderung erfolgte. Die Nummern sind auf dem Typenschild des Modells aufgeführt (siehe Seite 38).
Beispiel: **D0300 Serienummer 2503001** bedeutet, daß das Teil “**AB**” Serienummer **2503001** montiert wurde. Folglich wurden Teile, die mit **C0201** markiert sind, **“BIS”** Serienummer **2501999** montiert.Es sei auf die Code-Tabelle auf Seite 41 verwiesen.

21 **Gesamtzahl** des auf der Seite Aufgeführten Teils.Diese Zahl kann durch die folgenden Angaben ersetzt sein:
M = Lieferung in Meter. **AR** = Anzahl nach Bedarf.

22 **Beschreibung** von Teilen.

23 **L.C. - Lexikon-Code** zur Identifizierung von Bezeichnungen für Teile (siehe Seite 45).

24 Fußnotenverzeichnisse.

25 Hinweise zu Abbildungen.

26 Modellnummer.

01.01	01	p16	02/03

CHASSI
MAIN FRAME
BASTIDOR
TELAIO
GESTELL
CHASSI

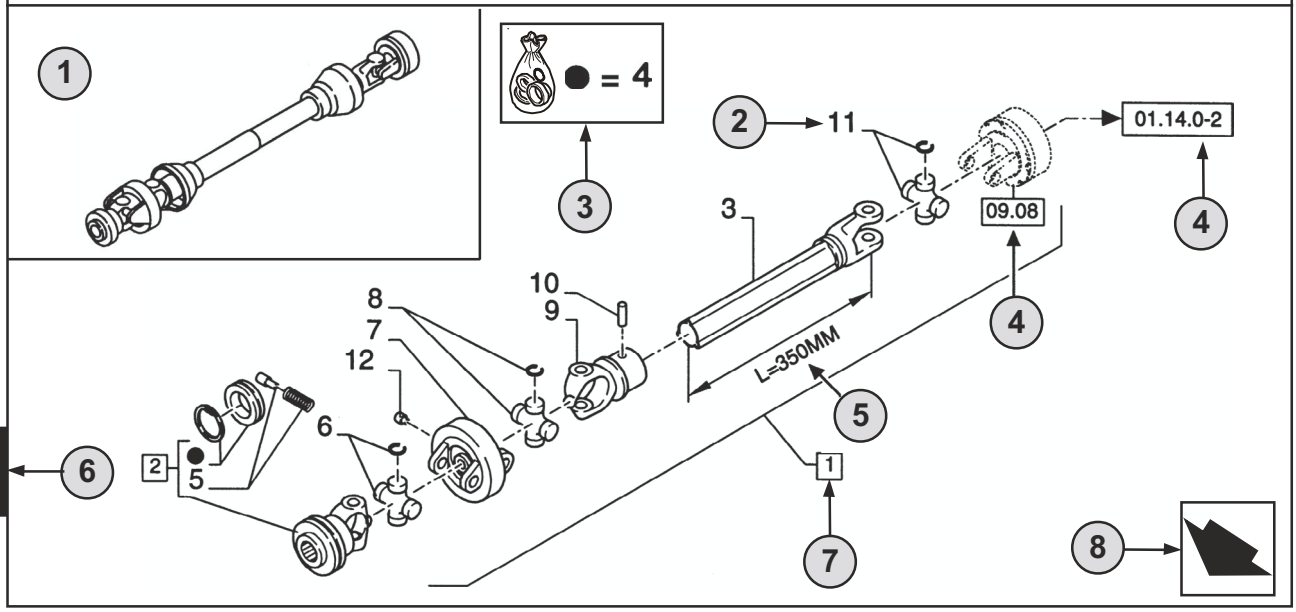

1

9 10

01.01	01	p16	02/03

11 12 13 14

CHASSI - D0200
MAIN FRAME
BASTIDOR
TELAIO
GESTELL
CHASSI

R	N	P.N.	MOD	Q	Descrição	Description	Descripción	L.C.
	A	**86529340**		1	TOMADA DE FORÇA **(2 AO 11)**	SHAFT, PTO	TOMA DE FUERZA	207P
2		**84014007**		1	GARFO **(4,5)**	YOKE	HORQUILLA	085F
3		**NSS**		1	EIXO, **L=350MM**	SHAFT	EJE	016A
4		**84004292**	C0204	1	KIT	KIT	EQUIPO	305C
		[84058743]	D0500	1	KIT	KIT	EQUIPO	305C

15 16 7

2 18 19 20 21 17 22 22 23

(A) SOMENTE BRASIL 24

1

STANDARD 25

26 **MODELOS**

1 Position du “Chiffre” sur la machine.

2 Référence-Chiffre de terminaison de la référence**.**

3 Pièces détachées approvisionnées en kit de réparation par symbole de référence.

4 01.14.0-2 Pièce illustrée dans la **page** ou sur la **figure** indiquée, pour des **variations** ou des **détails**. Montre les composants détaillés par ailleurs dans le catalogue sous le numéro de la figure.

5 Spécifications techniques relatif à la pièce indiquée.

6 Numérotation des sections.

7 2 ITEM inclus .....

8 Orientation (la Flèche indique l’avant de la machine). 

9 Description de la figure.

10 Information générale de la figure.

11 Code d’assemblage.

12 Code de séquence sans l’assemblage.

13 Numéro de page sans le code de séquence.

14 Date d’impression ou mise à jour de la page (mois-année).

15 Note-relatif à la référence. Ceci est la clé des symboles et abréviations en bas de la page suivante.

16 Pièces non servies (voir page 42).

17 Description supplémentaire de la pièces pour aider à la confirmation de l’identification.
Se reporter à la page 42 pour l’explication des symboles utilisés.

18 Ne concerne pas le service pièces détachées.

19 Référence.

20 Modification.
C 0201 = Pièce valable **JUSQU’A 0201** Changement.
D 0300 = Pièce valable **A PARTIR DE 0300** Changement.
F 0202 = Pièce valable **A PARTIR DU** N° de série **.... Jusqu’au** N° de série**....**

Mise en oeuvre de changement.Les numéro de série qui démarrent.Les numéros sont indiqués sur la plaque d’identification du modèles (voir page 38).
Ex.: **D0300** N° de série **2503001** indique que la pièce a été installée à partir du N° de série **2503001**.
En conséquence la pièce marquée **C0201** serait installée après le N° de série **2501999**.
Voir la table - codes page 41.

21 Total du nombre de pièces référencées dans la page.
La quantité peut être remplacée par l’indications suivante:
M = Vendu au mètres. **AR** = Quantité à la demande.

22 Description de la pièce.

23 L.C. - Code Lexique ou Glossaire pour l’identification du nom des pièces (voir page 45).

24 Référence en bas de page.

25 Annotation des chiffres.

26 Numéro du modèle.

TABLE OF CONTENTS

00.100.01		INITIAL STOCKING LIST (ISL) SR175, SV185
05.100.01		FILTERS AND CAPACITIES (SR175,SV185)
10.001.01		MOTOR - SUPORTE
10.001.02		CYLINDER BLOCK - OIL FILTER
10.012.01		ENGINE MOUNTING (SR175,SV185)
10.012.01		ENGINE MOUNTING (SR200-TV380)
10.012.01	01	REMOTE ENGINE OIL FILTER (SR175,SV185)
10.012.01	02	REMOTE DIPSTICK ISM (SR175,SV185)
10.012.01	04	REMOTE ENGINE OIL (SR200-TV380)
10.101.01		CYLINDER HEAD
10.101.02		VALVE COVER & CRANKSHAFT PULLEY
10.101.03		REMOTE OIL DRAIN
10.101.04		OIL FILL - ENGINE
10.102.01		OIL PAN
10.103.01		CRANKSHAFT & PISTONS
10.103.02		FLYWHEEL, BELL HOUSING
10.106.01		CAMSHAFT
10.106.02		ROCKER ARMS
10.106.03		TIMING GEAR CASE, GOVERNOR
10.202.01		AIR CLEANER ASSY NA 7IN (SV185)
10.202.01		FILTRO DE AR - MOTOR
10.214.01	01	FUEL INJECTION SYSTEM
10.214.01	02	TUBOS DE COMBUSTÍVEL
10.216.01		FUEL SYSTEM ISM (SR175,SV185)
10.216.01		FUEL SYSTEM (SR220-SV300,TR320,TV380)
10.218.01		INJECTOR
10.220.01		THROTTLE HAND FOOT MECHANICAL (SR175,SV185)
10.220.01	01	CONTROLES - ESTRANGULADOR
10.220.01	02	CONTROLS - FOOT AND HAND THROTTLE
10.220.02		THROTTLE HAND FOOT EH (SR175,SV185,L218,L220)
10.250.01		TURBOCHARGER
10.254.01		BLOCK HEATER (SR130-SV185)
10.254.02		ESCAPAMENTO, ASPIRADOR
10.254.02		ENGINE - BLOCK HEATER
10.254.03		ENGINE EXHAUST MED (SV185)
10.254.04		INTAKE MANIFOLD
10.304.01		OIL PUMP & SUCTION FILTER
10.400.01		COOLING COMPONENTS MID ISM (SR175,SV185)
10.402.01		WATER PUMP
10.406.01	01	RADIADOR - SISTEMA DE RECUPERAÇÃO DO FLUIDO DE REFRIGERAÇÃO
10.406.01	02	RADIATOR/OIL COOLER
10.406.02		MODULE, RADIATOR AND COOLING MED (SR175,SV185,SR200,TR270)
10.408.01		ARREFECEDOR DO ÓLEO DESVIO
29.200.01		LEVEL 100 CASE CONTROL HANDLES (SR130-SV300)
29.200.02		LEVEL 200 CASE CONTROL HANDLES (SR130-SV300)
29.200.03		LEVEL 250 CASE CONTROL HANDLES (ALL CASE)
29.200.04		LEVEL 300 CASE CONTROL HANDLES (SR175-SV300)
29.200.05		LEVEL 350 CASE CONTROL HANDLES (ALL CASE)
29.212.01		TRAVEL SPEED 1SPD (SR175,SV185)
29.212.02		TRAVEL SPEED 2SPD (SR175,SV185)
29.212.03		TRAVEL SPEED E-H (SR175,SV185)
29.212.04	01	MOTOR, REXROTH DRIVE MOTOR 2SPD (SR175,SV185)
29.212.04	01	MOTOR, REXROTH DRIVE MOTOR 1SPD (SR130-SV185)
29.212.04	02	MOTOR, REXROTH DRIVE MOTOR 2SPD (SR175,SV185)
29.212.04	02	MOTOR, REXROTH DRIVE MOTOR 1SPD (SR130-SV185)

TABLE OF CONTENTS

29.212.05	01	VALVE, BRAKE (SR130-SV300)
29.212.05	02	VALVE, BRAKE 2SPD (SR175-SV300)
29.212.05	04	VALVE, BRAKE EH 2SPD (SR175-SV300)
29.212.06	01	PUMP, HYDROSTATIC TANDEM 35CC DDC FRONT (SR130-SV185)
29.212.06	02	PUMP, HYDROSTATIC TANDEM 35CC DDC FRONT (SR130-SV185)
29.212.06	03	PUMP, HYDROSTATIC TANDEM 35CC DDC FRONT (SR130-SV185)
29.212.06	04	PUMP, HYDROSTATIC TANDEM 35CC DDC REAR (SR130-SV185)
29.212.06	05	PUMP, HYDROSTATIC TANDEM 35CC DDC REAR (SR130-SV185)
29.212.06	06	PUMP, HYDROSTATIC TANDEM 35CC DDC REAR (SR130-SV185)
29.212.07		PUMP, HYDROSTATIC EH 35CC A20VG ET (SR130-SV185)
35.100.01		CHASSIS HYDRAULICS (SV185)
35.101.02		SELF LEVELING - NONE MED LG (SR175-TV380)
35.102.01		RIDE CONTROL (SR175-TV380)
35.102.02		RIDE CONTROL - NONE (SR175-TV380)
35.204.01		MANUAL COUPLER, TAN (SR175-TV380)
35.204.02	01	HYDRAULIC COUPLER (SV185)
35.204.02	01	HYDRAULIC COUPLER - CHASSIS PLUMBING (SV185,SV250,SV300,TV380)
35.204.02	02	HYDRAULIC COUPLER - BASIC GRAY (SR175-TV380)
35.204.02	03	HYDRAULIC COUPLER CHASSIS PLUMBING - BASIC(SR175-TV380)
35.220.01		AUX HYD, STD FLOW (SV185)
35.220.01	01	AUX HYD, STD C.U.P. (SV185)
35.220.01	02	AUX HYD, STD, GEAR PUMP (SR175,SV185)
35.220.01	03	AUX HYD, STD, CHASSIS PLUMBING (SV185)
35.220.01	04	AUX HYD, STD, ARM PLUMBING (SV185)
35.220.01	04	AUX HYD, STD C.U.P. ARM PLUMBING (SV185)
35.220.01	05	AUX HYD, STD C.U.P. CASE DRAIN CHASSIS PLUMBING (SV185)
35.220.02	01	AUX HYD, HIGH FLOW (SV185)
35.220.02	02	AUX HYD, HIGH FLOW (SR175)(SV185)
35.220.02	03	AUX HYD, HIGH FLOW, CHASSIS PLUMBING (SV185)
35.220.02	04	AUX HYD, HIGH FLOW, ARM PLUMBING (SV185)
35.220.02	05	AUX HYD, HIGH FLOW, ARM PLUMBING BASIC (SV185)
35.359.01	01	PUMP, EH AND CONTROL VALVE (SR175,SV185)
35.359.01	02	PUMP, EH AND CONTROL VALVE (SR175,SV185)
35.359.02	01	PUMP, MECHANICAL (SR130-SR220)
35.359.02	01	PUMP, MECHANICAL (SR175,SV185)
35.359.02	02	PUMP, MECHANICAL (SR175,SV185)
35.359.03		CONTROL VALVE, EH W/ HARNESS (ALL CASE)
35.359.04		CONTROL VALVE, MECHANICAL HAND EH AUX (SR130-SV300)
35.701.01		LOADER HYDRAULICS (SV185)
35.701.02	01	LOADER VALVE PLUMBING (SV185)
35.701.02	02	LOADER VALVE PLUMBING (SV185)
35.701.03		SUPPLY PLUMBING (LOADER VALVE) (SR175,SV185)
35.701.04		RETURN PLUMBING (LOADER VALVE) (SR175,SV185,SR200,TR270)
35.701.05		2SPD PLUMBING (SR175,SV185)
35.701.06	01	BRAKE PLUMBING (SR130,SR150,SR175,SV185)
35.701.06	02	BRAKE PLUMBING (SR130 - SV300)
35.730.01		HYDRAULIC CYLINDER (SV185)
35.730.02		BUCKET CYLINDER (SV185)
35.750.01		TANK, HYDRAULIC (SV185)
37.140.01		COUNTERWEIGHT (SR175, SV185, TR270)
39.100.01		CHASSIS HOODS AND COVERS (SV185)
39.105.01	01	COUPLER BASIC TAN (SR175,TR270,SR200)
39.105.02		BOOM (SV185)
39.105.03		COUPLER, BASIC TAN (SV185,SV250,SV300,TV380)
44.106.01		POWER TRAIN (SR175,SV185)

TABLE OF CONTENTS

44.106.02		AXLE ASSY, STD (SR175,SV185)
44.511/520	01	WHEELS (SR175-SV300)
44.511/520	01	WHEELS (SR175,SV185,SR200)
50.200.01		OPEN CAB, NO HEAT OR HVAC (SR175,SV185)
50.200.02		HEATER, MEDIUM FRAME (SR175,SV185)
50.200.02	02	HEATER PLUMBING BASIC (SR175,SV185)
50.200.02	03	AC PLUMBING BASIC (SR175,SV185)
50.200.02	04	HVAC, MEDIUM FRAME ISM (SR175,SV185)
50.200.03		HVAC, MEDIUM FRAME (SR175,SV185)
50.200.03		HVAC, LARGE FRAME (SR220-SV300,TR320,TV380)
50.200.05		HEATER (ALL CASE)
50.200.06		HEATER W/AC (SR175-TV380)
55.100.01		CHASSIS OPTIONS HARNESS, MECH MD (SR175-SR200)
55.100.01	01	ENGINE - ELECTRICAL
55.100.01	02	ENGINE - ELECTRICAL
55.100.05	01	ELECTRICAL MECH MED (SR175-SR200)
55.100.05	02	ELECTRICAL MECH MED OPEN CAB (SR175-SR200)
55.100.06	01	ELECTRICAL EH MED (SR175-SR200,TR270)
55.100.06	02	ELECTRICAL EH MED OPEN CAB (SR175-SR200,TR270)
55.100.07	01	BATTERY DISCONNECT MED ISM (SR175,SV185)
55.100.07	02	NO BATTERY DISCONNECT MED ISM (SR175,SV185)
55.100.08		MULTIFUNCTION ELECTRICAL (SV185,SV250,SV300,TV380)
55.100.09		NO MULTIFUNCTION ELECTRICAL (ALL CASE)
55.100.10		ELECTRICAL ASSEMBLY SOCKET NA (ALL CASE)
55.100.10		ELECTRICAL ASSEMBLY SOCKET EU (ALL CASE)
55.101.01		ENGINE ELECTRICAL (SR175,SV185)
55.101.02		BATTERY RETENTION MED (ALL CASE)
55.11.068		ALTERNADOR FIOS
55.201.03		MOTOR DE ARRANQUE
55.301.01		ALTERNATOR ASSY
55.301.02		ALTERNATOR MOUNTING
55.418.01		INSTRUMENTS AND ELECTRICAL VERT (SV185)
55.418.01	01	COMMON INSTRUMENTS AND ELEC (ALL CASE)
55.418.02		LIGHT ASSY, 55 DEGREE (SV185,SV250,SV300,TV380)
55.512.01		IGNITION AND DISPLAY, KEYED/KEYLESS CASE (ALL CASE)
55.514.01		EU ROAD LIGHTS MED VERT CASE (SV185)
55.514.02		NO ROAD LIGHTS OR TURN SIGNAL (ALL CASE)
55.514.05		LIGHT ASSEMBLY REAR ROAD (ALL CASE)
55.514.09		LAMP WORK REAR ASSEMBLY (SV185,SV250,SV300,TV380)
82.100.01	01	BUCKETS - LOADER, DIRT / FOUNDRY
82.100.01	02	BUCKETS - LOADER, LOW PROFILE, EXTENDED LOW PROFILE
82.100.01	03	BUCKETS - LOADER, UTILITY / LIGHT MATERIAL
82.100.01	04	BUCKETS - LOADER, HEAVY DUTY DIRT
82.100.01	05	BUCKETS - LOADER, MANURE / SLURRY
82.100.02		BUCKET, BOLT ON CUTTING EDGE (B.O.C.E.) (ALL CASE)
82.100.03		PALLET FORK 48 TINE (ALL CASE)
82.100.04	01	SPILL GUARD 66 TAN (SR130-SR200)
82.100.04	02	SPILL GUARD 72 TAN (SR130-TR270)
82.100.04	03	SPILL GUARD 78 TAN (SR175-TV380)
88.010.03		DIA KIT, ASPIRATOR (SV185)
88.010.07		DIA KIT, BLOCK HEATER 120V USA (SR130-SV185)
88.035.03		DIA KIT, SELF-LEVEL 40 (SV185)
88.035.07		DIA KIT, RIDE CONTROL CASE MED/LG (SR175-SV300,TR270,TR320,TV380)
88.035.10		DIA KIT, HYDRAULIC COUPLER VERT (SV185,SV250,SV300,TV380)
88.035.12		DIA KIT, HIGH FLOW AUX - MED VERT (SV185)

TABLE OF CONTENTS

88.035.16		DIA KIT, 2ND FRONT HYD AUX - MED VERT (SV185)
88.035.21		DIA KIT, MED FRM FOOT CONTROLS, MANUAL (SR175,SV185)
88.037.05		DIA KIT, COUNTERWEIGHT MF CASE (SR175-SR200,TR270)
88.050.05		DIA KIT, MED FRM ISM HVAC KIT (SR175,SV185)
88.050.09		DIA KIT, MED FRM ISM HEAT KIT (SR175,SV185)
88.055.01		DIA KIT, BEACON (ALL CASE)
88.055.02		DIA KIT, STROBE (ALL CASE)
88.055.08		DIA KIT, MULTI-FUNCTION ELEC MECH VERT (SV185)
88.055.12		DIA KIT, MULTI-FUNCTION ELEC EH VERT (SV185)
88.055.17		DIA KIT, EU ROAD LIGHT MED VERT CASE (SV185)
88.055.27		DIA KIT, MECH CHASS OPT HARNESS, MED (SR175-SR200)
88.055.29		DIA KIT, SIDE LAMP (ALL CASE)
88.082.01		DIA KIT, PALLET FORK 48IN TINES (ALL CASE)
88.082.02		DIA KIT, 66IN SPILL GUARD TAN (SR130-SR200)
88.082.03		DIA KIT, 72IN SPILL GUARD TAN (SR130-TR270)
88.082.04		DIA KIT, 78IN SPILL GUARD TAN (SR175-TV380)
88.082.07		DIA KIT, 66IN B.O.C.E. (SR130-SR200)
88.082.08		DIA KIT, 72IN B.O.C.E. (SR130-TR270)
88.082.09		DIA KIT, 78IN B.O.C.E. (SR175-TV380)
88.082.10		DIA KIT, 84IN B.O.C.E. (SR175-TV380)
88.082.11		DIA KIT, BUCKET TEETH (ALL CASE)
88.082.12		DIA KIT, BUCKETS - FIELD (ALL CASE)
88.088.03		DIA KIT, SINGLE POINT LIFT HOOK (SV185)
88.088.06		DIA KIT, RADIO (ALL CASE)
88.088.07		DIA KIT, 4 POINT LIFT HOOK (SR175-SR200,TR270)
88.088.08		DIA KIT, 4 POINT LIFT HOOK (SR220-SV300,TR320,TV380)
88.088.09		DIA KIT, FOPS LEVEL 2 MODS (ALL CASE)
88.088.10		DIA KIT, MIRROR (ALL CASE)
88.088.13		DIA KIT, DRAW BAR MED GRAY (SR175-SR200,TR270)
88.088.14		DIA KIT, DRAW BAR LARGE GRAY (SR220-SV300,TR320,TV380)
88.088.15		DIA KIT, FIRE EXTINGUISHER (ALL CASE)
88.090.01		DIA KIT, DEMO REAR DOOR (ALL CASE)
88.090.02		DIA KIT, GLASS FRONT DOOR (ALL CASE)
88.090.03		DIA KIT, DEMO FRONT DOOR (ALL CASE)
88.090.04		DIA KIT, CAB SIDE WINDOWS (ALL CASE)
88.090.05		DIA KIT, REAR EXT ACCESS WINDOW (ALL CASE)
88.090.06		DIA KIT, 3IN LAP BELT (ALL CASE)
88.090.08		DIA KIT, REMOVABLE TOP WINDOW (ALL CASE)
88.090.09		DIA KIT, RH, SIDE SCREEN (ALL CASE)
88.090.10		DIA KIT, LH, SIDE SCREEN (ALL CASE)
88.090.12		DIA KIT, HANDLE 300/400 (ALL CASE)
88.090.14		DIA KIT, HANDLE 350/450 (ALL CASE)
88.100.01		ENGINE ACCESSORIES EU/OPEN EU (SV185)
88.100.01		ENGINE ACCESSORIES NA (SR175,SV185)
88.120.01		SEAL PACKAGE, FOAM (ALL CASE)
88.120.02		FUSE COVER, MED-LG CHASSIS (SR175-TV380)
90.100.01		HOODS AND COVERS (SV185)
90.112.01		HAND CONTROLS, MANUAL MD FRAME (SR175-TV380)
90.112.01	01	FLOORPLATE, NO PEDAL (ALL CASE)
90.112.01	02	HAND CONTROLS, INTERLINK (SR130-SV300)
90.112.01	03	HANDLE MOUNTING, MD-LG FRAME HC (SR175-SV300)
90.112.01	04	HAND CONTROLS, HANDLE LH (SR130-SV300)
90.112.01	05	HAND CONTROLS, HANDLE RH (SR130-SV300)
90.112.01	06	DAMPENING CONTROL (SR130-SV185)
90.112.01	06	DAMPENING & CENTERING CONTROL (SR200-SV300)

TABLE OF CONTENTS

90.112.01	07	MANUAL CENTERING (SR130-SV185)
90.112.02		ELEC-HYDRAULIC CONTROLS MD-LG FRM (SR175-TV380)
90.112.02	02	HANDLE MOUNTING EH (SR175-TV380)
90.112.02	03	HANDLE, ELECTRONIC CONTROL CASE (ALL CASE)
90.116.01		LOADER STOP 40MM (SV185,SV250,SV300,TV380)
90.116.02		LOADER STOP 63MM (SV185,SV250,SV300)
90.120.01		SEAT, NON SUSPENSION (ALL CASE)
90.120.02		SEAT, SUSPENSION (ALL CASE)
90.120.03		SEAT AIR SUSPENSION (ALL CASE)
90.120.04	01	SEAT BELT, 2 PT RETRACTOR 2 IN WEB (ALL CASE)
90.120.04	02	SEAT BELT, 3 PT (ALL CASE)
90.120.05		LAP BAR (ALL CASE)
90.120.06		SEAT ASSEMBLY, SUSPENSION (ALL CASE)
90.120.07		SEAT ASSEMBLY, STANDARD (ALL CASE)
90.150.01	01	CAB CASE (SR175-TV380)
90.150.01	02	CAB CASE (SR175-TV380)
90.150.01	03	CAB, GAS STRUT ASSY (ALL CASE)
90.150.02		CAB SEALING (ALL CASE)
90.150.03		FLOOR MAT, MECHANICAL HAND CONTROL (ALL CASE)
90.150.05		FLOOR MAT, EH CONTROLS (SR130-SV300)
90.154.00		FRONT DOOR, GLASS (ALL CASE)
90.154.01	01	DOOR ASSY, FRONT (ALL CASE)
90.154.01	02	DOOR ASSY, FRONT (ALL CASE)
90.154.01	03	NO FRONT DOOR (ALL CASE)
90.154.01	04	DOOR ASSY, FRONT DEMO (ALL CASE)
90.154.01	05	DOOR ASSY, FRONT DEMO (ALL CASE)
90.154.01	06	FRONT DEMO, DOOR (ALL CASE)
90.154.02		SIDE WINDOW ASSY (ALL CASE)
90.154.03	02	DOOR ASSY, REAR (ALL CASE)
90.154.04		REAR WINDOW NA (ALL CASE)
90.154.04		REAR WINDOW EU (ALL CASE)
90.154.05	01	WASHER BOTTLE, FRONT (ALL CASE)
90.154.05	02	WASHER BOTTLE, REAR (ALL CASE)
90.154.05	03	WASHER BOTTLE, FRONT & REAR (ALL CASE)
90.160.01	01	INTERIOR TRIM CASE (ALL CASE)
90.160.01	02	INTERIOR TRIM CASE (ALL CASE)
90.160.01	03	CAB SEALING (ALL CASE)
90.160.02		SEAL PACKAGE (SR175-TV380)
90.160.03	01	CAB HEADLINER, NO RADIO (ALL CASE)
90.160.03	02	CAB HEADLINER, WITH RADIO (ALL CASE)
90.180.01	01	DECALS (SV185)
90.180.01	02	DECALS - WARNING (ALL CASE)
90.180.01	03	DECALS (ALL CASE)
90.180.01	04	DECALS (SV185)

SECTION INDEX
00 - Manutenção

00.100.01 INITIAL STOCKING LIST (ISL) SR175, SV185

00.100.01		p1	03/11

INITIAL STOCKING LIST (ISL) SR175, SV185
INITIAL STOCKING LIST (ISL) SR175, SV185
INITIAL STOCKING LIST (ISL) SR175, SV185
INITIAL STOCKING LIST (ISL) SR175, SV185

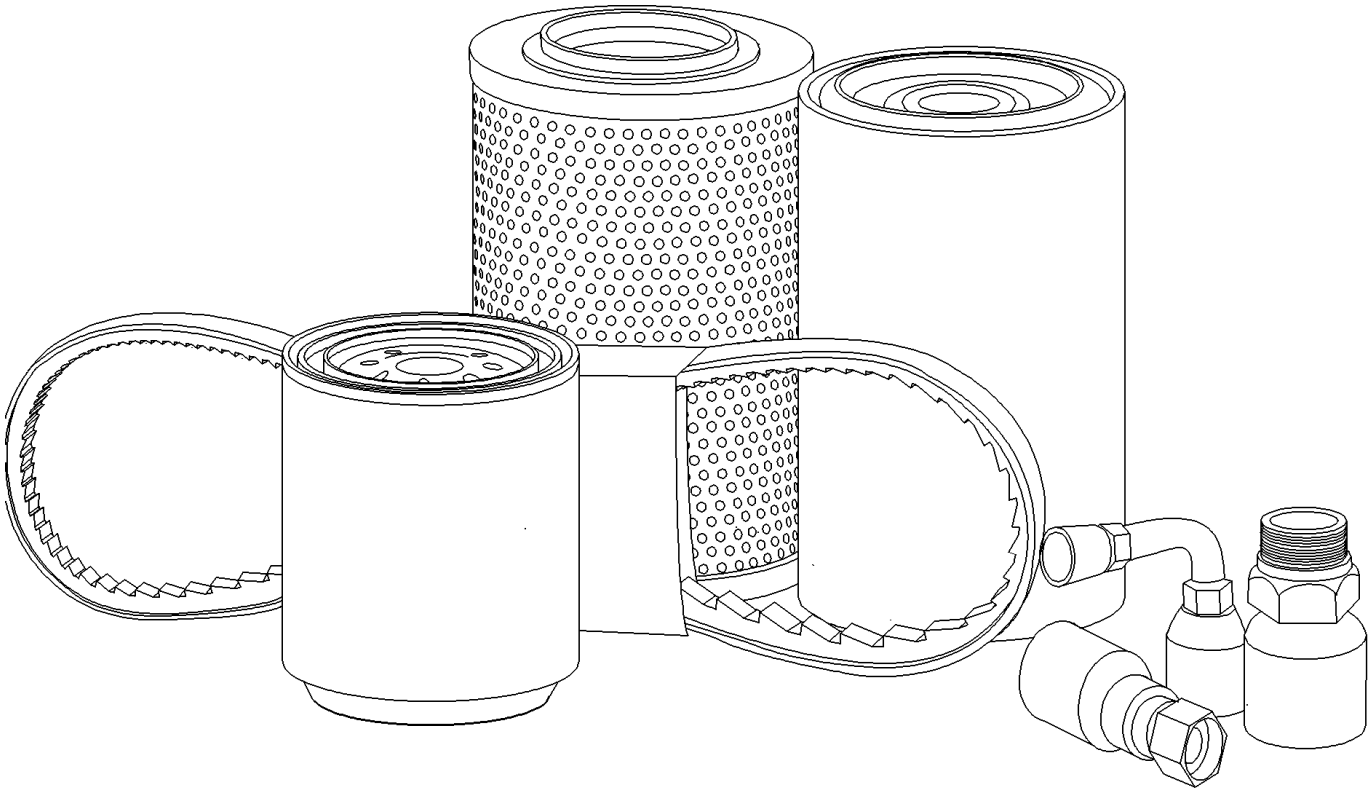

INITIAL STOCKING LIST (ISL) SR175, SV185
INITIAL STOCKING LIST (ISL) SR175, SV185
INITIAL STOCKING LIST (ISL) SR175, SV185
INITIAL STOCKING LIST (ISL) SR175, SV185

R	N	P.N.	MOD	Q	Denominação Description Bezeichnung	Description Bezeichnung	Denominacion Beskrivelse	Descrizione Beschrijving	L.C.
		{LIST A}			Parts required for Preventative Maintenance				
1		**87409203**		1	FILTRO DE ÓLEO DO MOTOR, ISM				
						ENGINE OIL FILTER	FILTRO DE ACEITE DE M	FILTRO OLIO MOTORE	067F
					FILTRE A HUILE MOTEU	MOTORÖLFILTER	MOTOROLIEFILTER	MOTOROLIEFILTER	
2		**84278070**		1	ELEMENTO, Hyd Filter	ELEMENT	ELEMENTO	ELEMENTO	020E
					ELEMENT	ELEMENT	ELEMENT	ELEMENT	
3		**84299977**		1	ELEMENTO, Fuel Filter - Main (Door)				
						ELEMENT	ELEMENTO	ELEMENTO	020E
					ELEMENT	ELEMENT	ELEMENT	ELEMENT	
4		**9611973**		1	FILTRO DE COMBUSTÍVEL, Inline ISM				
						FUEL FILTER	FILTRO DE COMBUSTIBI	FILTRO CARBURANTE	064F
					FILTRE A CARBURANT	KRAFTSTOFFFILTER	BRÆNDSTOFFILTER	BRANDSTOFFILTER	
5		**86982522**		1	FILTRO DE AR, Primary ISI	AIR FILTER	FILTRO DE AIRE	FILTRO ARIA	066F
					FILTRE A AIR	LUFTFILTER	LUFTFILTER	LUCHTFILTER	
6		**86982523**		1	FILTRO DE AR, Secondary ISM				
						AIR FILTER	FILTRO DE AIRE	FILTRO ARIA	066F
					FILTRE A AIR	LUFTFILTER	LUFTFILTER	LUCHTFILTER	
7		**84314786**		1	CORREIA, V-Belt, ISM 104	BELT	CORREA	CINGHIA	174C
					COURROIE	RIEMEN	REM	RIEM	
8		**84323065**		1	CORREIA, A/C ISM	BELT	CORREA	CINGHIA	174C
					COURROIE	RIEMEN	REM	RIEM	
		{LIST B}			Parts required for Preventative Maintenance and Basic Repair				
10		**87688409**		1	EMISSOR DE TEMPERATURA, Engine Coolant				
						TEMPERATURE SENDEF	EMISOR DE TEMPERATU	TRASMETT. TEMPERATI	Z366
					TRANSMETTEUR TEMPE	TEMPERATURGEBER	TEMPERATURSENDER	TEMPERATUURSENSOR	
11		**2852889**		1	INTERRUPTOR DE PRESSÃO, Oil				
						PRESSURE SWITCH	INTERRUPTOR DE PRES	PRESSOSTATO	079I
					PRESSOSTAT	DRUCKSCHALTER	KONTAKT, TRYK	DRUKSCHAKELAAR	
12		**279492A1**		1	INTERRUPTOR DE RESTRIÇÃO, Air				
						RESTRICTION SWITCH	INT. DE RESTRICCIÓN	INTERR. DI LIMITAZIONE	C037
					COMM. RESTRICTION	VERSTOPFUNGSSCHAL	KONTAKT, BEGRÆNSNI	BEGRENZINGSSCHAKEL	
13		**87668736**		1	INTERRUPTOR, AuxProportional Hyd handle (mechanical)				
						SWITCH	INTERRUPTOR	INTERRUTTORE	075I
					CONTACTEUR	SCHALTER	KONTAKT	SCHAKELAAR	
14		**84282677**		1	INTERRUPTOR, AuxProportional Hyd handle				
						SWITCH	INTERRUPTOR	INTERRUTTORE	075I
					CONTACTEUR	SCHALTER	KONTAKT	SCHAKELAAR	
15		**87427686**		1	INTERRUPTOR, Hyd MOM 2 (Front Elect Handle Switch)				
						SWITCH	INTERRUPTOR	COMMUTATORE	8850
					INTERRUPTEUR	SCHALTER	SWITCH	SWITCH	
16		**87630127**		1	INTERRUPTOR, Park Brake MOM				
						SWITCH	INTERRUPTOR	INTERRUTTORE	075I
					CONTACTEUR	SCHALTER	KONTAKT	SCHAKELAAR	

INITIAL STOCKING LIST (ISL) SR175, SV185
INITIAL STOCKING LIST (ISL) SR175, SV185
INITIAL STOCKING LIST (ISL) SR175, SV185
INITIAL STOCKING LIST (ISL) SR175, SV185

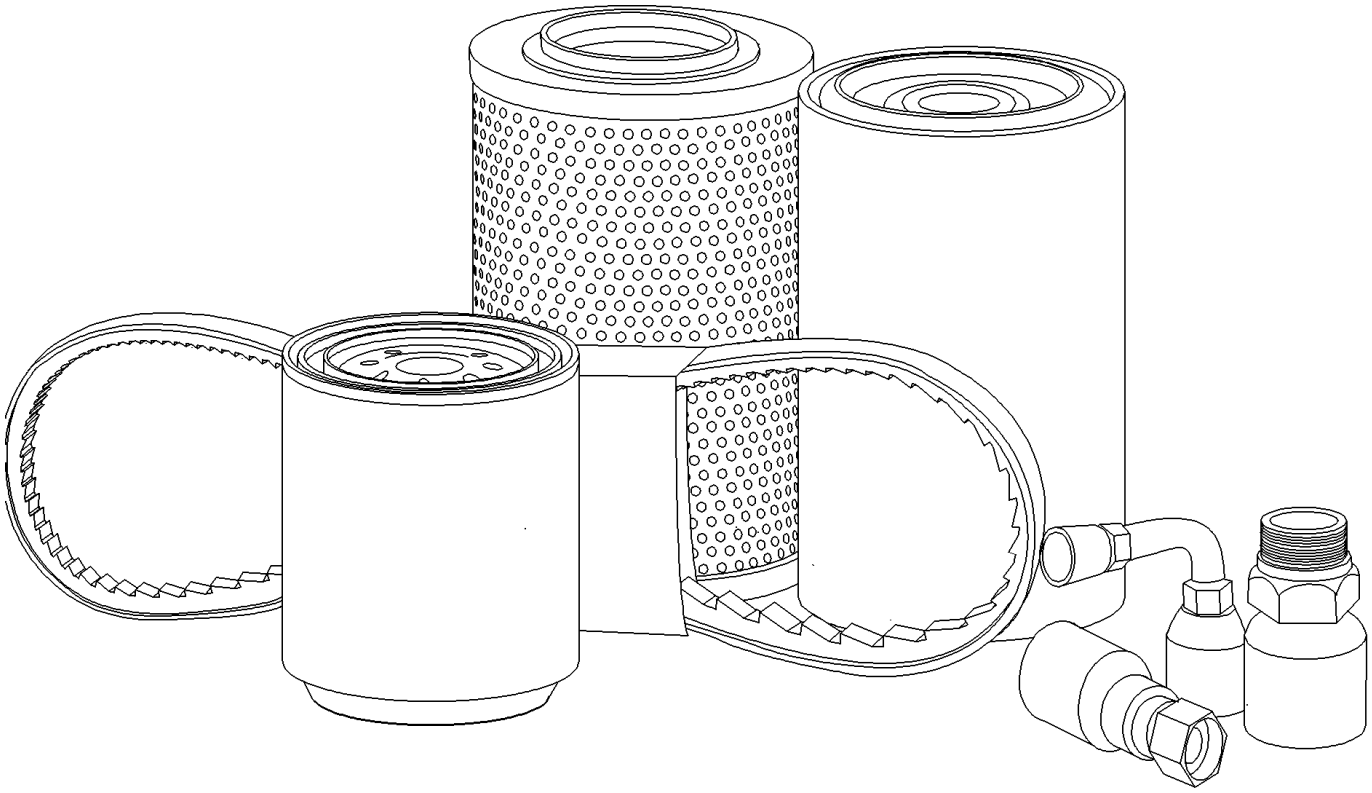

INITIAL STOCKING LIST (ISL) SR175, SV185
INITIAL STOCKING LIST (ISL) SR175, SV185
INITIAL STOCKING LIST (ISL) SR175, SV185
INITIAL STOCKING LIST (ISL) SR175, SV185

R	N	P.N.	MOD	Q	Denominação Description	Description Bezeichnung	Denominacion Beskrivelse	Descrizione Beschrijving	L.C.
17		**87427685**		1	INTERRUPTOR, Hyd MOM 1				
						SWITCH	INTERRUPTOR	COMMUTATORE	8850
					INTERRUPTEUR	SCHALTER	SWITCH	SWITCH	
18		**282775A1**		1	COMUTADOR, w/ Padded Keys - key 1964831C2				
						IGNITION SWITCH	CONMUTADOR DE ARR/	INTERRUTTORE ACCEN	P654
					CONTACTEUR DE DEMA	ZÜNDSCHALTER	KONTAKT, TÆNDING	CONTACTSCHAKELAAR	
19		**84311814**		1	INTERRUPTOR DE PRESSÃO, Brake				
						PRESSURE SWITCH	INTERRUPTOR DE PRES	PRESSOSTATO	079I
					PRESSOSTAT	DRUCKSCHALTER	KONTAKT, TRYK	DRUKSCHAKELAAR	
20		**84311813**		1	INTERRUPTOR DE PRESSÃO, Charge				
						PRESSURE SWITCH	INTERRUPTOR DE PRES	PRESSOSTATO	079I
					PRESSOSTAT	DRUCKSCHALTER	KONTAKT, TRYK	DRUKSCHAKELAAR	
21		**84239537**		1	INTERRUPTOR, Backup Alarm				
						SWITCH	INTERRUPTOR	INTERRUTTORE	075I
					CONTACTEUR	SCHALTER	KONTAKT	SCHAKELAAR	
22		**87392235**		1	INTERRUPTOR INTERMITENTE, Lap Bar/Door				
						SWITCH ASSY	CONJUNTO DE INTERRU	COMPLESSIVO INTERRU	067I
					ENSEMBLE COMMUTAT	SCHALTERBAUGRUPPE	KONTAKT, KPL.	SCHAKELAAREENHEID	
23		**84257183**		1	CONEXÃO, Quick Coupling (5/8-Male)				
						FITTING	ACOPLAMIENTO	RACCORDO	3300
					RACCORD	ARMATUR	FITTING	AANSLUITING	
24		**84257182**		1	CONEXÃO, Quick Coupling (5/8-Female)				
						FITTING	ACOPLAMIENTO	RACCORDO	3300
					RACCORD	ARMATUR	FITTING	AANSLUITING	
25		**84390117**		1	ENGATE, Quick Coupler	COUPLING	ACOPLAMIENTO	GIUNTO	Z321
					RACCORD	KUPPLUNG	KOBLING	KOPPELING	
26		**84390118**		1	ENGATE, Quick Coupler	COUPLING	ACOPLAMIENTO	GIUNTO	Z321
					RACCORD	KUPPLUNG	KOBLING	KOPPELING	
27		**84390119**		1	ENGATE, Quick Coupler	COUPLING	ACOPLAMIENTO	GIUNTO	Z321
					RACCORD	KUPPLUNG	KOBLING	KOPPELING	
28		**44995162**		1	LÂMPADA, Lamp 888-12V	BULB	BOMBILLA	LAMPADINA	030L
					AMPOULE	GLÜHLAMPE	PÆRE	LAMP	
29		**9847313**		1	LÂMPADA, #894, 12V, 37.5W, Halogen				
						BULB	BOMBILLA	LAMPADINA	030L
					AMPOULE	GLÜHLAMPE	PÆRE	LAMP	
30		**84287179**		1	MANGOTE, Lower Radiator ISM				
						HOSE,LARGE	Manguito	TUBO FLESSIBILE,GRDE	Z336
					Durite	SCHLAUCH	HOSE,LARGE	HOSE,LARGE	
31		**84314802**		1	TUBO FLEXÍVEL, Upper Radiator ISM				
						FLEXIBLE HOSE	TUBO FLEXIBLE	TUBO FLESSIBILE	192T
					TUYAU FLEXIBLE	BIEGSAMER SCHLAUCH	FLEKSIBEL SLANGE	FLEXIBELE SLANG	
32		**SBA198436010**		1	TAMPA DE RESERVATÓRIO, Eng Oil ISM				
						FILLER CAP	TAPÓN DE DEPÓSITO	TAPPO BOCCHETT. RIF(	P676
					BOUCHON DE REMPLIS	EINFÜLLKAPPE	PÅFYLDNINGSDÆKSEL	VULDOP	
33		**257884A1**		1	BUJAO, Hyd Reservoir Cap	PLUG	TAPON	TAPPO	6400
					BOUCHON	STOPFEN	PLUG	PLUG	
34		**87687375**		1	TAMPA DO RADIADOR	RADIATOR CAP	TAPÓN DE RADIADOR	TAPPO DEL RADIATORE	039T
					BOUCHON DU RADIATE	KÜHLERVERSCHLUSSK/	KØLERDÆKSEL	RADIATEURDOP	

INITIAL STOCKING LIST (ISL) SR175, SV185
INITIAL STOCKING LIST (ISL) SR175, SV185
INITIAL STOCKING LIST (ISL) SR175, SV185
INITIAL STOCKING LIST (ISL) SR175, SV185

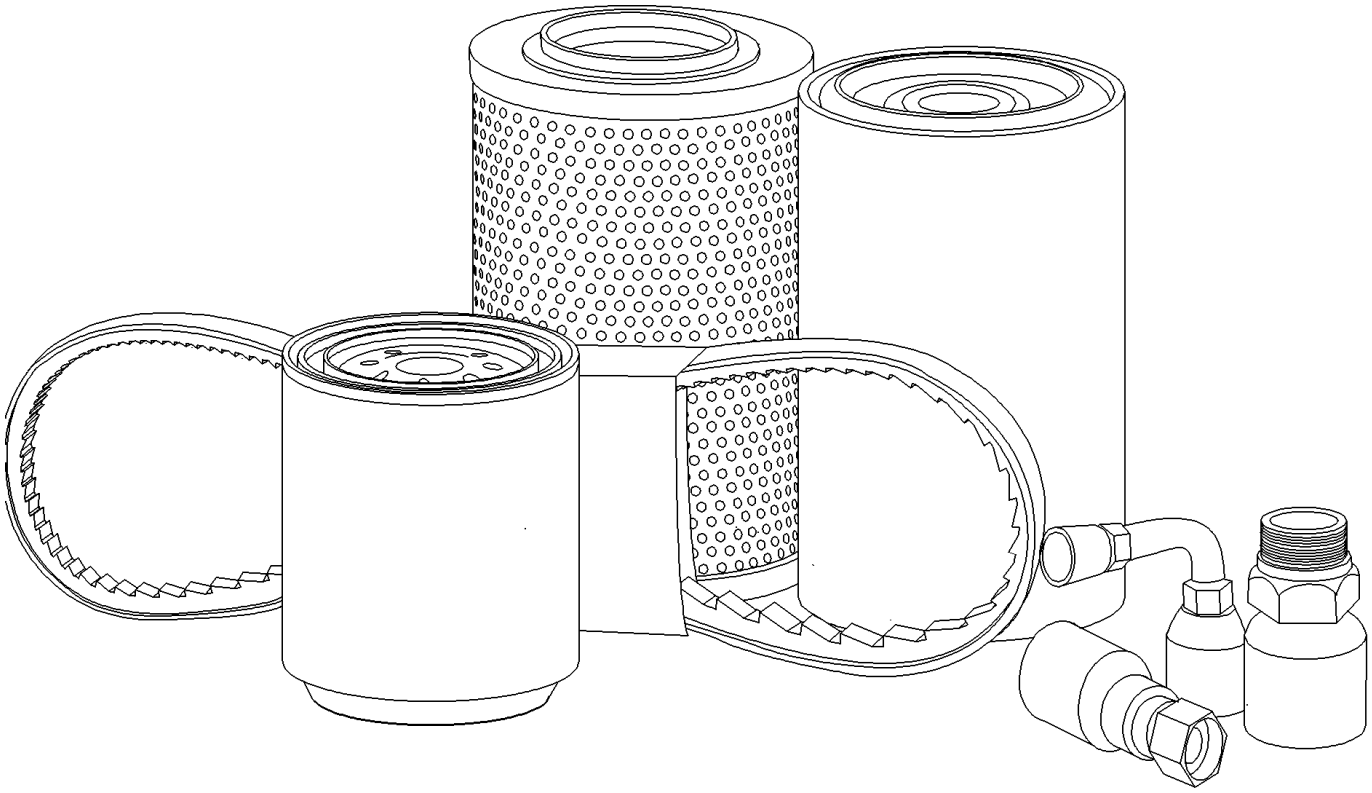

INITIAL STOCKING LIST (ISL) SR175, SV185
INITIAL STOCKING LIST (ISL) SR175, SV185
INITIAL STOCKING LIST (ISL) SR175, SV185
INITIAL STOCKING LIST (ISL) SR175, SV185

R	N	P.N.	MOD	Q	Denominação Description	Description Bezeichnung	Denominacion Beskrivelse	Descrizione Beschrijving	L.C.
35		**84383461**		1	TERMOSTATO, ISM	THERMOSTAT	TERMOSTATO	TERMOSTATO	096T
					THERMOSTAT	THERMOSTAT	TERMOSTAT	THERMOSTAAT	
36		**84200819**		1	CORRENTE, Assy 80/62P	CHAIN	CADENA	CATENA	095C
					CHAINE	KETTE	KÆDE	KETTING	
37		**84254100**		1	CORRENTE, Assy 80/76P	CHAIN	CADENA	CATENA	095C
					CHAINE	KETTE	KÆDE	KETTING	
38		**84254098**		1	PINHÃO, 37T	DRIVEN SPROCKET	CONTROL CON PIÑÓN	PIGNONE CONDOTTO	122P
					PIGNON MENE	ABTRIEBSZAHNRAD	KÆDEHJUL	AANGEDREVEN KETTIN(	
39		**84347514**		1	BRAÇO LIMPADOR, Front	WIPER ARM	BRAZO LIMPIAPARABRIS	BRACCIO TERGICRISTA	134B
					BRAS D'ESSUIE-GLACE	WISCHERARM	VISKERARM	ARM VAN RUITENWISSE	
40		**84347625**		1	PALHETA LIMPADOR, Front				
						WIPER BLADE	RASQUETA LIMPIAPARA	SPAZZOLA TERGICRIST.	175S
					LAME D'ESSUIE-GLACE	WISCHERBLATT	VISKERBLAD	RUITENWISSERBLAD	
41		**84323115**		1	BRAÇO LIMPADOR, Rear (EU)				
						WIPER ARM	BRAZO LIMPIAPARABRIS	BRACCIO TERGICRISTA	134B
					BRAS D'ESSUIE-GLACE	WISCHERARM	VISKERARM	ARM VAN RUITENWISSE	
42		**84323116**		1	LIMPADOR DO PARA-BRISA, Rear (EU)				
						WINDSHIELD WIPER	LIMPIAPARABRISAS	TERGICRISTALLI	Z493
					ESSUIE-GLACE	FRONTSCHEIBENWISCH	FORRUDEVISKER	RUITENWISSER VÓÓR	
43		**87355337**		1	RELE, A/C	RELAY	RELE	REL	7025
					RELAIS	RELAIS	RELAY	RELAY	
44		**84281043**		1	ALTERNADOR, ISM	ALTERNATOR	ALTERNADOR	ALTERNATORE	025A
					ALTERNATEUR	LICHTMASCHINE	GENERATOR	DYNAMO	
45		**84389760**		1	BOBINA, Proportional Solenoid				
						COIL	BOBINA	BOBINA	083B
					BOBINE	SPULE	SPOLE	SPOEL	
46		**84386295**		1	SENSOR, Loader Control Valve Spool Position (EH)				
						SENSOR	SENSOR	SENSORE	608S
					CAPTEUR	SENSOR	FØLER	SENSOR	
47		**86503942**		1	FUSÍVEL, Chart Autofuse	FUSE	FUSIBLE	FUSIBILE	110F
					FUSIBLE	SICHERUNG	SIKRING	ZEKERING	
48		**10395890**		1	FUSÍVEL, Mini 5 AMP	FUSE	FUSIBLE	FUSIBILE	110F
					FUSIBLE	SICHERUNG	SIKRING	ZEKERING	
49		**87522597**		1	FUSÍVEL, Mini 10 AMP	FUSE	FUSIBLE	FUSIBILE	110F
					FUSIBLE	SICHERUNG	SIKRING	ZEKERING	
50		**87524877**		1	FUSÍVEL, Mini 15 AMP	FUSE	FUSIBLE	FUSIBILE	110F
					FUSIBLE	SICHERUNG	SIKRING	ZEKERING	
51		**10401190**		1	FUSÍVEL, Mini 20 AMP	FUSE	FUSIBLE	FUSIBILE	110F
					FUSIBLE	SICHERUNG	SIKRING	ZEKERING	
52		**10401290**		1	FUSÍVEL, Mini 25 AMP	FUSE	FUSIBLE	FUSIBILE	110F
					FUSIBLE	SICHERUNG	SIKRING	ZEKERING	
53		**87472238**		1	FUSÍVEL, 60 AMP	FUSE	FUSIBLE	FUSIBILE	110F
					FUSIBLE	SICHERUNG	SIKRING	ZEKERING	
54		**87655334**		1	RELÉ, 35A N.O. ISO280 Micro				
						RELAY	RELÉ	RELÈ	011R
					RELAIS	RELAIS	RELÆ	RELAIS	
55		**SBA185366190**		1	VELA DE PRÉ-AQUECIMENTO, ISM				
						GLOW PLUG	BUJÍA INCANDESCENTE	CANDELA	056C
					BOUGIE DE PRECHAUFF	ZÜNDKERZE	GLØDERØR	GLOEIBOUGIE	

INITIAL STOCKING LIST (ISL) SR175, SV185
INITIAL STOCKING LIST (ISL) SR175, SV185
INITIAL STOCKING LIST (ISL) SR175, SV185
INITIAL STOCKING LIST (ISL) SR175, SV185

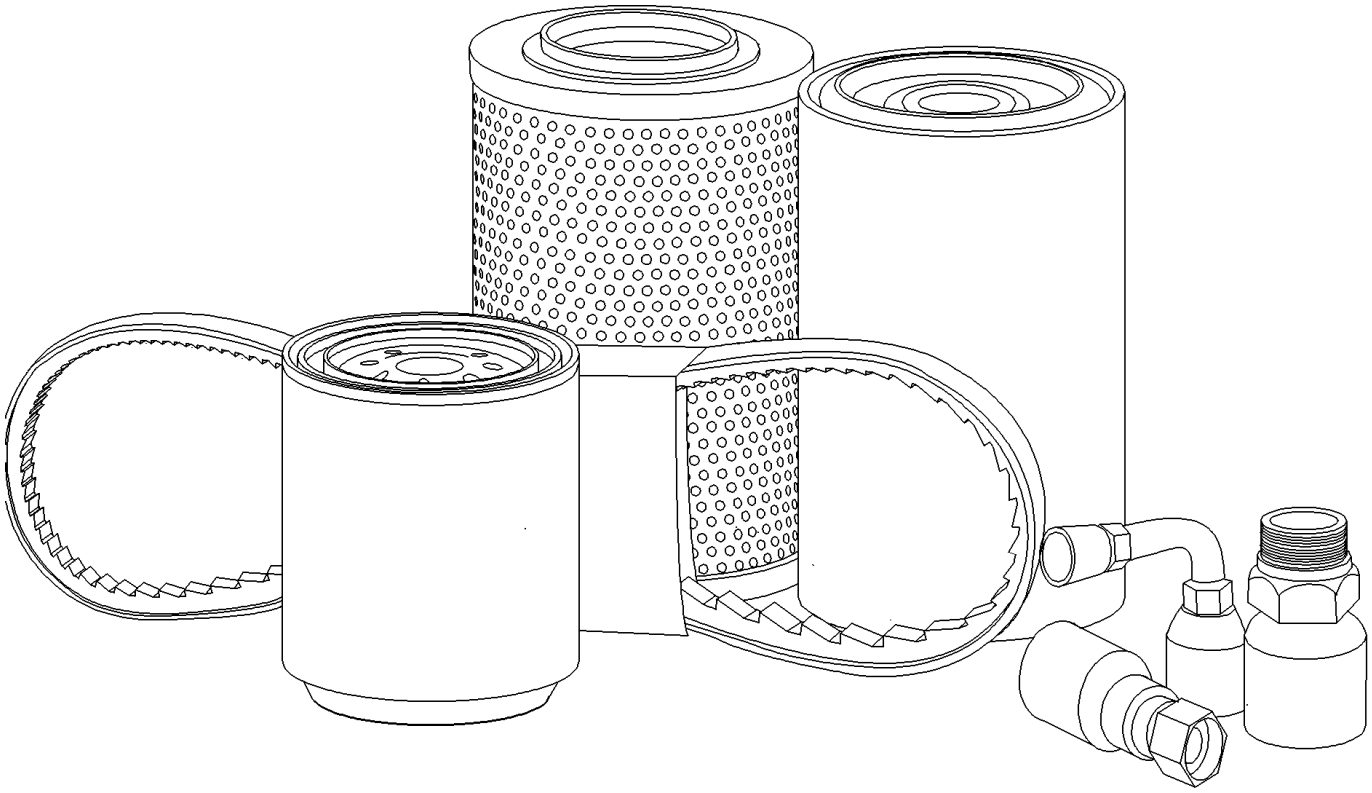

INITIAL STOCKING LIST (ISL) SR175, SV185
INITIAL STOCKING LIST (ISL) SR175, SV185
INITIAL STOCKING LIST (ISL) SR175, SV185
INITIAL STOCKING LIST (ISL) SR175, SV185

R	N	P.N.	MOD	Q	Denominação Description	Description Bezeichnung	Denominacion Beskrivelse	Descrizione Beschrijving	L.C.
56		**SBA131406360**		1	INJETOR SIST COMBUSTÍVEL, ISM				
						FUEL SYSTEM INJECTO	INYECTOR DE SIST. COI	INIETT. SISTEMA CARBU	089I
					INJECTEUR DE CARBUR	KRAFTSTOFFEINSPRITZ	BRÆNDSTOFPUMPE	VERSTUIVER	
57		**84389262**		1	KIT DE VEDAÇÃO, (Shimadzu Single Gear Pump)				
						SEAL KIT	KIT DE JUNTAS	KIT GUARNIZIONI	630S
					KIT DE JOINTS	DICHTUNGSSATZ	PAKNINGSSÆT	KIT MET AFDICHTINGEN	
58		**86594279**		1	KIT REP. BOMBA HIDR., Seal Overhaul M35				
						HYD PUMP REPAIR KIT	KIT DE REPAR. BOMBA I	KIT RIPAR. POMPA IDR.	014K
					KIT REPAR. POMPE HYD	WASSER-PUMP-REPARA	HYDR. PUMPE REP. SÆ	REPARATIEKIT V. HYD. I	
59		**84174264**		1	CINTO DE SEGURANÇA, Case 2 PT 2 Inch Wide				
						SEAT BELT	CINTURÓN DE SEGURID	CINTURA DI SICUREZZA	182C
					CEINTURE DE SECURIT	SICHERHEITSGURT	SIKKERHEDSBÆLTE	VEILIGHEIDSGORDEL	
60		**84174267**		1	CINTO DE SEGURANÇA, Case 2 PT 3 Inch Wide				
						SEAT BELT	CINTURÓN DE SEGURID	CINTURA DI SICUREZZA	182C
					CEINTURE DE SECURIT	SICHERHEITSGURT	SIKKERHEDSBÆLTE	VEILIGHEIDSGORDEL	
61		**84354487**		1	CINTO DE SEGURANÇA, Case 3 PT				
						SEAT BELT	CINTURÓN DE SEGURID	CINTURA DI SICUREZZA	182C
					CEINTURE DE SECURIT	SICHERHEITSGURT	SIKKERHEDSBÆLTE	VEILIGHEIDSGORDEL	

SECTION INDEX
05 - Acabamento da máquina e equipamento

05.100.01 FILTERS AND CAPACITIES (SR175,SV185)

FILTERS AND CAPACITIES (SR175,SV185)
FILTERS AND CAPACITIES (SR175,SV185)
FILTERS AND CAPACITIES (SR175,SV185)
FILTERS AND CAPACITIES (SR175,SV185)

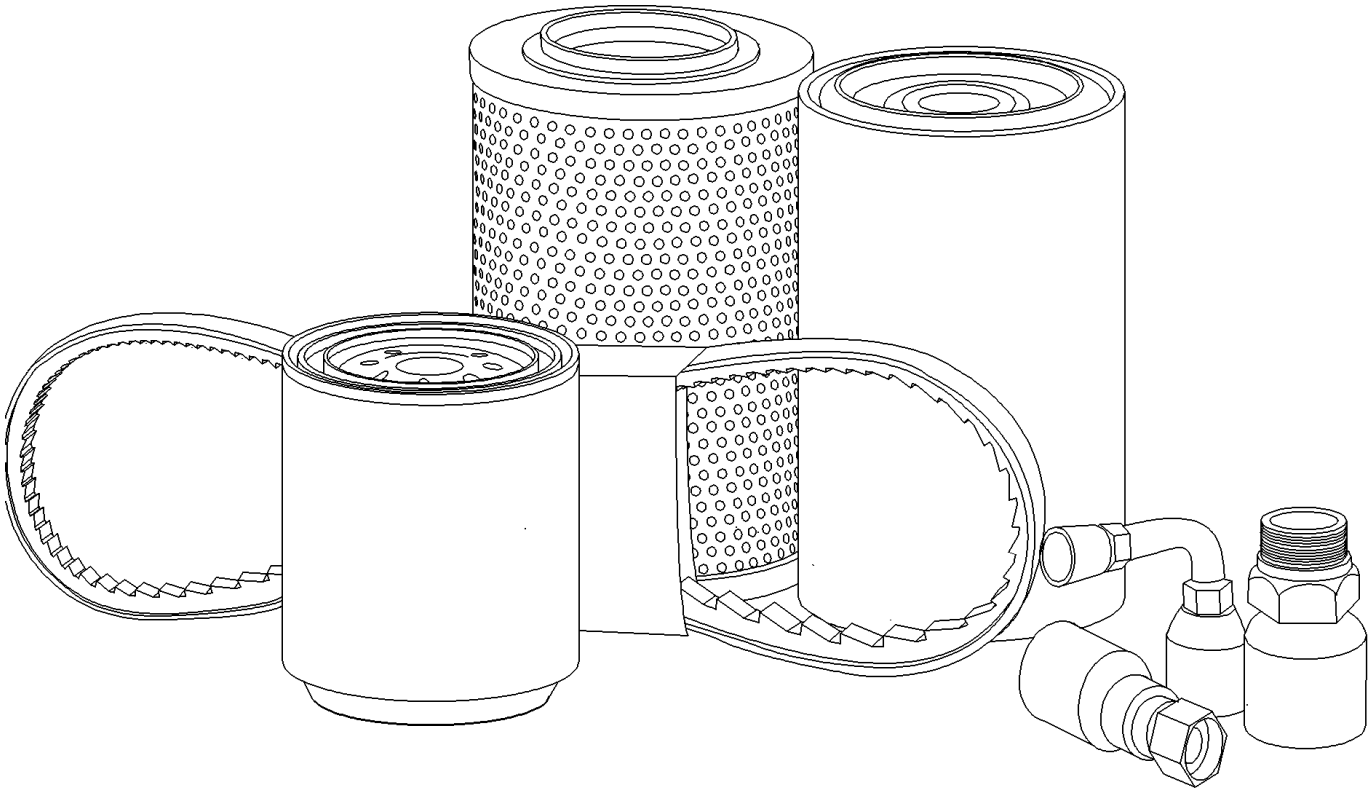

FILTERS AND CAPACITIES (SR175,SV185)
FILTERS AND CAPACITIES (SR175,SV185)
FILTERS AND CAPACITIES (SR175,SV185)
FILTERS AND CAPACITIES (SR175,SV185)

R	N	P.N.	MOD	Q	Denominação Description Bezeichnung	Description Bezeichnung	Denominacion Beskrivelse	Descrizione Beschrijving	L.C.
		87409203		1	FILTRO DE ÓLEO DO MOTOR, ISM				
						ENGINE OIL FILTER	FILTRO DE ACEITE DE M	FILTRO OLIO MOTORE	067F
					FILTRE A HUILE MOTEU	MOTORÖLFILTER	MOTOROLIEFILTER	MOTOROLIEFILTER	
		{}			Engine Crank case oil capacity: with filter change 8.0 l (8.5 US qt)				
		{}			Specifications: 10W30 Engine Oil 7-28				
		{}			Cooling System capacity: 15.6 l (4.2 US gal)				
		{}			Specifications: 50% distilled water and 50% ethylene glycol				
		84278070		1	ELEMENTO, Hyd Filter	ELEMENT	ELEMENTO	ELEMENTO	020E
					ELEMENT	ELEMENT	ELEMENT	ELEMENT	
		{}			Hydraulic System capacity: 32.1 l, (8.5 US gal)				
		{}			Hydraulic Reservoir capacity: 15.0 l (3.96 US gal)				
		{}			Specificaions: CNH MAT 3509				
		84299977		1	ELEMENTO, Fuel Filter - Main (Door)				
						ELEMENT	ELEMENTO	ELEMENTO	020E
					ELEMENT	ELEMENT	ELEMENT	ELEMENT	
		9611973		1	FILTRO DE COMBUSTÍVEL, Inline ISM				
						FUEL FILTER	FILTRO DE COMBUSTIBI	FILTRO CARBURANTE	064F
					FILTRE A CARBURANT	KRAFTSTOFFFILTER	BRÆNDSTOFFILTER	BRANDSTOFFILTER	
		{}			Fuel Tank capacity: 75.5 l (20.0 US gal)				
		{}			#2 Diesel				
		86982522		1	FILTRO DE AR, Primary ISI	AIR FILTER	FILTRO DE AIRE	FILTRO ARIA	066F
					FILTRE A AIR	LUFTFILTER	LUFTFILTER	LUCHTFILTER	
		86982523		1	FILTRO DE AR, Secondary ISM				
						AIR FILTER	FILTRO DE AIRE	FILTRO ARIA	066F
					FILTRE A AIR	LUFTFILTER	LUFTFILTER	LUCHTFILTER	
		{}			Grease Fittings: quantity - As Required				
		{}			Specifications: Molydisulfide grease				

SECTION INDEX
10 - Motor

10.001.01		MOTOR - SUPORTE
10.001.02		CYLINDER BLOCK - OIL FILTER
10.012.01		ENGINE MOUNTING (SR175,SV185)
10.012.01		ENGINE MOUNTING (SR200-TV380)
10.012.01	01	REMOTE ENGINE OIL FILTER (SR175,SV185)
10.012.01	02	REMOTE DIPSTICK ISM (SR175,SV185)
10.012.01	04	REMOTE ENGINE OIL (SR200-TV380)
10.101.01		CYLINDER HEAD
10.101.02		VALVE COVER & CRANKSHAFT PULLEY
10.101.03		REMOTE OIL DRAIN
10.101.04		OIL FILL - ENGINE
10.102.01		OIL PAN
10.103.01		CRANKSHAFT & PISTONS
10.103.02		FLYWHEEL, BELL HOUSING
10.106.01		CAMSHAFT
10.106.02		ROCKER ARMS
10.106.03		TIMING GEAR CASE, GOVERNOR
10.202.01		AIR CLEANER ASSY NA 7IN (SV185)
10.202.01		FILTRO DE AR - MOTOR
10.214.01	01	FUEL INJECTION SYSTEM
10.214.01	02	TUBOS DE COMBUSTÍVEL
10.216.01		FUEL SYSTEM ISM (SR175,SV185)
10.216.01		FUEL SYSTEM (SR220-SV300,TR320,TV380)
10.218.01		INJECTOR
10.220.01		THROTTLE HAND FOOT MECHANICAL (SR175,SV185)
10.220.01	01	CONTROLES - ESTRANGULADOR
10.220.01	02	CONTROLS - FOOT AND HAND THROTTLE
10.220.02		THROTTLE HAND FOOT EH (SR175,SV185,L218,L220)
10.250.01		TURBOCHARGER
10.254.01		BLOCK HEATER (SR130-SV185)
10.254.02		ESCAPAMENTO, ASPIRADOR
10.254.02		ENGINE - BLOCK HEATER
10.254.03		ENGINE EXHAUST MED (SV185)
10.254.04		INTAKE MANIFOLD
10.304.01		OIL PUMP & SUCTION FILTER
10.400.01		COOLING COMPONENTS MID ISM (SR175,SV185)
10.402.01		WATER PUMP
10.406.01	01	RADIADOR - SISTEMA DE RECUPERAÇÃO DO FLUIDO DE REFRIGERAÇÃO
10.406.01	02	RADIATOR/OIL COOLER
10.406.02		MODULE, RADIATOR AND COOLING MED (SR175,SV185,SR200,TR270)
10.408.01		ARREFECEDOR DO ÓLEO DESVIO

10.001.01		p1	07/11

MOTOR - SUPORTE
ENGINE - MOUNTING, ISM
MOTOR - TERMICO SOPORTE
MOTORE - MONTAGGIO

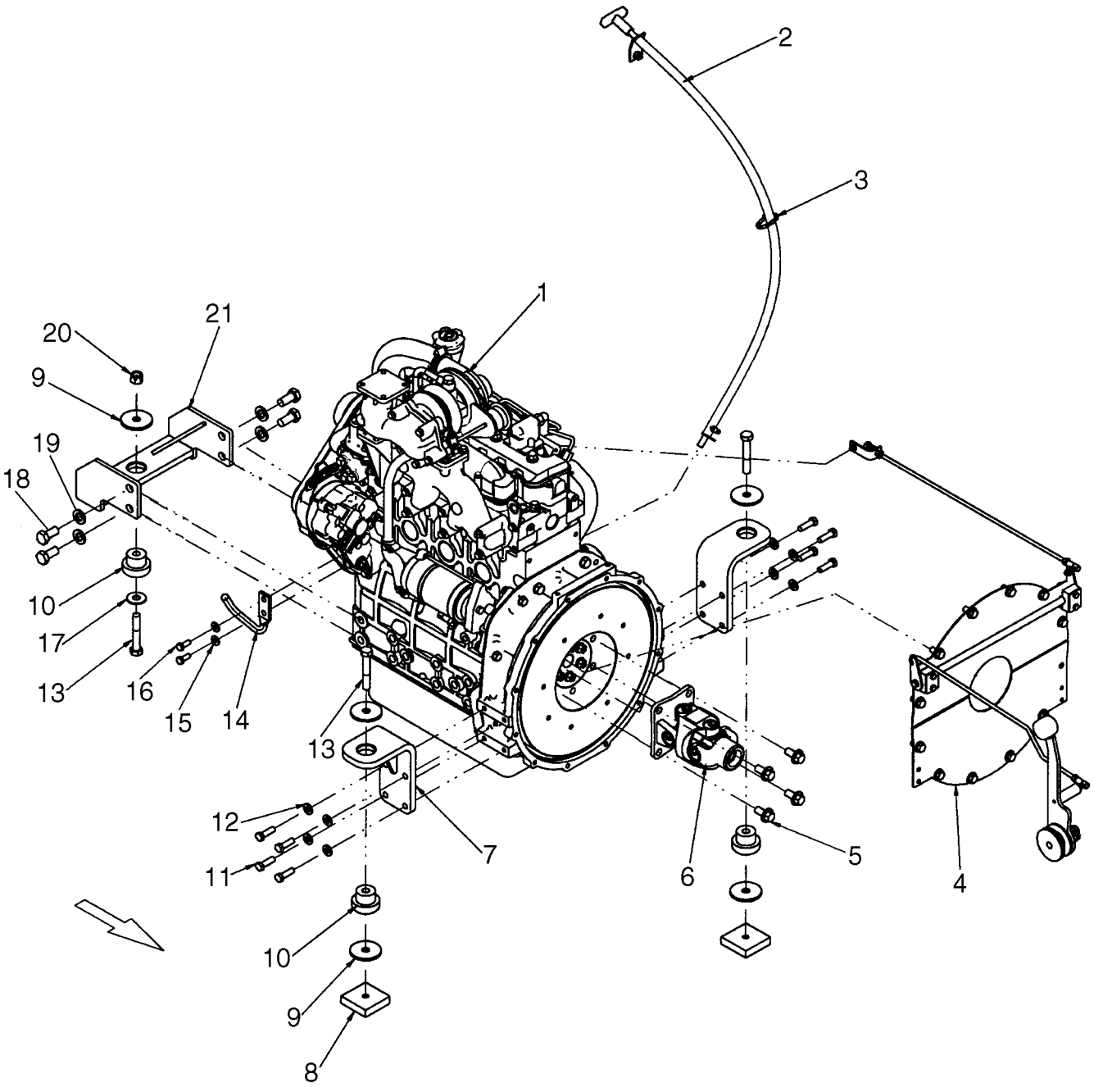

MOTEUR - THERMIQUE SUPPORT
MOTOR - BEFESTIGUNG
MOTOR - OPHÆNG
MOTOR - MONTAGE

R	N	P.N.	MOD	Q	Denominação Description Bezeichnung	Description Denominacion Beskrivelse	Denominacion Descrizione Beschrijving	L.C.
1		87393132		1	MOTOR, Engine, ISM 2.2L Tier 3; Incl Figures 02-09 - 02-10, 02-12 - 02-22, 03-03, 03-04, 04-01 - 04-03			
					ENGINE	MOTOR	MOTORE	130M
					MOTEUR	MOTOR	MOTOR	MOTOR
2		REF		1	INSTRUÇÃO, See Fig. 02-07			
					INSTRUCTION	INSTRUCCIÓN	ISTRUZIONI	Z571
					INSTRUCTION	ANLEITUNG	INSTRUKTION	INSTRUCTIE
3		87000312		1	PRENDEDOR DE CABOS	CABLE STRAP	BANDA DE CABLE	FASCETTA PER CAVO P716
					BRIDE DE CABLE	KABELBINDER	KABELSTROP	BUNDELBAND
4		REF		1	INSTRUÇÃO, See Fig. 03-02			
					INSTRUCTION	INSTRUCCIÓN	ISTRUZIONI	Z571
					INSTRUCTION	ANLEITUNG	INSTRUKTION	INSTRUCTIE
5		9804266		4	PARAFUSO, Hex Flg, M12 x 25, 8.8			
					BOLT	PERNO	BULLONE	140B
					VIS	SCHRAUBE	BOLT	BOUT
6		87446892		1	UNIAO CONJUNTO, Pump Drive			
					JOINT ASSY.	UNION (CONJUNTO)	UNIVERSALE UNITO ASS	P548
					JOINT-CARDAN ASS.	GELENK (KPLT.)	JOINT ASSY.	JOINT ASSY.
7		87438293		2	SUPORTE, Front Engine Mount			
					BRACKET	SOPORTE	STAFFA	225S
					SUPPORT	HALTERUNG	BESLAG	STEUN
8		87441050		2	PLACA, Plate Nut	PLATE	PLACA	PIASTRA 105P
					PLAQUE	PLATTE	PLADE	PLAAT
9		87040707		5	ARRUELA PLANA, Washer	WASHER	ARANDELA	RONDELLA 131R
					RONDELLE	UNTERLEGSCHEIBE	FLADSKIVE	SLUITRING
10		84201266		3	ISOLADOR, Isolation Mount			
					ISOLATOR	AISLADOR	ISOLATORE	Z082
					ISOLANT	ISOLATOR	ISOLATOR	ISOLATIE
11		88011		8	PARAFUSO, Hex, 3/8"-16 x 1 1/4", G5, Full Thd			
					BOLT	PERNO	BULLONE	140B
					VIS	SCHRAUBE	BOLT	BOUT
12		86625241		8	ARRUELA PLANA	WASHER	ARANDELA	RONDELLA 131R
					RONDELLE	UNTERLEGSCHEIBE	FLADSKIVE	SLUITRING
13		87339		3	PARAFUSO, Hex, 1/2"-13 x 3", G5			
					BOLT	PERNO	BULLONE	140B
					VIS	SCHRAUBE	BOLT	BOUT
14		86550180		1	SUPORTE	SUPPORT	SOPORTE	SUPPORTO 300S
					SUPPORT	STÜTZE	BESLAG	STEUN
15		322358		2	ARRUELA DE PRESSÃO, M8			
					BELLEVILLE WASHER	ARANDELA BELLEVILLE	RONDELLA BELLEVILLE	A143
					RONDELLE BELLEVILLE	TELLERFEDER	BELLEVILLE-SPÆNDSKI'	SCHOTELVEER
16		120104		2	PARAFUSO, Hex, M8 x 20, 8.8			
					SCREW	TORNILLO	VITE	040V
					VIS	SCHRAUBE	SKRUE	SCHROEF
17		80700		1	ARRUELA PLANA, 1/2"	WASHER	ARANDELA	RONDELLA 131R
					RONDELLE	UNTERLEGSCHEIBE	FLADSKIVE	SLUITRING
18		11422321		4	PARAFUSO, Hex, M14 x 1.5 x 30, 8.8, Full Thd			
					BOLT	PERNO	BULLONE	140B
					VIS	SCHRAUBE	BOLT	BOUT

10.001.01		p2	07/11

MOTOR - SUPORTE
ENGINE - MOUNTING, ISM
MOTOR - TERMICO SOPORTE
MOTORE - MONTAGGIO

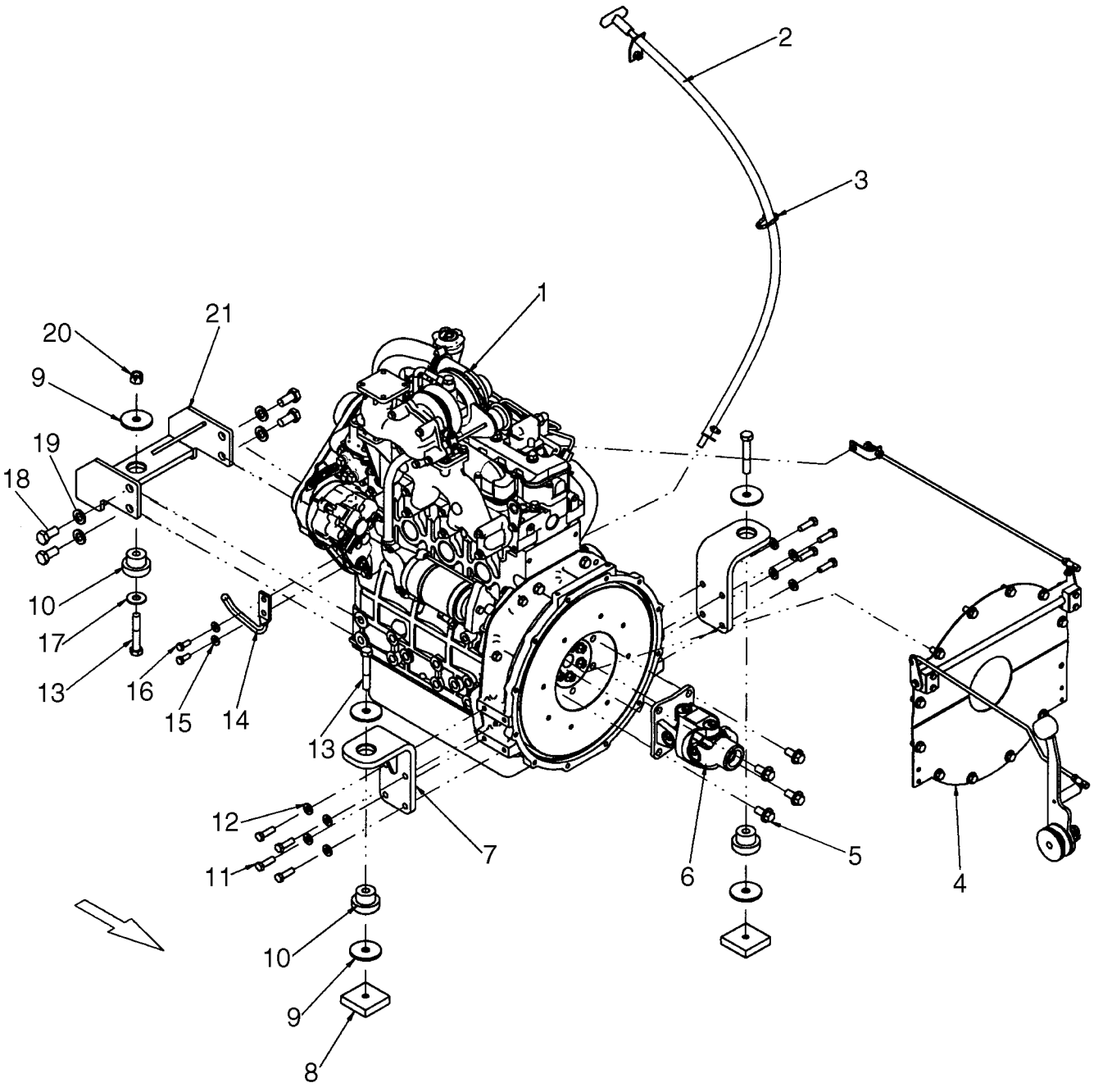

MOTEUR - THERMIQUE SUPPORT
MOTOR - BEFESTIGUNG
MOTOR - OPHÆNG
MOTOR - MONTAGE

R	N	P.N.	MOD	Q	Denominação Description	Description Bezeichnung	Denominacion Beskrivelse	Descrizione Beschrijving	L.C.
19		**87016615**		4	ARRUELA PLANA, M12 x 28.5 x 3, HT				
						WASHER	ARANDELA	RONDELLA	131R
					RONDELLE	UNTERLEGSCHEIBE	FLADSKIVE	SLUITRING	
20		**88871**		1	CONTRA PORCA, 1/2"-13, GC				
						LOCK NUT	TUERCA DE BLOQUEO	DADO DI BLOCCAGGIO	P263
					CONTRE-ECROU	SICHERUNGSMUTTER	LÅSEMØTRIK	BORGMOER	
21		**87438289**		1	SUPORTE DE MOTOR, Rear Engine Mount				
						ENGINE MOUNT	SOPORTE DE MOTOR	SUPPORTO MOTORE	299S
					SUPPORT MOTEUR	MOTORHALTERUNG	MOTOROPHÆNG	MOTORSTEUN	

10.001.02		p1	02/11

CYLINDER BLOCK - OIL FILTER
CYLINDER BLOCK - OIL FILTER
BLOQUE DE CILINDROS - FILTRO DE ACEITE
MONOBLOCCO - FILTRO DELL'OLIO

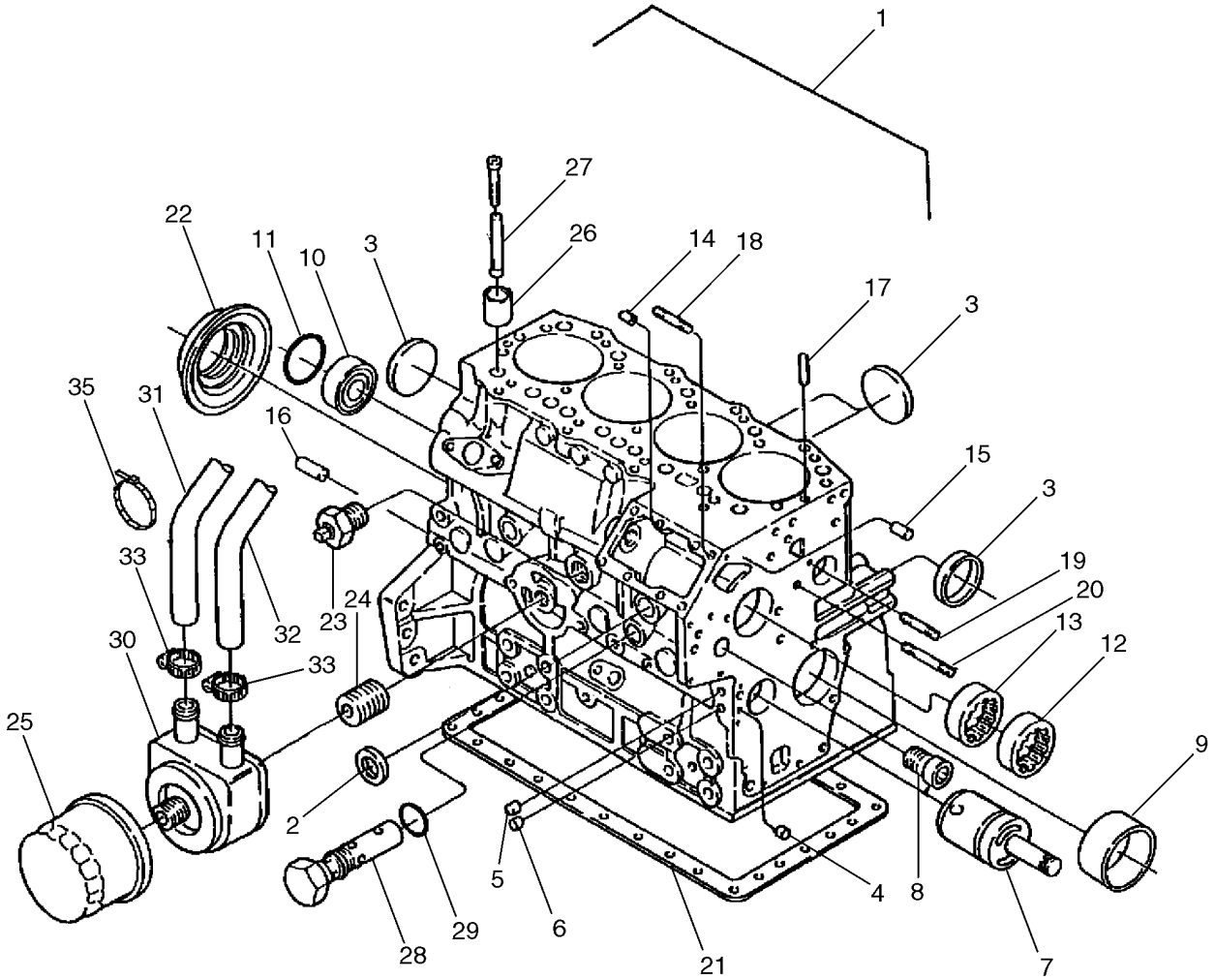

BS04M078

BLOC-CYLINDRES - FILTRE A HUILE
ZYLINDERBLOCK - ÖLFILTER
CYLINDERBLOK - OLIEFILTER
CILINDERBLOK - OLIEFILTER

R	N	P.N.	MOD	Q	Denominação Description	Description Bezeichnung	Denominacion Beskrivelse	Descrizione Beschrijving	L.C.
		SBA133735		1	MOTOR, Long Block	ENGINE	MOTOR	MOTORE	130M
					MOTEUR	MOTOR	MOTOR	MOTOR	
		SBA133735R		AR	MOTOR RECONDICIONADO, ISM Tier 3 Replacement Engine - For N.A. Only				
						EXCHANGE ENGINE	MOTOR DE SUSTITUCIÓ	MOTORE RIGENERATO	132M
					MOTEUR RENOVE	AUSTAUSCHMOTOR	OMBYTNINGSMOTOR	VERVANGINGSMOTOR	
		SBA133735C		AR	MOTOR-PRINCIPAL, Return Number, ENGINE - for N.A. Only				
						CORE-ENGINE	NÚCLEO-MOTOR	MOTORE DA REVISIONA	T023
					MOTEUR A RENOVER	HAUPTBAUTEIL-MOTOR	KERNE-MOTOR	TE VERNIEUWEN-MOTO	
		87393132C		AR	MOTOR-PRINCIPAL, Return Number, ENGINE - for N.A. Only				
						CORE-ENGINE	NÚCLEO-MOTOR	MOTORE DA REVISIONA	T023
					MOTEUR A RENOVER	HAUPTBAUTEIL-MOTOR	KERNE-MOTOR	TE VERNIEUWEN-MOTO	
1		**NSS**		1	SEM SERVIÇO EM SEPARADO, Cylinder Block				
						NOT SERVICED SEPARA	NO SE REPARA POR SE	NON FORNITO SEPARAT	064N
					NON FORUNI SEPAREM	NICHT A SEP ERS-T LIEI	SERVICERES IKKE SEPA	NIET LOS VERKRIJGBAA	
2		**SBA064210025**		2	BUJÃO, 25mm	PLUG	TAPÓN	TAPPO	050T
					BOUCHON	STOPFEN	PROP	PLUG	
3		**SBA064210040**		5	TAMPA	CAP	TAPÓN	TAPPO	052T
					CAPUCHON	KAPPE	TANKDÆKSEL	DOP	
4		**SBA198466010**		3	BUJÃO, 8.4mm	PLUG	TAPÓN	TAPPO	050T
					BOUCHON	STOPFEN	PROP	PLUG	
5		**SBA198466020**		2	BUJÃO, 10.4mm	PLUG	TAPÓN	TAPPO	050T
					BOUCHON	STOPFEN	PROP	PLUG	
6		**SBA198466030**		4	BUJÃO, 6.5 x 7mm	PLUG	TAPÓN	TAPPO	050T
					BOUCHON	STOPFEN	PROP	PLUG	
7		**SBA165296260**		1	EIXO, Idler Gear, Uses Pin SBA140196072				
						SHAFT	EJE	ALBERO	016A
					ARBRE	WELLE	AKSEL	AS	
8		**SBA198517090**		1	BUCHA	BUSHING	CASQUILLO	BOCCOLA	095B
					BAGUE	BUCHSE	BØSNING	BUS	
9		**SBA198517222**		1	BUCHA	BUSHING	CASQUILLO	BOCCOLA	095B
					BAGUE	BUCHSE	BØSNING	BUS	
10		**SBA040106203**		1	ROLAMENTO ESFÉRICO	BALL BEARING	RODAMIENTO DE BOLAS	CUSCINETTO A SFERE	343C
					ROULEMENT A BILLES	KUGELLAGER	KUGLELEJE	KOGELLAGER	
11		**SBA064100045**		1	BUJÃO, Expansion	PLUG	TAPÓN	TAPPO	050T
					BOUCHON	STOPFEN	PROP	PLUG	
12		**SBA042309018**		1	ROLAMENTO DE AGULHAS				
						NEEDLE BEARING	COJINETE DE AGUJAS	CUSCINETTO AD AGHI	344C
					ROULEMENT A AIGUILLE	NADELLAGER	NÅLELEJE	NAALDLAGER	
13		**SBA042309017**		1	ROLAMENTO DE AGULHAS				
						NEEDLE BEARING	COJINETE DE AGUJAS	CUSCINETTO AD AGHI	344C
					ROULEMENT A AIGUILLE	NADELLAGER	NÅLELEJE	NAALDLAGER	
14		**SBA030500612**		2	GUIA	DOWEL	BULÓN	PERNO	090G
					GOUJON	PASSSTIFT	DYVEL	PASPEN	
15		**SBA030500616**		2	GUIA, M6 x 16	DOWEL	BULÓN	PERNO	090G
					GOUJON	PASSSTIFT	DYVEL	PASPEN	
16		**SBA030501025**		2	PINO ESFÉRICO, M10 x 25 L				
						BALL PIN	GORRÓN ESFÉRICO	PERNO SFERICO	090P
					QUEUE A ROTULE	KUGELZAPFEN	KUGLETAP	KOGELPEN	

Note: Basic engines and reman engines are generic engines, all parts are not supplied with the engines. Check the configuration of the engine being removed with the configuration of the engine being installed. For any components not supplied with the engine being installed, reuse those parts from the engine that has just been removed. Do not return the old engine, until the unit is reassembled.

SV185

10.001.02		p2	02/11

CYLINDER BLOCK - OIL FILTER
CYLINDER BLOCK - OIL FILTER
BLOQUE DE CILINDROS - FILTRO DE ACEITE
MONOBLOCCO - FILTRO DELL'OLIO

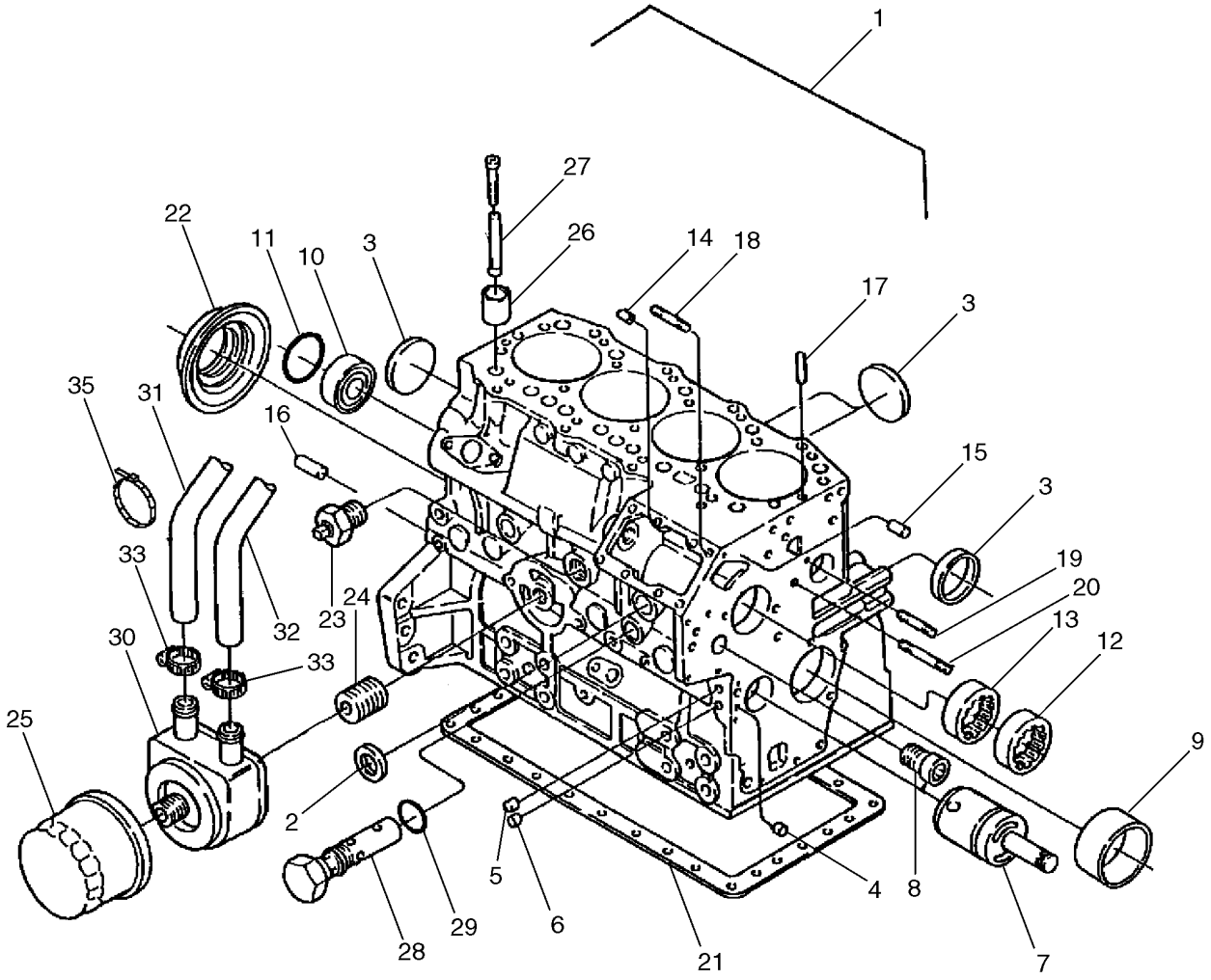

BS04M078

BLOC-CYLINDRES - FILTRE A HUILE
ZYLINDERBLOCK - ÖLFILTER
CYLINDERBLOK - OLIEFILTER
CILINDERBLOK - OLIEFILTER

R	N	P.N.	MOD	Q	Denominação Description	Description Bezeichnung	Denominacion Beskrivelse	Descrizione Beschrijving	L.C.
17		SBA030309005		2	PINO, Spring BROCHE	PIN PIN	PASADOR STIFT	PERNO PEN	080P
18		SBA012100820		3	PRISIONEIRO GOUJON	STUD GEWINDEBOLZEN	PRISIONERO STØTTEBOLT	PRIGIONIERO TAPEIND	210P
19		SBA012110660		1	PRISIONEIRO GOUJON	STUD GEWINDEBOLZEN	PRISIONERO STØTTEBOLT	PRIGIONIERO TAPEIND	210P
20		SBA012110635		1	PRISIONEIRO GOUJON	STUD GEWINDEBOLZEN	PRISIONERO STØTTEBOLT	PRIGIONIERO TAPEIND	210P
21		SBA110996860		1	JUNTA JOINT	GASKET DICHTUNG	JUNTA PAKNING	GUARNIZIONE PAKKING	123G
22		SBA050209083		1	VEDADOR DE ÓLEO JOINT ETANCHEITE D'HI	OIL SEAL ÖLDICHTUNG	JUNTA DE ACEITE OLIESEGL	PARAOLIO OLIEAFDICHTING	P278
23		SBA064500020		1	BUJÃO, Cock BOUCHON	PLUG STOPFEN	TAPÓN PROP	TAPPO PLUG	050T
24		SBA140546020		1	ADAPTADOR, Joint ADAPTATEUR	ADAPTER ADAPTER	ADAPTADOR ADAPTER	ADATTATORE ADAPTER	001A
25		SBA140517020		1	FILTRO DE ÓLEO DO MOTOR FILTRE A HUILE MOTEU	ENGINE OIL FILTER MOTORÖLFILTER	FILTRO DE ACEITE DE M MOTOROLIEFILTER	FILTRO OLIO MOTORE MOTOROLIEFILTER	067F
26		SBA120116160		8	PLATINADO POUSSOIR DE SOUPAPI	TAPPET STÖSSEL	LEVA VENTILLØFTER	PUNTERIA KLEPSTOTER	240P
27		SBA120456310		8	HASTE DE IMPULSO TIGE DE POUSSEE	PUSH ROD STÖSSELSTANGE	VÁSTAGO DE EMPUJE SKUBBESTANG	ASTA DI SPINTA STOTERSTANG	P307
28		SBA140036220		1	VÁLVULA ALÍVIO DA PRESSÃO CLAPET DECHARGE PRI	PRESSURE RELIEF VALV DRUCKENTLASTUNGSV	VÁLV. ALIVIO DE PRESI(SIKKERHEDSVENTIL	VALV. LIMITATRICE PRE OVERDRUKKLEP	007V
29		SBA052109113		1	O-RING JOINT TORIQUE	O-RING O-RING	JUNTA TÓRICA O-RING	ANELLO TOROIDALE O-RING	055A
30		SBA140656150		1	RESFRIADOR DO ÓLEO, Oil Cooler Assy REFROIDISSEUR D'HUIL	OIL COOLER ÖLKÜHLER	REFRIGERADOR DE ACI OLIEKØLER	RADIATORE OLIO OLIEKOELER	026R
		SBA140996390		1	JUNTA, Cooler To Block JOINT	GASKET DICHTUNG	JUNTA PAKNING	GUARNIZIONE PAKKING	123G
31		SBA068209246		1	MANGUEIRA FLEXIBLE	HOSE SCHLAUCH	TUBO SLANGE	TUBO FLESSIBILE SLANG	030M
32		SBA068209247		1	MANGUEIRA FLEXIBLE	HOSE SCHLAUCH	TUBO SLANGE	TUBO FLESSIBILE SLANG	030M
33		SBA067100025		4	BRAÇADEIRA MANGUEIRA, Hose Band COLLIER POUR FLEXIBL	HOSE CLAMP SCHLAUCHSCHELLE	ABRAZADERA DE MANG SLANGEKLEMME	FASCETTA STRINGITUB SLANGKLEM	P729

Note: Basic engines and reman engines are generic engines, all parts are not supplied with the engines. Check the configuration of the engine being removed, with the configuration of the engine being installed. For any components not supplied with the engine being installed, reuse those parts from the engine that has just been removed. Do not return the old engine, until the unit is reassembled.

SV185

10.012.01		p1	05/11

ENGINE MOUNTING (SR175,SV185)
ENGINE MOUNTING (SR175,SV185)
ENGINE MOUNTING (SR175,SV185)
ENGINE MOUNTING (SR175,SV185)

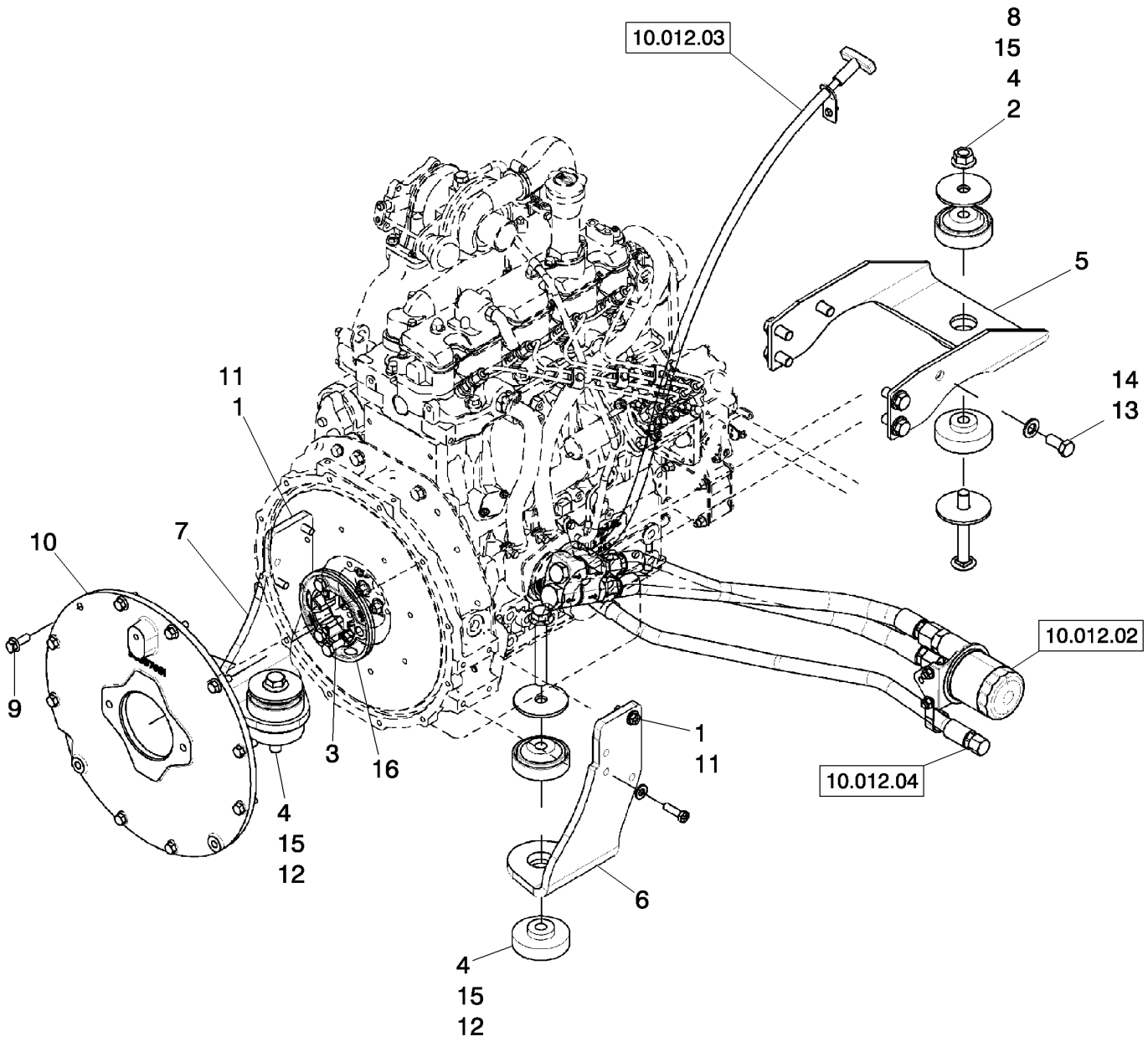

ENGINE MOUNTING (SR175,SV185)
ENGINE MOUNTING (SR175,SV185)
ENGINE MOUNTING (SR175,SV185)
ENGINE MOUNTING (SR175,SV185)

R	N	P.N.	MOD	Q	Denominação Description	Description Bezeichnung	Denominacion Beskrivelse	Descrizione Beschrijving	L.C.
1		87016486		4	PARAFUSO, 12 Pt Hd, M10 x 30, 12.9				
						SCREW	TORNILLO	VITE	040V
					VIS	SCHRAUBE	SKRUE	SCHROEF	
2		300663		1	PARAFUSO, Short NK, M16 x 120, Cl8.8				
						CARRIAGE BOLT	PERNO ALOMADO	BULLONE A TESTA TONI	P123
					VIS A TETE BOMBEE	SCHLOSSSCHRAUBE	BRÆDDEBOLT	SLOTBOUT	
3		9846677		3	PARAFUSO, Hex, M10 x 25, 10.9, Full Thd				
						BOLT	PERNO	BULLONE	140B
					VIS	SCHRAUBE	BOLT	BOUT	
4		84201266		6	ISOLADOR, Mount, Engine	ISOLATOR	AISLADOR	ISOLATORE	Z082
					ISOLANT	ISOLATOR	ISOLATOR	ISOLATIE	
5		84239652		1	PLACA DE MONTAGEM, Fan				
						MOUNTING PLATE	PLACA DE MONTAJE	PIASTRA DI MONTAGGI(	109P
					PLAQUE DE MONTAGE	MONTAGEPLATTE	MONTERINGSPLADE	BEVESTIGINGSPLAAT	
6		84277379		1	PLACA DE MONTAGEM, Pump, LH, Gray				
						MOUNTING PLATE	PLACA DE MONTAJE	PIASTRA DI MONTAGGI(	109P
					PLAQUE DE MONTAGE	MONTAGEPLATTE	MONTERINGSPLADE	BEVESTIGINGSPLAAT	
7		84277381		1	PLACA DE MONTAGEM, Pump, RH, Gray				
						MOUNTING PLATE	PLACA DE MONTAJE	PIASTRA DI MONTAGGI(	109P
					PLAQUE DE MONTAGE	MONTAGEPLATTE	MONTERINGSPLADE	BEVESTIGINGSPLAAT	
8		86512498		1	PORCA, M16 x 2, Flg, Cl 10	NUT	TUERCA	DADO	010D
					ECROU	MUTTER	MØTRIK	MOER	
9		9804261		10	PARAFUSO, Hex Flg, M10 x 25, 8.8				
						BOLT	PERNO	BULLONE	140B
					VIS	SCHRAUBE	BOLT	BOUT	
10		86567000		1	COBERTURA	COVER	CUBIERTA	COPERCHIO	265C
					COUVERCLE	ABDECKUNG	DÆKSEL	AFSCHERMING	
11		86639325		4	ARRUELA PLANA, M10 x 24.5 x 3, HT				
						WASHER	ARANDELA	RONDELLA	131R
					RONDELLE	UNTERLEGSCHEIBE	FLADSKIVE	SLUITRING	
12		87015923		2	PARAFUSO, Hex Flg, M16 x 110, 10.9, Full Thd				
						BOLT	PERNO	BULLONE	140B
					VIS	SCHRAUBE	BOLT	BOUT	
13		87016615		6	ARRUELA PLANA, M12 x 28.5 x 3, HT				
						WASHER	ARANDELA	RONDELLA	131R
					RONDELLE	UNTERLEGSCHEIBE	FLADSKIVE	SLUITRING	
14		87357989		6	PARAFUSO, M14 X 1.5 X 30				
						SCREW	TORNILLO	VITE	040V
					VIS	SCHRAUBE	SKRUE	SCHROEF	
15		87630175		6	ARRUELA PLANA, 0.656 X 3 X 0.179				
						WASHER	ARANDELA	RONDELLA	131R
					RONDELLE	UNTERLEGSCHEIBE	FLADSKIVE	SLUITRING	
16		87713744		1	PLÁSTICO, Flexible Coupler Plate				
						PLASTIC	PLÁSTICO	PLASTICA	Z065
					PLASTIQUE	KUNSTSTOFF	PLASTIK	KUNSTSTOF	
17		3562		1	ARRUELA PLANA, 1.562x3.25x.164 (Not Shown)				
						WASHER	ARANDELA	RONDELLA	131R
					RONDELLE	UNTERLEGSCHEIBE	FLADSKIVE	SLUITRING	

10.012.01		p1	07/11

ENGINE MOUNTING (SR200-TV380)
ENGINE MOUNTING (SR200-TV380)
ENGINE MOUNTING (SR200-TV380)
ENGINE MOUNTING (SR200-TV380)

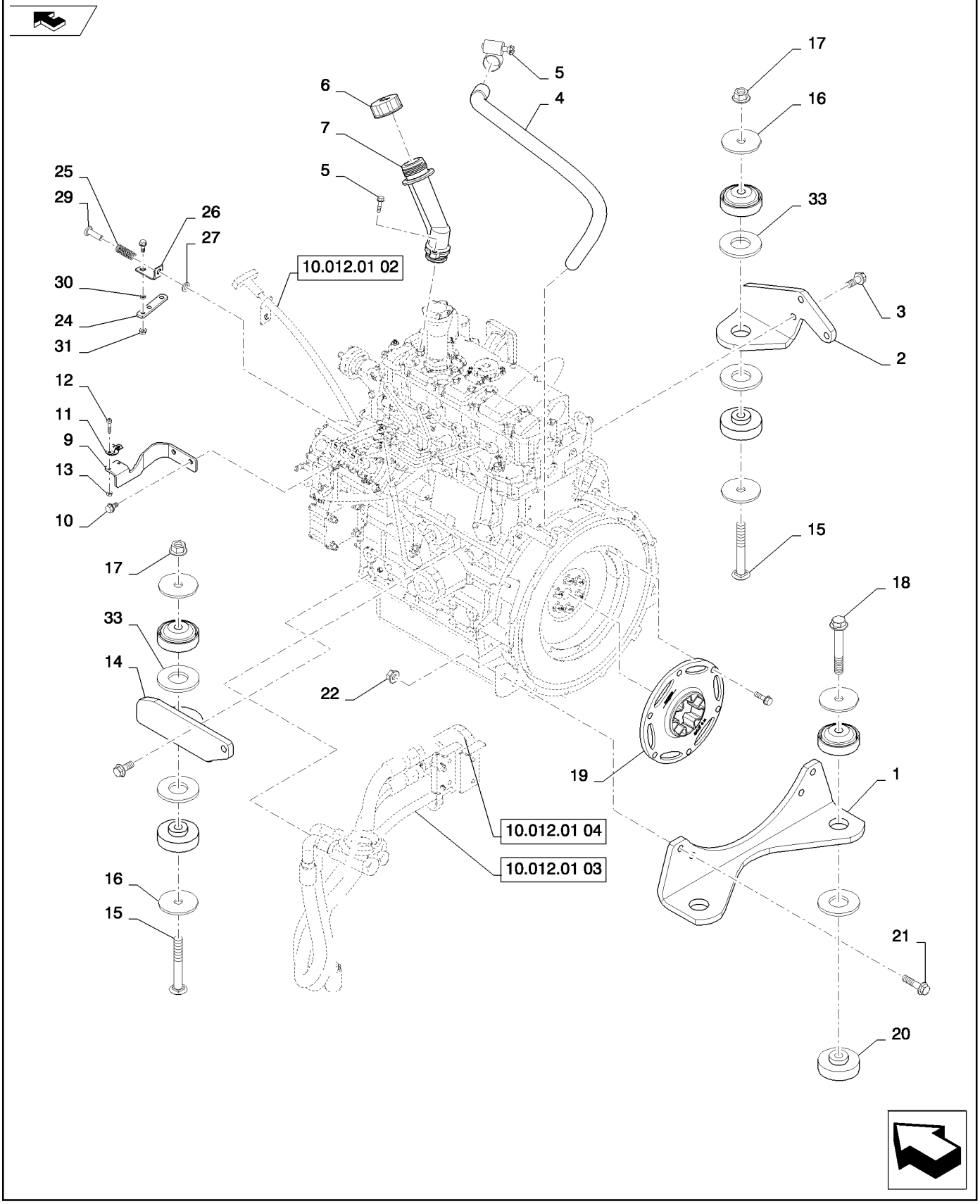

ENGINE MOUNTING (SR200-TV380)
ENGINE MOUNTING (SR200-TV380)
ENGINE MOUNTING (SR200-TV380)
ENGINE MOUNTING (SR200-TV380)

R	N	P.N.	MOD	Q	Denominação Description	Description Bezeichnung	Denominacion Beskrivelse	Descrizione Beschrijving	L.C.
1		84239651		1	PLACA DE MONTAGEM, F5C Pump, Gray				
						MOUNTING PLATE	PLACA DE MONTAJE	PIASTRA DI MONTAGGIO	109P
					PLAQUE DE MONTAGE	MONTAGEPLATTE	MONTERINGSPLADE	BEVESTIGINGSPLAAT	
2		84239653		1	PLACA DE MONTAGEM, F5C Fan, LH, Gray				
						MOUNTING PLATE	PLACA DE MONTAJE	PIASTRA DI MONTAGGIO	109P
					PLAQUE DE MONTAGE	MONTAGEPLATTE	MONTERINGSPLADE	BEVESTIGINGSPLAAT	
3		87030508		5	PARAFUSO, Hex Flg, M12 x 30, 10.9, Full Thd				
						BOLT	PERNO	BULLONE	140B
					VIS	SCHRAUBE	BOLT	BOUT	
4		84204223		1	MANGUEIRA ADMISSÃO DE AR, CCV				
						INTAKE AIR HOSE	TUBO DE ADMISIÓN DE	TUBO FLESS. ARIA ASPI	A059
					DURIT D'ADMISSION D'A	LUFTEINLASSSCHLAUCH	SLANGE, LUFTINDSUGN	INLAATLUCHTSLANG	
5		86625021		1	BRAÇADEIRA MANGUEIRA, #12, 0.69/1.25 Type F Worm				
						HOSE CLAMP	ABRAZADERA DE MANG	FASCETTA STRINGITUB	P729
					COLLIER POUR FLEXIBL	SCHLAUCHSCHELLE	SLANGEKLEMME	SLANGKLEM	
6		87674802		1	TAMPA, Oil Fill	CAP	TAPÓN	TAPPO	052T
					CAPUCHON	KAPPE	TANKDÆKSEL	DOP	
7		87680042		1	GARGALO, Neck A, Oil	NECK FILLER	BOCA DE LLENADO	BOCCHETTONE RIEMPII	5720
					GOULOT DE REMPLISSA	EINFÜLLSTUTZEN	HALSFILLER	VULHALS	
8		9804257		2	PARAFUSO, Hex Flg, M6 x 25, 8.8				
						BOLT	PERNO	BULLONE	140B
					VIS	SCHRAUBE	BOLT	BOUT	
9		84259542		1	SUPORTE, Throttle Cable	BRACKET	SOPORTE	STAFFA	225S
					SUPPORT	HALTERUNG	BESLAG	STEUN	
10		86511841		2	PARAFUSO, Hex Flg, M8 x 16, 8.8				
						BOLT	PERNO	BULLONE	140B
					VIS	SCHRAUBE	BOLT	BOUT	
11		84200938		1	BRAÇADEIRA, Throttle Cable				
						CLAMP	ABRAZADERA	MORSETTO	120M
					COLLIER	KLEMME	SPÆNDEBÅND	KLEM	
12		86639294		2	PARAFUSO, Hex Soc Hd, M4 x 20, 8.8				
						SCREW	TORNILLO	VITE	040V
					VIS	SCHRAUBE	SKRUE	SCHROEF	
13		100012		2	PORCA, M4, Cl 8	NUT	TUERCA	DADO	010D
					ECROU	MUTTER	MØTRIK	MOER	
14		84239654		1	PLACA DE MONTAGEM, F5C Fan, RH, Gray				
						MOUNTING PLATE	PLACA DE MONTAJE	PIASTRA DI MONTAGGIO	109P
					PLAQUE DE MONTAGE	MONTAGEPLATTE	MONTERINGSPLADE	BEVESTIGINGSPLAAT	
15		300663		2	PARAFUSO, Short NK, M16 x 120, Cl8.8				
						CARRIAGE BOLT	PERNO ALOMADO	BULLONE A TESTA TON	P123
					VIS A TETE BOMBEE	SCHLOSSSCHRAUBE	BRÆDDEBOLT	SLOTBOUT	
16		87630175		6	ARRUELA PLANA	WASHER	ARANDELA	RONDELLA	131R
					RONDELLE	UNTERLEGSCHEIBE	FLADSKIVE	SLUITRING	
17		86512498		2	PORCA, M16 x 2, Flg, Cl 10	NUT	TUERCA	DADO	010D
					ECROU	MUTTER	MØTRIK	MOER	
18		87015923		2	PARAFUSO, Hex Flg, M16 x 110, 10.9, Full Thd				
						BOLT	PERNO	BULLONE	140B
					VIS	SCHRAUBE	BOLT	BOUT	

10.012.01		p2	07/11

ENGINE MOUNTING (SR200-TV380)
ENGINE MOUNTING (SR200-TV380)
ENGINE MOUNTING (SR200-TV380)
ENGINE MOUNTING (SR200-TV380)

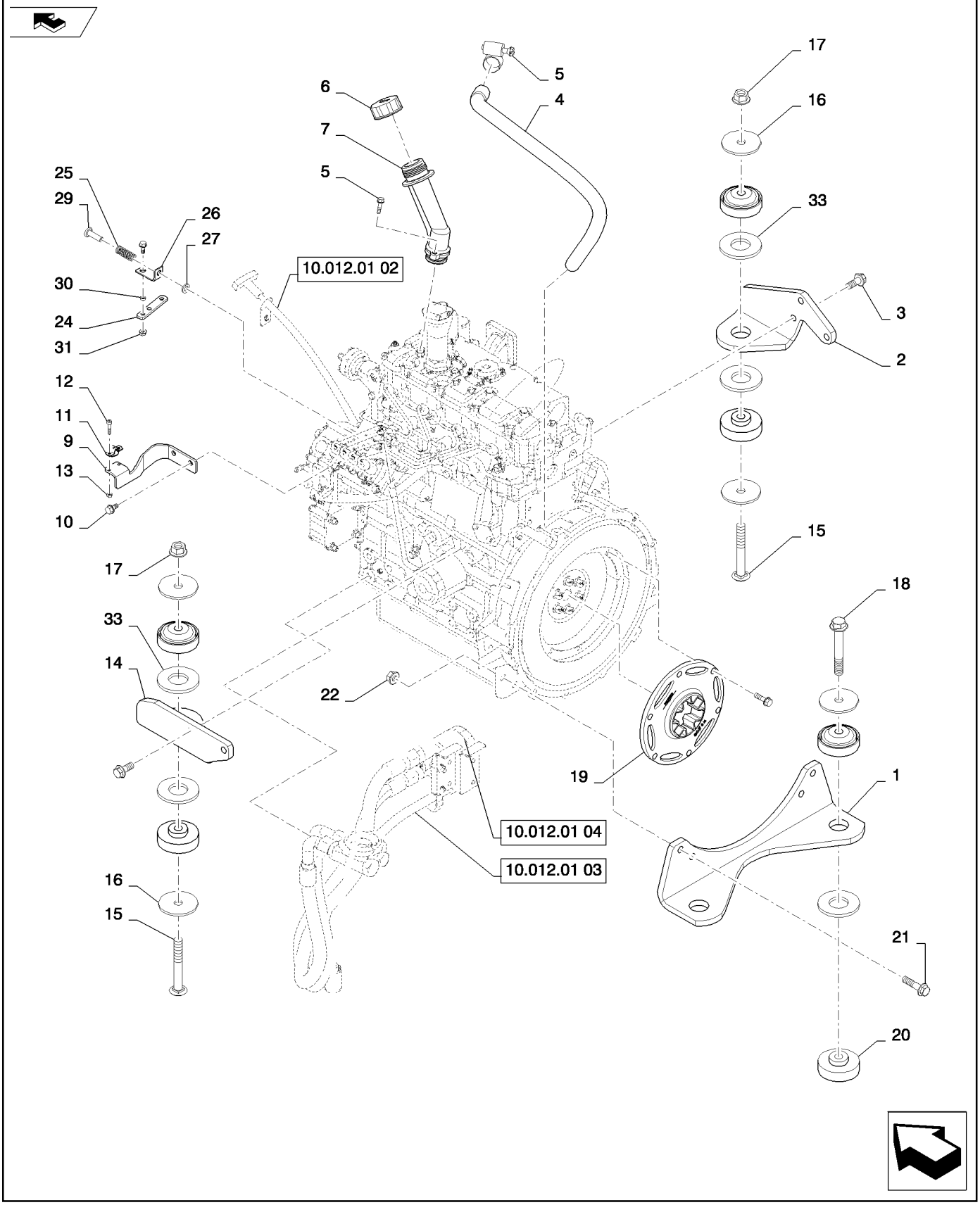

ENGINE MOUNTING (SR200-TV380)
ENGINE MOUNTING (SR200-TV380)
ENGINE MOUNTING (SR200-TV380)
ENGINE MOUNTING (SR200-TV380)

R	N	P.N.	MOD	Q	Denominação Description	Description Bezeichnung	Denominacion Beskrivelse	Descrizione Beschrijving	L.C.
19		87692685		1	ENGATE, Flexible	COUPLING	ACOPLAMIENTO	GIUNTO	Z321
					RACCORD	KUPPLUNG	KOBLING	KOPPELING	
20		84201266		8	ISOLADOR, Mount, ISO Engine				
						ISOLATOR	AISLADOR	ISOLATORE	Z082
					ISOLANT	ISOLATOR	ISOLATOR	ISOLATIE	
21		87670764		4	PARAFUSO, M12 X 50	BOLT	PERNO	BULLONE	140B
					VIS	SCHRAUBE	BOLT	BOUT	
22		86512497		4	PORCA, M12 x 1.75, Flg, Cl 10				
						NUT	TUERCA	DADO	010D
					ECROU	MUTTER	MØTRIK	MOER	
23		9804260		6	PARAFUSO, Hex Flg, M8 x 30, 8.8, Full Thd				
						BOLT	PERNO	BULLONE	140B
					VIS	SCHRAUBE	BOLT	BOUT	
24		84276430		1	SUPORTE, Throttle	BRACKET	SOPORTE	STAFFA	225S
					SUPPORT	HALTERUNG	BESLAG	STEUN	
25		84380082		1	MOLA, Throttle	SPRING	RESORTE	MOLLA	100M
					RESSORT	FEDER	FJEDER	VEER	
26		9844532		1	SUPORTE	BRACKET	SOPORTE	STAFFA	225S
					SUPPORT	HALTERUNG	BESLAG	STEUN	
27		86588450		1	ARRUELA PLANA, M6 x 12 x 1.6 Thk				
						WASHER	ARANDELA	RONDELLA	131R
					RONDELLE	UNTERLEGSCHEIBE	FLADSKIVE	SLUITRING	
28		9804255		3	PARAFUSO, Hex Flg, M6 x 16, 8.8				
						BOLT	PERNO	BULLONE	140B
					VIS	SCHRAUBE	BOLT	BOUT	
29		9860169		1	REBITE, Drilled	RIVET	REMACHE	RIVETTO	055R
					RIVET	NIET	NITTE	KLINKNAGEL	
30		13734		1	ESPAÇADOR	SPACER	SEPARADOR	DISTANZIALE	075D
					ENTRETOISE	DISTANZSTÜCK	AFSTANDSSTYKKE	AFSTANDSSTUK	
31		9804276		1	PORCA, M6 x 1, Flg, Cl 8	NUT	TUERCA	DADO	010D
					ECROU	MUTTER	MØTRIK	MOER	
32		L11541		1	PRENDEDOR DE CABOS, Tie				
						CABLE STRAP	BANDA DE CABLE	FASCETTA PER CAVO	P716
					BRIDE DE CABLE	KABELBINDER	KABELSTROP	BUNDELBAND	
33		3562		2	ARRUELA PLANA, Engine Mount				
						WASHER	ARANDELA	RONDELLA	131R
					RONDELLE	UNTERLEGSCHEIBE	FLADSKIVE	SLUITRING	

10.012.01	01	p1	02/11

REMOTE ENGINE OIL FILTER (SR175,SV185)
REMOTE ENGINE OIL FILTER (SR175,SV185)
REMOTE ENGINE OIL FILTER (SR175,SV185)
REMOTE ENGINE OIL FILTER (SR175,SV185)

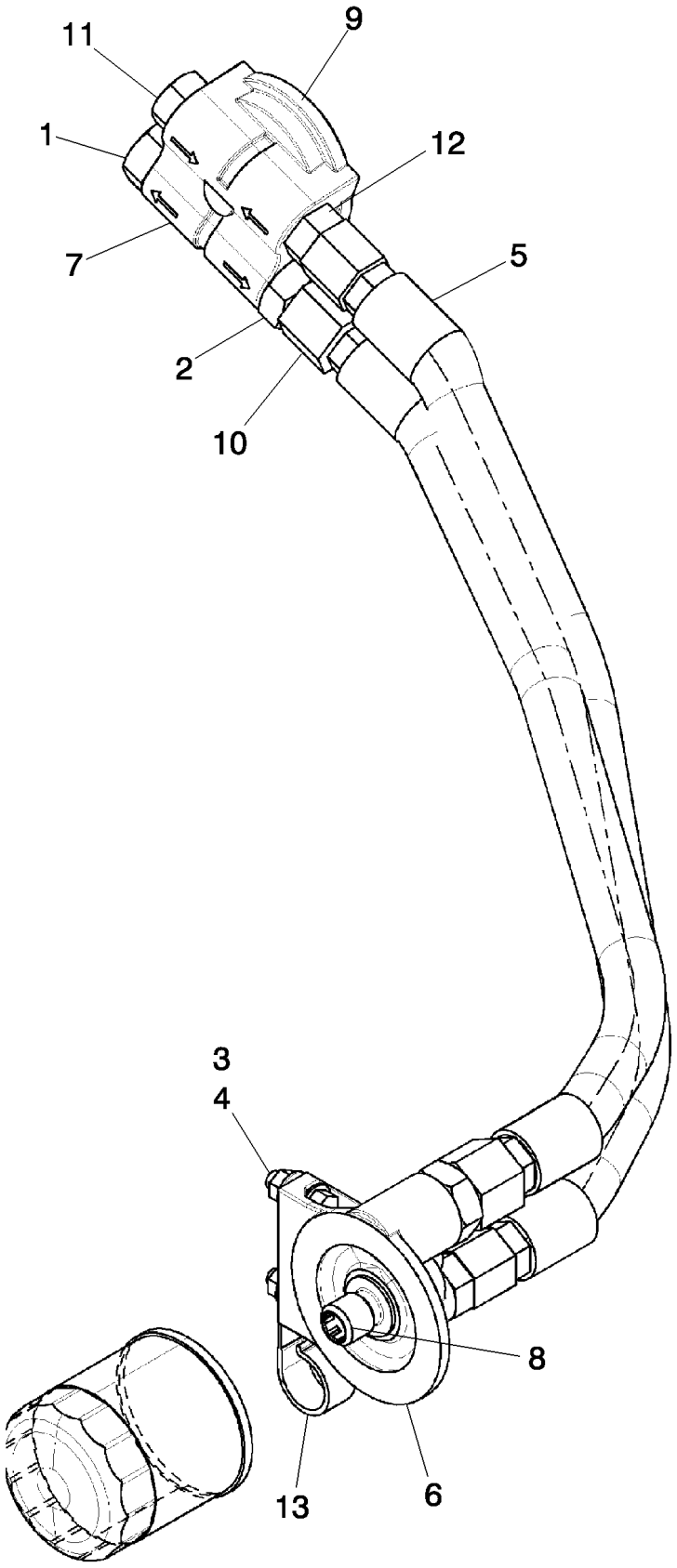

REMOTE ENGINE OIL FILTER (SR175,SV185)
REMOTE ENGINE OIL FILTER (SR175,SV185)
REMOTE ENGINE OIL FILTER (SR175,SV185)
REMOTE ENGINE OIL FILTER (SR175,SV185)

R	N	P.N.	MOD	Q	Denominação Description	Description Bezeichnung	Denominacion Beskrivelse	Descrizione Beschrijving	L.C.
1		163410		1	BUJÃO, Hex Hd, 1 1/16"-12 ORB				
						PLUG	TAPÓN	TAPPO	050T
					BOUCHON	STOPFEN	PROP	PLUG	
2		322896		2	CONECTOR HIDRÁUL, 1 1/16"-12, 37° x 1 1/16"-12, O-Ring				
						HYD CONNECTOR	CONECTOR HIDRÁULIC(	CONNETTORE IDRAULIC	020R
					CONNECTEUR HYDRAU	HYDR STECKVERBINDE	HYDRAULIKSTIK	HYDRAULISCHE AANSLU	
3		9671714		2	PARAFUSO, Hex Flg, M8 x 25, 8.8				
						BOLT	PERNO	BULLONE	140B
					VIS	SCHRAUBE	BOLT	BOUT	
4		9804277		2	PORCA, M8 x 1.25, Flg, Cl 8				
						NUT	TUERCA	DADO	010D
					ECROU	MUTTER	MØTRIK	MOER	
5		84269297		1	MANGUEIRA HIDRÁULICA, Remote Oil Filter				
						HYDRAULIC HOSE	TUBO HIDRÁULICO	TUBO FLESSIBILE IDRAU	A058
					FLEXIBLE HYDRAULIQU	HYDRAULIKSCHLAUCH	SLANGE, HYDRAULIK	HYDRAULISCHE SLANG	
6		84296830		1	ADAPTADOR, Oil Filter	ADAPTER	ADAPTADOR	ADATTATORE	001A
					ADAPTATEUR	ADAPTER	ADAPTER	ADAPTER	
7		84296855		1	ADAPTADOR, Remote Oil Filter ISM				
						ADAPTER	ADAPTADOR	ADATTATORE	001A
					ADAPTATEUR	ADAPTER	ADAPTER	ADAPTER	
8		84297795		1	ADAPTADOR, Filter Head, ISM Engine				
						ADAPTER	ADAPTADOR	ADATTATORE	001A
					ADAPTATEUR	ADAPTER	ADAPTER	ADAPTER	
9		84303971		1	VEDADOR DE ÓLEO, Oil Filter				
						OIL SEAL	JUNTA DE ACEITE	PARAOLIO	P278
					JOINT ETANCHEITE D'HI	ÖLDICHTUNG	OLIESEGL	OLIEAFDICHTING	
10		84305915		1	MANGUEIRA HIDRÁULICA, Remote Oil Filter				
						HYDRAULIC HOSE	TUBO HIDRÁULICO	TUBO FLESSIBILE IDRAU	A058
					FLEXIBLE HYDRAULIQU	HYDRAULIKSCHLAUCH	SLANGE, HYDRAULIK	HYDRAULISCHE SLANG	
11		86512512		1	BUJÃO, Hex Hd, 7/8"-14 ORB				
						PLUG	TAPÓN	TAPPO	050T
					BOUCHON	STOPFEN	PROP	PLUG	
12		87301330		2	CONECTOR HIDRÁUL	HYD CONNECTOR	CONECTOR HIDRÁULIC(	CONNETTORE IDRAULIC	020R
					CONNECTEUR HYDRAU	HYDR STECKVERBINDE	HYDRAULIKSTIK	HYDRAULISCHE AANSLU	
13		87313351		1	GRAMPO	CLIP	ABRAZADERA	FERMO	045F
					COLLIER	KLAMMER	KLIPS	KLEM	
14		84353803		1	GUARNIÇÃO, 310 mm; Not Shown				
						TRIM	GUARNICIÓN	RIVESTIMENTO	C046
					GARNITURE	VERKLEIDUNG	INDTRÆK	BEKLEDING	

SV185

10.012.01	02	p1	05/11

REMOTE DIPSTICK ISM (SR175,SV185)
REMOTE DIPSTICK ISM (SR175,SV185)
REMOTE DIPSTICK ISM (SR175,SV185)
REMOTE DIPSTICK ISM (SR175,SV185)

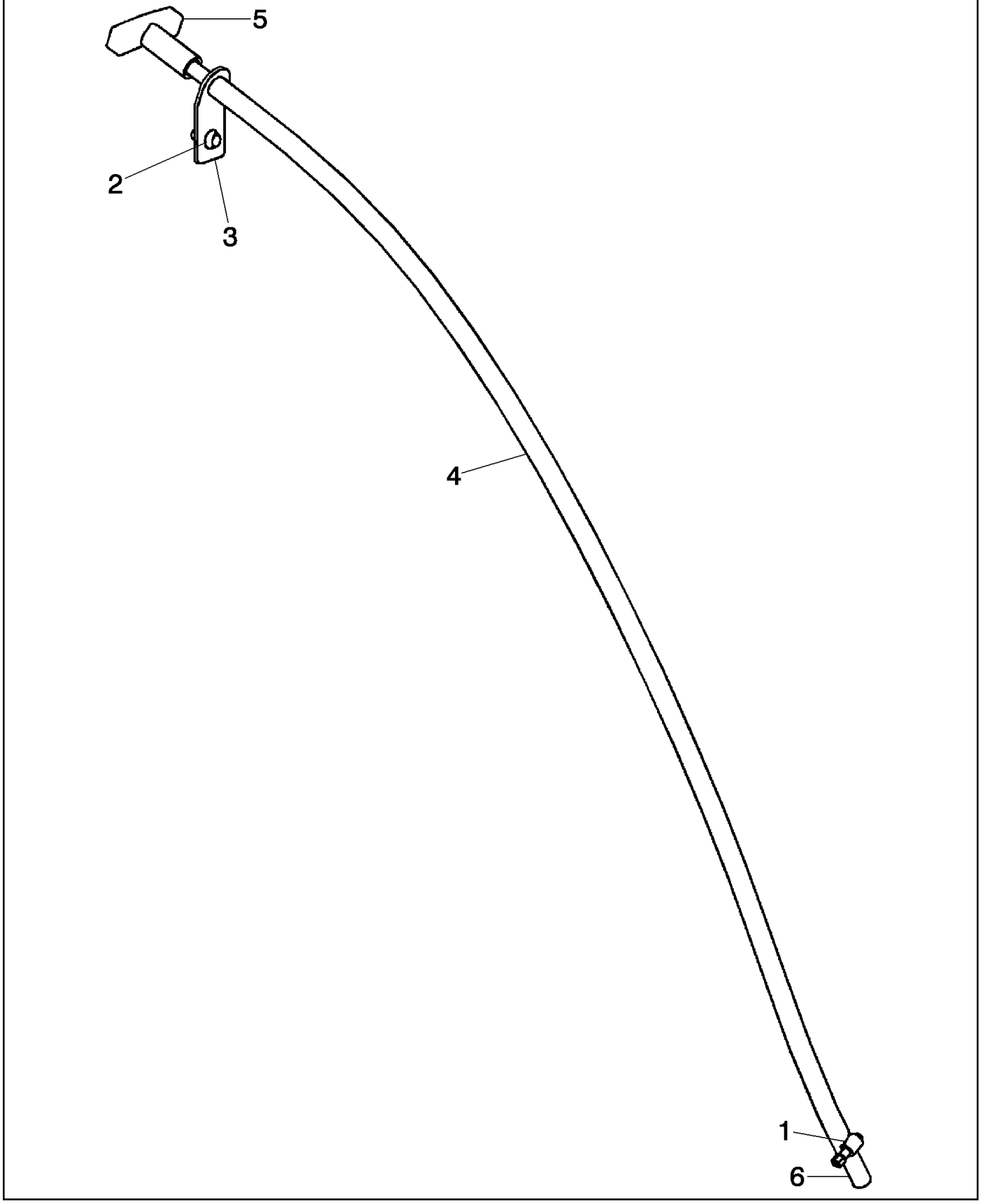

REMOTE DIPSTICK ISM (SR175,SV185)
REMOTE DIPSTICK ISM (SR175,SV185)
REMOTE DIPSTICK ISM (SR175,SV185)
REMOTE DIPSTICK ISM (SR175,SV185)

R	N	P.N.	MOD	Q	Denominação Description	Description Bezeichnung	Denominacion Beskrivelse	Descrizione Beschrijving	L.C.
1		574518		1	BRAÇADEIRA MANGUEIRA, #4, 0.25/0.62 Type M Worm				
						HOSE CLAMP	ABRAZADERA DE MANG	FASCETTA STRINGITUB	P729
					COLLIER POUR FLEXIBL	SCHLAUCHSCHELLE	SLANGEKLEMME	SLANGKLEM	
2		84163981		1	PARAFUSO, M6x15	SCREW	TORNILLO	VITE	040V
					VIS	SCHRAUBE	SKRUE	SCHROEF	
3		84259455		1	SUPORTE, Dipstick Tube	BRACKET	SOPORTE	STAFFA	225S
					SUPPORT	HALTERUNG	BESLAG	STEUN	
4		87454494		1	MANGUEIRA, Dipstick	HOSE	TUBO	TUBO FLESSIBILE	030M
					FLEXIBLE	SCHLAUCH	SLANGE	SLANG	
5		87713795		1	HASTE DE NÍVEL, Engine	DIPSTICK	VARILLA DE NIVEL	ASTINA DI LIVELLO	091A
					JAUGE DE NIVEAU	MESSSTAB	MÅLEPIND	PEILSTOK	
6		{}			Not Used				
7		86632601		1	TRAVA DA ARRUELA, Ext Tooth, M8, (Not Shown) Use to mount Ref. 3				
						LOCK WASHER	ARANDELA DE BLOQUE	RONDELLA DI SICUREZ	132R
					RONDELLE FREIN	SICHERUNGSSCHEIBE	LÅSESKIVE	BORGRING	

10.012.01	04	p1	02/11

REMOTE ENGINE OIL (SR200-TV380)
REMOTE ENGINE OIL (SR200-TV380)
REMOTE ENGINE OIL (SR200-TV380)
REMOTE ENGINE OIL (SR200-TV380)

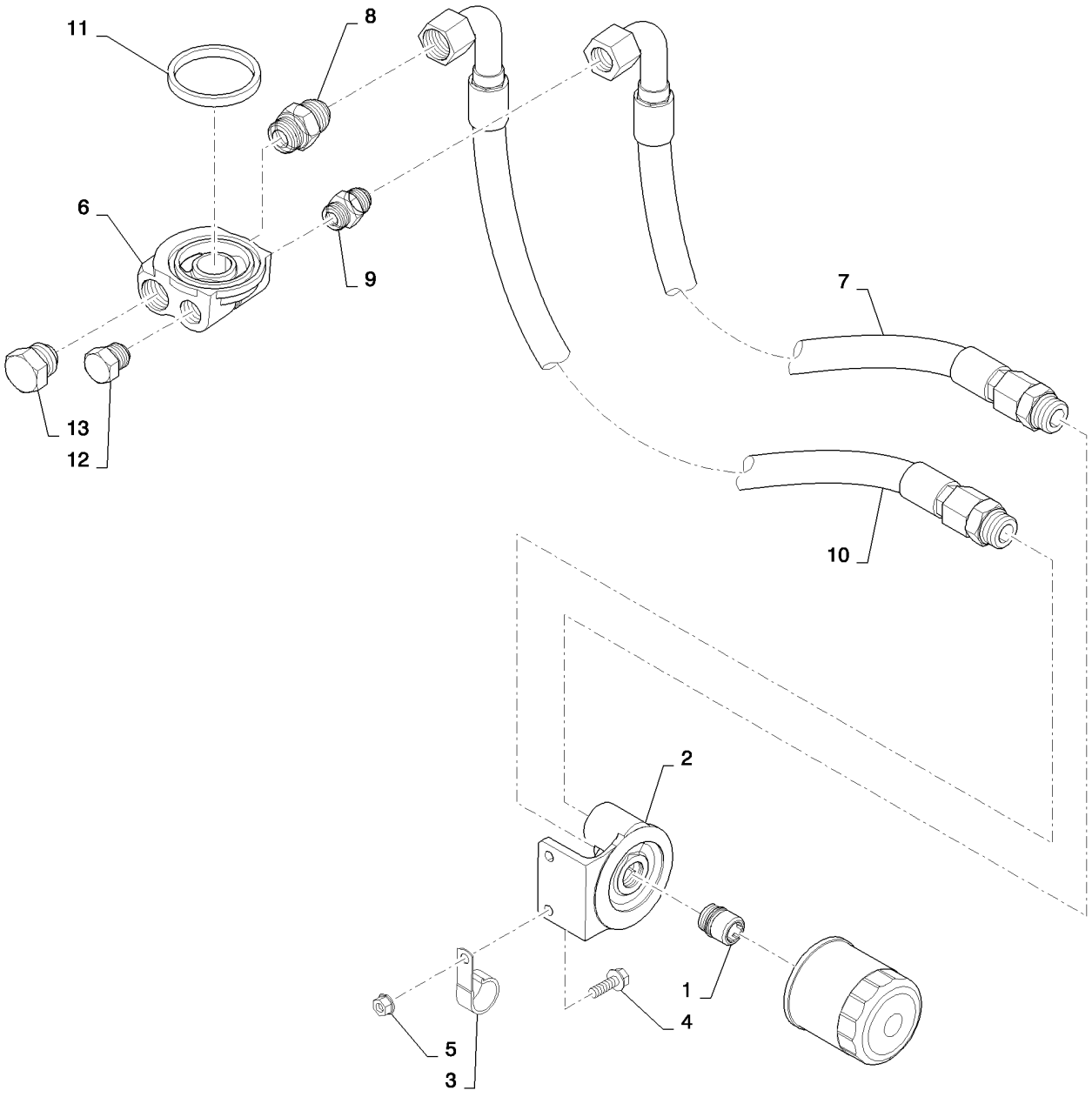

REMOTE ENGINE OIL (SR200-TV380)
REMOTE ENGINE OIL (SR200-TV380)
REMOTE ENGINE OIL (SR200-TV380)
REMOTE ENGINE OIL (SR200-TV380)

R	N	P.N.	MOD	Q	Denominação Description Bezeichnung	Denominacion Beskrivelse	Descrizione Beschrijving	L.C.
1		84297794		1	ADAPTADOR, Filter Head, F5C Engine ADAPTER	ADAPTADOR	ADATTATORE	001A
					ADAPTATEUR ADAPTER	ADAPTER	ADAPTER	
2		84296830		1	ADAPTADOR, Oil Filter ADAPTER	ADAPTADOR	ADATTATORE	001A
					ADAPTATEUR ADAPTER	ADAPTER	ADAPTER	
3		87313351		1	GRAMPO, J, 25.4mm CLIP	ABRAZADERA	FERMO	045F
					COLLIER KLAMMER	KLIPS	KLEM	
4		9671714		2	PARAFUSO, Hex Flg, M8 x 25, 8.8 BOLT	PERNO	BULLONE	140B
					VIS SCHRAUBE	BOLT	BOUT	
5		9804277		2	PORCA, M8 x 1.25, Flg, Cl 8 NUT	TUERCA	DADO	010D
					ECROU MUTTER	MØTRIK	MOER	
6		84296854		1	ADAPTADOR, Oil Filter, F5C ADAPTER	ADAPTADOR	ADATTATORE	001A
					ADAPTATEUR ADAPTER	ADAPTER	ADAPTER	
7		84269293		1	MANGUEIRA HIDRÁULICA, Remote Oil Filter HYDRAULIC HOSE	TUBO HIDRÁULICO	TUBO FLESSIBILE IDRAU	A058
					FLEXIBLE HYDRAULIQUI HYDRAULIKSCHLAUCH	SLANGE, HYDRAULIK	HYDRAULISCHE SLANG	
8		322896		2	CONECTOR HIDRÁUL, 1 1/16"-12, 37º x 1 1/16"-12, O-Ring HYD CONNECTOR	CONECTOR HIDRÁULIC	CONNETTORE IDRAULIC	020R
					CONNECTEUR HYDRAU HYDR STECKVERBINDE	HYDRAULIKSTIK	HYDRAULISCHE AANSLU	
9		87301330		2	CONECTOR HIDRÁUL HYD CONNECTOR	CONECTOR HIDRÁULIC	CONNETTORE IDRAULIC	020R
					CONNECTEUR HYDRAU HYDR STECKVERBINDE	HYDRAULIKSTIK	HYDRAULISCHE AANSLU	
10		84305911		1	MANGUEIRA HIDRÁULICA, Remote Oil Filter HYDRAULIC HOSE	TUBO HIDRÁULICO	TUBO FLESSIBILE IDRAU	A058
					FLEXIBLE HYDRAULIQUI HYDRAULIKSCHLAUCH	SLANGE, HYDRAULIK	HYDRAULISCHE SLANG	
11		84303971		1	VEDADOR DE ÓLEO, Ring OIL SEAL	JUNTA DE ACEITE	PARAOLIO	P278
					JOINT ETANCHEITE D'HI ÖLDICHTUNG	OLIESEGL	OLIEAFDICHTING	
12		86512512		1	BUJÃO, Hex Hd, 7/8"-14 ORB PLUG	TAPÓN	TAPPO	050T
					BOUCHON STOPFEN	PROP	PLUG	
13		163410		1	BUJÃO, Hex Hd, 1 1/16"-12 ORB PLUG	TAPÓN	TAPPO	050T
					BOUCHON STOPFEN	PROP	PLUG	
14		84353803		1	GUARNIÇÃO, 290 mm; Not Shown TRIM	GUARNICIÓN	RIVESTIMENTO	C046
					GARNITURE VERKLEIDUNG	INDTRÆK	BEKLEDING	

10.101.01		p1	02/11

CYLINDER HEAD
CYLINDER HEAD
CULATA DEL CILINDRO
TESTA DEL CILINDRO

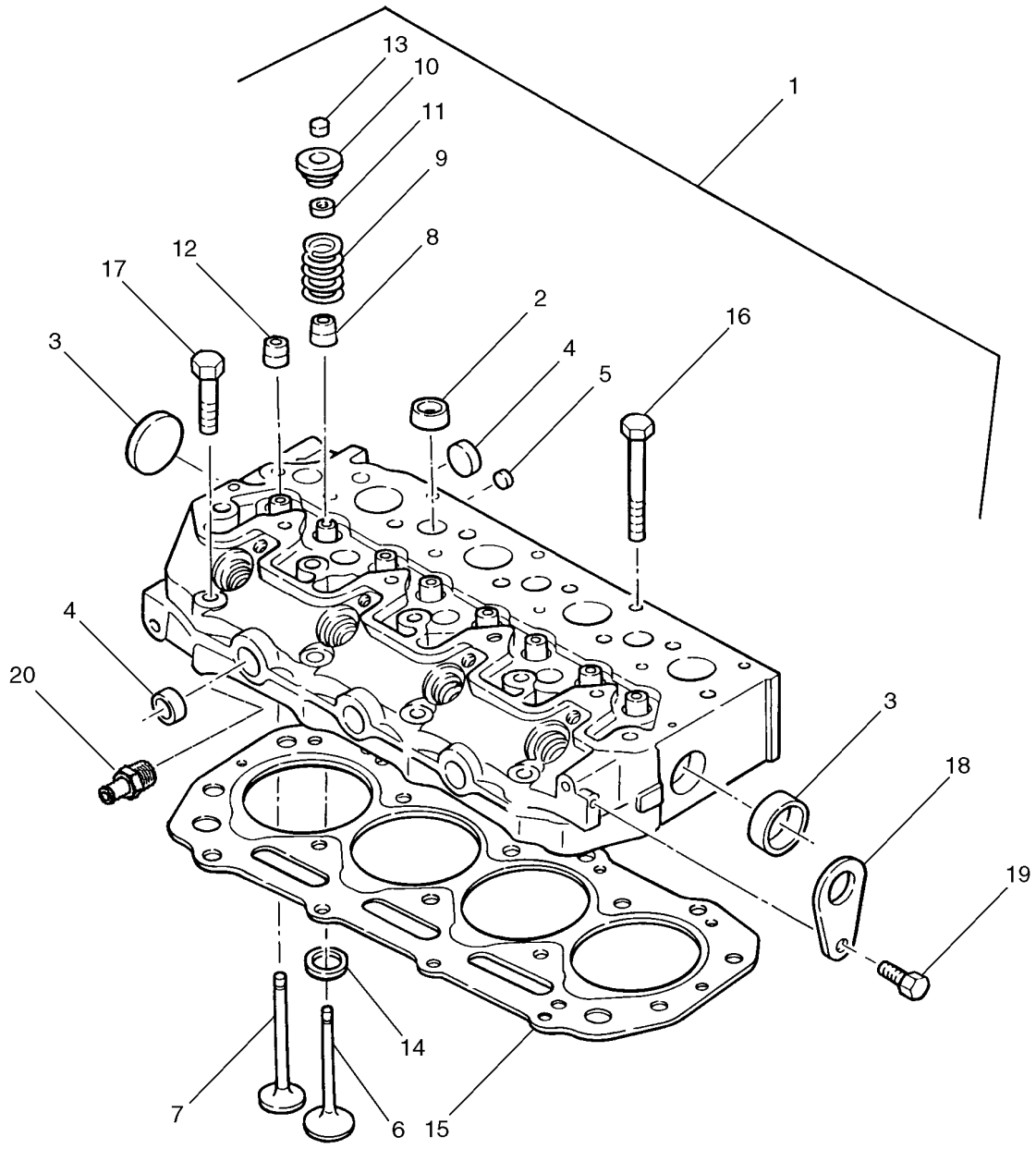

BS04M080

CULASSE
ZYLINDERKOPF
CYLINDERHOVED
CILINDERHOOFD

R	N	P.N.	MOD	Q	Denominação Description	Description Bezeichnung	Denominacion Beskrivelse	Descrizione Beschrijving	L.C.
1		SBA111011130		1	CABEÇOTE, Cylinder Head; Incl. Ref 2 - 14				
						CYLINDER HEAD	CULATA	TESTATA	113T
					CULASSE	ZYLINDERKOPF	CYLINDERHOVED	CILINDERKOP	
2		SBA064210018		7	BUJÃO, Sealing	PLUG	TAPÓN	TAPPO	050T
					BOUCHON	STOPFEN	PROP	PLUG	
3		SBA064210030		2	BUJÃO, 30mm	PLUG	TAPÓN	TAPPO	050T
					BOUCHON	STOPFEN	PROP	PLUG	
4		SBA064210025		4	BUJÃO, 25mm	PLUG	TAPÓN	TAPPO	050T
					BOUCHON	STOPFEN	PROP	PLUG	
5		SBA064210010		3	BUJÃO, 10mm	PLUG	TAPÓN	TAPPO	050T
					BOUCHON	STOPFEN	PROP	PLUG	
6		SBA120166350		4	VÁLVULA DE ADMISSÃO	STD ENGINE INLET VALV	VALV. ADM. DE MOTOR	VALV. ASPIR. MOTORE S	111V
					SOUP. ADMISSION MOT	STANDARD-MOTOREINL	INDSUGNINGSVENTIL, S	STANDAARDINLAATKLEI	
7		SBA120176360		4	VÁLVULA DE ESCAPE	STD ENGINE EXHAUST V	VALV. ESCAPE MOTOR I	VALV. SCARICO MOTOR	112V
					SOUP. ECHAPPEMENT M	STANDARD-MOTORAUS	UDSTØDNINGSVENTIL, S	STANDAARDUITLAATKLI	
8		SBA120406070		4	VEDAÇÃO, Valve Guide, Intake				
						SEAL	ANILLO DE CIERRE	GUARNIZIONE; TENUTA	132A
					JOINT	DICHTUNG	PAKNING	AFDICHTING	
9		SBA198216700		8	MOLA	SPRING	RESORTE	MOLLA	100M
					RESSORT	FEDER	FJEDER	VEER	
10		SBA120186080		8	RETENTOR	RETAINER	RETENEDOR	FERMO	109R
					DISPOSITIF DE RETENU	HALTERUNG	HOLDER	HOUDER	
11		SBA120226070		16	RETENTOR, Cotter	RETAINER	RETENEDOR	FERMO	109R
					DISPOSITIF DE RETENU	HALTERUNG	HOLDER	HOUDER	
12		SBA120406050		4	VEDAÇÃO, Valve Guide, Exhaust				
						SEAL	ANILLO DE CIERRE	GUARNIZIONE; TENUTA	132A
					JOINT	DICHTUNG	PAKNING	AFDICHTING	
13		SBA120216040		8	TAMPA, If Used	CAP	TAPÓN	TAPPO	052T
					CAPUCHON	KAPPE	TANKDÆKSEL	DOP	
13		SBA120216041		8	TAMPA, If Used	CAP	TAPÓN	TAPPO	052T
					CAPUCHON	KAPPE	TANKDÆKSEL	DOP	
14		SBA110136400		4	SEDE DE VÁLVULA, Intake	VALVE SEAT	ASIENTO DE VÁLVULA	SEDE VALVOLA	074S
					SIEGE DE SOUPAPE	VENTILSITZ	VENTIL, SÆDE	KLEPZITTING	
15		SBA111147751		1	JUNTA DO CABEÇOTE, 1.1 Thickness; Metal Type				
						CYLINDER HEAD GASKE	JUNTA DE CULATA	GUARNIZIONE TESTATA	129G
					JOINT DE CULASSE	ZYLINDERKOPFDICHTUI	TOPPAKNING	CILINDERKOPPAKKING	
15		SBA111147711		1	JUNTA DO CABEÇOTE, 1.2 Thickness; Carbon Type				
						CYLINDER HEAD GASKE	JUNTA DE CULATA	GUARNIZIONE TESTATA	129G
					JOINT DE CULASSE	ZYLINDERKOPFDICHTUI	TOPPAKNING	CILINDERKOPPAKKING	
15		SBA111147761		1	JUNTA DO CABEÇOTE, 1.2 Thickness; Metal Type				
						CYLINDER HEAD GASKE	JUNTA DE CULATA	GUARNIZIONE TESTATA	129G
					JOINT DE CULASSE	ZYLINDERKOPFDICHTUI	TOPPAKNING	CILINDERKOPPAKKING	
15		SBA111147721		1	JUNTA DO CABEÇOTE, 1.3 Thickness; Carbon Type				
						CYLINDER HEAD GASKE	JUNTA DE CULATA	GUARNIZIONE TESTATA	129G
					JOINT DE CULASSE	ZYLINDERKOPFDICHTUI	TOPPAKNING	CILINDERKOPPAKKING	
15		SBA111147771		1	JUNTA DO CABEÇOTE, 1.3 Thickness; Metal Type				
						CYLINDER HEAD GASKE	JUNTA DE CULATA	GUARNIZIONE TESTATA	129G
					JOINT DE CULASSE	ZYLINDERKOPFDICHTUI	TOPPAKNING	CILINDERKOPPAKKING	

CYLINDER HEAD
CYLINDER HEAD
CULATA DEL CILINDRO
TESTA DEL CILINDRO

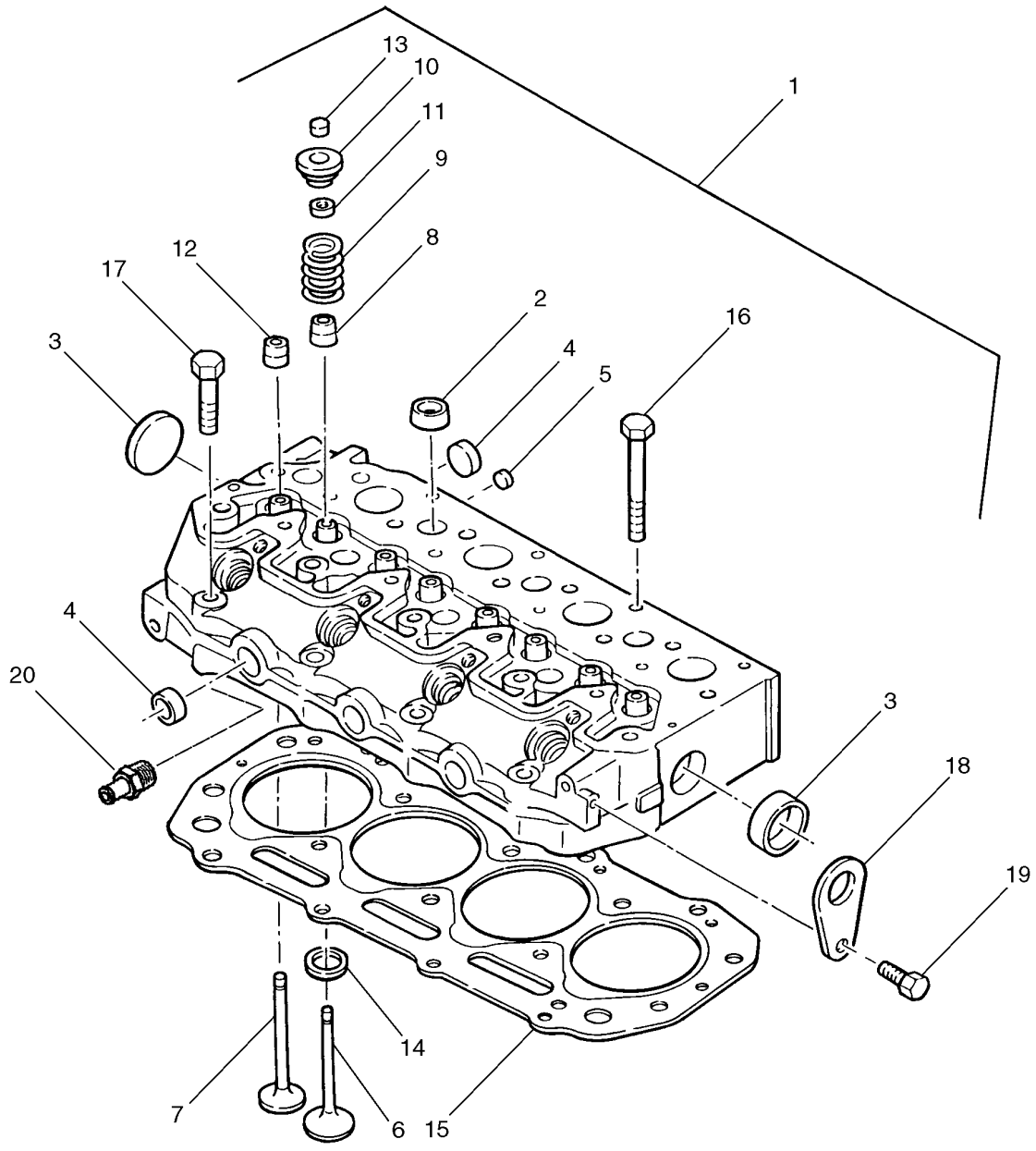

BS04M080

CULASSE
ZYLINDERKOPF
CYLINDERHOVED
CILINDERHOOFD

R	N	P.N.	MOD	Q	Denominação Description	Description Bezeichnung	Denominacion Beskrivelse	Descrizione Beschrijving	L.C.
16		**SBA111136480**		14	PARAFUSO, Head VIS	BOLT SCHRAUBE	PERNO BOLT	BULLONE BOUT	140B
17		**SBA111136490**		4	PARAFUSO, Head VIS	BOLT SCHRAUBE	PERNO BOLT	BULLONE BOUT	140B
18		**SBA195816540**		2	OLHAL DE IÇAMENTO ŒILLET	LIFTING EYE HUBÖSE	ARGOLLA DE ELEVACIÓ ØJE, LØFTE	ANELLO DI SOLLEVAME HIJSOOG	P783
19		**SBA011510816**		2	PARAFUSO, M8 x 16 VIS	BOLT SCHRAUBE	PERNO BOLT	BULLONE BOUT	140B
20		**SBA198487901**		1	CONECTOR, Connector CONNEXION	CONNECTION VERBINDUNG	TERMINAL CONNECTION	CONNETTORE CONNECTION	P154

10.101.02		p1	02/11

VALVE COVER & CRANKSHAFT PULLEY
VALVE COVER & CRANKSHAFT PULLEY
CUBIERTA DEL CABEZAL Y POLEA DEL CIGÜEÑAL
COPERCHIO DELLA TESTA, PULEGGIA ALBERO A GOMITI

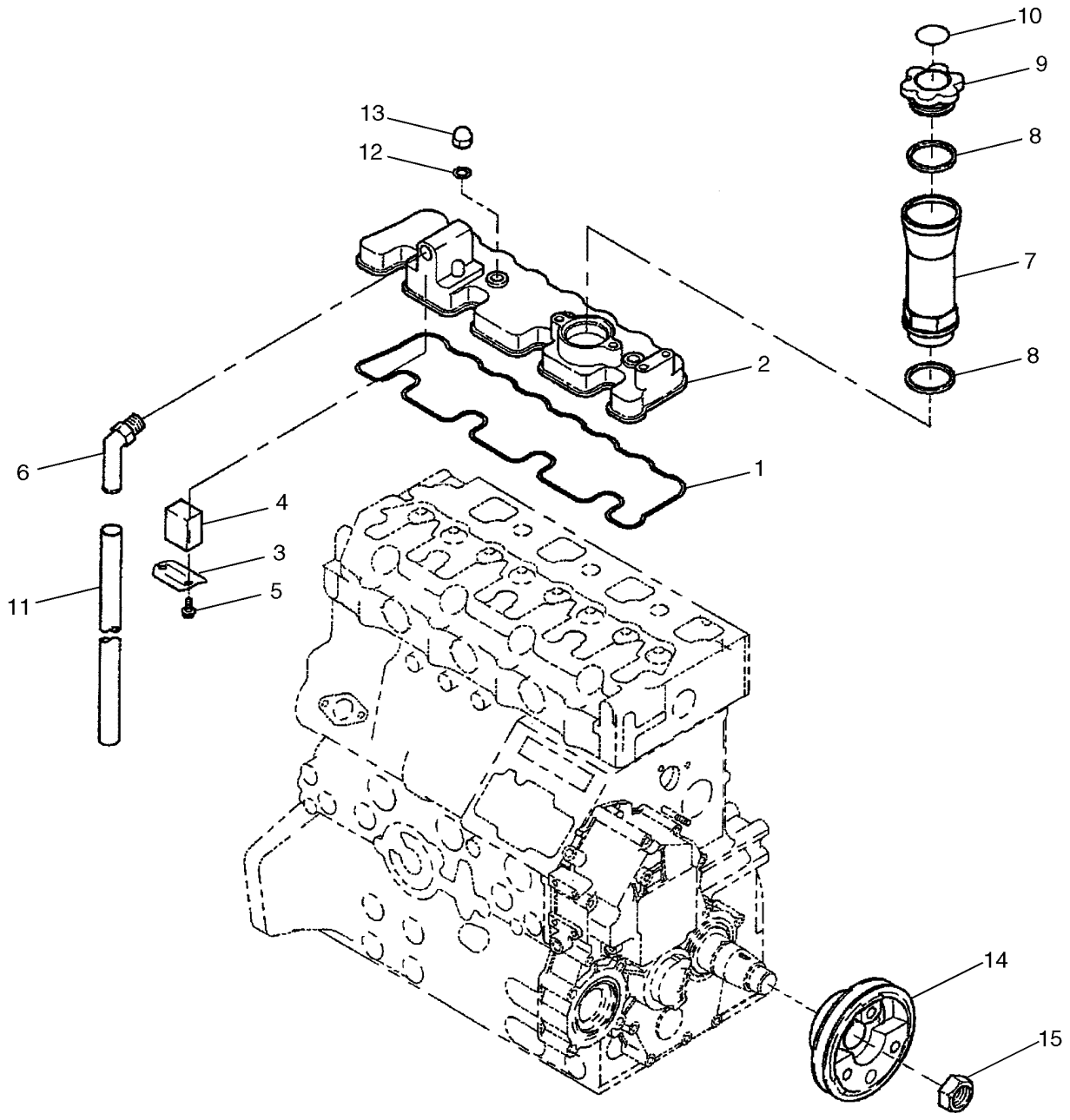

CACHE-CULBUTEURS, POULIE DE VILEBREQUIN
ZYLINDERKOPFABDECKUNG, KURBELWELLENRIEMENSCHEIBE
DÆKSEL TIL TOPSTYKKE, REMSKIVE PÅ KRUMTAPAKSEL
KOPAFDEKKING, KRUKASSCHIJF

R	N	P.N.	MOD	Q	Denominação Description Bezeichnung	Description Bezeichnung	Denominacion Beskrivelse	Descrizione Beschrijving	L.C.
1		SBA052109072		1	O-RING, 345mm ID x 3mm Width				
						O-RING	JUNTA TÓRICA	ANELLO TOROIDALE	055A
					JOINT TORIQUE	O-RING	O-RING	O-RING	
2		SBA111026150		1	TAMPA VÁLVULA, Head, Incl. Ref 3 - 5, 10				
						VALVE COVER	TAPA DE VÁLVULA	COPERCHIO VALVOLA	P889
					COUVERCLE DE SOUPA	VENTILDECKEL	VENTILDÆKSEL	KLEPPENDEKSEL	
3		SBA110666050		1	DEFLETOR, Oil	DEFLECTOR	DEFLECTOR	DEFLETTORE	020D
					DEFLECTEUR	ABWEISER	AFLEDEPLADE	VERDEELPLAAT	
4		SBA110666090		1	FILTRO	FILTER	FILTRO	FILTRO	065F
					FILTRE	FILTER	FILTER	FILTER	
5		SBA011310612		2	PARAFUSO CABEÇA FLANGEADA, Hex, M6 x 12, Cl 8.8				
						CAPTIVE WASHER SCRE	TORNILLO DE ARAND. C	VITE RONDELLA PRIGIO	A091
					VIS A RONDELLE CAPTI'	SCHRAUBE M UNVERL U	SKRUE, FORMONTERET	SCHROEF MET RONDSE	
6		SBA140986581		1	COTOVELO	ELBOW	CODO	GOMITO	085G
					COUDE	KNIESTÜCK	VINKELRØR	KNIESTUK	
7		SBA110466031		1	TUBO	PIPE	TUBO	TUBO	200T
					TUYAU	ROHR	PÅFYLDNINGSSTUDS	BUIS	
8		SBA052100400		1	O-RING, 39.7mm ID x 3.5mm Width				
						O-RING	JUNTA TÓRICA	ANELLO TOROIDALE	055A
					JOINT TORIQUE	O-RING	O-RING	O-RING	
9		SBA198436010		1	TAMPA DE RESERVATÓRIO				
						FILLER CAP	TAPÓN DE DEPÓSITO	TAPPO BOCCHETT. RIF(	P676
					BOUCHON DE REMPLIS:	EINFÜLLKAPPE	PÅFYLDNINGSDÆKSEL	VULDOP	
10		SBA190297900		1	ADESIVO	DECAL	CALCOMANÍA	DECALCOMANIA	012D
					AUTOCOLLANT	AUFKLEBER	TRANSFER	STICKER	
11		SBA068109092		1	TUBO, Tube	TUBE	TUBO	TUBO	195T
					TUBE	ROHR	RØR	LEIDING	
12		SBA131996200		4	JUNTA	GASKET	JUNTA	GUARNIZIONE	123G
					JOINT	DICHTUNG	PAKNING	PAKKING	
13		SBA024600010		4	PORCA, Cap	NUT	TUERCA	DADO	010D
					ECROU	MUTTER	MØTRIK	MOER	
14		SBA115391060		1	POLIA, Pulley; Crankshaft	PULLEY	POLEA	PULEGGIA	230P
					POULIE	RIEMENSCHEIBE	REMSKIVE	RIEMSCHIJF	
15		SBA020109086		1	PORCA	NUT	TUERCA	DADO	010D
					ECROU	MUTTER	MØTRIK	MOER	

10.101.03		p1	02/11

REMOTE OIL DRAIN
REMOTE OIL DRAIN
DRENAJE DE ACEITE
SCARICO DELL'OLIO

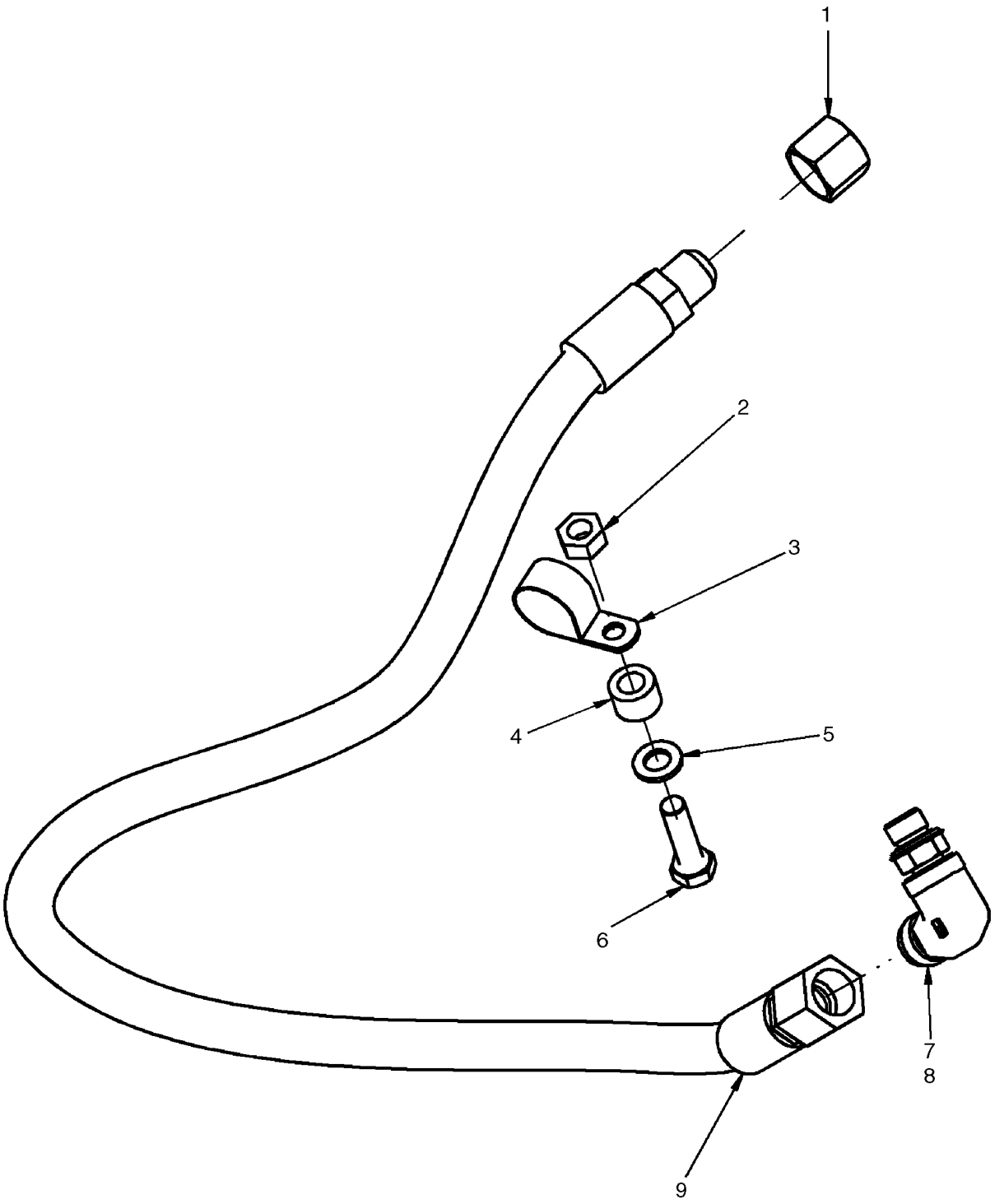

BS07K952

VIDANGE DE L'HUILE
ÖLABLASS
OLIEAFTAPNING
OLIE AFTAPPEN

R	N	P.N.	MOD	Q	Denominação Description	Description Bezeichnung	Denominacion Beskrivelse	Descrizione Beschrijving	L.C.
1		129200		1	TAMPA, 37º, 7/8"-14	CAP	TAPÓN	TAPPO	052T
					CAPUCHON	KAPPE	TANKDÆKSEL	DOP	
2		100016		1	PORCA, M10, Cl 8, If Used; Used With M10 Bolt Ref 6, 9706704				
						NUT	TUERCA	DADO	010D
					ECROU	MUTTER	MØTRIK	MOER	
3		87307884		1	BRAÇADEIRA	CLAMP	ABRAZADERA	MORSETTO	120M
					COLLIER	KLEMME	SPÆNDEBÅND	KLEM	
2		9706690		1	PORCA, M8, Cl 8, If Used; Used With M8 Bolt Ref 6, 43129				
						NUT	TUERCA	DADO	010D
					ECROU	MUTTER	MØTRIK	MOER	
4		87042897		1	ESPACADOR, If Used; Used With M10 Bolt Ref 6, 9706704				
						SPACER	ESPACIADOR	DISTANZIALE	8090
					ENTRETOISE	ABSTANDSSTUECK	SPACER	SPACER	
4		229398		1	ESPAÇADOR, If Used; Used With M8 Bolt Ref 6, 43129				
						SPACER	SEPARADOR	DISTANZIALE	075D
					ENTRETOISE	DISTANZSTÜCK	AFSTANDSSTYKKE	AFSTANDSSTUK	
5		86624176		1	ARRUELA PLANA, M10 x 20 x 2, If Used; Used With M10 Bolt Ref 6, 9706704				
						WASHER	ARANDELA	RONDELLA	131R
					RONDELLE	UNTERLEGSCHEIBE	FLADSKIVE	SLUITRING	
7		87691909		1	TUBO HIDRÁULICO, Fitting, Remote Oil Drain; Incl 8				
						HYD. TUBE	TUBO HIDRÁULICO	TUBO IDRAULICO	190T
					TUYAU HYDRAULIQUE	HYDRAULIKLEITUNG	HYD. RØR	HYDRAULISCHE LEIDIN(	
5		86625263		1	ARRUELA PLANA, M8 x 20 x 1.6, If Used; Used With M8 Bolt Ref 6, 43129				
						WASHER	ARANDELA	RONDELLA	131R
					RONDELLE	UNTERLEGSCHEIBE	FLADSKIVE	SLUITRING	
6		9706704		1	PARAFUSO, Hex, M10 x 35, 8.8, Full Thd, If Used				
						BOLT	PERNO	BULLONE	140B
					VIS	SCHRAUBE	BOLT	BOUT	
6		43129		1	PARAFUSO, Hex, M8 x 40, 8.8, If Used				
						BOLT	PERNO	BULLONE	140B
					VIS	SCHRAUBE	BOLT	BOUT	
8		86598100		1	O-RING, 13.3mm ID x 2.2mm Width				
						O-RING	JUNTA TÓRICA	ANELLO TOROIDALE	055A
					JOINT TORIQUE	O-RING	O-RING	O-RING	
9		87694058		1	MANGUEIRA, Remote Oil Drain, 730mm (28 3/4 in.)				
						HOSE	TUBO	TUBO FLESSIBILE	030M
					FLEXIBLE	SCHLAUCH	SLANGE	SLANG	

OIL FILL - ENGINE
OIL FILL - ENGINE
LLENADO DE ACEITE, MOTOR
RABBOCCO DELL'OLIO MOTORE

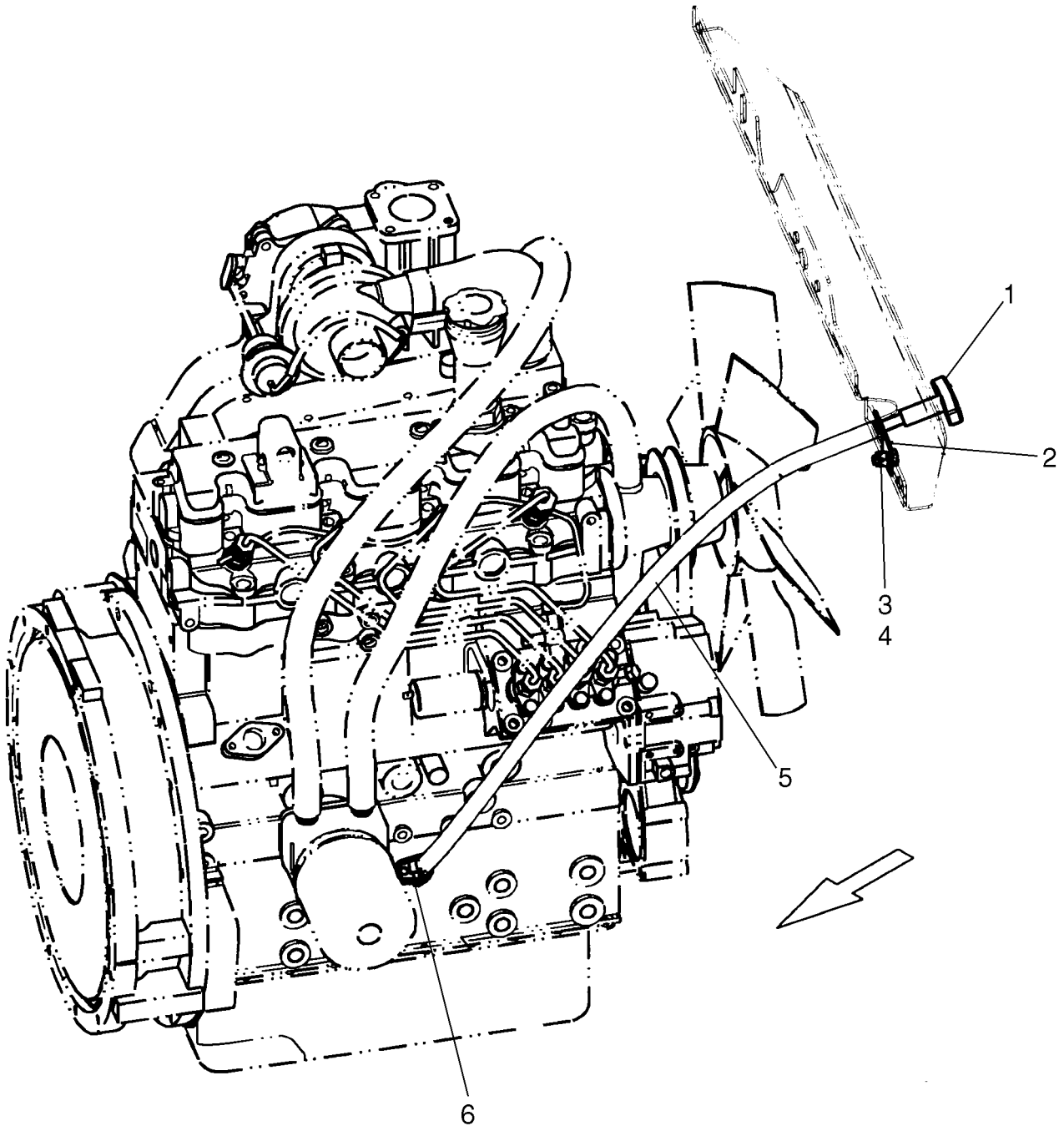

REMPLISSAGE D'HUILE, MOTEUR
ÖLEINFÜLLSTUTZEN, MOTOR
OLIEPÅFYLDNING, MOTOR
OLIE VULLEN, MOTOR

R	N	P.N.	MOD	Q	Denominação Description Bezeichnung Denominacion Beskrivelse Descrizione Beschrijving	L.C.
1		87344599		1	HASTE DE NÍVEL, With Steel Ball Tip DIPSTICK VARILLA DE NIVEL ASTINA DI LIVELLO JAUGE DE NIVEAU MESSSTAB MÅLEPIND PEILSTOK	091A
2		86556982		1	TUBO TUBE TUBO TUBO TUBE ROHR RØR LEIDING	195T
3		9628098		1	CONTRA PORCA, M8 x 1.25, Cl 10 LOCK NUT TUERCA DE BLOQUEO DADO DI BLOCCAGGIO CONTRE-ECROU SICHERUNGSMUTTER LÅSEMØTRIK BORGMOER	P263
4		120103		1	PARAFUSO, Hex, M8 x 16, 8.8 BOLT PERNO BULLONE VIS SCHRAUBE BOLT BOUT	140B
5		87454494		1	MANGUEIRA HOSE TUBO TUBO FLESSIBILE FLEXIBLE SCHLAUCH SLANGE SLANG	030M
6		574518		1	BRAÇADEIRA MANGUEIRA, #4, 0.25/0.62 Type M Worm HOSE CLAMP ABRAZADERA DE MANG FASCETTA STRINGITUB COLLIER POUR FLEXIBL SCHLAUCHSCHELLE SLANGEKLEMME SLANGKLEM	P729

10.102.01		p1	02/11

OIL PAN
OIL PAN
BANDEJA DEL ACEITE
COPPA DELL'OLIO

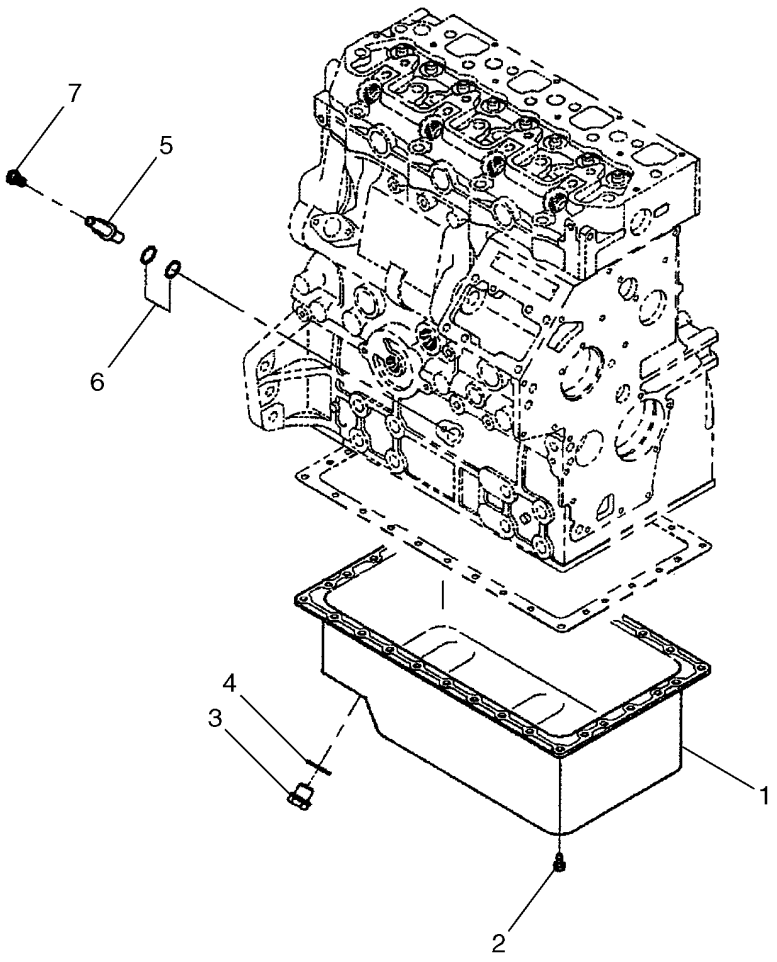

BS04M165

CARTER D'HUILE
ÖLWANNE
BUNDKAR
OLIECARTER

R	N	P.N.	MOD	Q	Denominação Description Bezeichnung	Description Bezeichnung Beskrivelse	Denominacion Beskrivelse Descrizione	Descrizione Beschrijving	L.C.
1		SBA110708770		1	CÁRTER DE ÓLEO DO MOTOR, Oil Pan ENGINE OIL PAN CARTER D'HUILE MOTE	CUBETA DE ACEITE DE MOTORÖLWANNE BUNDKAR	COPPA DELL'OLIO MOT(MOTOROLIECARTER		274C
2		SBA010109235		30	PARAFUSO VIS	BOLT SCHRAUBE	PERNO BOLT	BULLONE BOUT	140B
3		SBA010109238		1	PARAFUSO, Drain Bolt VIS	BOLT SCHRAUBE	PERNO BOLT	BULLONE BOUT	140B
4		SBA025100016		1	ARRUELA PLANA RONDELLE	WASHER UNTERLEGSCHEIBE	ARANDELA FLADSKIVE	RONDELLA SLUITRING	131R
5		SBA110756660		1	GUIA, Guide GUIDE	GUIDE FÜHRUNG	GUÍA STYR	GUIDA GELEIDER	145G
6		SBA052109113		2	O-RING JOINT TORIQUE	O-RING O-RING	JUNTA TÓRICA O-RING	ANELLO TOROIDALE O-RING	055A
7		SBA011310612		1	PARAFUSO CABEÇA FLANGEADA, Hex, M6 x 12, Cl 8.8 CAPTIVE WASHER SCRE VIS A RONDELLE CAPTI'	TORNILLO DE ARAND. C SCHRAUBE M UNVERL U	VITE RONDELLA PRIGIO SKRUE, FORMONTERET	SCHROEF MET RONDSE	A091

SV185

10.103.01		p1	02/11

CRANKSHAFT & PISTONS
CRANKSHAFT & PISTONS
CIGÜEÑAL, PISTÓN
PISTONE DELL'ALBERO A GOMITI

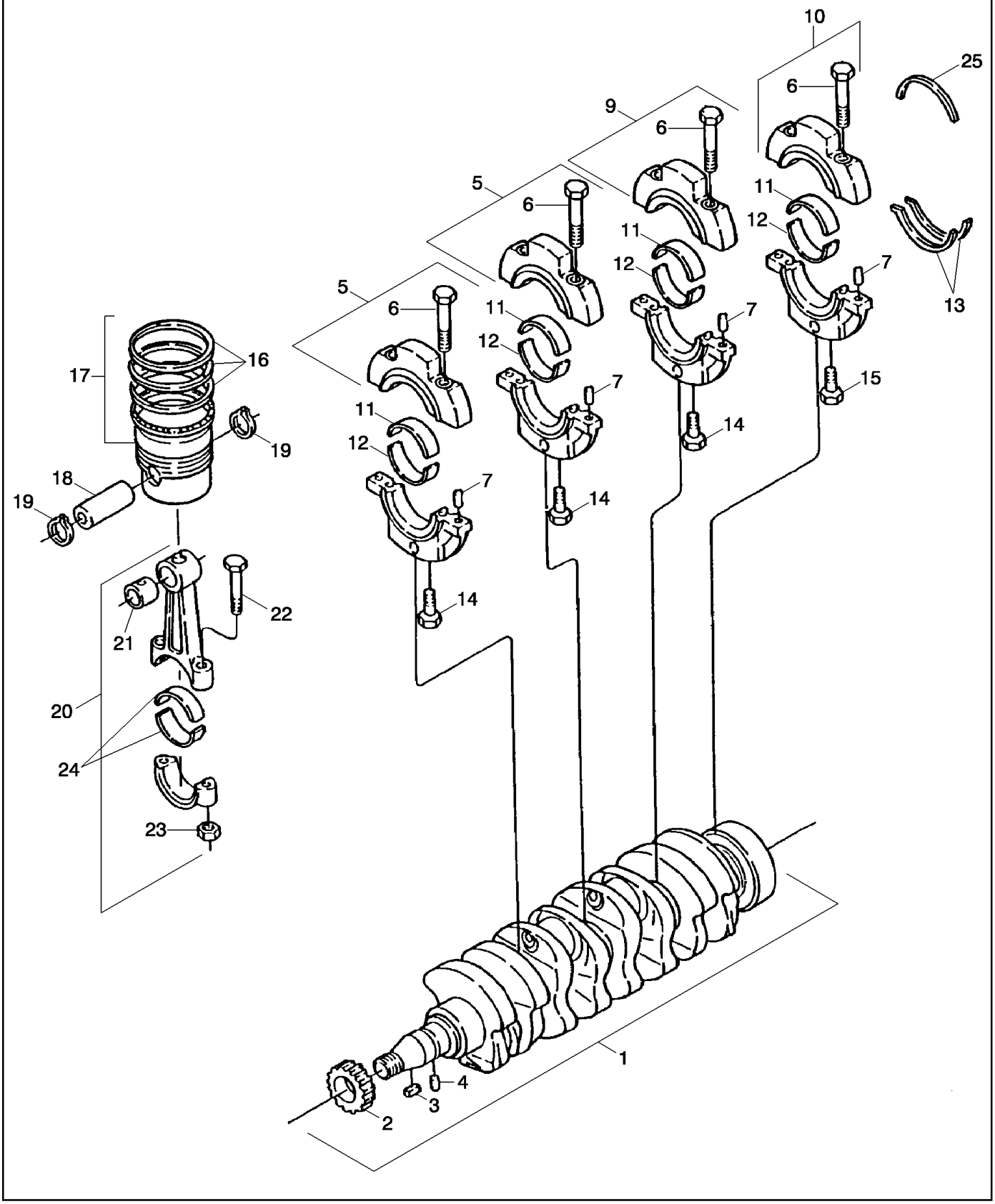

VILEBREQUIN, PISTONS
KURBELWELLE, KOLBEN
KRUMTAPAKSEL, STEMPEL
KRUKAS, ZUIGER

R	N	P.N.	MOD	Q	Denominação Description	Description Bezeichnung	Denominacion Beskrivelse	Descrizione Beschrijving	L.C.
1		SBA115256750		1	VIRABREQUIM	CRANKSHAFT	CIGÜEÑAL	ALBERO MOTORE	018A
					VILEBREQUIN	KURBELWELLE	KRUMTAPAKSEL	KRUKAS	
2		SBA115276200		1	ENGRENAGEM, Crankshaft				
						GEAR	ENGRANAJE	INGRANAGGIO	050I
					PIGNON	ZAHNRAD	TANDHJUL	TANDWIEL	
3		SBA034100508		1	CHAVE	KEY	LLAVE	CHIAVE	060L
					CLE	FEDERKEIL	KILE	SPIE	
4		SBA030509020		1	PINO, Dowel	PIN	PASADOR	PERNO	080P
					BROCHE	PIN	STIFT	PEN	
5		SBA110156360		1	FIXADOR, Bearing, Incl. Ref 6, 7				
						HOLDER	SOPORTE	SUPPORTO	174S
					SUPPORT	HALTER	HOLDER	HOUDER	
6		SBA010109406		8	PARAFUSO	BOLT	PERNO	BULLONE	140B
					VIS	SCHRAUBE	BOLT	BOUT	
7		SBA030500612		8	GUIA	DOWEL	BULÓN	PERNO	090G
					GOUJON	PASSSTIFT	DYVEL	PASPEN	
8		SBA110156370		1	FIXADOR, Bearing, Incl. Ref 6, 7				
						HOLDER	SOPORTE	SUPPORTO	174S
					SUPPORT	HALTER	HOLDER	HOUDER	
9		SBA110156380		1	FIXADOR, Bearing, Incl. Ref 6, 7				
						HOLDER	SOPORTE	SUPPORTO	174S
					SUPPORT	HALTER	HOLDER	HOUDER	
10		SBA110156390		1	FIXADOR, Bearing	HOLDER	SOPORTE	SUPPORTO	174S
					SUPPORT	HALTER	HOLDER	HOUDER	
11		SBA198517231		4	ROLAMENTO, Upper, Std.	BEARING	COJINETE	CUSCINETTO	0600
					ROULEMENT	LAGER	LEJE	LAGER	
11		SBA198517236		4	CAMISA DO ROLAMENTO, .010" U/S, Upper, (0.25mm)				
						BEARING LINER	FORRO INTER. DE COJI	CANNA CUSCINETTO	P114
					COUSSINET	LAGERBUCHSE	LEJEFORING	LAGERVOERING	
11		SBA198517239		4	CAMISA DO ROLAMENTO, .020" U/S, Upper, (0.50mm)				
						BEARING LINER	FORRO INTER. DE COJI	CANNA CUSCINETTO	P114
					COUSSINET	LAGERBUCHSE	LEJEFORING	LAGERVOERING	
12		SBA198517241		4	ROLAMENTO, Lower, Std.	BEARING	COJINETE	CUSCINETTO	0600
					ROULEMENT	LAGER	LEJE	LAGER	
12		SBA198517246		4	CAMISA DO ROLAMENTO, .010" U/S, Lower, (0.25mm)				
						BEARING LINER	FORRO INTER. DE COJI	CANNA CUSCINETTO	P114
					COUSSINET	LAGERBUCHSE	LEJEFORING	LAGERVOERING	
12		SBA198517249		4	CAMISA DO ROLAMENTO, .020" U/S, Lower, (0.50mm)				
						BEARING LINER	FORRO INTER. DE COJI	CANNA CUSCINETTO	P114
					COUSSINET	LAGERBUCHSE	LEJEFORING	LAGERVOERING	
13		SBA199266200		2	ANEL DE ENCOSTO	THRUST WASHER	ARANDELA DE EMPUJE	RONDELLA REGGISPINT	023R
					ANNEAU DE BUTEE	DRUCKSCHEIBE	TRYKSKIVE	DRUKRING	
14		SBA011511070		3	PARAFUSO, M10 x 70	BOLT	PERNO	BULLONE	140B
					VIS	SCHRAUBE	BOLT	BOUT	
15		SBA010700860		2	PARAFUSO	BOLT	PERNO	BULLONE	140B
					VIS	SCHRAUBE	BOLT	BOUT	
16		SBA115104020		4	KIT DE ANÉIS DO PISTÃO	PISTON RINGS KIT	KIT ANILLAS DE PISTON	KIT FASCE ELAST. PIST	309S
					KIT SEGMENTS DE PIST	KOLBENRINGSATZ	STEMPELRINGESÆT	KIT MET ZUIGERVEREN	

10.103.01		p2	02/11

CRANKSHAFT & PISTONS
CRANKSHAFT & PISTONS
CIGÜEÑAL, PISTÓN
PISTONE DELL'ALBERO A GOMITI

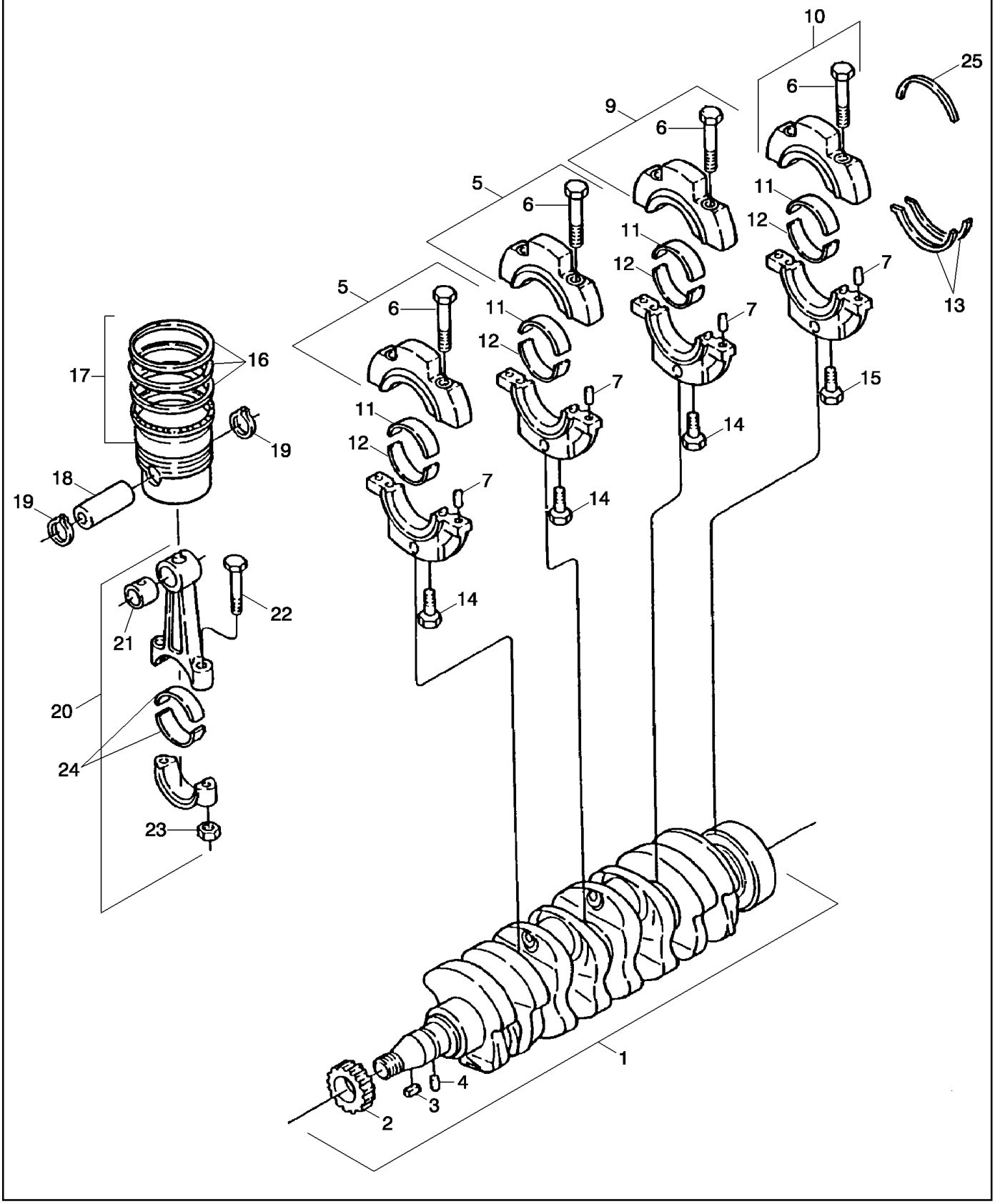

VILEBREQUIN, PISTONS
KURBELWELLE, KOLBEN
KRUMTAPAKSEL, STEMPEL
KRUKAS, ZUIGER

R	N	P.N.	MOD	Q	Denominação Description	Description Bezeichnung	Denominacion Beskrivelse	Descrizione Beschrijving	L.C.
16		**SBA115104021**		4	KIT DE ANÉIS DO PISTÃO, Kit, Piston Rings; Replaces SBA115104020				
						PISTON RINGS KIT	KIT ANILLAS DE PISTON	KIT FASCE ELAST. PIST(	309S
					KIT SEGMENTS DE PIST	KOLBENRINGSATZ	STEMPELRINGESÆT	KIT MET ZUIGERVEREN	
17		**SBA115017580**		4	CONJ PISTÃO	PISTON ASSY	CONJUNTO DE PISTÓN	COMPLESSIVO PISTONE	245S
					ENS. PISTON	KOLBENBAUGRUPPE	STEMPEL KOMPLET	ZUIGEREENHEID	
17		**SBA115017581**		4	KIT DE ANÉIS E PISTÕES, Piston Assy; Replaces SBA115017581				
						PISTON & RINGS KIT	KIT DE PISTONES Y ANI	KIT PIST. E FASCE ELAS	313S
					KIT DE PISTONS+SEGMI	KOLBEN- UND RINGSAT.	STEMPEL OG RINGE	KIT MET ZUIGER + ZGR\	
18		**SBA115326220**		4	PINO DE PISTÃO	PISTON PIN	BULÓN DEL PISTÓN	PERNO DEL PISTONE	084P
					AXE DE PISTON	KOLBENBOLZEN	STEMPELPIND	ZUIGERPEN	
19		**SBA036500028**		8	ANEL DE PRESSÃO	SNAP RING	ANILLO DE RESORTE	ANELLO ELASTICO	054A
					ANNEAU D'ARRET	SPRENGRING	LÅSERING	VEERRING	
20		**SBA115026330**		4	HASTE DE CONEXÃO	CONNECTING ROD	BIELA	BIELLA	051B
					BIELLE	PLEUELSTANGE	PLEJLSTANG	DRIJFSTANG	
21		**SBA198517260**		4	BUCHA	BUSHING	CASQUILLO	BOCCOLA	095B
					BAGUE	BUCHSE	BØSNING	BUS	
22		**SBA115176140**		8	PARAFUSO, Connecting Rod				
						BOLT	PERNO	BULLONE	140B
					VIS	SCHRAUBE	BOLT	BOUT	
23		**SBA020109120**		8	PORCA	NUT	TUERCA	DADO	010D
					ECROU	MUTTER	MØTRIK	MOER	
24		**SBA198517251**		8	ROLAMENTO	BEARING	COJINETE	CUSCINETTO	0600
					ROULEMENT	LAGER	LEJE	LAGER	
25		**SBA199266210**		1	ANEL DE ENCOSTO	THRUST WASHER	ARANDELA DE EMPUJE	RONDELLA REGGISPINT	023R
					ANNEAU DE BUTEE	DRUCKSCHEIBE	TRYKSKIVE	DRUKRING	

10.103.02		p1	03/11

FLYWHEEL, BELL HOUSING
FLYWHEEL, BELL HOUSING
VOLANTE, CUBIERTA
VOLANO, COPERCHIO

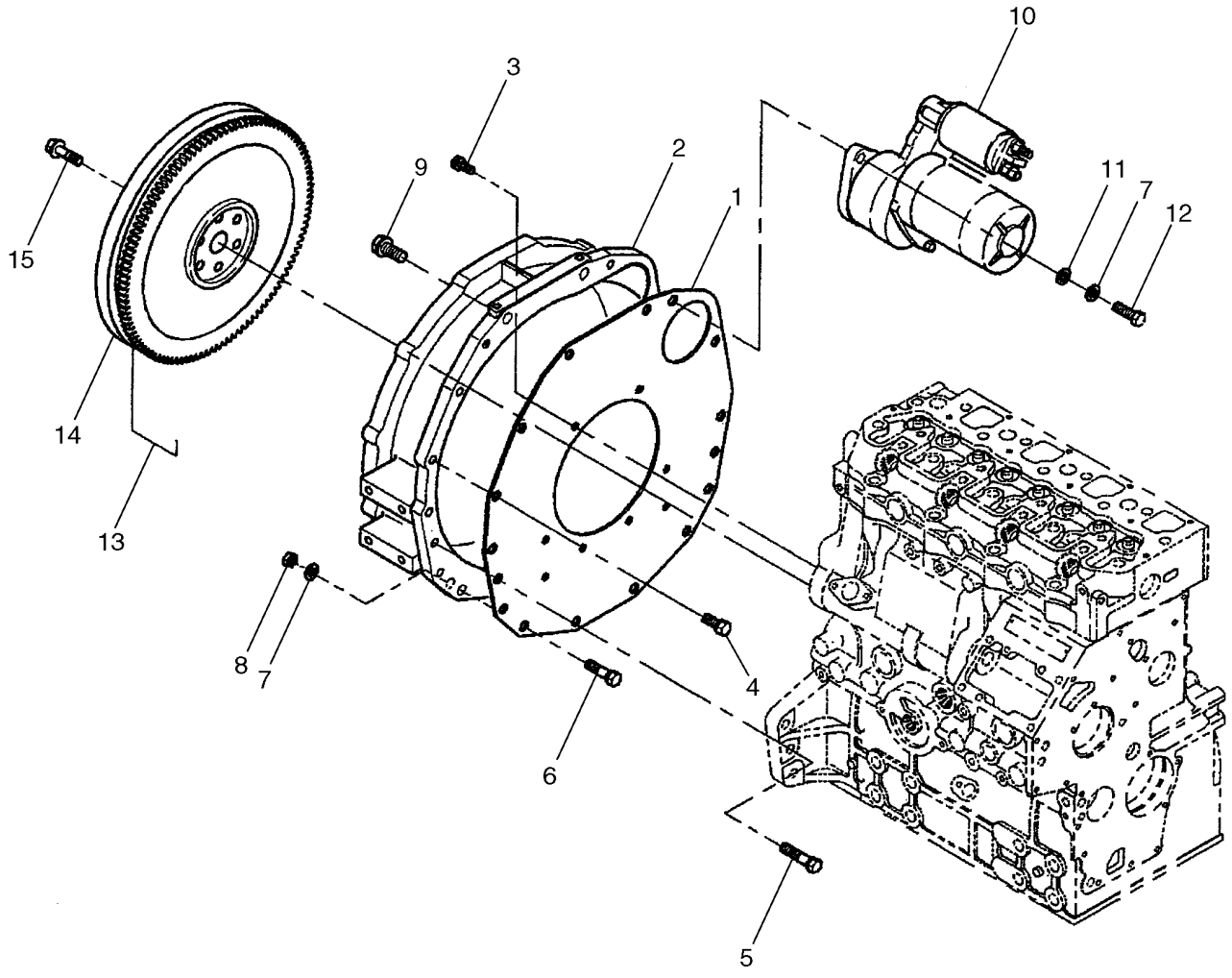

BS04M161

VOLANT MOTEUR, COUVERCLE
SCHWUNGRAD, ABDECKUNG
SVINGHJUL, DÆKSEL
VLIEGWIEL, AFDEKKING

R	N	P.N.	MOD	Q	Denominação Description	Description Bezeichnung	Denominacion Beskrivelse	Descrizione Beschrijving	L.C.
1		SBA110367580		1	PLACA, Rear PLAQUE	PLATE PLATTE	PLACA PLADE	PIASTRA PLAAT	105P
2		{SBA110447760}		1					
3		SBA011510816		10	PARAFUSO VIS	BOLT SCHRAUBE	PERNO BOLT	BULLONE BOUT	140B
4		SBA011511020		2	PARAFUSO, M10 x 20 VIS	BOLT SCHRAUBE	PERNO BOLT	BULLONE BOUT	140B
5		SBA011511045		6	PARAFUSO VIS	BOLT SCHRAUBE	PERNO BOLT	BULLONE BOUT	140B
6		SBA011311030		4	PARAFUSO VIS	BOLT SCHRAUBE	PERNO BOLT	BULLONE BOUT	140B
7		SBA027100010		6	ARRUELA PLANA RONDELLE	WASHER UNTERLEGSCHEIBE	ARANDELA FLADSKIVE	RONDELLA SLUITRING	131R
8		100016		6	PORCA, M10, Cl 8 ECROU	NUT MUTTER	TUERCA MØTRIK	DADO MOER	010D
9		SBA011511235		2	PARAFUSO, M12 x 35 VIS	BOLT SCHRAUBE	PERNO BOLT	BULLONE BOUT	140B
10		{SBA185086750}		1					
11		SBA026100010		2	ARRUELA PLANA RONDELLE	WASHER UNTERLEGSCHEIBE	ARANDELA FLADSKIVE	RONDELLA SLUITRING	131R
12		SBA011311030		2	PARAFUSO VIS	BOLT SCHRAUBE	PERNO BOLT	BULLONE BOUT	140B
13		SBA115351030		1	VOLANTE VOLANT	FLYWHEEL SCHWUNGRAD	VOLANTE SVINGHJUL	VOLANO VLIEGWIEL	3570
14		SBA115376160		1	COROA DENTADA COURONNE DENTEE	RING GEAR ZAHNKRANZ	CORONA DENTADA TANDKRANS	CORONA DENTATA RINGWIEL	297C
15		SBA010109341		6	PARAFUSO VIS	BOLT SCHRAUBE	PERNO BOLT	BULLONE BOUT	140B

CAMSHAFT
CAMSHAFT
ÀRBOL DE LEVAS
ALBERO A CAMME

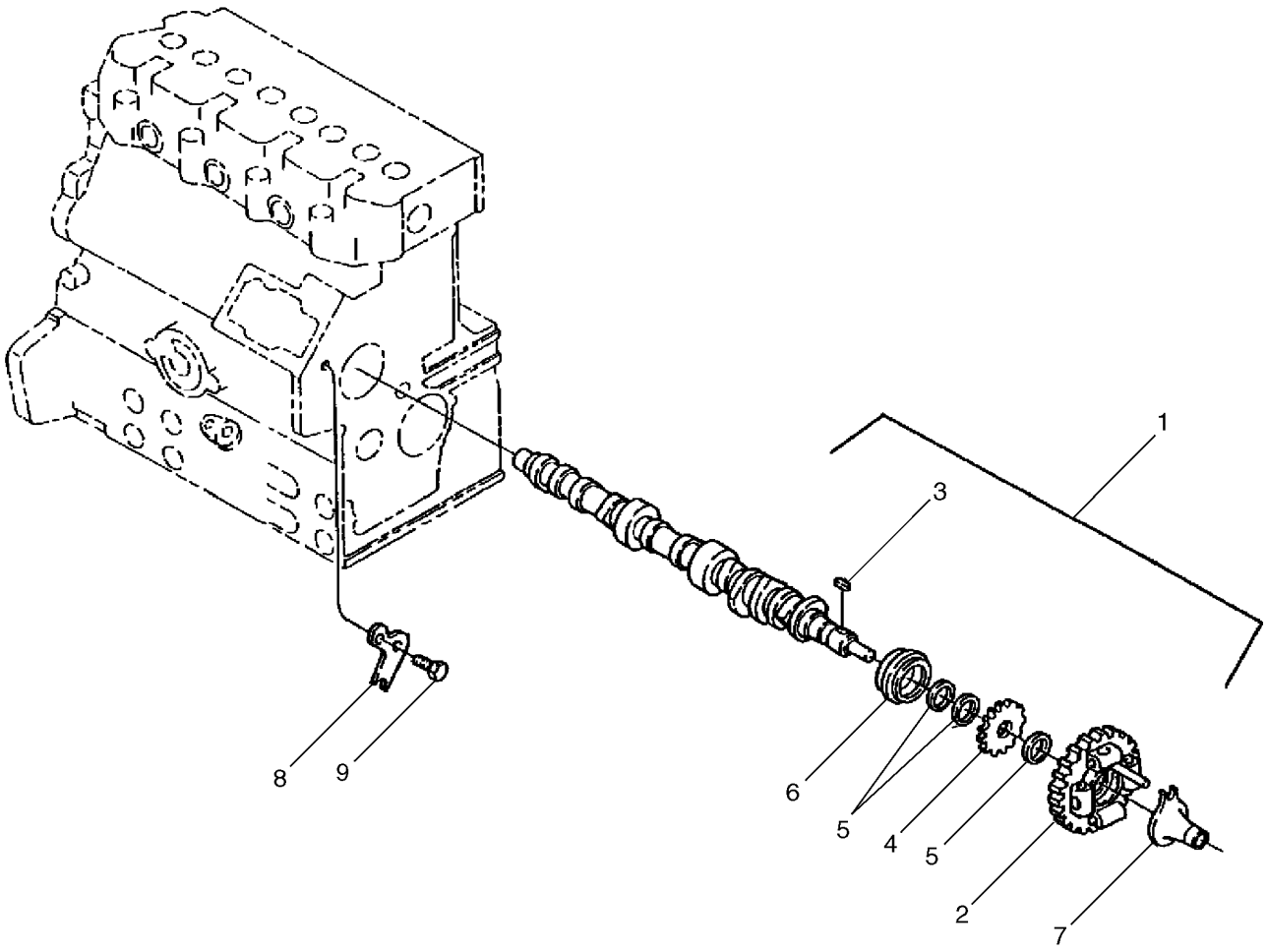

BS04M082

ARBRE À CAMES
NOCKENWELLE
KNASTAKSEL
NOKKENAS

R	N	P.N.	MOD	Q	Denominação Description Bezeichnung	Description Bezeichnung	Denominacion Beskrivelse	Descrizione Beschrijving	L.C.
1		SBA120026970		1	EIXO EXCÊNTRICO, Incl. Ref 2 - 6				
						CAMSHAFT	ÁRBOL DE LEVAS	ALBERO A CAMME	017A
					ARBRE A CAMES	NOCKENWELLE	KNASTAKSEL	NOKKENAS	
2		SBA120016050		1	ENGRENAGEM, Cam, Complete				
						GEAR	ENGRANAJE	INGRANAGGIO	050I
					PIGNON	ZAHNRAD	TANDHJUL	TANDWIEL	
3		SBA034100508		1	CHAVE	KEY	LLAVE	CHIAVE	060L
					CLE	FEDERKEIL	KILE	SPIE	
4		SBA120736081		1	ENGRENAGEM	GEAR	ENGRANAJE	INGRANAGGIO	050I
					PIGNON	ZAHNRAD	TANDHJUL	TANDWIEL	
5		SBA199216230		3	ESPAÇADOR	SPACER	SEPARADOR	DISTANZIALE	075D
					ENTRETOISE	DISTANZSTÜCK	AFSTANDSSTYKKE	AFSTANDSSTUK	
6		SBA040109057		1	ROLAMENTO	BEARING	COJINETE	CUSCINETTO	0600
					ROULEMENT	LAGER	LEJE	LAGER	
7		SBA125256120		1	GUIA DESLIZANTE	SLIDE GUIDE	GUÍA DESLIZANTE	GUIDA DI SCORRIMENT	153G
					GUIDE DE COULISSAGE	GLEITFÜHRUNG	GLIDESKINNE	SCHUIFGELEIDER	
8		SBA199566750		1	SUPORTE	BRACKET	SOPORTE	STAFFA	225S
					SUPPORT	HALTERUNG	BESLAG	STEUN	
9		SBA011310612		2	PARAFUSO CABEÇA FLANGEADA, Hex, M6 x 12, Cl 8.8				
						CAPTIVE WASHER SCRE	TORNILLO DE ARAND. C	VITE RONDELLA PRIGIO	A091
					VIS A RONDELLE CAPTI'	SCHRAUBE M UNVERL U	SKRUE, FORMONTERET	SCHROEF MET RONDSE	

10.106.02		p1	02/11

ROCKER ARMS
ROCKER ARMS
CONJUNTO DEL BRAZO OSCILADOR
GRUPPO DEL BILANCIERE

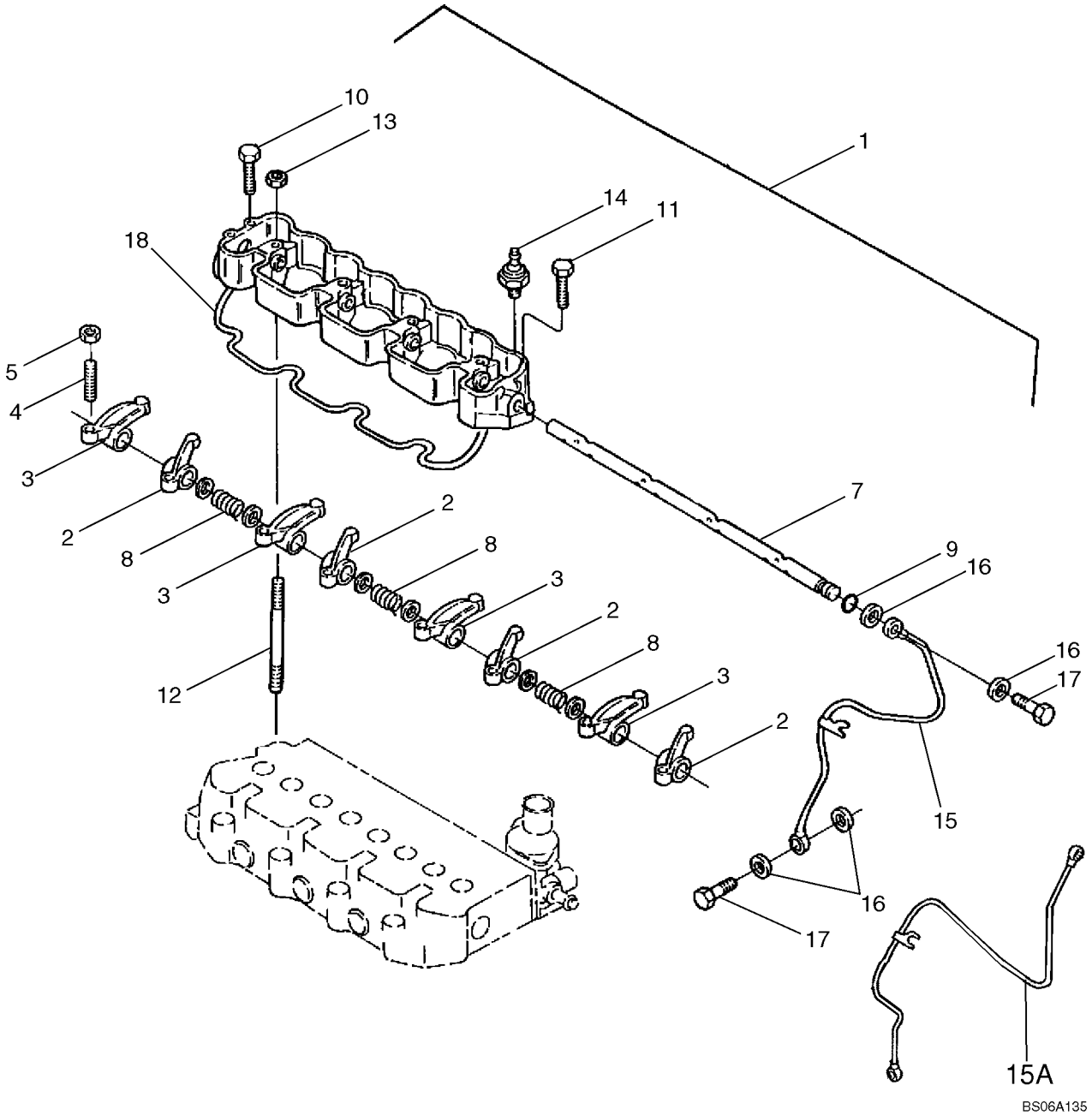

CULBUTEURS
KIPPHEBEL
VIPPEARMSSAMLING
TUIMELAAR

R	N	P.N.	MOD	Q	Denominação Description	Description Bezeichnung	Denominacion Beskrivelse	Descrizione Beschrijving	L.C.
1		SBA120036393		1	BALANCIM, Incl. Ref 2 - 9	ROCKER ARM	BRAZO DE BALANCÍN	BILANCIERE	055B
					BRAS DE CULBUTEUR	KIPPHEBELARM	VIPPEARM	TUIMELAARARM	
2		SBA120356131		4	BALANCIM, Intake, Complete				
						ROCKER ARM	BRAZO DE BALANCÍN	BILANCIERE	055B
					BRAS DE CULBUTEUR	KIPPHEBELARM	VIPPEARM	TUIMELAARARM	
3		SBA120356141		4	BALANCIM, Exhaust, Complete				
						ROCKER ARM	BRAZO DE BALANCÍN	BILANCIERE	055B
					BRAS DE CULBUTEUR	KIPPHEBELARM	VIPPEARM	TUIMELAARARM	
4		SBA199486220		8	PARAFUSO DE REGULAGEM				
						ADJUSTMENT SCREW	TORNILLO DE REGLAJE	VITE DI REGOLAZIONE	051V
					VIS DE REGLAGE	EINSTELLSCHRAUBE	JUSTERINGSSKRUE	STELSCHROEF	
5		SBA020109076		8	PORCA	NUT	TUERCA	DADO	010D
					ECROU	MUTTER	MØTRIK	MOER	
7		SBA120316200		1	EIXO, Rocker Arm	SHAFT	EJE	ALBERO	016A
					ARBRE	WELLE	AKSEL	AS	
8		SBA198217170		3	MOLA	SPRING	RESORTE	MOLLA	100M
					RESSORT	FEDER	FJEDER	VEER	
9		SBA052109076		1	O-RING	O-RING	JUNTA TÓRICA	ANELLO TOROIDALE	055A
					JOINT TORIQUE	O-RING	O-RING	O-RING	
10		SBA011310650		1	PARAFUSO	BOLT	PERNO	BULLONE	140B
					VIS	SCHRAUBE	BOLT	BOUT	
11		SBA011310625		1	PARAFUSO CABEÇA FLANGEADA, Hex, M6 x 25, Cl 8.8				
						CAPTIVE WASHER SCRE	TORNILLO DE ARAND. C	VITE RONDELLA PRIGIO	A091
					VIS A RONDELLE CAPTI'	SCHRAUBE M UNVERL U	SKRUE, FORMONTERET	SCHROEF MET RONDSE	
12		SBA012109044		4	PRISIONEIRO	STUD	PRISIONERO	PRIGIONIERO	210P
					GOUJON	GEWINDEBOLZEN	STØTTEBOLT	TAPEIND	
13		SBA023109002		4	PORCA	NUT	TUERCA	DADO	010D
					ECROU	MUTTER	MØTRIK	MOER	
14		SBA185246060		1	TRANSMISSOR, Oil Pressure Switch				
						SENDER UNIT	UNIDAD EMISORA	TRASMETTITORE	160T
					ENS. TRANSMETTEUR	SIGNALGEBER	SENDER	SENSOREENHEID	
15		SBA140607090		1	TUBO, Oil; If Used	TUBE	TUBO	TUBO	195T
					TUBE	ROHR	RØR	LEIDING	
15A		SBA140607020		1	TUBO RÍGIDO, If Used	RIGID TUBE	TUBO RÍGIDO	TUBO RIGIDO	193T
					TUYAU RIGIDE	ROHR	STIFT RØR	VASTE LEIDING	
16		SBA140996260		4	JUNTA	GASKET	JUNTA	GUARNIZIONE	123G
					JOINT	DICHTUNG	PAKNING	PAKKING	
17		SBA198486780		2	PARAFUSO DE BANJO, M8 x 1.25; If Used				
						BANJO BOLT	PERNO BANJO	BULLONE MASCHIO	090B
					VIS BANJO	HOHLSCHRAUBE	BANJOBOLT	BANJOBOUT	
17		SBA198487840		2	PARAFUSO, M10 x 1.5; If Used				
						SCREW	TORNILLO	VITE	040V
					VIS	SCHRAUBE	SKRUE	SCHROEF	
18		SBA052109074		1	O-RING, 368mm ID x 3mm Width				
						O-RING	JUNTA TÓRICA	ANELLO TOROIDALE	055A
					JOINT TORIQUE	O-RING	O-RING	O-RING	

10.106.03		p1	02/11

TIMING GEAR CASE, GOVERNOR
TIMING GEAR CASE, GOVERNOR
TEMPORIZADOR DE LA CAJA DE ENGRANAJE, GOBERNADOR
SCATOLA INGRANAGGI DI DISTRIBUZIONE, REGOLATORE

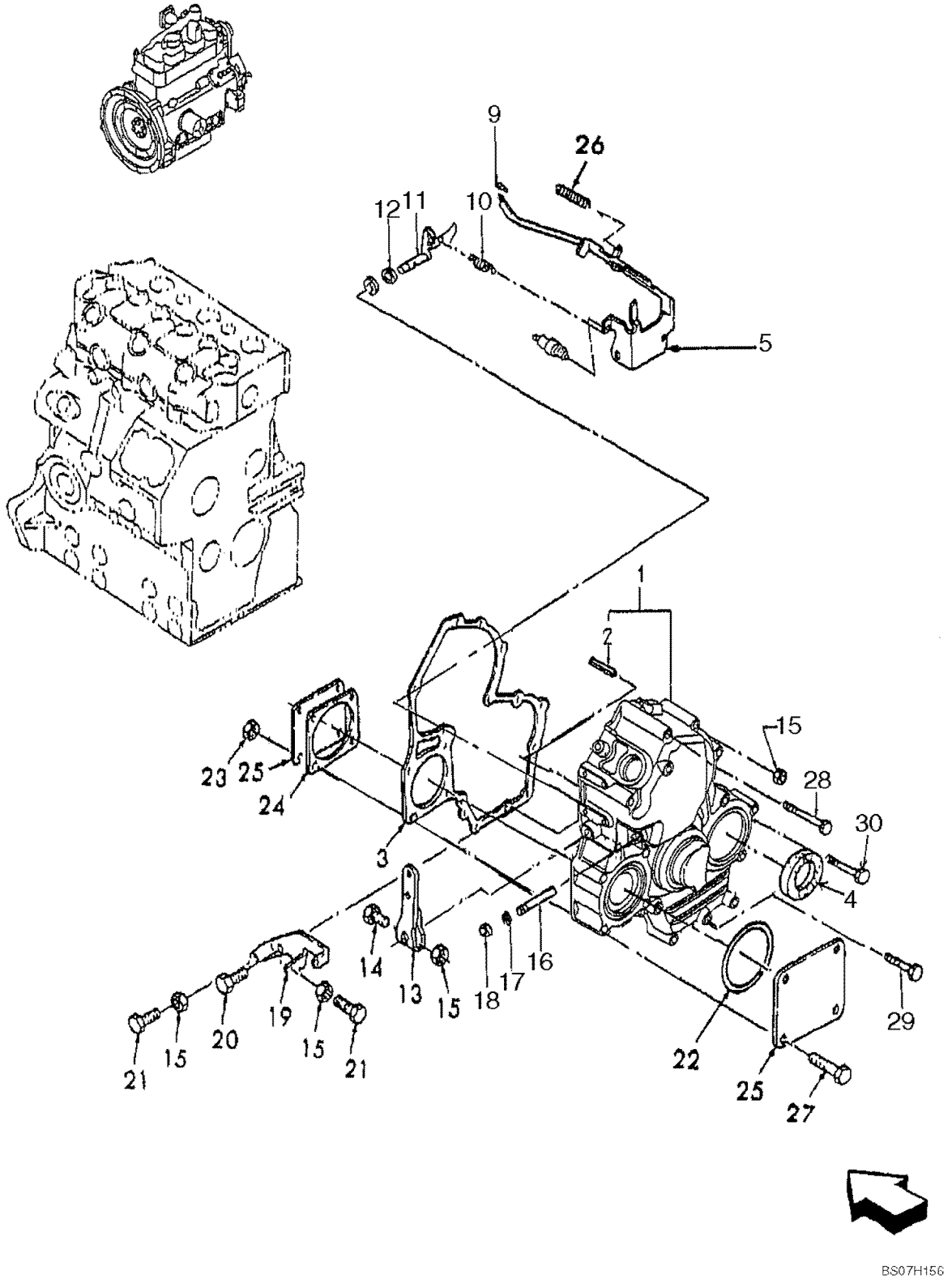

RÉGULATEUR, CARTER DE DISTRIBUTION
STEUERGEHÄUSE, REGLER
TAKTHJULSHUS, REGULATOR
BEHUIZING VAN DE DISTRIBUTIETANDKAST, REGELAAR

R	N	P.N.	MOD	Q	Denominação Description	Description Bezeichnung	Denominacion Beskrivelse	Descrizione Beschrijving	L.C.
1		SBA165106840		1	ENGRENAGEM, Case; Timing Gear, Incl. Ref 2				
						GEAR	ENGRANAJE	INGRANAGGIO	050I
					PIGNON	ZAHNRAD	TANDHJUL	TANDWIEL	
2		SBA030300414		1	PINO, Spring	PIN	PASADOR	PERNO	080P
					BROCHE	PIN	STIFT	PEN	
3		SBA165996550		1	JUNTA	GASKET	JUNTA	GUARNIZIONE	123G
					JOINT	DICHTUNG	PAKNING	PAKKING	
4		SBA198636160		1	VEDAÇÃO, M35 x 55 x 11, Oil				
						SEAL	ANILLO DE CIERRE	GUARNIZIONE; TENUTA	132A
					JOINT	DICHTUNG	PAKNING	AFDICHTING	
5		SBA125046510		1	ALAVANCA, Governor; If Used, BSN Engine SN 133723				
						LEVER	PALANCA	LEVA	045L
					LEVIER	HEBEL	ARM	HEFBOOM	
5		SBA125046880		1	ALAVANCA, Governor; If Used, ASN Engine SN 133723				
						LEVER	PALANCA	LEVA	045L
					LEVIER	HEBEL	ARM	HEFBOOM	
9		SBA031100004		1	PINO, Snap	PIN	PASADOR	PERNO	080P
					BROCHE	PIN	STIFT	PEN	
10		SBA198217380		1	MOLA, Main	SPRING	RESORTE	MOLLA	100M
					RESSORT	FEDER	FJEDER	VEER	
11		SBA125156170		1	BRAÇO, Snap	ARM	BRAZO	BRACCIO	130B
					BRAS	ARM	ARM	ARM	
12		SBA052109110		1	O-RING	O-RING	JUNTA TÓRICA	ANELLO TOROIDALE	055A
					JOINT TORIQUE	O-RING	O-RING	O-RING	
13		SBA125416300		1	ALAVANCA	LEVER	PALANCA	LEVA	045L
					LEVIER	HEBEL	ARM	HEFBOOM	
14		43117		1	PARAFUSO, Hex, M6 x 30, 8.8, Cap, HH, CL8.8, M6 x 1 x 30				
						SCREW	TORNILLO	VITE	040V
					VIS	SCHRAUBE	SKRUE	SCHROEF	
15		9804276		4	PORCA, M6 x 1, Flg, Cl 8, M6 x 1				
						NUT	TUERCA	DADO	010D
					ECROU	MUTTER	MØTRIK	MOER	
16		SBA125116141		1	HASTE	ROD	VARILLA	ASTA	090A
					TIGE	STANGE	STANG	STANG	
17		SBA052109108		1	O-RING	O-RING	JUNTA TÓRICA	ANELLO TOROIDALE	055A
					JOINT TORIQUE	O-RING	O-RING	O-RING	
18		SBA036800005		1	ANEL DE PRESSÃO	SNAP RING	ANILLO DE RESORTE	ANELLO ELASTICO	054A
					ANNEAU D'ARRET	SPRENGRING	LÅSERING	VEERRING	
19		SBA125976120		1	SUPORTE	BRACKET	SOPORTE	STAFFA	225S
					SUPPORT	HALTERUNG	BESLAG	STEUN	
20		SBA011310614		2	PARAFUSO, CL 8.8, M6 x 1 x 14				
						BOLT	PERNO	BULLONE	140B
					VIS	SCHRAUBE	BOLT	BOUT	
21		SBA010109264		2	PARAFUSO	BOLT	PERNO	BULLONE	140B
					VIS	SCHRAUBE	BOLT	BOUT	
22		SBA052300600		1	O-RING, G60	O-RING	JUNTA TÓRICA	ANELLO TOROIDALE	055A
					JOINT TORIQUE	O-RING	O-RING	O-RING	

TIMING GEAR CASE, GOVERNOR
TIMING GEAR CASE, GOVERNOR
TEMPORIZADOR DE LA CAJA DE ENGRANAJE, GOBERNADOR
SCATOLA INGRANAGGI DI DISTRIBUZIONE, REGOLATORE

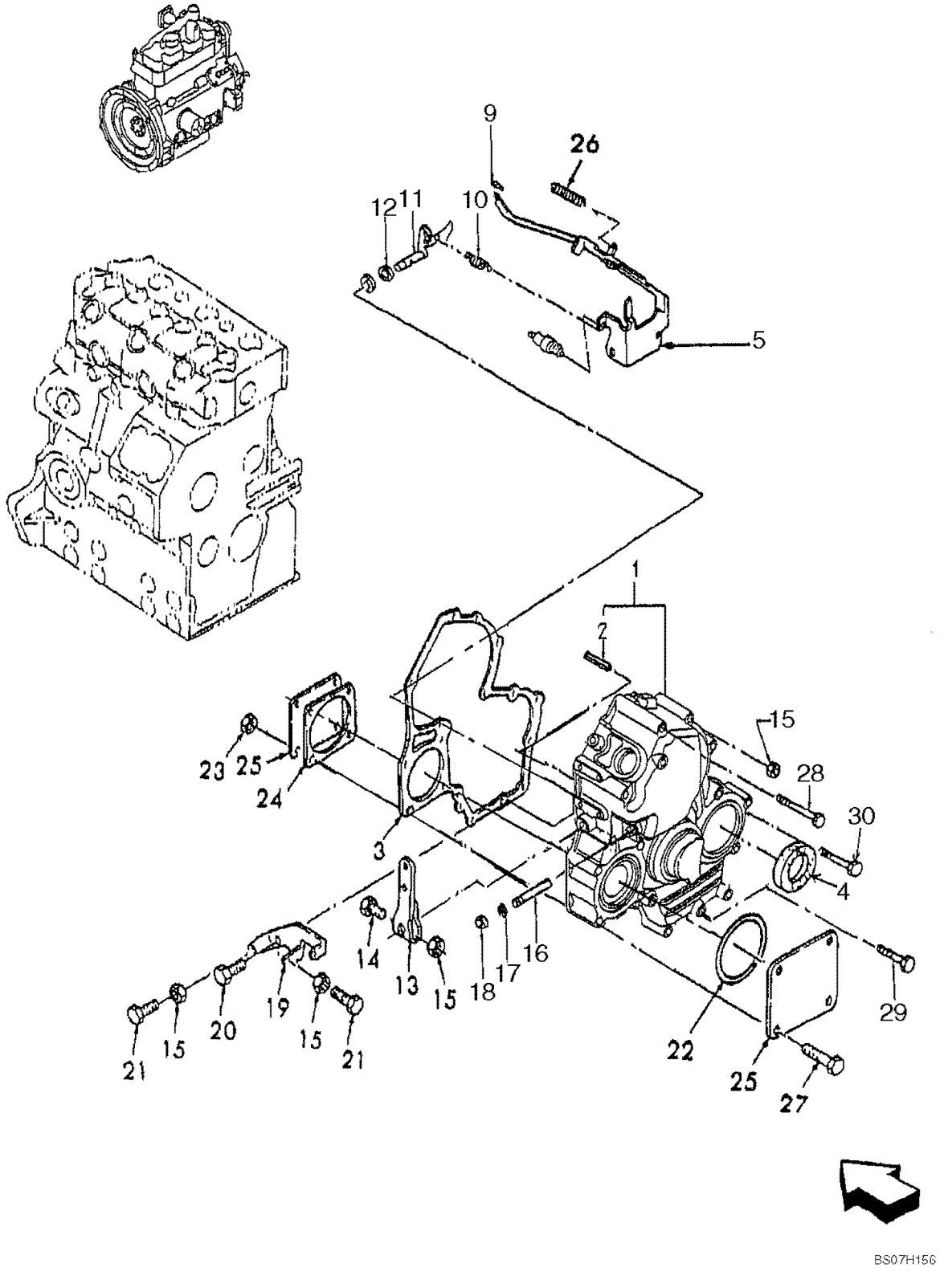

RÉGULATEUR, CARTER DE DISTRIBUTION
STEUERGEHÄUSE, REGLER
TAKTHJULSHUS, REGULATOR
BEHUIZING VAN DE DISTRIBUTIETANDKAST, REGELAAR

R	N	P.N.	MOD	Q	Denominação Description	Description Bezeichnung	Denominacion Beskrivelse	Descrizione Beschrijving	L.C.
23		**9804277**		4	PORCA, M8 x 1.25, Flg, Cl 8				
						NUT	TUERCA	DADO	010D
					ECROU	MUTTER	MØTRIK	MOER	
24		**SBA165996610**		1	JUNTA, Gasket	GASKET	JUNTA	GUARNIZIONE	123G
					JOINT	DICHTUNG	PAKNING	PAKKING	
25		**SBA165206010**		2	COBERTURA	COVER	CUBIERTA	COPERCHIO	265C
					COUVERCLE	ABDECKUNG	DÆKSEL	AFSCHERMING	
26		**SBA198217560**		1	MOLA	SPRING	RESORTE	MOLLA	100M
					RESSORT	FEDER	FJEDER	VEER	
27		**SBA011510865**		4	PARAFUSO	BOLT	PERNO	BULLONE	140B
					VIS	SCHRAUBE	BOLT	BOUT	
28		**SBA011310680**		2	PARAFUSO	BOLT	PERNO	BULLONE	140B
					VIS	SCHRAUBE	BOLT	BOUT	
29		**SBA011310645**		7	PARAFUSO CABEÇA FLANGEADA, Hex, M6 x 45, Cl 8.8				
						CAPTIVE WASHER SCRE	TORNILLO DE ARAND. C	VITE RONDELLA PRIGIO	A091
					VIS A RONDELLE CAPTI'	SCHRAUBE M UNVERL U	SKRUE, FORMONTERET	SCHROEF MET RONDSE	
30		**SBA011310660**		3	PARAFUSO	BOLT	PERNO	BULLONE	140B
					VIS	SCHRAUBE	BOLT	BOUT	

10.202.01		p1	01/11

AIR CLEANER ASSY NA 7IN (SV185)
AIR CLEANER ASSY NA 7IN (SV185)
AIR CLEANER ASSY NA 7IN (SV185)
AIR CLEANER ASSY NA 7IN (SV185)

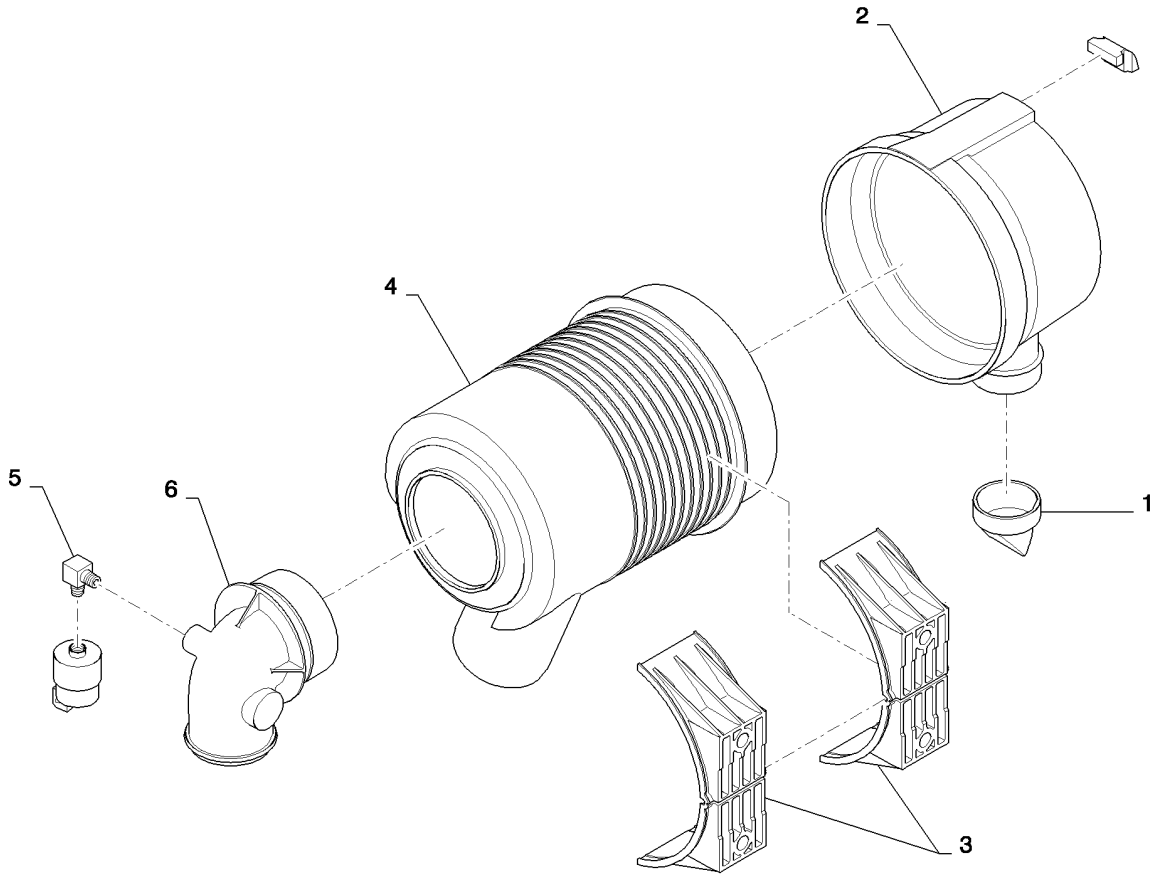

AIR CLEANER ASSY NA 7IN (SV185)
AIR CLEANER ASSY NA 7IN (SV185)
AIR CLEANER ASSY NA 7IN (SV185)
AIR CLEANER ASSY NA 7IN (SV185)

R	N	P.N.	MOD	Q	Denominação Description Description Bezeichnung	Denominacion Beskrivelse	Descrizione Beschrijving	L.C.
1		A184597		1	VÁLVULA DO OBTURADOR, Vacuator VALVE POPPET	RESORTE DE VÁLVULA	VALVOLA A FUNGO	P048
					CLAPET A RESSORT VENTILTELLER	DOKVENTIL	KLEPSCHOTEL	
2		440831A1		1	TAMPA DO FILTRO, Assy FILTER COVER	TAPA DE FILTRO	COPERCHIO FILTRO	Z316
					COUVERCLE DE FILTRE FILTERABDECKUNG	FILTERHUS	FILTERKAP	
3		86982522		1	FILTRO DE AR, Primany AIR FILTER	FILTRO DE AIRE	FILTRO ARIA	066F
					FILTRE A AIR LUFTFILTER	LUFTFILTER	LUCHTFILTER	
4		86982523		1	FILTRO DE AR, Secondary AIR FILTER	FILTRO DE AIRE	FILTRO ARIA	066F
					FILTRE A AIR LUFTFILTER	LUFTFILTER	LUCHTFILTER	
5		279492A1		1	INTERRUPTOR DE RESTRIÇÃO RESTRICTION SWITCH	INT. DE RESTRICCIÓN	INTERR. DI LIMITAZIONE	C037
					COMM. RESTRICTION VERSTOPFUNGSSCHAL	KONTAKT, BEGRÆNSNI	BEGRENZINGSSCHAKEL	
6		217-1227		1	COTOVELO, 90º, 1/8"-27 Male ELBOW	CODO	GOMITO	085G
					COUDE KNIESTÜCK	VINKELRØR	KNIESTUK	

10.202.01		p1	02/11

FILTRO DE AR - MOTOR
AIR CLEANER - ENGINE
FILTRO DE AIRE - MOTOR
FILTRO DELL'ARIA - MOTORE

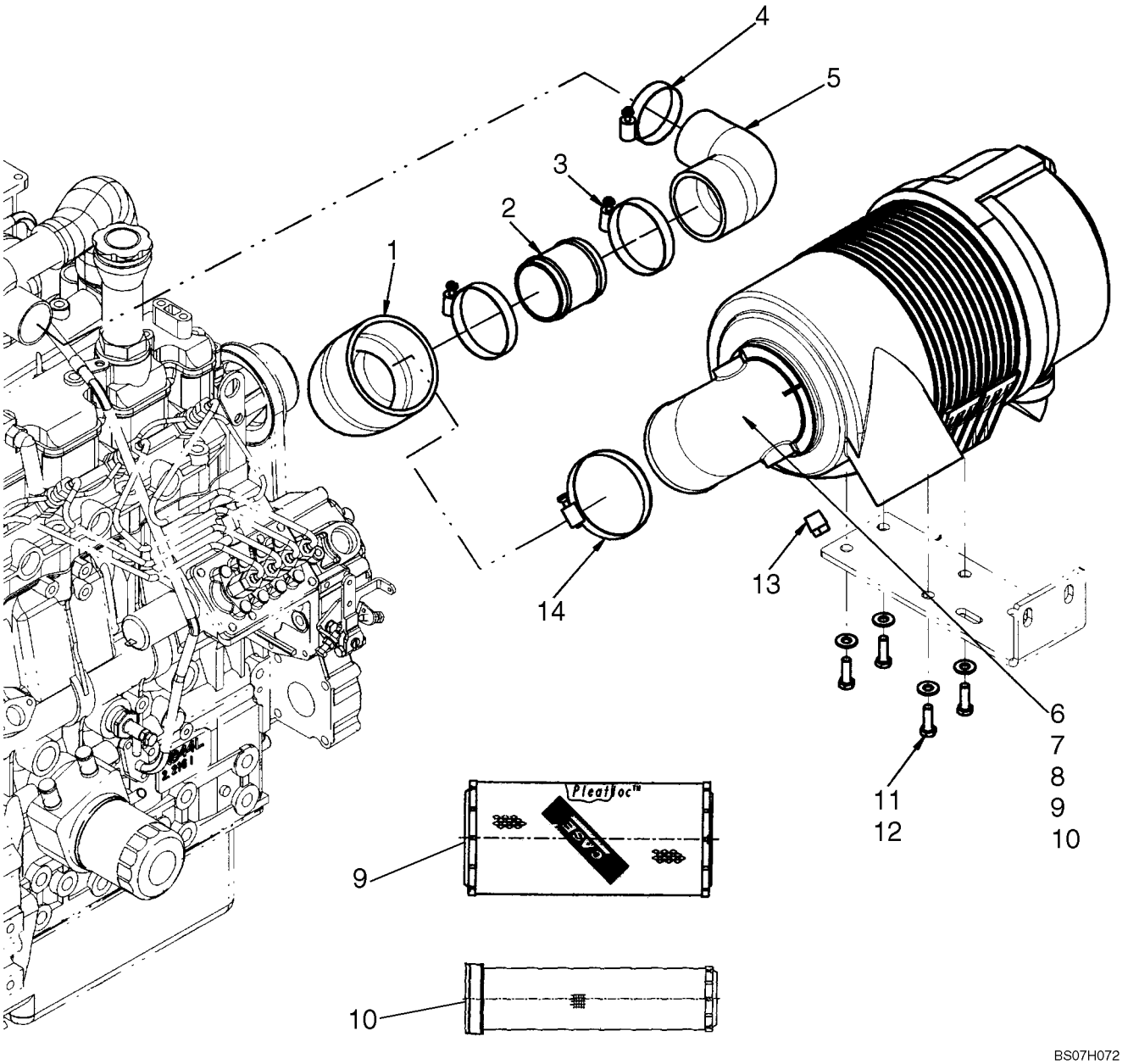

FILTRE A AIR - MOTEUR
LUFTFILTER - MOTOR
LUFTFILTER - MOTOR
LUCHTFILTER - MOTOR

R	N	P.N.	MOD	Q	Denominação Description Bezeichnung	Description Denominacion Beskrivelse	Denominacion Descrizione Beschrijving	Descrizione Beschrijving	L.C.
1		87604025		1	MANGUEIRA ADMISSÃO DE AR, 60.30 mm ID, 88.90 mm ID x 160.50 mm, SAE J20 R4, Hose, Air Cleaner Inlet				
					INTAKE AIR HOSE	TUBO DE ADMISIÓN DE	TUBO FLESS. ARIA ASPI		A059
					DURIT D'ADMISSION D'A	LUFTEINLASSSCHLAUCI	SLANGE, LUFTINDSUGN	INLAATLUCHTSLANG	
2		87604026		1	ENGATE RÁPIDO MACHO, Coupler, Air Cleaner Inlet				
					QUICK MALE COUPLING	ACOPLAMIENTO RÁPIDO	ATTACCO RAPIDO MASC		115A
					ACCOUPLEMENT RAP. M	SCHNELLKUPPLUNGSST	LYNKOBLING	SNELKOPPELINGSPEN	
3		87040758		2	BRAÇADEIRA MANGUEIRA	HOSE CLAMP	ABRAZADERA DE MANG	FASCETTA STRINGITUB	P729
					COLLIER POUR FLEXIBL	SCHLAUCHSCHELLE	SLANGEKLEMME	SLANGKLEM	
4		86050197		1	BRAÇADEIRA MANGUEIRA	HOSE CLAMP	ABRAZADERA DE MANG	FASCETTA STRINGITUB	P729
					COLLIER POUR FLEXIBL	SCHLAUCHSCHELLE	SLANGEKLEMME	SLANGKLEM	
5		87604024		1	MANGUEIRA ADMISSÃO DE AR, 46.00 mm ID, 60.30 mm ID x 88.20 mm, SAE J20 R4, Hose, Air Cleaner Inlet				
					INTAKE AIR HOSE	TUBO DE ADMISIÓN DE	TUBO FLESS. ARIA ASPI		A059
					DURIT D'ADMISSION D'A	LUFTEINLASSSCHLAUCI	SLANGE, LUFTINDSUGN	INLAATLUCHTSLANG	
6		87644689		1	FILTRO DE AR, Air Cleaner Assembly 8"; Incl. 7 - 10				
					AIR FILTER	FILTRO DE AIRE	FILTRO ARIA		066F
					FILTRE A AIR	LUFTFILTER	LUFTFILTER	LUCHTFILTER	
7		A184597		1	VÁLVULA DO OBTURADOR, Vacuator				
					VALVE POPPET	RESORTE DE VÁLVULA	VALVOLA A FUNGO		P048
					CLAPET A RESSORT	VENTILTELLER	DOKVENTIL	KLEPSCHOTEL	
8		395792A1		1	CONJUNTO DA TAMPA	COVER ASSY	CONJUNTO DE FUNDAS	COPERCHIO, COMPL	P426
					COUVERCLE	ABDECKUNGSBAUGRUP	DÆKSELENHED	AFSCHERMEENHEID	
9		222421A1		1	FILTRO DE AR, Filter, Primary				
					AIR FILTER	FILTRO DE AIRE	FILTRO ARIA		066F
					FILTRE A AIR	LUFTFILTER	LUFTFILTER	LUCHTFILTER	
10		222422A1		1	ELEMENTO FILTRO, Filter, Secondary				
					ELEMENT, FILTER	ELEMENTO DE FILTRO	ELEMENTO DEL FILTRO		2960
					ELEMENT FILTRANT	FILTERELEMENT	ELEMENT, FILTER	ELEMENT, FILTER	
11		43127		7	PARAFUSO, Hex, M8 x 25, 8.8				
					SCREW	TORNILLO	VITE		040V
					VIS	SCHRAUBE	SKRUE	SCHROEF	
12		86625263		4	ARRUELA PLANA, M8 x 20 x 1.6				
					WASHER	ARANDELA	RONDELLA		131R
					RONDELLE	UNTERLEGSCHEIBE	FLADSKIVE	SLUITRING	
13		87597959		1	BUJÃO, Plug, Square Drive Plastic 3/8-18 NPTF				
					PLUG	TAPÓN	TAPPO		050T
					BOUCHON	STOPFEN	PROP	PLUG	
14		381144		1	BRAÇADEIRA MANGUEIRA, #60, 3.31/4.25 Type F Worm				
					HOSE CLAMP	ABRAZADERA DE MANG	FASCETTA STRINGITUB		P729
					COLLIER POUR FLEXIBL	SCHLAUCHSCHELLE	SLANGEKLEMME	SLANGKLEM	

10.214.01	01	p1	02/11

FUEL INJECTION SYSTEM
FUEL INJECTION SYSTEM
INYECTOR DE LA BOMBA DE INYECCIÓN
INIETTORE DELLA POMPA DI INIEZIONE

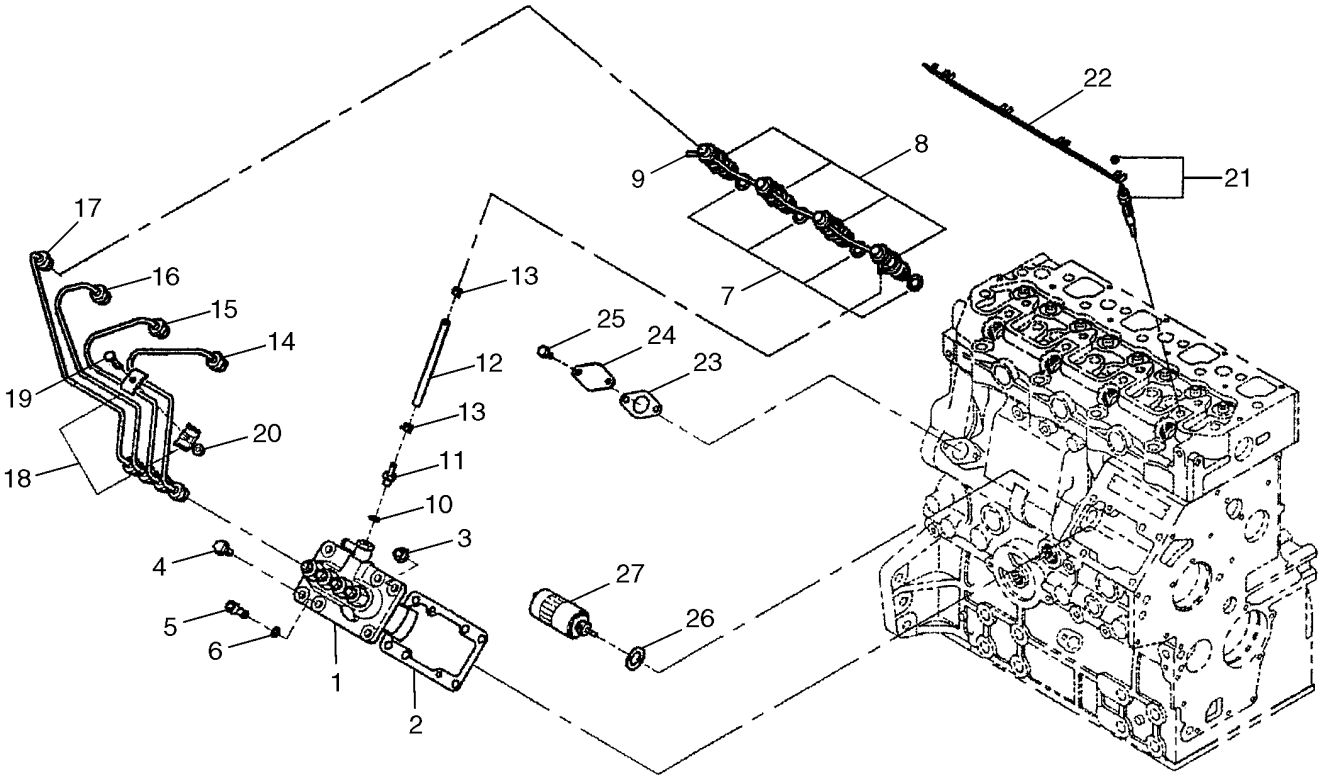

BS04M163

POMPE D'INJECTION, INJECTEURS
EINSPRITZPUMPE, EINSPRITZVENTIL
INDSPRØJTNINGSPUMPEDYSE
INJECTIEPOMPVERSTUIVER

R	N	P.N.	MOD	Q	Denominação Description	Description Bezeichnung	Denominacion Beskrivelse	Descrizione Beschrijving	L.C.
1		SBA131011100		1	BOMBA INJEÇÃO COMBUSTÍVEL, Components Not Serviced				
						FUEL INJECTION PUMP	BOMBA DE INY. DE COM	POMPA INIEZ. CARBURA	158P
					POMPE INJECT. CARBUI	KRAFTSTOFFEINPRITZP	INDSPRØJTNINGSPUMP	INSPUITPOMP	
2		SBA131426320		1	KIT DE CALÇOS	SHIM KIT	KIT DE COMPENSADOR	KIT SPESSORI	P688
					KIT DE CALES	UNTERLEGSCHEIBENSA	AFSTANDSSTYKKESÆT	KIT MET VULPLAATJES	
3		SBA023100008		3	PORCA	NUT	TUERCA	DADO	010D
					ECROU	MUTTER	MØTRIK	MOER	
4		SBA010800820		2	PARAFUSO	BOLT	PERNO	BULLONE	140B
					VIS	SCHRAUBE	BOLT	BOUT	
5		SBA010700820		1	PARAFUSO	BOLT	PERNO	BULLONE	140B
					VIS	SCHRAUBE	BOLT	BOUT	
6		SBA026100008		1	ARRUELA PLANA	WASHER	ARANDELA	RONDELLA	131R
					RONDELLE	UNTERLEGSCHEIBE	FLADSKIVE	SLUITRING	
7		SBA131426200		4	JUNTA	GASKET	JUNTA	GUARNIZIONE	123G
					JOINT	DICHTUNG	PAKNING	PAKKING	
8		SBA131406520		4	INJETOR SIST COMBUSTÍVEL				
						FUEL SYSTEM INJECTO	INYECTOR DE SIST. COI	INIETT. SISTEMA CARBU	089I
					INJECTEUR DE CARBUI	KRAFTSTOFFEINSPRITZ	BRÆNDSTOFPUMPE	VERSTUIVER	
9		SBA131606690		1	TUBO	TUBE	TUBO	TUBO	195T
					TUBE	ROHR	RØR	LEIDING	
10		SBA140996350		1	ARRUELA DE COBRE	COPPER WASHER	ARANDELA DE COBRE	RONDELLA IN RAME	P674
					RONDELLE CUIVRE	KUPFERUNTERLEGSCH	KOBBERSKIVE	KOPEREN SLUITRING	
11		SBA198487920		1	CONECTOR HIDRÁUL	HYD CONNECTOR	CONECTOR HIDRÁULIC	CONNETTORE IDRAULIC	020R
					CONNECTEUR HYDRAU	HYDR STECKVERBINDE	HYDRAULIKSTIK	HYDRAULISCHE AANSLI	
12		{SBA068209622}		1					
13		SBA067200078		2	BRAÇADEIRA MANGUEIR	HOSE CLAMP	ABRAZADERA DE MANG	FASCETTA STRINGITUB	P729
					COLLIER POUR FLEXIBL	SCHLAUCHSCHELLE	SLANGEKLEMME	SLANGKLEM	
14		SBA131507700		1	TUBO RÍGIDO	RIGID TUBE	TUBO RÍGIDO	TUBO RIGIDO	193T
					TUYAU RIGIDE	ROHR	STIFT RØR	VASTE LEIDING	
15		SBA131507710		1	TUBO RÍGIDO	RIGID TUBE	TUBO RÍGIDO	TUBO RIGIDO	193T
					TUYAU RIGIDE	ROHR	STIFT RØR	VASTE LEIDING	
16		SBA131507720		1	TUBO RÍGIDO	RIGID TUBE	TUBO RÍGIDO	TUBO RIGIDO	193T
					TUYAU RIGIDE	ROHR	STIFT RØR	VASTE LEIDING	
17		SBA131507730		1	TUBO RÍGIDO	RIGID TUBE	TUBO RÍGIDO	TUBO RIGIDO	193T
					TUYAU RIGIDE	ROHR	STIFT RØR	VASTE LEIDING	
18		SBA199106021		6	BRAÇADEIRA	CLAMP	ABRAZADERA	MORSETTO	120M
					COLLIER	KLEMME	SPÆNDEBÅND	KLEM	
19		SBA010110625		3	PARAFUSO	SCREW	TORNILLO	VITE	040V
					VIS	SCHRAUBE	SKRUE	SCHROEF	
20		SBA023100006		3	PORCA	NUT	TUERCA	DADO	010D
					ECROU	MUTTER	MØTRIK	MOER	
21		SBA185366190		4	VELA DE PRÉ-AQUECIMENTO				
						GLOW PLUG	BUJÍA INCANDESCENTE	CANDELA	056C
					BOUGIE DE PRECHAUFI	ZÜNDKERZE	GLØDERØR	GLOEIBOUGIE	
22		SBA185376150		1	SUPORTE	BRACKET	SOPORTE	STAFFA	225S
					SUPPORT	HALTERUNG	BESLAG	STEUN	
23		SBA130996130		1	JUNTA	GASKET	JUNTA	GUARNIZIONE	123G
					JOINT	DICHTUNG	PAKNING	PAKKING	

FUEL INJECTION SYSTEM
FUEL INJECTION SYSTEM
INYECTOR DE LA BOMBA DE INYECCIÓN
INIETTORE DELLA POMPA DI INIEZIONE

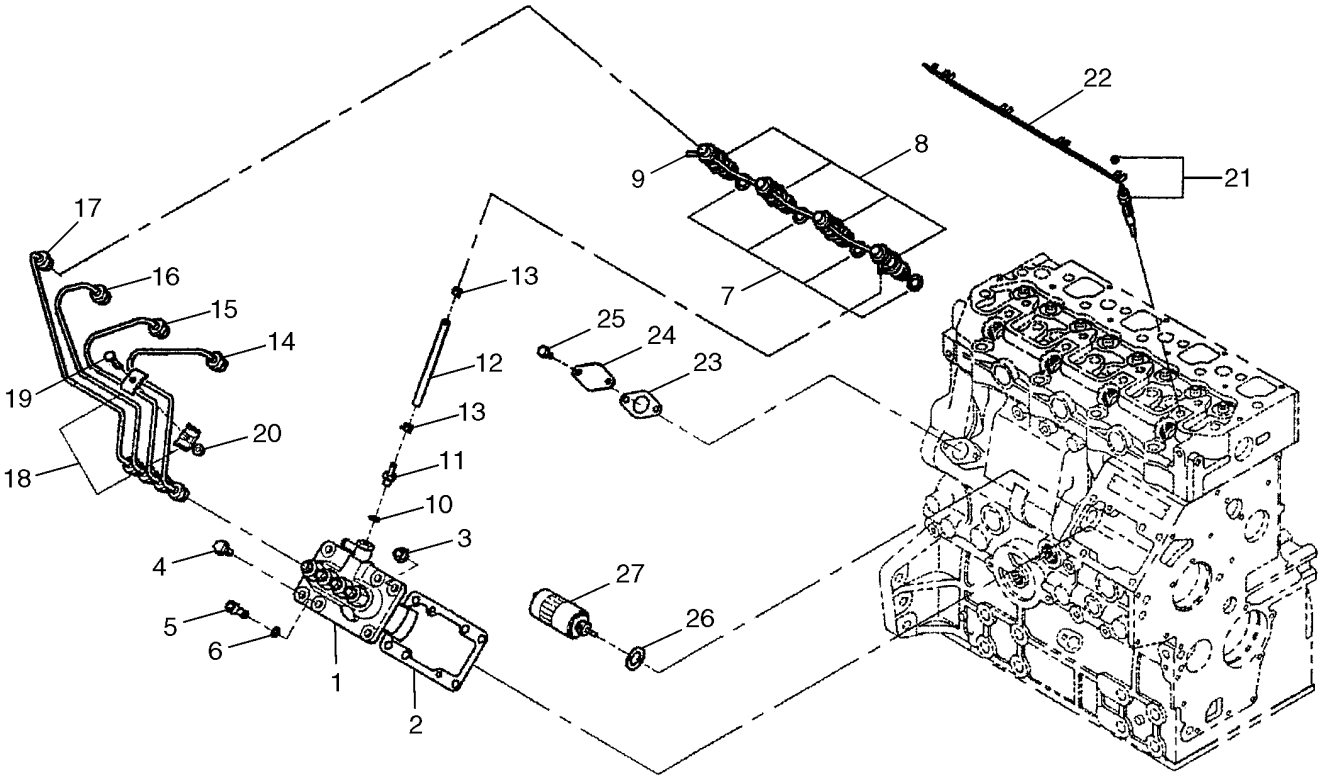

BS04M163

POMPE D'INJECTION, INJECTEURS
EINSPRITZPUMPE, EINSPRITZVENTIL
INDSPRØJTNINGSPUMPEDYSE
INJECTIEPOMPVERSTUIVER

R	N	P.N.	MOD	Q	Denominação Description	Description Bezeichnung	Denominacion Beskrivelse	Descrizione Beschrijving	L.C.
24		**SBA165206640**		1	COBERTURA COUVERCLE	COVER ABDECKUNG	CUBIERTA DÆKSEL	COPERCHIO AFSCHERMING	265C
25		**SBA011310612**		2	PARAFUSO CABEÇA FLANGEADA, Hex, M6 x 12, Cl 8.8 CAPTIVE WASHER SCRE TORNILLO DE ARAND. C VITE RONDELLA PRIGIO VIS A RONDELLE CAPTI' SCHRAUBE M UNVERL U SKRUE, FORMONTERET SCHROEF MET RONDSE				A091
26		**SBA025100016**		1	ARRUELA PLANA RONDELLE	WASHER UNTERLEGSCHEIBE	ARANDELA FLADSKIVE	RONDELLA SLUITRING	131R
27		**SBA185206083**		1	SOLENOIDE SOLENOIDE	SOLENOID MAGNETSCHALTER	SOLENOIDE MAGNETVENTIL	SOLENOIDE SOLENOÏDE	168S

10.214.01	02	p1	02/11

TUBOS DE COMBUSTÍVEL
FUEL LINES - FILTER, PUMP
LINEA DE COMBUSTIBLE - FILTRO, BOMBA
TUBAZIONI DEL COMBUSTIBILE - FILTRO, POMBA

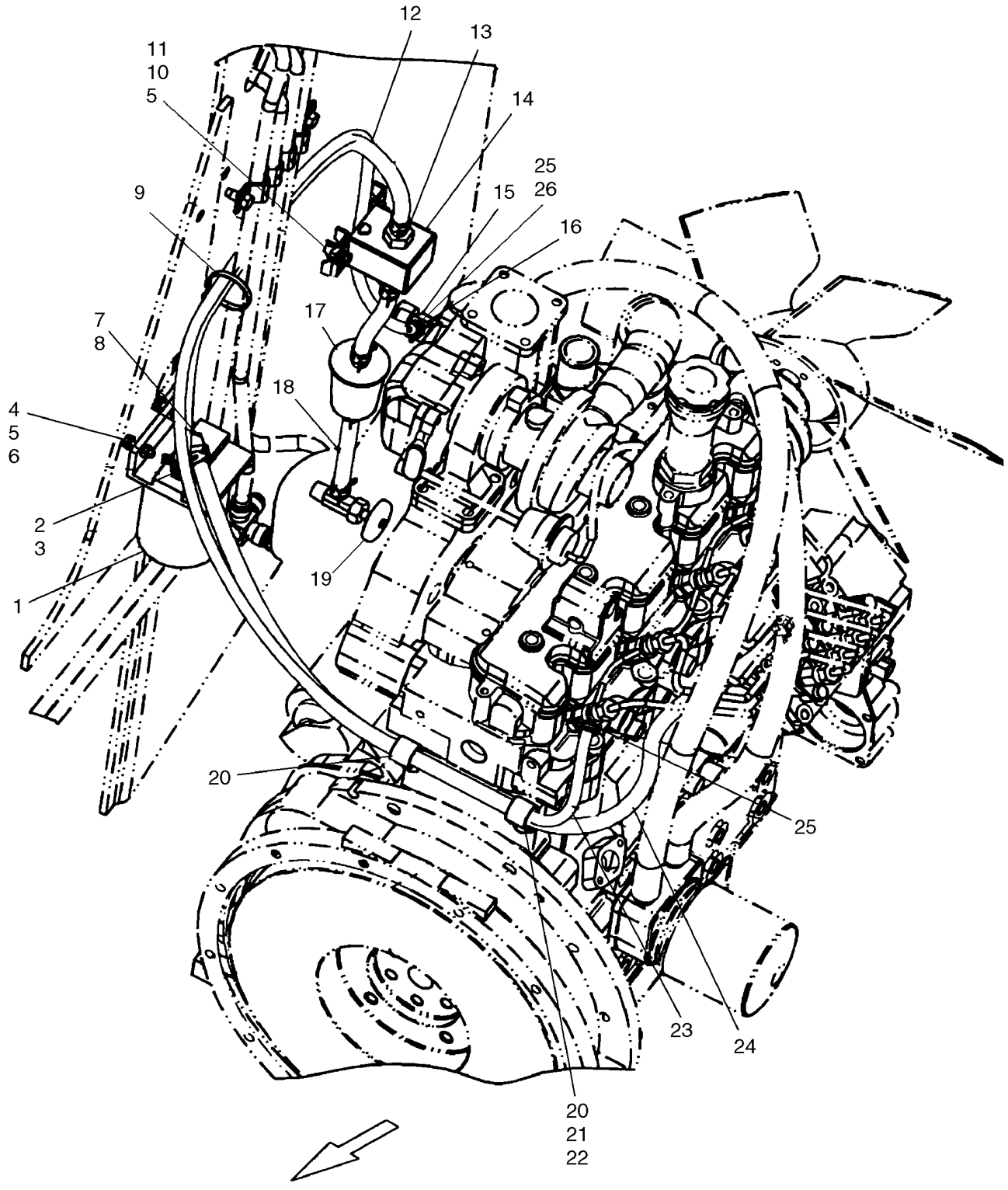

CONDUITES D'ESSENCE - FILTRE, POMPE
KRAFTSTOFFLEITUNGEN - FILTER, PUMPE
BRÆNDSTOFLEDNINGER - FILTER, PUMPE
BRANDSTOFLEIDINGEN - FILTER, POMP

R	N	P.N.	MOD	Q	Denominação Description	Description Bezeichnung	Denominacion Beskrivelse	Descrizione Beschrijving	L.C.
1		87036043		1	FILTRO DE COMBUSTÍVEL, Incl. 1A, 1B				
						FUEL FILTER	FILTRO DE COMBUSTIBI	FILTRO CARBURANTE	064F
					FILTRE A CARBURANT	KRAFTSTOFFFILTER	BRÆNDSTOFFILTER	BRANDSTOFFILTER	
1A		87039679		1	FILTRO DE COMBUSTÍVEL, Element; Not Illustrated Separately				
						FUEL FILTER	FILTRO DE COMBUSTIBI	FILTRO CARBURANTE	064F
					FILTRE A CARBURANT	KRAFTSTOFFFILTER	BRÆNDSTOFFILTER	BRANDSTOFFILTER	
1B		87042231		1	CABEÇA DO FILTRO, Not Illustrated Separately				
						FILTER HEAD	CABEZA DE FILTRO	TESTA DEL FILTRO	A007
					TETE DE FILTRE	FILTERKOPF	FILTERHOVED	FILTERKOP	
2		9844342		1	CONEXÃO, Stem; 5/16 ID x 7/16-20; Incl. 3				
						FITTING	ACOPLAMIENTO	RACCORDO	3300
					RACCORD	ARMATUR	FITTING	AANSLUITING	
3		165202		1	O-RING, 0.351" ID x 0.072" Width				
						O-RING	JUNTA TÓRICA	ANELLO TOROIDALE	055A
					JOINT TORIQUE	O-RING	O-RING	O-RING	
4		86977786		2	PARAFUSO, Hex, M6 x 25, 8.8, Full Thd				
						BOLT	PERNO	BULLONE	140B
					VIS	SCHRAUBE	BOLT	BOUT	
5		86588450		4	ARRUELA PLANA, M6 x 12 x 1.6 Thk				
						WASHER	ARANDELA	RONDELLA	131R
					RONDELLE	UNTERLEGSCHEIBE	FLADSKIVE	SLUITRING	
6		87030561		2	CONTRA PORCA, M6 x 1, Cl 8, M6 x 1, Cl 8				
						LOCK NUT	TUERCA DE BLOQUEO	DADO DI BLOCCAGGIO	P263
					CONTRE-ECROU	SICHERUNGSMUTTER	LÅSEMØTRIK	BORGMOER	
7		9829986		1	COTOVELO, Stem; 90, 5/16 ID x 7/16-20; Incl. 8				
						ELBOW	CODO	GOMITO	085G
					COUDE	KNIESTÜCK	VINKELRØR	KNIESTUK	
8		165202		1	O-RING, 0.351" ID x 0.072" Width				
						O-RING	JUNTA TÓRICA	ANELLO TOROIDALE	055A
					JOINT TORIQUE	O-RING	O-RING	O-RING	
9		L11541		1	PRENDEDOR DE CABOS	CABLE STRAP	BANDA DE CABLE	FASCETTA PER CAVO	P716
					BRIDE DE CABLE	KABELBINDER	KABELSTROP	BUNDELBAND	
10		86977726		2	PARAFUSO, Hex, M6 x 12, 8.8				
						SCREW	TORNILLO	VITE	040V
					VIS	SCHRAUBE	SKRUE	SCHROEF	
11		87404992		2	PORCA, M6 x 1	NUT	TUERCA	DADO	010D
					ECROU	MUTTER	MØTRIK	MOER	
12		87440884		1	MANGUEIRA, 615 (24 in)	HOSE	TUBO	TUBO FLESSIBILE	030M
					FLEXIBLE	SCHLAUCH	SLANGE	SLANG	
13		87436932		7	BRAÇADEIRA, 15 mm	CLAMP	ABRAZADERA	MORSETTO	120M
					COLLIER	KLEMME	SPÆNDEBÅND	KLEM	
14		87024903		1	BOMBA DE COMBUSTÍVEL, If Used				
						FUEL PUMP	BOMBA DE COMBUSTIBI	POMPA CARBURANTE	154P
					POMPE A CARBURANT	KRAFTSTOFFPUMPE	BRÆNDSTOFPUMPE	BRANDSTOFPOMP	
14		{87130988}		1	Fuel Pump; If Used				

10.214.01	02	p2	02/11

TUBOS DE COMBUSTÍVEL
FUEL LINES - FILTER, PUMP
LINEA DE COMBUSTIBLE - FILTRO, BOMBA
TUBAZIONI DEL COMBUSTIBILE - FILTRO, POMBA

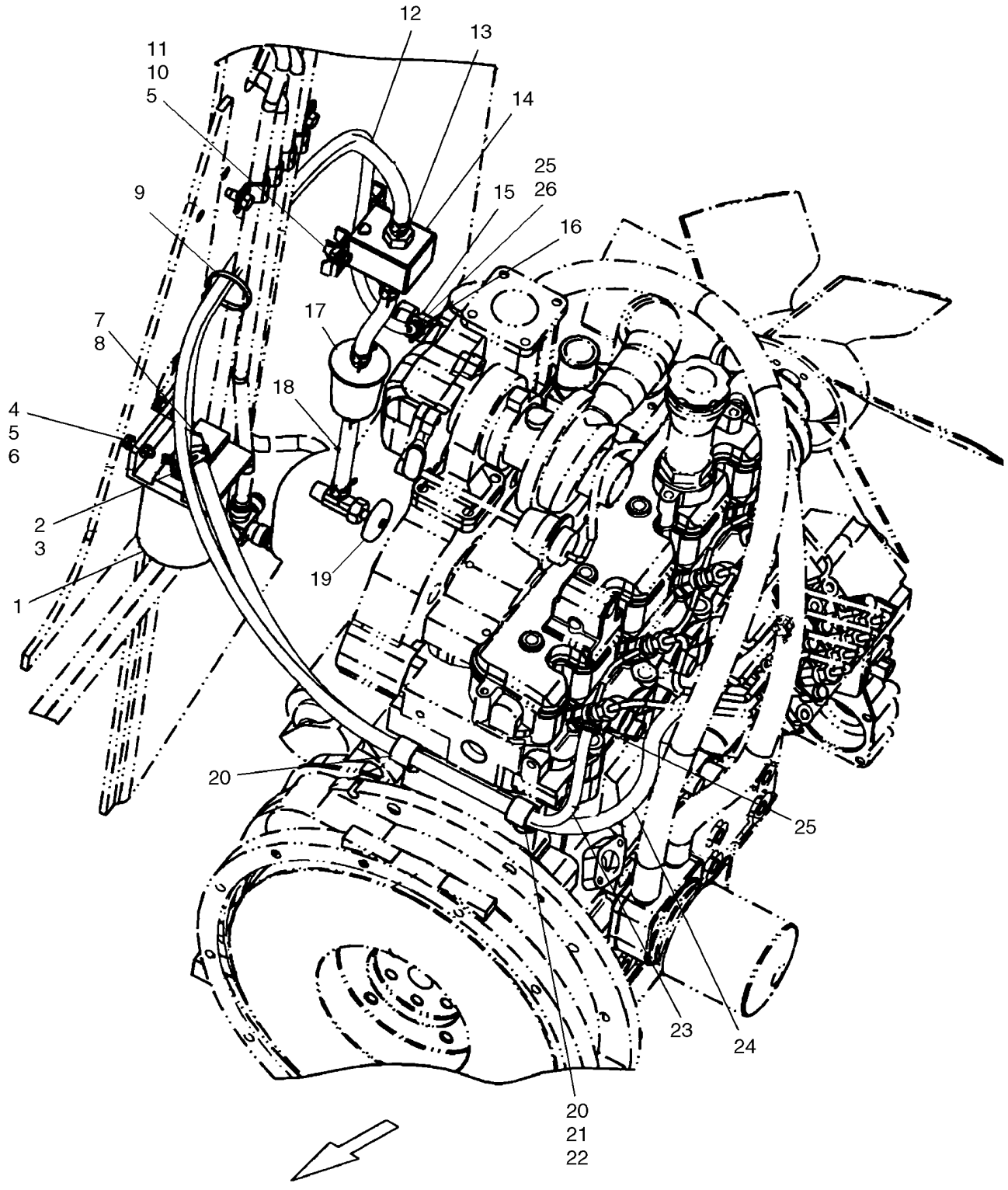

CONDUITES D'ESSENCE - FILTRE, POMPE
KRAFTSTOFFLEITUNGEN - FILTER, PUMPE
BRÆNDSTOFLEDNINGER - FILTER, PUMPE
BRANDSTOFLEIDINGEN - FILTER, POMP

R	N	P.N.	MOD	Q	Denominação Description	Description Bezeichnung	Denominacion Beskrivelse	Descrizione Beschrijving	L.C.
15		217-1015		1	COTOVELO, 90º, 1/4"-18 Female x 1/4"-18 Male, If Used				
						ELBOW	CODO	GOMITO	085G
					COUDE	KNIESTÜCK	VINKELRØR	KNIESTUK	
15		{87038402}		1	Elbow; 90 Deg, 1/4" - 18 Male X 1/4" - 18 Female; If Used				
16		223593		1	CONEXÃO, 3/16" Hose x 1/4" NPTF, Barbed				
						FITTING	ACOPLAMIENTO	RACCORDO	3300
					RACCORD	ARMATUR	FITTING	AANSLUITING	
17		9611973		1	FILTRO DE COMBUSTÍVEL	FUEL FILTER	FILTRO DE COMBUSTIBI	FILTRO CARBURANTE	064F
					FILTRE A CARBURANT	KRAFTSTOFFFILTER	BRÆNDSTOFFILTER	BRANDSTOFFILTER	
18		87440883		2	MANGUEIRA, 130 (5 in)	HOSE	TUBO	TUBO FLESSIBILE	030M
					FLEXIBLE	SCHLAUCH	SLANGE	SLANG	
19		H434805		1	VÁLVULA, Shut Off	VALVE	VÁLVULA	VALVOLA	9620
					SOUPAPE	VENTIL	VENTIL	KLEP	
20		9827902		2	BRAÇADEIRA, 1", Insul, 3/8" Bolt, If Used				
						CLAMP	ABRAZADERA	MORSETTO	120M
					COLLIER	KLEMME	SPÆNDEBÅND	KLEM	
21		614-8016		1	PARAFUSO, Hex, M8 x 16, 8.8				
						BOLT	PERNO	BULLONE	140B
					VIS	SCHRAUBE	BOLT	BOUT	
22		86624184		1	ARRUELA PLANA, M8 x 16 x 1.6				
						WASHER	ARANDELA	RONDELLA	131R
					RONDELLE	UNTERLEGSCHEIBE	FLADSKIVE	SLUITRING	
23		87440886		1	MANGUEIRA, 1600 (63 in)	HOSE	TUBO	TUBO FLESSIBILE	030M
					FLEXIBLE	SCHLAUCH	SLANGE	SLANG	
24		87462775		1	MANGUEIRA COMBUSTÍVEL, 7.94 mm ID x 1065.0 mm, SAE 30R7, 945 (37.2 in); If Used				
						FUEL HOSE	TUBO DE COMBUSTIBLE	TUBO FLESS. CARBURA	A056
					FLEXIBLE DE CARBURA	KRAFTSTOFFSCHLAUCH	SLANGE, BRÆNDSTOF	BRANDSTOFSLANG	
25		574518		2-3	BRAÇADEIRA MANGUEIRA, #4, 0.25/0.62 Type M Worm				
						HOSE CLAMP	ABRAZADERA DE MANG	FASCETTA STRINGITUB	P729
					COLLIER POUR FLEXIBL	SCHLAUCHSCHELLE	SLANGEKLEMME	SLANGKLEM	
26		87436933		1	BRAÇADEIRA, 12 mm	CLAMP	ABRAZADERA	MORSETTO	120M
					COLLIER	KLEMME	SPÆNDEBÅND	KLEM	

10.216.01		p1	06/11

FUEL SYSTEM ISM (SR175,SV185)
FUEL SYSTEM ISM (SR175,SV185)
FUEL SYSTEM ISM (SR175,SV185)
FUEL SYSTEM ISM (SR175,SV185)

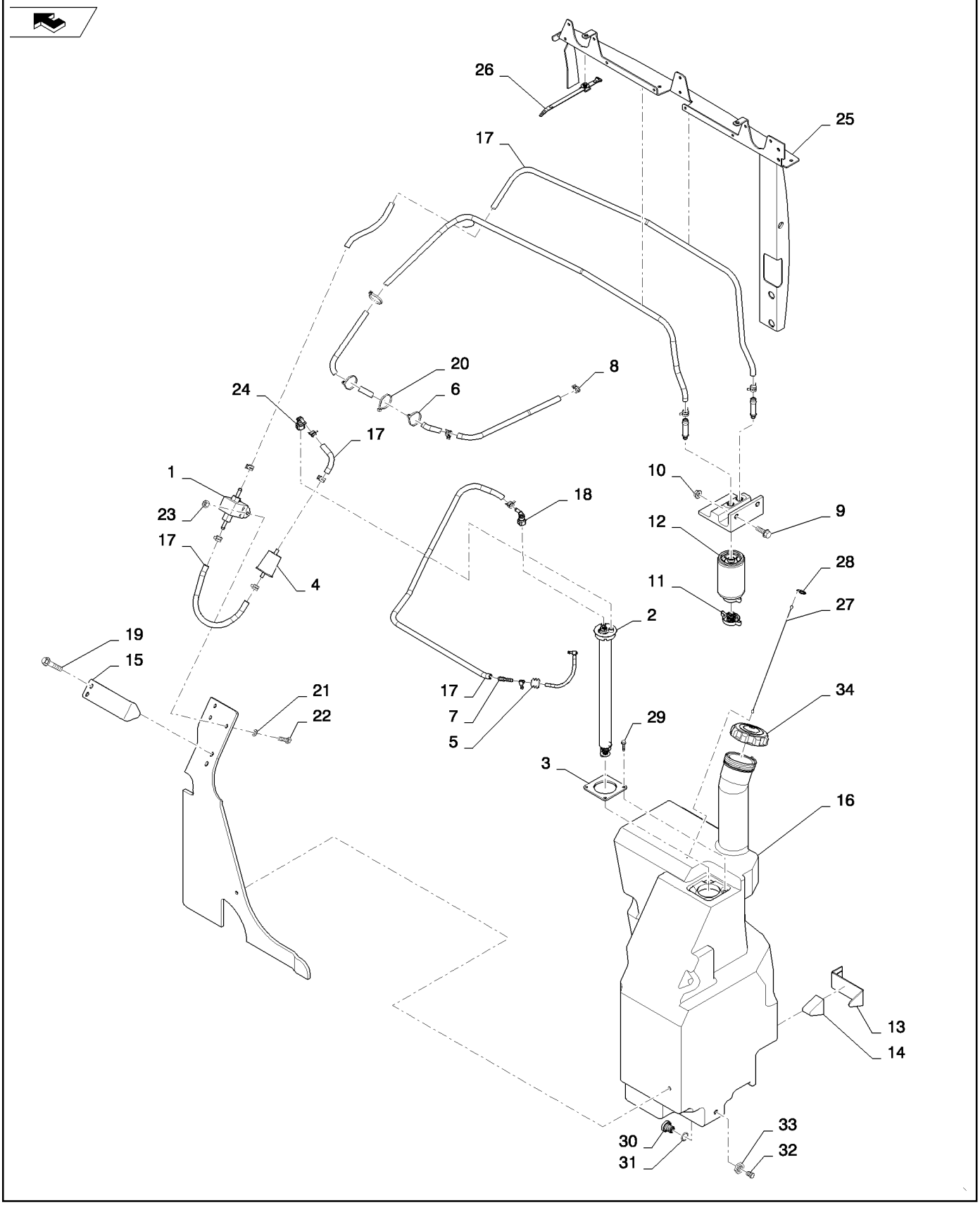

FUEL SYSTEM ISM (SR175,SV185)
FUEL SYSTEM ISM (SR175,SV185)
FUEL SYSTEM ISM (SR175,SV185)
FUEL SYSTEM ISM (SR175,SV185)

R	N	P.N.	MOD	Q	Denominação Description	Description Bezeichnung	Denominacion Beskrivelse	Descrizione Beschrijving	L.C.
1		84130988		1	BOMBA DE COMBUSTÍVEL, Electric Lift				
						FUEL PUMP	BOMBA DE COMBUSTIBI	POMPA CARBURANTE	154P
					POMPE A CARBURANT	KRAFTSTOFFPUMPE	BRÆNDSTOFPUMPE	BRANDSTOFPOMP	
2		84268571		1	TRANSMISSOR, Fuel	SENDER UNIT	UNIDAD EMISORA	TRASMETTITORE	160T
					ENS. TRANSMETTEUR	SIGNALGEBER	SENDER	SENSOREENHEID	
3		84338049		1	PLACA DE MONTAGEM, Sender Retaining				
						MOUNTING PLATE	PLACA DE MONTAJE	PIASTRA DI MONTAGGI(	109P
					PLAQUE DE MONTAGE	MONTAGEPLATTE	MONTERINGSPLADE	BEVESTIGINGSPLAAT	
4		9611973		1	FILTRO DE COMBUSTÍVEL	FUEL FILTER	FILTRO DE COMBUSTIBI	FILTRO CARBURANTE	064F
					FILTRE A CARBURANT	KRAFTSTOFFFILTER	BRÆNDSTOFFILTER	BRANDSTOFFILTER	
5		291260		1	GANCHO, .6ft, Fuel Line	HOOK	GANCHO	GANCIO	030G
					CROCHET	HAKEN	KROG	HAAK	
6		574518		2	BRAÇADEIRA MANGUEIRA, #4, 0.25/0.62 Type M Worm				
						HOSE CLAMP	ABRAZADERA DE MANG	FASCETTA STRINGITUB	P729
					COLLIER POUR FLEXIBL	SCHLAUCHSCHELLE	SLANGEKLEMME	SLANGKLEM	
7		84298470		1	ADAPTADOR, Fuel Fitting	ADAPTER	ADAPTADOR	ADATTATORE	001A
					ADAPTATEUR	ADAPTER	ADAPTER	ADAPTER	
8		87436932		10	BRAÇADEIRA, CTB	CLAMP	ABRAZADERA	MORSETTO	120M
					COLLIER	KLEMME	SPÆNDEBÅND	KLEM	
9		9804256		2	PARAFUSO, Hex Flg, M6 x 20, 8.8				
						BOLT	PERNO	BULLONE	140B
					VIS	SCHRAUBE	BOLT	BOUT	
10		86619800		2	CONTRA PORCA, M6 x 1, Flg, Cl 8				
						LOCK NUT	TUERCA DE BLOQUEO	DADO DI BLOCCAGGIO	P263
					CONTRE-ECROU	SICHERUNGSMUTTER	LÅSEMØTRIK	BORGMOER	
11		84299976		1	FILTRO DE COMBUSTÍVEL, Assembly, Incl. 11A				
						FUEL FILTER	FILTRO DE COMBUSTIBI	FILTRO CARBURANTE	064F
					FILTRE A CARBURANT	KRAFTSTOFFFILTER	BRÆNDSTOFFILTER	BRANDSTOFFILTER	
12		9844342		2	CONEXÃO, Assembly	FITTING	ACOPLAMIENTO	RACCORDO	3300
					RACCORD	ARMATUR	FITTING	AANSLUITING	
11A		84299977		1	ELEMENTO, Fuel Filter	ELEMENT	ELEMENTO	ELEMENTO	020E
					ELEMENT	ELEMENT	ELEMENT	ELEMENT	
13		87054825		1	SUPORTE, Tank	SUPPORT	SOPORTE	SUPPORTO	300S
					SUPPORT	STÜTZE	BESLAG	STEUN	
14		84373790		2	ESPUMA, Pad	FOAM	ESPUMA	SCHIUMA	P033
					MOUSSE	SCHAUM	SKUM	SCHUIM	
15		280476		4	PARAFUSO, Hex Wash Hd, 3/8" x 1"				
						SELF-TAP SCREW	TORNILLO AUTORROSC	VITE AUTOFILETTANTE	062V
					VIS AUTOTARAUDEUSE	SELBSTSCHN SCHRAUE	SELVLÅSENDE BOLT	ZELFTAPPENDE SCHRO	
16		84239312		1	TANQUE DE COMBUSTÍVEL, Fuel Tank				
						FUEL TANK	DEPÓSITO DE COMBUS	SERBATOIO CARBURAN	P550
					RESERVOIR DE CARBUI	KRAFTSTOFFTANK	BRÆNDSTOFTANK	BRANDSTOFTANK	
17		290323		1	MANGUEIRA, 0.31" ID, SAE 30R7				
						HOSE	TUBO	TUBO FLESSIBILE	030M
					FLEXIBLE	SCHLAUCH	SLANGE	SLANG	
18		84350218		1	CONECTOR HIDRÁUL, Fitting, 3/8				
						HYD CONNECTOR	CONECTOR HIDRÁULIC(	CONNETTORE IDRAULI(	020R
					CONNECTEUR HYDRAU	HYDR STECKVERBINDE	HYDRAULIKSTIK	HYDRAULISCHE AANSLI	

SV185

10.216.01		p2	06/11

FUEL SYSTEM ISM (SR175,SV185)
FUEL SYSTEM ISM (SR175,SV185)
FUEL SYSTEM ISM (SR175,SV185)
FUEL SYSTEM ISM (SR175,SV185)

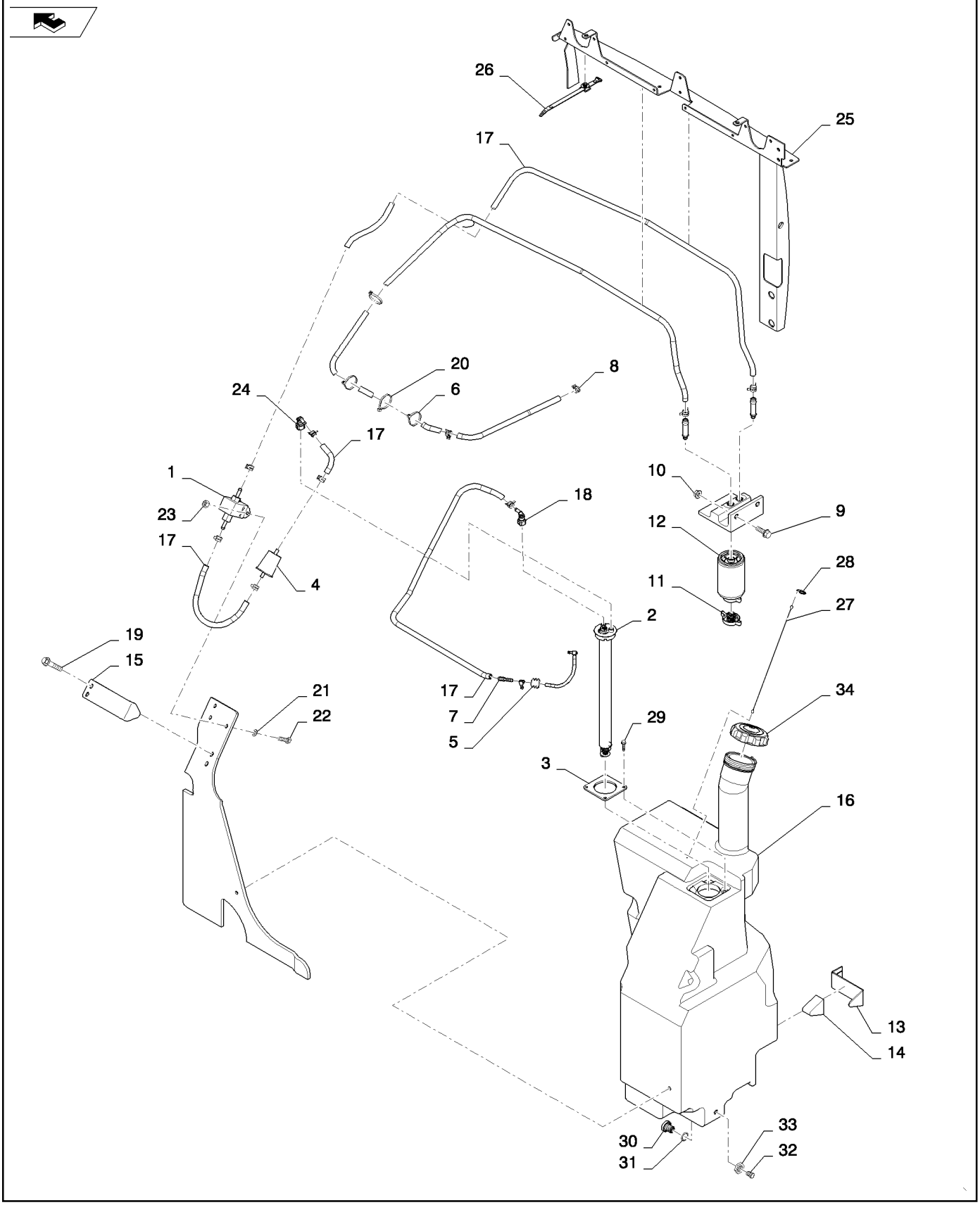

FUEL SYSTEM ISM (SR175,SV185)
FUEL SYSTEM ISM (SR175,SV185)
FUEL SYSTEM ISM (SR175,SV185)
FUEL SYSTEM ISM (SR175,SV185)

R	N	P.N.	MOD	Q	Denominação Description	Description Bezeichnung	Denominacion Beskrivelse	Descrizione Beschrijving	L.C.
19		**84273624**		1	SUPORTE, Fuel Tank	BRACKET	SOPORTE	STAFFA	225S
					SUPPORT	HALTERUNG	BESLAG	STEUN	
20		**L11541**		4	PRENDEDOR DE CABOS,	Nylon Tie, 7-8in			
						CABLE STRAP	BANDA DE CABLE	FASCETTA PER CAVO	P716
					BRIDE DE CABLE	KABELBINDER	KABELSTROP	BUNDELBAND	
21		**120100**		2	PARAFUSO, Hex, M6 x 20,	8.8			
						BOLT	PERNO	BULLONE	140B
					VIS	SCHRAUBE	BOLT	BOUT	
22		**87655041**		2	ARRUELA ESPECIAL, M6,	6.85 X 12.75 X 1.8			
						SPECIAL WASHER	ARANDELA ESPECIAL	RONDELLA SPECIALE	Z333
					RONDELLE SPECIALE	SPEZIALUNTERLEGSCH	SPECIALSKIVE	SPECIALE RING	
23		**9804276**		2	PORCA, M6 x 1, Flg, CI 8	NUT	TUERCA	DADO	010D
					ECROU	MUTTER	MØTRIK	MOER	
24		**84350217**		1	CONECTOR HIDRÁUL,	Fitting, 5/16			
						HYD CONNECTOR	CONECTOR HIDRÁULIC(	CONNETTORE IDRAULIC	020R
					CONNECTEUR HYDRAU	HYDR STECKVERBINDE	HYDRAULIKSTIK	HYDRAULISCHE AANSLI	
25		**NSS**		1	SEM SERVIÇO EM SEPARA	DO, Edge Channel, 85.3mm			
						NOT SERVICED SEPARA	NO SE REPARA POR SE	NON FORNITO SEPARAT	064N
					NON FORUNI SEPAREM	NICHT A SEP ERS-T LIEI	SERVICERES IKKE SEPA	NIET LOS VERKRIJGBAA	
26		**84259663**		4	CORREIA DE FIXAÇÃO,	Tie			
						SECURING STRAP	BANDA DE SEGURIDAD	FASCETTA DI FISSAGGI	172C
					SANGLE DE FIXATION	SICHERUNGSBAND	FASTSPÆNDINGSSTRO	BORGRIEM	
27		**84370069**		1	CORRENTE (CONSTR),	Fuel Cap			
						CHAIN (CE)	CADENA (CE)	CATENA (CE)	P458
					CHAINE (TP)	KETTE (BAUMASCHINEN	KÆDE (CE)	KETTING (CE)	
28		**84367737**		1	TRAVA DA ARRUELA,	Fuel Cap, Locking			
						LOCK WASHER	ARANDELA DE BLOQUE(	RONDELLA DI SICUREZ	132R
					RONDELLE FREIN	SICHERUNGSSCHEIBE	LÅSESKIVE	BORGRING	
29		**9804257**		4	PARAFUSO, Hex Flg, M6 x 25,	8.8			
						BOLT	PERNO	BULLONE	140B
					VIS	SCHRAUBE	BOLT	BOUT	
30		**9576801**		1	BUJÃO, Hex 1/4-18	PLUG	TAPÓN	TAPPO	050T
					BOUCHON	STOPFEN	PROP	PLUG	
31		**238-5210**		1	O-RING, -210, 70 Duro, .734" ID x .139" Thk				
						O-RING	JUNTA TÓRICA	ANELLO TOROIDALE	055A
					JOINT TORIQUE	O-RING	O-RING	O-RING	
32		**87694594**		1	PARAFUSO, Fitting, Fuel Tank Drain				
						BOLT	PERNO	BULLONE	140B
					VIS	SCHRAUBE	BOLT	BOUT	
33		**1251791C1**		1	PORCA, Fitting, Fuel Tank Drain				
						NUT	TUERCA	DADO	010D
					ECROU	MUTTER	MØTRIK	MOER	
34		**87700725**		1	TAMPA DE RESERVATÓRIO,	W/Check Valve			
						FILLER CAP	TAPÓN DE DEPÓSITO	TAPPO BOCCHETT. RIF(	P676
					BOUCHON DE REMPLIS	EINFÜLLKAPPE	PÅFYLDNINGSDÆKSEL	VULDOP	

10.216.01		p1	07/11

FUEL SYSTEM (SR220-SV300,TR320,TV380)
FUEL SYSTEM (SR220-SV300,TR320,TV380)
FUEL SYSTEM (SR220-SV300,TR320,TV380)
FUEL SYSTEM (SR220-SV300,TR320,TV380)

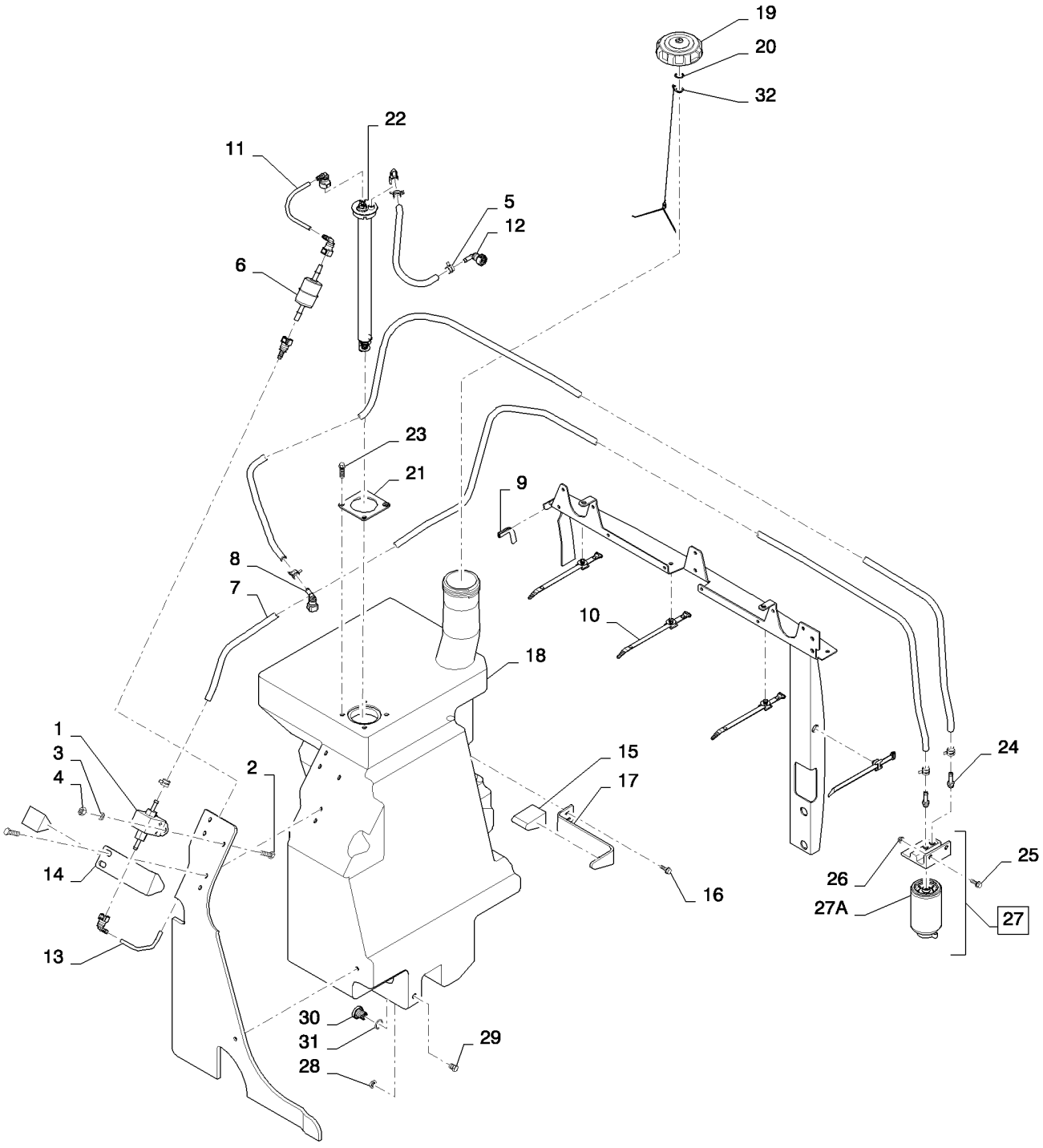

FUEL SYSTEM (SR220-SV300,TR320,TV380)
FUEL SYSTEM (SR220-SV300,TR320,TV380)
FUEL SYSTEM (SR220-SV300,TR320,TV380)
FUEL SYSTEM (SR220-SV300,TR320,TV380)

R	N	P.N.	MOD	Q	Denominação Description Bezeichnung	Denominacion Beskrivelse	Descrizione Beschrijving	L.C.
1		84306974		1	BOMBA DE COMBUSTÍVEL, Electric Lift FUEL PUMP POMPE A CARBURANT KRAFTSTOFFPUMPE	BOMBA DE COMBUSTIBI BRÆNDSTOFPUMPE	POMPA CARBURANTE BRANDSTOFPOMP	154P
2		120100		2	PARAFUSO, Hex, M6 x 20, 8.8 BOLT VIS SCHRAUBE	PERNO BOLT	BULLONE BOUT	140B
3		87655041		2	ARRUELA ESPECIAL, M6, 6.85 X 12.75 X 1.8 SPECIAL WASHER RONDELLE SPECIALE SPEZIALUNTERLEGSCH	ARANDELA ESPECIAL SPECIALSKIVE	RONDELLA SPECIALE SPECIALE RING	Z333
4		9804276		2	PORCA, M6 x 1, Flg, Cl 8 NUT ECROU MUTTER	TUERCA MØTRIK	DADO MOER	010D
5		87436932		6	BRAÇADEIRA, CTB CLAMP COLLIER KLEMME	ABRAZADERA SPÆNDEBÅND	MORSETTO KLEM	120M
6		87548612		1	FILTRO DE COMBUSTÍVEL, Inline FUEL FILTER FILTRE A CARBURANT KRAFTSTOFFFILTER	FILTRO DE COMBUSTIBI BRÆNDSTOFFILTER	FILTRO CARBURANTE BRANDSTOFFILTER	064F
7		290323		1	MANGUEIRA, 0.31" ID, SAE 30R7, Fuel HOSE FLEXIBLE SCHLAUCH	TUBO SLANGE	TUBO FLESSIBILE SLANG	030M
8		84350217		2	CONECTOR HIDRÁUL, Fuel, 5/16 HYD CONNECTOR CONNECTEUR HYDRAU HYDR STECKVERBINDE	CONECTOR HIDRÁULIC HYDRAULIKSTIK	CONNETTORE IDRAULIC HYDRAULISCHE AANSLI	020R
9		NSS		1	SEM SERVIÇO EM SEPARADO, Edge, Channel NOT SERVICED SEPARA NON FORUNI SEPAREM NICHT A SEP ERS-T LIEI	NO SE REPARA POR SE SERVICERES IKKE SEPA	NON FORNITO SEPARAT NIET LOS VERKRIJGBAA	064N
10		84259663		4	CORREIA DE FIXAÇÃO, Tie SECURING STRAP SANGLE DE FIXATION SICHERUNGSBAND	BANDA DE SEGURIDAD FASTSPÆNDINGSSTRO	FASCETTA DI FISSAGGI BORGRIEM	172C
11		84305872		1	TUBO DE COMBUSTÍVEL, Plastic FUEL TUBE TUYAU D'ALIM. CARBUR KRAFTSTOFFLEITUNG	TUBO DE COMBUSTIBLE BRÆNDSTOFRØR	TUBO CARBURANTE BRANDSTOFLEIDING	A133
12		84350218		1	CONECTOR HIDRÁUL, Fuel, 3/8 HYD CONNECTOR CONNECTEUR HYDRAU HYDR STECKVERBINDE	CONECTOR HIDRÁULIC HYDRAULIKSTIK	CONNETTORE IDRAULIC HYDRAULISCHE AANSLI	020R
13		84305879		1	TUBO DE COMBUSTÍVEL, Plastic FUEL TUBE TUYAU D'ALIM. CARBUR KRAFTSTOFFLEITUNG	TUBO DE COMBUSTIBLE BRÆNDSTOFRØR	TUBO CARBURANTE BRANDSTOFLEIDING	A133
14		84273624		1	SUPORTE, Fuel Tank BRACKET SUPPORT HALTERUNG	SOPORTE BESLAG	STAFFA STEUN	225S
15		84373790		2	ESPUMA, Pad FOAM MOUSSE SCHAUM	ESPUMA SKUM	SCHIUMA SCHUIM	P033
16		280476		4	PARAFUSO, Hex Wash Hd, 3/8" x 1" SELF-TAP SCREW VIS AUTOTARAUDEUSE SELBSTSCHN SCHRAUE	TORNILLO AUTORROSC SELVLÅSENDE BOLT	VITE AUTOFILETTANTE ZELFTAPPENDE SCHRO	062V
17		87054825		1	SUPORTE, Tank SUPPORT SUPPORT STÜTZE	SOPORTE BESLAG	SUPPORTO STEUN	300S
18		84201104		1	TANQUE DE COMBUSTÍVEL, Fuel FUEL TANK RESERVOIR DE CARBUI KRAFTSTOFFTANK	DEPÓSITO DE COMBUS BRÆNDSTOFTANK	SERBATOIO CARBURAN BRANDSTOFTANK	P550

10.216.01		p2	07/11

FUEL SYSTEM (SR220-SV300,TR320,TV380)
FUEL SYSTEM (SR220-SV300,TR320,TV380)
FUEL SYSTEM (SR220-SV300,TR320,TV380)
FUEL SYSTEM (SR220-SV300,TR320,TV380)

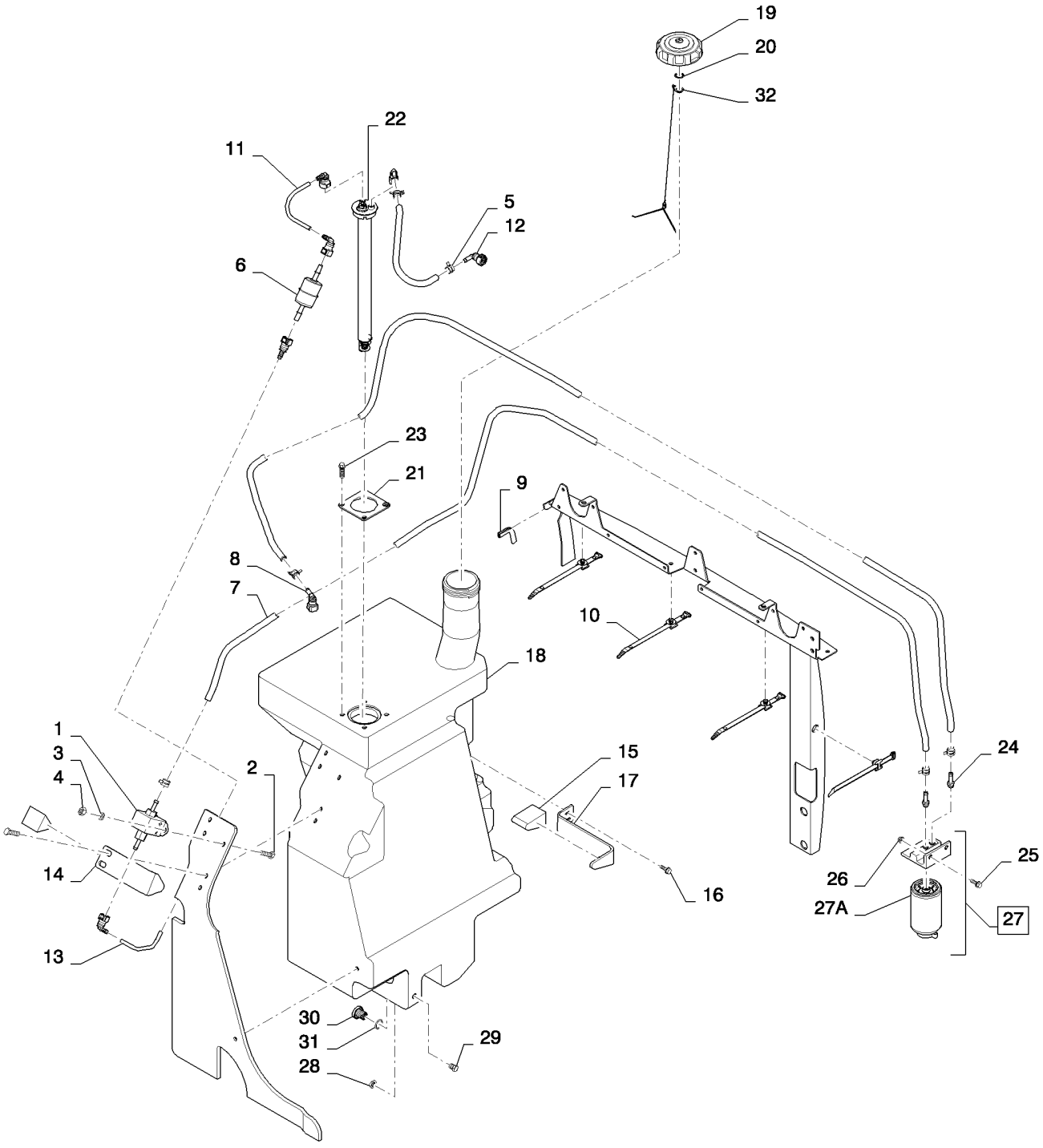

FUEL SYSTEM (SR220-SV300,TR320,TV380)
FUEL SYSTEM (SR220-SV300,TR320,TV380)
FUEL SYSTEM (SR220-SV300,TR320,TV380)
FUEL SYSTEM (SR220-SV300,TR320,TV380)

R	N	P.N.	MOD	Q	Denominação Description	Description Bezeichnung	Denominacion Beskrivelse	Descrizione Beschrijving	L.C.
19		87700725		1	TAMPA DE RESERVATÓRIO, W/Check Valve				
						FILLER CAP	TAPÓN DE DEPÓSITO	TAPPO BOCCHETT. RIF(	P676
					BOUCHON DE REMPLIS	EINFÜLLKAPPE	PÅFYLDNINGSDÆKSEL	VULDOP	
20		84367737		1	TRAVA DA ARRUELA, Fuel Cap				
						LOCK WASHER	ARANDELA DE BLOQUE(	RONDELLA DI SICUREZ/	132R
					RONDELLE FREIN	SICHERUNGSSCHEIBE	LÅSESKIVE	BORGRING	
21		84338049		1	PLACA DE MONTAGEM, Sender, Retaining				
						MOUNTING PLATE	PLACA DE MONTAJE	PIASTRA DI MONTAGGI(	109P
					PLAQUE DE MONTAGE	MONTAGEPLATTE	MONTERINGSPLADE	BEVESTIGINGSPLAAT	
22		84268571		1	TRANSMISSOR, Fuel	SENDER UNIT	UNIDAD EMISORA	TRASMETTITORE	160T
					ENS. TRANSMETTEUR	SIGNALGEBER	SENDER	SENSOREENHEID	
23		9804257		4	PARAFUSO, Hex Flg, M6 x 25, 8.8				
						BOLT	PERNO	BULLONE	140B
					VIS	SCHRAUBE	BOLT	BOUT	
24		9844342		2	CONEXÃO, Assembly	FITTING	ACOPLAMIENTO	RACCORDO	3300
					RACCORD	ARMATUR	FITTING	AANSLUITING	
25		9804256		2	PARAFUSO, Hex Flg, M6 x 20, 8.8				
						BOLT	PERNO	BULLONE	140B
					VIS	SCHRAUBE	BOLT	BOUT	
26		86619800		2	CONTRA PORCA, M6 x 1, Flg, Cl 8				
						LOCK NUT	TUERCA DE BLOQUEO	DADO DI BLOCCAGGIO	P263
					CONTRE-ECROU	SICHERUNGSMUTTER	LÅSEMØTRIK	BORGMOER	
27		84299976		1	FILTRO DE COMBUSTÍVEL, Assembly, Incl. 27A				
						FUEL FILTER	FILTRO DE COMBUSTIBI	FILTRO CARBURANTE	064F
					FILTRE A CARBURANT	KRAFTSTOFFFILTER	BRÆNDSTOFFILTER	BRANDSTOFFILTER	
27A		84299977		1	ELEMENTO, Fuel Filter	ELEMENT	ELEMENTO	ELEMENTO	020E
					ELEMENT	ELEMENT	ELEMENT	ELEMENT	
28		1251791C1		1	PORCA, Fuel Tank Drain Fitting				
						NUT	TUERCA	DADO	010D
					ECROU	MUTTER	MØTRIK	MOER	
29		87694594		1	PARAFUSO, Fitting Fuel Tank Drain				
						BOLT	PERNO	BULLONE	140B
					VIS	SCHRAUBE	BOLT	BOUT	
30		9576801		1	BUJÃO	PLUG	TAPÓN	TAPPO	050T
					BOUCHON	STOPFEN	PROP	PLUG	
31		238-5210		1	O-RING, -210, 70 Duro, .734" ID x .139" Thk				
						O-RING	JUNTA TÓRICA	ANELLO TOROIDALE	055A
					JOINT TORIQUE	O-RING	O-RING	O-RING	
32		84370069		1	CORRENTE (CONSTR), Fuel Cap				
						CHAIN (CE)	CADENA (CE)	CATENA (CE)	P458
					CHAINE (TP)	KETTE (BAUMASCHINEN	KÆDE (CE)	KETTING (CE)	

INJECTOR
INJECTOR
CONJUNTO DEL INYECTOR
GRUPPO DELL'INIETTORE

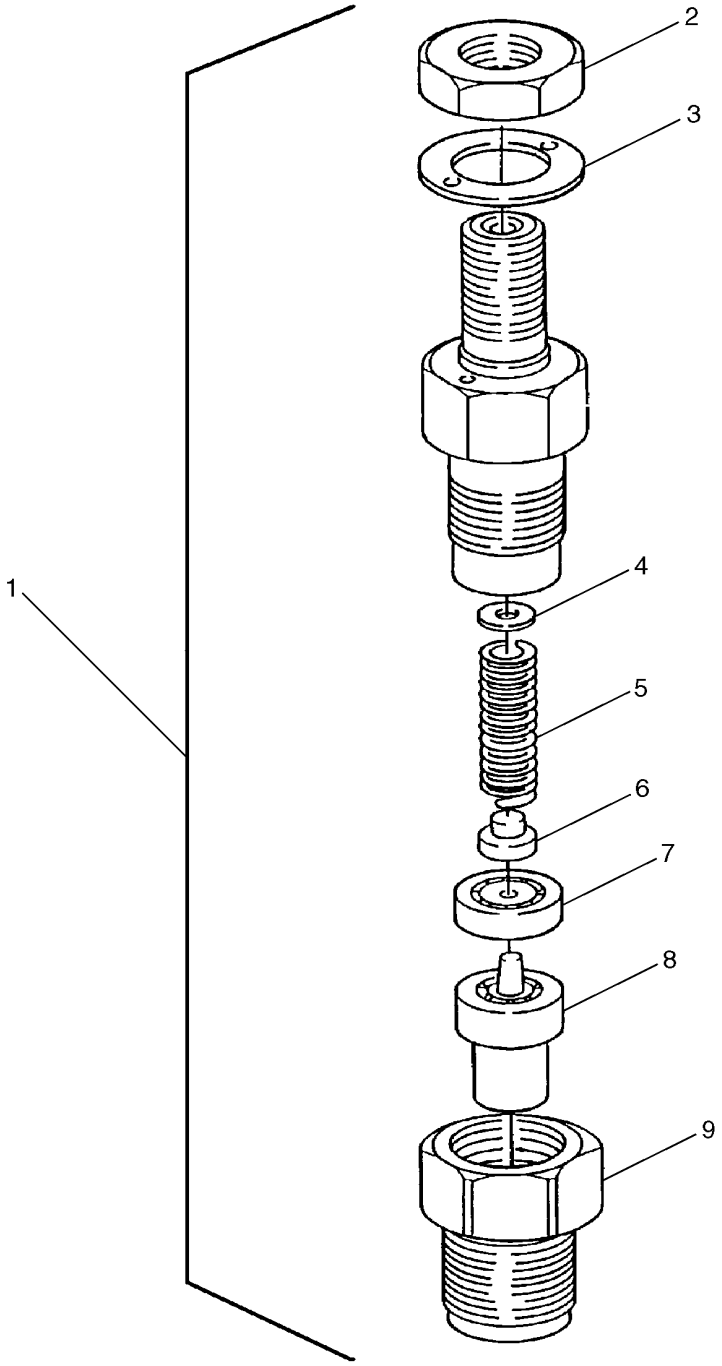

BS04M086

INJECTEUR
EINSPRITZVENTIL
DYSESAMLING
VERSTUIVER

R	N	P.N.	MOD	Q	Denominação Description	Description Bezeichnung	Denominacion Beskrivelse	Descrizione Beschrijving	L.C.
1		SBA131406520		4	INJETOR SIST COMBUSTÍVEL INJECTEUR DE CARBUR	FUEL SYSTEM INJECTO KRAFTSTOFFEINSPRITZ	INYECTOR DE SIST. COI BRÆNDSTOFPUMPE	INIETT. SISTEMA CARBU VERSTUIVER	089I
2		SBA131446006		4	PORCA ECROU	NUT MUTTER	TUERCA MØTRIK	DADO MOER	010D
3		SBA131426230		4	JUNTA JOINT	GASKET DICHTUNG	JUNTA PAKNING	GUARNIZIONE PAKKING	123G
4		SBA131437360		1	KIT DE CALÇOS KIT DE CALES	SHIM KIT UNTERLEGSCHEIBENSA	KIT DE COMPENSADOR AFSTANDSSTYKKESÆT	KIT SPESSORI KIT MET VULPLAATJES	P688
5		SBA131446989		4	MOLA RESSORT	SPRING FEDER	RESORTE FJEDER	MOLLA VEER	100M
6		SBA131446075		4	SEDE/ALOJAMENTO SIEGE/FENTE	SEAT/SLOT SITZ/SCHLITZ	ASIENTO/RANURA SÆDE	SEDE/ASOLA ZITTING/SLEUF	069S
7		SBA131446076		4	ESPAÇADOR ENTRETOISE	SPACER DISTANZSTÜCK	SEPARADOR AFSTANDSSTYKKE	DISTANZIALE AFSTANDSSTUK	075D
8		SBA131416170		4	INJETOR, Assy GICLEUR	NOZZLE DÜSE	BOQUILLA DYSE	UGELLO MONDSTUK	148P
9		SBA131446077		4	PORCA ECROU	NUT MUTTER	TUERCA MØTRIK	DADO MOER	010D

10.220.01		p1	02/11

THROTTLE HAND FOOT MECHANICAL (SR175,SV185)
THROTTLE HAND FOOT MECHANICAL (SR175,SV185)
THROTTLE HAND FOOT MECHANICAL (SR175,SV185)
THROTTLE HAND FOOT MECHANICAL (SR175,SV185)

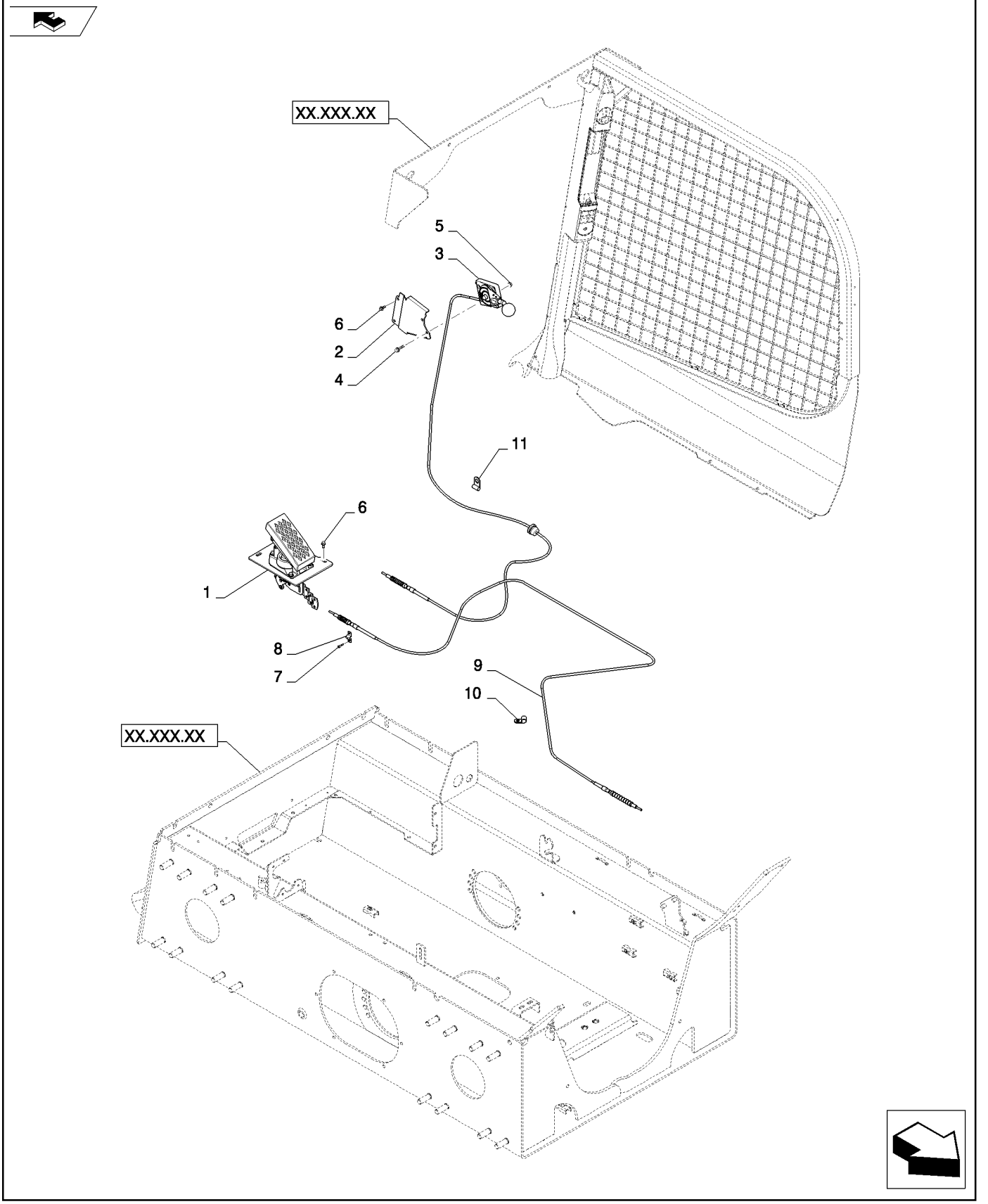

THROTTLE HAND FOOT MECHANICAL (SR175,SV185)
THROTTLE HAND FOOT MECHANICAL (SR175,SV185)
THROTTLE HAND FOOT MECHANICAL (SR175,SV185)
THROTTLE HAND FOOT MECHANICAL (SR175,SV185)

R	N	P.N.	MOD	Q	Denominação Description	Description Bezeichnung	Denominacion Beskrivelse	Descrizione Beschrijving	L.C.
1		84374767		1	COMANDO DO ACELERADOR, Mechanical, Foot				
						THROTTLE CONTROL	CONTROL DE REGULAD	COMANDO ACCELERAT(	197C
					COMMANDE D'ACCELEF	DROSSELKLAPPENZUG	GASREGULERINGSKABE	GASBEDIENINGSKABEL	
2		84333202		1	FIXADOR, Hand Throttle, CE Gray				
						MOUNT	SOPORTE	SUPPORTO	C022
					MONTAGE	GESTELL	BESLAG	BEVESTIGING	
3		84258153		1	EMPUNHADURA, Throttle to Pedal				
						HANDLE GRIP	PERILLA	IMPUGNATURA	025I
					POIGNEE DE MAINTIEN	HANDGRIFF	HÅNDGREB	HANDGREEP	
4		86511839		2	PARAFUSO, Hex Flg, M6 x 30, 8.8				
						BOLT	PERNO	BULLONE	140B
					VIS	SCHRAUBE	BOLT	BOUT	
5		9804276		2	PORCA, M6 x 1, Flg, Cl 8	NUT	TUERCA	DADO	010D
					ECROU	MUTTER	MØTRIK	MOER	
6		84305556		5	PARAFUSO	SCREW	TORNILLO	VITE	040V
					VIS	SCHRAUBE	SKRUE	SCHROEF	
7		84200938		2	BRAÇADEIRA, Throttle Cable				
						CLAMP	ABRAZADERA	MORSETTO	120M
					COLLIER	KLEMME	SPÆNDEBÅND	KLEM	
8		86624126		4	PARAFUSO, Hex Soc Hd, M4 x 16, 8.8				
						SCREW	TORNILLO	VITE	040V
					VIS	SCHRAUBE	SKRUE	SCHROEF	
9		84258820		1	CABO, Pedal to Governor, MD FRM ISM				
						CABLE	CABLE	CAVO	650C
					CABLE	KABEL	KABEL	KABEL	
10		86625036		1	BRAÇADEIRA, 1/2", Insul, 5/16" Bolt				
						CLAMP	ABRAZADERA	MORSETTO	120M
					COLLIER	KLEMME	SPÆNDEBÅND	KLEM	
11		86639010		1	BRAÇADEIRA, 3/8", Insul, 1/2" Bolt				
						CLAMP	ABRAZADERA	MORSETTO	120M
					COLLIER	KLEMME	SPÆNDEBÅND	KLEM	
12		84272827		2	REBITE, M6x1.0 (Not Shown)				
						RIVET	REMACHE	RIVETTO	055R
					RIVET	NIET	NITTE	KLINKNAGEL	

10.220.01	01	p1	02/11

CONTROLES - ESTRANGULADOR
CONTROLS - THROTTLE
CONTROLES - ACELERADOR
COMANDI - ACCELERATORE

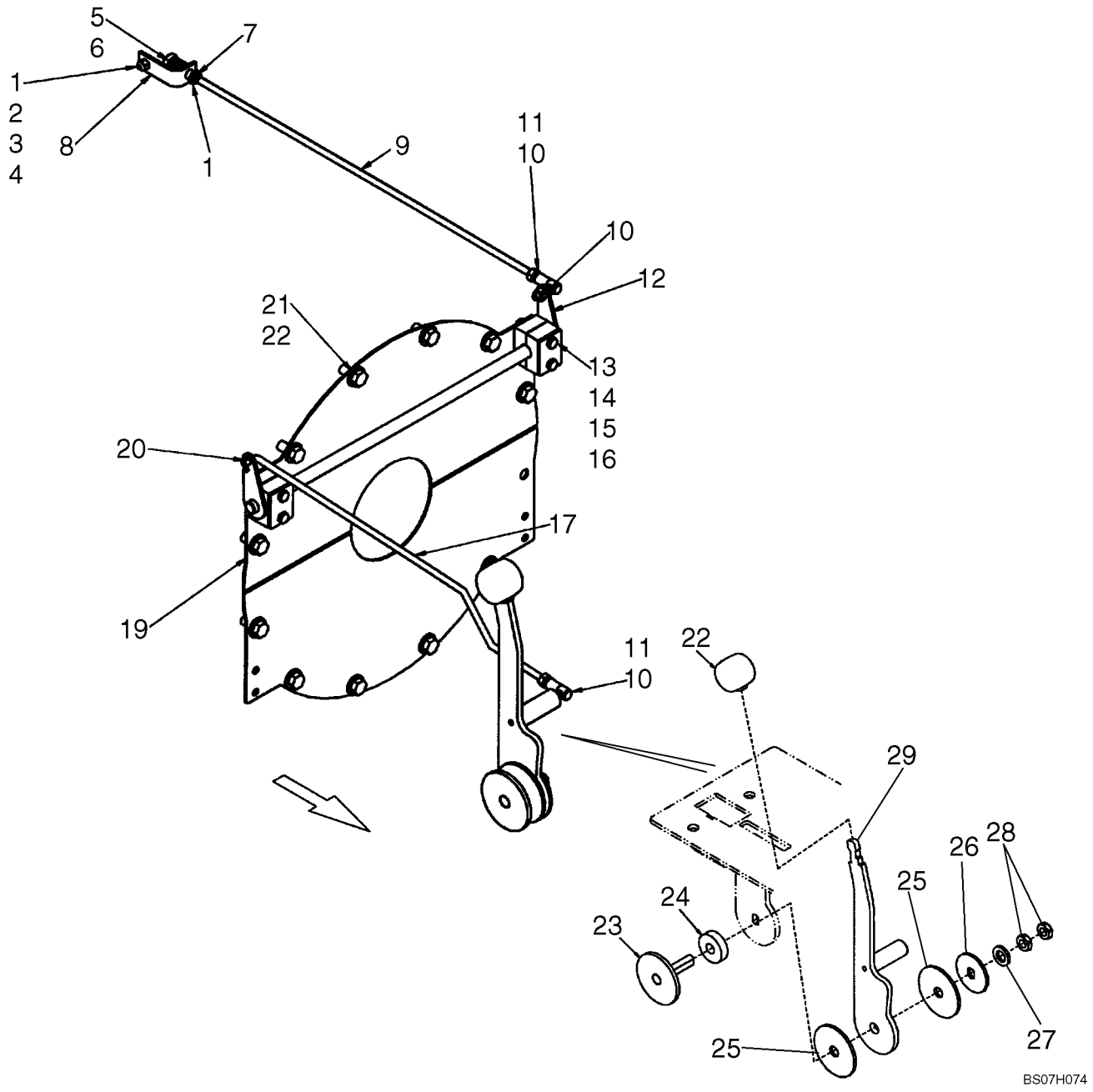

COMMANDES - PAPILLON DES GAZ
ZUSATZSTEUEURGERÄTE BEFESTIGUNG - GASHEBELGESTÄNGE
BETJENINGSGREB - GASSPJÆLD
BEDIENINGSELEMENTEN - GASHENDEL

R	N	P.N.	MOD	Q	Denominação Description	Description Bezeichnung	Denominacion Beskrivelse	Descrizione Beschrijving	L.C.
1		80707		2	ARRUELA PLANA, 3/16"	WASHER	ARANDELA	RONDELLA	131R
					RONDELLE	UNTERLEGSCHEIBE	FLADSKIVE	SLUITRING	
2		13734		1	ESPAÇADOR	SPACER	SEPARADOR	DISTANZIALE	075D
					ENTRETOISE	DISTANZSTÜCK	AFSTANDSSTYKKE	AFSTANDSSTUK	
3		88826		1	CONTRA PORCA, #10-24, GA				
						LOCK NUT	TUERCA DE BLOQUEO	DADO DI BLOCCAGGIO	P263
					CONTRE-ECROU	SICHERUNGSMUTTER	LÅSEMØTRIK	BORGMOER	
4		86511920		1	PARAFUSO, Cross Pan Hd, #10-24 x 1/2"				
						SCREW	TORNILLO	VITE	040V
					VIS	SCHRAUBE	SKRUE	SCHROEF	
5		11104		1	MOLA	SPRING	RESORTE	MOLLA	100M
					RESSORT	FEDER	FJEDER	VEER	
6		9860169		1	REBITE	RIVET	REMACHE	RIVETTO	055R
					RIVET	NIET	NITTE	KLINKNAGEL	
7		87825		1	PORCA, #10-32	NUT	TUERCA	DADO	010D
					ECROU	MUTTER	MØTRIK	MOER	
8		9844532		1	SUPORTE	BRACKET	SOPORTE	STAFFA	225S
					SUPPORT	HALTERUNG	BESLAG	STEUN	
9		87460722		1	HASTE, Throttle Rod, 505mm (19 7/8 in.)				
						ROD	VARILLA	ASTA	090A
					TIGE	STANGE	STANG	STANG	
10		86509309		3	PORCA, 1/4"-28, G5	NUT	TUERCA	DADO	010D
					ECROU	MUTTER	MØTRIK	MOER	
11		H169920		2	JUNTA ESF+RICA	BALL JOINT	JUNTA DE ROTULA	GIUNTO SFERICO	P009
					ROTULE	KUGELGELENK	KEGELED	KOGELWRICHT	
12		87435735		1	ARRANQUE	CRANK	MANIVELA	MANOVELLA	2340
					MANIVELLE	KURBEL	KRUMTAP	KRUK	
13		86977790		4	PARAFUSO, Hex, M6 x 45, 8.8				
						SCREW	TORNILLO	VITE	040V
					VIS	SCHRAUBE	SKRUE	SCHROEF	
14		87435732		2	BRAÇADEIRA, Single Tube Clamp				
						CLAMP	ABRAZADERA	MORSETTO	120M
					COLLIER	KLEMME	SPÆNDEBÅND	KLEM	
15		87435739		2	BARRA, Top Bar Clamp	BAR	BARRA	BARRA	530B
					BARRE	BAR	BJÆLKE	STANG	
16		87030561		4	CONTRA PORCA, M6 x 1, Cl 8				
						LOCK NUT	TUERCA DE BLOQUEO	DADO DI BLOCCAGGIO	P263
					CONTRE-ECROU	SICHERUNGSMUTTER	LÅSEMØTRIK	BORGMOER	
17		87435736		1	HASTE, Throttle Rod, 478mm (18 7/8 in.)				
						ROD	VARILLA	ASTA	090A
					TIGE	STANGE	STANG	STANG	
19		87461758		2	COBERTURA, Flywheel Cover				
						COVER	CUBIERTA	COPERCHIO	265C
					COUVERCLE	ABDECKUNG	DÆKSEL	AFSCHERMING	
20		D131983		1	PINO, Cotter Ring	PIN	PASADOR	PERNO	080P
					BROCHE	PIN	STIFT	PEN	
21		88434		11	PARAFUSO, Hex, 3/8"-16 x 3/4", G5, Full Thd				
						BOLT	PERNO	BULLONE	140B
					VIS	SCHRAUBE	BOLT	BOUT	

10.220.01	01	p2	02/11

CONTROLES - ESTRANGULADOR
CONTROLS - THROTTLE
CONTROLES - ACELERADOR
COMANDI - ACCELERATORE

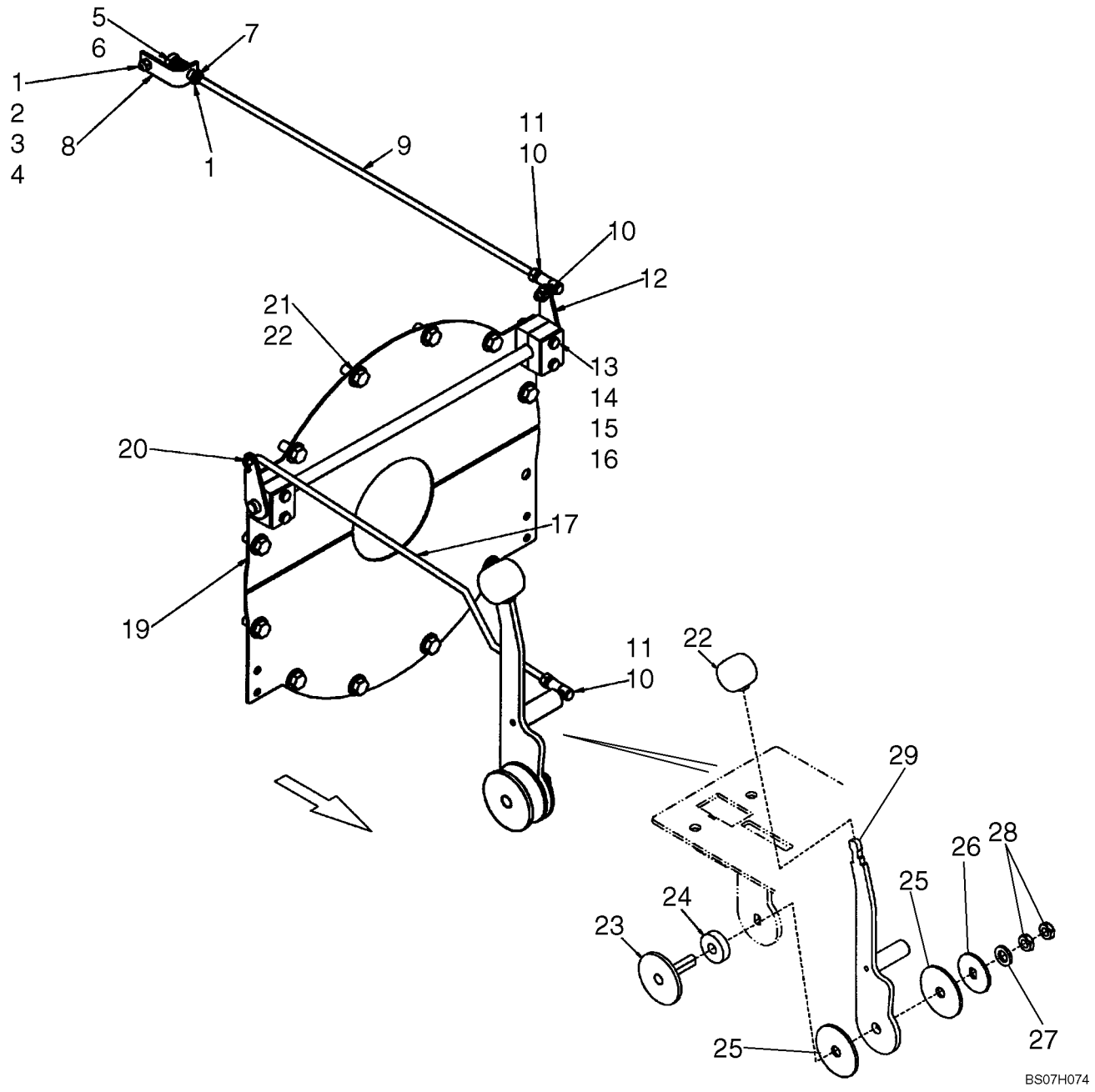

COMMANDES - PAPILLON DES GAZ
ZUSATZSTEUEURGERÄTE BEFESTIGUNG - GASHEBELGESTÄNGE
BETJENINGSGREB - GASSPJÆLD
BEDIENINGSELEMENTEN - GASHENDEL

R	N	P.N.	MOD	Q	Denominação Description Bezeichnung	Denominacion Beskrivelse	Descrizione Beschrijving	L.C.
22		87016		11	ARRUELA PLANA, 3/8", SAE WASHER RONDELLE UNTERLEGSCHEIBE	ARANDELA FLADSKIVE	RONDELLA SLUITRING	131R
23		291244A1		1	ALAVANCA, Throttle Pivot LEVER LEVIER HEBEL	PALANCA LEVER	LEVA LEVER	5110
24		257973A1		1	ARRUELA, Rubber Washer WASHER RONDELLE UNTERLEGSCHEIBE	ARANDELA WASHER	RONDELLA WASHER	9720
25		1342374C1		2	DISCO, Friction Disc DISC DISQUE SCHEIBE	DISCO DISC	DISCO DISC	2700
26		257971A1		1	ARRUELA, Slotted Washer WASHER RONDELLE UNTERLEGSCHEIBE	ARANDELA WASHER	RONDELLA WASHER	9720
27		86625255		1	ARRUELA PLANA, M13.5 x 24.5 x 3, HT WASHER RONDELLE UNTERLEGSCHEIBE	ARANDELA FLADSKIVE	RONDELLA SLUITRING	131R
28		323238		2	PORCA, Thin, M12 x 1.75, Cl 05 NUT ECROU MUTTER	TUERCA MØTRIK	DADO MOER	010D
29		87573756		1	ALAVANCA, Hand Throttle Lever LEVER LEVIER HEBEL	PALANCA ARM	LEVA HEFBOOM	045L

10.220.01	02	p1	02/11

CONTROLS - FOOT AND HAND THROTTLE
CONTROLS - FOOT AND HAND THROTTLE
CONTROLES - ACELERADOR DE PEDAL, ACELERADOR DE MANO
COMANDI - ACCELERATORE A PEDALE, ACCELERATORE MANUALE

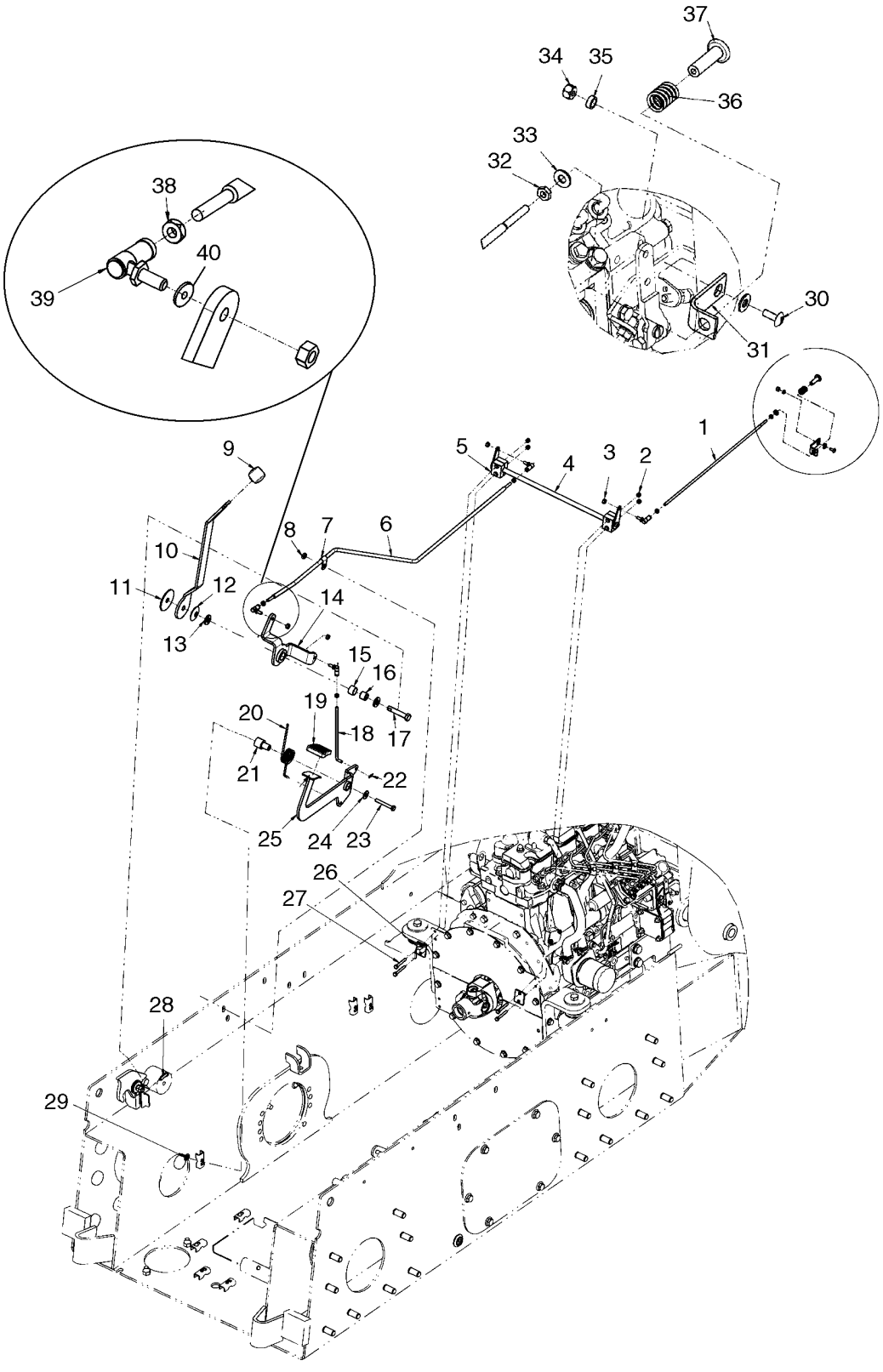

BS09A201

COMMANDES - PÉDALE D'ACCÉLÉRATION, ACCELERATEUR A MAIN
ZUSATZSTEUEURGERÄTE BEFESTIGUNG - GASPEDAL, HANDGASGESTÄNGE
BETJENINGSGREB - FODSTYRING, GAS, HÅND-
BEDIENINGSELEMENTEN - VOETBEDIENING, GAS, HAND

R	N	P.N.	MOD	Q	Denominação Description	Description Bezeichnung	Denominacion Beskrivelse	Descrizione Beschrijving	L.C.
1		87460722		1	HASTE, Throttle Rod	ROD	VARILLA	ASTA	090A
					TIGE	STANGE	STANG	STANG	
2		87030561		4	CONTRA PORCA, M6 x 1, Cl 8				
						LOCK NUT	TUERCA DE BLOQUEO	DADO DI BLOCCAGGIO	P263
					CONTRE-ECROU	SICHERUNGSMUTTER	LÅSEMØTRIK	BORGMOER	
3		86509309		4	PORCA, 1/4"-28, G5	NUT	TUERCA	DADO	010D
					ECROU	MUTTER	MØTRIK	MOER	
4		87435735		1	ARRANQUE	CRANK	MANIVELA	MANOVELLA	2340
					MANIVELLE	KURBEL	KRUMTAP	KRUK	
5		87435732		2	BRAÇADEIRA	CLAMP	ABRAZADERA	MORSETTO	120M
					COLLIER	KLEMME	SPÆNDEBÅND	KLEM	
6		87688637		1	HASTE, Throttle Rod	ROD	VARILLA	ASTA	090A
					TIGE	STANGE	STANG	STANG	
7		87028524		1	BRACADEIRA	CLAMP	GRAPON	MORSETTO	Z458
					CRAMPON	KRAMPE	CLAMP	CLAMP	
8		694371		1	ESPAÇADOR	SPACER	SEPARADOR	DISTANZIALE	075D
					ENTRETOISE	DISTANZSTÜCK	AFSTANDSSTYKKE	AFSTANDSSTUK	
9		A177436		1	MANOPLA	KNOB	PERILLA	MANOPOLA	4850
					BOULE DE DIRECTION	KNAUF	KNOB	KNOB	
10		87712373		1	COMANDO DO ACELERADOR, Throttle Handle				
						THROTTLE CONTROL	CONTROL DE REGULAD	COMANDO ACCELERAT	197C
					COMMANDE D'ACCELEF	DROSSELKLAPPENZUG	GASREGULERINGSKABE	GASBEDIENINGSKABEL	
11		1342374C1		1	DISCO	DISC	DISCO	DISCO	2700
					DISQUE	SCHEIBE	DISC	DISC	
12		R14771		1	ARRUELA	WASHER	ARANDELA	RONDELLA	9720
					RONDELLE	UNTERLEGSCHEIBE	WASHER	WASHER	
13		86625256		2	ARRUELA PLANA, M12 x 28.5 x 4, HT				
						WASHER	ARANDELA	RONDELLA	131R
					RONDELLE	UNTERLEGSCHEIBE	FLADSKIVE	SLUITRING	
14		87712376		1	COMANDO DO ACELERADOR, Throttle Control				
						THROTTLE CONTROL	CONTROL DE REGULAD	COMANDO ACCELERAT	197C
					COMMANDE D'ACCELEF	DROSSELKLAPPENZUG	GASREGULERINGSKABE	GASBEDIENINGSKABEL	
15		186905A1		1	BUCHA	BUSHING	CASQUILLO	BOCCOLA	095B
					BAGUE	BUCHSE	BØSNING	BUS	
16		187035A2		1	LUVA	SLEEVE	MANGUITO	MANICOTTO	031M
					CHEMISE	BUCHSE	TRYKLEJE, KOBLING	MOF; BUS	
17		87612749		1	BOTÃO DE IMPULSO	FASTENER	SUJETADOR	DISPOSITIVO DI FISSAG	123B
					ATTACHE	BEFESTIGUNGSELEMEN	LUKKER	BEVESTIGING	
18		87650094		1	HASTE, Foot Throttle Rod	ROD	VARILLA	ASTA	090A
					TIGE	STANGE	STANG	STANG	
19		323657A1		1	PASTILHA	PAD	PASTILLA	CUSCINO; TAMPONE	060T
					COUSSIN	UNTERLAGE	BREMSEKLODS	BLOK	
20		87416539		1	MOLA DE TORÇÃO	TORSION SPRING	RESORTE DE TORSIÓN	MOLLA DI TORSIONE	Z619
					RESSORT DE TORSION	DREHFEDER	VRIDNINGSFJEDER	TORSIEVEER	
21		87424095		1	LUVA, Throttle Pivot	SLEEVE	MANGUITO	MANICOTTO	031M
					CHEMISE	BUCHSE	TRYKLEJE, KOBLING	MOF; BUS	
22		D131983		1	PINO	PIN	PASADOR	PERNO	080P
					BROCHE	PIN	STIFT	PEN	

10.220.01	02	p2	02/11

CONTROLS - FOOT AND HAND THROTTLE
CONTROLS - FOOT AND HAND THROTTLE
CONTROLES - ACELERADOR DE PEDAL, ACELERADOR DE MANO
COMANDI - ACCELERATORE A PEDALE, ACCELERATORE MANUALE

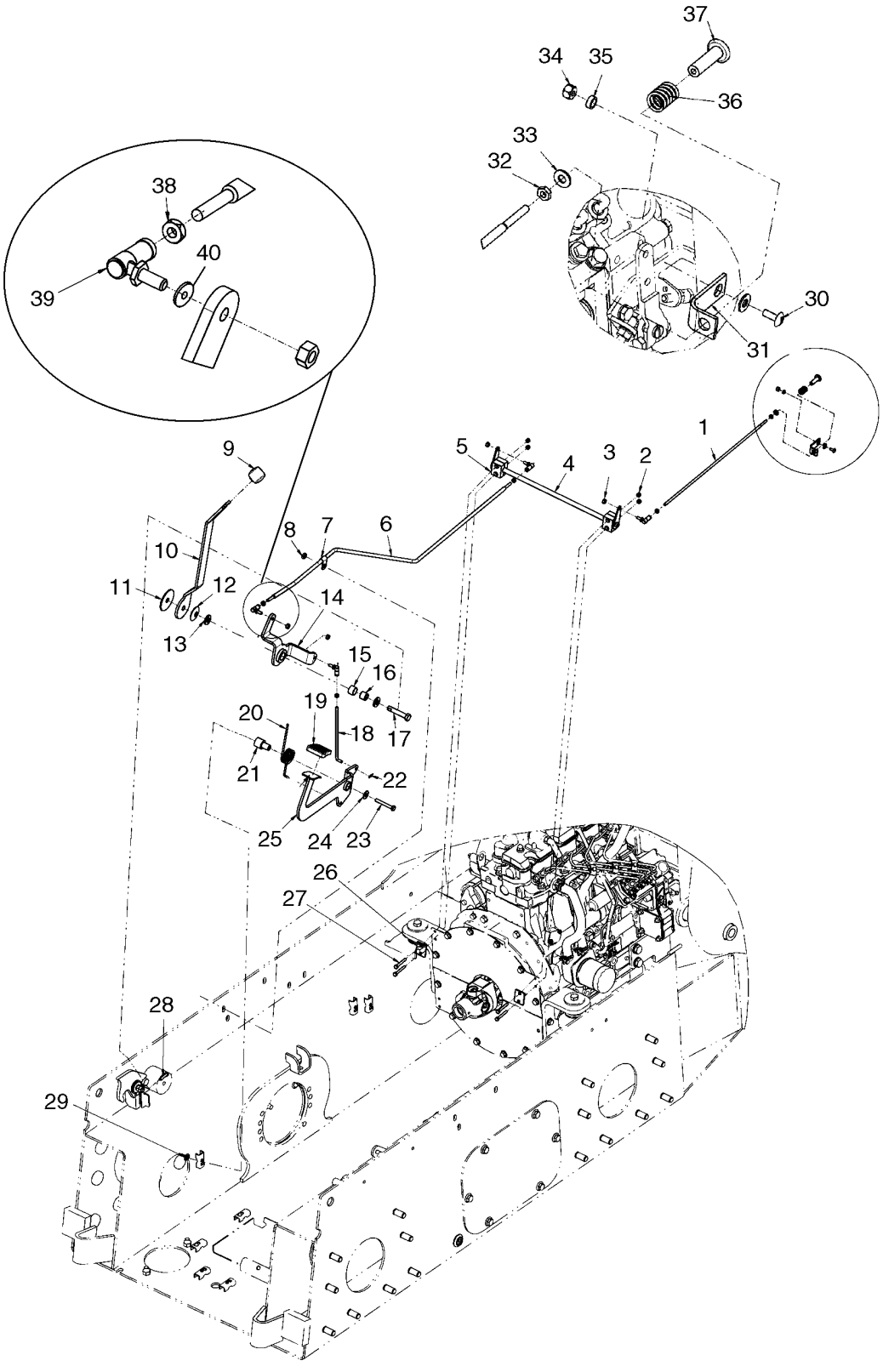

BS09A201

COMMANDES - PÉDALE D'ACCÉLÉRATION, ACCELERATEUR A MAIN
ZUSATZSTEUEURGERÄTE BEFESTIGUNG - GASPEDAL, HANDGASGESTÄNGE
BETJENINGSGREB - FODSTYRING, GAS, HÅND-
BEDIENINGSELEMENTEN - VOETBEDIENING, GAS, HAND

R	N	P.N.	MOD	Q	Denominação Description	Description Bezeichnung	Denominacion Beskrivelse	Descrizione Beschrijving	L.C.
23		16044321		1	PARAFUSO, Hex, M8 x 55, 8.8				
						SCREW	TORNILLO	VITE	040V
					VIS	SCHRAUBE	SKRUE	SCHROEF	
24		86639313		1	ARRUELA PLANA, M8 x 20 x 1.6				
						WASHER	ARANDELA	RONDELLA	131R
					RONDELLE	UNTERLEGSCHEIBE	FLADSKIVE	SLUITRING	
25		87725977		1	PEDAL, Foot Pedal; Replaces 87650090				
						PEDAL	PEDAL	PEDALE	060P
					PEDALE	PEDAL	PEDAL	PEDAAL	
26		87435739		2	BARRA	BAR	BARRA	BARRA	530B
					BARRE	BAR	BJÆLKE	STANG	
27		86977790		4	PARAFUSO, Hex, M6 x 45, 8.8				
						SCREW	TORNILLO	VITE	040V
					VIS	SCHRAUBE	SKRUE	SCHROEF	
28		43117		1	PARAFUSO, Hex, M6 x 30, 8.8				
						SCREW	TORNILLO	VITE	040V
					VIS	SCHRAUBE	SKRUE	SCHROEF	
29		229197A1		1	PORCA	NUT	TUERCA	DADO	5780
					ECROU	MUTTER	NUT	NUT	
30		84821		1	PARAFUSO, Slotted Truss Hd, #10-24 x 1/2"				
						SCREW	TORNILLO	VITE	040V
					VIS	SCHRAUBE	SKRUE	SCHROEF	
31		9844532		1	SUPORTE	BRACKET	SOPORTE	STAFFA	225S
					SUPPORT	HALTERUNG	BESLAG	STEUN	
32		87825		1	PORCA, #10-32	NUT	TUERCA	DADO	010D
					ECROU	MUTTER	MØTRIK	MOER	
33		80707		2	ARRUELA PLANA, 3/16"	WASHER	ARANDELA	RONDELLA	131R
					RONDELLE	UNTERLEGSCHEIBE	FLADSKIVE	SLUITRING	
34		88826		1	CONTRA PORCA, #10-24, GA				
						LOCK NUT	TUERCA DE BLOQUEO	DADO DI BLOCCAGGIO	P263
					CONTRE-ECROU	SICHERUNGSMUTTER	LÅSEMØTRIK	BORGMOER	
35		13734		1	ESPAÇADOR	SPACER	SEPARADOR	DISTANZIALE	075D
					ENTRETOISE	DISTANZSTÜCK	AFSTANDSSTYKKE	AFSTANDSSTUK	
36		11104		1	MOLA	SPRING	RESORTE	MOLLA	100M
					RESSORT	FEDER	FJEDER	VEER	
37		9860169		1	REBITE	RIVET	REMACHE	RIVETTO	055R
					RIVET	NIET	NITTE	KLINKNAGEL	
38		86976064		4	PORCA, Jam, 1/4"-28, G5	NUT	TUERCA	DADO	010D
					ECROU	MUTTER	MØTRIK	MOER	
39		H169920		4	JUNTA ESF+RICA	BALL JOINT	JUNTA DE ROTULA	GIUNTO SFERICO	P009
					ROTULE	KUGELGELENK	KEGELED	KOGELWRICHT	
40		86588450		1	ARRUELA PLANA, M6 x 12 x 1.6 Thk				
						WASHER	ARANDELA	RONDELLA	131R
					RONDELLE	UNTERLEGSCHEIBE	FLADSKIVE	SLUITRING	

10.220.02		p1	05/11

THROTTLE HAND FOOT EH (SR175,SV185,L218,L220)
THROTTLE HAND FOOT EH (SR175,SV185,L218,L220)
THROTTLE HAND FOOT EH (SR175,SV185,L218,L220)
THROTTLE HAND FOOT EH (SR175,SV185,L218,L220)

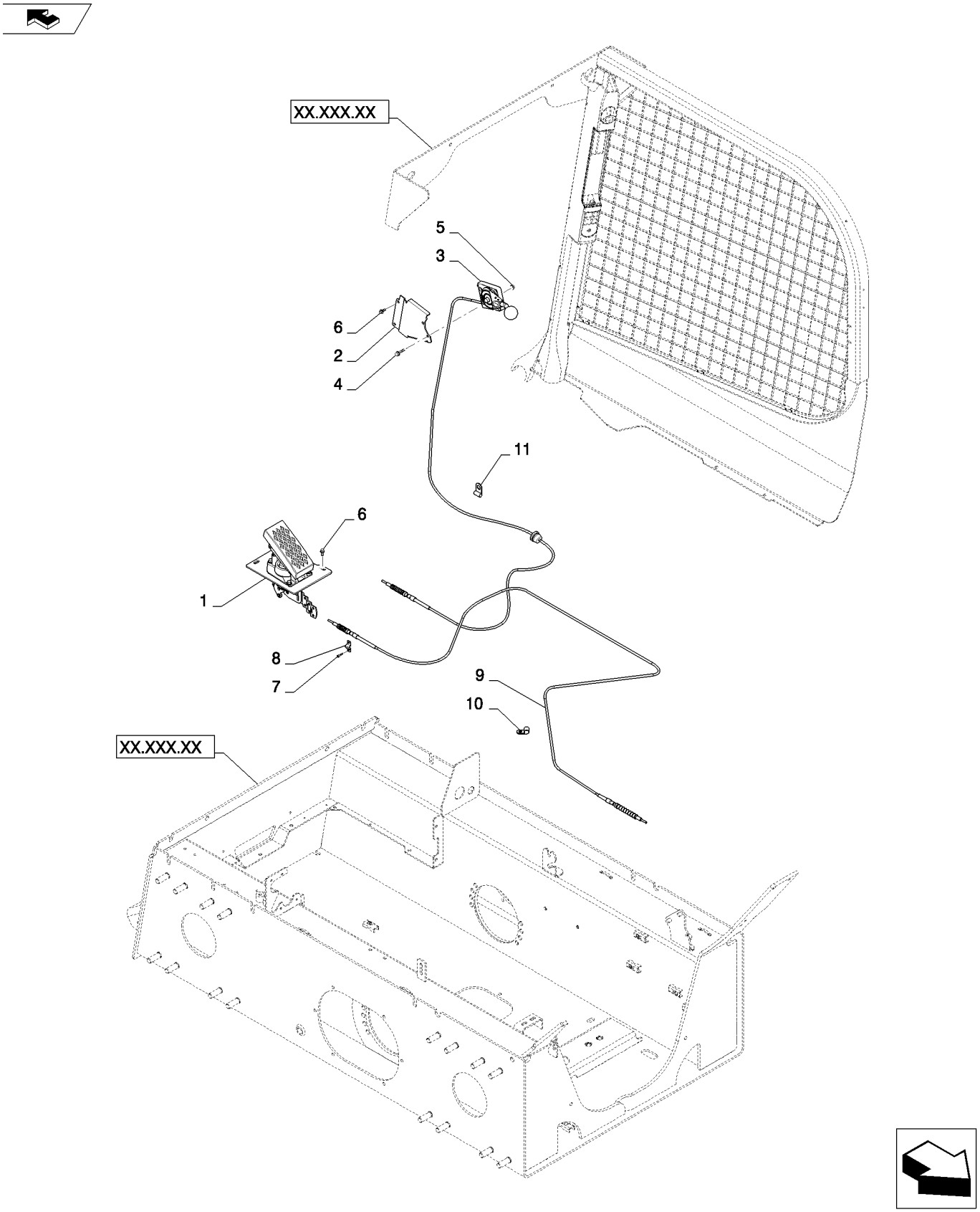

THROTTLE HAND FOOT EH (SR175,SV185,L218,L220)
THROTTLE HAND FOOT EH (SR175,SV185,L218,L220)
THROTTLE HAND FOOT EH (SR175,SV185,L218,L220)
THROTTLE HAND FOOT EH (SR175,SV185,L218,L220)

R	N	P.N.	MOD	Q	Denominação Description	Description Bezeichnung	Denominacion Beskrivelse	Descrizione Beschrijving	L.C.
1		84374768		1	REGULADOR PRESSÃO, EH, Foot				
						THROTTLE	REGULADOR	ACCELERATORE	P070
					PAPIL. GAZ ; ACCELERA	DROSSEL; GASPEDAL	GASPEDAL	GASKLEP	
2		84333202		1	FIXADOR, Hand Throttle, CE Gray				
						MOUNT	SOPORTE	SUPPORTO	C022
					MONTAGE	GESTELL	BESLAG	BEVESTIGING	
3		84258153		1	EMPUNHADURA, Throttle to Pedal				
						HANDLE GRIP	PERILLA	IMPUGNATURA	025I
					POIGNEE DE MAINTIEN	HANDGRIFF	HÅNDGREB	HANDGREEP	
4		86511839		2	PARAFUSO, Hex Flg, M6 x 30, 8.8				
						BOLT	PERNO	BULLONE	140B
					VIS	SCHRAUBE	BOLT	BOUT	
5		9804276		2	PORCA, M6 x 1, Flg, Cl 8	NUT	TUERCA	DADO	010D
					ECROU	MUTTER	MØTRIK	MOER	
6		84305556		5	PARAFUSO, RDW-HD M6x25 TORX				
						SCREW	TORNILLO	VITE	040V
					VIS	SCHRAUBE	SKRUE	SCHROEF	
7		84200938		2	BRAÇADEIRA, Throttle Cable				
						CLAMP	ABRAZADERA	MORSETTO	120M
					COLLIER	KLEMME	SPÆNDEBÅND	KLEM	
8		86624126		4	PARAFUSO, Hex Soc Hd, M4 x 16, 8.8				
						SCREW	TORNILLO	VITE	040V
					VIS	SCHRAUBE	SKRUE	SCHROEF	
9		84258820		1	CABO, Pedal to Governor, MD FRM ISM				
						CABLE	CABLE	CAVO	650C
					CABLE	KABEL	KABEL	KABEL	
10		86625036		1	BRAÇADEIRA, 1/2", Insul, 5/16" Bolt				
						CLAMP	ABRAZADERA	MORSETTO	120M
					COLLIER	KLEMME	SPÆNDEBÅND	KLEM	
11		86639010		1	BRAÇADEIRA, 3/8", Insul, 1/2" Bolt				
						CLAMP	ABRAZADERA	MORSETTO	120M
					COLLIER	KLEMME	SPÆNDEBÅND	KLEM	
12		84272827		2	REBITE	RIVET	REMACHE	RIVETTO	055R
					RIVET	NIET	NITTE	KLINKNAGEL	

10.250.01		p1	02/11

TURBOCHARGER
TURBOCHARGER
TURBOCOMPRESOR
TURBOCOMPRESSORE

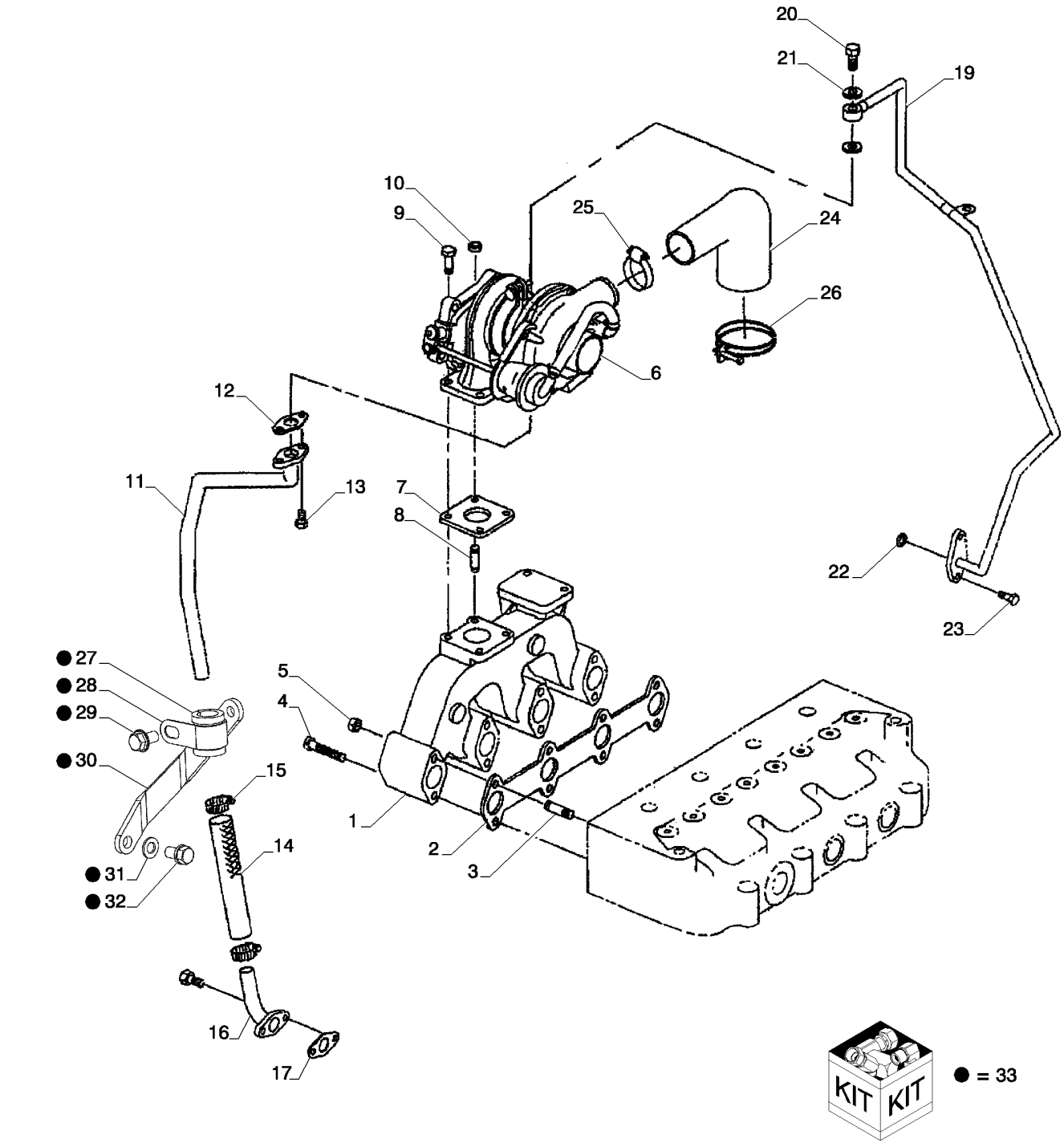

TURBO COMPRESSEUR
ABGASTURBOLADER
TURBOLADER
TURBOCHARGER

R	N	P.N.	MOD	Q	Denominação Description	Description Bezeichnung	Denominacion Beskrivelse	Descrizione Beschrijving	L.C.
1		SBA135617240		1	COLETOR DE EXAUSTÃO, Exhaust				
						EXHAUST MANIFOLD	COLECTOR DE ESCAPE	COLLETTORE DI SCARIC	230C
					COLLECTEUR D'ECHAPI	AUSPUFFKRÜMMER	UDSTØDNINGSMANIFOL	UITLAATSPRUITSTUK	
2		SBA135996780		1	JUNTA DO COLETOR	MANIFOLD GASKET	JUNTA DE COLECTOR	GUARNIZIONE COLLETT	125G
					JOINT DE COLLECTEUR	KRÜMMERDICHTUNG	PAKNING, MANIFOLD	SPRUITSTUKPAKKING	
3		SBA012110875		2	PRISIONEIRO, Bolt	STUD	PRISIONERO	PRIGIONIERO	210P
					GOUJON	GEWINDEBOLZEN	STØTTEBOLT	TAPEIND	
4		SBA011510875		6	PARAFUSO	BOLT	PERNO	BULLONE	140B
					VIS	SCHRAUBE	BOLT	BOUT	
5		9804277		2	PORCA, M8 x 1.25, Flg, Cl 8				
						NUT	TUERCA	DADO	010D
					ECROU	MUTTER	MØTRIK	MOER	
6		SBA135756171		1	TURBO-COMPRESSOR	TURBOCHARGER	TURBOCOMPRESOR	TURBOCOMPRESSORE	210T
					TURBOCOMPRESSEUR	TURBOLADER	TURBOLADER	TURBOCOMPRESSOR	
6		SBA135756171R		AR	TURBOCOMPRESSOR REMANUFATURADO, Remanufactured Turbocharger; For N.A. only				
						REMAN-TURBOCHARGE	REMAN-TURBOCOMPRE	TURBOCOMPR. RIGENE	T037
					TURBOCOMPRESSEUR	AUSTAUSCH-TURBOLAI	OPD-TURBOLADER	GEREVISEERDE-TURBO	
7		SBA135997020		1	JUNTA	GASKET	JUNTA	GUARNIZIONE	123G
					JOINT	DICHTUNG	PAKNING	PAKKING	
6		SBA135756171C		AR	TURBOCOMPRESSOR-PRINCIPAL, Return Number, TURBOCHARGER - for N.A. Only				
						CORE-TURBOCHARGER	ORIG-TURBOCOMPRES(	TURBOCOMPR. DA REV	T036
					TURBOCOMPRESSEUR	HAUPTBAUTEIL-TURBOI	KERNE-TURBOLADER	TE VERNIEUWEN-TURB(	
8		SBA012109235		2	PRISIONEIRO, Stainless Steel				
						STUD	PRISIONERO	PRIGIONIERO	210P
					GOUJON	GEWINDEBOLZEN	STØTTEBOLT	TAPEIND	
9		SBA010109465		2	PARAFUSO, Stainless Steel				
						SCREW	TORNILLO	VITE	040V
					VIS	SCHRAUBE	SKRUE	SCHROEF	
10		9804277		2	PORCA, M8 x 1.25, Flg, Cl 8				
						NUT	TUERCA	DADO	010D
					ECROU	MUTTER	MØTRIK	MOER	
11		SBA140607320		1	TUBO	TUBE	TUBO	TUBO	195T
					TUBE	ROHR	RØR	LEIDING	
12		SBA140996280		1	JUNTA	GASKET	JUNTA	GUARNIZIONE	123G
					JOINT	DICHTUNG	PAKNING	PAKKING	
13		SBA011310616		2	PARAFUSO, M6 x 1 x 16, Cl 8.8				
						BOLT	PERNO	BULLONE	140B
					VIS	SCHRAUBE	BOLT	BOUT	
14		SBA063209121		1	MANGUEIRA	HOSE	TUBO	TUBO FLESSIBILE	030M
					FLEXIBLE	SCHLAUCH	SLANGE	SLANG	
15		SBA198756200		2	TIRA, Band	BAND	TIRA	FASCETTA	020N
					BANDE	GURT	BÅND	RIEM	
16		SBA140607370		1	TUBO	PIPE	TUBO	TUBO	200T
					TUYAU	ROHR	PÅFYLDNINGSSTUDS	BUIS	
17		SBA140996280		1	JUNTA	GASKET	JUNTA	GUARNIZIONE	123G
					JOINT	DICHTUNG	PAKNING	PAKKING	
18		SBA011310616		2	PARAFUSO, M6 x 1 x 16, Cl 8.8				
						BOLT	PERNO	BULLONE	140B
					VIS	SCHRAUBE	BOLT	BOUT	

10.250.01		p2	02/11

TURBOCHARGER
TURBOCHARGER
TURBOCOMPRESOR
TURBOCOMPRESSORE

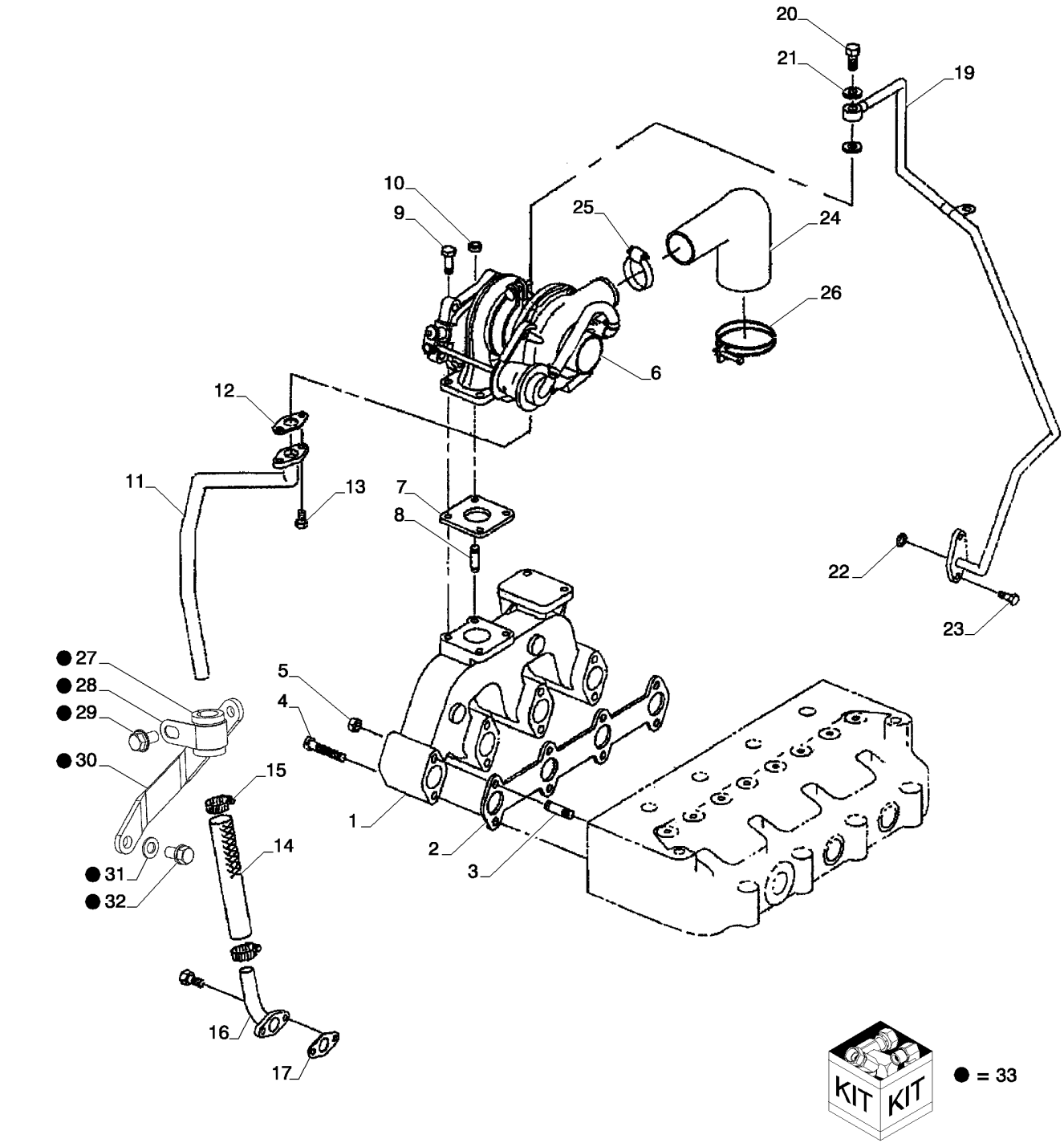

TURBO COMPRESSEUR
ABGASTURBOLADER
TURBOLADER
TURBOCHARGER

R	N	P.N.	MOD	Q	Denominação Description	Description Bezeichnung	Denominacion Beskrivelse	Descrizione Beschrijving	L.C.
19		**SBA140607360**		1	TUBO TUYAU	PIPE ROHR	TUBO PÅFYLDNINGSSTUDS	TUBO BUIS	200T
20		**SBA198486780**		1	PARAFUSO DE BANJO, M8 x 1.25; If Used VIS BANJO	BANJO BOLT HOHLSCHRAUBE	PERNO BANJO BANJOBOLT	BULLONE MASCHIO BANJOBOUT	090B
20		**SBA198487840**		1	PARAFUSO, M10 x 1.5; If Used VIS	SCREW SCHRAUBE	TORNILLO SKRUE	VITE SCHROEF	040V
21		**SBA054109025**		2	JUNTA JOINT	GASKET DICHTUNG	JUNTA PAKNING	GUARNIZIONE PAKKING	123G
22		**SBA052109078**		1	O-RING JOINT TORIQUE	O-RING O-RING	JUNTA TÓRICA O-RING	ANELLO TOROIDALE O-RING	055A
23		**SBA011310616**		2	PARAFUSO, M6 x 1 x 16, Cl 8.8 VIS	BOLT SCHRAUBE	PERNO BOLT	BULLONE BOUT	140B
24		**SBA135596570**		1	COTOVELO, Hose, Rubber COUDE	ELBOW KNIESTÜCK	CODO VINKELRØR	GOMITO KNIESTUK	085G
25		**SBA067100065**		1	GRAMPO COLLIER	CLIP KLAMMER	ABRAZADERA KLIPS	FERMO KLEM	045F
26		**SBA398750450**		1	TIRA BANDE	BAND GURT	TIRA BÅND	FASCETTA RIEM	020N
27		**{SBA198116970}**		1					
28		**{SBA199116530}**		1					
29		**SBA010800814**		1	PARAFUSO VIS	BOLT SCHRAUBE	PERNO BOLT	BULLONE BOUT	140B
30		**{SBA185977470}**		1					
31		**{SBA06200008}**		1					
32		**SBA011510816**		1	PARAFUSO VIS	BOLT SCHRAUBE	PERNO BOLT	BULLONE BOUT	140B
33		**SBA185977480**		1	JOGO, Inc 27-32 POCHETTE	KIT PACKUNG	JEUGO KIT	KIT KIT	4830

BLOCK HEATER (SR130-SV185)
BLOCK HEATER (SR130-SV185)
BLOCK HEATER (SR130-SV185)
BLOCK HEATER (SR130-SV185)

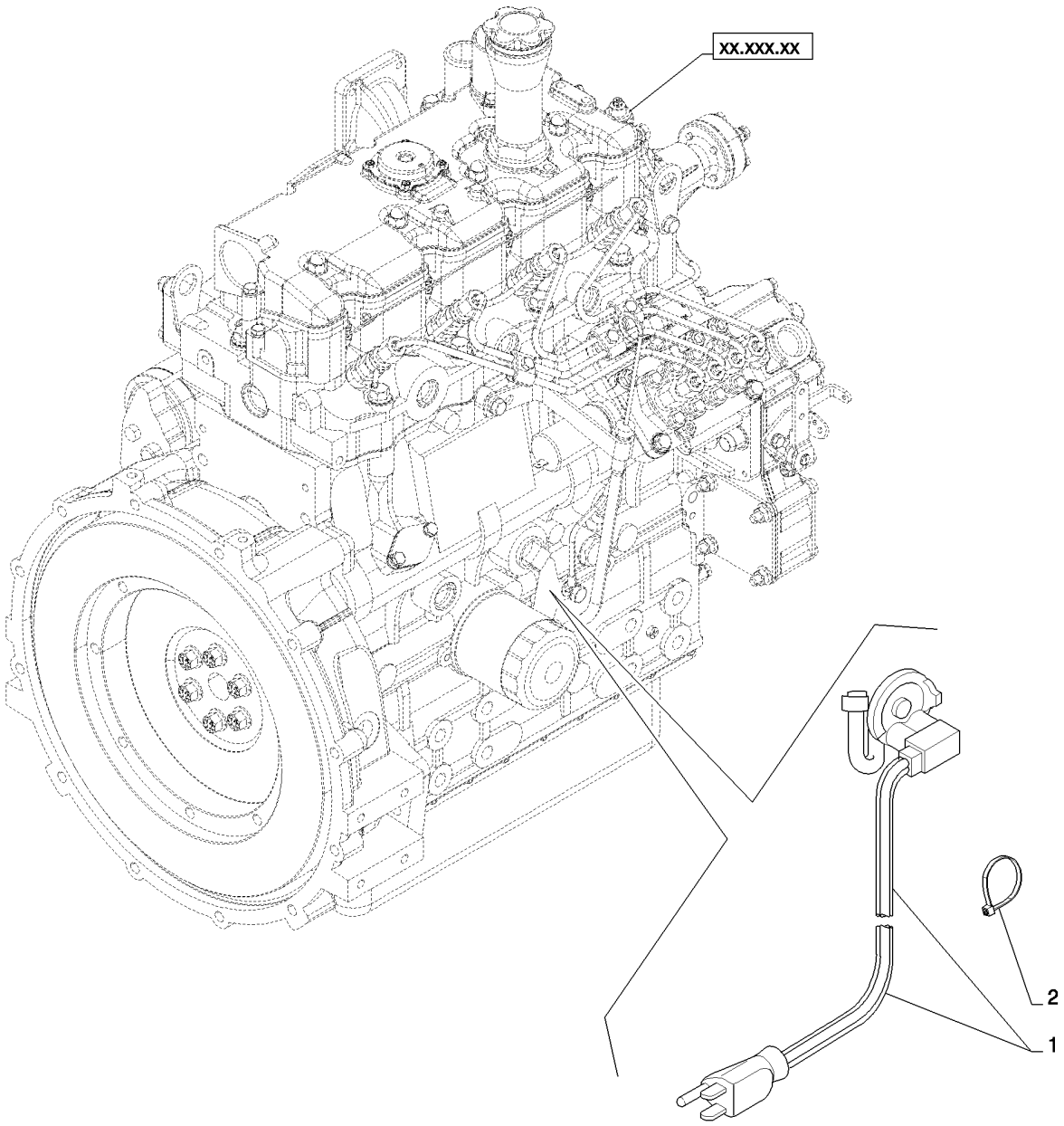

BLOCK HEATER (SR130-SV185)
BLOCK HEATER (SR130-SV185)
BLOCK HEATER (SR130-SV185)
BLOCK HEATER (SR130-SV185)

R	N	P.N.	MOD	Q	Denominação Description Bezeichnung	Description Bezeichnung	Denominacion Beskrivelse	Descrizione Beschrijving	L.C.
1		86594039		1	CABO ELÉTRICO, Cord, Block Heater CABLE ELECTRIQUE	ELECTRIC CABLE ELEKTROKABEL	CABLE ELÉCTRICO EL-KABEL	CAVO ELETTRICO ELEKTRICITEITSKABEL	111C
2		646223		4	TIRA, .19" x 8 1/2" BRIDE	STRAP BAND	BANDA STROP	FASCETTA RIEM	532B

SV185

10.254.02		p1	04/11

ESCAPAMENTO, ASPIRADOR
EXHAUST SYSTEM - ASPIRATOR
ESCAPE, ASPIRADOR
IMPIANTO DI SCARICO, ASPIRATORE

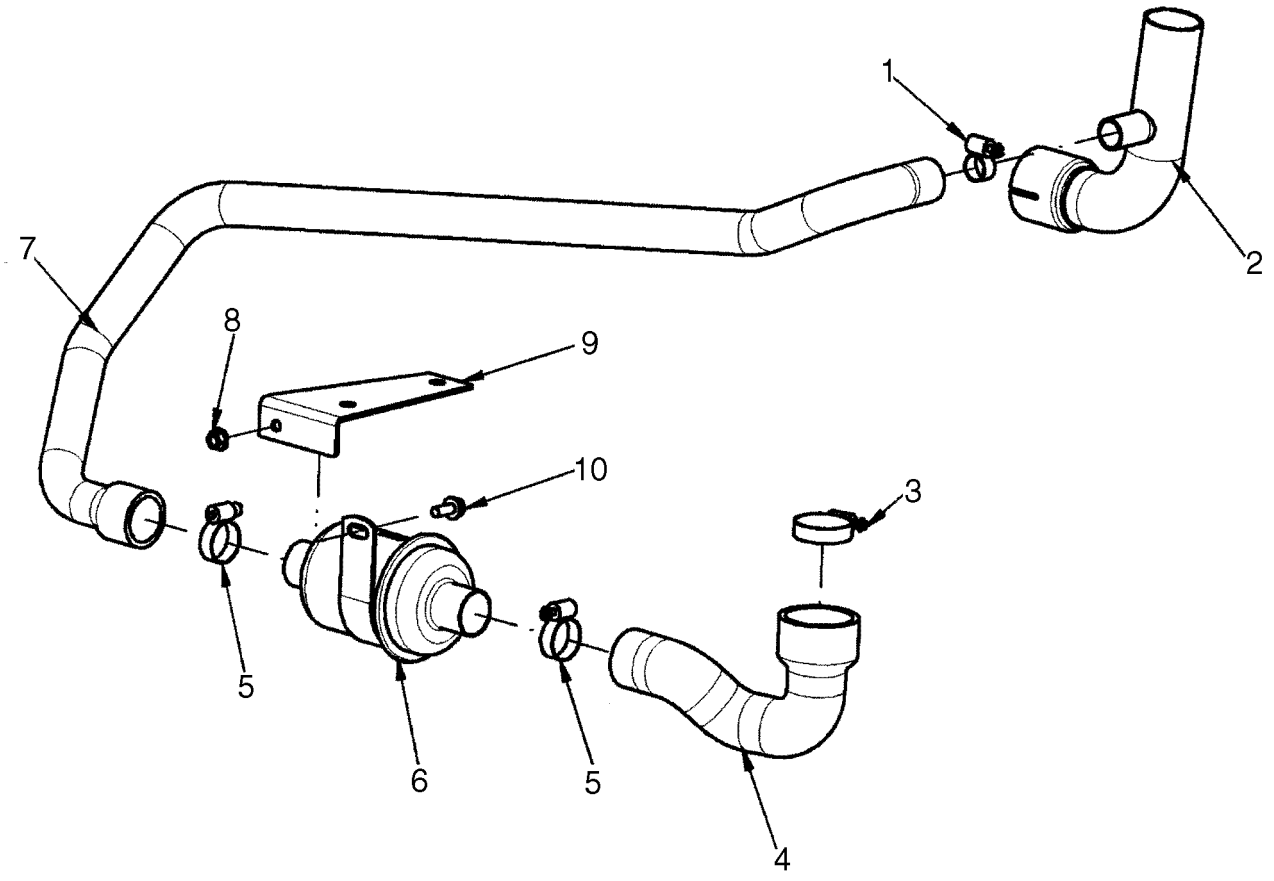

BS07H071

ECHAPPEMENT, ASPIRATEUR
AUSPUFFSYSTEM, SAUGGEBLÄSE
UDSTØDNINGSSYSTEM, ASPIRATOR
UITLAATSYSTEEM, ASPIRATOR

R	N	P.N.	MOD	Q	Denominação Description Bezeichnung Denominacion Beskrivelse Descrizione Beschrijving	L.C.
		87638312		1	KIT DE SERVIÇO, Kit, Aspirator; Incl 1 - 10 SERVICE KIT KIT DE SERVICIO KIT DI MANUTENZIONE KIT D'ENTRETIEN SERVICE-SATZ SERVICESÆT SERVICEKIT	021K
1		**507586**		1	BRAÇADEIRA MANGUEIRA, #20, 0.81/1.75 Type F Worm HOSE CLAMP ABRAZADERA DE MANG FASCETTA STRINGITUB COLLIER POUR FLEXIBL SCHLAUCHSCHELLE SLANGEKLEMME SLANGKLEM	P729
2		**87052642**		1	TUBO ESCAPE, 47.60 - 50.80 mm OD, Exhaust Tube EXHAUST SYSTEM PIPE TUBO DE SISTEMA DE E TUBO SISTEMA DI SCAR TUYAU D'ECHAPPEMEN AUSPUFFROHR RØRUDSTØDNINGSSYS PIJP VAN UITLAATSYSTI	198T
3		**86624194**		1	BRAÇADEIRA MANGUEIRA, #36, 1.81/2.75 Type F Worm, If Used HOSE CLAMP ABRAZADERA DE MANG FASCETTA STRINGITUB COLLIER POUR FLEXIBL SCHLAUCHSCHELLE SLANGEKLEMME SLANGKLEM	P729
3		**84137995**		1	BRAÇADEIRA MANGUEIRA, Hose Clamp Turnkey Grip #36 HOSE CLAMP ABRAZADERA DE MANG FASCETTA STRINGITUB COLLIER POUR FLEXIBL SCHLAUCHSCHELLE SLANGEKLEMME SLANGKLEM	P729
4		**87056123**		1	MANGUEIRA, 38.00 mm ID, 56.00 mm ID x 171.00 mm, SAE 20R4 Class D1, Formed Hose HOSE TUBO TUBO FLESSIBILE FLEXIBLE SCHLAUCH SLANGE SLANG	030M
5		**84674**		2	BRAÇADEIRA MANGUEIRA, #28, 1.31/2.25 Type F Worm HOSE CLAMP ABRAZADERA DE MANG FASCETTA STRINGITUB COLLIER POUR FLEXIBL SCHLAUCHSCHELLE SLANGEKLEMME SLANGKLEM	P729
6		**406089A2**		1	VALVULA, Aspirator Check Valve VALVE VALVULA VALVOLA VALVE VENTIL VALVE VALVE	P468
7		**87621213**		1	MANGUEIRA ADMISSÃO DE AR, 25.40 mm ID, 34.00 mm ID x 509.80 mm, SAE 20R4 Class D1, Air Cleaner To Aspirator INTAKE AIR HOSE TUBO DE ADMISIÓN DE TUBO FLESS. ARIA ASPI DURIT D'ADMISSION D'A LUFTEINLASSSCHLAUCI SLANGE, LUFTINDSUGN INLAATLUCHTSLANG	A059
8		**86505868**		1	PORCA, M8, Flg Ser NUT TUERCA DADO ECROU MUTTER MØTRIK MOER	010D
9		**87624927**		1	SUPORTE, Mount, Aspirator Valve BRACKET SOPORTE STAFFA SUPPORT HALTERUNG BESLAG STEUN	225S
10		**9804258**		1	PARAFUSO, Hex Flg, M8 x 20, 8.8 BOLT PERNO BULLONE VIS SCHRAUBE BOLT BOUT	140B

SV185

10.254.02		p1	02/11

ENGINE - BLOCK HEATER
ENGINE - BLOCK HEATER
MOTOR - CALENTADOR DEL BLOQUE
MOTORE - BLOCCO DI RISCALDAMENTO

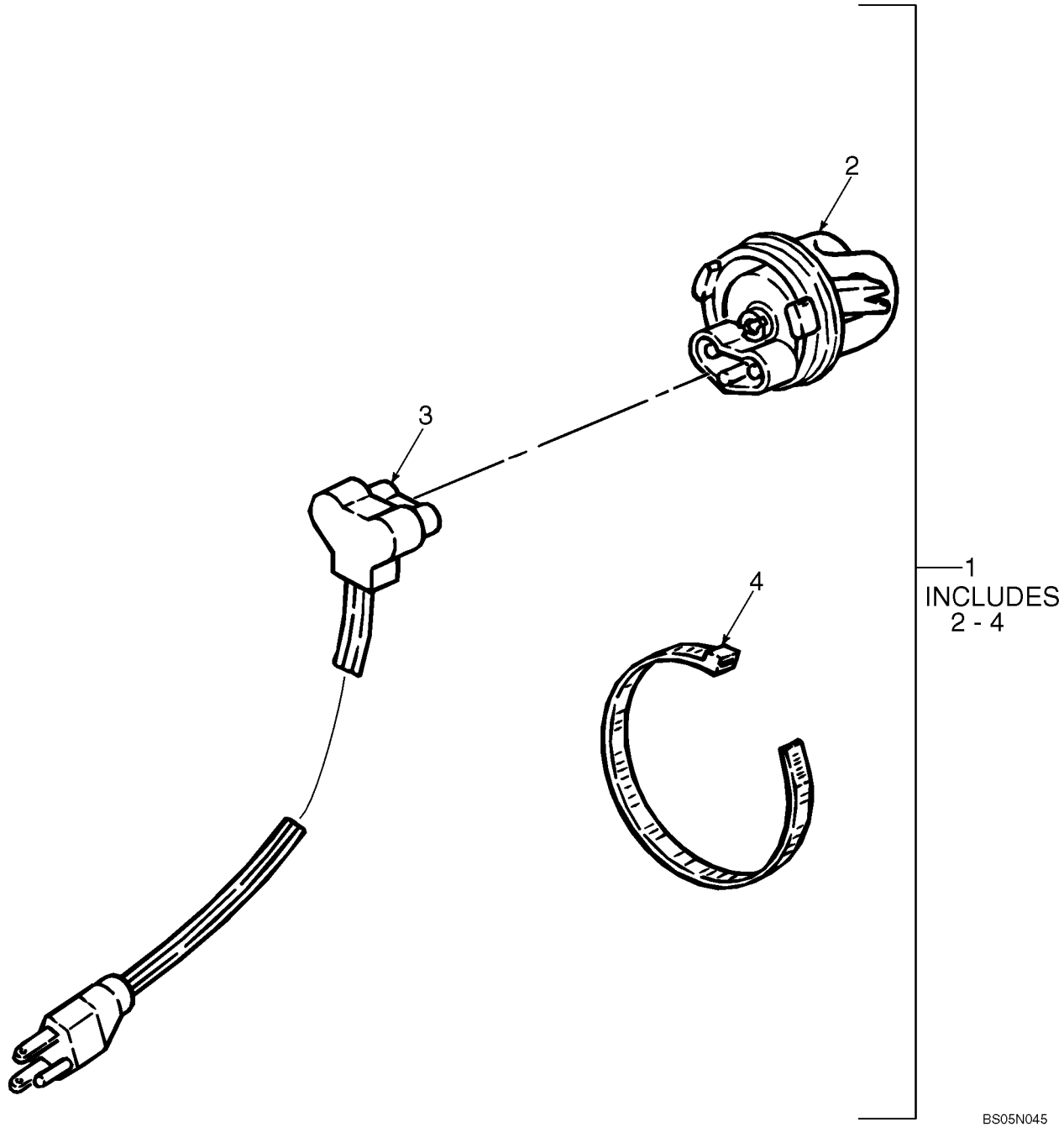

MOTEUR - BLOC CHAUFFAGE
MOTOR - BLOCKHEIZER
MOTOR - BLOKFORVARMER
MOTOR - BLOKVERWARMING

R	N	P.N.	MOD	Q	Denominação Description	Description Bezeichnung	Denominacion Beskrivelse	Descrizione Beschrijving	L.C.
1		86580173		1	KIT, Block Heater, Incl. 2 - 4 KIT	KIT SATZ	KIT SÆT	KIT KIT	305C
2		NSS		1	SEM SERVIÇO EM SEPARADO, Block Heater NON FORUNI SEPAREM	NOT SERVICED SEPARA NICHT A SEP ERS-T LIEI	NO SE REPARA POR SE SERVICERES IKKE SEPA	NON FORNITO SEPARAT NIET LOS VERKRIJGBAA	064N
3		87028494		1	CABO ELÉTRICO CABLE ELECTRIQUE	ELECTRIC CABLE ELEKTROKABEL	CABLE ELÉCTRICO EL-KABEL	CAVO ELETTRICO ELEKTRICITEITSKABEL	111C
4		263117		1	PRENDEDOR DE CABOS, .14" x 11 1/2" BRIDE DE CABLE	CABLE STRAP KABELBINDER	BANDA DE CABLE KABELSTROP	FASCETTA PER CAVO BUNDELBAND	P716

10.254.03		p1	05/11

ENGINE EXHAUST MED (SV185)
ENGINE EXHAUST MED (SV185)
ENGINE EXHAUST MED (SV185)
ENGINE EXHAUST MED (SV185)

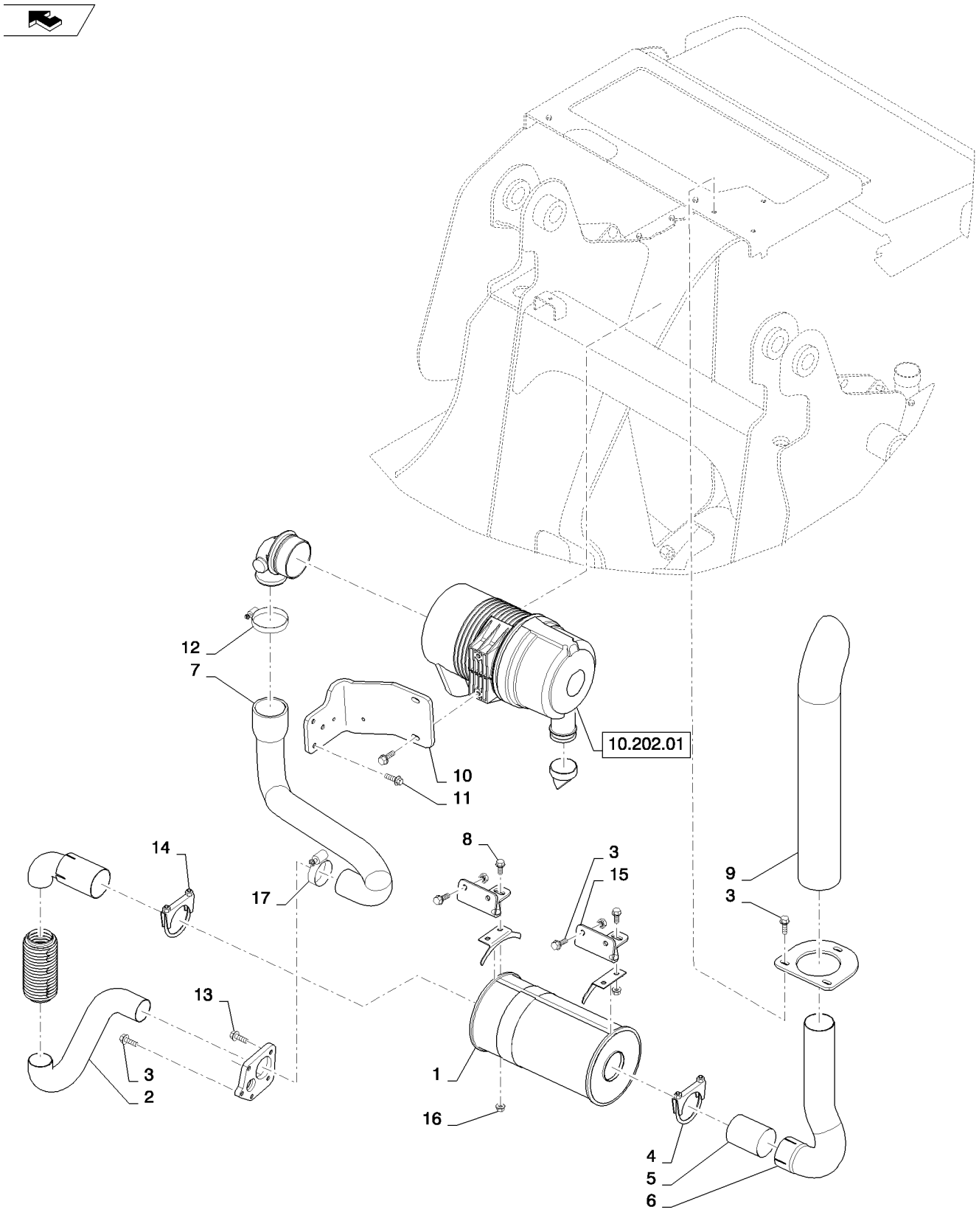

ENGINE EXHAUST MED (SV185)
ENGINE EXHAUST MED (SV185)
ENGINE EXHAUST MED (SV185)
ENGINE EXHAUST MED (SV185)

R	N	P.N.	MOD	Q	Denominação Description	Description Bezeichnung	Denominacion Beskrivelse	Descrizione Beschrijving	L.C.
1		84287171		1	SILENCIOSO, Bilen ISM	MUFFLER	SILENCIADOR	MARMITTA	160S
					SILENCIEUX	SCHALLDÄMPFER	LYDDÆMPER	UITLAATDEMPER	
2		84287177		2	TUBO DE ADMISSÃO DE AR, Flexible, Med ISM				
						AIR INTAKE TUBE	TUBO DE ADMISIÓN DE	TUBO DI ASPIRAZIONE /	P089
					TUBE D'ADMISSION D'AI	LUFTEINLASSROHR	LUFTINDSUGNINGSSLAI	LUCHTINLAATLEIDING	
3		9671714		12	PARAFUSO, Hex Flg, M8 x 25, 8.8				
						BOLT	PERNO	BULLONE	140B
					VIS	SCHRAUBE	BOLT	BOUT	
4		87461995		1	BRAÇADEIRA	CLAMP	ABRAZADERA	MORSETTO	120M
					COLLIER	KLEMME	SPÆNDEBÅND	KLEM	
5		87360034		2	ESPAÇADOR, .334X.500X.138□□.334X.500X.138□□.334X.500X.138□□				
						SPACER	SEPARADOR	DISTANZIALE	075D
					ENTRETOISE	DISTANZSTÜCK	AFSTANDSSTYKKE	AFSTANDSSTUK	
6		84287180		1	TUBO DE ADMISSÃO DE AR, Exhaust Tailpipe				
						AIR INTAKE TUBE	TUBO DE ADMISIÓN DE	TUBO DI ASPIRAZIONE /	P089
					TUBE D'ADMISSION D'AI	LUFTEINLASSROHR	LUFTINDSUGNINGSSLAI	LUCHTINLAATLEIDING	
7		84287200		1	MANGUEIRA AR CONDICIONADO, Air Cleaner to Turbo				
						A/C HOSE	TUBO A/A	TUBO FLESSIBILE A/C	A054
					FLEXIBLE CLIMATISATIC	KLIMAANLAGENSCHLAU	SLANGE, AIRCONDITION	SLANG VOOR AIRCO	
8		9804258		4	PARAFUSO, Hex Flg, M8 x 20, 8.8				
						BOLT	PERNO	BULLONE	140B
					VIS	SCHRAUBE	BOLT	BOUT	
9		84340478		1	TUBO ESCAPE, Exhaust Stack				
						EXHAUST SYSTEM PIPE	TUBO DE SISTEMA DE E	TUBO SISTEMA DI SCAR	198T
					TUYAU D'ECHAPPEMEN	AUSPUFFROHR	RØRUDSTØDNINGSSYS	PIJP VAN UITLAATSYSTI	
10		84370092		1	SUPORTE, Air Cleaner ISM	BRACKET	SOPORTE	STAFFA	225S
					SUPPORT	HALTERUNG	BESLAG	STEUN	
11		87016557		3	PARAFUSO, Hex Flg Hd, M8 x 25				
						SELF-TAP SCREW	TORNILLO AUTORROSC	VITE AUTOFILETTANTE	062V
					VIS AUTOTARAUDEUSE	SELBSTSCHN SCHRAUE	SELVLÅSENDE BOLT	ZELFTAPPENDE SCHRO	
12		87040758		1	BRAÇADEIRA MANGUEIRA, #52 Wormgear				
						HOSE CLAMP	ABRAZADERA DE MANG	FASCETTA STRINGITUB	P729
					COLLIER POUR FLEXIBL	SCHLAUCHSCHELLE	SLANGEKLEMME	SLANGKLEM	
13		9804260		2	PARAFUSO, Hex Flg, M8 x 30, 8.8, Full Thd				
						BOLT	PERNO	BULLONE	140B
					VIS	SCHRAUBE	BOLT	BOUT	
14		83910871		1	BRAÇADEIRA	CLAMP	ABRAZADERA	MORSETTO	120M
					COLLIER	KLEMME	SPÆNDEBÅND	KLEM	
15		84308151		2	PLACA DE MONTAGEM, Muffler				
						MOUNTING PLATE	PLACA DE MONTAJE	PIASTRA DI MONTAGGI(	109P
					PLAQUE DE MONTAGE	MONTAGEPLATTE	MONTERINGSPLADE	BEVESTIGINGSPLAAT	
16		9804277		4	PORCA, M8 x 1.25, Flg, Cl 8				
						NUT	TUERCA	DADO	010D
					ECROU	MUTTER	MØTRIK	MOER	
17		86050202		1	BRAÇADEIRA MANGUEIRA, #32, 1.56/2.50 Type F Worm				
						HOSE CLAMP	ABRAZADERA DE MANG	FASCETTA STRINGITUB	P729
					COLLIER POUR FLEXIBL	SCHLAUCHSCHELLE	SLANGEKLEMME	SLANGKLEM	

10.254.04		p1	02/11

INTAKE MANIFOLD
INTAKE MANIFOLD
BLOQUE DE ADMISIÓN
COLLETTORE D'ASPIRAZIONE

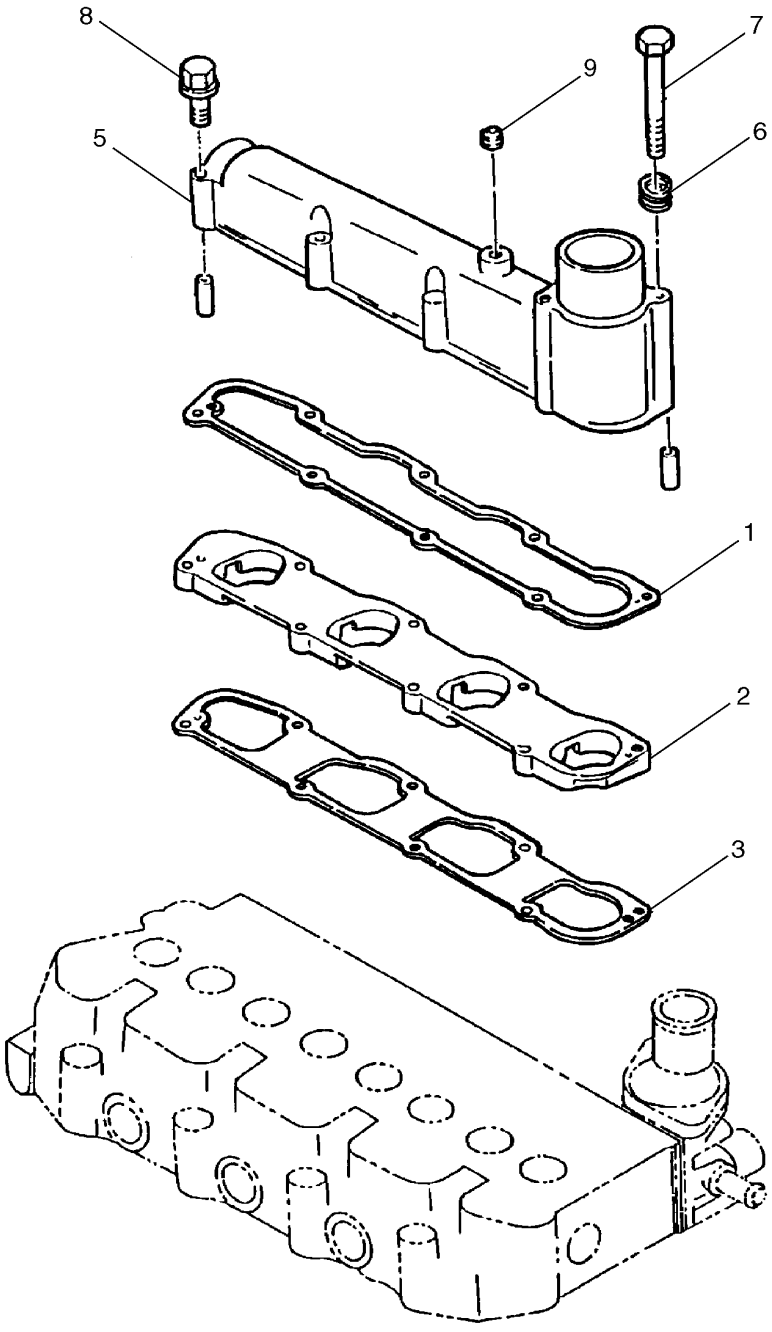

BS04M084

COLLECTEUR D'ADMISSION
EINLASSKRÜMMER
INDSUGNINGSMANIFOLD
INLAATVERDEELSTUK

R	N	P.N.	MOD	Q	Denominação Description Bezeichnung	Description Bezeichnung	Denominacion Beskrivelse	Descrizione Beschrijving	L.C.
1		SBA135996880		1	JUNTA DO COLETOR, Intake JOINT DE COLLECTEUR	MANIFOLD GASKET KRÜMMERDICHTUNG	JUNTA DE COLECTOR PAKNING, MANIFOLD	GUARNIZIONE COLLETT SPRUITSTUKPAKKING	125G
2		SBA135596920		1	ESPAÇADOR ENTRETOISE	SPACER DISTANZSTÜCK	SEPARADOR AFSTANDSSTYKKE	DISTANZIALE AFSTANDSSTUK	075D
3		SBA135996870		1	JUNTA, Spacer JOINT	GASKET DICHTUNG	JUNTA PAKNING	GUARNIZIONE PAKKING	123G
4		SBA030300414		2	PINO, Spring BROCHE	PIN PIN	PASADOR STIFT	PERNO PEN	080P
5		SBA135596710		1	COLETOR DE ADMISSÃO COLLECTEUR D'ADMISS	INLET MANIFOLD EINLASSKRÜMMER	COLECTOR DE ADMISIÓ INDSUGNINGSMANIFOL	COLLETTORE DI ASPIRA INLAATSPRUITSTUK	225C
6		SBA027100006		2	ARRUELA PLANA, M6 RONDELLE	WASHER UNTERLEGSCHEIBE	ARANDELA FLADSKIVE	RONDELLA SLUITRING	131R
7		SBA010109119		2	PARAFUSO VIS	BOLT SCHRAUBE	PERNO BOLT	BULLONE BOUT	140B
8		SBA011310660		6	PARAFUSO VIS	BOLT SCHRAUBE	PERNO BOLT	BULLONE BOUT	140B
9		SBA064500010		1	BUJÃO BOUCHON	PLUG STOPFEN	TAPÓN PROP	TAPPO PLUG	050T

10.304.01		p1	02/11

OIL PUMP & SUCTION FILTER
OIL PUMP & SUCTION FILTER
BOMBA DEL ACEITE Y FILTRO SUCCIÓN
POMPA DELL'OLIO E FILTRO DI ASPIRAZIONE

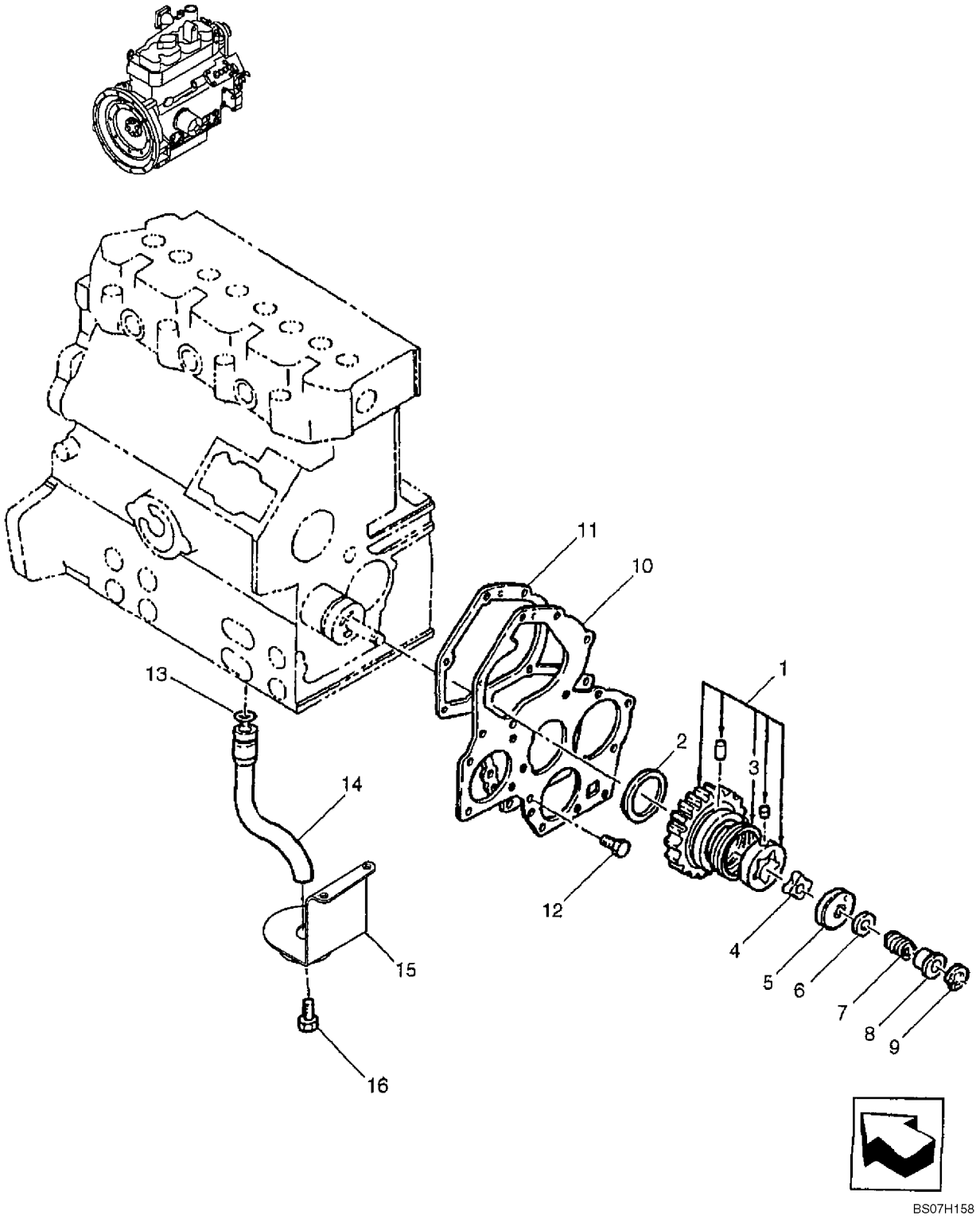

POMPE À HUILE ET CRÉPINE D'ASPIRATION
ÖLPUMPE UND ANSAUGFILTER
OLIEPUMPE & SUGEFILTER
OLIEPOMP & ZUIGFILTER

R	N	P.N.	MOD	Q	Denominação Description	Description Bezeichnung	Denominacion Beskrivelse	Descrizione Beschrijving	L.C.
1		SBA165026230		1	ENGRENAGEM INTERMEDIÁRIA, Incl. Ref 3				
						IDLER GEAR	PIÑÓN LOCO	INGRANAGGIO DI RINVI(	053I
					PIGNON INTERMEDIAIRI	ZWISCHENRAD	MELLEMHJUL	TUSSENTANDWIEL	
2		SBA199266270		1	ANEL DE ENCOSTO	WASHER, THRUST	ANILLO DE APOYO	ANELLO APPOGGIO	046A
					RONDELLE DE BUTEE	DRUCKSCHEIBE	WASHER, THRUST	WASHER, THRUST	
3		SBA198216821		1	MOLA	SPRING	RESORTE	MOLLA	100M
					RESSORT	FEDER	FJEDER	VEER	
4		SBA140166250		1	GEROTOR	GEROTOR	GEROTOR	GEROTOR	T046
					GEROTOR	GEROTOR	GEROTOR	GEROTOR	
5		SBA140116220		1	COBERTURA, Oil Pump	COVER	COBERTURA	COPERTURA	271C
					COUVERTURE	ABDECKUNG	COVER	COVER	
6		SBA199286150		1	CALÇO DE AFINAÇÃO, 0.1mm Thk				
						SHIM	SUPLEMENTO	SPESSORE	198S
					CALE	AUSGLEICHSSCHEIBE	MELLEMLÆG	VULPLAATJE	
6		SBA199286160		1	CALÇO DE AFINAÇÃO, 0.15mm Thk				
						SHIM	SUPLEMENTO	SPESSORE	198S
					CALE	AUSGLEICHSSCHEIBE	MELLEMLÆG	VULPLAATJE	
6		SBA199286170		1	CALÇO DE AFINAÇÃO, 0.2mm Thk				
						SHIM	SUPLEMENTO	SPESSORE	198S
					CALE	AUSGLEICHSSCHEIBE	MELLEMLÆG	VULPLAATJE	
6		SBA199286180		1	CALÇO DE AFINAÇÃO, 0.5mm Thk				
						SHIM	SUPLEMENTO	SPESSORE	198S
					CALE	AUSGLEICHSSCHEIBE	MELLEMLÆG	VULPLAATJE	
7		SBA198216720		1	MOLA	SPRING	RESORTE	MOLLA	100M
					RESSORT	FEDER	FJEDER	VEER	
8		SBA199236540		1	COLAR	COLLAR	COLLAR	COLLARE	031F
					COLLIER	RINGE	SLANGEBÅND	KRAAG	
9		SBA036800010		1	ANEL DE PRESSÃO	SNAP RING	ANILLO DE RESORTE	ANELLO ELASTICO	054A
					ANNEAU D'ARRET	SPRENGRING	LÅSERING	VEERRING	
10		SBA165166650		1	PLACA, Plate, Front	PLATE	PLACA	PIASTRA	105P
					PLAQUE	PLATTE	PLADE	PLAAT	
11		SBA165996540		1	JUNTA	GASKET	JUNTA	GUARNIZIONE	123G
					JOINT	DICHTUNG	PAKNING	PAKKING	
12		SBA011310612		2	PARAFUSO CABEÇA FLANGEADA, Hex, M6 x 12, Cl 8.8				
						CAPTIVE WASHER SCRE	TORNILLO DE ARAND. C	VITE RONDELLA PRIGIO	A091
					VIS A RONDELLE CAPTI'	SCHRAUBE M UNVERL U	SKRUE, FORMONTERET	SCHROEF MET RONDSE	
13		SBA052109076		1	O-RING	O-RING	JUNTA TÓRICA	ANELLO TOROIDALE	055A
					JOINT TORIQUE	O-RING	O-RING	O-RING	
14		SBA140986820		1	TUBO	TUBE	TUBO	TUBO	195T
					TUBE	ROHR	RØR	LEIDING	
15		SBA140406490		1	FILTRO TELA	FILTER SCREEN	PANTALLA DE FILTRO	FILTRO A RETE	7440
					TAMIS-FILTRE	FILTERSIEB	FILTERSI	FILTERZEEF	
16		SBA011310612		2	PARAFUSO CABEÇA FLANGEADA, Hex, M6 x 12, Cl 8.8				
						CAPTIVE WASHER SCRE	TORNILLO DE ARAND. C	VITE RONDELLA PRIGIO	A091
					VIS A RONDELLE CAPTI'	SCHRAUBE M UNVERL U	SKRUE, FORMONTERET	SCHROEF MET RONDSE	

10.400.01		p1	05/11

COOLING COMPONENTS MID ISM (SR175,SV185)
COOLING COMPONENTS MID ISM (SR175,SV185)
COOLING COMPONENTS MID ISM (SR175,SV185)
COOLING COMPONENTS MID ISM (SR175,SV185)

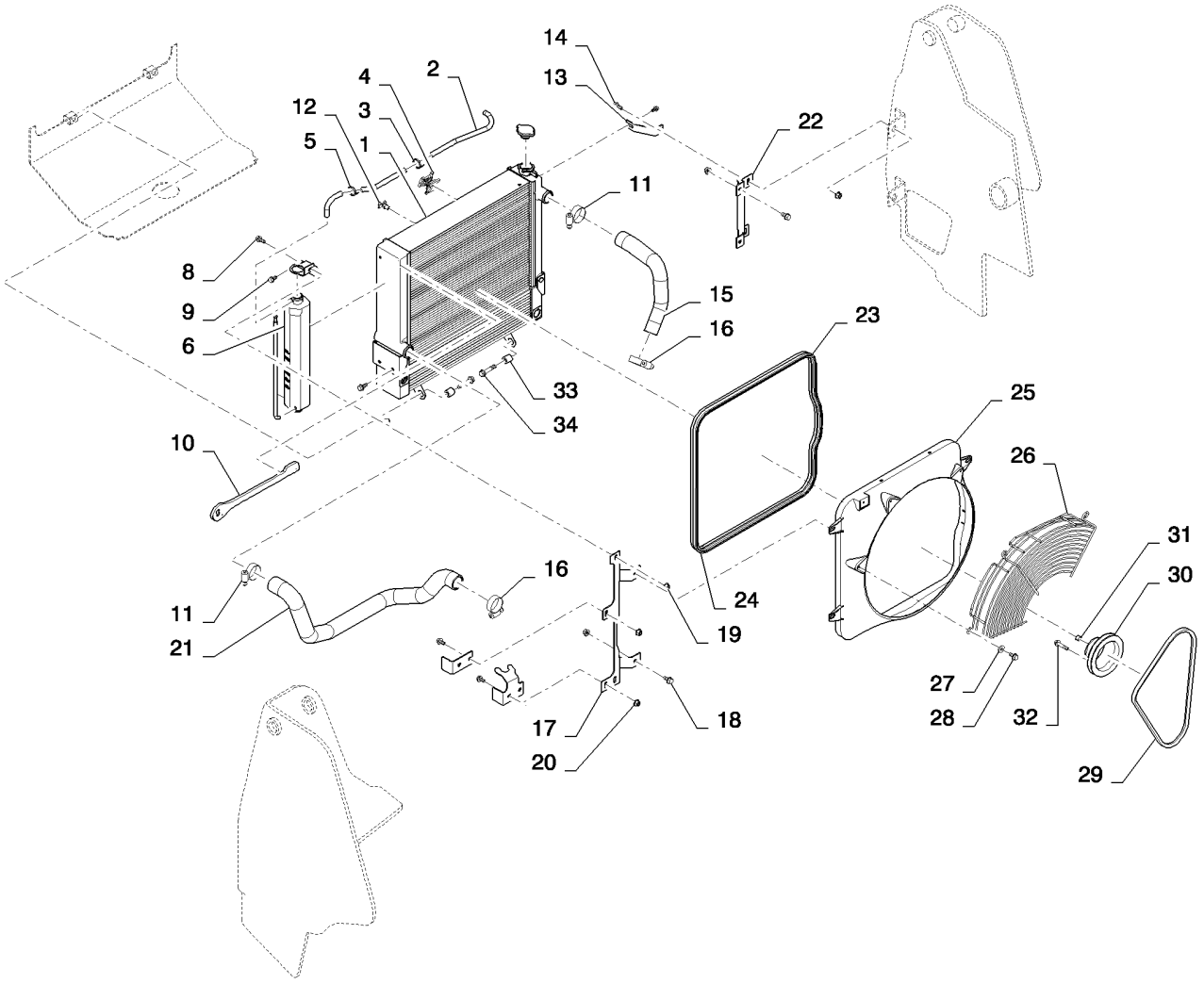

COOLING COMPONENTS MID ISM (SR175,SV185)
COOLING COMPONENTS MID ISM (SR175,SV185)
COOLING COMPONENTS MID ISM (SR175,SV185)
COOLING COMPONENTS MID ISM (SR175,SV185)

R	N	P.N.	MOD	Q	Denominação Description	Description Bezeichnung	Denominacion Beskrivelse	Descrizione Beschrijving	L.C.
1		84201142		1	MÓDULO, Radiator and Cooling, Medium				
						MODULE	MÓDULO	MODULO	T102
					MODULE	MODUL	MODUL	MODULE	
2		84268809		1	MANGUEIRA, Coolant Recovery				
						HOSE	TUBO	TUBO FLESSIBILE	030M
					FLEXIBLE	SCHLAUCH	SLANGE	SLANG	
3		L11541		2	PRENDEDOR DE CABOS, Nylon Tie, 7-8in				
						CABLE STRAP	BANDA DE CABLE	FASCETTA PER CAVO	P716
					BRIDE DE CABLE	KABELBINDER	KABELSTROP	BUNDELBAND	
4		84318895		2	ESPAÇADOR, Swivel Tie, Base				
						SPACER	SEPARADOR	DISTANZIALE	075D
					ENTRETOISE	DISTANZSTÜCK	AFSTANDSSTYKKE	AFSTANDSSTUK	
5		L18331		4	PRENDEDOR DE CABOS, Nylon Tie, 15.5in				
						CABLE STRAP	BANDA DE CABLE	FASCETTA PER CAVO	P716
					BRIDE DE CABLE	KABELBINDER	KABELSTROP	BUNDELBAND	
6		87020980		1	RESERVAT EXPANS LÍQ ARREF, Recovery				
						COOLANT EXPANSION F	DEP. EXP. REFRIGERAN	SERB. ESPANS. LIQ. RAI	117S
					RESERV. EXP. LIQ. REFI	KÜHLM-AUSGLEICHSBE	VAKUMTANK	EXPANSIETANK KOELSY	
7		84254071		1	SUPORTE, Coolant Bottle, Upper				
						BRACKET	SOPORTE	STAFFA	225S
					SUPPORT	HALTERUNG	BESLAG	STEUN	
8		9804258		1	PARAFUSO, Hex Flg, M8 x 20, 8.8				
						BOLT	PERNO	BULLONE	140B
					VIS	SCHRAUBE	BOLT	BOUT	
9		86511841		2	PARAFUSO, Hex Flg, M8 x 16, 8.8				
						BOLT	PERNO	BULLONE	140B
					VIS	SCHRAUBE	BOLT	BOUT	
10		84350590		1	SUPORTE, Coolant Recovery				
						SUPPORT	SOPORTE	SUPPORTO	300S
					SUPPORT	STÜTZE	BESLAG	STEUN	
11		84674		2	BRAÇADEIRA MANGUEIRA, #28, 1.31/2.25 Type F Worm				
						HOSE CLAMP	ABRAZADERA DE MANG	FASCETTA STRINGITUB	P729
					COLLIER POUR FLEXIBL	SCHLAUCHSCHELLE	SLANGEKLEMME	SLANGKLEM	
12		86625234		1	TORNEIRA, Drain	COCK	LLAVE DE PASO	RUBINETTO	P148
					ROBINET	HAHN	HANE	KRAAN	
13		84259564		1	SUPORTE, Radiator Mount	BRACKET	SOPORTE	STAFFA	225S
					SUPPORT	HALTERUNG	BESLAG	STEUN	
14		9804261		1	PARAFUSO, Hex Flg, M10 x 25, 8.8				
						BOLT	PERNO	BULLONE	140B
					VIS	SCHRAUBE	BOLT	BOUT	
15		84314802		1	TUBO FLEXÍVEL, Upper, Coolant				
						FLEXIBLE HOSE	TUBO FLEXIBLE	TUBO FLESSIBILE	192T
					TUYAU FLEXIBLE	BIEGSAMER SCHLAUCH	FLEKSIBEL SLANGE	FLEXIBELE SLANG	
16		507586		2	BRAÇADEIRA MANGUEIRA, #20, 0.81/1.75 Type F Worm				
						HOSE CLAMP	ABRAZADERA DE MANG	FASCETTA STRINGITUB	P729
					COLLIER POUR FLEXIBL	SCHLAUCHSCHELLE	SLANGEKLEMME	SLANGKLEM	
17		84259396		1	SUPORTE, Fan Shroud, RH	BRACKET	SOPORTE	STAFFA	225S
					SUPPORT	HALTERUNG	BESLAG	STEUN	

10.400.01		p2	05/11

COOLING COMPONENTS MID ISM (SR175,SV185)
COOLING COMPONENTS MID ISM (SR175,SV185)
COOLING COMPONENTS MID ISM (SR175,SV185)
COOLING COMPONENTS MID ISM (SR175,SV185)

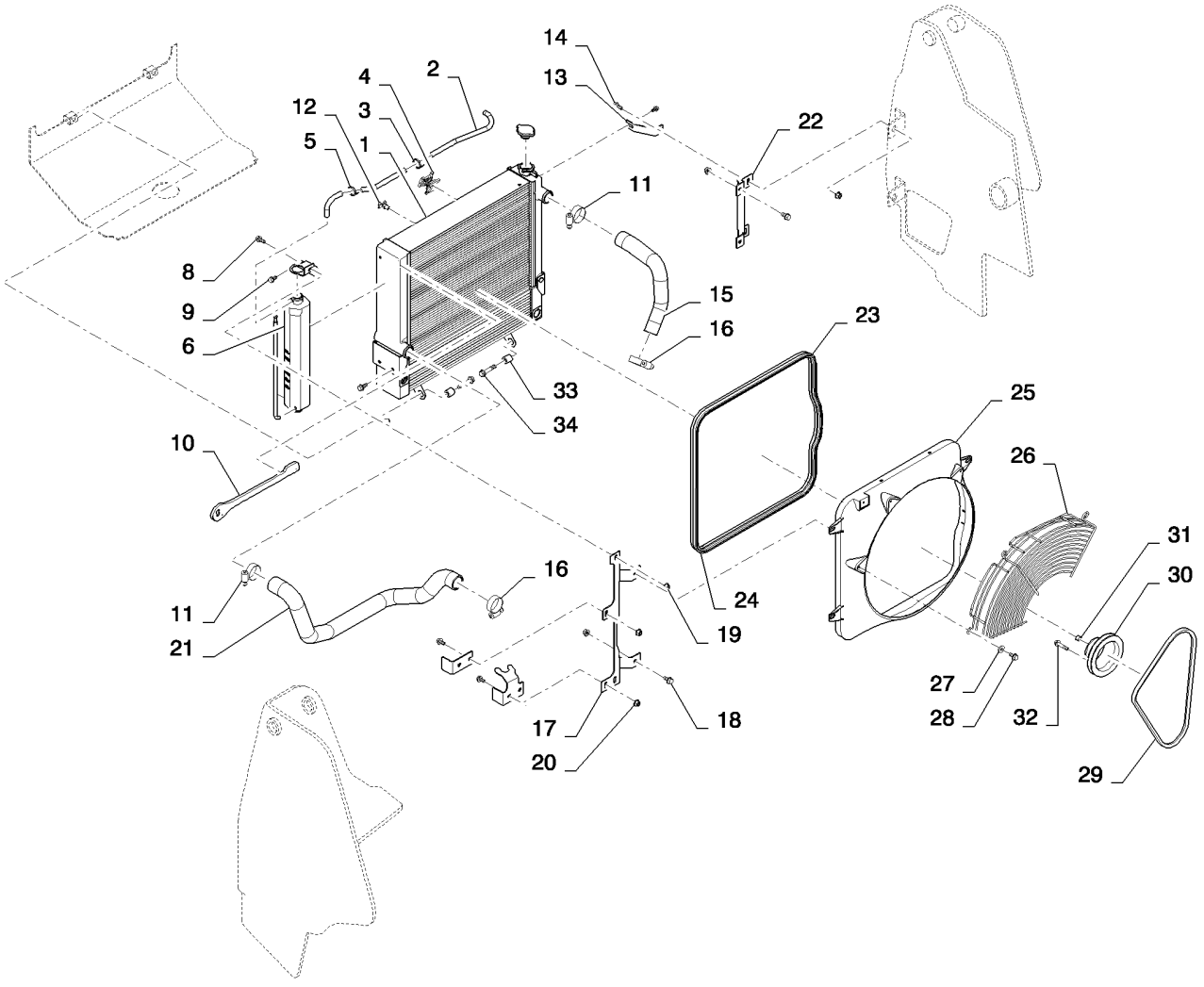

COOLING COMPONENTS MID ISM (SR175,SV185)
COOLING COMPONENTS MID ISM (SR175,SV185)
COOLING COMPONENTS MID ISM (SR175,SV185)
COOLING COMPONENTS MID ISM (SR175,SV185)

R	N	P.N.	MOD	Q	Denominação Description	Description Bezeichnung	Denominacion Beskrivelse	Descrizione Beschrijving	L.C.
18		86050286		7	PARAFUSO FLANGEADO, Hex, M10 x 20, 8.8, Full Thd				
						FLANGE BOLT	PERNO DE CORONA	BULLONE FLANGIATO	A027
					VIS A EMBASE	FLANSCHSCHRAUBE	FLANGEBOLT	FLENSBOUT	
19		86505868		1	PORCA, M8, Flg Ser	NUT	TUERCA	DADO	010D
					ECROU	MUTTER	MØTRIK	MOER	
20		86619802		4	CONTRA PORCA, M10	LOCK NUT	TUERCA DE BLOQUEO	DADO DI BLOCCAGGIO	P263
					CONTRE-ECROU	SICHERUNGSMUTTER	LÅSEMØTRIK	BORGMOER	
21		84287179		1	MANGOTE, Lower, Coolant	HOSE,LARGE	Manguito	TUBO FLESSIBILE,GRDE	Z336
					Durite	SCHLAUCH	HOSE,LARGE	HOSE,LARGE	
20		43435		4	PORCA, M10, Flg Ser	NUT	TUERCA	DADO	010D
					ECROU	MUTTER	MØTRIK	MOER	
22		84259397		1	SUPORTE, Fan Shroud, LH	BRACKET	SOPORTE	STAFFA	225S
					SUPPORT	HALTERUNG	BESLAG	STEUN	
23		84277010		1	VEDAÇÃO, Bulb	SEAL	ANILLO DE CIERRE	GUARNIZIONE; TENUTA	132A
					JOINT	DICHTUNG	PAKNING	AFDICHTING	
24		84277011		1	VEDAÇÃO, Bulb	SEAL	ANILLO DE CIERRE	GUARNIZIONE; TENUTA	132A
					JOINT	DICHTUNG	PAKNING	AFDICHTING	
25		84314229		1	COBERTURA, 450mm, Fan	SHROUD	PROTECTOR	RIPARO	7830
					PROTECTION	VERKLEIDUNG	DÆKKE	MANTEL	
26		84335905		1	PROTEÇÃO, Fan	GUARD	DEFENSA	PROTEZIONE	070R
					PROTECTION	SCHUTZABDECKUNG	BESKYTTELSESSKÆRM	AFSCHERMING	
27		84137412		3	PARAFUSO, Bosscrew, M6 X 18				
						SCREW	TORNILLO	VITE	040V
					VIS	SCHRAUBE	SKRUE	SCHROEF	
28		86624182		3	ARRUELA PLANA, M6 x 18 x 1.6				
						WASHER	ARANDELA	RONDELLA	131R
					RONDELLE	UNTERLEGSCHEIBE	FLADSKIVE	SLUITRING	
29		84314786		1	CORREIA, V-Belt	BELT	CORREA	CINGHIA	174C
					COURROIE	RIEMEN	REM	RIEM	
30		84298023		1	POLIA, Fan ISM	PULLEY	POLEA	PULEGGIA	230P
					POULIE	RIEMENSCHEIBE	REMSKIVE	RIEMSCHIJF	
31		84401342		1	ESPAÇADOR, Pilot	SPACER	SEPARADOR	DISTANZIALE	075D
					ENTRETOISE	DISTANZSTÜCK	AFSTANDSSTYKKE	AFSTANDSSTUK	
32		87026500		4	PARAFUSO, Hex Flg, M6 x 50, 8.8				
						BOLT	PERNO	BULLONE	140B
					VIS	SCHRAUBE	BOLT	BOUT	
33		87626729		2	ESPAÇADOR, Hinge, Pivot	SPACER	SEPARADOR	DISTANZIALE	075D
					ENTRETOISE	DISTANZSTÜCK	AFSTANDSSTYKKE	AFSTANDSSTUK	
34		87301277		2	PARAFUSO, M12 X 60	BOLT	PERNO	BULLONE	140B
					VIS	SCHRAUBE	BOLT	BOUT	

10.402.01		p1	02/11

WATER PUMP
WATER PUMP
BOMBA DEL AGUA
POMPA DELL'ACQUA

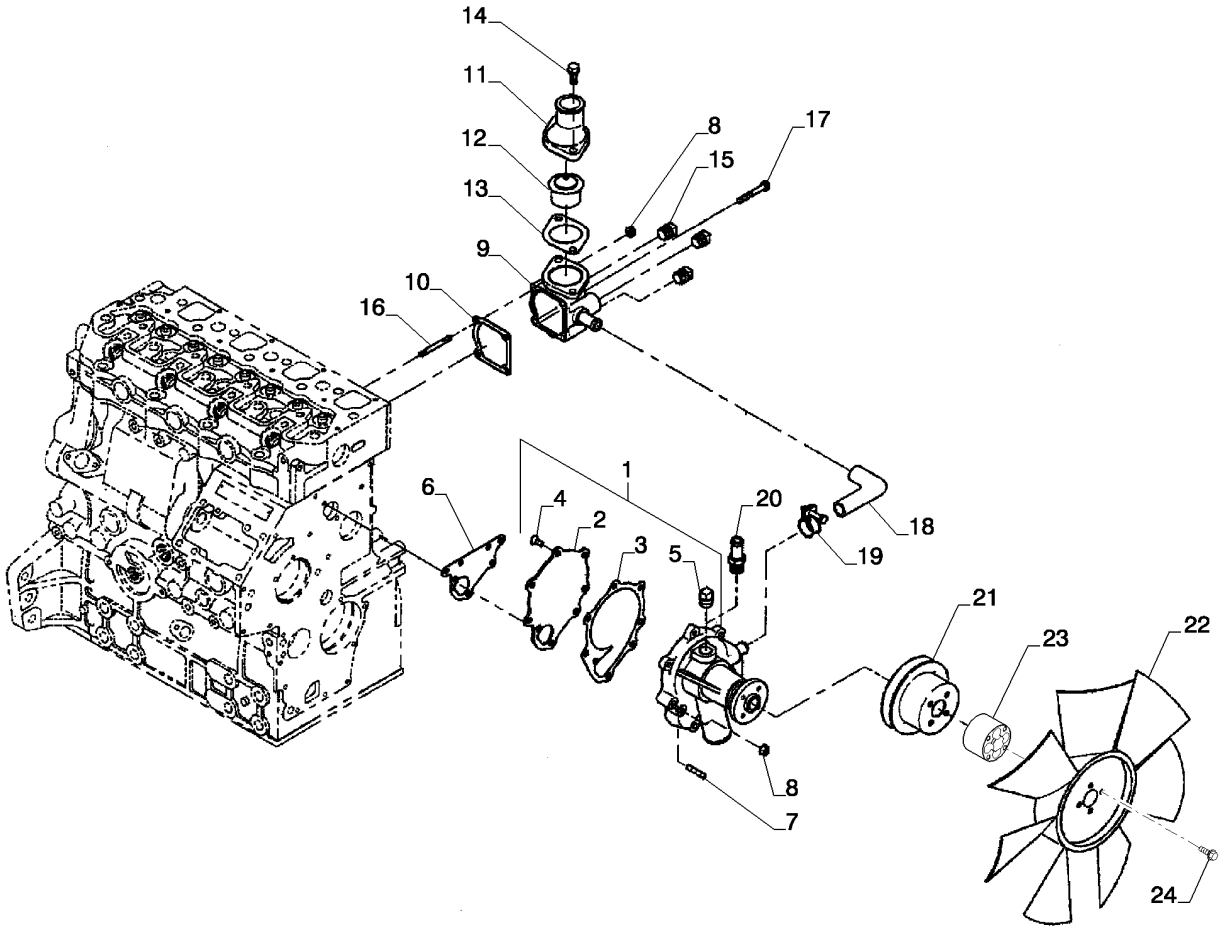

POMPE À EAU
WASSERPUMPE
VANDPUMPE
WATERPOMP

R	N	P.N.	MOD	Q	Denominação Description	Description Bezeichnung	Denominacion Beskrivelse	Descrizione Beschrijving	L.C.
1		SBA145017730		1	BOMBA DE ÁGUA, Incl. Ref 2 - 5				
						WATER PUMP	BOMBA DE AGUA	POMPA ACQUA	152P
					POMPE A EAU	WASSERPUMPE	VANDPUMPE	WATERPOMP	
2		SBA145146320		1	PLACA, Set	PLATE	PLACA	PIASTRA	105P
					PLAQUE	PLATTE	PLADE	PLAAT	
3		SBA145996680		1	JUNTA	GASKET	JUNTA	GUARNIZIONE	123G
					JOINT	DICHTUNG	PAKNING	PAKKING	
4		SBA015300614		5	PARAFUSO	SCREW	TORNILLO	VITE	040V
					VIS	SCHRAUBE	SKRUE	SCHROEF	
5		SBA064500030		4	BUJÃO, 3/8"	PLUG	TAPÓN	TAPPO	050T
					BOUCHON	STOPFEN	PROP	PLUG	
6		SBA145996670		1	JUNTA	GASKET	JUNTA	GUARNIZIONE	123G
					JOINT	DICHTUNG	PAKNING	PAKKING	
7		SBA012110635		4	PRISIONEIRO	STUD	PRISIONERO	PRIGIONIERO	210P
					GOUJON	GEWINDEBOLZEN	STØTTEBOLT	TAPEIND	
8		9804276		7	PORCA, M6 x 1, Flg, Cl 8	NUT	TUERCA	DADO	010D
					ECROU	MUTTER	MØTRIK	MOER	
9		SBA145216640		1	ALOJAMENTO, Thermostat	HOUSING	ALOJAMIENTO	ALLOGGIAMENTO	014V
					CARTER	GEHÄUSE	HUS	HUIS	
10		SBA145996710		1	JUNTA	GASKET	JUNTA	GUARNIZIONE	123G
					JOINT	DICHTUNG	PAKNING	PAKKING	
11		SBA145226340		1	COBERTURA, Thermostat	COVER	CUBIERTA	COPERCHIO	265C
					COUVERCLE	ABDECKUNG	DÆKSEL	AFSCHERMING	
12		SBA145206220		1	TERMOSTATO, 71° C (160° F), 1.875" OD x 2.2" H				
						THERMOSTAT	TERMOSTATO	TERMOSTATO	096T
					THERMOSTAT	THERMOSTAT	TERMOSTAT	THERMOSTAAT	
13		SBA145996051		1	JUNTA	GASKET	JUNTA	GUARNIZIONE	123G
					JOINT	DICHTUNG	PAKNING	PAKKING	
14		SBA010800820		2	PARAFUSO	BOLT	PERNO	BULLONE	140B
					VIS	SCHRAUBE	BOLT	BOUT	
15		SBA064500030		3	BUJÃO, 3/8"	PLUG	TAPÓN	TAPPO	050T
					BOUCHON	STOPFEN	PROP	PLUG	
16		SBA012100655		2	PRISIONEIRO	STUD	PRISIONERO	PRIGIONIERO	210P
					GOUJON	GEWINDEBOLZEN	STØTTEBOLT	TAPEIND	
17		SBA011310655		2	PARAFUSO, Hex, M6 x 55, Cl 8.8				
						BOLT	PERNO	BULLONE	140B
					VIS	SCHRAUBE	BOLT	BOUT	
18		SBA145336051		1	MANGUEIRA	HOSE	TUBO	TUBO FLESSIBILE	030M
					FLEXIBLE	SCHLAUCH	SLANGE	SLANG	
19		SBA067100022		2	BRAÇADEIRA MANGUEIR	HOSE CLAMP	ABRAZADERA DE MANG	FASCETTA STRINGITUB	P729
					COLLIER POUR FLEXIBL	SCHLAUCHSCHELLE	SLANGEKLEMME	SLANGKLEM	
20		SBA198487870		1	NIPLE	NIPPLE	BOQUILLA	NIPPLO	A065
					GRAISSEUR	NIPPEL	NIPPEL	NIPPEL	
21		84298023		1	POLIA	PULLEY	POLEA	PULEGGIA	230P
					POULIE	RIEMENSCHEIBE	REMSKIVE	RIEMSCHIJF	
22		84371084		1	VENTILADOR, Clockwise, Pusher				
						FAN	VENTILADOR	VENTOLA	030V
					VENTILATEUR	GEBLÄSE	VENTILATOR	VENTILATOR	

10.402.01		p2	02/11

WATER PUMP
WATER PUMP
BOMBA DEL AGUA
POMPA DELL'ACQUA

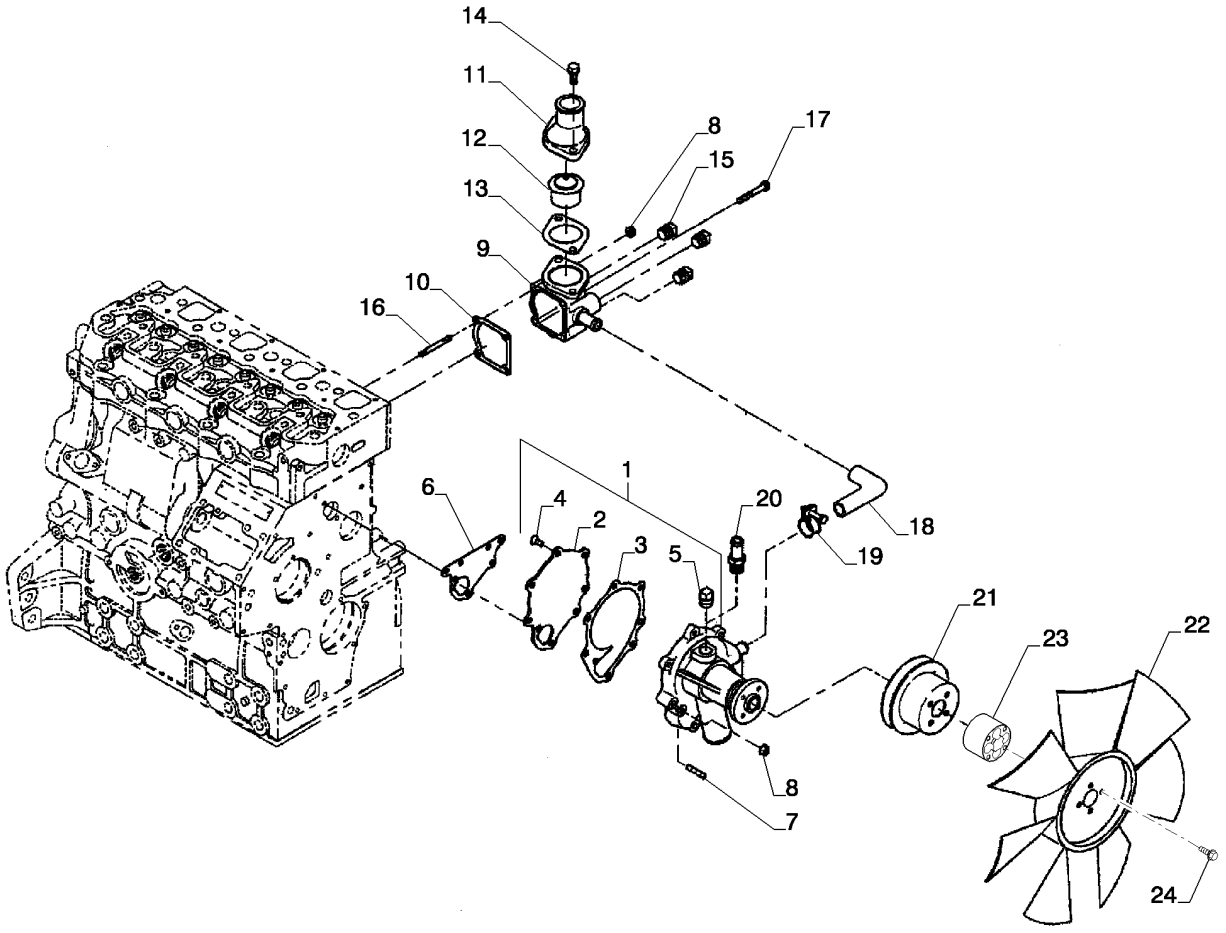

POMPE À EAU
WASSERPUMPE
VANDPUMPE
WATERPOMP

R	N	P.N.	MOD	Q	Denominação Description	Description Bezeichnung	Denominacion Beskrivelse	Descrizione Beschrijving	L.C.
23		**84374543**		1	ESPAÇADOR ENTRETOISE	SPACER DISTANZSTÜCK	SEPARADOR AFSTANDSSTYKKE	DISTANZIALE AFSTANDSSTUK	075D
24		**86511842**		4	PARAFUSO, Hex Flg, M8 x 40, 8.8 BOLT VIS	 BOLT SCHRAUBE	 PERNO BOLT	 BULLONE BOUT	140B

10.406.01	01	p1	04/11

RADIADOR - SISTEMA DE RECUPERAÇÃO DO FLUIDO DE REFRIGERAÇÃO
RADIATOR/OIL COOLER - COOLANT RECOVERY SYSTEM
RADIADOR - SISTEMA DE RECUPERACION DEL REFRIGERANTE
RADIATORE - SISTEMA DI RECUPERO DEL REFRIGERANTE

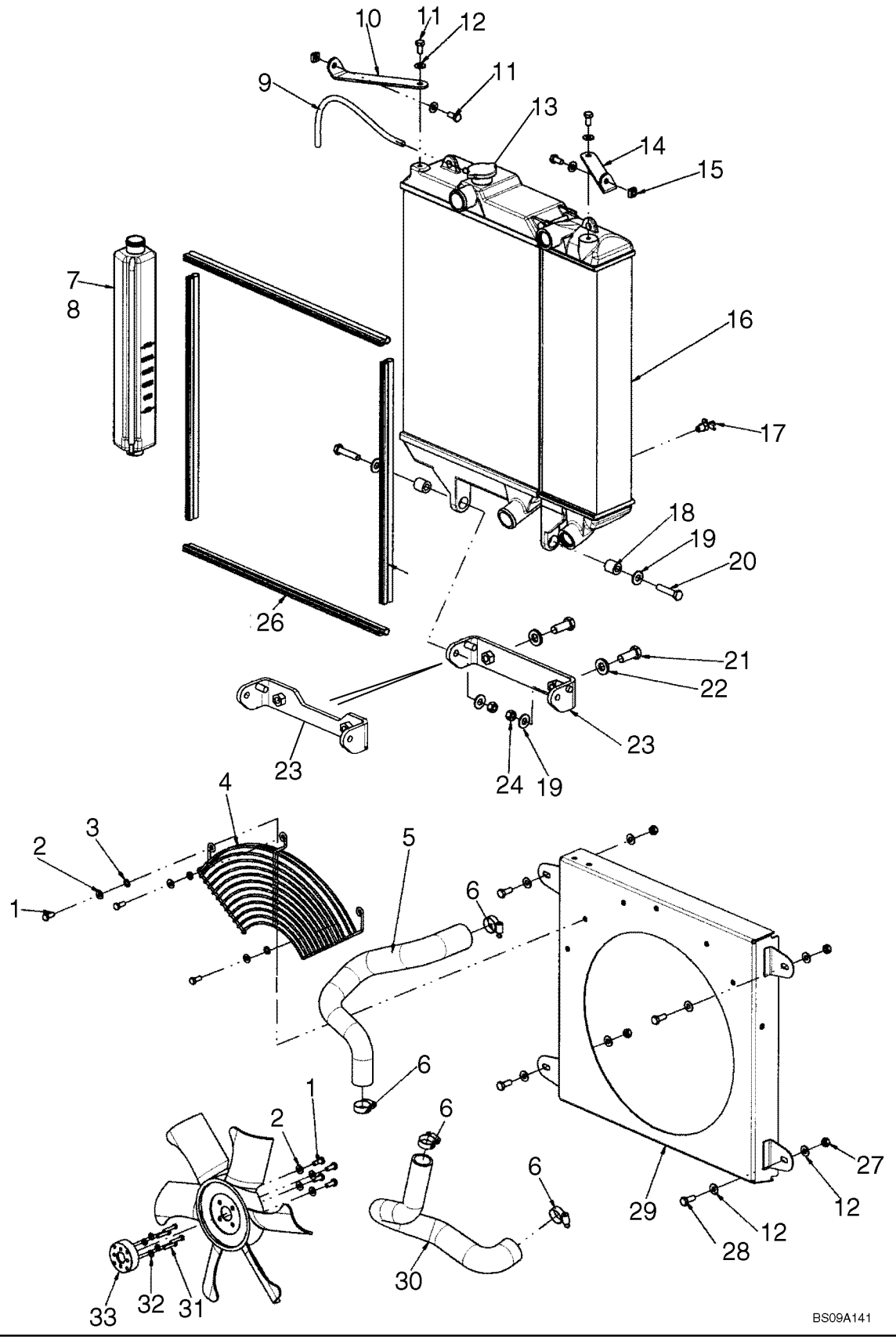

RADIATEUR - CIRCUIT DE RECUPERATION DU LIQUIDE DE REFROIDISSEMENT
KÜHLER - KÜHLMITTEL-RÜCKGEWINNUNGSSYSTEM
KØLER - KØLEMIDDELGENINDVINDINGSSYSTEM
RADIATOR - KOELVLOEISTOFOPVANGSYSTEEM

R	N	P.N.	MOD	Q	Denominação Description	Description Bezeichnung	Denominacion Beskrivelse	Descrizione Beschrijving	L.C.
1		120104		7	PARAFUSO, Hex, M8 x 20, 8.8				
						SCREW	TORNILLO	VITE	040V
					VIS	SCHRAUBE	SKRUE	SCHROEF	
2		322358		7	ARRUELA DE PRESSÃO, M8				
						BELLEVILLE WASHER	ARANDELA BELLEVILLE	RONDELLA BELLEVILLE	A143
					RONDELLE BELLEVILLE	TELLERFEDER	BELLEVILLE-SPÆNDSKI'	SCHOTELVEER	
3		86624184		3	ARRUELA PLANA, M8 x 16 x 1.6				
						WASHER	ARANDELA	RONDELLA	131R
					RONDELLE	UNTERLEGSCHEIBE	FLADSKIVE	SLUITRING	
4		87018958		1	PROTEÇÃO, Fan Guard	GUARD	DEFENSA	PROTEZIONE	070R
					PROTECTION	SCHUTZABDECKUNG	BESKYTTELSESSKÆRM	AFSCHERMING	
5		87661366		1	MANGUEIRA DO RADIADOR, 34.00 mm ID, 45.00 mm ID x 277.80 mm, SAE 20R4 Class D1 Or D2, Formed, Upper				
						RADIATOR HOSE	TUBO DE RADIADOR	TUBO FLESSIBILE RADI/	A060
					FLEXIBLE DE RADIATEU	KÜHLERSCHLAUCH	SLANGE, KØLER	RADIATEURSLANG	
6		84674		2-4	BRAÇADEIRA MANGUEIRA, #28, 1.31/2.25 Type F Worm, If Used				
						HOSE CLAMP	ABRAZADERA DE MANG	FASCETTA STRINGITUB	P729
					COLLIER POUR FLEXIBL	SCHLAUCHSCHELLE	SLANGEKLEMME	SLANGKLEM	
6		86050202		2	BRAÇADEIRA MANGUEIRA, #32, 1.56/2.50 Type F Worm				
						HOSE CLAMP	ABRAZADERA DE MANG	FASCETTA STRINGITUB	P729
					COLLIER POUR FLEXIBL	SCHLAUCHSCHELLE	SLANGEKLEMME	SLANGKLEM	
7		87020980		1	RESERVAT EXPANS LÍQ ARREF, Coolant Recovery Bottle; Incl. 8				
						COOLANT EXPANSION F	DEP. EXP. REFRIGERAN	SERB. ESPANS. LIQ. RAI	117S
					RESERV. EXP. LIQ. REFI	KÜHLM-AUSGLEICHSBE	VAKUMTANK	EXPANSIETANK KOELSY	
8		257884A1		1	BUJAO, Cap	PLUG	TAPON	TAPPO	6400
					BOUCHON	STOPFEN	PLUG	PLUG	
9		87534725		1	MANGUEIRA, 7.90 mm ID x 105.00 mm, SAE J20, SAE 20R3, Coolant Recovery				
						HOSE	TUBO	TUBO FLESSIBILE	030M
					FLEXIBLE	SCHLAUCH	SLANGE	SLANG	
10		87651799		1	SUPORTE, Upper Radiator Mount, RH				
						BRACKET	SOPORTE	STAFFA	225S
					SUPPORT	HALTERUNG	BESLAG	STEUN	
11		43138		3-4	PARAFUSO, Hex, M10 x 20, 8.8, Full Thd				
						BOLT	PERNO	BULLONE	140B
					VIS	SCHRAUBE	BOLT	BOUT	
12		140045		8-12	ARRUELA DE PRESSÃO, M10				
						BELLEVILLE WASHER	ARANDELA BELLEVILLE	RONDELLA BELLEVILLE	A143
					RONDELLE BELLEVILLE	TELLERFEDER	BELLEVILLE-SPÆNDSKI'	SCHOTELVEER	
13		87687375		1	TAMPA DO RADIADOR, Radiator Cap; Included With Ref 16				
						RADIATOR CAP	TAPÓN DE RADIADOR	TAPPO DEL RADIATORE	039T
					BOUCHON DU RADIATE	KÜHLERVERSCHLUSSK/	KØLERDÆKSEL	RADIATEURDOP	
14		87651800		1	SUPORTE, Upper Radiator Mount, LH				
						BRACKET	SOPORTE	STAFFA	225S
					SUPPORT	HALTERUNG	BESLAG	STEUN	
15		230427A1		2	PORCA	NUT	TUERCA	DADO	5780
					ECROU	MUTTER	NUT	NUT	
16		87660842		1	RADIADOR, Radiator And Oil Cooler Unit; See Fig 02-02; Incl 13				
						RADIATOR	RADIADOR	RADIATORE	025R
					RADIATEUR	KÜHLER	KØLER	RADIATEUR	

10.406.01	01	p2	04/11

RADIADOR - SISTEMA DE RECUPERAÇÃO DO FLUIDO DE REFRIGERAÇÃO
RADIATOR/OIL COOLER - COOLANT RECOVERY SYSTEM
RADIADOR - SISTEMA DE RECUPERACION DEL REFRIGERANTE
RADIATORE - SISTEMA DI RECUPERO DEL REFRIGERANTE

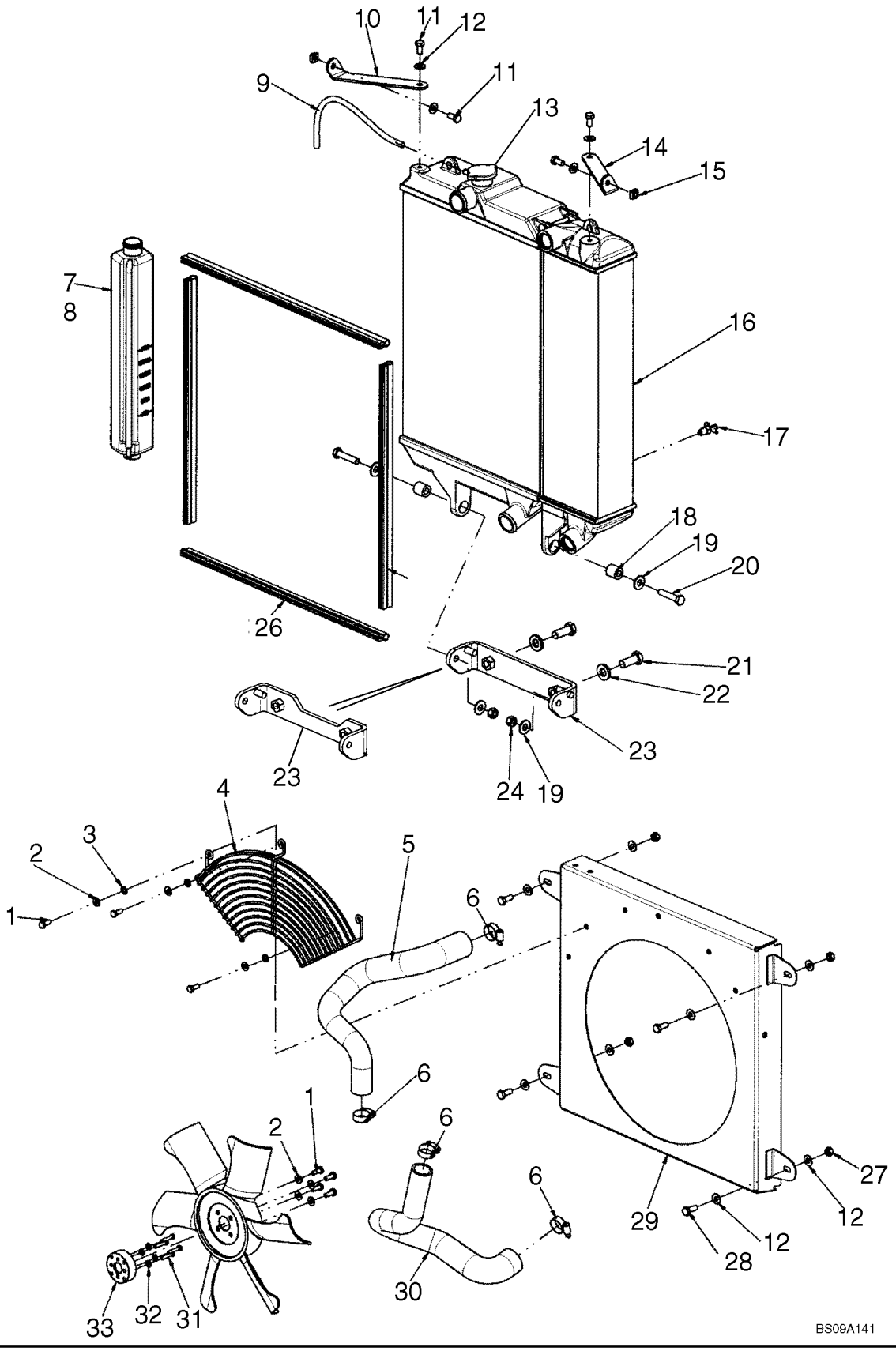

RADIATEUR - CIRCUIT DE RECUPERATION DU LIQUIDE DE REFROIDISSEMENT
KÜHLER - KÜHLMITTEL-RÜCKGEWINNUNGSSYSTEM
KØLER - KØLEMIDDELGENINDVINDINGSSYSTEM
RADIATOR - KOELVLOEISTOFOPVANGSYSTEEM

R	N	P.N.	MOD	Q	Denominação Description	Description Bezeichnung	Denominacion Beskrivelse	Descrizione Beschrijving	L.C.
17		86625234		1	TORNEIRA	COCK	LLAVE DE PASO	RUBINETTO	P148
					ROBINET	HAHN	HANE	KRAAN	
18		87626729		2	ESPAÇADOR	SPACER	SEPARADOR	DISTANZIALE	075D
					ENTRETOISE	DISTANZSTÜCK	AFSTANDSSTYKKE	AFSTANDSSTUK	
19		86625254		4	ARRUELA PLANA, M12 x 28 x 2.5, Replaces 87528989, M12 X 30 X 2.5				
						WASHER	ARANDELA	RONDELLA	131R
					RONDELLE	UNTERLEGSCHEIBE	FLADSKIVE	SLUITRING	
20		43263		2	PARAFUSO, Hex, M12 x 60, 10.9, Replaces 87021825, Hex, M12 x 55, 10.9				
						BOLT	PERNO	BULLONE	140B
					VIS	SCHRAUBE	BOLT	BOUT	
21		43168		2	PARAFUSO, Hex, M16 x 2 x 40, 8.8, Full Thd				
						BOLT	PERNO	BULLONE	140B
					VIS	SCHRAUBE	BOLT	BOUT	
22		86639326		2	ARRUELA PLANA, M17.5 x 34 x 5, HT				
						WASHER	ARANDELA	RONDELLA	131R
					RONDELLE	UNTERLEGSCHEIBE	FLADSKIVE	SLUITRING	
23		87720465		1	SUPORTE, Lower Hinge Mount; Replaces 87676100				
						BRACKET	SOPORTE	STAFFA	225S
					SUPPORT	HALTERUNG	BESLAG	STEUN	
24		87533547		2	PORCA, Nut, M12 X 1.75 10 ZND				
						NUT	TUERCA	DADO	010D
					ECROU	MUTTER	MØTRIK	MOER	
25		87648128		2	VEDAÇÃO, Bulb Seal, 562mm (22 1/8 in.)				
						SEAL	ANILLO DE CIERRE	GUARNIZIONE; TENUTA	132A
					JOINT	DICHTUNG	PAKNING	AFDICHTING	
26		87578980		2	VEDAÇÃO, Bulb Seal, 590mm (23 1/4 in.)				
						SEAL	ANILLO DE CIERRE	GUARNIZIONE; TENUTA	132A
					JOINT	DICHTUNG	PAKNING	AFDICHTING	
27		86500689		4	PORCA, M10, Cl 10, Replaces 87344209; M10				
						NUT	TUERCA	DADO	010D
					ECROU	MUTTER	MØTRIK	MOER	
28		86633356		4	PARAFUSO, Short NK, M10 x 25, Cl8.8, Full Thd, Replaces 43139, Hex, M10 x 25, 8.8				
						CARRIAGE BOLT	PERNO ALOMADO	BULLONE A TESTA TONI	P123
					VIS A TETE BOMBEE	SCHLOSSSCHRAUBE	BRÆDDEBOLT	SLOTBOUT	
29		87720450		1	COBERTURA, Fan Shroud; Replaces 87660814				
						SHROUD	PROTECTOR	RIPARO	7830
					PROTECTION	VERKLEIDUNG	DÆKKE	MANTEL	
30		87661375		1	MANGUEIRA DO RADIADOR, 34.00 mm ID, 45.00 mm ID x 322.50 mm, SAE 20R4 Class D1 Or D2, Formed, Lower				
						RADIATOR HOSE	TUBO DE RADIADOR	TUBO FLESSIBILE RADI/	A060
					FLEXIBLE DE RADIATEU	KÜHLERSCHLAUCH	SLANGE, KØLER	RADIATEURSLANG	
31		80120101		4	PARAFUSO, M6 X 30 8.8 ZND				
						BOLT	PERNO	BULLONE	140B
					VIS	SCHRAUBE	BOLT	BOUT	
32		322357		4	ARRUELA DE PRESSÃO, M6				
						BELLEVILLE WASHER	ARANDELA BELLEVILLE	RONDELLA BELLEVILLE	A143
					RONDELLE BELLEVILLE	TELLERFEDER	BELLEVILLE-SPÆNDSKI'	SCHOTELVEER	
33		87470292		1	ESPAÇADOR, Replaces 9860094				
						SPACER	SEPARADOR	DISTANZIALE	075D
					ENTRETOISE	DISTANZSTÜCK	AFSTANDSSTYKKE	AFSTANDSSTUK	

RADIADOR - SISTEMA DE RECUPERAÇÃO DO FLUIDO DE REFRIGERAÇÃO
RADIATOR/OIL COOLER - COOLANT RECOVERY SYSTEM
RADIADOR - SISTEMA DE RECUPERACION DEL REFRIGERANTE
RADIATORE - SISTEMA DI RECUPERO DEL REFRIGERANTE

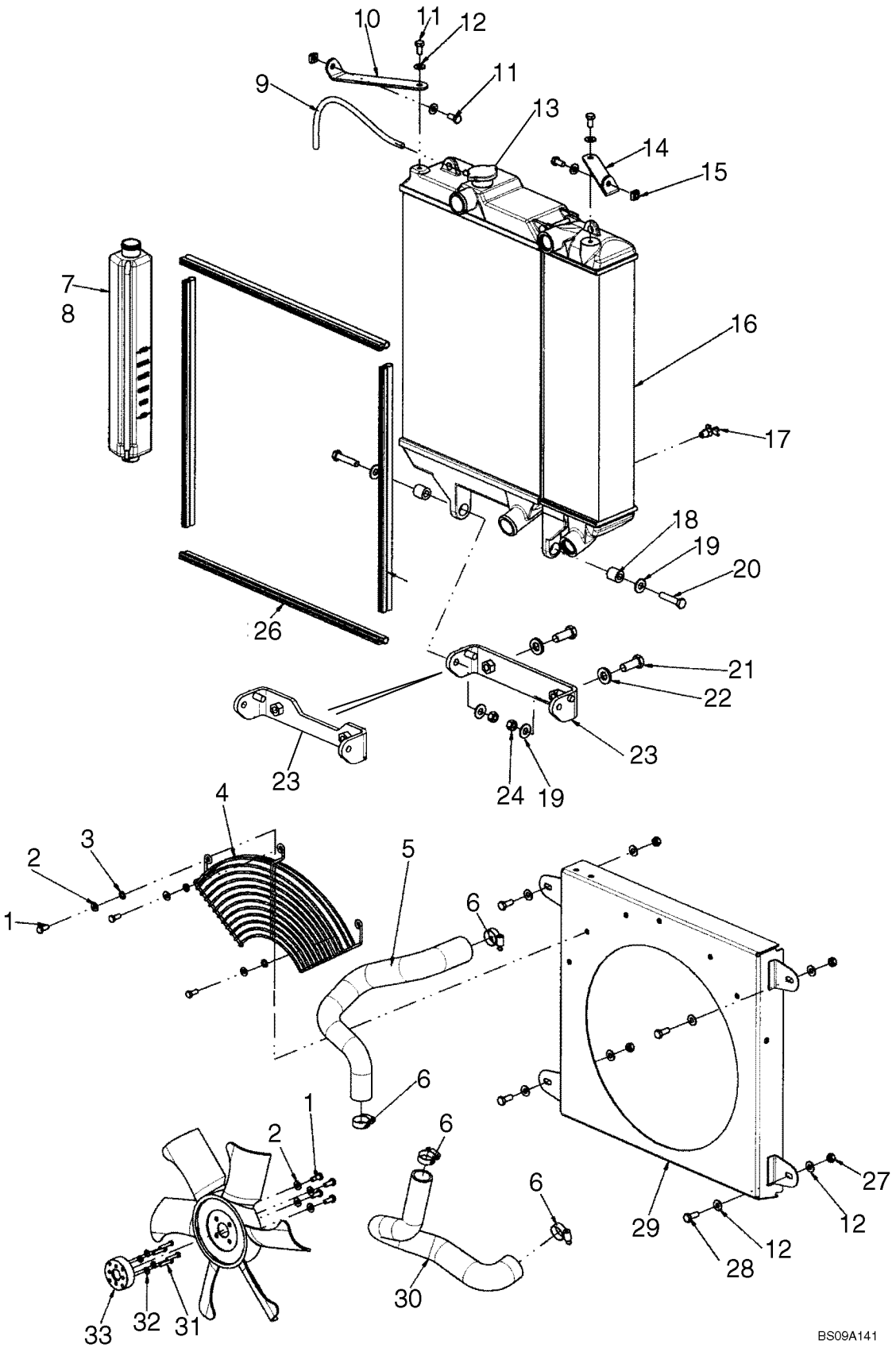

RADIATEUR - CIRCUIT DE RECUPERATION DU LIQUIDE DE REFROIDISSEMENT
KÜHLER - KÜHLMITTEL-RÜCKGEWINNUNGSSYSTEM
KØLER - KØLEMIDDELGENINDVINDINGSSYSTEM
RADIATOR - KOELVLOEISTOFOPVANGSYSTEEM

R	N	P.N.	MOD	Q	Denominação Description	Description Bezeichnung	Denominacion Beskrivelse	Descrizione Beschrijving	L.C.
34		**507586**		2	BRAÇADEIRA MANGUEIRA, #20, 0.81/1.75 Type F Worm, Replaces 513309, #24 Wormgear F 2.0 X 1.06 SST				
					HOSE CLAMP	ABRAZADERA DE MANG	FASCETTA STRINGITUB		P729
					COLLIER POUR FLEXIBL	SCHLAUCHSCHELLE	SLANGEKLEMME	SLANGKLEM	
34		**513309**		2	BRAÇADEIRA MANGUEIRA, #24, 1.06/2.00 Type F Worm, Replaces 507586				
					HOSE CLAMP	ABRAZADERA DE MANG	FASCETTA STRINGITUB		P729
					COLLIER POUR FLEXIBL	SCHLAUCHSCHELLE	SLANGEKLEMME	SLANGKLEM	

10.406.01	02	p1	02/11

RADIATOR/OIL COOLER
RADIATOR/OIL COOLER
RADIADOR/REFRIGERADOR DE ACEITE
RADIATORE/SCAMBIATORE DI CALORE OLIO

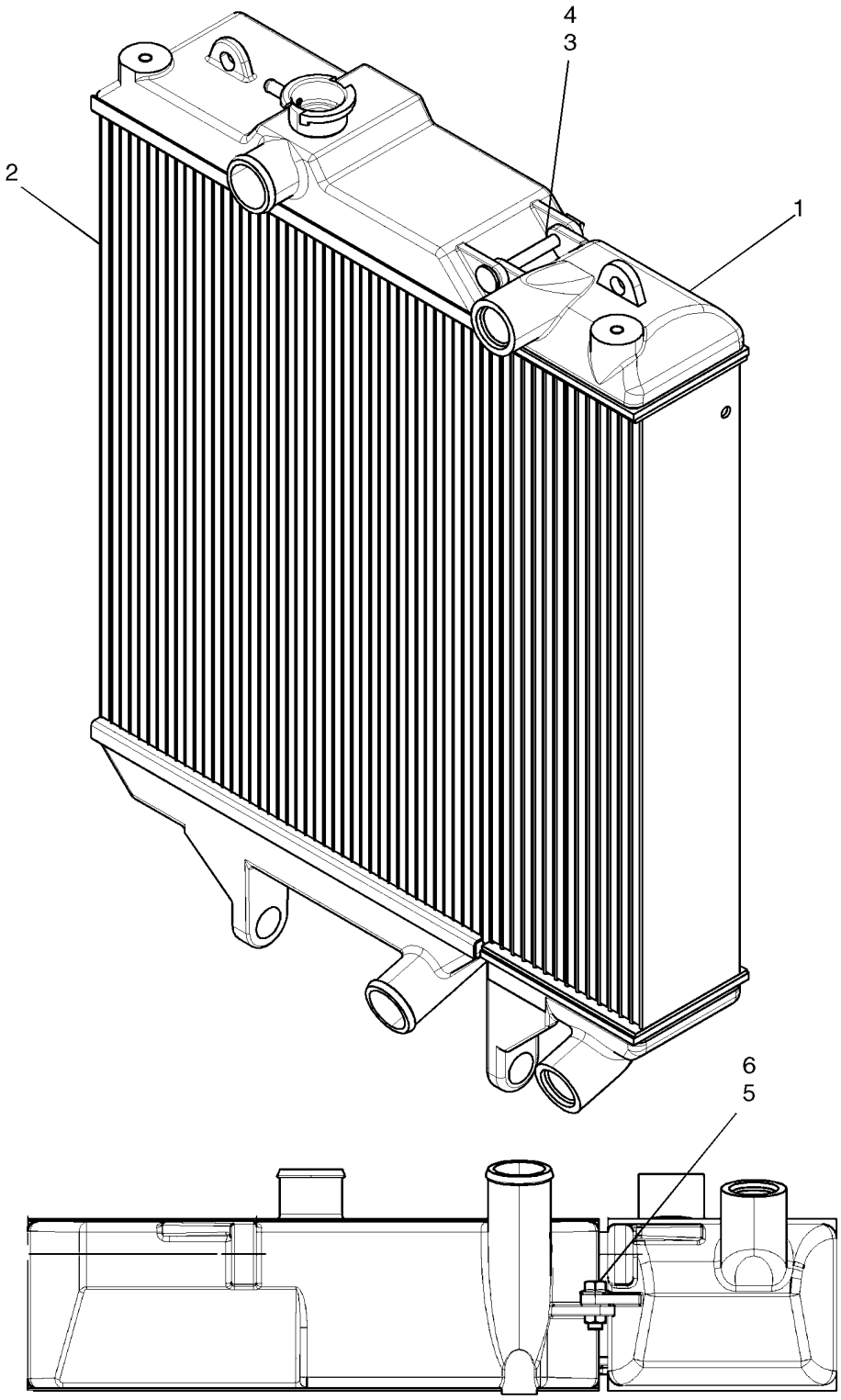

BS07K378

RADIATEUR/REFROIDISSEUR D'HUILE
KÜHLER/ÖLKÜHLER
KØLER/OLIEKØLER
RADIATOR/OLIEKOELER

R	N	P.N.	MOD	Q	Denominação Description	Description Bezeichnung	Denominacion Beskrivelse	Descrizione Beschrijving	L.C.
		87660842		1	RADIADOR, Incl 1 - 8	RADIATOR	RADIADOR	RADIATORE	025R
					RADIATEUR	KÜHLER	KØLER	RADIATEUR	
1		**87687372**		1	RESFRIADOR DO ÓLEO, Oil Cooler; ATS 21506				
						OIL COOLER	REFRIGERADOR DE ACI	RADIATORE OLIO	026R
					REFROIDISSEUR D'HUIL	ÖLKÜHLER	OLIEKØLER	OLIEKOELER	
1		**87688650**		1	RESFRIADOR DO ÓLEO, Low Fin Density Oil Cooler; ATS 21754; Service Option Only; For Applications With Significant Air-Born Debris, Not For Use In Hot Environments Or In High Engine Load Applications				
						OIL COOLER	REFRIGERADOR DE ACI	RADIATORE OLIO	026R
					REFROIDISSEUR D'HUIL	ÖLKÜHLER	OLIEKØLER	OLIEKOELER	
2		**87688523**		1	RADIADOR, Standard Radiator And Decal; ATS 21505				
						RADIATOR	RADIADOR	RADIATORE	025R
					RADIATEUR	KÜHLER	KØLER	RADIATEUR	
2		**87688649**		1	RADIADOR, Low Fin Density Radiator And Decal; ATS 21753; Service Option Only; For Applications With Significant Air-Born Debris, Not For Use In Hot Environments Or In High Engine Load Applications				
						RADIATOR	RADIADOR	RADIATORE	025R
					RADIATEUR	KÜHLER	KØLER	RADIATEUR	
3		**87687373**		1	PINO, Pin; If Used	PIN	PASADOR	PERNO	080P
					BROCHE	PIN	STIFT	PEN	
3		**87687379**		1	PINO	PIN	PASADOR	PERNO	080P
					BROCHE	PIN	STIFT	PEN	
4		**87687374**		1	GRAMPO	CLIP	ABRAZADERA	FERMO	045F
					COLLIER	KLAMMER	KLIPS	KLEM	
5		**9804262**		1	PARAFUSO, Hex Flg, M10 x 30, 8.8				
						BOLT	PERNO	BULLONE	140B
					VIS	SCHRAUBE	BOLT	BOUT	
6		**9804278**		1	PORCA, M10 x 1.5, Flg, Cl 8				
						NUT	TUERCA	DADO	010D
					ECROU	MUTTER	MØTRIK	MOER	
7		**87687376**		1	VEDAÇÃO	SEAL	ANILLO DE CIERRE	GUARNIZIONE; TENUTA	132A
					JOINT	DICHTUNG	PAKNING	AFDICHTING	
8		**87687375**		1	TAMPA DO RADIADOR, Radiator Cap; Not Illustrated				
						RADIATOR CAP	TAPÓN DE RADIADOR	TAPPO DEL RADIATORE	039T
					BOUCHON DU RADIATE	KÜHLERVERSCHLUSSK	KØLERDÆKSEL	RADIATEURDOP	

10.406.02		p1	08/11

MODULE, RADIATOR AND COOLING MED (SR175,SV185,SR200,TR270)
MODULE, RADIATOR AND COOLING MED (SR175,SV185,SR200,TR270)
MODULE, RADIATOR AND COOLING MED (SR175,SV185,SR200,TR270)
MODULE, RADIATOR AND COOLING MED (SR175,SV185,SR200,TR270)

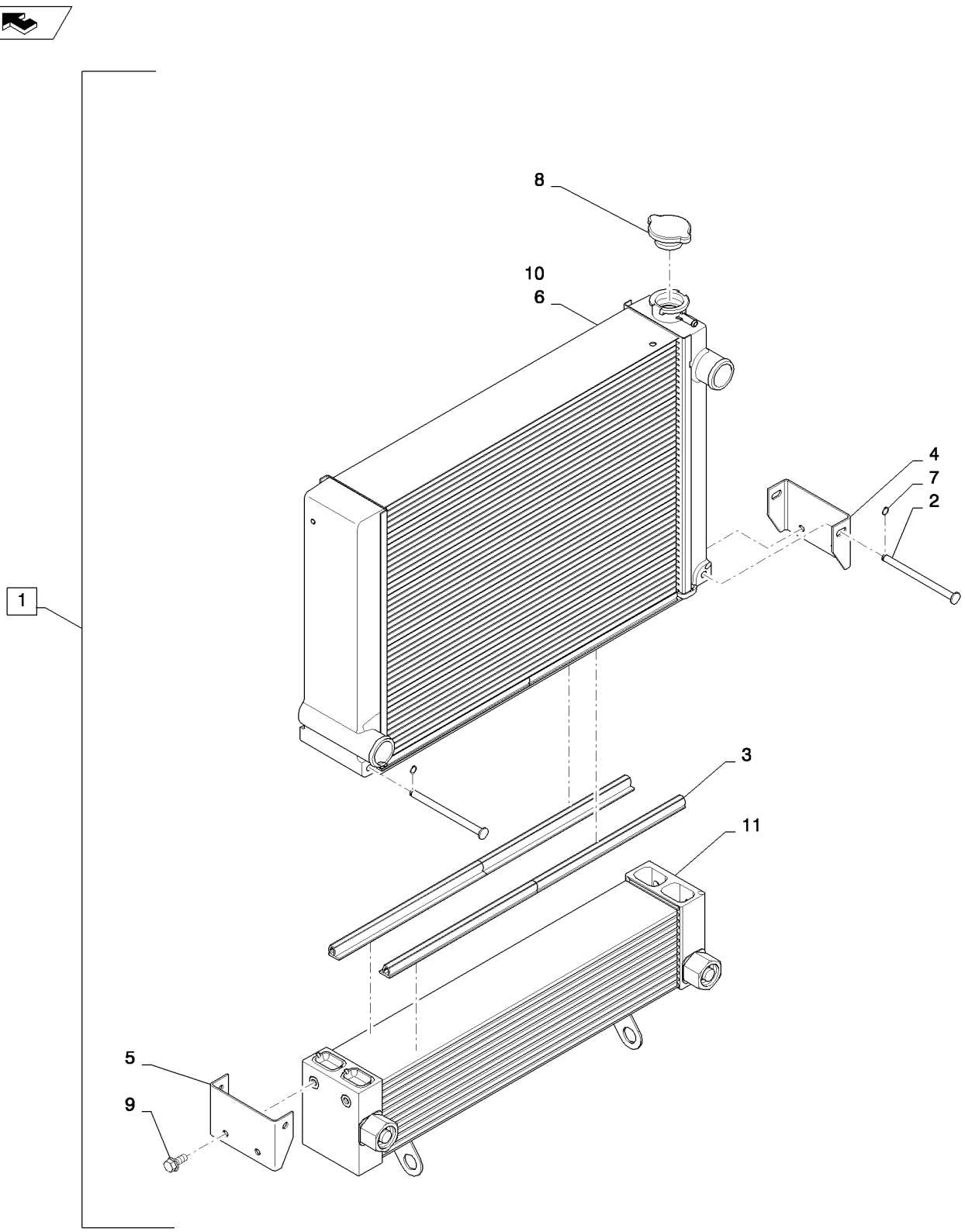

MODULE, RADIATOR AND COOLING MED (SR175,SV185,SR200,TR270)
MODULE, RADIATOR AND COOLING MED (SR175,SV185,SR200,TR270)
MODULE, RADIATOR AND COOLING MED (SR175,SV185,SR200,TR270)
MODULE, RADIATOR AND COOLING MED (SR175,SV185,SR200,TR270)

R	N	P.N.	MOD	Q	Denominação Description	Description Bezeichnung	Denominacion Beskrivelse	Descrizione Beschrijving	L.C.
1		84201142		1	MÓDULO, Assembly, Includes Oil Cooler and Radiator				
						MODULE	MÓDULO	MODULO	T102
					MODULE	MODUL	MODUL	MODULE	
2		84379138		1	PINO, ATS 815875	PIN	PASADOR	PERNO	080P
					BROCHE	PIN	STIFT	PEN	
3		84379140		1	VEDAÇÃO, ATS 824371	SEAL	ANILLO DE CIERRE	GUARNIZIONE; TENUTA	132A
					JOINT	DICHTUNG	PAKNING	AFDICHTING	
4		84379148		1	CANAL, Mounting	CHANNEL	CANAL	CANALE	050C
					CANAL	RINNE	KANAL	KANAAL	
5		84379149		1	CANAL, Mounting	CHANNEL	CANAL	CANALE	050C
					CANAL	RINNE	KANAL	KANAAL	
6		84379153		1	RADIADOR, W/Decals	RADIATOR	RADIADOR	RADIATORE	025R
					RADIATEUR	KÜHLER	KØLER	RADIATEUR	
7		87687374		1	GRAMPO, ATS 812837	CLIP	ABRAZADERA	FERMO	045F
					COLLIER	KLAMMER	KLIPS	KLEM	
8		87687375		1	TAMPA DO RADIADOR, ATS 816525				
						RADIATOR CAP	TAPÓN DE RADIADOR	TAPPO DEL RADIATORE	039T
					BOUCHON DU RADIATE	KÜHLERVERSCHLUSSK	KØLERDÆKSEL	RADIATEURDOP	
9		86511841		1	PARAFUSO, Hex Flg, M8 x 16, 8.8				
						BOLT	PERNO	BULLONE	140B
					VIS	SCHRAUBE	BOLT	BOUT	
10		84475176		1	RADIADOR, W/Decals, Low Fin Density, Applications With Significant Air-Born Debris, Not For Use In Hot Environments Or In High Engine Load Applications				
						RADIATOR	RADIADOR	RADIATORE	025R
					RADIATEUR	KÜHLER	KØLER	RADIATEUR	
11		84475178		1	RESFRIADOR DO ÓLEO, Low Fin Density, Applications With Significant Air-Born Debris, Not For Use In Hot Environments Or In High Engine Load Applications				
						OIL COOLER	REFRIGERADOR DE ACI	RADIATORE OLIO	026R
					REFROIDISSEUR D'HUIL	ÖLKÜHLER	OLIEKØLER	OLIEKOELER	
11		84379132		1	RESFRIADOR DO ÓLEO, ATS 22547				
						OIL COOLER	REFRIGERADOR DE ACI	RADIATORE OLIO	026R
					REFROIDISSEUR D'HUIL	ÖLKÜHLER	OLIEKØLER	OLIEKOELER	
12		84259482		1	CONEXÃO EM T, 16-16-16 Check Valve (Not Shown)				
						UNION TEE	RACOR EN T	RACCORDO A T	A134
					RACCORD EN T	T-VERSCHRAUBUNG	T-FORSKRUNING	KOPPEL-T-STUK	
13		268277		1	COTOVELO, 90º, 1 5/16"-12, 37º x 1 5/16"-12, O-Ring, (Not Shown)				
						ELBOW	CODO	GOMITO	085G
					COUDE	KNIESTÜCK	VINKELRØR	KNIESTUK	

10.408.01		p1	02/11

ARREFECEDOR DO ÓLEO DESVIO
OIL COOLER BYPASS
REFRIGERADOR DE ACEITE DESVIACIÓN
SCAMBIATORE DI CALORE OLIO BYPASS

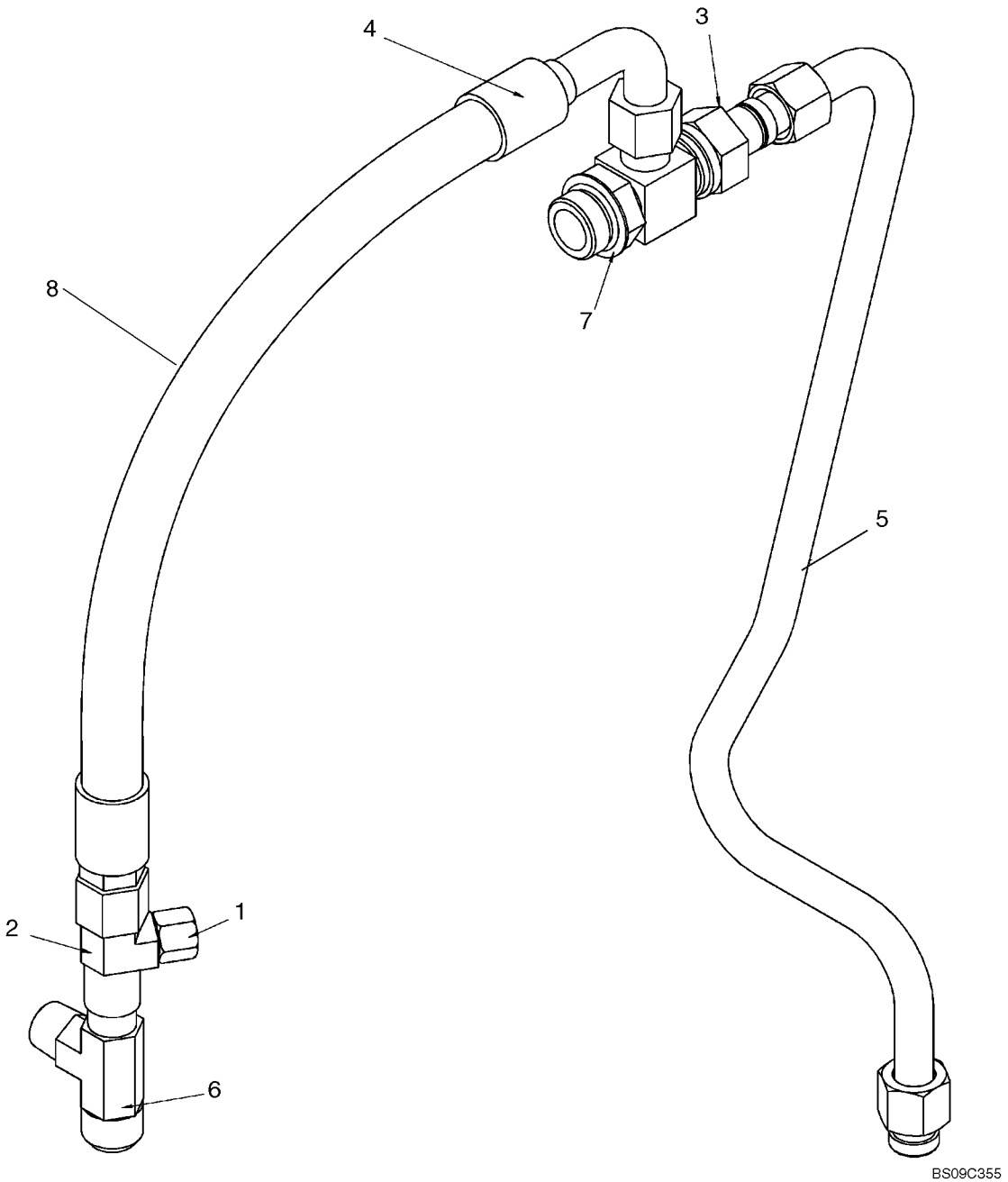

REFROIDISSEUR D'HUILE DÉRIVATION
ÖLKÜHLER BYPASS
OLIEKØLER OMFØRINGS
OLIEKOELER OVERBRUGGINGS

R	N	P.N.	MOD	Q	Denominação Description Bezeichnung	Description Denominacion Beskrivelse	Denominacion Descrizione Beschrijving	L.C.
		REF			INSTRUÇÃO, If Used, For Non-Bypass Option See Fig 06-13			
					INSTRUCTION	INSTRUCCIÓN	ISTRUZIONI	Z571
					INSTRUCTION	ANLEITUNG	INSTRUKTION	INSTRUCTIE
1		**262159**		1	TAMPA, 37º, 3/4"-16	CAP	TAPÓN	TAPPO	052T
					CAPUCHON	KAPPE	TANKDÆKSEL	DOP	
2		**86632548**		1	T, 37º, 7/8"-14 x 3/4"-16, Fem Sw Run x 3/4"-16 Br			
					TEE	RACOR EN T	PEZZO A T	9020
					RACCORD EN T	T-STÜCK	T-STYKKE	T-STUK	
3		**87032415**		1	ADAPTADOR, Adapter Tube Reducer,37FL Male X Female 16-12			
					ADAPTER	ADAPTADOR	ADATTATORE	001A
					ADAPTATEUR	ADAPTER	ADAPTER	ADAPTER	
4		**87659246**		1	MANGUEIRA, Oil Cooler Bypass			
					HOSE	TUBO	TUBO FLESSIBILE	030M
					FLEXIBLE	SCHLAUCH	SLANGE	SLANG	
5		**87661904**		1	TUBO, 19.05 mm OD, Valve To Filter			
					TUBE	TUBO	TUBO	195T
					TUBE	ROHR	RØR	LEIDING	
6		**87690479**		1	T, Male 37 Fl, 1.0 x .75 x .75 PTF			
					TEE	RACOR EN T	PEZZO A T	9020
					RACCORD EN T	T-STÜCK	T-STYKKE	T-STUK	
7		**254524A1**		1	T, Hydraulic- Special	TEE	RACOR EN T	PEZZO A T	9020
					RACCORD EN T	T-STÜCK	T-STYKKE	T-STUK	
8		**87661896**		1	MANGUEIRA, CoolerTo Tank			
					HOSE	TUBO	TUBO FLESSIBILE	030M
					FLEXIBLE	SCHLAUCH	SLANGE	SLANG	

SECTION INDEX
29 - Transmissão hidrostática

29.200.01		LEVEL 100 CASE CONTROL HANDLES (SR130-SV300)
29.200.02		LEVEL 200 CASE CONTROL HANDLES (SR130-SV300)
29.200.03		LEVEL 250 CASE CONTROL HANDLES (ALL CASE)
29.200.04		LEVEL 300 CASE CONTROL HANDLES (SR175-SV300)
29.200.05		LEVEL 350 CASE CONTROL HANDLES (ALL CASE)
29.212.01		TRAVEL SPEED 1SPD (SR175,SV185)
29.212.02		TRAVEL SPEED 2SPD (SR175,SV185)
29.212.03		TRAVEL SPEED E-H (SR175,SV185)
29.212.04	01	MOTOR, REXROTH DRIVE MOTOR 2SPD (SR175,SV185)
29.212.04	01	MOTOR, REXROTH DRIVE MOTOR 1SPD (SR130-SV185)
29.212.04	02	MOTOR, REXROTH DRIVE MOTOR 2SPD (SR175,SV185)
29.212.04	02	MOTOR, REXROTH DRIVE MOTOR 1SPD (SR130-SV185)
29.212.05	01	VALVE, BRAKE (SR130-SV300)
29.212.05	02	VALVE, BRAKE 2SPD (SR175-SV300)
29.212.05	04	VALVE, BRAKE EH 2SPD (SR175-SV300)
29.212.06	01	PUMP, HYDROSTATIC TANDEM 35CC DDC FRONT (SR130-SV185)
29.212.06	02	PUMP, HYDROSTATIC TANDEM 35CC DDC FRONT (SR130-SV185)
29.212.06	03	PUMP, HYDROSTATIC TANDEM 35CC DDC FRONT (SR130-SV185)
29.212.06	04	PUMP, HYDROSTATIC TANDEM 35CC DDC REAR (SR130-SV185)
29.212.06	05	PUMP, HYDROSTATIC TANDEM 35CC DDC REAR (SR130-SV185)
29.212.06	06	PUMP, HYDROSTATIC TANDEM 35CC DDC REAR (SR130-SV185)
29.212.07		PUMP, HYDROSTATIC EH 35CC A20VG ET (SR130-SV185)

29.200.01		p1	06/11

LEVEL 100 CASE CONTROL HANDLES (SR130-SV300)
LEVEL 100 CASE CONTROL HANDLES (SR130-SV300)
LEVEL 100 CASE CONTROL HANDLES (SR130-SV300)
LEVEL 100 CASE CONTROL HANDLES (SR130-SV300)

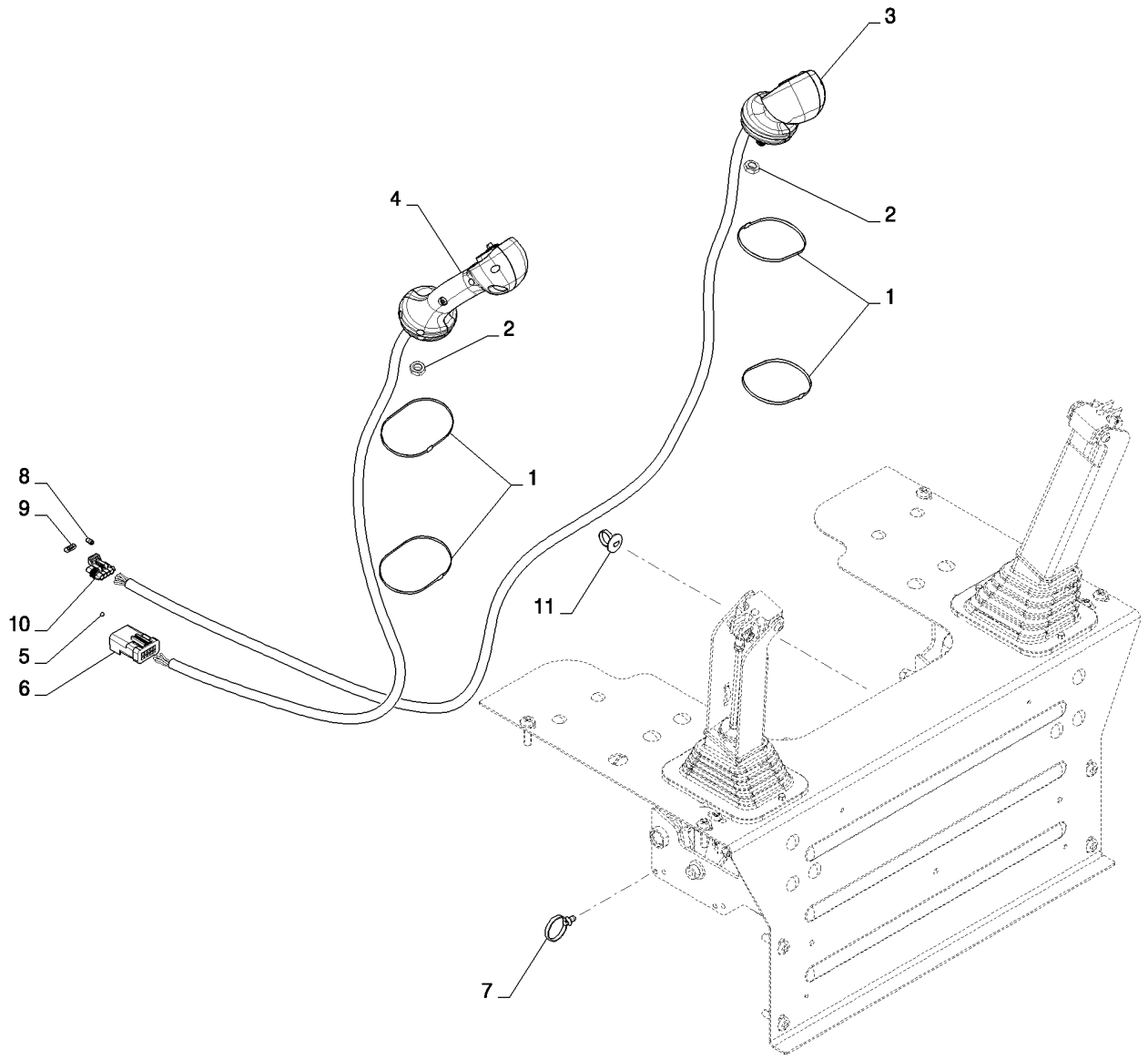

LEVEL 100 CASE CONTROL HANDLES (SR130-SV300)
LEVEL 100 CASE CONTROL HANDLES (SR130-SV300)
LEVEL 100 CASE CONTROL HANDLES (SR130-SV300)
LEVEL 100 CASE CONTROL HANDLES (SR130-SV300)

R	N	P.N.	MOD	Q	Denominação Description	Description Bezeichnung	Denominacion Beskrivelse	Descrizione Beschrijving	L.C.
1		263117		4	PRENDEDOR DE CABOS, .14" x 11 1/2"				
						CABLE STRAP	BANDA DE CABLE	FASCETTA PER CAVO	P716
					BRIDE DE CABLE	KABELBINDER	KABELSTROP	BUNDELBAND	
2		323238		2	PORCA, Thin, M12 x 1.75, Cl 05				
						NUT	TUERCA	DADO	010D
					ECROU	MUTTER	MØTRIK	MOER	
3		84201270		1	EMPUNHADURA, Case Level 100 LH				
						HANDLE GRIP	PERILLA	IMPUGNATURA	025I
					POIGNEE DE MAINTIEN	HANDGRIFF	HÅNDGREB	HANDGREEP	
4		84201273		1	EMPUNHADURA, Case Level 100 RH, Includes Ref. 12 & 13				
						HANDLE GRIP	PERILLA	IMPUGNATURA	025I
					POIGNEE DE MAINTIEN	HANDGRIFF	HÅNDGREB	HANDGREEP	
5		84279937		5	BUJÃO, Cavity Plug Apex 2.8MM				
						PLUG	TAPÓN	TAPPO	050T
					BOUCHON	STOPFEN	PROP	PLUG	
6		87382923		1	CONECTOR ELÉTR, 87382923, FCI Apex 2.8MM 10-Way Tab HSG				
						ELEC CONNECTOR	CONECTOR ELÉCTRICC	CONNETTORE ELETTRI(	235C
					CONNECTEUR ELECTRI	ELEKTR STECKVERBINI	EL-STIK	CONNECTOR	
7		87668737		5	TIRA, Fir Tree Assembly	STRAP	BANDA	FASCETTA	532B
					BRIDE	BAND	STROP	RIEM	
8		87689636		2	BUJÃO, Dark Red Cable Cavity Plug				
						PLUG	TAPÓN	TAPPO	050T
					BOUCHON	STOPFEN	PROP	PLUG	
9		87689643		1	GRAMPO, Black Secondary Lock				
						CLIP	ABRAZADERA	FERMO	045F
					COLLIER	KLAMMER	KLIPS	KLEM	
10		87697724		1	CONECTOR ELÉTR, Packard Metri-Pack 150 4-Way Female				
						ELEC CONNECTOR	CONECTOR ELÉCTRICC	CONNETTORE ELETTRI(	235C
					CONNECTEUR ELECTRI	ELEKTR STECKVERBINI	EL-STIK	CONNECTOR	
11		378884A2		3	TIRA, Panel Wire Tie	STRAP	CORREA	CINGHIA	8630
					SANGLE	HALTEBAND	STRAP	STRAP	
12		84296544		1	INTERRUPTOR, Proportional Switch				
						SWITCH	INTERRUPTOR	INTERRUTTORE	075I
					CONTACTEUR	SCHALTER	KONTAKT	SCHAKELAAR	
13		87630127		1	INTERRUPTOR, Parking Brake				
						SWITCH	INTERRUPTOR	INTERRUTTORE	075I
					CONTACTEUR	SCHALTER	KONTAKT	SCHAKELAAR	
14		84296542		1	INTERRUPTOR INTERMITENTE, Horn				
						SWITCH ASSY	CONJUNTO DE INTERRU	COMPLESSIVO INTERRU	067I
					ENSEMBLE COMMUTATI	SCHALTERBAUGRUPPE	KONTAKT, KPL.	SCHAKELAAREENHEID	

29.200.02		p1	06/11

LEVEL 200 CASE CONTROL HANDLES (SR130-SV300)
LEVEL 200 CASE CONTROL HANDLES (SR130-SV300)
LEVEL 200 CASE CONTROL HANDLES (SR130-SV300)
LEVEL 200 CASE CONTROL HANDLES (SR130-SV300)

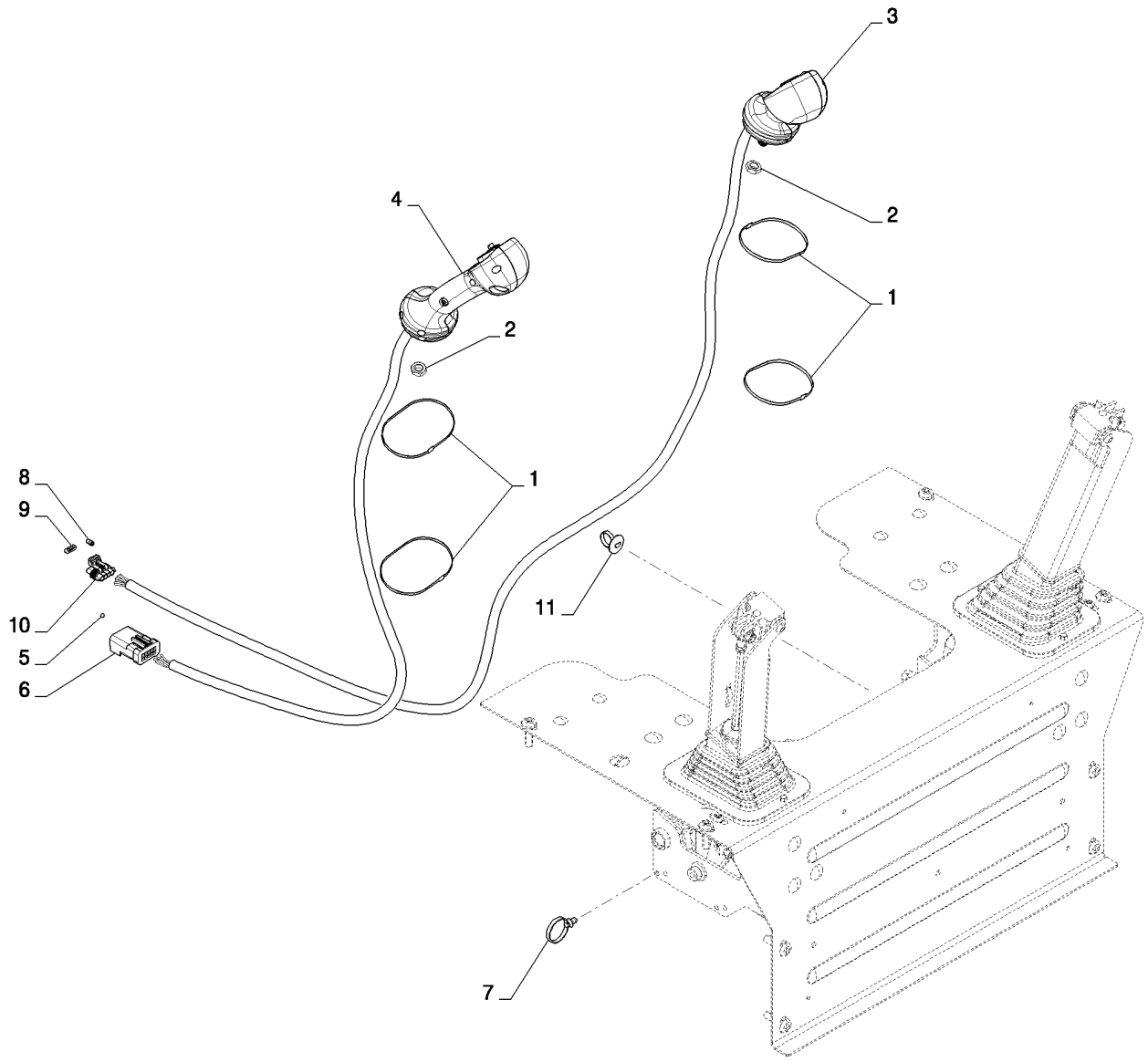

LEVEL 200 CASE CONTROL HANDLES (SR130-SV300)
LEVEL 200 CASE CONTROL HANDLES (SR130-SV300)
LEVEL 200 CASE CONTROL HANDLES (SR130-SV300)
LEVEL 200 CASE CONTROL HANDLES (SR130-SV300)

R	N	P.N.	MOD	Q	Denominação Description	Description Bezeichnung	Denominacion Beskrivelse	Descrizione Beschrijving	L.C.
1		263117		4	PRENDEDOR DE CABOS, .14" x 11 1/2"				
						CABLE STRAP	BANDA DE CABLE	FASCETTA PER CAVO	P716
					BRIDE DE CABLE	KABELBINDER	KABELSTROP	BUNDELBAND	
2		323238		2	PORCA, Thin, M12 x 1.75, Cl 05				
						NUT	TUERCA	DADO	010D
					ECROU	MUTTER	MØTRIK	MOER	
3		84201271		1	EMPUNHADURA, Case Level 200 LH				
						HANDLE GRIP	PERILLA	IMPUGNATURA	025I
					POIGNEE DE MAINTIEN	HANDGRIFF	HÅNDGREB	HANDGREEP	
4		84201274		1	EMPUNHADURA, Case Level 200 RH				
						HANDLE GRIP	PERILLA	IMPUGNATURA	025I
					POIGNEE DE MAINTIEN	HANDGRIFF	HÅNDGREB	HANDGREEP	
5		84279937		3	BUJÃO, Cavity Plug Apex 2.8MM				
						PLUG	TAPÓN	TAPPO	050T
					BOUCHON	STOPFEN	PROP	PLUG	
6		87382923		1	CONECTOR ELÉTR, 87382923, FCI Apex 2.8MM 10-Way Tab HSG				
						ELEC CONNECTOR	CONECTOR ELÉCTRICC	CONNETTORE ELETTRI(	235C
					CONNECTEUR ELECTRI	ELEKTR STECKVERBINI	EL-STIK	CONNECTOR	
7		87668737		5	TIRA, Fir Tree Assembly	STRAP	BANDA	FASCETTA	532B
					BRIDE	BAND	STROP	RIEM	
8		87689636		1	BUJÃO, Dark Red Cable Cavity Plug				
						PLUG	TAPÓN	TAPPO	050T
					BOUCHON	STOPFEN	PROP	PLUG	
9		87689643		1	GRAMPO, Black Secondary Lock				
						CLIP	ABRAZADERA	FERMO	045F
					COLLIER	KLAMMER	KLIPS	KLEM	
10		87697724		1	CONECTOR ELÉTR, Packard Metri-Pack 150 4-Way Female				
						ELEC CONNECTOR	CONECTOR ELÉCTRICC	CONNETTORE ELETTRI(	235C
					CONNECTEUR ELECTRI	ELEKTR STECKVERBINI	EL-STIK	CONNECTOR	
11		378884A2		3	TIRA, Panel Wire Tie	STRAP	CORREA	CINGHIA	8630
					SANGLE	HALTEBAND	STRAP	STRAP	
12		84296544		1	INTERRUPTOR, Proportional Switch				
						SWITCH	INTERRUPTOR	INTERRUTTORE	075I
					CONTACTEUR	SCHALTER	KONTAKT	SCHAKELAAR	
13		87630127		1	INTERRUPTOR, Parking Brake				
						SWITCH	INTERRUPTOR	INTERRUTTORE	075I
					CONTACTEUR	SCHALTER	KONTAKT	SCHAKELAAR	
14		87673088		1	INTERRUPTOR, 2 Speed	SWITCH	INTERRUPTOR	INTERRUTTORE	075I
					CONTACTEUR	SCHALTER	KONTAKT	SCHAKELAAR	
15		84296542		1	INTERRUPTOR INTERMITENTE, Horn				
						SWITCH ASSY	CONJUNTO DE INTERRU	COMPLESSIVO INTERRU	067I
					ENSEMBLE COMMUTAT	SCHALTERBAUGRUPPE	KONTAKT, KPL.	SCHAKELAAREENHEID	
16		87673089		1	INTERRUPTOR, Ride Control				
						SWITCH	INTERRUPTOR	INTERRUTTORE	075I
					CONTACTEUR	SCHALTER	KONTAKT	SCHAKELAAR	

29.200.03		p1	06/11

LEVEL 250 CASE CONTROL HANDLES (ALL CASE)
LEVEL 250 CASE CONTROL HANDLES (ALL CASE)
LEVEL 250 CASE CONTROL HANDLES (ALL CASE)
LEVEL 250 CASE CONTROL HANDLES (ALL CASE)

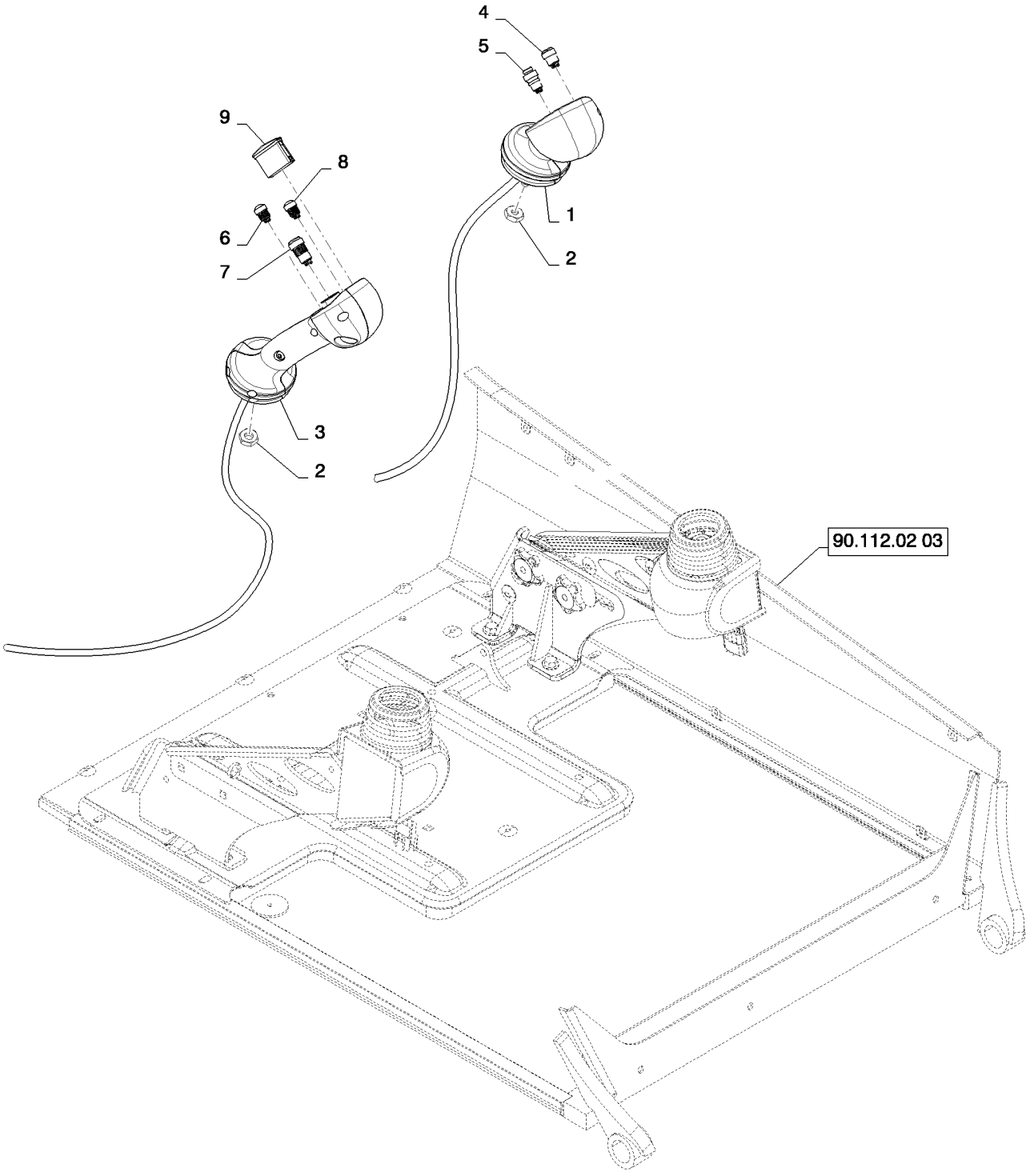

LEVEL 250 CASE CONTROL HANDLES (ALL CASE)
LEVEL 250 CASE CONTROL HANDLES (ALL CASE)
LEVEL 250 CASE CONTROL HANDLES (ALL CASE)
LEVEL 250 CASE CONTROL HANDLES (ALL CASE)

R	N	P.N.	MOD	Q	Denominação Description Bezeichnung	Description Bezeichnung	Denominacion Beskrivelse	Descrizione Beschrijving	L.C.
1		84280471		1	EMPUNHADURA, Case Level 250 LH				
						HANDLE GRIP	PERILLA	IMPUGNATURA	025I
					POIGNEE DE MAINTIEN	HANDGRIFF	HÅNDGREB	HANDGREEP	
2		323238		2	PORCA, Thin, M12 x 1.75, Cl 05				
						NUT	TUERCA	DADO	010D
					ECROU	MUTTER	MØTRIK	MOER	
3		84201275		1	EMPUNHADURA, Case Level 250 RH				
						HANDLE GRIP	PERILLA	IMPUGNATURA	025I
					POIGNEE DE MAINTIEN	HANDGRIFF	HÅNDGREB	HANDGREEP	
4		84296542		1	INTERRUPTOR INTERMITENTE, Horn				
						SWITCH ASSY	CONJUNTO DE INTERRU	COMPLESSIVO INTERRU	067I
					ENSEMBLE COMMUTATI	SCHALTERBAUGRUPPE	KONTAKT, KPL.	SCHAKELAAREENHEID	
5		87673088		1	INTERRUPTOR, 2 Speed	SWITCH	INTERRUPTOR	INTERRUTTORE	075I
					CONTACTEUR	SCHALTER	KONTAKT	SCHAKELAAR	
6		87673089		1	INTERRUPTOR, Ride Control				
						SWITCH	INTERRUPTOR	INTERRUTTORE	075I
					CONTACTEUR	SCHALTER	KONTAKT	SCHAKELAAR	
7		87630127		1	INTERRUPTOR, Park Brake				
						SWITCH	INTERRUPTOR	INTERRUTTORE	075I
					CONTACTEUR	SCHALTER	KONTAKT	SCHAKELAAR	
8		84296543		1	INTERRUPTOR, Float	SWITCH	INTERRUPTOR	INTERRUTTORE	075I
					CONTACTEUR	SCHALTER	KONTAKT	SCHAKELAAR	
9		84282677		1	INTERRUPTOR, Proportional Hydraulics				
						SWITCH	INTERRUPTOR	INTERRUTTORE	075I
					CONTACTEUR	SCHALTER	KONTAKT	SCHAKELAAR	

29.200.04		p1	06/11

LEVEL 300 CASE CONTROL HANDLES (SR175-SV300)
LEVEL 300 CASE CONTROL HANDLES (SR175-SV300)
LEVEL 300 CASE CONTROL HANDLES (SR175-SV300)
LEVEL 300 CASE CONTROL HANDLES (SR175-SV300)

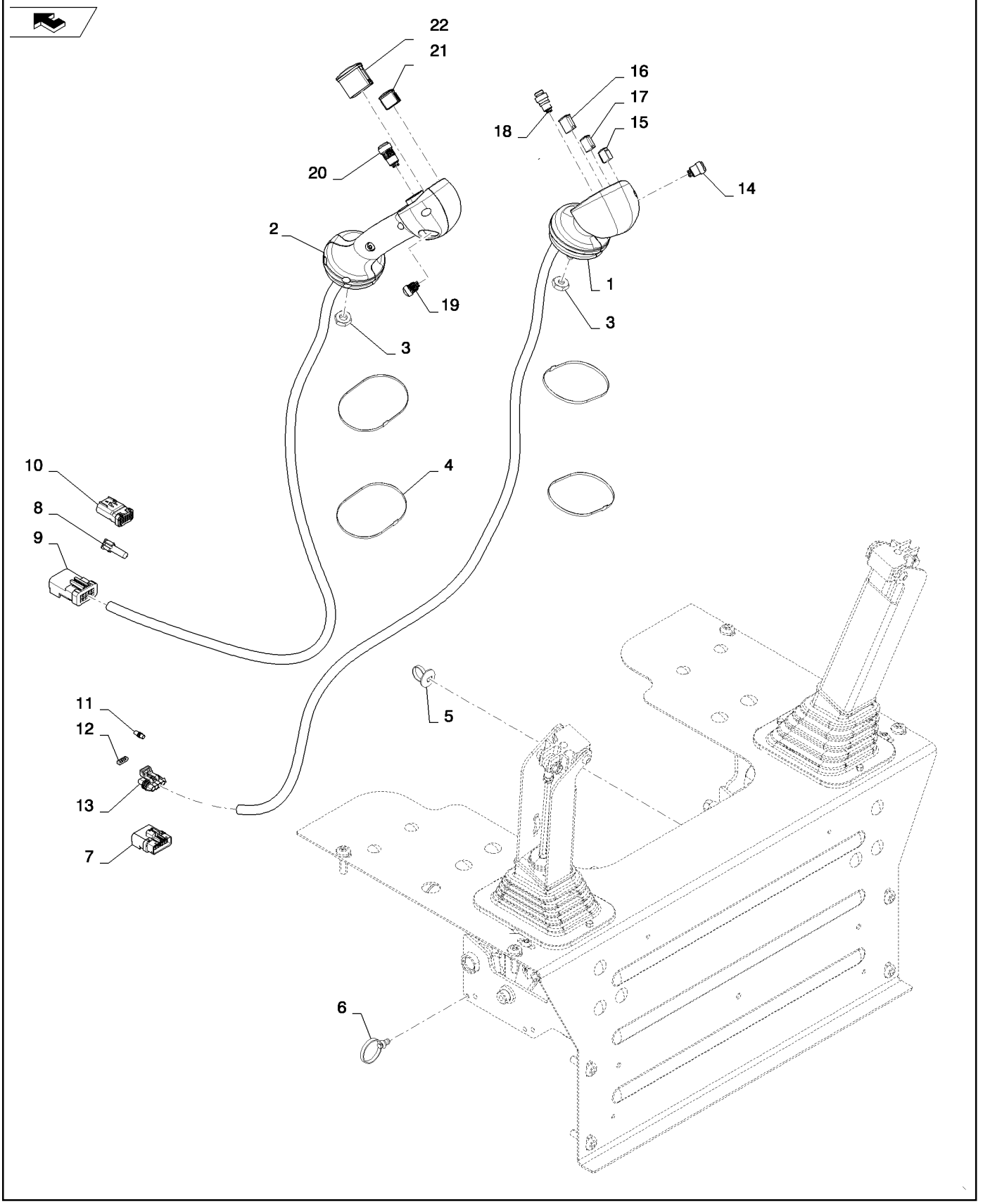

LEVEL 300 CASE CONTROL HANDLES (SR175-SV300)
LEVEL 300 CASE CONTROL HANDLES (SR175-SV300)
LEVEL 300 CASE CONTROL HANDLES (SR175-SV300)
LEVEL 300 CASE CONTROL HANDLES (SR175-SV300)

R	N	P.N.	MOD	Q	Denominação Description	Description Bezeichnung	Denominacion Beskrivelse	Descrizione Beschrijving	L.C.
1		84201272		1	EMPUNHADURA, Case Level 300 LH				
						HANDLE GRIP	PERILLA	IMPUGNATURA	025I
					POIGNEE DE MAINTIEN	HANDGRIFF	HÅNDGREB	HANDGREEP	
2		84201276		1	EMPUNHADURA, Case Level 300 RH				
						HANDLE GRIP	PERILLA	IMPUGNATURA	025I
					POIGNEE DE MAINTIEN	HANDGRIFF	HÅNDGREB	HANDGREEP	
3		323238		2	PORCA, Thin, M12 x 1.75, Cl 05				
						NUT	TUERCA	DADO	010D
					ECROU	MUTTER	MØTRIK	MOER	
4		263117		4	PRENDEDOR DE CABOS, .14" x 11 1/2"				
						CABLE STRAP	BANDA DE CABLE	FASCETTA PER CAVO	P716
					BRIDE DE CABLE	KABELBINDER	KABELSTROP	BUNDELBAND	
5		378884A2		3	TIRA, Panel Wire Tie	STRAP	CORREA	CINGHIA	8630
					SANGLE	HALTEBAND	STRAP	STRAP	
6		87668737		5	TIRA, Fir Tree Assembly	STRAP	BANDA	FASCETTA	532B
					BRIDE	BAND	STROP	RIEM	
7		87382919		1	CONECTOR ELÉTR, 87382919, 6 Cavity Plug Black				
						ELEC CONNECTOR	CONECTOR ELÉCTRICC	CONNETTORE ELETTRI(	235C
					CONNECTEUR ELECTRI	ELEKTR STECKVERBIND	EL-STIK	CONNECTOR	
8		84279937		11	BUJÃO, Cavity Plug Apex 2.8MM				
						PLUG	TAPÓN	TAPPO	050T
					BOUCHON	STOPFEN	PROP	PLUG	
9		87382923		1	CONECTOR ELÉTR, 87382923, FCI Apex 2.8MM 10-Way Tab HSG				
						ELEC CONNECTOR	CONECTOR ELÉCTRICC	CONNETTORE ELETTRI(	235C
					CONNECTEUR ELECTRI	ELEKTR STECKVERBIND	EL-STIK	CONNECTOR	
10		87382927		1	CONECTOR ELÉTR, 87382927, FCI Apex 2.8MM 14-Way Tab HSG				
						ELEC CONNECTOR	CONECTOR ELÉCTRICC	CONNETTORE ELETTRI(	235C
					CONNECTEUR ELECTRI	ELEKTR STECKVERBIND	EL-STIK	CONNECTOR	
11		87689636		1	BUJÃO, Dark Red Cable Cavity Plug				
						PLUG	TAPÓN	TAPPO	050T
					BOUCHON	STOPFEN	PROP	PLUG	
12		87689643		1	GRAMPO, Black Secondary Lock				
						CLIP	ABRAZADERA	FERMO	045F
					COLLIER	KLAMMER	KLIPS	KLEM	
13		87697724		1	CONECTOR ELÉTR, Packard Metri-Pack 150 4-Way Female				
						ELEC CONNECTOR	CONECTOR ELÉCTRICC	CONNETTORE ELETTRI(	235C
					CONNECTEUR ELECTRI	ELEKTR STECKVERBIND	EL-STIK	CONNECTOR	
14		87673088		1	INTERRUPTOR, 2 Speed	SWITCH	INTERRUPTOR	INTERRUTTORE	075I
					CONTACTEUR	SCHALTER	KONTAKT	SCHAKELAAR	
15		84398133		1	INTERRUPTOR, Multi-Function 4				
						SWITCH	INTERRUPTOR	INTERRUTTORE	075I
					CONTACTEUR	SCHALTER	KONTAKT	SCHAKELAAR	
16		{84296547}		1	Multi-Function 3				
17		{84296546}		1	Multi-Function 2				
18		84296542		1	INTERRUPTOR INTERMITENTE, Horn				
						SWITCH ASSY	CONJUNTO DE INTERRU	COMPLESSIVO INTERRU	067I
					ENSEMBLE COMMUTAT	SCHALTERBAUGRUPPE	KONTAKT, KPL.	SCHAKELAAREENHEID	

29.200.04		p2	06/11

LEVEL 300 CASE CONTROL HANDLES (SR175-SV300)
LEVEL 300 CASE CONTROL HANDLES (SR175-SV300)
LEVEL 300 CASE CONTROL HANDLES (SR175-SV300)
LEVEL 300 CASE CONTROL HANDLES (SR175-SV300)

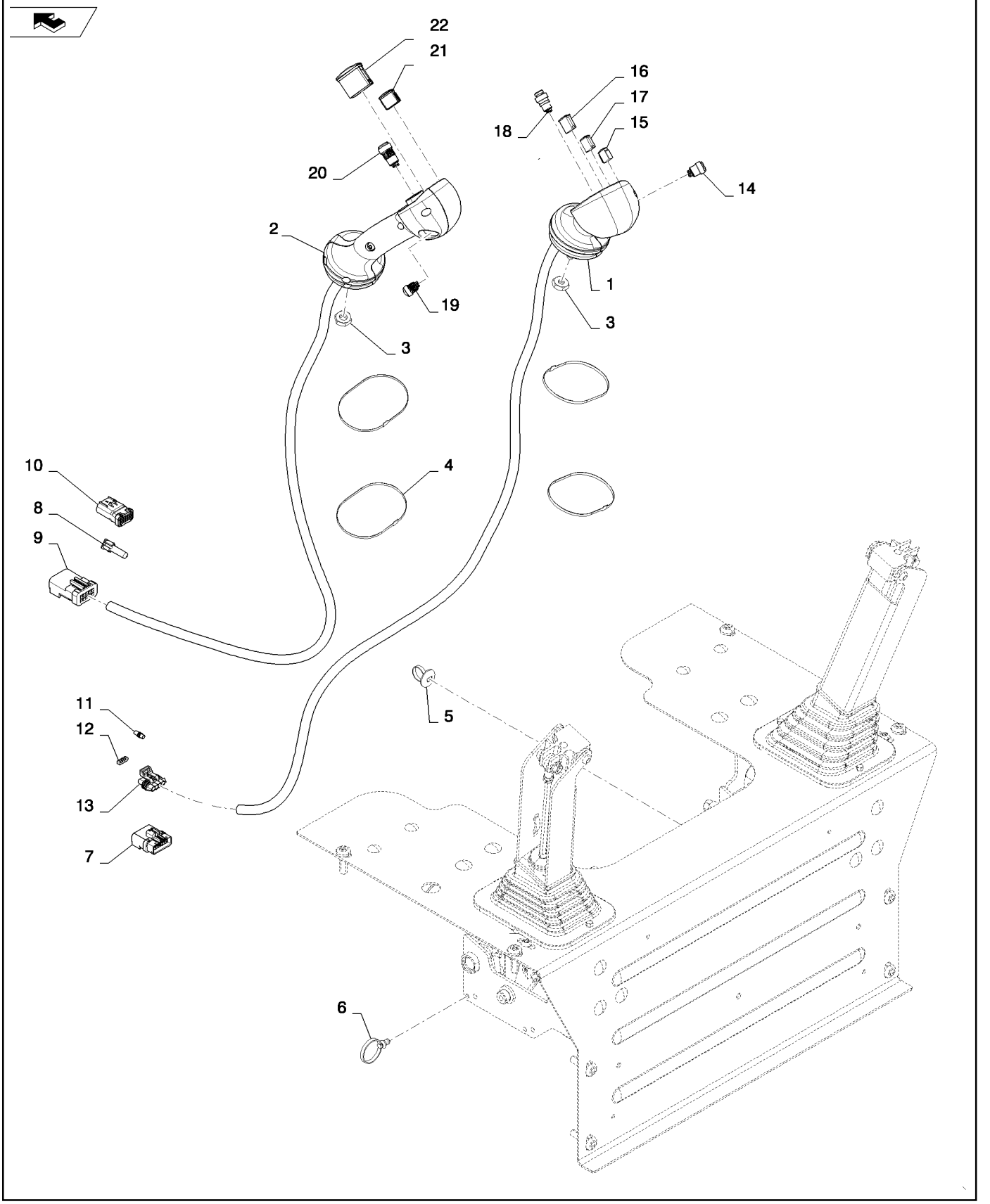

LEVEL 300 CASE CONTROL HANDLES (SR175-SV300)
LEVEL 300 CASE CONTROL HANDLES (SR175-SV300)
LEVEL 300 CASE CONTROL HANDLES (SR175-SV300)
LEVEL 300 CASE CONTROL HANDLES (SR175-SV300)

R	N	P.N.	MOD	Q	Denominação Description Bezeichnung	Description Bezeichnung	Denominacion Beskrivelse	Descrizione Beschrijving	L.C.
19		**87673089**		1	INTERRUPTOR, Ride Control				
						SWITCH	INTERRUPTOR	INTERRUTTORE	075I
					CONTACTEUR	SCHALTER	KONTAKT	SCHAKELAAR	
20		**87630127**		1	INTERRUPTOR, Park Brake				
						SWITCH	INTERRUPTOR	INTERRUTTORE	075I
					CONTACTEUR	SCHALTER	KONTAKT	SCHAKELAAR	
21		**{84296545}**		1	Multi-Function 1				
22		**84296544**		1	INTERRUPTOR, Proportional Hydraulic				
						SWITCH	INTERRUPTOR	INTERRUTTORE	075I
					CONTACTEUR	SCHALTER	KONTAKT	SCHAKELAAR	

29.200.05		p1	06/11

LEVEL 350 CASE CONTROL HANDLES (ALL CASE)
LEVEL 350 CASE CONTROL HANDLES (ALL CASE)
LEVEL 350 CASE CONTROL HANDLES (ALL CASE)
LEVEL 350 CASE CONTROL HANDLES (ALL CASE)

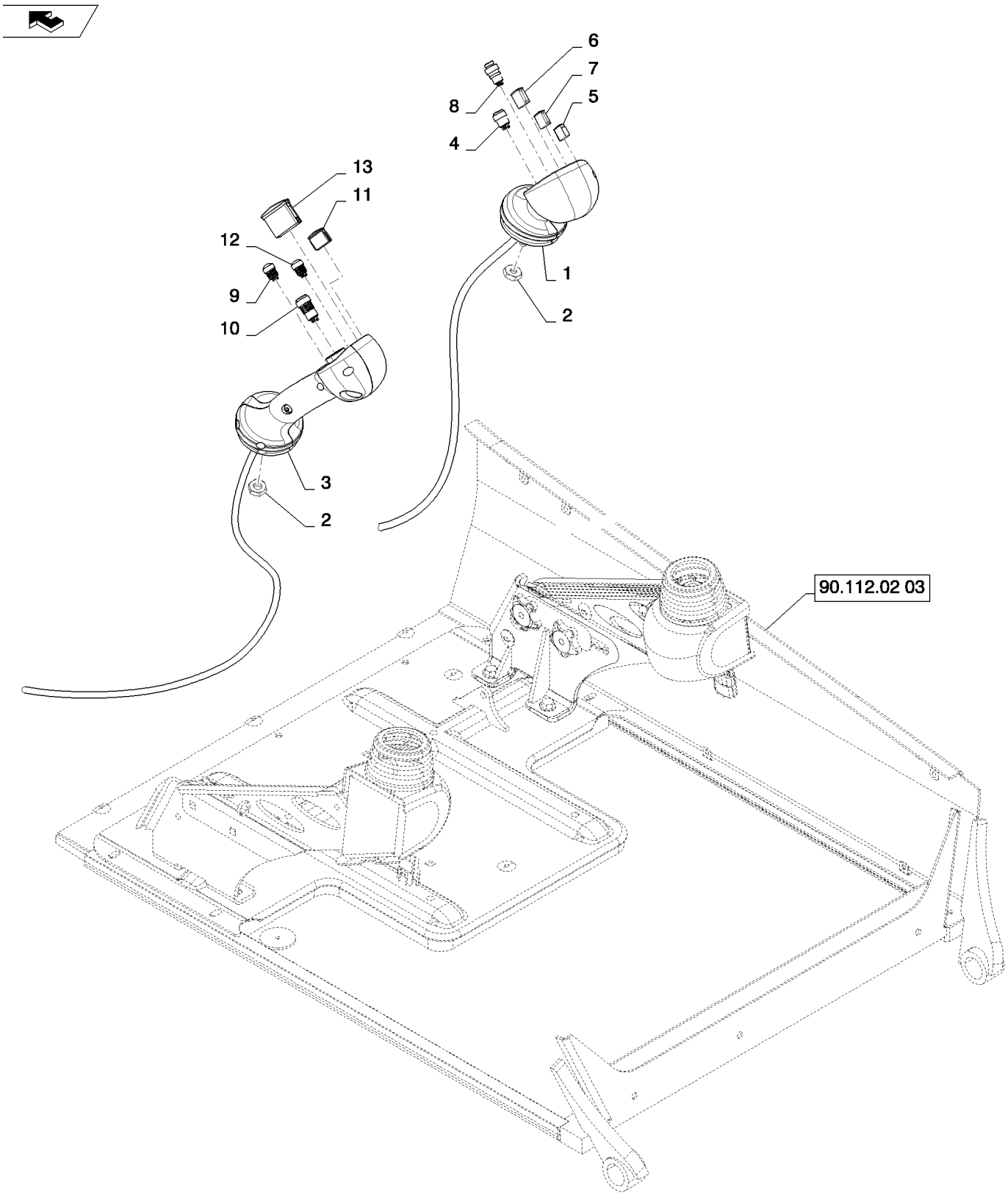

LEVEL 350 CASE CONTROL HANDLES (ALL CASE)
LEVEL 350 CASE CONTROL HANDLES (ALL CASE)
LEVEL 350 CASE CONTROL HANDLES (ALL CASE)
LEVEL 350 CASE CONTROL HANDLES (ALL CASE)

R	N	P.N.	MOD	Q	Denominação Description	Description Bezeichnung	Denominacion Beskrivelse	Descrizione Beschrijving	L.C.
1		84280472		1	EMPUNHADURA, Case Level 350 LH				
						HANDLE GRIP	PERILLA	IMPUGNATURA	025I
					POIGNEE DE MAINTIEN	HANDGRIFF	HÅNDGREB	HANDGREEP	
2		323238		2	PORCA, Thin, M12 x 1.75, Cl 05				
						NUT	TUERCA	DADO	010D
					ECROU	MUTTER	MØTRIK	MOER	
3		84201277		1	EMPUNHADURA, Case Level 350 RH				
						HANDLE GRIP	PERILLA	IMPUGNATURA	025I
					POIGNEE DE MAINTIEN	HANDGRIFF	HÅNDGREB	HANDGREEP	
4		87673088		1	INTERRUPTOR, 2 Speed	SWITCH	INTERRUPTOR	INTERRUTTORE	075I
					CONTACTEUR	SCHALTER	KONTAKT	SCHAKELAAR	
5		84398133		1	INTERRUPTOR, Multi-Function 4				
						SWITCH	INTERRUPTOR	INTERRUTTORE	075I
					CONTACTEUR	SCHALTER	KONTAKT	SCHAKELAAR	
6		{84296547}		1	Multi-Function 3				
7		{84296546}		1	Multi-Function 2				
8		84296542		1	INTERRUPTOR INTERMITENTE, Horn				
						SWITCH ASSY	CONJUNTO DE INTERRU	COMPLESSIVO INTERRU	067I
					ENSEMBLE COMMUTATI	SCHALTERBAUGRUPPE	KONTAKT, KPL.	SCHAKELAAREENHEID	
9		87673089		1	INTERRUPTOR, Ride Control				
						SWITCH	INTERRUPTOR	INTERRUTTORE	075I
					CONTACTEUR	SCHALTER	KONTAKT	SCHAKELAAR	
10		87630127		1	INTERRUPTOR, Park Brake				
						SWITCH	INTERRUPTOR	INTERRUTTORE	075I
					CONTACTEUR	SCHALTER	KONTAKT	SCHAKELAAR	
11		{84296545}		1	Multi-Function 1				
12		84296543		1	INTERRUPTOR, Float	SWITCH	INTERRUPTOR	INTERRUTTORE	075I
					CONTACTEUR	SCHALTER	KONTAKT	SCHAKELAAR	
13		84282677		1	INTERRUPTOR, Proportional Hydraulic				
						SWITCH	INTERRUPTOR	INTERRUTTORE	075I
					CONTACTEUR	SCHALTER	KONTAKT	SCHAKELAAR	

29.212.01		p1	01/11

TRAVEL SPEED 1SPD (SR175,SV185)
TRAVEL SPEED 1SPD (SR175,SV185)
TRAVEL SPEED 1SPD (SR175,SV185)
TRAVEL SPEED 1SPD (SR175,SV185)

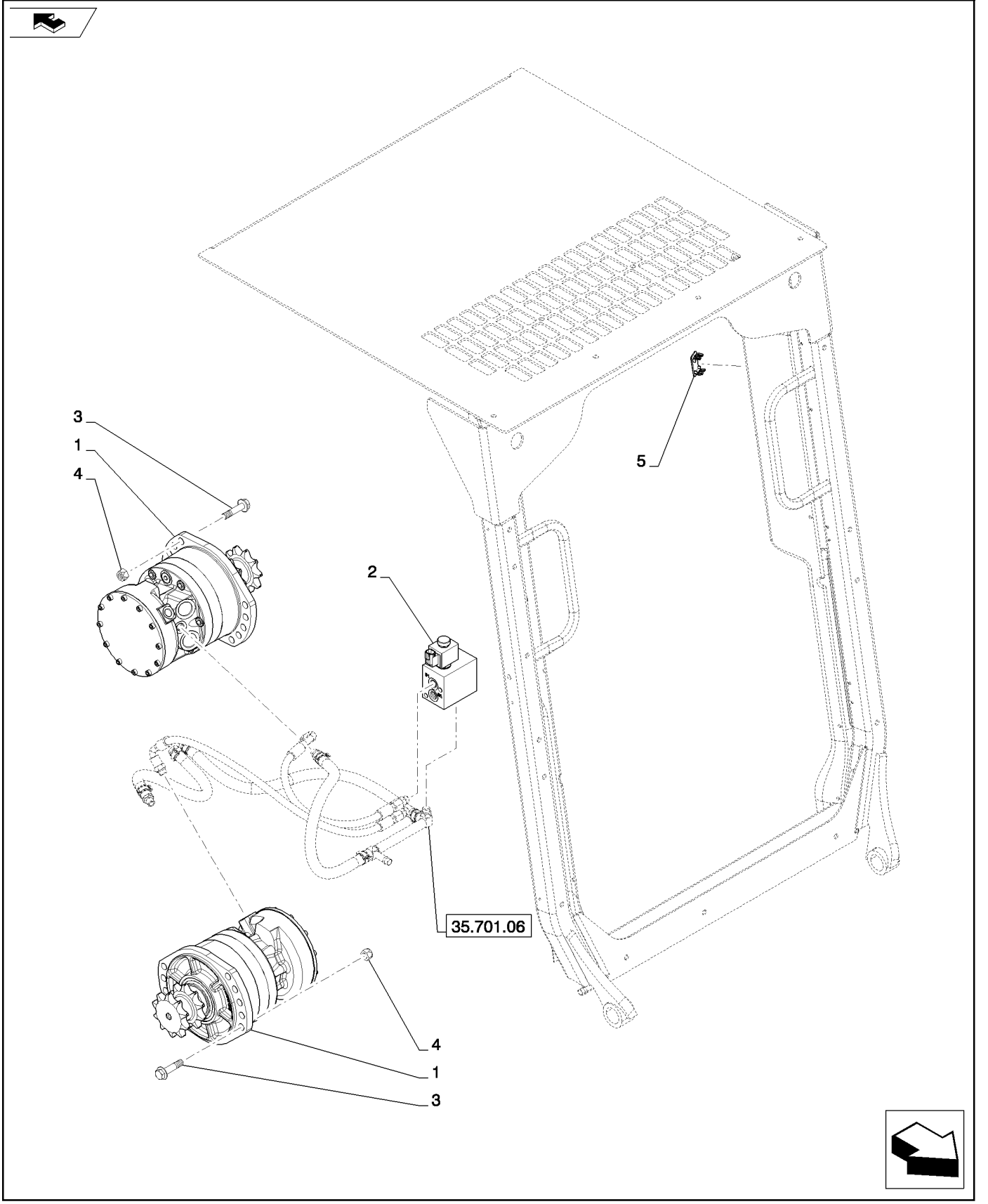

TRAVEL SPEED 1SPD (SR175,SV185)
TRAVEL SPEED 1SPD (SR175,SV185)
TRAVEL SPEED 1SPD (SR175,SV185)
TRAVEL SPEED 1SPD (SR175,SV185)

R	N	P.N.	MOD	Q	Denominação Description	Description Bezeichnung	Denominacion Beskrivelse	Descrizione Beschrijving	L.C.
1		84256614		2	MOTOR HIDRÁULICO, 325cc 1Spd W/Seal				
						HYDRAULIC MOTOR	MOTOR HIDRÁULICO	MOTORE IDRAULICO	900M
					MOTEUR HYDRAULIQUE	HYDRAULIKMOTOR	HYDRAULIKMOTOR	HYDRAULISCHE MOTOR	
2		84256530		1	VÁLVULA DE FREIO	BRAKE VALVE	VÁLVULA DE FRENO	VALVOLA DI COMANDO	017V
					SOUPAPE DE FREIN	BREMSVENTIL	BREMSEVENTIL	REMVENTIEL	
3		87670764		16	PARAFUSO, Flange, M12x50				
						BOLT	PERNO	BULLONE	140B
					VIS	SCHRAUBE	BOLT	BOUT	
4		412672		16	CONTRA PORCA, M12 x 1.75, Cl 10				
						LOCK NUT	TUERCA DE BLOQUEO	DADO DI BLOCCAGGIO	P263
					CONTRE-ECROU	SICHERUNGSMUTTER	LÅSEMØTRIK	BORGMOER	
5		126844A1		1	BUJÃO, Switch Hole Cover	PLUG	TAPÓN	TAPPO	050T
					BOUCHON	STOPFEN	PROP	PLUG	

29.212.02		p1	01/11

TRAVEL SPEED 2SPD (SR175,SV185)
TRAVEL SPEED 2SPD (SR175,SV185)
TRAVEL SPEED 2SPD (SR175,SV185)
TRAVEL SPEED 2SPD (SR175,SV185)

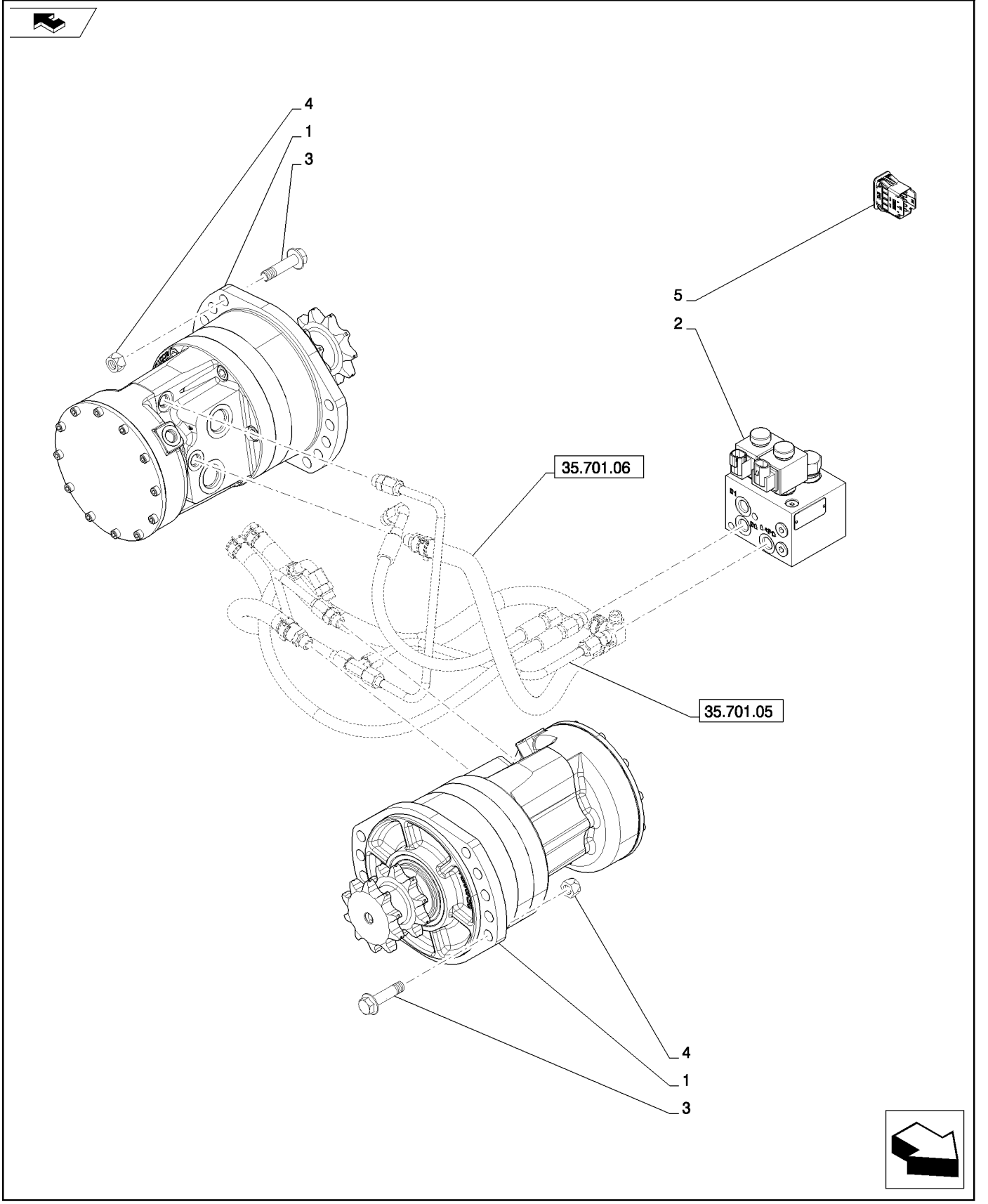

TRAVEL SPEED 2SPD (SR175,SV185)
TRAVEL SPEED 2SPD (SR175,SV185)
TRAVEL SPEED 2SPD (SR175,SV185)
TRAVEL SPEED 2SPD (SR175,SV185)

R	N	P.N.	MOD	Q	Denominação Description	Description Bezeichnung	Denominacion Beskrivelse	Descrizione Beschrijving	L.C.
1		84256615		2	MOTOR HIDRÁULICO, 325cc, 2Spd, W/Seal				
					HYDRAULIC MOTOR	MOTOR HIDRÁULICO	MOTORE IDRAULICO	900M	
					MOTEUR HYDRAULIQUE	HYDRAULIKMOTOR	HYDRAULIKMOTOR	HYDRAULISCHE MOTOR	
2		84256531		1	VÁLVULA DE FREIO, 2Spd Brake				
					BRAKE VALVE	VÁLVULA DE FRENO	VALVOLA DI COMANDO	017V	
					SOUPAPE DE FREIN	BREMSVENTIL	BREMSEVENTIL	REMVENTIEL	
3		87670764		16	PARAFUSO, M12x50	BOLT	PERNO	BULLONE	140B
					VIS	SCHRAUBE	BOLT	BOUT	
4		412672		16	CONTRA PORCA, M12 x 1.75, Cl 10				
					LOCK NUT	TUERCA DE BLOQUEO	DADO DI BLOCCAGGIO	P263	
					CONTRE-ECROU	SICHERUNGSMUTTER	LÅSEMØTRIK	BORGMOER	
5		84388282		1	INDICADOR, Indicator, High Speed				
					INDICATOR	INDICADOR	INDICATORE	087S	
					INDICATEUR	ANZEIGE	INDIKATOR	INDICATOR	

SV185

29.212.03		p1	01/11

TRAVEL SPEED E-H (SR175,SV185)
TRAVEL SPEED E-H (SR175,SV185)
TRAVEL SPEED E-H (SR175,SV185)
TRAVEL SPEED E-H (SR175,SV185)

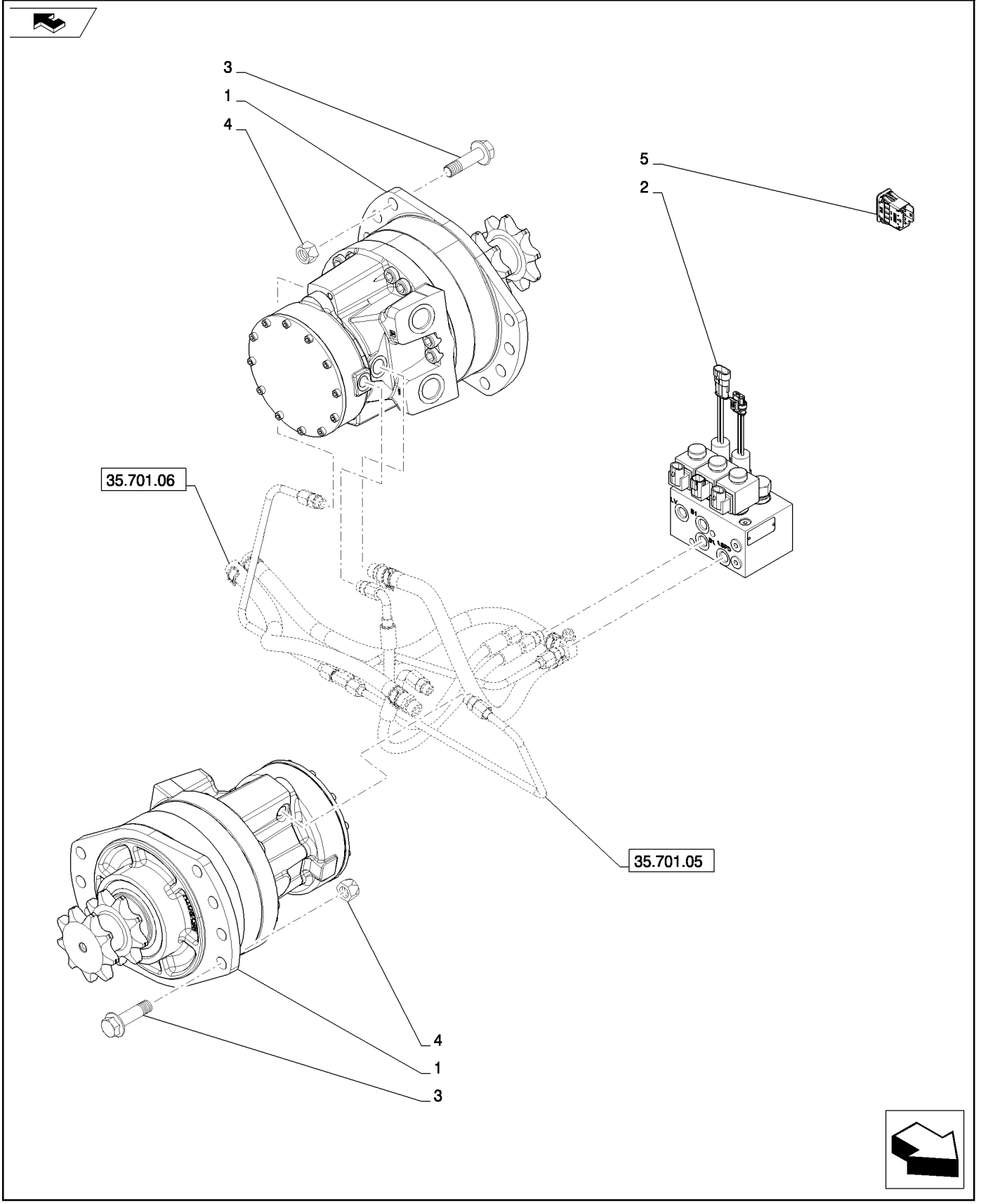

TRAVEL SPEED E-H (SR175,SV185)
TRAVEL SPEED E-H (SR175,SV185)
TRAVEL SPEED E-H (SR175,SV185)
TRAVEL SPEED E-H (SR175,SV185)

R	N	P.N.	MOD	Q	Denominação Description	Description Bezeichnung	Denominacion Beskrivelse	Descrizione Beschrijving	L.C.
1		84256615		2	MOTOR HIDRÁULICO, 470cc, 2Spd, W/Seal				
						HYDRAULIC MOTOR	MOTOR HIDRÁULICO	MOTORE IDRAULICO	900M
					MOTEUR HYDRAULIQUE	HYDRAULIKMOTOR	HYDRAULIKMOTOR	HYDRAULISCHE MOTOR	
2		84256533		1	VÁLVULA DE FREIO, 2Spd Brake				
						BRAKE VALVE	VÁLVULA DE FRENO	VALVOLA DI COMANDO	017V
					SOUPAPE DE FREIN	BREMSVENTIL	BREMSEVENTIL	REMVENTIEL	
3		87670764		16	PARAFUSO, Flg M12x50	BOLT	PERNO	BULLONE	140B
					VIS	SCHRAUBE	BOLT	BOUT	
4		412672		16	CONTRA PORCA, M12 x 1.75, Cl 10				
						LOCK NUT	TUERCA DE BLOQUEO	DADO DI BLOCCAGGIO	P263
					CONTRE-ECROU	SICHERUNGSMUTTER	LÅSEMØTRIK	BORGMOER	
5		84388282		1	INDICADOR, Indicator, High Speed				
						INDICATOR	INDICADOR	INDICATORE	087S
					INDICATEUR	ANZEIGE	INDIKATOR	INDICATOR	

SV185

29.212.04	01	p1	01/11

MOTOR, REXROTH DRIVE MOTOR 2SPD (SR175,SV185)
MOTOR, REXROTH DRIVE MOTOR 2SPD (SR175,SV185)
MOTOR, REXROTH DRIVE MOTOR 2SPD (SR175,SV185)
MOTOR, REXROTH DRIVE MOTOR 2SPD (SR175,SV185)

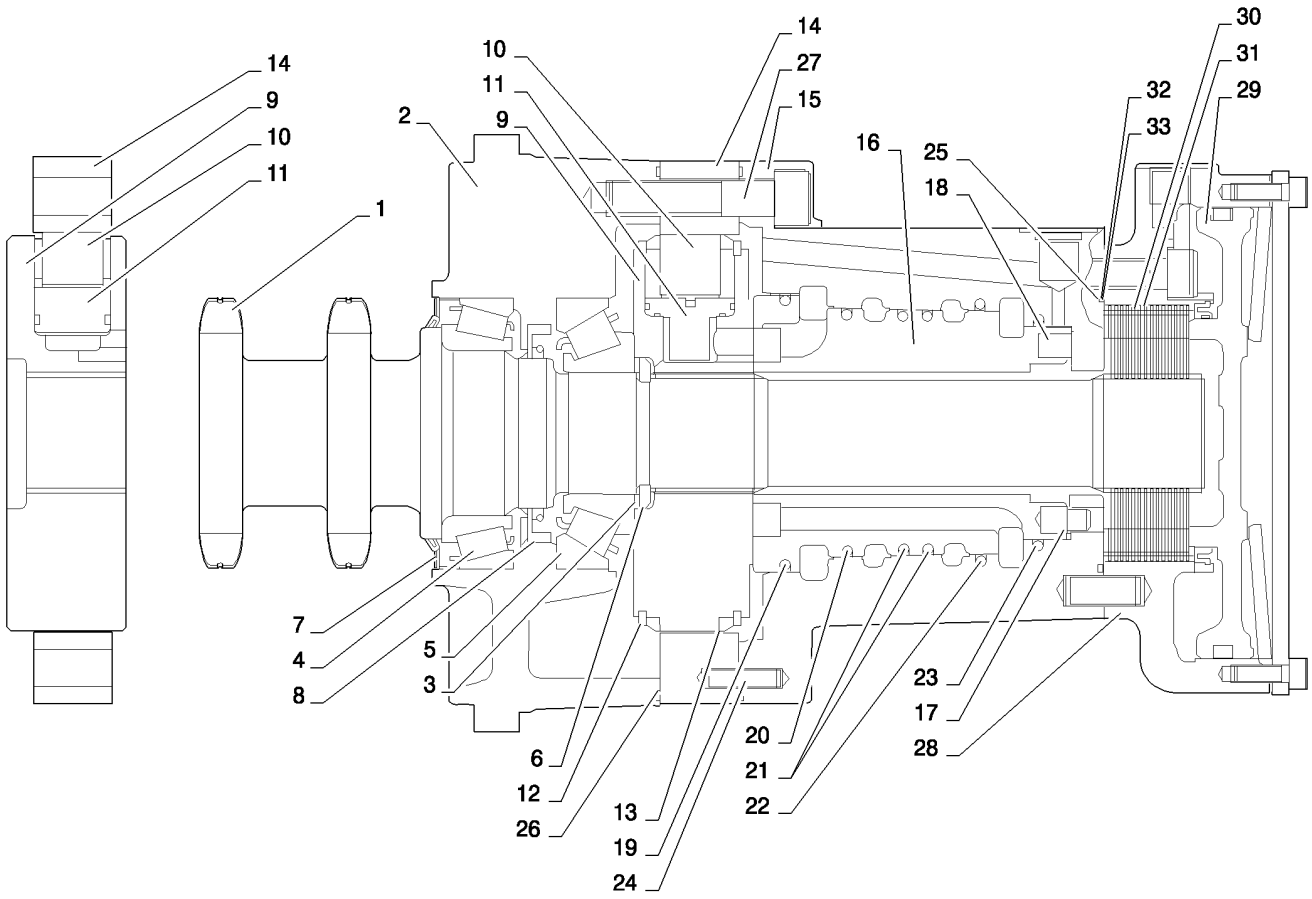

MOTOR, REXROTH DRIVE MOTOR 2SPD (SR175,SV185)
MOTOR, REXROTH DRIVE MOTOR 2SPD (SR175,SV185)
MOTOR, REXROTH DRIVE MOTOR 2SPD (SR175,SV185)
MOTOR, REXROTH DRIVE MOTOR 2SPD (SR175,SV185)

R	N	P.N.	MOD	Q	Denominação Description Bezeichnung	Denominacion Beskrivelse	Descrizione Beschrijving	L.C.
1		84293367		1	EIXO COMANDO, MCR3 2SPD ASM			
					DRIVE SHAFT	EJE DE TRANSMISIÓN	ALBERO DI TRASMISSIC	P754
					ARBRE D'ENTRAINEMEN ANTRIEBSWELLE	DRIVAKSEL	AANDRIJFAS	
2		84293379		1	CARCAÇA MOTOR, MCR3 Front W Seal			
					MOTOR HOUSING	ALOJAMIENTO DEL MOT	ALLOGGIAMENTO MOTC	P650
					CARTER DU MOTEUR MOTORGEHÄUSE	MOTORHUS	MOTORHUIS	
3		87043989		1	KIT, Abutment Washer	KIT	KIT	305C
					KIT SATZ	SÆT	KIT	
4		87043990		1	ROLAMENTO ESFÉRICO, 55 mm ID x 90 mm OD x 23 mm, 55 X 90 X 23			
					BALL BEARING	RODAMIENTO DE BOLAS	CUSCINETTO A SFERE	343C
					ROULEMENT A BILLES KUGELLAGER	KUGLELEJE	KOGELLAGER	
5		87043991		1	ROLAMENTO ESFÉRICO, 40 mm ID x 90 mm OD x 25.25 mm, MCR3 40 X 90 X 25.25			
					BALL BEARING	RODAMIENTO DE BOLAS	CUSCINETTO A SFERE	343C
					ROULEMENT A BILLES KUGELLAGER	KUGLELEJE	KOGELLAGER	
6		87043992		1	ANEL, MCR3 Split	RING	ANILLO	ANELLO	045A
					ANNEAU RING	RING	RING	
7		NSS		1	SEM SERVIÇO EM SEPARADO, MCR3 Face Seal 70 X 90 X 11.2			
					NOT SERVICED SEPARA	NO SE REPARA POR SE	NON FORNITO SEPARAT	064N
					NON FORUNI SEPAREM NICHT A SEP ERS-T LIEI	SERVICERES IKKE SEPA	NIET LOS VERKRIJGBAA	
8		NSS		1	SEM SERVIÇO EM SEPARADO, MCR3 Shaft Seal 50 VITON			
					NOT SERVICED SEPARA	NO SE REPARA POR SE	NON FORNITO SEPARAT	064N
					NON FORUNI SEPAREM NICHT A SEP ERS-T LIEI	SERVICERES IKKE SEPA	NIET LOS VERKRIJGBAA	
9		NSS		1	SEM SERVIÇO EM SEPARADO, MCR3 Cyl Block HD/2W/P			
					NOT SERVICED SEPARA	NO SE REPARA POR SE	NON FORNITO SEPARAT	064N
					NON FORUNI SEPAREM NICHT A SEP ERS-T LIEI	SERVICERES IKKE SEPA	NIET LOS VERKRIJGBAA	
10		NSS		8	SEM SERVIÇO EM SEPARADO, MCR3 Roller HD			
					NOT SERVICED SEPARA	NO SE REPARA POR SE	NON FORNITO SEPARAT	064N
					NON FORUNI SEPAREM NICHT A SEP ERS-T LIEI	SERVICERES IKKE SEPA	NIET LOS VERKRIJGBAA	
11		NSS		8	SEM SERVIÇO EM SEPARADO, MCR3 Piston S/A HD/HX/2W			
					NOT SERVICED SEPARA	NO SE REPARA POR SE	NON FORNITO SEPARAT	064N
					NON FORUNI SEPAREM NICHT A SEP ERS-T LIEI	SERVICERES IKKE SEPA	NIET LOS VERKRIJGBAA	
12		NSS		2	SEM SERVIÇO EM SEPARADO, CIRClip EXT 120 DIA			
					NOT SERVICED SEPARA	NO SE REPARA POR SE	NON FORNITO SEPARAT	064N
					NON FORUNI SEPAREM NICHT A SEP ERS-T LIEI	SERVICERES IKKE SEPA	NIET LOS VERKRIJGBAA	
13		NSS		2	SEM SERVIÇO EM SEPARADO, MCR3 Retaining Ring			
					NOT SERVICED SEPARA	NO SE REPARA POR SE	NON FORNITO SEPARAT	064N
					NON FORUNI SEPAREM NICHT A SEP ERS-T LIEI	SERVICERES IKKE SEPA	NIET LOS VERKRIJGBAA	
14		84293388		1	KIT DE VEDAÇÃO, CAM, MCR3 325CC 2SPD			
					SEAL KIT	KIT DE JUNTAS	KIT GUARNIZIONI	630S
					KIT DE JOINTS DICHTUNGSSATZ	PAKNINGSSÆT	KIT MET AFDICHTINGEN	
15		87043994		1	ESTOJO, MCR3 R/CASE D/2W/S0455C			
					CASE	ESTUCHE	CASSA; SCATOLA	101A
					CARTER GEHÄUSE	KASSE	HUIS	
16		87043995		1	DISTRIBUIDOR, MCR3 Distributor 2WL			
					DISTRIBUTOR	DISTRIBUIDOR	DISTRIBUTORE	080D
					DISTRIBUTEUR VERTEILER	STRØMFORDELER	VERDELER	
17		87042911		1	PINO, MCR5 Stop Pin S0471			
					PIN	PASADOR	PERNO	080P
					BROCHE PIN	STIFT	PEN	

MOTOR, REXROTH DRIVE MOTOR 2SPD (SR175,SV185)
MOTOR, REXROTH DRIVE MOTOR 2SPD (SR175,SV185)
MOTOR, REXROTH DRIVE MOTOR 2SPD (SR175,SV185)
MOTOR, REXROTH DRIVE MOTOR 2SPD (SR175,SV185)

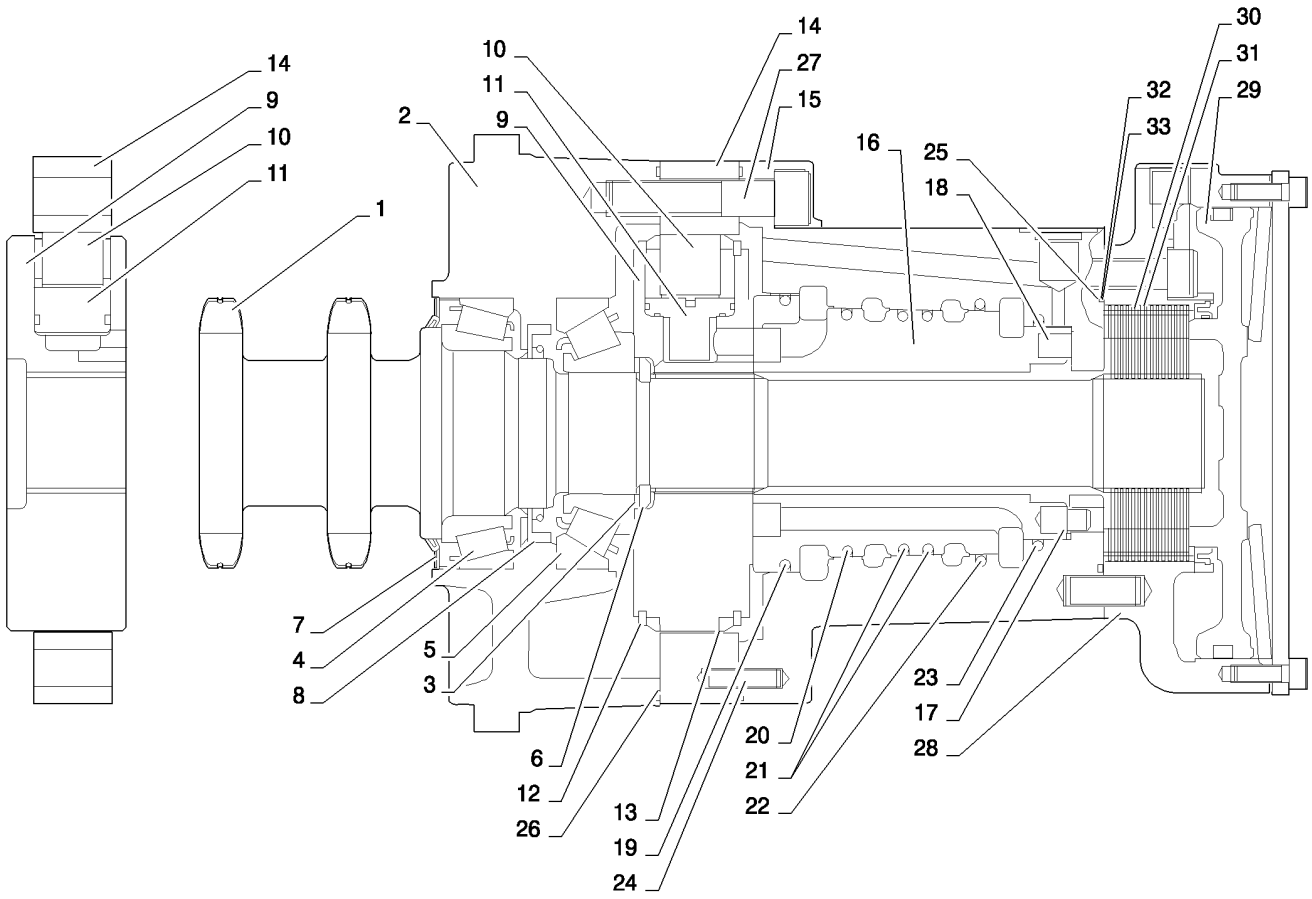

MOTOR, REXROTH DRIVE MOTOR 2SPD (SR175,SV185)
MOTOR, REXROTH DRIVE MOTOR 2SPD (SR175,SV185)
MOTOR, REXROTH DRIVE MOTOR 2SPD (SR175,SV185)
MOTOR, REXROTH DRIVE MOTOR 2SPD (SR175,SV185)

R	N	P.N.	MOD	Q	Denominação Description	Description Bezeichnung	Denominacion Beskrivelse	Descrizione Beschrijving	L.C.
18		87042912		12	MOLA, MCR3	SPRING	RESORTE	MOLLA	100M
					RESSORT	FEDER	FJEDER	VEER	
19		NSS		1	SEM SERVIÇO EM SEPARADO, Piston Seal 91				
						NOT SERVICED SEPARA	NO SE REPARA POR SE	NON FORNITO SEPARAT	064N
					NON FORUNI SEPAREM	NICHT A SEP ERS-T LIEI	SERVICERES IKKE SEPA	NIET LOS VERKRIJGBAA	
20		NSS		1	SEM SERVIÇO EM SEPARADO, Piston Seal 82.25				
						NOT SERVICED SEPARA	NO SE REPARA POR SE	NON FORNITO SEPARAT	064N
					NON FORUNI SEPAREM	NICHT A SEP ERS-T LIEI	SERVICERES IKKE SEPA	NIET LOS VERKRIJGBAA	
21		NSS		2	SEM SERVIÇO EM SEPARADO, Piston Seal 81.25				
						NOT SERVICED SEPARA	NO SE REPARA POR SE	NON FORNITO SEPARAT	064N
					NON FORUNI SEPAREM	NICHT A SEP ERS-T LIEI	SERVICERES IKKE SEPA	NIET LOS VERKRIJGBAA	
22		NSS		1	SEM SERVIÇO EM SEPARADO, Rod Seal 80.25				
						NOT SERVICED SEPARA	NO SE REPARA POR SE	NON FORNITO SEPARAT	064N
					NON FORUNI SEPAREM	NICHT A SEP ERS-T LIEI	SERVICERES IKKE SEPA	NIET LOS VERKRIJGBAA	
23		NSS		1	SEM SERVIÇO EM SEPARADO, Rod Seal 70.00				
						NOT SERVICED SEPARA	NO SE REPARA POR SE	NON FORNITO SEPARAT	064N
					NON FORUNI SEPAREM	NICHT A SEP ERS-T LIEI	SERVICERES IKKE SEPA	NIET LOS VERKRIJGBAA	
24		87043996		1	GUIA, Pin DIA 6 X 25	DOWEL	BULÓN	PERNO	090G
					GOUJON	PASSSTIFT	DYVEL	PASPEN	
25		NSS		1	SEM SERVIÇO EM SEPARADO, Sq. Ring 88.62 X 1.68 VIT				
						NOT SERVICED SEPARA	NO SE REPARA POR SE	NON FORNITO SEPARAT	064N
					NON FORUNI SEPAREM	NICHT A SEP ERS-T LIEI	SERVICERES IKKE SEPA	NIET LOS VERKRIJGBAA	
26		NSS		2	SEM SERVIÇO EM SEPARADO, Sq. Ring 171.5 X 1.68 VIT				
						NOT SERVICED SEPARA	NO SE REPARA POR SE	NON FORNITO SEPARAT	064N
					NON FORUNI SEPAREM	NICHT A SEP ERS-T LIEI	SERVICERES IKKE SEPA	NIET LOS VERKRIJGBAA	
27		87043997		6	PARAFUSO, SH Cap M12 X 55				
						SCREW	TORNILLO	VITE	040V
					VIS	SCHRAUBE	SKRUE	SCHROEF	
28		87043998		1	FREIO, MCR3 BRK HSG 2W/S0471C				
						BRAKE	FRENO	FRENO	092F
					FREIN	BREMSE	BREMSE	REM	
29		87043999		1	PISTÃO, MCR3 Brake Piston S03828				
						PISTON	PISTÓN	PISTONE	235S
					PISTON	KOLBEN	STEMPEL	ZUIGER	
30		NSS		15	SEM SERVIÇO EM SEPARADO, MCR3 Outer Plate				
						NOT SERVICED SEPARA	NO SE REPARA POR SE	NON FORNITO SEPARAT	064N
					NON FORUNI SEPAREM	NICHT A SEP ERS-T LIEI	SERVICERES IKKE SEPA	NIET LOS VERKRIJGBAA	
31		NSS		13	SEM SERVIÇO EM SEPARADO, MCR3 Inner Plate				
						NOT SERVICED SEPARA	NO SE REPARA POR SE	NON FORNITO SEPARAT	064N
					NON FORUNI SEPAREM	NICHT A SEP ERS-T LIEI	SERVICERES IKKE SEPA	NIET LOS VERKRIJGBAA	
32		NSS		1	SEM SERVIÇO EM SEPARADO, Shim 80 X 63 X 0.1				
						NOT SERVICED SEPARA	NO SE REPARA POR SE	NON FORNITO SEPARAT	064N
					NON FORUNI SEPAREM	NICHT A SEP ERS-T LIEI	SERVICERES IKKE SEPA	NIET LOS VERKRIJGBAA	
33		NSS		1	SEM SERVIÇO EM SEPARADO, Shim 80 X 63 X 0.3				
						NOT SERVICED SEPARA	NO SE REPARA POR SE	NON FORNITO SEPARAT	064N
					NON FORUNI SEPAREM	NICHT A SEP ERS-T LIEI	SERVICERES IKKE SEPA	NIET LOS VERKRIJGBAA	

MOTOR, REXROTH DRIVE MOTOR 2SPD (SR175,SV185)
MOTOR, REXROTH DRIVE MOTOR 2SPD (SR175,SV185)
MOTOR, REXROTH DRIVE MOTOR 2SPD (SR175,SV185)
MOTOR, REXROTH DRIVE MOTOR 2SPD (SR175,SV185)

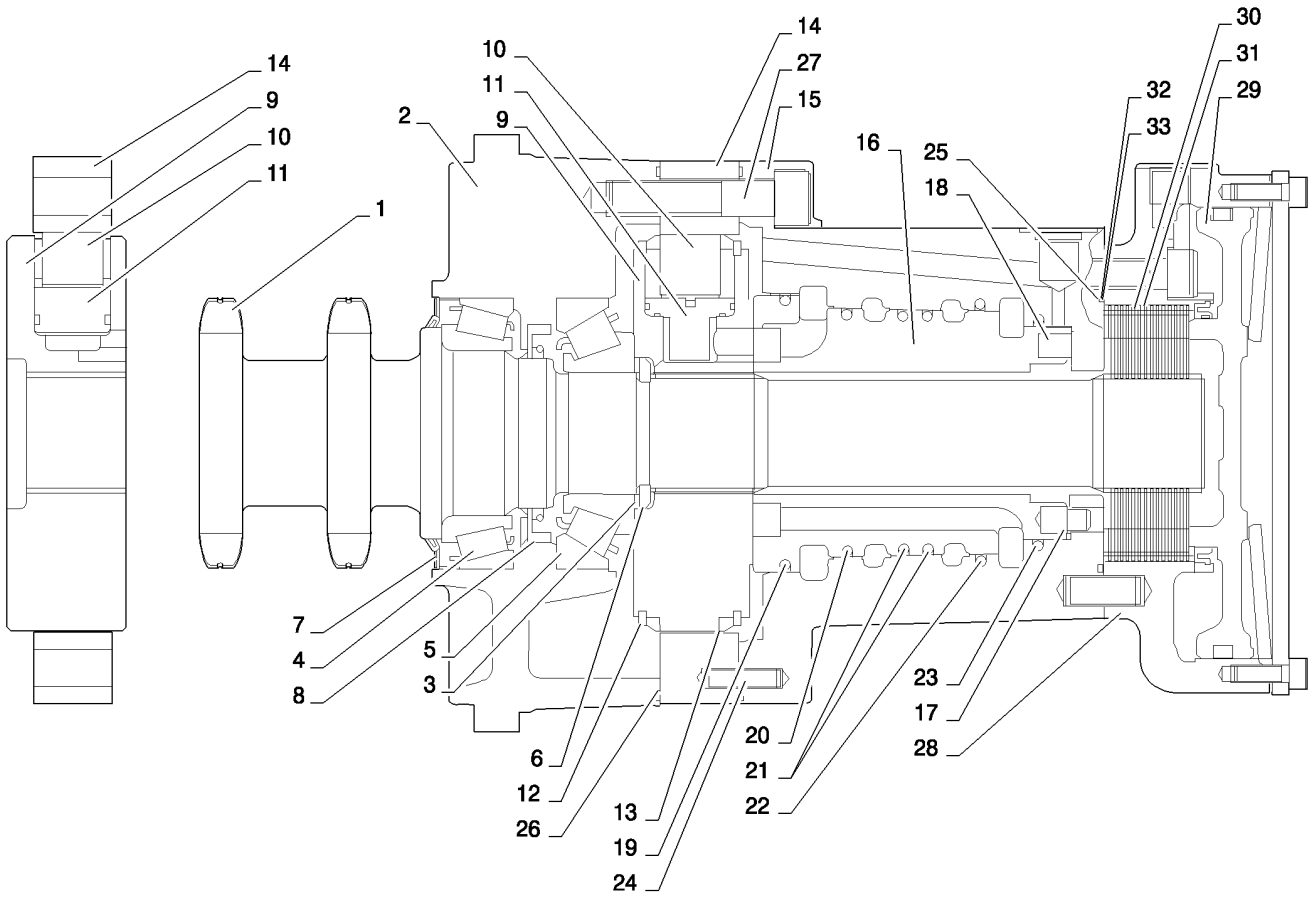

MOTOR, REXROTH DRIVE MOTOR 2SPD (SR175,SV185)
MOTOR, REXROTH DRIVE MOTOR 2SPD (SR175,SV185)
MOTOR, REXROTH DRIVE MOTOR 2SPD (SR175,SV185)
MOTOR, REXROTH DRIVE MOTOR 2SPD (SR175,SV185)

R	N	P.N.	MOD	Q	Denominação Description	Description Bezeichnung	Denominacion Beskrivelse	Descrizione Beschrijving	L.C.
34		**NSS**		1	SEM SERVIÇO EM SEPARADO, Spring Pin DIA 6 X 16				
						NOT SERVICED SEPARA	NO SE REPARA POR SE	NON FORNITO SEPARAT	064N
					NON FORUNI SEPAREM	NICHT A SEP ERS-T LIEI	SERVICERES IKKE SEPA	NIET LOS VERKRIJGBAA	
35		**NSS**		1	SEM SERVIÇO EM SEPARADO, MCR5 Spring, Shut off				
						NOT SERVICED SEPARA	NO SE REPARA POR SE	NON FORNITO SEPARAT	064N
					NON FORUNI SEPAREM	NICHT A SEP ERS-T LIEI	SERVICERES IKKE SEPA	NIET LOS VERKRIJGBAA	

29.212.04	01	p1	01/11

MOTOR, REXROTH DRIVE MOTOR 1SPD (SR130-SV185)
MOTOR, REXROTH DRIVE MOTOR 1SPD (SR130-SV185)
MOTOR, REXROTH DRIVE MOTOR 1SPD (SR130-SV185)
MOTOR, REXROTH DRIVE MOTOR 1SPD (SR130-SV185)

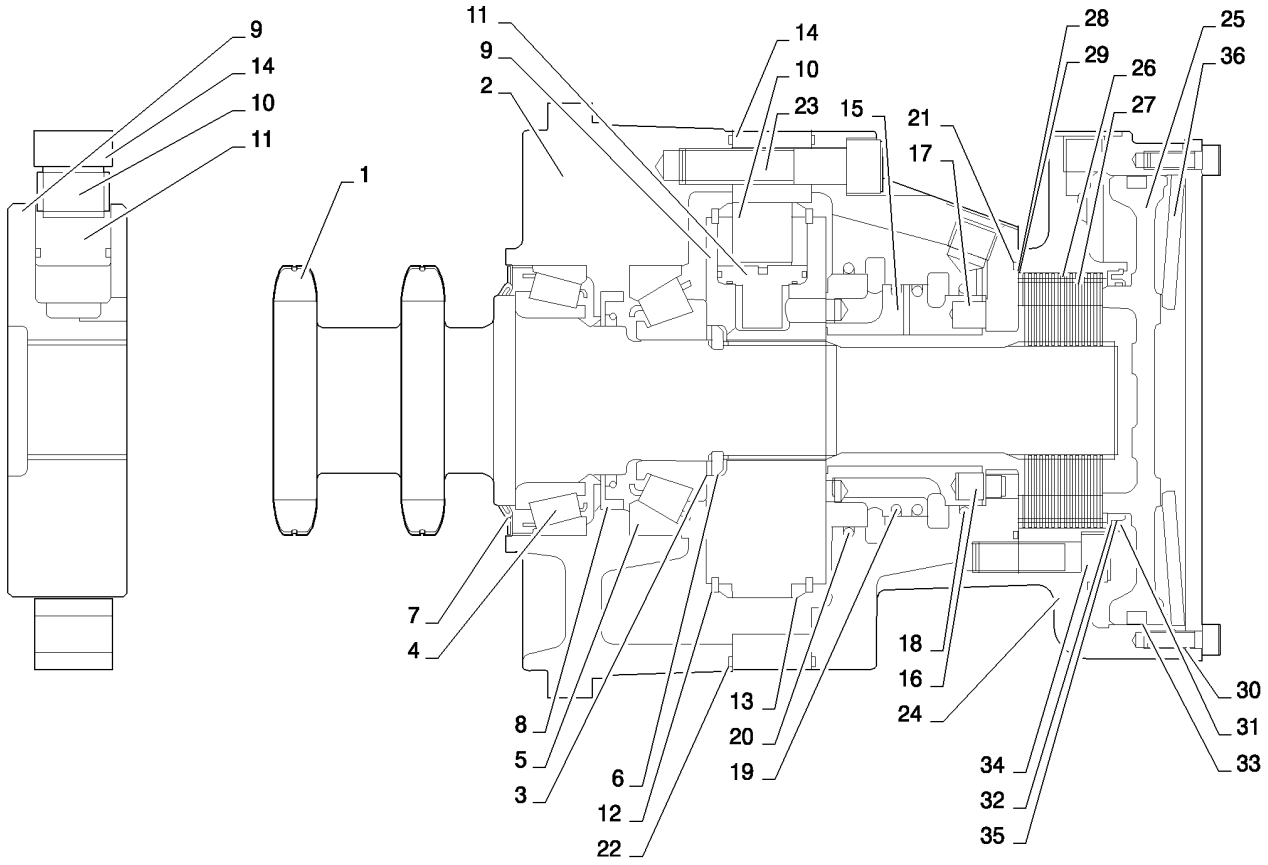

MOTOR, REXROTH DRIVE MOTOR 1SPD (SR130-SV185)
MOTOR, REXROTH DRIVE MOTOR 1SPD (SR130-SV185)
MOTOR, REXROTH DRIVE MOTOR 1SPD (SR130-SV185)
MOTOR, REXROTH DRIVE MOTOR 1SPD (SR130-SV185)

R	N	P.N.	MOD	Q	Denominação Description	Description Bezeichnung	Denominacion Beskrivelse	Descrizione Beschrijving	L.C.
1		84293366		1	EIXO COMANDO, MCR3 1 SPD ASM				
						DRIVE SHAFT	EJE DE TRANSMISIÓN	ALBERO DI TRASMISSIC	P754
					ARBRE D'ENTRAINEMEN	ANTRIEBSWELLE	DRIVAKSEL	AANDRIJFAS	
2		84293379		1	CARCAÇA MOTOR, ASM MCR3 Front W Seal				
						MOTOR HOUSING	ALOJAMIENTO DEL MOT	ALLOGGIAMENTO MOTC	P650
					CARTER DU MOTEUR	MOTORGEHÄUSE	MOTORHUS	MOTORHUIS	
3		87043989		1	KIT, Abutment Washer	KIT	KIT	KIT	305C
					KIT	SATZ	SÆT	KIT	
4		87043990		1	ROLAMENTO ESFÉRICO, 55 mm ID x 90 mm OD x 23 mm, 55 X 90 X 23				
						BALL BEARING	RODAMIENTO DE BOLAS	CUSCINETTO A SFERE	343C
					ROULEMENT A BILLES	KUGELLAGER	KUGLELEJE	KOGELLAGER	
5		87043991		1	ROLAMENTO ESFÉRICO, 40 mm ID x 90 mm OD x 25.25 mm, MCR3 40 X 90 X 25.25				
						BALL BEARING	RODAMIENTO DE BOLAS	CUSCINETTO A SFERE	343C
					ROULEMENT A BILLES	KUGELLAGER	KUGLELEJE	KOGELLAGER	
6		87043992		1	ANEL, MCR3 Split Ring	RING	ANILLO	ANELLO	045A
					ANNEAU	RING	RING	RING	
7		NSS		1	SEM SERVIÇO EM SEPARADO, Seal, MCR3 Shaft				
						NOT SERVICED SEPARA	NO SE REPARA POR SE	NON FORNITO SEPARAT	064N
					NON FORUNI SEPAREM	NICHT A SEP ERS-T LIEI	SERVICERES IKKE SEPA	NIET LOS VERKRIJGBAA	
8		NSS		1	SEM SERVIÇO EM SEPARADO, MCR3 Shaft Seal 50 X 72 X 8/6 VITON				
						NOT SERVICED SEPARA	NO SE REPARA POR SE	NON FORNITO SEPARAT	064N
					NON FORUNI SEPAREM	NICHT A SEP ERS-T LIEI	SERVICERES IKKE SEPA	NIET LOS VERKRIJGBAA	
9		NSS		1	SEM SERVIÇO EM SEPARADO, MCR3 Cyl Block HD/1W/P				
						NOT SERVICED SEPARA	NO SE REPARA POR SE	NON FORNITO SEPARAT	064N
					NON FORUNI SEPAREM	NICHT A SEP ERS-T LIEI	SERVICERES IKKE SEPA	NIET LOS VERKRIJGBAA	
10		NSS		8	SEM SERVIÇO EM SEPARADO, MCR3 Roller HD				
						NOT SERVICED SEPARA	NO SE REPARA POR SE	NON FORNITO SEPARAT	064N
					NON FORUNI SEPAREM	NICHT A SEP ERS-T LIEI	SERVICERES IKKE SEPA	NIET LOS VERKRIJGBAA	
11		NSS		8	SEM SERVIÇO EM SEPARADO, MCR3 Piston S/A HD/HX				
						NOT SERVICED SEPARA	NO SE REPARA POR SE	NON FORNITO SEPARAT	064N
					NON FORUNI SEPAREM	NICHT A SEP ERS-T LIEI	SERVICERES IKKE SEPA	NIET LOS VERKRIJGBAA	
12		NSS		2	SEM SERVIÇO EM SEPARADO, CirClip EXT 120 DIA				
						NOT SERVICED SEPARA	NO SE REPARA POR SE	NON FORNITO SEPARAT	064N
					NON FORUNI SEPAREM	NICHT A SEP ERS-T LIEI	SERVICERES IKKE SEPA	NIET LOS VERKRIJGBAA	
13		NSS		2	SEM SERVIÇO EM SEPARADO, MCR3 Retaining Ring				
						NOT SERVICED SEPARA	NO SE REPARA POR SE	NON FORNITO SEPARAT	064N
					NON FORUNI SEPAREM	NICHT A SEP ERS-T LIEI	SERVICERES IKKE SEPA	NIET LOS VERKRIJGBAA	
14		84293386		1	KIT DE VEDAÇÃO, Cam MCR3 325cc 1 spd				
						SEAL KIT	KIT DE JUNTAS	KIT GUARNIZIONI	630S
					KIT DE JOINTS	DICHTUNGSSATZ	PAKNINGSSÆT	KIT MET AFDICHTINGEN	
15		87045008		1	DISTRIBUIDOR, MCR3 2WL				
						DISTRIBUTOR	DISTRIBUIDOR	DISTRIBUTORE	080D
					DISTRIBUTEUR	VERTEILER	STRØMFORDELER	VERDELER	
16		87042911		1	PINO, MCR5 Stop Pin S0471				
						PIN	PASADOR	PERNO	080P
					BROCHE	PIN	STIFT	PEN	
17		87042912		9	MOLA, MCR3 Distributor Spring				
						SPRING	RESORTE	MOLLA	100M
					RESSORT	FEDER	FJEDER	VEER	

29.212.04	01	p2	01/11

MOTOR, REXROTH DRIVE MOTOR 1SPD (SR130-SV185)
MOTOR, REXROTH DRIVE MOTOR 1SPD (SR130-SV185)
MOTOR, REXROTH DRIVE MOTOR 1SPD (SR130-SV185)
MOTOR, REXROTH DRIVE MOTOR 1SPD (SR130-SV185)

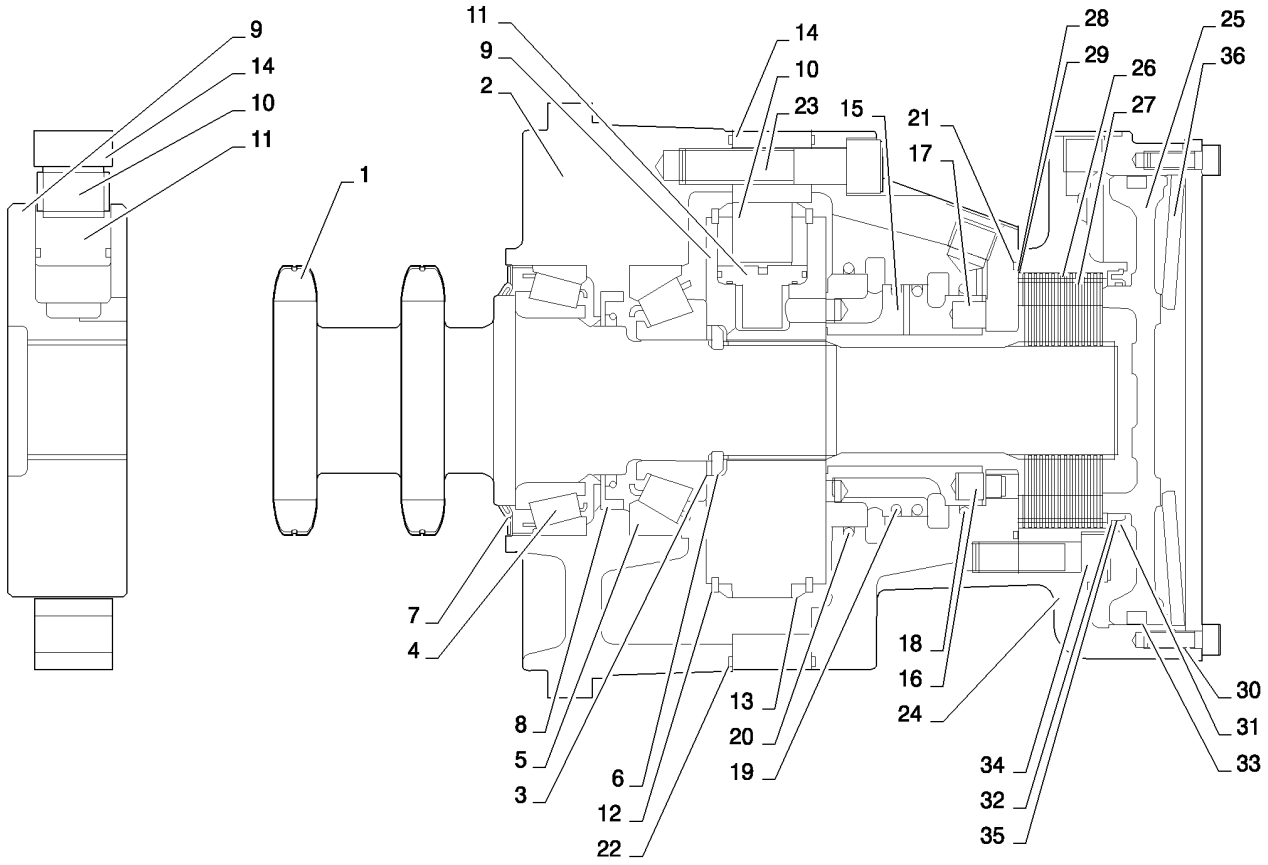

MOTOR, REXROTH DRIVE MOTOR 1SPD (SR130-SV185)
MOTOR, REXROTH DRIVE MOTOR 1SPD (SR130-SV185)
MOTOR, REXROTH DRIVE MOTOR 1SPD (SR130-SV185)
MOTOR, REXROTH DRIVE MOTOR 1SPD (SR130-SV185)

R	N	P.N.	MOD	Q	Denominação Description Bezeichnung	Denominacion Beskrivelse	Descrizione Beschrijving	L.C.
18		NSS		1	SEM SERVIÇO EM SEPARADO, Rod Seal 70 NOT SERVICED SEPARA NON FORUNI SEPAREM NICHT A SEP ERS-T LIEI	NO SE REPARA POR SE SERVICERES IKKE SEPA	NON FORNITO SEPARAT NIET LOS VERKRIJGBAA	064N
19		NSS		2	SEM SERVIÇO EM SEPARADO, Piston Seal 77.225 NOT SERVICED SEPARA NON FORUNI SEPAREM NICHT A SEP ERS-T LIEI	NO SE REPARA POR SE SERVICERES IKKE SEPA	NON FORNITO SEPARAT NIET LOS VERKRIJGBAA	064N
20		NSS		1	SEM SERVIÇO EM SEPARADO, Rod Seal 84 NOT SERVICED SEPARA NON FORUNI SEPAREM NICHT A SEP ERS-T LIEI	NO SE REPARA POR SE SERVICERES IKKE SEPA	NON FORNITO SEPARAT NIET LOS VERKRIJGBAA	064N
21		NSS		1	SEM SERVIÇO EM SEPARADO, Sq. Ring 88.1 X 1.68 VIT NOT SERVICED SEPARA NON FORUNI SEPAREM NICHT A SEP ERS-T LIEI	NO SE REPARA POR SE SERVICERES IKKE SEPA	NON FORNITO SEPARAT NIET LOS VERKRIJGBAA	064N
22		NSS		1	SEM SERVIÇO EM SEPARADO, Sq. Ring 171.5 X 1.68 VIT NOT SERVICED SEPARA NON FORUNI SEPAREM NICHT A SEP ERS-T LIEI	NO SE REPARA POR SE SERVICERES IKKE SEPA	NON FORNITO SEPARAT NIET LOS VERKRIJGBAA	064N
23		87043997		6	PARAFUSO, SH Cap M12 X 55 SCREW VIS SCHRAUBE	TORNILLO SKRUE	VITE SCHROEF	040V
24		87045010		1	ALOJAMENTO, MCR3 BRK HSG 1W/S0471C HOUSING CARTER GEHÄUSE	ALOJAMIENTO HUS	ALLOGGIAMENTO HUIS	014V
25		87043999		1	PISTÃO, MCR3 Brake Piston S0382B PISTON PISTON KOLBEN	PISTÓN STEMPEL	PISTONE ZUIGER	235S
26		NSS		15	SEM SERVIÇO EM SEPARADO, MCR3 Outer Plate NOT SERVICED SEPARA NON FORUNI SEPAREM NICHT A SEP ERS-T LIEI	NO SE REPARA POR SE SERVICERES IKKE SEPA	NON FORNITO SEPARAT NIET LOS VERKRIJGBAA	064N
27		NSS		13	SEM SERVIÇO EM SEPARADO, MCR3 Inner Plate NOT SERVICED SEPARA NON FORUNI SEPAREM NICHT A SEP ERS-T LIEI	NO SE REPARA POR SE SERVICERES IKKE SEPA	NON FORNITO SEPARAT NIET LOS VERKRIJGBAA	064N
28		NSS		1	SEM SERVIÇO EM SEPARADO, Brake Shim 80 X 63 X 0.1 NOT SERVICED SEPARA NON FORUNI SEPAREM NICHT A SEP ERS-T LIEI	NO SE REPARA POR SE SERVICERES IKKE SEPA	NON FORNITO SEPARAT NIET LOS VERKRIJGBAA	064N
29		NSS		1	SEM SERVIÇO EM SEPARADO, Brake Shim 80 X 63 X 0.3 NOT SERVICED SEPARA NON FORUNI SEPAREM NICHT A SEP ERS-T LIEI	NO SE REPARA POR SE SERVICERES IKKE SEPA	NON FORNITO SEPARAT NIET LOS VERKRIJGBAA	064N
30		NSS		1	SEM SERVIÇO EM SEPARADO, MCR3 Gasket B2 0.5 NOT SERVICED SEPARA NON FORUNI SEPAREM NICHT A SEP ERS-T LIEI	NO SE REPARA POR SE SERVICERES IKKE SEPA	NON FORNITO SEPARAT NIET LOS VERKRIJGBAA	064N
31		NSS		1	SEM SERVIÇO EM SEPARADO, Sq. Ring 139.07 X 5.16 VIT NOT SERVICED SEPARA NON FORUNI SEPAREM NICHT A SEP ERS-T LIEI	NO SE REPARA POR SE SERVICERES IKKE SEPA	NON FORNITO SEPARAT NIET LOS VERKRIJGBAA	064N
32		87042924		1	ANEL, MCR3 Brake Seal Ring B2M RING ANNEAU RING	ANILLO RING	ANELLO RING	045A
33		87042925		1	GRAMPO, MCR3 Circlip INT. DIA 87 CLIP COLLIER KLAMMER	ABRAZADERA KLIPS	FERMO KLEM	045F

29.212.04	01	p3	01/11

MOTOR, REXROTH DRIVE MOTOR 1SPD (SR130-SV185)
MOTOR, REXROTH DRIVE MOTOR 1SPD (SR130-SV185)
MOTOR, REXROTH DRIVE MOTOR 1SPD (SR130-SV185)
MOTOR, REXROTH DRIVE MOTOR 1SPD (SR130-SV185)

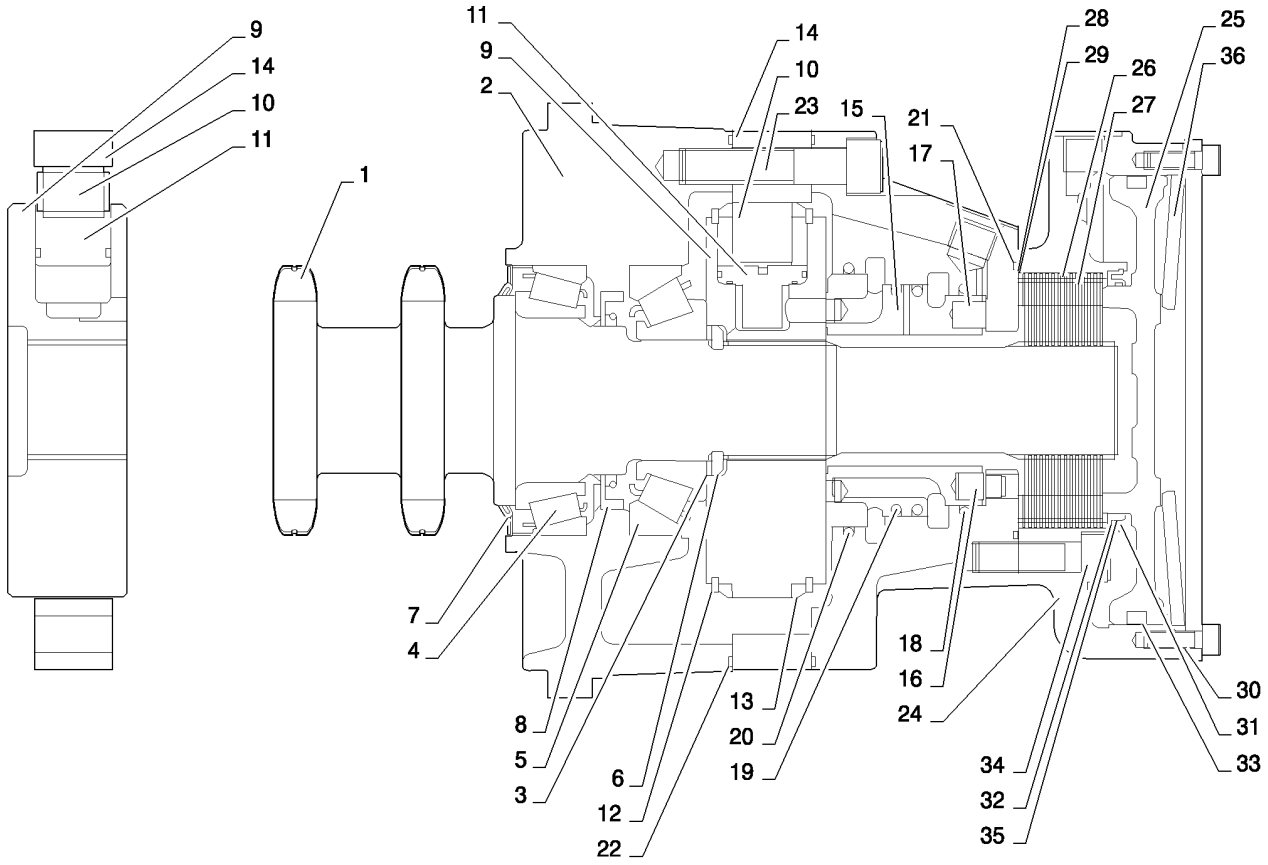

MOTOR, REXROTH DRIVE MOTOR 1SPD (SR130-SV185)
MOTOR, REXROTH DRIVE MOTOR 1SPD (SR130-SV185)
MOTOR, REXROTH DRIVE MOTOR 1SPD (SR130-SV185)
MOTOR, REXROTH DRIVE MOTOR 1SPD (SR130-SV185)

R	N	P.N.	MOD	Q	Denominação Description	Description Bezeichnung	Denominacion Beskrivelse	Descrizione Beschrijving	L.C.
34		**86566100**		8	PARAFUSO, Hex Soc Hd, M10 x 35, 12.9				
						SCREW	TORNILLO	VITE	040V
					VIS	SCHRAUBE	SKRUE	SCHROEF	
35		**NSS**		1	SEM SERVIÇO EM SEPARADO, O-Ring 75.92 X 1.78 VITON				
						NOT SERVICED SEPARA	NO SE REPARA POR SE	NON FORNITO SEPARAT	064N
					NON FORUNI SEPAREM	NICHT A SEP ERS-T LIEI	SERVICERES IKKE SEPA	NIET LOS VERKRIJGBAA	
36		**87042926**		1	MOLA, Disc	SPRING	RESORTE	MOLLA	100M
					RESSORT	FEDER	FJEDER	VEER	

SV185

MOTOR, REXROTH DRIVE MOTOR 2SPD (SR175,SV185)
MOTOR, REXROTH DRIVE MOTOR 2SPD (SR175,SV185)
MOTOR, REXROTH DRIVE MOTOR 2SPD (SR175,SV185)
MOTOR, REXROTH DRIVE MOTOR 2SPD (SR175,SV185)

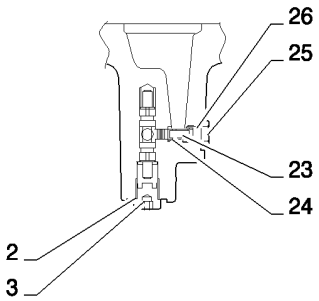

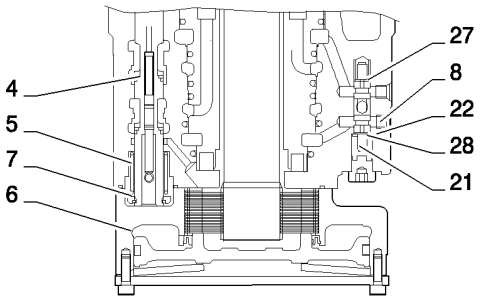

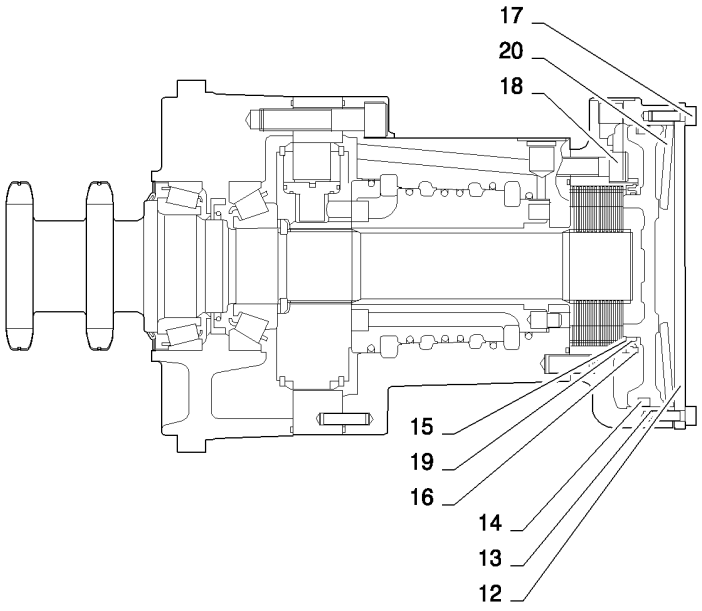

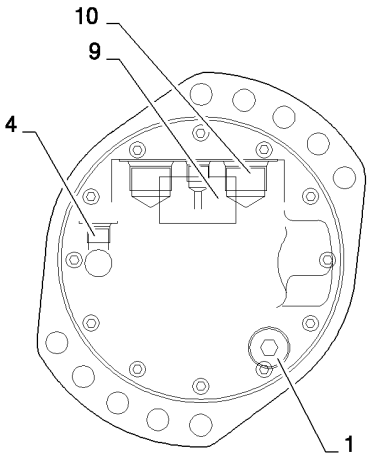

MOTOR, REXROTH DRIVE MOTOR 2SPD (SR175,SV185)
MOTOR, REXROTH DRIVE MOTOR 2SPD (SR175,SV185)
MOTOR, REXROTH DRIVE MOTOR 2SPD (SR175,SV185)
MOTOR, REXROTH DRIVE MOTOR 2SPD (SR175,SV185)

R	N	P.N.	MOD	Q	Denominação Description	Description Bezeichnung	Denominacion Beskrivelse	Descrizione Beschrijving	L.C.
1		86590562		1	BUJÃO, Hex Soc, 3/4"-16 ORB				
						PLUG	TAPÓN	TAPPO	050T
					BOUCHON	STOPFEN	PROP	PLUG	
2		NSS		1	SEM SERVIÇO EM SEPARADO, O-Ring 11.90 X 1.98 90 SH				
						NOT SERVICED SEPARA	NO SE REPARA POR SE	NON FORNITO SEPARAT	064N
					NON FORUNI SEPAREM	NICHT A SEP ERS-T LIEI	SERVICERES IKKE SEPA	NIET LOS VERKRIJGBAA	
3		76349		1	BUJÃO, Hex Hd, 9/16"-18 ORB				
						PLUG	TAPÓN	TAPPO	050T
					BOUCHON	STOPFEN	PROP	PLUG	
4		NSS		1	SEM SERVIÇO EM SEPARADO, MCR3/5 2-SPD Spool 12 Bar				
						NOT SERVICED SEPARA	NO SE REPARA POR SE	NON FORNITO SEPARAT	064N
					NON FORUNI SEPAREM	NICHT A SEP ERS-T LIEI	SERVICERES IKKE SEPA	NIET LOS VERKRIJGBAA	
5		NSS		1	SEM SERVIÇO EM SEPARADO, MCR5 Washer & Spring				
						NOT SERVICED SEPARA	NO SE REPARA POR SE	NON FORNITO SEPARAT	064N
					NON FORUNI SEPAREM	NICHT A SEP ERS-T LIEI	SERVICERES IKKE SEPA	NIET LOS VERKRIJGBAA	
6		NSS		1	SEM SERVIÇO EM SEPARADO, CIR Clip EXT 18 DIA				
						NOT SERVICED SEPARA	NO SE REPARA POR SE	NON FORNITO SEPARAT	064N
					NON FORUNI SEPAREM	NICHT A SEP ERS-T LIEI	SERVICERES IKKE SEPA	NIET LOS VERKRIJGBAA	
7		NSS		1	SEM SERVIÇO EM SEPARADO, O-Ring 33.05 X 1.78 FKM90				
						NOT SERVICED SEPARA	NO SE REPARA POR SE	NON FORNITO SEPARAT	064N
					NON FORUNI SEPAREM	NICHT A SEP ERS-T LIEI	SERVICERES IKKE SEPA	NIET LOS VERKRIJGBAA	
8		NSS		1	SEM SERVIÇO EM SEPARADO, Shear Plug M8				
						NOT SERVICED SEPARA	NO SE REPARA POR SE	NON FORNITO SEPARAT	064N
					NON FORUNI SEPAREM	NICHT A SEP ERS-T LIEI	SERVICERES IKKE SEPA	NIET LOS VERKRIJGBAA	
9		NSS		1	SEM SERVIÇO EM SEPARADO, CNH Label Bar Coded				
						NOT SERVICED SEPARA	NO SE REPARA POR SE	NON FORNITO SEPARAT	064N
					NON FORUNI SEPAREM	NICHT A SEP ERS-T LIEI	SERVICERES IKKE SEPA	NIET LOS VERKRIJGBAA	
10		NSS		2	SEM SERVIÇO EM SEPARADO, Shipping Plug 1 1/16-12				
						NOT SERVICED SEPARA	NO SE REPARA POR SE	NON FORNITO SEPARAT	064N
					NON FORUNI SEPAREM	NICHT A SEP ERS-T LIEI	SERVICERES IKKE SEPA	NIET LOS VERKRIJGBAA	
11		NSS		3	SEM SERVIÇO EM SEPARADO, Shipping Plug 9/16-18 UNF				
						NOT SERVICED SEPARA	NO SE REPARA POR SE	NON FORNITO SEPARAT	064N
					NON FORUNI SEPAREM	NICHT A SEP ERS-T LIEI	SERVICERES IKKE SEPA	NIET LOS VERKRIJGBAA	
12		87042923		1	COBERTURA, MCR3 End	COVER	CUBIERTA	COPERCHIO	265C
					COUVERCLE	ABDECKUNG	DÆKSEL	AFSCHERMING	
13		NSS		1	SEM SERVIÇO EM SEPARADO, MCR3 Gasket B2/0.5				
						NOT SERVICED SEPARA	NO SE REPARA POR SE	NON FORNITO SEPARAT	064N
					NON FORUNI SEPAREM	NICHT A SEP ERS-T LIEI	SERVICERES IKKE SEPA	NIET LOS VERKRIJGBAA	
14		NSS		1	SEM SERVIÇO EM SEPARADO, SQ. Ring 139.07 X 5.16 VIT				
						NOT SERVICED SEPARA	NO SE REPARA POR SE	NON FORNITO SEPARAT	064N
					NON FORUNI SEPAREM	NICHT A SEP ERS-T LIEI	SERVICERES IKKE SEPA	NIET LOS VERKRIJGBAA	
15		87042924		1	ANEL, MCR3 Brake Seal Ring B2M				
						RING	ANILLO	ANELLO	045A
					ANNEAU	RING	RING	RING	
16		87042925		1	GRAMPO, MCR3 CirClip INT. DIA 87				
						CLIP	ABRAZADERA	FERMO	045F
					COLLIER	KLAMMER	KLIPS	KLEM	

MOTOR, REXROTH DRIVE MOTOR 2SPD (SR175,SV185)
MOTOR, REXROTH DRIVE MOTOR 2SPD (SR175,SV185)
MOTOR, REXROTH DRIVE MOTOR 2SPD (SR175,SV185)
MOTOR, REXROTH DRIVE MOTOR 2SPD (SR175,SV185)

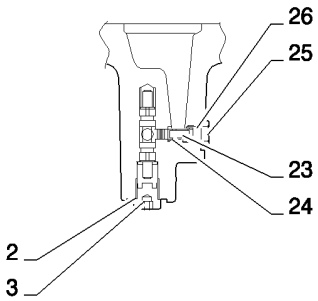

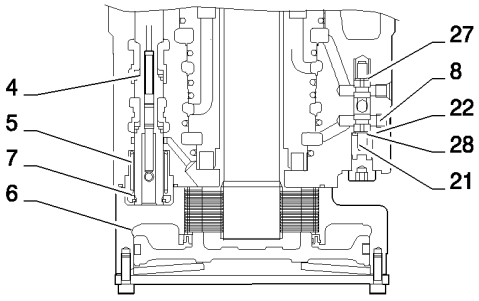

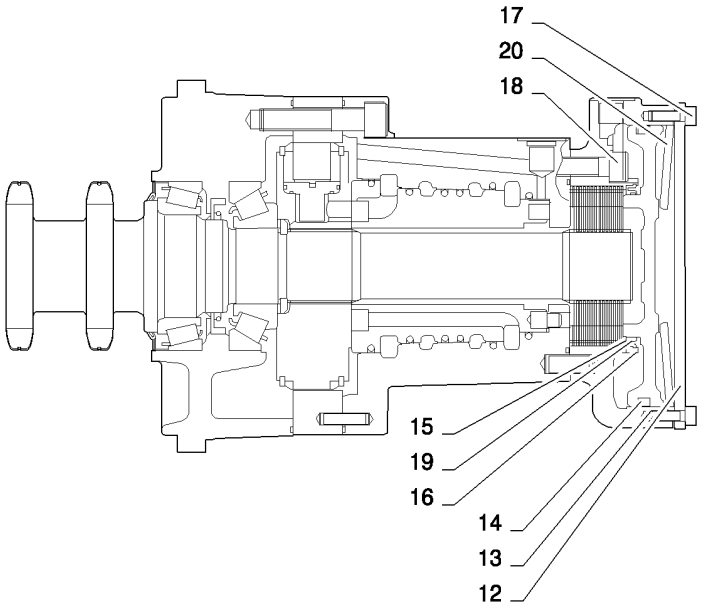

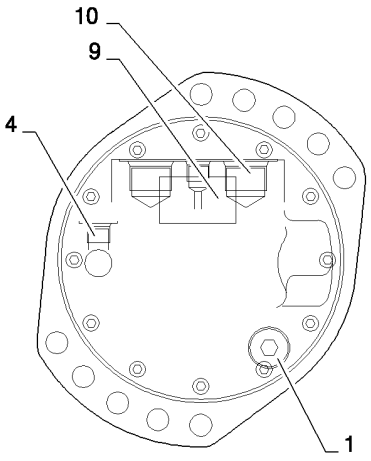

MOTOR, REXROTH DRIVE MOTOR 2SPD (SR175,SV185)
MOTOR, REXROTH DRIVE MOTOR 2SPD (SR175,SV185)
MOTOR, REXROTH DRIVE MOTOR 2SPD (SR175,SV185)
MOTOR, REXROTH DRIVE MOTOR 2SPD (SR175,SV185)

R	N	P.N.	MOD	Q	Denominação Description	Description Bezeichnung	Denominacion Beskrivelse	Descrizione Beschrijving	L.C.
17		86512134		12	PARAFUSO, Hex Soc Hd, M6 x 16, 12.9				
						SCREW	TORNILLO	VITE	040V
					VIS	SCHRAUBE	SKRUE	SCHROEF	
18		86566100		8	PARAFUSO, Hex Soc Hd, M10 x 35, 12.9				
						SCREW	TORNILLO	VITE	040V
					VIS	SCHRAUBE	SKRUE	SCHROEF	
19		NSS		1	SEM SERVIÇO EM SEPARADO, O-Ring 75.92 X 1.78 VITON				
						NOT SERVICED SEPARA	NO SE REPARA POR SE	NON FORNITO SEPARAT	064N
					NON FORUNI SEPAREM	NICHT A SEP ERS-T LIEI	SERVICERES IKKE SEPA	NIET LOS VERKRIJGBAA	
20		87042926		1	MOLA, Disc Spring	SPRING	RESORTE	MOLLA	100M
					RESSORT	FEDER	FJEDER	VEER	
21		87042928		1	CARRETO, Flushing	SPOOL	BOBINA	STELO	134P
					TIROIR	KOLBENSCHIEBER	SPOLE	SPOEL	
22		87042929		1	ARRUELA PLANA, 1.5 THK	WASHER	ARANDELA	RONDELLA	131R
					RONDELLE	UNTERLEGSCHEIBE	FLADSKIVE	SLUITRING	
23		84293390		1	VÁLVULA DO OBTURADOR, Poppet, Flushing RV 2.0MM				
						VALVE POPPET	RESORTE DE VÁLVULA	VALVOLA A FUNGO	P048
					CLAPET A RESSORT	VENTILTELLER	DOKVENTIL	KLEPSCHOTEL	
24		87042932		1	MOLA, Flushing R.V.	SPRING	RESORTE	MOLLA	100M
					RESSORT	FEDER	FJEDER	VEER	
25		87042933		1	OBTURADOR, Plug 7/16 SAE				
						POPPET	RESORTE	PISTONCINO	012V
					CLAPET	KEGELVENTIL	POPNITTE	KLEP	
26		NSS		1	SEM SERVIÇO EM SEPARADO, O-Ring 8.92 X 1.83 VITON				
						NOT SERVICED SEPARA	NO SE REPARA POR SE	NON FORNITO SEPARAT	064N
					NON FORUNI SEPAREM	NICHT A SEP ERS-T LIEI	SERVICERES IKKE SEPA	NIET LOS VERKRIJGBAA	
27		87042934		1	MOLA, Flushing Side A	SPRING	RESORTE	MOLLA	100M
					RESSORT	FEDER	FJEDER	VEER	
28		87042935		1	MOLA, Flushing Side B	SPRING	RESORTE	MOLLA	100M
					RESSORT	FEDER	FJEDER	VEER	
29		87039379		0	KIT, Rotation Kit 2W	KIT	KIT	KIT	305C
					KIT	SATZ	SÆT	KIT	
30		84293383		0	KIT DE VEDAÇÃO, MCR3 2SPD				
						SEAL KIT	KIT DE JUNTAS	KIT GUARNIZIONI	630S
					KIT DE JOINTS	DICHTUNGSSATZ	PAKNINGSSÆT	KIT MET AFDICHTINGEN	
31		87039373		0	KIT, Brake S0471	KIT	KIT	KIT	305C
					KIT	SATZ	SÆT	KIT	
32		84281322		0	KIT DE SERVIÇO, Kit, 2SPD Spool 12BAR MCR3				
						SERVICE KIT	KIT DE SERVICIO	KIT DI MANUTENZIONE	021K
					KIT D'ENTRETIEN	SERVICE-SATZ	SERVICESÆT	SERVICEKIT	

29.212.04	02	p1	01/11

MOTOR, REXROTH DRIVE MOTOR 1SPD (SR130-SV185)
MOTOR, REXROTH DRIVE MOTOR 1SPD (SR130-SV185)
MOTOR, REXROTH DRIVE MOTOR 1SPD (SR130-SV185)
MOTOR, REXROTH DRIVE MOTOR 1SPD (SR130-SV185)

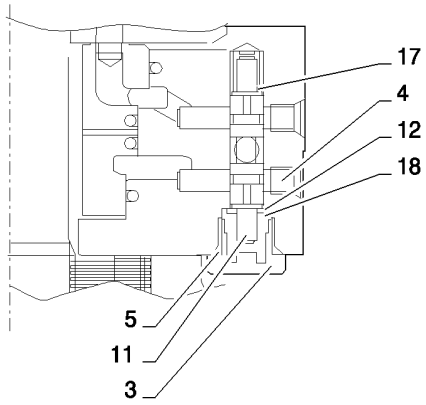

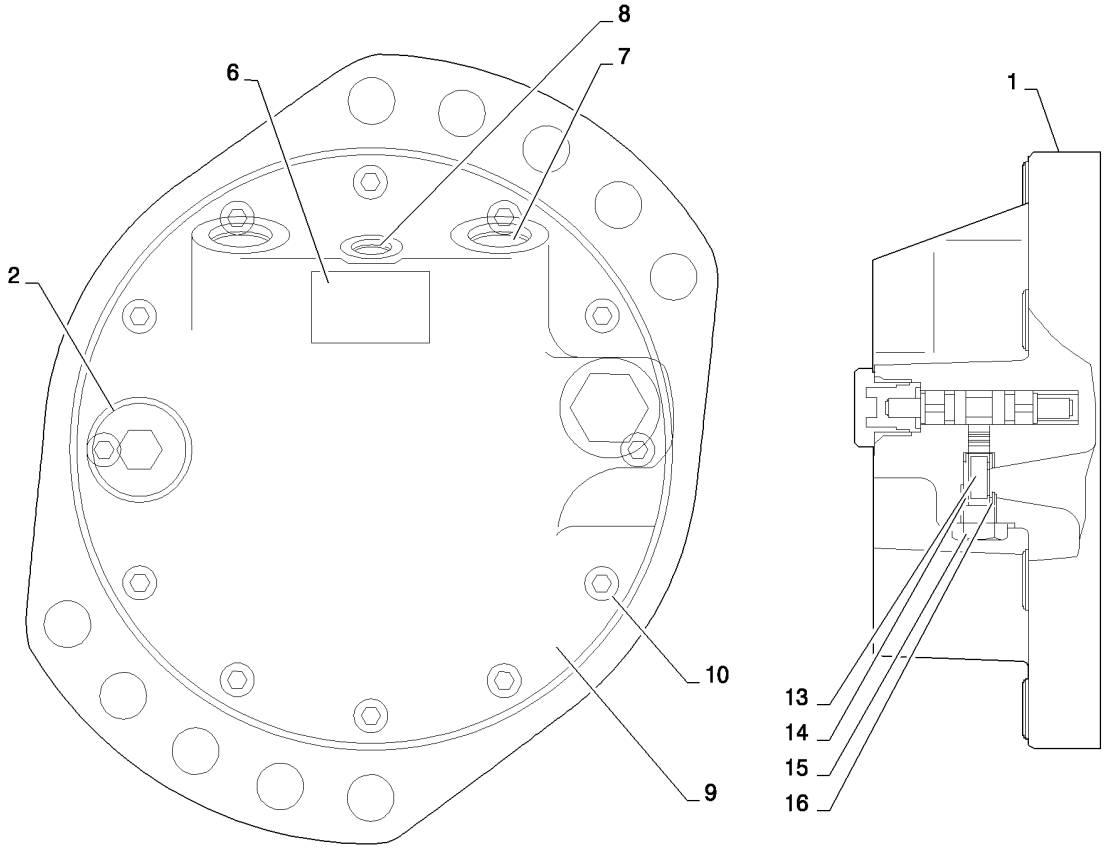

MOTOR, REXROTH DRIVE MOTOR 1SPD (SR130-SV185)
MOTOR, REXROTH DRIVE MOTOR 1SPD (SR130-SV185)
MOTOR, REXROTH DRIVE MOTOR 1SPD (SR130-SV185)
MOTOR, REXROTH DRIVE MOTOR 1SPD (SR130-SV185)

R	N	P.N.	MOD	Q	Denominação Description	Description Bezeichnung	Denominacion Beskrivelse	Descrizione Beschrijving	L.C.
1		87045007		1	ESTOJO, MCR3 R/Case D/2W/S0455C				
						CASE	ESTUCHE	CASSA; SCATOLA	101A
					CARTER	GEHÄUSE	KASSE	HUIS	
2		214389		1	BUJÃO, Hex Hd, 3/4"-16 ORB				
						PLUG	TAPÓN	TAPPO	050T
					BOUCHON	STOPFEN	PROP	PLUG	
3		87045009		1	BUJÃO, Flushing Plug G 3/8 - 19				
						PLUG	TAPÓN	TAPPO	050T
					BOUCHON	STOPFEN	PROP	PLUG	
4		NSS		1	SEM SERVIÇO EM SEPARADO, Shear Plug M8				
						NOT SERVICED SEPARA	NO SE REPARA POR SE	NON FORNITO SEPARAT	064N
					NON FORUNI SEPAREM	NICHT A SEP ERS-T LIEI	SERVICERES IKKE SEPA	NIET LOS VERKRIJGBAA	
5		NSS		1	SEM SERVIÇO EM SEPARADO, O-Ring 13.60 X 2.40 FKM90				
						NOT SERVICED SEPARA	NO SE REPARA POR SE	NON FORNITO SEPARAT	064N
					NON FORUNI SEPAREM	NICHT A SEP ERS-T LIEI	SERVICERES IKKE SEPA	NIET LOS VERKRIJGBAA	
6		NSS		1	SEM SERVIÇO EM SEPARADO, CNH Label Bar Coded				
						NOT SERVICED SEPARA	NO SE REPARA POR SE	NON FORNITO SEPARAT	064N
					NON FORUNI SEPAREM	NICHT A SEP ERS-T LIEI	SERVICERES IKKE SEPA	NIET LOS VERKRIJGBAA	
7		NSS		2	SEM SERVIÇO EM SEPARADO, Shipping Plug 1 1/16 - 12				
						NOT SERVICED SEPARA	NO SE REPARA POR SE	NON FORNITO SEPARAT	064N
					NON FORUNI SEPAREM	NICHT A SEP ERS-T LIEI	SERVICERES IKKE SEPA	NIET LOS VERKRIJGBAA	
8		NSS		2	SEM SERVIÇO EM SEPARADO, Shipping Plug 9/16 - 18 UNF				
						NOT SERVICED SEPARA	NO SE REPARA POR SE	NON FORNITO SEPARAT	064N
					NON FORUNI SEPAREM	NICHT A SEP ERS-T LIEI	SERVICERES IKKE SEPA	NIET LOS VERKRIJGBAA	
9		87042923		1	COBERTURA, MCR3 End Cover				
						COVER	CUBIERTA	COPERCHIO	265C
					COUVERCLE	ABDECKUNG	DÆKSEL	AFSCHERMING	
10		86512134		12	PARAFUSO, Hex Soc Hd, M6 x 16, 12.9				
						SCREW	TORNILLO	VITE	040V
					VIS	SCHRAUBE	SKRUE	SCHROEF	
11		87042928		1	CARRETO, Flushing	SPOOL	BOBINA	STELO	134P
					TIROIR	KOLBENSCHIEBER	SPOLE	SPOEL	
12		87042929		1	ARRUELA PLANA, 11.9 X 6.3 X 1.5 THK				
						WASHER	ARANDELA	RONDELLA	131R
					RONDELLE	UNTERLEGSCHEIBE	FLADSKIVE	SLUITRING	
13		87042931		1	OBTURADOR, Flushing, 1.7 Orifice				
						POPPET	RESORTE	PISTONCINO	012V
					CLAPET	KEGELVENTIL	POPNITTE	KLEP	
14		87042932		1	MOLA, Flushing R.V	SPRING	RESORTE	MOLLA	100M
					RESSORT	FEDER	FJEDER	VEER	
15		87042933		1	OBTURADOR, Poppet Plug 7/16 SAE				
						POPPET	RESORTE	PISTONCINO	012V
					CLAPET	KEGELVENTIL	POPNITTE	KLEP	
16		NSS		1	SEM SERVIÇO EM SEPARADO, O-Ring 8.92 X 1.83 VITON				
						NOT SERVICED SEPARA	NO SE REPARA POR SE	NON FORNITO SEPARAT	064N
					NON FORUNI SEPAREM	NICHT A SEP ERS-T LIEI	SERVICERES IKKE SEPA	NIET LOS VERKRIJGBAA	
17		87042934		1	MOLA, Flushing Side A (10 Bar)				
						SPRING	RESORTE	MOLLA	100M
					RESSORT	FEDER	FJEDER	VEER	

MOTOR, REXROTH DRIVE MOTOR 1SPD (SR130-SV185)
MOTOR, REXROTH DRIVE MOTOR 1SPD (SR130-SV185)
MOTOR, REXROTH DRIVE MOTOR 1SPD (SR130-SV185)
MOTOR, REXROTH DRIVE MOTOR 1SPD (SR130-SV185)

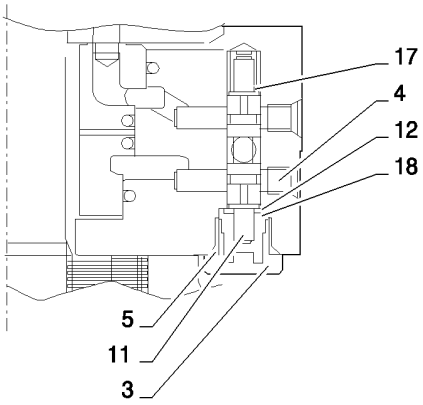

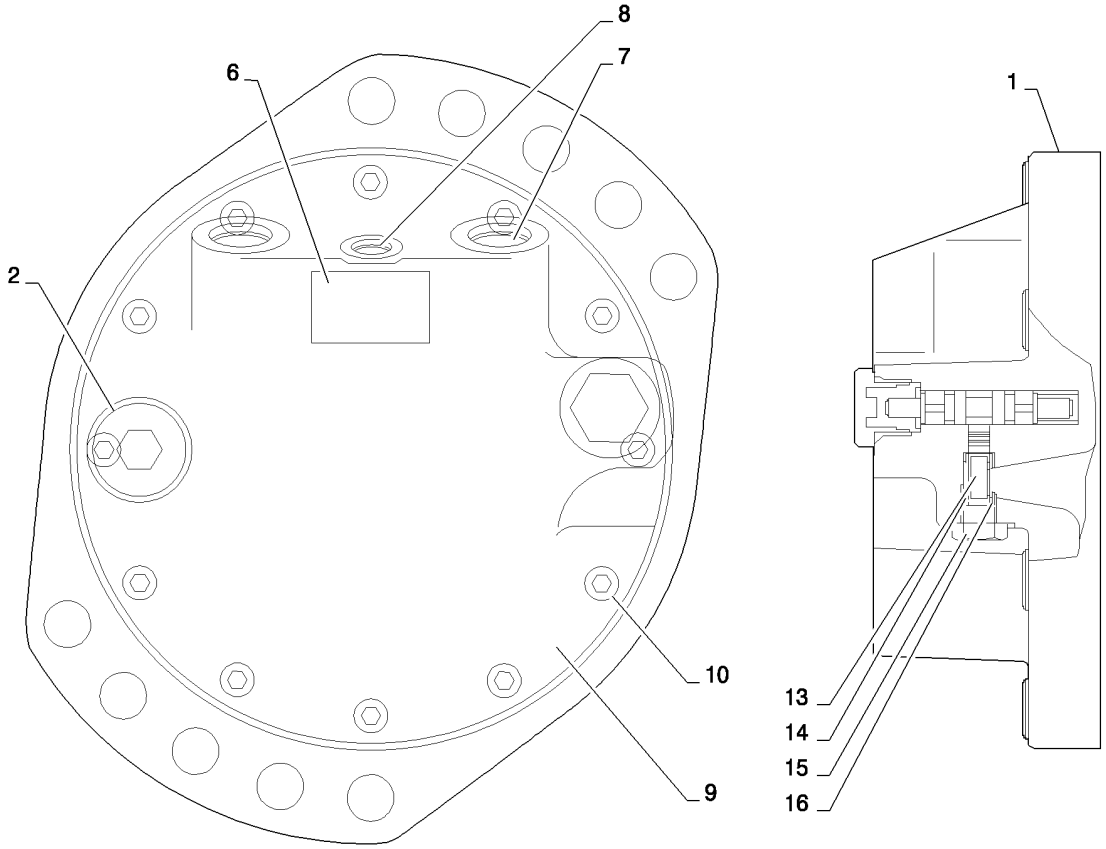

MOTOR, REXROTH DRIVE MOTOR 1SPD (SR130-SV185)
MOTOR, REXROTH DRIVE MOTOR 1SPD (SR130-SV185)
MOTOR, REXROTH DRIVE MOTOR 1SPD (SR130-SV185)
MOTOR, REXROTH DRIVE MOTOR 1SPD (SR130-SV185)

R	N	P.N.	MOD	Q	Denominação Description Bezeichnung	Description Bezeichnung Beschreibung	Denominacion Beskrivelse Descripción	Descrizione Beschrijving Descrição	L.C.
18		**87042935**		1	MOLA, Flushing Side B (10 Bar) SPRING RESSORT	SPRING FEDER	RESORTE FJEDER	MOLLA VEER	100M
19		**87039378**		1	KIT, MCR3 Speed Rotation KIT	KIT SATZ	KIT SÆT	KIT KIT	305C
20		**84293381**		1	KIT DE VEDAÇÃO, MCR3 1 Speed W Shaft Seal SEAL KIT KIT DE JOINTS	SEAL KIT DICHTUNGSSATZ	KIT DE JUNTAS PAKNINGSSÆT	KIT GUARNIZIONI KIT MET AFDICHTINGEN	630S
21		**87039373**		1	KIT, Brake Kit S0471 KIT	KIT SATZ	KIT SÆT	KIT KIT	305C

29.212.05	01	p1	01/11

VALVE, BRAKE (SR130-SV300)
VALVE, BRAKE (SR130-SV300)
VALVE, BRAKE (SR130-SV300)
VALVE, BRAKE (SR130-SV300)

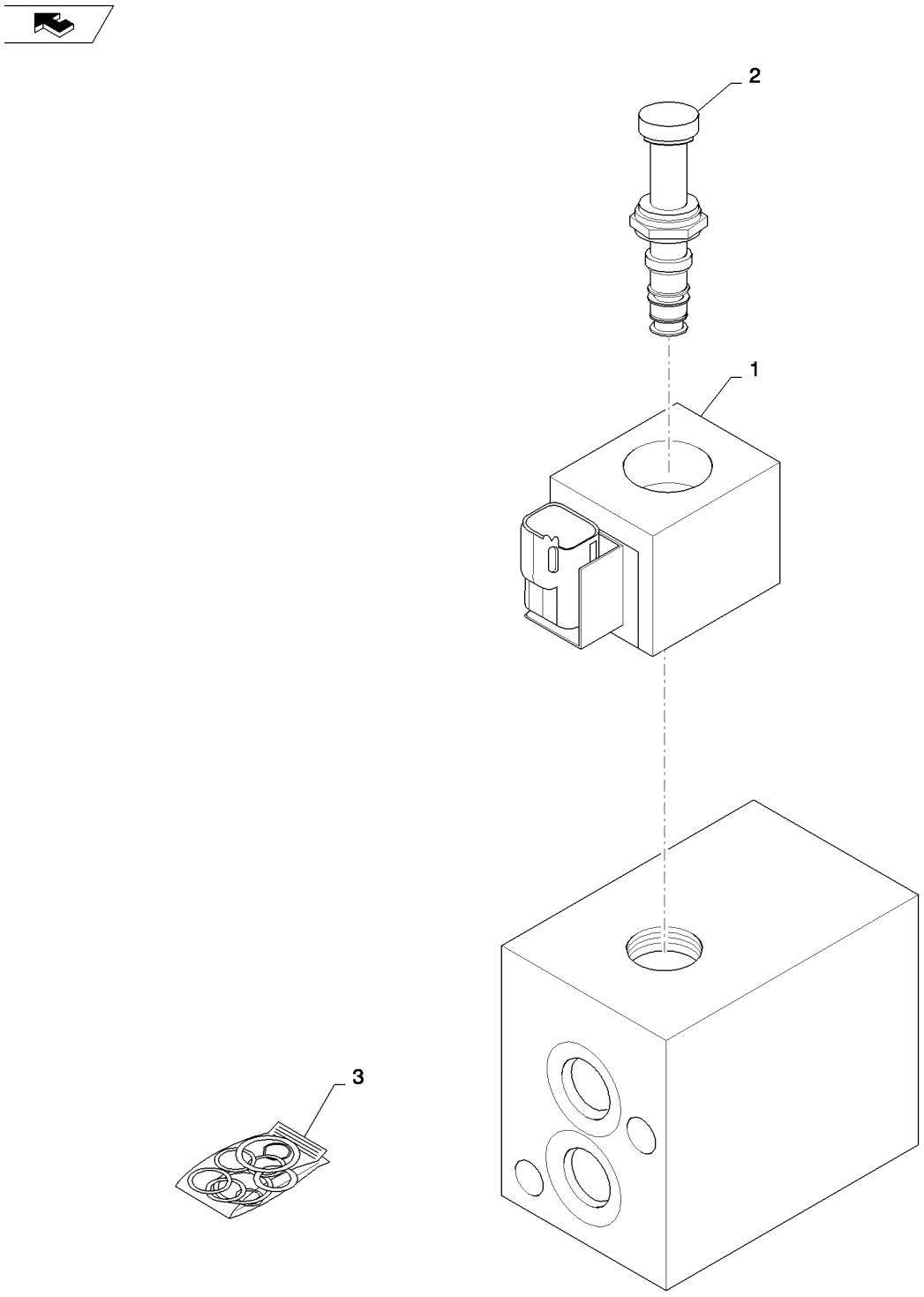

VALVE, BRAKE (SR130-SV300)
VALVE, BRAKE (SR130-SV300)
VALVE, BRAKE (SR130-SV300)
VALVE, BRAKE (SR130-SV300)

R	N	P.N.	MOD	Q	Denominação Description	Description Bezeichnung	Denominacion Beskrivelse	Descrizione Beschrijving	L.C.
1		84390141		1	BOBINA, Brake	COIL	BOBINA	BOBINA	083B
					BOBINE	SPULE	SPOLE	SPOEL	
2		84311808		1	VÁLVULA HIDRÁULICA, 2 Spd Interlock Brake 3W2P Spool				
						HYDRAULIC VALVE	VÁLVULA HIDRÁULICA	DISTRIBUTORE IDRAULI	010V
					SOUPAPE HYDRAULIQU	HYDRAULIKVENTIL	HYDRAULIKVENTIL	HYDRAULISCHE KLEP	
3		84311809		1	KIT DE VEDAÇÃO, Seal Kit, 2 Spd Interlock Brake				
						SEAL KIT	KIT DE JUNTAS	KIT GUARNIZIONI	630S
					KIT DE JOINTS	DICHTUNGSSATZ	PAKNINGSSÆT	KIT MET AFDICHTINGEN	

29.212.05	02	p1	07/11

VALVE, BRAKE 2SPD (SR175-SV300)
VALVE, BRAKE 2SPD (SR175-SV300)
VALVE, BRAKE 2SPD (SR175-SV300)
VALVE, BRAKE 2SPD (SR175-SV300)

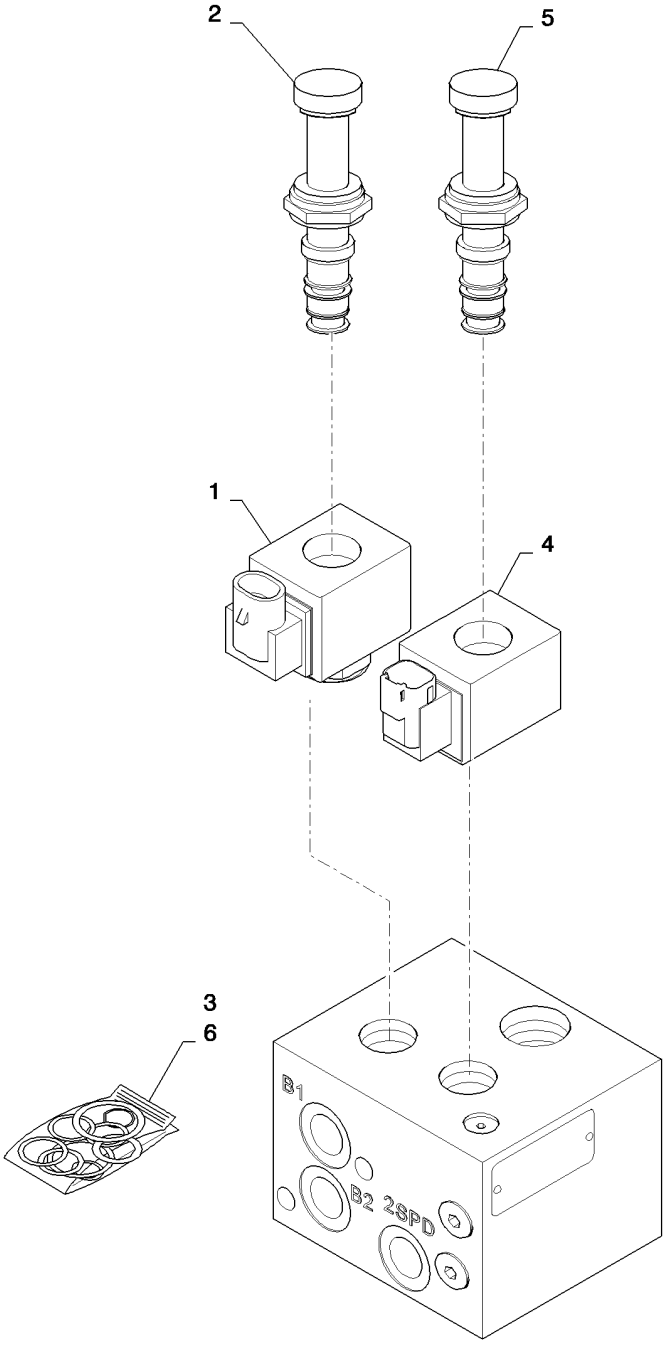

VALVE, BRAKE 2SPD (SR175-SV300)
VALVE, BRAKE 2SPD (SR175-SV300)
VALVE, BRAKE 2SPD (SR175-SV300)
VALVE, BRAKE 2SPD (SR175-SV300)

R	N	P.N.	MOD	Q	Denominação Description Bezeichnung	Description Bezeichnung	Denominacion Beskrivelse	Descrizione Beschrijving	L.C.
1		84390141		1	BOBINA, Brake BOBINE	COIL SPULE	BOBINA SPOLE	BOBINA SPOEL	083B
2		84311808		2	VÁLVULA HIDRÁULICA, 2 Spd Brake Interlock 3W2P Spool SOUPAPE HYDRAULIQU	HYDRAULIC VALVE HYDRAULIKVENTIL	VÁLVULA HIDRÁULICA HYDRAULIKVENTIL	DISTRIBUTORE IDRAULI HYDRAULISCHE KLEP	010V
3		84311809		2	KIT DE VEDAÇÃO, Seal Kit, 2 Spd Brake Interlock KIT DE JOINTS	SEAL KIT DICHTUNGSSATZ	KIT DE JUNTAS PAKNINGSSÆT	KIT GUARNIZIONI KIT MET AFDICHTINGEN	630S
4		84390142		1	BOBINA, 2 Spd BOBINE	COIL SPULE	BOBINA SPOLE	BOBINA SPOEL	083B
5		84311811		1	VÁLVULA HIDRÁULICA, 2 Spd Sequence SOUPAPE HYDRAULIQU	HYDRAULIC VALVE HYDRAULIKVENTIL	VÁLVULA HIDRÁULICA HYDRAULIKVENTIL	DISTRIBUTORE IDRAULI HYDRAULISCHE KLEP	010V
6		84311809		1	KIT DE VEDAÇÃO, Seal Kit, 2 Spd Sequence KIT DE JOINTS	SEAL KIT DICHTUNGSSATZ	KIT DE JUNTAS PAKNINGSSÆT	KIT GUARNIZIONI KIT MET AFDICHTINGEN	630S

29.212.05	04	p1	07/11

VALVE, BRAKE EH 2SPD (SR175-SV300)
VALVE, BRAKE EH 2SPD (SR175-SV300)
VALVE, BRAKE EH 2SPD (SR175-SV300)
VALVE, BRAKE EH 2SPD (SR175-SV300)

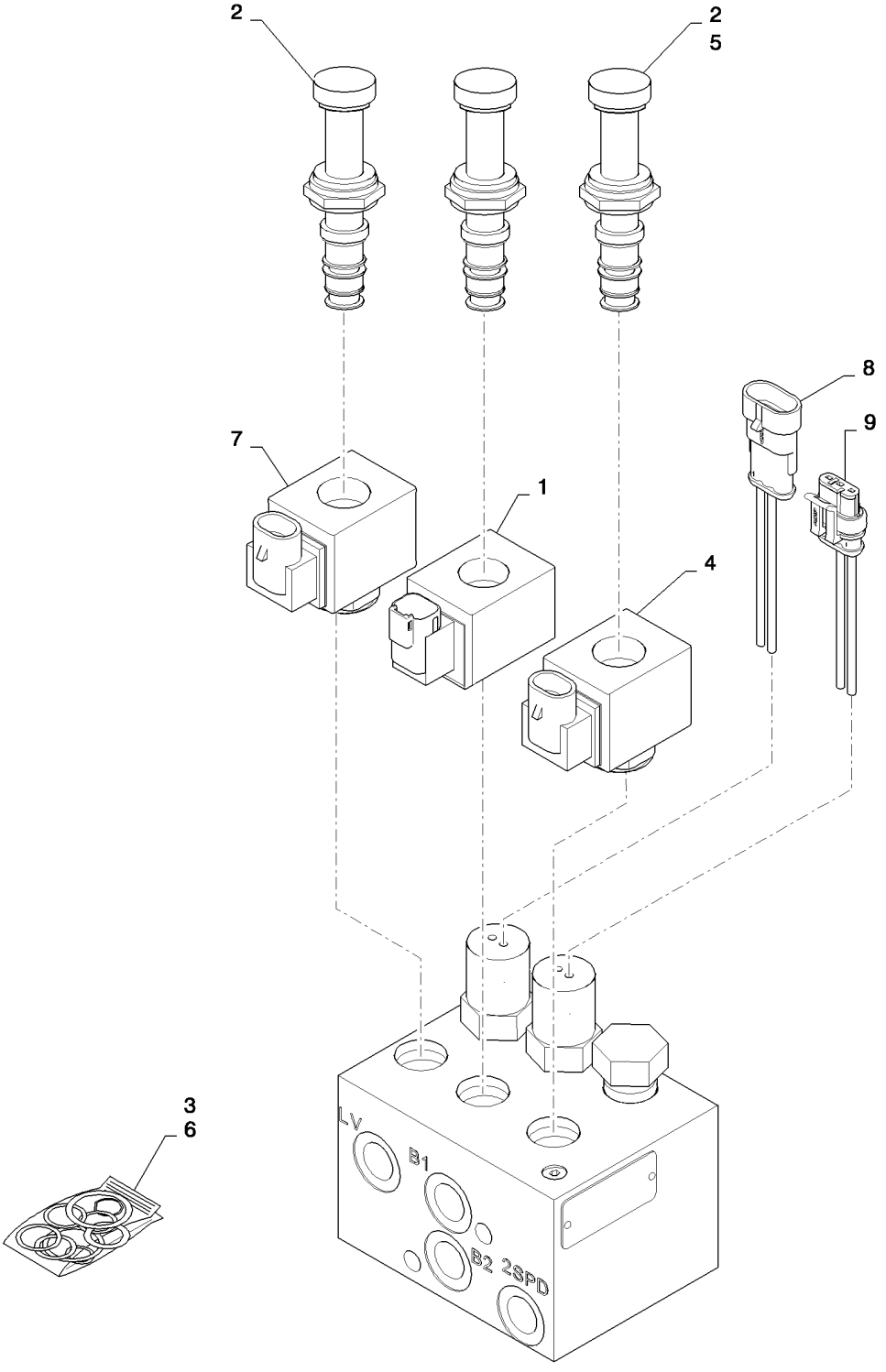

VALVE, BRAKE EH 2SPD (SR175-SV300)
VALVE, BRAKE EH 2SPD (SR175-SV300)
VALVE, BRAKE EH 2SPD (SR175-SV300)
VALVE, BRAKE EH 2SPD (SR175-SV300)

R	N	P.N.	MOD	Q	Denominação Description	Description Bezeichnung	Denominacion Beskrivelse	Descrizione Beschrijving	L.C.
1		84390141		1	BOBINA, Brake	COIL	BOBINA	BOBINA	083B
					BOBINE	SPULE	SPOLE	SPOEL	
2		84311808		3	VÁLVULA HIDRÁULICA, 2 Spd Brake Interlock 3W2P Spool				
						HYDRAULIC VALVE	VÁLVULA HIDRÁULICA	DISTRIBUTORE IDRAULI	010V
					SOUPAPE HYDRAULIQU	HYDRAULIKVENTIL	HYDRAULIKVENTIL	HYDRAULISCHE KLEP	
3		84311809		3	KIT DE VEDAÇÃO, Seal Kit, 2 Spd Brake Interlock				
						SEAL KIT	KIT DE JUNTAS	KIT GUARNIZIONI	630S
					KIT DE JOINTS	DICHTUNGSSATZ	PAKNINGSSÆT	KIT MET AFDICHTINGEN	
4		84390142		1	BOBINA, 2 Spd	COIL	BOBINA	BOBINA	083B
					BOBINE	SPULE	SPOLE	SPOEL	
5		84311811		1	VÁLVULA HIDRÁULICA, 2 Spd Sequence				
						HYDRAULIC VALVE	VÁLVULA HIDRÁULICA	DISTRIBUTORE IDRAULI	010V
					SOUPAPE HYDRAULIQU	HYDRAULIKVENTIL	HYDRAULIKVENTIL	HYDRAULISCHE KLEP	
6		84311809		1	KIT DE VEDAÇÃO, Seal Kit, 2 Spd Sequence				
						SEAL KIT	KIT DE JUNTAS	KIT GUARNIZIONI	630S
					KIT DE JOINTS	DICHTUNGSSATZ	PAKNINGSSÆT	KIT MET AFDICHTINGEN	
7		84390140		1	BOBINA, Interlock	COIL	BOBINA	BOBINA	083B
					BOBINE	SPULE	SPOLE	SPOEL	
8		84311813		1	INTERRUPTOR DE PRESSÃO, Charge Pressure				
						PRESSURE SWITCH	INTERRUPTOR DE PRES	PRESSOSTATO	079I
					PRESSOSTAT	DRUCKSCHALTER	KONTAKT, TRYK	DRUKSCHAKELAAR	
9		84311814		1	INTERRUPTOR DE PRESSÃO, Brake Pressure				
						PRESSURE SWITCH	INTERRUPTOR DE PRES	PRESSOSTATO	079I
					PRESSOSTAT	DRUCKSCHALTER	KONTAKT, TRYK	DRUKSCHAKELAAR	

29.212.06	01	p1	01/11

PUMP, HYDROSTATIC TANDEM 35CC DDC FRONT (SR130-SV185)
PUMP, HYDROSTATIC TANDEM 35CC DDC FRONT (SR130-SV185)
PUMP, HYDROSTATIC TANDEM 35CC DDC FRONT (SR130-SV185)
PUMP, HYDROSTATIC TANDEM 35CC DDC FRONT (SR130-SV185)

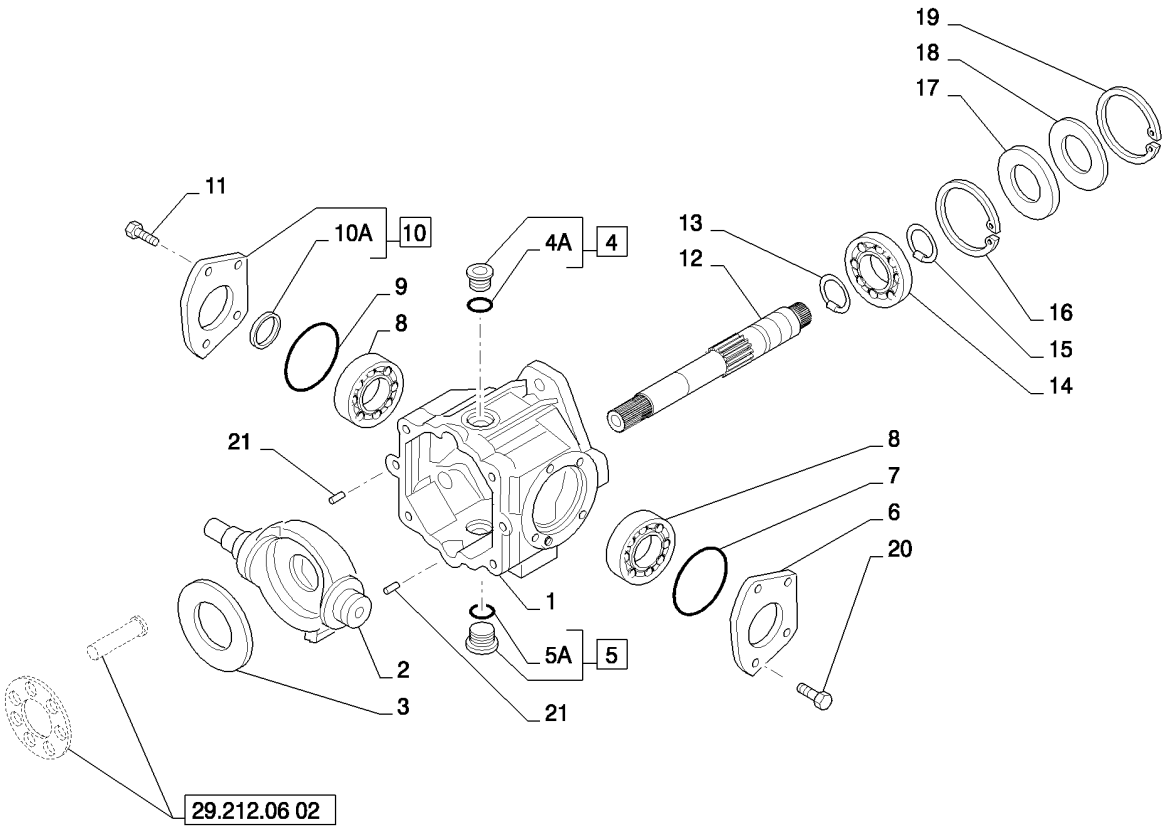

PUMP, HYDROSTATIC TANDEM 35CC DDC FRONT (SR130-SV185)
PUMP, HYDROSTATIC TANDEM 35CC DDC FRONT (SR130-SV185)
PUMP, HYDROSTATIC TANDEM 35CC DDC FRONT (SR130-SV185)
PUMP, HYDROSTATIC TANDEM 35CC DDC FRONT (SR130-SV185)

R	N	P.N.	MOD	Q	Denominação Description	Description Bezeichnung	Denominacion Beskrivelse	Descrizione Beschrijving	L.C.
1		241587A1		1	CARCACA CARTER	HOUSING GEHAEUSE	CARCASA HOUSING	ALLOGGIAMENTO HOUSING	4540
2		84388310		1	PLACA OSCILANTE, M35 PLATEAU OSCILLANT	SWASH PLATE TAUMELSCHEIBE	PLATO DISTRIBUIDOR STØJPLADE	DISCO OSCILLANTE TUIMELSCHIJF	A011
3		100700A1		1	PLACA PLAQUE	PLATE PLATTE	PLACA PLADE	PIASTRA PLAAT	105P
4		9841223		1	BUJÃO, Hex Soc, 1 1/16"-12 ORB BOUCHON	PLUG STOPFEN	TAPÓN PROP	TAPPO PLUG	050T
4A		167266		1	O-RING, 0.924" ID x 0.116" Width JOINT TORIQUE	O-RING O-RING	JUNTA TÓRICA O-RING	ANELLO TOROIDALE O-RING	055A
5		9841223		1	BUJÃO, Hex Soc, 1 1/16"-12 ORB BOUCHON	PLUG STOPFEN	TAPÓN PROP	TAPPO PLUG	050T
5A		167266		1	O-RING, 0.924" ID x 0.116" Width JOINT TORIQUE	O-RING O-RING	JUNTA TÓRICA O-RING	ANELLO TOROIDALE O-RING	055A
6		H438310		1	TAMPA COUVERCLE	COVER DECKEL	TAPA COVER	COPERCHIO COVER	2250
7		239-5146		1	O-RING, Rect, 2.612" ID x 2.8" OD, Cl 5 JOINT TORIQUE	O-RING O-RING	JUNTA TÓRICA O-RING	ANELLO TOROIDALE O-RING	055A
8		241590A1		1	CONJUNTO DO ROLAMENTO, Taper ROULEMENT	BEARING ASSY LAGERBAURUPPE	CONJUNTO DE COJINET LEJESAMLING	COMPLESSIVO CUSCINI LAGEREENHEID	341C
9		239-5146		1	O-RING, Rect, 2.612" ID x 2.8" OD, Cl 5 JOINT TORIQUE	O-RING O-RING	JUNTA TÓRICA O-RING	ANELLO TOROIDALE O-RING	055A
10		84388659		1	CONJUNTO DA TAMPA, Trunion w/Seal COUVERCLE	COVER ASSY ABDECKUNGSBAUGRUF	CONJUNTO DE FUNDAS DÆKSELENHED	COPERCHIO, COMPL AFSCHERMEENHEID	P426
10A		H438288		2	VEDADOR DE RETENCAO JOINT-D'ETANCHEITE	SEAL DICHTRING	SELLO/RETEN SEAL	GUARNIZIONE TENUTA SEAL	7460
11		43232		4	PARAFUSO, Cap VIS	SCREW SCHRAUBE	TORNILLO SKRUE	VITE SCHROEF	040V
12		84388311		1	EIXO, Front ARBRE	SHAFT WELLE	EJE AKSEL	ALBERO AS	016A
13		100-11137		1	ANEL DE PRESSÃO, #137, Ext ANNEAU D'ARRET	SNAP RING SPRENGRING	ANILLO DE RESORTE LÅSERING	ANELLO ELASTICO VEERRING	054A
14		A29183		1	ROLAMENTO ESFÉRICO, 34.994 mm ID x 71.9935 mm OD x 16.94 mm ROULEMENT A BILLES	BALL BEARING KUGELLAGER	RODAMIENTO DE BOLA KUGLELEJE	CUSCINETTO A SFERE KOGELLAGER	343C
15		100-11137		1	ANEL DE PRESSÃO, #137, Ext ANNEAU D'ARRET	SNAP RING SPRENGRING	ANILLO DE RESORTE LÅSERING	ANELLO ELASTICO VEERRING	054A

29.212.06	01	p2	01/11

PUMP, HYDROSTATIC TANDEM 35CC DDC FRONT (SR130-SV185)
PUMP, HYDROSTATIC TANDEM 35CC DDC FRONT (SR130-SV185)
PUMP, HYDROSTATIC TANDEM 35CC DDC FRONT (SR130-SV185)
PUMP, HYDROSTATIC TANDEM 35CC DDC FRONT (SR130-SV185)

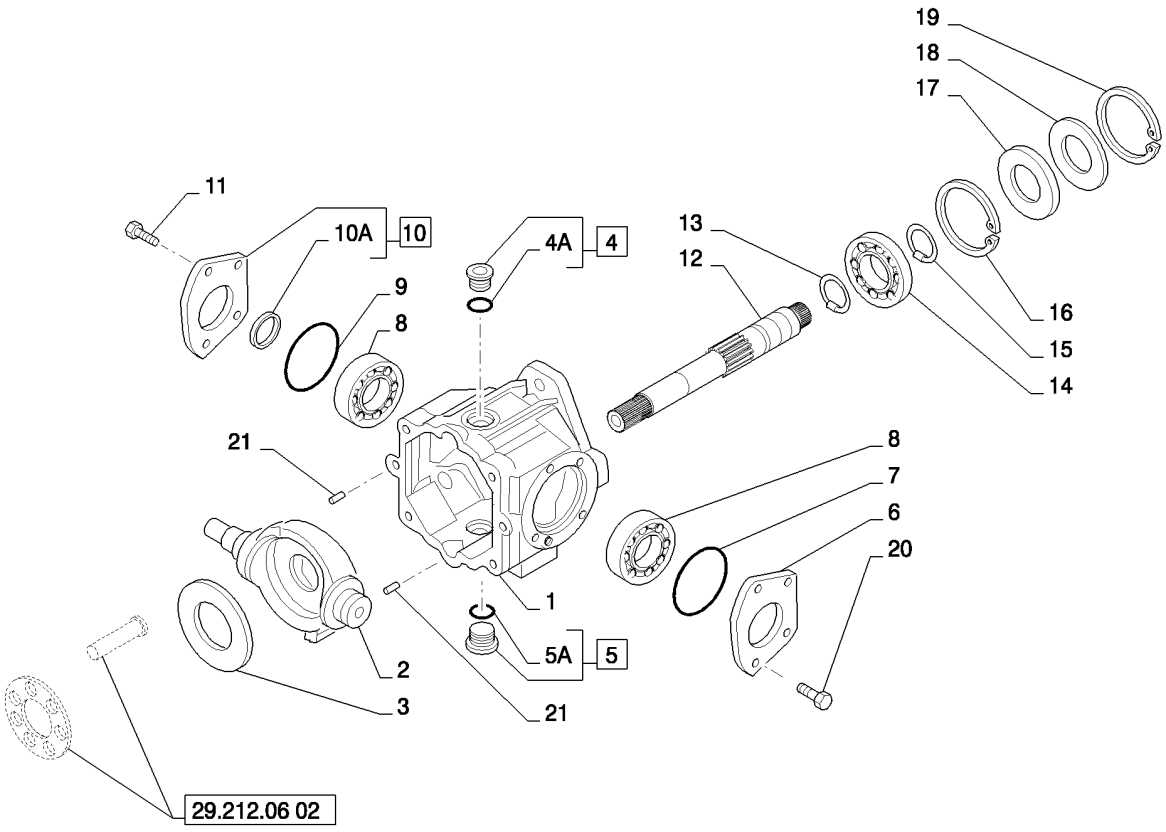

PUMP, HYDROSTATIC TANDEM 35CC DDC FRONT (SR130-SV185)
PUMP, HYDROSTATIC TANDEM 35CC DDC FRONT (SR130-SV185)
PUMP, HYDROSTATIC TANDEM 35CC DDC FRONT (SR130-SV185)
PUMP, HYDROSTATIC TANDEM 35CC DDC FRONT (SR130-SV185)

R	N	P.N.	MOD	Q	Denominação Description	Description Bezeichnung	Denominacion Beskrivelse	Descrizione Beschrijving	L.C.
16		**103-21281**		1	ANEL DE PRESSÃO, 2.812", Int, #281				
						SNAP RING	ANILLO DE RESORTE	ANELLO ELASTICO	054A
					ANNEAU D'ARRET	SPRENGRING	LÅSERING	VEERRING	
17		**N14103**		1	VEDADOR DE RETENCAO	SEAL	SELLO/RETEN	GUARNIZIONE TENUTA	7460
					JOINT-D'ETANCHEITE	DICHTRING	SEAL	SEAL	
18		**241589A1**		1	ARRUELA	WASHER	ARANDELA	RONDELLA	9720
					RONDELLE	UNTERLEGSCHEIBE	WASHER	WASHER	
19		**103-21281**		1	ANEL DE PRESSÃO, 2.812", Int, #281				
						SNAP RING	ANILLO DE RESORTE	ANELLO ELASTICO	054A
					ANNEAU D'ARRET	SPRENGRING	LÅSERING	VEERRING	
20		**43232**		4	PARAFUSO, Cap	SCREW	TORNILLO	VITE	040V
					VIS	SCHRAUBE	SKRUE	SCHROEF	
21		**87012464**		2	PINO ESPECIAL, Dowel, Knurled				
						SPECIAL PIN	BULÓN ESPECIAL	PERNO SPECIALE	Z356
					GOUPILLE SPECIALE	SPEZIALSTIFT	SPECIALSTIFT	SPECIALE PEN	

PUMP, HYDROSTATIC TANDEM 35CC DDC FRONT (SR130-SV185)
PUMP, HYDROSTATIC TANDEM 35CC DDC FRONT (SR130-SV185)
PUMP, HYDROSTATIC TANDEM 35CC DDC FRONT (SR130-SV185)
PUMP, HYDROSTATIC TANDEM 35CC DDC FRONT (SR130-SV185)

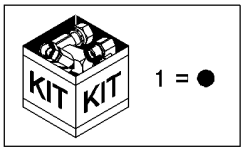

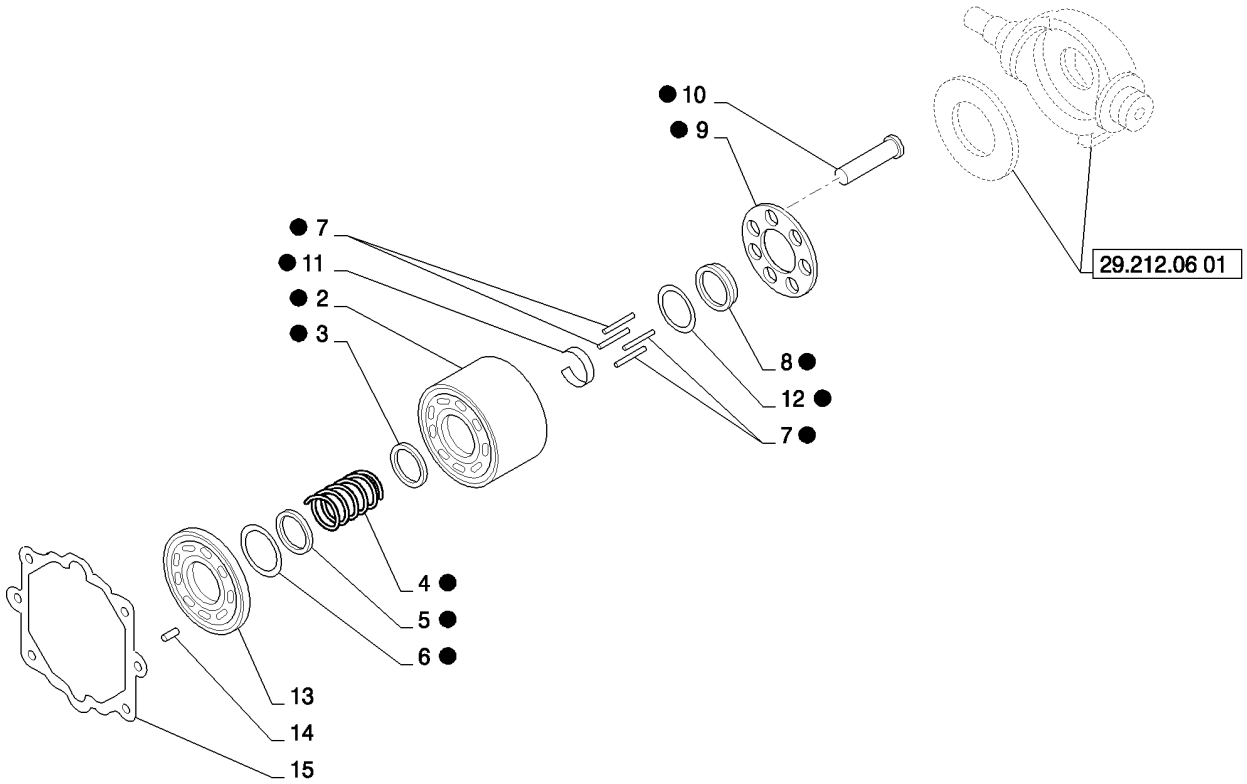

PUMP, HYDROSTATIC TANDEM 35CC DDC FRONT (SR130-SV185)
PUMP, HYDROSTATIC TANDEM 35CC DDC FRONT (SR130-SV185)
PUMP, HYDROSTATIC TANDEM 35CC DDC FRONT (SR130-SV185)
PUMP, HYDROSTATIC TANDEM 35CC DDC FRONT (SR130-SV185)

R	N	P.N.	MOD	Q	Denominação Description	Description Bezeichnung	Denominacion Beskrivelse	Descrizione Beschrijving	L.C.
1		100706A1		1	BLOCO CILINDRO, Kit BLOC-CYLINDRE	CYLINDER BLOCK ZYLINDERBLOCK	BLOQUE CILINDRICO CYLINDER BLOCK	BOZZELLO, CILINDRO CYLINDER BLOCK	P643
2		NSS		2	SEM SERVIÇO EM SEPARADO, Cylinder Block NON FORUNI SEPAREM	NOT SERVICED SEPARA NICHT A SEP ERS-T LIEI	NO SE REPARA POR SE SERVICERES IKKE SEPA	NON FORNITO SEPARAT NIET LOS VERKRIJGBAA	064N
3		176372A1		2	ARRUELA RONDELLE	WASHER UNTERLEGSCHEIBE	ARANDELA WASHER	RONDELLA WASHER	9720
4		176373A1		2	MOLA RESSORT	SPRING FEDER	MUELLE SPRING	MOLLA SPRING	8315
5		115950A1		2	DISCO, Washer DISQUE	DISC SCHEIBE	DISCO DISC	DISCO DISC	2700
6		102-22162		2	ANEL DE PRESSÃO, #162, 1.701, Int, Spiral ANNEAU D'ARRET	SNAP RING SPRENGRING	ANILLO DE RESORTE LÅSERING	ANELLO ELASTICO VEERRING	054A
7		117381A1		8	PINO, Retainer GOUPILLE FENDUE/SEC	SPLIT PIN/SAFETY PIN SPANNHÜLSE/SICHERH	CHAVETA HENDIDA SPLIT/SIKKERHEDSBOL	COPPIGLIA/PERNO SICU SPLITPEN/VEILIGHEIDSI	Z510
8		176375A1		2	ANEL GUIA BAGUE DE GUIDAGE	GUIDE RING FÜHRUNGSRING	ANILLO DE GUÍA STYRERING	ANELLO GUIDA GELEIDERING	P804
9		176376A1		2	COLAR, Retainer BAGUE-D'ARRET	COLLAR STELLRING	CASQUILLO/RETENCION COLLAR	GHIERA COLLAR	1800
10		NSS		9	SEM SERVIÇO EM SEPARADO, Piston Assembly NON FORUNI SEPAREM	NOT SERVICED SEPARA NICHT A SEP ERS-T LIEI	NO SE REPARA POR SE SERVICERES IKKE SEPA	NON FORNITO SEPARAT NIET LOS VERKRIJGBAA	064N
11		117382A1		2	PINO, Retainer GOUPILLE FENDUE/SEC	SPLIT PIN/SAFETY PIN SPANNHÜLSE/SICHERH	CHAVETA HENDIDA SPLIT/SIKKERHEDSBOL	COPPIGLIA/PERNO SICU SPLITPEN/VEILIGHEIDSI	Z510
12		100705A1		2	ARRUELA RONDELLE	WASHER UNTERLEGSCHEIBE	ARANDELA WASHER	RONDELLA WASHER	9720
13		84388312		1	PLACA, Valve, Front PLAQUE	PLATE PLATTE	PLACA PLADE	PIASTRA PLAAT	105P
14		38-11210		1	PINO DE FIXAÇÃO, 3/16" x 5/8", Slotted GOUPILLE DE BLOCAGE	LOCK PIN VERRIEGELUNGSSTIFT	PASADOR DE BLOQUEO LÅSETAP	PERNO DI BLOCCAGGIC BORGPEN	081P
15		124826A1		1	JUNTA JOINT	GASKET DICHTUNG	JUNTA GASKET	GUARNIZIONE GASKET	3720

SV185

PUMP, HYDROSTATIC TANDEM 35CC DDC FRONT (SR130-SV185)
PUMP, HYDROSTATIC TANDEM 35CC DDC FRONT (SR130-SV185)
PUMP, HYDROSTATIC TANDEM 35CC DDC FRONT (SR130-SV185)
PUMP, HYDROSTATIC TANDEM 35CC DDC FRONT (SR130-SV185)

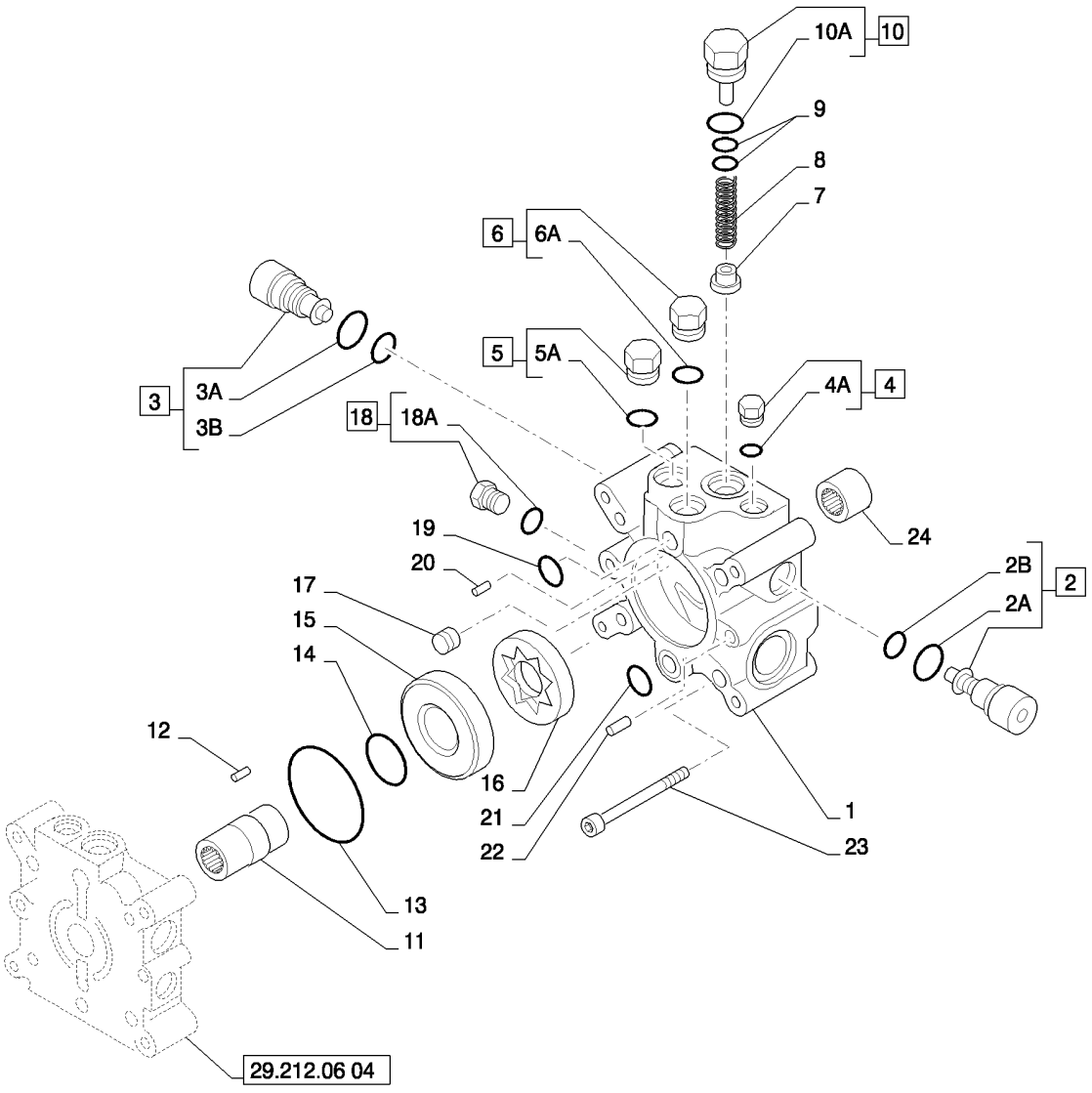

PUMP, HYDROSTATIC TANDEM 35CC DDC FRONT (SR130-SV185)
PUMP, HYDROSTATIC TANDEM 35CC DDC FRONT (SR130-SV185)
PUMP, HYDROSTATIC TANDEM 35CC DDC FRONT (SR130-SV185)
PUMP, HYDROSTATIC TANDEM 35CC DDC FRONT (SR130-SV185)

R	N	P.N.	MOD	Q	Denominação Description	Description Bezeichnung	Denominacion Beskrivelse	Descrizione Beschrijving	L.C.
1		84388319		1	ALOJAMENTO, End Cap CARTER	HOUSING GEHÄUSE	ALOJAMIENTO HUS	ALLOGGIAMENTO HUIS	014V
2		108194A2		1	VALVULA, Assembly VALVE	VALVE VENTIL	VALVULA VALVE	VALVOLA VALVE	P468
2A		238-5210		4	O-RING, -210, 70 Duro, .734" ID x .139" Thk JOINT TORIQUE	O-RING O-RING	JUNTA TÓRICA O-RING	ANELLO TOROIDALE O-RING	055A
2B		237-6008		4	O-RING, 0.176" ID x 0.316" OD x 0.07" JOINT TORIQUE	O-RING O-RING	JUNTA TÓRICA O-RING	ANELLO TOROIDALE O-RING	055A
3		108194A2		1	VALVULA, Assembly VALVE	VALVE VENTIL	VALVULA VALVE	VALVOLA VALVE	P468
3A		238-5210		4	O-RING, -210, 70 Duro, .734" ID x .139" Thk JOINT TORIQUE	O-RING O-RING	JUNTA TÓRICA O-RING	ANELLO TOROIDALE O-RING	055A
3B		237-6008		4	O-RING, 0.176" ID x 0.316" OD x 0.07" JOINT TORIQUE	O-RING O-RING	JUNTA TÓRICA O-RING	ANELLO TOROIDALE O-RING	055A
4		76349		1	BUJÃO, Hex Hd, 9/16"-18 ORB BOUCHON	PLUG STOPFEN	TAPÓN PROP	TAPPO PLUG	050T
4A		237-6006		1	O-RING, 0.114" ID x 0.254" OD x 0.07" JOINT TORIQUE	O-RING O-RING	JUNTA TÓRICA O-RING	ANELLO TOROIDALE O-RING	055A
5		86512512		1	BUJÃO, Hex Hd, 7/8"-14 ORB BOUCHON	PLUG STOPFEN	TAPÓN PROP	TAPPO PLUG	050T
5A		237-6010		1	O-RING, 0.239" ID x 0.379" OD x 0.07" JOINT TORIQUE	O-RING O-RING	JUNTA TÓRICA O-RING	ANELLO TOROIDALE O-RING	055A
6		86512512		1	BUJÃO, Hex Hd, 7/8"-14 ORB BOUCHON	PLUG STOPFEN	TAPÓN PROP	TAPPO PLUG	050T
6A		237-6010		1	O-RING, 0.239" ID x 0.379" OD x 0.07" JOINT TORIQUE	O-RING O-RING	JUNTA TÓRICA O-RING	ANELLO TOROIDALE O-RING	055A
7		H438300		1	REBITE, Poppet RIVET	RIVET NIET	REMACHE RIVET	RIBATTINO RIVET	7220
8		84388657		1	MOLA, Charge Relief RESSORT	SPRING FEDER	RESORTE FJEDER	MOLLA VEER	100M
9		132377A1		1	BLOCO, Kit, Shim BLOC	BLOCK BLOCK	BLOQUE STOPKLODS	BLOCHETTO BLOK	0710
10		234850A1		1	BUJAO BOUCHON	PLUG STOPFEN	TAPON PLUG	TAPPO PLUG	6400
10A		237-6010		1	O-RING, 0.239" ID x 0.379" OD x 0.07" JOINT TORIQUE	O-RING O-RING	JUNTA TÓRICA O-RING	ANELLO TOROIDALE O-RING	055A
11		84388318		1	ENGATE RACCORD	COUPLING KUPPLUNG	ACOPLAMIENTO KOBLING	GIUNTO KOPPELING	Z321

SV185

PUMP, HYDROSTATIC TANDEM 35CC DDC FRONT (SR130-SV185)
PUMP, HYDROSTATIC TANDEM 35CC DDC FRONT (SR130-SV185)
PUMP, HYDROSTATIC TANDEM 35CC DDC FRONT (SR130-SV185)
PUMP, HYDROSTATIC TANDEM 35CC DDC FRONT (SR130-SV185)

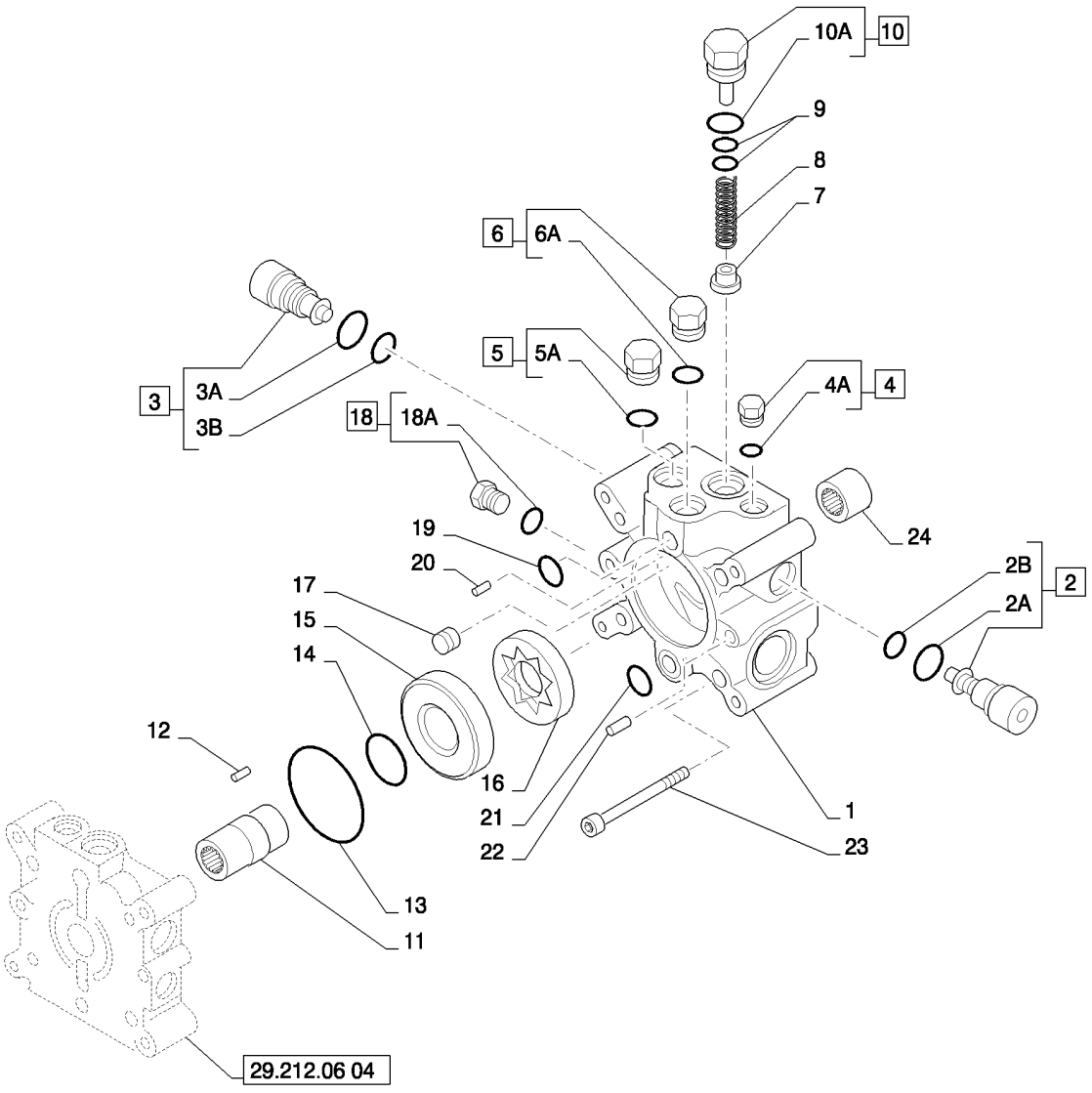

PUMP, HYDROSTATIC TANDEM 35CC DDC FRONT (SR130-SV185)
PUMP, HYDROSTATIC TANDEM 35CC DDC FRONT (SR130-SV185)
PUMP, HYDROSTATIC TANDEM 35CC DDC FRONT (SR130-SV185)
PUMP, HYDROSTATIC TANDEM 35CC DDC FRONT (SR130-SV185)

R	N	P.N.	MOD	Q	Denominação Description	Description Bezeichnung	Denominacion Beskrivelse	Descrizione Beschrijving	L.C.
12		**84388315**		1	PINO	PIN	PASADOR	PERNO	080P
					BROCHE	PIN	STIFT	PEN	
13		**511526**		1	O-RING, 3.359" ID x 3.637" OD x 0.139"				
						O-RING	JUNTA TÓRICA	ANELLO TOROIDALE	055A
					JOINT TORIQUE	O-RING	O-RING	O-RING	
14		**234848A1**		1	ANEL O	O-RING	ANILLO/ARO CAUCHO	ANELLO TOROIDALE	7176
					JOINT TORIQUE	O-RING	O-RING	O-RING	
15		**84388317**		1	ESPAÇADOR, Gerotor	SPACER	SEPARADOR	DISTANZIALE	075D
					ENTRETOISE	DISTANZSTÜCK	AFSTANDSSTYKKE	AFSTANDSSTUK	
16		**84388316**		1	GEROTOR, M35	GEROTOR	GEROTOR	GEROTOR	T046
					GEROTOR	GEROTOR	GEROTOR	GEROTOR	
17		**{}**							
18		**76349**		1	BUJÃO, Hex Hd, 9/16"-18 ORB				
						PLUG	TAPÓN	TAPPO	050T
					BOUCHON	STOPFEN	PROP	PLUG	
18A		**237-6006**		1	O-RING, 0.114" ID x 0.254" OD x 0.07"				
						O-RING	JUNTA TÓRICA	ANELLO TOROIDALE	055A
					JOINT TORIQUE	O-RING	O-RING	O-RING	
19		**238-5114**		1	O-RING, -114, 70 Duro, .612" ID x .103" Thk				
						O-RING	JUNTA TÓRICA	ANELLO TOROIDALE	055A
					JOINT TORIQUE	O-RING	O-RING	O-RING	
20		**H351445**		1	PINO	PIN	BOTADOR	SPINA	6200
					BROCHE	STIFT	PIN	PIN	
21		**238-5118**		1	O-RING, -118, 70 Duro, .862" ID x .103" Thk				
						O-RING	JUNTA TÓRICA	ANELLO TOROIDALE	055A
					JOINT TORIQUE	O-RING	O-RING	O-RING	
22		**87012464**		2	PINO ESPECIAL, Dowel, Knurled				
						SPECIAL PIN	BULÓN ESPECIAL	PERNO SPECIALE	Z356
					GOUPILLE SPECIALE	SPEZIALSTIFT	SPECIALSTIFT	SPECIALE PEN	
23		**14421231**		4	PARAFUSO	SCREW	TORNILLO	VITE	040V
					VIS	SCHRAUBE	SKRUE	SCHROEF	
24		**132391A1**		1	ROLAMENTO	BEARING, NEEDLE	COJINETE DE RODILLOS	CUSCINETTO, A RULLIN	P111
					ROULEMENT A AIGUILLE	NADELLAGER	NAALELEJE	LAGER, NAALD	

29.212.06	04	p1	01/11

PUMP, HYDROSTATIC TANDEM 35CC DDC REAR (SR130-SV185)
PUMP, HYDROSTATIC TANDEM 35CC DDC REAR (SR130-SV185)
PUMP, HYDROSTATIC TANDEM 35CC DDC REAR (SR130-SV185)
PUMP, HYDROSTATIC TANDEM 35CC DDC REAR (SR130-SV185)

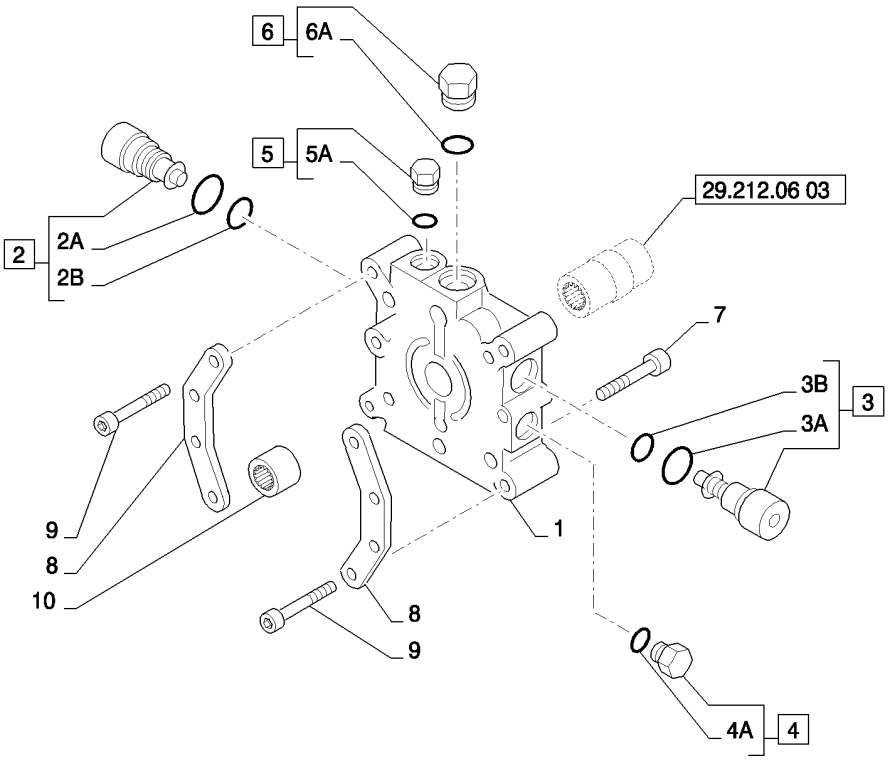

PUMP, HYDROSTATIC TANDEM 35CC DDC REAR (SR130-SV185)
PUMP, HYDROSTATIC TANDEM 35CC DDC REAR (SR130-SV185)
PUMP, HYDROSTATIC TANDEM 35CC DDC REAR (SR130-SV185)
PUMP, HYDROSTATIC TANDEM 35CC DDC REAR (SR130-SV185)

R	N	P.N.	MOD	Q	Denominação Description	Description Bezeichnung	Denominacion Beskrivelse	Descrizione Beschrijving	L.C.
1		241592A1		1	TAMPA, End Cap	COVER	TAPA	COPERCHIO	2250
					COUVERCLE	DECKEL	COVER	COVER	
2		108194A2		1	VALVULA, Assembly	VALVE	VALVULA	VALVOLA	P468
					VALVE	VENTIL	VALVE	VALVE	
2A		238-5210		4	O-RING, -210, 70 Duro, .734" ID x .139" Thk				
						O-RING	JUNTA TÓRICA	ANELLO TOROIDALE	055A
					JOINT TORIQUE	O-RING	O-RING	O-RING	
2B		237-6008		4	O-RING, 0.176" ID x 0.316" OD x 0.07"				
						O-RING	JUNTA TÓRICA	ANELLO TOROIDALE	055A
					JOINT TORIQUE	O-RING	O-RING	O-RING	
3		108194A2		1	VALVULA, Assembly	VALVE	VALVULA	VALVOLA	P468
					VALVE	VENTIL	VALVE	VALVE	
3A		238-5210		4	O-RING, -210, 70 Duro, .734" ID x .139" Thk				
						O-RING	JUNTA TÓRICA	ANELLO TOROIDALE	055A
					JOINT TORIQUE	O-RING	O-RING	O-RING	
3B		237-6008		4	O-RING, 0.176" ID x 0.316" OD x 0.07"				
						O-RING	JUNTA TÓRICA	ANELLO TOROIDALE	055A
					JOINT TORIQUE	O-RING	O-RING	O-RING	
4		76349		1	BUJÃO, Hex Hd, 9/16"-18 ORB				
						PLUG	TAPÓN	TAPPO	050T
					BOUCHON	STOPFEN	PROP	PLUG	
4A		237-6006		1	O-RING, 0.114" ID x 0.254" OD x 0.07"				
						O-RING	JUNTA TÓRICA	ANELLO TOROIDALE	055A
					JOINT TORIQUE	O-RING	O-RING	O-RING	
5		76349		1	BUJÃO, Hex Hd, 9/16"-18 ORB				
						PLUG	TAPÓN	TAPPO	050T
					BOUCHON	STOPFEN	PROP	PLUG	
5A		237-6006		1	O-RING, 0.114" ID x 0.254" OD x 0.07"				
						O-RING	JUNTA TÓRICA	ANELLO TOROIDALE	055A
					JOINT TORIQUE	O-RING	O-RING	O-RING	
6		86512512		1	BUJÃO, Hex Hd, 7/8"-14 ORB				
						PLUG	TAPÓN	TAPPO	050T
					BOUCHON	STOPFEN	PROP	PLUG	
6A		237-6010		1	O-RING, 0.239" ID x 0.379" OD x 0.07"				
						O-RING	JUNTA TÓRICA	ANELLO TOROIDALE	055A
					JOINT TORIQUE	O-RING	O-RING	O-RING	
7		106564A1		4	PARAFUSO	SCREW	TORNILLO	VITE	7450
					VIS	SCHRAUBE	SCREW	SCREW	
8		84377228		2	PLACA, M35, Support	PLATE	PLACA	PIASTRA	105P
					PLAQUE	PLATTE	PLADE	PLAAT	
9		132357A1		4	PARAFUSO	SCREW	TORNILLO	VITE	7450
					VIS	SCHRAUBE	SCREW	SCREW	
10		132391A1		1	ROLAMENTO	BEARING, NEEDLE	COJINETE DE RODILLOS	CUSCINETTO, A RULLIN	P111
					ROULEMENT A AIGUILLE	NADELLAGER	NAALELEJE	LAGER, NAALD	

SV185

29.212.06	05	p1	01/11

PUMP, HYDROSTATIC TANDEM 35CC DDC REAR (SR130-SV185)
PUMP, HYDROSTATIC TANDEM 35CC DDC REAR (SR130-SV185)
PUMP, HYDROSTATIC TANDEM 35CC DDC REAR (SR130-SV185)
PUMP, HYDROSTATIC TANDEM 35CC DDC REAR (SR130-SV185)

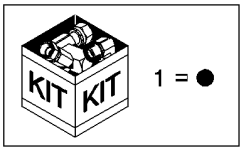

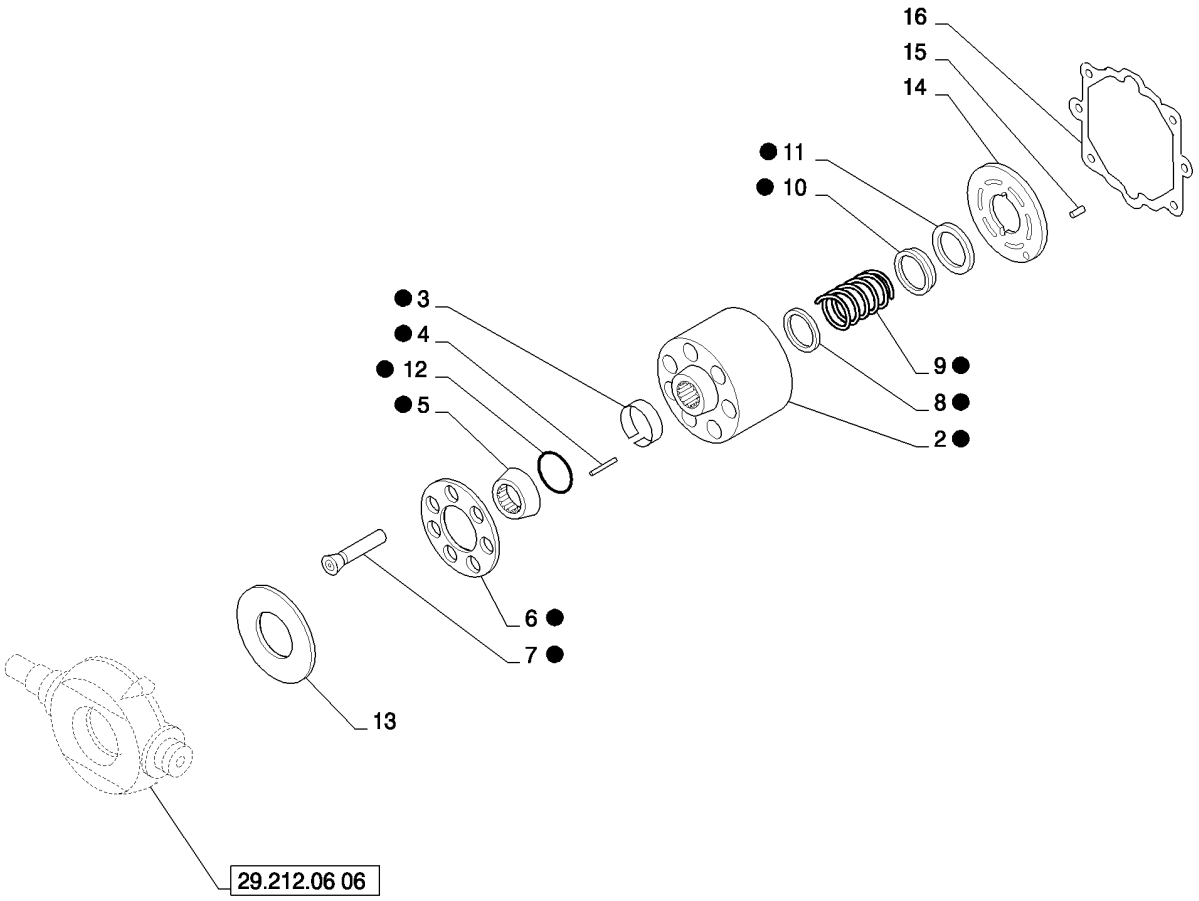

PUMP, HYDROSTATIC TANDEM 35CC DDC REAR (SR130-SV185)
PUMP, HYDROSTATIC TANDEM 35CC DDC REAR (SR130-SV185)
PUMP, HYDROSTATIC TANDEM 35CC DDC REAR (SR130-SV185)
PUMP, HYDROSTATIC TANDEM 35CC DDC REAR (SR130-SV185)

R	N	P.N.	MOD	Q	Denominação Description	Description Bezeichnung	Denominacion Beskrivelse	Descrizione Beschrijving	L.C.
1		100706A1		1	BLOCO CILINDRO, Kit BLOC-CYLINDRE	CYLINDER BLOCK ZYLINDERBLOCK	BLOQUE CILINDRICO CYLINDER BLOCK	BOZZELLO, CILINDRO CYLINDER BLOCK	P643
2		NSS		2	SEM SERVIÇO EM SEPARADO, Cylinder Block NON FORUNI SEPAREM	NOT SERVICED SEPARA NICHT A SEP ERS-T LIEI	NO SE REPARA POR SE SERVICERES IKKE SEPA	NON FORNITO SEPARAT NIET LOS VERKRIJGBAA	064N
3		117382A1		2	PINO, Retainer GOUPILLE FENDUE/SEC	SPLIT PIN/SAFETY PIN SPANNHÜLSE/SICHERH	CHAVETA HENDIDA SPLIT/SIKKERHEDSBOL	COPPIGLIA/PERNO SICU SPLITPEN/VEILIGHEIDSI	Z510
4		117381A1		8	PINO, Retainer GOUPILLE FENDUE/SEC	SPLIT PIN/SAFETY PIN SPANNHÜLSE/SICHERH	CHAVETA HENDIDA SPLIT/SIKKERHEDSBOL	COPPIGLIA/PERNO SICU SPLITPEN/VEILIGHEIDSI	Z510
5		176375A1		2	ANEL GUIA BAGUE DE GUIDAGE	GUIDE RING FÜHRUNGSRING	ANILLO DE GUÍA STYRERING	ANELLO GUIDA GELEIDERING	P804
6		176376A1		2	COLAR, Retainer BAGUE-D'ARRET	COLLAR STELLRING	CASQUILLO/RETENCION COLLAR	GHIERA COLLAR	1800
7		NSS		9	SEM SERVIÇO EM SEPARADO, Piston Assembly NON FORUNI SEPAREM	NOT SERVICED SEPARA NICHT A SEP ERS-T LIEI	NO SE REPARA POR SE SERVICERES IKKE SEPA	NON FORNITO SEPARAT NIET LOS VERKRIJGBAA	064N
8		176372A1		2	ARRUELA RONDELLE	WASHER UNTERLEGSCHEIBE	ARANDELA WASHER	RONDELLA WASHER	9720
9		176373A1		2	MOLA RESSORT	SPRING FEDER	MUELLE SPRING	MOLLA SPRING	8315
10		115950A1		2	DISCO, Washer DISQUE	DISC SCHEIBE	DISCO DISC	DISCO DISC	2700
11		102-22162		2	ANEL DE PRESSÃO, #162, 1.701, Int, Spiral ANNEAU D'ARRET	SNAP RING SPRENGRING	ANILLO DE RESORTE LÅSERING	ANELLO ELASTICO VEERRING	054A
12		100705A1		2	ARRUELA RONDELLE	WASHER UNTERLEGSCHEIBE	ARANDELA WASHER	RONDELLA WASHER	9720
13		100700A1		1	PLACA PLAQUE	PLATE PLATTE	PLACA PLADE	PIASTRA PLAAT	105P
14		84388314		1	PLACA, Valve, Rear PLAQUE	PLATE PLATTE	PLACA PLADE	PIASTRA PLAAT	105P
15		38-11210		1	PINO DE FIXAÇÃO, 3/16" x 5/8", Slotted GOUPILLE DE BLOCAGE	LOCK PIN VERRIEGELUNGSSTIFT	PASADOR DE BLOQUEO LÅSETAP	PERNO DI BLOCCAGGIC BORGPEN	081P
16		124826A1		1	JUNTA JOINT	GASKET DICHTUNG	JUNTA GASKET	GUARNIZIONE GASKET	3720

SV185

29.212.06	06	p1	01/11

PUMP, HYDROSTATIC TANDEM 35CC DDC REAR (SR130-SV185)
PUMP, HYDROSTATIC TANDEM 35CC DDC REAR (SR130-SV185)
PUMP, HYDROSTATIC TANDEM 35CC DDC REAR (SR130-SV185)
PUMP, HYDROSTATIC TANDEM 35CC DDC REAR (SR130-SV185)

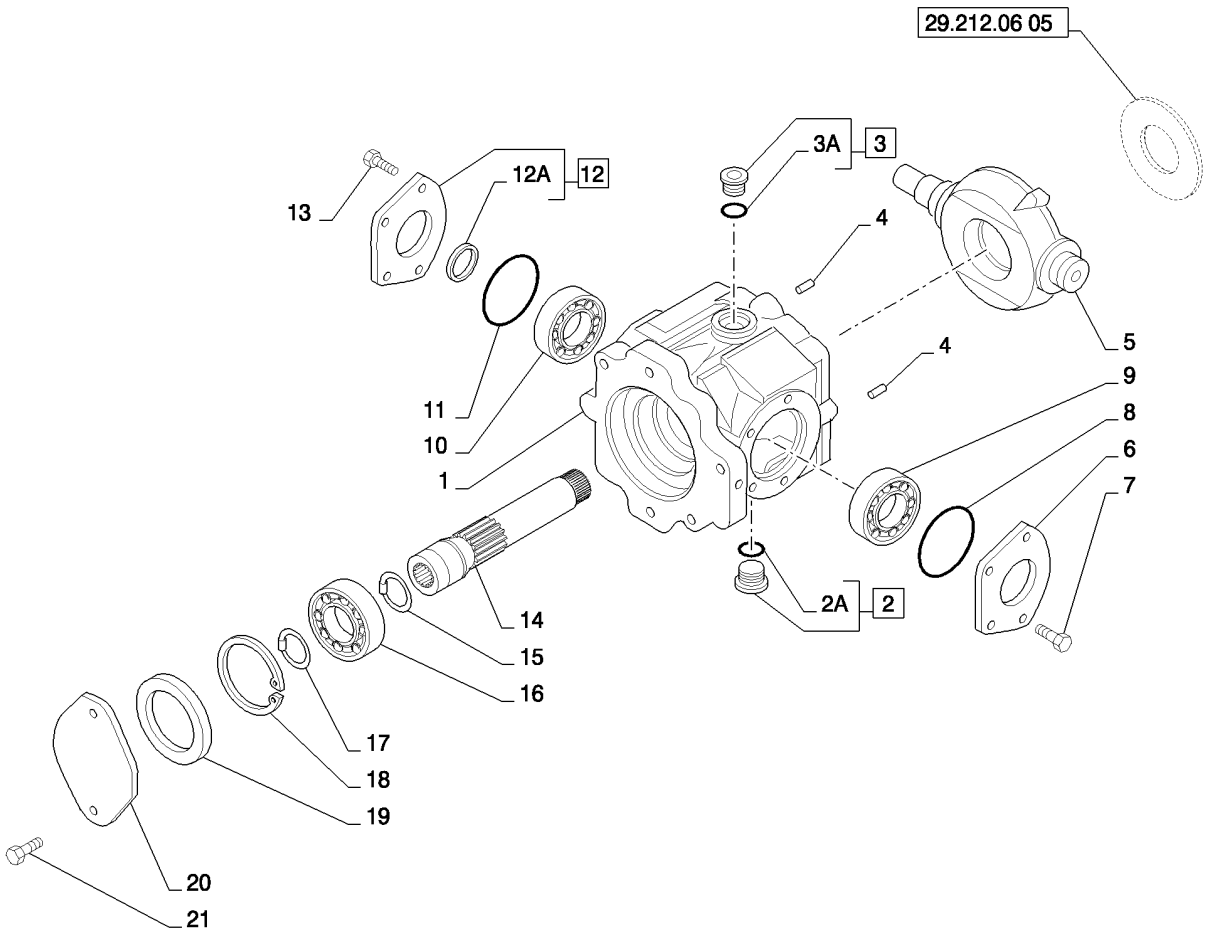

PUMP, HYDROSTATIC TANDEM 35CC DDC REAR (SR130-SV185)
PUMP, HYDROSTATIC TANDEM 35CC DDC REAR (SR130-SV185)
PUMP, HYDROSTATIC TANDEM 35CC DDC REAR (SR130-SV185)
PUMP, HYDROSTATIC TANDEM 35CC DDC REAR (SR130-SV185)

R	N	P.N.	MOD	Q	Denominação Description	Description Bezeichnung	Denominacion Beskrivelse	Descrizione Beschrijving	L.C.
1		84388320		1	ALOJAMENTO, Rear	HOUSING	ALOJAMIENTO	ALLOGGIAMENTO	014V
					CARTER	GEHÄUSE	HUS	HUIS	
2		9841223		1	BUJÃO, Hex Soc, 1 1/16"-12 ORB				
						PLUG	TAPÓN	TAPPO	050T
					BOUCHON	STOPFEN	PROP	PLUG	
2A		167266		1	O-RING, 0.924" ID x 0.116" Width				
						O-RING	JUNTA TÓRICA	ANELLO TOROIDALE	055A
					JOINT TORIQUE	O-RING	O-RING	O-RING	
3		9841223		1	BUJÃO, Hex Soc, 1 1/16"-12 ORB				
						PLUG	TAPÓN	TAPPO	050T
					BOUCHON	STOPFEN	PROP	PLUG	
3A		167266		1	O-RING, 0.924" ID x 0.116" Width				
						O-RING	JUNTA TÓRICA	ANELLO TOROIDALE	055A
					JOINT TORIQUE	O-RING	O-RING	O-RING	
4		87012464		2	PINO ESPECIAL, Dowel, Knurled				
						SPECIAL PIN	BULÓN ESPECIAL	PERNO SPECIALE	Z356
					GOUPILLE SPECIALE	SPEZIALSTIFT	SPECIALSTIFT	SPECIALE PEN	
5		84388310		1	PLACA OSCILANTE, M35	SWASH PLATE	PLATO DISTRIBUIDOR	DISCO OSCILLANTE	A011
					PLATEAU OSCILLANT	TAUMELSCHEIBE	STØJPLADE	TUIMELSCHIJF	
6		H438310		1	TAMPA	COVER	TAPA	COPERCHIO	2250
					COUVERCLE	DECKEL	COVER	COVER	
7		43232		4	PARAFUSO, Cap	SCREW	TORNILLO	VITE	040V
					VIS	SCHRAUBE	SKRUE	SCHROEF	
8		239-5146		1	O-RING, Rect, 2.612" ID x 2.8" OD, Cl 5				
						O-RING	JUNTA TÓRICA	ANELLO TOROIDALE	055A
					JOINT TORIQUE	O-RING	O-RING	O-RING	
9		241590A1		1	CONJUNTO DO ROLAMENTO, Taper				
						BEARING ASSY	CONJUNTO DE COJINET	COMPLESSIVO CUSCINI	341C
					ROULEMENT	LAGERBAURUPPE	LEJESAMLING	LAGEREENHEID	
10		241590A1		1	CONJUNTO DO ROLAMENTO, Taper				
						BEARING ASSY	CONJUNTO DE COJINET	COMPLESSIVO CUSCINI	341C
					ROULEMENT	LAGERBAURUPPE	LEJESAMLING	LAGEREENHEID	
11		239-5146		1	O-RING, Rect, 2.612" ID x 2.8" OD, Cl 5				
						O-RING	JUNTA TÓRICA	ANELLO TOROIDALE	055A
					JOINT TORIQUE	O-RING	O-RING	O-RING	
12		84388659		1	CONJUNTO DA TAMPA, Trunion w/Seal				
						COVER ASSY	CONJUNTO DE FUNDAS	COPERCHIO, COMPL	P426
					COUVERCLE	ABDECKUNGSBAUGRUP	DÆKSELENHED	AFSCHERMEENHEID	
12A		H438288		2	VEDADOR DE RETENCAO	SEAL	SELLO/RETEN	GUARNIZIONE TENUTA	7460
					JOINT-D'ETANCHEITE	DICHTRING	SEAL	SEAL	
13		43232		4	PARAFUSO, Cap	SCREW	TORNILLO	VITE	040V
					VIS	SCHRAUBE	SKRUE	SCHROEF	
14		84388321		1	EIXO, Rear	SHAFT	EJE	ALBERO	016A
					ARBRE	WELLE	AKSEL	AS	
15		100-11137		1	ANEL DE PRESSÃO, #137, Ext				
						SNAP RING	ANILLO DE RESORTE	ANELLO ELASTICO	054A
					ANNEAU D'ARRET	SPRENGRING	LÅSERING	VEERRING	

SV185

29.212.06	06	p2	01/11

PUMP, HYDROSTATIC TANDEM 35CC DDC REAR (SR130-SV185)
PUMP, HYDROSTATIC TANDEM 35CC DDC REAR (SR130-SV185)
PUMP, HYDROSTATIC TANDEM 35CC DDC REAR (SR130-SV185)
PUMP, HYDROSTATIC TANDEM 35CC DDC REAR (SR130-SV185)

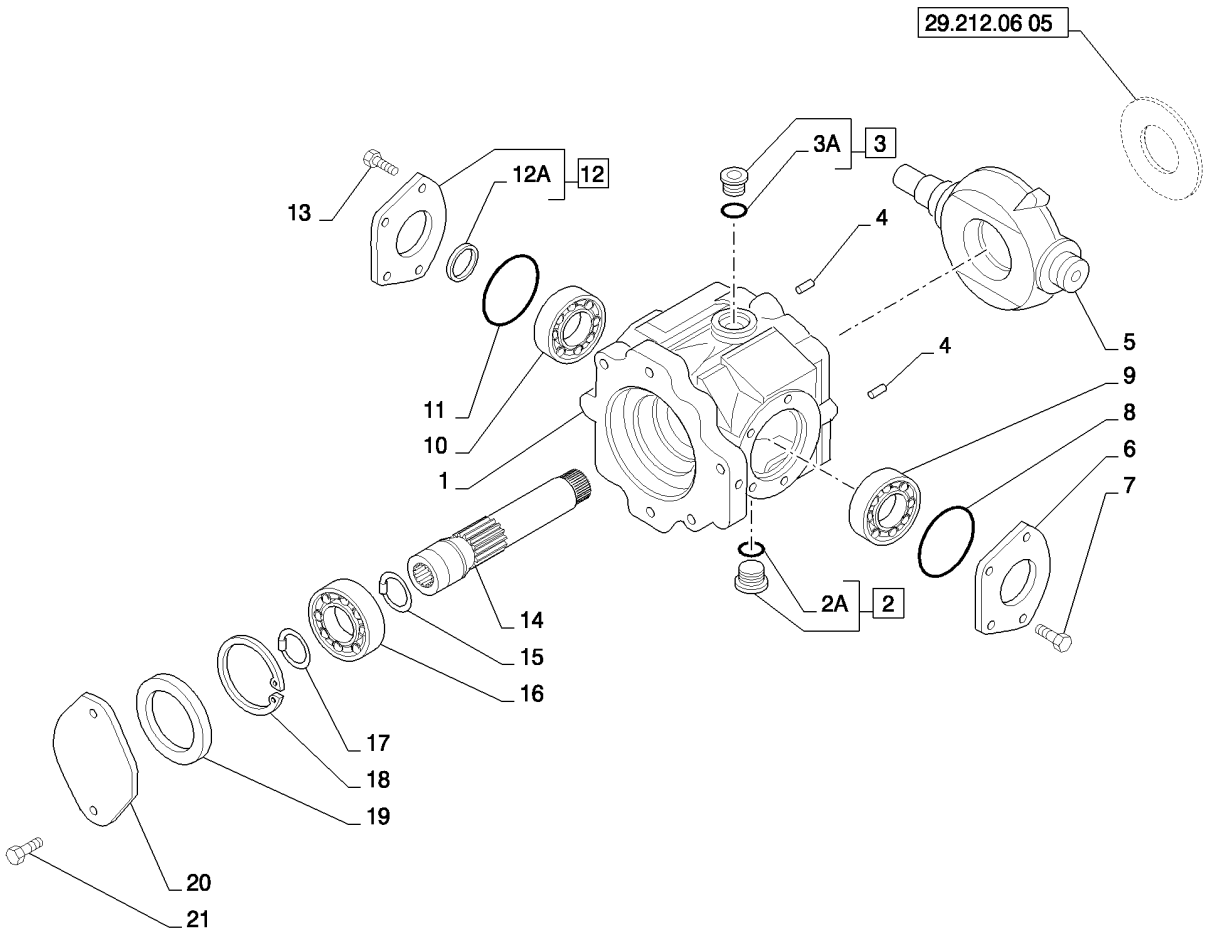

PUMP, HYDROSTATIC TANDEM 35CC DDC REAR (SR130-SV185)
PUMP, HYDROSTATIC TANDEM 35CC DDC REAR (SR130-SV185)
PUMP, HYDROSTATIC TANDEM 35CC DDC REAR (SR130-SV185)
PUMP, HYDROSTATIC TANDEM 35CC DDC REAR (SR130-SV185)

R	N	P.N.	MOD	Q	Denominação Description	Description Bezeichnung	Denominacion Beskrivelse	Descrizione Beschrijving	L.C.
16		A29183		1	ROLAMENTO ESFÉRICO, 34.994 mm ID x 71.9935 mm OD x 16.94 mm				
						BALL BEARING	RODAMIENTO DE BOLAS	CUSCINETTO A SFERE	343C
					ROULEMENT A BILLES	KUGELLAGER	KUGLELEJE	KOGELLAGER	
17		100-11137		1	ANEL DE PRESSÃO, #137, Ext				
						SNAP RING	ANILLO DE RESORTE	ANELLO ELASTICO	054A
					ANNEAU D'ARRET	SPRENGRING	LÅSERING	VEERRING	
18		103-21281		1	ANEL DE PRESSÃO, 2.812", Int, #281				
						SNAP RING	ANILLO DE RESORTE	ANELLO ELASTICO	054A
					ANNEAU D'ARRET	SPRENGRING	LÅSERING	VEERRING	
19		NSS		1	SEM SERVIÇO EM SEPARADO, Seal, B Pad				
						NOT SERVICED SEPARA	NO SE REPARA POR SE	NON FORNITO SEPARAT	064N
					NON FORUNI SEPAREM	NICHT A SEP ERS-T LIEI	SERVICERES IKKE SEPA	NIET LOS VERKRIJGBAA	
20		NSS		1	SEM SERVIÇO EM SEPARADO, Cover, Flange				
						NOT SERVICED SEPARA	NO SE REPARA POR SE	NON FORNITO SEPARAT	064N
					NON FORUNI SEPAREM	NICHT A SEP ERS-T LIEI	SERVICERES IKKE SEPA	NIET LOS VERKRIJGBAA	
21		NSS		2	SEM SERVIÇO EM SEPARADO, Screw				
						NOT SERVICED SEPARA	NO SE REPARA POR SE	NON FORNITO SEPARAT	064N
					NON FORUNI SEPAREM	NICHT A SEP ERS-T LIEI	SERVICERES IKKE SEPA	NIET LOS VERKRIJGBAA	

29.212.07		p1	02/11

PUMP, HYDROSTATIC EH 35CC A20VG ET (SR130-SV185)
PUMP, HYDROSTATIC EH 35CC A20VG ET (SR130-SV185)
PUMP, HYDROSTATIC EH 35CC A20VG ET (SR130-SV185)
PUMP, HYDROSTATIC EH 35CC A20VG ET (SR130-SV185)

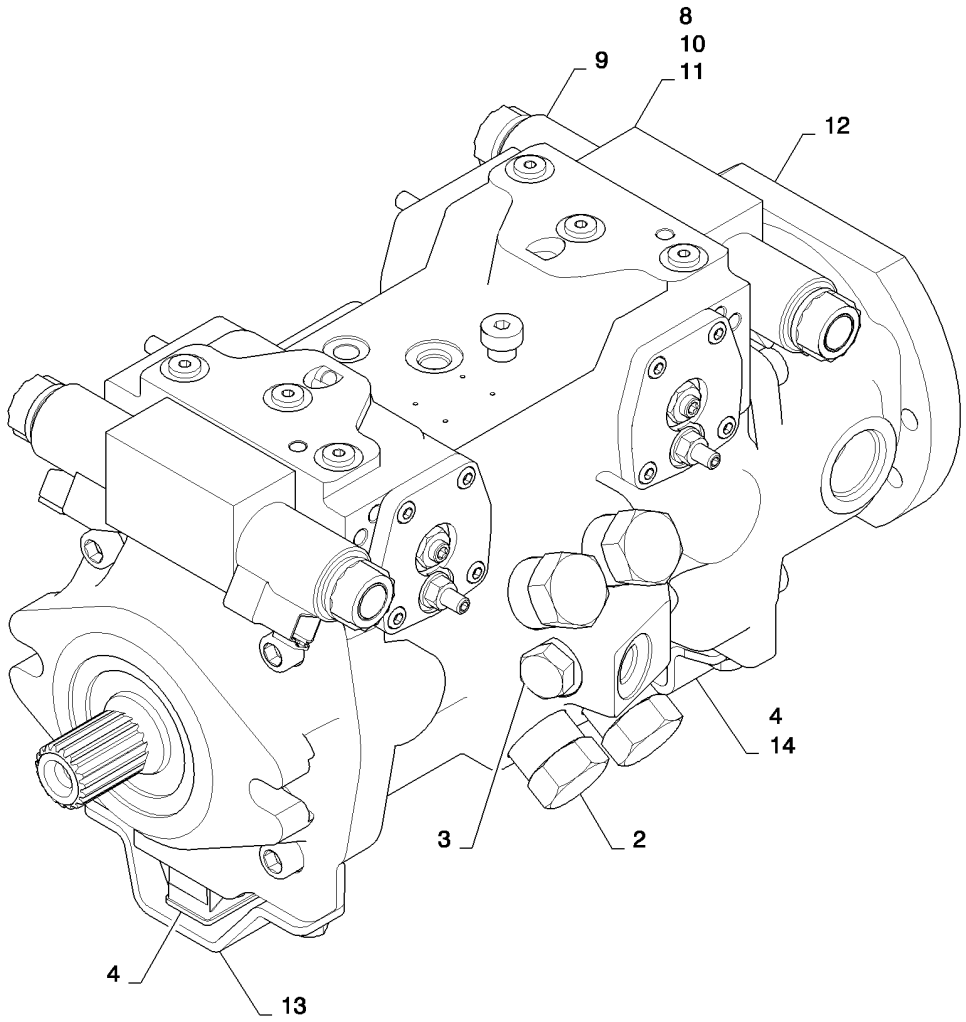

PUMP, HYDROSTATIC EH 35CC A20VG ET (SR130-SV185)
PUMP, HYDROSTATIC EH 35CC A20VG ET (SR130-SV185)
PUMP, HYDROSTATIC EH 35CC A20VG ET (SR130-SV185)
PUMP, HYDROSTATIC EH 35CC A20VG ET (SR130-SV185)

R	N	P.N.	MOD	Q	Denominação Description	Description Bezeichnung	Denominacion Beskrivelse	Descrizione Beschrijving	L.C.
1		**87627399**		4	TAMPA, Set of Service Caps				
						CAP	TAPÓN	TAPPO	052T
					CAPUCHON	KAPPE	TANKDÆKSEL	DOP	
2		**87614031**		4	VÁLVULA ALÍVIO DA PRESSÃO, 360 Bar				
						PRESSURE RELIEF VAL\	VÁLV. ALIVIO DE PRESI(	VALV. LIMITATRICE PRE	007V
					CLAPET DECHARGE PRI	DRUCKENTLASTUNGSV	SIKKERHEDSVENTIL	OVERDRUKKLEP	
3		**87553604**		1	VÁLVULA ALÍVIO DA PRESSÃO				
						PRESSURE RELIEF VAL\	VÁLV. ALIVIO DE PRESI(	VALV. LIMITATRICE PRE	007V
					CLAPET DECHARGE PRI	DRUCKENTLASTUNGSV	SIKKERHEDSVENTIL	OVERDRUKKLEP	
4		**84356794**		2	SENSOR, Angle, A20 PumpSENSOR		SENSOR	SENSORE	608S
					CAPTEUR	SENSOR	FØLER	SENSOR	
5		**84389755**		2	VEDAÇÃO, V-Ring (Not Shown)				
						SEAL	ANILLO DE CIERRE	GUARNIZIONE; TENUTA	132A
					JOINT	DICHTUNG	PAKNING	AFDICHTING	
6		**84389757**		1	VEDAÇÃO, Shaft (Not Shown)				
						SEAL	ANILLO DE CIERRE	GUARNIZIONE; TENUTA	132A
					JOINT	DICHTUNG	PAKNING	AFDICHTING	
7		**84389758**		4	PORCA, Seal Lock (Not Shown)				
						NUT	TUERCA	DADO	010D
					ECROU	MUTTER	MØTRIK	MOER	
8		**84389759**		1	MÓDULO, A20ET Control Complete; Incl. Ref. 9, 10, 11				
						MODULE	MÓDULO	MODULO	T102
					MODULE	MODUL	MODUL	MODULE	
9		**84389760**		4	BOBINA, Proportional Solenoid				
						COIL	BOBINA	BOBINA	083B
					BOBINE	SPULE	SPOLE	SPOEL	
10		**84389762**		1	MÓDULO, A20 ET Control w/o Coils				
						MODULE	MÓDULO	MODULO	T102
					MODULE	MODUL	MODUL	MODULE	
11		**84389763**		1	JUNTA, A20 ET Control Module				
						GASKET	JUNTA	GUARNIZIONE	123G
					JOINT	DICHTUNG	PAKNING	PAKKING	
12		**84389765**		1	BOMBA HIDRÁULICA, A20 Charge				
						HYDRAULIC PUMP	BOMBA HIDRÁULICO	POMPA IDRAULICA	155P
					POMPE HYDRAULIQUE	HYDRAULIKPUMPE	HYDRAULIKPUMPE	HYDRAULISCHE POMP	
13		**84389781**		1	PROTEÇÃO, A20 Front Angle Sensor				
						SHIELD	PROTECCIÓN	PROTEZIONE	224P
					PROTECTION	SCHILD	BESKYTTELSESKÆRM	AFSCHERMING	
14		**84389782**		1	PROTEÇÃO, A20 Rear Angle Sensor				
						SHIELD	PROTECCIÓN	PROTEZIONE	224P
					PROTECTION	SCHILD	BESKYTTELSESKÆRM	AFSCHERMING	

SECTION INDEX
35 - Sistemas hidráulicos

35.100.01		CHASSIS HYDRAULICS (SV185)
35.101.02		SELF LEVELING - NONE MED LG (SR175-TV380)
35.102.01		RIDE CONTROL (SR175-TV380)
35.102.02		RIDE CONTROL - NONE (SR175-TV380)
35.204.01		MANUAL COUPLER, TAN (SR175-TV380)
35.204.02	01	HYDRAULIC COUPLER (SV185)
35.204.02	01	HYDRAULIC COUPLER - CHASSIS PLUMBING (SV185,SV250,SV300,TV380)
35.204.02	02	HYDRAULIC COUPLER - BASIC GRAY (SR175-TV380)
35.204.02	03	HYDRAULIC COUPLER CHASSIS PLUMBING - BASIC(SR175-TV380)
35.220.01		AUX HYD, STD FLOW (SV185)
35.220.01	01	AUX HYD, STD C.U.P. (SV185)
35.220.01	02	AUX HYD, STD, GEAR PUMP (SR175,SV185)
35.220.01	03	AUX HYD, STD, CHASSIS PLUMBING (SV185)
35.220.01	04	AUX HYD, STD, ARM PLUMBING (SV185)
35.220.01	04	AUX HYD, STD C.U.P. ARM PLUMBING (SV185)
35.220.01	05	AUX HYD, STD C.U.P. CASE DRAIN CHASSIS PLUMBING (SV185)
35.220.02	01	AUX HYD, HIGH FLOW (SV185)
35.220.02	02	AUX HYD, HIGH FLOW (SR175)(SV185)
35.220.02	03	AUX HYD, HIGH FLOW, CHASSIS PLUMBING (SV185)
35.220.02	04	AUX HYD, HIGH FLOW, ARM PLUMBING (SV185)
35.220.02	05	AUX HYD, HIGH FLOW, ARM PLUMBING BASIC (SV185)
35.359.01	01	PUMP, EH AND CONTROL VALVE (SR175,SV185)
35.359.01	02	PUMP, EH AND CONTROL VALVE (SR175,SV185)
35.359.02	01	PUMP, MECHANICAL (SR130-SR220)
35.359.02	01	PUMP, MECHANICAL (SR175,SV185)
35.359.02	02	PUMP, MECHANICAL (SR175,SV185)
35.359.03		CONTROL VALVE, EH W/ HARNESS (ALL CASE)
35.359.04		CONTROL VALVE, MECHANICAL HAND EH AUX (SR130-SV300)
35.701.01		LOADER HYDRAULICS (SV185)
35.701.02	01	LOADER VALVE PLUMBING (SV185)
35.701.02	02	LOADER VALVE PLUMBING (SV185)
35.701.03		SUPPLY PLUMBING (LOADER VALVE) (SR175,SV185)
35.701.04		RETURN PLUMBING (LOADER VALVE) (SR175,SV185,SR200,TR270)
35.701.05		2SPD PLUMBING (SR175,SV185)
35.701.06	01	BRAKE PLUMBING (SR130,SR150,SR175,SV185)
35.701.06	02	BRAKE PLUMBING (SR130 - SV300)
35.730.01		HYDRAULIC CYLINDER (SV185)
35.730.02		BUCKET CYLINDER (SV185)
35.750.01		TANK, HYDRAULIC (SV185)

35.100.01		p1	01/11

CHASSIS HYDRAULICS (SV185)
CHASSIS HYDRAULICS (SV185)
CHASSIS HYDRAULICS (SV185)
CHASSIS HYDRAULICS (SV185)

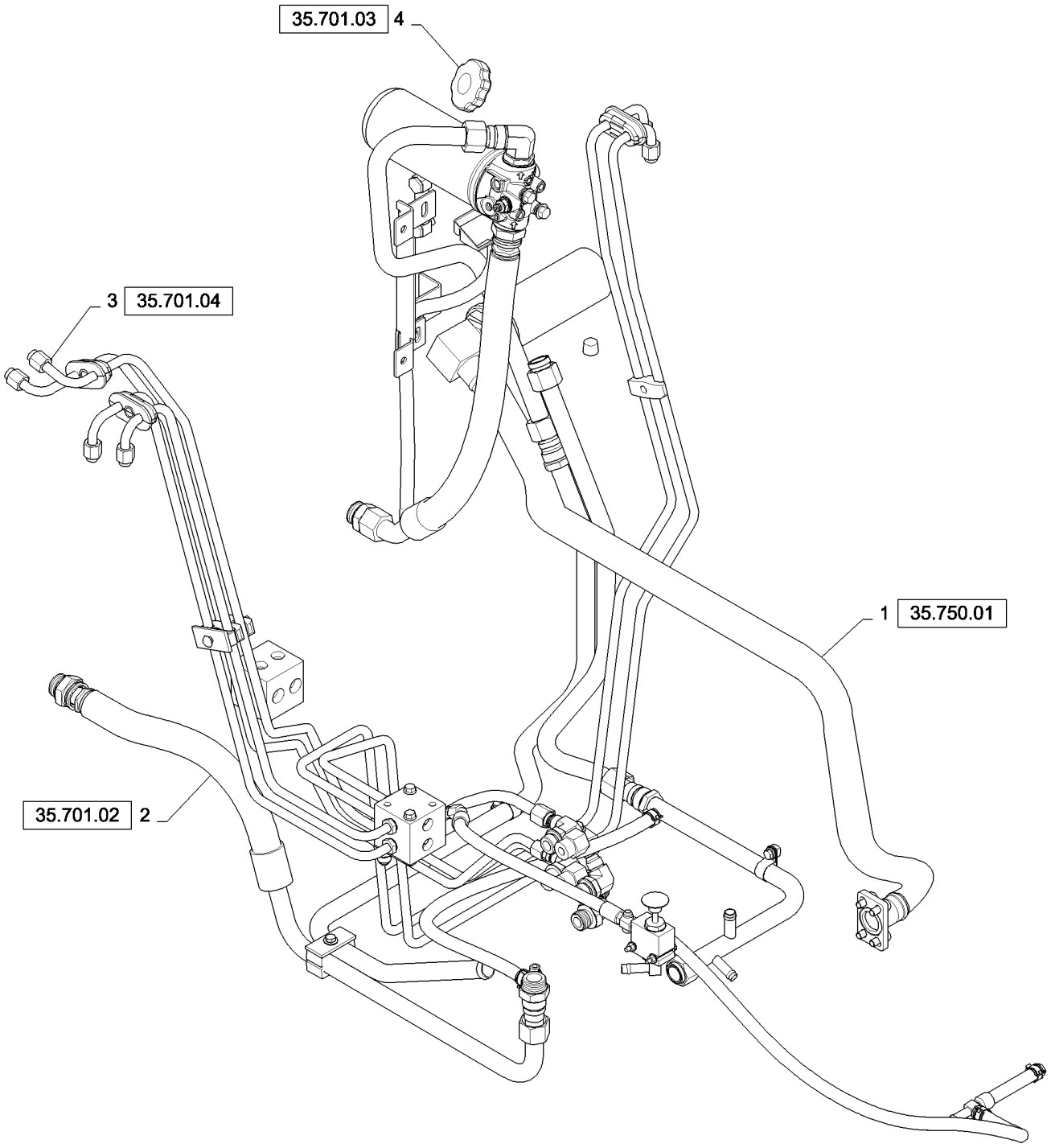

CHASSIS HYDRAULICS (SV185)
CHASSIS HYDRAULICS (SV185)
CHASSIS HYDRAULICS (SV185)
CHASSIS HYDRAULICS (SV185)

R	N	P.N.	MOD	Q	Denominação Description Bezeichnung	Denominacion Beskrivelse	Descrizione Beschrijving	L.C.
1		NSS		1	SEM SERVIÇO EM SEPARADO, Return Plumbing NOT SERVICED SEPARA NON FORUNI SEPAREM	NO SE REPARA POR SE NICHT A SEP ERS-T LIEI SERVICERES IKKE SEPA	NON FORNITO SEPARAT NIET LOS VERKRIJGBAA	064N
2		NSS		1	SEM SERVIÇO EM SEPARADO, Loader Valve Plumbing NOT SERVICED SEPARA NON FORUNI SEPAREM	NO SE REPARA POR SE NICHT A SEP ERS-T LIEI SERVICERES IKKE SEPA	NON FORNITO SEPARAT NIET LOS VERKRIJGBAA	064N
3		NSS		1	SEM SERVIÇO EM SEPARADO, Supply Plumbing NOT SERVICED SEPARA NON FORUNI SEPAREM	NO SE REPARA POR SE NICHT A SEP ERS-T LIEI SERVICERES IKKE SEPA	NON FORNITO SEPARAT NIET LOS VERKRIJGBAA	064N
4		NSS		1	SEM SERVIÇO EM SEPARADO, Hydraulic Tank NOT SERVICED SEPARA NON FORUNI SEPAREM	NO SE REPARA POR SE NICHT A SEP ERS-T LIEI SERVICERES IKKE SEPA	NON FORNITO SEPARAT NIET LOS VERKRIJGBAA	064N

SELF LEVELING - NONE MED LG (SR175-TV380)
SELF LEVELING - NONE MED LG (SR175-TV380)
SELF LEVELING - NONE MED LG (SR175-TV380)
SELF LEVELING - NONE MED LG (SR175-TV380)

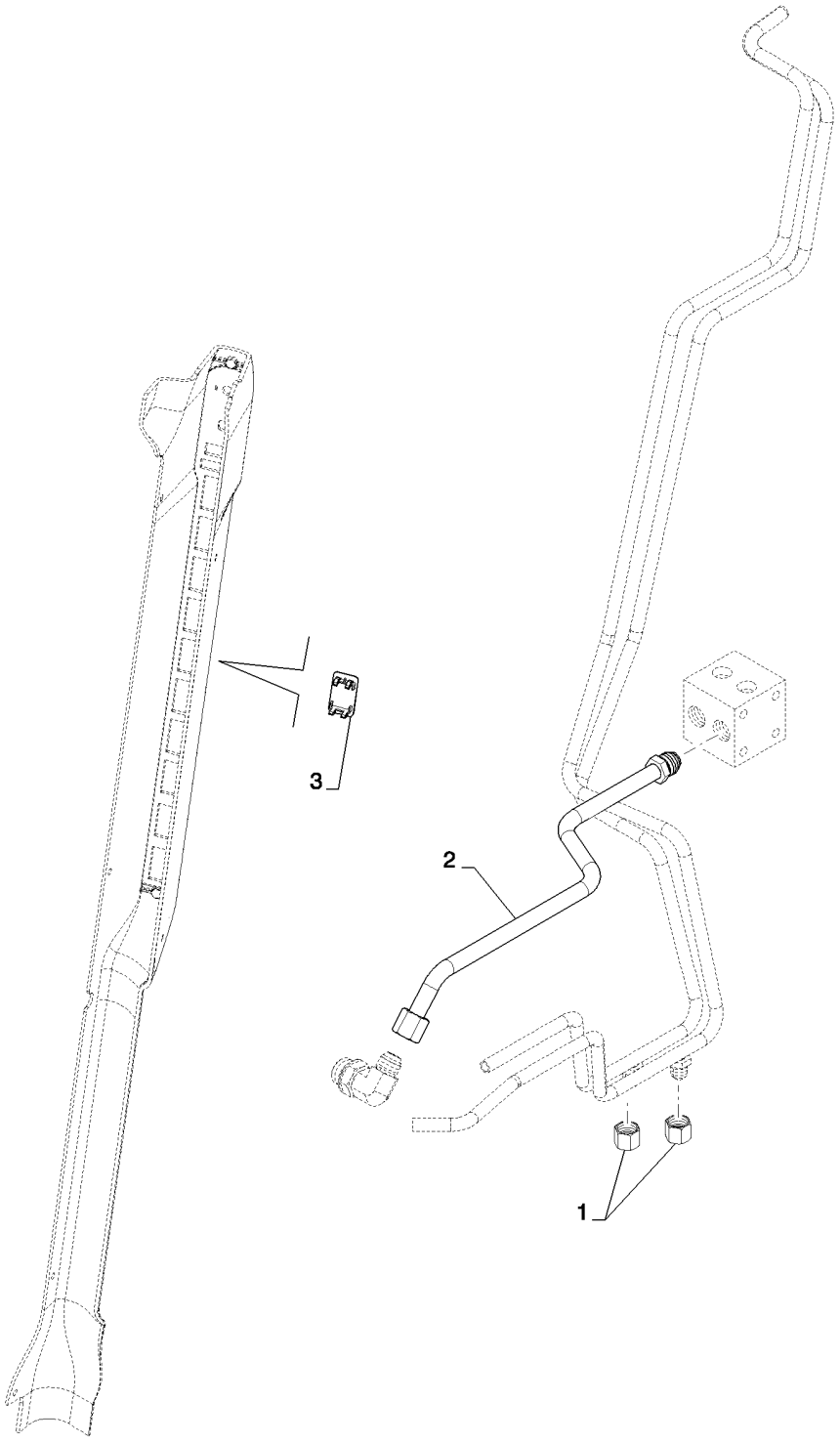

SELF LEVELING - NONE MED LG (SR175-TV380)
SELF LEVELING - NONE MED LG (SR175-TV380)
SELF LEVELING - NONE MED LG (SR175-TV380)
SELF LEVELING - NONE MED LG (SR175-TV380)

R	N	P.N.	MOD	Q	Denominação Description	Description Bezeichnung	Denominacion Beskrivelse	Descrizione Beschrijving	L.C.
1		262159		2	TAMPA, 37º, 3/4"-16 CAPUCHON	CAP KAPPE	TAPÓN TANKDÆKSEL	TAPPO DOP	052T
2		84186149		1	TUBO RÍGIDO, Assembly, Lower, LDR Valve to Manifold TUYAU RIGIDE	RIGID TUBE ROHR	TUBO RÍGIDO STIFT RØR	TUBO RIGIDO VASTE LEIDING	193T
3		126844A1		1	BUJÃO, Cover BOUCHON	PLUG STOPFEN	TAPÓN PROP	TAPPO PLUG	050T

35.102.01		p1	01/11

RIDE CONTROL (SR175-TV380)
RIDE CONTROL (SR175-TV380)
RIDE CONTROL (SR175-TV380)
RIDE CONTROL (SR175-TV380)

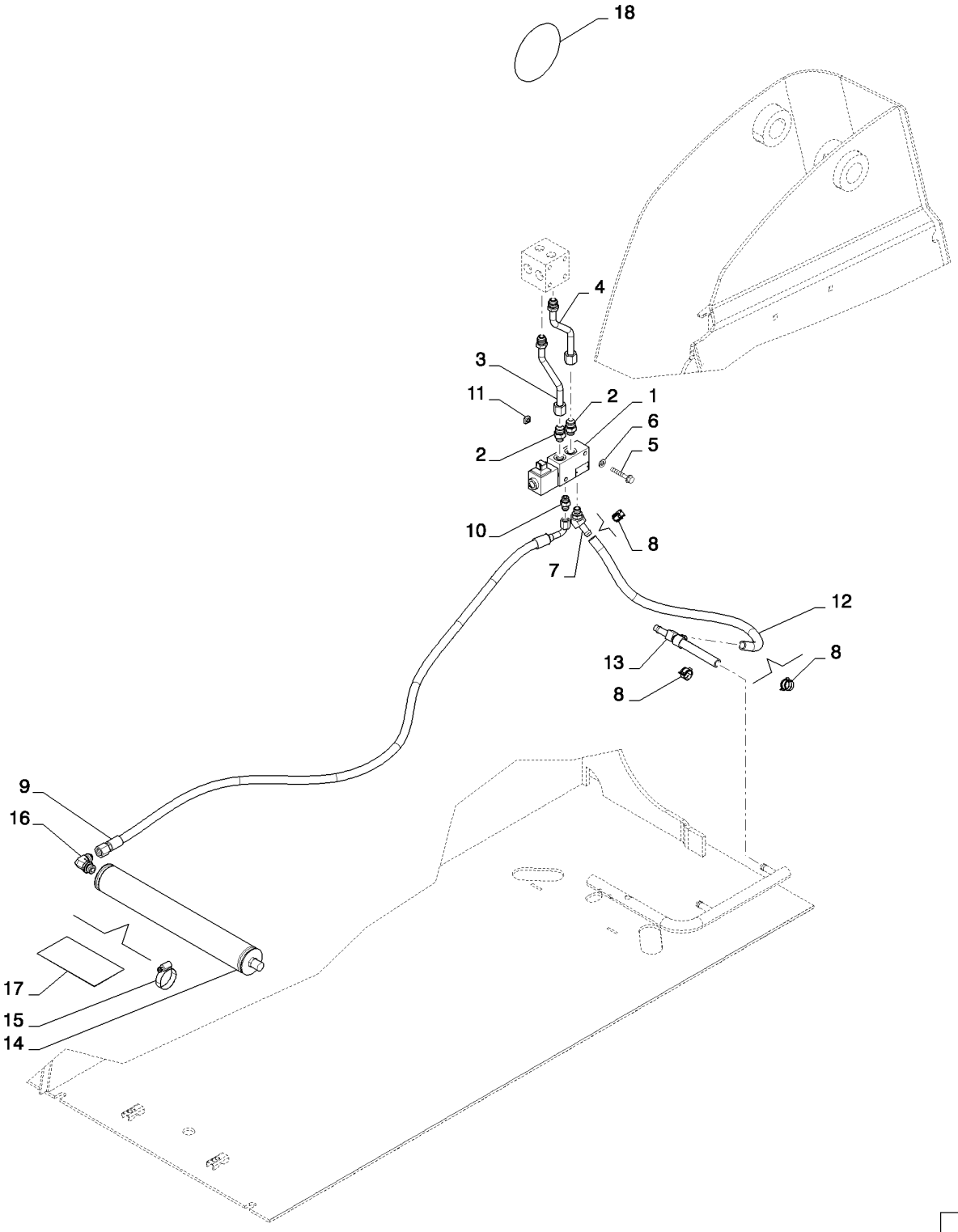

RIDE CONTROL (SR175-TV380)
RIDE CONTROL (SR175-TV380)
RIDE CONTROL (SR175-TV380)
RIDE CONTROL (SR175-TV380)

R	N	P.N.	MOD	Q	Denominação Description Bezeichnung	Description Bezeichnung	Denominacion Beskrivelse	Descrizione Beschrijving	L.C.
1		84256404		1	VÁLVULA HIDRÁULICA, Ride Control				
						HYDRAULIC VALVE	VÁLVULA HIDRÁULICA	DISTRIBUTORE IDRAULI	010V
					SOUPAPE HYDRAULIQU	HYDRAULIKVENTIL	HYDRAULIKVENTIL	HYDRAULISCHE KLEP	
2		86509028		2	CONECTOR HIDRÁUL, 3/4"-16, 37º x 9/16"-18, O-Ring				
						HYD CONNECTOR	CONECTOR HIDRÁULIC	CONNETTORE IDRAULIC	020R
					CONNECTEUR HYDRAU	HYDR STECKVERBINDE	HYDRAULIKSTIK	HYDRAULISCHE AANSLU	
3		84375899		1	TUBO RÍGIDO, Hydraulic, Ride Control to Manifold				
						RIGID TUBE	TUBO RÍGIDO	TUBO RIGIDO	193T
					TUYAU RIGIDE	ROHR	STIFT RØR	VASTE LEIDING	
4		84375901		1	TUBO RÍGIDO, Hydraulic, Ride Control to Manifold				
						RIGID TUBE	TUBO RÍGIDO	TUBO RIGIDO	193T
					TUYAU RIGIDE	ROHR	STIFT RØR	VASTE LEIDING	
5		86511481		2	PARAFUSO, Hex Flg, M8 x 50, 8.8				
						BOLT	PERNO	BULLONE	140B
					VIS	SCHRAUBE	BOLT	BOUT	
6		87655042		2	ARRUELA ESPECIAL, M8, 8.80 X 17.5 X 2.2 HTS				
						SPECIAL WASHER	ARANDELA ESPECIAL	RONDELLA SPECIALE	Z333
					RONDELLE SPECIALE	SPEZIALUNTERLEGSCH	SPECIALSKIVE	SPECIALE RING	
7		87302140		1	CONEXÃO, 45º, 1/2" Hose x 9/16"-18 ORB Beaded				
						FITTING	ACOPLAMIENTO	RACCORDO	3300
					RACCORD	ARMATUR	FITTING	AANSLUITING	
8		87443510		3	BRAÇADEIRA MANGUEIRA, M20				
						HOSE CLAMP	ABRAZADERA DE MANG	FASCETTA STRINGITUB	P729
					COLLIER POUR FLEXIBL	SCHLAUCHSCHELLE	SLANGEKLEMME	SLANGKLEM	
9		84331280		1	MANGUEIRA, Assembly, RC Valve to ACC				
						HOSE	TUBO	TUBO FLESSIBILE	030M
					FLEXIBLE	SCHLAUCH	SLANGE	SLANG	
10		76350		1	CONECTOR HIDRÁUL, 9/16"-18, 37º x 9/16"-18, O-Ring				
						HYD CONNECTOR	CONECTOR HIDRÁULIC	CONNETTORE IDRAULIC	020R
					CONNECTEUR HYDRAU	HYDR STECKVERBINDE	HYDRAULIKSTIK	HYDRAULISCHE AANSLU	
11		229197A1		2	PORCA, Square	NUT	TUERCA	DADO	5780
					ECROU	MUTTER	NUT	NUT	
12		84259548		1	MANGUEIRA, LOL, Ride Control Drain				
						HOSE	TUBO	TUBO FLESSIBILE	030M
					FLEXIBLE	SCHLAUCH	SLANGE	SLANG	
13		84259682		1	CONEXÃO EM T, Assembly, Option				
						UNION TEE	RACOR EN T	RACCORDO A T	A134
					RACCORD EN T	T-VERSCHRAUBUNG	T-FORSKRUNING	KOPPEL-T-STUK	
14		87403797		1	ACUMULADOR, Hydraulic	ACCUMULATOR	ACUMULADOR	ACCUMULATORE	037A
					ACCUMULATEUR	DRUCKSPEICHER	AKKUMULATOR	ACCUMULATOR	
15		86624194		2	BRAÇADEIRA MANGUEIRA, #36, 1.81/2.75 Type F Worm				
						HOSE CLAMP	ABRAZADERA DE MANG	FASCETTA STRINGITUB	P729
					COLLIER POUR FLEXIBL	SCHLAUCHSCHELLE	SLANGEKLEMME	SLANGKLEM	
16		128830		1	COTOVELO, 90º, 3/4"-16, 37º x 3/4"-16, O-Ring				
						ELBOW	CODO	GOMITO	085G
					COUDE	KNIESTÜCK	VINKELRØR	KNIESTUK	

35.102.01		p2	01/11

RIDE CONTROL (SR175-TV380)
RIDE CONTROL (SR175-TV380)
RIDE CONTROL (SR175-TV380)
RIDE CONTROL (SR175-TV380)

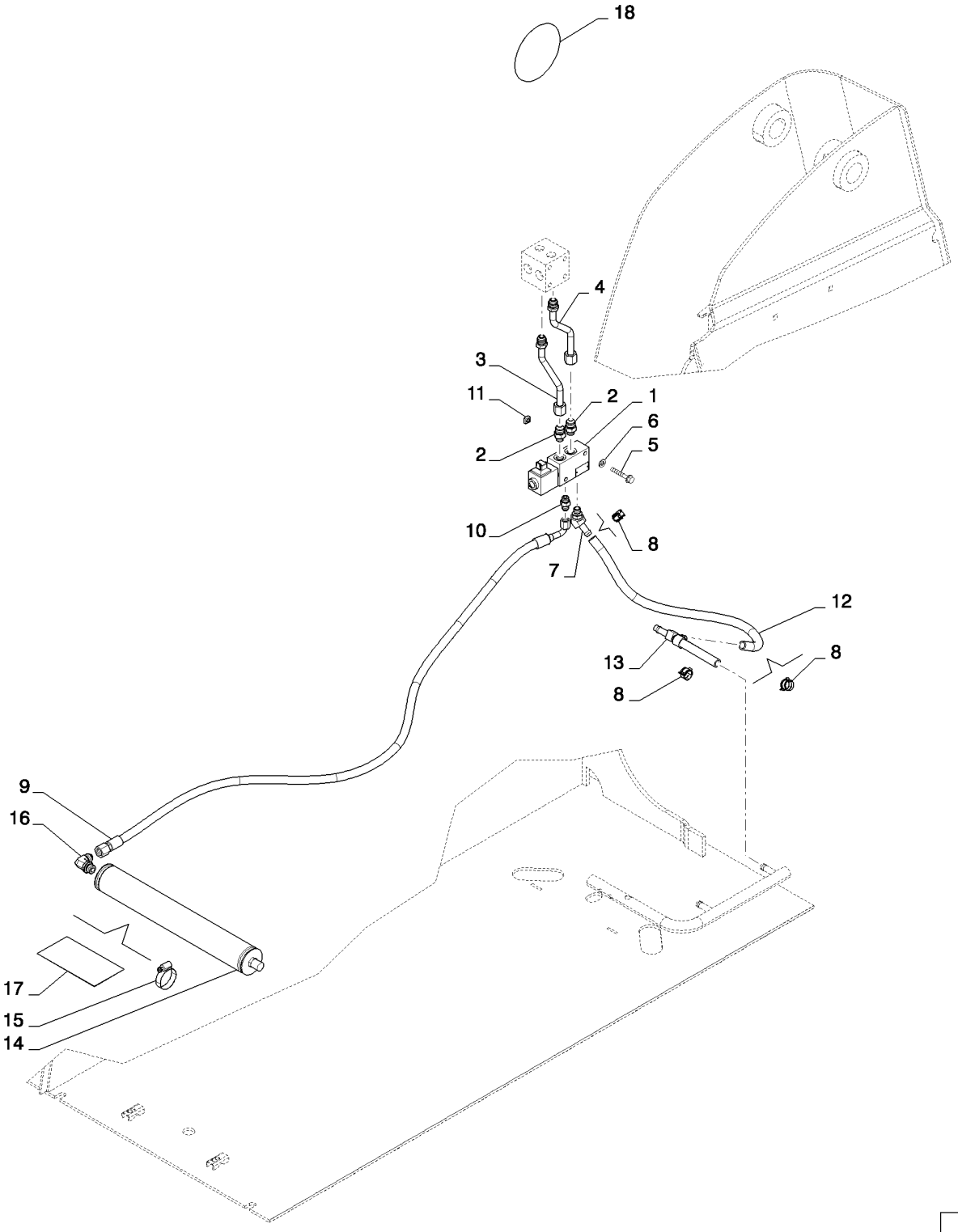

RIDE CONTROL (SR175-TV380)
RIDE CONTROL (SR175-TV380)
RIDE CONTROL (SR175-TV380)
RIDE CONTROL (SR175-TV380)

R	N	P.N.	MOD	Q	Denominação Description Bezeichnung Denominacion Beskrivelse Descrizione Beschrijving	L.C.
17		**328903A1**		1	DECALCOMANIA, Warning - Pressurized System DECAL CALCOMANIA AUTOADESIVO DECALCOMANIE ABZIEHBILD DECAL DECAL	P903
18		**304083A1**		2	DECALCOMANIA, Ride Control Option DECAL CALCOMANIA AUTOADESIVO DECALCOMANIE ABZIEHBILD DECAL DECAL	P903

RIDE CONTROL - NONE (SR175-TV380)
RIDE CONTROL - NONE (SR175-TV380)
RIDE CONTROL - NONE (SR175-TV380)
RIDE CONTROL - NONE (SR175-TV380)

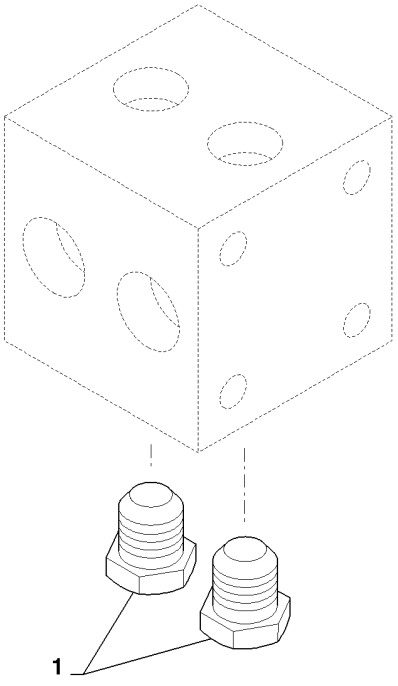

RIDE CONTROL - NONE (SR175-TV380)
RIDE CONTROL - NONE (SR175-TV380)
RIDE CONTROL - NONE (SR175-TV380)
RIDE CONTROL - NONE (SR175-TV380)

R	N	P.N.	MOD	Q	Denominação Description	Description Bezeichnung	Denominacion Beskrivelse	Descrizione Beschrijving	L.C.
1		86511868		2	BUJÃO, 3/4"-16, 37° BOUCHON	PLUG STOPFEN	TAPÓN PROP	TAPPO PLUG	050T

35.204.01		p1	03/11

MANUAL COUPLER, TAN (SR175-TV380)
MANUAL COUPLER, TAN (SR175-TV380)
MANUAL COUPLER, TAN (SR175-TV380)
MANUAL COUPLER, TAN (SR175-TV380)

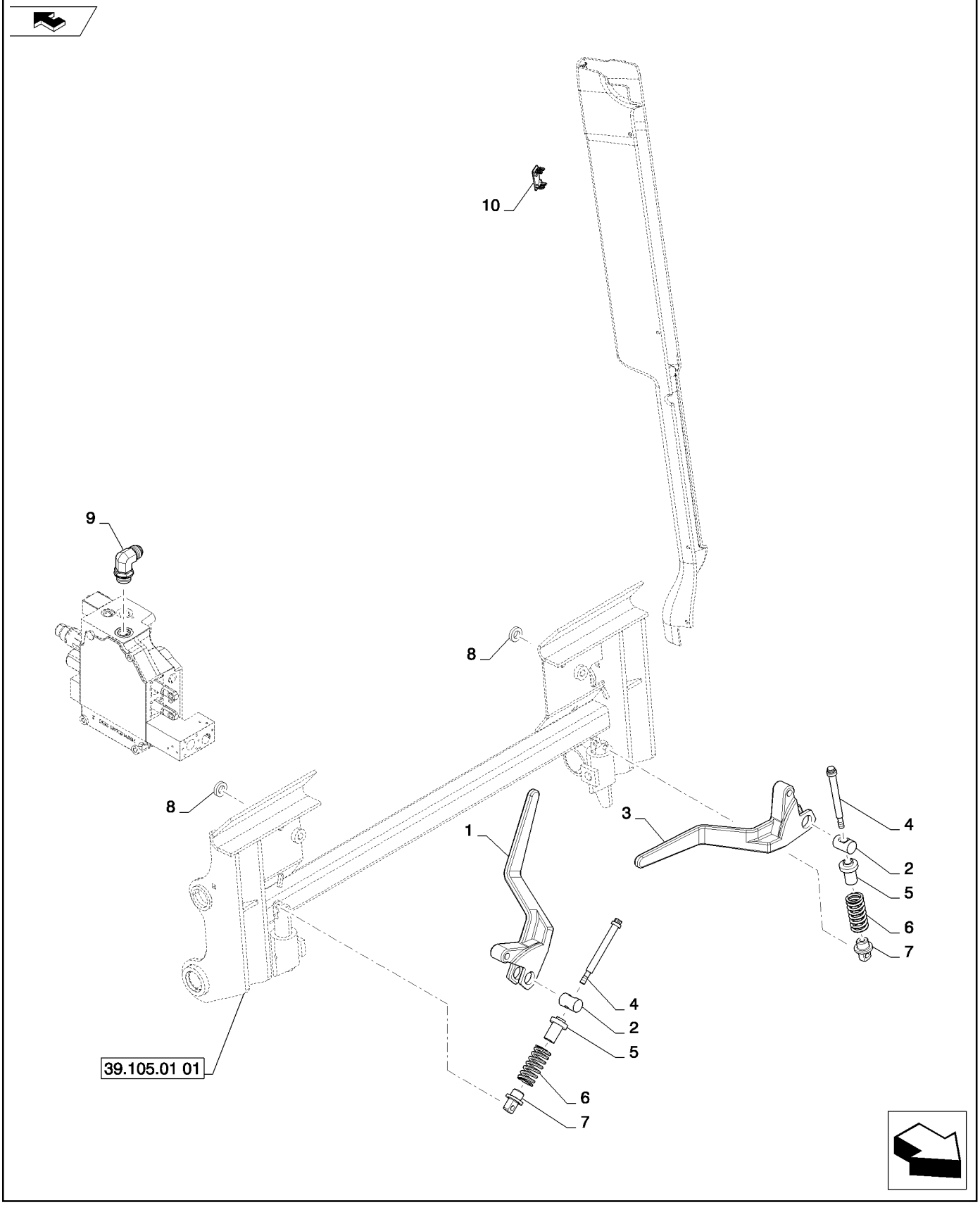

MANUAL COUPLER, TAN (SR175-TV380)
MANUAL COUPLER, TAN (SR175-TV380)
MANUAL COUPLER, TAN (SR175-TV380)
MANUAL COUPLER, TAN (SR175-TV380)

R	N	P.N.	MOD	Q	Denominação Description	Description Bezeichnung	Denominacion Beskrivelse	Descrizione Beschrijving	L.C.
1		86633196		1	MANILHA, RH Painted, CE Gray				
						HANDLE	MANECILLA	MANIGLIA	020M
					POIGNEE	GRIFF	HÅNDTAG	HENDEL	
2		9829733		2	PINO	PIN	PASADOR	PERNO	080P
					BROCHE	PIN	STIFT	PEN	
3		86633195		1	MANILHA, LH Painted, CE Gray				
						HANDLE	MANECILLA	MANIGLIA	020M
					POIGNEE	GRIFF	HÅNDTAG	HENDEL	
4		87533223		2	PINO, 12PT, 1/2in Shank, 3/8in Thread				
						PIN	PASADOR	PERNO	080P
					BROCHE	PIN	STIFT	PEN	
5		86610166		2	GUIA	GUIDE	GUÍA	GUIDA	145G
					GUIDE	FÜHRUNG	STYR	GELEIDER	
6		84218843		2	MOLA DE COMPRESSÃO	COMPRESSION SPRING	RESORTE DE COMPRES	MOLLA A COMPRESSION	Z641
					RESSORT DE COMPRES	DRUCKFEDER	TRYKFJEDER	COMPRESSIEVEER	
7		87579303		2	PINO, NH	PIN	PASADOR	PERNO	080P
					BROCHE	PIN	STIFT	PEN	
8		87655046		2	ARRUELA ESPECIAL, M10, 10.65 X 23.0 X 2.2MM HTS				
						SPECIAL WASHER	ARANDELA ESPECIAL	RONDELLA SPECIALE	Z333
					RONDELLE SPECIALE	SPEZIALUNTERLEGSCH	SPECIALSKIVE	SPECIALE RING	
9		322894		1	COTOVELO, 90º, 1 1/16"-12, 37º x 1 1/16"-12, O-Ring				
						ELBOW	CODO	GOMITO	085G
					COUDE	KNIESTÜCK	VINKELRØR	KNIESTUK	
10		126844A1		1	BUJÃO, Cover	PLUG	TAPÓN	TAPPO	050T
					BOUCHON	STOPFEN	PROP	PLUG	
11		87412041		2	ESPAÇADOR, Bushing (Not Shown)				
						SPACER	SEPARADOR	DISTANZIALE	075D
					ENTRETOISE	DISTANZSTÜCK	AFSTANDSSTYKKE	AFSTANDSSTUK	

35.204.02	01	p1	02/11

HYDRAULIC COUPLER (SV185)
HYDRAULIC COUPLER (SV185)
HYDRAULIC COUPLER (SV185)
HYDRAULIC COUPLER (SV185)

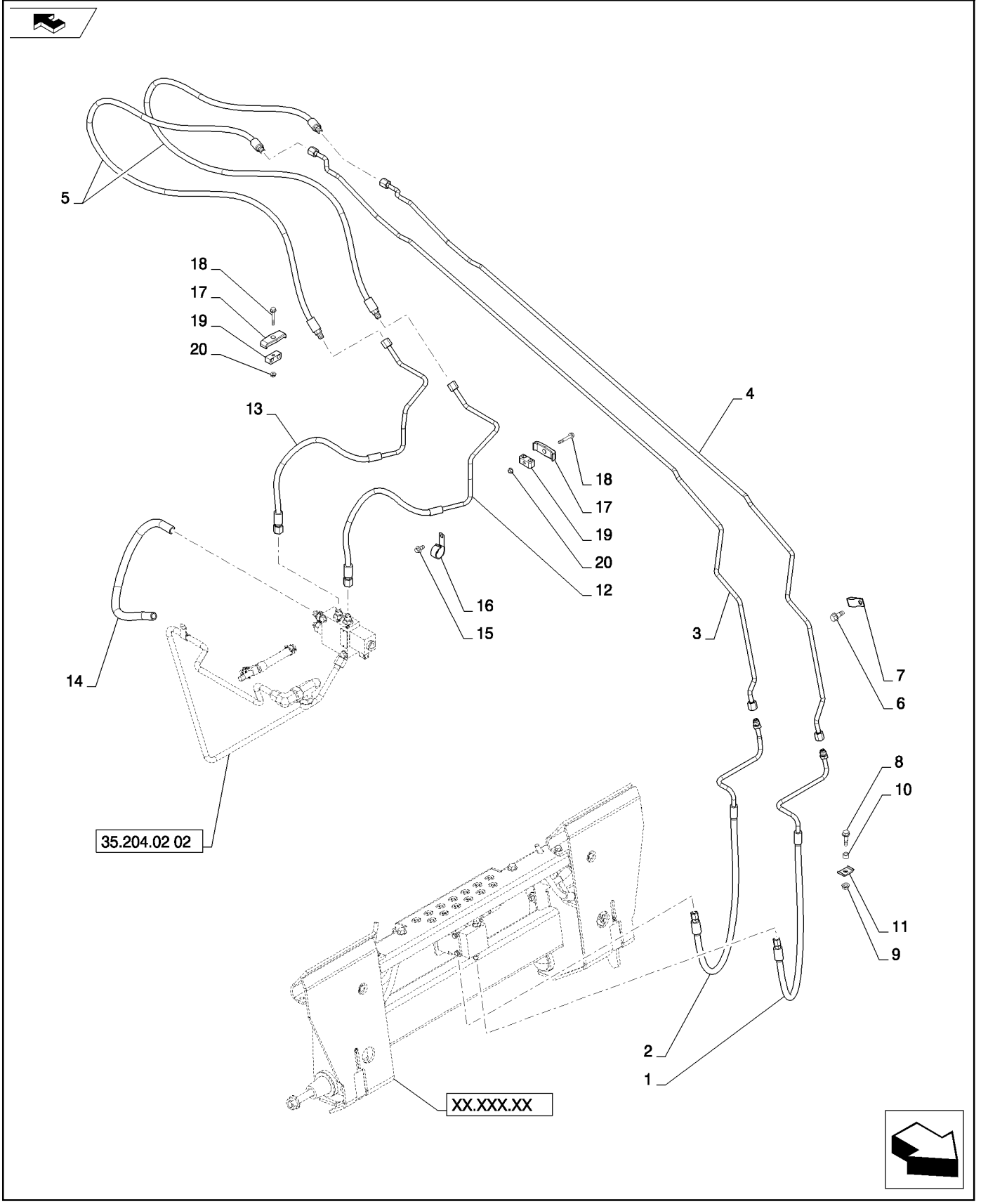

HYDRAULIC COUPLER (SV185)
HYDRAULIC COUPLER (SV185)
HYDRAULIC COUPLER (SV185)
HYDRAULIC COUPLER (SV185)

R	N	P.N.	MOD	Q	Denominação Description	Description Bezeichnung	Denominacion Beskrivelse	Descrizione Beschrijving	L.C.
1		84351545		1	TUBO HIDRÁULICO, Assembly, Step to Coupler				
						HYD. TUBE	TUBO HIDRÁULICO	TUBO IDRAULICO	190T
					TUYAU HYDRAULIQUE	HYDRAULIKLEITUNG	HYD. RØR	HYDRAULISCHE LEIDIN(	
2		84351547		1	TUBO HIDRÁULICO, Assembly, Step to Coupler				
						HYD. TUBE	TUBO HIDRÁULICO	TUBO IDRAULICO	190T
					TUYAU HYDRAULIQUE	HYDRAULIKLEITUNG	HYD. RØR	HYDRAULISCHE LEIDIN(	
3		84396808		1	TUBO HIDRÁULICO, Assembly, Coupler				
						HYD. TUBE	TUBO HIDRÁULICO	TUBO IDRAULICO	190T
					TUYAU HYDRAULIQUE	HYDRAULIKLEITUNG	HYD. RØR	HYDRAULISCHE LEIDIN(	
4		84396810		1	TUBO HIDRÁULICO, Assembly, Coupler				
						HYD. TUBE	TUBO HIDRÁULICO	TUBO IDRAULICO	190T
					TUYAU HYDRAULIQUE	HYDRAULIKLEITUNG	HYD. RØR	HYDRAULISCHE LEIDIN(	
5		84284644		2	CONJ. MANGUEIRA, Hydraulic Coupler				
						HOSE ASSY.	CONJUNTO DE TUBOS	COMPLESS. TUBO FLES	P457
					ENSEMBLE DE FLEXIBL	SCHLAUCHBAUGRUPPE	SLANGEENHED	SLANGEENHEID	
6		280476		1	PARAFUSO, Hex Wash Hd, 3/8" x 1"				
						SELF-TAP SCREW	TORNILLO AUTORROSC	VITE AUTOFILETTANTE	062V
					VIS AUTOTARAUDEUSE	SELBSTSCHN SCHRAUE	SELVLÅSENDE BOLT	ZELFTAPPENDE SCHRO	
7		605025		1	BRAÇADEIRA	CLAMP	ABRAZADERA	MORSETTO	120M
					COLLIER	KLEMME	SPÆNDEBÅND	KLEM	
8		9804260		1	PARAFUSO, Hex Flg, M8 x 30, 8.8, Full Thd				
						BOLT	PERNO	BULLONE	140B
					VIS	SCHRAUBE	BOLT	BOUT	
9		9804277		1	PORCA, M8 x 1.25, Flg, Cl 8				
						NUT	TUERCA	DADO	010D
					ECROU	MUTTER	MØTRIK	MOER	
10		87342191		1	ARRUELA PLANA, Spacer	WASHER	ARANDELA	RONDELLA	131R
					RONDELLE	UNTERLEGSCHEIBE	FLADSKIVE	SLUITRING	
11		84254052		1	BRAÇADEIRA MANGUEIRA, Tube				
						HOSE CLAMP	ABRAZADERA DE MANG	FASCETTA STRINGITUB	P729
					COLLIER POUR FLEXIBL	SCHLAUCHSCHELLE	SLANGEKLEMME	SLANGKLEM	
12		84281774		1	TUBO HIDRÁULICO, Assembly, Coupler				
						HYD. TUBE	TUBO HIDRÁULICO	TUBO IDRAULICO	190T
					TUYAU HYDRAULIQUE	HYDRAULIKLEITUNG	HYD. RØR	HYDRAULISCHE LEIDIN(	
13		84281772		1	TUBO HIDRÁULICO, Assembly, Coupler				
						HYD. TUBE	TUBO HIDRÁULICO	TUBO IDRAULICO	190T
					TUYAU HYDRAULIQUE	HYDRAULIKLEITUNG	HYD. RØR	HYDRAULISCHE LEIDIN(	
14		84292314		1	MANGUEIRA, Hydraulic Coupler - Drain				
						HOSE	TUBO	TUBO FLESSIBILE	030M
					FLEXIBLE	SCHLAUCH	SLANGE	SLANG	
15		87752074		1	PARAFUSO, Tapping, M8 X 15 HW HD TT				
						SCREW	TORNILLO	VITE	040V
					VIS	SCHRAUBE	SKRUE	SCHROEF	
16		87313351		1	GRAMPO, J, 25.4MM ZND M8 Bolt				
						CLIP	ABRAZADERA	FERMO	045F
					COLLIER	KLAMMER	KLIPS	KLEM	
17		D120614		2	BRACADEIRA	CLAMP	COLLAR	MORSETTO	1640
					COLLIER	SCHELLE	CLAMP	CLAMP	

SV185

35.204.02	01	p2	02/11

HYDRAULIC COUPLER (SV185)
HYDRAULIC COUPLER (SV185)
HYDRAULIC COUPLER (SV185)
HYDRAULIC COUPLER (SV185)

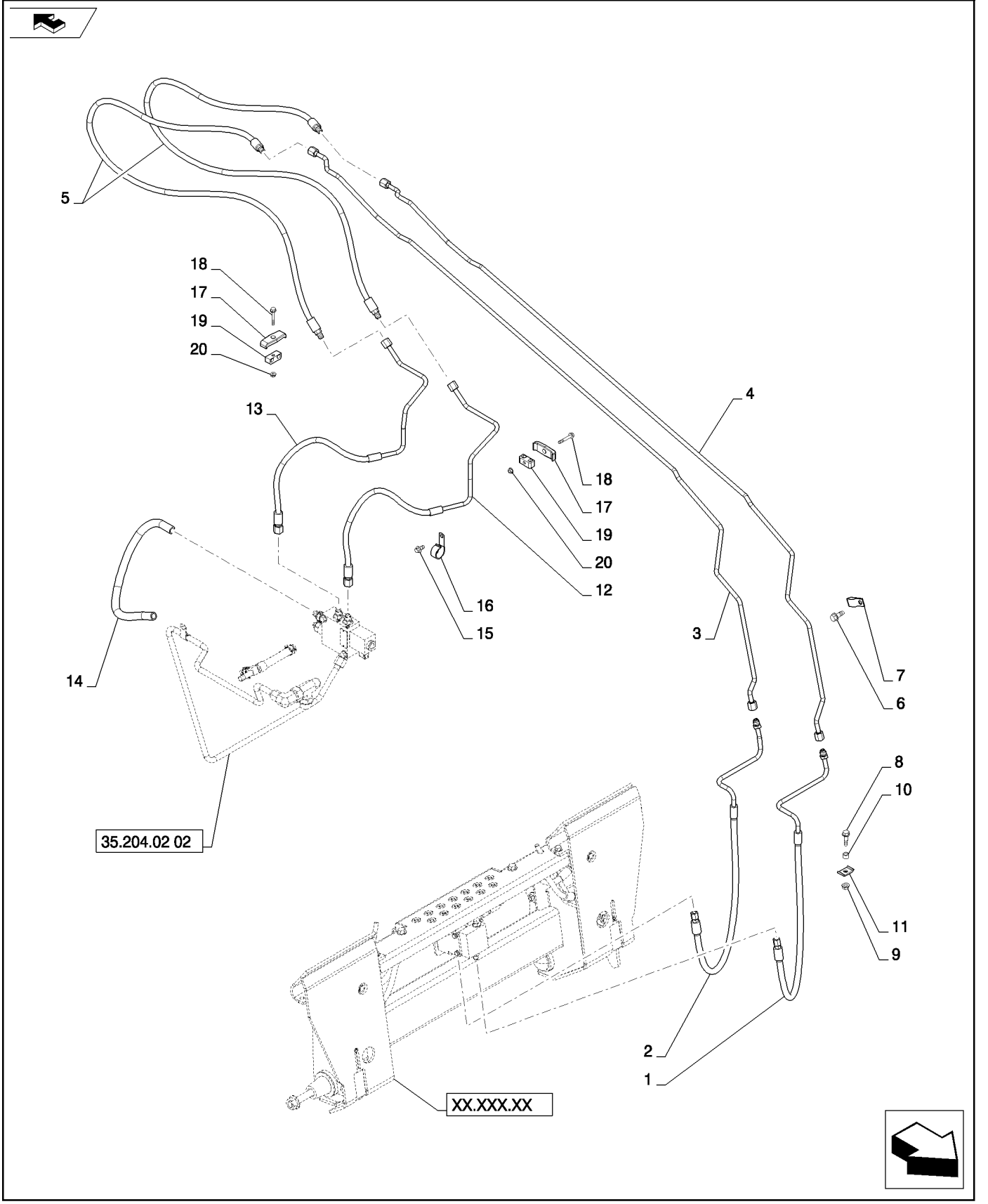

HYDRAULIC COUPLER (SV185)
HYDRAULIC COUPLER (SV185)
HYDRAULIC COUPLER (SV185)
HYDRAULIC COUPLER (SV185)

R	N	P.N.	MOD	Q	Denominação Description	Description Bezeichnung	Denominacion Beskrivelse	Descrizione Beschrijving	L.C.
18		**86511840**		2	PARAFUSO, Hex Flg, M6 x 40, 8.8				
					BOLT	PERNO	BULLONE		140B
					VIS	SCHRAUBE	BOLT	BOUT	
19		**604896**		2	BRAÇADEIRA	CLAMP	ABRAZADERA	MORSETTO	120M
					COLLIER	KLEMME	SPÆNDEBÅND	KLEM	
20		**9804276**		2	PORCA, M6 x 1, Flg, Cl 8	NUT	TUERCA	DADO	010D
					ECROU	MUTTER	MØTRIK	MOER	

35.204.02	01	p1	05/11

HYDRAULIC COUPLER - CHASSIS PLUMBING (SV185,SV250,SV300,TV380)
HYDRAULIC COUPLER - CHASSIS PLUMBING (SV185,SV250,SV300,TV380)
HYDRAULIC COUPLER - CHASSIS PLUMBING (SV185,SV250,SV300,TV380)
HYDRAULIC COUPLER - CHASSIS PLUMBING (SV185,SV250,SV300,TV380)

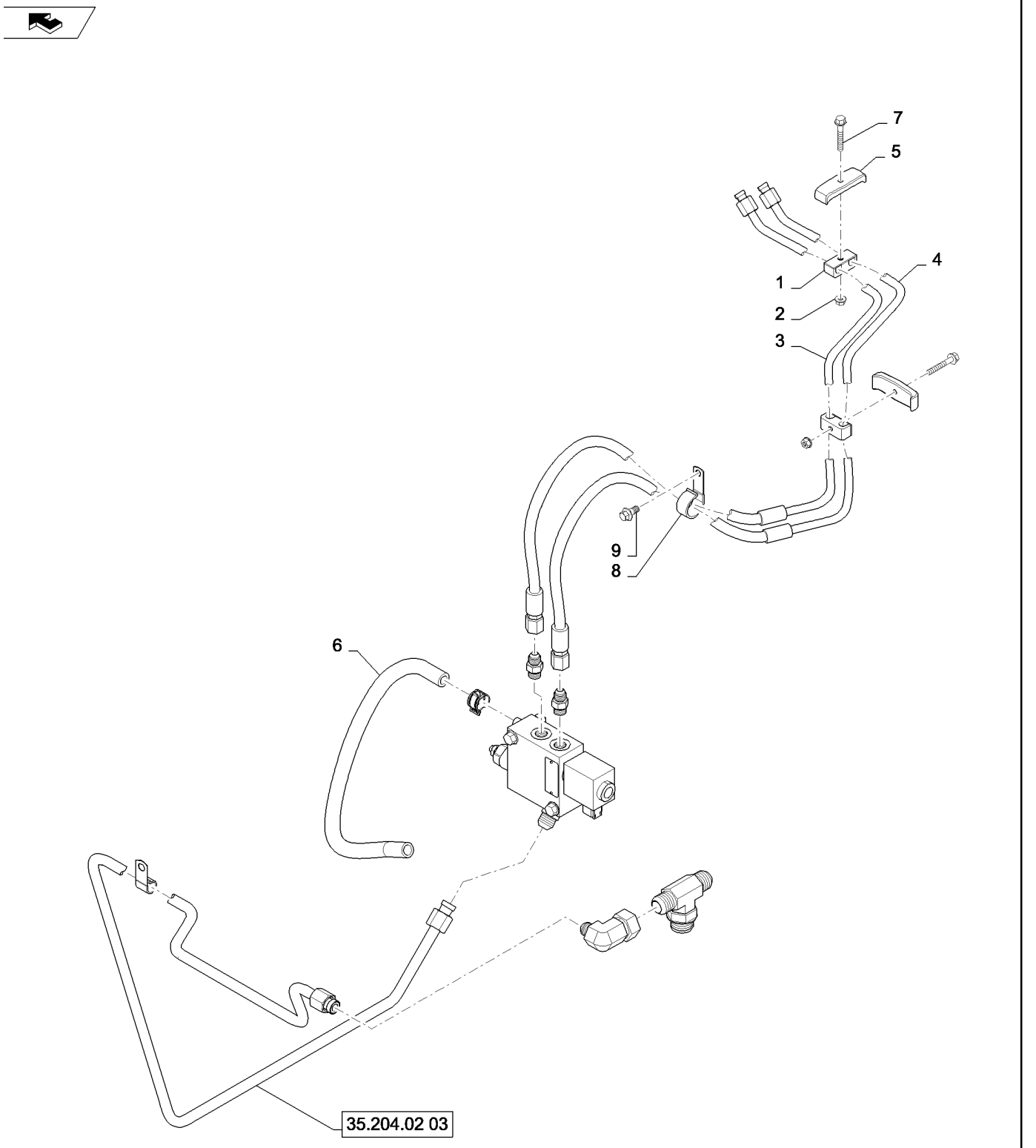

HYDRAULIC COUPLER - CHASSIS PLUMBING (SV185,SV250,SV300,TV380)
HYDRAULIC COUPLER - CHASSIS PLUMBING (SV185,SV250,SV300,TV380)
HYDRAULIC COUPLER - CHASSIS PLUMBING (SV185,SV250,SV300,TV380)
HYDRAULIC COUPLER - CHASSIS PLUMBING (SV185,SV250,SV300,TV380)

R	N	P.N.	MOD	Q	Denominação Description	Description Bezeichnung	Denominacion Beskrivelse	Descrizione Beschrijving	L.C.
1		604896		2	BRAÇADEIRA, Double COLLIER	CLAMP KLEMME	ABRAZADERA SPÆNDEBÅND	MORSETTO KLEM	120M
2		9804276		2	PORCA, M6 x 1, Flg, Cl 8 ECROU	NUT MUTTER	TUERCA MØTRIK	DADO MOER	010D
3		84281772		1	TUBO HIDRÁULICO, Assembly, Hydraulic Coupler TUYAU HYDRAULIQUE	HYD. TUBE HYDRAULIKLEITUNG	TUBO HIDRÁULICO HYD. RØR	TUBO IDRAULICO HYDRAULISCHE LEIDIN(	190T
4		84281774		1	TUBO HIDRÁULICO, Assembly, Hydraulic Coupler TUYAU HYDRAULIQUE	HYD. TUBE HYDRAULIKLEITUNG	TUBO HIDRÁULICO HYD. RØR	TUBO IDRAULICO HYDRAULISCHE LEIDIN(	190T
5		D120614		2	BRACADEIRA, Tube COLLIER	CLAMP SCHELLE	COLLAR CLAMP	MORSETTO CLAMP	1640
6		84292314		1	MANGUEIRA, Hydraulic Coupler, Drain FLEXIBLE	HOSE SCHLAUCH	TUBO SLANGE	TUBO FLESSIBILE SLANG	030M
7		86511840		2	PARAFUSO, Hex Flg, M6 x 40, 8.8 VIS	BOLT SCHRAUBE	PERNO BOLT	BULLONE BOUT	140B
8		87313351		1	GRAMPO, 25.4mm "J" Insulated 5/16 Bolt COLLIER	CLIP KLAMMER	ABRAZADERA KLIPS	FERMO KLEM	045F
9		87752074		1	PARAFUSO, M8 X 16 VIS	SCREW SCHRAUBE	TORNILLO SKRUE	VITE SCHROEF	040V

35.204.02	02	p1	02/11

HYDRAULIC COUPLER - BASIC GRAY (SR175-TV380)
HYDRAULIC COUPLER - BASIC GRAY (SR175-TV380)
HYDRAULIC COUPLER - BASIC GRAY (SR175-TV380)
HYDRAULIC COUPLER - BASIC GRAY (SR175-TV380)

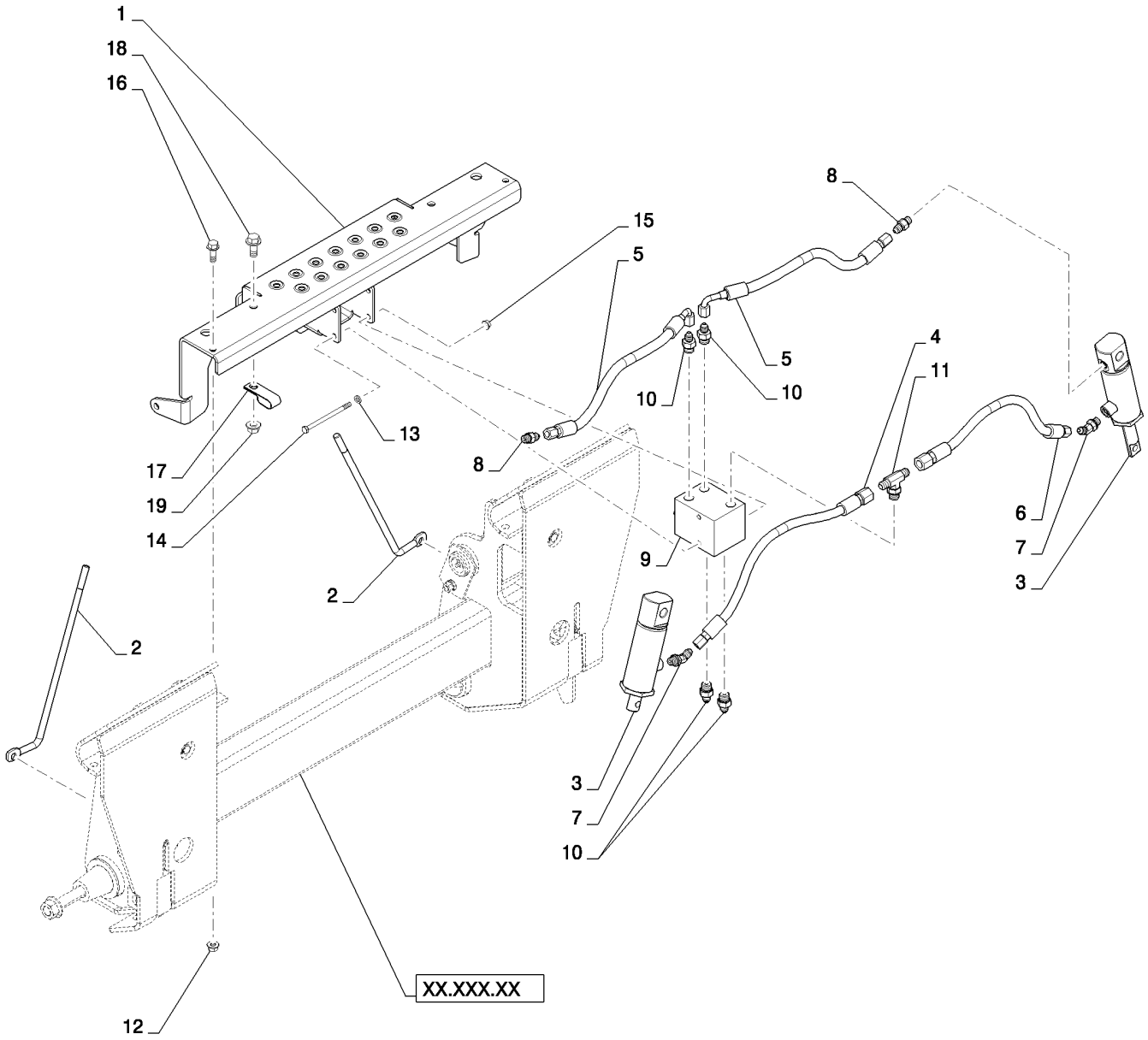

HYDRAULIC COUPLER - BASIC GRAY (SR175-TV380)
HYDRAULIC COUPLER - BASIC GRAY (SR175-TV380)
HYDRAULIC COUPLER - BASIC GRAY (SR175-TV380)
HYDRAULIC COUPLER - BASIC GRAY (SR175-TV380)

R	N	P.N.	MOD	Q	Denominação Description	Description Bezeichnung	Denominacion Beskrivelse	Descrizione Beschrijving	L.C.
1		84339847		1	ESTRIBO, Hydraulic Coupler, Gray				
						STEP	PELDAÑO	GRADINO	116M
					MARCHE-PIED	SCHRITT	TRINPLADE	TREDE	
2		84387739		2	HASTE, Hydraulic Coupler Position Indicator				
						ROD	VARILLA	ASTA	090A
					TIGE	STANGE	STANG	STANG	
1		84339845		1	ESTRIBO, Hydraulic Coupler, Power Tan				
						STEP	PELDAÑO	GRADINO	116M
					MARCHE-PIED	SCHRITT	TRINPLADE	TREDE	
3		87442337		2	CILINDRO, Hydraulic Coupler				
						CYLINDER	CILINDRO	CILINDRO	2480
					CYLINDRE	ZYLINDER	CYLINDER	CYLINDER	
4		84345506		1	MANGUEIRA, Coupler Cylinder				
						HOSE	TUBO	TUBO FLESSIBILE	030M
					FLEXIBLE	SCHLAUCH	SLANGE	SLANG	
5		84345496		2	MANGUEIRA, Coupler Cylinder				
						HOSE	TUBO	TUBO FLESSIBILE	030M
					FLEXIBLE	SCHLAUCH	SLANGE	SLANG	
6		84345532		1	MANGUEIRA, Coupler Cylinder				
						HOSE	TUBO	TUBO FLESSIBILE	030M
					FLEXIBLE	SCHLAUCH	SLANGE	SLANG	
7		86512993		2	COTOVELO, 45º, 7/16"-20, 37º x 7/16"-20, O-Ring				
						ELBOW	CODO	GOMITO	085G
					COUDE	KNIESTÜCK	VINKELRØR	KNIESTUK	
8		265235		2	CONECTOR HIDRÁUL, 7/16"-20, 37º x 7/16"-20, O-Ring				
						HYD CONNECTOR	CONECTOR HIDRÁULIC	CONNETTORE IDRAULIC	020R
					CONNECTEUR HYDRAU	HYDR STECKVERBINDE	HYDRAULIKSTIK	HYDRAULISCHE AANSLI	
9		294741A1		1	VÁLVULA CHECAGEM	CHECK VALVE	VÁLVULA DE COMPROB.	VALVOLA DI RITEGNO	P394
					CLAPET ANTI-RETOUR	RÜCKSCHLAGVENTIL	KONTRAVENTIL	TERUGSLAGKLEP	
10		139398		4	CONECTOR HIDRÁUL, 7/16"-20, 37º x 9/16"-18, O-Ring				
						HYD CONNECTOR	CONECTOR HIDRÁULIC	CONNETTORE IDRAULIC	020R
					CONNECTEUR HYDRAU	HYDR STECKVERBINDE	HYDRAULIKSTIK	HYDRAULISCHE AANSLI	
11		163335		1	T, 9/16"-18, 37º x 9/16"-18, O-Ring Br				
						TEE	RACOR EN T	PEZZO A T	9020
					RACCORD EN T	T-STÜCK	T-STYKKE	T-STUK	
12		9804277		2	PORCA, M8 x 1.25, Flg, Cl 8				
						NUT	TUERCA	DADO	010D
					ECROU	MUTTER	MØTRIK	MOER	
13		86588450		2	ARRUELA PLANA, M6 x 12 x 1.6 Thk				
						WASHER	ARANDELA	RONDELLA	131R
					RONDELLE	UNTERLEGSCHEIBE	FLADSKIVE	SLUITRING	
14		9850685		2	PARAFUSO, Hex, M6 x 90, 8.8				
						BOLT	PERNO	BULLONE	140B
					VIS	SCHRAUBE	BOLT	BOUT	
15		9804276		2	PORCA, M6 x 1, Flg, Cl 8	NUT	TUERCA	DADO	010D
					ECROU	MUTTER	MØTRIK	MOER	
16		9671714		2	PARAFUSO, Hex Flg, M8 x 25, 8.8				
						BOLT	PERNO	BULLONE	140B
					VIS	SCHRAUBE	BOLT	BOUT	

SV185

35.204.02	02	p2	02/11

HYDRAULIC COUPLER - BASIC GRAY (SR175-TV380)
HYDRAULIC COUPLER - BASIC GRAY (SR175-TV380)
HYDRAULIC COUPLER - BASIC GRAY (SR175-TV380)
HYDRAULIC COUPLER - BASIC GRAY (SR175-TV380)

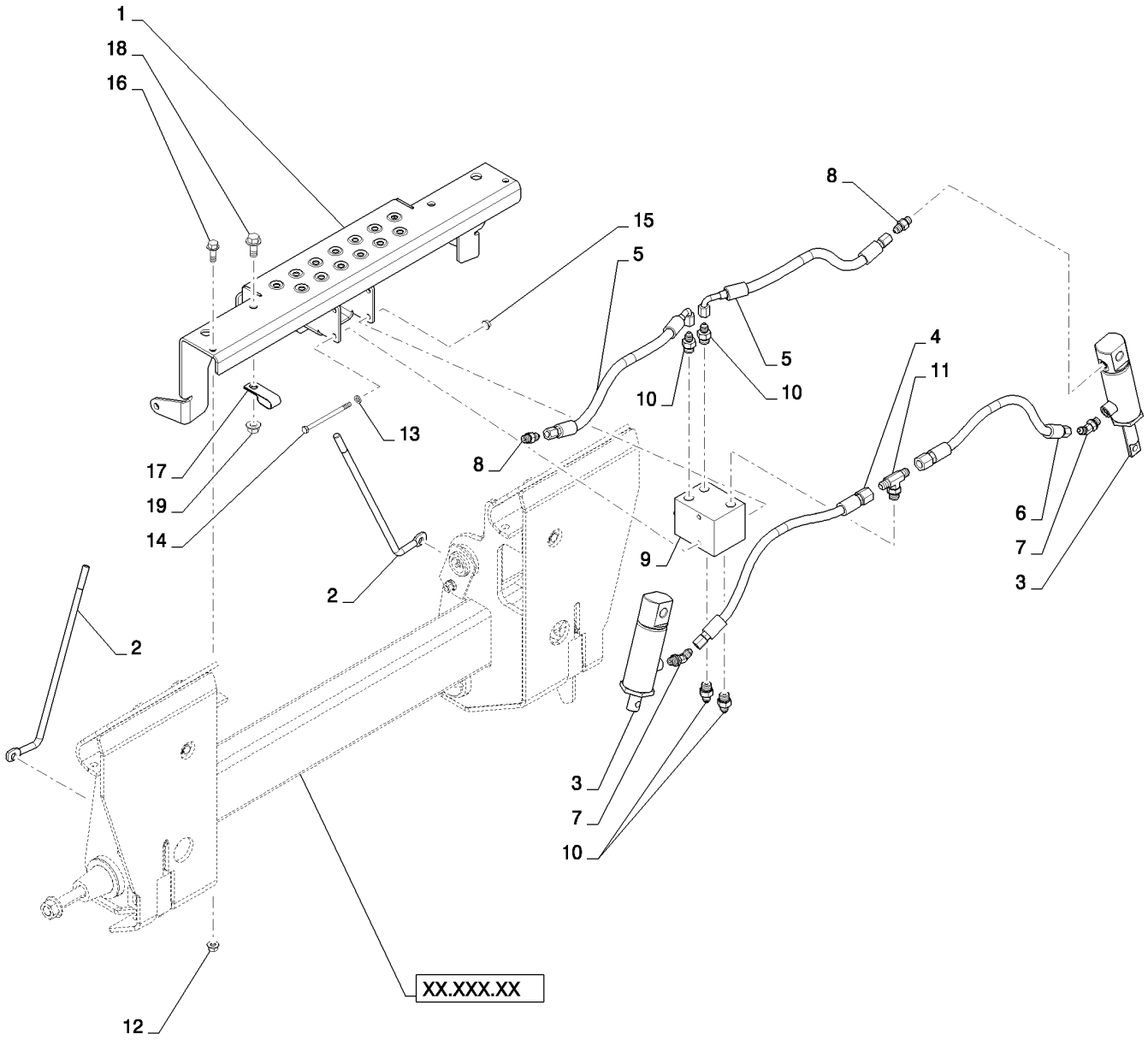

HYDRAULIC COUPLER - BASIC GRAY (SR175-TV380)
HYDRAULIC COUPLER - BASIC GRAY (SR175-TV380)
HYDRAULIC COUPLER - BASIC GRAY (SR175-TV380)
HYDRAULIC COUPLER - BASIC GRAY (SR175-TV380)

R	N	P.N.	MOD	Q	Denominação Description	Description Bezeichnung	Denominacion Beskrivelse	Descrizione Beschrijving	L.C.
17		**577927**		2	BRAÇADEIRA	CLAMP	ABRAZADERA	MORSETTO	120M
					COLLIER	KLEMME	SPÆNDEBÅND	KLEM	
18		**9804261**		2	PARAFUSO, Hex Flg, M10 x 25, 8.8				
						BOLT	PERNO	BULLONE	140B
					VIS	SCHRAUBE	BOLT	BOUT	
19		**9804278**		2	PORCA, M10 x 1.5, Flg, Cl 8				
						NUT	TUERCA	DADO	010D
					ECROU	MUTTER	MØTRIK	MOER	

35.204.02	03	p1	02/11

HYDRAULIC COUPLER CHASSIS PLUMBING - BASIC(SR175-TV380)
HYDRAULIC COUPLER CHASSIS PLUMBING - BASIC(SR175-TV380)
HYDRAULIC COUPLER CHASSIS PLUMBING - BASIC(SR175-TV380)
HYDRAULIC COUPLER CHASSIS PLUMBING - BASIC(SR175-TV380)

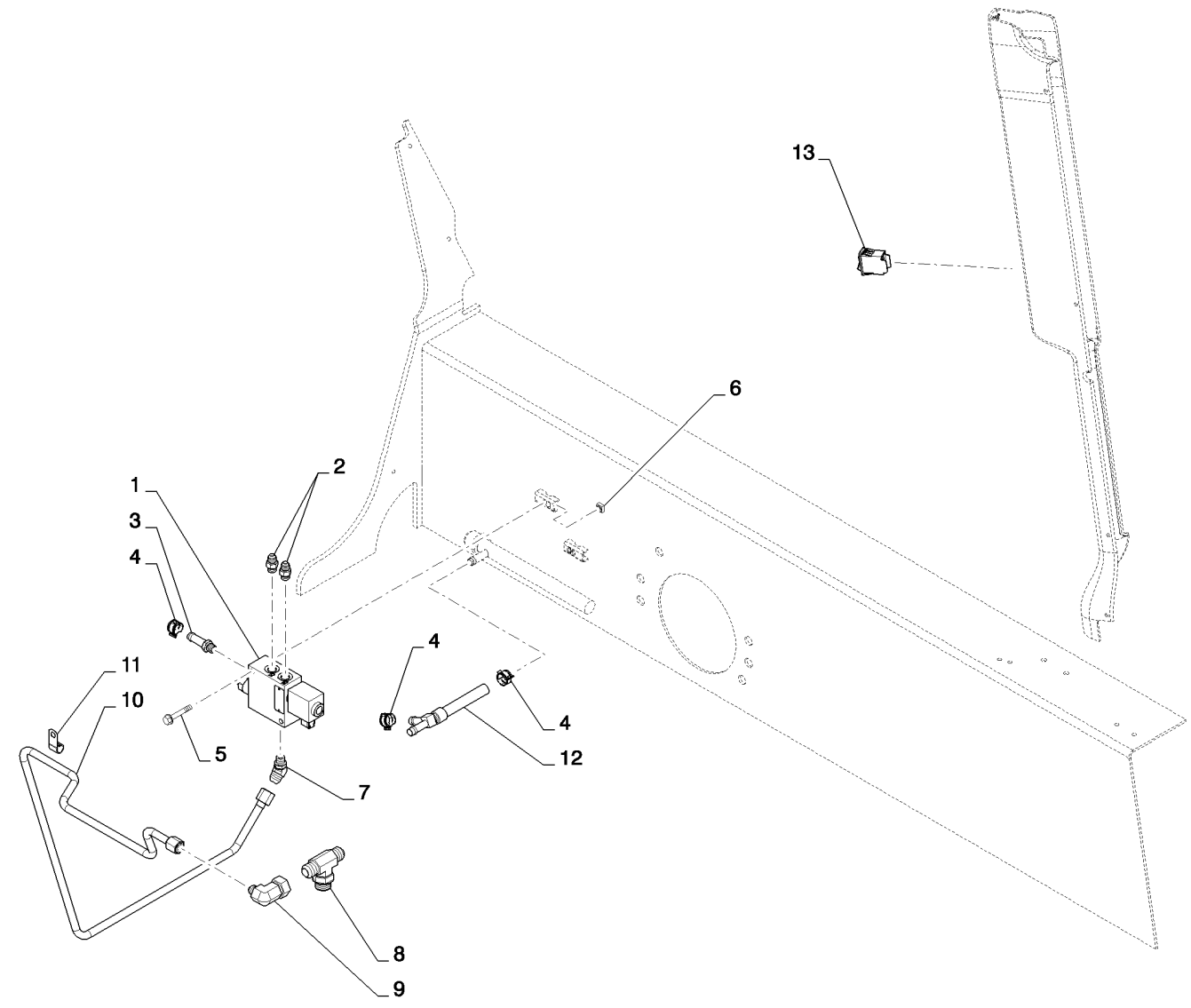

HYDRAULIC COUPLER CHASSIS PLUMBING - BASIC(SR175-TV380)
HYDRAULIC COUPLER CHASSIS PLUMBING - BASIC(SR175-TV380)
HYDRAULIC COUPLER CHASSIS PLUMBING - BASIC(SR175-TV380)
HYDRAULIC COUPLER CHASSIS PLUMBING - BASIC(SR175-TV380)

R	N	P.N.	MOD	Q	Denominação Description Bezeichnung Denominacion Beskrivelse Descrizione Beschrijving	L.C.
1		84256406		1	VÁLVULA HIDRÁULICA, Coupler HYDRAULIC VALVE / VÁLVULA HIDRÁULICA / DISTRIBUTORE IDRAULI SOUPAPE HYDRAULIQU / HYDRAULIKVENTIL / HYDRAULIKVENTIL / HYDRAULISCHE KLEP	010V
2		76350		2	CONECTOR HIDRÁUL, 9/16"-18, 37º x 9/16"-18, O-Ring HYD CONNECTOR / CONECTOR HIDRÁULIC / CONNETTORE IDRAULIC CONNECTEUR HYDRAU / HYDR STECKVERBINDE / HYDRAULIKSTIK / HYDRAULISCHE AANSLU	020R
3		86705988		1	CONEXÃO, 1/2" Hose x 9/16"-18 ORB, Beaded FITTING / ACOPLAMIENTO / RACCORDO RACCORD / ARMATUR / FITTING / AANSLUITING	3300
4		87443510		3	BRAÇADEIRA MANGUEIRA, M20 HOSE CLAMP / ABRAZADERA DE MANG / FASCETTA STRINGITUB COLLIER POUR FLEXIBL / SCHLAUCHSCHELLE / SLANGEKLEMME / SLANGKLEM	P729
5		86511481		2	PARAFUSO, Hex Flg, M8 x 50, 8.8 BOLT / PERNO / BULLONE VIS / SCHRAUBE / BOLT / BOUT	140B
6		229197A1		2	PORCA, Square / NUT / TUERCA / DADO ECROU / MUTTER / NUT / NUT	5780
7		87301276		1	CONECTOR HIDRÁUL, 45 Adj, Elbow, 37FL 1/2in X 3/8in HYD CONNECTOR / CONECTOR HIDRÁULIC / CONNETTORE IDRAULIC CONNECTEUR HYDRAU / HYDR STECKVERBINDE / HYDRAULIKSTIK / HYDRAULISCHE AANSLU	020R
8		87622774		1	CONEXÃO, Hydraulic Tee / FITTING / ACOPLAMIENTO / RACCORDO RACCORD / ARMATUR / FITTING / AANSLUITING	3300
9		86624011		1	COTOVELO, 90º, 3/4"-16, 37º x 1 1/16"-12, 37º Fem Sw ELBOW / CODO / GOMITO COUDE / KNIESTÜCK / VINKELRØR / KNIESTUK	085G
10		84291016		1	TUBO RÍGIDO, Assembly, Hydraulic Coupler RIGID TUBE / TUBO RÍGIDO / TUBO RIGIDO TUYAU RIGIDE / ROHR / STIFT RØR / VASTE LEIDING	193T
11		87301490		1	BRAÇADEIRA, J, 12.7MM Insul 3/8in Bolt CLAMP / ABRAZADERA / MORSETTO COLLIER / KLEMME / SPÆNDEBÅND / KLEM	120M
12		84259682		1	CONEXÃO EM T, Assembly, Option UNION TEE / RACOR EN T / RACCORDO A T RACCORD EN T / T-VERSCHRAUBUNG / T-FORSKRUNING / KOPPEL-T-STUK	A134
13		84251346		1	INTERRUPTOR, Rocker, Hydraulic Coupler SWITCH / INTERRUPTOR / INTERRUTTORE CONTACTEUR / SCHALTER / KONTAKT / SCHAKELAAR	075I

AUX HYD, STD FLOW (SV185)
AUX HYD, STD FLOW (SV185)
AUX HYD, STD FLOW (SV185)
AUX HYD, STD FLOW (SV185)

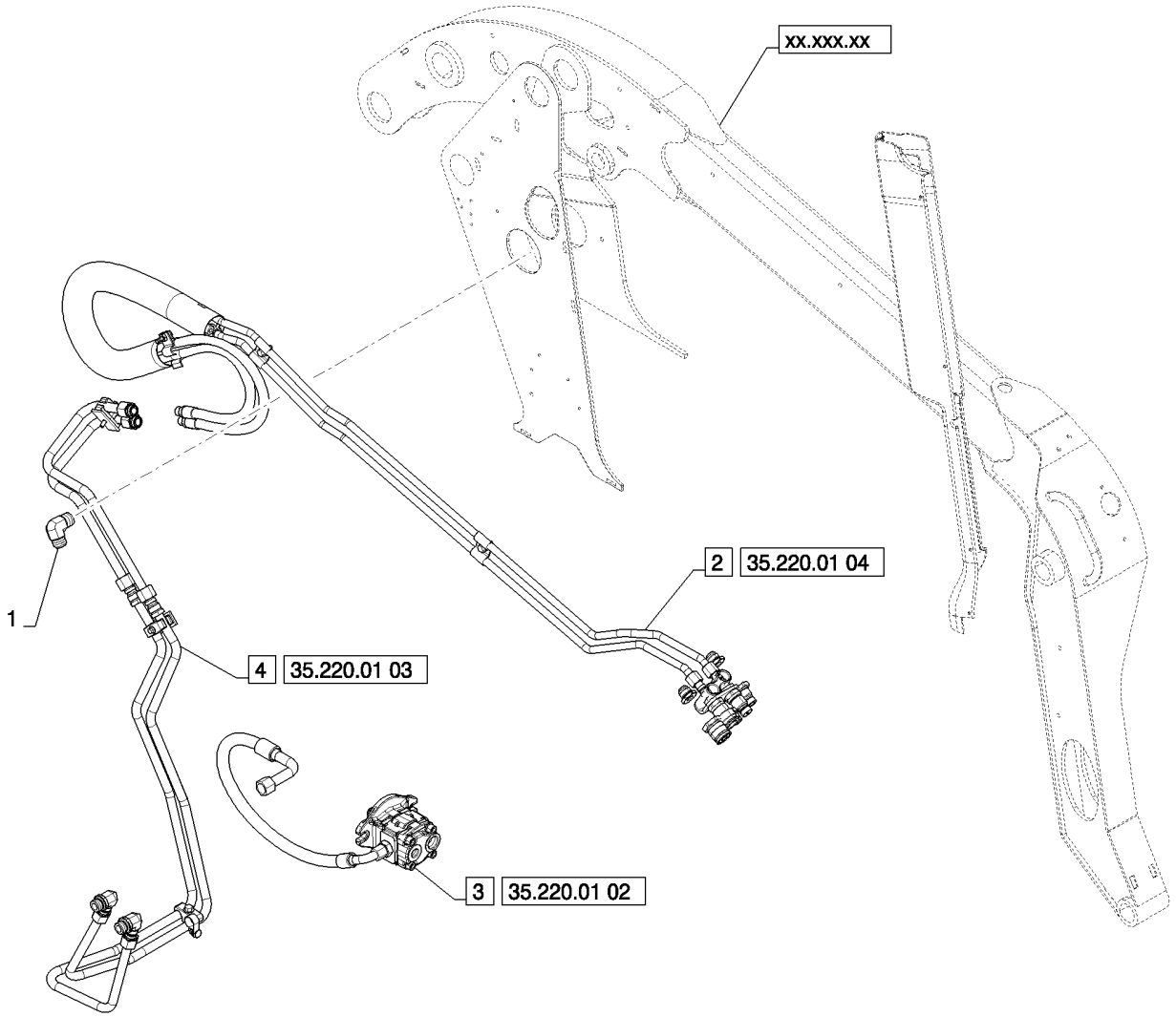

AUX HYD, STD FLOW (SV185)
AUX HYD, STD FLOW (SV185)
AUX HYD, STD FLOW (SV185)
AUX HYD, STD FLOW (SV185)

R	N	P.N.	MOD	Q	Denominação Description Bezeichnung	Description Denominacion Beskrivelse	Denominacion Descrizione Beschrijving	Descrizione L.C.
1		86512952		1	COTOVELO, 90º, 1 5/16"-12, 37º x 1"-11 1/2, NPTF			
					ELBOW	CODO	GOMITO	085G
					COUDE	KNIESTÜCK	VINKELRØR	KNIESTUK
2		NSS		1	SEM SERVIÇO EM SEPARADO, Std Aux, Arm Plumbing			
					NOT SERVICED SEPARA	NO SE REPARA POR SE	NON FORNITO SEPARAT	064N
					NON FORUNI SEPAREM	NICHT A SEP ERS-T LIEI	SERVICERES IKKE SEPA	NIET LOS VERKRIJGBAA
3		NSS		1	SEM SERVIÇO EM SEPARADO, Gear Pump			
					NOT SERVICED SEPARA	NO SE REPARA POR SE	NON FORNITO SEPARAT	064N
					NON FORUNI SEPAREM	NICHT A SEP ERS-T LIEI	SERVICERES IKKE SEPA	NIET LOS VERKRIJGBAA
4		NSS		1	SEM SERVIÇO EM SEPARADO, Std Aux, Chassis Plumbing			
					NOT SERVICED SEPARA	NO SE REPARA POR SE	NON FORNITO SEPARAT	064N
					NON FORUNI SEPAREM	NICHT A SEP ERS-T LIEI	SERVICERES IKKE SEPA	NIET LOS VERKRIJGBAA

35.220.01	01	p1	01/11

AUX HYD, STD C.U.P. (SV185)
AUX HYD, STD C.U.P. (SV185)
AUX HYD, STD C.U.P. (SV185)
AUX HYD, STD C.U.P. (SV185)

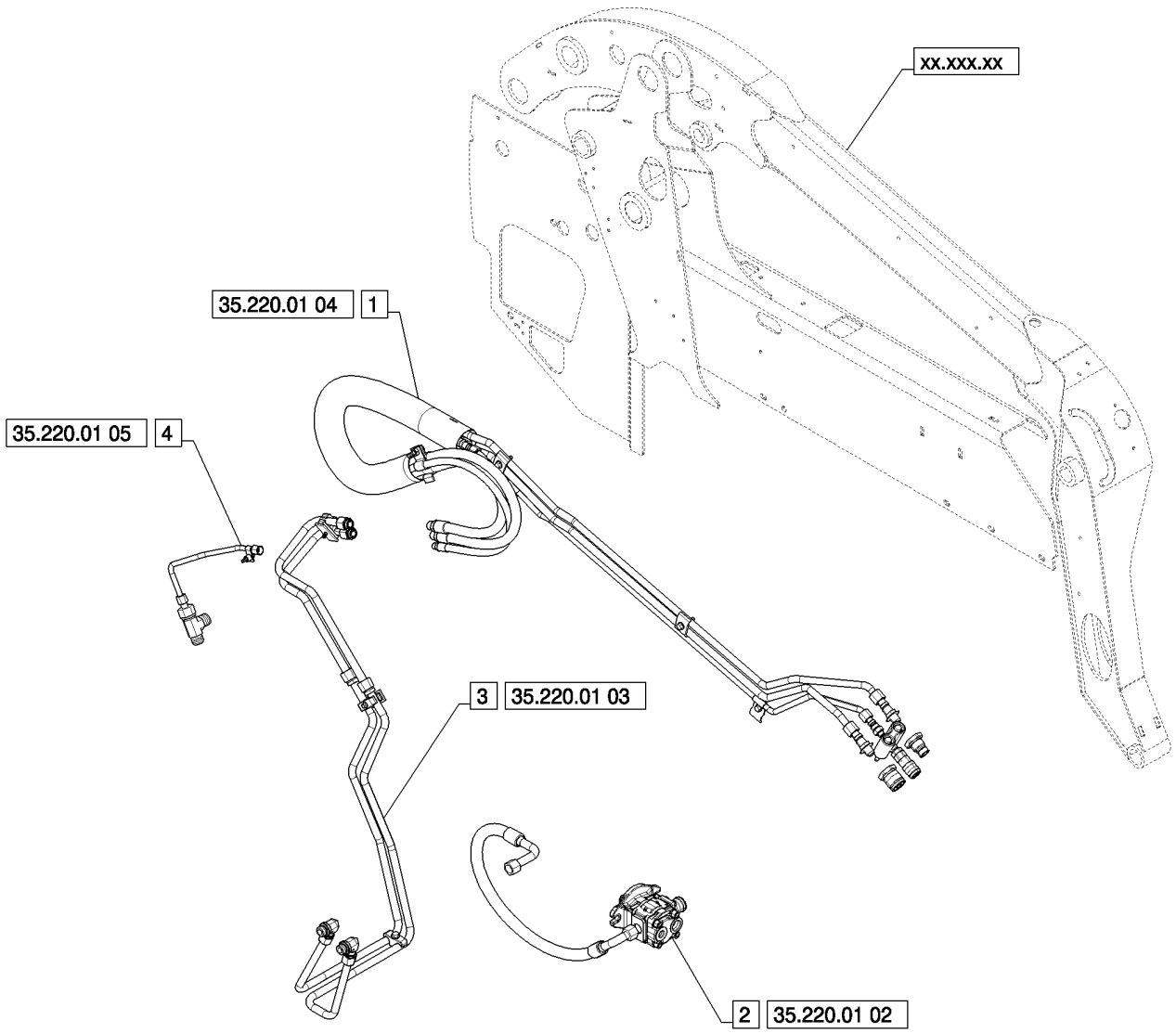

AUX HYD, STD C.U.P. (SV185)
AUX HYD, STD C.U.P. (SV185)
AUX HYD, STD C.U.P. (SV185)
AUX HYD, STD C.U.P. (SV185)

R	N	P.N.	MOD	Q	Denominação Description	Description Bezeichnung	Denominacion Beskrivelse	Descrizione Beschrijving	L.C.
1		NSS		1	SEM SERVIÇO EM SEPARADO, Std Aux, C.U.P., Arm Plumbing				
						NOT SERVICED SEPARA	NO SE REPARA POR SE	NON FORNITO SEPARAT	064N
					NON FORUNI SEPAREM	NICHT A SEP ERS-T LIEI	SERVICERES IKKE SEPA	NIET LOS VERKRIJGBAA	
2		NSS		1	SEM SERVIÇO EM SEPARADO, Gear Pump				
						NOT SERVICED SEPARA	NO SE REPARA POR SE	NON FORNITO SEPARAT	064N
					NON FORUNI SEPAREM	NICHT A SEP ERS-T LIEI	SERVICERES IKKE SEPA	NIET LOS VERKRIJGBAA	
3		NSS		1	SEM SERVIÇO EM SEPARADO, Std Aux, Chassis Plumbing				
						NOT SERVICED SEPARA	NO SE REPARA POR SE	NON FORNITO SEPARAT	064N
					NON FORUNI SEPAREM	NICHT A SEP ERS-T LIEI	SERVICERES IKKE SEPA	NIET LOS VERKRIJGBAA	
4		NSS		1	SEM SERVIÇO EM SEPARADO, Case Drain, Chassis Plumbing				
						NOT SERVICED SEPARA	NO SE REPARA POR SE	NON FORNITO SEPARAT	064N
					NON FORUNI SEPAREM	NICHT A SEP ERS-T LIEI	SERVICERES IKKE SEPA	NIET LOS VERKRIJGBAA	

35.220.01	02	p1	01/11

AUX HYD, STD, GEAR PUMP (SR175,SV185)
AUX HYD, STD, GEAR PUMP (SR175,SV185)
AUX HYD, STD, GEAR PUMP (SR175,SV185)
AUX HYD, STD, GEAR PUMP (SR175,SV185)

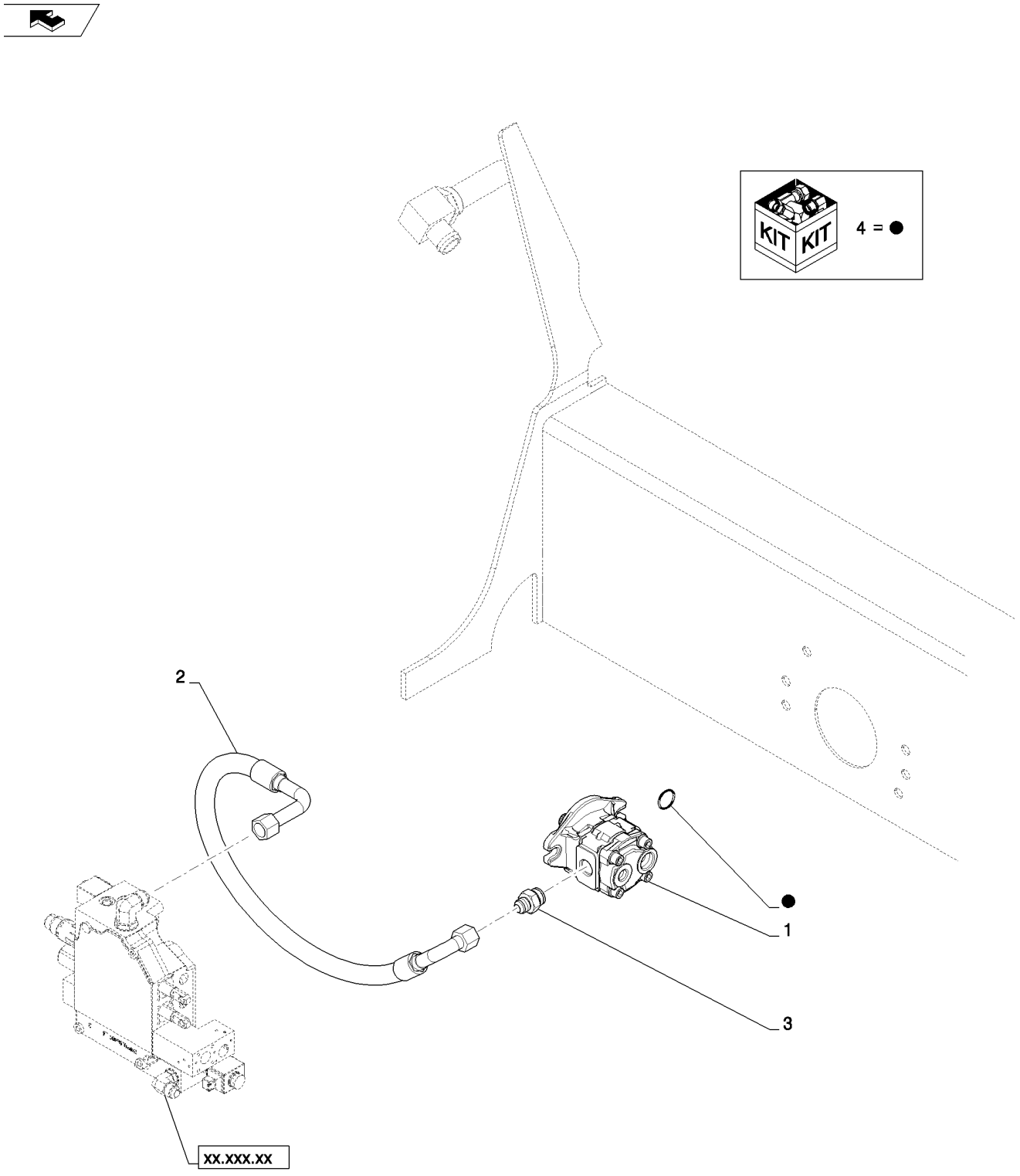

AUX HYD, STD, GEAR PUMP (SR175,SV185)
AUX HYD, STD, GEAR PUMP (SR175,SV185)
AUX HYD, STD, GEAR PUMP (SR175,SV185)
AUX HYD, STD, GEAR PUMP (SR175,SV185)

R	N	P.N.	MOD	Q	Denominação Description Bezeichnung	Description Bezeichnung Beschrijving	Denominacion Beskrivelse Descrizione	Descrizione Beschrijving L.C.	L.C.
1		84256517		1	BOMBA, 24.9CC Gear POMPE	PUMP PUMPE	BOMBA PUMPE	POMPA POMP	6570
2		84330502		1	MANGUEIRA, Assembly, Valve Supply FLEXIBLE	HOSE SCHLAUCH	TUBO SLANGE	TUBO FLESSIBILE SLANG	030M
3		86507102		1	CONECTOR HIDRÁUL, 7/8"-14, 37º x 1 1/16"-12, O-Ring CONNECTEUR HYDRAU	HYD CONNECTOR HYDR STECKVERBINDE	CONECTOR HIDRÁULIC HYDRAULIKSTIK	CONNETTORE IDRAULIC HYDRAULISCHE AANSLU	020R
4		84389261		1	KIT DE VEDAÇÃO, Single Pump KIT DE JOINTS	SEAL KIT DICHTUNGSSATZ	KIT DE JUNTAS PAKNINGSSÆT	KIT GUARNIZIONI KIT MET AFDICHTINGEN	630S

SV185

35.220.01	03	p1	03/11

AUX HYD, STD, CHASSIS PLUMBING (SV185)
AUX HYD, STD, CHASSIS PLUMBING (SV185)
AUX HYD, STD, CHASSIS PLUMBING (SV185)
AUX HYD, STD, CHASSIS PLUMBING (SV185)

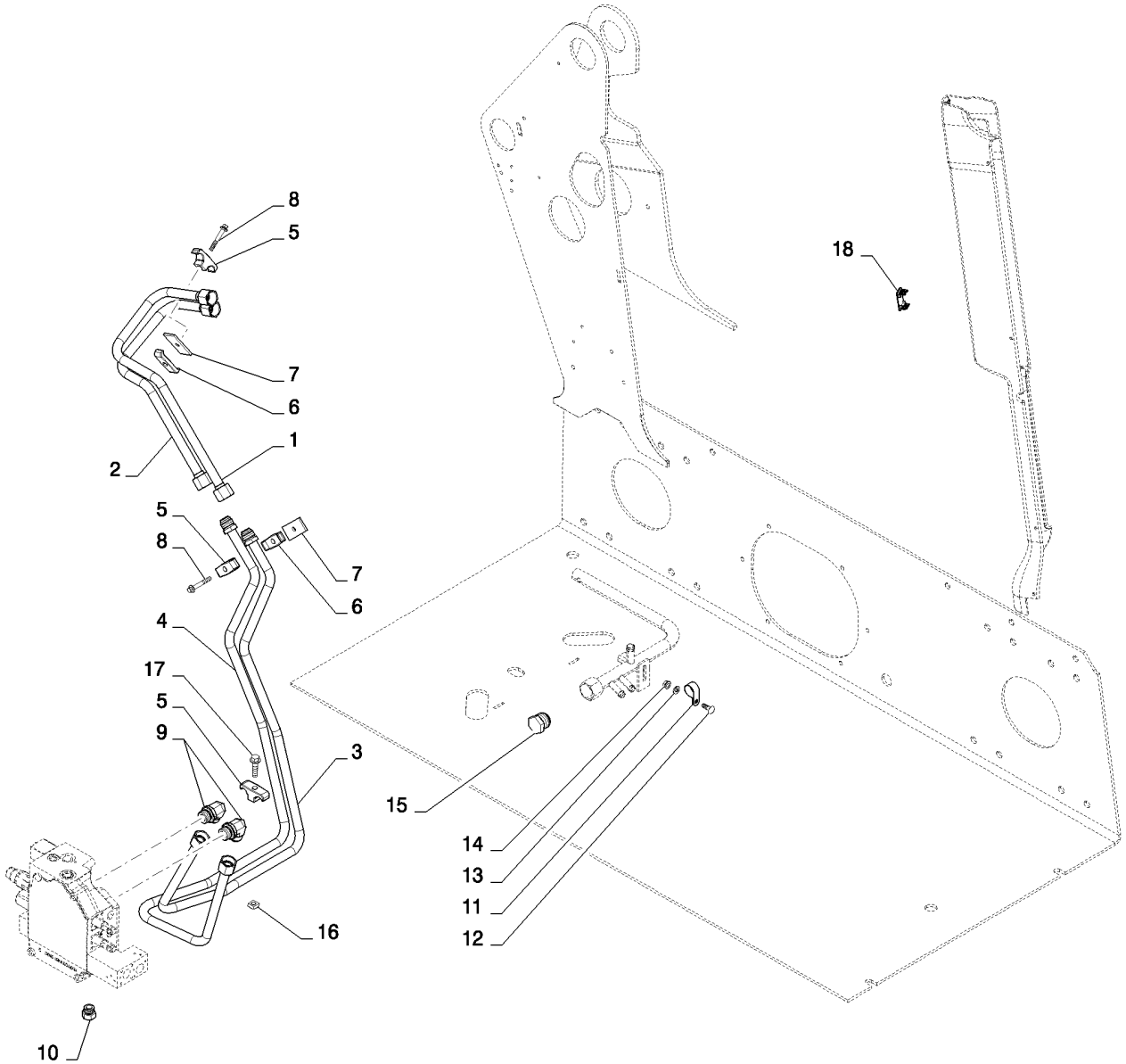

AUX HYD, STD, CHASSIS PLUMBING (SV185)
AUX HYD, STD, CHASSIS PLUMBING (SV185)
AUX HYD, STD, CHASSIS PLUMBING (SV185)
AUX HYD, STD, CHASSIS PLUMBING (SV185)

R	N	P.N.	MOD	Q	Denominação Description	Description Bezeichnung	Denominacion Beskrivelse	Descrizione Beschrijving	L.C.
1		84421500		1	TUBO HIDRÁULICO, Aux LH Tower				
						HYD. TUBE	TUBO HIDRÁULICO	TUBO IDRAULICO	190T
					TUYAU HYDRAULIQUE	HYDRAULIKLEITUNG	HYD. RØR	HYDRAULISCHE LEIDIN(	
2		84421502		1	TUBO HIDRÁULICO, Aux LH Tower				
						HYD. TUBE	TUBO HIDRÁULICO	TUBO IDRAULICO	190T
					TUYAU HYDRAULIQUE	HYDRAULIKLEITUNG	HYD. RØR	HYDRAULISCHE LEIDIN(	
3		84377504		1	TUBO, Aux, Ldr Vlv to Lft Tower				
						TUBE	TUBO	TUBO	195T
					TUBE	ROHR	RØR	LEIDING	
4		84377506		1	TUBO, Aux, Ldr Vlv to Lft Tower				
						TUBE	TUBO	TUBO	195T
					TUBE	ROHR	RØR	LEIDING	
5		D124301		3	BRACADEIRA, Tube, 3/4	CLAMP	COLLAR	MORSETTO	1640
					COLLIER	SCHELLE	CLAMP	CLAMP	
6		D120614		2	BRACADEIRA, Tube	CLAMP	COLLAR	MORSETTO	1640
					COLLIER	SCHELLE	CLAMP	CLAMP	
7		257859A1		2	PLACA ESPACADORA, Bar Clamp Top				
						PLATE,SPACER	PLAQUETA	DISTANZ PIASTRA	Z324
					PLAQUETTE	PLAETTCHEN	PLATE,SPACER	PLATE,SPACER	
8		87582902		2	PARAFUSO, M8x55	SELF-TAP SCREW	TORNILLO AUTORROSC	VITE AUTOFILETTANTE	062V
					VIS AUTOTARAUDEUSE	SELBSTSCHN SCHRAUE	SELVLÅSENDE BOLT	ZELFTAPPENDE SCHRO	
9		322894		2	COTOVELO, 90º, 1 1/16"-12, 37º x 1 1/16"-12, O-Ring				
						ELBOW	CODO	GOMITO	085G
					COUDE	KNIESTÜCK	VINKELRØR	KNIESTUK	
10		86512512		1	BUJÃO, Hex Hd, 7/8"-14 ORB				
						PLUG	TAPÓN	TAPPO	050T
					BOUCHON	STOPFEN	PROP	PLUG	
11		86637977		1	BRAÇADEIRA, 1", Insul, 5/16" Bolt				
						CLAMP	ABRAZADERA	MORSETTO	120M
					COLLIER	KLEMME	SPÆNDEBÅND	KLEM	
12		308761		1	PARAFUSO, Short NK, M8 x 25, Cl8.8, Full Thd				
						CARRIAGE BOLT	PERNO ALOMADO	BULLONE A TESTA TON	P123
					VIS A TETE BOMBEE	SCHLOSSSCHRAUBE	BRÆDDEBOLT	SLOTBOUT	
13		87655042		1	ARRUELA ESPECIAL	SPECIAL WASHER	ARANDELA ESPECIAL	RONDELLA SPECIALE	Z333
					RONDELLE SPECIALE	SPEZIALUNTERLEGSCH	SPECIALSKIVE	SPECIALE RING	
14		9804277		1	PORCA, M8 x 1.25, Flg, Cl 8				
						NUT	TUERCA	DADO	010D
					ECROU	MUTTER	MØTRIK	MOER	
15		9790527		1	BUJÃO, 1 5/16"-12, 37º	PLUG	TAPÓN	TAPPO	050T
					BOUCHON	STOPFEN	PROP	PLUG	
16		230427A1		1	PORCA	NUT	TUERCA	DADO	5780
					ECROU	MUTTER	NUT	NUT	
17		9804263		1	PARAFUSO, Hex Flg, M10 x 40, 8.8				
						BOLT	PERNO	BULLONE	140B
					VIS	SCHRAUBE	BOLT	BOUT	
18		126844A1		1	BUJÃO, Switch Hole Cover	PLUG	TAPÓN	TAPPO	050T
					BOUCHON	STOPFEN	PROP	PLUG	

35.220.01	04	p1	01/11

AUX HYD, STD, ARM PLUMBING (SV185)
AUX HYD, STD, ARM PLUMBING (SV185)
AUX HYD, STD, ARM PLUMBING (SV185)
AUX HYD, STD, ARM PLUMBING (SV185)

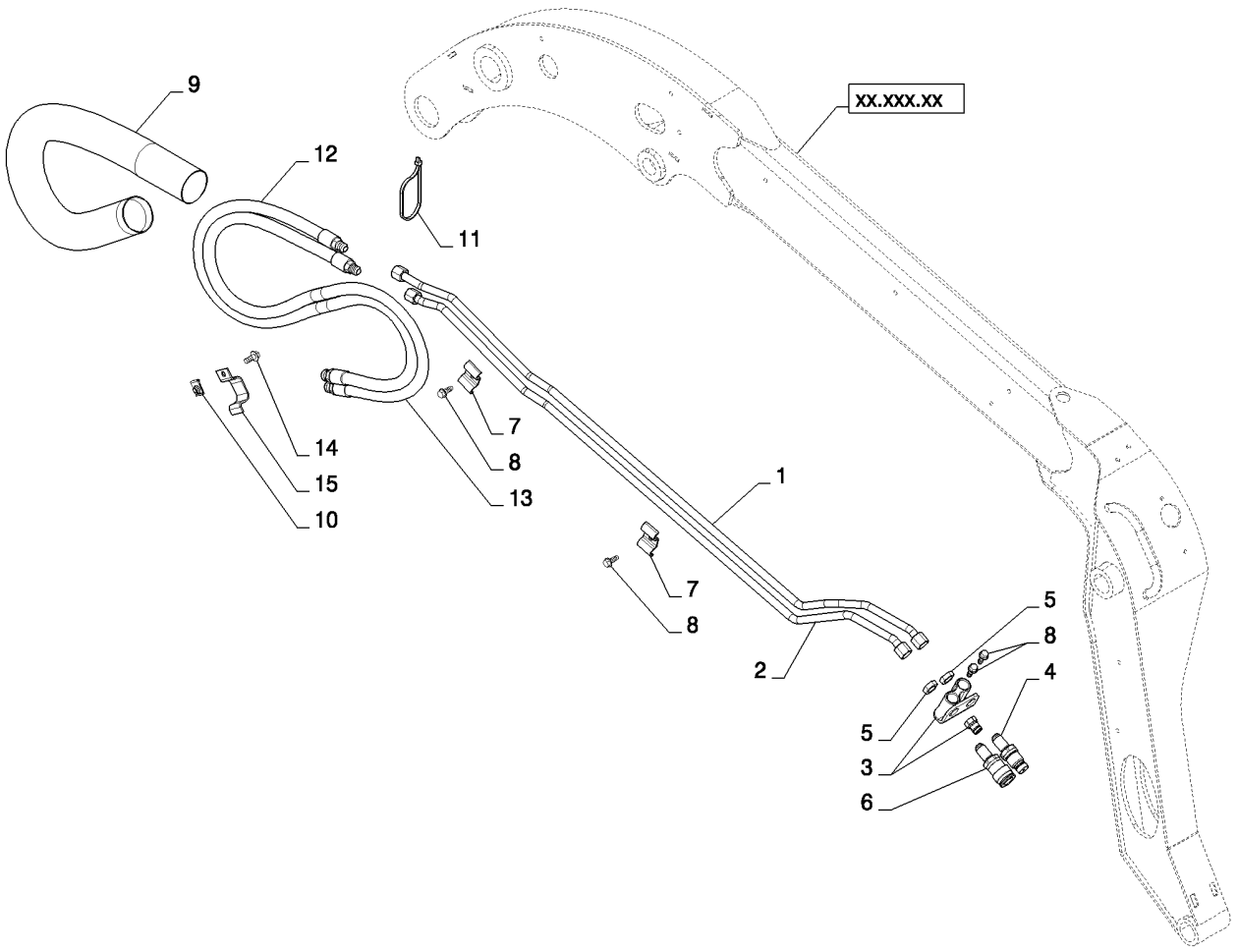

AUX HYD, STD, ARM PLUMBING (SV185)
AUX HYD, STD, ARM PLUMBING (SV185)
AUX HYD, STD, ARM PLUMBING (SV185)
AUX HYD, STD, ARM PLUMBING (SV185)

R	N	P.N.	MOD	Q	Denominação Description	Description Bezeichnung	Denominacion Beskrivelse	Descrizione Beschrijving	L.C.
1		84331879		1	TUBO RÍGIDO, Hyd, Assembly, Std Aux				
						RIGID TUBE	TUBO RÍGIDO	TUBO RIGIDO	193T
					TUYAU RIGIDE	ROHR	STIFT RØR	VASTE LEIDING	
2		84331876		1	TUBO RÍGIDO, Hyd, Assembly, Std Aux				
						RIGID TUBE	TUBO RÍGIDO	TUBO RIGIDO	193T
					TUYAU RIGIDE	ROHR	STIFT RØR	VASTE LEIDING	
3		84252821		1	SUPORTE, Aux Coupler	BRACKET	SOPORTE	STAFFA	225S
					SUPPORT	HALTERUNG	BESLAG	STEUN	
4		87741500		1	ENGATE RÁPIDO MACHO	QUICK MALE COUPLING	ACOPLAMIENTO RÁPIDO	ATTACCO RAPIDO MASC	115A
					ACCOUPLEMENT RAP. M	SCHNELLKUPPLUNGSST	LYNKOBLING	SNELKOPPELINGSPEN	
5		595460		2	CONTRA PORCA, Blkhd, 7/8"-14				
						LOCK NUT	TUERCA DE BLOQUEO	DADO DI BLOCCAGGIO	P263
					CONTRE-ECROU	SICHERUNGSMUTTER	LÅSEMØTRIK	BORGMOER	
6		87741499		1	ENGATE RÁPIDO FÊMEA	QUICK FEMALE COUPLII	ACOPL. RÁPIDO HEMBR	ATTACCO RAPIDO FEMM	540A
					ACCOUPLEMENT RAPID	SCHNELLKUPPLUNGSM	KOBLINGSSKIVE	SNELKOPPELINGSBUS	
7		84252828		2	BRAÇADEIRA, Butterfly Tube				
						CLAMP	ABRAZADERA	MORSETTO	120M
					COLLIER	KLEMME	SPÆNDEBÅND	KLEM	
8		280476		4	PARAFUSO, Hex Wash Hd, 3/8" x 1"				
						SELF-TAP SCREW	TORNILLO AUTORROSC	VITE AUTOFILETTANTE	062V
					VIS AUTOTARAUDEUSE	SELBSTSCHN SCHRAUE	SELVLÅSENDE BOLT	ZELFTAPPENDE SCHRO	
9		84362110		1	PROTEÇÃO, Hose	GUARD	DEFENSA	PROTEZIONE	070R
					PROTECTION	SCHUTZABDECKUNG	BESKYTTELSESSKÆRM	AFSCHERMING	
10		86625071		1	PORCA, M10, U	NUT	TUERCA	DADO	010D
					ECROU	MUTTER	MØTRIK	MOER	
11		L18331		1	PRENDEDOR DE CABOS, Nylon Tie 15.5 in.				
						CABLE STRAP	BANDA DE CABLE	FASCETTA PER CAVO	P716
					BRIDE DE CABLE	KABELBINDER	KABELSTROP	BUNDELBAND	
12		84300990		1	TUBO FLEXÍVEL, Hose, Assembly, Aux				
						FLEXIBLE HOSE	TUBO FLEXIBLE	TUBO FLESSIBILE	192T
					TUYAU FLEXIBLE	BIEGSAMER SCHLAUCH	FLEKSIBEL SLANGE	FLEXIBELE SLANG	
13		84300989		1	TUBO FLEXÍVEL, Hose, Assembly, Aux				
						FLEXIBLE HOSE	TUBO FLEXIBLE	TUBO FLESSIBILE	192T
					TUYAU FLEXIBLE	BIEGSAMER SCHLAUCH	FLEKSIBEL SLANGE	FLEXIBELE SLANG	
14		9804261		1	PARAFUSO, Hex Flg, M10 x 25, 8.8				
						BOLT	PERNO	BULLONE	140B
					VIS	SCHRAUBE	BOLT	BOUT	
15		84285091		1	BRAÇADEIRA MANGUEIRA, -10 Hose Double				
						HOSE CLAMP	ABRAZADERA DE MANG	FASCETTA STRINGITUB	P729
					COLLIER POUR FLEXIBL	SCHLAUCHSCHELLE	SLANGEKLEMME	SLANGKLEM	

35.220.01	04	p1	08/11

AUX HYD, STD C.U.P. ARM PLUMBING (SV185)
AUX HYD, STD C.U.P. ARM PLUMBING (SV185)
AUX HYD, STD C.U.P. ARM PLUMBING (SV185)
AUX HYD, STD C.U.P. ARM PLUMBING (SV185)

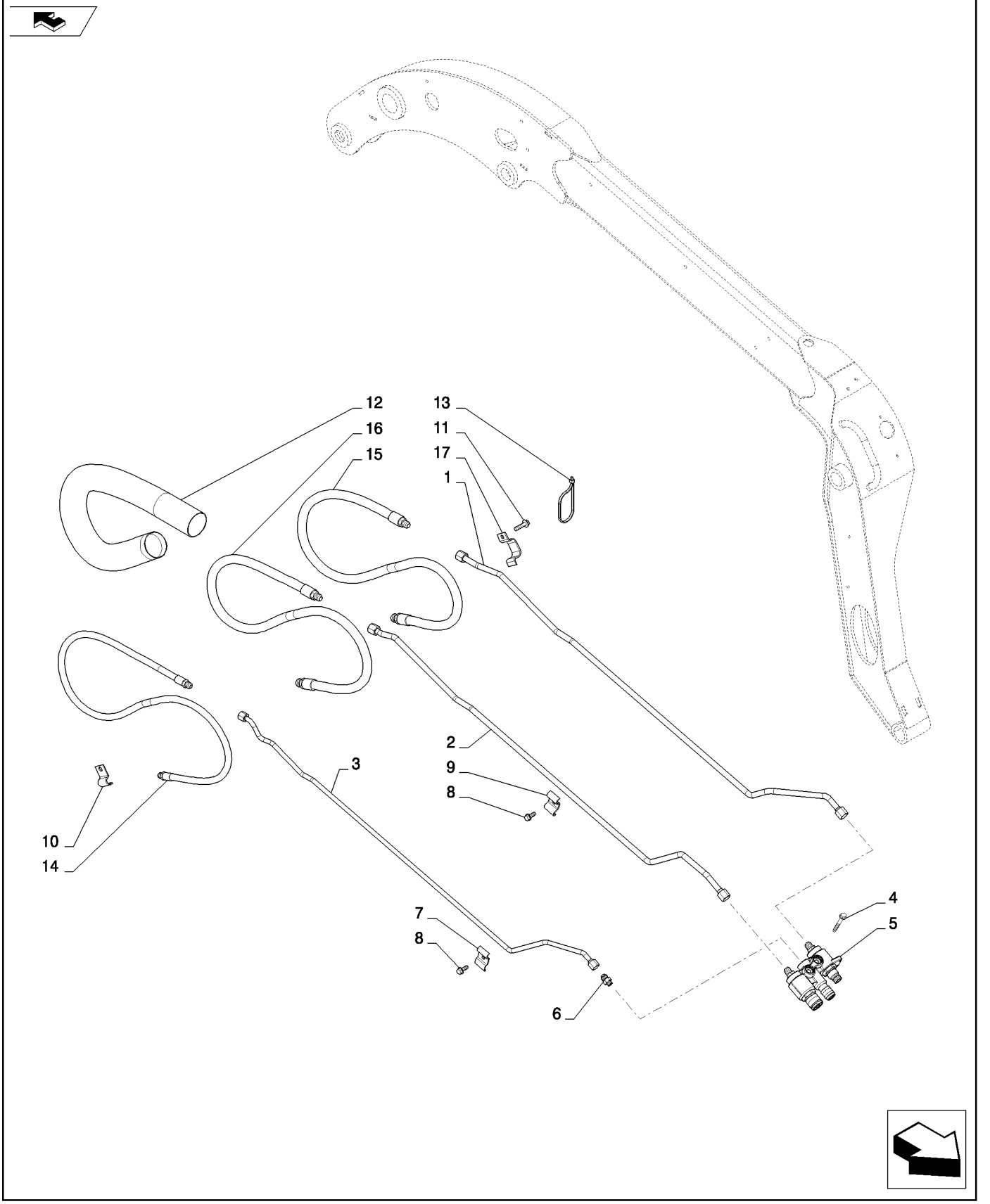

AUX HYD, STD C.U.P. ARM PLUMBING (SV185)
AUX HYD, STD C.U.P. ARM PLUMBING (SV185)
AUX HYD, STD C.U.P. ARM PLUMBING (SV185)
AUX HYD, STD C.U.P. ARM PLUMBING (SV185)

R	N	P.N.	MOD	Q	Denominação Description	Description Bezeichnung	Denominacion Beskrivelse	Descrizione Beschrijving	L.C.
1		84331851		1	TUBO RÍGIDO, Hyd, Assembly, Aux C.U.P.				
						RIGID TUBE	TUBO RÍGIDO	TUBO RIGIDO	193T
					TUYAU RIGIDE	ROHR	STIFT RØR	VASTE LEIDING	
2		84331849		1	TUBO RÍGIDO, Hyd, Assembly, Aux C.U.P.				
						RIGID TUBE	TUBO RÍGIDO	TUBO RIGIDO	193T
					TUYAU RIGIDE	ROHR	STIFT RØR	VASTE LEIDING	
3		84421506		1	TUBO HIDRÁULICO, Hyd, Case Drain				
						HYD. TUBE	TUBO HIDRÁULICO	TUBO IDRAULICO	190T
					TUYAU HYDRAULIQUE	HYDRAULIKLEITUNG	HYD. RØR	HYDRAULISCHE LEIDIN(	
4		84331287		2	PARAFUSO, Tapping, 3/8-16 X 3 TT				
						SCREW	TORNILLO	VITE	040V
					VIS	SCHRAUBE	SKRUE	SCHROEF	
5		84173613		1	VÁLVULA, Quick Attach, Includes Ref. 17-19				
						VALVE	VÁLVULA	VALVOLA	9620
					SOUPAPE	VENTIL	VENTIL	KLEP	
6		86509028		1	CONECTOR HIDRÁUL, 3/4"-16, 37° x 9/16"-18, O-Ring				
						HYD CONNECTOR	CONECTOR HIDRÁULIC(	CONNETTORE IDRAULIC	020R
					CONNECTEUR HYDRAU	HYDR STECKVERBINDE	HYDRAULIKSTIK	HYDRAULISCHE AANSLI	
7		84254056		2	BRAÇADEIRA MANGUEIRA, Butterfly Tube				
						HOSE CLAMP	ABRAZADERA DE MANG	FASCETTA STRINGITUB	P729
					COLLIER POUR FLEXIBL	SCHLAUCHSCHELLE	SLANGEKLEMME	SLANGKLEM	
8		280476		6	PARAFUSO, Hex Wash Hd, 3/8" x 1"				
						SELF-TAP SCREW	TORNILLO AUTORROSC	VITE AUTOFILETTANTE	062V
					VIS AUTOTARAUDEUSE	SELBSTSCHN SCHRAUE	SELVLÅSENDE BOLT	ZELFTAPPENDE SCHRO	
9		84252828		2	BRAÇADEIRA, Butterfly Tube				
						CLAMP	ABRAZADERA	MORSETTO	120M
					COLLIER	KLEMME	SPÆNDEBÅND	KLEM	
10		84423570		1	GUIA, Hose	GUIDE	GUÍA	GUIDA	145G
					GUIDE	FÜHRUNG	STYR	GELEIDER	
11		86625201		2	PARAFUSO, Hex Flg Hd, M8 x 30				
						SELF-TAP SCREW	TORNILLO AUTORROSC	VITE AUTOFILETTANTE	062V
					VIS AUTOTARAUDEUSE	SELBSTSCHN SCHRAUE	SELVLÅSENDE BOLT	ZELFTAPPENDE SCHRO	
12		84423574		1	GUIA, Hose	GUIDE	GUÍA	GUIDA	145G
					GUIDE	FÜHRUNG	STYR	GELEIDER	
13		L18331		4	PRENDEDOR DE CABOS, Nylon Tie 15.5in.				
						CABLE STRAP	BANDA DE CABLE	FASCETTA PER CAVO	P716
					BRIDE DE CABLE	KABELBINDER	KABELSTROP	BUNDELBAND	
14		84468943		1	CONJ. MANGUEIRA, Hose Assembly, Case Drain				
						HOSE ASSY.	CONJUNTO DE TUBOS	COMPLESS. TUBO FLES	P457
					ENSEMBLE DE FLEXIBLE	SCHLAUCHBAUGRUPPE	SLANGEENHED	SLANGEENHEID	
15		84422556		1	CONJ. MANGUEIRA, Aux	HOSE ASSY.	CONJUNTO DE TUBOS	COMPLESS. TUBO FLES	P457
					ENSEMBLE DE FLEXIBLE	SCHLAUCHBAUGRUPPE	SLANGEENHED	SLANGEENHEID	
16		84468326		1	CONJ. MANGUEIRA, Hose Assembly, Aux				
						HOSE ASSY.	CONJUNTO DE TUBOS	COMPLESS. TUBO FLES	P457
					ENSEMBLE DE FLEXIBLE	SCHLAUCHBAUGRUPPE	SLANGEENHED	SLANGEENHEID	
17		84390117		1	ENGATE, 1/2" Male (Not Shown)				
						COUPLING	ACOPLAMIENTO	GIUNTO	Z321
					RACCORD	KUPPLUNG	KOBLING	KOPPELING	

35.220.01	04	p2	08/11

AUX HYD, STD C.U.P. ARM PLUMBING (SV185)
AUX HYD, STD C.U.P. ARM PLUMBING (SV185)
AUX HYD, STD C.U.P. ARM PLUMBING (SV185)
AUX HYD, STD C.U.P. ARM PLUMBING (SV185)

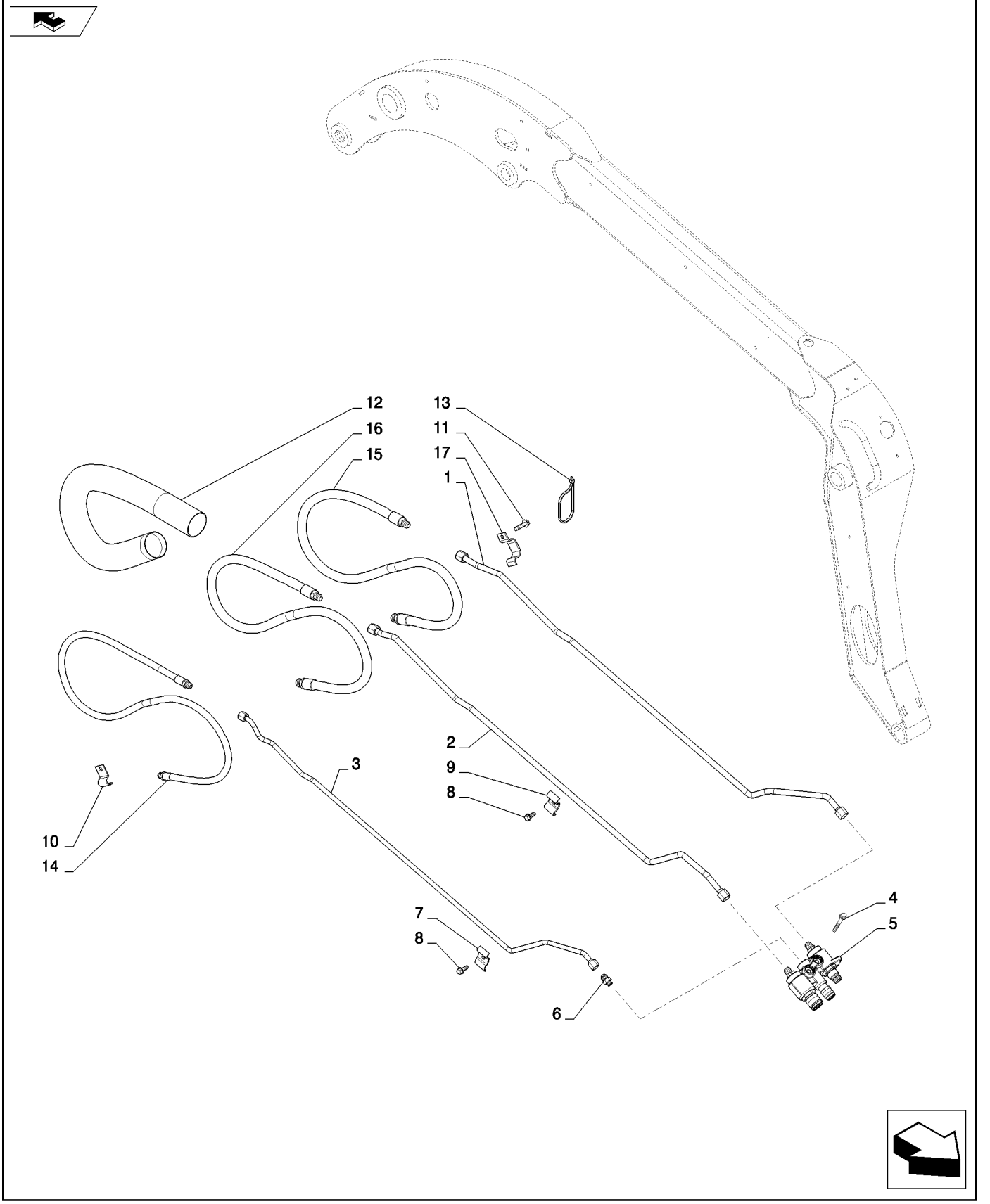

AUX HYD, STD C.U.P. ARM PLUMBING (SV185)
AUX HYD, STD C.U.P. ARM PLUMBING (SV185)
AUX HYD, STD C.U.P. ARM PLUMBING (SV185)
AUX HYD, STD C.U.P. ARM PLUMBING (SV185)

R	N	P.N.	MOD	Q	Denominação Description	Description Bezeichnung	Denominacion Beskrivelse	Descrizione Beschrijving	L.C.
18		**84390118**		1	ENGATE, 1/2" Female (Not Shown)				
						COUPLING	ACOPLAMIENTO	GIUNTO	Z321
					RACCORD	KUPPLUNG	KOBLING	KOPPELING	
19		**84390119**		1	ENGATE, 3/8" Male (Not Shown)				
						COUPLING	ACOPLAMIENTO	GIUNTO	Z321
					RACCORD	KUPPLUNG	KOBLING	KOPPELING	

35.220.01	05	p1	01/11

AUX HYD, STD C.U.P. CASE DRAIN CHASSIS PLUMBING (SV185)
AUX HYD, STD C.U.P. CASE DRAIN CHASSIS PLUMBING (SV185)
AUX HYD, STD C.U.P. CASE DRAIN CHASSIS PLUMBING (SV185)
AUX HYD, STD C.U.P. CASE DRAIN CHASSIS PLUMBING (SV185)

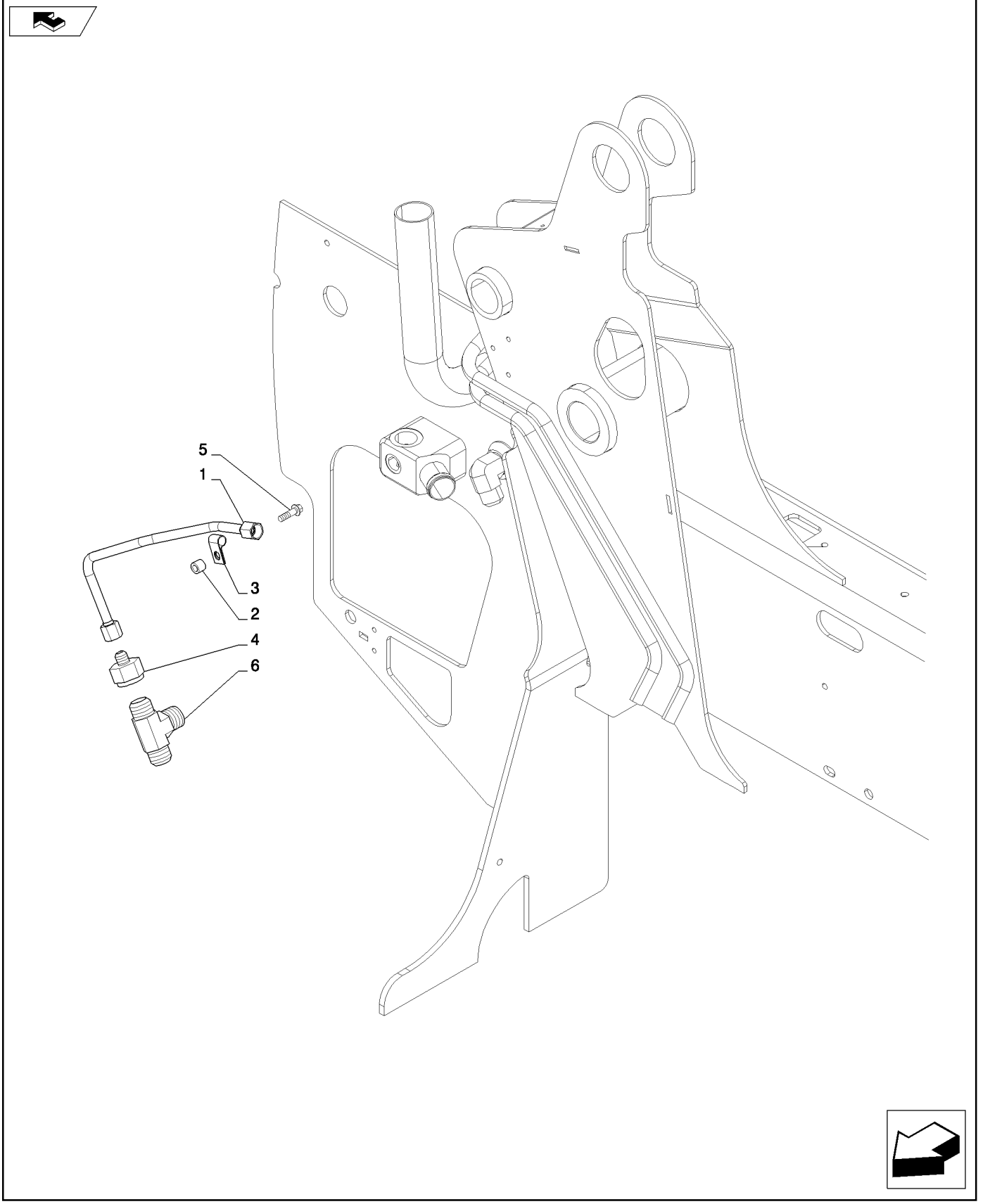

AUX HYD, STD C.U.P. CASE DRAIN CHASSIS PLUMBING (SV185)
AUX HYD, STD C.U.P. CASE DRAIN CHASSIS PLUMBING (SV185)
AUX HYD, STD C.U.P. CASE DRAIN CHASSIS PLUMBING (SV185)
AUX HYD, STD C.U.P. CASE DRAIN CHASSIS PLUMBING (SV185)

R	N	P.N.	MOD	Q	Denominação Description	Description Bezeichnung	Denominacion Beskrivelse	Descrizione Beschrijving	L.C.
1		84201223		1	TUBO RÍGIDO, Assembly, Case Drain				
						RIGID TUBE	TUBO RÍGIDO	TUBO RIGIDO	193T
					TUYAU RIGIDE	ROHR	STIFT RØR	VASTE LEIDING	
2		86589143		1	ESPAÇADOR	SPACER	SEPARADOR	DISTANZIALE	075D
					ENTRETOISE	DISTANZSTÜCK	AFSTANDSSTYKKE	AFSTANDSSTUK	
3		86010402		1	BRAÇADEIRA, 1/2", Insul, 3/8" Bolt				
						CLAMP	ABRAZADERA	MORSETTO	120M
					COLLIER	KLEMME	SPÆNDEBÅND	KLEM	
4		84278113		1	CONECTOR REDUTOR, 37 FL 1-5/16-12 X 3/4-16				
						REDUCER FITTING	ACOPLAMIENTO DE REI	RACCORDO RIDUTTORE	P053
					RACCORD REDUCTEUR	REDUZIERSTÜCK	ARMATURREDUKTOR	REDUCEERAANSLUITIN	
5		86625201		1	PARAFUSO, Hex Flg Hd, M8 x 30				
						SELF-TAP SCREW	TORNILLO AUTORROSC	VITE AUTOFILETTANTE	062V
					VIS AUTOTARAUDEUSE	SELBSTSCHN SCHRAUE	SELVLÅSENDE BOLT	ZELFTAPPENDE SCHRO	
6		9790547		1	T, 1 5/16"-12, 37° x 1"-11 1/2, NPTF Br				
						TEE	RACOR EN T	PEZZO A T	9020
					RACCORD EN T	T-STÜCK	T-STYKKE	T-STUK	

35.220.02	01	p1	01/11

AUX HYD, HIGH FLOW (SV185)
AUX HYD, HIGH FLOW (SV185)
AUX HYD, HIGH FLOW (SV185)
AUX HYD, HIGH FLOW (SV185)

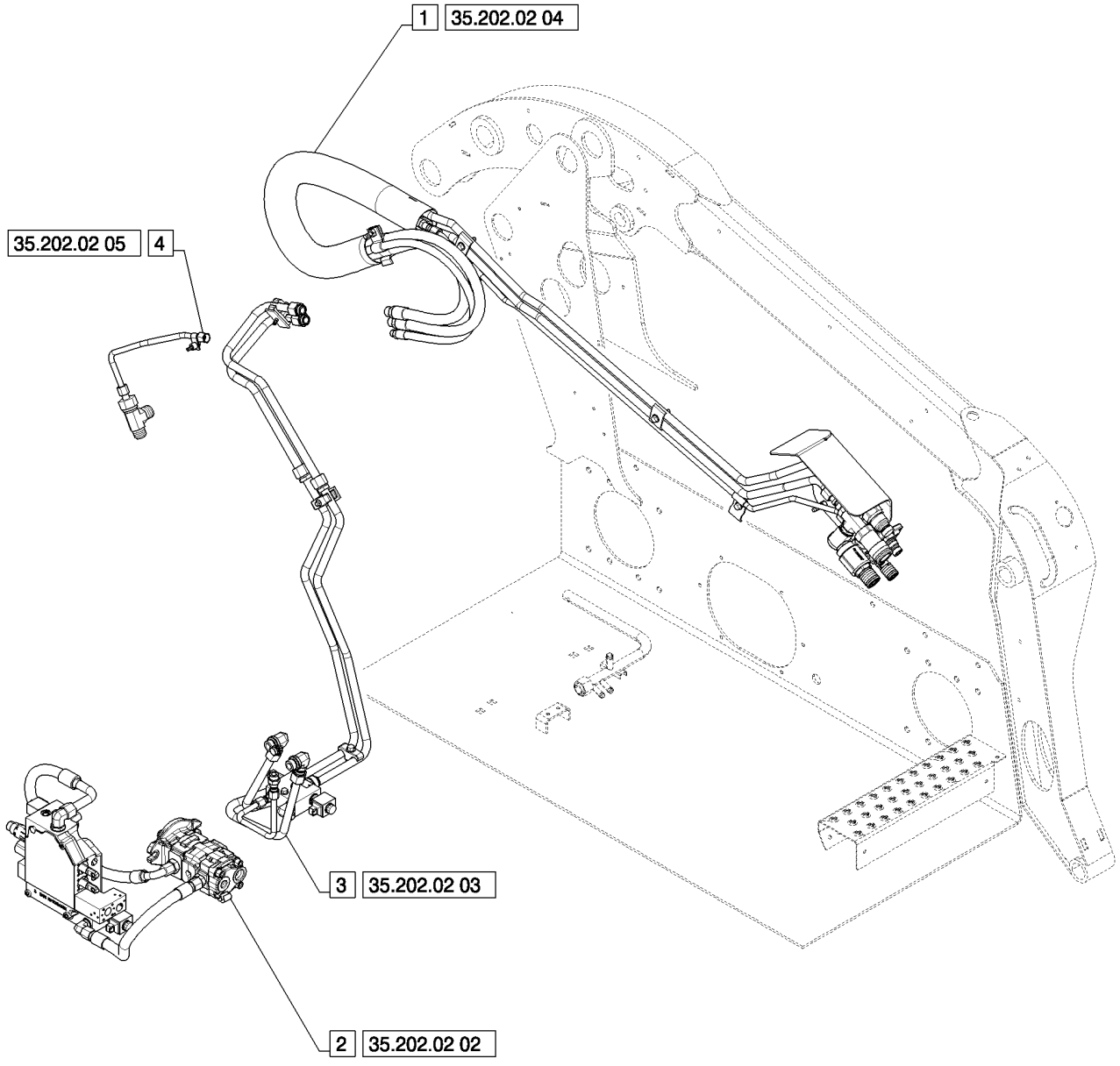

AUX HYD, HIGH FLOW (SV185)
AUX HYD, HIGH FLOW (SV185)
AUX HYD, HIGH FLOW (SV185)
AUX HYD, HIGH FLOW (SV185)

R	N	P.N.	MOD	Q	Denominação Description	Description Bezeichnung	Denominacion Beskrivelse	Descrizione Beschrijving	L.C.
1		NSS		1	SEM SERVIÇO EM SEPARADO, HF Aux, Arm Plumbing				
						NOT SERVICED SEPARA	NO SE REPARA POR SE	NON FORNITO SEPARAT	064N
					NON FORUNI SEPAREM	NICHT A SEP ERS-T LIEI	SERVICERES IKKE SEPA	NIET LOS VERKRIJGBAA	
2		NSS		1	SEM SERVIÇO EM SEPARADO, HF Gear Pump				
						NOT SERVICED SEPARA	NO SE REPARA POR SE	NON FORNITO SEPARAT	064N
					NON FORUNI SEPAREM	NICHT A SEP ERS-T LIEI	SERVICERES IKKE SEPA	NIET LOS VERKRIJGBAA	
3		NSS		1	SEM SERVIÇO EM SEPARADO, HF Aux, Chassis Plumbing				
						NOT SERVICED SEPARA	NO SE REPARA POR SE	NON FORNITO SEPARAT	064N
					NON FORUNI SEPAREM	NICHT A SEP ERS-T LIEI	SERVICERES IKKE SEPA	NIET LOS VERKRIJGBAA	
4		NSS		1	SEM SERVIÇO EM SEPARADO, Case Drain, Chassis Plumbing				
						NOT SERVICED SEPARA	NO SE REPARA POR SE	NON FORNITO SEPARAT	064N
					NON FORUNI SEPAREM	NICHT A SEP ERS-T LIEI	SERVICERES IKKE SEPA	NIET LOS VERKRIJGBAA	

AUX HYD, HIGH FLOW (SR175)(SV185)
AUX HYD, HIGH FLOW (SR175)(SV185)
AUX HYD, HIGH FLOW (SR175)(SV185)
AUX HYD, HIGH FLOW (SR175)(SV185)

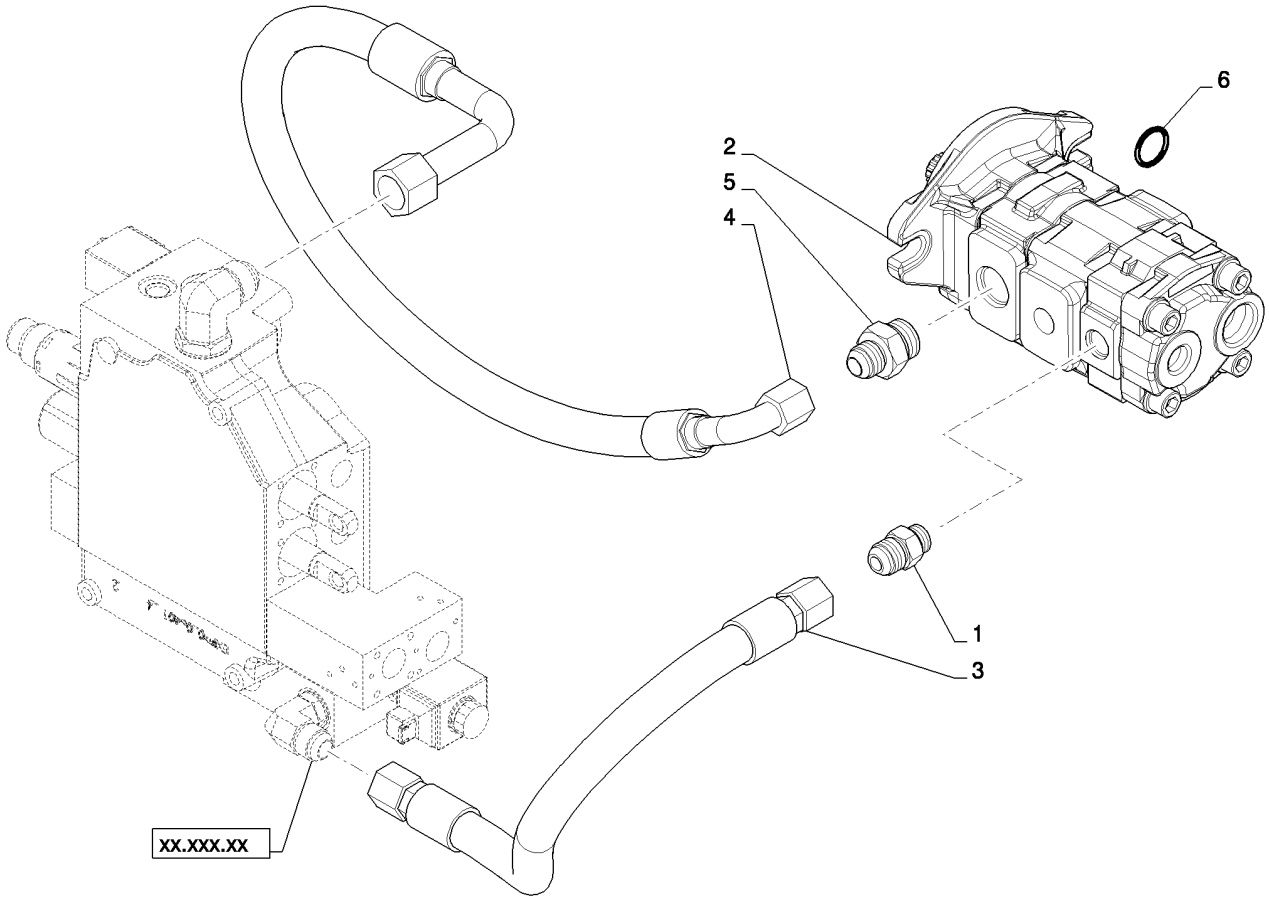

AUX HYD, HIGH FLOW (SR175)(SV185)
AUX HYD, HIGH FLOW (SR175)(SV185)
AUX HYD, HIGH FLOW (SR175)(SV185)
AUX HYD, HIGH FLOW (SR175)(SV185)

R	N	P.N.	MOD	Q	Denominação Description	Description Bezeichnung	Denominacion Beskrivelse	Descrizione Beschrijving	L.C.
1		86071		1	CONECTOR HIDRÁUL, 7/8"-14, 37° x 3/4"-16, O-Ring				
						HYD CONNECTOR	CONECTOR HIDRÁULIC	CONNETTORE IDRAULIC	020R
					CONNECTEUR HYDRAU	HYDR STECKVERBINDE	HYDRAULIKSTIK	HYDRAULISCHE AANSLU	
2		84256518		1	BOMBA, 24.9/12.5CC Gear	PUMP	BOMBA	POMPA	6570
					POMPE	PUMPE	PUMPE	POMP	
3		84329004		1	MANGUEIRA, Assembly, High Flow Supply				
						HOSE	TUBO	TUBO FLESSIBILE	030M
					FLEXIBLE	SCHLAUCH	SLANGE	SLANG	
4		84330502		1	MANGUEIRA, Assembly, Valve Supply				
						HOSE	TUBO	TUBO FLESSIBILE	030M
					FLEXIBLE	SCHLAUCH	SLANGE	SLANG	
5		86507102		1	CONECTOR HIDRÁUL, 7/8"-14, 37° x 1 1/16"-12, O-Ring				
						HYD CONNECTOR	CONECTOR HIDRÁULIC	CONNETTORE IDRAULIC	020R
					CONNECTEUR HYDRAU	HYDR STECKVERBINDE	HYDRAULIKSTIK	HYDRAULISCHE AANSLU	
6		84389262		1	KIT DE VEDAÇÃO, Double Pump				
						SEAL KIT	KIT DE JUNTAS	KIT GUARNIZIONI	630S
					KIT DE JOINTS	DICHTUNGSSATZ	PAKNINGSSÆT	KIT MET AFDICHTINGEN	

SV185

35.220.02	03	p1	01/11

AUX HYD, HIGH FLOW, CHASSIS PLUMBING (SV185)
AUX HYD, HIGH FLOW, CHASSIS PLUMBING (SV185)
AUX HYD, HIGH FLOW, CHASSIS PLUMBING (SV185)
AUX HYD, HIGH FLOW, CHASSIS PLUMBING (SV185)

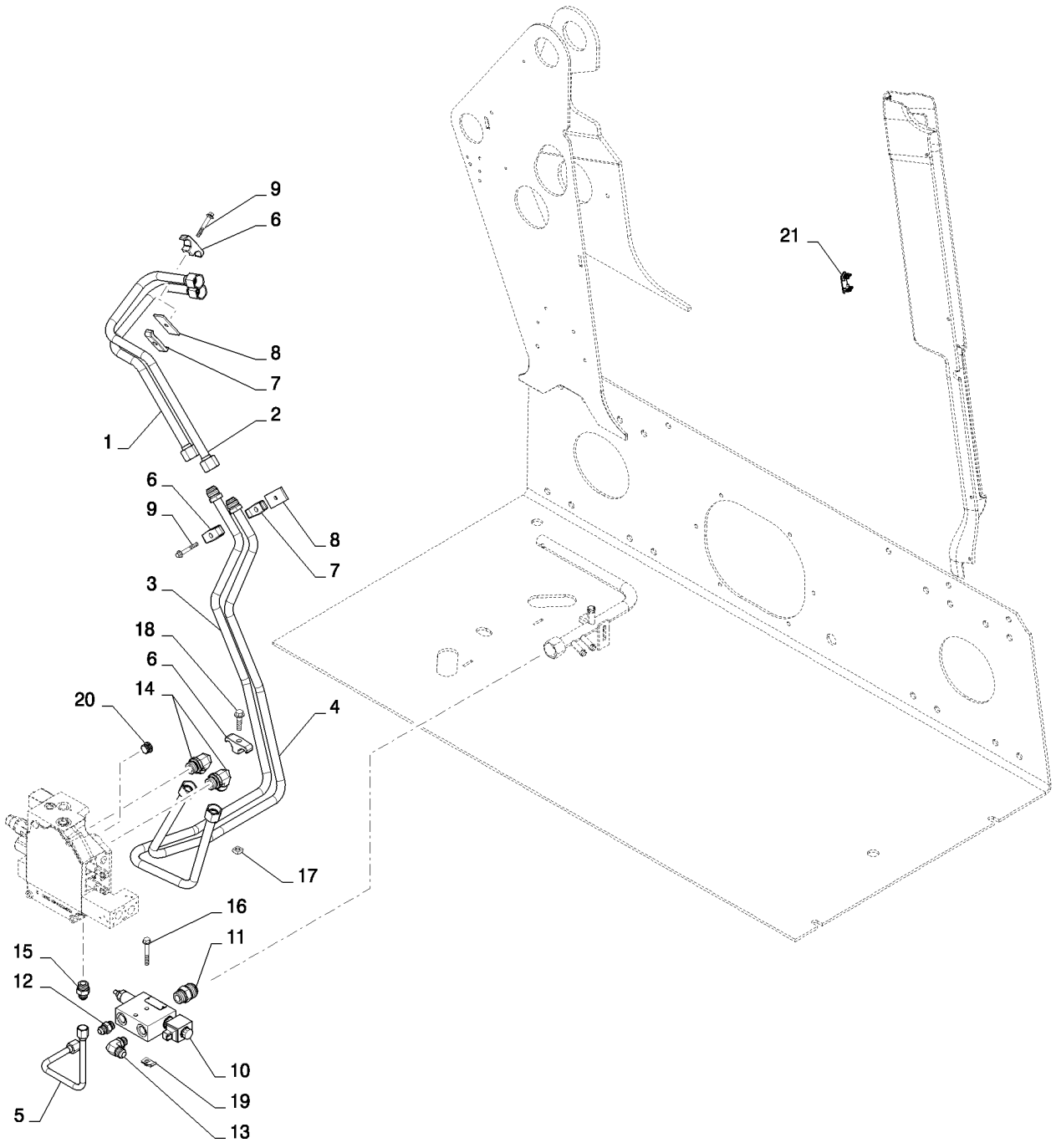

AUX HYD, HIGH FLOW, CHASSIS PLUMBING (SV185)
AUX HYD, HIGH FLOW, CHASSIS PLUMBING (SV185)
AUX HYD, HIGH FLOW, CHASSIS PLUMBING (SV185)
AUX HYD, HIGH FLOW, CHASSIS PLUMBING (SV185)

R	N	P.N.	MOD	Q	Denominação Description	Description Bezeichnung	Denominacion Beskrivelse	Descrizione Beschrijving	L.C.
1		84377521		1	TUBO, Aux, LH Tower	TUBE	TUBO	TUBO	195T
					TUBE	ROHR	RØR	LEIDING	
2		84377518		1	TUBO, Aux, LH Tower	TUBE	TUBO	TUBO	195T
					TUBE	ROHR	RØR	LEIDING	
3		84377506		1	TUBO, Aux, LDR Valve to LFT Tower				
						TUBE	TUBO	TUBO	195T
					TUBE	ROHR	RØR	LEIDING	
4		84377504		1	TUBO, Aux, LDR Valve to LFT Tower				
						TUBE	TUBO	TUBO	195T
					TUBE	ROHR	RØR	LEIDING	
5		84186146		1	TUBO, Assembly, HF Valve to LDR Valve				
						TUBE	TUBO	TUBO	195T
					TUBE	ROHR	RØR	LEIDING	
6		D124301		3	BRACADEIRA, Tube, 3/4	CLAMP	COLLAR	MORSETTO	1640
					COLLIER	SCHELLE	CLAMP	CLAMP	
7		D120614		2	BRACADEIRA, Tube	CLAMP	COLLAR	MORSETTO	1640
					COLLIER	SCHELLE	CLAMP	CLAMP	
8		257859A1		2	PLACA ESPACADORA, Bar				
						PLATE,SPACER	PLAQUETA	DISTANZ PIASTRA	Z324
					PLAQUETTE	PLAETTCHEN	PLATE,SPACER	PLATE,SPACER	
9		87582902		2	PARAFUSO, HXFLNGHD, M8 X 55				
						SELF-TAP SCREW	TORNILLO AUTORROSC	VITE AUTOFILETTANTE	062V
					VIS AUTOTARAUDEUSE	SELBSTSCHN SCHRAUE	SELVLÅSENDE BOLT	ZELFTAPPENDE SCHRO	
10		84256405		1	VÁLVULA HIDRÁULICA, HF Combiner				
						HYDRAULIC VALVE	VÁLVULA HIDRÁULICA	DISTRIBUTORE IDRAULI	010V
					SOUPAPE HYDRAULIQU	HYDRAULIKVENTIL	HYDRAULIKVENTIL	HYDRAULISCHE KLEP	
11		86512926		1	CONECTOR HIDRÁUL, 1 5/16"-12, 37º x 1 1/16"-12, O-Ring				
						HYD CONNECTOR	CONECTOR HIDRÁULIC	CONNETTORE IDRAULIC	020R
					CONNECTEUR HYDRAU	HYDR STECKVERBINDE	HYDRAULIKSTIK	HYDRAULISCHE AANSLI	
12		128818		1	CONECTOR HIDRÁUL, 3/4"-16, 37º x 3/4"-16, O-Ring				
						HYD CONNECTOR	CONECTOR HIDRÁULIC	CONNETTORE IDRAULIC	020R
					CONNECTEUR HYDRAU	HYDR STECKVERBINDE	HYDRAULIKSTIK	HYDRAULISCHE AANSLI	
13		86527		1	COTOVELO, 90º, 7/8"-14, 37º x 3/4"-16, O-Ring				
						ELBOW	CODO	GOMITO	085G
					COUDE	KNIESTÜCK	VINKELRØR	KNIESTUK	
14		322894		2	COTOVELO, 90º, 1 1/16"-12, 37º x 1 1/16"-12, O-Ring				
						ELBOW	CODO	GOMITO	085G
					COUDE	KNIESTÜCK	VINKELRØR	KNIESTUK	
15		128819		1	CONECTOR HIDRÁUL, 3/4"-16, 37º x 7/8"-14, O-Ring				
						HYD CONNECTOR	CONECTOR HIDRÁULIC	CONNETTORE IDRAULIC	020R
					CONNECTEUR HYDRAU	HYDR STECKVERBINDE	HYDRAULIKSTIK	HYDRAULISCHE AANSLI	
16		86511843		2	PARAFUSO, Hex Flg, M8 x 60, 8.8				
						BOLT	PERNO	BULLONE	140B
					VIS	SCHRAUBE	BOLT	BOUT	
17		230427A1		1	PORCA	NUT	TUERCA	DADO	5780
					ECROU	MUTTER	NUT	NUT	
18		9804263		1	PARAFUSO, Hex Flg, M10 x 40, 8.8				
						BOLT	PERNO	BULLONE	140B
					VIS	SCHRAUBE	BOLT	BOUT	

35.220.02	03	p2	01/11

AUX HYD, HIGH FLOW, CHASSIS PLUMBING (SV185)
AUX HYD, HIGH FLOW, CHASSIS PLUMBING (SV185)
AUX HYD, HIGH FLOW, CHASSIS PLUMBING (SV185)
AUX HYD, HIGH FLOW, CHASSIS PLUMBING (SV185)

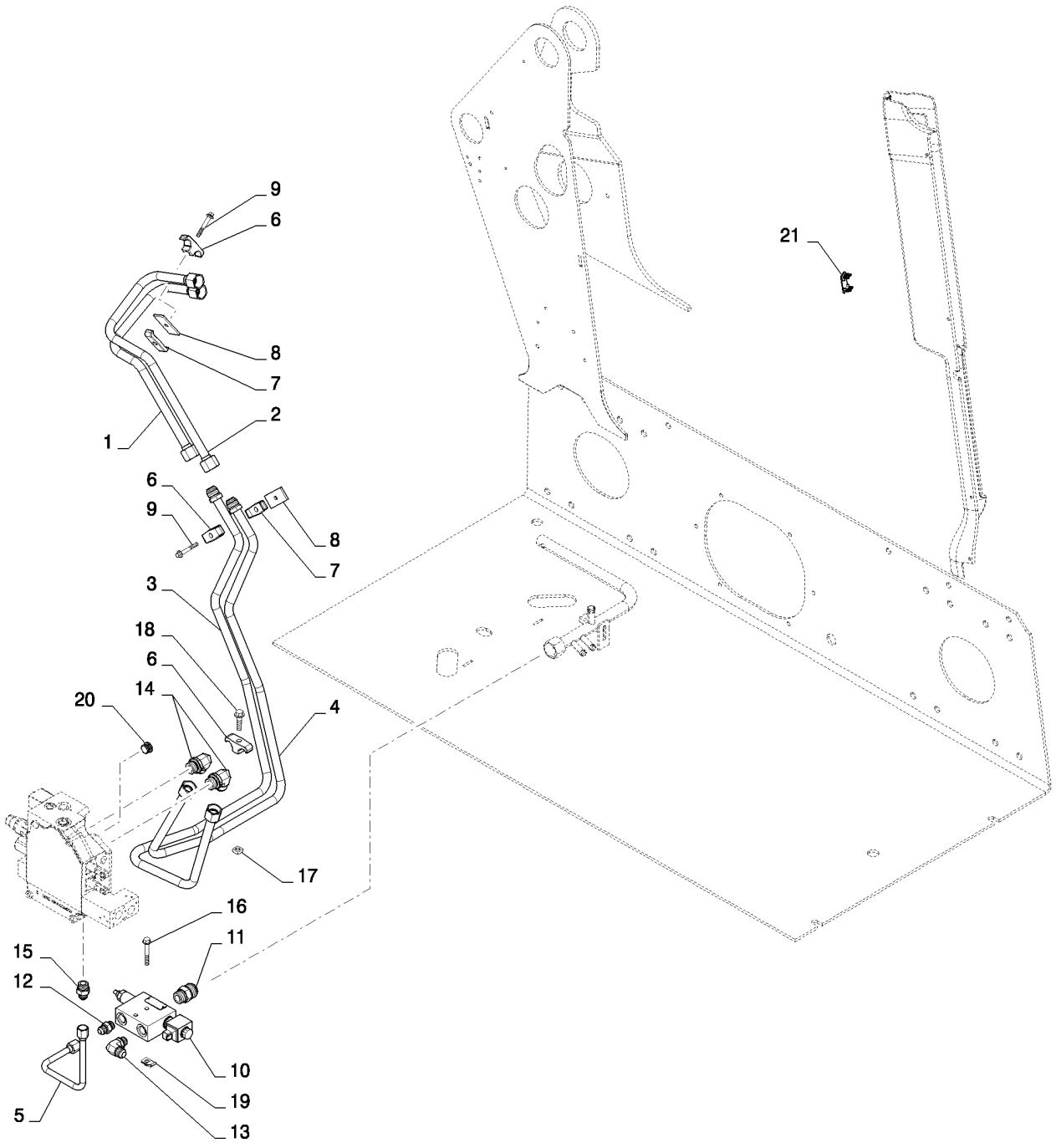

AUX HYD, HIGH FLOW, CHASSIS PLUMBING (SV185)
AUX HYD, HIGH FLOW, CHASSIS PLUMBING (SV185)
AUX HYD, HIGH FLOW, CHASSIS PLUMBING (SV185)
AUX HYD, HIGH FLOW, CHASSIS PLUMBING (SV185)

R	N	P.N.	MOD	Q	Denominação Description	Description Bezeichnung	Denominacion Beskrivelse	Descrizione Beschrijving	L.C.
19		87016586		2	PORCA, M8, U ECROU	NUT MUTTER	TUERCA MØTRIK	DADO MOER	010D
20		84373460		1	BUJÃO, Load Check BOUCHON	PLUG STOPFEN	TAPÓN PROP	TAPPO PLUG	050T
21		84251427		1	INTERRUPTOR, Rocker, High Flow CONTACTEUR	SWITCH SCHALTER	INTERRUPTOR KONTAKT	INTERRUTTORE SCHAKELAAR	075I

35.220.02	04	p1	08/11

AUX HYD, HIGH FLOW, ARM PLUMBING (SV185)
AUX HYD, HIGH FLOW, ARM PLUMBING (SV185)
AUX HYD, HIGH FLOW, ARM PLUMBING (SV185)
AUX HYD, HIGH FLOW, ARM PLUMBING (SV185)

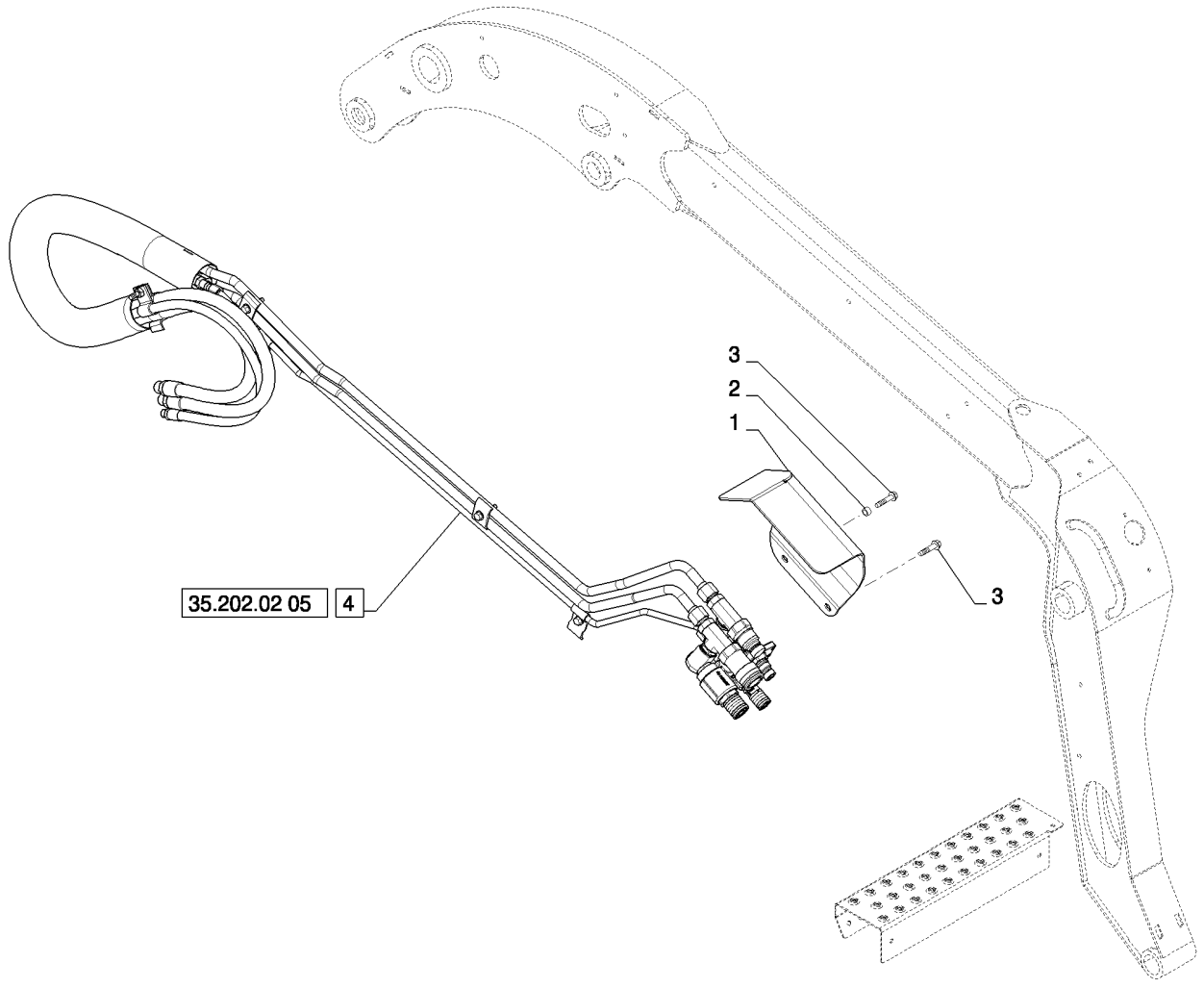

AUX HYD, HIGH FLOW, ARM PLUMBING (SV185)
AUX HYD, HIGH FLOW, ARM PLUMBING (SV185)
AUX HYD, HIGH FLOW, ARM PLUMBING (SV185)
AUX HYD, HIGH FLOW, ARM PLUMBING (SV185)

R	N	P.N.	MOD	Q	Denominação Description	Description Bezeichnung	Denominacion Beskrivelse	Descrizione Beschrijving	L.C.
1		84306937		1	PLACA DE COBERTURA, Hydraulic Tan				
						COVER PLATE	PLACA DE CUBIERTA	PIASTRA DI COPERTUR/	110P
					COUVERCLE	ABDECKPLATTE	DÆKPLADE	AFSCHERMPLAAT	
2		84306875		1	ESPAÇADOR	SPACER	SEPARADOR	DISTANZIALE	075D
					ENTRETOISE	DISTANZSTÜCK	AFSTANDSSTYKKE	AFSTANDSSTUK	
3		87030530		2	PARAFUSO, 3/8 X 1.75 TT	HW ZND			
						SCREW	TORNILLO	VITE	040V
					VIS	SCHRAUBE	SKRUE	SCHROEF	
4		NSS		1	SEM SERVIÇO EM SEPARADO, Installation, HF Aux, Arm Plumbing - Basic				
						NOT SERVICED SEPARA	NO SE REPARA POR SE	NON FORNITO SEPARAT	064N
					NON FORUNI SEPAREM	NICHT A SEP ERS-T LIEI	SERVICERES IKKE SEPA	NIET LOS VERKRIJGBAA	

SV185

35.220.02	05	p1	03/11

AUX HYD, HIGH FLOW, ARM PLUMBING BASIC (SV185)
AUX HYD, HIGH FLOW, ARM PLUMBING BASIC (SV185)
AUX HYD, HIGH FLOW, ARM PLUMBING BASIC (SV185)
AUX HYD, HIGH FLOW, ARM PLUMBING BASIC (SV185)

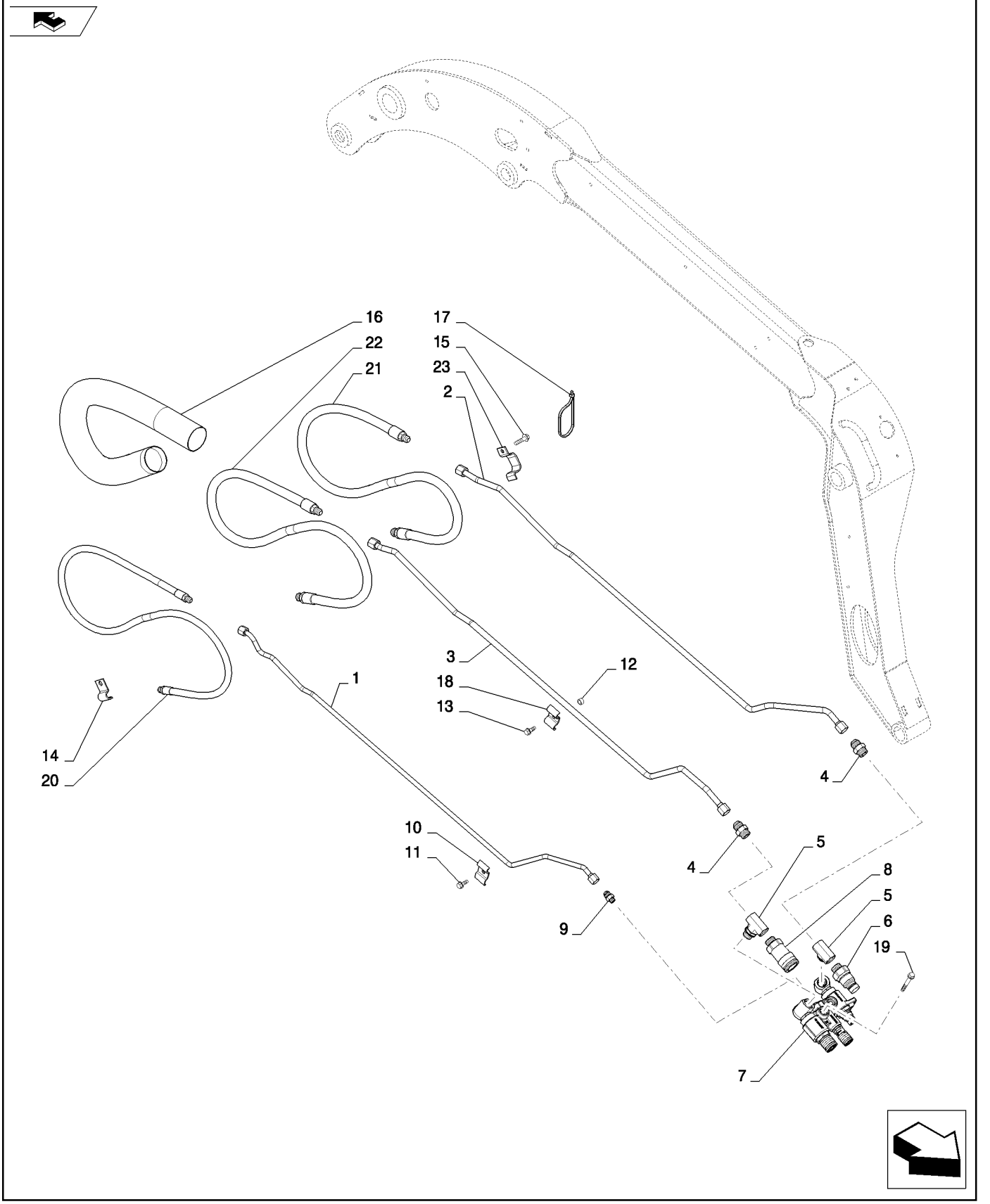

AUX HYD, HIGH FLOW, ARM PLUMBING BASIC (SV185)
AUX HYD, HIGH FLOW, ARM PLUMBING BASIC (SV185)
AUX HYD, HIGH FLOW, ARM PLUMBING BASIC (SV185)
AUX HYD, HIGH FLOW, ARM PLUMBING BASIC (SV185)

R	N	P.N.	MOD	Q	Denominação Description	Description Bezeichnung	Denominacion Beskrivelse	Descrizione Beschrijving	L.C.
1		84421506		1	TUBO HIDRÁULICO, Hyd, Case Drain				
						HYD. TUBE	TUBO HIDRÁULICO	TUBO IDRAULICO	190T
					TUYAU HYDRAULIQUE	HYDRAULIKLEITUNG	HYD. RØR	HYDRAULISCHE LEIDIN(	
2		84331840		1	TUBO RÍGIDO, Hyd, Assembly, High Flow				
						RIGID TUBE	TUBO RÍGIDO	TUBO RIGIDO	193T
					TUYAU RIGIDE	ROHR	STIFT RØR	VASTE LEIDING	
3		84331838		1	TUBO RÍGIDO, Hyd, Assembly, High Flow				
						RIGID TUBE	TUBO RÍGIDO	TUBO RIGIDO	193T
					TUYAU RIGIDE	ROHR	STIFT RØR	VASTE LEIDING	
4		322896		2	CONECTOR HIDRÁUL, 1 1/16"-12, 37º x 1 1/16"-12, O-Ring				
						HYD CONNECTOR	CONECTOR HIDRÁULIC(	CONNETTORE IDRAULIC	020R
					CONNECTEUR HYDRAU	HYDR STECKVERBINDE	HYDRAULIKSTIK	HYDRAULISCHE AANSLI	
5		84255994		2	CONEXÃO, Tee Adj, -12 ORB				
						FITTING	ACOPLAMIENTO	RACCORDO	3300
					RACCORD	ARMATUR	FITTING	AANSLUITING	
6		84257183		1	CONEXÃO, Male, Quick Coupler				
						FITTING	ACOPLAMIENTO	RACCORDO	3300
					RACCORD	ARMATUR	FITTING	AANSLUITING	
7		84259689		1	VÁLVULA, Quick Attach, HFVALVE		VÁLVULA	VALVOLA	9620
					SOUPAPE	VENTIL	VENTIL	KLEP	
8		84257182		1	CONEXÃO, Female, Quick Coupler				
						FITTING	ACOPLAMIENTO	RACCORDO	3300
					RACCORD	ARMATUR	FITTING	AANSLUITING	
9		86509028		1	CONECTOR HIDRÁUL, 3/4"-16, 37º x 9/16"-18, O-Ring				
						HYD CONNECTOR	CONECTOR HIDRÁULIC(	CONNETTORE IDRAULIC	020R
					CONNECTEUR HYDRAU	HYDR STECKVERBINDE	HYDRAULIKSTIK	HYDRAULISCHE AANSLI	
10		84254056		2	BRAÇADEIRA MANGUEIRA, Butterfly Tube				
						HOSE CLAMP	ABRAZADERA DE MANG	FASCETTA STRINGITUB	P729
					COLLIER POUR FLEXIBL	SCHLAUCHSCHELLE	SLANGEKLEMME	SLANGKLEM	
11		280476		4	PARAFUSO, Hex Wash Hd, 3/8" x 1"				
						SELF-TAP SCREW	TORNILLO AUTORROSC	VITE AUTOFILETTANTE	062V
					VIS AUTOTARAUDEUSE	SELBSTSCHN SCHRAUE	SELVLÅSENDE BOLT	ZELFTAPPENDE SCHRO	
12		84277083		2	ESPAÇADOR TUBO	TUBE SPACER	ESPACIADOR DE TUBO	DISTANZIALE TUBO	Z038
					TUBE ENTRETOISE	DISTANZROHR	SLANGE, AFSTANDSSTY	AFSTANDSSTUK V. LEID	
13		87030530		2	PARAFUSO, 3/8 X 1.75 TT HW ZND				
						SCREW	TORNILLO	VITE	040V
					VIS	SCHRAUBE	SKRUE	SCHROEF	
14		84423570		1	GUIA, Hose	GUIDE	GUÍA	GUIDA	145G
					GUIDE	FÜHRUNG	STYR	GELEIDER	
15		86625201		2	PARAFUSO, Hex Flg Hd, M8 x 30				
						SELF-TAP SCREW	TORNILLO AUTORROSC	VITE AUTOFILETTANTE	062V
					VIS AUTOTARAUDEUSE	SELBSTSCHN SCHRAUE	SELVLÅSENDE BOLT	ZELFTAPPENDE SCHRO	
16		84423574		1	GUIA, Hose	GUIDE	GUÍA	GUIDA	145G
					GUIDE	FÜHRUNG	STYR	GELEIDER	
17		L18331		4	PRENDEDOR DE CABOS, Nylon Tie 15.5in.				
						CABLE STRAP	BANDA DE CABLE	FASCETTA PER CAVO	P716
					BRIDE DE CABLE	KABELBINDER	KABELSTROP	BUNDELBAND	
18		84277076		2	BRAÇADEIRA TUBO, Tube	PIPE CLAMP	ABRAZADERA DE TUBO	FERMO TUBO	Z430
					COLLIER DE TUYAU	ROHRSCHELLE	RØRKLEMME	LEIDINGKLEM	

35.220.02	05	p2	03/11

AUX HYD, HIGH FLOW, ARM PLUMBING BASIC (SV185)
AUX HYD, HIGH FLOW, ARM PLUMBING BASIC (SV185)
AUX HYD, HIGH FLOW, ARM PLUMBING BASIC (SV185)
AUX HYD, HIGH FLOW, ARM PLUMBING BASIC (SV185)

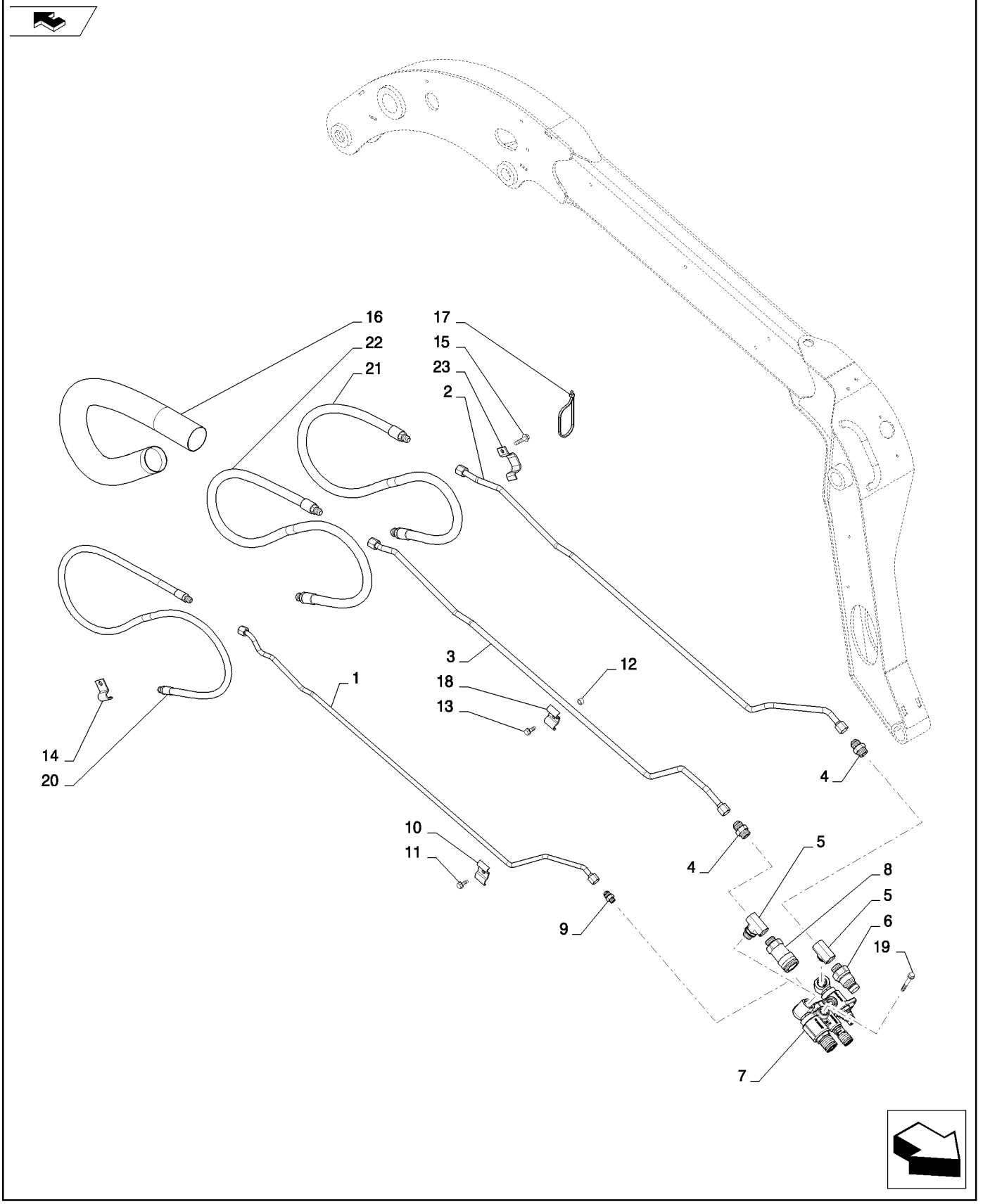

AUX HYD, HIGH FLOW, ARM PLUMBING BASIC (SV185)
AUX HYD, HIGH FLOW, ARM PLUMBING BASIC (SV185)
AUX HYD, HIGH FLOW, ARM PLUMBING BASIC (SV185)
AUX HYD, HIGH FLOW, ARM PLUMBING BASIC (SV185)

R	N	P.N.	MOD	Q	Denominação Description	Description Bezeichnung	Denominacion Beskrivelse	Descrizione Beschrijving	L.C.
19		**84331287**		2	PARAFUSO, Tapping, 3/8-16 X 3 TT				
						SCREW	TORNILLO	VITE	040V
					VIS	SCHRAUBE	SKRUE	SCHROEF	
20		**84468943**		1	CONJ. MANGUEIRA, Assembly, Case Drain				
						HOSE ASSY.	CONJUNTO DE TUBOS	COMPLESS. TUBO FLES	P457
					ENSEMBLE DE FLEXIBLE	SCHLAUCHBAUGRUPPE	SLANGEENHED	SLANGEENHEID	
21		**84421509**		1	CONJ. MANGUEIRA, Aux	HOSE ASSY.	CONJUNTO DE TUBOS	COMPLESS. TUBO FLES	P457
					ENSEMBLE DE FLEXIBLE	SCHLAUCHBAUGRUPPE	SLANGEENHED	SLANGEENHEID	
22		**84468327**		1	CONJ. MANGUEIRA, Hose Assy, Aux				
						HOSE ASSY.	CONJUNTO DE TUBOS	COMPLESS. TUBO FLES	P457
					ENSEMBLE DE FLEXIBLE	SCHLAUCHBAUGRUPPE	SLANGEENHED	SLANGEENHEID	

35.359.01	01	p1	02/11

PUMP, EH AND CONTROL VALVE (SR175,SV185)
PUMP, EH AND CONTROL VALVE (SR175,SV185)
PUMP, EH AND CONTROL VALVE (SR175,SV185)
PUMP, EH AND CONTROL VALVE (SR175,SV185)

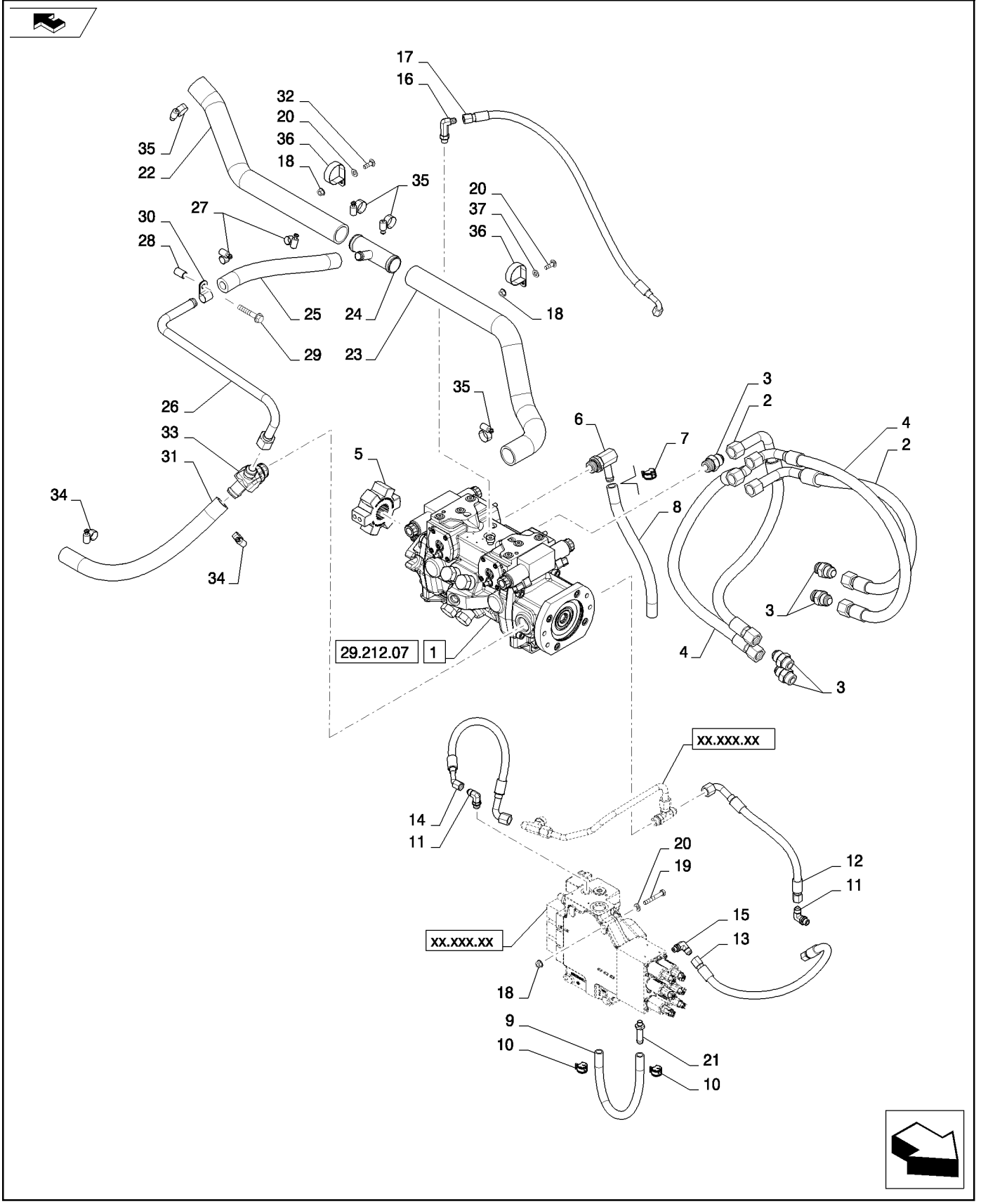

PUMP, EH AND CONTROL VALVE (SR175,SV185)
PUMP, EH AND CONTROL VALVE (SR175,SV185)
PUMP, EH AND CONTROL VALVE (SR175,SV185)
PUMP, EH AND CONTROL VALVE (SR175,SV185)

R	N	P.N.	MOD	Q	Denominação Description Bezeichnung	Denominacion Beskrivelse	Descrizione Beschrijving	L.C.
1		84302364		1	BOMBA HIDRÁULICA, EH, 35cc, 360BAR HYDRAULIC PUMP	BOMBA HIDRÁULICO	POMPA IDRAULICA	155P
					POMPE HYDRAULIQUE HYDRAULIKPUMPE	HYDRAULIKPUMPE	HYDRAULISCHE POMP	
2		84258854		2	TUBO FLEXÍVEL, Assembly, Loop FLEXIBLE HOSE	TUBO FLEXIBLE	TUBO FLESSIBILE	192T
					TUYAU FLEXIBLE BIEGSAMER SCHLAUCH	FLEKSIBEL SLANGE	FLEXIBELE SLANG	
3		322896		8	CONECTOR HIDRÁUL, 1 1/16"-12, 37º x 1 1/16"-12, O-Ring HYD CONNECTOR	CONECTOR HIDRÁULIC	CONNETTORE IDRAULIC	020R
					CONNECTEUR HYDRAU HYDR STECKVERBINDE	HYDRAULIKSTIK	HYDRAULISCHE AANSLU	
4		84412421		2	CONJ. MANGUEIRA, Assembly, Loop HOSE ASSY.	CONJUNTO DE TUBOS	COMPLESS. TUBO FLES	P457
					ENSEMBLE DE FLEXIBLE SCHLAUCHBAUGRUPPE	SLANGEENHED	SLANGEENHEID	
5		87711337		1	ENGATE, Drive, Star COUPLING	ACOPLAMIENTO	GIUNTO	Z321
					RACCORD KUPPLUNG	KOBLING	KOPPELING	
6		84273629		1	CONEXÃO, M10 X 1 FITTING	ACOPLAMIENTO	RACCORDO	3300
					RACCORD ARMATUR	FITTING	AANSLUITING	
7		87443511		2	BRAÇADEIRA, Spring CLAMP	ABRAZADERA	MORSETTO	120M
					COLLIER KLEMME	SPÆNDEBÅND	KLEM	
8		84273645		1	MANGUEIRA, Pump Drain HOSE	TUBO	TUBO FLESSIBILE	030M
					FLEXIBLE SCHLAUCH	SLANGE	SLANG	
9		84373394		1	MANGUEIRA, EH Aux to EH Aux Drain HOSE	TUBO	TUBO FLESSIBILE	030M
					FLEXIBLE SCHLAUCH	SLANGE	SLANG	
10		87443510		2	BRAÇADEIRA MANGUEIRA, M20 HOSE CLAMP	ABRAZADERA DE MANG	FASCETTA STRINGITUB	P729
					COLLIER POUR FLEXIBL SCHLAUCHSCHELLE	SLANGEKLEMME	SLANGKLEM	
11		76344		2	COTOVELO, 90º, 9/16"-18, 37º x 9/16"-18, O-Ring ELBOW	CODO	GOMITO	085G
					COUDE KNIESTÜCK	VINKELRØR	KNIESTUK	
12		84299737		1	TUBO FLEXÍVEL, Assembly, Brake Charge, EH FLEXIBLE HOSE	TUBO FLEXIBLE	TUBO FLESSIBILE	192T
					TUYAU FLEXIBLE BIEGSAMER SCHLAUCH	FLEKSIBEL SLANGE	FLEXIBELE SLANG	
13		84288343		1	TUBO FLEXÍVEL, Assembly, EH Control to Brake FLEXIBLE HOSE	TUBO FLEXIBLE	TUBO FLESSIBILE	192T
					TUYAU FLEXIBLE BIEGSAMER SCHLAUCH	FLEKSIBEL SLANGE	FLEXIBELE SLANG	
14		84299736		1	TUBO FLEXÍVEL, Assembly, EH LV Interlock FLEXIBLE HOSE	TUBO FLEXIBLE	TUBO FLESSIBILE	192T
					TUYAU FLEXIBLE BIEGSAMER SCHLAUCH	FLEKSIBEL SLANGE	FLEXIBELE SLANG	
15		86512936		1	COTOVELO, 90º, 9/16"-18, 37º x 7/16"-20, O-Ring ELBOW	CODO	GOMITO	085G
					COUDE KNIESTÜCK	VINKELRØR	KNIESTUK	
16		86526		2	COTOVELO, 90º, 9/16"-18, 37º x 9/16"-18, LG ELBOW	CODO	GOMITO	085G
					COUDE KNIESTÜCK	VINKELRØR	KNIESTUK	
17		84309599		1	TUBO FLEXÍVEL, Assembly, EH Brake Nor FLEXIBLE HOSE	TUBO FLEXIBLE	TUBO FLESSIBILE	192T
					TUYAU FLEXIBLE BIEGSAMER SCHLAUCH	FLEKSIBEL SLANGE	FLEXIBELE SLANG	

SV185

PUMP, EH AND CONTROL VALVE (SR175,SV185)
PUMP, EH AND CONTROL VALVE (SR175,SV185)
PUMP, EH AND CONTROL VALVE (SR175,SV185)
PUMP, EH AND CONTROL VALVE (SR175,SV185)

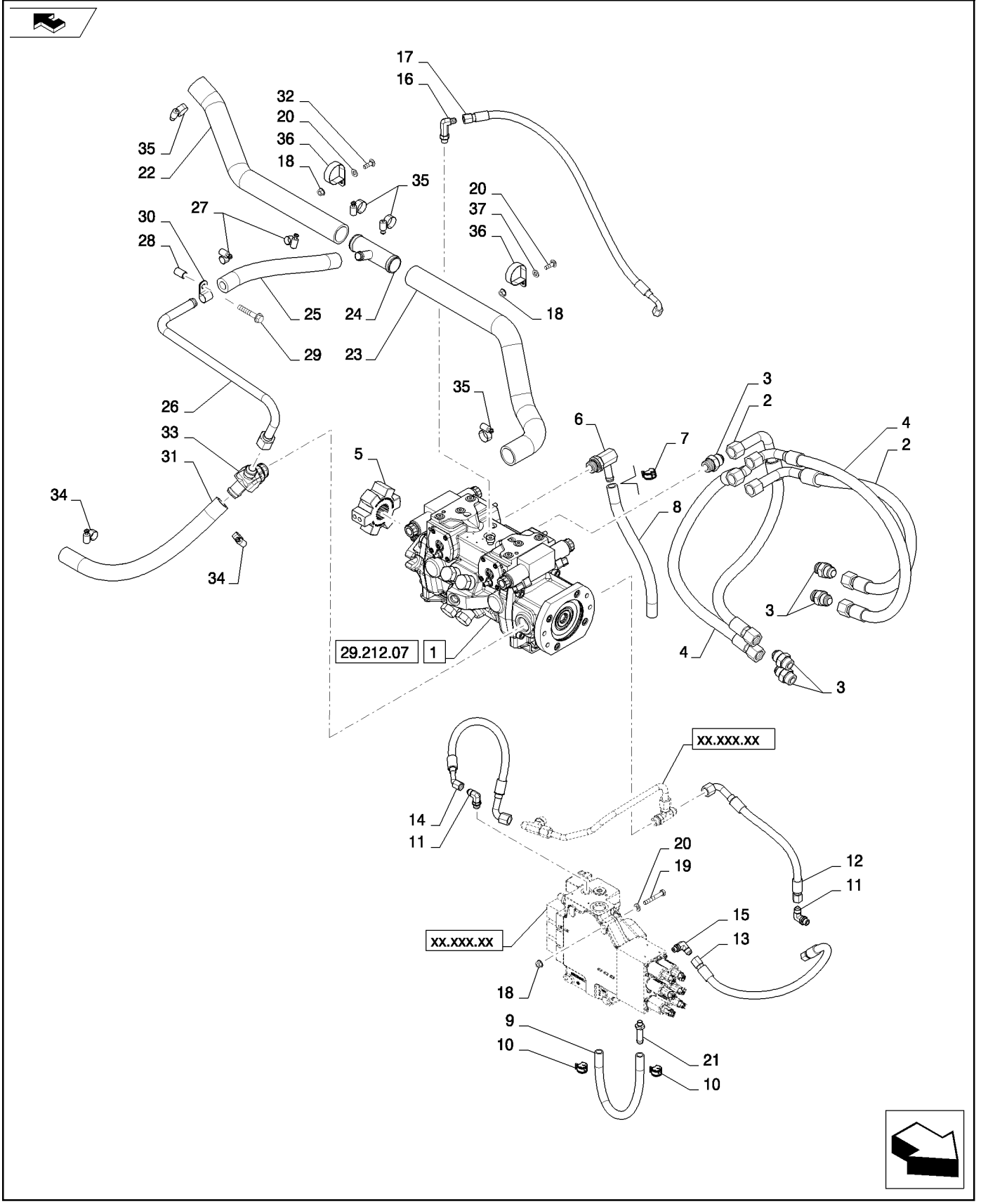

PUMP, EH AND CONTROL VALVE (SR175,SV185)
PUMP, EH AND CONTROL VALVE (SR175,SV185)
PUMP, EH AND CONTROL VALVE (SR175,SV185)
PUMP, EH AND CONTROL VALVE (SR175,SV185)

R	N	P.N.	MOD	Q	Denominação Description	Description Bezeichnung	Denominacion Beskrivelse	Descrizione Beschrijving	L.C.
18		**9804277**		3	PORCA, M8 x 1.25, Flg, Cl 8				
						NUT	TUERCA	DADO	010D
					ECROU	MUTTER	MØTRIK	MOER	
19		**16044321**		3	PARAFUSO, Hex, M8 x 55, 8.8				
						SCREW	TORNILLO	VITE	040V
					VIS	SCHRAUBE	SKRUE	SCHROEF	
20		**87655042**		5	ARRUELA ESPECIAL, M8, 8.80 X 17.5 X 2.2 HTS				
						SPECIAL WASHER	ARANDELA ESPECIAL	RONDELLA SPECIALE	Z333
					RONDELLE SPECIALE	SPEZIALUNTERLEGSCH	SPECIALSKIVE	SPECIALE RING	
21		**87314487**		1	CONECTOR HIDRÁUL, Bead, Hose, 1/2in				
						HYD CONNECTOR	CONECTOR HIDRÁULIC(	CONNETTORE IDRAULIC	020R
					CONNECTEUR HYDRAU	HYDR STECKVERBINDE	HYDRAULIKSTIK	HYDRAULISCHE AANSLI	
22		**84349294**		1	MANGUEIRA, Gear Pump, Suction				
						HOSE	TUBO	TUBO FLESSIBILE	030M
					FLEXIBLE	SCHLAUCH	SLANGE	SLANG	
23		**84349295**		1	MANGUEIRA, Gear Pump, Suction				
						HOSE	TUBO	TUBO FLESSIBILE	030M
					FLEXIBLE	SCHLAUCH	SLANGE	SLANG	
24		**84344919**		1	T, -24 Bead, -24 Bead, -12 Bead				
						TEE	RACOR EN T	PEZZO A T	9020
					RACCORD EN T	T-STÜCK	T-STYKKE	T-STUK	
25		**84344942**		1	MANGUEIRA, Tandem Supply				
						HOSE	TUBO	TUBO FLESSIBILE	030M
					FLEXIBLE	SCHLAUCH	SLANGE	SLANG	
26		**84344934**		1	TUBO RÍGIDO, Hydraulic, Tandem Supply				
						RIGID TUBE	TUBO RÍGIDO	TUBO RIGIDO	193T
					TUYAU RIGIDE	ROHR	STIFT RØR	VASTE LEIDING	
27		**86625021**		2	BRAÇADEIRA MANGUEIRA, #12, 0.69/1.25 Type F Worm				
						HOSE CLAMP	ABRAZADERA DE MANG	FASCETTA STRINGITUB	P729
					COLLIER POUR FLEXIBL	SCHLAUCHSCHELLE	SLANGEKLEMME	SLANGKLEM	
28		**84277083**		1	ESPAÇADOR TUBO	TUBE SPACER	ESPACIADOR DE TUBO	DISTANZIALE TUBO	Z038
					TUBE ENTRETOISE	DISTANZROHR	SLANGE, AFSTANDSSTY	AFSTANDSSTUK V. LEID	
29		**9804264**		1	PARAFUSO, Hex Flg, M10 x 50, 8.8				
						BOLT	PERNO	BULLONE	140B
					VIS	SCHRAUBE	BOLT	BOUT	
30		**86637999**		1	BRAÇADEIRA, 3/4", Insul, 7/16" Bolt				
						CLAMP	ABRAZADERA	MORSETTO	120M
					COLLIER	KLEMME	SPÆNDEBÅND	KLEM	
31		**84349308**		1	MANGUEIRA, Charge Supply				
						HOSE	TUBO	TUBO FLESSIBILE	030M
					FLEXIBLE	SCHLAUCH	SLANGE	SLANG	
32		**308761**		2	PARAFUSO, Short NK, M8 x 25, Cl8.8, Full Thd				
						CARRIAGE BOLT	PERNO ALOMADO	BULLONE A TESTA TONI	P123
					VIS A TETE BOMBEE	SCHLOSSSCHRAUBE	BRÆDDEBOLT	SLOTBOUT	
33		**84344925**		1	COTOVELO 45, Fitting, 45 -16 Bead, -16 Bead, -12MJ				
						45 ELBOW	CODO 45	GOMITO A 45°	A044
					COUDE A 45°	45-GRAD-KNIESTÜCK	VINKELRØR, 45	KNIESTUK 45º	

PUMP, EH AND CONTROL VALVE (SR175,SV185)
PUMP, EH AND CONTROL VALVE (SR175,SV185)
PUMP, EH AND CONTROL VALVE (SR175,SV185)
PUMP, EH AND CONTROL VALVE (SR175,SV185)

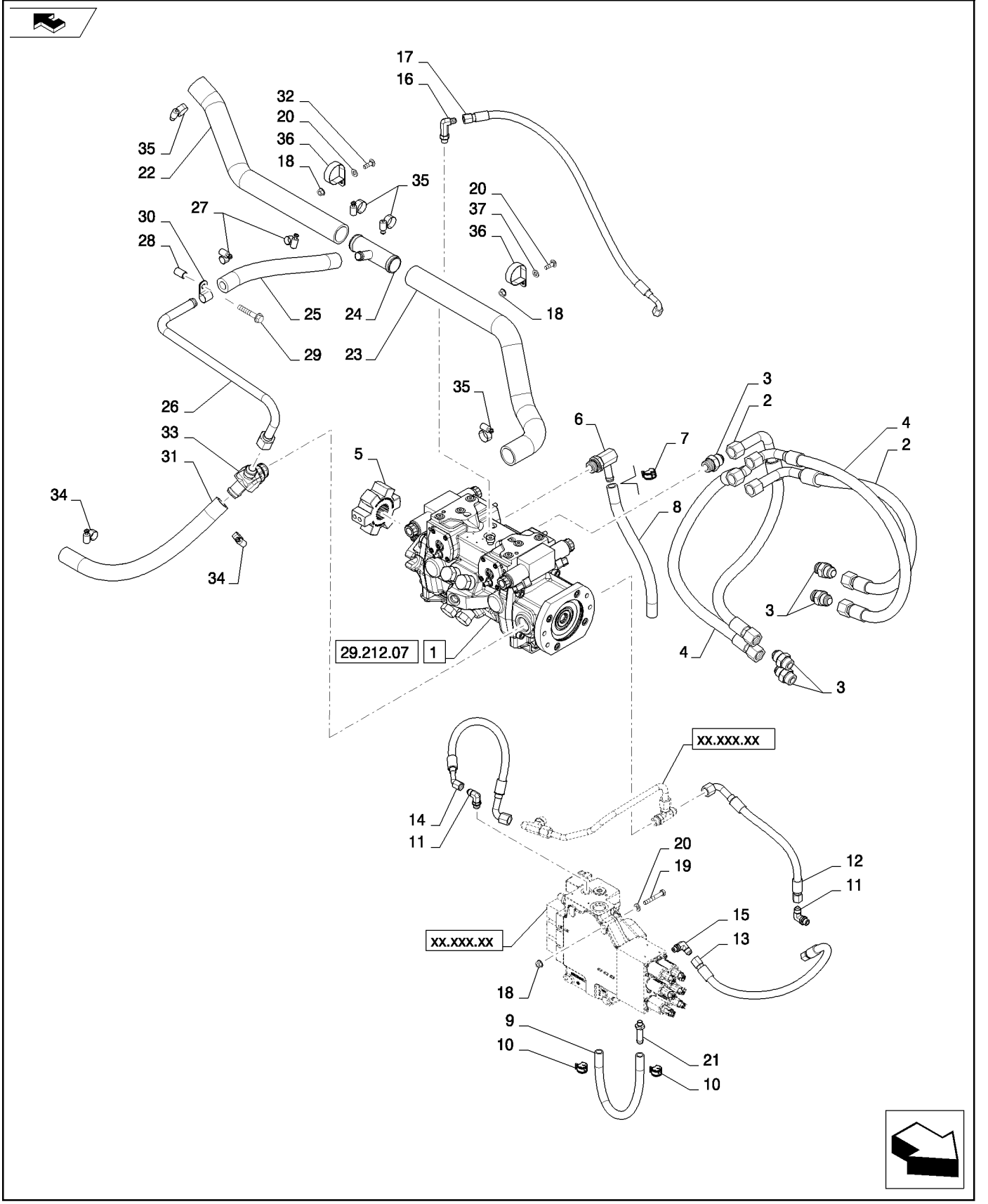

PUMP, EH AND CONTROL VALVE (SR175,SV185)
PUMP, EH AND CONTROL VALVE (SR175,SV185)
PUMP, EH AND CONTROL VALVE (SR175,SV185)
PUMP, EH AND CONTROL VALVE (SR175,SV185)

R	N	P.N.	MOD	Q	Denominação Description	Description Bezeichnung	Denominacion Beskrivelse	Descrizione Beschrijving	L.C.
34		**507586**		2	BRAÇADEIRA MANGUEIRA, #20, 0.81/1.75 Type F Worm				
						HOSE CLAMP	ABRAZADERA DE MANG	FASCETTA STRINGITUB	P729
					COLLIER POUR FLEXIBL	SCHLAUCHSCHELLE	SLANGEKLEMME	SLANGKLEM	
35		**513309**		4	BRAÇADEIRA MANGUEIRA, #24, 1.06/2.00 Type F Worm				
						HOSE CLAMP	ABRAZADERA DE MANG	FASCETTA STRINGITUB	P729
					COLLIER POUR FLEXIBL	SCHLAUCHSCHELLE	SLANGEKLEMME	SLANGKLEM	
36		**84265306**		2	BRAÇADEIRA, 47.6MM M8 Bolt ZND				
						CLAMP	ABRAZADERA	MORSETTO	120M
					COLLIER	KLEMME	SPÆNDEBÅND	KLEM	

SV185

35.359.01	02	p1	02/11

PUMP, EH AND CONTROL VALVE (SR175,SV185)
PUMP, EH AND CONTROL VALVE (SR175,SV185)
PUMP, EH AND CONTROL VALVE (SR175,SV185)
PUMP, EH AND CONTROL VALVE (SR175,SV185)

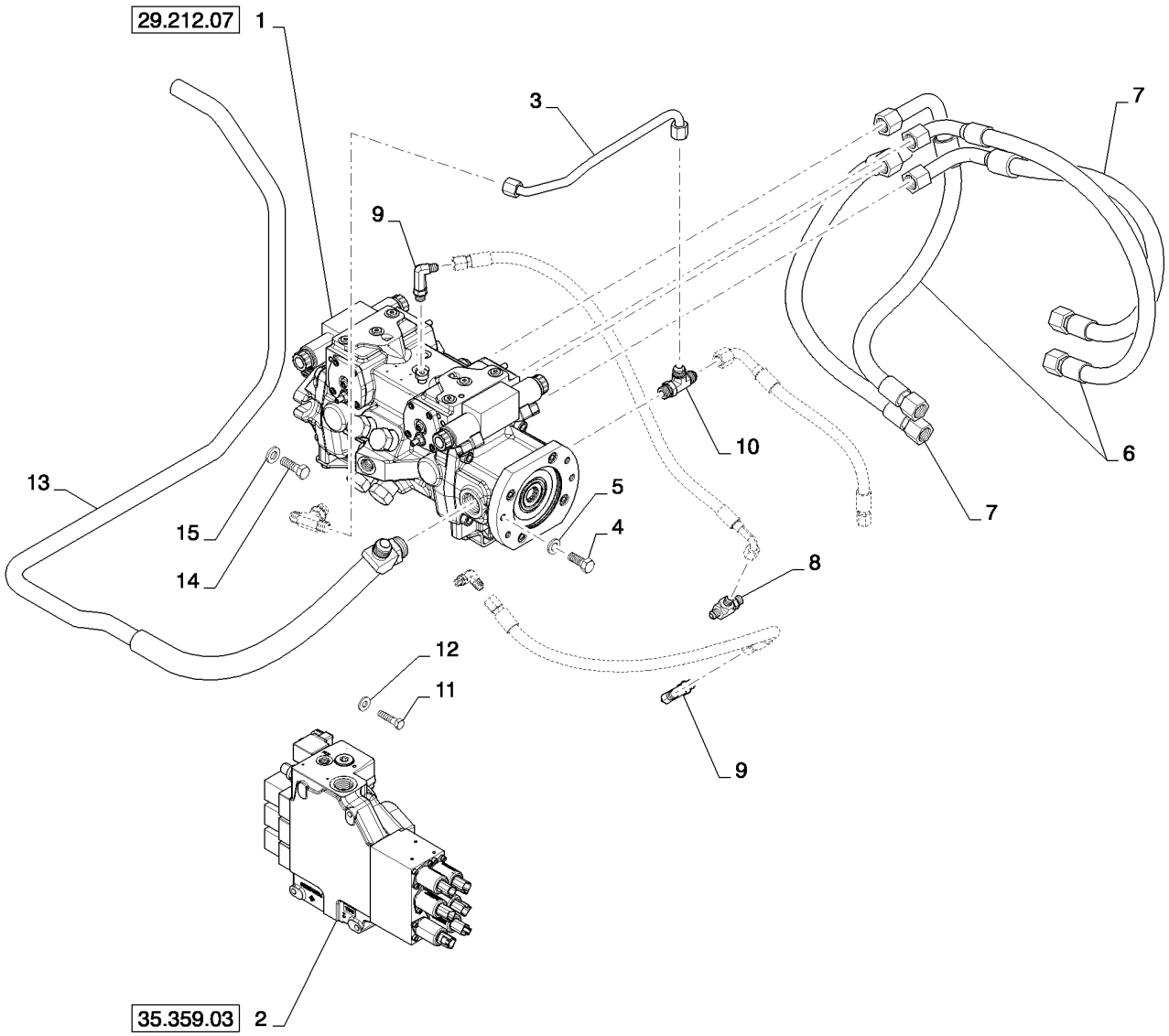

PUMP, EH AND CONTROL VALVE (SR175,SV185)
PUMP, EH AND CONTROL VALVE (SR175,SV185)
PUMP, EH AND CONTROL VALVE (SR175,SV185)
PUMP, EH AND CONTROL VALVE (SR175,SV185)

R	N	P.N.	MOD	Q	Denominação Description Bezeichnung	Denominacion Beskrivelse	Descrizione Beschrijving	L.C.
1		84302364		1	BOMBA HIDRÁULICA, EH, 35cc, 360BAR; See Figure 29.212.07 HYDRAULIC PUMP POMPE HYDRAULIQUE HYDRAULIKPUMPE	BOMBA HIDRÁULICO HYDRAULIKPUMPE	POMPA IDRAULICA HYDRAULISCHE POMP	155P
2		84312508		1	VÁLVULA HIDRÁULICA, EH Control with Harness; See Figure 35.359.03 HYDRAULIC VALVE SOUPAPE HYDRAULIQU HYDRAULIKVENTIL	VÁLVULA HIDRÁULICA HYDRAULIKVENTIL	DISTRIBUTORE IDRAULI HYDRAULISCHE KLEP	010V
3		84349300		1	TUBO RÍGIDO, Hydraulic, EH Charge Supply RIGID TUBE TUYAU RIGIDE ROHR	TUBO RÍGIDO STIFT RØR	TUBO RIGIDO VASTE LEIDING	193T
4		87670		2	PARAFUSO, Hex, 1/2"-13 x 1 1/4", G5, Full Thd BOLT VIS SCHRAUBE	PERNO BOLT	BULLONE BOUT	140B
5		86625255		2	ARRUELA PLANA, M13.5 x 24.5 x 3, HT WASHER RONDELLE UNTERLEGSCHEIBE	ARANDELA FLADSKIVE	RONDELLA SLUITRING	131R
6		84258852		2	TUBO FLEXÍVEL, Assembly, Loop FLEXIBLE HOSE TUYAU FLEXIBLE BIEGSAMER SCHLAUCH	TUBO FLEXIBLE FLEKSIBEL SLANGE	TUBO FLESSIBILE FLEXIBELE SLANG	192T
7		84258853		2	TUBO FLEXÍVEL, Assembly, Loop FLEXIBLE HOSE TUYAU FLEXIBLE BIEGSAMER SCHLAUCH	TUBO FLEXIBLE FLEKSIBEL SLANGE	TUBO FLESSIBILE FLEXIBELE SLANG	192T
8		86513020		1	T, 9/16"-18, 37º x 9/16"-18, O-Ring Run TEE RACCORD EN T T-STÜCK	RACOR EN T T-STYKKE	PEZZO A T T-STUK	9020
9		86526		2	COTOVELO, 90º, 9/16"-18, 37º x 9/16"-18, LG ELBOW COUDE KNIESTÜCK	CODO VINKELRØR	GOMITO KNIESTUK	085G
10		265808		1	T, 3/4"-16, 37º x 3/4"-18, O-Ring Run TEE RACCORD EN T T-STÜCK	RACOR EN T T-STYKKE	PEZZO A T T-STUK	9020
11		88044		2	PARAFUSO, Hex, 3/8"-16 x 1 1/2", G5 BOLT VIS SCHRAUBE	PERNO BOLT	BULLONE BOUT	140B
12		285072		2	ARRUELA PLANA, M10 x 22.2 x 2.87 Thk, HT WASHER RONDELLE UNTERLEGSCHEIBE	ARANDELA FLADSKIVE	RONDELLA SLUITRING	131R
13		84349308		1	MANGUEIRA, Charge Supply HOSE FLEXIBLE SCHLAUCH	TUBO SLANGE	TUBO FLESSIBILE SLANG	030M
14		87689		2	PARAFUSO, Hex, 1/2"-13 x 1 1/2", G5, Full Thd BOLT VIS SCHRAUBE	PERNO BOLT	BULLONE BOUT	140B
15		65319		2	ARRUELA PLANA, M13 x 25 x 3.5, HT WASHER RONDELLE UNTERLEGSCHEIBE	ARANDELA FLADSKIVE	RONDELLA SLUITRING	131R

35.359.02	01	p1	02/11

PUMP, MECHANICAL (SR130-SR220)
PUMP, MECHANICAL (SR130-SR220)
PUMP, MECHANICAL (SR130-SR220)
PUMP, MECHANICAL (SR130-SR220)

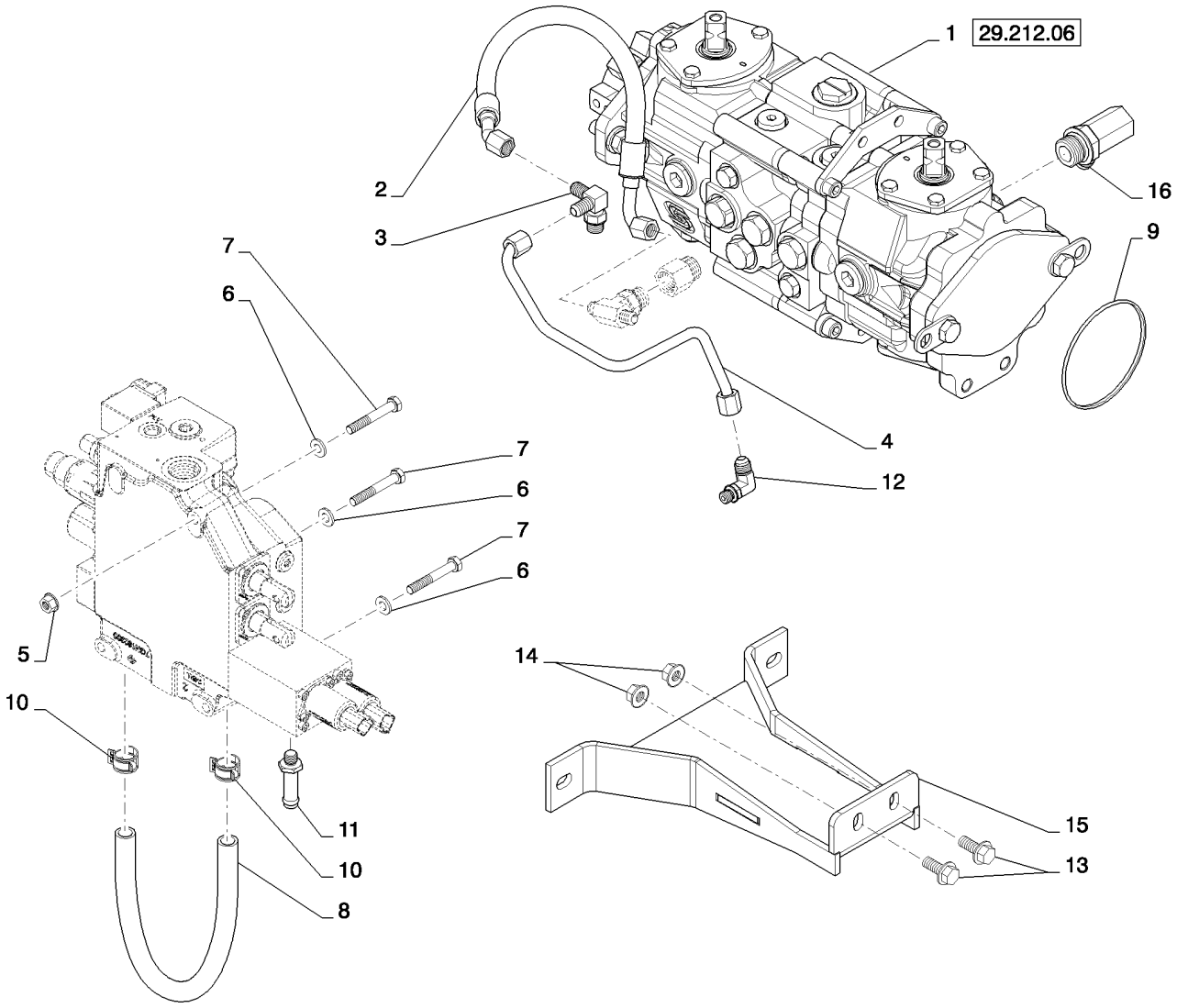

PUMP, MECHANICAL (SR130-SR220)
PUMP, MECHANICAL (SR130-SR220)
PUMP, MECHANICAL (SR130-SR220)
PUMP, MECHANICAL (SR130-SR220)

R	N	P.N.	MOD	Q	Denominação Description	Description Bezeichnung	Denominacion Beskrivelse	Descrizione Beschrijving	L.C.
1		84256059		1	BOMBA, Tandem, 35cc, DDC				
						PUMP	BOMBA	POMPA	6570
					POMPE	PUMPE	PUMPE	POMP	
2		84412421		1	CONJ. MANGUEIRA, Loop Test				
						HOSE ASSY.	CONJUNTO DE TUBOS	COMPLESS. TUBO FLES	P457
					ENSEMBLE DE FLEXIBLE	SCHLAUCHBAUGRUPPE	SLANGEENHED	SLANGEENHEID	
3		L104616		1	COTOVELO 90, 9/16"-18 x 9/16"-18 ORB				
						90 ELBOW	CODO 90	GOMITO A 90°	A045
					COUDE A 90°	90-GRAD-KNIESTÜCK	VINKELRØR, 90	KNIESTUK 90º	
4		84373389		1	TUBO RÍGIDO, Assembly, EH, Aux Charge				
						RIGID TUBE	TUBO RÍGIDO	TUBO RIGIDO	193T
					TUYAU RIGIDE	ROHR	STIFT RØR	VASTE LEIDING	
5		9804277		3	PORCA, M8 x 1.25, Flg, Cl 8				
						NUT	TUERCA	DADO	010D
					ECROU	MUTTER	MØTRIK	MOER	
6		87655042		5	ARRUELA ESPECIAL, M8, 8.80 X 17.5 X 2.2 HTS				
						SPECIAL WASHER	ARANDELA ESPECIAL	RONDELLA SPECIALE	Z333
					RONDELLE SPECIALE	SPEZIALUNTERLEGSCH	SPECIALSKIVE	SPECIALE RING	
7		16044321		3	PARAFUSO, Hex, M8 x 55, 8.8				
						SCREW	TORNILLO	VITE	040V
					VIS	SCHRAUBE	SKRUE	SCHROEF	
8		84373394		1	MANGUEIRA, EH Aux to EH Aux Drain				
						HOSE	TUBO	TUBO FLESSIBILE	030M
					FLEXIBLE	SCHLAUCH	SLANGE	SLANG	
9		9828498		1	O-RING, 3.987" ID x 4.193" OD x 0.103"				
						O-RING	JUNTA TÓRICA	ANELLO TOROIDALE	055A
					JOINT TORIQUE	O-RING	O-RING	O-RING	
10		87443510		2	BRAÇADEIRA MANGUEIRA, M20				
						HOSE CLAMP	ABRAZADERA DE MANG	FASCETTA STRINGITUB	P729
					COLLIER POUR FLEXIBL	SCHLAUCHSCHELLE	SLANGEKLEMME	SLANGKLEM	
11		87314487		1	CONECTOR HIDRÁUL, Bead, Hose, 1/2in				
						HYD CONNECTOR	CONECTOR HIDRÁULIC	CONNETTORE IDRAULIC	020R
					CONNECTEUR HYDRAU	HYDR STECKVERBINDE	HYDRAULIKSTIK	HYDRAULISCHE AANSLI	
12		86512936		1	COTOVELO, 90º, 9/16"-18, 37º x 7/16"-20, O-Ring				
						ELBOW	CODO	GOMITO	085G
					COUDE	KNIESTÜCK	VINKELRØR	KNIESTUK	
13		9804261		2	PARAFUSO, Hex Flg, M10 x 25, 8.8				
						BOLT	PERNO	BULLONE	140B
					VIS	SCHRAUBE	BOLT	BOUT	
14		9804278		2	PORCA, M10 x 1.5, Flg, Cl 8				
						NUT	TUERCA	DADO	010D
					ECROU	MUTTER	MØTRIK	MOER	
15		84254080		1	PLACA, Support, Pump	PLATE	PLACA	PIASTRA	105P
					PLAQUE	PLATTE	PLADE	PLAAT	
16		84273629		1	CONEXÃO, M10 X 1	FITTING	ACOPLAMIENTO	RACCORDO	3300
					RACCORD	ARMATUR	FITTING	AANSLUITING	

SV185

35.359.02	01	p1	02/11

PUMP, MECHANICAL (SR175,SV185)
PUMP, MECHANICAL (SR175,SV185)
PUMP, MECHANICAL (SR175,SV185)
PUMP, MECHANICAL (SR175,SV185)

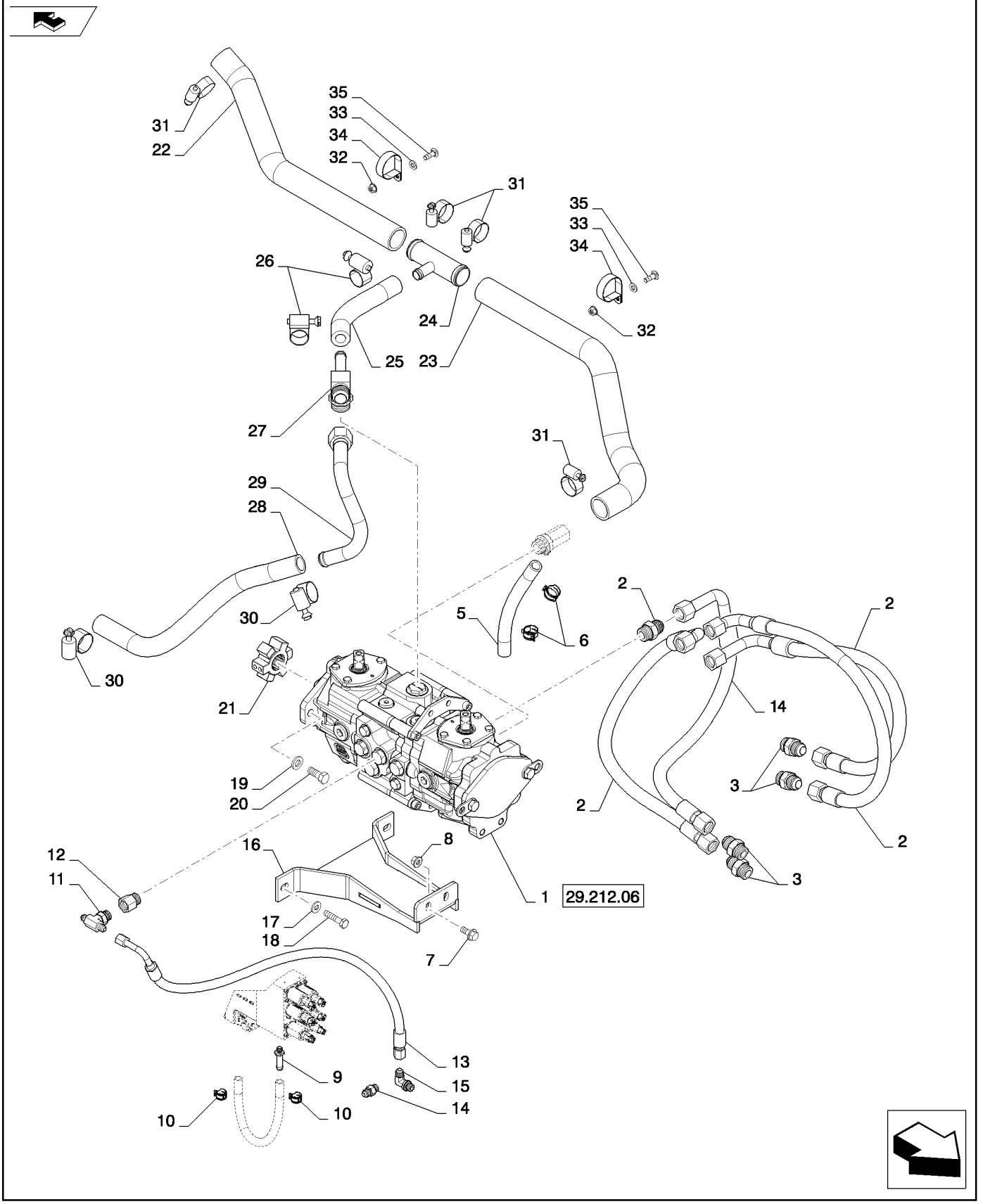

PUMP, MECHANICAL (SR175,SV185)
PUMP, MECHANICAL (SR175,SV185)
PUMP, MECHANICAL (SR175,SV185)
PUMP, MECHANICAL (SR175,SV185)

R	N	P.N.	MOD	Q	Denominação Description	Description Bezeichnung	Denominacion Beskrivelse	Descrizione Beschrijving	L.C.
1		84256059		REF	BOMBA, Tandem 35cc DDC; See Figures 29.212.06				
						PUMP	BOMBA	POMPA	6570
					POMPE	PUMPE	PUMPE	POMP	
2		84412421		2	CONJ. MANGUEIRA, Assembly, Loop				
						HOSE ASSY.	CONJUNTO DE TUBOS	COMPLESS. TUBO FLES	P457
					ENSEMBLE DE FLEXIBLE	SCHLAUCHBAUGRUPPE	SLANGEENHED	SLANGEENHEID	
3		322896		8	CONECTOR HIDRÁUL, 1 1/16"-12, 37º x 1 1/16"-12, O-Ring				
						HYD CONNECTOR	CONECTOR HIDRÁULIC	CONNETTORE IDRAULIC	020R
					CONNECTEUR HYDRAU	HYDR STECKVERBINDE	HYDRAULIKSTIK	HYDRAULISCHE AANSLU	
4		84258854		2	TUBO FLEXÍVEL, Assembly, Loop				
						FLEXIBLE HOSE	TUBO FLEXIBLE	TUBO FLESSIBILE	192T
					TUYAU FLEXIBLE	BIEGSAMER SCHLAUCH	FLEKSIBEL SLANGE	FLEXIBELE SLANG	
5		84273648		1	MANGUEIRA, Pump, Drain, EH				
						HOSE	TUBO	TUBO FLESSIBILE	030M
					FLEXIBLE	SCHLAUCH	SLANGE	SLANG	
6		87443511		2	BRAÇADEIRA, Spring	CLAMP	ABRAZADERA	MORSETTO	120M
					COLLIER	KLEMME	SPÆNDEBÅND	KLEM	
7		9804261		2	PARAFUSO, Hex Flg, M10 x 25, 8.8				
						BOLT	PERNO	BULLONE	140B
					VIS	SCHRAUBE	BOLT	BOUT	
8		9804278		2	PORCA, M10 x 1.5, Flg, Cl 8				
						NUT	TUERCA	DADO	010D
					ECROU	MUTTER	MØTRIK	MOER	
9		87314487		1	CONECTOR HIDRÁUL, Bead, Hose, 1/2in				
						HYD CONNECTOR	CONECTOR HIDRÁULIC	CONNETTORE IDRAULIC	020R
					CONNECTEUR HYDRAU	HYDR STECKVERBINDE	HYDRAULIKSTIK	HYDRAULISCHE AANSLU	
10		87443510		2	BRAÇADEIRA MANGUEIRA, M20				
						HOSE CLAMP	ABRAZADERA DE MANG	FASCETTA STRINGITUB	P729
					COLLIER POUR FLEXIBL	SCHLAUCHSCHELLE	SLANGEKLEMME	SLANGKLEM	
11		87331046		1	T, 9/16"-18, 37º x 3/4"-16, O-Ring Br				
						TEE	RACOR EN T	PEZZO A T	9020
					RACCORD EN T	T-STÜCK	T-STYKKE	T-STUK	
12		84323487		1	CONECTOR HIDRÁUL, 3/4 - 16				
						HYD CONNECTOR	CONECTOR HIDRÁULIC	CONNETTORE IDRAULIC	020R
					CONNECTEUR HYDRAU	HYDR STECKVERBINDE	HYDRAULIKSTIK	HYDRAULISCHE AANSLU	
13		84201225		1	CONJ. MANGUEIRA, Charge to Brake				
						HOSE ASSY.	CONJUNTO DE TUBOS	COMPLESS. TUBO FLES	P457
					ENSEMBLE DE FLEXIBLE	SCHLAUCHBAUGRUPPE	SLANGEENHED	SLANGEENHEID	
14		76350		1	CONECTOR HIDRÁUL, 9/16"-18, 37º x 9/16"-18, O-Ring				
						HYD CONNECTOR	CONECTOR HIDRÁULIC	CONNETTORE IDRAULIC	020R
					CONNECTEUR HYDRAU	HYDR STECKVERBINDE	HYDRAULIKSTIK	HYDRAULISCHE AANSLU	
15		76344		1	COTOVELO, 90º, 9/16"-18, 37º x 9/16"-18, O-Ring				
						ELBOW	CODO	GOMITO	085G
					COUDE	KNIESTÜCK	VINKELRØR	KNIESTUK	
16		84254080		1	PLACA, Support, Pump	PLATE	PLACA	PIASTRA	105P
					PLAQUE	PLATTE	PLADE	PLAAT	
17		285072		2	ARRUELA PLANA, M10 x 22.2 x 2.87 Thk, HT				
						WASHER	ARANDELA	RONDELLA	131R
					RONDELLE	UNTERLEGSCHEIBE	FLADSKIVE	SLUITRING	

SV185

35.359.02	01	p2	02/11

PUMP, MECHANICAL (SR175,SV185)
PUMP, MECHANICAL (SR175,SV185)
PUMP, MECHANICAL (SR175,SV185)
PUMP, MECHANICAL (SR175,SV185)

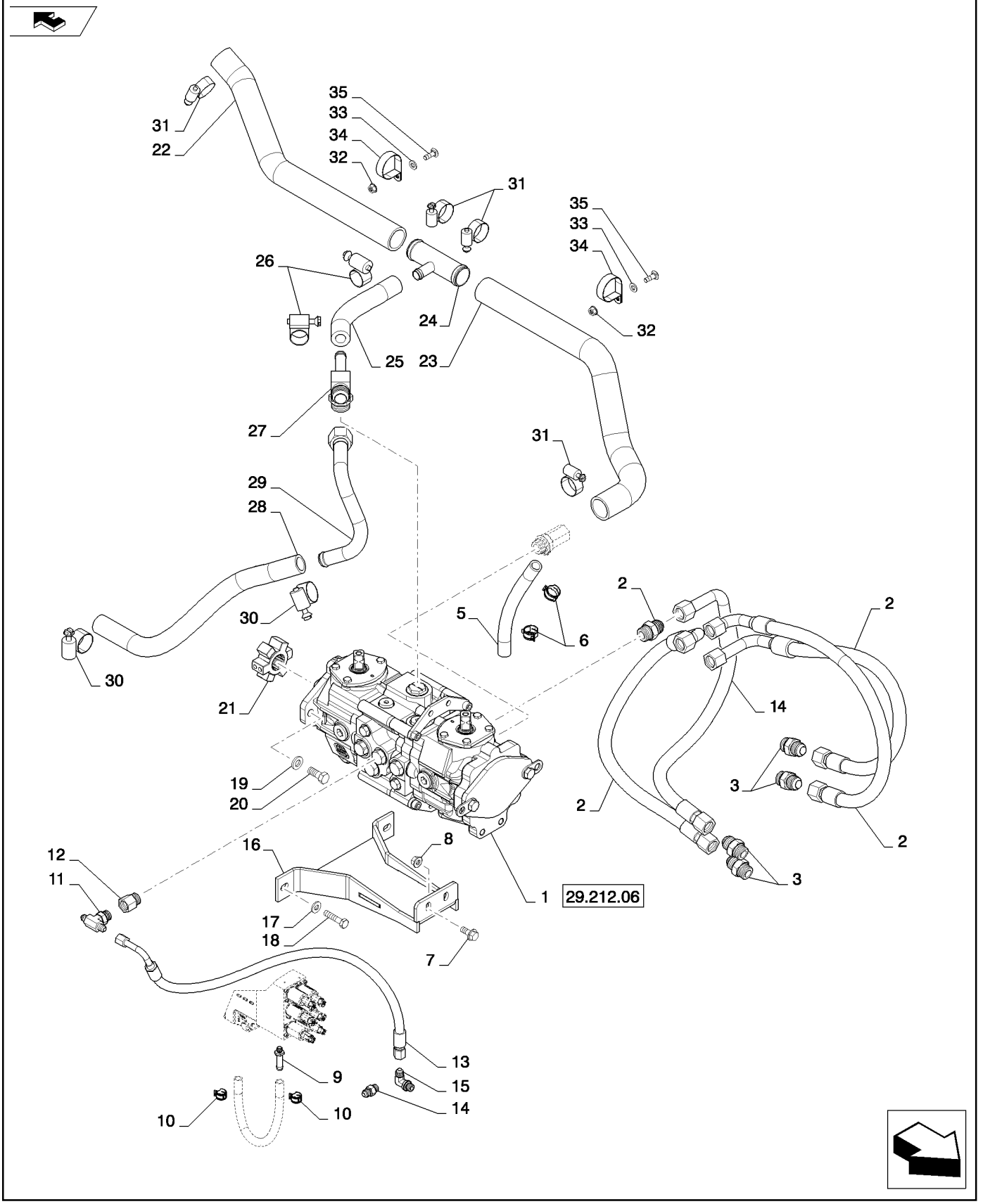

PUMP, MECHANICAL (SR175,SV185)
PUMP, MECHANICAL (SR175,SV185)
PUMP, MECHANICAL (SR175,SV185)
PUMP, MECHANICAL (SR175,SV185)

R	N	P.N.	MOD	Q	Denominação Description	Description Bezeichnung	Denominacion Beskrivelse	Descrizione Beschrijving	L.C.
18		325829		2	PARAFUSO, Hex, M10 x 45, 8.8				
						BOLT	PERNO	BULLONE	140B
					VIS	SCHRAUBE	BOLT	BOUT	
19		65319		2	ARRUELA PLANA, M13 x 25 x 3.5, HT				
						WASHER	ARANDELA	RONDELLA	131R
					RONDELLE	UNTERLEGSCHEIBE	FLADSKIVE	SLUITRING	
20		280853		2	PARAFUSO, Hex, 1/2"-13 x 1 1/4", G8, Full Thd				
						BOLT	PERNO	BULLONE	140B
					VIS	SCHRAUBE	BOLT	BOUT	
21		87713745		1	EMBREAGEM, Hub Star	CLUTCH	EMBRAGUE	FRIZIONE	095F
					EMBRAYAGE	KUPPLUNG	KOBLING	KOPPELING	
22		84349294		1	MANGUEIRA, Gear Pump, Suction				
						HOSE	TUBO	TUBO FLESSIBILE	030M
					FLEXIBLE	SCHLAUCH	SLANGE	SLANG	
23		84349295		1	MANGUEIRA, Gear Pump, Suction				
						HOSE	TUBO	TUBO FLESSIBILE	030M
					FLEXIBLE	SCHLAUCH	SLANGE	SLANG	
24		84344919		1	T, -24 Bead, -24 Bead, -12 Bead				
						TEE	RACOR EN T	PEZZO A T	9020
					RACCORD EN T	T-STÜCK	T-STYKKE	T-STUK	
25		84344943		1	MANGUEIRA, Tandem Supply				
						HOSE	TUBO	TUBO FLESSIBILE	030M
					FLEXIBLE	SCHLAUCH	SLANGE	SLANG	
26		86625021		2	BRAÇADEIRA MANGUEIRA, #12, 0.69/1.25 Type F Worm				
						HOSE CLAMP	ABRAZADERA DE MANG	FASCETTA STRINGITUB	P729
					COLLIER POUR FLEXIBL	SCHLAUCHSCHELLE	SLANGEKLEMME	SLANGKLEM	
27		84344939		1	T, -16MB, -16MJ, -12 Bead	TEE	RACOR EN T	PEZZO A T	9020
					RACCORD EN T	T-STÜCK	T-STYKKE	T-STUK	
28		84349308		1	MANGUEIRA, Charge Supply				
						HOSE	TUBO	TUBO FLESSIBILE	030M
					FLEXIBLE	SCHLAUCH	SLANGE	SLANG	
29		84344940		1	TUBO RÍGIDO, Hydraulic, Tandem Supply				
						RIGID TUBE	TUBO RÍGIDO	TUBO RIGIDO	193T
					TUYAU RIGIDE	ROHR	STIFT RØR	VASTE LEIDING	
30		507586		2	BRAÇADEIRA MANGUEIRA, #20, 0.81/1.75 Type F Worm				
						HOSE CLAMP	ABRAZADERA DE MANG	FASCETTA STRINGITUB	P729
					COLLIER POUR FLEXIBL	SCHLAUCHSCHELLE	SLANGEKLEMME	SLANGKLEM	
31		513309		4	BRAÇADEIRA MANGUEIRA, #24, 1.06/2.00 Type F Worm				
						HOSE CLAMP	ABRAZADERA DE MANG	FASCETTA STRINGITUB	P729
					COLLIER POUR FLEXIBL	SCHLAUCHSCHELLE	SLANGEKLEMME	SLANGKLEM	
32		9804277		3	PORCA, M8 x 1.25, Flg, Cl 8				
						NUT	TUERCA	DADO	010D
					ECROU	MUTTER	MØTRIK	MOER	
33		87655042		5	ARRUELA ESPECIAL, M8, 8.80 X 17.5 X 2.2 HTS				
						SPECIAL WASHER	ARANDELA ESPECIAL	RONDELLA SPECIALE	Z333
					RONDELLE SPECIALE	SPEZIALUNTERLEGSCH	SPECIALSKIVE	SPECIALE RING	
34		84265306		2	BRAÇADEIRA, 47.6MM M8 Bolt ZND				
						CLAMP	ABRAZADERA	MORSETTO	120M
					COLLIER	KLEMME	SPÆNDEBÅND	KLEM	

SV185

35.359.02	01	p3	02/11

PUMP, MECHANICAL (SR175,SV185)
PUMP, MECHANICAL (SR175,SV185)
PUMP, MECHANICAL (SR175,SV185)
PUMP, MECHANICAL (SR175,SV185)

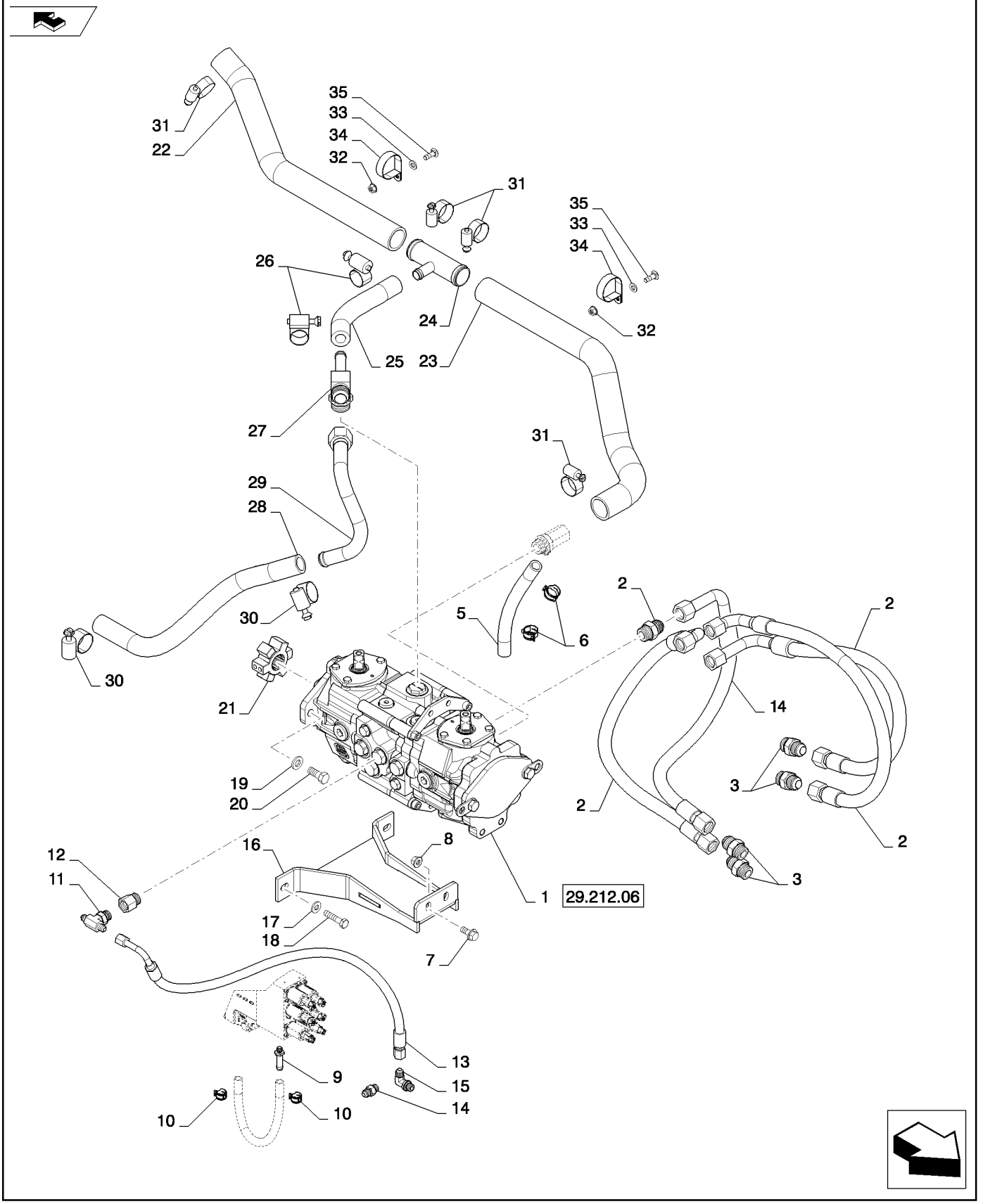

PUMP, MECHANICAL (SR175,SV185)
PUMP, MECHANICAL (SR175,SV185)
PUMP, MECHANICAL (SR175,SV185)
PUMP, MECHANICAL (SR175,SV185)

R	N	P.N.	MOD	Q	Denominação Description	Description Bezeichnung	Denominacion Beskrivelse	Descrizione Beschrijving	L.C.
35		308761		2	PARAFUSO, Short NK, M8 x 25, Cl8.8, Full Thd VIS A TETE BOMBEE	CARRIAGE BOLT SCHLOSSSCHRAUBE	PERNO ALOMADO BRÆDDEBOLT	BULLONE A TESTA TONI SLOTBOUT	P123

35.359.02	02	p1	02/11

PUMP, MECHANICAL (SR175,SV185)
PUMP, MECHANICAL (SR175,SV185)
PUMP, MECHANICAL (SR175,SV185)
PUMP, MECHANICAL (SR175,SV185)

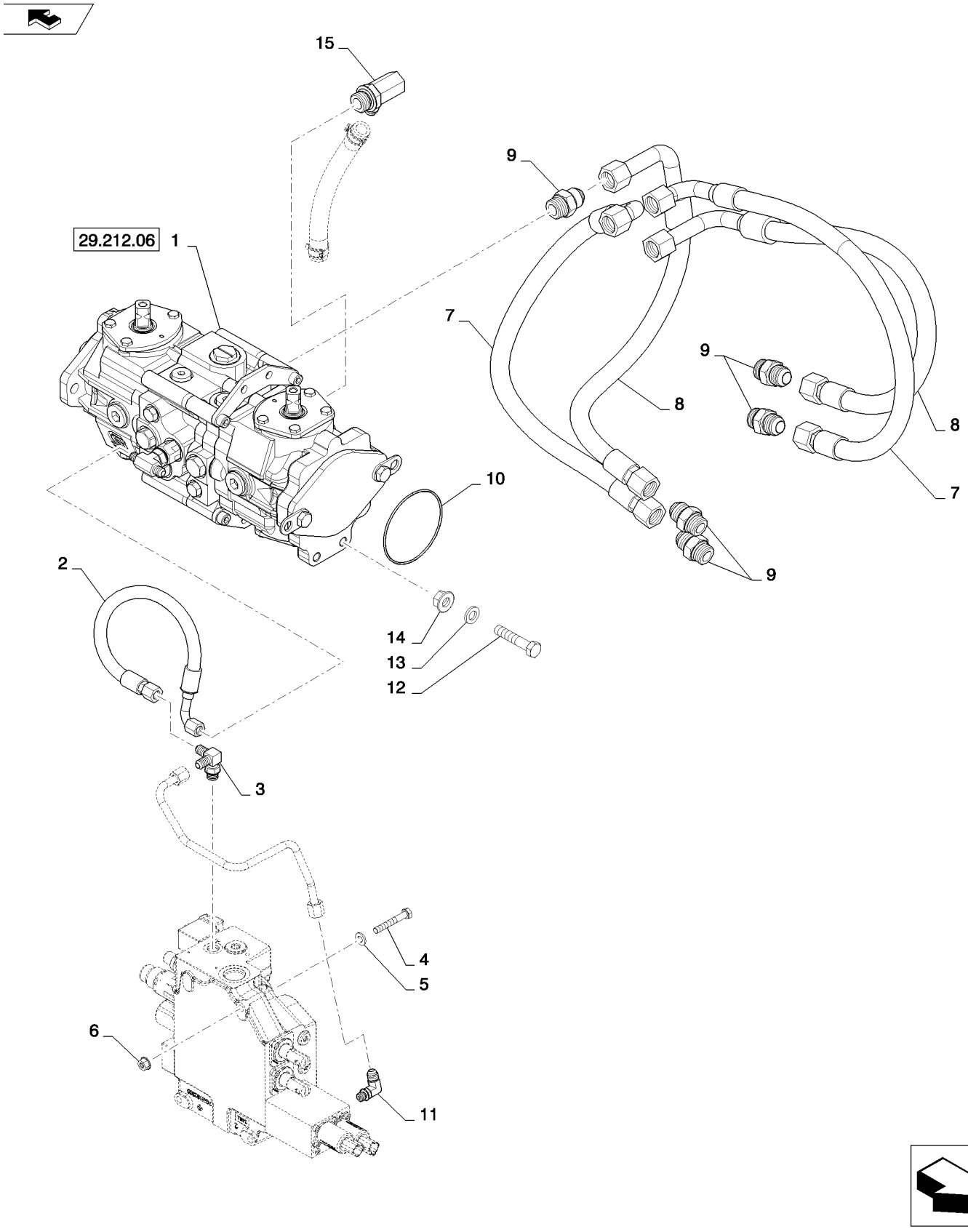

PUMP, MECHANICAL (SR175,SV185)
PUMP, MECHANICAL (SR175,SV185)
PUMP, MECHANICAL (SR175,SV185)
PUMP, MECHANICAL (SR175,SV185)

R	N	P.N.	MOD	Q	Denominação Description	Description Bezeichnung	Denominacion Beskrivelse	Descrizione Beschrijving	L.C.
1		84256059		1	BOMBA, Tandem, 35cc, DDC; See Figures 29.212.06				
						PUMP	BOMBA	POMPA	6570
					POMPE	PUMPE	PUMPE	POMP	
2		84259516		1	TUBO FLEXÍVEL, Assembly, LV Interlock				
						FLEXIBLE HOSE	TUBO FLEXIBLE	TUBO FLESSIBILE	192T
					TUYAU FLEXIBLE	BIEGSAMER SCHLAUCH	FLEKSIBEL SLANGE	FLEXIBELE SLANG	
3		L104616		1	COTOVELO 90, 9/16"-18 x 9/16"-18 ORB				
						90 ELBOW	CODO 90	GOMITO A 90°	A045
					COUDE A 90°	90-GRAD-KNIESTÜCK	VINKELRØR, 90	KNIESTUK 90°	
4		16044321		3	PARAFUSO, Hex, M8 x 55, 8.8				
						SCREW	TORNILLO	VITE	040V
					VIS	SCHRAUBE	SKRUE	SCHROEF	
5		87655042		5	ARRUELA ESPECIAL, M8, 8.80 X 17.5 X 2.2 HTS				
						SPECIAL WASHER	ARANDELA ESPECIAL	RONDELLA SPECIALE	Z333
					RONDELLE SPECIALE	SPEZIALUNTERLEGSCH	SPECIALSKIVE	SPECIALE RING	
6		9804277		3	PORCA, M8 x 1.25, Flg, Cl 8				
						NUT	TUERCA	DADO	010D
					ECROU	MUTTER	MØTRIK	MOER	
7		84258852		2	TUBO FLEXÍVEL, Assembly, Loop				
						FLEXIBLE HOSE	TUBO FLEXIBLE	TUBO FLESSIBILE	192T
					TUYAU FLEXIBLE	BIEGSAMER SCHLAUCH	FLEKSIBEL SLANGE	FLEXIBELE SLANG	
8		84258853		2	TUBO FLEXÍVEL, Assembly, Loop				
						FLEXIBLE HOSE	TUBO FLEXIBLE	TUBO FLESSIBILE	192T
					TUYAU FLEXIBLE	BIEGSAMER SCHLAUCH	FLEKSIBEL SLANGE	FLEXIBELE SLANG	
9		322896		8	CONECTOR HIDRÁUL, 1 1/16"-12, 37º x 1 1/16"-12, O-Ring				
						HYD CONNECTOR	CONECTOR HIDRÁULIC(	CONNETTORE IDRAULIC	020R
					CONNECTEUR HYDRAU	HYDR STECKVERBINDE	HYDRAULIKSTIK	HYDRAULISCHE AANSLI	
10		9828498		1	O-RING, 3.987" ID x 4.193" OD x 0.103"				
						O-RING	JUNTA TÓRICA	ANELLO TOROIDALE	055A
					JOINT TORIQUE	O-RING	O-RING	O-RING	
11		86512936		1	COTOVELO, 90º, 9/16"-18, 37º x 7/16"-20, O-Ring				
						ELBOW	CODO	GOMITO	085G
					COUDE	KNIESTÜCK	VINKELRØR	KNIESTUK	
12		280615		2	PARAFUSO, Hex, 1/2"-13 x 2 1/2", G5, Full Thd				
						BOLT	PERNO	BULLONE	140B
					VIS	SCHRAUBE	BOLT	BOUT	
13		86625255		2	ARRUELA PLANA, M13.5 x 24.5 x 3, HT				
						WASHER	ARANDELA	RONDELLA	131R
					RONDELLE	UNTERLEGSCHEIBE	FLADSKIVE	SLUITRING	
14		87343922		2	PORCA, Flange 1/2-13	NUT	TUERCA	DADO	010D
					ECROU	MUTTER	MØTRIK	MOER	
15		84273629		1	CONEXÃO, M10 X 1	FITTING	ACOPLAMIENTO	RACCORDO	3300
					RACCORD	ARMATUR	FITTING	AANSLUITING	

35.359.03		p1	08/11

CONTROL VALVE, EH W/ HARNESS (ALL CASE)
CONTROL VALVE, EH W/ HARNESS (ALL CASE)
CONTROL VALVE, EH W/ HARNESS (ALL CASE)
CONTROL VALVE, EH W/ HARNESS (ALL CASE)

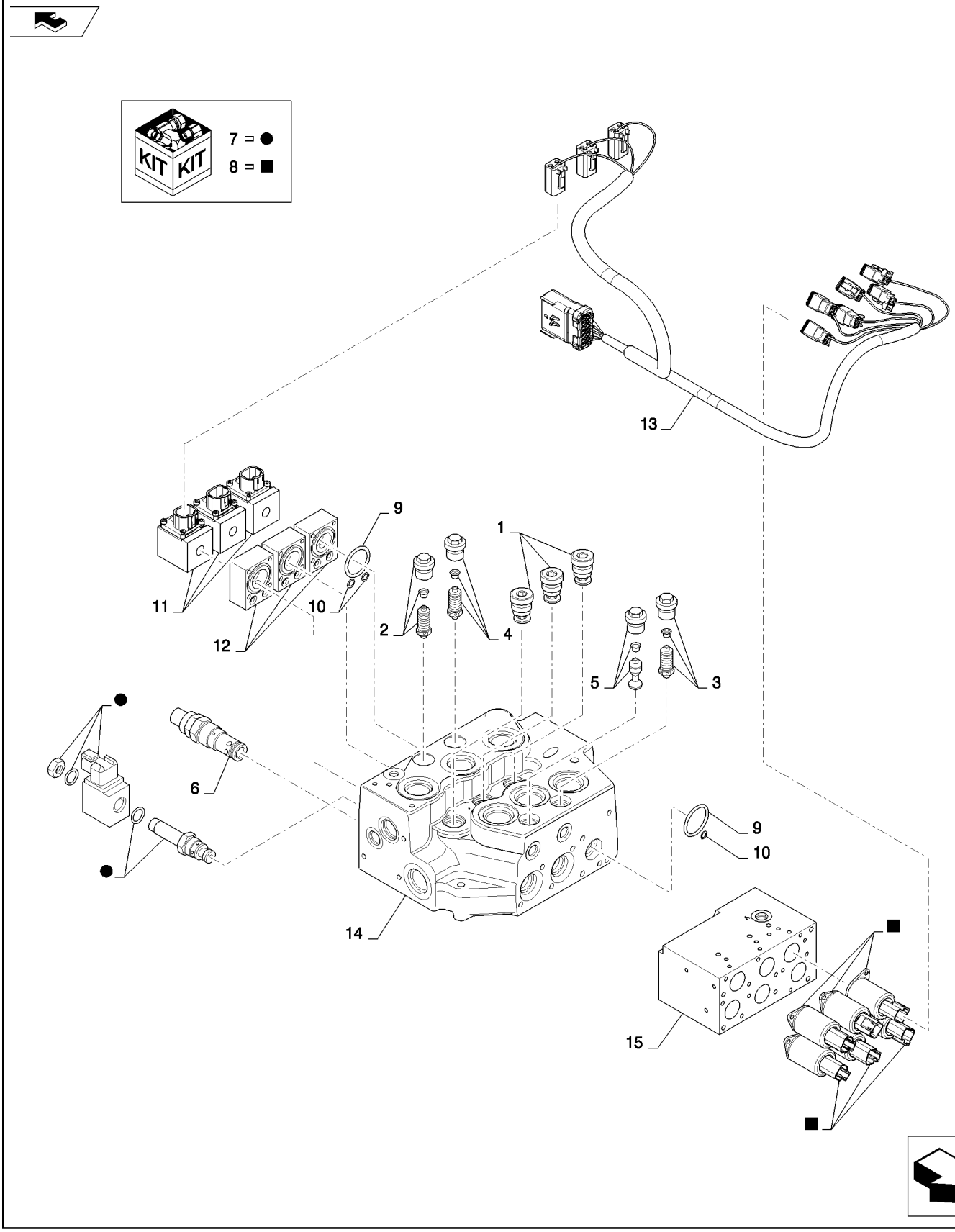

CONTROL VALVE, EH W/ HARNESS (ALL CASE)
CONTROL VALVE, EH W/ HARNESS (ALL CASE)
CONTROL VALVE, EH W/ HARNESS (ALL CASE)
CONTROL VALVE, EH W/ HARNESS (ALL CASE)

R	N	P.N.	MOD	Q	Denominação Description	Description Bezeichnung	Denominacion Beskrivelse	Descrizione Beschrijving	L.C.
1		84386281		3	VÁLVULA CHECAGEM, Load				
						CHECK VALVE	VÁLVULA DE COMPROB.	VALVOLA DI RITEGNO	P394
					CLAPET ANTI-RETOUR	RÜCKSCHLAGVENTIL	KONTRAVENTIL	TERUGSLAGKLEP	
2		84386282		1	VÁLVULA ALÍVIO DA PRESSÃO, 225 BAR Port Relief				
						PRESSURE RELIEF VAL\	VÁLV. ALIVIO DE PRESI(	VALV. LIMITATRICE PRE	007V
					CLAPET DECHARGE PRI	DRUCKENTLASTUNGSV	SIKKERHEDSVENTIL	OVERDRUKKLEP	
3		84386283		1	VÁLVULA ALÍVIO DA PRESSÃO, 230 BAR Port Relief				
						PRESSURE RELIEF VAL\	VÁLV. ALIVIO DE PRESI(	VALV. LIMITATRICE PRE	007V
					CLAPET DECHARGE PRI	DRUCKENTLASTUNGSV	SIKKERHEDSVENTIL	OVERDRUKKLEP	
4		84386284		1	VÁLVULA ALÍVIO DA PRESSÃO, 240 BAR Port Relief				
						PRESSURE RELIEF VAL\	VÁLV. ALIVIO DE PRESI(	VALV. LIMITATRICE PRE	007V
					CLAPET DECHARGE PRI	DRUCKENTLASTUNGSV	SIKKERHEDSVENTIL	OVERDRUKKLEP	
5		84386285		1	VÁLVULA HIDRÁULICA, Anti-Cavitation				
						HYDRAULIC VALVE	VÁLVULA HIDRÁULICA	DISTRIBUTORE IDRAULI	010V
					SOUPAPE HYDRAULIQU	HYDRAULIKVENTIL	HYDRAULIKVENTIL	HYDRAULISCHE KLEP	
6		84386287		1	VÁLVULA ALÍVIO DA PRESSÃO, 207 BAR Port Relief				
						PRESSURE RELIEF VAL\	VÁLV. ALIVIO DE PRESI(	VALV. LIMITATRICE PRE	007V
					CLAPET DECHARGE PRI	DRUCKENTLASTUNGSV	SIKKERHEDSVENTIL	OVERDRUKKLEP	
7		84386288		1	VÁLVULA HIDRÁULICA, PLV Cartridge				
						HYDRAULIC VALVE	VÁLVULA HIDRÁULICA	DISTRIBUTORE IDRAULI	010V
					SOUPAPE HYDRAULIQU	HYDRAULIKVENTIL	HYDRAULIKVENTIL	HYDRAULISCHE KLEP	
8		84386289		6	VÁLVULA CONTR. PRESSÃO, Reducing				
						PRESSURE CONTROL V	VÁLV. CONTROL DE PRI	VALVOLA CONTROLLO F	A140
					DISTRIBUTEUR DE PRE:	DRUCKSTEUERVENTIL	TRYKSTYRINGSVENTIL	DRUKREGELKLEP	
9		84386293		6	O-RING, EH Spool Cap	O-RING	JUNTA TÓRICA	ANELLO TOROIDALE	055A
					JOINT TORIQUE	O-RING	O-RING	O-RING	
10		84386294		9	O-RING, EH Passage	O-RING	JUNTA TÓRICA	ANELLO TOROIDALE	055A
					JOINT TORIQUE	O-RING	O-RING	O-RING	
11		84386295		3	SENSOR, Spool Position	SENSOR	SENSOR	SENSORE	608S
					CAPTEUR	SENSOR	FØLER	SENSOR	
12		84386296		3	TAMPA, Spool Position Sensor End				
						CAP	TAPÓN	TAPPO	052T
					CAPUCHON	KAPPE	TANKDÆKSEL	DOP	
13		84484220		1	CHICOTE, EH Control Valve				
						WIRE HARNESS	GRUPO DE CABLES	CABLAGGIO	070I
					FAISCEAU ELECTRIQUE	KABELBAUM	KABELNET	KABELBOOM	
14		84250154		1	VÁLVULA CONTROLE, Directional Control, Electro-Hydraulic, Includes Ref. 1-12				
						CONTROL VALVE	VÁLVULA DE CONTROL	DISTRIBUTORE IDRAULI	083D
					DISTRIBUTEUR	STEUERVENTIL	STYREVENTIL	REGELKLEP	

CONTROL VALVE, MECHANICAL HAND EH AUX (SR130-SV300)
CONTROL VALVE, MECHANICAL HAND EH AUX (SR130-SV300)
CONTROL VALVE, MECHANICAL HAND EH AUX (SR130-SV300)
CONTROL VALVE, MECHANICAL HAND EH AUX (SR130-SV300)

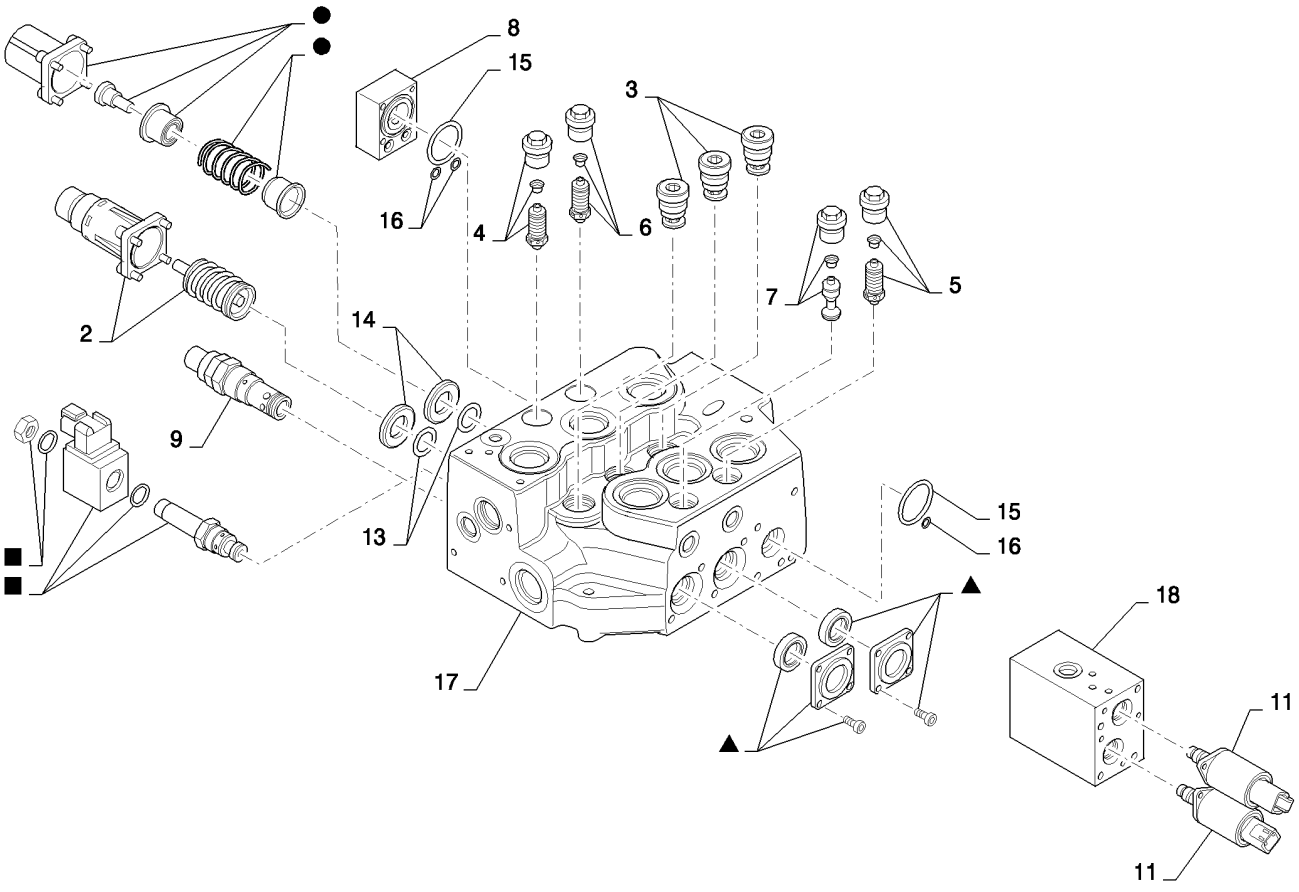

CONTROL VALVE, MECHANICAL HAND EH AUX (SR130-SV300)
CONTROL VALVE, MECHANICAL HAND EH AUX (SR130-SV300)
CONTROL VALVE, MECHANICAL HAND EH AUX (SR130-SV300)
CONTROL VALVE, MECHANICAL HAND EH AUX (SR130-SV300)

R	N	P.N.	MOD	Q	Denominação Description	Description Bezeichnung	Denominacion Beskrivelse	Descrizione Beschrijving	L.C.
1		84386277		1	JOGO, Hand Bucket Spring POCHETTE	KIT PACKUNG	JEUGO KIT	KIT KIT	4830
2		84386278		1	JOGO, Hand Boom Spring POCHETTE	KIT PACKUNG	JEUGO KIT	KIT KIT	4830
3		84386281		3	VÁLVULA CHECAGEM, Load CLAPET ANTI-RETOUR	CHECK VALVE RÜCKSCHLAGVENTIL	VÁLVULA DE COMPROB. KONTRAVENTIL	VALVOLA DI RITEGNO TERUGSLAGKLEP	P394
4		84386282		1	VÁLVULA ALÍVIO DA PRESSÃO, 225 BAR Port Relief CLAPET DECHARGE PRI	PRESSURE RELIEF VAL\ DRUCKENTLASTUNGSV	VÁLV. ALIVIO DE PRESI(SIKKERHEDSVENTIL	VALV. LIMITATRICE PRE OVERDRUKKLEP	007V
5		84386283		1	VÁLVULA ALÍVIO DA PRESSÃO, 230 BAR Port Relief CLAPET DECHARGE PRI	PRESSURE RELIEF VAL\ DRUCKENTLASTUNGSV	VÁLV. ALIVIO DE PRESI(SIKKERHEDSVENTIL	VALV. LIMITATRICE PRE OVERDRUKKLEP	007V
6		84386284		1	VÁLVULA ALÍVIO DA PRESSÃO, 240 BAR Port Relief CLAPET DECHARGE PRI	PRESSURE RELIEF VAL\ DRUCKENTLASTUNGSV	VÁLV. ALIVIO DE PRESI(SIKKERHEDSVENTIL	VALV. LIMITATRICE PRE OVERDRUKKLEP	007V
7		84386285		1	VÁLVULA HIDRÁULICA, Anti-Cavitation SOUPAPE HYDRAULIQU	HYDRAULIC VALVE HYDRAULIKVENTIL	VÁLVULA HIDRÁULICA HYDRAULIKVENTIL	DISTRIBUTORE IDRAULI HYDRAULISCHE KLEP	010V
8		84386286		1	TAMPA, EH Aux End CAPUCHON	CAP KAPPE	TAPÓN TANKDÆKSEL	TAPPO DOP	052T
9		84386287		1	VÁLVULA ALÍVIO DA PRESSÃO, 207 BAR Port Relief CLAPET DECHARGE PRI	PRESSURE RELIEF VAL\ DRUCKENTLASTUNGSV	VÁLV. ALIVIO DE PRESI(SIKKERHEDSVENTIL	VALV. LIMITATRICE PRE OVERDRUKKLEP	007V
10		84386288		1	VÁLVULA HIDRÁULICA, PLV Cartridge SOUPAPE HYDRAULIQU	HYDRAULIC VALVE HYDRAULIKVENTIL	VÁLVULA HIDRÁULICA HYDRAULIKVENTIL	DISTRIBUTORE IDRAULI HYDRAULISCHE KLEP	010V
11		84386289		2	VÁLVULA CONTR. PRESSÃO, Reducing DISTRIBUTEUR DE PRES	PRESSURE CONTROL V DRUCKSTEUERVENTIL	VÁLV. CONTROL DE PRE TRYKSTYRINGSVENTIL	VALVOLA CONTROLLO F DRUKREGELKLEP	A140
12		84386290		3	JOGO, Spool Wiper POCHETTE	KIT PACKUNG	JEUGO KIT	KIT KIT	4830
13		84386291		4	O-RING, Spool JOINT TORIQUE	O-RING O-RING	JUNTA TÓRICA O-RING	ANELLO TOROIDALE O-RING	055A
14		84386292		4	ANEL DE SEGURANÇA, Spool BAGUE ANTI-EXTRUSIOI	BACK-UP RING STÜTZRING	ANILLO DE SEGURIDAD RESERVERING	ANELLO DI SOSTEGNO ONDERLEGRING	Z334
15		84386293		2	O-RING, EH Spool Cap JOINT TORIQUE	O-RING O-RING	JUNTA TÓRICA O-RING	ANELLO TOROIDALE O-RING	055A
16		84386294		3	O-RING, EH Passage JOINT TORIQUE	O-RING O-RING	JUNTA TÓRICA O-RING	ANELLO TOROIDALE O-RING	055A
17		84279514		1	VÁLVULA HIDRÁULICA, Mechanical Hand Control/Electro-Hydraulic Aux SOUPAPE HYDRAULIQU	HYDRAULIC VALVE HYDRAULIKVENTIL	VÁLVULA HIDRÁULICA HYDRAULIKVENTIL	DISTRIBUTORE IDRAULI HYDRAULISCHE KLEP	010V

35.701.01		p1	05/11

LOADER HYDRAULICS (SV185)
LOADER HYDRAULICS (SV185)
LOADER HYDRAULICS (SV185)
LOADER HYDRAULICS (SV185)

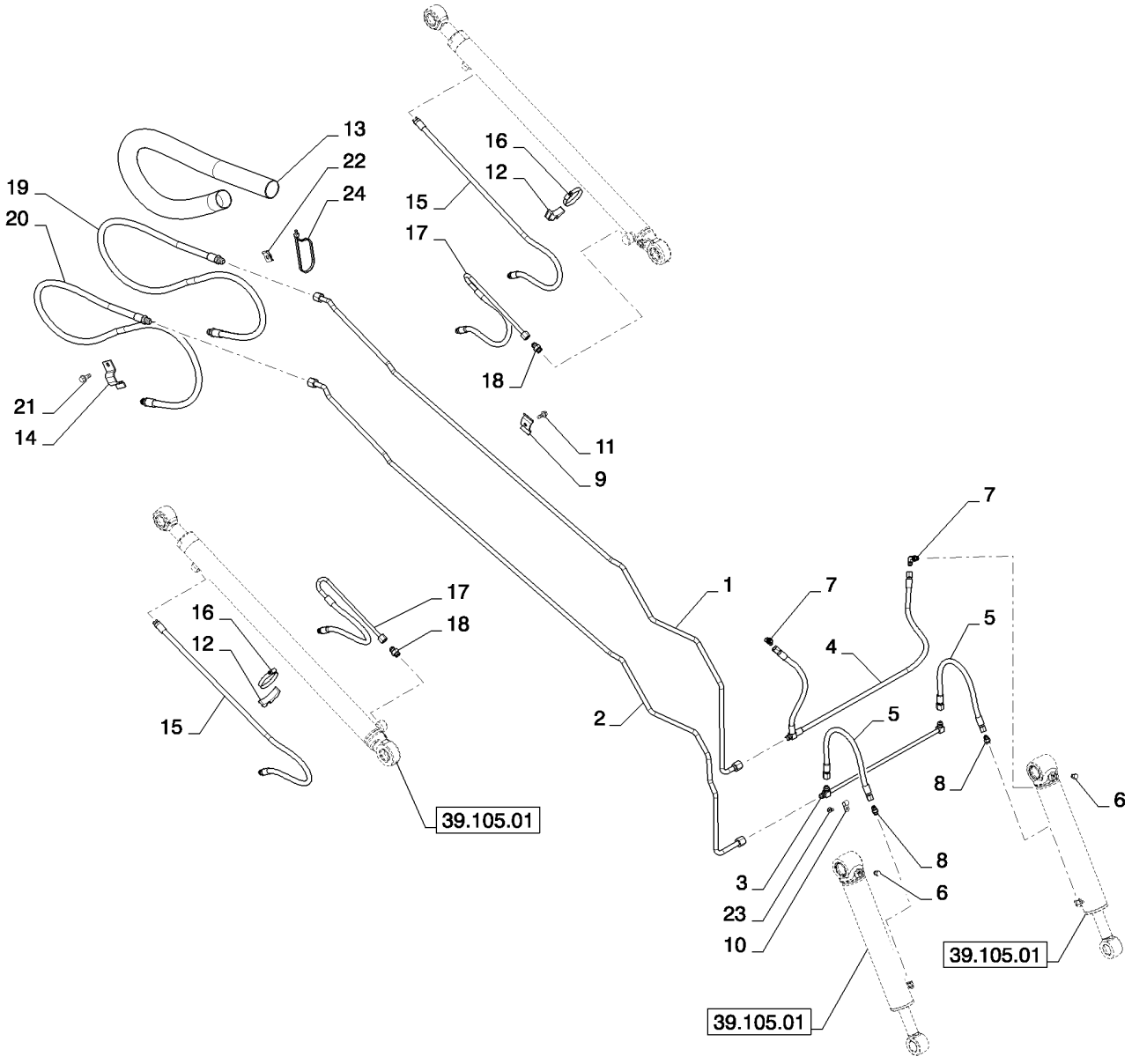

LOADER HYDRAULICS (SV185)
LOADER HYDRAULICS (SV185)
LOADER HYDRAULICS (SV185)
LOADER HYDRAULICS (SV185)

R	N	P.N.	MOD	Q	Denominação Description	Description Bezeichnung	Denominacion Beskrivelse	Descrizione Beschrijving	L.C.
1		84350447		1	TUBO HIDRÁULICO, Tip Cylinder				
						HYD. TUBE	TUBO HIDRÁULICO	TUBO IDRAULICO	190T
					TUYAU HYDRAULIQUE	HYDRAULIKLEITUNG	HYD. RØR	HYDRAULISCHE LEIDIN(	
2		84350449		1	TUBO HIDRÁULICO, Tip Cylinder				
						HYD. TUBE	TUBO HIDRÁULICO	TUBO IDRAULICO	190T
					TUYAU HYDRAULIQUE	HYDRAULIKLEITUNG	HYD. RØR	HYDRAULISCHE LEIDIN(	
3		84346785		1	TUBO HIDRÁULICO, Tip Crossover				
						HYD. TUBE	TUBO HIDRÁULICO	TUBO IDRAULICO	190T
					TUYAU HYDRAULIQUE	HYDRAULIKLEITUNG	HYD. RØR	HYDRAULISCHE LEIDIN(	
4		84346682		1	CONJ. MANGUEIRA, Tip Cylinder Base				
						HOSE ASSY.	CONJUNTO DE TUBOS	COMPLESS. TUBO FLES	P457
					ENSEMBLE DE FLEXIBLE	SCHLAUCHBAUGRUPPE	SLANGEENHED	SLANGEENHEID	
5		84346755		2	CONJ. MANGUEIRA, Tip Cylinder				
						HOSE ASSY.	CONJUNTO DE TUBOS	COMPLESS. TUBO FLES	P457
					ENSEMBLE DE FLEXIBLE	SCHLAUCHBAUGRUPPE	SLANGEENHED	SLANGEENHEID	
6		76349		2	BUJÃO, Hex Hd, 9/16"-18 ORB				
						PLUG	TAPÓN	TAPPO	050T
					BOUCHON	STOPFEN	PROP	PLUG	
7		76344		2	COTOVELO, 90º, 9/16"-18, 37º x 9/16"-18, O-Ring				
						ELBOW	CODO	GOMITO	085G
					COUDE	KNIESTÜCK	VINKELRØR	KNIESTUK	
8		76350		2	CONECTOR HIDRÁUL, 9/16"-18, 37º x 9/16"-18, O-Ring				
						HYD CONNECTOR	CONECTOR HIDRÁULIC(	CONNETTORE IDRAULIC	020R
					CONNECTEUR HYDRAU	HYDR STECKVERBINDE	HYDRAULIKSTIK	HYDRAULISCHE AANSLI	
9		86501706		4	BRAÇADEIRA, Double Tube				
						CLAMP	ABRAZADERA	MORSETTO	120M
					COLLIER	KLEMME	SPÆNDEBÅND	KLEM	
10		86625036		2	BRAÇADEIRA, 1/2", Insul, 5/16" Bolt				
						CLAMP	ABRAZADERA	MORSETTO	120M
					COLLIER	KLEMME	SPÆNDEBÅND	KLEM	
11		280476		4	PARAFUSO, Hex Wash Hd, 3/8" x 1"				
						SELF-TAP SCREW	TORNILLO AUTORROSC	VITE AUTOFILETTANTE	062V
					VIS AUTOTARAUDEUSE	SELBSTSCHN SCHRAUE	SELVLÅSENDE BOLT	ZELFTAPPENDE SCHRO	
12		84255986		2	BRAÇADEIRA MANGUEIRA, Cylinder Saddle				
						HOSE CLAMP	ABRAZADERA DE MANG	FASCETTA STRINGITUB	P729
					COLLIER POUR FLEXIBL	SCHLAUCHSCHELLE	SLANGEKLEMME	SLANGKLEM	
13		84362109		1	PROTEÇÃO, Hose Guard	GUARD	DEFENSA	PROTEZIONE	070R
					PROTECTION	SCHUTZABDECKUNG	BESKYTTELSESSKÆRM	AFSCHERMING	
14		84282426		1	BRAÇADEIRA MANGUEIR/	HOSE CLAMP	ABRAZADERA DE MANG	FASCETTA STRINGITUB	P729
					COLLIER POUR FLEXIBL	SCHLAUCHSCHELLE	SLANGEKLEMME	SLANGKLEM	
15		84284661		2	MANGUEIRA HIDRÁULICA	HYDRAULIC HOSE	TUBO HIDRÁULICO	TUBO FLESSIBILE IDRA(	A058
					FLEXIBLE HYDRAULIQUI	HYDRAULIKSCHLAUCH	SLANGE, HYDRAULIK	HYDRAULISCHE SLANG	
16		86625033		2	BRAÇADEIRA MANGUEIRA, #56, 3.06/4.00 Type F Worm				
						HOSE CLAMP	ABRAZADERA DE MANG	FASCETTA STRINGITUB	P729
					COLLIER POUR FLEXIBL	SCHLAUCHSCHELLE	SLANGEKLEMME	SLANGKLEM	
17		84255975		2	CONJ. MANGUEIRA, Lift Cylinder Base				
						HOSE ASSY.	CONJUNTO DE TUBOS	COMPLESS. TUBO FLES	P457
					ENSEMBLE DE FLEXIBLE	SCHLAUCHBAUGRUPPE	SLANGEENHED	SLANGEENHEID	

35.701.01		p2	05/11

LOADER HYDRAULICS (SV185)
LOADER HYDRAULICS (SV185)
LOADER HYDRAULICS (SV185)
LOADER HYDRAULICS (SV185)

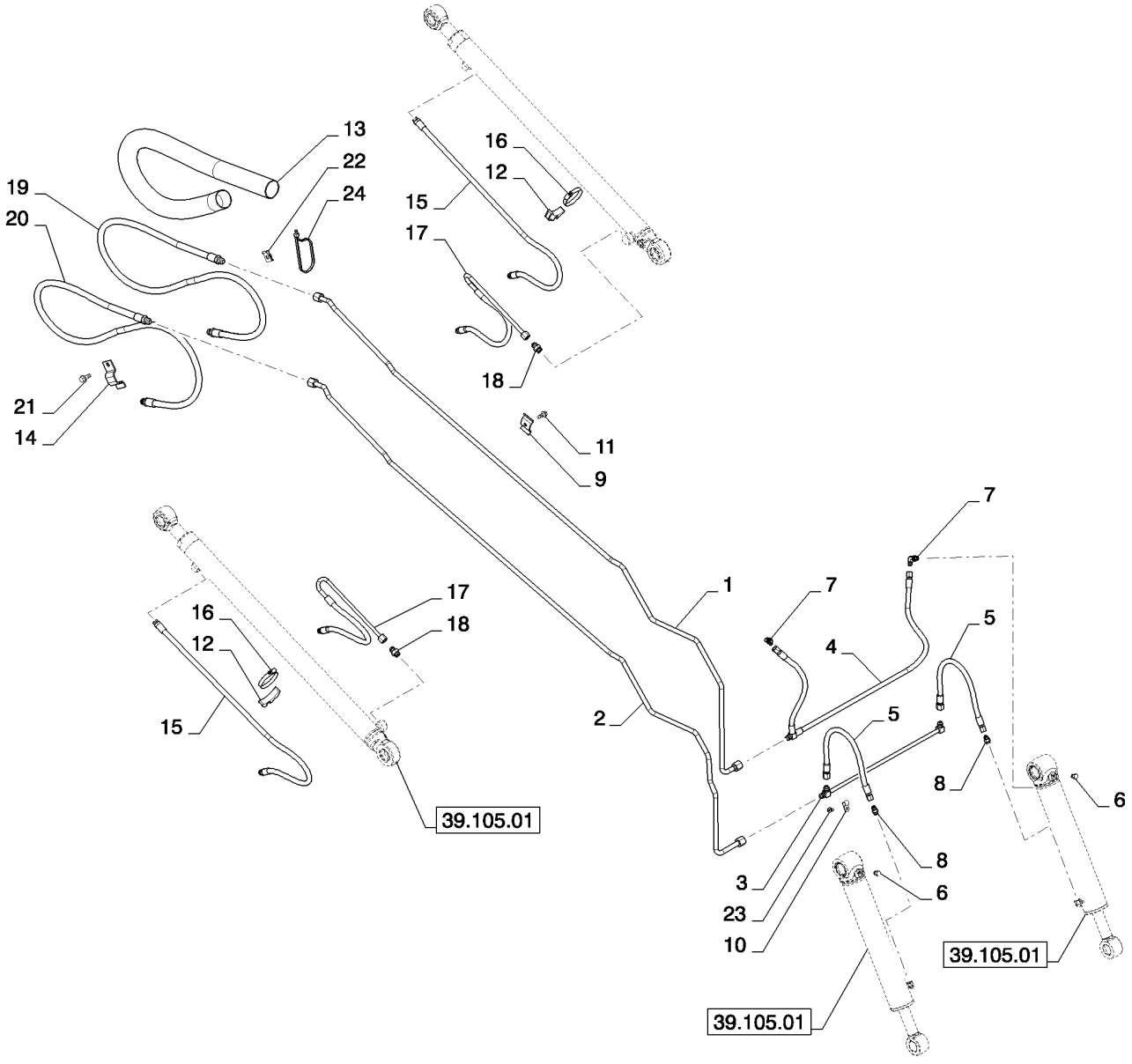

LOADER HYDRAULICS (SV185)
LOADER HYDRAULICS (SV185)
LOADER HYDRAULICS (SV185)
LOADER HYDRAULICS (SV185)

R	N	P.N.	MOD	Q	Denominação Description	Description Bezeichnung	Denominacion Beskrivelse	Descrizione Beschrijving	L.C.
18		**81827427**		2	CONECTOR HIDRÁUL CONNECTEUR HYDRAU	HYD CONNECTOR HYDR STECKVERBINDE	CONECTOR HIDRÁULIC HYDRAULIKSTIK	CONNETTORE IDRAULIC HYDRAULISCHE AANSLU	020R
19		**84284668**		1	MANGUEIRA HIDRÁULICA, Assy, Tip Cylinder FLEXIBLE HYDRAULIQUI	HYDRAULIC HOSE HYDRAULIKSCHLAUCH	TUBO HIDRÁULICO SLANGE, HYDRAULIK	TUBO FLESSIBILE IDRAU HYDRAULISCHE SLANG	A058
20		**84284669**		1	MANGUEIRA HIDRÁULICA, Assy, Tip Cylinder FLEXIBLE HYDRAULIQUI	HYDRAULIC HOSE HYDRAULIKSCHLAUCH	TUBO HIDRÁULICO SLANGE, HYDRAULIK	TUBO FLESSIBILE IDRAU HYDRAULISCHE SLANG	A058
21		**9804261**		2	PARAFUSO, Hex Flg, M10 x 25, 8.8 VIS	BOLT SCHRAUBE	PERNO BOLT	BULLONE BOUT	140B
22		**86625071**		1	PORCA, M10, U, Spring ECROU	NUT MUTTER	TUERCA MØTRIK	DADO MOER	010D
23		**84285339**		2	PARAFUSO, M8x15 VIS AUTOTARAUDEUSE	SELF-TAP SCREW SELBSTSCHN SCHRAUE	TORNILLO AUTORROSC SELVLÅSENDE BOLT	VITE AUTOFILETTANTE ZELFTAPPENDE SCHRO	062V
24		**L18331**		1	PRENDEDOR DE CABOS, 15.5 Inch BRIDE DE CABLE	CABLE STRAP KABELBINDER	BANDA DE CABLE KABELSTROP	FASCETTA PER CAVO BUNDELBAND	P716

35.701.02	01	p1	03/11

LOADER VALVE PLUMBING (SV185)
LOADER VALVE PLUMBING (SV185)
LOADER VALVE PLUMBING (SV185)
LOADER VALVE PLUMBING (SV185)

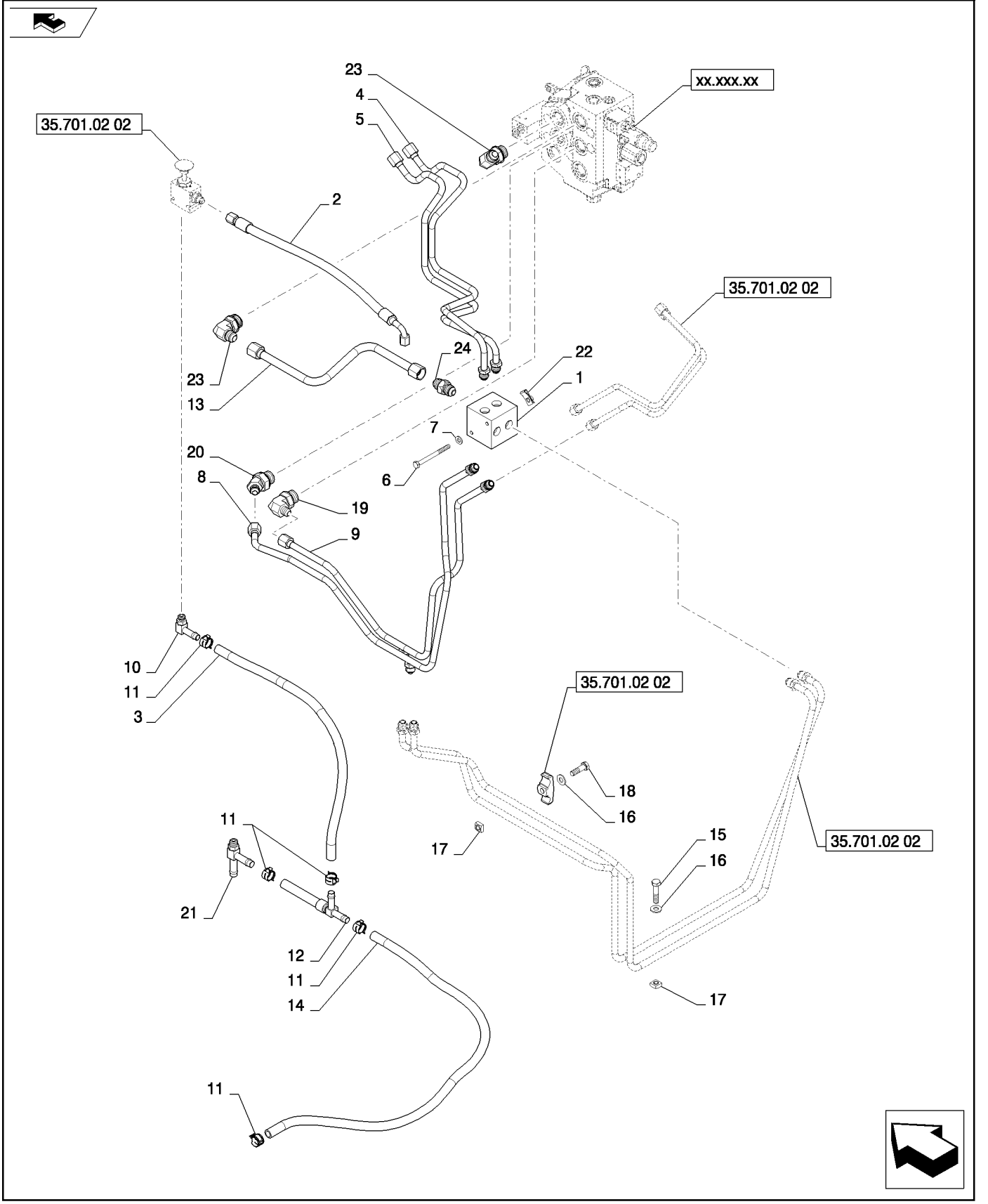

LOADER VALVE PLUMBING (SV185)
LOADER VALVE PLUMBING (SV185)
LOADER VALVE PLUMBING (SV185)
LOADER VALVE PLUMBING (SV185)

R	N	P.N.	MOD	Q	Denominação Description	Description Bezeichnung	Denominacion Beskrivelse	Descrizione Beschrijving	L.C.
1		84258823		1	COLETOR HIDRÁULICO COLLECTEUR HYDRAUL	HYDRAULIC MANIFOLD HYDRAULIKVERTEILER	COLECTOR HIDRÁULIC(HYDRAULISK MANIFOLD	COLLETTORE IDRAULIC HYDRAULISCH VERDEE	A063
2		84201224		1	MANGUEIRA HIDRÁULICA, Override FLEXIBLE HYDRAULIQUI	HYDRAULIC HOSE HYDRAULIKSCHLAUCH	TUBO HIDRÁULICO SLANGE, HYDRAULIK	TUBO FLESSIBILE IDRAU HYDRAULISCHE SLANG	A058
3		84299733		1	MANGUEIRA, Override to EH Aux Drain FLEXIBLE	HOSE SCHLAUCH	TUBO SLANGE	TUBO FLESSIBILE SLANG	030M
4		84178521		1	TUBO, Lower, Manifold to Rt Arm TUBE	TUBE ROHR	TUBO RØR	TUBO LEIDING	195T
5		84178523		1	TUBO, Lift, Manifold to Tr Arm TUBE	TUBE ROHR	TUBO RØR	TUBO LEIDING	195T
6		86508571		2	PARAFUSO, Hex, M8 x 90, 8.8 VIS	BOLT SCHRAUBE	PERNO BOLT	BULLONE BOUT	140B
7		87655042		2	ARRUELA ESPECIAL RONDELLE SPECIALE	SPECIAL WASHER SPEZIALUNTERLEGSCH	ARANDELA ESPECIAL SPECIALSKIVE	RONDELLA SPECIALE SPECIALE RING	Z333
8		84181023		1	TUBO, Tip, Loader Valve to Rt Arm TUBE	TUBE ROHR	TUBO RØR	TUBO LEIDING	195T
9		84181026		1	TUBO, Tip, Loader Valve to Rt Arm TUBE	TUBE ROHR	TUBO RØR	TUBO LEIDING	195T
10		86705580		1	CONEXÃO, 90º, 1/2" Hose x 9/16"-18 ORB Beaded RACCORD	FITTING ARMATUR	ACOPLAMIENTO FITTING	RACCORDO AANSLUITING	3300
11		87443510		5	BRAÇADEIRA MANGUEIRA, M20 COLLIER POUR FLEXIBL	HOSE CLAMP SCHLAUCHSCHELLE	ABRAZADERA DE MANG SLANGEKLEMME	FASCETTA STRINGITUB SLANGKLEM	P729
12		84259682		1	CONEXÃO EM T RACCORD EN T	UNION TEE T-VERSCHRAUBUNG	RACOR EN T T-FORSKRUNING	RACCORDO A T KOPPEL-T-STUK	A134
13		84378484		1	TUBO RÍGIDO, Lift, Valve to Manifold TUYAU RIGIDE	RIGID TUBE ROHR	TUBO RÍGIDO STIFT RØR	TUBO RIGIDO VASTE LEIDING	193T
14		84299735		1	MANGUEIRA, EH Aux Drain to Drain Man FLEXIBLE	HOSE SCHLAUCH	TUBO SLANGE	TUBO FLESSIBILE SLANG	030M
15		325829		1	PARAFUSO, Hex, M10 x 45, 8.8 VIS	BOLT SCHRAUBE	PERNO BOLT	BULLONE BOUT	140B
16		87655046		2	ARRUELA ESPECIAL RONDELLE SPECIALE	SPECIAL WASHER SPEZIALUNTERLEGSCH	ARANDELA ESPECIAL SPECIALSKIVE	RONDELLA SPECIALE SPECIALE RING	Z333
17		230427A1		2	PORCA ECROU	NUT MUTTER	TUERCA NUT	DADO NUT	5780
18		9706704		1	PARAFUSO, Hex, M10 x 35, 8.8, Full Thd VIS	BOLT SCHRAUBE	PERNO BOLT	BULLONE BOUT	140B

35.701.02	01	p2	03/11

LOADER VALVE PLUMBING (SV185)
LOADER VALVE PLUMBING (SV185)
LOADER VALVE PLUMBING (SV185)
LOADER VALVE PLUMBING (SV185)

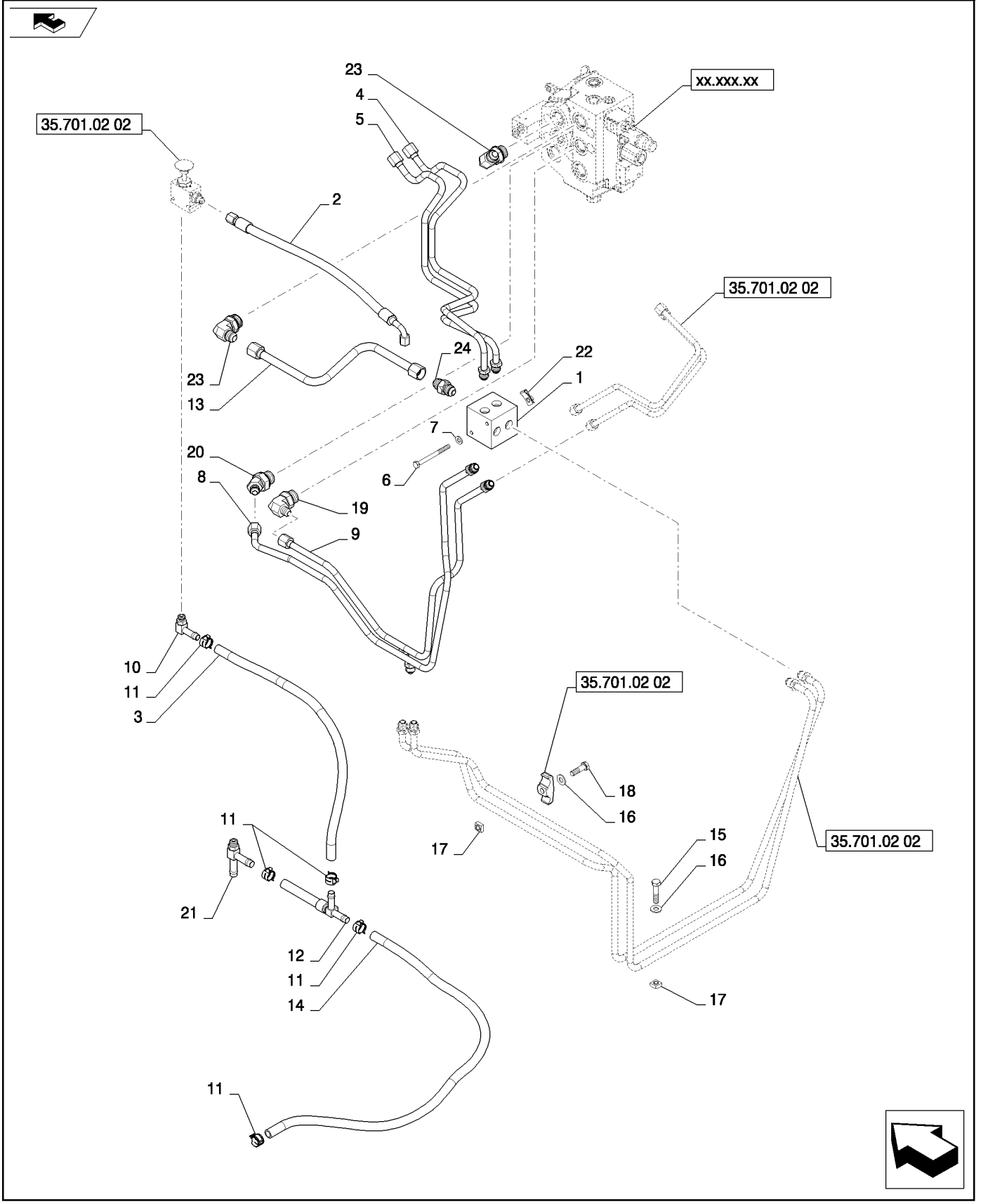

LOADER VALVE PLUMBING (SV185)
LOADER VALVE PLUMBING (SV185)
LOADER VALVE PLUMBING (SV185)
LOADER VALVE PLUMBING (SV185)

R	N	P.N.	MOD	Q	Denominação Description	Description Bezeichnung	Denominacion Beskrivelse	Descrizione Beschrijving	L.C.
19		87329785		1	COTOVELO, 90º, 3/4"-16, 37º x 1 1/16"-12, O-Ring				
						ELBOW	CODO	GOMITO	085G
					COUDE	KNIESTÜCK	VINKELRØR	KNIESTUK	
20		84289681		1	COTOVELO 45	45 ELBOW	CODO 45	GOMITO A 45°	A044
					COUDE A 45°	45-GRAD-KNIESTÜCK	VINKELRØR, 45	KNIESTUK 45º	
21		84299732		1	CONEXÃO	FITTING	ACOPLAMIENTO	RACCORDO	3300
					RACCORD	ARMATUR	FITTING	AANSLUITING	
22		87016586		2	PORCA, M8, U	NUT	TUERCA	DADO	010D
					ECROU	MUTTER	MØTRIK	MOER	
23		84570		2	COTOVELO, 90º, 7/8"-14, 37º x 1 1/16"-12, O-Ring				
						ELBOW	CODO	GOMITO	085G
					COUDE	KNIESTÜCK	VINKELRØR	KNIESTUK	
24		84373457		1	ORIFÍCIO	ORIFICE	ORIFICIO	ORIFIZIO	056O
					ORIFICE	BLENDE	PROP	SMOORPLAATJE	

35.701.02	02	p1	02/11

LOADER VALVE PLUMBING (SV185)
LOADER VALVE PLUMBING (SV185)
LOADER VALVE PLUMBING (SV185)
LOADER VALVE PLUMBING (SV185)

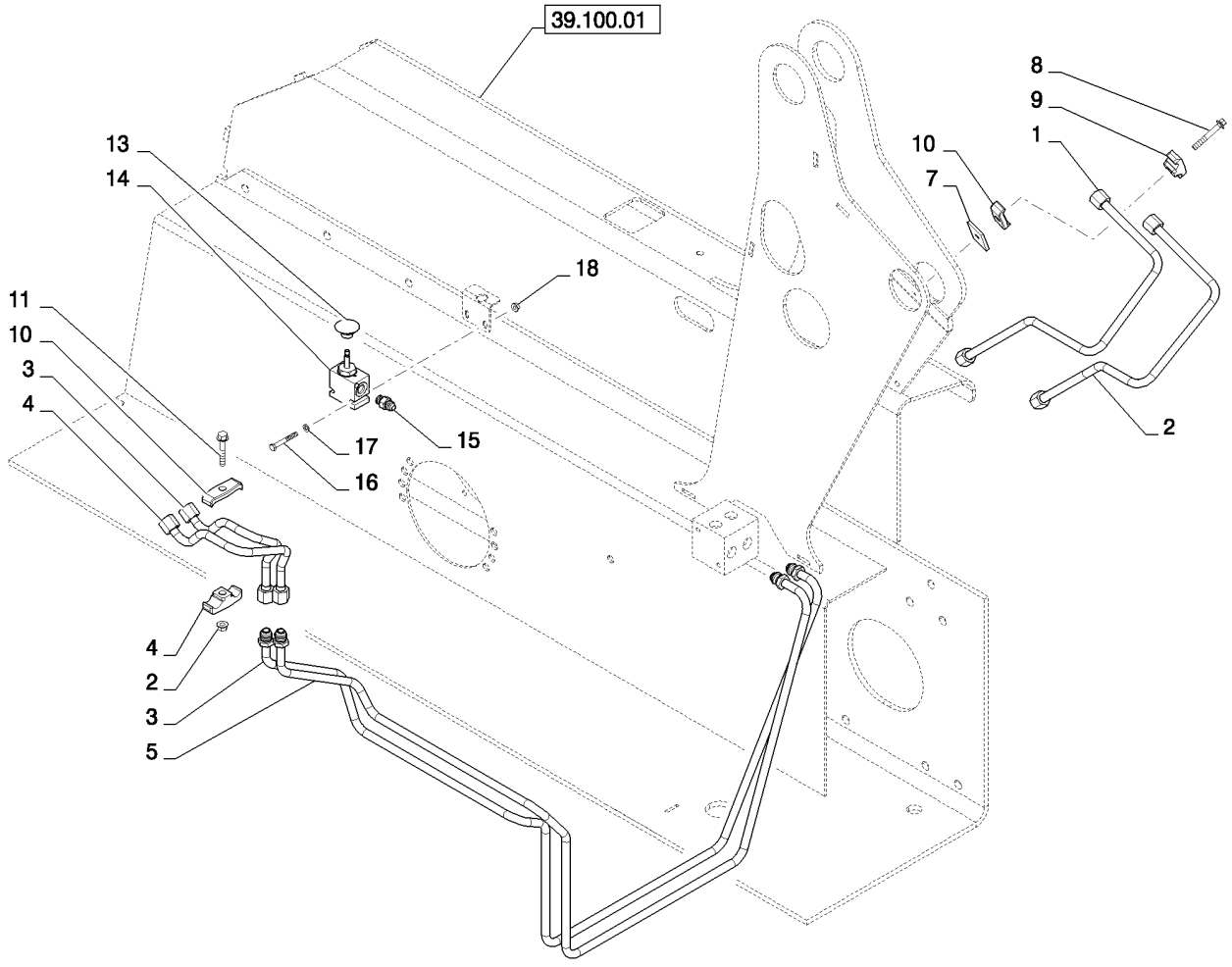

LOADER VALVE PLUMBING (SV185)
LOADER VALVE PLUMBING (SV185)
LOADER VALVE PLUMBING (SV185)
LOADER VALVE PLUMBING (SV185)

R	N	P.N.	MOD	Q	Denominação Description	Description Bezeichnung	Denominacion Beskrivelse	Descrizione Beschrijving	L.C.
1		84178631		1	TUBO, Tip, RH Tower	TUBE	TUBO	TUBO	195T
					TUBE	ROHR	RØR	LEIDING	
2		84178633		1	TUBO, Tip, RH Tower	TUBE	TUBO	TUBO	195T
					TUBE	ROHR	RØR	LEIDING	
3		84178627		1	TUBO, Lift, Left Fender	TUBE	TUBO	TUBO	195T
					TUBE	ROHR	RØR	LEIDING	
4		84178629		1	TUBO, Lower, Left Fender	TUBE	TUBO	TUBO	195T
					TUBE	ROHR	RØR	LEIDING	
5		84178529		1	TUBO, Lift, Manifold to Lft Arm				
						TUBE	TUBO	TUBO	195T
					TUBE	ROHR	RØR	LEIDING	
6		84178531		1	TUBO, Lower, Manifold to Lft Arm				
						TUBE	TUBO	TUBO	195T
					TUBE	ROHR	RØR	LEIDING	
7		257859A1		2	PLACA ESPACADORA, Bar Clamp Top				
						PLATE,SPACER	PLAQUETA	DISTANZ PIASTRA	Z324
					PLAQUETTE	PLAETTCHEN	PLATE,SPACER	PLATE,SPACER	
8		87582902		2	PARAFUSO	SELF-TAP SCREW	TORNILLO AUTORROSC	VITE AUTOFILETTANTE	062V
					VIS AUTOTARAUDEUSE	SELBSTSCHN SCHRAUE	SELVLÅSENDE BOLT	ZELFTAPPENDE SCHRO	
9		D120679		6	BRACADEIRA	CLAMP	COLLAR	MORSETTO	1640
					COLLIER	SCHELLE	CLAMP	CLAMP	
10		D120614		5	BRACADEIRA	CLAMP	COLLAR	MORSETTO	1640
					COLLIER	SCHELLE	CLAMP	CLAMP	
11		86511481		2	PARAFUSO, Hex Flg, M8 x 50, 8.8				
						BOLT	PERNO	BULLONE	140B
					VIS	SCHRAUBE	BOLT	BOUT	
12		9804277		2	PORCA, M8 x 1.25, Flg, Cl 8				
						NUT	TUERCA	DADO	010D
					ECROU	MUTTER	MØTRIK	MOER	
13		87522292		1	MAÇANETA	KNOB	MANDO	MANOPOLA	150P
					BOUTON	RUNDGRIFF	GREB	KNOP	
14		84294239		1	VÁLVULA	VALVE	VÁLVULA	VALVOLA	9620
					SOUPAPE	VENTIL	VENTIL	KLEP	
15		76350		1	CONECTOR HIDRÁUL, 9/16"-18, 37º x 9/16"-18, O-Ring				
						HYD CONNECTOR	CONECTOR HIDRÁULIC	CONNETTORE IDRAULIC	020R
					CONNECTEUR HYDRAU	HYDR STECKVERBINDE	HYDRAULIKSTIK	HYDRAULISCHE AANSLI	
16		120056		2	PARAFUSO, Hex, M6 x 50, 8.8				
						BOLT	PERNO	BULLONE	140B
					VIS	SCHRAUBE	BOLT	BOUT	
17		86588450		2	ARRUELA PLANA, M6 x 12 x 1.6 Thk				
						WASHER	ARANDELA	RONDELLA	131R
					RONDELLE	UNTERLEGSCHEIBE	FLADSKIVE	SLUITRING	
18		9804276		2	PORCA, M6 x 1, Flg, Cl 8	NUT	TUERCA	DADO	010D
					ECROU	MUTTER	MØTRIK	MOER	

35.701.03		p1	01/11

SUPPLY PLUMBING (LOADER VALVE) (SR175,SV185)
SUPPLY PLUMBING (LOADER VALVE) (SR175,SV185)
SUPPLY PLUMBING (LOADER VALVE) (SR175,SV185)
SUPPLY PLUMBING (LOADER VALVE) (SR175,SV185)

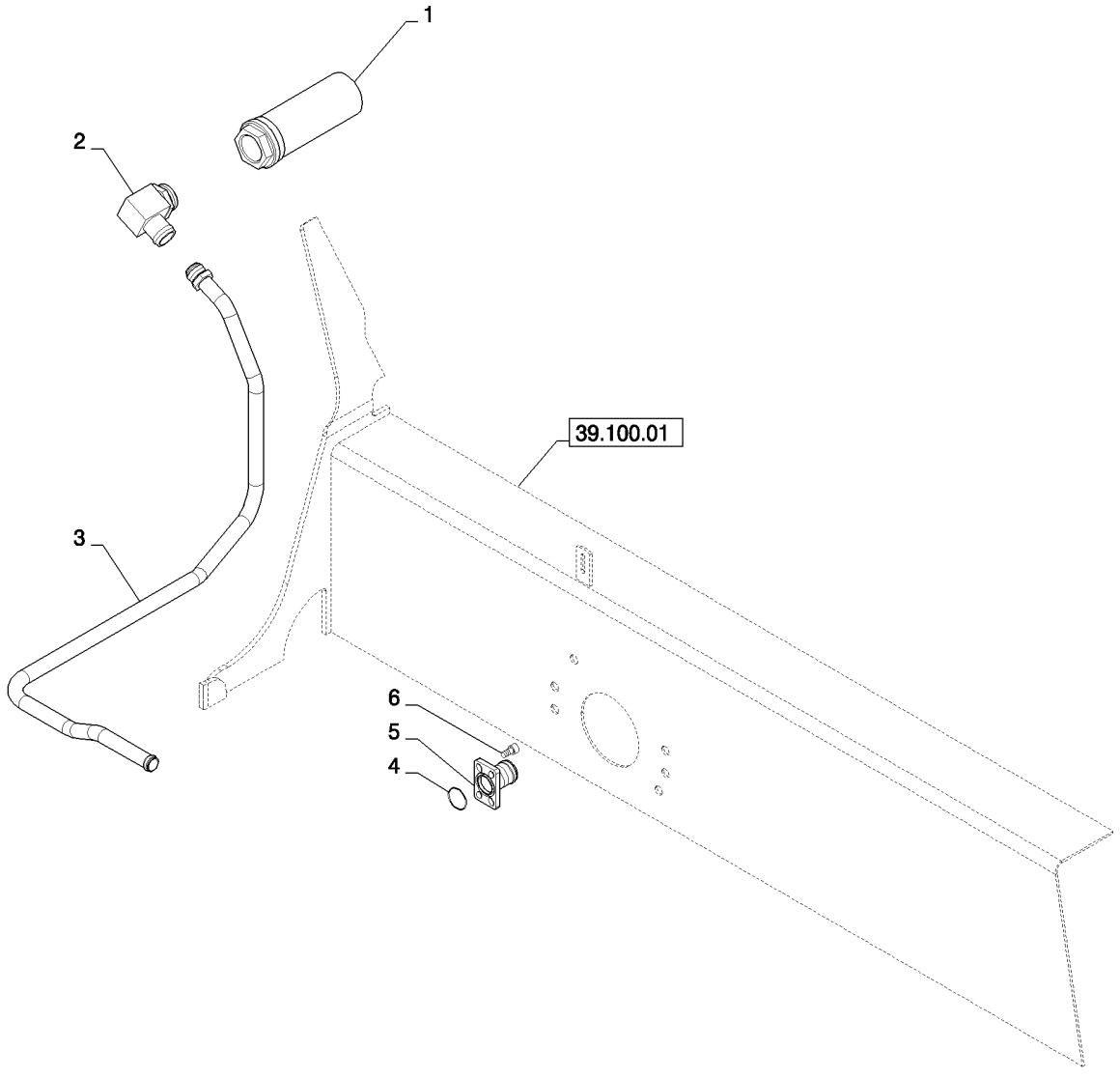

SUPPLY PLUMBING (LOADER VALVE) (SR175,SV185)
SUPPLY PLUMBING (LOADER VALVE) (SR175,SV185)
SUPPLY PLUMBING (LOADER VALVE) (SR175,SV185)
SUPPLY PLUMBING (LOADER VALVE) (SR175,SV185)

R	N	P.N.	MOD	Q	Denominação Description	Description Bezeichnung	Denominacion Beskrivelse	Descrizione Beschrijving	L.C.
1		84344918		1	REDE PARA FILTROS CREPINE FILTRANTE	FILTER STRAINER FILTERSIEB	COLADOR FILTERNET	RETICELLA DEL FILTRO FILTERZEEF	043R
2		84344944		1	COTOVELO 90 COUDE A 90°	90 ELBOW 90-GRAD-KNIESTÜCK	CODO 90 VINKELRØR, 90	GOMITO A 90° KNIESTUK 90º	A045
3		84344911		1	TUBO RÍGIDO, Tandem Supply				
						RIGID TUBE	TUBO RÍGIDO	TUBO RIGIDO	193T
					TUYAU RIGIDE	ROHR	STIFT RØR	VASTE LEIDING	
4		274754		1	O-RING, -220, 70 Duro, 1.359" ID x .139" Thk				
						O-RING	JUNTA TÓRICA	ANELLO TOROIDALE	055A
					JOINT TORIQUE	O-RING	O-RING	O-RING	
5		84269151		1	CONEXÃO, Gear Pump Suction				
						FITTING	ACOPLAMIENTO	RACCORDO	3300
					RACCORD	ARMATUR	FITTING	AANSLUITING	
6		14307321		4	PARAFUSO	SCREW	TORNILLO	VITE	040V
					VIS	SCHRAUBE	SKRUE	SCHROEF	

SV185

35.701.04		p1	08/11

RETURN PLUMBING (LOADER VALVE) (SR175,SV185,SR200,TR270)
RETURN PLUMBING (LOADER VALVE) (SR175,SV185,SR200,TR270)
RETURN PLUMBING (LOADER VALVE) (SR175,SV185,SR200,TR270)
RETURN PLUMBING (LOADER VALVE) (SR175,SV185,SR200,TR270)

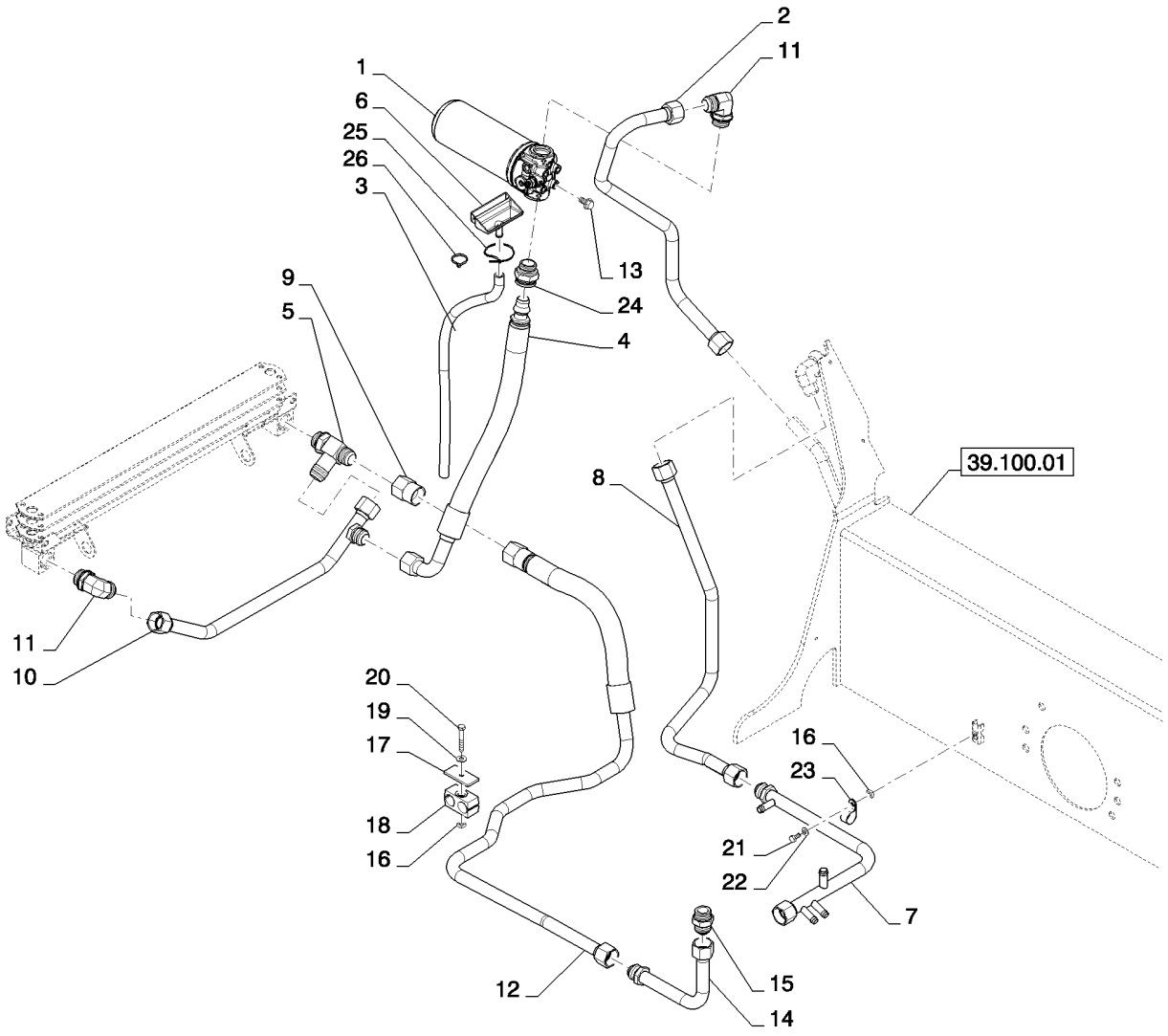

RETURN PLUMBING (LOADER VALVE) (SR175,SV185,SR200,TR270)
RETURN PLUMBING (LOADER VALVE) (SR175,SV185,SR200,TR270)
RETURN PLUMBING (LOADER VALVE) (SR175,SV185,SR200,TR270)
RETURN PLUMBING (LOADER VALVE) (SR175,SV185,SR200,TR270)

R	N	P.N.	MOD	Q	Denominação Description Bezeichnung	Denominacion Beskrivelse	Descrizione Beschrijving	L.C.
1		84278071		1	FILTRO DE ÓLEO HIDRÁULICO, Filter, Assembly, Includes Element HYDRAULIC OIL FILTER FILTRE A HUILE HYDR. HYDRAULIKÖLFILTER	FILTRO DE ACEITE HIDF HYDRAULIKOLIEFILTER	FILTRO OLIO IDRAULICO HYDRAULISCHE-OLIEFIL	074F
1		84278070		1	ELEMENTO, Hydraulic Oil Filter Assembly ELEMENT ELEMENT ELEMENT	ELEMENTO ELEMENT	ELEMENTO ELEMENT	020E
1		84274694		1	ANEL DE DESGASTE, Friction WEAR RING BAGUE D'USURE VERSCHLEISSRING	ANILLO DE DESGASTE SLIDRING	ANELLO ANTIUSURA SLIJTRING	A012
2		84344916		1	TUBO HIDRÁULICO, Hyd Filter Return HYD. TUBE TUYAU HYDRAULIQUE HYDRAULIKLEITUNG	TUBO HIDRÁULICO HYD. RØR	TUBO IDRAULICO HYDRAULISCHE LEIDIN(	190T
3		93963		1	TUBO PLÁSTICO, 0.50" ID x 0.75" OD, 2.0 Feet PLASTIC-RUBBER TUBE GAINE PLASTIQUE KUNSTSTOFF-/GUMMI-R	TUBO DE GOMA DE PLÁ PLASTIKGUMMISLANGE	TUBO IN PLASTICA-GOM KUNSTSTOF-RUBBERLE	Z192
4		84269601		1	CONJ. MANGUEIRA, Oil Cooler Outlet HOSE ASSY. ENSEMBLE DE FLEXIBLE SCHLAUCHBAUGRUPPE	CONJUNTO DE TUBOS SLANGEENHED	COMPLESS. TUBO FLES SLANGEENHEID	P457
5		84259482		1	CONEXÃO EM T UNION TEE RACCORD EN T T-VERSCHRAUBUNG	RACOR EN T T-FORSKRUNING	RACCORDO A T KOPPEL-T-STUK	A134
6		87455867		1	FUNIL, Oil Filter FUNNEL ENTONNOIR TRICHTER	EMBUDO TRAGT	IMBUTO TRECHTER	020I
7		84259538		1	TUBO RÍGIDO, Case Drain Manifold RIGID TUBE TUYAU RIGIDE ROHR	TUBO RÍGIDO STIFT RØR	TUBO RIGIDO VASTE LEIDING	193T
8		84269657		1	TUBO RÍGIDO, Case Drain Return RIGID TUBE TUYAU RIGIDE ROHR	TUBO RÍGIDO STIFT RØR	TUBO RIGIDO VASTE LEIDING	193T
9		84259489		1	ADAPTADOR ADAPTER ADAPTATEUR ADAPTER	ADAPTADOR ADAPTER	ADATTATORE ADAPTER	001A
10		84375905		1	TUBO RÍGIDO, Tube Assy, Oil Cooler Outlet RIGID TUBE TUYAU RIGIDE ROHR	TUBO RÍGIDO STIFT RØR	TUBO RIGIDO VASTE LEIDING	193T
11		268277		2	COTOVELO, 90º, 1 5/16"-12, 37º x 1 5/16"-12, O-Ring ELBOW COUDE KNIESTÜCK	CODO VINKELRØR	GOMITO KNIESTUK	085G
12		84310715		1	TUBO RÍGIDO, Loader Valve Outlet RIGID TUBE TUYAU RIGIDE ROHR	TUBO RÍGIDO STIFT RØR	TUBO RIGIDO VASTE LEIDING	193T
13		86050286		2	PARAFUSO FLANGEADO, Hex, M10 x 20, 8.8, Full Thd FLANGE BOLT VIS A EMBASE FLANSCHSCHRAUBE	PERNO DE CORONA FLANGEBOLT	BULLONE FLANGIATO FLENSBOUT	A027
14		84310722		1	TUBO RÍGIDO, Loader Valve Outlet RIGID TUBE TUYAU RIGIDE ROHR	TUBO RÍGIDO STIFT RØR	TUBO RIGIDO VASTE LEIDING	193T
15		378970		1	CONECTOR HIDRÁUL, 1 5/16"-12, 37º x 1 5/16"-12, O-Ring HYD CONNECTOR CONNECTEUR HYDRAU HYDR STECKVERBINDE	CONECTOR HIDRÁULIC HYDRAULIKSTIK	CONNETTORE IDRAULIC HYDRAULISCHE AANSLI	020R

RETURN PLUMBING (LOADER VALVE) (SR175,SV185,SR200,TR270)
RETURN PLUMBING (LOADER VALVE) (SR175,SV185,SR200,TR270)
RETURN PLUMBING (LOADER VALVE) (SR175,SV185,SR200,TR270)
RETURN PLUMBING (LOADER VALVE) (SR175,SV185,SR200,TR270)

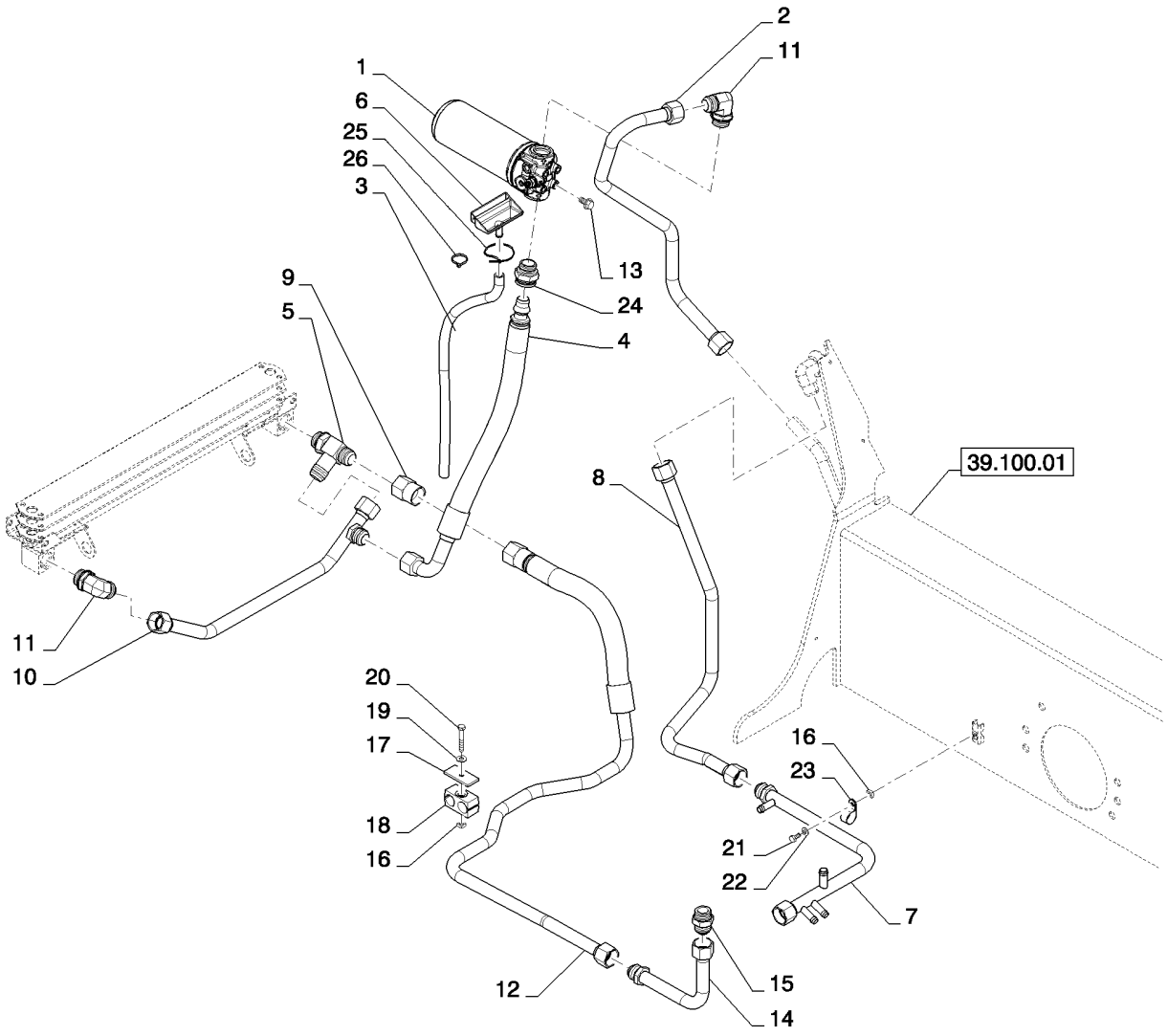

RETURN PLUMBING (LOADER VALVE) (SR175,SV185,SR200,TR270)
RETURN PLUMBING (LOADER VALVE) (SR175,SV185,SR200,TR270)
RETURN PLUMBING (LOADER VALVE) (SR175,SV185,SR200,TR270)
RETURN PLUMBING (LOADER VALVE) (SR175,SV185,SR200,TR270)

R	N	P.N.	MOD	Q	Denominação Description	Description Bezeichnung	Denominacion Beskrivelse	Descrizione Beschrijving	L.C.
16		**229197A1**		3	PORCA	NUT	TUERCA	DADO	5780
					ECROU	MUTTER	NUT	NUT	
17		**257859A1**		2	PLACA ESPACADORA, Bar Clamp Top				
						PLATE,SPACER	PLAQUETA	DISTANZ PIASTRA	Z324
					PLAQUETTE	PLAETTCHEN	PLATE,SPACER	PLATE,SPACER	
18		**225529A1**		2	CONEXÃO	FITTING	ACOPLAMIENTO	RACCORDO	3300
					RACCORD	ARMATUR	FITTING	AANSLUITING	
19		**86625263**		2	ARRUELA PLANA, M8 x 20 x 1.6				
						WASHER	ARANDELA	RONDELLA	131R
					RONDELLE	UNTERLEGSCHEIBE	FLADSKIVE	SLUITRING	
20		**16044321**		2	PARAFUSO, Hex, M8 x 55, 8.8				
						SCREW	TORNILLO	VITE	040V
					VIS	SCHRAUBE	SKRUE	SCHROEF	
21		**120103**		1	PARAFUSO, Hex, M8 x 16, 8.8				
						BOLT	PERNO	BULLONE	140B
					VIS	SCHRAUBE	BOLT	BOUT	
22		**87655042**		1	ARRUELA ESPECIAL	SPECIAL WASHER	ARANDELA ESPECIAL	RONDELLA SPECIALE	Z333
					RONDELLE SPECIALE	SPEZIALUNTERLEGSCH	SPECIALSKIVE	SPECIALE RING	
23		**86637977**		1	BRAÇADEIRA, 1", Insul, 5/16" Bolt				
						CLAMP	ABRAZADERA	MORSETTO	120M
					COLLIER	KLEMME	SPÆNDEBÅND	KLEM	
24		**84259488**		1	ADAPTADOR, -16MB-16 FQLL				
						ADAPTER	ADAPTADOR	ADATTATORE	001A
					ADAPTATEUR	ADAPTER	ADAPTER	ADAPTER	
25		**646223**		1	TIRA, .19" x 8 1/2", Cable Tie; Not Shown				
						STRAP	BANDA	FASCETTA	532B
					BRIDE	BAND	STROP	RIEM	
26		**87642915**		1	PRENDEDOR DE CABOS, Not Shown				
						CABLE STRAP	BANDA DE CABLE	FASCETTA PER CAVO	P716
					BRIDE DE CABLE	KABELBINDER	KABELSTROP	BUNDELBAND	

35.701.05		p1	01/11

2SPD PLUMBING (SR175,SV185)
2SPD PLUMBING (SR175,SV185)
2SPD PLUMBING (SR175,SV185)
2SPD PLUMBING (SR175,SV185)

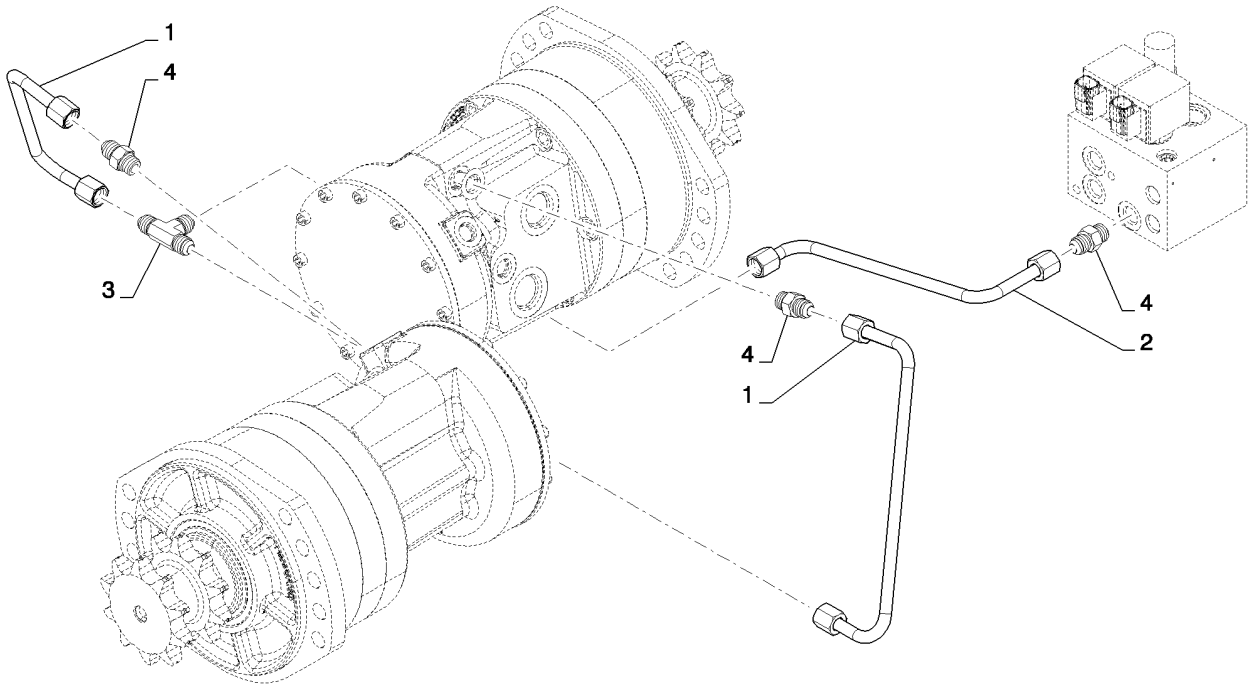

2SPD PLUMBING (SR175,SV185)
2SPD PLUMBING (SR175,SV185)
2SPD PLUMBING (SR175,SV185)
2SPD PLUMBING (SR175,SV185)

R	N	P.N.	MOD	Q	Denominação Description	Description Bezeichnung	Denominacion Beskrivelse	Descrizione Beschrijving	L.C.
1		84259640		2	TUBO RÍGIDO, Assy, Two Speed				
						RIGID TUBE	TUBO RÍGIDO	TUBO RIGIDO	193T
					TUYAU RIGIDE	ROHR	STIFT RØR	VASTE LEIDING	
2		84258810		1	TUBO RÍGIDO, Assy, Two Speed Common				
						RIGID TUBE	TUBO RÍGIDO	TUBO RIGIDO	193T
					TUYAU RIGIDE	ROHR	STIFT RØR	VASTE LEIDING	
3		76355		1	T, 9/16"-18, 37º	TEE	RACOR EN T	PEZZO A T	9020
					RACCORD EN T	T-STÜCK	T-STYKKE	T-STUK	
4		76350		3	CONECTOR HIDRÁUL, 9/16"-18, 37º x 9/16"-18, O-Ring				
						HYD CONNECTOR	CONECTOR HIDRÁULIC(	CONNETTORE IDRAULIC	020R
					CONNECTEUR HYDRAU	HYDR STECKVERBINDE	HYDRAULIKSTIK	HYDRAULISCHE AANSLI	

SV185

35.701.06	01	p1	01/11

BRAKE PLUMBING (SR130,SR150,SR175,SV185)
BRAKE PLUMBING (SR130,SR150,SR175,SV185)
BRAKE PLUMBING (SR130,SR150,SR175,SV185)
BRAKE PLUMBING (SR130,SR150,SR175,SV185)

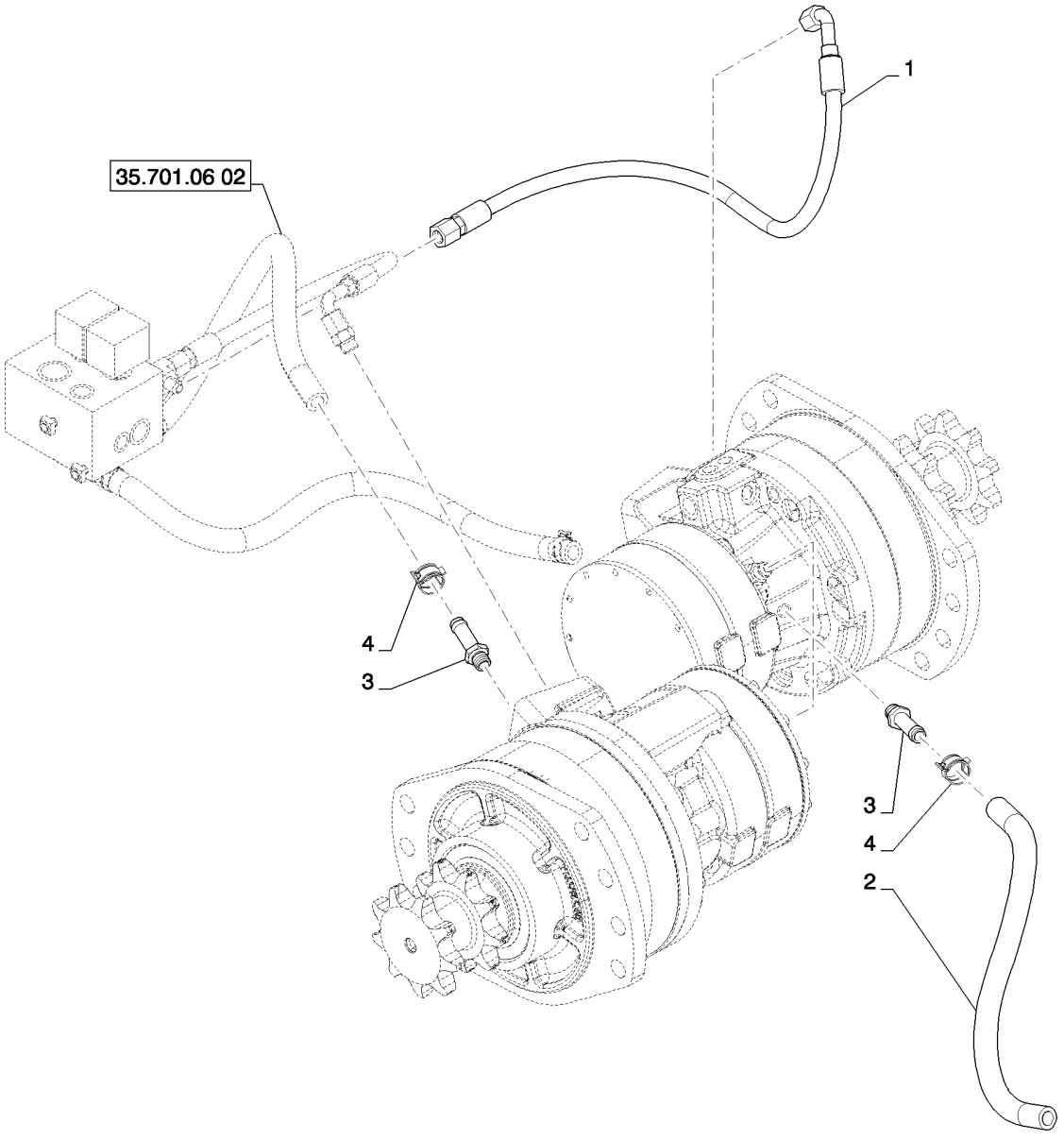

BRAKE PLUMBING (SR130,SR150,SR175,SV185)
BRAKE PLUMBING (SR130,SR150,SR175,SV185)
BRAKE PLUMBING (SR130,SR150,SR175,SV185)
BRAKE PLUMBING (SR130,SR150,SR175,SV185)

R	N	P.N.	MOD	Q	Denominação Description	Description Bezeichnung	Denominacion Beskrivelse	Descrizione Beschrijving	L.C.
1		84257176		1	CONJ. MANGUEIRA, Brake ENSEMBLE DE FLEXIBLE	HOSE ASSY. SCHLAUCHBAUGRUPPE	CONJUNTO DE TUBOS SLANGEENHED	COMPLESS. TUBO FLES SLANGEENHEID	P457
2		84259527		1	MANGUEIRA, Case Drain FLEXIBLE	HOSE SCHLAUCH	TUBO SLANGE	TUBO FLESSIBILE SLANG	030M
3		86705988		2	CONEXÃO, 1/2" Hose x 9/16"-18 ORB, Beaded RACCORD	FITTING ARMATUR	ACOPLAMIENTO FITTING	RACCORDO AANSLUITING	3300
4		87443510		2	BRAÇADEIRA MANGUEIRA, M20 COLLIER POUR FLEXIBL	HOSE CLAMP SCHLAUCHSCHELLE	ABRAZADERA DE MANG SLANGEKLEMME	FASCETTA STRINGITUB SLANGKLEM	P729

SV185

35.701.06	02	p1	02/11

BRAKE PLUMBING (SR130 - SV300)
BRAKE PLUMBING (SR130 - SV300)
BRAKE PLUMBING (SR130 - SV300)
BRAKE PLUMBING (SR130 - SV300)

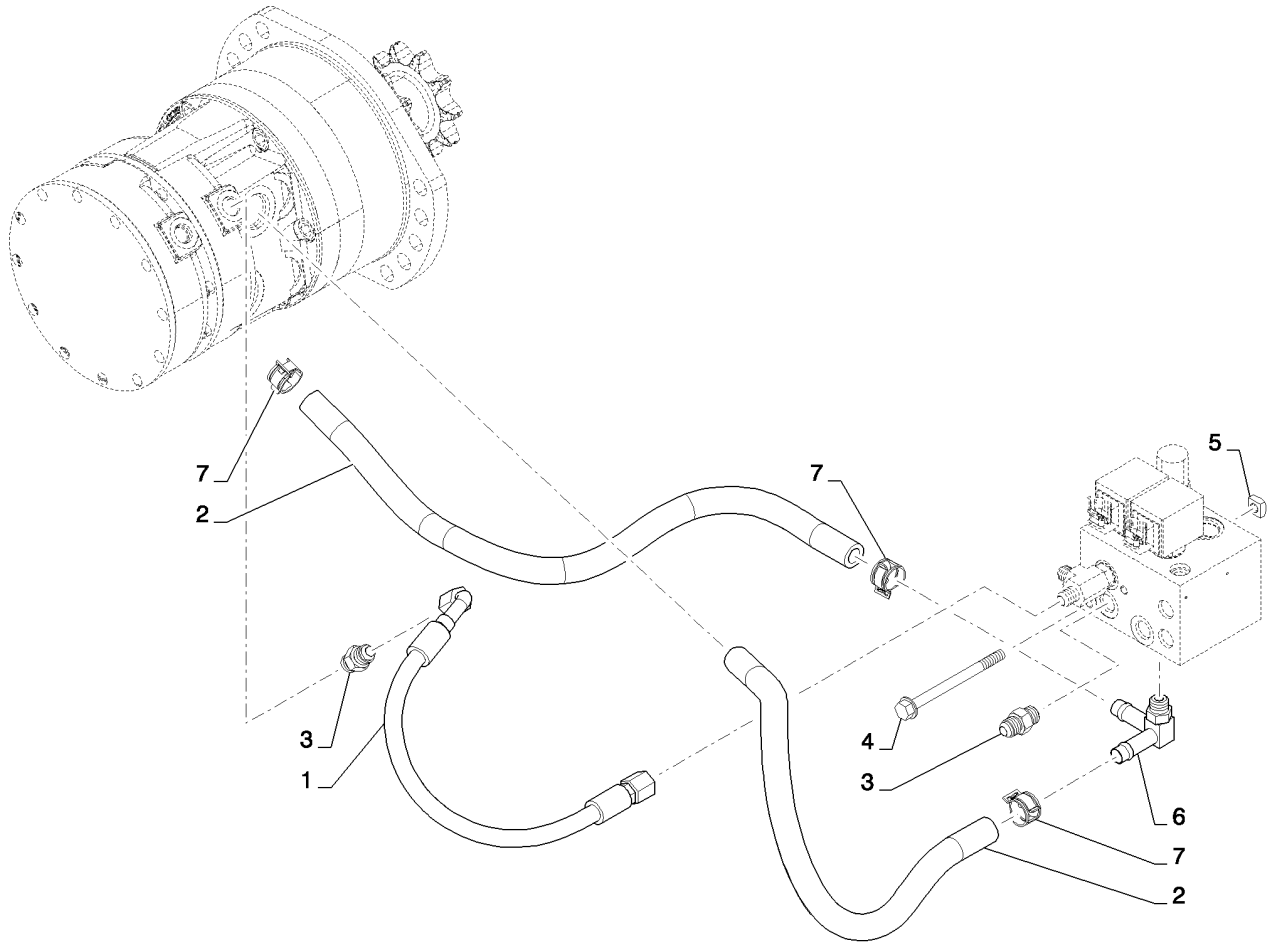

BRAKE PLUMBING (SR130 - SV300)
BRAKE PLUMBING (SR130 - SV300)
BRAKE PLUMBING (SR130 - SV300)
BRAKE PLUMBING (SR130 - SV300)

R	N	P.N.	MOD	Q	Denominação Description	Description Bezeichnung	Denominacion Beskrivelse	Descrizione Beschrijving	L.C.
1		84257177		1	CONJ. MANGUEIRA, Brake ENSEMBLE DE FLEXIBLE	HOSE ASSY. SCHLAUCHBAUGRUPPE	CONJUNTO DE TUBOS SLANGEENHED	COMPLESS. TUBO FLES SLANGEENHEID	P457
2		84257173		2	MANGUEIRA, Drain FLEXIBLE	HOSE SCHLAUCH	TUBO SLANGE	TUBO FLESSIBILE SLANG	030M
3		76350		3	CONECTOR HIDRÁUL, 9/16"-18, 37º x 9/16"-18, O-Ring CONNECTEUR HYDRAU	HYD CONNECTOR HYDR STECKVERBINDE	CONECTOR HIDRÁULIC HYDRAULIKSTIK	CONNETTORE IDRAULIC HYDRAULISCHE AANSLU	020R
4		86511844		2	PARAFUSO, Flange, M8x100 VIS	BOLT SCHRAUBE	PERNO BOLT	BULLONE BOUT	140B
5		229197A1		2	PORCA, Square, M8-1.25 ECROU	NUT MUTTER	TUERCA NUT	DADO NUT	5780
6		84187294		1	ADAPTADOR, Fitting ADAPTATEUR	ADAPTER ADAPTER	ADAPTADOR ADAPTER	ADATTATORE ADAPTER	001A
7		87443510		4	BRAÇADEIRA MANGUEIRA, M20 COLLIER POUR FLEXIBL	HOSE CLAMP SCHLAUCHSCHELLE	ABRAZADERA DE MANG SLANGEKLEMME	FASCETTA STRINGITUB SLANGKLEM	P729

35.730.01		p1	05/11

HYDRAULIC CYLINDER (SV185)
HYDRAULIC CYLINDER (SV185)
HYDRAULIC CYLINDER (SV185)
HYDRAULIC CYLINDER (SV185)

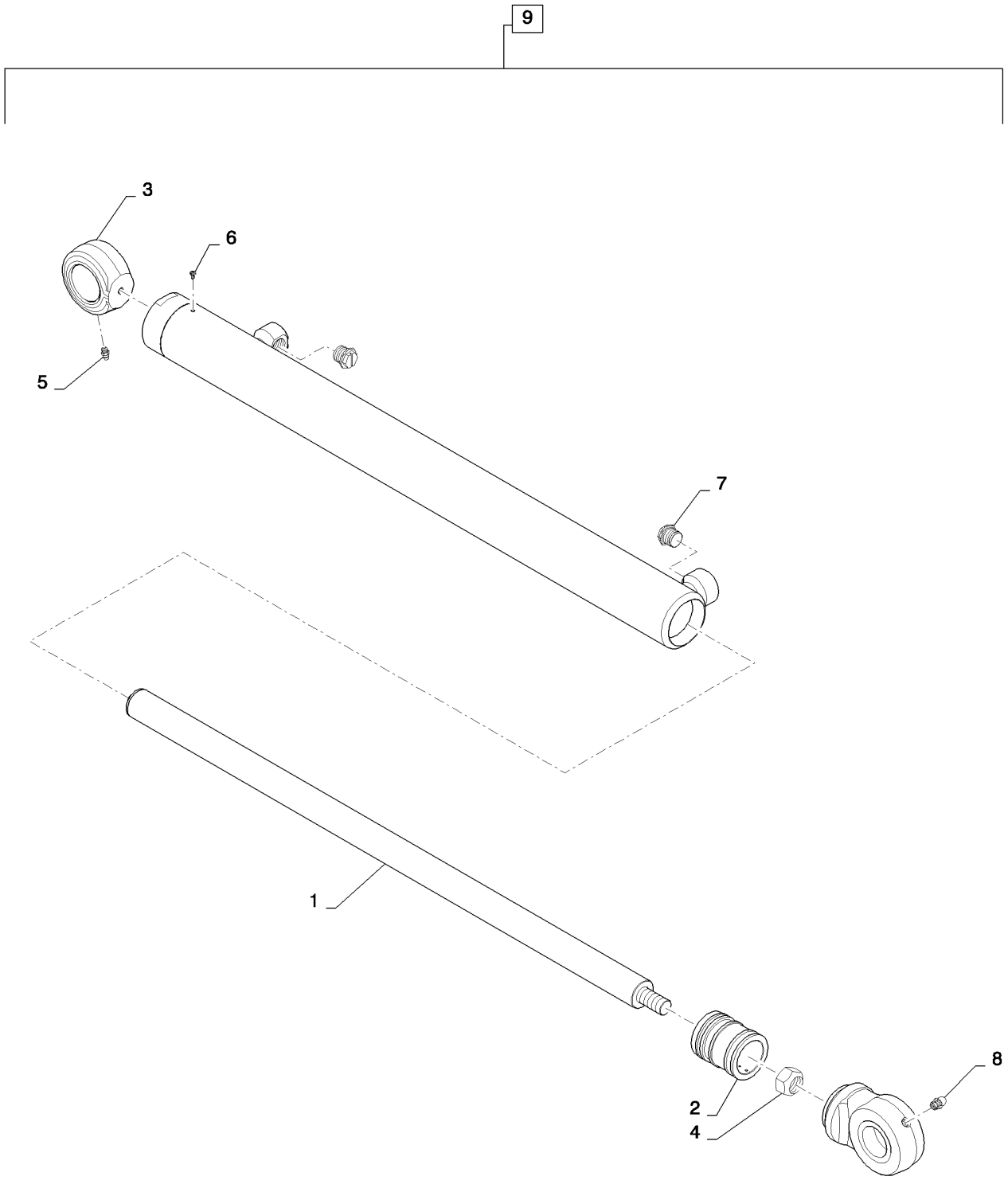

HYDRAULIC CYLINDER (SV185)
HYDRAULIC CYLINDER (SV185)
HYDRAULIC CYLINDER (SV185)
HYDRAULIC CYLINDER (SV185)

R	N	P.N.	MOD	Q	Denominação Description	Description Bezeichnung	Denominacion Beskrivelse	Descrizione Beschrijving	L.C.
9		84372032			CILINDRO, RH, Lift, Power Tan, Incl. 1-8				
						CYLINDER	CILINDRO	CILINDRO	164C
					VERIN	ZYLINDER	CYLINDER	CILINDER	
9		84358579			CILINDRO, LH, Lift, Power Tan, Incl. 1-8				
						CYLINDER	CILINDRO	CILINDRO	164C
					VERIN	ZYLINDER	CYLINDER	CILINDER	
1		NSS			SEM SERVIÇO EM SEPARADO, Tube, W				
						NOT SERVICED SEPARA	NO SE REPARA POR SE	NON FORNITO SEPARAT	064N
					NON FORUNI SEPAREM	NICHT A SEP ERS-T LIEI	SERVICERES IKKE SEPA	NIET LOS VERKRIJGBAA	
2		NSS			SEM SERVIÇO EM SEPARADO, Package, Piston-Gland, 57.2 X 34.9				
						NOT SERVICED SEPARA	NO SE REPARA POR SE	NON FORNITO SEPARAT	064N
					NON FORUNI SEPAREM	NICHT A SEP ERS-T LIEI	SERVICERES IKKE SEPA	NIET LOS VERKRIJGBAA	
3		NSS			SEM SERVIÇO EM SEPARADO, Rod, W, 34.9 DIA				
						NOT SERVICED SEPARA	NO SE REPARA POR SE	NON FORNITO SEPARAT	064N
					NON FORUNI SEPAREM	NICHT A SEP ERS-T LIEI	SERVICERES IKKE SEPA	NIET LOS VERKRIJGBAA	
4		280724		1	CONTRA PORCA, 3/4"-16, GC				
						LOCK NUT	TUERCA DE BLOQUEO	DADO DI BLOCCAGGIO	P263
					CONTRE-ECROU	SICHERUNGSMUTTER	LÅSEMØTRIK	BORGMOER	
5		87414		1	GRAXEIRA, 1/4"-28 x .56" lg, Self-Tap				
						LUBE NIPPLE	BOQUILLA DE LUBRICAC	INGRASSATORE	060I
					GRAISSEUR	SCHMIERNIPPEL	SMØRENIPPEL	SMEERNIPPEL	
6		G109395		1	PARAFUSO	SELF-TAP SCREW	TORNILLO AUTORROSC	VITE AUTOFILETTANTE	062V
					VIS AUTOTARAUDEUSE	SELBSTSCHN SCHRAUE	SELVLÅSENDE BOLT	ZELFTAPPENDE SCHRO	
7		86625120		2	BUJÃO, 3/4-16, w/O-Ring	PLUG	TAPÓN	TAPPO	050T
					BOUCHON	STOPFEN	PROP	PLUG	
8		86977989		1	GRAXEIRA, 90º, 1/8"-27 NPT x .97" lg, Leakproof				
						LUBE NIPPLE	BOQUILLA DE LUBRICAC	INGRASSATORE	060I
					GRAISSEUR	SCHMIERNIPPEL	SMØRENIPPEL	SMEERNIPPEL	
10		84480928			KIT DE VEDAÇÃO, (Not Shown) Cylinder Repair Kit				
						SEAL KIT	KIT DE JUNTAS	KIT GUARNIZIONI	630S
					KIT DE JOINTS	DICHTUNGSSATZ	PAKNINGSSÆT	KIT MET AFDICHTINGEN	

35.730.02		p1	05/11

BUCKET CYLINDER (SV185)
BUCKET CYLINDER (SV185)
BUCKET CYLINDER (SV185)
BUCKET CYLINDER (SV185)

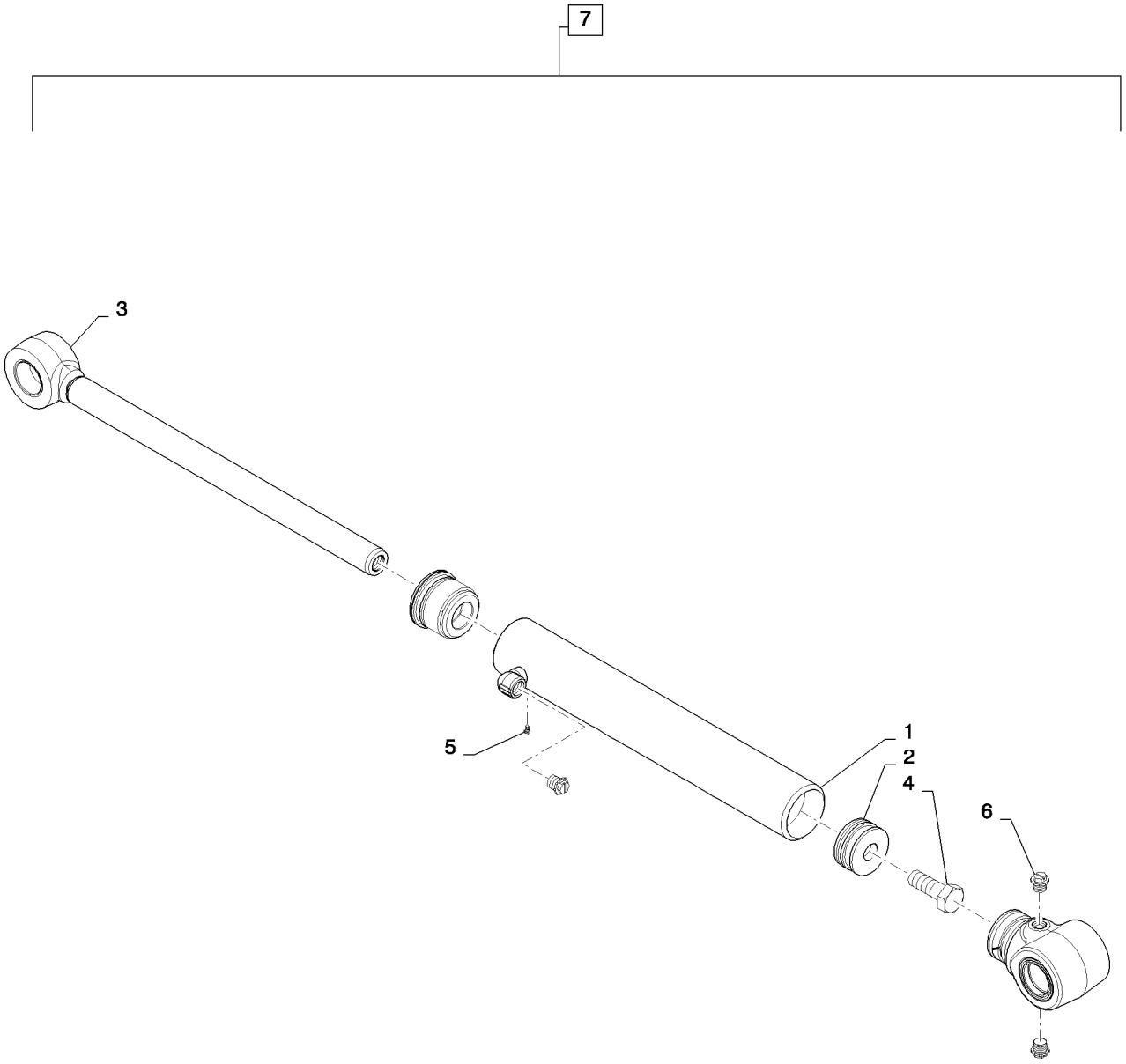

BUCKET CYLINDER (SV185)
BUCKET CYLINDER (SV185)
BUCKET CYLINDER (SV185)
BUCKET CYLINDER (SV185)

R	N	P.N.	MOD	Q	Denominação Description	Description Bezeichnung	Denominacion Beskrivelse	Descrizione Beschrijving	L.C.
7		84290573			CILINDRO LEVANTAMENTO, Hydraulic, Assembly, Bucket, Tan, Incl. 1-6				
						LIFT CYLINDER	CILINDRO DE ELEVADOI	CILINDRO DI SOLLEVAM	133C
					VERIN DE RELEVAGE	HUBZYLINDER	LØFTECYLINDER	HEFCILINDER	
1		84296084		1	TUBO, Hydraulic, W	TUBE	TUBO	TUBO	195T
					TUBE	ROHR	RØR	LEIDING	
2		NSS			SEM SERVIÇO EM SEPARADO, Package, Piston-Gland				
						NOT SERVICED SEPARA	NO SE REPARA POR SE	NON FORNITO SEPARAT	064N
					NON FORUNI SEPAREM	NICHT A SEP ERS-T LIEI	SERVICERES IKKE SEPA	NIET LOS VERKRIJGBAA	
3		NSS			SEM SERVIÇO EM SEPARADO, Rod, Piston, W				
						NOT SERVICED SEPARA	NO SE REPARA POR SE	NON FORNITO SEPARAT	064N
					NON FORUNI SEPAREM	NICHT A SEP ERS-T LIEI	SERVICERES IKKE SEPA	NIET LOS VERKRIJGBAA	
4		86982436		1	PARAFUSO ESPECIAL, SEMS/A, 7/8 X 2.50				
						SPECIAL BOLT	PERNO ESPECIAL	BULLONE SPECIALE	P698
					VIS SPECIALE	SPEZIALSCHRAUBE	SPECIALBOLT	SPECIALE BOUT	
5		G109395		1	PARAFUSO	SELF-TAP SCREW	TORNILLO AUTORROSC	VITE AUTOFILETTANTE	062V
					VIS AUTOTARAUDEUSE	SELBSTSCHN SCHRAUE	SELVLÅSENDE BOLT	ZELFTAPPENDE SCHRO	
6		86625122		3	BUJÃO	PLUG	TAPÓN	TAPPO	050T
					BOUCHON	STOPFEN	PROP	PLUG	
8		84480956			KIT DE VEDAÇÃO, (Not Shown) Cylinder Repair Kit				
						SEAL KIT	KIT DE JUNTAS	KIT GUARNIZIONI	630S
					KIT DE JOINTS	DICHTUNGSSATZ	PAKNINGSSÆT	KIT MET AFDICHTINGEN	

35.750.01		p1	01/11

TANK, HYDRAULIC (SV185)
TANK, HYDRAULIC (SV185)
TANK, HYDRAULIC (SV185)
TANK, HYDRAULIC (SV185)

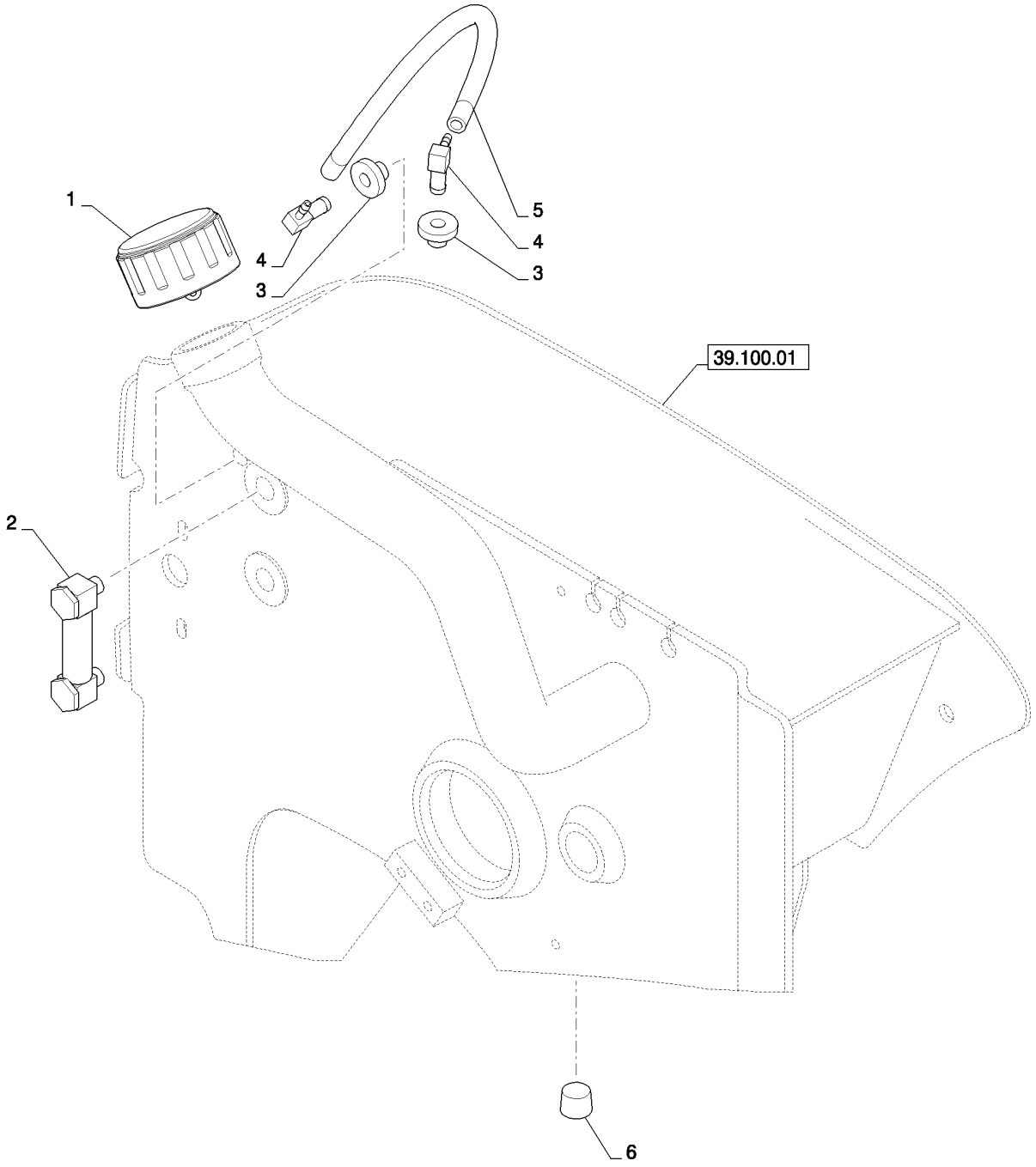

TANK, HYDRAULIC (SV185)
TANK, HYDRAULIC (SV185)
TANK, HYDRAULIC (SV185)
TANK, HYDRAULIC (SV185)

R	N	P.N.	MOD	Q	Denominação Description	Description Bezeichnung	Denominacion Beskrivelse	Descrizione Beschrijving	L.C.
1		**257448A1**		1	CAPA, Hydraulic Fill CHAPEAU	CAP KAPPE	TAPA CAP	CAPPUCCIO CAP	1380
2		**84344624**		1	MEDIDOR, Liquid Level Gauge JAUGE	GAUGE ANZEIGE	INDICADOR MANOMETER	INDICATORE METER	Z211
3		**86532842**		2	BUCHA BAGUE	BUSHING BUCHSE	CASQUILLO BØSNING	BOCCOLA BUS	095B
4		**86532841**		2	COTOVELO 90, 5/16", Hosebarb COUDE A 90°	90 ELBOW 90-GRAD-KNIESTÜCK	CODO 90 VINKELRØR, 90	GOMITO A 90° KNIESTUK 90º	A045
5		**84355847**		1	MANGUEIRA, Hydraulic Tank Vent FLEXIBLE	HOSE SCHLAUCH	TUBO SLANGE	TUBO FLESSIBILE SLANG	030M
6		**647429**		1	BUJÃO DE DRENO BOUCHON DE VIDANGE	DRAIN PLUG ABLASSSCHRAUBE	TAPÓN DE VACIADO AFTAPNINGSPROP	TAPPO DI SCARICO AFTAPPLUG	056T

SECTION INDEX
37 - Ganchos de reboque e lastro

37.140.01 COUNTERWEIGHT (SR175, SV185, TR270)

37.140.01		p1	07/11

COUNTERWEIGHT (SR175, SV185, TR270)
COUNTERWEIGHT (SR175, SV185, TR270)
COUNTERWEIGHT (SR175, SV185, TR270)
COUNTERWEIGHT (SR175, SV185, TR270)

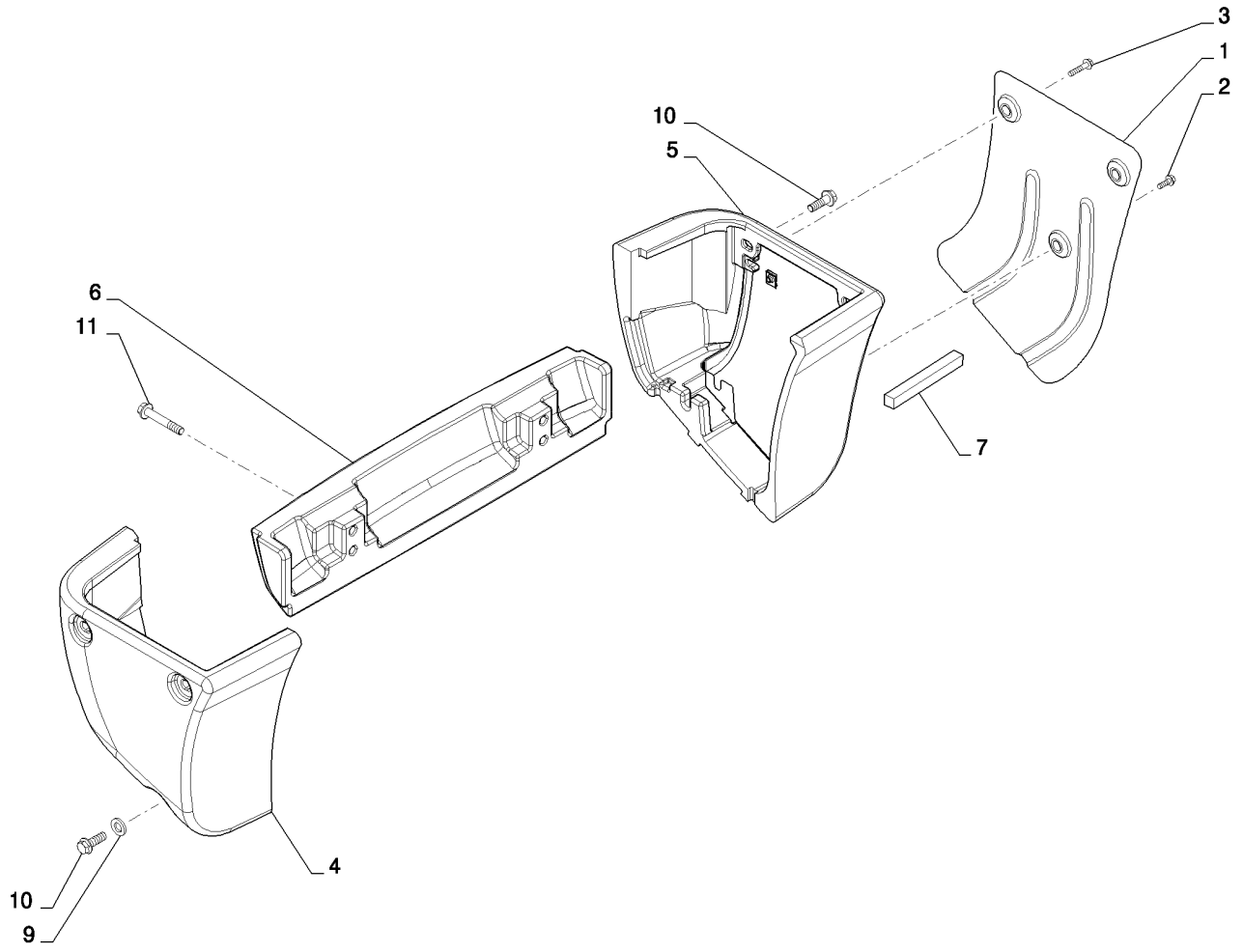

COUNTERWEIGHT (SR175, SV185, TR270)
COUNTERWEIGHT (SR175, SV185, TR270)
COUNTERWEIGHT (SR175, SV185, TR270)
COUNTERWEIGHT (SR175, SV185, TR270)

R	N	P.N.	MOD	Q	Denominação Description	Description Bezeichnung	Denominacion Beskrivelse	Descrizione Beschrijving	L.C.
1		84273170		1	PLACA DE COBERTURA COUVERCLE	COVER PLATE ABDECKPLATTE	PLACA DE CUBIERTA DÆKPLADE	PIASTRA DI COPERTUR AFSCHERMPLAAT	110P
2		9804262		1	PARAFUSO, Hex Flg, M10 x 30, 8.8 VIS	BOLT SCHRAUBE	PERNO BOLT	BULLONE BOUT	140B
3		9804264		2	PARAFUSO, Hex Flg, M10 x 50, 8.8 VIS	BOLT SCHRAUBE	PERNO BOLT	BULLONE BOUT	140B
4		84274252		1	ESTRUTURA CHASSIS	FRAME RAHMEN	BASTIDOR FRAME	TELAIO FRAME	077T
5		84274254		1	ESTRUTURA CHASSIS	FRAME RAHMEN	BASTIDOR FRAME	TELAIO FRAME	077T
6		84274279		1	ESTRUTURA CHASSIS	FRAME RAHMEN	BASTIDOR FRAME	TELAIO FRAME	077T
7		84355546		1	ESPUMA ISOLANTE MOUSSE ISOLANTE	FOAM INSULATION SCHAUMSTOFFISOLIER	ESPUMA AISLANTE SKUM ISOLERING	ISOLANTE IN SCHIUMA SCHUIMISOLATIE	051S
8		86625071		3	PORCA, M10, U ECROU	NUT MUTTER	TUERCA MØTRIK	DADO MOER	010D
9		87655047		1	ARRUELA ESPECIAL RONDELLE SPECIALE	SPECIAL WASHER SPEZIALUNTERLEGSCH	ARANDELA ESPECIAL SPECIALSKIVE	RONDELLA SPECIALE SPECIALE RING	Z333
10		87698849		6	PARAFUSO VIS	BOLT SCHRAUBE	PERNO BOLT	BULLONE BOUT	140B
11		87698850		4	PARAFUSO VIS	BOLT SCHRAUBE	PERNO BOLT	BULLONE BOUT	140B

SECTION INDEX
39 - Estruturas

39.100.01		CHASSIS HOODS AND COVERS (SV185)
39.105.01	01	COUPLER BASIC TAN (SR175,TR270,SR200)
39.105.02		BOOM (SV185)
39.105.03		COUPLER, BASIC TAN (SV185,SV250,SV300,TV380)

39.100.01		p1	02/11

CHASSIS HOODS AND COVERS (SV185)
CHASSIS HOODS AND COVERS (SV185)
CHASSIS HOODS AND COVERS (SV185)
CHASSIS HOODS AND COVERS (SV185)

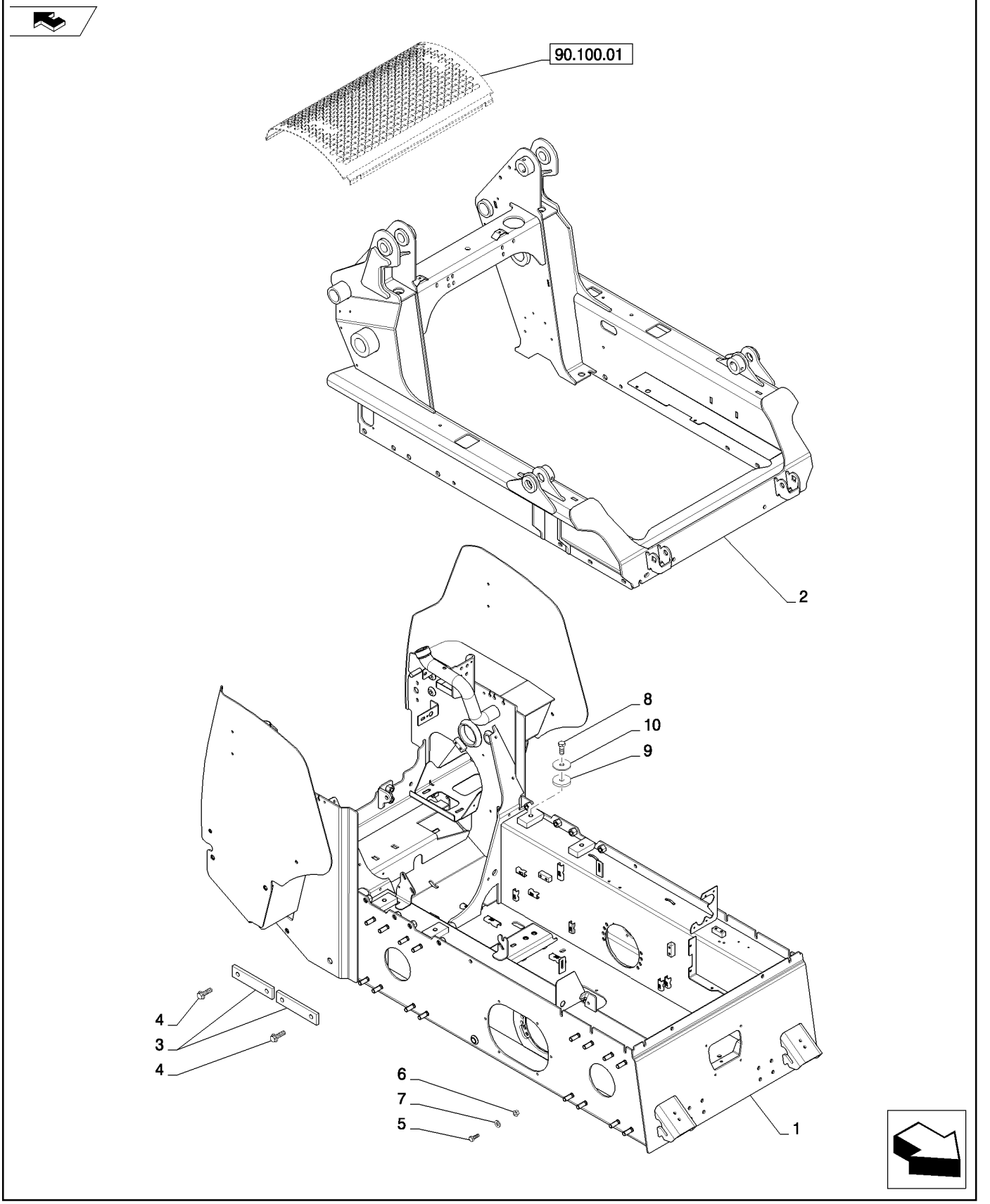

CHASSIS HOODS AND COVERS (SV185)
CHASSIS HOODS AND COVERS (SV185)
CHASSIS HOODS AND COVERS (SV185)
CHASSIS HOODS AND COVERS (SV185)

R	N	P.N.	MOD	Q	Denominação Description Bezeichnung	Denominacion Beskrivelse	Descrizione Beschrijving	L.C.
1		NSS		1	SEM SERVIÇO EM SEPARADO, Chassis NOT SERVICED SEPARA	NO SE REPARA POR SE	NON FORNITO SEPARAT	064N
					NON FORUNI SEPAREM NICHT A SEP ERS-T LIEI	SERVICERES IKKE SEPA	NIET LOS VERKRIJGBAA	
2		84285581		1	TRAVESSA PARA REBOQUE DRAWBAR FRAME	BAST. BARRA DE ENGAI	TELAIO BARRA DI TRAIN	181T
					TRAVERSE D'ATTELAGE ZUGSTANGENRAHMEN	TRÆKBOMSRAMME	TREKSTANGFRAME	
3		84329193		4	BARRA, Clamping BAR	BARRA	BARRA	530B
					BARRE BAR	BJÆLKE	STANG	
4		87698849		8	PARAFUSO, Flange, M16x50 BOLT	PERNO	BULLONE	140B
					VIS SCHRAUBE	BOLT	BOUT	
5		9824642		10	PARAFUSO, Hex, M12 x 35, 10.9 BOLT	PERNO	BULLONE	140B
					VIS SCHRAUBE	BOLT	BOUT	
6		86512497		10	PORCA, M12 x 1.75, Flg, Cl 10 NUT	TUERCA	DADO	010D
					ECROU MUTTER	MØTRIK	MOER	
7		86625256		10	ARRUELA PLANA, M12 x 28.5 x 4, HT WASHER	ARANDELA	RONDELLA	131R
					RONDELLE UNTERLEGSCHEIBE	FLADSKIVE	SLUITRING	
8		374835		4	PARAFUSO, Hex, M16 x 40, 10.9 BOLT	PERNO	BULLONE	140B
					VIS SCHRAUBE	BOLT	BOUT	
9		87305411		4	ESPAÇADOR SPACER	SEPARADOR	DISTANZIALE	075D
					ENTRETOISE DISTANZSTÜCK	AFSTANDSSTYKKE	AFSTANDSSTUK	
10		87687021		4	ARRUELA PLANA, Washer 70mm OD WASHER	ARANDELA	RONDELLA	131R
					RONDELLE UNTERLEGSCHEIBE	FLADSKIVE	SLUITRING	

39.105.01	01	p1	07/11

COUPLER BASIC TAN (SR175,TR270,SR200)
COUPLER BASIC TAN (SR175,TR270,SR200)
COUPLER BASIC TAN (SR175,TR270,SR200)
COUPLER BASIC TAN (SR175,TR270,SR200)

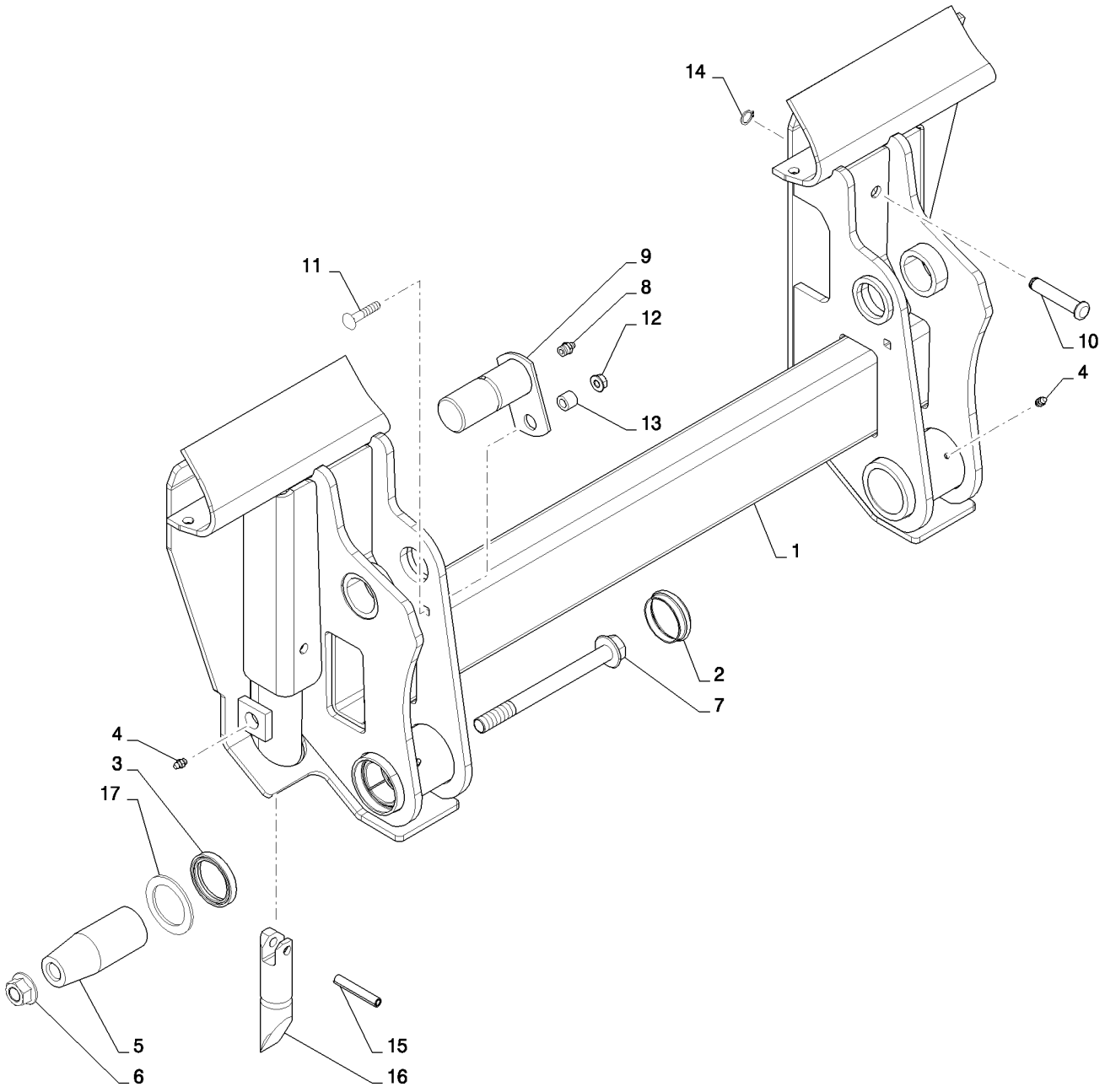

COUPLER BASIC TAN (SR175,TR270,SR200)
COUPLER BASIC TAN (SR175,TR270,SR200)
COUPLER BASIC TAN (SR175,TR270,SR200)
COUPLER BASIC TAN (SR175,TR270,SR200)

R	N	P.N.	MOD	Q	Denominação Description	Description Bezeichnung	Denominacion Beskrivelse	Descrizione Beschrijving	L.C.
1		84291892		1	FIXADOR, Plate CE Gray, Order W/Kit 84390420				
						MOUNT	SOPORTE	SUPPORTO	C022
					MONTAGE	GESTELL	BESLAG	BEVESTIGING	
2		86561087		2	GUARDA PÓ, Hub Cap	DUST CAP	CAPUCHÓN ANTIPOLVO	CAPPUCCIO PARAPOLV	066C
					CACHE-POUSSIERE	STAUBKAPPE	STØVHÆTTE	STOFKAP	
3		D95143		2	VEDAÇÃO, Wiper Rod	SEAL	ANILLO DE CIERRE	GUARNIZIONE; TENUTA	132A
					JOINT	DICHTUNG	PAKNING	AFDICHTING	
4		87414		4	GRAXEIRA, 1/4"-28 x .56" lg, Self-Tap				
						LUBE NIPPLE	BOQUILLA DE LUBRICA(	INGRASSATORE	060I
					GRAISSEUR	SCHMIERNIPPEL	SMØRENIPPEL	SMEERNIPPEL	
5		84201514		2	PINO	PIN	PASADOR	PERNO	080P
					BROCHE	PIN	STIFT	PEN	
6		86512498		2	PORCA, M16 x 2, Flg, Cl 10	NUT	TUERCA	DADO	010D
					ECROU	MUTTER	MØTRIK	MOER	
7		87015924		2	PARAFUSO, Hex Flg, M16 x 180, 8.8				
						BOLT	PERNO	BULLONE	140B
					VIS	SCHRAUBE	BOLT	BOUT	
8		80710		2	GRAXEIRA, 1/8"-27 x .66 lg	LUBE NIPPLE	BOQUILLA DE LUBRICA(	INGRASSATORE	060I
					GRAISSEUR	SCHMIERNIPPEL	SMØRENIPPEL	SMEERNIPPEL	
9		9614349		2	PINO	PIN	PASADOR	PERNO	080P
					BROCHE	PIN	STIFT	PEN	
10		87387540		2	RETENTOR, Pin Handle Pivot				
						RETAINER	RETENEDOR	FERMO	109R
					DISPOSITIF DE RETENU	HALTERUNG	HOLDER	HOUDER	
11		86512443		2	PARAFUSO, Short NK, M8 x 35, Cl8.8, Full Thd				
						CARRIAGE BOLT	PERNO ALOMADO	BULLONE A TESTA TON	P123
					VIS A TETE BOMBEE	SCHLOSSSCHRAUBE	BRÆDDEBOLT	SLOTBOUT	
12		9804277		2	PORCA, M8 x 1.25, Flg, Cl 8				
						NUT	TUERCA	DADO	010D
					ECROU	MUTTER	MØTRIK	MOER	
13		86589143		2	ESPAÇADOR	SPACER	SEPARADOR	DISTANZIALE	075D
					ENTRETOISE	DISTANZSTÜCK	AFSTANDSSTYKKE	AFSTANDSSTUK	
14		87612753		2	RETENTOR, Circlip, Ext. Hvy. #50 Plain				
						RETAINER	RETENEDOR	FERMO	109R
					DISPOSITIF DE RETENU	HALTERUNG	HOLDER	HOUDER	
15		87610718		2	PINO, Coiled Spring	PIN	PASADOR	PERNO	080P
					BROCHE	PIN	STIFT	PEN	
16		87758365		2	PINO, Latch	PIN	PASADOR	PERNO	080P
					BROCHE	PIN	STIFT	PEN	
17		87613204		2	ARRUELA PLANA, 1.781 X 2.5 X 0.1195 CST				
						WASHER	ARANDELA	RONDELLA	131R
					RONDELLE	UNTERLEGSCHEIBE	FLADSKIVE	SLUITRING	

39.105.02		p1	08/11

BOOM (SV185)
BOOM (SV185)
BOOM (SV185)
BOOM (SV185)

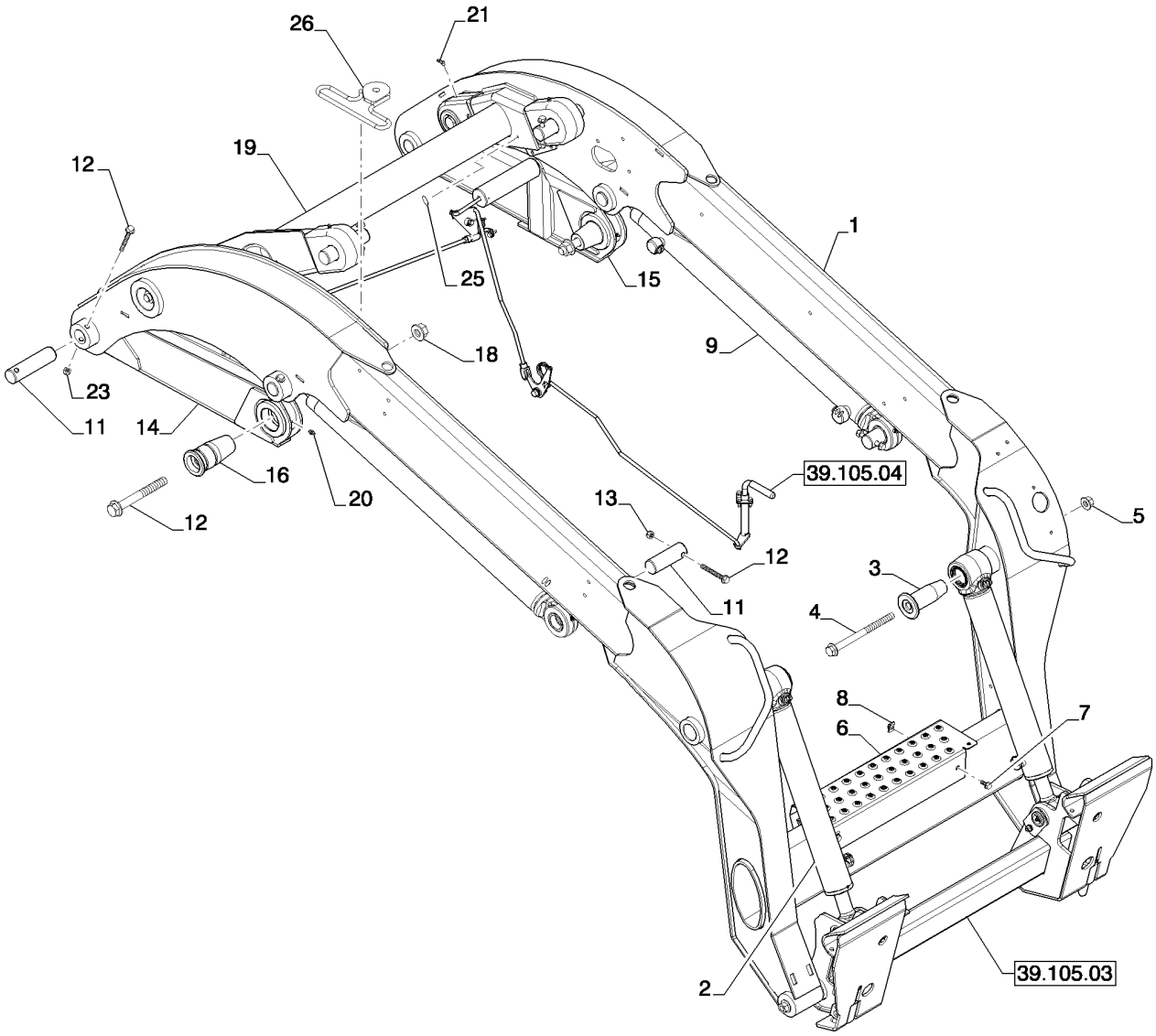

BOOM (SV185)
BOOM (SV185)
BOOM (SV185)
BOOM (SV185)

R	N	P.N.	MOD	Q	Denominação Description	Description Bezeichnung	Denominacion Beskrivelse	Descrizione Beschrijving	L.C.
1		NSS		1	SEM SERVIÇO EM SEPARADO, Boom, Order 84391761 Kit				
						NOT SERVICED SEPARA	NO SE REPARA POR SE	NON FORNITO SEPARAT	064N
					NON FORUNI SEPAREM	NICHT A SEP ERS-T LIEI	SERVICERES IKKE SEPA	NIET LOS VERKRIJGBAA	
2		84290573		2	CILINDRO LEVANTAMENTO, Bucket				
						LIFT CYLINDER	CILINDRO DE ELEVADOI	CILINDRO DI SOLLEVAM	133C
					VERIN DE RELEVAGE	HUBZYLINDER	LØFTECYLINDER	HEFCILINDER	
3		84319704		2	PINO, Boom to Tip Cylinder	PIN	PASADOR	PERNO	080P
					BROCHE	PIN	STIFT	PEN	
4		84238749		2	PARAFUSO	BOLT	PERNO	BULLONE	140B
					VIS	SCHRAUBE	BOLT	BOUT	
5		87016581		2	CONTRA PORCA, M16 x 2, Flg, Cl 10				
						LOCK NUT	TUERCA DE BLOQUEO	DADO DI BLOCCAGGIO	P263
					CONTRE-ECROU	SICHERUNGSMUTTER	LÅSEMØTRIK	BORGMOER	
6		84377147		1	ESTRIBO, Loader Step, Tar	STEP	PELDAÑO	GRADINO	116M
					MARCHE-PIED	SCHRITT	TRINPLADE	TREDE	
7		86625074		4	PORCA	NUT	TUERCA	DADO	010D
					ECROU	MUTTER	MØTRIK	MOER	
8		9804258		4	PARAFUSO, Hex Flg, M8 x 20, 8.8				
						BOLT	PERNO	BULLONE	140B
					VIS	SCHRAUBE	BOLT	BOUT	
9		84358579		1	CILINDRO, Hyd Lift Cylinder, LH				
						CYLINDER	CILINDRO	CILINDRO	164C
					VERIN	ZYLINDER	CYLINDER	CILINDER	
10		84372032		1	CILINDRO, Hyd Lift Cylinder, RH				
						CYLINDER	CILINDRO	CILINDRO	164C
					VERIN	ZYLINDER	CYLINDER	CILINDER	
11		86512554		8	CONTRA PORCA, M10 x 1.5, Cl 10				
						LOCK NUT	TUERCA DE BLOQUEO	DADO DI BLOCCAGGIO	P263
					CONTRE-ECROU	SICHERUNGSMUTTER	LÅSEMØTRIK	BORGMOER	
12		86507311		8	PARAFUSO, Hex Flg, M10 x 80, 8.8				
						BOLT	PERNO	BULLONE	140B
					VIS	SCHRAUBE	BOLT	BOUT	
13		84280377		2	PINO, Chassis to Lift Cylinder				
						PIN	PASADOR	PERNO	080P
					BROCHE	PIN	STIFT	PEN	
14		84270978		1	ESCORA, Lower Link RH, Order Kit 84364023				
						LIFT LINK	ESLABÓN DE ELEVACIÓ	TIRANTE DI SOLLEVAME	239P
					ARTICULATION RELEVA	HUBSTREBE	LØFTELED	HEFARM	
15		84270982		1	ESCORA, Lower Link LH, Order Kit 84364023				
						LIFT LINK	ESLABÓN DE ELEVACIÓ	TIRANTE DI SOLLEVAME	239P
					ARTICULATION RELEVA	HUBSTREBE	LØFTELED	HEFARM	
16		84239550		4	PINO, Boom to Links	PIN	PASADOR	PERNO	080P
					BROCHE	PIN	STIFT	PEN	
17		84246761		4	PARAFUSO	BOLT	PERNO	BULLONE	140B
					VIS	SCHRAUBE	BOLT	BOUT	
18		86512499		4	PORCA, M20 x 2.5, Flg, Cl 10				
						NUT	TUERCA	DADO	010D
					ECROU	MUTTER	MØTRIK	MOER	

SV185

BOOM (SV185)
BOOM (SV185)
BOOM (SV185)
BOOM (SV185)

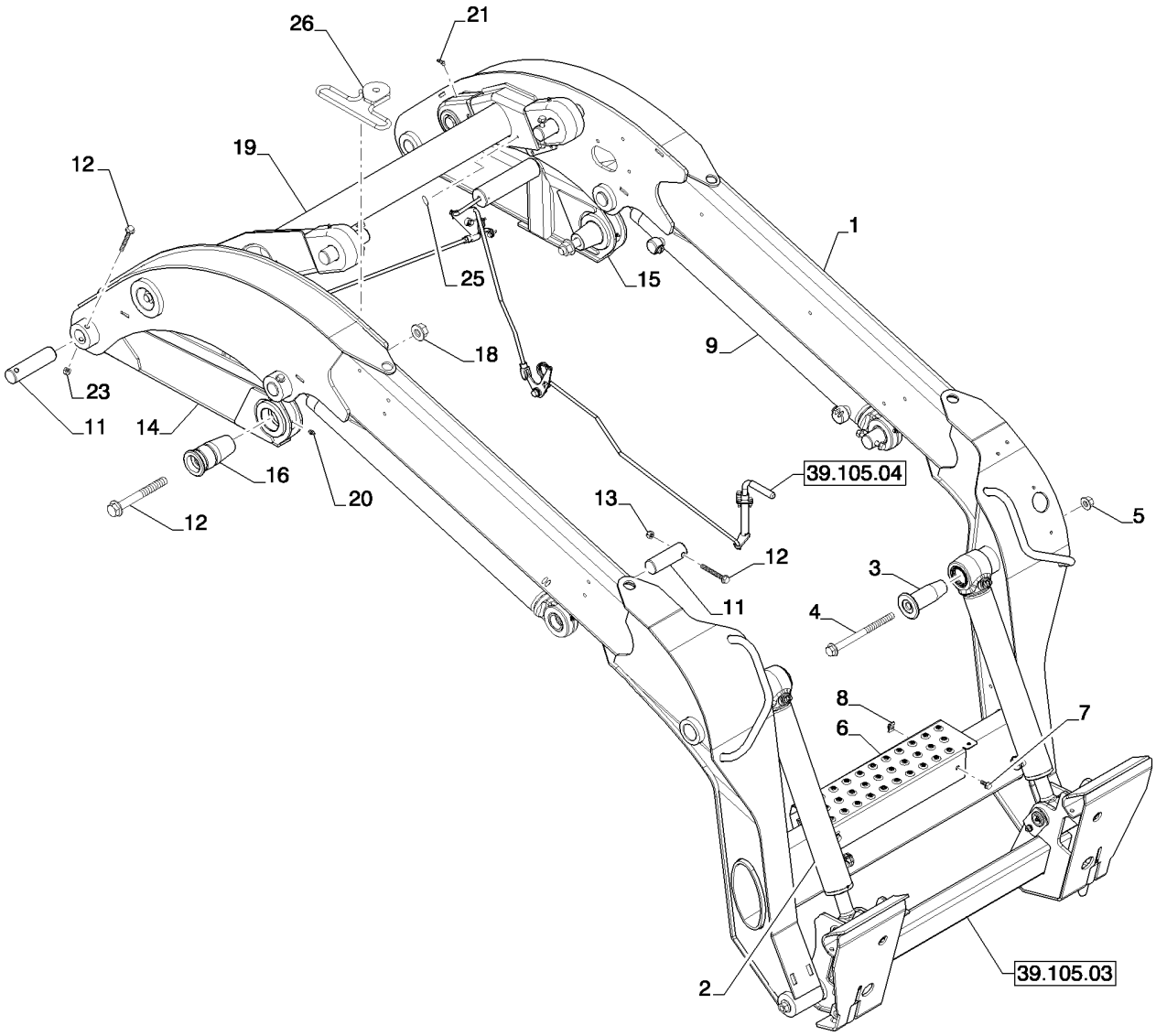

BOOM (SV185)
BOOM (SV185)
BOOM (SV185)
BOOM (SV185)

R	N	P.N.	MOD	Q	Denominação Description	Description Bezeichnung	Denominacion Beskrivelse	Descrizione Beschrijving	L.C.
19		**84422635**		1	ELO DE LIGAÇÃO, Gray MAILLON DE RACCORD	CONNECTING LINK VERBINDUNGSGLIED	ESLABÓN DE CONEXIÓN SAMLELED	TIRANTE DI COLLEGAMI VERBINDINGSSCHAKEL	540M
20		**87414**		4	GRAXEIRA, 1/4"-28 x .56" lg, Self-Tap GRAISSEUR	LUBE NIPPLE SCHMIERNIPPEL	BOQUILLA DE LUBRICA(SMØRENIPPEL	INGRASSATORE SMEERNIPPEL	060I
21		**87569**		2	GRAXEIRA, 45º, 1/4" NPT x .80" lg, Drive GRAISSEUR	LUBE NIPPLE SCHMIERNIPPEL	BOQUILLA DE LUBRICA(SMØRENIPPEL	INGRASSATORE SMEERNIPPEL	060I
22		**87415**		2	GRAXEIRA, 90º, 1/4" NPT x .75" lg, Drive GRAISSEUR	LUBE NIPPLE SCHMIERNIPPEL	BOQUILLA DE LUBRICA(SMØRENIPPEL	INGRASSATORE SMEERNIPPEL	060I
23		**84201510**		4	PINO, Boom to Lift Cylinder BROCHE	PIN PIN	PASADOR STIFT	PERNO PEN	080P
24		**84423056**		2	PINO, Boom to Lift Cylinder (Not Shown) Located near center of boom. BROCHE	PIN PIN	PASADOR STIFT	PERNO PEN	080P
25		**414635A1**		3	TAMPA, Lexan Gray COUVERCLE	COVER DECKEL	TAPA COVER	COPERCHIO COVER	2250
26		**84418303**		1	GUIA, Guide, Hose Loop GUIDE	GUIDE FÜHRUNG	GUÍA STYR	GUIDA GELEIDER	145G

39.105.03		p1	07/11

COUPLER, BASIC TAN (SV185,SV250,SV300,TV380)
COUPLER, BASIC TAN (SV185,SV250,SV300,TV380)
COUPLER, BASIC TAN (SV185,SV250,SV300,TV380)
COUPLER, BASIC TAN (SV185,SV250,SV300,TV380)

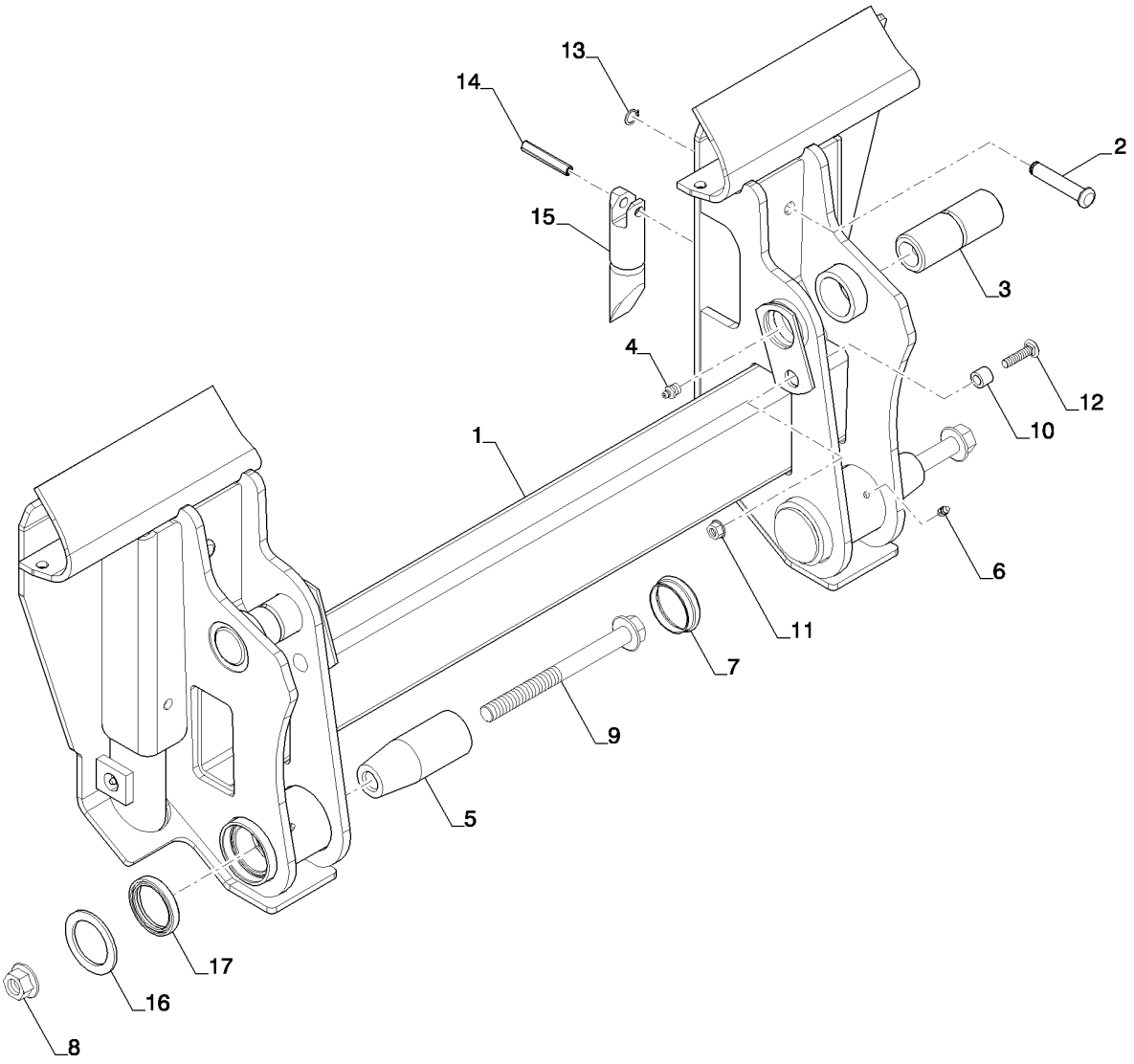

COUPLER, BASIC TAN (SV185,SV250,SV300,TV380)
COUPLER, BASIC TAN (SV185,SV250,SV300,TV380)
COUPLER, BASIC TAN (SV185,SV250,SV300,TV380)
COUPLER, BASIC TAN (SV185,SV250,SV300,TV380)

R	N	P.N.	MOD	Q	Denominação Description	Description Bezeichnung	Denominacion Beskrivelse	Descrizione Beschrijving	L.C.
1		84291892		1	FIXADOR, Plate, Case Power Tan, Order W/Kit 84390420				
						MOUNT	SOPORTE	SUPPORTO	C022
					MONTAGE	GESTELL	BESLAG	BEVESTIGING	
2		87387540		2	RETENTOR	RETAINER	RETENEDOR	FERMO	109R
					DISPOSITIF DE RETENU	HALTERUNG	HOLDER	HOUDER	
3		9614349		2	PINO	PIN	PASADOR	PERNO	080P
					BROCHE	PIN	STIFT	PEN	
4		80710		2	GRAXEIRA, 1/8"-27 x .66 lg	LUBE NIPPLE	BOQUILLA DE LUBRICA(	INGRASSATORE	060I
					GRAISSEUR	SCHMIERNIPPEL	SMØRENIPPEL	SMEERNIPPEL	
5		84201514		2	PINO, Boom to Coupler	PIN	PASADOR	PERNO	080P
					BROCHE	PIN	STIFT	PEN	
6		87414		4	GRAXEIRA, 1/4"-28 x .56" lg, Self-Tap				
						LUBE NIPPLE	BOQUILLA DE LUBRICA(	INGRASSATORE	060I
					GRAISSEUR	SCHMIERNIPPEL	SMØRENIPPEL	SMEERNIPPEL	
7		86561087		2	GUARDA PÓ	DUST CAP	CAPUCHÓN ANTIPOLVO	CAPPUCCIO PARAPOLV	066C
					CACHE-POUSSIERE	STAUBKAPPE	STØVHÆTTE	STOFKAP	
8		86512498		2	PORCA, M16 x 2, Flg, Cl 10	NUT	TUERCA	DADO	010D
					ECROU	MUTTER	MØTRIK	MOER	
9		87015924		2	PARAFUSO, Hex Flg, M16 x 180, 8.8				
						BOLT	PERNO	BULLONE	140B
					VIS	SCHRAUBE	BOLT	BOUT	
10		86589143		2	ESPAÇADOR	SPACER	SEPARADOR	DISTANZIALE	075D
					ENTRETOISE	DISTANZSTÜCK	AFSTANDSSTYKKE	AFSTANDSSTUK	
11		9804277		2	PORCA, M8 x 1.25, Flg, Cl 8				
						NUT	TUERCA	DADO	010D
					ECROU	MUTTER	MØTRIK	MOER	
12		86512443		2	PARAFUSO, Short NK, M8 x 35, Cl8.8, Full Thd				
						CARRIAGE BOLT	PERNO ALOMADO	BULLONE A TESTA TONI	P123
					VIS A TETE BOMBEE	SCHLOSSSCHRAUBE	BRÆDDEBOLT	SLOTBOUT	
13		87612753		2	RETENTOR	RETAINER	RETENEDOR	FERMO	109R
					DISPOSITIF DE RETENU	HALTERUNG	HOLDER	HOUDER	
14		87610718		2	PINO, Coiled Spring	PIN	PASADOR	PERNO	080P
					BROCHE	PIN	STIFT	PEN	
15		87758365		2	PINO, Latch	PIN	PASADOR	PERNO	080P
					BROCHE	PIN	STIFT	PEN	
16		87613204		2	ARRUELA PLANA	WASHER	ARANDELA	RONDELLA	131R
					RONDELLE	UNTERLEGSCHEIBE	FLADSKIVE	SLUITRING	
17		D95143		2	VEDAÇÃO, Wiper Rod	SEAL	ANILLO DE CIERRE	GUARNIZIONE; TENUTA	132A
					JOINT	DICHTUNG	PAKNING	AFDICHTING	

SECTION INDEX
44 - Eixos e rodas

44.106.01		POWER TRAIN (SR175,SV185)
44.106.02		AXLE ASSY, STD (SR175,SV185)
44.511/520	01	WHEELS (SR175-SV300)
44.511/520	01	WHEELS (SR175,SV185,SR200)

POWER TRAIN (SR175,SV185)
POWER TRAIN (SR175,SV185)
POWER TRAIN (SR175,SV185)
POWER TRAIN (SR175,SV185)

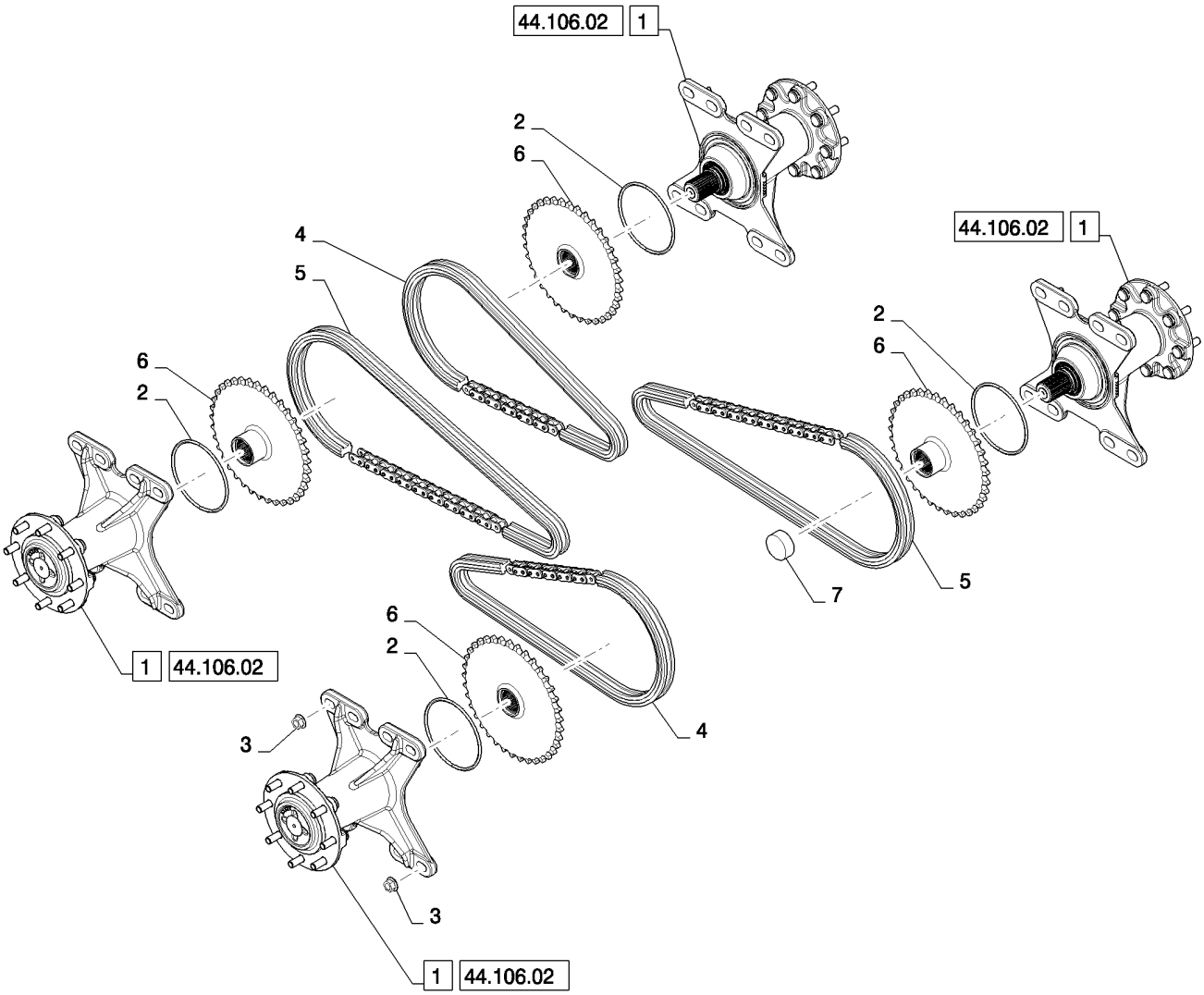

POWER TRAIN (SR175,SV185)
POWER TRAIN (SR175,SV185)
POWER TRAIN (SR175,SV185)
POWER TRAIN (SR175,SV185)

R	N	P.N.	MOD	Q	Denominação Description	Description Bezeichnung	Denominacion Beskrivelse	Descrizione Beschrijving	L.C.
1		84354270		4	CONJUNTO EIXO 4WD, Md., CE Gray				
						4WD AXLE ASSY	CONJUNTO DE EJE 4WI	COMPLESSIVO ASSALE	P569
					ESSIEU 4RM	4WD AXLE ASSY	4WD AKSELSAMLING	COMPLETE 4WD-AS	
2		70923606		4	O-RING	O-RING	JUNTA TÓRICA	ANELLO TOROIDALE	055A
					JOINT TORIQUE	O-RING	O-RING	O-RING	
3		86512498		32	PORCA, M16 x 2, Flg, Cl 10	NUT	TUERCA	DADO	010D
					ECROU	MUTTER	MØTRIK	MOER	
4		84200819		4	CORRENTE, 80/62P	CHAIN	CADENA	CATENA	095C
					CHAINE	KETTE	KÆDE	KETTING	
5		84254100		4	CORRENTE, 80/76P	CHAIN	CADENA	CATENA	095C
					CHAINE	KETTE	KÆDE	KETTING	
6		84254098		4	PINHÃO, Driven 30 tooth 80	DRIVEN SPROCKET	CONTROL CON PIÑÓN	PIGNONE CONDOTTO	122P
					PIGNON MENE	ABTRIEBSZAHNRAD	KÆDEHJUL	AANGEDREVEN KETTIN	
7		84298059		4	PARA-CHOQUE, Nylon	BUMPER	PARACHOQUES	PARAURTI	036P
					PARE-CHOC	STOSSFÄNGER	STØDVÆRN	BUMPER	

AXLE ASSY, STD (SR175,SV185)
AXLE ASSY, STD (SR175,SV185)
AXLE ASSY, STD (SR175,SV185)
AXLE ASSY, STD (SR175,SV185)

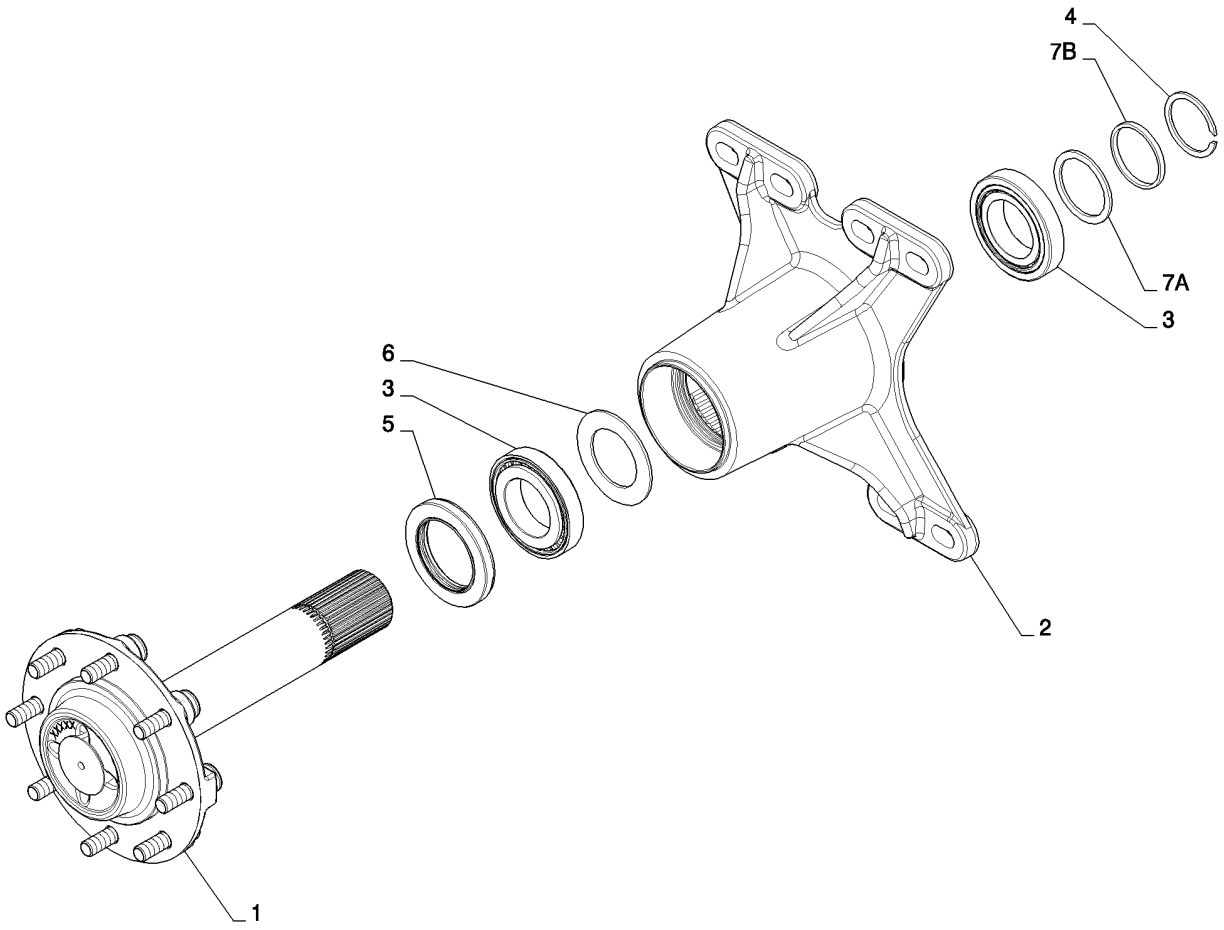

AXLE ASSY, STD (SR175,SV185)
AXLE ASSY, STD (SR175,SV185)
AXLE ASSY, STD (SR175,SV185)
AXLE ASSY, STD (SR175,SV185)

R	N	P.N.	MOD	Q	Denominação Description	Description Bezeichnung	Denominacion Beskrivelse	Descrizione Beschrijving	L.C.
1		84354277		1	EIXO, Std, Incl. Ref. 8	AXLE	EJE	ASSALE	087A
					ESSIEU	ACHSE	AKSEL	AS	
2		84354273		1	ALOJAMENTO DO EIXO, Std, CE Gray				
						AXLE HOUSING	ALOJAMIENTO DE EJE	ALLOGGIAMENTO ASSA	Z161
					CARTER D'ESSIEU	ACHSGEHÄUSE	AKSELHUS	ASHUIS	
3		84274693		2	ROLAMENTO ROLETE CÔNICO, TM#LM104949-911				
						TAPERED ROLLER BEAF	COJINETE RODILLO CÓI	CUSCINETTO RULLINI C	241P
					ROULEMENT ROUL. COI	KEGELROLLENLAGER	KONISK RULLELEJE	CONISCH ROLLAGER	
4		84239397		1	ANEL DE PRESSÃO, Ext, Hvy, 50.8MM Shaft				
						SNAP RING	ANILLO DE RESORTE	ANELLO ELASTICO	054A
					ANNEAU D'ARRET	SPRENGRING	LÅSERING	VEERRING	
5		341837A2		1	VEDADOR DE RETENCAO, Axle				
						SEAL	SELLO/RETEN	GUARNIZIONE TENUTA	7460
					JOINT-D'ETANCHEITE	DICHTRING	SEAL	SEAL	
6		84355375		1	DISCO, 51.80 X 72.80 X 3.20				
						DISC	DISCO	DISCO	060D
					DISQUE	SCHEIBE	NAV	SCHIJF	
7A		84393412		1	ESPAÇADOR, 51 X 59 X 5.3/Use one 7A				
						SPACER	SEPARADOR	DISTANZIALE	075D
					ENTRETOISE	DISTANZSTÜCK	AFSTANDSSTYKKE	AFSTANDSSTUK	
7A		84393415		1	ESPAÇADOR, 51 X 59 X 5.8/Use one 7A				
						SPACER	SEPARADOR	DISTANZIALE	075D
					ENTRETOISE	DISTANZSTÜCK	AFSTANDSSTYKKE	AFSTANDSSTUK	
7A		84393416		1	ESPAÇADOR, 51 X 59 X 6.3/Use one 7A				
						SPACER	SEPARADOR	DISTANZIALE	075D
					ENTRETOISE	DISTANZSTÜCK	AFSTANDSSTYKKE	AFSTANDSSTUK	
7A		84393417		1	ESPAÇADOR, 51 X 59 X 6.8/Use one 7A				
						SPACER	SEPARADOR	DISTANZIALE	075D
					ENTRETOISE	DISTANZSTÜCK	AFSTANDSSTYKKE	AFSTANDSSTUK	
7B		84393476		1	ESPAÇADOR, Shim, 50.84 Shft, 1.6 T/Use one 7B				
						SPACER	SEPARADOR	DISTANZIALE	075D
					ENTRETOISE	DISTANZSTÜCK	AFSTANDSSTYKKE	AFSTANDSSTUK	
7B		84393477		1	ESPAÇADOR, Shim, 50.84 Shft, 1.7 T/Use one 7B				
						SPACER	SEPARADOR	DISTANZIALE	075D
					ENTRETOISE	DISTANZSTÜCK	AFSTANDSSTYKKE	AFSTANDSSTUK	
7B		84393478		1	ESPAÇADOR, Shim, 50.84 Shft, 1.8 T/Use one 7B				
						SPACER	SEPARADOR	DISTANZIALE	075D
					ENTRETOISE	DISTANZSTÜCK	AFSTANDSSTYKKE	AFSTANDSSTUK	
7B		84393479		1	ESPAÇADOR, Shim, 50.84 Shft, 1.9 T/Use one 7B				
						SPACER	SEPARADOR	DISTANZIALE	075D
					ENTRETOISE	DISTANZSTÜCK	AFSTANDSSTYKKE	AFSTANDSSTUK	
7B		84393480		1	ESPAÇADOR, Shim, 50.84 Shft, 2.0 T/Use one 7B				
						SPACER	SEPARADOR	DISTANZIALE	075D
					ENTRETOISE	DISTANZSTÜCK	AFSTANDSSTYKKE	AFSTANDSSTUK	
8		84249319		8	PRISIONEIRO, Wheel, M16 X 2 X 60				
						STUD	PRISIONERO	PRIGIONIERO	210P
					GOUJON	GEWINDEBOLZEN	STØTTEBOLT	TAPEIND	

AXLE ASSY, STD (SR175,SV185)
AXLE ASSY, STD (SR175,SV185)
AXLE ASSY, STD (SR175,SV185)
AXLE ASSY, STD (SR175,SV185)

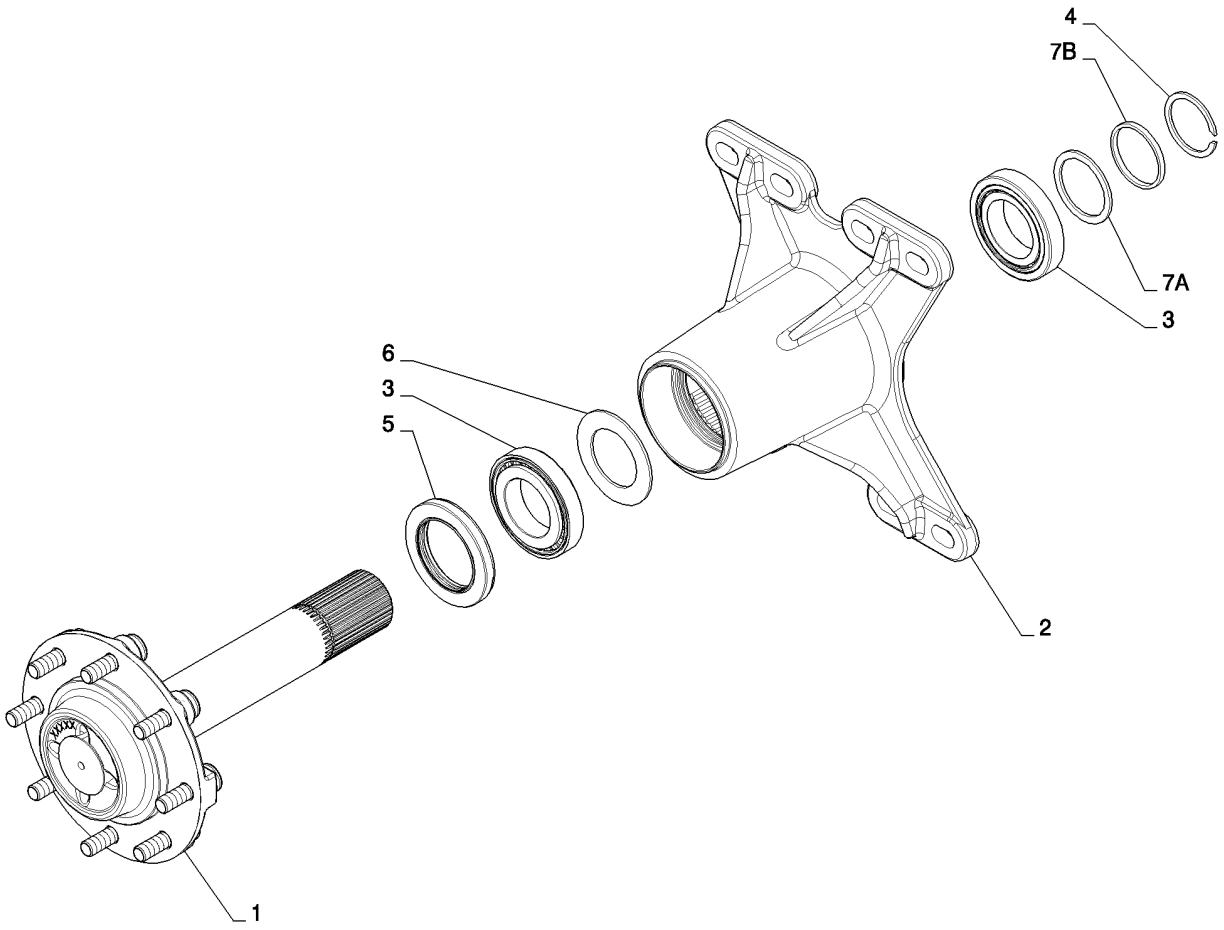

AXLE ASSY, STD (SR175,SV185)
AXLE ASSY, STD (SR175,SV185)
AXLE ASSY, STD (SR175,SV185)
AXLE ASSY, STD (SR175,SV185)

R	N	P.N.	MOD	Q	Denominação Description	Description Bezeichnung	Denominacion Beskrivelse	Descrizione Beschrijving	L.C.
9		408127A1		32	PORCA, M16 X 2, 90 Degree Taper (Not Shown)				
						NUT	TUERCA	DADO	5780
					ECROU	MUTTER	NUT	NUT	
9		86512498		32	PORCA, M16 x 2, Flg, Cl 10, (Not Shown)				
						NUT	TUERCA	DADO	010D
					ECROU	MUTTER	MØTRIK	MOER	

WHEELS (SR175-SV300)
WHEELS (SR175-SV300)
WHEELS (SR175-SV300)
WHEELS (SR175-SV300)

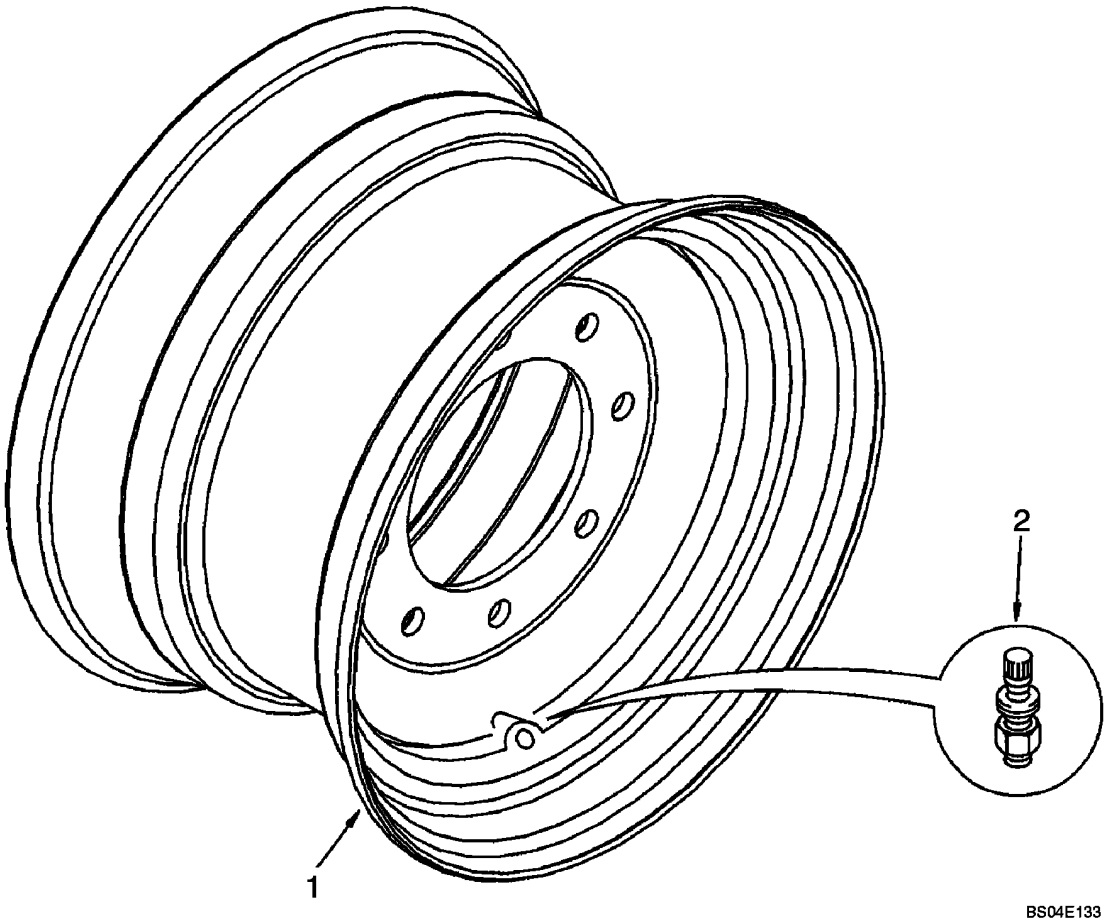

WHEELS (SR175-SV300)
WHEELS (SR175-SV300)
WHEELS (SR175-SV300)
WHEELS (SR175-SV300)

R	N	P.N.	MOD	Q	Denominação Description	Description Bezeichnung	Denominacion Beskrivelse	Descrizione Beschrijving	L.C.
1		84239414		4	ARO, 16.5x9.75 Stamped Center, Hvy Duty 70 OTW Tan LH & RH; Uses Ref. 2 & 3				
						RIM	LLANTA	CERCHIONE	135C
					JANTE	FELGE	FÆLG	VELG	
1		84239417		4	ARO, 16.5x9.75 Full Center, Premium 70 OTW Tan LH & RH; Uses Ref. 2 & 3				
						RIM	LLANTA	CERCHIONE	135C
					JANTE	FELGE	FÆLG	VELG	
2		512083		4	HASTE DA VÁLVULA	VALVE STEM	VÁSTAGO DE VÁLVULA	STELO DELLA VALVOLA	P397
					TIGE DE SOUPAPE	VENTILSCHAFT	STILKVENTIL	KLEPSTEEL	
3		408127A1		32	PORCA, M16 X 2, 90 Deg Taper, Not Shown				
						NUT	TUERCA	DADO	5780
					ECROU	MUTTER	NUT	NUT	

WHEELS (SR175,SV185,SR200)
WHEELS (SR175,SV185,SR200)
WHEELS (SR175,SV185,SR200)
WHEELS (SR175,SV185,SR200)

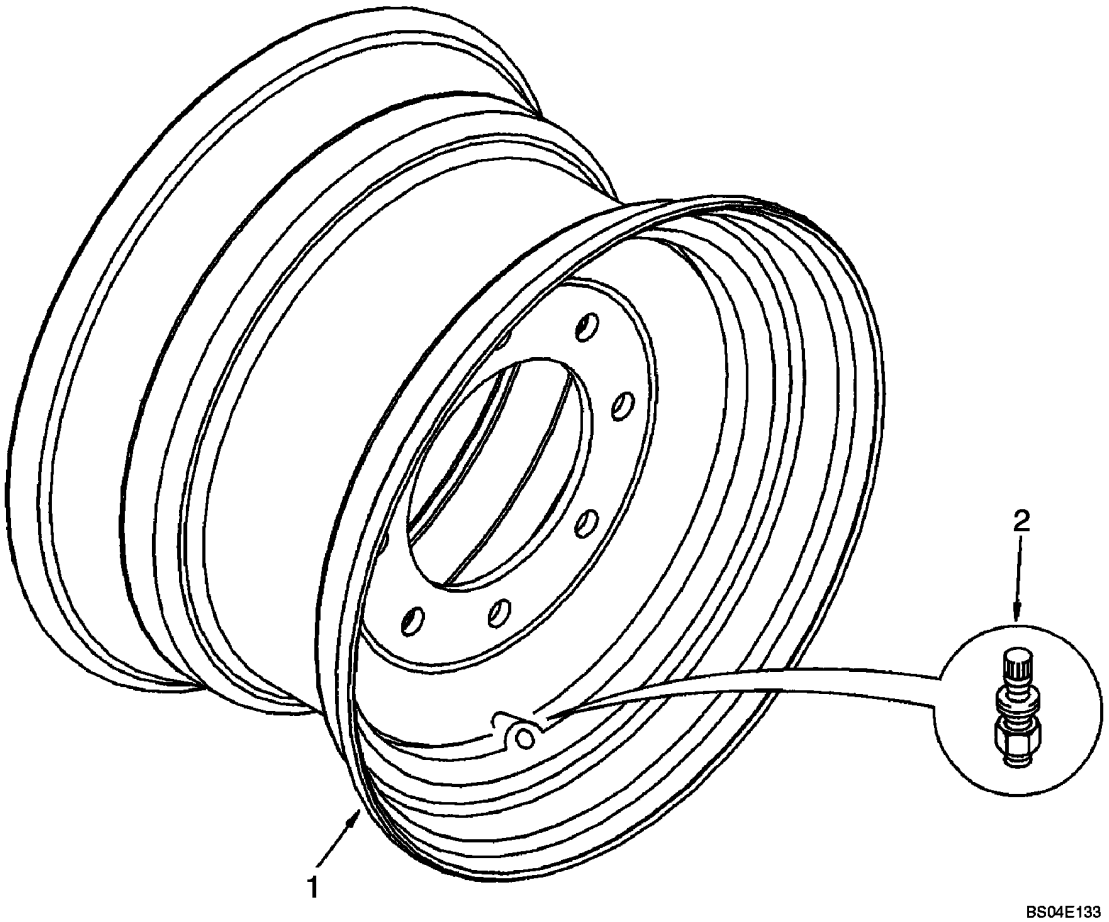

WHEELS (SR175,SV185,SR200)
WHEELS (SR175,SV185,SR200)
WHEELS (SR175,SV185,SR200)
WHEELS (SR175,SV185,SR200)

R	N	P.N.	MOD	Q	Denominação Description	Description Bezeichnung	Denominacion Beskrivelse	Descrizione Beschrijving	L.C.
1		**84239411**		4	ARO, 16.5x8.25 Stamped Center, Severe Duty 64 OTW Tan LH & RH; Uses Ref. 2 & 3				
						RIM	LLANTA	CERCHIONE	135C
					JANTE	FELGE	FÆLG	VELG	
2		**512083**		4	HASTE DA VÁLVULA	VALVE STEM	VÁSTAGO DE VÁLVULA	STELO DELLA VALVOLA	P397
					TIGE DE SOUPAPE	VENTILSCHAFT	STILKVENTIL	KLEPSTEEL	
3		**408127A1**		32	PORCA, M16 X 2, 90 Deg Taper, Not Shown				
						NUT	TUERCA	DADO	5780
					ECROU	MUTTER	NUT	NUT	

SECTION INDEX

50 - Controle de climatização da cabine

50.200.01		OPEN CAB, NO HEAT OR HVAC (SR175,SV185)
50.200.02		HEATER, MEDIUM FRAME (SR175,SV185)
50.200.02	02	HEATER PLUMBING BASIC (SR175,SV185)
50.200.02	03	AC PLUMBING BASIC (SR175,SV185)
50.200.02	04	HVAC, MEDIUM FRAME ISM (SR175,SV185)
50.200.03		HVAC, MEDIUM FRAME (SR175,SV185)
50.200.03		HVAC, LARGE FRAME (SR220-SV300,TR320,TV380)
50.200.05		HEATER (ALL CASE)
50.200.06		HEATER W/AC (SR175-TV380)

50.200.01		p1	04/11

OPEN CAB, NO HEAT OR HVAC (SR175,SV185)
OPEN CAB, NO HEAT OR HVAC (SR175,SV185)
OPEN CAB, NO HEAT OR HVAC (SR175,SV185)
OPEN CAB, NO HEAT OR HVAC (SR175,SV185)

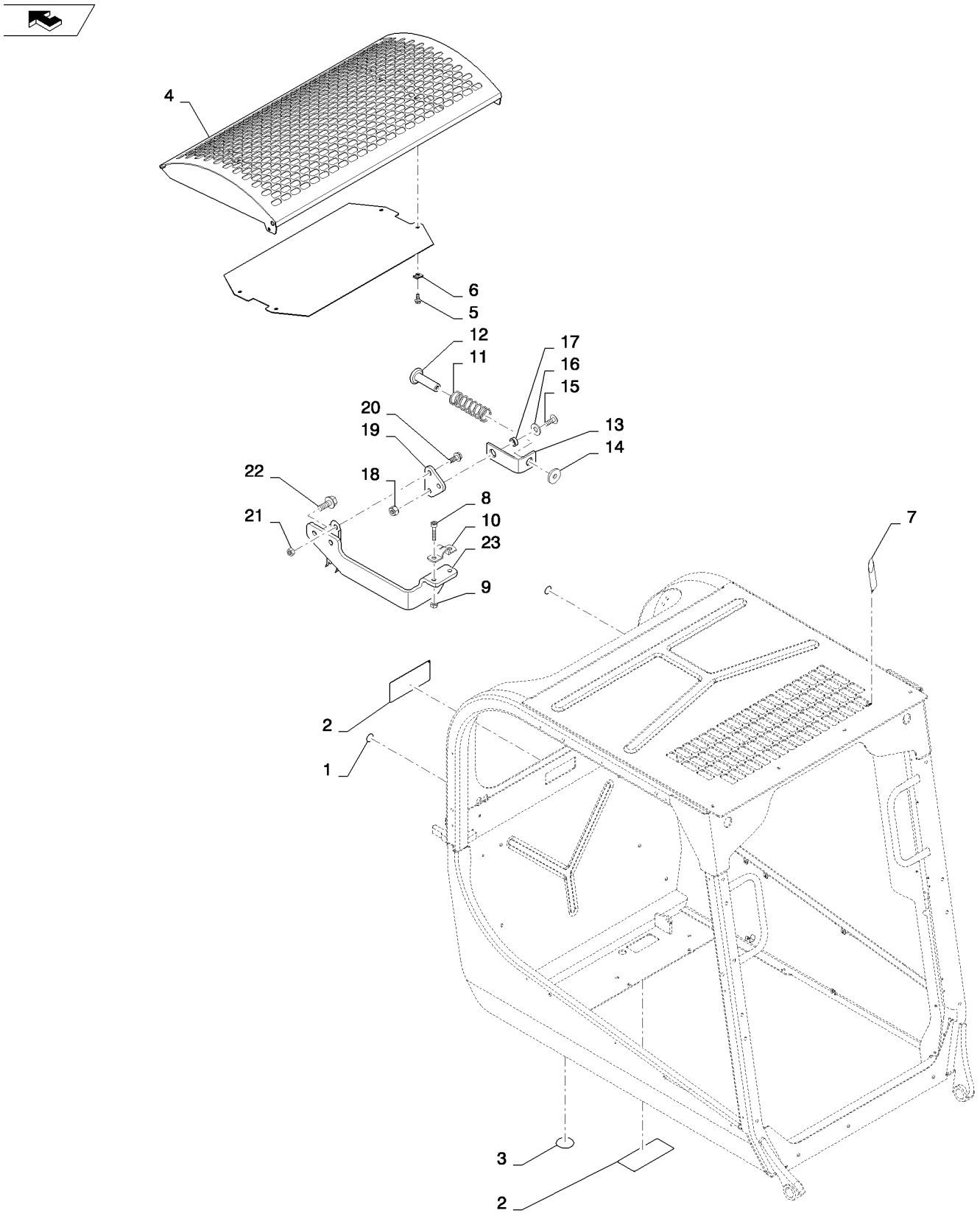

OPEN CAB, NO HEAT OR HVAC (SR175,SV185)
OPEN CAB, NO HEAT OR HVAC (SR175,SV185)
OPEN CAB, NO HEAT OR HVAC (SR175,SV185)
OPEN CAB, NO HEAT OR HVAC (SR175,SV185)

R	N	P.N.	MOD	Q	Denominação Description	Description Bezeichnung	Denominacion Beskrivelse	Descrizione Beschrijving	L.C.
1		414635A1		2	TAMPA, Lexan Gray	COVER	TAPA	COPERCHIO	2250
					COUVERCLE	DECKEL	COVER	COVER	
2		84312310		2	COBERTURA, Plate, Gray	COVER	CUBIERTA	COPERCHIO	265C
					COUVERCLE	ABDECKUNG	DÆKSEL	AFSCHERMING	
3		84357636		1	ADESIVO, Plug	DECAL	CALCOMANÍA	DECALCOMANIA	012D
					AUTOCOLLANT	AUFKLEBER	TRANSFER	STICKER	
4		84331307		1	TELA, No AC, Tilt Hood, Gray				
						SCREEN	PANTALLA	FILTRO; SCHERMO	047S
					TAMIS	GITTER; ABSCHIRMUNG	SKÆRM	SCHERM	
5		86511841		4	PARAFUSO, Hex Flg, M8 x 16, 8.8				
						BOLT	PERNO	BULLONE	140B
					VIS	SCHRAUBE	BOLT	BOUT	
6		86625074		4	PORCA	NUT	TUERCA	DADO	010D
					ECROU	MUTTER	MØTRIK	MOER	
7		84353623		1	ADESIVO, HVAC Blank	DECAL	CALCOMANÍA	DECALCOMANIA	012D
					AUTOCOLLANT	AUFKLEBER	TRANSFER	STICKER	
8		86639294		2	PARAFUSO, Hex Soc Hd, M4 x 20, 8.8				
						SCREW	TORNILLO	VITE	040V
					VIS	SCHRAUBE	SKRUE	SCHROEF	
9		100012		2	PORCA, M4, Cl 8	NUT	TUERCA	DADO	010D
					ECROU	MUTTER	MØTRIK	MOER	
10		84200938		1	BRAÇADEIRA, Throttle Cable				
						CLAMP	ABRAZADERA	MORSETTO	120M
					COLLIER	KLEMME	SPÆNDEBÅND	KLEM	
11		84286072		1	MOLA, Throttle	SPRING	RESORTE	MOLLA	100M
					RESSORT	FEDER	FJEDER	VEER	
12		9860169		1	REBITE, Drilled	RIVET	REMACHE	RIVETTO	055R
					RIVET	NIET	NITTE	KLINKNAGEL	
13		9844532		1	SUPORTE	BRACKET	SOPORTE	STAFFA	225S
					SUPPORT	HALTERUNG	BESLAG	STEUN	
14		140182		1	ARRUELA PLANA, M5 x 18 x 2				
						WASHER	ARANDELA	RONDELLA	131R
					RONDELLE	UNTERLEGSCHEIBE	FLADSKIVE	SLUITRING	
15		84821		1	PARAFUSO, Slotted Truss Hd, #10-24 x 1/2"				
						SCREW	TORNILLO	VITE	040V
					VIS	SCHRAUBE	SKRUE	SCHROEF	
16		80707		1	ARRUELA PLANA, 3/16"	WASHER	ARANDELA	RONDELLA	131R
					RONDELLE	UNTERLEGSCHEIBE	FLADSKIVE	SLUITRING	
17		13734		1	ESPAÇADOR	SPACER	SEPARADOR	DISTANZIALE	075D
					ENTRETOISE	DISTANZSTÜCK	AFSTANDSSTYKKE	AFSTANDSSTUK	
18		88826		1	CONTRA PORCA, #10-24, GA				
						LOCK NUT	TUERCA DE BLOQUEO	DADO DI BLOCCAGGIO	P263
					CONTRE-ECROU	SICHERUNGSMUTTER	LÅSEMØTRIK	BORGMOER	
19		9804255		2	PARAFUSO, Hex Flg, M6 x 16, 8.8				
						BOLT	PERNO	BULLONE	140B
					VIS	SCHRAUBE	BOLT	BOUT	
20		84321269		1	SUPORTE, Throttle Cable	BRACKET	SOPORTE	STAFFA	225S
					SUPPORT	HALTERUNG	BESLAG	STEUN	

50.200.02		p1	04/11

HEATER, MEDIUM FRAME (SR175,SV185)
HEATER, MEDIUM FRAME (SR175,SV185)
HEATER, MEDIUM FRAME (SR175,SV185)
HEATER, MEDIUM FRAME (SR175,SV185)

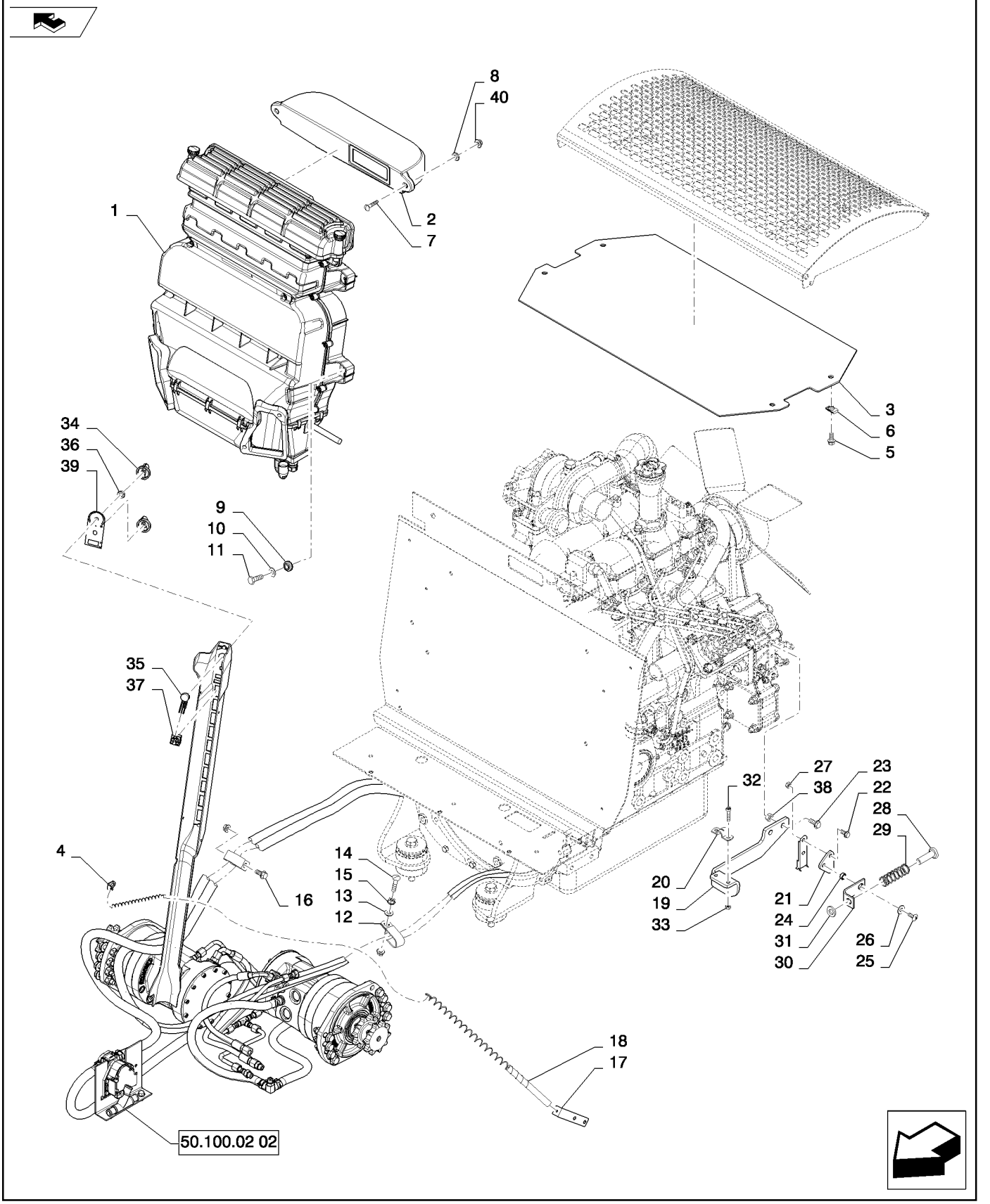

HEATER, MEDIUM FRAME (SR175,SV185)
HEATER, MEDIUM FRAME (SR175,SV185)
HEATER, MEDIUM FRAME (SR175,SV185)
HEATER, MEDIUM FRAME (SR175,SV185)

R	N	P.N.	MOD	Q	Denominação Description	Description Bezeichnung	Denominacion Beskrivelse	Descrizione Beschrijving	L.C.
1		84267543		1	AQUECEDOR CHAUFFAGE	HEATER HEIZUNG	CALENTADOR VARMEAPPARAT	RISCALDATORE VERWARMING	105R
2		84280313		1	DUTO DE AR, Intake CONDUITE D'AIR	AIR DUCT LUFTKANAL	CONDUCTO DE AIRE LUFTKANAL	CONDOTTO ARIA LUCHTKANAAL	224C
3		84331307		1	TELA, No AC, Tilt Hood, Gray TAMIS	SCREEN GITTER; ABSCHIRMUNG	PANTALLA SKÆRM	FILTRO; SCHERMO SCHERM	047S
4		84361522		1	SUPORTE SUPPORT	BRACKET HALTERUNG	SOPORTE BESLAG	STAFFA STEUN	225S
5		9804258		4	PARAFUSO, Hex Flg, M8 x 20, 8.8 VIS	BOLT SCHRAUBE	PERNO BOLT	BULLONE BOUT	140B
6		86625074		4	PORCA ECROU	NUT MUTTER	TUERCA MØTRIK	DADO MOER	010D
7		86512441		2	PARAFUSO, Short NK, M6 x 30, Cl8.8, Full Thd VIS A TETE BOMBEE	CARRIAGE BOLT SCHLOSSSCHRAUBE	PERNO ALOMADO BRÆDDEBOLT	BULLONE A TESTA TONI SLOTBOUT	P123
8		87655042		2	ARRUELA ESPECIAL, M8, 8.80 X 17.5 X 2.2 HTS RONDELLE SPECIALE	SPECIAL WASHER SPEZIALUNTERLEGSCH	ARANDELA ESPECIAL SPECIALSKIVE	RONDELLA SPECIALE SPECIALE RING	Z333
9		87436247		4	ENCHIMENTO ROSCADO, M6, Blind Threaded INSERT FILETE	THREADED INSERT GEWINDEEINSATZ	PIEZA DE INS. ROSCAD/ GEVINDINDSATS	INSERTO FILETTATO INZETST. MET SCHROEI	054I
10		86624183		4	ARRUELA PLANA, M6 x 25 x 1.6 RONDELLE	WASHER UNTERLEGSCHEIBE	ARANDELA FLADSKIVE	RONDELLA SLUITRING	131R
11		86511833		4	PARAFUSO, Cross Pan Hd, M6 x 40 VIS	SCREW SCHRAUBE	TORNILLO SKRUE	VITE SCHROEF	040V
12		D39696		2	BRACADEIRA COLLIER	CLAMP SCHELLE	COLLAR CLAMP	MORSETTO CLAMP	1640
13		87655046		1	ARRUELA ESPECIAL, M10, 10.65 X 23.0 X 2.2 HTS RONDELLE SPECIALE	SPECIAL WASHER SPEZIALUNTERLEGSCH	ARANDELA ESPECIAL SPECIALSKIVE	RONDELLA SPECIALE SPECIALE RING	Z333
14		350459		1	PARAFUSO, Short NK, M10 x 50, Cl8.8, Full Thd VIS	SCREW SCHRAUBE	TORNILLO SKRUE	VITE SCHROEF	040V
15		9804278		3	PORCA, M10 x 1.5, Flg, Cl 8 ECROU	NUT MUTTER	TUERCA MØTRIK	DADO MOER	010D
16		9804261		1	PARAFUSO, Hex Flg, M10 x 25, 8.8 VIS	BOLT SCHRAUBE	PERNO BOLT	BULLONE BOUT	140B
17		84370705		1	SUPORTE SUPPORT	BRACKET HALTERUNG	SOPORTE BESLAG	STAFFA STEUN	225S
18		412679A2		2	MOLA, Heater Hose RESSORT	SPRING FEDER	MUELLE SPRING	MOLLA SPRING	8315
19		84321269		1	SUPORTE, Throttle Cable SUPPORT	BRACKET HALTERUNG	SOPORTE BESLAG	STAFFA STEUN	225S

SV185

50.200.02		p2	04/11

HEATER, MEDIUM FRAME (SR175,SV185)
HEATER, MEDIUM FRAME (SR175,SV185)
HEATER, MEDIUM FRAME (SR175,SV185)
HEATER, MEDIUM FRAME (SR175,SV185)

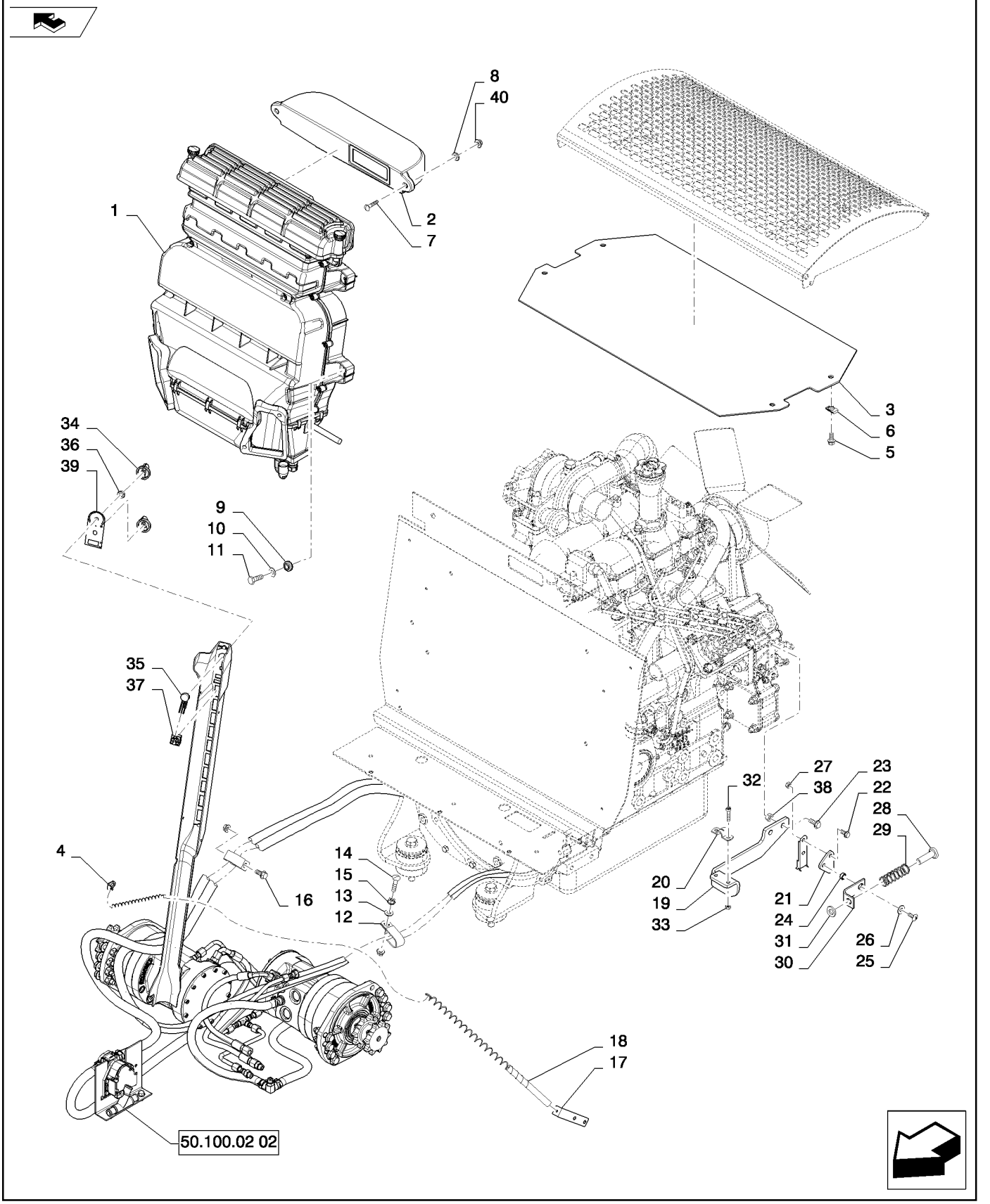

HEATER, MEDIUM FRAME (SR175,SV185)
HEATER, MEDIUM FRAME (SR175,SV185)
HEATER, MEDIUM FRAME (SR175,SV185)
HEATER, MEDIUM FRAME (SR175,SV185)

R	N	P.N.	MOD	Q	Denominação Description	Description Bezeichnung	Denominacion Beskrivelse	Descrizione Beschrijving	L.C.
20		**84200938**		1	BRAÇADEIRA, Throttle Cable				
						CLAMP	ABRAZADERA	MORSETTO	120M
					COLLIER	KLEMME	SPÆNDEBÅND	KLEM	
21		**9804255**		2	PARAFUSO, Hex Flg, M6 x 16, 8.8				
						BOLT	PERNO	BULLONE	140B
					VIS	SCHRAUBE	BOLT	BOUT	
22		**13734**		1	ESPAÇADOR	SPACER	SEPARADOR	DISTANZIALE	075D
					ENTRETOISE	DISTANZSTÜCK	AFSTANDSSTYKKE	AFSTANDSSTUK	
23		**84821**		1	PARAFUSO, Slotted Truss Hd, #10-24 x 1/2"				
						SCREW	TORNILLO	VITE	040V
					VIS	SCHRAUBE	SKRUE	SCHROEF	
24		**80707**		1	ARRUELA PLANA, 3/16"	WASHER	ARANDELA	RONDELLA	131R
					RONDELLE	UNTERLEGSCHEIBE	FLADSKIVE	SLUITRING	
25		**88826**		1	CONTRA PORCA, #10-24, GA				
						LOCK NUT	TUERCA DE BLOQUEO	DADO DI BLOCCAGGIO	P263
					CONTRE-ECROU	SICHERUNGSMUTTER	LÅSEMØTRIK	BORGMOER	
26		**9860169**		1	REBITE, Drilled	RIVET	REMACHE	RIVETTO	055R
					RIVET	NIET	NITTE	KLINKNAGEL	
27		**84286072**		1	MOLA, Throttle	SPRING	RESORTE	MOLLA	100M
					RESSORT	FEDER	FJEDER	VEER	
28		**9844532**		1	SUPORTE	BRACKET	SOPORTE	STAFFA	225S
					SUPPORT	HALTERUNG	BESLAG	STEUN	
29		**86588450**		1	ARRUELA PLANA, M6 x 12 x 1.6 Thk				
						WASHER	ARANDELA	RONDELLA	131R
					RONDELLE	UNTERLEGSCHEIBE	FLADSKIVE	SLUITRING	
30		**86639294**		2	PARAFUSO, Hex Soc Hd, M4 x 20, 8.8				
						SCREW	TORNILLO	VITE	040V
					VIS	SCHRAUBE	SKRUE	SCHROEF	
31		**100012**		2	PORCA, M4, Cl 8	NUT	TUERCA	DADO	010D
					ECROU	MUTTER	MØTRIK	MOER	
32		**86729670**		2	MAÇANETA	KNOB	MANDO	MANOPOLA	150P
					BOUTON	RUNDGRIFF	GREB	KNOP	
33		**86729675**		1	POTENCIÔMETRO, Switch	POTENTIOMETER	POTENCIÓMETRO	POTENZIOMETRO	550P
					POTENTIOMETRE	POTENTIOMETER	POTENTIOMETER	POTENTIOMETER	
34		**87310592**		2	PORCA, Jam, 7/16"-28, G5	NUT	TUERCA	DADO	010D
					ECROU	MUTTER	MØTRIK	MOER	
35		**86729669**		1	INTERRUPTOR, Blower/Light				
						SWITCH	INTERRUPTOR	INTERRUTTORE	075I
					CONTACTEUR	SCHALTER	KONTAKT	SCHAKELAAR	
36		**84347261**		1	ADESIVO, HVAC, Heat Only				
						DECAL	CALCOMANÍA	DECALCOMANIA	012D
					AUTOCOLLANT	AUFKLEBER	TRANSFER	STICKER	
37		**86619800**		2	CONTRA PORCA, M6 x 1, Flg, Cl 8				
						LOCK NUT	TUERCA DE BLOQUEO	DADO DI BLOCCAGGIO	P263
					CONTRE-ECROU	SICHERUNGSMUTTER	LÅSEMØTRIK	BORGMOER	

50.200.02	02	p1	02/11

HEATER PLUMBING BASIC (SR175,SV185)
HEATER PLUMBING BASIC (SR175,SV185)
HEATER PLUMBING BASIC (SR175,SV185)
HEATER PLUMBING BASIC (SR175,SV185)

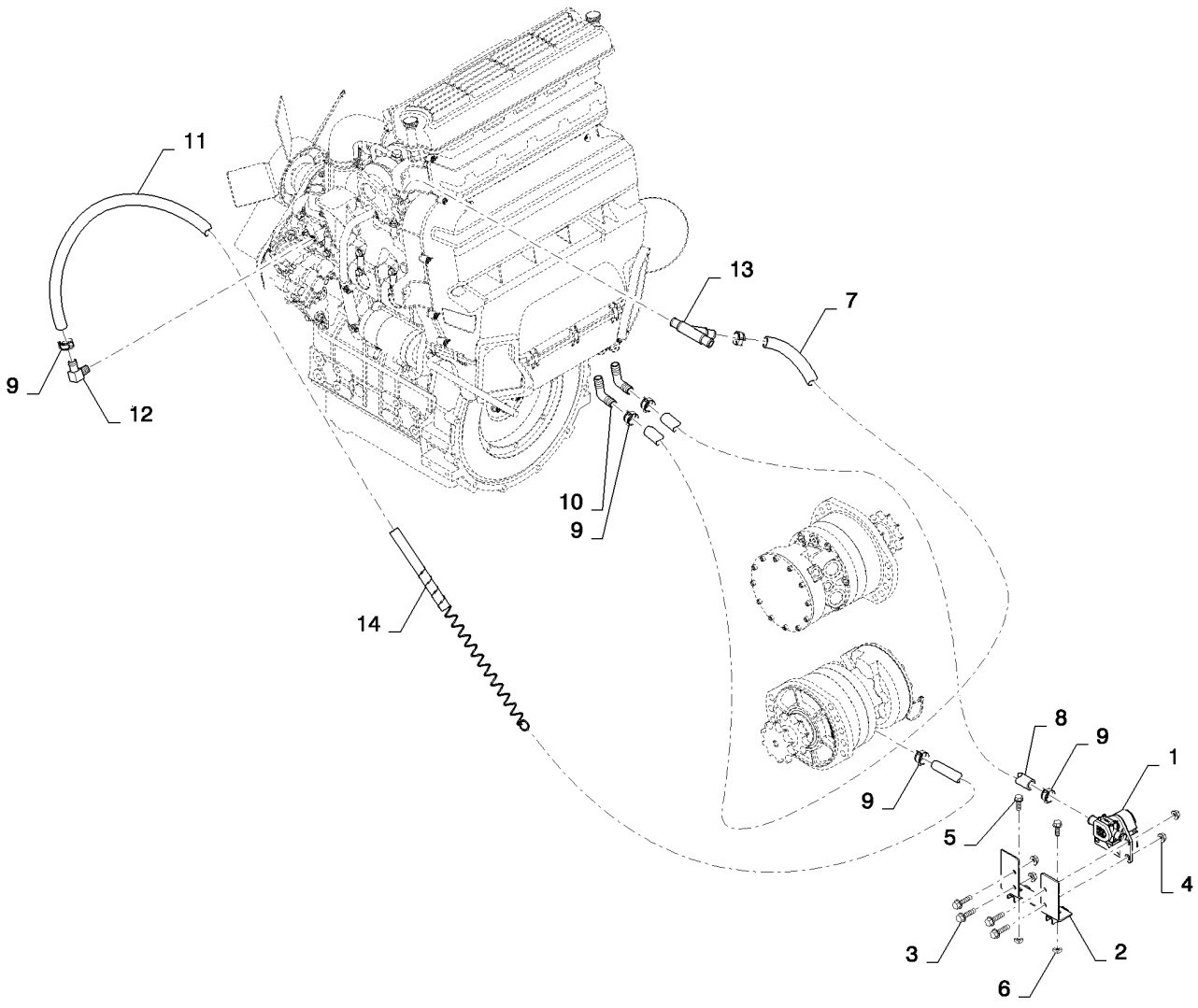

HEATER PLUMBING BASIC (SR175,SV185)
HEATER PLUMBING BASIC (SR175,SV185)
HEATER PLUMBING BASIC (SR175,SV185)
HEATER PLUMBING BASIC (SR175,SV185)

R	N	P.N.	MOD	Q	Denominação Description	Description Bezeichnung	Denominacion Beskrivelse	Descrizione Beschrijving	L.C.
1		87520839		1	VÁLVULA, Assembly	VALVE	VÁLVULA	VALVOLA	9620
					SOUPAPE	VENTIL	VENTIL	KLEP	
2		84247845		1	SUPORTE, Water Valve and Dryer				
						BRACKET	SOPORTE	STAFFA	225S
					SUPPORT	HALTERUNG	BESLAG	STEUN	
3		120100		4	PARAFUSO, Hex, M6 x 20, 8.8				
						BOLT	PERNO	BULLONE	140B
					VIS	SCHRAUBE	BOLT	BOUT	
4		9804276		4	PORCA, M6 x 1, Flg, Cl 8	NUT	TUERCA	DADO	010D
					ECROU	MUTTER	MØTRIK	MOER	
5		86511841		2	PARAFUSO, Hex Flg, M8 x 16, 8.8				
						BOLT	PERNO	BULLONE	140B
					VIS	SCHRAUBE	BOLT	BOUT	
6		229197A1		2	PORCA, Square	NUT	TUERCA	DADO	5780
					ECROU	MUTTER	NUT	NUT	
7		84357840		1	MANGUEIRA, Heater Return, Guarded				
						HOSE	TUBO	TUBO FLESSIBILE	030M
					FLEXIBLE	SCHLAUCH	SLANGE	SLANG	
8		84357678		1	MANGUEIRA, Heater Supply, Guarded				
						HOSE	TUBO	TUBO FLESSIBILE	030M
					FLEXIBLE	SCHLAUCH	SLANGE	SLANG	
9		87443511		10	BRAÇADEIRA, Spring	CLAMP	ABRAZADERA	MORSETTO	120M
					COLLIER	KLEMME	SPÆNDEBÅND	KLEM	
10		127083A1		2	COTOVELO	ELBOW	CODO	GOMITO	085G
					COUDE	KNIESTÜCK	VINKELRØR	KNIESTUK	
11		84357844		1	MANGUEIRA, Heater Supply, Guarded				
						HOSE	TUBO	TUBO FLESSIBILE	030M
					FLEXIBLE	SCHLAUCH	SLANGE	SLANG	
12		287644		1	CONEXÃO, 90º, 5/8" Hose x 3/8" NPTF Beaded				
						FITTING	ACOPLAMIENTO	RACCORDO	3300
					RACCORD	ARMATUR	FITTING	AANSLUITING	
13		86530043		1	CONEXÃO, Hose	FITTING	ACOPLAMIENTO	RACCORDO	3300
					RACCORD	ARMATUR	FITTING	AANSLUITING	
14		87441006		1	PROTEÇÃO, AC Hose	GUARD	DEFENSA	PROTEZIONE	070R
					PROTECTION	SCHUTZABDECKUNG	BESKYTTELSESSKÆRM	AFSCHERMING	

50.200.02	03	p1	02/11

AC PLUMBING BASIC (SR175,SV185)
AC PLUMBING BASIC (SR175,SV185)
AC PLUMBING BASIC (SR175,SV185)
AC PLUMBING BASIC (SR175,SV185)

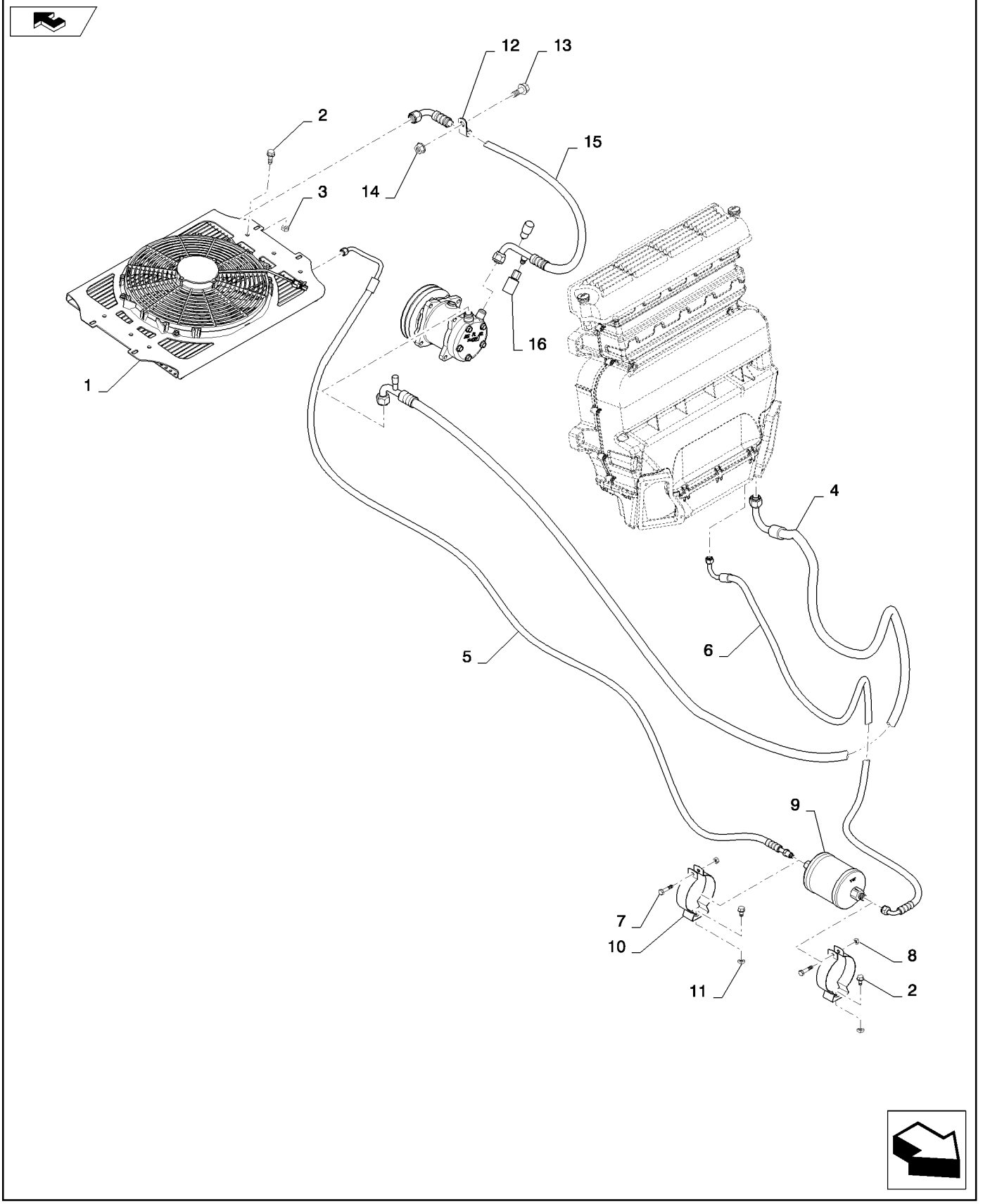

AC PLUMBING BASIC (SR175,SV185)
AC PLUMBING BASIC (SR175,SV185)
AC PLUMBING BASIC (SR175,SV185)
AC PLUMBING BASIC (SR175,SV185)

R	N	P.N.	MOD	Q	Denominação Description	Description Bezeichnung	Denominacion Beskrivelse	Descrizione Beschrijving	L.C.
1		84312881		1	CONDENSADOR, Assembly, w/Fan				
						CONDENSER	CONDENSADOR	CONDENSATORE	220C
					CONDENSATEUR	KONDENSATOR	KONDENSATOR	CONDENSOR	
2		86511841		2	PARAFUSO, Hex Flg, M8 x 16, 8.8				
						BOLT	PERNO	BULLONE	140B
					VIS	SCHRAUBE	BOLT	BOUT	
3		86625074		4	PORCA	NUT	TUERCA	DADO	010D
					ECROU	MUTTER	MØTRIK	MOER	
4		84403036		1	CONJ. MANGUEIRA, AC Discharge				
						HOSE ASSY.	CONJUNTO DE TUBOS	COMPLESS. TUBO FLES	P457
					ENSEMBLE DE FLEXIBLE	SCHLAUCHBAUGRUPPE	SLANGEENHED	SLANGEENHEID	
5		84347312		1	MANGUEIRA, Assembly, AC Liquid				
						HOSE	TUBO	TUBO FLESSIBILE	030M
					FLEXIBLE	SCHLAUCH	SLANGE	SLANG	
6		84403037		1	CONJ. MANGUEIRA, AC Discharge				
						HOSE ASSY.	CONJUNTO DE TUBOS	COMPLESS. TUBO FLES	P457
					ENSEMBLE DE FLEXIBLE	SCHLAUCHBAUGRUPPE	SLANGEENHED	SLANGEENHEID	
7		412479		2	PARAFUSO, Hex, M8 x 35, 8.8				
						BOLT	PERNO	BULLONE	140B
					VIS	SCHRAUBE	BOLT	BOUT	
8		9706690		2	PORCA, M8, Cl 8	NUT	TUERCA	DADO	010D
					ECROU	MUTTER	MØTRIK	MOER	
9		87105840		1	DESIDRATADOR	RECEIVER-DRYER	RECEPTOR-SECADOR	SERBATOIO-ESSICCATC	058D
					RESERVOIR DESHYDRA	TROCKNERPATRONE	VANDUDSKILLER	FILTERDROGER	
10		87105841		2	SUPORTE, HVAC	BRACKET	SOPORTE	STAFFA	225S
					SUPPORT	HALTERUNG	BESLAG	STEUN	
11		229197A1		2	PORCA, Square	NUT	TUERCA	DADO	5780
					ECROU	MUTTER	NUT	NUT	
12		86637976		1	BRAÇADEIRA, 3/4", Insul, 5/16" Bolt				
						CLAMP	ABRAZADERA	MORSETTO	120M
					COLLIER	KLEMME	SPÆNDEBÅND	KLEM	
13		9804258		5	PARAFUSO, Hex Flg, M8 x 20, 8.8				
						BOLT	PERNO	BULLONE	140B
					VIS	SCHRAUBE	BOLT	BOUT	
14		9804277		1	PORCA, M8 x 1.25, Flg, Cl 8				
						NUT	TUERCA	DADO	010D
					ECROU	MUTTER	MØTRIK	MOER	
15		84403035		1	CONJ. MANGUEIRA, AC Discharge				
						HOSE ASSY.	CONJUNTO DE TUBOS	COMPLESS. TUBO FLES	P457
					ENSEMBLE DE FLEXIBLE	SCHLAUCHBAUGRUPPE	SLANGEENHED	SLANGEENHEID	
16		87000227		1	INTERRUP ALTA PRESSÃO AC				
						A/C HIGH PRESSURE SV	INT. PRESIÓN ALTA A/A	INTERR. ALTA PRESS. A	A102
					PRESSOSTAT HP CLIMA	HOCHDR-SCHALTER KL	KONTAKT, A/C HØJTRYK	HOGEDRUKSCHAKELAA	

50.200.02	04	p1	02/11

HVAC, MEDIUM FRAME ISM (SR175,SV185)
HVAC, MEDIUM FRAME ISM (SR175,SV185)
HVAC, MEDIUM FRAME ISM (SR175,SV185)
HVAC, MEDIUM FRAME ISM (SR175,SV185)

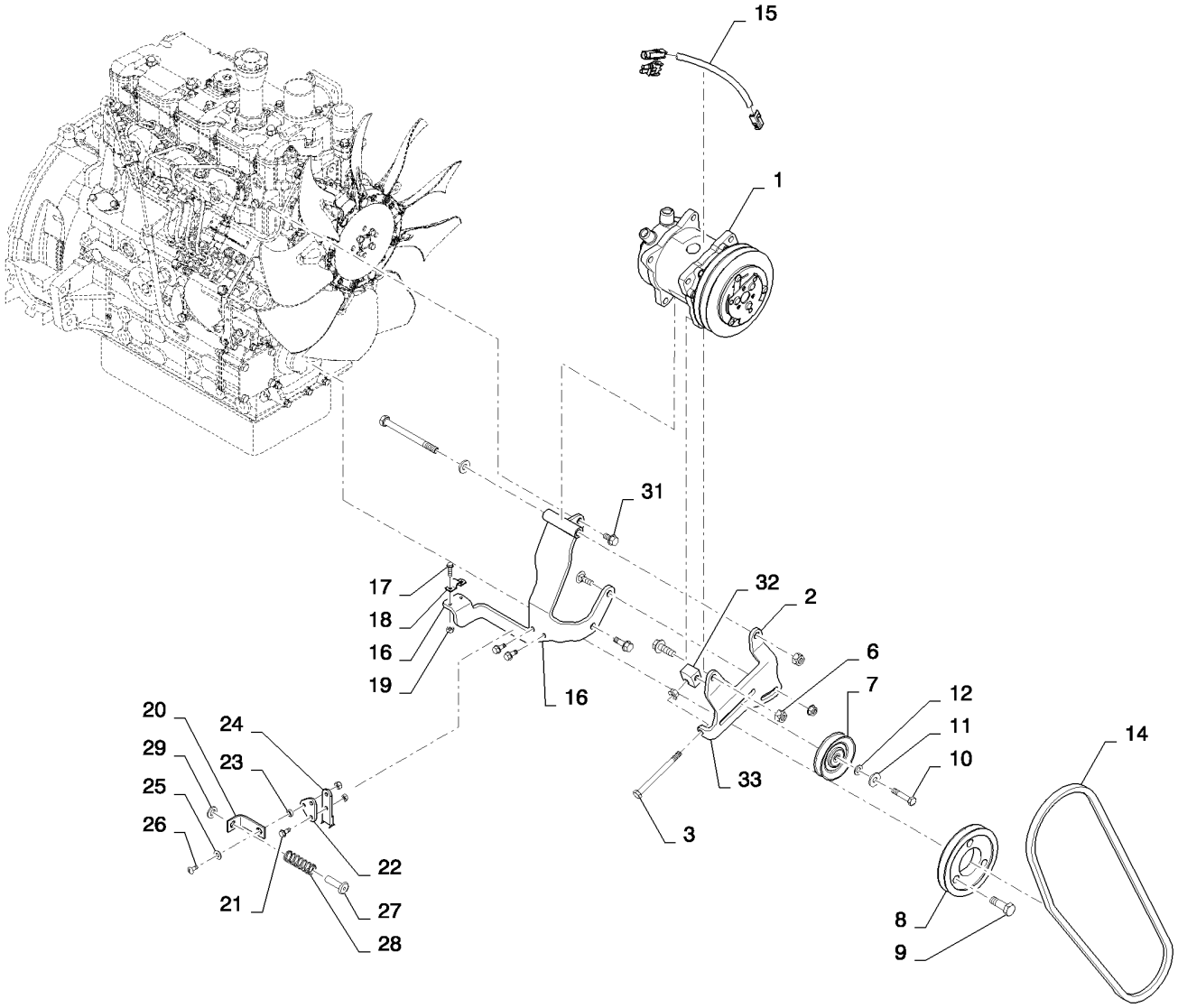

HVAC, MEDIUM FRAME ISM (SR175,SV185)
HVAC, MEDIUM FRAME ISM (SR175,SV185)
HVAC, MEDIUM FRAME ISM (SR175,SV185)
HVAC, MEDIUM FRAME ISM (SR175,SV185)

R	N	P.N.	MOD	Q	Denominação Description	Description Bezeichnung	Denominacion Beskrivelse	Descrizione Beschrijving	L.C.
1		84321962		1	COMPRESSOR AR COND. COMPRESSEUR CLIMAT	AIRCOND. COMPRESSO KLIMAANLAGENKOMPRE	COMPRESOR DE A/C AIRCONDITION KOMPRE	COMPRESSORE ARIA C AIRCOCOMPRESSOR	217C
2		84378693		1	SUPORTE, Compressor Pivot BRACKET SUPPORT	BRACKET HALTERUNG	SOPORTE BESLAG	STAFFA STEUN	225S
3		725403		1	PARAFUSO, Hex, M8 x 100, 8.8, Full Thd BOLT VIS	BOLT SCHRAUBE	PERNO BOLT	BULLONE BOUT	140B
4		9804277		2	PORCA, M8 x 1.25, Flg, Cl 8 NUT ECROU	NUT MUTTER	TUERCA MØTRIK	DADO MOER	010D
5		9804262		1	PARAFUSO, Hex Flg, M10 x 30, 8.8 BOLT VIS	BOLT SCHRAUBE	PERNO BOLT	BULLONE BOUT	140B
6		86512554		2	CONTRA PORCA, M10 x 1.5, Cl 10 LOCK NUT CONTRE-ECROU	LOCK NUT SICHERUNGSMUTTER	TUERCA DE BLOQUEO LÅSEMØTRIK	DADO DI BLOCCAGGIO BORGMOER	P263
7		87606706		1	POLIA, A/C POULIE	PULLEY RIEMENSCHEIBE	POLEA REMSKIVE	PULEGGIA RIEMSCHIJF	230P
8		86405134		1	POLIA, Compact A/C POULIE	PULLEY RIEMENSCHEIBE	POLEA REMSKIVE	PULEGGIA RIEMSCHIJF	230P
9		9824642		3	PARAFUSO, Hex, M12 x 35, 10.9 BOLT VIS	BOLT SCHRAUBE	PERNO BOLT	BULLONE BOUT	140B
10		43129		1	PARAFUSO, Hex, M8 x 40, 8.8 BOLT VIS	BOLT SCHRAUBE	PERNO BOLT	BULLONE BOUT	140B
11		86639313		1	ARRUELA PLANA, M8 x 20 x 1.6 WASHER RONDELLE	WASHER UNTERLEGSCHEIBE	ARANDELA FLADSKIVE	RONDELLA SLUITRING	131R
12		86624185		1	ARRUELA PLANA, M8 x 17.5 x 2, HT WASHER RONDELLE	WASHER UNTERLEGSCHEIBE	ARANDELA FLADSKIVE	RONDELLA SLUITRING	131R
13		86636815		1	PARAFUSO, Short NK, M8 x 25, Cl8.8, Full Thd CARRIAGE BOLT VIS A TETE BOMBEE	CARRIAGE BOLT SCHLOSSSCHRAUBE	PERNO ALOMADO BRÆDDEBOLT	BULLONE A TESTA TON SLOTBOUT	P123
14		84323065		1	CORREIA, V Belt, A/C Drive COURROIE	BELT RIEMEN	CORREA REM	CINGHIA RIEM	174C
15		84315532		1	CHICOTE, HVAC Jumper FAISCEAU ELECTRIQUE	WIRE HARNESS KABELBAUM	GRUPO DE CABLES KABELNET	CABLAGGIO KABELBOOM	070I
16		84321278		1	SUPORTE DE PIVÔ, W Compressor, Gray PIVOT BRACKET SUPPORT DE PIVOTEME	PIVOT BRACKET DREHLAGERHALTERUN	SOPORTE DE PIVOTE DREJEBESLAG	STAFFA PERNO DRAAIGEWRICHT	P817
17		87036224		2	PARAFUSO, M4 X 16 VIS	SCREW SCHRAUBE	TORNILLO SKRUE	VITE SCHROEF	040V
18		84200938		1	BRAÇADEIRA, Throttle Cable CLAMP COLLIER	CLAMP KLEMME	ABRAZADERA SPÆNDEBÅND	MORSETTO KLEM	120M

SV185

50.200.02	04	p2	02/11

HVAC, MEDIUM FRAME ISM (SR175,SV185)
HVAC, MEDIUM FRAME ISM (SR175,SV185)
HVAC, MEDIUM FRAME ISM (SR175,SV185)
HVAC, MEDIUM FRAME ISM (SR175,SV185)

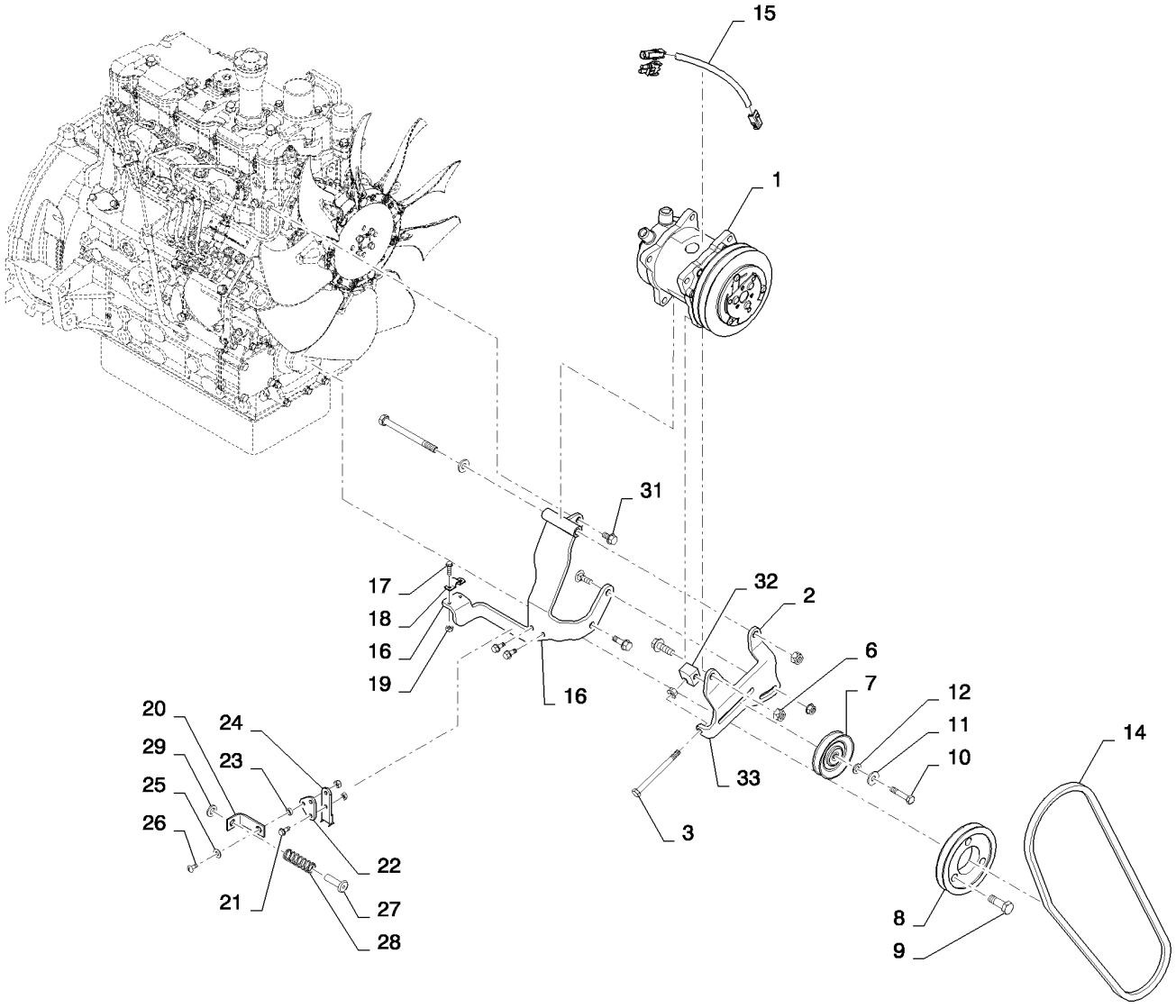

HVAC, MEDIUM FRAME ISM (SR175,SV185)
HVAC, MEDIUM FRAME ISM (SR175,SV185)
HVAC, MEDIUM FRAME ISM (SR175,SV185)
HVAC, MEDIUM FRAME ISM (SR175,SV185)

R	N	P.N.	MOD	Q	Denominação Description	Description Bezeichnung	Denominacion Beskrivelse	Descrizione Beschrijving	L.C.
19		100012		2	PORCA, M4, Cl 8	NUT	TUERCA	DADO	010D
					ECROU	MUTTER	MØTRIK	MOER	
20		9844532		1	SUPORTE	BRACKET	SOPORTE	STAFFA	225S
					SUPPORT	HALTERUNG	BESLAG	STEUN	
21		9804255		2	PARAFUSO, Hex Flg, M6 x 16, 8.8				
						BOLT	PERNO	BULLONE	140B
					VIS	SCHRAUBE	BOLT	BOUT	
22		84363155		1	SUPORTE, Throttle Adapter				
						BRACKET	SOPORTE	STAFFA	225S
					SUPPORT	HALTERUNG	BESLAG	STEUN	
23		13734		1	ESPAÇADOR	SPACER	SEPARADOR	DISTANZIALE	075D
					ENTRETOISE	DISTANZSTÜCK	AFSTANDSSTYKKE	AFSTANDSSTUK	
24		84821		1	PARAFUSO, Slotted Truss Hd, #10-24 x 1/2"				
						SCREW	TORNILLO	VITE	040V
					VIS	SCHRAUBE	SKRUE	SCHROEF	
25		80707		1	ARRUELA PLANA, 3/16"	WASHER	ARANDELA	RONDELLA	131R
					RONDELLE	UNTERLEGSCHEIBE	FLADSKIVE	SLUITRING	
26		88826		1	CONTRA PORCA, #10-24, GA				
						LOCK NUT	TUERCA DE BLOQUEO	DADO DI BLOCCAGGIO	P263
					CONTRE-ECROU	SICHERUNGSMUTTER	LÅSEMØTRIK	BORGMOER	
27		9860169		1	REBITE, Drilled	RIVET	REMACHE	RIVETTO	055R
					RIVET	NIET	NITTE	KLINKNAGEL	
28		84286072		1	MOLA, Throttle	SPRING	RESORTE	MOLLA	100M
					RESSORT	FEDER	FJEDER	VEER	
29		140182		1	ARRUELA PLANA, M5 x 18 x 2				
						WASHER	ARANDELA	RONDELLA	131R
					RONDELLE	UNTERLEGSCHEIBE	FLADSKIVE	SLUITRING	
30		9671714		1	PARAFUSO, Hex Flg, M8 x 25, 8.8				
						BOLT	PERNO	BULLONE	140B
					VIS	SCHRAUBE	BOLT	BOUT	
31		86511841		1	PARAFUSO, Hex Flg, M8 x 16, 8.8				
						BOLT	PERNO	BULLONE	140B
					VIS	SCHRAUBE	BOLT	BOUT	
32		87582270		1	BLOCO, Idler Adjust	BLOCK	BLOQUE	BLOCCO	074B
					BLOC	BLOCK	MOTORBLOK	BLOK	
33		7120985		1	PARAFUSO, Cap	BOLT	PERNO	BULLONE	140B
					VIS	SCHRAUBE	BOLT	BOUT	
34		285072		1	ARRUELA PLANA, M10 x 22.2 x 2.87 Thk, HT				
						WASHER	ARANDELA	RONDELLA	131R
					RONDELLE	UNTERLEGSCHEIBE	FLADSKIVE	SLUITRING	
35		86639263		2	PARAFUSO, Hex Wash Hd, M5 x 12				
						SCREW	TORNILLO	VITE	040V
					VIS	SCHRAUBE	SKRUE	SCHROEF	
36		86508813		2	PORCA, M5, Cl 8	NUT	TUERCA	DADO	010D
					ECROU	MUTTER	MØTRIK	MOER	
37		86639409		1	ADESIVO	DECAL	CALCOMANÍA	DECALCOMANIA	012D
					AUTOCOLLANT	AUFKLEBER	TRANSFER	STICKER	

50.200.03		p1	02/11

HVAC, MEDIUM FRAME (SR175,SV185)
HVAC, MEDIUM FRAME (SR175,SV185)
HVAC, MEDIUM FRAME (SR175,SV185)
HVAC, MEDIUM FRAME (SR175,SV185)

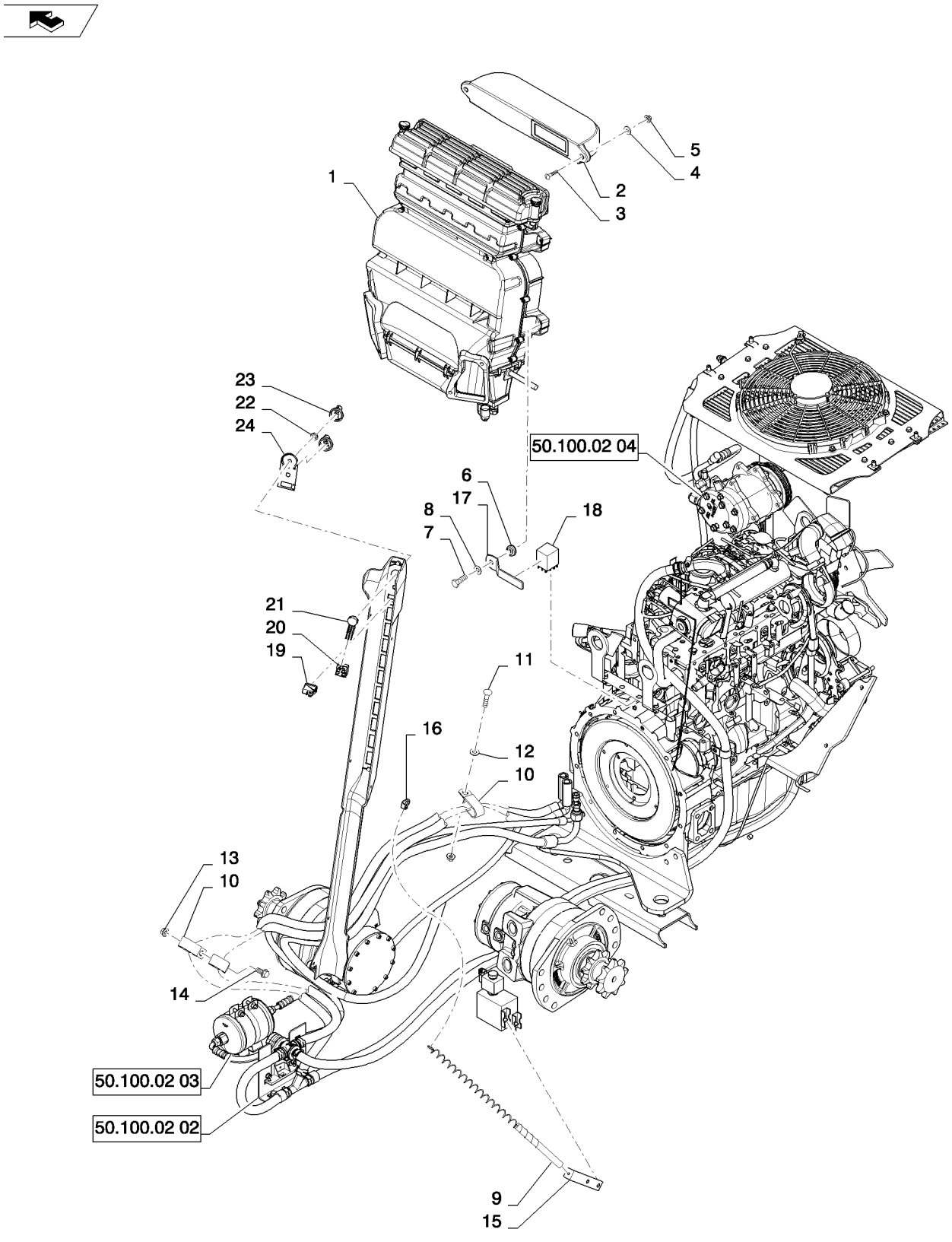

HVAC, MEDIUM FRAME (SR175,SV185)
HVAC, MEDIUM FRAME (SR175,SV185)
HVAC, MEDIUM FRAME (SR175,SV185)
HVAC, MEDIUM FRAME (SR175,SV185)

R	N	P.N.	MOD	Q	Denominação Description	Description Bezeichnung	Denominacion Beskrivelse	Descrizione Beschrijving	L.C.
1		84267544		1	UNIDADE DE AQUECIMENTO, w/AC, Cab				
						UNIT HEATER	APARATO DE CALEFAC(	RISCALDATORE UNITÀ	Z375
					APPAREIL DE CHAUFFA	HEIZUNGSEINHEIT	RADIATORENHED	VERWARMING	
2		84280313		1	DUTO DE AR, Intake	AIR DUCT	CONDUCTO DE AIRE	CONDOTTO ARIA	224C
					CONDUITE D'AIR	LUFTKANAL	LUFTKANAL	LUCHTKANAAL	
3		86512441		2	PARAFUSO, Short NK, M6 x 30, Cl8.8, Full Thd				
						CARRIAGE BOLT	PERNO ALOMADO	BULLONE A TESTA TONI	P123
					VIS A TETE BOMBEE	SCHLOSSSCHRAUBE	BRÆDDEBOLT	SLOTBOUT	
4		87655042		2	ARRUELA ESPECIAL, M8, 8.80 X 17.5 X 2.2 HTS				
						SPECIAL WASHER	ARANDELA ESPECIAL	RONDELLA SPECIALE	Z333
					RONDELLE SPECIALE	SPEZIALUNTERLEGSCH	SPECIALSKIVE	SPECIALE RING	
5		86619800		2	CONTRA PORCA, M6 x 1, Flg, Cl 8				
						LOCK NUT	TUERCA DE BLOQUEO	DADO DI BLOCCAGGIO	P263
					CONTRE-ECROU	SICHERUNGSMUTTER	LÅSEMØTRIK	BORGMOER	
6		87436247		4	ENCHIMENTO ROSCADO, M6, Blind Threaded				
						THREADED INSERT	PIEZA DE INS. ROSCAD/	INSERTO FILETTATO	054I
					INSERT FILETE	GEWINDEEINSATZ	GEVINDINDSATS	INZETST. MET SCHROEI	
7		86511833		4	PARAFUSO, Cross Pan Hd, M6 x 40				
						SCREW	TORNILLO	VITE	040V
					VIS	SCHRAUBE	SKRUE	SCHROEF	
8		86624183		3	ARRUELA PLANA, M6 x 25 x 1.6				
						WASHER	ARANDELA	RONDELLA	131R
					RONDELLE	UNTERLEGSCHEIBE	FLADSKIVE	SLUITRING	
9		412679A2		2	MOLA, Heater Hose	SPRING	MUELLE	MOLLA	8315
					RESSORT	FEDER	SPRING	SPRING	
10		D39696		4	BRACADEIRA	CLAMP	COLLAR	MORSETTO	1640
					COLLIER	SCHELLE	CLAMP	CLAMP	
11		350459		1	PARAFUSO, Short NK, M10 x 50, Cl8.8, Full Thd				
						SCREW	TORNILLO	VITE	040V
					VIS	SCHRAUBE	SKRUE	SCHROEF	
12		87655046		1	ARRUELA ESPECIAL, M10, 10.65 X 23.0 X 2.2 HTS				
						SPECIAL WASHER	ARANDELA ESPECIAL	RONDELLA SPECIALE	Z333
					RONDELLE SPECIALE	SPEZIALUNTERLEGSCH	SPECIALSKIVE	SPECIALE RING	
13		9804278		3	PORCA, M10 x 1.5, Flg, Cl 8				
						NUT	TUERCA	DADO	010D
					ECROU	MUTTER	MØTRIK	MOER	
14		9804261		1	PARAFUSO, Hex Flg, M10 x 25, 8.8				
						BOLT	PERNO	BULLONE	140B
					VIS	SCHRAUBE	BOLT	BOUT	
15		84370705		1	SUPORTE	BRACKET	SOPORTE	STAFFA	225S
					SUPPORT	HALTERUNG	BESLAG	STEUN	
16		84361522		1	SUPORTE	BRACKET	SOPORTE	STAFFA	225S
					SUPPORT	HALTERUNG	BESLAG	STEUN	
17		84380240		1	SUPORTE, Relay	BRACKET	SOPORTE	STAFFA	225S
					SUPPORT	HALTERUNG	BESLAG	STEUN	
18		87355337		1	RELE, Heavy Duty, 45 Amp	RELAY	RELE	REL	7025
					RELAIS	RELAIS	RELAY	RELAY	
19		87555249		1	INTERRUPTOR, A/C	SWITCH	INTERRUPTOR	INTERRUTTORE	075I
					CONTACTEUR	SCHALTER	KONTAKT	SCHAKELAAR	

SV185

50.200.03		p2	02/11

HVAC, MEDIUM FRAME (SR175,SV185)
HVAC, MEDIUM FRAME (SR175,SV185)
HVAC, MEDIUM FRAME (SR175,SV185)
HVAC, MEDIUM FRAME (SR175,SV185)

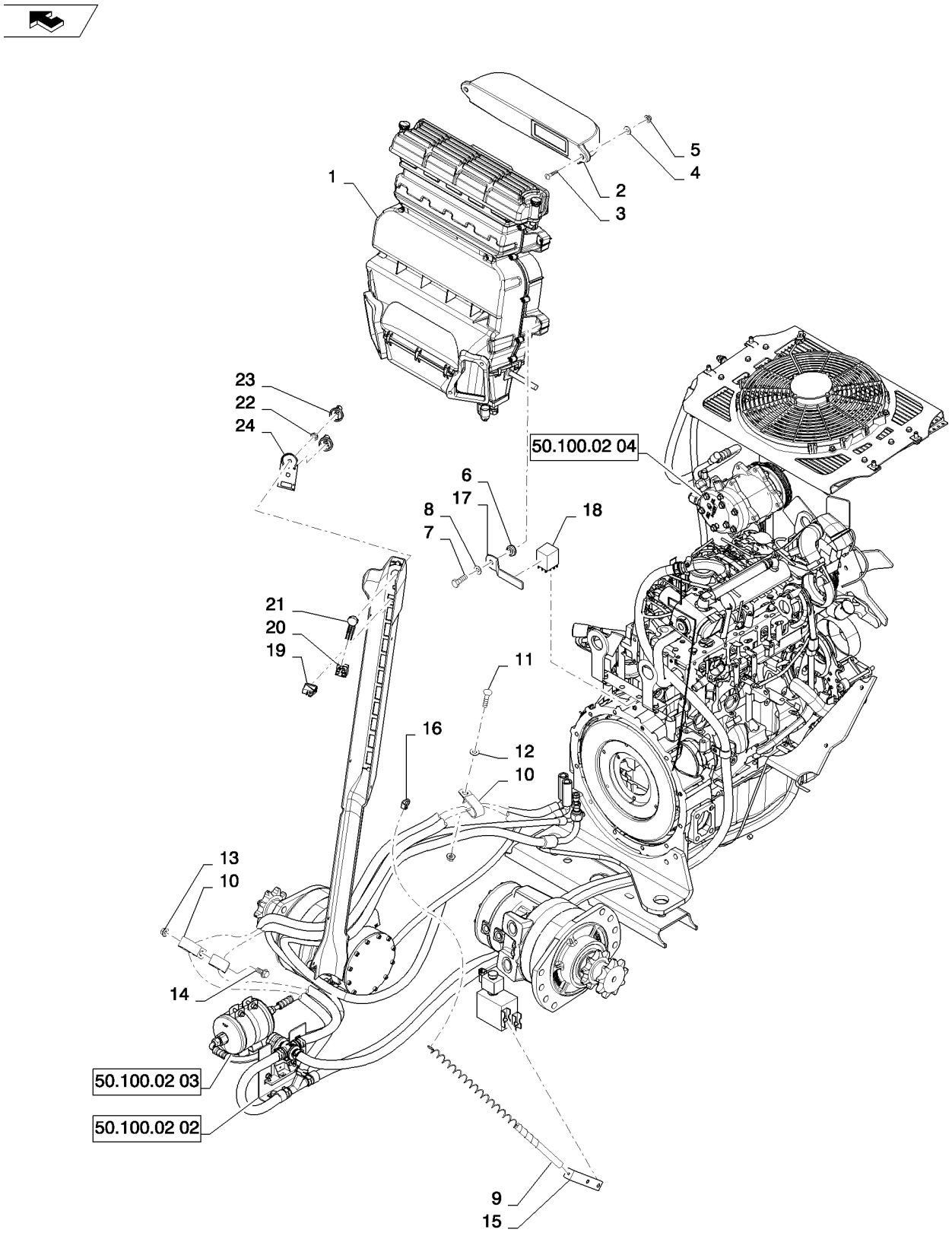

HVAC, MEDIUM FRAME (SR175,SV185)
HVAC, MEDIUM FRAME (SR175,SV185)
HVAC, MEDIUM FRAME (SR175,SV185)
HVAC, MEDIUM FRAME (SR175,SV185)

R	N	P.N.	MOD	Q	Denominação Description	Description Bezeichnung	Denominacion Beskrivelse	Descrizione Beschrijving	L.C.
20		**86729669**		1	INTERRUPTOR, Blower/Light SWITCH CONTACTEUR	SCHALTER	INTERRUPTOR KONTAKT	INTERRUTTORE SCHAKELAAR	075I
21		**86729675**		1	POTENCIÔMETRO, Switch POTENTIOMETRE	POTENTIOMETER POTENTIOMETER	POTENCIÓMETRO POTENTIOMETER	POTENZIOMETRO POTENTIOMETER	550P
22		**87310592**		2	PORCA, Jam, 7/16"-28, G5 ECROU	NUT MUTTER	TUERCA MØTRIK	DADO MOER	010D
23		**86729670**		2	MAÇANETA BOUTON	KNOB RUNDGRIFF	MANDO GREB	MANOPOLA KNOP	150P
24		**84347258**		1	ADESIVO, HVAC, Heat AC AUTOCOLLANT	DECAL AUFKLEBER	CALCOMANÍA TRANSFER	DECALCOMANIA STICKER	012D

50.200.03		p1	02/11

HVAC, LARGE FRAME (SR220-SV300,TR320,TV380)
HVAC, LARGE FRAME (SR220-SV300,TR320,TV380)
HVAC, LARGE FRAME (SR220-SV300,TR320,TV380)
HVAC, LARGE FRAME (SR220-SV300,TR320,TV380)

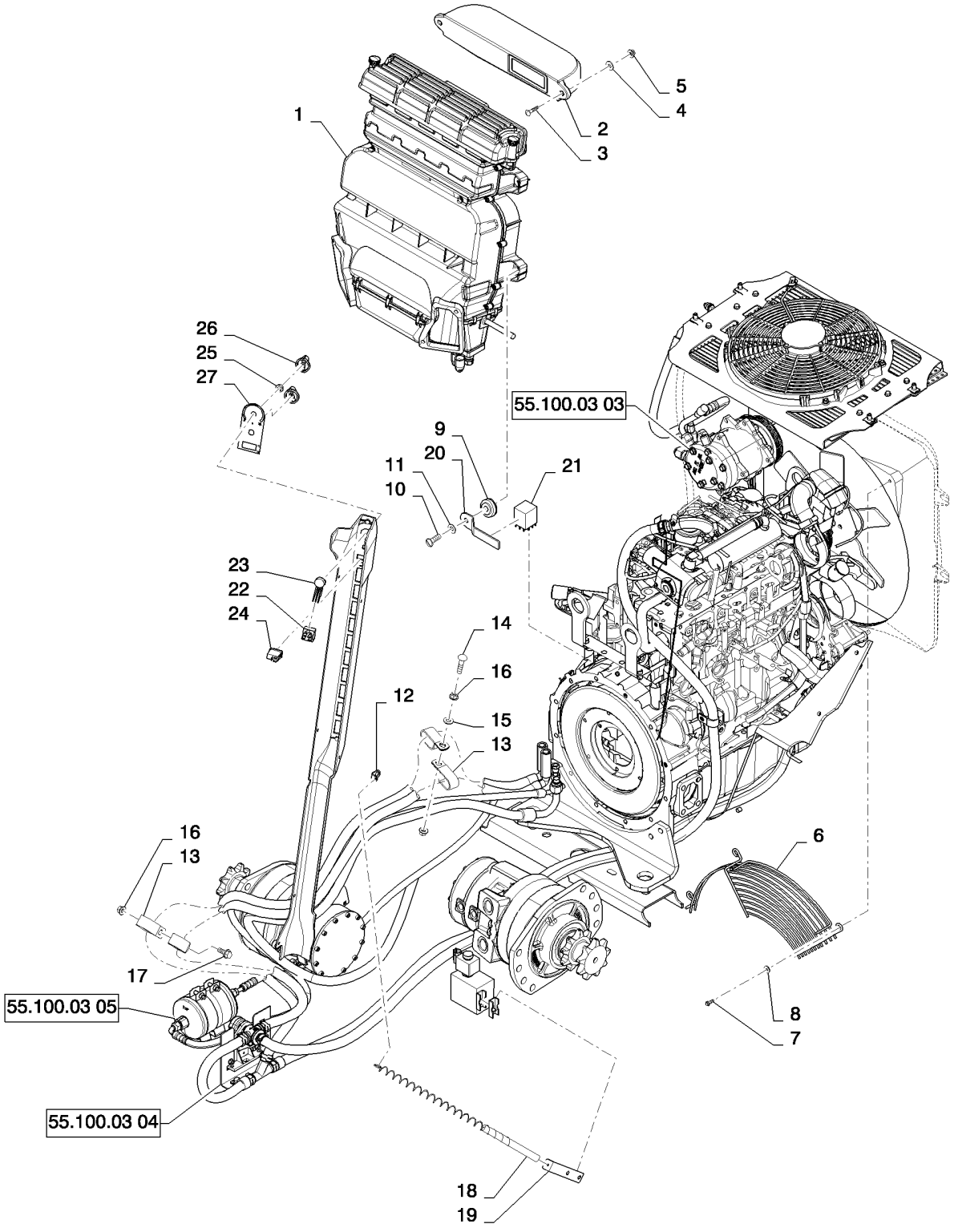

HVAC, LARGE FRAME (SR220-SV300,TR320,TV380)
HVAC, LARGE FRAME (SR220-SV300,TR320,TV380)
HVAC, LARGE FRAME (SR220-SV300,TR320,TV380)
HVAC, LARGE FRAME (SR220-SV300,TR320,TV380)

R	N	P.N.	MOD	Q	Denominação Description	Description Bezeichnung	Denominacion Beskrivelse	Descrizione Beschrijving	L.C.
1		84267544		1	UNIDADE DE AQUECIMENTO, w/AC, Cab				
						UNIT HEATER	APARATO DE CALEFAC(	RISCALDATORE UNITÀ	Z375
					APPAREIL DE CHAUFFA	HEIZUNGSEINHEIT	RADIATORENHED	VERWARMING	
2		84280313		1	DUTO DE AR, Intake	AIR DUCT	CONDUCTO DE AIRE	CONDOTTO ARIA	224C
					CONDUITE D'AIR	LUFTKANAL	LUFTKANAL	LUCHTKANAAL	
3		86512441		2	PARAFUSO, Short NK, M6 x 30, Cl8.8, Full Thd				
						CARRIAGE BOLT	PERNO ALOMADO	BULLONE A TESTA TONI	P123
					VIS A TETE BOMBEE	SCHLOSSSCHRAUBE	BRÆDDEBOLT	SLOTBOUT	
4		87655042		2	ARRUELA ESPECIAL, M8, 8.80 X 17.5 X 2.2 HTS				
						SPECIAL WASHER	ARANDELA ESPECIAL	RONDELLA SPECIALE	Z333
					RONDELLE SPECIALE	SPEZIALUNTERLEGSCH	SPECIALSKIVE	SPECIALE RING	
5		86619800		2	CONTRA PORCA, M6 x 1, Flg, Cl 8				
						LOCK NUT	TUERCA DE BLOQUEO	DADO DI BLOCCAGGIO	P263
					CONTRE-ECROU	SICHERUNGSMUTTER	LÅSEMØTRIK	BORGMOER	
6		84335904		1	PROTEÇÃO, Fan	GUARD	DEFENSA	PROTEZIONE	070R
					PROTECTION	SCHUTZABDECKUNG	BESKYTTELSESSKÆRM	AFSCHERMING	
7		84137412		3	PARAFUSO, Bosscrew, M6 X 18				
						SCREW	TORNILLO	VITE	040V
					VIS	SCHRAUBE	SKRUE	SCHROEF	
8		86624182		3	ARRUELA PLANA, M6 x 18 x 1.6				
						WASHER	ARANDELA	RONDELLA	131R
					RONDELLE	UNTERLEGSCHEIBE	FLADSKIVE	SLUITRING	
9		87436247		4	ENCHIMENTO ROSCADO, M6, Blind Threaded				
						THREADED INSERT	PIEZA DE INS. ROSCAD/	INSERTO FILETTATO	054I
					INSERT FILETE	GEWINDEEINSATZ	GEVINDINDSATS	INZETST. MET SCHROEI	
10		86511833		4	PARAFUSO, Cross Pan Hd, M6 x 40				
						SCREW	TORNILLO	VITE	040V
					VIS	SCHRAUBE	SKRUE	SCHROEF	
11		86624183		3	ARRUELA PLANA, M6 x 25 x 1.6				
						WASHER	ARANDELA	RONDELLA	131R
					RONDELLE	UNTERLEGSCHEIBE	FLADSKIVE	SLUITRING	
12		84361522		1	SUPORTE	BRACKET	SOPORTE	STAFFA	225S
					SUPPORT	HALTERUNG	BESLAG	STEUN	
13		D39696		4	BRACADEIRA	CLAMP	COLLAR	MORSETTO	1640
					COLLIER	SCHELLE	CLAMP	CLAMP	
14		350459		1	PARAFUSO, Short NK, M10 x 50, Cl8.8, Full Thd				
						SCREW	TORNILLO	VITE	040V
					VIS	SCHRAUBE	SKRUE	SCHROEF	
15		87655046		1	ARRUELA ESPECIAL, M10, 10.65 X 23.0 X 2.2 HTS				
						SPECIAL WASHER	ARANDELA ESPECIAL	RONDELLA SPECIALE	Z333
					RONDELLE SPECIALE	SPEZIALUNTERLEGSCH	SPECIALSKIVE	SPECIALE RING	
16		9804278		3	PORCA, M10 x 1.5, Flg, Cl 8				
						NUT	TUERCA	DADO	010D
					ECROU	MUTTER	MØTRIK	MOER	
17		9804261		1	PARAFUSO, Hex Flg, M10 x 25, 8.8				
						BOLT	PERNO	BULLONE	140B
					VIS	SCHRAUBE	BOLT	BOUT	
18		412679A2		2	MOLA, Heater Hose	SPRING	MUELLE	MOLLA	8315
					RESSORT	FEDER	SPRING	SPRING	

50.200.03		p2	02/11

HVAC, LARGE FRAME (SR220-SV300,TR320,TV380)
HVAC, LARGE FRAME (SR220-SV300,TR320,TV380)
HVAC, LARGE FRAME (SR220-SV300,TR320,TV380)
HVAC, LARGE FRAME (SR220-SV300,TR320,TV380)

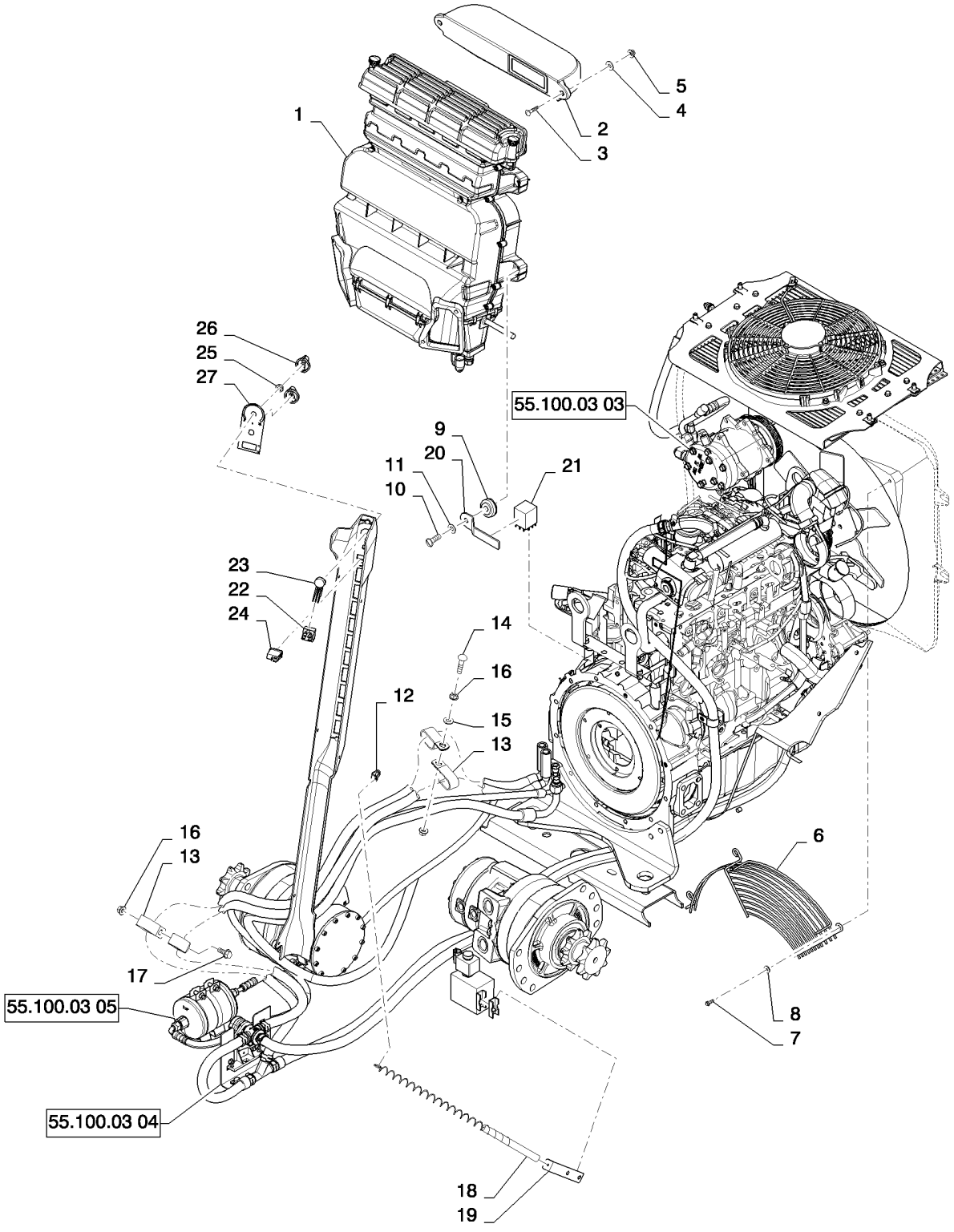

HVAC, LARGE FRAME (SR220-SV300,TR320,TV380)
HVAC, LARGE FRAME (SR220-SV300,TR320,TV380)
HVAC, LARGE FRAME (SR220-SV300,TR320,TV380)
HVAC, LARGE FRAME (SR220-SV300,TR320,TV380)

R	N	P.N.	MOD	Q	Denominação Description	Description Bezeichnung	Denominacion Beskrivelse	Descrizione Beschrijving	L.C.
19		**84370705**		1	SUPORTE SUPPORT	BRACKET HALTERUNG	SOPORTE BESLAG	STAFFA STEUN	225S
20		**84380240**		1	SUPORTE, Relay SUPPORT	BRACKET HALTERUNG	SOPORTE BESLAG	STAFFA STEUN	225S
21		**87355337**		1	RELE, Heavy Duty, 45 Amp RELAIS	RELAY RELAIS	RELE RELAY	REL RELAY	7025
22		**86729669**		1	INTERRUPTOR, Blower/Light CONTACTEUR	SWITCH SCHALTER	INTERRUPTOR KONTAKT	INTERRUTTORE SCHAKELAAR	075I
23		**86729675**		1	POTENCIÔMETRO, Switch POTENTIOMETRE	POTENTIOMETER POTENTIOMETER	POTENCIÓMETRO POTENTIOMETER	POTENZIOMETRO POTENTIOMETER	550P
24		**87555249**		1	INTERRUPTOR, A/C CONTACTEUR	SWITCH SCHALTER	INTERRUPTOR KONTAKT	INTERRUTTORE SCHAKELAAR	075I
25		**87310592**		2	PORCA, Jam, 7/16"-28, G5 ECROU	NUT MUTTER	TUERCA MØTRIK	DADO MOER	010D
26		**86729670**		2	MAÇANETA BOUTON	KNOB RUNDGRIFF	MANDO GREB	MANOPOLA KNOP	150P
27		**84347258**		1	ADESIVO, HVAC, Heat AC AUTOCOLLANT	DECAL AUFKLEBER	CALCOMANÍA TRANSFER	DECALCOMANIA STICKER	012D

50.200.05		p1	08/11

HEATER (ALL CASE)
HEATER (ALL CASE)
HEATER (ALL CASE)
HEATER (ALL CASE)

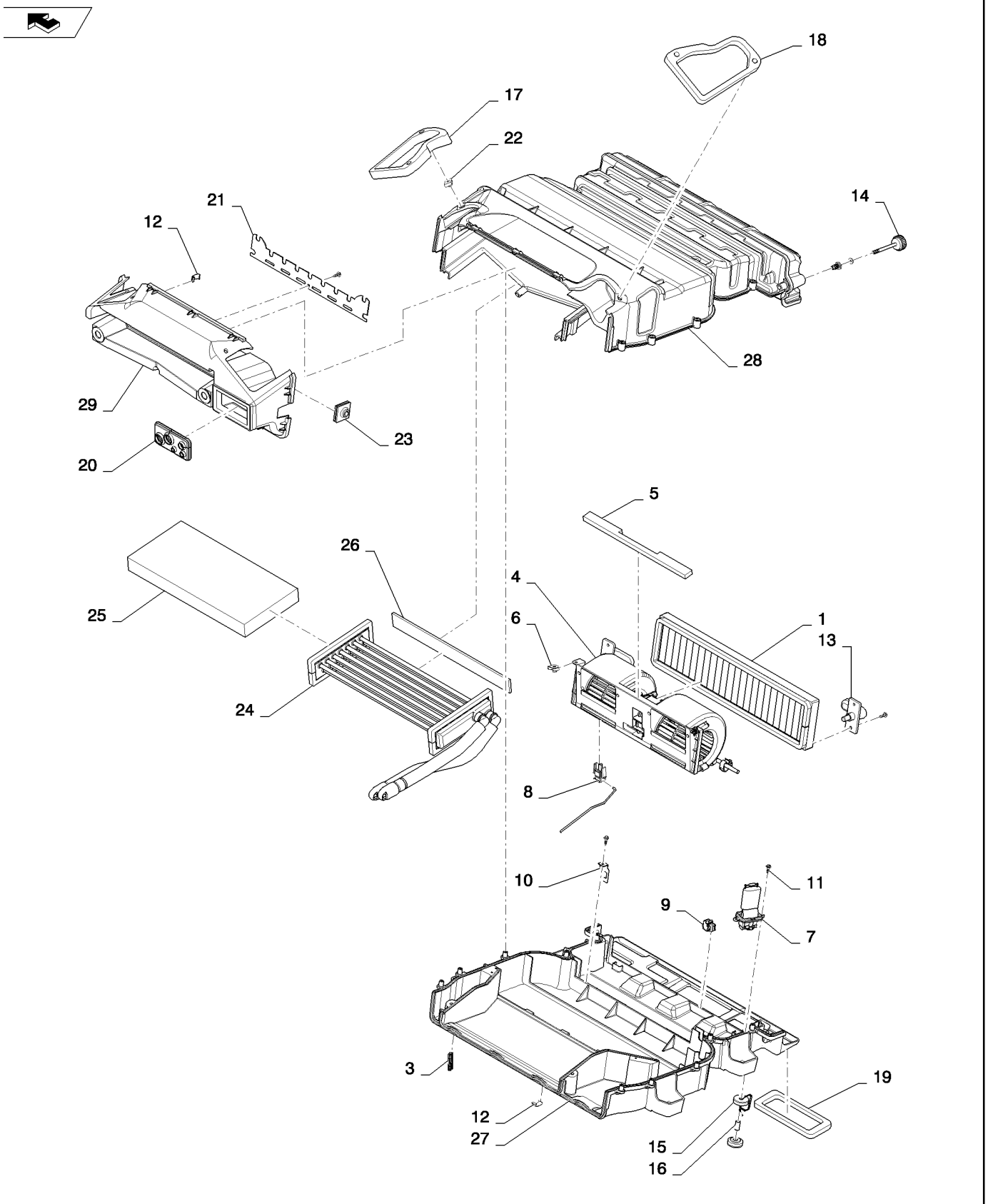

HEATER (ALL CASE)
HEATER (ALL CASE)
HEATER (ALL CASE)
HEATER (ALL CASE)

R	N	P.N.	MOD	Q	Denominação Description Bezeichnung	Description Bezeichnung	Denominacion Beskrivelse	Descrizione Beschrijving	L.C.
1		84376814		1	FILTRO DA CABINE, Air, Service				
						CAB FILTER	FILTRO DE CABINA	FILTRO CABINA	063F
					FILTRE DE LA CABINE	KABINENFILTER	KABINEFILTER	CABINEFILTER	
2		84376815		1	FILTRO DA CABINE, Air, Charcoal, Service, Not Shown				
						CAB FILTER	FILTRO DE CABINA	FILTRO CABINA	063F
					FILTRE DE LA CABINE	KABINENFILTER	KABINEFILTER	CABINEFILTER	
3		84380586		1	ESTOJO, Filter	CASE	ESTUCHE	CASSA; SCATOLA	101A
					CARTER	GEHÄUSE	KASSE	HUIS	
4		84380587		1	MOTOR ELÉTRICO, Blower				
						ELECTRIC MOTOR	MOTOR ELÉCTRICO	MOTORE ELETTRICO	128M
					MOTEUR ELECTRIQUE	ELEKTROMOTOR	EL-MOTOR	ELEKTROMOTOR	
5		84380588		1	JUNTA, Blower	GASKET	JUNTA	GUARNIZIONE	123G
					JOINT	DICHTUNG	PAKNING	PAKKING	
6		84380589		2	GRAMPO DO CABO, Spring, Blower				
						CABLE CLIP	ABRAZADERA DE CABLE	FERMO PER CAVO	P656
					ATTACHE-CABLE	KABELSCHELLE	KABELKLEMME	KABELKLEM	
7		84380590		1	RESISTOR	RESISTOR	RESISTENCIA	RESISTORE	040R
					RESISTANCE	WIDERSTAND	MODSTAND	WEERSTAND	
8		84380592		1	CHICOTE, W/ Relay	WIRE HARNESS	GRUPO DE CABLES	CABLAGGIO	070I
					FAISCEAU ELECTRIQUE	KABELBAUM	KABELNET	KABELBOOM	
9		84380593		3	GRAMPO DO CABO, Harness				
						CABLE CLIP	ABRAZADERA DE CABLE	FERMO PER CAVO	P656
					ATTACHE-CABLE	KABELSCHELLE	KABELKLEMME	KABELKLEM	
10		84380594		1	SUPORTE, Relay	BRACKET	SOPORTE	STAFFA	225S
					SUPPORT	HALTERUNG	BESLAG	STEUN	
11		84380596		23	PARAFUSO, 4 X 16	SCREW	TORNILLO	VITE	040V
					VIS	SCHRAUBE	SKRUE	SCHROEF	
12		84380597		11	ESTOJO, Cup, Condensate	CASE	ESTUCHE	CASSA; SCATOLA	101A
					CARTER	GEHÄUSE	KASSE	HUIS	
13		84380598		2	TRINCO, Filter, Closing	LATCH HOOK	GANCHO DE PESTILLO	GANCIO DISPOS. CHIUS	Z305
					CROCHET DE VERROUI	VERRIEGELUNGSHAKEN	SMÆKKROG	VERGRENDELHAAK	
14		84380599		2	MAÇANETA, Closing	KNOB	MANDO	MANOPOLA	150P
					BOUTON	RUNDGRIFF	GREB	KNOP	
15		5192101		8	BLOCO, Anti-vibration	BLOCK	BLOQUE	BLOCCO	074B
					BLOC	BLOCK	MOTORBLOK	BLOK	
16		84380601		4	ESPAÇADOR, Washer, Silent, Block				
						SPACER	SEPARADOR	DISTANZIALE	075D
					ENTRETOISE	DISTANZSTÜCK	AFSTANDSSTYKKE	AFSTANDSSTUK	
17		84380602		1	JUNTA, Left, Air Outlet	GASKET	JUNTA	GUARNIZIONE	123G
					JOINT	DICHTUNG	PAKNING	PAKKING	
18		84380603		1	JUNTA, Right, Air Outlet	GASKET	JUNTA	GUARNIZIONE	123G
					JOINT	DICHTUNG	PAKNING	PAKKING	
19		84380604		1	JUNTA, Air Inlet	GASKET	JUNTA	GUARNIZIONE	123G
					JOINT	DICHTUNG	PAKNING	PAKKING	
20		84380608		1	JUNTA, Hose Interface	GASKET	JUNTA	GUARNIZIONE	123G
					JOINT	DICHTUNG	PAKNING	PAKKING	
21		84380609		1	PLACA, Plate, Water Condensate				
						PLATE	PLACA	PIASTRA	105P
					PLAQUE	PLATTE	PLADE	PLAAT	

50.200.05		p2	08/11

HEATER (ALL CASE)
HEATER (ALL CASE)
HEATER (ALL CASE)
HEATER (ALL CASE)

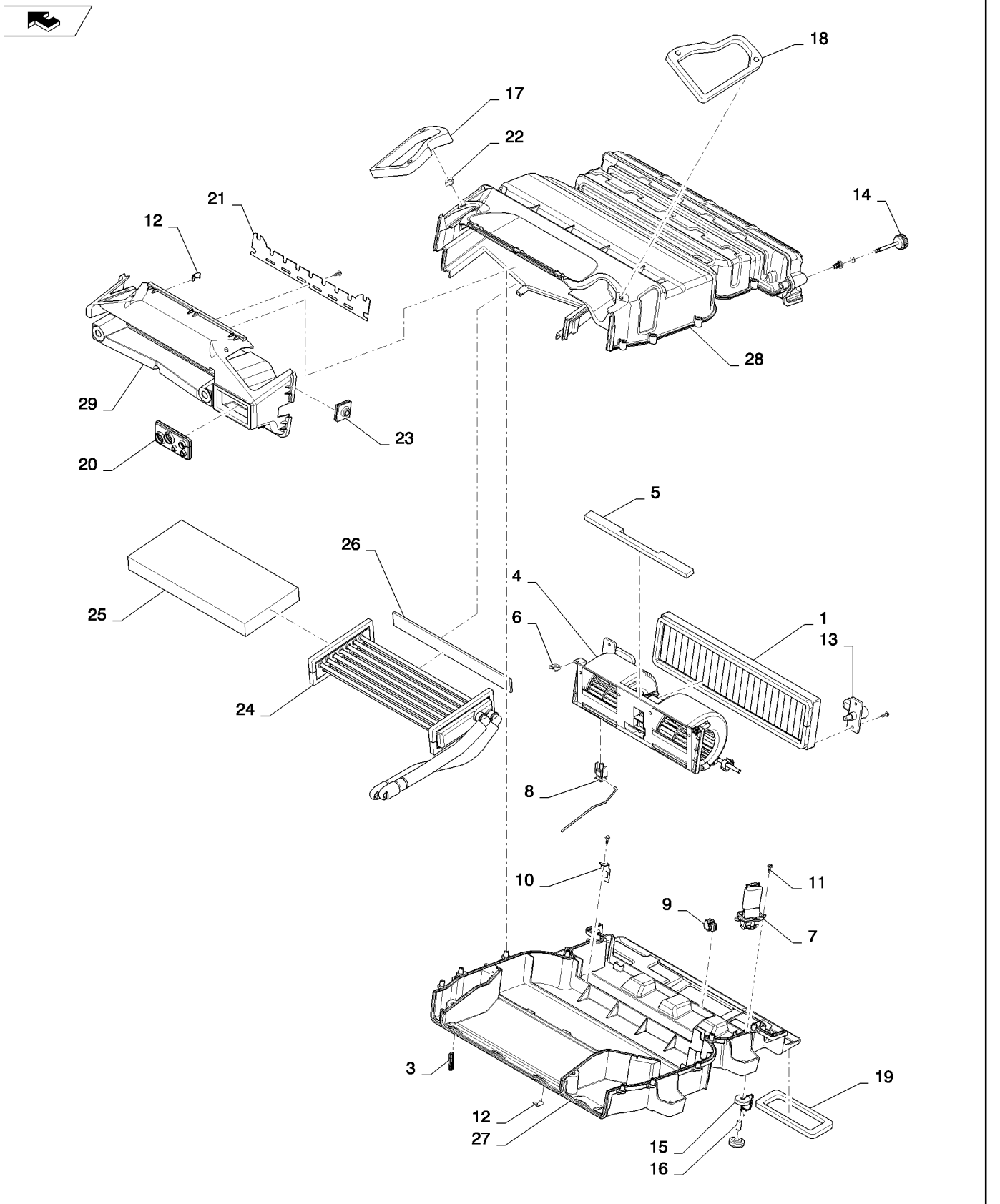

HEATER (ALL CASE)
HEATER (ALL CASE)
HEATER (ALL CASE)
HEATER (ALL CASE)

R	N	P.N.	MOD	Q	Denominação Description Bezeichnung	Description Bezeichnung	Denominacion Beskrivelse	Descrizione Beschrijving	L.C.
22		**84380611**		4	GRAMPO, Spring, M6 for Ducts				
						CLIP	ABRAZADERA	FERMO	045F
					COLLIER	KLAMMER	KLIPS	KLEM	
23		**84380612**		1	JUNTA, Harness	GASKET	JUNTA	GUARNIZIONE	123G
					JOINT	DICHTUNG	PAKNING	PAKKING	
24		**84380613**		1	AQUECEDOR	HEATER	CALENTADOR	RISCALDATORE	105R
					CHAUFFAGE	HEIZUNG	VARMEAPPARAT	VERWARMING	
25		**84380614**		1	JUNTA, Heater Core	GASKET	JUNTA	GUARNIZIONE	123G
					JOINT	DICHTUNG	PAKNING	PAKKING	
26		**84380615**		1	JUNTA, Heater, Lateral	GASKET	JUNTA	GUARNIZIONE	123G
					JOINT	DICHTUNG	PAKNING	PAKKING	
27		**84381032**		1	CAIXA, Lower	BOX	CAJA	CASSA; SCATOLA	035S
					BOITIER	KASTEN; OFF KASTENAI	KASSE	DOOS	
28		**84381034**		1	CAIXA, Upper	BOX	CAJA	CASSA; SCATOLA	035S
					BOITIER	KASTEN; OFF KASTENAI	KASSE	DOOS	
29		**84381035**		1	CAIXA, Bottom	BOX	CAJA	CASSA; SCATOLA	035S
					BOITIER	KASTEN; OFF KASTENAI	KASSE	DOOS	

50.200.06		p1	08/11

HEATER W/AC (SR175-TV380)
HEATER W/AC (SR175-TV380)
HEATER W/AC (SR175-TV380)
HEATER W/AC (SR175-TV380)

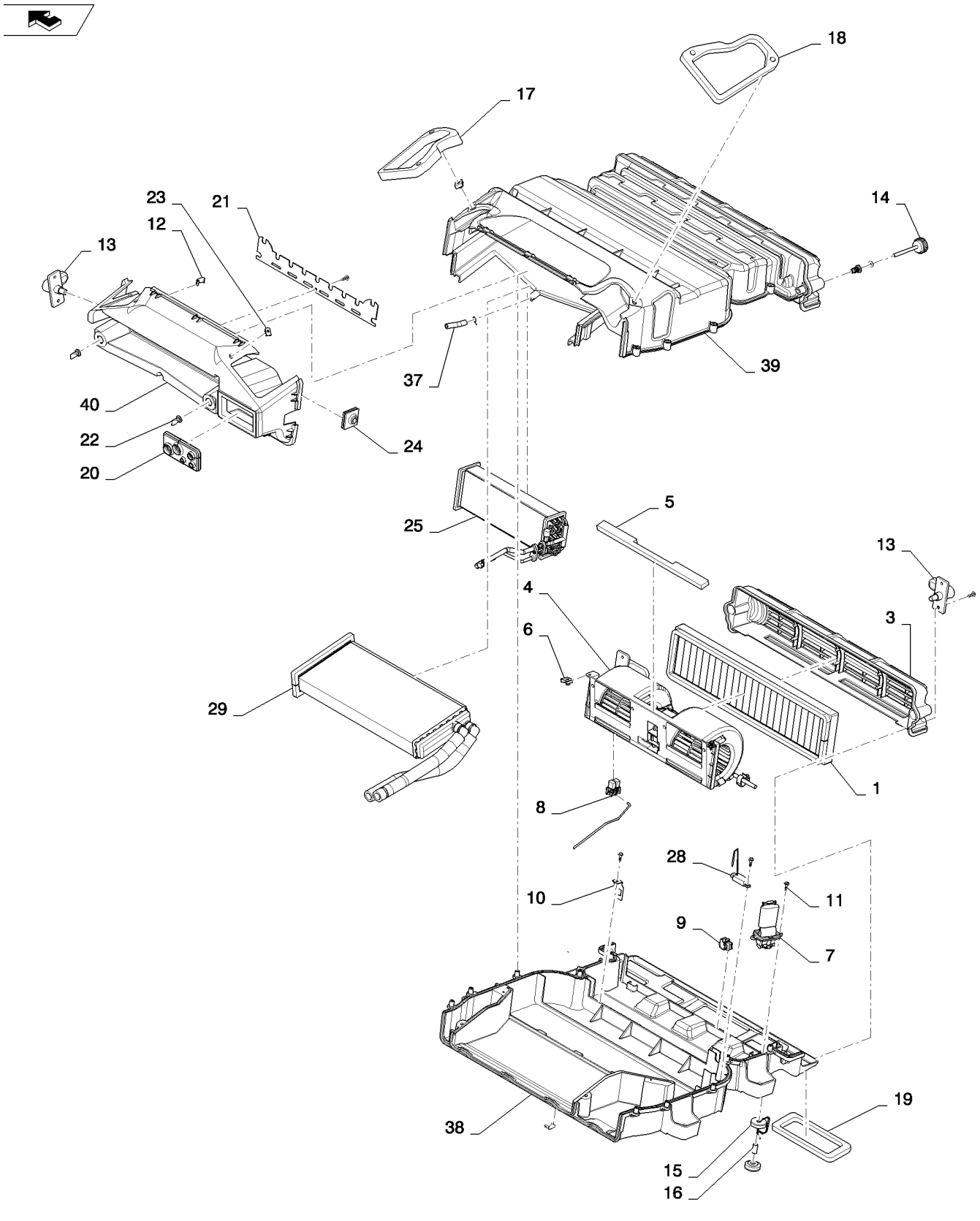

HEATER W/AC (SR175-TV380)
HEATER W/AC (SR175-TV380)
HEATER W/AC (SR175-TV380)
HEATER W/AC (SR175-TV380)

R	N	P.N.	MOD	Q	Denominação Description	Description Bezeichnung	Denominacion Beskrivelse	Descrizione Beschrijving	L.C.
1		84376814		1	FILTRO DA CABINE, Air, Service				
						CAB FILTER	FILTRO DE CABINA	FILTRO CABINA	063F
					FILTRE DE LA CABINE	KABINENFILTER	KABINEFILTER	CABINEFILTER	
2		84376815		1	FILTRO DA CABINE, Air, Charcoal, Service (Not Shown)				
						CAB FILTER	FILTRO DE CABINA	FILTRO CABINA	063F
					FILTRE DE LA CABINE	KABINENFILTER	KABINEFILTER	CABINEFILTER	
3		84380586		1	ESTOJO, Filter	CASE	ESTUCHE	CASSA; SCATOLA	101A
					CARTER	GEHÄUSE	KASSE	HUIS	
4		84380587		1	MOTOR ELÉTRICO, Blower				
						ELECTRIC MOTOR	MOTOR ELÉCTRICO	MOTORE ELETTRICO	128M
					MOTEUR ELECTRIQUE	ELEKTROMOTOR	EL-MOTOR	ELEKTROMOTOR	
5		84380588		1	JUNTA, Blower	GASKET	JUNTA	GUARNIZIONE	123G
					JOINT	DICHTUNG	PAKNING	PAKKING	
6		84380589		2	GRAMPO DO CABO, Spring, Blower				
						CABLE CLIP	ABRAZADERA DE CABLE	FERMO PER CAVO	P656
					ATTACHE-CABLE	KABELSCHELLE	KABELKLEMME	KABELKLEM	
7		84380590		1	RESISTOR	RESISTOR	RESISTENCIA	RESISTORE	040R
					RESISTANCE	WIDERSTAND	MODSTAND	WEERSTAND	
8		84380592		1	CHICOTE, W/ Relay	WIRE HARNESS	GRUPO DE CABLES	CABLAGGIO	070I
					FAISCEAU ELECTRIQUE	KABELBAUM	KABELNET	KABELBOOM	
9		84380593		3	GRAMPO DO CABO, Harness				
						CABLE CLIP	ABRAZADERA DE CABLE	FERMO PER CAVO	P656
					ATTACHE-CABLE	KABELSCHELLE	KABELKLEMME	KABELKLEM	
10		84380594		1	SUPORTE, Relay	BRACKET	SOPORTE	STAFFA	225S
					SUPPORT	HALTERUNG	BESLAG	STEUN	
11		84380596		23	PARAFUSO, 4 X 16	SCREW	TORNILLO	VITE	040V
					VIS	SCHRAUBE	SKRUE	SCHROEF	
12		84380597		11	ESTOJO, Cup, Condensate	CASE	ESTUCHE	CASSA; SCATOLA	101A
					CARTER	GEHÄUSE	KASSE	HUIS	
13		84380598		2	TRINCO, Filter Closing	LATCH HOOK	GANCHO DE PESTILLO	GANCIO DISPOS. CHIUS	Z305
					CROCHET DE VERROUI	VERRIEGELUNGSHAKEN	SMÆKKROG	VERGRENDELHAAK	
14		84380599		2	MAÇANETA, Closing	KNOB	MANDO	MANOPOLA	150P
					BOUTON	RUNDGRIFF	GREB	KNOP	
15		5192101		8	BLOCO, Anti-vibration	BLOCK	BLOQUE	BLOCCO	074B
					BLOC	BLOCK	MOTORBLOK	BLOK	
16		84380601		4	ESPAÇADOR, Silent Block	SPACER	SEPARADOR	DISTANZIALE	075D
					ENTRETOISE	DISTANZSTÜCK	AFSTANDSSTYKKE	AFSTANDSSTUK	
17		84380602		1	JUNTA, Left, Air Outlet	GASKET	JUNTA	GUARNIZIONE	123G
					JOINT	DICHTUNG	PAKNING	PAKKING	
18		84380603		1	JUNTA, Right, Air Outlet	GASKET	JUNTA	GUARNIZIONE	123G
					JOINT	DICHTUNG	PAKNING	PAKKING	
19		84380604		1	JUNTA, Air Inlet	GASKET	JUNTA	GUARNIZIONE	123G
					JOINT	DICHTUNG	PAKNING	PAKKING	
20		84380608		1	JUNTA, Hose Interface	GASKET	JUNTA	GUARNIZIONE	123G
					JOINT	DICHTUNG	PAKNING	PAKKING	
21		84380609		1	PLACA, Water Condensate	PLATE	PLACA	PIASTRA	105P
					PLAQUE	PLATTE	PLADE	PLAAT	

50.200.06		p2	08/11

HEATER W/AC (SR175-TV380)
HEATER W/AC (SR175-TV380)
HEATER W/AC (SR175-TV380)
HEATER W/AC (SR175-TV380)

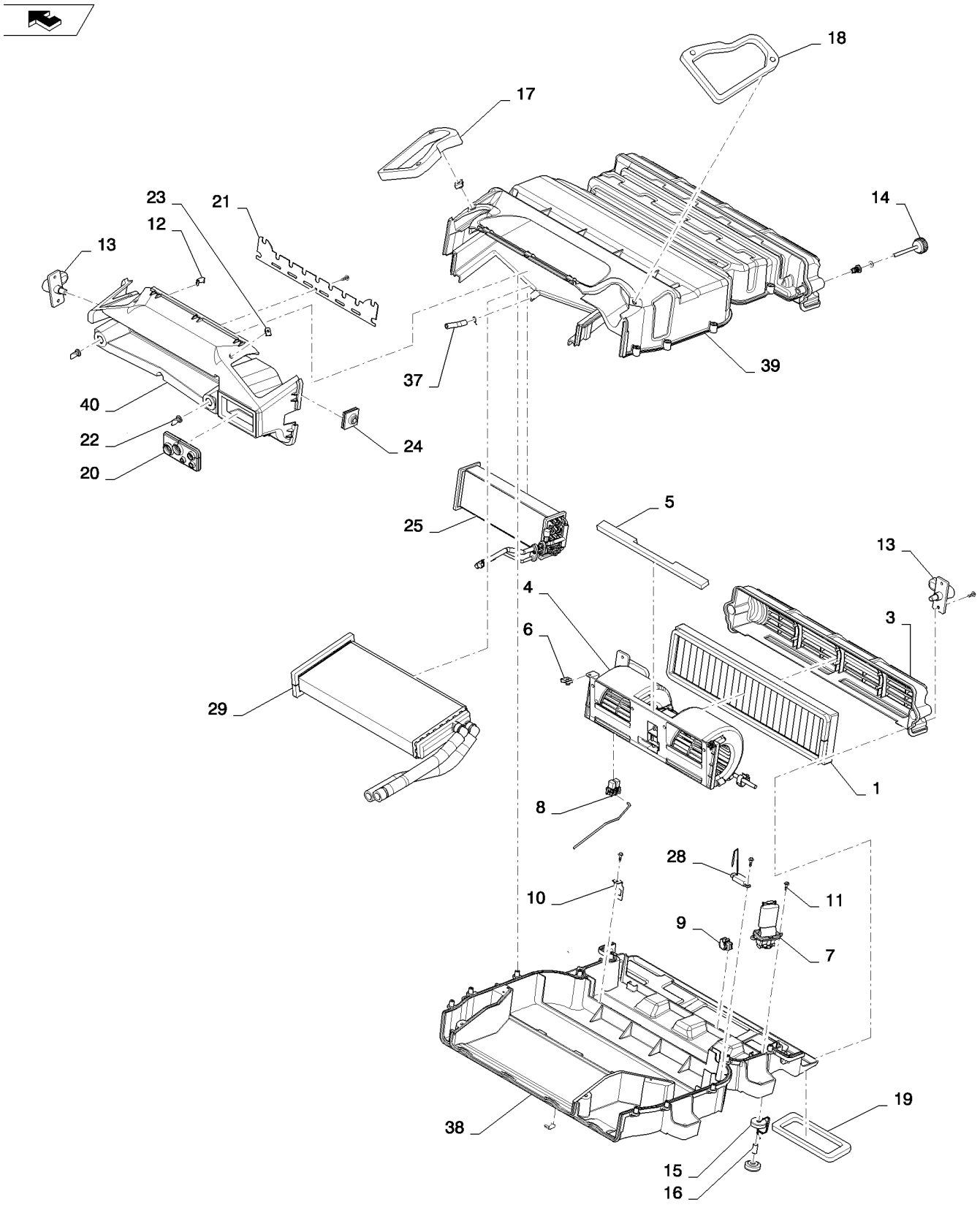

HEATER W/AC (SR175-TV380)
HEATER W/AC (SR175-TV380)
HEATER W/AC (SR175-TV380)
HEATER W/AC (SR175-TV380)

R	N	P.N.	MOD	Q	Denominação Description	Description Bezeichnung	Denominacion Beskrivelse	Descrizione Beschrijving	L.C.
22		**84380610**		2	VÁLVULA, Water Condensate				
						VALVE	VÁLVULA	VALVOLA	9620
					SOUPAPE	VENTIL	VENTIL	KLEP	
23		**84380611**		4	GRAMPO, Spring, M6 for Ducts				
						CLIP	ABRAZADERA	FERMO	045F
					COLLIER	KLAMMER	KLIPS	KLEM	
24		**84380612**		1	JUNTA, Harness	GASKET	JUNTA	GUARNIZIONE	123G
					JOINT	DICHTUNG	PAKNING	PAKKING	
25		**84380613**		1	AQUECEDOR	HEATER	CALENTADOR	RISCALDATORE	105R
					CHAUFFAGE	HEIZUNG	VARMEAPPARAT	VERWARMING	
26		**84380614**		1	JUNTA, Heater Core	GASKET	JUNTA	GUARNIZIONE	123G
					JOINT	DICHTUNG	PAKNING	PAKKING	
27		**84380615**		1	JUNTA, Heater Lateral	GASKET	JUNTA	GUARNIZIONE	123G
					JOINT	DICHTUNG	PAKNING	PAKKING	
28		**84380616**		1	TERMOSTATO, Electronic	THERMOSTAT	TERMOSTATO	TERMOSTATO	096T
					THERMOSTAT	THERMOSTAT	TERMOSTAT	THERMOSTAAT	
29		**84380617**		1	EVAPORADOR, Incl. Ref. 30 thru 36				
						EVAPORATOR	EVAPORADOR	EVAPORATORE	064E
					EVAPORATEUR	VERDAMPFER	FORDAMPER	VERDAMPER	
30		**84380618**		1	EVAPORADOR, Pipe, Inlet/Outlet Freon (Not Shown)				
						EVAPORATOR	EVAPORADOR	EVAPORATORE	064E
					EVAPORATEUR	VERDAMPFER	FORDAMPER	VERDAMPER	
31		**84380619**		1	JUNTA, Evaporator Core (Not Shown)				
						GASKET	JUNTA	GUARNIZIONE	123G
					JOINT	DICHTUNG	PAKNING	PAKKING	
32		**84380620**		1	JUNTA, Evaporator Lateral (Not Shown)				
						GASKET	JUNTA	GUARNIZIONE	123G
					JOINT	DICHTUNG	PAKNING	PAKKING	
33		**84380621**		1	VÁLVULA, Expansion (Not Shown)				
						VALVE	VÁLVULA	VALVOLA	9620
					SOUPAPE	VENTIL	VENTIL	KLEP	
34		**84380622**		1	PARAFUSO, M6 X 55, For Expansion Valve (Not Shown)				
						SCREW	TORNILLO	VITE	040V
					VIS	SCHRAUBE	SKRUE	SCHROEF	
35		**84380623**		1	TAMPA, Freon Inlet Cover, 5/8-18 (Not Shown)				
						CAP	TAPÓN	TAPPO	052T
					CAPUCHON	KAPPE	TANKDÆKSEL	DOP	
36		**84380624**		1	TAMPA, Freon Outlet Cover, 7/8-14 (Not Shown)				
						CAP	TAPÓN	TAPPO	052T
					CAPUCHON	KAPPE	TANKDÆKSEL	DOP	
37		**84380625**		1	MANGUEIRA, Tube, Condensate				
						HOSE	TUBO	TUBO FLESSIBILE	030M
					FLEXIBLE	SCHLAUCH	SLANGE	SLANG	
38		**84381032**		1	CAIXA, Lower	BOX	CAJA	CASSA; SCATOLA	035S
					BOITIER	KASTEN; OFF KASTENAI	KASSE	DOOS	
39		**84381034**		1	CAIXA, Upper	BOX	CAJA	CASSA; SCATOLA	035S
					BOITIER	KASTEN; OFF KASTENAI	KASSE	DOOS	
40		**84381035**		1	CAIXA, Bottom	BOX	CAJA	CASSA; SCATOLA	035S
					BOITIER	KASTEN; OFF KASTENAI	KASSE	DOOS	

SECTION INDEX
55 - Sistemas elétricos

55.100.01		CHASSIS OPTIONS HARNESS, MECH MD (SR175-SR200)
55.100.01	01	ENGINE - ELECTRICAL
55.100.01	02	ENGINE - ELECTRICAL
55.100.05	01	ELECTRICAL MECH MED (SR175-SR200)
55.100.05	02	ELECTRICAL MECH MED OPEN CAB (SR175-SR200)
55.100.06	01	ELECTRICAL EH MED (SR175-SR200,TR270)
55.100.06	02	ELECTRICAL EH MED OPEN CAB (SR175-SR200,TR270)
55.100.07	01	BATTERY DISCONNECT MED ISM (SR175,SV185)
55.100.07	02	NO BATTERY DISCONNECT MED ISM (SR175,SV185)
55.100.08		MULTIFUNCTION ELECTRICAL (SV185,SV250,SV300,TV380)
55.100.09		NO MULTIFUNCTION ELECTRICAL (ALL CASE)
55.100.10		ELECTRICAL ASSEMBLY SOCKET NA (ALL CASE)
55.100.10		ELECTRICAL ASSEMBLY SOCKET EU (ALL CASE)
55.101.01		ENGINE ELECTRICAL (SR175,SV185)
55.101.02		BATTERY RETENTION MED (ALL CASE)
55.11.068		ALTERNADOR FIOS
55.201.03		MOTOR DE ARRANQUE
55.301.01		ALTERNATOR ASSY
55.301.02		ALTERNATOR MOUNTING
55.418.01		INSTRUMENTS AND ELECTRICAL VERT (SV185)
55.418.01	01	COMMON INSTRUMENTS AND ELEC (ALL CASE)
55.418.02		LIGHT ASSY, 55 DEGREE (SV185,SV250,SV300,TV380)
55.512.01		IGNITION AND DISPLAY, KEYED/KEYLESS CASE (ALL CASE)
55.514.01		EU ROAD LIGHTS MED VERT CASE (SV185)
55.514.02		NO ROAD LIGHTS OR TURN SIGNAL (ALL CASE)
55.514.05		LIGHT ASSEMBLY REAR ROAD (ALL CASE)
55.514.09		LAMP WORK REAR ASSEMBLY (SV185,SV250,SV300,TV380)

CHASSIS OPTIONS HARNESS, MECH MD (SR175-SR200)
CHASSIS OPTIONS HARNESS, MECH MD (SR175-SR200)
CHASSIS OPTIONS HARNESS, MECH MD (SR175-SR200)
CHASSIS OPTIONS HARNESS, MECH MD (SR175-SR200)

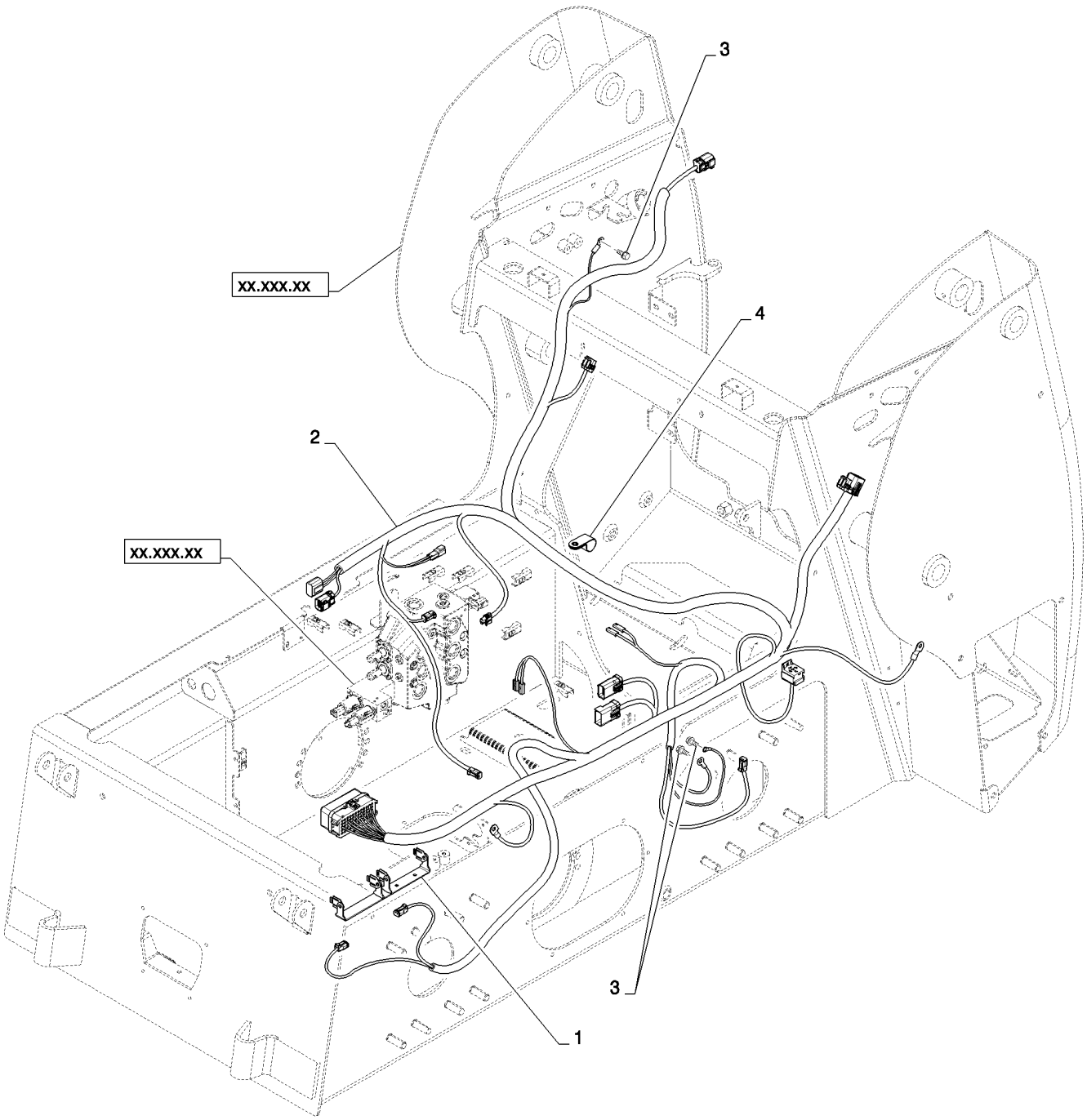

CHASSIS OPTIONS HARNESS, MECH MD (SR175-SR200)
CHASSIS OPTIONS HARNESS, MECH MD (SR175-SR200)
CHASSIS OPTIONS HARNESS, MECH MD (SR175-SR200)
CHASSIS OPTIONS HARNESS, MECH MD (SR175-SR200)

R	N	P.N.	MOD	Q	Denominação Description Bezeichnung Denominacion Beskrivelse Descrizione Beschrijving	L.C.
1		84285504		1	PEGA DE SUPORTE, Double Fuse Box BRACKET, SUPPORTING / PIEZA DE APOYO / SQUADRETTA EQUERRE / TRAGER, STUTZ / BRACKET, SUPPORTING / BRACKET, SUPPORTING	215S
2		84315528		1	CHICOTE, Chassis WIRE HARNESS / GRUPO DE CABLES / CABLAGGIO FAISCEAU ELECTRIQUE / KABELBAUM / KABELNET / KABELBOOM	070I
3		86511841		3	PARAFUSO, Hex Flg, M8 x 16, 8.8 BOLT / PERNO / BULLONE VIS / SCHRAUBE / BOLT / BOUT	140B
4		86000810		1	BRAÇADEIRA CLAMP / ABRAZADERA / MORSETTO COLLIER / KLEMME / SPÆNDEBÅND / KLEM	120M

SV185

55.100.01	01	p1	02/11

ENGINE - ELECTRICAL
ENGINE - ELECTRICAL
MOTOR, ELECTRICO
MOTORE, IMPIANTO ELETTRICO

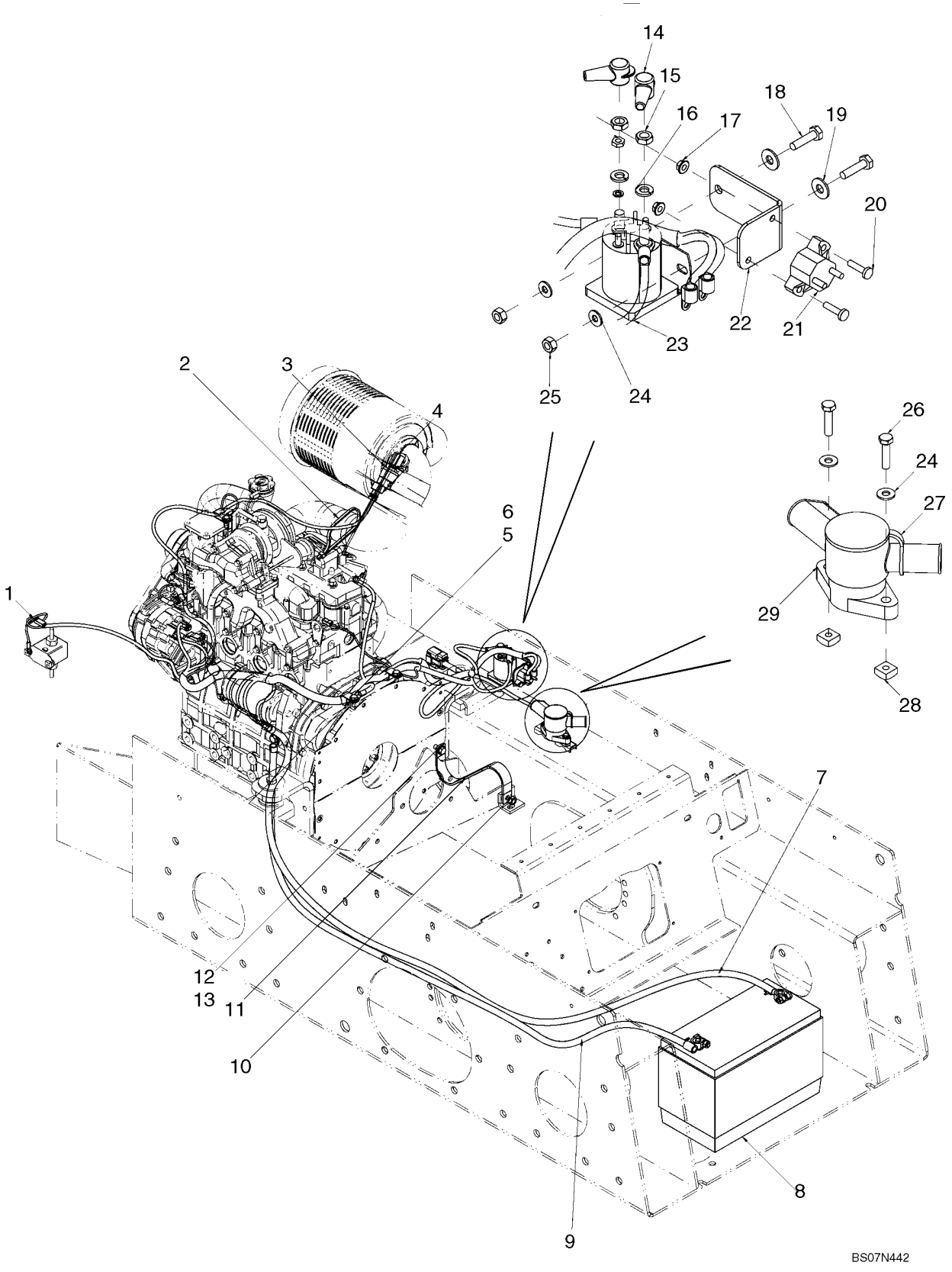

MOTEUR, SYSTÈME ÉLECTRIQUE
MOTOR, ELEKTRISCH
MOTOR, ELEKTRISK SYSTEM
MOTOR, ELEKTRA

R	N	P.N.	MOD	Q	Denominação Description	Description Bezeichnung	Denominacion Beskrivelse	Descrizione Beschrijving	L.C.
1		87716173		1	CHICOTE, Engine Harness, ISM; If Used				
						HARNESS	MAZO DE CABLES	CABLAGGIO	4160
					FAISCEAU	KABELBAUM	LEDNINGSNET	KABELBOOM	
1		87482504		1	CHICOTE, Engine Harness, ISM				
						HARNESS	MAZO DE CABLES	CABLAGGIO	4160
					FAISCEAU	KABELBAUM	LEDNINGSNET	KABELBOOM	
1A		84121323		1	CHICOTE, Alternator Backfeed Harness; See Fig 04-05A; Not Illustrated				
						HARNESS	MAZO DE CABLES	CABLAGGIO	4160
					FAISCEAU	KABELBAUM	LEDNINGSNET	KABELBOOM	
2		L18331		1	PRENDEDOR DE CABOS	CABLE STRAP	BANDA DE CABLE	FASCETTA PER CAVO	P716
					BRIDE DE CABLE	KABELBINDER	KABELSTROP	BUNDELBAND	
3		293797A1		1	INTERRUPTOR DE RESTRIÇÃO, Air				
						RESTRICTION SWITCH	INT. DE RESTRICCIÓN	INTERR. DI LIMITAZIONE	C037
					COMM. RESTRICTION	VERSTOPFUNGSSCHAL	KONTAKT, BEGRÆNSNI	BEGRENZINGSSCHAKEL	
4		84015293		1	COTOVELO, 90º, 1/8"-27 Female x 1/8"-27 Male				
						ELBOW	CODO	GOMITO	085G
					COUDE	KNIESTÜCK	VINKELRØR	KNIESTUK	
5		120104		3	PARAFUSO, Hex, M8 x 20, 8.8				
						SCREW	TORNILLO	VITE	040V
					VIS	SCHRAUBE	SKRUE	SCHROEF	
6		87029955		2	BRAÇADEIRA, 7/8", Insul, 3/8" Bolt				
						CLAMP	ABRAZADERA	MORSETTO	120M
					COLLIER	KLEMME	SPÆNDEBÅND	KLEM	
7		87446434		1	CABO CONJUNTO, Battery Cable, Positive				
						CABLE ASSY.	CABLE (CONJUNTO)	CAVO, COMPLESSIVO	P494
					CABLE (ASSEMBLE)	KABEL (KPLT.)	CABLE ASSY.	CABLE ASSY.	
8		87665227		1	BATERIA, Battery, 1125 CCA				
						BATTERY	BATERIA	BATTERIA	0560
					BATTERIE	BATTERIE	BATTERI	ACCU	
9		87713283		1	CABO BATERIA NEG	NEG BATTERY CABLE	CABLE NEG. DE LA BATI	CAVO NEGATIVO DELLA	Z221
					CABLE DE BATTERIE - N	NEGATIVES BATTERIEK	BATTERIKABEL - NEG	ACCUKABEL - MIN	
10		86500689		1	PORCA, M10, Cl 10	NUT	TUERCA	DADO	010D
					ECROU	MUTTER	MØTRIK	MOER	
11		512306		1	CABO DO TERRA	GROUND CABLE	CABLE DE MASA	CAVO DI TERRA	112C
					CABLE DE MASSE	MASSEKABEL	STELKABEL	MASSAKABEL	
12		87016		1	ARRUELA PLANA, 3/8", SAE				
						WASHER	ARANDELA	RONDELLA	131R
					RONDELLE	UNTERLEGSCHEIBE	FLADSKIVE	SLUITRING	
13		88434		1	PARAFUSO, Hex, 3/8"-16 x 3/4", G5, Full Thd				
						BOLT	PERNO	BULLONE	140B
					VIS	SCHRAUBE	BOLT	BOUT	
14		87461743		2	COIFA	BOOT	PROTECTOR	CUFFIA	0860
					MANCHETTE	MANSCHETTE/TUELLE	BOOT	BOOT	
15		9626568		2	PORCA, Jam, 5/16"-18, G2	NUT	TUERCA	DADO	010D
					ECROU	MUTTER	MØTRIK	MOER	
16		80681		2	TRAVA DA ARRUELA, 5/16"				
						LOCK WASHER	ARANDELA DE BLOQUE	RONDELLA DI SICUREZ	132R
					RONDELLE FREIN	SICHERUNGSSCHEIBE	LÅSESKIVE	BORGRING	

55.100.01	01	p2	02/11

ENGINE - ELECTRICAL
ENGINE - ELECTRICAL
MOTOR, ELECTRICO
MOTORE, IMPIANTO ELETTRICO

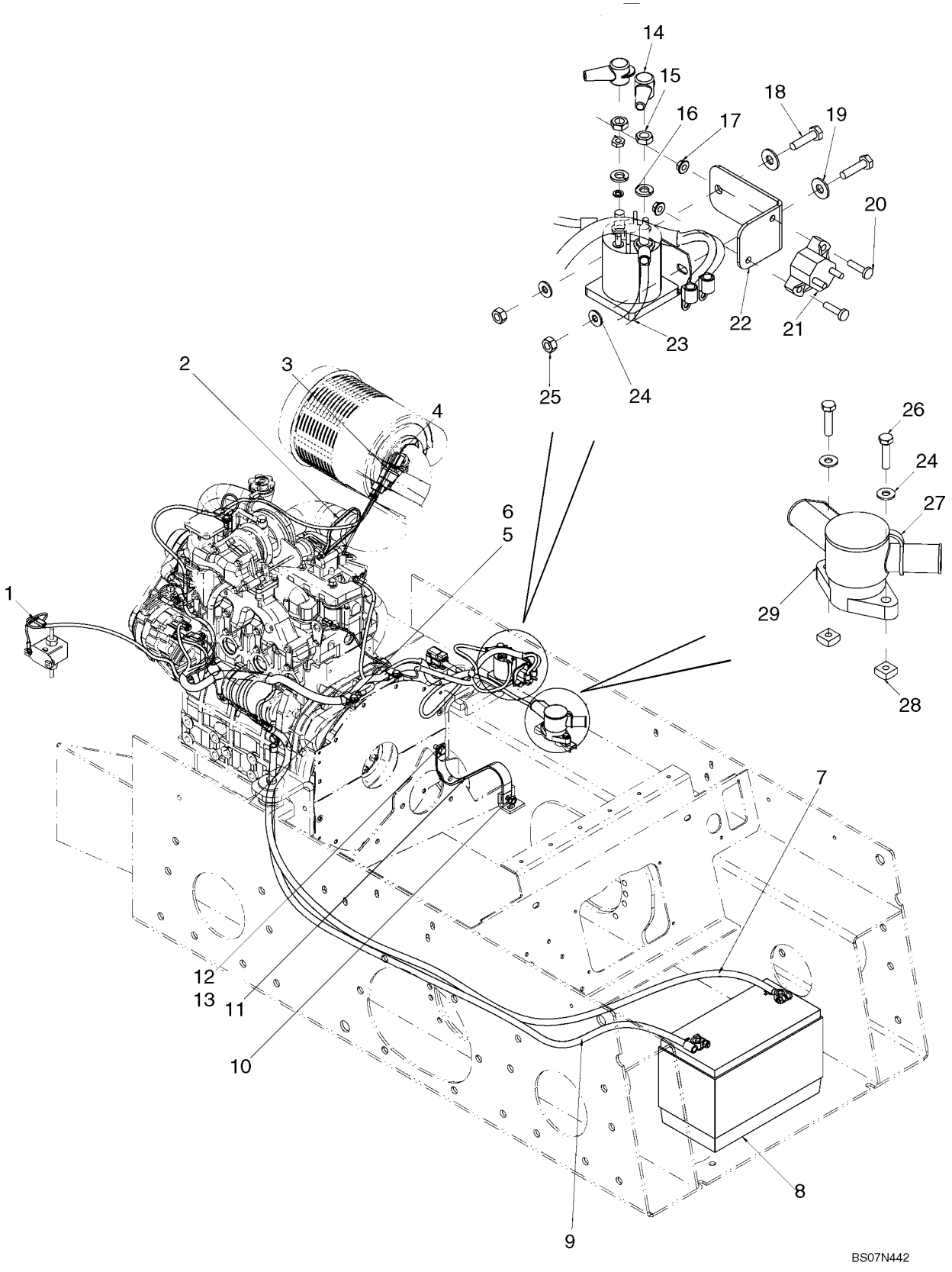

MOTEUR, SYSTÈME ÉLECTRIQUE
MOTOR, ELEKTRISCH
MOTOR, ELEKTRISK SYSTEM
MOTOR, ELEKTRA

R	N	P.N.	MOD	Q	Denominação Description	Description Bezeichnung	Denominacion Beskrivelse	Descrizione Beschrijving	L.C.
17		**43416**		2	PORCA	NUT	TUERCA	DADO	010D
					ECROU	MUTTER	MØTRIK	MOER	
18		**88146**		2	PARAFUSO, Hex, 1/4"-20 x 1", G5				
						BOLT	PERNO	BULLONE	140B
					VIS	SCHRAUBE	BOLT	BOUT	
19		**80701**		2	ARRUELA PLANA, 1/4"	WASHER	ARANDELA	RONDELLA	131R
					RONDELLE	UNTERLEGSCHEIBE	FLADSKIVE	SLUITRING	
20		**86511827**		2	PARAFUSO, Cross Pan Hd, M5 x 20				
						SCREW	TORNILLO	VITE	040V
					VIS	SCHRAUBE	SKRUE	SCHROEF	
21		**9843910**		1	INTERRUPTOR DE CIRCUITO, Circuit Breaker, 50A				
						CIRCUIT BREAKER	INTERRUPTOR AUTOMÁ	INTERRUTTORE	165R
					DISJONCTEUR	SCHUTZSCHALTER	AFBRYDER	STROOMONDERBREKEI	
22		**87447727**		1	CANTONEIRA	ANGLE	ÁNGULO	ANGOLARE	057C
					CORNIERE	WINKEL	VINKELBESLAG	HOEKSTUK	
23		**87406968**		1	INTERRUPTOR SOLENOIDE				
						SOLENOID SWITCH	INTERRUPTOR DE SOLE	INTERRUTTORE SOLEN	P667
					COMMUTATEUR SOLEN	MAGNETSCHALTER	KONTAKT, MAGNET	SOLENOÏDESCHAKELAA	
24		**322357**		6	ARRUELA DE PRESSÃO, M6				
						BELLEVILLE WASHER	ARANDELA BELLEVILLE	RONDELLA BELLEVILLE	A143
					RONDELLE BELLEVILLE	TELLERFEDER	BELLEVILLE-SPÆNDSKI'	SCHOTELVEER	
25		**7770**		2	PORCA, 0.25" OD	NUT	TUERCA	DADO	010D
					ECROU	MUTTER	MØTRIK	MOER	
26		**86977786**		2	PARAFUSO, Hex, M6 x 25, 8.8, Full Thd				
						BOLT	PERNO	BULLONE	140B
					VIS	SCHRAUBE	BOLT	BOUT	
27		**87630125**		1	CAPA	BOOT	FUNDA	PARAPOLVERE	330C
					SOUFFLET	MANSCHETTE	MANCHET	HOES	
28		**87404992**		2	PORCA	NUT	TUERCA	DADO	010D
					ECROU	MUTTER	MØTRIK	MOER	
29		**87630124**		1	POSTE	POST	POSTE	MONTANTE	6480
					COLONNE	SÄULE	STOLPE	STIJL	

55.100.01	02	p1	02/11

ENGINE - ELECTRICAL
ENGINE - ELECTRICAL
MOTOR, ELECTRICO
MOTORE, IMPIANTO ELETTRICO

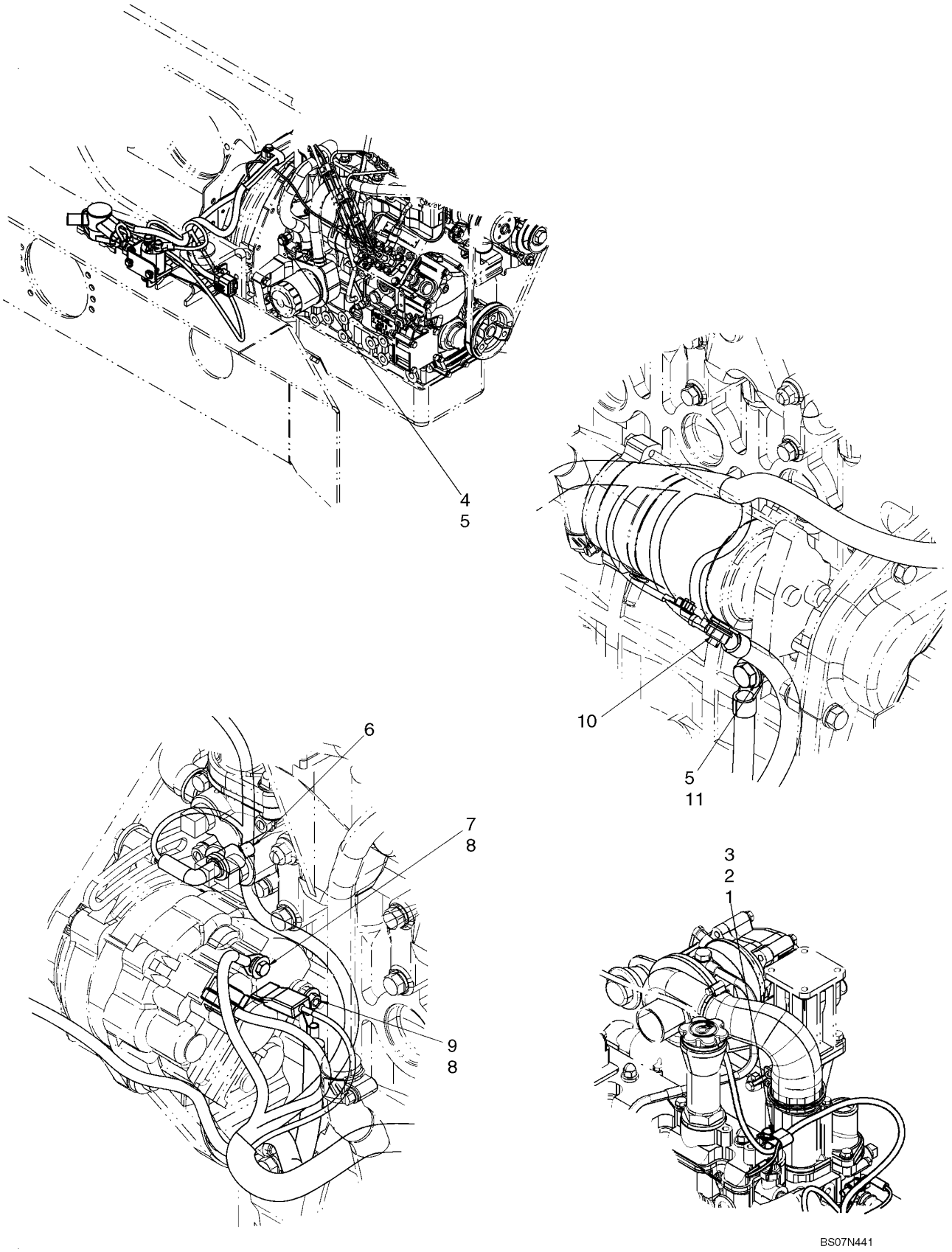

MOTEUR, SYSTÈME ÉLECTRIQUE
MOTOR, ELEKTRISCH
MOTOR, ELEKTRISK SYSTEM
MOTOR, ELEKTRA

R	N	P.N.	MOD	Q	Denominação Description Bezeichnung Denominacion Beskrivelse Descrizione Beschrijving	L.C.
1		322358		1	ARRUELA DE PRESSÃO, M8 BELLEVILLE WASHER ARANDELA BELLEVILLE RONDELLA BELLEVILLE RONDELLE BELLEVILLE TELLERFEDER BELLEVILLE-SPÆNDSKI' SCHOTELVEER	A143
2		120104		1	PARAFUSO, Hex, M8 x 20, 8.8 SCREW TORNILLO VITE VIS SCHRAUBE SKRUE SCHROEF	040V
3		134579		1	BRAÇADEIRA DE FIO, J WIRE CLAMP ABRAZADERA DE CABLE SERRAFILO SERRE-CABLES KABELSCHELLE KABELKLEMME DRAADKLEM	118S
4		86639325		1	ARRUELA PLANA, M10 x 24.5 x 3, HT WASHER ARANDELA RONDELLA RONDELLE UNTERLEGSCHEIBE FLADSKIVE SLUITRING	131R
5		43138		2	PARAFUSO, Hex, M10 x 20, 8.8, Full Thd BOLT PERNO BULLONE VIS SCHRAUBE BOLT BOUT	140B
6		3917490		1	EMISSOR DE TEMPERATURA, Water Temperature Sending Unit TEMPERATURE SENDEF EMISOR DE TEMPERATU TRASMETT. TEMPERATU TRANSMETTEUR TEMPE TEMPERATURGEBER TEMPERATURSENDER TEMPERATUURSENSOR	Z366
7		300806		1	PARAFUSO, Hex, M5 x 10, 8.8, Full Thd BOLT PERNO BULLONE VIS SCHRAUBE BOLT BOUT	140B
8		322357		2	ARRUELA DE PRESSÃO, M6 BELLEVILLE WASHER ARANDELA BELLEVILLE RONDELLA BELLEVILLE RONDELLE BELLEVILLE TELLERFEDER BELLEVILLE-SPÆNDSKI' SCHOTELVEER	A143
9		86508813		1	PORCA, M5, Cl 8 NUT TUERCA DADO ECROU MUTTER MØTRIK MOER	010D
10		9706690		1	PORCA, M8, Cl 8 NUT TUERCA DADO ECROU MUTTER MØTRIK MOER	010D
11		140045		1	ARRUELA DE PRESSÃO, M10 BELLEVILLE WASHER ARANDELA BELLEVILLE RONDELLA BELLEVILLE RONDELLE BELLEVILLE TELLERFEDER BELLEVILLE-SPÆNDSKI' SCHOTELVEER	A143

55.100.05	01	p1	05/11

ELECTRICAL MECH MED (SR175-SR200)
ELECTRICAL MECH MED (SR175-SR200)
ELECTRICAL MECH MED (SR175-SR200)
ELECTRICAL MECH MED (SR175-SR200)

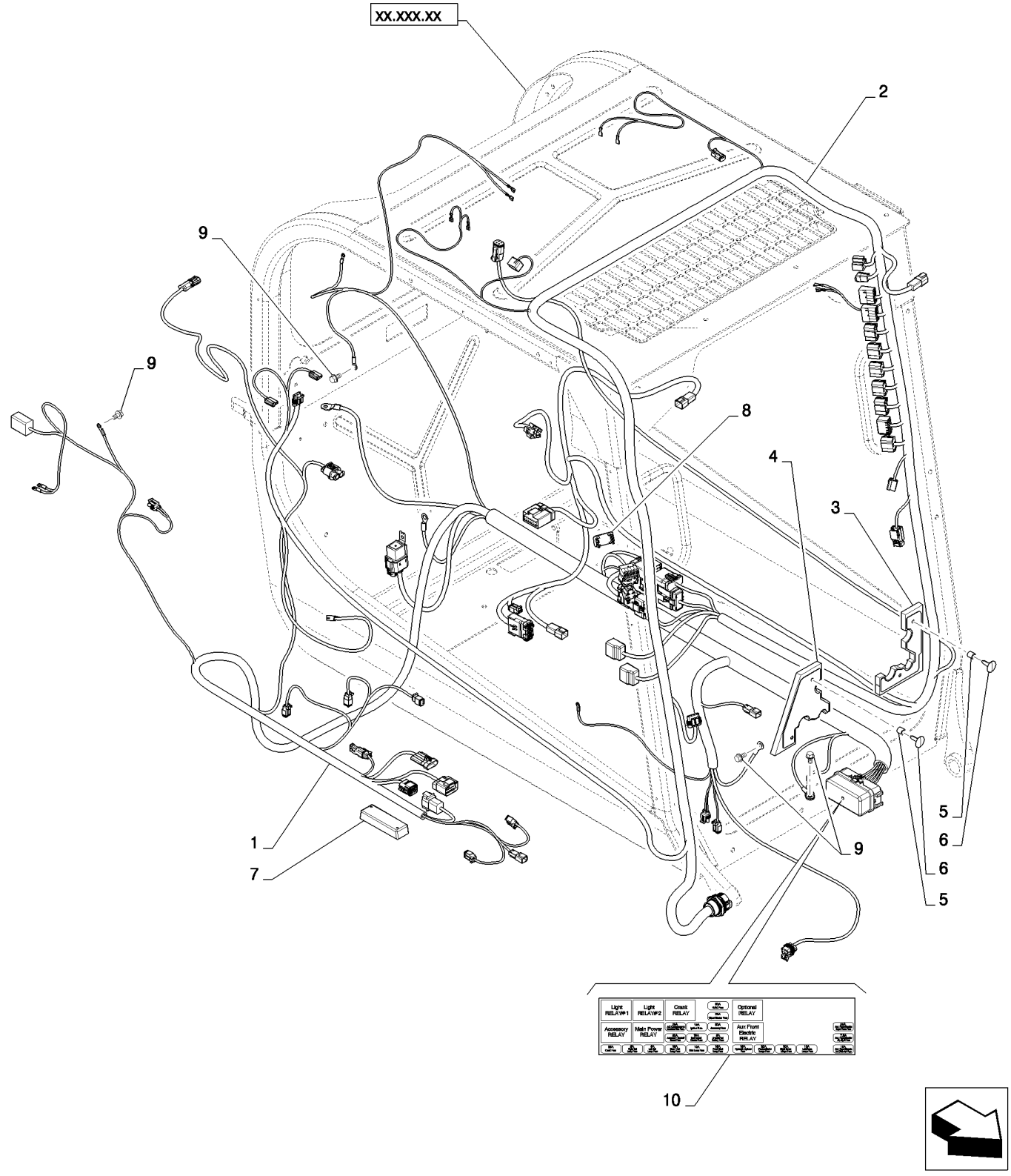

ELECTRICAL MECH MED (SR175-SR200)
ELECTRICAL MECH MED (SR175-SR200)
ELECTRICAL MECH MED (SR175-SR200)
ELECTRICAL MECH MED (SR175-SR200)

R	N	P.N.	MOD	Q	Denominação Description	Description Bezeichnung	Denominacion Beskrivelse	Descrizione Beschrijving	L.C.
1		84352396		1	CHICOTE, Chassis Mechanical MD				
						WIRE HARNESS	GRUPO DE CABLES	CABLAGGIO	070I
					FAISCEAU ELECTRIQUE	KABELBAUM	KABELNET	KABELBOOM	
2		84352394		1	CHICOTE, Cab Mechanical	WIRE HARNESS	GRUPO DE CABLES	CABLAGGIO	070I
					FAISCEAU ELECTRIQUE	KABELBAUM	KABELNET	KABELBOOM	
3		84309935		1	VEDAÇÃO, Assy, LH	SEAL	ANILLO DE CIERRE	GUARNIZIONE; TENUTA	132A
					JOINT	DICHTUNG	PAKNING	AFDICHTING	
4		84309934		1	VEDAÇÃO, Assy, LH	SEAL	ANILLO DE CIERRE	GUARNIZIONE; TENUTA	132A
					JOINT	DICHTUNG	PAKNING	AFDICHTING	
5		87035448		4	ESPAÇADOR, 1/2" Tube x 1/2"				
						SPACER	SEPARADOR	DISTANZIALE	075D
					ENTRETOISE	DISTANZSTÜCK	AFSTANDSSTYKKE	AFSTANDSSTUK	
6		86620930		4	BOTÃO DE IMPULSO	FASTENER	SUJETADOR	DISPOSITIVO DI FISSAG	123B
					ATTACHE	BEFESTIGUNGSELEMEN	LUKKER	BEVESTIGING	
7		84131374		1	VÁLVULA, Driver, PWM Prop Aux				
						VALVE	VÁLVULA	VALVOLA	9620
					SOUPAPE	VENTIL	VENTIL	KLEP	
8		126844A1		1	BUJÃO, Cover	PLUG	TAPÓN	TAPPO	050T
					BOUCHON	STOPFEN	PROP	PLUG	
9		86511841		6	PARAFUSO, Hex Flg, M8 x 16, 8.8				
						BOLT	PERNO	BULLONE	140B
					VIS	SCHRAUBE	BOLT	BOUT	
10		84380451		1	ADESIVO, Fuse Box Layout Mechanical				
						DECAL	CALCOMANÍA	DECALCOMANIA	012D
					AUTOCOLLANT	AUFKLEBER	TRANSFER	STICKER	
11		84420768		10	BOTÃO DE IMPULSO, Push-in Fastener (Not Shown)				
						FASTENER	SUJETADOR	DISPOSITIVO DI FISSAG	123B
					ATTACHE	BEFESTIGUNGSELEMEN	LUKKER	BEVESTIGING	
12		84420746		10	TIRA, Tie (Not Shown)	STRAP	BANDA	FASCETTA	532B
					BRIDE	BAND	STROP	RIEM	

55.100.05	02	p1	06/11

ELECTRICAL MECH MED OPEN CAB (SR175-SR200)
ELECTRICAL MECH MED OPEN CAB (SR175-SR200)
ELECTRICAL MECH MED OPEN CAB (SR175-SR200)
ELECTRICAL MECH MED OPEN CAB (SR175-SR200)

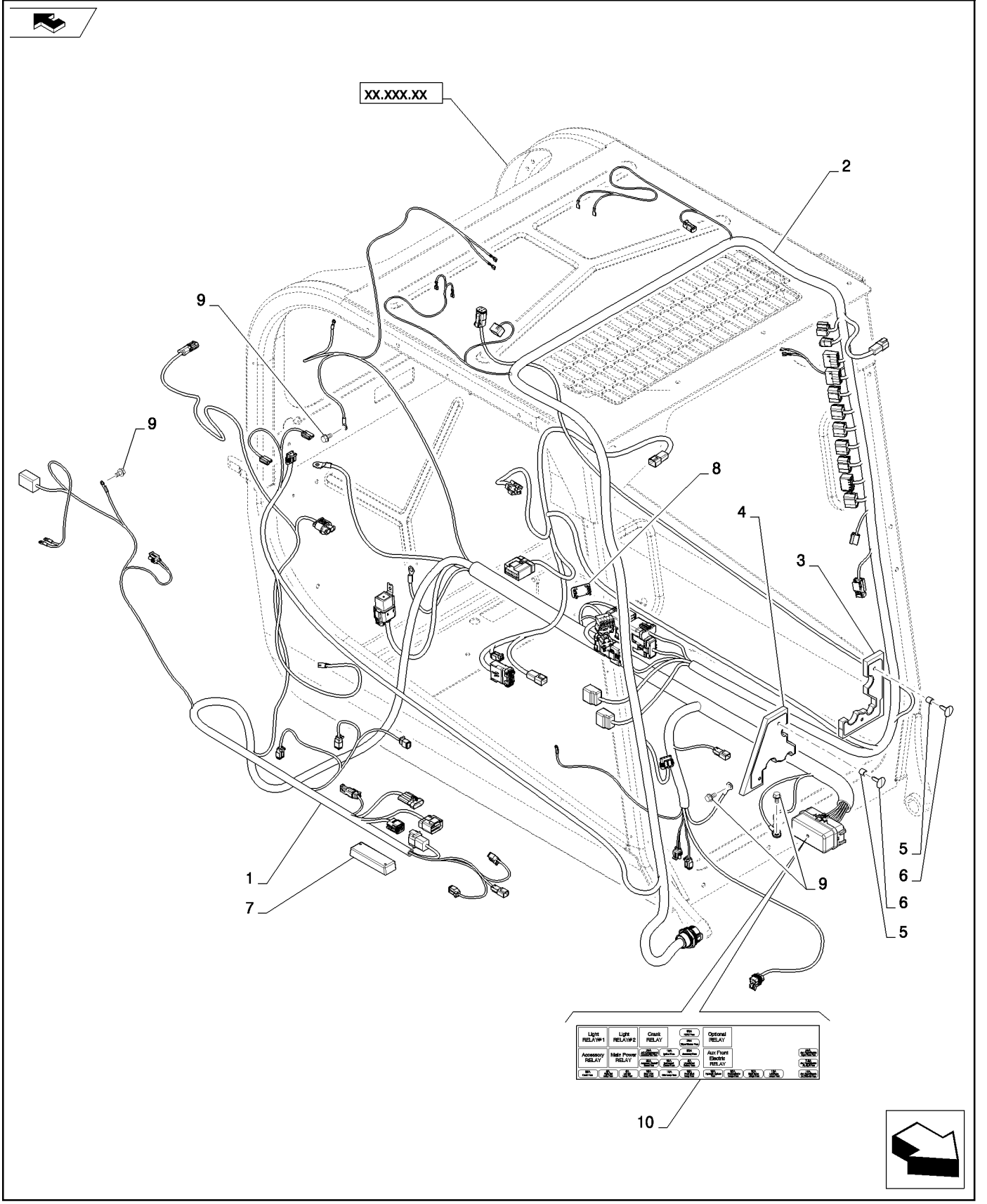

ELECTRICAL MECH MED OPEN CAB (SR175-SR200)
ELECTRICAL MECH MED OPEN CAB (SR175-SR200)
ELECTRICAL MECH MED OPEN CAB (SR175-SR200)
ELECTRICAL MECH MED OPEN CAB (SR175-SR200)

R	N	P.N.	MOD	Q	Denominação Description	Description Bezeichnung	Denominacion Beskrivelse	Descrizione Beschrijving	L.C.
1		84352396		1	CHICOTE, Chassis Mechanical MD				
						WIRE HARNESS	GRUPO DE CABLES	CABLAGGIO	070I
					FAISCEAU ELECTRIQUE	KABELBAUM	KABELNET	KABELBOOM	
2		84353936		1	CHICOTE, Cab Mechanical	WIRE HARNESS	GRUPO DE CABLES	CABLAGGIO	070I
					FAISCEAU ELECTRIQUE	KABELBAUM	KABELNET	KABELBOOM	
3		84309935		1	VEDAÇÃO, Assy, LH	SEAL	ANILLO DE CIERRE	GUARNIZIONE; TENUTA	132A
					JOINT	DICHTUNG	PAKNING	AFDICHTING	
4		84309934		1	VEDAÇÃO, Assy, LH	SEAL	ANILLO DE CIERRE	GUARNIZIONE; TENUTA	132A
					JOINT	DICHTUNG	PAKNING	AFDICHTING	
5		87035448		4	ESPAÇADOR, 1/2" Tube x 1/2"				
						SPACER	SEPARADOR	DISTANZIALE	075D
					ENTRETOISE	DISTANZSTÜCK	AFSTANDSSTYKKE	AFSTANDSSTUK	
6		86620930		4	BOTÃO DE IMPULSO	FASTENER	SUJETADOR	DISPOSITIVO DI FISSAG	123B
					ATTACHE	BEFESTIGUNGSELEMEN	LUKKER	BEVESTIGING	
7		84131374		1	VÁLVULA, Driver, PWM Prop Aux				
						VALVE	VÁLVULA	VALVOLA	9620
					SOUPAPE	VENTIL	VENTIL	KLEP	
8		126844A1		1	BUJÃO, Cover	PLUG	TAPÓN	TAPPO	050T
					BOUCHON	STOPFEN	PROP	PLUG	
9		86511841		6	PARAFUSO, Hex Flg, M8 x 16, 8.8				
						BOLT	PERNO	BULLONE	140B
					VIS	SCHRAUBE	BOLT	BOUT	
10		84380451		1	ADESIVO, Fuse Box Layout Mechanical				
						DECAL	CALCOMANÍA	DECALCOMANIA	012D
					AUTOCOLLANT	AUFKLEBER	TRANSFER	STICKER	
11		87313351		1	GRAMPO, J-clip, Insul. M8 (Not Shown)				
						CLIP	ABRAZADERA	FERMO	045F
					COLLIER	KLAMMER	KLIPS	KLEM	
12		84420768		10	BOTÃO DE IMPULSO, Push-in Fastener (Not Shown)				
						FASTENER	SUJETADOR	DISPOSITIVO DI FISSAG	123B
					ATTACHE	BEFESTIGUNGSELEMEN	LUKKER	BEVESTIGING	
13		84420746		10	TIRA, Tie (Not Shown)	STRAP	BANDA	FASCETTA	532B
					BRIDE	BAND	STROP	RIEM	

55.100.06	01	p1	06/11

ELECTRICAL EH MED (SR175-SR200,TR270)
ELECTRICAL EH MED (SR175-SR200,TR270)
ELECTRICAL EH MED (SR175-SR200,TR270)
ELECTRICAL EH MED (SR175-SR200,TR270)

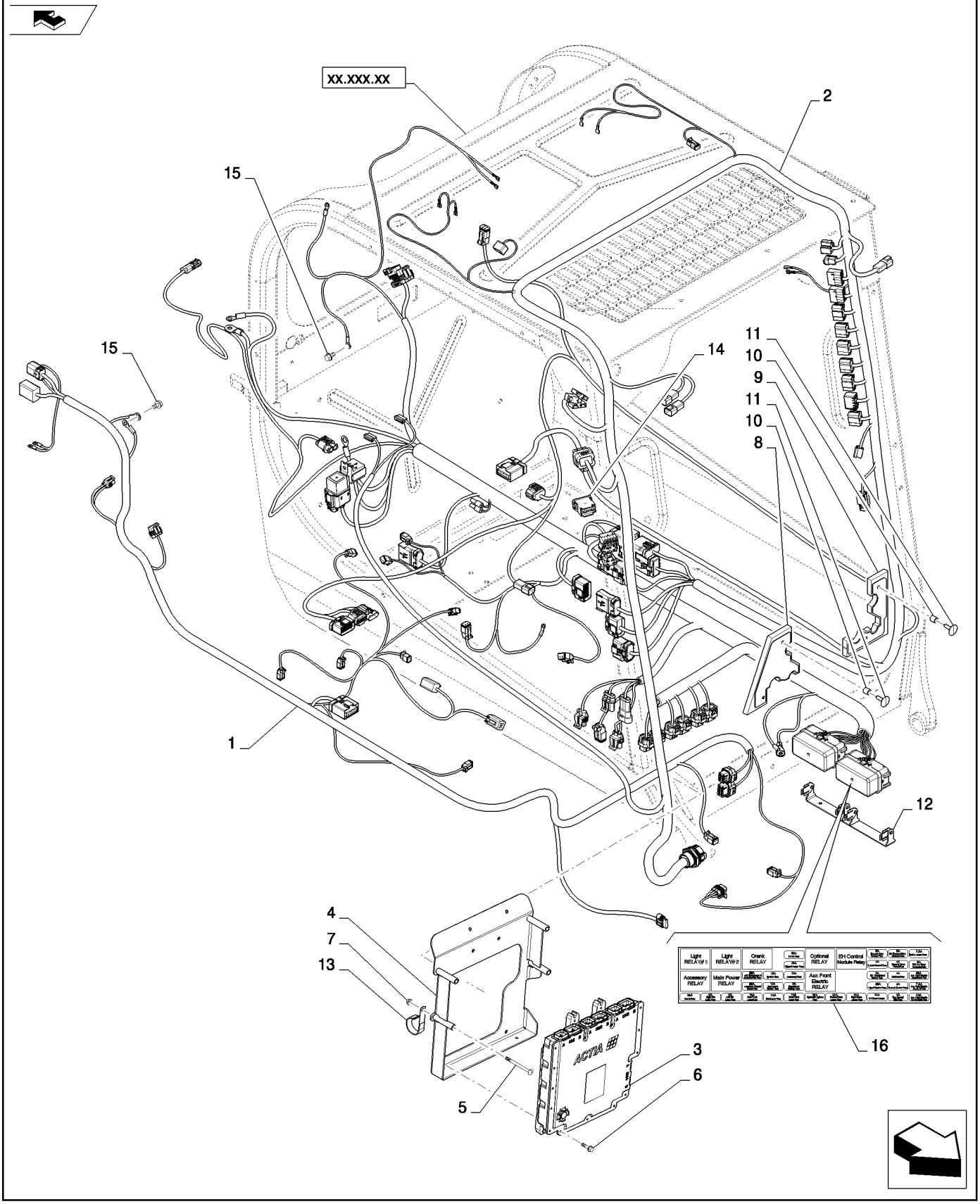

ELECTRICAL EH MED (SR175-SR200,TR270)
ELECTRICAL EH MED (SR175-SR200,TR270)
ELECTRICAL EH MED (SR175-SR200,TR270)
ELECTRICAL EH MED (SR175-SR200,TR270)

R	N	P.N.	MOD	Q	Denominação Description	Description Bezeichnung	Denominacion Beskrivelse	Descrizione Beschrijving	L.C.
1		84352399		1	CHICOTE, Chassis EH MD FAISCEAU ELECTRIQUE	WIRE HARNESS KABELBAUM	GRUPO DE CABLES KABELNET	CABLAGGIO KABELBOOM	070I
2		84352401		1	CHICOTE, Cab EH FAISCEAU ELECTRIQUE	WIRE HARNESS KABELBAUM	GRUPO DE CABLES KABELNET	CABLAGGIO KABELBOOM	070I
3		84348127		1	CENTRAL ELETRÔNICA, UCM SSL UNITE CMDE ELECTRON	ELECTRONIC CONTROL ELEKTRON STEUERGER	UNIDAD DE CONTROL E ELEKTRONIKBOKS	CENTRALINA ELETTRON ELEKTRON. REGELEENH	655C
4		84332287		1	SUPORTE, ECM Black SUPPORT	BRACKET HALTERUNG	SOPORTE BESLAG	STAFFA STEUN	225S
5		86512442		4	PARAFUSO, Carriage 8.8 P M6 X 80 VIS	BOLT SCHRAUBE	PERNO BOLT	BULLONE BOUT	140B
6		9804257		4	PARAFUSO, Hex Flg, M6 x 25, 8.8 VIS	BOLT SCHRAUBE	PERNO BOLT	BULLONE BOUT	140B
7		9804276		4	PORCA, M6 x 1, Flg, Cl 8 ECROU	NUT MUTTER	TUERCA MØTRIK	DADO MOER	010D
8		84309937		1	VEDAÇÃO, Assy, LH JOINT	SEAL DICHTUNG	ANILLO DE CIERRE PAKNING	GUARNIZIONE; TENUTA AFDICHTING	132A
9		84309938		1	VEDAÇÃO, Assy, LH JOINT	SEAL DICHTUNG	ANILLO DE CIERRE PAKNING	GUARNIZIONE; TENUTA AFDICHTING	132A
10		87035448		4	ESPAÇADOR, 1/2" Tube x 1/2" ENTRETOISE	SPACER DISTANZSTÜCK	SEPARADOR AFSTANDSSTYKKE	DISTANZIALE AFSTANDSSTUK	075D
11		86620930		4	BOTÃO DE IMPULSO ATTACHE	FASTENER BEFESTIGUNGSELEMEN	SUJETADOR LUKKER	DISPOSITIVO DI FISSAG BEVESTIGING	123B
12		84285504		1	PEGA DE SUPORTE, Double Fuse Box EQUERRE	BRACKET, SUPPORTING TRAGER, STUTZ	PIEZA DE APOYO BRACKET, SUPPORTING	SQUADRETTA BRACKET, SUPPORTING	215S
13		87313355		2	BRAÇADEIRA, 38.1MM J Insul 5/16 Bolt COLLIER	CLAMP KLEMME	ABRAZADERA SPÆNDEBÅND	MORSETTO KLEM	120M
14		84251343		1	INTERRUPTOR, Rocker, Drive Pattern CONTACTEUR	SWITCH SCHALTER	INTERRUPTOR KONTAKT	INTERRUTTORE SCHAKELAAR	075I
15		86511841		4	PARAFUSO, Hex Flg, M8 x 16, 8.8 VIS	BOLT SCHRAUBE	PERNO BOLT	BULLONE BOUT	140B
16		84380452		1	ADESIVO, Fuse Box Layout EH AUTOCOLLANT	DECAL AUFKLEBER	CALCOMANÍA TRANSFER	DECALCOMANIA STICKER	012D
17		84420768		10	BOTÃO DE IMPULSO, Push-in Fastener (Not Shown) ATTACHE	FASTENER BEFESTIGUNGSELEMEN	SUJETADOR LUKKER	DISPOSITIVO DI FISSAG BEVESTIGING	123B
18		84420746		10	TIRA, Tie (Not Shown) BRIDE	STRAP BAND	BANDA STROP	FASCETTA RIEM	532B

55.100.06	02	p1	06/11

ELECTRICAL EH MED OPEN CAB (SR175-SR200,TR270)
ELECTRICAL EH MED OPEN CAB (SR175-SR200,TR270)
ELECTRICAL EH MED OPEN CAB (SR175-SR200,TR270)
ELECTRICAL EH MED OPEN CAB (SR175-SR200,TR270)

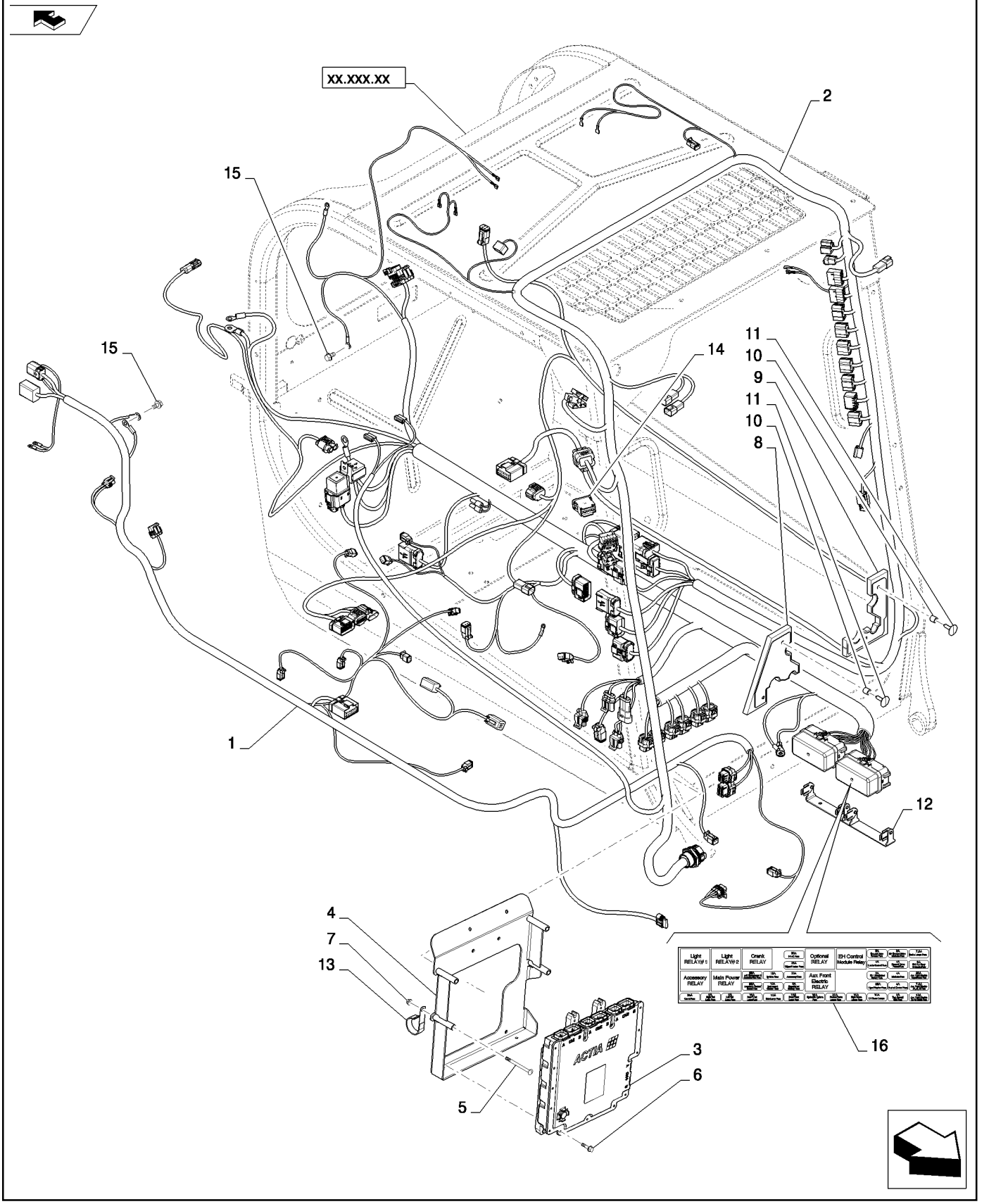

ELECTRICAL EH MED OPEN CAB (SR175-SR200,TR270)
ELECTRICAL EH MED OPEN CAB (SR175-SR200,TR270)
ELECTRICAL EH MED OPEN CAB (SR175-SR200,TR270)
ELECTRICAL EH MED OPEN CAB (SR175-SR200,TR270)

R	N	P.N.	MOD	Q	Denominação Description	Description Bezeichnung	Denominacion Beskrivelse	Descrizione Beschrijving	L.C.
1		84352399		1	CHICOTE, Chassis EH MD	WIRE HARNESS	GRUPO DE CABLES	CABLAGGIO	070I
					FAISCEAU ELECTRIQUE	KABELBAUM	KABELNET	KABELBOOM	
2		84352385		1	CHICOTE, Cab EH Basic	WIRE HARNESS	GRUPO DE CABLES	CABLAGGIO	070I
					FAISCEAU ELECTRIQUE	KABELBAUM	KABELNET	KABELBOOM	
3		84348127		1	CENTRAL ELETRÔNICA, UCM SSL				
						ELECTRONIC CONTROL	UNIDAD DE CONTROL E	CENTRALINA ELETTRON	655C
					UNITE CMDE ELECTRON	ELEKTRON STEUERGER	ELEKTRONIKBOKS	ELEKTRON. REGELEENH	
4		84332287		1	SUPORTE, ECM Black	BRACKET	SOPORTE	STAFFA	225S
					SUPPORT	HALTERUNG	BESLAG	STEUN	
5		86512442		4	PARAFUSO, Carriage 8.8 P M6 X 80				
						BOLT	PERNO	BULLONE	140B
					VIS	SCHRAUBE	BOLT	BOUT	
6		9804257		4	PARAFUSO, Hex Flg, M6 x 25, 8.8				
						BOLT	PERNO	BULLONE	140B
					VIS	SCHRAUBE	BOLT	BOUT	
7		9804276		4	PORCA, M6 x 1, Flg, Cl 8	NUT	TUERCA	DADO	010D
					ECROU	MUTTER	MØTRIK	MOER	
8		84309937		1	VEDAÇÃO, Assy, LH	SEAL	ANILLO DE CIERRE	GUARNIZIONE; TENUTA	132A
					JOINT	DICHTUNG	PAKNING	AFDICHTING	
9		84309938		1	VEDAÇÃO, Assy, LH	SEAL	ANILLO DE CIERRE	GUARNIZIONE; TENUTA	132A
					JOINT	DICHTUNG	PAKNING	AFDICHTING	
10		87035448		4	ESPAÇADOR, 1/2" Tube x 1/2"				
						SPACER	SEPARADOR	DISTANZIALE	075D
					ENTRETOISE	DISTANZSTÜCK	AFSTANDSSTYKKE	AFSTANDSSTUK	
11		86620930		4	BOTÃO DE IMPULSO	FASTENER	SUJETADOR	DISPOSITIVO DI FISSAG	123B
					ATTACHE	BEFESTIGUNGSELEMEN	LUKKER	BEVESTIGING	
12		84285504		1	PEGA DE SUPORTE, Double Fuse Box				
						BRACKET, SUPPORTING	PIEZA DE APOYO	SQUADRETTA	215S
					EQUERRE	TRAGER, STUTZ	BRACKET, SUPPORTING	BRACKET, SUPPORTING	
13		87313355		2	BRAÇADEIRA, 38.1MM J Insul 5/16 Bolt				
						CLAMP	ABRAZADERA	MORSETTO	120M
					COLLIER	KLEMME	SPÆNDEBÅND	KLEM	
14		84251343		1	INTERRUPTOR, Rocker, Drive Pattern				
						SWITCH	INTERRUPTOR	INTERRUTTORE	075I
					CONTACTEUR	SCHALTER	KONTAKT	SCHAKELAAR	
15		86511841		4	PARAFUSO, Hex Flg, M8 x 16, 8.8				
						BOLT	PERNO	BULLONE	140B
					VIS	SCHRAUBE	BOLT	BOUT	
16		84380452		1	ADESIVO, Fuse Box Layout EH				
						DECAL	CALCOMANÍA	DECALCOMANIA	012D
					AUTOCOLLANT	AUFKLEBER	TRANSFER	STICKER	
17		87313351		1	GRAMPO, J-clip Insul. M8; Not Shown				
						CLIP	ABRAZADERA	FERMO	045F
					COLLIER	KLAMMER	KLIPS	KLEM	
18		84420768		10	BOTÃO DE IMPULSO, Push-in Fastener (Not Shown)				
						FASTENER	SUJETADOR	DISPOSITIVO DI FISSAG	123B
					ATTACHE	BEFESTIGUNGSELEMEN	LUKKER	BEVESTIGING	
19		84420746		10	TIRA, Tie (Not Shown)	STRAP	BANDA	FASCETTA	532B
					BRIDE	BAND	STROP	RIEM	

55.100.07	01	p1	02/11

BATTERY DISCONNECT MED ISM (SR175,SV185)
BATTERY DISCONNECT MED ISM (SR175,SV185)
BATTERY DISCONNECT MED ISM (SR175,SV185)
BATTERY DISCONNECT MED ISM (SR175,SV185)

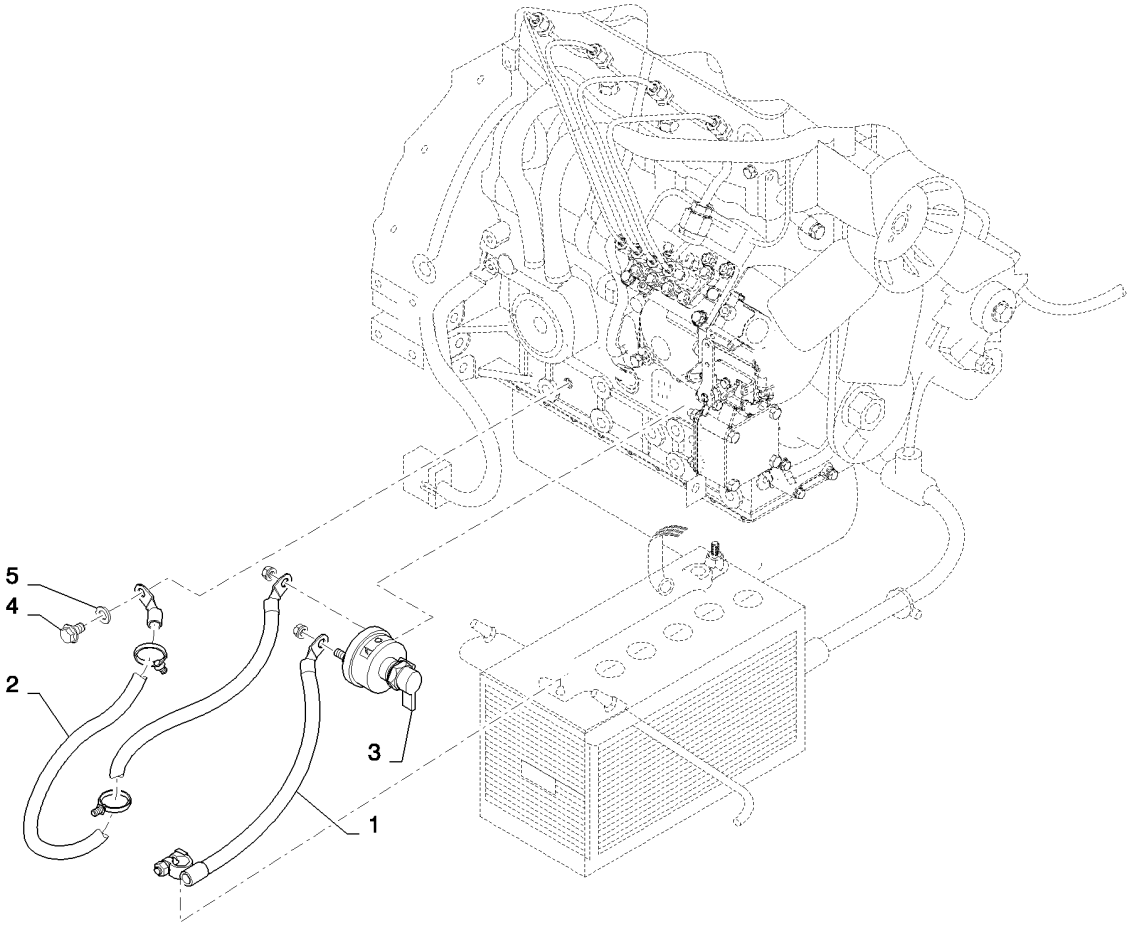

BATTERY DISCONNECT MED ISM (SR175,SV185)
BATTERY DISCONNECT MED ISM (SR175,SV185)
BATTERY DISCONNECT MED ISM (SR175,SV185)
BATTERY DISCONNECT MED ISM (SR175,SV185)

R	N	P.N.	MOD	Q	Denominação Description Bezeichnung	Description Bezeichnung Beskrivelse	Denominacion Beskrivelse Descrizione	Descrizione Beschrijving	L.C.
1		**84284996**		1	CABO BATERIA NEG CABLE DE BATTERIE - N	NEG BATTERY CABLE NEGATIVES BATTERIEK	CABLE NEG. DE LA BATI BATTERIKABEL - NEG	CAVO NEGATIVO DELLA ACCUKABEL - MIN	Z221
2		**84283238**		1	CABO DO TERRA CABLE DE MASSE	GROUND CABLE MASSEKABEL	CABLE DE MASA STELKABEL	CAVO DI TERRA MASSAKABEL	112C
3		**87458467**		1	INTERRUPTOR, Master Disconnnect INTERRUPTEUR	SWITCH SCHALTER	INTERRUPTOR SWITCH	COMMUTATORE SWITCH	8850
4		**15976921**		1	PARAFUSO, Screw VIS	BOLT SCHRAUBE	PERNO BOLT	BULLONE BOUT	140B
5		**87016615**		1	ARRUELA PLANA, M12 x 28.5 x 3, HT RONDELLE	WASHER UNTERLEGSCHEIBE	ARANDELA FLADSKIVE	RONDELLA SLUITRING	131R
6		**176332A1**		1	DECALCOMANIA, Not Shown DECALCOMANIE	DECAL ABZIEHBILD	CALCOMANIA DECAL	AUTOADESIVO DECAL	P903

NO BATTERY DISCONNECT MED ISM (SR175,SV185)
NO BATTERY DISCONNECT MED ISM (SR175,SV185)
NO BATTERY DISCONNECT MED ISM (SR175,SV185)
NO BATTERY DISCONNECT MED ISM (SR175,SV185)

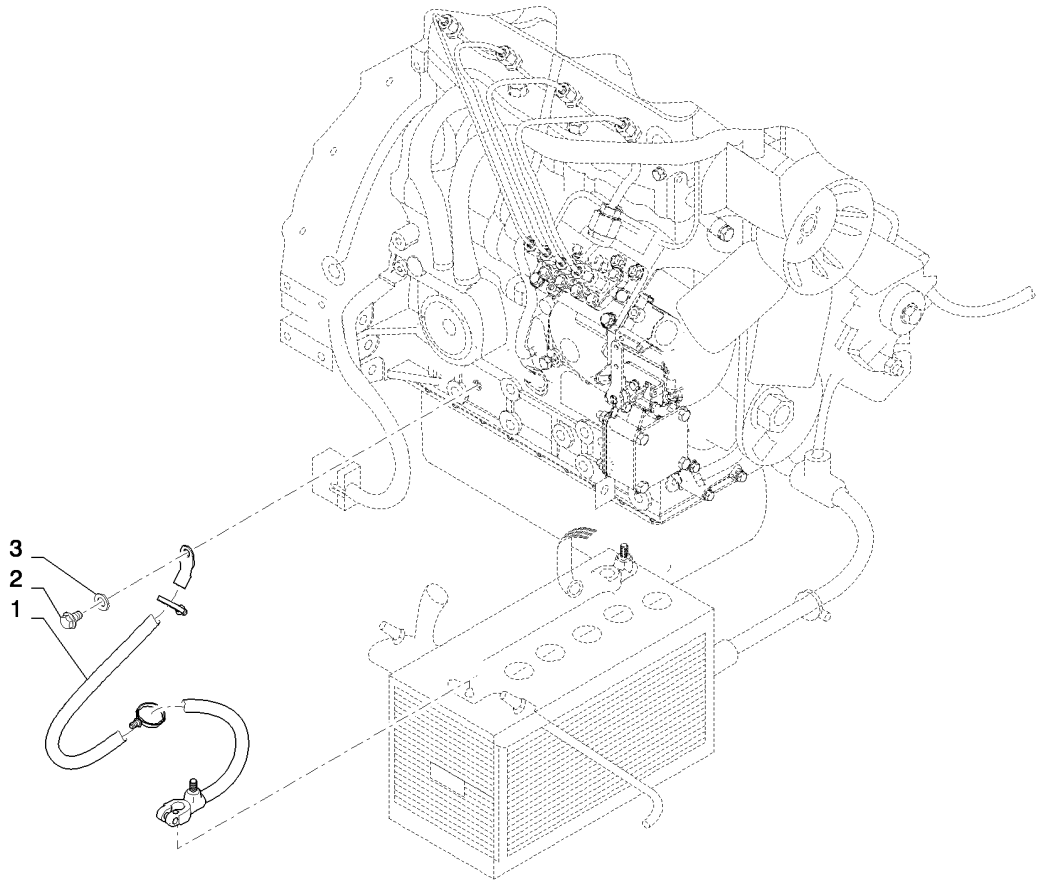

NO BATTERY DISCONNECT MED ISM (SR175,SV185)
NO BATTERY DISCONNECT MED ISM (SR175,SV185)
NO BATTERY DISCONNECT MED ISM (SR175,SV185)
NO BATTERY DISCONNECT MED ISM (SR175,SV185)

R	N	P.N.	MOD	Q	Denominação Description Bezeichnung Beskrivelse Descrizione Beschrijving	L.C.
1		84287808		1	CABO BATERIA NEG CABLE DE BATTERIE - N NEG BATTERY CABLE NEGATIVES BATTERIEK. CABLE NEG. DE LA BATI BATTERIKABEL - NEG CAVO NEGATIVO DELLA ACCUKABEL - MIN	Z221
2		15976921		1	PARAFUSO, Screw VIS BOLT SCHRAUBE PERNO BOLT BULLONE BOUT	140B
3		87016615		1	ARRUELA PLANA, M12 x 28.5 x 3, HT RONDELLE WASHER UNTERLEGSCHEIBE ARANDELA FLADSKIVE RONDELLA SLUITRING	131R

SV185

55.100.08		p1	07/11

MULTIFUNCTION ELECTRICAL (SV185,SV250,SV300,TV380)
MULTIFUNCTION ELECTRICAL (SV185,SV250,SV300,TV380)
MULTIFUNCTION ELECTRICAL (SV185,SV250,SV300,TV380)
MULTIFUNCTION ELECTRICAL (SV185,SV250,SV300,TV380)

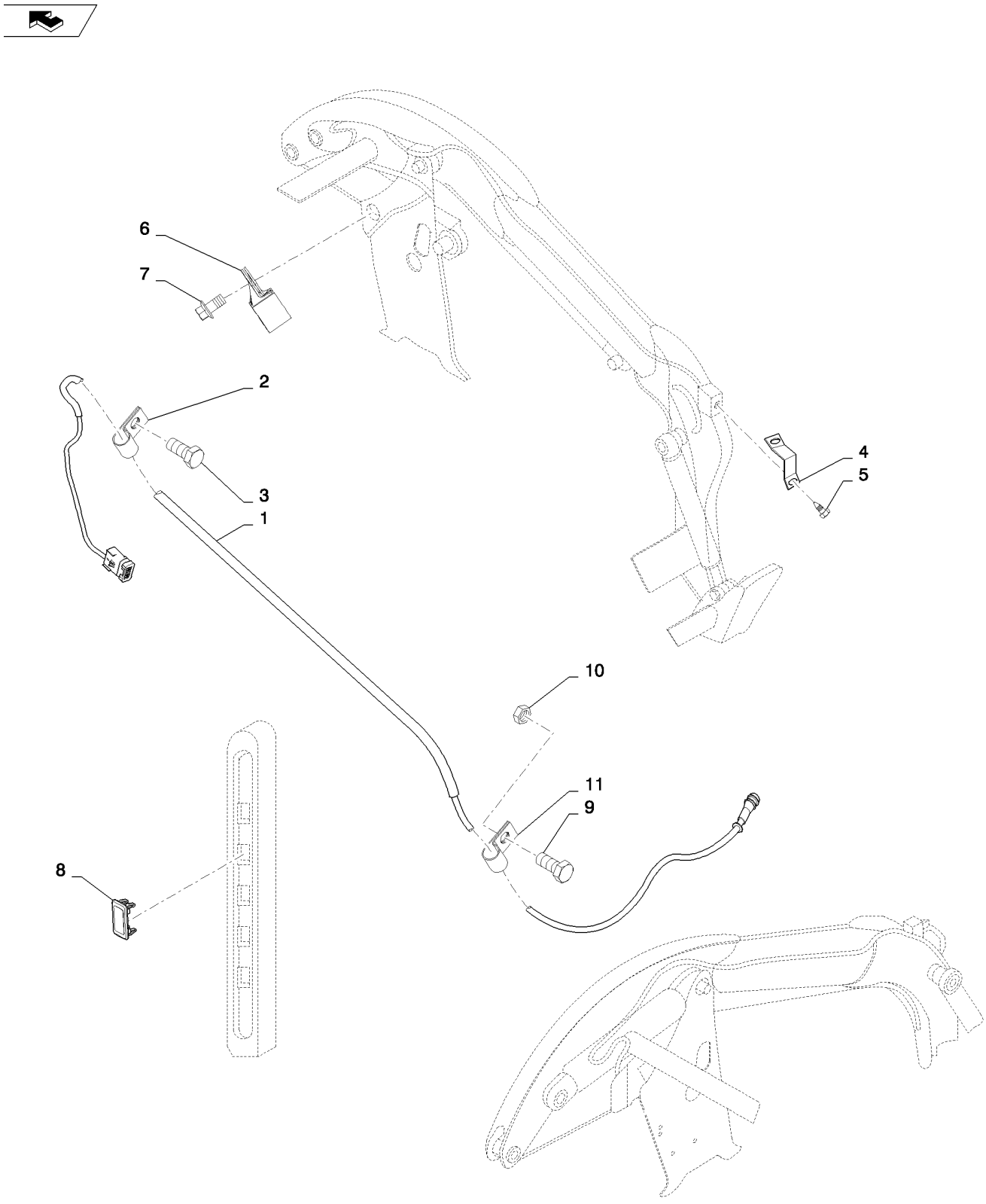

MULTIFUNCTION ELECTRICAL (SV185,SV250,SV300,TV380)
MULTIFUNCTION ELECTRICAL (SV185,SV250,SV300,TV380)
MULTIFUNCTION ELECTRICAL (SV185,SV250,SV300,TV380)
MULTIFUNCTION ELECTRICAL (SV185,SV250,SV300,TV380)

R	N	P.N.	MOD	Q	Denominação Description	Description Bezeichnung	Denominacion Beskrivelse	Descrizione Beschrijving	L.C.
1		84251324		1	CHICOTE, Front Electrical Boom Vertical				
						WIRE HARNESS	GRUPO DE CABLES	CABLAGGIO	070I
					FAISCEAU ELECTRIQUE	KABELBAUM	KABELNET	KABELBOOM	
2		86637977		2	BRAÇADEIRA, 1", Insul, 5/16" Bolt				
						CLAMP	ABRAZADERA	MORSETTO	120M
					COLLIER	KLEMME	SPÆNDEBÅND	KLEM	
3		9804260		1	PARAFUSO, Hex Flg, M8 x 30, 8.8, Full Thd				
						BOLT	PERNO	BULLONE	140B
					VIS	SCHRAUBE	BOLT	BOUT	
4		84293533		1	PEGA DE SUPORTE, Front Aux, Electric				
						BRACKET, SUPPORTING	PIEZA DE APOYO	SQUADRETTA	215S
					EQUERRE	TRAGER, STUTZ	BRACKET, SUPPORTING	BRACKET, SUPPORTING	
5		87030531		2	PARAFUSO, ST8 X 19	SCREW	TORNILLO	VITE	040V
					VIS	SCHRAUBE	SKRUE	SCHROEF	
6		86978777		4	BRAÇADEIRA	CLAMP	ABRAZADERA	MORSETTO	120M
					COLLIER	KLEMME	SPÆNDEBÅND	KLEM	
7		86625199		4	PARAFUSO, Hex Flg Hd, M6 x 13				
						SELF-TAP SCREW	TORNILLO AUTORROSC	VITE AUTOFILETTANTE	062V
					VIS AUTOTARAUDEUSE	SELBSTSCHN SCHRAUE	SELVLÅSENDE BOLT	ZELFTAPPENDE SCHRO	
8		87634134		1	INTERRUPTOR, Rocker, On/Off				
						SWITCH	INTERRUPTOR	INTERRUTTORE	075I
					CONTACTEUR	SCHALTER	KONTAKT	SCHAKELAAR	
9		9804258		1	PARAFUSO, Hex Flg, M8 x 20, 8.8, Not Shown				
						BOLT	PERNO	BULLONE	140B
					VIS	SCHRAUBE	BOLT	BOUT	
10		86505868		1	PORCA, M8, Flg Ser, Not Shown				
						NUT	TUERCA	DADO	010D
					ECROU	MUTTER	MØTRIK	MOER	
11		87029955		2	BRAÇADEIRA, 7/8", Insul, 3/8" Bolt, Not Shown				
						CLAMP	ABRAZADERA	MORSETTO	120M
					COLLIER	KLEMME	SPÆNDEBÅND	KLEM	

55.100.09		p1	01/11

NO MULTIFUNCTION ELECTRICAL (ALL CASE)
NO MULTIFUNCTION ELECTRICAL (ALL CASE)
NO MULTIFUNCTION ELECTRICAL (ALL CASE)
NO MULTIFUNCTION ELECTRICAL (ALL CASE)

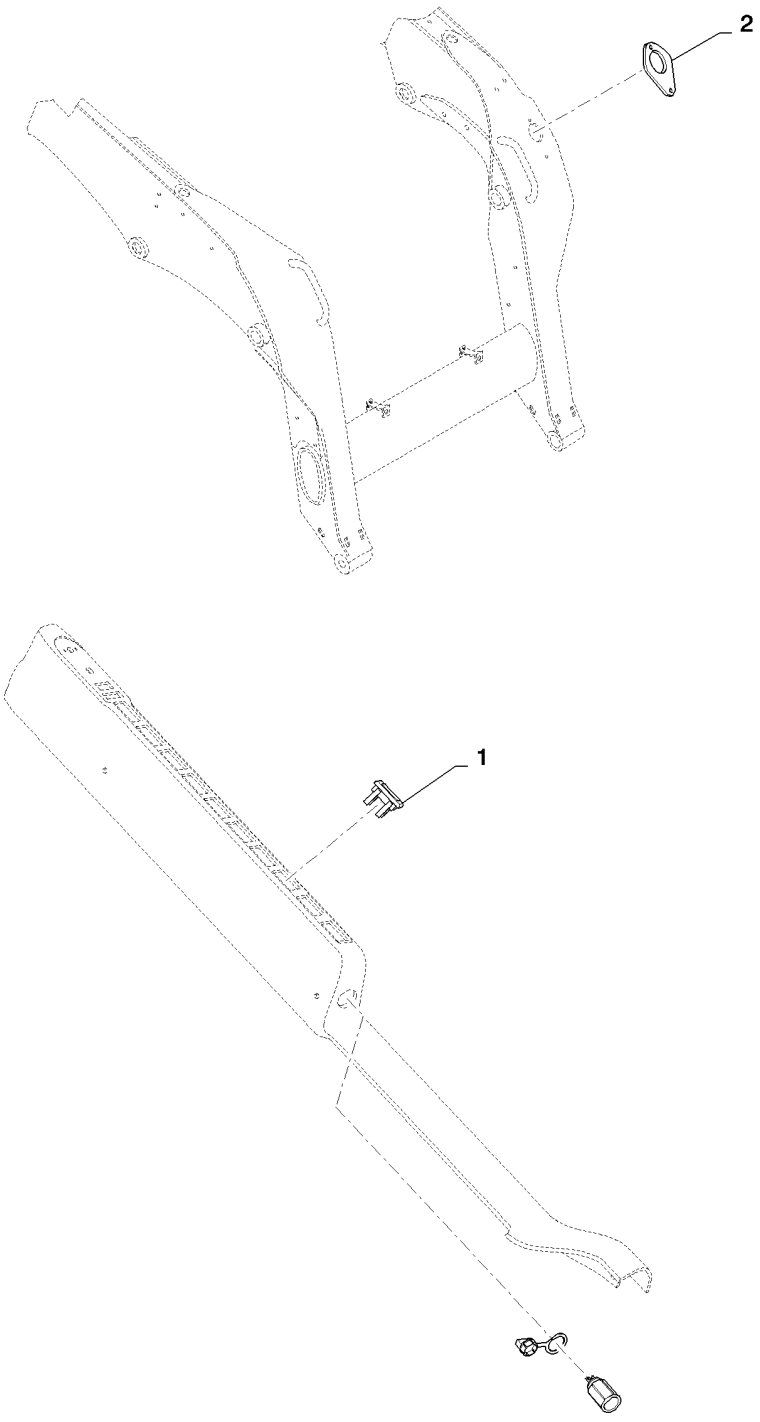

NO MULTIFUNCTION ELECTRICAL (ALL CASE)
NO MULTIFUNCTION ELECTRICAL (ALL CASE)
NO MULTIFUNCTION ELECTRICAL (ALL CASE)
NO MULTIFUNCTION ELECTRICAL (ALL CASE)

R	N	P.N.	MOD	Q	Denominação Description Bezeichnung	Description Bezeichnung	Denominacion Beskrivelse	Descrizione Beschrijving	L.C.
1		126844A1		1	BUJÃO, Cover BOUCHON	PLUG STOPFEN	TAPÓN PROP	TAPPO PLUG	050T
2		84300911		1	TAMPA DE ACESSO, Lexan Aux Electrical, Power Tan PANNEAU D'ACCES	ACCESS COVER ZUGANGSABDECKUNG	CUBIERTA DE ACCESO ADGANGSDÆKSEL	COPERCHIO, DI ACCES TOEGANGSAFSCHERMI	A036

SV185

ELECTRICAL ASSEMBLY SOCKET NA (ALL CASE)
ELECTRICAL ASSEMBLY SOCKET NA (ALL CASE)
ELECTRICAL ASSEMBLY SOCKET NA (ALL CASE)
ELECTRICAL ASSEMBLY SOCKET NA (ALL CASE)

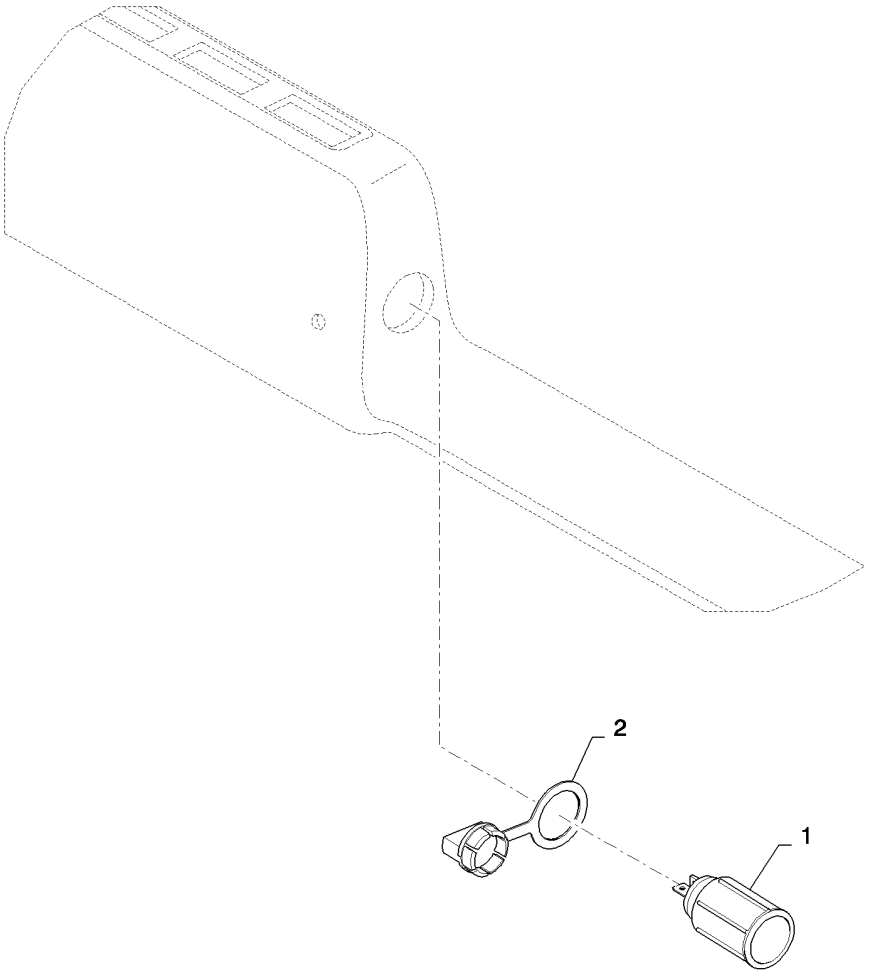

ELECTRICAL ASSEMBLY SOCKET NA (ALL CASE)
ELECTRICAL ASSEMBLY SOCKET NA (ALL CASE)
ELECTRICAL ASSEMBLY SOCKET NA (ALL CASE)
ELECTRICAL ASSEMBLY SOCKET NA (ALL CASE)

R	N	P.N.	MOD	Q	Denominação Description Bezeichnung	Description Bezeichnung	Denominacion Beskrivelse	Descrizione Beschrijving	L.C.
1		283779A1		1	TOMADA ELÉTRICA, Outlet Assembly				
						POWER SOCKET	ZÓCALO DE CORRIENTE	PRESA DI CORRENTE	205P
					PRISE DE COURANT	STECKDOSE	STRØMUDTAG	CONTACTDOOS	
2		283781A1		1	CAPA, Outlet, Power	CAP	TAPA	CAPPUCCIO	1380
					CHAPEAU	KAPPE	CAP	CAP	

SV185

55.100.10		p1	02/11

ELECTRICAL ASSEMBLY SOCKET EU (ALL CASE)
ELECTRICAL ASSEMBLY SOCKET EU (ALL CASE)
ELECTRICAL ASSEMBLY SOCKET EU (ALL CASE)
ELECTRICAL ASSEMBLY SOCKET EU (ALL CASE)

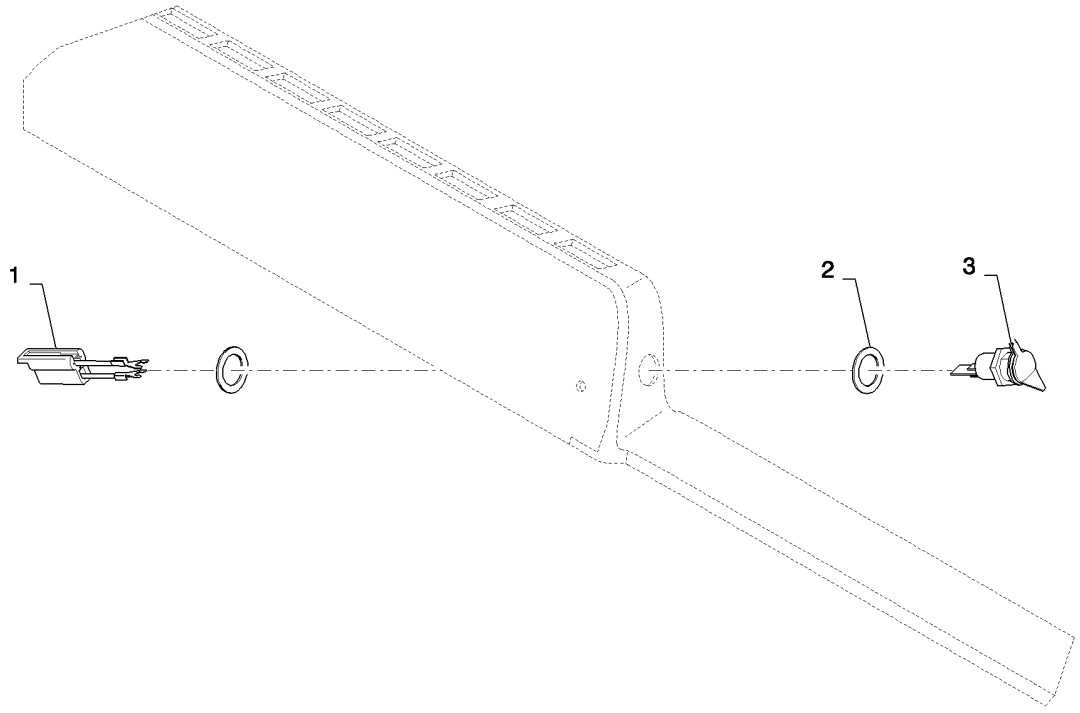

ELECTRICAL ASSEMBLY SOCKET EU (ALL CASE)
ELECTRICAL ASSEMBLY SOCKET EU (ALL CASE)
ELECTRICAL ASSEMBLY SOCKET EU (ALL CASE)
ELECTRICAL ASSEMBLY SOCKET EU (ALL CASE)

R	N	P.N.	MOD	Q	Denominação Description Bezeichnung	Description Bezeichnung Beskrivelse	Denominacion Beskrivelse Descrizione	Descrizione Beschrijving L.C.
1		**445092A1**		1	CHICOTE, Accessory Socket WIRE HARNESS FAISCEAU ELECTRIQUE	GRUPO DE CABLES KABELBAUM	CABLAGGIO KABELNET	CABLAGIO KABELBOOM 070I
2		**87644538**		2	ESPAÇADOR, Washer Plated SPACER ENTRETOISE	SEPARADOR DISTANZSTÜCK	DISTANZIALE AFSTANDSSTYKKE	AFSTANDSSTUK 075D
3		**142211A1**		1	SOQUETE, Receptacle SOCKET DOUILLE	LLAVE DE CUBO FASSUNG	PRESA; CHIAVE A BUSS FATNING	AANSLUITING P483

55.101.01		p1	03/11

ENGINE ELECTRICAL (SR175,SV185)
ENGINE ELECTRICAL (SR175,SV185)
ENGINE ELECTRICAL (SR175,SV185)
ENGINE ELECTRICAL (SR175,SV185)

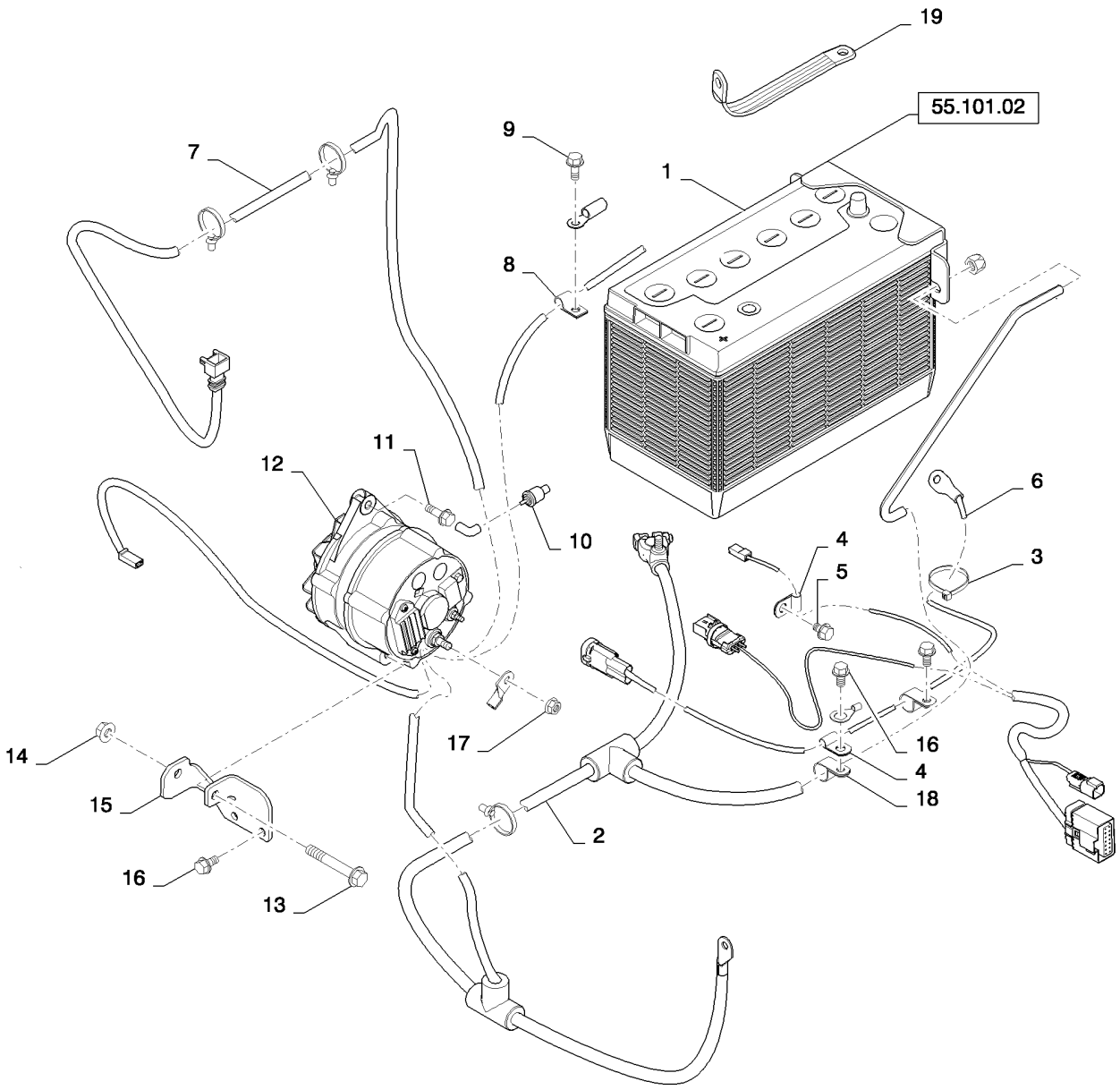

ENGINE ELECTRICAL (SR175,SV185)
ENGINE ELECTRICAL (SR175,SV185)
ENGINE ELECTRICAL (SR175,SV185)
ENGINE ELECTRICAL (SR175,SV185)

R	N	P.N.	MOD	Q	Denominação Description	Description Bezeichnung	Denominacion Beskrivelse	Descrizione Beschrijving	L.C.
1		84183281		1	BATERIA, 12V, 1000cca	BATTERY	BATERIA	BATTERIA	0560
					BATTERIE	BATTERIE	BATTERI	ACCU	
2		84298940		1	CABO BATERIA POSITIVO	POS BATTERY CABLE	CABLE POS. DE LA BATE	CAVO POSITIVO DELLA	N51C
					CABLE DE BATTERIE - P	POSITIVES BATTERIEKA	BATTERIKABEL - POS	ACCUKABEL - PLUS	
3		L11541		1	PRENDEDOR DE CABOS,	Nylon Tie, 7-8in			
						CABLE STRAP	BANDA DE CABLE	FASCETTA PER CAVO	P716
					BRIDE DE CABLE	KABELBINDER	KABELSTROP	BUNDELBAND	
4		853765		2	BRAÇADEIRA, 5/16", Insul,	3/8" Bolt			
						CLAMP	ABRAZADERA	MORSETTO	120M
					COLLIER	KLEMME	SPÆNDEBÅND	KLEM	
5		86512520		1	PARAFUSO, Hex Flg, M8 x 12, 8.8, Full Thd				
						BOLT	PERNO	BULLONE	140B
					VIS	SCHRAUBE	BOLT	BOUT	
6		84306339		1	CABO ELÉTRICO, Glow Plug				
						ELECTRIC CABLE	CABLE ELÉCTRICO	CAVO ELETTRICO	111C
					CABLE ELECTRIQUE	ELEKTROKABEL	EL-KABEL	ELEKTRICITEITSKABEL	
7		84375312		1	CHICOTE, Engine, ISM	WIRE HARNESS	GRUPO DE CABLES	CABLAGGIO	070I
					FAISCEAU ELECTRIQUE	KABELBAUM	KABELNET	KABELBOOM	
8		858956		1	BRAÇADEIRA, 7/16", Insul,	5/16" Bolt			
						CLAMP	ABRAZADERA	MORSETTO	120M
					COLLIER	KLEMME	SPÆNDEBÅND	KLEM	
9		9804258		1	PARAFUSO, Hex Flg, M8 x 20, 8.8				
						BOLT	PERNO	BULLONE	140B
					VIS	SCHRAUBE	BOLT	BOUT	
10		3917490		1	EMISSOR DE TEMPERATURA				
						TEMPERATURE SENDEF	EMISOR DE TEMPERATU	TRASMETT. TEMPERATU	Z366
					TRANSMETTEUR TEMPE	TEMPERATURGEBER	TEMPERATURSENDER	TEMPERATUURSENSOR	
11		9671714		1	PARAFUSO, Hex Flg, M8 x 25, 8.8				
						BOLT	PERNO	BULLONE	140B
					VIS	SCHRAUBE	BOLT	BOUT	
12		84281043		1	ALTERNADOR, ISM, 14V, 120A				
						ALTERNATOR	ALTERNADOR	ALTERNATORE	025A
					ALTERNATEUR	LICHTMASCHINE	GENERATOR	DYNAMO	
13		86011090		1	PARAFUSO, Hex Flg, M10 x 70, 8.8				
						BOLT	PERNO	BULLONE	140B
					VIS	SCHRAUBE	BOLT	BOUT	
14		86050279		2	PORCA, M10 x 1.5, Flg, Cl	10			
						NUT	TUERCA	DADO	010D
					ECROU	MUTTER	MØTRIK	MOER	
15		84367403		1	SUPORTE, Alternator Mount				
						BRACKET	SOPORTE	STAFFA	225S
					SUPPORT	HALTERUNG	BESLAG	STEUN	
16		86511841		4	PARAFUSO, Hex Flg, M8 x 16, 8.8				
						BOLT	PERNO	BULLONE	140B
					VIS	SCHRAUBE	BOLT	BOUT	
17		86507066		1	PORCA, M8 x 1.25, Flg, Cl	10			
						NUT	TUERCA	DADO	010D
					ECROU	MUTTER	MØTRIK	MOER	

SV185

ENGINE ELECTRICAL (SR175,SV185)
ENGINE ELECTRICAL (SR175,SV185)
ENGINE ELECTRICAL (SR175,SV185)
ENGINE ELECTRICAL (SR175,SV185)

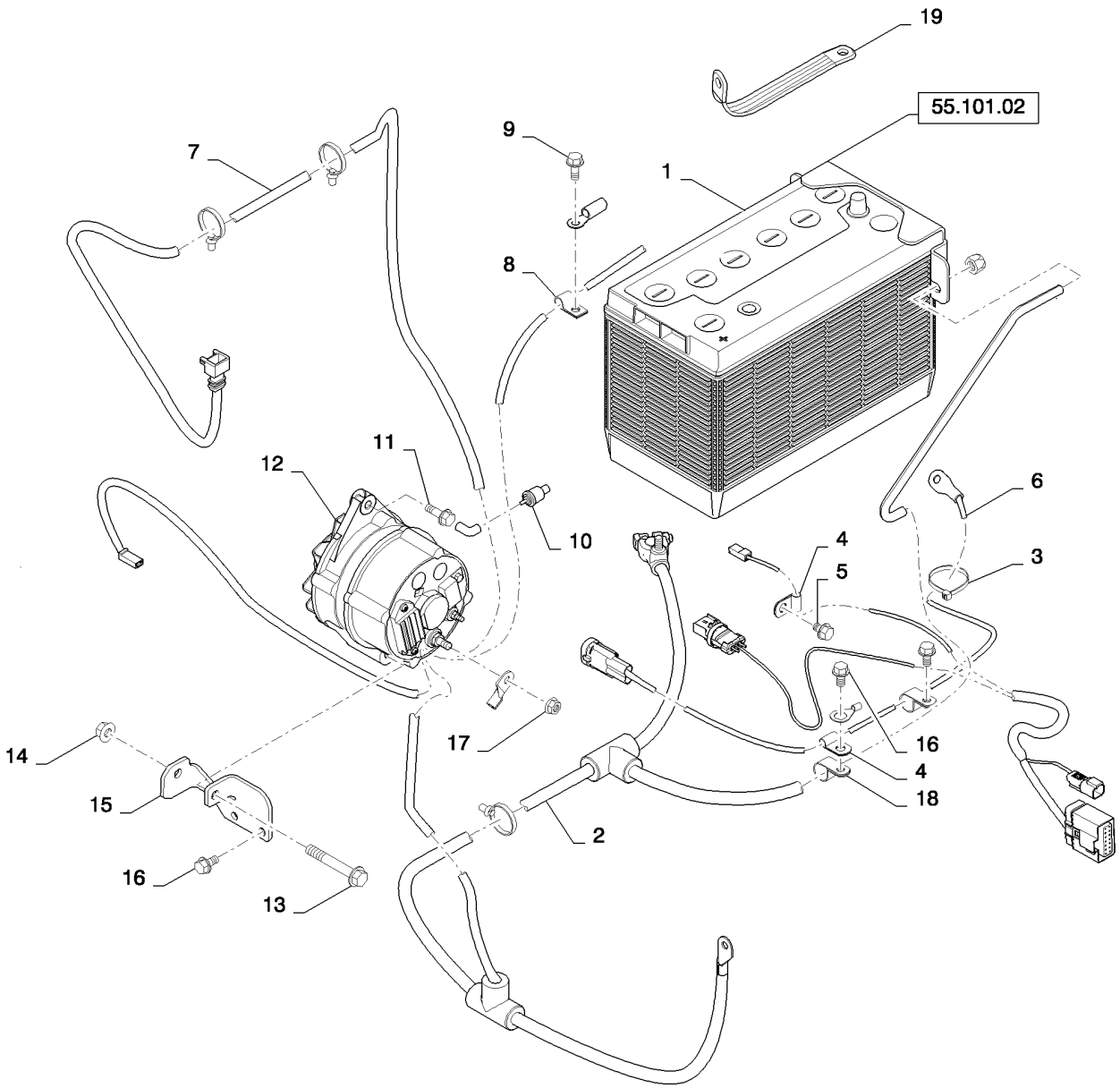

ENGINE ELECTRICAL (SR175,SV185)
ENGINE ELECTRICAL (SR175,SV185)
ENGINE ELECTRICAL (SR175,SV185)
ENGINE ELECTRICAL (SR175,SV185)

R	N	P.N.	MOD	Q	Denominação Description	Description Bezeichnung	Denominacion Beskrivelse	Descrizione Beschrijving	L.C.
18		86637976		2	BRAÇADEIRA, 3/4", Insul, 5/16" Bolt				
					CLAMP		ABRAZADERA	MORSETTO	120M
					COLLIER	KLEMME	SPÆNDEBÅND	KLEM	
19		D140369		1	CABO PUXADOR, Strap	CABLE PULLING GRIP	MANGO DE TRACC. DEL	TESTA DI TIRO PER CA\	Z646
					TIRE-CABLE	KABELZIEHGRIFF	KABELTRÆK	TREKHANDGREEP VAN	
20		86598598		1	BRAÇADEIRA, 3/4", Insul, 1/2" Bolt, Not Shown				
					CLAMP		ABRAZADERA	MORSETTO	120M
					COLLIER	KLEMME	SPÆNDEBÅND	KLEM	
21		15976921		1	PARAFUSO, Not Shown	BOLT	PERNO	BULLONE	140B
					VIS	SCHRAUBE	BOLT	BOUT	
22		86637978		1	BRAÇADEIRA, 3/8", Insul, 5/16" Bolt, Not Shown				
					CLAMP		ABRAZADERA	MORSETTO	120M
					COLLIER	KLEMME	SPÆNDEBÅND	KLEM	
23		87642915		3	PRENDEDOR DE CABOS, Not Shown				
					CABLE STRAP		BANDA DE CABLE	FASCETTA PER CAVO	P716
					BRIDE DE CABLE	KABELBINDER	KABELSTROP	BUNDELBAND	

55.101.02		p1	02/11

BATTERY RETENTION MED (ALL CASE)
BATTERY RETENTION MED (ALL CASE)
BATTERY RETENTION MED (ALL CASE)
BATTERY RETENTION MED (ALL CASE)

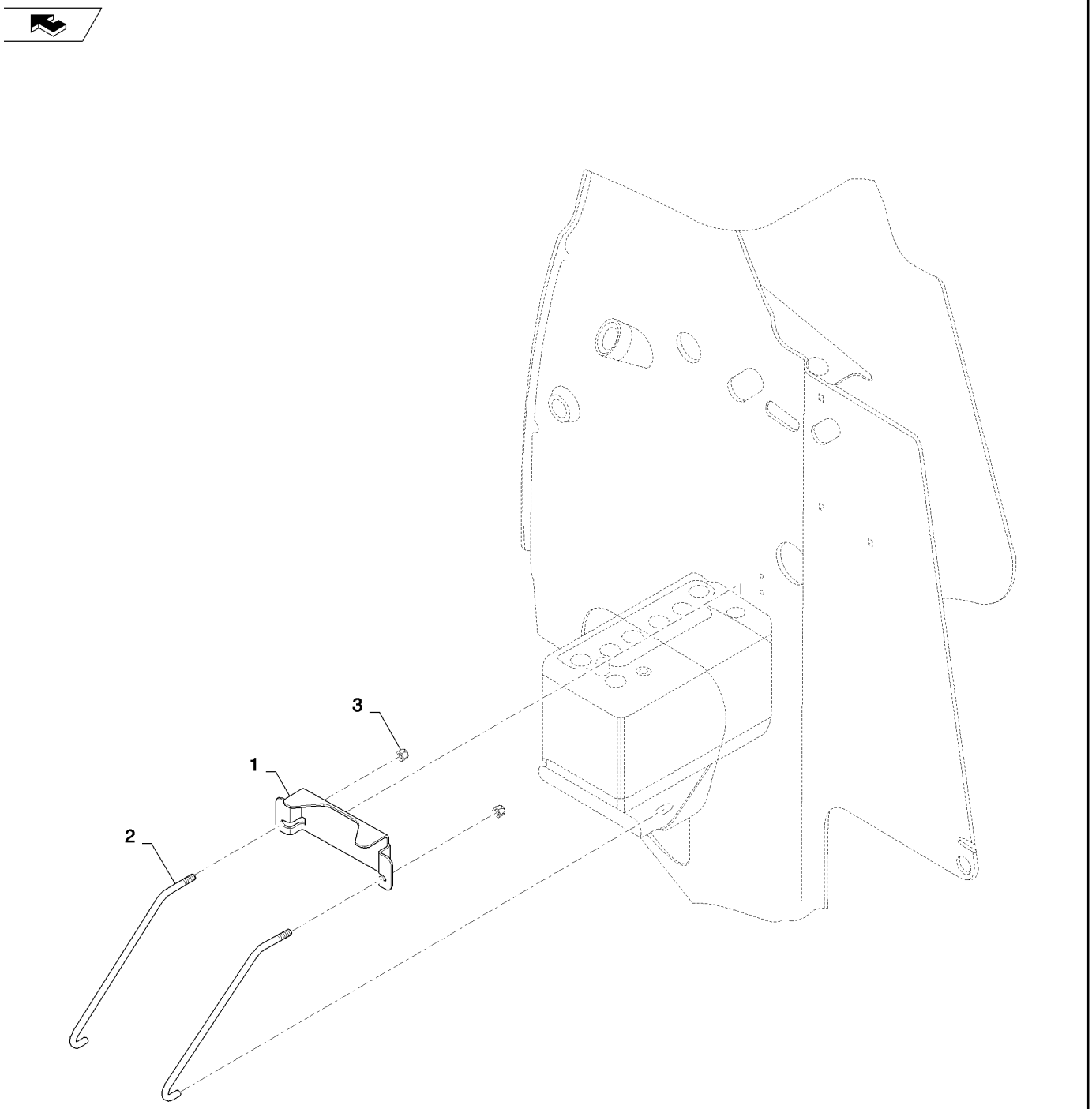

BATTERY RETENTION MED (ALL CASE)
BATTERY RETENTION MED (ALL CASE)
BATTERY RETENTION MED (ALL CASE)
BATTERY RETENTION MED (ALL CASE)

R	N	P.N.	MOD	Q	Denominação Description Bezeichnung	Description Bezeichnung	Denominacion Beskrivelse	Descrizione Beschrijving	L.C.
1		84420303		1	TIRA, Battery Mount BRIDE	STRAP BAND	BANDA STROP	FASCETTA RIEM	532B
2		84381823		2	GANCHO, Battery Tie Dowr CROCHET	HOOK HAKEN	GANCHO KROG	GANCIO HAAK	030G
3		9637692		2	CONTRA PORCA, 3/8"-16, GB CONTRE-ECROU	LOCK NUT SICHERUNGSMUTTER	TUERCA DE BLOQUEO LÅSEMØTRIK	DADO DI BLOCCAGGIO BORGMOER	P263

55.11.068		p1	02/11

ALTERNADOR FIOS
ALTERNATOR BACKFEED HARNESS
ALTERNADOR MAZO DE CABLES
ALTERNATORE CABLAGGIO

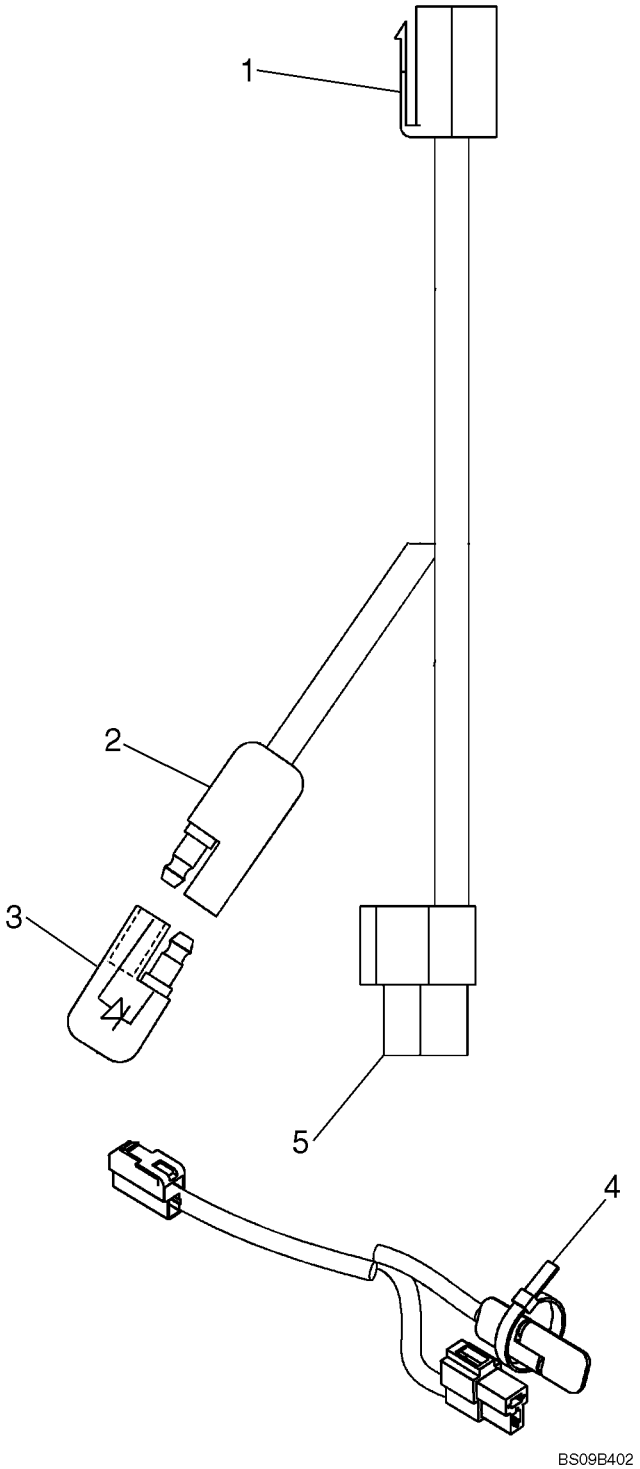

ALTERNATEUR FAISCEAU
DREHSTROMGENERATOR KABELSTRANG
VEKSELSTRØMSGENERATOR LEDNINGSNET
DYNAMO MODULE

R	N	P.N.	MOD	Q	Denominação Description Bezeichnung	Denominacion Beskrivelse	Descrizione Beschrijving	L.C.
		84121323		1	CHICOTE, Alternator Backfeed Harness; Incl 1-5			
					HARNESS	MAZO DE CABLES	CABLAGGIO	4160
					FAISCEAU	KABELBAUM	LEDNINGSNET	KABELBOOM
1		**365121A1**		1	CONECTOR DO TERMINAL, 365121A1, Yazaki; 7123-2128			
					TERMINAL CONNECTOR	CONECTOR DE TERMIN	CONNETTORE	Z313
					BORNE	KLEMMENSTECKVERBIN	TERMINALSTIK	CONNECTOR VAN AANS
2		**NSS**		1	SEM SERVIÇO EM SEPARADO, Connector Bullet, CNH Style 24			
					NOT SERVICED SEPARA	NO SE REPARA POR SE	NON FORNITO SEPARAT	064N
					NON FORUNI SEPAREM	NICHT A SEP ERS-T LIEI	SERVICERES IKKE SEPA	NIET LOS VERKRIJGBAA
3		**L71879**		1	ELEMENTO DE DIODO, Connector Bullet			
					DIODE ELEMENT	ELEMENTO DE DIODO	ELEMENTO DIODO	Z628
					ELEMENT DE DIODE	DIODENELEMENT	DIODEELEMENT	DIODE-ELEMENT
4		**263117**		1	PRENDEDOR DE CABOS, .14" x 11 1/2"			
					CABLE STRAP	BANDA DE CABLE	FASCETTA PER CAVO	P716
					BRIDE DE CABLE	KABELBINDER	KABELSTROP	BUNDELBAND
5		**NSS**		1	SEM SERVIÇO EM SEPARADO, Housing Male Yazaki; 7122-2128			
					NOT SERVICED SEPARA	NO SE REPARA POR SE	NON FORNITO SEPARAT	064N
					NON FORUNI SEPAREM	NICHT A SEP ERS-T LIEI	SERVICERES IKKE SEPA	NIET LOS VERKRIJGBAA

MOTOR DE ARRANQUE
STARTER
MOTOR DE ARRANQUE
MOTORINO DI AVVIAMENTO

ART

NOT

AVAILABLE

DÉMARREUR
ANLASSER
STARTER
STARTMOTOR

R	N	P.N.	MOD	Q	Denominação Description	Description Bezeichnung	Denominacion Beskrivelse	Descrizione Beschrijving	L.C.
		{SBA185086750}		1					

55.301.01		p1	02/11

ALTERNATOR ASSY
ALTERNATOR ASSY
COMPONENTES DEL ALTERNADOR
COMPONENTI DELL'ALTERNATORE

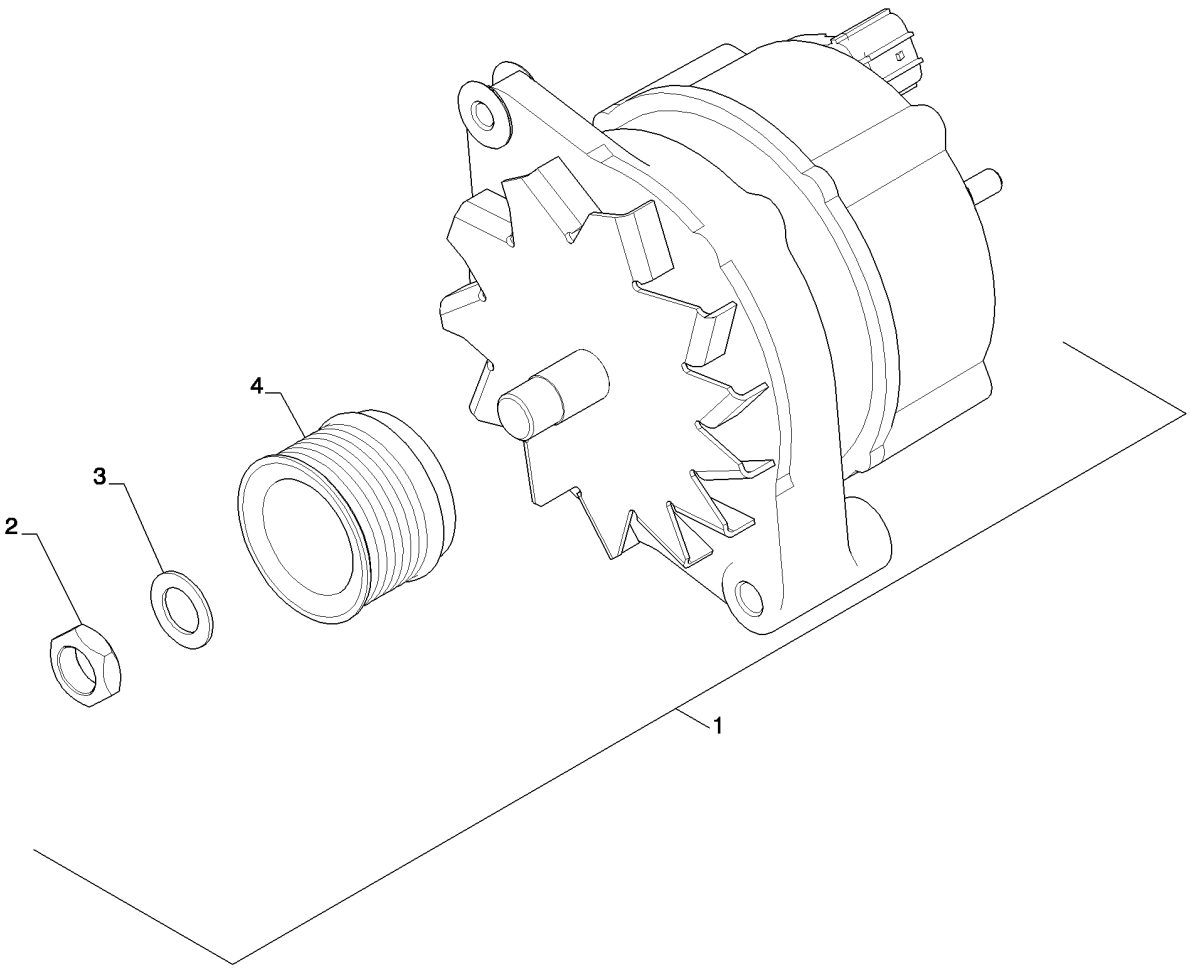

ÉLÉMENTS DE L'ALTERNATEUR
LICHTMASCHINEN-BAUTEILE
VEKSELSTRØMSGENERATOR, DELE
DYNAMO-ONDERDELEN

R	N	P.N.	MOD	Q	Denominação Description	Description Bezeichnung	Denominacion Beskrivelse	Descrizione Beschrijving	L.C.
1		84281043		1	ALTERNADOR ALTERNATEUR	ALTERNATOR LICHTMASCHINE	ALTERNADOR GENERATOR	ALTERNATORE DYNAMO	025A
2		NS		1	SEM SERVIÇO NON FOURNI	NOT SERVICED NICHT ALS ERS-T LIEFE	NO SE REPARA SERVICERES IKKE	NON SOTTOPOSTO A M. NIET VERKRIJGBAAR	061N
3		NS		1	SEM SERVIÇO NON FOURNI	NOT SERVICED NICHT ALS ERS-T LIEFE	NO SE REPARA SERVICERES IKKE	NON SOTTOPOSTO A M. NIET VERKRIJGBAAR	061N
4		NS		1	SEM SERVIÇO NON FOURNI	NOT SERVICED NICHT ALS ERS-T LIEFE	NO SE REPARA SERVICERES IKKE	NON SOTTOPOSTO A M. NIET VERKRIJGBAAR	061N

55.301.02		p1	02/11

ALTERNATOR MOUNTING
ALTERNATOR MOUNTING
ALTERNADOR
ALTERNATORE

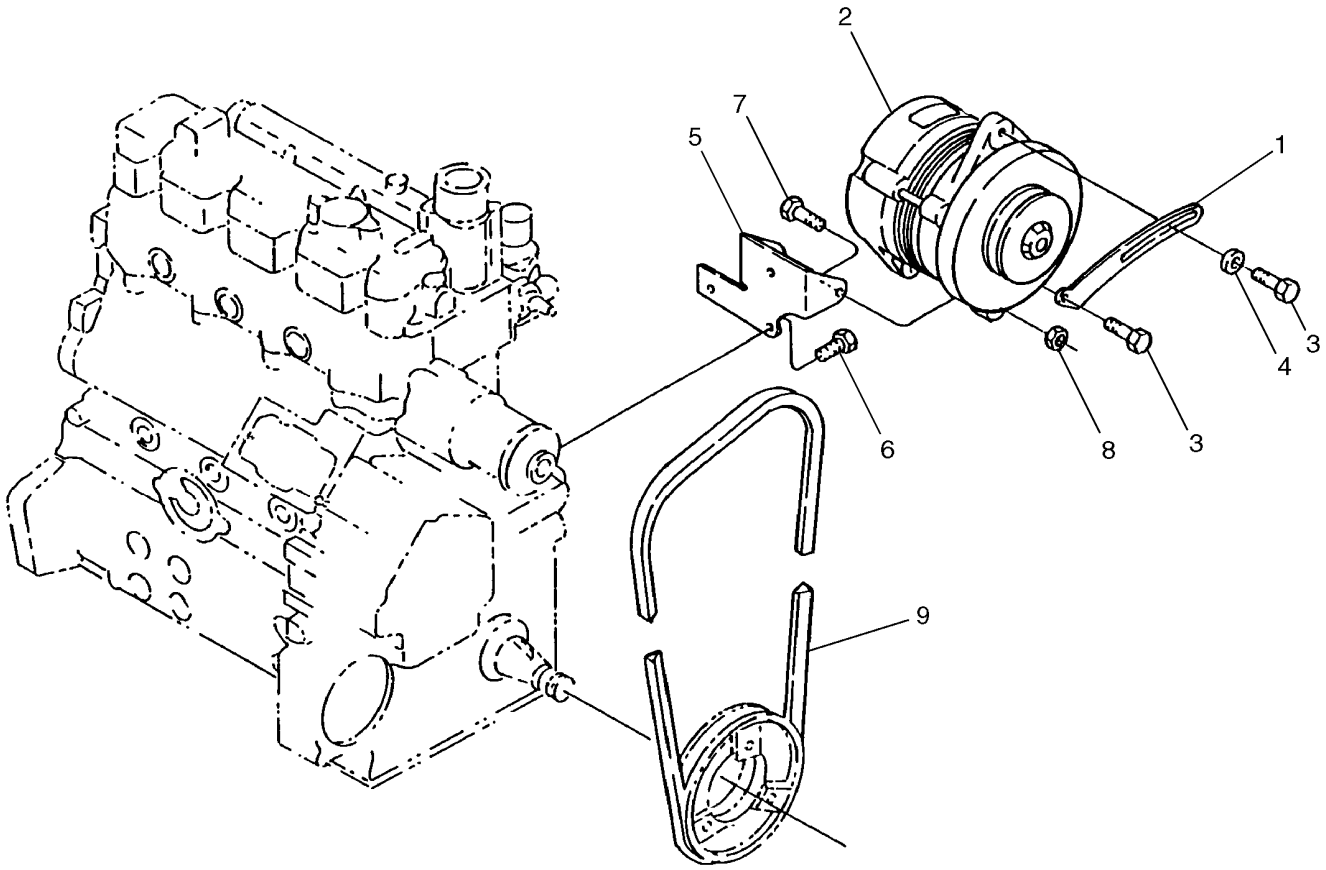

BS04M088

ALTERNATEUR
LICHTMASCHINE
VEKSELSTRØMSGENERATOR
DYNAMO

R	N	P.N.	MOD	Q	Denominação Description	Description Bezeichnung	Denominacion Beskrivelse	Descrizione Beschrijving	L.C.
1		SBA185727000		1	PLACA, Adjusting PLAQUE	PLATE PLATTE	PLACA PLADE	PIASTRA PLAAT	105P
2		84281043		1	ALTERNADOR ALTERNATEUR	ALTERNATOR LICHTMASCHINE	ALTERNADOR GENERATOR	ALTERNATORE DYNAMO	025A
3		SBA011510825		2	PARAFUSO CABEÇA FLANGEADA, Hex, M8 x 25, G5 CAPTIVE WASHER SCRE VIS A RONDELLE CAPTI'	TORNILLO DE ARAND. C SCHRAUBE M UNVERL U	VITE RONDELLA PRIGIO SKRUE, FORMONTERET	A091 SCHROEF MET RONDSE	
4		SBA026109017		1	ARRUELA PLANA RONDELLE	WASHER UNTERLEGSCHEIBE	ARANDELA FLADSKIVE	RONDELLA SLUITRING	131R
5		84367403		1	SUPORTE SUPPORT	BRACKET HALTERUNG	SOPORTE BESLAG	STAFFA STEUN	225S
6		SBA011510816		3	PARAFUSO VIS	BOLT SCHRAUBE	PERNO BOLT	BULLONE BOUT	140B
7		SBA010311035		2	PARAFUSO, M10 x 35 VIS	BOLT SCHRAUBE	PERNO BOLT	BULLONE BOUT	140B
8		825-11410		2	PORCA, M10 x 1.25, Cl 8 ECROU	NUT MUTTER	TUERCA MØTRIK	DADO MOER	010D
9		84314786		1	CORREIA COURROIE	BELT RIEMEN	CORREA REM	CINGHIA RIEM	174C

SV185

55.418.01		p1	03/11

INSTRUMENTS AND ELECTRICAL VERT (SV185)
INSTRUMENTS AND ELECTRICAL VERT (SV185)
INSTRUMENTS AND ELECTRICAL VERT (SV185)
INSTRUMENTS AND ELECTRICAL VERT (SV185)

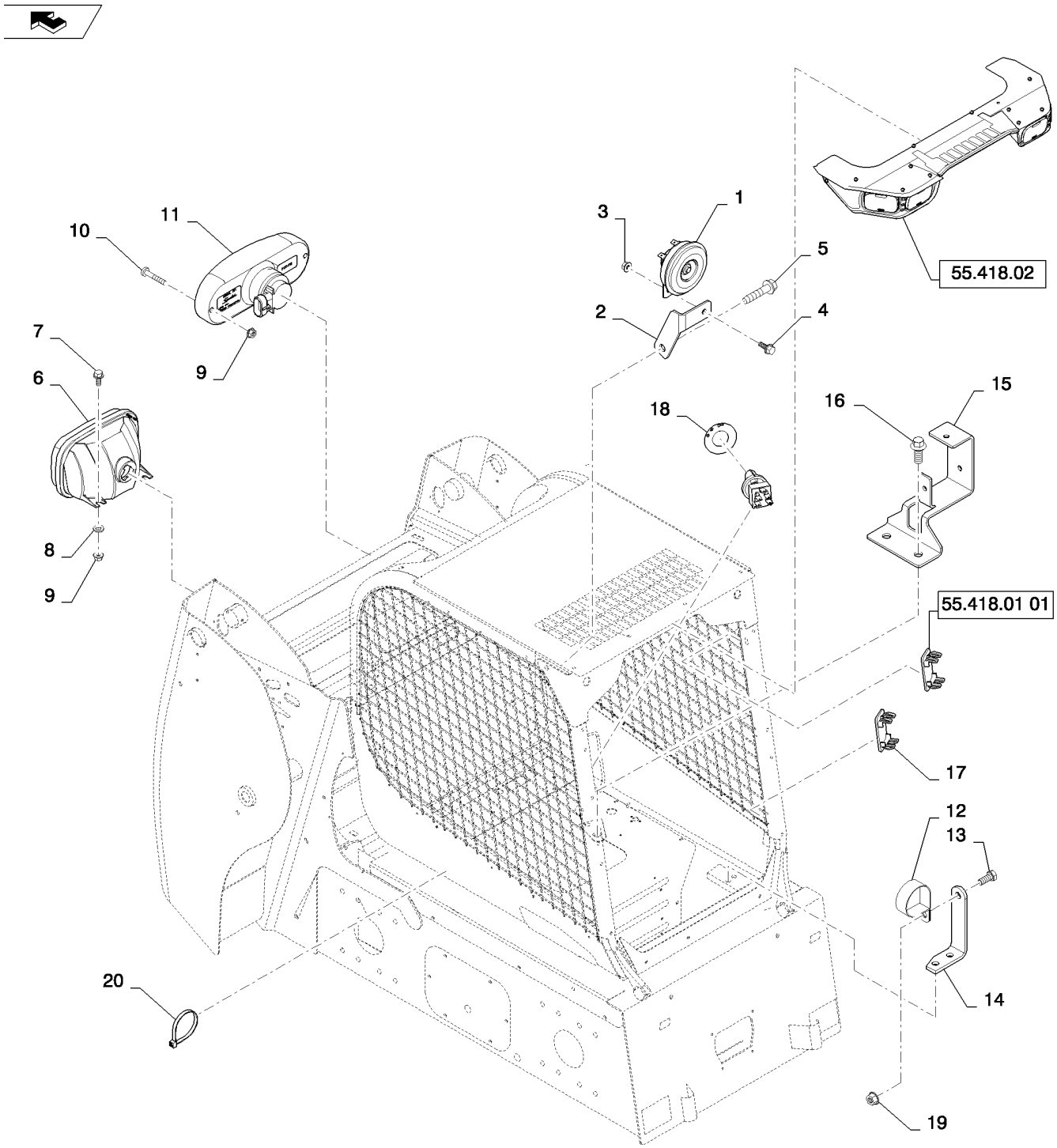

INSTRUMENTS AND ELECTRICAL VERT (SV185)
INSTRUMENTS AND ELECTRICAL VERT (SV185)
INSTRUMENTS AND ELECTRICAL VERT (SV185)
INSTRUMENTS AND ELECTRICAL VERT (SV185)

R	N	P.N.	MOD	Q	Denominação Description Bezeichnung	Denominacion Beskrivelse	Descrizione Beschrijving	L.C.
1		87714969		1	BUZINA, W/Breather AVERTISSEUR SONORE	HORN HUPE	BOCINA HORN	AVVISATORE ACUSTICC 105A CLAXON
2		84425025		1	SUPORTE, Horn Mounting SUPPORT	BRACKET HALTERUNG	SOPORTE BESLAG	STAFFA 225S STEUN
3		9804276		1	PORCA, M6 x 1, Flg, Cl 8 ECROU	NUT MUTTER	TUERCA MØTRIK	DADO 010D MOER
4		9804255		1	PARAFUSO, Hex Flg, M6 x 16, 8.8 VIS	BOLT SCHRAUBE	PERNO BOLT	BULLONE 140B BOUT
5		87030530		1	PARAFUSO, HWHD 3/8x1.75 VIS	SCREW SCHRAUBE	TORNILLO SKRUE	VITE 040V SCHROEF
6		84306337		2	LÂMPADA DE TRABALHO, 37.5 W FEU DE TRAVAIL	WORK LAMP ARBEITSLEUCHTE	LÁMPARA DE TRABAJO ARBEJDSLAMPE	LUCE DI LAVORO 219P WERKLAMP
7		86511838		4	PARAFUSO, Hex Flg, M5 x 12, 8.8, Full Thd VIS	BOLT SCHRAUBE	PERNO BOLT	BULLONE 140B BOUT
8		86588450		4	ARRUELA PLANA, M6 x 12 x 1.6 Thk RONDELLE	WASHER UNTERLEGSCHEIBE	ARANDELA FLADSKIVE	RONDELLA 131R SLUITRING
9		86512495		8	PORCA, M5 x .8, Flg, Cl 8 ECROU	NUT MUTTER	TUERCA MØTRIK	DADO 010D MOER
10		86502967		4	PARAFUSO, Cross Pan Hd, M5 x 30 VIS	SCREW SCHRAUBE	TORNILLO SKRUE	VITE 040V SCHROEF
11		87627854		2	FAROL CONJUNTO, Tail/Stop Incand. FEU (ASSEMBLE)	LIGHT ASSY. LAMPE (KPLT.)	FARO (CONJ) LIGHT ASSY.	LUCE, COMPLESSIVO P478 LIGHT ASSY.
12		603022		1	BRAÇADEIRA, 1 3/4", Insul, 3/8" Bolt COLLIER	CLAMP KLEMME	ABRAZADERA SPÆNDEBÅND	MORSETTO 120M KLEM
13		120104		1	PARAFUSO, Hex, M8 x 20, 8.8 VIS	SCREW SCHRAUBE	TORNILLO SKRUE	VITE 040V SCHROEF
14		84323563		1	CANTONEIRA, Hood Lock Tab CORNIERE	ANGLE WINKEL	ÁNGULO VINKELBESLAG	ANGOLARE 057C HOEKSTUK
15		84296194		1	PEGA DE SUPORTE, FCI Connector EQUERRE	BRACKET, SUPPORTING TRAGER, STUTZ	PIEZA DE APOYO BRACKET, SUPPORTING	SQUADRETTA 215S BRACKET, SUPPORTING
16		87550233		2	PARAFUSO VIS	SCREW SCHRAUBE	TORNILLO SKRUE	VITE 040V SCHROEF
17		126844A1		1	BUJÃO, Switch Hole Cover BOUCHON	PLUG STOPFEN	TAPÓN PROP	TAPPO 050T PLUG
18		84412290		1	ADESIVO, Light Switch AUTOCOLLANT	DECAL AUFKLEBER	CALCOMANÍA TRANSFER	DECALCOMANIA 012D STICKER

55.418.01		p2	03/11

INSTRUMENTS AND ELECTRICAL VERT (SV185)
INSTRUMENTS AND ELECTRICAL VERT (SV185)
INSTRUMENTS AND ELECTRICAL VERT (SV185)
INSTRUMENTS AND ELECTRICAL VERT (SV185)

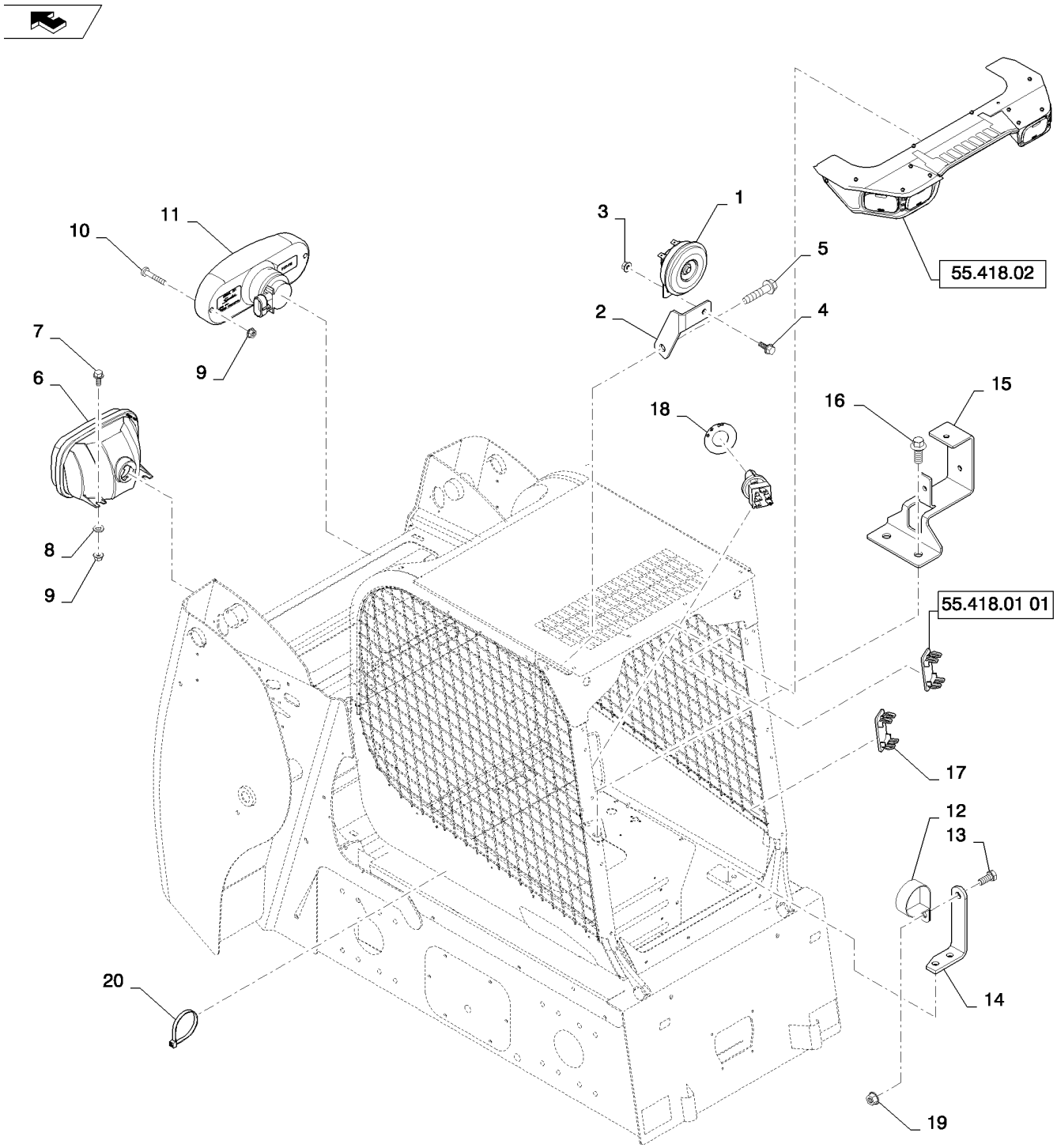

INSTRUMENTS AND ELECTRICAL VERT (SV185)
INSTRUMENTS AND ELECTRICAL VERT (SV185)
INSTRUMENTS AND ELECTRICAL VERT (SV185)
INSTRUMENTS AND ELECTRICAL VERT (SV185)

R	N	P.N.	MOD	Q	Denominação Description	Description Bezeichnung	Denominacion Beskrivelse	Descrizione Beschrijving	L.C.
19		**9804277**		1	PORCA, M8 x 1.25, Flg, Cl 8				
						NUT	TUERCA	DADO	010D
					ECROU	MUTTER	MØTRIK	MOER	
20		**L11541**		10	PRENDEDOR DE CABOS, Tie				
						CABLE STRAP	BANDA DE CABLE	FASCETTA PER CAVO	P716
					BRIDE DE CABLE	KABELBINDER	KABELSTROP	BUNDELBAND	
21		**86625264**		4	TRAVA DA ARRUELA, Ext Tooth, M5, (Not Shown) Used to mount Ref. 6				
						LOCK WASHER	ARANDELA DE BLOQUE	RONDELLA DI SICUREZ	132R
					RONDELLE FREIN	SICHERUNGSSCHEIBE	LÅSESKIVE	BORGRING	

55.418.01	01	p1	05/11

COMMON INSTRUMENTS AND ELEC (ALL CASE)
COMMON INSTRUMENTS AND ELEC (ALL CASE)
COMMON INSTRUMENTS AND ELEC (ALL CASE)
COMMON INSTRUMENTS AND ELEC (ALL CASE)

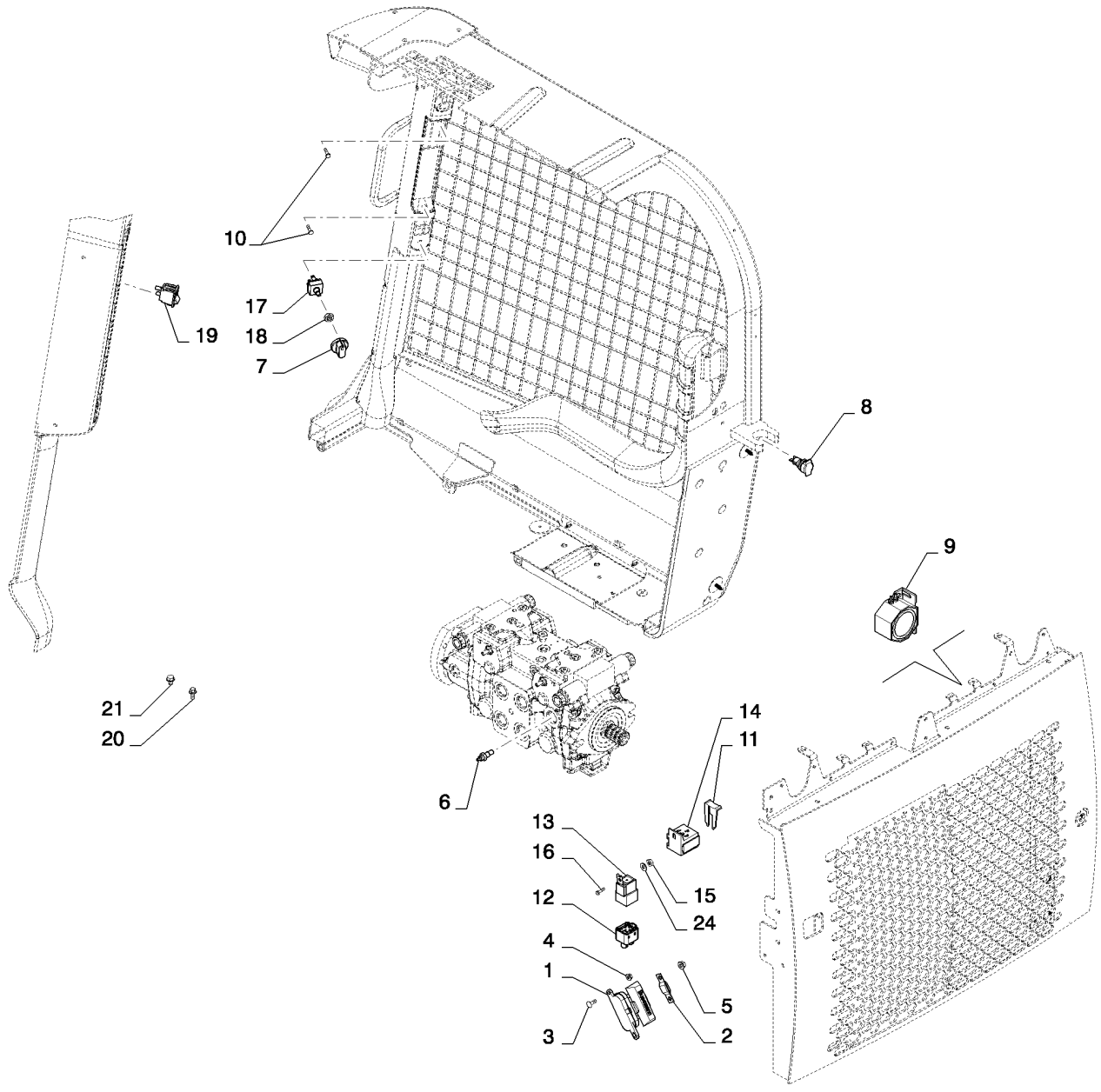

COMMON INSTRUMENTS AND ELEC (ALL CASE)
COMMON INSTRUMENTS AND ELEC (ALL CASE)
COMMON INSTRUMENTS AND ELEC (ALL CASE)
COMMON INSTRUMENTS AND ELEC (ALL CASE)

R	N	P.N.	MOD	Q	Denominação Description	Description Bezeichnung	Denominacion Beskrivelse	Descrizione Beschrijving	L.C.
1		440038A1		1	BLOCO DE JUNÇÃO, Fuse Block				
						JUNCTION BLOCK	BLOQUE DE CONEXIÓN	BASETTA DI GIUNZIONE	Z398
					BLOC DE JONCTION	ANSCHLUSSBLOCK	FORBINDELSESBLOK	VERDEELBLOK	
2		87472238		1	FUSÍVEL, 60 Amp	FUSE	FUSIBLE	FUSIBILE	110F
					FUSIBLE	SICHERUNG	SIKRING	ZEKERING	
3		9706703		2	PARAFUSO, Short NK, M6 x 20, Cl8.8, Full Thd				
						CARRIAGE BOLT	PERNO ALOMADO	BULLONE A TESTA TONI	P123
					VIS A TETE BOMBEE	SCHLOSSSCHRAUBE	BRÆDDEBOLT	SLOTBOUT	
4		9804276		2	PORCA, M6 x 1, Flg, Cl 8	NUT	TUERCA	DADO	010D
					ECROU	MUTTER	MØTRIK	MOER	
5		9804277		2	PORCA, M8 x 1.25, Flg, Cl 8				
						NUT	TUERCA	DADO	010D
					ECROU	MUTTER	MØTRIK	MOER	
6		87688409		1	EMISSOR DE TEMPERATURA, Water				
						TEMPERATURE SENDER	EMISOR DE TEMPERATU	TRASMETT. TEMPERATU	Z366
					TRANSMETTEUR TEMPE	TEMPERATURGEBER	TEMPERATURSENDER	TEMPERATUURSENSOR	
7		86729670		1	MAÇANETA	KNOB	MANDO	MANOPOLA	150P
					BOUTON	RUNDGRIFF	GREB	KNOP	
8		82002966		1	TOMADA ELÉTRICA	POWER SOCKET	ZÓCALO DE CORRIENTE	PRESA DI CORRENTE	205P
					PRISE DE COURANT	STECKDOSE	STRØMUDTAG	CONTACTDOOS	
9		325258A1		1	KIT DE SERVIÇO, Backup Alarm Assembly				
						SERVICE KIT	KIT DE SERVICIO	KIT DI MANUTENZIONE	021K
					KIT D'ENTRETIEN	SERVICE-SATZ	SERVICESÆT	SERVICEKIT	
10		86511042		2	PARAFUSO, Cross Pan Hd, M4 x 16				
						SCREW	TORNILLO	VITE	040V
					VIS	SCHRAUBE	SKRUE	SCHROEF	
11		84352550		1	CONECTOR ELÉTR	ELEC CONNECTOR	CONECTOR ELÉCTRICO	CONNETTORE ELETTRI(	235C
					CONNECTEUR ELECTRI	ELEKTR STECKVERBIND	EL-STIK	CONNECTOR	
12		84359805		1	CONECTOR ELÉTR, Relay Socket 8W				
						ELEC CONNECTOR	CONECTOR ELÉCTRICO	CONNETTORE ELETTRI(	235C
					CONNECTEUR ELECTRI	ELEKTR STECKVERBIND	EL-STIK	CONNECTOR	
13		84297432		1	RELÉ	RELAY	RELÉ	RELÈ	011R
					RELAIS	RELAIS	RELÆ	RELAIS	
14		NSS		1	SEM SERVIÇO EM SEPARADO, Packard Metri-Pack Female 5-Way				
						NOT SERVICED SEPARA	NO SE REPARA POR SE	NON FORNITO SEPARAT	064N
					NON FORUNI SEPAREM	NICHT A SEP ERS-T LIEF	SERVICERES IKKE SEPA	NIET LOS VERKRIJGBAA	
15		87825		1	PORCA, #10-32	NUT	TUERCA	DADO	010D
					ECROU	MUTTER	MØTRIK	MOER	
16		87308282		1	PARAFUSO, Hex Hd, #10-32 x 3/4"				
						SCREW	TORNILLO	VITE	040V
					VIS	SCHRAUBE	SKRUE	SCHROEF	
17		86729669		1	INTERRUPTOR, Blower	SWITCH	INTERRUPTOR	INTERRUTTORE	075I
					CONTACTEUR	SCHALTER	KONTAKT	SCHAKELAAR	
18		87310592		1	PORCA, Jam, 7/16"-28, G5	NUT	TUERCA	DADO	010D
					ECROU	MUTTER	MØTRIK	MOER	
19		133714A1		1	INTERRUPTOR, Rocker, Beacon				
						SWITCH	INTERRUPTOR	COMMUTATORE	8850
					INTERRUPTEUR	SCHALTER	SWITCH	SWITCH	

55.418.01	01	p2	05/11

COMMON INSTRUMENTS AND ELEC (ALL CASE)
COMMON INSTRUMENTS AND ELEC (ALL CASE)
COMMON INSTRUMENTS AND ELEC (ALL CASE)
COMMON INSTRUMENTS AND ELEC (ALL CASE)

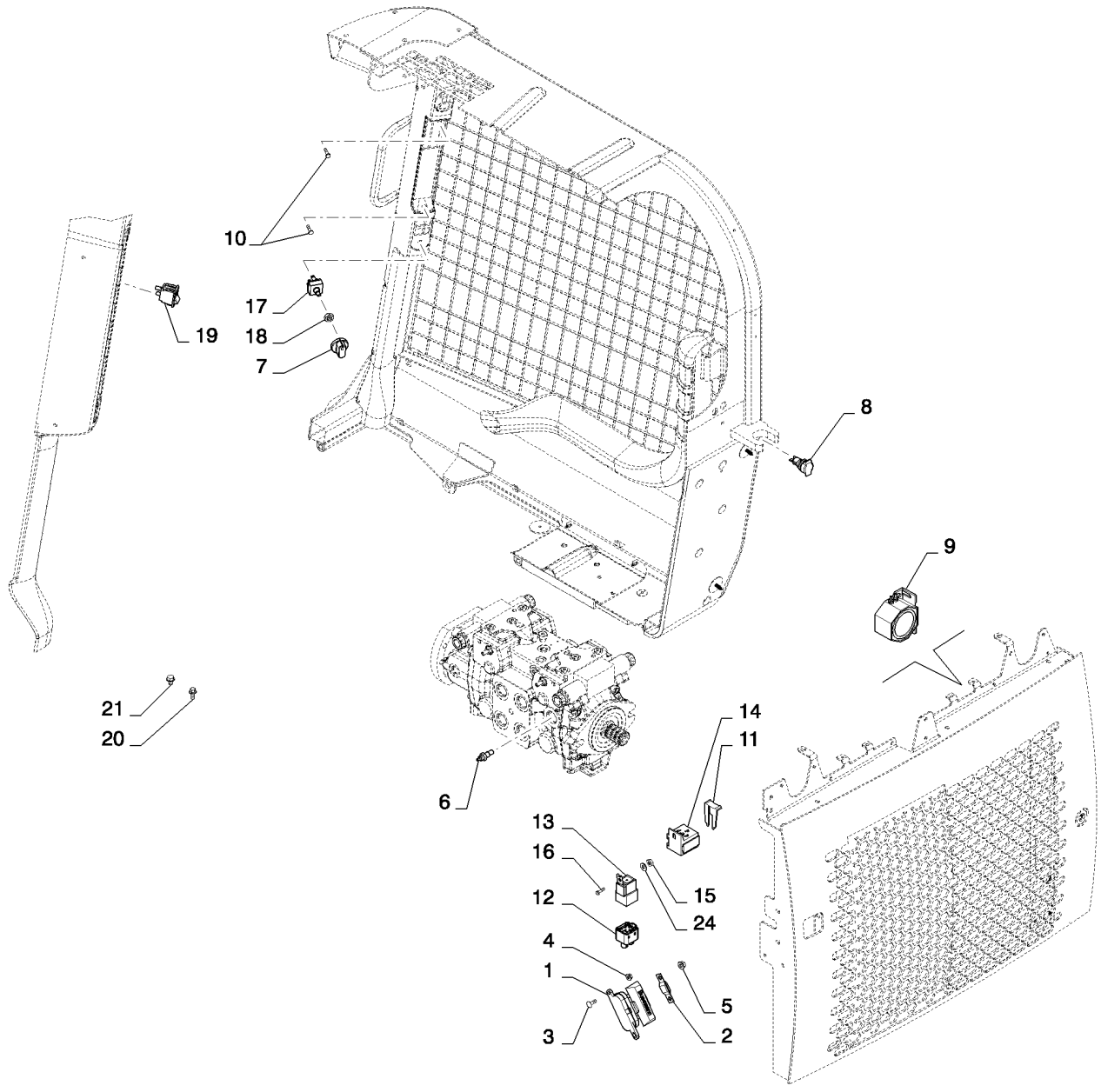

COMMON INSTRUMENTS AND ELEC (ALL CASE)
COMMON INSTRUMENTS AND ELEC (ALL CASE)
COMMON INSTRUMENTS AND ELEC (ALL CASE)
COMMON INSTRUMENTS AND ELEC (ALL CASE)

R	N	P.N.	MOD	Q	Denominação Description	Description Bezeichnung	Denominacion Beskrivelse	Descrizione Beschrijving	L.C.
20		**86625199**		1	PARAFUSO, Hex Flg Hd, M6 x 13				
						SELF-TAP SCREW	TORNILLO AUTORROSC	VITE AUTOFILETTANTE	062V
					VIS AUTOTARAUDEUSE	SELBSTSCHN SCHRAUE	SELVLÅSENDE BOLT	ZELFTAPPENDE SCHRO	
21		**380426**		1	PARAFUSO	SCREW	TORNILLO	VITE	040V
					VIS	SCHRAUBE	SKRUE	SCHROEF	
22		**84360112**		1	SUPORTE, (Not shown)	BRACKET	SOPORTE	STAFFA	225S
					SUPPORT	HALTERUNG	BESLAG	STEUN	
23		**84409478**		1	ADESIVO, LH Post Console (Not shown)				
						DECAL	CALCOMANÍA	DECALCOMANIA	012D
					AUTOCOLLANT	AUFKLEBER	TRANSFER	STICKER	
24		**80707**		2	ARRUELA PLANA, 3/16"	WASHER	ARANDELA	RONDELLA	131R
					RONDELLE	UNTERLEGSCHEIBE	FLADSKIVE	SLUITRING	

55.418.02		p1	05/11

LIGHT ASSY, 55 DEGREE (SV185,SV250,SV300,TV380)
LIGHT ASSY, 55 DEGREE (SV185,SV250,SV300,TV380)
LIGHT ASSY, 55 DEGREE (SV185,SV250,SV300,TV380)
LIGHT ASSY, 55 DEGREE (SV185,SV250,SV300,TV380)

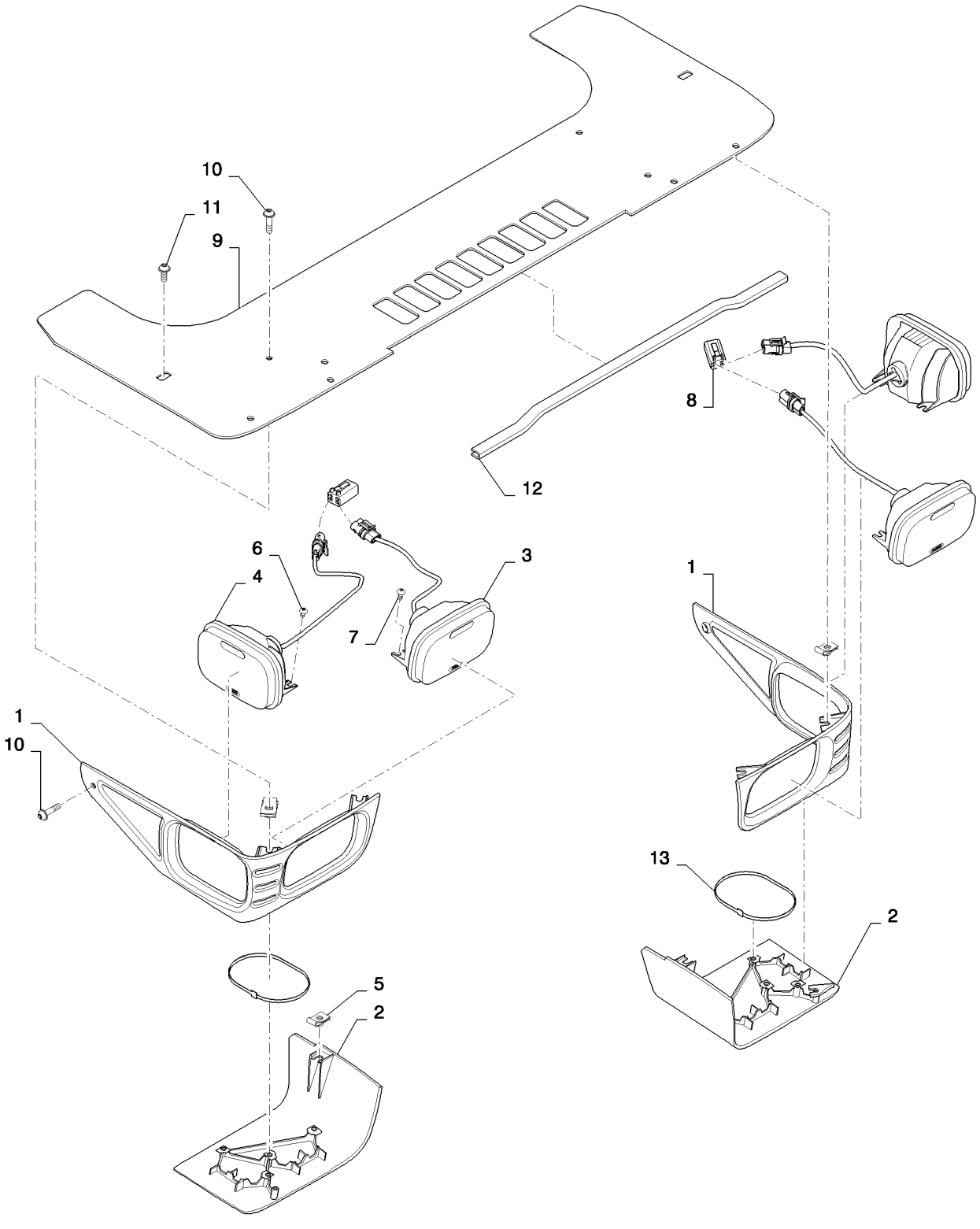

LIGHT ASSY, 55 DEGREE (SV185,SV250,SV300,TV380)
LIGHT ASSY, 55 DEGREE (SV185,SV250,SV300,TV380)
LIGHT ASSY, 55 DEGREE (SV185,SV250,SV300,TV380)
LIGHT ASSY, 55 DEGREE (SV185,SV250,SV300,TV380)

R	N	P.N.	MOD	Q	Denominação Description	Description Bezeichnung	Denominacion Beskrivelse	Descrizione Beschrijving	L.C.
1		84338452		1	ALOJAMENTO, Light, Face LH				
						HOUSING	ALOJAMIENTO	ALLOGGIAMENTO	014V
					CARTER	GEHÄUSE	HUS	HUIS	
1		84338454		1	ALOJAMENTO, Light, Face RH				
						HOUSING	ALOJAMIENTO	ALLOGGIAMENTO	014V
					CARTER	GEHÄUSE	HUS	HUIS	
2		84338451		1	ALOJAMENTO, Light Bottom LH				
						HOUSING	ALOJAMIENTO	ALLOGGIAMENTO	014V
					CARTER	GEHÄUSE	HUS	HUIS	
2		84338455		1	ALOJAMENTO, LIght Bottom RH				
						HOUSING	ALOJAMIENTO	ALLOGGIAMENTO	014V
					CARTER	GEHÄUSE	HUS	HUIS	
3		84306268		2	LÂMPADA DE TRABALHO, 50 W				
						WORK LAMP	LÁMPARA DE TRABAJO	LUCE DI LAVORO	219P
					FEU DE TRAVAIL	ARBEITSLEUCHTE	ARBEJDSLAMPE	WERKLAMP	
4		84306271		2	LÂMPADA DE TRABALHO, 37.5 W				
						WORK LAMP	LÁMPARA DE TRABAJO	LUCE DI LAVORO	219P
					FEU DE TRAVAIL	ARBEITSLEUCHTE	ARBEJDSLAMPE	WERKLAMP	
5		86625073		6	PORCA, M6, U, Spring	NUT	TUERCA	DADO	010D
					ECROU	MUTTER	MØTRIK	MOER	
6		529942		4	PARAFUSO, Cross Pan Hd, #10 x 5/16"				
						SELF-TAP SCREW	TORNILLO AUTORROSC	VITE AUTOFILETTANTE	062V
					VIS AUTOTARAUDEUSE	SELBSTSCHN SCHRAUE	SELVLÅSENDE BOLT	ZELFTAPPENDE SCHRO	
7		87564728		8	PARAFUSO, Tapping PNH XREC #10 x .5				
						SCREW	TORNILLO	VITE	040V
					VIS	SCHRAUBE	SKRUE	SCHROEF	
8		84306340		2	CHICOTE, Lamp Jumper Front				
						WIRE HARNESS	GRUPO DE CABLES	CABLAGGIO	070I
					FAISCEAU ELECTRIQUE	KABELBAUM	KABELNET	KABELBOOM	
9		84338448		1	PEGA DE SUPORTE, Brow	BRACKET, SUPPORTING	PIEZA DE APOYO	SQUADRETTA	215S
					EQUERRE	TRAGER, STUTZ	BRACKET, SUPPORTING	BRACKET, SUPPORTING	
10		84305556		8	PARAFUSO, RWH M6x25 TORX				
						SCREW	TORNILLO	VITE	040V
					VIS	SCHRAUBE	SKRUE	SCHROEF	
11		87682398		4	PARAFUSO, RWH M6x16 TORX				
						SCREW	TORNILLO	VITE	040V
					VIS	SCHRAUBE	SKRUE	SCHROEF	
12		84353803		1	GUARNIÇÃO, Edge 376 mn	TRIM	GUARNICIÓN	RIVESTIMENTO	C046
					GARNITURE	VERKLEIDUNG	INDTRÆK	BEKLEDING	
13		263117		2	PRENDEDOR DE CABOS, .14" x 11 1/2"				
						CABLE STRAP	BANDA DE CABLE	FASCETTA PER CAVO	P716
					BRIDE DE CABLE	KABELBINDER	KABELSTROP	BUNDELBAND	
14		86624182		4	ARRUELA PLANA, M6 x 18 x 1.6, (Not Shown) Use 2 with Ref. 10, 2x				
						WASHER	ARANDELA	RONDELLA	131R
					RONDELLE	UNTERLEGSCHEIBE	FLADSKIVE	SLUITRING	

55.512.01		p1	05/11

IGNITION AND DISPLAY, KEYED/KEYLESS CASE (ALL CASE)
IGNITION AND DISPLAY, KEYED/KEYLESS CASE (ALL CASE)
IGNITION AND DISPLAY, KEYED/KEYLESS CASE (ALL CASE)
IGNITION AND DISPLAY, KEYED/KEYLESS CASE (ALL CASE)

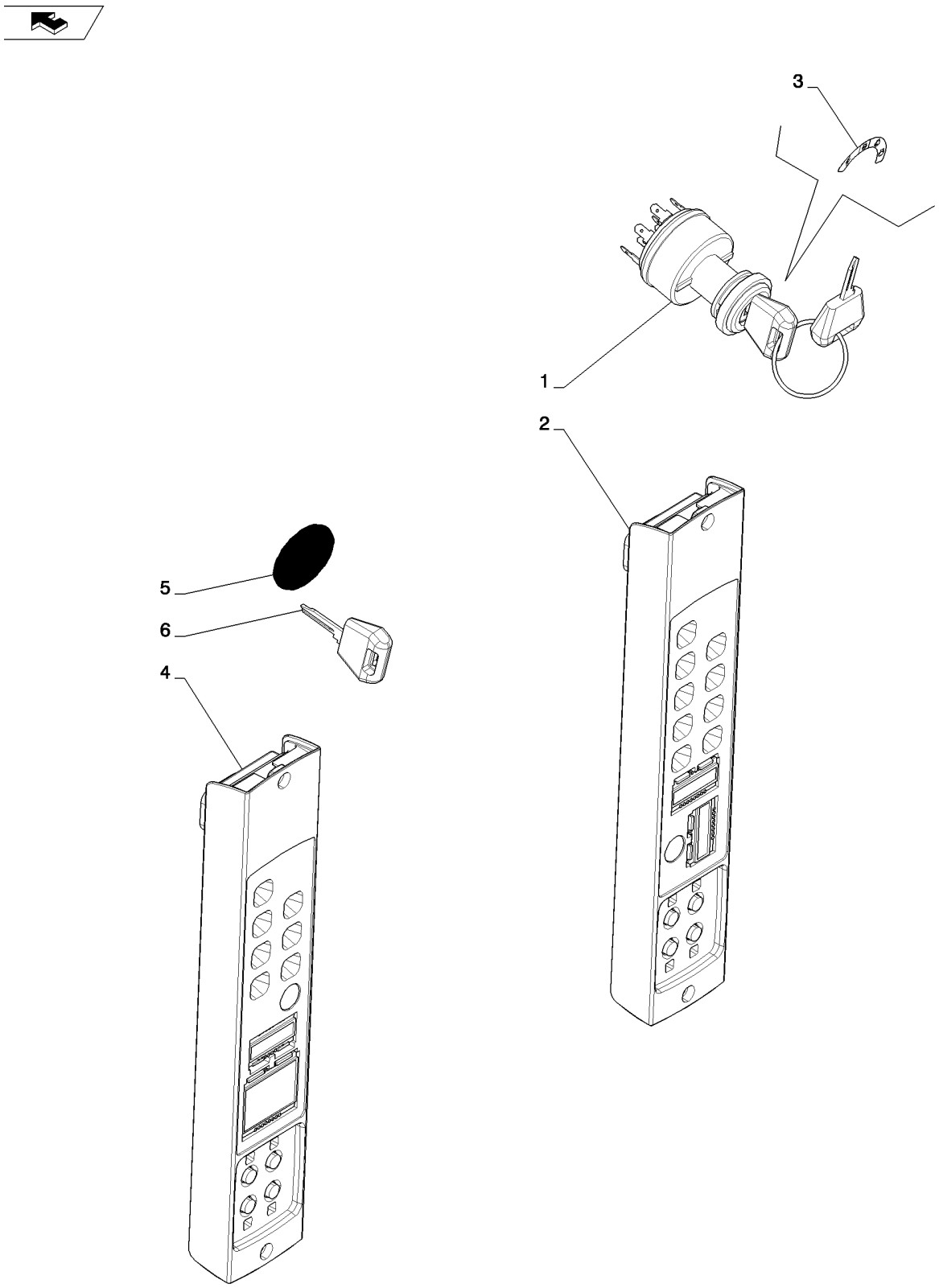

IGNITION AND DISPLAY, KEYED/KEYLESS CASE (ALL CASE)
IGNITION AND DISPLAY, KEYED/KEYLESS CASE (ALL CASE)
IGNITION AND DISPLAY, KEYED/KEYLESS CASE (ALL CASE)
IGNITION AND DISPLAY, KEYED/KEYLESS CASE (ALL CASE)

R	N	P.N.	MOD	Q	Denominação Description Bezeichnung Beskrivelse Descrizione Beschrijving	L.C.
1		282775A1		1	COMUTADOR, W/Padded Key IGNITION SWITCH / CONMUTADOR DE ARR / INTERRUTTORE ACCEN CONTACTEUR DE DEM / ZÜNDSCHALTER / KONTAKT, TÆNDING / CONTACTSCHAKELAAR	P654
2		84384712		1	CONJUNTO DE INSTRUMENTOS, Instrument Cluster, Case Standard INSTRUMENT CLUSTER / GRUPO DE INSTRUMEN / QUADRO STRUMENTI TABLEAU DE BORD / KOMBIINSTRUMENT / KOMBIINSTRUMENT / INSTRUMENTENPANEEL	288S
3		84377886		1	ADESIVO, Key Switch Case DECAL / CALCOMANÍA / DECALCOMANIA AUTOCOLLANT / AUFKLEBER / TRANSFER / STICKER	012D
4		84239241		1	CONJ INSTRUMEN MILHAGEM, Instrument Cluster, Case Deluxe, Keyless MILES INSTRUMENT CL / GRUPO DE INSTR. DE M / QUADRO STRUM. CONT TABLEAU DE BORD (MIL / KOMBIINSTRUMENT (ME / INSTRUMENTBRÆT, MIL / INSTRUM.PANEEL V. MI	287S
5		84270680		1	ADESIVO, Key Blank DECAL / CALCOMANÍA / DECALCOMANIA AUTOCOLLANT / AUFKLEBER / TRANSFER / STICKER	012D
6		1964831C2		1	JOGO 2 CHAVES, Padded Case Logo SET OF 2 KEYS / JUEGO DE 2 LLAVES / KIT DI 2 CHIAVI JEU DE 2 CLES / SATZ 2 SCHLÜSSEL / SKRUENØGLESÆT / SET VAN 2 SLEUTELS	Z524

55.514.01		p1	03/11

EU ROAD LIGHTS MED VERT CASE (SV185)
EU ROAD LIGHTS MED VERT CASE (SV185)
EU ROAD LIGHTS MED VERT CASE (SV185)
EU ROAD LIGHTS MED VERT CASE (SV185)

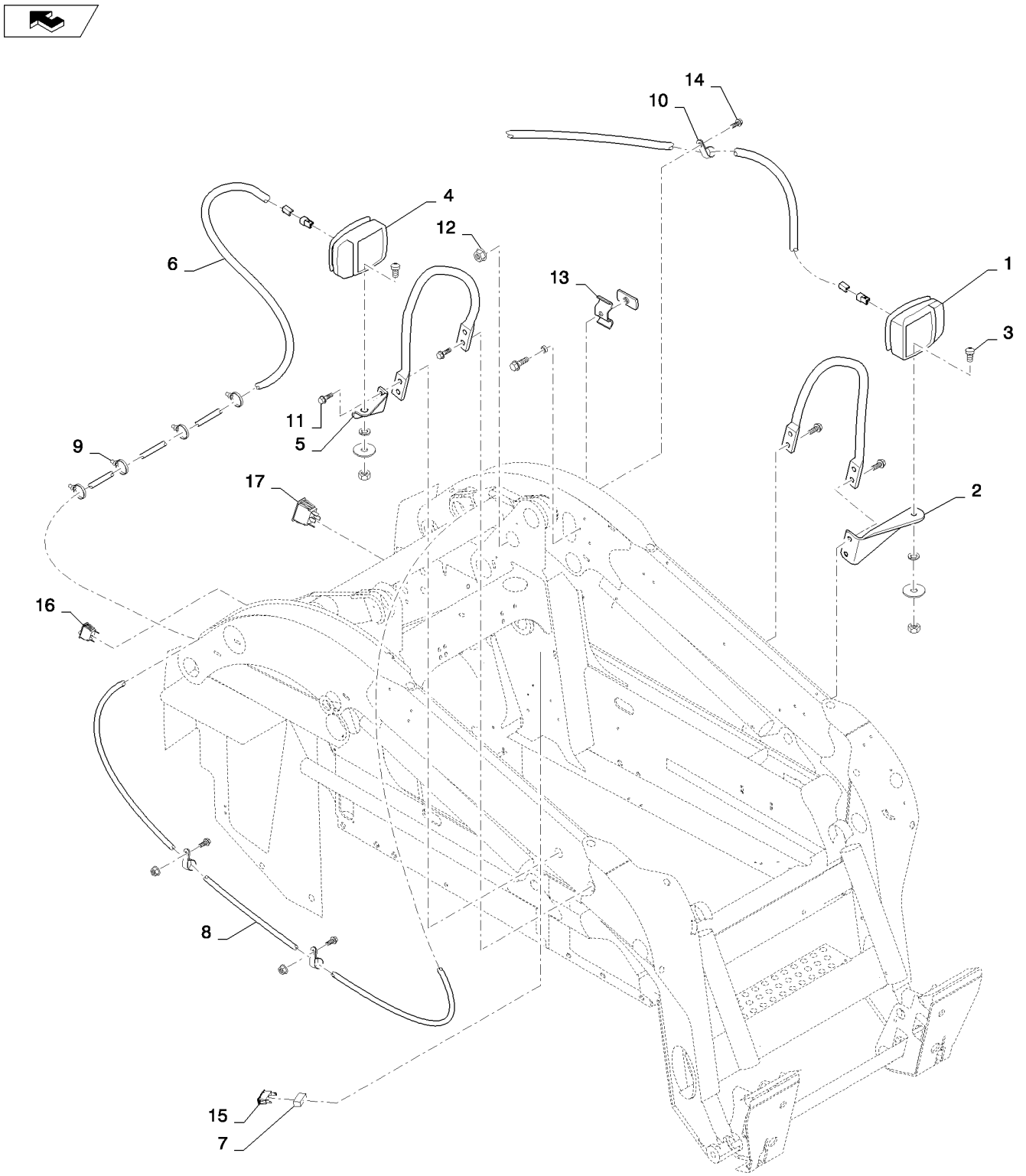

EU ROAD LIGHTS MED VERT CASE (SV185)
EU ROAD LIGHTS MED VERT CASE (SV185)
EU ROAD LIGHTS MED VERT CASE (SV185)
EU ROAD LIGHTS MED VERT CASE (SV185)

R	N	P.N.	MOD	Q	Denominação Description	Description Bezeichnung	Denominacion Beskrivelse	Descrizione Beschrijving	L.C.
1		87572860		1	LÂMPADA, EU Boom, Left Lamp				
						LAMP	LÁMPARA	SPIA	009F
					LAMPE	LEUCHTE	LYGTE	LAMP	
2		84306583		1	SUPORTE, Light, LH, Tan	BRACKET	SOPORTE	STAFFA	225S
					SUPPORT	HALTERUNG	BESLAG	STEUN	
3		280476		4	PARAFUSO, Hex Wash Hd, 3/8" x 1"				
						SELF-TAP SCREW	TORNILLO AUTORROSC	VITE AUTOFILETTANTE	062V
					VIS AUTOTARAUDEUSE	SELBSTSCHN SCHRAUE	SELVLÅSENDE BOLT	ZELFTAPPENDE SCHRO	
4		87572859		1	LÂMPADA, EU Boom, Right Lamp				
						LAMP	LÁMPARA	SPIA	009F
					LAMPE	LEUCHTE	LYGTE	LAMP	
5		84306585		1	SUPORTE, Light, RH, Tan	BRACKET	SOPORTE	STAFFA	225S
					SUPPORT	HALTERUNG	BESLAG	STEUN	
6		84262452		1	CHICOTE, FE Boom VT	WIRE HARNESS	GRUPO DE CABLES	CABLAGGIO	070I
					FAISCEAU ELECTRIQUE	KABELBAUM	KABELNET	KABELBOOM	
7		9821783		1	LÂMPADA INTERMITENTE, Assembly				
						FLASHER UNIT	UNIDAD INTERMITENTE	UNITÀ LAMPEGGIATORE	035L
					CENTRALE CLIGNOTAN	BLINKEREINHEIT	BLINKLAMPE	KNIPPERAUTOMAAT	
8		84383307		1	CHICOTE, Rear, Road Jumper				
						WIRE HARNESS	GRUPO DE CABLES	CABLAGGIO	070I
					FAISCEAU ELECTRIQUE	KABELBAUM	KABELNET	KABELBOOM	
9		87668737		4	TIRA, Fir Tree Assembly	STRAP	BANDA	FASCETTA	532B
					BRIDE	BAND	STROP	RIEM	
10		87029955		1	BRAÇADEIRA, 7/8", Insul, 3/8" Bolt				
						CLAMP	ABRAZADERA	MORSETTO	120M
					COLLIER	KLEMME	SPÆNDEBÅND	KLEM	
11		86637977		1	BRAÇADEIRA, 1", Insul, 5/16" Bolt				
						CLAMP	ABRAZADERA	MORSETTO	120M
					COLLIER	KLEMME	SPÆNDEBÅND	KLEM	
12		86505868		2	PORCA, M8, Flg Ser	NUT	TUERCA	DADO	010D
					ECROU	MUTTER	MØTRIK	MOER	
13		86632595		2	BRAÇADEIRA, 1/2", Insul, 1/2" Bolt				
						CLAMP	ABRAZADERA	MORSETTO	120M
					COLLIER	KLEMME	SPÆNDEBÅND	KLEM	
14		9804260		2	PARAFUSO, Hex Flg, M8 x 30, 8.8, Full Thd				
						BOLT	PERNO	BULLONE	140B
					VIS	SCHRAUBE	BOLT	BOUT	
15		86604657		1	INDICADOR DE DIREÇÃO	TURN SIGNAL INDICATC	INDIC. DE SEÑAL DE GIF	INDICATORE DI DIREZIC	029I
					CLIGNOTANT	FAHRTRICHTUNGSANZE	RETNINGSVISER	RICHTINGAANWIJZER	
16		87634133		1	INTERRUPTOR, Hazard Lights				
						SWITCH	INTERRUPTOR	INTERRUTTORE	075I
					CONTACTEUR	SCHALTER	KONTAKT	SCHAKELAAR	
17		84263153		1	INTERRUPTOR, Rocker, Loader Lockout				
						SWITCH	INTERRUPTOR	INTERRUTTORE	075I
					CONTACTEUR	SCHALTER	KONTAKT	SCHAKELAAR	
18		86625035		2	BRAÇADEIRA, 1/2", Insul, 1/4" Bolt				
						CLAMP	ABRAZADERA	MORSETTO	120M
					COLLIER	KLEMME	SPÆNDEBÅND	KLEM	

SV185

55.514.01		p2	03/11

EU ROAD LIGHTS MED VERT CASE (SV185)
EU ROAD LIGHTS MED VERT CASE (SV185)
EU ROAD LIGHTS MED VERT CASE (SV185)
EU ROAD LIGHTS MED VERT CASE (SV185)

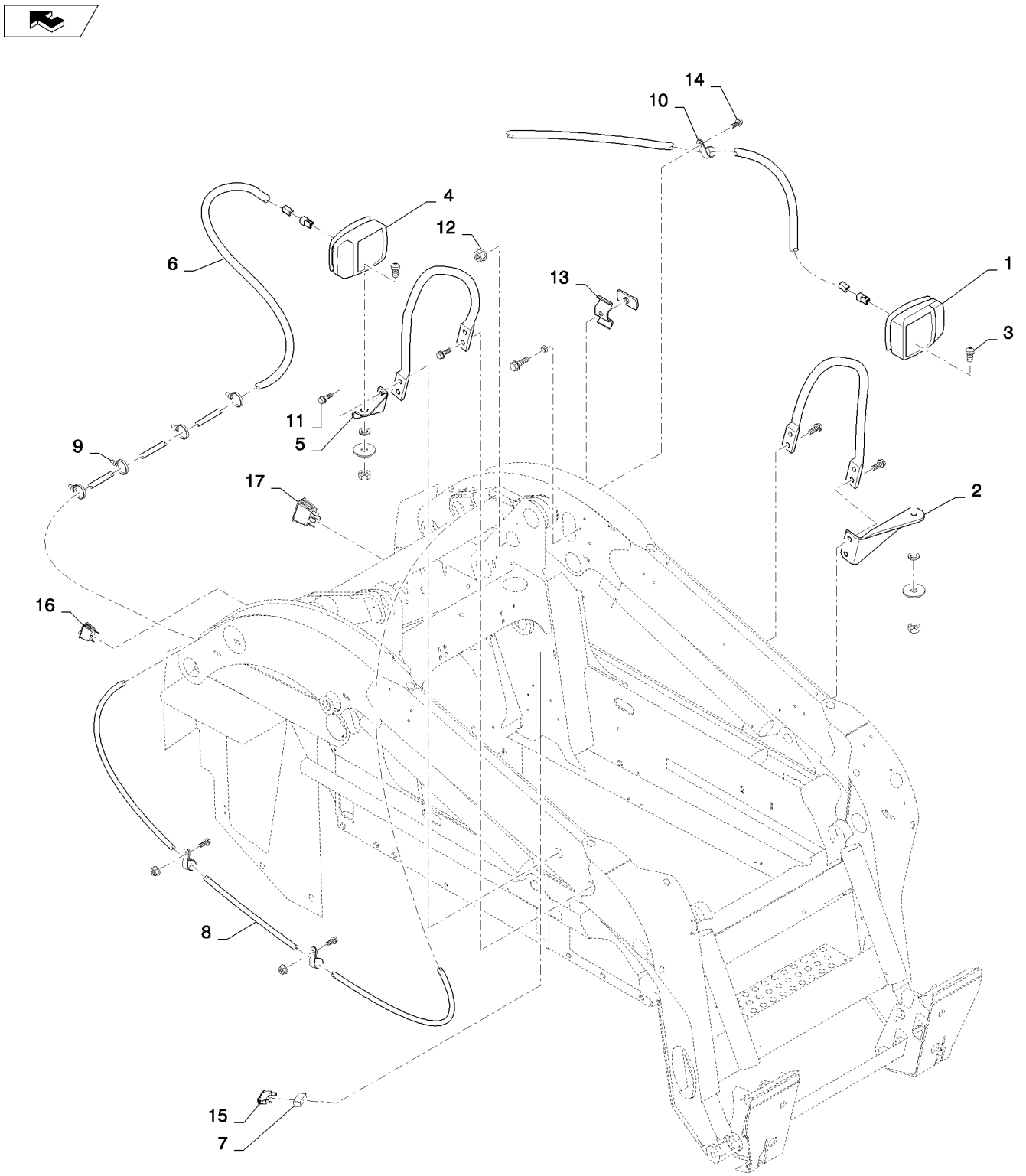

EU ROAD LIGHTS MED VERT CASE (SV185)
EU ROAD LIGHTS MED VERT CASE (SV185)
EU ROAD LIGHTS MED VERT CASE (SV185)
EU ROAD LIGHTS MED VERT CASE (SV185)

R	N	P.N.	MOD	Q	Denominação Description	Description Bezeichnung	Denominacion Beskrivelse	Descrizione Beschrijving	L.C.
19		**84467699**		2	BRAÇADEIRA, 12.7 mm COLLIER	CLAMP KLEMME	ABRAZADERA SPÆNDEBÅND	MORSETTO KLEM	120M
20		**84420530**		2	CHICOTE, Boom LH Vert FAISCEAU ELECTRIQUE	WIRE HARNESS KABELBAUM	GRUPO DE CABLES KABELNET	CABLAGGIO KABELBOOM	070I
21		**84416164**		2	ESPUMA ISOLANTE MOUSSE ISOLANTE	FOAM INSULATION SCHAUMSTOFFISOLIER	ESPUMA AISLANTE SKUM ISOLERING	ISOLANTE IN SCHIUMA SCHUIMISOLATIE	051S
22		**131691A1**		1	INTERRUPTOR, Rocker INTERRUPTEUR	SWITCH SCHALTER	INTERRUPTOR SWITCH	COMMUTATORE SWITCH	8850

55.514.02		p1	01/11

NO ROAD LIGHTS OR TURN SIGNAL (ALL CASE)
NO ROAD LIGHTS OR TURN SIGNAL (ALL CASE)
NO ROAD LIGHTS OR TURN SIGNAL (ALL CASE)
NO ROAD LIGHTS OR TURN SIGNAL (ALL CASE)

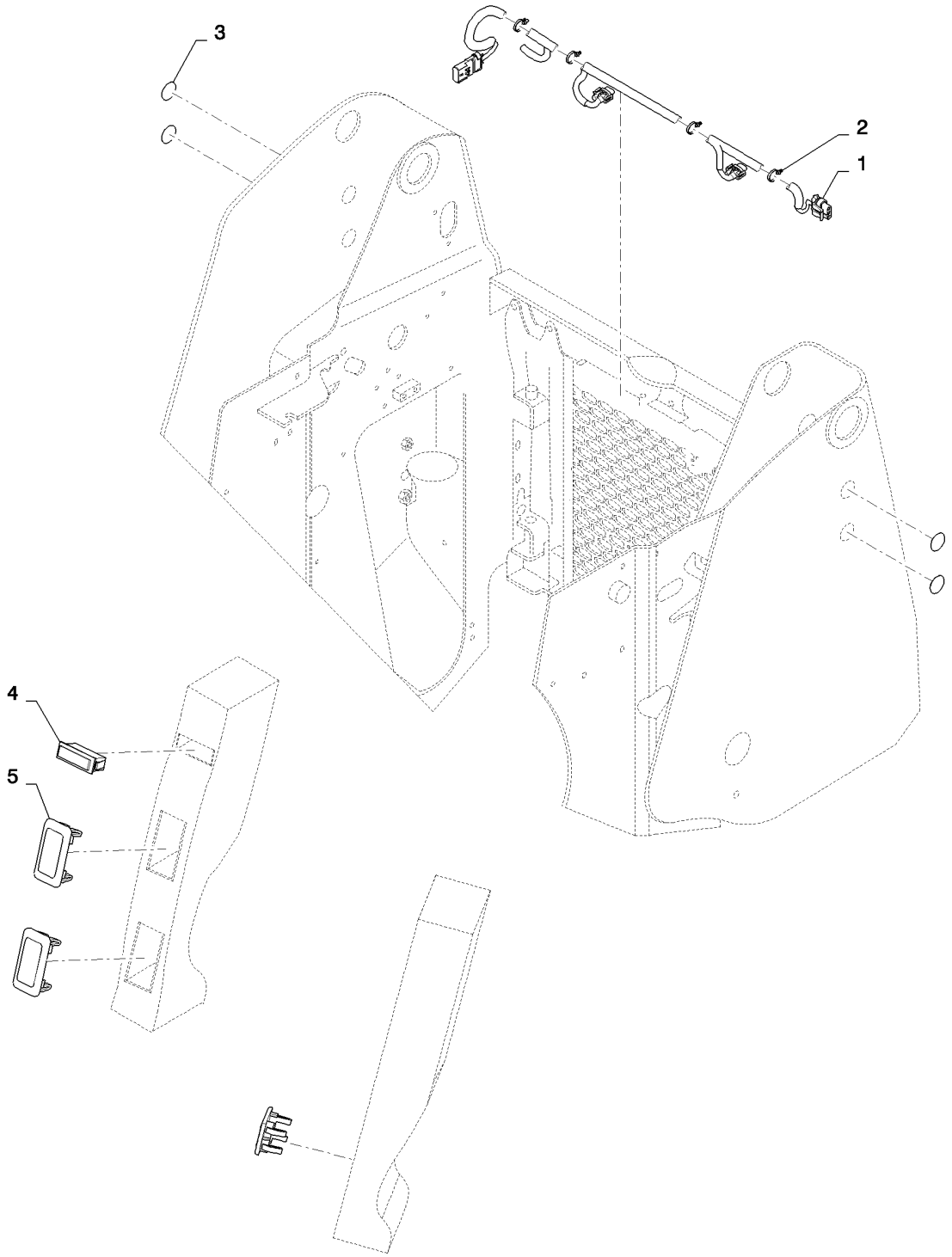

NO ROAD LIGHTS OR TURN SIGNAL (ALL CASE)
NO ROAD LIGHTS OR TURN SIGNAL (ALL CASE)
NO ROAD LIGHTS OR TURN SIGNAL (ALL CASE)
NO ROAD LIGHTS OR TURN SIGNAL (ALL CASE)

R	N	P.N.	MOD	Q	Denominação Description Bezeichnung	Description Bezeichnung	Denominacion Beskrivelse	Descrizione Beschrijving	L.C.
1		84251331		1	CHICOTE, Rear, Lamp Jumper FAISCEAU ELECTRIQUE	WIRE HARNESS KABELBAUM	GRUPO DE CABLES KABELNET	CABLAGGIO KABELBOOM	070I
2		87668737		4	TIRA, Fir Tree Assembly BRIDE	STRAP BAND	BANDA STROP	FASCETTA RIEM	532B
3		299274A2		4	TAMPA, Lexan COUVERCLE	COVER DECKEL	TAPA COVER	COPERCHIO COVER	2250
4		86627432		1	BUJÃO DE PLÁSTICO BOUCHON EN PLASTIQU	PLASTIC PLUG KUNSTSTOFFSTOPFEN	TAPÓN DE PLÁSTICO PLASTPROP	TAPPO IN PLASTICA KUNSTSTOFPLUG	Z412
5		126844A1		3	BUJÃO, Cover BOUCHON	PLUG STOPFEN	TAPÓN PROP	TAPPO PLUG	050T

55.514.05		p1	01/11

LIGHT ASSEMBLY REAR ROAD (ALL CASE)
LIGHT ASSEMBLY REAR ROAD (ALL CASE)
LIGHT ASSEMBLY REAR ROAD (ALL CASE)
LIGHT ASSEMBLY REAR ROAD (ALL CASE)

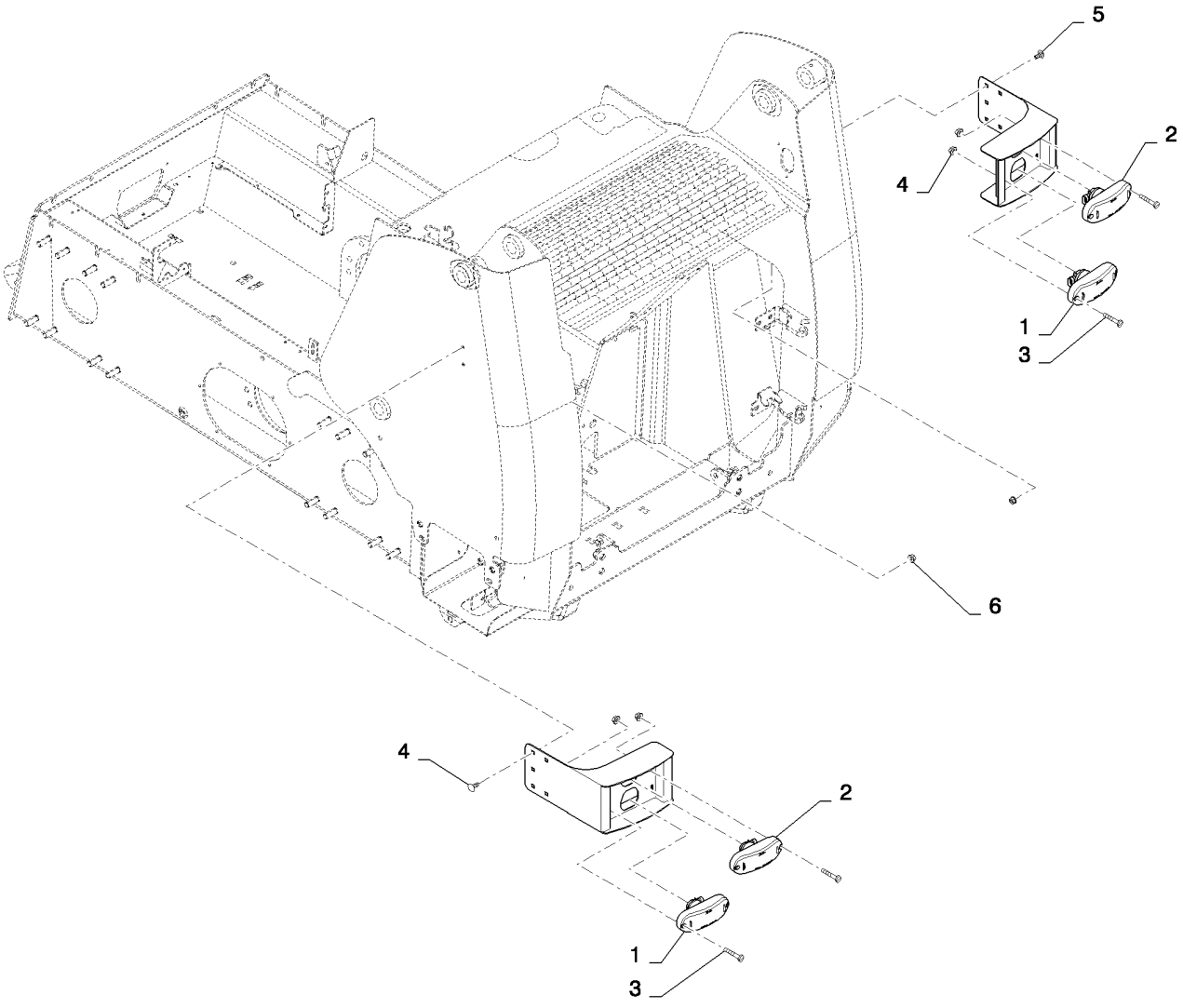

LIGHT ASSEMBLY REAR ROAD (ALL CASE)
LIGHT ASSEMBLY REAR ROAD (ALL CASE)
LIGHT ASSEMBLY REAR ROAD (ALL CASE)
LIGHT ASSEMBLY REAR ROAD (ALL CASE)

R	N	P.N.	MOD	Q	Denominação Description	Description Bezeichnung	Denominacion Beskrivelse	Descrizione Beschrijving	L.C.
1		87629587		2	FAROL CONJUNTO, Warning Lamp				
						LIGHT ASSY.	FARO (CONJ)	LUCE, COMPLESSIVO	P478
					FEU (ASSEMBLE)	LAMPE (KPLT.)	LIGHT ASSY.	LIGHT ASSY.	
2		87627854		2	FAROL CONJUNTO, Rear Stop, Tail Lamp				
						LIGHT ASSY.	FARO (CONJ)	LUCE, COMPLESSIVO	P478
					FEU (ASSEMBLE)	LAMPE (KPLT.)	LIGHT ASSY.	LIGHT ASSY.	
3		86502967		8	PARAFUSO, Cross Pan Hd, M5 x 30				
						SCREW	TORNILLO	VITE	040V
					VIS	SCHRAUBE	SKRUE	SCHROEF	
4		86512495		8	PORCA, M5 x .8, Flg, Cl 8	NUT	TUERCA	DADO	010D
					ECROU	MUTTER	MØTRIK	MOER	
5		86512420		4	PARAFUSO, Short NK, M8 x 20, Cl8.8, Full Thd				
						CARRIAGE BOLT	PERNO ALOMADO	BULLONE A TESTA TONI	P123
					VIS A TETE BOMBEE	SCHLOSSSCHRAUBE	BRÆDDEBOLT	SLOTBOUT	
6		9804277		4	PORCA, M8 x 1.25, Flg, Cl 8				
						NUT	TUERCA	DADO	010D
					ECROU	MUTTER	MØTRIK	MOER	

55.514.09		p1	02/11

LAMP WORK REAR ASSEMBLY (SV185,SV250,SV300,TV380)
LAMP WORK REAR ASSEMBLY (SV185,SV250,SV300,TV380)
LAMP WORK REAR ASSEMBLY (SV185,SV250,SV300,TV380)
LAMP WORK REAR ASSEMBLY (SV185,SV250,SV300,TV380)

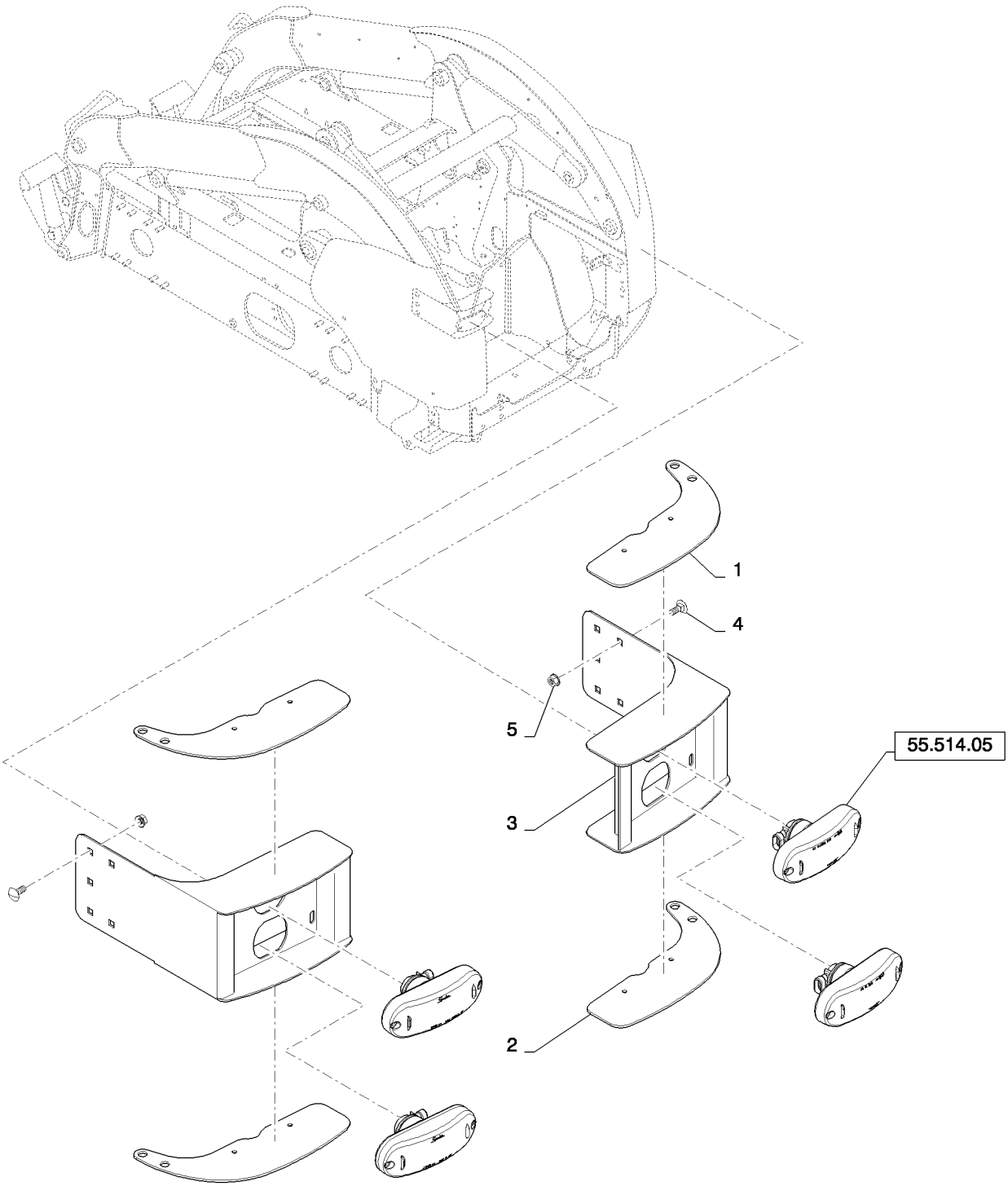

LAMP WORK REAR ASSEMBLY (SV185,SV250,SV300,TV380)
LAMP WORK REAR ASSEMBLY (SV185,SV250,SV300,TV380)
LAMP WORK REAR ASSEMBLY (SV185,SV250,SV300,TV380)
LAMP WORK REAR ASSEMBLY (SV185,SV250,SV300,TV380)

R	N	P.N.	MOD	Q	Denominação Description	Description Bezeichnung	Denominacion Beskrivelse	Descrizione Beschrijving	L.C.
1		84419628		2	SUPORTE, RR, Road Light, Power Tan				
						BRACKET	SOPORTE	STAFFA	225S
					SUPPORT	HALTERUNG	BESLAG	STEUN	
2		84383468		2	SUPORTE, Radial, Tan	BRACKET	SOPORTE	STAFFA	225S
					SUPPORT	HALTERUNG	BESLAG	STEUN	
3		84384442		2	SUPORTE, Vertical, Tan	BRACKET	SOPORTE	STAFFA	225S
					SUPPORT	HALTERUNG	BESLAG	STEUN	
4		86511844		2	PARAFUSO, Screw	BOLT	PERNO	BULLONE	140B
					VIS	SCHRAUBE	BOLT	BOUT	
5		9804277		2	PORCA, M8 x 1.25, Flg, Cl 8				
						NUT	TUERCA	DADO	010D
					ECROU	MUTTER	MØTRIK	MOER	

SECTION INDEX

82 - Pá carregadeira dianteira

82.100.01	01	BUCKETS - LOADER, DIRT / FOUNDRY
82.100.01	02	BUCKETS - LOADER, LOW PROFILE, EXTENDED LOW PROFILE
82.100.01	03	BUCKETS - LOADER, UTILITY / LIGHT MATERIAL
82.100.01	04	BUCKETS - LOADER, HEAVY DUTY DIRT
82.100.01	05	BUCKETS - LOADER, MANURE / SLURRY
82.100.02		BUCKET, BOLT ON CUTTING EDGE (B.O.C.E.) (ALL CASE)
82.100.03		PALLET FORK 48 TINE (ALL CASE)
82.100.04	01	SPILL GUARD 66 TAN (SR130-SR200)
82.100.04	02	SPILL GUARD 72 TAN (SR130-TR270)
82.100.04	03	SPILL GUARD 78 TAN (SR175-TV380)

82.100.01	01	p1	08/11

BUCKETS - LOADER, DIRT / FOUNDRY
BUCKETS - LOADER, DIRT / FOUNDRY
CUCHARON - CARGADORA, SUCIEDAD/FUNDICIÓN
BENNE - CARICATORE

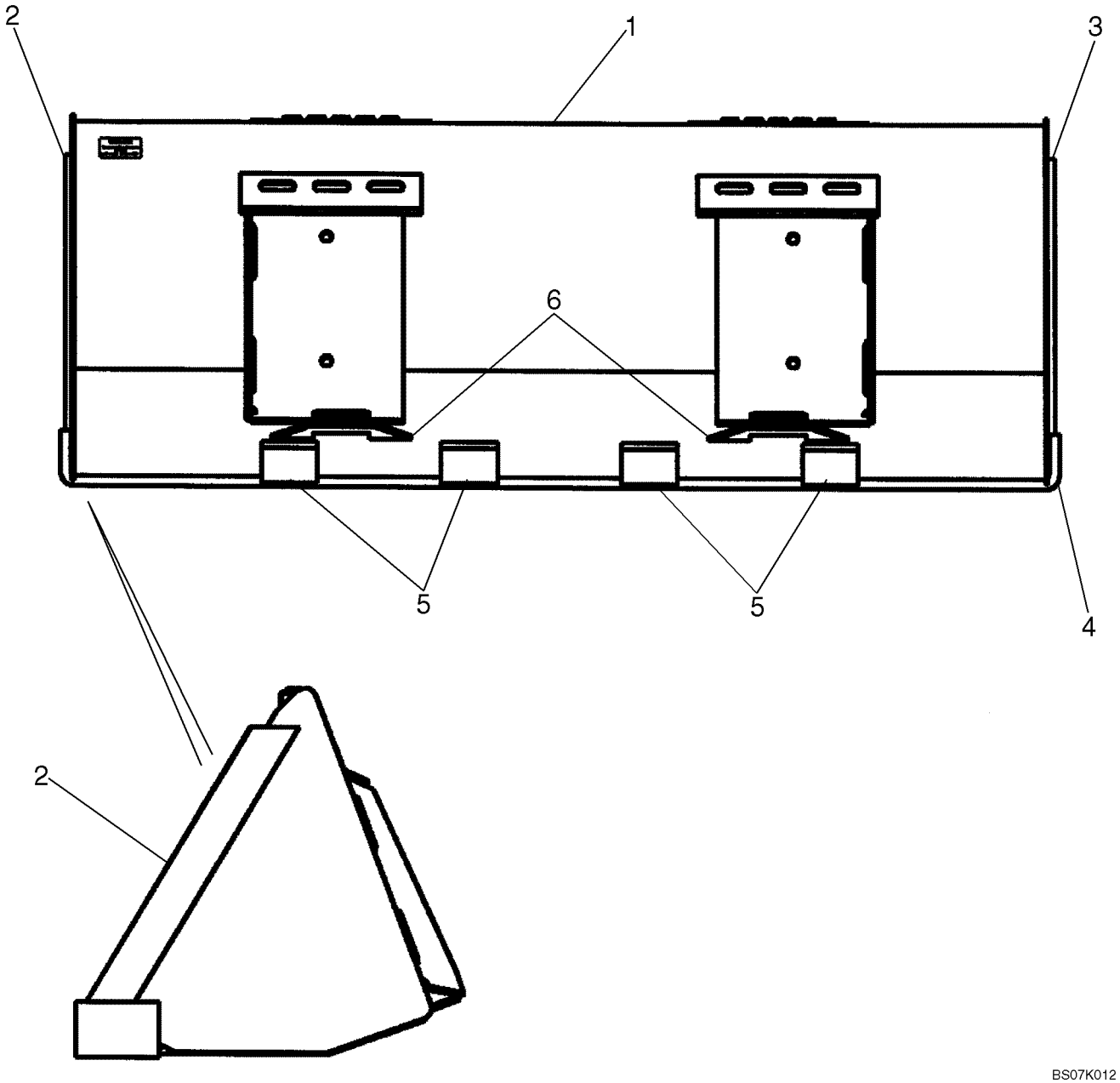

GODETS - CHARGEUSE, POUSSIÈRE/FONDERIE
LADESCHAUFELN - LADER
SKOVLE - LÆSSER
GRAAFBAKKEN - LADER

R	N	P.N.	MOD	Q	Denominação Description	Description Bezeichnung	Denominacion Beskrivelse	Descrizione Beschrijving	L.C.
		REF			INSTRUÇÃO, DIRT / FOUNDRY				
						INSTRUCTION	INSTRUCCIÓN	ISTRUZIONI	Z571
					INSTRUCTION	ANLEITUNG	INSTRUKTION	INSTRUCTIE	
1		**86618349**		1	CAÇAMBA, 60 Inch; Order From Machinery Price List; Incl. 2 - 6				
						BUCKET	CUCHARA	BENNA	035B
					GODET	LÖFFEL	SKOVL	GRAAFBAK	
2		**9841636**		1	BORDA CORTANTE, LH Cutter				
						CUTTING EDGE	BORDE DE CORTE	BORDO TAGLIENTE	018T
					BORD TRANCHANT	SCHNEIDKANTE	SKÆREKANT	SNIJRAND	
3		**9841637**		1	BORDA CORTANTE, RH Cutter				
						CUTTING EDGE	BORDE DE CORTE	BORDO TAGLIENTE	018T
					BORD TRANCHANT	SCHNEIDKANTE	SKÆREKANT	SNIJRAND	
4		**86577164**		1	BORDA CORTANTE, Weld On Blade 60 in				
						CUTTING EDGE	BORDE DE CORTE	BORDO TAGLIENTE	018T
					BORD TRANCHANT	SCHNEIDKANTE	SKÆREKANT	SNIJRAND	
5		**86501841**		3	BARRA, Skid Bar	BAR	BARRA	BARRA	530B
					BARRE	BAR	BJÆLKE	STANG	
6		**9822175**		2	PLACA	PLATE	PLACA	PIASTRA	105P
					PLAQUE	PLATTE	PLADE	PLAAT	
1A		**86618350**		1	CAÇAMBA, 66 Inch; Order From Machinery Price List; Incl. 2A - 6A				
						BUCKET	CUCHARA	BENNA	035B
					GODET	LÖFFEL	SKOVL	GRAAFBAK	
2A		**87014505**		1	LÂMINA DE CORTE, LH Cutter				
						CUTTING BLADE	HOJA DE CORTE	LAMA DI TAGLIO	600L
					LAME DE COUPE	SCHNEIDMESSER	KNIVBLAD	MAAIBLAD	
3A		**87014504**		1	LÂMINA DE CORTE, RH Cutter				
						CUTTING BLADE	HOJA DE CORTE	LAMA DI TAGLIO	600L
					LAME DE COUPE	SCHNEIDMESSER	KNIVBLAD	MAAIBLAD	
4A		**86577166**		1	BORDA CORTANTE, Weld On Blade 66 in				
						CUTTING EDGE	BORDE DE CORTE	BORDO TAGLIENTE	018T
					BORD TRANCHANT	SCHNEIDKANTE	SKÆREKANT	SNIJRAND	
5A		**87016983**		3	BARRA, Skid Bar	BAR	BARRA	BARRA	530B
					BARRE	BAR	BJÆLKE	STANG	
6A		**9822175**		2	PLACA	PLATE	PLACA	PIASTRA	105P
					PLAQUE	PLATTE	PLADE	PLAAT	
1B		**86618351**		1	CAÇAMBA, 72 Inch; Order From Machinery Price List; Incl. 2B - 6B				
						BUCKET	CUCHARA	BENNA	035B
					GODET	LÖFFEL	SKOVL	GRAAFBAK	
2B		**87014505**		1	LÂMINA DE CORTE, LH Cutter				
						CUTTING BLADE	HOJA DE CORTE	LAMA DI TAGLIO	600L
					LAME DE COUPE	SCHNEIDMESSER	KNIVBLAD	MAAIBLAD	
3B		**87014504**		1	LÂMINA DE CORTE, RH Cutter				
						CUTTING BLADE	HOJA DE CORTE	LAMA DI TAGLIO	600L
					LAME DE COUPE	SCHNEIDMESSER	KNIVBLAD	MAAIBLAD	
4B		**86577168**		1	BORDA CORTANTE, Weld On Blade 72 in				
						CUTTING EDGE	BORDE DE CORTE	BORDO TAGLIENTE	018T
					BORD TRANCHANT	SCHNEIDKANTE	SKÆREKANT	SNIJRAND	
5B		**87016983**		4	BARRA, Skid Bar	BAR	BARRA	BARRA	530B
					BARRE	BAR	BJÆLKE	STANG	

BUCKETS - LOADER, DIRT / FOUNDRY
BUCKETS - LOADER, DIRT / FOUNDRY
CUCHARON - CARGADORA, SUCIEDAD/FUNDICIÓN
BENNE - CARICATORE

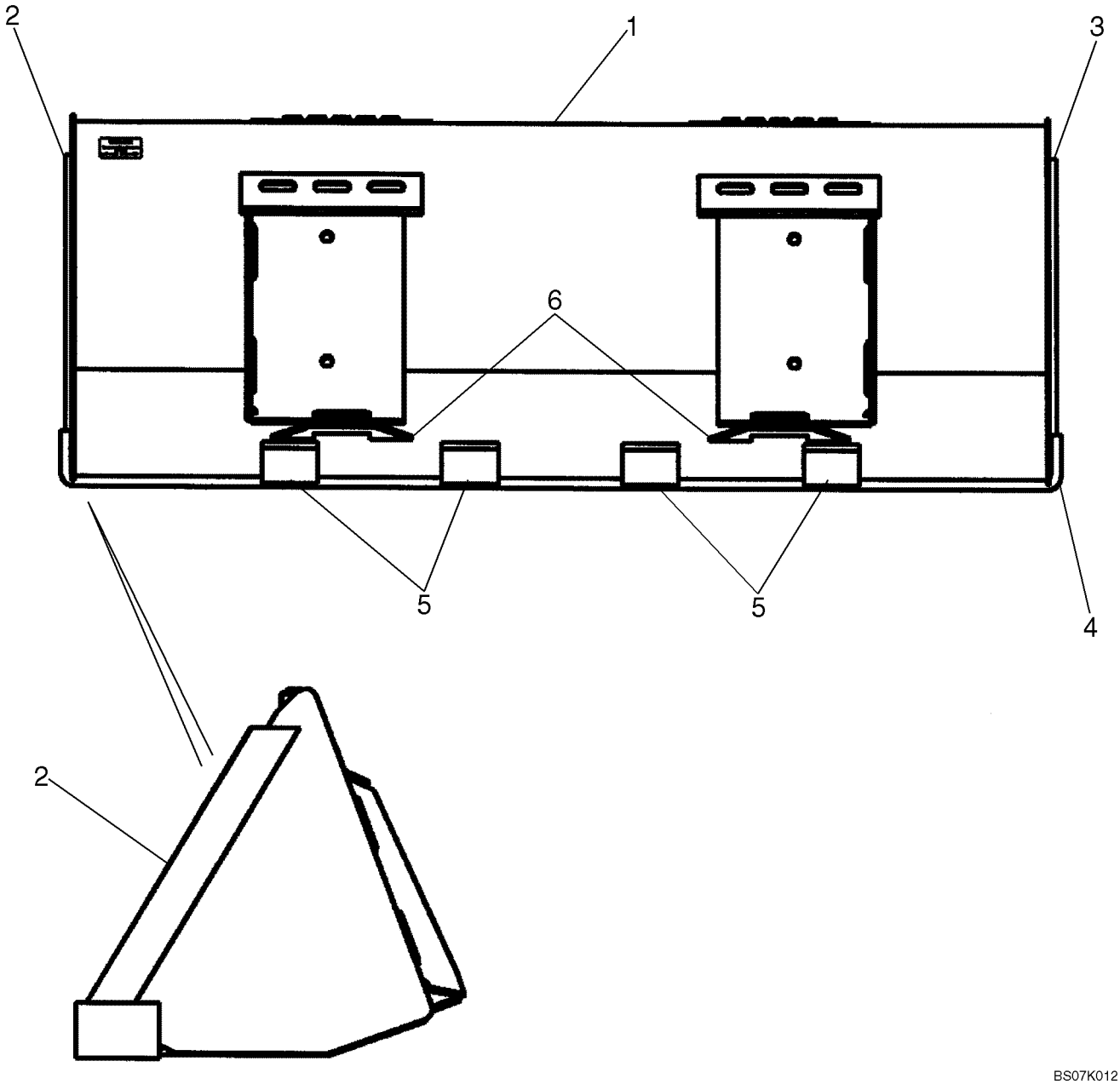

GODETS - CHARGEUSE, POUSSIÈRE/FONDERIE
LADESCHAUFELN - LADER
SKOVLE - LÆSSER
GRAAFBAKKEN - LADER

R	N	P.N.	MOD	Q	Denominação Description	Description Bezeichnung	Denominacion Beskrivelse	Descrizione Beschrijving	L.C.
6B		9822175		2	PLACA PLAQUE	PLATE PLATTE	PLACA PLADE	PIASTRA PLAAT	105P
1C		{86633060}		1	Bucket; 78 Inch; Order From Machinery Price List; Incl. 2C - 6C				
2C		87014505		1	LÂMINA DE CORTE, LH Cutter LAME DE COUPE	CUTTING BLADE SCHNEIDMESSER	HOJA DE CORTE KNIVBLAD	LAMA DI TAGLIO MAAIBLAD	600L
3C		87014504		1	LÂMINA DE CORTE, RH Cutter LAME DE COUPE	CUTTING BLADE SCHNEIDMESSER	HOJA DE CORTE KNIVBLAD	LAMA DI TAGLIO MAAIBLAD	600L
4C		86577170		1	BORDA CORTANTE, Weld On Blade 78 in BORD TRANCHANT	CUTTING EDGE SCHNEIDKANTE	BORDE DE CORTE SKÆREKANT	BORDO TAGLIENTE SNIJRAND	018T
5C		87016983		4	BARRA, Skid Bar BARRE	BAR BAR	BARRA BJÆLKE	BARRA STANG	530B
6C		9822175		2	PLACA PLAQUE	PLATE PLATTE	PLACA PLADE	PIASTRA PLAAT	105P

82.100.01	02	p1	03/11

BUCKETS - LOADER, LOW PROFILE, EXTENDED LOW PROFILE
BUCKETS - LOADER, LOW PROFILE, EXTENDED LOW PROFILE
CUCHARON - CARGADORA, PERFIL BAJO
BENNE - CARICATORE

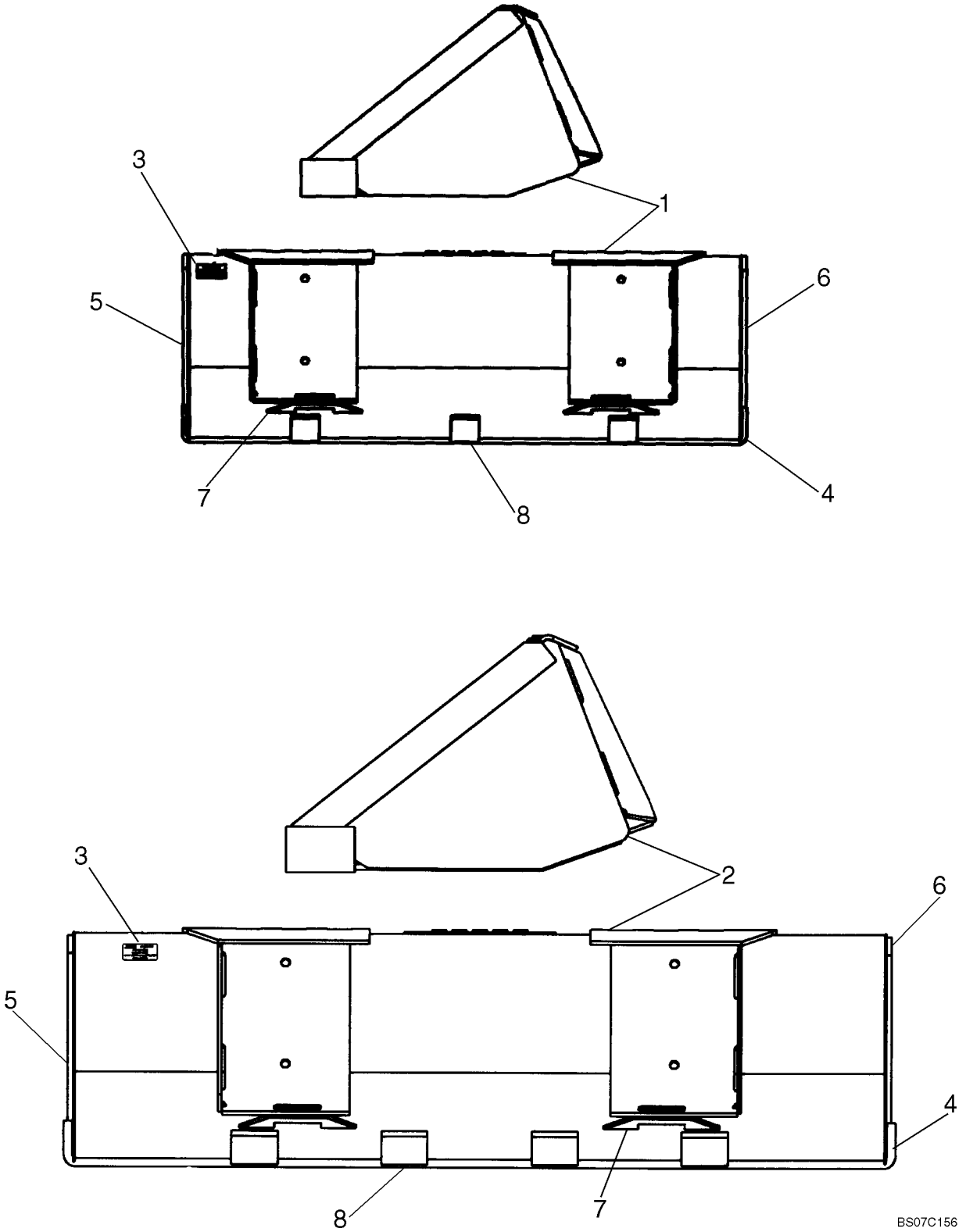

GODETS - CHARGEUSE, PROFIL BAS
LADESCHAUFELN - LADER
SKOVLE - LÆSSER
GRAAFBAKKEN - LADER

R	N	P.N.	MOD	Q	Denominação Description	Description Bezeichnung	Denominacion Beskrivelse	Descrizione Beschrijving	L.C.
		REF			INSTRUÇÃO, LOW PROFILE, EXTENDED LOW PROFILE				
						INSTRUCTION	INSTRUCCIÓN	ISTRUZIONI	Z571
					INSTRUCTION	ANLEITUNG	INSTRUKTION	INSTRUCTIE	
1		**87010190**		1	CAÇAMBA, Low Profile; 60 Inch; Order From Machinery Price List; Incl. 3 - 8				
						BUCKET	CUCHARA	BENNA	035B
					GODET	LÖFFEL	SKOVL	GRAAFBAK	
3		**NSS**		1	SEM SERVIÇO EM SEPARADO, Decal				
						NOT SERVICED SEPARA	NO SE REPARA POR SE	NON FORNITO SEPARAT	064N
					NON FORUNI SEPAREM	NICHT A SEP ERS-T LIEF	SERVICERES IKKE SEPA	NIET LOS VERKRIJGBAA	
4		**86577164**		1	BORDA CORTANTE, Weld On Blade				
						CUTTING EDGE	BORDE DE CORTE	BORDO TAGLIENTE	018T
					BORD TRANCHANT	SCHNEIDKANTE	SKÆREKANT	SNIJRAND	
5		**9829784**		1	BORDA CORTANTE, Cutter Left Hand				
						CUTTING EDGE	BORDE DE CORTE	BORDO TAGLIENTE	018T
					BORD TRANCHANT	SCHNEIDKANTE	SKÆREKANT	SNIJRAND	
6		**9829783**		1	BORDA CORTANTE, Cutter Right Hand				
						CUTTING EDGE	BORDE DE CORTE	BORDO TAGLIENTE	018T
					BORD TRANCHANT	SCHNEIDKANTE	SKÆREKANT	SNIJRAND	
7		**9822175**		2	PLACA	PLATE	PLACA	PIASTRA	105P
					PLAQUE	PLATTE	PLADE	PLAAT	
8		**86501840**		3	BARRA, Skid	BAR	BARRA	BARRA	530B
					BARRE	BAR	BJÆLKE	STANG	
1A		**86618363**		1	CAÇAMBA, Low Profile; 66 Inch; Order From Machinery Price List; Incl. 3A - 8A				
						BUCKET	CUCHARA	BENNA	035B
					GODET	LÖFFEL	SKOVL	GRAAFBAK	
3A		**NSS**		1	SEM SERVIÇO EM SEPARADO, Decal				
						NOT SERVICED SEPARA	NO SE REPARA POR SE	NON FORNITO SEPARAT	064N
					NON FORUNI SEPAREM	NICHT A SEP ERS-T LIEF	SERVICERES IKKE SEPA	NIET LOS VERKRIJGBAA	
4A		**86577166**		1	BORDA CORTANTE, Weld On Blade				
						CUTTING EDGE	BORDE DE CORTE	BORDO TAGLIENTE	018T
					BORD TRANCHANT	SCHNEIDKANTE	SKÆREKANT	SNIJRAND	
5A		**9829784**		1	BORDA CORTANTE, Cutter Left Hand				
						CUTTING EDGE	BORDE DE CORTE	BORDO TAGLIENTE	018T
					BORD TRANCHANT	SCHNEIDKANTE	SKÆREKANT	SNIJRAND	
6A		**9829783**		1	BORDA CORTANTE, Cutter Right Hand				
						CUTTING EDGE	BORDE DE CORTE	BORDO TAGLIENTE	018T
					BORD TRANCHANT	SCHNEIDKANTE	SKÆREKANT	SNIJRAND	
7A		**9822175**		2	PLACA	PLATE	PLACA	PIASTRA	105P
					PLAQUE	PLATTE	PLADE	PLAAT	
8A		**9829786**		3	BARRA, Skid	BAR	BARRA	BARRA	530B
					BARRE	BAR	BJÆLKE	STANG	
1B		**86618364**		1	CAÇAMBA, Low Profile; 72 Inch; Order From Machinery Price List; Incl. 3B - 8B				
						BUCKET	CUCHARA	BENNA	035B
					GODET	LÖFFEL	SKOVL	GRAAFBAK	
3B		**NSS**		1	SEM SERVIÇO EM SEPARADO, Decal				
						NOT SERVICED SEPARA	NO SE REPARA POR SE	NON FORNITO SEPARAT	064N
					NON FORUNI SEPAREM	NICHT A SEP ERS-T LIEF	SERVICERES IKKE SEPA	NIET LOS VERKRIJGBAA	

82.100.01	02	p2	03/11

BUCKETS - LOADER, LOW PROFILE, EXTENDED LOW PROFILE
BUCKETS - LOADER, LOW PROFILE, EXTENDED LOW PROFILE
CUCHARON - CARGADORA, PERFIL BAJO
BENNE - CARICATORE

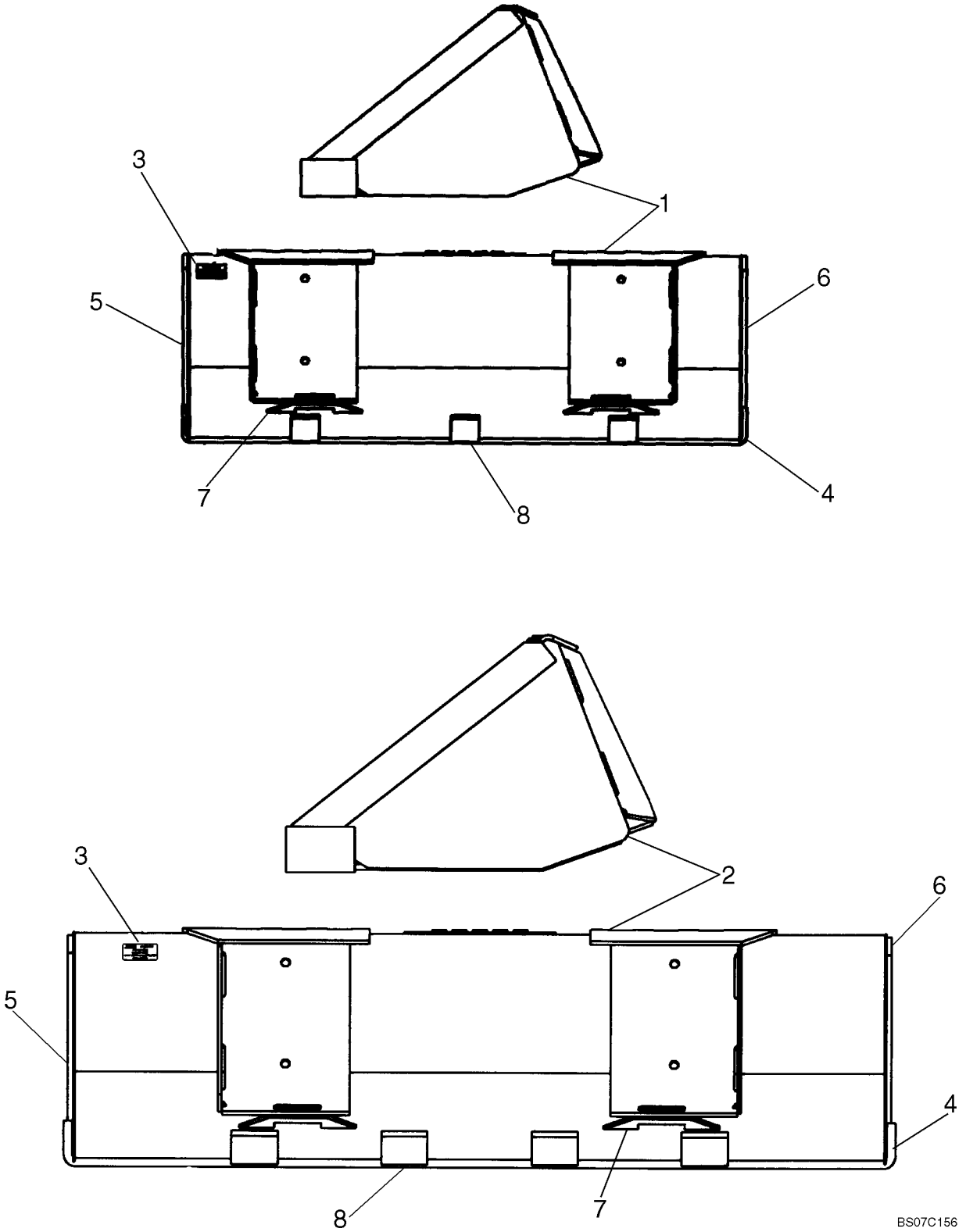

GODETS - CHARGEUSE, PROFIL BAS
LADESCHAUFELN - LADER
SKOVLE - LÆSSER
GRAAFBAKKEN - LADER

R	N	P.N.	MOD	Q	Denominação Description	Description Bezeichnung	Denominacion Beskrivelse	Descrizione Beschrijving	L.C.
4B		86577168		1	BORDA CORTANTE, Weld On Blade				
						CUTTING EDGE	BORDE DE CORTE	BORDO TAGLIENTE	018T
					BORD TRANCHANT	SCHNEIDKANTE	SKÆREKANT	SNIJRAND	
5B		9829784		1	BORDA CORTANTE, Cutter Left Hand				
						CUTTING EDGE	BORDE DE CORTE	BORDO TAGLIENTE	018T
					BORD TRANCHANT	SCHNEIDKANTE	SKÆREKANT	SNIJRAND	
6B		9829783		1	BORDA CORTANTE, Cutter Right Hand				
						CUTTING EDGE	BORDE DE CORTE	BORDO TAGLIENTE	018T
					BORD TRANCHANT	SCHNEIDKANTE	SKÆREKANT	SNIJRAND	
7B		9822175		2	PLACA	PLATE	PLACA	PIASTRA	105P
					PLAQUE	PLATTE	PLADE	PLAAT	
8B		9829786		4	BARRA, Skid	BAR	BARRA	BARRA	530B
					BARRE	BAR	BJÆLKE	STANG	
2		86618353		1	CAÇAMBA, Extended Low Profile; 60 Inch; Order From Machinery Price List; Incl. 3C - 8C				
						BUCKET	CUCHARA	BENNA	035B
					GODET	LÖFFEL	SKOVL	GRAAFBAK	
3C		NSS		1	SEM SERVIÇO EM SEPARADO, Decal				
						NOT SERVICED SEPARA	NO SE REPARA POR SE	NON FORNITO SEPARAT	064N
					NON FORUNI SEPAREM	NICHT A SEP ERS-T LIEI	SERVICERES IKKE SEPA	NIET LOS VERKRIJGBAA	
4C		86577164		1	BORDA CORTANTE, Weld On Blade				
						CUTTING EDGE	BORDE DE CORTE	BORDO TAGLIENTE	018T
					BORD TRANCHANT	SCHNEIDKANTE	SKÆREKANT	SNIJRAND	
5C		86510316		1	BORDA CORTANTE, Cutter Left Hand				
						CUTTING EDGE	BORDE DE CORTE	BORDO TAGLIENTE	018T
					BORD TRANCHANT	SCHNEIDKANTE	SKÆREKANT	SNIJRAND	
6C		86510315		1	BORDA CORTANTE, Cutter Right Hand				
						CUTTING EDGE	BORDE DE CORTE	BORDO TAGLIENTE	018T
					BORD TRANCHANT	SCHNEIDKANTE	SKÆREKANT	SNIJRAND	
7C		9822175		2	PLACA	PLATE	PLACA	PIASTRA	105P
					PLAQUE	PLATTE	PLADE	PLAAT	
8C		86510313		3	BARRA, Skid	BAR	BARRA	BARRA	530B
					BARRE	BAR	BJÆLKE	STANG	
2A		86618354		1	CAÇAMBA, Extended Low Profile; 66 Inch; Order From Machinery Price List; Incl. 3D - 8D				
						BUCKET	CUCHARA	BENNA	035B
					GODET	LÖFFEL	SKOVL	GRAAFBAK	
3D		NSS		1	SEM SERVIÇO EM SEPARADO, Decal				
						NOT SERVICED SEPARA	NO SE REPARA POR SE	NON FORNITO SEPARAT	064N
					NON FORUNI SEPAREM	NICHT A SEP ERS-T LIEI	SERVICERES IKKE SEPA	NIET LOS VERKRIJGBAA	
4D		86577166		1	BORDA CORTANTE, Weld On Blade				
						CUTTING EDGE	BORDE DE CORTE	BORDO TAGLIENTE	018T
					BORD TRANCHANT	SCHNEIDKANTE	SKÆREKANT	SNIJRAND	
5D		9829784		1	BORDA CORTANTE, Cutter Left Hand				
						CUTTING EDGE	BORDE DE CORTE	BORDO TAGLIENTE	018T
					BORD TRANCHANT	SCHNEIDKANTE	SKÆREKANT	SNIJRAND	
6D		9829783		1	BORDA CORTANTE, Cutter Right Hand				
						CUTTING EDGE	BORDE DE CORTE	BORDO TAGLIENTE	018T
					BORD TRANCHANT	SCHNEIDKANTE	SKÆREKANT	SNIJRAND	
7D		9822175		2	PLACA	PLATE	PLACA	PIASTRA	105P
					PLAQUE	PLATTE	PLADE	PLAAT	

BUCKETS - LOADER, LOW PROFILE, EXTENDED LOW PROFILE
BUCKETS - LOADER, LOW PROFILE, EXTENDED LOW PROFILE
CUCHARON - CARGADORA, PERFIL BAJO
BENNE - CARICATORE

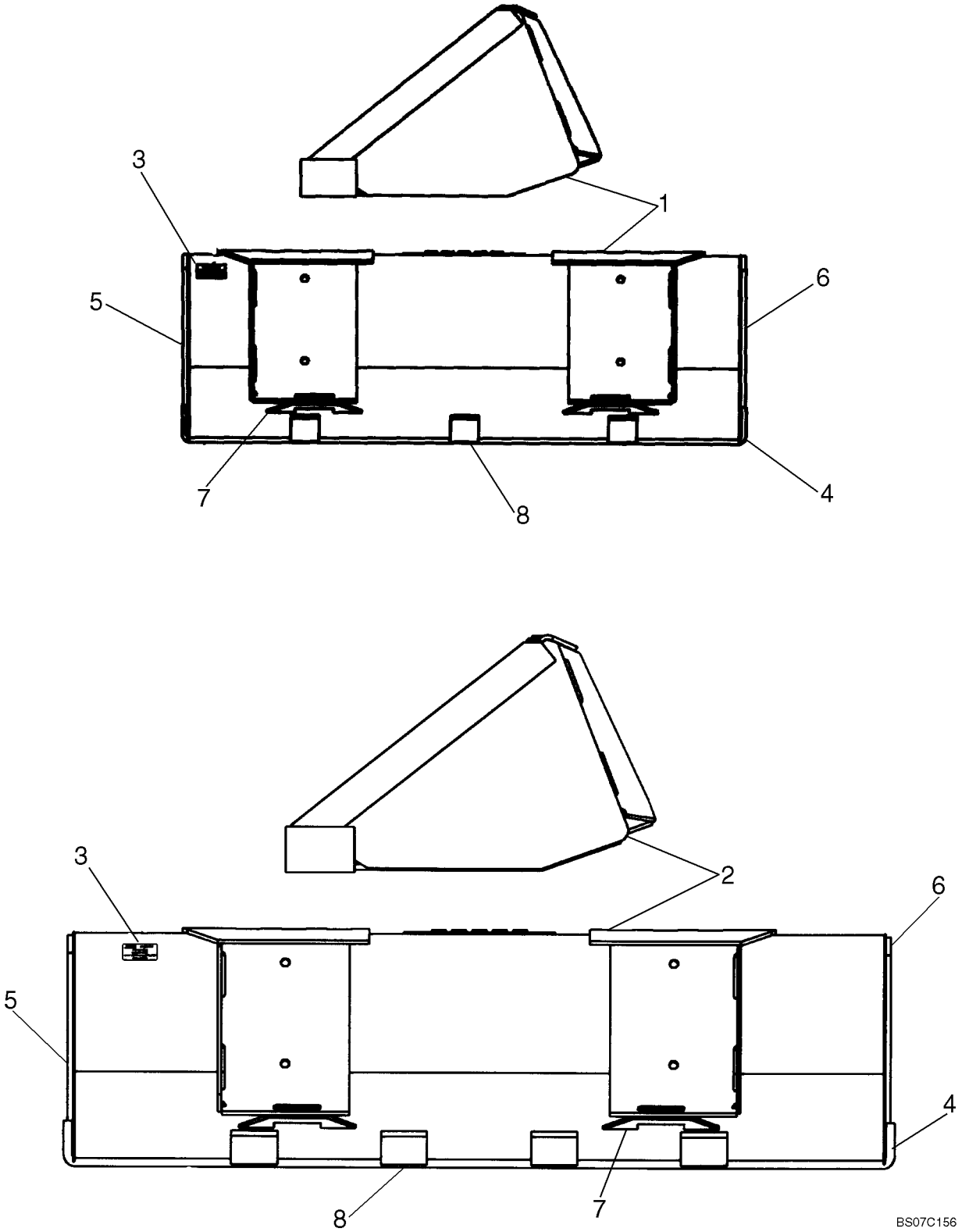

GODETS - CHARGEUSE, PROFIL BAS
LADESCHAUFELN - LADER
SKOVLE - LÆSSER
GRAAFBAKKEN - LADER

R	N	P.N.	MOD	Q	Denominação Description	Description Bezeichnung	Denominacion Beskrivelse	Descrizione Beschrijving	L.C.
8D		9829786		3	BARRA, Skid	BAR	BARRA	BARRA	530B
					BARRE	BAR	BJÆLKE	STANG	
2B		86618355		1	CAÇAMBA, Extended Low Profile; 72 Inch; Order From Machinery Price List; Incl. 3E - 8E				
						BUCKET	CUCHARA	BENNA	035B
					GODET	LÖFFEL	SKOVL	GRAAFBAK	
3E		NSS		1	SEM SERVIÇO EM SEPARADO, Decal				
						NOT SERVICED SEPARA	NO SE REPARA POR SE	NON FORNITO SEPARAT	064N
					NON FORUNI SEPAREM	NICHT A SEP ERS-T LIEI	SERVICERES IKKE SEPA	NIET LOS VERKRIJGBAA	
4E		86577168		1	BORDA CORTANTE, Weld On Blade				
						CUTTING EDGE	BORDE DE CORTE	BORDO TAGLIENTE	018T
					BORD TRANCHANT	SCHNEIDKANTE	SKÆREKANT	SNIJRAND	
5E		86510316		1	BORDA CORTANTE, Cutter Left Hand				
						CUTTING EDGE	BORDE DE CORTE	BORDO TAGLIENTE	018T
					BORD TRANCHANT	SCHNEIDKANTE	SKÆREKANT	SNIJRAND	
6E		86510315		1	BORDA CORTANTE, Cutter Right Hand				
						CUTTING EDGE	BORDE DE CORTE	BORDO TAGLIENTE	018T
					BORD TRANCHANT	SCHNEIDKANTE	SKÆREKANT	SNIJRAND	
7E		9822175		2	PLACA	PLATE	PLACA	PIASTRA	105P
					PLAQUE	PLATTE	PLADE	PLAAT	
8E		86510314		3	BARRA, Skid	BAR	BARRA	BARRA	530B
					BARRE	BAR	BJÆLKE	STANG	
2C		{86633059}		1	Extended Low Profile; 78 Inch; Order From Machinery Price List; Incl. 3F - 8F				
3F		NSS		1	SEM SERVIÇO EM SEPARADO, Decal				
						NOT SERVICED SEPARA	NO SE REPARA POR SE	NON FORNITO SEPARAT	064N
					NON FORUNI SEPAREM	NICHT A SEP ERS-T LIEI	SERVICERES IKKE SEPA	NIET LOS VERKRIJGBAA	
4F		86577170		1	BORDA CORTANTE, Weld On Blade				
						CUTTING EDGE	BORDE DE CORTE	BORDO TAGLIENTE	018T
					BORD TRANCHANT	SCHNEIDKANTE	SKÆREKANT	SNIJRAND	
5F		86510316		1	BORDA CORTANTE, Cutter Left Hand				
						CUTTING EDGE	BORDE DE CORTE	BORDO TAGLIENTE	018T
					BORD TRANCHANT	SCHNEIDKANTE	SKÆREKANT	SNIJRAND	
6F		86510315		1	BORDA CORTANTE, Cutter Right Hand				
						CUTTING EDGE	BORDE DE CORTE	BORDO TAGLIENTE	018T
					BORD TRANCHANT	SCHNEIDKANTE	SKÆREKANT	SNIJRAND	
7F		9822175		2	PLACA	PLATE	PLACA	PIASTRA	105P
					PLAQUE	PLATTE	PLADE	PLAAT	
8F		86510314		4	BARRA, Skid	BAR	BARRA	BARRA	530B
					BARRE	BAR	BJÆLKE	STANG	
2D		{86618356}		1	Extended Low Profile; 84 Inch; Order From Machinery Price List; Incl. 3G - 8G				
3G		NSS		1	SEM SERVIÇO EM SEPARADO, Decal				
						NOT SERVICED SEPARA	NO SE REPARA POR SE	NON FORNITO SEPARAT	064N
					NON FORUNI SEPAREM	NICHT A SEP ERS-T LIEI	SERVICERES IKKE SEPA	NIET LOS VERKRIJGBAA	
4G		86577172		1	BORDA CORTANTE, Weld On Blade				
						CUTTING EDGE	BORDE DE CORTE	BORDO TAGLIENTE	018T
					BORD TRANCHANT	SCHNEIDKANTE	SKÆREKANT	SNIJRAND	

BUCKETS - LOADER, LOW PROFILE, EXTENDED LOW PROFILE
BUCKETS - LOADER, LOW PROFILE, EXTENDED LOW PROFILE
CUCHARON - CARGADORA, PERFIL BAJO
BENNE - CARICATORE

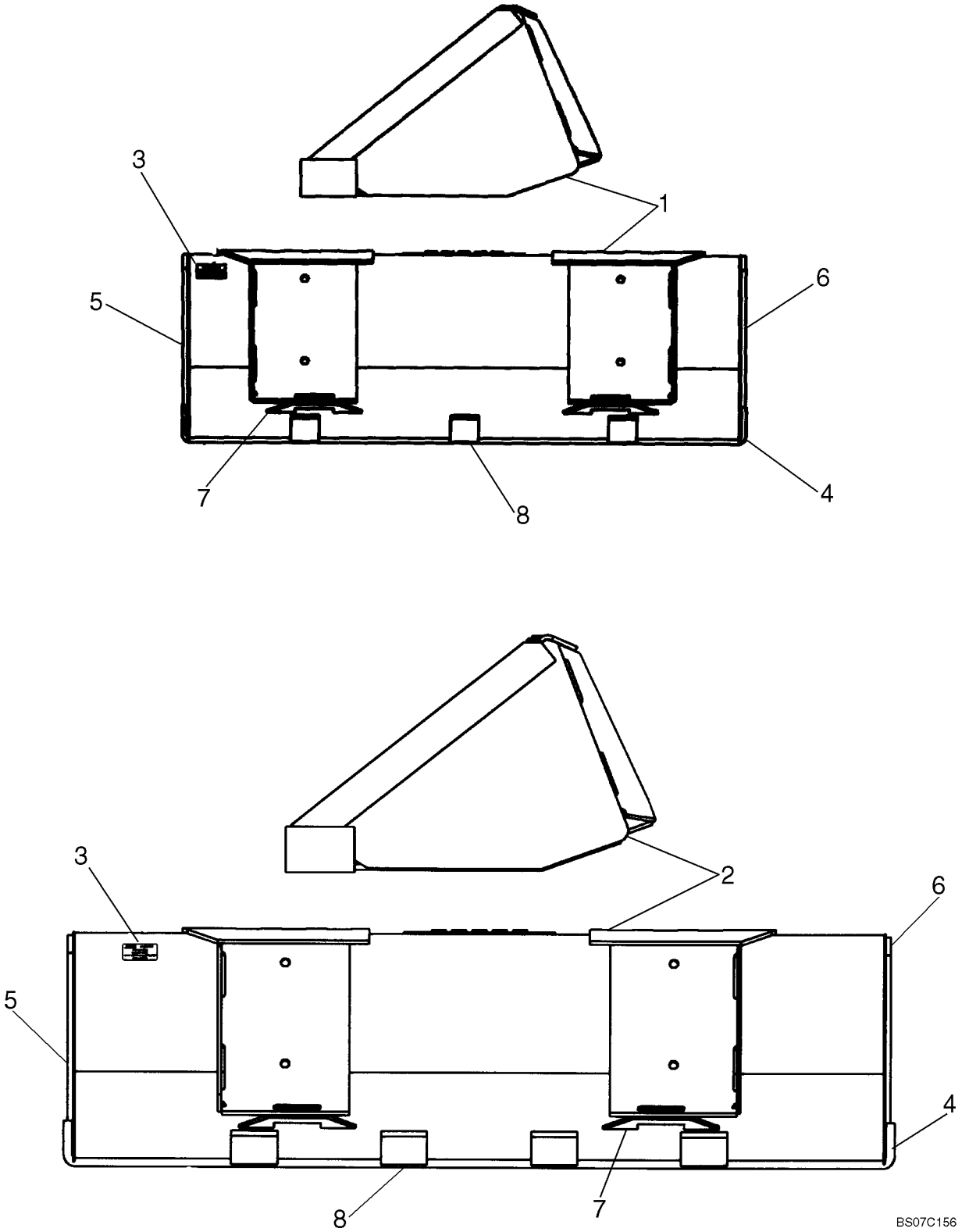

GODETS - CHARGEUSE, PROFIL BAS
LADESCHAUFELN - LADER
SKOVLE - LÆSSER
GRAAFBAKKEN - LADER

R	N	P.N.	MOD	Q	Denominação Description Bezeichnung	Description Bezeichnung Beskrivelse	Denominacion Beskrivelse Descrizione	Descrizione Beschrijving Beschrijving	L.C.
5G		86510316		1	BORDA CORTANTE, Cutter Left Hand CUTTING EDGE BORD TRANCHANT	SCHNEIDKANTE	BORDE DE CORTE SKÆREKANT	BORDO TAGLIENTE SNIJRAND	018T
6G		86510315		1	BORDA CORTANTE, Cutter Right Hand CUTTING EDGE BORD TRANCHANT	SCHNEIDKANTE	BORDE DE CORTE SKÆREKANT	BORDO TAGLIENTE SNIJRAND	018T
7G		9822175		2	PLACA PLAQUE	PLATE PLATTE	PLACA PLADE	PIASTRA PLAAT	105P
8G		86554088		5	BARRA, SKid Bar BARRE	BAR BAR	BARRA BJÆLKE	BARRA STANG	530B

BUCKETS - LOADER, UTILITY / LIGHT MATERIAL
BUCKETS - LOADER, UTILITY / LIGHT MATERIAL
CUCHARON - CARGADORA, SERVICIO PÚBLICO/MATERIAL LIGERO
BENNE - CARICATORE

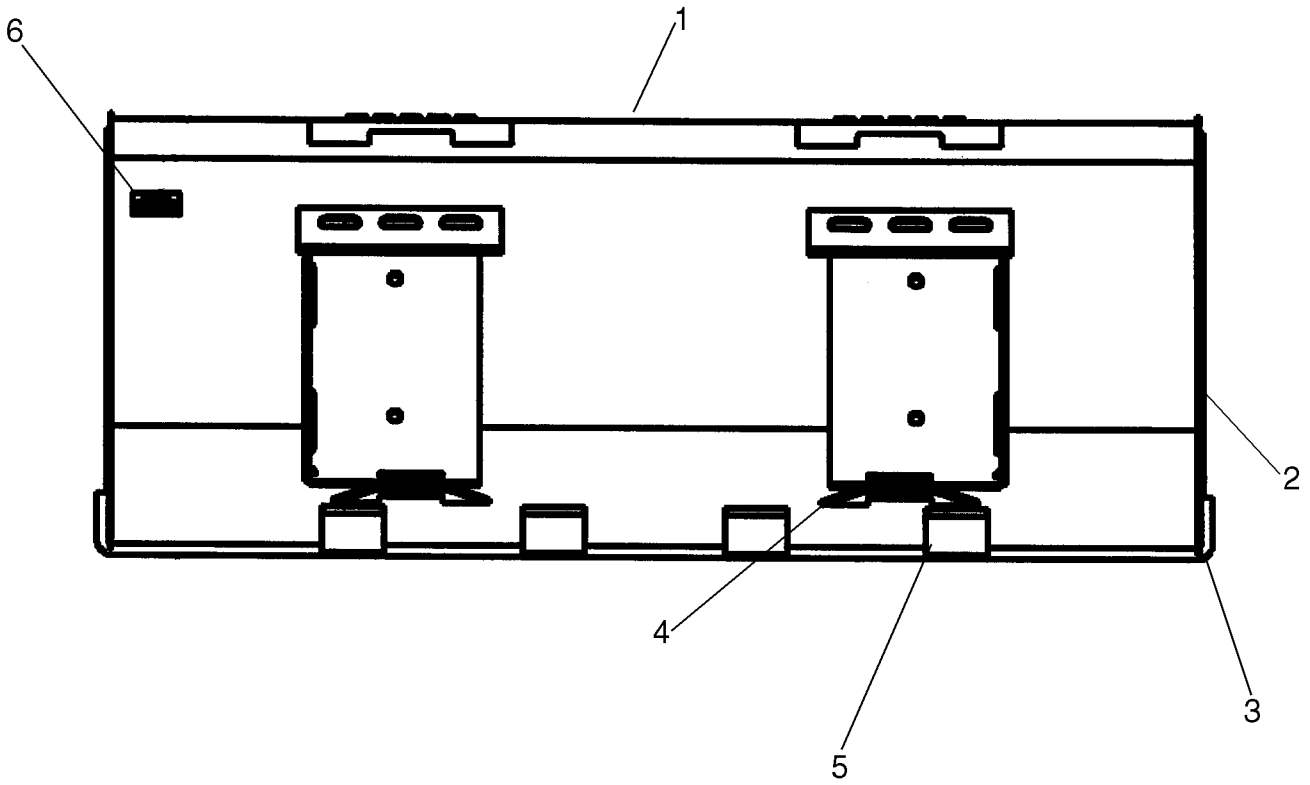

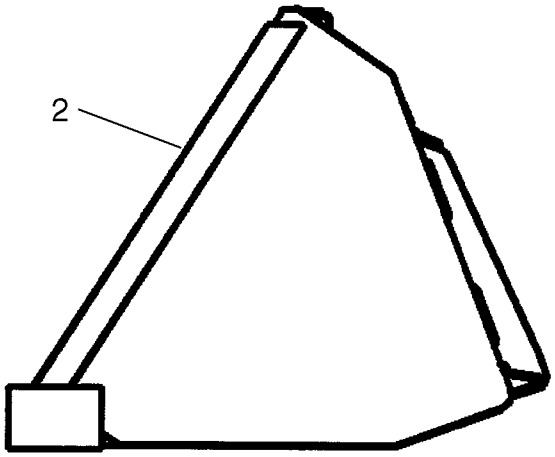

BS07K013

GODETS - CHARGEUSE, MATÉRIEL LÉGER/UTILITAIRE
LADESCHAUFELN - LADER
SKOVLE - LÆSSER
GRAAFBAKKEN - LADER

R	N	P.N.	MOD	Q	Denominação Description	Description Bezeichnung	Denominacion Beskrivelse	Descrizione Beschrijving	L.C.
		REF			INSTRUÇÃO, UTILITY / LIGHT MATERIAL				
						INSTRUCTION	INSTRUCCIÓN	ISTRUZIONI	Z571
					INSTRUCTION	ANLEITUNG	INSTRUKTION	INSTRUCTIE	
1		**{87010187}**		1	BUCKET, 60 Inch; Order From Machinery Price List; Incl 2 - 6				
2		**86501801**		2	BORDA CORTANTE	CUTTING EDGE	BORDE DE CORTE	BORDO TAGLIENTE	018T
					BORD TRANCHANT	SCHNEIDKANTE	SKÆREKANT	SNIJRAND	
3		**86577164**		1	BORDA CORTANTE, 60 in	CUTTING EDGE	BORDE DE CORTE	BORDO TAGLIENTE	018T
					BORD TRANCHANT	SCHNEIDKANTE	SKÆREKANT	SNIJRAND	
4		**9822175**		2	PLACA	PLATE	PLACA	PIASTRA	105P
					PLAQUE	PLATTE	PLADE	PLAAT	
5		**86501839**		3	BARRA, Skid Bar	BAR	BARRA	BARRA	530B
					BARRE	BAR	BJÆLKE	STANG	
6		**NSS**		1	SEM SERVIÇO EM SEPARADO, Decal				
						NOT SERVICED SEPARA	NO SE REPARA POR SE	NON FORNITO SEPARAT	064N
					NON FORUNI SEPAREM	NICHT A SEP ERS-T LIEI	SERVICERES IKKE SEPA	NIET LOS VERKRIJGBAA	
1A		**{87010188}**		1	BUCKET, 72 Inch; Order From Machinery Price List; Incl 2A - 6A				
2A		**86501801**		2	BORDA CORTANTE	CUTTING EDGE	BORDE DE CORTE	BORDO TAGLIENTE	018T
					BORD TRANCHANT	SCHNEIDKANTE	SKÆREKANT	SNIJRAND	
3A		**86577168**		1	BORDA CORTANTE, 72 in	CUTTING EDGE	BORDE DE CORTE	BORDO TAGLIENTE	018T
					BORD TRANCHANT	SCHNEIDKANTE	SKÆREKANT	SNIJRAND	
4A		**9822175**		2	PLACA	PLATE	PLACA	PIASTRA	105P
					PLAQUE	PLATTE	PLADE	PLAAT	
5A		**86501815**		4	BARRA, Skid Bar	BAR	BARRA	BARRA	530B
					BARRE	BAR	BJÆLKE	STANG	
6A		**NSS**		1	SEM SERVIÇO EM SEPARADO, Decal				
						NOT SERVICED SEPARA	NO SE REPARA POR SE	NON FORNITO SEPARAT	064N
					NON FORUNI SEPAREM	NICHT A SEP ERS-T LIEI	SERVICERES IKKE SEPA	NIET LOS VERKRIJGBAA	
1B		**{87010189}**		1	BUCKET, 84 Inch; Order From Machinery Price List; Incl 2B - 6B				
2B		**86501801**		2	BORDA CORTANTE	CUTTING EDGE	BORDE DE CORTE	BORDO TAGLIENTE	018T
					BORD TRANCHANT	SCHNEIDKANTE	SKÆREKANT	SNIJRAND	
3B		**86900574**		1	BORDA CORTANTE, 84 in	CUTTING EDGE	BORDE DE CORTE	BORDO TAGLIENTE	018T
					BORD TRANCHANT	SCHNEIDKANTE	SKÆREKANT	SNIJRAND	
4B		**9822175**		2	PLACA	PLATE	PLACA	PIASTRA	105P
					PLAQUE	PLATTE	PLADE	PLAAT	
5B		**86501815**		5	BARRA, Skid Bar	BAR	BARRA	BARRA	530B
					BARRE	BAR	BJÆLKE	STANG	
6B		**NSS**		1	SEM SERVIÇO EM SEPARADO, Decal				
						NOT SERVICED SEPARA	NO SE REPARA POR SE	NON FORNITO SEPARAT	064N
					NON FORUNI SEPAREM	NICHT A SEP ERS-T LIEI	SERVICERES IKKE SEPA	NIET LOS VERKRIJGBAA	

BUCKETS - LOADER, HEAVY DUTY DIRT
BUCKETS - LOADER, HEAVY DUTY DIRT
BUCKETS - LOADER, HEAVY DUTY DIRT
BUCKETS - LOADER, HEAVY DUTY DIRT

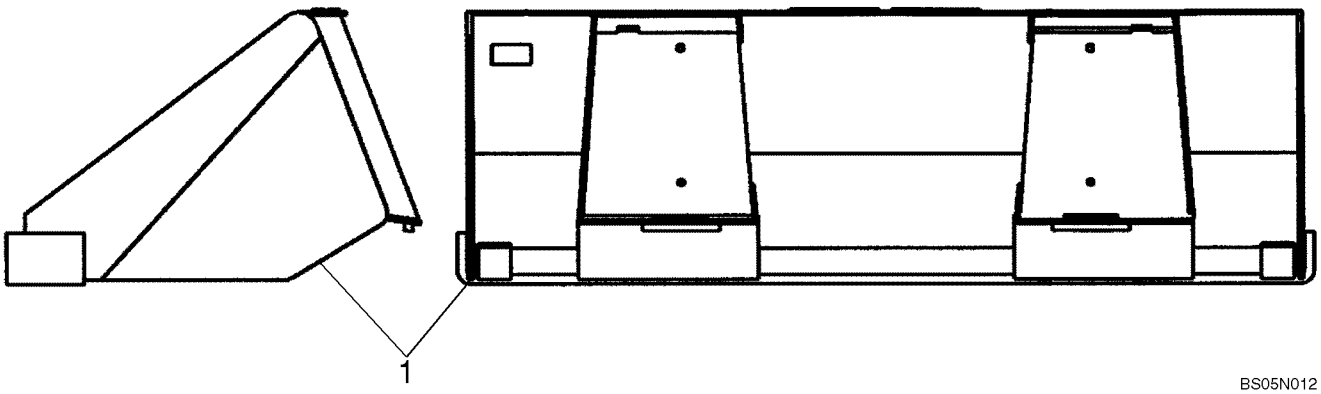

BUCKETS - LOADER, HEAVY DUTY DIRT
BUCKETS - LOADER, HEAVY DUTY DIRT
BUCKETS - LOADER, HEAVY DUTY DIRT
BUCKETS - LOADER, HEAVY DUTY DIRT

R	N	P.N.	MOD	Q	Denominação Description	Description Bezeichnung	Denominacion Beskrivelse	Descrizione Beschrijving	L.C.
1		84285098		1	CAÇAMBA, 66 Inch Heavy Duty Dirt Tan; Order from Whole Goods; Incl. 84296997 & 84285096				
					BUCKET	CUCHARA	BENNA		035B
					GODET	LÖFFEL	SKOVL	GRAAFBAK	
		84296997		1	ADESIVO, Not Shown	DECAL	CALCOMANÍA	DECALCOMANIA	012D
					AUTOCOLLANT	AUFKLEBER	TRANSFER	STICKER	
		84285096		1	CAÇAMBA, 66 Inch	BUCKET	CUCHARA	BENNA	035B
					GODET	LÖFFEL	SKOVL	GRAAFBAK	
1A		84285101		1	CAÇAMBA, 72 Inch Heavy Duty Dirt Tan; Order from Whole Goods; Incl. 84296999 & 84285099				
					BUCKET	CUCHARA	BENNA		035B
					GODET	LÖFFEL	SKOVL	GRAAFBAK	
		84296999		1	ADESIVO, Not Shown	DECAL	CALCOMANÍA	DECALCOMANIA	012D
					AUTOCOLLANT	AUFKLEBER	TRANSFER	STICKER	
		84285099		1	CAÇAMBA, 72 Inch	BUCKET	CUCHARA	BENNA	035B
					GODET	LÖFFEL	SKOVL	GRAAFBAK	
1B		84285104		1	CAÇAMBA, 78 Inch Heavy Duty Dirt Tan; Order from Whole Goods; Incl. 84297001 & 84285102				
					BUCKET	CUCHARA	BENNA		035B
					GODET	LÖFFEL	SKOVL	GRAAFBAK	
		84297001		1	ADESIVO, Not Shown	DECAL	CALCOMANÍA	DECALCOMANIA	012D
					AUTOCOLLANT	AUFKLEBER	TRANSFER	STICKER	
		84285102		1	CAÇAMBA, 78 Inch	BUCKET	CUCHARA	BENNA	035B
					GODET	LÖFFEL	SKOVL	GRAAFBAK	
1C		84285107		1	CAÇAMBA, 84 Inch Heavy Duty Dirt Tan; Order from Whole Goods; Incl. 84297003 & 84285105				
					BUCKET	CUCHARA	BENNA		035B
					GODET	LÖFFEL	SKOVL	GRAAFBAK	
		84297003		1	ADESIVO, Not Shown	DECAL	CALCOMANÍA	DECALCOMANIA	012D
					AUTOCOLLANT	AUFKLEBER	TRANSFER	STICKER	
		84285105		1	CAÇAMBA, 84 Inch	BUCKET	CUCHARA	BENNA	035B
					GODET	LÖFFEL	SKOVL	GRAAFBAK	

82.100.01	05	p1	03/11

BUCKETS - LOADER, MANURE / SLURRY
BUCKETS - LOADER, MANURE / SLURRY
BUCKETS - LOADER, MANURE / SLURRY
BUCKETS - LOADER, MANURE / SLURRY

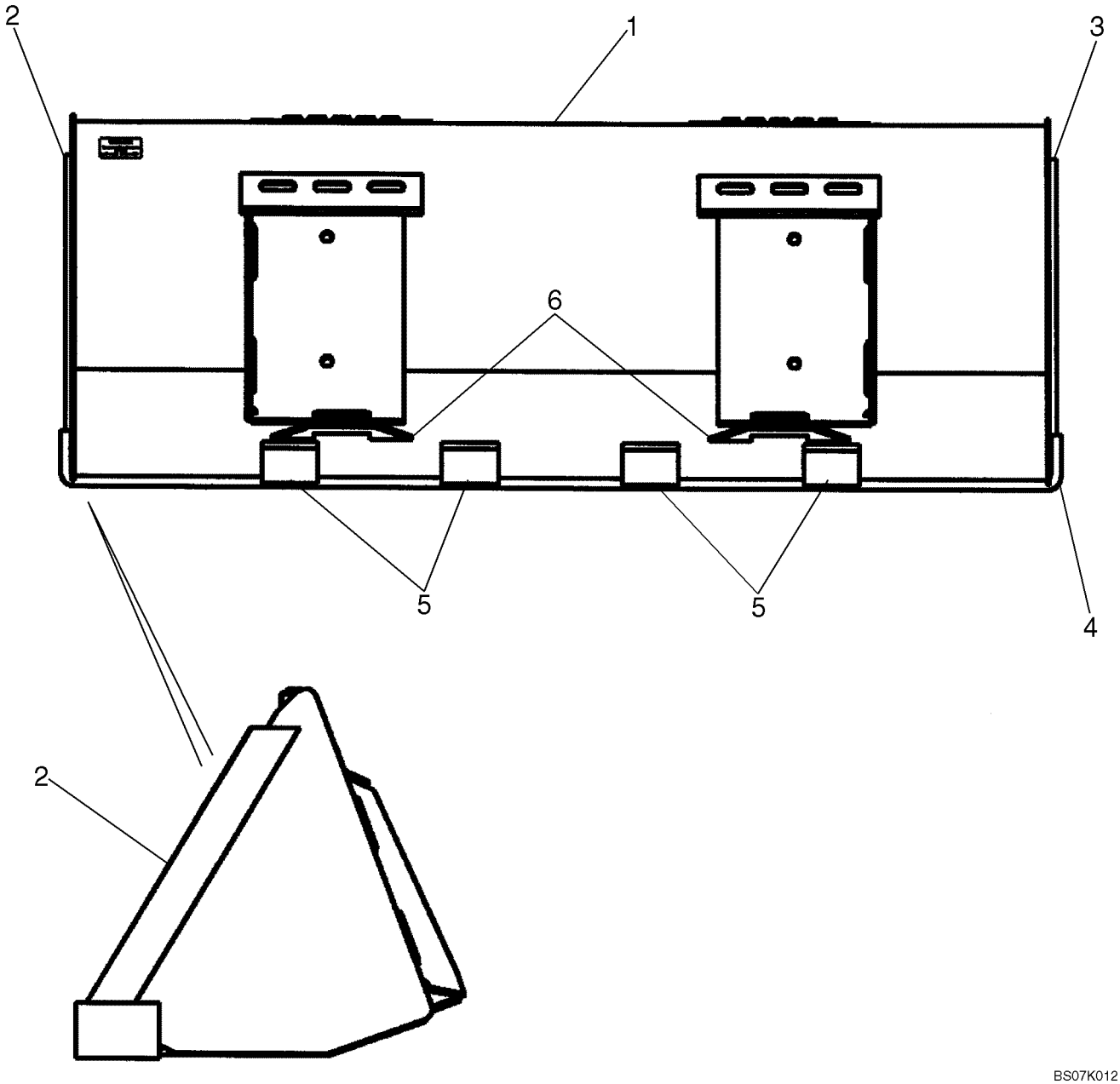

BUCKETS - LOADER, MANURE / SLURRY
BUCKETS - LOADER, MANURE / SLURRY
BUCKETS - LOADER, MANURE / SLURRY
BUCKETS - LOADER, MANURE / SLURRY

R	N	P.N.	MOD	Q	Denominação Description	Description Bezeichnung	Denominacion Beskrivelse	Descrizione Beschrijving	L.C.
1		84304961		1	CAÇAMBA, Manure/Slurry; 60 Inch Tan; Order from Whole Goods; Incl. 84304978, 2 - 6				
					BUCKET	CUCHARA	BENNA		035B
					GODET	LÖFFEL	SKOVL	GRAAFBAK	
		84304978		1	ADESIVO	DECAL	CALCOMANÍA	DECALCOMANIA	012D
					AUTOCOLLANT	AUFKLEBER	TRANSFER	STICKER	
2		86501789		1	BORDA CORTANTE, Cutting Edge, LH				
					CUTTING EDGE	BORDE DE CORTE	BORDO TAGLIENTE		018T
					BORD TRANCHANT	SCHNEIDKANTE	SKÆREKANT	SNIJRAND	
3		86501789		1	BORDA CORTANTE, Cutting Edge, RH				
					CUTTING EDGE	BORDE DE CORTE	BORDO TAGLIENTE		018T
					BORD TRANCHANT	SCHNEIDKANTE	SKÆREKANT	SNIJRAND	
4		86577164		1	BORDA CORTANTE, Weld On Blade, 60 Inch				
					CUTTING EDGE	BORDE DE CORTE	BORDO TAGLIENTE		018T
					BORD TRANCHANT	SCHNEIDKANTE	SKÆREKANT	SNIJRAND	
5		86501838		3	BARRA, Skid Bar	BAR	BARRA	BARRA	530B
					BARRE	BAR	BJÆLKE	STANG	
6		9822175		2	PLACA, LH & RH	PLATE	PLACA	PIASTRA	105P
					PLAQUE	PLATTE	PLADE	PLAAT	
1A		84304965		1	CAÇAMBA, Manure/Slurry; 72 Inch Tan; Order from Whole Goods; Incl. 84304982, 2A - 6A				
					BUCKET	CUCHARA	BENNA		035B
					GODET	LÖFFEL	SKOVL	GRAAFBAK	
		84304982		1	ADESIVO	DECAL	CALCOMANÍA	DECALCOMANIA	012D
					AUTOCOLLANT	AUFKLEBER	TRANSFER	STICKER	
2A		86501789		1	BORDA CORTANTE, Cutting Edge, LH				
					CUTTING EDGE	BORDE DE CORTE	BORDO TAGLIENTE		018T
					BORD TRANCHANT	SCHNEIDKANTE	SKÆREKANT	SNIJRAND	
3A		86501789		1	BORDA CORTANTE, Cutting Edge, RH				
					CUTTING EDGE	BORDE DE CORTE	BORDO TAGLIENTE		018T
					BORD TRANCHANT	SCHNEIDKANTE	SKÆREKANT	SNIJRAND	
4A		86577168		1	BORDA CORTANTE, Weld On Blade, 72 Inch				
					CUTTING EDGE	BORDE DE CORTE	BORDO TAGLIENTE		018T
					BORD TRANCHANT	SCHNEIDKANTE	SKÆREKANT	SNIJRAND	
5A		86501816		4	BARRA, Skid Bar	BAR	BARRA	BARRA	530B
					BARRE	BAR	BJÆLKE	STANG	
6A		9822175		2	PLACA, LH & RH	PLATE	PLACA	PIASTRA	105P
					PLAQUE	PLATTE	PLADE	PLAAT	
1B		84304969		1	CAÇAMBA, Manure/Slurry; 84 Inch Tan; Order from Whole Goods; Incl. 84304986, 2B - 6B				
					BUCKET	CUCHARA	BENNA		035B
					GODET	LÖFFEL	SKOVL	GRAAFBAK	
		84304986		1	ADESIVO	DECAL	CALCOMANÍA	DECALCOMANIA	012D
					AUTOCOLLANT	AUFKLEBER	TRANSFER	STICKER	
2B		86501789		1	BORDA CORTANTE, Cutting Edge, LH				
					CUTTING EDGE	BORDE DE CORTE	BORDO TAGLIENTE		018T
					BORD TRANCHANT	SCHNEIDKANTE	SKÆREKANT	SNIJRAND	
3B		86501789		1	BORDA CORTANTE, Cutting Edge, RH				
					CUTTING EDGE	BORDE DE CORTE	BORDO TAGLIENTE		018T
					BORD TRANCHANT	SCHNEIDKANTE	SKÆREKANT	SNIJRAND	

BUCKETS - LOADER, MANURE / SLURRY
BUCKETS - LOADER, MANURE / SLURRY
BUCKETS - LOADER, MANURE / SLURRY
BUCKETS - LOADER, MANURE / SLURRY

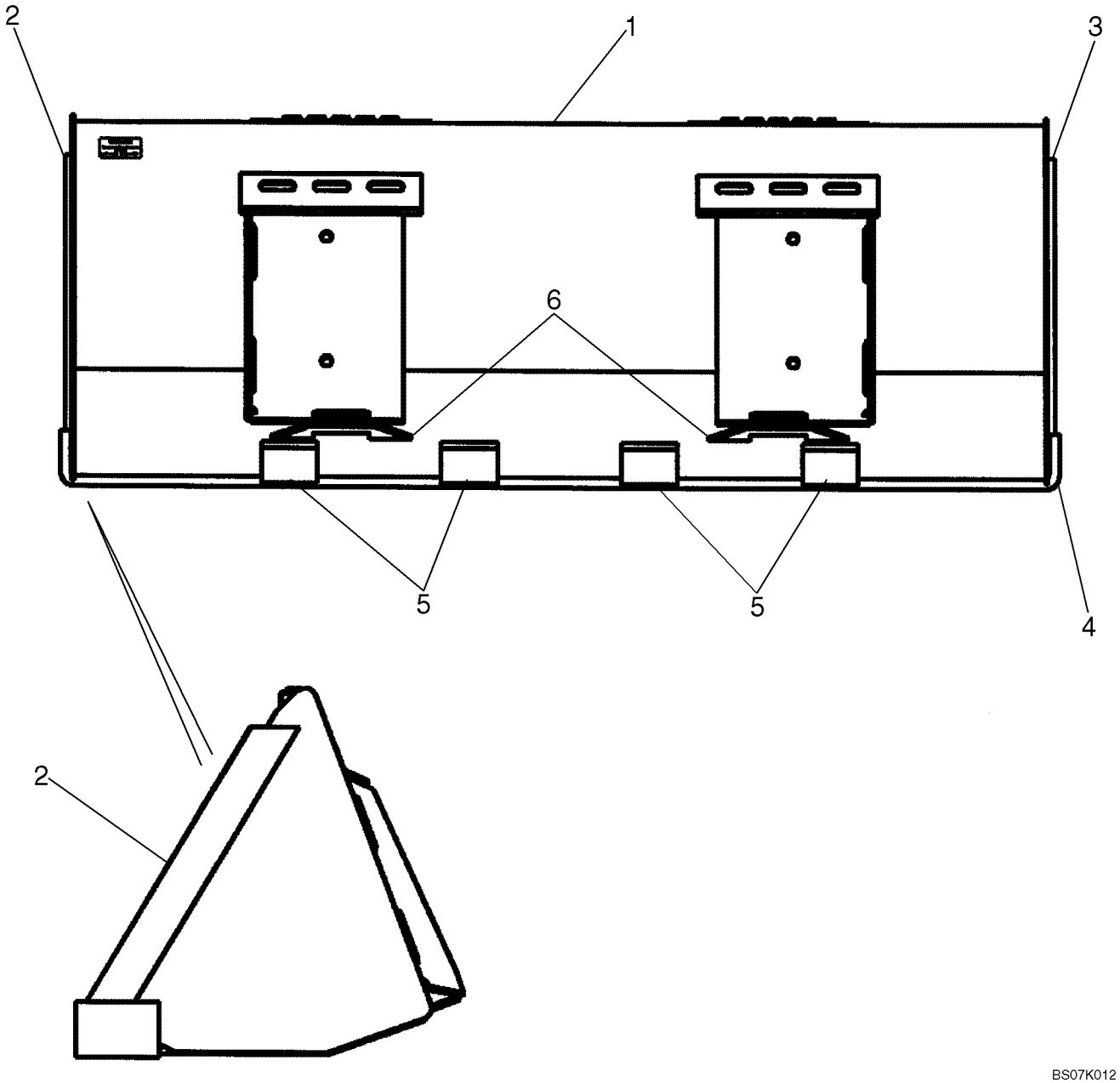

BUCKETS - LOADER, MANURE / SLURRY
BUCKETS - LOADER, MANURE / SLURRY
BUCKETS - LOADER, MANURE / SLURRY
BUCKETS - LOADER, MANURE / SLURRY

R	N	P.N.	MOD	Q	Denominação Description	Description Bezeichnung	Denominacion Beskrivelse	Descrizione Beschrijving	L.C.
4B		86900574		1	BORDA CORTANTE, Weld On Blade, 84 Inch				
						CUTTING EDGE	BORDE DE CORTE	BORDO TAGLIENTE	018T
					BORD TRANCHANT	SCHNEIDKANTE	SKÆREKANT	SNIJRAND	
5B		86501816		5	BARRA, Skid Bar	BAR	BARRA	BARRA	530B
					BARRE	BAR	BJÆLKE	STANG	
6B		9822175		2	PLACA, LH & RH	PLATE	PLACA	PIASTRA	105P
					PLAQUE	PLATTE	PLADE	PLAAT	

82.100.02		p1	05/11

BUCKET, BOLT ON CUTTING EDGE (B.O.C.E.) (ALL CASE)
BUCKET, BOLT ON CUTTING EDGE (B.O.C.E.) (ALL CASE)
BUCKET, BOLT ON CUTTING EDGE (B.O.C.E.) (ALL CASE)
BUCKET, BOLT ON CUTTING EDGE (B.O.C.E.) (ALL CASE)

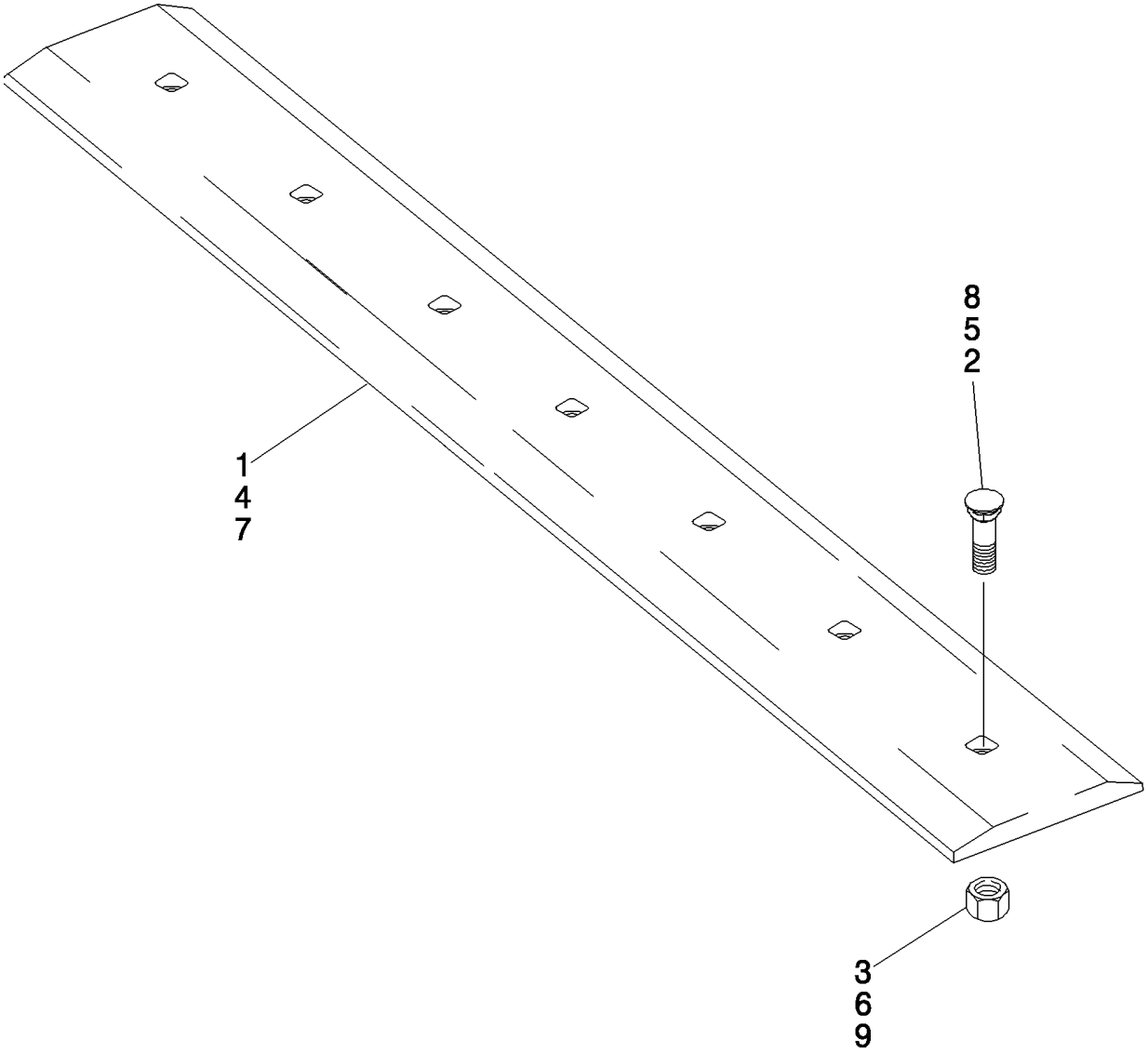

BUCKET, BOLT ON CUTTING EDGE (B.O.C.E.) (ALL CASE)
BUCKET, BOLT ON CUTTING EDGE (B.O.C.E.) (ALL CASE)
BUCKET, BOLT ON CUTTING EDGE (B.O.C.E.) (ALL CASE)
BUCKET, BOLT ON CUTTING EDGE (B.O.C.E.) (ALL CASE)

R	N	P.N.	MOD	Q	Denominação Description	Description Bezeichnung	Denominacion Beskrivelse	Descrizione Beschrijving	L.C.
1		86576801		1	BORDA CORTANTE, 54 in; Bolt-on; 6 Hole				
						CUTTING EDGE	BORDE DE CORTE	BORDO TAGLIENTE	018T
					BORD TRANCHANT	SCHNEIDKANTE	SKÆREKANT	SNIJRAND	
		430497A1		1	LAMINA DE CORTE, Kit; 60 Inch; Incl. Ref 1 - 3; Order Components				
						EDGE, CUTTING	CUCHILLA	BORDO, TAGLIO	Z114
					LAME D'ATTAQUE	SCHNEIDKANTE	EDGE, CUTTING	EDGE, CUTTING	
1		86576801		1	BORDA CORTANTE, 54 in; Bolt-on; 7 Hole				
						CUTTING EDGE	BORDE DE CORTE	BORDO TAGLIENTE	018T
					BORD TRANCHANT	SCHNEIDKANTE	SKÆREKANT	SNIJRAND	
1		87454489		1	BORDA CORTANTE, 1524 mm (60 inch); Power Tan				
						CUTTING EDGE	BORDE DE CORTE	BORDO TAGLIENTE	018T
					BORD TRANCHANT	SCHNEIDKANTE	SKÆREKANT	SNIJRAND	
1		86577165		1	BORDA CORTANTE, 1524 mm (60 inch); Gray				
						CUTTING EDGE	BORDE DE CORTE	BORDO TAGLIENTE	018T
					BORD TRANCHANT	SCHNEIDKANTE	SKÆREKANT	SNIJRAND	
2		86548338		7	PARAFUSO DE ARADO, 5/8"-11 x 2", G5				
						PLOW BOLT	PERNO DE ARADO	BULLONE SCANALATO	P128
					BOULON DE CHARRUE	PFLUGSCHRAUBE	PLOVRIGEL	PLOEGBOUT	
3		425-1010		7	PORCA, 5/8"-11, G5	NUT	TUERCA	DADO	010D
					ECROU	MUTTER	MØTRIK	MOER	
		430498A1		1	LAMINA DE CORTE, Kit; 66 Inch; Incl. Ref 4 - 6; Order Components				
						EDGE, CUTTING	CUCHILLA	BORDO, TAGLIO	Z114
					LAME D'ATTAQUE	SCHNEIDKANTE	EDGE, CUTTING	EDGE, CUTTING	
4		87454483		1	BORDA CORTANTE, 1676 mm (66 inch); Power Tan				
						CUTTING EDGE	BORDE DE CORTE	BORDO TAGLIENTE	018T
					BORD TRANCHANT	SCHNEIDKANTE	SKÆREKANT	SNIJRAND	
4		86577167		1	BORDA CORTANTE, 1676 mm (66 inch); Gray				
						CUTTING EDGE	BORDE DE CORTE	BORDO TAGLIENTE	018T
					BORD TRANCHANT	SCHNEIDKANTE	SKÆREKANT	SNIJRAND	
5		86548338		7	PARAFUSO DE ARADO, 5/8"-11 x 2", G5				
						PLOW BOLT	PERNO DE ARADO	BULLONE SCANALATO	P128
					BOULON DE CHARRUE	PFLUGSCHRAUBE	PLOVRIGEL	PLOEGBOUT	
6		425-1010		7	PORCA, 5/8"-11, G5	NUT	TUERCA	DADO	010D
					ECROU	MUTTER	MØTRIK	MOER	
		430499A1		1	LAMINA DE CORTE, Kit; 72 Inch; Incl. Ref 7 - 9; Order Components				
						EDGE, CUTTING	CUCHILLA	BORDO, TAGLIO	Z114
					LAME D'ATTAQUE	SCHNEIDKANTE	EDGE, CUTTING	EDGE, CUTTING	
7		87454488		1	BORDA CORTANTE, 1829 mm (72 inch); Power Tan				
						CUTTING EDGE	BORDE DE CORTE	BORDO TAGLIENTE	018T
					BORD TRANCHANT	SCHNEIDKANTE	SKÆREKANT	SNIJRAND	
7		86577169		1	BORDA CORTANTE, 1829 mm (72 inch); Gray				
						CUTTING EDGE	BORDE DE CORTE	BORDO TAGLIENTE	018T
					BORD TRANCHANT	SCHNEIDKANTE	SKÆREKANT	SNIJRAND	
8		86548338		7	PARAFUSO DE ARADO, 5/8"-11 x 2", G5				
						PLOW BOLT	PERNO DE ARADO	BULLONE SCANALATO	P128
					BOULON DE CHARRUE	PFLUGSCHRAUBE	PLOVRIGEL	PLOEGBOUT	
9		425-1010		7	PORCA, 5/8"-11, G5	NUT	TUERCA	DADO	010D
					ECROU	MUTTER	MØTRIK	MOER	

BUCKET, BOLT ON CUTTING EDGE (B.O.C.E.) (ALL CASE)
BUCKET, BOLT ON CUTTING EDGE (B.O.C.E.) (ALL CASE)
BUCKET, BOLT ON CUTTING EDGE (B.O.C.E.) (ALL CASE)
BUCKET, BOLT ON CUTTING EDGE (B.O.C.E.) (ALL CASE)

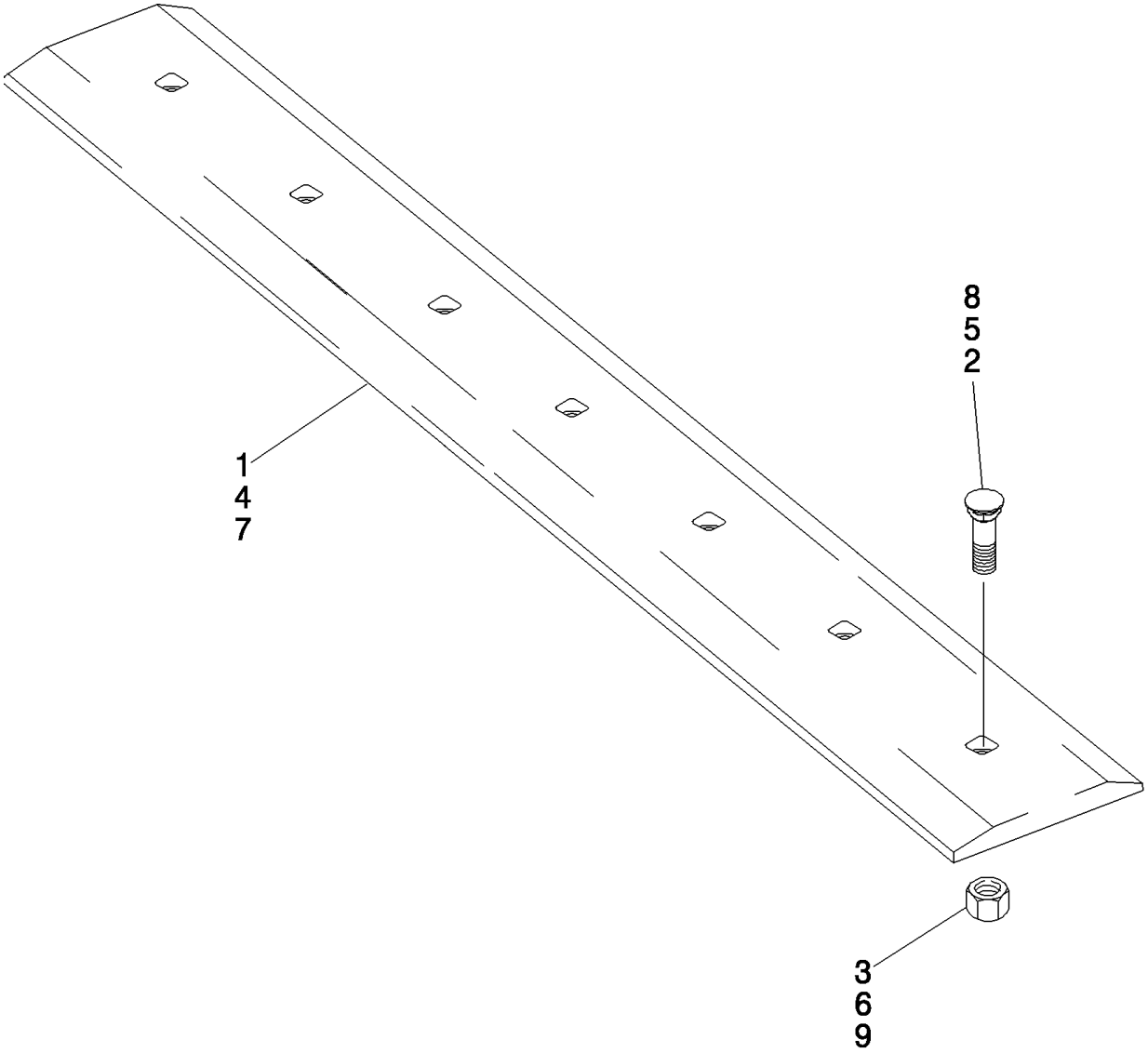

BUCKET, BOLT ON CUTTING EDGE (B.O.C.E.) (ALL CASE)
BUCKET, BOLT ON CUTTING EDGE (B.O.C.E.) (ALL CASE)
BUCKET, BOLT ON CUTTING EDGE (B.O.C.E.) (ALL CASE)
BUCKET, BOLT ON CUTTING EDGE (B.O.C.E.) (ALL CASE)

R	N	P.N.	MOD	Q	Denominação Description	Description Bezeichnung	Denominacion Beskrivelse	Descrizione Beschrijving	L.C.
		434817A1		1	LAMINA DE CORTE, Kit; 78 Inch; Incl. Ref 7 - 9; Order Components				
						EDGE, CUTTING	CUCHILLA	BORDO, TAGLIO	Z114
					LAME D'ATTAQUE	SCHNEIDKANTE	EDGE, CUTTING	EDGE, CUTTING	
7		**86577171**		1	BORDA CORTANTE, 1981 mm (78 inch); Gray				
						CUTTING EDGE	BORDE DE CORTE	BORDO TAGLIENTE	018T
					BORD TRANCHANT	SCHNEIDKANTE	SKÆREKANT	SNIJRAND	
8		**86548338**		9	PARAFUSO DE ARADO, 5/8"-11 x 2", G5				
						PLOW BOLT	PERNO DE ARADO	BULLONE SCANALATO	P128
					BOULON DE CHARRUE	PFLUGSCHRAUBE	PLOVRIGEL	PLOEGBOUT	
9		**425-1010**		9	PORCA, 5/8"-11, G5	NUT	TUERCA	DADO	010D
					ECROU	MUTTER	MØTRIK	MOER	
		430500A1		1	LAMINA DE CORTE, Kit; 84 Inch; Incl. Ref 7 - 9; Order Components				
						EDGE, CUTTING	CUCHILLA	BORDO, TAGLIO	Z114
					LAME D'ATTAQUE	SCHNEIDKANTE	EDGE, CUTTING	EDGE, CUTTING	
7		**86577173**		1	BORDA CORTANTE, 2134 mm (84 inch); Gray				
						CUTTING EDGE	BORDE DE CORTE	BORDO TAGLIENTE	018T
					BORD TRANCHANT	SCHNEIDKANTE	SKÆREKANT	SNIJRAND	
8		**86548338**		7	PARAFUSO DE ARADO, 5/8"-11 x 2", G5				
						PLOW BOLT	PERNO DE ARADO	BULLONE SCANALATO	P128
					BOULON DE CHARRUE	PFLUGSCHRAUBE	PLOVRIGEL	PLOEGBOUT	
9		**280374**		7	PORCA, 5/8"-11, G5	NUT	TUERCA	DADO	010D
					ECROU	MUTTER	MØTRIK	MOER	

PALLET FORK 48 TINE (ALL CASE)
PALLET FORK 48 TINE (ALL CASE)
PALLET FORK 48 TINE (ALL CASE)
PALLET FORK 48 TINE (ALL CASE)

ART

NOT

AVAILABLE

PALLET FORK 48 TINE (ALL CASE)
PALLET FORK 48 TINE (ALL CASE)
PALLET FORK 48 TINE (ALL CASE)
PALLET FORK 48 TINE (ALL CASE)

R	N	P.N.	MOD	Q	Denominação Description	Description Bezeichnung	Denominacion Beskrivelse	Descrizione Beschrijving	L.C.
1		**84332182**		1	ESTRUTURA, Pallet Forks CHASSIS	FRAME RAHMEN	BASTIDOR FRAME	TELAIO FRAME	077T
2		**86574055**		2	GARFO DA CAÇAMBA, A-48 FOURCHE A GODET	BUCKET FORK GABELSCHAUFEL	HORQUILLA DE CUCHAI SKOVLGAFFEL	FORCA PER BENNA VORK VOOR GRAAFBAK	127F
3		**84476692**		1	ADESIVO, Pallet Fork, Case AUTOCOLLANT	DECAL AUFKLEBER	CALCOMANÍA TRANSFER	DECALCOMANIA STICKER	012D

82.100.04	01	p1	01/11

SPILL GUARD 66 TAN (SR130-SR200)
SPILL GUARD 66 TAN (SR130-SR200)
SPILL GUARD 66 TAN (SR130-SR200)
SPILL GUARD 66 TAN (SR130-SR200)

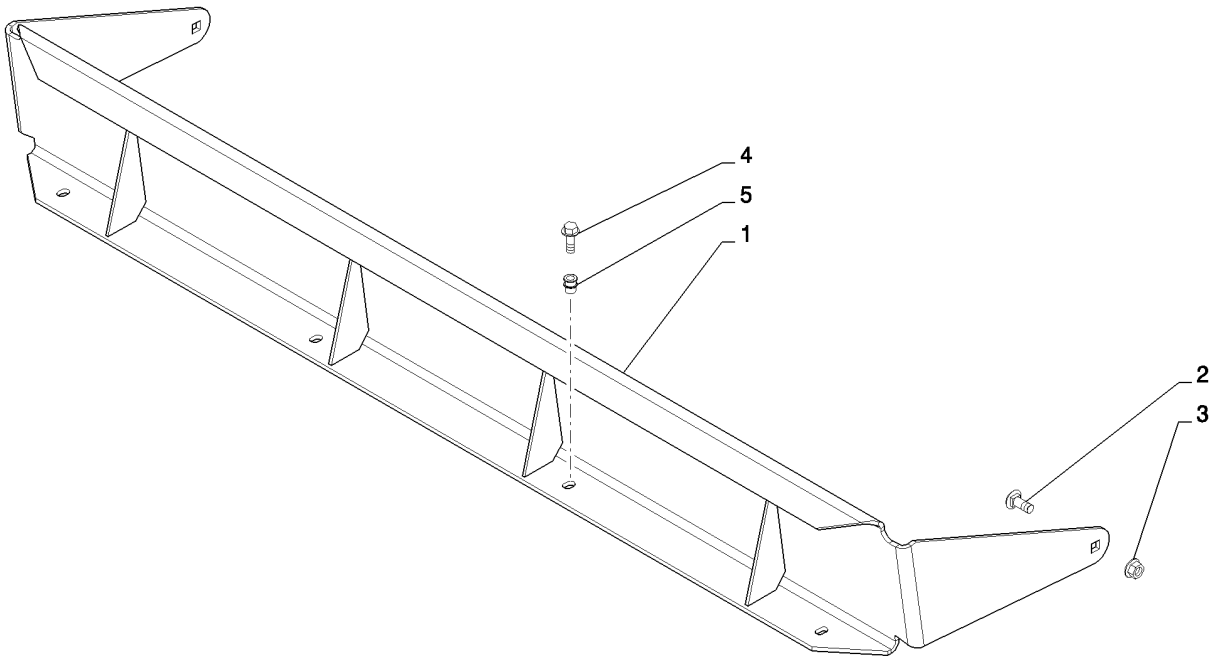

SPILL GUARD 66 TAN (SR130-SR200)
SPILL GUARD 66 TAN (SR130-SR200)
SPILL GUARD 66 TAN (SR130-SR200)
SPILL GUARD 66 TAN (SR130-SR200)

R	N	P.N.	MOD	Q	Denominação Description Bezeichnung	Description Bezeichnung	Denominacion Beskrivelse	Descrizione Beschrijving	L.C.
1		84263252		1	EXTENSÃO, 66 Spill Guard, Tan				
						EXTENSION	EXTENSIÓN	PROLUNGA	226P
					RALLONGE	ERWEITERUNG	FORLÆNGNING	VERLENGSTUK	
2		120044		2	PARAFUSO, Short NK, M12 x 30, Cl8.8, Full Thd				
						CARRIAGE BOLT	PERNO ALOMADO	BULLONE A TESTA TON	P123
					VIS A TETE BOMBEE	SCHLOSSSCHRAUBE	BRÆDDEBOLT	SLOTBOUT	
3		86512497		2	PORCA, M12 x 1.75, Flg, Cl 10				
						NUT	TUERCA	DADO	010D
					ECROU	MUTTER	MØTRIK	MOER	
4		9804262		4	PARAFUSO, Hex Flg, M10 x 30, 8.8				
						BOLT	PERNO	BULLONE	140B
					VIS	SCHRAUBE	BOLT	BOUT	
5		390618A1		4	PORCA DE INSERCAO	INSERT	TUERCA DE INSERCION	INSERTO	4675
					DOUILLE RAPPORTEE	EINSATZ	INSERT	INSERT	

SPILL GUARD 72 TAN (SR130-TR270)
SPILL GUARD 72 TAN (SR130-TR270)
SPILL GUARD 72 TAN (SR130-TR270)
SPILL GUARD 72 TAN (SR130-TR270)

ART

NOT

AVAILABLE

SPILL GUARD 72 TAN (SR130-TR270)
SPILL GUARD 72 TAN (SR130-TR270)
SPILL GUARD 72 TAN (SR130-TR270)
SPILL GUARD 72 TAN (SR130-TR270)

R	N	P.N.	MOD	Q	Denominação Description Bezeichnung	Description Bezeichnung	Denominacion Beskrivelse	Descrizione Beschrijving	L.C.
1		84263254		1	EXTENSÃO, 72 Spill Guard, Tan				
						EXTENSION	EXTENSIÓN	PROLUNGA	226P
					RALLONGE	ERWEITERUNG	FORLÆNGNING	VERLENGSTUK	
2		120044		2	PARAFUSO, Short NK, M12 x 30, Cl8.8, Full Thd				
						CARRIAGE BOLT	PERNO ALOMADO	BULLONE A TESTA TONI	P123
					VIS A TETE BOMBEE	SCHLOSSSCHRAUBE	BRÆDDEBOLT	SLOTBOUT	
3		86512497		2	PORCA, M12 x 1.75, Flg, Cl 10				
						NUT	TUERCA	DADO	010D
					ECROU	MUTTER	MØTRIK	MOER	
4		9804262		4	PARAFUSO, Hex Flg, M10 x 30, 8.8				
						BOLT	PERNO	BULLONE	140B
					VIS	SCHRAUBE	BOLT	BOUT	
5		390618A1		4	PORCA DE INSERCAO	INSERT	TUERCA DE INSERCION	INSERTO	4675
					DOUILLE RAPPORTEE	EINSATZ	INSERT	INSERT	

SPILL GUARD 78 TAN (SR175-TV380)
SPILL GUARD 78 TAN (SR175-TV380)
SPILL GUARD 78 TAN (SR175-TV380)
SPILL GUARD 78 TAN (SR175-TV380)

ART
NOT
AVAILABLE

SPILL GUARD 78 TAN (SR175-TV380)
SPILL GUARD 78 TAN (SR175-TV380)
SPILL GUARD 78 TAN (SR175-TV380)
SPILL GUARD 78 TAN (SR175-TV380)

R	N	P.N.	MOD	Q	Denominação Description Bezeichnung	Description Bezeichnung Beskrivelse	Denominacion Beskrivelse Descrizione	Descrizione Beschrijving Beschrijving	L.C.
1		84263256		1	EXTENSÃO, 78 Spill Guard, Tan EXTENSION RALLONGE	EXTENSIÓN ERWEITERUNG	PROLUNGA FORLÆNGNING	VERLENGSTUK	226P
2		120044		2	PARAFUSO, Short NK, M12 x 30, Cl8.8, Full Thd CARRIAGE BOLT VIS A TETE BOMBEE	PERNO ALOMADO SCHLOSSSCHRAUBE	BULLONE A TESTA TONI BRÆDDEBOLT	SLOTBOUT	P123
3		86512497		2	PORCA, M12 x 1.75, Flg, Cl 10 NUT ECROU	TUERCA MUTTER	DADO MØTRIK	MOER	010D
4		9804262		4	PARAFUSO, Hex Flg, M10 x 30, 8.8 BOLT VIS	PERNO SCHRAUBE	BULLONE BOLT	BOUT	140B
5		390618A1		4	PORCA DE INSERCAO DOUILLE RAPPORTEE	INSERT EINSATZ	TUERCA DE INSERCION INSERT	INSERTO INSERT	4675

SV185

SECTION INDEX
88 - Acessórios

88.010.03	DIA KIT, ASPIRATOR (SV185)
88.010.07	DIA KIT, BLOCK HEATER 120V USA (SR130-SV185)
88.035.03	DIA KIT, SELF-LEVEL 40 (SV185)
88.035.07	DIA KIT, RIDE CONTROL CASE MED/LG (SR175-SV300,TR270,TR320,TV380)
88.035.10	DIA KIT, HYDRAULIC COUPLER VERT (SV185,SV250,SV300,TV380)
88.035.12	DIA KIT, HIGH FLOW AUX - MED VERT (SV185)
88.035.16	DIA KIT, 2ND FRONT HYD AUX - MED VERT (SV185)
88.035.21	DIA KIT, MED FRM FOOT CONTROLS, MANUAL (SR175,SV185)
88.037.05	DIA KIT, COUNTERWEIGHT MF CASE (SR175-SR200,TR270)
88.050.05	DIA KIT, MED FRM ISM HVAC KIT (SR175,SV185)
88.050.09	DIA KIT, MED FRM ISM HEAT KIT (SR175,SV185)
88.055.01	DIA KIT, BEACON (ALL CASE)
88.055.02	DIA KIT, STROBE (ALL CASE)
88.055.08	DIA KIT, MULTI-FUNCTION ELEC MECH VERT (SV185)
88.055.12	DIA KIT, MULTI-FUNCTION ELEC EH VERT (SV185)
88.055.17	DIA KIT, EU ROAD LIGHT MED VERT CASE (SV185)
88.055.27	DIA KIT, MECH CHASS OPT HARNESS, MED (SR175-SR200)
88.055.29	DIA KIT, SIDE LAMP (ALL CASE)
88.082.01	DIA KIT, PALLET FORK 48IN TINES (ALL CASE)
88.082.02	DIA KIT, 66IN SPILL GUARD TAN (SR130-SR200)
88.082.03	DIA KIT, 72IN SPILL GUARD TAN (SR130-TR270)
88.082.04	DIA KIT, 78IN SPILL GUARD TAN (SR175-TV380)
88.082.07	DIA KIT, 66IN B.O.C.E. (SR130-SR200)
88.082.08	DIA KIT, 72IN B.O.C.E. (SR130-TR270)
88.082.09	DIA KIT, 78IN B.O.C.E. (SR175-TV380)
88.082.10	DIA KIT, 84IN B.O.C.E. (SR175-TV380)
88.082.11	DIA KIT, BUCKET TEETH (ALL CASE)
88.082.12	DIA KIT, BUCKETS - FIELD (ALL CASE)
88.088.03	DIA KIT, SINGLE POINT LIFT HOOK (SV185)
88.088.06	DIA KIT, RADIO (ALL CASE)
88.088.07	DIA KIT, 4 POINT LIFT HOOK (SR175-SR200,TR270)
88.088.08	DIA KIT, 4 POINT LIFT HOOK (SR220-SV300,TR320,TV380)
88.088.09	DIA KIT, FOPS LEVEL 2 MODS (ALL CASE)
88.088.10	DIA KIT, MIRROR (ALL CASE)
88.088.13	DIA KIT, DRAW BAR MED GRAY (SR175-SR200,TR270)
88.088.14	DIA KIT, DRAW BAR LARGE GRAY (SR220-SV300,TR320,TV380)
88.088.15	DIA KIT, FIRE EXTINGUISHER (ALL CASE)
88.090.01	DIA KIT, DEMO REAR DOOR (ALL CASE)
88.090.02	DIA KIT, GLASS FRONT DOOR (ALL CASE)
88.090.03	DIA KIT, DEMO FRONT DOOR (ALL CASE)
88.090.04	DIA KIT, CAB SIDE WINDOWS (ALL CASE)
88.090.05	DIA KIT, REAR EXT ACCESS WINDOW (ALL CASE)
88.090.06	DIA KIT, 3IN LAP BELT (ALL CASE)
88.090.08	DIA KIT, REMOVABLE TOP WINDOW (ALL CASE)
88.090.09	DIA KIT, RH, SIDE SCREEN (ALL CASE)
88.090.10	DIA KIT, LH, SIDE SCREEN (ALL CASE)
88.090.12	DIA KIT, HANDLE 300/400 (ALL CASE)
88.090.14	DIA KIT, HANDLE 350/450 (ALL CASE)
88.100.01	ENGINE ACCESSORIES EU/OPEN EU (SV185)
88.100.01	ENGINE ACCESSORIES NA (SR175,SV185)
88.120.01	SEAL PACKAGE, FOAM (ALL CASE)
88.120.02	FUSE COVER, MED-LG CHASSIS (SR175-TV380)

DIA KIT, ASPIRATOR (SV185)
DIA KIT, ASPIRATOR (SV185)
DIA KIT, ASPIRATOR (SV185)
DIA KIT, ASPIRATOR (SV185)



DIA KIT, ASPIRATOR (SV185)
DIA KIT, ASPIRATOR (SV185)
DIA KIT, ASPIRATOR (SV185)
DIA KIT, ASPIRATOR (SV185)

R	N	P.N.	MOD	Q	Denominação Description Bezeichnung Denominacion Beskrivelse Descrizione Beschrijving	L.C.
		84396760			JOGO, DIA Kit, Aspirator, Incl. 1-11 KIT JEUGO KIT POCHETTE PACKUNG KIT KIT	4830
1		**84674**		2	BRAÇADEIRA MANGUEIRA, #28, 1.31/2.25 Type F Worm HOSE CLAMP ABRAZADERA DE MANG FASCETTA STRINGITUB COLLIER POUR FLEXIBL SCHLAUCHSCHELLE SLANGEKLEMME SLANGKLEM	P729
2		**507586**		1	BRAÇADEIRA MANGUEIRA, #20, 0.81/1.75 Type F Worm HOSE CLAMP ABRAZADERA DE MANG FASCETTA STRINGITUB COLLIER POUR FLEXIBL SCHLAUCHSCHELLE SLANGEKLEMME SLANGKLEM	P729
3		**9671714**		1	PARAFUSO, Hex Flg, M8 x 25, 8.8 BOLT PERNO BULLONE VIS SCHRAUBE BOLT BOUT	140B
4		**9804277**		1	PORCA, M8 x 1.25, Flg, Cl 8 NUT TUERCA DADO ECROU MUTTER MØTRIK MOER	010D
5		**84137995**		1	BRAÇADEIRA MANGUEIRA, Turn Key Grip HOSE CLAMP ABRAZADERA DE MANG FASCETTA STRINGITUB COLLIER POUR FLEXIBL SCHLAUCHSCHELLE SLANGEKLEMME SLANGKLEM	P729
6		**84312967**		1	MANGUEIRA, Tail Pipe to Aspirator HOSE TUBO TUBO FLESSIBILE FLEXIBLE SCHLAUCH SLANGE SLANG	030M
7		**84312972**		1	MANGUEIRA, Air Cleaner to Aspirator HOSE TUBO TUBO FLESSIBILE FLEXIBLE SCHLAUCH SLANGE SLANG	030M
8		**84359080**		1	TUBO RÍGIDO, Exhaust Tail Pipe RIGID TUBE TUBO RÍGIDO TUBO RIGIDO TUYAU RIGIDE ROHR STIFT RØR VASTE LEIDING	193T
9		**84396232**		1	SUPORTE, Aspirator Mounting BRACKET SOPORTE STAFFA SUPPORT HALTERUNG BESLAG STEUN	225S
10		**406089A2**		1	VALVULA, Aspirator Check VALVE VALVULA VALVOLA VALVE VENTIL VALVE VALVE	P468
11		**84396768**		1	INSTRUÇÃO, Sheet, Aspirator INSTRUCTION INSTRUCCIÓN ISTRUZIONI INSTRUCTION ANLEITUNG INSTRUKTION INSTRUCTIE	Z571

DIA KIT, BLOCK HEATER 120V USA (SR130-SV185)
DIA KIT, BLOCK HEATER 120V USA (SR130-SV185)
DIA KIT, BLOCK HEATER 120V USA (SR130-SV185)
DIA KIT, BLOCK HEATER 120V USA (SR130-SV185)



DIA KIT, BLOCK HEATER 120V USA (SR130-SV185)
DIA KIT, BLOCK HEATER 120V USA (SR130-SV185)
DIA KIT, BLOCK HEATER 120V USA (SR130-SV185)
DIA KIT, BLOCK HEATER 120V USA (SR130-SV185)

R	N	P.N.	MOD	Q	Denominação Description Bezeichnung	Description Denominacion Beskrivelse	Denominacion Descrizione Beschrijving	L.C.
		84395705			KIT DE SERVIÇO, DIA Kit, Block Heater, 120V, Incl. 1-4			
					SERVICE KIT	KIT DE SERVICIO	KIT DI MANUTENZIONE	021K
					KIT D'ENTRETIEN	SERVICE-SATZ	SERVICESÆT	SERVICEKIT
1		**86590117**		1	KIT, Cord, Block Heater	KIT	KIT	KIT	305C
					KIT	SATZ	SÆT	KIT
2		**263117**		4	PRENDEDOR DE CABOS, .14" x 11 1/2"			
					CABLE STRAP	BANDA DE CABLE	FASCETTA PER CAVO	P716
					BRIDE DE CABLE	KABELBINDER	KABELSTROP	BUNDELBAND
3		**84395708**		1	INSTRUÇÃO, Installation, ISM, Block Heater			
					INSTRUCTION	INSTRUCCIÓN	ISTRUZIONI	Z571
					INSTRUCTION	ANLEITUNG	INSTRUKTION	INSTRUCTIE
4		**12646001**		1	ARRUELA PLANA, M14 x 24 x 2			
					WASHER	ARANDELA	RONDELLA	131R
					RONDELLE	UNTERLEGSCHEIBE	FLADSKIVE	SLUITRING

88.035.03		p1	03/11

DIA KIT, SELF-LEVEL 40 (SV185)
DIA KIT, SELF-LEVEL 40 (SV185)
DIA KIT, SELF-LEVEL 40 (SV185)
DIA KIT, SELF-LEVEL 40 (SV185)



DIA KIT, SELF-LEVEL 40 (SV185)
DIA KIT, SELF-LEVEL 40 (SV185)
DIA KIT, SELF-LEVEL 40 (SV185)
DIA KIT, SELF-LEVEL 40 (SV185)

R	N	P.N.	MOD	Q	Denominação Description	Description Bezeichnung	Denominacion Beskrivelse	Descrizione Beschrijving	L.C.
		84417337			JOGO, DIA Kit, Self-Level 40, Incl. 1-12				
						KIT	JEUGO	KIT	4830
					POCHETTE	PACKUNG	KIT	KIT	
1		**84326479**		1	VÁLVULA, 40, Self-Level	VALVE	VÁLVULA	VALVOLA	9620
					SOUPAPE	VENTIL	VENTIL	KLEP	
2		**128819**		2	CONECTOR HIDRÁUL, 3/4"-16, 37º x 7/8"-14, O-Ring				
						HYD CONNECTOR	CONECTOR HIDRÁULIC(	CONNETTORE IDRAULIC	020R
					CONNECTEUR HYDRAU	HYDR STECKVERBINDE	HYDRAULIKSTIK	HYDRAULISCHE AANSLI	
3		**164910**		1	COTOVELO, 90º, 7/8"-14, 37º x 7/8"-14, O-Ring				
						ELBOW	CODO	GOMITO	085G
					COUDE	KNIESTÜCK	VINKELRØR	KNIESTUK	
4		**84186140**		1	TUBO RÍGIDO, Assembly, Lower, LDR Valve to SL				
						RIGID TUBE	TUBO RÍGIDO	TUBO RIGIDO	193T
					TUYAU RIGIDE	ROHR	STIFT RØR	VASTE LEIDING	
5		**84258865**		1	TUBO RÍGIDO, Assembly, Lower, SL to Manifold				
						RIGID TUBE	TUBO RÍGIDO	TUBO RIGIDO	193T
					TUYAU RIGIDE	ROHR	STIFT RØR	VASTE LEIDING	
6		**84258866**		2	TUBO RÍGIDO, Assembly, SL Valve to TIP				
						RIGID TUBE	TUBO RÍGIDO	TUBO RIGIDO	193T
					TUYAU RIGIDE	ROHR	STIFT RØR	VASTE LEIDING	
7		**84271904**		1	INTERRUPTOR, Rocker, Self-Leveling				
						SWITCH	INTERRUPTOR	INTERRUTTORE	075I
					CONTACTEUR	SCHALTER	KONTAKT	SCHAKELAAR	
8		**86511843**		2	PARAFUSO, Hex Flg, M8 x 60, 8.8				
						BOLT	PERNO	BULLONE	140B
					VIS	SCHRAUBE	BOLT	BOUT	
9		**87301330**		1	CONECTOR HIDRÁUL, 37FL -ORB 5/8				
						HYD CONNECTOR	CONECTOR HIDRÁULIC(	CONNETTORE IDRAULIC	020R
					CONNECTEUR HYDRAU	HYDR STECKVERBINDE	HYDRAULIKSTIK	HYDRAULISCHE AANSLI	
10		**87655042**		4	ARRUELA ESPECIAL, M8, 8.80 X 17.5 X 2.2 HTS				
						SPECIAL WASHER	ARANDELA ESPECIAL	RONDELLA SPECIALE	Z333
					RONDELLE SPECIALE	SPEZIALUNTERLEGSCH	SPECIALSKIVE	SPECIALE RING	
11		**229197A1**		2	PORCA, Square	NUT	TUERCA	DADO	5780
					ECROU	MUTTER	NUT	NUT	
12		**84417338**		1	INSTRUÇÃO, Installation	INSTRUCTION	INSTRUCCIÓN	ISTRUZIONI	Z571
					INSTRUCTION	ANLEITUNG	INSTRUKTION	INSTRUCTIE	

SV185

DIA KIT, RIDE CONTROL CASE MED/LG (SR175-SV300,TR270,TR320,TV380)
DIA KIT, RIDE CONTROL CASE MED/LG (SR175-SV300,TR270,TR320,TV380)
DIA KIT, RIDE CONTROL CASE MED/LG (SR175-SV300,TR270,TR320,TV380)
DIA KIT, RIDE CONTROL CASE MED/LG (SR175-SV300,TR270,TR320,TV380)



DIA KIT, RIDE CONTROL CASE MED/LG (SR175-SV300,TR270,TR320,TV380)
DIA KIT, RIDE CONTROL CASE MED/LG (SR175-SV300,TR270,TR320,TV380)
DIA KIT, RIDE CONTROL CASE MED/LG (SR175-SV300,TR270,TR320,TV380)
DIA KIT, RIDE CONTROL CASE MED/LG (SR175-SV300,TR270,TR320,TV380)

R	N	P.N.	MOD	Q	Denominação Description Bezeichnung	Denominacion Beskrivelse	Descrizione Beschrijving	L.C.
		84391580			JOGO, DIA Kit, Ride Control, Case Med/LG, Incl. 1-19			
					KIT	JEUGO	KIT	4830
					POCHETTE	PACKUNG	KIT	KIT
1		**76350**		1	CONECTOR HIDRÁUL, 9/16"-18, 37° x 9/16"-18, O-Ring			
					HYD CONNECTOR	CONECTOR HIDRÁULIC	CONNETTORE IDRAULIC	020R
					CONNECTEUR HYDRAU	HYDR STECKVERBINDE	HYDRAULIKSTIK	HYDRAULISCHE AANSLU
2		**128830**		1	COTOVELO, 90°, 3/4"-16, 37° x 3/4"-16, O-Ring			
					ELBOW	CODO	GOMITO	085G
					COUDE	KNIESTÜCK	VINKELRØR	KNIESTUK
3		**84256404**		1	VÁLVULA HIDRÁULICA, Ride Control			
					HYDRAULIC VALVE	VÁLVULA HIDRÁULICA	DISTRIBUTORE IDRAULI	010V
					SOUPAPE HYDRAULIQU	HYDRAULIKVENTIL	HYDRAULIKVENTIL	HYDRAULISCHE KLEP
4		**84375899**		1	TUBO RÍGIDO, Hydraulic, Assembly, Ride Control to Manifold			
					RIGID TUBE	TUBO RÍGIDO	TUBO RIGIDO	193T
					TUYAU RIGIDE	ROHR	STIFT RØR	VASTE LEIDING
5		**84375901**		1	TUBO RÍGIDO, Hydraulic, Assembly, Ride Control to Manifold			
					RIGID TUBE	TUBO RÍGIDO	TUBO RIGIDO	193T
					TUYAU RIGIDE	ROHR	STIFT RØR	VASTE LEIDING
6		**84259548**		1	MANGUEIRA, LOL, Ride Control, Drain			
					HOSE	TUBO	TUBO FLESSIBILE	030M
					FLEXIBLE	SCHLAUCH	SLANGE	SLANG
7		**84259682**		1	CONEXÃO EM T, Assembly, Option			
					UNION TEE	RACOR EN T	RACCORDO A T	A134
					RACCORD EN T	T-VERSCHRAUBUNG	T-FORSKRUNING	KOPPEL-T-STUK
8		**84331280**		1	MANGUEIRA, Assembly, Valve to Accumulator			
					HOSE	TUBO	TUBO FLESSIBILE	030M
					FLEXIBLE	SCHLAUCH	SLANGE	SLANG
9		**86509028**		2	CONECTOR HIDRÁUL, 3/4"-16, 37° x 9/16"-18, O-Ring			
					HYD CONNECTOR	CONECTOR HIDRÁULIC	CONNETTORE IDRAULIC	020R
					CONNECTEUR HYDRAU	HYDR STECKVERBINDE	HYDRAULIKSTIK	HYDRAULISCHE AANSLU
10		**86511481**		2	PARAFUSO, Hex Flg, M8 x 50, 8.8			
					BOLT	PERNO	BULLONE	140B
					VIS	SCHRAUBE	BOLT	BOUT
11		**86624194**		2	BRAÇADEIRA MANGUEIRA, #36, 1.81/2.75 Type F Worm			
					HOSE CLAMP	ABRAZADERA DE MANG	FASCETTA STRINGITUB	P729
					COLLIER POUR FLEXIBL	SCHLAUCHSCHELLE	SLANGEKLEMME	SLANGKLEM
12		**87302140**		1	CONEXÃO, 45°, 1/2" Hose x 9/16"-18 ORB Beaded			
					FITTING	ACOPLAMIENTO	RACCORDO	3300
					RACCORD	ARMATUR	FITTING	AANSLUITING
13		**87403797**		1	ACUMULADOR, Hydraulic	ACCUMULATOR	ACUMULADOR	ACCUMULATORE	037A
					ACCUMULATEUR	DRUCKSPEICHER	AKKUMULATOR	ACCUMULATOR
14		**87443510**		3	BRAÇADEIRA MANGUEIRA, M20			
					HOSE CLAMP	ABRAZADERA DE MANG	FASCETTA STRINGITUB	P729
					COLLIER POUR FLEXIBL	SCHLAUCHSCHELLE	SLANGEKLEMME	SLANGKLEM
15		**87655042**		2	ARRUELA ESPECIAL, M8, 8.80 X 17.5 X 2.2 HTS			
					SPECIAL WASHER	ARANDELA ESPECIAL	RONDELLA SPECIALE	Z333
					RONDELLE SPECIALE	SPEZIALUNTERLEGSCH	SPECIALSKIVE	SPECIALE RING
16		**229197A1**		2	PORCA, Square	NUT	TUERCA	DADO	5780
					ECROU	MUTTER	NUT	NUT

DIA KIT, RIDE CONTROL CASE MED/LG (SR175-SV300,TR270,TR320,TV380)
DIA KIT, RIDE CONTROL CASE MED/LG (SR175-SV300,TR270,TR320,TV380)
DIA KIT, RIDE CONTROL CASE MED/LG (SR175-SV300,TR270,TR320,TV380)
DIA KIT, RIDE CONTROL CASE MED/LG (SR175-SV300,TR270,TR320,TV380)



DIA KIT, RIDE CONTROL CASE MED/LG (SR175-SV300,TR270,TR320,TV380)
DIA KIT, RIDE CONTROL CASE MED/LG (SR175-SV300,TR270,TR320,TV380)
DIA KIT, RIDE CONTROL CASE MED/LG (SR175-SV300,TR270,TR320,TV380)
DIA KIT, RIDE CONTROL CASE MED/LG (SR175-SV300,TR270,TR320,TV380)

R	N	P.N.	MOD	Q	Denominação Description	Description Bezeichnung	Denominacion Beskrivelse	Descrizione Beschrijving	L.C.
17		**328903A1**		1	DECALCOMANIA DECALCOMANIE	DECAL ABZIEHBILD	CALCOMANIA DECAL	AUTOADESIVO DECAL	P903
18		**304083A1**		2	DECALCOMANIA, Ride Control Option DECALCOMANIE	DECAL ABZIEHBILD	CALCOMANIA DECAL	AUTOADESIVO DECAL	P903
19		**84391583**		1	INSTRUÇÃO, Sheet, Ride Control, Case Med/LG INSTRUCTION	INSTRUCTION ANLEITUNG	INSTRUCCIÓN INSTRUKTION	ISTRUZIONI INSTRUCTIE	Z571

DIA KIT, HYDRAULIC COUPLER VERT (SV185,SV250,SV300,TV380)
DIA KIT, HYDRAULIC COUPLER VERT (SV185,SV250,SV300,TV380)
DIA KIT, HYDRAULIC COUPLER VERT (SV185,SV250,SV300,TV380)
DIA KIT, HYDRAULIC COUPLER VERT (SV185,SV250,SV300,TV380)



DIA KIT, HYDRAULIC COUPLER VERT (SV185,SV250,SV300,TV380)
DIA KIT, HYDRAULIC COUPLER VERT (SV185,SV250,SV300,TV380)
DIA KIT, HYDRAULIC COUPLER VERT (SV185,SV250,SV300,TV380)
DIA KIT, HYDRAULIC COUPLER VERT (SV185,SV250,SV300,TV380)

R	N	P.N.	MOD	Q	Denominação Description	Description Bezeichnung	Denominacion Beskrivelse	Descrizione Beschrijving	L.C.
		84392553			JOGO, DIA Kit, Hydraulic Coupler Vert, Incl. 1-				
						KIT	JEUGO	KIT	4830
					POCHETTE	PACKUNG	KIT	KIT	
1		**280476**		3	PARAFUSO, Hex Wash Hd, 3/8" x 1"				
						SELF-TAP SCREW	TORNILLO AUTORROSC	VITE AUTOFILETTANTE	062V
					VIS AUTOTARAUDEUSE	SELBSTSCHN SCHRAUE	SELVLÅSENDE BOLT	ZELFTAPPENDE SCHRO	
2		**605025**		1	BRAÇADEIRA	CLAMP	ABRAZADERA	MORSETTO	120M
					COLLIER	KLEMME	SPÆNDEBÅND	KLEM	
3		**9804260**		1	PARAFUSO, Hex Flg, M8 x 30, 8.8, Full Thd				
						BOLT	PERNO	BULLONE	140B
					VIS	SCHRAUBE	BOLT	BOUT	
4		**9804277**		1	PORCA, M8 x 1.25, Flg, Cl 8				
						NUT	TUERCA	DADO	010D
					ECROU	MUTTER	MØTRIK	MOER	
5		**84254052**		1	BRAÇADEIRA MANGUEIRA, Tube				
						HOSE CLAMP	ABRAZADERA DE MANG	FASCETTA STRINGITUB	P729
					COLLIER POUR FLEXIBL	SCHLAUCHSCHELLE	SLANGEKLEMME	SLANGKLEM	
6		**84254056**		2	BRAÇADEIRA MANGUEIRA, Butterfly Tube				
						HOSE CLAMP	ABRAZADERA DE MANG	FASCETTA STRINGITUB	P729
					COLLIER POUR FLEXIBL	SCHLAUCHSCHELLE	SLANGEKLEMME	SLANGKLEM	
7		**84284644**		2	CONJ. MANGUEIRA, Hydraulic Coupler				
						HOSE ASSY.	CONJUNTO DE TUBOS	COMPLESS. TUBO FLES	P457
					ENSEMBLE DE FLEXIBLE	SCHLAUCHBAUGRUPPE	SLANGEENHED	SLANGEENHEID	
8		**84396808**		1	TUBO HIDRÁULICO, Assembly, Hydraulic Coupler				
						HYD. TUBE	TUBO HIDRÁULICO	TUBO IDRAULICO	190T
					TUYAU HYDRAULIQUE	HYDRAULIKLEITUNG	HYD. RØR	HYDRAULISCHE LEIDIN(	
9		**84396810**		1	TUBO HIDRÁULICO, Assembly, Hydraulic Coupler				
						HYD. TUBE	TUBO HIDRÁULICO	TUBO IDRAULICO	190T
					TUYAU HYDRAULIQUE	HYDRAULIKLEITUNG	HYD. RØR	HYDRAULISCHE LEIDIN(	
10		**84351545**		1	TUBO HIDRÁULICO, Assembly, Step to Coupler				
						HYD. TUBE	TUBO HIDRÁULICO	TUBO IDRAULICO	190T
					TUYAU HYDRAULIQUE	HYDRAULIKLEITUNG	HYD. RØR	HYDRAULISCHE LEIDIN(	
11		**84351547**		1	TUBO HIDRÁULICO, Assembly, Step to Coupler				
						HYD. TUBE	TUBO HIDRÁULICO	TUBO IDRAULICO	190T
					TUYAU HYDRAULIQUE	HYDRAULIKLEITUNG	HYD. RØR	HYDRAULISCHE LEIDIN(	
12		**87342191**		1	ARRUELA PLANA, Spacer	WASHER	ARANDELA	RONDELLA	131R
					RONDELLE	UNTERLEGSCHEIBE	FLADSKIVE	SLUITRING	
13		**84281694**		2	CONJ. MANGUEIRA, Hydraulic Coupler				
						HOSE ASSY.	CONJUNTO DE TUBOS	COMPLESS. TUBO FLES	P457
					ENSEMBLE DE FLEXIBLE	SCHLAUCHBAUGRUPPE	SLANGEENHED	SLANGEENHEID	
14		**84350180**		1	TUBO HIDRÁULICO, Coupler				
						HYD. TUBE	TUBO HIDRÁULICO	TUBO IDRAULICO	190T
					TUYAU HYDRAULIQUE	HYDRAULIKLEITUNG	HYD. RØR	HYDRAULISCHE LEIDIN(	
15		**84350178**		1	TUBO HIDRÁULICO, Assembly, Coupler				
						HYD. TUBE	TUBO HIDRÁULICO	TUBO IDRAULICO	190T
					TUYAU HYDRAULIQUE	HYDRAULIKLEITUNG	HYD. RØR	HYDRAULISCHE LEIDIN(	

DIA KIT, HYDRAULIC COUPLER VERT (SV185,SV250,SV300,TV380)
DIA KIT, HYDRAULIC COUPLER VERT (SV185,SV250,SV300,TV380)
DIA KIT, HYDRAULIC COUPLER VERT (SV185,SV250,SV300,TV380)
DIA KIT, HYDRAULIC COUPLER VERT (SV185,SV250,SV300,TV380)



DIA KIT, HYDRAULIC COUPLER VERT (SV185,SV250,SV300,TV380)
DIA KIT, HYDRAULIC COUPLER VERT (SV185,SV250,SV300,TV380)
DIA KIT, HYDRAULIC COUPLER VERT (SV185,SV250,SV300,TV380)
DIA KIT, HYDRAULIC COUPLER VERT (SV185,SV250,SV300,TV380)

R	N	P.N.	MOD	Q	Denominação Description	Description Bezeichnung	Denominacion Beskrivelse	Descrizione Beschrijving	L.C.
16		139398		4	CONECTOR HIDRÁUL, 7/16"-20, 37º x 9/16"-18, O-Ring				
						HYD CONNECTOR	CONECTOR HIDRÁULIC	CONNETTORE IDRAULIC	020R
					CONNECTEUR HYDRAU	HYDR STECKVERBINDE	HYDRAULIKSTIK	HYDRAULISCHE AANSLU	
17		163335		1	T, 9/16"-18, 37º x 9/16"-18, O-Ring Br				
						TEE	RACOR EN T	PEZZO A T	9020
					RACCORD EN T	T-STÜCK	T-STYKKE	T-STUK	
18		265235		2	CONECTOR HIDRÁUL, 7/16"-20, 37º x 7/16"-20, O-Ring				
						HYD CONNECTOR	CONECTOR HIDRÁULIC	CONNETTORE IDRAULIC	020R
					CONNECTEUR HYDRAU	HYDR STECKVERBINDE	HYDRAULIKSTIK	HYDRAULISCHE AANSLU	
19		577927		2	BRAÇADEIRA	CLAMP	ABRAZADERA	MORSETTO	120M
					COLLIER	KLEMME	SPÆNDEBÅND	KLEM	
20		9671714		2	PARAFUSO, Hex Flg, M8 x 25, 8.8				
						BOLT	PERNO	BULLONE	140B
					VIS	SCHRAUBE	BOLT	BOUT	
21		9804261		2	PARAFUSO, Hex Flg, M10 x 25, 8.8				
						BOLT	PERNO	BULLONE	140B
					VIS	SCHRAUBE	BOLT	BOUT	
22		9804276		2	PORCA, M6 x 1, Flg, Cl 8	NUT	TUERCA	DADO	010D
					ECROU	MUTTER	MØTRIK	MOER	
23		9804277		2	PORCA, M8 x 1.25, Flg, Cl 8				
						NUT	TUERCA	DADO	010D
					ECROU	MUTTER	MØTRIK	MOER	
24		9804278		2	PORCA, M10 x 1.5, Flg, Cl 8				
						NUT	TUERCA	DADO	010D
					ECROU	MUTTER	MØTRIK	MOER	
25		9850685		2	PARAFUSO, Hex, M6 x 90, 8.8				
						BOLT	PERNO	BULLONE	140B
					VIS	SCHRAUBE	BOLT	BOUT	
26		84387739		2	HASTE, Hydraulic Coupler, Position Indicator				
						ROD	VARILLA	ASTA	090A
					TIGE	STANGE	STANG	STANG	
27		84339845		1	ESTRIBO, Hydraulic Coupler, Power Tan				
						STEP	PELDAÑO	GRADINO	116M
					MARCHE-PIED	SCHRITT	TRINPLADE	TREDE	
28		84345496		2	MANGUEIRA, Hydraulic Cylinder				
						HOSE	TUBO	TUBO FLESSIBILE	030M
					FLEXIBLE	SCHLAUCH	SLANGE	SLANG	
29		84345506		1	MANGUEIRA, Coupler Cylinder				
						HOSE	TUBO	TUBO FLESSIBILE	030M
					FLEXIBLE	SCHLAUCH	SLANGE	SLANG	
30		84345532		1	MANGUEIRA, Coupler Cylinder				
						HOSE	TUBO	TUBO FLESSIBILE	030M
					FLEXIBLE	SCHLAUCH	SLANGE	SLANG	
31		86512993		2	COTOVELO, 45º, 7/16"-20, 37º x 7/16"-20, O-Ring				
						ELBOW	CODO	GOMITO	085G
					COUDE	KNIESTÜCK	VINKELRØR	KNIESTUK	
32		86588450		2	ARRUELA PLANA, M6 x 12 x 1.6 Thk				
						WASHER	ARANDELA	RONDELLA	131R
					RONDELLE	UNTERLEGSCHEIBE	FLADSKIVE	SLUITRING	

DIA KIT, HYDRAULIC COUPLER VERT (SV185,SV250,SV300,TV380)
DIA KIT, HYDRAULIC COUPLER VERT (SV185,SV250,SV300,TV380)
DIA KIT, HYDRAULIC COUPLER VERT (SV185,SV250,SV300,TV380)
DIA KIT, HYDRAULIC COUPLER VERT (SV185,SV250,SV300,TV380)



DIA KIT, HYDRAULIC COUPLER VERT (SV185,SV250,SV300,TV380)
DIA KIT, HYDRAULIC COUPLER VERT (SV185,SV250,SV300,TV380)
DIA KIT, HYDRAULIC COUPLER VERT (SV185,SV250,SV300,TV380)
DIA KIT, HYDRAULIC COUPLER VERT (SV185,SV250,SV300,TV380)

R	N	P.N.	MOD	Q	Denominação Description Bezeichnung	Description Bezeichnung	Denominacion Beskrivelse	Descrizione Beschrijving	L.C.
33		87442337		2	CILINDRO, Hydraulic Coupler				
						CYLINDER	CILINDRO	CILINDRO	2480
					CYLINDRE	ZYLINDER	CYLINDER	CYLINDER	
34		294741A1		1	VÁLVULA CHECAGEM	CHECK VALVE	VÁLVULA DE COMPROB.	VALVOLA DI RITEGNO	P394
					CLAPET ANTI-RETOUR	RÜCKSCHLAGVENTIL	KONTRAVENTIL	TERUGSLAGKLEP	
35		84339847		1	ESTRIBO, Hydraulic Coupler, Gray				
						STEP	PELDAÑO	GRADINO	116M
					MARCHE-PIED	SCHRITT	TRINPLADE	TREDE	
36		604896		2	BRAÇADEIRA	CLAMP	ABRAZADERA	MORSETTO	120M
					COLLIER	KLEMME	SPÆNDEBÅND	KLEM	
37		9804276		2	PORCA, M6 x 1, Flg, Cl 8	NUT	TUERCA	DADO	010D
					ECROU	MUTTER	MØTRIK	MOER	
38		84281772		1	TUBO HIDRÁULICO, Assembly, Coupler				
						HYD. TUBE	TUBO HIDRÁULICO	TUBO IDRAULICO	190T
					TUYAU HYDRAULIQUE	HYDRAULIKLEITUNG	HYD. RØR	HYDRAULISCHE LEIDIN(	
39		84281774		1	TUBO HIDRÁULICO, Assembly, Coupler				
						HYD. TUBE	TUBO HIDRÁULICO	TUBO IDRAULICO	190T
					TUYAU HYDRAULIQUE	HYDRAULIKLEITUNG	HYD. RØR	HYDRAULISCHE LEIDIN(	
40		84292314		1	MANGUEIRA, Hydraulic Coupler, Drain				
						HOSE	TUBO	TUBO FLESSIBILE	030M
					FLEXIBLE	SCHLAUCH	SLANGE	SLANG	
41		86511840		2	PARAFUSO, Hex Flg, M6 x 40, 8.8				
						BOLT	PERNO	BULLONE	140B
					VIS	SCHRAUBE	BOLT	BOUT	
42		87313351		1	GRAMPO, 25.4mm, J	CLIP	ABRAZADERA	FERMO	045F
					COLLIER	KLAMMER	KLIPS	KLEM	
43		87752074		1	PARAFUSO, Tapping, M8 X 16				
						SCREW	TORNILLO	VITE	040V
					VIS	SCHRAUBE	SKRUE	SCHROEF	
44		D120614		2	BRACADEIRA	CLAMP	COLLAR	MORSETTO	1640
					COLLIER	SCHELLE	CLAMP	CLAMP	
45		84201227		1	MANGUEIRA, Hydraulic Coupler, Drain				
						HOSE	TUBO	TUBO FLESSIBILE	030M
					FLEXIBLE	SCHLAUCH	SLANGE	SLANG	
46		76350		2	CONECTOR HIDRÁUL, 9/16"-18, 37º x 9/16"-18, O-Ring				
						HYD CONNECTOR	CONECTOR HIDRÁULIC(	CONNETTORE IDRAULIC	020R
					CONNECTEUR HYDRAU	HYDR STECKVERBINDE	HYDRAULIKSTIK	HYDRAULISCHE AANSLI(	
47		84251346		1	INTERRUPTOR, Rocker, Hydraulic Coupler				
						SWITCH	INTERRUPTOR	INTERRUTTORE	075I
					CONTACTEUR	SCHALTER	KONTAKT	SCHAKELAAR	
48		84256406		1	VÁLVULA HIDRÁULICA, Coupler				
						HYDRAULIC VALVE	VÁLVULA HIDRÁULICA	DISTRIBUTORE IDRAULI	010V
					SOUPAPE HYDRAULIQU	HYDRAULIKVENTIL	HYDRAULIKVENTIL	HYDRAULISCHE KLEP	
49		84259682		1	CONEXÃO EM T, Assembly, Option				
						UNION TEE	RACOR EN T	RACCORDO A T	A134
					RACCORD EN T	T-VERSCHRAUBUNG	T-FORSKRUNING	KOPPEL-T-STUK	
50		84291016		1	TUBO RÍGIDO, Assembly, Hydraulic Coupler				
						RIGID TUBE	TUBO RÍGIDO	TUBO RIGIDO	193T
					TUYAU RIGIDE	ROHR	STIFT RØR	VASTE LEIDING	

DIA KIT, HYDRAULIC COUPLER VERT (SV185,SV250,SV300,TV380)
DIA KIT, HYDRAULIC COUPLER VERT (SV185,SV250,SV300,TV380)
DIA KIT, HYDRAULIC COUPLER VERT (SV185,SV250,SV300,TV380)
DIA KIT, HYDRAULIC COUPLER VERT (SV185,SV250,SV300,TV380)



DIA KIT, HYDRAULIC COUPLER VERT (SV185,SV250,SV300,TV380)
DIA KIT, HYDRAULIC COUPLER VERT (SV185,SV250,SV300,TV380)
DIA KIT, HYDRAULIC COUPLER VERT (SV185,SV250,SV300,TV380)
DIA KIT, HYDRAULIC COUPLER VERT (SV185,SV250,SV300,TV380)

R	N	P.N.	MOD	Q	Denominação Description	Description Bezeichnung	Denominacion Beskrivelse	Descrizione Beschrijving	L.C.
51		86511481		2	PARAFUSO, Hex Flg, M8 x 50, 8.8				
						BOLT	PERNO	BULLONE	140B
					VIS	SCHRAUBE	BOLT	BOUT	
52		86624011		1	COTOVELO, 90º, 3/4"-16, 37º x 1 1/16"-12, 37º Fem Sw				
						ELBOW	CODO	GOMITO	085G
					COUDE	KNIESTÜCK	VINKELRØR	KNIESTUK	
53		86705988		1	CONEXÃO, 1/2" Hose x 9/16"-18 ORB, Beaded				
						FITTING	ACOPLAMIENTO	RACCORDO	3300
					RACCORD	ARMATUR	FITTING	AANSLUITING	
54		87301276		1	CONECTOR HIDRÁUL, 37FL X ORB 8-6 Elbow				
						HYD CONNECTOR	CONECTOR HIDRÁULIC(	CONNETTORE IDRAULIC	020R
					CONNECTEUR HYDRAU	HYDR STECKVERBINDE	HYDRAULIKSTIK	HYDRAULISCHE AANSLI	
55		87301490		1	BRAÇADEIRA, J, 12.7mm	CLAMP	ABRAZADERA	MORSETTO	120M
					COLLIER	KLEMME	SPÆNDEBÅND	KLEM	
56		87443510		3	BRAÇADEIRA MANGUEIRA, M20				
						HOSE CLAMP	ABRAZADERA DE MANG	FASCETTA STRINGITUB	P729
					COLLIER POUR FLEXIBL	SCHLAUCHSCHELLE	SLANGEKLEMME	SLANGKLEM	
57		87622774		1	CONEXÃO, Hydraulic Tee	FITTING	ACOPLAMIENTO	RACCORDO	3300
					RACCORD	ARMATUR	FITTING	AANSLUITING	
58		229197A1		2	PORCA, Square	NUT	TUERCA	DADO	5780
					ECROU	MUTTER	NUT	NUT	
59		84392556		1	INSTRUÇÃO, Sheet, Hydraulic Coupler VERT				
						INSTRUCTION	INSTRUCCIÓN	ISTRUZIONI	Z571
					INSTRUCTION	ANLEITUNG	INSTRUKTION	INSTRUCTIE	

DIA KIT, HIGH FLOW AUX - MED VERT (SV185)
DIA KIT, HIGH FLOW AUX - MED VERT (SV185)
DIA KIT, HIGH FLOW AUX - MED VERT (SV185)
DIA KIT, HIGH FLOW AUX - MED VERT (SV185)



DIA KIT, HIGH FLOW AUX - MED VERT (SV185)
DIA KIT, HIGH FLOW AUX - MED VERT (SV185)
DIA KIT, HIGH FLOW AUX - MED VERT (SV185)
DIA KIT, HIGH FLOW AUX - MED VERT (SV185)

R	N	P.N.	MOD	Q	Denominação Description	Description Bezeichnung	Denominacion Beskrivelse	Descrizione Beschrijving	L.C.
		84425718			JOGO, DIA Kit, High Flow Aux - Med Vert, Incl. 1-55				
						KIT	JEUGO	KIT	4830
					POCHETTE	PACKUNG	KIT	KIT	
1		**86071**		1	CONECTOR HIDRÁUL, 7/8"-14, 37º x 3/4"-16, O-Ring				
						HYD CONNECTOR	CONECTOR HIDRÁULIC	CONNETTORE IDRAULIC	020R
					CONNECTEUR HYDRAU	HYDR STECKVERBINDE	HYDRAULIKSTIK	HYDRAULISCHE AANSLU	
2		**86527**		1	COTOVELO, 90º, 7/8"-14, 37º x 3/4"-16, O-Ring				
						ELBOW	CODO	GOMITO	085G
					COUDE	KNIESTÜCK	VINKELRØR	KNIESTUK	
3		**128818**		1	CONECTOR HIDRÁUL, 3/4"-16, 37º x 3/4"-16, O-Ring				
						HYD CONNECTOR	CONECTOR HIDRÁULIC	CONNETTORE IDRAULIC	020R
					CONNECTEUR HYDRAU	HYDR STECKVERBINDE	HYDRAULIKSTIK	HYDRAULISCHE AANSLU	
4		**128819**		1	CONECTOR HIDRÁUL, 3/4"-16, 37º x 7/8"-14, O-Ring				
						HYD CONNECTOR	CONECTOR HIDRÁULIC	CONNETTORE IDRAULIC	020R
					CONNECTEUR HYDRAU	HYDR STECKVERBINDE	HYDRAULIKSTIK	HYDRAULISCHE AANSLU	
5		**230427A1**		1	PORCA	NUT	TUERCA	DADO	5780
					ECROU	MUTTER	NUT	NUT	
6		**257859A1**		2	PLACA ESPACADORA, Bar				
						PLATE,SPACER	PLAQUETA	DISTANZ PIASTRA	Z324
					PLAQUETTE	PLAETTCHEN	PLATE,SPACER	PLATE,SPACER	
7		**280476**		4	PARAFUSO, Hex Wash Hd, 3/8" x 1"				
						SELF-TAP SCREW	TORNILLO AUTORROSC	VITE AUTOFILETTANTE	062V
					VIS AUTOTARAUDEUSE	SELBSTSCHN SCHRAUE	SELVLÅSENDE BOLT	ZELFTAPPENDE SCHRO	
8		**322894**		2	COTOVELO, 90º, 1 1/16"-12, 37º x 1 1/16"-12, O-Ring				
						ELBOW	CODO	GOMITO	085G
					COUDE	KNIESTÜCK	VINKELRØR	KNIESTUK	
9		**322896**		2	CONECTOR HIDRÁUL, 1 1/16"-12, 37º x 1 1/16"-12, O-Ring				
						HYD CONNECTOR	CONECTOR HIDRÁULIC	CONNETTORE IDRAULIC	020R
					CONNECTEUR HYDRAU	HYDR STECKVERBINDE	HYDRAULIKSTIK	HYDRAULISCHE AANSLU	
10		**9790547**		1	T, 1 5/16"-12, 37º x 1"-11 1/2, NPTF Br				
						TEE	RACOR EN T	PEZZO A T	9020
					RACCORD EN T	T-STÜCK	T-STYKKE	T-STUK	
11		**9804263**		1	PARAFUSO, Hex Flg, M10 x 40, 8.8				
						BOLT	PERNO	BULLONE	140B
					VIS	SCHRAUBE	BOLT	BOUT	
12		**84186146**		1	TUBO, High Flow Valve to Loader Valve				
						TUBE	TUBO	TUBO	195T
					TUBE	ROHR	RØR	LEIDING	
13		**84251427**		1	INTERRUPTOR, Rocker, High Flow				
						SWITCH	INTERRUPTOR	INTERRUTTORE	075I
					CONTACTEUR	SCHALTER	KONTAKT	SCHAKELAAR	
14		**84254056**		2	BRAÇADEIRA MANGUEIRA, Butterfly Tube				
						HOSE CLAMP	ABRAZADERA DE MANG	FASCETTA STRINGITUB	P729
					COLLIER POUR FLEXIBL	SCHLAUCHSCHELLE	SLANGEKLEMME	SLANGKLEM	
15		**84255994**		2	CONEXÃO, Tee Adjustment				
						FITTING	ACOPLAMIENTO	RACCORDO	3300
					RACCORD	ARMATUR	FITTING	AANSLUITING	

SV185

DIA KIT, HIGH FLOW AUX - MED VERT (SV185)
DIA KIT, HIGH FLOW AUX - MED VERT (SV185)
DIA KIT, HIGH FLOW AUX - MED VERT (SV185)
DIA KIT, HIGH FLOW AUX - MED VERT (SV185)



DIA KIT, HIGH FLOW AUX - MED VERT (SV185)
DIA KIT, HIGH FLOW AUX - MED VERT (SV185)
DIA KIT, HIGH FLOW AUX - MED VERT (SV185)
DIA KIT, HIGH FLOW AUX - MED VERT (SV185)

R	N	P.N.	MOD	Q	Denominação Description	Description Bezeichnung	Denominacion Beskrivelse	Descrizione Beschrijving	L.C.
16		84256405		1	VÁLVULA HIDRÁULICA, High Flow Combiner				
						HYDRAULIC VALVE	VÁLVULA HIDRÁULICA	DISTRIBUTORE IDRAULI	010V
					SOUPAPE HYDRAULIQU	HYDRAULIKVENTIL	HYDRAULIKVENTIL	HYDRAULISCHE KLEP	
17		84256518		1	BOMBA, 24.9/12.5cc Gear	PUMP	BOMBA	POMPA	6570
					POMPE	PUMPE	PUMPE	POMP	
18		84257182		1	CONEXÃO, Female Quick Coupling				
						FITTING	ACOPLAMIENTO	RACCORDO	3300
					RACCORD	ARMATUR	FITTING	AANSLUITING	
19		84257183		1	CONEXÃO, Male Quick Coupling				
						FITTING	ACOPLAMIENTO	RACCORDO	3300
					RACCORD	ARMATUR	FITTING	AANSLUITING	
20		84259689		1	VÁLVULA, Quick Attach High Flow				
						VALVE	VÁLVULA	VALVOLA	9620
					SOUPAPE	VENTIL	VENTIL	KLEP	
21		84277076		2	BRAÇADEIRA TUBO, Tube	PIPE CLAMP	ABRAZADERA DE TUBO	FERMO TUBO	Z430
					COLLIER DE TUYAU	ROHRSCHELLE	RØRKLEMME	LEIDINGKLEM	
22		84277083		2	ESPAÇADOR TUBO	TUBE SPACER	ESPACIADOR DE TUBO	DISTANZIALE TUBO	Z038
					TUBE ENTRETOISE	DISTANZROHR	SLANGE, AFSTANDSSTY	AFSTANDSSTUK V. LEID	
23		84278113		1	CONECTOR REDUTOR, 1-5/16-12 X 3/4-16				
						REDUCER FITTING	ACOPLAMIENTO DE REI	RACCORDO RIDUTTORE	P053
					RACCORD REDUCTEUR	REDUZIERSTÜCK	ARMATURREDUKTOR	REDUCEERAANSLUITIN	
24		L18331		4	PRENDEDOR DE CABOS, Nylon Tie, 15.5 Inch				
						CABLE STRAP	BANDA DE CABLE	FASCETTA PER CAVO	P716
					BRIDE DE CABLE	KABELBINDER	KABELSTROP	BUNDELBAND	
25		84306875		2	ESPAÇADOR	SPACER	SEPARADOR	DISTANZIALE	075D
					ENTRETOISE	DISTANZSTÜCK	AFSTANDSSTYKKE	AFSTANDSSTUK	
26		84306937		1	PLACA DE COBERTURA, Hydraulic, Tan				
						COVER PLATE	PLACA DE CUBIERTA	PIASTRA DI COPERTURA	110P
					COUVERCLE	ABDECKPLATTE	DÆKPLADE	AFSCHERMPLAAT	
27		84306939		1	COBERTURA, Hydraulic, Gray				
						COVER	COBERTURA	COPERTURA	271C
					COUVERTURE	ABDECKUNG	COVER	COVER	
28		84329004		1	MANGUEIRA, High Flow, Supply				
						HOSE	TUBO	TUBO FLESSIBILE	030M
					FLEXIBLE	SCHLAUCH	SLANGE	SLANG	
29		84330502		1	MANGUEIRA, Assembly, Valve Supply				
						HOSE	TUBO	TUBO FLESSIBILE	030M
					FLEXIBLE	SCHLAUCH	SLANGE	SLANG	
30		84331287		2	PARAFUSO, 3/8-16 X 3	SCREW	TORNILLO	VITE	040V
					VIS	SCHRAUBE	SKRUE	SCHROEF	
31		84331838		1	TUBO RÍGIDO, Assembly, High Flow				
						RIGID TUBE	TUBO RÍGIDO	TUBO RIGIDO	193T
					TUYAU RIGIDE	ROHR	STIFT RØR	VASTE LEIDING	
32		84331840		1	TUBO RÍGIDO, Assembly, High Flow				
						RIGID TUBE	TUBO RÍGIDO	TUBO RIGIDO	193T
					TUYAU RIGIDE	ROHR	STIFT RØR	VASTE LEIDING	
33		84377504		1	TUBO, Aux Loader Valve to Lift Tower				
						TUBE	TUBO	TUBO	195T
					TUBE	ROHR	RØR	LEIDING	

DIA KIT, HIGH FLOW AUX - MED VERT (SV185)
DIA KIT, HIGH FLOW AUX - MED VERT (SV185)
DIA KIT, HIGH FLOW AUX - MED VERT (SV185)
DIA KIT, HIGH FLOW AUX - MED VERT (SV185)



DIA KIT, HIGH FLOW AUX - MED VERT (SV185)
DIA KIT, HIGH FLOW AUX - MED VERT (SV185)
DIA KIT, HIGH FLOW AUX - MED VERT (SV185)
DIA KIT, HIGH FLOW AUX - MED VERT (SV185)

R	N	P.N.	MOD	Q	Denominação Description	Description Bezeichnung	Denominacion Beskrivelse	Descrizione Beschrijving	L.C.
34		84377506		1	TUBO, Aux Loader Valve to Lift Tower				
						TUBE	TUBO	TUBO	195T
					TUBE	ROHR	RØR	LEIDING	
35		84421500		1	TUBO HIDRÁULICO, Assembly, Aux, LH Tower				
						HYD. TUBE	TUBO HIDRÁULICO	TUBO IDRAULICO	190T
					TUYAU HYDRAULIQUE	HYDRAULIKLEITUNG	HYD. RØR	HYDRAULISCHE LEIDIN(	
36		84421502		1	TUBO HIDRÁULICO, Assembly, Aux, LH Tower				
						HYD. TUBE	TUBO HIDRÁULICO	TUBO IDRAULICO	190T
					TUYAU HYDRAULIQUE	HYDRAULIKLEITUNG	HYD. RØR	HYDRAULISCHE LEIDIN(	
37		84421504		1	TUBO HIDRÁULICO, Assembly, Case Drain				
						HYD. TUBE	TUBO HIDRÁULICO	TUBO IDRAULICO	190T
					TUYAU HYDRAULIQUE	HYDRAULIKLEITUNG	HYD. RØR	HYDRAULISCHE LEIDIN(	
38		84421506		1	TUBO HIDRÁULICO, Assembly, Case Drain				
						HYD. TUBE	TUBO HIDRÁULICO	TUBO IDRAULICO	190T
					TUYAU HYDRAULIQUE	HYDRAULIKLEITUNG	HYD. RØR	HYDRAULISCHE LEIDIN(	
39		84421509		1	CONJ. MANGUEIRA, Assembly, Aux				
						HOSE ASSY.	CONJUNTO DE TUBOS	COMPLESS. TUBO FLES	P457
					ENSEMBLE DE FLEXIBLE	SCHLAUCHBAUGRUPPE	SLANGEENHED	SLANGEENHEID	
40		84423570		1	GUIA, Hose	GUIDE	GUÍA	GUIDA	145G
					GUIDE	FÜHRUNG	STYR	GELEIDER	
41		84423574		1	GUIA, Hose	GUIDE	GUÍA	GUIDA	145G
					GUIDE	FÜHRUNG	STYR	GELEIDER	
42		84468327		1	CONJ. MANGUEIRA, Aux	HOSE ASSY.	CONJUNTO DE TUBOS	COMPLESS. TUBO FLES	P457
					ENSEMBLE DE FLEXIBLE	SCHLAUCHBAUGRUPPE	SLANGEENHED	SLANGEENHEID	
43		84468540		1	INSTRUÇÃO, Installation	INSTRUCTION	INSTRUCCIÓN	ISTRUZIONI	Z571
					INSTRUCTION	ANLEITUNG	INSTRUKTION	INSTRUCTIE	
44		84468943		1	CONJ. MANGUEIRA, Case Drain				
						HOSE ASSY.	CONJUNTO DE TUBOS	COMPLESS. TUBO FLES	P457
					ENSEMBLE DE FLEXIBLE	SCHLAUCHBAUGRUPPE	SLANGEENHED	SLANGEENHEID	
45		86010402		1	BRAÇADEIRA, 1/2", Insul, 3/8" Bolt				
						CLAMP	ABRAZADERA	MORSETTO	120M
					COLLIER	KLEMME	SPÆNDEBÅND	KLEM	
46		86507102		1	CONECTOR HIDRÁUL, 7/8"-14, 37° x 1 1/16"-12, O-Ring				
						HYD CONNECTOR	CONECTOR HIDRÁULIC(	CONNETTORE IDRAULIC	020R
					CONNECTEUR HYDRAU	HYDR STECKVERBINDE	HYDRAULIKSTIK	HYDRAULISCHE AANSLI	
47		86509028		1	CONECTOR HIDRÁUL, 3/4"-16, 37° x 9/16"-18, O-Ring				
						HYD CONNECTOR	CONECTOR HIDRÁULIC(	CONNETTORE IDRAULIC	020R
					CONNECTEUR HYDRAU	HYDR STECKVERBINDE	HYDRAULIKSTIK	HYDRAULISCHE AANSLI	
48		86511843		2	PARAFUSO, Hex Flg, M8 x 60, 8.8				
						BOLT	PERNO	BULLONE	140B
					VIS	SCHRAUBE	BOLT	BOUT	
49		86512926		1	CONECTOR HIDRÁUL, 1 5/16"-12, 37° x 1 1/16"-12, O-Ring				
						HYD CONNECTOR	CONECTOR HIDRÁULIC(	CONNETTORE IDRAULIC	020R
					CONNECTEUR HYDRAU	HYDR STECKVERBINDE	HYDRAULIKSTIK	HYDRAULISCHE AANSLI	
50		86625201		2	PARAFUSO, Hex Flg Hd, M8 x 30				
						SELF-TAP SCREW	TORNILLO AUTORROSC	VITE AUTOFILETTANTE	062V
					VIS AUTOTARAUDEUSE	SELBSTSCHN SCHRAUE	SELVLÅSENDE BOLT	ZELFTAPPENDE SCHRO	
51		87016586		2	PORCA, M8, U	NUT	TUERCA	DADO	010D
					ECROU	MUTTER	MØTRIK	MOER	

SV185

DIA KIT, HIGH FLOW AUX - MED VERT (SV185)
DIA KIT, HIGH FLOW AUX - MED VERT (SV185)
DIA KIT, HIGH FLOW AUX - MED VERT (SV185)
DIA KIT, HIGH FLOW AUX - MED VERT (SV185)



DIA KIT, HIGH FLOW AUX - MED VERT (SV185)
DIA KIT, HIGH FLOW AUX - MED VERT (SV185)
DIA KIT, HIGH FLOW AUX - MED VERT (SV185)
DIA KIT, HIGH FLOW AUX - MED VERT (SV185)

R	N	P.N.	MOD	Q	Denominação Description	Description Bezeichnung	Denominacion Beskrivelse	Descrizione Beschrijving	L.C.
52		**87030530**		4	PARAFUSO, 3/8 X 1.75 VIS	SCREW SCHRAUBE	TORNILLO SKRUE	VITE SCHROEF	040V
53		**87582902**		2	PARAFUSO, 8 X 55 VIS AUTOTARAUDEUSE	SELF-TAP SCREW SELBSTSCHN SCHRAUE	TORNILLO AUTORROSC SELVLÅSENDE BOLT	VITE AUTOFILETTANTE ZELFTAPPENDE SCHRO	062V
54		**D120614**		2	BRACADEIRA COLLIER	CLAMP SCHELLE	COLLAR CLAMP	MORSETTO CLAMP	1640
55		**D124301**		3	BRACADEIRA COLLIER	CLAMP SCHELLE	COLLAR CLAMP	MORSETTO CLAMP	1640

DIA KIT, 2ND FRONT HYD AUX - MED VERT (SV185)
DIA KIT, 2ND FRONT HYD AUX - MED VERT (SV185)
DIA KIT, 2ND FRONT HYD AUX - MED VERT (SV185)
DIA KIT, 2ND FRONT HYD AUX - MED VERT (SV185)



DIA KIT, 2ND FRONT HYD AUX - MED VERT (SV185)
DIA KIT, 2ND FRONT HYD AUX - MED VERT (SV185)
DIA KIT, 2ND FRONT HYD AUX - MED VERT (SV185)
DIA KIT, 2ND FRONT HYD AUX - MED VERT (SV185)

R	N	P.N.	MOD	Q	Denominação Description	Description Bezeichnung	Denominacion Beskrivelse	Descrizione Beschrijving	L.C.
		84402923			JOGO, DIA Kit, 2nd Front Hyd Aux, Incl. 1-44				
						KIT	JEUGO	KIT	4830
					POCHETTE	PACKUNG	KIT	KIT	
1		**84569**		1	COTOVELO, Hydraulic, L	ELBOW	CODO	GOMITO	085G
					COUDE	KNIESTÜCK	VINKELRØR	KNIESTUK	
2		**280476**		4	PARAFUSO, Hex Wash Hd, 3/8" x 1"				
						SELF-TAP SCREW	TORNILLO AUTORROSC	VITE AUTOFILETTANTE	062V
					VIS AUTOTARAUDEUSE	SELBSTSCHN SCHRAUE	SELVLÅSENDE BOLT	ZELFTAPPENDE SCHRO	
3		**322894**		1	COTOVELO, 90º, 1 1/16"-12, 37º x 1 1/16"-12, O-Ring				
						ELBOW	CODO	GOMITO	085G
					COUDE	KNIESTÜCK	VINKELRØR	KNIESTUK	
4		**577927**		2	BRAÇADEIRA	CLAMP	ABRAZADERA	MORSETTO	120M
					COLLIER	KLEMME	SPÆNDEBÅND	KLEM	
5		**595460**		2	CONTRA PORCA, Blkhd, 7/8"-14				
						LOCK NUT	TUERCA DE BLOQUEO	DADO DI BLOCCAGGIO	P263
					CONTRE-ECROU	SICHERUNGSMUTTER	LÅSEMØTRIK	BORGMOER	
6		**9671714**		1	PARAFUSO, Hex Flg, M8 x 25, 8.8				
						BOLT	PERNO	BULLONE	140B
					VIS	SCHRAUBE	BOLT	BOUT	
7		**9804277**		2	PORCA, M8 x 1.25, Flg, Cl 8				
						NUT	TUERCA	DADO	010D
					ECROU	MUTTER	MØTRIK	MOER	
8		**81827427**		2	CONECTOR HIDRÁUL, Adapter, 3/4-16 SAE				
						HYD CONNECTOR	CONECTOR HIDRÁULIC	CONNETTORE IDRAULIC	020R
					CONNECTEUR HYDRAU	HYDR STECKVERBINDE	HYDRAULIKSTIK	HYDRAULISCHE AANSLI	
9		**84252828**		3	BRAÇADEIRA, Butterfly Tube				
						CLAMP	ABRAZADERA	MORSETTO	120M
					COLLIER	KLEMME	SPÆNDEBÅND	KLEM	
10		**84292198**		1	VÁLVULA, EH Secondary Aux				
						VALVE	VÁLVULA	VALVOLA	9620
					SOUPAPE	VENTIL	VENTIL	KLEP	
11		**84299740**		1	TUBO RÍGIDO, Assembly, 2nd Aux Control				
						RIGID TUBE	TUBO RÍGIDO	TUBO RIGIDO	193T
					TUYAU RIGIDE	ROHR	STIFT RØR	VASTE LEIDING	
12		**84322489**		1	SUPORTE, 2nd Aux Valve	SUPPORT	SOPORTE	SUPPORTO	300S
					SUPPORT	STÜTZE	BESLAG	STEUN	
13		**84323488**		1	PARAFUSO, M8 X 70	SELF-TAP SCREW	TORNILLO AUTORROSC	VITE AUTOFILETTANTE	062V
					VIS AUTOTARAUDEUSE	SELBSTSCHN SCHRAUE	SELVLÅSENDE BOLT	ZELFTAPPENDE SCHRO	
14		**84330254**		1	CONJ. MANGUEIRA, 2nd Aux A				
						HOSE ASSY.	CONJUNTO DE TUBOS	COMPLESS. TUBO FLES	P457
					ENSEMBLE DE FLEXIBLE	SCHLAUCHBAUGRUPPE	SLANGEENHED	SLANGEENHEID	
15		**84332288**		1	TUBO RÍGIDO, 2nd Aux, Valve Return				
						RIGID TUBE	TUBO RÍGIDO	TUBO RIGIDO	193T
					TUYAU RIGIDE	ROHR	STIFT RØR	VASTE LEIDING	
16		**84355404**		1	CONJ. MANGUEIRA, 2nd Aux, Supply				
						HOSE ASSY.	CONJUNTO DE TUBOS	COMPLESS. TUBO FLES	P457
					ENSEMBLE DE FLEXIBLE	SCHLAUCHBAUGRUPPE	SLANGEENHED	SLANGEENHEID	
17		**84362109**		1	PROTEÇÃO, Hose	GUARD	DEFENSA	PROTEZIONE	070R
					PROTECTION	SCHUTZABDECKUNG	BESKYTTELSESSKÆRM	AFSCHERMING	

SV185

DIA KIT, 2ND FRONT HYD AUX - MED VERT (SV185)
DIA KIT, 2ND FRONT HYD AUX - MED VERT (SV185)
DIA KIT, 2ND FRONT HYD AUX - MED VERT (SV185)
DIA KIT, 2ND FRONT HYD AUX - MED VERT (SV185)



DIA KIT, 2ND FRONT HYD AUX - MED VERT (SV185)
DIA KIT, 2ND FRONT HYD AUX - MED VERT (SV185)
DIA KIT, 2ND FRONT HYD AUX - MED VERT (SV185)
DIA KIT, 2ND FRONT HYD AUX - MED VERT (SV185)

R	N	P.N.	MOD	Q	Denominação Description Bezeichnung	Denominacion Beskrivelse	Descrizione Beschrijving	L.C.
18		84392527		1	INTERRUPTOR, Rocker, Aux Elec SWITCH CONTACTEUR SCHALTER	INTERRUPTOR KONTAKT	INTERRUTTORE SCHAKELAAR	075I
19		84471599		1	INSTRUÇÃO, Installation, Medium Vertical INSTRUCTION INSTRUCTION ANLEITUNG	INSTRUCCIÓN INSTRUKTION	ISTRUZIONI INSTRUCTIE	Z571
20		84474235		1	SUPORTE, Aux, Coupler BRACKET SUPPORT HALTERUNG	SOPORTE BESLAG	STAFFA STEUN	225S
21		84474953		1	CONJ. MANGUEIRA, Assembly, 2nd Aux HOSE ASSY. ENSEMBLE DE FLEXIBLE SCHLAUCHBAUGRUPPE	CONJUNTO DE TUBOS SLANGEENHED	COMPLESS. TUBO FLES SLANGEENHEID	P457
22		84474956		1	CONJ. MANGUEIRA, Assembly, 2nd Aux HOSE ASSY. ENSEMBLE DE FLEXIBLE SCHLAUCHBAUGRUPPE	CONJUNTO DE TUBOS SLANGEENHED	COMPLESS. TUBO FLES SLANGEENHEID	P457
23		84475145		1	CONJ. MANGUEIRA, Assembly, 2nd Aux Return HOSE ASSY. ENSEMBLE DE FLEXIBLE SCHLAUCHBAUGRUPPE	CONJUNTO DE TUBOS SLANGEENHED	COMPLESS. TUBO FLES SLANGEENHEID	P457
24		84475147		1	TUBO HIDRÁULICO, Assembly, 2nd Aux Arm A HYD. TUBE TUYAU HYDRAULIQUE HYDRAULIKLEITUNG	TUBO HIDRÁULICO HYD. RØR	TUBO IDRAULICO HYDRAULISCHE LEIDIN(	190T
25		84475153		1	TUBO HIDRÁULICO, Assembly, 2nd Aux Arm B HYD. TUBE TUYAU HYDRAULIQUE HYDRAULIKLEITUNG	TUBO HIDRÁULICO HYD. RØR	TUBO IDRAULICO HYDRAULISCHE LEIDIN(	190T
26		84475155		1	TUBO HIDRÁULICO, Assembly, 2nd Aux A-2 HYD. TUBE TUYAU HYDRAULIQUE HYDRAULIKLEITUNG	TUBO HIDRÁULICO HYD. RØR	TUBO IDRAULICO HYDRAULISCHE LEIDIN(	190T
27		84475157		1	TUBO HIDRÁULICO, Assembly, 2nd Aux B-2 HYD. TUBE TUYAU HYDRAULIQUE HYDRAULIKLEITUNG	TUBO HIDRÁULICO HYD. RØR	TUBO IDRAULICO HYDRAULISCHE LEIDIN(	190T
28		84475160		1	CONJ. MANGUEIRA, 2nd Aux B HOSE ASSY. ENSEMBLE DE FLEXIBLE SCHLAUCHBAUGRUPPE	CONJUNTO DE TUBOS SLANGEENHED	COMPLESS. TUBO FLES SLANGEENHEID	P457
29		84475182		1	PROTETOR DE MANGUEIRA, Hose HOSE PROTECTION PROTECTION DE FLEXIE SCHLAUCHSCHUTZ	PROTECCIÓN DE TUBO SLANGEBESKYTTELSE	PROTEZ. TUBO FLESSIE SLANGBESCHERMING	P827
30		86505868		1	PORCA, M8, Flg Ser NUT ECROU MUTTER	TUERCA MØTRIK	DADO MOER	010D
31		86636815		2	PARAFUSO, Short NK, M8 x 25, Cl8.8, Full Thd CARRIAGE BOLT VIS A TETE BOMBEE SCHLOSSSCHRAUBE	PERNO ALOMADO BRÆDDEBOLT	BULLONE A TESTA TON SLOTBOUT	P123
32		86637976		2	BRAÇADEIRA, 3/4", Insul, 5/16" Bolt CLAMP COLLIER KLEMME	ABRAZADERA SPÆNDEBÅND	MORSETTO KLEM	120M
33		87016586		2	PORCA, M8, U NUT ECROU MUTTER	TUERCA MØTRIK	DADO MOER	010D
34		87023483		1	PLACA PLATE PLAQUE PLATTE	PLACA PLADE	PIASTRA PLAAT	105P
35		87030530		1	PARAFUSO, 3/8 X 1.75 SCREW VIS SCHRAUBE	TORNILLO SKRUE	VITE SCHROEF	040V

SV185

DIA KIT, 2ND FRONT HYD AUX - MED VERT (SV185)
DIA KIT, 2ND FRONT HYD AUX - MED VERT (SV185)
DIA KIT, 2ND FRONT HYD AUX - MED VERT (SV185)
DIA KIT, 2ND FRONT HYD AUX - MED VERT (SV185)



DIA KIT, 2ND FRONT HYD AUX - MED VERT (SV185)
DIA KIT, 2ND FRONT HYD AUX - MED VERT (SV185)
DIA KIT, 2ND FRONT HYD AUX - MED VERT (SV185)
DIA KIT, 2ND FRONT HYD AUX - MED VERT (SV185)

R	N	P.N.	MOD	Q	Denominação Description	Description Bezeichnung	Denominacion Beskrivelse	Descrizione Beschrijving	L.C.
36		87303203		1	ESPAÇADOR ENTRETOISE	SPACER DISTANZSTÜCK	SEPARADOR AFSTANDSSTYKKE	DISTANZIALE AFSTANDSSTUK	075D
37		87329785		1	COTOVELO, 90º, 3/4"-16, 37º x 1 1/16"-12, O-Ring COUDE	ELBOW KNIESTÜCK	CODO VINKELRØR	GOMITO KNIESTUK	085G
38		87344205		2	PARAFUSO VIS	BOLT SCHRAUBE	PERNO BOLT	BULLONE BOUT	140B
39		87655042		2	ARRUELA ESPECIAL, M8 RONDELLE SPECIALE	SPECIAL WASHER SPEZIALUNTERLEGSCH	ARANDELA ESPECIAL SPECIALSKIVE	RONDELLA SPECIALE SPECIALE RING	Z333
40		87741499		1	ENGATE RÁPIDO FÊMEA ACCOUPLEMENT RAPID	QUICK FEMALE COUPLI SCHNELLKUPPLUNGSM	ACOPL. RÁPIDO HEMBR KOBLINGSSKIVE	ATTACCO RAPIDO FEMI SNELKOPPELINGSBUS	540A
41		87741500		1	ENGATE RÁPIDO MACHO ACCOUPLEMENT RAP. M	QUICK MALE COUPLING SCHNELLKUPPLUNGSS	ACOPLAMIENTO RÁPIDO LYNKOBLING	ATTACCO RAPIDO MAS SNELKOPPELINGSPEN	115A
42		87752075		2	PARAFUSO, M8 X 25 VIS	SCREW SCHRAUBE	TORNILLO SKRUE	VITE SCHROEF	040V
43		D120679		1	BRACADEIRA COLLIER	CLAMP SCHELLE	COLLAR CLAMP	MORSETTO CLAMP	1640
44		L18331		1	PRENDEDOR DE CABOS, Nylon Tie, 15.5 Inch BRIDE DE CABLE	CABLE STRAP KABELBINDER	BANDA DE CABLE KABELSTROP	FASCETTA PER CAVO BUNDELBAND	P716

DIA KIT, MED FRM FOOT CONTROLS, MANUAL (SR175,SV185)
DIA KIT, MED FRM FOOT CONTROLS, MANUAL (SR175,SV185)
DIA KIT, MED FRM FOOT CONTROLS, MANUAL (SR175,SV185)
DIA KIT, MED FRM FOOT CONTROLS, MANUAL (SR175,SV185)



DIA KIT, MED FRM FOOT CONTROLS, MANUAL (SR175,SV185)
DIA KIT, MED FRM FOOT CONTROLS, MANUAL (SR175,SV185)
DIA KIT, MED FRM FOOT CONTROLS, MANUAL (SR175,SV185)
DIA KIT, MED FRM FOOT CONTROLS, MANUAL (SR175,SV185)

R	N	P.N.	MOD	Q	Denominação Description	Description Bezeichnung	Denominacion Beskrivelse	Descrizione Beschrijving	L.C.
		84423360			KIT DE SERVIÇO, DIA Kit, Med Frame, Foot Controls, Incl. 1-38				
						SERVICE KIT	KIT DE SERVICIO	KIT DI MANUTENZIONE	021K
					KIT D'ENTRETIEN	SERVICE-SATZ	SERVICESÆT	SERVICEKIT	
1		**84425014**		1	INSTRUÇÃO, Instruction, Installation, Foot Control				
						INSTRUCTION	INSTRUCCIÓN	ISTRUZIONI	Z571
					INSTRUCTION	ANLEITUNG	INSTRUKTION	INSTRUCTIE	
2		**84201059**		1	PLACA, Pedal	PLATE	PLACA	PIASTRA	105P
					PLAQUE	PLATTE	PLADE	PLAAT	
3		**84339380**		2	DEGRAU, Block	RISER	REALCE	MONTANTE	7205
					REHAUSSE	HEBEVORRICHTUNG	STIGRØR	STAANDER	
4		**84291859**		2	ROLAMENTO ESFÉRICO, Pillow Block				
						BALL BEARING	RODAMIENTO DE BOLAS	CUSCINETTO A SFERE	343C
					ROULEMENT A BILLES	KUGELLAGER	KUGLELEJE	KOGELLAGER	
5		**14305821**		4	PARAFUSO, Hex Soc Hd, M6 x 40, 8.8				
						SCREW	TORNILLO	VITE	040V
					VIS	SCHRAUBE	SKRUE	SCHROEF	
6		**84349081**		2	TUBO, Foot Control, Handle, Gray				
						TUBE	TUBO	TUBO	195T
					TUBE	ROHR	RØR	LEIDING	
7		**294901A1**		4	PARAFUSO "U", M8 X 1.25	BOLT "U"	TORNILLO "U"	BULLONE AD "U"	P611
					BOULON "U"	SCHRAUBE "U"	BOLT "U"	BOLT "U"	
8		**9804277**		8	PORCA, M8 x 1.25, Flg, Cl 8				
						NUT	TUERCA	DADO	010D
					ECROU	MUTTER	MØTRIK	MOER	
9		**84339815**		2	PLACA, Foot Controls, Boot Base, Gray				
						PLATE	PLACA	PIASTRA	105P
					PLAQUE	PLATTE	PLADE	PLAAT	
10		**9827590**		2	CAPA, Soft Cover	BOOT	FUNDA	PARAPOLVERE	330C
					SOUFFLET	MANSCHETTE	MANCHET	HOES	
11		**9844042**		2	ANEL	RING	ANILLO	ANELLO	045A
					ANNEAU	RING	RING	RING	
12		**86729477**		8	BOTÃO DE IMPULSO	FASTENER	SUJETADOR	DISPOSITIVO DI FISSAG	123B
					ATTACHE	BEFESTIGUNGSELEMEN	LUKKER	BEVESTIGING	
13		**84317959**		1	HASTE, Foot Control	ROD	VARILLA	ASTA	090A
					TIGE	STANGE	STANG	STANG	
14		**84317960**		1	HASTE, Valve Tip	ROD	VARILLA	ASTA	090A
					TIGE	STANGE	STANG	STANG	
15		**84359579**		1	MOLA, Assembly, FC Boom	SPRING	RESORTE	MOLLA	100M
					RESSORT	FEDER	FJEDER	VEER	
16		**84359580**		1	MOLA, Assembly, FC Bucket				
						SPRING	RESORTE	MOLLA	100M
					RESSORT	FEDER	FJEDER	VEER	
17		**84262595**		1	EMPUNHADURA, Throttle to Governor, Medium Frame				
						HANDLE GRIP	PERILLA	IMPUGNATURA	025I
					POIGNEE DE MAINTIEN	HANDGRIFF	HÅNDGREB	HANDGREEP	
18		**84355747**		1	CAPA, Foot Controls	BOOT	FUNDA	PARAPOLVERE	330C
					SOUFFLET	MANSCHETTE	MANCHET	HOES	

SV185

DIA KIT, MED FRM FOOT CONTROLS, MANUAL (SR175,SV185)
DIA KIT, MED FRM FOOT CONTROLS, MANUAL (SR175,SV185)
DIA KIT, MED FRM FOOT CONTROLS, MANUAL (SR175,SV185)
DIA KIT, MED FRM FOOT CONTROLS, MANUAL (SR175,SV185)



DIA KIT, MED FRM FOOT CONTROLS, MANUAL (SR175,SV185)
DIA KIT, MED FRM FOOT CONTROLS, MANUAL (SR175,SV185)
DIA KIT, MED FRM FOOT CONTROLS, MANUAL (SR175,SV185)
DIA KIT, MED FRM FOOT CONTROLS, MANUAL (SR175,SV185)

R	N	P.N.	MOD	Q	Denominação Description	Description Bezeichnung	Denominacion Beskrivelse	Descrizione Beschrijving	L.C.
19		**87586485**		1	ADESIVO, EU Foot Controls, RH				
						DECAL	CALCOMANÍA	DECALCOMANIA	012D
					AUTOCOLLANT	AUFKLEBER	TRANSFER	STICKER	
20		**87586484**		1	ADESIVO, EU Foot Controls, LH				
						DECAL	CALCOMANÍA	DECALCOMANIA	012D
					AUTOCOLLANT	AUFKLEBER	TRANSFER	STICKER	
21		**84353742**		1	ADESIVO, Case, Level 200, RH				
						DECAL	CALCOMANÍA	DECALCOMANIA	012D
					AUTOCOLLANT	AUFKLEBER	TRANSFER	STICKER	
22		**84353741**		1	ADESIVO, Case, Level 200, LH				
						DECAL	CALCOMANÍA	DECALCOMANIA	012D
					AUTOCOLLANT	AUFKLEBER	TRANSFER	STICKER	
23		**84353738**		1	ADESIVO, Case, Level 100, RH				
						DECAL	CALCOMANÍA	DECALCOMANIA	012D
					AUTOCOLLANT	AUFKLEBER	TRANSFER	STICKER	
24		**84353734**		1	ADESIVO, Case, Level 100, LH				
						DECAL	CALCOMANÍA	DECALCOMANIA	012D
					AUTOCOLLANT	AUFKLEBER	TRANSFER	STICKER	
25		**D131983**		2	PINO, Ring	PIN	PASADOR	PERNO	080P
					BROCHE	PIN	STIFT	PEN	
26		**87343114**		1	PARAFUSO, 3/8 X 1.00	BOLT	PERNO	BULLONE	140B
					VIS	SCHRAUBE	BOLT	BOUT	
27		**84357328**		1	PEDAL, RH, Gray	PEDAL	PEDAL	PEDALE	060P
					PEDALE	PEDAL	PEDAL	PEDAAL	
28		**84357323**		1	PEDAL, LH, Gray	PEDAL	PEDAL	PEDALE	060P
					PEDALE	PEDAL	PEDAL	PEDAAL	
29		**84317963**		2	HASTE, Foot Control	ROD	VARILLA	ASTA	090A
					TIGE	STANGE	STANG	STANG	
30		**84291866**		2	COLAR DE FIXAÇÃO, 3/4 Shaft				
						RETAINER COLLAR	COLLAR DE RETENCIÓN	COLLARE DI FISSAGGIO	230S
					COLLIER DE RETENUE	HALTERING	RING, SPÆNDE	BORGKRAAG	
31		**84291855**		1	PLACA, Foot Control, EAR	PLATE	PLACA	PIASTRA	105P
					PLAQUE	PLATTE	PLADE	PLAAT	
32		**84201070**		1	EIXO, Pedal, W	SHAFT	EJE	ALBERO	016A
					ARBRE	WELLE	AKSEL	AS	
33		**83980600**		2	PORCA, Thin, M10 x 1.25, Cl 04				
						NUT	TUERCA	DADO	010D
					ECROU	MUTTER	MØTRIK	MOER	
34		**10090811**		2	PORCA, Adjusting, M10 x 1.25 x 90mm				
						NUT	TUERCA	DADO	010D
					ECROU	MUTTER	MØTRIK	MOER	
35		**856800**		1	PINO RANHURADO, 3/16" x 1 1/2", Type E, Hardened				
						GROOVED PIN	PASADOR RANURADO	PERNO SCANALATO	086P
					GOUPILLE CANNELEE	KERBSTIFT	TAP M/NOT	GEGROEFDE PEN	
36		**600083**		4	ARRUELA PLANA	WASHER	ARANDELA	RONDELLA	131R
					RONDELLE	UNTERLEGSCHEIBE	FLADSKIVE	SLUITRING	
37		**234726**		2	PINO DE GARFO, 1/4" x .770"				
						CLEVIS PIN	EJE CON CABEZA	PERNO A TESTA PIANA	P694
					AXE DE CHAPE	GABELBOLZEN	GAFFELBOLT	GAFFELPEN	

DIA KIT, MED FRM FOOT CONTROLS, MANUAL (SR175,SV185)
DIA KIT, MED FRM FOOT CONTROLS, MANUAL (SR175,SV185)
DIA KIT, MED FRM FOOT CONTROLS, MANUAL (SR175,SV185)
DIA KIT, MED FRM FOOT CONTROLS, MANUAL (SR175,SV185)



DIA KIT, MED FRM FOOT CONTROLS, MANUAL (SR175,SV185)
DIA KIT, MED FRM FOOT CONTROLS, MANUAL (SR175,SV185)
DIA KIT, MED FRM FOOT CONTROLS, MANUAL (SR175,SV185)
DIA KIT, MED FRM FOOT CONTROLS, MANUAL (SR175,SV185)

R	N	P.N.	MOD	Q	Denominação Description	Description Bezeichnung	Denominacion Beskrivelse	Descrizione Beschrijving	L.C.
38		**228500**		2	BUCHA BAGUE	BUSHING BUCHSE	CASQUILLO BØSNING	BOCCOLA BUS	095B

DIA KIT, COUNTERWEIGHT MF CASE (SR175-SR200,TR270)
DIA KIT, COUNTERWEIGHT MF CASE (SR175-SR200,TR270)
DIA KIT, COUNTERWEIGHT MF CASE (SR175-SR200,TR270)
DIA KIT, COUNTERWEIGHT MF CASE (SR175-SR200,TR270)



DIA KIT, COUNTERWEIGHT MF CASE (SR175-SR200,TR270)
DIA KIT, COUNTERWEIGHT MF CASE (SR175-SR200,TR270)
DIA KIT, COUNTERWEIGHT MF CASE (SR175-SR200,TR270)
DIA KIT, COUNTERWEIGHT MF CASE (SR175-SR200,TR270)

R	N	P.N.	MOD	Q	Denominação Description	Description Bezeichnung	Denominacion Beskrivelse	Descrizione Beschrijving	L.C.
		84306086			JOGO, DIA Kit, Counterweight MF, Case, Incl. 1-4				
						KIT	JEUGO	KIT	4830
					POCHETTE	PACKUNG	KIT	KIT	
1		**84332297**		4	PLACA, Counterweight, Tan	PLATE	PLACA	PIASTRA	105P
					PLAQUE	PLATTE	PLADE	PLAAT	
2		**87301277**		4	PARAFUSO, Flange, M12 X 60				
						BOLT	PERNO	BULLONE	140B
					VIS	SCHRAUBE	BOLT	BOUT	
3		**86512497**		3	PORCA, M12 x 1.75, Flg, Cl 10				
						NUT	TUERCA	DADO	010D
					ECROU	MUTTER	MØTRIK	MOER	
4		**84354545**		1	INSTRUÇÃO, Installation	INSTRUCTION	INSTRUCCIÓN	ISTRUZIONI	Z571
					INSTRUCTION	ANLEITUNG	INSTRUKTION	INSTRUCTIE	

SV185

DIA KIT, MED FRM ISM HVAC KIT (SR175,SV185)
DIA KIT, MED FRM ISM HVAC KIT (SR175,SV185)
DIA KIT, MED FRM ISM HVAC KIT (SR175,SV185)
DIA KIT, MED FRM ISM HVAC KIT (SR175,SV185)



DIA KIT, MED FRM ISM HVAC KIT (SR175,SV185)
DIA KIT, MED FRM ISM HVAC KIT (SR175,SV185)
DIA KIT, MED FRM ISM HVAC KIT (SR175,SV185)
DIA KIT, MED FRM ISM HVAC KIT (SR175,SV185)

R	N	P.N.	MOD	Q	Denominação Description Bezeichnung	Denominacion Beskrivelse	Descrizione Beschrijving	L.C.
		84468151			KIT DE SERVIÇO, DIA Kit, Med Frm ISM HVAC, Incl. 1-91 SERVICE KIT	KIT DE SERVICIO	KIT DI MANUTENZIONE	021K
					KIT D'ENTRETIEN SERVICE-SATZ	SERVICESÆT	SERVICEKIT	
1		**43129**		1	PARAFUSO, Hex, M8 x 40, 8.8 BOLT	PERNO	BULLONE	140B
					VIS SCHRAUBE	BOLT	BOUT	
2		**120100**		4	PARAFUSO, Hex, M6 x 20, 8.8 BOLT	PERNO	BULLONE	140B
					VIS SCHRAUBE	BOLT	BOUT	
3		**287644**		1	CONEXÃO, 90º, 5/8" Hose x 3/8" NPTF Beaded FITTING	ACOPLAMIENTO	RACCORDO	3300
					RACCORD ARMATUR	FITTING	AANSLUITING	
4		**308761**		1	PARAFUSO, Short NK, M8 x 25, Cl8.8, Full Thd CARRIAGE BOLT	PERNO ALOMADO	BULLONE A TESTA TONI	P123
					VIS A TETE BOMBEE SCHLOSSSCHRAUBE	BRÆDDEBOLT	SLOTBOUT	
5		**323238**		1	PORCA, Thin, M12 x 1.75, Cl 05 NUT	TUERCA	DADO	010D
					ECROU MUTTER	MØTRIK	MOER	
6		**350459**		1	PARAFUSO, Short NK, M10 x 50, Cl8.8, Full Thd SCREW	TORNILLO	VITE	040V
					VIS SCHRAUBE	SKRUE	SCHROEF	
7		**412479**		2	PARAFUSO, Hex, M8 x 35, 8.8 BOLT	PERNO	BULLONE	140B
					VIS SCHRAUBE	BOLT	BOUT	
8		**725403**		1	PARAFUSO, Hex, M8 x 100, 8.8, Full Thd BOLT	PERNO	BULLONE	140B
					VIS SCHRAUBE	BOLT	BOUT	
9		**7120985**		1	PARAFUSO, M10 X 115 BOLT	PERNO	BULLONE	140B
					VIS SCHRAUBE	BOLT	BOUT	
10		**9671714**		1	PARAFUSO, Hex Flg, M8 x 25, 8.8 BOLT	PERNO	BULLONE	140B
					VIS SCHRAUBE	BOLT	BOUT	
11		**9706690**		2	PORCA, M8, Cl 8 NUT	TUERCA	DADO	010D
					ECROU MUTTER	MØTRIK	MOER	
12		**9804255**		2	PARAFUSO, Hex Flg, M6 x 16, 8.8 BOLT	PERNO	BULLONE	140B
					VIS SCHRAUBE	BOLT	BOUT	
13		**9804258**		1	PARAFUSO, Hex Flg, M8 x 20, 8.8 BOLT	PERNO	BULLONE	140B
					VIS SCHRAUBE	BOLT	BOUT	
14		**9804261**		1	PARAFUSO, Hex Flg, M10 x 25, 8.8 BOLT	PERNO	BULLONE	140B
					VIS SCHRAUBE	BOLT	BOUT	
15		**9804262**		1	PARAFUSO, Hex Flg, M10 x 30, 8.8 BOLT	PERNO	BULLONE	140B
					VIS SCHRAUBE	BOLT	BOUT	
16		**9804276**		4	PORCA, M6 x 1, Flg, Cl 8 NUT	TUERCA	DADO	010D
					ECROU MUTTER	MØTRIK	MOER	

SV185

DIA KIT, MED FRM ISM HVAC KIT (SR175,SV185)
DIA KIT, MED FRM ISM HVAC KIT (SR175,SV185)
DIA KIT, MED FRM ISM HVAC KIT (SR175,SV185)
DIA KIT, MED FRM ISM HVAC KIT (SR175,SV185)



DIA KIT, MED FRM ISM HVAC KIT (SR175,SV185)
DIA KIT, MED FRM ISM HVAC KIT (SR175,SV185)
DIA KIT, MED FRM ISM HVAC KIT (SR175,SV185)
DIA KIT, MED FRM ISM HVAC KIT (SR175,SV185)

R	N	P.N.	MOD	Q	Denominação Description	Description Bezeichnung	Denominacion Beskrivelse	Descrizione Beschrijving	L.C.
17		9804277		3	PORCA, M8 x 1.25, Flg, Cl 8				
						NUT	TUERCA	DADO	010D
					ECROU	MUTTER	MØTRIK	MOER	
18		9804278		3	PORCA, M10 x 1.5, Flg, Cl 8				
						NUT	TUERCA	DADO	010D
					ECROU	MUTTER	MØTRIK	MOER	
19		9824642		3	PARAFUSO, Hex, M12 x 35, 10.9				
						BOLT	PERNO	BULLONE	140B
					VIS	SCHRAUBE	BOLT	BOUT	
20		84200938		1	BRAÇADEIRA, Throttle Cable				
						CLAMP	ABRAZADERA	MORSETTO	120M
					COLLIER	KLEMME	SPÆNDEBÅND	KLEM	
21		84247845		1	SUPORTE, Water Valve, and Dryer				
						BRACKET	SOPORTE	STAFFA	225S
					SUPPORT	HALTERUNG	BESLAG	STEUN	
22		84267544		1	UNIDADE DE AQUECIMENTO, W/AC				
						UNIT HEATER	APARATO DE CALEFAC(	RISCALDATORE UNITÀ	Z375
					APPAREIL DE CHAUFFA	HEIZUNGSEINHEIT	RADIATORENHED	VERWARMING	
23		84280313		1	DUTO DE AR, Intake	AIR DUCT	CONDUCTO DE AIRE	CONDOTTO ARIA	224C
					CONDUITE D'AIR	LUFTKANAL	LUFTKANAL	LUCHTKANAAL	
24		84285339		4	PARAFUSO, M8 X 15	SELF-TAP SCREW	TORNILLO AUTORROSC	VITE AUTOFILETTANTE	062V
					VIS AUTOTARAUDEUSE	SELBSTSCHN SCHRAUE	SELVLÅSENDE BOLT	ZELFTAPPENDE SCHRO	
25		84389708		1	PAINEL, Rear Trim, Gray	PANEL	PANEL	PANNELLO	025P
					PANNEAU	PLATTE	PANEL	PANEEL	
26		84299751		1	DUTO DE AR, RH, Wheat	AIR DUCT	CONDUCTO DE AIRE	CONDOTTO ARIA	224C
					CONDUITE D'AIR	LUFTKANAL	LUFTKANAL	LUCHTKANAAL	
27		84299754		1	DUTO DE AR, RH, Wheat	AIR DUCT	CONDUCTO DE AIRE	CONDOTTO ARIA	224C
					CONDUITE D'AIR	LUFTKANAL	LUFTKANAL	LUCHTKANAAL	
28		84403037		1	CONJ. MANGUEIRA, AC Discharge				
						HOSE ASSY.	CONJUNTO DE TUBOS	COMPLESS. TUBO FLES	P457
					ENSEMBLE DE FLEXIBLE	SCHLAUCHBAUGRUPPE	SLANGEENHED	SLANGEENHEID	
29		84312881		1	CONDENSADOR, Assembly, W/Fan				
						CONDENSER	CONDENSADOR	CONDENSATORE	220C
					CONDENSATEUR	KONDENSATOR	KONDENSATOR	CONDENSOR	
30		84315532		1	CHICOTE, HVAC Jumper	WIRE HARNESS	GRUPO DE CABLES	CABLAGGIO	070I
					FAISCEAU ELECTRIQUE	KABELBAUM	KABELNET	KABELBOOM	
31		84403035		1	CONJ. MANGUEIRA, AC Discharge				
						HOSE ASSY.	CONJUNTO DE TUBOS	COMPLESS. TUBO FLES	P457
					ENSEMBLE DE FLEXIBLE	SCHLAUCHBAUGRUPPE	SLANGEENHED	SLANGEENHEID	
32		84380551		6	BOTÃO DE IMPULSO, Pine Tree, Wheat				
						FASTENER	SUJETADOR	DISPOSITIVO DI FISSAG	123B
					ATTACHE	BEFESTIGUNGSELEMEN	LUKKER	BEVESTIGING	
33		84321962		1	COMPRESSOR AR COND.	AIRCOND. COMPRESSO	COMPRESOR DE A/C	COMPRESSORE ARIA C(	217C
					COMPRESSEUR CLIMAT	KLIMAANLAGENKOMPRE	AIRCONDITION KOMPRE	AIRCOCOMPRESSOR	
34		84322838		1	PLACA, Cover, Tan	PLATE	PLACA	PIASTRA	105P
					PLAQUE	PLATTE	PLADE	PLAAT	
35		84322854		1	ESPUMA ISOLANTE, 684mm				
						FOAM INSULATION	ESPUMA AISLANTE	ISOLANTE IN SCHIUMA	051S
					MOUSSE ISOLANTE	SCHAUMSTOFFISOLIER	SKUM ISOLERING	SCHUIMISOLATIE	

SV185

DIA KIT, MED FRM ISM HVAC KIT (SR175,SV185)
DIA KIT, MED FRM ISM HVAC KIT (SR175,SV185)
DIA KIT, MED FRM ISM HVAC KIT (SR175,SV185)
DIA KIT, MED FRM ISM HVAC KIT (SR175,SV185)



DIA KIT, MED FRM ISM HVAC KIT (SR175,SV185)
DIA KIT, MED FRM ISM HVAC KIT (SR175,SV185)
DIA KIT, MED FRM ISM HVAC KIT (SR175,SV185)
DIA KIT, MED FRM ISM HVAC KIT (SR175,SV185)

R	N	P.N.	MOD	Q	Denominação Description	Description Bezeichnung	Denominacion Beskrivelse	Descrizione Beschrijving	L.C.
36		84323065		1	CORREIA, A/C Drive	BELT	CORREA	CINGHIA	174C
					COURROIE	RIEMEN	REM	RIEM	
37		84347258		1	ADESIVO, HVAC, Heat AC	DECAL	CALCOMANÍA	DECALCOMANIA	012D
					AUTOCOLLANT	AUFKLEBER	TRANSFER	STICKER	
38		84347312		1	MANGUEIRA, AC Liquid	HOSE	TUBO	TUBO FLESSIBILE	030M
					FLEXIBLE	SCHLAUCH	SLANGE	SLANG	
39		84357678		1	MANGUEIRA, Supply, Guarded				
						HOSE	TUBO	TUBO FLESSIBILE	030M
					FLEXIBLE	SCHLAUCH	SLANGE	SLANG	
40		84357840		1	MANGUEIRA, Heater, Return, Guarded				
						HOSE	TUBO	TUBO FLESSIBILE	030M
					FLEXIBLE	SCHLAUCH	SLANGE	SLANG	
41		84357844		1	MANGUEIRA, Heater, Supply, Guarded				
						HOSE	TUBO	TUBO FLESSIBILE	030M
					FLEXIBLE	SCHLAUCH	SLANGE	SLANG	
42		84361522		1	SUPORTE	BRACKET	SOPORTE	STAFFA	225S
					SUPPORT	HALTERUNG	BESLAG	STEUN	
43		84362125		1	ESPUMA ISOLANTE, Crossmember				
						FOAM INSULATION	ESPUMA AISLANTE	ISOLANTE IN SCHIUMA	051S
					MOUSSE ISOLANTE	SCHAUMSTOFFISOLIER	SKUM ISOLERING	SCHUIMISOLATIE	
44		84362126		1	ESPUMA ISOLANTE, Roof	FOAM INSULATION	ESPUMA AISLANTE	ISOLANTE IN SCHIUMA	051S
					MOUSSE ISOLANTE	SCHAUMSTOFFISOLIER	SKUM ISOLERING	SCHUIMISOLATIE	
45		84403036		1	CONJ. MANGUEIRA, AC Discharge				
						HOSE ASSY.	CONJUNTO DE TUBOS	COMPLESS. TUBO FLES	P457
					ENSEMBLE DE FLEXIBLE	SCHLAUCHBAUGRUPPE	SLANGEENHED	SLANGEENHEID	
46		84321278		1	SUPORTE DE PIVÔ, Compressor, Gray				
						PIVOT BRACKET	SOPORTE DE PIVOTE	STAFFA PERNO	P817
					SUPPORT DE PIVOTEME	DREHLAGERHALTERUN	DREJEBESLAG	DRAAIGEWRICHT	
47		84370302		1	ESPUMA, HVAC Box	FOAM	ESPUMA	SCHIUMA	P033
					MOUSSE	SCHAUM	SKUM	SCHUIM	
48		84370705		1	SUPORTE	BRACKET	SOPORTE	STAFFA	225S
					SUPPORT	HALTERUNG	BESLAG	STEUN	
49		84378693		1	SUPORTE, Compressor Pivot, Gray				
						BRACKET	SOPORTE	STAFFA	225S
					SUPPORT	HALTERUNG	BESLAG	STEUN	
50		86405134		1	POLIA, Compact A/C	PULLEY	POLEA	PULEGGIA	230P
					POULIE	RIEMENSCHEIBE	REMSKIVE	RIEMSCHIJF	
51		86511833		4	PARAFUSO, Cross Pan Hd, M6 x 40				
						SCREW	TORNILLO	VITE	040V
					VIS	SCHRAUBE	SKRUE	SCHROEF	
52		86511841		9	PARAFUSO, Hex Flg, M8 x 16, 8.8				
						BOLT	PERNO	BULLONE	140B
					VIS	SCHRAUBE	BOLT	BOUT	
53		86512441		2	PARAFUSO, Short NK, M6 x 30, Cl8.8, Full Thd				
						CARRIAGE BOLT	PERNO ALOMADO	BULLONE A TESTA TONI	P123
					VIS A TETE BOMBEE	SCHLOSSSCHRAUBE	BRÆDDEBOLT	SLOTBOUT	
54		86512554		2	CONTRA PORCA, M10 x 1.5, Cl 10				
						LOCK NUT	TUERCA DE BLOQUEO	DADO DI BLOCCAGGIO	P263
					CONTRE-ECROU	SICHERUNGSMUTTER	LÅSEMØTRIK	BORGMOER	

DIA KIT, MED FRM ISM HVAC KIT (SR175,SV185)
DIA KIT, MED FRM ISM HVAC KIT (SR175,SV185)
DIA KIT, MED FRM ISM HVAC KIT (SR175,SV185)
DIA KIT, MED FRM ISM HVAC KIT (SR175,SV185)



DIA KIT, MED FRM ISM HVAC KIT (SR175,SV185)
DIA KIT, MED FRM ISM HVAC KIT (SR175,SV185)
DIA KIT, MED FRM ISM HVAC KIT (SR175,SV185)
DIA KIT, MED FRM ISM HVAC KIT (SR175,SV185)

R	N	P.N.	MOD	Q	Denominação Description	Description Bezeichnung	Denominacion Beskrivelse	Descrizione Beschrijving	L.C.
55		86530043		1	CONEXÃO, Y	FITTING	ACOPLAMIENTO	RACCORDO	3300
					RACCORD	ARMATUR	FITTING	AANSLUITING	
56		86619800		6	CONTRA PORCA, M6 x 1, Flg, Cl 8				
						LOCK NUT	TUERCA DE BLOQUEO	DADO DI BLOCCAGGIO	P263
					CONTRE-ECROU	SICHERUNGSMUTTER	LÅSEMØTRIK	BORGMOER	
57		86624183		4	ARRUELA PLANA, M6 x 25 x 1.6				
						WASHER	ARANDELA	RONDELLA	131R
					RONDELLE	UNTERLEGSCHEIBE	FLADSKIVE	SLUITRING	
58		86624185		1	ARRUELA PLANA, M8 x 17.5 x 2, HT				
						WASHER	ARANDELA	RONDELLA	131R
					RONDELLE	UNTERLEGSCHEIBE	FLADSKIVE	SLUITRING	
59		86625074		4	PORCA, M8	NUT	TUERCA	DADO	010D
					ECROU	MUTTER	MØTRIK	MOER	
60		86637976		1	BRAÇADEIRA, 3/4", Insul, 5/16" Bolt				
						CLAMP	ABRAZADERA	MORSETTO	120M
					COLLIER	KLEMME	SPÆNDEBÅND	KLEM	
61		86639313		1	ARRUELA PLANA, M8 x 20 x 1.6				
						WASHER	ARANDELA	RONDELLA	131R
					RONDELLE	UNTERLEGSCHEIBE	FLADSKIVE	SLUITRING	
62		86729669		1	INTERRUPTOR	SWITCH	INTERRUPTOR	INTERRUTTORE	075I
					CONTACTEUR	SCHALTER	KONTAKT	SCHAKELAAR	
63		86729670		2	MAÇANETA	KNOB	MANDO	MANOPOLA	150P
					BOUTON	RUNDGRIFF	GREB	KNOP	
64		86729675		1	POTENCIÔMETRO, Switch	POTENTIOMETER	POTENCIÓMETRO	POTENZIOMETRO	550P
					POTENTIOMETRE	POTENTIOMETER	POTENTIOMETER	POTENTIOMETER	
65		87000227		1	INTERRUP ALTA PRESSÃO AC				
						A/C HIGH PRESSURE SV	INT. PRESIÓN ALTA A/A	INTERR. ALTA PRESS. A	A102
					PRESSOSTAT HP CLIMA	HOCHDR-SCHALTER KL	KONTAKT, A/C HØJTRYK	HOGEDRUKSCHAKELAA	
66		87015931		4	PARAFUSO, Hex Flg, M6 x 35, 8.8				
						BOLT	PERNO	BULLONE	140B
					VIS	SCHRAUBE	BOLT	BOUT	
67		87036224		2	PARAFUSO, M4 X 16	SCREW	TORNILLO	VITE	040V
					VIS	SCHRAUBE	SKRUE	SCHROEF	
68		87105840		1	DESIDRATADOR, Assembly				
						RECEIVER-DRYER	RECEPTOR-SECADOR	SERBATOIO-ESSICCATC	058D
					RESERVOIR DESHYDRA	TROCKNERPATRONE	VANDUDSKILLER	FILTERDROGER	
69		87105841		2	SUPORTE, Receiver/Dryer	BRACKET	SOPORTE	STAFFA	225S
					SUPPORT	HALTERUNG	BESLAG	STEUN	
70		87310592		2	PORCA, Jam, 7/16"-28, G5	NUT	TUERCA	DADO	010D
					ECROU	MUTTER	MØTRIK	MOER	
71		87355337		1	RELE, HD, Sealed 45 Amp	RELAY	RELE	REL	7025
					RELAIS	RELAIS	RELAY	RELAY	
72		87443511		10	BRAÇADEIRA, Hose, CTB 24mm				
						CLAMP	ABRAZADERA	MORSETTO	120M
					COLLIER	KLEMME	SPÆNDEBÅND	KLEM	
73		87520839		1	VÁLVULA, Package	VALVE	VÁLVULA	VALVOLA	9620
					SOUPAPE	VENTIL	VENTIL	KLEP	
74		87555249		1	INTERRUPTOR, A/C	SWITCH	INTERRUPTOR	INTERRUTTORE	075I
					CONTACTEUR	SCHALTER	KONTAKT	SCHAKELAAR	

DIA KIT, MED FRM ISM HVAC KIT (SR175,SV185)
DIA KIT, MED FRM ISM HVAC KIT (SR175,SV185)
DIA KIT, MED FRM ISM HVAC KIT (SR175,SV185)
DIA KIT, MED FRM ISM HVAC KIT (SR175,SV185)



DIA KIT, MED FRM ISM HVAC KIT (SR175,SV185)
DIA KIT, MED FRM ISM HVAC KIT (SR175,SV185)
DIA KIT, MED FRM ISM HVAC KIT (SR175,SV185)
DIA KIT, MED FRM ISM HVAC KIT (SR175,SV185)

R	N	P.N.	MOD	Q	Denominação Description	Description Bezeichnung	Denominacion Beskrivelse	Descrizione Beschrijving	L.C.
75		87582270		1	BLOCO, Idler Adjust	BLOCK	BLOQUE	BLOCCO	074B
					BLOC	BLOCK	MOTORBLOK	BLOK	
76		87606706		1	POLIA, A/C	PULLEY	POLEA	PULEGGIA	230P
					POULIE	RIEMENSCHEIBE	REMSKIVE	RIEMSCHIJF	
77		87655042		2	ARRUELA ESPECIAL, M8, Boron				
						SPECIAL WASHER	ARANDELA ESPECIAL	RONDELLA SPECIALE	Z333
					RONDELLE SPECIALE	SPEZIALUNTERLEGSCH	SPECIALSKIVE	SPECIALE RING	
78		87655046		1	ARRUELA ESPECIAL, M10, Boron				
						SPECIAL WASHER	ARANDELA ESPECIAL	RONDELLA SPECIALE	Z333
					RONDELLE SPECIALE	SPEZIALUNTERLEGSCH	SPECIALSKIVE	SPECIALE RING	
79		87669161		6	RESPIRO, Louver, Global	VENT	RESPIRADERO	BOCCHETTA	P079
					BUSE D'AERATION	AUSSTRÖMER	UDLUFTNINGSDYSE	LUCHTROOSTER	
80		127083A1		2	COTOVELO, Heater Hose	ELBOW	CODO	GOMITO	085G
					COUDE	KNIESTÜCK	VINKELRØR	KNIESTUK	
81		229197A1		4	PORCA, M8, Square	NUT	TUERCA	DADO	5780
					ECROU	MUTTER	NUT	NUT	
82		412679A2		2	MOLA, Heater Hose	SPRING	MUELLE	MOLLA	8315
					RESSORT	FEDER	SPRING	SPRING	
83		D39696		4	BRACADEIRA, Double	CLAMP	COLLAR	MORSETTO	1640
					COLLIER	SCHELLE	CLAMP	CLAMP	
84		87441006		1	PROTEÇÃO, A/C Hoses	GUARD	DEFENSA	PROTEZIONE	070R
					PROTECTION	SCHUTZABDECKUNG	BESKYTTELSESSKÆRM	AFSCHERMING	
85		84478873		1	INSTRUÇÃO, Instruction Sheet, Med FRM ISM HVAC Kit				
						INSTRUCTION	INSTRUCCIÓN	ISTRUZIONI	Z571
					INSTRUCTION	ANLEITUNG	INSTRUKTION	INSTRUCTIE	
86		86639409		1	ADESIVO, AC-Specs	DECAL	CALCOMANÍA	DECALCOMANIA	012D
					AUTOCOLLANT	AUFKLEBER	TRANSFER	STICKER	
87		84411489		1	ESPUMA ISOLANTE, Center, Upper Chassis				
						FOAM INSULATION	ESPUMA AISLANTE	ISOLANTE IN SCHIUMA	051S
					MOUSSE ISOLANTE	SCHAUMSTOFFISOLIER	SKUM ISOLERING	SCHUIMISOLATIE	
88		84416163		2	ESPUMA ISOLANTE, RH, Upper Chassis				
						FOAM INSULATION	ESPUMA AISLANTE	ISOLANTE IN SCHIUMA	051S
					MOUSSE ISOLANTE	SCHAUMSTOFFISOLIER	SKUM ISOLERING	SCHUIMISOLATIE	
89		84416164		2	ESPUMA ISOLANTE, RH, Upper Chassis				
						FOAM INSULATION	ESPUMA AISLANTE	ISOLANTE IN SCHIUMA	051S
					MOUSSE ISOLANTE	SCHAUMSTOFFISOLIER	SKUM ISOLERING	SCHUIMISOLATIE	
90		348452A1		10	BOTÃO DE IMPULSO, Xmas Tree, 1 Inch Grip				
						FASTENER	SUJETADOR	DISPOSITIVO DI FISSAG	123B
					ATTACHE	BEFESTIGUNGSELEMEN	LUKKER	BEVESTIGING	
91		84318533		8	BOTÃO DE IMPULSO, Push-in, Wheat				
						FASTENER	SUJETADOR	DISPOSITIVO DI FISSAG	123B
					ATTACHE	BEFESTIGUNGSELEMEN	LUKKER	BEVESTIGING	

DIA KIT, MED FRM ISM HEAT KIT (SR175,SV185)
DIA KIT, MED FRM ISM HEAT KIT (SR175,SV185)
DIA KIT, MED FRM ISM HEAT KIT (SR175,SV185)
DIA KIT, MED FRM ISM HEAT KIT (SR175,SV185)



DIA KIT, MED FRM ISM HEAT KIT (SR175,SV185)
DIA KIT, MED FRM ISM HEAT KIT (SR175,SV185)
DIA KIT, MED FRM ISM HEAT KIT (SR175,SV185)
DIA KIT, MED FRM ISM HEAT KIT (SR175,SV185)

R	N	P.N.	MOD	Q	Denominação Description	Description Bezeichnung	Denominacion Beskrivelse	Descrizione Beschrijving	L.C.
		84468160			KIT DE SERVIÇO, DIA Kit, Med FRM ISM Heat Kit, Incl. 1-58				
						SERVICE KIT	KIT DE SERVICIO	KIT DI MANUTENZIONE	021K
					KIT D'ENTRETIEN	SERVICE-SATZ	SERVICESÆT	SERVICEKIT	
1		**120100**		4	PARAFUSO, Hex, M6 x 20, 8.8				
						BOLT	PERNO	BULLONE	140B
					VIS	SCHRAUBE	BOLT	BOUT	
2		**287644**		1	CONEXÃO, 90º, 5/8" Hose x 3/8" NPTF Beaded				
						FITTING	ACOPLAMIENTO	RACCORDO	3300
					RACCORD	ARMATUR	FITTING	AANSLUITING	
3		**323238**		1	PORCA, Thin, M12 x 1.75, Cl 05				
						NUT	TUERCA	DADO	010D
					ECROU	MUTTER	MØTRIK	MOER	
4		**350459**		1	PARAFUSO, Short NK, M10 x 50, Cl8.8, Full Thd				
						SCREW	TORNILLO	VITE	040V
					VIS	SCHRAUBE	SKRUE	SCHROEF	
5		**9804255**		2	PARAFUSO, Hex Flg, M6 x 16, 8.8				
						BOLT	PERNO	BULLONE	140B
					VIS	SCHRAUBE	BOLT	BOUT	
6		**9804261**		1	PARAFUSO, Hex Flg, M10 x 25, 8.8				
						BOLT	PERNO	BULLONE	140B
					VIS	SCHRAUBE	BOLT	BOUT	
7		**9804276**		4	PORCA, M6 x 1, Flg, Cl 8	NUT	TUERCA	DADO	010D
					ECROU	MUTTER	MØTRIK	MOER	
8		**9804278**		3	PORCA, M10 x 1.5, Flg, Cl 8				
						NUT	TUERCA	DADO	010D
					ECROU	MUTTER	MØTRIK	MOER	
9		**84200938**		1	BRAÇADEIRA, Throttle Cable				
						CLAMP	ABRAZADERA	MORSETTO	120M
					COLLIER	KLEMME	SPÆNDEBÅND	KLEM	
10		**84247845**		1	SUPORTE, Water Valve and Dryer				
						BRACKET	SOPORTE	STAFFA	225S
					SUPPORT	HALTERUNG	BESLAG	STEUN	
11		**84267543**		1	AQUECEDOR	HEATER	CALENTADOR	RISCALDATORE	105R
					CHAUFFAGE	HEIZUNG	VARMEAPPARAT	VERWARMING	
12		**84280313**		1	DUTO DE AR, Intake	AIR DUCT	CONDUCTO DE AIRE	CONDOTTO ARIA	224C
					CONDUITE D'AIR	LUFTKANAL	LUFTKANAL	LUCHTKANAAL	
13		**84285339**		4	PARAFUSO, M8 X 15	SELF-TAP SCREW	TORNILLO AUTORROSC	VITE AUTOFILETTANTE	062V
					VIS AUTOTARAUDEUSE	SELBSTSCHN SCHRAUE	SELVLÅSENDE BOLT	ZELFTAPPENDE SCHRO	
14		**84389708**		1	PAINEL, Rear, Trim, Gray	PANEL	PANEL	PANNELLO	025P
					PANNEAU	PLATTE	PANEL	PANEEL	
15		**84299751**		1	DUTO DE AR, RH, Wheat	AIR DUCT	CONDUCTO DE AIRE	CONDOTTO ARIA	224C
					CONDUITE D'AIR	LUFTKANAL	LUFTKANAL	LUCHTKANAAL	
16		**84299754**		1	DUTO DE AR, RH, Wheat	AIR DUCT	CONDUCTO DE AIRE	CONDOTTO ARIA	224C
					CONDUITE D'AIR	LUFTKANAL	LUFTKANAL	LUCHTKANAAL	
17		**84380551**		6	BOTÃO DE IMPULSO, Pine Tree, Wheat				
						FASTENER	SUJETADOR	DISPOSITIVO DI FISSAG	123B
					ATTACHE	BEFESTIGUNGSELEMEN	LUKKER	BEVESTIGING	
18		**84322838**		1	PLACA, Cover, Tan	PLATE	PLACA	PIASTRA	105P
					PLAQUE	PLATTE	PLADE	PLAAT	

SV185

DIA KIT, MED FRM ISM HEAT KIT (SR175,SV185)
DIA KIT, MED FRM ISM HEAT KIT (SR175,SV185)
DIA KIT, MED FRM ISM HEAT KIT (SR175,SV185)
DIA KIT, MED FRM ISM HEAT KIT (SR175,SV185)



DIA KIT, MED FRM ISM HEAT KIT (SR175,SV185)
DIA KIT, MED FRM ISM HEAT KIT (SR175,SV185)
DIA KIT, MED FRM ISM HEAT KIT (SR175,SV185)
DIA KIT, MED FRM ISM HEAT KIT (SR175,SV185)

R	N	P.N.	MOD	Q	Denominação Description Bezeichnung	Denominacion Beskrivelse	Descrizione Beschrijving	L.C.
19		84322854		1	ESPUMA ISOLANTE, 684mm FOAM INSULATION MOUSSE ISOLANTE SCHAUMSTOFFISOLIER	ESPUMA AISLANTE SKUM ISOLERING	ISOLANTE IN SCHIUMA SCHUIMISOLATIE	051S
20		84331307		1	TELA, No A/C, Tilt Hood, Gray SCREEN TAMIS GITTER; ABSCHIRMUNG	PANTALLA SKÆRM	FILTRO; SCHERMO SCHERM	047S
21		84347261		1	ADESIVO, HVAC, Heat Only DECAL AUTOCOLLANT AUFKLEBER	CALCOMANÍA TRANSFER	DECALCOMANIA STICKER	012D
22		84357678		1	MANGUEIRA, Heater Supply, Guarded HOSE FLEXIBLE SCHLAUCH	TUBO SLANGE	TUBO FLESSIBILE SLANG	030M
23		84357840		1	MANGUEIRA, Heater Return, Guarded HOSE FLEXIBLE SCHLAUCH	TUBO SLANGE	TUBO FLESSIBILE SLANG	030M
24		84357844		1	MANGUEIRA, Heater Supply, Guarded HOSE FLEXIBLE SCHLAUCH	TUBO SLANGE	TUBO FLESSIBILE SLANG	030M
25		84361522		1	SUPORTE BRACKET SUPPORT HALTERUNG	SOPORTE BESLAG	STAFFA STEUN	225S
26		84362125		1	ESPUMA ISOLANTE, Crossmember FOAM INSULATION MOUSSE ISOLANTE SCHAUMSTOFFISOLIER	ESPUMA AISLANTE SKUM ISOLERING	ISOLANTE IN SCHIUMA SCHUIMISOLATIE	051S
27		84362126		1	ESPUMA ISOLANTE, Roof FOAM INSULATION MOUSSE ISOLANTE SCHAUMSTOFFISOLIER	ESPUMA AISLANTE SKUM ISOLERING	ISOLANTE IN SCHIUMA SCHUIMISOLATIE	051S
28		84370302		1	ESPUMA, HVAC Box FOAM MOUSSE SCHAUM	ESPUMA SKUM	SCHIUMA SCHUIM	P033
29		84370705		1	SUPORTE BRACKET SUPPORT HALTERUNG	SOPORTE BESLAG	STAFFA STEUN	225S
30		86508813		2	PORCA, M5, Cl 8 NUT ECROU MUTTER	TUERCA MØTRIK	DADO MOER	010D
31		86511833		4	PARAFUSO, Cross Pan Hd, M6 x 40 SCREW VIS SCHRAUBE	TORNILLO SKRUE	VITE SCHROEF	040V
32		86511841		6	PARAFUSO, Hex Flg, M8 x 16, 8.8 BOLT VIS SCHRAUBE	PERNO BOLT	BULLONE BOUT	140B
33		86512441		2	PARAFUSO, Short NK, M6 x 30, Cl8.8, Full Thd CARRIAGE BOLT VIS A TETE BOMBEE SCHLOSSSCHRAUBE	PERNO ALOMADO BRÆDDEBOLT	BULLONE A TESTA TONI SLOTBOUT	P123
34		86530043		1	CONEXÃO, Y FITTING RACCORD ARMATUR	ACOPLAMIENTO FITTING	RACCORDO AANSLUITING	3300
35		86588450		1	ARRUELA PLANA, M6 x 12 x 1.6 Thk WASHER RONDELLE UNTERLEGSCHEIBE	ARANDELA FLADSKIVE	RONDELLA SLUITRING	131R
36		86619800		6	CONTRA PORCA, M6 x 1, Flg, Cl 8 LOCK NUT CONTRE-ECROU SICHERUNGSMUTTER	TUERCA DE BLOQUEO LÅSEMØTRIK	DADO DI BLOCCAGGIO BORGMOER	P263

SV185

DIA KIT, MED FRM ISM HEAT KIT (SR175,SV185)
DIA KIT, MED FRM ISM HEAT KIT (SR175,SV185)
DIA KIT, MED FRM ISM HEAT KIT (SR175,SV185)
DIA KIT, MED FRM ISM HEAT KIT (SR175,SV185)



DIA KIT, MED FRM ISM HEAT KIT (SR175,SV185)
DIA KIT, MED FRM ISM HEAT KIT (SR175,SV185)
DIA KIT, MED FRM ISM HEAT KIT (SR175,SV185)
DIA KIT, MED FRM ISM HEAT KIT (SR175,SV185)

R	N	P.N.	MOD	Q	Denominação Description	Description Bezeichnung	Denominacion Beskrivelse	Descrizione Beschrijving	L.C.
37		86624183		4	ARRUELA PLANA, M6 x 25 x 1.6				
						WASHER	ARANDELA	RONDELLA	131R
					RONDELLE	UNTERLEGSCHEIBE	FLADSKIVE	SLUITRING	
38		86625074		4	PORCA, M8	NUT	TUERCA	DADO	010D
					ECROU	MUTTER	MØTRIK	MOER	
39		86639263		2	PARAFUSO, Hex Wash Hd, M5 x 12				
						SCREW	TORNILLO	VITE	040V
					VIS	SCHRAUBE	SKRUE	SCHROEF	
40		86639294		2	PARAFUSO, Hex Soc Hd, M4 x 20, 8.8				
						SCREW	TORNILLO	VITE	040V
					VIS	SCHRAUBE	SKRUE	SCHROEF	
41		86729669		1	INTERRUPTOR	SWITCH	INTERRUPTOR	INTERRUTTORE	075I
					CONTACTEUR	SCHALTER	KONTAKT	SCHAKELAAR	
42		86729670		2	MAÇANETA	KNOB	MANDO	MANOPOLA	150P
					BOUTON	RUNDGRIFF	GREB	KNOP	
43		86729675		1	POTENCIÔMETRO, Switch	POTENTIOMETER	POTENCIÓMETRO	POTENZIOMETRO	550P
					POTENTIOMETRE	POTENTIOMETER	POTENTIOMETER	POTENTIOMETER	
44		87015931		4	PARAFUSO, Hex Flg, M6 x 35, 8.8				
						BOLT	PERNO	BULLONE	140B
					VIS	SCHRAUBE	BOLT	BOUT	
45		87310592		2	PORCA, Jam, 7/16"-28, G5	NUT	TUERCA	DADO	010D
					ECROU	MUTTER	MØTRIK	MOER	
46		87443511		10	BRAÇADEIRA, CTB 24mm	CLAMP	ABRAZADERA	MORSETTO	120M
					COLLIER	KLEMME	SPÆNDEBÅND	KLEM	
47		87520839		1	VÁLVULA, Package	VALVE	VÁLVULA	VALVOLA	9620
					SOUPAPE	VENTIL	VENTIL	KLEP	
48		87655042		2	ARRUELA ESPECIAL, M8	SPECIAL WASHER	ARANDELA ESPECIAL	RONDELLA SPECIALE	Z333
					RONDELLE SPECIALE	SPEZIALUNTERLEGSCH	SPECIALSKIVE	SPECIALE RING	
49		87655046		1	ARRUELA ESPECIAL, M10	SPECIAL WASHER	ARANDELA ESPECIAL	RONDELLA SPECIALE	Z333
					RONDELLE SPECIALE	SPEZIALUNTERLEGSCH	SPECIALSKIVE	SPECIALE RING	
50		87669161		6	RESPIRO, Louver, Global	VENT	RESPIRADERO	BOCCHETTA	P079
					BUSE D'AERATION	AUSSTRÖMER	UDLUFTNINGSDYSE	LUCHTROOSTER	
51		127083A1		2	COTOVELO, Heater Hose	ELBOW	CODO	GOMITO	085G
					COUDE	KNIESTÜCK	VINKELRØR	KNIESTUK	
52		229197A1		2	PORCA, M8, Square	NUT	TUERCA	DADO	5780
					ECROU	MUTTER	NUT	NUT	
53		412679A2		2	MOLA, Heater Hose	SPRING	MUELLE	MOLLA	8315
					RESSORT	FEDER	SPRING	SPRING	
54		D39696		2	BRACADEIRA, Double	CLAMP	COLLAR	MORSETTO	1640
					COLLIER	SCHELLE	CLAMP	CLAMP	
55		87441006		1	PROTEÇÃO, A/C Hoses	GUARD	DEFENSA	PROTEZIONE	070R
					PROTECTION	SCHUTZABDECKUNG	BESKYTTELSESSKÆRM	AFSCHERMING	
56		84478866		1	INSTRUÇÃO, Instruction Sheet, Med FRM ISM Heat Kit				
						INSTRUCTION	INSTRUCCIÓN	ISTRUZIONI	Z571
					INSTRUCTION	ANLEITUNG	INSTRUKTION	INSTRUCTIE	
57		348452A1		10	BOTÃO DE IMPULSO, Pine Tree, 1 Inch				
						FASTENER	SUJETADOR	DISPOSITIVO DI FISSAG	123B
					ATTACHE	BEFESTIGUNGSELEMEN	LUKKER	BEVESTIGING	

SV185

DIA KIT, MED FRM ISM HEAT KIT (SR175,SV185)
DIA KIT, MED FRM ISM HEAT KIT (SR175,SV185)
DIA KIT, MED FRM ISM HEAT KIT (SR175,SV185)
DIA KIT, MED FRM ISM HEAT KIT (SR175,SV185)



DIA KIT, MED FRM ISM HEAT KIT (SR175,SV185)
DIA KIT, MED FRM ISM HEAT KIT (SR175,SV185)
DIA KIT, MED FRM ISM HEAT KIT (SR175,SV185)
DIA KIT, MED FRM ISM HEAT KIT (SR175,SV185)

R	N	P.N.	MOD	Q	Denominação Description	Description Bezeichnung	Denominacion Beskrivelse	Descrizione Beschrijving	L.C.
58		**84318533**		8	BOTÃO DE IMPULSO, Push-in, Wheat				
						FASTENER	SUJETADOR	DISPOSITIVO DI FISSAG	123B
					ATTACHE	BEFESTIGUNGSELEMEN	LUKKER	BEVESTIGING	

DIA KIT, BEACON (ALL CASE)
DIA KIT, BEACON (ALL CASE)
DIA KIT, BEACON (ALL CASE)
DIA KIT, BEACON (ALL CASE)



DIA KIT, BEACON (ALL CASE)
DIA KIT, BEACON (ALL CASE)
DIA KIT, BEACON (ALL CASE)
DIA KIT, BEACON (ALL CASE)

R	N	P.N.	MOD	Q	Denominação Description Bezeichnung	Description Bezeichnung Beschrijving	Denominacion Beskrivelse Descrizione	Descrizione Beschrijving L.C.
		84422725			KIT DE SERVIÇO, DIA Kit, Beacon, Incl. 1-2 SERVICE KIT KIT D'ENTRETIEN	SERVICE KIT SERVICE-SATZ	KIT DE SERVICIO SERVICESÆT	KIT DI MANUTENZIONE SERVICEKIT 021K
1		**9840716**		1	LUZ DE SINALIZAÇÃO GYROPHARE	BEACON RUNDUMLEUCHTE	BALIZA ROTERENDE ADVARSEL	GIROFARO ZWAAILICHT 080L
2		**84422727**		1	INSTRUÇÃO, Instruction, Sheet, Beacon INSTRUCTION	INSTRUCTION ANLEITUNG	INSTRUCCIÓN INSTRUKTION	ISTRUZIONI INSTRUCTIE Z571

SV185

DIA KIT, STROBE (ALL CASE)
DIA KIT, STROBE (ALL CASE)
DIA KIT, STROBE (ALL CASE)
DIA KIT, STROBE (ALL CASE)



DIA KIT, STROBE (ALL CASE)
DIA KIT, STROBE (ALL CASE)
DIA KIT, STROBE (ALL CASE)
DIA KIT, STROBE (ALL CASE)

R	N	P.N.	MOD	Q	Denominação Description	Description Bezeichnung	Denominacion Beskrivelse	Descrizione Beschrijving	L.C.
		84305658			KIT DE SERVIÇO, DIA Kit, Strobe, Incl. 1-13				
						SERVICE KIT	KIT DE SERVICIO	KIT DI MANUTENZIONE	021K
					KIT D'ENTRETIEN	SERVICE-SATZ	SERVICESÆT	SERVICEKIT	
1		**140024**		8	TRAVA DA ARRUELA, M4	LOCK WASHER	ARANDELA DE BLOQUE	RONDELLA DI SICUREZ	132R
					RONDELLE FREIN	SICHERUNGSSCHEIBE	LÅSESKIVE	BORGRING	
2		**9804258**		3	PARAFUSO, Hex Flg, M8 x 20, 8.8				
						BOLT	PERNO	BULLONE	140B
					VIS	SCHRAUBE	BOLT	BOUT	
3		**83990583**		3	TRAVA DA ARRUELA, M8	LOCK WASHER	ARANDELA DE BLOQUE	RONDELLA DI SICUREZ	132R
					RONDELLE FREIN	SICHERUNGSSCHEIBE	LÅSESKIVE	BORGRING	
4		**84251317**		1	CHICOTE, Strobe	WIRE HARNESS	GRUPO DE CABLES	CABLAGGIO	070I
					FAISCEAU ELECTRIQUE	KABELBAUM	KABELNET	KABELBOOM	
5		**84251538**		1	ESTRUTURA, WA Strobe, Gray				
						FRAME	BASTIDOR	TELAIO	072I
					CHASSIS	RAHMEN	RAMME	FRAME	
6		**84272827**		4	REBITE, Nut, M6 X 1.0	RIVET	REMACHE	RIVETTO	055R
					RIVET	NIET	NITTE	KLINKNAGEL	
7		**84305556**		4	PARAFUSO, M6 X 25	SCREW	TORNILLO	VITE	040V
					VIS	SCHRAUBE	SKRUE	SCHROEF	
8		**86508812**		8	PORCA, M3, Cl 8	NUT	TUERCA	DADO	010D
					ECROU	MUTTER	MØTRIK	MOER	
9		**86511818**		8	PARAFUSO, Cross Pan Hd, M3 x 30				
						SCREW	TORNILLO	VITE	040V
					VIS	SCHRAUBE	SKRUE	SCHROEF	
10		**86625036**		3	BRAÇADEIRA, 1/2", Insul, 5/16" Bolt				
						CLAMP	ABRAZADERA	MORSETTO	120M
					COLLIER	KLEMME	SPÆNDEBÅND	KLEM	
11		**86629542**		3	CONTRA PORCA, M8 x 1.25, Cl 8				
						LOCK NUT	TUERCA DE BLOQUEO	DADO DI BLOCCAGGIO	P263
					CONTRE-ECROU	SICHERUNGSMUTTER	LÅSEMØTRIK	BORGMOER	
12		**87745165**		4	LUZ, Strobe, LED Light	LIGHT	LUZ	LUCE	Z496
					FEU	LAMPE	BELYSNING	LAMP	
13		**84251531**		1	INSTRUÇÃO, Strobe Install	INSTRUCTION	INSTRUCCIÓN	ISTRUZIONI	Z571
					INSTRUCTION	ANLEITUNG	INSTRUKTION	INSTRUCTIE	

SV185

DIA KIT, MULTI-FUNCTION ELEC MECH VERT (SV185)
DIA KIT, MULTI-FUNCTION ELEC MECH VERT (SV185)
DIA KIT, MULTI-FUNCTION ELEC MECH VERT (SV185)
DIA KIT, MULTI-FUNCTION ELEC MECH VERT (SV185)



DIA KIT, MULTI-FUNCTION ELEC MECH VERT (SV185)
DIA KIT, MULTI-FUNCTION ELEC MECH VERT (SV185)
DIA KIT, MULTI-FUNCTION ELEC MECH VERT (SV185)
DIA KIT, MULTI-FUNCTION ELEC MECH VERT (SV185)

R	N	P.N.	MOD	Q	Denominação Description	Description Bezeichnung	Denominacion Beskrivelse	Descrizione Beschrijving	L.C.
		84399687			JOGO, DIA Kit, Multi-Function Elec Mech Vert, Incl. 1-10				
						KIT	JEUGO	KIT	4830
					POCHETTE	PACKUNG	KIT	KIT	
1		**263117**		2	PRENDEDOR DE CABOS, .14" x 11 1/2"				
						CABLE STRAP	BANDA DE CABLE	FASCETTA PER CAVO	P716
					BRIDE DE CABLE	KABELBINDER	KABELSTROP	BUNDELBAND	
2		**9804260**		1	PARAFUSO, Hex Flg, M8 x 30, 8.8, Full Thd				
						BOLT	PERNO	BULLONE	140B
					VIS	SCHRAUBE	BOLT	BOUT	
3		**84251324**		1	CHICOTE, FE Boom VT	WIRE HARNESS	GRUPO DE CABLES	CABLAGGIO	070I
					FAISCEAU ELECTRIQUE	KABELBAUM	KABELNET	KABELBOOM	
4		**84293533**		1	PEGA DE SUPORTE, Front Aux Elec				
						BRACKET, SUPPORTING	PIEZA DE APOYO	SQUADRETTA	215S
					EQUERRE	TRAGER, STUTZ	BRACKET, SUPPORTING	BRACKET, SUPPORTING	
5		**84396783**		1	CHICOTE, Multi-Function Jumper Mech				
						WIRE HARNESS	GRUPO DE CABLES	CABLAGGIO	070I
					FAISCEAU ELECTRIQUE	KABELBAUM	KABELNET	KABELBOOM	
6		**84467699**		1	BRAÇADEIRA, P, 25.4mm Insulated Special				
						CLAMP	ABRAZADERA	MORSETTO	120M
					COLLIER	KLEMME	SPÆNDEBÅND	KLEM	
7		**84474175**		1	INSTRUÇÃO, Instruction Sheet, Vertical				
						INSTRUCTION	INSTRUCCIÓN	ISTRUZIONI	Z571
					INSTRUCTION	ANLEITUNG	INSTRUKTION	INSTRUCTIE	
8		**86505868**		1	PORCA, M8, Flg Ser	NUT	TUERCA	DADO	010D
					ECROU	MUTTER	MØTRIK	MOER	
9		**86637977**		1	BRAÇADEIRA, 1", Insul, 5/16" Bolt				
						CLAMP	ABRAZADERA	MORSETTO	120M
					COLLIER	KLEMME	SPÆNDEBÅND	KLEM	
10		**87030531**		2	PARAFUSO, Tapping, ST8 X 19				
						SCREW	TORNILLO	VITE	040V
					VIS	SCHRAUBE	SKRUE	SCHROEF	

DIA KIT, MULTI-FUNCTION ELEC EH VERT (SV185)
DIA KIT, MULTI-FUNCTION ELEC EH VERT (SV185)
DIA KIT, MULTI-FUNCTION ELEC EH VERT (SV185)
DIA KIT, MULTI-FUNCTION ELEC EH VERT (SV185)



DIA KIT, MULTI-FUNCTION ELEC EH VERT (SV185)
DIA KIT, MULTI-FUNCTION ELEC EH VERT (SV185)
DIA KIT, MULTI-FUNCTION ELEC EH VERT (SV185)
DIA KIT, MULTI-FUNCTION ELEC EH VERT (SV185)

R	N	P.N.	MOD	Q	Denominação Description	Description Bezeichnung	Denominacion Beskrivelse	Descrizione Beschrijving	L.C.
		84399688			JOGO, DIA Kit, Multi-Function Elec, EH, Vert, Incl. 1-8				
						KIT	JEUGO	KIT	4830
					POCHETTE	PACKUNG	KIT	KIT	
1		**84251324**		1	CHICOTE, FE Boom, VT	WIRE HARNESS	GRUPO DE CABLES	CABLAGGIO	070I
					FAISCEAU ELECTRIQUE	KABELBAUM	KABELNET	KABELBOOM	
2		**84293533**		1	PEGA DE SUPORTE, Front Aux, Elec				
						BRACKET, SUPPORTING	PIEZA DE APOYO	SQUADRETTA	215S
					EQUERRE	TRAGER, STUTZ	BRACKET, SUPPORTING	BRACKET, SUPPORTING	
3		**86505868**		1	PORCA, M8, Flg Ser	NUT	TUERCA	DADO	010D
					ECROU	MUTTER	MØTRIK	MOER	
4		**87030531**		2	PARAFUSO, ST8 X 19	SCREW	TORNILLO	VITE	040V
					VIS	SCHRAUBE	SKRUE	SCHROEF	
5		**9804260**		1	PARAFUSO, Hex Flg, M8 x 30, 8.8, Full Thd				
						BOLT	PERNO	BULLONE	140B
					VIS	SCHRAUBE	BOLT	BOUT	
6		**84396781**		1	CHICOTE, Multi-Function Jumper, EH				
						WIRE HARNESS	GRUPO DE CABLES	CABLAGGIO	070I
					FAISCEAU ELECTRIQUE	KABELBAUM	KABELNET	KABELBOOM	
7		**84469621**		1	INSTRUÇÃO, Instruction, Installation, FE, Vertical				
						INSTRUCTION	INSTRUCCIÓN	ISTRUZIONI	Z571
					INSTRUCTION	ANLEITUNG	INSTRUKTION	INSTRUCTIE	
8		**86637977**		2	BRAÇADEIRA, 1", Insul, 5/16" Bolt				
						CLAMP	ABRAZADERA	MORSETTO	120M
					COLLIER	KLEMME	SPÆNDEBÅND	KLEM	

DIA KIT, EU ROAD LIGHT MED VERT CASE (SV185)
DIA KIT, EU ROAD LIGHT MED VERT CASE (SV185)
DIA KIT, EU ROAD LIGHT MED VERT CASE (SV185)
DIA KIT, EU ROAD LIGHT MED VERT CASE (SV185)



DIA KIT, EU ROAD LIGHT MED VERT CASE (SV185)
DIA KIT, EU ROAD LIGHT MED VERT CASE (SV185)
DIA KIT, EU ROAD LIGHT MED VERT CASE (SV185)
DIA KIT, EU ROAD LIGHT MED VERT CASE (SV185)

R	N	P.N.	MOD	Q	Denominação Description	Description Bezeichnung	Denominacion Beskrivelse	Descrizione Beschrijving	L.C.
		84424043			KIT DE SERVIÇO, DIA Kit, EU, Road Light, Med, Vert, Case, Incl. 1-30				
						SERVICE KIT	KIT DE SERVICIO	KIT DI MANUTENZIONE	021K
					KIT D'ENTRETIEN	SERVICE-SATZ	SERVICESÆT	SERVICEKIT	
1		**280476**		4	PARAFUSO, Hex Wash Hd, 3/8" x 1"				
						SELF-TAP SCREW	TORNILLO AUTORROSC	VITE AUTOFILETTANTE	062V
					VIS AUTOTARAUDEUSE	SELBSTSCHN SCHRAUE	SELVLÅSENDE BOLT	ZELFTAPPENDE SCHRO	
2		**9804260**		2	PARAFUSO, Hex Flg, M8 x 30, 8.8, Full Thd				
						BOLT	PERNO	BULLONE	140B
					VIS	SCHRAUBE	BOLT	BOUT	
3		**9821783**		1	LÂMPADA INTERMITENTE, A				
						FLASHER UNIT	UNIDAD INTERMITENTE	UNITÀ LAMPEGGIATORE	035L
					CENTRALE CLIGNOTAN	BLINKEREINHEIT	BLINKLAMPE	KNIPPERAUTOMAAT	
4		**84262452**		1	CHICOTE, FE Boom, VT	WIRE HARNESS	GRUPO DE CABLES	CABLAGGIO	070I
					FAISCEAU ELECTRIQUE	KABELBAUM	KABELNET	KABELBOOM	
5		**84263153**		1	INTERRUPTOR, Rocker, Loader Lockout				
						SWITCH	INTERRUPTOR	INTERRUTTORE	075I
					CONTACTEUR	SCHALTER	KONTAKT	SCHAKELAAR	
6		**84306583**		1	SUPORTE, Light, LH Tan	BRACKET	SOPORTE	STAFFA	225S
					SUPPORT	HALTERUNG	BESLAG	STEUN	
7		**84306585**		1	SUPORTE, Light, RH Tan	BRACKET	SOPORTE	STAFFA	225S
					SUPPORT	HALTERUNG	BESLAG	STEUN	
8		**84383307**		1	CHICOTE, Rear, Road Jumper				
						WIRE HARNESS	GRUPO DE CABLES	CABLAGGIO	070I
					FAISCEAU ELECTRIQUE	KABELBAUM	KABELNET	KABELBOOM	
9		**9804277**		4	PORCA, M8 x 1.25, Flg, Cl 8				
						NUT	TUERCA	DADO	010D
					ECROU	MUTTER	MØTRIK	MOER	
10		**87627854**		2	FAROL CONJUNTO, Rear, Stop-Tail				
						LIGHT ASSY.	FARO (CONJ)	LUCE, COMPLESSIVO	P478
					FEU (ASSEMBLE)	LAMPE (KPLT.)	LIGHT ASSY.	LIGHT ASSY.	
11		**86502967**		8	PARAFUSO, Cross Pan Hd, M5 x 30				
						SCREW	TORNILLO	VITE	040V
					VIS	SCHRAUBE	SKRUE	SCHROEF	
12		**86512420**		4	PARAFUSO, Short NK, M8 x 20, Cl8.8, Full Thd				
						CARRIAGE BOLT	PERNO ALOMADO	BULLONE A TESTA TON	P123
					VIS A TETE BOMBEE	SCHLOSSSCHRAUBE	BRÆDDEBOLT	SLOTBOUT	
13		**86512495**		8	PORCA, M5 x .8, Flg, Cl 8	NUT	TUERCA	DADO	010D
					ECROU	MUTTER	MØTRIK	MOER	
14		**87629587**		2	FAROL CONJUNTO, Warning				
						LIGHT ASSY.	FARO (CONJ)	LUCE, COMPLESSIVO	P478
					FEU (ASSEMBLE)	LAMPE (KPLT.)	LIGHT ASSY.	LIGHT ASSY.	
15		**84419628**		2	SUPORTE, RR, Road Light, Tan				
						BRACKET	SOPORTE	STAFFA	225S
					SUPPORT	HALTERUNG	BESLAG	STEUN	
16		**84416164**		2	ESPUMA ISOLANTE, RH Upper Chassis				
						FOAM INSULATION	ESPUMA AISLANTE	ISOLANTE IN SCHIUMA	051S
					MOUSSE ISOLANTE	SCHAUMSTOFFISOLIER	SKUM ISOLERING	SCHUIMISOLATIE	
17		**84420530**		1	CHICOTE, Boom, LH, VT	WIRE HARNESS	GRUPO DE CABLES	CABLAGGIO	070I
					FAISCEAU ELECTRIQUE	KABELBAUM	KABELNET	KABELBOOM	

DIA KIT, EU ROAD LIGHT MED VERT CASE (SV185)
DIA KIT, EU ROAD LIGHT MED VERT CASE (SV185)
DIA KIT, EU ROAD LIGHT MED VERT CASE (SV185)
DIA KIT, EU ROAD LIGHT MED VERT CASE (SV185)



DIA KIT, EU ROAD LIGHT MED VERT CASE (SV185)
DIA KIT, EU ROAD LIGHT MED VERT CASE (SV185)
DIA KIT, EU ROAD LIGHT MED VERT CASE (SV185)
DIA KIT, EU ROAD LIGHT MED VERT CASE (SV185)

R	N	P.N.	MOD	Q	Denominação Description	Description Bezeichnung	Denominacion Beskrivelse	Descrizione Beschrijving	L.C.
18		**86505868**		2	PORCA, M8, Flg Ser	NUT	TUERCA	DADO	010D
					ECROU	MUTTER	MØTRIK	MOER	
19		**86604657**		1	INDICADOR DE DIREÇÃO	TURN SIGNAL INDICATC	INDIC. DE SEÑAL DE GIF	INDICATORE DI DIREZIC	029I
					CLIGNOTANT	FAHRTRICHTUNGSANZE	RETNINGSVISER	RICHTINGAANWIJZER	
20		**86625035**		2	BRAÇADEIRA, 1/2", Insul, 1/4" Bolt				
						CLAMP	ABRAZADERA	MORSETTO	120M
					COLLIER	KLEMME	SPÆNDEBÅND	KLEM	
21		**86632595**		2	BRAÇADEIRA, 1/2", Insul, 1/2" Bolt				
						CLAMP	ABRAZADERA	MORSETTO	120M
					COLLIER	KLEMME	SPÆNDEBÅND	KLEM	
22		**86637977**		1	BRAÇADEIRA, 1", Insul, 5/16" Bolt				
						CLAMP	ABRAZADERA	MORSETTO	120M
					COLLIER	KLEMME	SPÆNDEBÅND	KLEM	
23		**87029955**		1	BRAÇADEIRA, 7/8", Insul, 3/8" Bolt				
						CLAMP	ABRAZADERA	MORSETTO	120M
					COLLIER	KLEMME	SPÆNDEBÅND	KLEM	
24		**87572859**		1	LÂMPADA, Head	LAMP	LÁMPARA	SPIA	009F
					LAMPE	LEUCHTE	LYGTE	LAMP	
25		**87572860**		1	LÂMPADA, Head	LAMP	LÁMPARA	SPIA	009F
					LAMPE	LEUCHTE	LYGTE	LAMP	
26		**87634133**		1	INTERRUPTOR, Hazard Lights				
						SWITCH	INTERRUPTOR	INTERRUTTORE	075I
					CONTACTEUR	SCHALTER	KONTAKT	SCHAKELAAR	
27		**87668737**		4	TIRA, Fir Tree Assembly	STRAP	BANDA	FASCETTA	532B
					BRIDE	BAND	STROP	RIEM	
28		**131691A1**		1	INTERRUPTOR, Turn Signal				
						SWITCH	INTERRUPTOR	COMMUTATORE	8850
					INTERRUPTEUR	SCHALTER	SWITCH	SWITCH	
29		**84470597**		1	INSTRUÇÃO, Instruction Sheet, Road Lights EU				
						INSTRUCTION	INSTRUCCIÓN	ISTRUZIONI	Z571
					INSTRUCTION	ANLEITUNG	INSTRUKTION	INSTRUCTIE	
30		**84467699**		2	BRAÇADEIRA, Clamp, P 25.4mm insulated special				
						CLAMP	ABRAZADERA	MORSETTO	120M
					COLLIER	KLEMME	SPÆNDEBÅND	KLEM	

SV185

DIA KIT, MECH CHASS OPT HARNESS, MED (SR175-SR200)
DIA KIT, MECH CHASS OPT HARNESS, MED (SR175-SR200)
DIA KIT, MECH CHASS OPT HARNESS, MED (SR175-SR200)
DIA KIT, MECH CHASS OPT HARNESS, MED (SR175-SR200)



DIA KIT, MECH CHASS OPT HARNESS, MED (SR175-SR200)
DIA KIT, MECH CHASS OPT HARNESS, MED (SR175-SR200)
DIA KIT, MECH CHASS OPT HARNESS, MED (SR175-SR200)
DIA KIT, MECH CHASS OPT HARNESS, MED (SR175-SR200)

R	N	P.N.	MOD	Q	Denominação Description	Description Bezeichnung	Denominacion Beskrivelse	Descrizione Beschrijving	L.C.
		84424524			JOGO, DIA Kit, Mech Chass, Opt Harness, Med, Incl. 1-5				
						KIT	JEUGO	KIT	4830
					POCHETTE	PACKUNG	KIT	KIT	
1		**84285504**		1	PEGA DE SUPORTE, Double Fuse Box				
						BRACKET, SUPPORTING	PIEZA DE APOYO	SQUADRETTA	215S
					EQUERRE	TRAGER, STUTZ	BRACKET, SUPPORTING	BRACKET, SUPPORTING	
2		**84315528**		1	CHICOTE, Chassis	WIRE HARNESS	GRUPO DE CABLES	CABLAGGIO	070I
					FAISCEAU ELECTRIQUE	KABELBAUM	KABELNET	KABELBOOM	
3		**86511841**		3	PARAFUSO, Hex Flg, M8 x 16, 8.8				
						BOLT	PERNO	BULLONE	140B
					VIS	SCHRAUBE	BOLT	BOUT	
4		**86000810**		1	BRAÇADEIRA	CLAMP	ABRAZADERA	MORSETTO	120M
					COLLIER	KLEMME	SPÆNDEBÅND	KLEM	
5		**84424525**		1	INSTRUÇÃO, Installation, Option, Harness				
						INSTRUCTION	INSTRUCCIÓN	ISTRUZIONI	Z571
					INSTRUCTION	ANLEITUNG	INSTRUKTION	INSTRUCTIE	

DIA KIT, SIDE LAMP (ALL CASE)
DIA KIT, SIDE LAMP (ALL CASE)
DIA KIT, SIDE LAMP (ALL CASE)
DIA KIT, SIDE LAMP (ALL CASE)



DIA KIT, SIDE LAMP (ALL CASE)
DIA KIT, SIDE LAMP (ALL CASE)
DIA KIT, SIDE LAMP (ALL CASE)
DIA KIT, SIDE LAMP (ALL CASE)

R	N	P.N.	MOD	Q	Denominação Description Bezeichnung	Description Bezeichnung	Denominacion Beskrivelse	Descrizione Beschrijving	L.C.
		84421496			KIT DE SERVIÇO, DIA Kit, Side Lamp, Incl. 1-6				
						SERVICE KIT	KIT DE SERVICIO	KIT DI MANUTENZIONE	021K
					KIT D'ENTRETIEN	SERVICE-SATZ	SERVICESÆT	SERVICEKIT	
1		**82002966**		1	TOMADA ELÉTRICA, Aux, Electric Power				
						POWER SOCKET	ZÓCALO DE CORRIENTE	PRESA DI CORRENTE	205P
					PRISE DE COURANT	STECKDOSE	STRØMUDTAG	CONTACTDOOS	
2		**84422958**		1	CHICOTE, Harness, Wire, Side Lamp				
						WIRE HARNESS	GRUPO DE CABLES	CABLAGGIO	070I
					FAISCEAU ELECTRIQUE	KABELBAUM	KABELNET	KABELBOOM	
3		**84384729**		2	LANTERNA LATERAL	SIDE LAMP ASSY	CONJ. DE LÁMP. LATER.	COMPLESSIVO LUCI LAT	011F
					FEU LATERAL	SEITENLEUCHTENBAUG	SIDELYGTE, KPL.	ZIJLAMP	
4		**87016557**		2	PARAFUSO, Hex Flg Hd, M8 x 25				
						SELF-TAP SCREW	TORNILLO AUTORROSC	VITE AUTOFILETTANTE	062V
					VIS AUTOTARAUDEUSE	SELBSTSCHN SCHRAUE	SELVLÅSENDE BOLT	ZELFTAPPENDE SCHRO	
5		**87668737**		4	TIRA, Fir Tree Assembly	STRAP	BANDA	FASCETTA	532B
					BRIDE	BAND	STROP	RIEM	
6		**84423012**		1	INSTRUÇÃO, Instruction, Installation, Side Lamp				
						INSTRUCTION	INSTRUCCIÓN	ISTRUZIONI	Z571
					INSTRUCTION	ANLEITUNG	INSTRUKTION	INSTRUCTIE	

SV185

DIA KIT, PALLET FORK 48IN TINES (ALL CASE)
DIA KIT, PALLET FORK 48IN TINES (ALL CASE)
DIA KIT, PALLET FORK 48IN TINES (ALL CASE)
DIA KIT, PALLET FORK 48IN TINES (ALL CASE)



DIA KIT, PALLET FORK 48IN TINES (ALL CASE)
DIA KIT, PALLET FORK 48IN TINES (ALL CASE)
DIA KIT, PALLET FORK 48IN TINES (ALL CASE)
DIA KIT, PALLET FORK 48IN TINES (ALL CASE)

R	N	P.N.	MOD	Q	Denominação Description	Description Bezeichnung	Denominacion Beskrivelse	Descrizione Beschrijving	L.C.
		84397634			JOGO, DIA Kit, Pallet Fork, 48in Tines, Incl. 1-4				
						KIT	JEUGO	KIT	4830
					POCHETTE	PACKUNG	KIT	KIT	
1		**84332182**		1	ESTRUTURA, Pallet, Fork	FRAME	BASTIDOR	TELAIO	077T
					CHASSIS	RAHMEN	FRAME	FRAME	
2		**86574055**		2	GARFO DA CAÇAMBA, Pallet, Fork, 48				
						BUCKET FORK	HORQUILLA DE CUCHAI	FORCA PER BENNA	127F
					FOURCHE A GODET	GABELSCHAUFEL	SKOVLGAFFEL	VORK VOOR GRAAFBAK	
3		**84368123**		1	ADESIVO, Pallet, Fork	DECAL	CALCOMANÍA	DECALCOMANIA	012D
					AUTOCOLLANT	AUFKLEBER	TRANSFER	STICKER	
4		**84397636**		1	INSTRUÇÃO, Sheet, Pallet Fork				
						INSTRUCTION	INSTRUCCIÓN	ISTRUZIONI	Z571
					INSTRUCTION	ANLEITUNG	INSTRUKTION	INSTRUCTIE	

SV185

88.082.02		p1	01/11

DIA KIT, 66IN SPILL GUARD TAN (SR130-SR200)
DIA KIT, 66IN SPILL GUARD TAN (SR130-SR200)
DIA KIT, 66IN SPILL GUARD TAN (SR130-SR200)
DIA KIT, 66IN SPILL GUARD TAN (SR130-SR200)



DIA KIT, 66IN SPILL GUARD TAN (SR130-SR200)
DIA KIT, 66IN SPILL GUARD TAN (SR130-SR200)
DIA KIT, 66IN SPILL GUARD TAN (SR130-SR200)
DIA KIT, 66IN SPILL GUARD TAN (SR130-SR200)

R	N	P.N.	MOD	Q	Denominação Description	Description Bezeichnung	Denominacion Beskrivelse	Descrizione Beschrijving	L.C.
		84344481			JOGO, DIA Kit, 66in Spill Guard, Tan, Incl. 1-6				
						KIT	JEUGO	KIT	4830
					POCHETTE	PACKUNG	KIT	KIT	
1		**84263252**		1	EXTENSÃO, 66 Spill Guard, Tan				
						EXTENSION	EXTENSIÓN	PROLUNGA	226P
					RALLONGE	ERWEITERUNG	FORLÆNGNING	VERLENGSTUK	
2		**120044**		2	PARAFUSO, Short NK, M12 x 30, Cl8.8, Full Thd				
						CARRIAGE BOLT	PERNO ALOMADO	BULLONE A TESTA TONI	P123
					VIS A TETE BOMBEE	SCHLOSSSCHRAUBE	BRÆDDEBOLT	SLOTBOUT	
3		**86512497**		2	PORCA, M12 x 1.75, Flg, Cl 10				
						NUT	TUERCA	DADO	010D
					ECROU	MUTTER	MØTRIK	MOER	
4		**9804262**		4	PARAFUSO, Hex Flg, M10 x 30, 8.8				
						BOLT	PERNO	BULLONE	140B
					VIS	SCHRAUBE	BOLT	BOUT	
5		**390618A1**		4	PORCA DE INSERCAO, M10, Threaded				
						INSERT	TUERCA DE INSERCION	INSERTO	4675
					DOUILLE RAPPORTEE	EINSATZ	INSERT	INSERT	
6		**84353935**		1	INSTRUÇÃO, Installation	INSTRUCTION	INSTRUCCIÓN	ISTRUZIONI	Z571
					INSTRUCTION	ANLEITUNG	INSTRUKTION	INSTRUCTIE	

SV185

DIA KIT, 72IN SPILL GUARD TAN (SR130-TR270)
DIA KIT, 72IN SPILL GUARD TAN (SR130-TR270)
DIA KIT, 72IN SPILL GUARD TAN (SR130-TR270)
DIA KIT, 72IN SPILL GUARD TAN (SR130-TR270)



DIA KIT, 72IN SPILL GUARD TAN (SR130-TR270)
DIA KIT, 72IN SPILL GUARD TAN (SR130-TR270)
DIA KIT, 72IN SPILL GUARD TAN (SR130-TR270)
DIA KIT, 72IN SPILL GUARD TAN (SR130-TR270)

R	N	P.N.	MOD	Q	Denominação Description	Description Bezeichnung	Denominacion Beskrivelse	Descrizione Beschrijving	L.C.
		84344505			JOGO, DIA Kit, 72in Spill Guard, Tan, Incl. 1-6				
						KIT	JEUGO	KIT	4830
					POCHETTE	PACKUNG	KIT	KIT	
1		**84263254**		1	EXTENSÃO, 72in Spill Guard, Tan				
						EXTENSION	EXTENSIÓN	PROLUNGA	226P
					RALLONGE	ERWEITERUNG	FORLÆNGNING	VERLENGSTUK	
2		**120044**		2	PARAFUSO, Short NK, M12 x 30, Cl8.8, Full Thd				
						CARRIAGE BOLT	PERNO ALOMADO	BULLONE A TESTA TONI	P123
					VIS A TETE BOMBEE	SCHLOSSSCHRAUBE	BRÆDDEBOLT	SLOTBOUT	
3		**86512497**		2	PORCA, M12 x 1.75, Flg, Cl 10				
						NUT	TUERCA	DADO	010D
					ECROU	MUTTER	MØTRIK	MOER	
4		**9804262**		4	PARAFUSO, Hex Flg, M10 x 30, 8.8				
						BOLT	PERNO	BULLONE	140B
					VIS	SCHRAUBE	BOLT	BOUT	
5		**390618A1**		4	PORCA DE INSERCAO, M10, Threaded				
						INSERT	TUERCA DE INSERCION	INSERTO	4675
					DOUILLE RAPPORTEE	EINSATZ	INSERT	INSERT	
6		**84353935**		1	INSTRUÇÃO, Installation	INSTRUCTION	INSTRUCCIÓN	ISTRUZIONI	Z571
					INSTRUCTION	ANLEITUNG	INSTRUKTION	INSTRUCTIE	

DIA KIT, 78IN SPILL GUARD TAN (SR175-TV380)
DIA KIT, 78IN SPILL GUARD TAN (SR175-TV380)
DIA KIT, 78IN SPILL GUARD TAN (SR175-TV380)
DIA KIT, 78IN SPILL GUARD TAN (SR175-TV380)



DIA KIT, 78IN SPILL GUARD TAN (SR175-TV380)
DIA KIT, 78IN SPILL GUARD TAN (SR175-TV380)
DIA KIT, 78IN SPILL GUARD TAN (SR175-TV380)
DIA KIT, 78IN SPILL GUARD TAN (SR175-TV380)

R	N	P.N.	MOD	Q	Denominação Description	Description Bezeichnung	Denominacion Beskrivelse	Descrizione Beschrijving	L.C.
		84344510			JOGO, DIA Kit, 78in Spill Guard, Tan, Incl. 1-6				
						KIT	JEUGO	KIT	4830
					POCHETTE	PACKUNG	KIT	KIT	
1		**84263256**		1	EXTENSÃO, 78in Spill Guard, Tan				
						EXTENSION	EXTENSIÓN	PROLUNGA	226P
					RALLONGE	ERWEITERUNG	FORLÆNGNING	VERLENGSTUK	
2		**120044**		2	PARAFUSO, Short NK, M12 x 30, Cl8.8, Full Thd				
						CARRIAGE BOLT	PERNO ALOMADO	BULLONE A TESTA TONI	P123
					VIS A TETE BOMBEE	SCHLOSSSCHRAUBE	BRÆDDEBOLT	SLOTBOUT	
3		**86512497**		2	PORCA, M12 x 1.75, Flg, Cl 10				
						NUT	TUERCA	DADO	010D
					ECROU	MUTTER	MØTRIK	MOER	
4		**9804262**		4	PARAFUSO, Hex Flg, M10 x 30, 8.8				
						BOLT	PERNO	BULLONE	140B
					VIS	SCHRAUBE	BOLT	BOUT	
5		**390618A1**		4	PORCA DE INSERCAO, M10, Threaded				
						INSERT	TUERCA DE INSERCION	INSERTO	4675
					DOUILLE RAPPORTEE	EINSATZ	INSERT	INSERT	
6		**84353935**		1	INSTRUÇÃO, Installation	INSTRUCTION	INSTRUCCIÓN	ISTRUZIONI	Z571
					INSTRUCTION	ANLEITUNG	INSTRUKTION	INSTRUCTIE	

88.082.07		p1	01/11

DIA KIT, 66IN B.O.C.E. (SR130-SR200)
DIA KIT, 66IN B.O.C.E. (SR130-SR200)
DIA KIT, 66IN B.O.C.E. (SR130-SR200)
DIA KIT, 66IN B.O.C.E. (SR130-SR200)



DIA KIT, 66IN B.O.C.E. (SR130-SR200)
DIA KIT, 66IN B.O.C.E. (SR130-SR200)
DIA KIT, 66IN B.O.C.E. (SR130-SR200)
DIA KIT, 66IN B.O.C.E. (SR130-SR200)

R	N	P.N.	MOD	Q	Denominação Description Bezeichnung	Description Bezeichnung	Denominacion Beskrivelse	Descrizione Beschrijving	L.C.
		84399877			JOGO, 66in B.O.C.E., Incl. 1-4				
						KIT	JEUGO	KIT	4830
					POCHETTE	PACKUNG	KIT	KIT	
1		**86577167**		1	BORDA CORTANTE, 66in, Bolt On				
						CUTTING EDGE	BORDE DE CORTE	BORDO TAGLIENTE	018T
					BORD TRANCHANT	SCHNEIDKANTE	SKÆREKANT	SNIJRAND	
2		**86548338**		7	PARAFUSO DE ARADO, 5/8"-11 x 2", G5				
						PLOW BOLT	PERNO DE ARADO	BULLONE SCANALATO	P128
					BOULON DE CHARRUE	PFLUGSCHRAUBE	PLOVRIGEL	PLOEGBOUT	
3		**280374**		7	PORCA, 5/8"-11, G5	NUT	TUERCA	DADO	010D
					ECROU	MUTTER	MØTRIK	MOER	
4		**84399871**		1	INSTRUÇÃO, Sheet, B.O.C.E.				
						INSTRUCTION	INSTRUCCIÓN	ISTRUZIONI	Z571
					INSTRUCTION	ANLEITUNG	INSTRUKTION	INSTRUCTIE	

SV185

88.082.08		p1	01/11

DIA KIT, 72IN B.O.C.E. (SR130-TR270)
DIA KIT, 72IN B.O.C.E. (SR130-TR270)
DIA KIT, 72IN B.O.C.E. (SR130-TR270)
DIA KIT, 72IN B.O.C.E. (SR130-TR270)



DIA KIT, 72IN B.O.C.E. (SR130-TR270)
DIA KIT, 72IN B.O.C.E. (SR130-TR270)
DIA KIT, 72IN B.O.C.E. (SR130-TR270)
DIA KIT, 72IN B.O.C.E. (SR130-TR270)

R	N	P.N.	MOD	Q	Denominação Description Description Bezeichnung Denominacion Beskrivelse Descrizione Beschrijving	L.C.
		84399878			JOGO, DIA Kit, 72in B.O.C.E., Incl. 1-4 KIT JEUGO KIT 4830 POCHETTE PACKUNG KIT KIT	
1		**86577169**		1	BORDA CORTANTE, 72in, Bolt On CUTTING EDGE BORDE DE CORTE BORDO TAGLIENTE 018T BORD TRANCHANT SCHNEIDKANTE SKÆREKANT SNIJRAND	
2		**86548338**		7	PARAFUSO DE ARADO, 5/8"-11 x 2", G5 PLOW BOLT PERNO DE ARADO BULLONE SCANALATO P128 BOULON DE CHARRUE PFLUGSCHRAUBE PLOVRIGEL PLOEGBOUT	
3		**280374**		7	PORCA, 5/8"-11, G5 NUT TUERCA DADO 010D ECROU MUTTER MØTRIK MOER	
4		**84399879**		1	INSTRUÇÃO, Sheet, B.O.C.E. INSTRUCTION INSTRUCCIÓN ISTRUZIONI Z571 INSTRUCTION ANLEITUNG INSTRUKTION INSTRUCTIE	

88.082.09		p1	02/11

DIA KIT, 78IN B.O.C.E. (SR175-TV380)
DIA KIT, 78IN B.O.C.E. (SR175-TV380)
DIA KIT, 78IN B.O.C.E. (SR175-TV380)
DIA KIT, 78IN B.O.C.E. (SR175-TV380)



DIA KIT, 78IN B.O.C.E. (SR175-TV380)
DIA KIT, 78IN B.O.C.E. (SR175-TV380)
DIA KIT, 78IN B.O.C.E. (SR175-TV380)
DIA KIT, 78IN B.O.C.E. (SR175-TV380)

R	N	P.N.	MOD	Q	Denominação Description Bezeichnung	Description Bezeichnung	Denominacion Beskrivelse	Descrizione Beschrijving	L.C.
		84402211			JOGO, DIA Kit, 78in B.O.C.E., Incl. 1-4				
						KIT	JEUGO	KIT	4830
					POCHETTE	PACKUNG	KIT	KIT	
1		**86577171**		1	BORDA CORTANTE, 78in, Bolt On				
						CUTTING EDGE	BORDE DE CORTE	BORDO TAGLIENTE	018T
					BORD TRANCHANT	SCHNEIDKANTE	SKÆREKANT	SNIJRAND	
2		**86548338**		9	PARAFUSO DE ARADO, 5/8"-11 x 2", G5				
						PLOW BOLT	PERNO DE ARADO	BULLONE SCANALATO	P128
					BOULON DE CHARRUE	PFLUGSCHRAUBE	PLOVRIGEL	PLOEGBOUT	
3		**280374**		9	PORCA, 5/8"-11, G5	NUT	TUERCA	DADO	010D
					ECROU	MUTTER	MØTRIK	MOER	
4		**84402946**		1	INSTRUÇÃO, Sheet, B.O.C.E.				
						INSTRUCTION	INSTRUCCIÓN	ISTRUZIONI	Z571
					INSTRUCTION	ANLEITUNG	INSTRUKTION	INSTRUCTIE	

88.082.10		p1	01/11

DIA KIT, 84IN B.O.C.E. (SR175-TV380)
DIA KIT, 84IN B.O.C.E. (SR175-TV380)
DIA KIT, 84IN B.O.C.E. (SR175-TV380)
DIA KIT, 84IN B.O.C.E. (SR175-TV380)



DIA KIT, 84IN B.O.C.E. (SR175-TV380)
DIA KIT, 84IN B.O.C.E. (SR175-TV380)
DIA KIT, 84IN B.O.C.E. (SR175-TV380)
DIA KIT, 84IN B.O.C.E. (SR175-TV380)

R	N	P.N.	MOD	Q	Denominação Description Description Bezeichnung	Denominacion Beskrivelse	Descrizione Beschrijving	L.C.
		84402199			JOGO, DIA Kit, 84in B.O.C.E., Incl. 1-4			
					KIT	JEUGO	KIT	4830
					POCHETTE	PACKUNG	KIT	KIT
1		**86577173**		1	BORDA CORTANTE, 84in, Bolt On			
					CUTTING EDGE	BORDE DE CORTE	BORDO TAGLIENTE	018T
					BORD TRANCHANT	SCHNEIDKANTE	SKÆREKANT	SNIJRAND
2		**86548338**		9	PARAFUSO DE ARADO, 5/8"-11 x 2", G5			
					PLOW BOLT	PERNO DE ARADO	BULLONE SCANALATO	P128
					BOULON DE CHARRUE	PFLUGSCHRAUBE	PLOVRIGEL	PLOEGBOUT
3		**280374**		9	PORCA, 5/8"-11, G5	NUT	TUERCA	DADO	010D
					ECROU	MUTTER	MØTRIK	MOER
4		**84402215**		1	INSTRUÇÃO, Sheet, B.O.C.E.			
					INSTRUCTION	INSTRUCCIÓN	ISTRUZIONI	Z571
					INSTRUCTION	ANLEITUNG	INSTRUKTION	INSTRUCTIE

SV185

DIA KIT, BUCKET TEETH (ALL CASE)
DIA KIT, BUCKET TEETH (ALL CASE)
DIA KIT, BUCKET TEETH (ALL CASE)
DIA KIT, BUCKET TEETH (ALL CASE)



DIA KIT, BUCKET TEETH (ALL CASE)
DIA KIT, BUCKET TEETH (ALL CASE)
DIA KIT, BUCKET TEETH (ALL CASE)
DIA KIT, BUCKET TEETH (ALL CASE)

R	N	P.N.	MOD	Q	Denominação Description Bezeichnung	Description Bezeichnung	Denominacion Beskrivelse	Descrizione Beschrijving	L.C.
		84425857			JOGO, DIA Kit, Bucket Teeth, Incl. 1-4				
						KIT	JEUGO	KIT	4830
					POCHETTE	PACKUNG	KIT	KIT	
1		**84239378**		9	DENTE, Bolt On	TOOTH	DIENTE	DENTI	9130
					DENT	ZAHN	TAND	TAND	
2		**280374**		18	PORCA, 5/8"-11, G5	NUT	TUERCA	DADO	010D
					ECROU	MUTTER	MØTRIK	MOER	
3		**86548338**		18	PARAFUSO DE ARADO, 5/8"-11 x 2", G5				
						PLOW BOLT	PERNO DE ARADO	BULLONE SCANALATO	P128
					BOULON DE CHARRUE	PFLUGSCHRAUBE	PLOVRIGEL	PLOEGBOUT	
4		**84425858**		1	INSTRUÇÃO, Sheet, Bucket Teeth				
						INSTRUCTION	INSTRUCCIÓN	ISTRUZIONI	Z571
					INSTRUCTION	ANLEITUNG	INSTRUKTION	INSTRUCTIE	

DIA KIT, BUCKETS - FIELD (ALL CASE)
DIA KIT, BUCKETS - FIELD (ALL CASE)
DIA KIT, BUCKETS - FIELD (ALL CASE)
DIA KIT, BUCKETS - FIELD (ALL CASE)



DIA KIT, BUCKETS - FIELD (ALL CASE)
DIA KIT, BUCKETS - FIELD (ALL CASE)
DIA KIT, BUCKETS - FIELD (ALL CASE)
DIA KIT, BUCKETS - FIELD (ALL CASE)

R	N	P.N.	MOD	Q	Denominação Description Description Bezeichnung Denominacion Beskrivelse Descrizione Beschrijving	L.C.
1		{84363499}			DIA Kit, Bucket 60in DF, (SR130,SR150)	
2		{84363506}			DIA Kit, Bucket 66in DF, (SR130-SR200)	
3		{84363507}			DIA Kit, Bucket 72in DF, (SR130-TR270)	
4		{84363512}			DIA Kit, Bucket 78in DF, (SR175-TV380)	
5		{84363513}			DIA Kit, Bucket 60in LP, (SR130,SR150)	
6		{84363517}			DIA Kit, Bucket 66in LP, (SR130-SR200)	
7		{84363518}			DIA Kit, Bucket 72in LP, (SR130-TR270)	
8		{84363521}			DIA Kit, Bucket 60in LPE, (SR130,SR150)	
9		{84363522}			DIA Kit, Bucket 66in LPE, (SR130-SR200)	
10		{84363528}			DIA Kit, Bucket 72in LPE, (SR130-TR270)	
11		{84363529}			DIA Kit, Bucket 78in LPE, (SR175-TV380)	
12		{84363536}			DIA Kit, Bucket 84in LPE, (SR175-TV380)	
13		{84363537}			DIA Kit, Bucket 60in LM, (SR130,SR150)	
14		{84363550}			DIA Kit, Bucket 72in LM, (SR130-TR270)	
15		{84363551}			DIA Kit, Bucket 84in LM, (SR175-TV380)	
16		{84363556}			DIA Kit, Bucket 60in MS, (SR130,SR150)	

DIA KIT, BUCKETS - FIELD (ALL CASE)
DIA KIT, BUCKETS - FIELD (ALL CASE)
DIA KIT, BUCKETS - FIELD (ALL CASE)
DIA KIT, BUCKETS - FIELD (ALL CASE)



DIA KIT, BUCKETS - FIELD (ALL CASE)
DIA KIT, BUCKETS - FIELD (ALL CASE)
DIA KIT, BUCKETS - FIELD (ALL CASE)
DIA KIT, BUCKETS - FIELD (ALL CASE)

R	N	P.N.	MOD	Q	Denominação Description	Description Bezeichnung	Denominacion Beskrivelse	Descrizione Beschrijving	L.C.
17		{84363558}			DIA Kit, Bucket 72in MS, (SR130-TR270)				
18		{84363562}			DIA Kit, Bucket 84in MS, (SR175-TV380)				
19		{84363563}			DIA Kit, Bucket 66in HD, (SR130-SR200)				
20		{84363568}			DIA Kit, Bucket 72in HD, (SR130-TR270)				
21		{84363570}			DIA Kit, Bucket 78in HD, (SR175-TV380)				
22		{84363573}			DIA Kit, Bucket 84in HD, (SR220-TV380)				

88.088.03		p1	03/11

DIA KIT, SINGLE POINT LIFT HOOK (SV185)
DIA KIT, SINGLE POINT LIFT HOOK (SV185)
DIA KIT, SINGLE POINT LIFT HOOK (SV185)
DIA KIT, SINGLE POINT LIFT HOOK (SV185)



DIA KIT, SINGLE POINT LIFT HOOK (SV185)
DIA KIT, SINGLE POINT LIFT HOOK (SV185)
DIA KIT, SINGLE POINT LIFT HOOK (SV185)
DIA KIT, SINGLE POINT LIFT HOOK (SV185)

R	N	P.N.	MOD	Q	Denominação Description Bezeichnung	Description Bezeichnung Denominacion	Denominacion Beskrivelse Descrizione	Descrizione Beschrijving	L.C.
		84408952			KIT DE SERVIÇO, DIA Kit, Single Point Lift Hook, Incl. 1-14				
						SERVICE KIT	KIT DE SERVICIO	KIT DI MANUTENZIONE	021K
					KIT D'ENTRETIEN	SERVICE-SATZ	SERVICESÆT	SERVICEKIT	
1		**9804277**		4	PORCA, M8 x 1.25, Flg, Cl 8				
						NUT	TUERCA	DADO	010D
					ECROU	MUTTER	MØTRIK	MOER	
2		**84362347**		1	SUPORTE, Single Point, Gray				
						CARRIER	SOPORTE	SUPPORTO	196P
					SUPPORT	TRÄGER	MEDBRINGER	DRAGER	
3		**84388634**		2	PLACA PLÁSTICA, Nylatron, Block				
						PLASTIC PLATE	PLACA DE PLÁSTICO	PIASTRA DI PLASTICA	P778
					PLAQUE EN PLASTIQUE	KUNSTSTOFFPLATTE	PLASTPLADE	KUNSTSTOFPLAAT	
4		**84408941**		1	PINO, Gray	PIN	PASADOR	PERNO	080P
					BROCHE	PIN	STIFT	PEN	
5		**84408945**		1	PLACA, RH, Lift Strap	PLATE	PLACA	PIASTRA	105P
					PLAQUE	PLATTE	PLADE	PLAAT	
6		**84408946**		1	PLACA, LH, Lift Strap	PLATE	PLACA	PIASTRA	105P
					PLAQUE	PLATTE	PLADE	PLAAT	
7		**84409170**		2	PLACA, Cover, Gray	PLATE	PLACA	PIASTRA	105P
					PLAQUE	PLATTE	PLADE	PLAAT	
8		**86625221**		4	PARAFUSO, Hex Soc Hd, M8 x 30, 8.8				
						SCREW	TORNILLO	VITE	040V
					VIS	SCHRAUBE	SKRUE	SCHROEF	
9		**87564735**		4	PARAFUSO, M10 X 35	BOLT	PERNO	BULLONE	140B
					VIS	SCHRAUBE	BOLT	BOUT	
10		**87681209**		8	PORCA, M12	NUT	TUERCA	DADO	010D
					ECROU	MUTTER	MØTRIK	MOER	
11		**87695414**		6	PARAFUSO, M12 X 35	BOLT	PERNO	BULLONE	140B
					VIS	SCHRAUBE	BOLT	BOUT	
12		**87698845**		2	PARAFUSO, M12 X 70	BOLT	PERNO	BULLONE	140B
					VIS	SCHRAUBE	BOLT	BOUT	
13		**84475169**		1	INSTRUÇÃO, Instruction, Single Point Med Vertical				
						INSTRUCTION	INSTRUCCIÓN	ISTRUZIONI	Z571
					INSTRUCTION	ANLEITUNG	INSTRUKTION	INSTRUCTIE	
14		**139729A1**		2	DECALCOMANIA, Lift	DECAL	CALCOMANIA	AUTOADESIVO	P903
					DECALCOMANIE	ABZIEHBILD	DECAL	DECAL	

DIA KIT, RADIO (ALL CASE)
DIA KIT, RADIO (ALL CASE)
DIA KIT, RADIO (ALL CASE)
DIA KIT, RADIO (ALL CASE)



DIA KIT, RADIO (ALL CASE)
DIA KIT, RADIO (ALL CASE)
DIA KIT, RADIO (ALL CASE)
DIA KIT, RADIO (ALL CASE)

R	N	P.N.	MOD	Q	Denominação Description	Description Bezeichnung	Denominacion Beskrivelse	Descrizione Beschrijving	L.C.
		84420704			JOGO, DIA Kit, Radio, Incl. 1-14				
						KIT	JEUGO	KIT	4830
					POCHETTE	PACKUNG	KIT	KIT	
1		**9804258**		2	PARAFUSO, Hex Flg, M8 x 20, 8.8				
						BOLT	PERNO	BULLONE	140B
					VIS	SCHRAUBE	BOLT	BOUT	
2		**84281707**		2	SUPORTE, Sheet, Speaker Bracket, Gray				
						BRACKET	SOPORTE	STAFFA	225S
					SUPPORT	HALTERUNG	BESLAG	STEUN	
3		**84281708**		1	SUPORTE, Sheet, Radio Bracket, Gray				
						BRACKET	SOPORTE	STAFFA	225S
					SUPPORT	HALTERUNG	BESLAG	STEUN	
4		**84298557**		2	ALTO-FALANTE, 4in, Sealed HP				
						SPEAKER	ALTAVOZ	ALTOPARLANTE	039A
					HAUT-PARLEUR	LAUTSPRECHER	HØJTALER	LUIDSPREKER	
5		**84347538**		1	ESPUMA ISOLANTE, Antenna Seal				
						FOAM INSULATION	ESPUMA AISLANTE	ISOLANTE IN SCHIUMA	051S
					MOUSSE ISOLANTE	SCHAUMSTOFFISOLIER	SKUM ISOLERING	SCHUIMISOLATIE	
6		**86500939**		8	PARAFUSO, Hex Wash Hd, #10 x 3/8"				
						SELF-TAP SCREW	TORNILLO AUTORROSC	VITE AUTOFILETTANTE	062V
					VIS AUTOTARAUDEUSE	SELBSTSCHN SCHRAUE	SELVLÅSENDE BOLT	ZELFTAPPENDE SCHRO	
7		**13272611**		4	PARAFUSO	SCREW	TORNILLO	VITE	040V
					VIS	SCHRAUBE	SKRUE	SCHROEF	
8		**86624182**		4	ARRUELA PLANA, M6 x 18 x 1.6				
						WASHER	ARANDELA	RONDELLA	131R
					RONDELLE	UNTERLEGSCHEIBE	FLADSKIVE	SLUITRING	
9		**86625199**		4	PARAFUSO, Hex Flg Hd, M6 x 13				
						SELF-TAP SCREW	TORNILLO AUTORROSC	VITE AUTOFILETTANTE	062V
					VIS AUTOTARAUDEUSE	SELBSTSCHN SCHRAUE	SELVLÅSENDE BOLT	ZELFTAPPENDE SCHRO	
10		**86625241**		2	ARRUELA PLANA	WASHER	ARANDELA	RONDELLA	131R
					RONDELLE	UNTERLEGSCHEIBE	FLADSKIVE	SLUITRING	
11		**87668735**		1	ANTENA, Rubber Mast	ANTENNA	ANTENA	ANTENNA	064A
					ANTENNE	ANTENNE	ANTENNE	ANTENNE	
12		**87672223**		1	RÁDIO	RADIO	RADIO	AUTORADIO	042R
					RADIO	RADIO	RADIO	RADIO	
13		**84420705**		1	INSTRUÇÃO, Radio Kit	INSTRUCTION	INSTRUCCIÓN	ISTRUZIONI	Z571
					INSTRUCTION	ANLEITUNG	INSTRUKTION	INSTRUCTIE	
14		**84363241**		1	ESPAÇADOR, Radio Cooling				
						SPACER	SEPARADOR	DISTANZIALE	075D
					ENTRETOISE	DISTANZSTÜCK	AFSTANDSSTYKKE	AFSTANDSSTUK	

88.088.07		p1	02/11

DIA KIT, 4 POINT LIFT HOOK (SR175-SR200,TR270)
DIA KIT, 4 POINT LIFT HOOK (SR175-SR200,TR270)
DIA KIT, 4 POINT LIFT HOOK (SR175-SR200,TR270)
DIA KIT, 4 POINT LIFT HOOK (SR175-SR200,TR270)



DIA KIT, 4 POINT LIFT HOOK (SR175-SR200,TR270)
DIA KIT, 4 POINT LIFT HOOK (SR175-SR200,TR270)
DIA KIT, 4 POINT LIFT HOOK (SR175-SR200,TR270)
DIA KIT, 4 POINT LIFT HOOK (SR175-SR200,TR270)

R	N	P.N.	MOD	Q	Denominação Description Bezeichnung	Description Bezeichnung Beschrijving	Denominacion Beskrivelse Descrizione	Descrizione Beschrijving L.C.
		84405090			KIT DE SERVIÇO, DIA Kit, 4 Point Lift Hook, Incl. 1-9			
					SERVICE KIT	KIT DE SERVICIO	KIT DI MANUTENZIONE	021K
					KIT D'ENTRETIEN	SERVICE-SATZ	SERVICESÆT	SERVICEKIT
1		**87698849**		4	PARAFUSO, M16 X 50	BOLT	PERNO	BULLONE 140B
					VIS	SCHRAUBE	BOLT	BOUT
2		**86512498**		4	PORCA, M16 x 2, Flg, Cl 10	NUT	TUERCA	DADO 010D
					ECROU	MUTTER	MØTRIK	MOER
3		**84362131**		2	SUPORTE, Lift, Gray	BRACKET	SOPORTE	STAFFA 225S
					SUPPORT	HALTERUNG	BESLAG	STEUN
4		**87695413**		4	PARAFUSO, Flange	BOLT	PERNO	BULLONE 140B
					VIS	SCHRAUBE	BOLT	BOUT
5		**87533547**		4	PORCA, M12 X 1.75	NUT	TUERCA	DADO 010D
					ECROU	MUTTER	MØTRIK	MOER
6		**139729A1**		4	DECALCOMANIA, Lift	DECAL	CALCOMANIA	AUTOADESIVO P903
					DECALCOMANIE	ABZIEHBILD	DECAL	DECAL
7		**84403433**		1	SUPORTE, WA, Lift, RH, Gray			
						BRACKET	SOPORTE	STAFFA 225S
					SUPPORT	HALTERUNG	BESLAG	STEUN
8		**84403431**		1	SUPORTE, WA, Lift, LH, Gray			
						BRACKET	SOPORTE	STAFFA 225S
					SUPPORT	HALTERUNG	BESLAG	STEUN
9		**84405093**		1	INSTRUÇÃO, 4 Point Lift Hook			
						INSTRUCTION	INSTRUCCIÓN	ISTRUZIONI Z571
					INSTRUCTION	ANLEITUNG	INSTRUKTION	INSTRUCTIE

88.088.08		p1	02/11

DIA KIT, 4 POINT LIFT HOOK (SR220-SV300,TR320,TV380)
DIA KIT, 4 POINT LIFT HOOK (SR220-SV300,TR320,TV380)
DIA KIT, 4 POINT LIFT HOOK (SR220-SV300,TR320,TV380)
DIA KIT, 4 POINT LIFT HOOK (SR220-SV300,TR320,TV380)



DIA KIT, 4 POINT LIFT HOOK (SR220-SV300,TR320,TV380)
DIA KIT, 4 POINT LIFT HOOK (SR220-SV300,TR320,TV380)
DIA KIT, 4 POINT LIFT HOOK (SR220-SV300,TR320,TV380)
DIA KIT, 4 POINT LIFT HOOK (SR220-SV300,TR320,TV380)

R	N	P.N.	MOD	Q	Denominação Description	Description Bezeichnung	Denominacion Beskrivelse	Descrizione Beschrijving	L.C.
		84405091			KIT DE SERVIÇO, DIA Kit, 4 Point Lift Hook, Incl. 1-9				
						SERVICE KIT	KIT DE SERVICIO	KIT DI MANUTENZIONE	021K
					KIT D'ENTRETIEN	SERVICE-SATZ	SERVICESÆT	SERVICEKIT	
1		**87698849**		4	PARAFUSO, M16 X 50	BOLT	PERNO	BULLONE	140B
					VIS	SCHRAUBE	BOLT	BOUT	
2		**86512498**		4	PORCA, M16 x 2, Flg, Cl 10	NUT	TUERCA	DADO	010D
					ECROU	MUTTER	MØTRIK	MOER	
3		**84374556**		2	SUPORTE, Lift, Gray	BRACKET	SOPORTE	STAFFA	225S
					SUPPORT	HALTERUNG	BESLAG	STEUN	
4		**87695413**		4	PARAFUSO, Flange	BOLT	PERNO	BULLONE	140B
					VIS	SCHRAUBE	BOLT	BOUT	
5		**87533547**		4	PORCA, M12 X 1.75	NUT	TUERCA	DADO	010D
					ECROU	MUTTER	MØTRIK	MOER	
6		**139729A1**		4	DECALCOMANIA	DECAL	CALCOMANIA	AUTOADESIVO	P903
					DECALCOMANIE	ABZIEHBILD	DECAL	DECAL	
7		**84403433**		1	SUPORTE, WA, Lift, RH, Gray				
						BRACKET	SOPORTE	STAFFA	225S
					SUPPORT	HALTERUNG	BESLAG	STEUN	
8		**84403431**		1	SUPORTE, WA, Lift, LH, Gray				
						BRACKET	SOPORTE	STAFFA	225S
					SUPPORT	HALTERUNG	BESLAG	STEUN	
9		**84405093**		1	INSTRUÇÃO, 4 Point Lift Hook				
						INSTRUCTION	INSTRUCCIÓN	ISTRUZIONI	Z571
					INSTRUCTION	ANLEITUNG	INSTRUKTION	INSTRUCTIE	

DIA KIT, FOPS LEVEL 2 MODS (ALL CASE)
DIA KIT, FOPS LEVEL 2 MODS (ALL CASE)
DIA KIT, FOPS LEVEL 2 MODS (ALL CASE)
DIA KIT, FOPS LEVEL 2 MODS (ALL CASE)



DIA KIT, FOPS LEVEL 2 MODS (ALL CASE)
DIA KIT, FOPS LEVEL 2 MODS (ALL CASE)
DIA KIT, FOPS LEVEL 2 MODS (ALL CASE)
DIA KIT, FOPS LEVEL 2 MODS (ALL CASE)

R	N	P.N.	MOD	Q	Denominação Description Bezeichnung	Description Bezeichnung	Denominacion Beskrivelse	Descrizione Beschrijving	L.C.
		84350193			JOGO, DIA Kit, FOPS, Level 2, Mods, Incl. 1-3				
						KIT	JEUGO	KIT	4830
					POCHETTE	PACKUNG	KIT	KIT	
1		**84350192**		1	CHASSI DE SEGURANÇA, FOPS, Gray				
						ROPS	SIST. PROT. ANTIVUELC	TELAIO DI SICUREZZA R	078T
					PAVILLON DE SECURITE	ROPS	FØRERVÆRN	ROPS	
2		**84305556**		4	PARAFUSO, M6 X 25	SCREW	TORNILLO	VITE	040V
					VIS	SCHRAUBE	SKRUE	SCHROEF	
3		**84272827**		4	REBITE, M6 X 1.0	RIVET	REMACHE	RIVETTO	055R
					RIVET	NIET	NITTE	KLINKNAGEL	
4		**84368519**		1	INSTRUÇÃO, Installation, FOPS, Level 2				
						INSTRUCTION	INSTRUCCIÓN	ISTRUZIONI	Z571
					INSTRUCTION	ANLEITUNG	INSTRUKTION	INSTRUCTIE	

DIA KIT, MIRROR (ALL CASE)
DIA KIT, MIRROR (ALL CASE)
DIA KIT, MIRROR (ALL CASE)
DIA KIT, MIRROR (ALL CASE)



DIA KIT, MIRROR (ALL CASE)
DIA KIT, MIRROR (ALL CASE)
DIA KIT, MIRROR (ALL CASE)
DIA KIT, MIRROR (ALL CASE)

R	N	P.N.	MOD	Q	Denominação Description	Description Bezeichnung	Denominacion Beskrivelse	Descrizione Beschrijving	L.C.
		84355806			KIT DE SERVIÇO, DIA Kit, Mirror, Incl. 1-9				
						SERVICE KIT	KIT DE SERVICIO	KIT DI MANUTENZIONE	021K
					KIT D'ENTRETIEN	SERVICE-SATZ	SERVICESÆT	SERVICEKIT	
1		**84369357**		1	SUPORTE, Mirror, RH, Gray				
						BRACKET	SOPORTE	STAFFA	225S
					SUPPORT	HALTERUNG	BESLAG	STEUN	
2		**84369358**		1	SUPORTE, Mirror, LH, Gray	BRACKET	SOPORTE	STAFFA	225S
					SUPPORT	HALTERUNG	BESLAG	STEUN	
3		**3962022**		2	ESPELHO ESQUERDO	LH MIRROR	ESPEJO IZQDA	SPECCHIETTO SX	184S
					RETROVISEUR GAUCHE	LINKER SPIEGEL	SPEJL, VENSTRE	SPIEGEL LINKS	
4		**87682398**		2	PARAFUSO	SCREW	TORNILLO	VITE	040V
					VIS	SCHRAUBE	SKRUE	SCHROEF	
5		**84285339**		2	PARAFUSO, M8 X 15	SELF-TAP SCREW	TORNILLO AUTORROSC	VITE AUTOFILETTANTE	062V
					VIS AUTOTARAUDEUSE	SELBSTSCHN SCHRAUE	SELVLÅSENDE BOLT	ZELFTAPPENDE SCHRO	
6		**43646**		4	PARAFUSO, M4 X 20	SCREW	TORNILLO	VITE	040V
					VIS	SCHRAUBE	SKRUE	SCHROEF	
7		**9824840**		4	ARRUELA PLANA, M4.3 x 9 x 0.8				
						WASHER	ARANDELA	RONDELLA	131R
					RONDELLE	UNTERLEGSCHEIBE	FLADSKIVE	SLUITRING	
8		**152799**		4	PORCA	NUT	TUERCA	DADO	010D
					ECROU	MUTTER	MØTRIK	MOER	
9		**84363713**		1	INSTRUÇÃO, Mirror Install	INSTRUCTION	INSTRUCCIÓN	ISTRUZIONI	Z571
					INSTRUCTION	ANLEITUNG	INSTRUKTION	INSTRUCTIE	

DIA KIT, DRAW BAR MED GRAY (SR175-SR200,TR270)
DIA KIT, DRAW BAR MED GRAY (SR175-SR200,TR270)
DIA KIT, DRAW BAR MED GRAY (SR175-SR200,TR270)
DIA KIT, DRAW BAR MED GRAY (SR175-SR200,TR270)



DIA KIT, DRAW BAR MED GRAY (SR175-SR200,TR270)
DIA KIT, DRAW BAR MED GRAY (SR175-SR200,TR270)
DIA KIT, DRAW BAR MED GRAY (SR175-SR200,TR270)
DIA KIT, DRAW BAR MED GRAY (SR175-SR200,TR270)

R	N	P.N.	MOD	Q	Denominação Description	Description Bezeichnung	Denominacion Beskrivelse	Descrizione Beschrijving	L.C.
		84306097			JOGO, DIA Kit, Draw Bar, Medium, Gray, Incl. 1-5				
						KIT	JEUGO	KIT	4830
					POCHETTE	PACKUNG	KIT	KIT	
1		**328754**		2	PARAFUSO, Short NK, M12 x 40, Cl8.8, Full Thd				
						SCREW	TORNILLO	VITE	040V
					VIS	SCHRAUBE	SKRUE	SCHROEF	
2		**86512497**		2	PORCA, M12 x 1.75, Flg, Cl 10				
						NUT	TUERCA	DADO	010D
					ECROU	MUTTER	MØTRIK	MOER	
3		**84372085**		1	BARRA DE TRAÇÃO, Medium, Gray				
						DRAWBAR	BARRA DE ENGANCHE	BARRA DI TRAINO	013B
					BARRE D'ATTELAGE	ZUGSTANGE	TRÆKBOM	TREKSTANG	
4		**87015923**		4	PARAFUSO, Hex Flg, M16 x 110, 10.9, Full Thd				
						BOLT	PERNO	BULLONE	140B
					VIS	SCHRAUBE	BOLT	BOUT	
5		**84362180**		1	INSTRUÇÃO, Installation	INSTRUCTION	INSTRUCCIÓN	ISTRUZIONI	Z571
					INSTRUCTION	ANLEITUNG	INSTRUKTION	INSTRUCTIE	

88.088.14		p1	02/11

DIA KIT, DRAW BAR LARGE GRAY (SR220-SV300,TR320,TV380)
DIA KIT, DRAW BAR LARGE GRAY (SR220-SV300,TR320,TV380)
DIA KIT, DRAW BAR LARGE GRAY (SR220-SV300,TR320,TV380)
DIA KIT, DRAW BAR LARGE GRAY (SR220-SV300,TR320,TV380)



DIA KIT, DRAW BAR LARGE GRAY (SR220-SV300,TR320,TV380)
DIA KIT, DRAW BAR LARGE GRAY (SR220-SV300,TR320,TV380)
DIA KIT, DRAW BAR LARGE GRAY (SR220-SV300,TR320,TV380)
DIA KIT, DRAW BAR LARGE GRAY (SR220-SV300,TR320,TV380)

R	N	P.N.	MOD	Q	Denominação Description	Description Bezeichnung	Denominacion Beskrivelse	Descrizione Beschrijving	L.C.
		84373391			JOGO, DIA Kit, Draw Bar, Large, Gray, Incl. 1-5				
						KIT	JEUGO	KIT	4830
					POCHETTE	PACKUNG	KIT	KIT	
1		**328754**		2	PARAFUSO, Short NK, M12 x 40, Cl8.8, Full Thd				
						SCREW	TORNILLO	VITE	040V
					VIS	SCHRAUBE	SKRUE	SCHROEF	
2		**86512497**		2	PORCA, M12 x 1.75, Flg, Cl 10				
						NUT	TUERCA	DADO	010D
					ECROU	MUTTER	MØTRIK	MOER	
3		**84372075**		1	BARRA DE TRAÇÃO, Large, Gray				
						DRAWBAR	BARRA DE ENGANCHE	BARRA DI TRAINO	013B
					BARRE D'ATTELAGE	ZUGSTANGE	TRÆKBOM	TREKSTANG	
4		**87015923**		4	PARAFUSO, Hex Flg, M16 x 110, 10.9, Full Thd				
						BOLT	PERNO	BULLONE	140B
					VIS	SCHRAUBE	BOLT	BOUT	
5		**84373858**		1	INSTRUÇÃO, Installation	INSTRUCTION	INSTRUCCIÓN	ISTRUZIONI	Z571
					INSTRUCTION	ANLEITUNG	INSTRUKTION	INSTRUCTIE	

DIA KIT, FIRE EXTINGUISHER (ALL CASE)
DIA KIT, FIRE EXTINGUISHER (ALL CASE)
DIA KIT, FIRE EXTINGUISHER (ALL CASE)
DIA KIT, FIRE EXTINGUISHER (ALL CASE)



DIA KIT, FIRE EXTINGUISHER (ALL CASE)
DIA KIT, FIRE EXTINGUISHER (ALL CASE)
DIA KIT, FIRE EXTINGUISHER (ALL CASE)
DIA KIT, FIRE EXTINGUISHER (ALL CASE)

R	N	P.N.	MOD	Q	Denominação Description	Description Bezeichnung	Denominacion Beskrivelse	Descrizione Beschrijving	L.C.
		84300931			JOGO, DIA Kit, Fire Extinguisher, Incl. 1-6				
						KIT	JEUGO	KIT	4830
					POCHETTE	PACKUNG	KIT	KIT	
1		**84300929**		1	FIXADOR, Fire Extinguisher	MOUNT	SOPORTE	SUPPORTO	C022
					MONTAGE	GESTELL	BESLAG	BEVESTIGING	
2		**9804276**		3	PORCA, M6 x 1, Flg, Cl 8	NUT	TUERCA	DADO	010D
					ECROU	MUTTER	MØTRIK	MOER	
3		**86977726**		3	PARAFUSO, Hex, M6 x 12, 8.8				
						SCREW	TORNILLO	VITE	040V
					VIS	SCHRAUBE	SKRUE	SCHROEF	
4		**86625199**		2	PARAFUSO, Hex Flg Hd, M6 x 13				
						SELF-TAP SCREW	TORNILLO AUTORROSC	VITE AUTOFILETTANTE	062V
					VIS AUTOTARAUDEUSE	SELBSTSCHN SCHRAUE	SELVLÅSENDE BOLT	ZELFTAPPENDE SCHRO	
5		**84324365**		1	FIXADOR, Fire Extinguisher	MOUNT	SOPORTE	SUPPORTO	C022
					MONTAGE	GESTELL	BESLAG	BEVESTIGING	
6		**84325028**		1	INSTRUÇÃO, Installation, Fire Extinguisher				
						INSTRUCTION	INSTRUCCIÓN	ISTRUZIONI	Z571
					INSTRUCTION	ANLEITUNG	INSTRUKTION	INSTRUCTIE	

DIA KIT, DEMO REAR DOOR (ALL CASE)
DIA KIT, DEMO REAR DOOR (ALL CASE)
DIA KIT, DEMO REAR DOOR (ALL CASE)
DIA KIT, DEMO REAR DOOR (ALL CASE)



DIA KIT, DEMO REAR DOOR (ALL CASE)
DIA KIT, DEMO REAR DOOR (ALL CASE)
DIA KIT, DEMO REAR DOOR (ALL CASE)
DIA KIT, DEMO REAR DOOR (ALL CASE)

R	N	P.N.	MOD	Q	Denominação Description Bezeichnung	Description Bezeichnung	Denominacion Beskrivelse	Descrizione Beschrijving	L.C.
		84306068			JOGO, DIA Kit, Demo Rear Door, Incl. 1-4				
						KIT	JEUGO	KIT	4830
					POCHETTE	PACKUNG	KIT	KIT	
1		**9671714**		6	PARAFUSO, Hex Flg, M8 x 25, 8.8				
						BOLT	PERNO	BULLONE	140B
					VIS	SCHRAUBE	BOLT	BOUT	
2		**84329292**		1	PORTA, Heavy Duty, Gray	DOOR	PUERTA	SPORTELLO	180P
					PORTE	TÜR	DØR	PORTIER	
3		**84365533**		1	INSTRUÇÃO, Install, Demo Rear				
						INSTRUCTION	INSTRUCCIÓN	ISTRUZIONI	Z571
					INSTRUCTION	ANLEITUNG	INSTRUKTION	INSTRUCTIE	
4		**87752089**		1	BUJÃO, Pipe, 1/4 - 18	PLUG	TAPÓN	TAPPO	050T
					BOUCHON	STOPFEN	PROP	PLUG	

SV185

DIA KIT, GLASS FRONT DOOR (ALL CASE)
DIA KIT, GLASS FRONT DOOR (ALL CASE)
DIA KIT, GLASS FRONT DOOR (ALL CASE)
DIA KIT, GLASS FRONT DOOR (ALL CASE)



DIA KIT, GLASS FRONT DOOR (ALL CASE)
DIA KIT, GLASS FRONT DOOR (ALL CASE)
DIA KIT, GLASS FRONT DOOR (ALL CASE)
DIA KIT, GLASS FRONT DOOR (ALL CASE)

R	N	P.N.	MOD	Q	Denominação Description	Description Bezeichnung	Denominacion Beskrivelse	Descrizione Beschrijving	L.C.
		84427179			KIT DE SERVIÇO, DIA Kit, Glass Front Door, Incl. 1-23				
						SERVICE KIT	KIT DE SERVICIO	KIT DI MANUTENZIONE	021K
					KIT D'ENTRETIEN	SERVICE-SATZ	SERVICESÆT	SERVICEKIT	
1		**84272826**		2	REBITE, Nut, M6 X 1.0	RIVET	REMACHE	RIVETTO	055R
					RIVET	NIET	NITTE	KLINKNAGEL	
2		**84281703**		1	MANGUEIRA DO LAVADOR, Tube, Front Windshield Washer				
						HOSE WASHER	TUBO DE LAVAPARABRI	RONDELLA FLESSIBILE	A061
					TUYAU DE LAVE-GLACE	WASCHANLAGENSCHLA	SLANGE, SPRINKLER	SLUITRING VOOR SLAN(	
3		**84285452**		1	MANGUEIRA DO LAVADOR, Tube, Rear Windshield Washer				
						HOSE WASHER	TUBO DE LAVAPARABRI	RONDELLA FLESSIBILE	A061
					TUYAU DE LAVE-GLACE	WASCHANLAGENSCHLA	SLANGE, SPRINKLER	SLUITRING VOOR SLAN(	
4		**84285453**		2	MANGUEIRA DO LAVADOR, Tube, Washer Bottle				
						HOSE WASHER	TUBO DE LAVAPARABRI	RONDELLA FLESSIBILE	A061
					TUYAU DE LAVE-GLACE	WASCHANLAGENSCHLA	SLANGE, SPRINKLER	SLUITRING VOOR SLAN(	
5		**84306335**		1	T, Barb Connector	TEE	RACOR EN T	PEZZO A T	9020
					RACCORD EN T	T-STÜCK	T-STYKKE	T-STUK	
6		**84389613**		1	GARRAFA, Washer Assembly				
						BOTTLE	BOTELLA	BOTTIGLIA	102B
					BOUTEILLE	FLASCHE	FLASKE	FLES	
7		**84326923**		2	SUPORTE, Washer Bottle, CE Gray				
						BRACKET	SOPORTE	STAFFA	225S
					SUPPORT	HALTERUNG	BESLAG	STEUN	
8		**87335499**		1	INTERRUPTOR, Wiper/Washer				
						SWITCH	INTERRUPTOR	INTERRUTTORE	075I
					CONTACTEUR	SCHALTER	KONTAKT	SCHAKELAAR	
9		**87682398**		2	PARAFUSO	SCREW	TORNILLO	VITE	040V
					VIS	SCHRAUBE	SKRUE	SCHROEF	
10		**K307050**		1	VÁLVULA, Non-Return	VALVE	VÁLVULA	VALVOLA	9620
					SOUPAPE	VENTIL	VENTIL	KLEP	
11		**L11541**		6	PRENDEDOR DE CABOS, Nylon Tie, 7-8in.				
						CABLE STRAP	BANDA DE CABLE	FASCETTA PER CAVO	P716
					BRIDE DE CABLE	KABELBINDER	KABELSTROP	BUNDELBAND	
12		**84257150**		1	PORTA, Assembly, Jamb	DOOR	PUERTA	SPORTELLO	180P
					PORTE	TÜR	DØR	PORTIER	
13		**84415694**		1	PORTA, Assembly, Front	DOOR	PUERTA	SPORTELLO	180P
					PORTE	TÜR	DØR	PORTIER	
14		**84378453**		1	COMPASSO, Spring, Gas	GAS STRUT	COLUMNA DE GAS	AMMORTIZZATORE A G/	Z331
					BEQUILLE A GAZ	GASDRUCKFEDER	CYLINDER, GASSTØDD/	GASVEER	
15		**86624468**		1	ESPAÇADOR	SPACER	SEPARADOR	DISTANZIALE	075D
					ENTRETOISE	DISTANZSTÜCK	AFSTANDSSTYKKE	AFSTANDSSTUK	
16		**87392235**		1	INTERRUPTOR INTERMITENTE, Reed, Non-Contact				
						SWITCH ASSY	CONJUNTO DE INTERRU	COMPLESSIVO INTERRU	067I
					ENSEMBLE COMMUTATI	SCHALTERBAUGRUPPE	KONTAKT, KPL.	SCHAKELAAREENHEID	
17		**84183818**		2	PARAFUSO, M4 X 20	SCREW	TORNILLO	VITE	040V
					VIS	SCHRAUBE	SKRUE	SCHROEF	
18		**100012**		2	PORCA, M4, Cl 8	NUT	TUERCA	DADO	010D
					ECROU	MUTTER	MØTRIK	MOER	
19		**84305556**		11	PARAFUSO, M6 X 25	SCREW	TORNILLO	VITE	040V
					VIS	SCHRAUBE	SKRUE	SCHROEF	

SV185

DIA KIT, GLASS FRONT DOOR (ALL CASE)
DIA KIT, GLASS FRONT DOOR (ALL CASE)
DIA KIT, GLASS FRONT DOOR (ALL CASE)
DIA KIT, GLASS FRONT DOOR (ALL CASE)



DIA KIT, GLASS FRONT DOOR (ALL CASE)
DIA KIT, GLASS FRONT DOOR (ALL CASE)
DIA KIT, GLASS FRONT DOOR (ALL CASE)
DIA KIT, GLASS FRONT DOOR (ALL CASE)

R	N	P.N.	MOD	Q	Denominação Description	Description Bezeichnung	Denominacion Beskrivelse	Descrizione Beschrijving	L.C.
20		**84359102**		4	PARAFUSO, M6 X 35 VIS	SCREW SCHRAUBE	TORNILLO SKRUE	VITE SCHROEF	040V
21		**84272827**		15	REBITE, Nut, M6 X 1.0 RIVET	RIVET NIET	REMACHE NITTE	RIVETTO KLINKNAGEL	055R
22		**84331404**		1	CONECTOR DO FIO, Jumper CONNECTEUR DU FIL	WIRE CONNECTOR KABELSTECKVERBINDE	CONECTOR DE CABLE SAMLEMUFFE	CONNETTORE DEL FILO DRAADCONNECTOR	250C
23		**84427180**		1	INSTRUÇÃO, Instruction Sheet, Glass, Front Door INSTRUCTION	INSTRUCTION ANLEITUNG	INSTRUCCIÓN INSTRUKTION	ISTRUZIONI INSTRUCTIE	Z571

DIA KIT, DEMO FRONT DOOR (ALL CASE)
DIA KIT, DEMO FRONT DOOR (ALL CASE)
DIA KIT, DEMO FRONT DOOR (ALL CASE)
DIA KIT, DEMO FRONT DOOR (ALL CASE)



DIA KIT, DEMO FRONT DOOR (ALL CASE)
DIA KIT, DEMO FRONT DOOR (ALL CASE)
DIA KIT, DEMO FRONT DOOR (ALL CASE)
DIA KIT, DEMO FRONT DOOR (ALL CASE)

R	N	P.N.	MOD	Q	Denominação Description	Description Bezeichnung	Denominacion Beskrivelse	Descrizione Beschrijving	L.C.
		84427186			KIT DE SERVIÇO, DIA Kit, Demo Front Door, Incl. 1-23				
						SERVICE KIT	KIT DE SERVICIO	KIT DI MANUTENZIONE	021K
					KIT D'ENTRETIEN	SERVICE-SATZ	SERVICESÆT	SERVICEKIT	
1		**84272826**		2	REBITE, Nut, M6 X 1.0	RIVET	REMACHE	RIVETTO	055R
					RIVET	NIET	NITTE	KLINKNAGEL	
2		**84281703**		1	MANGUEIRA DO LAVADOR, Tube, Front Windshield Washer				
						HOSE WASHER	TUBO DE LAVAPARABRI	RONDELLA FLESSIBILE	A061
					TUYAU DE LAVE-GLACE	WASCHANLAGENSCHLA	SLANGE, SPRINKLER	SLUITRING VOOR SLAN(	
3		**84285452**		1	MANGUEIRA DO LAVADOR, Tube, Rear Windshield Washer				
						HOSE WASHER	TUBO DE LAVAPARABRI	RONDELLA FLESSIBILE	A061
					TUYAU DE LAVE-GLACE	WASCHANLAGENSCHLA	SLANGE, SPRINKLER	SLUITRING VOOR SLAN(	
4		**84285453**		2	MANGUEIRA DO LAVADOR, Tube, Washer Bottle				
						HOSE WASHER	TUBO DE LAVAPARABRI	RONDELLA FLESSIBILE	A061
					TUYAU DE LAVE-GLACE	WASCHANLAGENSCHLA	SLANGE, SPRINKLER	SLUITRING VOOR SLAN(	
5		**84306335**		1	T, Barb Connector	TEE	RACOR EN T	PEZZO A T	9020
					RACCORD EN T	T-STÜCK	T-STYKKE	T-STUK	
6		**84389613**		1	GARRAFA, Washer Assembly				
						BOTTLE	BOTELLA	BOTTIGLIA	102B
					BOUTEILLE	FLASCHE	FLASKE	FLES	
7		**84326923**		2	SUPORTE, Washer Bottle, CE Gray				
						BRACKET	SOPORTE	STAFFA	225S
					SUPPORT	HALTERUNG	BESLAG	STEUN	
8		**87335499**		1	INTERRUPTOR, Wiper/Washer				
						SWITCH	INTERRUPTOR	INTERRUTTORE	075I
					CONTACTEUR	SCHALTER	KONTAKT	SCHAKELAAR	
9		**87682398**		2	PARAFUSO	SCREW	TORNILLO	VITE	040V
					VIS	SCHRAUBE	SKRUE	SCHROEF	
10		**K307050**		1	VÁLVULA, Non-Return	VALVE	VÁLVULA	VALVOLA	9620
					SOUPAPE	VENTIL	VENTIL	KLEP	
11		**L11541**		7	PRENDEDOR DE CABOS, Nylon Tie, 7-8in				
						CABLE STRAP	BANDA DE CABLE	FASCETTA PER CAVO	P716
					BRIDE DE CABLE	KABELBINDER	KABELSTROP	BUNDELBAND	
12		**84323416**		1	PORTA, Assembly, Jamb	DOOR	PUERTA	SPORTELLO	180P
					PORTE	TÜR	DØR	PORTIER	
13		**84416291**		1	PORTA, Door Assembly, Front, Demo				
						DOOR	PUERTA	SPORTELLO	180P
					PORTE	TÜR	DØR	PORTIER	
14		**84378453**		1	COMPASSO, Spring, Gas	GAS STRUT	COLUMNA DE GAS	AMMORTIZZATORE A G/	Z331
					BEQUILLE A GAZ	GASDRUCKFEDER	CYLINDER, GASSTØDD/	GASVEER	
15		**86624468**		1	ESPAÇADOR	SPACER	SEPARADOR	DISTANZIALE	075D
					ENTRETOISE	DISTANZSTÜCK	AFSTANDSSTYKKE	AFSTANDSSTUK	
16		**87392235**		1	INTERRUPTOR INTERMITENTE, Reed, Non-Contact				
						SWITCH ASSY	CONJUNTO DE INTERRU	COMPLESSIVO INTERRU	067I
					ENSEMBLE COMMUTATI	SCHALTERBAUGRUPPE	KONTAKT, KPL.	SCHAKELAAREENHEID	
17		**84183818**		2	PARAFUSO, M4 X 20	SCREW	TORNILLO	VITE	040V
					VIS	SCHRAUBE	SKRUE	SCHROEF	
18		**100012**		2	PORCA, M4, Cl 8	NUT	TUERCA	DADO	010D
					ECROU	MUTTER	MØTRIK	MOER	

DIA KIT, DEMO FRONT DOOR (ALL CASE)
DIA KIT, DEMO FRONT DOOR (ALL CASE)
DIA KIT, DEMO FRONT DOOR (ALL CASE)
DIA KIT, DEMO FRONT DOOR (ALL CASE)



DIA KIT, DEMO FRONT DOOR (ALL CASE)
DIA KIT, DEMO FRONT DOOR (ALL CASE)
DIA KIT, DEMO FRONT DOOR (ALL CASE)
DIA KIT, DEMO FRONT DOOR (ALL CASE)

R	N	P.N.	MOD	Q	Denominação Description	Description Bezeichnung	Denominacion Beskrivelse	Descrizione Beschrijving	L.C.
19		**84305556**		11	PARAFUSO, M6 X 25 VIS	SCREW SCHRAUBE	TORNILLO SKRUE	VITE SCHROEF	040V
20		**84359102**		4	PARAFUSO, M6 X 35 VIS	SCREW SCHRAUBE	TORNILLO SKRUE	VITE SCHROEF	040V
21		**84272827**		15	REBITE, Nut, M6 X 1.0 RIVET	RIVET NIET	REMACHE NITTE	RIVETTO KLINKNAGEL	055R
22		**84331404**		1	CONECTOR DO FIO, Jumper CONNECTEUR DU FIL	WIRE CONNECTOR KABELSTECKVERBINDE	CONECTOR DE CABLE SAMLEMUFFE	CONNETTORE DEL FILO DRAADCONNECTOR	250C
23		**84427187**		1	INSTRUÇÃO, Instruction Sheet, Demo Door INSTRUCTION	INSTRUCTION ANLEITUNG	INSTRUCCIÓN INSTRUKTION	ISTRUZIONI INSTRUCTIE	Z571

DIA KIT, CAB SIDE WINDOWS (ALL CASE)
DIA KIT, CAB SIDE WINDOWS (ALL CASE)
DIA KIT, CAB SIDE WINDOWS (ALL CASE)
DIA KIT, CAB SIDE WINDOWS (ALL CASE)



DIA KIT, CAB SIDE WINDOWS (ALL CASE)
DIA KIT, CAB SIDE WINDOWS (ALL CASE)
DIA KIT, CAB SIDE WINDOWS (ALL CASE)
DIA KIT, CAB SIDE WINDOWS (ALL CASE)

R	N	P.N.	MOD	Q	Denominação Description Bezeichnung	Denominacion Beskrivelse	Descrizione Beschrijving	L.C.
		84427190			KIT DE SERVIÇO, DIA Kit, Cab, Side Windows, Incl. 1-10			
					SERVICE KIT	KIT DE SERVICIO	KIT DI MANUTENZIONE	021K
					KIT D'ENTRETIEN SERVICE-SATZ	SERVICESÆT	SERVICEKIT	
1		**84272827**		12	REBITE	RIVET	REMACHE	RIVETTO	055R
					RIVET	NIET	NITTE	KLINKNAGEL	
2		**84310724**		22	REBITE	RIVET	REMACHE	RIVETTO	055R
					RIVET	NIET	NITTE	KLINKNAGEL	
3		**84473111**		8	SUPORTE, Bracket, Window, Gray			
					BRACKET	SOPORTE	STAFFA	225S
					SUPPORT HALTERUNG	BESLAG	STEUN	
4		**84473118**		1	JANELA, Window Assy, RH Side			
					WINDOW	VENTANILLA	FINESTRINO	9810
					FENETRE FENSTER	VINDUE	RUIT	
5		**84473121**		1	JANELA, Window Assy, LH Side			
					WINDOW	VENTANILLA	FINESTRINO	9810
					FENETRE FENSTER	VINDUE	RUIT	
6		**84473199**		2	SUPORTE, Bracket, Window, RH, Gray			
					BRACKET	SOPORTE	STAFFA	225S
					SUPPORT HALTERUNG	BESLAG	STEUN	
7		**84473201**		2	SUPORTE, Bracket, Window, LH, Gray			
					BRACKET	SOPORTE	STAFFA	225S
					SUPPORT HALTERUNG	BESLAG	STEUN	
8		**84481921**		1	INSTRUÇÃO, Instruction Sheet, Kit, Cab Side Window			
					INSTRUCTION	INSTRUCCIÓN	ISTRUZIONI	Z571
					INSTRUCTION ANLEITUNG	INSTRUKTION	INSTRUCTIE	
9		**87682398**		24	PARAFUSO	SCREW	TORNILLO	VITE	040V
					VIS	SCHRAUBE	SKRUE	SCHROEF	
10		**84425058**		2	ESPUMA ISOLANTE, Window			
					FOAM INSULATION	ESPUMA AISLANTE	ISOLANTE IN SCHIUMA	051S
					MOUSSE ISOLANTE SCHAUMSTOFFISOLIER	SKUM ISOLERING	SCHUIMISOLATIE	

DIA KIT, REAR EXT ACCESS WINDOW (ALL CASE)
DIA KIT, REAR EXT ACCESS WINDOW (ALL CASE)
DIA KIT, REAR EXT ACCESS WINDOW (ALL CASE)
DIA KIT, REAR EXT ACCESS WINDOW (ALL CASE)



DIA KIT, REAR EXT ACCESS WINDOW (ALL CASE)
DIA KIT, REAR EXT ACCESS WINDOW (ALL CASE)
DIA KIT, REAR EXT ACCESS WINDOW (ALL CASE)
DIA KIT, REAR EXT ACCESS WINDOW (ALL CASE)

R	N	P.N.	MOD	Q	Denominação Description Bezeichnung	Description Bezeichnung	Denominacion Beskrivelse	Descrizione Beschrijving	L.C.
		84306071			JOGO, DIA Kit, Rear Ext Access Window, Incl. 1-5				
						KIT	JEUGO	KIT	4830
					POCHETTE	PACKUNG	KIT	KIT	
1		**263117**		2	PRENDEDOR DE CABOS, .14" x 11 1/2"				
						CABLE STRAP	BANDA DE CABLE	FASCETTA PER CAVO	P716
					BRIDE DE CABLE	KABELBINDER	KABELSTROP	BUNDELBAND	
2		**84366018**		1	CHAVE, Lock	KEY	LLAVE	CHIAVE	060L
					CLE	FEDERKEIL	KILE	SPIE	
3		**84366019**		1	JUNTA, Locking	GASKET	JUNTA	GUARNIZIONE	123G
					JOINT	DICHTUNG	PAKNING	PAKKING	
4		**87026871**		2	SINAL PLÁSTICO, Exit Tag	PLASTIC SIGN	SEÑAL DE PLÁSTICO	TARGHETTA IN PLASTIC	092I
					PLAQUE SIGN. PLASTIQ	KUNSTSTOFFSCHILD	PLASTIKSKILT	KUNSTSTOF BORD	
5		**84366065**		1	INSTRUÇÃO, Installation	INSTRUCTION	INSTRUCCIÓN	ISTRUZIONI	Z571
					INSTRUCTION	ANLEITUNG	INSTRUKTION	INSTRUCTIE	

DIA KIT, 3IN LAP BELT (ALL CASE)
DIA KIT, 3IN LAP BELT (ALL CASE)
DIA KIT, 3IN LAP BELT (ALL CASE)
DIA KIT, 3IN LAP BELT (ALL CASE)



DIA KIT, 3IN LAP BELT (ALL CASE)
DIA KIT, 3IN LAP BELT (ALL CASE)
DIA KIT, 3IN LAP BELT (ALL CASE)
DIA KIT, 3IN LAP BELT (ALL CASE)

R	N	P.N.	MOD	Q	Denominação Description	Description Bezeichnung	Denominacion Beskrivelse	Descrizione Beschrijving	L.C.
		84306093			JOGO, DIA Kit, 3in Lap Belt, Incl. 1-5				
						KIT	JEUGO	KIT	4830
					POCHETTE	PACKUNG	KIT	KIT	
1		**9804262**		1	PARAFUSO, Hex Flg, M10 x 30, 8.8				
						BOLT	PERNO	BULLONE	140B
					VIS	SCHRAUBE	BOLT	BOUT	
2		**84174267**		1	CINTO DE SEGURANÇA, Case, 2 Point, 3in Wide				
						SEAT BELT	CINTURÓN DE SEGURID	CINTURA DI SICUREZZA	182C
					CEINTURE DE SECURIT	SICHERHEITSGURT	SIKKERHEDSBÆLTE	VEILIGHEIDSGORDEL	
3		**86512554**		1	CONTRA PORCA, M10 x 1.5, Cl 10				
						LOCK NUT	TUERCA DE BLOQUEO	DADO DI BLOCCAGGIO	P263
					CONTRE-ECROU	SICHERUNGSMUTTER	LÅSEMØTRIK	BORGMOER	
4		**87655046**		1	ARRUELA ESPECIAL, M10, 10.65 X 23.0 X 2.2				
						SPECIAL WASHER	ARANDELA ESPECIAL	RONDELLA SPECIALE	Z333
					RONDELLE SPECIALE	SPEZIALUNTERLEGSCH	SPECIALSKIVE	SPECIALE RING	
5		**84365636**		1	INSTRUÇÃO, Installation, Lap Belt, Kit				
						INSTRUCTION	INSTRUCCIÓN	ISTRUZIONI	Z571
					INSTRUCTION	ANLEITUNG	INSTRUKTION	INSTRUCTIE	

DIA KIT, REMOVABLE TOP WINDOW (ALL CASE)
DIA KIT, REMOVABLE TOP WINDOW (ALL CASE)
DIA KIT, REMOVABLE TOP WINDOW (ALL CASE)
DIA KIT, REMOVABLE TOP WINDOW (ALL CASE)



DIA KIT, REMOVABLE TOP WINDOW (ALL CASE)
DIA KIT, REMOVABLE TOP WINDOW (ALL CASE)
DIA KIT, REMOVABLE TOP WINDOW (ALL CASE)
DIA KIT, REMOVABLE TOP WINDOW (ALL CASE)

R	N	P.N.	MOD	Q	Denominação Description Bezeichnung	Description Bezeichnung	Denominacion Beskrivelse	Descrizione Beschrijving	L.C.
		84306096			JOGO, DIA Kit, Removable Top Window, Incl. 1-2				
						KIT	JEUGO	KIT	4830
					POCHETTE	PACKUNG	KIT	KIT	
1		**84354564**		1	JANELA, Assembly, Removable Top				
						WINDOW	VENTANILLA	FINESTRINO	9810
					FENETRE	FENSTER	VINDUE	RUIT	
2		**84371221**		1	INSTRUÇÃO, Installation	INSTRUCTION	INSTRUCCIÓN	ISTRUZIONI	Z571
					INSTRUCTION	ANLEITUNG	INSTRUKTION	INSTRUCTIE	

DIA KIT, RH, SIDE SCREEN (ALL CASE)
DIA KIT, RH, SIDE SCREEN (ALL CASE)
DIA KIT, RH, SIDE SCREEN (ALL CASE)
DIA KIT, RH, SIDE SCREEN (ALL CASE)



DIA KIT, RH, SIDE SCREEN (ALL CASE)
DIA KIT, RH, SIDE SCREEN (ALL CASE)
DIA KIT, RH, SIDE SCREEN (ALL CASE)
DIA KIT, RH, SIDE SCREEN (ALL CASE)

R	N	P.N.	MOD	Q	Denominação Description Bezeichnung	Description Bezeichnung	Denominacion Beskrivelse	Descrizione Beschrijving	L.C.
		84374152			JOGO, DIA Kit, RH, Side Screen, Incl. 1-3				
						KIT	JEUGO	KIT	4830
					POCHETTE	PACKUNG	KIT	KIT	
1		**84200803**		1	TELA, W, Side ROPS, RH	SCREEN	PANTALLA	FILTRO; SCHERMO	047S
					TAMIS	GITTER; ABSCHIRMUNG	SKÆRM	SCHERM	
2		**84310724**		11	REBITE, Pop, 1/4 X 5/8	RIVET	REMACHE	RIVETTO	055R
					RIVET	NIET	NITTE	KLINKNAGEL	
3		**84374159**		1	INSTRUÇÃO, Sheet, Side Screen, RH				
						INSTRUCTION	INSTRUCCIÓN	ISTRUZIONI	Z571
					INSTRUCTION	ANLEITUNG	INSTRUKTION	INSTRUCTIE	

SV185

DIA KIT, LH, SIDE SCREEN (ALL CASE)
DIA KIT, LH, SIDE SCREEN (ALL CASE)
DIA KIT, LH, SIDE SCREEN (ALL CASE)
DIA KIT, LH, SIDE SCREEN (ALL CASE)



DIA KIT, LH, SIDE SCREEN (ALL CASE)
DIA KIT, LH, SIDE SCREEN (ALL CASE)
DIA KIT, LH, SIDE SCREEN (ALL CASE)
DIA KIT, LH, SIDE SCREEN (ALL CASE)

R	N	P.N.	MOD	Q	Denominação Description	Description Bezeichnung	Denominacion Beskrivelse	Descrizione Beschrijving	L.C.
		84374154			JOGO, DIA Kit, LH, Side Screen, Incl. 1-3				
						KIT	JEUGO	KIT	4830
					POCHETTE	PACKUNG	KIT	KIT	
1		**84307405**		1	TELA, W, Side ROPS, LH	SCREEN	PANTALLA	FILTRO; SCHERMO	047S
					TAMIS	GITTER; ABSCHIRMUNG	SKÆRM	SCHERM	
2		**84310724**		11	REBITE, Pop, 1/4 X 5/8	RIVET	REMACHE	RIVETTO	055R
					RIVET	NIET	NITTE	KLINKNAGEL	
3		**84374160**		1	INSTRUÇÃO, Sheet, Side Screen, LH				
						INSTRUCTION	INSTRUCCIÓN	ISTRUZIONI	Z571
					INSTRUCTION	ANLEITUNG	INSTRUKTION	INSTRUCTIE	

88.090.12		p1	03/11

DIA KIT, HANDLE 300/400 (ALL CASE)
DIA KIT, HANDLE 300/400 (ALL CASE)
DIA KIT, HANDLE 300/400 (ALL CASE)
DIA KIT, HANDLE 300/400 (ALL CASE)



DIA KIT, HANDLE 300/400 (ALL CASE)
DIA KIT, HANDLE 300/400 (ALL CASE)
DIA KIT, HANDLE 300/400 (ALL CASE)
DIA KIT, HANDLE 300/400 (ALL CASE)

R	N	P.N.	MOD	Q	Denominação Description	Description Bezeichnung	Denominacion Beskrivelse	Descrizione Beschrijving	L.C.
		84428505			JOGO, DIA Kit, Handle, 300 Case LH, No 2nd Aux-Mech, Incl. 1-10				
						KIT	JEUGO	KIT	4830
					POCHETTE	PACKUNG	KIT	KIT	
1		**263117**		6	PRENDEDOR DE CABOS, .14" x 11 1/2"				
						CABLE STRAP	BANDA DE CABLE	FASCETTA PER CAVO	P716
					BRIDE DE CABLE	KABELBINDER	KABELSTROP	BUNDELBAND	
2		**323238**		1	PORCA, Thin, M12 x 1.75, Cl 05				
						NUT	TUERCA	DADO	010D
					ECROU	MUTTER	MØTRIK	MOER	
3		**84279937**		6	BUJÃO, Cavity, FCI	PLUG	TAPÓN	TAPPO	050T
					BOUCHON	STOPFEN	PROP	PLUG	
4		**84396068**		1	INTERRUPTOR, Grip, 300 LH, No 2nd Aux				
						SWITCH	INTERRUPTOR	INTERRUTTORE	075I
					CONTACTEUR	SCHALTER	KONTAKT	SCHAKELAAR	
5		**84396167**		1	ADESIVO	DECAL	CALCOMANÍA	DECALCOMANIA	012D
					AUTOCOLLANT	AUFKLEBER	TRANSFER	STICKER	
6		**87382927**		1	CONECTOR ELÉTR, 87382927, FCI				
						ELEC CONNECTOR	CONECTOR ELÉCTRICC	CONNETTORE ELETTRI(	235C
					CONNECTEUR ELECTRI	ELEKTR STECKVERBIND	EL-STIK	CONNECTOR	
7		**87689636**		1	BUJÃO, Cavity, Meri-plug	PLUG	TAPÓN	TAPPO	050T
					BOUCHON	STOPFEN	PROP	PLUG	
8		**87689643**		1	GRAMPO, Secondary Lock, Metri-pack				
						CLIP	ABRAZADERA	FERMO	045F
					COLLIER	KLAMMER	KLIPS	KLEM	
9		**87697724**		1	CONECTOR ELÉTR, Packard, Metri-pack 150 4-Way Female				
						ELEC CONNECTOR	CONECTOR ELÉCTRICC	CONNETTORE ELETTRI(	235C
					CONNECTEUR ELECTRI	ELEKTR STECKVERBIND	EL-STIK	CONNECTOR	
10		**84470439**		1	INSTRUÇÃO, Installation	INSTRUCTION	INSTRUCCIÓN	ISTRUZIONI	Z571
					INSTRUCTION	ANLEITUNG	INSTRUKTION	INSTRUCTIE	
		84428506			JOGO, DIA Kit, Handle, 300 Case RH, Mech, Incl. 1A-8A				
						KIT	JEUGO	KIT	4830
					POCHETTE	PACKUNG	KIT	KIT	
1A		**263117**		4	PRENDEDOR DE CABOS, .14" x 11 1/2"				
						CABLE STRAP	BANDA DE CABLE	FASCETTA PER CAVO	P716
					BRIDE DE CABLE	KABELBINDER	KABELSTROP	BUNDELBAND	
2A		**323238**		1	PORCA, Thin, M12 x 1.75, Cl 05				
						NUT	TUERCA	DADO	010D
					ECROU	MUTTER	MØTRIK	MOER	
3A		**84201276**		1	EMPUNHADURA, Grip, 300 RH				
						HANDLE GRIP	PERILLA	IMPUGNATURA	025I
					POIGNEE DE MAINTIEN	HANDGRIFF	HÅNDGREB	HANDGREEP	
4A		**84279937**		5	BUJÃO, Cavity, FCI	PLUG	TAPÓN	TAPPO	050T
					BOUCHON	STOPFEN	PROP	PLUG	
5A		**84353756**		1	ADESIVO	DECAL	CALCOMANÍA	DECALCOMANIA	012D
					AUTOCOLLANT	AUFKLEBER	TRANSFER	STICKER	
6A		**87382919**		1	CONECTOR ELÉTR, 87382919, Framatome, 6 Cavity				
						ELEC CONNECTOR	CONECTOR ELÉCTRICC	CONNETTORE ELETTRI(	235C
					CONNECTEUR ELECTRI	ELEKTR STECKVERBIND	EL-STIK	CONNECTOR	

DIA KIT, HANDLE 300/400 (ALL CASE)
DIA KIT, HANDLE 300/400 (ALL CASE)
DIA KIT, HANDLE 300/400 (ALL CASE)
DIA KIT, HANDLE 300/400 (ALL CASE)



DIA KIT, HANDLE 300/400 (ALL CASE)
DIA KIT, HANDLE 300/400 (ALL CASE)
DIA KIT, HANDLE 300/400 (ALL CASE)
DIA KIT, HANDLE 300/400 (ALL CASE)

R	N	P.N.	MOD	Q	Denominação Description	Description Bezeichnung	Denominacion Beskrivelse	Descrizione Beschrijving	L.C.
7A		87382923		1	CONECTOR ELÉTR, 87382923, 10 Position, Apex				
						ELEC CONNECTOR	CONECTOR ELÉCTRICC	CONNETTORE ELETTRI(	235C
					CONNECTEUR ELECTRI	ELEKTR STECKVERBIND	EL-STIK	CONNECTOR	
8A		84470439		1	INSTRUÇÃO, Installation	INSTRUCTION	INSTRUCCIÓN	ISTRUZIONI	Z571
					INSTRUCTION	ANLEITUNG	INSTRUKTION	INSTRUCTIE	
		84428509			JOGO, DIA Kit, Handle 400	Case LH, 2nd Aux-Mech, Incl. 1B-10B			
						KIT	JEUGO	KIT	4830
					POCHETTE	PACKUNG	KIT	KIT	
1B		263117		6	PRENDEDOR DE CABOS, .14" x 11 1/2"				
						CABLE STRAP	BANDA DE CABLE	FASCETTA PER CAVO	P716
					BRIDE DE CABLE	KABELBINDER	KABELSTROP	BUNDELBAND	
2B		323238		1	PORCA, Thin, M12 x 1.75, Cl 05				
						NUT	TUERCA	DADO	010D
					ECROU	MUTTER	MØTRIK	MOER	
3B		84279937		6	BUJÃO, Cavity, FCI	PLUG	TAPÓN	TAPPO	050T
					BOUCHON	STOPFEN	PROP	PLUG	
4B		84396066		1	INTERRUPTOR, Grip, 400 LH, 2nd Aux				
						SWITCH	INTERRUPTOR	INTERRUTTORE	075I
					CONTACTEUR	SCHALTER	KONTAKT	SCHAKELAAR	
5B		84396166		1	ADESIVO	DECAL	CALCOMANÍA	DECALCOMANIA	012D
					AUTOCOLLANT	AUFKLEBER	TRANSFER	STICKER	
6B		87382927		1	CONECTOR ELÉTR, 87382927, FCI				
						ELEC CONNECTOR	CONECTOR ELÉCTRICC	CONNETTORE ELETTRI(	235C
					CONNECTEUR ELECTRI	ELEKTR STECKVERBIND	EL-STIK	CONNECTOR	
7B		87689636		1	BUJÃO, Cavity, Meri-plug	PLUG	TAPÓN	TAPPO	050T
					BOUCHON	STOPFEN	PROP	PLUG	
8B		87689643		1	GRAMPO, Secondary Lock, Metri-pack				
						CLIP	ABRAZADERA	FERMO	045F
					COLLIER	KLAMMER	KLIPS	KLEM	
9B		87697724		1	CONECTOR ELÉTR, Packard, Metri-pack 150 4-Way Female				
						ELEC CONNECTOR	CONECTOR ELÉCTRICC	CONNETTORE ELETTRI(	235C
					CONNECTEUR ELECTRI	ELEKTR STECKVERBIND	EL-STIK	CONNECTOR	
10B		84470439		1	INSTRUÇÃO, Installation	INSTRUCTION	INSTRUCCIÓN	ISTRUZIONI	Z571
					INSTRUCTION	ANLEITUNG	INSTRUKTION	INSTRUCTIE	

88.090.14		p1	03/11

DIA KIT, HANDLE 350/450 (ALL CASE)
DIA KIT, HANDLE 350/450 (ALL CASE)
DIA KIT, HANDLE 350/450 (ALL CASE)
DIA KIT, HANDLE 350/450 (ALL CASE)



DIA KIT, HANDLE 350/450 (ALL CASE)
DIA KIT, HANDLE 350/450 (ALL CASE)
DIA KIT, HANDLE 350/450 (ALL CASE)
DIA KIT, HANDLE 350/450 (ALL CASE)

R	N	P.N.	MOD	Q	Denominação Description	Description Bezeichnung	Denominacion Beskrivelse	Descrizione Beschrijving	L.C.
		84428507			JOGO, DIA Kit, Handle 350, LH-No 2nd Aux-EH, Incl. 1-5				
						KIT	JEUGO	KIT	4830
					POCHETTE	PACKUNG	KIT	KIT	
1		**263117**		6	PRENDEDOR DE CABOS, .14" x 11 1/2"				
						CABLE STRAP	BANDA DE CABLE	FASCETTA PER CAVO	P716
					BRIDE DE CABLE	KABELBINDER	KABELSTROP	BUNDELBAND	
2		**323238**		1	PORCA, Thin, M12 x 1.75, Cl 05				
						NUT	TUERCA	DADO	010D
					ECROU	MUTTER	MØTRIK	MOER	
3		**84396053**		1	INTERRUPTOR, Case, Level 350 LH, No 2nd Aux				
						SWITCH	INTERRUPTOR	INTERRUTTORE	075I
					CONTACTEUR	SCHALTER	KONTAKT	SCHAKELAAR	
4		**84396167**		1	ADESIVO	DECAL	CALCOMANÍA	DECALCOMANIA	012D
					AUTOCOLLANT	AUFKLEBER	TRANSFER	STICKER	
5		**84472670**		1	INSTRUÇÃO, Installation	INSTRUCTION	INSTRUCCIÓN	ISTRUZIONI	Z571
					INSTRUCTION	ANLEITUNG	INSTRUKTION	INSTRUCTIE	
		84428508			JOGO, DIA Kit, Handle 350, RH-EH, Incl. 1a-5a				
						KIT	JEUGO	KIT	4830
					POCHETTE	PACKUNG	KIT	KIT	
1a		**263117**		6	PRENDEDOR DE CABOS, .14" x 11 1/2"				
						CABLE STRAP	BANDA DE CABLE	FASCETTA PER CAVO	P716
					BRIDE DE CABLE	KABELBINDER	KABELSTROP	BUNDELBAND	
2a		**323238**		1	PORCA, Thin, M12 x 1.75, Cl 05				
						NUT	TUERCA	DADO	010D
					ECROU	MUTTER	MØTRIK	MOER	
3a		**84201277**		1	EMPUNHADURA, Case, Level 350 RH				
						HANDLE GRIP	PERILLA	IMPUGNATURA	025I
					POIGNEE DE MAINTIEN	HANDGRIFF	HÅNDGREB	HANDGREEP	
4a		**84353756**		1	ADESIVO	DECAL	CALCOMANÍA	DECALCOMANIA	012D
					AUTOCOLLANT	AUFKLEBER	TRANSFER	STICKER	
5a		**84470443**		1	INSTRUÇÃO, Installation	INSTRUCTION	INSTRUCCIÓN	ISTRUZIONI	Z571
					INSTRUCTION	ANLEITUNG	INSTRUKTION	INSTRUCTIE	
		84428510			JOGO, DIA Kit, Handle 450, LH-2nd Aux-EH, Incl. 1b-5b				
						KIT	JEUGO	KIT	4830
					POCHETTE	PACKUNG	KIT	KIT	
1b		**263117**		6	PRENDEDOR DE CABOS, .14" x 11 1/2"				
						CABLE STRAP	BANDA DE CABLE	FASCETTA PER CAVO	P716
					BRIDE DE CABLE	KABELBINDER	KABELSTROP	BUNDELBAND	
2b		**323238**		1	PORCA, Thin, M12 x 1.75, Cl 05				
						NUT	TUERCA	DADO	010D
					ECROU	MUTTER	MØTRIK	MOER	
3B		**84396062**		1	INTERRUPTOR, Case, Level 450, LH				
						SWITCH	INTERRUPTOR	INTERRUTTORE	075I
					CONTACTEUR	SCHALTER	KONTAKT	SCHAKELAAR	
4B		**84396166**		1	ADESIVO	DECAL	CALCOMANÍA	DECALCOMANIA	012D
					AUTOCOLLANT	AUFKLEBER	TRANSFER	STICKER	
5B		**84470443**		1	INSTRUÇÃO, Installation Sheet, Case Grip EH				
						INSTRUCTION	INSTRUCCIÓN	ISTRUZIONI	Z571
					INSTRUCTION	ANLEITUNG	INSTRUKTION	INSTRUCTIE	

ENGINE ACCESSORIES EU/OPEN EU (SV185)
ENGINE ACCESSORIES EU/OPEN EU (SV185)
ENGINE ACCESSORIES EU/OPEN EU (SV185)
ENGINE ACCESSORIES EU/OPEN EU (SV185)

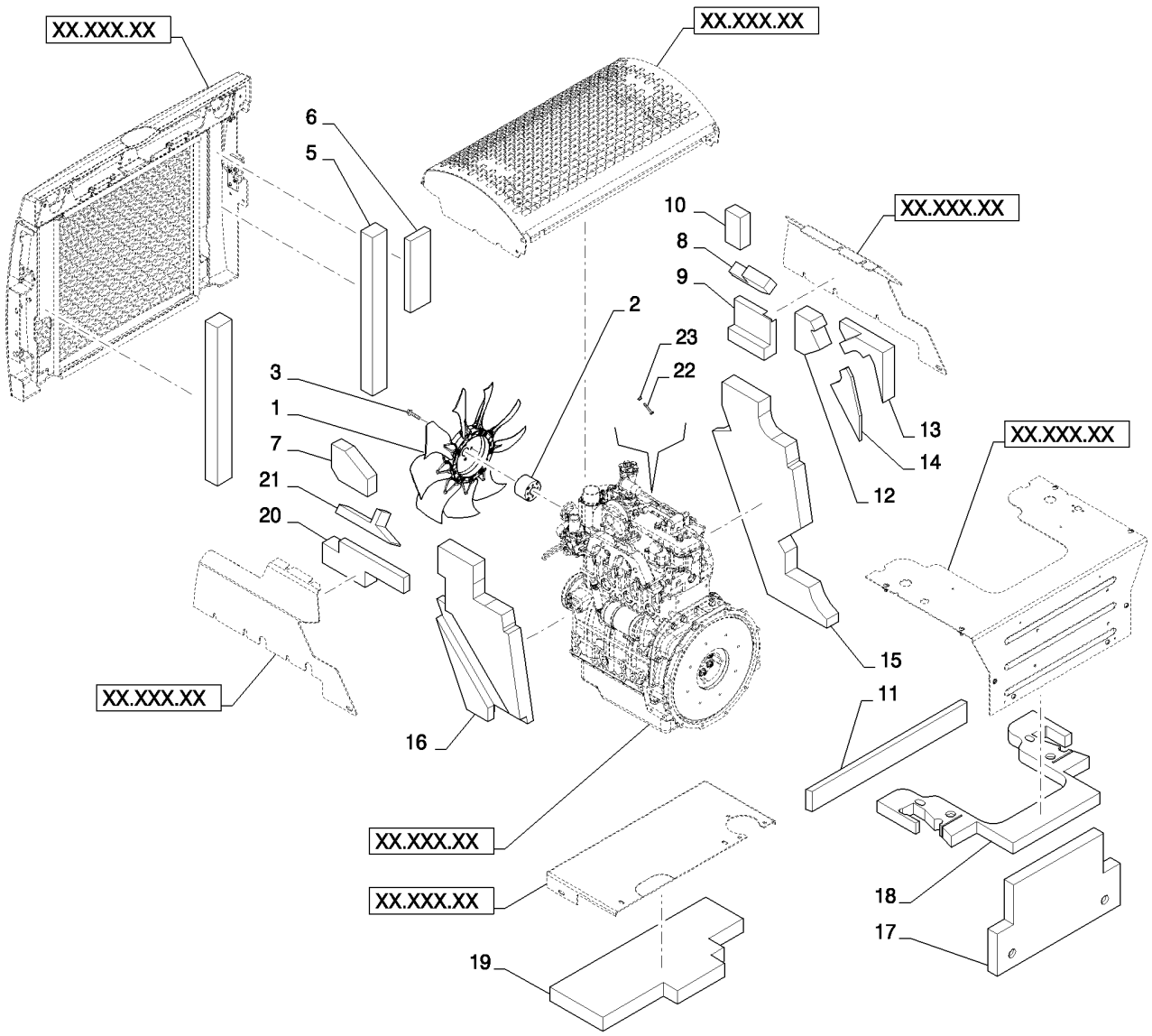

ENGINE ACCESSORIES EU/OPEN EU (SV185)
ENGINE ACCESSORIES EU/OPEN EU (SV185)
ENGINE ACCESSORIES EU/OPEN EU (SV185)
ENGINE ACCESSORIES EU/OPEN EU (SV185)

R	N	P.N.	MOD	Q	Denominação Description	Description Bezeichnung	Denominacion Beskrivelse	Descrizione Beschrijving	L.C.
1		84374544		1	VENTILADOR, Clockwise Pusher 450				
						FAN	VENTILADOR	VENTOLA	030V
					VENTILATEUR	GEBLÄSE	VENTILATOR	VENTILATOR	
2		84374543		1	ESPAÇADOR, Fan, Extended ISM				
						SPACER	SEPARADOR	DISTANZIALE	075D
					ENTRETOISE	DISTANZSTÜCK	AFSTANDSSTYKKE	AFSTANDSSTUK	
3		9671714		4	PARAFUSO, Hex Flg, M8 x 25, 8.8				
						BOLT	PERNO	BULLONE	140B
					VIS	SCHRAUBE	BOLT	BOUT	
4		84374184		1	ESPUMA ISOLANTE, RR Door RH				
						FOAM INSULATION	ESPUMA AISLANTE	ISOLANTE IN SCHIUMA	051S
					MOUSSE ISOLANTE	SCHAUMSTOFFISOLIER	SKUM ISOLERING	SCHUIMISOLATIE	
5		84374183		1	ESPUMA ISOLANTE, RR Door LH				
						FOAM INSULATION	ESPUMA AISLANTE	ISOLANTE IN SCHIUMA	051S
					MOUSSE ISOLANTE	SCHAUMSTOFFISOLIER	SKUM ISOLERING	SCHUIMISOLATIE	
6		84372973		1	ESPUMA ISOLANTE, Fan LH				
						FOAM INSULATION	ESPUMA AISLANTE	ISOLANTE IN SCHIUMA	051S
					MOUSSE ISOLANTE	SCHAUMSTOFFISOLIER	SKUM ISOLERING	SCHUIMISOLATIE	
7		84366326		1	ESPUMA ISOLANTE, Chassis RH				
						FOAM INSULATION	ESPUMA AISLANTE	ISOLANTE IN SCHIUMA	051S
					MOUSSE ISOLANTE	SCHAUMSTOFFISOLIER	SKUM ISOLERING	SCHUIMISOLATIE	
8		84366332		1	ESPUMA ISOLANTE, Chassis LH				
						FOAM INSULATION	ESPUMA AISLANTE	ISOLANTE IN SCHIUMA	051S
					MOUSSE ISOLANTE	SCHAUMSTOFFISOLIER	SKUM ISOLERING	SCHUIMISOLATIE	
9		84366325		1	ESPUMA ISOLANTE, Chassis LH				
						FOAM INSULATION	ESPUMA AISLANTE	ISOLANTE IN SCHIUMA	051S
					MOUSSE ISOLANTE	SCHAUMSTOFFISOLIER	SKUM ISOLERING	SCHUIMISOLATIE	
10		84366329		1	ESPUMA ISOLANTE, Chassis LH				
						FOAM INSULATION	ESPUMA AISLANTE	ISOLANTE IN SCHIUMA	051S
					MOUSSE ISOLANTE	SCHAUMSTOFFISOLIER	SKUM ISOLERING	SCHUIMISOLATIE	
11		84362125		1	ESPUMA ISOLANTE, Crossmember; Used only with Open Cab				
						FOAM INSULATION	ESPUMA AISLANTE	ISOLANTE IN SCHIUMA	051S
					MOUSSE ISOLANTE	SCHAUMSTOFFISOLIER	SKUM ISOLERING	SCHUIMISOLATIE	
12		84366331		1	ESPUMA ISOLANTE, Chassis LH				
						FOAM INSULATION	ESPUMA AISLANTE	ISOLANTE IN SCHIUMA	051S
					MOUSSE ISOLANTE	SCHAUMSTOFFISOLIER	SKUM ISOLERING	SCHUIMISOLATIE	
13		84366333		1	ESPUMA ISOLANTE, Insulation, Foam, Chassis LH				
						FOAM INSULATION	ESPUMA AISLANTE	ISOLANTE IN SCHIUMA	051S
					MOUSSE ISOLANTE	SCHAUMSTOFFISOLIER	SKUM ISOLERING	SCHUIMISOLATIE	
14		84380909		1	ISOLAMENTO, Chassis LH	INSULATION	AISLAMIENTO	ISOLAMENTO	A148
					ISOLATION	ISOLIERUNG	ISOLERING	ISOLATIE	
15		84366334		1	ESPUMA ISOLANTE, Chassis Front LH				
						FOAM INSULATION	ESPUMA AISLANTE	ISOLANTE IN SCHIUMA	051S
					MOUSSE ISOLANTE	SCHAUMSTOFFISOLIER	SKUM ISOLERING	SCHUIMISOLATIE	
16		84366323		1	ESPUMA ISOLANTE, Chassis RH				
						FOAM INSULATION	ESPUMA AISLANTE	ISOLANTE IN SCHIUMA	051S
					MOUSSE ISOLANTE	SCHAUMSTOFFISOLIER	SKUM ISOLERING	SCHUIMISOLATIE	

ENGINE ACCESSORIES EU/OPEN EU (SV185)
ENGINE ACCESSORIES EU/OPEN EU (SV185)
ENGINE ACCESSORIES EU/OPEN EU (SV185)
ENGINE ACCESSORIES EU/OPEN EU (SV185)

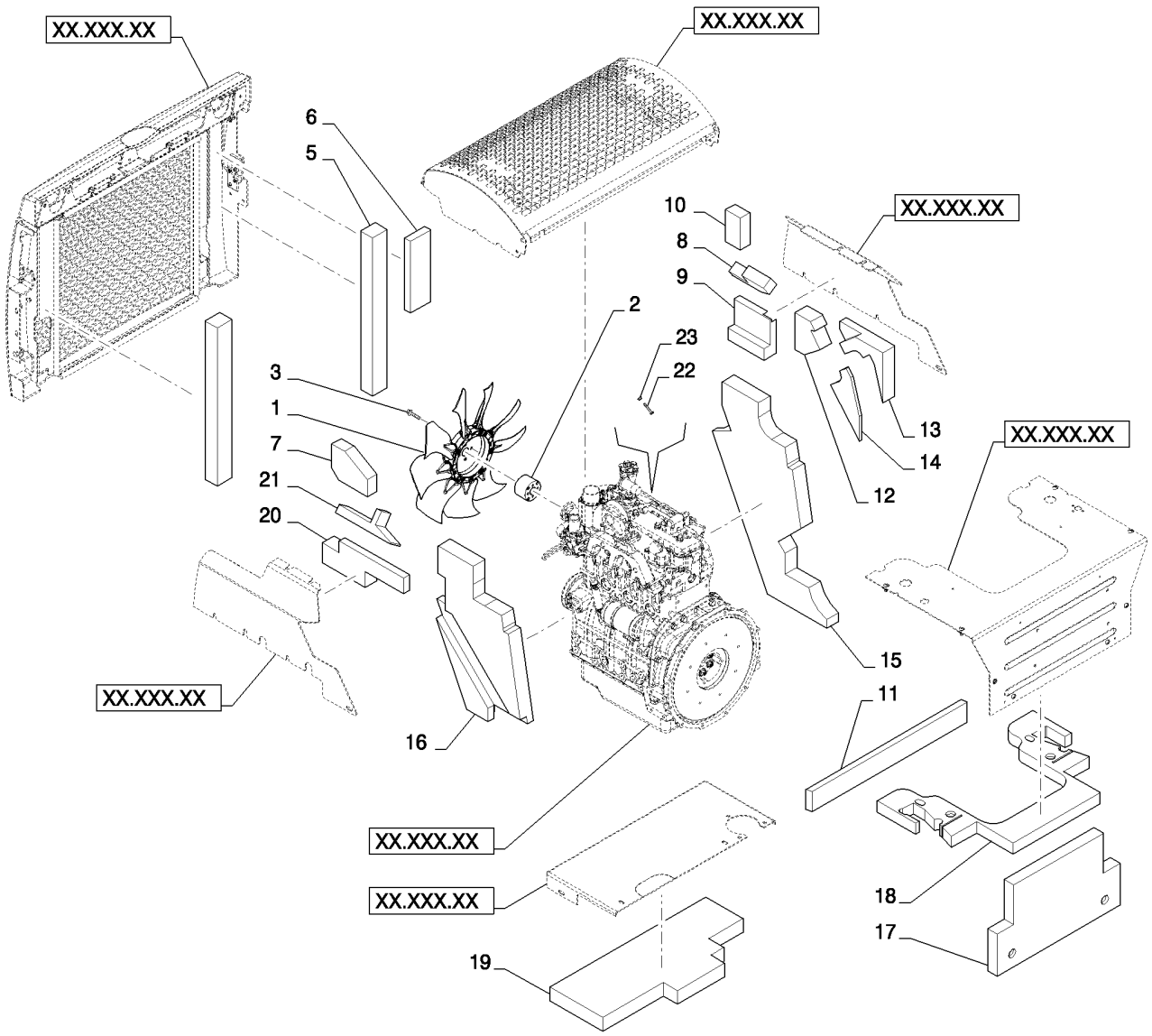

ENGINE ACCESSORIES EU/OPEN EU (SV185)
ENGINE ACCESSORIES EU/OPEN EU (SV185)
ENGINE ACCESSORIES EU/OPEN EU (SV185)
ENGINE ACCESSORIES EU/OPEN EU (SV185)

R	N	P.N.	MOD	Q	Denominação Description Bezeichnung	Denominacion Beskrivelse	Descrizione Beschrijving	L.C.
17		84366353		1	ESPUMA ISOLANTE, Heel Plate Horizontal			
					FOAM INSULATION	ESPUMA AISLANTE	ISOLANTE IN SCHIUMA	051S
					MOUSSE ISOLANTE	SCHAUMSTOFFISOLIER	SKUM ISOLERING	SCHUIMISOLATIE
18		84366352		1	ESPUMA ISOLANTE, Heel Plate Vertical			
					FOAM INSULATION	ESPUMA AISLANTE	ISOLANTE IN SCHIUMA	051S
					MOUSSE ISOLANTE	SCHAUMSTOFFISOLIER	SKUM ISOLERING	SCHUIMISOLATIE
19		84374545		1	ESPUMA ISOLANTE, Hood FOAM INSULATION	ESPUMA AISLANTE	ISOLANTE IN SCHIUMA	051S
					MOUSSE ISOLANTE	SCHAUMSTOFFISOLIER	SKUM ISOLERING	SCHUIMISOLATIE
20		84366327		1	ESPUMA ISOLANTE, Chassis RH			
					FOAM INSULATION	ESPUMA AISLANTE	ISOLANTE IN SCHIUMA	051S
					MOUSSE ISOLANTE	SCHAUMSTOFFISOLIER	SKUM ISOLERING	SCHUIMISOLATIE
21		84366324		1	ESPUMA ISOLANTE, Chassis RH			
					FOAM INSULATION	ESPUMA AISLANTE	ISOLANTE IN SCHIUMA	051S
					MOUSSE ISOLANTE	SCHAUMSTOFFISOLIER	SKUM ISOLERING	SCHUIMISOLATIE
22		15212521		1	PARAFUSO, Hex, M6 x 35, 8.8, Full Thd			
					BOLT	PERNO	BULLONE	140B
					VIS	SCHRAUBE	BOLT	BOUT
23		86511444		1	PORCA, M6, Flg Ser	NUT	TUERCA	DADO	010D
					ECROU	MUTTER	MØTRIK	MOER
24		84372040		1	ESPUMA, Seat Pan; Used only with Open Cab (Not Shown)			
					FOAM	ESPUMA	SCHIUMA	P033
					MOUSSE	SCHAUM	SKUM	SCHUIM
25		87353967		1	ADESIVO, LWA 101 (Not Shown)			
					DECAL	CALCOMANÍA	DECALCOMANIA	012D
					AUTOCOLLANT	AUFKLEBER	TRANSFER	STICKER

ENGINE ACCESSORIES NA (SR175,SV185)
ENGINE ACCESSORIES NA (SR175,SV185)
ENGINE ACCESSORIES NA (SR175,SV185)
ENGINE ACCESSORIES NA (SR175,SV185)

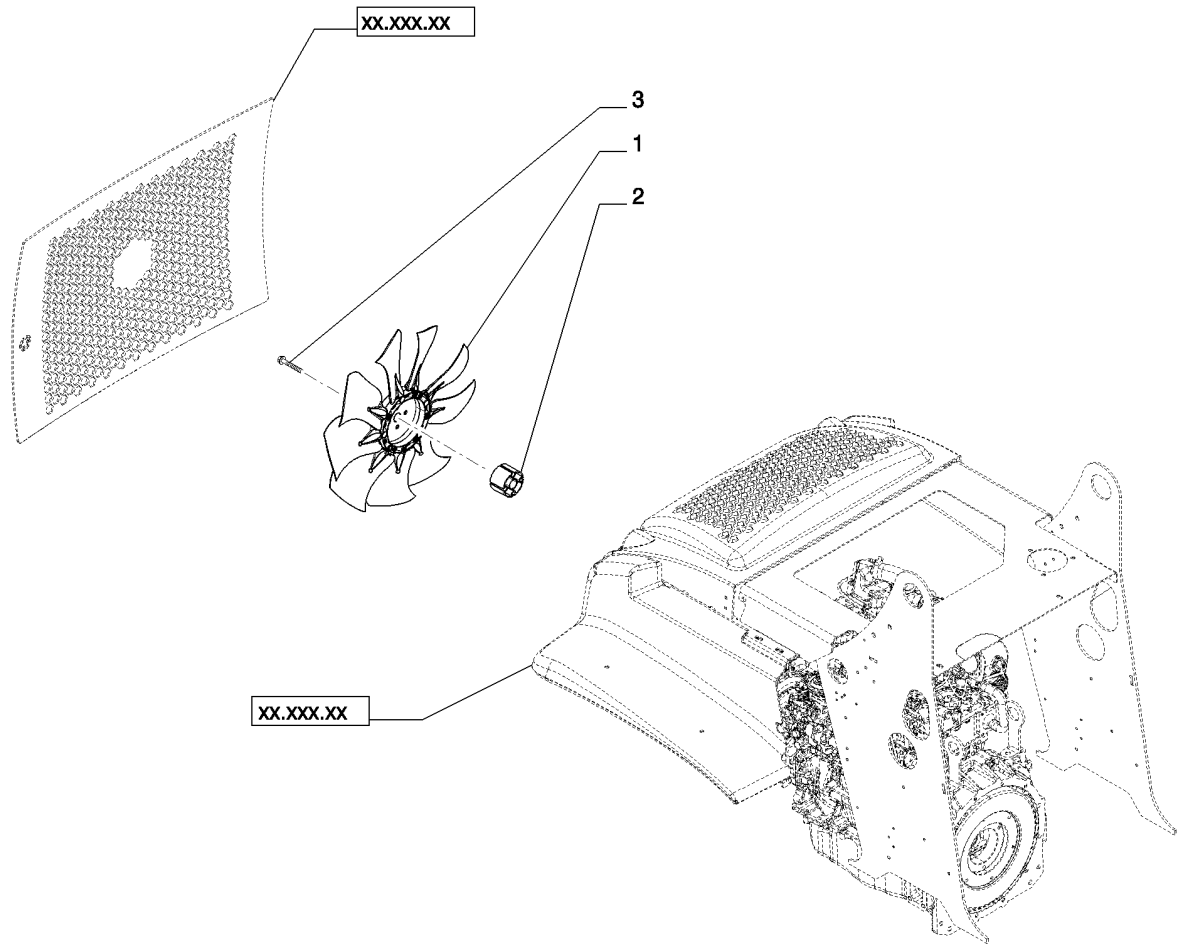

ENGINE ACCESSORIES NA (SR175,SV185)
ENGINE ACCESSORIES NA (SR175,SV185)
ENGINE ACCESSORIES NA (SR175,SV185)
ENGINE ACCESSORIES NA (SR175,SV185)

R	N	P.N.	MOD	Q	Denominação Description	Description Bezeichnung	Denominacion Beskrivelse	Descrizione Beschrijving	L.C.
1		**84371084**		1	VENTILADOR, Clockwise Pusher 450NA				
						FAN	VENTILADOR	VENTOLA	030V
					VENTILATEUR	GEBLÄSE	VENTILATOR	VENTILATOR	
2		**84374543**		1	ESPAÇADOR, Fan, Extended ISM				
						SPACER	SEPARADOR	DISTANZIALE	075D
					ENTRETOISE	DISTANZSTÜCK	AFSTANDSSTYKKE	AFSTANDSSTUK	
3		**9671714**		4	PARAFUSO, Hex Flg, M8 x 25, 8.8				
						BOLT	PERNO	BULLONE	140B
					VIS	SCHRAUBE	BOLT	BOUT	

SV185

SEAL PACKAGE, FOAM (ALL CASE)
SEAL PACKAGE, FOAM (ALL CASE)
SEAL PACKAGE, FOAM (ALL CASE)
SEAL PACKAGE, FOAM (ALL CASE)

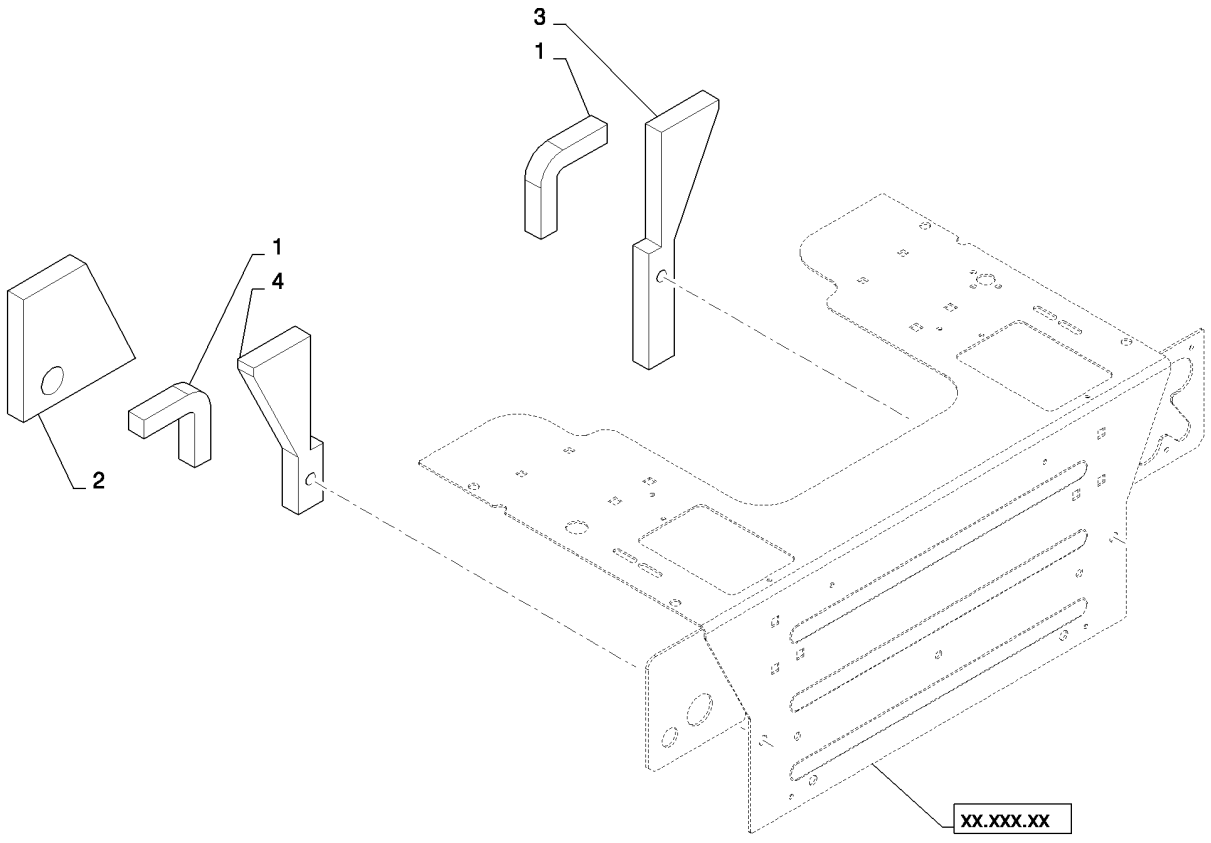

SEAL PACKAGE, FOAM (ALL CASE)
SEAL PACKAGE, FOAM (ALL CASE)
SEAL PACKAGE, FOAM (ALL CASE)
SEAL PACKAGE, FOAM (ALL CASE)

R	N	P.N.	MOD	Q	Denominação Description	Description Bezeichnung	Denominacion Beskrivelse	Descrizione Beschrijving	L.C.
1		**84342690**		2	ESPUMA ISOLANTE MOUSSE ISOLANTE	FOAM INSULATION SCHAUMSTOFFISOLIER	ESPUMA AISLANTE SKUM ISOLERING	ISOLANTE IN SCHIUMA SCHUIMISOLATIE	051S
2		**84287773**		1	ESPUMA, RH Filler MOUSSE	FOAM SCHAUM	ESPUMA SKUM	SCHIUMA SCHUIM	P033
3		**84287772**		1	ESPUMA, LH Heel Plate MOUSSE	FOAM SCHAUM	ESPUMA SKUM	SCHIUMA SCHUIM	P033
4		**84287771**		1	ESPUMA, RH Heel Plate MOUSSE	FOAM SCHAUM	ESPUMA SKUM	SCHIUMA SCHUIM	P033

88.120.02		p1	05/11

FUSE COVER, MED-LG CHASSIS (SR175-TV380)
FUSE COVER, MED-LG CHASSIS (SR175-TV380)
FUSE COVER, MED-LG CHASSIS (SR175-TV380)
FUSE COVER, MED-LG CHASSIS (SR175-TV380)

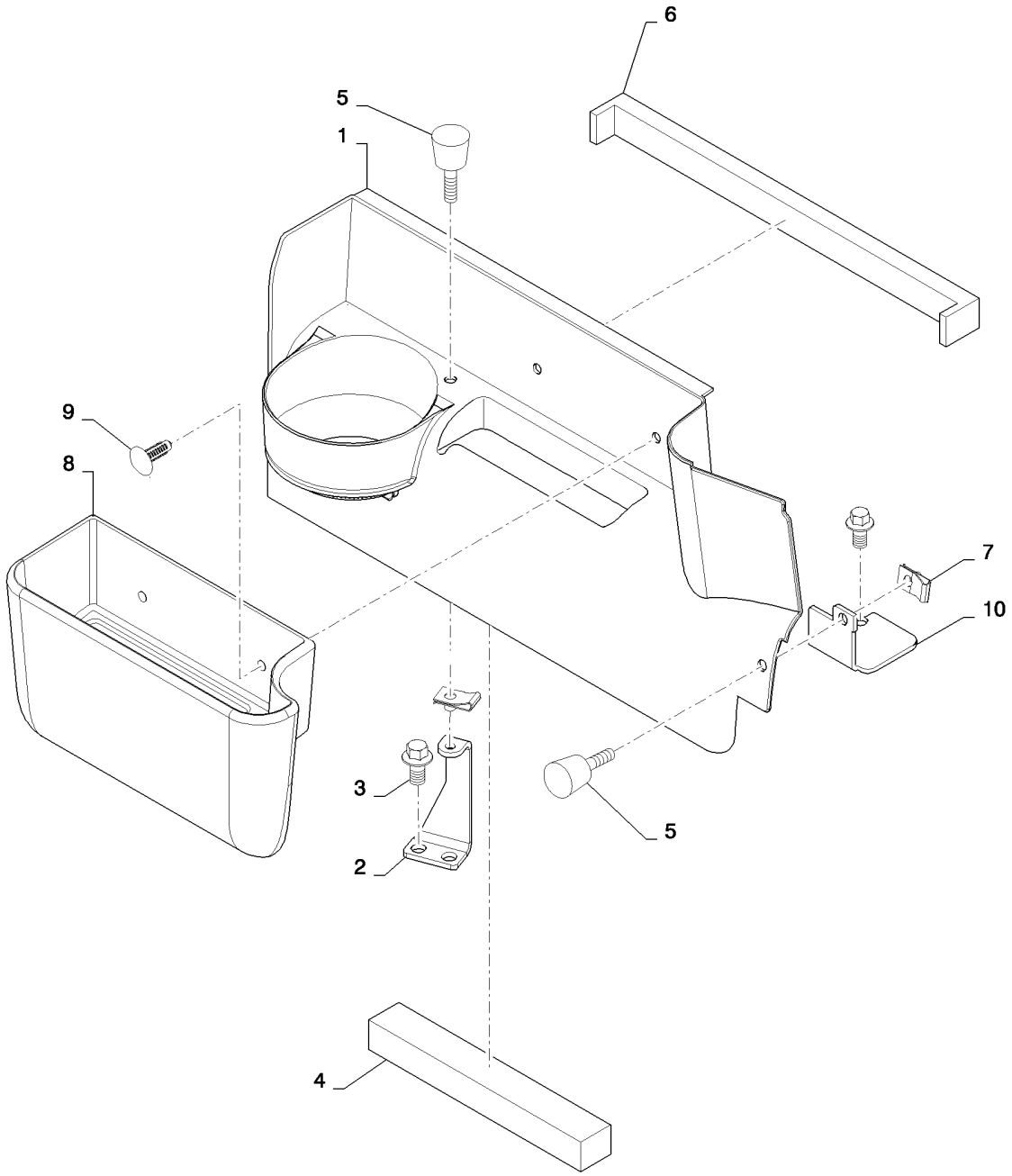

FUSE COVER, MED-LG CHASSIS (SR175-TV380)
FUSE COVER, MED-LG CHASSIS (SR175-TV380)
FUSE COVER, MED-LG CHASSIS (SR175-TV380)
FUSE COVER, MED-LG CHASSIS (SR175-TV380)

R	N	P.N.	MOD	Q	Denominação Description Bezeichnung	Denominacion Beskrivelse	Descrizione Beschrijving	L.C.
1		84301222		1	TAMPA DE ACESSO, Fuse Cover, Large Chassis ACCESS COVER	CUBIERTA DE ACCESO	COPERCHIO, DI ACCES	A036
					PANNEAU D'ACCES ZUGANGSABDECKUNG	ADGANGSDÆKSEL	TOEGANGSAFSCHERMI	
2		84481035		1	SUPORTE, Fuse Cover, Gray BRACKET	SOPORTE	STAFFA	225S
					SUPPORT HALTERUNG	BESLAG	STEUN	
3		84285339		2	PARAFUSO SELF-TAP SCREW	TORNILLO AUTORROSC	VITE AUTOFILETTANTE	062V
					VIS AUTOTARAUDEUSE SELBSTSCHN SCHRAUE	SELVLÅSENDE BOLT	ZELFTAPPENDE SCHRO	
4		84282686		1	ESPUMA ISOLANTE, Fuse Cover FOAM INSULATION	ESPUMA AISLANTE	ISOLANTE IN SCHIUMA	051S
					MOUSSE ISOLANTE SCHAUMSTOFFISOLIER	SKUM ISOLERING	SCHUIMISOLATIE	
5		273890		2	MAÇANETA, Thumb Screw KNOB	MANDO	MANOPOLA	150P
					BOUTON RUNDGRIFF	GREB	KNOP	
6		86508457		1	PASTILHA, Foam Console, .97 ft. PAD	PASTILLA	CUSCINO; TAMPONE	060T
					COUSSIN UNTERLAGE	BREMSEKLODS	BLOK	
7		87301324		2	PORCA, M5, U NUT	TUERCA	DADO	010D
					ECROU MUTTER	MØTRIK	MOER	
8		84362695		1	CESTO BASKET	CESTA	CESTINO	A024
					PANIER KORB	KURV	KORF	
9		84318533		2	BOTÃO DE IMPULSO, Push In, Wheat FASTENER	SUJETADOR	DISPOSITIVO DI FISSAG	123B
					ATTACHE BEFESTIGUNGSELEMEN	LUKKER	BEVESTIGING	
10		84379555		1	SUPORTE, Fuse Cover BRACKET	SOPORTE	STAFFA	225S
					SUPPORT HALTERUNG	BESLAG	STEUN	

SECTION INDEX

90 - Plataforma, cabine, lataria e adesivos

90.100.01		HOODS AND COVERS (SV185)
90.112.01		HAND CONTROLS, MANUAL MD FRAME (SR175-TV380)
90.112.01	01	FLOORPLATE, NO PEDAL (ALL CASE)
90.112.01	02	HAND CONTROLS, INTERLINK (SR130-SV300)
90.112.01	03	HANDLE MOUNTING, MD-LG FRAME HC (SR175-SV300)
90.112.01	04	HAND CONTROLS, HANDLE LH (SR130-SV300)
90.112.01	05	HAND CONTROLS, HANDLE RH (SR130-SV300)
90.112.01	06	DAMPENING CONTROL (SR130-SV185)
90.112.01	06	DAMPENING & CENTERING CONTROL (SR200-SV300)
90.112.01	07	MANUAL CENTERING (SR130-SV185)
90.112.02		ELEC-HYDRAULIC CONTROLS MD-LG FRM (SR175-TV380)
90.112.02	02	HANDLE MOUNTING EH (SR175-TV380)
90.112.02	03	HANDLE, ELECTRONIC CONTROL CASE (ALL CASE)
90.116.01		LOADER STOP 40MM (SV185,SV250,SV300,TV380)
90.116.02		LOADER STOP 63MM (SV185,SV250,SV300)
90.120.01		SEAT, NON SUSPENSION (ALL CASE)
90.120.02		SEAT, SUSPENSION (ALL CASE)
90.120.03		SEAT AIR SUSPENSION (ALL CASE)
90.120.04	01	SEAT BELT, 2 PT RETRACTOR 2 IN WEB (ALL CASE)
90.120.04	02	SEAT BELT, 3 PT (ALL CASE)
90.120.05		LAP BAR (ALL CASE)
90.120.06		SEAT ASSEMBLY, SUSPENSION (ALL CASE)
90.120.07		SEAT ASSEMBLY, STANDARD (ALL CASE)
90.150.01	01	CAB CASE (SR175-TV380)
90.150.01	02	CAB CASE (SR175-TV380)
90.150.01	03	CAB, GAS STRUT ASSY (ALL CASE)
90.150.02		CAB SEALING (ALL CASE)
90.150.03		FLOOR MAT, MECHANICAL HAND CONTROL (ALL CASE)
90.150.05		FLOOR MAT, EH CONTROLS (SR130-SV300)
90.154.00		FRONT DOOR, GLASS (ALL CASE)
90.154.01	01	DOOR ASSY, FRONT (ALL CASE)
90.154.01	02	DOOR ASSY, FRONT (ALL CASE)
90.154.01	03	NO FRONT DOOR (ALL CASE)
90.154.01	04	DOOR ASSY, FRONT DEMO (ALL CASE)
90.154.01	05	DOOR ASSY, FRONT DEMO (ALL CASE)
90.154.01	06	FRONT DEMO, DOOR (ALL CASE)
90.154.02		SIDE WINDOW ASSY (ALL CASE)
90.154.03	02	DOOR ASSY, REAR (ALL CASE)
90.154.04		REAR WINDOW NA (ALL CASE)
90.154.04		REAR WINDOW EU (ALL CASE)
90.154.05	01	WASHER BOTTLE, FRONT (ALL CASE)
90.154.05	02	WASHER BOTTLE, REAR (ALL CASE)
90.154.05	03	WASHER BOTTLE, FRONT & REAR (ALL CASE)
90.160.01	01	INTERIOR TRIM CASE (ALL CASE)
90.160.01	02	INTERIOR TRIM CASE (ALL CASE)
90.160.01	03	CAB SEALING (ALL CASE)
90.160.02		SEAL PACKAGE (SR175-TV380)
90.160.03	01	CAB HEADLINER, NO RADIO (ALL CASE)
90.160.03	02	CAB HEADLINER, WITH RADIO (ALL CASE)
90.180.01	01	DECALS (SV185)
90.180.01	02	DECALS - WARNING (ALL CASE)
90.180.01	03	DECALS (ALL CASE)
90.180.01	04	DECALS (SV185)

90.100.01		p1	04/11

HOODS AND COVERS (SV185)
HOODS AND COVERS (SV185)
HOODS AND COVERS (SV185)
HOODS AND COVERS (SV185)

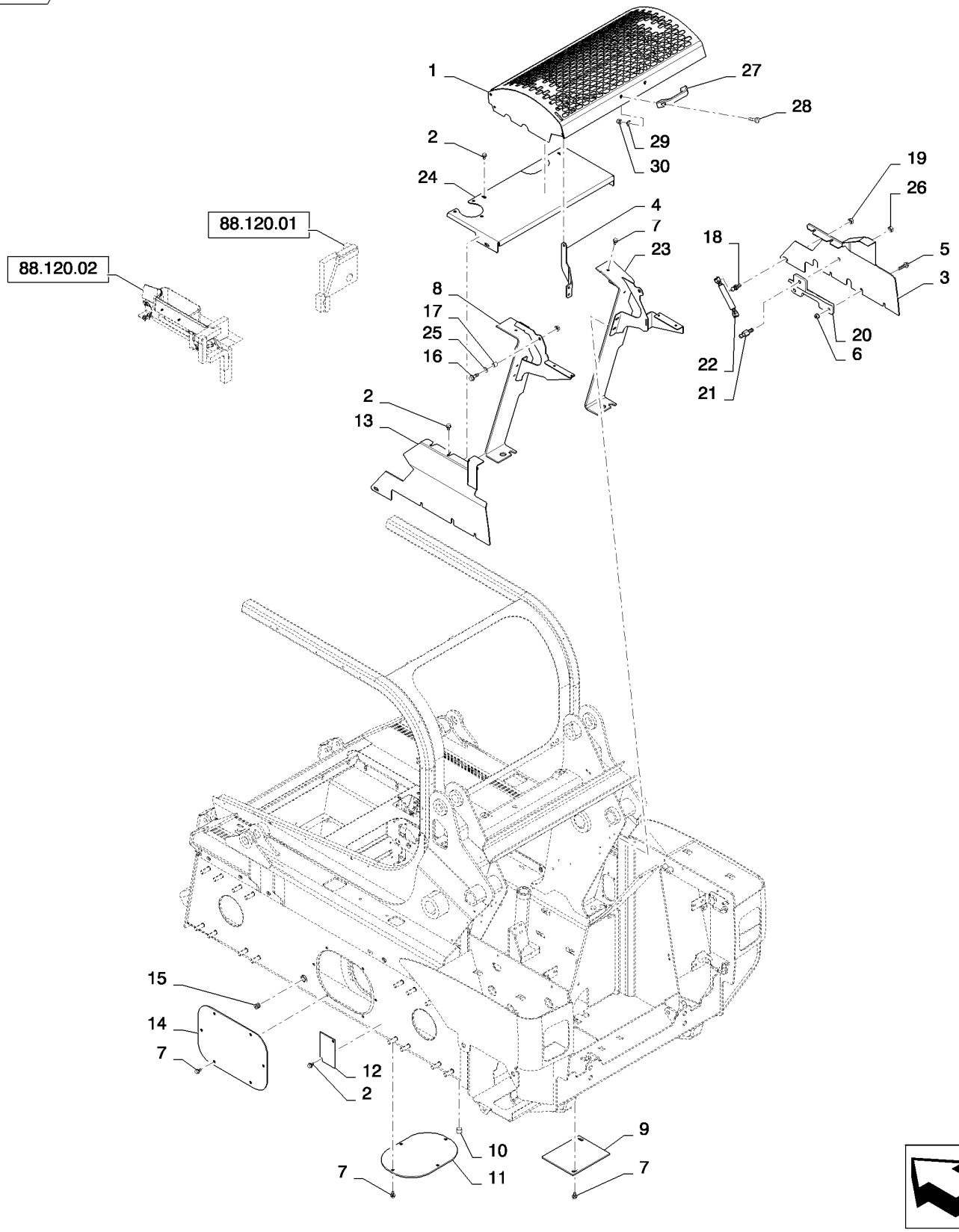

HOODS AND COVERS (SV185)
HOODS AND COVERS (SV185)
HOODS AND COVERS (SV185)
HOODS AND COVERS (SV185)

R	N	P.N.	MOD	Q	Denominação Description	Description Bezeichnung	Denominacion Beskrivelse	Descrizione Beschrijving	L.C.
1		84423420		1	ESTRUTURA, Tilt, Gray	FRAME	BASTIDOR	TELAIO	077T
					CHASSIS	RAHMEN	FRAME	FRAME	
2		84285339		14	PARAFUSO, M8 X 15	SELF-TAP SCREW	TORNILLO AUTORROSC	VITE AUTOFILETTANTE	062V
					VIS AUTOTARAUDEUSE	SELBSTSCHN SCHRAUE	SELVLÅSENDE BOLT	ZELFTAPPENDE SCHRO	
3		84361513		1	PAINEL, RH, Cover Tan	PANEL	PANEL	PANNELLO	025P
					PANNEAU	PLATTE	PANEL	PANEEL	
4		84317996		1	CANTONEIRA, Hood Lock Tan				
						ANGLE	ÁNGULO	ANGOLARE	057C
					CORNIERE	WINKEL	VINKELBESLAG	HOEKSTUK	
5		9804260		2	PARAFUSO, Hex Flg, M8 x 30, 8.8, Full Thd				
						BOLT	PERNO	BULLONE	140B
					VIS	SCHRAUBE	BOLT	BOUT	
6		9804277		4	PORCA, M8 x 1.25, Flg, Cl 8				
						NUT	TUERCA	DADO	010D
					ECROU	MUTTER	MØTRIK	MOER	
7		87030529		30	PARAFUSO, Hex Wash Hd, 3/8"-16 x 7/8"				
						SELF-TAP SCREW	TORNILLO AUTORROSC	VITE AUTOFILETTANTE	062V
					VIS AUTOTARAUDEUSE	SELBSTSCHN SCHRAUE	SELVLÅSENDE BOLT	ZELFTAPPENDE SCHRO	
8		84378355		1	CANTONEIRA, Cover Mounting Gray				
						ANGLE	ÁNGULO	ANGOLARE	057C
					CORNIERE	WINKEL	VINKELBESLAG	HOEKSTUK	
9		84299809		1	PLACA DE COBERTURA, Plumbing Access Cover				
						COVER PLATE	PLACA DE CUBIERTA	PIASTRA DI COPERTUR/	110P
					COUVERCLE	ABDECKPLATTE	DÆKPLADE	AFSCHERMPLAAT	
10		236622		2	BUJÃO, Pipe	PLUG	TAPÓN	TAPPO	050T
					BOUCHON	STOPFEN	PROP	PLUG	
11		84299800		1	PLACA DE COBERTURA, Gray				
						COVER PLATE	PLACA DE CUBIERTA	PIASTRA DI COPERTUR/	110P
					COUVERCLE	ABDECKPLATTE	DÆKPLADE	AFSCHERMPLAAT	
12		84370417		2	PLACA, Cover CE Gray	PLATE	PLACA	PIASTRA	105P
					PLAQUE	PLATTE	PLADE	PLAAT	
13		84361519		1	PAINEL, LH, Cover Tan	PANEL	PANEL	PANNELLO	025P
					PANNEAU	PLATTE	PANEL	PANEEL	
14		84421075		2	PLACA DE COBERTURA, W/Bung Tan				
						COVER PLATE	PLACA DE CUBIERTA	PIASTRA DI COPERTUR/	110P
					COUVERCLE	ABDECKPLATTE	DÆKPLADE	AFSCHERMPLAAT	
15		647429		2	BUJÃO DE DRENO, Pipe	DRAIN PLUG	TAPÓN DE VACIADO	TAPPO DI SCARICO	056T
					BOUCHON DE VIDANGE	ABLASSSCHRAUBE	AFTAPNINGSPROP	AFTAPPLUG	
16		9671714		2	PARAFUSO, Hex Flg, M8 x 25, 8.8				
						BOLT	PERNO	BULLONE	140B
					VIS	SCHRAUBE	BOLT	BOUT	
17		87035448		2	ESPAÇADOR, 1/2" Tube x 1/2"				
						SPACER	SEPARADOR	DISTANZIALE	075D
					ENTRETOISE	DISTANZSTÜCK	AFSTANDSSTYKKE	AFSTANDSSTUK	
20		84423418		1	SUPORTE, Gas Strut Support				
						BRACKET	SOPORTE	STAFFA	225S
					SUPPORT	HALTERUNG	BESLAG	STEUN	
21		109498A1		2	PRISIONEIRO, Ball	STUD	ESPARRAGO	PRIGIONIERO	P521
					GOUJON	STEHBOLZEN	STUD	STUD	

90.100.01		p2	04/11

HOODS AND COVERS (SV185)
HOODS AND COVERS (SV185)
HOODS AND COVERS (SV185)
HOODS AND COVERS (SV185)

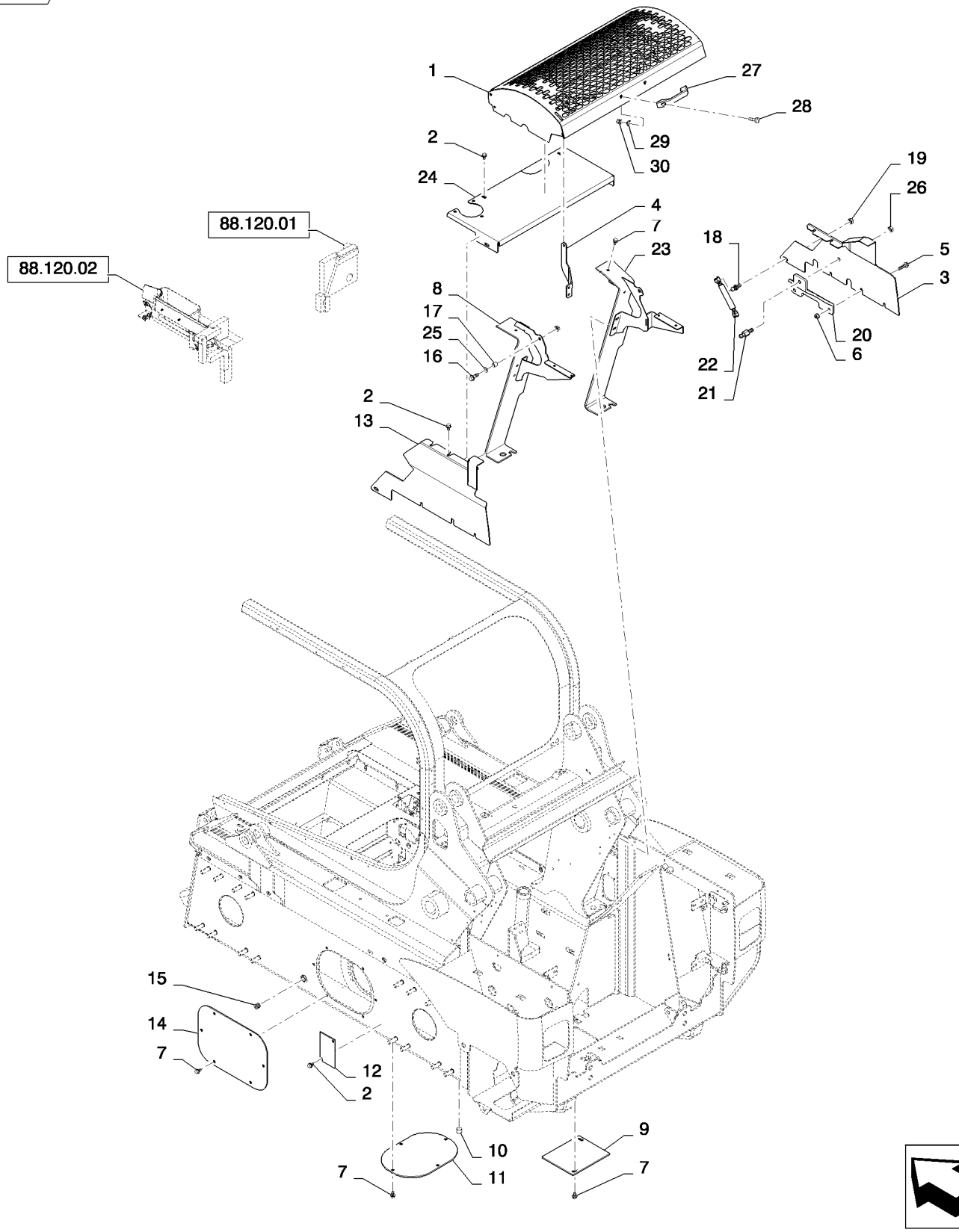

HOODS AND COVERS (SV185)
HOODS AND COVERS (SV185)
HOODS AND COVERS (SV185)
HOODS AND COVERS (SV185)

R	N	P.N.	MOD	Q	Denominação Description	Description Bezeichnung	Denominacion Beskrivelse	Descrizione Beschrijving	L.C.
22		**400472A1**		1	MOLA, Hood Assist	SPRING	MUELLE	MOLLA	8315
					RESSORT	FEDER	SPRING	SPRING	
23		**84361834**		1	CANTONEIRA, Cover Mounting Gray				
						ANGLE	ÁNGULO	ANGOLARE	057C
					CORNIERE	WINKEL	VINKELBESLAG	HOEKSTUK	
24		**84361530**		1	PAINEL, Assy, Rear Deck Gray				
						PANEL	PANEL	PANNELLO	025P
					PANNEAU	PLATTE	PANEL	PANEEL	
25		**65319**		1	ARRUELA PLANA, M13 x 25 x 3.5, HT				
						WASHER	ARANDELA	RONDELLA	131R
					RONDELLE	UNTERLEGSCHEIBE	FLADSKIVE	SLUITRING	
26		**9635082**		3	PORCA, 5/16"-18, G5, (Not Shown)				
						NUT	TUERCA	DADO	010D
					ECROU	MUTTER	MØTRIK	MOER	
27		**406256A1**		1	ALAVANCA, Rear Hood (Not Shown)				
						HANDLE	PALANCA	MANIGLIA	4120
					POIGNEE	GRIFF	HANDLE	HANDLE	
28		**86511827**		2	PARAFUSO, Cross Pan Hd, M5 x 20, Attach Handle to Hood (Not Shown)				
						SCREW	TORNILLO	VITE	040V
					VIS	SCHRAUBE	SKRUE	SCHROEF	
29		**86625264**		2	TRAVA DA ARRUELA, Ext Tooth, M5, Attach Handle to Hood (Not Shown)				
						LOCK WASHER	ARANDELA DE BLOQUE	RONDELLA DI SICUREZ	132R
					RONDELLE FREIN	SICHERUNGSSCHEIBE	LÅSESKIVE	BORGRING	
30		**86639241**		2	CONTRA PORCA, M5 x .8, Cl 8, Attach Handle to Hood (Not Shown)				
						LOCK NUT	TUERCA DE BLOQUEO	DADO DI BLOCCAGGIO	P263
					CONTRE-ECROU	SICHERUNGSMUTTER	LÅSEMØTRIK	BORGMOER	

90.112.01		p1	01/11

HAND CONTROLS, MANUAL MD FRAME (SR175-TV380)
HAND CONTROLS, MANUAL MD FRAME (SR175-TV380)
HAND CONTROLS, MANUAL MD FRAME (SR175-TV380)
HAND CONTROLS, MANUAL MD FRAME (SR175-TV380)

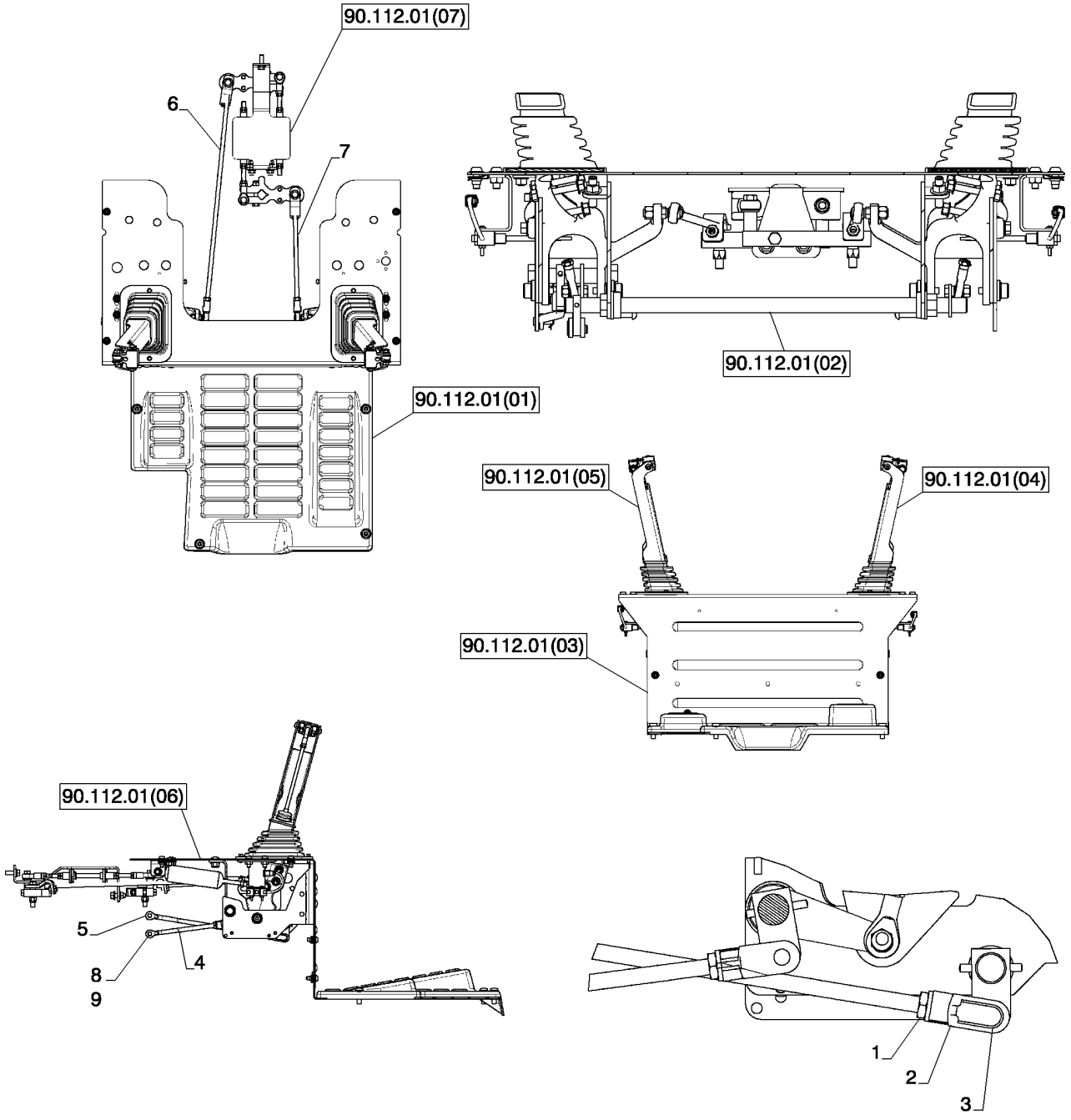

HAND CONTROLS, MANUAL MD FRAME (SR175-TV380)
HAND CONTROLS, MANUAL MD FRAME (SR175-TV380)
HAND CONTROLS, MANUAL MD FRAME (SR175-TV380)
HAND CONTROLS, MANUAL MD FRAME (SR175-TV380)

R	N	P.N.	MOD	Q	Denominação Description	Description Bezeichnung	Denominacion Beskrivelse	Descrizione Beschrijving	L.C.
1		84221258		2	PORCA FINA, M10 Class 05 ZND				
						THIN NUT	TUERCA DELGADA	DADO SOTTILE	A076
					ECROU FIN	FLACHMUTTER	MØTRIK, TYND	DUNNE MOER	
2		84299261		2	GARFO	CLEVIS	MOSQUETÓN	FORCELLA DI ATTACCO	084F
					CHAPE	SCHÄKEL	GAFFELBOLT	GAFFEL	
3		84299262		2	PINO DE GARFO	CLEVIS PIN	EJE CON CABEZA	PERNO A TESTA PIANA	P694
					AXE DE CHAPE	GABELBOLZEN	GAFFELBOLT	GAFFELPEN	
4		84300037		1	HASTE, Loader Valve Bucket				
						ROD	VARILLA	ASTA	090A
					TIGE	STANGE	STANG	STANG	
5		84300039		1	HASTE, Loader Valve Boom	ROD	VARILLA	ASTA	090A
					TIGE	STANGE	STANG	STANG	
6		84303656		1	HASTE ROSCADA, Ground Drive - Medium Frame				
						THREADED ROD	VÁSTAGO ROSCADO	ASTA FILETTATA	095A
					TIGE FILETEE	GEWINDESTANGE	GEVINDSTANG	DRAADSTANG	
7		84303657		1	HASTE ROSCADA, Ground Drive - Medium Frame				
						THREADED ROD	VÁSTAGO ROSCADO	ASTA FILETTATA	095A
					TIGE FILETEE	GEWINDESTANGE	GEVINDSTANG	DRAADSTANG	
8		234726		2	PINO DE GARFO, 1/4" x .770"				
						CLEVIS PIN	EJE CON CABEZA	PERNO A TESTA PIANA	P694
					AXE DE CHAPE	GABELBOLZEN	GAFFELBOLT	GAFFELPEN	
9		D131983		2	PINO	PIN	PASADOR	PERNO	080P
					BROCHE	PIN	STIFT	PEN	

90.112.01	01	p1	02/11

FLOORPLATE, NO PEDAL (ALL CASE)
FLOORPLATE, NO PEDAL (ALL CASE)
FLOORPLATE, NO PEDAL (ALL CASE)
FLOORPLATE, NO PEDAL (ALL CASE)

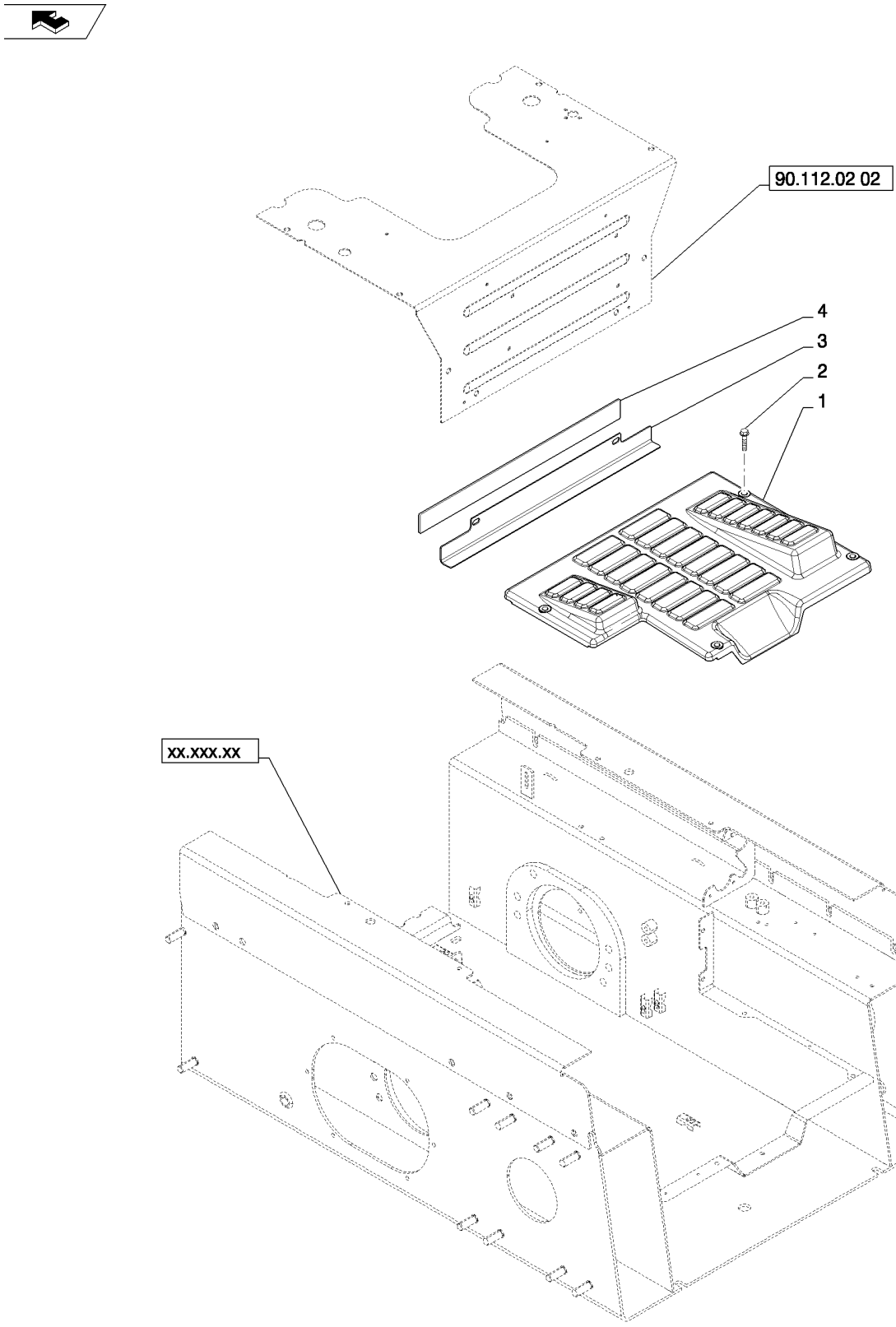

FLOORPLATE, NO PEDAL (ALL CASE)
FLOORPLATE, NO PEDAL (ALL CASE)
FLOORPLATE, NO PEDAL (ALL CASE)
FLOORPLATE, NO PEDAL (ALL CASE)

R	N	P.N.	MOD	Q	Denominação Description	Description Bezeichnung	Denominacion Beskrivelse	Descrizione Beschrijving	L.C.
1		84201060		1	PLACA PLÁSTICA PLAQUE EN PLASTIQUE	PLASTIC PLATE KUNSTSTOFFPLATTE	PLACA DE PLÁSTICO PLASTPLADE	PIASTRA DI PLASTICA KUNSTSTOFPLAAT	P778
2		84312232		4	PARAFUSO VIS AUTOTARAUDEUSE	SELF-TAP SCREW SELBSTSCHN SCHRAUE	TORNILLO AUTORROSC SELVLÅSENDE BOLT	VITE AUTOFILETTANTE ZELFTAPPENDE SCHRO	062V
3		84341453		1	CANTONEIRA CORNIERE	ANGLE WINKEL	ÁNGULO VINKELBESLAG	ANGOLARE HOEKSTUK	057C
4		87061045		2	FITA ADESIVA BANDE ADHESIVE	ADHESIVE STRIP KLEBESTREIFEN	CINTA ADHESIVA SELVKLÆBENDE STRIP	NASTRO ADESIVO KLEEFSTRIP	Z391

90.112.01	02	p1	01/11

HAND CONTROLS, INTERLINK (SR130-SV300)
HAND CONTROLS, INTERLINK (SR130-SV300)
HAND CONTROLS, INTERLINK (SR130-SV300)
HAND CONTROLS, INTERLINK (SR130-SV300)

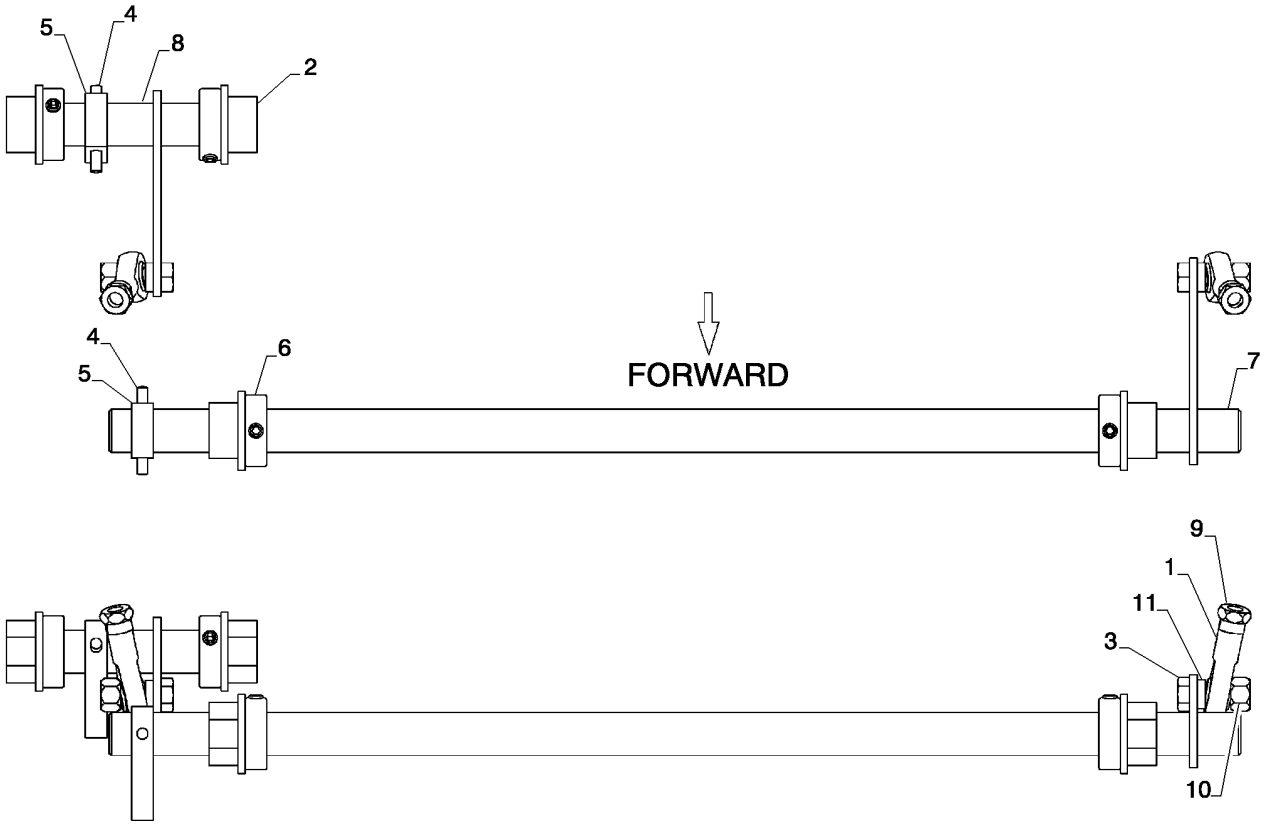

HAND CONTROLS, INTERLINK (SR130-SV300)
HAND CONTROLS, INTERLINK (SR130-SV300)
HAND CONTROLS, INTERLINK (SR130-SV300)
HAND CONTROLS, INTERLINK (SR130-SV300)

R	N	P.N.	MOD	Q	Denominação Description	Description Bezeichnung	Denominacion Beskrivelse	Descrizione Beschrijving	L.C.
1		221665		2	ROLAMENTO ESFÉRICO, 0.315" ID x 0.625" OD x 0.437"				
						SPHERICAL BEARING	COJINETE ESFÉRICO	CUSCINETTO SFERICO	A164
					ROULEMENT SPHERIQU	PENDELKUGELLAGER	SFÆRISK LEJE	KOGELLAGER	
2		228500		4	BUCHA	BUSHING	CASQUILLO	BOCCOLA	095B
					BAGUE	BUCHSE	BØSNING	BUS	
3		280483		2	PARAFUSO, Hex, 5/16"-24 x 1", G5, Full Thd				
						BOLT	PERNO	BULLONE	140B
					VIS	SCHRAUBE	BOLT	BOUT	
4		856800		2	PINO RANHURADO, 3/16" x 1 1/2", Type E, Hardened				
						GROOVED PIN	PASADOR RANURADO	PERNO SCANALATO	086P
					GOUPILLE CANNELEE	KERBSTIFT	TAP M/NOT	GEGROEFDE PEN	
5		84273628		2	PLACA, Foot Control Ear	PLATE	PLACA	PIASTRA	105P
					PLAQUE	PLATTE	PLADE	PLAAT	
6		84291866		4	COLAR DE FIXAÇÃO, 3/4" Shaft				
						RETAINER COLLAR	COLLAR DE RETENCIÓN	COLLARE DI FISSAGGIO	230S
					COLLIER DE RETENUE	HALTERING	RING, SPÆNDE	BORGKRAAG	
7		84299773		1	EIXO DE COMANDO, Hand Control, Boom				
						CONTROL SHAFT	EJE DE CONTROL	ALBERO DI COMANDO	008A
					ARBRE DE COMMANDE	STEUERWELLE	DRIVAKSEL	REGELAS	
8		84299785		1	EIXO DE COMANDO, Hand Control, Bucket				
						CONTROL SHAFT	EJE DE CONTROL	ALBERO DI COMANDO	008A
					ARBRE DE COMMANDE	STEUERWELLE	DRIVAKSEL	REGELAS	
9		86637933		2	PORCA, Jam, 5/16"-24, G5	NUT	TUERCA	DADO	010D
					ECROU	MUTTER	MØTRIK	MOER	
10		87034527		2	PORCA	NUT	TUERCA	DADO	010D
					ECROU	MUTTER	MØTRIK	MOER	
11		87360034		2	ESPAÇADOR, 1/2" Tube	SPACER	SEPARADOR	DISTANZIALE	075D
					ENTRETOISE	DISTANZSTÜCK	AFSTANDSSTYKKE	AFSTANDSSTUK	

90.112.01	03	p1	02/11

HANDLE MOUNTING, MD-LG FRAME HC (SR175-SV300)
HANDLE MOUNTING, MD-LG FRAME HC (SR175-SV300)
HANDLE MOUNTING, MD-LG FRAME HC (SR175-SV300)
HANDLE MOUNTING, MD-LG FRAME HC (SR175-SV300)

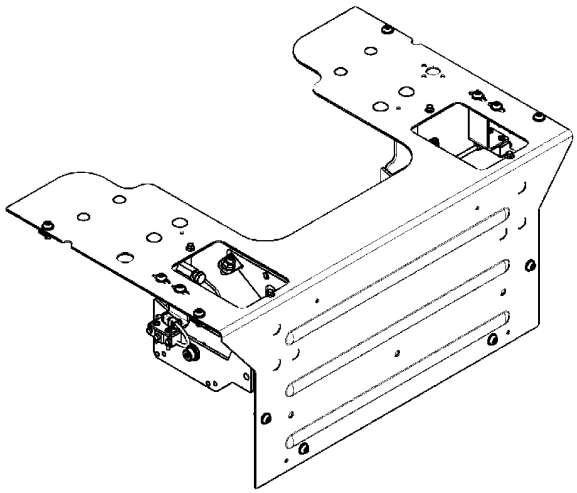

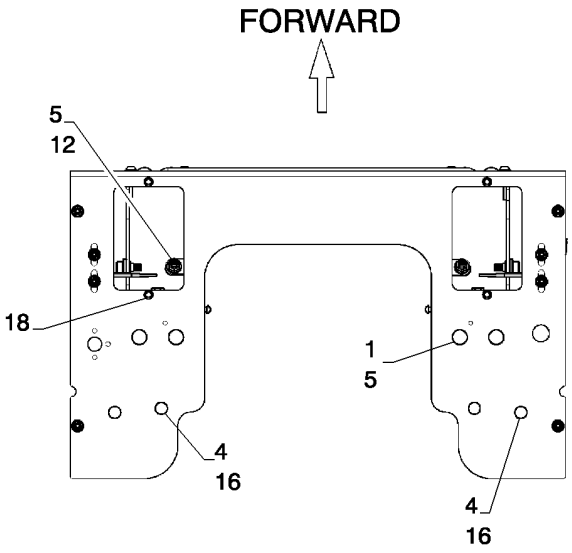

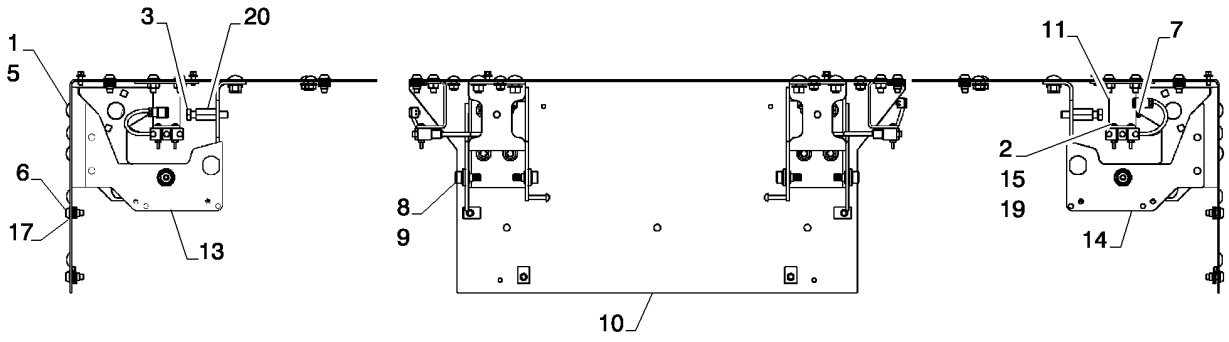

HANDLE MOUNTING, MD-LG FRAME HC (SR175-SV300)
HANDLE MOUNTING, MD-LG FRAME HC (SR175-SV300)
HANDLE MOUNTING, MD-LG FRAME HC (SR175-SV300)
HANDLE MOUNTING, MD-LG FRAME HC (SR175-SV300)

R	N	P.N.	MOD	Q	Denominação Description	Description Bezeichnung	Denominacion Beskrivelse	Descrizione Beschrijving	L.C.
1		86633356		10	PARAFUSO, Short NK, M10 x 25, Cl8.8, Full Thd				
						CARRIAGE BOLT	PERNO ALOMADO	BULLONE A TESTA TONI	P123
					VIS A TETE BOMBEE	SCHLOSSSCHRAUBE	BRÆDDEBOLT	SLOTBOUT	
2		280859		4	PORCA, Keps, w/LW,#6-32	NUT	TUERCA	DADO	010D
					ECROU	MUTTER	MØTRIK	MOER	
3		412217		2	PARAFUSO, Hex, M10 x 55, 8.8, Full Thd				
						BOLT	PERNO	BULLONE	140B
					VIS	SCHRAUBE	BOLT	BOUT	
4		9804277		4	PORCA, M8 x 1.25, Flg, Cl 8				
						NUT	TUERCA	DADO	010D
					ECROU	MUTTER	MØTRIK	MOER	
5		9804278		12	PORCA, M10 x 1.5, Flg, Cl 8				
						NUT	TUERCA	DADO	010D
					ECROU	MUTTER	MØTRIK	MOER	
6		84187826		12	PARAFUSO, RWH M8x20 Torx 8.8 Pol				
						SCREW	TORNILLO	VITE	040V
					VIS	SCHRAUBE	SKRUE	SCHROEF	
7		84239537		2	INTERRUPTOR, OMRON 2-15GNJ55				
						SWITCH	INTERRUPTOR	INTERRUTTORE	075I
					CONTACTEUR	SCHALTER	KONTAKT	SCHAKELAAR	
8		84291864		4	PARAFUSO, Custom Shoulder Pivot				
						BOLT	PERNO	BULLONE	140B
					VIS	SCHRAUBE	BOLT	BOUT	
9		84291865		4	BUCHA, Handle Pivot	BUSHING	CASQUILLO	BOCCOLA	095B
					BAGUE	BUCHSE	BØSNING	BUS	
10		84392252		1	PLACA, Heel, Removable, Med-Lg Frame				
						PLATE	PLACA	PIASTRA	105P
					PLAQUE	PLATTE	PLADE	PLAAT	
11		84407176		1	SUPORTE, Back-Up Alarm Switch, RH				
						BRACKET	SOPORTE	STAFFA	225S
					SUPPORT	HALTERUNG	BESLAG	STEUN	
11		84407179		1	SUPORTE, Back-Up Alarm Switch, LH				
						BRACKET	SOPORTE	STAFFA	225S
					SUPPORT	HALTERUNG	BESLAG	STEUN	
12		84345494		2	PARAFUSO DE AJUSTE	SET SCREW	TORNILLO DE AJUSTE	VITE DI FERMO	P327
					VIS DE REGLAGE	STELLSCHRAUBE	SÆTSKRUE	STELSCHROEF	
13		84386369		1	SUPORTE, Handle, LH Gray				
						BRACKET	SOPORTE	STAFFA	225S
					SUPPORT	HALTERUNG	BESLAG	STEUN	
14		84386372		1	SUPORTE, Handle, RH Gray				
						BRACKET	SOPORTE	STAFFA	225S
					SUPPORT	HALTERUNG	BESLAG	STEUN	
15		86511189		4	ARRUELA PLANA, #6, .156 x .375 x .049				
						WASHER	ARANDELA	RONDELLA	131R
					RONDELLE	UNTERLEGSCHEIBE	FLADSKIVE	SLUITRING	
16		308761		4	PARAFUSO, Short NK, M8 x 25, Cl8.8, Full Thd, M8x16 Cl 8.8				
						CARRIAGE BOLT	PERNO ALOMADO	BULLONE A TESTA TONI	P123
					VIS A TETE BOMBEE	SCHLOSSSCHRAUBE	BRÆDDEBOLT	SLOTBOUT	

90.112.01	03	p2	02/11

HANDLE MOUNTING, MD-LG FRAME HC (SR175-SV300)
HANDLE MOUNTING, MD-LG FRAME HC (SR175-SV300)
HANDLE MOUNTING, MD-LG FRAME HC (SR175-SV300)
HANDLE MOUNTING, MD-LG FRAME HC (SR175-SV300)

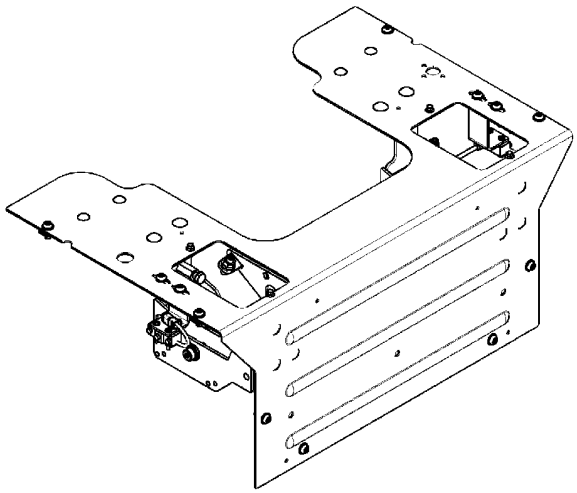

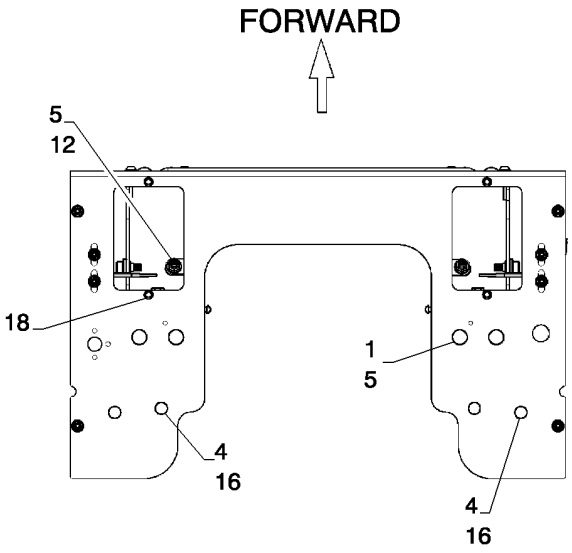

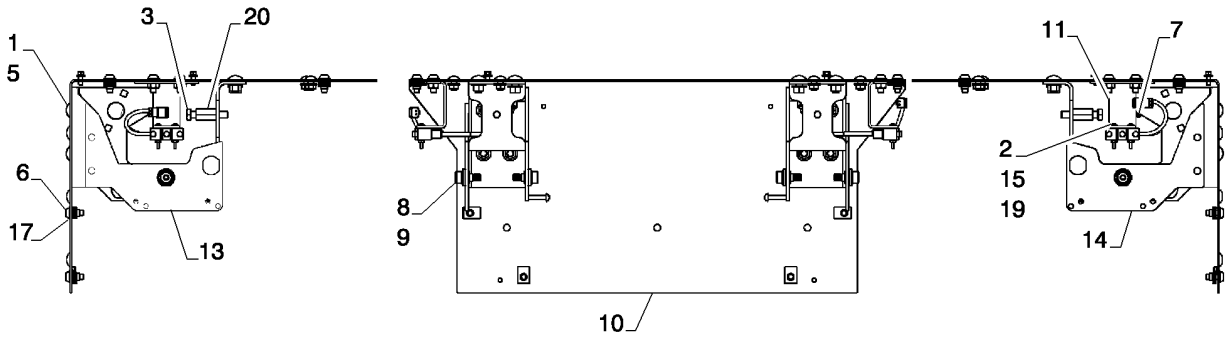

HANDLE MOUNTING, MD-LG FRAME HC (SR175-SV300)
HANDLE MOUNTING, MD-LG FRAME HC (SR175-SV300)
HANDLE MOUNTING, MD-LG FRAME HC (SR175-SV300)
HANDLE MOUNTING, MD-LG FRAME HC (SR175-SV300)

R	N	P.N.	MOD	Q	Denominação Description	Description Bezeichnung	Denominacion Beskrivelse	Descrizione Beschrijving	L.C.
17		**86625074**		8	PORCA, Spring, Multi-thread M8x1.25				
						NUT	TUERCA	DADO	010D
					ECROU	MUTTER	MØTRIK	MOER	
18		**87017606**		4	PARAFUSO, Hex Flg Hd, M6 x 20, Tapping, Flange M6x13				
						SELF-TAP SCREW	TORNILLO AUTORROSC	VITE AUTOFILETTANTE	062V
					VIS AUTOTARAUDEUSE	SELBSTSCHN SCHRAUE	SELVLÅSENDE BOLT	ZELFTAPPENDE SCHRO	
19		**87319756**		4	PARAFUSO, PHD #6-32xt .375 CST Znd				
						SCREW	TORNILLO	VITE	040V
					VIS	SCHRAUBE	SKRUE	SCHROEF	
20		**130105A1**		2	PORCA, Hex Coupling M10x1.5x38				
						NUT	TUERCA	DADO	5780
					ECROU	MUTTER	NUT	NUT	
21		**86624182**		4	ARRUELA PLANA, M6 x 18 x 1.6, (Not Shown) Used with Ref. 18				
						WASHER	ARANDELA	RONDELLA	131R
					RONDELLE	UNTERLEGSCHEIBE	FLADSKIVE	SLUITRING	
22		**87026182**		12	ARRUELA PLANA, 17/32" x 1" x .030", (Not Shown) Used with Ref. 8 & 9				
						WASHER	ARANDELA	RONDELLA	131R
					RONDELLE	UNTERLEGSCHEIBE	FLADSKIVE	SLUITRING	

90.112.01	04	p1	01/11

HAND CONTROLS, HANDLE LH (SR130-SV300)
HAND CONTROLS, HANDLE LH (SR130-SV300)
HAND CONTROLS, HANDLE LH (SR130-SV300)
HAND CONTROLS, HANDLE LH (SR130-SV300)

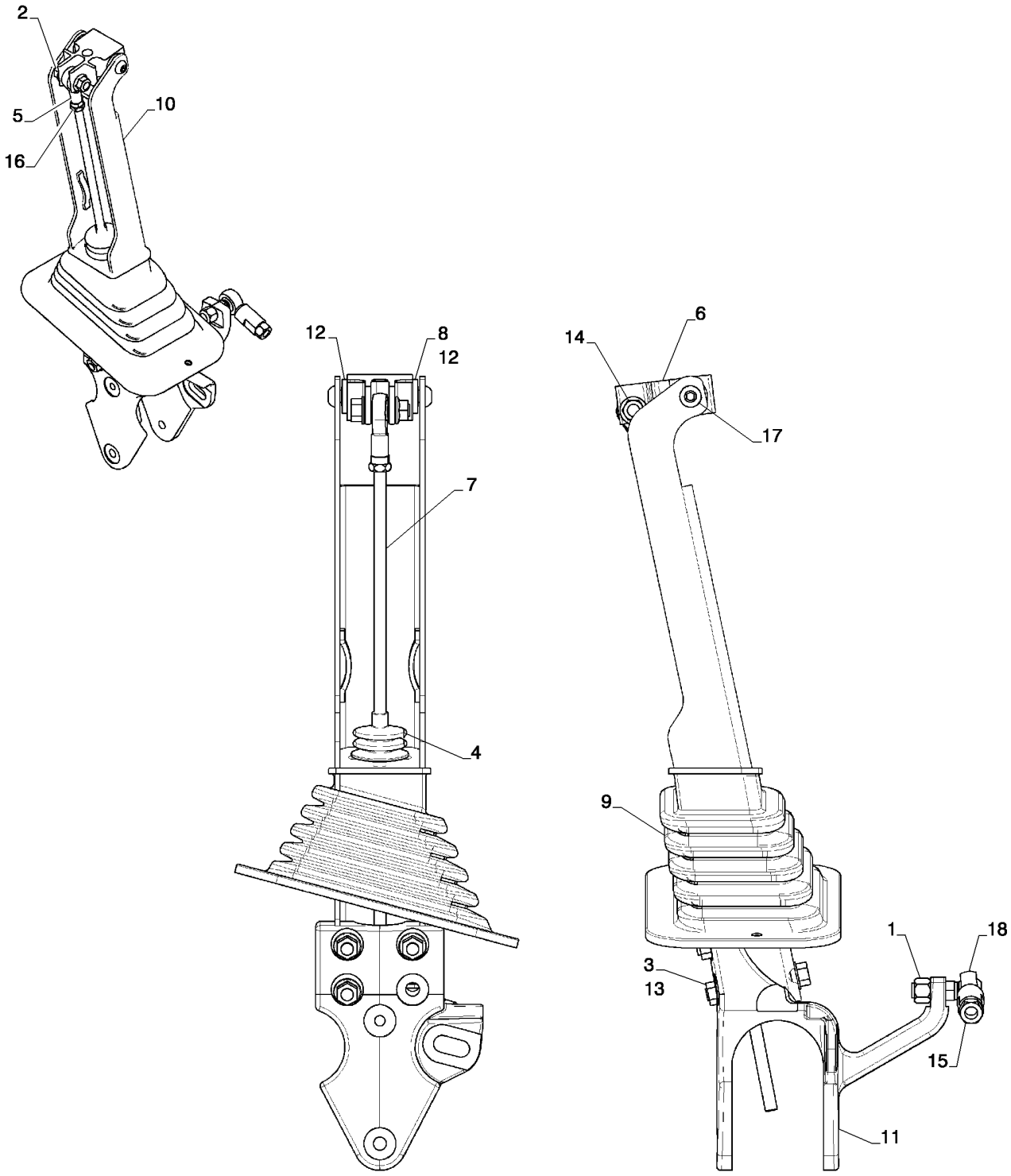

HAND CONTROLS, HANDLE LH (SR130-SV300)
HAND CONTROLS, HANDLE LH (SR130-SV300)
HAND CONTROLS, HANDLE LH (SR130-SV300)
HAND CONTROLS, HANDLE LH (SR130-SV300)

R	N	P.N.	MOD	Q	Denominação Description	Description Bezeichnung	Denominacion Beskrivelse	Descrizione Beschrijving	L.C.
1		80855		1	CONTRA PORCA, 3/8"-24, GC				
						LOCK NUT	TUERCA DE BLOQUEO	DADO DI BLOCCAGGIO	P263
					CONTRE-ECROU	SICHERUNGSMUTTER	LÅSEMØTRIK	BORGMOER	
2		9804260		1	PARAFUSO, Hex Flg, M8 x 30, 8.8, Full Thd				
						BOLT	PERNO	BULLONE	140B
					VIS	SCHRAUBE	BOLT	BOUT	
3		9804277		3	PORCA, M8 x 1.25, Flg, Cl 8				
						NUT	TUERCA	DADO	010D
					ECROU	MUTTER	MØTRIK	MOER	
4		84201371		1	CAPA, Control Rod Boot	BOOT	FUNDA	PARAPOLVERE	330C
					SOUFFLET	MANSCHETTE	MANCHET	HOES	
5		84263144		1	JUNTA ESFÉRICA, Rod End				
						BALL JOINT	RÓTULA	GIUNTO SFERICO	070G
					JOINT A ROTULE	KUGELGELENK	KUGLELED	KOGELGEWRICHT	
6		84291862		1	JUNTA ARTICULAÇÃO, Hand Control				
						KNUCKLE JOINT	JUNTA DE PIVOTE	ARTICOLAZIONE A FOR(	Z408
					ROTULE	GELENKVERBINDUNG	FORBINDELSESSPINDEI	GEWRICHTSKOPPELING	
7		84300731		1	HASTE ROSCADA, Hand Control LDH				
						THREADED ROD	VÁSTAGO ROSCADO	ASTA FILETTATA	095A
					TIGE FILETEE	GEWINDESTANGE	GEVINDSTANG	DRAADSTANG	
8		84302564		1	HASTE, Grip Pivol	ROD	VARILLA	ASTA	090A
					TIGE	STANGE	STANG	STANG	
9		84339566		1	CAPA, Control Handle SQ LH				
						BOOT	FUNDA	PARAPOLVERE	330C
					SOUFFLET	MANSCHETTE	MANCHET	HOES	
10		84348730		1	MANILHA, C Channel W Silver				
						HANDLE	MANECILLA	MANIGLIA	020M
					POIGNEE	GRIFF	HÅNDTAG	HENDEL	
11		84351110		1	FIXADOR, Handle Pivot LH	MOUNT	SOPORTE	SUPPORTO	C022
					MONTAGE	GESTELL	BESLAG	BEVESTIGING	
12		86013179		2	BUCHA, Flange Bearing	BUSHING	CASQUILLO	BOCCOLA	095B
					BAGUE	BUCHSE	BØSNING	BUS	
13		86511843		3	PARAFUSO, Hex Flg, M8 x 60, 8.8				
						BOLT	PERNO	BULLONE	140B
					VIS	SCHRAUBE	BOLT	BOUT	
14		86619801		1	CONTRA PORCA, M8 x 1.25, Flg, Cl 8				
						LOCK NUT	TUERCA DE BLOQUEO	DADO DI BLOCCAGGIO	P263
					CONTRE-ECROU	SICHERUNGSMUTTER	LÅSEMØTRIK	BORGMOER	
15		87030547		1	PORCA, 3/8"-24, G5, LH	NUT	TUERCA	DADO	010D
					ECROU	MUTTER	MØTRIK	MOER	
16		87034513		1	PORCA-TRAVA	JAM NUT	CONTRATUERCA	CONTRODADO	A070
					CONTRE-ECROU	KONTERMUTTER	KONTRAMØTRIK	CONTRAMOER	
17		87360874		2	PARAFUSO, Hex Soc Btn Hd M8x16				
						SCREW	TORNILLO	VITE	040V
					VIS	SCHRAUBE	SKRUE	SCHROEF	
18		230426A1		1	JUNTA ESF+RICA, Socket Threaded Stuc w/ Rod End				
						BALL JOINT	JUNTA DE ROTULA	GIUNTO SFERICO	P009
					ROTULE	KUGELGELENK	KEGELED	KOGELWRICHT	

90.112.01	05	p1	01/11

HAND CONTROLS, HANDLE RH (SR130-SV300)
HAND CONTROLS, HANDLE RH (SR130-SV300)
HAND CONTROLS, HANDLE RH (SR130-SV300)
HAND CONTROLS, HANDLE RH (SR130-SV300)

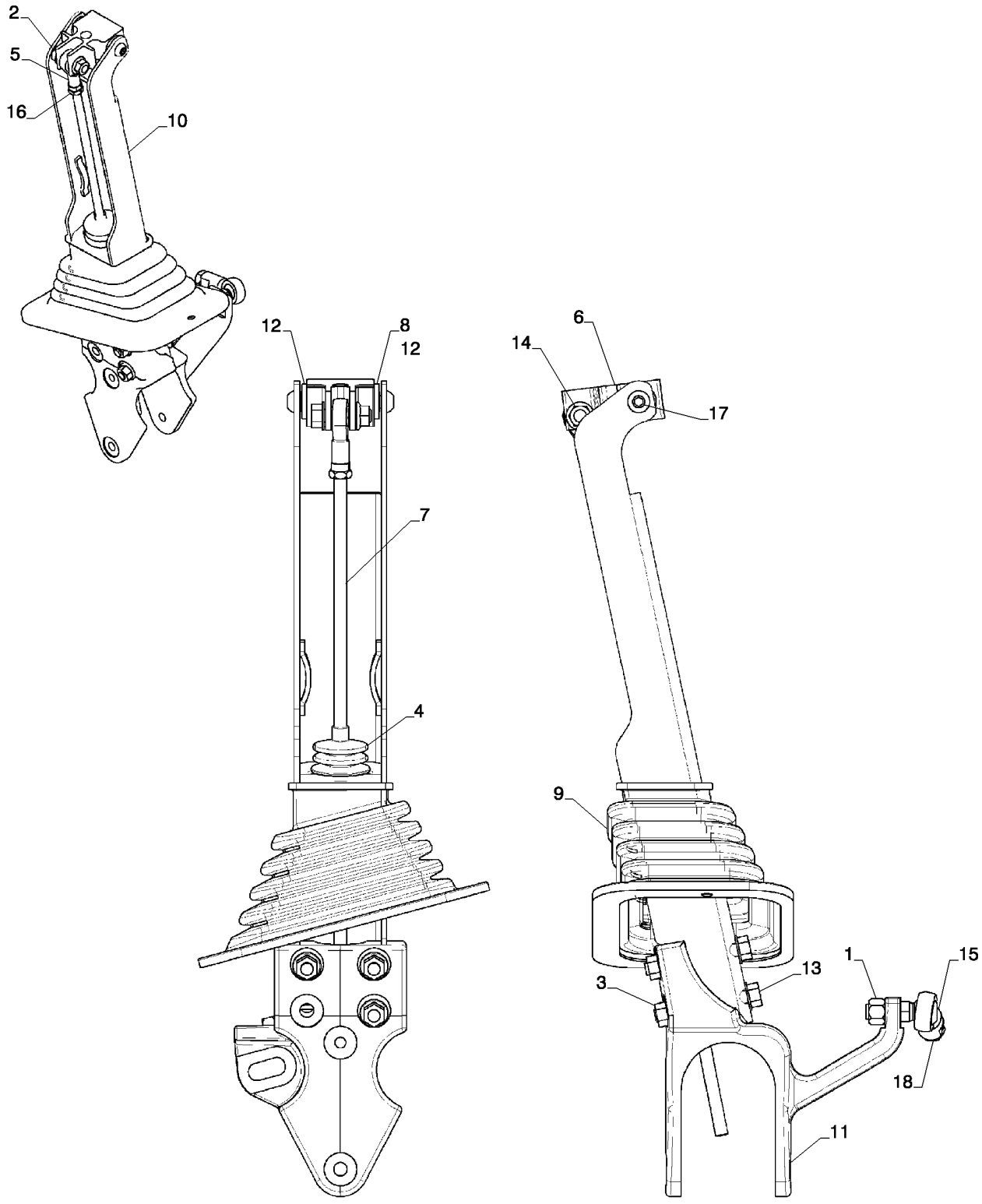

HAND CONTROLS, HANDLE RH (SR130-SV300)
HAND CONTROLS, HANDLE RH (SR130-SV300)
HAND CONTROLS, HANDLE RH (SR130-SV300)
HAND CONTROLS, HANDLE RH (SR130-SV300)

R	N	P.N.	MOD	Q	Denominação Description	Description Bezeichnung	Denominacion Beskrivelse	Descrizione Beschrijving	L.C.
1		80855		1	CONTRA PORCA, 3/8"-24, GC				
						LOCK NUT	TUERCA DE BLOQUEO	DADO DI BLOCCAGGIO	P263
					CONTRE-ECROU	SICHERUNGSMUTTER	LÅSEMØTRIK	BORGMOER	
2		9804260		1	PARAFUSO, Hex Flg, M8 x 30, 8.8, Full Thd				
						BOLT	PERNO	BULLONE	140B
					VIS	SCHRAUBE	BOLT	BOUT	
3		9804277		3	PORCA, M8 x 1.25, Flg, Cl 8				
						NUT	TUERCA	DADO	010D
					ECROU	MUTTER	MØTRIK	MOER	
4		84201371		1	CAPA, Control Rod Boot	BOOT	FUNDA	PARAPOLVERE	330C
					SOUFFLET	MANSCHETTE	MANCHET	HOES	
5		84263144		1	JUNTA ESFÉRICA, Rod End				
						BALL JOINT	RÓTULA	GIUNTO SFERICO	070G
					JOINT A ROTULE	KUGELGELENK	KUGLELED	KOGELGEWRICHT	
6		84291862		1	JUNTA ARTICULAÇÃO, Hand Control				
						KNUCKLE JOINT	JUNTA DE PIVOTE	ARTICOLAZIONE A FOR(	Z408
					ROTULE	GELENKVERBINDUNG	FORBINDELSESSPINDEI	GEWRICHTSKOPPELING	
7		84300731		1	HASTE ROSCADA, Hand Control LDH				
						THREADED ROD	VÁSTAGO ROSCADO	ASTA FILETTATA	095A
					TIGE FILETEE	GEWINDESTANGE	GEVINDSTANG	DRAADSTANG	
8		84302564		1	HASTE, Grip Pivol	ROD	VARILLA	ASTA	090A
					TIGE	STANGE	STANG	STANG	
9		84339565		1	CAPA, Control Handle SQ RH				
						BOOT	FUNDA	PARAPOLVERE	330C
					SOUFFLET	MANSCHETTE	MANCHET	HOES	
10		84348730		1	MANILHA, C Channel W Silver				
						HANDLE	MANECILLA	MANIGLIA	020M
					POIGNEE	GRIFF	HÅNDTAG	HENDEL	
11		84351111		1	FIXADOR, Handle Pivot RH	MOUNT	SOPORTE	SUPPORTO	C022
					MONTAGE	GESTELL	BESLAG	BEVESTIGING	
12		86013179		2	BUCHA, Flange Bearing	BUSHING	CASQUILLO	BOCCOLA	095B
					BAGUE	BUCHSE	BØSNING	BUS	
13		86511843		3	PARAFUSO, Hex Flg, M8 x 60, 8.8				
						BOLT	PERNO	BULLONE	140B
					VIS	SCHRAUBE	BOLT	BOUT	
14		86619801		1	CONTRA PORCA, M8 x 1.25, Flg, Cl 8				
						LOCK NUT	TUERCA DE BLOQUEO	DADO DI BLOCCAGGIO	P263
					CONTRE-ECROU	SICHERUNGSMUTTER	LÅSEMØTRIK	BORGMOER	
15		87030547		1	PORCA, 3/8"-24, G5, LH	NUT	TUERCA	DADO	010D
					ECROU	MUTTER	MØTRIK	MOER	
16		87034513		1	PORCA-TRAVA	JAM NUT	CONTRATUERCA	CONTRODADO	A070
					CONTRE-ECROU	KONTERMUTTER	KONTRAMØTRIK	CONTRAMOER	
17		87360874		2	PARAFUSO, Hex Soc Btn Hd M8x16				
						SCREW	TORNILLO	VITE	040V
					VIS	SCHRAUBE	SKRUE	SCHROEF	
18		230426A1		1	JUNTA ESF+RICA, Socket Threaded Stuc w/ Rod End				
						BALL JOINT	JUNTA DE ROTULA	GIUNTO SFERICO	P009
					ROTULE	KUGELGELENK	KEGELED	KOGELWRICHT	

90.112.01	06	p1	02/11

DAMPENING CONTROL (SR130-SV185)
DAMPENING CONTROL (SR130-SV185)
DAMPENING CONTROL (SR130-SV185)
DAMPENING CONTROL (SR130-SV185)

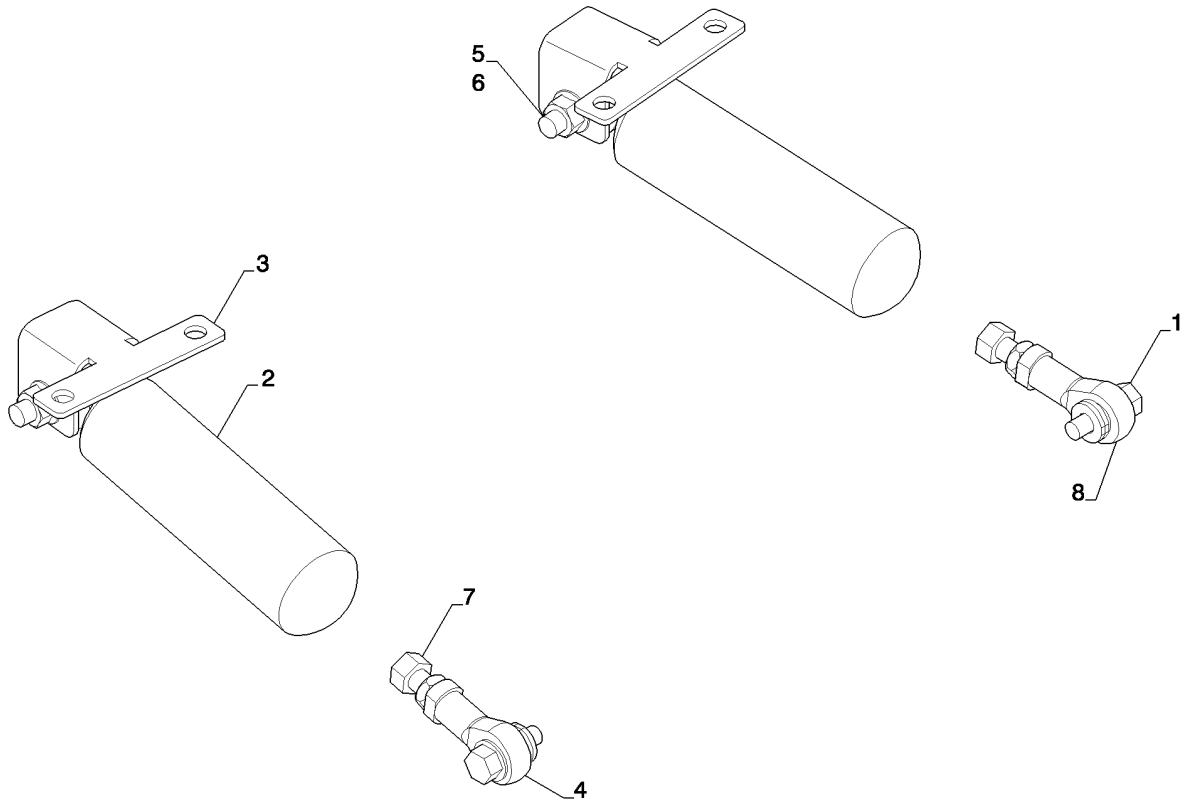

DAMPENING CONTROL (SR130-SV185)
DAMPENING CONTROL (SR130-SV185)
DAMPENING CONTROL (SR130-SV185)
DAMPENING CONTROL (SR130-SV185)

R	N	P.N.	MOD	Q	Denominação Description	Description Bezeichnung	Denominacion Beskrivelse	Descrizione Beschrijving	L.C.
1		9671714		2	PARAFUSO, Hex Flg, M8 x 25, 8.8				
						BOLT	PERNO	BULLONE	140B
					VIS	SCHRAUBE	BOLT	BOUT	
2		9826723		2	AMORTECEDOR	SHOCK ABSORBER	AMORTIGUADOR	AMMORTIZZATORE	036A
					AMORTISSEUR	STOSSDÄMPFER	STØDDÆMPER	SCHOKDEMPER	
3		84258844		2	SUPORTE, Shock Mount	BRACKET	SOPORTE	STAFFA	225S
					SUPPORT	HALTERUNG	BESLAG	STEUN	
4		86500348		2	JUNTA ESFÉRICA, Spher Brg Rod End .38				
						BALL JOINT	RÓTULA	GIUNTO SFERICO	070G
					JOINT A ROTULE	KUGELGELENK	KUGLELED	KOGELGEWRICHT	
5		86521606		2	PORCA, Flg, 3/8"-16, G5	NUT	TUERCA	DADO	010D
					ECROU	MUTTER	MØTRIK	MOER	
6		86533830		2	PARAFUSO, Hex Flg, 3/8"-16 x 2", G5				
						BOLT	PERNO	BULLONE	140B
					VIS	SCHRAUBE	BOLT	BOUT	
7		87319446		2	PORCA, Hex Jam .375-24UNF GR5				
						NUT	TUERCA	DADO	010D
					ECROU	MUTTER	MØTRIK	MOER	
8		87655042		4	ARRUELA ESPECIAL	SPECIAL WASHER	ARANDELA ESPECIAL	RONDELLA SPECIALE	Z333
					RONDELLE SPECIALE	SPEZIALUNTERLEGSCH	SPECIALSKIVE	SPECIALE RING	
9		86625263		2	ARRUELA PLANA, M8 x 20 x 1.6, Not Shown				
						WASHER	ARANDELA	RONDELLA	131R
					RONDELLE	UNTERLEGSCHEIBE	FLADSKIVE	SLUITRING	

90.112.01	06	p1	01/11

DAMPENING & CENTERING CONTROL (SR200-SV300)
DAMPENING & CENTERING CONTROL (SR200-SV300)
DAMPENING & CENTERING CONTROL (SR200-SV300)
DAMPENING & CENTERING CONTROL (SR200-SV300)

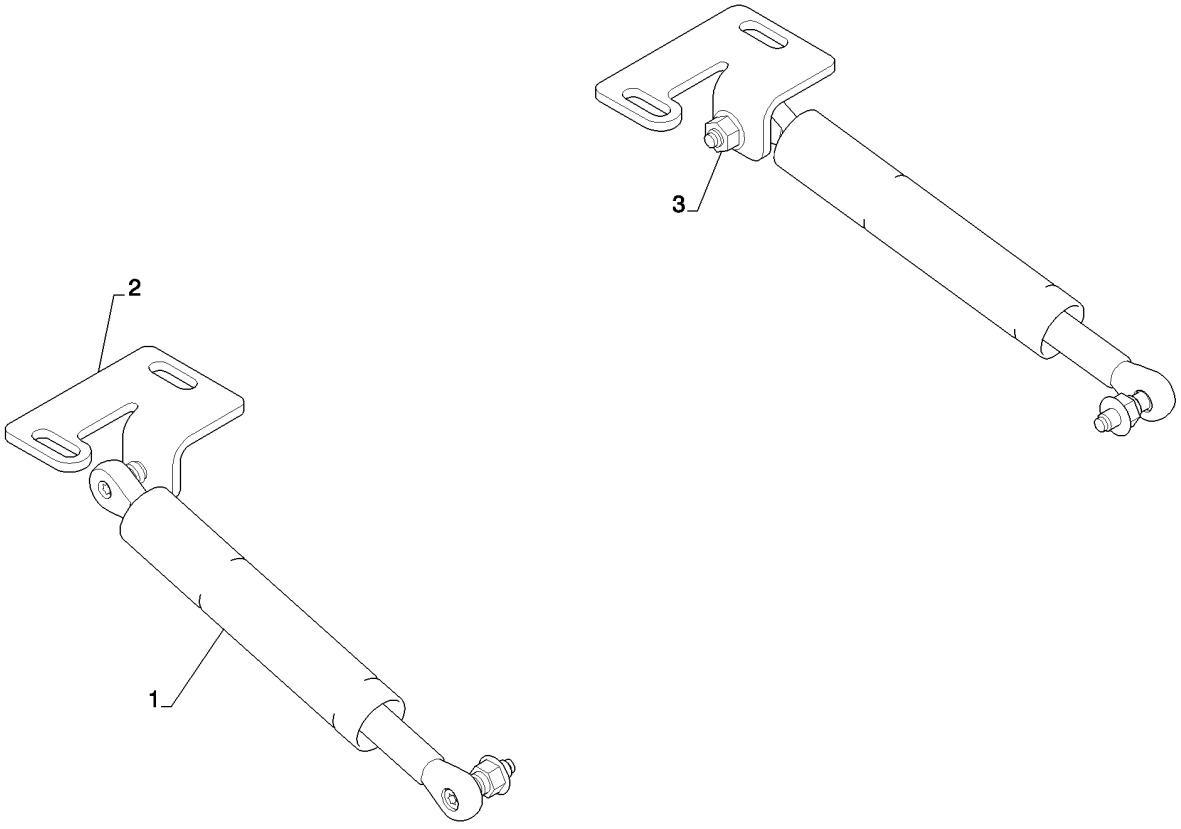

DAMPENING & CENTERING CONTROL (SR200-SV300)
DAMPENING & CENTERING CONTROL (SR200-SV300)
DAMPENING & CENTERING CONTROL (SR200-SV300)
DAMPENING & CENTERING CONTROL (SR200-SV300)

R	N	P.N.	MOD	Q	Denominação Description	Description Bezeichnung	Denominacion Beskrivelse	Descrizione Beschrijving	L.C.
1		84310789		2	AMORTECEDOR DE VIBRAÇÃO, Self-Centering				
						DAMPER	AMORTIGUADOR	AMMORTIZZATORE	164S
					AMORTISSEUR	DÄMPFER	SVINGNINGSDÆMPER	DEMPER	
2		84338477		2	PEGA DE SUPORTE, Shock Mount Gray				
						BRACKET, SUPPORTING	PIEZA DE APOYO	SQUADRETTA	215S
					EQUERRE	TRAGER, STUTZ	BRACKET, SUPPORTING	BRACKET, SUPPORTING	
3		9804277		4	PORCA, M8 x 1.25, Flg, Cl 8				
						NUT	TUERCA	DADO	010D
					ECROU	MUTTER	MØTRIK	MOER	

SV185

90.112.01	07	p1	02/11

MANUAL CENTERING (SR130-SV185)
MANUAL CENTERING (SR130-SV185)
MANUAL CENTERING (SR130-SV185)
MANUAL CENTERING (SR130-SV185)

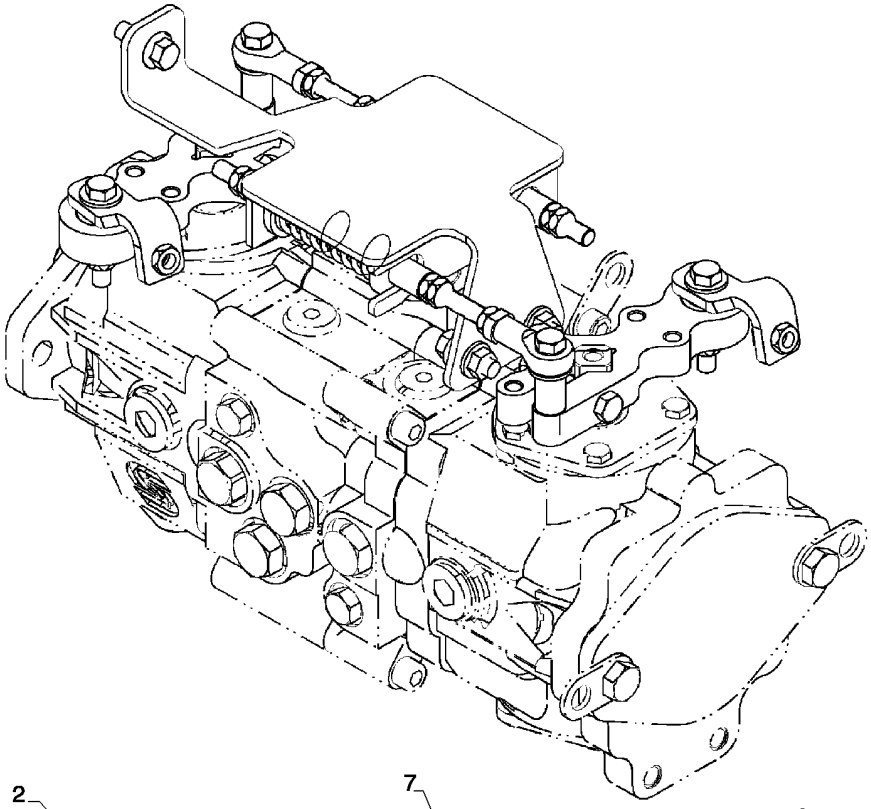

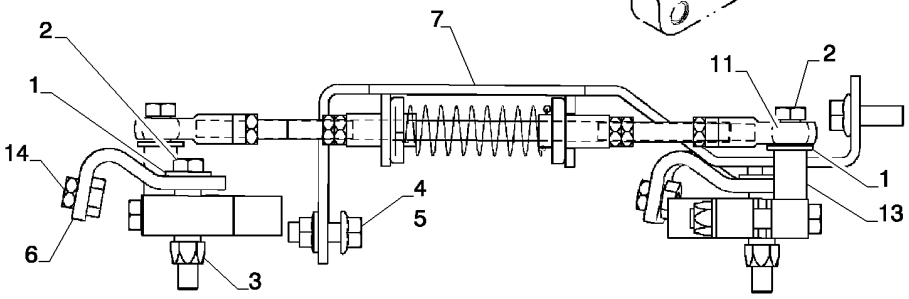

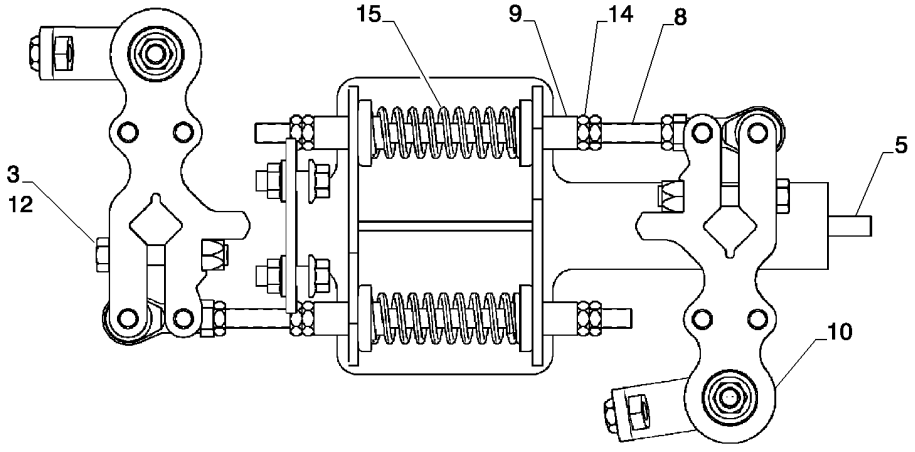

MANUAL CENTERING (SR130-SV185)
MANUAL CENTERING (SR130-SV185)
MANUAL CENTERING (SR130-SV185)
MANUAL CENTERING (SR130-SV185)

R	N	P.N.	MOD	Q	Denominação Description	Description Bezeichnung	Denominacion Beskrivelse	Descrizione Beschrijving	L.C.
1		80664		10	ARRUELA PLANA, 5/16"	WASHER	ARANDELA	RONDELLA	131R
					RONDELLE	UNTERLEGSCHEIBE	FLADSKIVE	SLUITRING	
2		88546		4	PARAFUSO, Hex, 3/8"-16 x 2 1/4", G5				
						BOLT	PERNO	BULLONE	140B
					VIS	SCHRAUBE	BOLT	BOUT	
3		88902		4	CONTRA PORCA, 3/8"-16, GC				
						LOCK NUT	TUERCA DE BLOQUEO	DADO DI BLOCCAGGIO	P263
					CONTRE-ECROU	SICHERUNGSMUTTER	LÅSEMØTRIK	BORGMOER	
4		247780		2	PORCA FLANGEADA, Flg, USR, 3/8"-16				
						FLANGE NUT	TUERCA DE BRIDA	DADO FLANGIATO	A069
					ECROU A EMBASE	FLANSCHMUTTER	FLANGEMØTRIK	FLENSMOER	
5		9706726		2	PARAFUSO, Hex Flg, 3/8"-16 x 1", Serr				
						BOLT	PERNO	BULLONE	140B
					VIS	SCHRAUBE	BOLT	BOUT	
6		84333092		3	GARFO, Manual Control Link				
						CLEVIS	MOSQUETÓN	FORCELLA DI ATTACCO	084F
					CHAPE	SCHÄKEL	GAFFELBOLT	GAFFEL	
7		84333820		1	PLACA, Manual Pump Centering				
						PLATE	PLACA	PIASTRA	105P
					PLAQUE	PLATTE	PLADE	PLAAT	
8		84335061		2	HASTE, Manual Centering	ROD	VARILLA	ASTA	090A
					TIGE	STANGE	STANG	STANG	
9		84335069		4	BUCHA, Spring Lock	BUSHING	CASQUILLO	BOCCOLA	095B
					BAGUE	BUCHSE	BØSNING	BUS	
10		84345022		2	BRAÇO, Pintle Arm Rear	ARM	BRAZO	BRACCIO	130B
					BRAS	ARM	ARM	ARM	
11		86500348		2	JUNTA ESFÉRICA, Spher Brg Rod End .38				
						BALL JOINT	RÓTULA	GIUNTO SFERICO	070G
					JOINT A ROTULE	KUGELGELENK	KUGLELED	KOGELGEWRICHT	
12		86575418		2	PARAFUSO, Hex, 3/8"-16 x 2 1/4", G8				
						BOLT	PERNO	BULLONE	140B
					VIS	SCHRAUBE	BOLT	BOUT	
13		87036413		2	ESPAÇADOR, 5/8" Pipe x 15/16"				
						SPACER	SEPARADOR	DISTANZIALE	075D
					ENTRETOISE	DISTANZSTÜCK	AFSTANDSSTYKKE	AFSTANDSSTUK	
14		87319446		12	PORCA, Hex Jam, .375-24UNF Gr 5				
						NUT	TUERCA	DADO	010D
					ECROU	MUTTER	MØTRIK	MOER	
15		D70304		2	MOLA, Manual Centering	SPRING	MUELLE	MOLLA	8315
					RESSORT	FEDER	SPRING	SPRING	

SV185

ELEC-HYDRAULIC CONTROLS MD-LG FRM (SR175-TV380)
ELEC-HYDRAULIC CONTROLS MD-LG FRM (SR175-TV380)
ELEC-HYDRAULIC CONTROLS MD-LG FRM (SR175-TV380)
ELEC-HYDRAULIC CONTROLS MD-LG FRM (SR175-TV380)

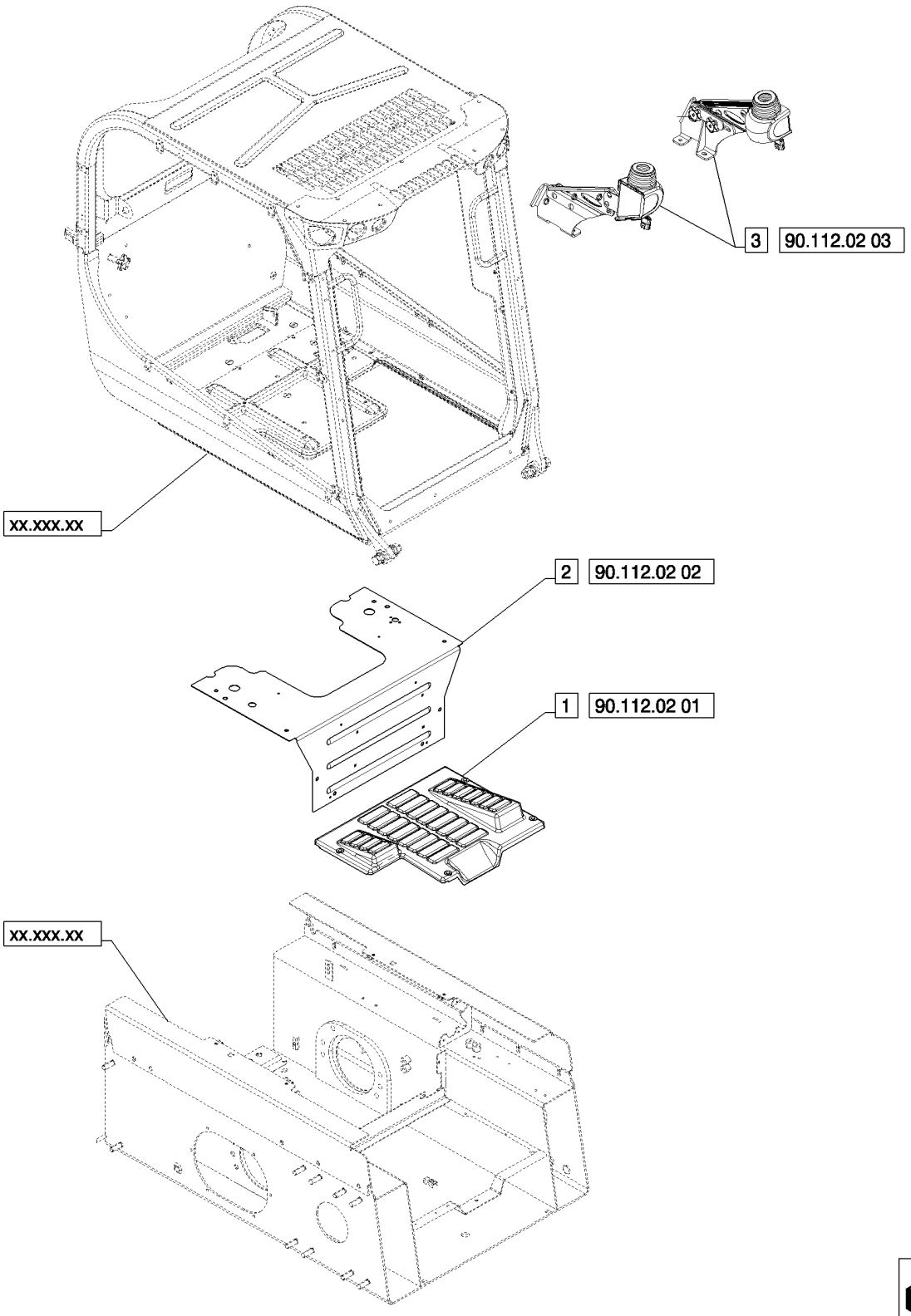

ELEC-HYDRAULIC CONTROLS MD-LG FRM (SR175-TV380)
ELEC-HYDRAULIC CONTROLS MD-LG FRM (SR175-TV380)
ELEC-HYDRAULIC CONTROLS MD-LG FRM (SR175-TV380)
ELEC-HYDRAULIC CONTROLS MD-LG FRM (SR175-TV380)

R	N	P.N.	MOD	Q	Denominação Description	Description Bezeichnung	Denominacion Beskrivelse	Descrizione Beschrijving	L.C.
1		NSS		1	SEM SERVIÇO EM SEPARADO, Floorplate, No Pedal (see 90.112.02(01)				
						NOT SERVICED SEPARA	NO SE REPARA POR SE	NON FORNITO SEPARAT	064N
					NON FORUNI SEPAREM	NICHT A SEP ERS-T LIEI	SERVICERES IKKE SEPA	NIET LOS VERKRIJGBAA	
2		NSS		1	SEM SERVIÇO EM SEPARADO, Handle Mounting EH (see 90.112.02(02)				
						NOT SERVICED SEPARA	NO SE REPARA POR SE	NON FORNITO SEPARAT	064N
					NON FORUNI SEPAREM	NICHT A SEP ERS-T LIEI	SERVICERES IKKE SEPA	NIET LOS VERKRIJGBAA	
3		NSS		1	SEM SERVIÇO EM SEPARADO, Handle, Electronic Control CASE (see 90.112.02(03)				
						NOT SERVICED SEPARA	NO SE REPARA POR SE	NON FORNITO SEPARAT	064N
					NON FORUNI SEPAREM	NICHT A SEP ERS-T LIEI	SERVICERES IKKE SEPA	NIET LOS VERKRIJGBAA	

90.112.02	02	p1	01/11

HANDLE MOUNTING EH (SR175-TV380)
HANDLE MOUNTING EH (SR175-TV380)
HANDLE MOUNTING EH (SR175-TV380)
HANDLE MOUNTING EH (SR175-TV380)

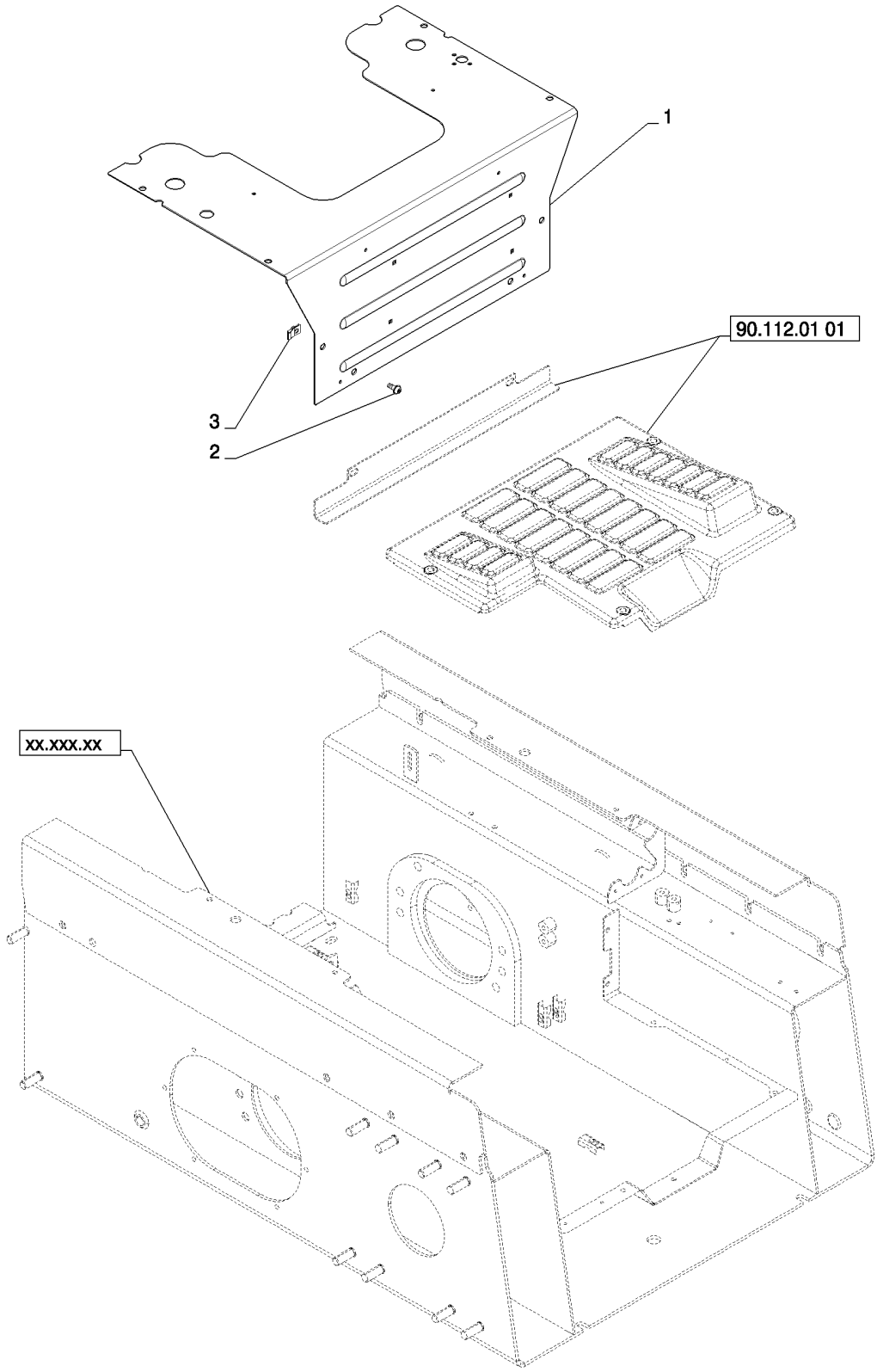

HANDLE MOUNTING EH (SR175-TV380)
HANDLE MOUNTING EH (SR175-TV380)
HANDLE MOUNTING EH (SR175-TV380)
HANDLE MOUNTING EH (SR175-TV380)

R	N	P.N.	MOD	Q	Denominação Description	Description Bezeichnung	Denominacion Beskrivelse	Descrizione Beschrijving	L.C.
1		84187826		8	PARAFUSO, RWH M8x20	SCREW	TORNILLO	VITE	040V
					VIS	SCHRAUBE	SKRUE	SCHROEF	
2		84335594		1	PLACA, Removable Heel Plate Md-Lg Frame EH				
						PLATE	PLACA	PIASTRA	105P
					PLAQUE	PLATTE	PLADE	PLAAT	
3		87016586		8	PORCA, M8, U, Spring, Multi - Thd, M8x1.25 lg				
						NUT	TUERCA	DADO	010D
					ECROU	MUTTER	MØTRIK	MOER	

90.112.02	03	p1	02/11

HANDLE, ELECTRONIC CONTROL CASE (ALL CASE)
HANDLE, ELECTRONIC CONTROL CASE (ALL CASE)
HANDLE, ELECTRONIC CONTROL CASE (ALL CASE)
HANDLE, ELECTRONIC CONTROL CASE (ALL CASE)

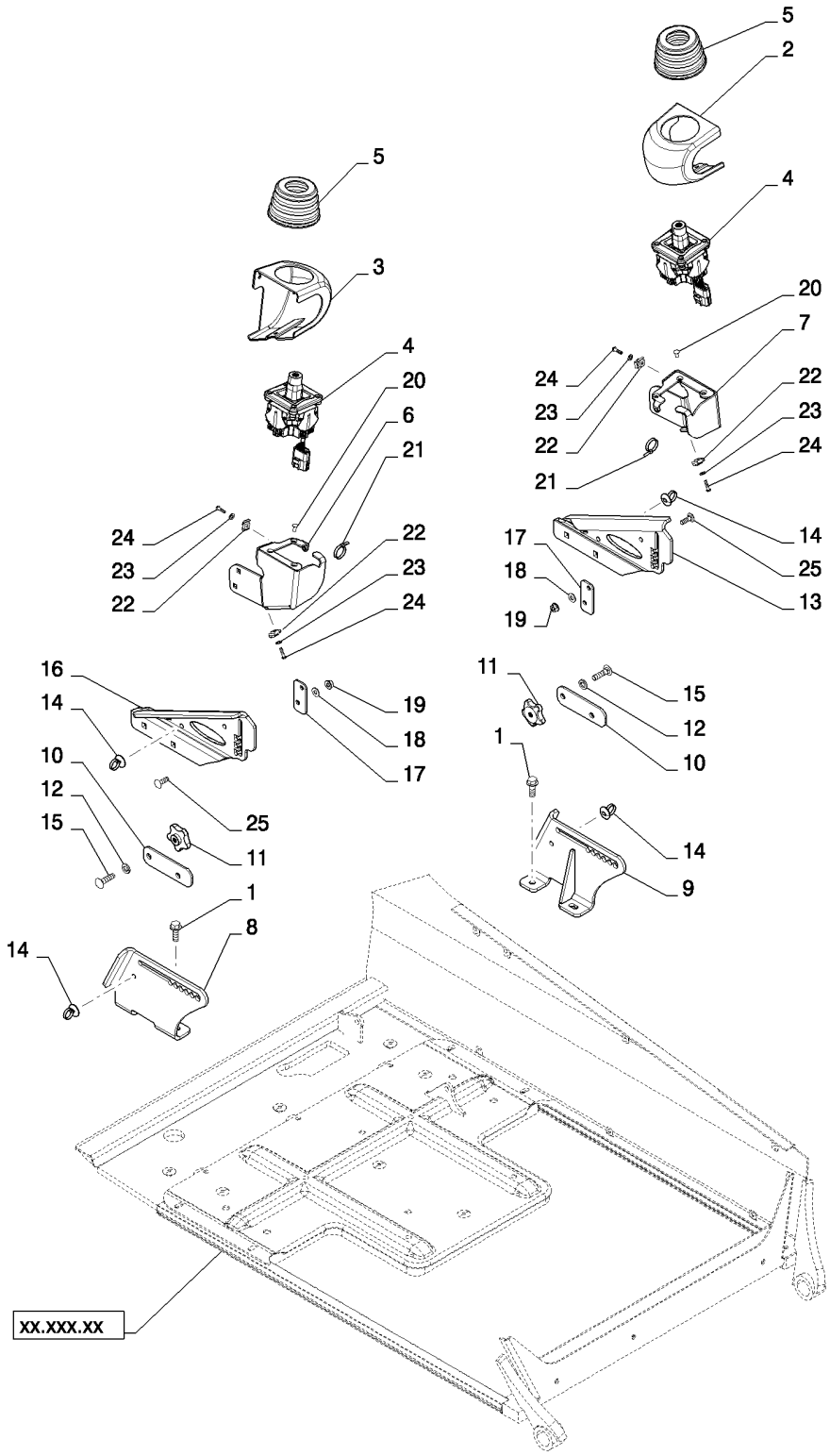

HANDLE, ELECTRONIC CONTROL CASE (ALL CASE)
HANDLE, ELECTRONIC CONTROL CASE (ALL CASE)
HANDLE, ELECTRONIC CONTROL CASE (ALL CASE)
HANDLE, ELECTRONIC CONTROL CASE (ALL CASE)

R	N	P.N.	MOD	Q	Denominação Description	Description Bezeichnung	Denominacion Beskrivelse	Descrizione Beschrijving	L.C.
1		9804262		4	PARAFUSO, Hex Flg, M10 x 30, 8.8				
						BOLT	PERNO	BULLONE	140B
					VIS	SCHRAUBE	BOLT	BOUT	
2		84201490		1	COBERTURA, LH EH Cover				
						COVER	CUBIERTA	COPERCHIO	265C
					COUVERCLE	ABDECKUNG	DÆKSEL	AFSCHERMING	
3		84201491		1	COBERTURA, RH EH Cover				
						COVER	CUBIERTA	COPERCHIO	265C
					COUVERCLE	ABDECKUNG	DÆKSEL	AFSCHERMING	
4		84249066		2	JOYSTICK, Joystick, Two-Axis Ratiometric				
						JOYSTICK	JOYSTICK	JOYSTICK	001J
					JOYSTICK	JOYSTICK	JOYSTICK	JOYSTICK	
5		84412489		2	CAPA, EH Control	BOOT	FUNDA	PARAPOLVERE	330C
					SOUFFLET	MANSCHETTE	MANCHET	HOES	
6		84410986		1	SUPORTE, RH EH Upper	BRACKET	SOPORTE	STAFFA	225S
					SUPPORT	HALTERUNG	BESLAG	STEUN	
7		84410984		1	SUPORTE, LH EH Upper	BRACKET	SOPORTE	STAFFA	225S
					SUPPORT	HALTERUNG	BESLAG	STEUN	
8		84369519		2	PEGA DE SUPORTE, RH EH Base				
						BRACKET, SUPPORTING	PIEZA DE APOYO	SQUADRETTA	215S
					EQUERRE	TRAGER, STUTZ	BRACKET, SUPPORTING	BRACKET, SUPPORTING	
9		84368998		8	TORRE, LH EH Base	TOWER	TORRECILLA	TORRE	T100
					TOURELLE	MAST	TÅRN	TOREN	
10		84368561		4	PLACA	PLATE	PLACA	PIASTRA	105P
					PLAQUE	PLATTE	PLADE	PLAAT	
11		87639912		4	MAÇANETA, Star 3/8	KNOB	MANDO	MANOPOLA	150P
					BOUTON	RUNDGRIFF	GREB	KNOP	
12		81547		4	TRAVA DA ARRUELA, 7/16"				
						LOCK WASHER	ARANDELA DE BLOQUE	RONDELLA DI SICUREZ	132R
					RONDELLE FREIN	SICHERUNGSSCHEIBE	LÅSESKIVE	BORGRING	
13		84410989		1	SUPORTE, LH	BRACKET	SOPORTE	STAFFA	225S
					SUPPORT	HALTERUNG	BESLAG	STEUN	
14		378884A2		6	TIRA, Through Panel Tie	STRAP	CORREA	CINGHIA	8630
					SANGLE	HALTEBAND	STRAP	STRAP	
15		9706752		4	PARAFUSO, Short NK, 3/8"-16 x 1 1/2", G5				
						CARRIAGE BOLT	PERNO ALOMADO	BULLONE A TESTA TON	P123
					VIS A TETE BOMBEE	SCHLOSSSCHRAUBE	BRÆDDEBOLT	SLOTBOUT	
16		84410990		1	SUPORTE, RH	BRACKET	SOPORTE	STAFFA	225S
					SUPPORT	HALTERUNG	BESLAG	STEUN	
17		84410988		2	ESPAÇADOR	SPACER	SEPARADOR	DISTANZIALE	075D
					ENTRETOISE	DISTANZSTÜCK	AFSTANDSSTYKKE	AFSTANDSSTUK	
18		322358		4	ARRUELA DE PRESSÃO, M8				
						BELLEVILLE WASHER	ARANDELA BELLEVILLE	RONDELLA BELLEVILLE	A143
					RONDELLE BELLEVILLE	TELLERFEDER	BELLEVILLE-SPÆNDSKI	SCHOTELVEER	
19		86619801		4	CONTRA PORCA, M8 x 1.25, Flg, Cl 8				
						LOCK NUT	TUERCA DE BLOQUEO	DADO DI BLOCCAGGIO	P263
					CONTRE-ECROU	SICHERUNGSMUTTER	LÅSEMØTRIK	BORGMOER	

90.112.02	03	p2	02/11

HANDLE, ELECTRONIC CONTROL CASE (ALL CASE)
HANDLE, ELECTRONIC CONTROL CASE (ALL CASE)
HANDLE, ELECTRONIC CONTROL CASE (ALL CASE)
HANDLE, ELECTRONIC CONTROL CASE (ALL CASE)

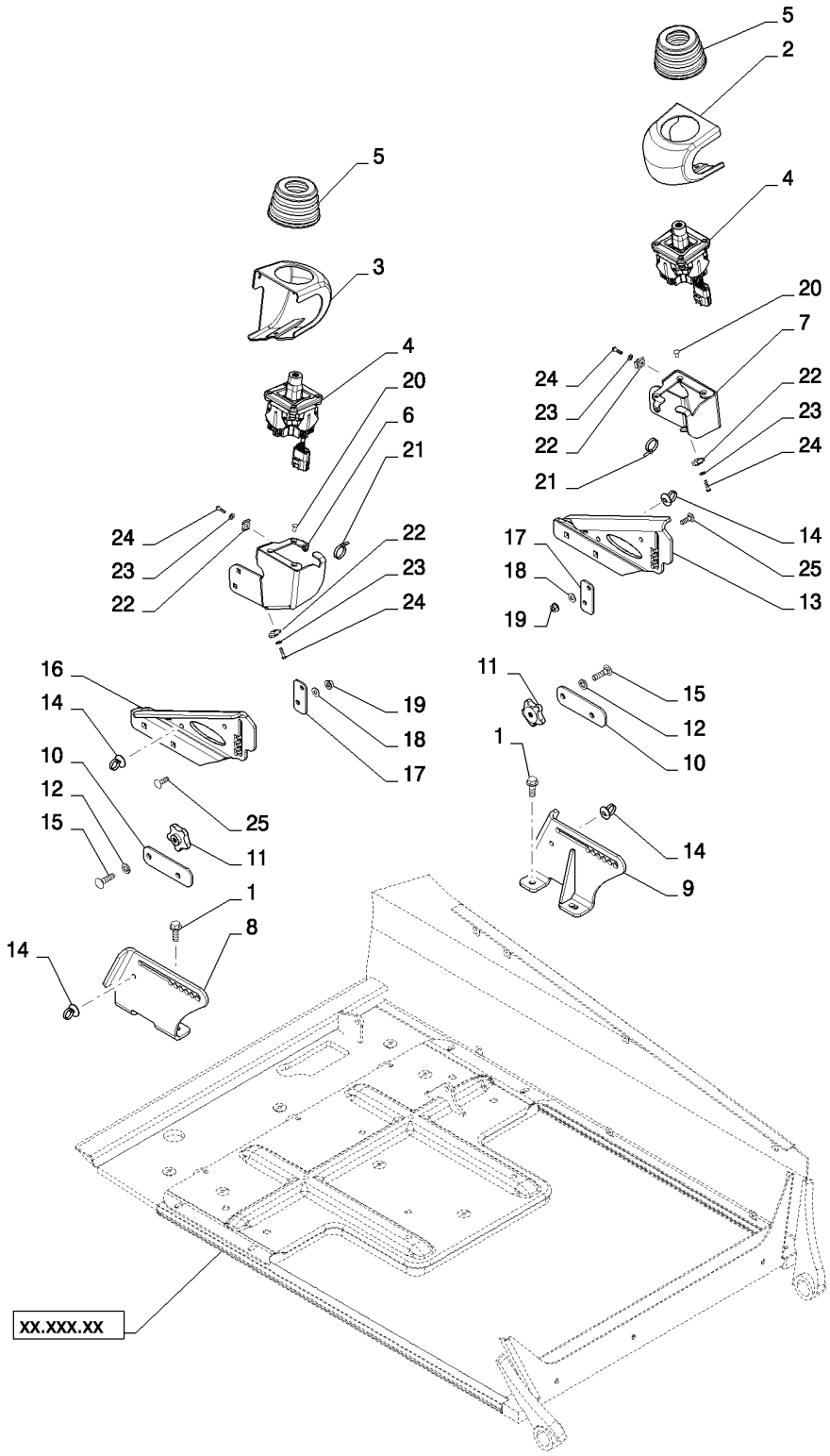

HANDLE, ELECTRONIC CONTROL CASE (ALL CASE)
HANDLE, ELECTRONIC CONTROL CASE (ALL CASE)
HANDLE, ELECTRONIC CONTROL CASE (ALL CASE)
HANDLE, ELECTRONIC CONTROL CASE (ALL CASE)

R	N	P.N.	MOD	Q	Denominação Description	Description Bezeichnung	Denominacion Beskrivelse	Descrizione Beschrijving	L.C.
20		**86511855**		6	PARAFUSO, Hex Flat Hd, M6 x 12, 4.8				
						SCREW	TORNILLO	VITE	040V
					VIS	SCHRAUBE	SKRUE	SCHROEF	
21		**263117**		2	PRENDEDOR DE CABOS, .14" x 11 1/2"				
						CABLE STRAP	BANDA DE CABLE	FASCETTA PER CAVO	P716
					BRIDE DE CABLE	KABELBINDER	KABELSTROP	BUNDELBAND	
22		**86625077**		4	PORCA, J, Ret, #10-24	NUT	TUERCA	DADO	010D
					ECROU	MUTTER	MØTRIK	MOER	
23		**86588450**		4	ARRUELA PLANA, M6 x 12 x 1.6 Thk				
						WASHER	ARANDELA	RONDELLA	131R
					RONDELLE	UNTERLEGSCHEIBE	FLADSKIVE	SLUITRING	
24		**86511922**		4	PARAFUSO, Cross Pan Hd, #10-24 x 3/4"				
						SCREW	TORNILLO	VITE	040V
					VIS	SCHRAUBE	SKRUE	SCHROEF	
25		**308761**		4	PARAFUSO, Short NK, M8 x 25, Cl8.8, Full Thd				
						CARRIAGE BOLT	PERNO ALOMADO	BULLONE A TESTA TONI	P123
					VIS A TETE BOMBEE	SCHLOSSSCHRAUBE	BRÆDDEBOLT	SLOTBOUT	

90.116.01		p1	07/11

LOADER STOP 40MM (SV185,SV250,SV300,TV380)
LOADER STOP 40MM (SV185,SV250,SV300,TV380)
LOADER STOP 40MM (SV185,SV250,SV300,TV380)
LOADER STOP 40MM (SV185,SV250,SV300,TV380)

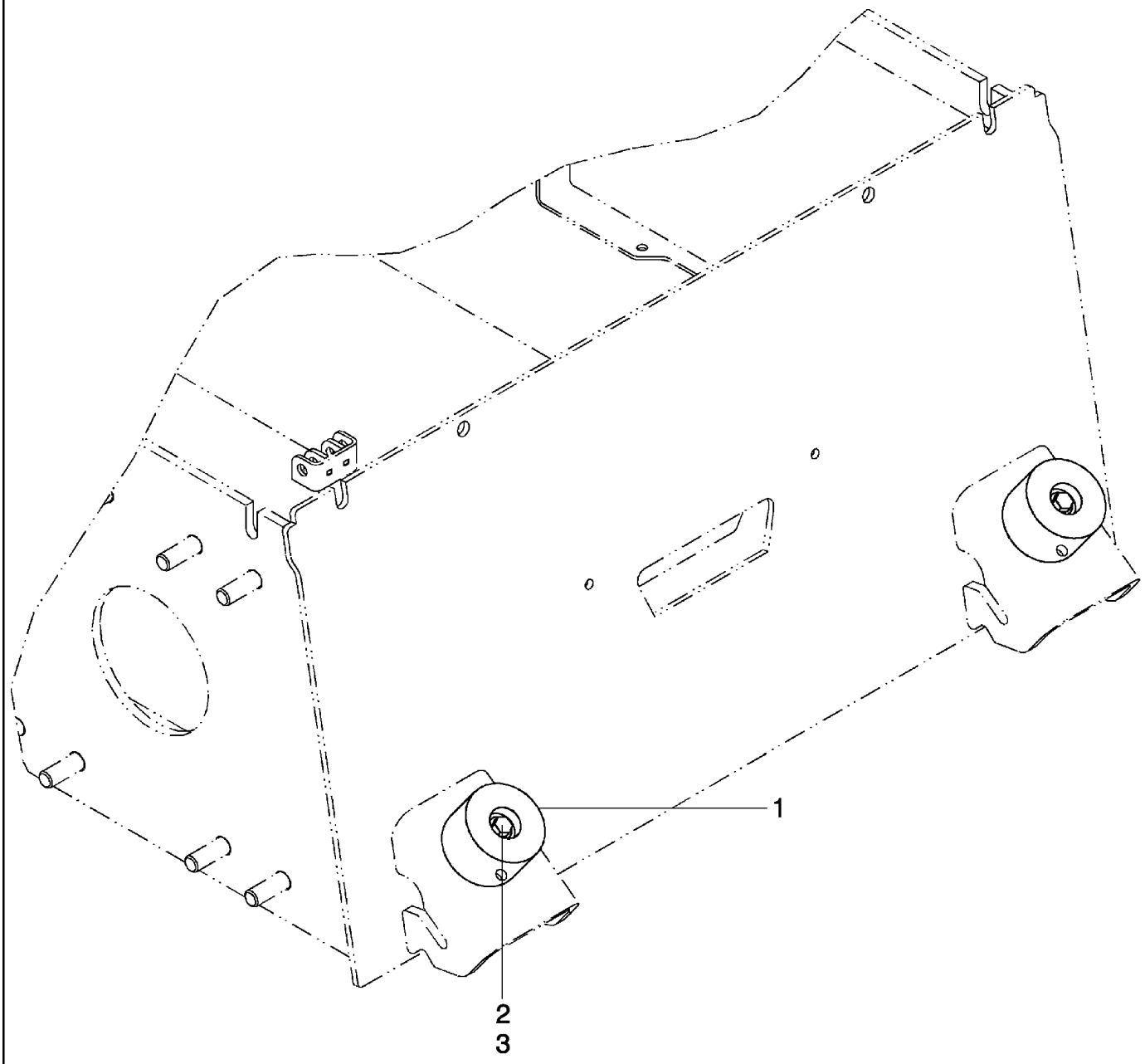

LOADER STOP 40MM (SV185,SV250,SV300,TV380)
LOADER STOP 40MM (SV185,SV250,SV300,TV380)
LOADER STOP 40MM (SV185,SV250,SV300,TV380)
LOADER STOP 40MM (SV185,SV250,SV300,TV380)

R	N	P.N.	MOD	Q	Denominação Description	Description Bezeichnung	Denominacion Beskrivelse	Descrizione Beschrijving	L.C.
1		84306051		2	BLOCO, Stop 40mm BLOC	BLOCK BLOCK	BLOQUE MOTORBLOK	BLOCCO BLOK	074B
2		9804264		2	PARAFUSO, Hex Flg, M10 x 50, 8.8 VIS	BOLT SCHRAUBE	PERNO BOLT	BULLONE BOUT	140B
3		86619802		2	CONTRA PORCA, Flange CONTRE-ECROU	LOCK NUT SICHERUNGSMUTTER	TUERCA DE BLOQUEO LÅSEMØTRIK	DADO DI BLOCCAGGIO BORGMOER	P263

90.116.02		p1	07/11

LOADER STOP 63MM (SV185,SV250,SV300)
LOADER STOP 63MM (SV185,SV250,SV300)
LOADER STOP 63MM (SV185,SV250,SV300)
LOADER STOP 63MM (SV185,SV250,SV300)

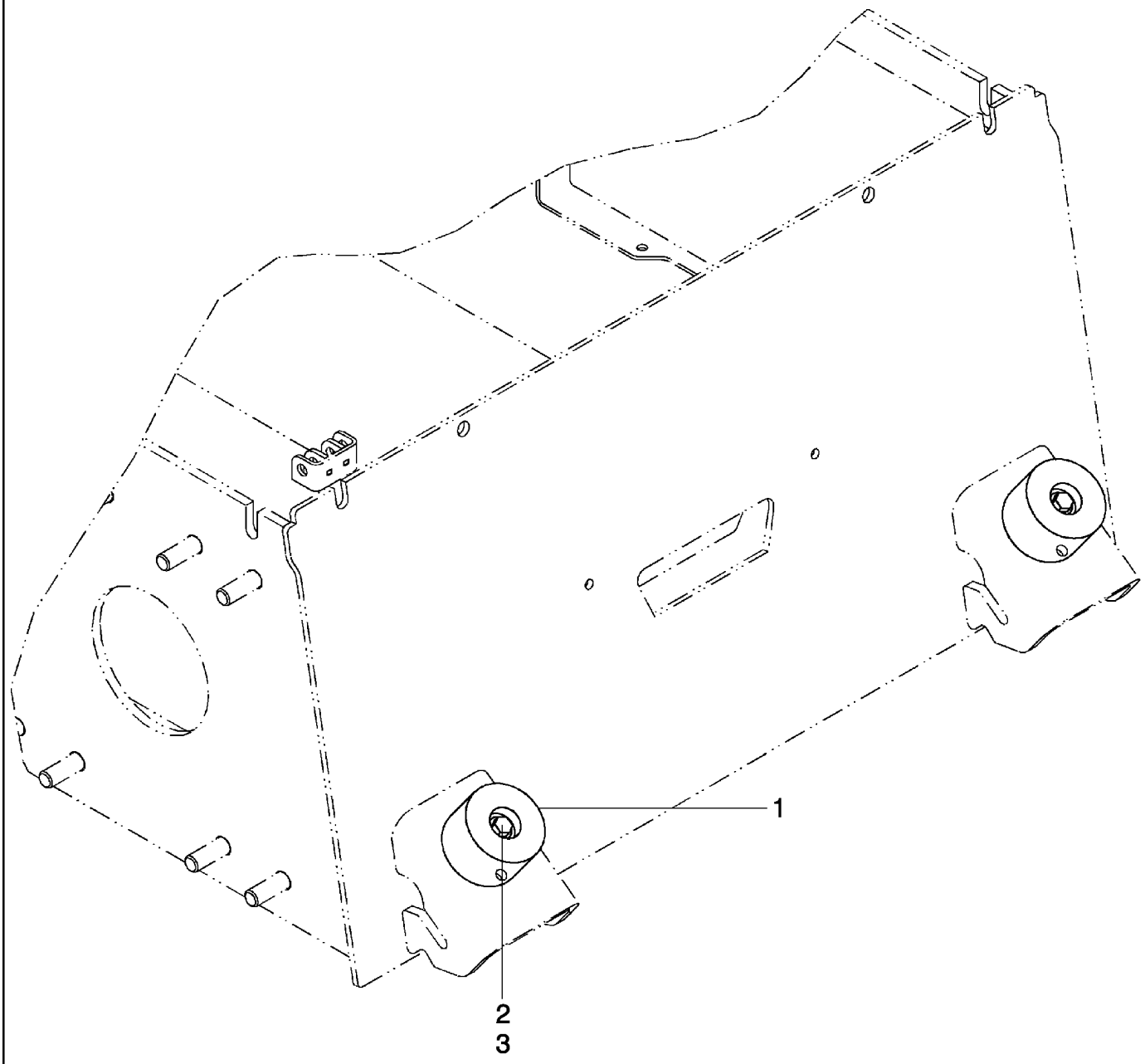

LOADER STOP 63MM (SV185,SV250,SV300)
LOADER STOP 63MM (SV185,SV250,SV300)
LOADER STOP 63MM (SV185,SV250,SV300)
LOADER STOP 63MM (SV185,SV250,SV300)

R	N	P.N.	MOD	Q	Denominação Description	Description Bezeichnung	Denominacion Beskrivelse	Descrizione Beschrijving	L.C.
1		84306053		2	BLOCO, Stop, 63mm BLOC	BLOCK BLOCK	BLOQUE MOTORBLOK	BLOCCO BLOK	074B
2		9804265		2	PARAFUSO, Hex Flg, M10 x 60, 8.8 VIS	BOLT SCHRAUBE	PERNO BOLT	BULLONE BOUT	140B
3		86619802		2	CONTRA PORCA, Flange CONTRE-ECROU	LOCK NUT SICHERUNGSMUTTER	TUERCA DE BLOQUEO LÅSEMØTRIK	DADO DI BLOCCAGGIO BORGMOER	P263

SEAT, NON SUSPENSION (ALL CASE)
SEAT, NON SUSPENSION (ALL CASE)
SEAT, NON SUSPENSION (ALL CASE)
SEAT, NON SUSPENSION (ALL CASE)



SEAT, NON SUSPENSION (ALL CASE)
SEAT, NON SUSPENSION (ALL CASE)
SEAT, NON SUSPENSION (ALL CASE)
SEAT, NON SUSPENSION (ALL CASE)

R	N	P.N.	MOD	Q	Denominação Description	Description Bezeichnung	Denominacion Beskrivelse	Descrizione Beschrijving	L.C.
1		87702543		1	ASSENTO, Non-Suspensior SIEGE	SEAT SITZ	ASIENTO SÆDE	SEDILE STOEL	7480
2		87655046		12	ARRUELA ESPECIAL RONDELLE SPECIALE	SPECIAL WASHER SPEZIALUNTERLEGSCH	ARANDELA ESPECIAL SPECIALSKIVE	RONDELLA SPECIALE SPECIALE RING	Z333
3		86629544		4	CONTRA PORCA, 5/16"-18, GB CONTRE-ECROU	LOCK NUT SICHERUNGSMUTTER	TUERCA DE BLOQUEO LÅSEMØTRIK	DADO DI BLOCCAGGIO BORGMOER	P263

SEAT, SUSPENSION (ALL CASE)
SEAT, SUSPENSION (ALL CASE)
SEAT, SUSPENSION (ALL CASE)
SEAT, SUSPENSION (ALL CASE)



SEAT, SUSPENSION (ALL CASE)
SEAT, SUSPENSION (ALL CASE)
SEAT, SUSPENSION (ALL CASE)
SEAT, SUSPENSION (ALL CASE)

R	N	P.N.	MOD	Q	Denominação Description	Description Bezeichnung	Denominacion Beskrivelse	Descrizione Beschrijving	L.C.
1		87662513		4	ASSENTO, Suspension SIEGE	SEAT SITZ	ASIENTO SÆDE	SEDILE STOEL	7480
2		87655046		11	ARRUELA ESPECIAL RONDELLE SPECIALE	SPECIAL WASHER SPEZIALUNTERLEGSCH	ARANDELA ESPECIAL SPECIALSKIVE	RONDELLA SPECIALE SPECIALE RING	Z333
3		86629544		1	CONTRA PORCA, 5/16"-18, GB CONTRE-ECROU	LOCK NUT SICHERUNGSMUTTER	TUERCA DE BLOQUEO LÅSEMØTRIK	DADO DI BLOCCAGGIO BORGMOER	P263

SV185

SEAT AIR SUSPENSION (ALL CASE)
SEAT AIR SUSPENSION (ALL CASE)
SEAT AIR SUSPENSION (ALL CASE)
SEAT AIR SUSPENSION (ALL CASE)



SEAT AIR SUSPENSION (ALL CASE)
SEAT AIR SUSPENSION (ALL CASE)
SEAT AIR SUSPENSION (ALL CASE)
SEAT AIR SUSPENSION (ALL CASE)

R	N	P.N.	MOD	Q	Denominação Description Bezeichnung	Description Bezeichnung	Denominacion Beskrivelse	Descrizione Beschrijving	L.C.
1		84201374		1	ASSENTO, Air Suspension SIEGE	SEAT SITZ	ASIENTO SÆDE	SEDILE STOEL	7480
2		87655046		11	ARRUELA ESPECIAL RONDELLE SPECIALE	SPECIAL WASHER SPEZIALUNTERLEGSCH	ARANDELA ESPECIAL SPECIALSKIVE	RONDELLA SPECIALE SPECIALE RING	Z333
3		86629544		4	CONTRA PORCA, 5/16"-18, GB CONTRE-ECROU	LOCK NUT SICHERUNGSMUTTER	TUERCA DE BLOQUEO LÅSEMØTRIK	DADO DI BLOCCAGGIO BORGMOER	P263

SV185

90.120.04	01	p1	10/10

SEAT BELT, 2 PT RETRACTOR 2 IN WEB (ALL CASE)
SEAT BELT, 2 PT RETRACTOR 2 IN WEB (ALL CASE)
SEAT BELT, 2 PT RETRACTOR 2 IN WEB (ALL CASE)
SEAT BELT, 2 PT RETRACTOR 2 IN WEB (ALL CASE)

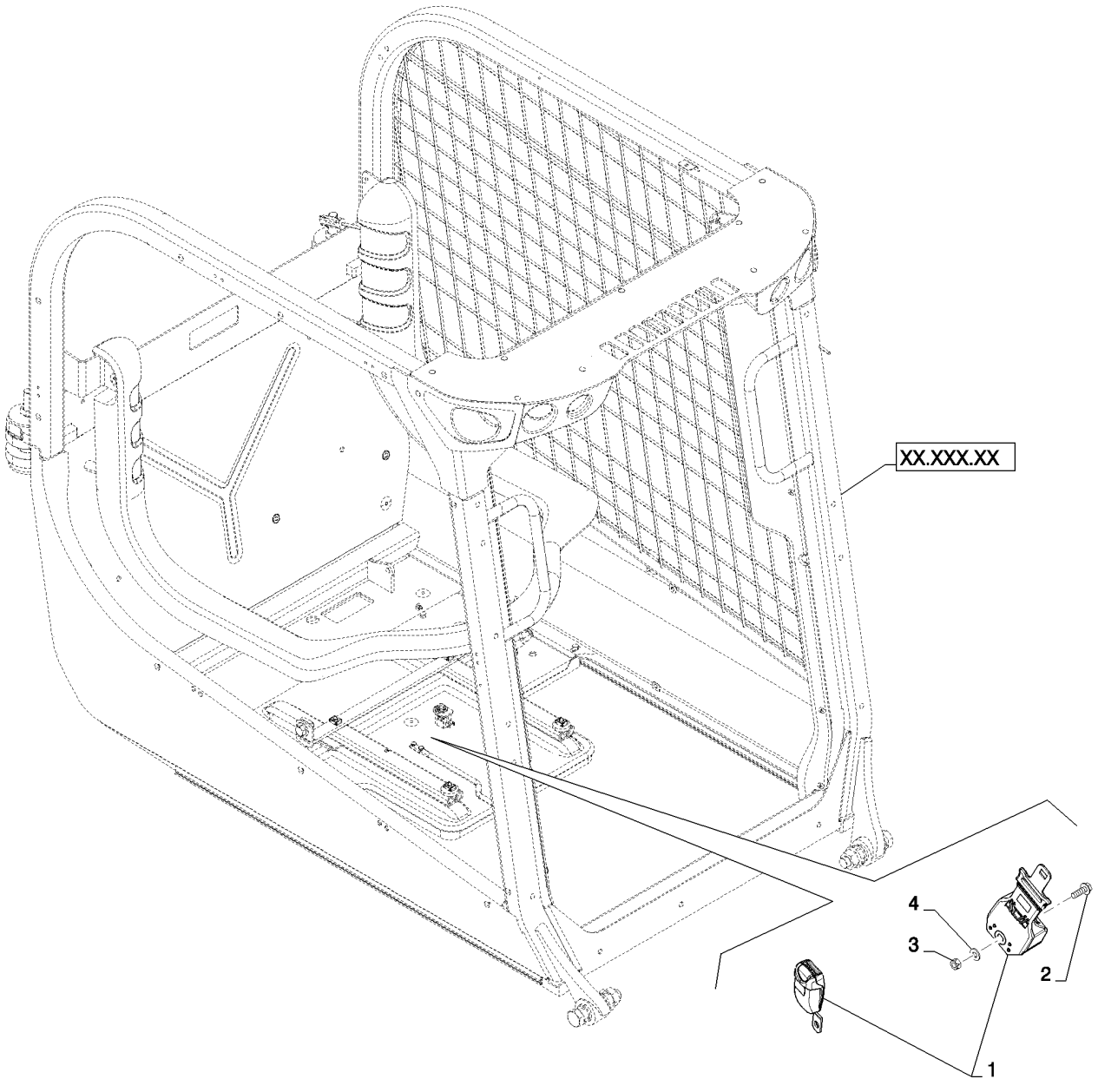

SEAT BELT, 2 PT RETRACTOR 2 IN WEB (ALL CASE)
SEAT BELT, 2 PT RETRACTOR 2 IN WEB (ALL CASE)
SEAT BELT, 2 PT RETRACTOR 2 IN WEB (ALL CASE)
SEAT BELT, 2 PT RETRACTOR 2 IN WEB (ALL CASE)

R	N	P.N.	MOD	Q	Denominação Description	Description Bezeichnung	Denominacion Beskrivelse	Descrizione Beschrijving	L.C.
1		84174264		1	CINTO DE SEGURANÇA, 2 Pt Retractor, Case 2 In Web				
						SEAT BELT	CINTURÓN DE SEGURID	CINTURA DI SICUREZZA	182C
					CEINTURE DE SECURIT	SICHERHEITSGURT	SIKKERHEDSBÆLTE	VEILIGHEIDSGORDEL	
2		9804262		1	PARAFUSO, Hex Flg, M10 x 30, 8.8				
						BOLT	PERNO	BULLONE	140B
					VIS	SCHRAUBE	BOLT	BOUT	
3		86512554		1	CONTRA PORCA, M10 x 1.5, Cl 10				
						LOCK NUT	TUERCA DE BLOQUEO	DADO DI BLOCCAGGIO	P263
					CONTRE-ECROU	SICHERUNGSMUTTER	LÅSEMØTRIK	BORGMOER	
4		87655046		1	ARRUELA ESPECIAL	SPECIAL WASHER	ARANDELA ESPECIAL	RONDELLA SPECIALE	Z333
					RONDELLE SPECIALE	SPEZIALUNTERLEGSCH	SPECIALSKIVE	SPECIALE RING	

90.120.04	02	p1	10/10

SEAT BELT, 3 PT (ALL CASE)
SEAT BELT, 3 PT (ALL CASE)
SEAT BELT, 3 PT (ALL CASE)
SEAT BELT, 3 PT (ALL CASE)

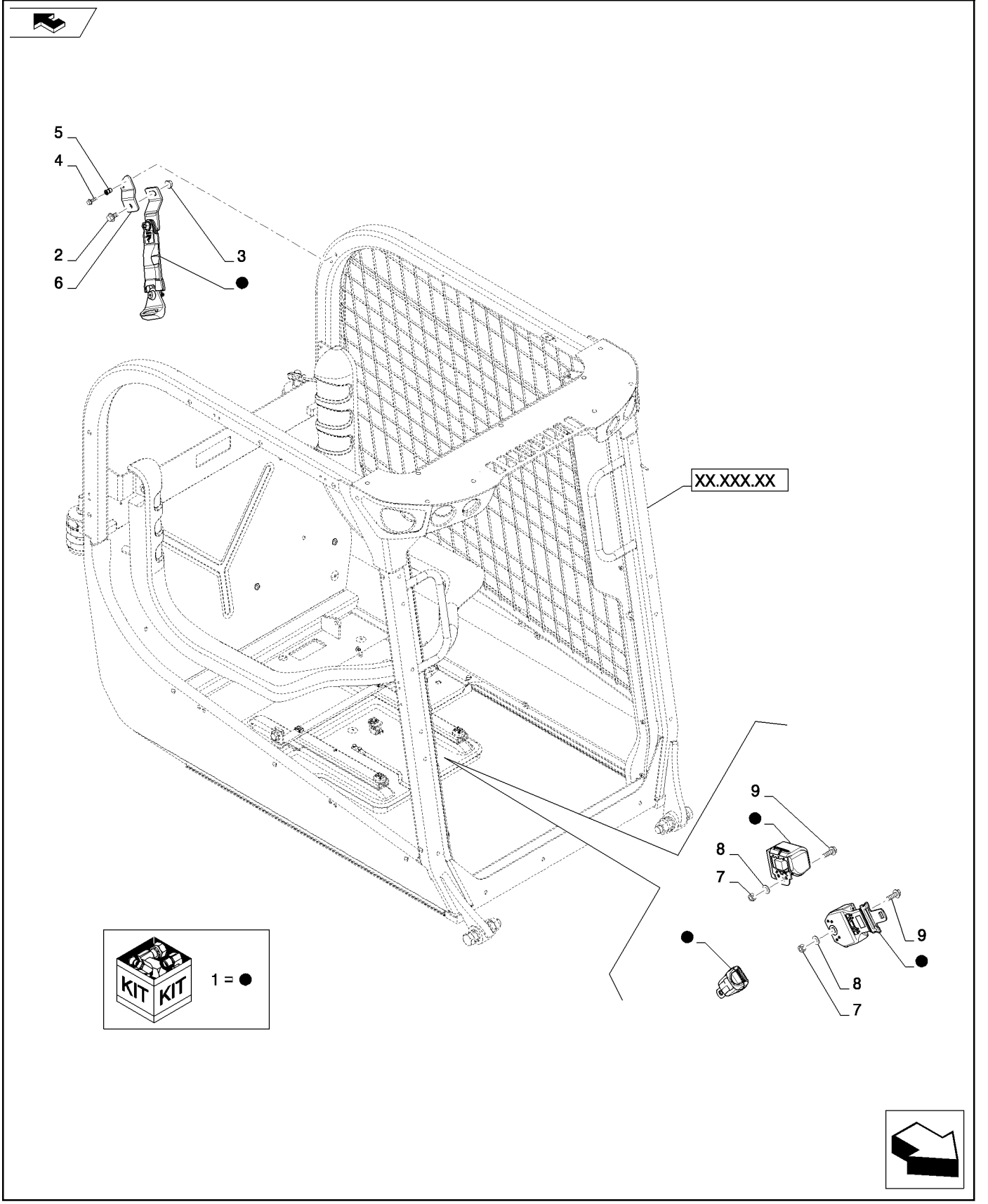

SEAT BELT, 3 PT (ALL CASE)
SEAT BELT, 3 PT (ALL CASE)
SEAT BELT, 3 PT (ALL CASE)
SEAT BELT, 3 PT (ALL CASE)

R	N	P.N.	MOD	Q	Denominação Description	Description Bezeichnung	Denominacion Beskrivelse	Descrizione Beschrijving	L.C.
1		84354487		1	CINTO DE SEGURANÇA, Case 3 Pt				
						SEAT BELT	CINTURÓN DE SEGURID	CINTURA DI SICUREZZA	182C
					CEINTURE DE SECURIT	SICHERHEITSGURT	SIKKERHEDSBÆLTE	VEILIGHEIDSGORDEL	
2		86050286		1	PARAFUSO FLANGEADO, Hex, M10 x 20, 8.8, Full Thd				
						FLANGE BOLT	PERNO DE CORONA	BULLONE FLANGIATO	A027
					VIS A EMBASE	FLANSCHSCHRAUBE	FLANGEBOLT	FLENSBOUT	
3		86619802		1	CONTRA PORCA	LOCK NUT	TUERCA DE BLOQUEO	DADO DI BLOCCAGGIO	P263
					CONTRE-ECROU	SICHERUNGSMUTTER	LÅSEMØTRIK	BORGMOER	
4		9804257		2	PARAFUSO, Hex Flg, M6 x 25, 8.8				
						BOLT	PERNO	BULLONE	140B
					VIS	SCHRAUBE	BOLT	BOUT	
5		87436247		2	ENCHIMENTO ROSCADO	THREADED INSERT	PIEZA DE INS. ROSCAD/	INSERTO FILETTATO	054I
					INSERT FILETE	GEWINDEEINSATZ	GEVINDINDSATS	INZETST. MET SCHROEI	
6		84291791		1	SUPORTE, Plate, C-Belt 3 Pt Retractable				
						BRACKET	SOPORTE	STAFFA	225S
					SUPPORT	HALTERUNG	BESLAG	STEUN	
7		86512554		2	CONTRA PORCA, M10 x 1.5, Cl 10				
						LOCK NUT	TUERCA DE BLOQUEO	DADO DI BLOCCAGGIO	P263
					CONTRE-ECROU	SICHERUNGSMUTTER	LÅSEMØTRIK	BORGMOER	
8		87655046		2	ARRUELA ESPECIAL	SPECIAL WASHER	ARANDELA ESPECIAL	RONDELLA SPECIALE	Z333
					RONDELLE SPECIALE	SPEZIALUNTERLEGSCH	SPECIALSKIVE	SPECIALE RING	

90.120.05		p1	01/11

LAP BAR (ALL CASE)
LAP BAR (ALL CASE)
LAP BAR (ALL CASE)
LAP BAR (ALL CASE)

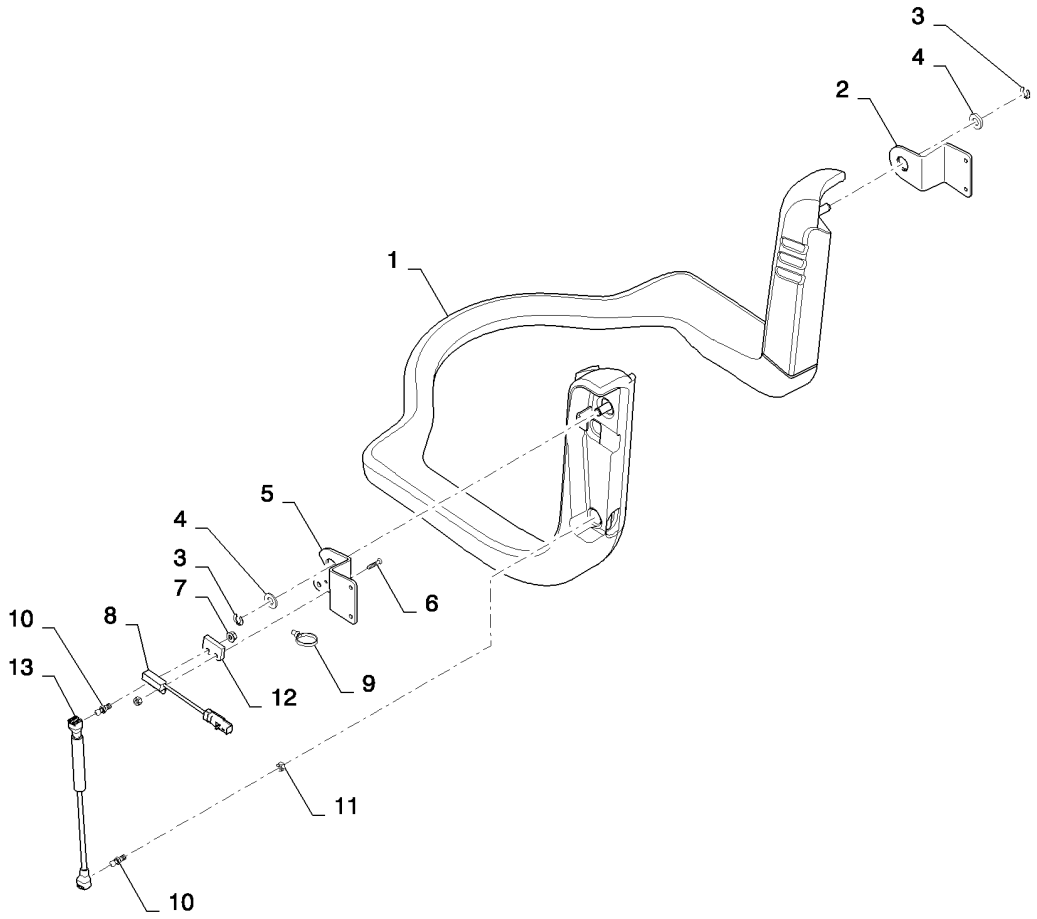

LAP BAR (ALL CASE)
LAP BAR (ALL CASE)
LAP BAR (ALL CASE)
LAP BAR (ALL CASE)

R	N	P.N.	MOD	Q	Denominação Description	Description Bezeichnung	Denominacion Beskrivelse	Descrizione Beschrijving	L.C.
1		84201339		1	ESPUMA ISOLANTE, Bar, Coating				
						FOAM INSULATION	ESPUMA AISLANTE	ISOLANTE IN SCHIUMA	051S
					MOUSSE ISOLANTE	SCHAUMSTOFFISOLIER	SKUM ISOLERING	SCHUIMISOLATIE	
2		84239191		1	SUPORTE DE PIVÔ, Seat Bar, RH				
						PIVOT BRACKET	SOPORTE DE PIVOTE	STAFFA PERNO	P817
					SUPPORT DE PIVOTEME	DREHLAGERHALTERUN	DREJEBESLAG	DRAAIGEWRICHT	
3		D143415		2	ANEL DE PRESSÃO	SNAP RING	ANILLO DE RESORTE	ANELLO ELASTICO	054A
					ANNEAU D'ARRET	SPRENGRING	LÅSERING	VEERRING	
4		86632589		2	ARRUELA PLANA	WASHER	ARANDELA	RONDELLA	131R
					RONDELLE	UNTERLEGSCHEIBE	FLADSKIVE	SLUITRING	
5		84239192		1	SUPORTE DE PIVÔ, Seat Bar, LH				
						PIVOT BRACKET	SOPORTE DE PIVOTE	STAFFA PERNO	P817
					SUPPORT DE PIVOTEME	DREHLAGERHALTERUN	DREJEBESLAG	DRAAIGEWRICHT	
6		43646		2	PARAFUSO	SCREW	TORNILLO	VITE	040V
					VIS	SCHRAUBE	SKRUE	SCHROEF	
7		385681		2	CONTRA PORCA, M4 x .7, Cl 8				
						LOCK NUT	TUERCA DE BLOQUEO	DADO DI BLOCCAGGIO	P263
					CONTRE-ECROU	SICHERUNGSMUTTER	LÅSEMØTRIK	BORGMOER	
8		87392235		1	INTERRUPTOR INTERMITENTE				
						SWITCH ASSY	CONJUNTO DE INTERRU	COMPLESSIVO INTERRU	067I
					ENSEMBLE COMMUTATI	SCHALTERBAUGRUPPE	KONTAKT, KPL.	SCHAKELAAREENHEID	
9		87668737		1	TIRA, Assy, Fir Tree	STRAP	BANDA	FASCETTA	532B
					BRIDE	BAND	STROP	RIEM	
10		189609A1		2	PRISIONEIRO, Ball, M8x1.25				
						STUD	ESPARREGO	PRIGIONIERO	8720
					GOUJON	STIFTSCHRAUBE	STUD	STUD	
11		86505868		1	PORCA, M8, Flg Ser	NUT	TUERCA	DADO	010D
					ECROU	MUTTER	MØTRIK	MOER	
12		86624468		1	ESPAÇADOR, Switch	SPACER	SEPARADOR	DISTANZIALE	075D
					ENTRETOISE	DISTANZSTÜCK	AFSTANDSSTYKKE	AFSTANDSSTUK	
13		84371064		1	COMPASSO, Lap Bar Assist				
						GAS STRUT	COLUMNA DE GAS	AMMORTIZZATORE A G/	Z331
					BEQUILLE A GAZ	GASDRUCKFEDER	CYLINDER, GASSTØDD/	GASVEER	

SEAT ASSEMBLY, SUSPENSION (ALL CASE)
SEAT ASSEMBLY, SUSPENSION (ALL CASE)
SEAT ASSEMBLY, SUSPENSION (ALL CASE)
SEAT ASSEMBLY, SUSPENSION (ALL CASE)

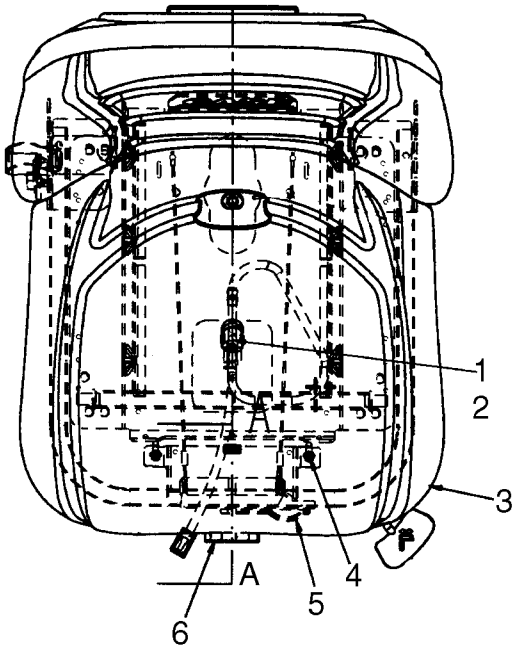

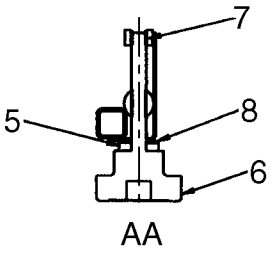

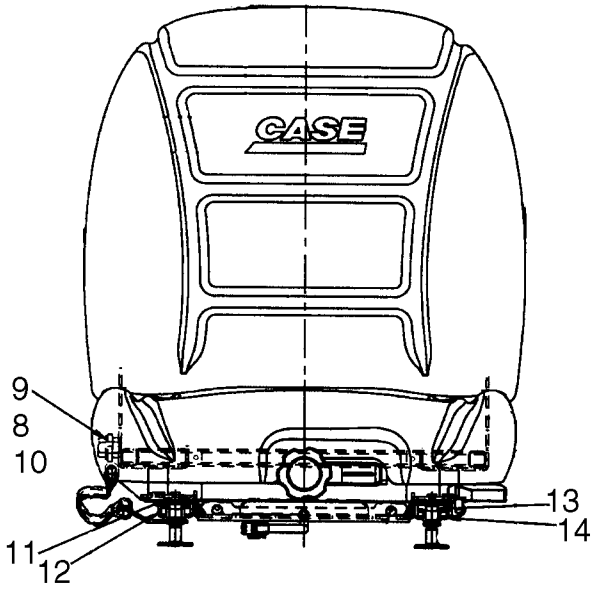

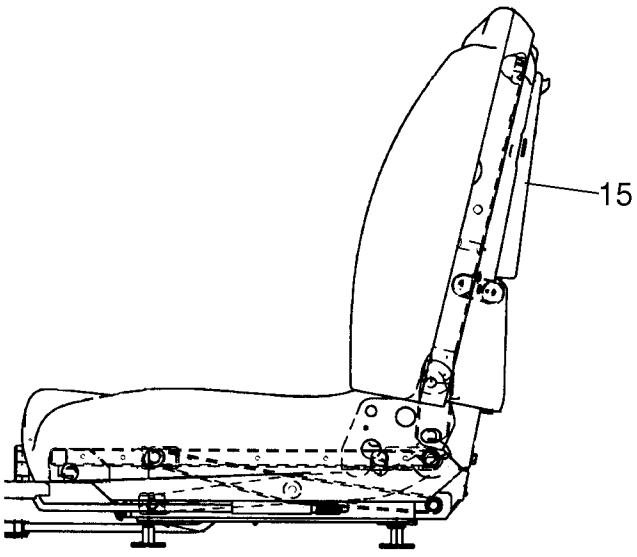

BS09A192

SEAT ASSEMBLY, SUSPENSION (ALL CASE)
SEAT ASSEMBLY, SUSPENSION (ALL CASE)
SEAT ASSEMBLY, SUSPENSION (ALL CASE)
SEAT ASSEMBLY, SUSPENSION (ALL CASE)

R	N	P.N.	MOD	Q	Denominação Description	Description Bezeichnung	Denominacion Beskrivelse	Descrizione Beschrijving	L.C.
		87662513		1	ASSENTO, Suspension Seat Assy; Incl 1 - 15				
						SEAT	ASIENTO	SEDILE	7480
					SIEGE	SITZ	SÆDE	STOEL	
1		**84130082**		1	INTERRUPTOR, Switch Operator Presence				
						SWITCH	INTERRUPTOR	INTERRUTTORE	075I
					CONTACTEUR	SCHALTER	KONTAKT	SCHAKELAAR	
2		**84130072**		1	CHICOTE, Operator Presence; Vendor Number 901217795				
						HARNESS	MAZO DE CABLES	CABLAGGIO	4160
					FAISCEAU	KABELBAUM	LEDNINGSNET	KABELBOOM	
3		**84130069**		1	COXIM	SEAT CUSHION	COJÍN DE ASIENTO	CUSCINO SEDILE	345C
					COUSSIN DE SIEGE	SITZKISSEN	SÆDEPOLSTRING	ZITKUSSEN	
4		**84130065**		2	PARAFUSO, .25-20 x .75	SCREW	TORNILLO	VITE	040V
					VIS	SCHRAUBE	SKRUE	SCHROEF	
5		**84130060**		1	MEDIDOR, Weight Indicator				
						GAUGE	INDICADOR	INDICATORE	019C
					JAUGE	ANZEIGE	MANOMETER	METER	
6		**84130064**		1	MAÇANETA, Weight Adjustment				
						KNOB	MANDO	MANOPOLA	150P
					BOUTON	RUNDGRIFF	GREB	KNOP	
7		**84130079**		1	PORCA, .3125-18	NUT	TUERCA	DADO	010D
					ECROU	MUTTER	MØTRIK	MOER	
8		**84130058**		1	ARRUELA PLANA	WASHER	ARANDELA	RONDELLA	131R
					RONDELLE	UNTERLEGSCHEIBE	FLADSKIVE	SLUITRING	
9		**NSS**		1	SEM SERVIÇO EM SEPARADO, Tether				
						NOT SERVICED SEPARA	NO SE REPARA POR SE	NON FORNITO SEPARAT	064N
					NON FORUNI SEPAREM	NICHT A SEP ERS-T LIEI	SERVICERES IKKE SEPA	NIET LOS VERKRIJGBAA	
10		**NSS**		1	SEM SERVIÇO EM SEPARADO, Hex Bolt, M12				
						NOT SERVICED SEPARA	NO SE REPARA POR SE	NON FORNITO SEPARAT	064N
					NON FORUNI SEPAREM	NICHT A SEP ERS-T LIEI	SERVICERES IKKE SEPA	NIET LOS VERKRIJGBAA	
11		**84130063**		7	ARRUELA PLANA	WASHER	ARANDELA	RONDELLA	131R
					RONDELLE	UNTERLEGSCHEIBE	FLADSKIVE	SLUITRING	
12		**84130080**		1	AJUSTADOR, Adjuster, Slave				
						ADJUSTER	REGULADOR	REGOLATORE	118A
					DISPOSITIF DE REGLAG	EINSTELLVORRICHTUN(	STILLESKRUE	AFSTELMECHANISME	
13		**84130078**		4	PARAFUSO, .3125-18 x .75	SCREW	TORNILLO	VITE	040V
					VIS	SCHRAUBE	SKRUE	SCHROEF	
14		**84130062**		1	AJUSTADOR, Assy	ADJUSTER	REGULADOR	REGOLATORE	118A
					DISPOSITIF DE REGLAG	EINSTELLVORRICHTUN(	STILLESKRUE	AFSTELMECHANISME	
15		**84130066**		1	ENCOSTO, Rear Manual, Kit Incl (5) #8-18 Screws Which Are Not Serviced Separately				
						SEAT BACK	RESPALDO	SCHIENALE	050S
					SIEGE ARRIERE	SITZRÜCKENLEHNE	SÆDE, BAG	RUGLEUNING	

90.120.07		p1	06/11

SEAT ASSEMBLY, STANDARD (ALL CASE)
SEAT ASSEMBLY, STANDARD (ALL CASE)
SEAT ASSEMBLY, STANDARD (ALL CASE)
SEAT ASSEMBLY, STANDARD (ALL CASE)

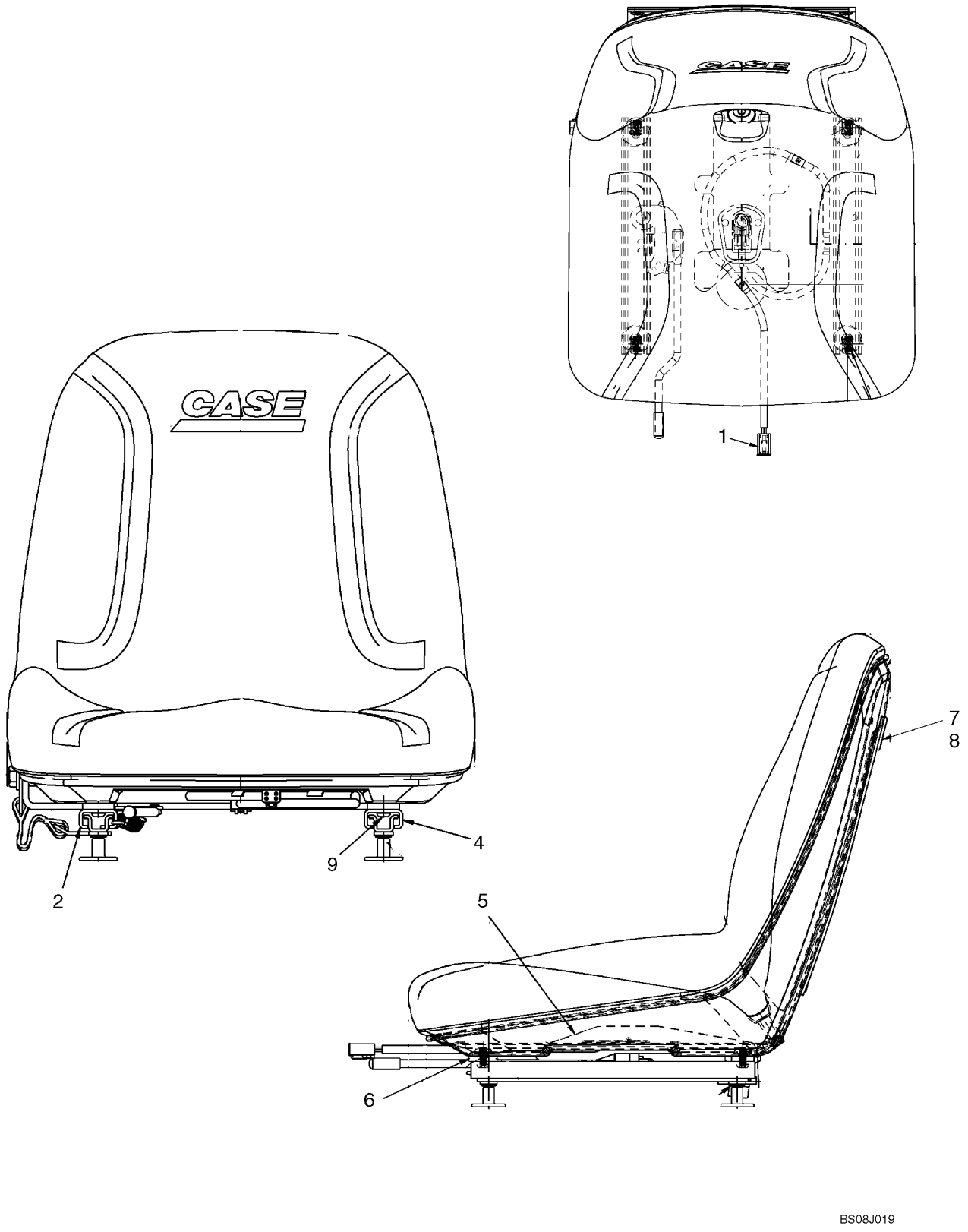

SEAT ASSEMBLY, STANDARD (ALL CASE)
SEAT ASSEMBLY, STANDARD (ALL CASE)
SEAT ASSEMBLY, STANDARD (ALL CASE)
SEAT ASSEMBLY, STANDARD (ALL CASE)

R	N	P.N.	MOD	Q	Denominação Description Bezeichnung	Description Bezeichnung	Denominacion Beskrivelse	Descrizione Beschrijving	L.C.
		87702543		1	ASSENTO, Standard Seat, Mid-Back; Incl 1 - 8				
						SEAT	ASIENTO	SEDILE	7480
					SIEGE	SITZ	SÆDE	STOEL	
1		**84130077**		1	CHICOTE, Operator Presence				
						HARNESS	MAZO DE CABLES	CABLAGGIO	4160
					FAISCEAU	KABELBAUM	LEDNINGSNET	KABELBOOM	
2		**84130061**		1	AJUSTADOR	ADJUSTER	REGULADOR	REGOLATORE	118A
					DISPOSITIF DE REGLAG	EINSTELLVORRICHTUN(	STILLESKRUE	AFSTELMECHANISME	
3		**84130076**		4	PARAFUSO, .3125-18 x .75	SCREW	TORNILLO	VITE	040V
					VIS	SCHRAUBE	SKRUE	SCHROEF	
4		**84130080**		1	AJUSTADOR, Slave	ADJUSTER	REGULADOR	REGOLATORE	118A
					DISPOSITIF DE REGLAG	EINSTELLVORRICHTUN(	STILLESKRUE	AFSTELMECHANISME	
5		**84130082**		1	INTERRUPTOR, Operator Presence				
						SWITCH	INTERRUPTOR	INTERRUTTORE	075I
					CONTACTEUR	SCHALTER	KONTAKT	SCHAKELAAR	
6		**84130059**		2	ESPAÇADOR, Nylon	SPACER	SEPARADOR	DISTANZIALE	075D
					ENTRETOISE	DISTANZSTÜCK	AFSTANDSSTYKKE	AFSTANDSSTUK	
7		**84130075**		1	CAIXA, Manual Storage	BOX	CAJA	CASSA; SCATOLA	035S
					BOITIER	KASTEN; OFF KASTENA(	KASSE	DOOS	
8		**84130074**		4	BUJÃO, Nut	PLUG	TAPÓN	TAPPO	050T
					BOUCHON	STOPFEN	PROP	PLUG	

90.150.01	01	p1	02/11

CAB CASE (SR175-TV380)
CAB CASE (SR175-TV380)
CAB CASE (SR175-TV380)
CAB CASE (SR175-TV380)

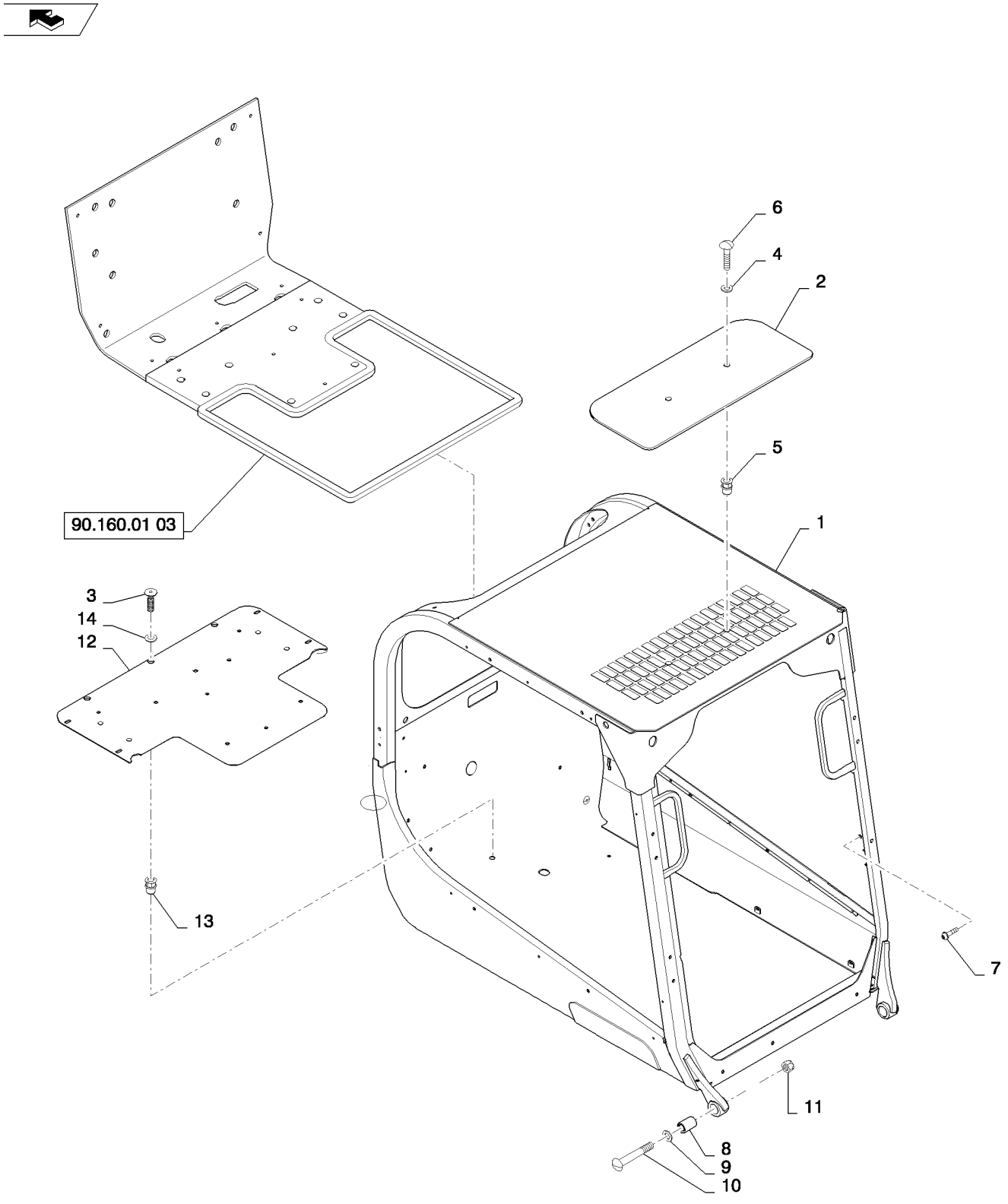

CAB CASE (SR175-TV380)
CAB CASE (SR175-TV380)
CAB CASE (SR175-TV380)
CAB CASE (SR175-TV380)

R	N	P.N.	MOD	Q	Denominação Description	Description Bezeichnung	Denominacion Beskrivelse	Descrizione Beschrijving	L.C.
1		{84200710}		1	ROPS, CNH Gray				
2		{84376784}		1	Skylight Window				
3		84305556		9	PARAFUSO VIS	SCREW SCHRAUBE	TORNILLO SKRUE	VITE SCHROEF	040V
4		394277A1		2	ARRUELA RONDELLE	WASHER UNTERLEGSCHEIBE	ARANDELA WASHER	RONDELLA WASHER	9720
5		84310724		2	REBITE RIVET	RIVET NIET	REMACHE NITTE	RIVETTO KLINKNAGEL	055R
6		84375323		2	PARAFUSO, Screw VIS	SCREW SCHRAUBE	TORNILLO SKRUE	VITE SCHROEF	040V
7		86625199		8	PARAFUSO, Hex Flg Hd, M6 x 13 VIS AUTOTARAUDEUSE	SELF-TAP SCREW SELBSTSCHN SCHRAUE	TORNILLO AUTORROSC SELVLÅSENDE BOLT	VITE AUTOFILETTANTE ZELFTAPPENDE SCHRO	062V
8		84200848		2	FIXADOR MONTAGE	MOUNT GESTELL	SOPORTE BESLAG	SUPPORTO BEVESTIGING	C022
9		{84365968}		2	Nylon Washer				
10		84370842		2	PARAFUSO VIS	BOLT SCHRAUBE	PERNO BOLT	BULLONE BOUT	140B
11		86536985		2	CONTRA PORCA, M20 x 2.5, Cl 10 CONTRE-ECROU	LOCK NUT SICHERUNGSMUTTER	TUERCA DE BLOQUEO LÅSEMØTRIK	DADO DI BLOCCAGGIO BORGMOER	P263
12		84284728		1	ASSENTO, Seat Pan, Gray SIEGE	SEAT SITZ	ASIENTO SÆDE	SEDILE STOEL	7480
13		84272826		7	REBITE RIVET	RIVET NIET	REMACHE NITTE	RIVETTO KLINKNAGEL	055R
14		86624182		4	ARRUELA PLANA, M6 x 18 x 1.6 RONDELLE	WASHER UNTERLEGSCHEIBE	ARANDELA FLADSKIVE	RONDELLA SLUITRING	131R

90.150.01	02	p1	08/11

CAB CASE (SR175-TV380)
CAB CASE (SR175-TV380)
CAB CASE (SR175-TV380)
CAB CASE (SR175-TV380)

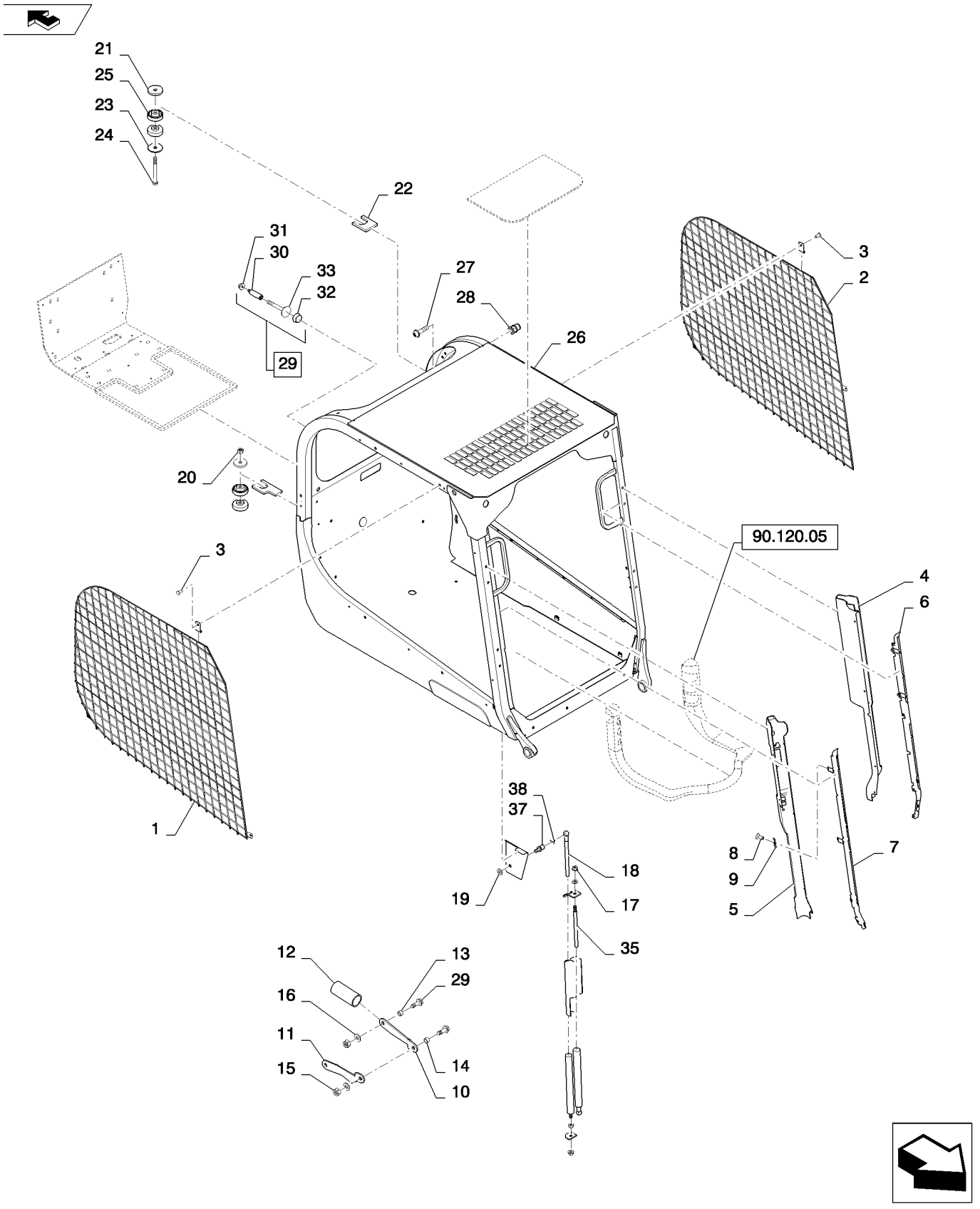

CAB CASE (SR175-TV380)
CAB CASE (SR175-TV380)
CAB CASE (SR175-TV380)
CAB CASE (SR175-TV380)

R	N	P.N.	MOD	Q	Denominação Description	Description Bezeichnung	Denominacion Beskrivelse	Descrizione Beschrijving	L.C.
1		84200803		1	TELA, ROPS Side Screen RH				
						SCREEN	PANTALLA	FILTRO; SCHERMO	047S
					TAMIS	GITTER; ABSCHIRMUNG	SKÆRM	SCHERM	
2		84307405		1	TELA, ROPS Side Screen LH				
						SCREEN	PANTALLA	FILTRO; SCHERMO	047S
					TAMIS	GITTER; ABSCHIRMUNG	SKÆRM	SCHERM	
3		84310724		22	REBITE	RIVET	REMACHE	RIVETTO	055R
					RIVET	NIET	NITTE	KLINKNAGEL	
4		84379512		1	CONSOLE, LH Case, Wheat				
						CONSOLE	CONSOLA	CONSOLE	080M
					CONSOLE	KONSOLE	KONSOL	CONSOLE	
5		84302476		1	CONSOLE, RH Case, Wheat				
						CONSOLE	CONSOLA	CONSOLE	080M
					CONSOLE	KONSOLE	KONSOL	CONSOLE	
6		84473542		1	SUPORTE, LH A-Post Console				
						BRACKET	SOPORTE	STAFFA	225S
					SUPPORT	HALTERUNG	BESLAG	STEUN	
7		84473534		1	SUPORTE, RH A-Post Console				
						BRACKET	SOPORTE	STAFFA	225S
					SUPPORT	HALTERUNG	BESLAG	STEUN	
8		84349415		12	PARAFUSO, Screw, RWH M6x12				
						SCREW	TORNILLO	VITE	040V
					VIS	SCHRAUBE	SKRUE	SCHROEF	
9		87594976		6	BOTÃO DE IMPULSO, U Nut				
						FASTENER	SUJETADOR	DISPOSITIVO DI FISSAG	123B
					ATTACHE	BEFESTIGUNGSELEMEN	LUKKER	BEVESTIGING	
10		84349494		1	PLACA, Plate, Upper Locking Arm				
						PLATE	PLACA	PIASTRA	105P
					PLAQUE	PLATTE	PLADE	PLAAT	
11		84349498		1	PLACA, Plate, Lower Locking Arm				
						PLATE	PLACA	PIASTRA	105P
					PLAQUE	PLATTE	PLADE	PLAAT	
12		84309929		1	TUBO, Tube, Locking Collar Safety				
						TUBE	TUBO	TUBO	195T
					TUBE	ROHR	RØR	LEIDING	
13		84349662		2	ESPAÇADOR, Spacer, 8 mm				
						SPACER	SEPARADOR	DISTANZIALE	075D
					ENTRETOISE	DISTANZSTÜCK	AFSTANDSSTYKKE	AFSTANDSSTUK	
14		84349661		1	ESPAÇADOR, Spacer, 16 mm				
						SPACER	SEPARADOR	DISTANZIALE	075D
					ENTRETOISE	DISTANZSTÜCK	AFSTANDSSTYKKE	AFSTANDSSTUK	
15		100037		3	PORCA, M10 x 1.5, Cl 8	NUT	TUERCA	DADO	010D
					ECROU	MUTTER	MØTRIK	MOER	
16		87655046		3	ARRUELA ESPECIAL	SPECIAL WASHER	ARANDELA ESPECIAL	RONDELLA SPECIALE	Z333
					RONDELLE SPECIALE	SPEZIALUNTERLEGSCH	SPECIALSKIVE	SPECIALE RING	
17		412141		1	CONTRA PORCA, M10 x 1.5, Cl 8				
						LOCK NUT	TUERCA DE BLOQUEO	DADO DI BLOCCAGGIO	P263
					CONTRE-ECROU	SICHERUNGSMUTTER	LÅSEMØTRIK	BORGMOER	

90.150.01	02	p2	08/11

CAB CASE (SR175-TV380)
CAB CASE (SR175-TV380)
CAB CASE (SR175-TV380)
CAB CASE (SR175-TV380)

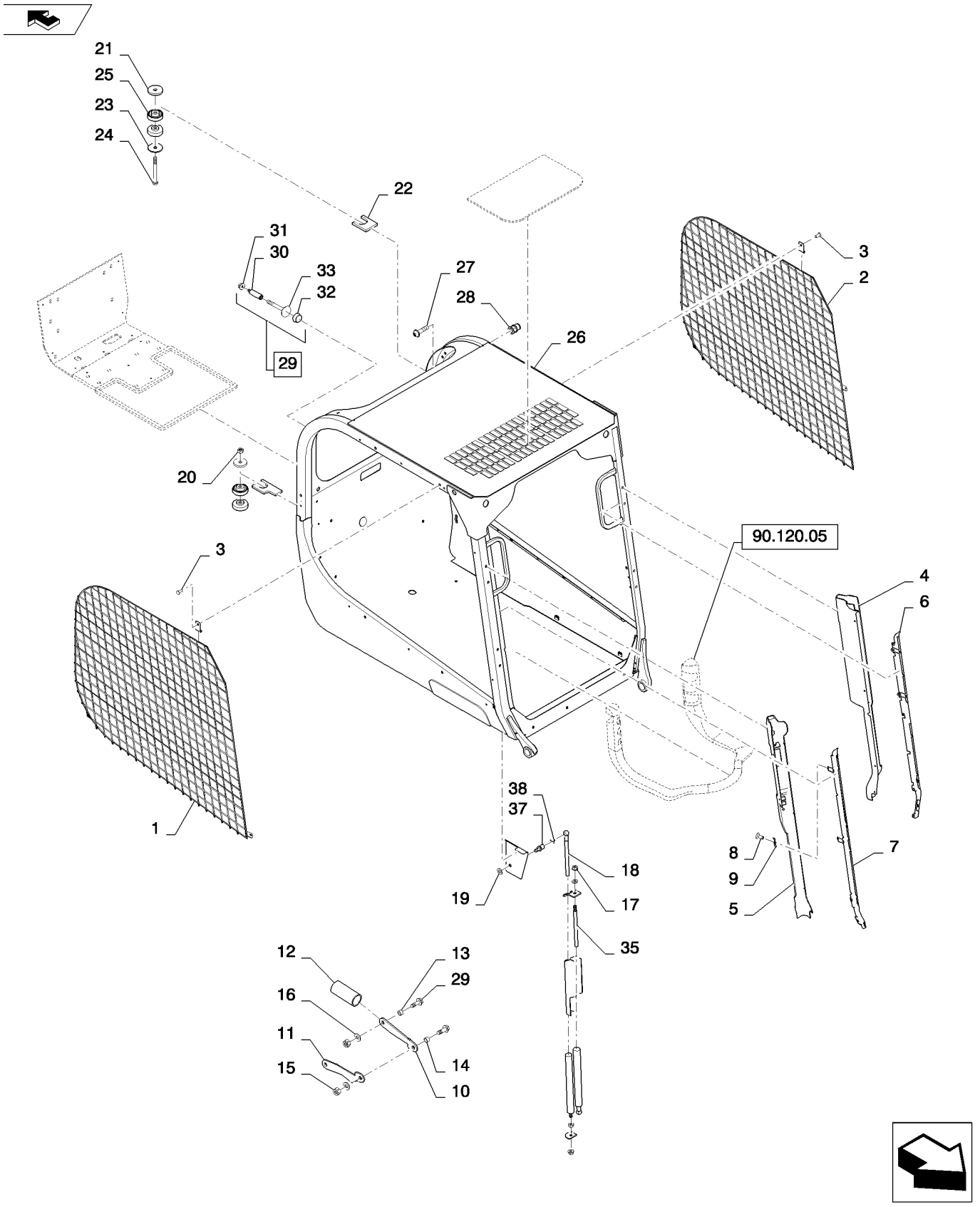

CAB CASE (SR175-TV380)
CAB CASE (SR175-TV380)
CAB CASE (SR175-TV380)
CAB CASE (SR175-TV380)

R	N	P.N.	MOD	Q	Denominação Description	Description Bezeichnung	Denominacion Beskrivelse	Descrizione Beschrijving	L.C.
18		84423628		1	COMPASSO, Strut, Gas, Assy				
						GAS STRUT	COLUMNA DE GAS	AMMORTIZZATORE A G/	Z331
					BEQUILLE A GAZ	GASDRUCKFEDER	CYLINDER, GASSTØDD/	GASVEER	
19		86624176		2	ARRUELA PLANA, M10 x 20 x 2				
						WASHER	ARANDELA	RONDELLA	131R
					RONDELLE	UNTERLEGSCHEIBE	FLADSKIVE	SLUITRING	
20		412066		2	PORCA, M16 x 2, Cl 8	NUT	TUERCA	DADO	010D
					ECROU	MUTTER	MØTRIK	MOER	
21		84298254		2	PLACA, Plate, Rear Mount	PLATE	PLACA	PIASTRA	105P
					PLAQUE	PLATTE	PLADE	PLAAT	
22		84361070		2	PLACA	PLATE	PLACA	PIASTRA	105P
					PLAQUE	PLATTE	PLADE	PLAAT	
23		87630175		2	ARRUELA PLANA	WASHER	ARANDELA	RONDELLA	131R
					RONDELLE	UNTERLEGSCHEIBE	FLADSKIVE	SLUITRING	
24		87698773		2	PARAFUSO	BOLT	PERNO	BULLONE	140B
					VIS	SCHRAUBE	BOLT	BOUT	
25		84201266		4	ISOLADOR, Engine Mount	ISOLATOR	AISLADOR	ISOLATORE	Z082
					ISOLANT	ISOLATOR	ISOLATOR	ISOLATIE	
26		{84200710}		REF	ROPS, CNH Gray				
27		84305556		3	PARAFUSO	SCREW	TORNILLO	VITE	040V
					VIS	SCHRAUBE	SKRUE	SCHROEF	
28		9804262		2	PARAFUSO, Hex Flg, M10 x 30, 8.8				
						BOLT	PERNO	BULLONE	140B
					VIS	SCHRAUBE	BOLT	BOUT	
29		{84355969}		REF	Lap Bar Stop; Incl. 30-33				
30		84355970		2	FIXADOR, Round Lap Bar Stop				
						MOUNT	SOPORTE	SUPPORTO	C022
					MONTAGE	GESTELL	BESLAG	BEVESTIGING	
31		9804276		2	PORCA, M6 x 1, Flg, Cl 8	NUT	TUERCA	DADO	010D
					ECROU	MUTTER	MØTRIK	MOER	
32		87639914		2	MAÇANETA, Pivot Lap Bar Stop				
						KNOB	MANDO	MANOPOLA	150P
					BOUTON	RUNDGRIFF	GREB	KNOP	
33		87639912		2	MAÇANETA, Star Knob 3/8"				
						KNOB	MANDO	MANOPOLA	150P
					BOUTON	RUNDGRIFF	GREB	KNOP	
34		{84466947}		1	Cab Strut Bumper (Not Shown)				
35		120112		1	PARAFUSO, Hex, M10 x 40, 8.8, Full Thd, Use with Ref. 34 (Not Shown)				
						BOLT	PERNO	BULLONE	140B
					VIS	SCHRAUBE	BOLT	BOUT	
36		254206A1		4	ESPACADOR, Black, Use with Ref. 34 (Not Shown)				
						SPACER	ESPACIADOR	DISTANZIALE	8090
					ENTRETOISE	ABSTANDSSTUECK	SPACER	SPACER	
37		84372097		2	PRISIONEIRO, Ball	STUD	PRISIONERO	PRIGIONIERO	210P
					GOUJON	GEWINDEBOLZEN	STØTTEBOLT	TAPEIND	

90.150.01	02	p3	08/11

CAB CASE (SR175-TV380)
CAB CASE (SR175-TV380)
CAB CASE (SR175-TV380)
CAB CASE (SR175-TV380)

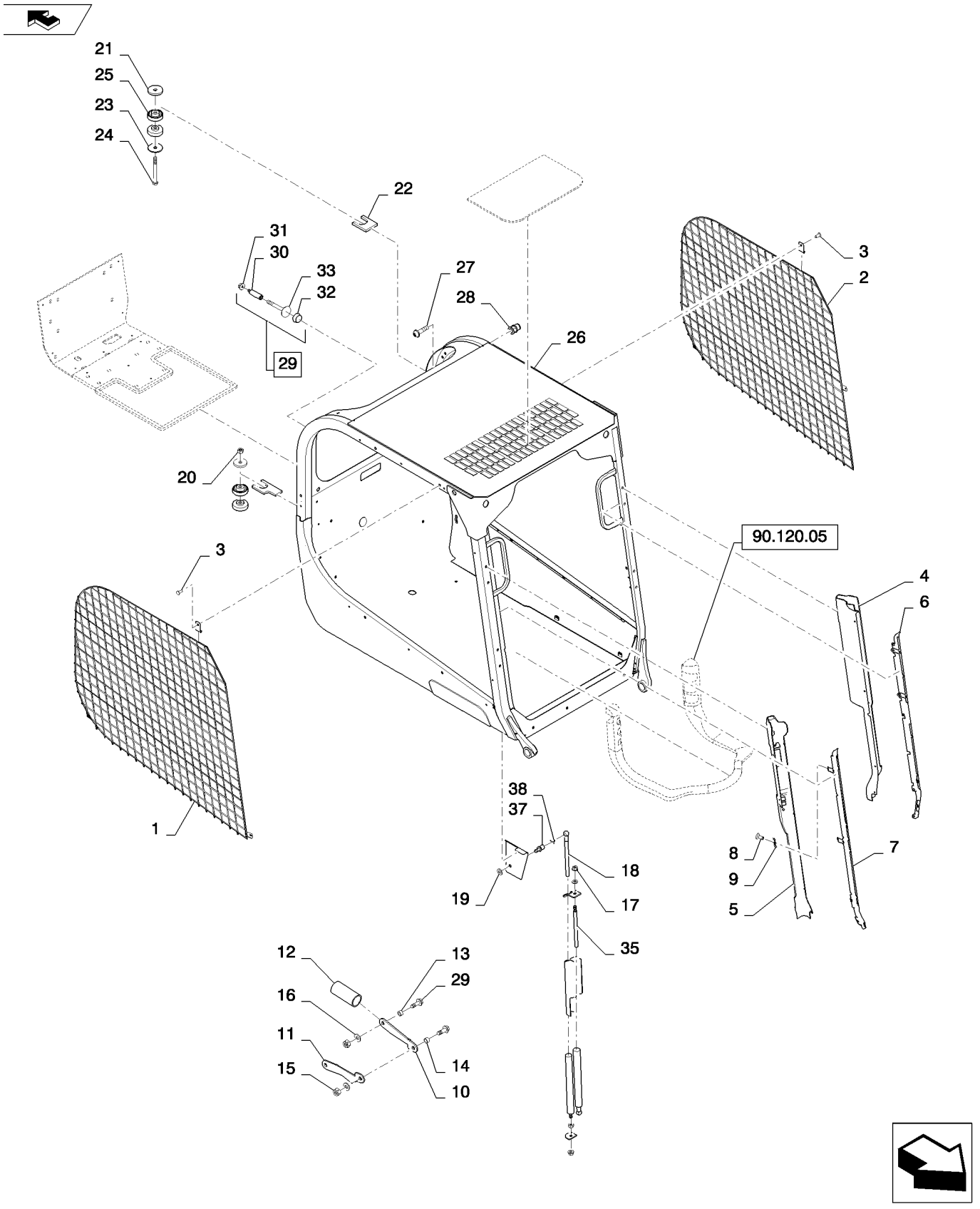

CAB CASE (SR175-TV380)
CAB CASE (SR175-TV380)
CAB CASE (SR175-TV380)
CAB CASE (SR175-TV380)

R	N	P.N.	MOD	Q	Denominação Description Bezeichnung Denominacion Beskrivelse Descrizione Beschrijving	L.C.
38		**84372099**		2	GRAMPO, Locking CLIP ABRAZADERA FERMO COLLIER KLAMMER KLIPS KLEM	045F
39		**84473525**		6	PORCA, Acorn, Console to Bracket NUT TUERCA DADO ECROU MUTTER MØTRIK MOER	010D

90.150.01	03	p1	06/11

CAB, GAS STRUT ASSY (ALL CASE)
CAB, GAS STRUT ASSY (ALL CASE)
CAB, GAS STRUT ASSY (ALL CASE)
CAB, GAS STRUT ASSY (ALL CASE)

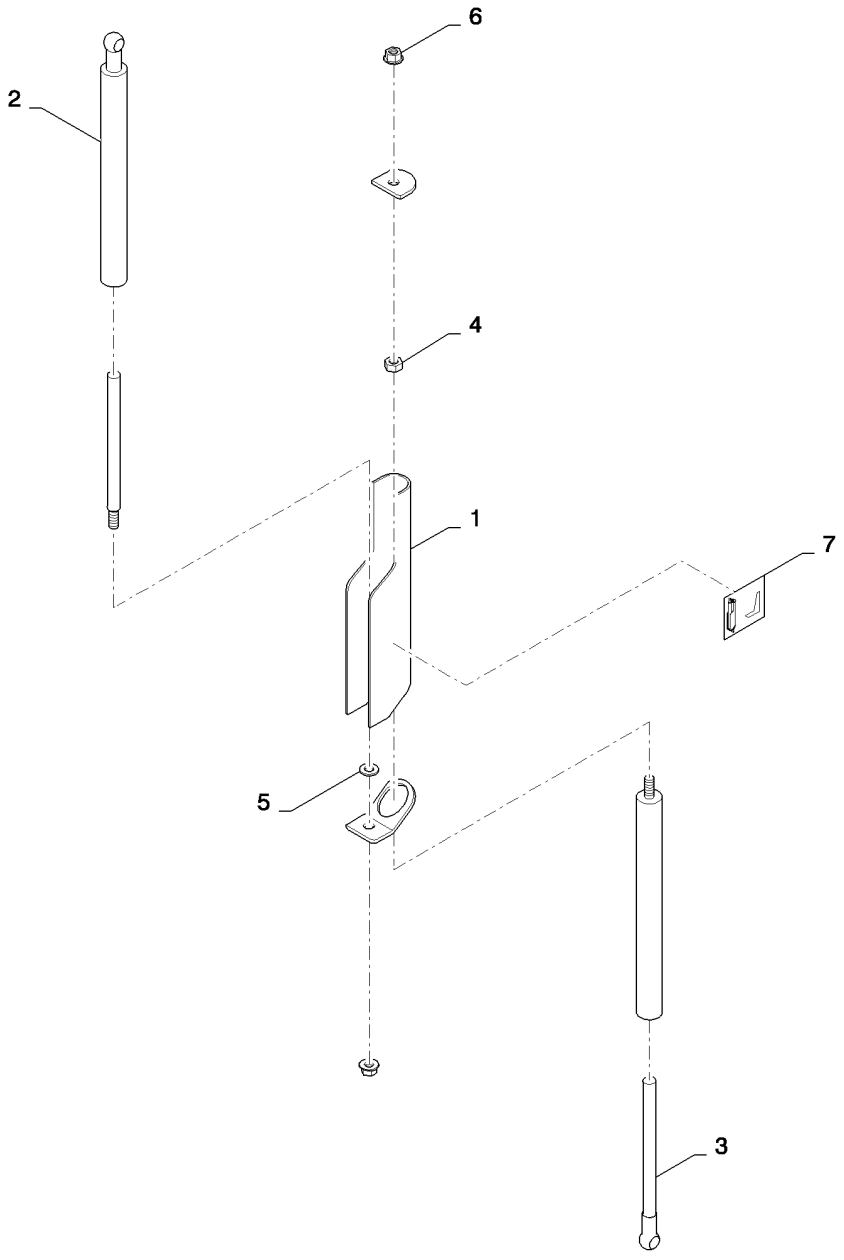

CAB, GAS STRUT ASSY (ALL CASE)
CAB, GAS STRUT ASSY (ALL CASE)
CAB, GAS STRUT ASSY (ALL CASE)
CAB, GAS STRUT ASSY (ALL CASE)

R	N	P.N.	MOD	Q	Denominação Description	Description Bezeichnung	Denominacion Beskrivelse	Descrizione Beschrijving	L.C.
1		84418681		1	ESCORA ESTABILIZADORA, Gray				
						STRUT	COLUMNA	AMMORTIZZATORE	245P
					JAMBE	STREBE	STØDDÆMPERARME	GASVEER	
		84385168		1	COMPASSO, Assembly, Incl. 1-7				
						GAS STRUT	COLUMNA DE GAS	AMMORTIZZATORE A G/	Z331
					BEQUILLE A GAZ	GASDRUCKFEDER	CYLINDER, GASSTØDD/	GASVEER	
2		84365652		1	COMPASSO, 330SN	GAS STRUT	COLUMNA DE GAS	AMMORTIZZATORE A G/	Z331
					BEQUILLE A GAZ	GASDRUCKFEDER	CYLINDER, GASSTØDD/	GASVEER	
3		84365651		1	COMPASSO, 2410 N	GAS STRUT	COLUMNA DE GAS	AMMORTIZZATORE A G/	Z331
					BEQUILLE A GAZ	GASDRUCKFEDER	CYLINDER, GASSTØDD/	GASVEER	
4		100016		1	PORCA, M10, Cl 8	NUT	TUERCA	DADO	010D
					ECROU	MUTTER	MØTRIK	MOER	
5		86625241		1	ARRUELA PLANA, .406x.812x.089 HDN				
						WASHER	ARANDELA	RONDELLA	131R
					RONDELLE	UNTERLEGSCHEIBE	FLADSKIVE	SLUITRING	
6		9804278		2	PORCA, M10 x 1.5, Flg, Cl 8				
						NUT	TUERCA	DADO	010D
					ECROU	MUTTER	MØTRIK	MOER	
7		84385641		1	ADESIVO, Gas Strut Orientation				
						DECAL	CALCOMANÍA	DECALCOMANIA	012D
					AUTOCOLLANT	AUFKLEBER	TRANSFER	STICKER	

90.150.02		p1	02/11

CAB SEALING (ALL CASE)
CAB SEALING (ALL CASE)
CAB SEALING (ALL CASE)
CAB SEALING (ALL CASE)

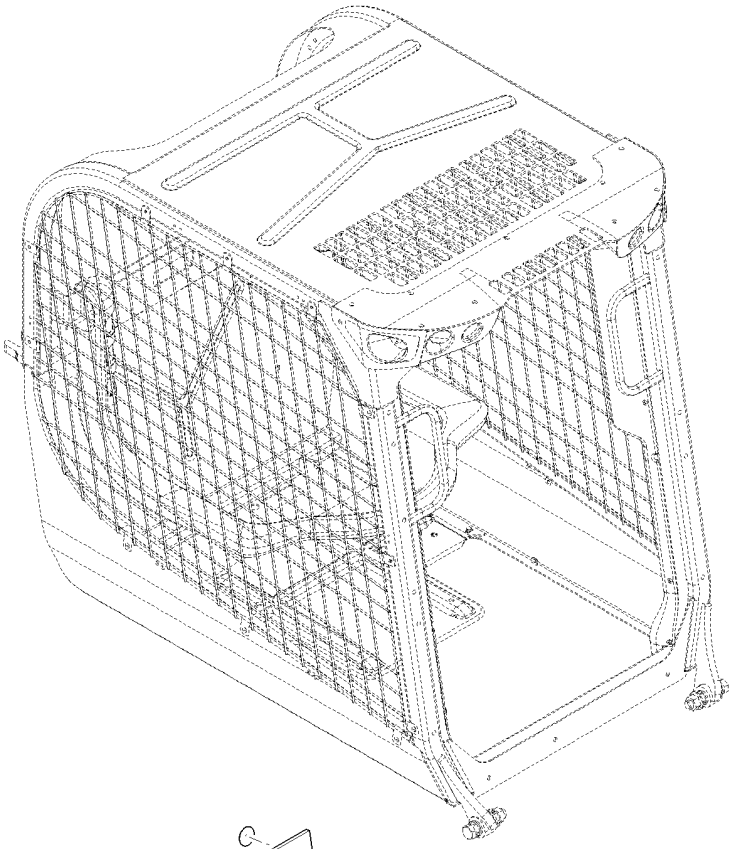

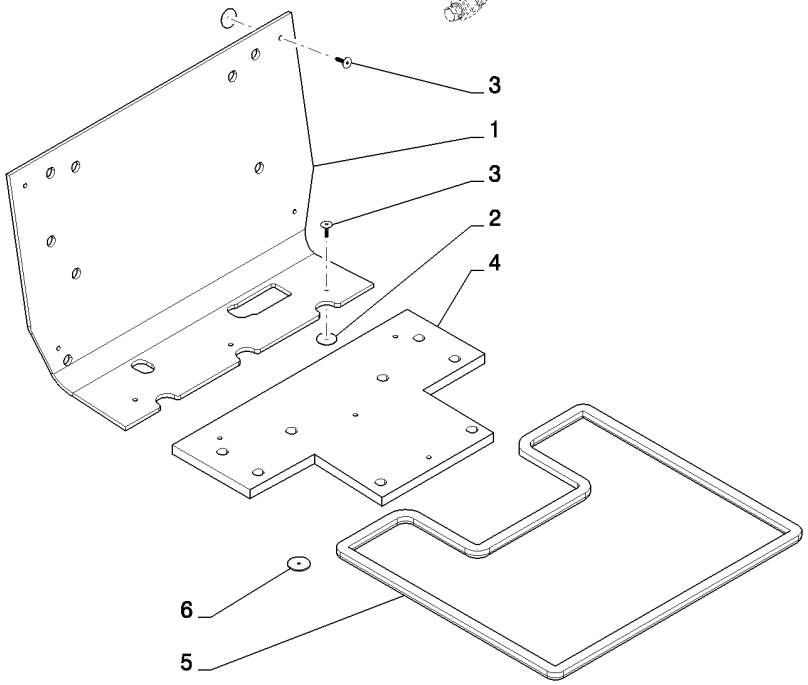

CAB SEALING (ALL CASE)
CAB SEALING (ALL CASE)
CAB SEALING (ALL CASE)
CAB SEALING (ALL CASE)

R	N	P.N.	MOD	Q	Denominação Description Bezeichnung	Description Denominacion Beskrivelse	Descrizione Beschrijving	L.C.
1		84362124		1	ESPUMA ISOLANTE, Firewall MOUSSE ISOLANTE	FOAM INSULATION SCHAUMSTOFFISOLIER	ESPUMA AISLANTE SKUM ISOLERING	ISOLANTE IN SCHIUMA SCHUIMISOLATIE	051S
2		348434A1		7	ARRUELA, Flat RONDELLE	WASHER UNTERLEGSCHEIBE	ARANDELA WASHER	RONDELLA WASHER	9720
3		348452A1		7	BOTÃO DE IMPULSO, Push-In ATTACHE	FASTENER BEFESTIGUNGSELEMEN	SUJETADOR LUKKER	DISPOSITIVO DI FISSAG BEVESTIGING	123B
4		84342684		1	ESPUMA ISOLANTE, Seat Pan MOUSSE ISOLANTE	FOAM INSULATION SCHAUMSTOFFISOLIER	ESPUMA AISLANTE SKUM ISOLERING	ISOLANTE IN SCHIUMA SCHUIMISOLATIE	051S
5		84338534		1	VEDAÇÃO, 3326 mm JOINT	SEAL DICHTUNG	ANILLO DE CIERRE PAKNING	GUARNIZIONE; TENUTA AFDICHTING	132A
6		84311384		1	ESPUMA ISOLANTE, Dump Valve MOUSSE ISOLANTE	FOAM INSULATION SCHAUMSTOFFISOLIER	ESPUMA AISLANTE SKUM ISOLERING	ISOLANTE IN SCHIUMA SCHUIMISOLATIE	051S

90.150.03		p1	01/11

FLOOR MAT, MECHANICAL HAND CONTROL (ALL CASE)
FLOOR MAT, MECHANICAL HAND CONTROL (ALL CASE)
FLOOR MAT, MECHANICAL HAND CONTROL (ALL CASE)
FLOOR MAT, MECHANICAL HAND CONTROL (ALL CASE)

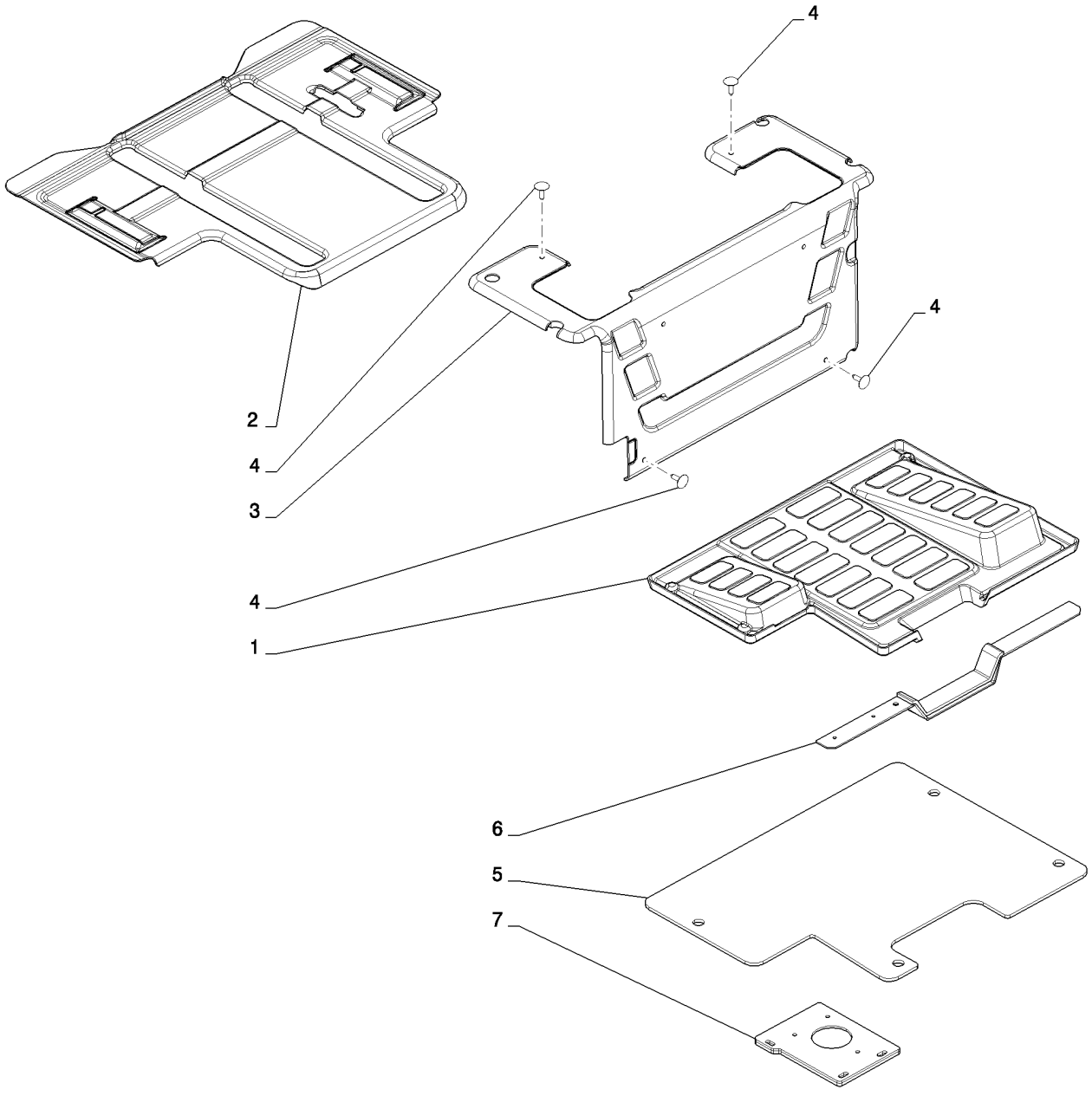

FLOOR MAT, MECHANICAL HAND CONTROL (ALL CASE)
FLOOR MAT, MECHANICAL HAND CONTROL (ALL CASE)
FLOOR MAT, MECHANICAL HAND CONTROL (ALL CASE)
FLOOR MAT, MECHANICAL HAND CONTROL (ALL CASE)

R	N	P.N.	MOD	Q	Denominação Description	Description Bezeichnung	Denominacion Beskrivelse	Descrizione Beschrijving	L.C.
1		84259690		1	TAPETE DO PISO, Trim	FLOOR MAT	ALFOMBRA	TAPPETINO	Z068
					TAPIS DE SOL	BODENMATTE	GULVMÅTTE	VLOERMAT	
2		84259693		1	TAPETE DO PISO, Seat Pan, Mechanical				
						FLOOR MAT	ALFOMBRA	TAPPETINO	Z068
					TAPIS DE SOL	BODENMATTE	GULVMÅTTE	VLOERMAT	
3		84397559		1	TAPETE, Heel Plate, Mechanical				
						MAT	ALFOMBRILLA	TAPPETINO	030T
					TAPIS	MATTE	MÅTTE	MAT	
4		86620930		6	BOTÃO DE IMPULSO, Push-In				
						FASTENER	SUJETADOR	DISPOSITIVO DI FISSAG	123B
					ATTACHE	BEFESTIGUNGSELEMEN	LUKKER	BEVESTIGING	
5		84372627		1	ESPUMA, No Pedal Floor Plate				
						FOAM	ESPUMA	SCHIUMA	P033
					MOUSSE	SCHAUM	SKUM	SCHUIM	
6		84372707		1	ESPUMA, Front Door Plate	FOAM	ESPUMA	SCHIUMA	P033
					MOUSSE	SCHAUM	SKUM	SCHUIM	
7		84372630		1	ESPUMA, Foot Throttle	FOAM	ESPUMA	SCHIUMA	P033
					MOUSSE	SCHAUM	SKUM	SCHUIM	

90.150.05		p1	02/11

FLOOR MAT, EH CONTROLS (SR130-SV300)
FLOOR MAT, EH CONTROLS (SR130-SV300)
FLOOR MAT, EH CONTROLS (SR130-SV300)
FLOOR MAT, EH CONTROLS (SR130-SV300)

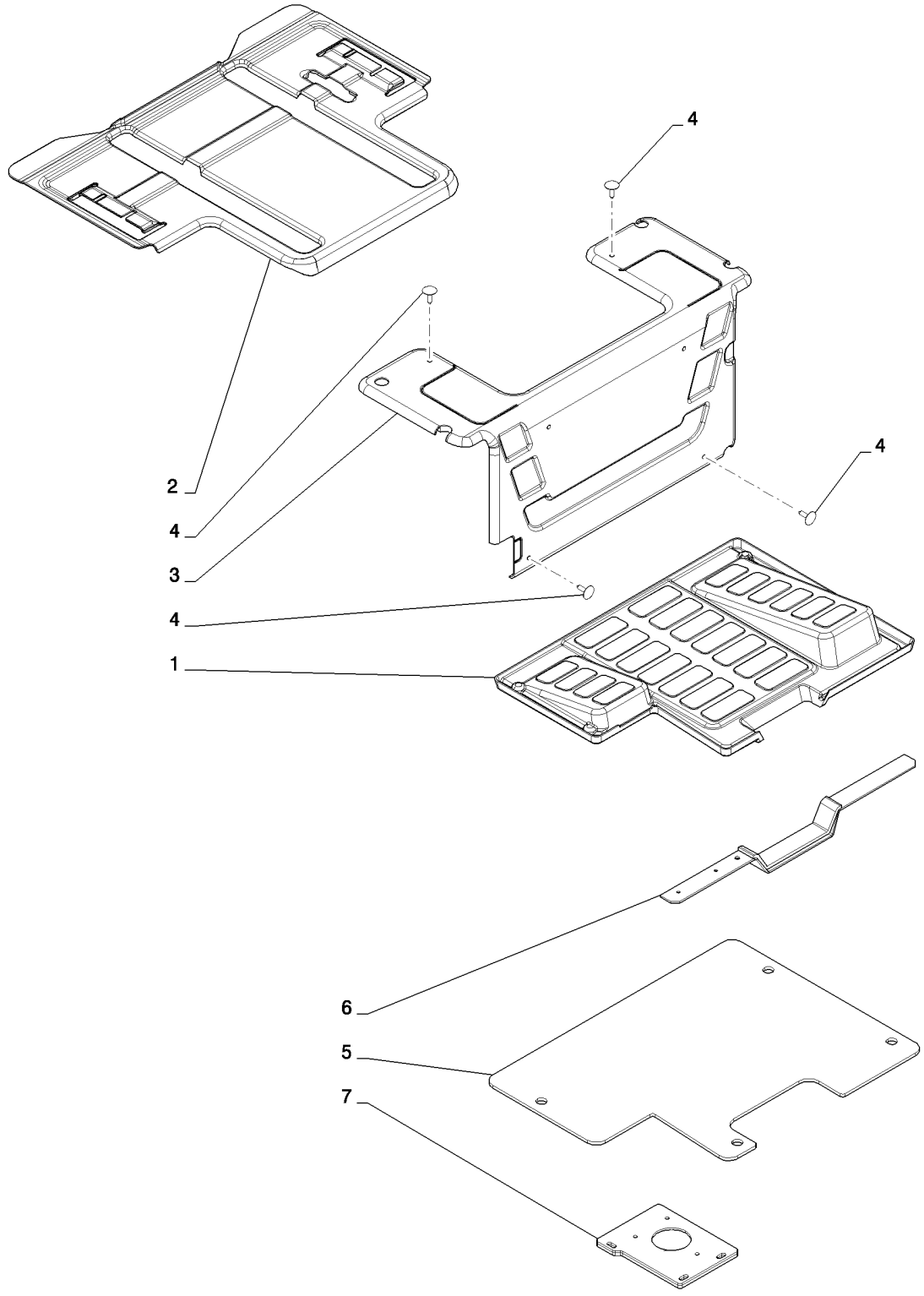

FLOOR MAT, EH CONTROLS (SR130-SV300)
FLOOR MAT, EH CONTROLS (SR130-SV300)
FLOOR MAT, EH CONTROLS (SR130-SV300)
FLOOR MAT, EH CONTROLS (SR130-SV300)

R	N	P.N.	MOD	Q	Denominação Description Bezeichnung	Description Bezeichnung	Denominacion Beskrivelse	Descrizione Beschrijving	L.C.
1		84259690		1	TAPETE DO PISO, Trim TAPIS DE SOL	FLOOR MAT BODENMATTE	ALFOMBRA GULVMÅTTE	TAPPETINO VLOERMAT	Z068
2		84271712		1	TAPETE DO PISO, Seat Pan, EH TAPIS DE SOL	FLOOR MAT BODENMATTE	ALFOMBRA GULVMÅTTE	TAPPETINO VLOERMAT	Z068
3		84397556		1	TAPETE, Heel Plate, EH TAPIS	MAT MATTE	ALFOMBRILLA MÅTTE	TAPPETINO MAT	030T
4		86620930		6	BOTÃO DE IMPULSO, Push-In ATTACHE	FASTENER BEFESTIGUNGSELEMEN	SUJETADOR LUKKER	DISPOSITIVO DI FISSAG BEVESTIGING	123B
5		84372627		1	ESPUMA, No Pedal Floor Plate MOUSSE	FOAM SCHAUM	ESPUMA SKUM	SCHIUMA SCHUIM	P033
6		84372707		1	ESPUMA, Front Door Plate MOUSSE	FOAM SCHAUM	ESPUMA SKUM	SCHIUMA SCHUIM	P033
7		84372630		1	ESPUMA, Foot Throttle MOUSSE	FOAM SCHAUM	ESPUMA SKUM	SCHIUMA SCHUIM	P033

90.154.00		p1	05/11

FRONT DOOR, GLASS (ALL CASE)
FRONT DOOR, GLASS (ALL CASE)
FRONT DOOR, GLASS (ALL CASE)
FRONT DOOR, GLASS (ALL CASE)

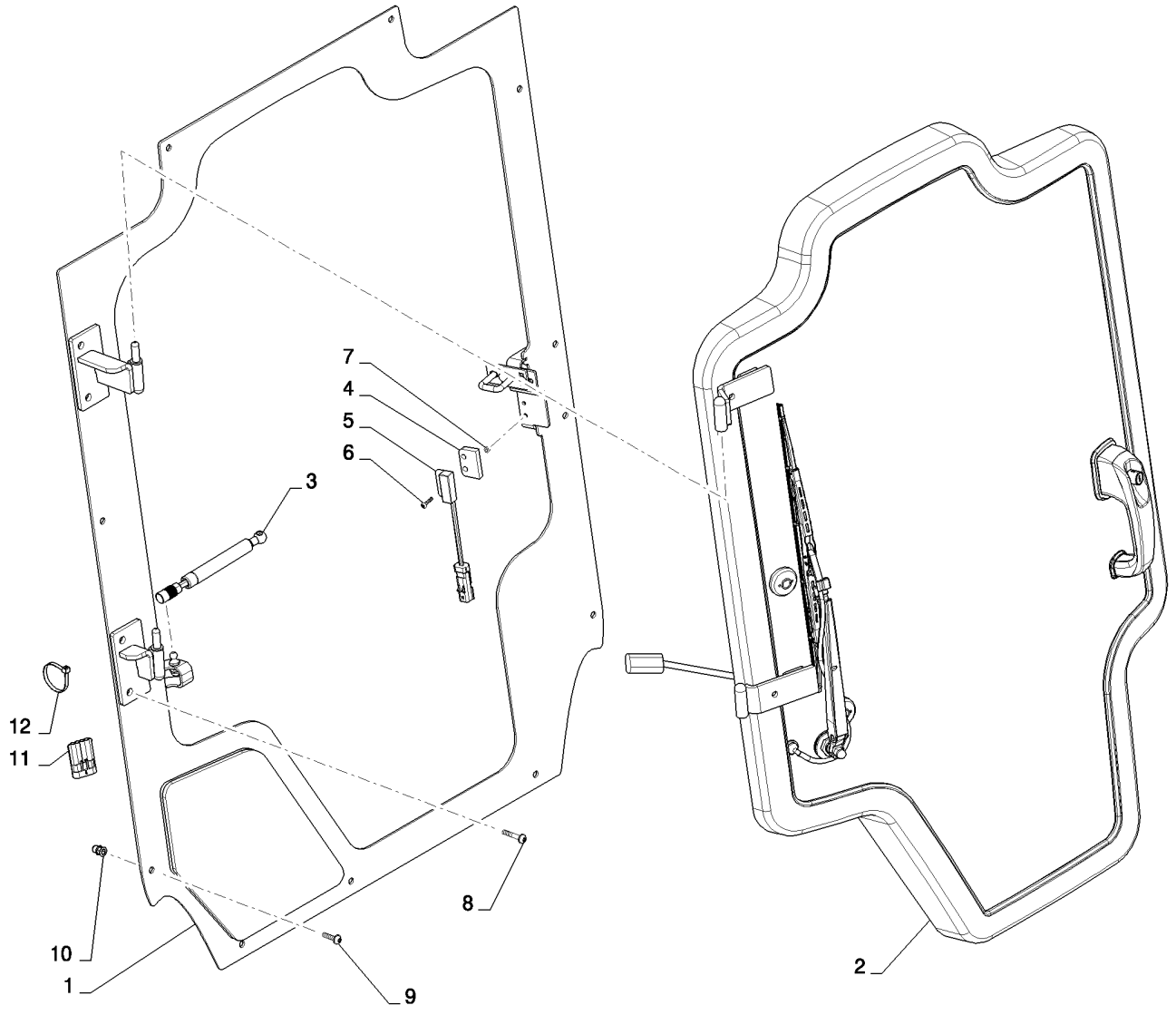

FRONT DOOR, GLASS (ALL CASE)
FRONT DOOR, GLASS (ALL CASE)
FRONT DOOR, GLASS (ALL CASE)
FRONT DOOR, GLASS (ALL CASE)

R	N	P.N.	MOD	Q	Denominação Description	Description Bezeichnung	Denominacion Beskrivelse	Descrizione Beschrijving	L.C.
1		84257150		1	PORTA, Door Assy, Jamb, Incl. 1A				
						DOOR	PUERTA	SPORTELLO	180P
					PORTE	TÜR	DØR	PORTIER	
2		84415694		1	PORTA, Assy, Front	DOOR	PUERTA	SPORTELLO	180P
					PORTE	TÜR	DØR	PORTIER	
1A		84259722		1	JANELA, Small, Lower Window				
						WINDOW	VENTANILLA	FINESTRINO	9810
					FENETRE	FENSTER	VINDUE	RUIT	
3		84378453		1	COMPASSO, Gas Spring	GAS STRUT	COLUMNA DE GAS	AMMORTIZZATORE A G/	Z331
					BEQUILLE A GAZ	GASDRUCKFEDER	CYLINDER, GASSTØDD/	GASVEER	
4		86624468		1	ESPAÇADOR, Switch	SPACER	SEPARADOR	DISTANZIALE	075D
					ENTRETOISE	DISTANZSTÜCK	AFSTANDSSTYKKE	AFSTANDSSTUK	
5		87392235		1	INTERRUPTOR INTERMITENTE, Reed, Non-Contact NO				
						SWITCH ASSY	CONJUNTO DE INTERRU	COMPLESSIVO INTERRU	067I
					ENSEMBLE COMMUTATI	SCHALTERBAUGRUPPE	KONTAKT, KPL.	SCHAKELAAREENHEID	
6		84183818		2	PARAFUSO	SCREW	TORNILLO	VITE	040V
					VIS	SCHRAUBE	SKRUE	SCHROEF	
7		100012		2	PORCA, M4, Cl 8	NUT	TUERCA	DADO	010D
					ECROU	MUTTER	MØTRIK	MOER	
8		84359102		4	PARAFUSO	SCREW	TORNILLO	VITE	040V
					VIS	SCHRAUBE	SKRUE	SCHROEF	
9		84305556		11	PARAFUSO	SCREW	TORNILLO	VITE	040V
					VIS	SCHRAUBE	SKRUE	SCHROEF	
10		84272827		15	REBITE	RIVET	REMACHE	RIVETTO	055R
					RIVET	NIET	NITTE	KLINKNAGEL	
11		84331404		1	CONECTOR DO FIO, Jumper				
						WIRE CONNECTOR	CONECTOR DE CABLE	CONNETTORE DEL FILO	250C
					CONNECTEUR DU FIL	KABELSTECKVERBINDE	SAMLEMUFFE	DRAADCONNECTOR	
12		L11541		1	PRENDEDOR DE CABOS	CABLE STRAP	BANDA DE CABLE	FASCETTA PER CAVO	P716
					BRIDE DE CABLE	KABELBINDER	KABELSTROP	BUNDELBAND	

90.154.01	01	p1	06/11

DOOR ASSY, FRONT (ALL CASE)
DOOR ASSY, FRONT (ALL CASE)
DOOR ASSY, FRONT (ALL CASE)
DOOR ASSY, FRONT (ALL CASE)

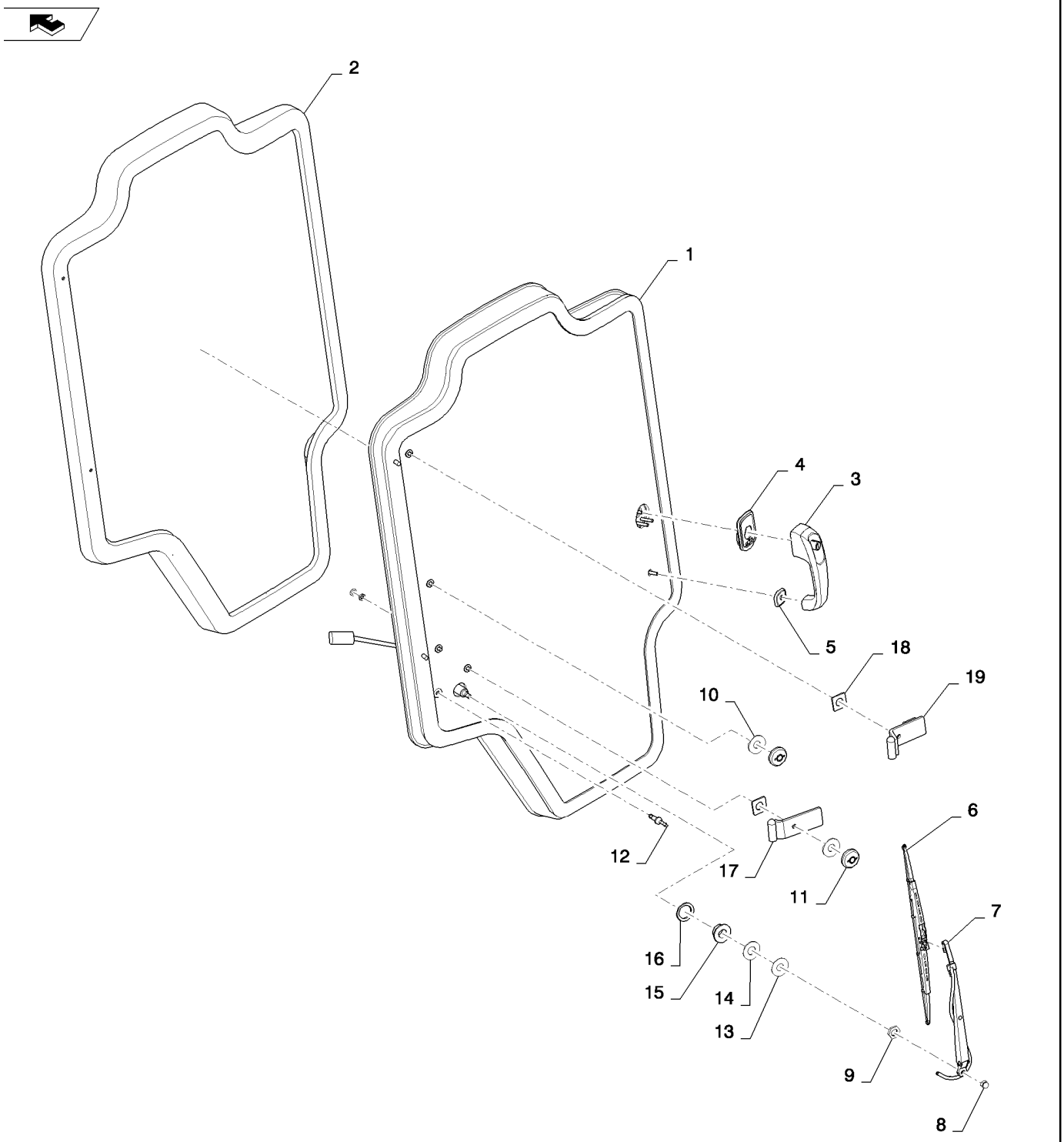

DOOR ASSY, FRONT (ALL CASE)
DOOR ASSY, FRONT (ALL CASE)
DOOR ASSY, FRONT (ALL CASE)
DOOR ASSY, FRONT (ALL CASE)

R	N	P.N.	MOD	Q	Denominação Description	Description Bezeichnung	Denominacion Beskrivelse	Descrizione Beschrijving	L.C.
1		84368761		1	VEDAÇÃO, Dust, Glass JOINT	SEAL DICHTUNG	ANILLO DE CIERRE PAKNING	GUARNIZIONE; TENUTA AFDICHTING	132A
2		84415734		1	PORTA, Assembly PORTE	DOOR TÜR	PUERTA DØR	SPORTELLO PORTIER	180P
3		84396681		1	MAÇANETA DA PORTA, Door POIGNEE DE PORTE	DOOR HANDLE TÜRGRIFF	EMPUÑADURA DE PUER DØRHÅNDTAG	MANIGLIA DELLA PORTA HANDGREEP VAN PORT	A051
4		84293060		1	VEDAÇÃO, Handle Upper JOINT	SEAL DICHTUNG	ANILLO DE CIERRE PAKNING	GUARNIZIONE; TENUTA AFDICHTING	132A
5		84293058		1	VEDAÇÃO, Handle Lower JOINT	SEAL DICHTUNG	ANILLO DE CIERRE PAKNING	GUARNIZIONE; TENUTA AFDICHTING	132A
6		84347625		1	PALHETA LIMPADOR LAME D'ESSUIE-GLACE	WIPER BLADE WISCHERBLATT	RASQUETA LIMPIAPARA VISKERBLAD	SPAZZOLA TERGICRIST. RUITENWISSERBLAD	175S
7		84347514		1	BRAÇO LIMPADOR, Arm BRAS D'ESSUIE-GLACE	WIPER ARM WISCHERARM	BRAZO LIMPIAPARABRIS VISKERARM	BRACCIO TERGICRISTA ARM VAN RUITENWISSE	134B
8		412326		2	PORCA, Dome Crown M8 ECROU	NUT MUTTER	TUERCA MØTRIK	DADO MOER	010D
9		87607505		1	PORCA, Wiper ECROU	NUT MUTTER	TUERCA MØTRIK	DADO MOER	010D
10		84415813		2	VEDAÇÃO, Washer JOINT	SEAL DICHTUNG	ANILLO DE CIERRE PAKNING	GUARNIZIONE; TENUTA AFDICHTING	132A
11		86531235		2	BUCHA, Hinge BAGUE	BUSHING BUCHSE	CASQUILLO BØSNING	BOCCOLA BUS	095B
12		84369351		1	COTOVELO 90, Assembly COUDE A 90°	90 ELBOW 90-GRAD-KNIESTÜCK	CODO 90 VINKELRØR, 90	GOMITO A 90° KNIESTUK 90º	A045
13		84346315		1	ARRUELA PLANA, Plastic RONDELLE	WASHER UNTERLEGSCHEIBE	ARANDELA FLADSKIVE	RONDELLA SLUITRING	131R
14		84346316		1	VEDAÇÃO DE BORRACHA, Wiper Motor JOINT EN CAOUTCHOU	RUBBER SEAL GUMMIDICHTUNG	JUNTA DE GOMA GUMMITÆTNING	GUARNIZIONE DI GOMM RUBBEREN AFDICHTINC	122G
15		84346317		1	ESPAÇADOR, Wiper Motor ENTRETOISE	SPACER DISTANZSTÜCK	SEPARADOR AFSTANDSSTYKKE	DISTANZIALE AFSTANDSSTUK	075D
16		84485661		1	VEDAÇÃO, Wiper Motor Foam JOINT	SEAL DICHTUNG	ANILLO DE CIERRE PAKNING	GUARNIZIONE; TENUTA AFDICHTING	132A
17		84298540		1	SEMI-DOBRADIÇA, Bottom Door, Black DEMI-CHARNIERE	HALF-HINGE SCHARNIERHÄLFTE	SEMIBISAGRA HÆNGSELHALVDEL	SEMICERNIERA SCHARNIERHELFT	413S
18		84257222		2	VEDAÇÃO DE BORRACHA, Hinge JOINT EN CAOUTCHOU	RUBBER SEAL GUMMIDICHTUNG	JUNTA DE GOMA GUMMITÆTNING	GUARNIZIONE DI GOMM RUBBEREN AFDICHTINC	122G
19		84298543		1	SEMI-DOBRADIÇA, Top Door, Black DEMI-CHARNIERE	HALF-HINGE SCHARNIERHÄLFTE	SEMIBISAGRA HÆNGSELHALVDEL	SEMICERNIERA SCHARNIERHELFT	413S

90.154.01	02	p1	06/11

DOOR ASSY, FRONT (ALL CASE)
DOOR ASSY, FRONT (ALL CASE)
DOOR ASSY, FRONT (ALL CASE)
DOOR ASSY, FRONT (ALL CASE)

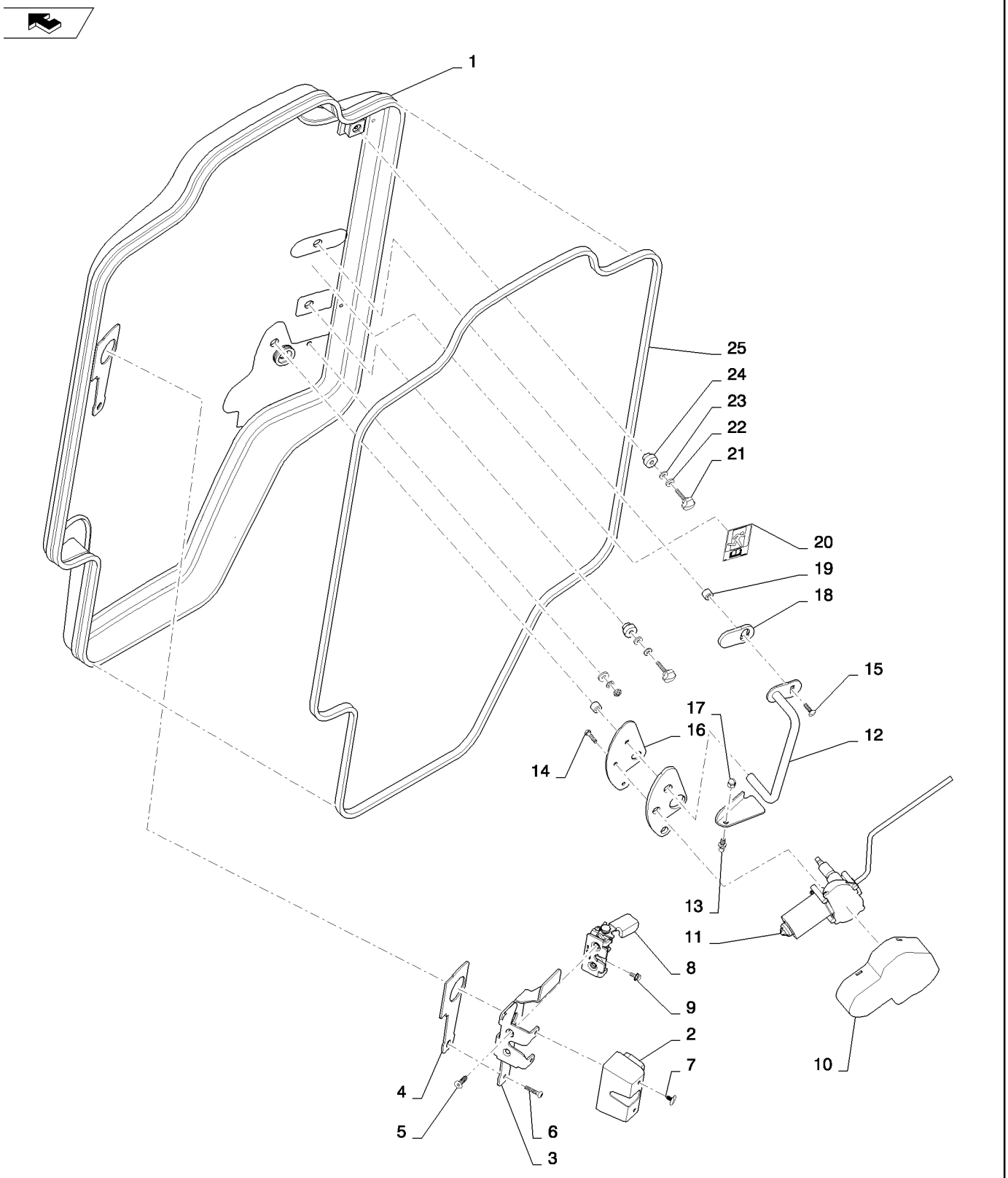

DOOR ASSY, FRONT (ALL CASE)
DOOR ASSY, FRONT (ALL CASE)
DOOR ASSY, FRONT (ALL CASE)
DOOR ASSY, FRONT (ALL CASE)

R	N	P.N.	MOD	Q	Denominação Description	Description Bezeichnung	Denominacion Beskrivelse	Descrizione Beschrijving	L.C.
1		84415734		1	PORTA, Assy, Door, Glass	DOOR	PUERTA	SPORTELLO	180P
					PORTE	TÜR	DØR	PORTIER	
2		84345556		1	COBERTURA, Latch	COVER	CUBIERTA	COPERCHIO	265C
					COUVERCLE	ABDECKUNG	DÆKSEL	AFSCHERMING	
3		84345554		1	SUPORTE, Latch	BRACKET	SOPORTE	STAFFA	225S
					SUPPORT	HALTERUNG	BESLAG	STEUN	
4		84293054		1	VEDAÇÃO, Door Latch	SEAL	ANILLO DE CIERRE	GUARNIZIONE; TENUTA	132A
					JOINT	DICHTUNG	PAKNING	AFDICHTING	
5		14442131		2	PARAFUSO, M8 X 25	SCREW	TORNILLO	VITE	040V
					VIS	SCHRAUBE	SKRUE	SCHROEF	
6		84129691		3	PARAFUSO, M6 X 30	SCREW	TORNILLO	VITE	040V
					VIS	SCHRAUBE	SKRUE	SCHROEF	
7		87712706		2	BOTÃO DE IMPULSO, Push-in Fastener				
						FASTENER	SUJETADOR	DISPOSITIVO DI FISSAG	123B
					ATTACHE	BEFESTIGUNGSELEMEN	LUKKER	BEVESTIGING	
8		84293079		1	TRINCO, Door	LATCH	PESTILLO	CHIUSURA A SCATTO	156C
					LOQUET	VERRIEGELUNG	PAL	GRENDEL	
9		86050272		1	PARAFUSO, Hex Flg, M6 x 12, 8.8				
						BOLT	PERNO	BULLONE	140B
					VIS	SCHRAUBE	BOLT	BOUT	
10		84300094		1	MOTOR DO LIMPADOR, Cover				
						WIPER MOTOR	MOTOR DE LIMPIAPARA	MOTORINO TERGICRIST	093T
					MOTEUR D'ESSUIE-GLA	WISCHERMOTOR	VISKERMOTOR	RUITENWISSERMOTOR	
11		84345627		1	MOTOR DO LIMPADOR, Motor				
						WIPER MOTOR	MOTOR DE LIMPIAPARA	MOTORINO TERGICRIST	093T
					MOTEUR D'ESSUIE-GLA	WISCHERMOTOR	VISKERMOTOR	RUITENWISSERMOTOR	
12		84347705		1	MAÇANETA DA PORTA, Black				
						DOOR HANDLE	EMPUÑADURA DE PUER	MANIGLIA DELLA PORTA	A051
					POIGNEE DE PORTE	TÜRGRIFF	DØRHÅNDTAG	HANDGREEP VAN PORT	
13		87581669		1	PRISIONEIRO, Ball	STUD	PRISIONERO	PRIGIONIERO	210P
					GOUJON	GEWINDEBOLZEN	STØTTEBOLT	TAPEIND	
14		86977786		2	PARAFUSO, Hex, M6 x 25, 8.8, Full Thd				
						BOLT	PERNO	BULLONE	140B
					VIS	SCHRAUBE	BOLT	BOUT	
15		374891		2	PARAFUSO, Short NK, M6 x 25, CI8.8, Full Thd				
						CARRIAGE BOLT	PERNO ALOMADO	BULLONE A TESTA TON	P123
					VIS A TETE BOMBEE	SCHLOSSSCHRAUBE	BRÆDDEBOLT	SLOTBOUT	
16		84293056		1	VEDAÇÃO, Wiper Motor	SEAL	ANILLO DE CIERRE	GUARNIZIONE; TENUTA	132A
					JOINT	DICHTUNG	PAKNING	AFDICHTING	
17		412326		2	PORCA, Dome Crown, M8	NUT	TUERCA	DADO	010D
					ECROU	MUTTER	MØTRIK	MOER	
18		84344562		1	VEDAÇÃO DE BORRACHA, Grab Handle				
						RUBBER SEAL	JUNTA DE GOMA	GUARNIZIONE DI GOMM	122G
					JOINT EN CAOUTCHOU	GUMMIDICHTUNG	GUMMITÆTNING	RUBBEREN AFDICHTINC	
19		84298763		2	ESPAÇADOR	SPACER	SEPARADOR	DISTANZIALE	075D
					ENTRETOISE	DISTANZSTÜCK	AFSTANDSSTYKKE	AFSTANDSSTUK	
20		84367244		1	ADESIVO, Emergency Exit	DECAL	CALCOMANÍA	DECALCOMANIA	012D
					AUTOCOLLANT	AUFKLEBER	TRANSFER	STICKER	

90.154.01	02	p2	06/11

DOOR ASSY, FRONT (ALL CASE)
DOOR ASSY, FRONT (ALL CASE)
DOOR ASSY, FRONT (ALL CASE)
DOOR ASSY, FRONT (ALL CASE)

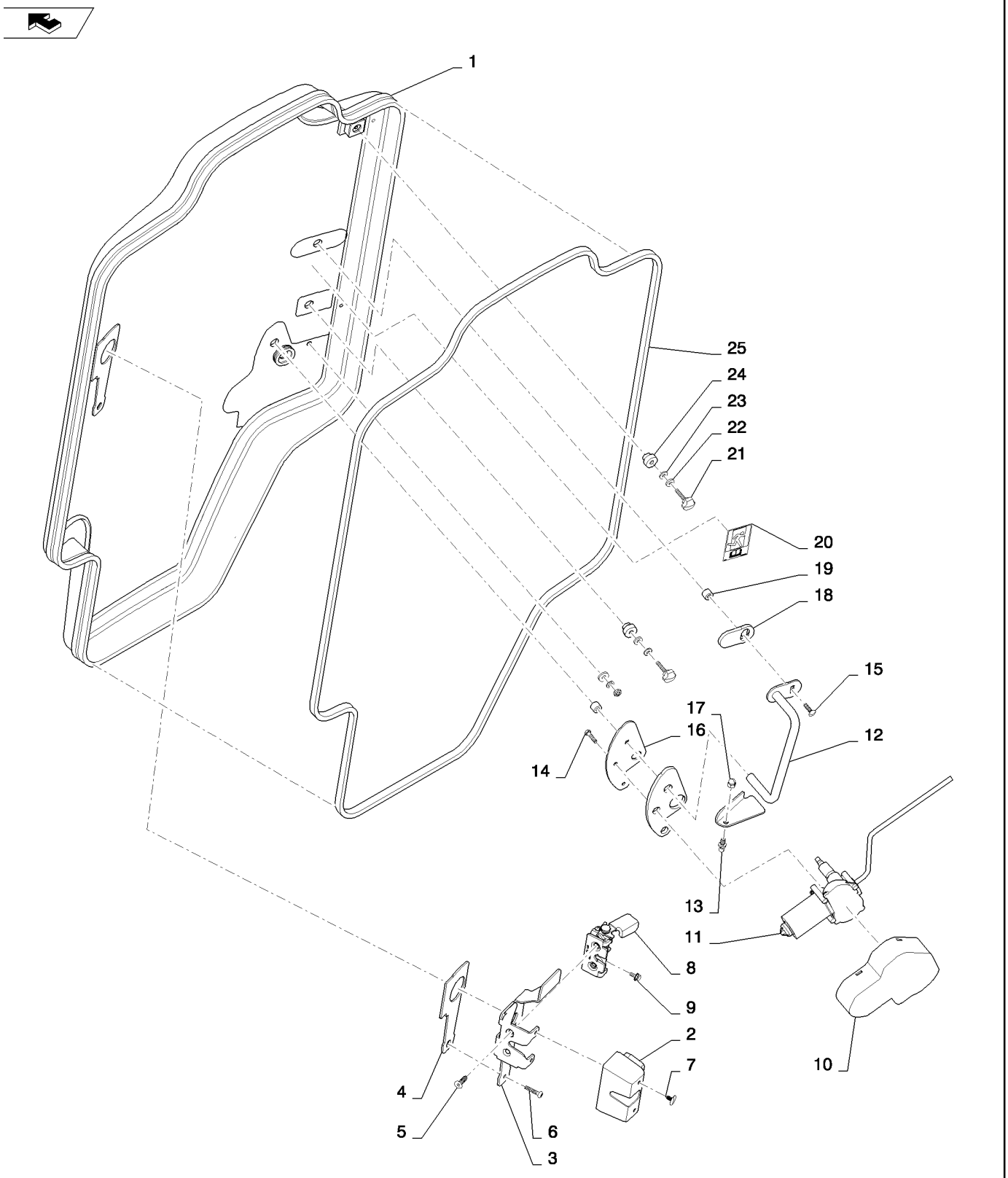

DOOR ASSY, FRONT (ALL CASE)
DOOR ASSY, FRONT (ALL CASE)
DOOR ASSY, FRONT (ALL CASE)
DOOR ASSY, FRONT (ALL CASE)

R	N	P.N.	MOD	Q	Denominação Description	Description Bezeichnung	Denominacion Beskrivelse	Descrizione Beschrijving	L.C.
21		44911647		2	MAÇANETA, M6	KNOB	MANDO	MANOPOLA	150P
					BOUTON	RUNDGRIFF	GREB	KNOP	
22		12647621		2	ARRUELA PLANA, M6 x 16 x 2				
						WASHER	ARANDELA	RONDELLA	131R
					RONDELLE	UNTERLEGSCHEIBE	FLADSKIVE	SLUITRING	
23		84385500		2	ARRUELA DE BORRACHA, 16 X 6.5 X 3				
						RUBBER WASHER	ARANDELA DE GOMA	RONDELLA IN GOMMA	Z363
					RONDELLE EN CAOUTC	GUMMIUNTERLEGSCHE	GUMMISKIVE	RUBBEREN SLUITRING	
24		84257223		2	ESPAÇADOR	SPACER	SEPARADOR	DISTANZIALE	075D
					ENTRETOISE	DISTANZSTÜCK	AFSTANDSSTYKKE	AFSTANDSSTUK	
25		84391276		1	VEDAÇÃO DE PORTA, Bulb				
						DOOR SEAL	JUNTA DE PUERTA	GUARNIZIONE SPORTEL	Z529
					JOINT DE PORTE	TÜRDICHTUNG	DØRTÆTNING	PORTIERAFDICHTING	
25		84344565		1	VIDRO, Door	GLASS	VIDRIO	CRISTALLO	038V
					VITRE	GLAS	GLAS	GLAS	

90.154.01	03	p1	04/11

NO FRONT DOOR (ALL CASE)
NO FRONT DOOR (ALL CASE)
NO FRONT DOOR (ALL CASE)
NO FRONT DOOR (ALL CASE)

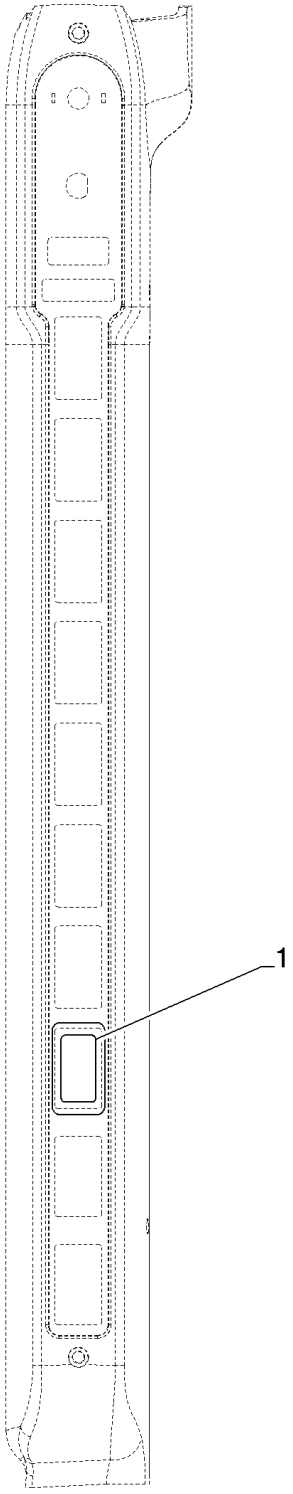

NO FRONT DOOR (ALL CASE)
NO FRONT DOOR (ALL CASE)
NO FRONT DOOR (ALL CASE)
NO FRONT DOOR (ALL CASE)

R	N	P.N.	MOD	Q	Denominação Description Bezeichnung Beskrivelse Descrizione Beschrijving	L.C.
1		126844A1		1	BUJÃO, Switch Hole Cover PLUG TAPÓN TAPPO BOUCHON STOPFEN PROP PLUG	050T
2		84472461		1	COBERTURA, Rear Cover, NA, Gray, Not Shown COVER COBERTURA COPERTURA COUVERTURE ABDECKUNG COVER COVER	271C

90.154.01	04	p1	06/11

DOOR ASSY, FRONT DEMO (ALL CASE)
DOOR ASSY, FRONT DEMO (ALL CASE)
DOOR ASSY, FRONT DEMO (ALL CASE)
DOOR ASSY, FRONT DEMO (ALL CASE)

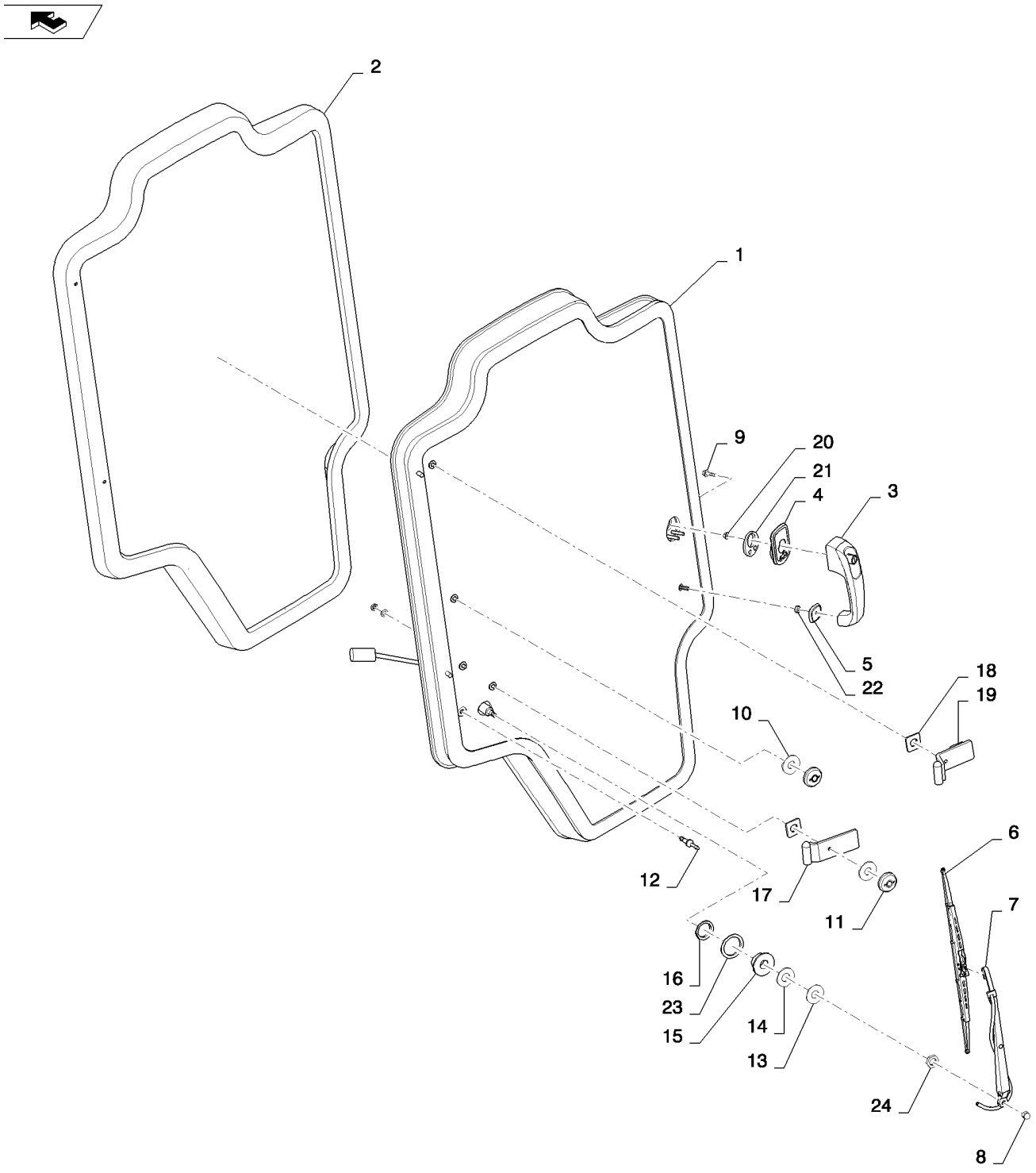

DOOR ASSY, FRONT DEMO (ALL CASE)
DOOR ASSY, FRONT DEMO (ALL CASE)
DOOR ASSY, FRONT DEMO (ALL CASE)
DOOR ASSY, FRONT DEMO (ALL CASE)

R	N	P.N.	MOD	Q	Denominação Description	Description Bezeichnung	Denominacion Beskrivelse	Descrizione Beschrijving	L.C.
1		84415734		1	PORTA, Assy, Door, Glass	DOOR	PUERTA	SPORTELLO	180P
					PORTE	TÜR	DØR	PORTIER	
2		84368761		1	VEDAÇÃO, Dust	SEAL	ANILLO DE CIERRE	GUARNIZIONE; TENUTA	132A
					JOINT	DICHTUNG	PAKNING	AFDICHTING	
3		84396681		1	MAÇANETA DA PORTA	DOOR HANDLE	EMPUÑADURA DE PUEF	MANIGLIA DELLA PORTA	A051
					POIGNEE DE PORTE	TÜRGRIFF	DØRHÅNDTAG	HANDGREEP VAN PORT	
4		84293060		1	VEDAÇÃO, Handle Upper	SEAL	ANILLO DE CIERRE	GUARNIZIONE; TENUTA	132A
					JOINT	DICHTUNG	PAKNING	AFDICHTING	
5		84293058		1	VEDAÇÃO, Handle Lower	SEAL	ANILLO DE CIERRE	GUARNIZIONE; TENUTA	132A
					JOINT	DICHTUNG	PAKNING	AFDICHTING	
6		84347625		1	PALHETA LIMPADOR	WIPER BLADE	RASQUETA LIMPIAPARA	SPAZZOLA TERGICRIST.	175S
					LAME D'ESSUIE-GLACE	WISCHERBLATT	VISKERBLAD	RUITENWISSERBLAD	
7		84347514		1	BRAÇO LIMPADOR	WIPER ARM	BRAZO LIMPIAPARABRIS	BRACCIO TERGICRISTA	134B
					BRAS D'ESSUIE-GLACE	WISCHERARM	VISKERARM	ARM VAN RUITENWISSE	
8		412326		1	PORCA, Dome Crown M8	NUT	TUERCA	DADO	010D
					ECROU	MUTTER	MØTRIK	MOER	
9		86050272		1	PARAFUSO, Hex Flg, M6 x 12, 8.8				
						BOLT	PERNO	BULLONE	140B
					VIS	SCHRAUBE	BOLT	BOUT	
10		84415813		2	VEDAÇÃO, Washer, Seal	SEAL	ANILLO DE CIERRE	GUARNIZIONE; TENUTA	132A
					JOINT	DICHTUNG	PAKNING	AFDICHTING	
11		86531235		2	BUCHA	BUSHING	CASQUILLO	BOCCOLA	095B
					BAGUE	BUCHSE	BØSNING	BUS	
12		84369351		1	COTOVELO 90, Assembly	90 ELBOW	CODO 90	GOMITO A 90°	A045
					COUDE A 90°	90-GRAD-KNIESTÜCK	VINKELRØR, 90	KNIESTUK 90º	
13		84346315		1	ARRUELA PLANA, Plastic	WASHER	ARANDELA	RONDELLA	131R
					RONDELLE	UNTERLEGSCHEIBE	FLADSKIVE	SLUITRING	
14		84346316		1	VEDAÇÃO DE BORRACHA, Wiper Motor				
						RUBBER SEAL	JUNTA DE GOMA	GUARNIZIONE DI GOMM	122G
					JOINT EN CAOUTCHOU(	GUMMIDICHTUNG	GUMMITÆTNING	RUBBEREN AFDICHTINC	
15		84359052		1	ESPAÇADOR, Wiper Motor	SPACER	SEPARADOR	DISTANZIALE	075D
					ENTRETOISE	DISTANZSTÜCK	AFSTANDSSTYKKE	AFSTANDSSTUK	
16		84485661		1	VEDAÇÃO, Wiper Motor Foam				
						SEAL	ANILLO DE CIERRE	GUARNIZIONE; TENUTA	132A
					JOINT	DICHTUNG	PAKNING	AFDICHTING	
17		84298540		1	SEMI-DOBRADIÇA, Door Bottom				
						HALF-HINGE	SEMIBISAGRA	SEMICERNIERA	413S
					DEMI-CHARNIERE	SCHARNIERHÄLFTE	HÆNGSELHALVDEL	SCHARNIERHELFT	
18		84257222		2	VEDAÇÃO DE BORRACHA, Half Hinge				
						RUBBER SEAL	JUNTA DE GOMA	GUARNIZIONE DI GOMM	122G
					JOINT EN CAOUTCHOU(	GUMMIDICHTUNG	GUMMITÆTNING	RUBBEREN AFDICHTINC	
19		84298543		1	SEMI-DOBRADIÇA, Door Top				
						HALF-HINGE	SEMIBISAGRA	SEMICERNIERA	413S
					DEMI-CHARNIERE	SCHARNIERHÄLFTE	HÆNGSELHALVDEL	SCHARNIERHELFT	
20		9804276		1	PORCA, M6 x 1, Flg, Cl 8	NUT	TUERCA	DADO	010D
					ECROU	MUTTER	MØTRIK	MOER	
21		{84485291}		1	Upper Handle				

90.154.01	04	p2	06/11

DOOR ASSY, FRONT DEMO (ALL CASE)
DOOR ASSY, FRONT DEMO (ALL CASE)
DOOR ASSY, FRONT DEMO (ALL CASE)
DOOR ASSY, FRONT DEMO (ALL CASE)

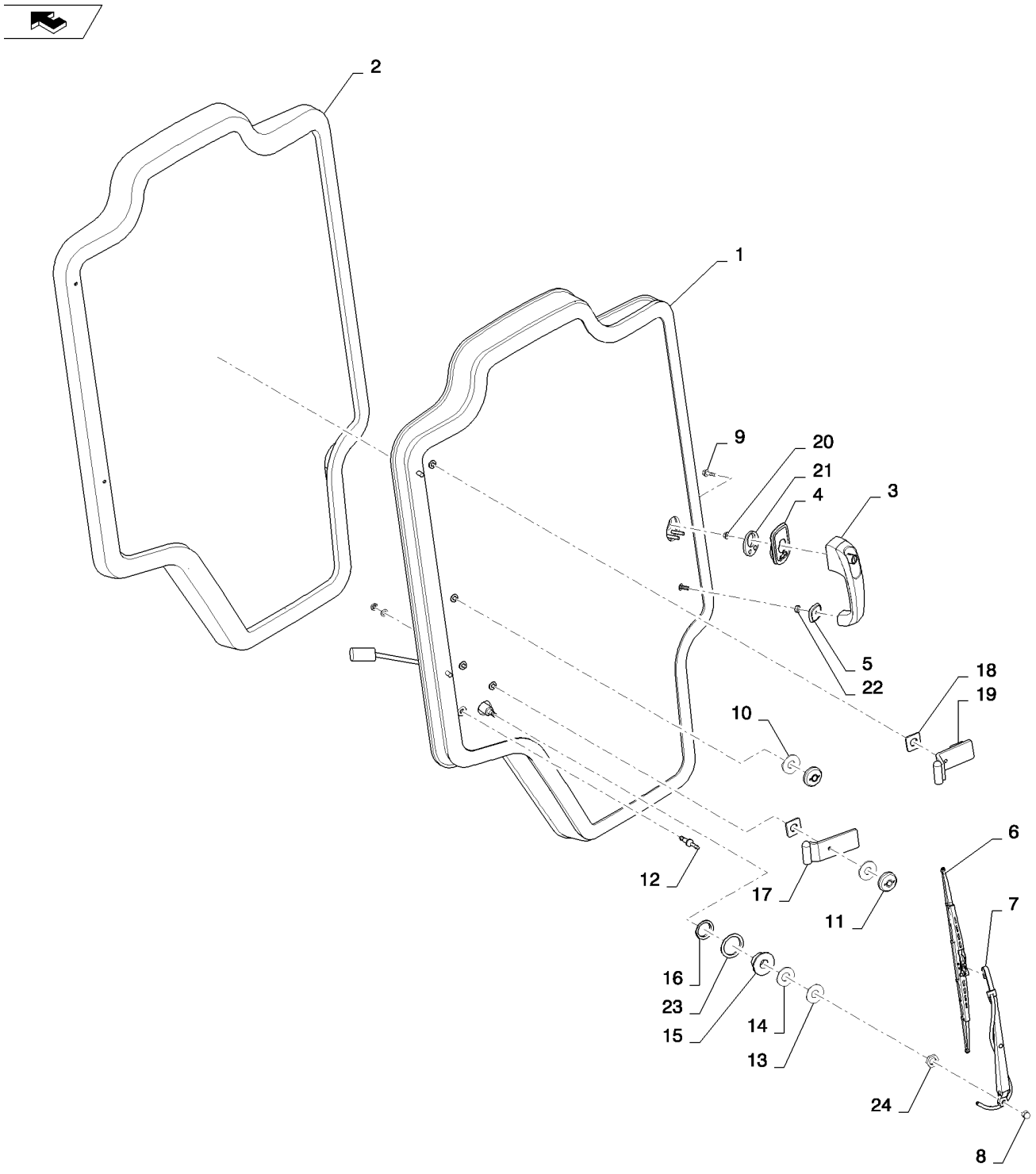

DOOR ASSY, FRONT DEMO (ALL CASE)
DOOR ASSY, FRONT DEMO (ALL CASE)
DOOR ASSY, FRONT DEMO (ALL CASE)
DOOR ASSY, FRONT DEMO (ALL CASE)

R	N	P.N.	MOD	Q	Denominação Description	Description Bezeichnung	Denominacion Beskrivelse	Descrizione Beschrijving	L.C.
22		**{84485292}**		1	Lower Handle				
23		**{84485295}**		1	Wiper Motor Foam				
24		**87607505**		1	PORCA, Wiper Arm ECROU	NUT MUTTER	TUERCA MØTRIK	DADO MOER	010D

90.154.01	05	p1	06/11

DOOR ASSY, FRONT DEMO (ALL CASE)
DOOR ASSY, FRONT DEMO (ALL CASE)
DOOR ASSY, FRONT DEMO (ALL CASE)
DOOR ASSY, FRONT DEMO (ALL CASE)

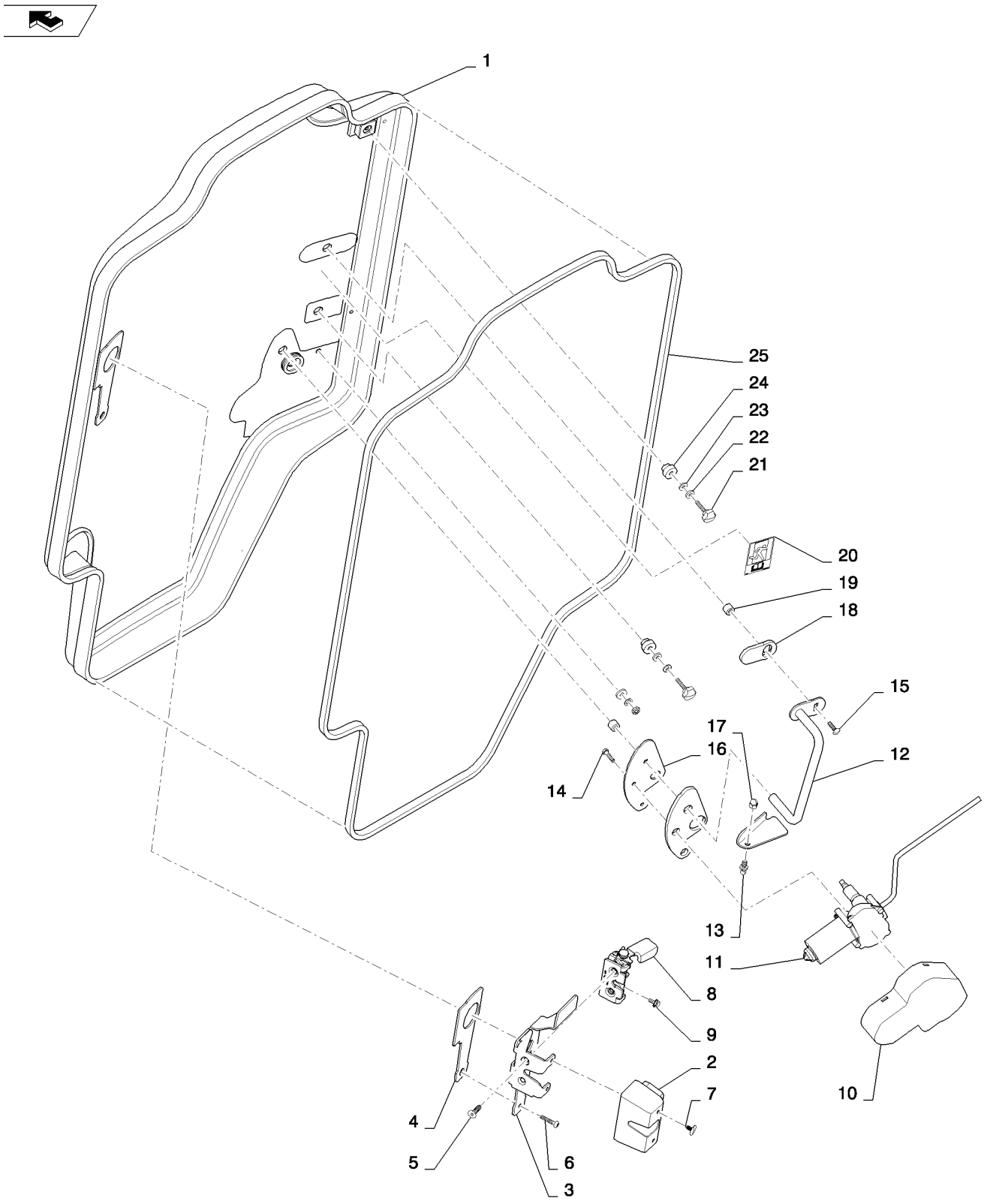

DOOR ASSY, FRONT DEMO (ALL CASE)
DOOR ASSY, FRONT DEMO (ALL CASE)
DOOR ASSY, FRONT DEMO (ALL CASE)
DOOR ASSY, FRONT DEMO (ALL CASE)

R	N	P.N.	MOD	Q	Denominação Description	Description Bezeichnung	Denominacion Beskrivelse	Descrizione Beschrijving	L.C.
1		84415734		1	PORTA, Assy, Door, Glass	DOOR	PUERTA	SPORTELLO	180P
					PORTE	TÜR	DØR	PORTIER	
2		84345556		1	COBERTURA, Latch	COVER	CUBIERTA	COPERCHIO	265C
					COUVERCLE	ABDECKUNG	DÆKSEL	AFSCHERMING	
3		84345554		1	SUPORTE, Door Latch	BRACKET	SOPORTE	STAFFA	225S
					SUPPORT	HALTERUNG	BESLAG	STEUN	
4		84293054		1	VEDAÇÃO, Door Latch	SEAL	ANILLO DE CIERRE	GUARNIZIONE; TENUTA	132A
					JOINT	DICHTUNG	PAKNING	AFDICHTING	
5		14442131		2	PARAFUSO, Hex Soc FLH	M8x25			
						SCREW	TORNILLO	VITE	040V
					VIS	SCHRAUBE	SKRUE	SCHROEF	
6		84129691		3	PARAFUSO, Pan Hd Torx	M6x30			
						SCREW	TORNILLO	VITE	040V
					VIS	SCHRAUBE	SKRUE	SCHROEF	
7		87712706		2	BOTÃO DE IMPULSO, Push-in				
						FASTENER	SUJETADOR	DISPOSITIVO DI FISSAG	123B
					ATTACHE	BEFESTIGUNGSELEMEN	LUKKER	BEVESTIGING	
8		84293079		1	TRINCO, Door	LATCH	PESTILLO	CHIUSURA A SCATTO	156C
					LOQUET	VERRIEGELUNG	PAL	GRENDEL	
9		87607505		1	PORCA, Wiper	NUT	TUERCA	DADO	010D
					ECROU	MUTTER	MØTRIK	MOER	
10		84300094		1	MOTOR DO LIMPADOR, Cover				
						WIPER MOTOR	MOTOR DE LIMPIAPARA	MOTORINO TERGICRIST	093T
					MOTEUR D'ESSUIE-GLA	WISCHERMOTOR	VISKERMOTOR	RUITENWISSERMOTOR	
11		84345627		1	MOTOR DO LIMPADOR	WIPER MOTOR	MOTOR DE LIMPIAPARA	MOTORINO TERGICRIST	093T
					MOTEUR D'ESSUIE-GLA	WISCHERMOTOR	VISKERMOTOR	RUITENWISSERMOTOR	
12		84347705		1	MAÇANETA DA PORTA	DOOR HANDLE	EMPUÑADURA DE PUEF	MANIGLIA DELLA PORTA	A051
					POIGNEE DE PORTE	TÜRGRIFF	DØRHÅNDTAG	HANDGREEP VAN PORT	
13		87581669		1	PRISIONEIRO, Ball	STUD	PRISIONERO	PRIGIONIERO	210P
					GOUJON	GEWINDEBOLZEN	STØTTEBOLT	TAPEIND	
14		86977786		2	PARAFUSO, Hex, M6 x 25, 8.8, Full Thd				
						BOLT	PERNO	BULLONE	140B
					VIS	SCHRAUBE	BOLT	BOUT	
15		374891		2	PARAFUSO, Short NK, M6 x 25, CI8.8, Full Thd				
						CARRIAGE BOLT	PERNO ALOMADO	BULLONE A TESTA TON	P123
					VIS A TETE BOMBEE	SCHLOSSSCHRAUBE	BRÆDDEBOLT	SLOTBOUT	
16		84293056		1	VEDAÇÃO, Wiper Motor	SEAL	ANILLO DE CIERRE	GUARNIZIONE; TENUTA	132A
					JOINT	DICHTUNG	PAKNING	AFDICHTING	
17		412326		1	PORCA, Dome Crown M8	NUT	TUERCA	DADO	010D
					ECROU	MUTTER	MØTRIK	MOER	
18		84344562		1	VEDAÇÃO DE BORRACHA, Grab Handle				
						RUBBER SEAL	JUNTA DE GOMA	GUARNIZIONE DI GOMM	122G
					JOINT EN CAOUTCHOU	GUMMIDICHTUNG	GUMMITÆTNING	RUBBEREN AFDICHTINC	
19		84298763		2	ESPAÇADOR	SPACER	SEPARADOR	DISTANZIALE	075D
					ENTRETOISE	DISTANZSTÜCK	AFSTANDSSTYKKE	AFSTANDSSTUK	
20		84367244		1	ADESIVO, Emergency Exit	DECAL	CALCOMANÍA	DECALCOMANIA	012D
					AUTOCOLLANT	AUFKLEBER	TRANSFER	STICKER	

SV185

90.154.01	05	p2	06/11

DOOR ASSY, FRONT DEMO (ALL CASE)
DOOR ASSY, FRONT DEMO (ALL CASE)
DOOR ASSY, FRONT DEMO (ALL CASE)
DOOR ASSY, FRONT DEMO (ALL CASE)

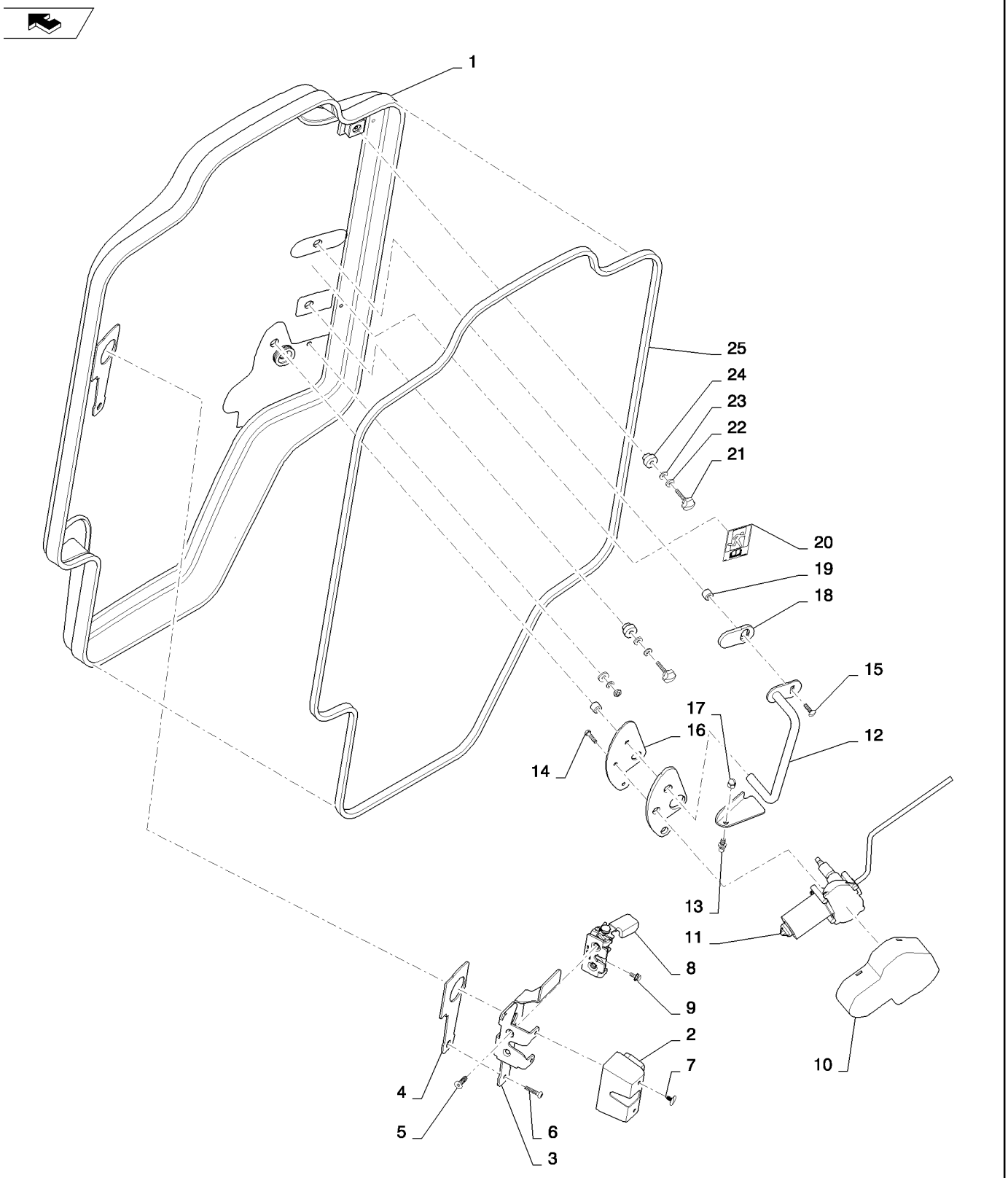

DOOR ASSY, FRONT DEMO (ALL CASE)
DOOR ASSY, FRONT DEMO (ALL CASE)
DOOR ASSY, FRONT DEMO (ALL CASE)
DOOR ASSY, FRONT DEMO (ALL CASE)

R	N	P.N.	MOD	Q	Denominação Description	Description Bezeichnung	Denominacion Beskrivelse	Descrizione Beschrijving	L.C.
21		44911647		2	MAÇANETA, M6 Thumb Screw				
						KNOB	MANDO	MANOPOLA	150P
					BOUTON	RUNDGRIFF	GREB	KNOP	
22		12647621		2	ARRUELA PLANA, M6 x 16 x 2				
						WASHER	ARANDELA	RONDELLA	131R
					RONDELLE	UNTERLEGSCHEIBE	FLADSKIVE	SLUITRING	
23		84385500		2	ARRUELA DE BORRACHA, 16x6.5x3				
						RUBBER WASHER	ARANDELA DE GOMA	RONDELLA IN GOMMA	Z363
					RONDELLE EN CAOUTC	GUMMIUNTERLEGSCHE	GUMMISKIVE	RUBBEREN SLUITRING	
24		84257223		2	ESPAÇADOR	SPACER	SEPARADOR	DISTANZIALE	075D
					ENTRETOISE	DISTANZSTÜCK	AFSTANDSSTYKKE	AFSTANDSSTUK	
25		84391276		1	VEDAÇÃO DE PORTA, Bulb				
						DOOR SEAL	JUNTA DE PUERTA	GUARNIZIONE SPORTEL	Z529
					JOINT DE PORTE	TÜRDICHTUNG	DØRTÆTNING	PORTIERAFDICHTING	
25		84344565		1	VIDRO, Demo Door	GLASS	VIDRIO	CRISTALLO	038V
					VITRE	GLAS	GLAS	GLAS	

90.154.01	06	p1	08/11

FRONT DEMO, DOOR (ALL CASE)
FRONT DEMO, DOOR (ALL CASE)
FRONT DEMO, DOOR (ALL CASE)
FRONT DEMO, DOOR (ALL CASE)

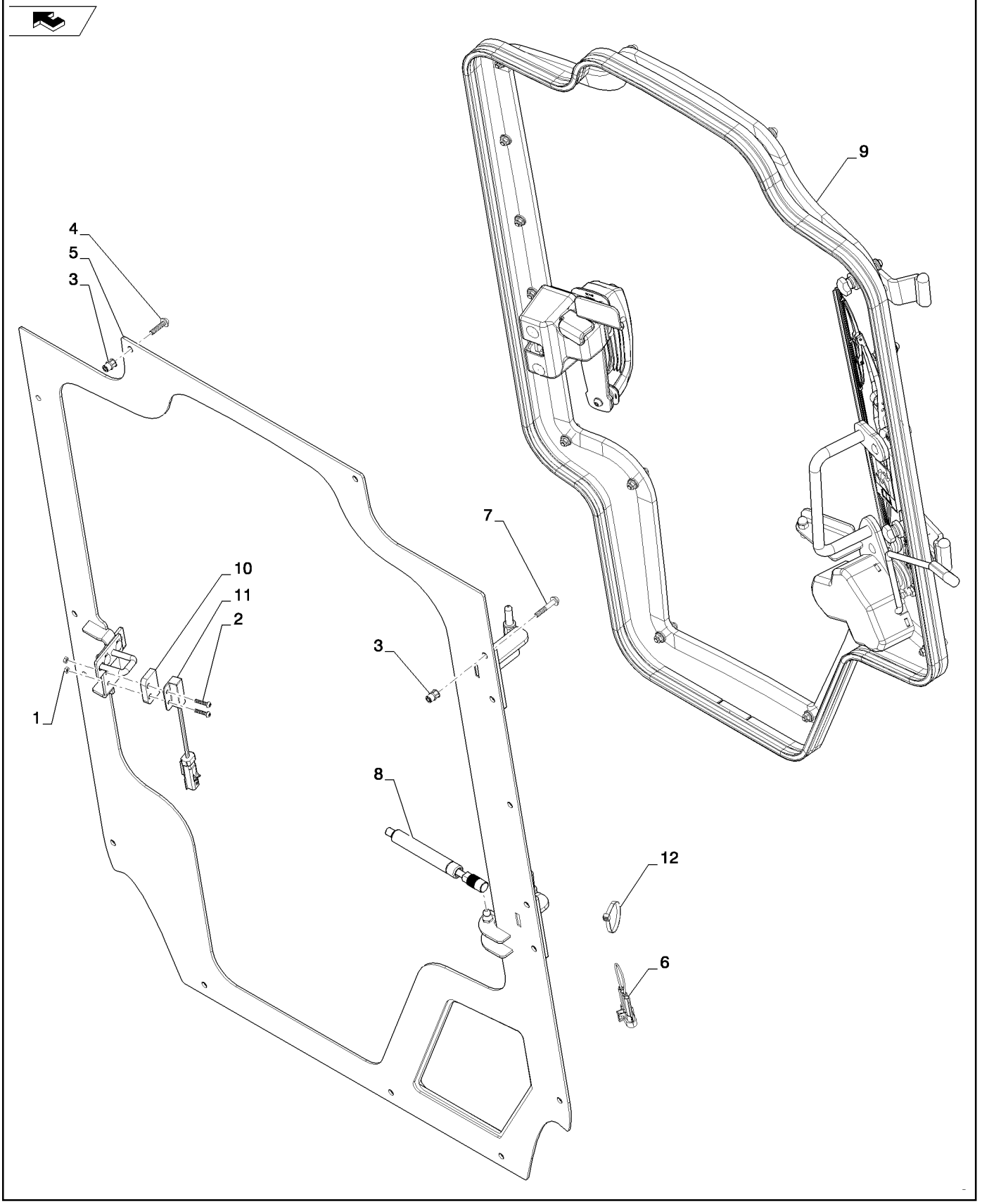

FRONT DEMO, DOOR (ALL CASE)
FRONT DEMO, DOOR (ALL CASE)
FRONT DEMO, DOOR (ALL CASE)
FRONT DEMO, DOOR (ALL CASE)

R	N	P.N.	MOD	Q	Denominação Description	Description Bezeichnung	Denominacion Beskrivelse	Descrizione Beschrijving	L.C.
1		100012		2	PORCA, M4, Cl 8	NUT	TUERCA	DADO	010D
					ECROU	MUTTER	MØTRIK	MOER	
2		84183818		2	PARAFUSO, Pan Head, M4 X 20				
						SCREW	TORNILLO	VITE	040V
					VIS	SCHRAUBE	SKRUE	SCHROEF	
3		84272827		15	REBITE, M6 X 1	RIVET	REMACHE	RIVETTO	055R
					RIVET	NIET	NITTE	KLINKNAGEL	
4		84305556		11	PARAFUSO, M6 X 25	SCREW	TORNILLO	VITE	040V
					VIS	SCHRAUBE	SKRUE	SCHROEF	
5		84323416		1	PORTA, Assembly, Jamb	DOOR	PUERTA	SPORTELLO	180P
					PORTE	TÜR	DØR	PORTIER	
6		84331404		1	CONECTOR DO FIO, Jumper				
						WIRE CONNECTOR	CONECTOR DE CABLE	CONNETTORE DEL FILO	250C
					CONNECTEUR DU FIL	KABELSTECKVERBINDE	SAMLEMUFFE	DRAADCONNECTOR	
7		84359102		4	PARAFUSO, M6 X 35	SCREW	TORNILLO	VITE	040V
					VIS	SCHRAUBE	SKRUE	SCHROEF	
8		84378453		1	COMPASSO, Spring	GAS STRUT	COLUMNA DE GAS	AMMORTIZZATORE A G/	Z331
					BEQUILLE A GAZ	GASDRUCKFEDER	CYLINDER, GASSTØDD/	GASVEER	
9		84416291		1	PORTA, Assembly, Front Demo				
						DOOR	PUERTA	SPORTELLO	180P
					PORTE	TÜR	DØR	PORTIER	
10		86624468		1	ESPAÇADOR, Switch	SPACER	SEPARADOR	DISTANZIALE	075D
					ENTRETOISE	DISTANZSTÜCK	AFSTANDSSTYKKE	AFSTANDSSTUK	
11		87392235		1	INTERRUPTOR INTERMITENTE, Reed, Normally Open				
						SWITCH ASSY	CONJUNTO DE INTERRU	COMPLESSIVO INTERRU	067I
					ENSEMBLE COMMUTATI	SCHALTERBAUGRUPPE	KONTAKT, KPL.	SCHAKELAAREENHEID	
12		L11541		1	PRENDEDOR DE CABOS, 7-8 Inch, Nylon				
						CABLE STRAP	BANDA DE CABLE	FASCETTA PER CAVO	P716
					BRIDE DE CABLE	KABELBINDER	KABELSTROP	BUNDELBAND	

90.154.02		p1	02/11

SIDE WINDOW ASSY (ALL CASE)
SIDE WINDOW ASSY (ALL CASE)
SIDE WINDOW ASSY (ALL CASE)
SIDE WINDOW ASSY (ALL CASE)

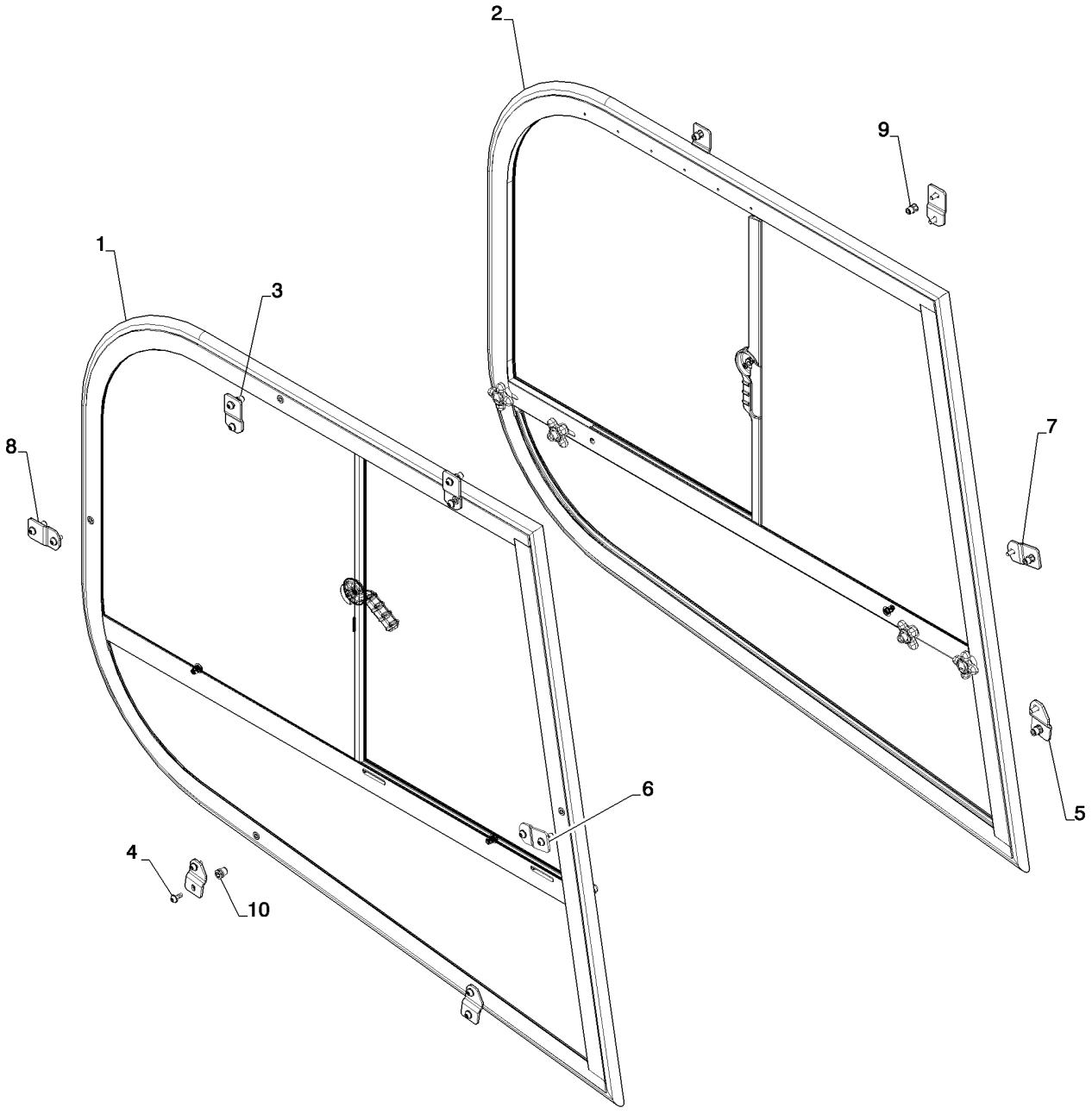

SIDE WINDOW ASSY (ALL CASE)
SIDE WINDOW ASSY (ALL CASE)
SIDE WINDOW ASSY (ALL CASE)
SIDE WINDOW ASSY (ALL CASE)

R	N	P.N.	MOD	Q	Denominação Description	Description Bezeichnung	Denominacion Beskrivelse	Descrizione Beschrijving	L.C.
1		84415735		1	JANELA, Assy, RH Side FENETRE	WINDOW FENSTER	VENTANILLA VINDUE	FINESTRINO RUIT	9810
2		84415736		1	JANELA, Assy, LH Side FENETRE	WINDOW FENSTER	VENTANILLA VINDUE	FINESTRINO RUIT	9810
3		84309360		6	SUPORTE, Window SUPPORT	BRACKET HALTERUNG	SOPORTE BESLAG	STAFFA STEUN	225S
4		84309339		2	SUPORTE, Window, RH SUPPORT	BRACKET HALTERUNG	SOPORTE BESLAG	STAFFA STEUN	225S
5		84309344		2	SUPORTE, Window, LH SUPPORT	BRACKET HALTERUNG	SOPORTE BESLAG	STAFFA STEUN	225S
6		84309356		1	SUPORTE, Window, RH SUPPORT	BRACKET HALTERUNG	SOPORTE BESLAG	STAFFA STEUN	225S
7		84309359		1	SUPORTE, Window, LH SUPPORT	BRACKET HALTERUNG	SOPORTE BESLAG	STAFFA STEUN	225S
8		87682398		24	PARAFUSO VIS	SCREW SCHRAUBE	TORNILLO SKRUE	VITE SCHROEF	040V
9		84272827		8	REBITE, Nut RIVET	RIVET NIET	REMACHE NITTE	RIVETTO KLINKNAGEL	055R
10		84272827		4	REBITE, Nut RIVET	RIVET NIET	REMACHE NITTE	RIVETTO KLINKNAGEL	055R
11		84425058		2	ESPUMA ISOLANTE, Window (Not Shown) MOUSSE ISOLANTE	FOAM INSULATION SCHAUMSTOFFISOLIER	ESPUMA AISLANTE SKUM ISOLERING	ISOLANTE IN SCHIUMA SCHUIMISOLATIE	051S

90.154.03	02	p1	05/11

DOOR ASSY, REAR (ALL CASE)
DOOR ASSY, REAR (ALL CASE)
DOOR ASSY, REAR (ALL CASE)
DOOR ASSY, REAR (ALL CASE)

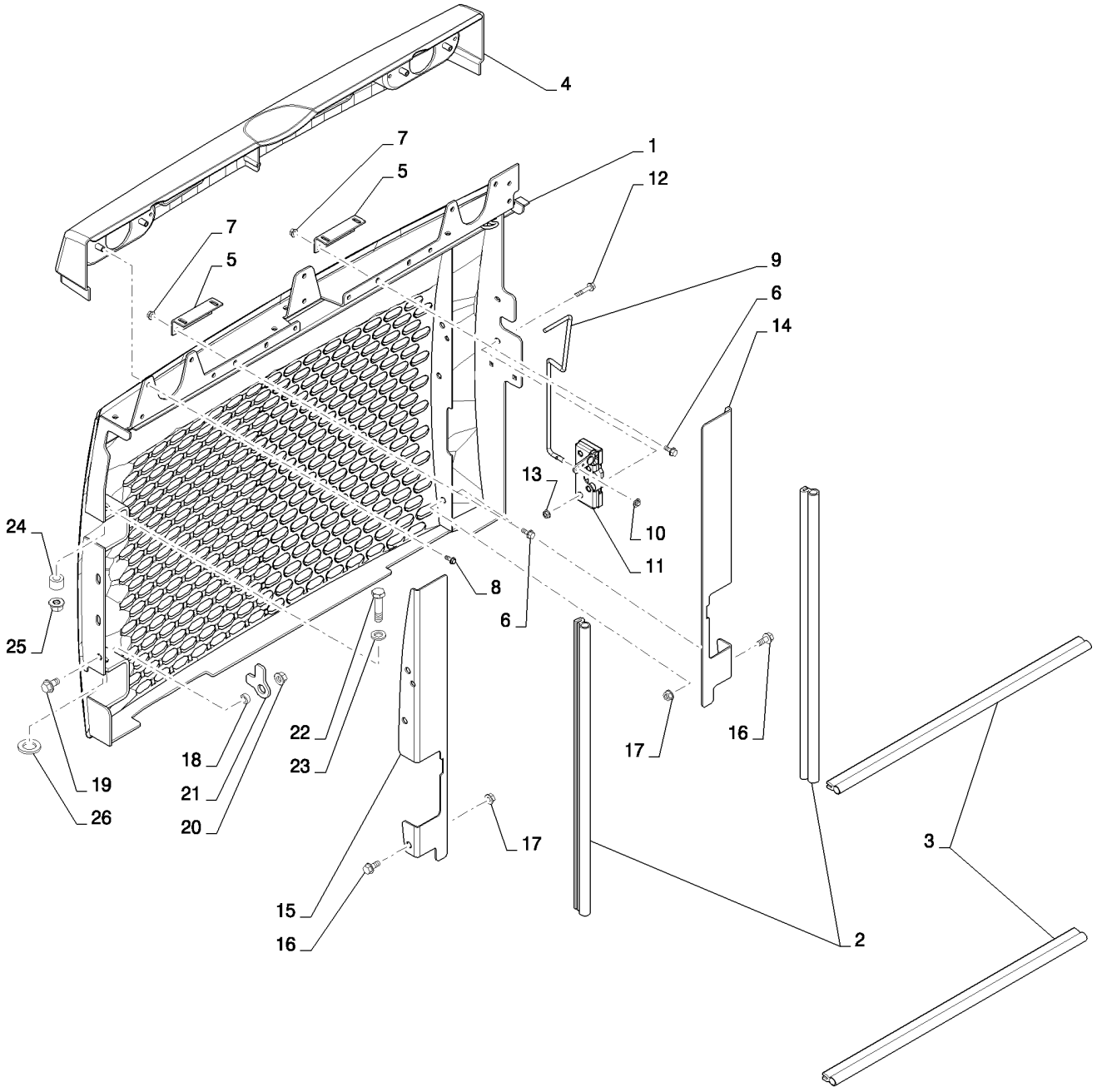

DOOR ASSY, REAR (ALL CASE)
DOOR ASSY, REAR (ALL CASE)
DOOR ASSY, REAR (ALL CASE)
DOOR ASSY, REAR (ALL CASE)

R	N	P.N.	MOD	Q	Denominação Description	Description Bezeichnung	Denominacion Beskrivelse	Descrizione Beschrijving	L.C.
1		84375772		1	PORTA, Case, Rear, Power Tan				
						DOOR	PUERTA	SPORTELLO	180P
					PORTE	TÜR	DØR	PORTIER	
2		84201450		2	VEDAÇÃO DE PORTA, Bulb, 575mm				
						DOOR SEAL	JUNTA DE PUERTA	GUARNIZIONE SPORTEL	Z529
					JOINT DE PORTE	TÜRDICHTUNG	DØRTÆTNING	PORTIERAFDICHTING	
3		84201449		2	VEDAÇÃO DE PORTA, Bulb, 580mm				
						DOOR SEAL	JUNTA DE PUERTA	GUARNIZIONE SPORTEL	Z529
					JOINT DE PORTE	TÜRDICHTUNG	DØRTÆTNING	PORTIERAFDICHTING	
4		84200915		1	ANEL, Rear Door, Upper	CAPPING	MARCO	CORNICE	295C
					MONTURE	RAHMEN	CAPPING	CAPPING	
5		84355007		2	CANTONEIRA, Light Mounting, Gray				
						ANGLE	ÁNGULO	ANGOLARE	057C
					CORNIERE	WINKEL	VINKELBESLAG	HOEKSTUK	
6		9804255		4	PARAFUSO, Hex Flg, M6 x 16, 8.8				
						BOLT	PERNO	BULLONE	140B
					VIS	SCHRAUBE	BOLT	BOUT	
7		9804276		4	PORCA, M6 x 1, Flg, Cl 8	NUT	TUERCA	DADO	010D
					ECROU	MUTTER	MØTRIK	MOER	
8		84163981		6	PARAFUSO, M6 X 15	SCREW	TORNILLO	VITE	040V
					VIS	SCHRAUBE	SKRUE	SCHROEF	
9		84350972		1	HASTE, Latch Pull	ROD	VARILLA	ASTA	090A
					TIGE	STANGE	STANG	STANG	
10		380751A1		1	PORCA, Push Cap	NUT	TUERCA	DADO	5780
					ECROU	MUTTER	NUT	NUT	
11		87437076		1	TRINCO	LATCH	PESTILLO	CHIUSURA A SCATTO	156C
					LOQUET	VERRIEGELUNG	PAL	GRENDEL	
12		87015931		2	PARAFUSO, Hex Flg, M6 x 35, 8.8				
						BOLT	PERNO	BULLONE	140B
					VIS	SCHRAUBE	BOLT	BOUT	
13		86619800		2	CONTRA PORCA, M6 x 1, Flg, Cl 8				
						LOCK NUT	TUERCA DE BLOQUEO	DADO DI BLOCCAGGIO	P263
					CONTRE-ECROU	SICHERUNGSMUTTER	LÅSEMØTRIK	BORGMOER	
14		84338540		1	CANTONEIRA, Door Seal, LH, Gray				
						ANGLE	ÁNGULO	ANGOLARE	057C
					CORNIERE	WINKEL	VINKELBESLAG	HOEKSTUK	
15		84338537		1	CANTONEIRA, Door Seal, RH, Gray				
						ANGLE	ÁNGULO	ANGOLARE	057C
					CORNIERE	WINKEL	VINKELBESLAG	HOEKSTUK	
16		9804258		6	PARAFUSO, Hex Flg, M8 x 20, 8.8				
						BOLT	PERNO	BULLONE	140B
					VIS	SCHRAUBE	BOLT	BOUT	
17		9804277		6	PORCA, M8 x 1.25, Flg, Cl 8				
						NUT	TUERCA	DADO	010D
					ECROU	MUTTER	MØTRIK	MOER	
18		87352559		1	ESPAÇADOR, Door Lock	SPACER	SEPARADOR	DISTANZIALE	075D
					ENTRETOISE	DISTANZSTÜCK	AFSTANDSSTYKKE	AFSTANDSSTUK	

90.154.03	02	p2	05/11

DOOR ASSY, REAR (ALL CASE)
DOOR ASSY, REAR (ALL CASE)
DOOR ASSY, REAR (ALL CASE)
DOOR ASSY, REAR (ALL CASE)

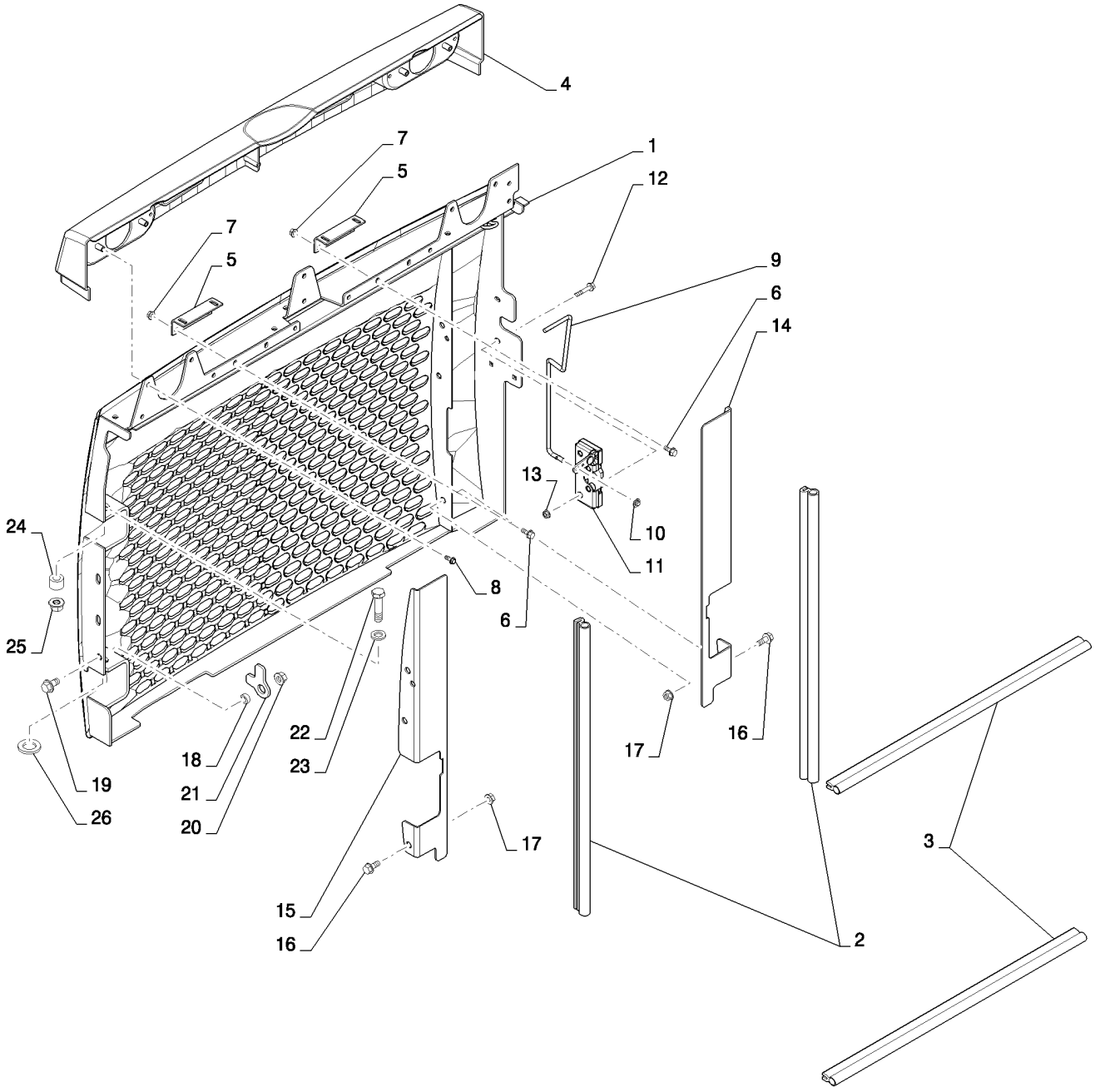

DOOR ASSY, REAR (ALL CASE)
DOOR ASSY, REAR (ALL CASE)
DOOR ASSY, REAR (ALL CASE)
DOOR ASSY, REAR (ALL CASE)

R	N	P.N.	MOD	Q	Denominação Description	Description Bezeichnung	Denominacion Beskrivelse	Descrizione Beschrijving	L.C.
19		**86050286**		1	PARAFUSO FLANGEADO, Hex, M10 x 20, 8.8, Full Thd				
						FLANGE BOLT	PERNO DE CORONA	BULLONE FLANGIATO	A027
					VIS A EMBASE	FLANSCHSCHRAUBE	FLANGEBOLT	FLENSBOUT	
20		**9804278**		1	PORCA, M10 x 1.5, Flg, Cl 8				
						NUT	TUERCA	DADO	010D
					ECROU	MUTTER	MØTRIK	MOER	
21		**84306554**		1	PLACA DE TRAVAMENTO, Door Lock, Arm				
						LOCKING PLATE	PLACA DE BLOQUEO	PIASTRA DI BLOCCAGGI	113P
					PLAQUE DE SURETE	SICHERUNGSPLATTE	LÅSEPLADE	BORGPLAAT	
22		**337476**		1	PARAFUSO, Hex, M12 x 50, 10.9				
						BOLT	PERNO	BULLONE	140B
					VIS	SCHRAUBE	BOLT	BOUT	
23		**86625255**		1	ARRUELA PLANA, M13.5 x 24.5 x 3, HT				
						WASHER	ARANDELA	RONDELLA	131R
					RONDELLE	UNTERLEGSCHEIBE	FLADSKIVE	SLUITRING	
24		**84306545**		1	BUCHA, Bushing, Door Hinge				
						BUSHING	CASQUILLO	BOCCOLA	095B
					BAGUE	BUCHSE	BØSNING	BUS	
25		**87681209**		1	PORCA	NUT	TUERCA	DADO	010D
					ECROU	MUTTER	MØTRIK	MOER	
26		**86625260**		1	ARRUELA PLANA, M20 x 37.5 x 4, HT				
						WASHER	ARANDELA	RONDELLA	131R
					RONDELLE	UNTERLEGSCHEIBE	FLADSKIVE	SLUITRING	

90.154.04		p1	05/11

REAR WINDOW NA (ALL CASE)
REAR WINDOW NA (ALL CASE)
REAR WINDOW NA (ALL CASE)
REAR WINDOW NA (ALL CASE)

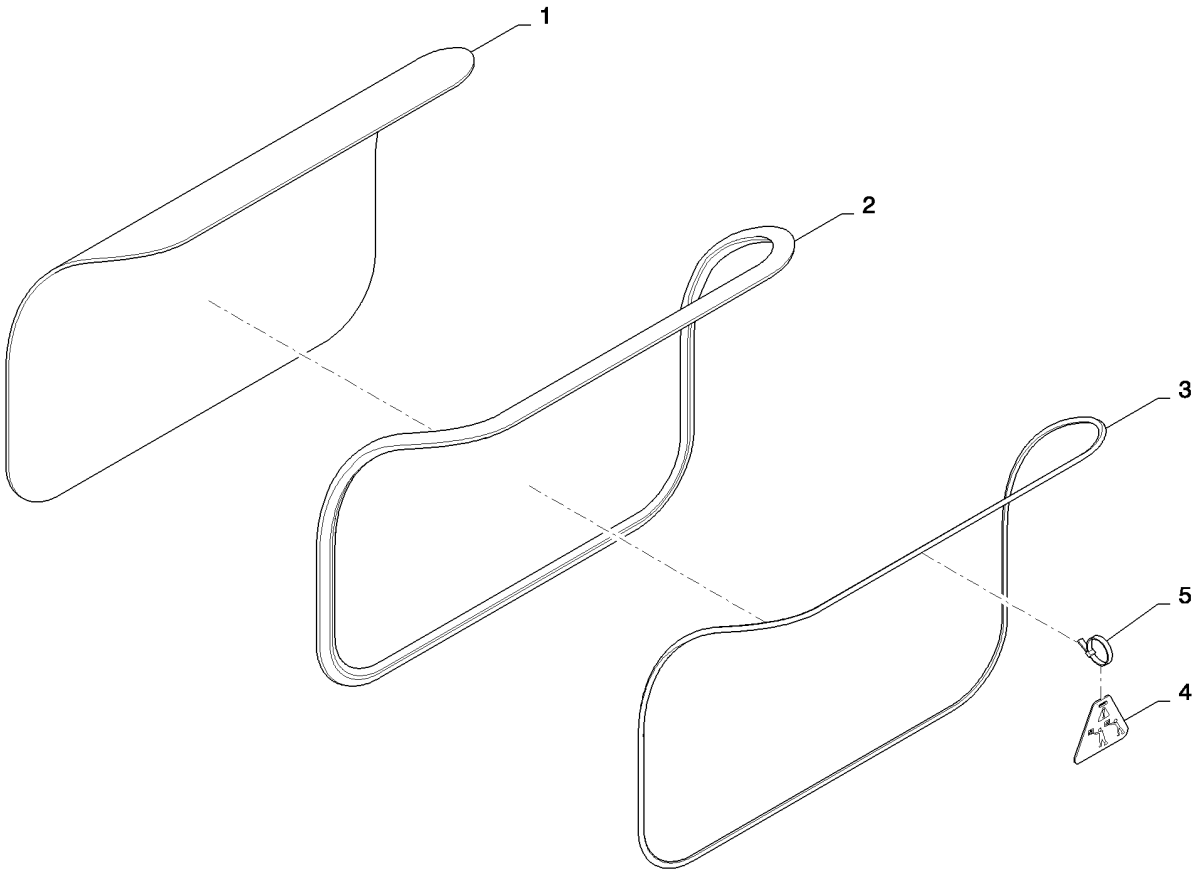

REAR WINDOW NA (ALL CASE)
REAR WINDOW NA (ALL CASE)
REAR WINDOW NA (ALL CASE)
REAR WINDOW NA (ALL CASE)

R	N	P.N.	MOD	Q	Denominação Description Description Bezeichnung	Denominacion Beskrivelse	Descrizione Beschrijving	L.C.
1		84254142		1	MONTAGEM VIDRO DA CABINE, Rear Window CAB GLASS ASSY	CONJ. CRISTALES DE C.	COMPL. CRISTALLO CAI	315C
					VITRE DE CABINE KABINENVERGLASUNG	KABINERUDE, KPL.	GLASEENHEID CABINE	
2		84478939		1	JUNTA, Locking GASKET	JUNTA	GUARNIZIONE	123G
					JOINT DICHTUNG	PAKNING	PAKKING	
3		92626		1	ENCHIMENTO, Locking Strip 8 Ft. FILLING STRIP	BANDA DE GUARNICIÓN	NASTRO DI RIFORNIMEI	P721
					BANDE DE REMPLISSAG FÜLLSTREIFEN	FYLDNINGSLISTE	VULSTRIP	
4		87026871		1	SINAL PLÁSTICO, Exit Tag PLASTIC SIGN	SEÑAL DE PLÁSTICO	TARGHETTA IN PLASTIC	092I
					PLAQUE SIGN. PLASTIQ KUNSTSTOFFSCHILD	PLASTIKSKILT	KUNSTSTOF BORD	
5		263117		1	PRENDEDOR DE CABOS, .14" x 11 1/2" CABLE STRAP	BANDA DE CABLE	FASCETTA PER CAVO	P716
					BRIDE DE CABLE KABELBINDER	KABELSTROP	BUNDELBAND	

90.154.04		p1	05/11

REAR WINDOW EU (ALL CASE)
REAR WINDOW EU (ALL CASE)
REAR WINDOW EU (ALL CASE)
REAR WINDOW EU (ALL CASE)

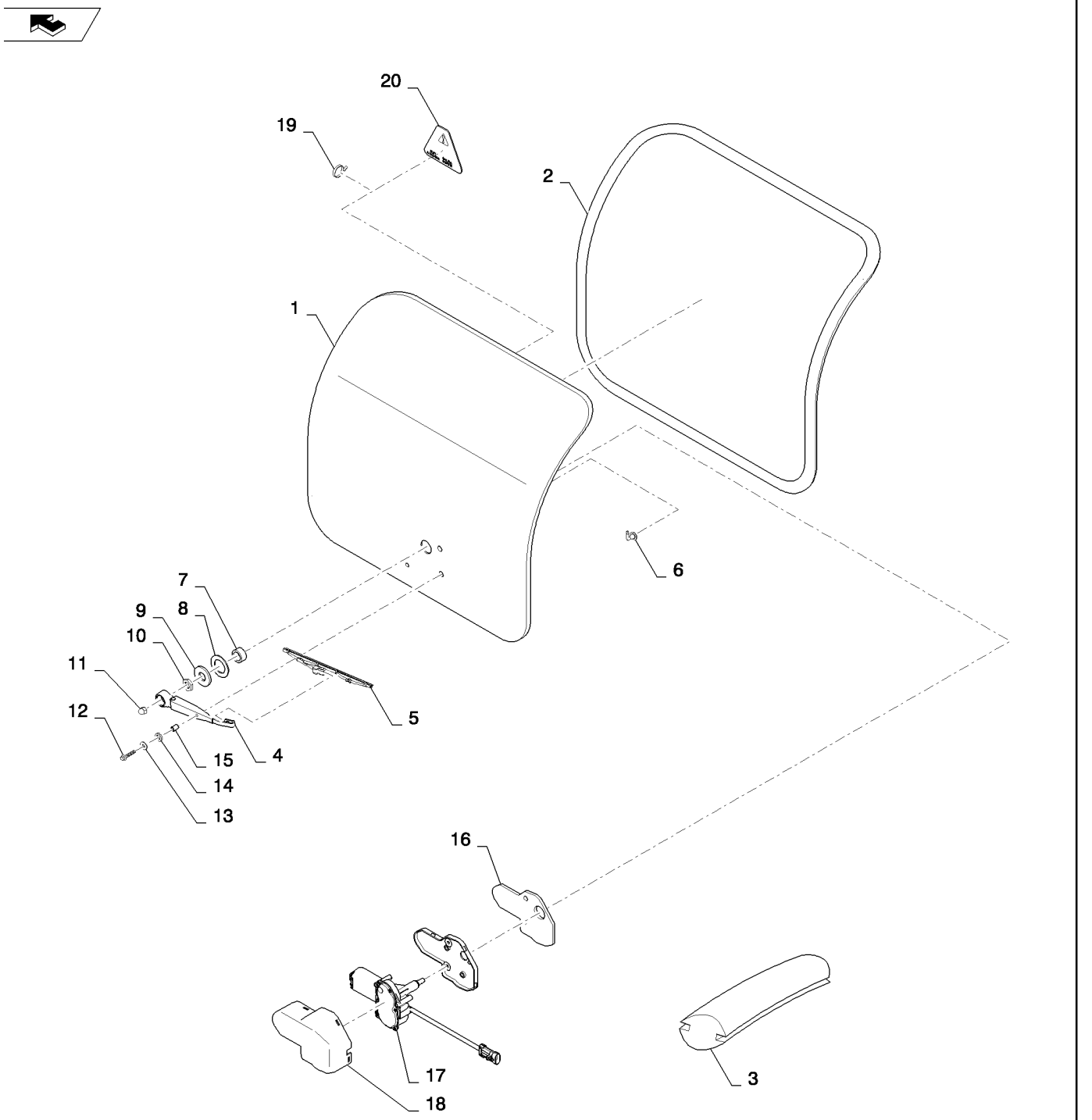

REAR WINDOW EU (ALL CASE)
REAR WINDOW EU (ALL CASE)
REAR WINDOW EU (ALL CASE)
REAR WINDOW EU (ALL CASE)

R	N	P.N.	MOD	Q	Denominação Description	Description Bezeichnung	Denominacion Beskrivelse	Descrizione Beschrijving	L.C.
1		84251333		1	VIDRO COLORIDO, Rear Window EU				
						TINTED GLASS	CRISTAL TINTADO	CRISTALLO ATERMICO	398C
					VITRE TEINTEE	GETÖNTE SCHEIBE	TONET RUDE	GETINT GLAS	
2		84478939		1	JUNTA, Locking	GASKET	JUNTA	GUARNIZIONE	123G
					JOINT	DICHTUNG	PAKNING	PAKKING	
3		92626		1	ENCHIMENTO, Locking Strip 8 Ft.				
						FILLING STRIP	BANDA DE GUARNICIÓN	NASTRO DI RIFORNIMEI	P721
					BANDE DE REMPLISSAG	FÜLLSTREIFEN	FYLDNINGSLISTE	VULSTRIP	
4		84323115		1	BRAÇO LIMPADOR	WIPER ARM	BRAZO LIMPIAPARABRIS	BRACCIO TERGICRISTA	134B
					BRAS D'ESSUIE-GLACE	WISCHERARM	VISKERARM	ARM VAN RUITENWISSE	
5		84323116		1	LIMPADOR DO PARA-BRISA				
						WINDSHIELD WIPER	LIMPIAPARABRISAS	TERGICRISTALLI	Z493
					ESSUIE-GLACE	FRONTSCHEIBENWISCH	FORRUDEVISKER	RUITENWISSER VÓÓR	
6		84369351		1	COTOVELO 90, Assy, Connector				
						90 ELBOW	CODO 90	GOMITO A 90°	A045
					COUDE A 90°	90-GRAD-KNIESTÜCK	VINKELRØR, 90	KNIESTUK 90º	
7		87642536		1	BUCHA, Wiper Motor	BUSHING	CASQUILLO	BOCCOLA	095B
					BAGUE	BUCHSE	BØSNING	BUS	
8		84297721		1	VEDAÇÃO, Washer	SEAL	ANILLO DE CIERRE	GUARNIZIONE; TENUTA	132A
					JOINT	DICHTUNG	PAKNING	AFDICHTING	
9		84156178		1	ARRUELA PLANA, .781 x 1.75 x .179"				
						WASHER	ARANDELA	RONDELLA	131R
					RONDELLE	UNTERLEGSCHEIBE	FLADSKIVE	SLUITRING	
10		87607505		1	PORCA, Wiper	NUT	TUERCA	DADO	010D
					ECROU	MUTTER	MØTRIK	MOER	
11		412326		1	PORCA, Dome Crown M8	NUT	TUERCA	DADO	010D
					ECROU	MUTTER	MØTRIK	MOER	
12		9804257		2	PARAFUSO, Hex Flg, M6 x 25, 8.8				
						BOLT	PERNO	BULLONE	140B
					VIS	SCHRAUBE	BOLT	BOUT	
13		86624182		2	ARRUELA PLANA, M6 x 18 x 1.6				
						WASHER	ARANDELA	RONDELLA	131R
					RONDELLE	UNTERLEGSCHEIBE	FLADSKIVE	SLUITRING	
14		84321136		2	VEDADOR	SEAL WASHER	JUNTA CIRCULAR	RONDELLA DELLA GUAF	Z526
					JOINT-CIRCULAIRE	DICHTUNGSSCHEIBE	SEAL WASHER	SEAL WASHER	
15		87642540		2	ESPAÇADOR, Wiper Motor	SPACER	SEPARADOR	DISTANZIALE	075D
					ENTRETOISE	DISTANZSTÜCK	AFSTANDSSTYKKE	AFSTANDSSTUK	
16		84319673		1	VEDAÇÃO DO LIMPADOR, Rear				
						WIPER SEAL	JUNTA ROZANTE	GUARNIZIONE, RASCHIA	Z350
					JOINT RACLEUR	ABSTREIFDICHTUNG	SKRABERING	RUITENWISSERAFDICHT	
17		84319569		1	MOTOR DO LIMPADOR	WIPER MOTOR	MOTOR DE LIMPIAPARA	MOTORINO TERGICRIST	093T
					MOTEUR D'ESSUIE-GLA	WISCHERMOTOR	VISKERMOTOR	RUITENWISSERMOTOR	
18		84300094		1	MOTOR DO LIMPADOR, Cover				
						WIPER MOTOR	MOTOR DE LIMPIAPARA	MOTORINO TERGICRIST	093T
					MOTEUR D'ESSUIE-GLA	WISCHERMOTOR	VISKERMOTOR	RUITENWISSERMOTOR	
19		263117		1	PRENDEDOR DE CABOS, .14" x 11 1/2"				
						CABLE STRAP	BANDA DE CABLE	FASCETTA PER CAVO	P716
					BRIDE DE CABLE	KABELBINDER	KABELSTROP	BUNDELBAND	

90.154.04		p2	05/11

REAR WINDOW EU (ALL CASE)
REAR WINDOW EU (ALL CASE)
REAR WINDOW EU (ALL CASE)
REAR WINDOW EU (ALL CASE)

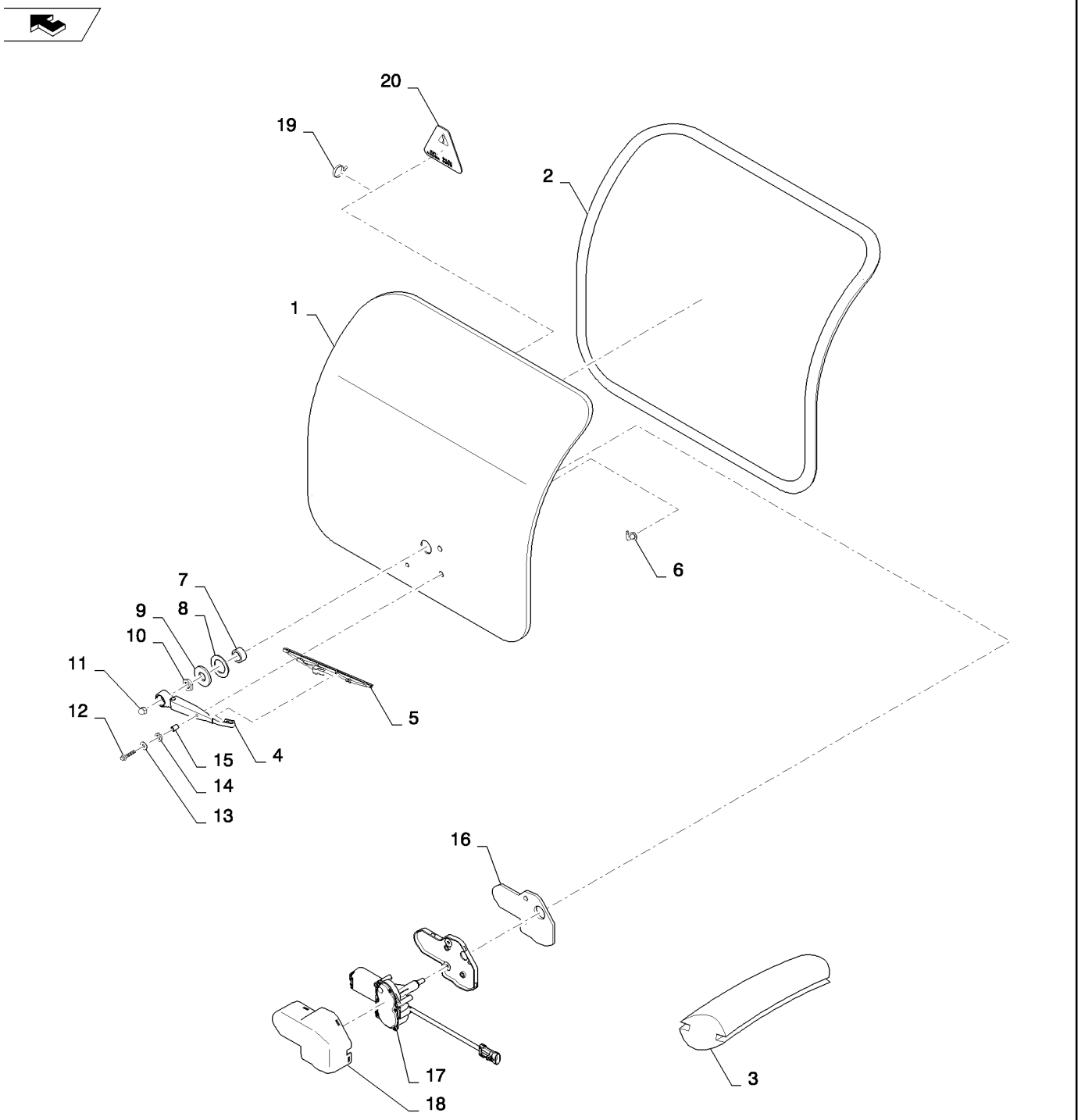

REAR WINDOW EU (ALL CASE)
REAR WINDOW EU (ALL CASE)
REAR WINDOW EU (ALL CASE)
REAR WINDOW EU (ALL CASE)

R	N	P.N.	MOD	Q	Denominação Description Bezeichnung	Description Bezeichnung Beschrijving	Denominacion Beskrivelse Descrizione	Descrizione Beschrijving L.C.
20		**87026871**		1	SINAL PLÁSTICO, Exit Tag PLAQUE SIGN. PLASTIQ	PLASTIC SIGN KUNSTSTOFFSCHILD	SEÑAL DE PLÁSTICO PLASTIKSKILT	TARGHETTA IN PLASTIC KUNSTSTOF BORD 092I
21		**87037822**		1	PARAFUSO, Hex Flg Hd, M6 x 30, (Not Shown) VIS AUTOTARAUDEUSE	SELF-TAP SCREW SELBSTSCHN SCHRAUE	TORNILLO AUTORROSC SELVLÅSENDE BOLT	VITE AUTOFILETTANTE ZELFTAPPENDE SCHRO 062V

90.154.05	01	p1	02/11

WASHER BOTTLE, FRONT (ALL CASE)
WASHER BOTTLE, FRONT (ALL CASE)
WASHER BOTTLE, FRONT (ALL CASE)
WASHER BOTTLE, FRONT (ALL CASE)

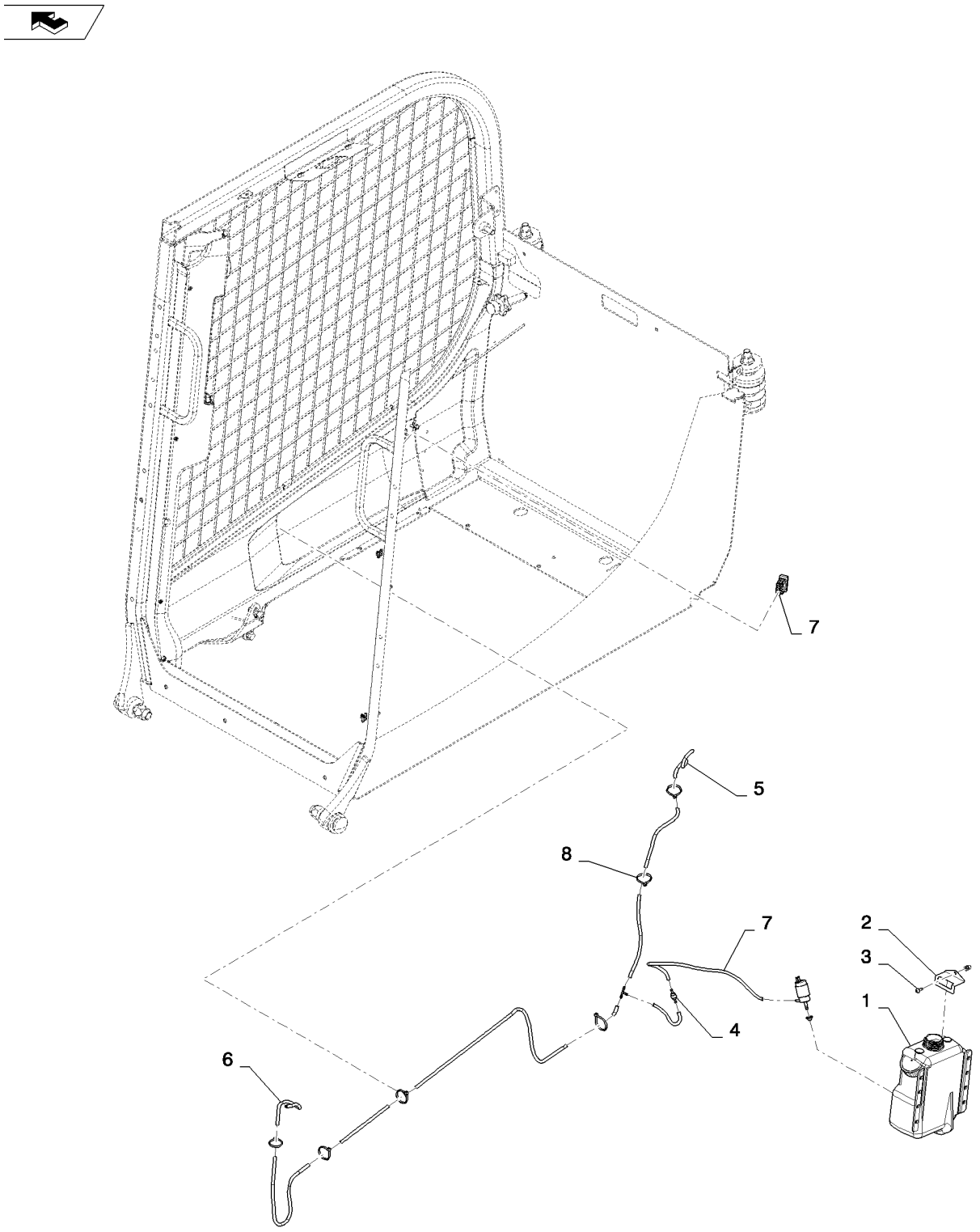

WASHER BOTTLE, FRONT (ALL CASE)
WASHER BOTTLE, FRONT (ALL CASE)
WASHER BOTTLE, FRONT (ALL CASE)
WASHER BOTTLE, FRONT (ALL CASE)

R	N	P.N.	MOD	Q	Denominação Description Bezeichnung	Description Bezeichnung	Denominacion Beskrivelse	Descrizione Beschrijving	L.C.
1		84389613		1	GARRAFA, Windshield Washer Bottle Assy				
						BOTTLE	BOTELLA	BOTTIGLIA	102B
					BOUTEILLE	FLASCHE	FLASKE	FLES	
2		84326923		2	SUPORTE, Washer Bottle	BRACKET	SOPORTE	STAFFA	225S
					SUPPORT	HALTERUNG	BESLAG	STEUN	
3		87682398		2	PARAFUSO, M6x16	SCREW	TORNILLO	VITE	040V
					VIS	SCHRAUBE	SKRUE	SCHROEF	
4		K307050		1	VÁLVULA, Non-Return	VALVE	VÁLVULA	VALVOLA	9620
					SOUPAPE	VENTIL	VENTIL	KLEP	
5		84281703		1	MANGUEIRA DO LAVADOR, Front Windshield Washer Hose				
						HOSE WASHER	TUBO DE LAVAPARABRI	RONDELLA FLESSIBILE	A061
					TUYAU DE LAVE-GLACE	WASCHANLAGENSCHLA	SLANGE, SPRINKLER	SLUITRING VOOR SLAN(	
6		84285453		1	MANGUEIRA DO LAVADOR, Washer Bottle Hose				
						HOSE WASHER	TUBO DE LAVAPARABRI	RONDELLA FLESSIBILE	A061
					TUYAU DE LAVE-GLACE	WASCHANLAGENSCHLA	SLANGE, SPRINKLER	SLUITRING VOOR SLAN(	
7		87335499		1	INTERRUPTOR, Rocker, Windshield Wiper/Washer				
						SWITCH	INTERRUPTOR	INTERRUTTORE	075I
					CONTACTEUR	SCHALTER	KONTAKT	SCHAKELAAR	
8		L11541		4	PRENDEDOR DE CABOS	CABLE STRAP	BANDA DE CABLE	FASCETTA PER CAVO	P716
					BRIDE DE CABLE	KABELBINDER	KABELSTROP	BUNDELBAND	

90.154.05	02	p1	04/11

WASHER BOTTLE, REAR (ALL CASE)
WASHER BOTTLE, REAR (ALL CASE)
WASHER BOTTLE, REAR (ALL CASE)
WASHER BOTTLE, REAR (ALL CASE)

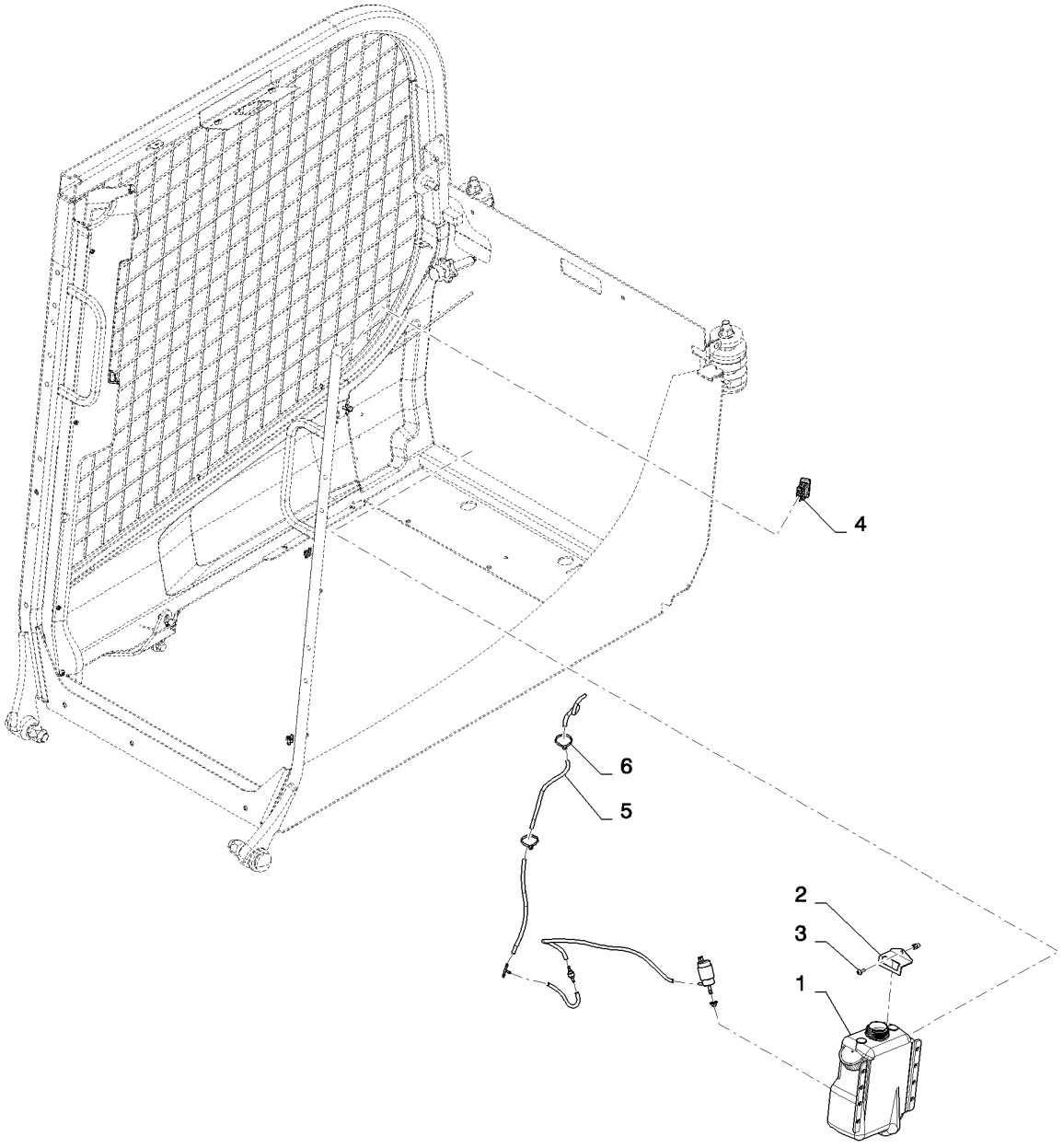

WASHER BOTTLE, REAR (ALL CASE)
WASHER BOTTLE, REAR (ALL CASE)
WASHER BOTTLE, REAR (ALL CASE)
WASHER BOTTLE, REAR (ALL CASE)

R	N	P.N.	MOD	Q	Denominação Description	Description Bezeichnung	Denominacion Beskrivelse	Descrizione Beschrijving	L.C.
1		84389613		1	GARRAFA, Windshield Washer Bottle Assy				
						BOTTLE	BOTELLA	BOTTIGLIA	102B
					BOUTEILLE	FLASCHE	FLASKE	FLES	
2		84326923		2	SUPORTE, Washer Bottle	BRACKET	SOPORTE	STAFFA	225S
					SUPPORT	HALTERUNG	BESLAG	STEUN	
3		87682398		2	PARAFUSO, M6x16	SCREW	TORNILLO	VITE	040V
					VIS	SCHRAUBE	SKRUE	SCHROEF	
4		87335499		1	INTERRUPTOR, Rocker, Windshield Wiper/Washer				
						SWITCH	INTERRUPTOR	INTERRUTTORE	075I
					CONTACTEUR	SCHALTER	KONTAKT	SCHAKELAAR	
5		84285452		1	MANGUEIRA DO LAVADOR, Washer, Rear Windshield				
						HOSE WASHER	TUBO DE LAVAPARABRI	RONDELLA FLESSIBILE	A061
					TUYAU DE LAVE-GLACE	WASCHANLAGENSCHLA	SLANGE, SPRINKLER	SLUITRING VOOR SLAN(	
6		L11541		2	PRENDEDOR DE CABOS	CABLE STRAP	BANDA DE CABLE	FASCETTA PER CAVO	P716
					BRIDE DE CABLE	KABELBINDER	KABELSTROP	BUNDELBAND	
7		84472462		1	COBERTURA, Rear Cover, Euro, Gray, Not Shown				
						COVER	COBERTURA	COPERTURA	271C
					COUVERTURE	ABDECKUNG	COVER	COVER	
8		84272827		2	REBITE, Nut, M6 X 1.0, Not Shown				
						RIVET	REMACHE	RIVETTO	055R
					RIVET	NIET	NITTE	KLINKNAGEL	

90.154.05	03	p1	02/11

WASHER BOTTLE, FRONT & REAR (ALL CASE)
WASHER BOTTLE, FRONT & REAR (ALL CASE)
WASHER BOTTLE, FRONT & REAR (ALL CASE)
WASHER BOTTLE, FRONT & REAR (ALL CASE)

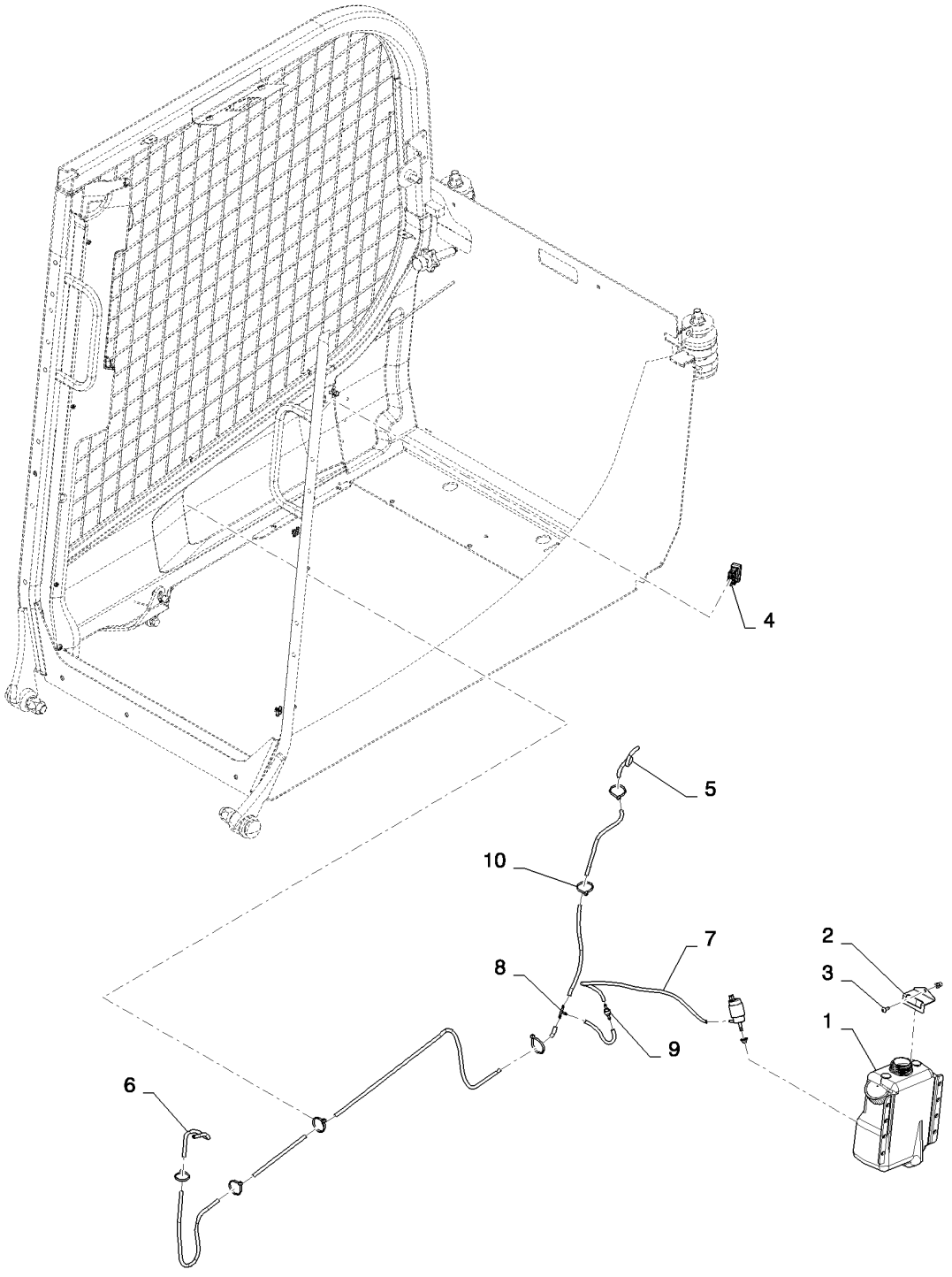

WASHER BOTTLE, FRONT & REAR (ALL CASE)
WASHER BOTTLE, FRONT & REAR (ALL CASE)
WASHER BOTTLE, FRONT & REAR (ALL CASE)
WASHER BOTTLE, FRONT & REAR (ALL CASE)

R	N	P.N.	MOD	Q	Denominação Description	Description Bezeichnung	Denominacion Beskrivelse	Descrizione Beschrijving	L.C.
1		84389613		1	GARRAFA, Windshield Washer Bottle Assy				
						BOTTLE	BOTELLA	BOTTIGLIA	102B
					BOUTEILLE	FLASCHE	FLASKE	FLES	
2		84326923		2	SUPORTE, Washer Bottle	BRACKET	SOPORTE	STAFFA	225S
					SUPPORT	HALTERUNG	BESLAG	STEUN	
3		87682398		2	PARAFUSO, M6x16	SCREW	TORNILLO	VITE	040V
					VIS	SCHRAUBE	SKRUE	SCHROEF	
4		87335498		1	INTERRUPTOR, Rocker, Windshield Wiper/Washer				
						LIGHT SWITCH	INTERRUPTOR DE LUZ	INTERRUTTORE LUCI	228S
					COMM. LUMIERES	LICHTSCHALTER	KONTAKT, LYS	VERLICHTINGSSCHAKEI	
5		84281703		1	MANGUEIRA DO LAVADOR, Windshield Washer, Front Door				
						HOSE WASHER	TUBO DE LAVAPARABRI	RONDELLA FLESSIBILE	A061
					TUYAU DE LAVE-GLACE	WASCHANLAGENSCHLA	SLANGE, SPRINKLER	SLUITRING VOOR SLAN(	
6		84285452		1	MANGUEIRA DO LAVADOR, Windshield Washer, Rear Window				
						HOSE WASHER	TUBO DE LAVAPARABRI	RONDELLA FLESSIBILE	A061
					TUYAU DE LAVE-GLACE	WASCHANLAGENSCHLA	SLANGE, SPRINKLER	SLUITRING VOOR SLAN(	
7		84285453		2	MANGUEIRA DO LAVADOR, Washer Bottle				
						HOSE WASHER	TUBO DE LAVAPARABRI	RONDELLA FLESSIBILE	A061
					TUYAU DE LAVE-GLACE	WASCHANLAGENSCHLA	SLANGE, SPRINKLER	SLUITRING VOOR SLAN(	
8		84306335		1	T, Barb Connector	TEE	RACOR EN T	PEZZO A T	9020
					RACCORD EN T	T-STÜCK	T-STYKKE	T-STUK	
9		K307050		1	VÁLVULA, Non-Return	VALVE	VÁLVULA	VALVOLA	9620
					SOUPAPE	VENTIL	VENTIL	KLEP	
10		L11541		6	PRENDEDOR DE CABOS	CABLE STRAP	BANDA DE CABLE	FASCETTA PER CAVO	P716
					BRIDE DE CABLE	KABELBINDER	KABELSTROP	BUNDELBAND	
11		84272827		2	REBITE, M6 X 1.0	RIVET	REMACHE	RIVETTO	055R
					RIVET	NIET	NITTE	KLINKNAGEL	

90.160.01	01	p1	07/11

INTERIOR TRIM CASE (ALL CASE)
INTERIOR TRIM CASE (ALL CASE)
INTERIOR TRIM CASE (ALL CASE)
INTERIOR TRIM CASE (ALL CASE)

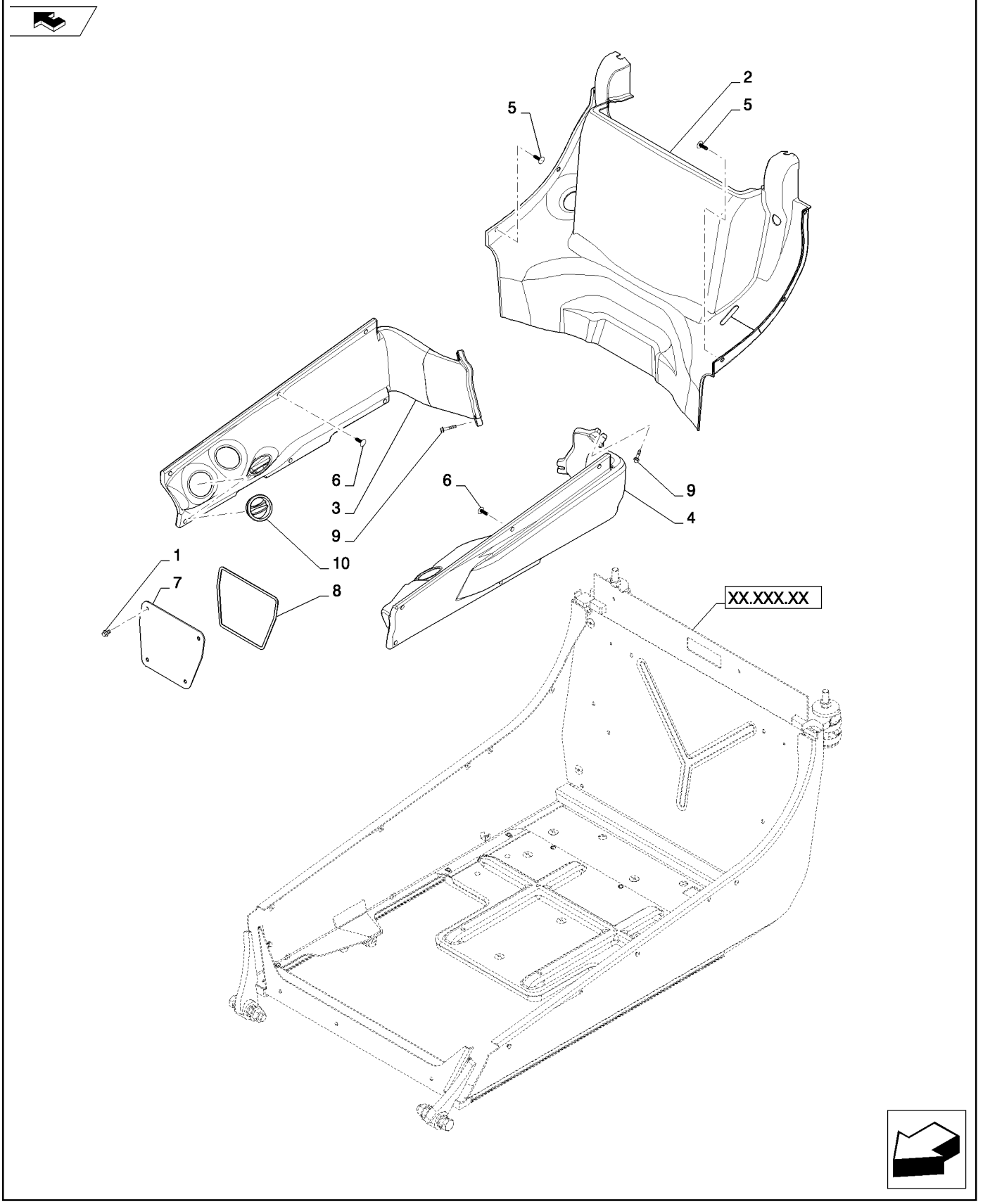

INTERIOR TRIM CASE (ALL CASE)
INTERIOR TRIM CASE (ALL CASE)
INTERIOR TRIM CASE (ALL CASE)
INTERIOR TRIM CASE (ALL CASE)

R	N	P.N.	MOD	Q	Denominação Description Bezeichnung	Description Bezeichnung	Denominacion Beskrivelse	Descrizione Beschrijving	L.C.
1		84285339		4	PARAFUSO VIS AUTOTARAUDEUSE	SELF-TAP SCREW SELBSTSCHN SCHRAUE	TORNILLO AUTORROSC SELVLÅSENDE BOLT	VITE AUTOFILETTANTE ZELFTAPPENDE SCHRO	062V
2		84389708		1	PAINEL, Rear Trim, Gray PANNEAU	PANEL PLATTE	PANEL PANEL	PANNELLO PANEEL	025P
3		84299751		1	DUTO DE AR CONDUITE D'AIR	AIR DUCT LUFTKANAL	CONDUCTO DE AIRE LUFTKANAL	CONDOTTO ARIA LUCHTKANAAL	224C
4		84299754		1	DUTO DE AR CONDUITE D'AIR	AIR DUCT LUFTKANAL	CONDUCTO DE AIRE LUFTKANAL	CONDOTTO ARIA LUCHTKANAAL	224C
5		84380551		6	BOTÃO DE IMPULSO, Push-In, Wheat ATTACHE	FASTENER BEFESTIGUNGSELEMEN	SUJETADOR LUKKER	DISPOSITIVO DI FISSAG BEVESTIGING	123B
6		348452A1		14	BOTÃO DE IMPULSO, Push-In ATTACHE	FASTENER BEFESTIGUNGSELEMEN	SUJETADOR LUKKER	DISPOSITIVO DI FISSAG BEVESTIGING	123B
7		84322838		1	PLACA, Cover PLAQUE	PLATE PLATTE	PLACA PLADE	PIASTRA PLAAT	105P
8		84322854		1	ESPUMA ISOLANTE, Sealing Strip; 891mm MOUSSE ISOLANTE	FOAM INSULATION SCHAUMSTOFFISOLIER	ESPUMA AISLANTE SKUM ISOLERING	ISOLANTE IN SCHIUMA SCHUIMISOLATIE	051S
9		87015931		4	PARAFUSO, Hex Flg, M6 x 35, 8.8 VIS	BOLT SCHRAUBE	PERNO BOLT	BULLONE BOUT	140B
10		87669161		6	RESPIRO, Louver Global BUSE D'AERATION	VENT AUSSTRÖMER	RESPIRADERO UDLUFTNINGSDYSE	BOCCHETTA LUCHTROOSTER	P079

90.160.01	02	p1	10/10

INTERIOR TRIM CASE (ALL CASE)
INTERIOR TRIM CASE (ALL CASE)
INTERIOR TRIM CASE (ALL CASE)
INTERIOR TRIM CASE (ALL CASE)

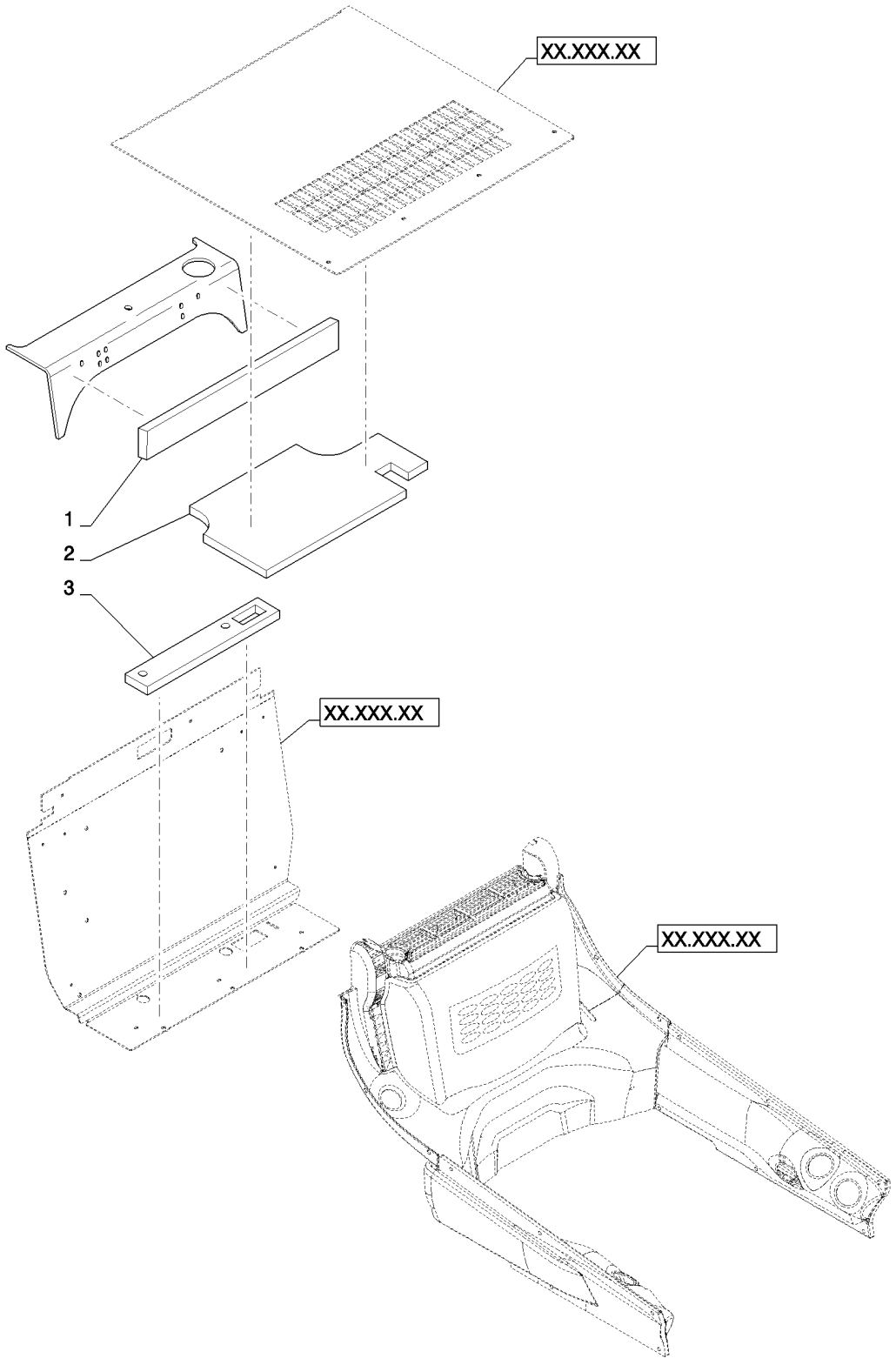

INTERIOR TRIM CASE (ALL CASE)
INTERIOR TRIM CASE (ALL CASE)
INTERIOR TRIM CASE (ALL CASE)
INTERIOR TRIM CASE (ALL CASE)

R	N	P.N.	MOD	Q	Denominação Description	Description Bezeichnung	Denominacion Beskrivelse	Descrizione Beschrijving	L.C.
1		**84362125**		1	ESPUMA ISOLANTE, Crossmember				
						FOAM INSULATION	ESPUMA AISLANTE	ISOLANTE IN SCHIUMA	051S
					MOUSSE ISOLANTE	SCHAUMSTOFFISOLIER	SKUM ISOLERING	SCHUIMISOLATIE	
2		**84362126**		1	ESPUMA ISOLANTE, Roof	FOAM INSULATION	ESPUMA AISLANTE	ISOLANTE IN SCHIUMA	051S
					MOUSSE ISOLANTE	SCHAUMSTOFFISOLIER	SKUM ISOLERING	SCHUIMISOLATIE	
3		**84370302**		1	ESPUMA, HVAC Box	FOAM	ESPUMA	SCHIUMA	P033
					MOUSSE	SCHAUM	SKUM	SCHUIM	

90.160.01	03	p1	02/11

CAB SEALING (ALL CASE)
CAB SEALING (ALL CASE)
CAB SEALING (ALL CASE)
CAB SEALING (ALL CASE)

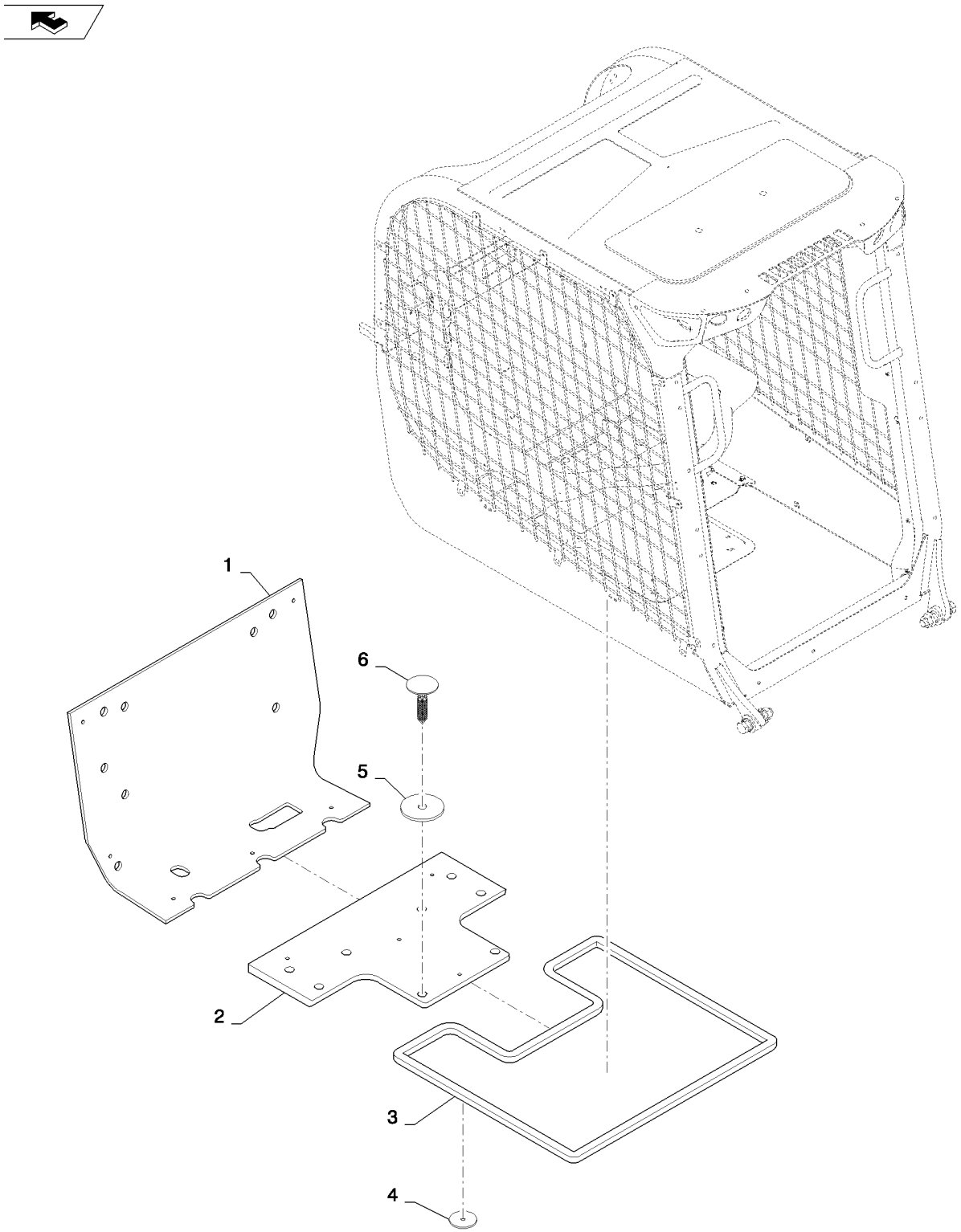

CAB SEALING (ALL CASE)
CAB SEALING (ALL CASE)
CAB SEALING (ALL CASE)
CAB SEALING (ALL CASE)

R	N	P.N.	MOD	Q	Denominação Description Bezeichnung	Description Denominacion Beskrivelse	Denominacion Descrizione Beschrijving	L.C.
1		84362124		1	ESPUMA ISOLANTE, Firewall FOAM INSULATION MOUSSE ISOLANTE	ESPUMA AISLANTE SCHAUMSTOFFISOLIER SKUM ISOLERING	ISOLANTE IN SCHIUMA SCHUIMISOLATIE	051S
2		84338534		1	VEDAÇÃO, 3326 mm JOINT	SEAL DICHTUNG	ANILLO DE CIERRE PAKNING	GUARNIZIONE; TENUTA AFDICHTING	132A
3		84311384		1	ESPUMA ISOLANTE, Dump Valve FOAM INSULATION MOUSSE ISOLANTE	ESPUMA AISLANTE SCHAUMSTOFFISOLIER SKUM ISOLERING	ISOLANTE IN SCHIUMA SCHUIMISOLATIE	051S
4		348434A1		7	ARRUELA, Flat RONDELLE	WASHER UNTERLEGSCHEIBE	ARANDELA WASHER	RONDELLA WASHER	9720
5		348452A1		7	BOTÃO DE IMPULSO, Push-In FASTENER ATTACHE	SUJETADOR BEFESTIGUNGSELEMEN	DISPOSITIVO DI FISSAG LUKKER	BEVESTIGING	123B

SEAL PACKAGE (SR175-TV380)
SEAL PACKAGE (SR175-TV380)
SEAL PACKAGE (SR175-TV380)
SEAL PACKAGE (SR175-TV380)

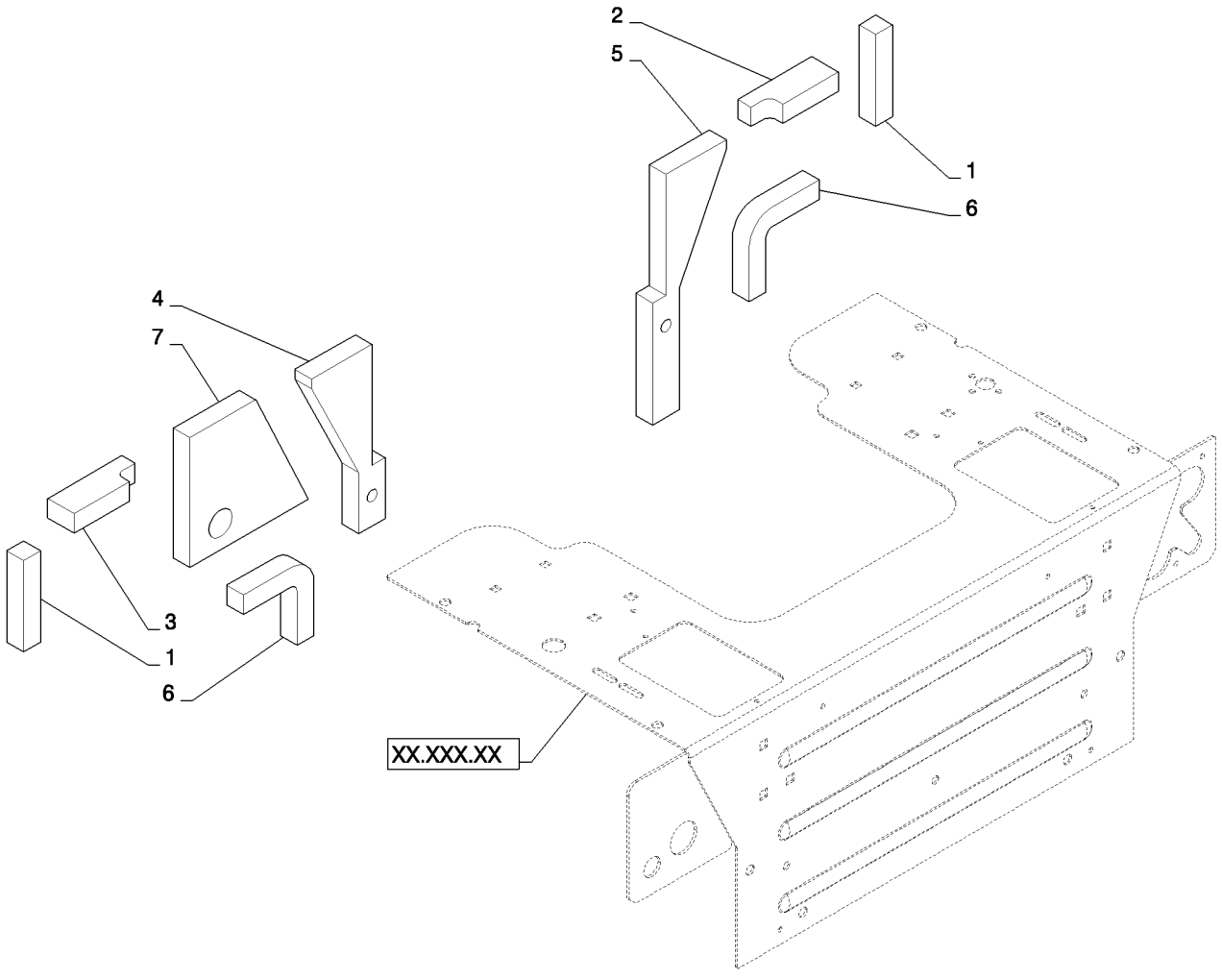

SEAL PACKAGE (SR175-TV380)
SEAL PACKAGE (SR175-TV380)
SEAL PACKAGE (SR175-TV380)
SEAL PACKAGE (SR175-TV380)

R	N	P.N.	MOD	Q	Denominação Description	Description Bezeichnung	Denominacion Beskrivelse	Descrizione Beschrijving	L.C.
1		{84379232}		2	Chassis Filler				
2		84372899		1	ESPUMA, LH Upper Chassis Filler				
						FOAM	ESPUMA	SCHIUMA	P033
					MOUSSE	SCHAUM	SKUM	SCHUIM	
3		84372898		1	ESPUMA, RH Upper Chassis Filler				
						FOAM	ESPUMA	SCHIUMA	P033
					MOUSSE	SCHAUM	SKUM	SCHUIM	
4		84372629		1	ESPUMA, RH Heel Plate	FOAM	ESPUMA	SCHIUMA	P033
					MOUSSE	SCHAUM	SKUM	SCHUIM	
5		84372628		1	ESPUMA, LH Heel Plate	FOAM	ESPUMA	SCHIUMA	P033
					MOUSSE	SCHAUM	SKUM	SCHUIM	
6		84342690		2	ESPUMA ISOLANTE	FOAM INSULATION	ESPUMA AISLANTE	ISOLANTE IN SCHIUMA	051S
					MOUSSE ISOLANTE	SCHAUMSTOFFISOLIER	SKUM ISOLERING	SCHUIMISOLATIE	
7		84287773		1	ESPUMA, RH Filler	FOAM	ESPUMA	SCHIUMA	P033
					MOUSSE	SCHAUM	SKUM	SCHUIM	

90.160.03	01	p1	02/11

CAB HEADLINER, NO RADIO (ALL CASE)
CAB HEADLINER, NO RADIO (ALL CASE)
CAB HEADLINER, NO RADIO (ALL CASE)
CAB HEADLINER, NO RADIO (ALL CASE)

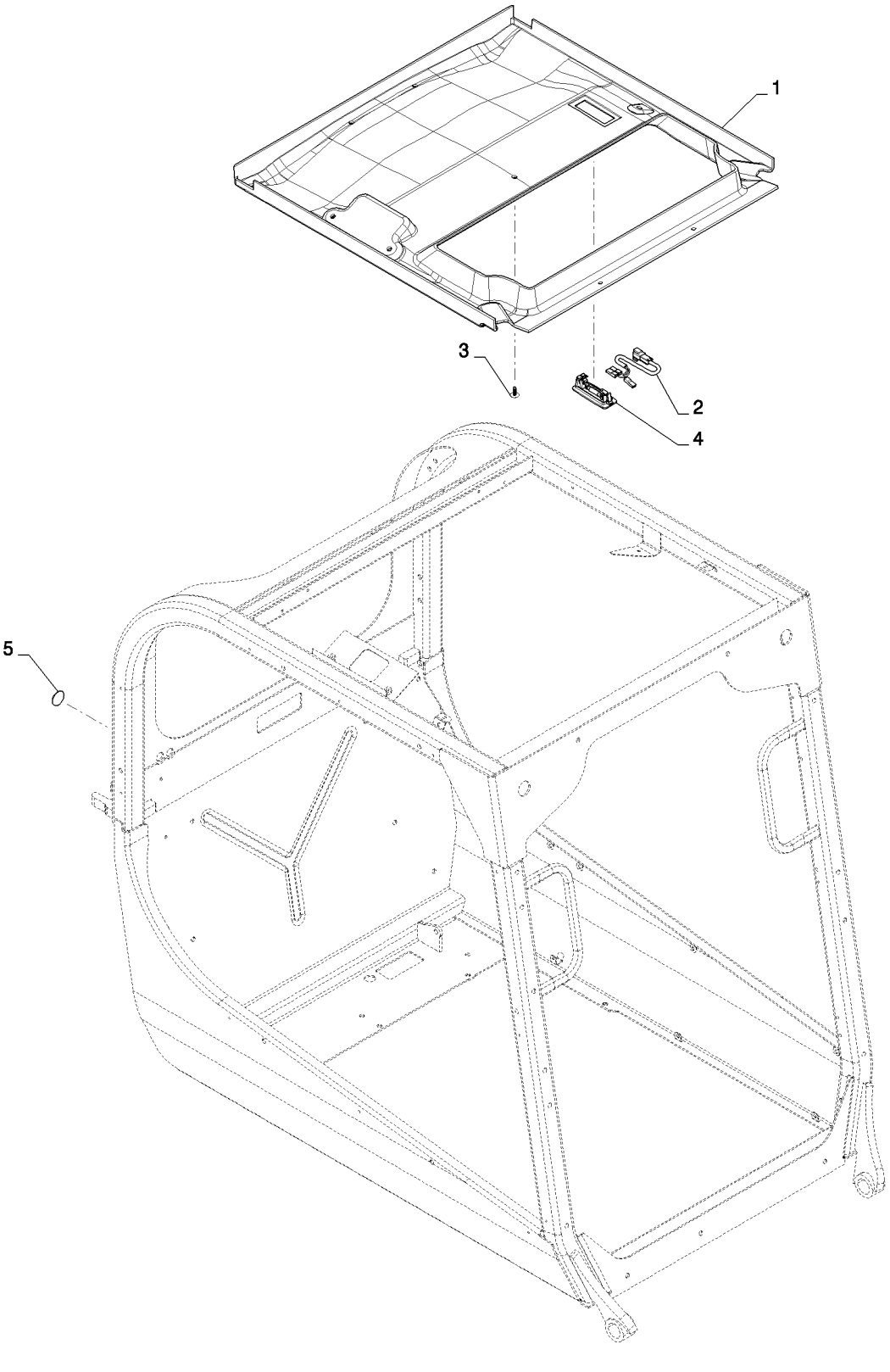

CAB HEADLINER, NO RADIO (ALL CASE)
CAB HEADLINER, NO RADIO (ALL CASE)
CAB HEADLINER, NO RADIO (ALL CASE)
CAB HEADLINER, NO RADIO (ALL CASE)

R	N	P.N.	MOD	Q	Denominação Description Bezeichnung	Description Bezeichnung	Denominacion Beskrivelse	Descrizione Beschrijving	L.C.
1		84259658		1	PAINEL, Headliner W/Dome (Case)				
						PANEL	PANEL	PANNELLO	025P
					PANNEAU	PLATTE	PANEL	PANEEL	
2		84297137		1	CHICOTE, Dome Lamp	WIRE HARNESS	GRUPO DE CABLES	CABLAGGIO	070I
					FAISCEAU ELECTRIQUE	KABELBAUM	KABELNET	KABELBOOM	
3		84318533		8	BOTÃO DE IMPULSO, Push in, Wheat				
						FASTENER	SUJETADOR	DISPOSITIVO DI FISSAG	123B
					ATTACHE	BEFESTIGUNGSELEMEN	LUKKER	BEVESTIGING	
4		1983391C1		1	LÂMPADA, Light Dome	LAMP	LÁMPARA	SPIA	009F
					LAMPE	LEUCHTE	LYGTE	LAMP	
5		NSS			SEM SERVIÇO EM SEPARADO				
						NOT SERVICED SEPARA	NO SE REPARA POR SE	NON FORNITO SEPARAT	064N
					NON FORUNI SEPAREM	NICHT A SEP ERS-T LIEI	SERVICERES IKKE SEPA	NIET LOS VERKRIJGBAA	
6		353-425		1	BUJAO, Flat Face (Not Shown)				
						PLUG	TAPON	TAPPO	6400
					BOUCHON	STOPFEN	PLUG	PLUG	

90.160.03	02	p1	02/11

CAB HEADLINER, WITH RADIO (ALL CASE)
CAB HEADLINER, WITH RADIO (ALL CASE)
CAB HEADLINER, WITH RADIO (ALL CASE)
CAB HEADLINER, WITH RADIO (ALL CASE)

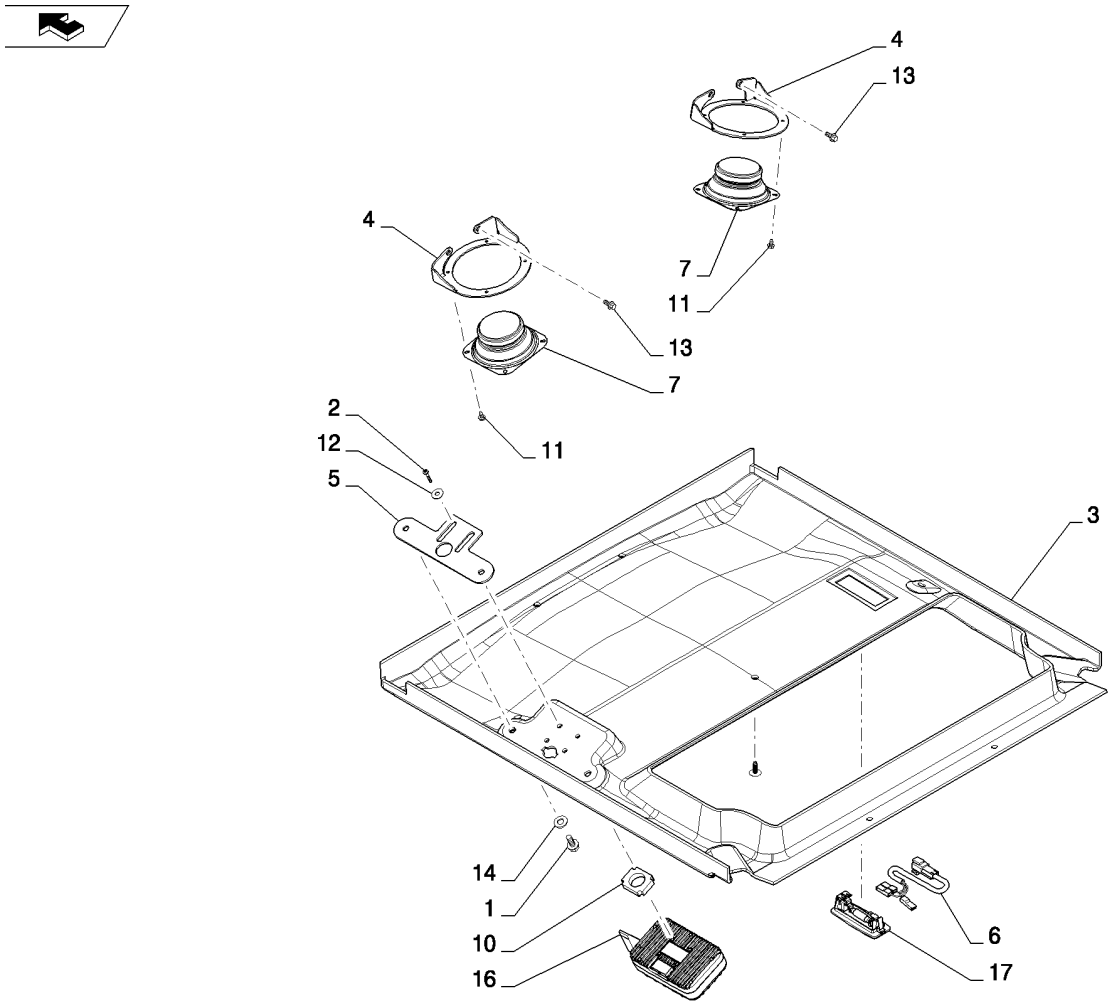

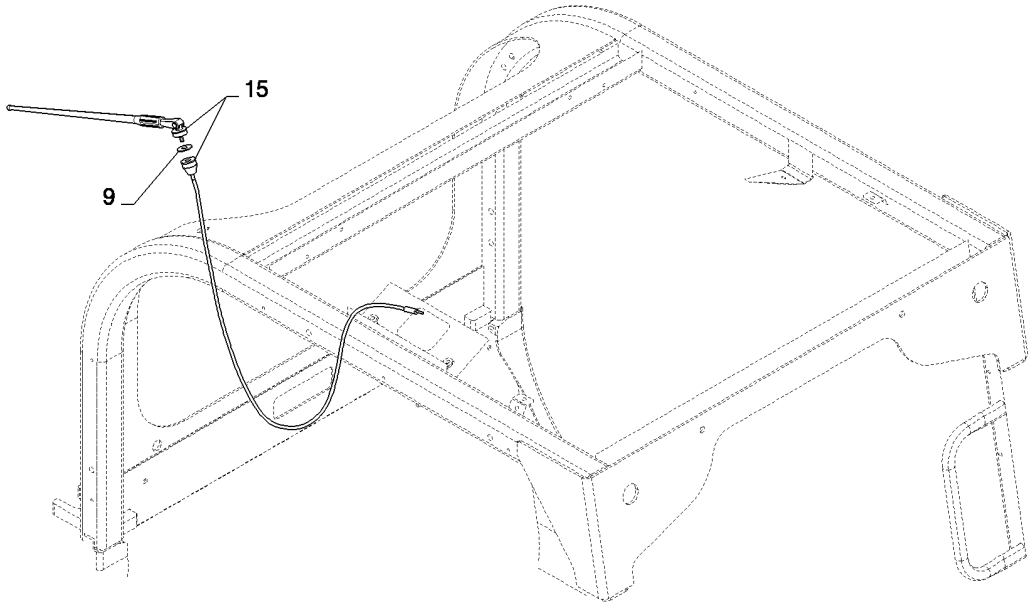

CAB HEADLINER, WITH RADIO (ALL CASE)
CAB HEADLINER, WITH RADIO (ALL CASE)
CAB HEADLINER, WITH RADIO (ALL CASE)
CAB HEADLINER, WITH RADIO (ALL CASE)

R	N	P.N.	MOD	Q	Denominação Description	Description Bezeichnung	Denominacion Beskrivelse	Descrizione Beschrijving	L.C.
1		9804258		2	PARAFUSO, Hex Flg, M8 x 20, 8.8				
						BOLT	PERNO	BULLONE	140B
					VIS	SCHRAUBE	BOLT	BOUT	
2		13272611		4	PARAFUSO, M4 X 25 P/HD C/R-Z 5.8 ZND				
						SCREW	TORNILLO	VITE	040V
					VIS	SCHRAUBE	SKRUE	SCHROEF	
3		84259665		1	PAINEL, Headliner Radio Dome (CASE)				
						PANEL	PANEL	PANNELLO	025P
					PANNEAU	PLATTE	PANEL	PANEEL	
4		84281707		2	SUPORTE, Sheet, Speaker Bracket, Gray				
						BRACKET	SOPORTE	STAFFA	225S
					SUPPORT	HALTERUNG	BESLAG	STEUN	
5		84281708		1	SUPORTE, Sheet, Radio Bracket, Gray				
						BRACKET	SOPORTE	STAFFA	225S
					SUPPORT	HALTERUNG	BESLAG	STEUN	
6		84297137		1	CHICOTE, Dome Lamp	WIRE HARNESS	GRUPO DE CABLES	CABLAGGIO	070I
					FAISCEAU ELECTRIQUE	KABELBAUM	KABELNET	KABELBOOM	
7		84298557		2	ALTO-FALANTE, 4 in. Sealed HP				
						SPEAKER	ALTAVOZ	ALTOPARLANTE	039A
					HAUT-PARLEUR	LAUTSPRECHER	HØJTALER	LUIDSPREKER	
8		84318533		6	BOTÃO DE IMPULSO, Push in, Wheat				
						FASTENER	SUJETADOR	DISPOSITIVO DI FISSAG	123B
					ATTACHE	BEFESTIGUNGSELEMEN	LUKKER	BEVESTIGING	
9		84347538		1	ESPUMA ISOLANTE, Antenna Seal				
						FOAM INSULATION	ESPUMA AISLANTE	ISOLANTE IN SCHIUMA	051S
					MOUSSE ISOLANTE	SCHAUMSTOFFISOLIER	SKUM ISOLERING	SCHUIMISOLATIE	
10		84363241		1	ESPAÇADOR, Radio Cooling				
						SPACER	SEPARADOR	DISTANZIALE	075D
					ENTRETOISE	DISTANZSTÜCK	AFSTANDSSTYKKE	AFSTANDSSTUK	
11		86500939		8	PARAFUSO, Hex Wash Hd, #10 x 3/8"				
						SELF-TAP SCREW	TORNILLO AUTORROSC	VITE AUTOFILETTANTE	062V
					VIS AUTOTARAUDEUSE	SELBSTSCHN SCHRAUE	SELVLÅSENDE BOLT	ZELFTAPPENDE SCHRO	
12		86624182		4	ARRUELA PLANA, M6 x 18 x 1.6				
						WASHER	ARANDELA	RONDELLA	131R
					RONDELLE	UNTERLEGSCHEIBE	FLADSKIVE	SLUITRING	
13		86625199		4	PARAFUSO, Hex Flg Hd, M6 x 13				
						SELF-TAP SCREW	TORNILLO AUTORROSC	VITE AUTOFILETTANTE	062V
					VIS AUTOTARAUDEUSE	SELBSTSCHN SCHRAUE	SELVLÅSENDE BOLT	ZELFTAPPENDE SCHRO	
14		86625241		2	ARRUELA PLANA, 0.406 X 0.812 X 0.089 IN HDN ZND				
						WASHER	ARANDELA	RONDELLA	131R
					RONDELLE	UNTERLEGSCHEIBE	FLADSKIVE	SLUITRING	
15		87668735		1	ANTENA, Rubber Mast	ANTENNA	ANTENA	ANTENNA	064A
					ANTENNE	ANTENNE	ANTENNE	ANTENNE	
16		87672223		1	RÁDIO, Mini WP AM/FM/WX Band				
						RADIO	RADIO	AUTORADIO	042R
					RADIO	RADIO	RADIO	RADIO	
17		1983391C1		1	LÂMPADA, Light Dome	LAMP	LÁMPARA	SPIA	009F
					LAMPE	LEUCHTE	LYGTE	LAMP	

90.180.01	01	p1	03/11

DECALS (SV185)
DECALS (SV185)
DECALS (SV185)
DECALS (SV185)

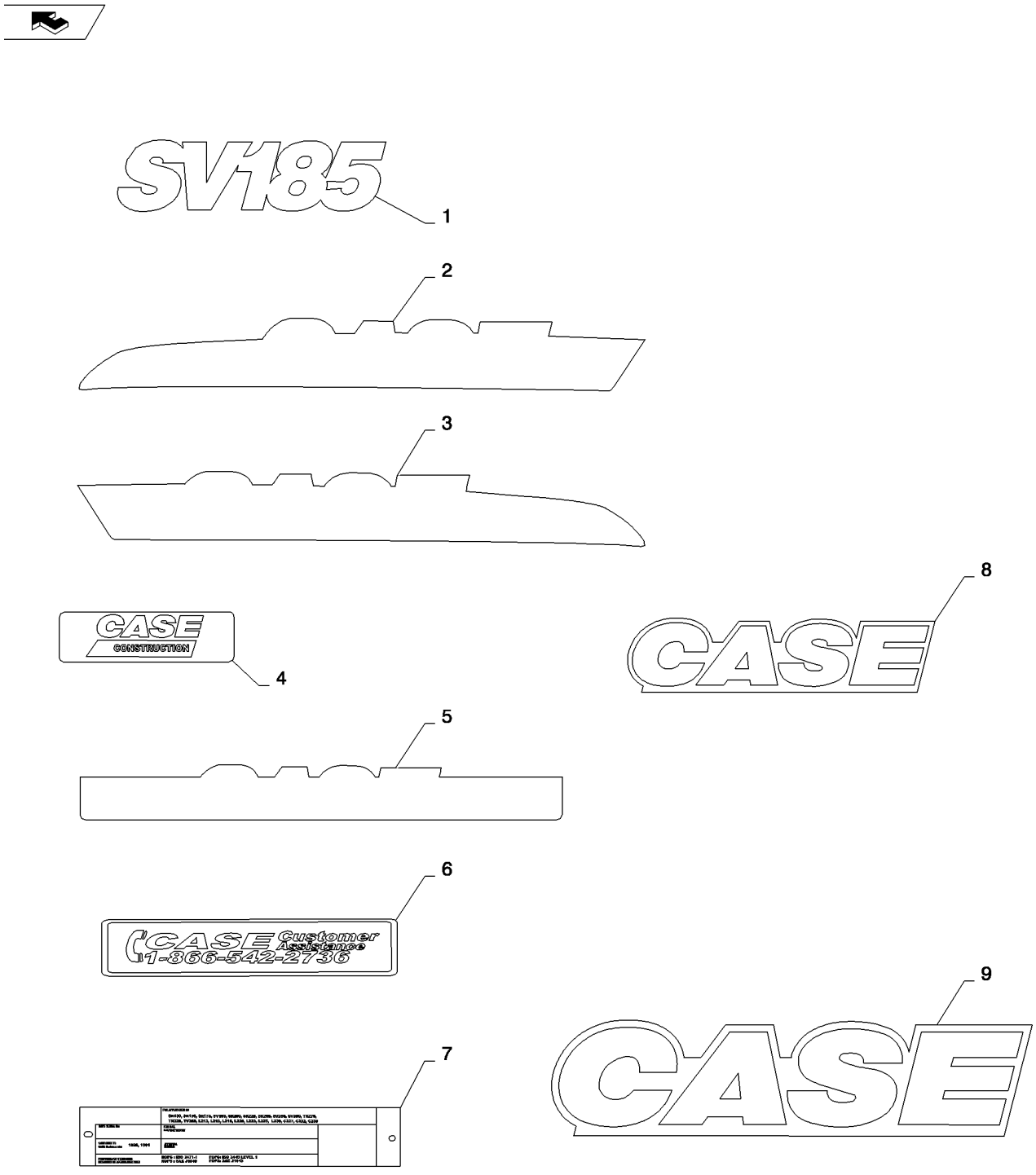

DECALS (SV185)
DECALS (SV185)
DECALS (SV185)
DECALS (SV185)

R	N	P.N.	MOD	Q	Denominação Description Bezeichnung	Denominacion Beskrivelse	Descrizione Beschrijving	L.C.
1		84312468		2	ADESIVO, SV185, Model Designation DECAL AUTOCOLLANT AUFKLEBER	CALCOMANÍA TRANSFER	DECALCOMANIA STICKER	012D
2		84312470		1	ADESIVO, LH, Medium Vert, Stripe DECAL AUTOCOLLANT AUFKLEBER	CALCOMANÍA TRANSFER	DECALCOMANIA STICKER	012D
3		84312471		1	ADESIVO, RH, Medium Vert, Stripe DECAL AUTOCOLLANT AUFKLEBER	CALCOMANÍA TRANSFER	DECALCOMANIA STICKER	012D
4		84385194		1	ADESIVO, Case Logo, Front DECAL AUTOCOLLANT AUFKLEBER	CALCOMANÍA TRANSFER	DECALCOMANIA STICKER	012D
5		84350219		1	ADESIVO, Rear, Case Logo, Background DECAL AUTOCOLLANT AUFKLEBER	CALCOMANÍA TRANSFER	DECALCOMANIA STICKER	012D
6		84311902		1	ADESIVO, Customer Assistance, Case DECAL AUTOCOLLANT AUFKLEBER	CALCOMANÍA TRANSFER	DECALCOMANIA STICKER	012D
7		NSS			SEM SERVIÇO EM SEPARADO NOT SERVICED SEPARA NON FORUNI SEPAREM NICHT A SEP ERS-T LIEI	NO SE REPARA POR SE SERVICERES IKKE SEPA	NON FORNITO SEPARAT NIET LOS VERKRIJGBAA	064N
8		84383732		2	ADESIVO, Side, Case Logo DECAL AUTOCOLLANT AUFKLEBER	CALCOMANÍA TRANSFER	DECALCOMANIA STICKER	012D
9		87389374		1	DECALCOMANIA, Case Logo DECAL DECALCOMANIE ABZIEHBILD	CALCOMANIA DECAL	AUTOADESIVO DECAL	P903

90.180.01	02	p1	02/11

DECALS - WARNING (ALL CASE)
DECALS - WARNING (ALL CASE)
DECALS - WARNING (ALL CASE)
DECALS - WARNING (ALL CASE)

1

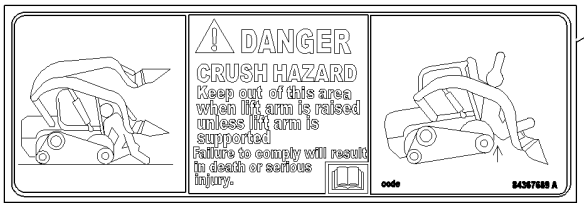

2



3

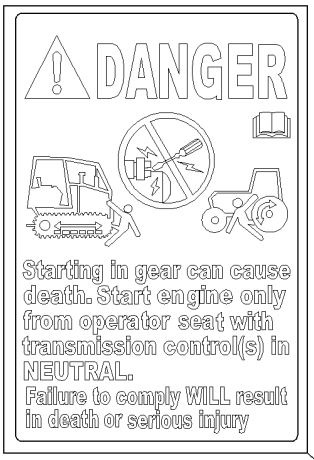

4

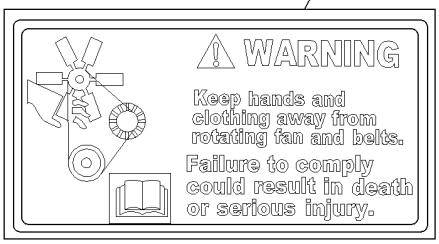

5



6



7

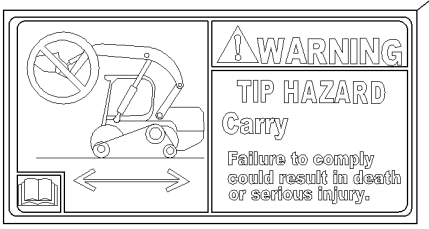

8

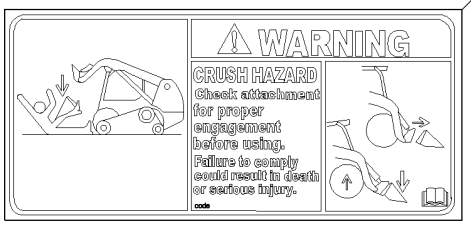

9

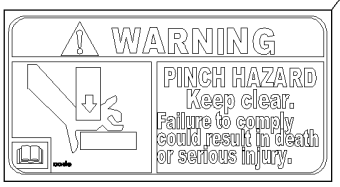

10

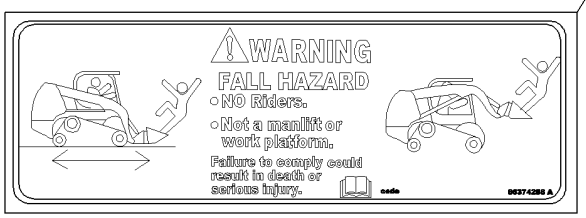

DECALS - WARNING (ALL CASE)
DECALS - WARNING (ALL CASE)
DECALS - WARNING (ALL CASE)
DECALS - WARNING (ALL CASE)

R	N	P.N.	MOD	Q	Denominação Description Description Bezeichnung	Denominacion Beskrivelse	Descrizione Beschrijving	L.C.
1		84367563		1	ADESIVO DE PERIGO, Boom Crush Hazard			
					DANGER DECAL	RÓTULO DE PELIGRO	DECALCOMANIA PERIC(	A038
					AUTOCOLLANT DANGEF AUFKLEBER GEFAHR	MÆRKAT, FARE	STICKER: GEVAAR	
2		84367570		1	ADESIVO DE ADVERTÊNCIA, Combination			
					WARNING DECAL	RÓTULO DE ADVERTEN	DECALCOMANIA AVVER	A040
					AUTOCOLLANT AVERTIS AUFKLEBER WARNUNG	MÆRKAT, ADVARSEL	STICKER: WAARSCHUW	
3		84135011		1	ADESIVO, Warning, Engine Start			
					DECAL	CALCOMANÍA	DECALCOMANIA	012D
					AUTOCOLLANT AUFKLEBER	TRANSFER	STICKER	
4		9828825		1	ADESIVO DE ADVERTÊNCIA, Fan			
					WARNING DECAL	RÓTULO DE ADVERTEN	DECALCOMANIA AVVER	A040
					AUTOCOLLANT AVERTIS AUFKLEBER WARNUNG	MÆRKAT, ADVARSEL	STICKER: WAARSCHUW	
5		8603092		1	ADESIVO DE ADVERTÊNCIA, Ether			
					WARNING DECAL	RÓTULO DE ADVERTEN	DECALCOMANIA AVVER	A040
					AUTOCOLLANT AVERTIS AUFKLEBER WARNUNG	MÆRKAT, ADVARSEL	STICKER: WAARSCHUW	
6		84316983		1	ADESIVO, Warning, Radiator Cap			
					DECAL	CALCOMANÍA	DECALCOMANIA	012D
					AUTOCOLLANT AUFKLEBER	TRANSFER	STICKER	
7		84367572		1	ADESIVO DE PERIGO, Tip Hazard			
					DANGER DECAL	RÓTULO DE PELIGRO	DECALCOMANIA PERIC(	A038
					AUTOCOLLANT DANGEF AUFKLEBER GEFAHR	MÆRKAT, FARE	STICKER: GEVAAR	
8		84367561		1	ADESIVO DE ADVERTÊNCIA, Crush Hazard			
					WARNING DECAL	RÓTULO DE ADVERTEN	DECALCOMANIA AVVER	A040
					AUTOCOLLANT AVERTIS AUFKLEBER WARNUNG	MÆRKAT, ADVARSEL	STICKER: WAARSCHUW	
9		84394350		2	ADESIVO DE ADVERTÊNCIA, Pinch Point			
					WARNING DECAL	RÓTULO DE ADVERTEN	DECALCOMANIA AVVER	A040
					AUTOCOLLANT AVERTIS AUFKLEBER WARNUNG	MÆRKAT, ADVARSEL	STICKER: WAARSCHUW	
10		84374298		1	ADESIVO DE ADVERTÊNCIA, No Rider, Manlift			
					WARNING DECAL	RÓTULO DE ADVERTEN	DECALCOMANIA AVVER	A040
					AUTOCOLLANT AVERTIS AUFKLEBER WARNUNG	MÆRKAT, ADVARSEL	STICKER: WAARSCHUW	

DECALS (ALL CASE)
DECALS (ALL CASE)
DECALS (ALL CASE)
DECALS (ALL CASE)

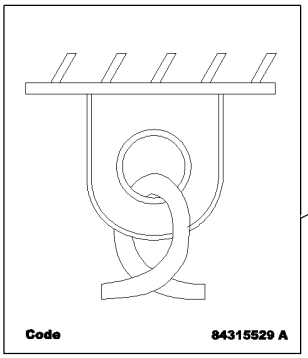

1

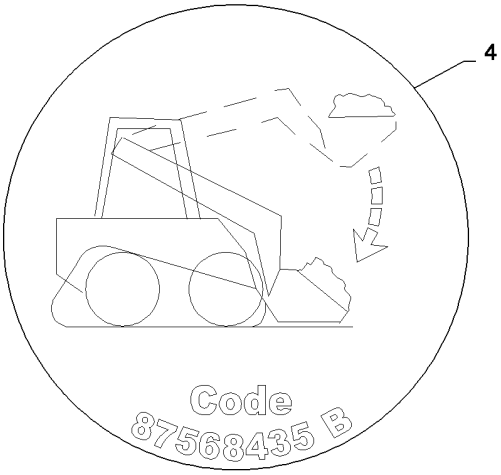

4

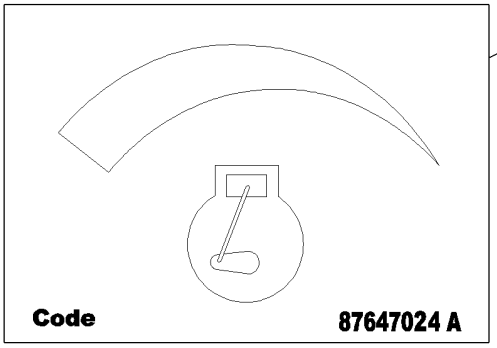

2

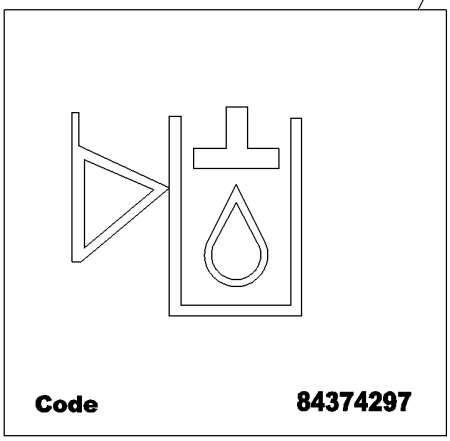

5

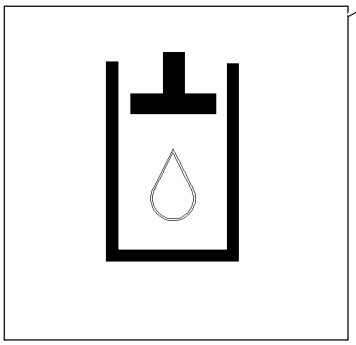

3

DECALS (ALL CASE)
DECALS (ALL CASE)
DECALS (ALL CASE)
DECALS (ALL CASE)

R	N	P.N.	MOD	Q	Denominação Description Bezeichnung	Description Bezeichnung	Denominacion Beskrivelse	Descrizione Beschrijving	L.C.
1		**84315529**		4	ADESIVO, Tie Down AUTOCOLLANT	DECAL AUFKLEBER	CALCOMANÍA TRANSFER	DECALCOMANIA STICKER	012D
2		**87647024**		1	ADESIVO, Throttle AUTOCOLLANT	DECAL AUFKLEBER	CALCOMANÍA TRANSFER	DECALCOMANIA STICKER	012D
3		**251753A1**		1	ADESIVO, Hydraulic Fluid AUTOCOLLANT	DECAL AUFKLEBER	CALCOMANÍA TRANSFER	DECALCOMANIA STICKER	012D
4		**87568435**		1	ADESIVO, Boom Override AUTOCOLLANT	DECAL AUFKLEBER	CALCOMANÍA TRANSFER	DECALCOMANIA STICKER	012D
5		**84374297**		1	ADESIVO, Hydraulic Oil Level AUTOCOLLANT	DECAL AUFKLEBER	CALCOMANÍA TRANSFER	DECALCOMANIA STICKER	012D
6		**84469201**		2	ADESIVO, Tie Down (Not Shown) AUTOCOLLANT	DECAL AUFKLEBER	CALCOMANÍA TRANSFER	DECALCOMANIA STICKER	012D

DECALS (SV185)
DECALS (SV185)
DECALS (SV185)
DECALS (SV185)

1

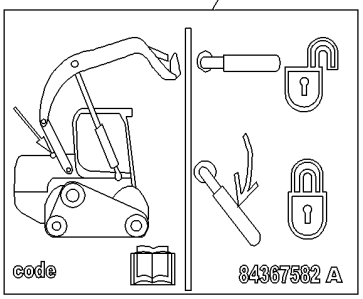

2

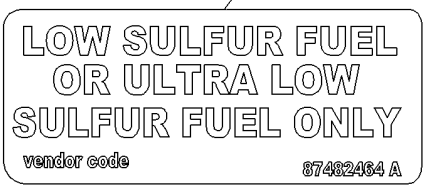

3



5

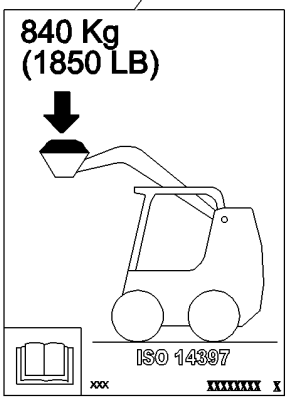

4

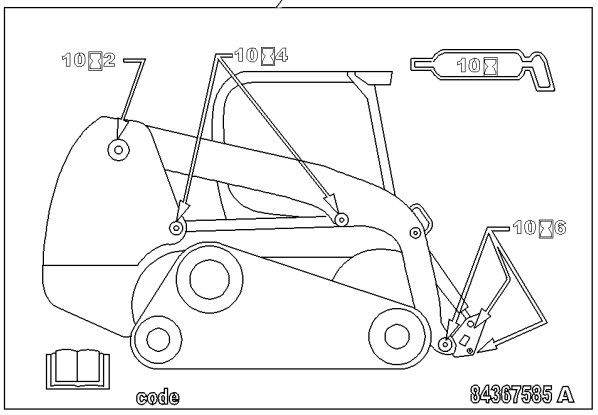

6

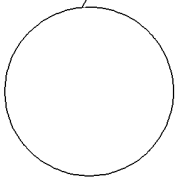

DECALS (SV185)
DECALS (SV185)
DECALS (SV185)
DECALS (SV185)

R	N	P.N.	MOD	Q	Denominação Description Bezeichnung	Description Bezeichnung	Denominacion Beskrivelse	Descrizione Beschrijving	L.C.
1		**84367582**		1	ADESIVO, Loader Latch	DECAL	CALCOMANÍA	DECALCOMANIA	012D
					AUTOCOLLANT	AUFKLEBER	TRANSFER	STICKER	
2		**87482464**		1	ADESIVO, Low Sulfur Fuel	DECAL	CALCOMANÍA	DECALCOMANIA	012D
					AUTOCOLLANT	AUFKLEBER	TRANSFER	STICKER	
3		**86521673**		2	ADESIVO DE ADVERTÊNCIA, Pinch Point				
						WARNING DECAL	RÓTULO DE ADVERTEN	DECALCOMANIA AVVER	A040
					AUTOCOLLANT AVERTIS	AUFKLEBER WARNUNG	MÆRKAT, ADVARSEL	STICKER: WAARSCHUW	
4		**84367583**		1	ADESIVO, Lubrication, Vertical				
						DECAL	CALCOMANÍA	DECALCOMANIA	012D
					AUTOCOLLANT	AUFKLEBER	TRANSFER	STICKER	
5		**84350657**		1	ADESIVO, Operating Capacity				
						DECAL	CALCOMANÍA	DECALCOMANIA	012D
					AUTOCOLLANT	AUFKLEBER	TRANSFER	STICKER	
6		**299274A2**		4	TAMPA, Lexan	COVER	TAPA	COPERCHIO	2250
					COUVERCLE	DECKEL	COVER	COVER	