RUTHZIL TRATOR COMERCIAL DE PEÇAS LTDA 11 97083-6812 ROLANDO CITRANGULO

零件图册 SY135C 812K

PARTS MANUAL

SY135C8I2K液压挖掘机

Hydraulic Excavator

设备编号 Equipment No.

11SY013228768

前 言

本图册适用于普通用户设备保养、配件查询与采购、维修工程师等工程技术人员参考。

本图册分图片页和明细页,严格按照上图下表格式排版.在多图多表的情况下,可能出现图表重复或者一个部件拆分为X张图(1/X,2/X,3/X)等情况，查阅时请注意。

本图册由三一重机自主设计与编排，因产品设计的不断改良和升级，造成本图册中某些信息可能与您的设备不同。如果您对设备或图册有疑问，请向购买设备的代理商或最近的三一重机授权代理商询问。

《零件图册》有关详细内容和下载方式可登录三一全球客户门户（Sany Global Customer Portal，简称GCP）网站查询：http://gcp.sany.com.cn

三一重机有限公司

导　读

请将本图册放在机器的驾驶室内，以便随时查阅。

本图册规定：工作装置侧为前，发动机侧为后，司机室侧为左侧，相对一侧为右侧。对于下车，行走马达侧为后。

一 如何查询设备及零部件

1. 登陆三一全球客户门户：http://gcp.sany.com.cn

注册/登录 ⇨ 功能选择 ⇨ 配件导航 ⇨ 配件查询/申购 ⇨ 申购订单查询 ⇨ 成功

除此之外SanyGCP还具备设备管理，了解设备历史轨迹及工况；保养查询、预警查询；

另外SanyGCP还提供了丰富的知识库功能，更多的理论知识指导您更好的使用和保养您的设备。

2.订购零部件时，请详细注明下列示例中的各项条款：

	示例	
(1)识别码	(2-7-7)	(查询本图册明细页识别码列)
(2)机型	(SY205C8)	(查询本图册封面或者驾驶室右下方回转平台的铭牌)
(3)出厂编号	(08SY02112602)	(查询本图册封面或者驾驶室右下方回转平台的铭牌)
(4)零件编码	(B230101000215)	(查询图册明细页零件编码列)
(5)名称	(O形圈)	(查询图册明细页名称列)
(6)数量	(5)	(查询图册明细页数量列或者订购者决定)

(7)订购者姓名、地址和联系方式

二 如何使用零件图册

图表	打开此零件图册后，在上侧的页面(偶数页)用图示表示产品安装的零件，在图示上标有各种零件的索引号码。在下侧的页面(奇数页)按照上侧图示上表示的零件索引号码以列表的形式表示识别码、零件编码、名称和数量及备注。
识别码(IC)	表示该零件的独立识别编码，由图册页码和序号组成，它必须与机器出厂编号同时使用。 例如：2-3-16,表示页码为2-3，序号为16的零件。
序号(INDEX)	与图的索引号码一致，按索引号码顺序编制为表格形式。
零件代码 (PART NUMBER)	此栏所示是图示零件的物料编码，它是在订货时需要标明的特定代号，是非常重要的。
名称 (PART NAME)	表示相当于代码的零件名称。
数量(QTY)	表示一台机器所用的零件数量，但对于装配(总成)部件则表示组成一个部件的零件数量。

Foreword

The manual is a guide for user to maintain equipment, query and purchase accessories. And it is a reference for the service engineer and other technicians.

The manual contains pictures and details, and all of pictures stay above the table.Attention shall be paid to repeated pictures or tables, or that a component is divided in to X drawings (1/X, 2/X, 3/X).

The manual is designed and printed by SANY.Due to continuing improvement and updating in product design, some information in the manual may be different from your equipment. If you have any question, contact your SANY dealer for further information.

You could go to SANY Global Customer Portal (GCP) to find details and download the Parts Manual.

Web site:**http://gcp.sany.com.cn**

SANY

Guidance

The Parts Manual should be placed in the driving cab all the time for reference at any time.

The references in the parts manual of “LEFT”,“RIGHT”,“FRONT” and “REAR” are identified as follows.The driver’s seat is positioned “LEFT” side,and the opposite is “RIGHT”.The front end attachments is at the “FRONT”.The counterweight is attached at the “REAR”.

Ⅰ How to query equipment or components.

1. Loging into SANY global customer portal: **http://gcp.sany.com.cn**

Register/Login ⇨ Option ⇨ Accessory navigation ⇨ Accessory query/subscription ⇨ Subscription order query ⇨ Succeed

Besides that, SanyGCP also could manage equipment; find out the development history and operating condition of the equipment, and query maintenance, and prealarms.

In addition, SanyGCP also provides rich information database.The theoretical information could help you to use and maintain your equipments effectively.

2. When order components, please specify the following items.

	Sample	
(1) IC	(2-7-7)	(Query the manual detail ID codes)
(2) Model NO.	(SY205C8)	(Query the manual cover or the nameplate of the lower right rotary table of the cab)
(3) Equipment NO.	(08SY02112602)	(Query the manual cover or the nameplate of the lower right rotary table of the cab)
(4) PART NUMBER	(B230101000215)	(Query code column of manual)
(5) PART NAME	(O-ring)	(Query code column of manual)

(6) QTY (5) (Query number of detail pages or decision of subscriber)

(7) The name,address,and contact information of subscriber.

Ⅱ How to use the parts manual

CHART	When you open this Parts Manual you will find an illustration on the left page (even-numbered page) for the parts used for assembly. Each individual part in the page is given an index number.On the right page(even-numbered page), the component parts are listed in the order of the index numbers The IC,INDEX,PART NUMBER, PART NAME and QTY are given for each part.
IC	Means the identification code, includes the page number and index number, and it should be used with equipment factory number.For example: 2-3-16, means the part can be found on page 2-3, with serial number 16.
INDEX	This is identical to the index number in the illustration. The Parts are listed in order of the index number.
PART NUMBER	The number given in the PART No. column is the part number for the part shown. This code number is very important as it should bew clearly identified when ordering a part.
PART NAME	Indicates the name of part corresponding to a code.
QTY	This specifies the number of pieces used for one machine. However,for an assembly and / or component,its quantity indicates the number of parts included in such assembly and / or component.

目录 INDEX

第1章 SY135C8液压挖掘机(Hydraulic Excavator) ····· 1–1
10173505 SY135C8液压挖掘机(Hydraulic Excavator) ····· 1–2

第2章 回转装置(Swing Unit) ····· 2–1
10180252 回转装置(Swing Unit) ····· 2–2
10169508 液压主管路(Lines – Main (Hyd.)) ····· 2–4
B220301000534 柱塞泵(Pump – Gear) ····· 2–14
B220401000740 多路阀(Valve – Main Control) ····· 2–28
B229900002718 减速机总成(Reducer As – Swing) ····· 2–42
A810201010298 液压油箱总成(Fuel Tank As – Hyd.) ····· 2–50
A810101040152 动力系统(Power Train) ····· 2–52
A810102040030 减震与传动系统(Damper & Drive System) ····· 2–54
A810102010099 油门控制系统(Control System – Throttle) ····· 2–56
A810102090161 冷却系统(Cooling System) ····· 2–58
A810102071275 进气系统(Air Inlet System) ····· 2–62
A810102020218 燃油及润滑系统(Fuel & Lubrication System) ····· 2–66
A810102021125 燃油箱总成(Fuel Tank As) ····· 2–70
A810102071276 排气系统(Exhaust System) ····· 2–72
B220200000095 发动机(Engine) ····· 2–74
10173301 先导管路(Lines – Pilot) ····· 2–76
10165921 PPC管路(Ppc Lines) ····· 2–78
60004101 脚踏阀(Valve – Foot) ····· 2–84

B220401001301 手动先导阀(Valve, pilot, manual) …… 2–90
10585259 左手柄总装(Joystick As – Lh) …… 2–94
10585261 右手柄总装(Joystick As – Rh) …… 2–96
10165924 主阀管路(Lines – Control Valve (Main)) …… 2–98
10165926 电磁阀管路(Lines – Valve (Solenoid)) …… 2–100
10165928 主泵管路(Lines – Main Pump) …… 2–104
10165922 梭阀组管路(Lines – Valve (Shuttle)) …… 2–106
11342997 驾驶室(cab) …… 2–108
10458174 座椅及操纵箱(Seat & Console) …… 2–112
10437915 底板架(Frame) …… 2–116
A810201073014 行走操纵机构(Travel Control Mechanism) …… 2–120
10206667 覆盖件总装(Cover As) …… 2–122
10683865 左门总成(Door As – Lh) …… 2–130
A810502017041 电瓶箱总成(Battery As) …… 2–132
A810502010559 右门总成(Door As – Rh) …… 2–134
A810502029015 紧锁装置(Lock Unit) …… 2–136
10179470 空调系统(Air Conditioner System) …… 2–138
10473304 空调电气系统(Electrical System – Air Conditioner) …… 2–144
10706010 配重总成(Counterweight As) …… 2–146

第3章 行走装置(Travel Unit) …… 3–1
10187380 行走装置(Travel Unit) …… 3–2
B229900002849 减速机总成(Reducer As) …… 3–12
A810401990268 回转支承总成(Bearing AS – Swing) …… 3–22
A229900004512 回转接头(Swivel Joint) …… 3–24

第4章 工作装置总成(Work Equipment) …… 4–1

A810312010052 工作装置总成(Work Equipment) ····· 4–2
A810312000362 工作装置管路(Lines – Work Equipment) ····· 4–10
A810201030039 润滑油管路(Lines – Lubrication) ····· 4–14
11041064 铲斗(Bucket) ····· 4–16
10143975 齿销(Pin – Tip) ····· 4–18

第5章 电气系统(Electrical System) ····· 5–1
10465745 电气系统(Electrical System) ····· 5–2

第6章 涂装(Painting) ····· 6–1
10233895 涂装(Painting) ····· 6–2

第7章 随机附件(Attached Tools & Fittings) ····· 7–1
A810504000829 随机附件(Attached Tools & Fittings) ····· 7–2
10456280 随机工具(Attached Tools) ····· 7–4

第8章 其他配置(Other Fittings) ····· 8–1

第1章
SY135C8液压挖掘机
(Hydraulic Excavator)

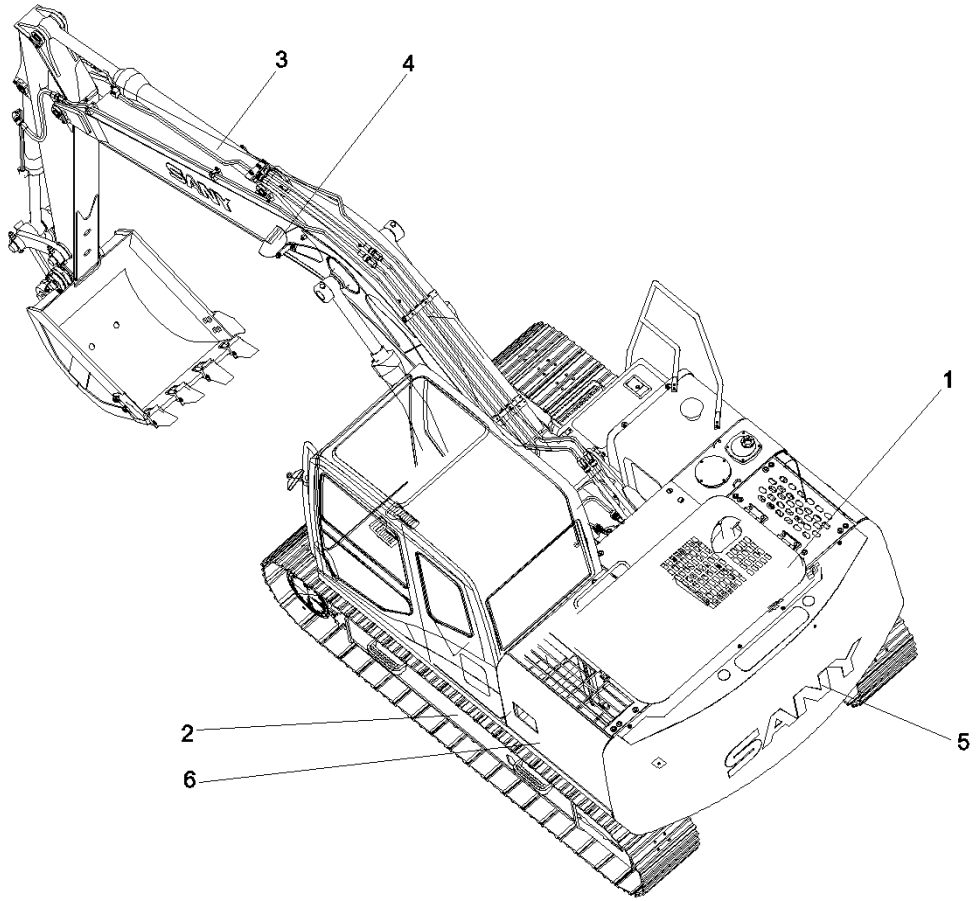
3
4
1
2
6
5

识别码 IC	序号 INDEX	零件代码 PART NUMBER	数量 QTY	名称 PART NAME	
1–3–1	1	10180252	1	回转装置	Swing Unit
1–3–2	2	10187380	1	行走装置	Travel Unit
1–3–3	3	A810312010052	1	工作装置总成	Work Equipment
1–3–4	4	10465745	1	电气系统	Electrical System
1–3–5	5	10233895	1	涂装	Painting
1–3–6	6	A810504000829	1	随机附件	Attached Tools & Fittings

第2章
回转装置
(Swing Unit)

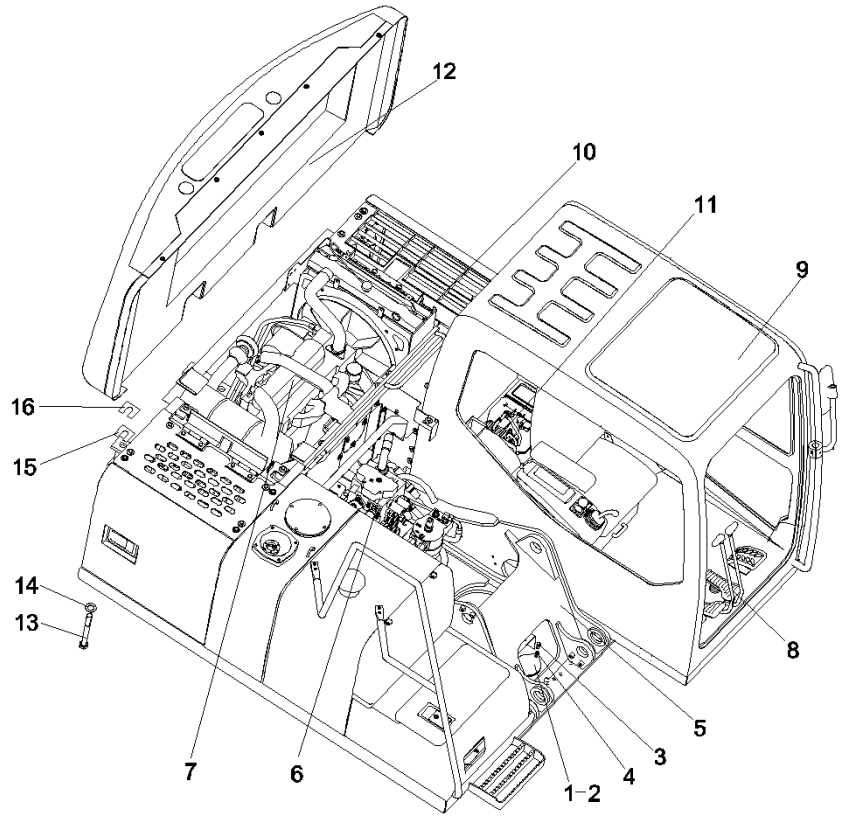
12
10
11
9
16
15
14
13
8
5
3
4
1-2
6
7

识别码 IC	序号 INDEX	零件代码 PART NUMBER	数量 QTY	名称 PART NAME	
2–3–1	1	A820606030364	1	密封垫	Seal
2–3–2	2	A820101117871	1	盖	Cover
2–3–3	3	A210111000202	2	螺栓	Bolt
2–3–4	4	A210405000001	2	垫圈	Washer
2–3–5	5	A810302050305	1	回转平台	Platform – Swing
2–3–6	6	10169508	1	液压主管路	Lines – Main (Hyd.)
2–3–7	7	A810101040152	1	动力系统	Power Train
2–3–8	8	10173301	1	先导管路	Lines – Pilot
2–3–9	9	11342997	1	驾驶室	cab
2–3–10	10	10206667	1	覆盖件总装	Cover As
2–3–11	11	10179470	1	空调系统	Air Conditioner System
2–3–12	12	10706010	1	配重总成	Counterweight As
2–3–13	13	A210110000448	4	螺栓	Bolt
2–3–14	14	A210444000004	4	垫圈	Washer
2–3–15	15	A820101327187	2	垫片	Gasket
2–3–16	16	A820101327188	2	配重调整垫片	Shim – Counterweight

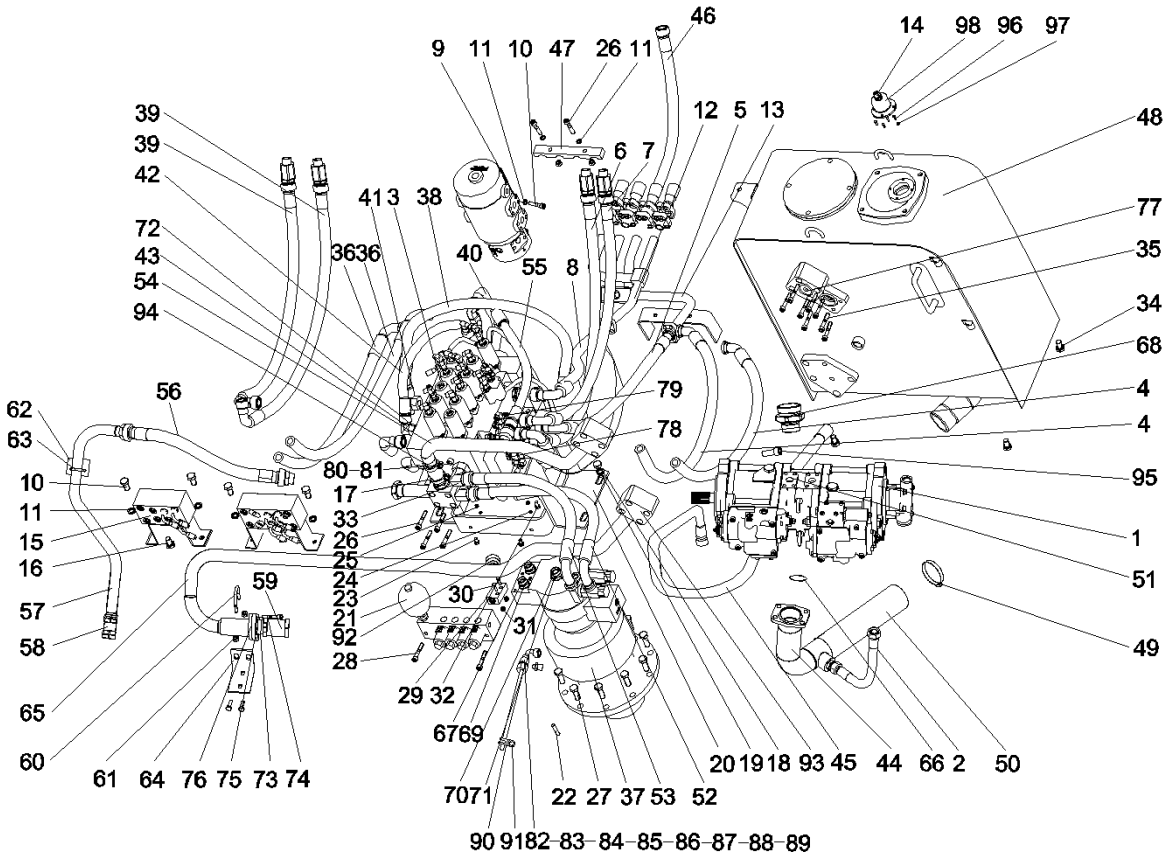

10169508 液压主管路 (Lines - Main (Hyd.)) (1/5)

识别码 IC	序号 INDEX	零件代码 PART NUMBER	数量 QTY	名称 PART NAME	
2–5–1	1	B220301000534	1	柱塞泵	Pump – Gear
2–5–2	2	B230103002177	1	胶管	Hose
2–5–3	3	B220401000740	1	多路阀	Valve – Main Control
2–5–4	4	B230103006438	2	胶管	Hose
2–5–5	5	B230103006439	1	胶管	Hose, rubber
2–5–6	6	B230103006441	1	胶管	Hose
2–5–7	7	B230103001830	1	胶管	Hose, rubber
2–5–8	8	B230103007774	1	胶管	Hose
2–5–9	9	B210780000696	20	对开法兰	Flange
2–5–10	10	A210204000354	56	螺钉	Screw
2–5–11	11	A210401000001	78	垫圈	Washer
2–5–12	12	10165805	1	动臂大腔管	Tube – Boom
2–5–13	13	10165806	1	动臂小腔钢管	Tube – Boom
2–5–14	14	变更或见其他配置	1	橡胶垫	Gasket – Rubber
2–5–15	15	B220401000739	2	梭阀阀块	Valve – Shuttle
2–5–16	16	A210111000012	6	螺栓	Bolt
2–5–17	17	10226395	1	回油钢管	Tube – Oil Return
2–5–18	18	A210204000198	4	螺钉	Screw
2–5–19	19	A210401000004	18	垫圈	Washer
2–5–20	20	10165814	1	主阀架	Frame – Control Valve (Main)

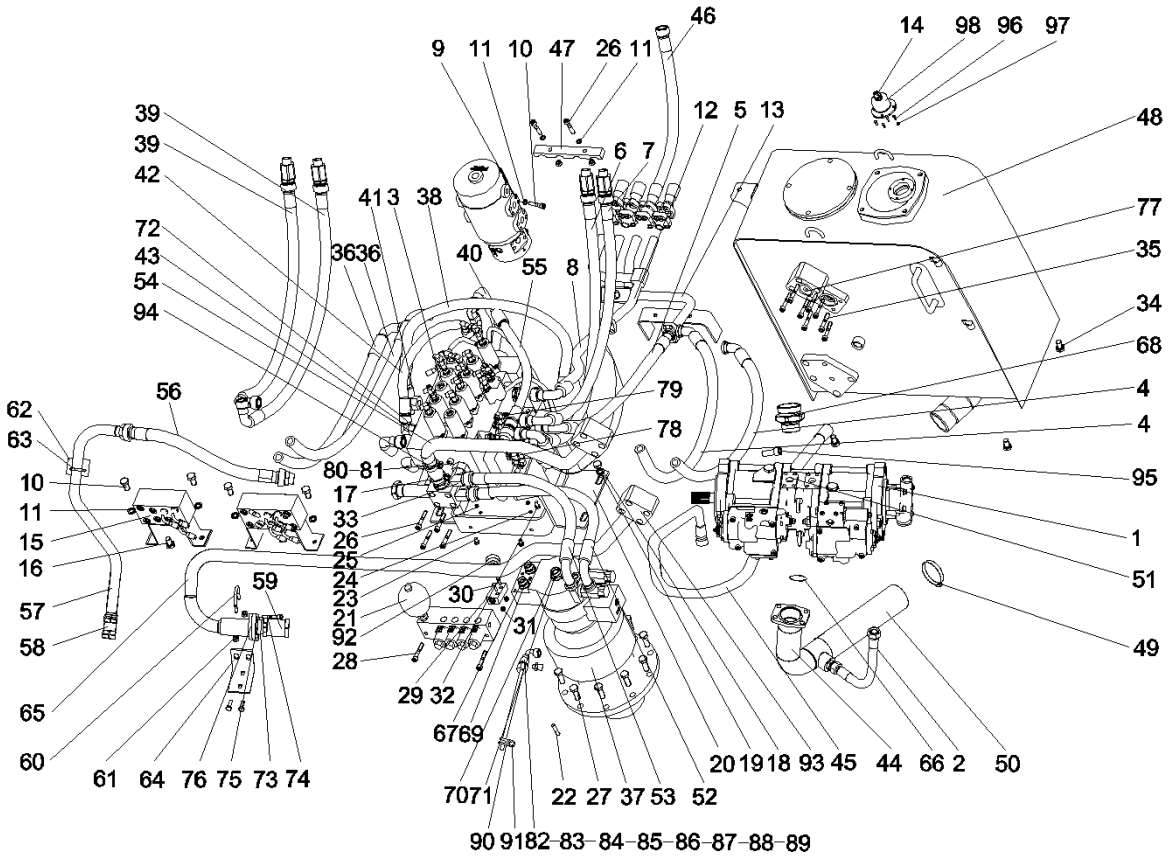

10169508 液压主管路 (Lines - Main (Hyd.)) (2/5)

识别码 IC	序号 INDEX	零件代码 PART NUMBER	数量 QTY	名称 PART NAME	
2–7–21	21	A220401000835	1	阀块	Block – Valve
2–7–22	22	10570332	1	回转机构定位销	Dowel – Swing Mechanism
2–7–23	23	21027533	3	螺钉	Screw
2–7–24	24	A210401000002	13	螺栓	Washer
2–7–25	25	A210307000001	3	螺母	Nut
2–7–26	26	A210204000345	6	螺钉	Screw
2–7–27	27	A210204000312	9	螺钉	Screw
2–7–28	28	A210111000295	2	螺栓	Bolt
2–7–29	29	A820199000360	1	PT块	PT – Block
2–7–30	30	A210204000355	2	螺钉	Screw
2–7–31	31	A210307000017	2	螺母	Nut
2–7–32	32	A210204000337	5	螺钉	Screw
2–7–33	33	B210780000029	3	管接头	Connector, pipe
2–7–34	34	A313041602516	5	螺钉	Screw
2–7–35	35	A210204000336	8	螺钉	Screw
2–7–36	36	B230103007775	2	胶管	Hose
2–7–37	37	B229900002718	1	减速机总成	Reducer As – Swing
2–7–38	38	B230103006437	1	胶管	Hose
2–7–39	39	B230103003627	2	胶管	Hose
2–7–40	40	B230103006436	1	胶管	Hose, rubber

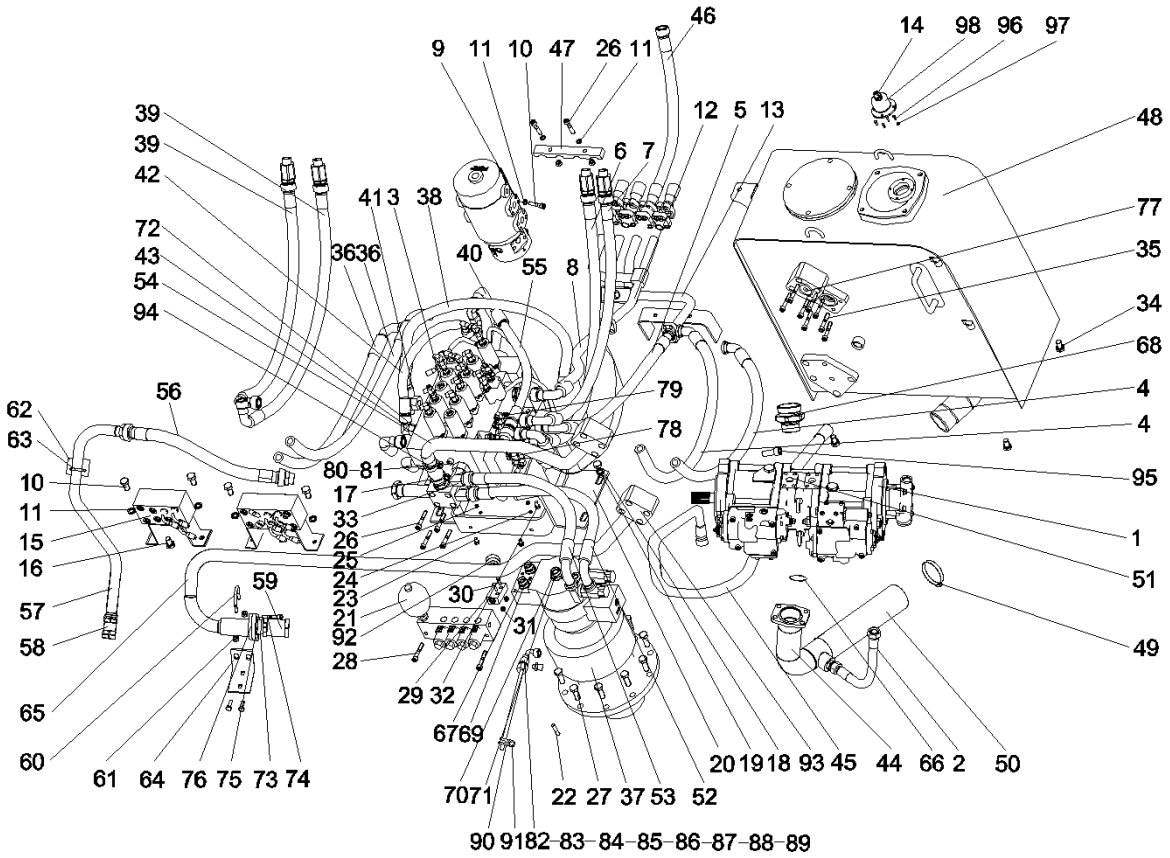

10169508 液压主管路 (Lines - Main (Hyd.)) (3/5)

识别码 IC	序号 INDEX	零件代码 PART NUMBER	数量 QTY	名称 PART NAME	
2–9–41	41	B210780000021	1	管接头	Union
2–9–42	42	B230103006435	1	胶管	Hose
2–9–43	43	B210780001310	3	管接头	Connector
2–9–44	44	A810201012043	1	吸油钢管	Tube – Oil Suction
2–9–45	45	B230103002446	1	胶管	Hose
2–9–46	46	B230103005717	4	胶管	Hose
2–9–47	47	A820101344841	2	管夹	Clamp
2–9–48	48	A810201010298	1	液压油箱总成	Fuel Tank As – Hyd.
2–9–49	49	A210855000052	4	T型抱箍	Anchor ear, T–type
2–9–50	50	A820606020546	1	吸油胶管	Hose – Oil Suction
2–9–51	51	B210780000007	4	对开法兰	Flange, split
2–9–52	52	B230103001232	1	胶管	Hose
2–9–53	53	B230103004360	1	胶管	Hose
2–9–54	54	B230103008550	1	胶管	Hose
2–9–55	55	B230103001239	1	胶管	Hose
2–9–56	56	B230103004054	1	胶管	Hose
2–9–57	57	10165810	1	回油钢管	Tube – Oil Return
2–9–58	58	B229900002750	1	软性连接头	Connector
2–9–59	59	A229900004566	1	管夹	Clamp
2–9–60	60	A820301017374	1	U形螺栓	U–Bolt

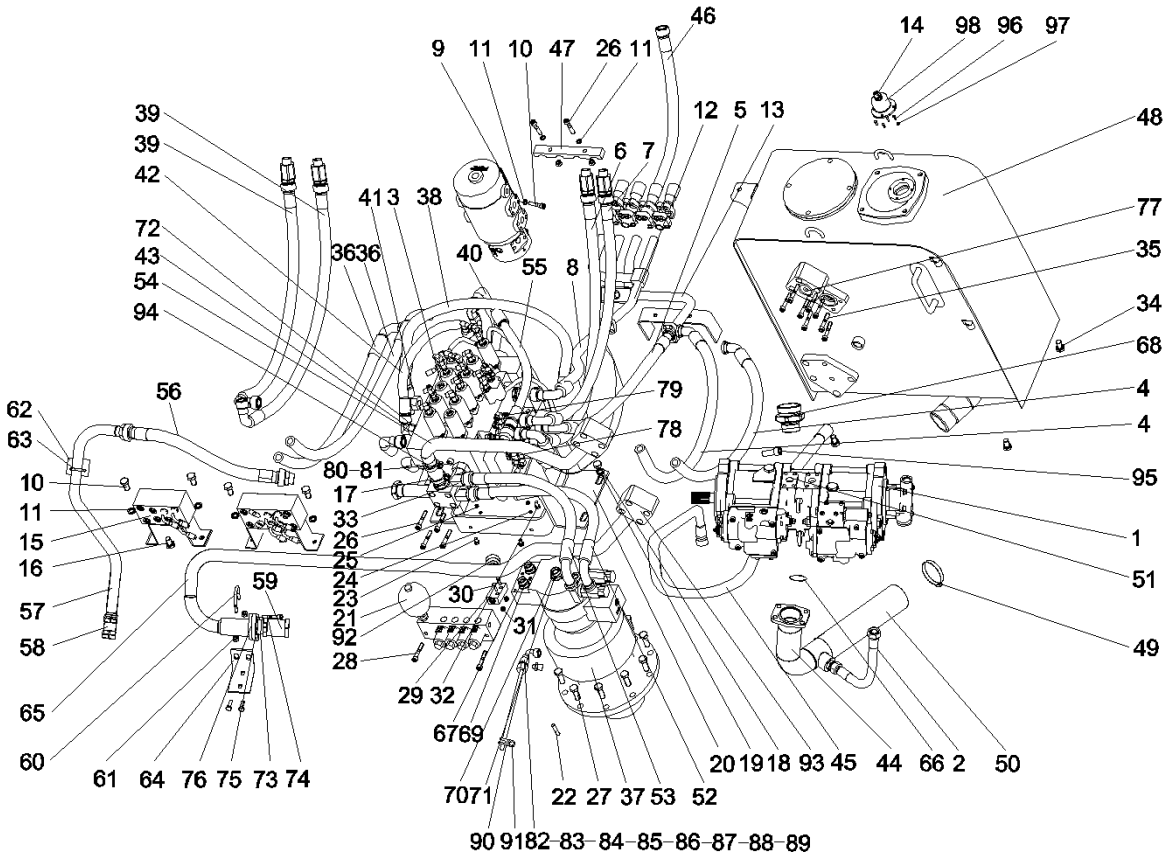
46
9 11 10 47 26 11
14 98 96 97
12 5 13
48
39
39
42
6 7
41 3 38
77
72
43
54
94
36 36
40
55 8
35
34
68
56
79
4
62
63
78
4
80 81
95
10
17
11
33
1
15
26
16
25
51
24
59
23
30
57
21
31
92
49
58
28
29 32
65
67 69
60
20 19 18 93 45 44 66 2 50
61 64 76 75 73 74
70 71
22 27 37 53 52
90 91 82 83 84 85 86 87 88 89

识别码 IC	序号 INDEX	零件代码 PART NUMBER	数量 QTY	名称 PART NAME	
2–11–61	61	A210307000012	8	螺母	Nut
2–11–62	62	A820101345202	1	支板	Plate – Support
2–11–63	63	A820301017131	1	U型螺栓	U – Bolt
2–11–64	64	10141478	1	管夹安装板	Clamp
2–11–65	65	10266663	1	回油钢管	Tube – Oil Return
2–11–66	66	B230101000038	1	O形圈	O–ring
2–11–67	67	B230101000090	3	O形圈	Seal – O – Ring
2–11–68	68	A820205002280	1	接头	Connector
2–11–69	69	A820205000962	2	接头	Connector
2–11–70	70	A820205000942	4	接头	Connector
2–11–71	71	B230101000356	19	O形圈	Seal – O – Ring
2–11–72	72	10165802	2	接头	Connector
2–11–73	73	B220401000589	1	单向阀	Valve – Check
2–11–74	74	A210204000364	2	螺钉	Screw
2–11–75	75	B230101000366	3	O形圈	O–ring
2–11–76	76	A810201024215	1	法兰	Flange
2–11–77	77	B220401000590	1	单向阀	Valve – Check
2–11–78	78	A820205002473	7	接头	Connector
2–11–79	79	A820205002474	6	接头	Connector
2–11–80	80	10227607	1	接头	Connector

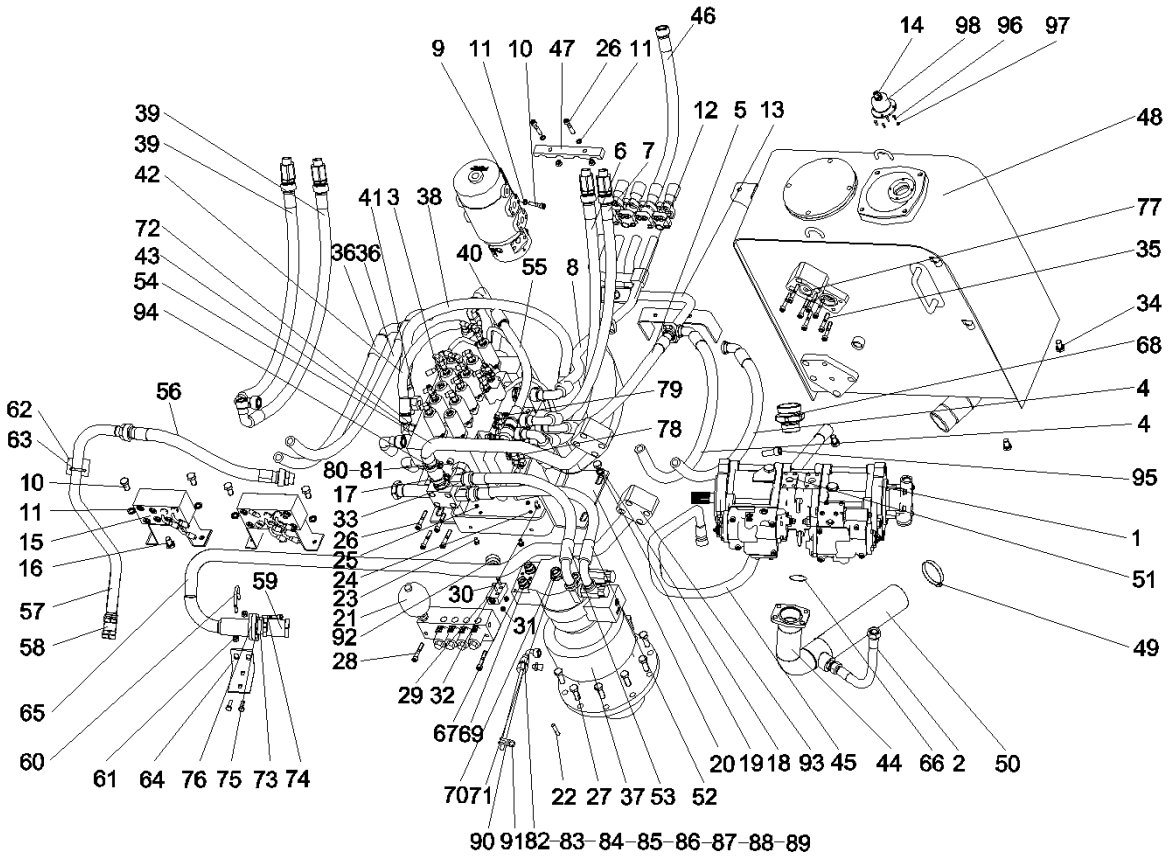
46
9 11 10 47 26 11
14 98 96 97
39
39
42
72
43
54
94
41 3 38
12 5 13
6 7
48
77
35
34
68
4
4
95
1
51
49
3636
40
55 8
56
62
63
10
11
15
16
57
58
65
60
61 64 76 75 73 74
59
80-81
17
33
26
25
24
23
21
92
28
30
31
29 32
6769
7071
22 27 37 53 52
20 19 18 93 45 44 66 2 50
79
78
90 9182-83-84-85-86-87-88-89

识别码 IC	序号 INDEX	零件代码 PART NUMBER	数量 QTY	名称 PART NAME	
2–13–81	81	B230101000050	1	O形圈	O–ring
2–13–82	82	A820205002283	1	接头	Connector
2–13–83	83	B210780000024	1	管接头	Connector
2–13–84	84	B210780001426	1	管接头	Fitting – Pipe
2–13–85	85	10137010	1	接头	Connector
2–13–86	86	60006360	1	铜垫圈	Washer – Copper
2–13–87	87	B220401000916	1	放油阀 三菱	Valve – Oil Outlet
2–13–88	88	A229900001345	1	软管环箍	Hoop – Hose
2–13–89	89	10192981	1	放油软管	Hose – Oil Outlet
2–13–90	90	A230200000167	1	线夹	Clip
2–13–91	91	A210111000195	1	螺栓	Bolt
2–13–92	92	A820205002351	1	堵头	Plug
2–13–93	93	10225831	1	回油钢管	Tube – Oil Return
2–13–94	94	B210780000838	1	管接头	Connector, pipe
2–13–95	95	A210204000232	4	螺钉	Screw
2–13–96	96	A210204000130	4	螺钉	Screw
2–13–97	97	A210405000006	4	垫圈	Washer
2–13–98	98	变更或见其他配置	1	呼吸阀	Valve, breather

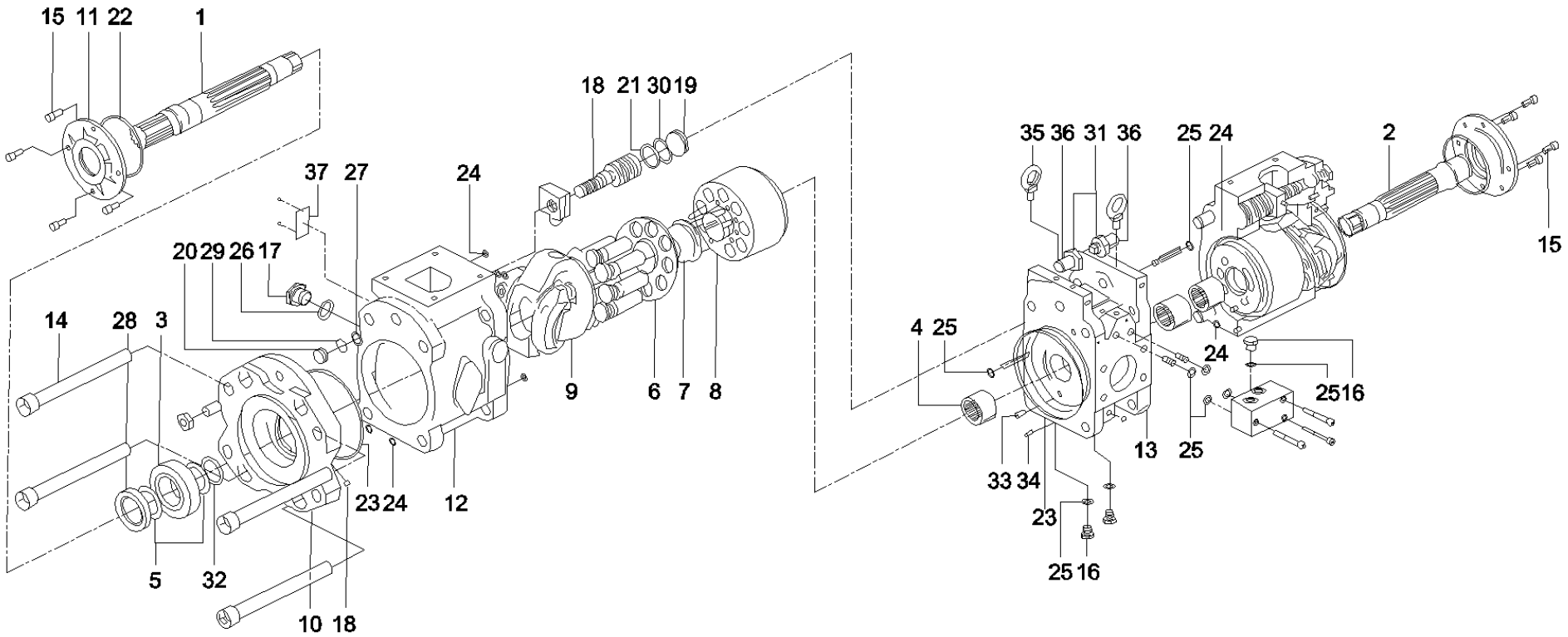
15 11 22 1
18 21 30 19
37 27 24
20 29 26 17
14 28 3
9 6 7 8
23 24 12
5 32
10 18
35 36 31 36
25 24
2
15
4 25
24
25 16
13 25
33 34
23
25 16

识别码 IC	序号 INDEX	零件代码 PART NUMBER	数量 QTY	名称 PART NAME	
2–15–1	1	60038589	1	驱动轴	Shaft – Drive
2–15–2	2	60038590	1	驱动轴	Shaft – Drive
2–15–3	3	60038136	2	圆柱滚珠轴承	Bearing – Roller
2–15–4	4	60038124	2	滚针轴承	Bearing – Needle
2–15–5	5	60038677	4	轴承垫圈	Washer – Bearing
2–15–6	6	60038630	2	压板	Plate – Pressure
2–15–7	7	60038585	2	球面衬套	Sleeve
2–15–8	8	60038383	18	回程弹簧	Spring
2–15–9	9	60038379	2	滑靴盘	Plate – Slipper
2–15–10	10	60038623	2	斜盘支承台	Support – Swash Plate
2–15–11	11	60038868	1	油封盖	Cover – Seal (Oil)
2–15–12	12	60038053	2	泵体	Body – Pump
2–15–13	13	60038577	1	配油壳体	Housing – Oil Distribution
2–15–14	14	60038567	8	内六角螺栓	Bolt – Socket Head
2–15–15	15	60038565	4	内六角螺栓	Bolt – Socket Head
2–15–16	16	60038654	2	油塞	Plug – Oil
2–15–17	17	60038653	4	油塞	Plug
2–15–18	18	60038595	2	伺服柱塞	Plunger – Servo
2–15–19	19	60037947	2	挡柱	Post – Bumping
2–15–20	20	60037948	2	挡柱	Post – Bumping

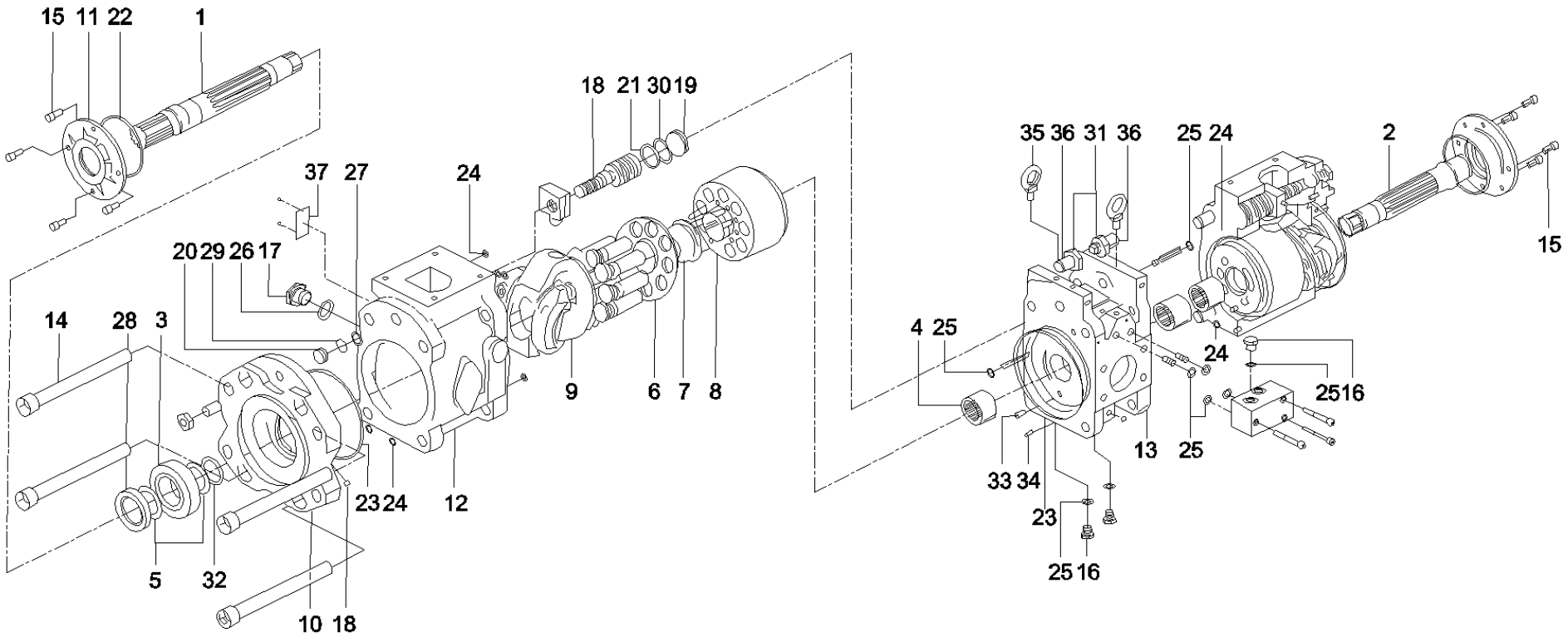
15 11 22 1
18 21 30 19
37 27 24
20 29 26 17
14 28 3
9 6 7 8
23 24 12
5 32
10 18
35 36 31 36
25 24
2
15
4 25
24
25 16
13 25
33 34
23
25 16

识别码 IC	序号 INDEX	零件代码 PART NUMBER	数量 QTY	名称 PART NAME	
2–17–21	21	60038708	2	O形圈	O–ring
2–17–22	22	60038710	1	O形圈	Seal – O – Ring
2–17–23	23	60038707	2	O形圈	O–ring
2–17–24	24	60038716	18	O形圈	O–ring
2–17–25	25	60038712	2	O形圈	O–ring
2–17–26	26	60038714	4	O形圈	O–ring
2–17–27	27	60038713	2	O形圈	O–ring
2–17–28	28	60038865	1	油封	Seal – Oil
2–17–29	29	60038280	2	挡圈	Ring – Retaining
2–17–30	30	60038279	2	挡圈	Ring – Retaining
2–17–31	31	60038452	4	六角螺母	Nut – Hex
2–17–32	32	60037945	2	弹性挡环	Ring – Retaining
2–17–33	33	60038579	2	配油盘销	Pin – Tray (Oil Distribution)
2–17–34	34	60038260	4	弹簧销	Pin – Spring
2–17–35	35	60038330	2	吊环螺栓	Eyebolt
2–17–36	36	60038337	2	定位螺钉	Setscrew
2–17–37	37	60038547	1	铭牌	Nameplate

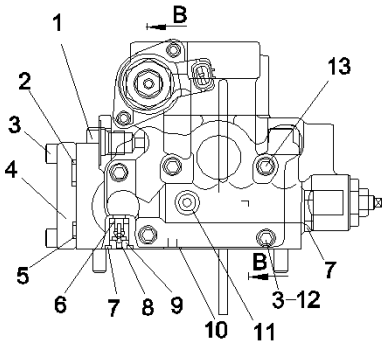

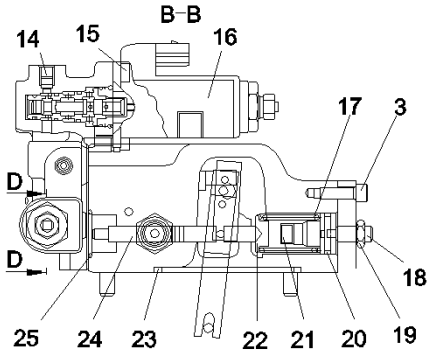

液压回路图
HYDRAULIC LOOP

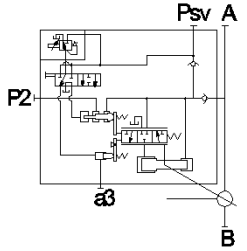

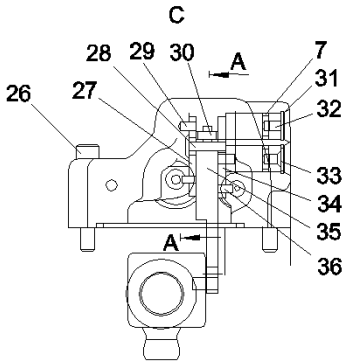

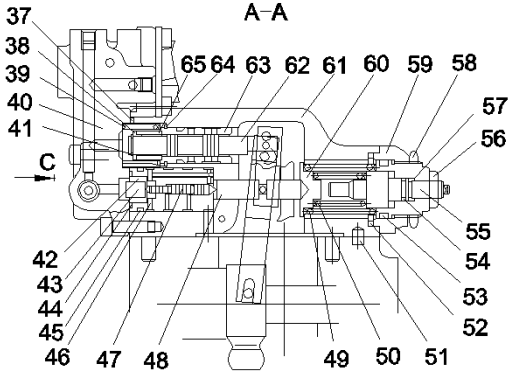

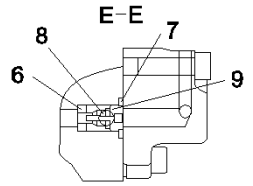

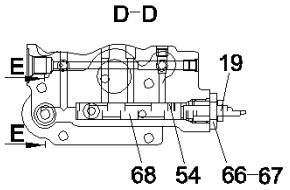

识别码 IC	序号 INDEX	零件代码 PART NUMBER	数量 QTY	名称 PART NAME	
2–19–1	1	60038555	2	内六角螺钉	Screw – Socket Head
2–19–2	2	60038758	1	O形圈	Seal – O–Ring
2–19–3	3	60038556	10	内六角螺钉	Screw – Socket Head
2–19–4	4	60038011	1	盲板	Blind
2–19–5	5	60038763	3	O形圈	Seal – O–Ring
2–19–6	6	60037946	2	挡块	Stop
2–19–7	7	60038767	5	O形圈	Seal – O–Ring
2–19–8	8	60038045	2	钢球	Ball
2–19–9	9	60038701	2	座	Seat
2–19–10	10	60038768	8	O形圈	Seal – O–Ring
2–19–11	11	60038769	1	O形圈	Seal – O–Ring
2–19–12	12	60038340	1	堵头	Plug
2–19–13	13	60038557	3	内六角螺钉	Screw – Socket Head
2–19–14	14	60038341	15	堵头	Plug
2–19–15	15	60038558	2	内六角螺钉	Screw – Socket Head
2–19–16	16	60038874	1	调节器	Regulator
2–19–17	17	60038307	1	导向弹簧	Spring – Guide
2–19–18	18	60038552	1	内六角定位螺钉	Setscrew – Socket Head
2–19–19	19	60038453	2	六角螺母	Nut – Hex
2–19–20	20	60038772	1	O形圈	Seal – O–Ring

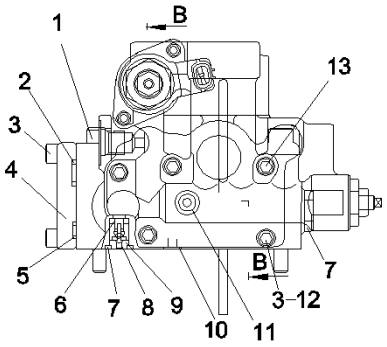
B
1
2
3
4
5
6
7
8
9
10
11
13
B
3-12
7

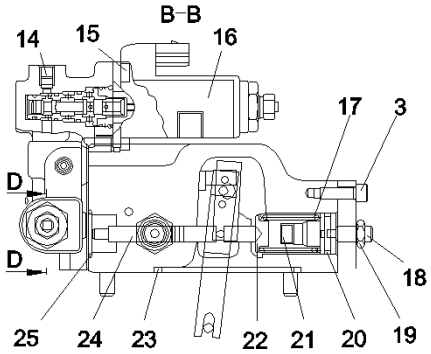
B-B
14
15
16
17
3
D
D
18
25
24
23
22
21
20
19

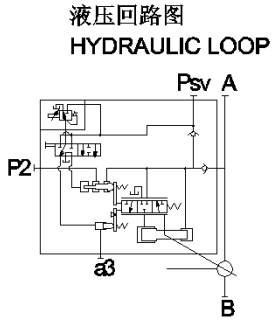
液压回路图
HYDRAULIC LOOP
Psv
A
P2
a3
B

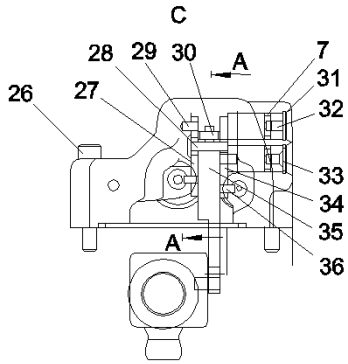
C
28
29
30
A
7
31
32
26
27
33
34
35
36
A

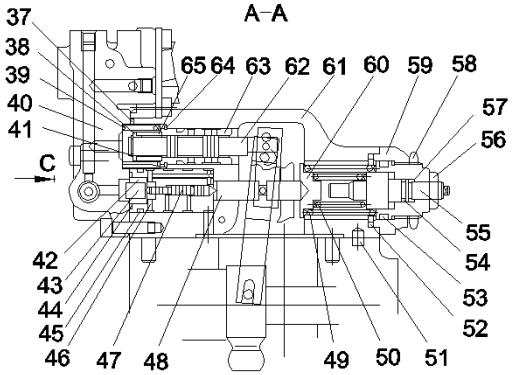
A-A
37
38
39
40
41
65
64
63
62
61
60
59
58
57
56
C
55
54
53
52
42
43
44
45
46
47
48
49
50
51

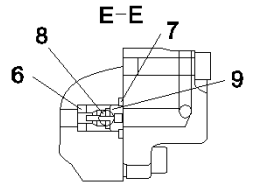
E-E
8
7
6
9

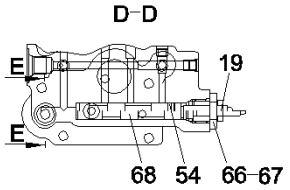
D-D
E
19
E
68
54
66-67

识别码 IC	序号 INDEX	零件代码 PART NUMBER	数量 QTY	名称 PART NAME	
2–21–21	21	60038334	1	调整环	Ring – Adjusting
2–21–22	22	60038264	1	弹簧座	Seat – Spring
2–21–23	23	60038774	1	O形圈	Seal – O–Ring
2–21–24	24	60038309	1	导向活塞	Piston – Guide
2–21–25	25	60038775	1	O形圈	Seal – O–Ring
2–21–26	26	60038559	2	内六角螺钉	Screw – Socket Head
2–21–27	27	60038879	1	杠杆	Lever
2–21–28	28	60038610	1	销	Pin
2–21–29	29	60038611	2	销	Pin
2–21–30	30	60038612	1	销	Pin
2–21–31	31	60038157	2	锁紧圈	Ring – Clamp
2–21–32	32	60038176	1	补偿活塞	Piston – Compensation
2–21–33	33	60038663	1	支点销	Pin – Pivot
2–21–34	34	60038880	1	杠杆	Lever
2–21–35	35	60038351	1	反馈杆块	Block – Feedback Rod
2–21–36	36	60038613	2	销	Pin
2–21–37	37	60038776	1	O形圈	Seal – O–Ring
2–21–38	38	60038271	1	弹簧座	Seat – Spring
2–21–39	39	60038237	1	弹簧	Spring
2–21–40	40	60038308	1	导向盖	Cover – Guide

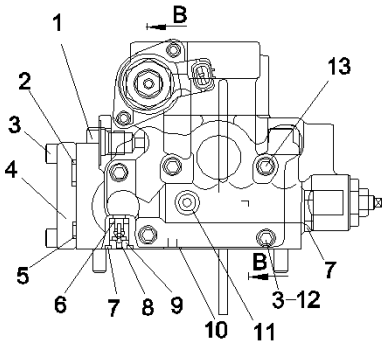

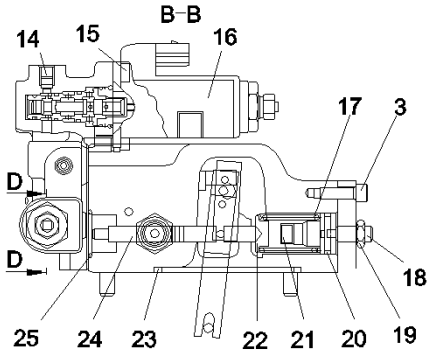

液压回路图
HYDRAULIC LOOP

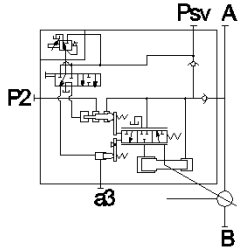

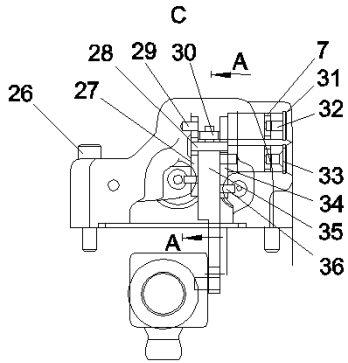

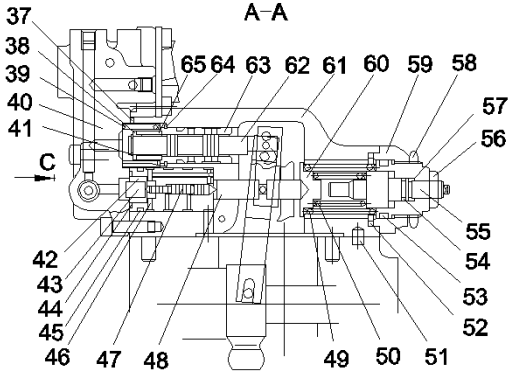

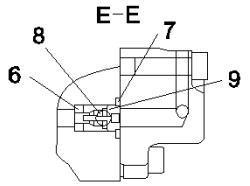

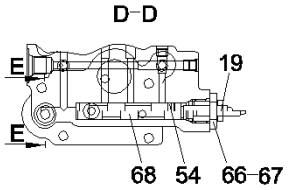

识别码 IC	序号 INDEX	零件代码 PART NUMBER	数量 QTY	名称 PART NAME	
2–23–41	41	60038281	1	挡圈	Ring – Retaining
2–23–42	42	60038377	1	滑块	Block – Slide
2–23–43	43	60038614	1	销	Pin
2–23–44	44	60038730	2	O形圈	Seal – O–Ring
2–23–45	45	60038732	1	O形圈	Seal – O–Ring
2–23–46	46	60038412	1	活塞壳	Housing – Piston
2–23–47	47	60038019	1	腔内活栓	Stopcock – Intracavity
2–23–48	48	60037940	1	补偿件	Compensation Piece
2–23–49	49	60038604	1	外弹簧	Spring – Outer
2–23–50	50	60038551	1	内弹簧	Spring – Inner
2–23–51	51	60038616	1	销	Pin
2–23–52	52	60038734	1	O形圈	Seal – O–Ring
2–23–53	53	60038735	1	O形圈	Seal – O–Ring
2–23–54	54	60038737	2	O形圈	Seal – O–Ring
2–23–55	55	60038333	1	调整环	Ring – Adjusting
2–23–56	56	60038454	1	六角螺母	Nut – Hex
2–23–57	57	60038335	1	调整螺栓	Bolt – Adjusting
2–23–58	58	60038597	1	锁紧螺母	Nut – Lock
2–23–59	59	60037964	1	盖子	Cover
2–23–60	60	60038263	1	弹簧座	Seat – Spring

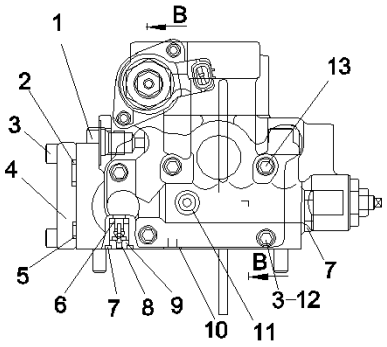

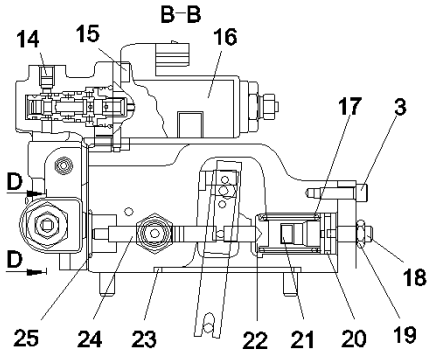

液压回路图
HYDRAULIC LOOP

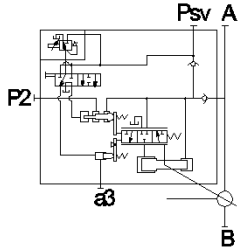

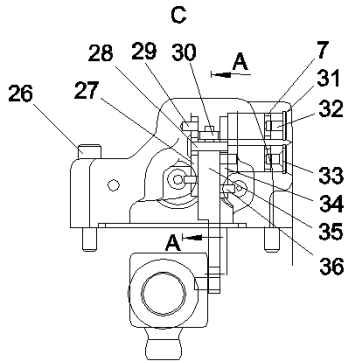

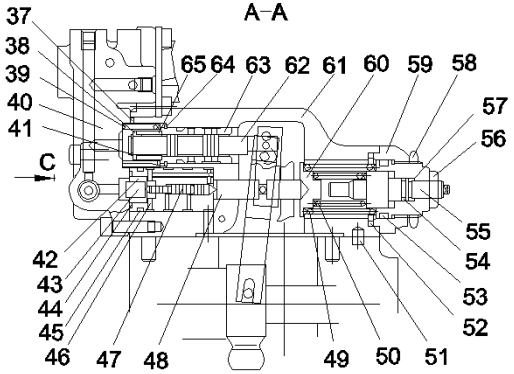

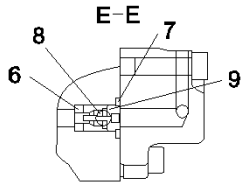

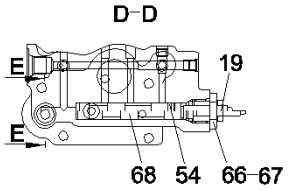

识别码 IC	序号 INDEX	零件代码 PART NUMBER	数量 QTY	名称 PART NAME	
2–25–61	61	60038445	1	壳体	Housing
2–25–62	62	60038194	1	衬套	Sleeve
2–25–63	63	60038378	1	滑块	Block – Slide
2–25–64	64	60038283	1	挡圈	Ring – Retaining
2–25–65	65	60038385	1	回程弹簧	Spring
2–25–66	66	60038739	1	O形圈	Seal – O–Ring
2–25–67	67	60038342	1	堵头	Plug
2–25–68	68	60037966	1	杆	Bar

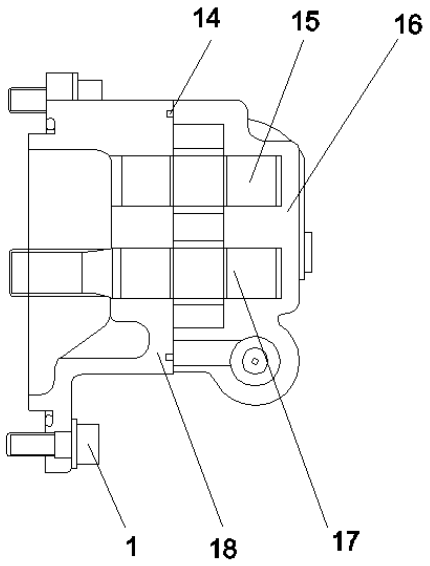
14
15
16
1
18
17

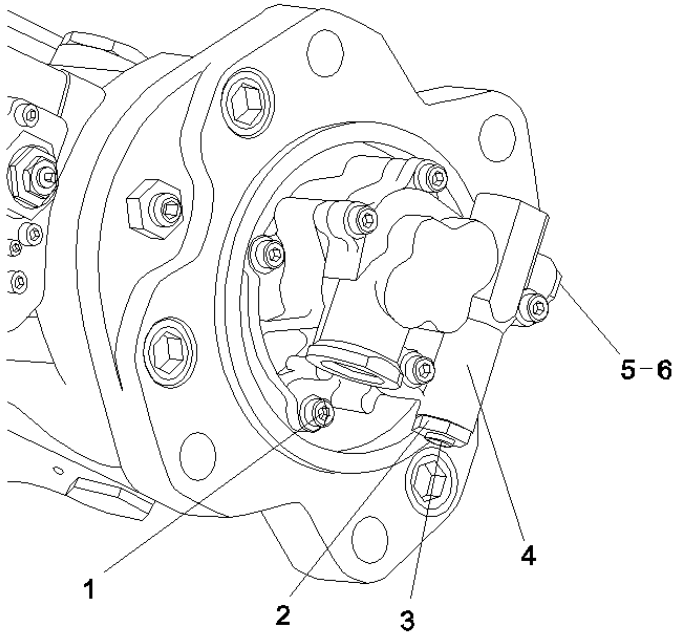
5-6
1
2
3
4

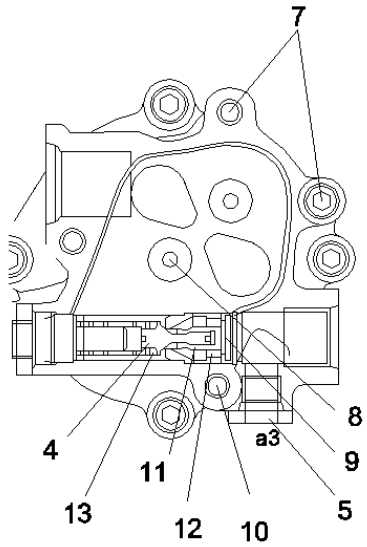
7
8
a3
9
4
11
5
13
12
10

识别码 IC	序号 INDEX	零件代码 PART NUMBER	数量 QTY	名称 PART NAME	
2–27–1	1	60038467	4	螺钉	Screw
2–27–2	2	60038598	1	锁紧螺母	Nut – Lock
2–27–3	3	60038336	1	调整螺栓	Bolt – Adjusting
2–27–4	4	60038111	1	提升阀	Valve – Lift
2–27–5	5	60038343	1	堵头	Plug
2–27–6	6	60038821	1	O形圈	Seal – O–Ring
2–27–7	7	60038468	2	螺钉	Screw
2–27–8	8	60038282	1	挡圈	Ring – Retaining
2–27–9	9	60038461	1	滤网	Strainer
2–27–10	10	60038469	2	螺钉	Screw
2–27–11	11	60038532	1	密封垫	Seal
2–27–12	12	60038284	1	挡圈	Ring – Retaining
2–27–13	13	60038252	1	弹簧	Spring
2–27–14	14	60038533	1	密封垫	Seal
2–27–15	15	60038196	1	齿轮轴	Shaft – Gear
2–27–16	16	60038442	1	壳体	Housing
2–27–17	17	60038197	1	齿轮轴	Shaft – Gear
2–27–18	18	60038444	1	壳体	Housing

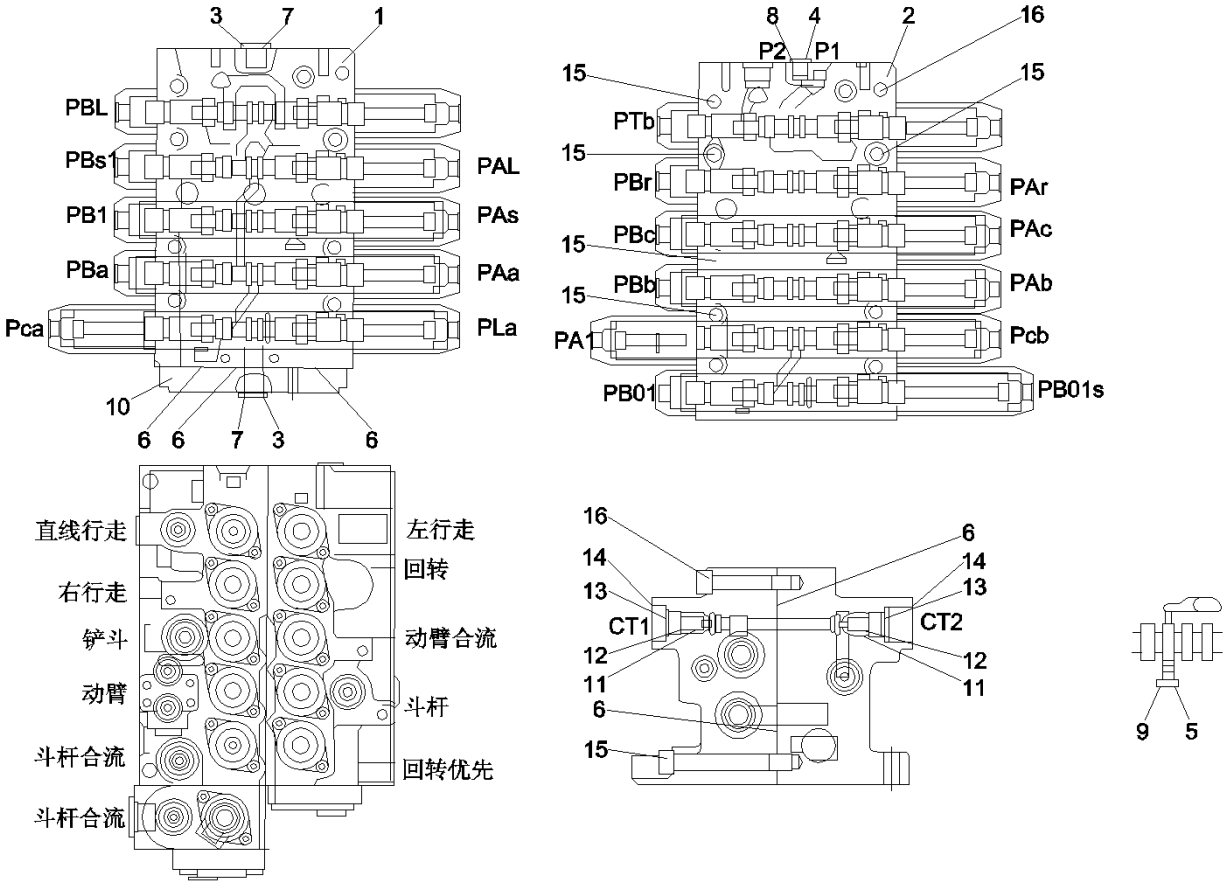
3
7
1
PBL
PBs1
PB1
PBa
Pca
PAL
PAs
PAa
PLa
10
6
6
7
3
6
8
4
2
16
P2
P1
15
15
PTb
15
PBr
PAr
PAc
15
PBc
PAb
15
PBb
Pcb
PA1
PB01
PB01s
直线行走
左行走
回转
右行走
铲斗
动臂合流
动臂
斗杆
斗杆合流
回转优先
斗杆合流
16
14
13
CT1
12
11
6
15
6
14
13
CT2
12
11
9
5

识别码 IC	序号 INDEX	零件代码 PART NUMBER	数量 QTY	名称 PART NAME	
2–29–1	1	60038441	1	壳体	Housing
2–29–2	2	60038443	1	壳体	Housing
2–29–3	3	60038648	3	油塞	Plug
2–29–4	4	60038652	3	油塞	Plug
2–29–5	5	60038650	1	油塞	Plug
2–29–6	6	60038721	20	O形圈	O–ring
2–29–7	7	60038725	3	O形圈	Seal – O – Ring
2–29–8	8	60038723	3	O形圈	Seal – O – Ring
2–29–9	9	60038727	1	O形圈	Seal – O – Ring
2–29–10	10	60037938	2	板	Plate
2–29–11	11	60038110	11	提升阀	Valve – Lift
2–29–12	12	60038248	13	弹簧	Spring
2–29–13	13	60038655	14	油塞	Plug
2–29–14	14	60038715	16	O形圈	Seal – O – Ring
2–29–15	15	60038465	7	螺钉	Screw
2–29–16	16	60038466	1	螺钉	Screw

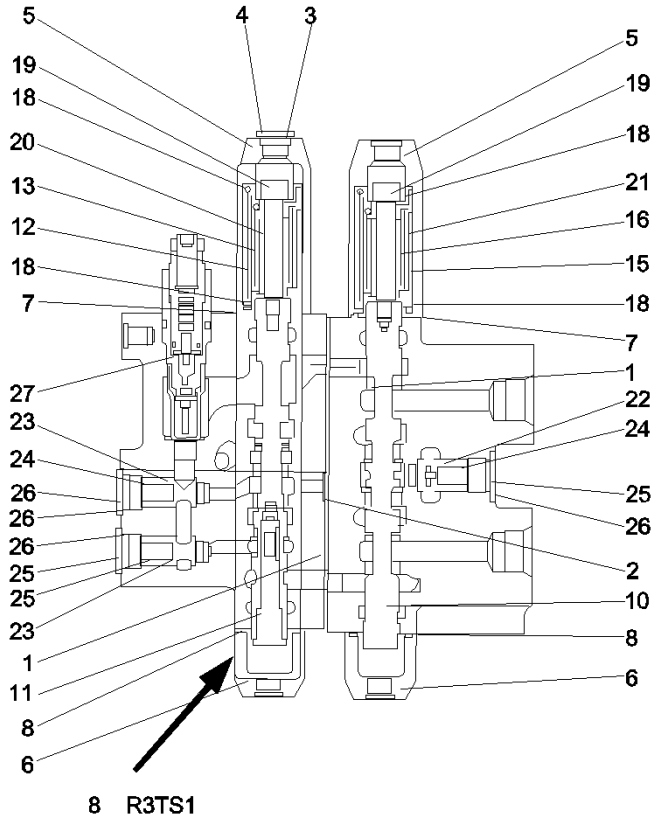
5
4
3
19
18
20
13
12
18
7
27
23
24
26
26
26
25
25
23
1
11
8
6
8 R3TS1
5
19
18
21
16
15
18
7
1
22
24
25
26
2
10
8
6

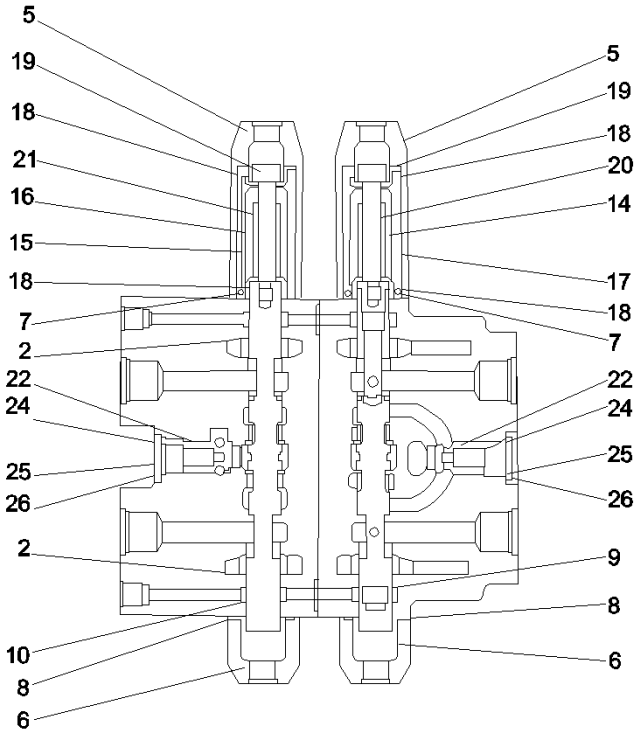
5
19
18
21
16
15
18
7
2
22
24
25
26
2
10
8
6
5
19
18
20
14
17
18
7
22
24
25
26
9
8
6

识别码 IC	序号 INDEX	零件代码 PART NUMBER	数量 QTY	名称 PART NAME	
2–31–1	1	60038721	20	O形圈	O–ring
2–31–2	2	60038724	3	O形圈	Seal – O–Ring
2–31–3	3	60038652	3	油塞	Plug
2–31–4	4	60038723	3	O形圈	Seal – O – Ring
2–31–5	5	60037963	8	盖	Cover
2–31–6	6	60008824	8	盖	Cover
2–31–7	7	60008821	12	O形圈	Seal – O – Ring
2–31–8	8	60038722	8	O形圈	Seal – O – Ring
2–31–9	9	60038086	1	阀芯总成	Spool As
2–31–10	10	60038085	2	阀芯总成	Spool As
2–31–11	11	60038084	1	阀芯总成	Spool As
2–31–12	12	60038247	1	弹簧	Spring
2–31–13	13	60038251	1	弹簧	Spring
2–31–14	14	60038244	4	弹簧	Spring
2–31–15	15	60038249	2	弹簧	Spring
2–31–16	16	60038250	2	弹簧	Spring
2–31–17	17	60038243	4	弹簧	Spring
2–31–18	18	60008825	24	座	Seat
2–31–19	19	60038528	12	螺栓	Bolt
2–31–20	20	60037950	11	挡柱	Post – Bumping

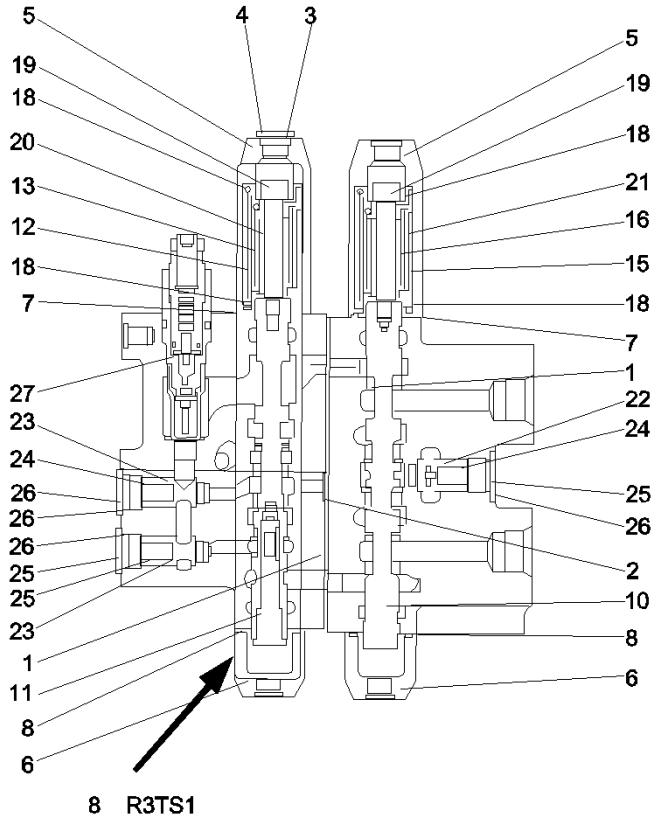
5
4
3
19
18
20
13
12
18
7
27
23
24
26
26
26
25
25
23
1
11
8
6
8 R3TS1
5
19
18
21
16
15
18
7
1
22
24
25
26
2
10
8
6

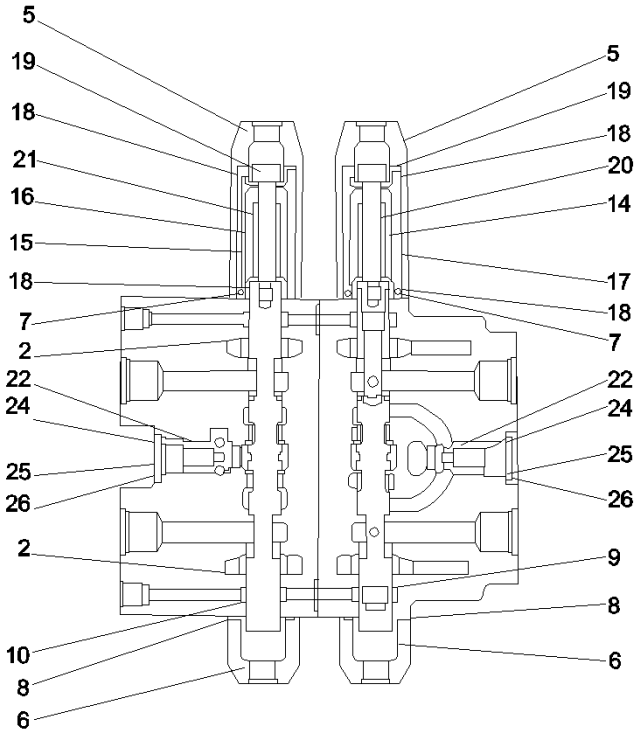
5
19
18
21
16
15
18
7
2
22
24
25
26
2
10
8
6
5
19
18
20
14
17
18
7
22
24
25
26
9
8
6

识别码 IC	序号 INDEX	零件代码 PART NUMBER	数量 QTY	名称 PART NAME	
2–33–21	21	60037949	2	挡柱	Post – Bumping
2–33–22	22	60038110	11	提升阀	Valve – Lift
2–33–23	23	60038108	2	提升阀	Valve – Lift
2–33–24	24	60038248	13	弹簧	Spring
2–33–25	25	60038655	14	油塞	Plug
2–33–26	26	60038715	16	O形圈	Seal – O – Ring
2–33–27	27	60038117	1	主安全阀	Valve – Relief (Main)

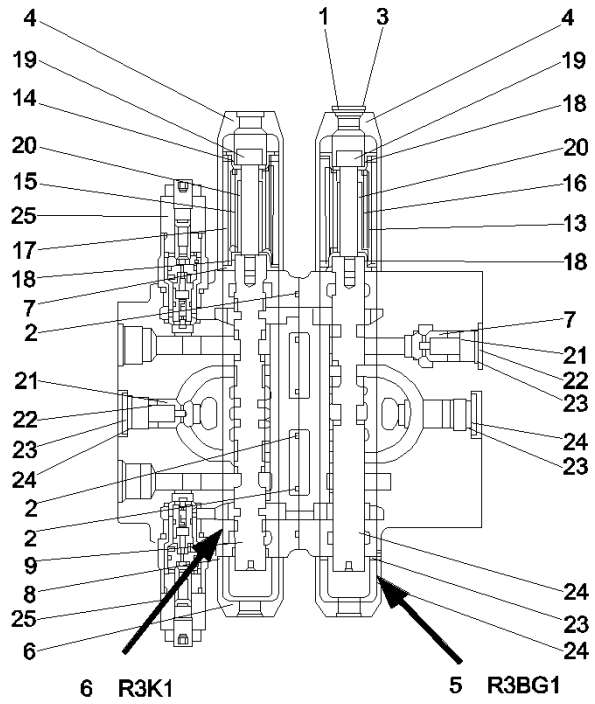
4
19
14
20
15
25
17
18
7
2
21
22
23
24
2
2
9
8
25
6
6 R3K1
1
3
4
19
18
20
16
13
18
7
21
22
23
24
23
24
23
24
5 R3BG1

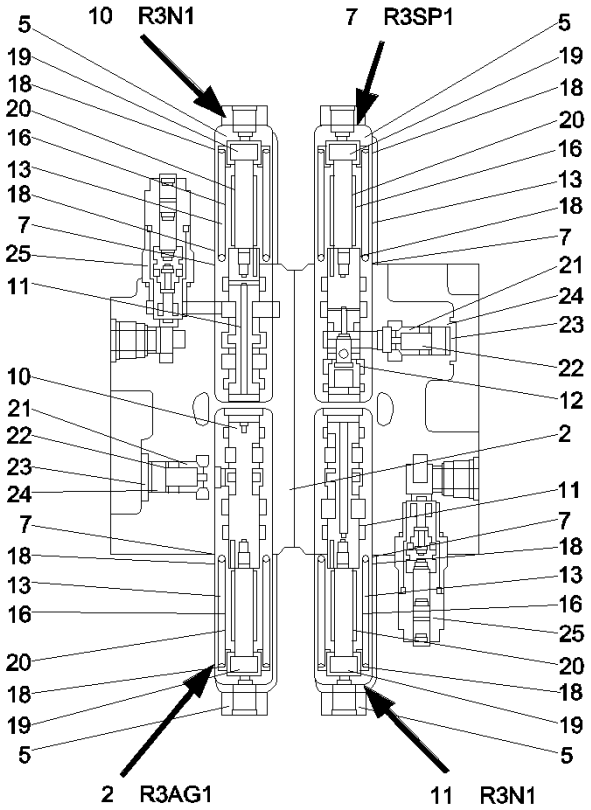
10 R3N1
7 R3SP1
5
19
18
20
16
13
18
7
25
11
10
21
22
23
24
7
18
13
16
20
18
19
5
2 R3AG1
5
19
18
20
16
13
18
7
21
24
23
22
12
2
11
7
18
13
16
25
20
18
19
5
11 R3N1

识别码 IC	序号 INDEX	零件代码 PART NUMBER	数量 QTY	名称 PART NAME	
2–35–1	1	60038652	3	油塞	Plug
2–35–2	2	60038721	20	O形圈	O–ring
2–35–3	3	60038723	3	O形圈	Seal – O – Ring
2–35–4	4	60037963	8	盖	Cover
2–35–5	5	60037962	4	盖	Cover
2–35–6	6	60008824	8	盖	Cover
2–35–7	7	60008821	12	O形圈	Seal – O – Ring
2–35–8	8	60038722	8	O形圈	Seal – O – Ring
2–35–9	9	60038074	1	阀芯	Spool
2–35–10	10	60038081	1	阀芯总成	Spool As
2–35–11	11	60038075	2	阀芯	Spool
2–35–12	12	60038076	1	阀芯	Spool
2–35–13	13	60038245	5	弹簧	Spring
2–35–14	14	60038247	1	弹簧	Spring
2–35–15	15	60038244	4	弹簧	Spring
2–35–16	16	60038246	5	弹簧	Spring
2–35–17	17	60038243	4	弹簧	Spring
2–35–18	18	60008825	24	座	Seat
2–35–19	19	60038528	12	螺栓	Bolt
2–35–20	20	60037950	11	挡柱	Post – Bumping

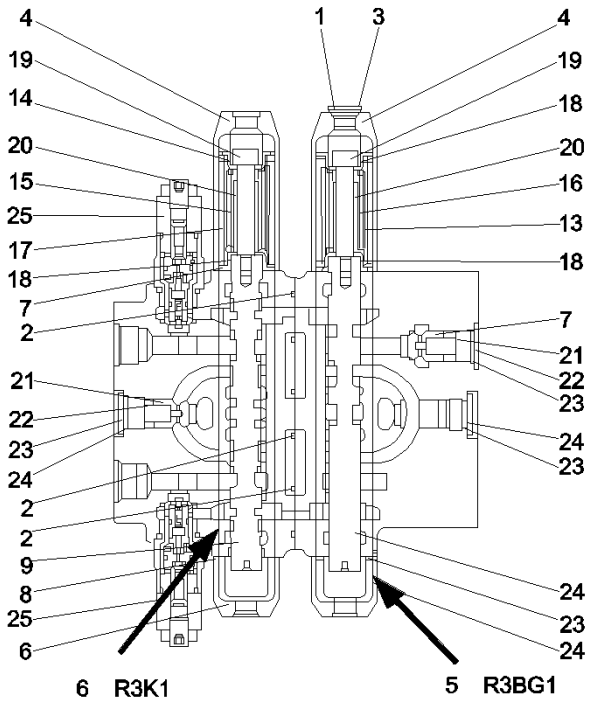
4
19
14
20
15
25
17
18
7
2
21
22
23
24
2
2
9
8
25
6
6 R3K1
1
3
4
19
18
20
16
13
18
7
21
22
23
24
23
24
23
24
5 R3BG1

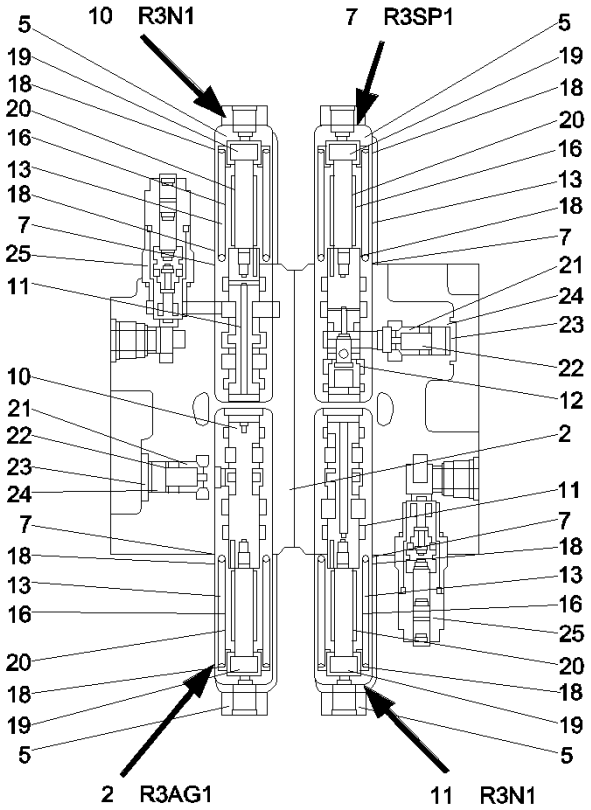
10 R3N1
7 R3SP1
5
19
18
20
16
13
18
7
25
11
10
21
22
23
24
7
18
13
16
20
18
19
5
2 R3AG1
5
19
18
20
16
13
18
7
21
24
23
22
12
2
11
7
18
13
16
25
20
18
19
5
11 R3N1

识别码 IC	序号 INDEX	零件代码 PART NUMBER	数量 QTY	名称 PART NAME	
2–37–21	21	60038110	11	提升阀	Valve – Lift
2–37–22	22	60038248	13	弹簧	Spring
2–37–23	23	60038655	14	油塞	Plug
2–37–24	24	60038715	16	O形圈	Seal – O – Ring
2–37–25	25	B220401000690	7	油口溢流阀	Valve, overflow, oil port

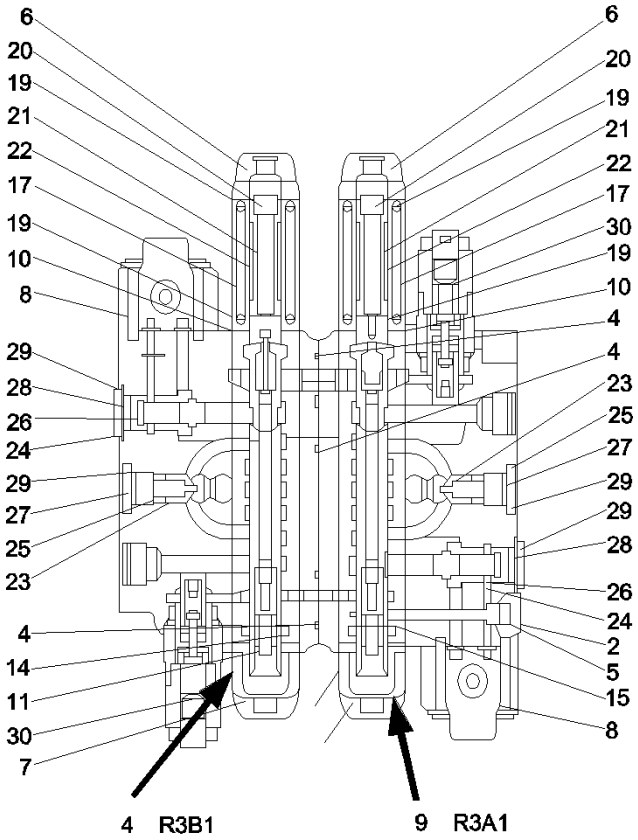
6
20
19
21
22
17
19
10
8
29
28
26
24
29
27
25
23
4
14
11
30
7
4 R3B1
9 R3A1

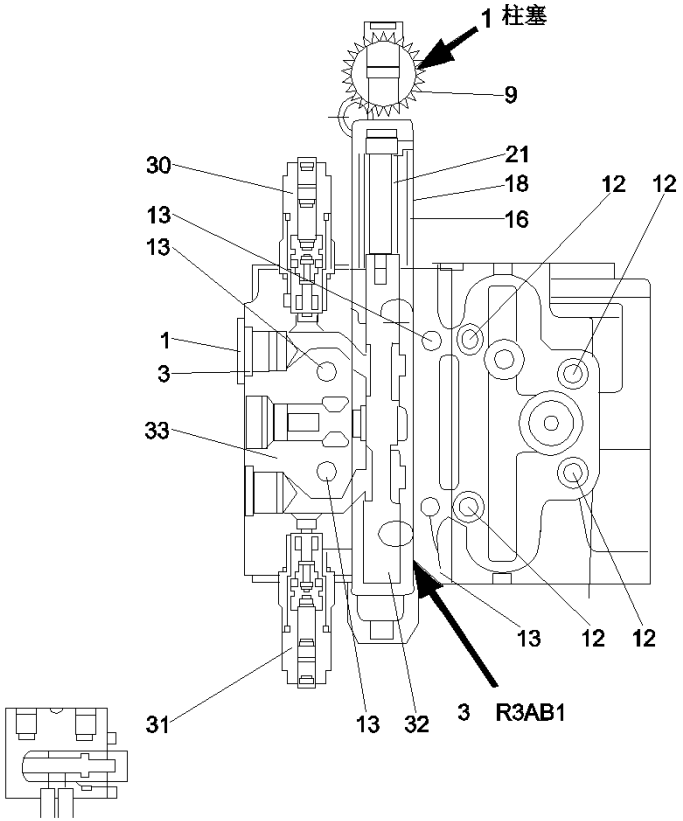
1 柱塞
9
21
18
16
12
12
30
13
13
1
3
33
13
12
12
31
13
32
3 R3AB1

识别码 IC	序号 INDEX	零件代码 PART NUMBER	数量 QTY	名称 PART NAME	
2–39–1	1	60038651	1	油塞	Plug
2–39–2	2	60038649	1	油塞	Plug
2–39–3	3	60038726	1	O形圈	Seal – O – Ring
2–39–4	4	60038721	20	O形圈	O–ring
2–39–5	5	60038711	1	O形圈	O–ring
2–39–6	6	60037963	8	盖	Cover
2–39–7	7	60008824	8	盖	Cover
2–39–8	8	60038430	2	紧固螺钉	Setscrew
2–39–9	9	60038392	1	活塞	Piston
2–39–10	10	60008821	12	O形圈	Seal – O – Ring
2–39–11	11	60038722	8	O形圈	Seal – O – Ring
2–39–12	12	60038463	4	螺钉	Screw
2–39–13	13	60038464	4	螺钉	Screw
2–39–14	14	60038083	1	阀芯总成	Spool As
2–39–15	15	60038082	1	阀芯总成	Spool As
2–39–16	16	60038245	1	弹簧	Spring
2–39–17	17	60038243	4	弹簧	Spring
2–39–18	18	60038246	1	弹簧	Spring
2–39–19	19	60008825	24	座	Seat
2–39–20	20	60038528	12	螺栓	Bolt

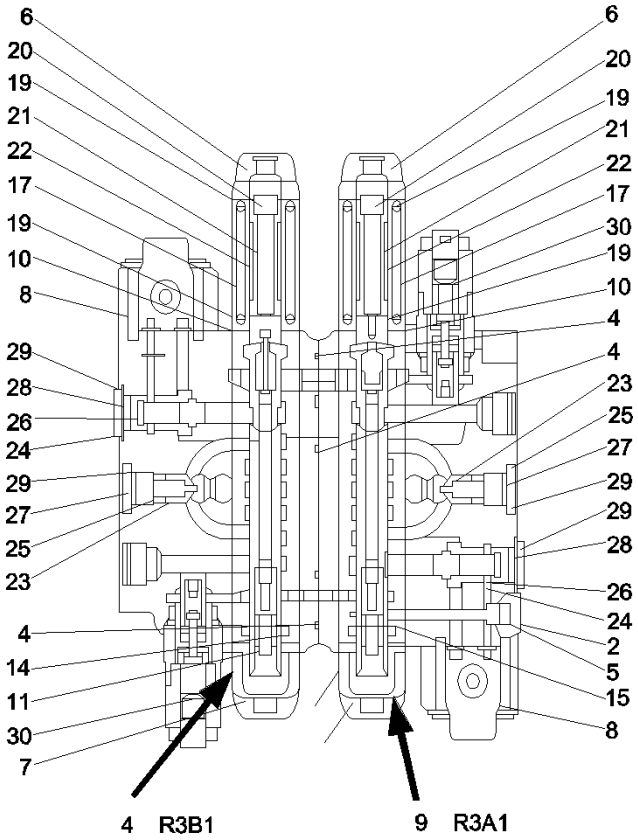
6
20
19
21
22
17
19
10
8
29
28
26
24
29
27
25
23
4
14
11
30
7
4 R3B1
9 R3A1

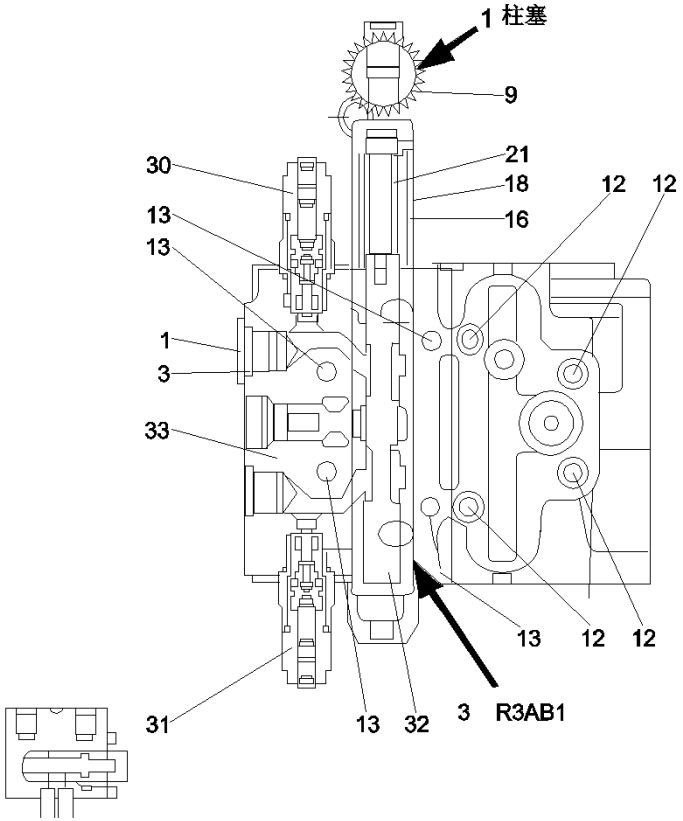
1 柱塞
9
21
18
16
12 12
30
13
13
1
3
33
13 12 12
31
13 32 3 R3AB1

识别码 IC	序号 INDEX	零件代码 PART NUMBER	数量 QTY	名称 PART NAME	
2–41–21	21	60037950	11	挡柱	Post – Bumping
2–41–22	22	60038244	4	弹簧	Spring
2–41–23	23	60038110	11	提升阀	Valve – Lift
2–41–24	24	60038109	2	提升阀	Valve – Lift
2–41–25	25	60038248	13	弹簧	Spring
2–41–26	26	60038240	2	弹簧	Spring
2–41–27	27	60038655	14	油塞	Plug
2–41–28	28	60038656	2	油塞	Plug
2–41–29	29	60038715	16	O形圈	Seal – O – Ring
2–41–30	30	B220401000690	7	油口溢流阀	Valve, overflow, oil port
2–41–31	31	60038092	1	过载保护阀	Valve – Protection (Overload)
2–41–32	32	60038080	1	阀芯总成	Spool As
2–41–33	33	60038104	1	控制阀总成	Valve As – Control

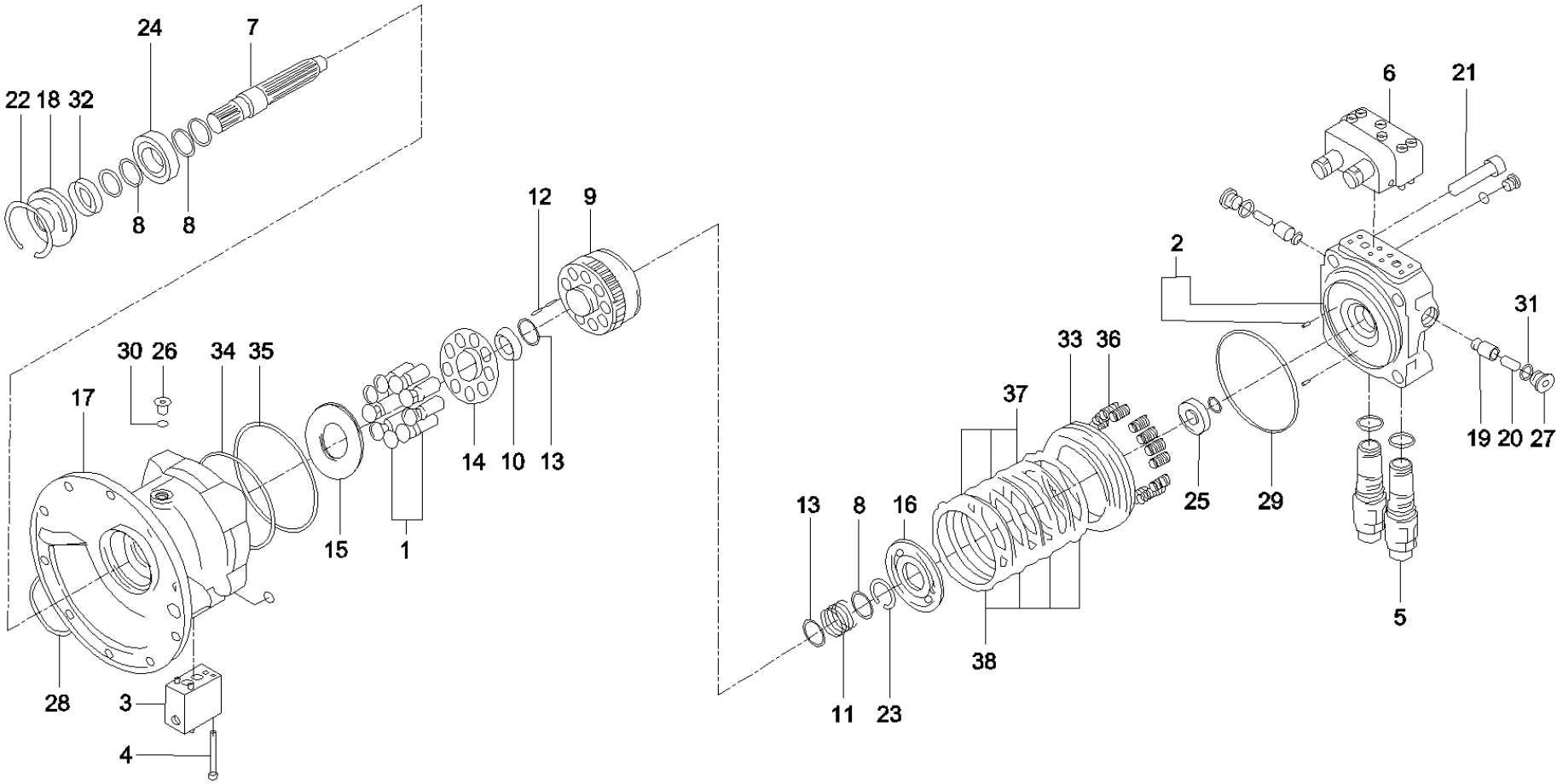

B229900002718 减速机总成 (Reducer As - Swing) (1/4)

识别码 IC	序号 INDEX	零件代码 PART NUMBER	数量 QTY	名称 PART NAME	
2–43–1	1	60038697	1	柱塞组件	Plunger Gp
2–43–2	2	60038687	1	柱塞	Plunger
2–43–3	3	60038112	1	延迟阀	Valve – Delay
2–43–4	4	60038566	3	内六角螺栓	Screw – Socket Head
2–43–5	5	60038114	2	溢流阀	Valve – Relief
2–43–6	6	60038091	1	防逆转阀组件	Valve Gp – Anti–Reverse
2–43–7	7	60038592	1	驱动轴	Shaft – Drive
2–43–8	8	60038178	3	衬垫	Gasket
2–43–9	9	60038355	1	缸体	Body – Cylinder
2–43–10	10	60038586	1	球面衬套	Sleeve
2–43–11	11	60038384	1	回程弹簧	Spring
2–43–12	12	60038602	12	推杆	Pushrod
2–43–13	13	60038179	2	衬垫	Gasket
2–43–14	14	60038386	1	回程盘	Tray
2–43–15	15	60038380	1	滑靴盘	Tray – Slipper
2–43–16	16	60038578	1	配油盘	Tray – Oil Distribution
2–43–17	17	60038435	1	壳体	Housing
2–43–18	18	60038018	1	前盖	Cover – Front
2–43–19	19	60038093	2	滑阀套	Bushing – Spool Valve
2–43–20	20	60038217	2	弹簧	Spring

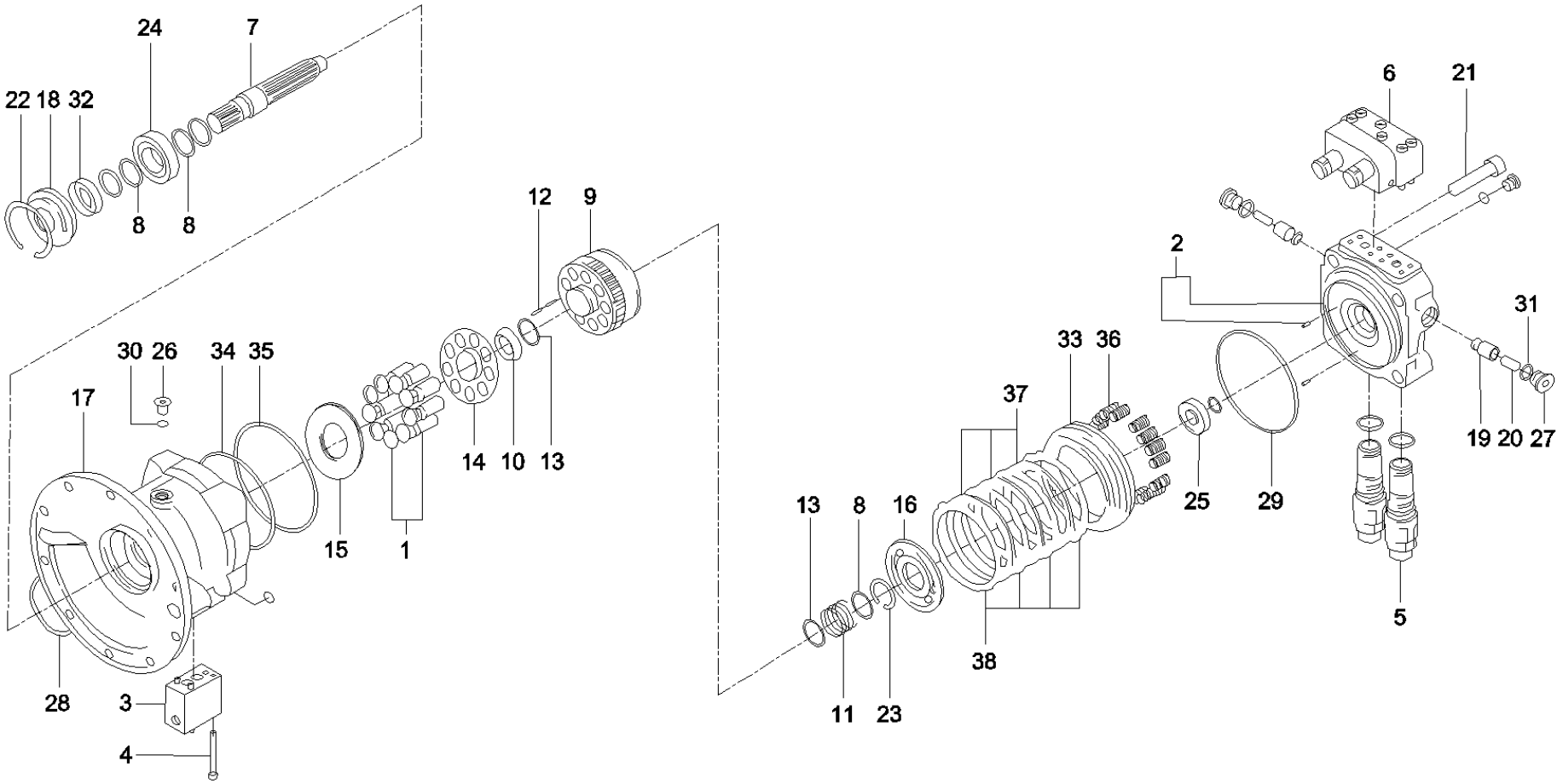

B229900002718 减速机总成 (Reducer As - Swing) (2/4)

识别码 IC	序号 INDEX	零件代码 PART NUMBER	数量 QTY	名称 PART NAME	
2–45–21	21	60038564	4	内六角螺栓	Bolt – Socket Head
2–45–22	22	60038156	1	锁紧圈	Lockwasher
2–45–23	23	60038155	1	锁紧圈	Lockwasher
2–45–24	24	60038135	1	圆柱滚珠轴承	Bearing – Roller
2–45–25	25	60038134	1	圆柱滚珠轴承	Bearing – Roller
2–45–26	26	60038646	3	油塞	Plug
2–45–27	27	60038647	2	油塞	Plug
2–45–28	28	60038709	1	O形圈	O–ring
2–45–29	29	60038718	1	O形圈	O–ring
2–45–30	30	60038711	3	O形圈	O–ring
2–45–31	31	60038715	2	O形圈	Seal – O – Ring
2–45–32	32	60038866	1	油封	Seal – Oil
2–45–33	33	60038669	1	制动活塞	Piston – Stop
2–45–34	34	60038717	1	O形圈	O–ring
2–45–35	35	60038719	1	O形圈	O–ring
2–45–36	36	60038668	20	制动弹簧	Spring – Stop
2–45–37	37	60038548	3	摩擦片	Plate – Friction
2–45–38	38	60038354	4	分离片	Plate – Seperate

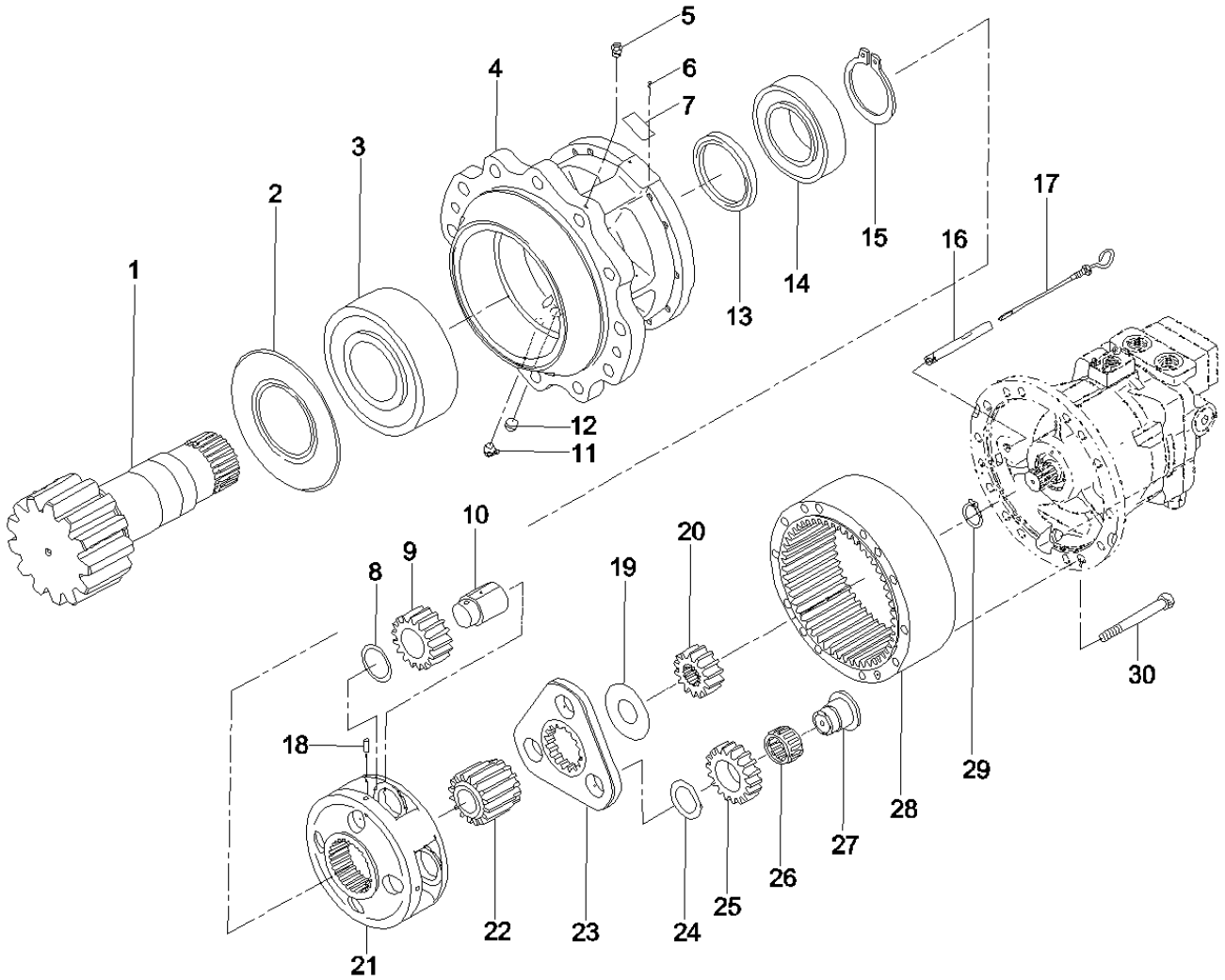

B229900002718 减速机总成 (Reducer As - Swing) (3/4)

识别码 IC	序号 INDEX	零件代码 PART NUMBER	数量 QTY	名称 PART NAME	
2–47–1	1	B229900005915	1	回转减速机驱动轴	Shaft – Drive
2–47–2	2	B229900005914	1	回转减速机密封盖	Cover – Seal
2–47–3	3	B221500000591	1	回转减速机滚动轴承	Bearing – Roller
2–47–4	4	60038440	1	壳体	Housing
2–47–5	5	60008609	1	堵	Plug
2–47–6	6	60038620	4	销子	Pin
2–47–7	7	60038547	2	铭牌	Nameplate
2–47–8	8	B229900005907	1	回转减速机挡圈	Ring – Retaining
2–47–9	9	B221801000057	4	回转减速机行星齿轮	Gear – Planetary
2–47–10	10	B229900005918	4	回转减速机销轴	Roll – Pin
2–47–11	11	60008610	1	黄油嘴	Fitting – Grease
2–47–12	12	60038163	1	PT堵头	Plug, PT
2–47–13	13	B230101002046	1	回转减速机骨架油封	Seal – Oil (Frame)
2–47–14	14	B221500000592	1	回转减速机滚动轴承	Bearing – Roller
2–47–15	15	60038871	1	止动环	Ring – Stop
2–47–16	16	B229900005919	1	回转减速机油标管	Pipe – Oil Scale
2–47–17	17	B229900000269	1	油标	Indicator, oil
2–47–18	18	60038261	4	弹簧销	Pin – Spring
2–47–19	19	B229900005905	3	回转减速机挡圈	Ring – Retaining
2–47–20	20	B221801000054	1	回转减速机太阳齿轮	Gear – Sun

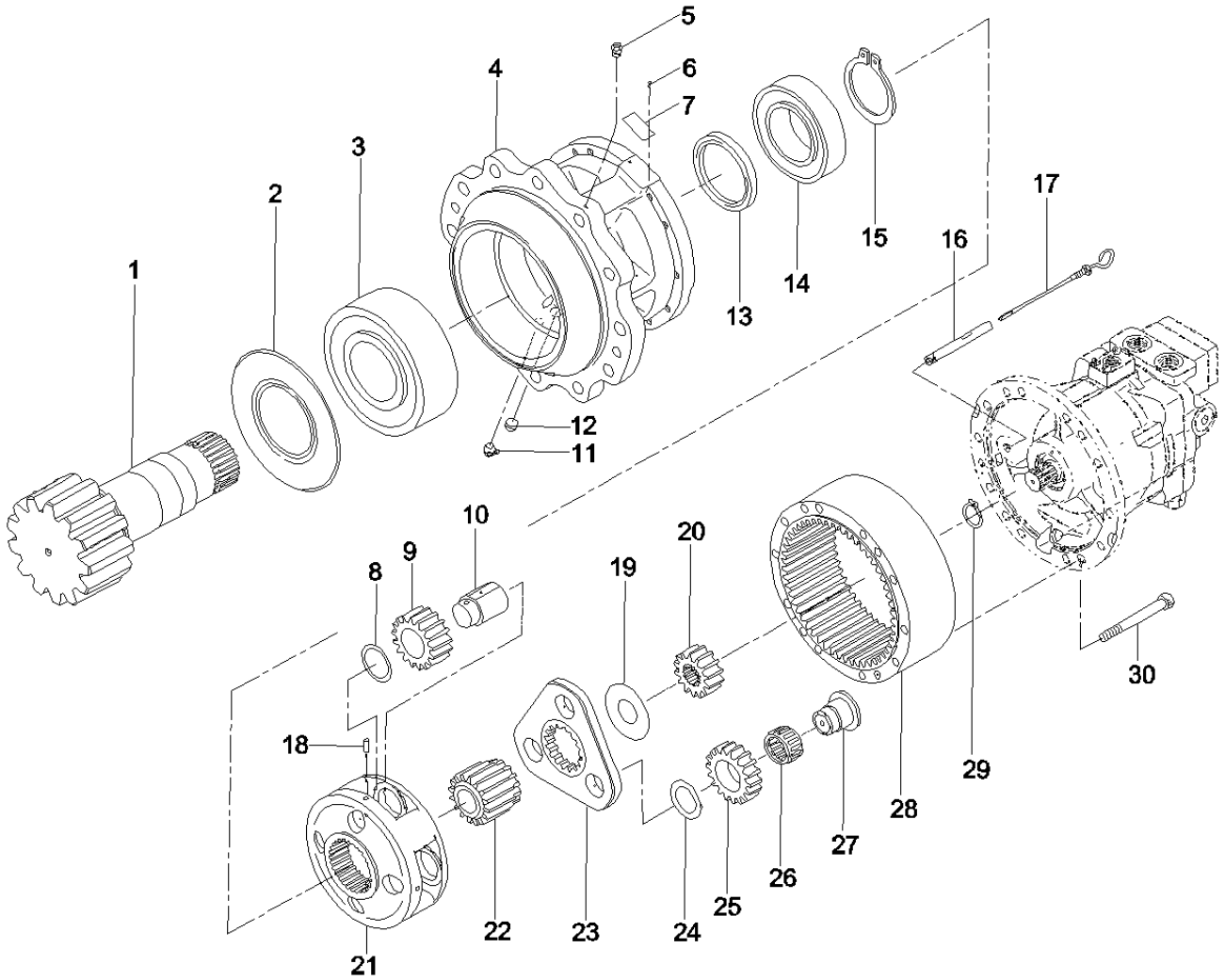

B229900002718 减速机总成 (Reducer As - Swing) (4/4)

识别码 IC	序号 INDEX	零件代码 PART NUMBER	数量 QTY	名称 PART NAME	
2–49–21	21	60038625	1	行星架	Carrier – Planetary
2–49–22	22	B221801000055	1	回转减速机太阳齿轮	Gear – Sun
2–49–23	23	60038624	1	行星架	Carrier – Planetary
2–49–24	24	B229900005906	7	回转减速机挡圈	Ring – Retaining
2–49–25	25	B221801000056	3	回转减速机行星齿轮	Gear – Planetary
2–49–26	26	B229900005916	3	回转减速机锁紧螺母	Nut – Lock
2–49–27	27	60038603	1	推力垫圈	Washer – Thrust
2–49–28	28	B229900005522	1	齿圈	Ring – Gear
2–49–29	29	60038870	1	止动环	Ring – Stop
2–49–30	30	60038451	10	六角螺钉	Screw – Hex

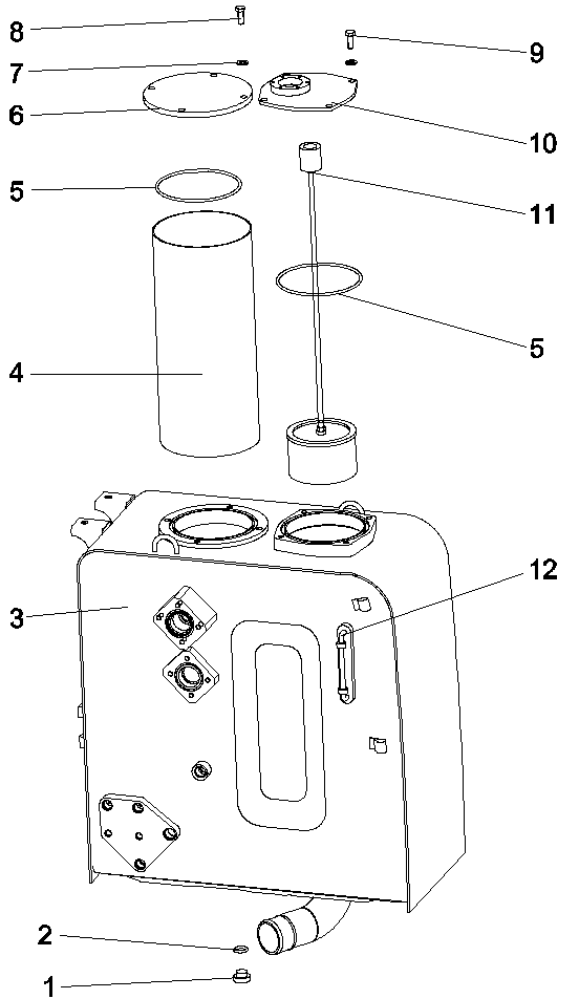
8
9
7
6
10
5
11
5
4
12
3
2
1

识别码 IC	序号 INDEX	零件代码 PART NUMBER	数量 QTY	名称 PART NAME	
2–51–1	1	10514225	1	堵头	Plug
2–51–2	2	B230101000356	1	O形圈	Seal – O – Ring
2–51–3	3	A810201011287	1	工作油箱	Fuel Tank
2–51–4	4	B222100000379	1	回油滤芯	Element – Filter (Oil Return)
2–51–5	5	B230101000588	2	O形圈	Seal – O – Ring
2–51–6	6	A820201000692	1	回油盖	Cover – Oil Return
2–51–7	7	A210405000001	8	垫圈	Washer
2–51–8	8	A210111000038	4	螺栓	Bolt
2–51–9	9	A210111000037	4	螺栓	Bolt
2–51–10	10	10179460	1	吸油盖	Cover – Oil Suction
2–51–11	11	B222100000270	1	吸油滤芯	Element – Filter (Oil Suction)
2–51–12	12	A250100000174	1	液位液温计	Thermometer – Fluid Level

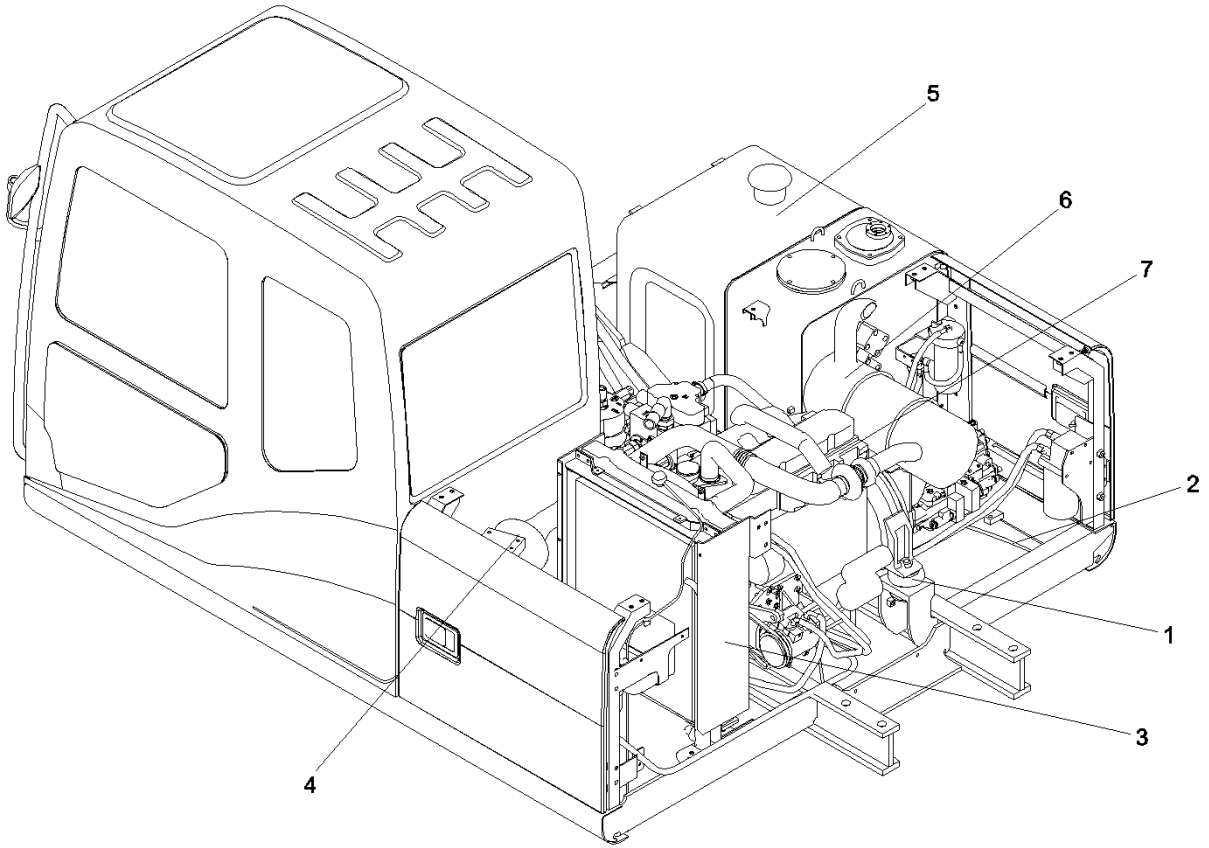
5
6
7
2
1
3
4

识别码 IC	序号 INDEX	零件代码 PART NUMBER	数量 QTY	名称 PART NAME	
2–53–1	1	A810102040030	1	减震与传动系统	Damper & Drive System
2–53–2	2	A810102010099	1	油门控制系统	Control System – Throttle
2–53–3	3	A810102090161	1	冷却系统	Cooling System
2–53–4	4	A810102071275	1	进气系统	Air Inlet System
2–53–5	5	A810102020218	1	燃油及润滑系统	Fuel & Lubrication System
2–53–6	6	A810102071276	1	排气系统	Exhaust System
2–53–7	7	B220200000095	1	发动机	Engine

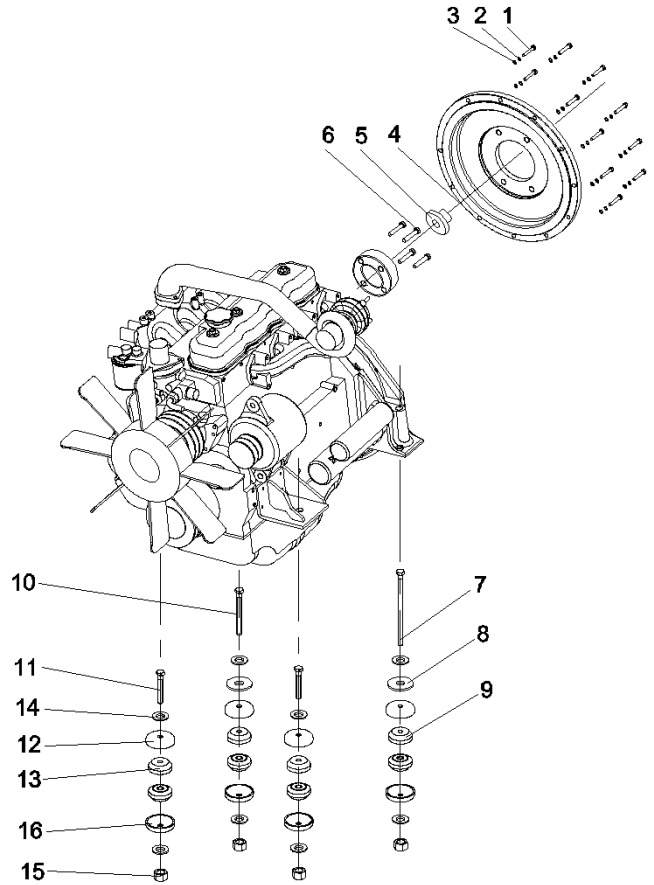
3
2
1
6
5
4
10
7
8
9
11
14
12
13
16
15

识别码 IC	序号 INDEX	零件代码 PART NUMBER	数量 QTY	名称 PART NAME	
2–55–1	1	A210204000215	8	螺钉	Screw
2–55–2	2	A210401000001	11	垫圈	Washer
2–55–3	3	A210405000011	11	垫圈	Washer
2–55–4	4	A820203002682	1	安装法兰	Flange
2–55–5	5	B221701000089	1	齿轮联轴器	Coupling – Gear
2–55–6	6	A210111000225	4	螺栓	Bolt
2–55–7	7	10185746	1	螺栓	Bolt
2–55–8	8	10185743	2	垫板	Plate
2–55–9	9	B229900005494	4	减震垫	Cushion
2–55–10	10	10185744	1	螺栓	Bolt
2–55–11	11	A820301021297	2	螺栓	Bolt
2–55–12	12	11459681	4	上碗垫	mat
2–55–13	13	B229900005493	4	减震垫	Cushion
2–55–14	14	A210491000144	8	垫圈	Washer
2–55–15	15	A820204000534	4	螺母	Nut
2–55–16	16	10251081	4	下碗扣	Coaster

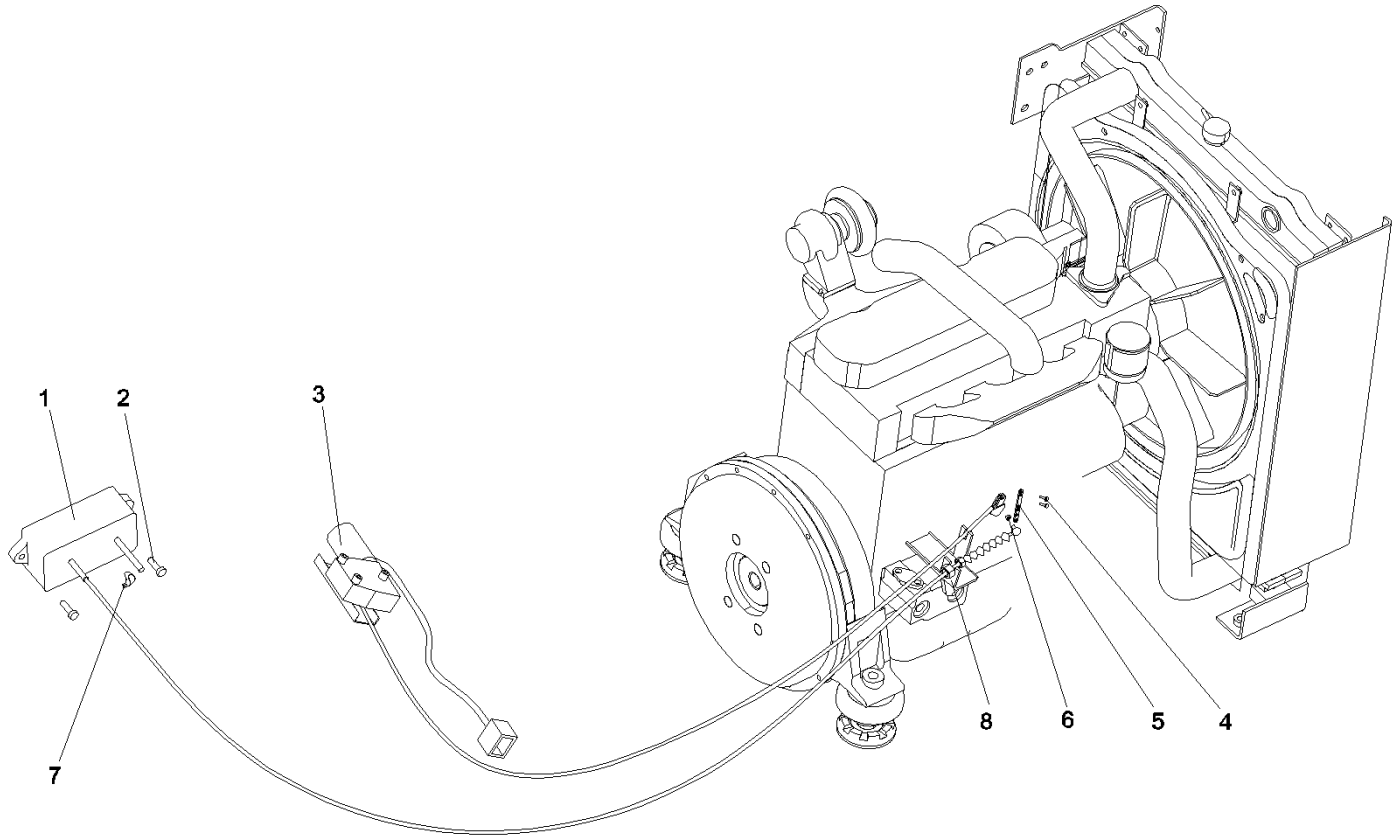
1
2
3
4
5
6
7
8

识别码 IC	序号 INDEX	零件代码 PART NUMBER	数量 QTY	名称 PART NAME	
2–57–1	1	B220501000347	1	控制马达	Motor – Control
2–57–2	2	A210111000293	2	螺栓	Bolt
2–57–3	3	B229900002662	1	发动机停车总成	Brake
2–57–4	4	A210111000079	2	螺栓	Bolt
2–57–5	5	A820101026713	1	油门拐臂	Lever – Throttle
2–57–6	6	A210307000012	1	螺母	Nut
2–57–7	7	11322508	1	油门马达拉线护孔环	Grommet – Wire (Motor – Throttle)
2–57–8	8	11232927	1	油门拉线挡板	Plate – Retaining (Wire – Throttle)

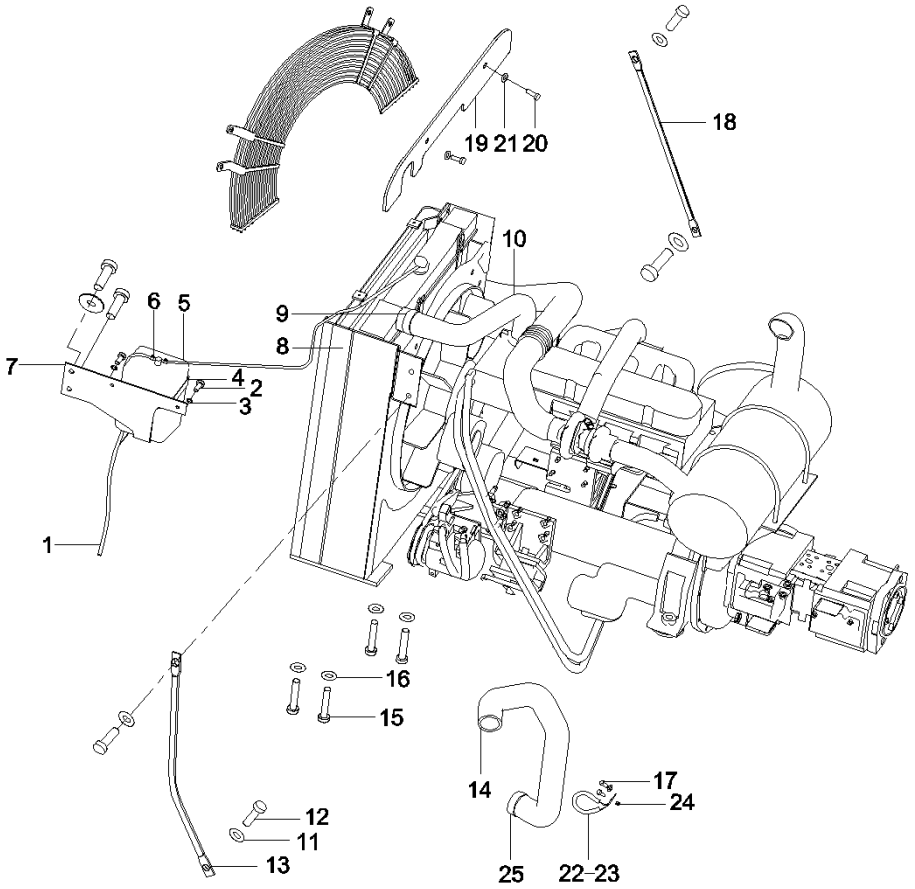

A810102090161 冷却系统 (Cooling System) (1/2)

识别码 IC	序号 INDEX	零件代码 PART NUMBER	数量 QTY	名称 PART NAME	
2–59–1	1	A820606030367	2	软管	Hose
2–59–2	2	A210204000147	2	螺钉	Screw
2–59–3	3	A210404000005	2	垫圈	Washer
2–59–4	4	A810102099060	1	支架	Bracket
2–59–5	5	A229900001590	1	储液箱	Reservoir
2–59–6	6	A229900001345	3	软管环箍	Hoop – Hose
2–59–7	7	A810102099167	1	副水箱支架	Bracket – Reservoir (Auxiliary)
2–59–8	8	60042926	1	散热器	Radiator
2–59–9	9	60097976	3	双钢丝式环箍 ϕ56–ϕ62 进口	Dual–wire hoop
2–59–10	10	A820606030947	1	进水胶管	Hose – Air Inlet
2–59–11	11	A210404000008	4	垫圈	Washer
2–59–12	12	A210111000263	4	螺栓	Bolt
2–59–13	13	A820301017359	1	水箱支架	Bracket – Reservoir
2–59–14	14	A820606030948	1	回水胶管	Hose – Air Return
2–59–15	15	A210111000202	4	螺栓	Bolt
2–59–16	16	A210404000004	8	垫圈	Washer
2–59–17	17	A210111000101	4	螺栓	Bolt
2–59–18	18	10144629	1	水箱前支撑	Support – Front (Reservoir)
2–59–19	19	10176570	1	顶部挡板	Plate – Retaining (Top)
2–59–20	20	A210111000018	2	螺栓	Bolt

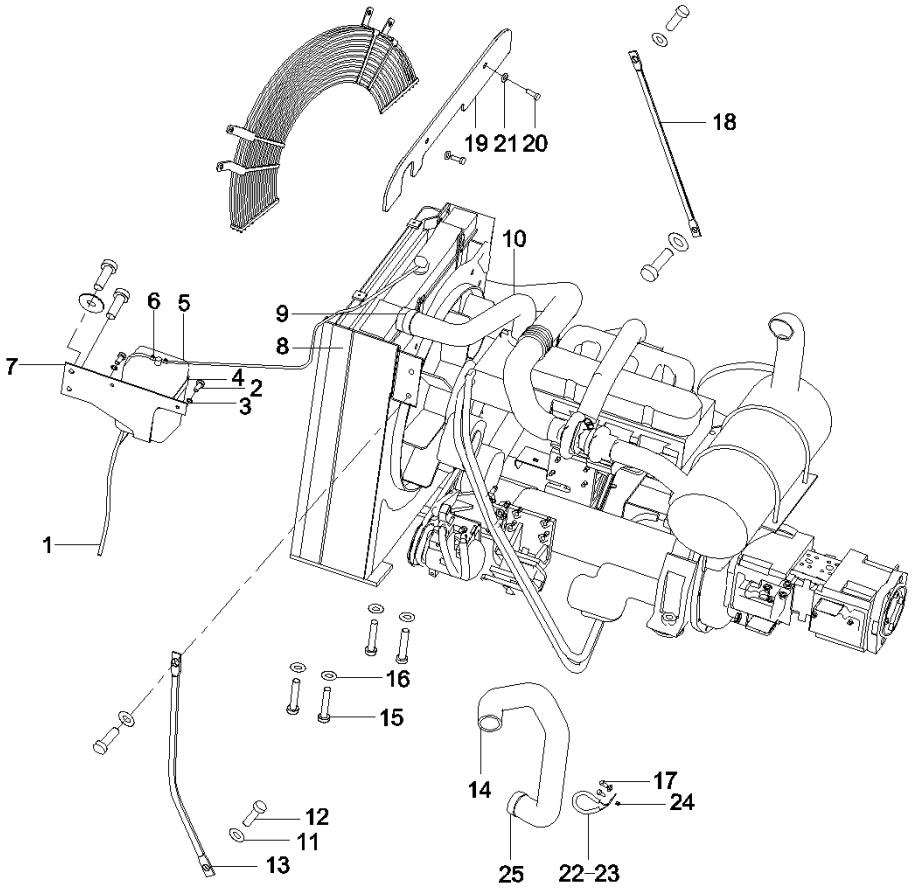

A810102090161 冷却系统 (Cooling System) (2/2)

识别码 IC	序号 INDEX	零件代码 PART NUMBER	数量 QTY	名称 PART NAME	
2–61–21	21	A210404000003	2	垫圈	Washer
2–61–22	22	10659168	1	水管管夹	Clamp
2–61–23	23	A820606030450	1	护套	Bushing
2–61–24	24	A210307000031	1	螺母	Nut
2–61–25	25	60097977	1	双钢丝式环箍 ϕ61–ϕ67 进口	Dual–wire hoop

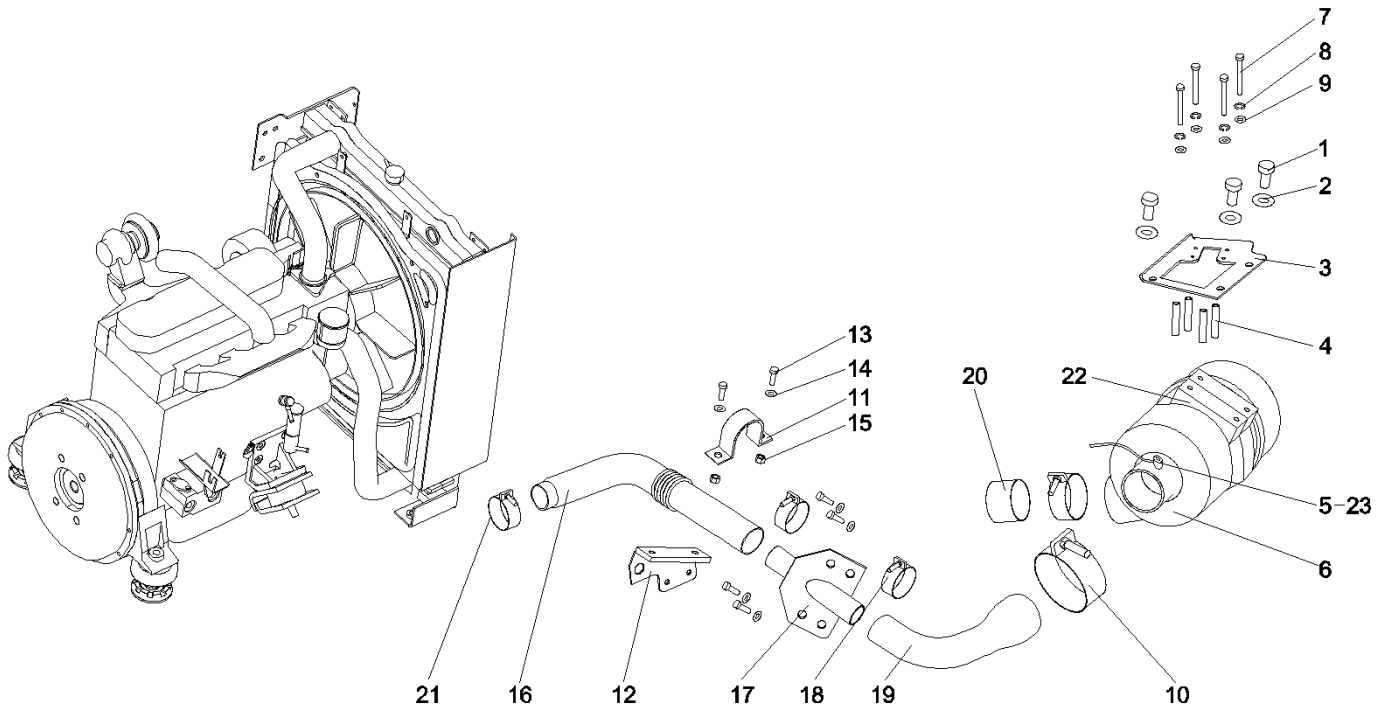

A810102071275 进气系统 (Air Inlet System) (1/2)

识别码 IC	序号 INDEX	零件代码 PART NUMBER	数量 QTY	名称 PART NAME	
2–63–1	1	A210111000101	7	螺栓	Bolt
2–63–2	2	A210405000001	7	垫圈	Washer
2–63–3	3	A820101346097	1	安装板	Plate – Mtg
2–63–4	4	A820301017514	4	安装套	Sleeve – Mtg
2–63–5	5	B229900003909	1	空滤传感器接头	Connector – Sensor (Air Cleaner)
2–63–6	6	B222100000458	1	空气滤清器	Air Cleaner
2–63–7	7	A210110000367	4	螺栓M8×110(GB5782) 10.9级	Bolt
2–63–8	8	A210405000007	4	垫圈	Washer
2–63–9	9	A210401000017	4	垫圈	Washer
2–63–10	10	A229900002222	2	T型抱箍	Anchor ear, T–type
2–63–11	11	A820101346724	1	卡箍	Clip
2–63–12	12	A810102072219	1	导管支架	Bracket – Duct
2–63–13	13	A210210000017	2	螺钉	Screw
2–63–14	14	A210405000006	2	垫圈	Washer
2–63–15	15	A210307000016	2	螺母	Nut
2–63–16	16	10072576	1	长进气管	Pipe – Air Inlet
2–63–17	17	10177031	1	联接管	Pipe
2–63–18	18	B229900001059	2	T型抱箍	Anchor ear, T–type
2–63–19	19	10072577	1	短进气管	Pipe – Air Inlet
2–63–20	20	10177023	1	滤网	Strainer

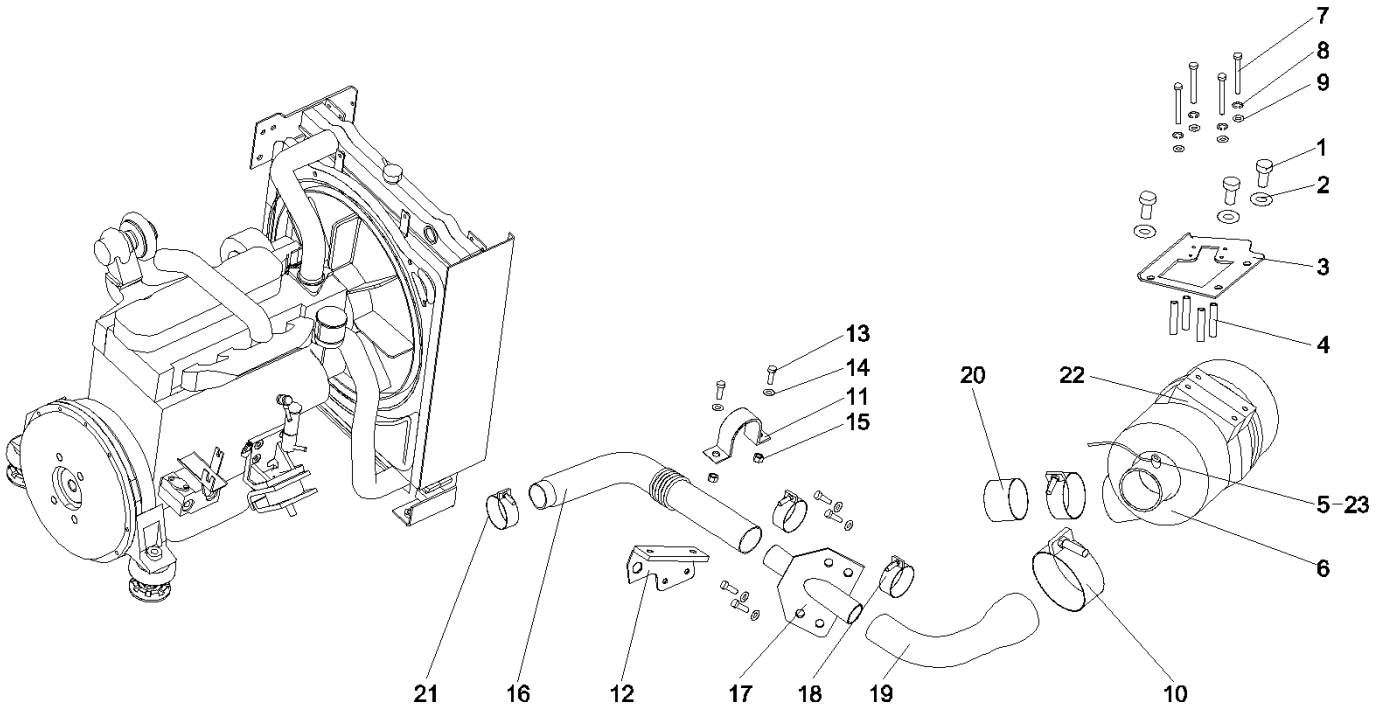

A810102071275 进气系统 (Air Inlet System) (2/2)

识别码 IC	序号 INDEX	零件代码 PART NUMBER	数量 QTY	名称 PART NAME	
2–65–21	21	A229900003104	1	T型抱箍	Anchor ear, T–type
2–65–22	22	10181386	2	空滤报箍	Hoop – Air Cleaner
2–65–23	23	60053691	1	压力传感器	Sensor, pressure

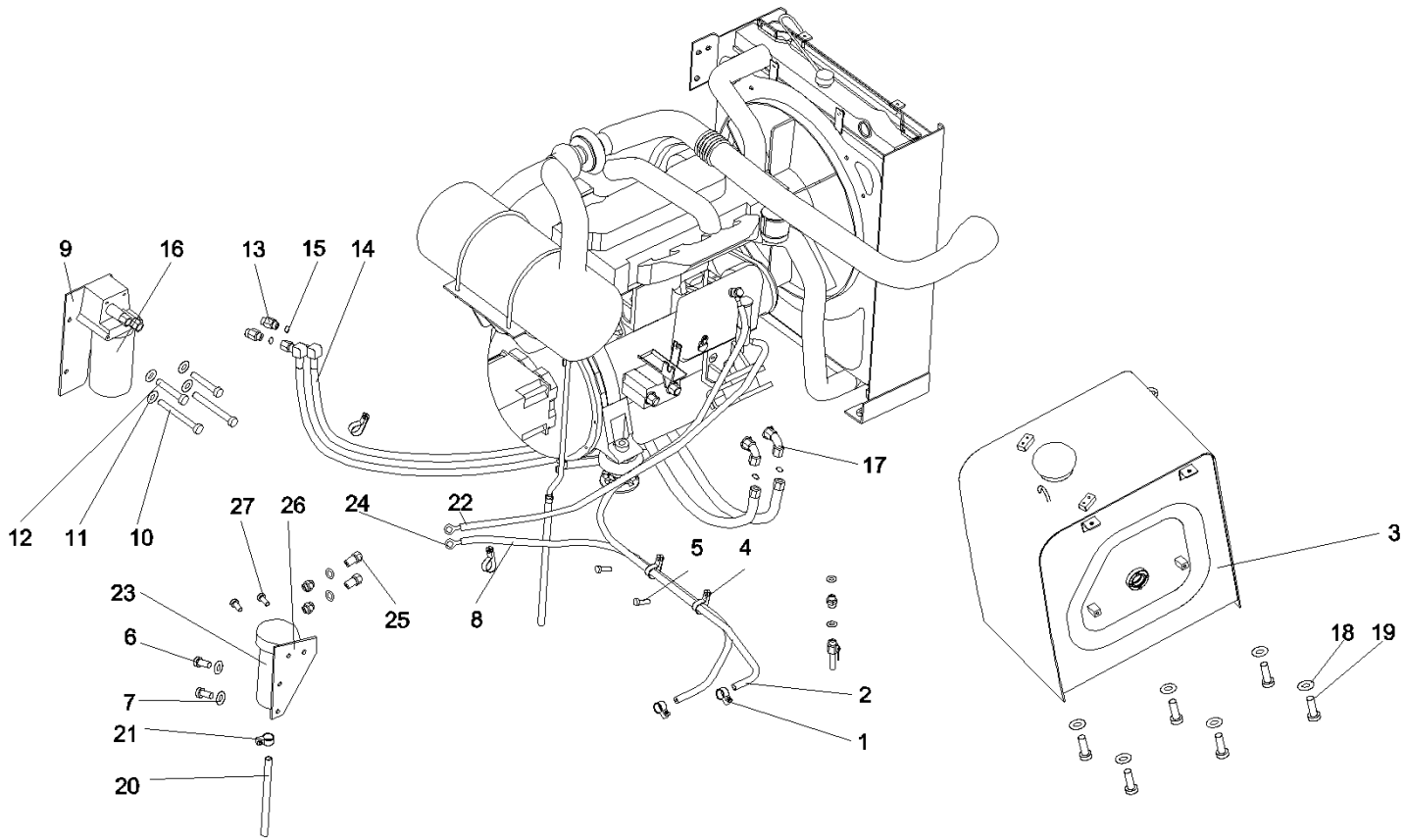

A810102020218 燃油及润滑系统 (Fuel & Lubrication System) (1/2)

识别码 IC	序号 INDEX	零件代码 PART NUMBER	数量 QTY	名称 PART NAME	
2–67–1	1	21053360	6	软管环箍	Hoop – Hose
2–67–2	2	A820606030880	1	回油软管	Hose – Oil Return
2–67–3	3	A810102021125	1	燃油箱总成	Fuel Tank As
2–67–4	4	A230200000178	6	线夹	Clamp
2–67–5	5	A210111000199	5	螺栓	Bolt
2–67–6	6	A210111000038	4	螺栓	Bolt
2–67–7	7	A210404000004	4	垫圈	Washer
2–67–8	8	10145222	1	预滤进油管	Pipe – Oil Inlet (Precleaner)
2–67–9	9	A810102023061	1	机油滤安装架	Bracket – Mtg (Filter – Oil)
2–67–10	10	A210204000005	2	螺钉	Screw
2–67–11	11	A210405000011	6	垫圈	Washer
2–67–12	12	A210204000477	2	螺钉M10×110GB70.1 10.9级	Screw
2–67–13	13	A820205000942	4	接头	Connector
2–67–14	14	60044059	2	机油胶管	Hose – Oil
2–67–15	15	B230101000356	4	O形圈	Seal – O – Ring
2–67–16	16	B222100000398	1	机油滤清器	Filter – Oil
2–67–17	17	B210780000028	2	管接头	Connector, pipe
2–67–18	18	A210491000118	6	垫圈	Washer
2–67–19	19	A210204000198	6	螺钉	Screw
2–67–20	20	11127565	1	放水管	Pipe – Drain

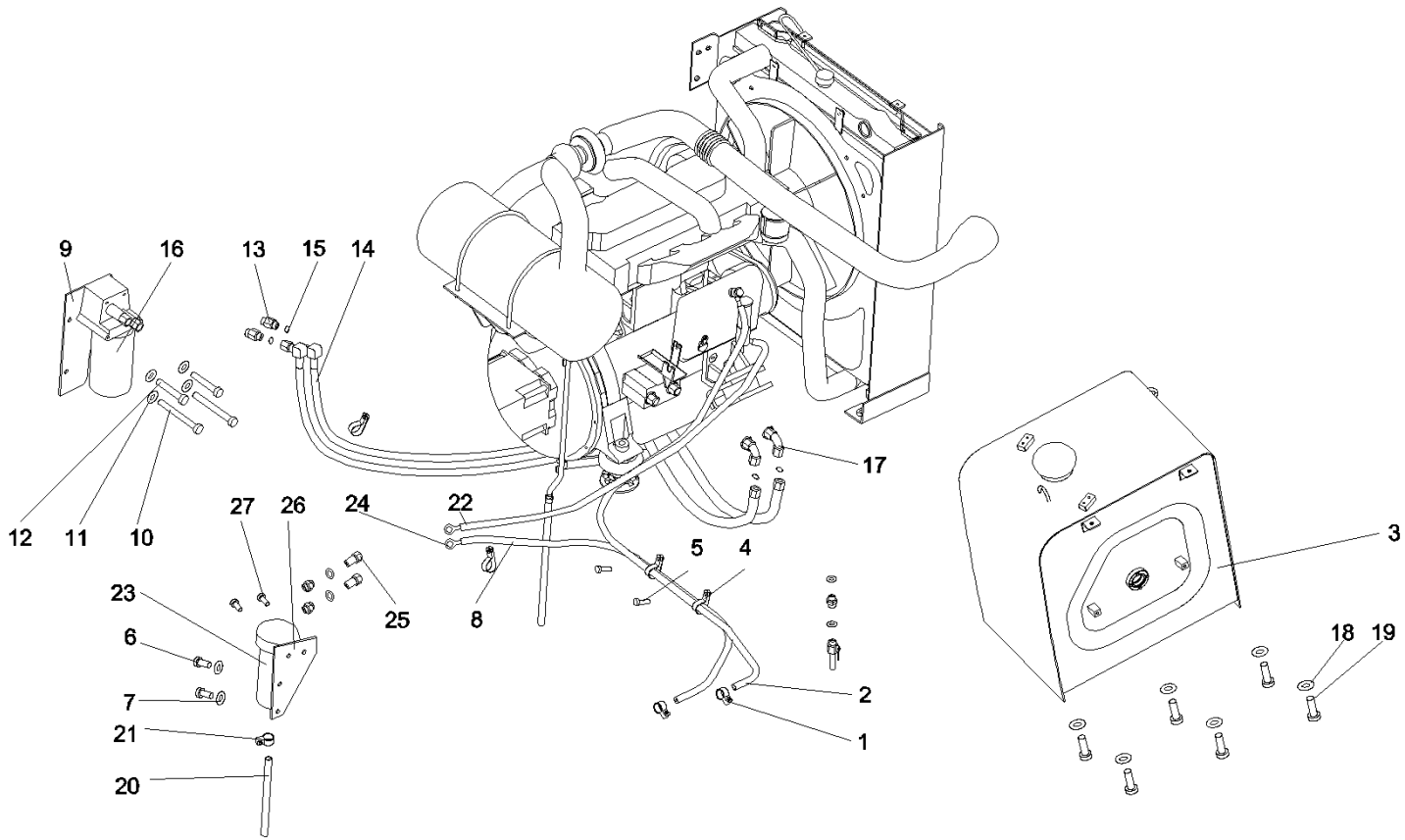

A810102020218 燃油及润滑系统 (Fuel & Lubrication System) (2/2)

识别码 IC	序号 INDEX	零件代码 PART NUMBER	数量 QTY	名称 PART NAME	
2–69–21	21	A229900001345	1	软管环箍	Hoop – Hose
2–69–22	22	10145221	1	发动机进油管	Pipe – Oil Inlet (Engine)
2–69–23	23	60017772	1	柴油滤清器	Filter, diesel
2–69–24	24	60018586	1	燃油管总成	Pipe As – Fuel
2–69–25	25	A210111000295	2	螺栓	Bolt
2–69–26	26	10853100	1	燃油粗滤安装板	Plate – Mtg (Fuel Filter – Primary)
2–69–27	27	21005186	1	螺栓	Bolt

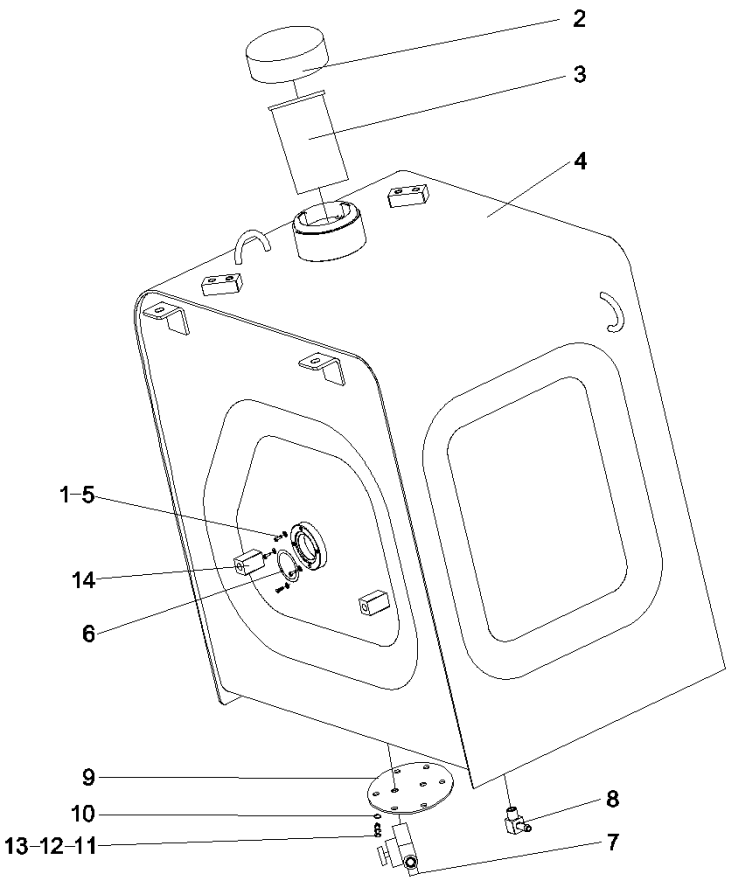
2
3
4
1-5
14
6
9
10
13-12-11
8
7

识别码 IC	序号 INDEX	零件代码 PART NUMBER	数量 QTY	名称 PART NAME	
2–71–1	1	A210204000129	1	螺钉	Screw
2–71–2	2	A290000002193	1	燃油箱锁盖	Cover – Lock (Fuel Tank)
2–71–3	3	B222100000201	1	燃油滤清器	Filter – Fuel
2–71–4	4	A810102021126	1	燃油箱	Fuel Tank
2–71–5	5	A210405000006	4	垫圈	Washer
2–71–6	6	B230101000251	1	O形圈	O–ring
2–71–7	7	A229900000882	1	阀	Valve
2–71–8	8	10210085	1	回油管接头	Fitting – Pipe (Oil Return)
2–71–9	9	11182204	1	底盖总成	Cover As – Bottom
2–71–10	10	B230101000934	1	O形圈	Seal – O – Ring
2–71–11	11	A210401000017	1	垫圈	Washer
2–71–12	12	A210111000090	1	螺栓	Bolt
2–71–13	13	A210405000007	1	垫圈	Washer
2–71–14	14	60029642	1	液位传感器	Sensor – Fluid

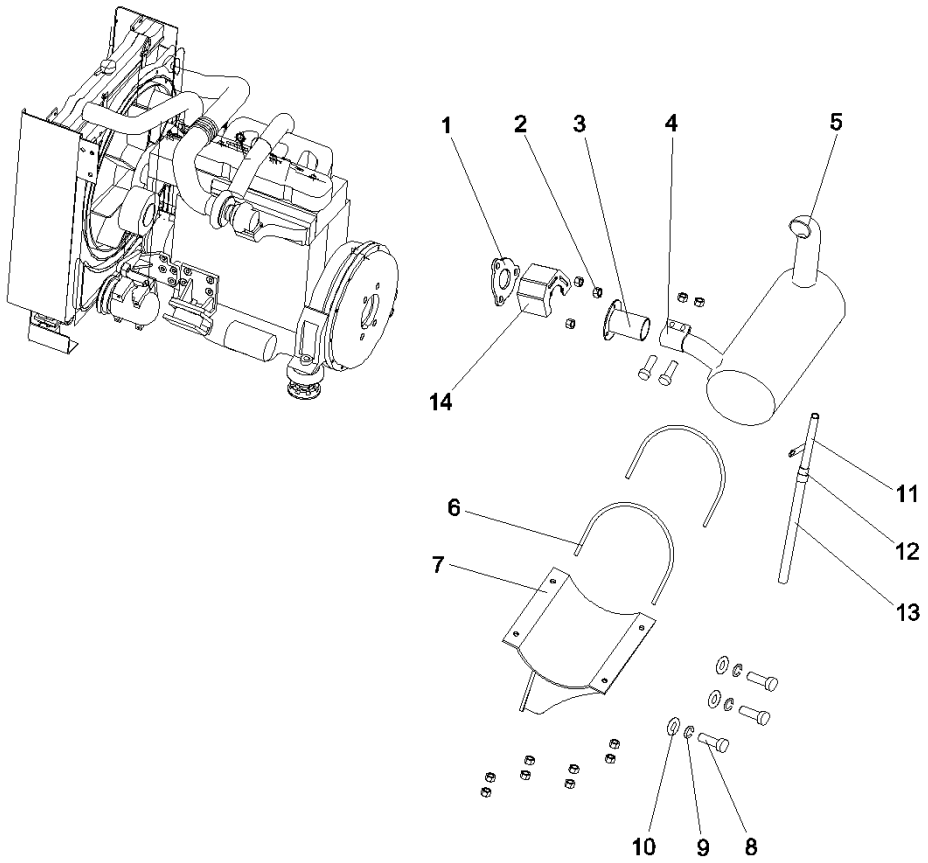
1
2
3
4
5
14
6
7
11
12
13
10
9
8

识别码 IC	序号 INDEX	零件代码 PART NUMBER	数量 QTY	名称 PART NAME	
2–73–1	1	B229900002663	1	增压–排气管垫圈	Washer (Turbocharger – Exhaust
2–73–2	2	A210307000012	11	螺母	Nut
2–73–3	3	A229900005503	1	接管	Pipe – Connecting
2–73–4	4	B210840000021	1	管夹	Clamp
2–73–5	5	A220202000032	1	消声器总成	Muffler As
2–73–6	6	A820301017444	2	U型螺栓	U–Bolt
2–73–7	7	A810102070264	1	支架	Bracket
2–73–8	8	A210204000364	3	螺钉	Screw
2–73–9	9	A210401000001	3	垫圈	Washer
2–73–10	10	A210404000003	3	垫圈	Washer
2–73–11	11	A810102072218	1	排沙管支架	Bracket – Pipe
2–73–12	12	A229900001347	1	软管环箍	Hoop, ring, hose
2–73–13	13	A820606020626	1	引水胶管	Hose
2–73–14	14	10455683	1	增压器护板	Guard – Turbocharger

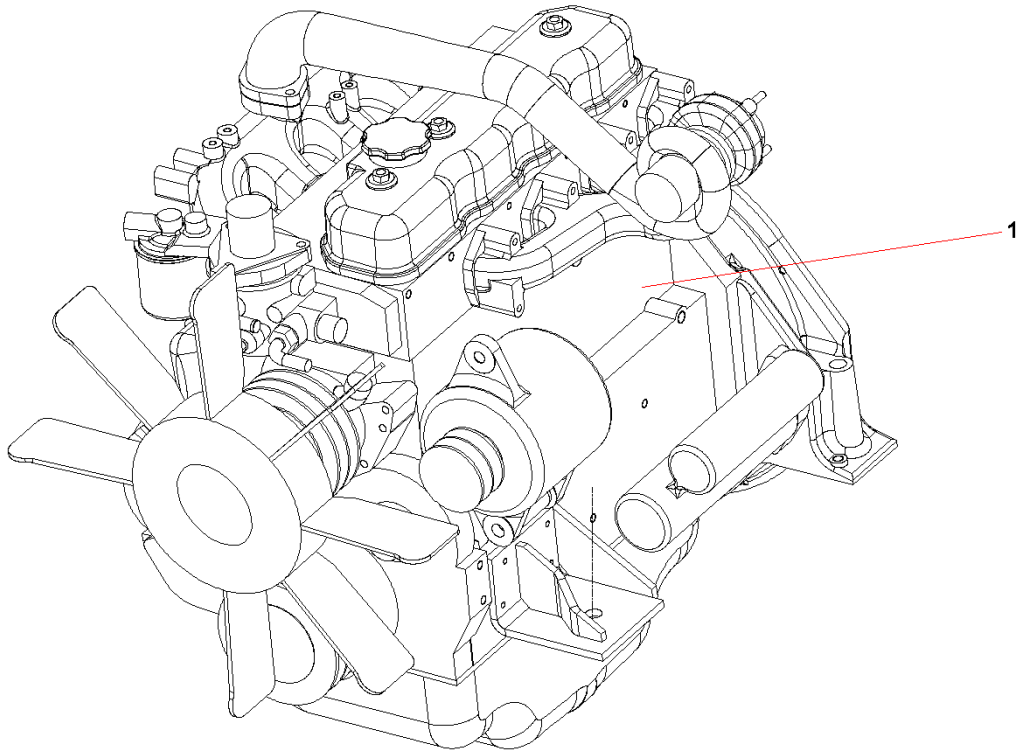
1

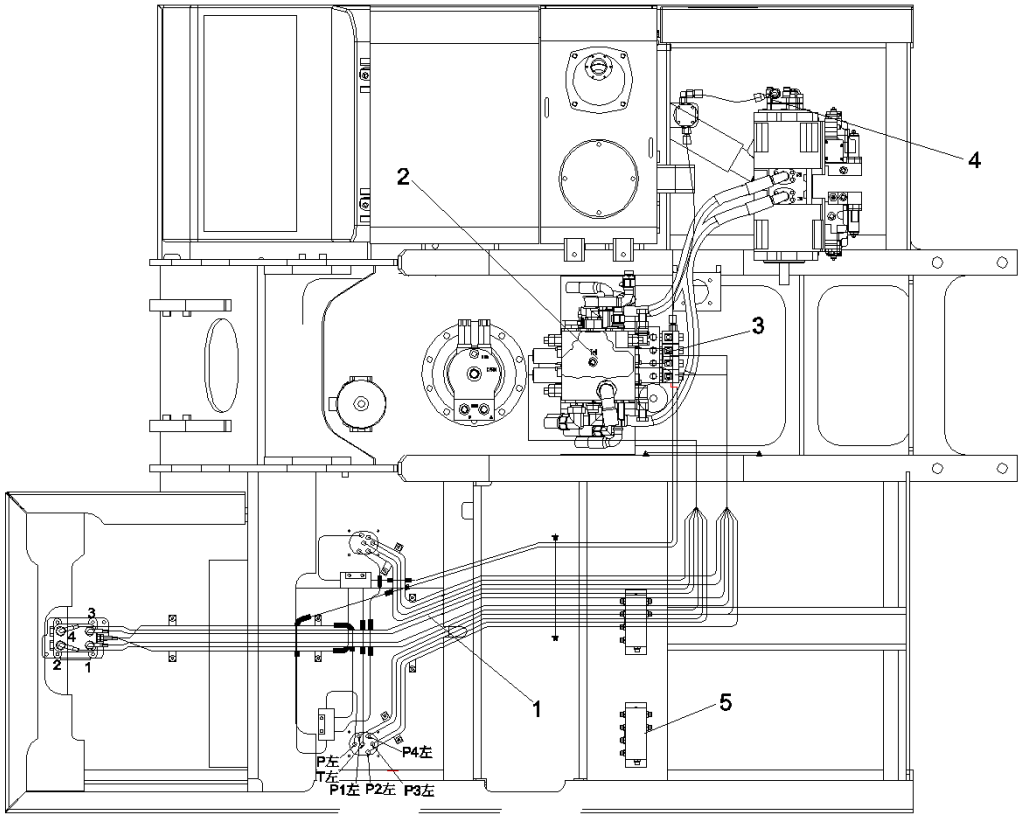
2
4
3
1
5
3
4
2
1
P左
T左
P1左
P2左
P3左
P4左

识别码 IC	序号 INDEX	零件代码 PART NUMBER	数量 QTY	名称 PART NAME	
2–77–1	1	10165921	1	PPC管路	Ppc Lines
2–77–2	2	10165924	1	主阀管路	Lines – Control Valve (Main)
2–77–3	3	10165926	1	电磁阀管路	Lines – Valve (Solenoid)
2–77–4	4	10165928	1	主泵管路	Lines – Main Pump
2–77–5	5	10165922	1	梭阀组管路	Lines – Valve (Shuttle)

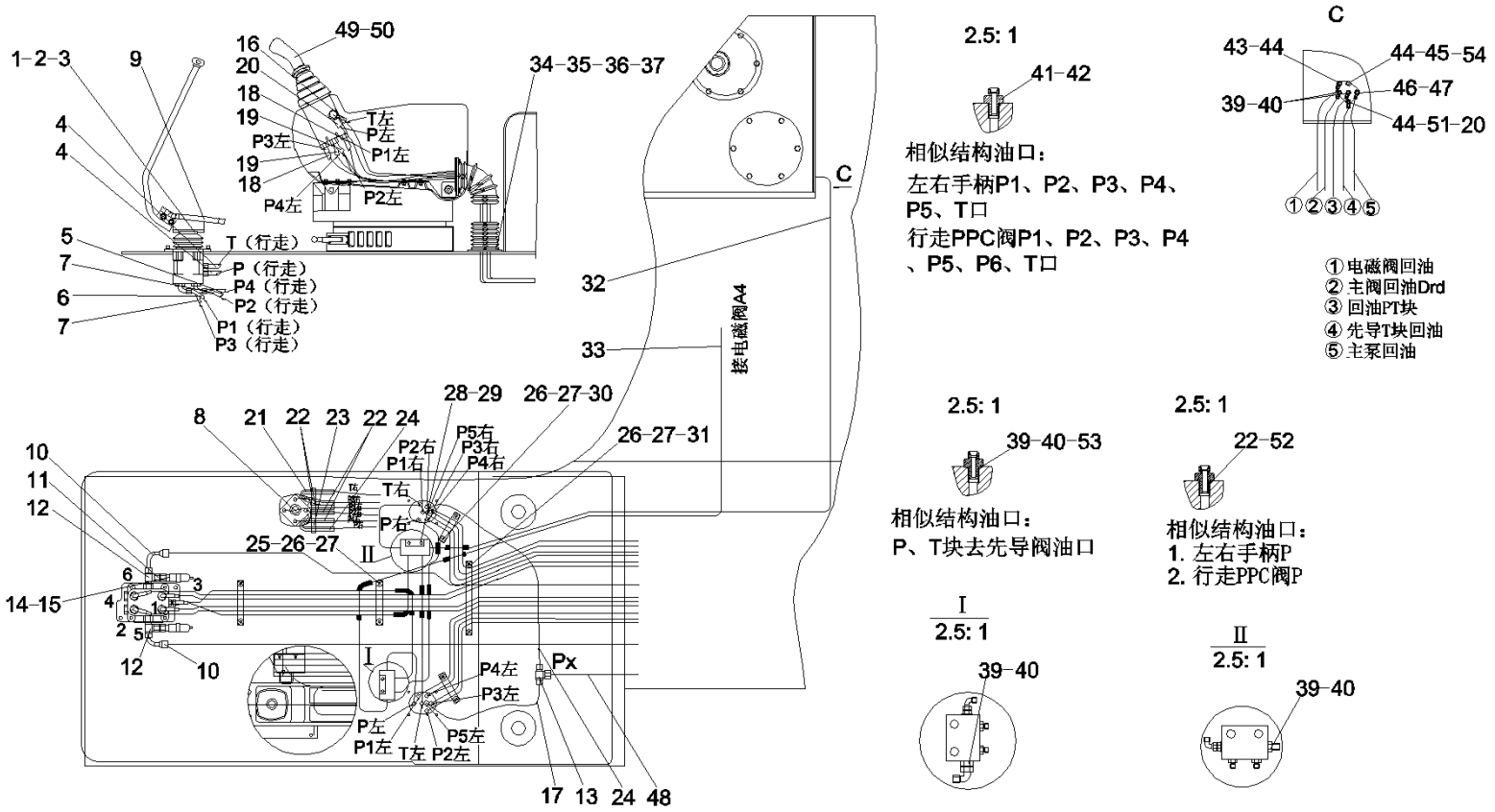
1-2-3
9
16
20
18
19
19
18
49-50
34-35-36-37
T左
P左
P3左
P1左
P4左
P2左
4
4
5
7
6
7
T（行走）
P（行走）
P4（行走）
P2（行走）
P1（行走）
P3（行走）
32
33
C
接电磁阀A4
8
21
22
23
22
24
28-29
26-27-30
26-27-31
P2右
P1右
P5右
P3右
P4右
T右
P右
10
11
12
25-26-27
II
14-15
6
4
3
2
5
12
10
I
P4左
P3左
Px
P左
P1左
T左
P2左
P5左
17
13
24
48
2.5: 1
41-42
相似结构油口：
左右手柄P1、P2、P3、P4、
P5、T口
行走PPC阀P1、P2、P3、P4
、P5、P6、T口
C
43-44
44-45-54
46-47
39-40
44-51-20
①②③④⑤
①电磁阀回油
②主阀回油Drd
③回油PT块
④先导T块回油
⑤主泵回油
2.5: 1
39-40-53
相似结构油口：
P、T块去先导阀油口
2.5: 1
22-52
相似结构油口：
1. 左右手柄P
2. 行走PPC阀P
I
2.5: 1
39-40
II
2.5: 1
39-40

识别码 IC	序号 INDEX	零件代码 PART NUMBER	数量 QTY	名称 PART NAME	
2–79–1	1	A210401000001	8	垫圈	Washer
2–79–2	2	A210111000197	4	螺栓	Bolt
2–79–3	3	60004101	1	脚踏阀	Valve – Foot
2–79–4	4	B230103000982	2	胶管	Hose
2–79–5	5	B230103001563	1	胶管	Hose
2–79–6	6	B230103002275	1	胶管	Hose
2–79–7	7	B230103000899	2	胶管	Hose
2–79–8	8	B220401001301	2	手动先导阀	Valve, pilot, manual
2–79–9	9	B229900005985	1	脚踏阀垫板	Gasket – Valve (Foot)
2–79–10	10	B230103001892	2	胶管	Hose
2–79–11	11	B210780001045	2	管接头	Connector
2–79–12	12	B210780000170	2	管接头	Connector
2–79–13	13	B220400000169	1	三通梭阀	Valve – Shuttle (Tee)
2–79–14	14	A820205000944	2	继电器过渡接头	Fitting – Relay
2–79–15	15	A240700000548	2	压力继电器	Relay – Pressure
2–79–16	16	B230103002263	1	胶管	Hose
2–79–17	17	A831211120000	2	胶管	Hose
2–79–18	18	A831211300000	2	胶管	Hose
2–79–19	19	B230103001375	2	胶管	Hose
2–79–20	20	B210780000418	1	管接头	Connector

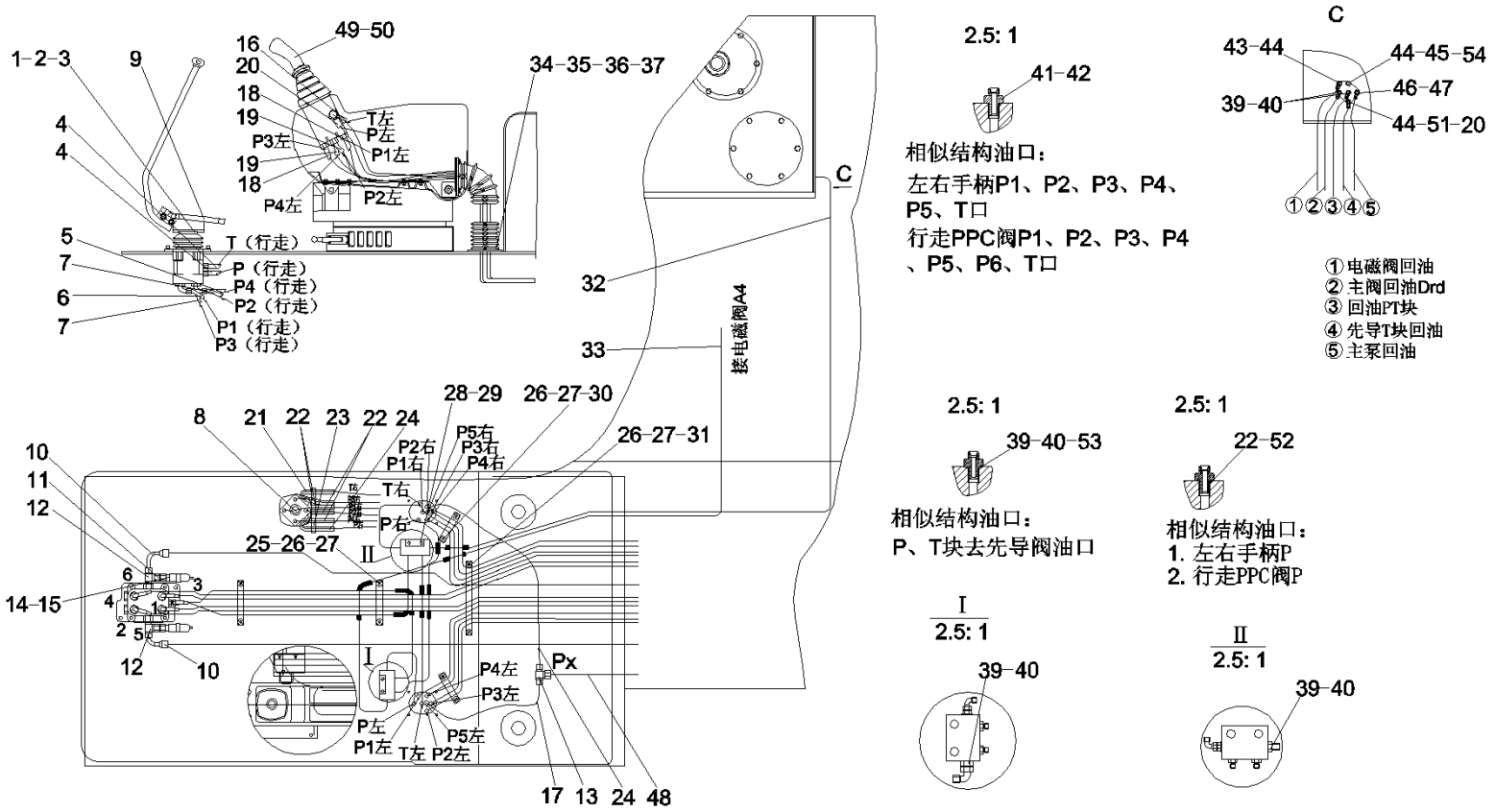
1-2-3
9
16
20
18
19
19
18
49-50
34-35-36-37
T左
P左
P3左
P1左
P4左
P2左
4
4
5
7
6
7
T（行走）
P（行走）
P4（行走）
P2（行走）
P1（行走）
P3（行走）
32
33
C
接电磁阀A4
8
21
22
23
22
24
28-29
26-27-30
26-27-31
P2右
P1右
P5右
P3右
P4右
T右
P右
10
11
12
25-26-27
II
14-15
6
4
3
2
5
12
10
I
P4左
P3左
Px
P左
P1左
T左
P2左
P5左
17
13
24
48
2.5: 1
41-42
相似结构油口：
左右手柄P1、P2、P3、P4、
P5、T口
行走PPC阀P1、P2、P3、P4
、P5、P6、T口
C
43-44
44-45-54
46-47
39-40
44-51-20
①②③④⑤
①电磁阀回油
②主阀回油Drd
③回油PT块
④先导T块回油
⑤主泵回油
2.5: 1
39-40-53
相似结构油口：
P、T块去先导阀油口
2.5: 1
22-52
相似结构油口：
1. 左右手柄P
2. 行走PPC阀P
I
2.5: 1
39-40
II
2.5: 1
39-40

识别码 IC	序号 INDEX	零件代码 PART NUMBER	数量 QTY	名称 PART NAME	
2–81–21	21	B230103000983	1	胶管	Hose
2–81–22	22	B230103001434	4	胶管	Hose
2–81–23	23	A239900000065	6	尼龙扎带	Band – Nylon
2–81–24	24	B230103002722	2	管	Hose, rubber
2–81–25	25	A820101117104	2	管夹	Clamp
2–81–26	26	A210111000348	10	螺栓	Bolt
2–81–27	27	A210401000017	10	垫圈	Washer
2–81–28	28	A820199000360	2	PT块	PT – Block
2–81–29	29	21005186	4	螺栓	Bolt
2–81–30	30	A820101117116	3	管夹	Clamp
2–81–31	31	10379080	1	管夹	Clamp
2–81–32	32	B230103002553	1	胶管	Hose
2–81–33	33	B230103003283	1	胶管	Hose
2–81–34	34	A820601990304	2	法兰	Flange
2–81–35	35	A820601990336	2	波纹管	Bellows
2–81–36	36	A210111000078	20	螺栓	Bolt
2–81–37	37	A210401000016	20	垫圈	Washer
2–81–39	39	A230101000247	10	O形圈	Seal – O – Ring
2–81–40	40	A820205000839	8	接头	Connector
2–81–41	41	A820205000940	19	接头	Connector

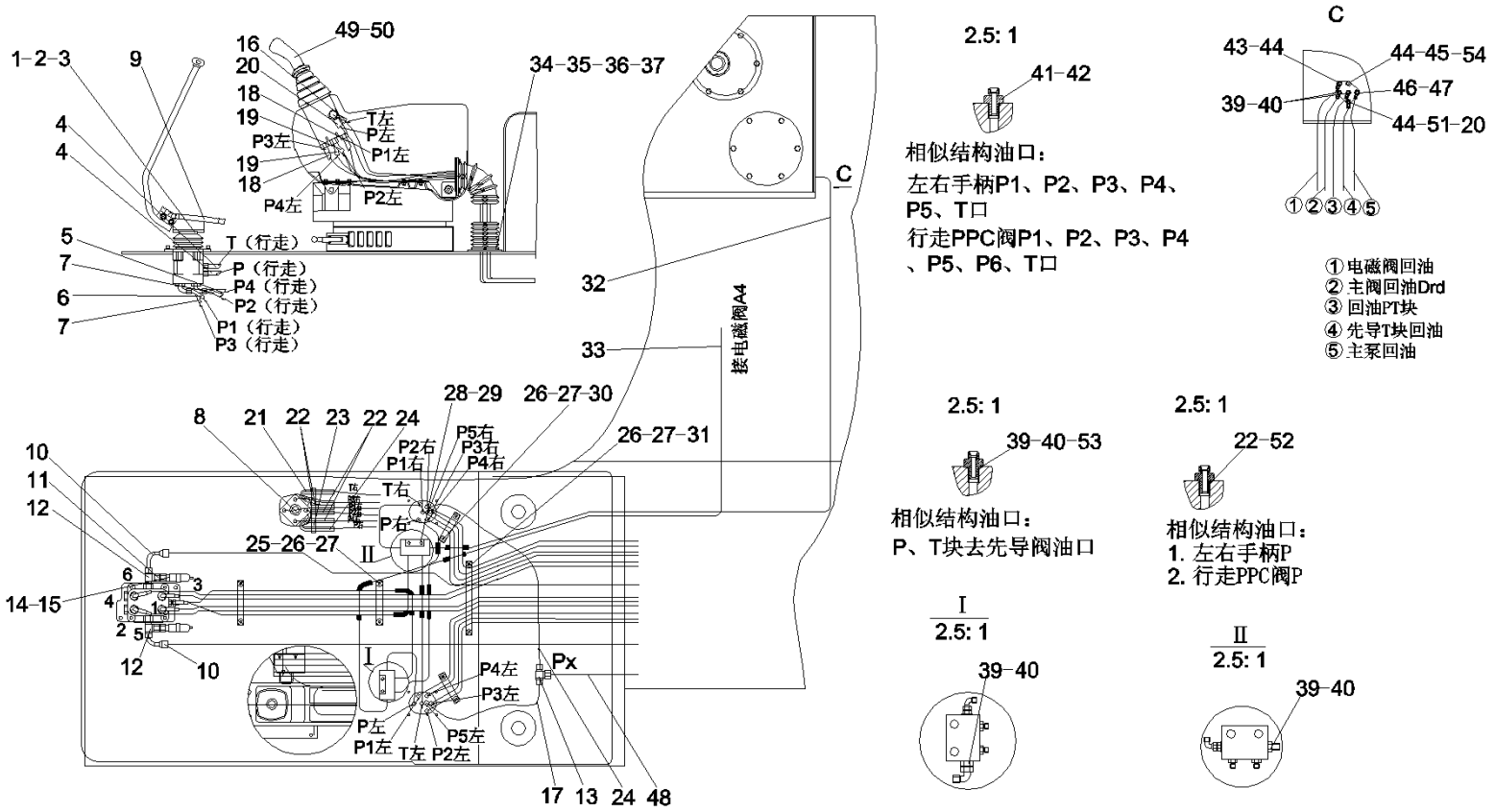
1-2-3
9
16
20
18
19
19
18
49-50
34-35-36-37
T左
P左
P3左
P1左
P4左
P2左
4
4
5
7
6
7
T（行走）
P（行走）
P4（行走）
P2（行走）
P1（行走）
P3（行走）
32
33
C
接电磁阀A4
8
21
22
23
22
24
28-29
26-27-30
26-27-31
P2右
P1右
P5右
P3右
P4右
T右
P右
10
11
12
25-26-27
II
14-15
6
4
3
2
5
12
10
I
P4左
P3左
Px
P左
P1左
T左
P2左
P5左
17
13
24
48
2.5: 1
41-42
相似结构油口：
左右手柄P1、P2、P3、P4、
P5、T口
行走PPC阀P1、P2、P3、P4
、P5、P6、T口
C
43-44
44-45-54
46-47
39-40
44-51-20
①②③④⑤
①电磁阀回油
②主阀回油Drd
③回油PT块
④先导T块回油
⑤主泵回油
2.5: 1
39-40-53
相似结构油口：
P、T块去先导阀油口
2.5: 1
22-52
相似结构油口：
1. 左右手柄P
2. 行走PPC阀P
I
2.5: 1
39-40
II
2.5: 1
39-40

识别码 IC	序号 INDEX	零件代码 PART NUMBER	数量 QTY	名称 PART NAME	
2–83–42	42	B230101000047	22	O形圈	Seal – O – Ring
2–83–43	43	A820205000836	1	接头	Connector
2–83–44	44	A230101000243	3	O形圈	Seal – O – Ring
2–83–45	45	A820205001027	1	M20堵头	Plug
2–83–46	46	A820205000837	1	接头	Connector
2–83–47	47	A229900001581	2	O形圈	Seal – O – Ring
2–83–48	48	B230103002709	1	胶管	Hose
2–83–49	49	10585259	1	左手柄总装	Joystick As – Lh
2–83–50	50	10585261	1	右手柄总装	Joystick As – Rh
2–83–51	51	A820205000838	2	接头	Connector
2–83–52	52	60020078	3	过滤接头	Fitting
2–83–53	53	A820205000894	2	接头	Connector
2–83–54	54	B210780000024	2	管接头	Connector

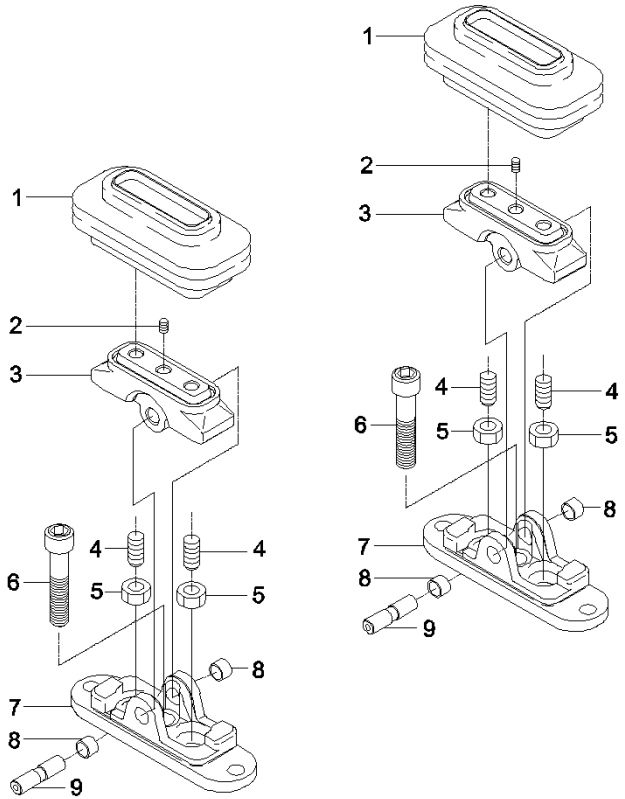

60004101 脚踏阀 (Valve - Foot) (1/3)

识别码 IC	序号 INDEX	零件代码 PART NUMBER	数量 QTY	名称 PART NAME	
2–85–1	1	60008593	2	护罩	Hood
2–85–2	2	60038339	2	定位螺栓	Bolt – Positioning
2–85–3	3	60008591	2	凸轮	Cam
2–85–4	4	60008592	4	调整螺杆	Rod – Screw (Adjusting)
2–85–5	5	60038480	4	螺母	Nut
2–85–6	6	60038527	2	螺栓	Bolt
2–85–7	7	60008791	2	盖	Cover
2–85–8	8	60038181	4	衬套	Sleeve
2–85–9	9	60008585	2	凸轮轴	Camshaft

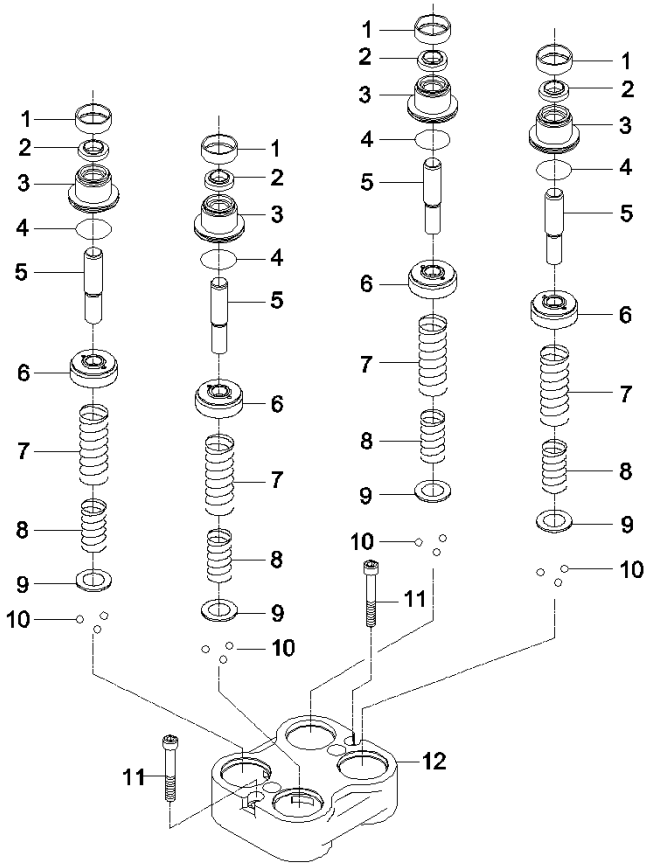

60004101 脚踏阀 (Valve - Foot) (2/3)

识别码 IC	序号 INDEX	零件代码 PART NUMBER	数量 QTY	名称 PART NAME	
2–87–1	1	60008754	4	盖	Cover
2–87–2	2	60008776	4	防尘圈	Ring – Dust
2–87–3	3	60008780	4	堵	Plug
2–87–4	4	60038720	4	O形圈	Seal – O – Ring
2–87–5	5	60008813	4	推杆	Pushrod
2–87–6	6	60008803	4	活塞	Piston
2–87–7	7	60008767	4	弹簧	Spring
2–87–8	8	60008766	4	弹簧	Spring
2–87–9	9	60008756	4	弹簧座	Seat – Spring
2–87–10	10	60038140	12	轴承钢珠	Ball – Bearing
2–87–11	11	60038563	2	内六角螺钉	Screw – Socket Head
2–87–12	12	60038605	1	外壳(阻尼器)	Housing

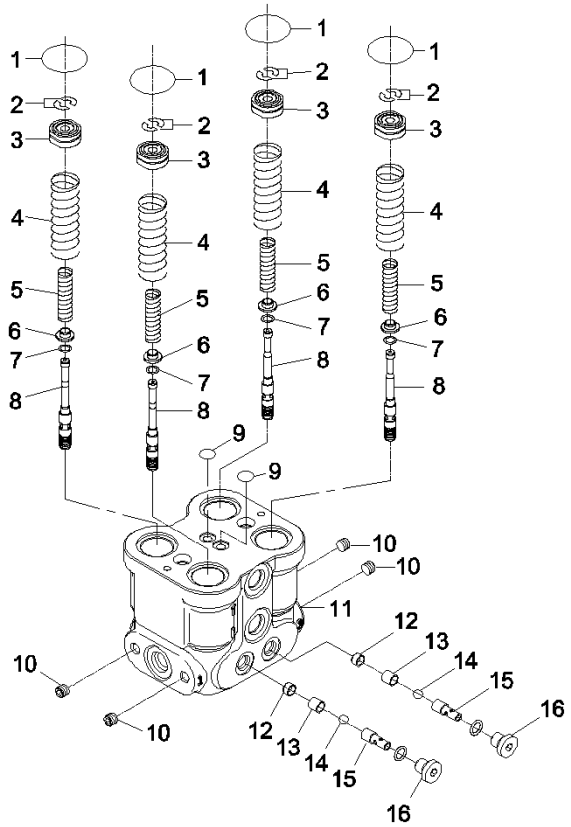

60004101 脚踏阀 (Valve - Foot) (3/3)

识别码 IC	序号 INDEX	零件代码 PART NUMBER	数量 QTY	名称 PART NAME	
2–89–1	1	60038820	4	O形圈	Seal – O – Ring
2–89–2	2	60008596	4	垫圈	Washer
2–89–3	3	60008757	4	弹簧座	Seat – Spring
2–89–4	4	60038221	4	弹簧	Spring
2–89–5	5	60008594	4	弹簧	Spring
2–89–6	6	60008589	4	垫圈	Washer
2–89–7	7	60008597	4	垫圈	Washer
2–89–8	8	60008588	4	柱塞	Plunger
2–89–9	9	60038727	2	O形圈	Seal – O – Ring
2–89–10	10	60008728	4	紧定螺钉	Setscrew
2–89–11	11	60038436	1	壳体	Housing
2–89–12	12	60038702	2	座	Seat
2–89–13	13	60038020	2	套	Sleeve
2–89–14	14	60038139	2	轴承钢珠	Ball – Bearing
2–89–15	15	60038703	2	座	Seat
2–89–16	16	60038487	2	螺塞	Plug

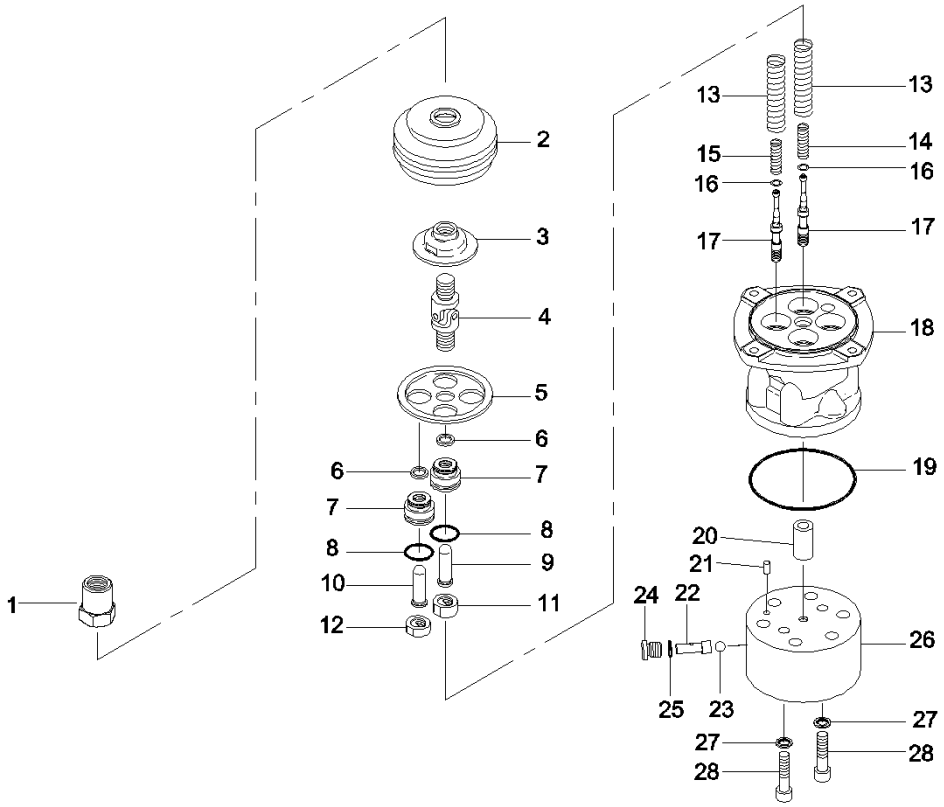

B220401001301 手动先导阀 (Valve, pilot, manual) (1/2)

识别码 IC	序号 INDEX	零件代码 PART NUMBER	数量 QTY	名称 PART NAME	
2-91-1	1	60038479	1	螺母	Nut
2-91-2	2	60038013	1	密封套	Sleeve – Seal
2-91-3	3	60008809	1	圆板	Plate
2-91-4	4	60008602	1	接头	Connector
2-91-5	5	60037936	1	板	Plate
2-91-6	6	60008603	4	密封圈	Ring – Seal
2-91-7	7	60008595	4	堵头	Plug
2-91-8	8	60038715	4	O形圈	Seal – O – Ring
2-91-9	9	60008599	2	推动杆	Pushrod
2-91-10	10	60038601	2	推杆	Pushrod
2-91-11	11	60008758	2	弹簧座	Seat – Spring
2-91-12	12	60038272	2	弹簧座	Seat – Spring
2-91-13	13	60008774	4	弹簧	Spring
2-91-14	14	60038242	2	弹簧	Spring
2-91-15	15	60038241	2	弹簧	Spring
2-91-16	16	60008597	4	垫圈	Washer
2-91-17	17	60008760	4	滑轴	Shaft
2-91-18	18	60008795	1	壳体	Housing
2-91-19	19	60008799	1	O形圈	Seal – O–Ring
2-91-20	20	60008806	1	衬套	Bushing

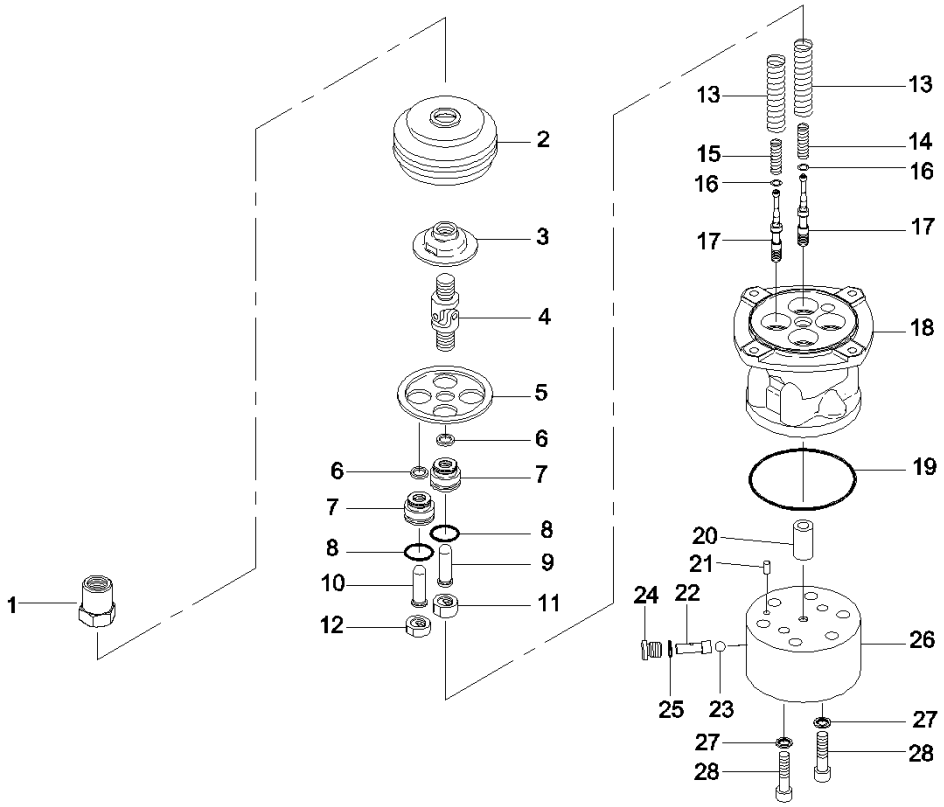
1
2
3
4
5
6
6
7
7
8
8
9
10
11
12
13
13
14
15
16
16
17
17
18
19
20
21
22
24
23
25
26
27
27
28
28

识别码 IC	序号 INDEX	零件代码 PART NUMBER	数量 QTY	名称 PART NAME	
2–93–21	21	60038259	1	弹簧销	Pin – Spring
2–93–22	22	60038704	2	座	Seat
2–93–23	23	60038139	3	轴承钢珠	Ball – Bearing
2–93–24	24	60038487	3	螺塞	Plug
2–93–25	25	60038727	3	O形圈	Seal – O – Ring
2–93–26	26	60037937	1	板	Plate
2–93–27	27	60008598	2	密封垫圈	Washer
2–93–28	28	60038553	2	内六角螺钉	Screw – Socket Head

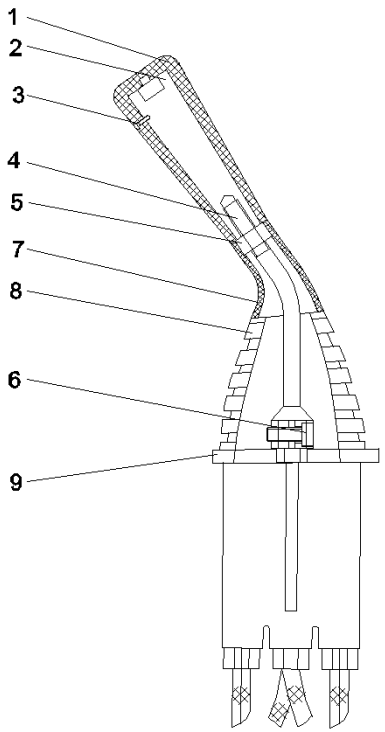
1
2
3
4
5
7
8
6
9

识别码 IC	序号 INDEX	零件代码 PART NUMBER	数量 QTY	名称 PART NAME	
2–95–1	1	B229900001613	1	左手柄	Grip – Lh
2–95–2	2	A229900006438	1	插入件	Insert
2–95–3	3	A210264000022	1	自攻螺钉	Screw – Tapping
2–95–4	4	11050165	1	手柄	Grip
2–95–5	5	A210308000006	1	螺母	Nut
2–95–6	6	A210307000025	1	螺母	Nut
2–95–7	7	A229900006446	1	罩	Hood
2–95–8	8	A229900001028	1	罩	Hood
2–95–9	9	A229900001027	1	板	Plate

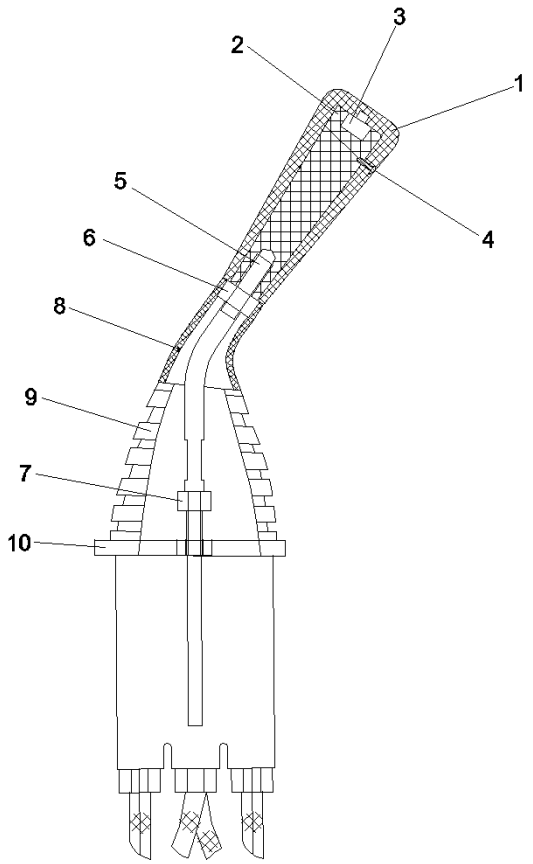
3
2
1
5
4
6
8
9
7
10

识别码 IC	序号 INDEX	零件代码 PART NUMBER	数量 QTY	名称 PART NAME	
2–97–1	1	B229900001614	1	右手柄	Grip – Rh
2–97–2	2	A229900006438	1	插入件	Insert
2–97–3	3	60034948	1	开关	Switch
2–97–4	4	A210264000022	1	自攻螺钉	Screw – Tapping
2–97–5	5	11050165	1	手柄	Grip
2–97–6	6	A210308000006	1	螺母	Nut
2–97–7	7	A210307000025	1	螺母	Nut
2–97–8	8	A229900006446	1	罩	Hood
2–97–9	9	A229900001028	1	罩	Hood
2–97–10	10	A229900001027	1	板	Plate

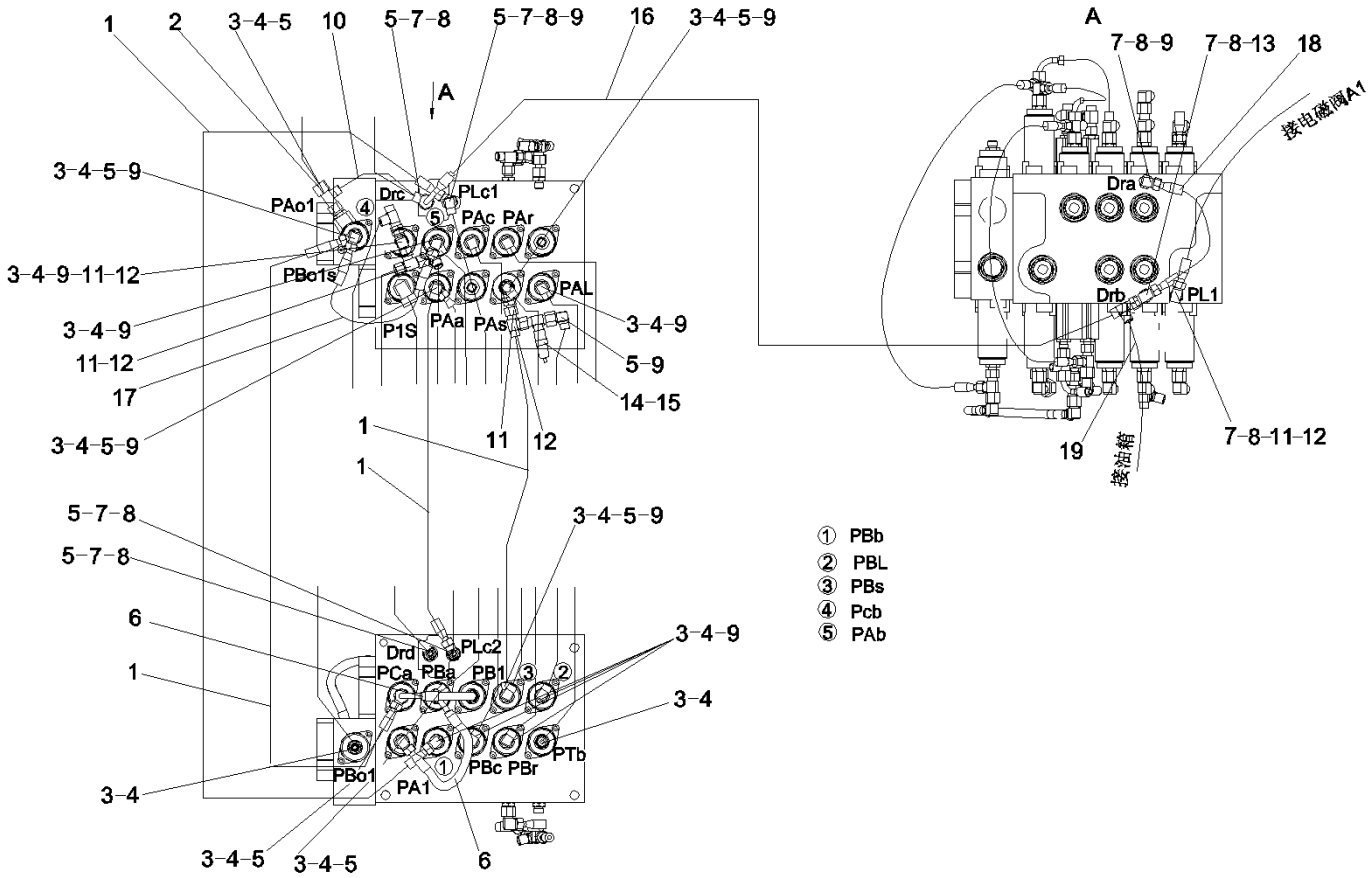
1
2
3-4-5
10
5-7-8
5-7-8-9
16
3-4-5-9
A
3-4-5-9
PAo1
Drc
PLc1
PAc
PAr
3-4-9-11-12
PBo1s
PAL
3-4-9
P1S
PAa
PAs
3-4-9
11-12
5-9
17
14-15
3-4-5-9
1
11
12
1
5-7-8
5-7-8
3-4-5-9
6
1
Drd
PLc2
PCa
PBa
PB1
3
2
3-4-9
3-4
PTb
PBo1
PA1
PBc
PBr
3-4
3-4-5
3-4-5
6
A
7-8-9
7-8-13
18
接电磁阀A1
Dra
Drb
PL1
19
接油箱
7-8-11-12
① PBb
② PBL
③ PBs
④ Pcb
⑤ PAb

识别码 IC	序号 INDEX	零件代码 PART NUMBER	数量 QTY	名称 PART NAME	
2–99–1	1	B230103000995	4	胶管	Hose
2–99–2	2	B230103000808	1	胶管	Hose, rubber
2–99–3	3	A820205000946	20	接头	Connector
2–99–4	4	B230101000049	20	O形圈	Seal – O – Ring
2–99–5	5	B210780000170	12	管接头	Connector
2–99–6	6	B230103002045	3	胶管	Hose
2–99–7	7	A820205000940	8	接头	Connector
2–99–8	8	B230101000047	8	O形圈	Seal – O – Ring
2–99–9	9	B210780000418	19	管接头	Connector
2–99–10	10	A831213035000	1	胶管	Hose, rubber
2–99–11	11	B210780001045	3	管接头	Connector
2–99–12	12	B220400000169	2	三通梭阀	Valve – Shuttle (Tee)
2–99–13	13	B210780000172	2	管接头	Connector
2–99–14	14	A820205000944	1	继电器过渡接头	Fitting – Relay
2–99–15	15	A240700000548	1	压力继电器	Relay – Pressure
2–99–16	16	B230103002657	1	胶管	Hose
2–99–17	17	B230103004133	1	胶管	Hose
2–99–18	18	B230103001898	1	胶管	Hose
2–99–19	19	B230103001114	2	胶管	Hose

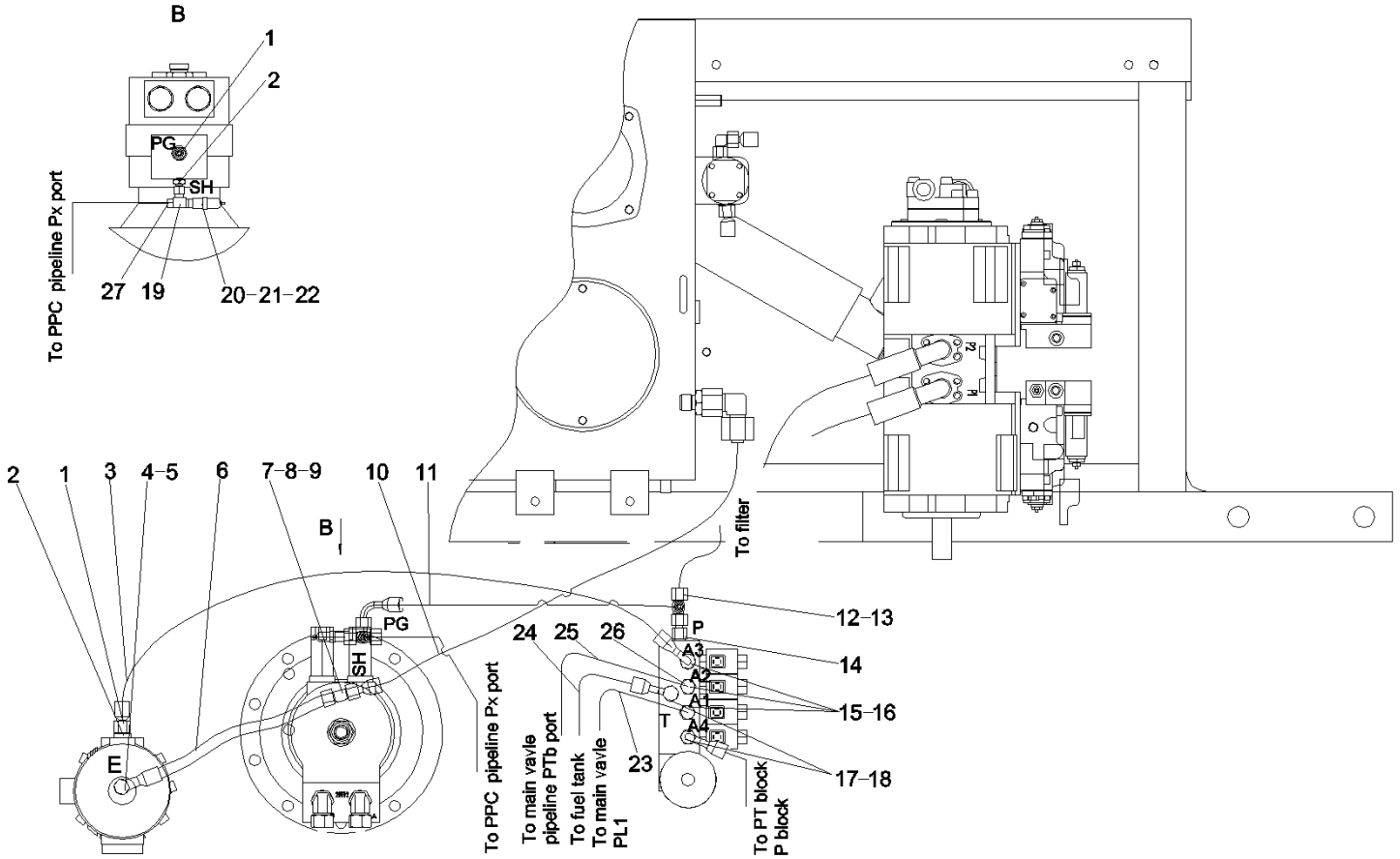
B
1
2
PG
SH
To PPC pipeline Px port
27
19
20–21–22
2
1
3
4–5
6
7–8–9
10
11
B
To filter
12–13
14
15–16
17–18
PG
SH
E
24
25
26
23
P
A3
A2
A1
A4
T
To PPC pipeline Px port
To main vavle pipeline PTb port
To fuel tank
To main vavle PL1
To PT block P block

识别码 IC	序号 INDEX	零件代码 PART NUMBER	数量 QTY	名称 PART NAME	
2–101–1	1	A820205000940	3	接头	Connector
2–101–2	2	B230101000047	3	O形圈	Seal – O – Ring
2–101–3	3	B230103003046	1	胶管	Hose
2–101–4	4	A820205000962	1	接头	Connector
2–101–5	5	B230101000090	1	O形圈	Seal – O – Ring
2–101–6	6	B230103004072	1	胶管	Hose, rubber
2–101–7	7	B230101000049	1	O形圈	Seal – O – Ring
2–101–8	8	A820205000948	1	G3/8–M26接头	Connector
2–101–9	9	B210780001363	1	管接头	Connector, pipe
2–101–10	10	B230103001100	1	胶管	Hose
2–101–11	11	A831213065000	1	胶管	Hose
2–101–12	12	B210780000016	1	管接头	Connector
2–101–13	13	B210780000827	1	管接头	Connector
2–101–14	14	A820205000894	1	接头	Connector
2–101–15	15	A820205000839	3	接头	Connector
2–101–16	16	A230101000247	4	O形圈	Seal – O – Ring
2–101–17	17	A820205000838	2	接头	Connector
2–101–18	18	A230101000243	2	O形圈	Seal – O – Ring
2–101–19	19	B210780000172	1	管接头	Connector
2–101–20	20	B210780001045	1	管接头	Connector

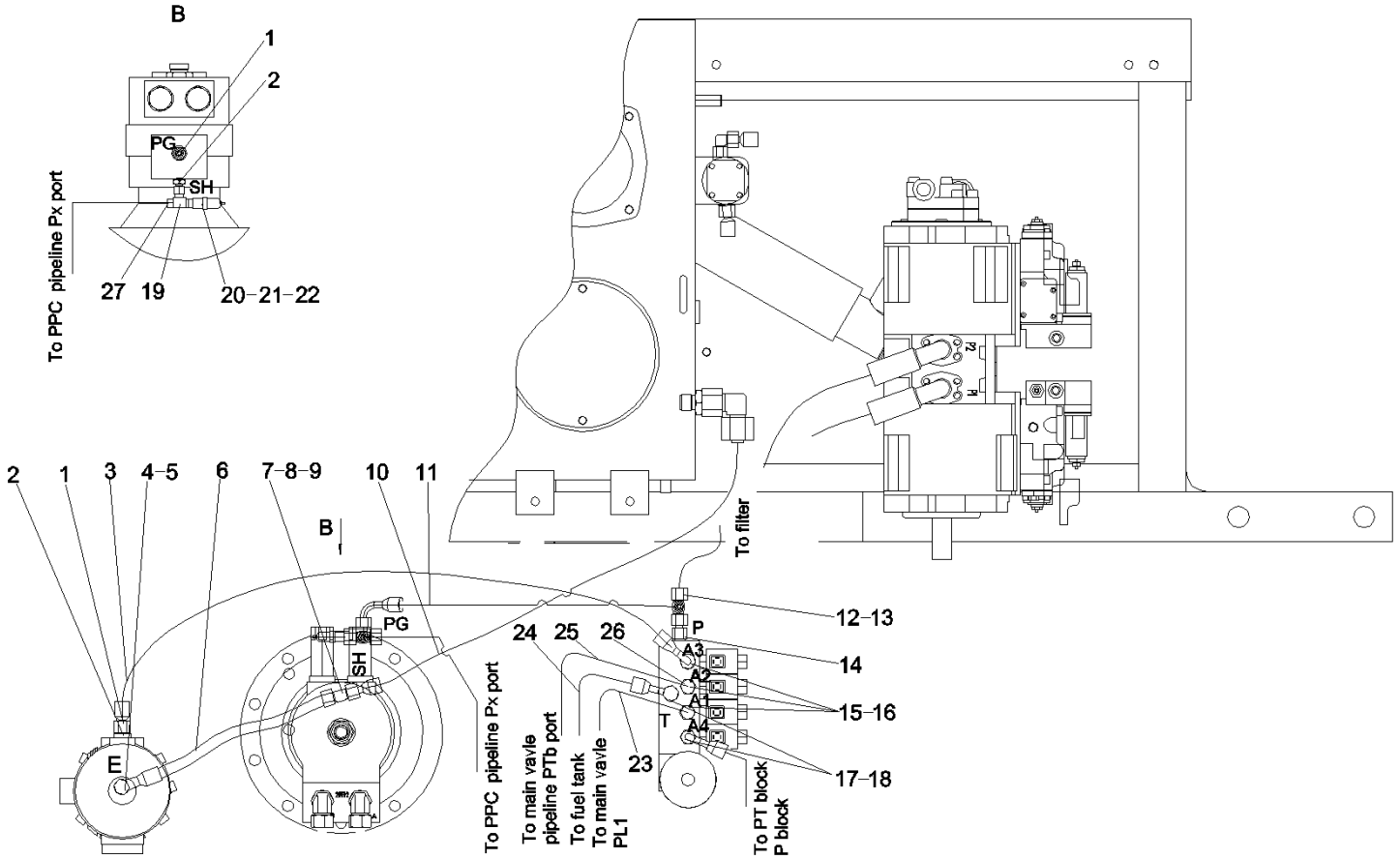
B
1
2
PG
SH
To PPC pipeline Px port
27
19
20–21–22
2
1
3
4–5
6
7–8–9
10
11
B
To filter
12–13
14
15–16
17–18
PG
SH
E
24
25
26
P
A3
A2
A1
T
A4
23
To PPC pipeline Px port
To main vavle pipeline PTb port
To fuel tank
To main vavle PL1
To PT block P block

识别码 IC	序号 INDEX	零件代码 PART NUMBER	数量 QTY	名称 PART NAME	
2–103–21	21	A820205000944	1	继电器过渡接头	Fitting – Relay
2–103–22	22	B240700000221	1	压力继电器	Relay – Pressure
2–103–23	23	B230103002043	1	胶管	Hose
2–103–24	24	B230103002543	1	胶管	Hose, rubber
2–103–25	25	B230103001898	1	胶管	Hose
2–103–26	26	B210780000170	2	管接头	Connector
2–103–27	27	B210780000418	2	管接头	Connector

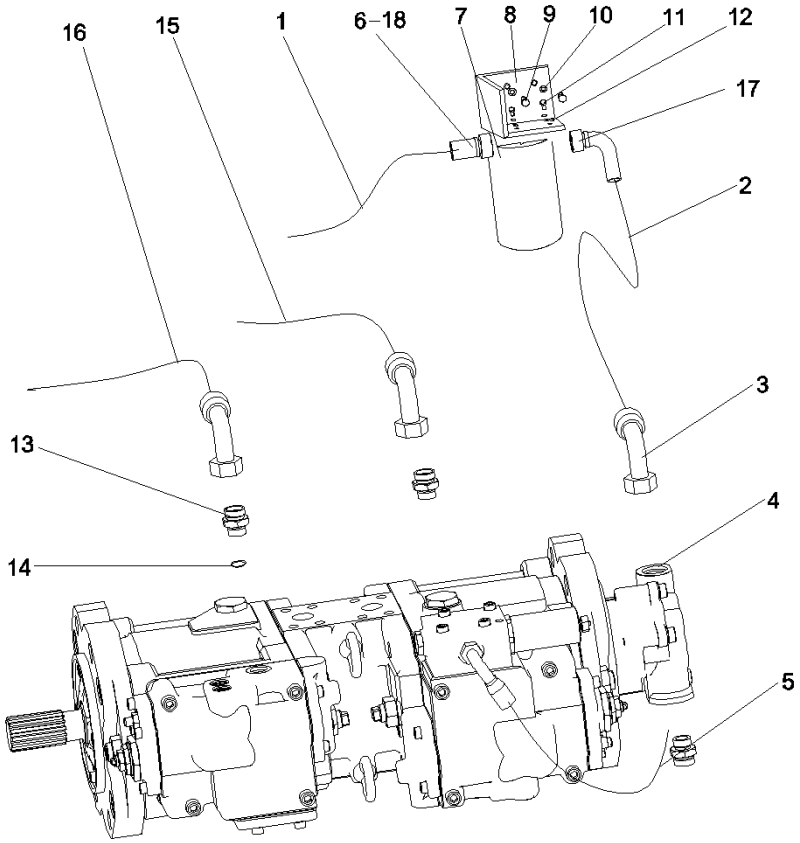
16
15
1
6-18
7
8
9
10
11
12
17
2
3
13
4
14
5

识别码 IC	序号 INDEX	零件代码 PART NUMBER	数量 QTY	名称 PART NAME	
2–105–1	1	B230103001433	1	胶管	Hose, rubber
2–105–2	2	B230103002543	1	胶管	Hose, rubber
2–105–3	3	A820205000941	1	接头	Connector
2–105–4	4	B230101000090	1	O形圈	Seal – O – Ring
2–105–5	5	B230103000808	1	胶管	Hose, rubber
2–105–6	6	B210780000746	1	管接头	Connector, pipe
2–105–7	7	B229900000063	1	滤油器	Filter – Oil
2–105–8	8	A810102023065	1	先导过滤支架	Bracket
2–105–9	9	A210204000337	2	螺钉	Screw
2–105–10	10	A210401000002	2	螺栓	Washer
2–105–11	11	A210204000339	4	螺钉	Screw
2–105–12	12	A210401000017	4	垫圈	Washer
2–105–13	13	A820205000940	4	接头	Connector
2–105–14	14	B230101000047	4	O形圈	Seal – O – Ring
2–105–15	15	B230103004707	1	胶管	Hose
2–105–16	16	B230103000074	1	胶管	Hose
2–105–17	17	B210780000418	2	管接头	Connector
2–105–18	18	B210780000024	1	管接头	Connector

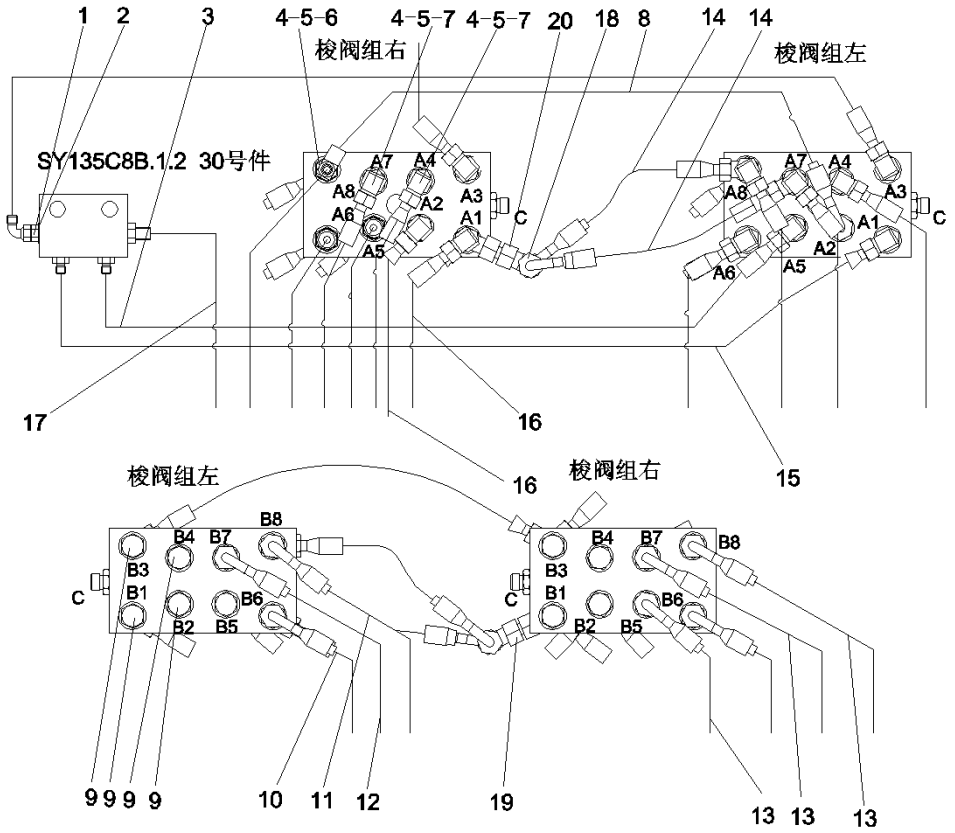
1 2 3 4-5-6 4-5-7 4-5-7 20 18 8 14 14
梭阀组右
梭阀组左
SY135C8B.1.2 30号件
A7 A4 A8 A3 A2 A6 A1 A5 C
17
16
15
梭阀组左
梭阀组右
B8 B4 B7 B3 B1 B6 B2 B5 C
9 9 9 9
10 11 12
19
13 13 13

识别码 IC	序号 INDEX	零件代码 PART NUMBER	数量 QTY	名称 PART NAME	
2–107–1	1	A820205000839	4	接头	Connector
2–107–2	2	A230101000247	4	O形圈	Seal – O – Ring
2–107–3	3	B230103003046	2	胶管	Hose
2–107–4	4	A820205002652	25	接头	Connector
2–107–5	5	B230101001197	34	O形圈	O–ring
2–107–6	6	B210780000170	5	管接头	Connector
2–107–7	7	B210780000418	11	管接头	Connector
2–107–8	8	B230103000977	1	胶管	Hose
2–107–9	9	A820205002653	9	堵头	Plug
2–107–10	10	B230103000074	1	胶管	Hose
2–107–11	11	B230103000872	2	胶管	Hose, rubber
2–107–12	12	A831213135000	2	胶管	Hose
2–107–13	13	B230103000983	3	胶管	Hose
2–107–14	14	B230103004133	2	胶管	Hose
2–107–15	15	B230103002040	1	胶管	Hose, rubber
2–107–16	16	B230103000875	2	胶管	Hose, rubber
2–107–17	17	A831213050000	1	胶管	Hose, rubber
2–107–18	18	B220400000169	1	三通梭阀	Valve – Shuttle (Tee)
2–107–19	19	A831213035000	1	胶管	Hose, rubber
2–107–20	20	B210780001045	1	管接头	Connector

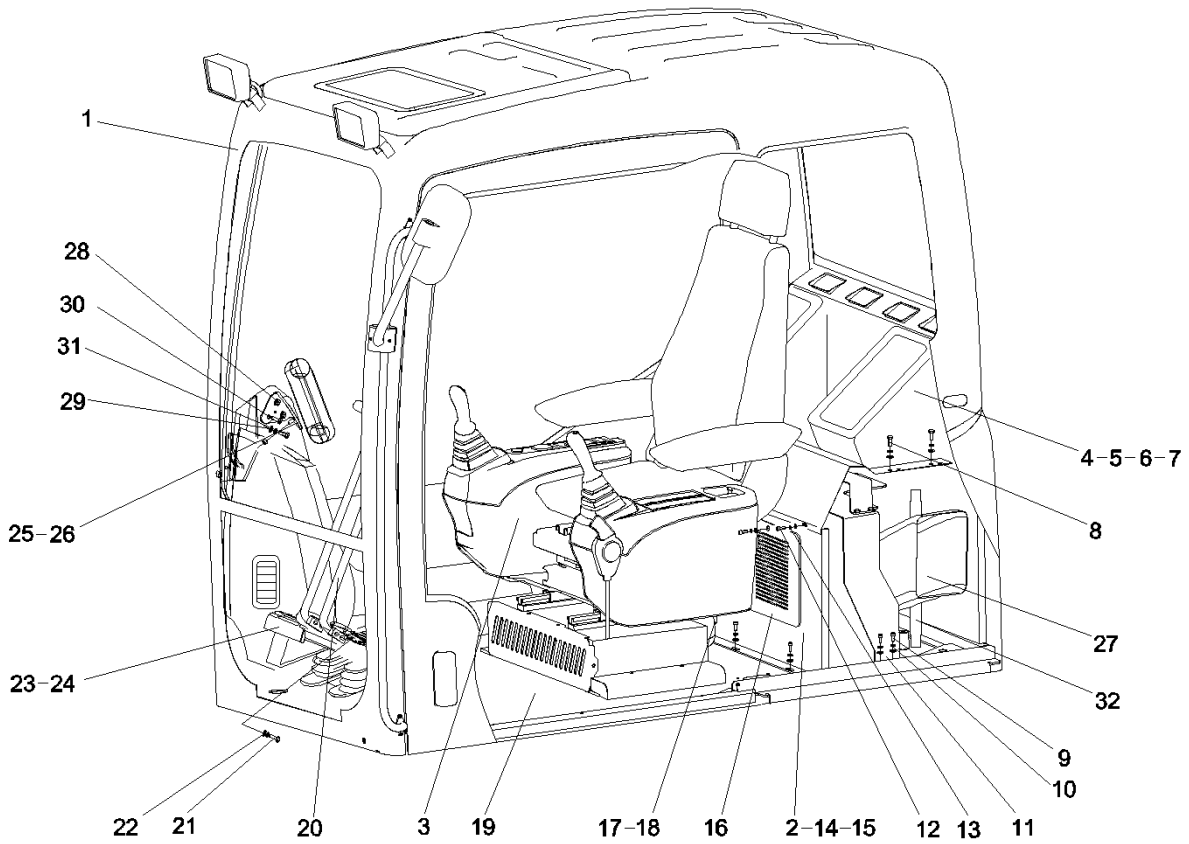

11342997 驾驶室（cab）(1/2)

识别码 IC	序号 INDEX	零件代码 PART NUMBER	数量 QTY	名称 PART NAME	
2–109–1	1	60078345	1	扬子驾驶室FEMC0512A–HX 华兴	Yangzi cab
2–109–2	2	A210264000004	1	自攻螺钉	Screw – Tapping
2–109–3	3	10458174	1	座椅及操纵箱	Seat & Console
2–109–4	4	10243524	1	空调罩	Hood – Air Conditioner
2–109–5	5	60004098	1	主风道	Passage, air, main
2–109–6	6	10578270	1	吹背风道密封海绵	Foam – Sealing (Air Duct)
2–109–7	7	60004097	1	右风道	Passage, air, right
2–109–8	8	A210111000089	4	螺栓	Bolt
2–109–9	9	A210210000027	6	螺钉	Screw
2–109–10	10	A210405000006	6	垫圈	Washer
2–109–11	11	10253101	1	电气安装板	Plate – MTG (Electrical)
2–109–12	12	A210204000146	20	螺钉	Screw
2–109–13	13	A210405000007	22	垫圈	Washer
2–109–14	14	10243510	1	左下立板	Pillar
2–109–15	15	10243522	1	右下立板	Pillar
2–109–16	16	10244287	1	内气盖板	Louver – Recirculation
2–109–17	17	A229900010630	1	吹脚风道	Duct – Air
2–109–18	18	10567493	1	吹脚风道密封海绵	Foam – Sealing (Air Duct)
2–109–19	19	10437915	1	底板架	Frame
2–109–20	20	A810201073014	1	行走操纵机构	Travel Control Mechanism

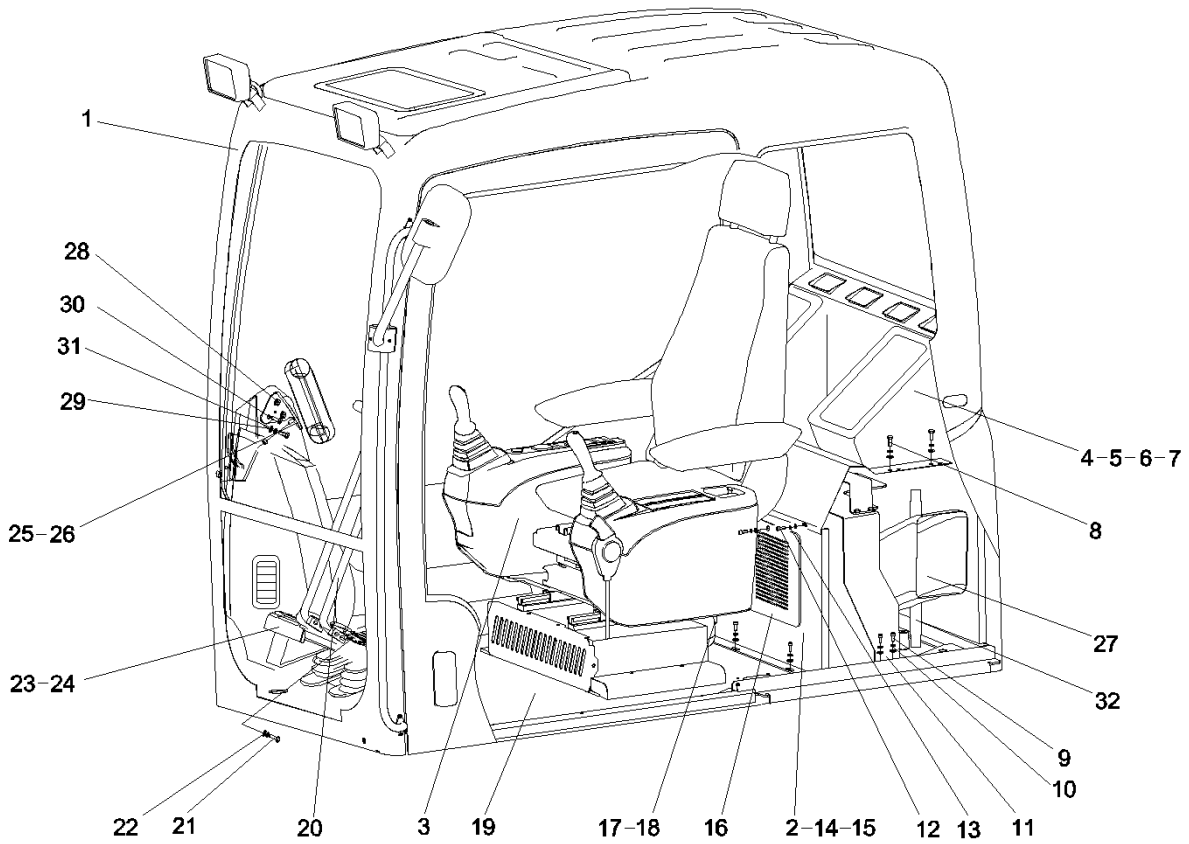

11342997 驾驶室（cab）(2/2)

识别码 IC	序号 INDEX	零件代码 PART NUMBER	数量 QTY	名称 PART NAME	
2–111–21	21	A210111000195	6	螺栓	Bolt
2–111–22	22	A210401000001	1	垫圈	Washer
2–111–23	23	A810299000007	2	脚踏板	Pedal
2–111–24	24	A820606030112	2	橡胶套	Sleeve – Rubber
2–111–25	25	10079587	1	安装支架	Bracket – Installation
2–111–26	26	10182798	1	安装板	Plate – Installation
2–111–27	27	60004096	1	新风道	Passage, air, new
2–111–28	28	A210307000040	1	螺母	Nut
2–111–29	29	A210405000003	1	垫圈	Washer
2–111–30	30	A210204000130	4	螺钉	Screw
2–111–31	31	A210111000090	3	螺栓	Bolt
2–111–32	32	10253103	3	支撑杆	Bar – Support

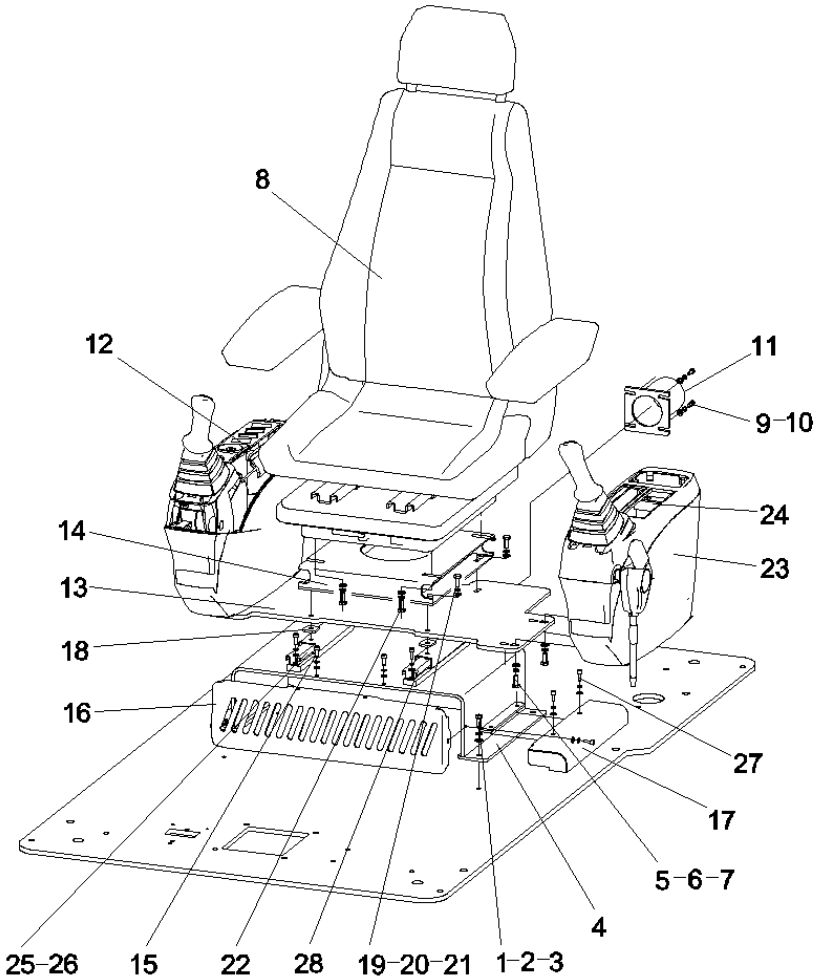

10458174 座椅及操纵箱 (Seat & Console) (1/2)

识别码 IC	序号 INDEX	零件代码 PART NUMBER	数量 QTY	名称 PART NAME	
2–113–1	1	A210111000090	4	螺栓	Bolt
2–113–2	2	A210404000005	4	垫圈	Washer
2–113–3	3	A210401000017	12	垫圈	Washer
2–113–4	4	10428097	1	座椅下底座架	Bracket – Seat (Lower – Cab)
2–113–5	5	A210111000018	8	螺栓	Bolt
2–113–6	6	A210405000011	8	垫圈	Washer
2–113–7	7	A210401000001	8	垫圈	Washer
2–113–8	8	B229900000265	1	机械悬浮式驾驶座椅	Seat – Suspended
2–113–9	9	A210204000130	2	螺钉	Screw
2–113–10	10	A210405000006	2	垫圈	Washer
2–113–11	11	10241175	1	风道连接法兰	Flange – Air Duct
2–113–12	12	A229900007791	1	右扶手箱总成 含钢架	Console AS – Rh
2–113–13	13	10115283	1	支撑平板	Plate – Support
2–113–14	14	10115295	1	座椅上底座架	Bracket – Seat (Upper – Cab)
2–113–15	15	A210210000010	4	螺钉	Screw
2–113–16	16	10140450	1	电装底座架前盖	Cover – Front (Bracket – Seat)
2–113–17	17	10344193	1	外护罩	Hood
2–113–18	18	10130346	4	座椅导轨调整垫	Shim – Guide Track (Seat)
2–113–19	19	A210307000012	8	螺母	Nut
2–113–20	20	A210405000007	8	垫圈	Washer

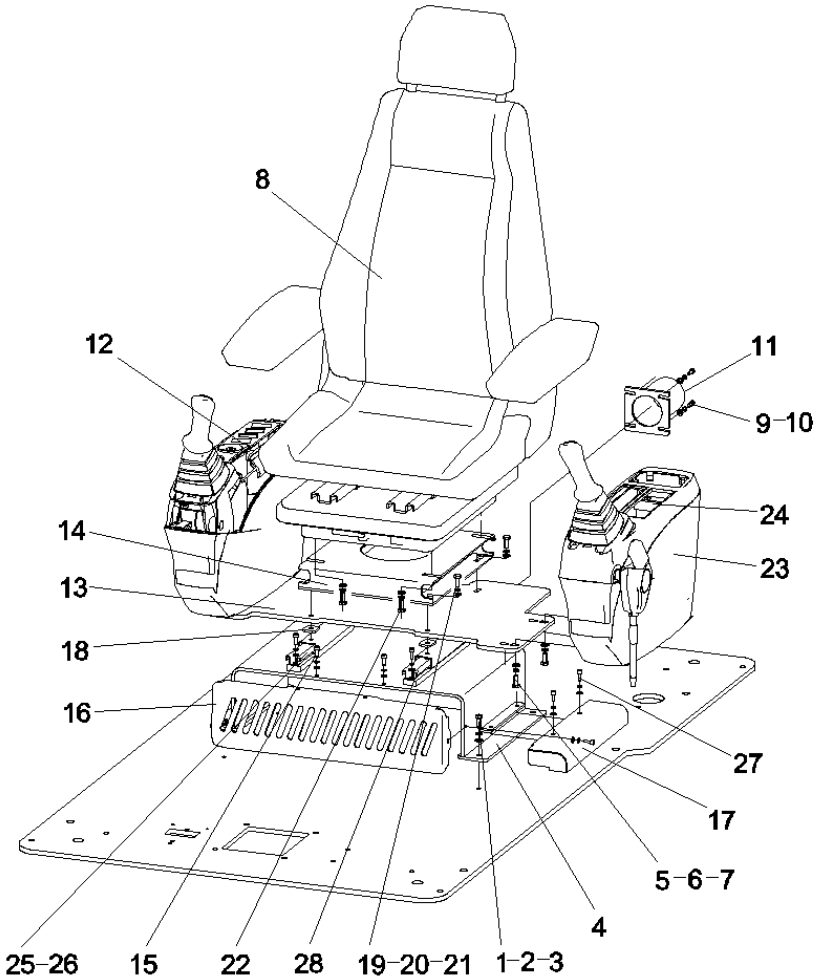

10458174 座椅及操纵箱 (Seat & Console) (2/2)

识别码 IC	序号 INDEX	零件代码 PART NUMBER	数量 QTY	名称 PART NAME	
2–115–21	21	A210204000164	4	螺钉	Screw
2–115–22	22	A210111000089	4	螺栓	Bolt
2–115–23	23	A229900007792	1	左扶手箱总成 含钢架	Console AS – Lh
2–115–24	24	B249900001447	1	控制面板	Panel – Control
2–115–25	25	60033517	1	座椅右导轨	Guide Track – Rh (Seat)
2–115–26	26	B229900000494	1	座椅拉杆	Pullrod – Seat
2–115–27	27	A210204000172	2	螺钉	Screw
2–115–28	28	60033205	1	座椅左导轨	Guide Track – Lh (Seat)

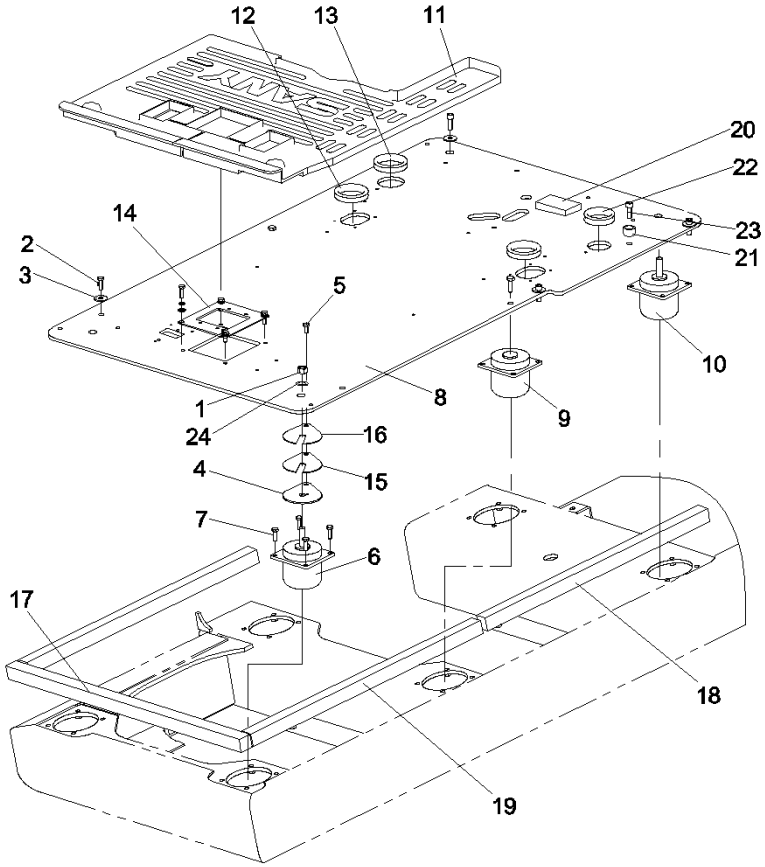

10437915 底板架 (Frame) (1/2)

识别码 IC	序号 INDEX	零件代码 PART NUMBER	数量 QTY	名称 PART NAME	
2–117–1	1	A210307000028	4	螺母	Nut
2–117–2	2	A210111000204	2	螺栓	Bolt
2–117–3	3	A210404000004	2	垫圈	Washer
2–117–4	4	11546613	4	垫板	Gasket
2–117–5	5	A210111000195	8	螺栓	Bolt
2–117–6	6	B229900000244	2	司机室支承	Bearing – Cab
2–117–7	7	A210111000024	24	螺栓	Bolt
2–117–8	8	10212791	1	底板	Plate – Bottom
2–117–9	9	A222000000019	2	减震器	Damper
2–117–10	10	B229900000245	2	司机室支承	Bearing – Cab
2–117–11	11	A820606030753	1	地板垫	Floor Mat
2–117–12	12	A820606030056	2	护孔环	Grommet
2–117–13	13	10898697	1	护孔环	Grommet
2–117–14	14	A810402050021	1	连接板	Plate – Connecting
2–117–15	15	11593942	4	垫片	Gasket
2–117–16	16	11594064	4	垫片	Gasket
2–117–17	17	A820699000679	1	驾驶室底板海绵	Foam – Bottom Plate (Cab)
2–117–18	18	A820699000678	2	驾驶室底板海绵	Foam – Bottom Plate (Cab)
2–117–19	19	A820699000677	1	驾驶室底板海绵	Foam – Bottom Plate (Cab)
2–117–20	20	A820699000215	2	背部海绵	Foam

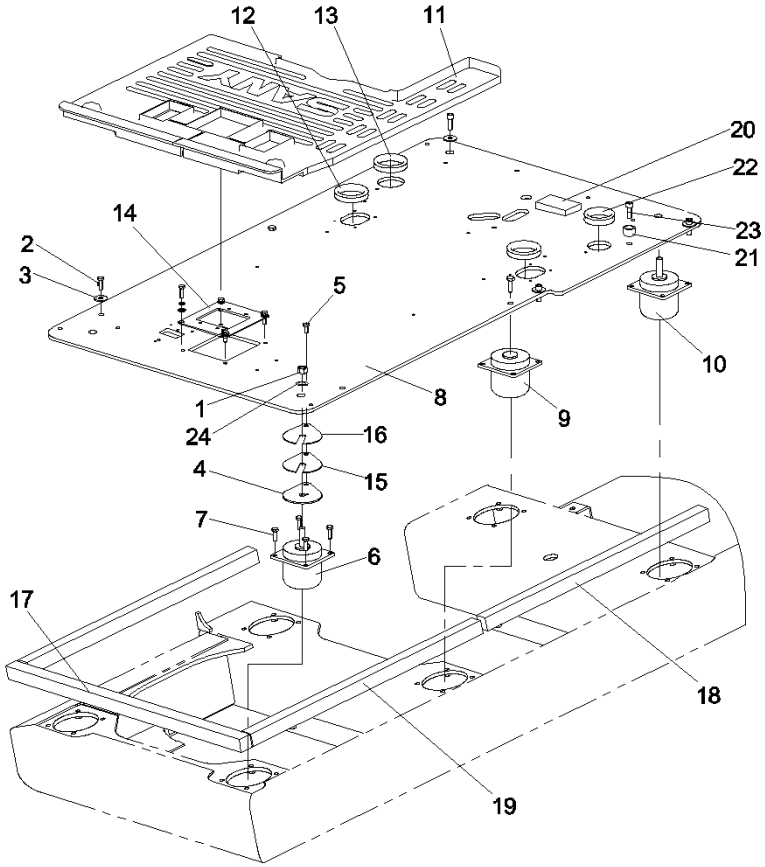

10437915 底板架 (Frame) (2/2)

识别码 IC	序号 INDEX	零件代码 PART NUMBER	数量 QTY	名称 PART NAME	
2-119-21	21	A820299000383	3	套	Sleeve
2-119-22	22	A820606030059	1	护孔环	Grommet
2-119-23	23	A210204000028	3	螺钉	Screw
2-119-24	24	A210405000003	4	垫圈	Washer

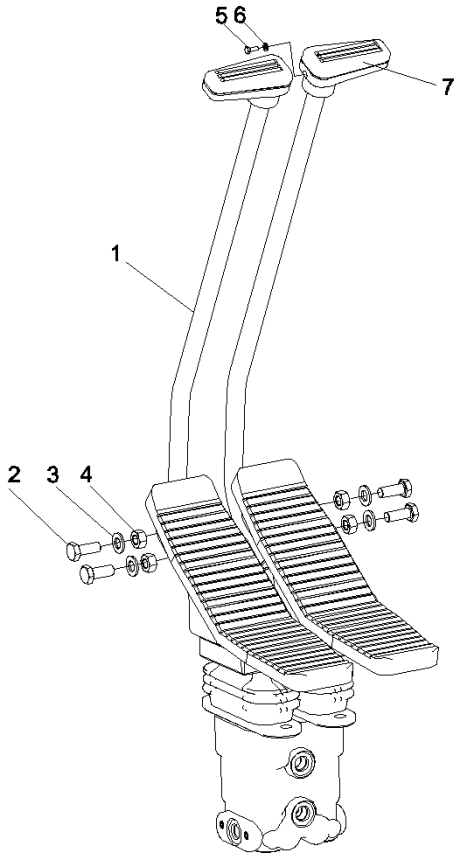
5 6
7
1
2 3 4

识别码 IC	序号 INDEX	零件代码 PART NUMBER	数量 QTY	名称 PART NAME	
2–121–1	1	A810201073015	2	操纵杆	Lever – Control
2–121–2	2	A210111000197	4	螺栓	Bolt
2–121–3	3	A210405000011	4	垫圈	Washer
2–121–4	4	A210307000036	4	螺母	Nut
2–121–5	5	A210210000012	2	螺钉	Screw
2–121–6	6	A210405000027	2	垫圈	Washer
2–121–7	7	A820606030175	2	手柄	Joystick

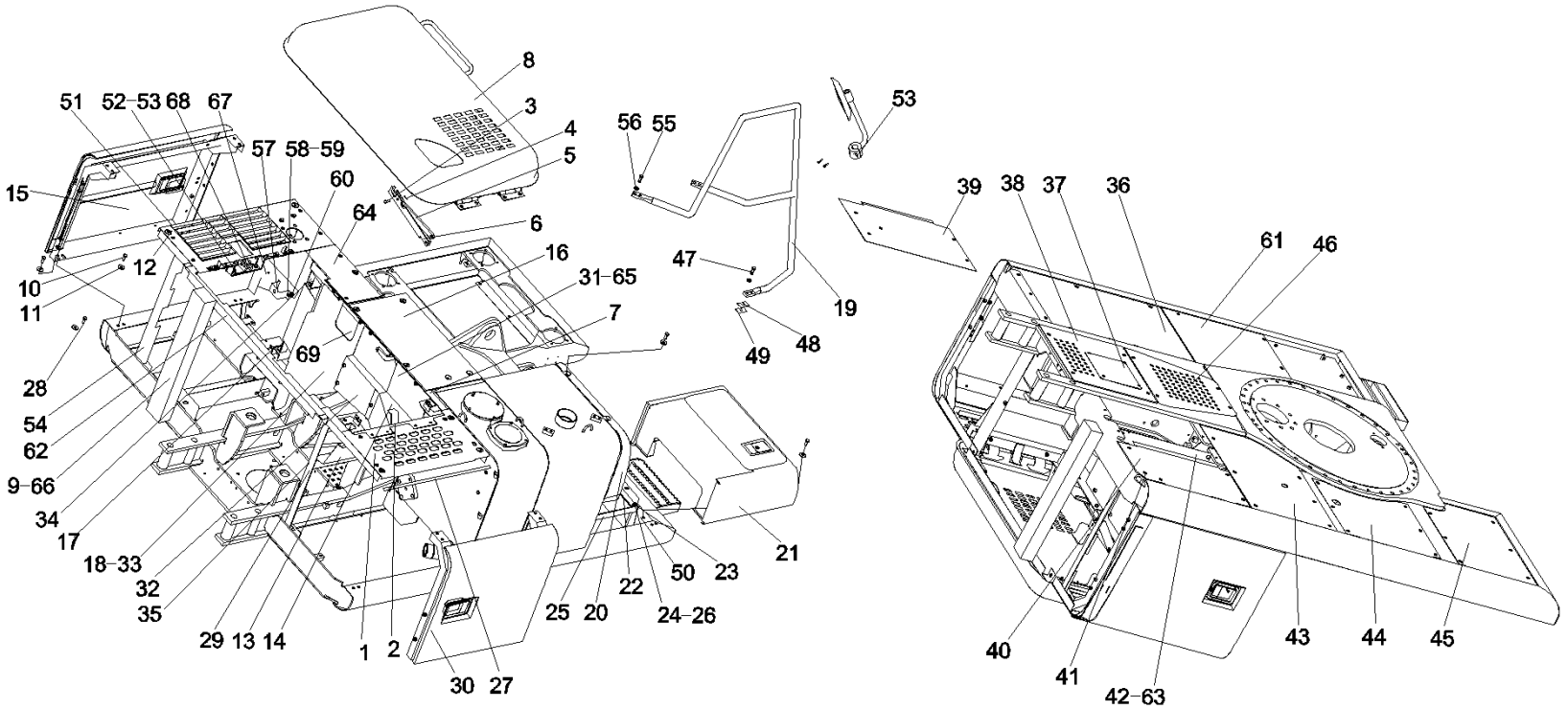

10206667 覆盖件总装 (Cover As) (1/4)

识别码 IC	序号 INDEX	零件代码 PART NUMBER	数量 QTY	名称 PART NAME	
2–123–1	1	A810502012252	1	右上后盖板	Cover
2–123–2	2	A810502015254	1	托架	Bracket
2–123–3	3	A210508000009	3	销轴	Roll – Pin
2–123–4	4	A210491000014	3	销	Pin
2–123–5	5	A810502015323	1	撑杆	Rod – Support
2–123–6	6	A820302010101	1	支杆	Rod – Support
2–123–7	7	A810502015255	1	前横梁	Beam
2–123–8	8	11229576	1	机顶罩总成	Bonnet Assy
2–123–9	9	A820699001139	1	散热器左侧海绵	Foam – Lh (Radiator)
2–123–10	10	A210111000202	134	螺栓	Bolt
2–123–11	11	A210404000004	97	垫圈	Washer
2–123–12	12	A810502000572	1	左上后盖板	Cover
2–123–13	13	A810502012285	1	侧隔板	Plate
2–123–14	14	A810502012286	1	右前侧隔板	Plate
2–123–15	15	10683865	1	左门总成	Door As – Lh
2–123–16	16	A820101345488	1	前盖板	Cover
2–123–17	17	10200730	1	中侧隔板	Plate
2–123–18	18	A820699001177	1	吸音海绵	Foam
2–123–19	19	A810599001056	1	扶手	Handhold
2–123–20	20	A810502990185	1	装饰盖	Cover

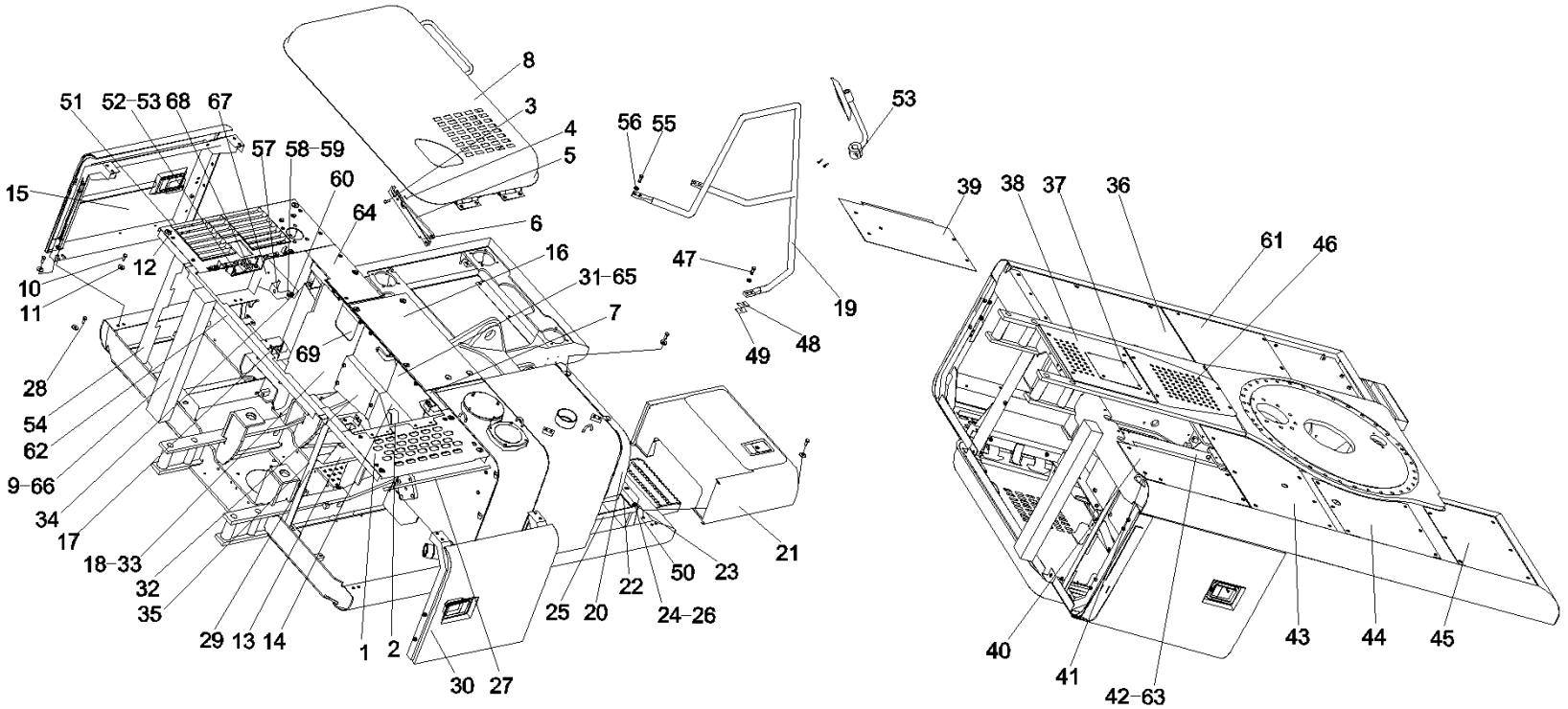
8
3
4
5
6
51
52-53
68
67
57
58-59
60
64
15
12
10
11
16
31-65
7
69
28
54
62
9-66
34
17
18-33
32
35
29
13
14
1
2
30
27
25
20
22
24-26
50
23
21
56
55
53
47
19
49
48
39
38
37
36
61
46
40
41
42-63
43
44
45

识别码 IC	序号 INDEX	零件代码 PART NUMBER	数量 QTY	名称 PART NAME	
2–125–21	21	A810502017041	1	电瓶箱总成	Battery As
2–125–22	22	A820606030643	4	蓄电池胶垫	Gasket – Rubber (Battery)
2–125–23	23	A820606020243	1	蓄电池胶垫	Gasket – Rubber (Battery)
2–125–24	24	A820301015908	4	双头螺柱	Stud
2–125–25	25	A810599001149	1	蓄电池固定架	Bracket – Battery
2–125–26	26	A210307000036	8	螺母	Nut
2–125–27	27	A820699001180	1	门降噪海绵	Foam – Denoise (Door)
2–125–28	28	A210111000199	5	螺栓	Bolt
2–125–29	29	A810502015256	1	右后支架	Bracket
2–125–30	30	A810502010559	1	右门总成	Door As – Rh
2–125–31	31	10684013	1	右隔板	Plate
2–125–32	32	A810502012313	1	中隔板	Plate
2–125–33	33	A810502012312	1	左隔板	Plate
2–125–34	34	A810502015257	1	左前支架	Bracket
2–125–35	35	A820101351600	1	侧隔板固定板	Plate
2–125–36	36	A820101345487	1	右封板	Plate – Seal (Rh)
2–125–37	37	变更或见其他配置	1	盖	Cover Plate
2–125–38	38	A810502012324	1	中后封板	Plate – Seal
2–125–39	39	A820101345486	1	左中封板	Plate – Seal (Middle Rear)
2–125–40	40	A820101346123	1	左后封板	Plate – Seal

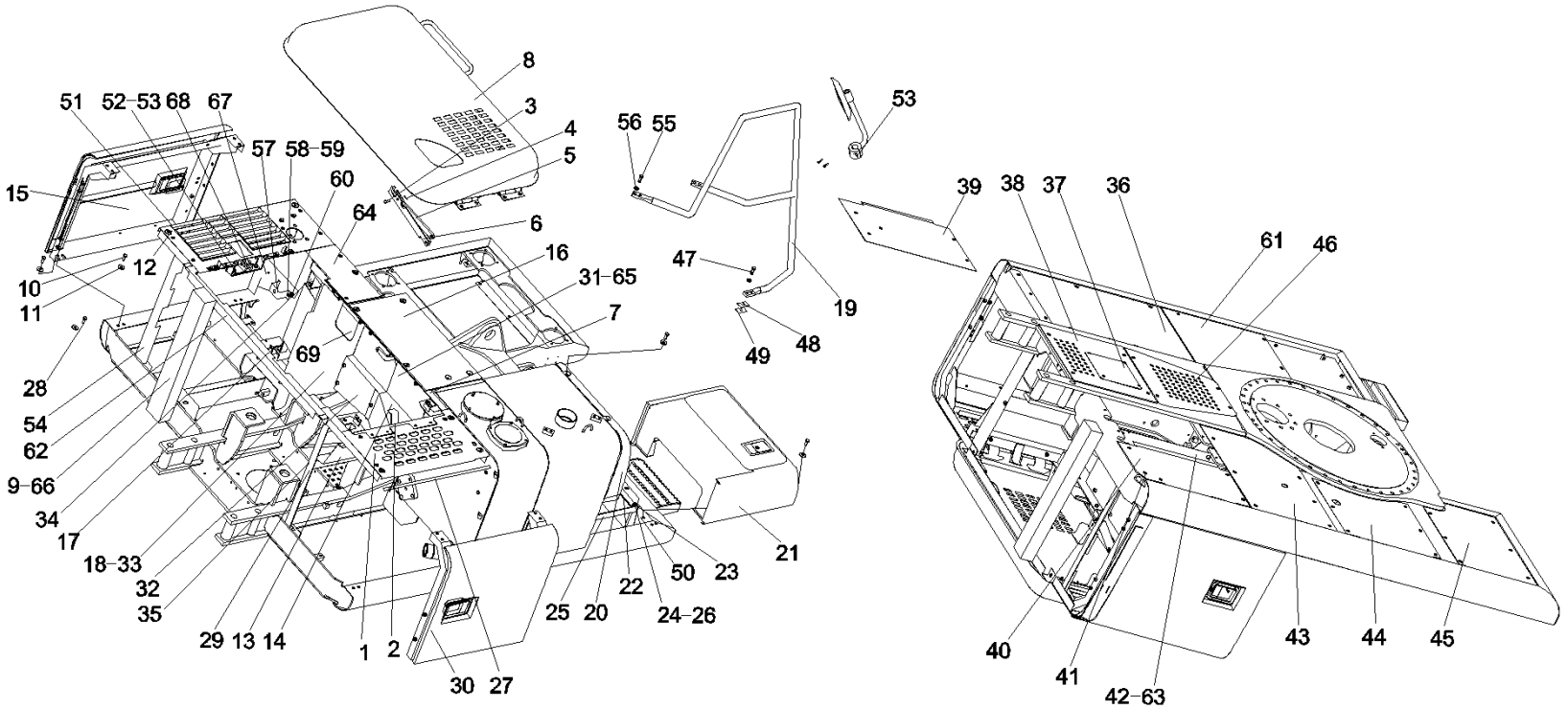
8
3
4
5
6
51
52-53
68
67
57
58-59
60
64
15
12
10
11
16
31-65
7
69
28
54
62
9-66
34
17
18-33
32
35
29
13
14
1
2
30
27
25
20
22
24-26
50
23
21
56
55
53
47
19
49
48
39
38
37
36
61
46
40
41
42-63
43
44
45

识别码 IC	序号 INDEX	零件代码 PART NUMBER	数量 QTY	名称 PART NAME	
2–127–41	41	A210401000002	51	螺栓	Washer
2–127–42	42	A820699000269	1	底海绵	Foam – Bottom
2–127–43	43	A820101345494	1	驾驶室后封板	Plate – Seal (Cab)
2–127–44	44	A820101345492	1	驾驶室中封板	Plate – Seal (Cab)
2–127–45	45	A820101345493	1	驾驶室前封板	Plaet – Seal (Cab)
2–127–46	46	A820101345495	1	中前封板	Plate – Seal
2–127–47	47	A210111000204	2	螺栓	Bolt
2–127–48	48	A820101210711	8	垫片	Gasket
2–127–49	49	A820101210712	8	垫片	Gasket
2–127–50	50	A820101324589	1	灯安装座	Seat – Mtg (Lamp)
2–127–51	51	A820699000224	1	门降噪海绵	Foam – Denoise (Door)
2–127–52	52	A210111000197	2	螺栓	Bolt
2–127–53	53	A210405000011	1	垫圈	Washer
2–127–54	54	A810502015268	1	左后支架	Bracket
2–127–55	55	A210111000203	4	螺栓	Bolt
2–127–56	56	A210491000121	6	垫圈	Washer
2–127–57	57	A820101216763	1	检修灯安装支架零件图	Parts Drawing – Bracket MTG
2–127–58	58	A210210000019	2	螺钉	Screw
2–127–59	59	A210405000007	2	垫圈	Washer
2–127–60	60	A210307000012	2	螺母	Nut

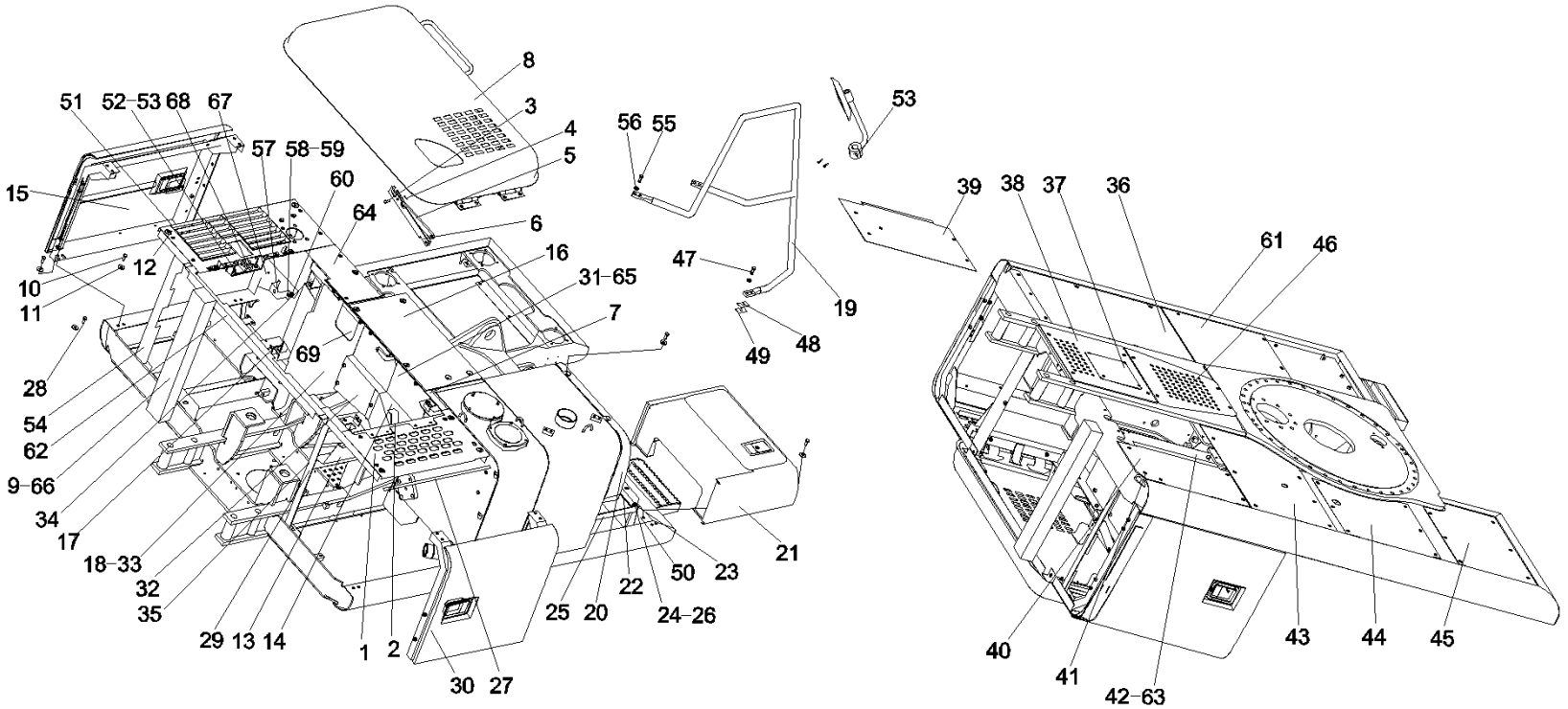
8
3
4
5
6
16
31-65
7
69
60
64
57
58-59
51
52-53
68
67
15
12
10
11
28
54
62
9-66
34
17
18-33
32
35
29
13
14
1
2
30
27
25
20
22
24-26
50
23
21
56
55
47
49
48
19
53
39
38
37
36
61
46
40
41
42-63
43
44
45

识别码 IC	序号 INDEX	零件代码 PART NUMBER	数量 QTY	名称 PART NAME	
2–129–61	61	A820101357783	1	油箱封板	Plate – Seal (Fuel Tank)
2–129–62	62	10072949	1	后横梁	Beam
2–129–63	63	10072952	1	散热器下隔板	Plate – Bottom (Radiator)
2–129–64	64	11464041	1	侧盖板	side covering plate
2–129–65	65	10118648	1	右隔板吸音海绵	Foam – Plate (Rh)
2–129–66	66	A820601991116	2	底密封海棉板	Plate – Foam (Seal – Bottom)
2–129–67	67	10138594	1	固定板	Plate
2–129–68	68	A810502029015	1	紧锁装置	Lock Unit
2–129–69	69	11463987	1	前盖板支架	Plate Bracket – Front Cover

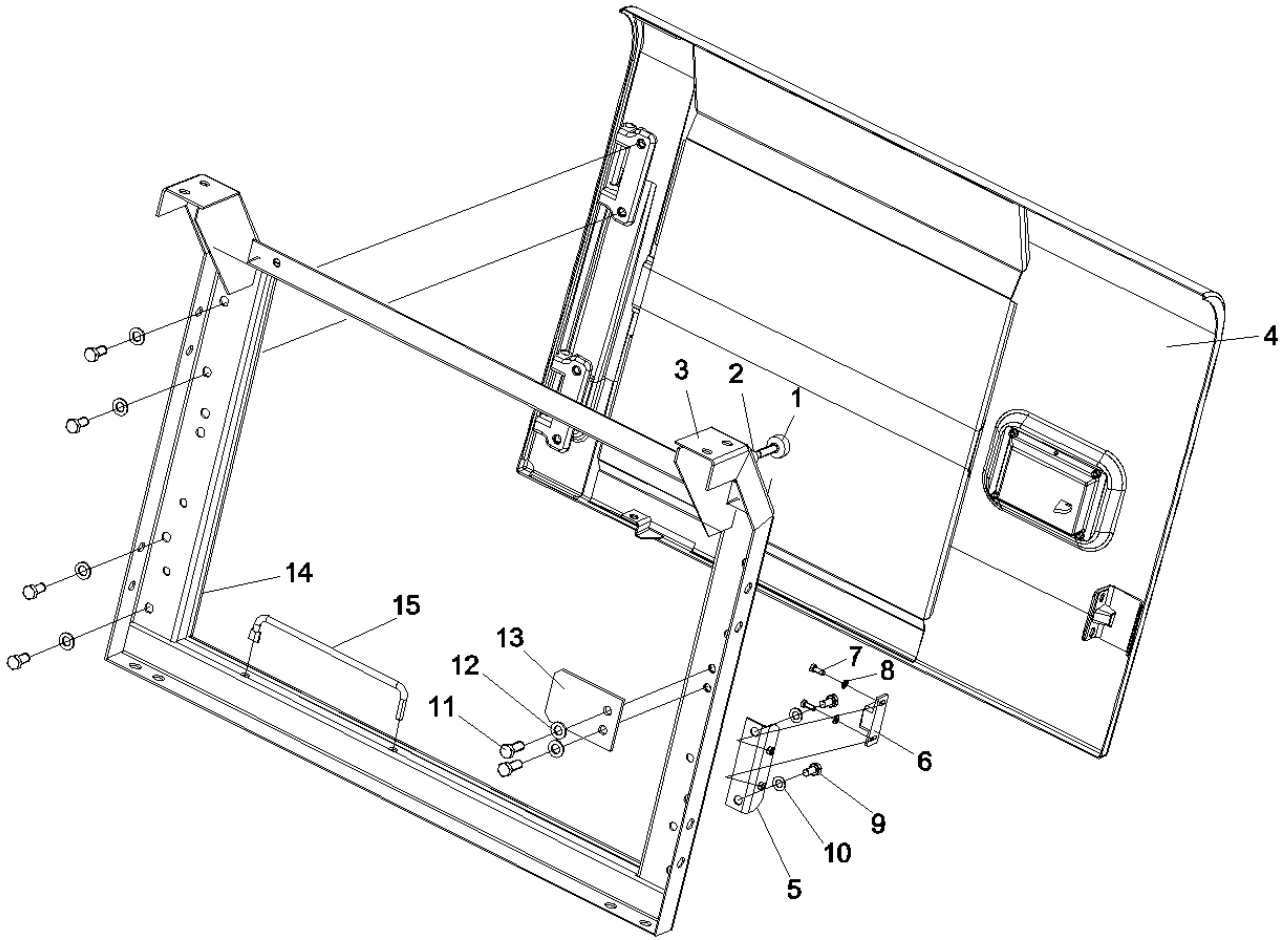
1
2
3
4
5
6
7
8
9
10
11
12
13
14
15

识别码 IC	序号 INDEX	零件代码 PART NUMBER	数量 QTY	名称 PART NAME	
2–131–1	1	A810502019056	1	定位螺钉	Setscrew
2–131–2	2	A210307000017	1	螺母	Nut
2–131–3	3	10683828	1	左门安装架	Bracket – Mtg (Door – Lh)
2–131–4	4	10683768	1	左门	Door – Lh
2–131–5	5	A810502015054	1	固定块	Block
2–131–6	6	A820405000009	1	卡座	Seat
2–131–7	7	A210111000080	2	螺栓	Bolt
2–131–8	8	A210405000006	2	垫圈	Washer
2–131–9	9	A210111000018	2	螺栓	Bolt
2–131–10	10	A210405000011	2	垫圈	Washer
2–131–11	11	A210111000038	6	螺栓	Bolt
2–131–12	12	A210405000001	6	垫圈	Washer
2–131–13	13	A820101118440	1	锁卡板	Plate – Retaning (Lock)
2–131–14	14	A820606030378	1	密封条	Strip – Sealing
2–131–15	15	A820301012423	1	风钩	Hook

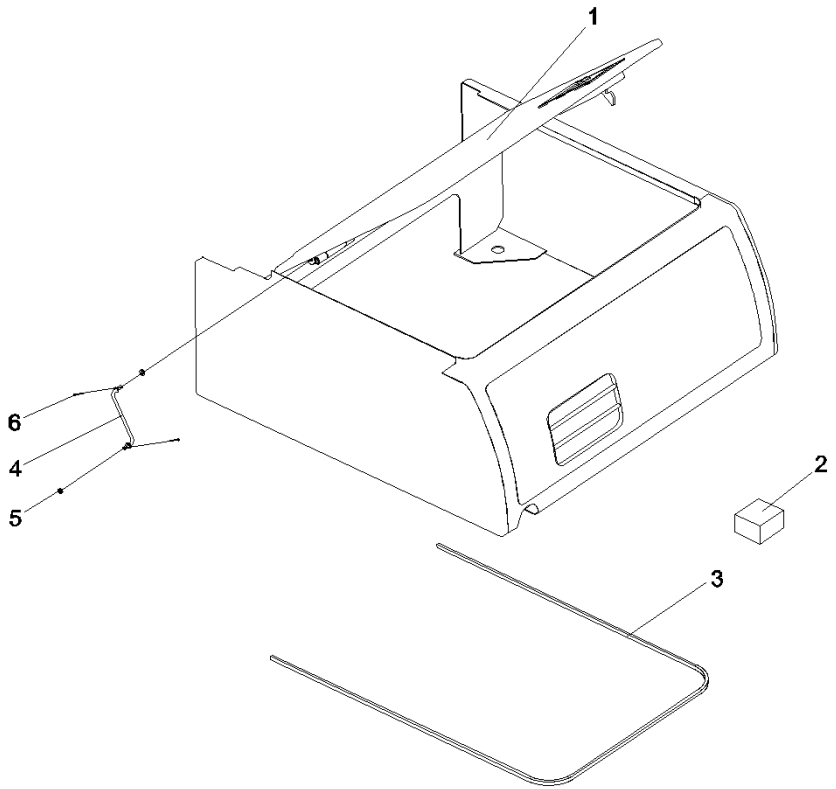
1
2
3
4
5
6

识别码 IC	序号 INDEX	零件代码 PART NUMBER	数量 QTY	名称 PART NAME	
2–133–1	1	A810502017042	1	电瓶箱主体	Body – Battery
2–133–2	2	A820606030559	1	缓冲垫	Cushion
2–133–3	3	A820606030886	1	密封条	Strip – Seal
2–133–4	4	A810502990125	1	支杆	Rod – Support
2–133–5	5	A210404000009	1	垫圈	Washer
2–133–6	6	A210491000007	2	销	Pin

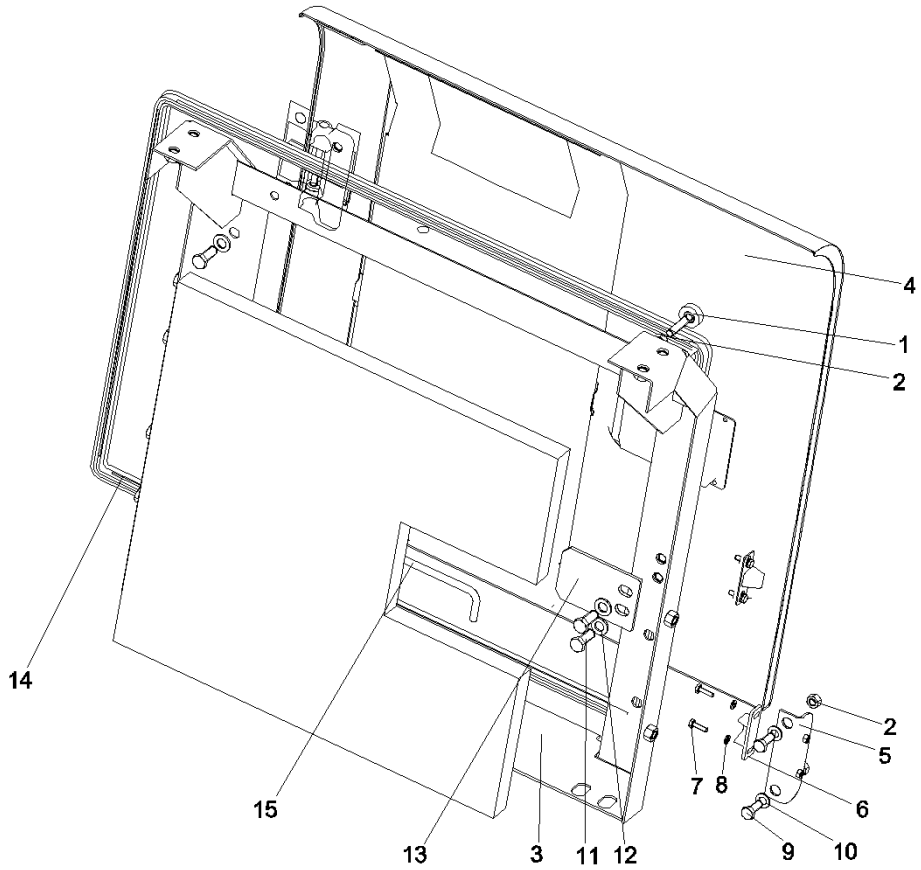
4
1
2
14
2
5
7
8
6
15
13
3
11
12
9
10

识别码 IC	序号 INDEX	零件代码 PART NUMBER	数量 QTY	名称 PART NAME	
2–135–1	1	A810502019056	1	定位螺钉	Setscrew
2–135–2	2	A210307000017	6	螺母	Nut
2–135–3	3	A810502010560	1	右门框架	Frame – Door (Rh)
2–135–4	4	A810502010561	1	右门	Door – Rh
2–135–5	5	A810502015054	2	固定块	Block
2–135–6	6	A820405000009	1	卡座	Seat
2–135–7	7	A210111000080	1	螺栓	Bolt
2–135–8	8	A210405000006	1	垫圈	Washer
2–135–9	9	A210111000018	2	螺栓	Bolt
2–135–10	10	A210405000011	1	垫圈	Washer
2–135–11	11	A210111000038	3	螺栓	Bolt
2–135–12	12	A210405000001	2	垫圈	Washer
2–135–13	13	A820101118440	1	锁卡板	Plate – Retaning (Lock)
2–135–14	14	A820606030378	1	密封条	Strip – Sealing
2–135–15	15	A820301012423	1	风钩	Hook

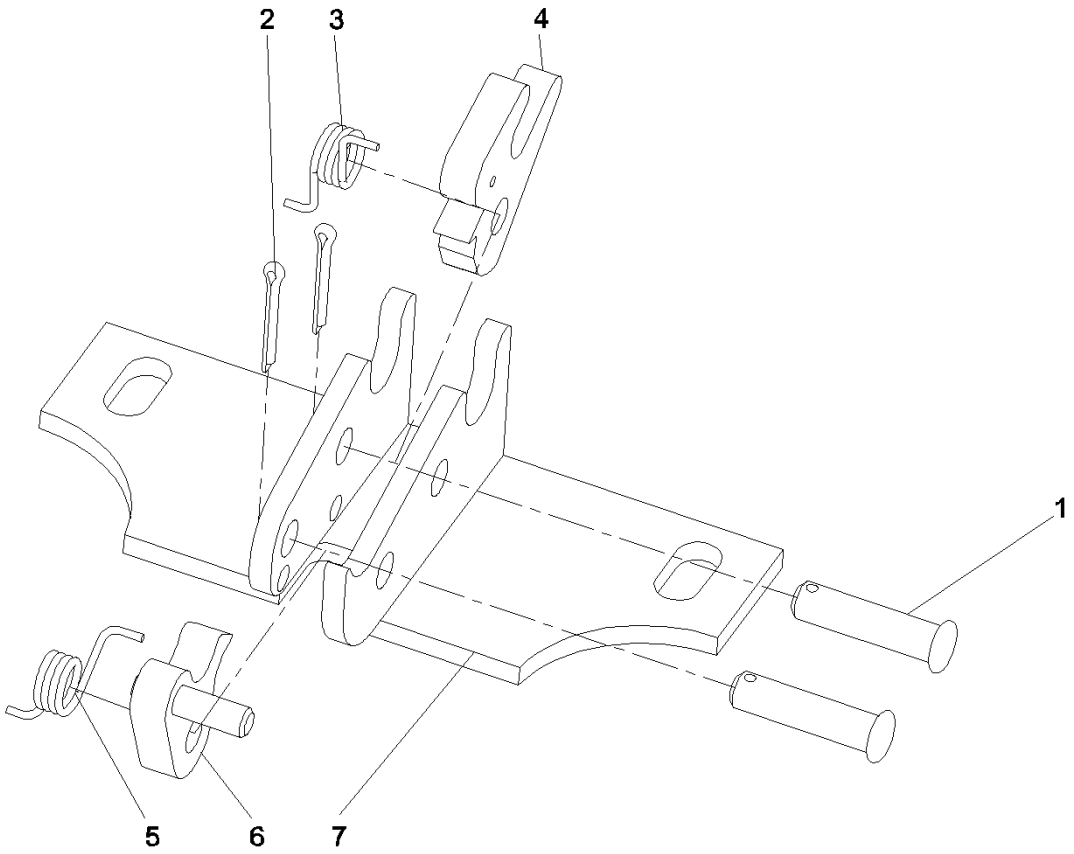
2
3
4
1
5
6
7

识别码 IC	序号 INDEX	零件代码 PART NUMBER	数量 QTY	名称 PART NAME	
2–137–1	1	A210508000001	2	销轴	Shaft, Pin
2–137–2	2	A210501000023	2	销	Pin
2–137–3	3	A829900001035	1	前部弹簧	Spring
2–137–4	4	A820101310600	1	大棘轮	Sprocket
2–137–5	5	A829900001034	1	后部弹簧	Spring
2–137–6	6	A810502990116	1	小棘轮	Sprocket
2–137–7	7	A810502014057	1	固定板	Plate

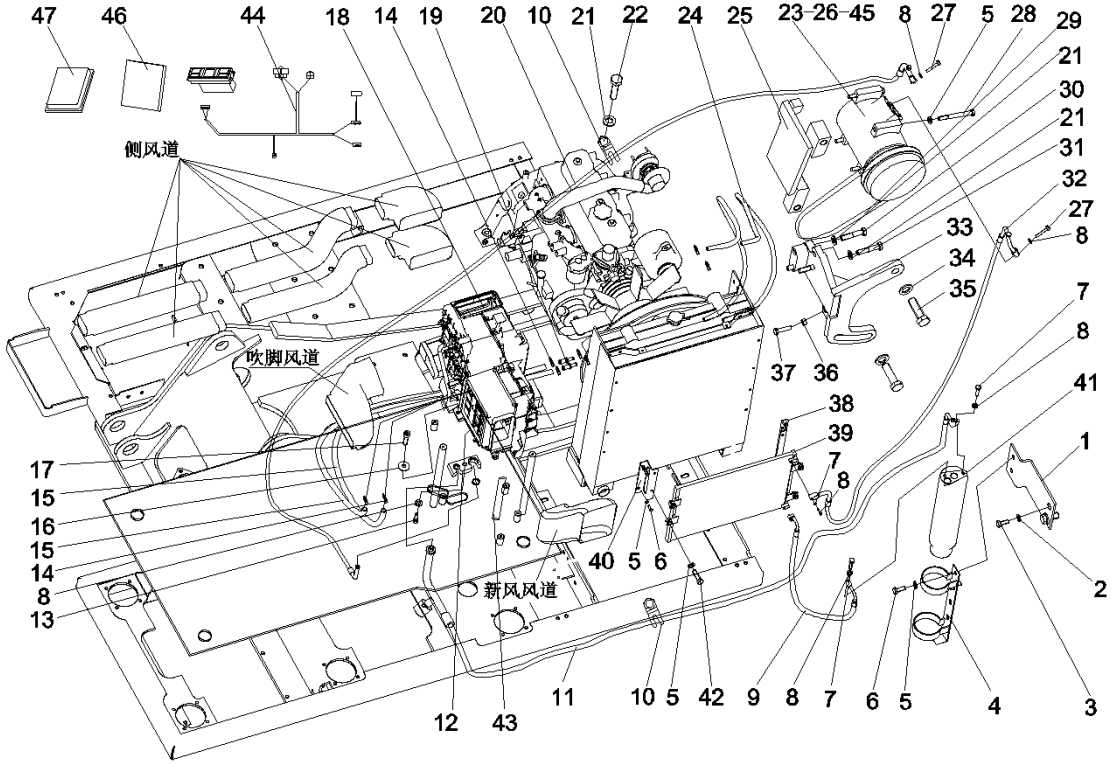

10179470 空调系统 (Air Conditioner System) (1/3)

识别码 IC	序号 INDEX	零件代码 PART NUMBER	数量 QTY	名称 PART NAME	
2–139–1	1	10179977	1	干燥瓶安装板	Plate – Mtg (Drying Bottle)
2–139–2	2	A210405000001	2	垫圈	Washer
2–139–3	3	A210111000199	2	螺栓	Bolt
2–139–4	4	A229900008784	1	储液器支架	Bracket – Reservoir
2–139–5	5	A210405000007	14	垫圈	Washer
2–139–6	6	A210111000343	6	螺栓	Bolt
2–139–7	7	A210111000081	4	螺栓	Bolt
2–139–8	8	A210405000006	7	垫圈	Washer
2–139–9	9	60001238	1	液体胶管	Hose – Fluid
2–139–10	10	A230200000178	7	线夹	Clamp
2–139–11	11	60004378	1	液体胶管	Hose – Liquid
2–139–12	12	B229900005758	1	管接头	Connector
2–139–13	13	A210204000131	1	螺钉	Screw
2–139–14	14	A210855000005	8	喉箍	Hoop
2–139–15	15	10448928	2	蒸汽胶管	Hose – Steam
2–139–16	16	A210404000005	7	垫圈	Washer
2–139–17	17	A210204000164	7	螺钉	Screw
2–139–18	18	A221600000159	1	空调单元总成	Air Conditioner Unit AS
2–139–19	19	A820205002617	2	水管变径接头	Adapter – Water Pipe
2–139–20	20	60004375	1	吸气胶管	Hose – Air Inlet

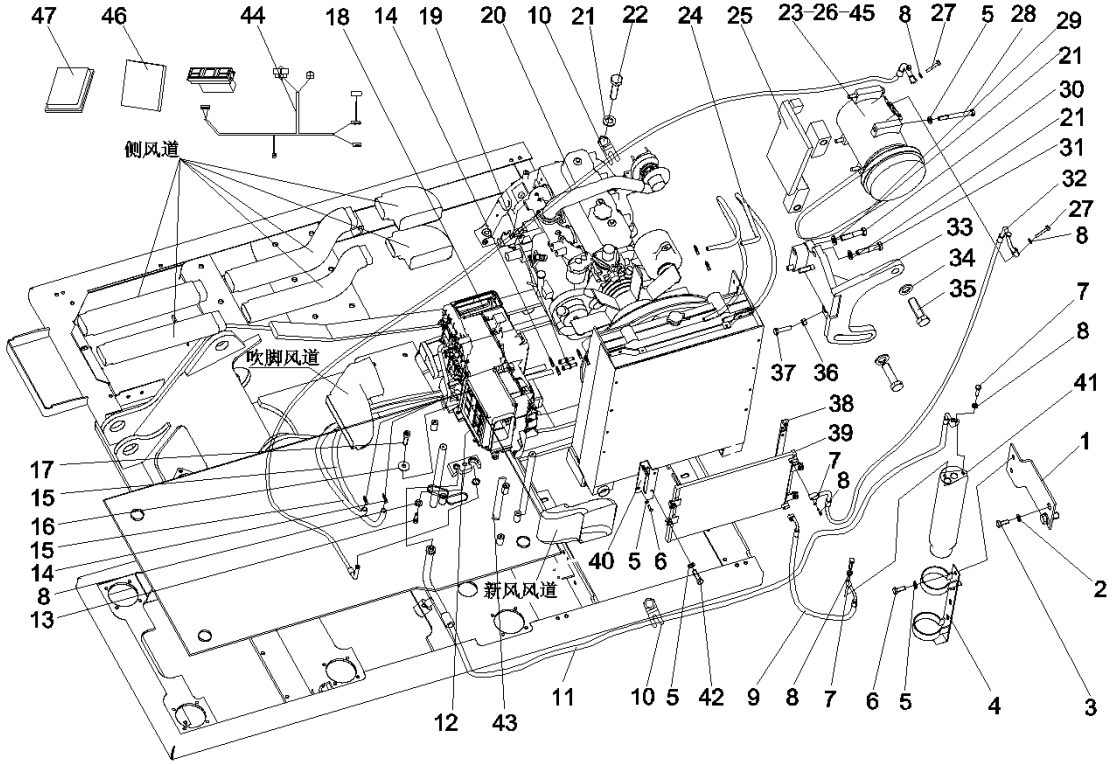
47
46
44
18
14
19
20
10
21
22
24
25
23-26-45
8
27
5
28
29
21
30
21
31
32
27
8
33
34
35
7
8
41
1
2
侧风道
吹脚风道
新风风道
37
36
38
39
7
8
17
15
16
15
14
8
13
40
5
6
12
43
11
10
5
42
9
8
7
6
5
4
3

识别码 IC	序号 INDEX	零件代码 PART NUMBER	数量 QTY	名称 PART NAME	
2-141-21	21	A210404000003	10	垫圈	Washer
2-141-22	22	A210111000011	6	螺栓	Bolt
2-141-23	23	A420104000007	1	冷冻油	Oil – Refrigeration
2-141-24	24	10448927	2	蒸汽胶管	Hose – Steam
2-141-25	25	10179456	1	调整板	Plate – Adjusting
2-141-26	26	B220203000007	1	压缩机	Compressor
2-141-27	27	A210111000082	2	螺栓	Bolt
2-141-28	28	A210108000097	4	螺栓	Bolt
2-141-29	29	A230106000292	1	V带	V-belt
2-141-30	30	A210113000266	2	螺栓M10×1.25×50GB5785 10.9	Bolt
2-141-31	31	21086590	2	螺栓GB5786 10.9级	Bolt
2-141-32	32	60001232	1	排气胶管	Hose – Exhaust
2-141-33	33	A810406012731	1	支架	Bracket
2-141-34	34	A210405000003	2	垫圈	Washer
2-141-35	35	A210111000054	2	螺栓	Bolt
2-141-36	36	A210307000028	1	螺母	Nut
2-141-37	37	A210110000272	1	螺栓	Bolt
2-141-38	38	10254232	1	右支架	Bracket – Rh
2-141-39	39	A220700000028	1	冷凝器总成	Condenser AS
2-141-40	40	10254231	1	左支架	Bracket – Lh

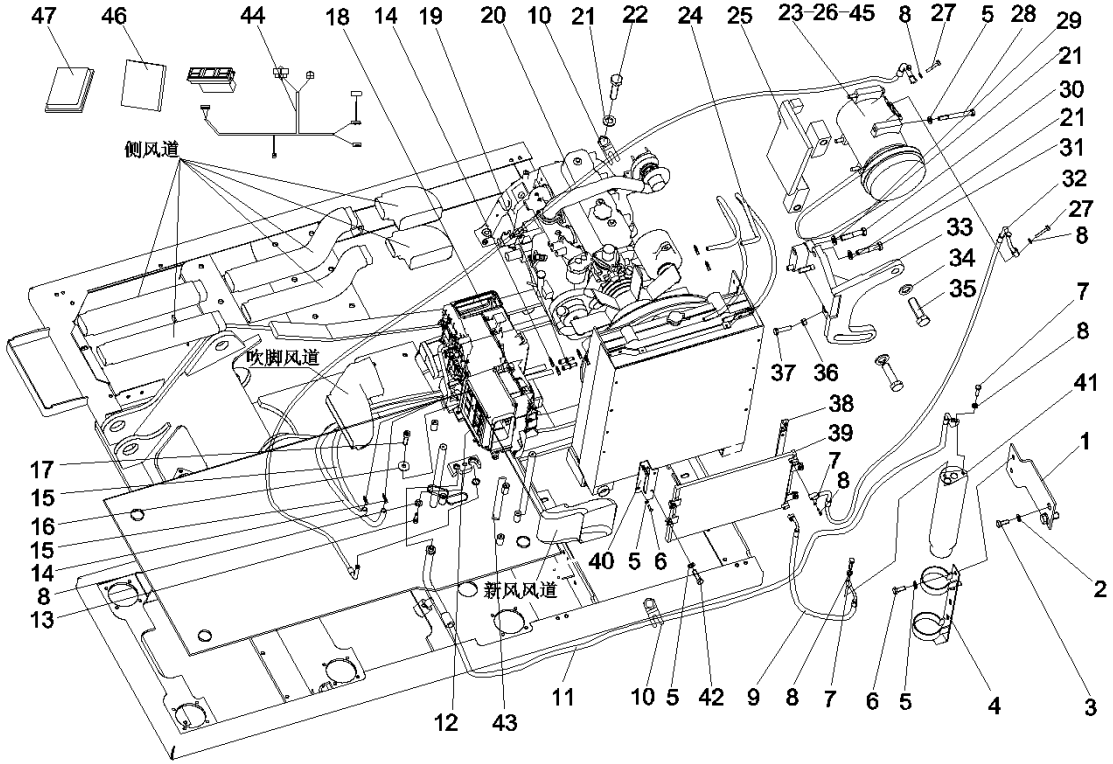
47
46
44
18
14
19
20
10
21
22
24
25
23-26-45
8
27
5
28
29
21
30
21
31
32
27
8
33
34
35
7
8
41
1
2
侧风道
吹脚风道
新风风道
37
36
38
39
7
8
17
15
16
15
14
8
13
40
5
6
12
43
11
10
5
42
9
8
7
6
5
4
3

识别码 IC	序号 INDEX	零件代码 PART NUMBER	数量 QTY	名称 PART NAME	
2–143–41	41	B229900005141	1	储液器	Reservoir
2–143–42	42	A210111000293	4	螺栓	Bolt
2–143–43	43	A229900009481	1	排水管	Pipe – Drain
2–143–44	44	10473304	1	空调电气系统	Electrical System – Air Conditioner
2–143–45	45	A429900000010	1	制冷剂 13.61kg/桶	Refrigerant
2–143–46	46	B222100000711	1	内气过滤器	Filter, air, inner
2–143–47	47	B222100000660	1	外气过滤器	Filter – Fresh Air

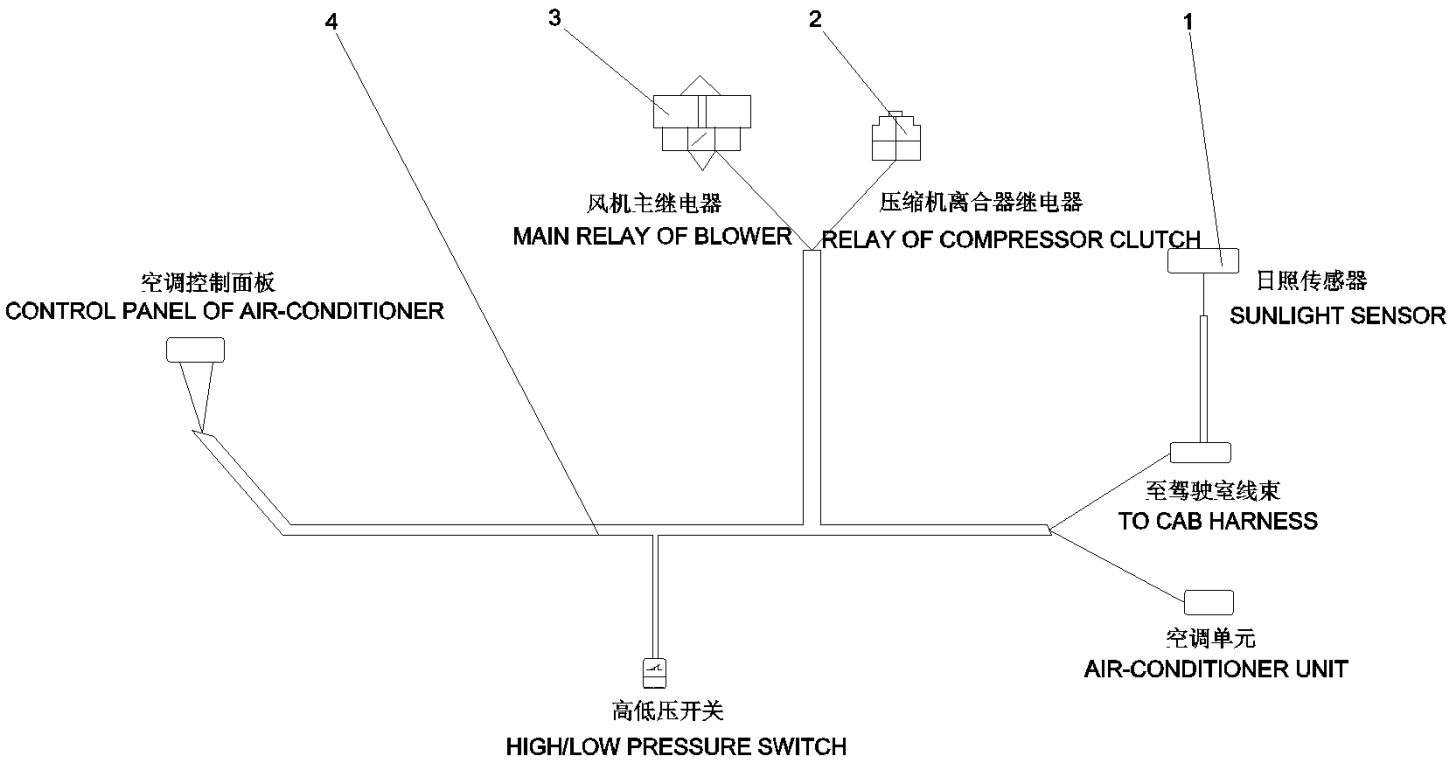
4
3
2
1
风机主继电器
MAIN RELAY OF BLOWER
压缩机离合器继电器
RELAY OF COMPRESSOR CLUTCH
空调控制面板
CONTROL PANEL OF AIR-CONDITIONER
日照传感器
SUNLIGHT SENSOR
至驾驶室线束
TO CAB HARNESS
空调单元
AIR-CONDITIONER UNIT
高低压开关
HIGH/LOW PRESSURE SWITCH

识别码 IC	序号 INDEX	零件代码 PART NUMBER	数量 QTY	名称 PART NAME	
2–145–1	1	B240600000334	1	日照传感器	Sensor – Sunlight
2–145–2	2	B240700000473	1	继电器	Relay
2–145–3	3	B240700000472	1	继电器	Relay
2–145–4	4	10448933	1	空调连接线	Wire – Connecting (Air Conditioner)

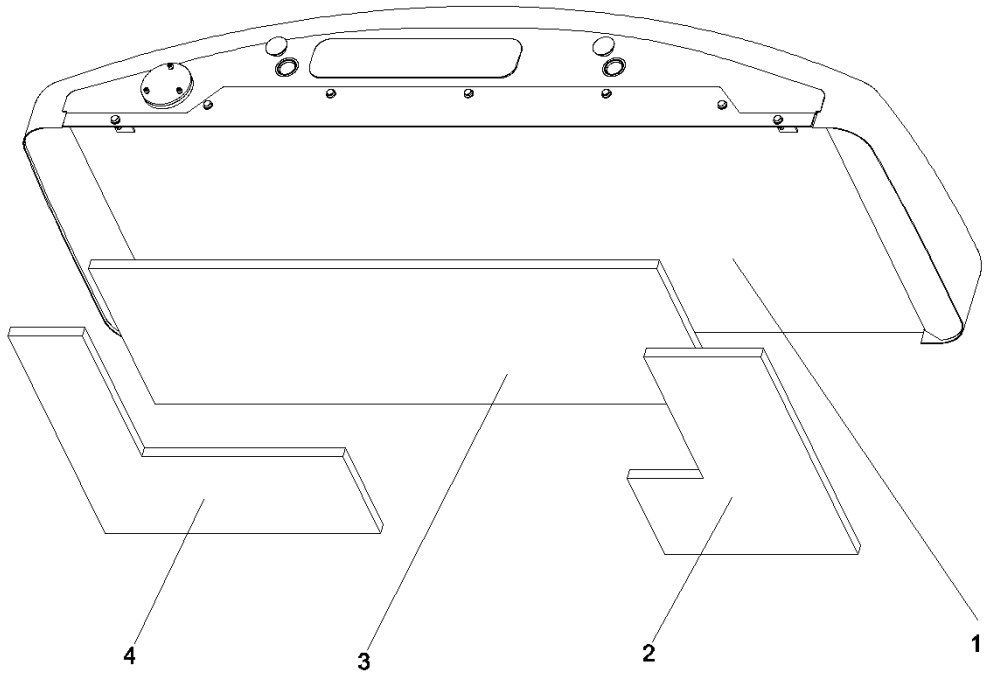
4
3
2
1

识别码 IC	序号 INDEX	零件代码 PART NUMBER	数量 QTY	名称 PART NAME	
2–147–1	1	10705421	1	配重主体	Body – Counterweight
2–147–2	2	A820699001224	1	右部海绵	Foam
2–147–3	3	A820699001225	1	中部海绵	Foam
2–147–4	4	A820699001233	1	左部海绵	Foam

第3章
行走装置
(Travel Unit)

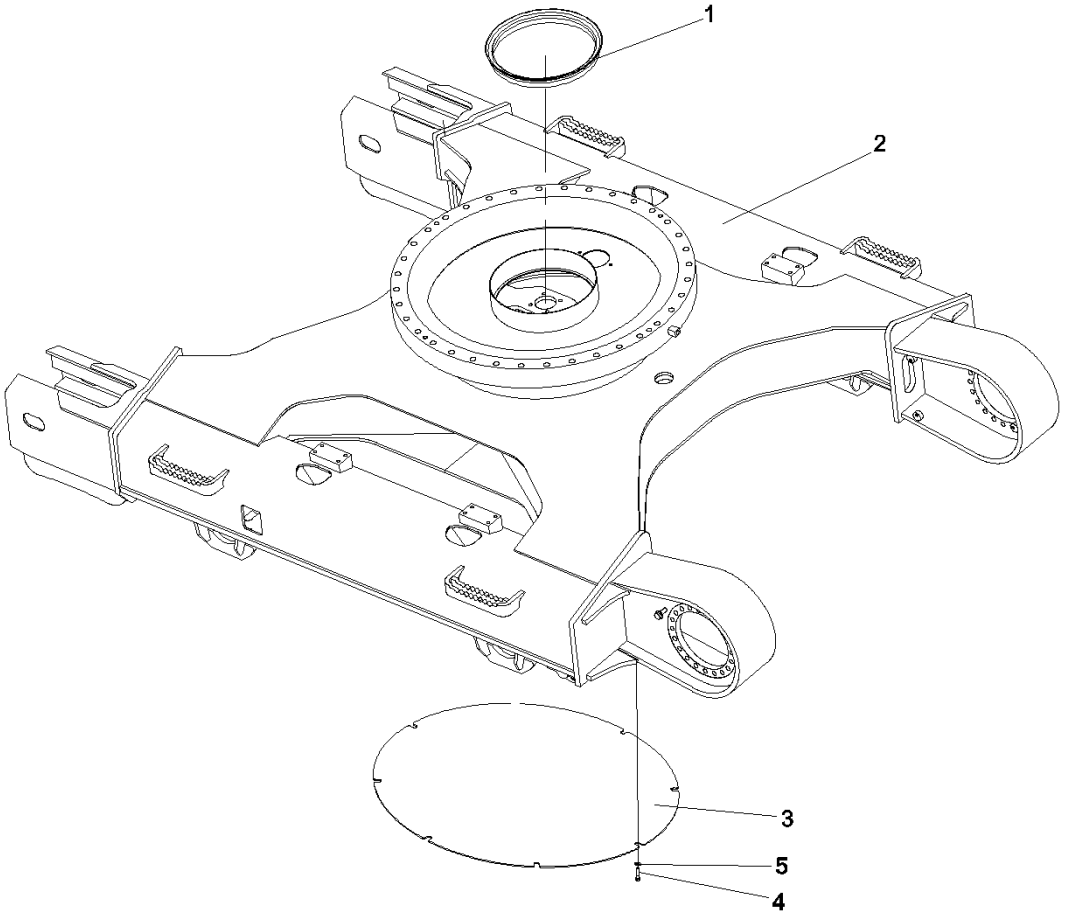

10187380 行走装置 (Travel Unit) (1/5)

识别码 IC	序号 INDEX	零件代码 PART NUMBER	数量 QTY	名称 PART NAME	
3–3–1	1	A820606020548	1	上密封圈	Ring – Seal (Upper)
3–3–2	2	10187355	1	履带架	Frame – Track
3–3–3	3	10454867	1	底盖	Cover – Bottom
3–3–4	4	A210204000196	8	螺钉	Screw
3–3–5	5	A210405000011	8	垫圈	Washer

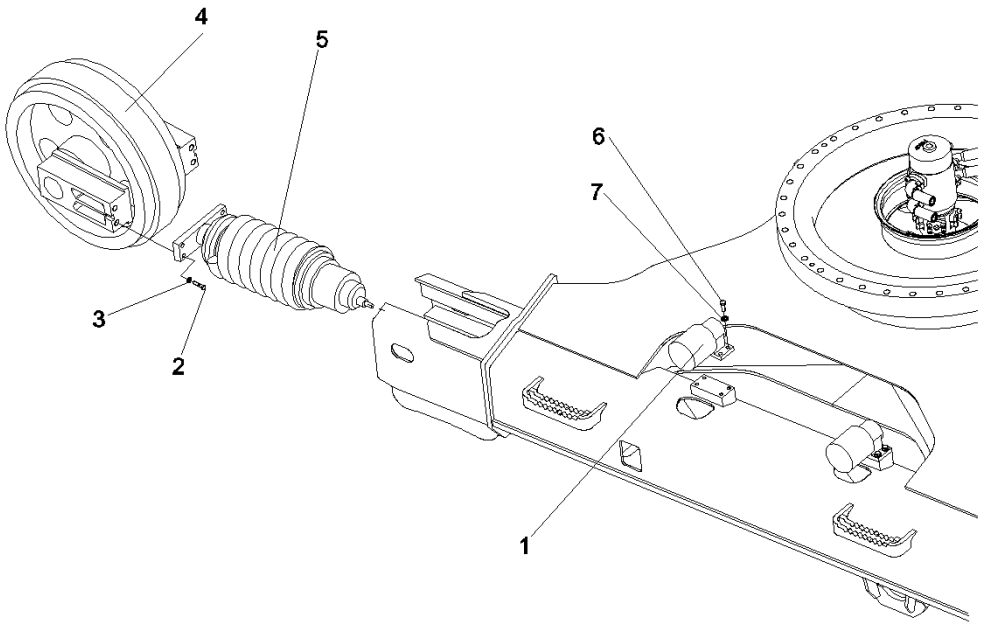
4
5
6
7
3
2
1

识别码 IC	序号 INDEX	零件代码 PART NUMBER	数量 QTY	名称 PART NAME	
3–5–1	1	A229900004677	4	托链轮	Roller – Track Carrier
3–5–2	2	A210110000346	8	螺栓	Bolt
3–5–3	3	A210401000003	8	垫圈	Washer
3–5–4	4	A229900010405	2	引导轮	Idler
3–5–5	5	A229900004679	2	涨紧装置	Tensioning Unit
3–5–6	6	A210111000202	20	螺栓	Bolt
3–5–7	7	A210491000121	16	垫圈	Washer

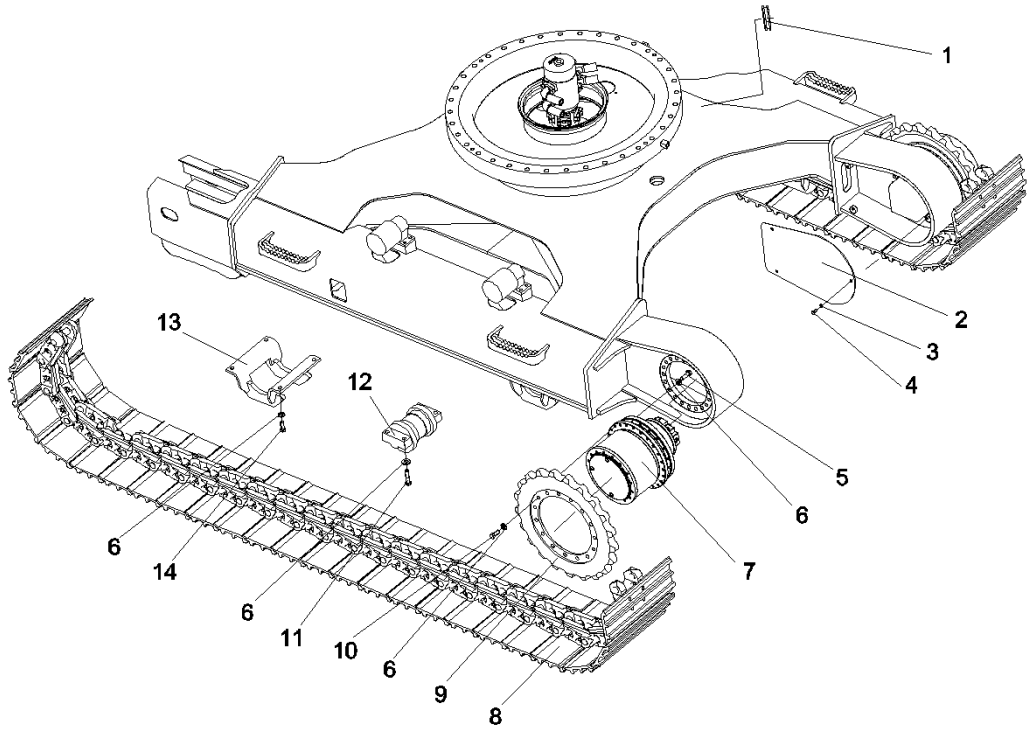

10187380 行走装置 (Travel Unit) (3/5)

识别码 IC	序号 INDEX	零件代码 PART NUMBER	数量 QTY	名称 PART NAME	
3–7–1	1	A820606030918	2	护套	Bushing
3–7–2	2	A820101344863	2	侧盖	Cover – Side
3–7–3	3	A210401000001	22	垫圈	Washer
3–7–4	4	A210111000012	6	螺栓	Bolt
3–7–5	5	60023119	40	螺栓	Bolt
3–7–6	6	A210491000118	142	垫圈	Washer
3–7–7	7	B229900002849	2	减速机总成	Reducer As
3–7–8	8	10786233	2	履带总成	Track As
3–7–9	9	A229900004678	2	驱动轮	Sprocket
3–7–10	10	60023118	30	螺栓	Bolt
3–7–11	11	A210110000281	56	螺栓	Bolt
3–7–12	12	A229900004676	14	支重轮	Roller – Carrier
3–7–13	13	A810401990264	4	履带护板	Guard – Track
3–7–14	14	A210111000053	16	螺栓	Bolt

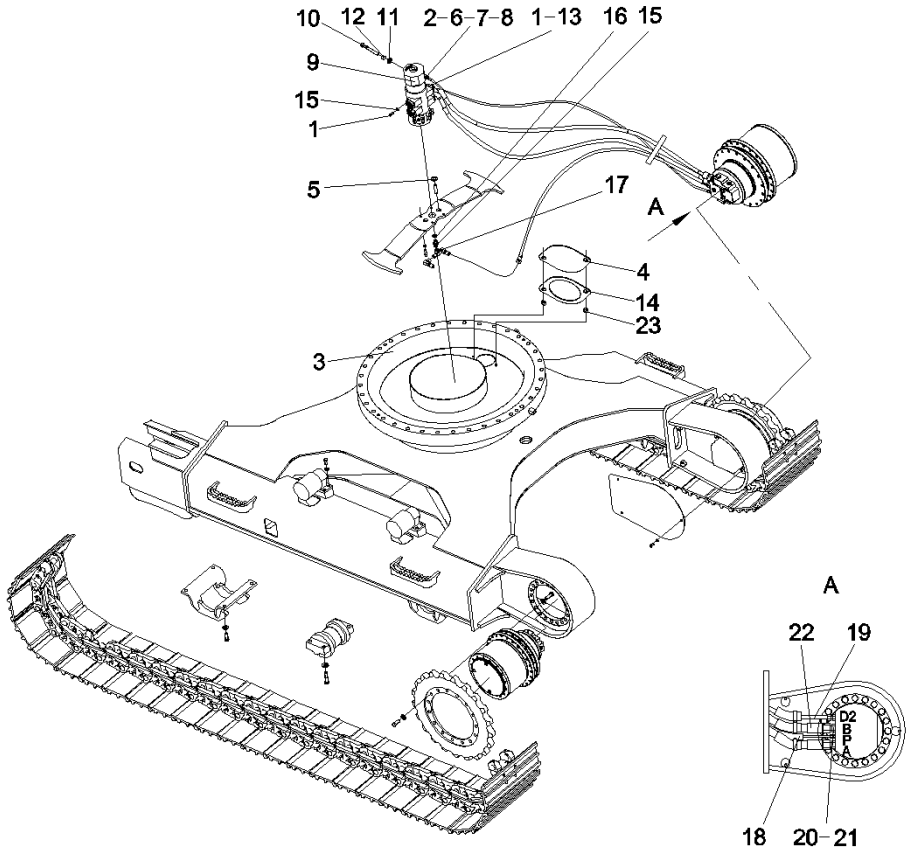

10187380 行走装置 (Travel Unit) (4/5)

识别码 IC	序号 INDEX	零件代码 PART NUMBER	数量 QTY	名称 PART NAME	
3–9–1	1	A210204000354	16	螺钉	Screw
3–9–2	2	B210780000418	3	管接头	Connector
3–9–3	3	A810401990268	1	回转支承总成	Bearing AS – Swing
3–9–4	4	A820606020170	1	橡胶垫	Gasket – Rubber
3–9–5	5	A210405000001	4	垫圈	Washer
3–9–6	6	B210780000172	1	管接头	Connector
3–9–7	7	A820205000844	3	接头	Connector
3–9–8	8	B230101000047	3	O形圈	Seal – O – Ring
3–9–9	9	A229900004512	1	回转接头	Swivel Joint
3–9–10	10	A210110000234	1	螺栓	Bolt
3–9–11	11	A210405000008	1	垫圈	Washer
3–9–12	12	A210307000005	1	螺母	Nut
3–9–13	13	B210780000696	8	对开法兰	Flange
3–9–14	14	A820101210192	1	密封板	Plate – Seal
3–9–15	15	A820205000843	3	接头	Connector
3–9–16	16	B230101000090	4	O形圈	Seal – O – Ring
3–9–17	17	B210780000413	1	管接头	Connector, pipe
3–9–18	18	B230103000671	2	胶管	Hose, rubber
3–9–19	19	B230103000282	2	胶管	Hose
3–9–20	20	A820205002473	4	接头	Connector

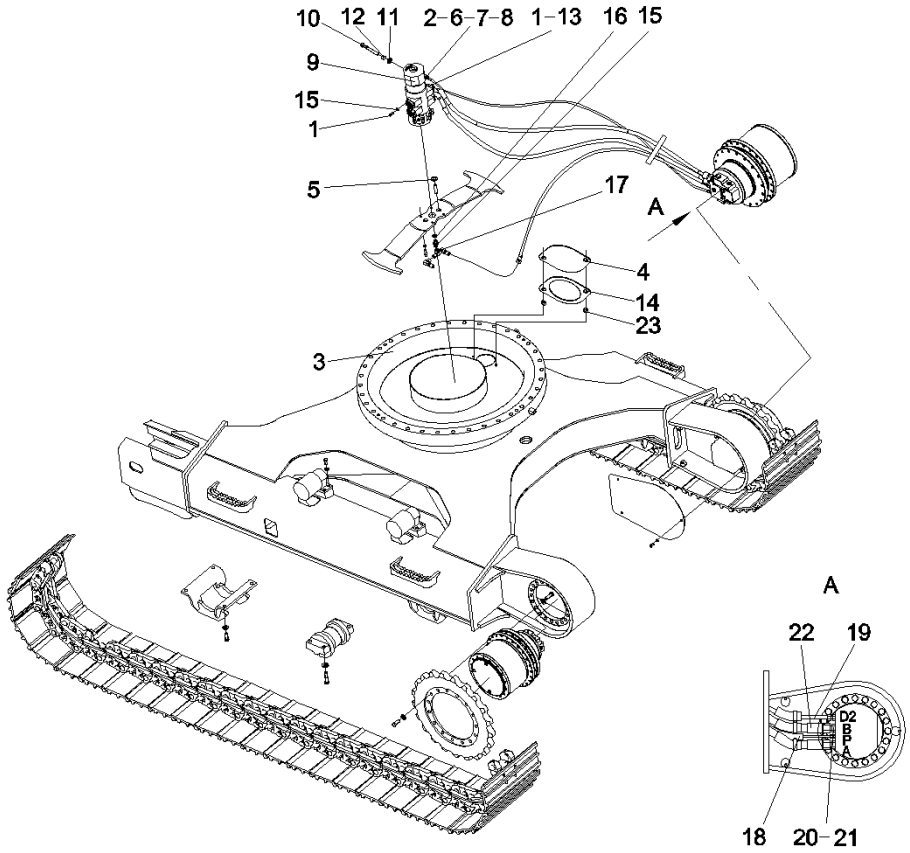

10187380 行走装置 (Travel Unit) (5/5)

识别码 IC	序号 INDEX	零件代码 PART NUMBER	数量 QTY	名称 PART NAME	
3–11–21	21	B230101000356	4	O形圈	Seal – O – Ring
3–11–22	22	B230103005402	4	胶管	Rubber Hose
3–11–23	23	A210307000036	2	螺母	Nut

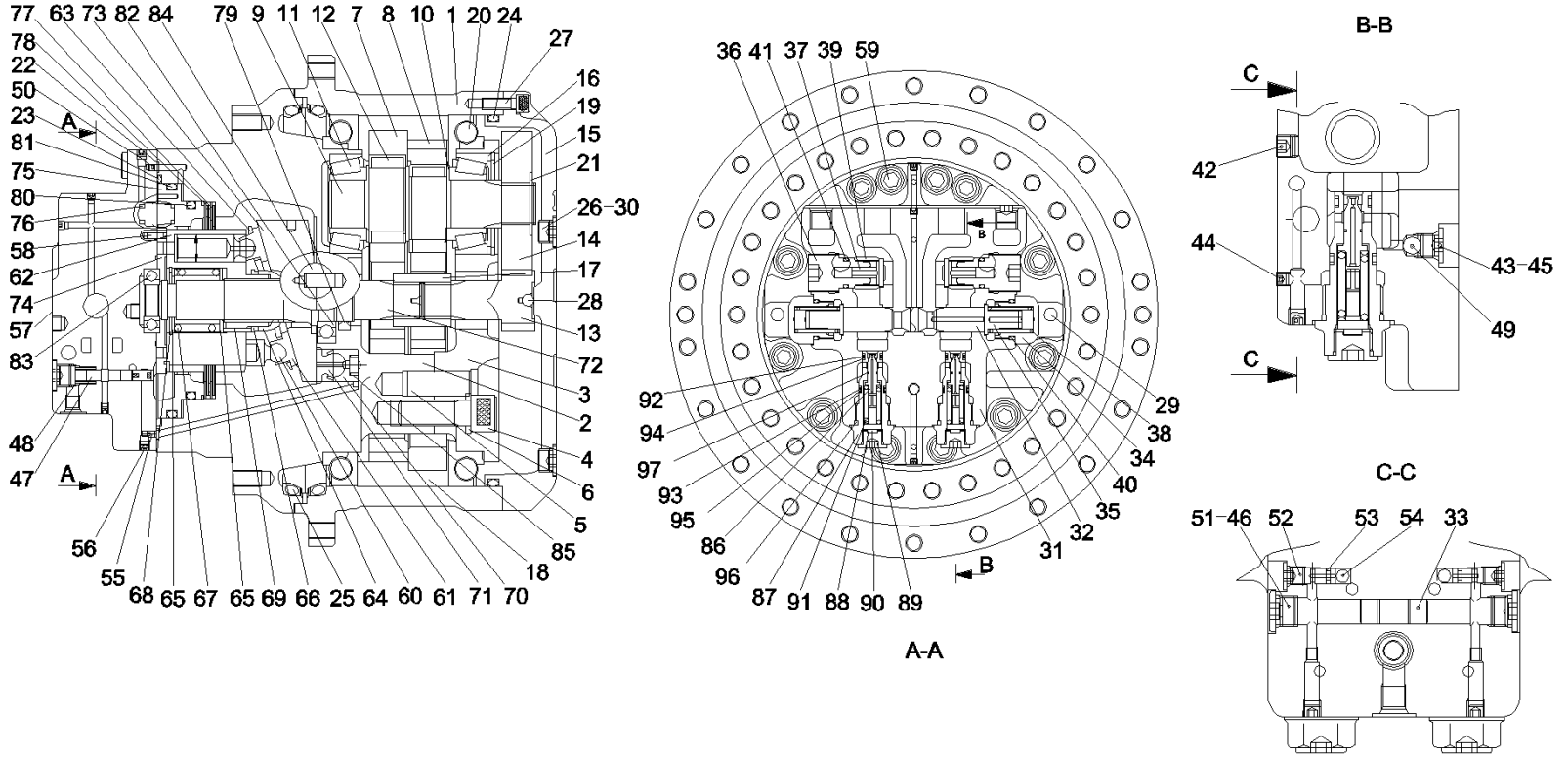
77 63 73 82 84 79 9 11 12 7 8 10 1 20 24
78
22
50
23
81
75
80
76
58
62
74
57
83
48
47
56
55
68 65 67 65 69 66 25 64 60 61 71 70
18
85
5
6
4
2
3
72
13
28
17
14
26-30
21
15
19
16
27
A
A
36 41 37 39 59
92
94
97
93
95
86
96
87 91 88 90 89
31
32
35
40
34
38
29
B
A-A
B-B
C
42
44
43-45
49
C
C-C
51-46 52 53 54 33

识别码 IC	序号 INDEX	零件代码 PART NUMBER	数量 QTY	名称 PART NAME	
3–13–1	1	60038437	1	壳体	Housing
3–13–2	2	60038000	1	架	Bracket
3–13–3	3	60038166	1	保持架	Retainer
3–13–4	4	60038470	3	螺钉	Screw
3–13–5	5	60038581	6	平销	Pin
3–13–6	6	60038291	3	挡圈	Ring – Retaining
3–13–7	7	60038145	1	太阳轮	Gear – Sun
3–13–8	8	60038146	1	太阳轮	Gear – Sun
3–13–9	9	60038588	3	曲轴	Crankshaft
3–13–10	10	60037975	6	隔片	Spacer
3–13–11	11	60038121	6	滚针轴承	Bearing – Needle
3–13–12	12	60038122	6	滚针轴承	Bearing – Needle
3–13–13	13	60038143	1	输入齿轮	Gear – Input
3–13–14	14	60038149	3	行星轮	Gear – Planetary
3–13–15	15	60038346	1	法兰	Flange
3–13–16	16	60037976	3	隔片	Spacer
3–13–17	17	60038875	1	联接器	Coupling
3–13–18	18	60038615	24	销	Pin
3–13–19	19	60038432	3	卡环	Ring
3–13–20	20	60038128	2	滚珠轴承	Bearing – Roller

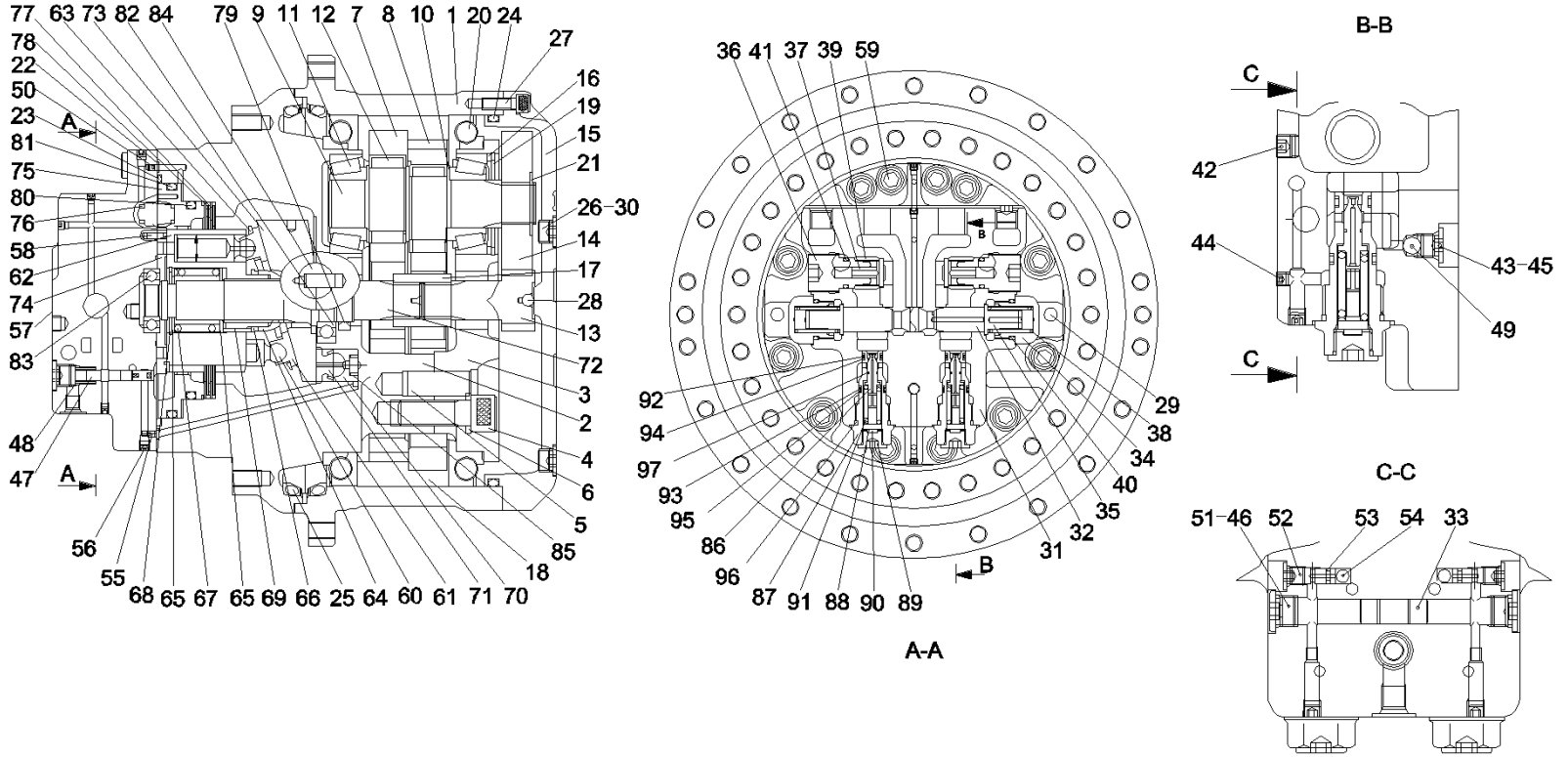
77 63 73 82 84 79 9 11 12 7 8 10 1 20 24
78
22
50
23
81
75
80
76
58
62
74
57
83
48
47
56
55
68 65 67 65 69 66 25 64 60 61 71 70
18
85
5
6
4
2
3
72
13
28
17
14
26-30
21
15
19
16
27
A
A
36 41 37 39 59
92
94
97
93
95
86
96
87 91 88 90 89
31
32
35
40
34
38
29
B
B
A-A
B-B
C
42
44
43-45
49
C
C-C
51-46 52 53 54 33

识别码 IC	序号 INDEX	零件代码 PART NUMBER	数量 QTY	名称 PART NAME	
3–15–21	21	60038433	3	卡环	Ring
3–15–22	22	60038808	4	O形圈	Seal – O–Ring
3–15–23	23	60038797	1	O形圈	Seal – O–Ring
3–15–24	24	60038806	1	O形圈	Seal – O–Ring
3–15–25	25	60038842	2	浮动密封圈	Ring – Seal (Float)
3–15–26	26	60038495	5	螺塞	Plug
3–15–27	27	60038475	12	螺钉	Screw
3–15–28	28	60038044	1	钢球	Ball
3–15–29	29	60038582	4	平行销	Pin
3–15–30	30	60038801	5	O形圈	Seal – O–Ring
3–15–31	31	60038345	1	端面法兰	Flange – End
3–15–32	32	60038077	1	阀芯	Spool
3–15–33	33	60038394	1	活塞	Piston
3–15–34	34	60038488	2	螺塞	Plug
3–15–35	35	60038267	2	弹簧座	Seat – Spring
3–15–36	36	60038489	2	螺塞	Plug
3–15–37	37	60038061	2	阀	Valve
3–15–38	38	60038210	2	弹簧	Spring
3–15–39	39	60038211	2	弹簧	Spring
3–15–40	40	60038805	2	O形圈	Seal – O–Ring

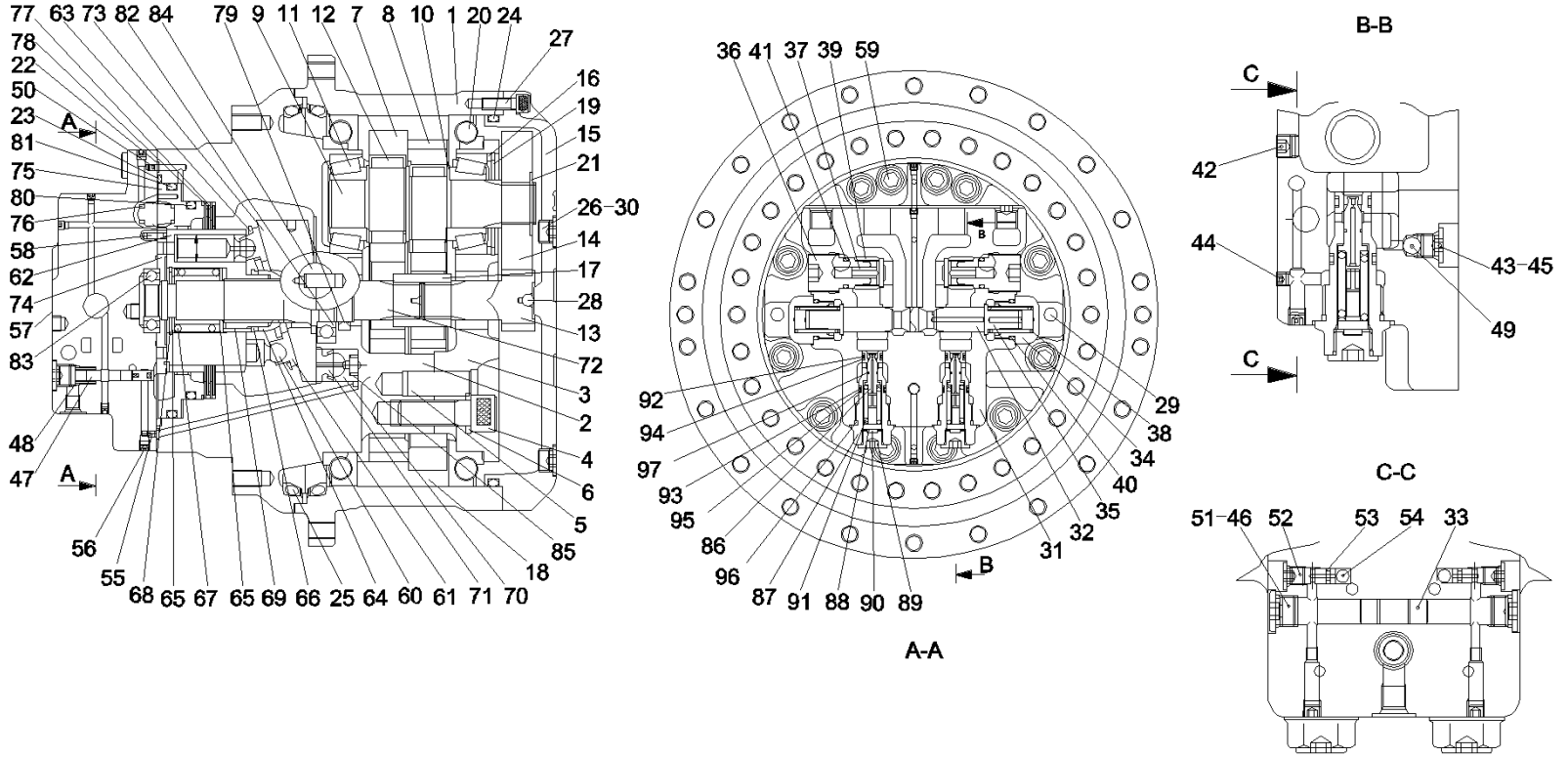
77 63 73 82 84 79 9 11 12 7 8 10 1 20 24
78
22
50
23
81
75
80
76
58
62
74
57
83
48
47
56
55
68 65 67 65 69 66 25 64 60 61 71 70
18
85
5
6
4
2
3
72
13
28
17
14
26-30
21
15
19
16
27
A
A
36 41 37 39 59
92
94
97
93
95
86
96
87 91 88 90 89
31
32
35
40
34
38
29
B
B
A-A
B-B
C
42
44
43-45
49
C
C-C
51-46 52 53 54 33

识别码 IC	序号 INDEX	零件代码 PART NUMBER	数量 QTY	名称 PART NAME	
3–17–41	41	60038803	2	O形圈	Seal – O–Ring
3–17–42	42	60038503	4	螺塞	Plug
3–17–43	43	60038494	2	螺塞	Plug
3–17–44	44	60038502	8	螺塞	Plug
3–17–45	45	60038798	2	O形圈	Seal – O–Ring
3–17–46	46	60038799	2	O形圈	Seal – O–Ring
3–17–47	47	60038078	1	阀芯	Spool
3–17–48	48	60038225	1	弹簧	Spring
3–17–49	49	60038042	2	钢球	Ball
3–17–50	50	60038152	1	滤芯	Element – Filter
3–17–51	51	60038498	2	螺塞	Plug
3–17–52	52	60038497	2	螺塞	Plug
3–17–53	53	60038807	2	O形圈	Seal – O–Ring
3–17–54	54	60038043	2	钢球	Ball
3–17–55	55	60038096	1	节流阀	Valve – Throttle
3–17–56	56	60038504	4	螺塞	Plug
3–17–57	57	60038544	1	铭牌	Nameplate
3–17–58	58	60038583	1	平行销	Pin
3–17–59	59	60038476	12	螺钉	Screw
3–17–60	60	60038689	9	柱塞	Plunger

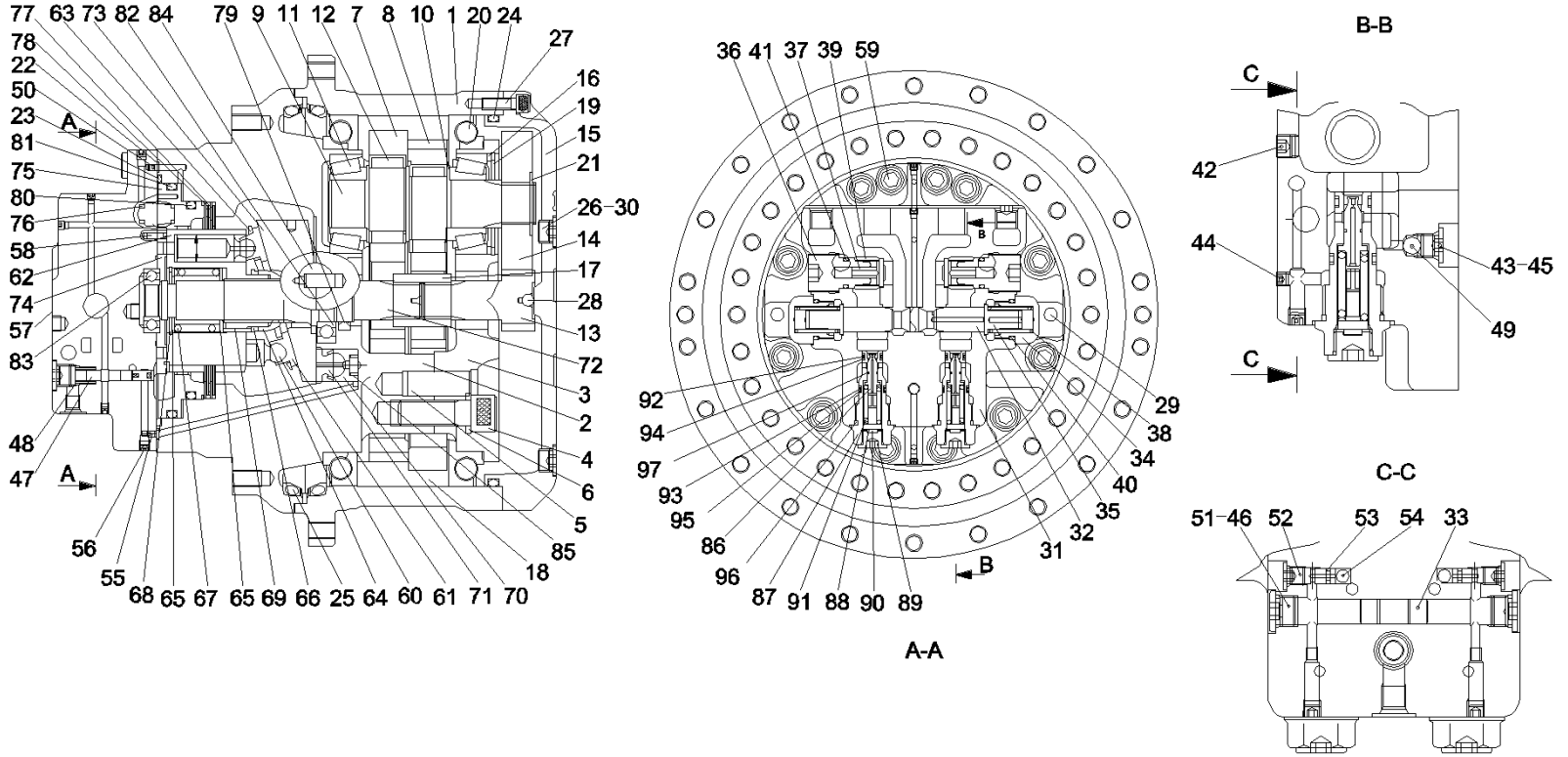
77 63 73 82 84 79 9 11 12 7 8 10 1 20 24
78
22
50
23
81
75
80
76
58
62
74
57
83
48
47
A
56
55
68 65 67 65 69 66 25 64 60 61 71 70
18
85
5
6
4
2
3
72
13
28
17
14
26-30
21
15
19
16
27
36 41 37 39 59
92
94
97
93
95
86
96
87 91 88 90 89
B
31
32
35
40
34
38
29
A-A
B-B
C
42
44
43-45
49
C
C-C
51-46 52 53 54 33

识别码 IC	序号 INDEX	零件代码 PART NUMBER	数量 QTY	名称 PART NAME	
3–19–61	61	60037991	1	滑靴	Slipper
3–19–62	62	60038356	1	缸体	Cylinder Block
3–19–63	63	60037939	1	保持板	Retainer
3–19–64	64	60038022	1	推力球	Ball – Thrust
3–19–65	65	60038328	2	垫圈	Washer
3–19–66	66	60038004	1	卡圈	Ring
3–19–67	67	60038222	1	弹簧	Spring
3–19–68	68	60038431	1	卡环	Ring
3–19–69	69	60037989	5	滚针	Needle
3–19–70	70	60038688	1	柱塞	Plunger
3–19–71	71	60037990	1	滑靴	Slipper
3–19–72	72	60038673	1	轴	Shaft
3–19–73	73	60038622	1	斜盘	Plate – Swash
3–19–74	74	60037954	1	调速板	Plate – Speed Governing
3–19–75	75	60038393	1	活塞	Piston
3–19–76	76	60038224	12	弹簧	Spring
3–19–77	77	60038037	2	制动片	Catch
3–19–78	78	60038017	2	配合板	Plate
3–19–79	79	60038867	1	油封	Seal – Oil
3–19–80	80	60038770	1	O形圈	Seal – O–Ring

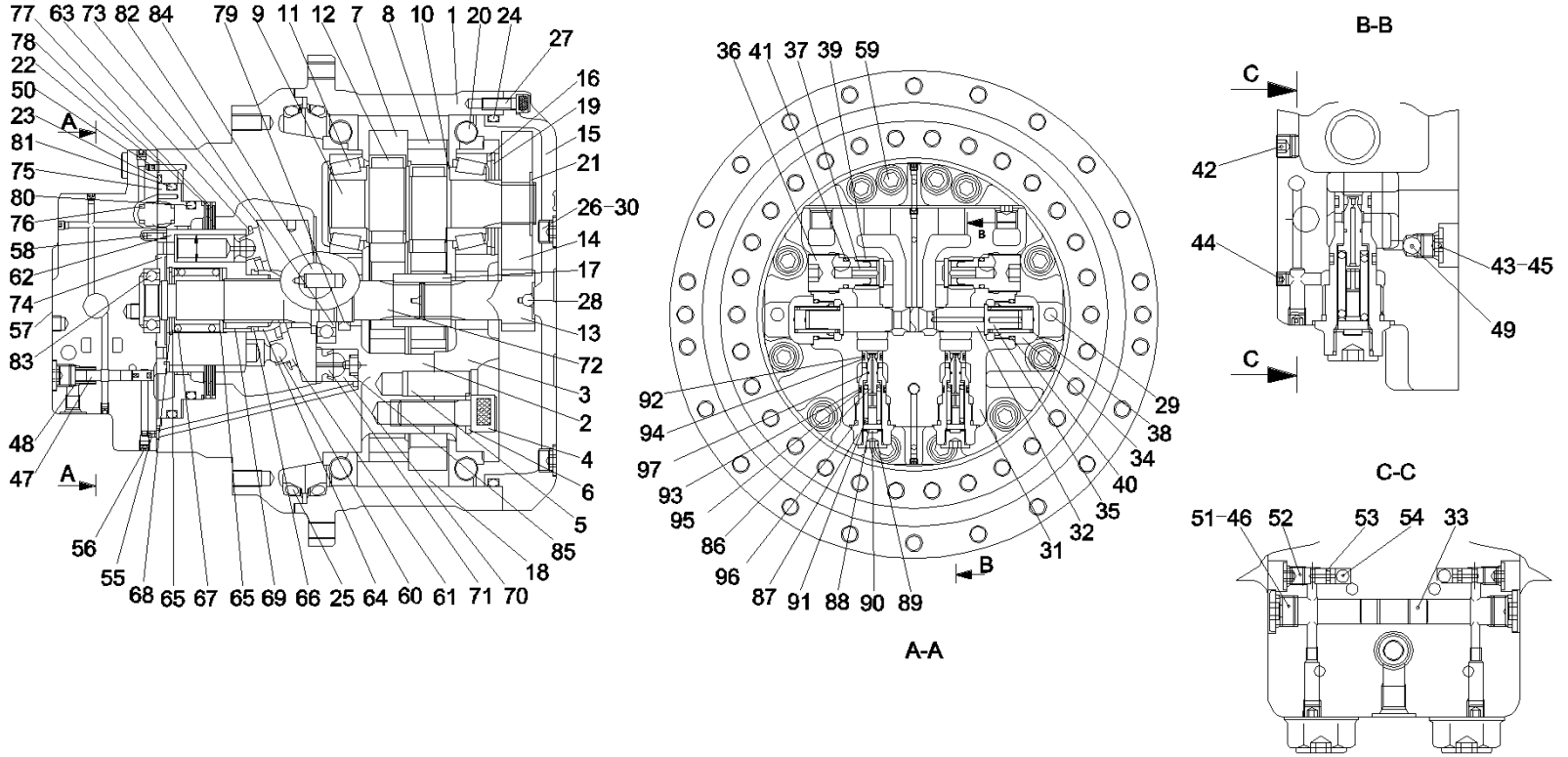
77 63 73 82 84 79 9 11 12 7 8 10 1 20 24
78
22
50
23
81
75
80
76
58
62
74
57
83
48
47
56
55
68 65 67 65 69 66 25 64 60 61 71 70
18
85
5
6
4
2
3
72
13
28
17
14
26-30
21
15
19
16
27
A
A
36 41 37 39 59
92
94
97
93
95
86
96
87 91 88 90 89
31
32
35
40
34
38
29
B
B
A-A
B-B
C
42
44
43-45
49
C
C-C
51-46 52 53 54 33

识别码 IC	序号 INDEX	零件代码 PART NUMBER	数量 QTY	名称 PART NAME	
3–21–81	81	60038771	1	O形圈	Seal – O–Ring
3–21–82	82	60038129	1	滚珠轴承	Bearing – Roller
3–21–83	83	60038123	1	滚针轴承	Bearing – Needle
3–21–84	84	60038030	2	支点	Pivot
3–21–85	85	60038220	1	弹簧	Spring
3–21–86	86	60038062	1	阀	Valve
3–21–87	87	60038067	1	阀套	Sleeve – Valve
3–21–88	88	60038268	1	弹簧座	Seat – Spring
3–21–89	89	60038496	1	螺塞	Plug
3–21–90	90	60038175	1	薄垫片	Gasket
3–21–91	91	60038223	1	弹簧	Spring
3–21–92	92	60038800	1	O形圈	Seal – O–Ring
3–21–93	93	60038802	1	O形圈	Seal – O–Ring
3–21–94	94	60038302	2	挡圈	Ring – Retaining
3–21–95	95	60038301	2	挡圈	Ring – Retaining
3–21–96	96	60038804	1	O形圈	Seal – O–Ring
3–21–97	97	60038872	1	柱塞密封圈	Ring – Seal (Plunger)

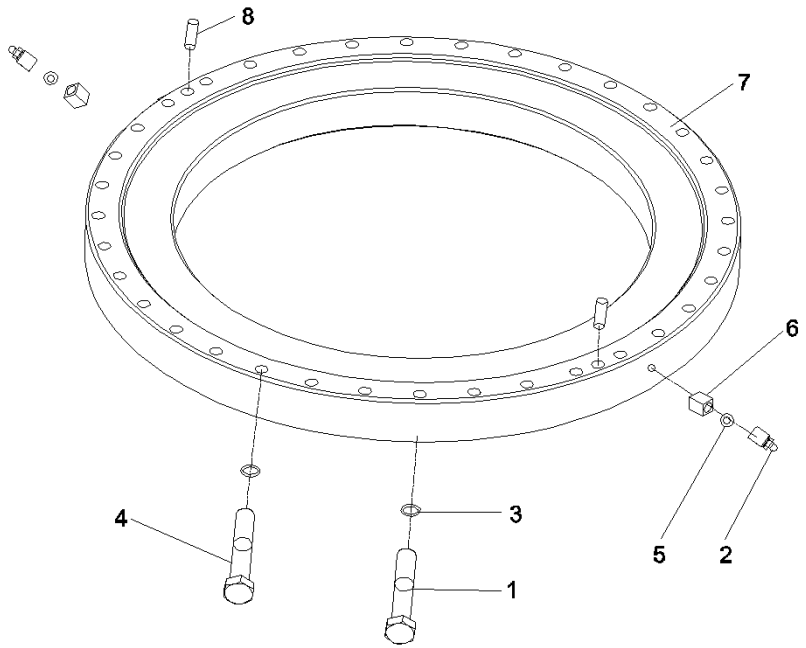
8
7
6
4
3
5
2
1

识别码 IC	序号 INDEX	零件代码 PART NUMBER	数量 QTY	名称 PART NAME	
3–23–1	1	A210111000063	36	螺栓	Bolt
3–23–2	2	B229900000686	2	黄油嘴	Fitting – Grease
3–23–3	3	A210491000132	72	垫圈	Washer
3–23–4	4	A210110000233	36	螺栓	Bolt
3–23–5	5	A820102010428	2	密封垫	Seal
3–23–6	6	A820205000955	2	方接头	Adapter
3–23–7	7	A229900004671	1	回转支承	Bearing – Swing
3–23–8	8	A820301012418	2	销	Pin

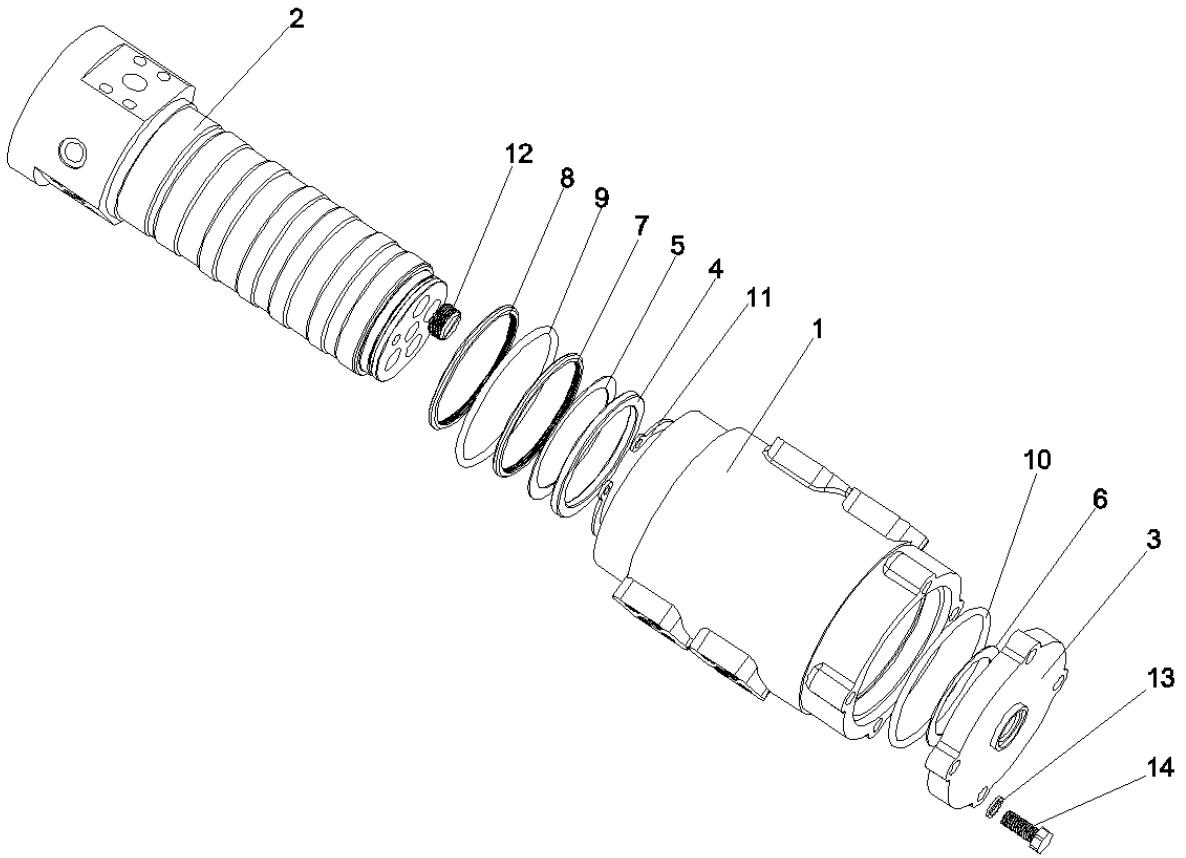
2
12
8
9
7
5
4
11
1
10
6
3
13
14

识别码 IC	序号 INDEX	零件代码 PART NUMBER	数量 QTY	名称 PART NAME	
3–25–1	1	60037996	1	回转体	Housing – Swing
3–25–2	2	60038387	1	回转轴	Rotor – Swing
3–25–3	3	60037961	1	盖	Cover
3–25–4	4	60038365	1	隔套	Sleeve – Spacer
3–25–5	5	60038315	1	垫片	Gasket
3–25–6	6	60038316	1	垫片	Gasket
3–25–7	7	60038862	6	旋转密封	Seal – Rotating
3–25–8	8	60008830	1	防尘圈	Ring – Dust
3–25–9	9	60038757	2	O形圈	Seal – O–Ring
3–25–10	10	60038748	1	O形圈	Seal – O–Ring
3–25–11	11	A210419000014	1	挡圈	Ring, retainer
3–25–12	12	60008887	4	螺堵	Plug
3–25–13	13	60038327	4	垫圈	Washer
3–25–14	14	60038460	4	六角头螺栓	Bolt – Hex

第4章
工作装置总成
(Work Equipment)

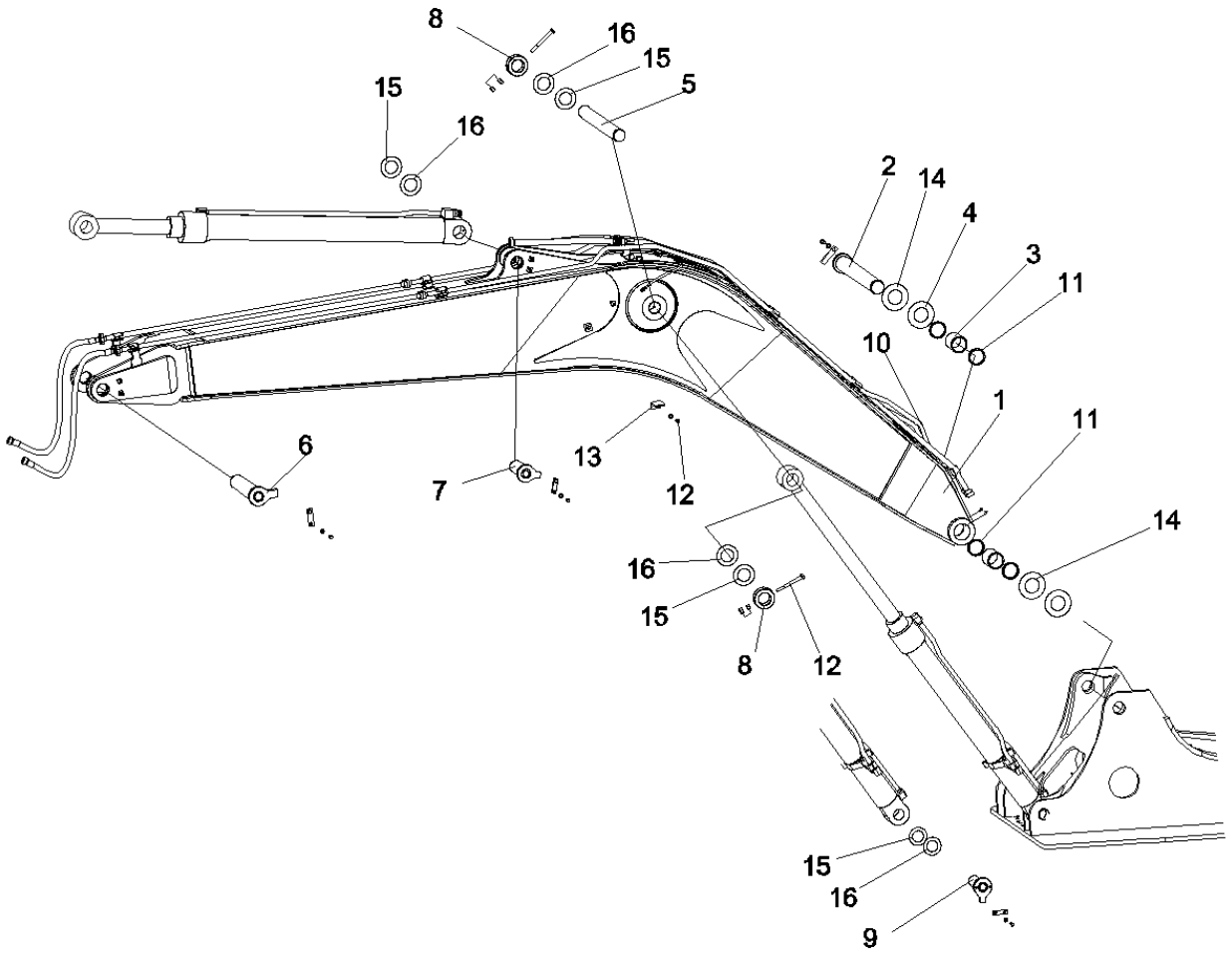

A810312010052 工作装置总成 (Work Equipment) (1/4)

识别码 IC	序号 INDEX	零件代码 PART NUMBER	数量 QTY	名称 PART NAME	
4–3–1	1	A810312060049	1	动臂	Boom
4–3–2	2	A810312110109	1	销轴	Roll – Pin
4–3–3	3	A820202005378	2	轴套	Sleeve – Shaft
4–3–4	4	A820102010793	2	垫片	Gasket
4–3–5	5	A820202005382	1	销轴	Roll – Pin
4–3–6	6	A810312110114	1	销轴	Roll – Pin
4–3–7	7	A810312110115	1	销轴	Roll – Pin
4–3–8	8	A810312019067	2	固定套	Sleeve
4–3–9	9	A810312110116	2	销轴	Roll – Pin
4–3–10	10	A810312000362	1	工作装置管路	Lines – Work Equipment
4–3–11	11	B230101001126	2	油封	Seal, oil, MSM
4–3–12	12	A210111000263	1	螺栓	Bolt
4–3–13	13	A820101322531	1	灯架	Bracket – Lamp
4–3–14	14	10167592	2	垫片	Gasket
4–3–15	15	10167594	14	垫片	Gasket
4–3–16	16	10167595	14	垫片	Gasket

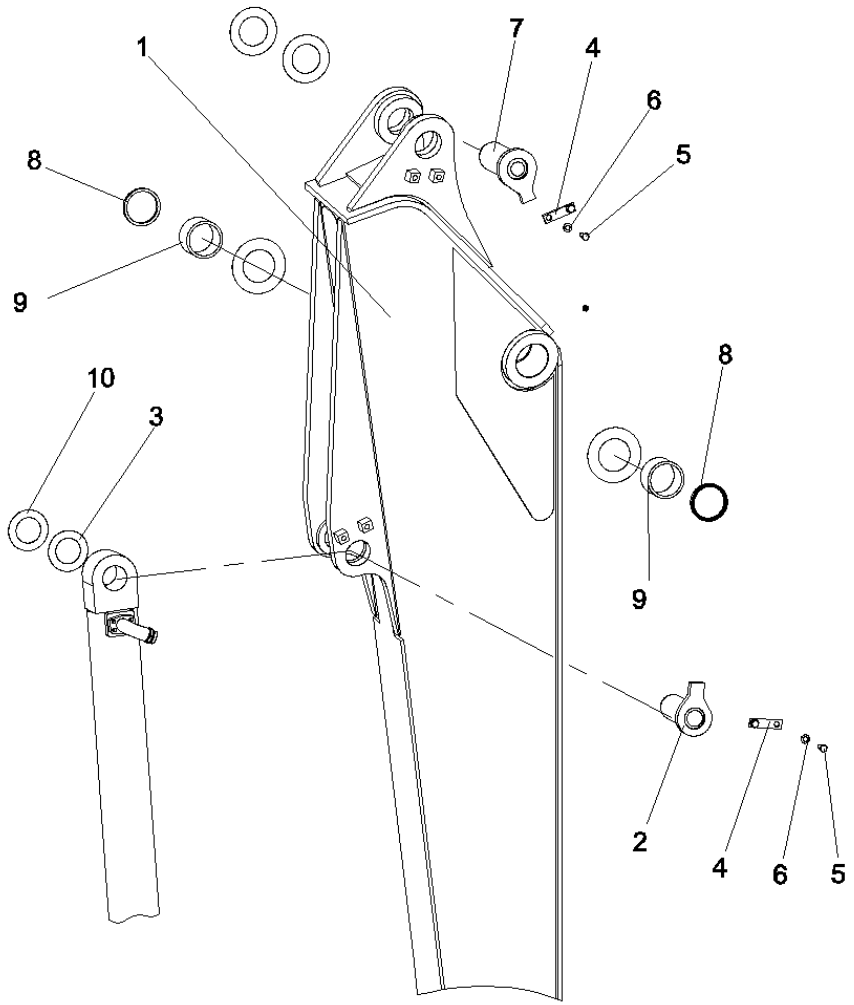

A810312010052 工作装置总成 (Work Equipment) (2/4)

识别码 IC	序号 INDEX	零件代码 PART NUMBER	数量 QTY	名称 PART NAME	
4–5–1	1	11041185	1	斗杆	Arm
4–5–2	2	A810312110107	1	销轴	Roll – Pin
4–5–3	3	A820102010791	4	垫片	Gasket
4–5–4	4	A810312019061	7	固定板	Plate – Fixing
4–5–5	5	A210111000202	14	螺栓	Bolt
4–5–6	6	A210401000002	14	螺栓	Washer
4–5–7	7	A810312110108	1	销轴	Roll – Pin
4–5–8	8	B230101001125	4	油封	Seal, oil, WD
4–5–9	9	A820202005383	2	轴套	Sleeve – Shaft
4–5–10	10	10167602	4	垫片	Gasket

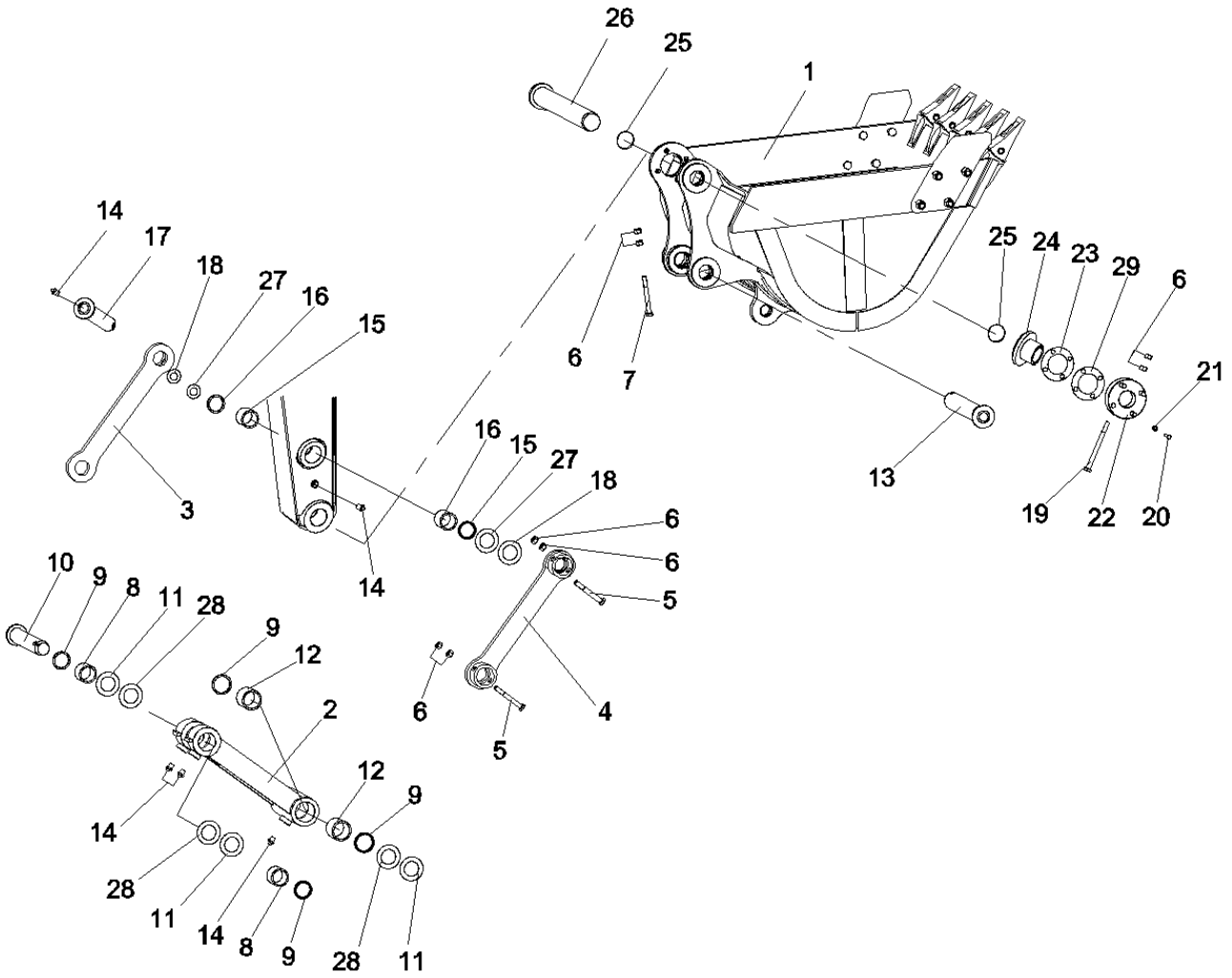

A810312010052 工作装置总成 (Work Equipment) (3/4)

识别码 IC	序号 INDEX	零件代码 PART NUMBER	数量 QTY	名称 PART NAME	
4–7–1	1	11041064	1	铲斗	Bucket
4–7–2	2	A810312100033	1	连杆	Rod – Connecting
4–7–3	3	11164478	1	左摇杆	Rocker – Lh
4–7–4	4	11164477	1	右摇杆	Rocker – Rh
4–7–5	5	A210110000067	2	螺栓	Bolt
4–7–6	6	A210307000005	12	螺母	Nut
4–7–7	7	A210110000352	3	螺栓	Bolt
4–7–8	8	A820202005379	2	轴套	Sleeve – Shaft
4–7–9	9	B230101001124	6	防尘圈	Ring, dustproof, ME–2
4–7–10	10	A810312110110	1	销轴	Roll – Pin
4–7–11	11	A810312990208	6	垫片	Gasket
4–7–12	12	A820202005380	2	轴套	Sleeve – Shaft
4–7–13	13	A810312110111	1	销轴	Roll – Pin
4–7–14	14	B229900000686	6	黄油嘴	Fitting – Grease
4–7–15	15	A820202005381	4	轴套	Sleeve – Shaft
4–7–16	16	B230101001123	4	防尘圈	Ring, dustproof, ME–2
4–7–17	17	A810312110112	1	销轴	Roll – Pin
4–7–18	18	A810312019062	2	垫片	Gasket
4–7–19	19	A210110000347	1	螺栓	Bolt
4–7–20	20	A210110000272	4	螺栓	Bolt

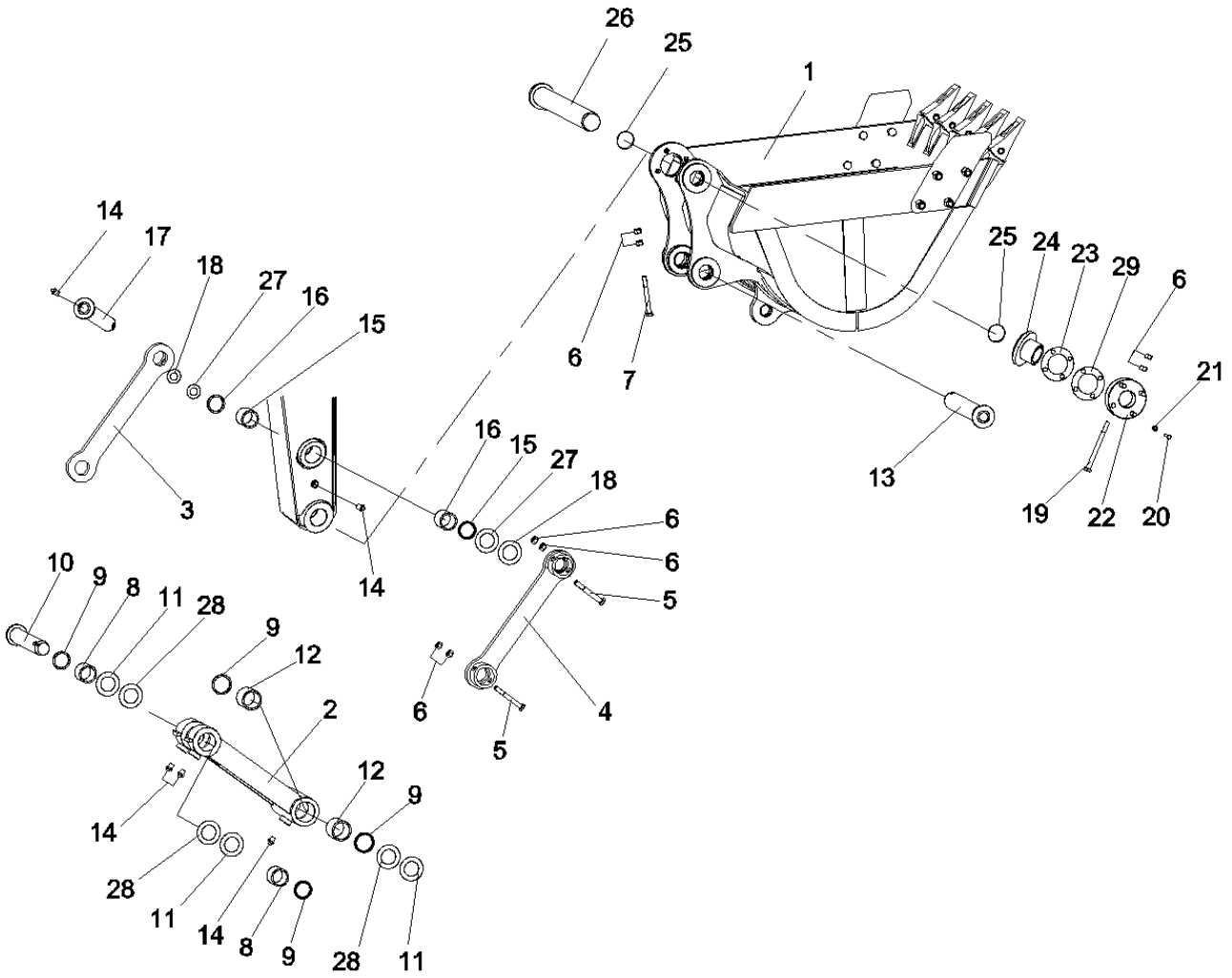

A810312010052 工作装置总成 (Work Equipment) (4/4)

识别码 IC	序号 INDEX	零件代码 PART NUMBER	数量 QTY	名称 PART NAME	
4–9–21	21	A210401000004	5	垫圈	Washer
4–9–22	22	A810312019064	1	压板	Plate
4–9–23	23	A810312019065	4	垫板	Plate
4–9–24	24	A810312019066	1	套	Sleeve
4–9–25	25	A210609000352	2	O形圈	O–ring
4–9–26	26	A810312110113	1	销轴	Roll – Pin
4–9–27	27	10167597	2	垫片	Gasket
4–9–28	28	A810312990209	6	垫片	Gasket
4–9–29	29	10217951	2	垫板	Plate

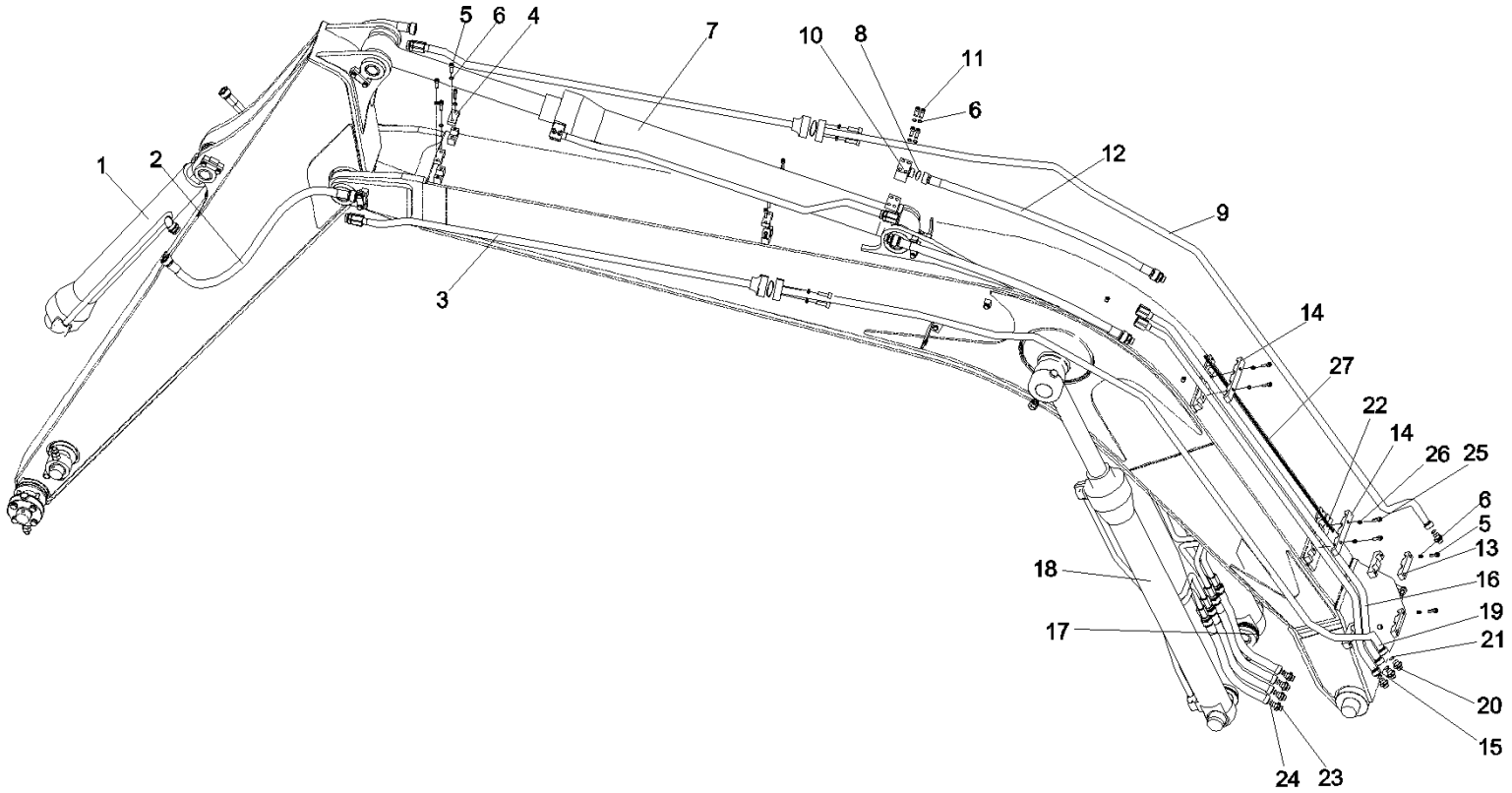

A810312000362 工作装置管路 (Lines - Work Equipment) (1/2)

识别码 IC	序号 INDEX	零件代码 PART NUMBER	数量 QTY	名称 PART NAME	
4–11–1	1	变更或见其他配置	1	铲斗油缸	Cylinder – Bucket
4–11–2	2	B230103005598	2	胶管	Hose
4–11–3	3	A810201068112	2	钢管	Tube
4–11–4	4	A820101344842	4	管夹	Clamp
4–11–5	5	A210204000215	24	螺钉	Screw
4–11–6	6	A210401000001	28	垫圈	Washer
4–11–7	7	变更或见其他配置	1	斗杆油缸	Cylinder – Arm
4–11–8	8	A210609000136	3	O形圈	Seal – O – Ring
4–11–9	9	A810201068113	1	钢管	Tube
4–11–10	10	A820203002656	1	钢管接头	Connector
4–11–11	11	A210204000345	4	螺钉	Screw
4–11–12	12	B230103005440	2	胶管	Hose
4–11–13	13	A820101344840	2	管夹	Clamp
4–11–14	14	10391248	2	管夹	Clamp
4–11–15	15	A810201068111	1	钢管	Tube
4–11–16	16	A810201068110	1	钢管	Tube
4–11–17	17	变更或见其他配置	1	动臂油缸(右)	Cylinder – Boom (Rh)
4–11–18	18	变更或见其他配置	1	动臂油缸(左)	Cylinder – Boom (Lh)
4–11–19	19	A810201068114	1	钢管	Tube
4–11–20	20	A820205002473	11	接头	Connector

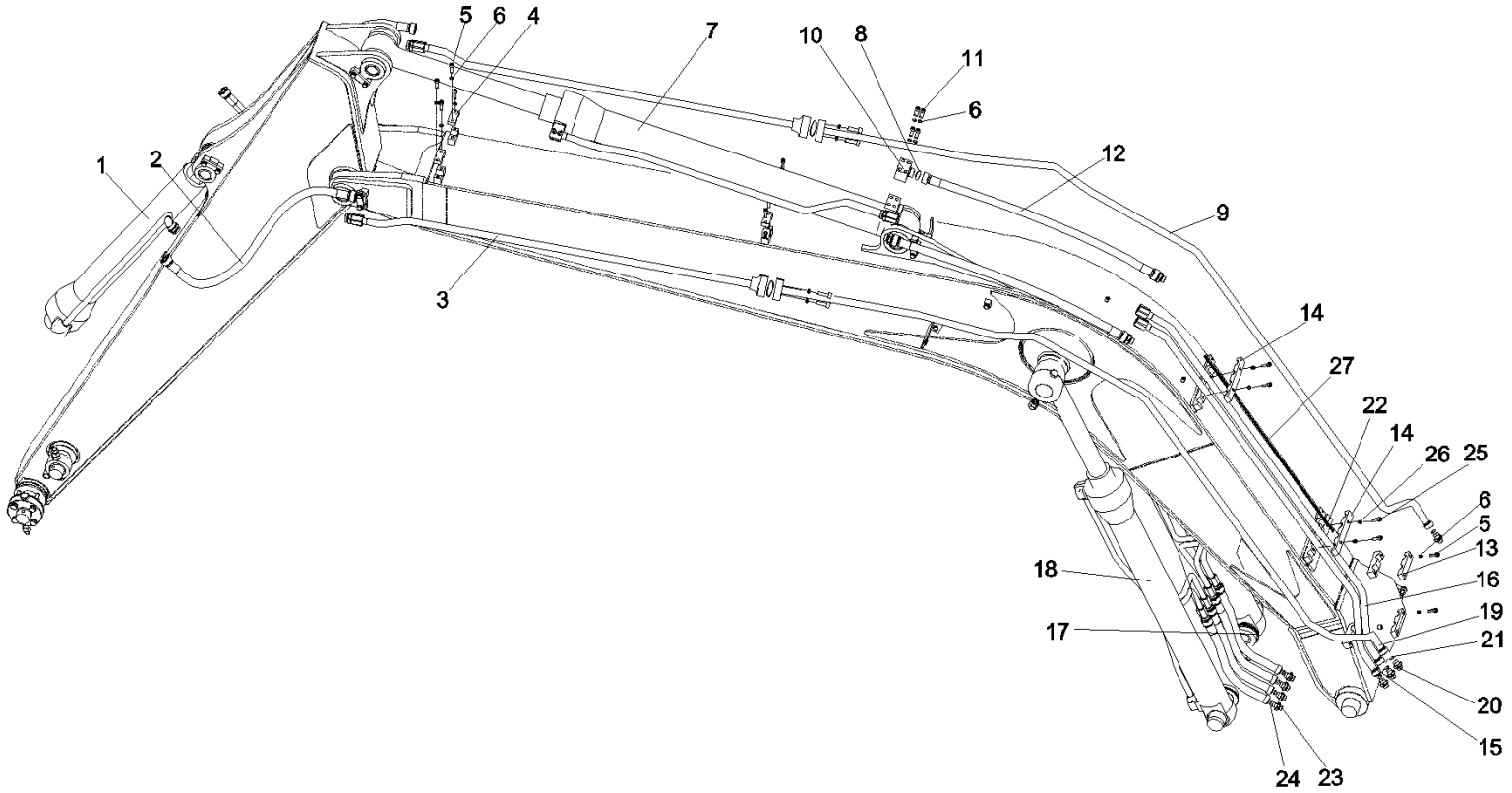

A810312000362 工作装置管路 (Lines - Work Equipment) (2/2)

识别码 IC	序号 INDEX	零件代码 PART NUMBER	数量 QTY	名称 PART NAME	
4–13–21	21	B230101000356	15	O形圈	Seal – O – Ring
4–13–22	22	A810201030039	1	润滑油管路	Lines – Lubrication
4–13–23	23	A820205002472	4	接头	Connector
4–13–24	24	B230101000090	4	O形圈	Seal – O – Ring
4–13–25	25	A210204000338	4	螺钉	Screw
4–13–26	26	A210401000002	4	螺栓	Washer
4–13–27	27	A239900000065	15	尼龙扎带	Band – Nylon

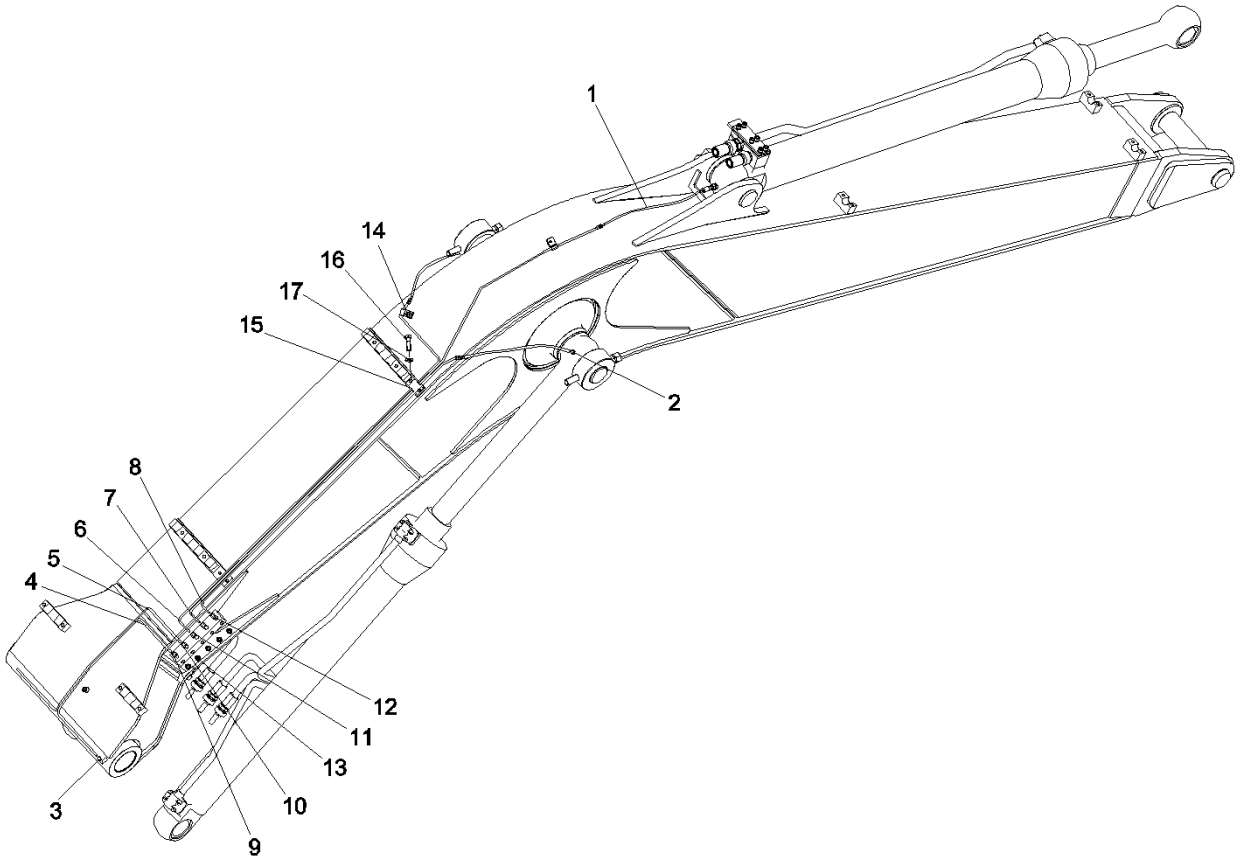
1
2
3
4
5
6
7
8
9
10
11
12
13
14
15
16
17

识别码 IC	序号 INDEX	零件代码 PART NUMBER	数量 QTY	名称 PART NAME	
4–15–1	1	B230103000815	3	胶管	Hose, rubber
4–15–2	2	A820205000858	3	管接头	Fitting – Pipe
4–15–3	3	A210715000008	2	管接头	Connector, pipe
4–15–4	4	A820207010415	1	黄油管	Butter Pipe
4–15–5	5	A820207010416	1	黄油管	Butter Pipe
4–15–6	6	A820207010417	1	黄油管	Butter Pipe
4–15–7	7	A820207010418	1	黄油管	Butter Pipe
4–15–8	8	A820207010419	1	黄油管	Butter Pipe
4–15–9	9	B210770000085	2	管接头	Fitting – Pipe
4–15–10	10	A210434000005	2	垫圈	Washer
4–15–11	11	A810201031035	6	过渡接头	Fitting
4–15–12	12	A210434000007	3	垫圈	Washer
4–15–13	13	B229900000686	5	黄油嘴	Fitting – Grease
4–15–14	14	A230200000170	2	线夹	Clip
4–15–15	15	A820101345161	2	管夹	Tube Clamp
4–15–16	16	A210204000339	7	螺钉	Screw
4–15–17	17	A210401000017	4	垫圈	Washer

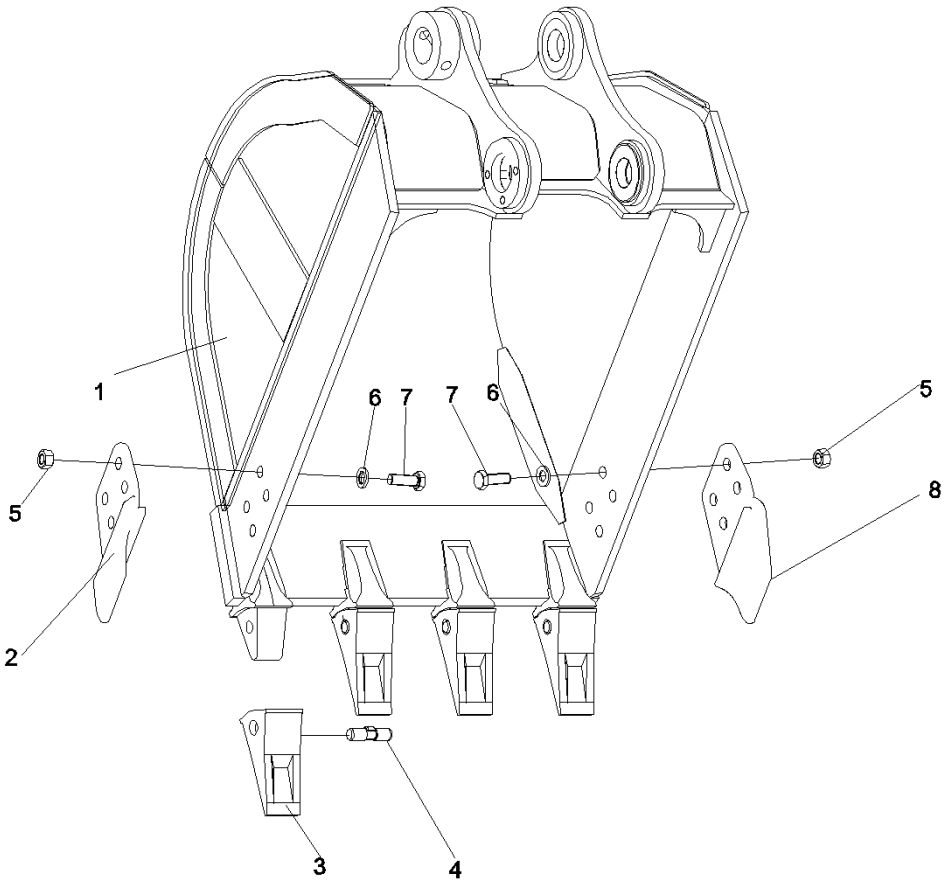
1
6
7
7
6
5
5
8
2
3
4

识别码 IC	序号 INDEX	零件代码 PART NUMBER	数量 QTY	名称 PART NAME	
4–17–1	1	11041078	1	斗体	Body – Bucket
4–17–2	2	A229900007131	1	左侧齿	Cutter – Lh
4–17–3	3	10143956	4	齿套	Tip – Bucket
4–17–4	4	10143975	4	齿销	Pin – Tip
4–17–5	5	A210307000006	8	螺母	Nut
4–17–6	6	A210444000002	8	垫圈	Washer
4–17–7	7	A210111000301	8	螺栓	Bolt
4–17–8	8	A229900007130	1	右侧齿	Cutter – Rh

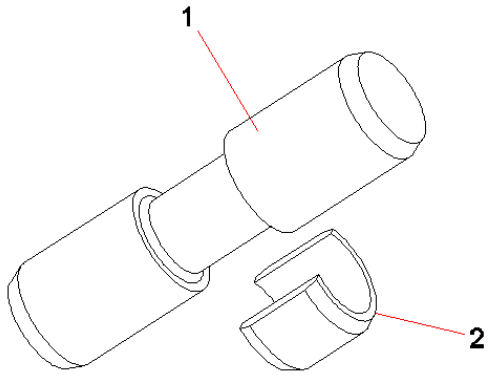
1
2

识别码 IC	序号 INDEX	零件代码 PART NUMBER	数量 QTY	名称 PART NAME	
4–19–1	1	10175953	1	斗齿销	Pin – Tip (Bucket)
4–19–2	2	A820301015145	1	卡簧	Spring

第5章
电气系统
(Electrical System)

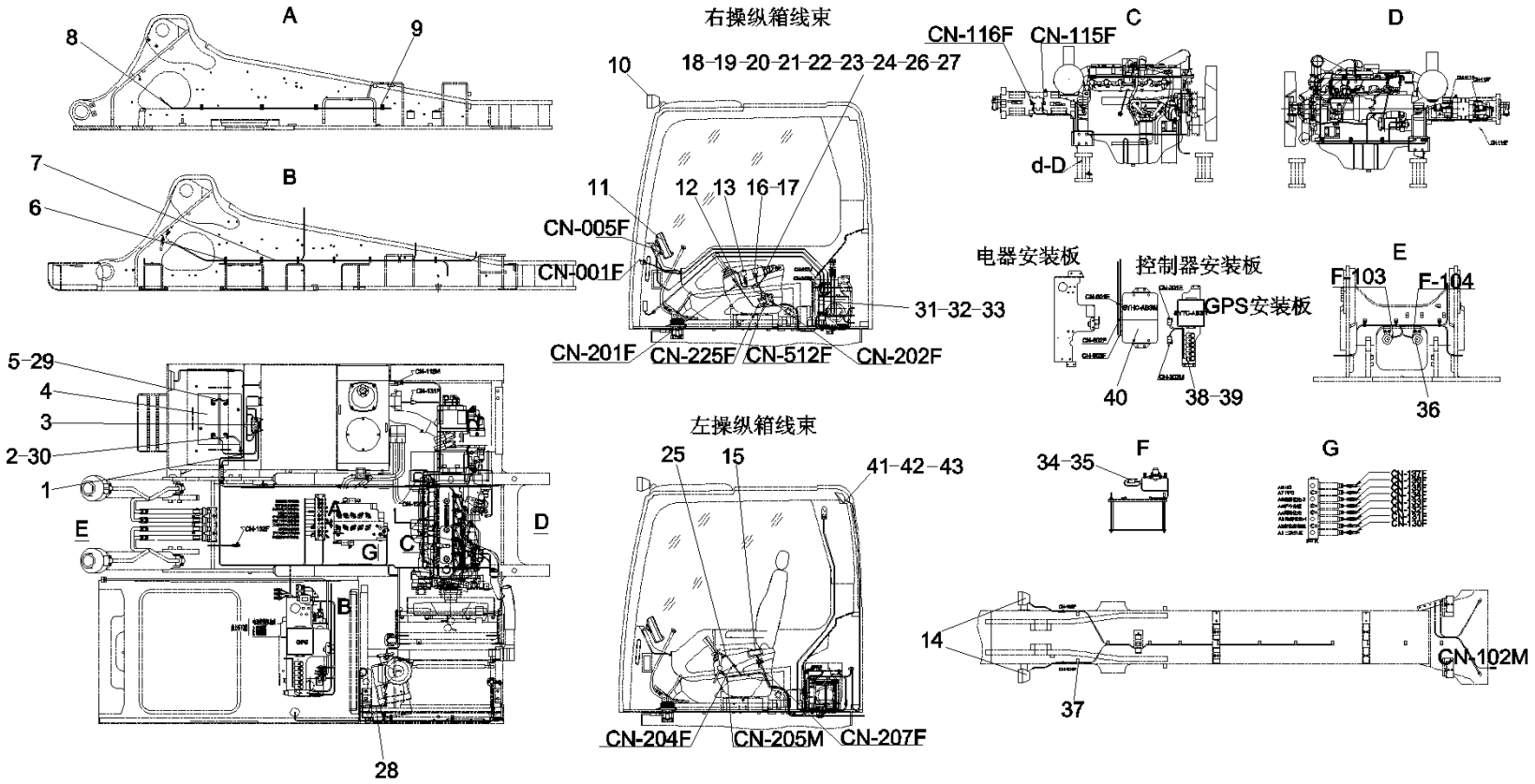
A
8
9
B
7
6
右操纵箱线束
10
18-19-20-21-22-23-24-26-27
11
12 13 16-17
CN-005F
CN-001F
31-32-33
CN-201F
CN-225F
CN-512F
CN-202F
CN-116F
CN-115F
C
d-D
D
电器安装板
控制器安装板
GPS安装板
40
38-39
E
F-103
F-104
36
5-29
4
3
2-30
1
E
A
G
C
D
B
28
左操纵箱线束
25
15
41-42-43
CN-204F
CN-205M
CN-207F
34-35
F
G
14
37
CN-102M

识别码 IC	序号 INDEX	零件代码 PART NUMBER	数量 QTY	名称 PART NAME	
5–3–1	1	60012805	1	电源线	Line, power supply
5–3–2	2	60012803	1	电源线	Harness – Power Supply
5–3–3	3	A240700000302	1	接触器	Connector
5–3–4	4	A242200000027	2	蓄电池	Battery
5–3–5	5	60012792	1	电源线	Harness – Power Supply
5–3–6	6	A230200000176	8	线夹	Clip
5–3–7	7	11217017	1	车身线束	Harness – Chassis
5–3–8	8	60012795	1	电源线	Harness – Power Supply
5–3–9	9	A230200000169	3	线夹	Clamp
5–3–10	10	B241100000391	2	工作灯	Lamp, working
5–3–11	11	11342923	1	三一显示屏	Monitor – Sany
5–3–12	12	10465097	1	驾驶室线束	Harness – Cab
5–3–13	13	A229900001930	1	旋钮开关	Switch, knob
5–3–14	14	A241100000352	2	工作灯	Lamp, working
5–3–15	15	A240500000113	1	收音机	Radio
5–3–16	16	A241200001217	1	启动开关	Switch, start
5–3–17	17	A230200000021	1	PVC电气胶带	Adhesive tape, electric, PVC
5–3–18	18	A210202000011	7	螺钉	Screw
5–3–19	19	A210401000013	7	垫圈	Washer
5–3–20	20	B241100000139	1	指示灯	Lamp, indicator, red

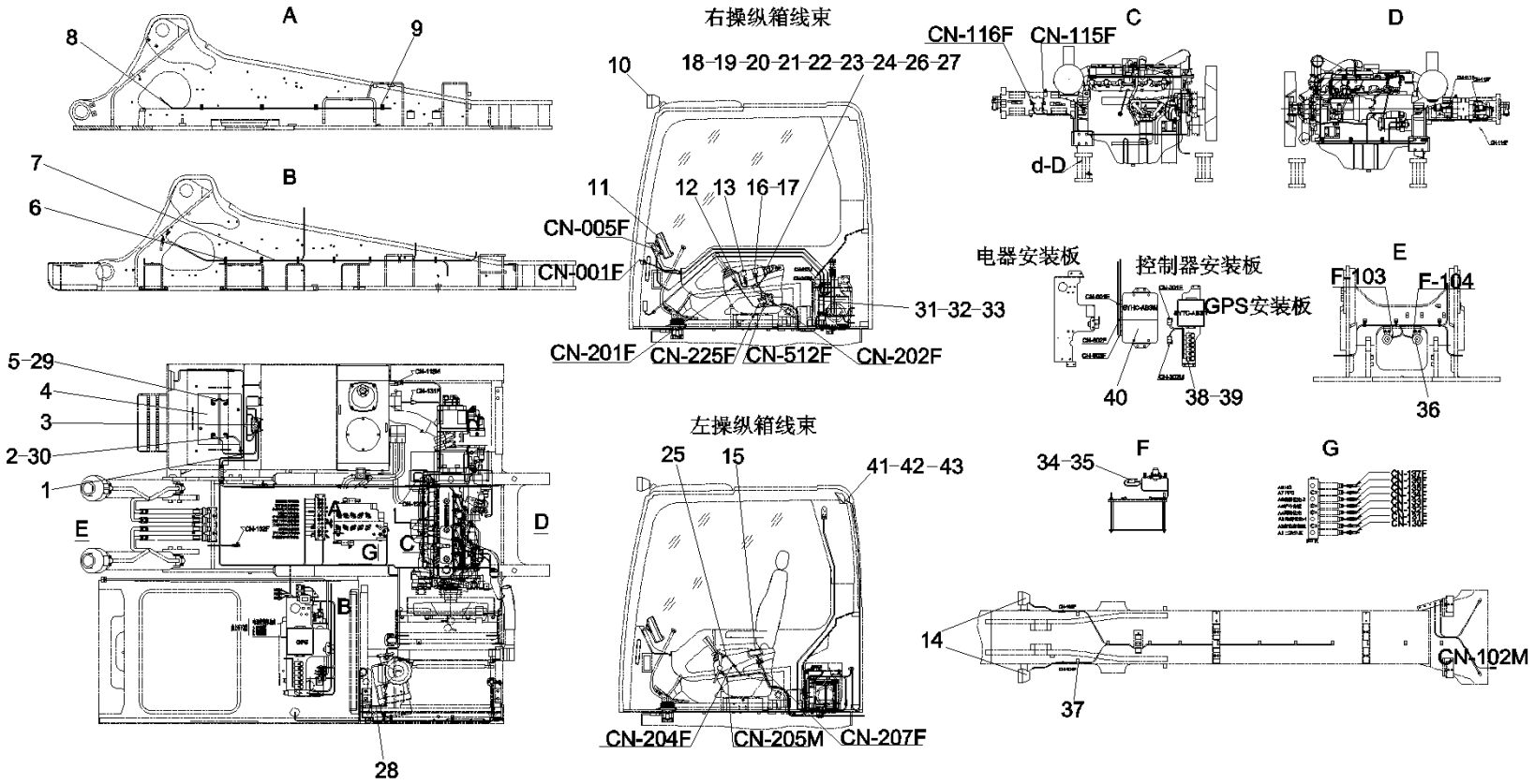
A
8
9
B
7
6
右操纵箱线束
10
18-19-20-21-22-23-24-26-27
11
12 13 16-17
CN-005F
CN-001F
31-32-33
CN-201F
CN-225F
CN-512F
CN-202F
CN-116F
CN-115F
C
d-D
D
电器安装板
控制器安装板
GPS安装板
40
38-39
E
F-103
F-104
36
5-29
4
3
2-30
1
E
A
G
C
D
B
28
左操纵箱线束
25
15
41-42-43
CN-204F
CN-205M
CN-207F
34-35
F
G
14
37
CN-102M

识别码 IC	序号 INDEX	零件代码 PART NUMBER	数量 QTY	名称 PART NAME	
5–5–21	21	B241100000140	1	指示灯	Lamp, indicator, yellow
5–5–22	22	10465120	1	控制开关线束	Harness – Switch (Control)
5–5–23	23	A230200000170	2	线夹	Clip
5–5–24	24	A210111000011	2	螺栓	Bolt
5–5–25	25	60034948	1	开关	Switch
5–5–26	26	A210111000088	12	螺栓	Bolt
5–5–27	27	A210401000017	12	垫圈	Washer
5–5–28	28	B241000000022	1	二线插座	Socket, two–wire
5–5–29	29	60013322	2	A型蓄电池正极接头总成	Connector assembly, anode,
5–5–30	30	60013321	2	A型蓄电池负极接头总成	Connector assembly, cathode,
5–5–31	31	A210111000199	20	螺栓	Bolt
5–5–32	32	A210401000002	20	螺栓	Washer
5–5–33	33	10465119	1	保险盒线束	Harness – Fuse Box
5–5–34	34	A241300000059	1	熔断器盒	Box – Fuse
5–5–35	35	A239900000053	4	尼龙扎带	Band – Nylon
5–5–36	36	A229900001896	1	喇叭	Horn
5–5–37	37	A230200000175	2	线夹	Clamp, cord
5–5–38	38	B240700000250	5	继电器	Relay
5–5–39	39	10465121	1	继电器线束	Harness – Relay
5–5–40	40	11342916	1	三一可组态液压控制器	Controller – Hyd. (Sany)

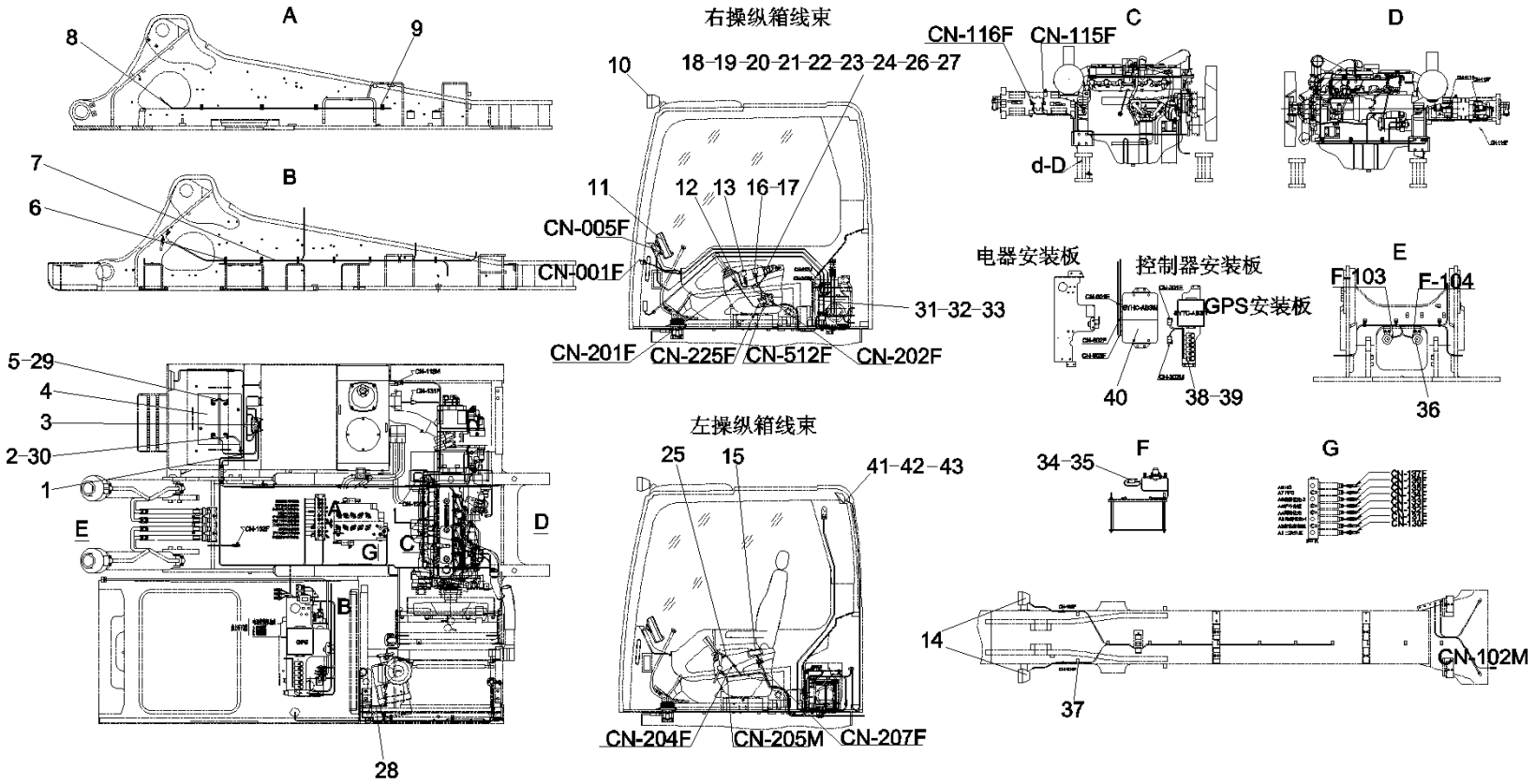
A
8
9
B
7
6
右操纵箱线束
10
18-19-20-21-22-23-24-26-27
11
12 13 16-17
CN-005F
CN-001F
31-32-33
CN-201F
CN-225F
CN-512F
CN-202F
CN-116F
CN-115F
C
d-D
D
电器安装板
控制器安装板
GPS安装板
40
38-39
E
F-103
F-104
36
5-29
4
3
2-30
1
E
A
G
C
D
B
28
左操纵箱线束
25
15
41-42-43
CN-204F
CN-205M
CN-207F
34-35
F
G
14
37
CN-102M

识别码 IC	序号 INDEX	零件代码 PART NUMBER	数量 QTY	名称 PART NAME	
5–7–41	41	变更或见其他配置	1	天线	Extension cord for Antenna
5–7–42	42	60023703	1	喇叭	Horn
5–7–43	43	变更或见其他配置	1	天线延长线	Wire – Extension (Antenna)

第6章
涂装
(Painting)

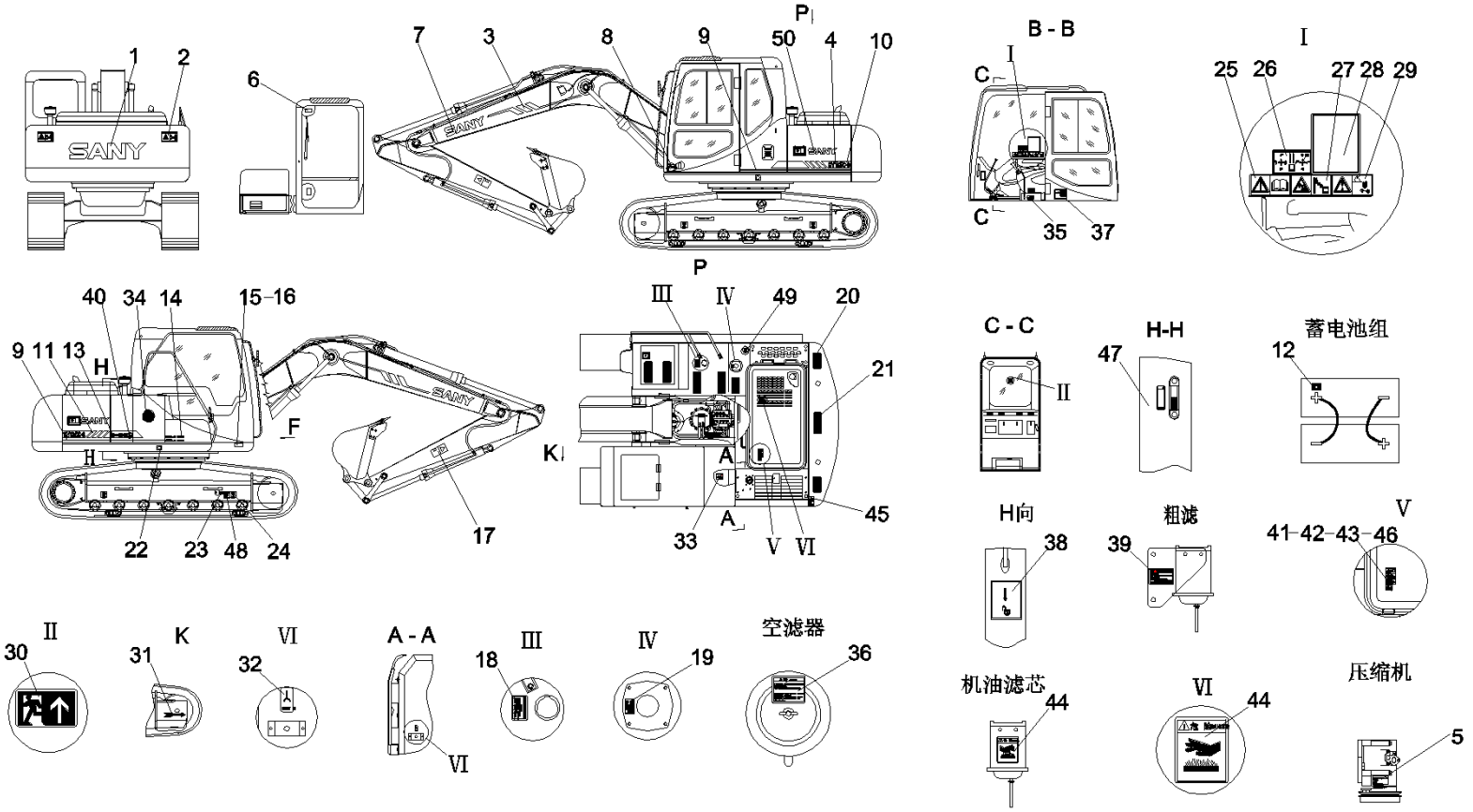
1
2
6
7
3
8
9
50
4
10
P
B - B
C
I
C
35
37
I
25
26
27
28
29
40
34
14
15-16
9
11
13
H
F
H
22
23
48
24
17
K
III
IV
49
20
21
A
A
33
V
VI
45
C - C
II
H-H
47
蓄电池组
12
H向
38
粗滤
39
V
41-42-43-46
II
30
K
31
VI
32
A - A
VI
III
18
IV
19
空滤器
36
机油滤芯
44
VI
44
压缩机
5

识别码 IC	序号 INDEX	零件代码 PART NUMBER	数量 QTY	名称 PART NAME	
6–3–1	1	A820699000786	1	配重贴花	Film – Counterweight
6–3–2	2	A820699001016	2	配重警示牌	Film – Warning (Counterweight)
6–3–3	3	10233746	2	动臂两侧贴花	Film – Boom (Both Sides)
6–3–4	4	10233763	2	机器型号贴花	Film – Machine Model
6–3–5	5	A820699001284	1	冷媒更换说明	Film – Instruction
6–3–6	6	A820699001019	1	前窗锁紧警示牌	Film – Warning (Window Lock)
6–3–7	7	A820699000768	2	机身贴花	Film – (Chassis)
6–3–8	8	10233764	1	噪音标志	Film – Information (Noise)
6–3–9	9	10233766	2	机身左侧中部条贴花	Film – Chassis (Left Middle)
6–3–10	10	10233769	1	机身左侧后贴花	Film – Chassis (Left Rear)
6–3–11	11	10233771	1	机身右侧贴花	Film – Chassis (Rh)
6–3–12	12	A820601990972	1	电源标志	Film – Identification
6–3–13	13	10220834	1	三一重机标识贴花	Film – Sany Hm
6–3–14	14	A820699000746	1	服务信息	Film – Service Information
6–3–15	15	10251978	1	铭牌	Nameplate
6–3–16	16	A210510000007	4	铆钉	Rivet
6–3–17	17	A820601990963	2	斗杆警示牌	Film – Warning (Arm)
6–3–18	18	A820601991076	1	燃油箱标识牌	Film – Identification (Fuel Tank)
6–3–19	19	A820601991075	1	液压油箱标识牌	Film – Identification (Hyd. Tank)
6–3–20	20	A820699000370	3	短防滑贴	Film – Warning (Anti–Skid)

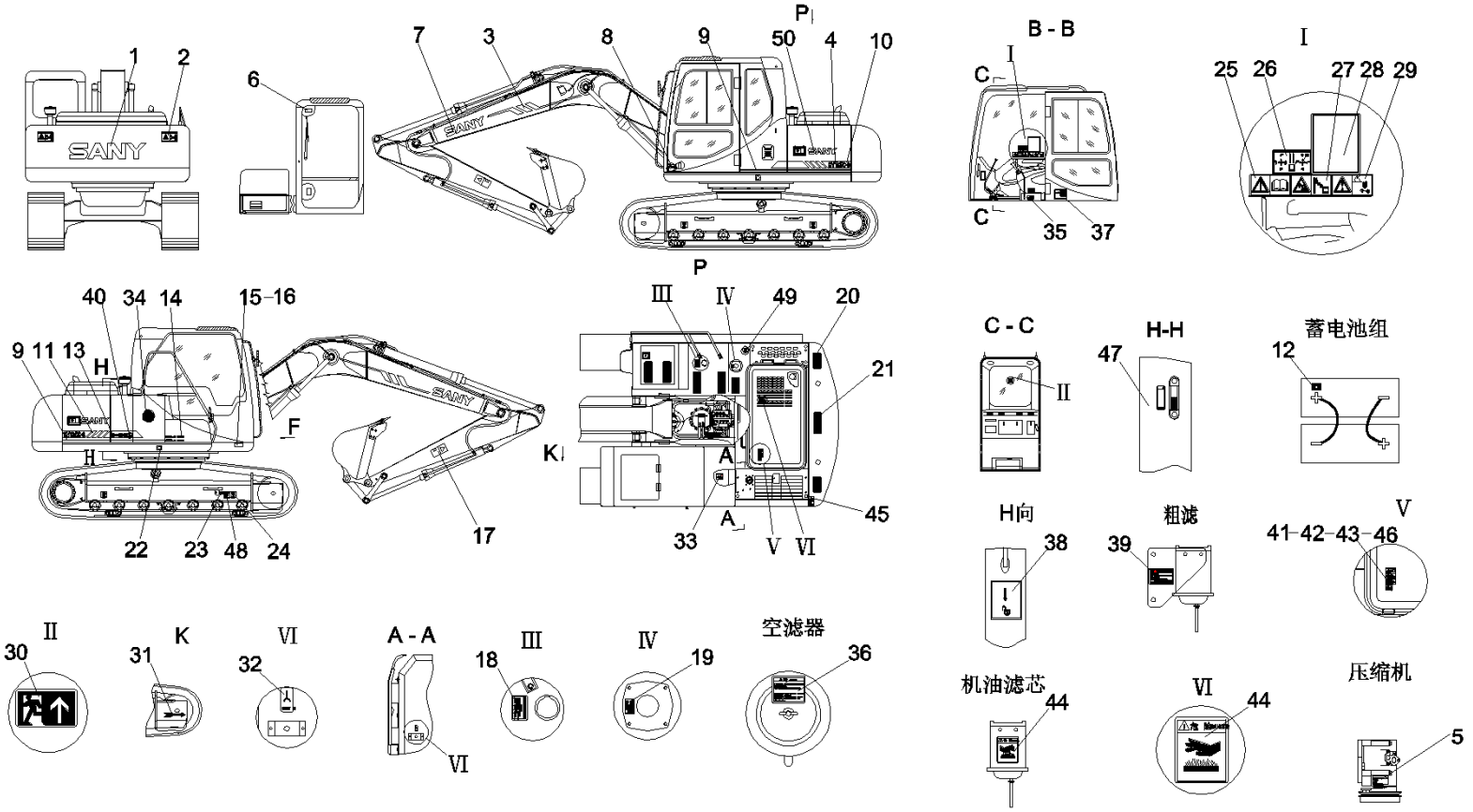
1
2
6
7
3
8
9
50
4
10
P
B - B
C
I
C
35
37
I
25
26
27
28
29
40
34
14
15-16
9
11
13
H
F
H
22
23
48
24
17
K
III
IV
49
20
21
A
A
33
V
VI
45
C - C
II
H-H
47
蓄电池组
12
H向
38
粗滤
39
V
41-42-43-46
II
30
K
31
VI
32
A - A
VI
III
18
IV
19
空滤器
36
机油滤芯
44
VI
44
压缩机
5

识别码 IC	序号 INDEX	零件代码 PART NUMBER	数量 QTY	名称 PART NAME	
6–5–21	21	A820699000369	5	长防滑贴	Film – Warning (Anti–Skid)
6–5–22	22	10232575	2	重心标志	Film – Identification
6–5–23	23	A820601990968	2	张紧装置警示牌	Film – Warning (Tensioning Unit)
6–5–24	24	A820101990552	4	吊钩点标示图	Film – Identification
6–5–25	25	A820601990971	1	查阅说明书警示牌	Film – Warning (Read Manual)
6–5–26	26	A820601990961	1	操纵标示图	Film – Warning (Operation)
6–5–27	27	A820601990974	1	高压回避警示牌	Film – Warning (High Pressure)
6–5–28	28	10185368	1	提升能力表	Diagram – Lift Capacity
6–5–29	29	A820699001020	1	钥匙断电警示牌	Film – Waring (Key– Disconnect)
6–5–30	30	A820601990969	1	安全出口标志	Film – Identification
6–5–31	31	A820699001018	2	前进方向标志	Film – Instruction
6–5–32	32	A820699001109	1	电源插座标志	Film – Identification
6–5–33	33	A820699001023	1	严禁坐人警示牌	Film – Warning (No Seating)
6–5–34	34	A290000003291	1	省油王标识	Film – Indentification
6–5–35	35	A820601990967	1	座椅调节指示牌	Film – Instruction
6–5–36	36	A820601990975	1	空滤器警示牌	Film – Warning (Air Cleaner)
6–5–37	37	11464411	1	润滑图表	Film – Information (Lube Chart)
6–5–38	38	A820601990927	1	开锁标识牌	Film – Identification (Unlock)
6–5–39	39	A820601990962	1	油水分离器放水标识	Film – Identification
6–5–40	40	10220833	1	三一VI标志	Film – Sany

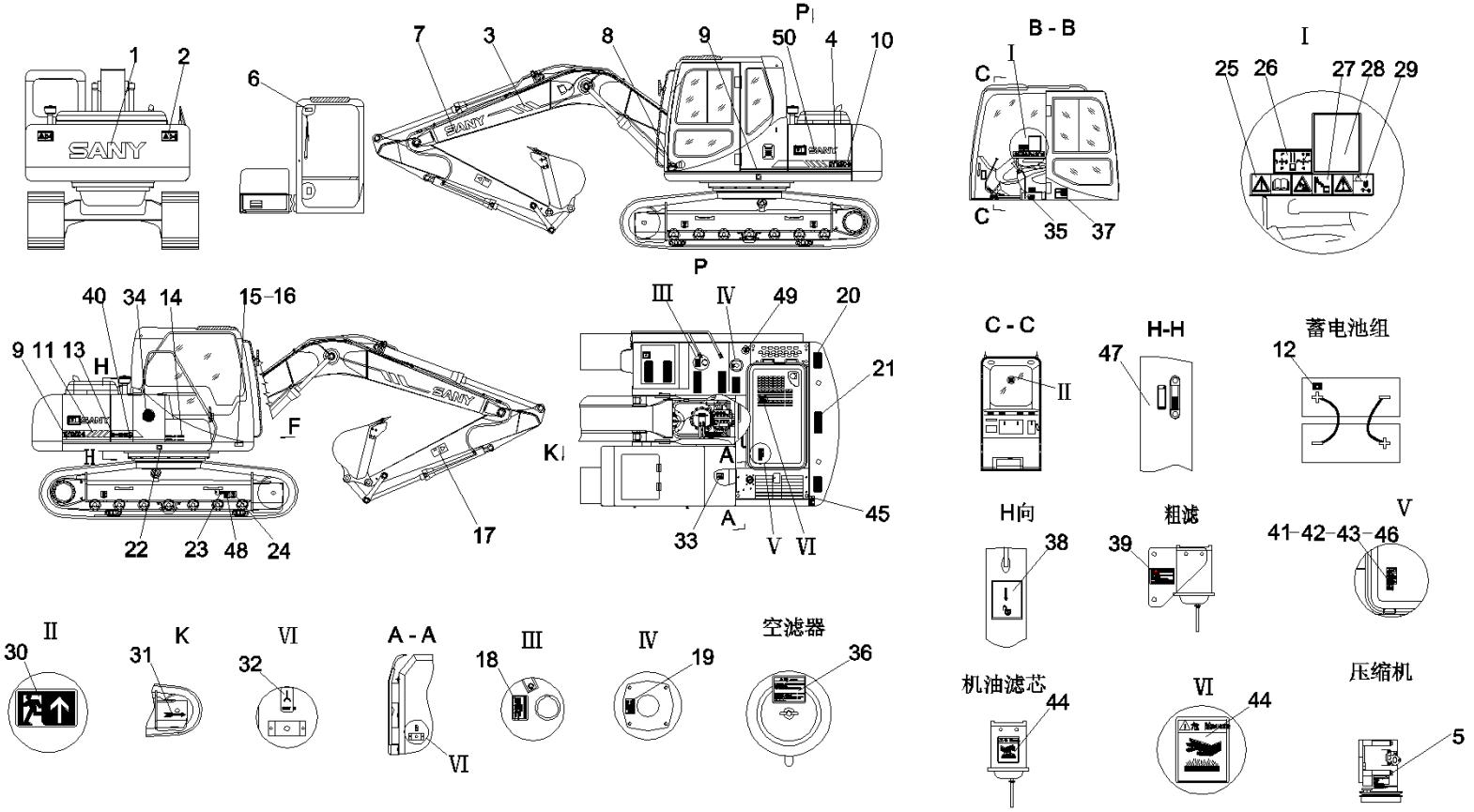
1
2
6
7
3
8
9
50
4
10
P
B - B
C
I
C
35
37
I
25
26
27
28
29
40
34
14
15-16
9
11
13
H
F
H
22
23
48
24
17
K
III
IV
49
20
21
A
A
33
V
VI
45
C - C
II
H-H
47
蓄电池组
12
H向
38
粗滤
39
V
41-42-43-46
II
30
K
31
VI
32
A - A
VI
III
18
IV
19
空滤器
36
机油滤芯
44
VI
44
压缩机
5

识别码 IC	序号 INDEX	零件代码 PART NUMBER	数量 QTY	名称 PART NAME	
6–7–41	41	A820601990973	1	机顶罩警示牌	Film – Warning (Engine Hood)
6–7–42	42	A820699001017	1	皮带安全警示牌	Film – Warning (Belt)
6–7–43	43	A820600000002	1	风扇打手警示牌	Film – Warning (Fan)
6–7–44	44	10123433	2	烫手警示标牌	Film – Warning (Hot Surface)
6–7–45	45	A820601990926	3	防跌落警示牌	Film – Warning (Anti–Fall)
6–7–46	46	A820699000948	1	防喷溅警示牌	Film – Warning
6–7–47	47	A820601990928	1	油位标签	Film – Instruction (Oil Level)
6–7–48	48	A820601990934	1	装运固定点标志	Film – Identification (Tie–Downs)
6–7–49	49	A820601990929	3	油箱放水标识	Film – Identification
6–7–50	50	10243385	2	机身贴花	Film – Chassis

第7章
随机附件
(Attached Tools & Fittings)

识别码 IC	序号 INDEX	零件代码 PART NUMBER	数量 QTY	名称 PART NAME	
7–2–1	1	A241300000017	5	片式熔断器	Fuse
7–2–2	2	A210609000131	2	O形圈	O–ring
7–2–3	3	B222100000500	1	空气滤清器主滤芯	Element – Main (Air Cleaner)
7–2–4	4	A210609000324	2	O形圈	O–ring
7–2–5	5	B230101000580	5	O形圈	O–ring
7–2–6	6	B230101000356	5	O形圈	Seal – O – Ring
7–2–7	7	B230101000090	5	O形圈	Seal – O – Ring
7–2–8	8	A279900000038	1	挖掘机保养光碟	Disc – Maintenance (Excavator)
7–2–9	9	B230101000038	2	O形圈	O–ring
7–2–10	10	A550300000008	1	工作服 售后人员用	Uniform
7–2–11	11	B230101000050	5	O形圈	O–ring
7–2–12	12	A241100000596	1	手提工作灯	Work Lamp – Portable
7–2–13	13	A230106000292	1	V带	V–belt
7–2–14	14	B222100000488	1	机油滤清器	Filter – Diesel
7–2–15	15	10456280	1	随机工具	Attached Tools
7–2–16	16	B229900000686	5	黄油嘴	Fitting – Grease
7–2–17	17	B229900000379	5	黄油嘴	Fitting – Grease
7–2–18	18	A241300000019	5	片式熔断器	Fuse
7–2–19	19	60017773	1	柴油滤清器	Filter – Diesel
7–2–20	20	60041997	1	随机附件箱	Box – Attached Parts

识别码 IC	序号 INDEX	零件代码 PART NUMBER	数量 QTY	名称 PART NAME	
7–3–21	21	B230101000588	5	O形圈	Seal – O – Ring
7–3–22	22	A229900001581	15	O形圈	Seal – O – Ring
7–3–23	23	60065109	1	履带式液压挖掘机操作保养手册	Operation & Maintenance Manual
7–3–24	24	10710527	1	零部件图册	Parts Manual
7–3–25	25	B230101000456	5	O形圈	Seal – O – Ring
7–3–26	26	B230101000091	5	O形圈	O–ring
7–3–27	27	A230101000243	5	O形圈	Seal – O – Ring
7–3–28	28	A210609000136	5	O形圈	Seal – O – Ring
7–3–29	29	B230101000047	5	O形圈	Seal – O – Ring
7–3–30	30	B222100000453	1	柴油滤清器	Filter – Diesel
7–3–31	31	A279900000037	1	三一挖掘机保养及保修手册	Maintenance & Service Manual
7–3–32	32	A241300000018	5	片式熔断器	Fuse
7–3–33	33	A230101000247	5	O形圈	Seal – O – Ring
7–3–34	34	B230101000049	5	O形圈	Seal – O – Ring
7–3–35	35	A241300000016	5	片式熔断器	Fuse
7–3–36	36	B230101000444	5	O形圈	O–ring
7–3–37	37	B230101000215	5	O形圈	O–ring

识别码 IC	序号 INDEX	零件代码 PART NUMBER	数量 QTY	名称 PART NAME	
7–4–1	1	A260401010023	1	套筒	Bushing
7–4–2	2	A260401010063	1	套筒	Bushing
7–4–3	3	A260401010024	1	套筒	Bushing
7–4–4	4	A260401010095	1	套筒	Bushing
7–4–5	5	A260401010025	1	套筒	Bushing
7–4–6	6	A260401010077	1	套筒	Bushing
7–4–7	7	60001295	1	套筒	Bushing
7–4–8	8	A260401010081	1	套筒	Bushing
7–4–9	9	A260401010027	1	套筒	Bushing
7–4–10	10	A260401010078	1	套筒	Bushing
7–4–11	11	A260401010051	1	套筒	Bushing
7–4–12	12	A260401010031	1	套筒	Bushing
7–4–13	13	A260401010055	1	套筒	Bushing
7–4–14	14	A260401010068	1	套筒	Socket
7–4–15	15	A229900007607	1	向接头	Adapter – Universal
7–4–16	16	A260401010065	1	接杆	Rod – Connecting
7–4–17	17	60001293	1	滑行头手柄	Grip
7–4–18	18	A260401090010	1	可逆式棘轮扳手	Wrench – Ratchet (Reversible)
7–4–19	19	A260401020014	1	内六角扳手	Wrench – Allen
7–4–20	20	A260401020015	1	内六角扳手	Wrench – Allen

识别码 IC	序号 INDEX	零件代码 PART NUMBER	数量 QTY	名称 PART NAME	
7–5–21	21	A260401020008	1	内六角扳手	Wrench – Allen
7–5–22	22	A260401020009	1	内六角扳手	Wrench – Allen
7–5–23	23	A260401020010	1	内六角扳手	Wrench – Allen
7–5–24	24	A260401020011	1	内六角扳手	Wrench – Allen
7–5–25	25	A260401020004	1	内六角扳手	Wrench – Allen
7–5–26	26	B260401020048	1	内六角扳手	Wrench – Allen
7–5–27	27	B260401020049	1	内六角扳手	Wrench – Allen
7–5–28	28	A260401030002	1	双头呆扳手	Spanner – End
7–5–29	29	A260401030001	1	双头呆扳手	Spanner – End
7–5–30	30	A260401030027	1	双头呆扳手	Spanner – End
7–5–31	31	A260401030005	1	双头呆扳手	Spanner, double–ended
7–5–32	32	A260401030029	1	双头呆扳手	Spanner – End
7–5–33	33	A260401030007	1	双头呆扳手	Spanner – End
7–5–34	34	A260401030008	1	双头呆扳手	Spanner – End
7–5–35	35	A260401030100	1	双头梅花扳手	Wrench – Box
7–5–36	36	A260402010022	1	一字槽螺钉旋具	Screwdriver – Flat Head
7–5–37	37	A260402020026	1	十字槽螺钉旋具	Screwdriver – Phillips
7–5–38	38	A260404000002	1	钢丝钳	Cutter, wire
7–5–39	39	60001296	1	链条扳手20节	Wrench
7–5–40	40	B260409000015	1	高压黄油枪	Grease Gun

识别码 IC	序号 INDEX	零件代码 PART NUMBER	数量 QTY	名称 PART NAME	
7–6–41	41	A260401040004	1	活扳手	Spanner, adjustable
7–6–42	42	A260401010021	1	接杆	Rod – Connecting
7–6–43	43	60001294	1	滑行头手柄	Grip
7–6–44	44	A290000000155	1	手提工具箱	Toolbox, portable

第8章
其他配置
(Other Fittings)

识别码 IC	序号 INDEX	零件代码 PART NUMBER	数量 QTY	名称 PART NAME	
8–2–1	1	60023704	1	天线	Antenna
8–2–2	2	60036846	1	铲斗油缸	Cylinder – Bucket
8–2–3	3	60036847	1	斗杆油缸	Cylinder – Arm
8–2–4	4	60036848	1	右动臂油缸	Cylinder – Boom (Rh)
8–2–5	5	60036849	1	左动臂油缸	Cylinder – Boom (Lh)
8–2–6	6	60049793	1	呼吸阀	Valve – Breath
8–2–7	7	A820101117947	1	盖	Cover
8–2–8	8	B230103005598	2	胶管	Hose
8–2–9	9	21023859	2	胶管	Hose
8–2–10	10	21003998	1	胶管	Hose, rubber
8–2–11	11	B230103007103	1	胶管	Hose, 4SH20–DKOS–DKOS90–
8–2–12	12	A820205002473	6	接头	Connector
8–2–13	13	B230101000356	6	O形圈	Seal – O – Ring
8–2–14	14	B220400000169	2	三通梭阀	Valve – Shuttle (Tee)
8–2–15	15	B210780001045	2	管接头	Connector
8–2–16	16	B210780000176	4	管接头	Connector, pipe
8–2–17	17	B210780000170	7	管接头	Connector
8–2–18	18	B210780000418	2	管接头	Connector
8–2–19	19	60004847	1	液控阀块	Hydraulic control valve block
8–2–20	20	B210780000164	1	螺塞	Plug, screw

识别码 IC	序号 INDEX	零件代码 PART NUMBER	数量 QTY	名称 PART NAME	
8–3–21	21	10453194	1	支架	Bracket
8–3–22	22	B230103000985	1	胶管	Hose
8–3–23	23	B230103000939	2	胶管	Hose
8–3–24	24	10949783	1	加油泵座	Seat – Filler Pump
8–3–25	25	B220304000087	1	加油泵总成	Petrol pump assembly
8–3–26	26	A210770000594	3	管接头	Fitting – Pipe
8–3–27	27	B240700000329	1	液位控制继电器	Relay, control, liquid level
8–3–28	28	10108211	1	加油泵继电器安装板	Plate – Mtg (Relay – Pump)
8–3–29	29	10088657	1	滤芯座	Seat – Element
8–3–30	30	10507160	1	加油泵滤芯座安装板	Mounting Plate – Filter Core
8–3–31	31	60044209	1	调向球阀	Valve, ball, direction, adjusting
8–3–32	32	B230103001359	3	胶管	Hose
8–3–33	33	B230103000980	1	胶管	Hose
8–3–34	34	B220401000848	1	脚踏阀	Valve – Foot
8–3–35	35	A820205000940	4	接头	Connector
8–3–36	36	B210780000191	2	管接头	Connector, pipe
8–3–37	37	B210780000903	2	锥孔堵头	Plug
8–3–38	38	A831213035000	1	胶管	Hose, rubber
8–3–39	39	B230103000817	1	胶管	Hose
8–3–40	40	11322508	1	油门马达拉线护孔环	Grommet – Wire (Motor – Throttle)