www.youfixthis.com

RUTHZIL TRATOR COMERCIAL DE PEÇAS LTDA 11 97083-6812 ROLANDO CITRANGULO

T190

TURBO

Bobcat®

Parts Manual

S/N 5277 11001 & Above

S/N 5278 11001 & Above

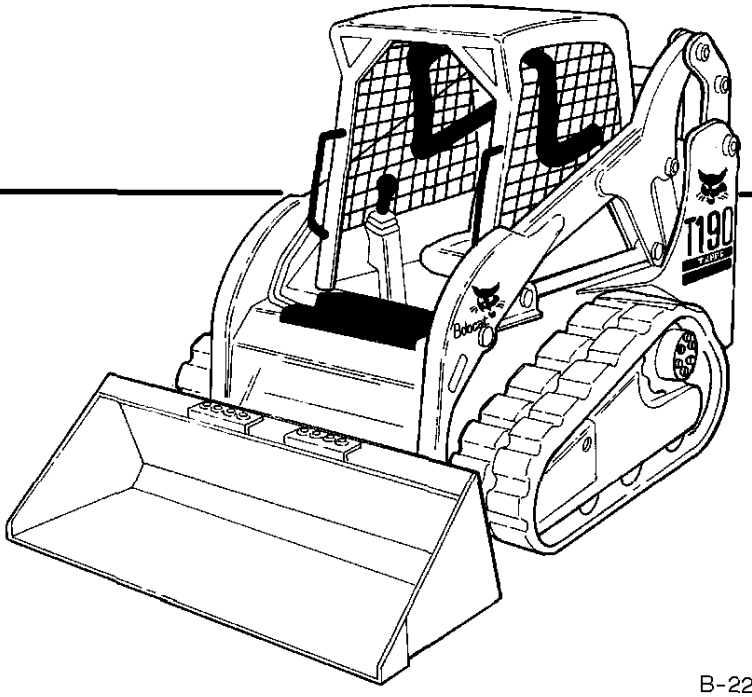

B-22862

www.youfixthis.com

T190 CONTENTS

MAIN FRAME 11-42
MAINTENANCE ITEMS 11-12
MAINTENANCE SCHEDULE ITEMS 13-20
MAIN FRAME 21-22
OPERATOR CAB 23-26
SEAT & SEAT BAR 27-28
SEAT 29-30
PANELS 31-32
REAR DOOR 33-34
LIFT ARMS & BOBTACH 35-36
BOB-TACH 37-38
FUEL SYSTEM 39-42
DRIVE TRAIN 43-52
DRIVE TRAIN 43-44
TRACK TENSIONER 45-46
FRONT IDLER 47-48
REAR IDLER 49-50
TRACK ROLLER 51-52
HYDRAULIC SYSTEM 53-82
HYDRAULIC CIRCUITRY 53-60
MANUAL LIFT RELEASE SYSTEM 61-62
AUXILIARY HYDRAULICS 63-64
TILT CYLINDER 65-66
LIFT CYLINDER 67-68
CONTROL PEDALS 69-70
HYDRAULIC CONTROL VALVE 71-78
BICS CONTROL VALVE 79-80
MANUAL LIFT RELEASE VALVE 81-82
HIGH FLOW HYDRAULICS 83-88
HIGH FLOW HYDRAULICS 83-88
HYDROSTATIC SYSTEM 89-122
HYDROSTATIC CIRCUITRY 89-96
HAND CONTROLS 97-100
HYDROSTATIC MOTOR 101-108
HYDROSTATIC PUMP 109-116
GEAR PUMP 117-118
HYDROSTATIC OIL FILTER 119-122
ELECTRICAL SYSTEM 123-142
CAB ELECTRICAL CIRCUITRY 123-124
ENGINE ELECTRICAL CIRCUITRY 125-128
CONTROLS ELECTRICAL 129-138
ALTERNATOR 139-140
STARTER 141-142
POWER UNIT 143-208
COOLING SYSTEM 143-146
ENGINE & ATTACHING PARTS 147-154
THROTTLE 155-156
COOLING FAN DRIVE ASSY. 157-158
ENGINE & GASKET KITS 159-160
GEARCASE 161-162
OIL COOLER 163-164
CRANKCASE 165-166
ROCKER ARM COVER 167-168
VALVE ROCKER ARM 169-170

www.youfixthis.com

T190 CONTENTS (Cont'd)

POWER UNIT (Cont'd) 143-208
CYLINDER HEAD 171-172
OIL PAN 173-174
PISTON & CRANKSHAFT 175-176
FUEL CAMSHAFT 177-178
CAMSHAFT 179-180
WATER PUMP 181-182
WATER FLANGE & THERMOSTAT 183-184
MANIFOLDS 185-186
TURBO CHARGER 187-188
OIL PIPE 189-190
ENGINE STOP LEVER 191-192
GOVERNOR 193-194
SPEED CONTROL PLATE 195-196
BOOST COMPENSATOR 197-198
INJECTION PUMP 199-202
INJECTOR NOZZLES 203-204
INJECTOR HOLDER 205-206
AIR CLEANER 207-208
ACCESSORIES & OPTIONS 212-353
ACS CONVERSION KIT 212-213
ACCESSORIES HARNESS 214-215
BACK-UP ALARM 216-217
BEACON 218-219
BLOCK HEATER 220-221
BOB-TACH LEVERS 222-223
BUCKET POSITIONING VALVE KIT 224-227
CAB DOOR 228-237
CAB ENCLOSURE 238-241
CAB WINDOWS 242-245
DECALS 246-249
DELUXE CAB 250-251
DUAL BATTERY KIT 252-253
DUAL DAMPENER KIT 254-255
ELECTRICAL CONNECTOR KIT 256-257
ELECTRICAL CONTROLS KIT 258-263
ENGINE MOUNT KIT 264-265
EUROPEAN ACCESSORIES 266-271
FIRE EXTINGUISHER 272-273
F.O.P.S. KIT 274-275
FLASHER LIGHTS 276-277
FRONT AUXILIARY 278-279
GAS SPRING KIT 280-281
HAND CONTROL KIT 282-285
HEATER & A/C 286-309
HORN KIT 310-311
LIFT LIT 312-315
LIGHT KIT 316-317
MUFFLER/PURIFIER KIT 318-319
POWER BOB-TACH KIT 320-321
POWER BOB-TACH 322-325
RADIATOR SCREEN KIT 326-327
REAR AUXILIARY 328-331
REAR AUXILIARY VALVE 332-333
REAR DOOR LOCK 334-335

www.youfixthis.com

T190 CONTENTS (Cont'd)

ACCESSORIES & OPTIONS (Cont'd) 212-353
REAR WIPER 336-337
SEAL ENCLOSURE KIT 338-339
SEAT 340-343
SEAT BELT 344-347
SOUND REDUCTION HARDHAT 348-349
STROBE LIGHT 350-351
BULK ITEMS 352-353
NUMERICAL INDEX 354-399
NUMERICAL INDEX 354-399

www.youfixthis.com

T190 CONTENTS

MAIN FRAME 11-42
MAINTENANCE ITEMS 11-12
MAINTENANCE SCHEDULE ITEMS 13-20
MAIN FRAME 21-22
OPERATOR CAB 23-26
SEAT & SEAT BAR 27-28
SEAT 29-30
PANELS 31-32
REAR DOOR 33-34
LIFT ARMS & BOBTACH 35-36
BOB-TACH 37-38
FUEL SYSTEM 39-42
DRIVE TRAIN 43-52
DRIVE TRAIN 43-44
TRACK TENSIONER 45-46
FRONT IDLER 47-48
REAR IDLER 49-50
TRACK ROLLER 51-52
HYDRAULIC SYSTEM 53-82
HYDRAULIC CIRCUITRY 53-60
MANUAL LIFT RELEASE SYSTEM 61-62
AUXILIARY HYDRAULICS 63-64
TILT CYLINDER 65-66
LIFT CYLINDER 67-68
CONTROL PEDALS 69-70
HYDRAULIC CONTROL VALVE 71-78
BICS CONTROL VALVE 79-80
MANUAL LIFT RELEASE VALVE 81-82
HIGH FLOW HYDRAULICS 83-88
HIGH FLOW HYDRAULICS 83-88
HYDROSTATIC SYSTEM 89-122
HYDROSTATIC CIRCUITRY 89-96
HAND CONTROLS 97-100
HYDROSTATIC MOTOR 101-108
HYDROSTATIC PUMP 109-116
GEAR PUMP 117-118
HYDROSTATIC OIL FILTER 119-122
ELECTRICAL SYSTEM 123-142
CAB ELECTRICAL CIRCUITRY 123-124
ENGINE ELECTRICAL CIRCUITRY 125-128
CONTROLS ELECTRICAL 129-138
ALTERNATOR 139-140
STARTER 141-142
POWER UNIT 143-208
COOLING SYSTEM 143-146
ENGINE & ATTACHING PARTS 147-154
THROTTLE 155-156
COOLING FAN DRIVE ASSY. 157-158
ENGINE & GASKET KITS 159-160
GEARCASE 161-162
OIL COOLER 163-164
CRANKCASE 165-166
ROCKER ARM COVER 167-168
VALVE ROCKER ARM 169-170

www.youfixthis.com

T190 CONTENTS (Cont'd)

POWER UNIT (Cont'd) 143-208
CYLINDER HEAD 171-172
OIL PAN 173-174
PISTON & CRANKSHAFT 175-176
FUEL CAMSHAFT 177-178
CAMSHAFT 179-180
WATER PUMP 181-182
WATER FLANGE & THERMOSTAT 183-184
MANIFOLDS 185-186
TURBO CHARGER 187-188
OIL PIPE 189-190
ENGINE STOP LEVER 191-192
GOVERNOR 193-194
SPEED CONTROL PLATE 195-196
BOOST COMPENSATOR 197-198
INJECTION PUMP 199-202
INJECTOR NOZZLES 203-204
INJECTOR HOLDER 205-206
AIR CLEANER 207-208
ACCESSORIES & OPTIONS 212-353
ACS CONVERSION KIT 212-213
ACCESSORIES HARNESS 214-215
BACK-UP ALARM 216-217
BEACON 218-219
BLOCK HEATER 220-221
BOB-TACH LEVERS 222-223
BUCKET POSITIONING VALVE KIT 224-227
CAB DOOR 228-237
CAB ENCLOSURE 238-241
CAB WINDOWS 242-245
DECALS 246-249
DELUXE CAB 250-251
DUAL BATTERY KIT 252-253
DUAL DAMPENER KIT 254-255
ELECTRICAL CONNECTOR KIT 256-257
ELECTRICAL CONTROLS KIT 258-263
ENGINE MOUNT KIT 264-265
EUROPEAN ACCESSORIES 266-271
FIRE EXTINGUISHER 272-273
F.O.P.S. KIT 274-275
FLASHER LIGHTS 276-277
FRONT AUXILIARY 278-279
GAS SPRING KIT 280-281
HAND CONTROL KIT 282-285
HEATER & A/C 286-309
HORN KIT 310-311
LIFT LIT 312-315
LIGHT KIT 316-317
MUFFLER/PURIFIER KIT 318-319
POWER BOB-TACH KIT 320-321
POWER BOB-TACH 322-325
RADIATOR SCREEN KIT 326-327
REAR AUXILIARY 328-331
REAR AUXILIARY VALVE 332-333
REAR DOOR LOCK 334-335

www.youfixthis.com

T190 CONTENTS (Cont'd)

ACCESSORIES & OPTIONS (Cont'd) 212-353
REAR WIPER 336-337
SEAL ENCLOSURE KIT 338-339
SEAT 340-343
SEAT BELT 344-347
SOUND REDUCTION HARDHAT 348-349
STROBE LIGHT 350-351
BULK ITEMS 352-353
NUMERICAL INDEX 354-399
NUMERICAL INDEX 354-399

www.youfixthis.com

GENERAL INFORMATION

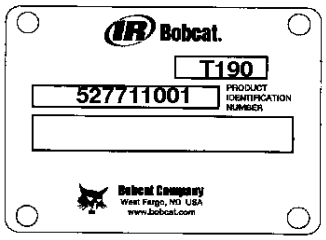

Domestic

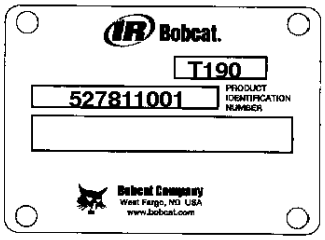

Export

When using the machine serial number, use the complete number.

Some Serial Number breaks are not available at time of printing. These are listed as & Below or & Above.

The number shown in the quantity column in this manual is the number of parts needed for the illustration on the page. For some parts an "x" will be shown in the quantity column. This "x" indicates that the quantity to be used is "As Needed".

When references L.H. and R.H. are used in this manual, it is done from the operator's seat in the forward operating position.

Some of the illustrations and information found in this parts manual were supplied to Bobcat by machine component companies.

ABBREVIATIONS & SYMBOLS

SALES = Order from Gwinner Sales Department

NSS = Not Serviced Seperately

NAP = Not Available as Parts

***** = Changed or Added Sections, Pages or Part Numbers

Disposition Code Definition (Found in the Remarks Column

[A] = Use Up

[B] = Use Up on Other Appplication (See PNI)

[C] = File PDR Report With Bobcat Parts Sales

[D] = Part Number Error

Explications en francais	Grid Nb	3
Erklärungen auf deutsch	Grid Nb	4
Spiegazioni in italiano	Grid Nb	5
Explicaciones en espanol	Grid Nb	6
Verklaring in het Nederlands	Grid Nb	7

www.youfixthis.com

NOTE D'INFORMATION

Pour toute référence au numéro de série de l'engin, toujours donner le numéro complet.

Le chiffré apparaissant dans la colonne des quantités de ce manuel représentent le nombre de pièces nécessaires pour l'illustration reprise sur la page. Dans certains cas, on lira un "x" dans la colonne des quantités. Cet "x" indique que la quantité nécessaire est "selon besoin".

Pour toute référence vers la GAUCHE ou la DROITE dans ce manuel, considérer que la personne se trouve assise dans le siège de l'opérateur, en position de fonctionnement en marche avant.

Certaines illustrations et informations reprises dans ce manuel de pièces de rechange ont été fournies à Bobcat/Ingersoll-Rand par des fabricants de composants.

ABREVIATIONS & SYMBOLES

SALES	= Commander au Service Ventes à Bruxelles
NSS	= Pas vendu séparément
NAP	= Non disponible comme pièce de rechange
*	= Chapitre, page ou numéro de pièce modifié ou supplémentaire
BTI	= Bobcat Technical Information Bulletin : voir à la fin de la microfiché du modèle concerné ou la microfiche générale reprenant l' ensemble des "BTI".
was 6535403	= était avant 6535403
adj. (adjustment)	= réglage
Assembly	= ensemble
available W/Ref.	= disponible avec réf.
bulk/sold per foot	= en vrac/vendu par pied
does not include	= ne comprend pas
included with	= compris dans
I.D.	= D.I. (diamètre intérieur)
O.D.	= D.E. (diamètre extérieur)
not in kit	= pas en kit
W/ - WO/	= inclus/ - non inclus/
Qty	= quantité requise
see page/ref.	= voir page/réf.
used with ref/	= utilisé avec réf.
0,05 inch thickness	= 0,05 pouce d'épaisseur (un pouce = 25.4 mm)
weld on	= à souder

www.youfixthis.com

ALLGEMEINE INFORMATIONEN

Bei Angabe der Maschinen-Seriennummer stets die komplette Nummer angeben.

Bei der in der Mengenspalte (Anzahl) in diesem Handbuch angegebenen Zahl handelt es sich um die Anzahl von Teilen, die für die Abbildung auf der betreffenden Seite benötigt werden. Bei manchen Teilen in der Mengenspalte ist ein “x” angegeben. Dieses “x” weist darauf hin, dass sich die Anzahl der verwendeten Teile auf den “Bedarf” bezieht.

Bei Verwendung der Seitenangaben links und rechts in diesem Handbuch gelten diese für die Blickrichtung vom Fahrersitz aus, und zwar in Vorwärts-Betriebsrichtung.

Einige der in diesem Ersatzteilhandbuch aufgeführten Abbildungen und Informationen wurden der Bobcat/Ingersoll-Rand von den Herstellern von Maschinenbauteilen zur Verfügung gestellt.

ABKÜRZUNGEN UND SYMBOLE

SALES	= Bestellung bei der Verkaufsabteilung in Brüssel
NSS	= Nicht einzeln erhältlich
NAP	= Nicht als Ersatzteil erhältlich
*	= Geänderte oder hinzugefügte Abschnitte, Seiten oder Teilenummern
BTI	= Bobcat Technical Information Bulletin : Siehe am Ende der Mikrokarte des jeweiligen Modells oder der allgemeinen Mikrokarte der BTI.
was 6535403	= War 6535403
adj.	= Einstellung
Assembly	= Baugruppe
available W/Ref.	= erhältlich mit der Referenz
bulk/sold per foot	= Mengenabnahme / Verkauf pro Fuss
does not include	= beinhaltet nicht
included with	= enthalten in
I.D.	= Innendurchmesser
O.D.	= Aussendurchmesser
not in kit	= nicht in Bausatz
W/ - WO/	= mit/ - ohne/
Qty	= Anzahl
see page/ref.	= Siehe Seite / Referenz
used with ref.	= verwendet mit Referenz
0.05 inch thickness	= Dicke : 0.05 Zoll (ein Zoll = 25.4 mm)
weld on	= anschweissen

www.youfixthis.com

INFORMAZIONI GENERALI

Quando si usa il numero di serie della macchina usare il numero completo.

Il numero mostrato nella colonna della quantità di questo manuale corrisponde al numero di componenti necessari per l'illustrazione della pagina. Per alcuni componenti appare "X" nella colonna delle quantità. Questa "X" indica che la quantità da usare è "come necessario".

See in questo manuale si fa riferimento alla parte destra o sinistra, si intende dal sedile dell'operatore nella posizione in avanti di funzionamento.

Alcune delle illustrazioni e informazioni trovate in questo manuale di componenti sono state fornite alla Bobcat/Ingersoll-Rand da società di componenti di macchine.

SIMBOLI E ABBREVIAZIONI

SALES	= Ordinare al servizio vendite di Bruxelles
NSS	= Non vendute separatamente
NAP	= Non disponibile come componente
*	= Sezioni, pagine o numeri di componente cambiati o aggiunti
BTI	= (Bobcat Technical information) Ved. al termine del microfiche del modello relativo oppure microfiche generale
was 6535403	= era 6535403
adj. (adjustment)	= regol. (regolazione)
Assembly	= Complessivo
available W/Ref.	= disponibile con rif.
bulk/sold per foot	= alla rinfusa/venduto al piede
does not include	= non comprende
Included with	= compreso con
I.D.	= d. i.
O.D.	= d. e.
not in kit	= non fa parte del kit
W/ - WO/	= con - senza
Qty	= Qtà
see page/ref	= ved. pagina/rif.
used with ref.	= usato con il rif.
0,05 inch thickness	= spessore 0,05 pollici (un pollice = 25,4 mm)
weld on	= a saldare

www.youfixthis.com

INFORMACION GENERAL

Al utilizar el número de serie de la máquina, debe emplearse el número completo.

El número que figura en la columna de “Unidades” en este manual es el número de piezas que se necesitan para la ilustración que consta en la página. En algunas piezas aparece una “x” en la columna de “Unidades”. Esta “x” indica que las unidades a utilizar son “según sea necesario”.

Cuando se empleen las referencias izq. y dcha., éstas se entienden mirando desde el asiento del conductor, en posición de marcha adelante.

Algunas de las ilustraciones y la información que figuran en este manual de piezas han sido facilitadas a Bobcat/Ingersoll-Rand por empresas de componentes de máquinas.

ABREVIATURAS Y SIMBOLOS

VENTAS	= Pedido al Departamento de Ventas de Bruselas
NSS	= No se vende por separado
NAP	= No disponible como pieza de repuesto
*	= Secciones, páginas o referencias modificadas o añadidas
BTI	= (Bobcat Tecnical Information) Ver al final de la microficha del modelo afectado o en la microficha general “Boletín de Información Técnica Bobcat”.
was 6535403	= era anteriormente el 6535403
adj. (adjustment)	= ajuste
assembly	= conjunto
available W/Ref.	= disponible con la ref.
bulk/sold per foot	= a granel/vendido por pies
does not include	= no incluye
included with	= incluido en
I.D.	= diámetro interior
O.D.	= diámetro exterior
not in kit	= no en el kit
W/ - WO/	= con/ - sin
Qty	= Unidades
see page /ref.	= ver página/ref.
used with ref.	= empleado con la ref.
0,05 inch thickness	= 0,05 pulgadas de espesor (1 pulgada = 25,4 mm)
weld on	= debe ser soldado

www.youfixthis.com

ALGEMENE INFORMATIE

Als u het serienummer van de machine gebruikt, geef dan het gehele serienummer.

Het cijfer dat voorkomt in de kolom “Aantal”, in deze handleiding, is het aantal onderdelen dat nodig is van de illustratie op de pagina. Voor sommige onderdelen staat er een “x” in de kolom “Aantal”. Deze “x” betekent dat er een aantal “zoals nodig” vereist is.

Wanneer er in deze handleiding naar “links” en naar “rechts” gerefereerd wordt, moet dit verstaan worden voor een bestuurder die in de bestuurdersstoel zit in de voorwaartse bedrijfsstand.

Sommige van de illustraties en informatie in deze onderdelen-handleiding werden door firma’s van machine-componenten geleverd aan Bobcat/Ingersoll-Rand.

AFKORTINGEN EN SYMBOLEN

SALES	= Bestellen bij de Verkoopafdeling te Brussel
NSS	= Niet afzonderlijk te verkrijgen
NAP	= Niet beschikbaar als onderdeel
*	= Gewijzigde of toegevoegde paragrafen, pagina’s of onderdeelnummers
BTI	= Bobcat Technical Information Bulletin : Zie einde van de microfiche van het desbetreffende model of einde van de algemene microfiche die het geheel van alle “BTI” herneemt.
was 6535403	= was vroeger 6535403
adj. (adjustment)	= afstelling
Assembly	= geheel
available W/Ref.	= beschikbaar met ref.
bulk/sold per foot	= bulk/aan de meter verkocht
does not include	= bevat niet
includes with	= is bevat in
I.D.	= ϕ inw. (inwendige diameter)
O.D.	= ϕ uitw. (uitwendige diameter)
not in kit	= niet in de kit
W/ - WO/	= met/ - zonder/
Qty	= vereiste aantal
see page/ref.	= zie pagina/ref.
used with ref/	= gebruikt met ref.
0,05 inch thickness	= 0.05 inch dik (een inch = 25.4 mm)
weld on	= te lassen

www.youfixthis.com

Use only Bobcat belts and hoses to maintain maximum service life.

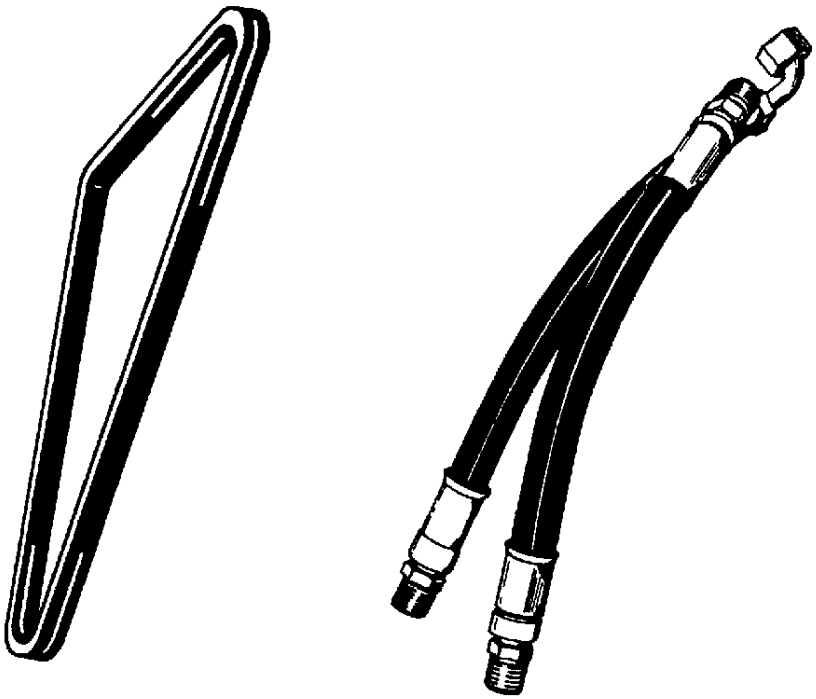

Available from Bobcat Parts.

Bobcat

www.youfixthis.com

MAINTENANCE ITEMS
Model T190

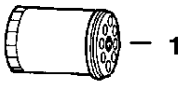

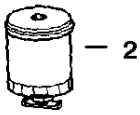

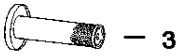

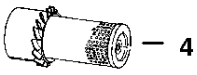

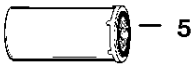

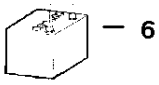

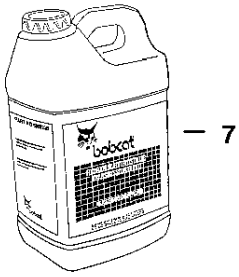

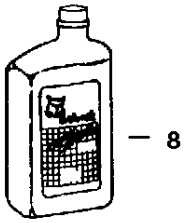

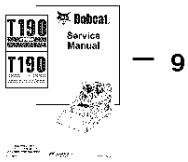

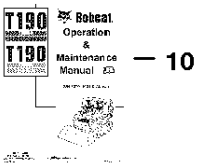

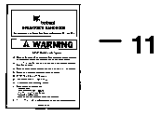

B-22670

www.youfixthis.com

MAINTENANCE ITEMS

Ref.N°	Part N°	Description	Remarks	Serial N°	Qty.
1	6675517	FILTER	Engine Oil (6 Pack) - See Page GEARCASE(1)		x
2	6667352	FILTER	Fuel - See Page FUEL SYSTEM(1)		x
3	6598362	CARTRIDGE	Inner Air Cleaner -See Page AIR CLEANER(1)		x
4	6598492	CARTRIDGE	Outer Air Cleaner -See Page AIR CLEANER(1)		x
5	6661248	ELEMENT	Hydrostatic # 3 Media - See Page HYDROSTATIC OIL FILTER(1)		x
6	6674687	BATTERY	See Page ENGINE ELECTRICAL CIRCUITRY(1)		x
7	6563328	BLACK GOLD	Hyd./Hydro. Fluid - (2) 2.5 Gal. - (5 Gal.) - See Page BULK ITEMS(1)		x
7	6722344	BLACK GOLD	Hyd./Hydro. Fluid - (5 Gal.) - See Page BULK ITEMS(1)		x
7	6563330	BLACK GOLD	55 Gallon Drum - See Page BULK ITEMS(1)		x
8	6657301	MOTOR OIL	10W30 CE/SG - 1 Qt. - See Page BULK ITEMS(1)		x
8	6724557	MOTOR OIL	10W30 CE/SG - 1 Gallon - See Page BULK ITEMS(1)		x
8	6674205	MOTOR OIL	10W30 CE/SG - 2.5 Gal. - See Page BULK ITEMS(1)		x
8	6657299	MOTOR OIL	15W40 CE/SG - 1 Qt. - See Page BULK ITEMS(1)		x
8	6724558	MOTOR OIL	15W40 CE/SG - 1 Gallon - See Page BULK ITEMS(1)		x
8	6674204	MOTOR OIL	15W40 CE/SG - 2.5 Gal. - See Page BULK ITEMS(1)		x
8	6657303	MOTOR OIL	30 CE/SG - 1 Qt. - See Page BULK ITEMS(1)		x
8	6724559	MOTOR OIL	30 CE/SG - 1 Gallon - See Page BULK ITEMS(1)		x
8	6674206	MOTOR OIL	30 CE/SG - 2.5 Gal. - See Page BULK ITEMS(1)		x
9	6902734	MANUAL	service		1
10	6902692	MANUAL	operation & maintenance		1
11	6719951	HANDBOOK	operator		1

www.youfixthis.com

MAINTENANCE SCHEDULE ITEMS
Model T190



B-22774

www.youfixthis.com

MAINTENANCE SCHEDULE ITEMS

Ref.N°	Part N°	Description	Remarks	Serial N°	Qty.
1	6675517	FILTER	engine oil (6 Pack) - See Page GEARCASE(1)		x
2	6657301	MOTOR OIL	10W30 CE/SG - 1 Qt. - See Page BULK ITEMS(1)		x
2	6724557	MOTOR OIL	10W30 CE/SG - 1 Gallon - See Page BULK ITEMS(1)		x
2	6674205	MOTOR OIL	10W30 CE/SG - 2.5 Gal. - See Page BULK ITEMS(1)		x
2	6657299	MOTOR OIL	15W40 CE/SG - 1 Qt. - See Page BULK ITEMS(1)		x
2	6724558	MOTOR OIL	15W40 CE/SG - 1 Gallon - See Page BULK ITEMS(1)		x
2	6674204	MOTOR OIL	15W40 CE/SG - 2.5 Gal. - See Page BULK ITEMS(1)		x
2	6657303	MOTOR OIL	30 CE/SG - 1 Qt. - See Page BULK ITEMS(1)		x
2	6724559	MOTOR OIL	30 CE/SG - 1 Gal - See Page BULK ITEMS(1)		x
2	6674206	MOTOR OIL	30 CE/SG - 2.5 Gal. - See Page BULK ITEMS(1)		x

www.youfixthis.com

MAINTENANCE SCHEDULE ITEMS
Model T190

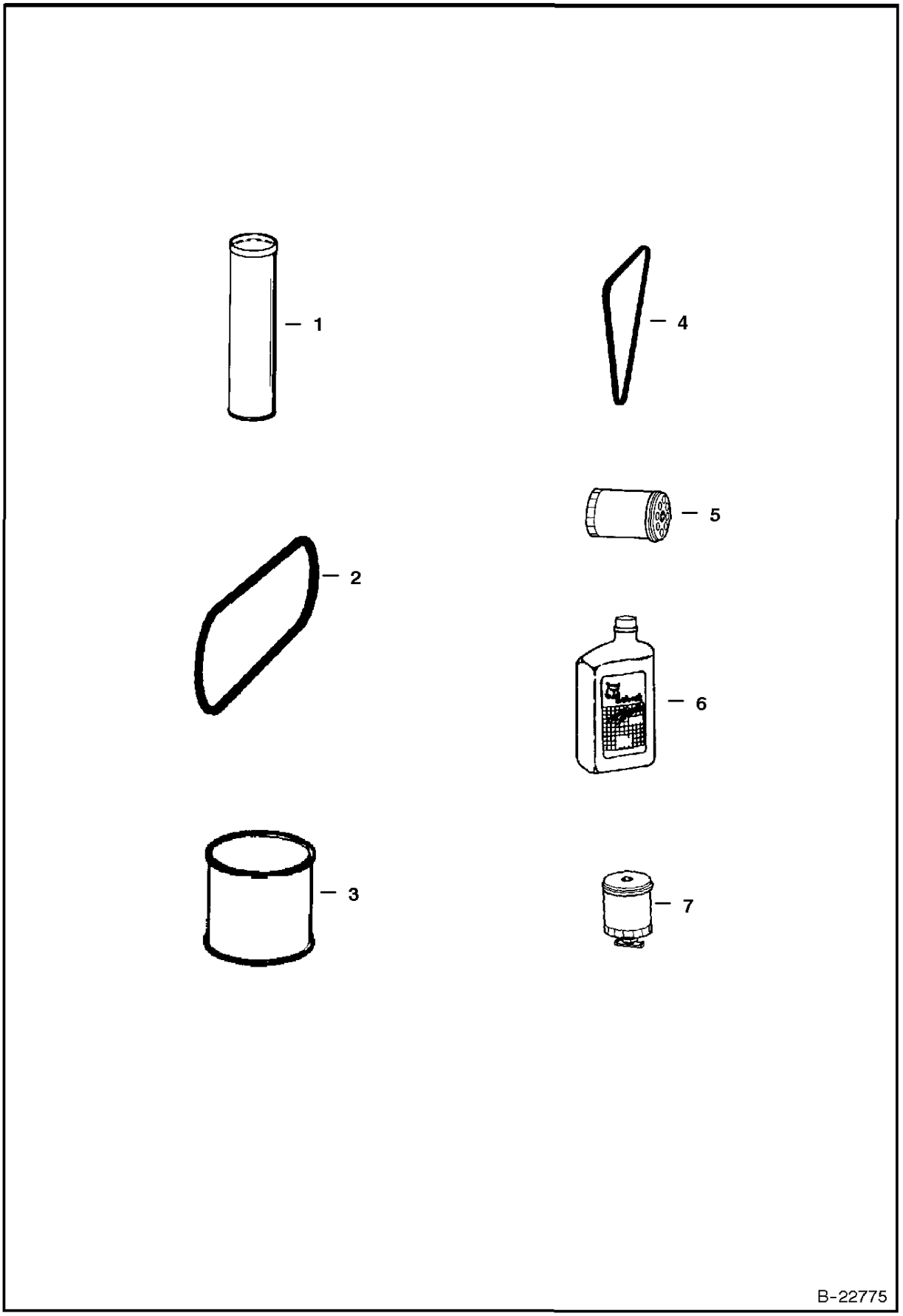

www.youfixthis.com

MAINTENANCE SCHEDULE ITEMS

Ref.N°	Part N°	Description	Remarks	Serial N°	Qty.
1	6658266	GREASE	steering lever pivots - See Page BULK ITEMS(1)		x
2	6726898	BELT	eng./hydro. drive - See Page ENGINE & ATTACHING PARTS(1)		x
3	6634393	LUBRICANT	cooling fan drive gearbox - See Page BULK ITEMS(1)		x
4	6675837	BELT	alternator - See Page ENGINE & ATTACHING PARTS(1)		x
5	6675517	FILTER	engine oil (6 Pack) - See Page GEARCASE(1)		x
6	6657301	MOTOR OIL	10W30 CE/SG - 1 Qt. - See Page BULK ITEMS(1)		x
6	6724557	MOTOR OIL	10W30 CE/SG - 1 Gallon - See Page BULK ITEMS(1)		x
6	6674205	MOTOR OIL	10W30 CE/SG - 2.5 Gal. - See Page BULK ITEMS(1)		x
6	6657299	MOTOR OIL	15W40 CE/SG - 1 Qt. - See Page BULK ITEMS(1)		x
6	6724558	MOTOR OIL	15W40 CE/SG - 1 Gallon - See Page BULK ITEMS(1)		x
6	6674204	MOTOR OIL	15W40 CE/SG - 2.5 Gal. - See Page BULK ITEMS(1)		x
6	6657303	MOTOR OIL	30 CE/SG - 1 Qt. - See Page BULK ITEMS(1)		x
6	6724559	MOTOR OIL	30 CE/SG - 1 Gal -See Page BULK ITEMS(1)		x
6	6674206	MOTOR OIL	30 CE/SG - 2.5 Gal. - See Page BULK ITEMS(1)		x
7	6667352	FILTER	fuel - See Page FUEL SYSTEM(1)		x

www.youfixthis.com

MAINTENANCE SCHEDULE ITEMS (Cont'd)
Model T190

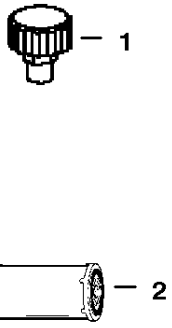

B-22776

www.youfixthis.com

MAINTENANCE SCHEDULE ITEMS

Ref.N°	Part N°	Description	Remarks	Serial N°	Qty.
1	6684923	CAP	hyd. reservoir breather - See Page HYDROSTATIC CIRCUITRY(1)		x
2	6661248	ELEMENT	hyd./hydro. - See Page HYDROSTATIC OIL FILTER(1)		x

www.youfixthis.com

MAINTENANCE SCHEDULE ITEMS
Model T190

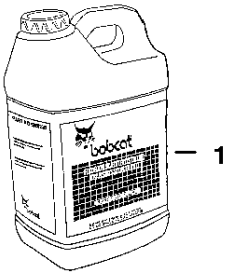

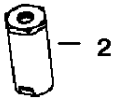

B-22777

www.youfixthis.com

MAINTENANCE SCHEDULE ITEMS

Ref.N°	Part N°	Description	Remarks	Serial N°	Qty.
1	6563328	BLACK GOLD	Hyd./Hydro. - (2) 2.5 Gal. - - See Page BULK ITEMS(1)		x
1	6722344	BLACK GOLD	Hyd./Hydro. - (5 Gal.) - See Page BULK ITEMS(1)		x
1	6563330	BLACK GOLD	Hyd./Hydro. - 55 Gallon Drum - See Page BULK ITEMS(1)		x
2	6661022	FILTER	case drain - See Page HYDROSTATIC OIL FILTER(1)		x

www.youfixthis.com

MAIN FRAME

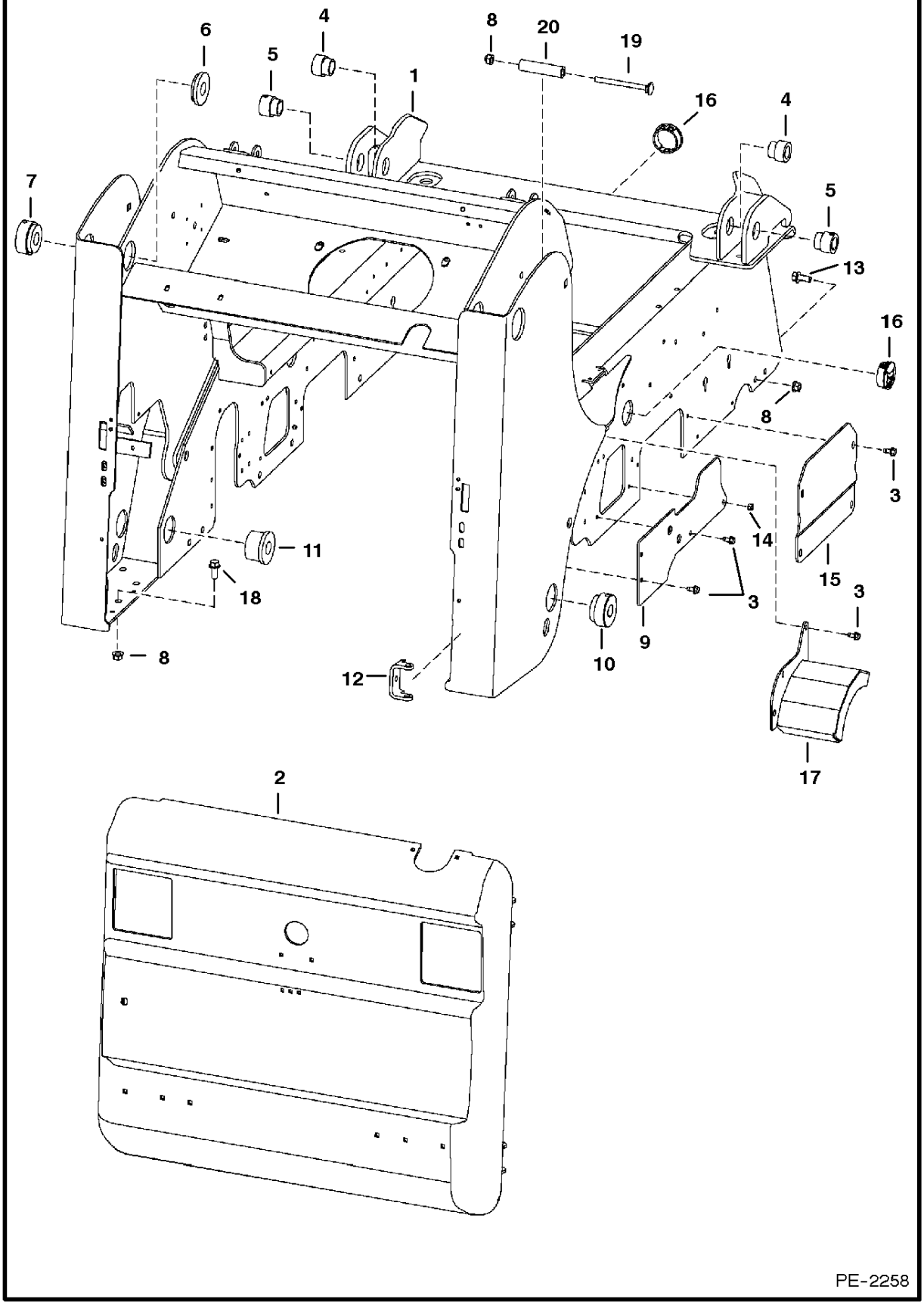

www.youfixthis.com

MAIN FRAME

Ref.N°	Part N°	Description	Remarks	Serial N°	Qty.
1	6733002	MAIN FRAME			1
2		REAR DOOR	See Page REAR DOOR(1)		1
3	84G-3712	BOLT			21
4	6717278	BUSHING	weld on		2
5	6717277	BUSHING	weld on		2
6	6717356	BUSHING	weld on		2
7	6731578	BUSHING	weld on		2
8	83D-8	NUT			28
9	6726063	SHIELD	lever		2
10	6731578	BUSHING	weld on		2
11	6717358	BUSHING	weld on		2
12	6708987	BRACKET	hinge - weld on		2
13	31C-820	BOLT			16
14	61D-6	NUT			2
15	6719201	COVER			2
16	6718796	PLUG			2
17	6726064	SHIELD	R.H.		1
17	6726065	SHIELD	L.H.		1
18	31C-828	BOLT			10
19	37C-888	BOLT			2
20	6732225	SPACER	tube		2

www.youfixthis.com

OPERATOR CAB

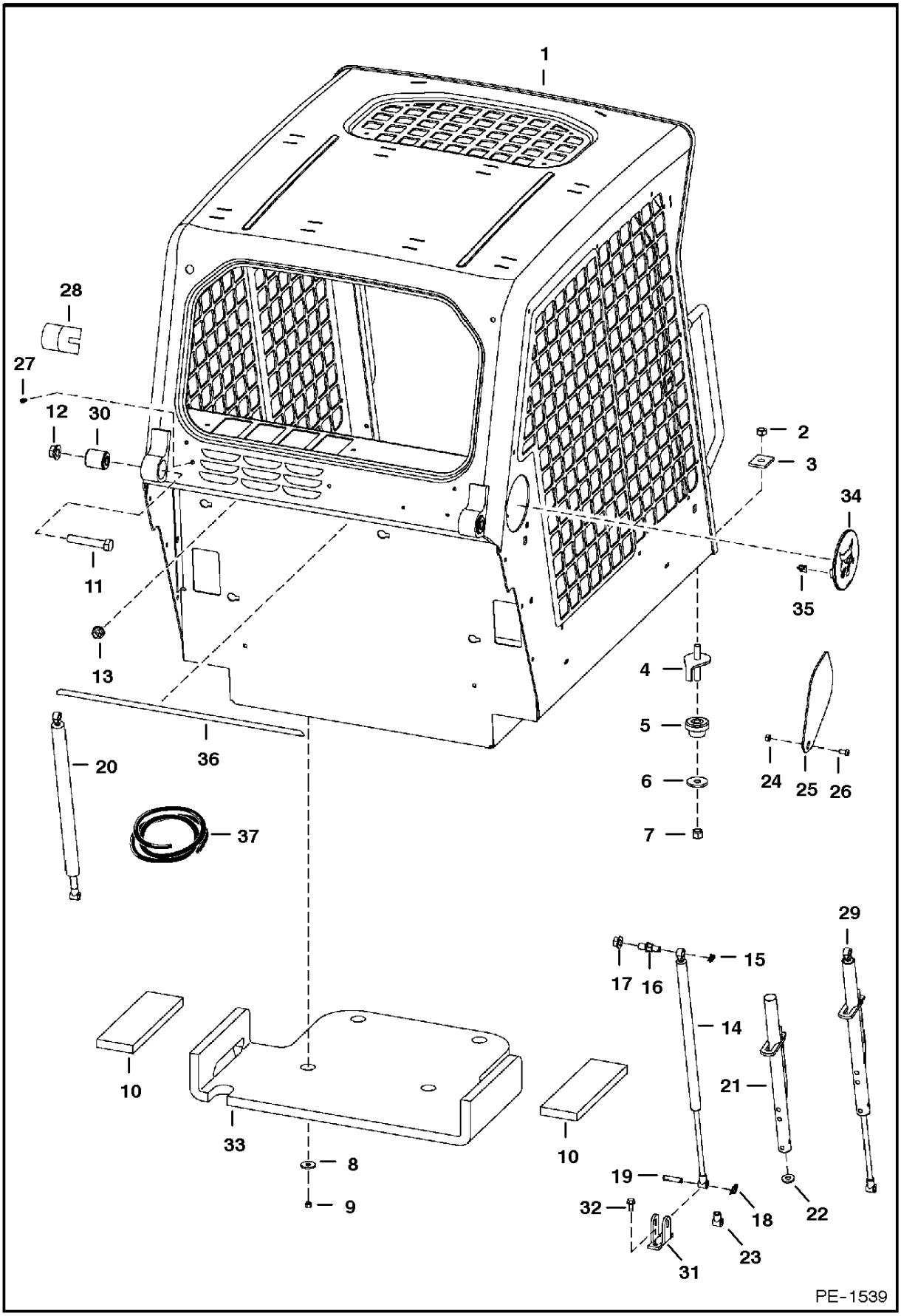

www.youfixthis.com

OPERATOR CAB

Ref.N°	Part N°	Description	Remarks	Serial N°	Qty.
1	6719672	OPERATOR CAB	includes cab decals		1
2	59D-8	NUT			2
3	6553709	WASHER	rectangular		2
4	6702971	BOLT			2
5	6560633	MOUNT			2
6	6515817	WASHER			2
7	85D-8	NUT			2
8	619021	WASHER			4
9	59D-5	NUT			4
10	6729012	INSULATION	seat pan		2
11	17C-1056	BOLT			2
12	53D-10	NUT			2
13	53D-6	NUT			4
14	6675135	GAS SPRING	R.H.		1
15	6675140	SNAP RING			2
16	6719064	MOUNT			2
17	97D-8	NUT			2
18	6631418	PIN	ring		2
19	6567743	PIN			2
20	6675134	GAS SPRING	L.H.		1
20	6675136	GAS SPRING	L.H. - heavy duty		1
21	6708189	TUBE	stop - R.H.		1
22	6701174	WASHER			1
23	6675257	ROD END			1
24	95D-5	NUT			2
25	6718784	COVER			2
26	25G-512	BOLT			2
27	6675033	INSERT			2
28	6579613	STOP			2
29	NAP	GAS SPRING	R.H. - W/latch - Order Ref. OPERATOR CAB(14) & OPERATOR CAB(21)-OPERATOR CAB(23)		1
30	6562602	BUSHING			2
31	6706349	MOUNT	gas spring		2
32	84G-3112	BOLT			4
33	6729013	INSULATION	seat pan		1
34	6733107	PLUG	W/ Ref. OPERATOR CAB(35) (3)		2
35	6679990	CLIP			6
36	NAP	SEAL	31'(787,4 mm) long - Order Ref. OPERATOR CAB(37)		1
37	6679994	SEAL	bulk - Sold Per Foot		x

www.youfixthis.com

OPERATOR CAB

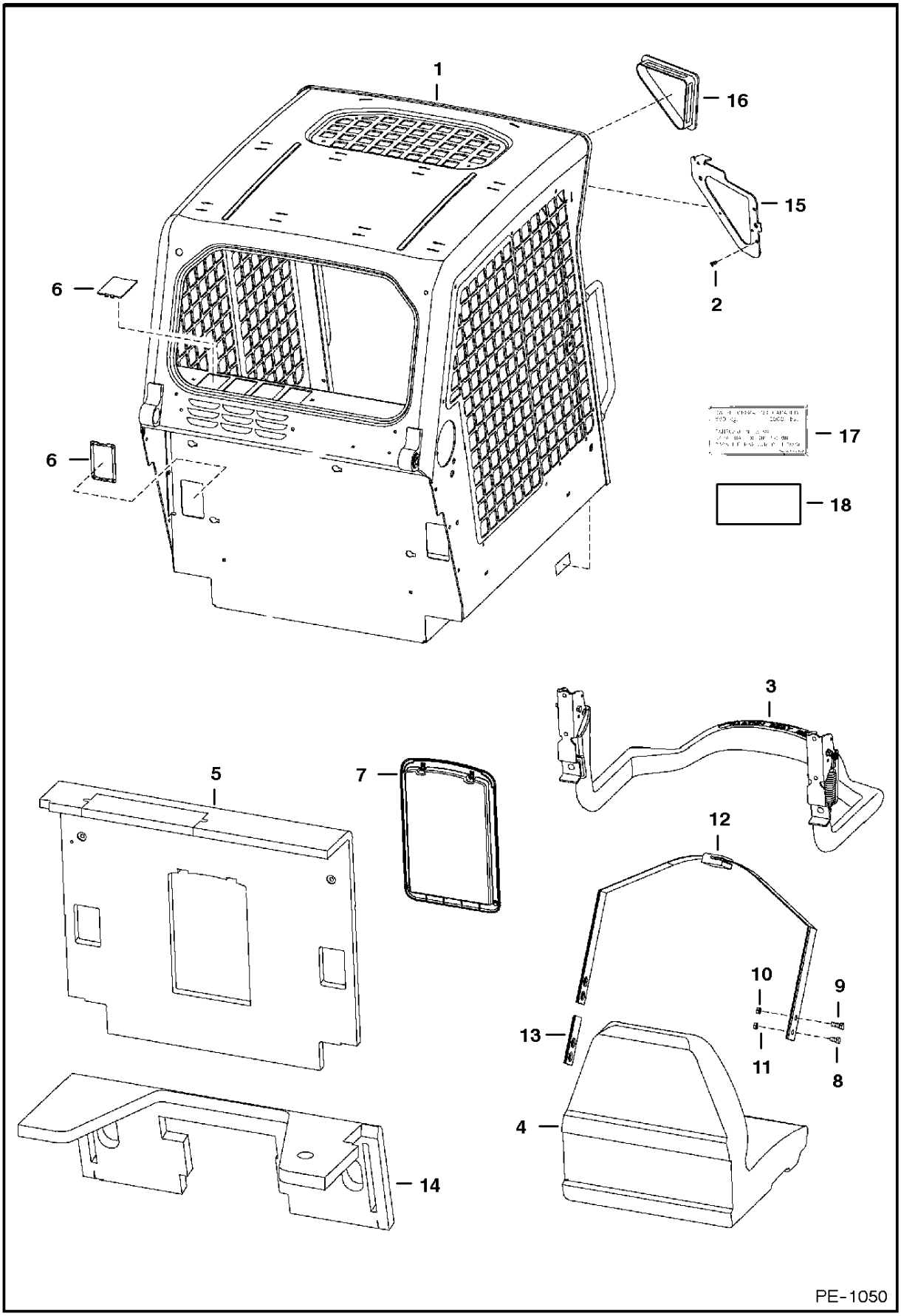

www.youfixthis.com

OPERATOR CAB

Ref.N°	Part N°	Description	Remarks	Serial N°	Qty.
1	6719672	OPERATOR CAB	includes cab decals		1
2	6675033	INSERT	See Page CAB ELECTRICAL CIRCUITRY(1)		6
3	6715860	SEAT BAR	See Page SEAT & SEAT BAR(1)		1
4	6669135	SEAT	See Page SEAT(1)		1
5	6719504	INSULATION	W/Ref. OPERATOR CAB(7)		1
6	6718101	COVER			6
7	6719503	CONTAINER	manuals		1
7	6675524	CLIP			2
7	6725301	COVER			1
7	6725303	FRAME			1
8	17C-612	BOLT			2
9	17C-716	BOLT			2
10	85D-7	NUT			2
11	85D-6	NUT			2
12	6675074	SEAT BELT	W/O spring plates		1
13	6725373	SPRING PLATE	(		2
14	6718489	INSULATION	steering panel		1
15	NSS	PLATE	R.H. - weld on		1
15	NSS	PLATE	L.H. - weld on		1
16	6674403	COVER	no lights		2
17	6710449	DECAL	load		1
18	6804790	DECAL	capacity		1

www.youfixthis.com

SEAT & SEAT BAR

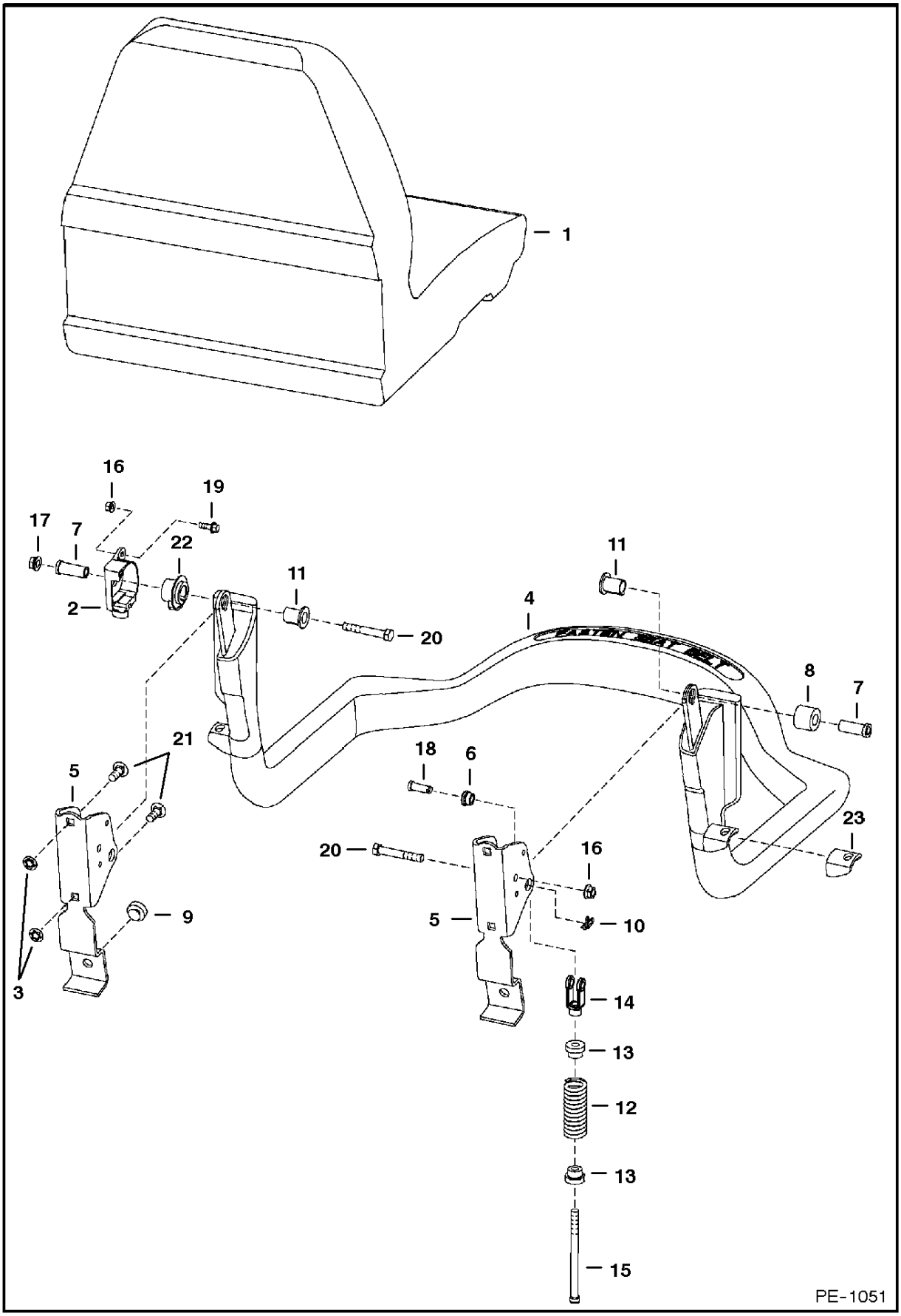

www.youfixthis.com

SEAT & SEAT BAR

Ref.N°	Part N°	Description	Remarks	Serial N°	Qty.
1	6669135	SEAT	See Page SEAT(1)		1
2	6680429	SENSOR			1
3	6684033	NUT			4
4	6715860	SEAT BAR			1
5	6715863	BRACKET			1
6	6715864	BUSHING			2
7	6715865	BUSHING			2
8	6715866	BUSHING			1
9	6519178	BUMPER			2
10	6631418	PIN	ring		2
11	6680441	BUSHING	keyed		2
12	6701535	SPRING			2
13	6710659	BUSHING			2
14	6713589	CLEVIS			2
15	6713887	BOLT			2
16	83D-4	NUT			1
17	53D-6	NUT			2
18	4F-6106	PIN			2
19	35C-412	BOLT			1
20	17C-640	BOLT			2
21	10C-616	BOLT			4
22	6680443	BUSHING			1
23	NAP	MOUNT	Order Ref. SEAT & SEAT BAR(4)		1

www.youfixthis.com

SEAT
(Michigan)

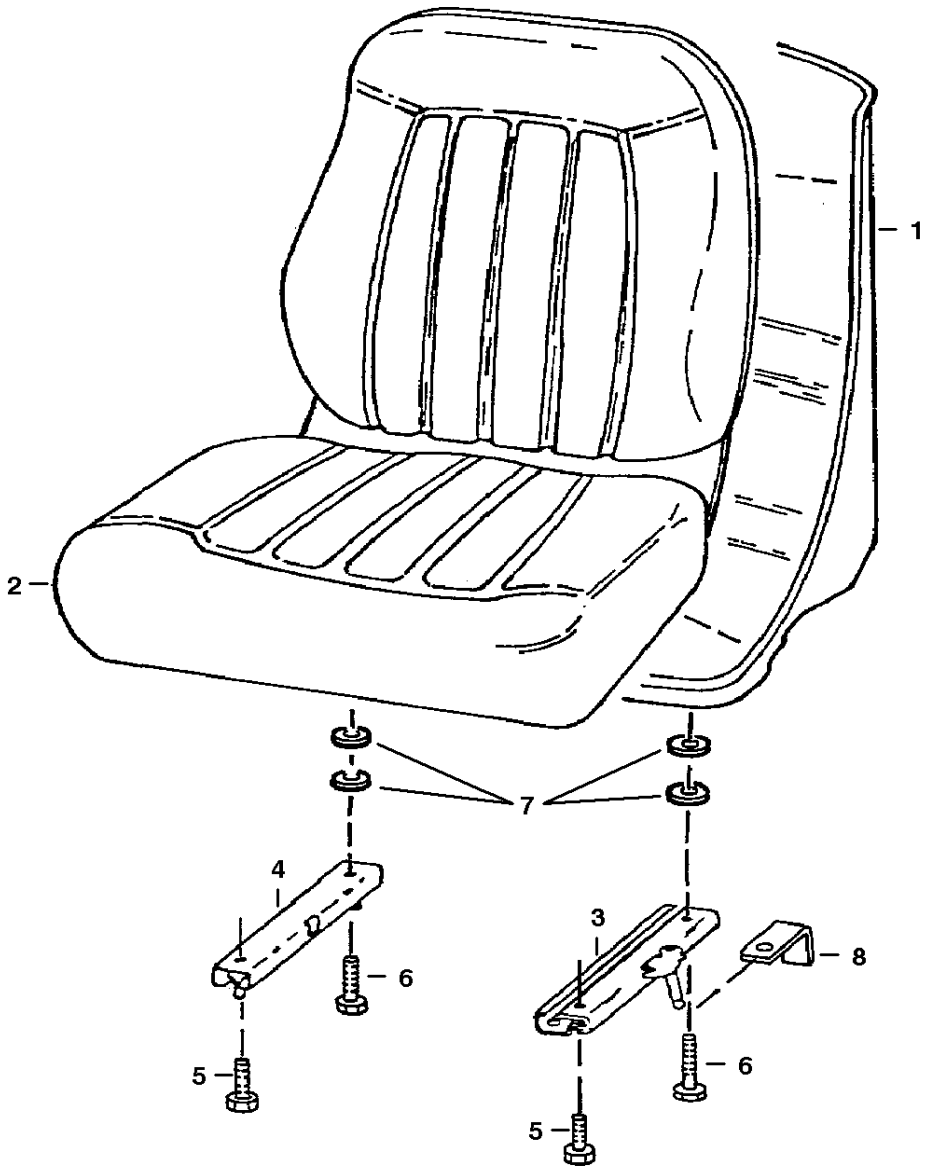

B-14720

www.youfixthis.com

SEAT

Ref.N°	Part N°	Description	Remarks	Serial N°	Qty.
1	6669135	SEAT	W/Ref. SEAT(2)-SEAT(7)		1
2	6670160	CUSHION	W/edging, clip & (2) grommets		1
2	NSS	EDGING			1
2	NSS	CLIP			1
3	6674013	TRACK	L.H. - W/ Latch		1
4	6669089	TRACK	R.H. - W/O Latch		1
5	25G-512	BOLT			2
6	25G-520	BOLT			2
7	7000010	SPACER			4
8	6668953	BRACKET			2

www.youfixthis.com

PANELS

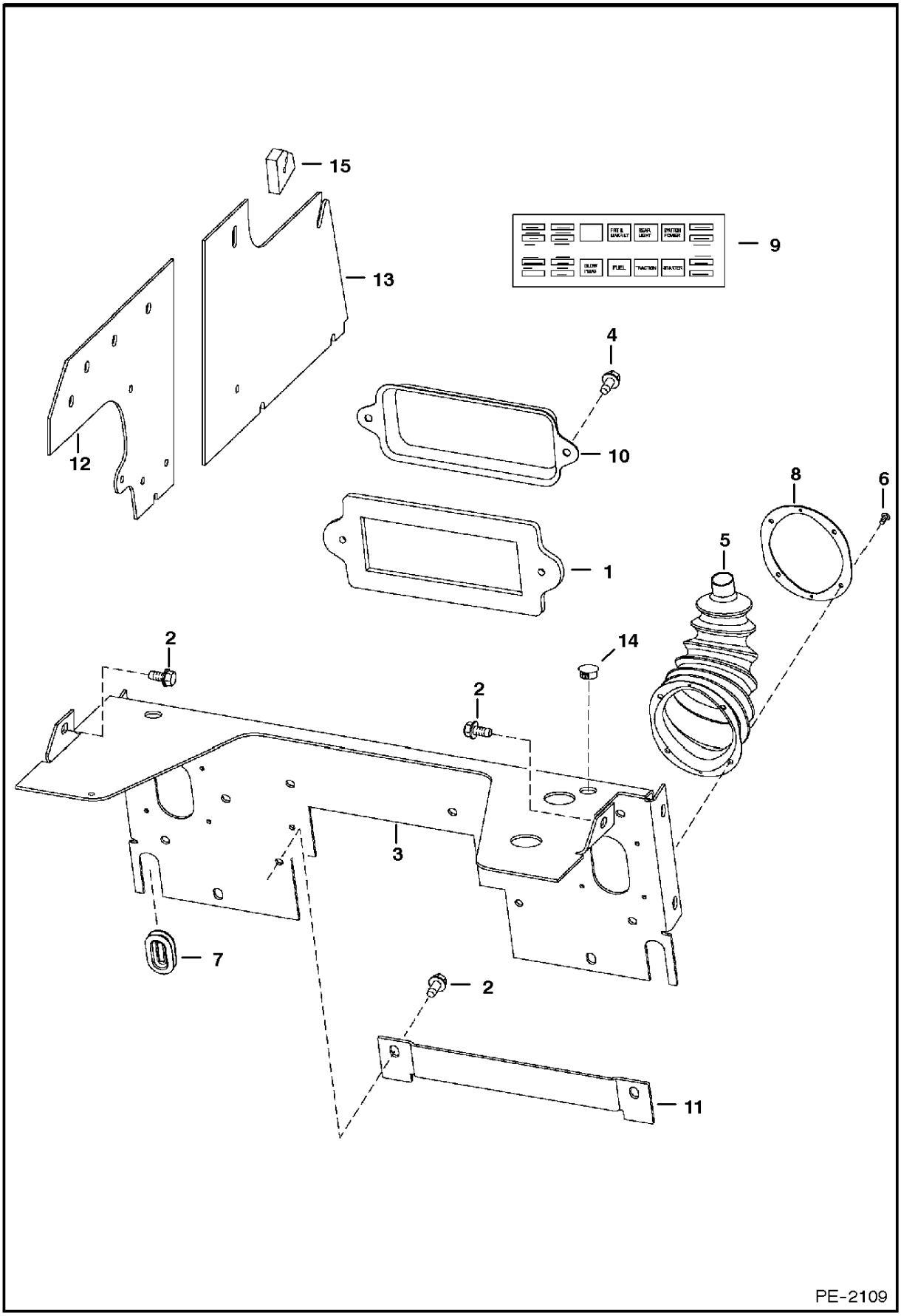

www.youfixthis.com

PANELS

Ref.N°	Part N°	Description	Remarks	Serial N°	Qty.
1	6725302	GASKET			1
2	84G-3712	BOLT			14
3	6717208	SHIELD			1
4	84G-3112	BOLT			2
5	6532127	BOOT	W/Ref. PANELS(8)		2
6	6630207	RIVET			12
7	6577961	GROMMET			2
8	NAP	PLATE	Order Ref. PANELS(5)		2
9	6718774	DECAL	fuse/relay		1
10	6716621	COVER	fuse/relay		1
10	6736071	KIT	extreme condition - W/decal and insulation		1
10	6718774	DECAL	fuse/relay		1
10	6731275	INSULATION			1
11	6717890	COVER			1
12	6732620	PANEL	side rear		2
13	6732621	PANEL	side front		2
14	6657719	PLUG	for .75' dia. hole		2
14	6648348	PLUG	for .812' dia. hole		2
15	6733529	SEAL			2

www.youfixthis.com

REAR DOOR

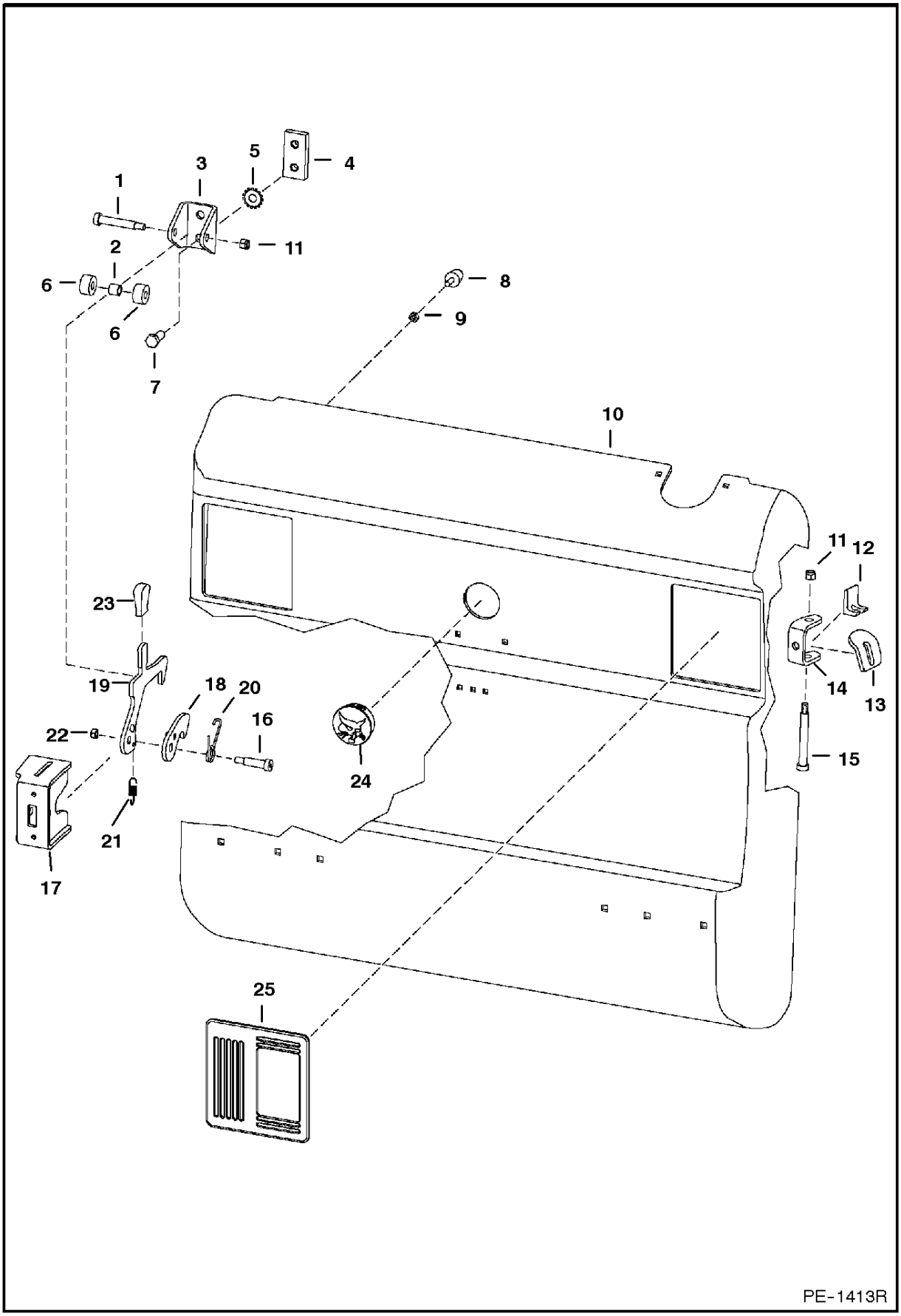

www.youfixthis.com

REAR DOOR

Ref.N°	Part N°	Description	Remarks	Serial N°	Qty.
1	38C-840	BOLT	carriage		1
2	6809734	BUSHING			1
3	6809727	CHANNEL			1
4	6719525	BAR	threaded striker		1
5	6675273	WASHER	lock		2
6	6809726	ROLLER			2
7	17C-820	BOLT			2
8	6733616	BUMPER	tapered		2
9	61D-5	NUT			2
10	6729991	REAR DOOR			1
11	59D-6	NUT			3
12	6719766	STOP			1
13	6714126	DOOR STOP			2
14	6733575	HINGE	weld on		2
15	6809845	SCREW			2
16	38C-824	SCREW			1
17	6729939	LATCH PLATE	weld on		1
18	6733667	LATCH			1
19	6732715	LATCH			1
20	6810132	SPRING			1
21	6810141	SPRING			1
22	85D-6	NUT			1
23	6564452	GRIP			1
24	6718796	PLUG			1
25	6670287	COVER			2

www.youfixthis.com

LIFT ARMS & BOBTACH

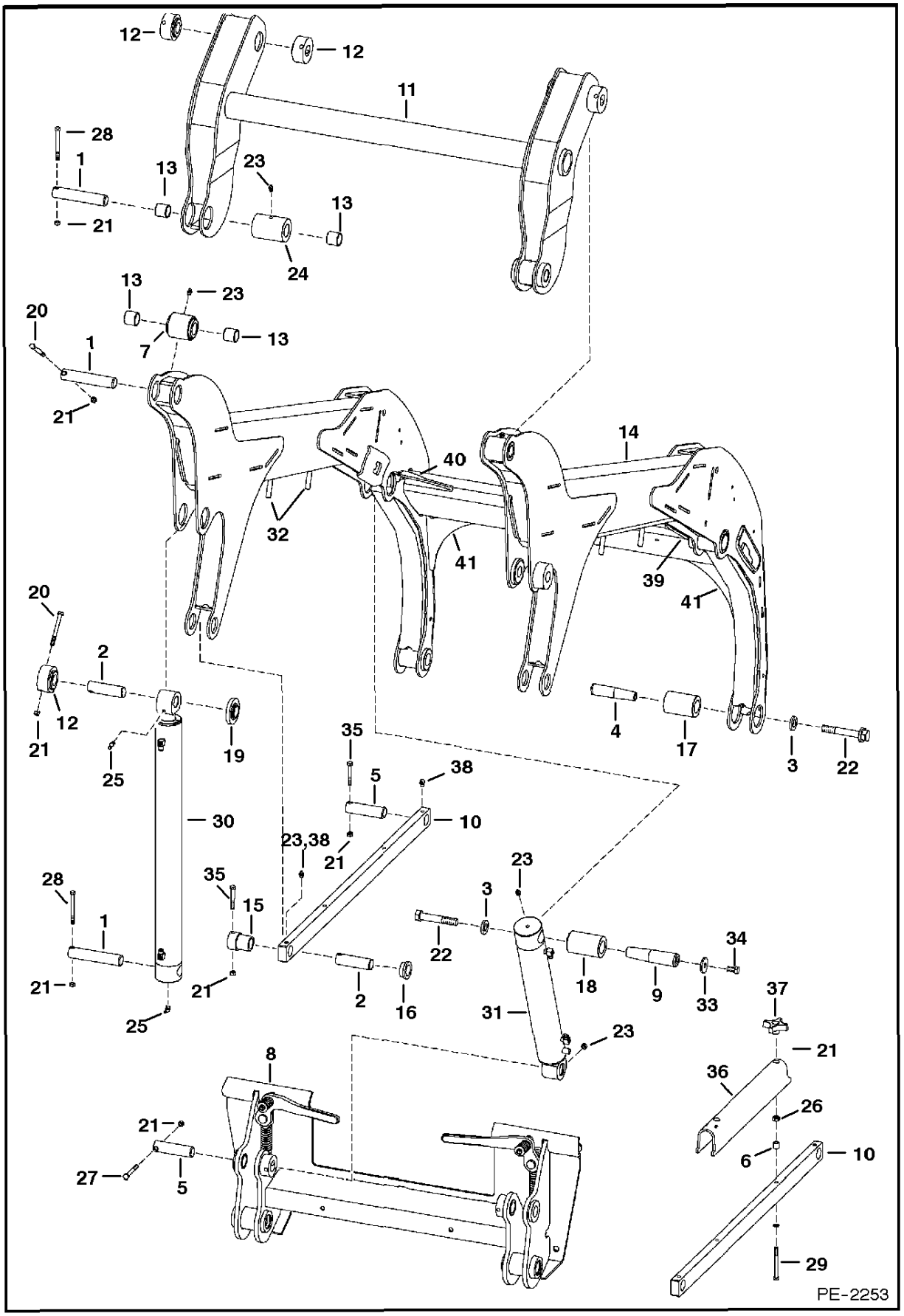

www.youfixthis.com

LIFT ARMS & BOBTACH

Ref.N°	Part N°	Description	Remarks	Serial N°	Qty.
1	6717560	PIN	1.25' x 6.20'(31,8mm x 157,5mm)		6
2	6718789	PIN	1.25' x 4.24'(31,8mm x 107,7mm)		4
3	27E-10	WASHER			4
4	6734661	PIN	tapered - 1.5' x 4.17' - (38,1 mm x 105,6 mm)		2
5	6577954	PIN			4
6	6532347	SPACER			2
7	6717039	BUSHING	weld on		2
8		BOB-TACH	See Page BOB-TACH(1)		2
9	6734662	PIN	tapered - 1.5' x 5.7' - (38,1 mm x 144,8 mm)		2
10	6727863	ROD LINK			2
11	6732264	FRAME LINK			1
12	6717246	BUSHING	weld on		6
13	6717562	BUSHING	wear		8
14	6737182	LIFT ARM			1
15	6717026	BUSHING	weld on		2
16	6717025	BUSHING	weld on		2
17	6735662	BUSHING	weld on		2
18	6734660	BUSHING	weld on		2
19	6717041	BUSHING	weld on		2
20	17C-656	BOLT			4
21	85D-6	NUT			14
22	17C-1080	BOLT			4
23	10H-25	GREASE ZERK			8
24	6732265	BUSHING	weld on		2
25	11H-15	GREASE ZERK			4
26	6718942	NUT			2
27	17C-648	BOLT			2
28	17C-660	BOLT			4
29	6730290	BOLT	stainless steel		2
30		CYLINDER	lift - See Page LIFT CYLINDER(1)		2
31	6809802	CYLINDER	tilt - See Page TILT CYLINDER(1)		2
32	1313995	STUD	weld on		4
33	6731160	WASHER			2
34	17C-1016	BOLT			2
35	17C-640	BOLT			4
36	6718312	STOP	lift arm		1
37	6679130	KNOB			2
38	12H-15	GREASE ZERK			8
39	6718879	GUSSET	L.H.		1
40	6718880	GUSSET	R.H.		1
41	6717961	GUSSET			2

www.youfixthis.com

BOB-TACH

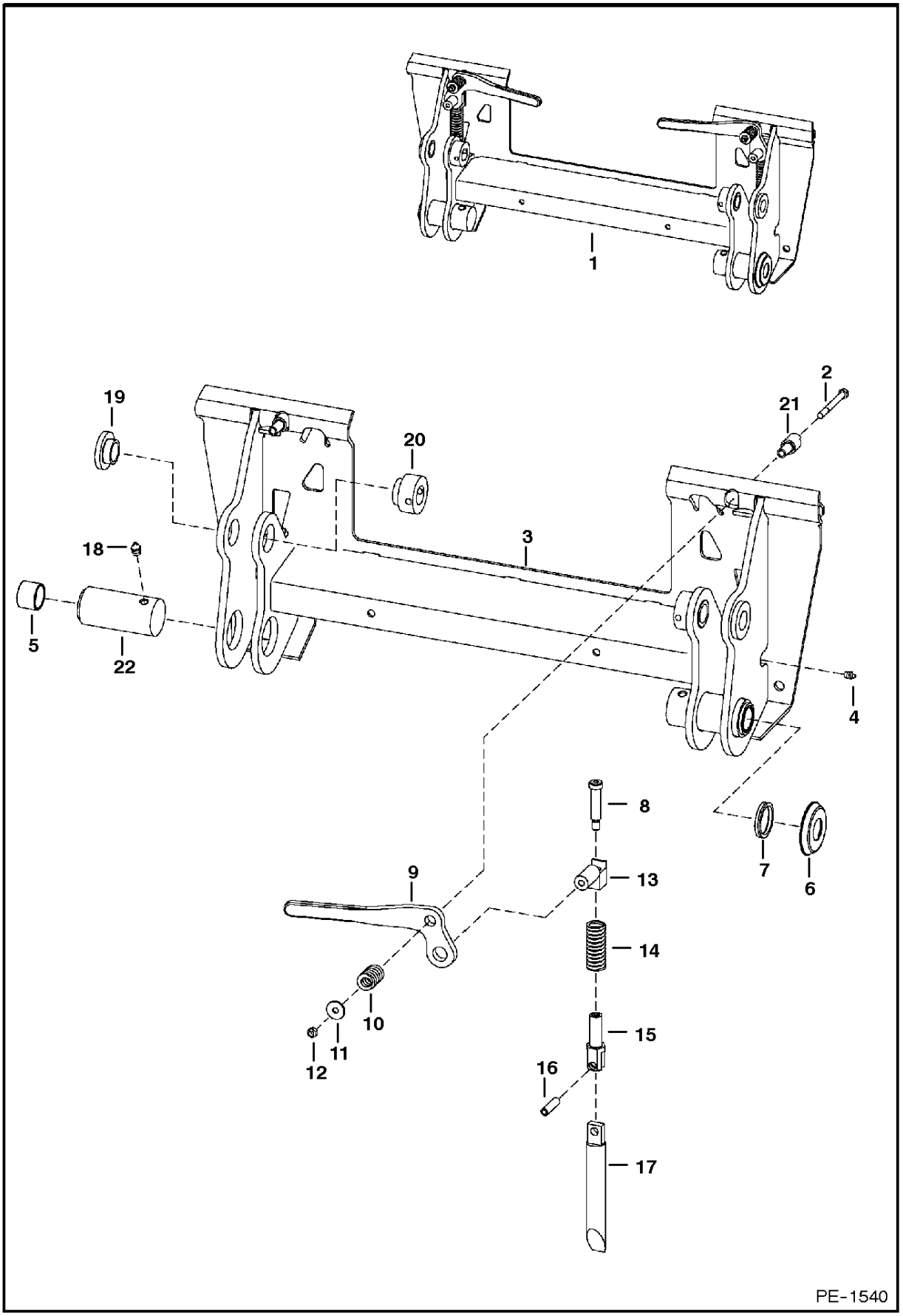

www.youfixthis.com

BOB-TACH

Ref.N°	Part N°	Description	Remarks	Serial N°	Qty.
1	6732537	BOB-TACH	Ref. BOB-TACH (2) - BOB-TACH (22)		1
2	17C-660	BOLT			2
3	NAP	FRAME			1
4	10H-35	GREASE ZERK			2
5	6730997	BUSHING	Press Fit		2
6	6732443	CUP	seal		2
7	6651709	SEAL			2
8	6728473	SCREW	shoulder		2
9	6702904	LEVER	R.H.		1
9	6702903	LEVER	L.H.		1
10	6713040	SPRING			2
11	619021	WASHER			2
12	85D-6	NUT			2
13	6714576	PIVOT			2
14	6562018	SPRING			2
15	6704248	PIVOT	wedge		2
16	14J-5032	PIN			2
17	6737191	WEDGE ASSY.			2
18	743332	GREASE ZERK			2
19	6717259	BUSHING	weld on		2
20	6717260	BUSHING	weld on		2
21	6702958	BUSHING	weld on		2
22	6731979	BUSHING	weld on - Also Order Ref. BOB-TACH (5) & BOB-TACH (18)		2

www.youfixthis.com

FUEL SYSTEM

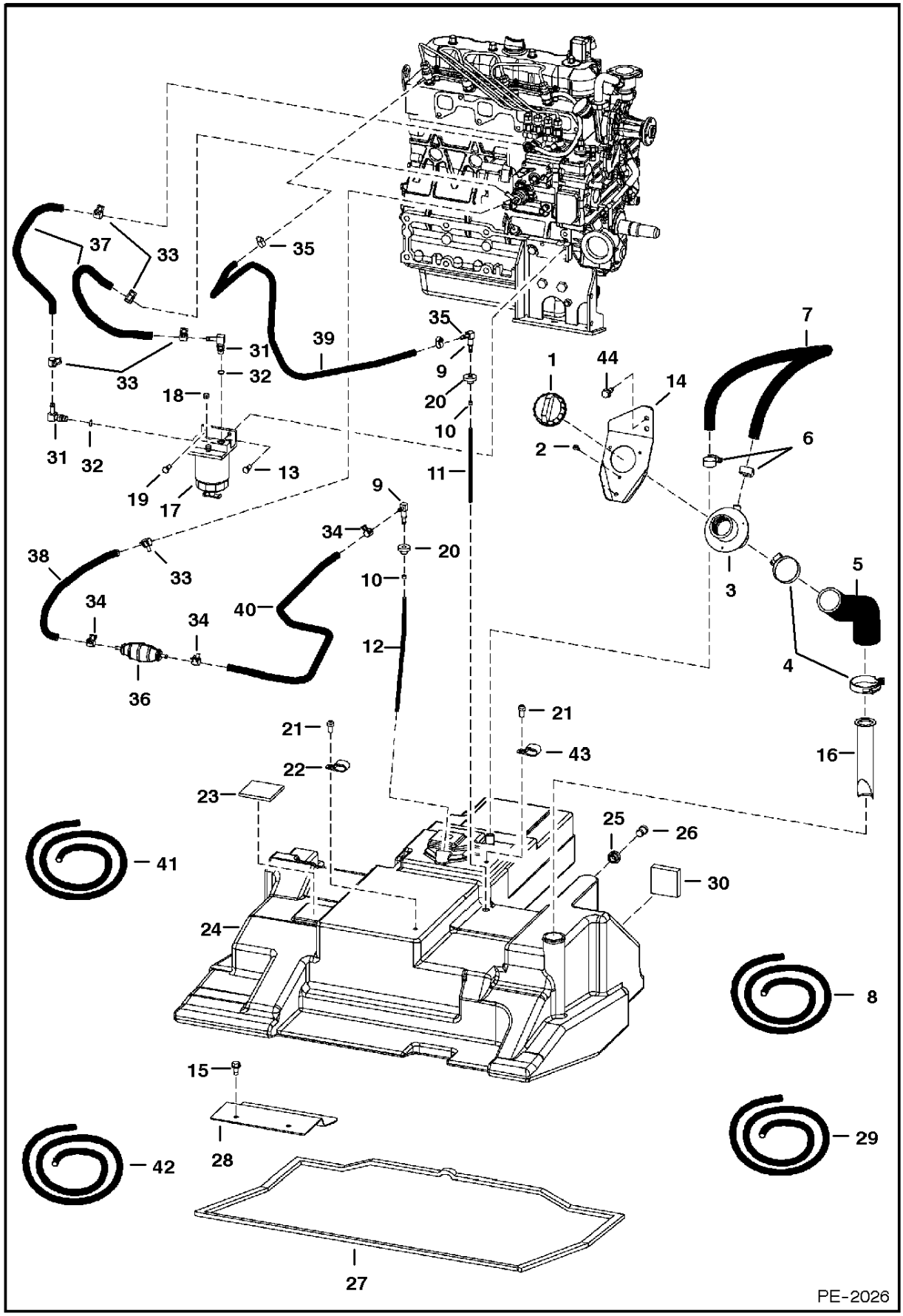

www.youfixthis.com

FUEL SYSTEM

Ref.N°	Part N°	Description	Remarks	Serial N°	Qty.
1	6661114	CAP	green		1
1	6661696	FUEL CAP	(locking - W/key - Code PK510		1
1	6587458	KEY SET	Code PK510		1
2	6706517	SCREW			3
3	6701449	FILLER TUBE			1
4	42H-32	CLAMP	worm gear		2
4	5HM-58	CLAMP	constant tension		2
5	6717704	HOSE			1
6	42H-10	CLAMP	worm gear		2
6	5HM-24	CLAMP	constant tension		2
7	NAP	HOSE	(42'(1066,8 mm)long-Order Ref. FUEL SYSTEM(8)		x
8	6578172	HOSE	bulk - Sold Per Foot		x
9	6681462	ELBOW			2
10	6661213	CLAMP			3
11	6730767	HOSE	7" (177,8 mm) long		1
12	6729854	HOSE	12.5'(317,5 mm) long		1
13	84G-3116	BOLT			1
14	6731059	BRACKET			1
15	84G-3712	BOLT			2
16	6569219	SCREEN			1
17	6667353	FILTER ASSY			1
17	6667352	FILTER			1
17	72F-1	DRAIN COCK			1
18	6658180	PLUG	breather		1
19	84G-3112	BOLT			1
20	6553411	BUSHING			2
21	17C-610	BOLT			2
22	31H-27	CLAMP			1
23	6578278	PAD	self adhesive one side		2
24	6683303	TANK			1
25	6717402	BUSHING			1
26	6717401	PLUG	fuel drain		1
27	6737760	GASKET			1
28	6737368	BRACKET			1
29	6578169	HOSE	bulk - Sold Per Foot		x
30	6704436	PAD			2
31	6715183	ELBOW	W/Ref. FUEL SYSTEM(32) - check boss face to determine correct replacement O-ring		2
32	99K-5	O-RING	tapered boss face		x
32	79K-5	O-RING	flat boss face		x
33	5HM-14	CLAMP			5
34	5HM-13	CLAMP			3
35	42HS-4	CLAMP			2
36	6657734	PUMP	hand primer		1
37	NAP	HOSE	13" (330,2 mm) long - Order Ref. FUEL SYSTEM(41)		2
38	NAP	HOSE	18"(457,2 mm)long-(Order Ref. FUEL SYSTEM(42)		1
39	NAP	HOSE	35" (889,0 mm) long - Order Ref. FUEL SYSTEM(42)		1
40	NAP	HOSE	53" (1346,2 mm) long - Order Ref. FUEL SYSTEM(29)		1
41	6577822	HOSE	bulk - Sold Per Foot		x
42	6577821	HOSE	bulk - Sold Per Foot		x
43	30H-36	CLAMP			1
44	84G-3716	BOLT			2

www.youfixthis.com

DRIVE TRAIN

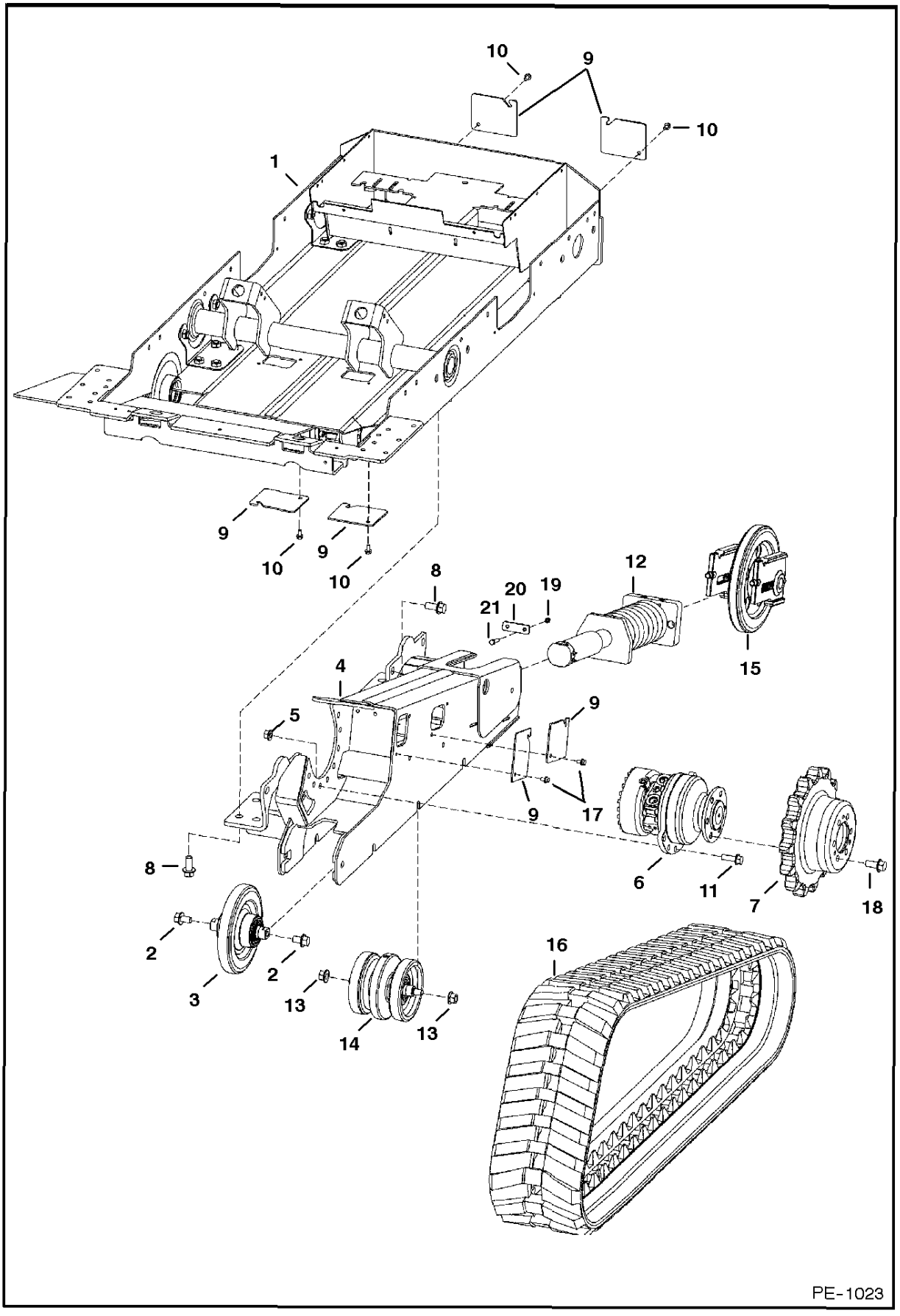

www.youfixthis.com

DRIVE TRAIN

Ref.N°	Part N°	Description	Remarks	Serial N°	Qty.
1	6726100	DRIVECASE			1
2	31C-1224	BOLT			4
3		IDLER ASSY	rear - See Page REAR IDLER(1)		2
4	6726028	FRAME	track - L.H.		1
4	6726029	FRAME	track - R.H.		1
5	83D-10	NUT			16
6		MOTOR	See Page HYDROSTATIC MOTOR(1)		2
7	6726052	SPROCKET			2
8	31C-1228	BOLT			24
9	6716010	COVER			8
10	84G-3712	BOLT			8
11	31C-1032	BOLT			16
12	6726053	RECOIL SPRING	See Page TRACK TENSIONER(1)		2
13	83D-12	NUT			12
14		ROLLER ASSY	See Page TRACK ROLLER(1)		6
15		IDLER ASSY	front - See Page FRONT IDLER(1)		2
16	6677204	TRACK	12'(304,8 mm) wide - Avon		2
16	6680161	TRACK	12'(304,8 mm) wide - Bridgestone		2
17	35C-610	BOLT			8
18	31C-1220	BOLT			12
19	85D-6	NUT			4
20	6726066	STOP	base cylinder		2
21	17C-628	BOLT			4

www.youfixthis.com

TRACK TENSIONER

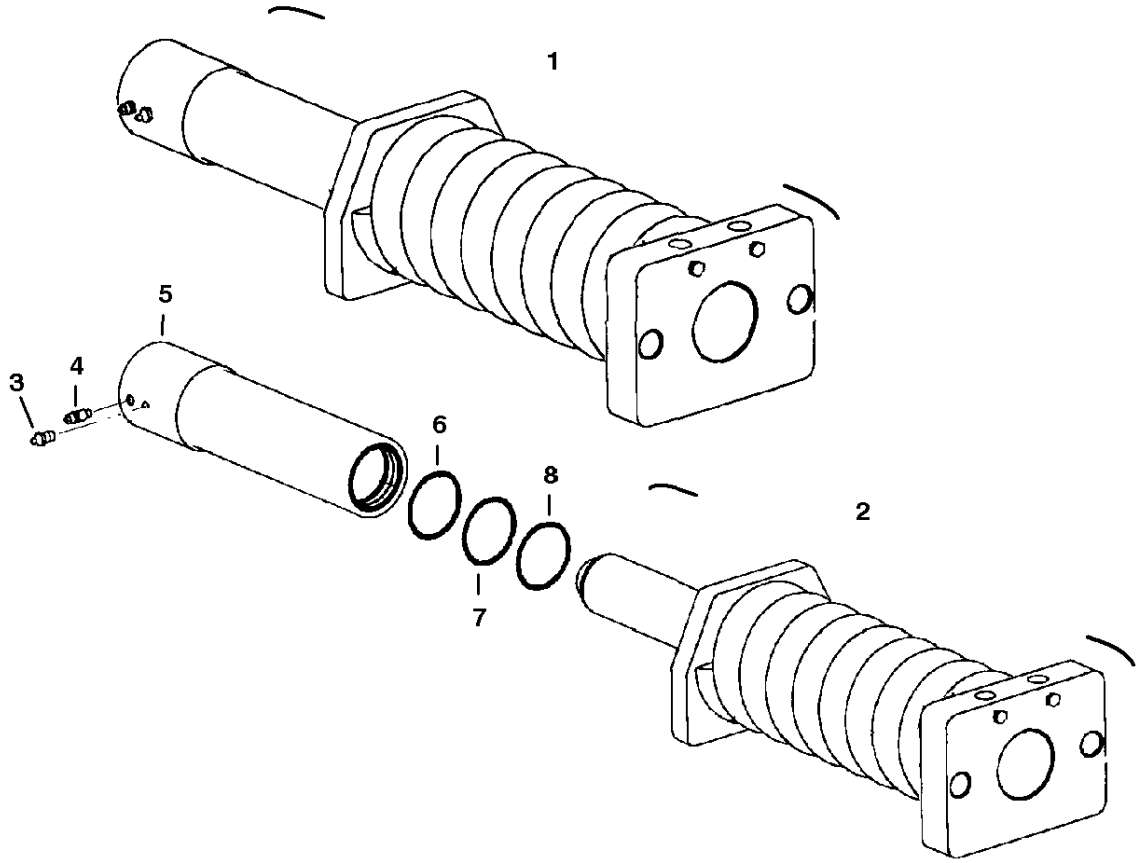

PE-1491

www.youfixthis.com

TRACK TENSIONER

Ref.N°	Part N°	Description	Remarks	Serial N°	Qty.
1	6726053	RECOIL SPRING	Ref. TRACK TENSIONER(2) - TRACK TENSIONER(8)		1
2	NSS	&COIL SPRING ASSY	Order Ref. TRACK TENSIONER(1)		1
3	6655752	GREASE ZERK	Must be rated 10,000 psi - Do not substitute!		1
4	6645812	BLEEDER			1
5	6726055	TUBE			1
6	6672338	O-RING			1
7	6672342	WASHER	backAup		1
8	6668004	SEAL	wiper		1

www.youfixthis.com

FRONT IDLER

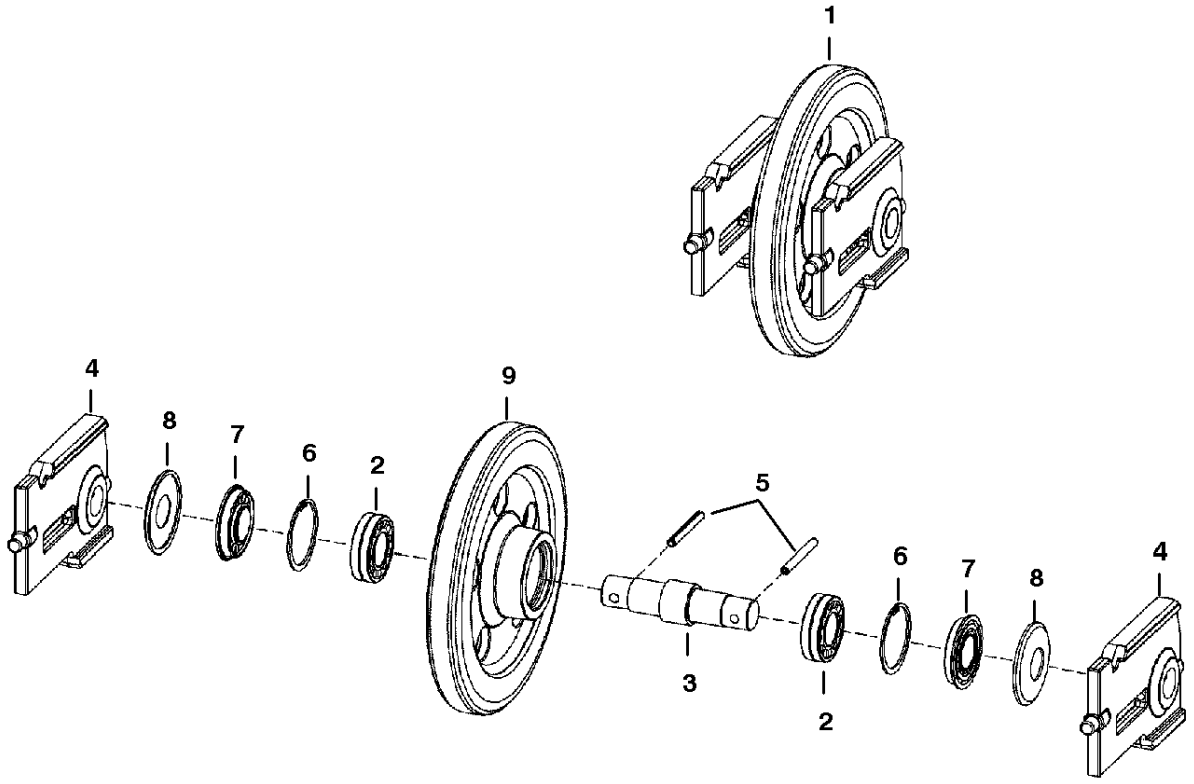

PE-1692

www.youfixthis.com

FRONT IDLER

Ref.N°	Part N°	Description	Remarks	Serial N°	Qty.
1	6732902	IDLER ASSY	front - Ref. FRONT IDLER(2)-FRONT IDLER(9)		1
2	6679884	BEARING			2
3	6732875	AXLE	shaft		1
4	6730967	BRACKET	Use W/Ref. FRONT IDLER(8)		2
5	2JM-1090	ROLL PIN			2
6	7JM-80	SNAP RING			2
7	6679882	SEAL			2
8	6730227	COVER	seal		2
9	6732905	IDLER			1

www.youfixthis.com

REAR IDLER

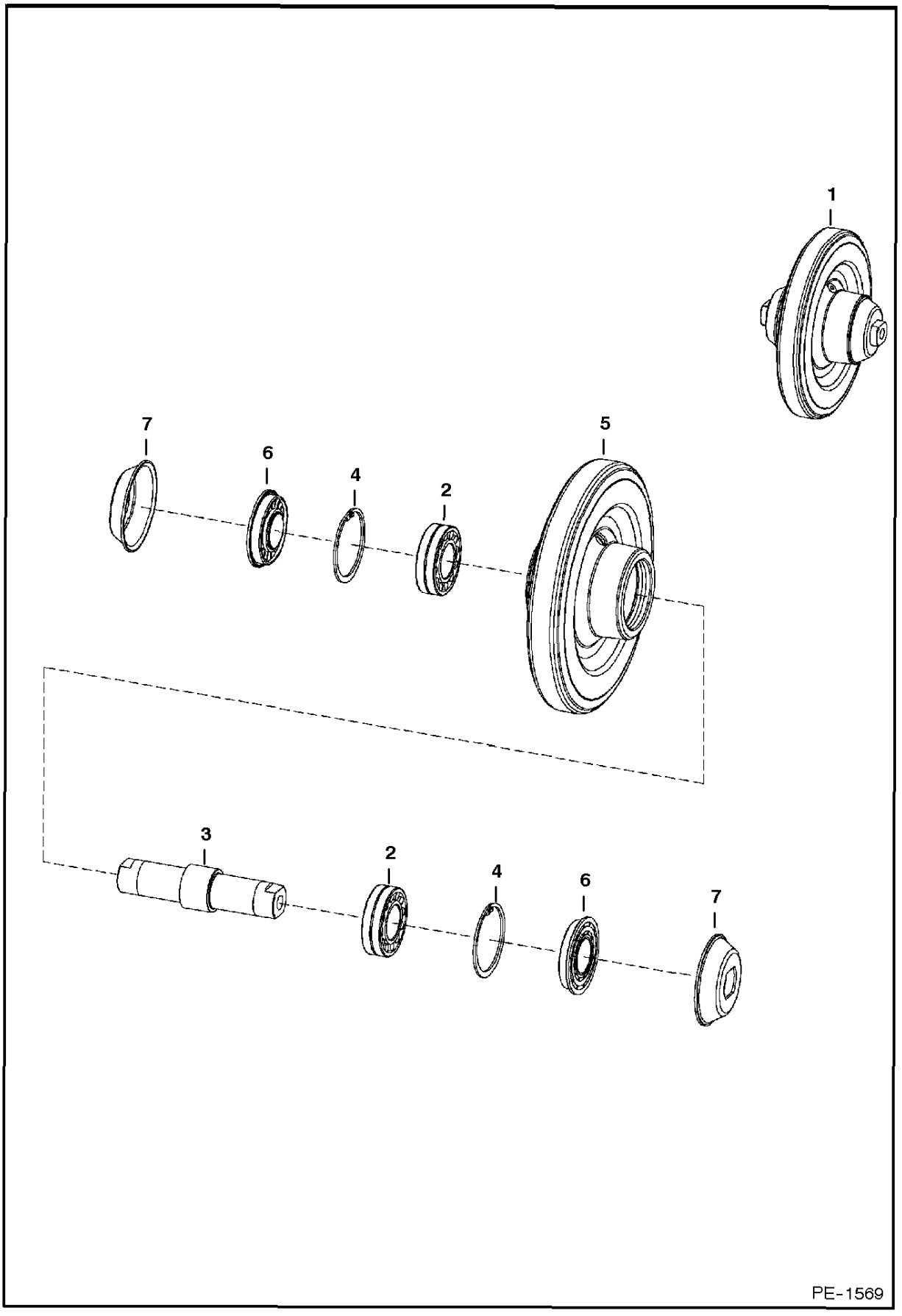

www.youfixthis.com

REAR IDLER

Ref.N°	Part N°	Description	Remarks	Serial N°	Qty.
1	6732903	IDLER ASSY	rear - W/Ref. REAR IDLER(2)-REAR IDLER(7)		1
2	6679884	BEARING			2
3	6732876	AXLE	shaft		1
4	7JM-80	SNAP RING			2
5	6732906	IDLER			1
6	6679882	SEAL			2
7	6730228	COVER	seal		2

www.youfixthis.com

TRACK ROLLER

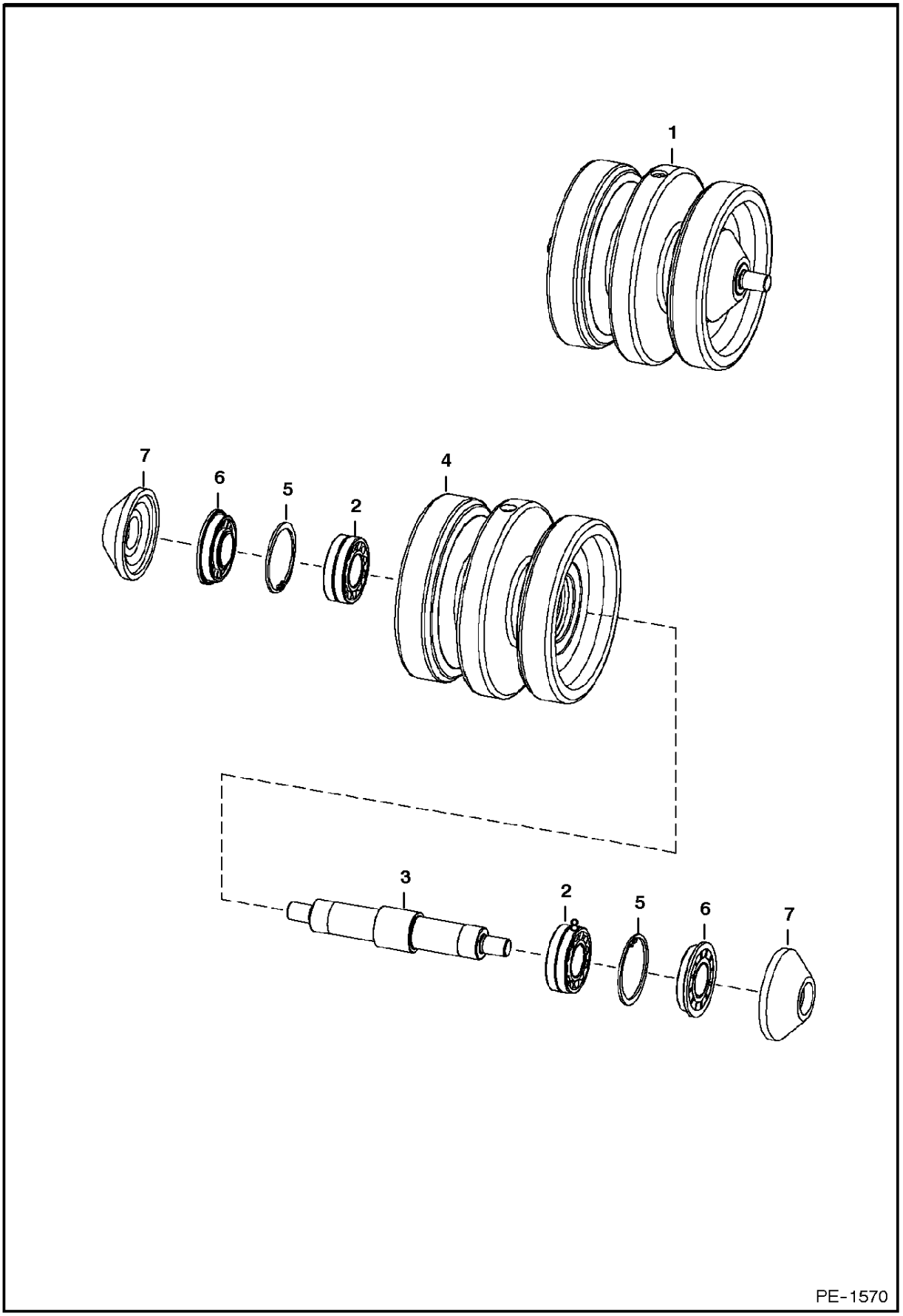

www.youfixthis.com

TRACK ROLLER

Ref.N°	Part N°	Description	Remarks	Serial N°	Qty.
1	6732901	ROLLER ASSY	W/Ref. TRACK ROLLER(2)-TRACK ROLLER(7)		1
2	6679883	BEARING			2
3	6732874	AXLE	shaft		1
4	6732904	ROLLER			1
5	7JM-72	SNAP RING			2
6	6679881	SEAL			2
7	6730229	COVER	seal		2

www.youfixthis.com

HYDRAULIC CIRCUITRY
(W/O Bucket Positioning Valve)

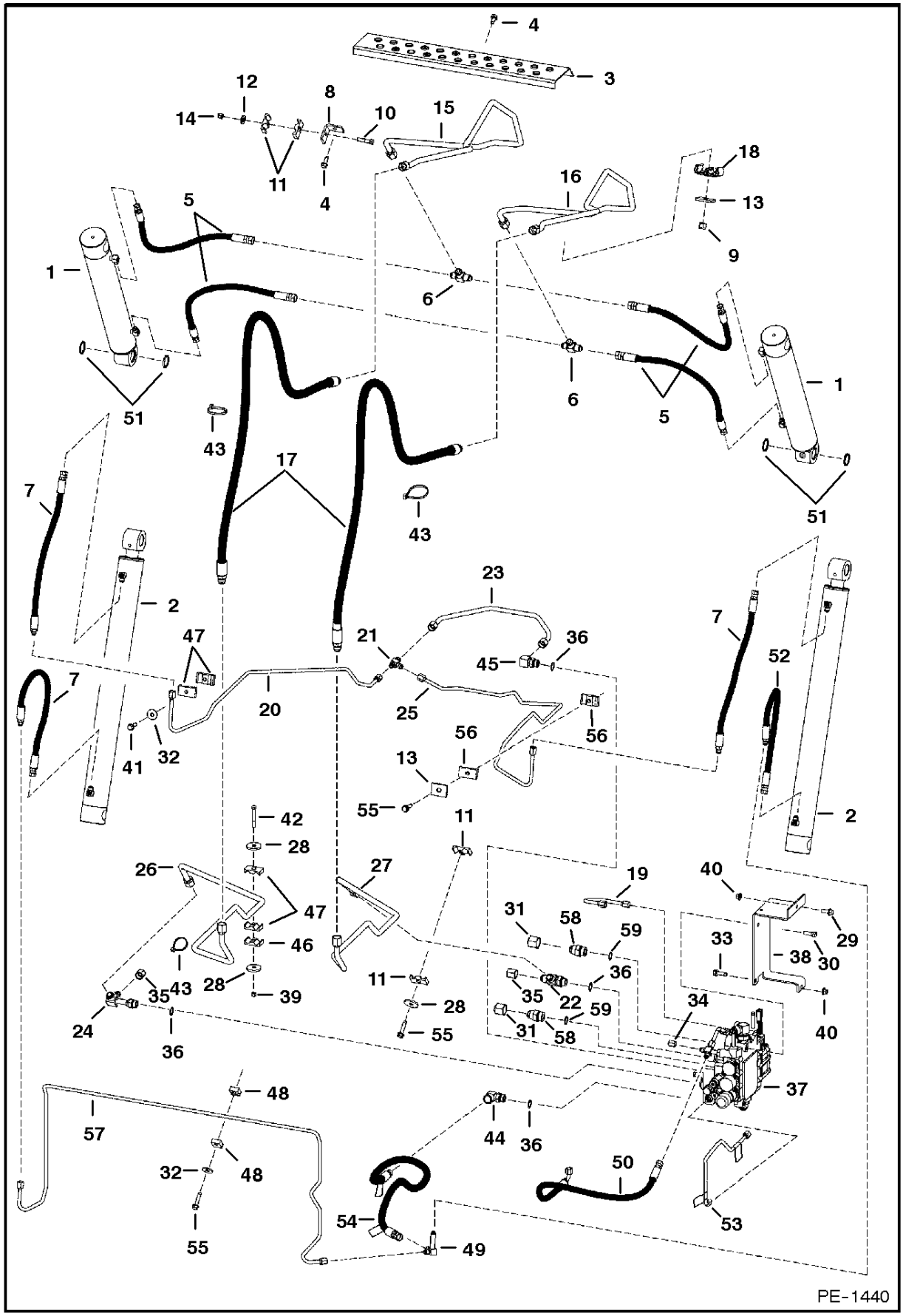

www.youfixthis.com

HYDRAULIC CIRCUITRY

Ref.N°	Part N°	Description	Remarks	Serial N°	Qty.
1		CYLINDER	tilt - See Page TILT CYLINDER(1)		2
2		CYLINDER	lift - See Page LIFT CYLINDER(1)		2
3	6735669	SHIELD			1
4	84G-3712	BOLT			4
5	6718066	HOSE			4
6	6716061	TEE			2
7	6718067	HOSE			3
8	6718238	BRACKET			1
9	59D-8	NUT			2
10	17C-628	BOLT			1
11	6701893	CLAMP			6
12	27E-6	WASHER			1
13	6553709	WASHER			2
14	59D-6	NUT			1
15	6718030	TUBE			1
16	6725337	TUBE			1
17	6719439	HOSE			2
18	6717933	CLAMP			2
19	6735837	TUBE			1
20	6726168	TUBE			1
21	6719424	TEE			1
22	21KB-1010	TEE	W/Ref. HYDRAULIC CIRCUITRY(36)		1
23	6726166	TUBE			1
24	6730142	TEE	W/Ref. HYDRAULIC CIRCUITRY(36)		1
25	6733186	TUBE			1
26	6730203	TUBE			1
27	6730202	TUBE			1
28	872229	WASHER			3
29	35C-616	BOLT			2
30	17C-620	BOLT			2
31	36K-8	CAP			2
32	619021	WASHER			2
33	84G-3720	BOLT			1
34	36K-5	CAP			1
35	36K-7	CAP			2
36	79K-10	O-RING			x
37		VALVE	See Page HYDRAULIC CONTROL VALVE(1)		1
38	6726253	MOUNT			1
39	59D-6	NUT			1
40	83D-6	NUT			2
41	84G-3724	BOLT			1
42	17C-644	BOLT			1
43	6624289	STA-STRAP			2
44	6814531	ELBOW	W/Ref. HYDRAULIC CIRCUITRY(36)		1
45	17KB-810	ELBOW	W/Ref. HYDRAULIC CIRCUITRY(36)		1
46	30H-45	CLAMP			1
47	6726277	CLAMP			4
48	6727707	CLAMP			2
49	6727638	TEE			1
50	6737648	HOSE	To Ref. HYDRAULIC CONTROL VALVE(54) - See Page HYDRAULIC CONTROL VALVE(1)		1
51	225855	SEAL			4
52	6726199	HOSE			2
53	6729909	TUBE	See Page MANUAL LIFT RELEASE SYSTEM(1)		1
53	6809511	DECAL			2

www.youfixthis.com

HYDRAULIC CIRCUITRY

Ref.N°	Part N°	Description	Remarks	Serial N°	Qty.
54	6727705	HOSE			1
54	6809511	DECAL			2
55	84G-3728	BOLT			3
56	6727708	CLAMP			2
57	6726167	TUBE			1
58	15KB-1212	ADAPTER	W/Ref. HYDRAULIC CIRCUITRY(59)		2
59	79K-12	O-RING			x

www.youfixthis.com

HYDRAULIC CIRCUITRY
(W/ Bucket Positioning Valve)

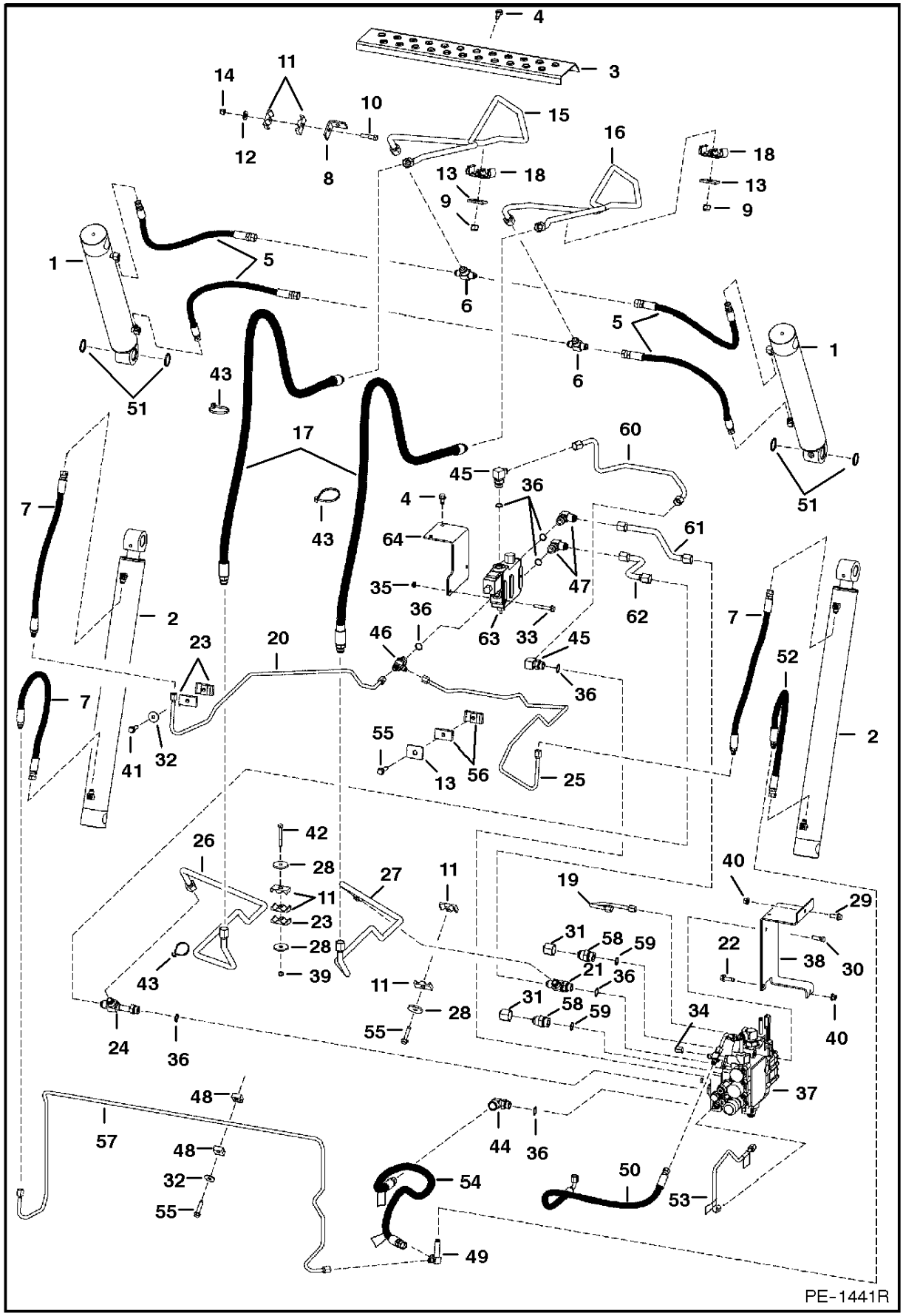

www.youfixthis.com

HYDRAULIC CIRCUITRY

Ref.N°	Part N°	Description	Remarks	Serial N°	Qty.
1		CYLINDER	tilt - See Page TILT CYLINDER(1)		2
2		CYLINDER	lift - See Page LIFT CYLINDER(1)		2
3	6735669	SHIELD			1
4	84G-3712	BOLT			4
5	6718066	HOSE			4
6	6716061	TEE			2
7	6718067	HOSE			3
8	6718238	BRACKET			1
9	59D-8	NUT			2
10	17C-628	BOLT			1
11	6701893	CLAMP			6
12	27E-6	WASHER			1
13	6553709	WASHER			2
14	59D-6	NUT			1
15	6718030	TUBE			1
16	6725337	TUBE			1
17	6719439	HOSE			2
18	6717933	CLAMP			2
19	6735837	TUBE			1
20	6726168	TUBE			1
21	10K-7	TEE			1
22	84G-3720	BOLT			1
23	6726277	CLAMP			4
24	6730142	TEE	W/Ref. HYDRAULIC CIRCUITRY(36)		1
25	6733186	TUBE			1
26	6730203	TUBE			1
27	6730202	TUBE			1
28	872229	WASHER			3
29	35C-616	BOLT			2
30	17C-620	BOLT			2
31	36K-8	CAP			2
32	619021	WASHER			2
33	35C-536	BOLT			2
34	36K-5	CAP			1
35	57D-5	NUT			2
36	79K-10	O-RING			x
37		VALVE	See Page HYDRAULIC CONTROL VALVE(1)		1
38	6726253	MOUNT			1
39	59D-6	NUT			1
40	83D-6	NUT			2
41	84G-3724	BOLT			1
42	17C-644	BOLT			1
43	6624289	STA-STRAP			3
44	6814531	ELBOW	W/Ref. HYDRAULIC CIRCUITRY(36)		1
45	17KB-810	ELBOW	W/Ref. HYDRAULIC CIRCUITRY(36)		2
46	21KB-610	TEE	W/Ref. HYDRAULIC CIRCUITRY(36)		1
47	17KB-1010	ELBOW	W/Ref. HYDRAULIC CIRCUITRY(36)		2
48	6727707	CLAMP			2
49	6727638	TEE			1
50	6737648	HOSE	To Ref. HYDRAULIC CONTROL VALVE(54) - See Page HYDRAULIC CONTROL VALVE(1)		1
51	225855	SEAL			4
52	6726199	HOSE			1
53	6729909	TUBE	See Page MANUAL LIFT RELEASE SYSTEM(1)		1
54	6727705	HOSE			1

www.youfixthis.com

HYDRAULIC CIRCUITRY

Ref.N°	Part N°	Description	Remarks	Serial N°	Qty.
54	6809511	DECAL			2
55	84G-3728	BOLT			3
56	6727708	CLAMP			2
57	6726167	TUBE			1
58	15KB-1212	ADAPTER	W/Ref. HYDRAULIC CIRCUITRY(59)		2
59	79K-12	O-RING			x
60	6726180	TUBE			1
61	6733684	TUBE			1
62	6730209	TUBE			1
63	6666341	VALVE	bucket pos. - See Page BUCKET POSITIONING VALVE (1)		1
64	6727646	BRACKET			1

www.youfixthis.com

MANUAL LIFT RELEASE SYSTEM

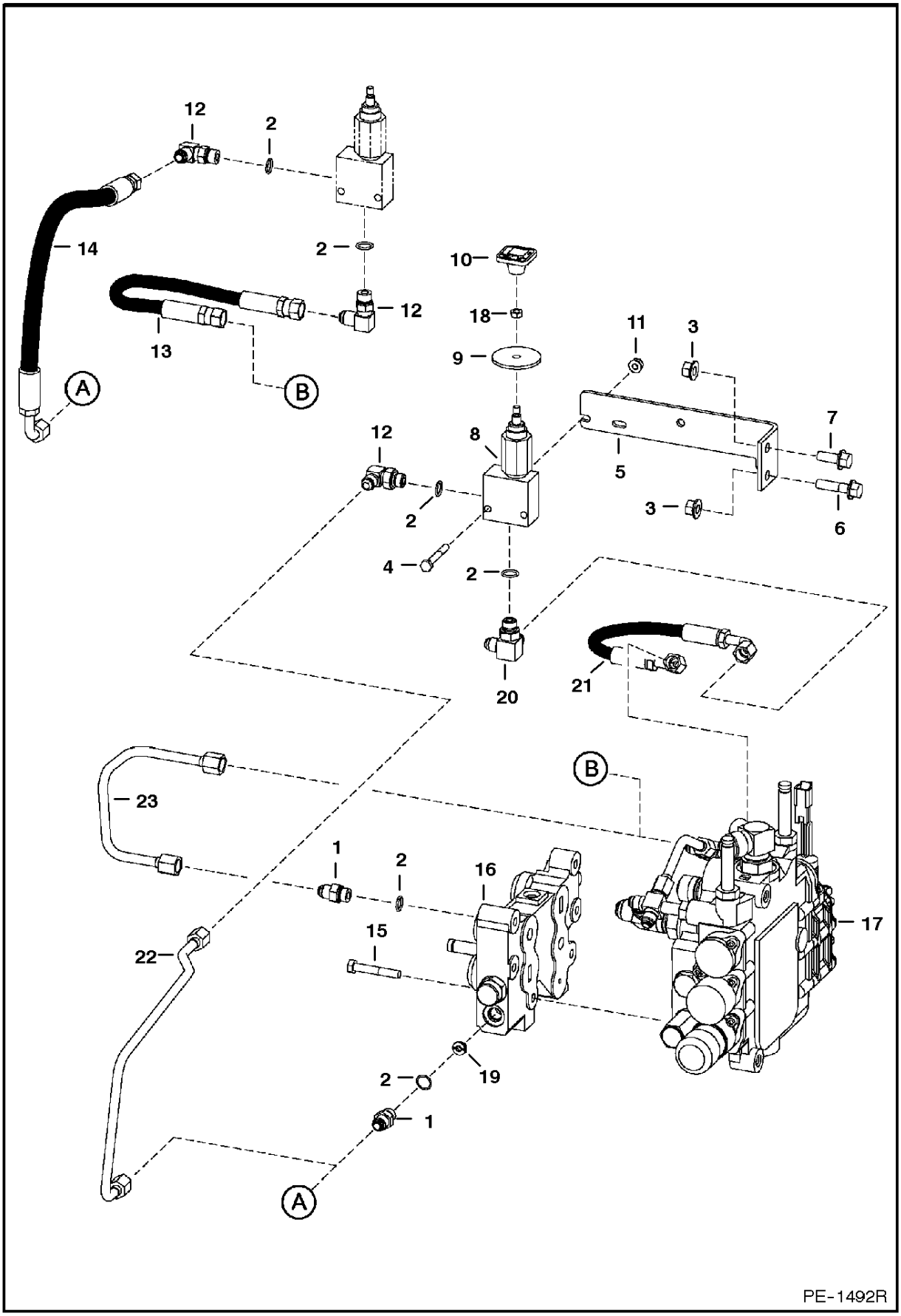

www.youfixthis.com

MANUAL LIFT RELEASE SYSTEM

Ref.N°	Part N°	Description	Remarks	Serial N°	Qty.
1	15KB-606	ADAPTER	W/Ref. MANUAL LIFT RELEASE SYSTEM(2)		2
2	79K-6	O-RING			x
3	83D-6	NUT			2
4	17C-428	BOLT			2
5	6717151	MOUNT			1
6	17C-624	BOLT			1
7	17C-612	BOLT			1
8	6667844	VALVE	manual lift release - See Page MANUAL LIFT RELEAS E VALVE(1)		1
9	6707101	WASHER	neoprene		1
10	6737524	KNOB	red square		1
11	83D-4	NUT			2
12	17KB-606	ELBOW	W/Ref. MANUAL LIFT RELEASE SYSTEM(2)		1
13	6727702	TUBE			1
13	6535451	HOSE	Use W/Rear Aux. & Power Bob-Tach combination & standard hydraulic flow		1
14	6727703	HOSE			1
15	43C-532	BOLT			6
16	6628571	VALVE	BICS Control - See Page BICS CONTROL VALVE(1)		1
17	NSS	VALVE	control - Order Complete Valve - See Page HYDRAULI C CONTROL VALVE(1)		1
18	7D-4	NUT			1
19	6668791	ORIFICE			1
20	6725182	TEE	W/Ref. MANUAL LIFT RELEASE SYSTEM(2)		1
21	6736213	HOSE			1
22	6729909	TUBE			1
23	6735837	TUBE			1

www.youfixthis.com

AUXILIARY HYDRAULICS
(W/Pressure Relief Coupler Block)

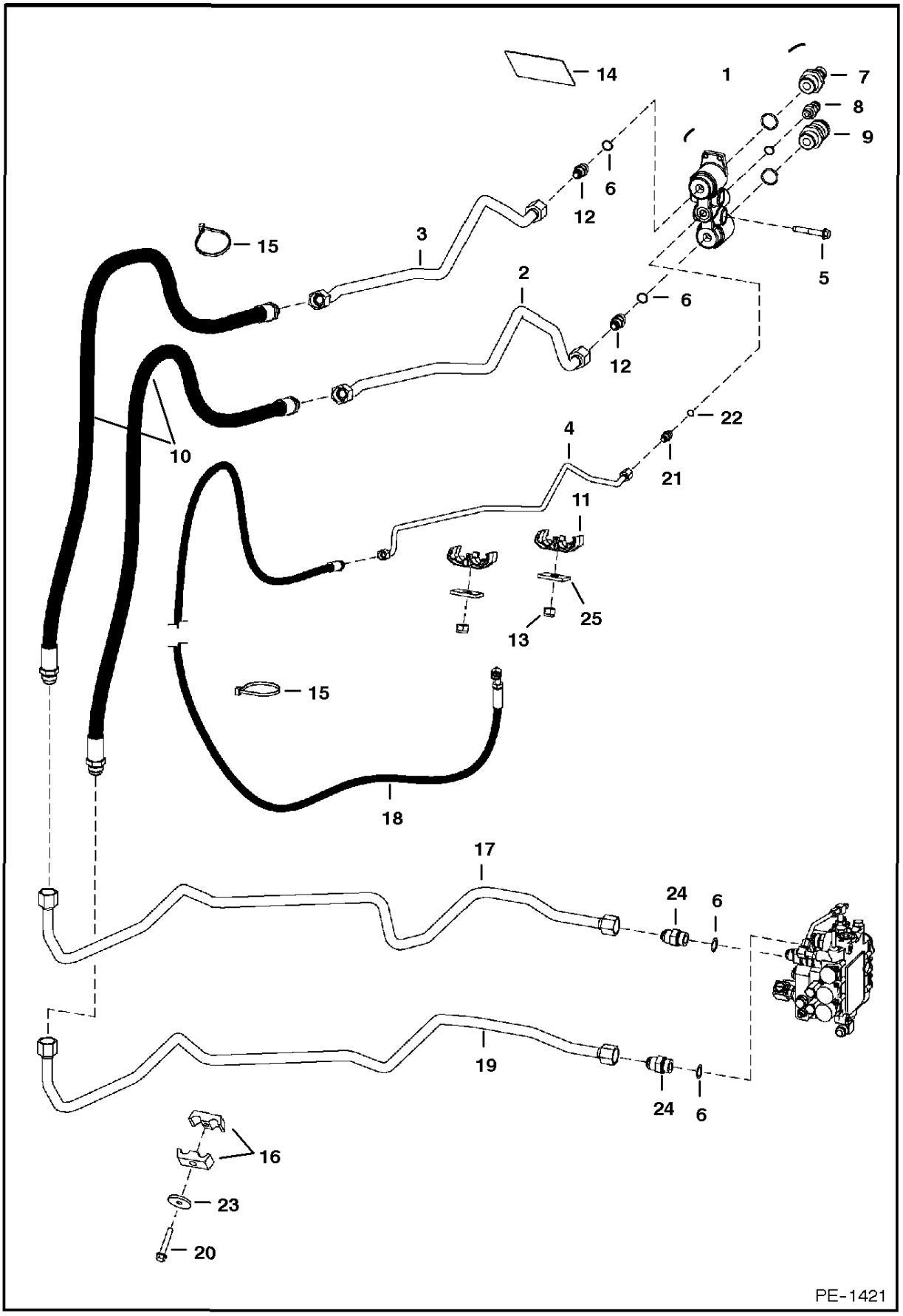

www.youfixthis.com

AUXILIARY HYDRAULICS

Ref.N°	Part N°	Description	Remarks	Serial N°	Qty.
1	6678076	BLOCK ASSY.	coupler		1
2	6731230	TUBE			1
3	6731229	TUBE			1
4	6731231	TUBE			1
5	84G-3740	BOLT			2
6	79K-12	O-RING			x
7	6679837	KIT	coupler - male - FF		1
7	6679841	SEAL KIT	blue		1
7	6680020	SEAL KIT	(2) O-rings & backup rings		1
8	6679838	KIT	coupler - male - W/spring, valve, seal & O-ring		1
8	6679840	SEAL KIT	blue		1
9	6679839	KIT	coupler - female - FF		1
9	6680020	SEAL KIT	(2) O-rings & backup rings		1
9	6680018	VALVE	coupler - female - Use W/Hyd. Breaker		1
10	6727657	HOSE	W/cover		2
11	6717951	CLAMP			2
12	6679836	KIT	adapter - W/spring & Ref. AUXILIARY HYDRAULICS(6)		2
13	59D-8	NUT			2
14	6731757	DECAL			1
15	6624289	STA-STRAP			2
16	6592506	CLAMP			2
17	6733683	TUBE			1
18	6734664	HOSE			1
19	6731228	TUBE			1
20	84G-3736	BOLT			1
21	15KB-606	ADAPTER	W/Ref. AUXILIARY HYDRAULICS(22)		1
22	79K-6	O-RING			x
23	872229	WASHER			1
24	15KB-1212	ADAPTER	W/Ref. AUXILIARY HYDRAULICS(6)		2
25	6553709	WASHER			2

www.youfixthis.com

TILT CYLINDER

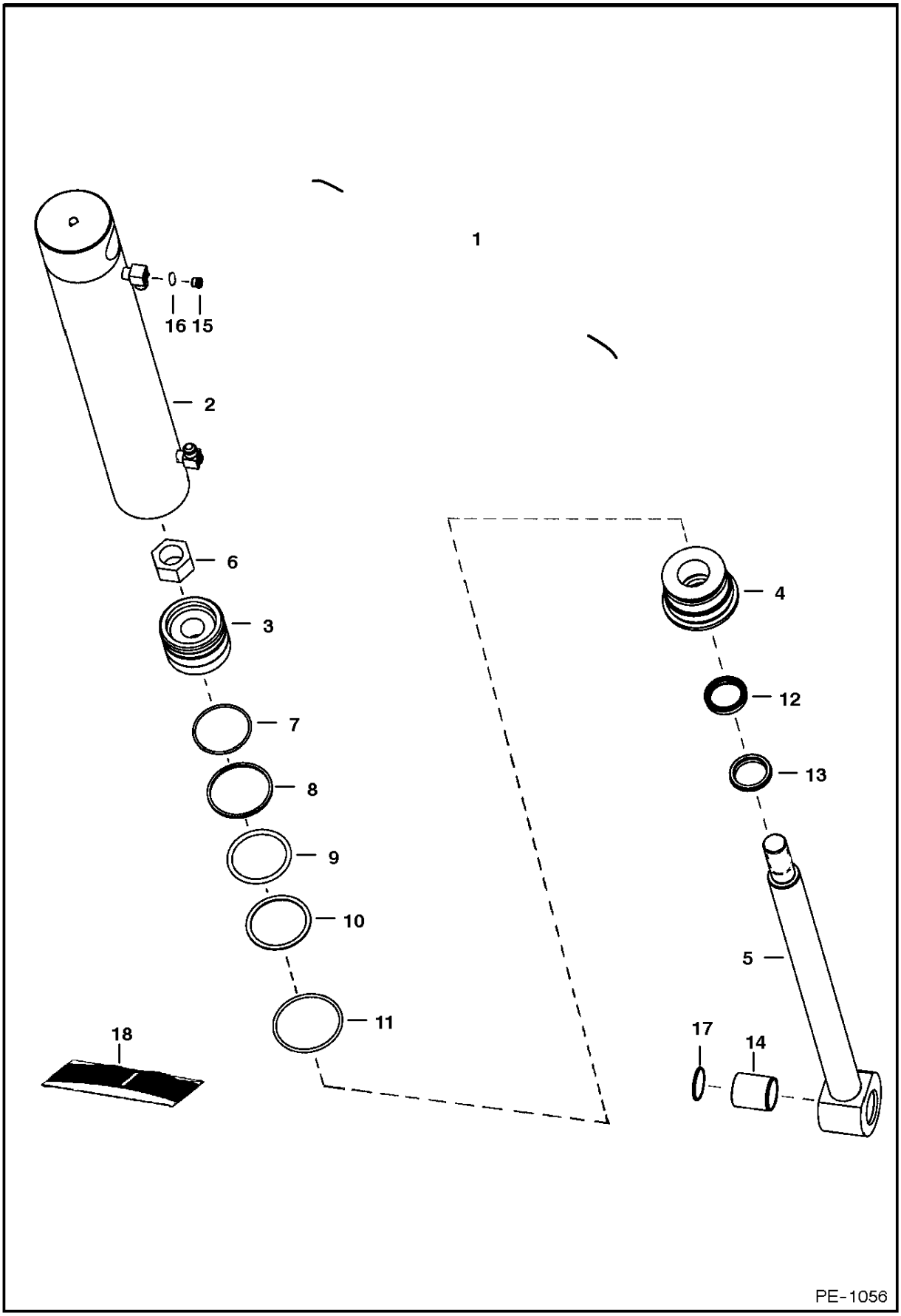

www.youfixthis.com

TILT CYLINDER

Ref.N°	Part N°	Description	Remarks	Serial N°	Qty.
1	6809802	CYLINDER	tilt - Ref. TILT CYLINDER(2)-TILT CYLINDER(16)		2
2	6809904	CASE	2.75' (69,9 mm) I.D.		1
3	6806315	PISTON			1
4	6806332	HEAD			1
5	6809903	ROD	1.375' (34,9 mm) - W/Ref. TILT CYLINDER(14)		1
6	92D-16	NUT			1
7	54K-30210	O-RING			1
8	6516229	SEAL			1
9	54K-60212	O-RING			1
10	80K-332	WASHER	back-up		1
11	54K-40224	O-RING			1
12	6667325	SEAL	rod		1
13	6666543	SEAL	wiper		1
14	6805453	BUSHING	wear		1
15	6812170	PLUG	W/Ref. TILT CYLINDER(16)		2
16	75K-3	O-RING			2
17	225855	SEAL			2
18	6806330	SEAL KIT	Ref. TILT CYLINDER(6) - TILT CYLINDER(13)		1

www.youfixthis.com

LIFT CYLINDER

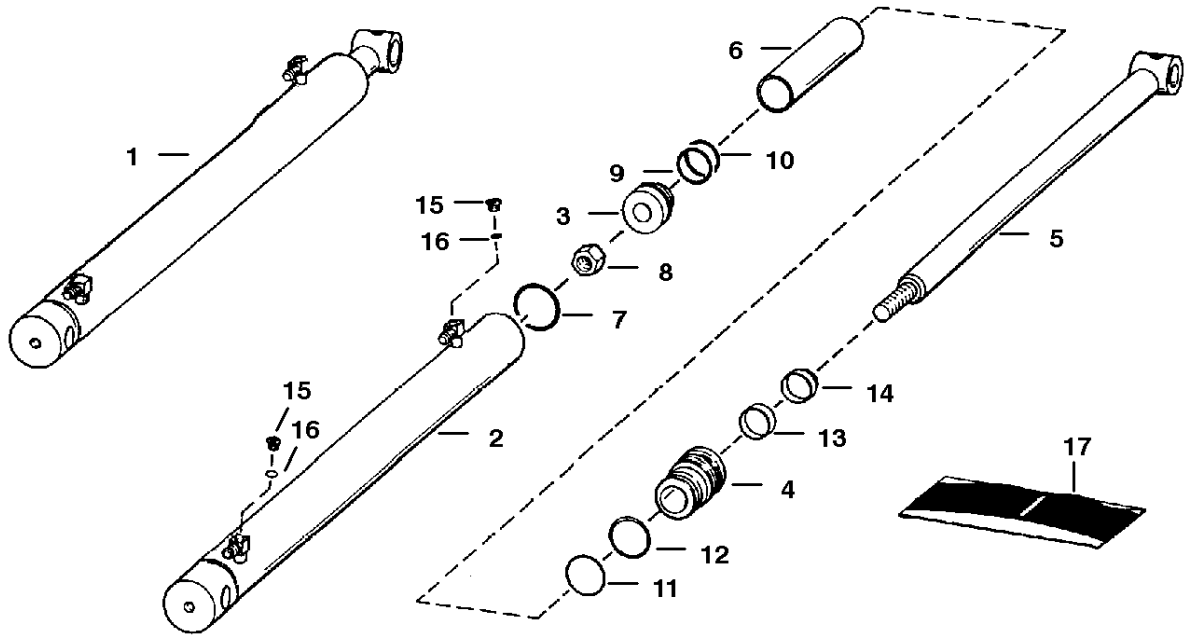

B-13593

www.youfixthis.com

LIFT CYLINDER

Ref.N°	Part N°	Description	Remarks	Serial N°	Qty.
1	6811995	CYLINDER	Ref. LIFT CYLINDER(2) - LIFT CYLINDER(17)		2
2	6805087	CASE			1
3	6678931	PISTON	W/Ref. LIFT CYLINDER(9) & LIFT CYLINDER(10) - Also has$ Non-Replaceable wear sleeves		1
4	6806124	HEAD			1
5	6810430	ROD			1
6	6539645	SPACER			1
7	58K-230	O-RING			1
8	6810539	NUT			1
9	1522534	RING			1
10	25K-30202	O-RING			1
11	54K-40208	O-RING			1
12	73K-228	WASHER	back-up		1
13	6667326	SEAL	rod		1
14	6665086	SEAL	wiper		1
15	6812170	PLUG	W/Ref. LIFT CYLINDER(16)		2
16	75K-3	O-RING			2
17	6816537	SEAL KIT	Ref. LIFT CYLINDER(7) - LIFT CYLINDER(14)		1

www.youfixthis.com

CONTROL PEDALS

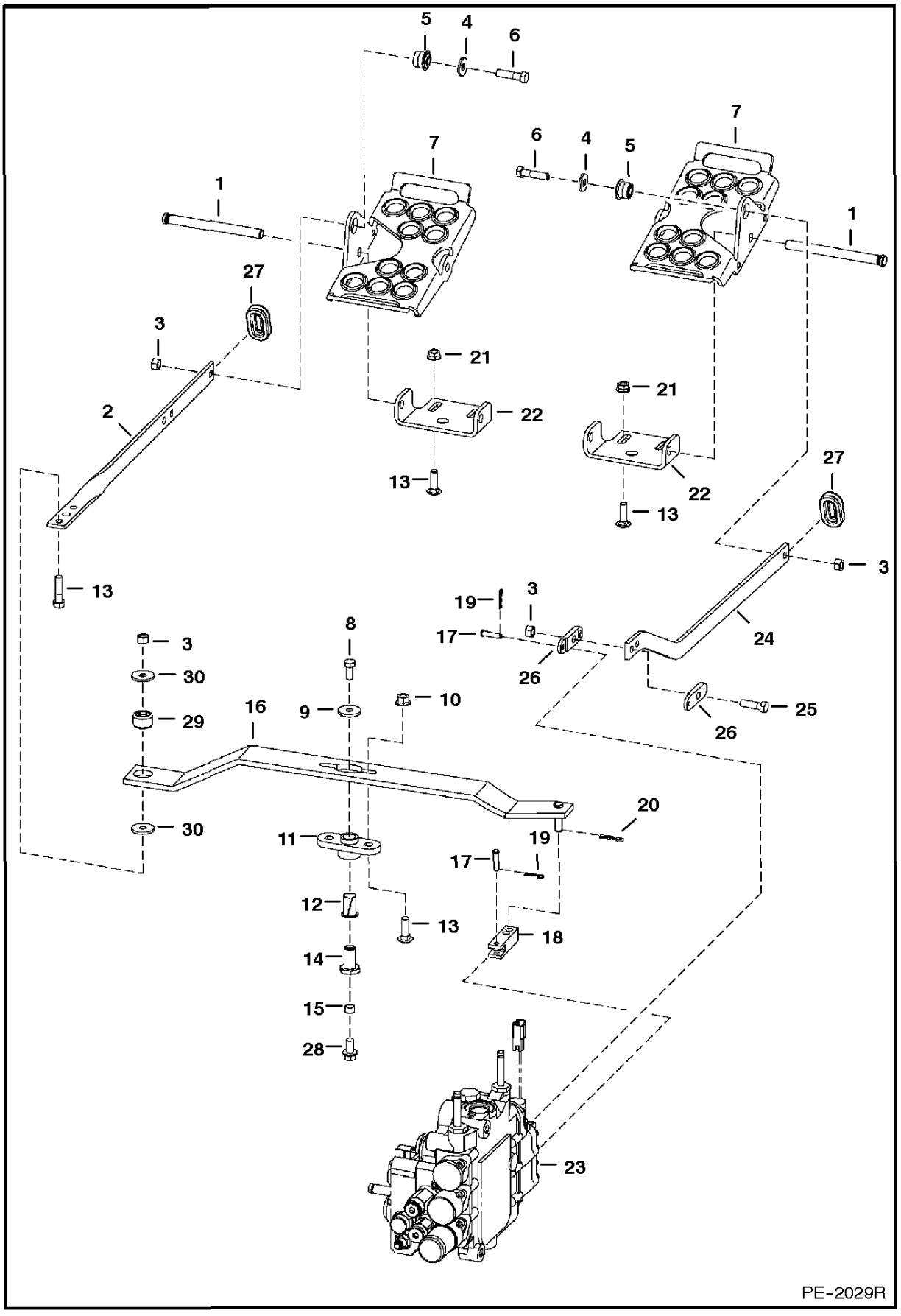

www.youfixthis.com

CONTROL PEDALS

Ref.N°	Part N°	Description	Remarks	Serial N°	Qty.
1	6564657	PIN			2
2	6576302	BAR			1
3	95D-6	NUT			5
4	6563914	WASHER			3
5	6665701	BUSHING			2
6	17C-624	BOLT			2
7	6726680	PEDAL			2
8	6665839	BOLT			1
9	619021	WASHER			1
10	83D-6	NUT			2
11	6708043	BUSHING	flange		1
12	6512026	BUSHING			1
13	37C-620	BOLT			5
14	6706104	RETAINING NUT			1
15	6544654	BUSHING	spacer		1
16	6733940	LEVER			1
17	6564654	PIN			2
18	6706105	YOKE			1
19	6513495	COTTER PIN			2
20	1306637	PIN			1
21	57D-6	NUT			4
22	6726679	BRACKET			2
23		VALVE	See Page HYDRAULIC CONTROL VALVE(1)		1
24	6717820	BAR			1
25	17C-620	BOLT			1
26	6708009	LINK	2.69'(68,3 mm) long		2
27	6577961	GROMMET			2
28	35C-612	BOLT			1
29	6685060	BUSHING	torsion		1
30	6737388	WASHER			2

www.youfixthis.com

HYDRAULIC CONTROL VALVE
(BICS Combo Valve)

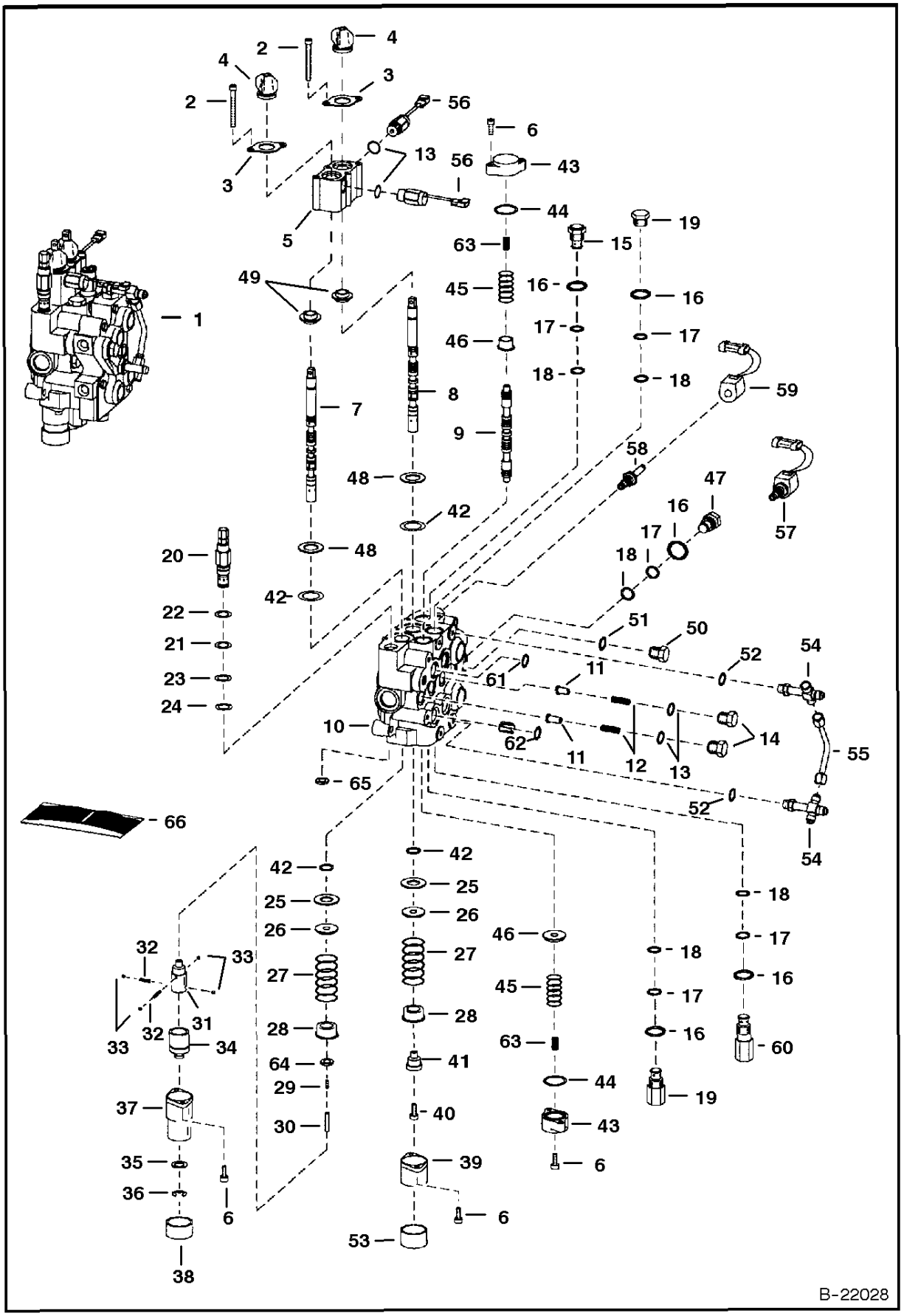

www.youfixthis.com

HYDRAULIC CONTROL VALVE

Ref.N°	Part N°	Description	Remarks	Serial N°	Qty.
1	6814925	VALVE	W/Fittings minus 6730142inD1E Tee & 15KB-1212 Adapter		1
1	6628571	VALVE	BICS control - See Page BICS CONTROL VALVE(1)		1
2	29G-444	BOLT			4
3	6589564	RETAINER			2
4	6587763	BOOT			2
5	6812031	BLOCK			1
6	29G-416	SCREW			8
7	6674808	SPOOL	lift - # 1 or Red		1
7	6674809	SPOOL	lift - # 2 or Green		1
7	6674810	SPOOL	lift - # 3 or Black		1
8	6674814	SPOOL	tilt - # 1 or Red		1
8	6674815	SPOOL	tilt - # 2 or Green		1
8	6674816	SPOOL	tilt - # 3 or Black		1
9	6588074	SPOOL	auxiliary		3
10	NSS	BODY			1
11	6592115	SEAT	load check		3
12	6592117	SPRING			3
13	79K-8	O-RING			3
14	6592116	NUT	load check		3
15	6667549	VALVE	anti-cavity check -W/Ref. HYDRAULIC CONTROL VALVE(16)-HYDRAULIC CONTROL VALVE(18)		1
16	79K-10	O-RING			2
17	80K-14	WASHER	back-up		5
18	58K-14	O-RING			5
19	6678574	VALVE	port relief - W/Ref. HYDRAULIC CONTROL VALVE(16) -HYDRAULIC CONTROL VALVE(18)		2
20	6685017	VALVE	main relief - W/Ref. HYDRAULIC CONTROL VALVE(21)-HYDRAULIC CONTROL VALVE(24) - pressure to be set in field		1
21	58K-17	O-RING			1
22	6665569	WASHER	back-up		1
23	25K-20016	O-RING			1
24	6665570	RING	glide		1
25	6595663	BUSHING			2
26	6587523	WASHER			2
27	6587580	SPRING			2
28	6592100	COLLAR			2
29	6596807	PLUG			1
30	6586918	SCREW			1
31	6587575	ADAPTER			1
32	6592107	SPRING			2
33	6592105	BALL			4
34	6531270	SLEEVE			1
35	6592098	WASHER			1
36	799119	RETAINER			1
37	6589226	BONNET	.625' flange		1
38	6660644	CAP			1
39	6587633	BONNET			1
40	30G-416	SCREW			1
41	6592109	ADAPTER			1
42	6683274	SEAL			4
43	6588781	END CAP			2
44	58K-124	O-RING			2
45	6806007	SPRING			2
46	6595951	SLEEVE			2

www.youfixthis.com

HYDRAULIC CONTROL VALVE

Ref.N°	Part N°	Description	Remarks	Serial N°	Qty.
47	6592720	PLUG	W/Ref. HYDRAULIC CONTROL VALVE(16)-HYDRAULIC CONTROL VALVE(18)		1
48	58K-127	O-RING			2
49	6805102	BUSHING			2
50	90K-8	PLUG	W/Ref. HYDRAULIC CONTROL VALVE(51) - allen socket head		1
51	75K-12	O-RING			1
52	79K-6	O-RING			x
53	6662848	CAP			1
54	6817553	CROSS	W/Ref. HYDRAULIC CONTROL VALVE(52)		2
55	6577690	TUBE			1
56	6677383	SOLENOID	spool lock - 5' (127 mm) wire		2
57	6678893	SOLENOID	W/Ref. HYDRAULIC CONTROL VALVE(58) & HYDRAULIC CONTROL VALVE(59)		2
57	6685603	SEAL KIT			x
58	6681932	STEM			2
58	79K-7	O-RING			2
59	6678891	COIL			2
60	6678552	VALVE	standard - port relief & anti-cav. W/Ref. HYDRAULIC CONTROL VALVE(16) - 3500 PSI - use in tilt cylinder base end port		1
61	55K-204	O-RING	See Page BICS CONTROL VALVE(15)		1
62	55K-212	O-RING	See Page BICS CONTROL VALVE(14)		4
63	6596332	SPRING			2
64	54K-20002	O-RING			1
65	6668791	ORIFICE			1
66	6816252	SEAL KIT	two spool - Ref. HYDRAULIC CONTROL VALVE(2), HYDRAULIC CONTROL VALVE(4), HYDRAULIC CONTROL VALVE(29), HYDRAULIC CONTROL VALVE(42		x
66	6632279	SEAL KIT	main relief - Ref. HYDRAULIC CONTROL VALVE(21)-HYDRAULIC CONTROL VALVE(24)		x
66	6809425	SEAL KIT	Ref. HYDRAULIC CONTROL VALVE(13) & HYDRAULIC CONTROL VALVE(16)-HYDRAULIC CONTROL VALVE(18)		x
66	6809448	SEAL KIT	complete - Ref. HYDRAULIC CONTROL VALVE(2), HYDRAULIC CONTROL VALVE(4), HYDRAULIC CONTROL VALVE(6), HYDRAULIC CONTROL VALVE (13),		x

www.youfixthis.com

HYDRAULIC CONTROL VALVE
(ACS)

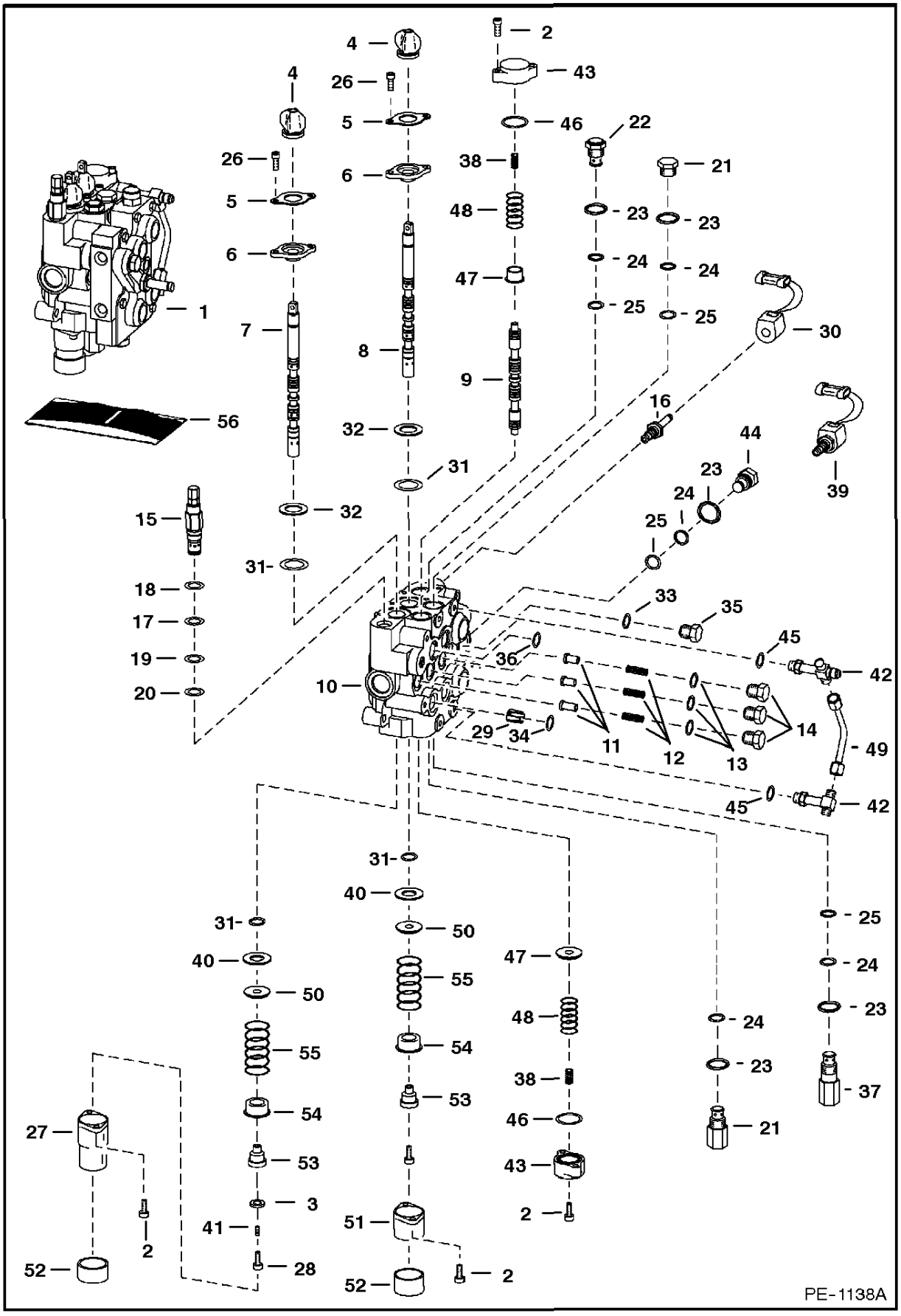

www.youfixthis.com

HYDRAULIC CONTROL VALVE

Ref.N°	Part N°	Description	Remarks	Serial N°	Qty.
1	6815003	VALVE			1
1	NSS	BODY	BICS control - See Page BICS CONTROL VALVE(1)		1
2	29G-416	SCREW			8
3	54K-20002	O-RING			1
4	6587763	BOOT			2
5	6589564	RETAINER			2
6	6589565	RETAINER	seal		2
7	6677660	SPOOL	lift - # 1 or Red		1
7	6677661	SPOOL	lift - # 2 or Green		1
8	6677662	SPOOL	tilt - # 1 or Red		1
8	6677663	SPOOL	tilt - # 2 or Green		1
9	6588074	SPOOL	auxiliary		3
10	NSS	BODY			1
11	6592115	SEAT	load check		2
12	6592117	SPRING			3
13	79K-8	O-RING			3
14	6592116	NUT	load check		3
15	6685017	VALVE	main relief - W/Ref. HYDRAULIC CONTROL VALVE(17)-HYDRAULIC CONTROL VALVE(20) - pressure to be set in field		1
16	6681932	STEM			2
16	79K-7	O-RING			2
17	58K-17	O-RING			1
18	6665569	WASHER	back-up		1
19	25K-20016	O-RING			1
20	6665570	RING	glide		1
21	6678574	VALVE	port relief - 3400-3600 PSI - W/Ref. HYDRAULIC CONTROL VALVE(23)-HYDRAULIC CONTROL VALVE(25)		2
22	6667549	VALVE	anti-cavity check -W/Ref. HYDRAULIC CONTROL VALVE(23)-HYDRAULIC CONTROL VALVE(25)		1
23	79K-10	O-RING			2
24	80K-14	WASHER	back-up		5
25	58K-14	O-RING			5
26	29G-412	SCREW			4
27	6803092	BONNET			1
28	30G-416	SCREW			2
29	6800124	RESTRICTOR	.185		1
30	6678891	COIL			2
31	6665846	SEAL			4
32	58K-127	O-RING			2
33	75K-12	O-RING	flat boss face		1
34	55K-212	O-RING			4
35	90K-8	PLUG	W/Ref. HYDRAULIC CONTROL VALVE(33) - allen socket head		1
36	55K-204	O-RING			1
37	6678552	VALVE	port relief - 3400-3600 PSI - W/Ref. HYDRAULIC CONTROL VALVE(23)-HYDRAULIC CONTROL VALVE(25)		1
38	6806007	SPRING	white		2
39	6678893	SOLENOID	W/Ref. HYDRAULIC CONTROL VALVE(16) & HYDRA ULIC CONTROL VALVE(30)		2
39	6685603	SEAL KIT			x
40	6595663	BUSHING			2
41	6801167	PLUG	plastic		1
42	6817553	CROSS	W/Ref. HYDRAULIC CONTROL VALVE(45)		2
43	6588781	END CAP			2
44	97K-6	O-RING			x

www.youfixthis.com

HYDRAULIC CONTROL VALVE

Ref.N°	Part N°	Description	Remarks	Serial N°	Qty.
45	58K-124	O-RING			2
46	6595951	SLEEVE			2
47	6596332	SPRING			2
48	6577690	TUBE			1
49	6587523	WASHER			2
50	6587633	BONNET			1
51	6662848	CAP			2
52	6592109	ADAPTER			2
53	6592100	COLLAR			2
54	6587580	SPRING			2
55	6816250	SEAL KIT	one spool - Ref. HYDRAULIC CONTROL VALVE(4), HYDRAULIC CONTROL VALVE(26) & HYDRAULIC CONTROL VALVE(31)		x
55	6632279	SEAL KIT	main relief - Ref. HYDRAULIC CONTROL VALVE(17)-HYDRAULIC CONTROL VALVE(20) - main relief		x
55	6809425	SEAL KIT	Ref. HYDRAULIC CONTROL VALVE(13) & HYDRAULIC CONTROL VALVE(23)-HYDRAULIC CONTROL VALVE(25)		x
55	6816253	SEAL KIT	complete - Ref. HYDRAULIC CONTROL VALVE(4), HYDRAULIC CONTROL VALVE(13), HYDRAULIC CONTROL VALVE(17)-HYDRAULIC CONTROL VALVE(20)		x

www.youfixthis.com

BICS CONTROL VALVE

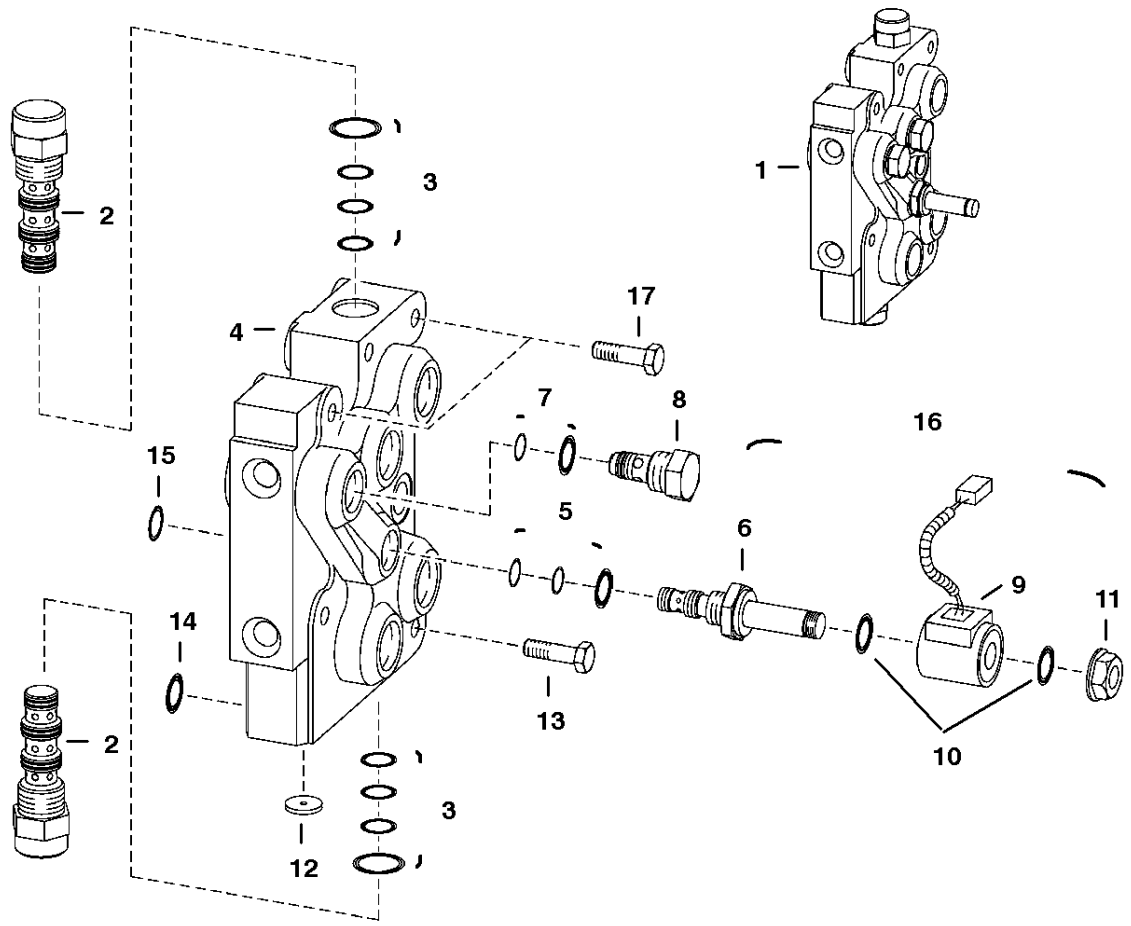

TS-1365

www.youfixthis.com

BICS CONTROL VALVE

Ref.N°	Part N°	Description	Remarks	Serial N°	Qty.
1	6628571	VALVE	Ref. BICS CONTROL VALVE(2) - BICS CONTROL VALVE(17)		1
2	6668765	VALVE	pilot operated		2
3	6669734	SEAL KIT			x
4	NSS	BODY			1
5	6669732	SEAL KIT			x
6	6667687	STEM	solenoid valve		1
7	6669733	SEAL KIT			x
8	6669057	CHECK VALVE	filter		1
9	6671025	COIL	W/Ref. BICS CONTROL VALVE(10) & BICS CONTRO L VALVE(11)		1
10	54K-20028	O-RING			2
11	6668820	NUT			1
12	6668791	ORIFICE			1
13	43C-532	BOLT			4
14	55K-212	O-RING			4
15	55K-204	O-RING			1
16	6672471	SOLENOID	W/Ref. BICS CONTROL VALVE(5), BICS CONTROL VALVE(6) & BICS CONTROL VALVE(9)		1
17	43C-524	BOLT			2

www.youfixthis.com

MANUAL LIFT RELEASE VALVE

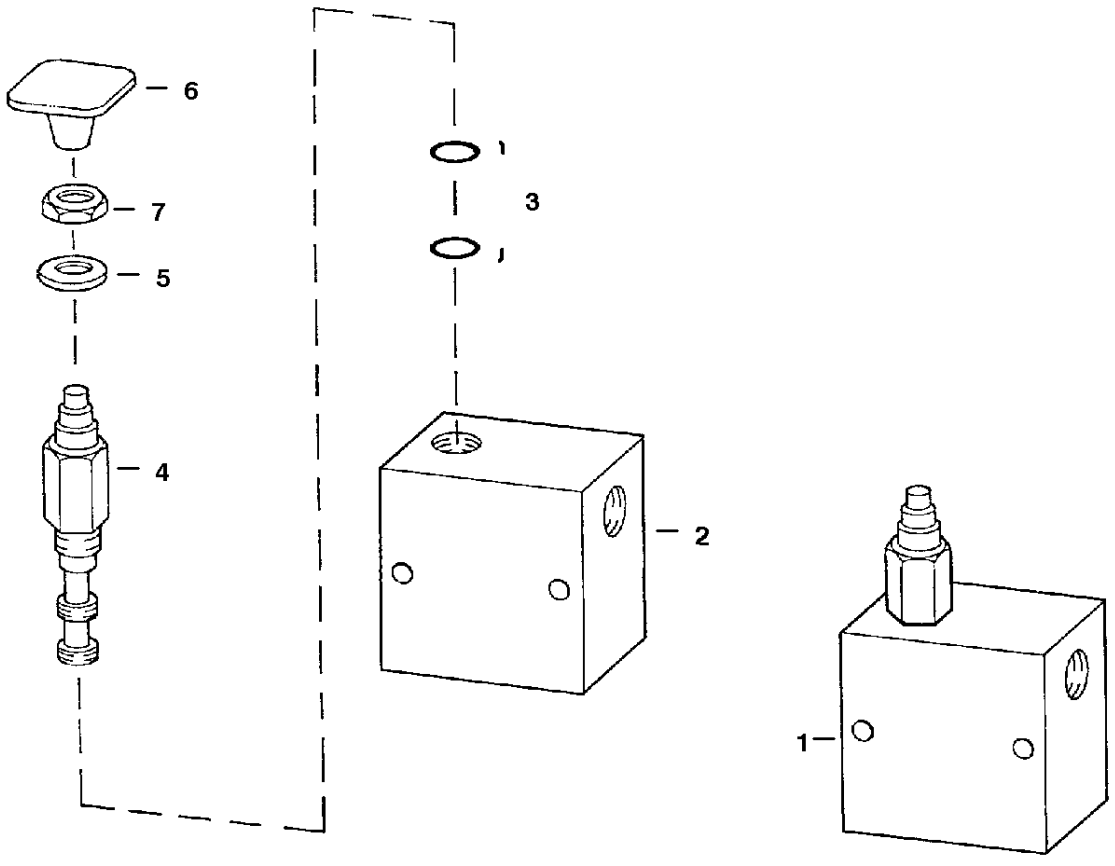

PE-1547

www.youfixthis.com

MANUAL LIFT RELEASE VALVE

Ref.N°	Part N°	Description	Remarks	Serial N°	Qty.
1	6667844	VALVE	Ref. MANUAL LIFT RELEASE VALVE(2) - MANUAL LIFT RELEASE VALVE(4)		1
2	NSS	BLOCK			1
3	6669087	SEAL KIT			1
4	6669085	VALVE			1
5	6707101	WASHER	neoprene		1
6	6737524	KNOB	red square		1
7	7D-4	NUT			1

www.youfixthis.com

HIGH FLOW HYDRAULICS

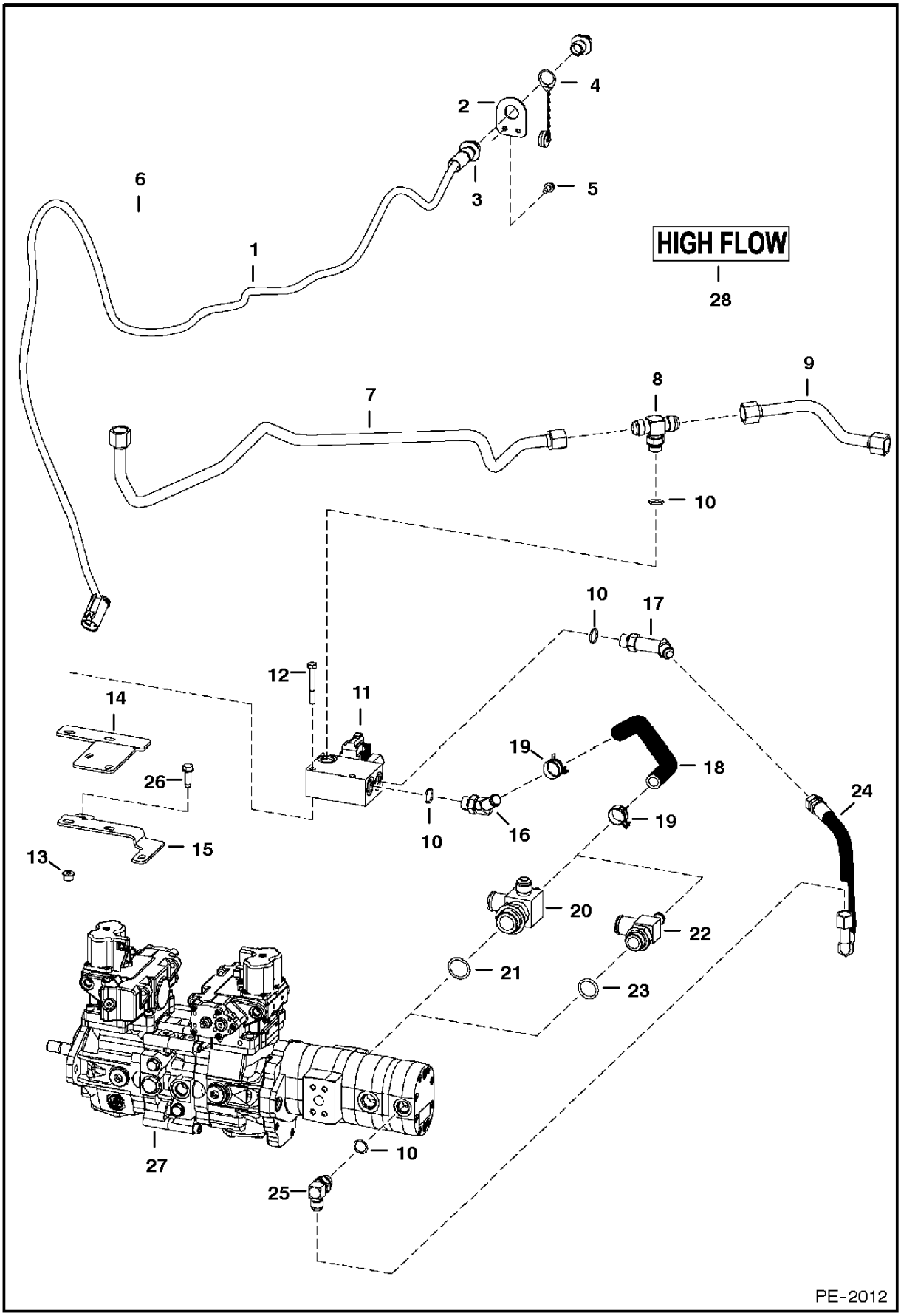

www.youfixthis.com

HIGH FLOW HYDRAULICS

Ref.N°	Part N°	Description	Remarks	Serial N°	Qty.
1	6718426	HARNESS			1
1	6667533	COVER			1
1	6674799	ADAPTER	heat shrink		1
2	6718750	MOUNT			1
3	6674802	CONNECTOR	7-pin		1
3	6669549	SOCKET	small		4
3	6677136	SOCKET	large - 12 ga.		3
4	6675026	CAP			1
5	84G-3112	BOLT			2
6	6624289	STA-STRAP			7
7	6736685	TUBE			1
8	19KB-1210	TEE	W/Ref. HIGH FLOW HYDRAULICS(10)		1
9	6736205	TUBE			1
10	79K-10	O-RING			x
11	6683819	VALVE	See Page HIGH FLOW HYDRAULICS(1)		1
12	17C-644	BOLT			2
13	83D-6	NUT			2
14	6736206	BRACKET	Models T180 & T190		1
15	6736207	BRACKET	ModelsA205, S150, S160, S175 & S185		1
16	6736586	ELBOW	W/Ref. HIGH FLOW HYDRAULICS(10)		1
17	6718080	ELBOW	W/Ref. HIGH FLOW HYDRAULICS(10)		1
18	6736210	HOSE			1
19	5HM-27	CLAMP	constant tension		2
20	6714904	TEE	W/Ref. HIGH FLOW HYDRAULICS(21) - W/Manual Controls - Models S160, S175, S185, T180, & T190		1
21	79K-16	O-RING			x
22	6733447	TEE	W/Ref. HIGH FLOW HYDRAULICS(21) - W/Joystick Controls - Models A205, S150, S160, S175, S185, T180 & T190		1
23	79K-20	O-RING			2
24	6736647	HOSE			1
25	17KB-1010	ELBOW	W/Ref. HIGH FLOW HYDRAULICS(10)		1
26	84G-3720	BOLT			1
27	6685033	PUMP	#W/Manual Controls - Models S160, S175, S185, T180, & T190 - See Page HYDROSTATIC PUMP(1)		1
27	6679917	PUMP	#W/Joystick Controls -Models A205, S150, S160, S175, S185, T180 & T190 - See Page HYDROSTATIC PUMP(1)		1
28	6727913	DECAL			1

www.youfixthis.com

HIGH FLOW HYDRAULICS

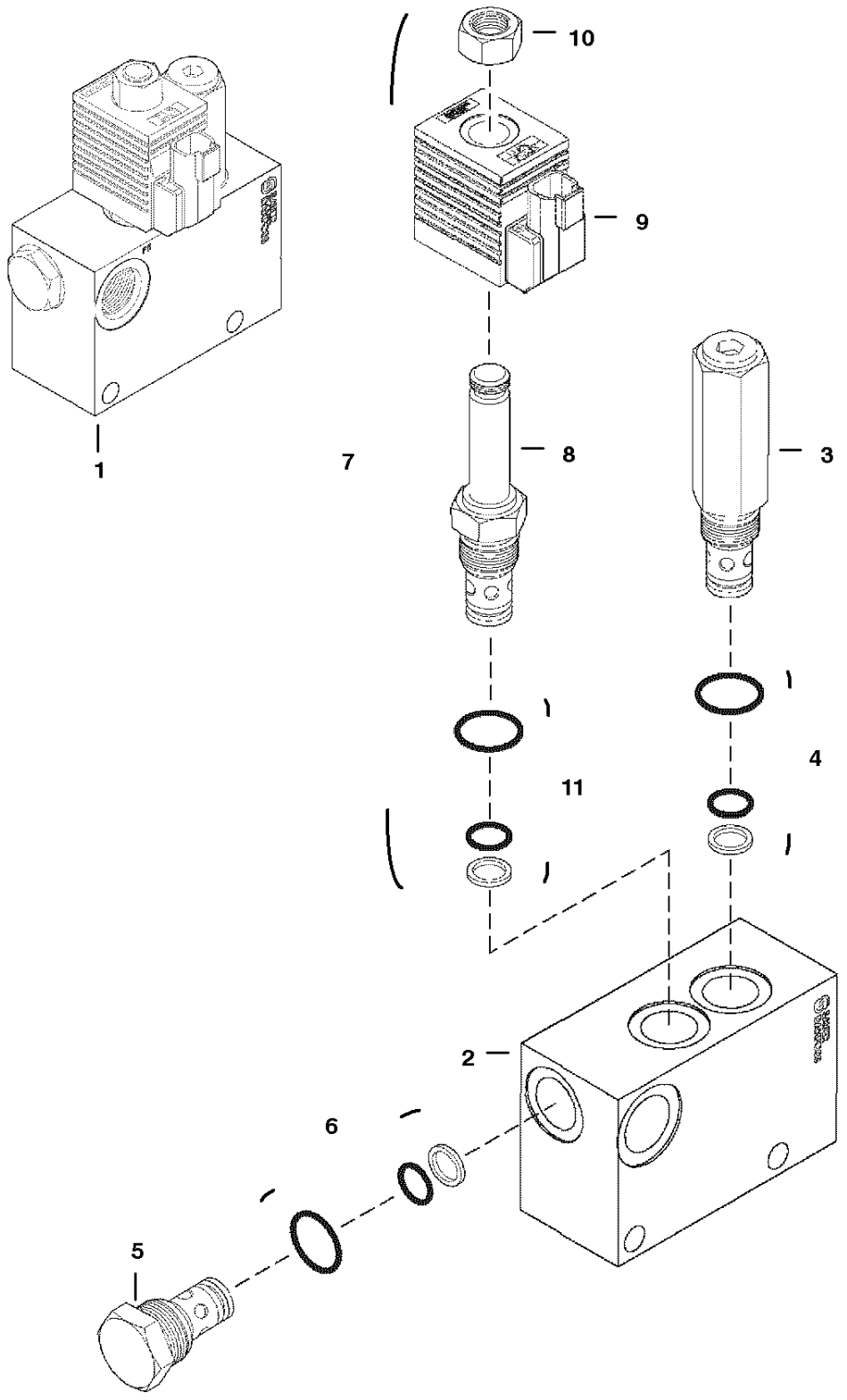

www.youfixthis.com

HIGH FLOW HYDRAULICS

Ref.N°	Part N°	Description	Remarks	Serial N°	Qty.
1	6683819	VALVE			1
2	NSS	BLOCK			1
3	6685185	RELIEF VALVE	W/Ref. HIGH FLOW HYDRAULICS(4)		1
4	6685184	SEAL KIT			1
5	6685186	CHECK VALVE	W/Ref. HIGH FLOW HYDRAULICS(6)		2
6	6672515	SEAL KIT			1
7	6685183	SOLENOID	W/Ref. HIGH FLOW HYDRAULICS(8) - HIGH FLOW HYDRAULICS(11)		1
8	NSS	STEM			1
9	6684058	COIL	W/Connector		2
10	6681492	NUT			1
11	6685184	SEAL KIT			1

www.youfixthis.com

HIGH FLOW HYDRAULICS
(Double Gear Pump - Cast Iron)

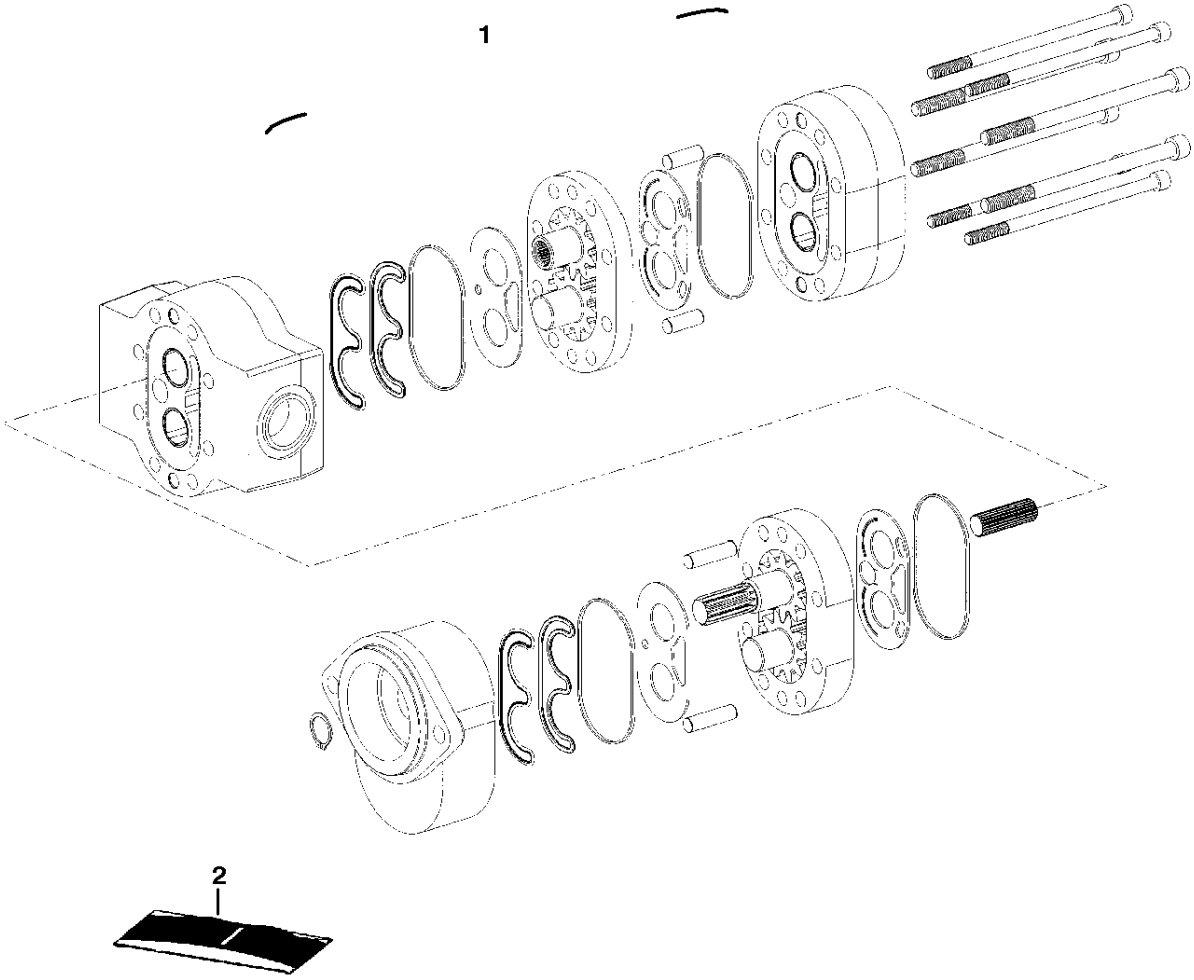

B-16051

www.youfixthis.com

HIGH FLOW HYDRAULICS

Ref.N°	Part N°	Description	Remarks	Serial N°	Qty.
1	6681594	PUMP	Model 163D-1305		1
2	6678733	SEAL KIT			1

www.youfixthis.com

HYDROSTATIC CIRCUITRY

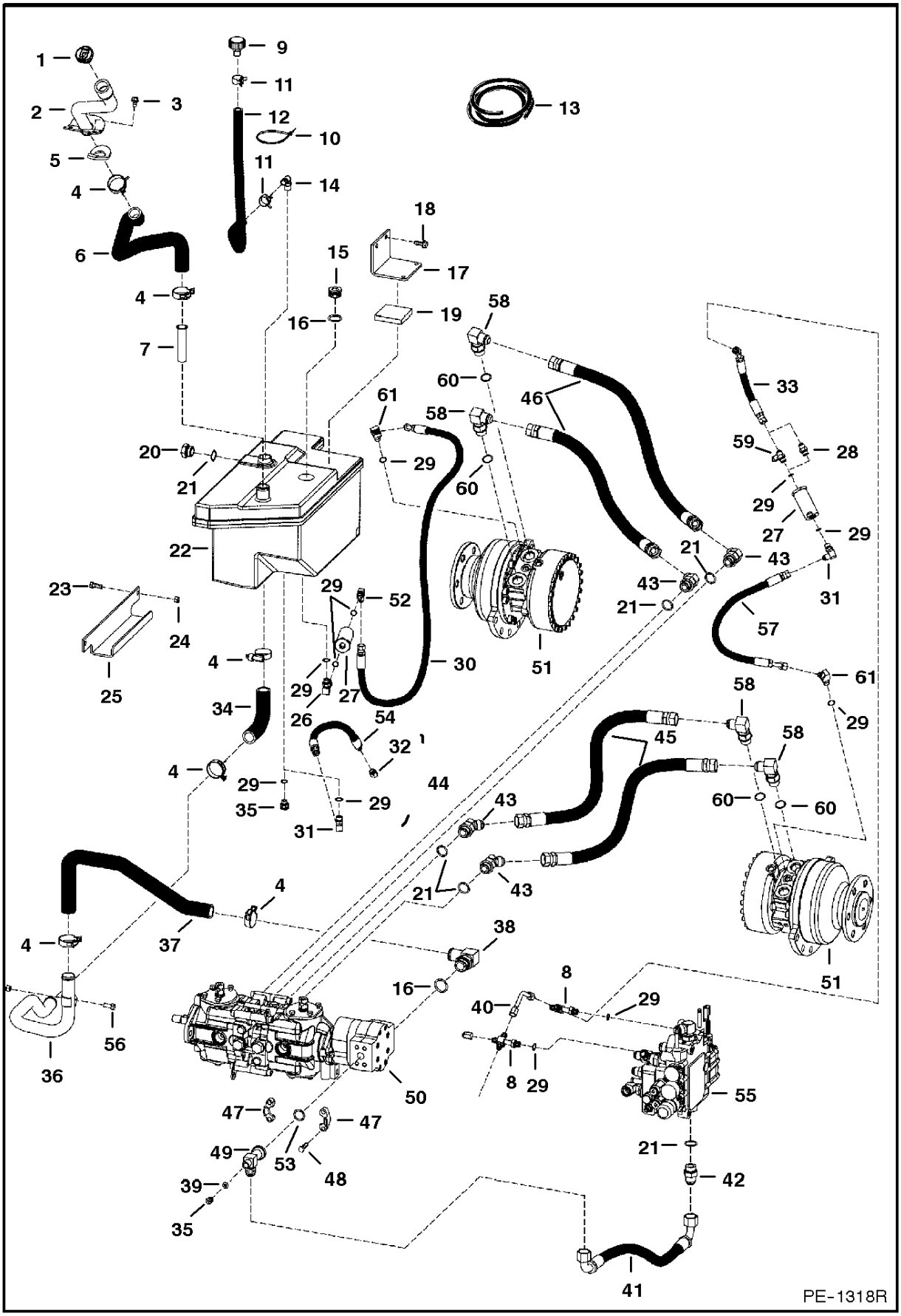

www.youfixthis.com

HYDROSTATIC CIRCUITRY

Ref.N°	Part N°	Description	Remarks	Serial N°	Qty.
1	6717827	CAP			1
2	6717830	TUBE			1
3	84G-3710	BOLT			2
4	5HM-42	CLAMP			6
5	6718772	GASKET			1
6	6718020	HOSE			1
7	6729982	SCREEN			1
8	6805241	CROSS	W/Ref. HYDROSTATIC CIRCUITRY(29) -See Page HYDRAULIC CONTROL VALVE(1)		2
9	6684923	CAP	breather		1
10	6610510	NYLON TIE			2
11	5HM-24	CLAMP			2
12	NAP	HOSE	21.5'(546,1 mm) long - Order Ref. HYDROSTATIC CIRCUITRY(13)		1
13	6578172	HOSE	bulk - Sold Per Foot		x
14	6727637	ELBOW	barbed		1
15	47K-10	PLUG	W/Ref. HYDROSTATIC CIRCUITRY(16)		1
16	79K-16	O-RING			1
17	6726254	BRACKET			1
18	84G-3716	BOLT			2
19	6726255	PAD	bumper		1
20	6665915	SIGHT GAUGE	W/Ref. HYDROSTATIC CIRCUITRY(21)		1
20	6734563	WASHER KIT			1
20	6734561	WASHER			1
20	25K-30118	O-RING			1
21	79K-12	O-RING			x
22	6728673	TANK			1
23	17C-616	BOLT			2
24	61D-6	NUT			2
25	6726162	BRACKET			1
26	6715190	ELBOW	W/Ref. HYDROSTATIC CIRCUITRY(29)		1
27	6661022	FILTER			2
28	15KB-606	ADAPTER	W/Ref. HYDROSTATIC CIRCUITRY(29)		1
29	79K-6	O-RING			x
30	6726271	HOSE			1
31	17KB-606	ELBOW	W/Ref. HYDROSTATIC CIRCUITRY(29)		2
32	36K-5	CAP			2
33	6735839	HOSE			1
34	6717905	HOSE			1
35	24K-5	PLUG	W/Ref. HYDROSTATIC CIRCUITRY(29)		2
36	6726159	TUBE			1
37	6729052	HOSE			1
38	6715191	ELBOW	W/Ref. HYDROSTATIC CIRCUITRY(16)		1
39	95K-6	O-RING			1
40	6577690	TUBE	See Page HYDRAULIC CONTROL VALVE(1)		1
41	6726251	HOSE	30'(762 mm) long		1
41	6727656	HOSE	34.5'(876,3 mm) long - W/Power Bob-Tach Option -See Page POWER (1)		1
42	15KB-1212	ADAPTER	W/Ref. HYDROSTATIC CIRCUITRY(21)		1
43	6737453	ELBOW	W/Ref. HYDROSTATIC CIRCUITRY(21)		8
43	97K-12	O-RING	flared end		1
44	6730192	KIT	tank drain - Ref. HYDROSTATIC CIRCUITRY(31), HYDROSTATIC CIRCUITRY(32) & HYDROSTATIC CIRCUITRY(54)		1
45	6676408	HOSE			2
46	6676407	HOSE			2

www.youfixthis.com

HYDROSTATIC CIRCUITRY

Ref.N°	Part N°	Description	Remarks	Serial N°	Qty.
47	19J-12	CLAMP			2
48	17C-620	BOLT			4
49	6734048	TEE	split flange		1
50	6677647	PUMP	See Page HYDROSTATIC PUMP(1)		1
51		MOTOR	See Page HYDROSTATIC MOTOR(1)		1
52	17KB-606	ELBOW	W/Ref. HYDROSTATIC CIRCUITRY(29)		1
53	58K-214	O-RING			1
54	6530859	HOSE			1
55		VALVE	See Page HYDRAULIC CONTROL VALVE(1)		1
56	17C-614	BOLT			2
57	6726276	HOSE			1
58	6726160	ELBOW	W/Ref. HYDROSTATIC CIRCUITRY(60)		4
59	21KB-606	TEE	W/Ref. HYDROSTATIC CIRCUITRY(29)		1
60	75K-12	O-RING			4
61	18KB-606	ELBOW	W/Ref. HYDROSTATIC CIRCUITRY(29)		2

www.youfixthis.com

HYDROSTATIC CIRCUITRY

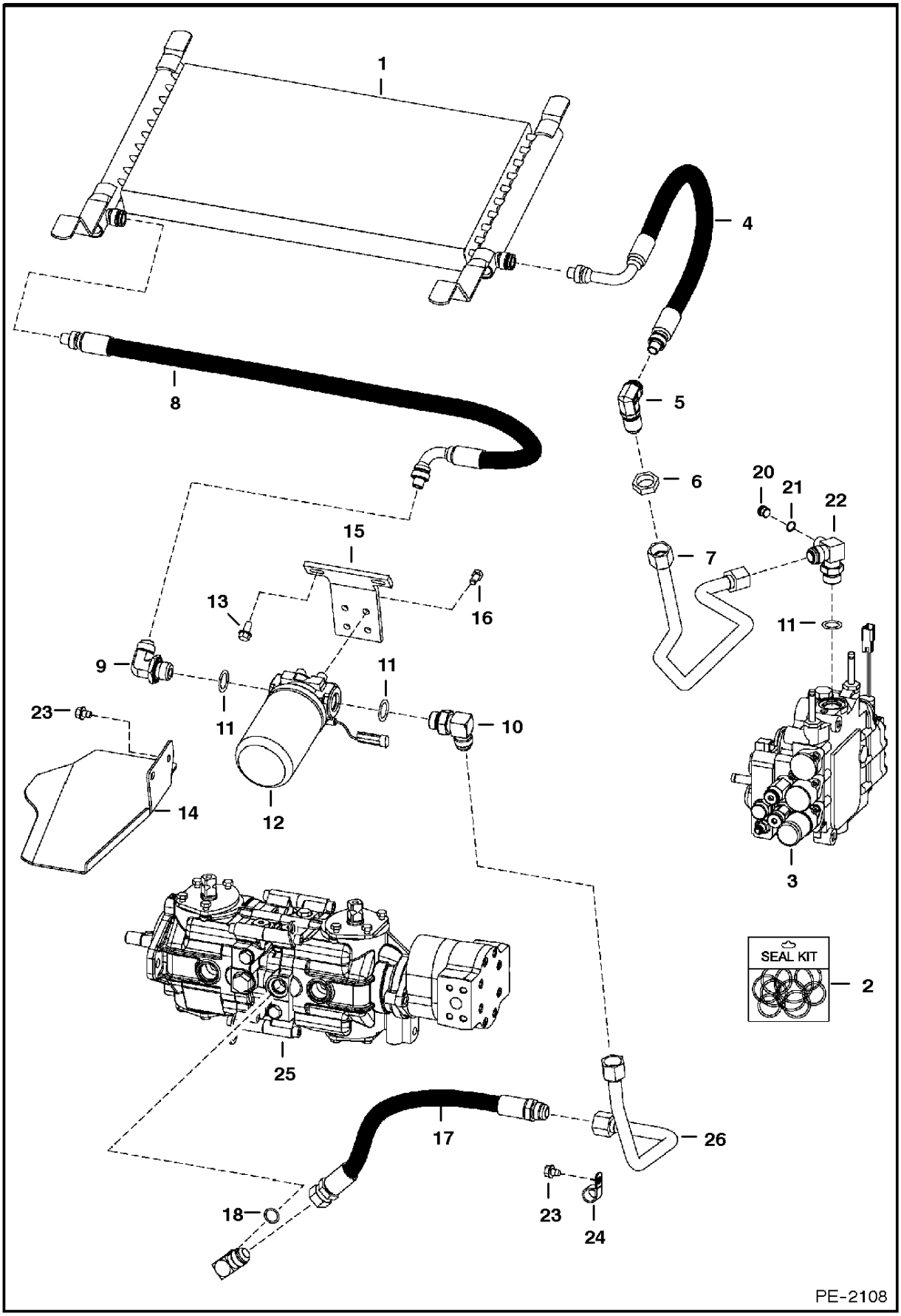

www.youfixthis.com

HYDROSTATIC CIRCUITRY

Ref.N°	Part N°	Description	Remarks	Serial N°	Qty.
1	6734743	OIL COOLER			1
2	6674798	REPAIR KIT	For Ref. HYDROSTATIC CIRCUITRY(1), HYDROSTAT IC CIRCUITRY(5) or HYDROSTATIC CIRCUITRY(9) - contains internal retaining ring (1),		2
3		VALVE	See Page HYDRAULIC CONTROL VALVE(1)		1
4	6673828	HOSE			1
5	6670831	ELBOW			1
6	86F-8	NUT			1
7	6727640	TUBE			1
8	6681944	HOSE			1
9	6681945	ELBOW			1
10	17KB-1010	ELBOW	W/Ref. HYDROSTATIC CIRCUITRY(11)		1
11	79K-12	O-RING			x
12		FILTER ASSY	See Page HYDROSTATIC OIL FILTER(1)		1
12	6661248	ELEMENT			1
13	84G-3712	BOLT			2
14	6729083	MOUNT			1
15	6729082	MOUNT			1
16	17C-610	BOLT			4
17	6727643	HOSE			1
18	6714901	ELBOW	W/Ref. HYDROSTATIC CIRCUITRY(19)		1
19	79K-10	O-RING			x
20	90K-5	PLUG	$W/Ref. HYDROSTATIC CIRCUITRY(21) - allen socket head		1
21	75K-6	O-RING			1
22	6715653	TEE	W/Ref. HYDROSTATIC CIRCUITRY(11)		1
23	84G-3708	BOLT			3
24	30H-44	CLAMP			1
25		PUMP	See Page HYDROSTATIC PUMP(1)		1
26	6727647	TUBE			1

www.youfixthis.com

HYDROSTATIC CIRCUITRY
(Brake Valve)

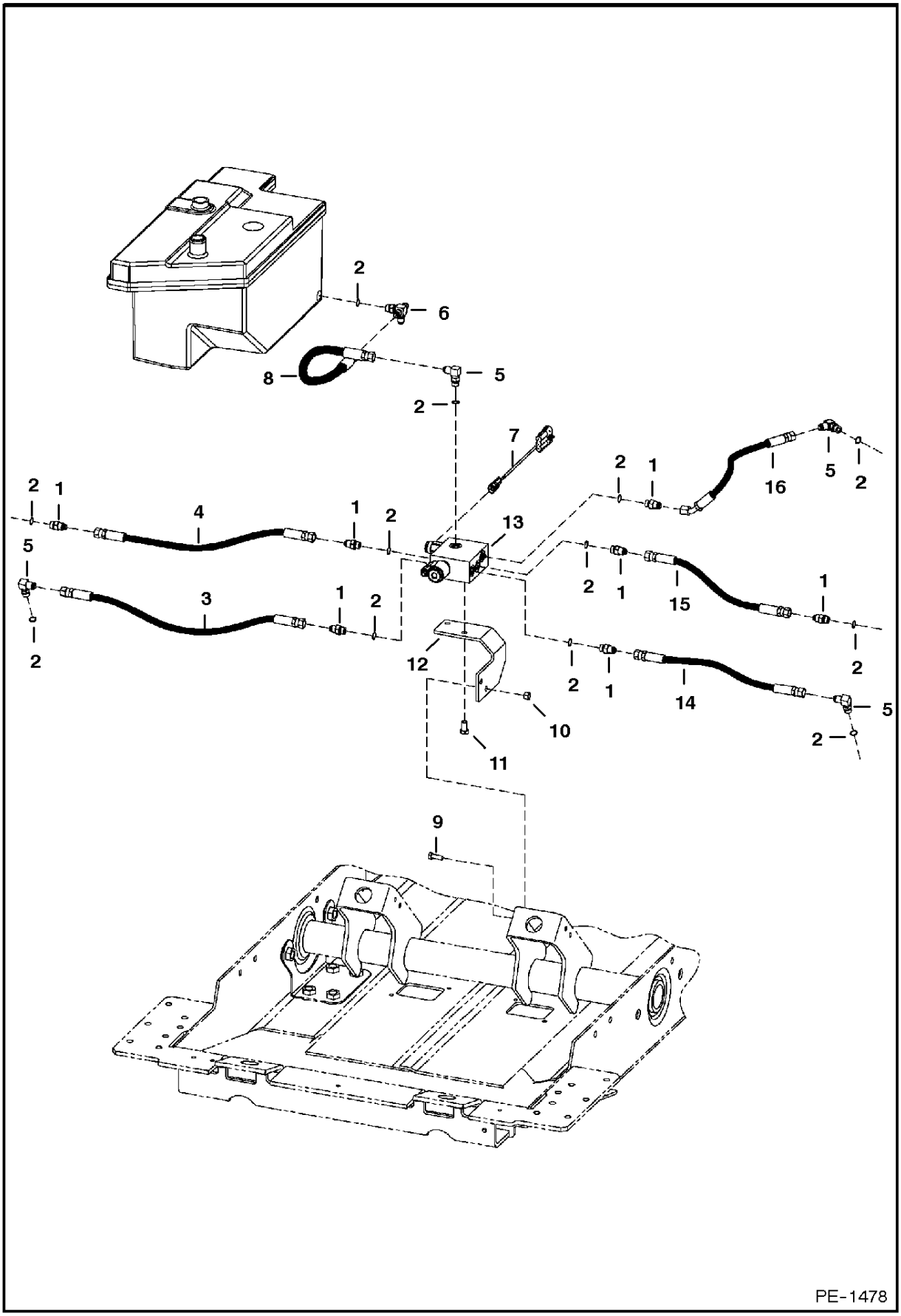

www.youfixthis.com

HYDROSTATIC CIRCUITRY

Ref.N°	Part N°	Description	Remarks	Serial N°	Qty.
1	15KB-606	ADAPTER	W/Ref. HYDROSTATIC CIRCUITRY(2)		7
2	99K-6	O-RING	tapered boss face		x
2	79K-6	O-RING	flat boss face		x
3	6732115	HOSE	21.50'(546,1 mm) long		1
4	6732116	HOSE	19'(482,6 mm) long		1
5	17KB-606	ELBOW	W/Ref. HYDROSTATIC CIRCUITRY(2)		4
6	6725497	CROSS	W/Ref. HYDROSTATIC CIRCUITRY(2)		1
6	17KB-606	ELBOW	W/Ref. HYDROSTATIC CIRCUITRY(2)		1
6	6725182	TEE	W/Ref. HYDROSTATIC CIRCUITRY(2)		1
7	6732781	HARNESS	brake valve		1
8	6701039	HOSE			1
9	17C-616	BOLT			2
10	61D-6	NUT			2
11	17C-612	BOLT			2
12	6732114	BRACKET			1
13	6678239	VALVE	brake		1
14	6679773	SOLENOID			1
14	6679770	STEM			1
14	6675731	COIL			1
14	6668820	NUT			1
14	6672756	SEAL KIT			1
14	6679771	CHECK VALVE			1
14	6679772	RELIEF VALVE			1
15	6732117	HOSE	17.50'(444,5 mm) long		1
16	6732118	HOSE	15.50'(393,7 mm) long		1
17	6709166	HOSE			1

www.youfixthis.com

HAND CONTROLS

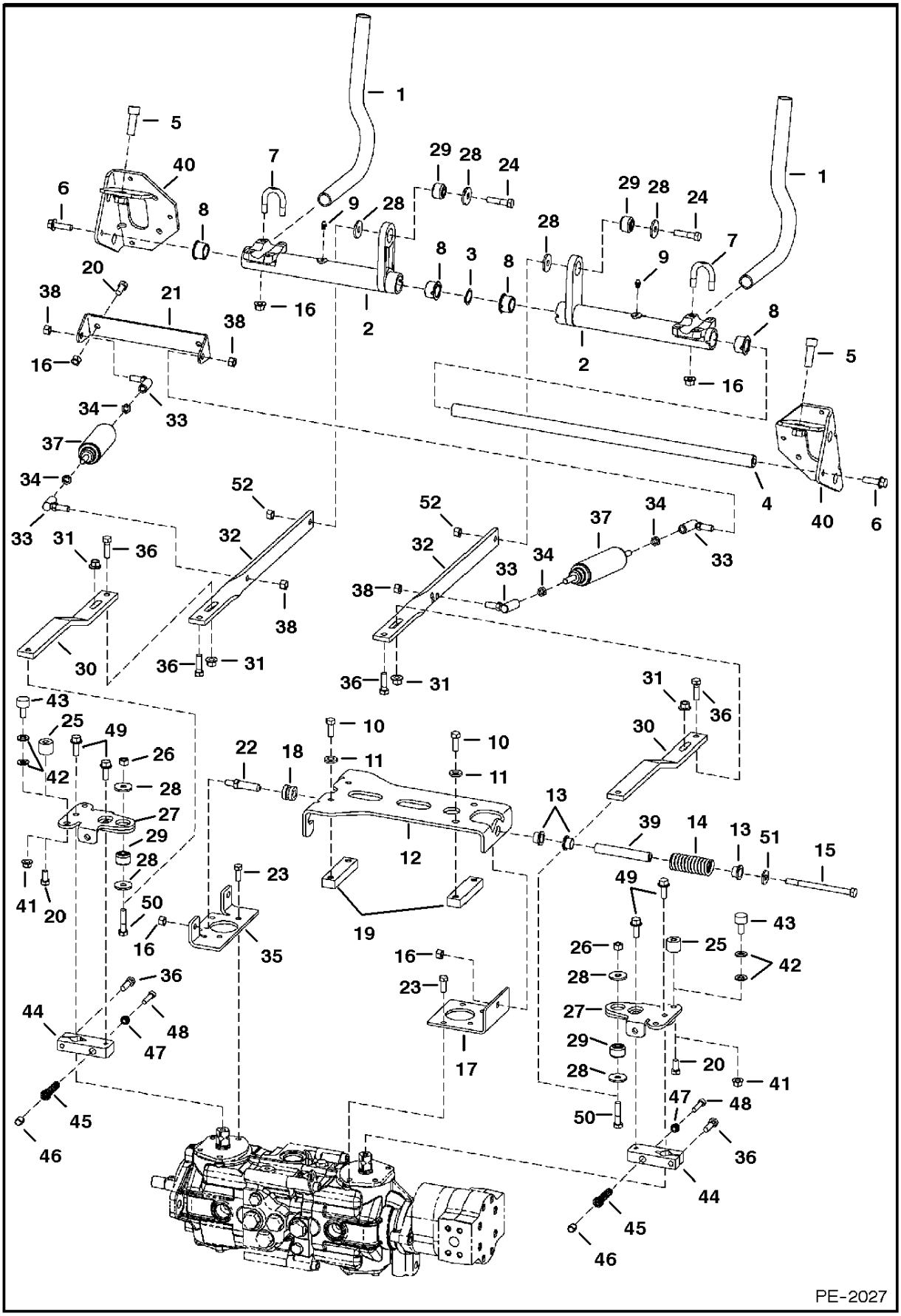

www.youfixthis.com

HAND CONTROLS

Ref.N°	Part N°	Description	Remarks	Serial N°	Qty.
1	6702543	LEVER			2
2	7101047	BELLCRANK	W/notch for bushing tab		2
3	6599741	WASHER	wave		1
4	6716545	ROD			1
5	73G-824	BOLT			2
6	45C-620	BOLT			2
7	6732997	U-BOLT			4
8	6703879	BUSHING	W/tab		4
8	6673710	BEARING	needle - AHC		2
9	10H-35	GREASE ZERK			2
10	17C-616	BOLT			4
11	6557831	WASHER			4
12	6734298	MOUNT			1
13	6715163	BUSHING			3
14	6701535	SPRING			1
15	17C-680	BOLT			1
16	91D-6	NUT			18
17	6734742	BRACKET			1
18	6706098	GUIDE			2
19	6702716	BLOCK			2
20	17C-612	BOLT			2
21	6706106	MOUNT			1
22	6577058	PIN			2
23	1CM-820	BOLT			8
24	17C-628	BOLT			4
25	6711643	CAM			4
26	63D-6	NUT			2
27	6734429	LEVER			2
28	6737388	WASHER			8
29	6685060	BUSHING			4
30	6735253	LINK			2
31	83D-6	NUT			4
32	7100265	LINK			2
33	6599744	BALL JOINT			4
34	8D-6	NUT			4
35	6736764	BRACKET			1
36	17C-620	BOLT			6
37	6649551	DAMPENER			2
38	62D-6	NUT			2
39	6715164	SLEEVE			1
40	6733022	BRACKET	R.H.		1
40	6733024	BRACKET	L.H.		1
41	98D-6	NUT	AHC - See Page CONTROLS ELECTRICAL(1)		4
42	25E-17	WASHER	AHC - See Page CONTROLS ELECTRICAL(1)		8
43	6673789	BEARING	roller - AHC - See Page CONTROLS ELECTRICAL(1)		4
44	6734299	BRACKET	centering		2
45	6734433	SPRING			2
46	4JM-1214	ROLL PIN			2
47	6737378	INSERT	threaded		2
48	74G-520	BOLT			2
49	49C-616	BOLT			4
50	49C-628	BOLT			2
51	6563914	WASHER			1
52	53D-6	NUT			2

www.youfixthis.com

HYDROSTATIC MOTOR

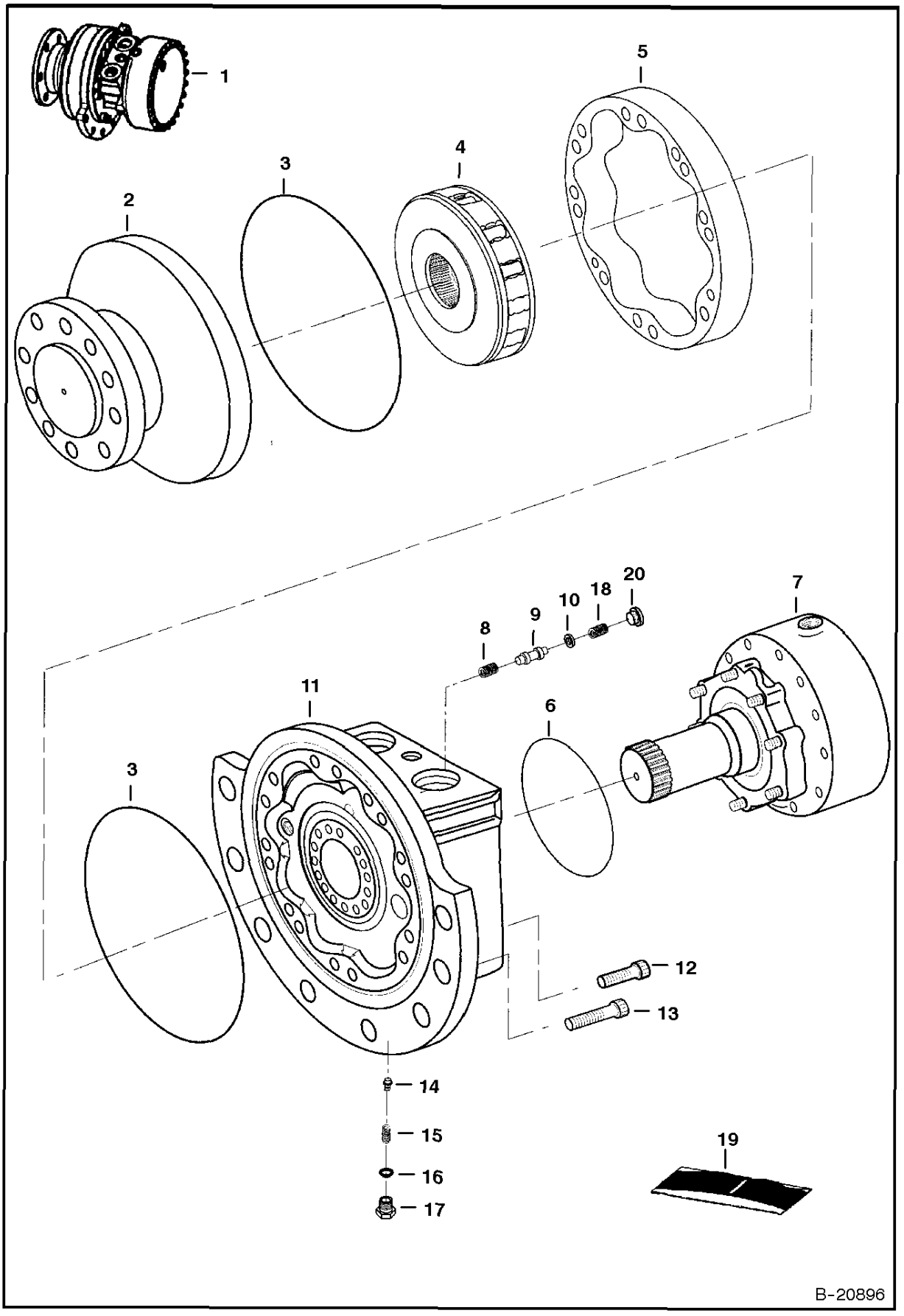

www.youfixthis.com

HYDROSTATIC MOTOR

Ref.N°	Part N°	Description	Remarks	Serial N°	Qty.
1	6681493	MOTOR			1
2	6681980	CASE	front - See Page $HYDROSTATIC MOTOR(1)		1
2	6682546	OIL	quart		1
3	6675864	QUAD RING			2
4	6681981	ROTOR			1
5	6678132	CAM			1
6	6675863	QUAD RING			1
7	6678141	BRAKE	See Page HYDROSTATIC MOTOR(1)		1
8	6678124	SPRING			1
9	6675866	SPOOL			1
10	6678137	WASHER			1
11	6678140	CASE	rear - See Page HYDROSTATIC MOTOR(1)		1
12	6675020	BOLT	M12 x 75 mm		2
13	6678959	BOLT	M12 x 80 mm		10
14	6678123	POPPET			1
15	6674344	SPRING			1
16	6675869	O-RING			1
17	6674345	PLUG			1
18	6678125	SPRING			1
19	6678142	SEAL KIT	Ref. HYDROSTATIC MOTOR(3), HYDROSTATIC MOTOR(6) & HYDROSTATIC MOTOR(16) - Also includ es Ref. HYDROSTATIC MOTOR(15), HYDROSTATIC		1
20	6678149	PLUG			1
20	6675093	O-RING			1

www.youfixthis.com

HYDROSTATIC MOTOR
(Brake Assembly)

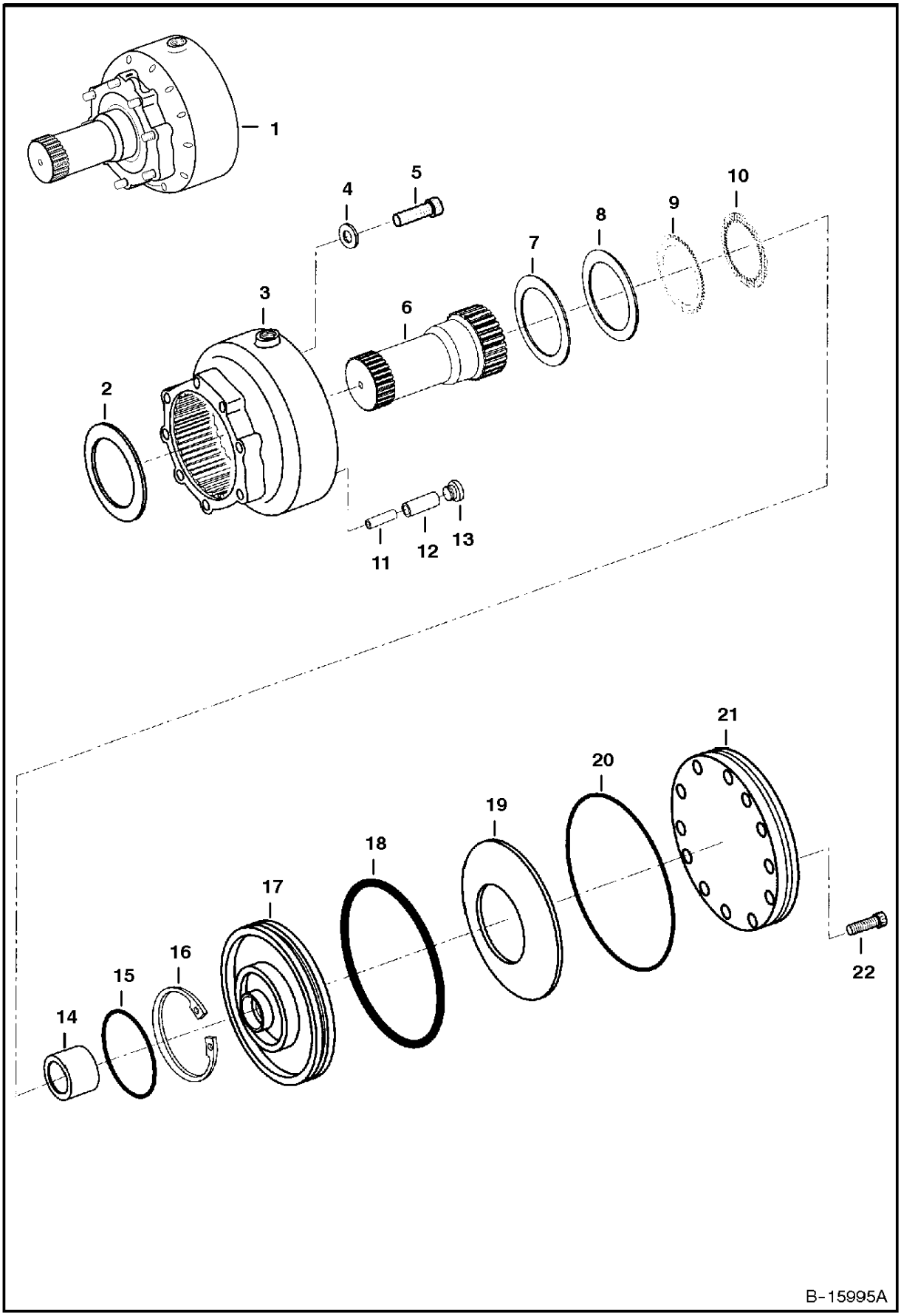

www.youfixthis.com

HYDROSTATIC MOTOR

Ref.N°	Part N°	Description	Remarks	Serial N°	Qty.
1	6678141	BRAKE	assy. - Ref. HYDROSTATIC MOTOR(2) - HYDROSTATIC MOTOR(22) - See Page HYDROSTATIC MOTOR(1)		1
2	6678121	WASHER			1
3	6678128	HOUSING	W/ snap ring groove for Ref. HYDROSTATIC MOTOR(16)		1
4	6674194	WASHER			6
5	6678113	BOLT			6
6	6678122	SHAFT			1
7	6674722	SHIM	0.1 mm		x
8	6674723	SHIM	0.3 mm		x
9	6674714	DISC	outer		16
10	6674713	DISC	inner		14
11	6678146	ROLL PIN			2
12	6678145	ROLL PIN			2
13	6676952	PLUG			2
14	6674734	BUSHING			1
15	6677828	SEAL	outer		1
16	6678133	SNAP RING			1
17	6681988	PISTON			1
18	6678138	O-RING			1
19	6678139	WASHER			1
20	6678114	O-RING			1
21	6678127	COVER			1
22	3GM-820	SCREW			24

www.youfixthis.com

HYDROSTATIC MOTOR
(Front Housing)

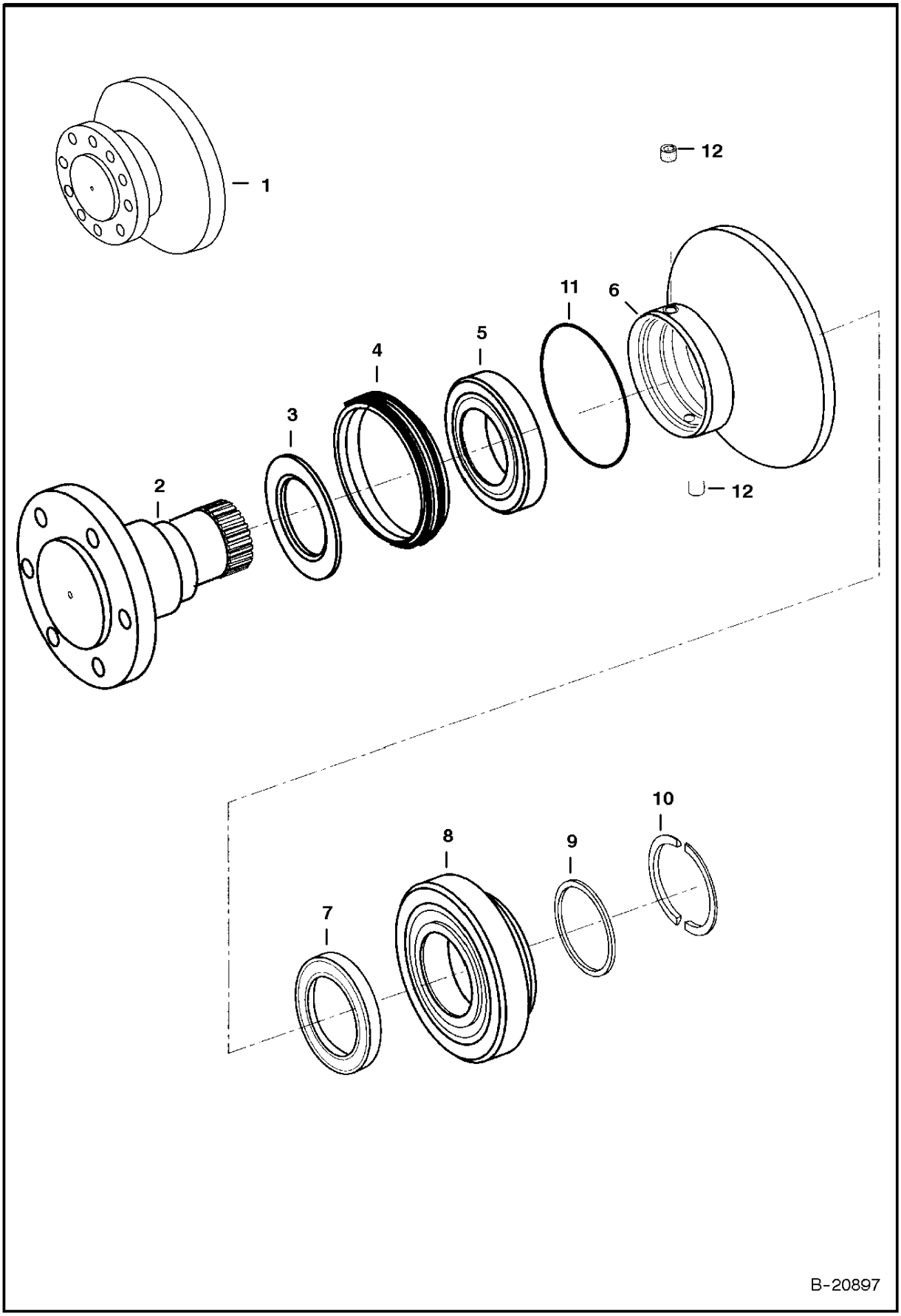

www.youfixthis.com

HYDROSTATIC MOTOR

Ref.N°	Part N°	Description	Remarks	Serial N°	Qty.
1	6681980	CASE	front assy. - Ref. HYDROSTATIC MOTOR(2) - HYDRO STATIC MOTOR(12) - See Page HYDROSTATIC MOTOR(1)		1
1	6682546	OIL	quart		1
2	6681982	SHAFT			1
3	6681984	BUSHING			1
4	6681987	SEAL	face		1
5	6681985	BEARING			1
6	6681983	CASE			1
7	6678135	SEAL	shaft		1
8	6678465	BEARING			1
9	6678116	WASHER	1.84 mm		1
9	6678117	WASHER	1.84 mm		1
9	6678118	WASHER	1.84 mm		1
9	6678119	WASHER	1.84 mm		1
9	6678120	WASHER	1.84 mm		1
10	6677849	RING			1
11	6681986	O-RING			1
12	6680019	PLUG	pressure		2

www.youfixthis.com

HYDROSTATIC MOTOR
(Rotor Group & Rear Housing)

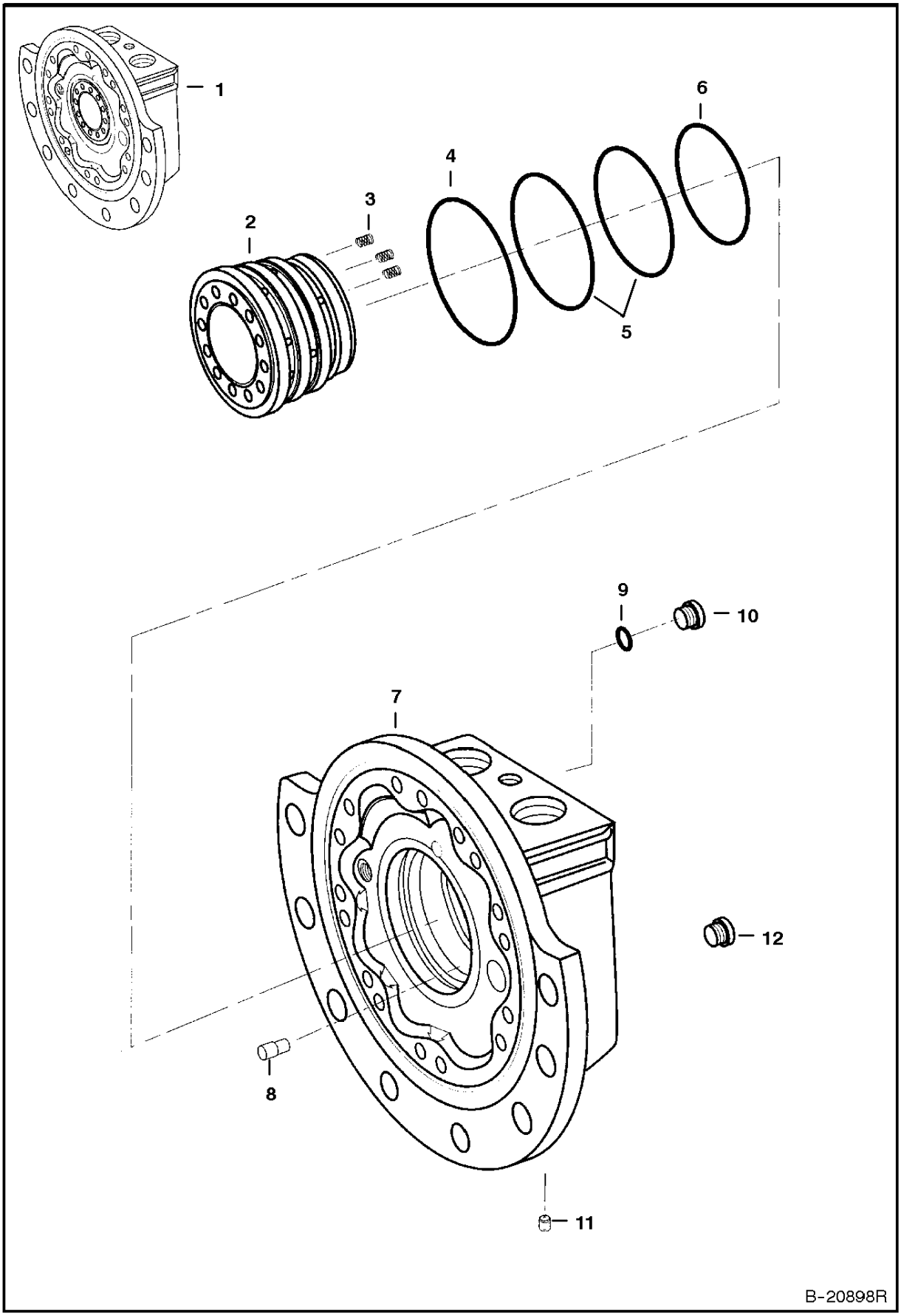

www.youfixthis.com

HYDROSTATIC MOTOR

Ref.N°	Part N°	Description	Remarks	Serial N°	Qty.
1	6678140	CASE	rear - Ref. HYDROSTATIC MOTOR(2) - HYDROSTATIC MOTOR(12) - See Page HYDROSTATIC MOTOR(1)		1
2	6674184	DISTRIBUTOR			1
3	6674037	SPRING			9
4	6675227	SEAL	W/ O-ring - 105,0 mm dia. - fits into Ref. HYDROSTATIC MOTOR(7)		1
5	6675228	SEAL	W/ O-ring - 96,5 mm dia. - fits onto Ref. HYDROSTATIC MOTOR(2)		2
6	6675229	SEAL	W/ O-ring - 87,15 mm dia. - fits into Ref. HYDROSTATIC MOTOR(7)		1
7	6678126	HOUSING			1
8	6675189	PIN	stop		1
9	6675093	O-RING			1
10	6678149	PLUG	.375' - W/Ref. HYDROSTATIC MOTOR(9)		1
11	6678115	PLUG	8 mm		1
12	6676024	PLUG	W/ O-ring		2

www.youfixthis.com

HYDROSTATIC PUMP

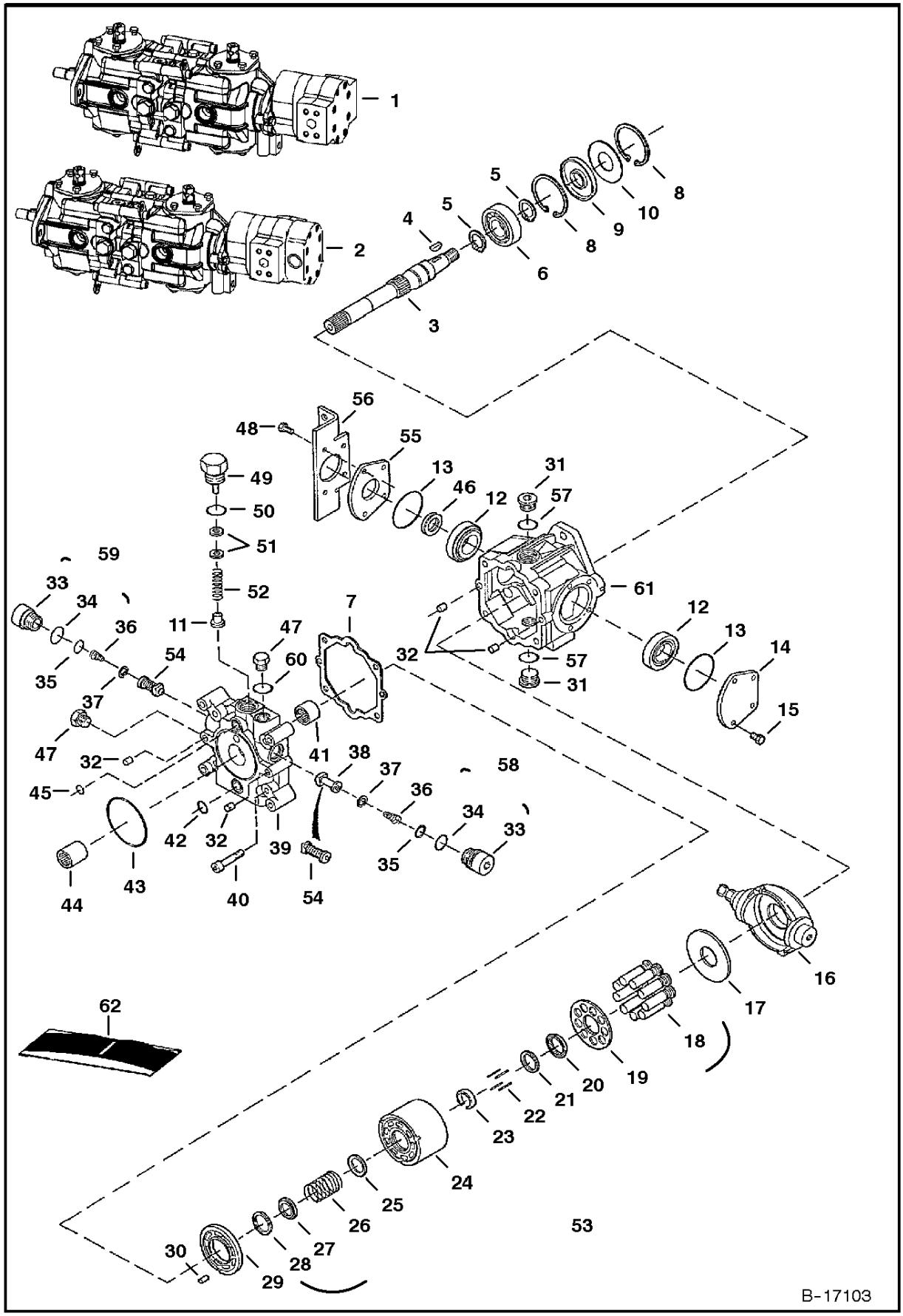

www.youfixthis.com

HYDROSTATIC PUMP

Ref.N°	Part N°	Description	Remarks	Serial N°	Qty.
1	6685032	PUMP	Model 4445160		1
2	6685033	PUMP	Model 4445161 - W/double gear pump for High Flow Hydraulics - See Page HIGH FLOW HYDRAULICS(1)		1
3	6682260	SHAFT	W/square key		1
4	6682261	KEY	square		1
5	658128	SNAP RING			2
6	654299	BEARING			1
7	6650634	GASKET			1
8	669863	SNAP RING			2
9	6645090	SEAL			1
10	6669409	WASHER			1
11	6650652	RELIEF	charge relief		1
12	6669411	BEARING			2
13	6660814	O-RING			2
14	6657068	COVER			2
15	6650668	BOLT			4
16	6671513	SWASH PLATE	W/threaded shaft		1
17	6650627	PLATE			1
18	NAP	PISTON ASSY	Order Ref. HYDROSTATIC PUMP(53)		1
19	NAP	RETAINER	Order Ref. HYDROSTATIC PUMP(53)		1
20	NAP	RETAINER	guide - Order Ref. HYDROSTATIC PUMP(53)		1
21	6666338	WASHER			1
22	6650629	PIN			4
23	6650630	RETAINER			1
24	NAP	BLOCK	Order Ref. HYDROSTATIC PUMP(53)		1
25	NAP	WASHER	Order Ref. HYDROSTATIC PUMP(53)		1
26	NAP	SPRING	Order Ref. HYDROSTATIC PUMP(53)		1
27	NAP	WASHER	Order Ref. HYDROSTATIC PUMP(53)		1
28	NAP	WASHER	Order Ref. HYDROSTATIC PUMP(53)		1
29	6675340	VALVE PLATE			1
30	6650636	PIN			1
31	47K-8	PLUG	W/Ref. HYDROSTATIC PUMP(57)		2
32	6675342	PIN			4
33	NAP	PLUG	Order Ref. HYDROSTATIC PUMP(58) or HYDROSTATIC PUMP(59)		2
34	6657028	O-RING			2
35	79K-8	O-RING			2
36	NAP	SPRING	Order Ref. HYDROSTATIC PUMP(58) or HYDROSTATIC PUMP(59)		2
37	NAP	RETAINER	Order Ref. HYDROSTATIC PUMP(58) or HYDROSTATIC PUMP(59)		2
38	NAP	CHECK VALVE	poppet - Order Ref. HYDROSTATIC PUMP(58)		1
39	6669406	END PLATE			1
40	6650637	BOLT			4
41	6650635	BEARING			1
42	6650647	O-RING			1
43	6645081	O-RING			1
44	6650675	COUPLER			1
45	6650646	O-RING			1
46	6673881	SEAL			1
47	6645086	PLUG	W/Ref. HYDROSTATIC PUMP(60)		2
48	6671518	BOLT			4
49	6650648	PLUG	charge relief		1
50	79K-10	O-RING			1
51	6669410	SHIM KIT	charge relief		1
52	6658301	SPRING			1

www.youfixthis.com

HYDROSTATIC PUMP

Ref.N°	Part N°	Description	Remarks	Serial N°	Qty.
53	6671512	BLOCK ASSY			1
54	NAP	RELIEF VALVE	5000 PSI (345 bar)- Order Ref. HYDROSTATIC PUMP(59)		1
55	6657067	COVER			1
56	6736764	BRACKET			1
57	79K-12	O-RING			2
58	6670684	CHECK VALVE			1
59	6671510	RELIEF VALVE			1
60	6661481	O-RING			2
61	6669402	HOUSING			1
62	6671516	SEAL KIT	Ref. HYDROSTATIC PUMP(7), HYDROSTATIC PUMP(9), HYDROSTATIC PUMP(13), HYDROSTATIC PUMP(34), HYDROSTATIC PUMP(35), HYDROSTATIC PUM		1

www.youfixthis.com

HYDROSTATIC PUMP

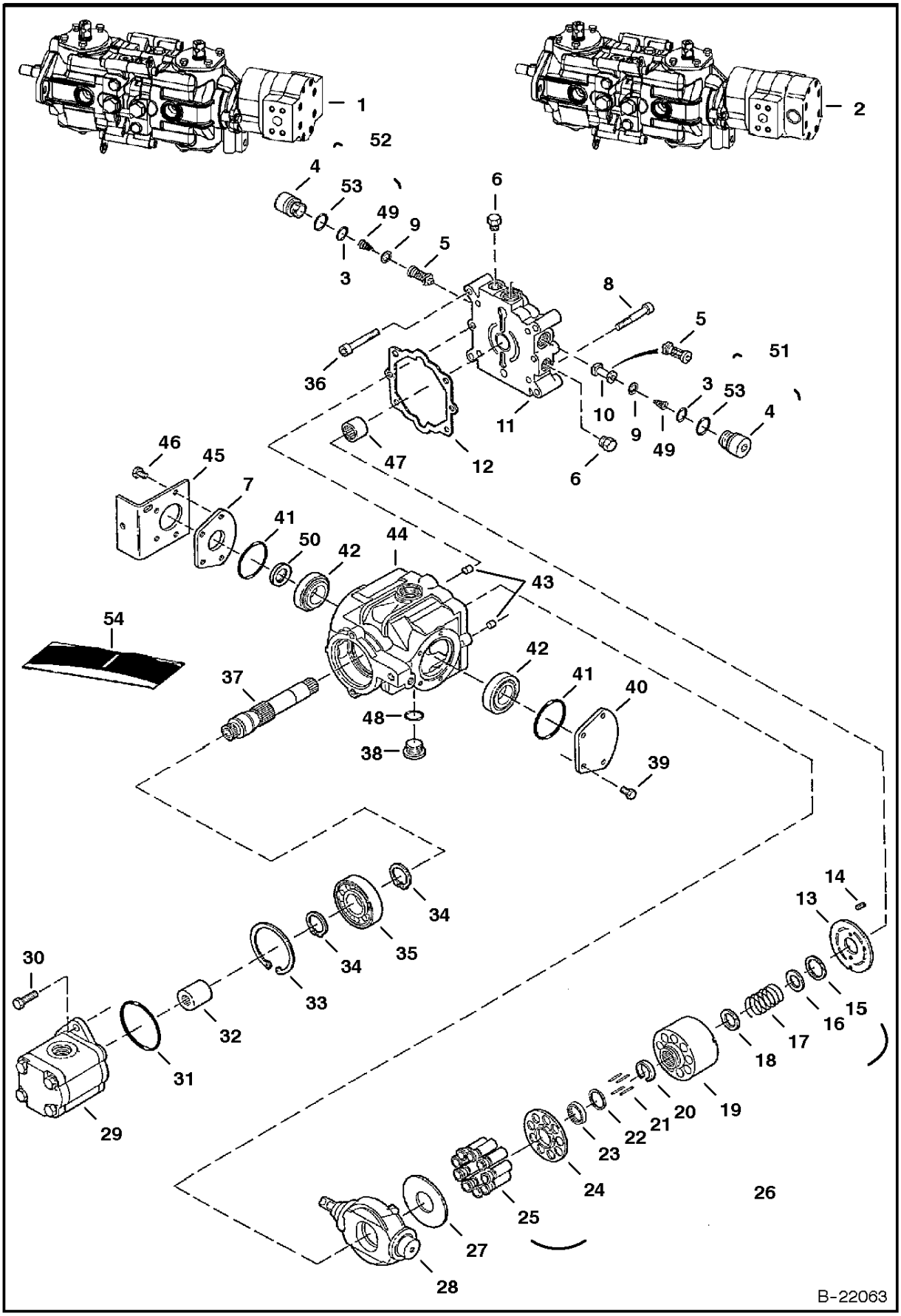

www.youfixthis.com

HYDROSTATIC PUMP

Ref.N°	Part N°	Description	Remarks	Serial N°	Qty.
1	6685032	PUMP	Model 4445160		1
2	6685033	PUMP	Model 4445161 - W/double gear pump for High Flow Hydraulics - See Page HIGH FLOW HYDRAULICS(1)		1
3	79K-8	O-RING			2
4	NAP	PLUG	Order Ref. HYDROSTATIC PUMP(51) or HYDROSTATIC PUMP(52)		2
5	NAP	RELIEF VALVE	5000 PSI (345 bar)- Order Ref. HYDROSTATIC PUMP(52)		1
6	6645086	PLUG			4
7	6657067	COVER			1
8	6650637	BOLT			2
9	NAP	RETAINER	Order Ref. HYDROSTATIC PUMP(51) or HYDROSTATIC PUMP(52)		4
10	NAP	CHECK VALVE	poppet - Order Ref. HYDROSTATIC PUMP(51)		1
11	6669405	END CAP			1
12	6650634	GASKET			1
13	6675339	VALVE PLATE			1
14	6650636	PIN			2
15	NAP	RETAINER	Order Ref. HYDROSTATIC PUMP(26)		1
16	NAP	WASHER	Order Ref. HYDROSTATIC PUMP(26)		1
17	NAP	SPRING	Order Ref. HYDROSTATIC PUMP(26)		1
18	NAP	WASHER	Order Ref. HYDROSTATIC PUMP(26)		1
19	NAP	BLOCK	Order Ref. HYDROSTATIC PUMP(26)		1
20	6650630	RETAINER			1
21	6650629	PIN			4
22	6666338	WASHER			1
23	NAP	RETAINER	Order Ref. HYDROSTATIC PUMP(26)		1
24	NAP	RETAINER	Order Ref. HYDROSTATIC PUMP(26)		1
25	NAP	PISTON ASSY	Order Ref. HYDROSTATIC PUMP(26)		1
26	6671512	BLOCK ASSY			1
27	6650627	PLATE			1
28	6671513	SWASH PLATE	W/threaded shaft		1
29		GEAR PUMP	single - See Page GEAR PUMP(1)		1
29		GEAR PUMP	double - High Flow Hydraulics - See Page HIGH FLOW HYDRAULICS(1)		1
30	6666339	BOLT			2
31	6645080	O-RING			1
32	6671509	COUPLER			1
33	669863	SNAP RING			1
34	658128	SNAP RING			2
35	654299	BEARING			1
36	6652018	BOLT			4
37	6669407	SHAFT			1
38	47K-8	PLUG	W/Ref. HYDROSTATIC PUMP(48)		1
39	6650668	BOLT			4
40	6657068	COVER			1
41	6660814	O-RING			2
42	6669411	BEARING			2
43	6675342	PIN			2
44	6669403	HOUSING			1
45	6734742	BRACKET			1
46	6650668	BOLT			4
47	6650635	BEARING			1
48	79K-12	O-RING			1
49	NAP	SPRING	Order Ref. HYDROSTATIC PUMP(51) or HYDROSTATIC PUMP(52)		2
50	6673881	SEAL			1

www.youfixthis.com

HYDROSTATIC PUMP

Ref.N°	Part N°	Description	Remarks	Serial N°	Qty.
51	6670684	CHECK VALVE			1
52	6671510	RELIEF VALVE			1
53	6657028	O-RING			2
54	6671516	SEAL KIT	Ref. HYDROSTATIC PUMP(3), HYDROSTATIC PUMP(12), HYDROSTATIC PUMP(41) & HYDROSTATIC PUMP(53)- Also includes HYDROSTATIC PUMP(7),		1

www.youfixthis.com

GEAR PUMP
(Cast Iron)

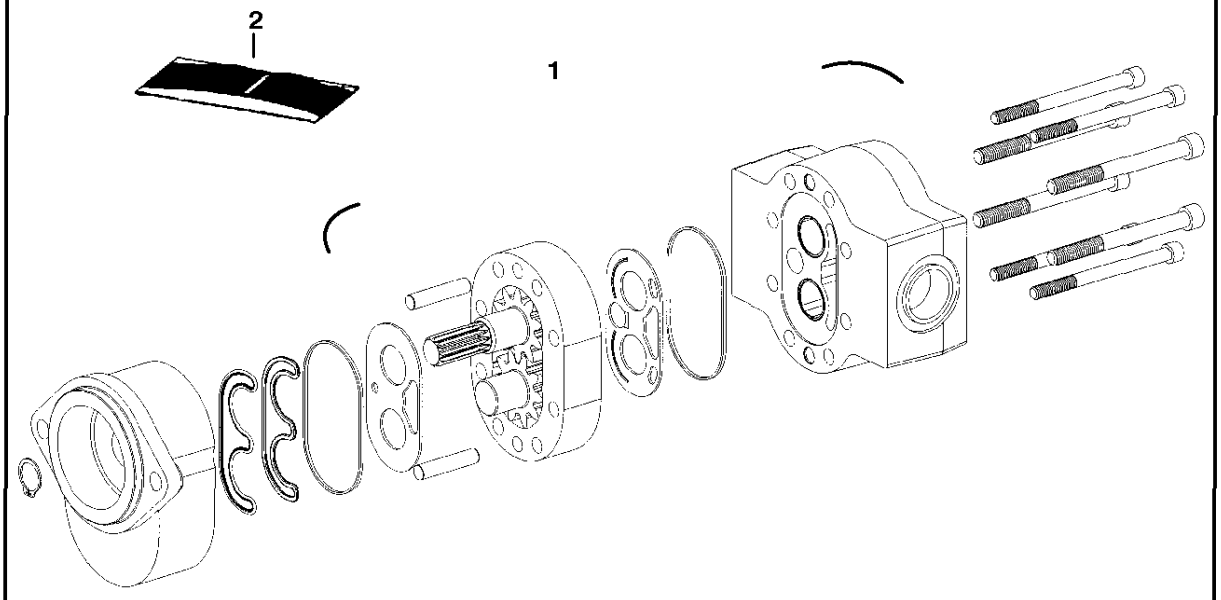

B-16050

www.youfixthis.com

GEAR PUMP

Ref.N°	Part N°	Description	Remarks	Serial N°	Qty.
1	6681602	PUMP	Model 163D-1309		1
2	6681581	SEAL KIT			1

www.youfixthis.com

HYDROSTATIC OIL FILTER
(In-Line)

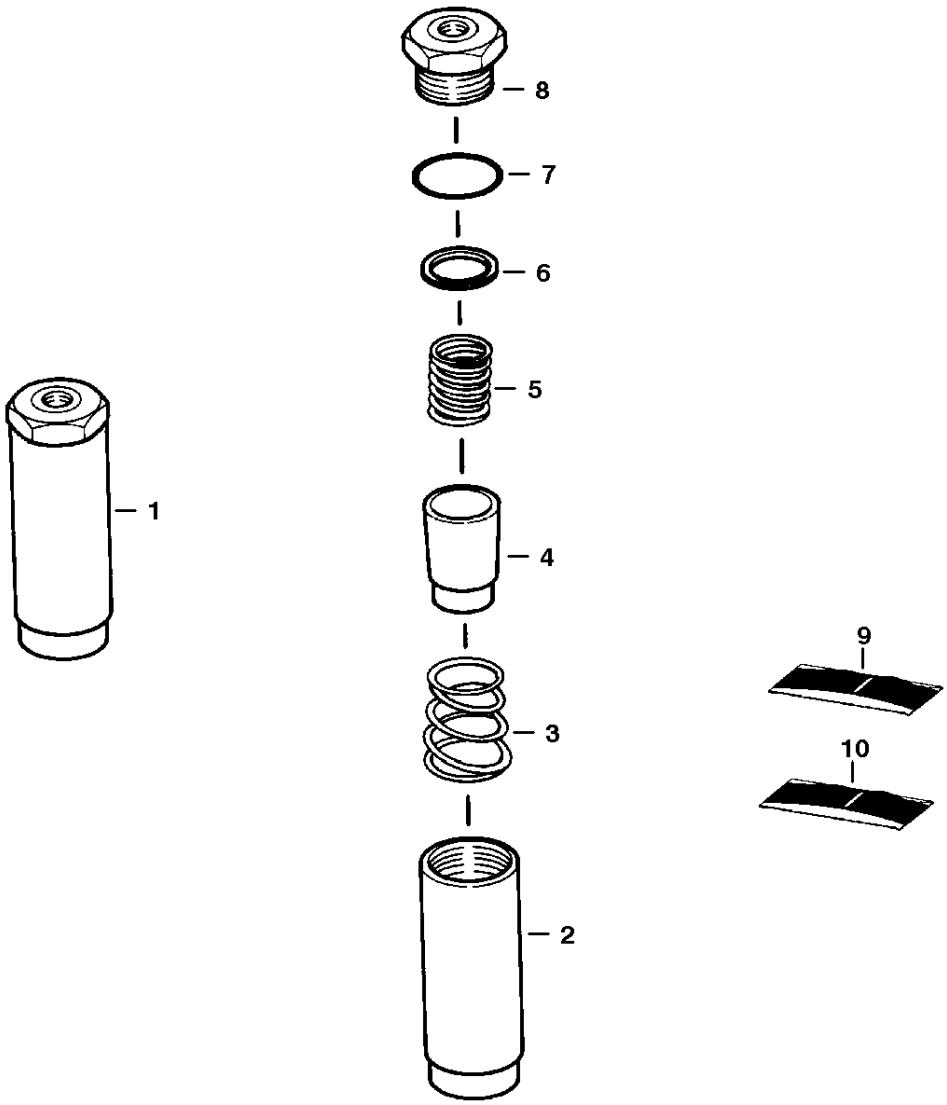

www.youfixthis.com

HYDROSTATIC OIL FILTER

Ref.N°	Part N°	Description	Remarks	Serial N°	Qty.
1	6661022	FILTER	Ref. HYDROSTATIC OIL FILTER(2) - HYDROSTATIC OIL FILTER(8)		1
2	NSS	HOUSING			1
3	NSS	SPRING			1
4	NSS	ELEMENT			1
5	NSS	SPRING			1
6	NSS	GASKET			1
7	NSS	O-RING			1
8	NSS	PLUG			1
9	6661807	KIT	element - Ref. HYDROSTATIC OIL FILTER(4), HYDRO STATIC OIL FILTER(6) & HYDROSTATIC OIL FILTER(7)		1
10	6661808	KIT	spring - Ref. HYDROSTATIC OIL FILTER(3) & HYDRO STATIC OIL FILTER(5)		1

www.youfixthis.com

HYDROSTATIC OIL FILTER

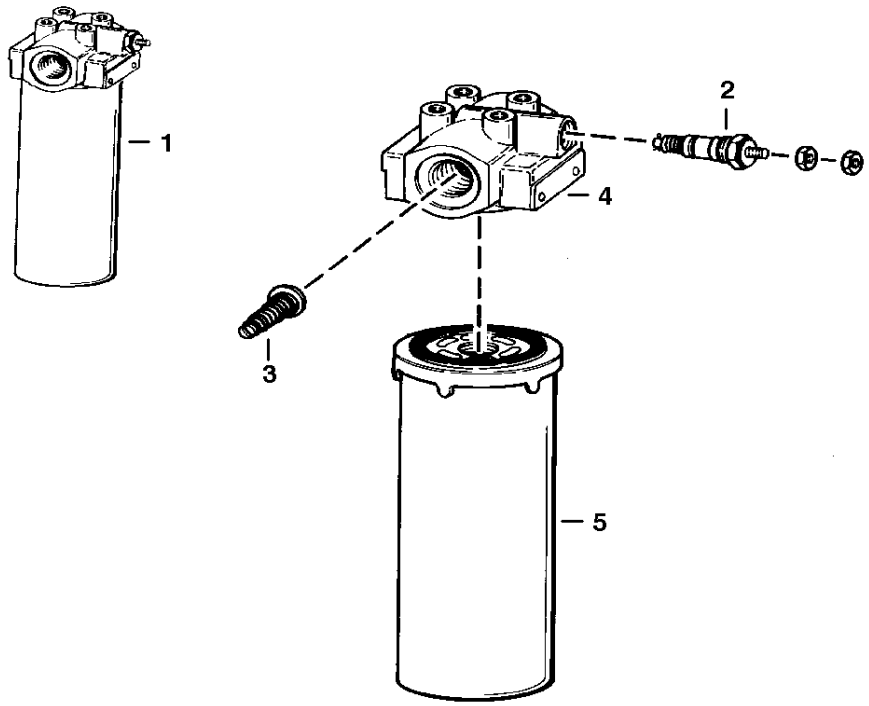

B-16487

www.youfixthis.com

HYDROSTATIC OIL FILTER

Ref.N°	Part N°	Description	Remarks	Serial N°	Qty.
1	6676969	FILTER ASSY			1
2	6660260	SWITCH	pressure - normally closed		1
2	6599365	KIT	Nut, washer & o-rings for 6660260 switch		1
3	NAP	VALVE	by-pass (50 PSI - Order Ref. HYDROSTATIC OIL FILTER(1))		1
4	NSS	HEAD	Order Ref. HYDROSTATIC OIL FILTER(1)		1
5	6661248	ELEMENT			1

www.youfixthis.com

CAB ELECTRICAL CIRCUITRY

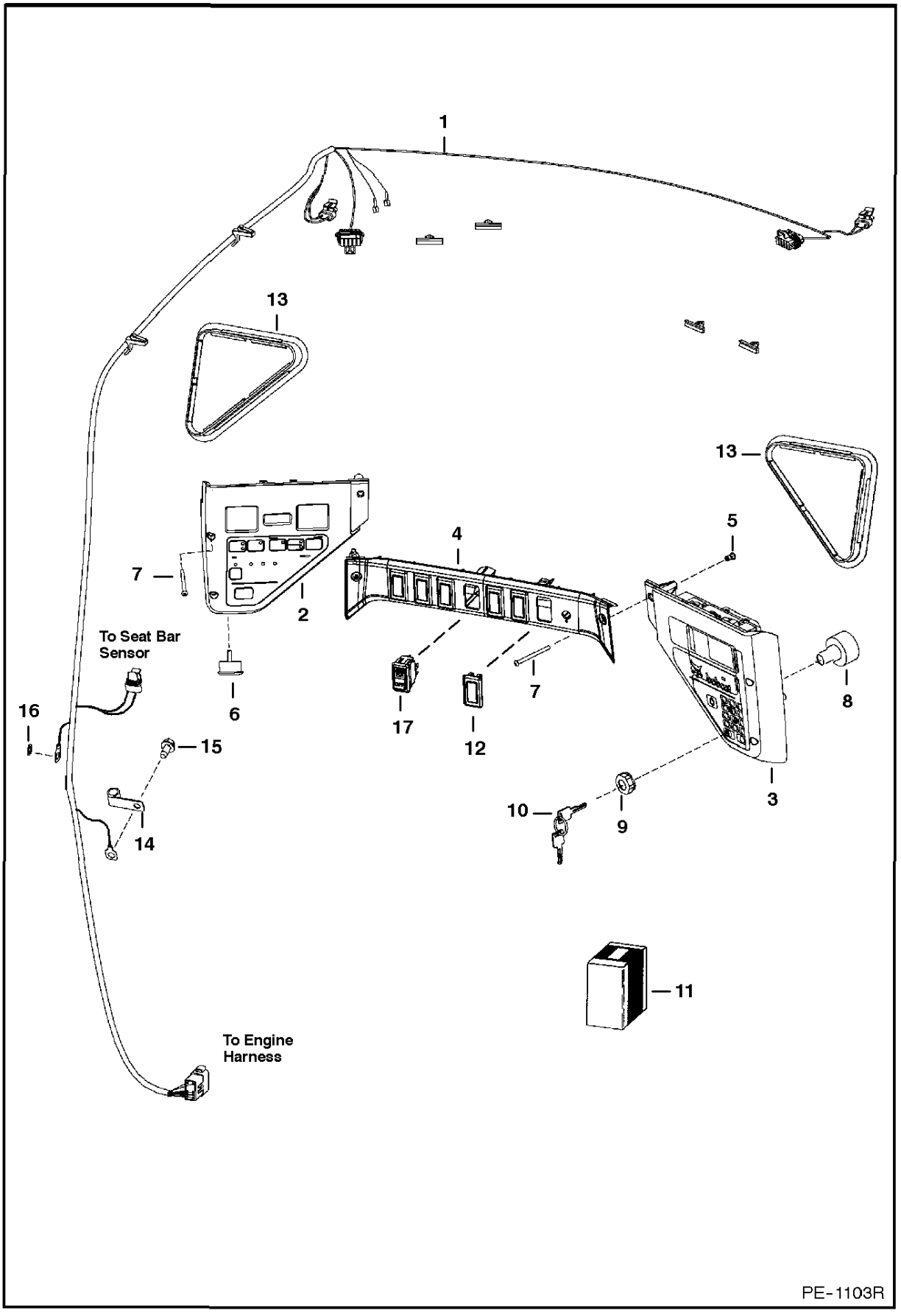

www.youfixthis.com

CAB ELECTRICAL CIRCUITRY

Ref.N°	Part N°	Description	Remarks	Serial N°	Qty.
1	6727178	HARNESS			1
2	6678680	PANEL	L.H. - W/Ref. CAB ELECTRICAL CIRCUITRY(6)		1
2	6675982	PLUG	backlighting service hole		1
2	6679855	BULB			2
3	6678681	PANEL	R.H. - keyed - W/Ref. CAB ELECTRICAL CIRCUITRY(8) & CAB ELECTRICAL CIRCUITRY(9)		1
3	6683395	PANEL	R.H. - deluxe - keyless		1
3	NAP	INSTRUCTIONS	for deluxe panel - See Service Manual		1
4	6679845	CROSSMEMBER			1
5	6675033	INSERT	threaded		6
6	6679856	ALARM	W/nut		1
7	6719084	BOLT			6
8	6679842	SWITCH	ignition - W/Ref. CAB ELECTRICAL CIRCUITRY(10)		1
9	6674202	NUT			2
10	6709527	KEY	ignition		1
11	NAP	KIT	keyless ign. - Order 6683395 Panel - See Service Manual		1
12	6665314	PLUG			x
13	6674403	COVER			2
14	6675171	CLAMP			1
15	84G-3712	BOLT			1
16	6E-5	WASHER			1
17	6676536	SWITCH	park brake		1

www.youfixthis.com

ENGINE ELECTRICAL CIRCUITRY

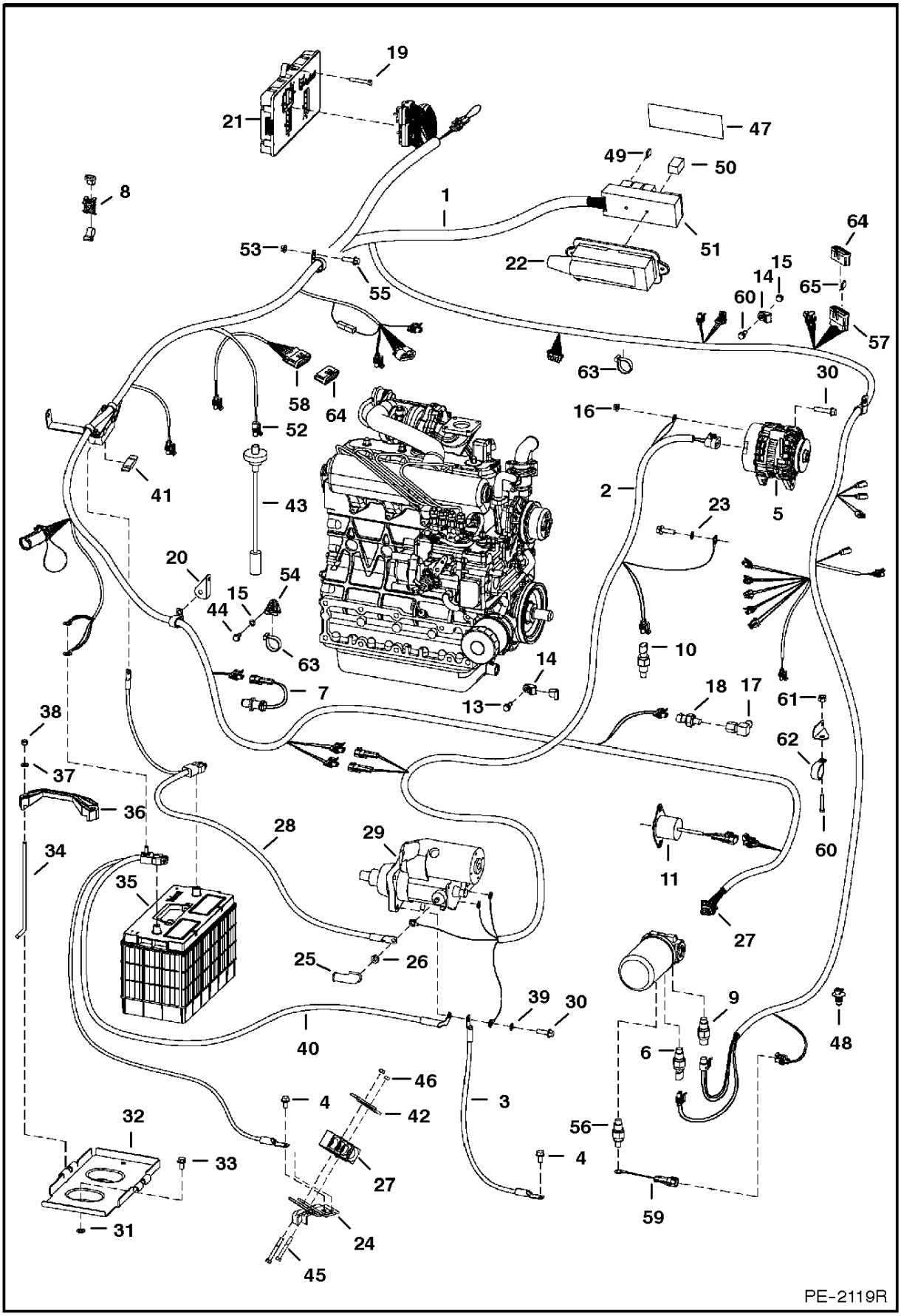

www.youfixthis.com

ENGINE ELECTRICAL CIRCUITRY

Ref.N°	Part N°	Description	Remarks	Serial N°	Qty.
1	7101181	HARNESS	loader - 2-connector for controller		1
2	7101311	HARNESS	starter/alt.		1
3	6565170	CABLE	neg.		1
4	84G-3712	BOLT			4
5		ALTERNATOR	See Page ALTERNATOR(1)		1
6	6727869	SENDER	hyd. temp.		1
7	6684037	SENSOR	rpm		1
8	6678668	STRAP			1
9	6674316	SWITCH	%hyd. chg. press. - 3-pin molded connector		1
10	6718415	SWITCH	eng. temp.		1
11	6684826	SOLENOID	fuel shut off		1
12	6678669	STRAP			1
13	6679034	MOUNT			1
14	6678667	MOUNT			4
15	83D-4	NUT			1
16	43DM-8	NUT			1
17	6707040	ELBOW			1
18	6674315	SWITCH	eng. oil press.		1
19	43C-616	BOLT			3
20	6714979	BRACKET			2
21	6678674	CONTROLLER	Bobcat		1
22	6718659	HOUSING	fuse - boot		1
23	6E-5	WASHER			1
24	6727508	BRACKET			1
25	6560172	COVER			1
26	4DM-10	NUT			1
27	6715197	CLAMP			1
28	6731256	CABLE	%pos.		1
29		STARTER	See Page STARTER(1)		1
30	35C-620	BOLT			3
31	616783	WASHER			2
32	6718260	BATTERY PAN			1
33	84G-3716	BOLT			2
34	6576280	BOLT			2
35	6674687	BATTERY			1
35		BATTERY CAP			2
36	6569203	CLAMP			1
37	25E-15	WASHER			2
38	59D-5	NUT			2
39	6E-6	WASHER			1
40	6729008	CABLE	ground		1
41	6675155	FUSE	100 amp		1
41	6675154	HOLDER	high amp fuse		1
42	6715132	RETAINER			1
43	6680436	SENSOR	fuel - W/gasket		1
43	6717579	GASKET			1
44	17C-412	BOLT			1
45	17C-540	BOLT			2
46	95D-5	NUT			1
47	6718774	DECAL	See Page PANELS(1)		1
48	6678666	MOUNT			1
49	6654806	FUSE	15 amp		2
49	6702444	FUSE	25 amp		6
49	6718034	FUSE	30 amp		2
50	6679820	SWITCH	relay		7

www.youfixthis.com

ENGINE ELECTRICAL CIRCUITRY

Ref.N°	Part N°	Description	Remarks	Serial N°	Qty.
51	6673200	FUSE BLOCK			1
52	6646383	CONNECTOR	fuel sender		1
52	6648330	TERMINAL	female		2
53	91D-6	NUT			2
54	6678818	MOUNT			1
55	35C-616	BOLT			1
56	6684826	SOLENOID	See Page ENGINE STOP LEVER(1)		1
57	6676400	CONNECTOR			x
58	6677216	CONNECTOR			x
59	6728626	HARNESS			1
60	17C-512	BOLT			2
61	85D-5	NUT			2
62	6675171	CLAMP			1
63	6624289	STA-STRAP			21
64	6684126	COVER			2
65	6684415	BUSS BAR			1

www.youfixthis.com

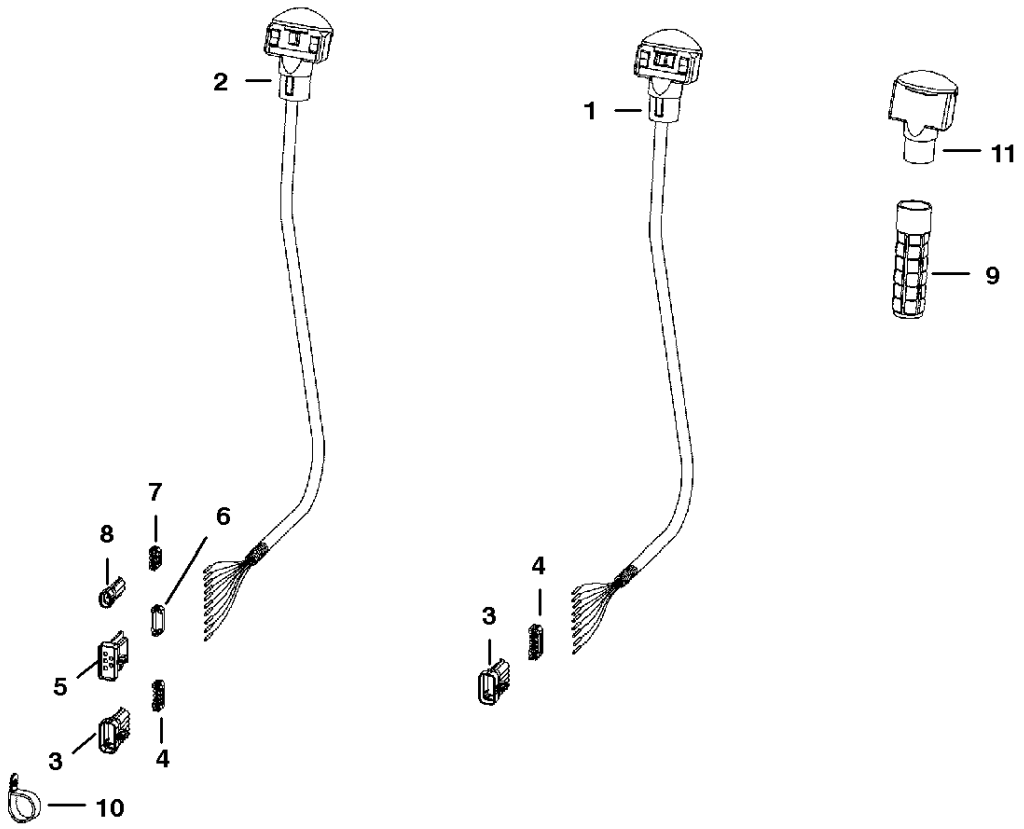

PE-1041

www.youfixthis.com

CONTROLS ELECTRICAL

Ref.N°	Part N°	Description	Remarks	Serial N°	Qty.
1	6680418	HANDLE ASSY.	R.H. - %Also Order Ref. CONTROLS ELECTRICAL(3) & CONTROLS ELECTRICAL(4)%		1
1	6640690	PIN			9
1	6641176	SEAL			9
2	6680419	HANDLE ASSY.	L.H. - Also Order Ref. CONTROLS ELECTRICAL(3) - CONTROLS ELECTRICAL(8)		1
2	6640690	PIN			10
2	6641176	SEAL			10
2	6680447	DECAL			1
3	6640692	CONNECTOR	10-pin		2
4	6640694	LOCK	10-pin		2
5	6667144	CONNECTOR	5 - way		1
6	6667145	LOCK	5 - way		1
7	6641180	LOCK	2 - pin		1
8	6641179	CONNECTOR	2 - pin		2
9	6702621	GRIP			2
10	6674000	CLAMP			2
11	6680415	HANDLE	L.H. - blank		2

www.youfixthis.com

CONTROLS ELECTRICAL
(AHC) (ACS)

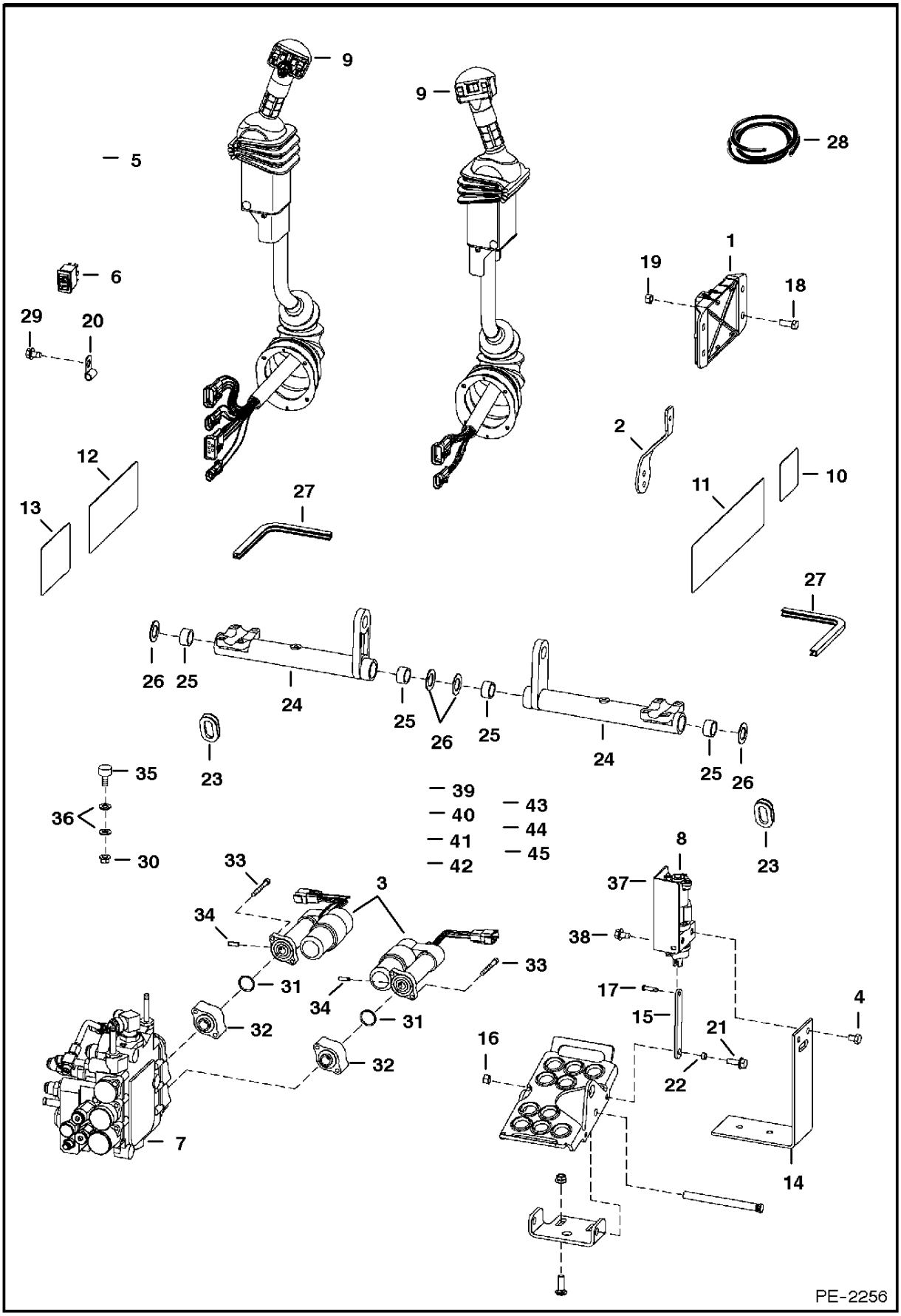

www.youfixthis.com

CONTROLS ELECTRICAL

Ref.N°	Part N°	Description	Remarks	Serial N°	Qty.
1	6680410	CONTROLLER			1
2	6717393	LEVER	throttle		1
3	6678775	ACTUATOR			2
4	17C-608	BOLT			4
5	6733292	HARNESS			1
6	6676537	SWITCH			1
7		VALVE	See Page HYDRAULIC CONTROL VALVE(1)		1
8	6684912	SENSOR	foot pedal - R.H. - See Page CONTROLS ELECTRICAL (1)		1
8	6676029	SOLENOID			1
8	6684911	SENSOR	%foot pedal - L.H. - See Page CONTROLS ELECTRICA L(1)		1
8	6676029	SOLENOID			1
9	6684915	LEVER	tilt - R.H. - See Page CONTROLS ELECTRICAL(1)		1
9	6684916	LEVER	lift - L.H. - See Page CONTROLS ELECTRICAL(1)		1
10	6718397	DECAL			1
11	6728540	DECAL			1
12	6728045	DECAL			1
13	6727941	DECAL			1
14	6726573	BRACKET			2
15	6726681	LINK			2
16	95D-5	NUT			2
17	6727496	PIN			2
18	17C-616	BOLT			2
19	95D-6	NUT			6
20	30H-62	CLIP			2
21	17C-514	BOLT			2
22	6729467	SPACER			2
23	6714726	PLUG			2
24	6716977	BELLCRANK			2
25	6673710	BEARING			4
26	6716916	WASHER	plastic		4
27	NAP	MOULDING	%10.5'(266,7 mm) long - Order Ref. CONTROLS ELECTRICAL(28)		1
28	6654139	MOULDING	bulk - Sold Per Foot		x
29	84G-3710	BOLT			2
30	98D-6	NUT	See Page HAND CONTROLS(1)		2
31	58K-120	O-RING			2
32	6725128	ADAPTER			2
33	69G-436	BOLT			4
34	6718506	PIN			2
35	6673789	BEARING	See Page HAND CONTROLS(1)		4
36	25E-17	WASHER	See Page HAND CONTROLS(1)		8
37	NAP	SHIELD	R.H.		1
37	NAP	SHIELD	L.H.		1
38	43C-408	BOLT			4
39	7101641	BRACKET	R.H.		1
40	7101640	BRACKET	L.H.		1
41	6649551	DAMPENER	shock		2
42	6599744	BALL JOINT			4
43	18C-616	BOLT			2
44	62D-6	NUT			6
45	8D-6	NUT			6

www.youfixthis.com

CONTROLS ELECTRICAL
(AHC) (ACS) (Handle Assembly)

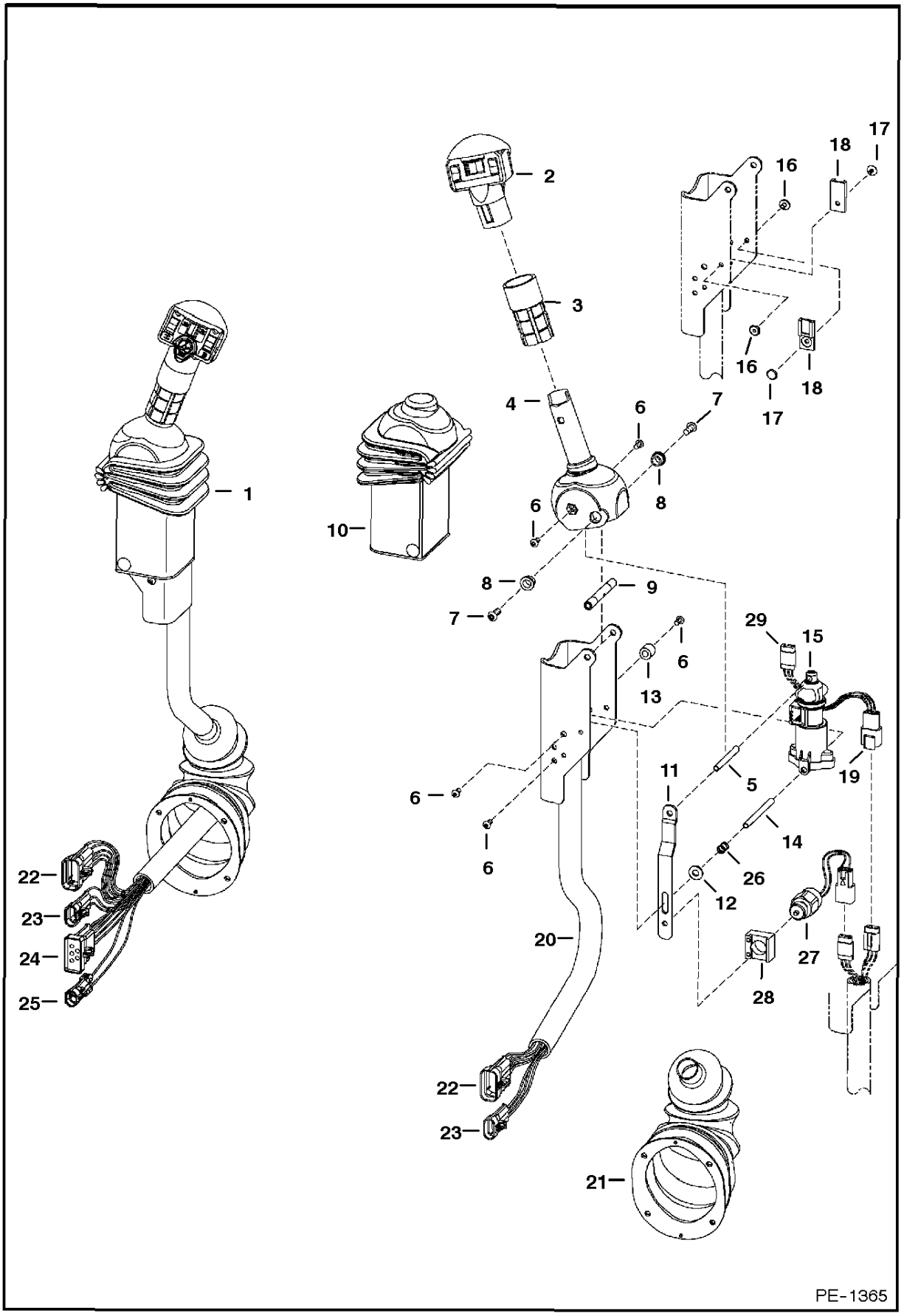

www.youfixthis.com

CONTROLS ELECTRICAL

Ref.N°	Part N°	Description	Remarks	Serial N°	Qty.
1	6684915	LEVER	tilt - R.H.		1
1	6684916	LEVER	lift - L.H.		1
2	6680462	HANDLE	tilt - R.H.		1
2	6680417	HANDLE	lift - L.H.		1
3	NAP	GRIP	Order 6702621 Grip & cut to 2.8' (71,1 mm) long		2
4	6729594	HANDLE	R.H.		1
4	6729595	HANDLE	L.H.		1
5	6680469	SPACER	threaded		1
6	6727065	BOLT			6
7	25GT-410	BOLT			8
8	6702990	BUSHING			4
9	6713043	SPACER			4
10	6680471	COVER			2
11	6680477	STRAP	stop		1
12	25E-13	WASHER			1
13	6719835	SLEEVE			4
14	6719834	SPACER	threaded		2
15	6684910	SENSOR			2
15	6670706	CONNECTOR			1
15	6670715	SOCKET			3
15	6670710	LOCK			1
16	6665322	RIVET	female		2
17	6665321	RIVET	male		2
18	6665000	CLIP			2
19	6670707	CONNECTOR			1
19	6670715	SOCKET			3
19	6670711	LOCK			1
20	6680481	CHANNEL	R.H.		1
20	6680480	CHANNEL	L.H.		1
21	6532127	BOOT			2
22	6640692	CONNECTOR	10-pin		1
22	6640690	PIN			8
22	6640694	LOCK			1
22	6641176	SEAL			8
22	6646582	PLUG	cavity		1
23	6640699	CONNECTOR	3-pin		2
23	6640690	PIN			3
23	6641176	SEAL			3
23	6640700	LOCK			3
24	6667144	CONNECTOR	5-pin		2
24	6640690	PIN			3
24	6641176	SEAL			3
24	6646582	PLUG	cavity		1
24	6641180	LOCK			1
25	6641179	CONNECTOR	2-pin		1
25	6640690	PIN			2
25	6641176	SEAL			2
25	6641180	LOCK			1
26	6680470	SPRING			1
27	6676029	SOLENOID			1
28	6680468	MOUNT			1
29	6676870	CONNECTOR	3-pin		1
29	6670711	LOCK			1
29	6670715	SOCKET			1
29	6676640	SEAL			5

www.youfixthis.com

CONTROLS ELECTRICAL
(ACS) (Foot Pedal Assemblies)

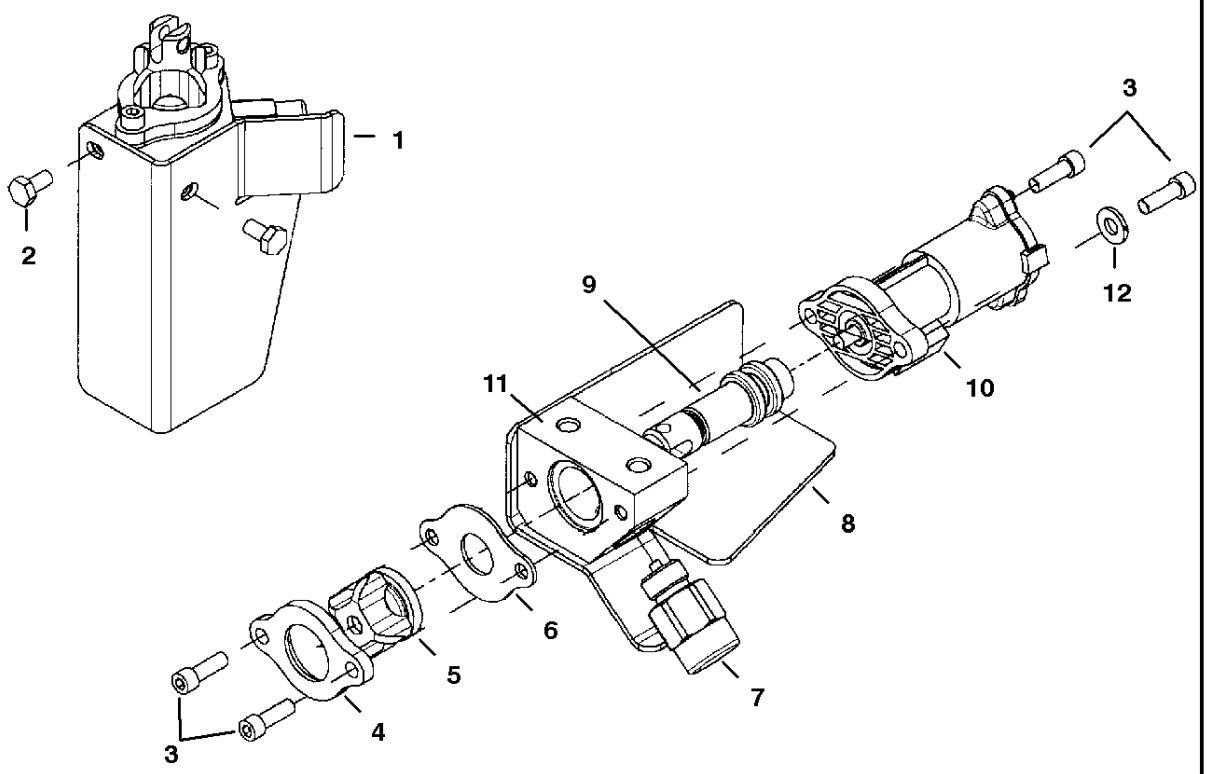

PE-1553

www.youfixthis.com

CONTROLS ELECTRICAL

Ref.N°	Part N°	Description	Remarks	Serial N°	Qty.
1	6684912	SENSOR	foot pedal - R.H.		1
1	6684911	SENSOR	foot pedal - L.H.		1
2	43C-408	BOLT			2
3	98G-412	BOLT			4
4	NAP	RETAINER	boot		1
5	6587763	BOOT			1
6	NAP	STOP PLATE			1
7	6676029	SOLENOID			1
8	NAP	SHIELD	R.H.		1
8	NAP	SHIELD	L.H.		1
9	NSS	SPOOL			1
10	NSS	SENSOR			1
11	NSS	BLOCK			1
12	25E-13	WASHER			2

www.youfixthis.com

ALTERNATOR

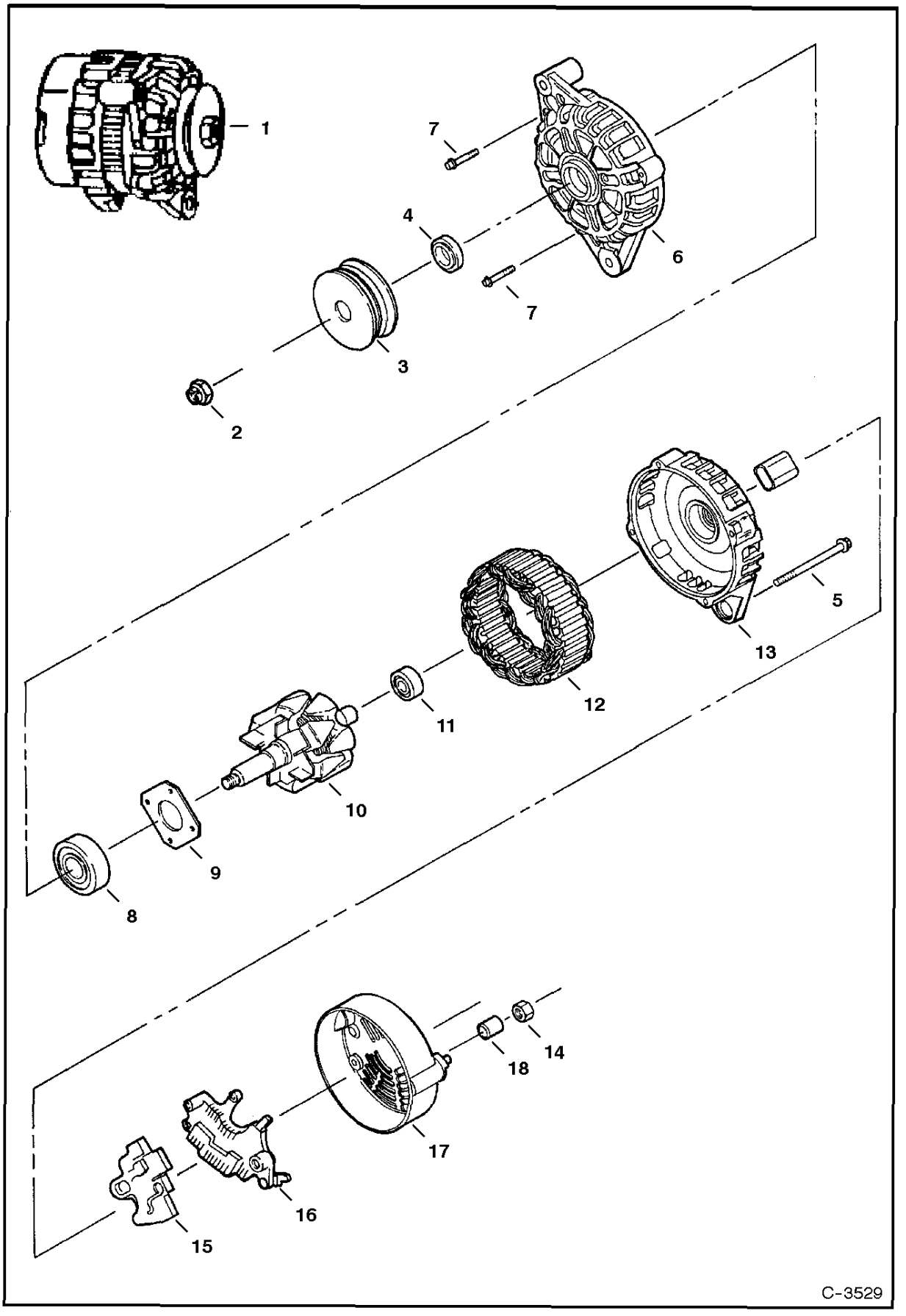

www.youfixthis.com

ALTERNATOR

Ref.N°	Part N°	Description	Remarks	Serial N°	Qty.
1	6678205	ALTERNATOR	90 amp - Ref. ALTERNATOR(2)-ALTERNATOR(14)		1
2	6677497	NUT			1
3	6677496	PULLEY			1
4	6677495	SPACER			1
5	6677494	BOLT			4
6	6677491	BRACKET	front		1
7	6677817	BOLT			4
8	6677818	BEARING			1
9	6677819	RETAINER			1
10	6677492	ROTOR ASSY			1
11	6677820	BEARING			1
12	6677493	STATOR ASSY			1
13	6677490	BRACKET			1
14	6677486	NUT			1
15	6677489	(REGULATOR ASSY	Order Ref. ALTERNATOR(1)		1
16	6677488	RECTIFIER ASSY			1
17	6677487	COVER			1
18	6677485	SPACER			1

www.youfixthis.com

STARTER
(Valeo)

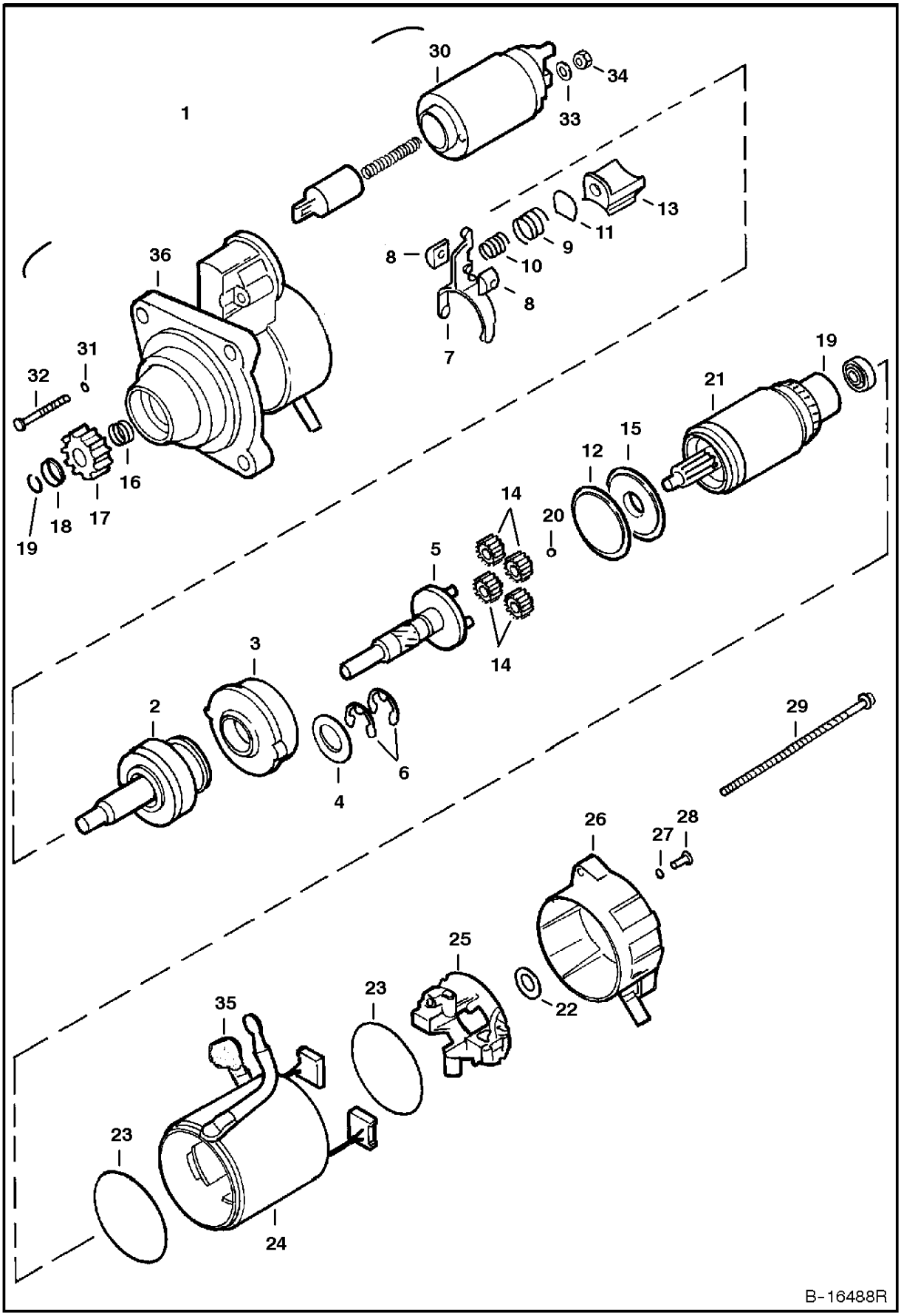

www.youfixthis.com

STARTER

Ref.N°	Part N°	Description	Remarks	Serial N°	Qty.
1	6685190	STARTER			1
2	6680375	SHAFT	O.R.C. assy.		1
3	6680367	GEAR			1
4	6680378	WASHER			1
5	6680365	SHAFT			1
6	6680368	STOP RING			2
7	NSS	LEVER			1
8	NSS	HOLDER			2
9	NSS	SPRING			1
10	NSS	SPRING			1
11	NSS	PLATE			1
12	6680369	SEAL			1
13	6680371	LEVER			1
14	6680366	GEAR			4
15	6680372	BRACKET			1
16	6680361	SPRING			1
17	6680390	GEAR			1
18	6680360	STOP			1
19	6680359	STOP RING			1
20	6680362	BALL			1
21	6680374	ARMATURE			1
22	6680363	WASHER			1
23	6680380	SEAL			2
24	6680373	YOKE			1
25	6680377	HOLDER			1
26	6680389	BRACKET			1
27	6680358	RING	rubber		2
28	6680384	BOLT			2
29	6680356	BOLT			2
30	6680376	SWITCH			1
31	6680379	SEAL			2
32	6680383	BOLT			2
33	6EM-80	WASHER			1
34	4DM-8	NUT			1
35	6680355	BOOT			1
36	6680388	BRACKET	W/Ref. STARTER(7) - STARTER(11)		1

www.youfixthis.com

COOLING SYSTEM

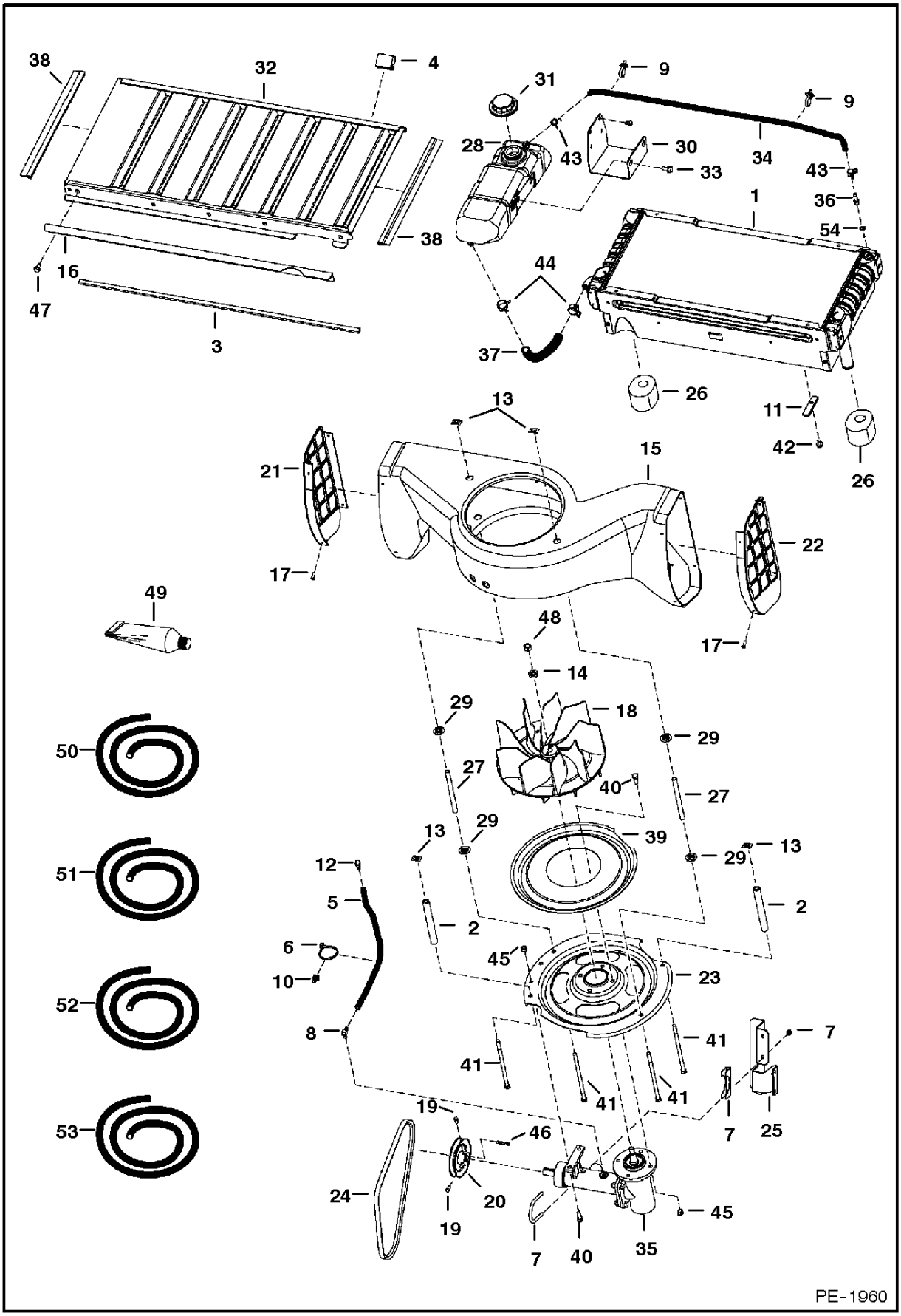

www.youfixthis.com

COOLING SYSTEM

Ref.N°	Part N°	Description	Remarks	Serial N°	Qty.
1	6734100	RADIATOR			1
2	6577382	SPACER			2
3	NAP	FOAM STRIP	34.5'(876,3mm) long - Order Ref. COOLING SYSTEM(52)		2
4	6579613	STOP			2
5	NAP	HOSE	16.5" (419,1 mm) long - Order Ref. COOLING SYSTEM (50)		1
6	6624289	STA-STRAP			1
7	6626631	CLAMP			1
8	6657376	ELBOW			1
9	6675734	TIE STRAP			2
10	6678666	MOUNT			2
11	6679991	SEAL	washer		1
12	6680970	BREATHER			1
13	6684033	NUT			4
14	6701097	WASHER			1
15	6702977	HOUSING			1
16	6703471	BRACKET			1
17	6706517	SCREW	plastic louvers		6
18	6715142	FAN			1
19	6715143	SET SCREW	$bond W/Ref. COOLING SYSTEM(49)		2
20	7100034	PULLEY	5.5'(139,7 mm) O.D.		1
21	6716571	LOUVER	L.H. - plastic		1
22	6716573	LOUVER	R.H. - plastic		1
23	6717478	INLET			1
24	6718730	BELT	fan - 42'(1066,8 mm) long		1
25	6719851	SHIELD	belt		1
26	6726433	SPACER			2
27	6732318	SPACER			2
28	6732375	TANK	expansion		1
29	6732457	WASHER	step		4
30	6732870	MOUNT			1
31	6733429	CAP			1
32	6733804	GRILL			1
33	6733886	BOLT			2
34	NAP	HOSE	36'(914,4 mm) long - Order Ref. COOLING SYSTEM(50)		1
35	6734104	HOUSING ASSY.	See Page COOLING FAN DRIVE ASSY.(1)		1
36	6734236	ADAPTER	W/Ref. COOLING SYSTEM(54)		1
37	NAP	HOSE	8.25'(209,6 mm) long - Order Ref. COOLING SYSTEM(53)		1
38	NAP	MOULDING	16.8'(426,7 mm) long - Order Ref. COOLING SYSTEM(51)		2
39	6735204	SCREEN	inlet		1
40	17C-616	BOLT			6
41	17C-6116	BOLT			4
42	35C-508	BOLT			2
43	5HM-14	CLAMP			2
44	5HM-24	CLAMP			2
45	61D-6	NUT			6
46	7J-2108	KEY			1
47	84G-3112	BOLT			3
48	96D-8	NUT			1
49	6650407	ADHESIVE	1oz. tube		x
50	6577822	HOSE	bulk - Sold Per Foot		x
51	6646705	MOULDING	bulk - Sold Per Foot		x

www.youfixthis.com

COOLING SYSTEM

Ref.N°	Part N°	Description	Remarks	Serial N°	Qty.
52	6511855	FOAM STRIP	bulk - Sold Per Foot		x
53	6578172	HOSE	bulk - Sold Per Foot		1
54	79K-2	O-RING			1

www.youfixthis.com

ENGINE & ATTACHING PARTS

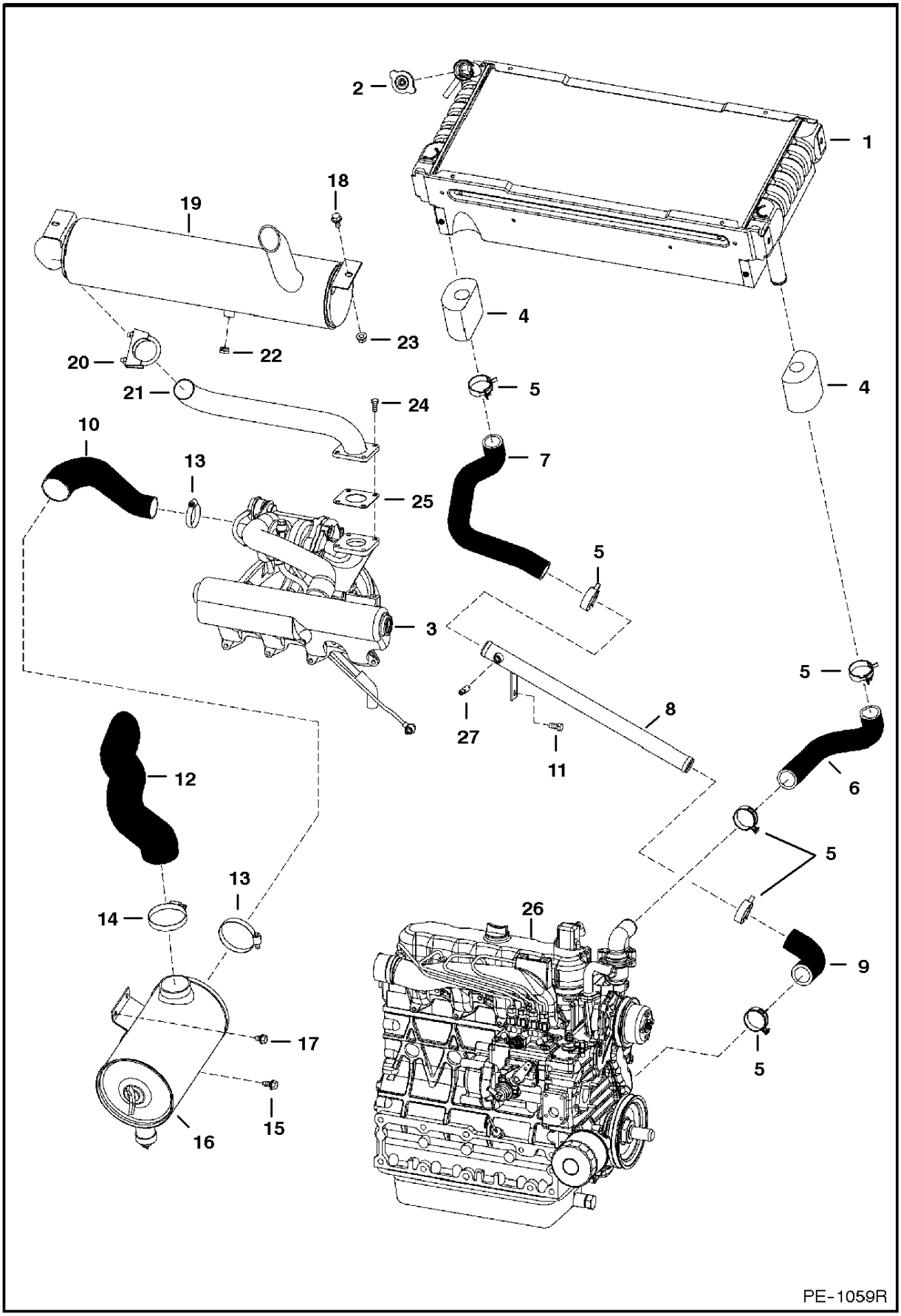

www.youfixthis.com

ENGINE & ATTACHING PARTS

Ref.N°	Part N°	Description	Remarks	Serial N°	Qty.
1	6718648	RADIATOR			1
2	6672491	CAP	14 PSI		1
3	6686048	TURBO	See Page TURBO CHARGER(1)		1
4	6726433	SPACER			2
5	5HM-42	CLAMP			6
6	6717591	HOSE			1
7	6717592	HOSE			1
8	6730999	TUBE ASSY			1
9	7100024	HOSE			1
10	6737355	HOSE			1
11	17C-612	BOLT			1
12	6717674	HOSE			1
13	42HL-300	CLAMP			2
14	42HL-325	CLAMP			1
15	84G-3712	BOLT			1
16	6700711	AIR CLEANER	See Page AIR CLEANER(1)		1
17	84G-3708	BOLT			2
18	35C-612	BOLT			2
19	6683915	MUFFLER			1
20	6677363	CLAMP			1
21	6683820	PIPE			1
22	6661062	PLUG	brass 3/8" (9,5 mm)		1
23	61D-6	NUT			2
24	6701123	BOLT			4
25	6727753	GASKET			1
26	6686031	ENGINE	See Page ENGINE & GASKET KITS(1)		1
27	40K-6	PLUG			1

www.youfixthis.com

ENGINE & ATTACHING PARTS
(Belt Drive System)

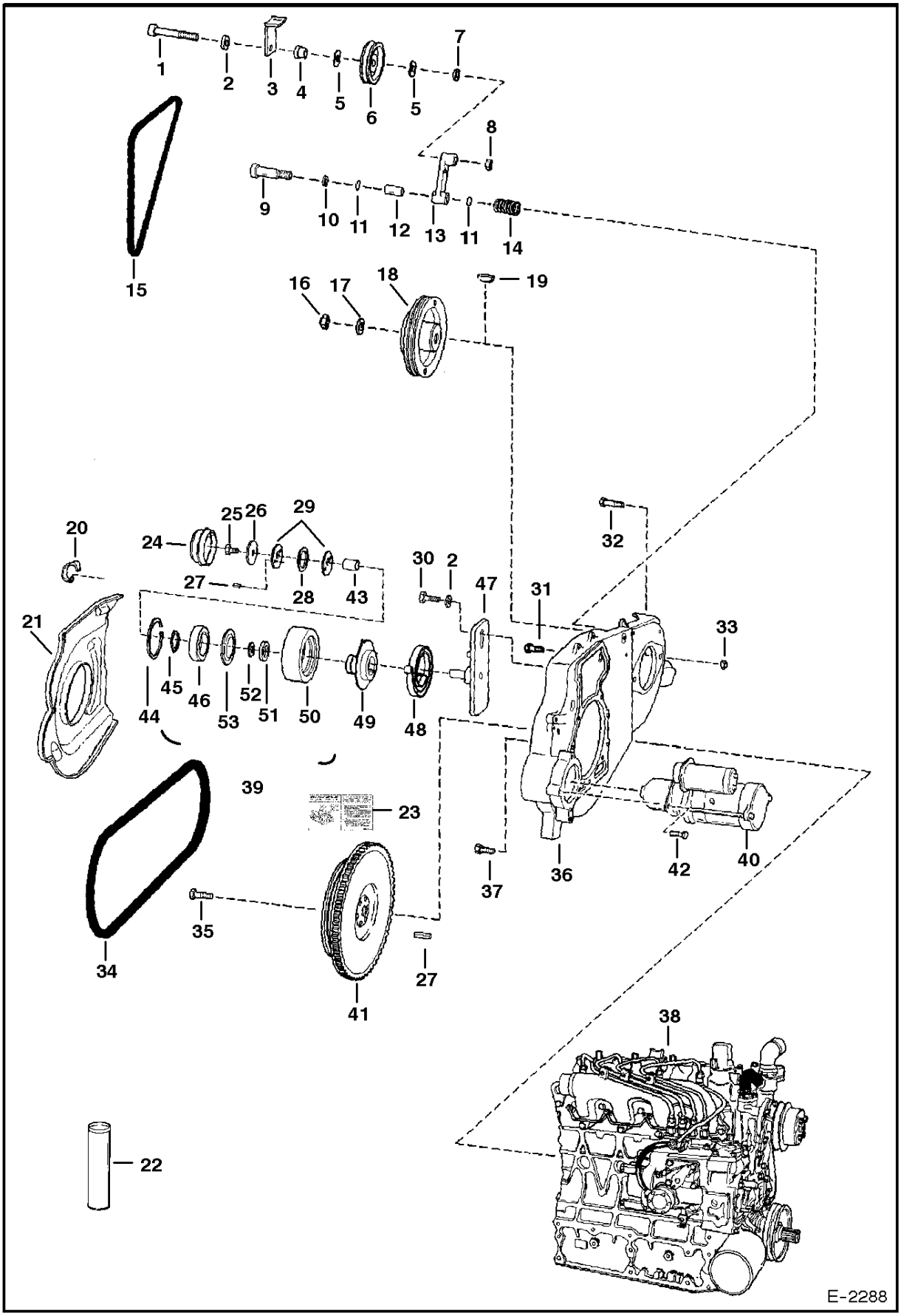

www.youfixthis.com

ENGINE & ATTACHING PARTS

Ref.N°	Part N°	Description	Remarks	Serial N°	Qty.
1	73G-656	BOLT			1
2	6704484	WASHER	thrust		3
3	6702474	RETAINER	fan drive idler belt		1
4	6704443	BUSHING	spacer		1
5	6660995	RING	grease		2
6	6662997	PULLEY	fan drive idler		1
7	6704444	WASHER			1
8	61D-6	NUT			1
9	38C-820	BOLT	shoulder		1
10	6655781	BEARING			1
11	6704820	O-RING			2
12	6670682	BEARING	nylon		1
13	6725212	IDLER ARM	W/Ref. ENGINE & ATTACHING PARTS(12)		1
14	6700115	SPRING			1
15	6718730	BELT	fan drive - See Page COOLING SYSTEM(1)		1
16	92D-12	NUT			1
17	6576033	WASHER			1
18	6726539	PULLEY	to hyd. pump - 3 groove - 7.95' (202 mm) dia.		1
19	6J-807	KEY			1
20	6703022	CLIP			3
21	6726938	SHIELD			1
22	6599719	GREASE	Use W/Ref. ENGINE & ATTACHING PARTS(39)		x
23	6709030	DECAL	belt tension spring loaded idler		1
24	6708770	CAP	dust		1
25	17C-610	BOLT			1
26	6705232&	WASHER			1
27	6713370	PIN			2
28	6710585	WASHER	wave spring		1
29	6705231	WASHER			2
30	17C-620	BOLT			1
31	6719828	BOLT			2
32	17C-828	BOLT	hyd. pump mount		2
33	85D-8	NUT			2
34	6736775	BELT	$pump drive		1
35	6598275	BOLT			6
36	6728062	MOUNT			1
37	6719825	BOLT			7
38	6686031	ENGINE	See Page ENGINE & GASKET KITS(1)		1
39	6735884	IDLER ASSY.	spring loaded - Ref. ENGINE & ATTACHING PARTS(24) - ENGINE & ATTACHING PARTS(29) & ENGINE & ATTACHING PARTS(43) - ENGINE & ATTAC		1
39	6714212	PULLEY ASSY.	Ref. ENGINE & ATTACHING PARTS(43) - ENGINE & ATTACHING PARTS(46) & ENGINE & ATTACHING PARTS(49) - ENGINE & ATTACHING PARTS(53),		1
40	6685190	STARTER	See Page STARTER(1)		1
41	6736807	FLYWHEEL ASSY	W/Ring Gear		1
41	6510470	RING GEAR			1
42	35C-620	BOLT			3
43	6682442	BEARING	bronze sleeve		1
44	6658847	SNAP RING			1
45	6658536	SNAP RING			1
46	6668114	BEARING	ball		1
47	6735883	BRACKET			1
48	6705491	SPRING	torsion		1
49	6711699	HUB ASSY.			1
50	6704391	PULLEY	idler		1

www.youfixthis.com

ENGINE & ATTACHING PARTS

Ref.N°	Part N°	Description	Remarks	Serial N°	Qty.
51	6661112	SEAL			1
52	6703168	BEARING	thrust		1
53	6664209	SEAL			1

www.youfixthis.com

ENGINE & ATTACHING PARTS
(Engine Mounts)

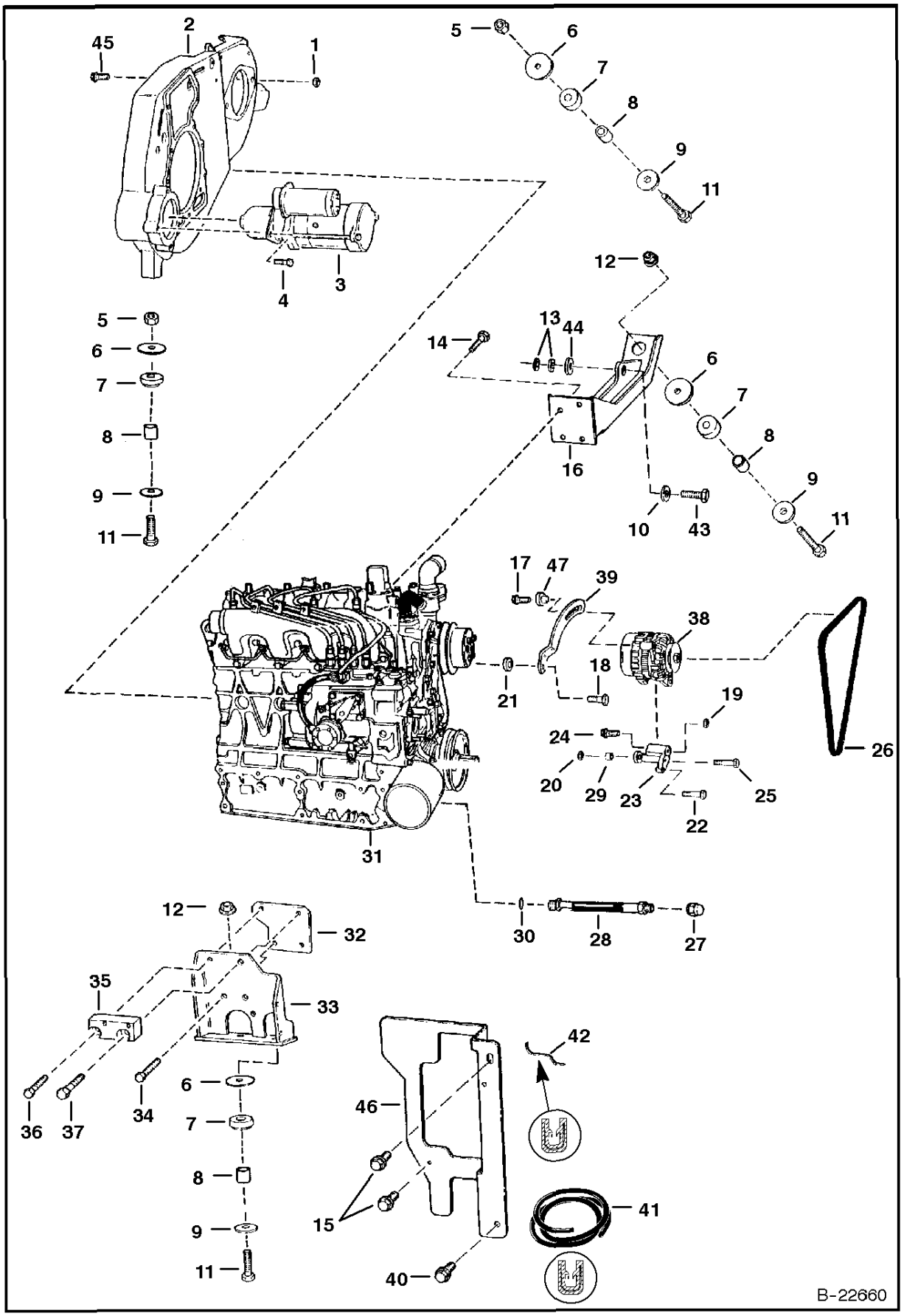

www.youfixthis.com

ENGINE & ATTACHING PARTS

Ref.N°	Part N°	Description	Remarks	Serial N°	Qty.
1	85D-8	NUT			2
2	6728062	MOUNT	See Page ENGINE & ATTACHING PARTS(1)		1
3	6685190	STARTER	See Page STARTER(1)		1
4	35C-620	BOLT			3
5	6652918	NUT			2
6	6705106	WASHER			4
7	6661785	MOUNT			4
8	6706043	BUSHING			4
9	6661787	WASHER			4
10	6734432	SPACER			1
11	43C-852	BOLT			4
12	83D-8	NUT			2
13	25E-21	WASHER	use 2 max.		x
14	6719827	BOLT			4
15	84G-3712	BOLT			2
16	6712161	MOUNT	engine & hyd. pump for horizontal mount		1
17	35C-516	BOLT			3
18	29CM-820	BOLT			1
19	57D-5	NUT			1
20	53DM-8	NUT			2
21	6E-5	WASHER			1
22	1CM-890	BOLT			1
23	6725427	BRACKET			1
24	17C-556	BOLT			1
25	1CM-8100	BOLT			2
26	6675837	BELT	alternator		1
27	36K-6	CAP			1
28	6563445	HOSE			1
29	6675838	BUSHING			1
30	79K-8	O-RING			x
31	6686031	ENGINE	See Page ENGINE & GASKET KITS(1)		1
32	6700535	SPACER			1
33	6703981	MOUNT			1
34	6719828	BOLT			2
35	6736817	MOUNT	fuel filter		1
36	6719826	BOLT			1
37	6719829	BOLT			1
38	6678205	ALTERNATOR	90 amp. - See Page ALTERNATOR(1)		1
39	6730867	BRACKET			1
40	84G-3716	BOLT			2
41	6654139	MOULDING	bulk - Sold Per Foot		x
42	NAP	MOULDING	5.5'(139,7 mm) long - Order Ref. ENGINE & ATTACHING PARTS(41)		1
43	6675221	BOLT	hyd. pump mount - 2.25' long		1
44	6703140	WASHER			1
45	17C-828	BOLT	hyd. pump mount		2
46	6731060	SHIELD	bolts to upright		1
47	6817566	BUSHING			1

www.youfixthis.com

THROTTLE

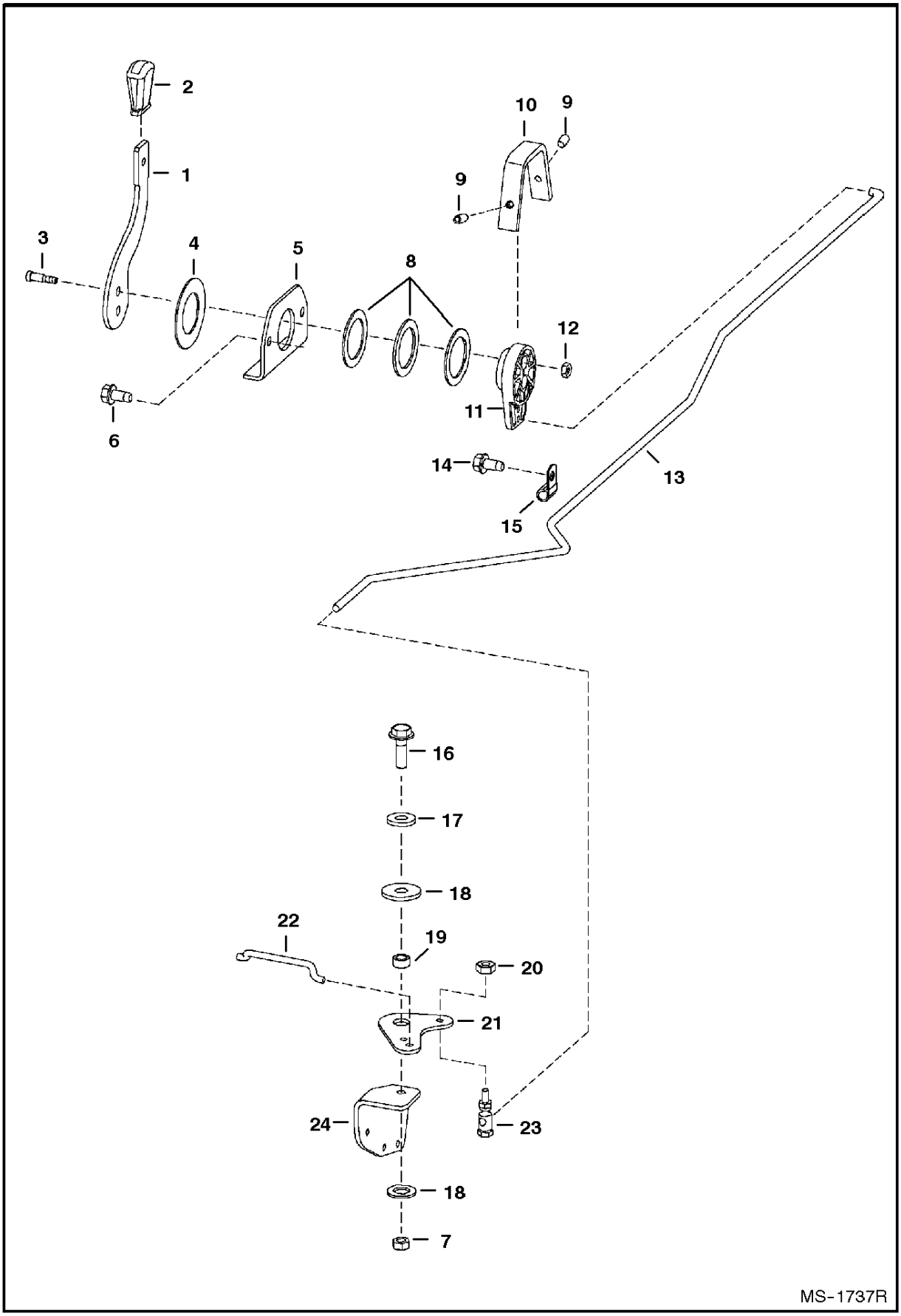

www.youfixthis.com

THROTTLE

Ref.N°	Part N°	Description	Remarks	Serial N°	Qty.
1	6705452	LEVER			1
2	6564452	GRIP			1
3	38C-610	BOLT	shoulder		2
4	6567962	WASHER			1
5	6576262	MOUNT			1
6	84G-3724	BOLT			2
7	95D-6	NUT			1
8	6630945	WASHER			3
9	6706572	SET SCREW			2
10	6576261	COVER			1
11	6709022	LEVER			1
12	85D-5	NUT			2
13	6702397	ROD			1
14	84G-3712	BOLT			1
15	30H-23	CLAMP			1
16	84G-3716	BOLT			1
17	25E-18	WASHER			1
18	6700170	WASHER	plastic		2
19	6564343	BUSHING			1
20	59D-4	NUT			1
21	6578268	BELLCRANK			1
22	6736195	ROD			1
23	6557291	BALL JOINT			1
24	6735986	MOUNT			1

www.youfixthis.com

COOLING FAN DRIVE ASSY.

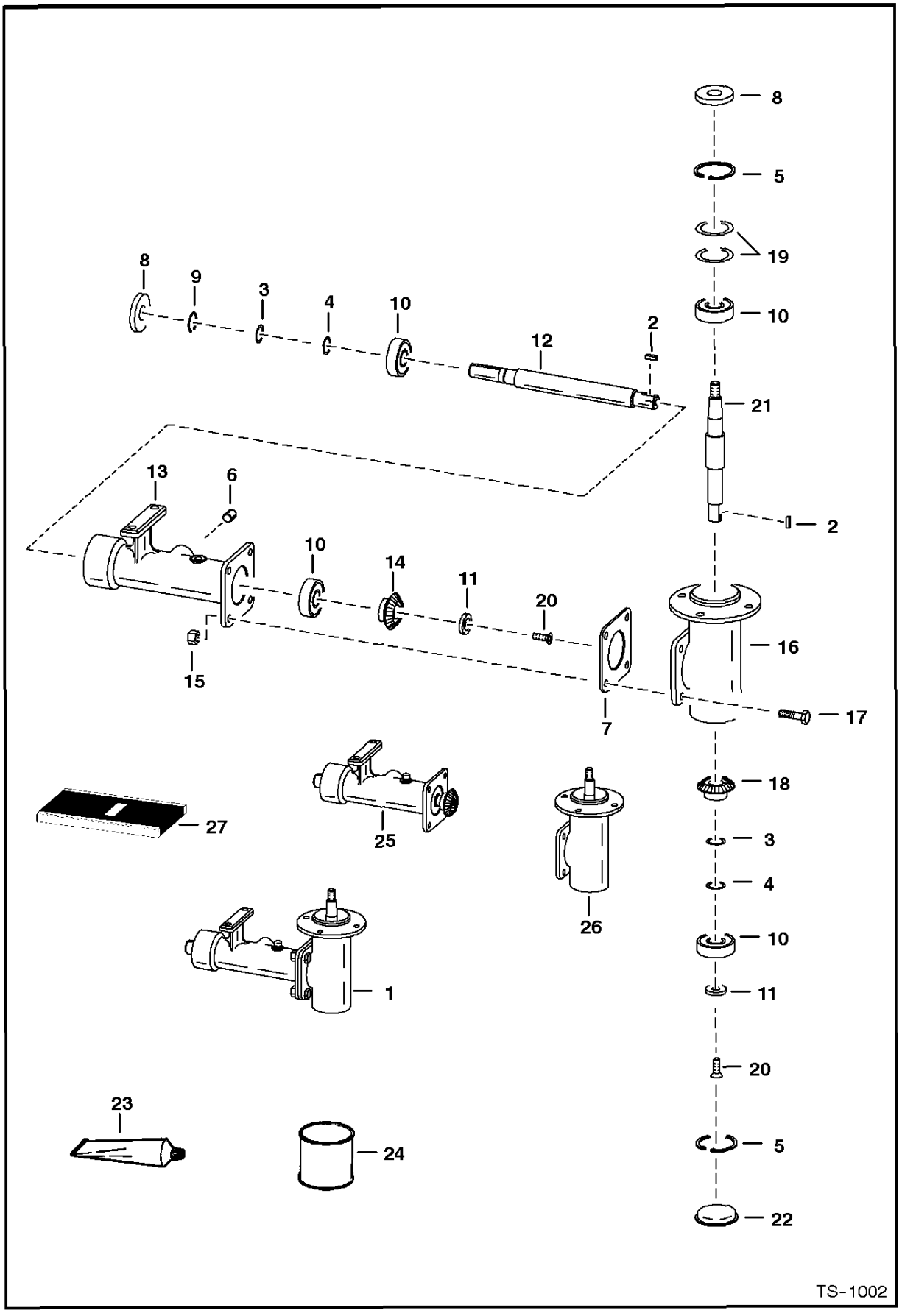

www.youfixthis.com

COOLING FAN DRIVE ASSY.

Ref.N°	Part N°	Description	Remarks	Serial N°	Qty.
1	6734104	HOUSING ASSY.	Ref. COOLING FAN DRIVE ASSY.(2) - COOLING FAN DRIVE ASSY.(22)		1
2	7J-2010	KEY			2
3	6702165	SHIM	.002'(0,05 mm) thickness - 1'(25,4 mm) O.D.		x
4	6701159	SHIM	.005'(0,13 mm) thickness - 1'(25,4 mm) O.D.		x
5	6653758	SNAP RING			2
6	16F-8	PLUG			1
7	6578284	SHIM	.003" (0,08 mm) thickness		x
8	6653702	SEAL			2
9	6653757	SNAP RING			1
10	6646627&	BEARING			4
11	NAP	WASHER	countersink		2
12	6702137	SHAFT	keyed		1
13	6579641	HOUSING			1
14	6702103	GEAR	keyed		1
15	95D-6	NUT			4
16	NSS	HOUSING	$Order 6702138 Housing or Ref. COOLING FAN DRIVE ASSY.(26)		1
17	17C-620	BOLT			4
18	6702102	GEAR	keyed		1
19	6702166	SHIM	.002" (0,05 mm) thickness - 2'(50,8 mm) O.D.		x
19	6702144	SHIM	.005" (0,13 mm) thickness - 2'(50,8 mm) O.D.		x
20	9G-512	SCREW			2
21	6702135	SHAFT	keyed		1
22	6700782	CAP	grease		1
23	6672486	SEALANT	polyurethane - Use W/Ref. COOLING FAN DRIVE ASSY.(7) & COOLING FAN DRIVE ASSY.(22)		x
24	6634393	LUBRICANT	gear - 1 pint		x
25	6707078	HOUSING ASSY.	half		1
26	6707077	HOUSING ASSY.	half		1
27	6669384	SPEEDY SLEEVE	repair kit		1

www.youfixthis.com

ENGINE & GASKET KITS
(Kubota - V2403-M-DI-TE2B-BC-1)

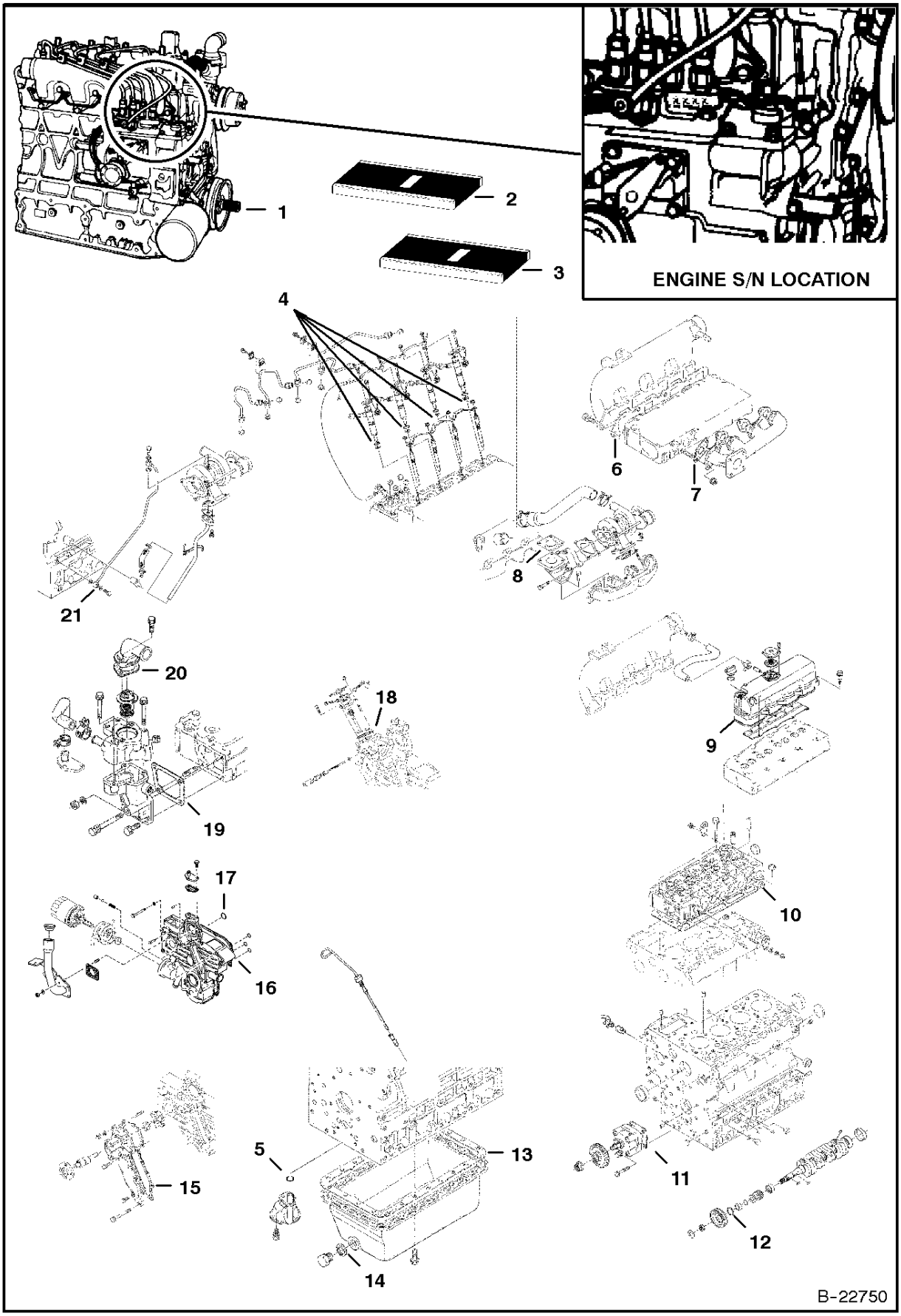

www.youfixthis.com

ENGINE & GASKET KITS

Ref.N°	Part N°	Description	Remarks	Serial N°	Qty.
1	6686031	ENGINE	Does not include starter, alternator, flywheel, & flywheel housing		1
2		GASKET KIT	Upper		1
3		GASKET KIT	Lower		1
4	6670769	O-RING	See Page INJECTOR NOZZLES(1)		4
5	6684754	O-RING	See Page OIL PAN(1)		1
6	6684877	GASKET	See Page MANIFOLDS(1)		1
7	6684879	GASKET	See Page MANIFOLDS(1)		4
8	6684782	O-RING	See Page ROCKER ARM COVER(1)		1
9	6684780	GASKET	See Page ROCKER ARM COVER(1)		1
10		GASKET	cylinder head - See Page CYLINDER HEAD(1)		x
11	6666782	GASKET	See Page CRANKCASE(1)		7
12	3974577	O-RING	See Page PISTON & CRANKSHAFT(1)		1
13	6684753	GASKET	oil pan - See Page OIL PAN(1)		1
14	6631046	GASKET	See Page OIL PAN(1)		1
15	6684870	GASKET	See Page WATER PUMP(1)		1
16	6684770	GASKET	gearcase - See Page GEARCASE(1)		1
17	6685468	O-RING	See Page GEARCASE(1)		1
18	6684824	GASKET	speed control plate - See Page SPEED CONTROL PLATE(1) & See Page BOOST COMPENSATOR(1)		1
19	6666802	GASKET	water flange - See Page WATER FLANGE & THERMO STAT(1)		1
20	6684863	GASKET	thermostat cover - See Page WATER FLANGE & THERMOSTAT(1)		1
21	3974095	GASKET	See Page OIL PIPE(1)		2

www.youfixthis.com

GEARCASE

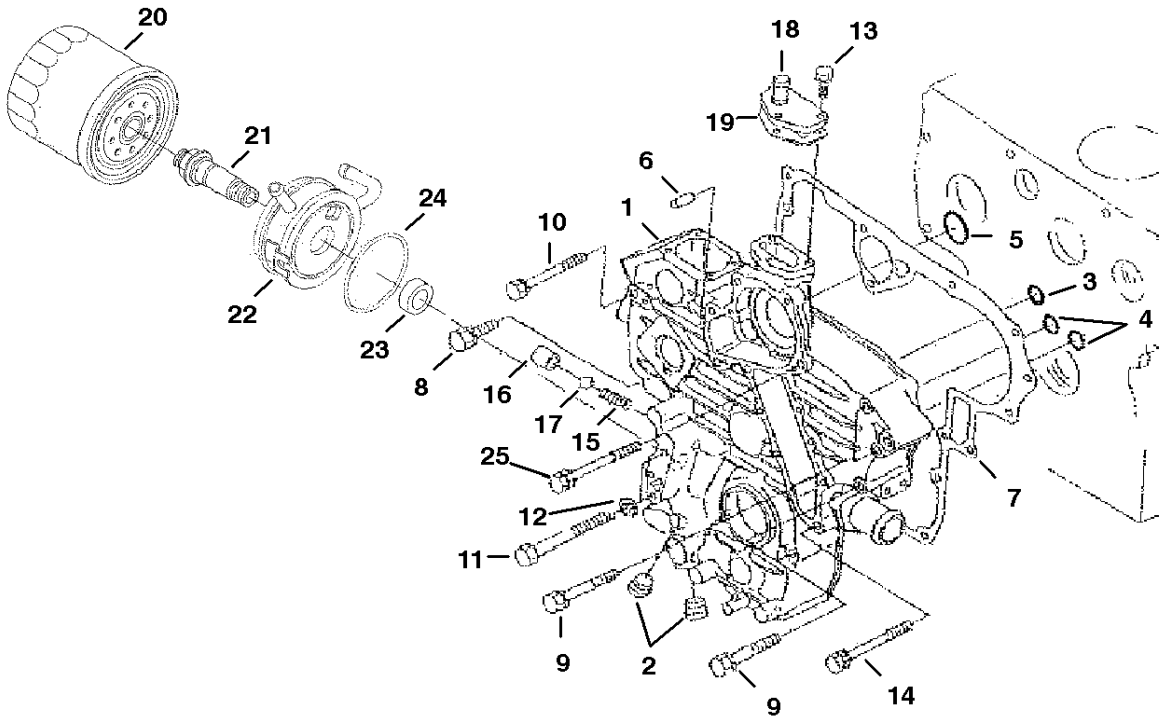

B-22736

www.youfixthis.com

GEARCASE

Ref.N°	Part N°	Description	Remarks	Serial N°	Qty.
1	6686045	GEAR CASE			1
2	6672360	PLUG			2
3	6685466	O-RING			1
4	6685467	O-RING			2
5	6685468	O-RING			1
6	3974395	PIN			2
7	6684770	GASKET			1
8	1CM-835	BOLT			1
9	1CM-870	BOLT			7
10	6653807	BOLT			1
11	6684772	BOLT			2
12	6667422	WASHER			2
13	4CM-620	BOLT			3
14	6653808	BOLT			4
15	6652652	SPRING			1
16	3974893	SEAT	valve		1
17	10J-13	BALL			1
18	3974894	FLANGE	water return		1
19	6684774	GASKET			1
20	6675517	FILTER	6 pack		1
21	6675681	ADAPTER			1
22	6685641	OIL COOLER	See Page OIL COOLER(1)		1
23	6685637	COLLAR			1
24	6657422	O-RING			1
25	6653808	BOLT			4

www.youfixthis.com

OIL COOLER

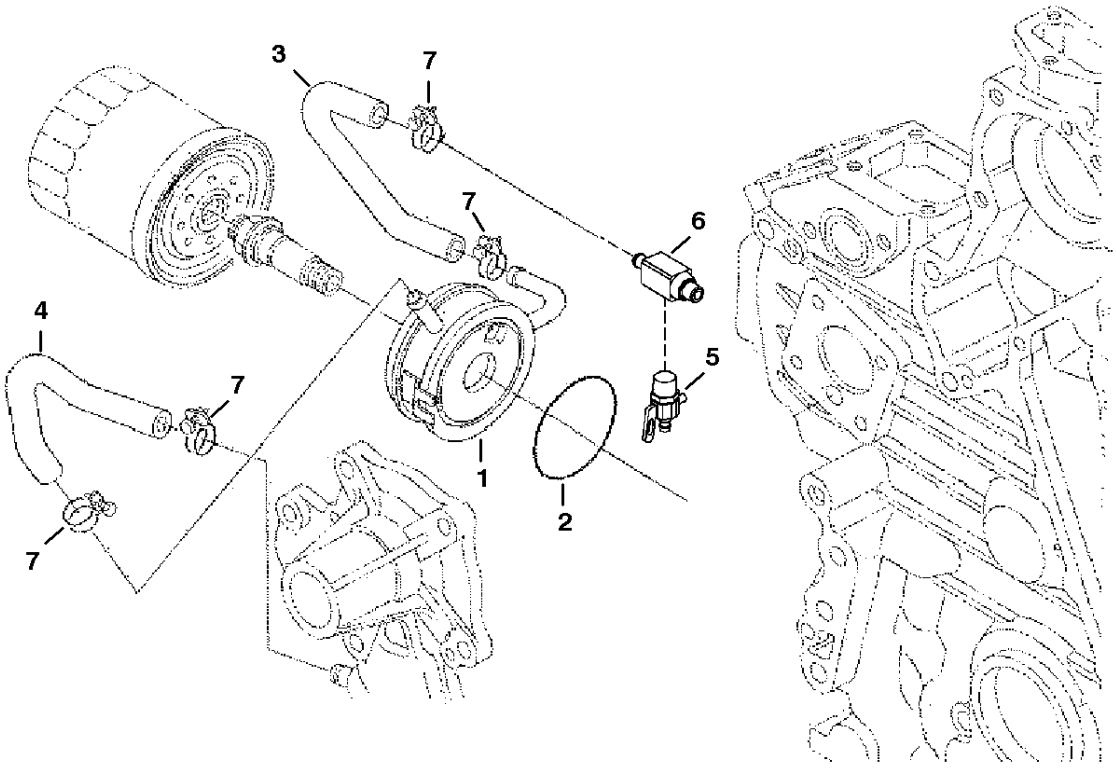

B-22748

www.youfixthis.com

OIL COOLER

Ref.N°	Part N°	Description	Remarks	Serial N°	Qty.
1	6685641	OIL COOLER	W/Ref. OIL COOLER(2)		1
2	6657422	O-RING			1
3	6685642	HOSE			1
4	6685643	HOSE			1
5	6672190	GEAR			1
6	6678946	FITTING			1
7	6652748	CLAMP			4

www.youfixthis.com

CRANKCASE

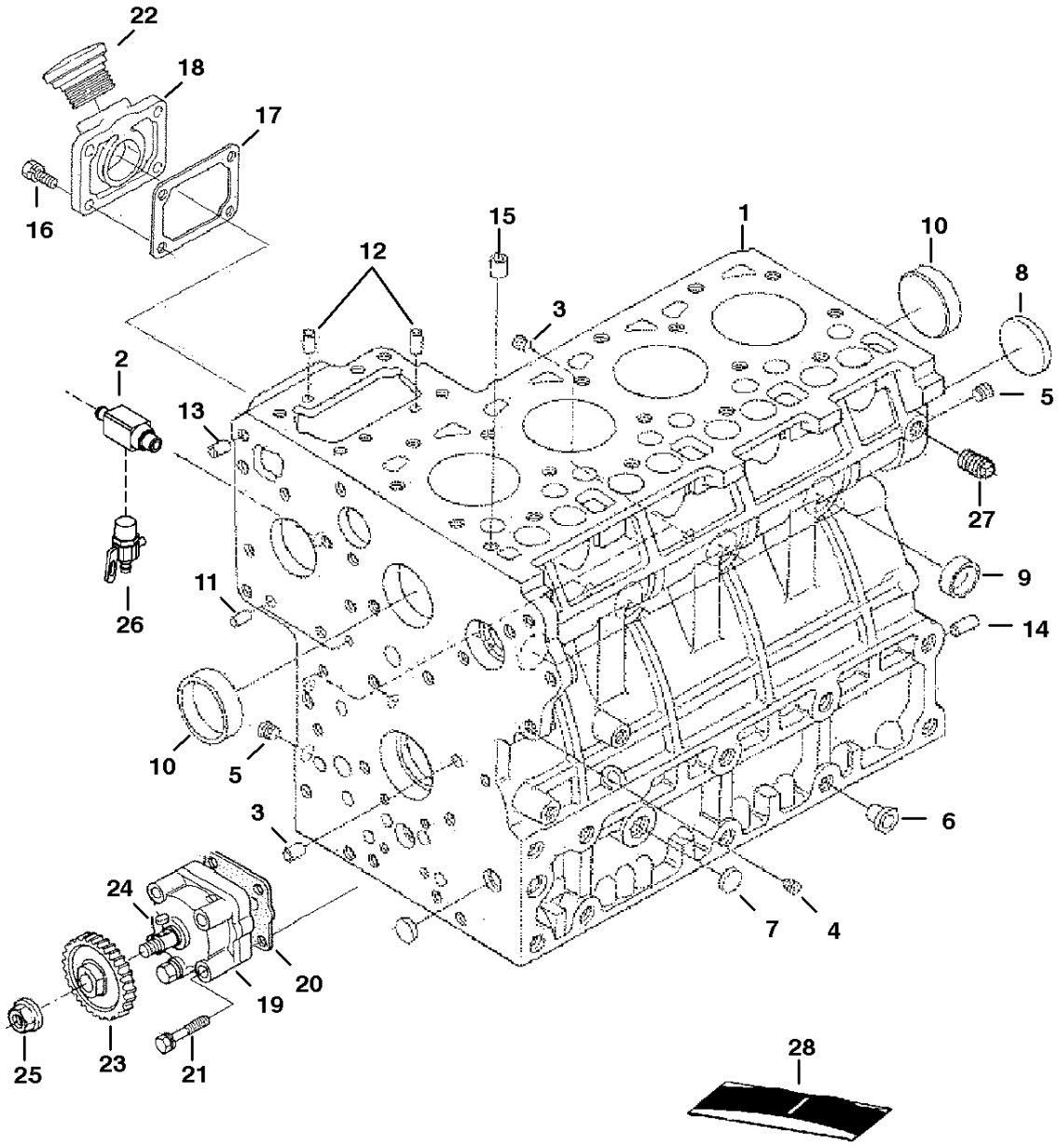

www.youfixthis.com

CRANKCASE

Ref.N°	Part N°	Description	Remarks	Serial N°	Qty.
1	6686044	CRANKCASE	assy. - W/Ref. CRANKCASE(2) - CRANKCASE(15)		1
2	6678946	FITTING			1
3	6652574	PLUG			5
4	6685477	PLUG			1
5	6652575	PLUG			2
6	6598187	PLUG			2
7	6667418	PLUG	expansion		3
8	6657663	PLUG	expansion		1
9	3974389	CAP	sealing		6
10	6680639	PLUG	sealing		2
11	3974393	PIN	straight		2
12	3974394	PIN	straight		3
13	3974395	PIN	straight		2
14	3974868	PIN	straight		1
15	3974037	PIN	pipe		1
16	6652580	BOLT			4
17	6684752	GASKET			1
18	6685478	FLANGE	oil fill		1
19	6682498	OIL PUMP			1
20	6666782	GASKET			1
21	6655195	BOLT			4
22	6685472	CAP	oil fill		1
23	3975441	GEAR			1
24	15JM-410	KEY			1
25	6653888	NUT			1
26	6672190	GEAR			1
27	16F-2	PLUG			1
28		GASKET KIT	Lower - Does not include rear oil seal - See Page ENGINE & GASKET KITS(1)		1

www.youfixthis.com

ROCKER ARM COVER

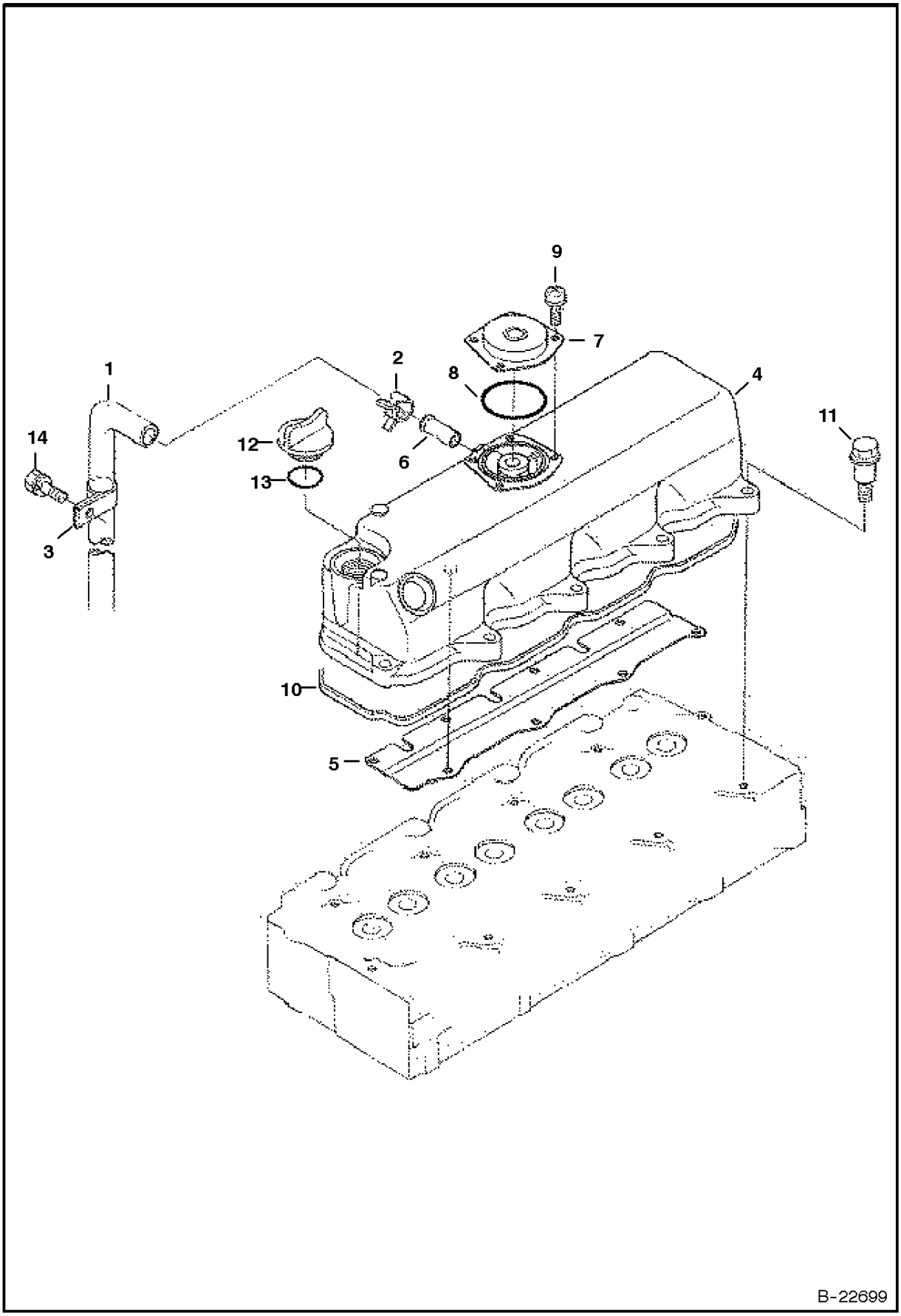

www.youfixthis.com

ROCKER ARM COVER

Ref.N°	Part N°	Description	Remarks	Serial N°	Qty.
1	6685580	TUBE	breather		1
2	6684776	CLAMP			1
3	6684777	CLAMP			1
4	6684778	CLAMP			1
5	6684779	SHIELD	breather		1
6	6655880	PIPE			1
7	6680692	COVER			1
8	6685581	O-RING			1
9	3974928	BOLT	W/Washer		4
10	6684780	GASKET			1
11	6684781	BOLT			10
12	6652653	PLUG	oil filler		1
13	6684782	O-RING			1
14	4CM-822	BOLT			1

www.youfixthis.com

VALVE ROCKER ARM

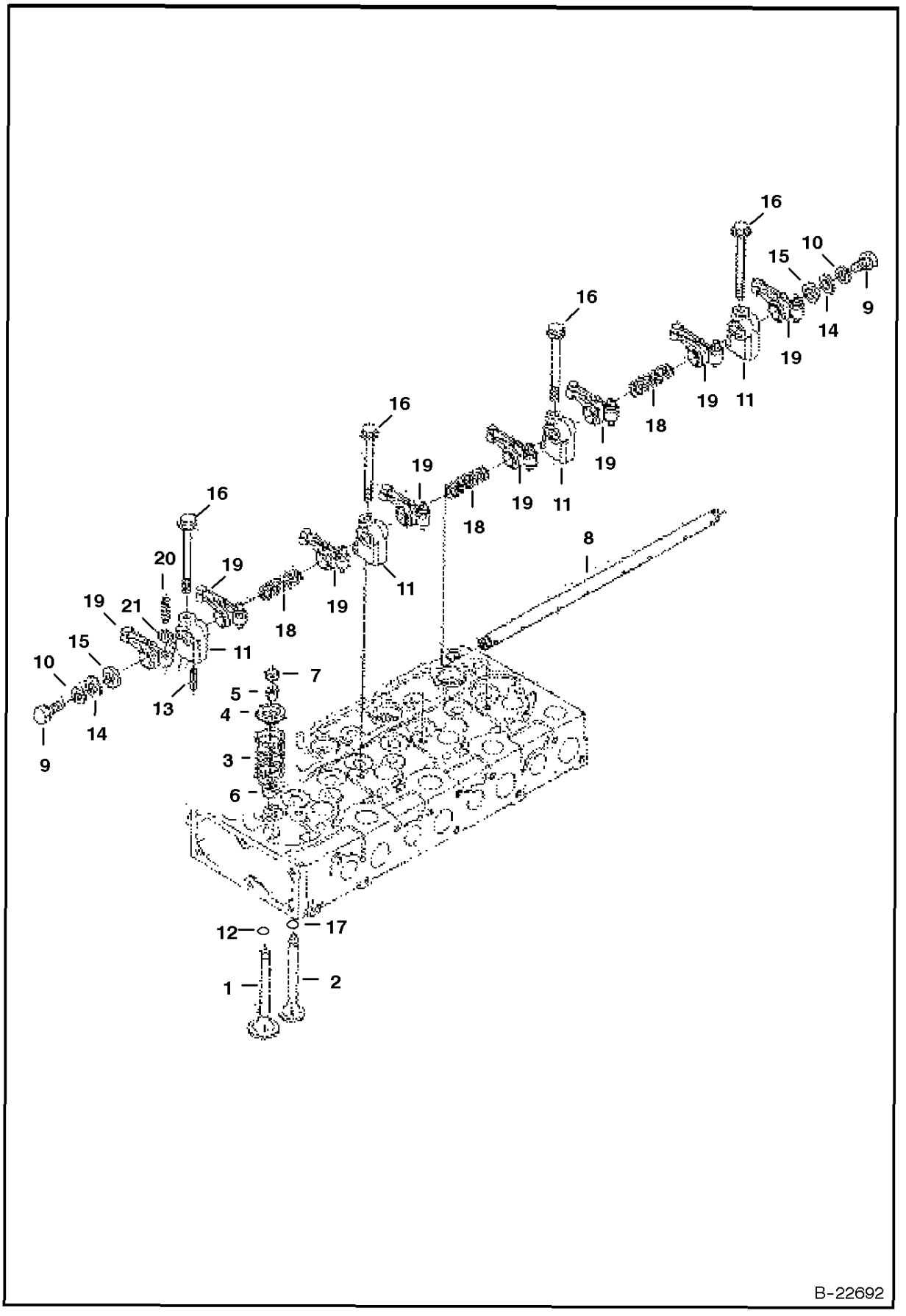

www.youfixthis.com

VALVE ROCKER ARM

Ref.N°	Part N°	Description	Remarks	Serial N°	Qty.
1	6684872	VALVE	inlet		4
2	6684873	VALVE	exhaust		4
3	3974514	SPRING	valve		8
4	3974515	RETAINER	valve spring		8
5	3974516	COLLET	valve spring - complete set		1
6	6653830	SEAL	valve stem		8
7	3974518	CAP	valve		8
8	6684875	SHAFT	rocker arm		1
9	5CM-812	BOLT			2
10	6667422	WASHER	external		2
11	3974521	BRACKET	rocker arm		4
12	6655155	SEAT	valve inlet		4
13	6667461	ORIFICE	spring		4
14	6667451	WASHER	spring		4
15	3974524	WASHER			2
16	6680685	BOLT			1
17	6655156	SEAT	valve exhaust		4
18	6653833	SPRING	rocker arm		3
19	6655870	ARM	rocker - W/Ref. VALVE ROCKER ARM(20) & VALVE ROCKER ARM(21)		8
20	3974920	SCREW	adjusting		8
21	2DM-8	NUT			8

www.youfixthis.com

CYLINDER HEAD

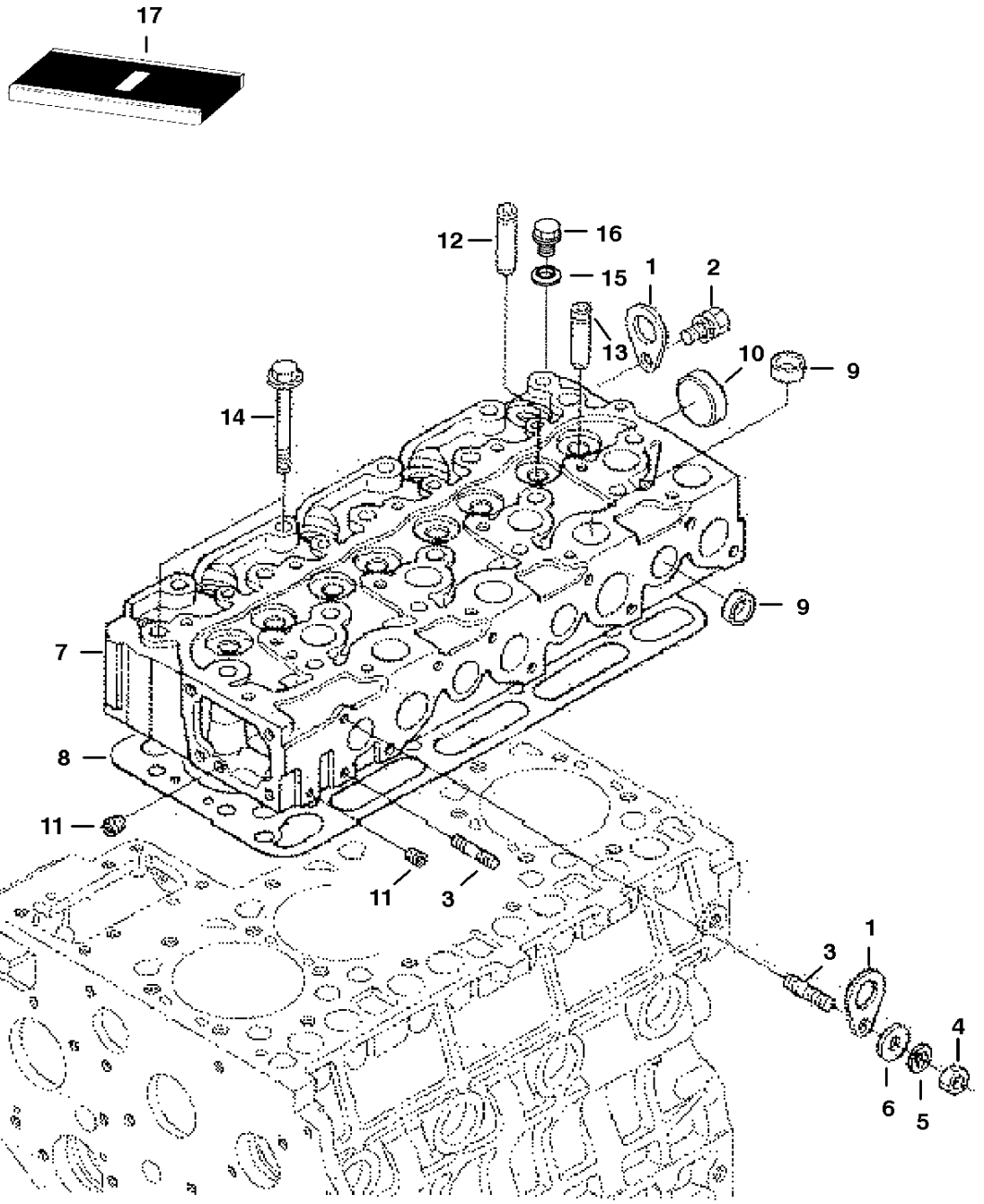

www.youfixthis.com

CYLINDER HEAD

Ref.N°	Part N°	Description	Remarks	Serial N°	Qty.
1	3974882	HOOK			1
2	6667421	BOLT			1
3	6598156	STUD			2
4	6652792	NUT			2
5	6667422	WASHER	spring		2
6	2EM-8	WASHER	plain		2
7	6684755	HEAD	cylinder - W/Ref. CYLINDER HEAD(9) - CYLINDER HEAD(13)		1
8	6685077	GASKET	cylinder head - 1.20 mm		1
8	6685078	GASKET	cylinder head - 1.15 mm		1
8	6685079	GASKET	cylinder head - 1.25 mm		1
8	6685080	GASKET	cylinder head - 1.30 mm		1
8	6685081	GASKET	cylinder head - 1.35 mm		1
9	3974432	CAP	sealing		12
10	3974433	CAP	sealing		1
11	6598116	PLUG			2
12	6655154	GUIDE	intake valve		4
13	6684756	GUIDE	exhaust valve		4
14	6655158	BOLT			18
15	6655161	WASHER			1
16	6655160	PLUG			1
17		GASKET KIT	upper - See Page ENGINE & GASKET KITS(1)		1

www.youfixthis.com

OIL PAN

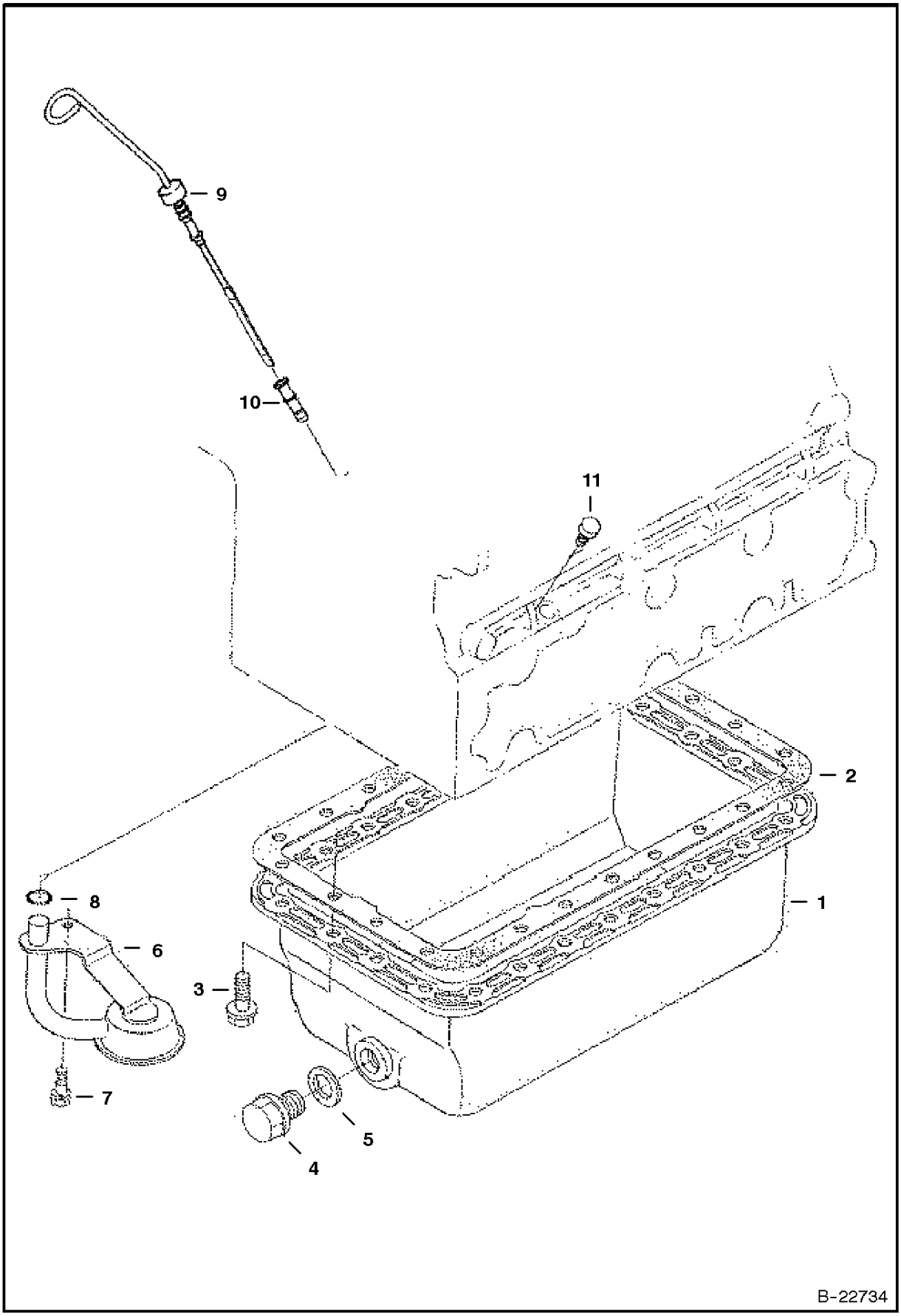

www.youfixthis.com

OIL PAN

Ref.N°	Part N°	Description	Remarks	Serial N°	Qty.
1	6685518	OIL PAN			1
2	6684753	GASKET	oil pan		1
3	6653798	BOLT			24
4	6680567	GASKET	drain		1
5	6631046	GASKET			1
6	6682500	OIL FILTER			1
7	6667420	BOLT			1
8	6684754	O-RING			1
9	6685499	DIPSTICK	oil		1
10	6677203	TUBE			1
11	6684785	PLUG			1

www.youfixthis.com

PISTON & CRANKSHAFT

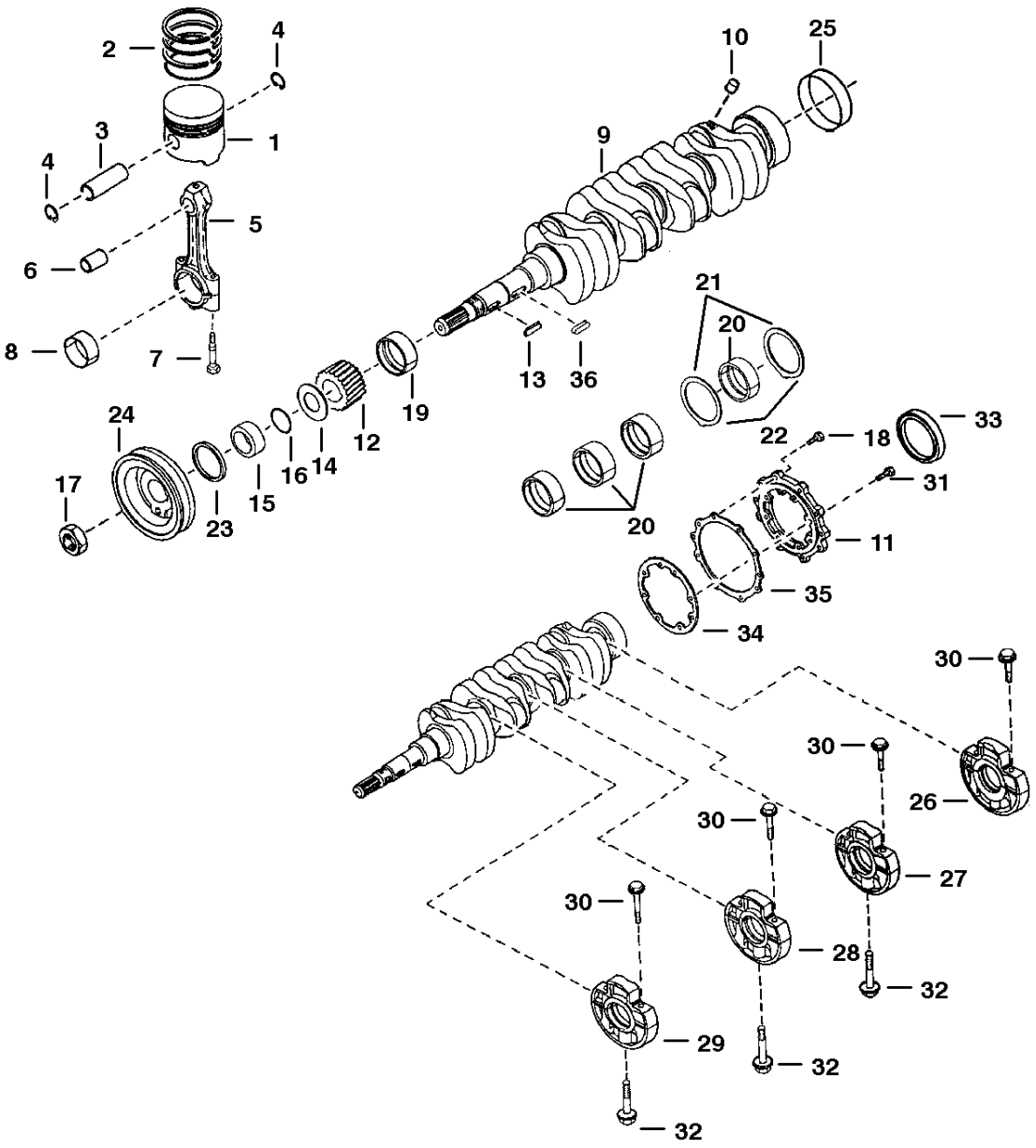

www.youfixthis.com

PISTON & CRANKSHAFT

Ref.N°	Part N°	Description	Remarks	Serial N°	Qty.
1	6686051	PISTON	Std.		4
1	6686052	PISTON	+.25		4
2	6686049	RINGS	piston - Std.		4
2	6686050	RINGS	piston - +.25		4
3	6655179	PIN			4
4	6655180	CIR-CLIP			8
5	6686054	ROD	connecting - W/Ref. PISTON & CRANKSHAFT(6), PISTON & CRANKSHAFT(7) & PISTON & CRANKSHAFT(8)		4
6	6686053	BUSHING			4
7	6655498	BOLT			8
8	6655183	BEARING	rod - Std.		4
8	6655236	BEARING	rod (0,2 mm-.0079)		4
8	6655237	BEARING	rod (0,4 mm-.0157)		4
9	6686040	CRANKSHAFT	Ref. PISTON & CRANKSHAFT(10) & PISTON & CRANKSHAFT(25) - Ref. PISTON & CRANKSHAFT(10) must be installted before using		1
10	6652633	PLUG	Must be installed before using Ref. PISTON & CRANKSHAFT(9) crankshaft - See S/L dated 3 Jan 85		4
11	6685515	COVER			1
12	6684808	GEAR			1
13	6684809	KEY			2
14	6653861	SLINGER	oil		1
15	3975337	COLLAR			1
16	3974577	O-RING			1
17	3974671	NUT			1
18	4CM-825	BOLT			8
19	6685486	BEARING	main - Std.		1
19	6685490	BEARING	main (0,2 mm-.0079)		1
19	6685491	BEARING	main (0,4 mm-.0157)		1
20	6685487	BEARING	main - Std.		4
20	6685492	BEARING	main (0,2 mm-.0079)		4
20	6685493	BEARING	main (0,4 mm-.0157)		4
21	6685488	WASHER	thrust - Std.		2
21	6685494	WASHER	thrust (0,2 mm-.0079)		2
21	6685495	WASHER	thrust (0,4 mm-.0157)		2
22	6685489	WASHER	thrust - Std.		2
22	6685496	WASHER	thrust (0,2 mm-.0079)		2
22	6685497	WASHER	thrust (0,4 mm-.0157)		2
23	6631664	SEAL	oil		1
24	6685521	PULLEY			1
25	6653859	SLEEVE			1
26	6685583	CASE	main bearing - W/Ref. PISTON & CRANKSHAFT(30)		1
27	6685586	CASE	main bearing - W/Ref. PISTON & CRANKSHAFT(30)		1
28	6685585	CASE	main bearing - W/Ref. PISTON & CRANKSHAFT(30)		1
29	6685584	CASE	main bearing - W/Ref. PISTON & CRANKSHAFT(30)		1
30	6685482	BOLT			8
31	4CM-828	BOLT			8
32	6653821	BOLT			3
33	6684789	SEAL	oil		1
34	6684788	GASKET			1
35	6666814	GASKET			1
36	6685469	KEY			1

www.youfixthis.com

FUEL CAMSHAFT

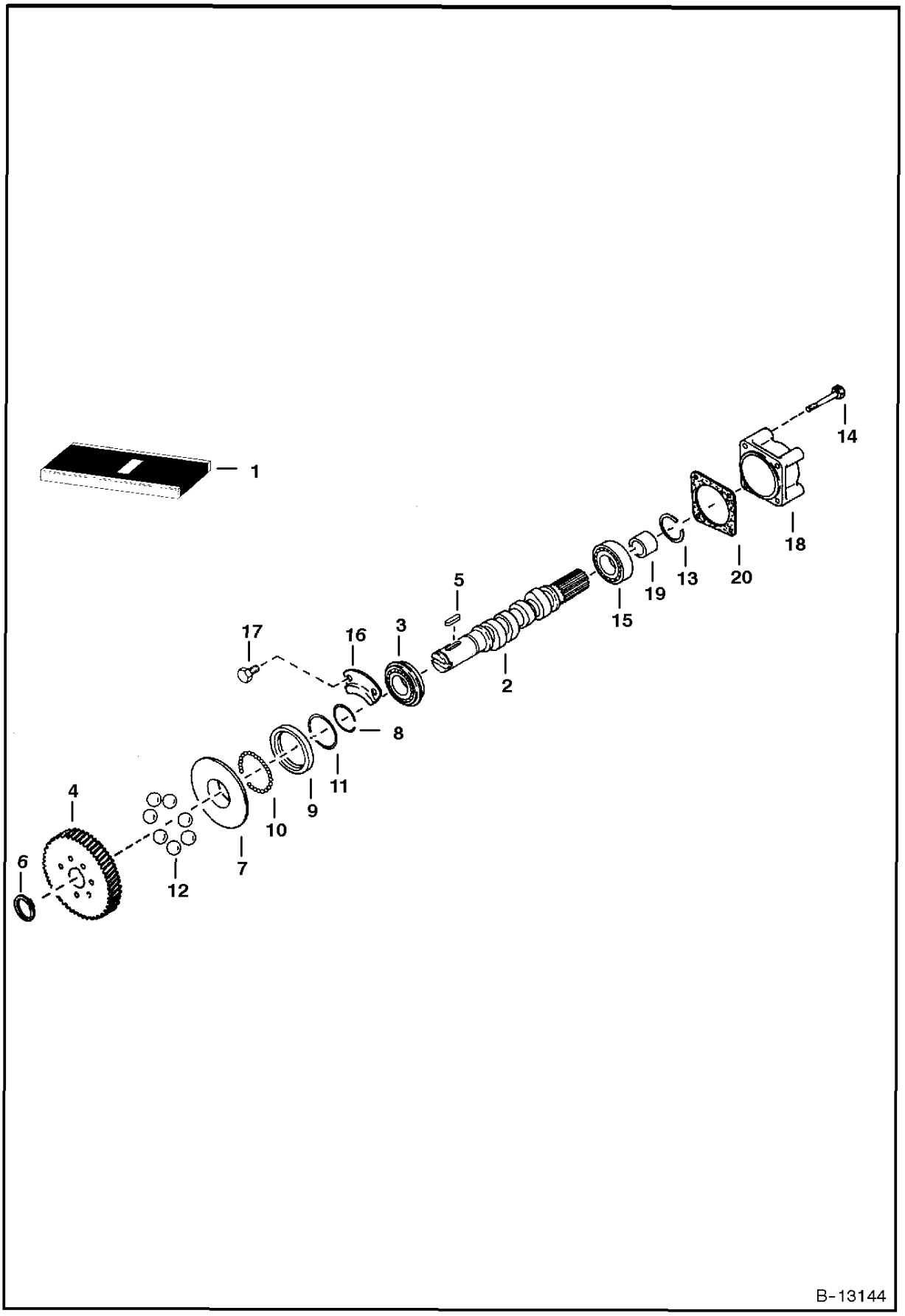

www.youfixthis.com

FUEL CAMSHAFT

Ref.N°	Part N°	Description	Remarks	Serial N°	Qty.
1	6686038	CAMSHAFT	assy. - Ref. FUEL CAMSHAFT(2)-FUEL CAMSHAFT(14)		1
2	NAP	CAMSHAFT	fuel		1
3	6686036	BALL BEARING			1
4	6686039	GEAR	injection pump		1
5	6598099	KEY			1
6	5JM-24	CIR-CLIP	external		1
7	6655213	SLEEVE	governor		1
8	3974618	CIR-CLIP	sleeve		1
9	6655214	CASE	governor ball		1
10	10J-5	BALL			39
11	3974620	CIR-CLIP	ball case		1
12	6655215	BALL			7
13	6598158	CIR-CLIP	governor ball		1
14	6651934	RIVET			7
15	6686042	BALL BEARING			1
16	6686047	STOPPER			1
17	6667420	BOLT			2
18	3974996	COVER	fuel camshaft		1
19	6686041	COLLAR			1
20	6684813	GASKET			1

www.youfixthis.com

CAMSHAFT

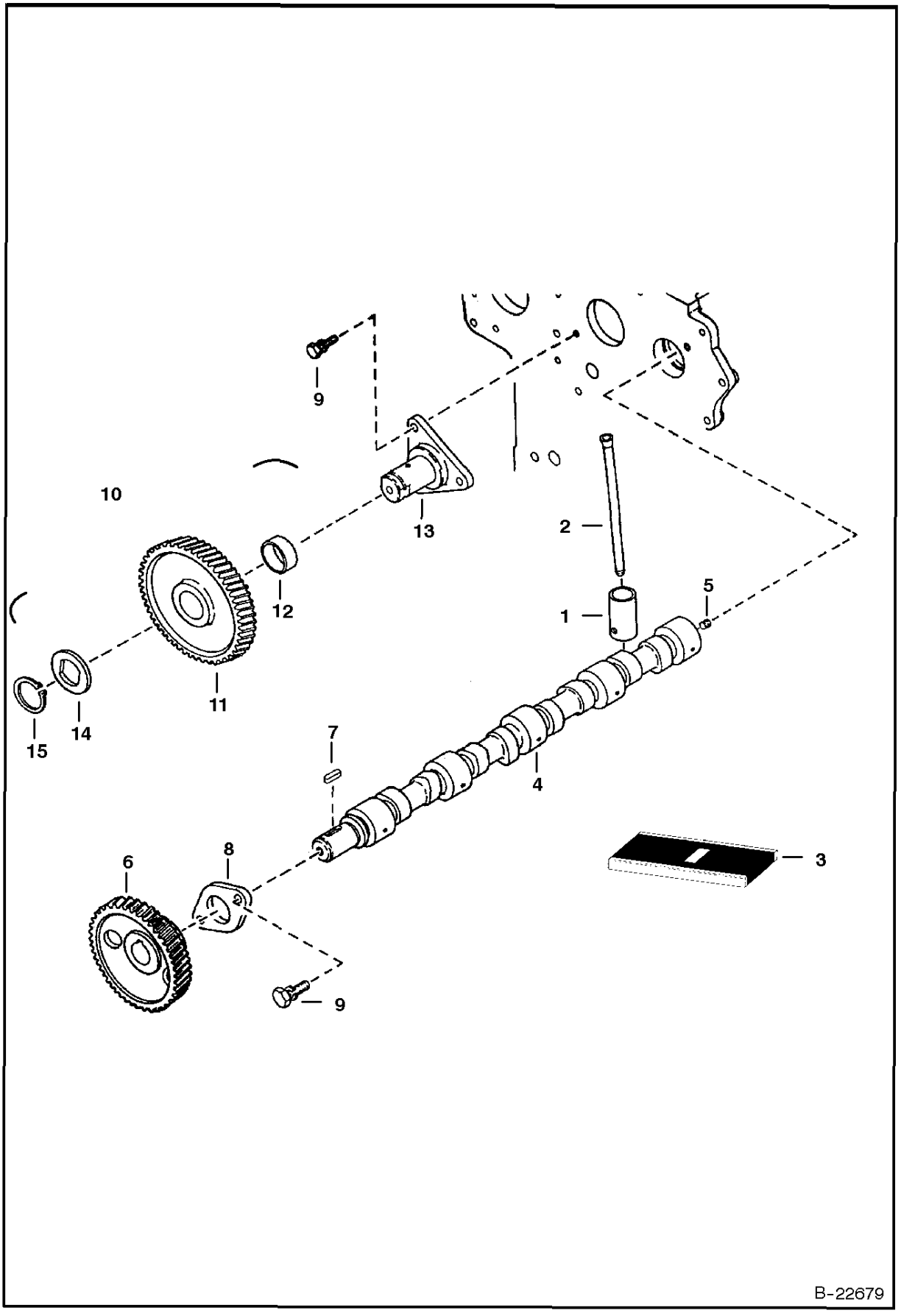

www.youfixthis.com

CAMSHAFT

Ref.N°	Part N°	Description	Remarks	Serial N°	Qty.
1	6667428	TAPPET			8
2	6686035	PUSH ROD			8
3	6684791	CAMSHAFT	assy. - Ref. CAMSHAFT(4)-CAMSHAFT(8)		1
4	6655384	CAMSHAFT			1
5	6652633	PLUG	seat		1
6	6684792	GEAR	camshaft		1
7	3974546	KEY			1
8	3974547	STOPPER	camshaft		1
9	4CM-818	BOLT			5
10	6684793	GEAR ASSY.	idle - W/Ref. CAMSHAFT(11) & CAMSHAFT(12)		1
11	NSS	GEAR	idle - Order Ref. CAMSHAFT(10)		2
12	6684794	BUSHING	idle gear		1
13	6685519	SHAFT	idle gear		1
14	6684795	COLLAR			1
15	6667433	SNAP RING	external		1

www.youfixthis.com

WATER PUMP

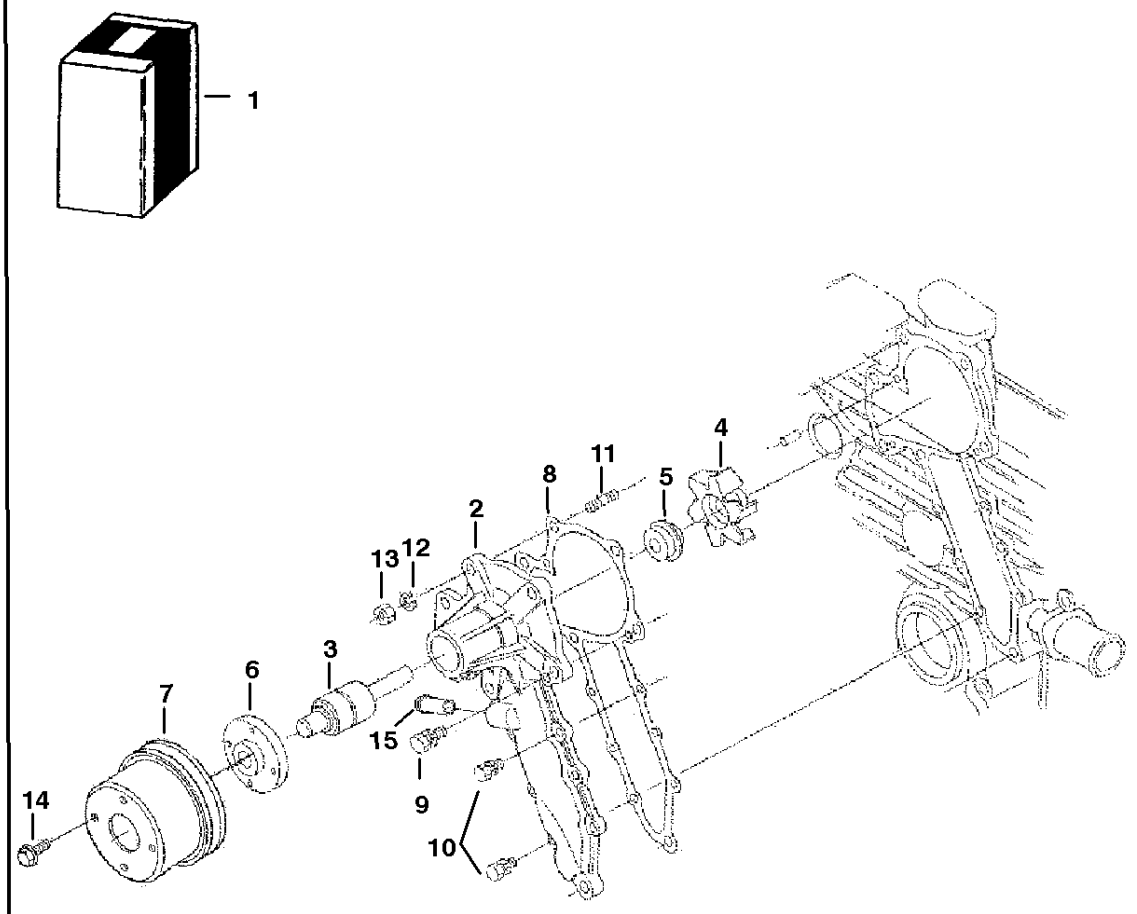

B-22740

www.youfixthis.com

WATER PUMP

Ref.N°	Part N°	Description	Remarks	Serial N°	Qty.
1	6684865	WATER PUMP	Ref. WATER PUMP(2)-WATER PUMP(6)		1
2	6684866	BODY			1
3	3974991	BEARING			1
4	6684867	IMPELLER			1
5	6684868	SET SEAL			1
6	6684869	FLANGE			1
7	6598155	PULLEY	fan		1
8	6684870	GASKET			1
9	4CM-828	BOLT			2
10	6652580	BOLT			6
11	6653946	STUD			2
12	6667422	WASHER	spring		2
13	6652792	NUT			2
14	6652762	BOLT			4
15	6670785	PIPE			1

www.youfixthis.com

WATER FLANGE & THERMOSTAT

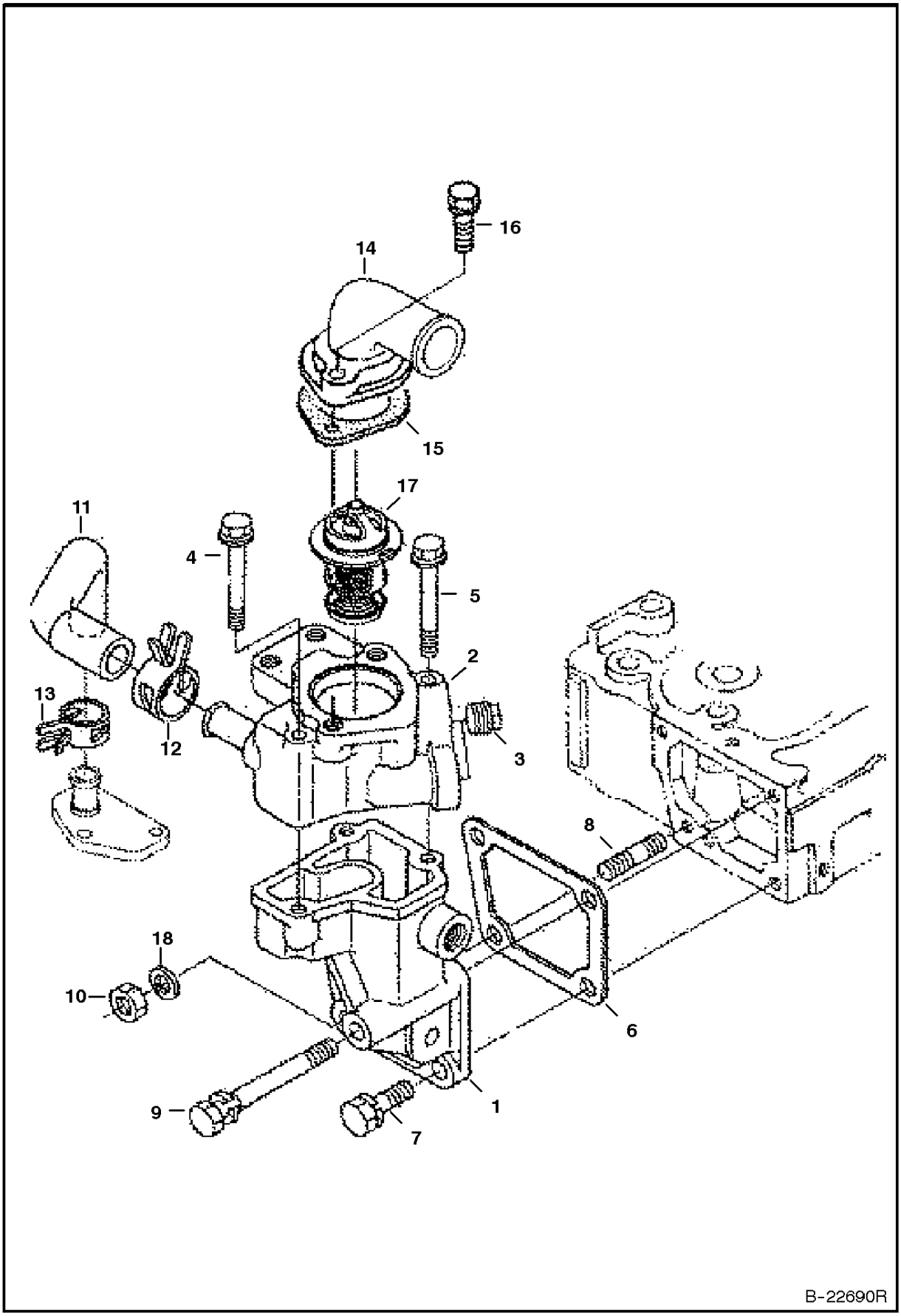

www.youfixthis.com

WATER FLANGE & THERMOSTAT

Ref.N°	Part N°	Description	Remarks	Serial N°	Qty.
1	6684855	FLANGE			1
2	6684856	FLANGE			1
3	6684857	PLUG			2
4	6683159	BOLT			2
5	6685104	BOLT			1
6	6666802	GASKET			1
7	6657415	BOLT			2
8	6652670	STUD			1
9	1CM-875	BOLT			1
10	6652792	NUT			1
11	6684862	PIPE			1
12	6675618	CLAMP			1
13	6684889	CLAMP			1
14	6651489	COVER			1
15	6684863	GASKET			1
16	1CM-835	BOLT			2
17	6685520	THERMOSTAT			1
18	6667422	WASHER	spring		1

www.youfixthis.com

MANIFOLDS

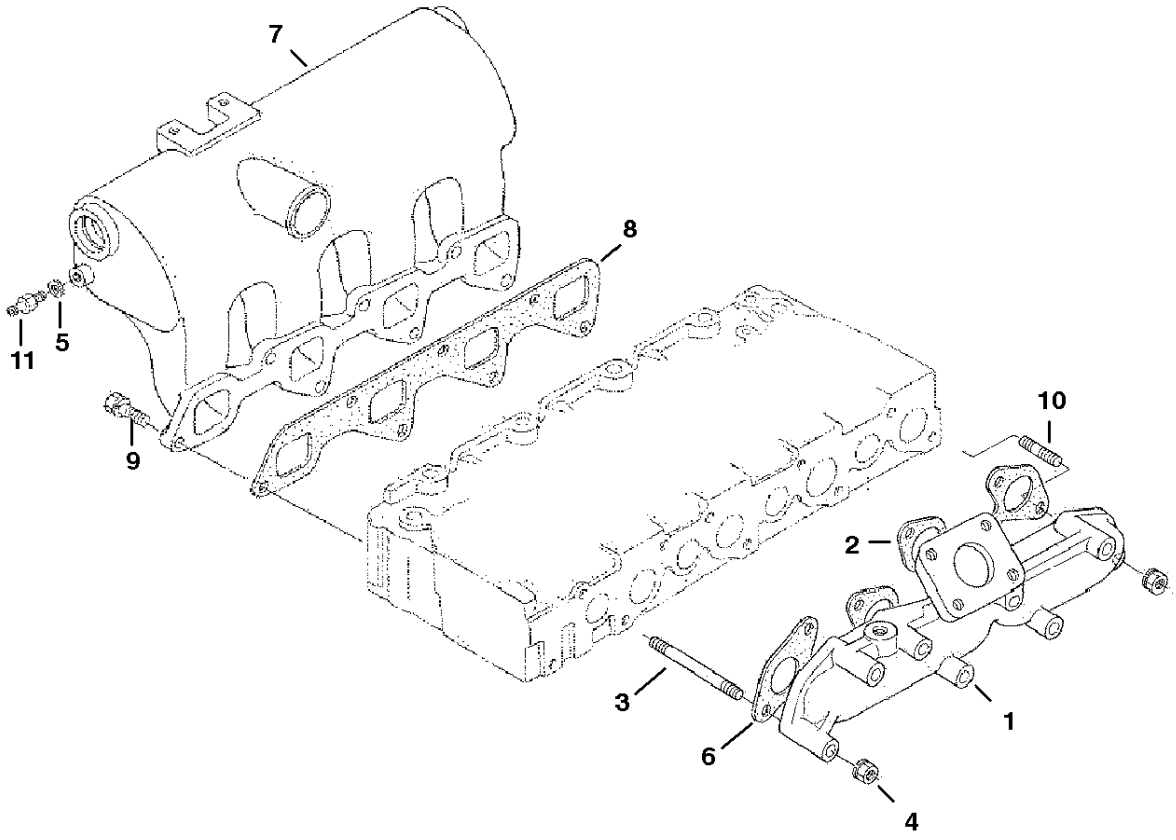

B-22741

www.youfixthis.com

MANIFOLDS

Ref.N°	Part N°	Description	Remarks	Serial N°	Qty.
1	6685592	MANIFOLD	exhaust		1
2	6684879	GASKET			1
3	6655893	STUD			7
4	6682532	NUT			8
5	3974972	GASKET			1
6	6684880	GASKET			1
7	6685640	MANIFOLD	intake		1
8	6684877	GASKET			1
9	4CM-822	BOLT			7
10	3974916	STUD			1
11	6685644	SCREW	air bleed		1

www.youfixthis.com

TURBO CHARGER

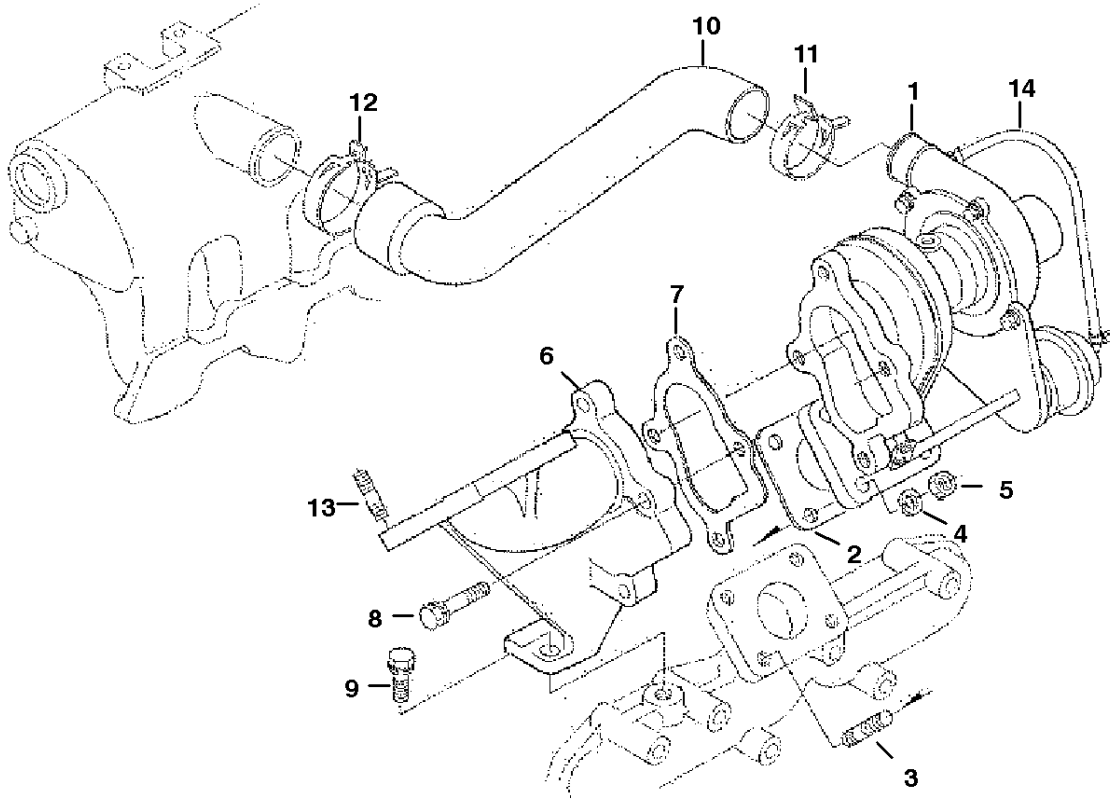

B-22742

www.youfixthis.com

TURBO CHARGER

Ref.N°	Part N°	Description	Remarks	Serial N°	Qty.
1	6686048	TURBO	W/Ref. TURBO CHARGER(14)		1
2	6675636	GASKET			1
3	6680564	STUD			4
4	6652792	NUT			4
5	6667422	WASHER			4
6	6685595	FLANGE			1
7	6675637	GASKET			1
8	6657416	BOLT			4
9	6686043	BOLT			1
10	6685596	HOSE			1
11	6686046	CLAMP			1
12	6680550	CLAMP			1
13	3974462	STUD			4
14	6685594	HOSE	W/clamps		1

www.youfixthis.com

OIL PIPE
(Turbo Charger)

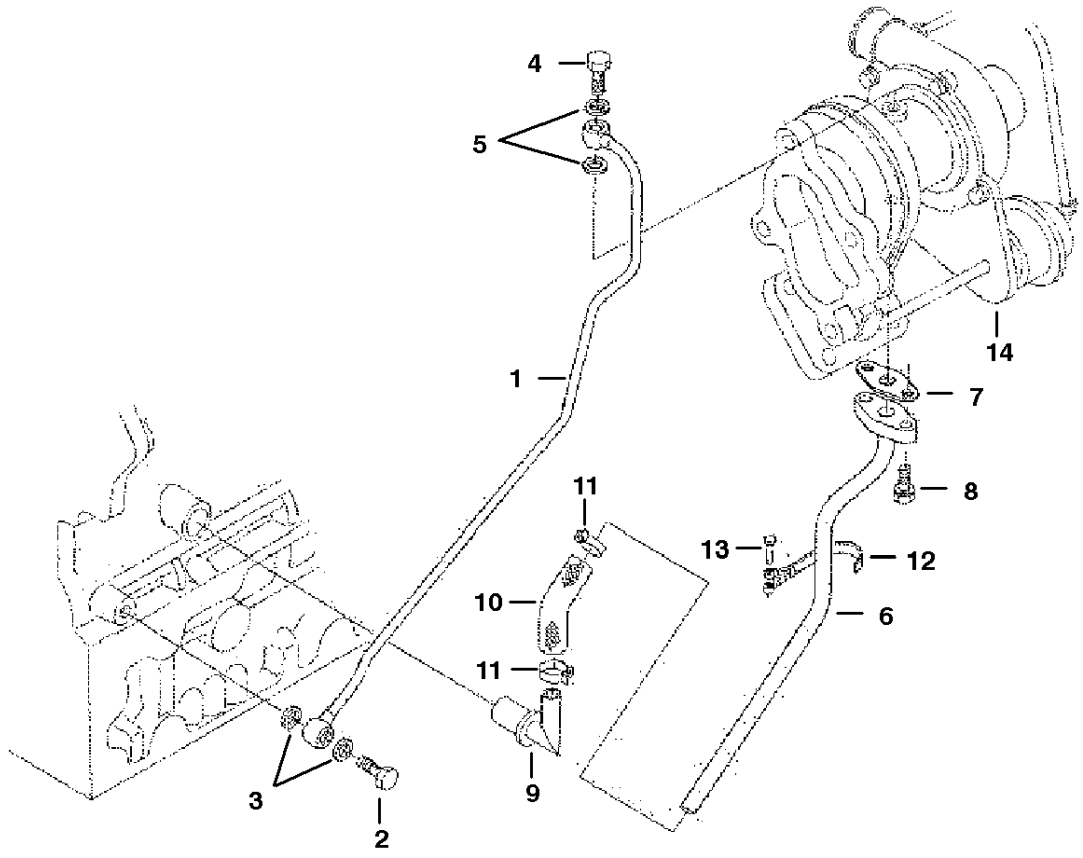

B-22747

www.youfixthis.com

OIL PIPE

Ref.N°	Part N°	Description	Remarks	Serial N°	Qty.
1	6686055	PIPE			1
2	6675622	BOLT	eye		1
3	3974095	GASKET			2
4	6685598	BOLT	eye		1
5	6675623	GASKET			2
6	6685599	PIPE			1
7	6675964	HANDLE			1
8	4CM-620	BOLT			2
9	6684884	PIPE			1
10	6685600	PIPE			1
11	6675618	CLAMP			2
12	6685601	CLAMP			1
13	6675683	PIN			1
14	6685593	TURBO	See Page TURBO CHARGER(1)		1

www.youfixthis.com

ENGINE STOP LEVER

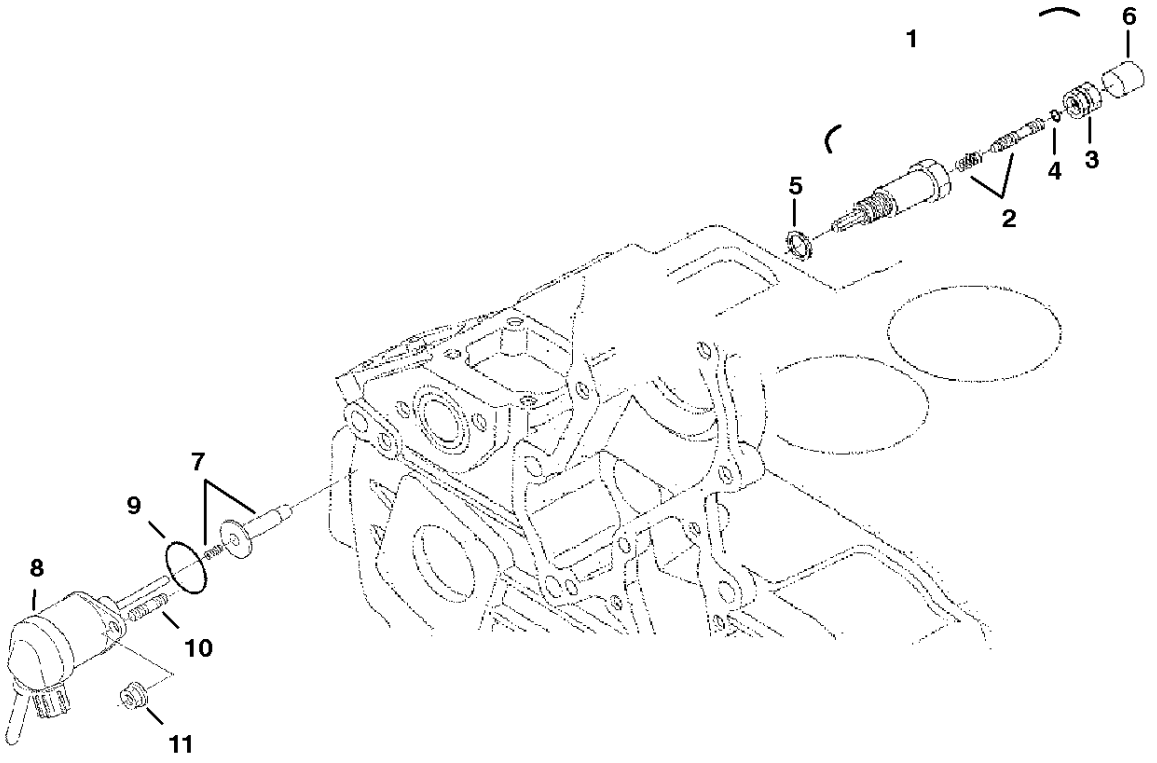

B-22737

www.youfixthis.com

ENGINE STOP LEVER

Ref.N°	Part N°	Description	Remarks	Serial N°	Qty.
1	6684815	APPARATUS	assy., idle - Ref. ENGINE STOP LEVER(2)-ENGINE STOP LEVER(6)		1
2	6684816	BOLT ASSY.	adjusting		1
3	6684817	NUT	adjusting		1
4	6684891	NUT			1
5	6684818	GASKET			2
6	6684819	CAP			1
7	6684825	GUIDE	solenoid		1
8	6684826	SOLENOID			1
9	6685465	O-RING			1
10	6652764	STUD			2
11	6684827	NUT			2

www.youfixthis.com

GOVERNOR

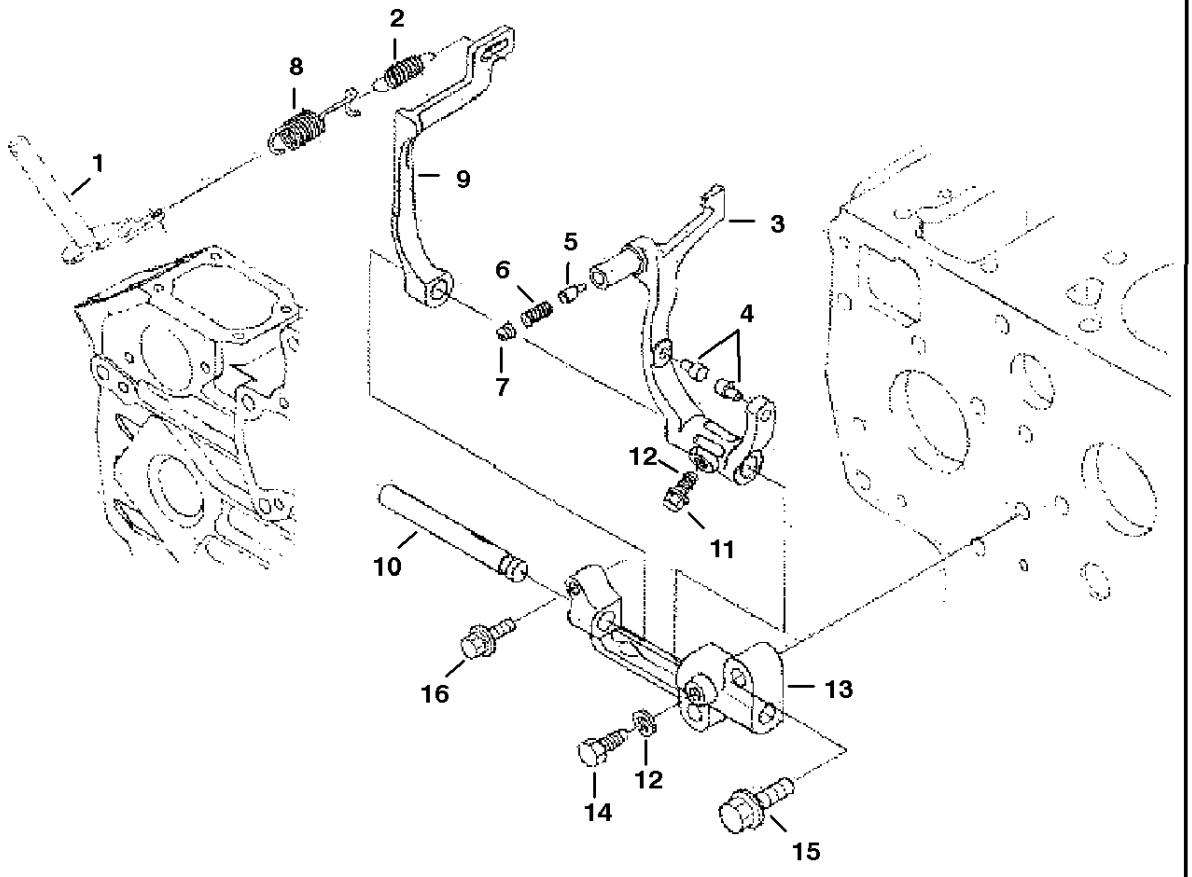

B-22687

www.youfixthis.com

GOVERNOR

Ref.N°	Part N°	Description	Remarks	Serial N°	Qty.
1	6684838	LEVER	governor		1
2	6685514	SPRING			1
3	6686058	LEVER	fork - W/Ref. GOVERNOR(4)-GOVERNOR(7)		1
4	NSS	PIN			2
5	NSS	PIN			1
6	NSS	SPRING			1
7	NSS	SCREW			1
8	6685636	SPRING	governor		1
9	6684832	LEVER			1
10	6684833	SHAFT			1
11	6680830	BOLT			1
12	6667419	WASHER			2
13	6653916	HOLDER			1
14	3974192	BOLT			1
15	6680706	BOLT			2
16	6685464	BOLT			1

www.youfixthis.com

SPEED CONTROL PLATE

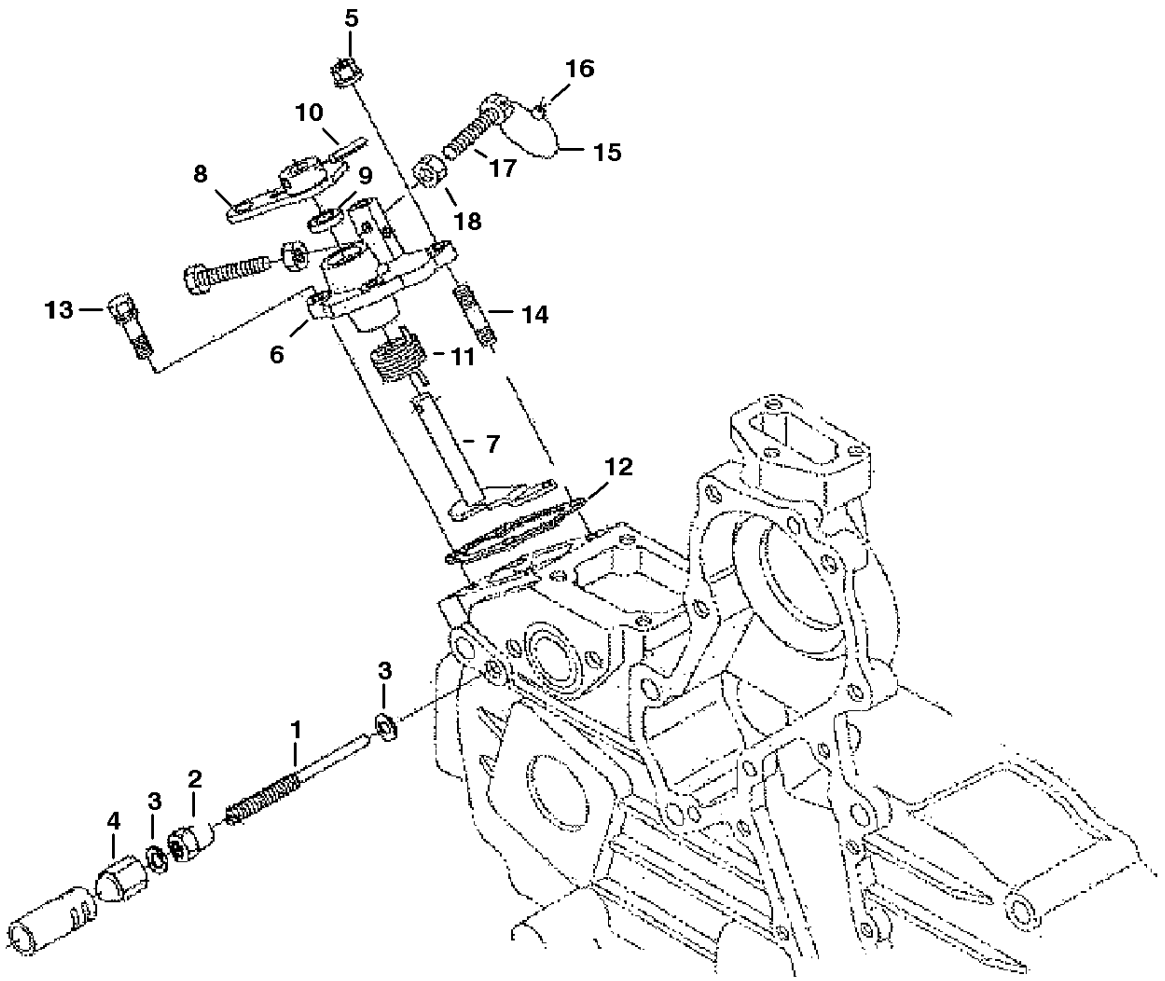

www.youfixthis.com

SPEED CONTROL PLATE

Ref.N°	Part N°	Description	Remarks	Serial N°	Qty.
1	6684836	BOLT	adjusting - W/Ref. SPEED CONTROL PLATE(2)		1
2	3974971	NUT			1
3	3974972	GASKET			2
4	6655223	NUT	cap		1
5	6653561	NUT			2
6	6685526	PLATE	control assy. - Ref. SPEED CONTROL PLATE(7)-SPEED CONTROL PLATE(11), SPEED CONTROL PLATE(17) &SPEED CONTROL PLATE(18)		1
7	6684838	LEVER			1
8	6684839	LEVER			1
9	6685476	SEAL			1
10	6598098	PIN	spring		1
11	6684823	SPRING			1
12	6684824	GASKET			1
13	4CM-20	BOLT			2
14	6652764	STUD			2
15	NAP	WIRE			1
16	NAP	LEAD	sealing		1
17	NAP	STOPPER			2
18	NAP	NUT			2

www.youfixthis.com

BOOST COMPENSATOR

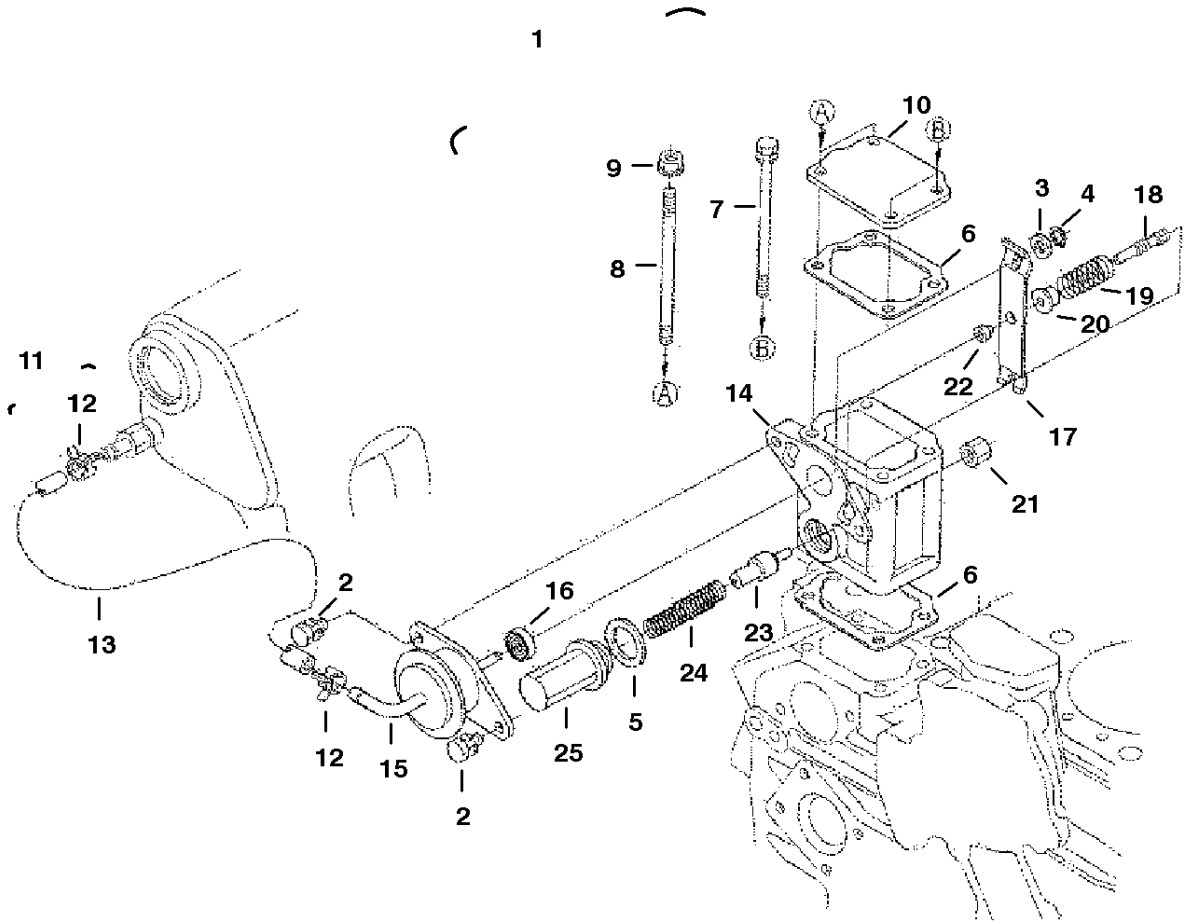

B-22739

www.youfixthis.com

BOOST COMPENSATOR

Ref.N°	Part N°	Description	Remarks	Serial N°	Qty.
1	6686057	COMPENSATOR	Ref. BOOST COMPENSATOR(2) - BOOST COMPENSATOR(5) & BOOST COMPENSATOR(14) - BOOST COMPENSATOR(25)		1
2	6652682	BOLT			2
3	6685633	WASHER			1
4	6680821	SNAP RING			1
5	6685634	GASKET			1
6	6684824	GASKET			2
7	6686034	BOLT			2
8	6685639	STUD			2
9	6653561	NUT			2
10	6685500	COVER			1
11	6685645	PIPE ASSY			1
12	6680628	CLAMP			2
13	6685635	TUBE			1
14	NSS	HOUSING			1
15	NSS	ELBOW			1
16	NSS	SPACER			1
17	NSS	BRACKET			1
18	NSS	PISTON			1
19	NSS	SPRING			1
20	NSS	BUSHING			1
21	NSS	NUT			1
22	NSS	BUSHING			1
23	NSS	PISTON			1
24	NSS	SPRING			1
25	NSS	VALVE			1

www.youfixthis.com

INJECTION PUMP

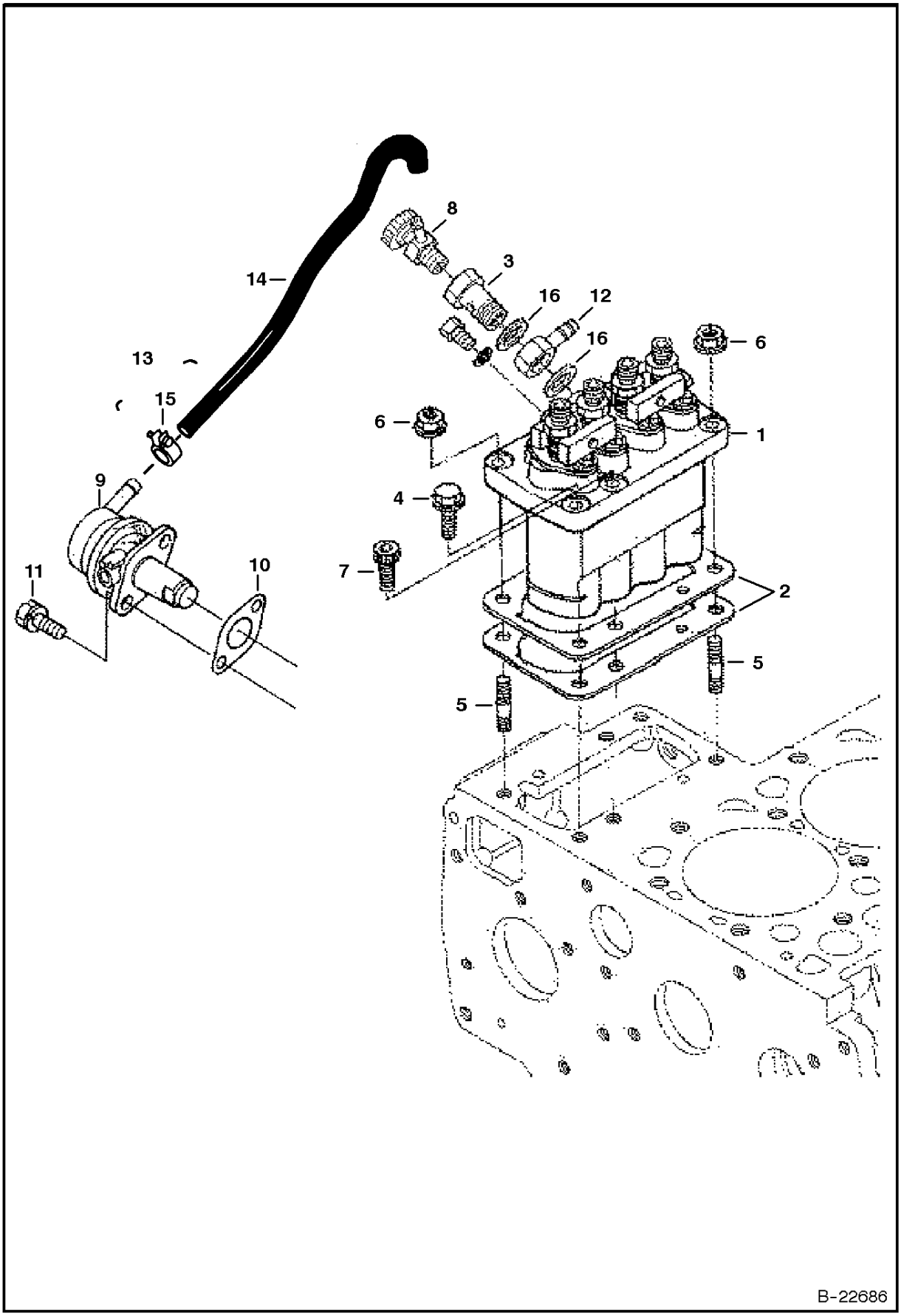

www.youfixthis.com

INJECTION PUMP

Ref.N°	Part N°	Description	Remarks	Serial N°	Qty.
1	6684828	PUMP	See Page INJECTION PUMP(1)		1
2	3974626	SHIM	0.20 mm		2
2	6682515	SHIM	0.25 mm		1
2	6655210	SHIM	0.30 mm		1
2	6684829	SHIM	0.35 mm		1
3	6685473	JOINT			1
4	6680801	BOLT			4
5	6652670	STUD			2
6	6680663	NUT			2
7	6684830	BOLT			1
8	6598102	COCK	jet start		1
9	6655216	FUEL PUMP			1
10	6686037	GASKET	fuel pump		1
11	4CM-616	BOLT			2
12	6513707	JOINT	eye - connect to Ref. FUEL SYSTEM(37) See Page FUEL SYSTEM(1)		1
13	6655197	PIPE ASSY.	fuel - W/Ref. INJECTION PUMP(14) & INJECTION PUMP(15)		1
14	NSS	PIPE	fuel		1
15	6655874	CLIP	pipe		2
16	6599118	WASHER			2

www.youfixthis.com

INJECTION PUMP

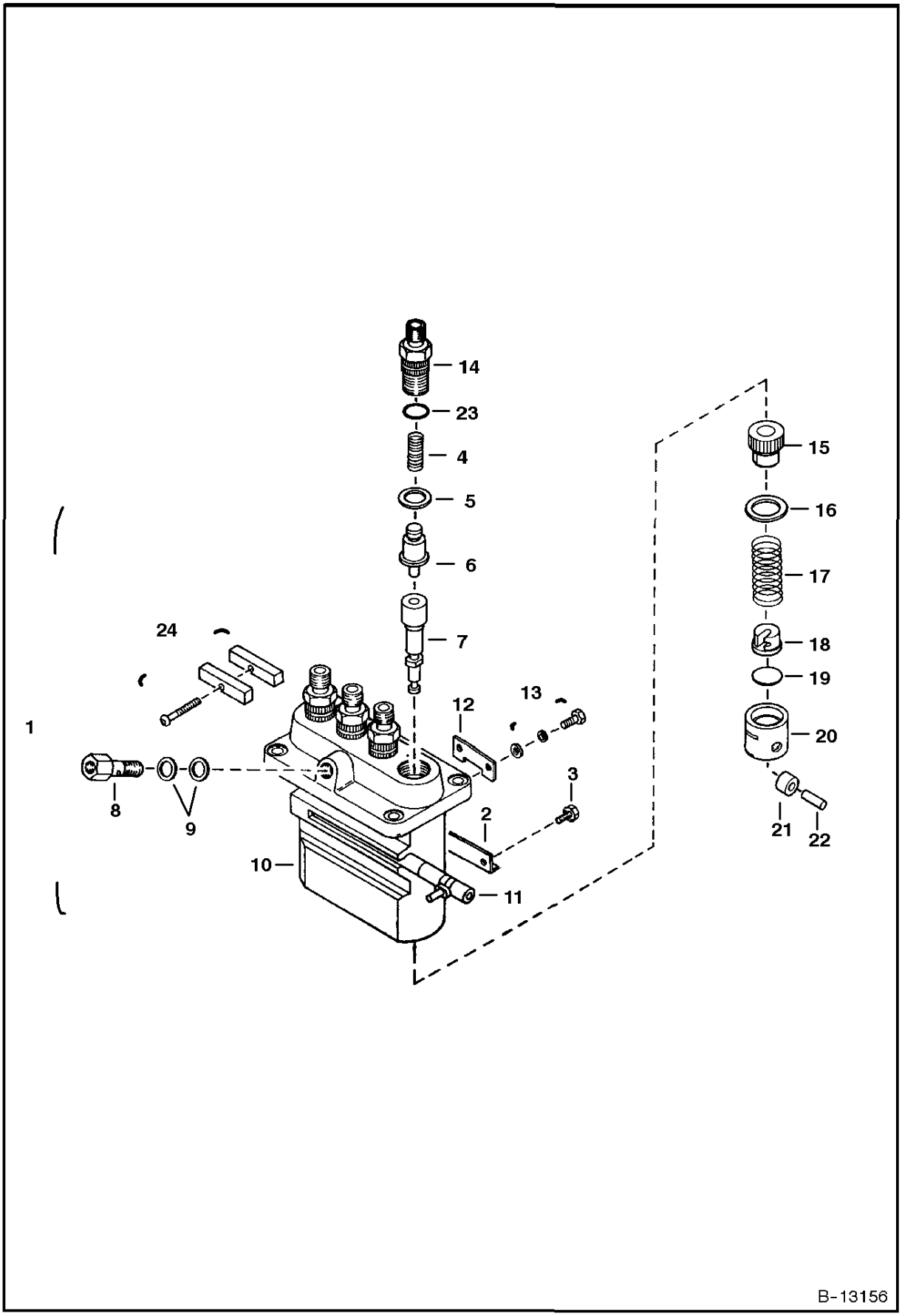

www.youfixthis.com

INJECTION PUMP

Ref.N°	Part N°	Description	Remarks	Serial N°	Qty.
1	6685511	PUMP	injection - No serviceable parts available - Take to injecti on pump specialist		1
2	6655207	PLATE	adjust		3
3	6655206	BOLT			3
4	6655203	SPRING	delivery valve		4
5	3974368	GASKET	delivery valve		4
6	6655202	VALVE	delivery		4
7	6655201	ELEMENT	pump		4
8	6599084	SCREW			1
9	6599119	GASKET			2
10	NSS	HOUSING	pump		1
11	3974787	RACK	control		1
12	6655209	PLATE	adjusting		3
13	3974366	BOLT			3
14	6655204	HOLDER	delivery valve		4
15	6653894	SLEEVE	control		4
16	3974381	SEAT	spring - Upper		4
17	3974382	SPRING	plunger		4
18	3974383	SEAT	spring - Under		4
19	3974384	SHIM			4
20	3974385	TAPPET	W/Ref. INJECTION PUMP(21) & INJECTION PUMP(22)		4
21	NSS	ROLLER			4
22	NSS	PIN			4
23	6655518	O-RING			4
24	6655205	PLATE ASSY.			2

www.youfixthis.com

INJECTOR NOZZLES

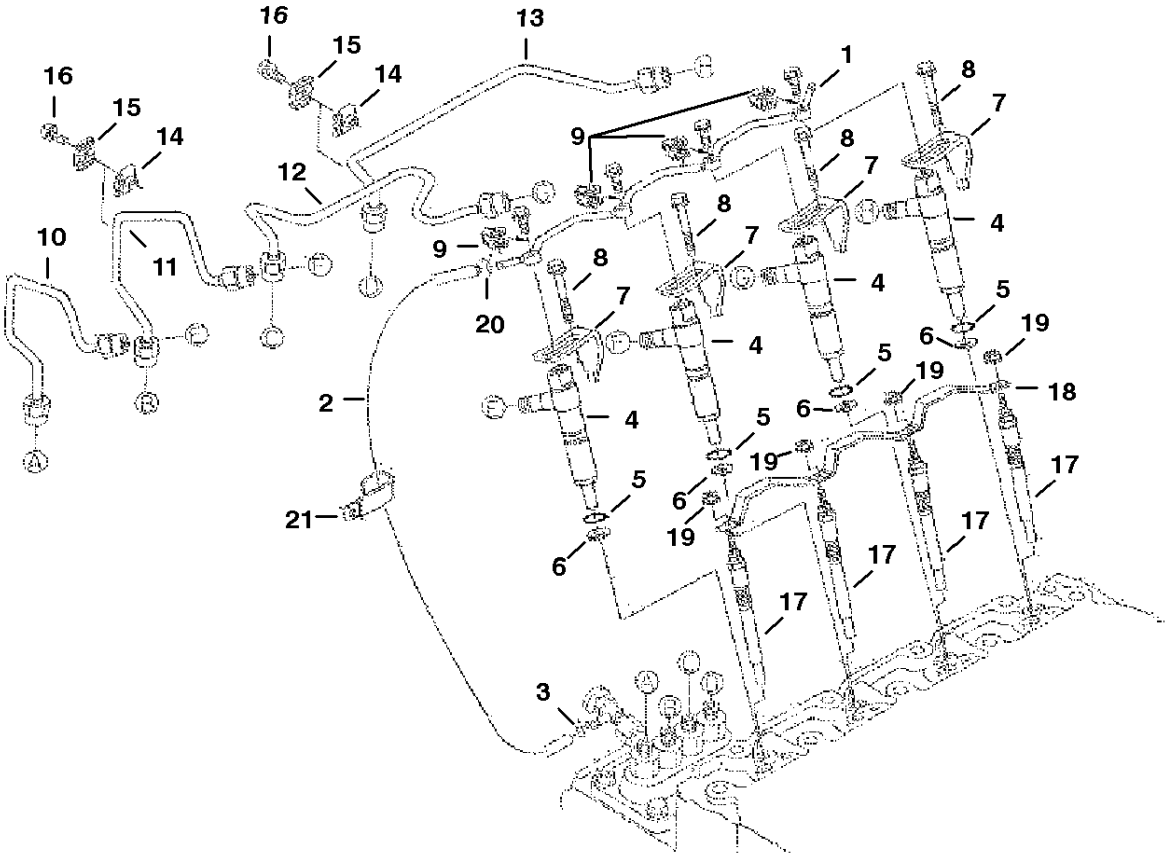

B-22738

www.youfixthis.com

INJECTOR NOZZLES

Ref.N°	Part N°	Description	Remarks	Serial N°	Qty.
1	6684842	PIPE	fuel over flow		1
2	6598146	PIPE	fuel over flow (2) - W/Ref. INJECTOR NOZZLES(3) & INJECTOR NOZZLES(20)		1
3	6599136	CLAMP	pipe		1
4	6686056	HOLDER KIT	nozzle-W/Ref. INJECTOR NOZZLES(5) - See Page INJECTOR HOLDER(1)		4
5	6670769	O-RING			4
6	6680779	GASKET			4
7	6684845	CLAMP			4
8	6684844	BOLT			4
9	6685498	GASKET			4
10	6684846	PIPE	injection (1)		1
11	6684847	PIPE	injection (2)		1
12	6684848	PIPE	injection (3)		1
13	6684849	PIPE	injection (4)		1
14	6652688	CLAMP	pipe (1)		3
15	6652689	CLAMP	pipe (2)		3
16	3974260	SCREW	with washer		3
17	6684850	GLOW PLUG			4
18	6684851	CORD	glow plug		1
19	6670472	NUT			4
20	6654718	CLIP	pipe		1
21	6667457	CLAMP			1

www.youfixthis.com

INJECTOR HOLDER

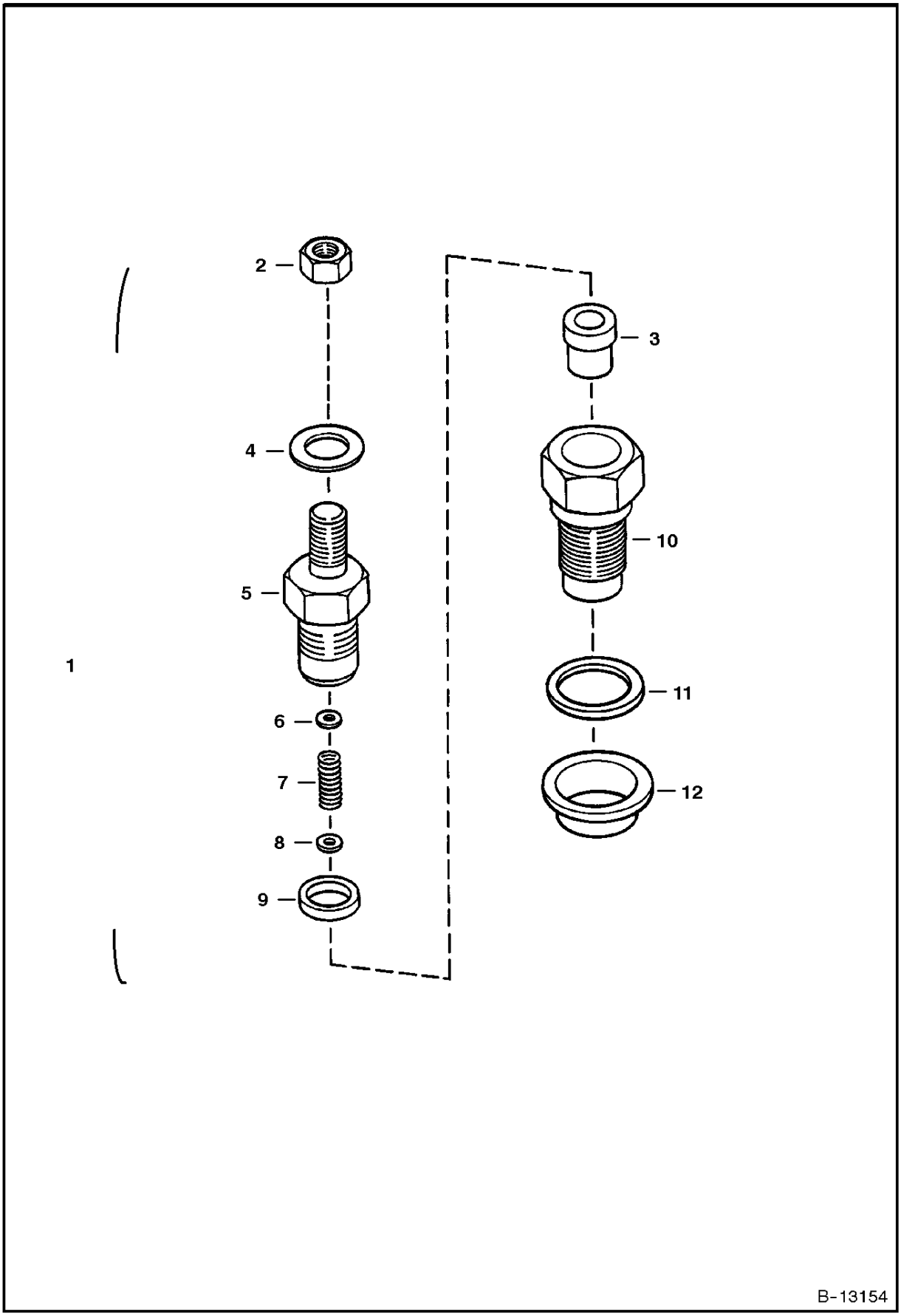

www.youfixthis.com

INJECTOR HOLDER

Ref.N°	Part N°	Description	Remarks	Serial N°	Qty.
1	6722147	HOLDER KIT	nozzle - Ref. INJECTOR NOZZLES(5) - INJECTOR HOLDER(12)		4
2	6657460	NUT			1
3	6655873	PIECE	nozzle		1
4	6657463	WASHER	plain		1
5	NSS	BODY	nozzle holder		1
6	6657742	WASHER ASSY	washer - (.900mm thru 1.950mm)		x
6	6656126	WASHER	adj. (1.00 mm)		x
6	6656127	WASHER	adj. (1.05 mm)		x
6	6656128	WASHER	adj. (1.10 mm)		x
6	6656129	WASHER	adj. (1.15 mm)		x
6	6656130	WASHER	adj. (1.20 mm)		x
6	6656131	WASHER	adj. (1.25 mm)		x
6	6656132	WASHER	adj. (1.30 mm)		x
7	NSS	SPRING	nozzle		1
8	NSS	PIECE	distance		1
9	NSS	PUSH ROD			1
10	NSS	NUT	nozzle		1
11	6655218	GASKET			1
12	6655872	SHIELD			1

www.youfixthis.com

AIR CLEANER

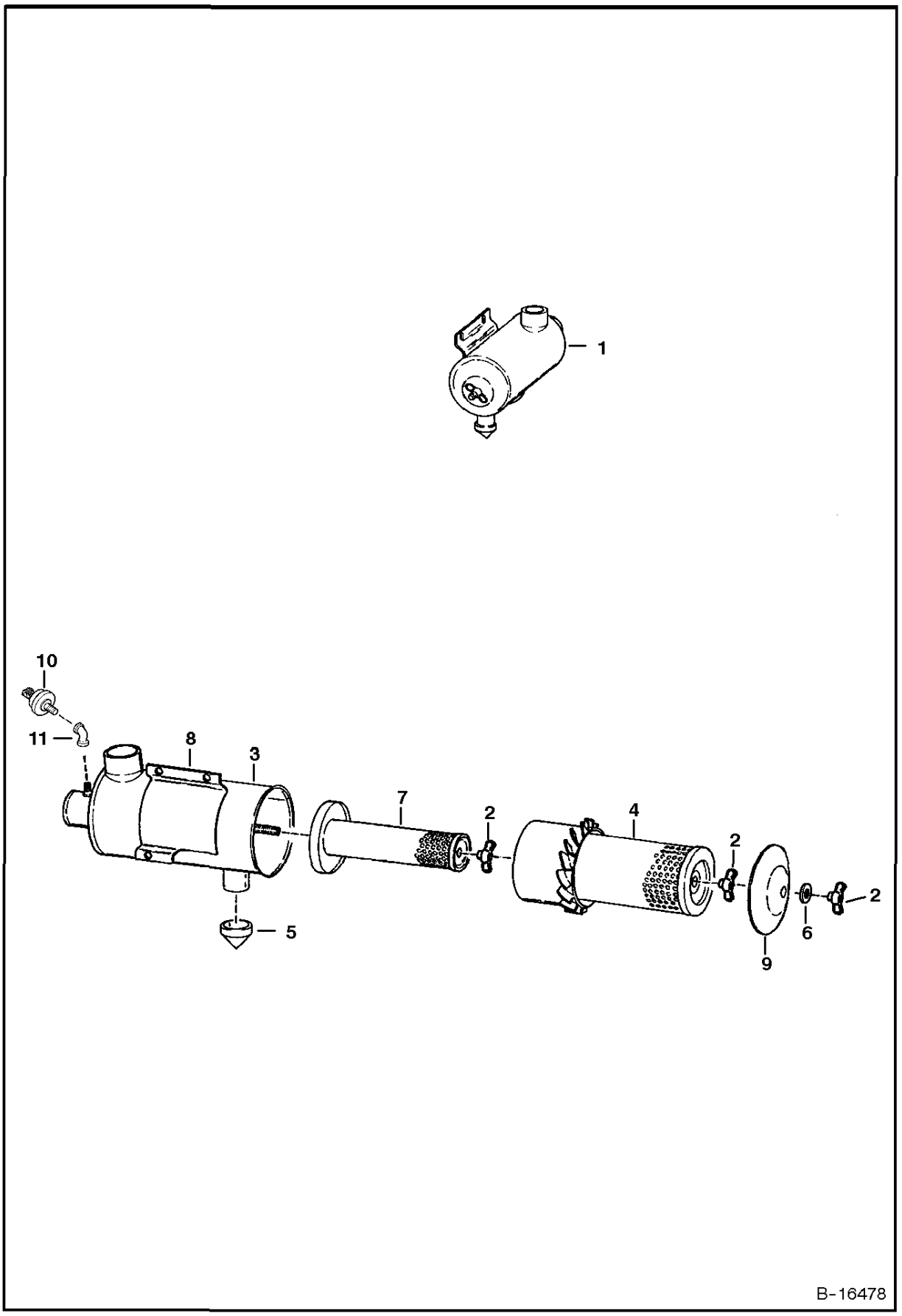

www.youfixthis.com

AIR CLEANER

Ref.N°	Part N°	Description	Remarks	Serial N°	Qty.
1	6700711	AIR CLEANER	W/ 1.5' Evacuator Valve		1
2	6661243	WING NUT			3
3	NAP	TANK			1
4	6598492	CARTRIDGE	outer		1
5	6655938	VALVE	evacuator - 1.5" I.D.		1
6	6661244	WASHER			1
7	6598362	CARTRIDGE	inner		1
8	866028	CLAMP			1
9	6661242	COVER			1
10	6665371	SWITCH			1
11	6725502	ELBOW			1

www.youfixthis.com

ACS CONVERSION KIT

NOTE: Loader must be equipped W/Advanced Hand Control Option for this kit to function.

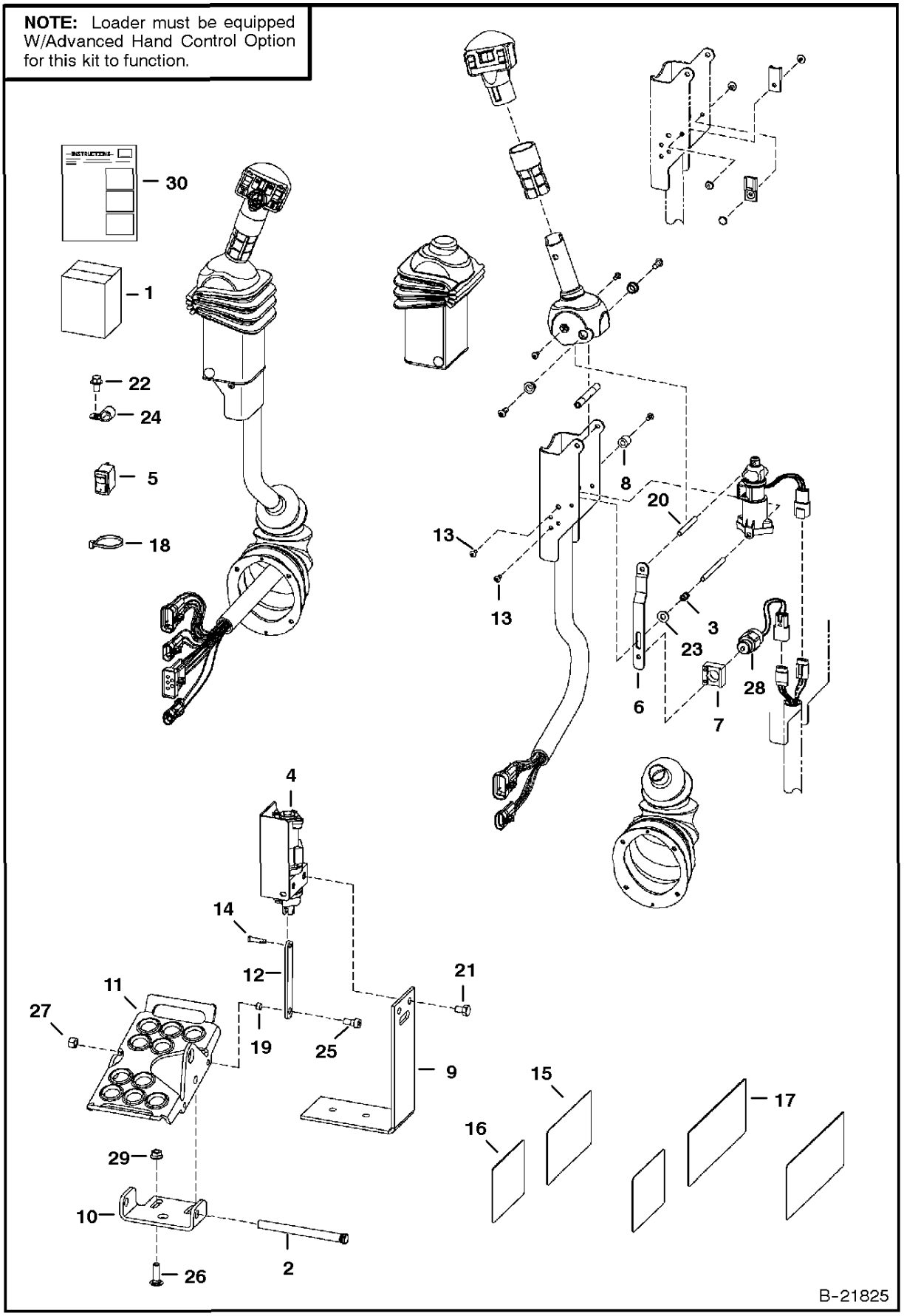

www.youfixthis.com

ACS CONVERSION KIT

Ref.N°	Part N°	Description	Remarks	Serial N°	Qty.
1	6731151	KIT	foot control - Ref. ACS CONVERSION KIT(2) -ACS CONVERSION KIT(14) & ACS CONVERSION KIT(17) - ACS CONVERSION KIT(30) - SEE NOTE		1
2	6564657	PIN			2
3	6680470	SPRING			2
4	6684912	SENSOR	foot pedal - R.H.		1
4	6676029	SOLENOID			1
4	6684911	SENSOR	foot pedal - L.H.		1
4	6676029	SOLENOID			1
5	6676537	SWITCH			2
6	6680477	STRAP			2
7	6680468	MOUNT	solenoid		2
8	NAP	SLEEVE			2
9	6726573	BRACKET			2
10	6726679	BRACKET	pedal		2
11	6726680	PEDAL			2
12	6726681	LINK			2
13	6727065	BOLT			12
14	6727496	PIN			2
15	6727926	DECAL	operations - 773G, 863G, 873G, 883, 963G		1
15	6728045	DECAL	operations - T190, T200		1
16	6727941	DECAL	ACS operations		1
17	6728539	DECAL	warning - 773G, 863G, 873G, 883, 963G		1
17	6728540	DECAL	warning - T190, T200		1
18	6624289	STA-STRAP			2
19	6729467	SPACER			2
20	6680469	SPACER	threaded		2
21	17C-608	BOLT			4
22	84G-3710	BOLT			2
23	25E-13	WASHER			2
24	30H-62	CLIP			2
25	17C-514	BOLT			2
26	37C-620	BOLT			4
27	95D-5	NUT			2
28	6676029	SOLENOID			2
29	57D-6	NUT			4
30	6901492	INSTRUCTIONS			1

www.youfixthis.com

ACCESSORIES HARNESS
(Standard - Non Deluxe Cab)

NOTE: If loader is not equipped with Deluxe Cab Option, this harness must be used to run Flasher Lights, Turn Indicators, Hazard LIghts, Rotating Beacon and/or Strobe Lights.

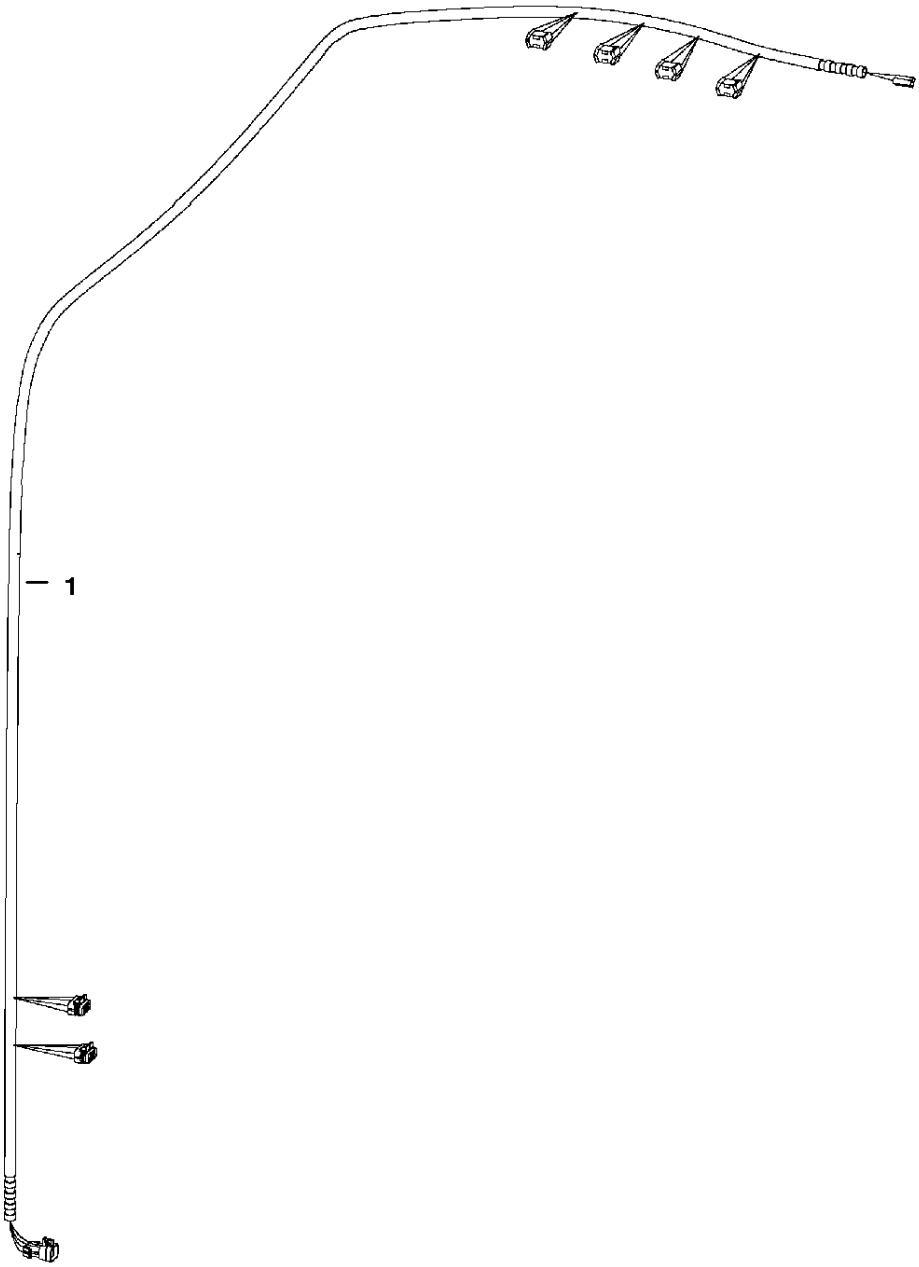

PE-1557

www.youfixthis.com

ACCESSORIES HARNESS

Ref.N°	Part N°	Description	Remarks	Serial N°	Qty.
1	6727468	HARNESS	SEE NOTE		1

www.youfixthis.com

BACK-UP ALARM

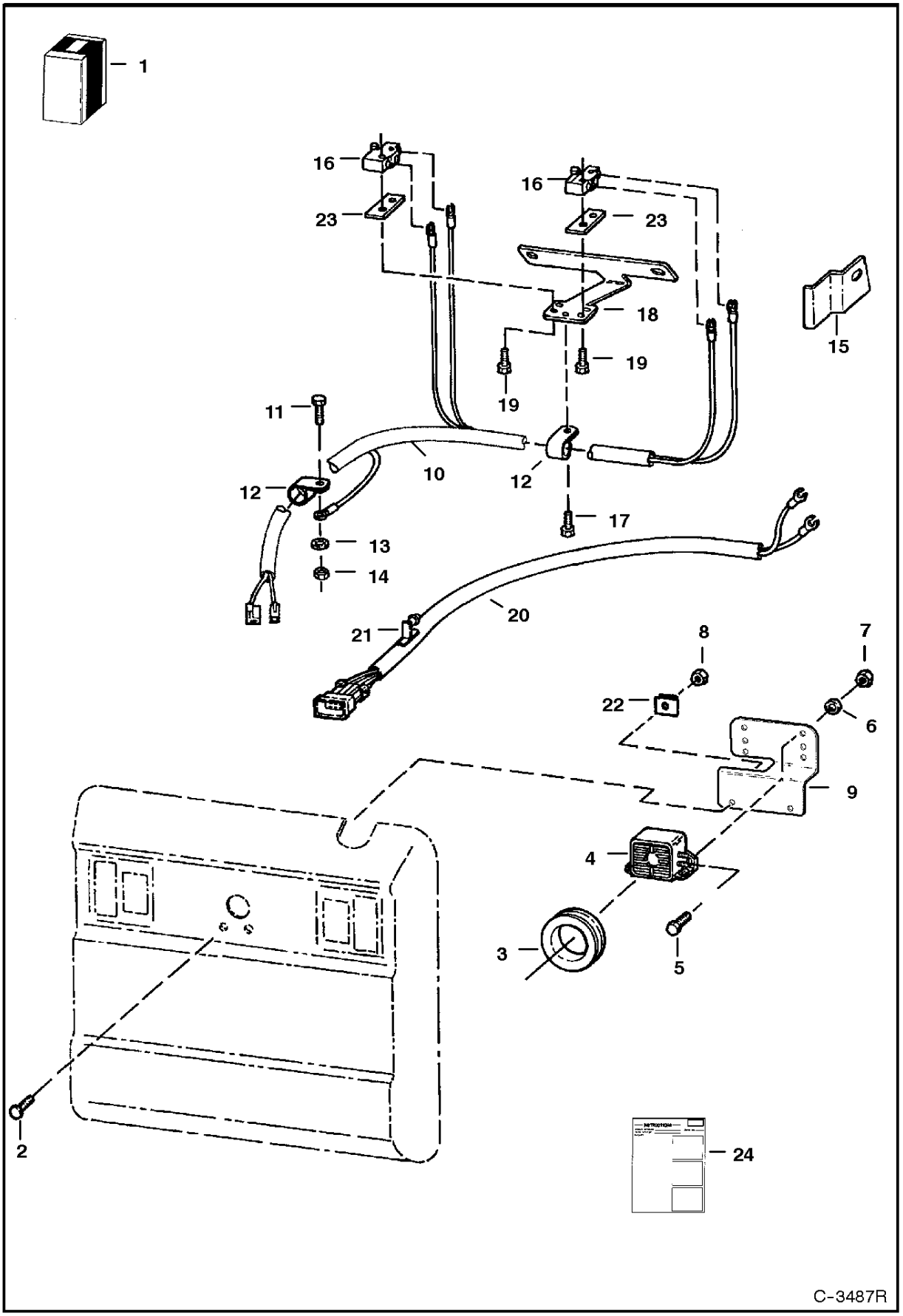

www.youfixthis.com

BACK-UP ALARM

Ref.N°	Part N°	Description	Remarks	Serial N°	Qty.
1	6718822	KIT	backup alarm - Ref. BACK-UP ALARM(2) - BACK-UP ALARM(24)		1
2	17C-410	BOLT			2
3	6577545	GROMMET			1
4	6599931	ALARM	backup		1
4	6668879	DECAL			1
5	35C-410	BOLT			2
6	25E-13	WASHER			2
7	61D-5	NUT			2
8	97D-4	NUT			2
9	6733970	MOUNT			1
10	6718820	HARNESS			1
11	17C-412	BOLT			1
12	30H-19	CLAMP	insulated		2
13	6E-4	WASHER			1
14	61D-4	NUT			1
15	6713793	BRACKET	switch		2
16	6646781	SWITCH	alarm		2
17	84G-3112	BOLT			1
18	7100153	MOUNT	switch		1
19	59G-616	BOLT			4
20	6715659	HARNESS	Used on loaders W/O rear lights - comes W/Ref. BACK-UP ALARM(21)		1
21	6672492	RETAINER			1
22	774220	NUT			2
23	6702593	SPACER			2
24	6900857	INSTRUCTIONS			1

www.youfixthis.com

BEACON

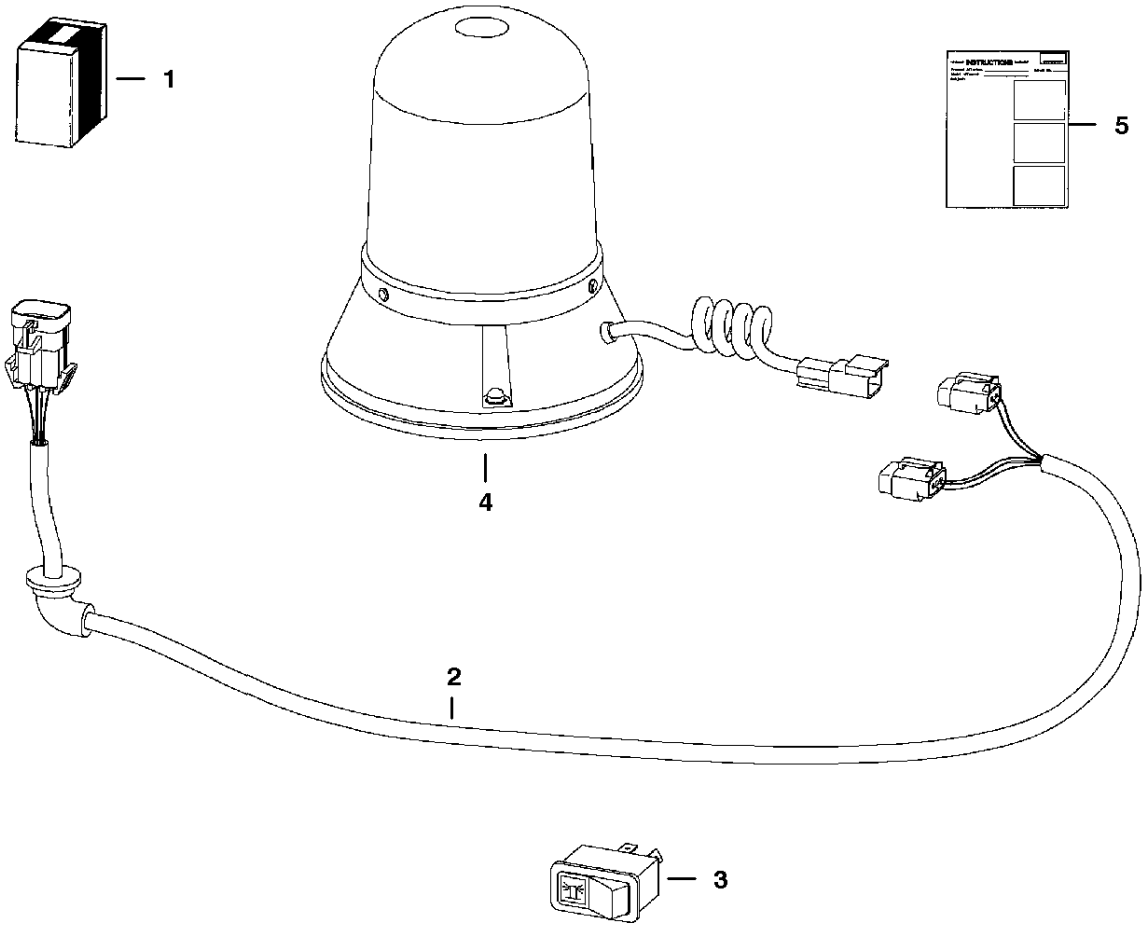

TS-1978

www.youfixthis.com

BEACON

Ref.N°	Part N°	Description	Remarks	Serial N°	Qty.
1	6719854	KIT	rotating beacon - If loader is equipped W/Deluxe Cab Option, also order 6727468 Harness - See Page ACCESSORIES HARNESS(1)		1
2	6718872	HARNESS			1
3	6668816	SWITCH	vertical		1
4	6675523	BEACON			1
4	6666571	BULB			1
5	6900991	INSTRUCTIONS			1

www.youfixthis.com

BLOCK HEATER
(Engine)

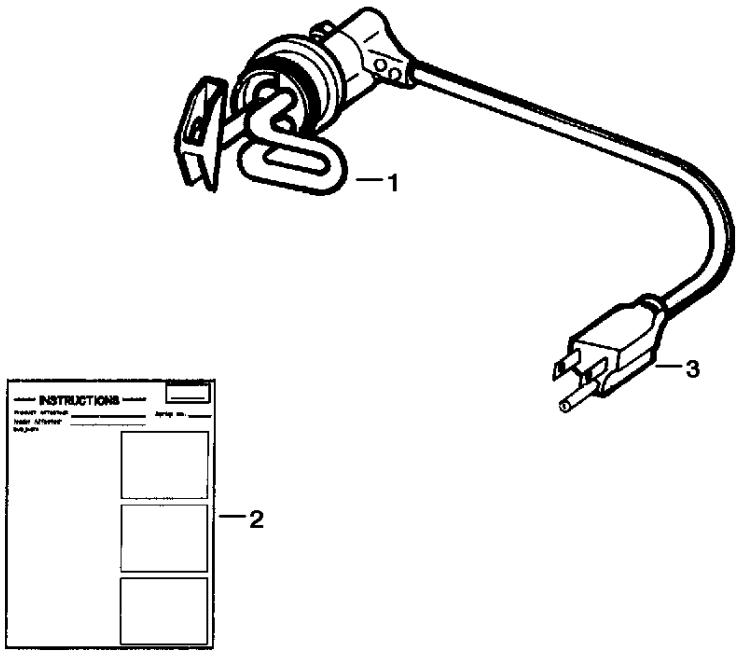

B-12299

www.youfixthis.com

BLOCK HEATER

Ref.N°	Part N°	Description	Remarks	Serial N°	Qty.
1	6720736	HEATER	W/Ref. BLOCK HEATER(2)		1
2	6720038	INSTRUCTIONS			1
3	6668881	CORD			1

www.youfixthis.com

BOB-TACH LEVERS
(For Use W/Industrial Grapple Fork)

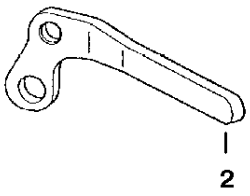



TS-1019

www.youfixthis.com

BOB-TACH LEVERS

Ref.N°	Part N°	Description	Remarks	Serial N°	Qty.
1	6578139	LEVER	R.H.		1
2	6578140	LEVER	L.H.		1

www.youfixthis.com

BUCKET POSITIONING VALVE KIT

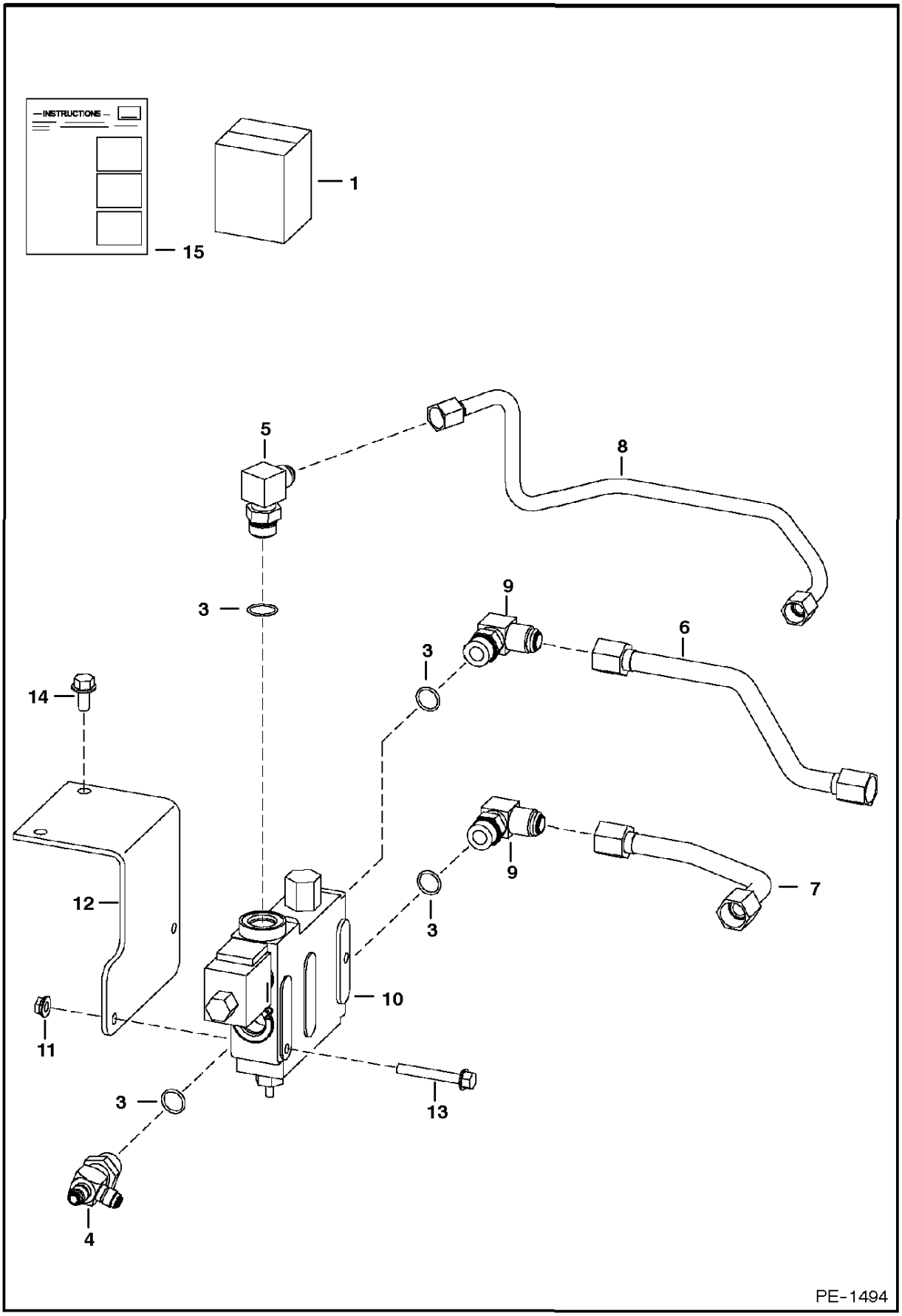

www.youfixthis.com

BUCKET POSITIONING VALVE KIT

Ref.N°	Part N°	Description	Remarks	Serial N°	Qty.
1	6730886	KIT	Ref. BUCKET POSITIONING VALVE KIT(2) - BUCKET POSITIONING VALVE KIT(15)		1
2	6666341	VALVE	bucket pos. - See Page BUCKET POSITIONING VALVE (1)		1
3	79K-10	O-RING			x
4	21KB-610	TEE	W/Ref. BUCKET POSITIONING VALVE KIT(3)		1
5	17KB-810	ELBOW	W/Ref. BUCKET POSITIONING VALVE KIT(3)		1
6	6733684	TUBE			1
7	6730209	TUBE			1
8	6726180	TUBE			1
9	17KB-1010	ELBOW	W/Ref. BUCKET POSITIONING VALVE KIT(3)		2
10	6672863	SOLENOID			1
10		CARTRIDGE	W/nut		1
10		COIL			1
10	6671527	NUT			1
10	6670634	SEAL KIT			1
11	57D-5	NUT			2
12	6727646	BRACKET			1
13	35C-536	BOLT			2
14	84G-3712	BOLT			2
15	6900838	INSTRUCTIONS			1

www.youfixthis.com

BUCKET POSITIONING VALVE

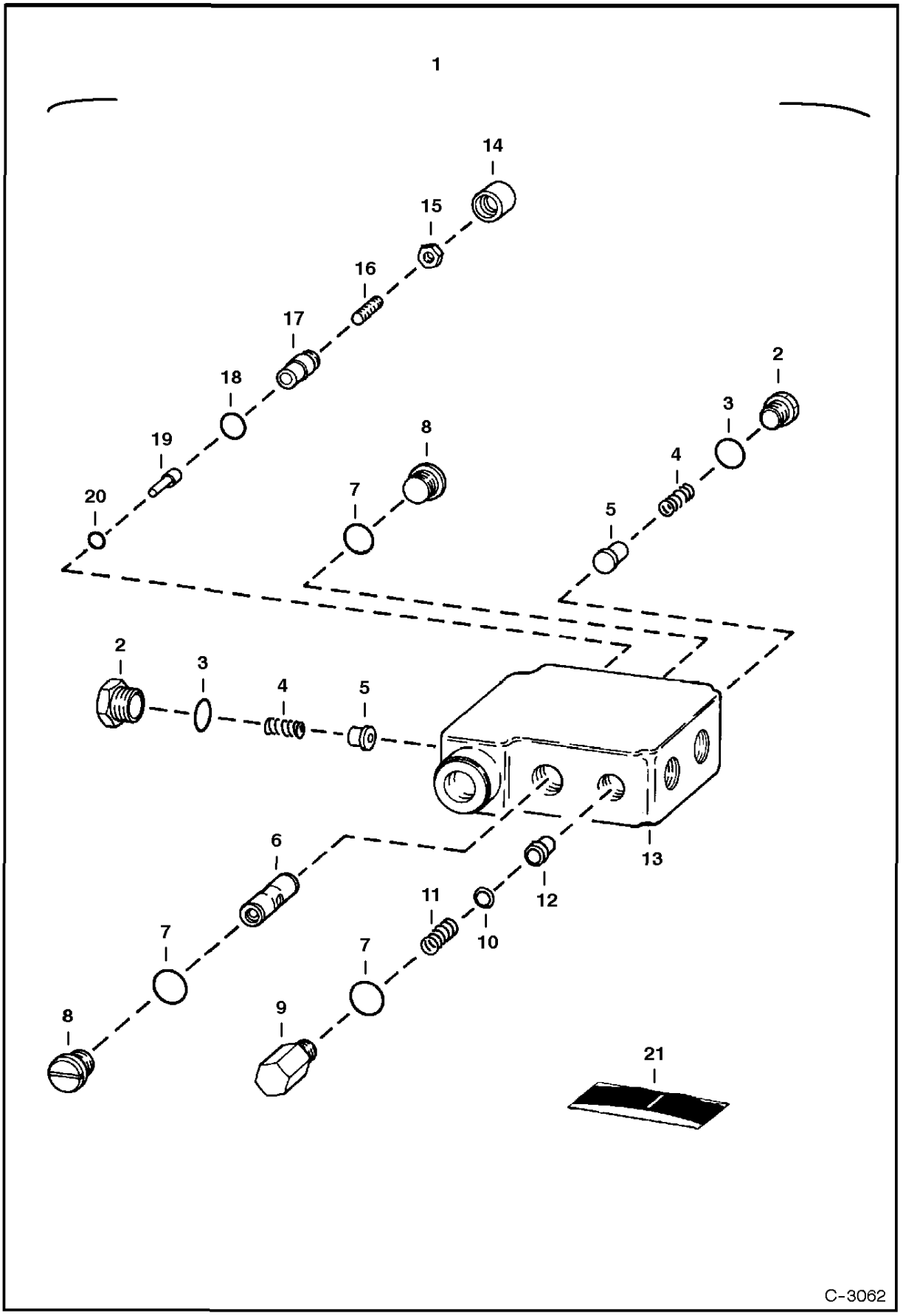

www.youfixthis.com

BUCKET POSITIONING VALVE

Ref.N°	Part N°	Description	Remarks	Serial N°	Qty.
1	6666341	VALVE	Ref. BUCKET POSITIONING VALVE(2)-BUCKET POSITIONING VALVE(20)		1
2	6647784	PLUG	W/Ref. BUCKET POSITIONING VALVE(3)		2
3	79K-8	O-RING			2
4	6647785	SPRING			2
5	6647783	LOAD CHECK			2
6	NSS	SPOOL			1
7	80K-116	RING	backup		3
8	6647780	PLUG	W/Ref. BUCKET POSITIONING VALVE(7)		2
9	6667176	PLUG	W/Ref. BUCKET POSITIONING VALVE(7)		1
10	6667680	SNAP RING			1
11	6648294	SPRING			1
12	NSS	SPOOL			1
13	NSS	BODY			1
14	6667676	COVER			1
15	6631561	NUT			1
16	6648293	SCREW			1
17	6647778	CAP			1
18	79K-6	O-RING			1
19	6647777	PIN			1
20	6667677	O-RING			1
21	6647786	SEAL KIT	Ref. BUCKET POSITIONING VALVE(3), BUCKET POSITIONING VALVE(7), BUCKET POSITIONING VALVE(14), BUCKET POSITIONING VALVE(18) & BUCK		1

www.youfixthis.com

CAB DOOR

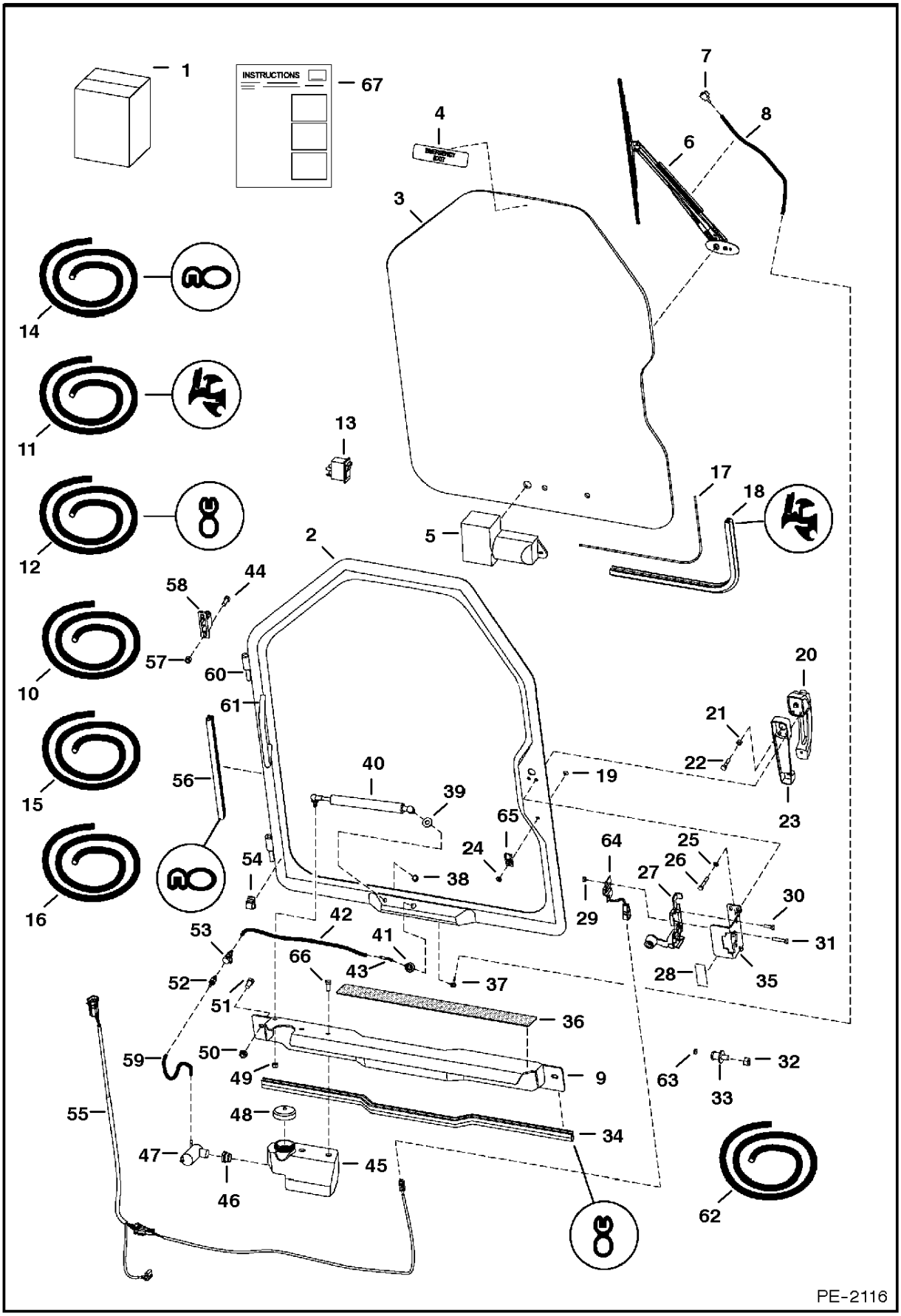

www.youfixthis.com

CAB DOOR

Ref.N°	Part N°	Description	Remarks	Serial N°	Qty.
1	6730822	KIT	door		1
2	6726435	DOOR	W/Ref. CAB DOOR(60) & CAB DOOR(61)		1
3	6729776	WINDOW	.25' thick glass - See Page CAB DOOR(1)		1
4	6707852	DECAL	exit		1
5	6679476	MOTOR	See Page CAB DOOR(1)		1
6	6677833	ARM ASSY	See Page CAB DOOR(1)		1
7	6678920	NOZZLE	wiper arm mount - See Page CAB DOOR(1)		1
8		HOSE	See Page CAB DOOR(1)		1
9	6730816	SHIELD			1
10	6676918	HOSE	(50'(15,240 mm) long roll - .125' I.D. - black		1
11	6665568	SEAL	bulk - Sold Per Foot		x
12	6513152	SEAL	bulk - Sold Per Foot		x
13	6665707	SWITCH	front wiper		1
14	6675558	SEAL	bulk - Sold Per Foot		1
15	6554149	CORD	bulk - Sold Per Foot		x
16	6676003	HOSE	bulk - Sold Per Foot - .109' I.D. - black		x
17	NAP	CORD	window - 113.3' (2877,8 mm) - Order Ref. CAB DOOR(15)		1
18	NAP	SEAL	window - 113.3' (2877,8 mm) - Order Ref. CAB DOOR(11)		1
19	6665321	RIVET	male plastic		1
20	6674667	HANDLE			1
20	6709527	KEY	ign/rear door		1
21	61D-4	NUT			1
22	17C-420	BOLT			1
23	6717146	SPACER	handle		1
24	6665322	RIVET	female plastic		1
25	6EM-60	WASHER			3
26	1CM-640	BOLT			3
27	6674666	LATCH			1
28	6732975	DECAL	door sensor		1
29	4DM-6	NUT			2
30	1CM-620	BOLT			2
31	4CM-635	BOLT			2
32	91D-7	NUT			1
33	6677194	BOLT			1
34	NAP	SEAL	threshold - 36' (914,4 mm) - - Order (3) ft. of Ref. CAB DOOR(12)		1
35	6717369	BRACKET	latch		1
36	6542731	SAFETY TREAD			1
37	6676500	ELBOW			1
38	46D-5	NUT	acorn		1
39	25E-16	WASHER			1
40	6682586	GAS SPRING			1
40	6678548	SOCKET	ball		2
40	6649244	BALL STUD			2
40	6649245	CLIP	spring		2
41	6676499	GROMMET	wiper		1
42	NAP	HOSE	18.25' (463,6 mm) long - Order Ref. CAB DOOR(16)		1
43	6676917	ELBOW			1
44	17C-512	BOLT			4
45	6736875	TANK	washer		1
46	6666766	GROMMET			1
47	6664554	PUMP	washer bottle		1
48	6674993	CAP	vented		1
49	61D-5	NUT			1

www.youfixthis.com

CAB DOOR

Ref.N°	Part N°	Description	Remarks	Serial N°	Qty.
50	61D-6	NUT			2
51	17C-612	BOLT			2
52	6675299	COUPLER	insert		1
53	6675298	COUPLER	body		1
54	6675378	CLIP			1
55	6730885	HARNESS	wiper - W/fuse		1
56	NAP	SEAL	127.3'(3233,4 mm)-Order Ref. CAB DOOR(14)		1
57	59D-5	NUT			4
58	6717593	HINGE	base		2
59	NAP	HOSE	4.25' (107,9 mm) long - Order Ref. CAB DOOR(62)		1
60	6718376	HINGE	door		2
61	6718521	HANDLE	grab		1
62	6708310	HOSE	bulk - Sold Per Foot - .149' I.D. - clear		x
63	6677192	MAGNET			1
64	6731212	SWITCH	door		1
64	6677193	RIVET	plastic		2
65	6665000	CLIP			1
66	35C-408	BOLT			2
67	6901013	INSTRUCTIONS			1

www.youfixthis.com

CAB DOOR
(Window & Wiper)

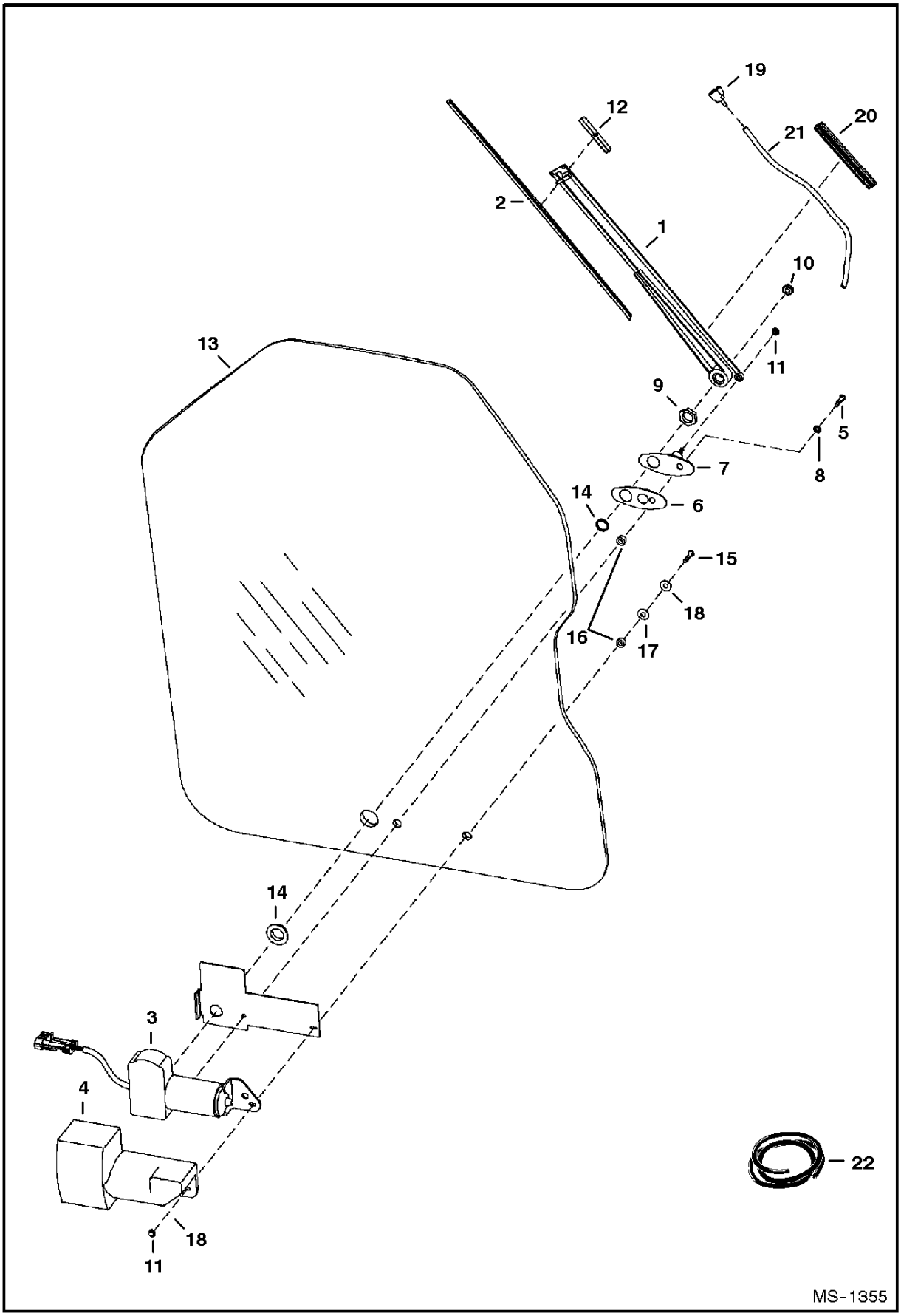

www.youfixthis.com

CAB DOOR

Ref.N°	Part N°	Description	Remarks	Serial N°	Qty.
1	6677833	ARM ASSY	W/Ref. CAB DOOR(19) - CAB DOOR(21)		1
2	6677834	BLADE			1
3	6679476	MOTOR	W/threaded shaft end & built in fuse		1
4	6677836	MOTOR			1
5	6677837	BOLT			1
6	6677839	GASKET			1
7	6677840	SWIVEL ASSY			1
8	6677841	WASHER	tooth lock		1
9	6677842	NUT			1
10	6677843	NUT			1
11	6677844	NUT			2
12	6677845	ADAPTER	arm		1
13	6729776	WINDOW	.25' thick glass		1
14	6677847	GROMMET	rubber		1
15	6678198	BOLT			1
16	6664085	BUSHING	nylon		2
17	6801059	WASHER	neoprene		1
18	6678739	WASHER	steel		2
19	6678920	NOZZLE			1
20	6678921	GUIDE	hose		1
21	NAP	HOSE	18'(457,2 mm) long - Order Ref. CAB DOOR(22)		x
22	6676003	HOSE	bulk - Sold Per Foot - .109' I.D. - black		x

www.youfixthis.com

CAB DOOR
(Special Applications)

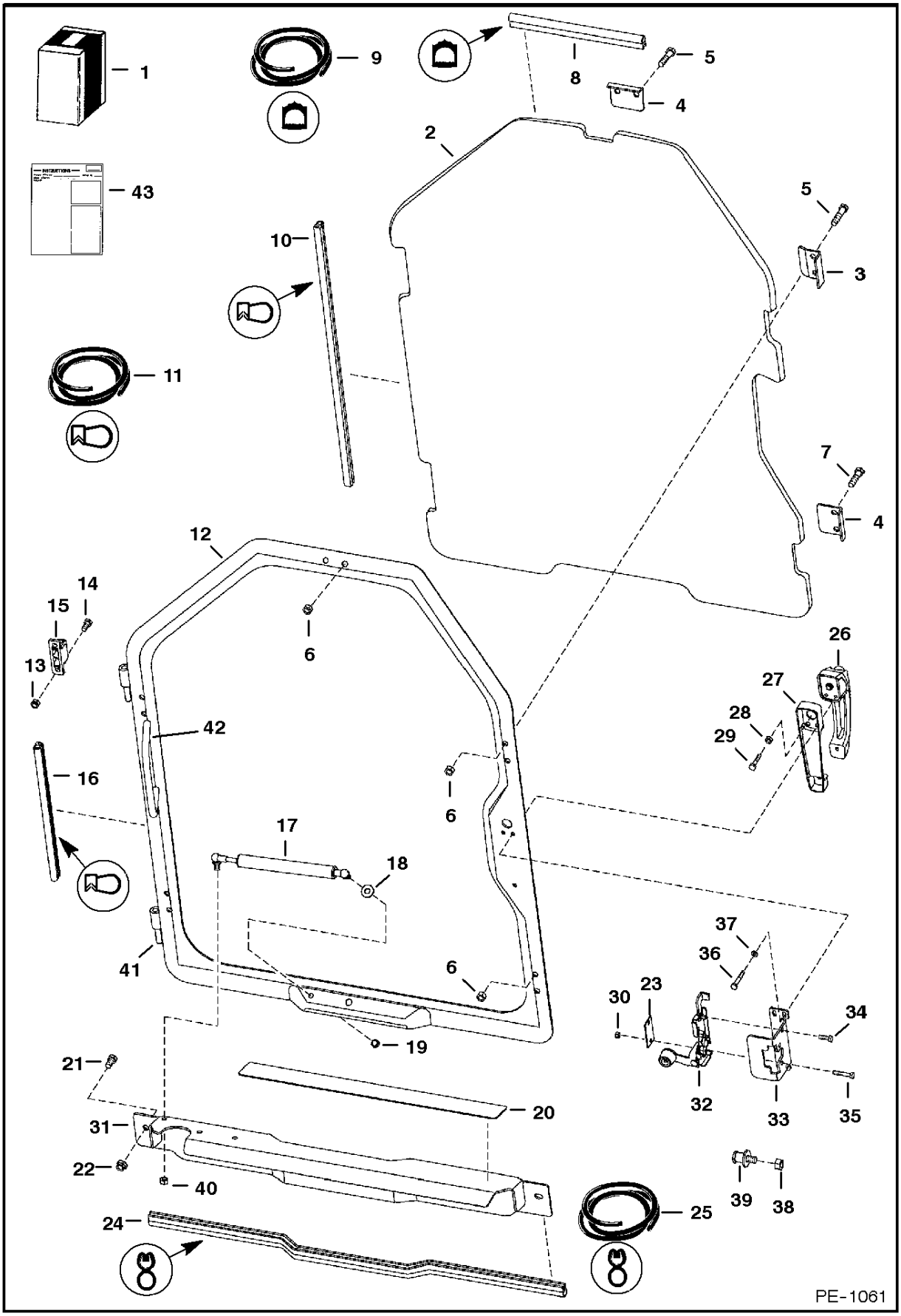

www.youfixthis.com

CAB DOOR

Ref.N°	Part N°	Description	Remarks	Serial N°	Qty.
1	6730823	KIT	door		1
2	6732351	WINDOW	.5' thick polycarbonate -W/ top notch		1
3	6725938	CLAMP			2
4	6725937	CLAMP			3
5	17C-628	BOLT			6
6	95D-6	NUT			10
7	17C-624	BOLT			4
8	NAP	SEAL	(12'(304,8 mm) long - Order Ref. CAB DOOR(9) - Used W/Ref. CAB DOOR(2) (W/O notch)		1
9	6670759	SEAL	bulk - Sold Per Foot		x
10	NAP	SEAL	(115'(2921 mm) long -Order Ref. CAB DOOR(11)		1
11	6675558	SEAL	bulk - Sold Per Foot		x
12	6726932	DOOR	W/Ref. CAB DOOR(41) & CAB DOOR(42)		1
13	59D-5	NUT			4
14	17C-512	BOLT			4
15	6717593	HINGE	base		2
16	NAP	SEAL	127.3'(3233,4 mm) long - Order Ref. CAB DOOR(11)		1
17	6682586	GAS SPRING			1
17	6678548	SOCKET	ball		2
17	6649244	BALL STUD			2
17	6649245	CLIP	spring		2
18	25E-16	WASHER			1
19	46D-5	NUT	acorn		1
20	6542731	SAFETY TREAD			1
21	55D-6	NUT			2
22	17C-612	BOLT			2
23	6718520	COVER	latch		1
24	NAP	SEAL	(36'(914,4 mm) long -Order Ref. CAB DOOR(25)		1
25	6513152	SEAL	bulk - Sold Per Foot		x
26	6674667	HANDLE			1
26	6709527	KEY	ign. & rear door		1
27	6717146	SPACER	handle		1
28	61D-4	NUT			1
29	17C-420	BOLT			1
30	4DM-6	NUT			2
31	6730816	SHIELD			1
32	6674666	LATCH			1
33	6717369	BRACKET	latch		1
34	1CM-620	BOLT			2
35	1CM-635	BOLT			2
36	1CM-640	BOLT			3
37	6EM-60	WASHER			3
38	91D-7	NUT			1
39	6654170	STRIKER BOLT			1
40	61D-5	NUT			1
41	6718376	HINGE	door		2
42	6718521	HANDLE	grab		1
43	6901013	INSTRUCTIONS			1

www.youfixthis.com

CAB DOOR
(Lexan Window)

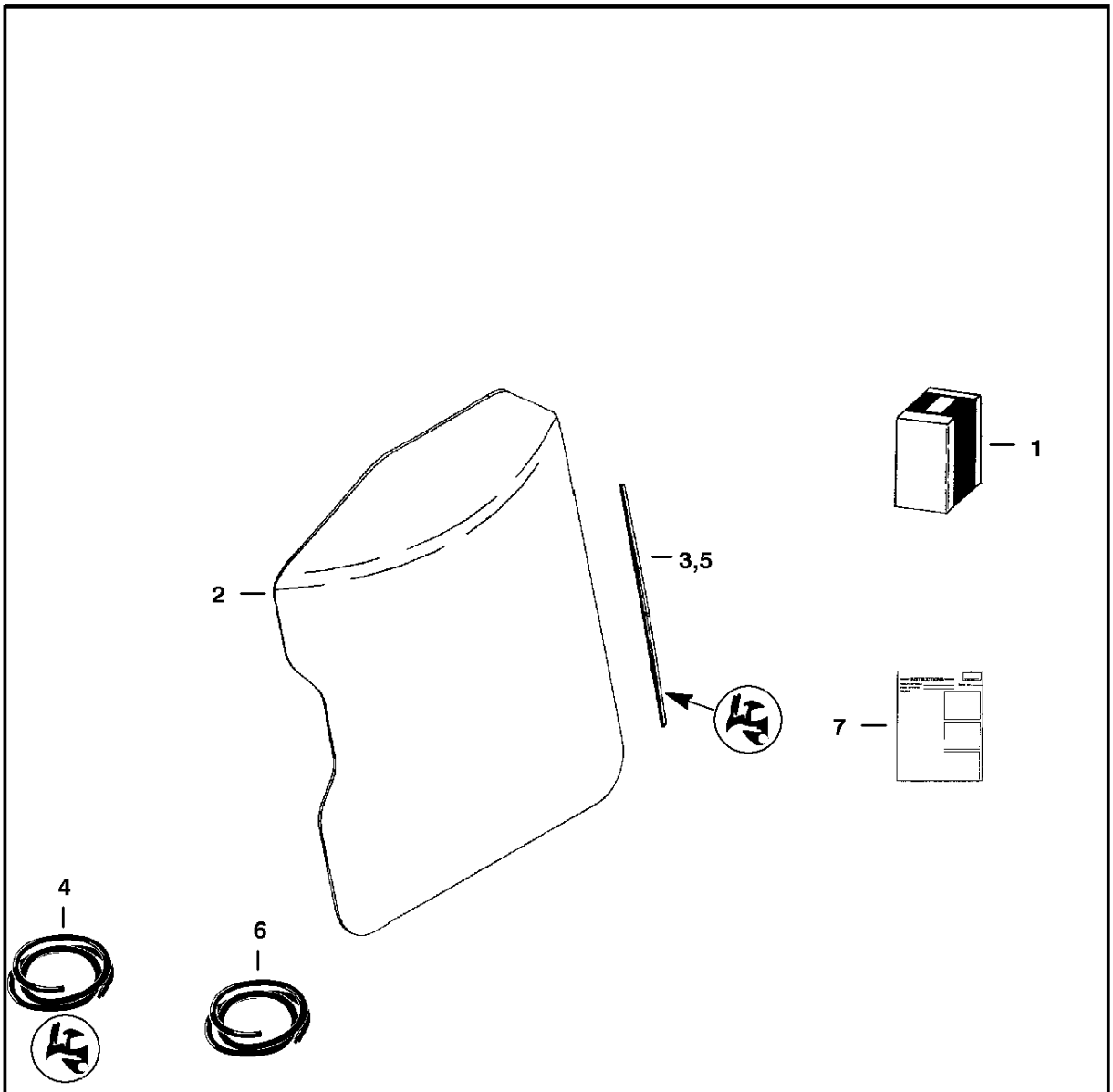

NOTE: This Lexan window is NOT approved as a Special Applications Kit. This window does not provide additional protection from materials entering cab openings.

PE-1558

www.youfixthis.com

CAB DOOR

Ref.N°	Part N°	Description	Remarks	Serial N°	Qty.
1	6726427	KIT	Ref. CAB DOOR(2) - CAB DOOR(7)		1
2	6732350	WINDOW	lexan - .236' thick		1
3	NAP	SEAL	113.3'(2877,8 mm) long - Order Ref. CAB DOOR(4)		1
4	6665568	SEAL	bulk - Sold Per Foot		x
5	NAP	CORD	113.3'(2877,8 mm) long - Order Ref. CAB DOOR(6)		1
6	6554149	CORD	bulk - Sold Per Foot		x
7	6901036	INSTRUCTIONS			1

www.youfixthis.com

CAB ENCLOSURE
(Envelope)

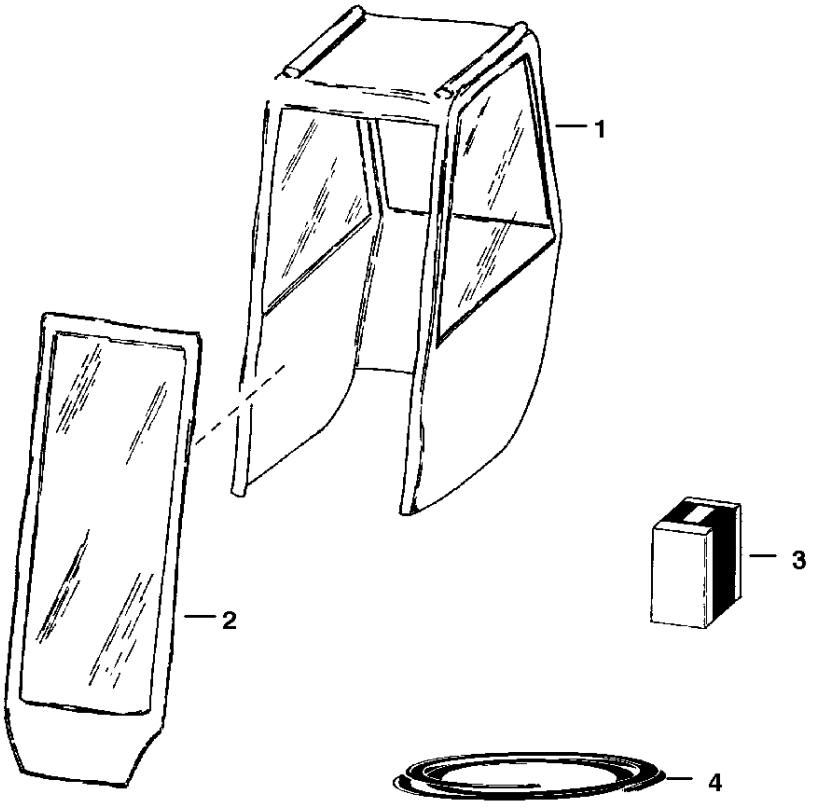

B-1413

www.youfixthis.com

CAB ENCLOSURE

Ref.N°	Part N°	Description	Remarks	Serial N°	Qty.
1	6675544'	COVER	fits over cab - W/Ref. CAB ENCLOSURE(2)		1
2	6675590	DOOR	vinyl		1
3	6675591	HINGE KIT			1
4	6722597	VELCRO	27 feet (8,2 m)		1

www.youfixthis.com

CAB ENCLOSURE

NOTE: Order Cab Enclosure Kit from Gwinner SALES #6719666.
Order Special Applications Kit from Gwinner SALES # 6719326.

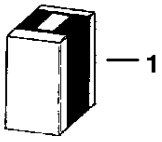

B-17100

www.youfixthis.com

CAB ENCLOSURE

Ref.N°	Part N°	Description	Remarks	Serial N°	Qty.
1	SALES	KIT	cab enclosure - SEE NOTE - includes items See Page CAB DOOR(1) & See Page CAB WINDOWS(1)		1
1	SALES	KIT	special cab enclosure - SEE NOTE - includes items See Page CAB DOOR(1) & See Page CAB WINDOWS(1)		1

www.youfixthis.com

CAB WINDOWS

NOTE: Order Top & Rear WIndow Kit from Gwinner Sales # 6718805.
Order Side Window Kit from Gwinner Sales # 6718806.

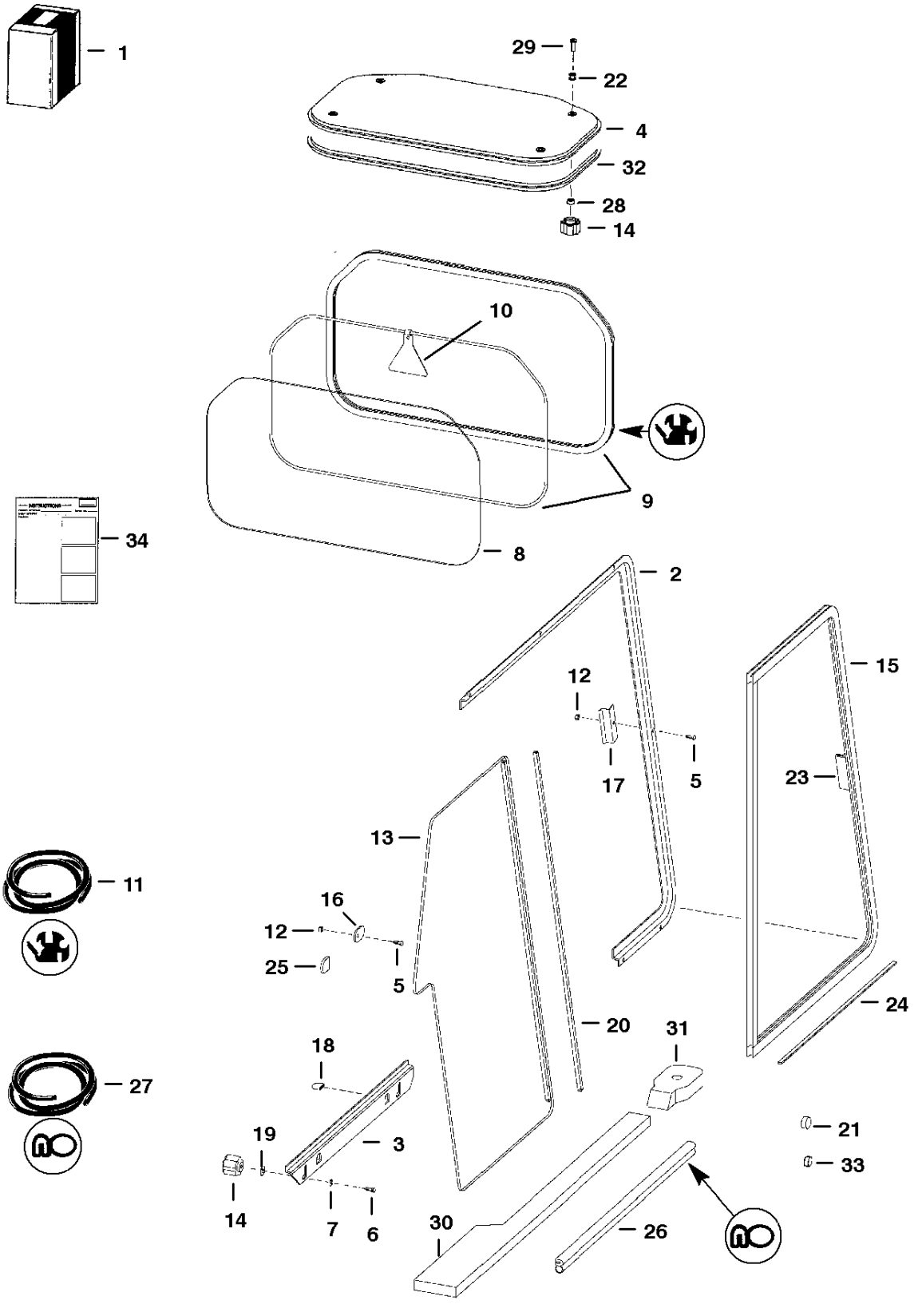

www.youfixthis.com

CAB WINDOWS

Ref.N°	Part N°	Description	Remarks	Serial N°	Qty.
1	SALES	KIT	Top & Rear Window - SEE NOTE		1
1	SALES	KIT	Side Window - SEE NOTE		1
2	6717870	TRACK	L.H. side		1
2	6717872	TRACK	R.H. side		1
3	6717871	TRACK	L.H. bottom		1
3	6717873	TRACK	R.H. bottom		1
4	6728629	WINDOW	top - lexan - W/Ref. CAB WINDOWS(22) & CAB WINDOWS(23)		1
5	10C-410	BOLT	carriage		18
6	10C-412	BOLT	carriage		4
7	25E-14	WASHER			4
8	6717874	WINDOW	rear		1
8	6719413	WINDOW	rear - lexan		1
9	NAP	EXTRUSION	75.75'(1924 mm) long - Order Ref. CAB WINDOWS(11)		x
9	NAP	CORD	75.75'(1924 mm) long - Order Ref. CAB WINDOWS(11)		x
10	6559515	EXIT TAG			1
11	6675387	SEA;	bulk - Sold Per Foot		x
11	6554149	CORD	bulk - Sold Per Foot		x
12	59D-4	NUT			18
13	6674520	WINDOW	L.H. rear		1
13	6674522	WINDOW	R.H. rear		1
14	6674741	KNOB	5/8' deep threads		8
14	6681614	KNOB	11/16' deep threads		8
15	6674519	WINDOW	L.H. front - W/Ref. CAB WINDOWS(24)		1
15	6674521	WINDOW	R.H. front - W/Ref. CAB WINDOWS(24)		1
16	6719063	STOP			2
17	6719037	STRIKER			2
18	6719065	COVER	tab		4
19	6675212	RETAINER	bolt		4
20	6675833	SEAL	rear window dual wiper W/tape		2
21	6657719	PLUG	for .75' dia. hole		2
22	6675545	GROMMET			4
23	6678283	HANDLE	(side window - W/tape & adhesive		2
24	6676927	FELT STRIP	20.38'(517,7 mm) long		2
25	6677198	CAP	tab		2
26	NAP	SEAL	24'(609,6 mm) long - Order Ref. CAB WINDOWS(27)		2
27	6555351	SEAL	bulk - Sold Per Foot		x
28	6664085	BUSHING	nylon		4
29	91G-416	BOLT	Use W/Ref. CAB WINDOWS(14) (6674741 Knob)		4
29	91G-420	BOLT	Use W/Ref. CAB WINDOWS(14) (6681614 Knob)		4
30	6729010	SEAL	L.H. - cab/main frame - foam		1
30	6729009	SEAL	R.H. - cab/main frame - foam		1
31	6729011	SEAL	cab mount		2
32	NAP	SEAL	Order Ref. CAB WINDOWS(4)		1
33	6677973	PLUG	for .22' dia. hole		2
34	6901013	INSTRUCTIONS	Top & Rear Window		1
34	6900853	INSTRUCTIONS	Side Windows		1

www.youfixthis.com

CAB WINDOWS
(Rear Window Removal Kit)

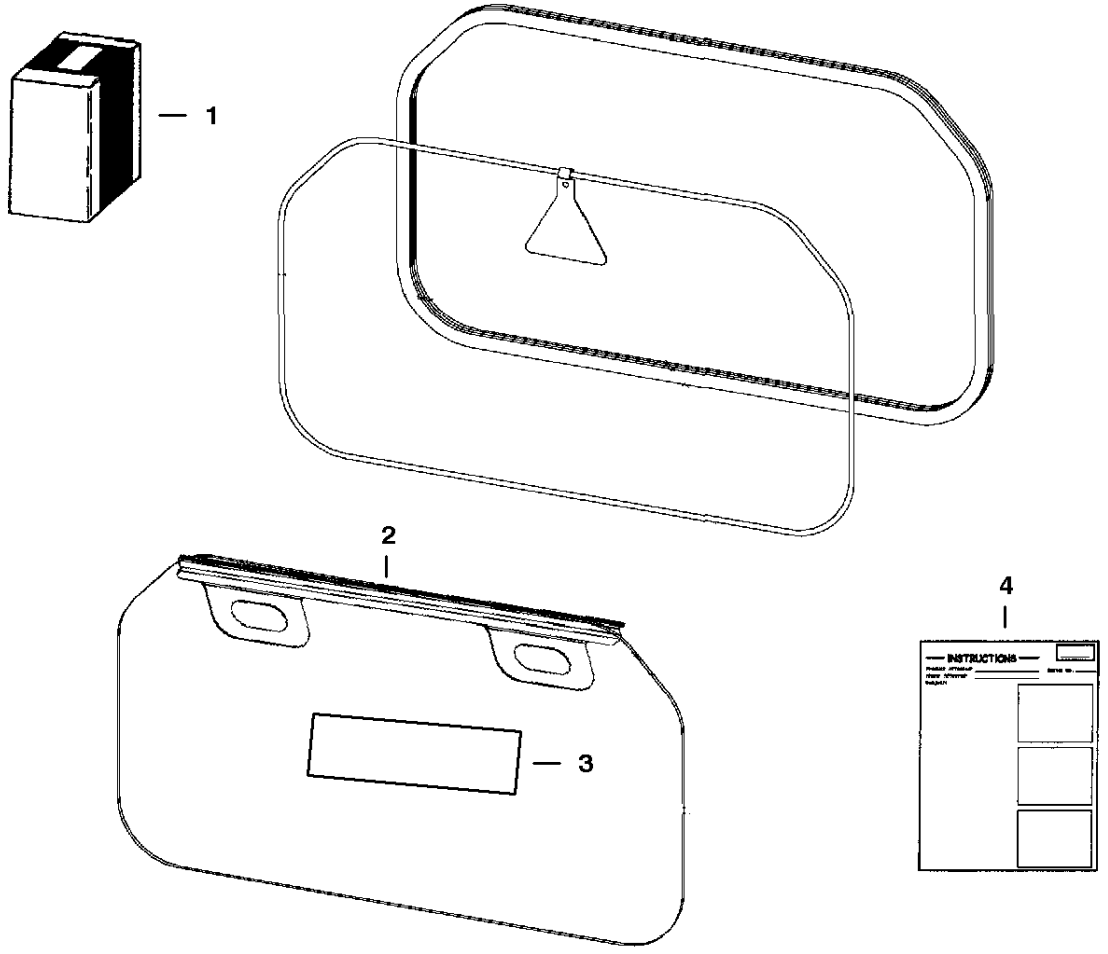

TS-2006

www.youfixthis.com

CAB WINDOWS

Ref.N°	Part N°	Description	Remarks	Serial N°	Qty.
1	6725946	KIT	Ref. CAB WINDOWS(2) - CAB WINDOWS(4)		1
2	6725421	HANDLE			1
3	6726303	DECAL			1
4	6901029	INSTRUCTIONS			1

www.youfixthis.com

DECALS

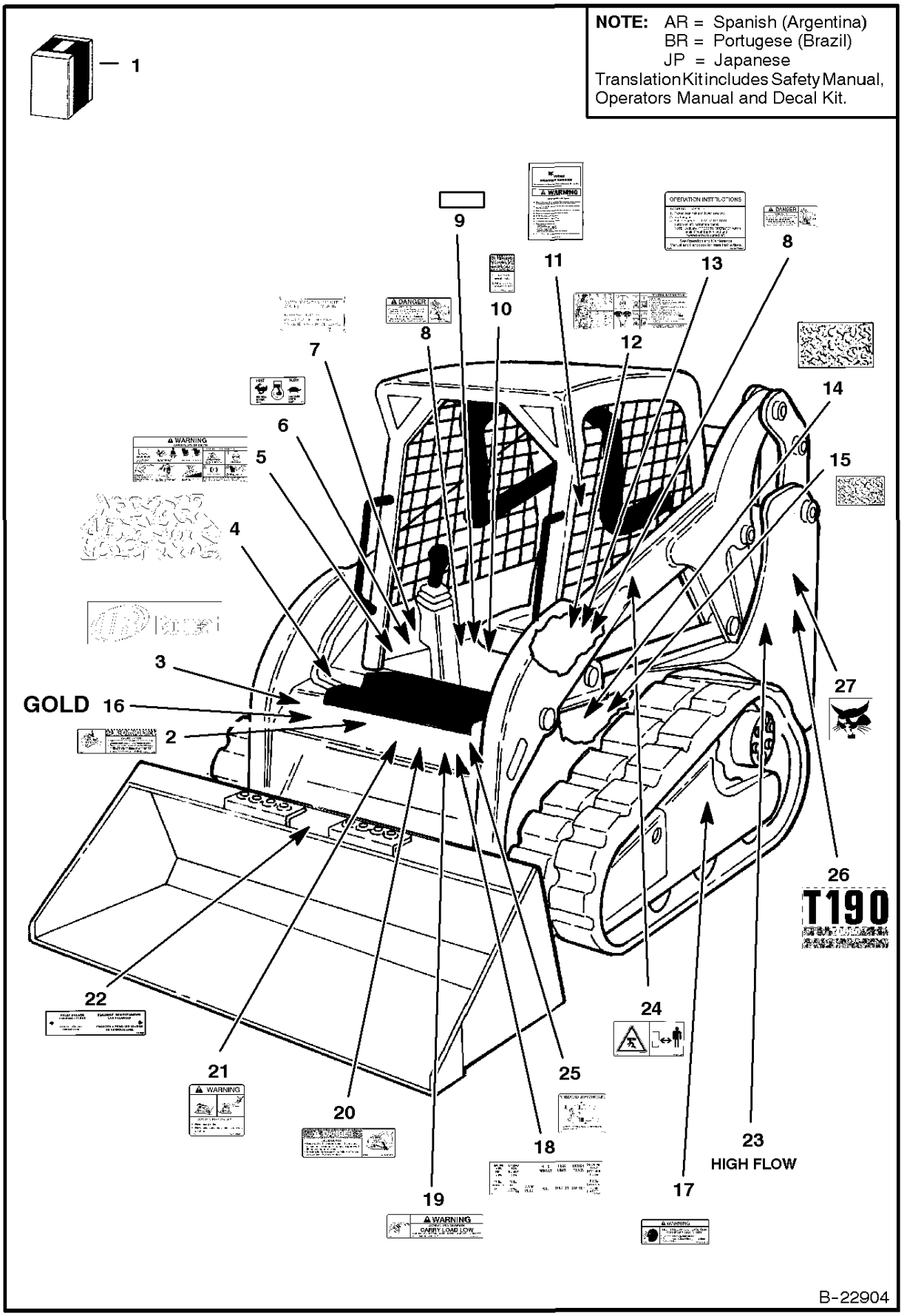

www.youfixthis.com

DECALS

Ref.N°	Part N°	Description	Remarks	Serial N°	Qty.
1	6901380	KIT	decal		1
1	6731911AR	KIT	decal - SEE NOTE		1
1	6731911BR	KIT	decal - SEE NOTE		1
1	6731911JP	KIT	decal - SEE NOTE		1
1	6731912AR	KIT	translation - SEE NOTE		1
1	6731912BR	KIT	translation - SEE NOTE		1
2	6718392	DECAL	carry load		1
3	6727310	DECAL	Ingersoll Rand - red and black letters - Not in Kit		1
4	6712791	SAFETY TREAD	(12' x 25.30'(304,8 mm x 642,6 mm)		1
5	6728540	DECAL	warning		1
5	6735255	DECAL	warning - joystick controls - Not in Kit		1
6	6735140	DECAL	throttle		1
7	6710449	DECAL	load		1
8	6717343	DECAL	danger		2
9	6803932	DECAL	warning - Not in Kit		1
10	6711840	DECAL	lift lock		1
11	6728607	KIT	handbook - W/Wire Rope - Not in Kit		1
11	6558309	WIRE ROPE	33' (838,2 mm) long - bulk - Sold Per Foot - Also Order (2) of 6558310		x
11	6558310	SLEEVE	wire rope		2
11	17C-512	BOLT			1
11	61D-5	NUT			1
11	84G-3112	BOLT			1
12	6727926	DECAL	operating		1
13	6718703	DECAL	operations		1
13	6717639	DECAL	seat & seat bar operating - AHC - Not in Kit		1
13	6735256	DECAL	seat & seat bar operating - joystick controls - Not in Kit		1
14	6553976	SAFETY TREAD	5' x 8' (127 mm x 203,2 mm)		2
15	6554100	SAFETY TREAD	6' x 6' (152,4 mm x 152,4 mm)		3
16	6735862	DECAL	gold package		1
17	6804114	DECAL	grease		1
18	6718774	DECAL	fuse/relay - Not in Kit		1
19	6718391	DECAL	carry load		1
20	6718393	DECAL	danger		1
21	6718396	DECAL	danger		1
22	6561383	DECAL	Bob-tach		1
23	6727913	DECAL	hi-flow - Not in Kit		1
24	6713507	DECAL	stay clear - European -Not in Kit		2
25	6731757	DECAL	front aux. coupler block - Not in Kit		1
26	6729473	DECAL	model number		1
27	6731508	DECAL	L.H. - Bobcat head - black		1

www.youfixthis.com

DECALS

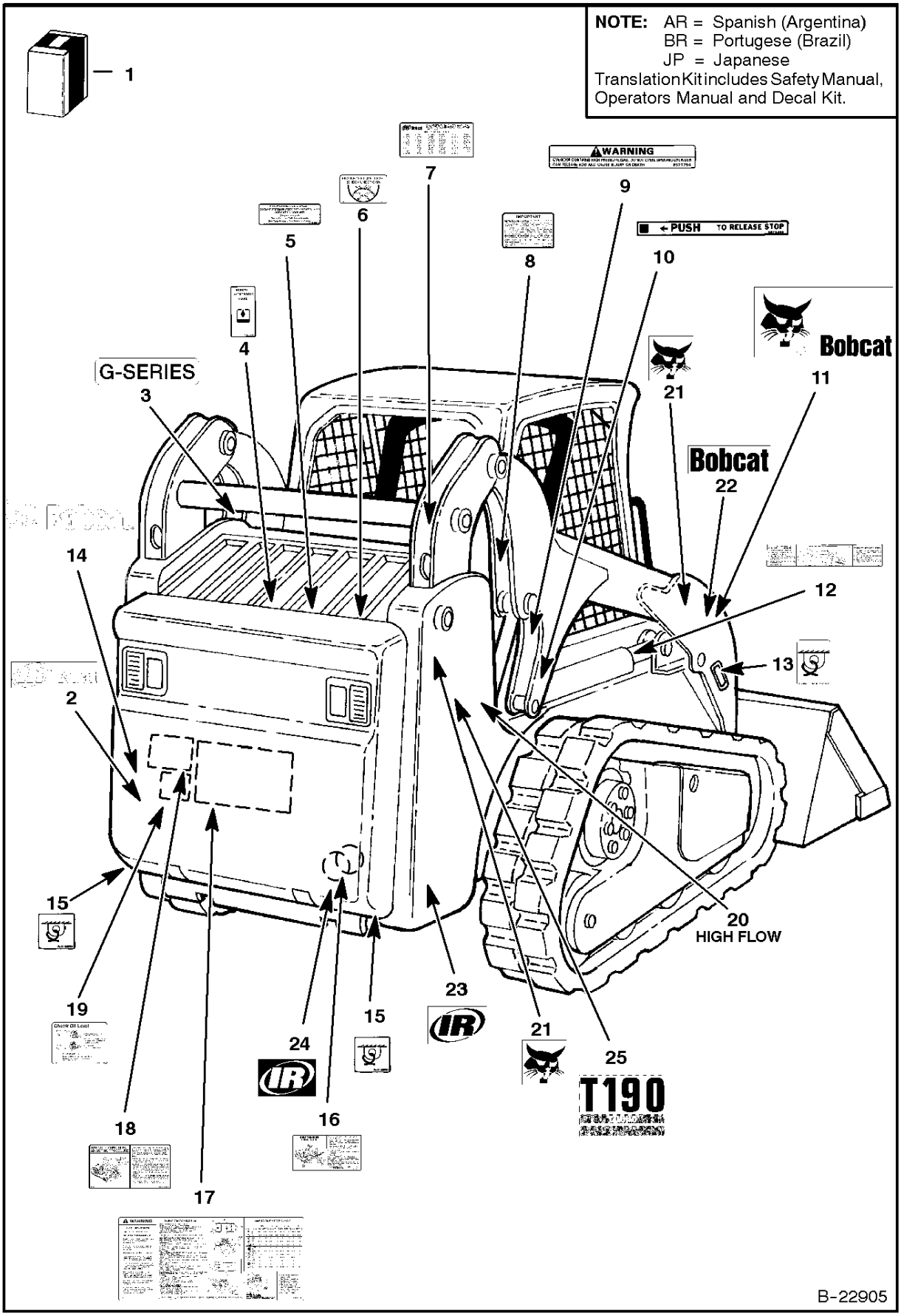

www.youfixthis.com

DECALS

Ref.N°	Part N°	Description	Remarks	Serial N°	Qty.
1	6901380	KIT	decal		1
1	6731911AR	KIT	decal - SEE NOTE		1
1	6731911BR	KIT	decal - SEE NOTE		1
1	6731911JP	KIT	decal - SEE NOTE		1
1	6731912AR	KIT	translation - SEE NOTE		1
1	6731912BR	KIT	translation - SEE NOTE		1
2	6727311	DECAL	IR Logo - Not in Kit		1
3	6717907	DECAL	G' Series - Not in Kit		1
4	6565990	DECAL	hydraulic fluid		1
5	6708929	DECAL	propylene glycol antifreeze		1
6	6719574	DECAL	coolant level		1
7	6557224	DECAL	patent		1
8	6560573	DECAL	spark arrestor		1
9	6577754	DECAL	warning		2
10	6578368	DECAL	push		1
11	6730909	DECAL	R.H. - Not in Kit		1
11	6730910	DECAL	L.H. - Not in Kit		1
12	6719018	DECAL	boom stop		1
13	6727595	DECAL	tie down		2
14	6735901	DECAL	Bobcat W/head		1
15	6595014	DECAL	tow hook		2
16	6565200	DECAL	filters		1
17	6734534	DECAL	service/warning/service parts		1
18	6709030	DECAL	belt tension - spring loaded idler		1
19	6717679	DECAL	check oil		1
20	6727913	DECAL	hi-flow - Not in Kit		1
21	6731507	DECAL	R.H. - Bobcat head - black		1
22	6731336	DECAL	Bobcat - black		2
23	6735864	DECAL	IR - black		2
24	6732423	DECAL	IR - white		1
25	6729473	DECAL	model		1

www.youfixthis.com

DELUXE CAB

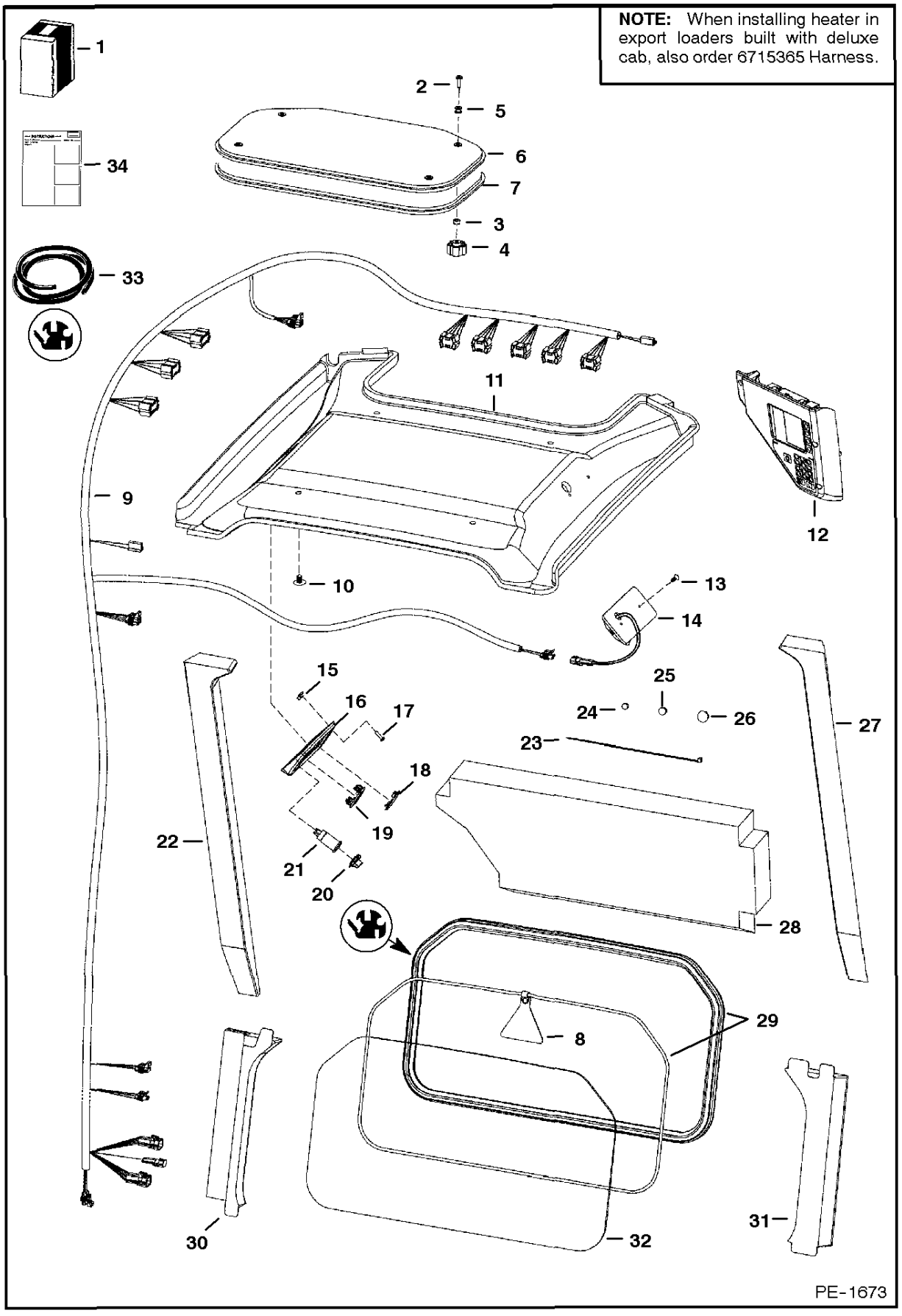

www.youfixthis.com

DELUXE CAB

Ref.N°	Part N°	Description	Remarks	Serial N°	Qty.
1	6729233	KIT	deluxe cab - SEE NOTE		1
2	91G-420	BOLT			4
3	6664085	BUSHING	nylon		4
4	6681614	KNOB			4
5	6675545	GROMMET			4
6	6728629	WINDOW	top - lexan - W/Ref. DELUXE CAB(5) & DELUXE CAB(7)		1
7	NAP	SEAL	Order Ref. DELUXE CAB(7)		1
8	6559515	EXIT TAG			1
9	6727190	HARNESS			1
9	6715365	HARNESS	(accessories - Export - SEE NOTE - Not in Kits		1
10	6674895	RETAINER	snap in		4
11	6717515	INSULATION	headliner		1
12	6683395	PANEL	R.H. - deluxe - keyless - Not in Kit		1
12	NAP	INSTRUCTIONS	See Loader Service Manual		1
13	6664221	RETAINER	snap in		2
14	6680326	LIGHT	dome		1
14	6665367	BULB			1
15	6669091	CLIP			4
16	6718580	PANEL			1
17	6669224	BOLT			4
18	6665314	PLUG	switch		5
19	6668742	SWITCH	travel control - Export		1
20	6664224	CAP			1
21	6664223	OUTLET			1
22	6717519	INSULATION			1
23	6610510	NYLON TIE			6
24	5289686	PLUG	black - .375' dia.		1
25	6649949	PLUG	.50' dia.		2
26	6657719	PLUG	.75' dia.		1
27	6717520	INSULATION			1
28	6727299	INSULATION	cab back		1
29	NAP	EXTRUSION	75.75'(1924 mm) long - Order Ref. DELUXE CAB(33)		x
29	NAP	CORD	75.75'(1924 mm) long - Order Ref. DELUXE CAB(33)		x
30	6717517	INSULATION			1
31	6717518	INSULATION			1
32	6717874	WINDOW	rear		1
33	6675387	SEA;	bulk - Sold Per Foot		x
33	6554149	CORD	bulk - Sold Per Foot		x
34	6900851	INSTRUCTIONS			1

www.youfixthis.com

DUAL BATTERY KIT

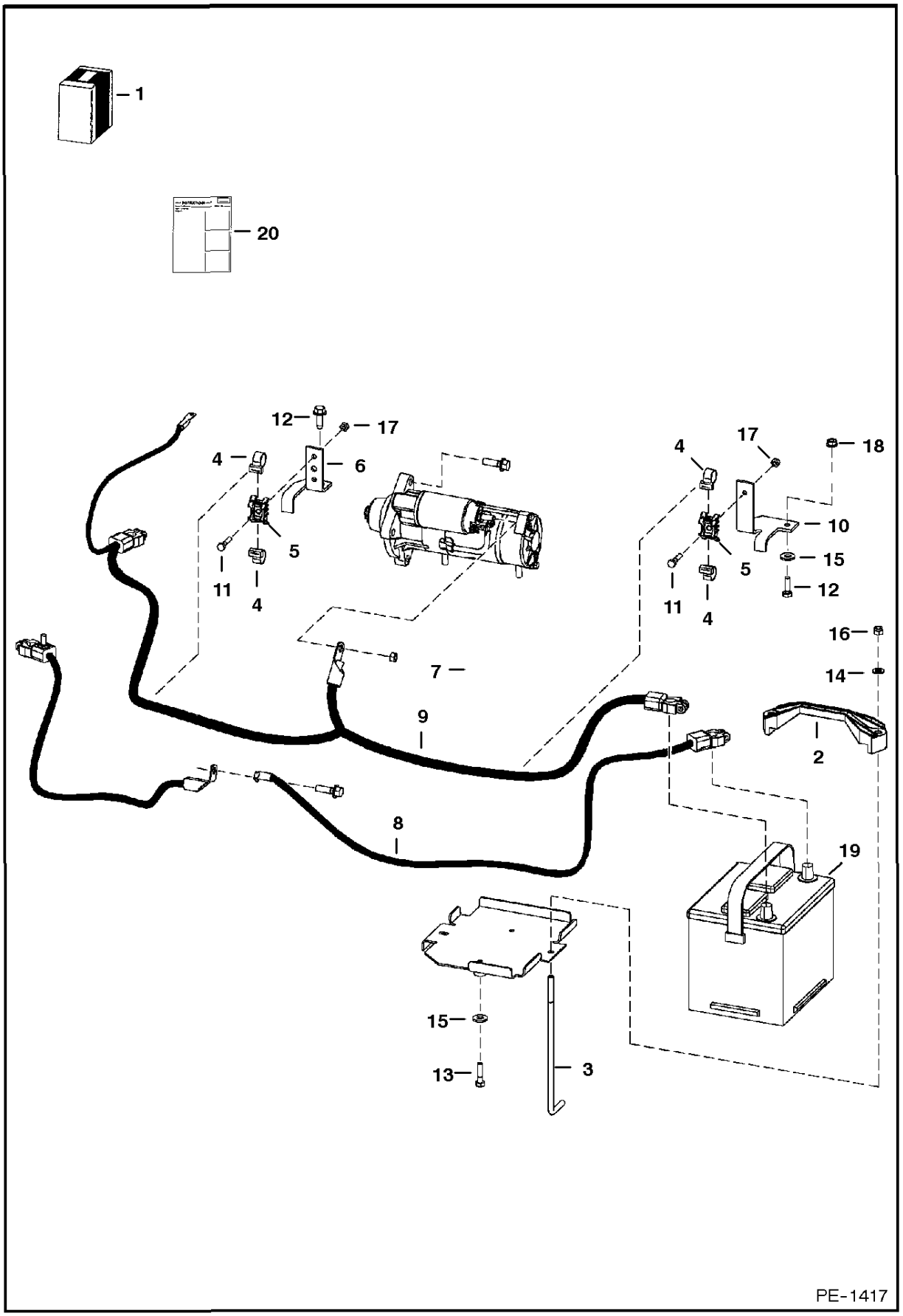

www.youfixthis.com

DUAL BATTERY KIT

Ref.N°	Part N°	Description	Remarks	Serial N°	Qty.
1	6731694	KIT	dual battery - Ref. DUAL BATTERY KIT(2)-DUAL BATTERY KIT(18) & DUAL BATTERY KIT(20)		1
2	6569203	CLAMP			1
3	6576280	BOLT			2
4	6678669	STRAP			4
5	6678974	MOUNT			2
6	6727508	BRACKET			1
7	6731617	PAN	battery		1
8	6731665	CABLE	negative		1
9	6731666	CABLE	positive		1
10	6731746	BRACKET			1
11	17C-420	BOLT			2
12	17C-516	BOLT			3
13	17C-520	BOLT			2
14	25E-15	WASHER			2
15	25E-16	WASHER			3
16	59D-5	NUT			2
17	61D-4	NUT			2
18	97D-5	NUT			1
19	6670251	BATTERY	Not in Kit		1
20	6901602	INSTRUCTIONS			1

www.youfixthis.com

DUAL DAMPENER KIT

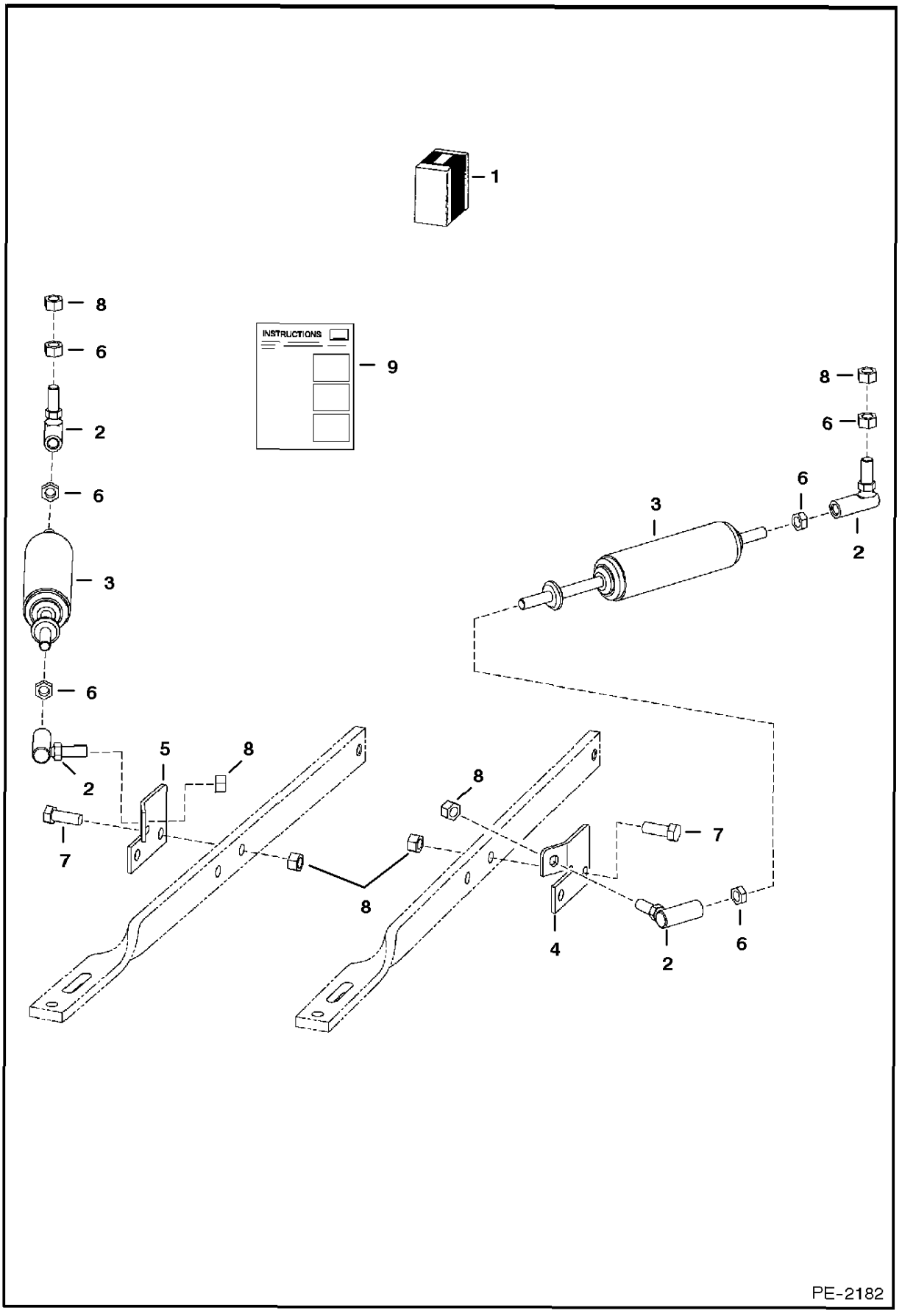

www.youfixthis.com

DUAL DAMPENER KIT

Ref.N°	Part N°	Description	Remarks	Serial N°	Qty.
1	7101670	KIT	dual dampener		1
2	6599744	BALL JOINT			4
3	6649551	DAMPENER			2
4	7101640	BRACKET	R.H.		1
5	7101641	BRACKET	L.H.		1
6	8D-6	NUT			6
7	18C-616	BOLT			2
8	62D-6	NUT			6
9	6902814	INSTRUCTIONS			1

www.youfixthis.com

ELECTRICAL CONNECTOR KIT
(7-Pin)

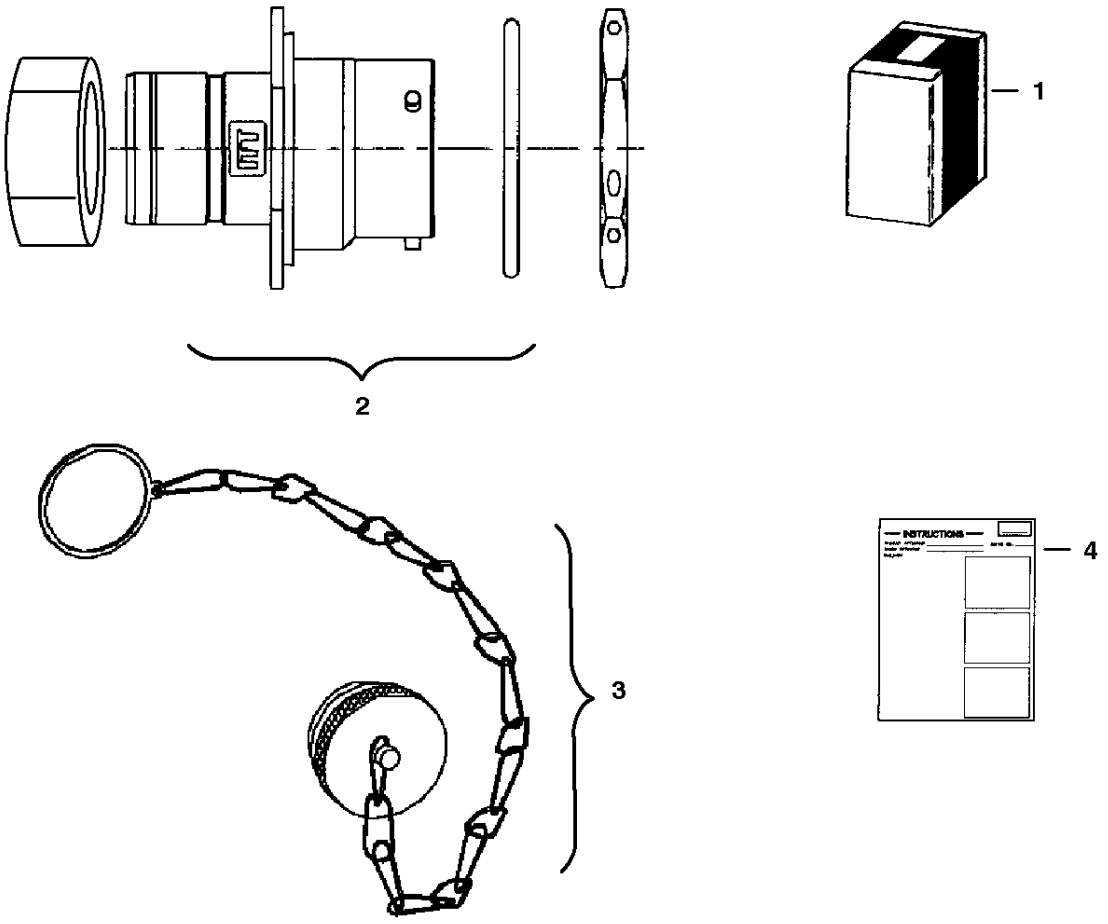

P-16385

www.youfixthis.com

ELECTRICAL CONNECTOR KIT

Ref.N°	Part N°	Description	Remarks	Serial N°	Qty.
1	6727176	KIT			1
2	6674802	CONNECTOR	7-pin		1
2	6669549	SOCKET	small		4
2	6677136	SOCKET	12 ga		3
3	6675026	CAP			1
4	6901076	INSTRUCTIONS			1

www.youfixthis.com

ELECTRICAL CONTROLS KIT
(7 Pin Attachments)

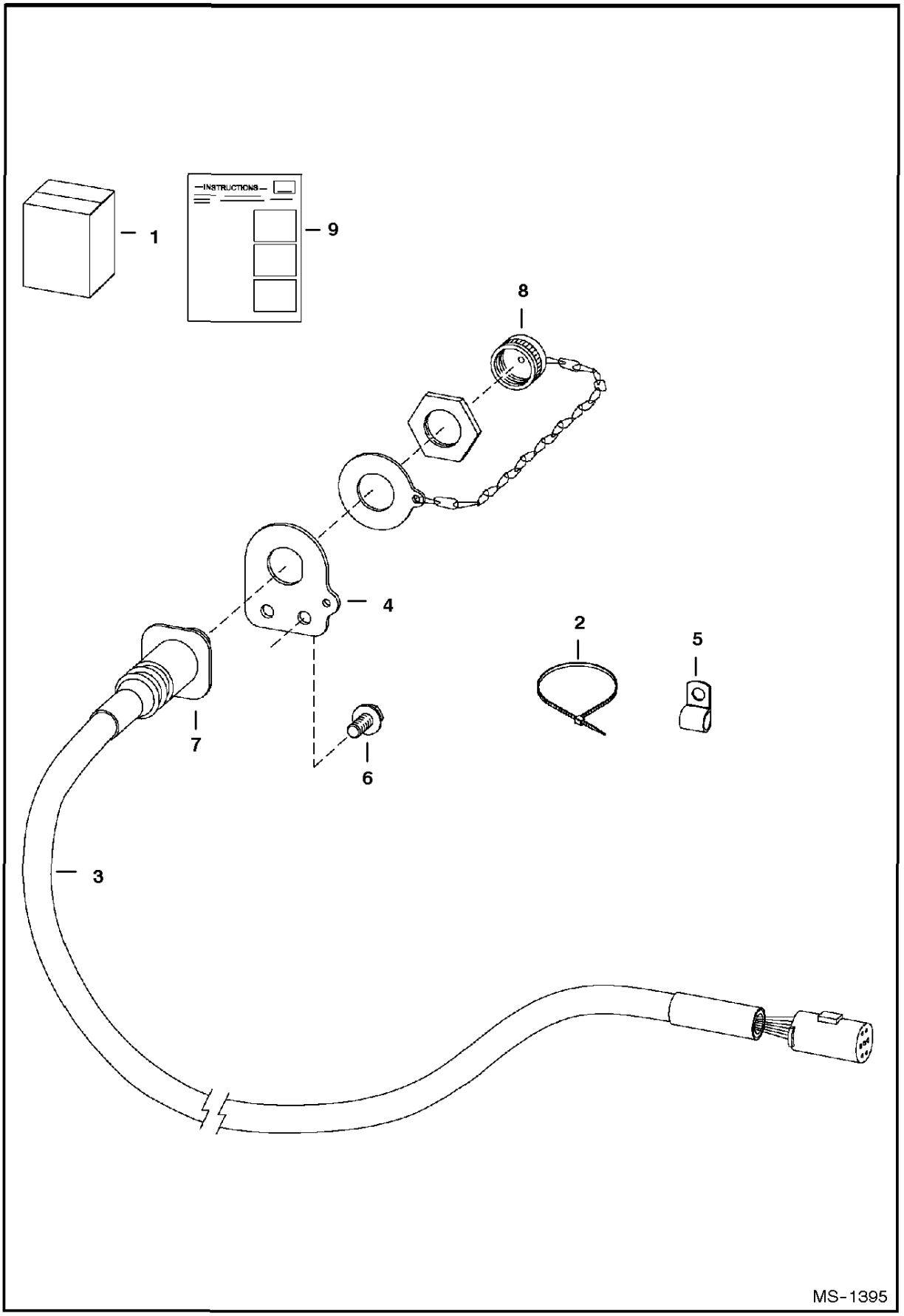

www.youfixthis.com

ELECTRICAL CONTROLS KIT

Ref.N°	Part N°	Description	Remarks	Serial N°	Qty.
1	6733142	KIT	Ref. ELECTRICAL CONTROLS KIT(2)-ELECTRICAL CONTROLS KIT(8)		1
2	6624289	STA-STRAP			4
3	6718426	HARNESS	W/Ref. ELECTRICAL CONTROLS KIT(7)		1
4	6718750	MOUNT			1
5	30H-27	CLAMP			6
6	84G-3112	BOLT			8
7	6674802	CONNECTOR	7pin		1
7	6669549	SOCKET	small		4
7	6677136	SOCKET	large - 12 ga.		3
8	6675026	CAP			1
9	6674799	ADAPTER	heat shrink		1
10	6901871	INSTRUCTIONS			1

www.youfixthis.com

ELECTRICAL CONTROLS KIT
(14 Pin Attachments)

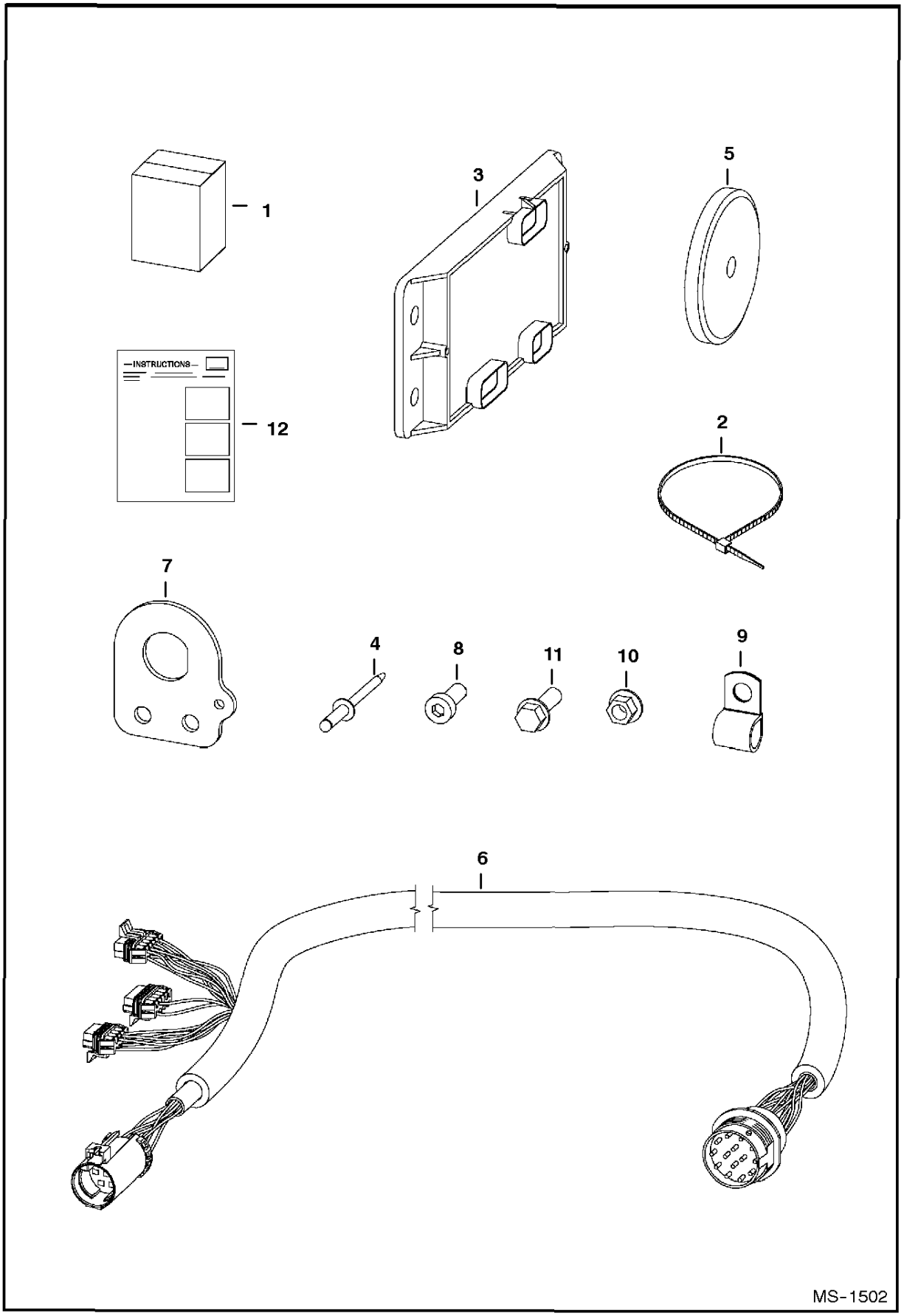

www.youfixthis.com

ELECTRICAL CONTROLS KIT

Ref.N°	Part N°	Description	Remarks	Serial N°	Qty.
1	6733136	KIT			1
2	6624289	STA-STRAP			7
3	6678675	CONTROLLER			1
4	6704892	RIVET			1
5	6719448	MAGNET			2
6	6732730	HARNESS			1
7	6733144	MOUNT			1
8	25G-612	BOLT			2
9	30H-50	CLAMP			6
10	83D-6	NUT			2
11	84G-3112	BOLT			2
12	6901872	INSTRUCTIONS			1

www.youfixthis.com

ELECTRICAL CONTROLS KIT
(To Run "G" Series Attachments & Old Attachments)

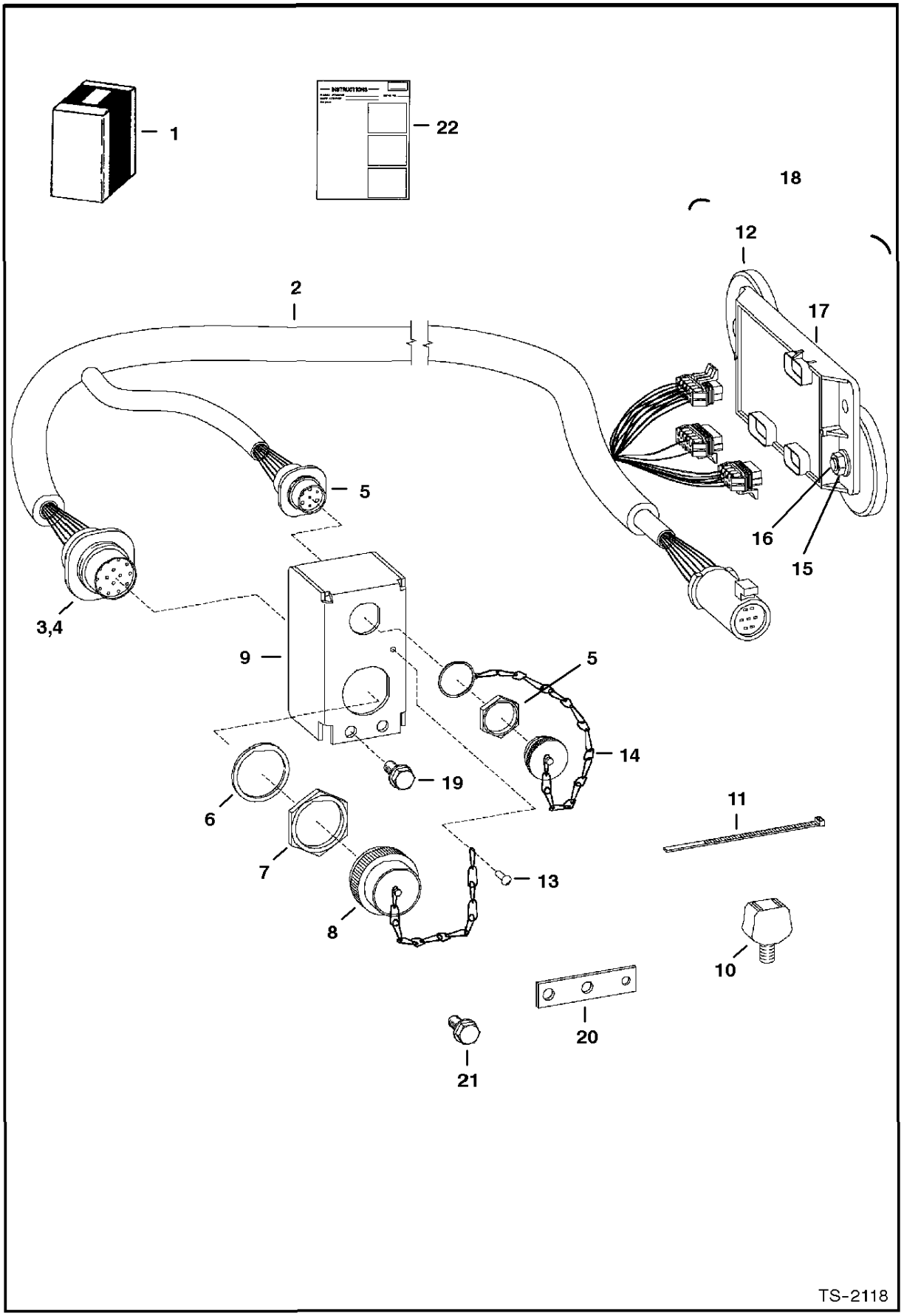

www.youfixthis.com

ELECTRICAL CONTROLS KIT

Ref.N°	Part N°	Description	Remarks	Serial N°	Qty.
1	6727739	KIT			1
2	6729380	HARNESS	W/Ref. ELECTRICAL CONTROLS KIT(3) - ELECTRICAL CONTROLS KIT(8) & ELECTRICAL CONTROLS KIT(14)		1
3	6667569	CONNECTOR	Also Order (14) of Ref. ELECTRICAL CONTROLS KIT(4)		1
4	6664040	PIN	male		x
5	6674802	CONNECTOR	7-pin - W/Nut - See Page ELECTRICAL CONNECTOR KIT(1)		1
5	6669549	SOCKET	small		4
5	6677136	SOCKET	large - 12 ga.		3
6	6664037	WASHER			2
7	6664036	NUT			2
8	6664035	CAP			1
9	6726945	MOUNT			1
10	6675281	MOUNT	773G only		1
11	6624289	STA-STRAP			8
12	6719448	MAGNET	100 lb. force		4
13	6704892	RIVET			1
14	6675026	CAP			2
15	83D-6	NUT			2
16	25G-612	BOLT			2
17	6678675	CONTROLLER			1
18	NAP	CONTROLLER	assy - Order Ref. ELECTRICAL CONTROLS KIT(17) & (2) ea. of (Ref. ELECTRICAL CONTROLS KIT(12), ELECTRICAL CONTROLS KIT(15) & ELEC		1
19	84G-3112	BOLT			2
20	6730291	BRACKET	873G-883 only		1
21	35C-512	BOLT			2
22	6901116	INSTRUCTIONS			1

www.youfixthis.com

ENGINE MOUNT KIT
(For Rough Application)

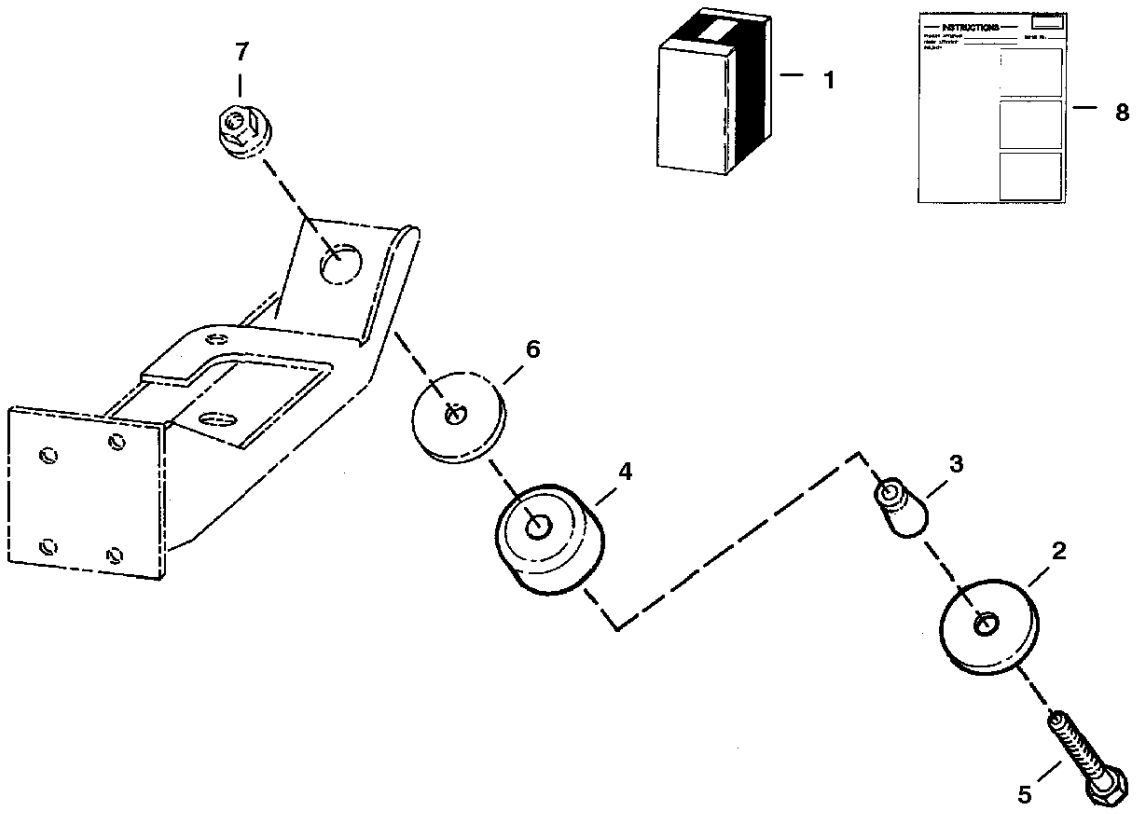

B-14623

www.youfixthis.com

ENGINE MOUNT KIT

Ref.N°	Part N°	Description	Remarks	Serial N°	Qty.
1	6711632	MOUNTING KIT	mounting - Ref. ENGINE MOUNT KIT(2) - ENGINE MOUNT KIT(8)		1
2	6661787	WASHER			4
3	6715287	SPACER			4
4	6668104	MOUNT			4
5	43C-852	BOLT			4
6	6705106	WASHER			4
7	6652918	NUT			4
8	6724482	INSTRUCTION			1

www.youfixthis.com

EUROPEAN ACCESSORIES
(Rear Door Lights)

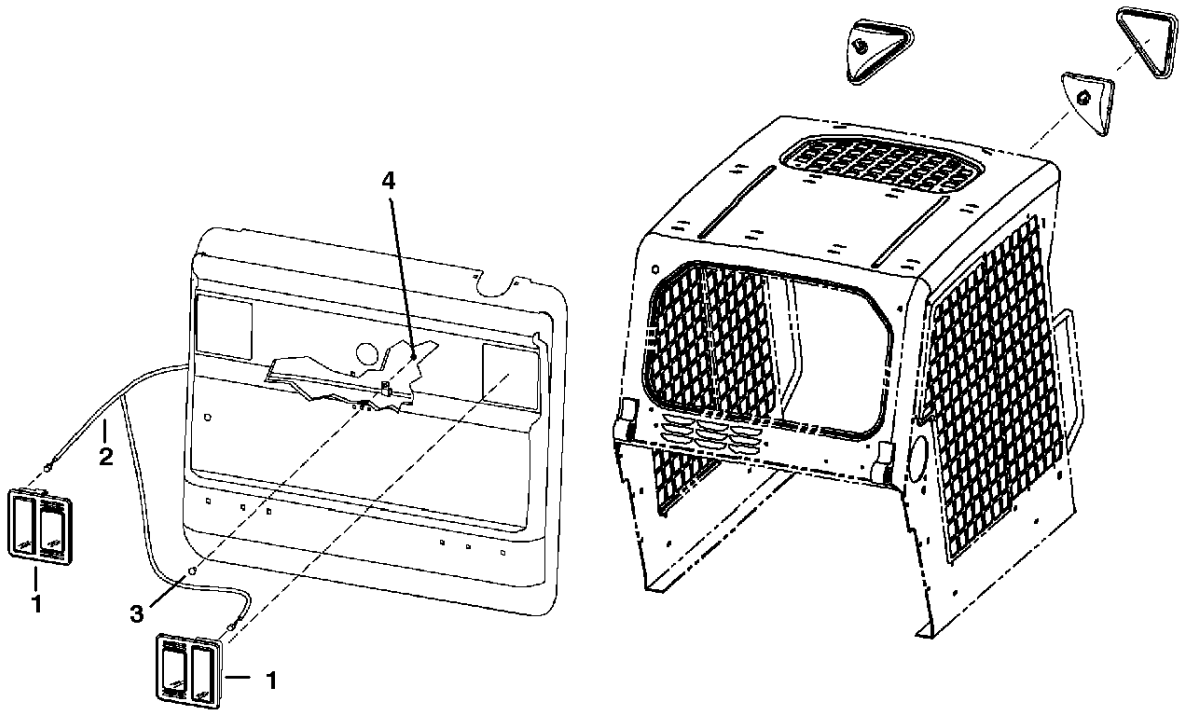

PE-1602

www.youfixthis.com

EUROPEAN ACCESSORIES

Ref.N°	Part N°	Description	Remarks	Serial N°	Qty.
1	6707789	LIGHT ASSY	rear		2
1	6666568	BULB	21W		2
1	6667887	BULB	21/5W		2
1	6668007	SCREW			2
1	6668010	LENS			2
2	6671027	LIGHT			2
3	6718198	HARNESS	deluxe		1
4	25E-11	WASHER			4
5	4DM-5	NUT			4

www.youfixthis.com

EUROPEAN ACCESSORIES
(Road Kit)

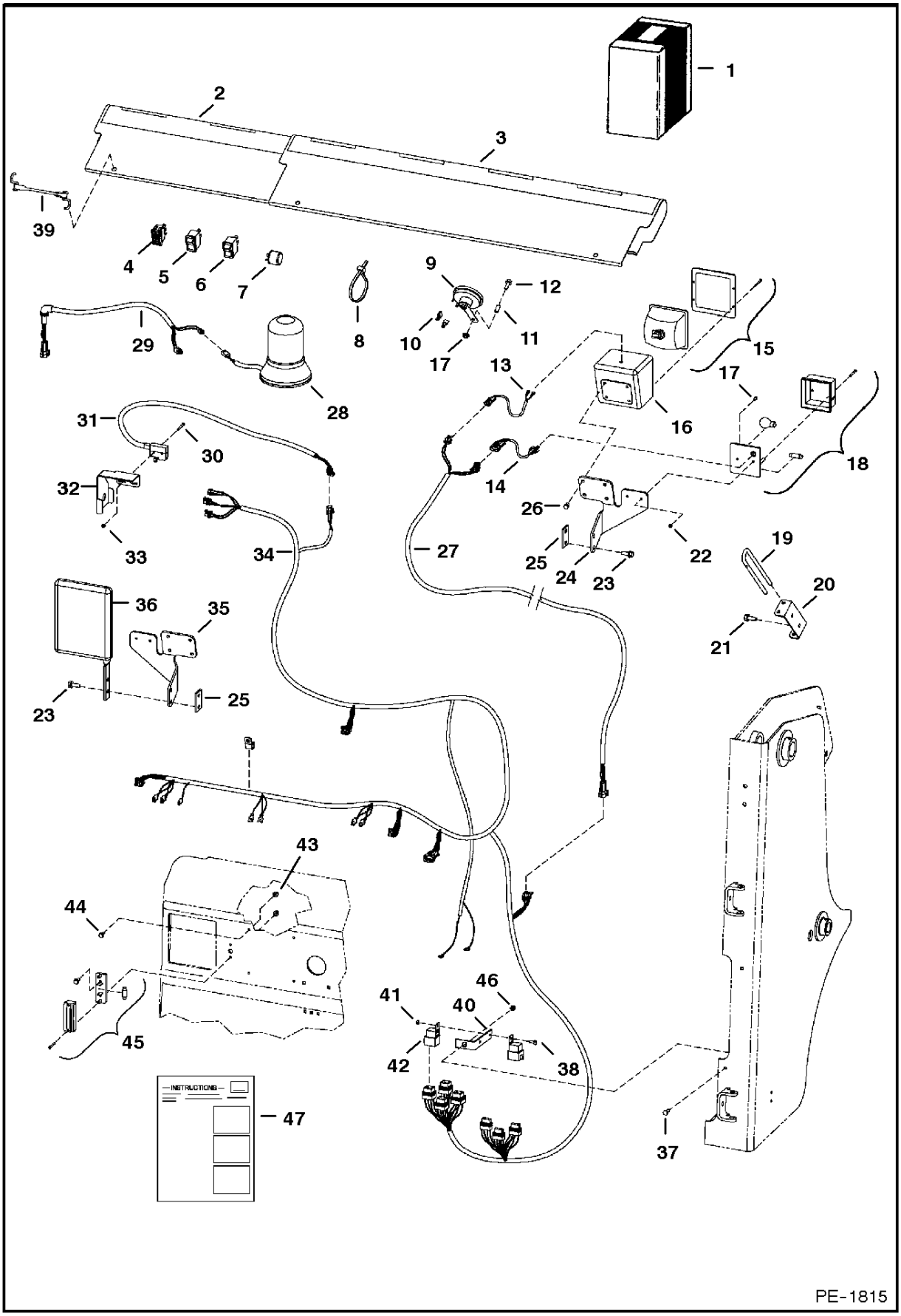

www.youfixthis.com

EUROPEAN ACCESSORIES

Ref.N°	Part N°	Description	Remarks	Serial N°	Qty.
1	SALES	KIT			1
2	6713841	SHIELD	bucket		1
3	6714820	SHIELD	bucket		1
3	6713840	DECAL			1
4	6676872	TURN SIGNAL			1
5	6668815	SWITCH	hazard		1
6	6668816	SWITCH	beacon		1
7	6557904	FLASHER			1
8	6624289	STA-STRAP			26
9	6671106	HORN			1
10	6675064	TERMINAL			2
11	6732206	SPACER			1
12	35C-536	BOLT			1
13	6713994	ADAPTER	adapter - headlight		2
14	6713993	ADAPTER	adapter - light		2
15	6665728	LIGHT	front		2
16	6707804	HOUSING			2
17	85G-808	SCREW			4
18	6665727	LIGHT	front turn		2
19	6731222	PIN	Bob-tach		1
20	6731973	HOLDER	pin		1
21	84G-3712	BOLT			2
22	12D-8	NUT			4
23	84G-3716	BOLT			4
24	6713151	MOUNT	light - R.H.		1
25	6735825	SPACER			2
26	17C-508	BOLT			8
27	6731239	HARNESS	boom light		2
28	6675523	BEACON	light		1
29	6718872	HARNESS	cab exterior		1
30	85G-616	BOLT			2
31	6661150	SWITCH			1
32	6713736	BRACKET			1
33	12D-6	NUT			2
34	6726430	HARNESS	engine/tail - Italian		1
35	6713150	MOUNT	light - L.H.		1
36	6665860	SIDE MIRROR	side mirror		1
37	17C-512	BOLT			1
38	17C-410	BOLT			2
39	6731819	STRAP	rubber		3
40	6702650	BRACKET	fuse		1
41	85D-4	NUT			2
42	6670312	SOLENOID	magnetic		4
43	83D-4	NUT			4
44	35C-410	BOLT			4
45	6665729	LIGHT	license plate		1
46	55D-5	NUT			2
47	6901663	INSTRUCTIONS			1

www.youfixthis.com

EUROPEAN ACCESSORIES
(Sound Option)

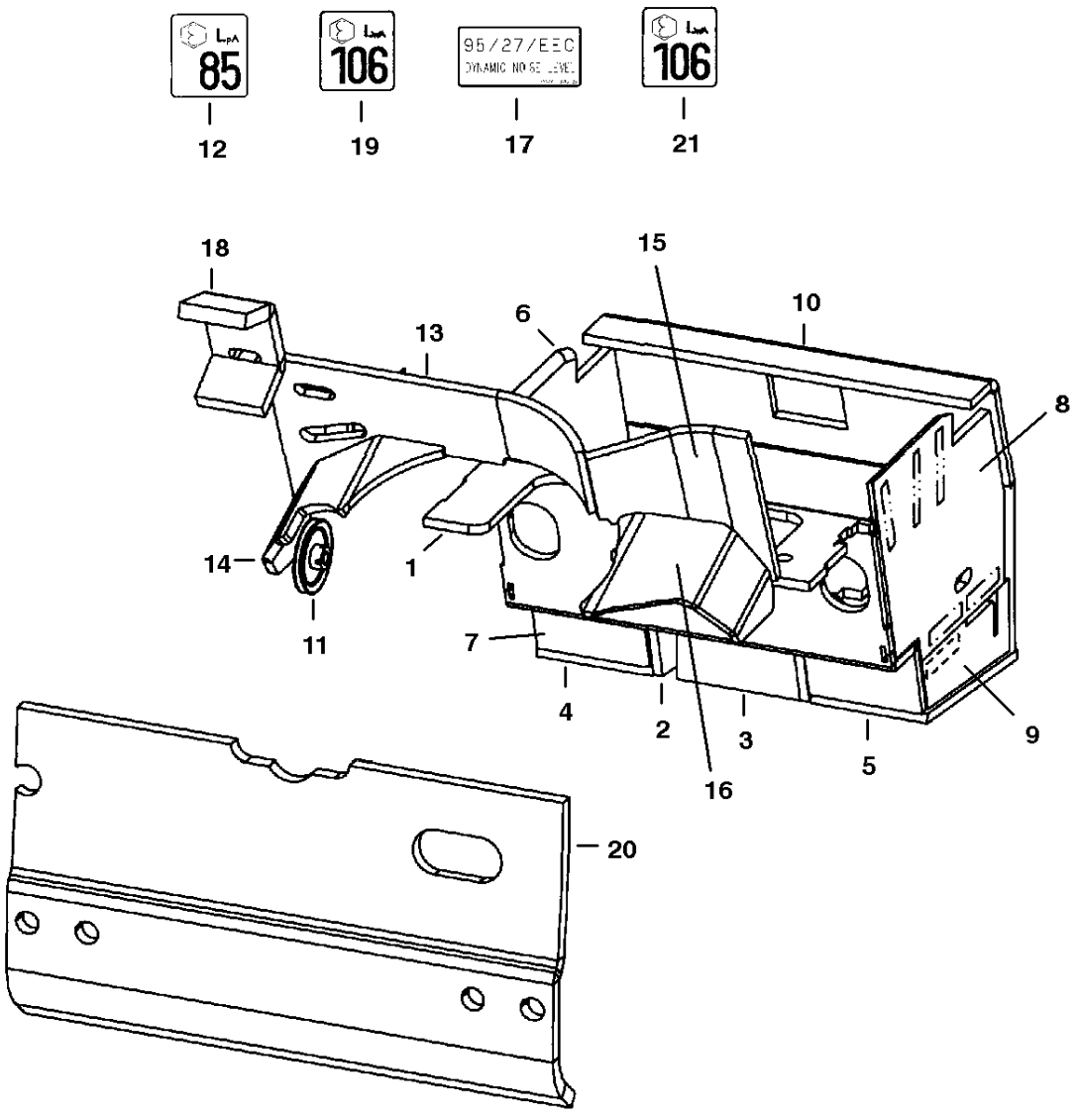

PE-1498

www.youfixthis.com

EUROPEAN ACCESSORIES

Ref.N°	Part N°	Description	Remarks	Serial N°	Qty.
1	6726222	INSULATION	steering panel		1
2	6726223	INSULATION	pedal mount		1
3	6726224	INSULATION	pedal mount		1
4	6726225	INSULATION	L.H. floor		1
5	6726226	INSULATION	R.H. floor		1
6	6726227	INSULATION	L.H. panel top		1
6	6730882	INSULATION	L.H. panel top		1
7	6726228	INSULATION	R.H. panel		1
8	6726229	INSULATION	R.H. panel top		1
8	6730883	INSULATION	R.H. panel top		1
9	6726230	INSULATION	R.H. panel bottom		1
10	6726231	INSULATION	crossmember		1
11	6712970	PULLEY	4.75'(120,7 mm) O.D.		1
11	6703483	PULLEY	5.25'(133,4 mm) O.D.		1
12	6579385	DECAL	sound level warning - 85 decibel		1
13	6719332	INSULATION	blower housing		1
14	6704769	INSULATION	blower housing		1
15	6719333	INSULATION	blower housing		1
16	6719334	INSULATION	blower housing		1
17	6715428	DECAL	dynamic level		1
18	6703331	INSULATION	air inlet		1
19	6579406	DECAL	sound level warning-106 decibel		1
20	6715106	INSULATION	rear door		1
21	6731996	DECAL	noise level - 106 decibel		1

www.youfixthis.com

FIRE EXTINGUISHER

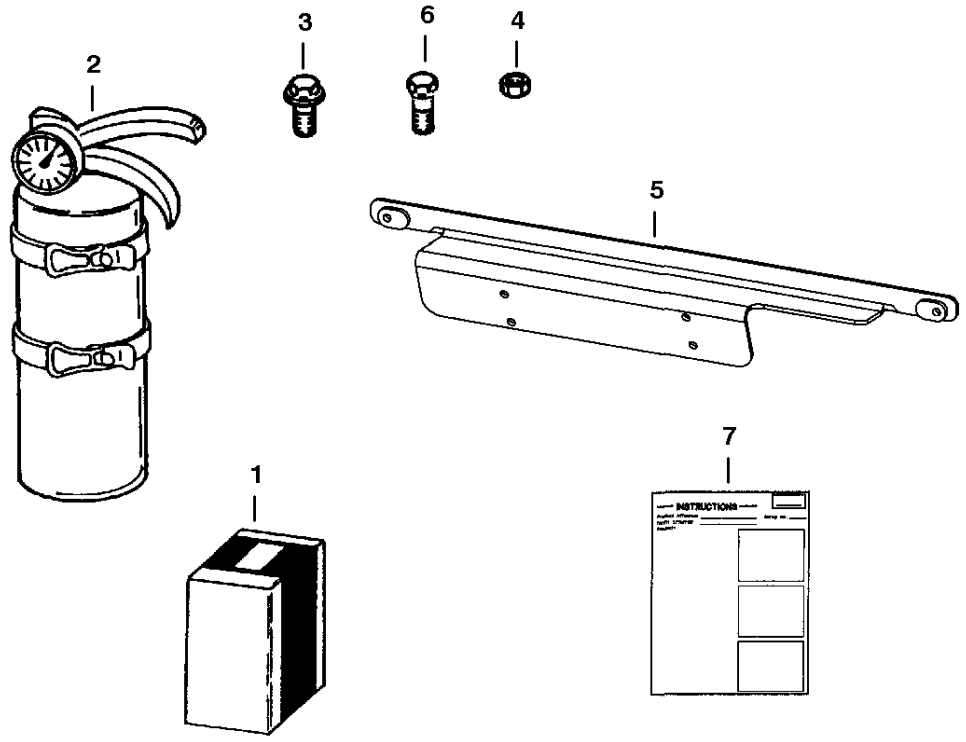

A-2386

www.youfixthis.com

FIRE EXTINGUISHER

Ref.N°	Part N°	Description	Remarks	Serial N°	Qty.
1	6725898	KIT	fire extinguisher - Ref. FIRE EXTINGUISHER(2) - FIRE EXTINGUISHER(7)		1
2	6675581	EXTINGUISHER			1
3	45G-1006	BOLT			4
4	12D-10	NUT			4
5	6725906	BRACKET			1
6	31C-410	BOLT			2
7	6901025	INSTRUCTIONS			1

www.youfixthis.com

F.O.P.S. KIT

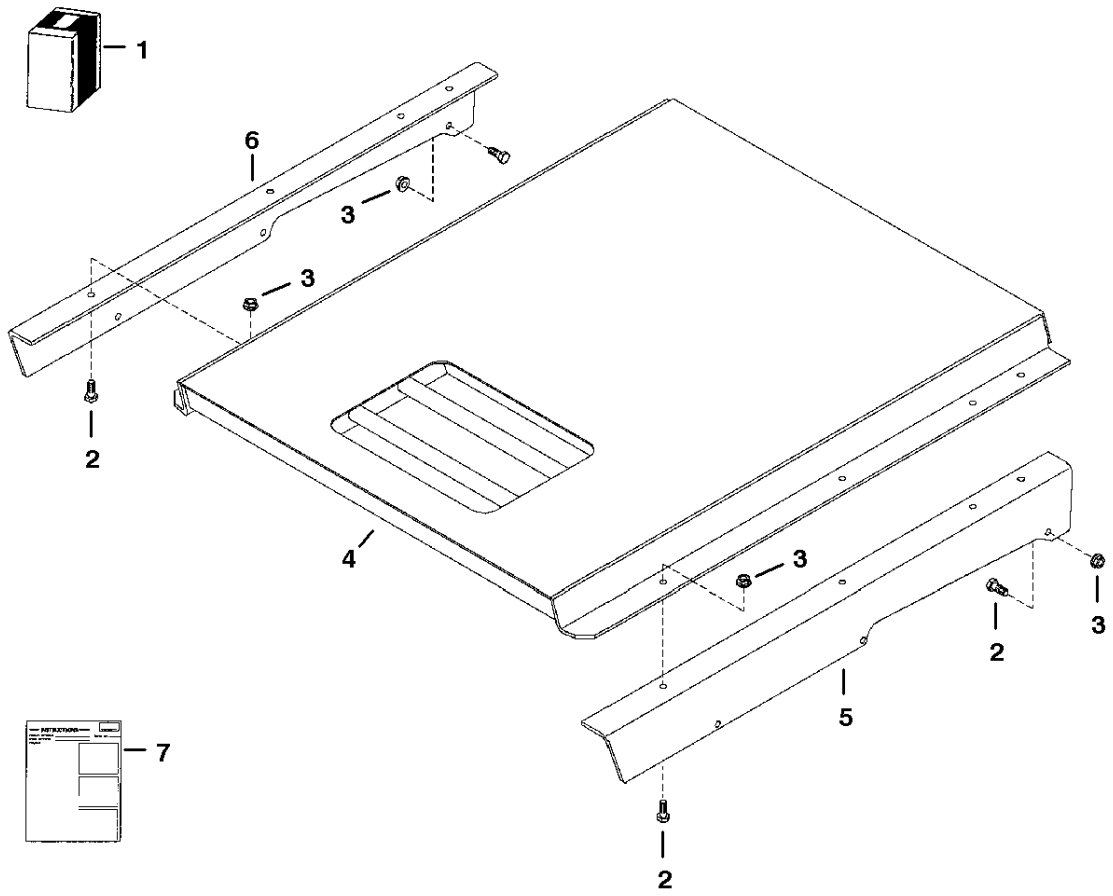

TS-2052

www.youfixthis.com

F.O.P.S. KIT

Ref.N°	Part N°	Description	Remarks	Serial N°	Qty.
1	6718924	KIT	Ref. F.O.P.S. KIT(2) - F.O.P.S. KIT(7)		1
2	17C-616	BOLT			14
3	83D-6	NUT			14
4	6702402	SHIELD			1
5	6718833	BRACKET	L.H.		1
6	6718834	BRACKET	R.H.		1
7	6720592	INSTRUCTIONS			1

www.youfixthis.com

FLASHER LIGHTS
(4-Way) (Turn Indicators)

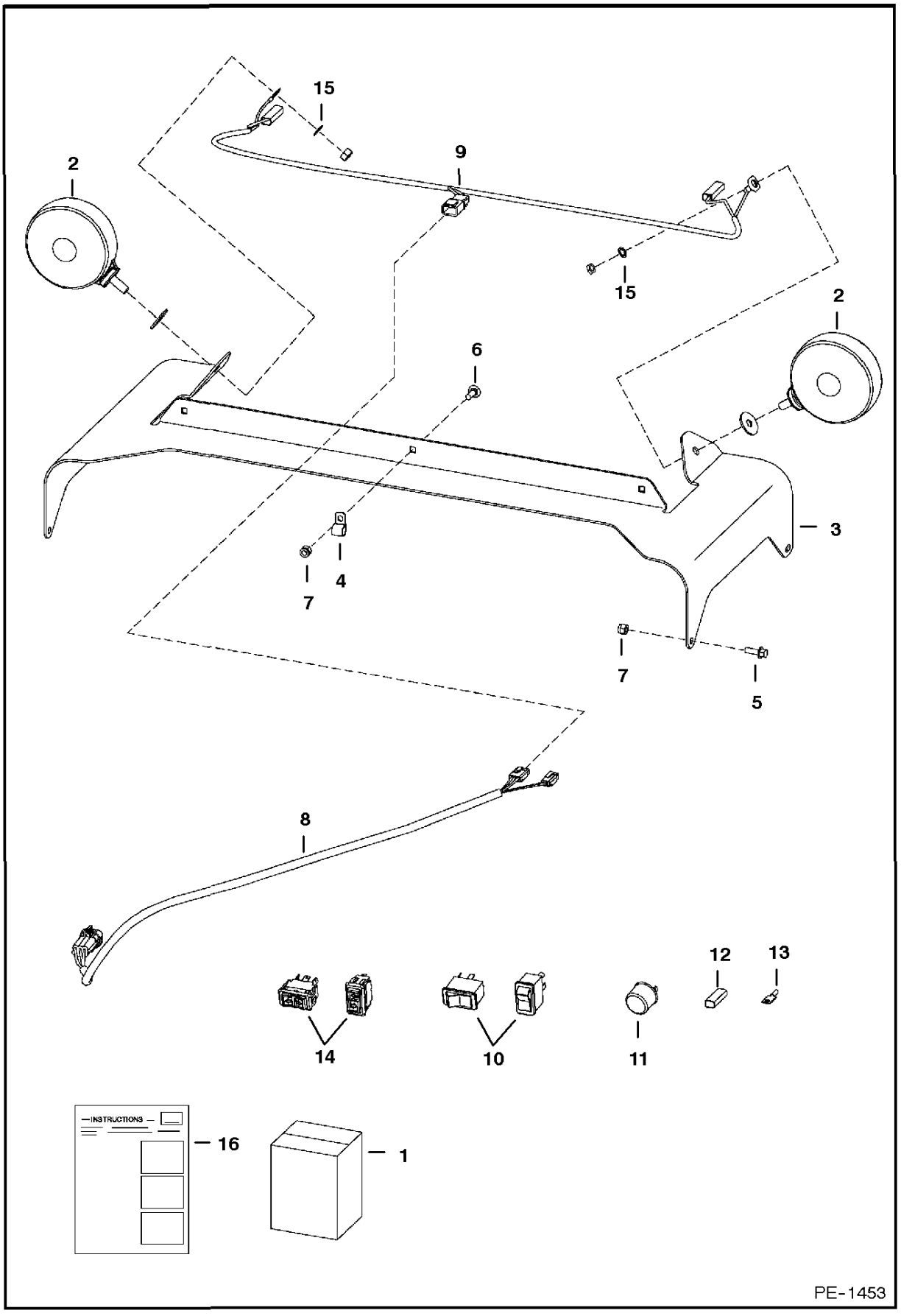

www.youfixthis.com

FLASHER LIGHTS

Ref.N°	Part N°	Description	Remarks	Serial N°	Qty.
1	6718411	KIT	Ref. FLASHER LIGHTS (2), FLASHER LIGHTS (3) & FLASHER LIGHTS (5)-FLASHER LIGHTS (16) - If loader is not equipped with Deluxe Cab		1
2	6517516	LIGHT			2
3	6718326	MOUNT			1
4	30H-21	CLAMP	Not in Kit		3
5	35C-412	BOLT			4
6	37C-412	BOLT			3
7	59D-4	NUT			7
8	6718872	HARNESS	ext. cab		1
9	6718873	HARNESS	4-way flasher		1
10	6665316	SWITCH	horizontal		1
10	6668815	SWITCH	vertical		1
11	6557904	FLASHER			1
12	614142	SLEEVE			1
13	6515131	TERMINAL			1
14	6675835	TURN SIGNAL	horizontal		1
14	6676872	TURN SIGNAL	vertical		1
15	6E-5	WASHER			2
16	6900848	INSTRUCTIONS			1

www.youfixthis.com

FRONT AUXILIARY
(R.H. Kit)

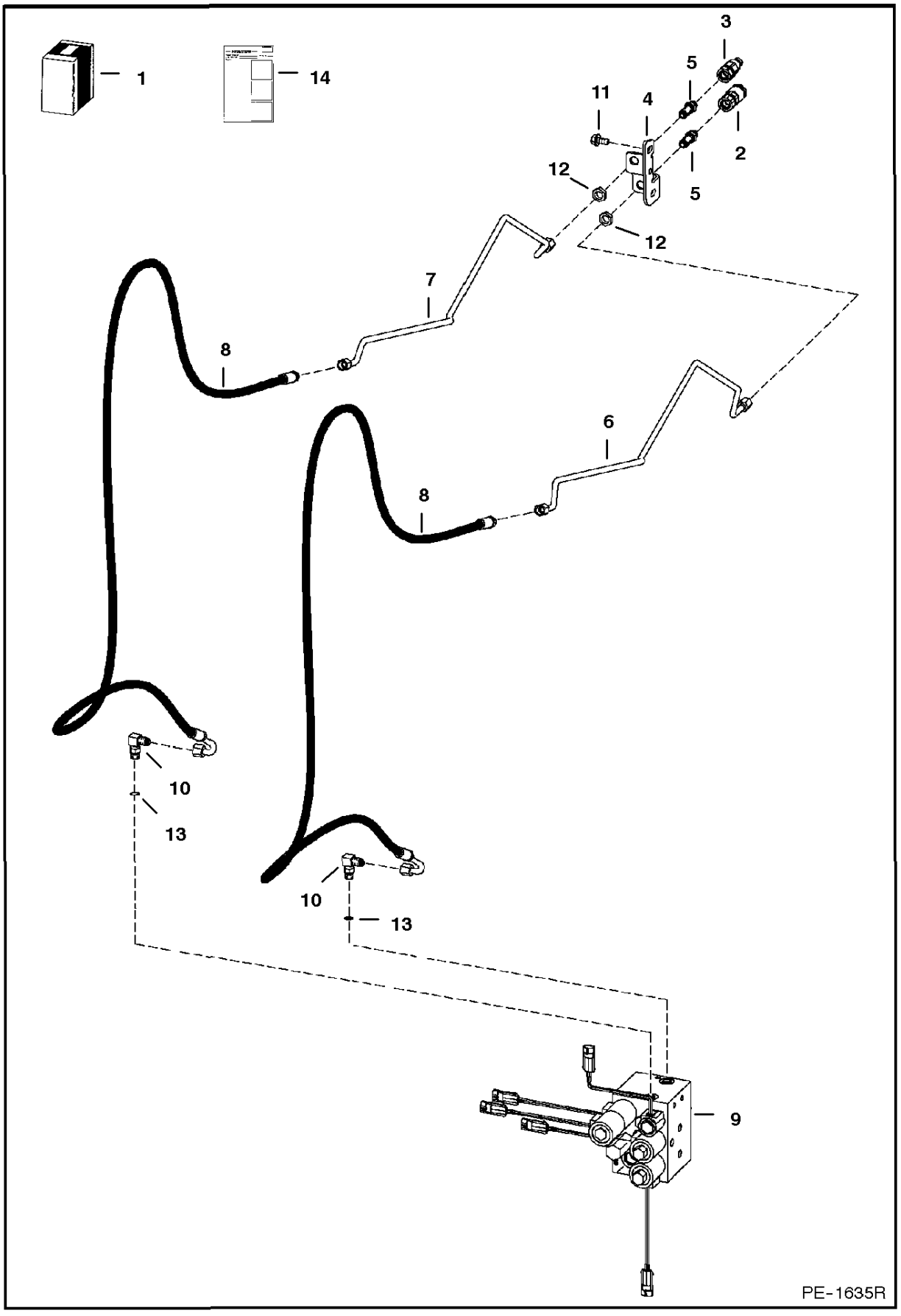

www.youfixthis.com

FRONT AUXILIARY

Ref.N°	Part N°	Description	Remarks	Serial N°	Qty.
1	6731524	KIT			1
2	6667803	QUICK COUPLER	female		1
3	6667804	QUICK COUPLER	male		1
3	6669657	O-RING			1
4	6711674	BRACKET			1
5	6716089	CONNECTOR	W/ O-rings		2
6	6718244	TUBE			1
7	6718245	TUBE			1
8	6718454	HOSE			2
9	6669203	VALVE	select - Not in Kit		1
10	17KB-606	ELBOW	W/Ref. FRONT AUXILIARY(13)		2
11	84G-3712	BOLT			2
12	86F-5	NUT	NUT		3
13	99K-10	O-RING			x
14	6901515	INSTRUCTIONS			1

www.youfixthis.com

GAS SPRING KIT

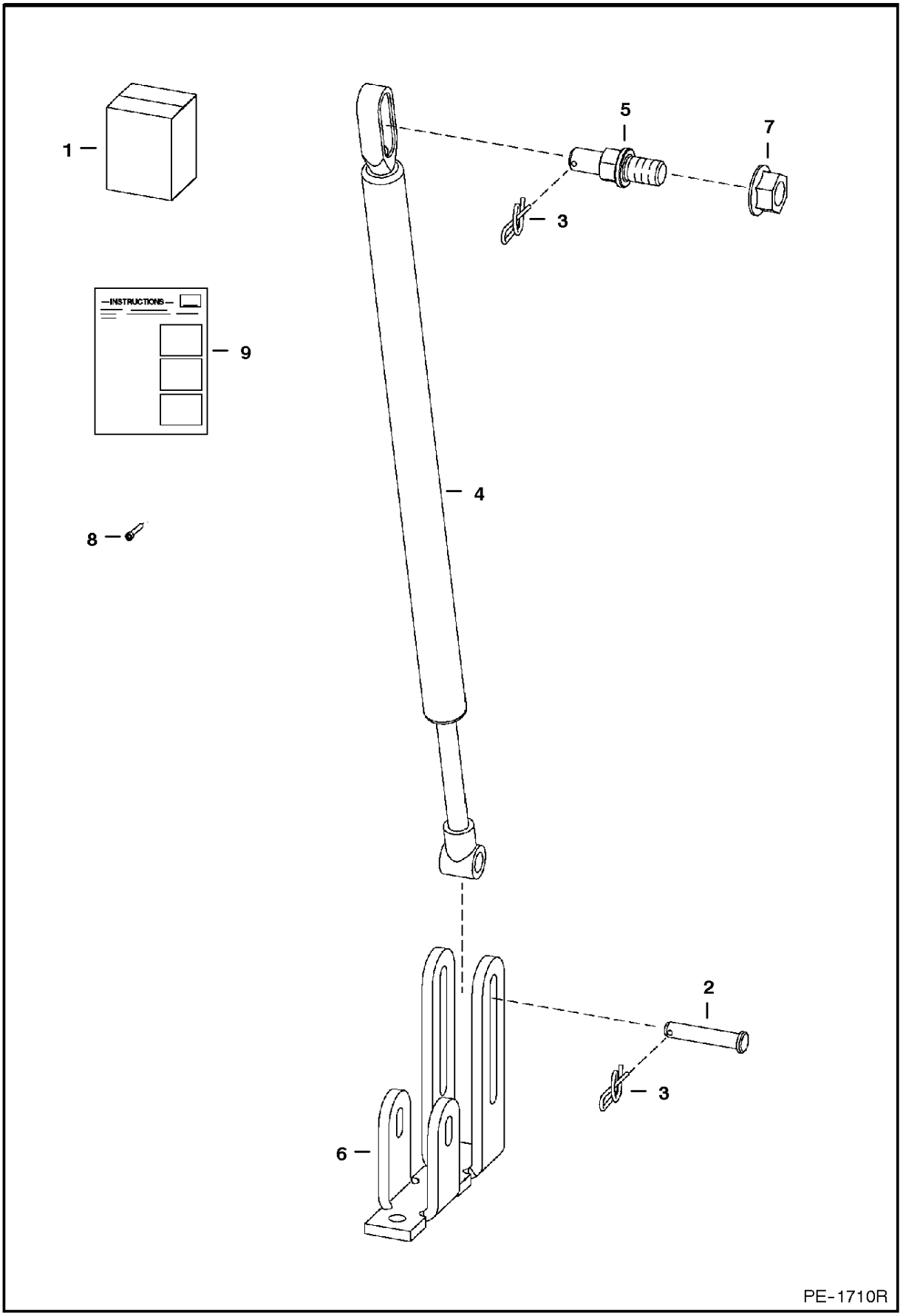

www.youfixthis.com

GAS SPRING KIT

Ref.N°	Part N°	Description	Remarks	Serial N°	Qty.
1	6732928	KIT			1
2	6567743	PIN			1
3	6631418	PIN			2
4	6678292	GAS SPRING			1
5	6719064	MOUNT			1
6	6729141	MOUNT			1
7	97D-8	NUT			1
8	21G-804	BOLT			1
9	6901816	INSTRUCTIONS			1

www.youfixthis.com

HAND CONTROL KIT
(W/Push Button Float)

NOTE: Also order 6900842 O/M with revised date of 6/00 or newer.

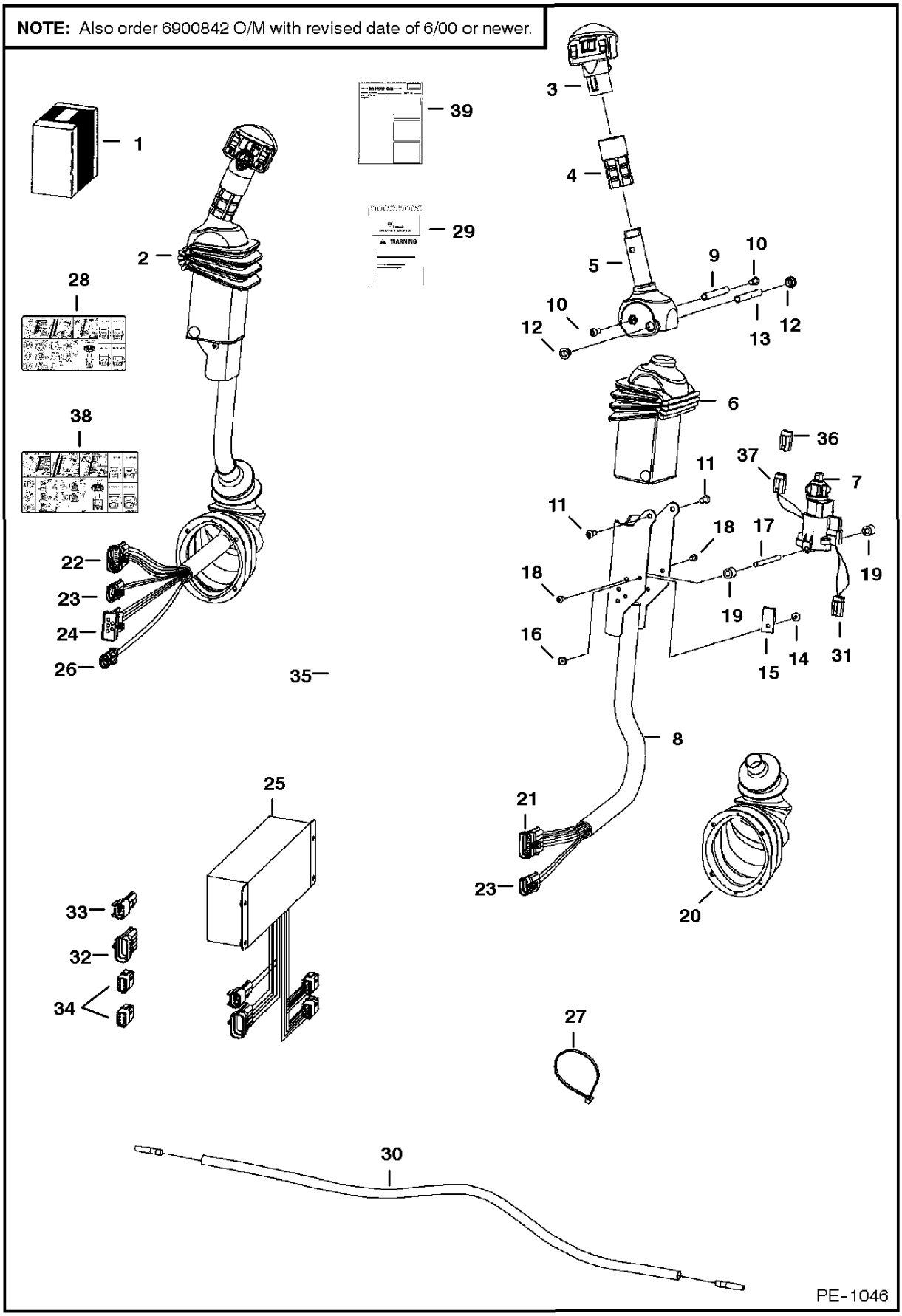

www.youfixthis.com

HAND CONTROL KIT

Ref.N°	Part N°	Description	Remarks	Serial N°	Qty.
1	6727298	KIT	SEE NOTE		1
2	6684913	LEVER	tilt - R.H.		1
2	6684914	LEVER	lift - L.H.		1
3	NAP	HANDLE	tilt - R.H. - SEE BTlinD1}\ 335		1
3	6680417	HANDLE	lift - L.H.		1
4	NAP	GRIP	O(rder 6702621 Grip & cut to 2.8' long		2
5	6729594	HANDLE	R.H.		1
5	6729595	HANDLE	L.H.		1
6	6680471	COVER			2
7	6684910	SENSOR			2
7	6670706	CONNECTOR	3pin		1
7	6670714	PIN			3
7	6670710	LOCK			1
8	6680481	CHANNEL	R.H.		1
8	6680480	CHANNEL	L.H.		1
9	6680469	SPACER			1
10	6727065	BOLT			2
11	25GT-410	BOLT			8
12	6702990	BUSHING			4
13	NAP	SPACER			4
14	6665321	RIVET	male		2
15	6665000	CLIP			2
16	6665322	RIVET	female		2
17	6719834	SPACER	threaded		2
18	6727065	BOLT			4
19	6719835	SLEEVE			4
20	6532127	BOOT			2
21	6640692	CONNECTOR	10pin		1
21	6640690	PIN			8
21	6640694	LOCK			1
21	6641176	SEAL			8
21	6646582	PLUG	cavity		2
22	6640692	CONNECTOR	10pin		1
22	6640690	PIN			6
22	6640694	LOCK			1
22	6641176	SEAL			6
22	6646582	PLUG	cavity		4
23	6640699	CONNECTOR	3pin		2
23	6640690	PIN			3
23	6641176	SEAL			3
23	6640700	LOCK			3
24	6667144	CONNECTOR	5pin		1
24	6640690	PIN			3
24	6641176	SEAL			3
24	6646582	PLUG	cavity		1
24	6667145	LOCK			1
25	6676153	CONTROLLER			1
26	6641179	CONNECTOR	2pin		1
26	6640690	PIN			2
26	6641176	SEAL			2
26	6641180	LOCK			1
27	6610510	NYLON TIE			11
28	6727155	DECAL			1
29	6719563	KIT	handbook		1
30	6727328	HARNESS			1

www.youfixthis.com

HAND CONTROL KIT

Ref.N°	Part N°	Description	Remarks	Serial N°	Qty.
31	6670707	CONNECTOR	3pin		1
31	6670715	SOCKET			3
31	6670711	LOCK			1
32	6640692	CONNECTOR	10pin		1
32	6640690	PIN			9
32	6640694	LOCK			1
32	6641176	SEAL			9
32	6646582	PLUG	cavity		1
33	6648307	CONNECTOR	2pin		1
34	6670709	CONNECTOR	8pin		2
35	6728742	HARNESS	W/capacitor		1
36	6677364	CONNECTOR	3-pin		1
36	6676640	SEAL			3
37	6676870	CONNECTOR	3-pin		1
37	6676640	SEAL			3
37	6670715	SOCKET			1
37	6670711	LOCK			1
38	6727243	DECAL			1
39	6901100	INSTRUCTIONS			1

www.youfixthis.com

HEATER & A/C
(Heater Kit)

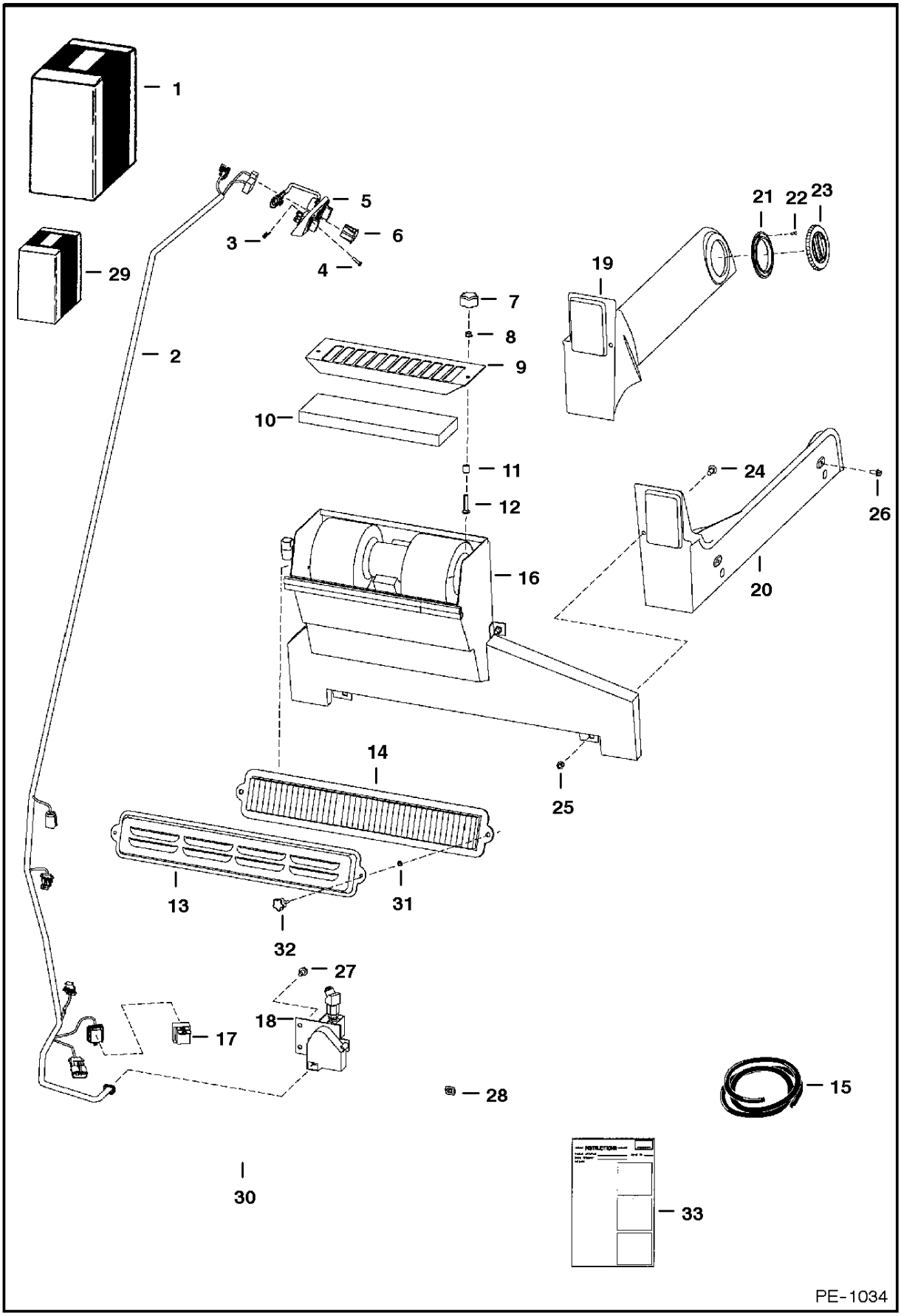

www.youfixthis.com

HEATER & A/C

Ref.N°	Part N°	Description	Remarks	Serial N°	Qty.
1	6735773	HEATER KIT	Ref. HEATER & A/C(2)-HEATER & A/C(12), HEATER & A/C(16)-HEATER & A/C(28) & HEATER & A/C(30)-HEATER & A/C(33) - If loader(does n		1
2	6725933	HARNESS	hvac-W/Ref. HEATER & A/C(17)		1
2	6725273	HARNESS	AHC		1
3	6669091	CLIP	retainer		3
4	6669224	BOLT			3
5	6674228	PANEL	control		1
5	6640699	CONNECTOR			1
5	6718579	DECAL			1
5	6718887	PANEL	A/C		1
5	6675176	SWITCH	blower		1
5	6675177	KNOB			1
5	6675846	POTENTIOMETER			1
6	6675181	PLUG	switch hole		1
7	6681614	KNOB			2
8	83D-4	NUT			2
9	6718175	SCREEN	filter		1
10	6678207	FILTER	recirculation		1
11	6718837	SPACER			2
12	37C-424	BOLT			2
13	6727847	COVER			1
14	6677983	FILTER			1
15	6513152	SEAL	bulk - Sold Per Foot		x
16		HEATER	See Page HEATER & A/C(1)		1
17	6670312	SOLENOID	relay		1
18	7100019	VALVE			1
18	6640699	CONNECTOR			1
18	6675175	BRACKET			1
18	6675172	BRACKET			1
18	6675173	ACTUATOR	pig tail		1
18	6680054	ACTUATOR	square plug		1
18	6675174	BODY			1
19	6735246	DUCT	L.H.		1
20	6735245	DUCT	R.H.		1
21	6675179	FLANGE			4
22	57G-608	SCREW			16
23	6674231	VENT	round		4
24	37C-512	BOLT			4
25	59D-5	NUT			4
26	35C-410	BOLT			4
27	84G-3110	BOLT			2
28	774220	NUT	spring		2
29	6725513	DECAL PACKAGE	decal		1
30	NAP	SEAL	16.25'(412,8 mm) long - Order Ref. HEATER & A/C(15)		1
31	6676516	NUT	push		2
32	6726386	KNOB			2
33	6900850	INSTRUCTIONS			1
33	6902356	INSTRUCTIONS	800 Series W/Kubota engine		1

www.youfixthis.com

HEATER & A/C
(Heater Assembly)

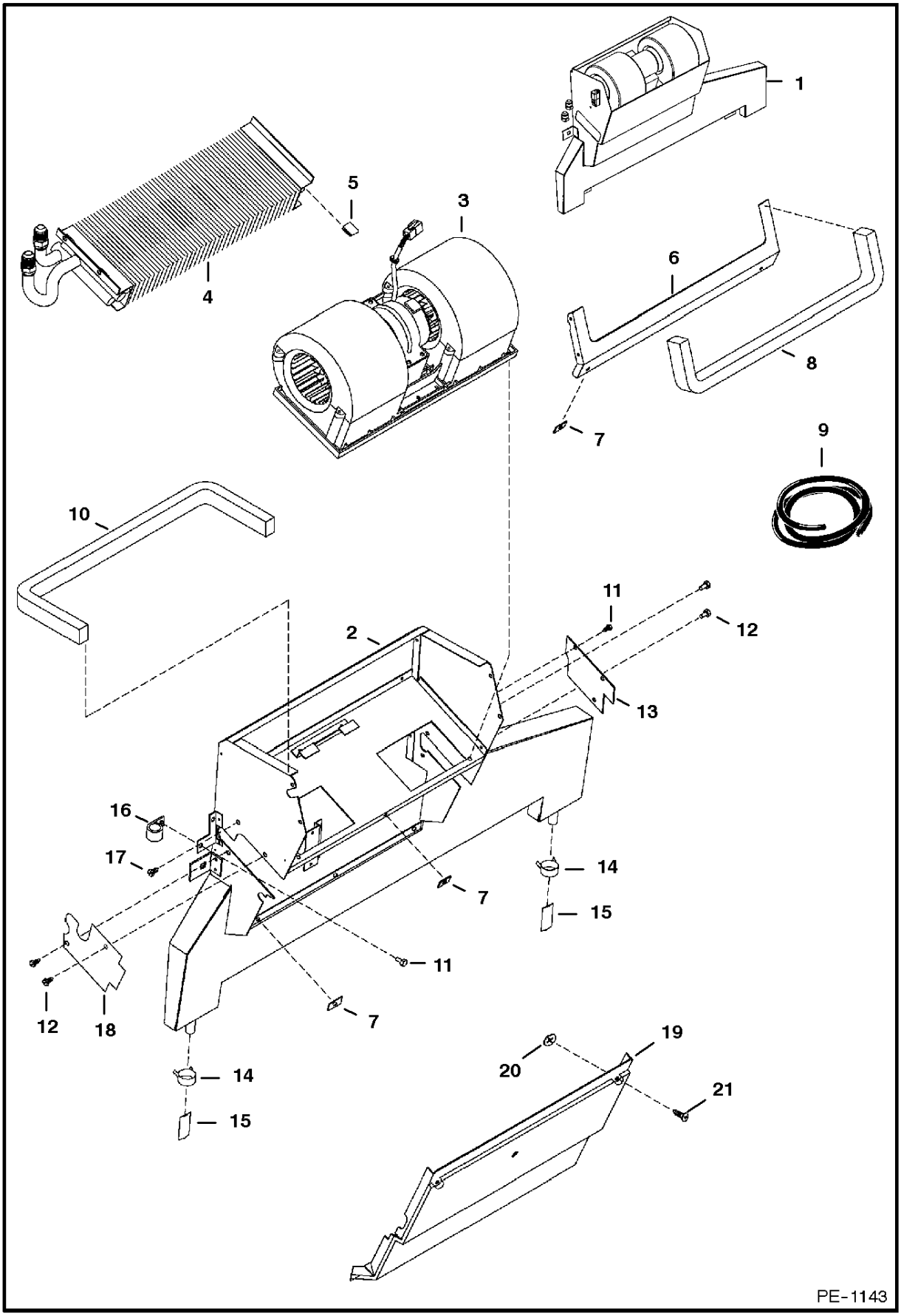

www.youfixthis.com

HEATER & A/C

Ref.N°	Part N°	Description	Remarks	Serial N°	Qty.
1	6676562	HEATER	Ref. HEATER & A/C(2)-HEATER & A/C(12)		1
2	6677108	HOUSING			1
3	6675497	BLOWER	assy. - See Page HEATER & A/C(1)		1
3	6676618	CLIP			2
4	NAP	COIL	heater - See Page HEATER & A/C(1)		1
5	6676539	CLIP			3
6	6678152	SEAL			1
7	6677115	RECEPTACLE			6
8	NAP	SEAL	(22.6'(575mm) long - Order Ref. HEATER & A/C(9)		1
9	6677111	SEAL	bulk - Sold Per Foot		x
10	NAP	SEAL	25'(635mm) long - Order Ref. HEATER & A/C(9)		1
11	6677119	SCREW	sheetmetal		7
12	6677118	SCREW	w/washer		4
13	6677120	COVER			1
14	6675510	CLAMP	drain hose		2
15	6675511	DRAIN VALVE			2
16	6675512	CLAMP	hose		2
17	6675513	GROMMET			1
18	6677504	COVER			1
19	6678151	COVER			1
20	6677116	RETAINER			6
21	6677117	SCREW	captive		6

www.youfixthis.com

HEATER & A/C
(Blower)

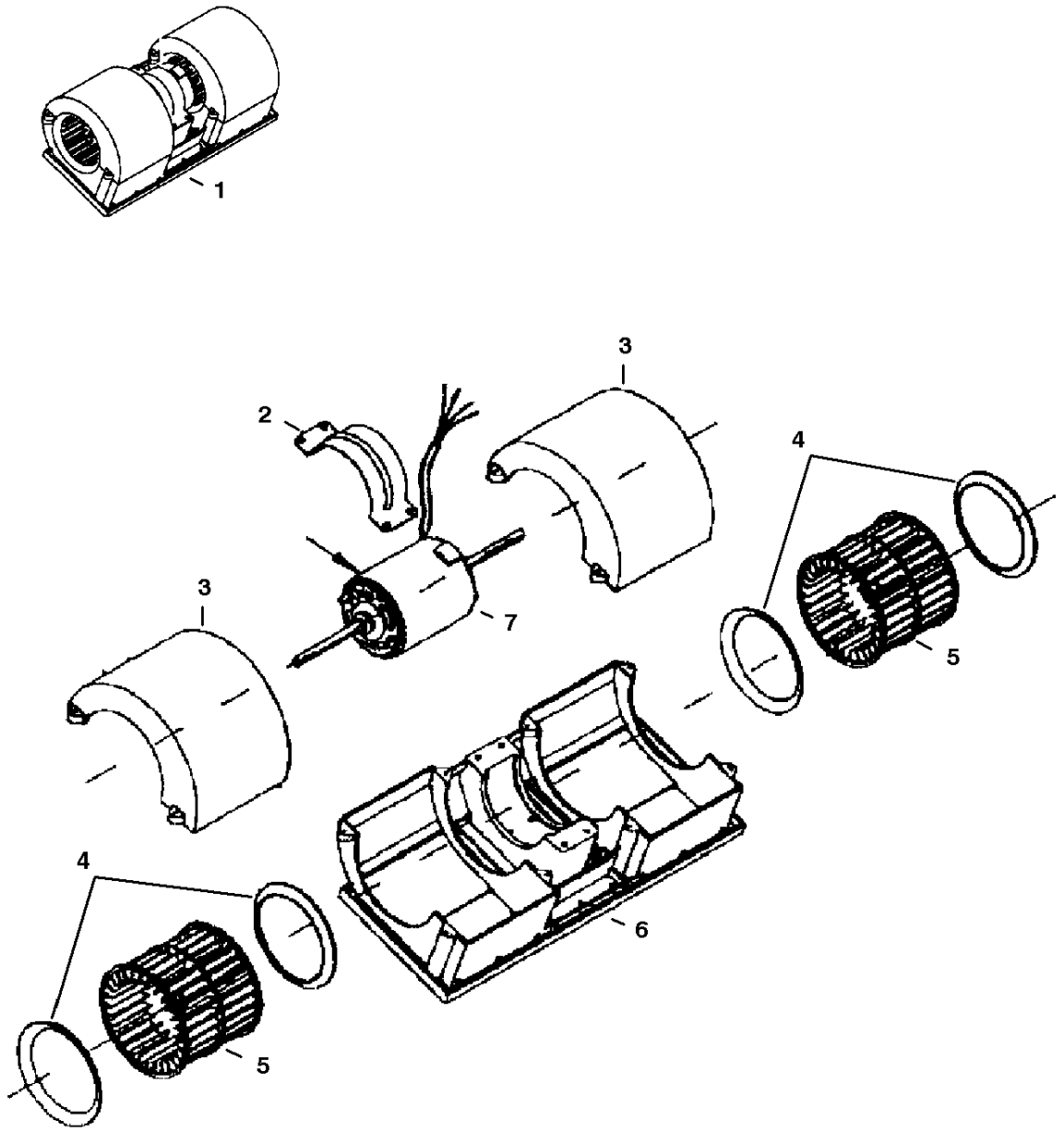

PE-1502

www.youfixthis.com

HEATER & A/C

Ref.N°	Part N°	Description	Remarks	Serial N°	Qty.
1	6675497	BLOWER	assy - Ref. HEATER & A/C(2)-HEATER & A/C(7)		1
2	6675506	MOUNT			1
3	6675507	COVER			2
4	6675504	RING			4
5	6675505	BLOWER WHEEL			2
6	6675509	MOTOR			1
7	6675503	HOUSING			1

www.youfixthis.com

HEATER & A/C
(Heater Blower Seal Kit)

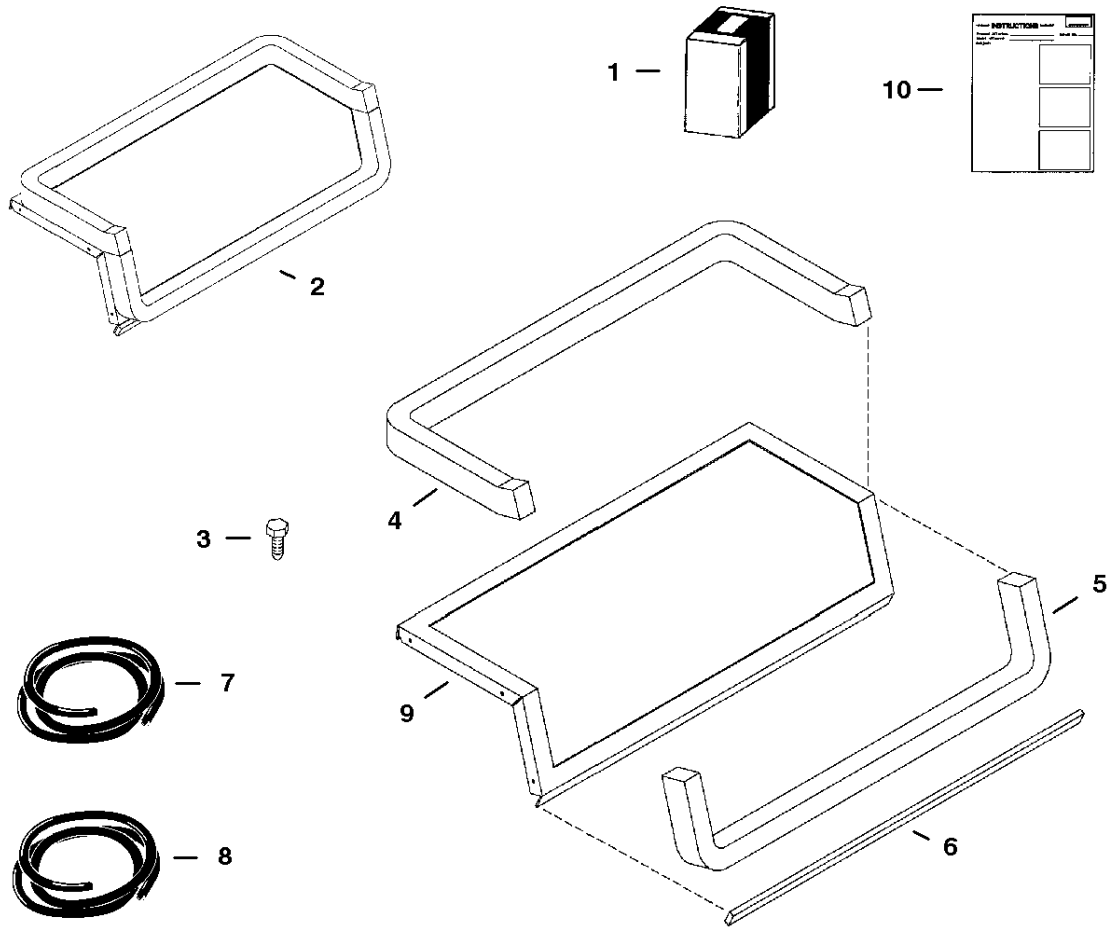

PE-1151

www.youfixthis.com

HEATER & A/C

Ref.N°	Part N°	Description	Remarks	Serial N°	Qty.
1	6728567	KIT	blower seal - W/Ref. HEATER & A/C(2), HEATER & A/C(3) & HEATER & A/C(10)		1
2	NSS	FLANGE SEAL	assy - Ref. HEATER & A/C(4) - HEATER & A/C(6) & HEATER & A/C(9) - Order Ref. HEATER & A/C(1)		1
3	6726621	SCREW			7
4	NAP	SEAL	27'(686mm) long - Order Ref. HEATER & A/C(8)		1
5	NAP	SEAL	21'(534mm) long - Order Ref. HEATER & A/C(8)		1
6	NAP	SEAL	15'(384mm) long - Order Ref. HEATER & A/C(7)		1
7	6675611	SEAL	bulk - Sold Per Foot		x
8	6677111	SEAL	bulk - Sold Per Foot		x
9	NSS	FLANGE	Order Ref. HEATER & A/C(1)		1
10	6901213	INSTRUCTIONS			1

www.youfixthis.com

HEATER & A/C
(Heater Coil Kit)

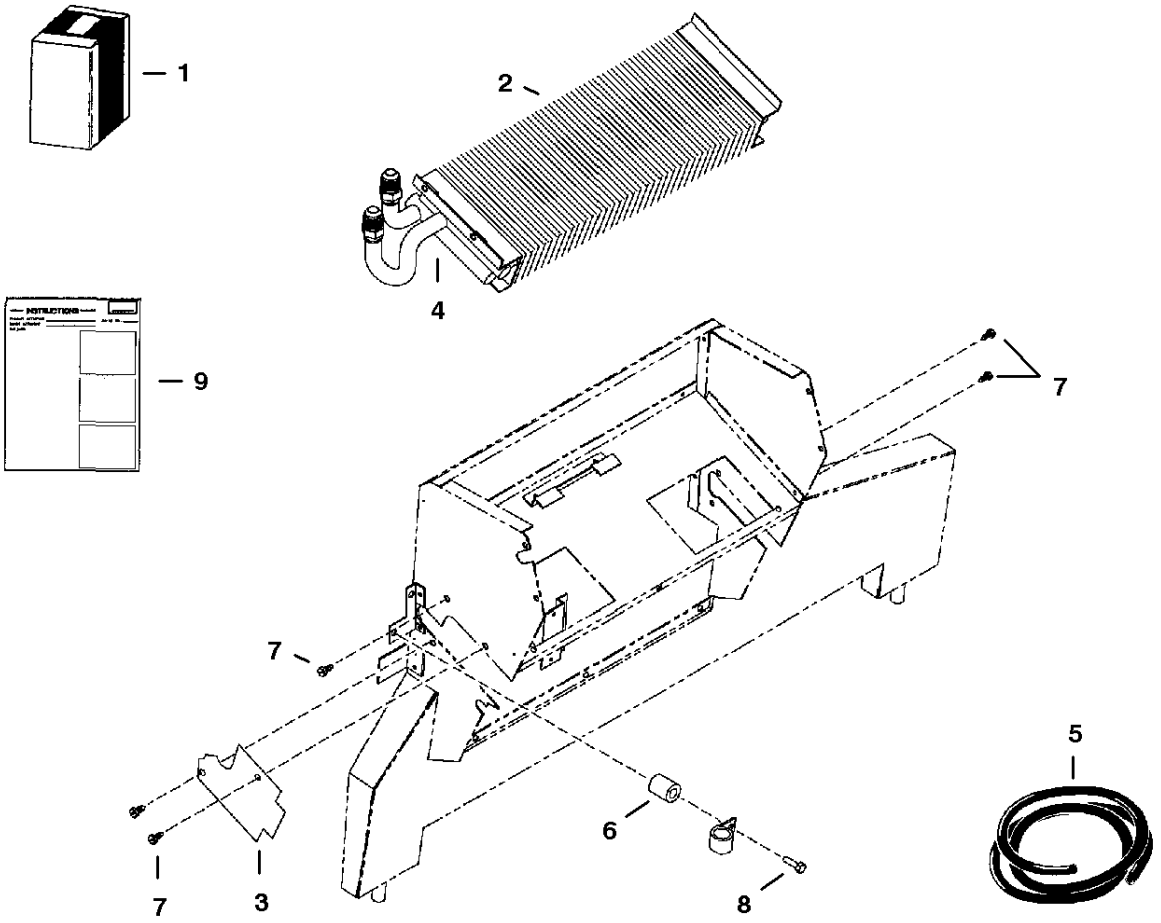

PE-1228

www.youfixthis.com

HEATER & A/C

Ref.N°	Part N°	Description	Remarks	Serial N°	Qty.
1	6727786	KIT	heater coil - W/Ref. HEATER & A/C(2)-HEATER & A/C(9)		1
2	NSS	HEATER COIL	Order Ref. HEATER & A/C(1)		1
3	6676604	COVER	.279'(7,1mm) thickness		1
4	NAP	INSULATION	6(152.4mm) long - Order Ref. HEATER & A/C(5)		1
5	6676538	INSULATION	bulk - Sold Per Foot		x
6	6676606	SPACER			1
7	6677579	SCREW			4
8	6676653	SCREW			1
9	6901120	INSTRUCTIONS			1

www.youfixthis.com

HEATER & A/C
(Heater Plumbing Kit)

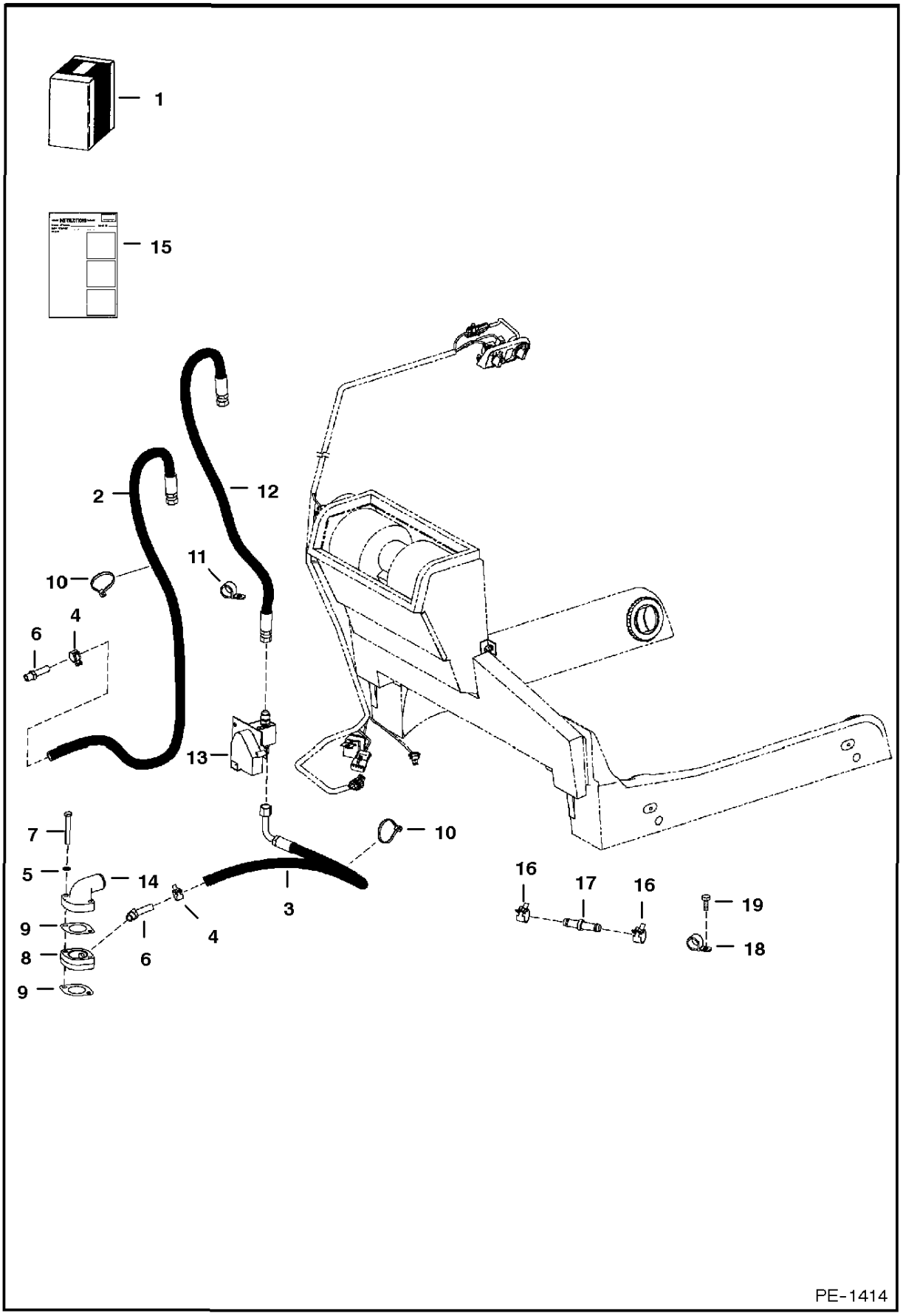

www.youfixthis.com

HEATER & A/C

Ref.N°	Part N°	Description	Remarks	Serial N°	Qty.
1	6731158	KIT	Ref. HEATER & A/C(2) - HEATER & A/C(12) - For Heater Kit See Page HEATER & A/C(1)		1
2	6730996	HOSE	W/10' spring guard		1
3	6730998	HOSE			1
4	5HM-20	CLAMP	hose		2
5	6EM-80	WASHER			2
6	6731085	ELBOW			2
7	1CM-860	BOLT			2
8	6731049	ADAPTER			1
9	6732199	GASKET	thermostat		2
10	6624289	STA-STRAP			3
11	30H-45	CLAMP	insulated		1
12	6719144		34'(863,6 mm) long - W/spring guide		1
13		VALVE	Not in Kit - See Page HEATER & A/C(1)		1
14		HOUSING	thermostat - Not in Kit - See Page WATER FLANGE & THERMOSTAT(1)		1
15	6900850	INSTRUCTIONS	Not in Kit - See Page HEATER & A/C(1)		1
16	30H-50	CLAMP	(insulated - Not in Kit - Used in factory option only		1
17	6732023	CONNECTOR	hose - Not in Kit - Used in factory option only		1
18	5HM-20	CLAMP	Not in Kit - Used in factory option only		2
19	84G-3716	BOLT	Not in Kit - Used in factory option only		1

www.youfixthis.com

HEATER & A/C
(Heater & A/C Option)

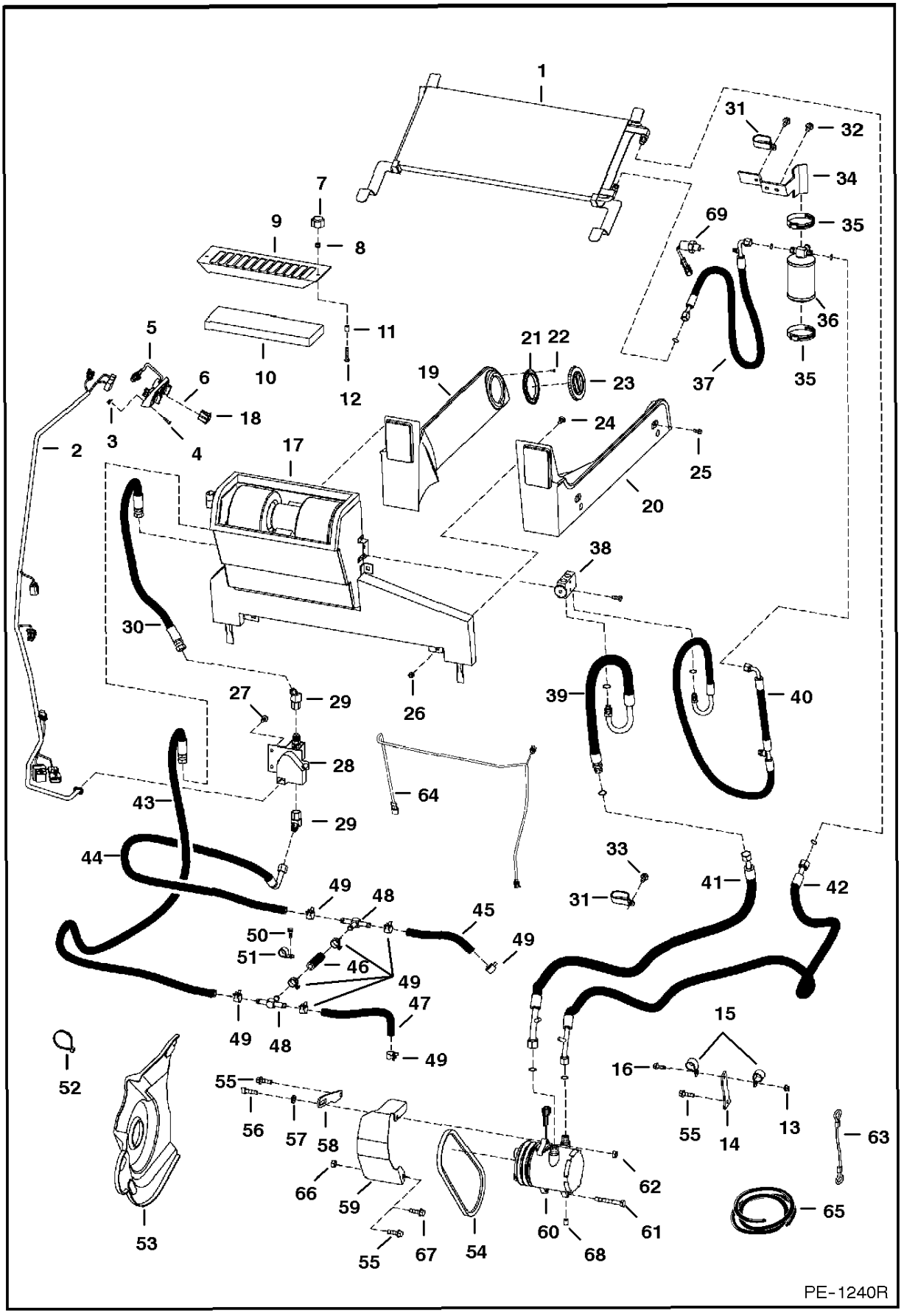

www.youfixthis.com

HEATER & A/C

Ref.N°	Part N°	Description	Remarks	Serial N°	Qty.
1	6732486	CONDENSER	A/C		1
2	6725933	HARNESS	hvac		1
3	6669091	CLIP	retainer		3
4	6669224	BOLT			3
5	6674228	PANEL	control		1
5	6640699	CONNECTOR			1
5	6718579	DECAL			1
5	6718887	PANEL	A/C		1
5	6675176	SWITCH	blower		1
5	6675177	KNOB			1
5	6675846	POTENTIOMETER			1
6	6675181	PLUG	switch hole		1
7	6681614	KNOB			2
8	83D-4	NUT			2
9	6718175	SCREEN	filter		1
10	6678207	FILTER	recirculation		1
11	6718837	SPACER			2
12	37C-424	BOLT			2
13	83D-5	NUT			1
14	6728011	BRACKET			1
15	30H-50	CLAMP			2
16	35C-516	BOLT			1
17	6683001	HVAC ASSY	See Page HEATER & A/C(1)		1
17	6676562	HEATER	See Page HEATER & A/C(1)		1
18	6719176	SWITCH			1
19	6717644	DUCT	L.H.		1
20	6717643	DUCT	R.H.		1
21	6675179	FLANGE			4
22	57G-608	SCREW			16
23	6674231	VENT	round		4
24	37C-512	BOLT			4
25	35C-410	BOLT			4
26	59D-5	NUT			4
27	84G-3110	BOLT			2
28	6675684	VALVE			1
28	6641174	CONNECTOR			1
28	6675175	BRACKET			1
28	6675172	BRACKET			1
28	6675173	ACTUATOR			1
28	6675174	BODY			1
29	12K-6	ELBOW			2
30	6719144		W/spring guard		1
31	31H-46	CLAMP			2
32	84G-3710	BOLT			3
33	84G-3716	BOLT			1
34	6726620	BRACKET			1
35	6515576	CLAMP			2
36	6674235	RECEIVER DRIER			1
37	6727414	HOSE			1
38	6675534	BLOCK VALVE			1
39	6676623	HOSE			1
40	6675075	HOSE			1
41	6726656	HOSE			1
42	6726661	HOSE			1
43	6719080	HOSE	W/spring guard		1

www.youfixthis.com

HEATER & A/C

Ref.N°	Part N°	Description	Remarks	Serial N°	Qty.
44	6717987	HOSE			1
45	NAP	HOSE	8.3' (210,8 mm) long - Order Ref. HEATER & A/C(65)		1
46	NAP	HOSE	3' (76,2 mm) long - Order Ref. HEATER & A/C(65)		1
47	NAP	HOSE	10.5' (266,7 mm) long - Order Ref. HEATER & A/C(65)		1
48	6718578	TEE			2
49	5HM-20	CLAMP			8
50	1CM-820	BOLT			1
51	30H-64	CLAMP			1
52	6624289	STA-STRAP			5
53	6726937	SHIELD			1
54	6726988	BELT	compressor		1
55	35C-620	BOLT			3
56	2GM-1035	BOLT			1
57	6557831	WASHER			1
58	6726648	BRACKET	swing		1
59	6731495	SHIELD	belt		1
59	3com3Z=}H~10 {M				x
60	6733655	COMPRESSOR	W/Ref. HEATER & A/C(68)		1
60	6679145	CLUTCH			1
60	6648307	CONNECTOR	2-pin		1
60	6648308	CONNECTOR			1
61	5CM-1080	BOLT			1
62	2DM-10	NUT			1
63	6808831		14'(355,6 mm) long		1
64	6726888	HARNESS	ACS		1
65	6674905	HOSE	bulk - Sold Per Foot		x
66	97D-6	NUT			1
67	35C-624	BOLT			1
68	6732732	BUSHING			1
69	6675779	SWITCH			1

www.youfixthis.com

HEATER & A/C
(A/C Kit)

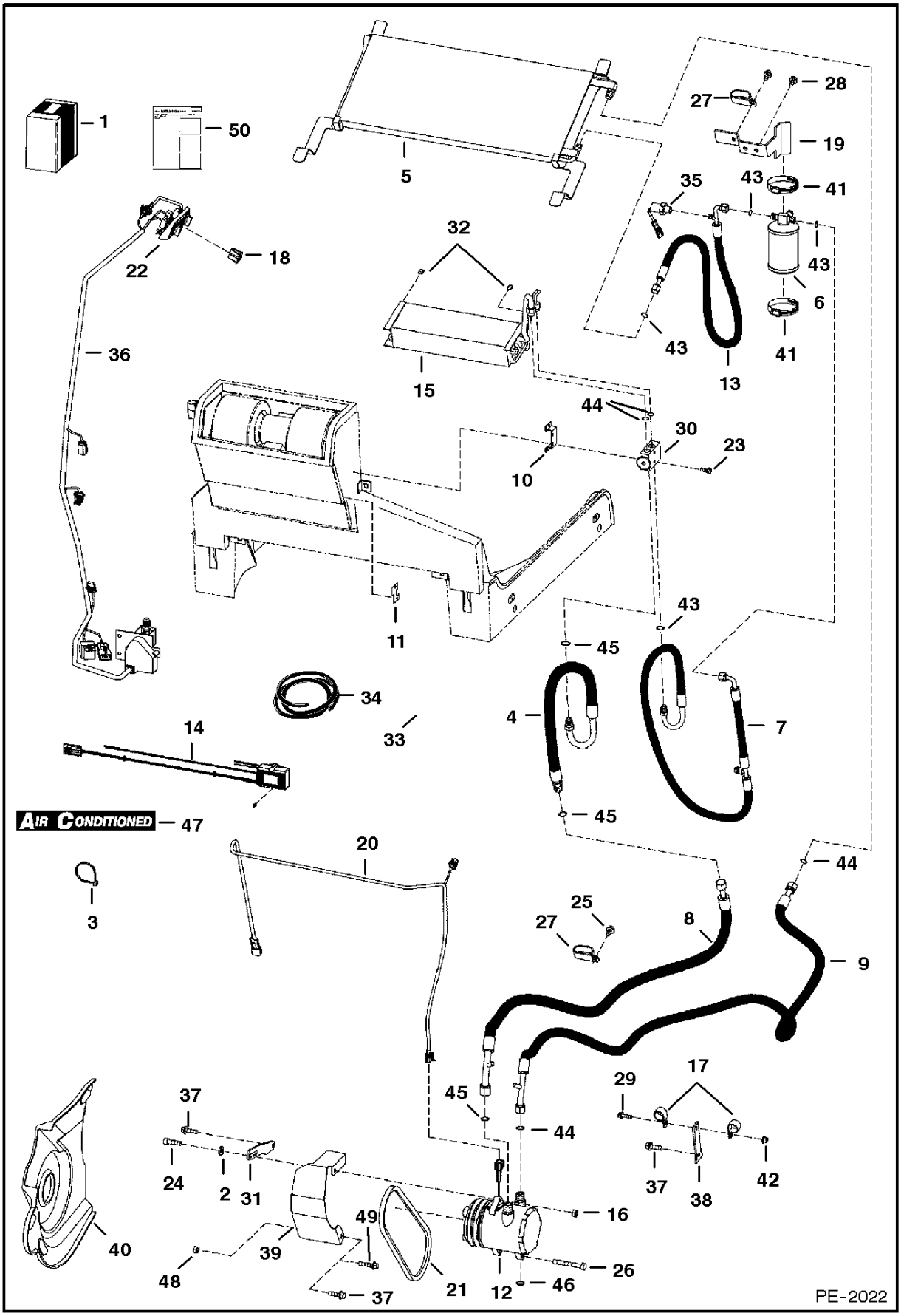

www.youfixthis.com

HEATER & A/C

Ref.N°	Part N°	Description	Remarks	Serial N°	Qty.
1	6737261	KIT			1
2	6557831	WASHER			1
3	6624289	STA-STRAP			5
4	6726623	HOSE			1
5	6733001	CONDENSER			1
6	6674235	RECEIVER DRIER			1
6	6676062	RELIEF VALVE	relief		1
7	6675075	HOSE			1
7	6677122	CAP			1
8	6726656	HOSE			1
8	6685199	CAP			1
9	6726661	HOSE			1
9	6685198	CAP			1
10	6676984	BRACKET	valve		1
11	6677105	COVER	plate		1
12	6733655	COMPRESSOR	W/Ref. HEATER & A/C(46)		1
12	6679145	CLUTCH			1
12	6648307	CONNECTOR	2-pin		1
12	6648308	CONNECTOR			1
13	6727414	HOSE	W/Ref. HEATER & A/C(35)		1
14	6683004	THERMOSTAT			1
15	6683003	COIL	evaporator - See Page HEATER & A/C(1)		1
16	2DM-10	NUT			1
17	30H-50	CLAMP			3
18	6719176	SWITCH			1
19	6726620	BRACKET	receiver drier		1
20	6726888	HARNESS			1
21	6726988	BELT	compressor		1
22	6726621	SCREW			2
23	1CM-635	BOLT			2
24	2GM-1035	BOLT			1
25	84G-3716	BOLT			1
26	5CM-1080	BOLT			1
27	31H-46	CLAMP			2
28	84G-3710	BOLT			3
29	35C-516	BOLT			2
30	6675534	BLOCK VALVE			1
31	6726648	BRACKET	swing		1
32	6676539	CLIP			2
33	NAP	INSULATION	tape - 6'(152,4 mm) long - Order Ref. HEATER & A/C(34)		1
34	6676538	INSULATION	bulk - Sold Per Foot		x
35	6675779	SWITCH	pressure		1
36	6725933	HARNESS	Not in Kit		1
37	35C-620	BOLT			2
38	6728011	BRACKET			1
39	6731495	SHIELD	belt		1
40	6726937	SHIELD			1
41	44H-48	CLAMP			2
42	83D-5	NUT			2
43	6675824	O-RING	#6		x
44	6675538	O-RING	#8		x
45	6675825	O-RING	#10		x
46	6732732	BUSHING			1
47	6729077	DECAL	air conditioned		1

www.youfixthis.com

HEATER & A/C

Ref.N°	Part N°	Description	Remarks	Serial N°	Qty.
48	97D-6	NUT			1
49	35C-624	BOLT			1
50	6901224	INSTRUCTIONS			1

www.youfixthis.com

HEATER & A/C
(HVAC Assembly)

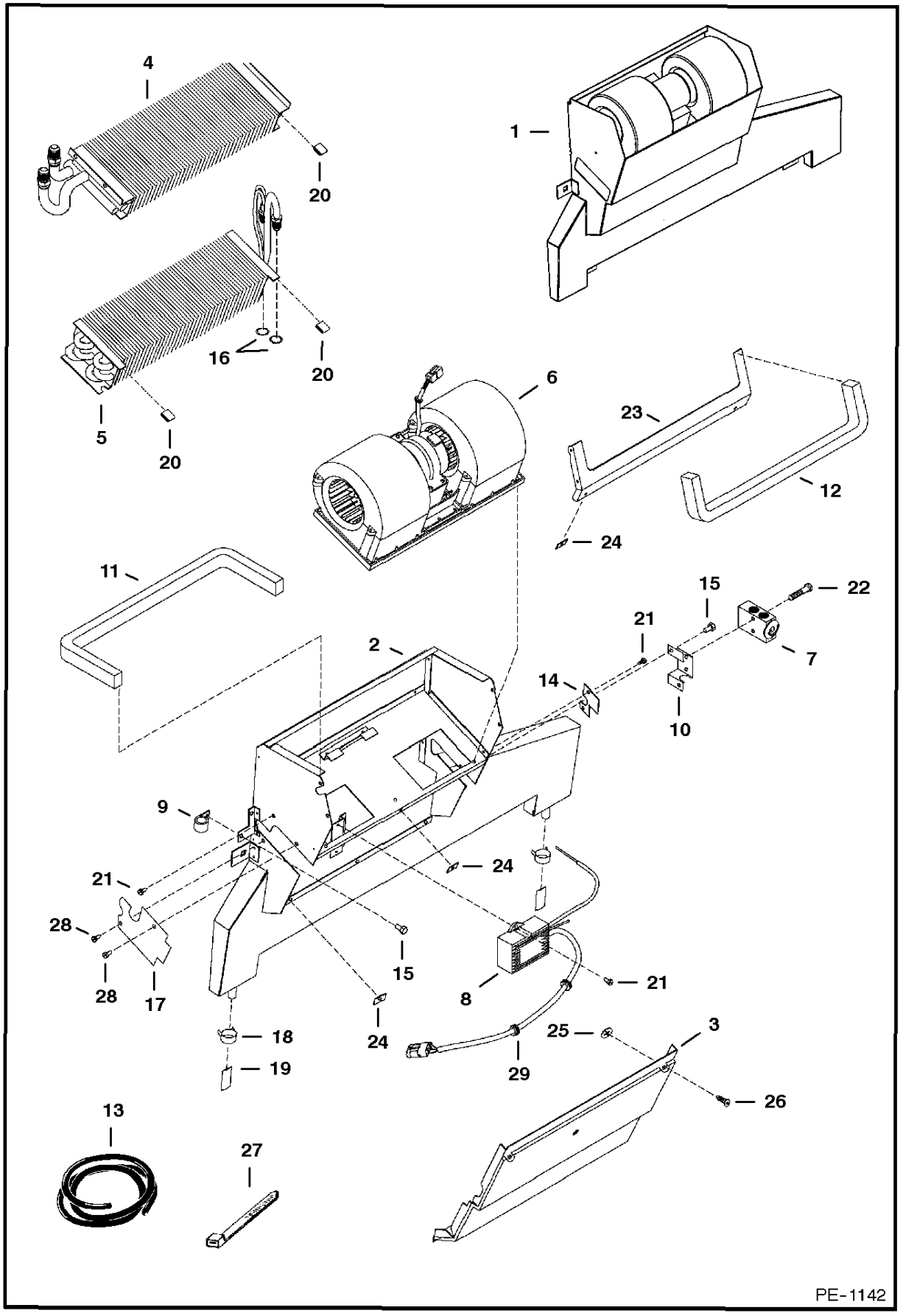

www.youfixthis.com

HEATER & A/C

Ref.N°	Part N°	Description	Remarks	Serial N°	Qty.
1	6683001	HVAC ASSY	Ref. HEATER & A/C(2)-HEATER & A/C(28)		1
2	6677108	HOUSING			1
3	6678151	COVER			1
4	NSS	COIL	heater - See Page HEATER & A/C(1) - Order 6728990 Heater Coil Kit		1
5	6683003	COIL	evaporator - See Page HEATER & A/C(1)		1
6	6675497	BLOWER	assy - See Page HEATER & A/C(1)		1
6	6676618	CLIP			2
7	6675534	BLOCK VALVE			1
8	6683004	THERMOSTAT			1
9	6675512	CLAMP	hose		2
10	6676984	BRACKET	valve		1
11	NAP	SEAL	25'(635mm) long - Order Ref. HEATER & A/C(13)		1
12	NAP	SEAL	(22.6'(575mm) long - Order Ref. HEATER & A/C(13)		1
13	6677111	SEAL	bulk - Sold Per Foot		x
14	6677105	COVER			1
15	6677118	SCREW	w/washer		4
16	6675538	O-RING			2
17	6677504	COVER			1
18	6675510	CLAMP	drain hose		2
19	6675511	DRAIN VALVE			2
20	6676539	CLIP			3
21	6726621	SCREW	sheetmetal		7
22	1CM-635	BOLT			2
23	6678152	SEAL			1
24	6677115	RECEPTACLE			6
25	6677116	RETAINER			6
26	6677117	SCREW	captive		6
27	6677113	TIE			1
28	6677119	SCREW	sheetmetal		7
29	6675513	GROMMET			1

www.youfixthis.com

HORN KIT

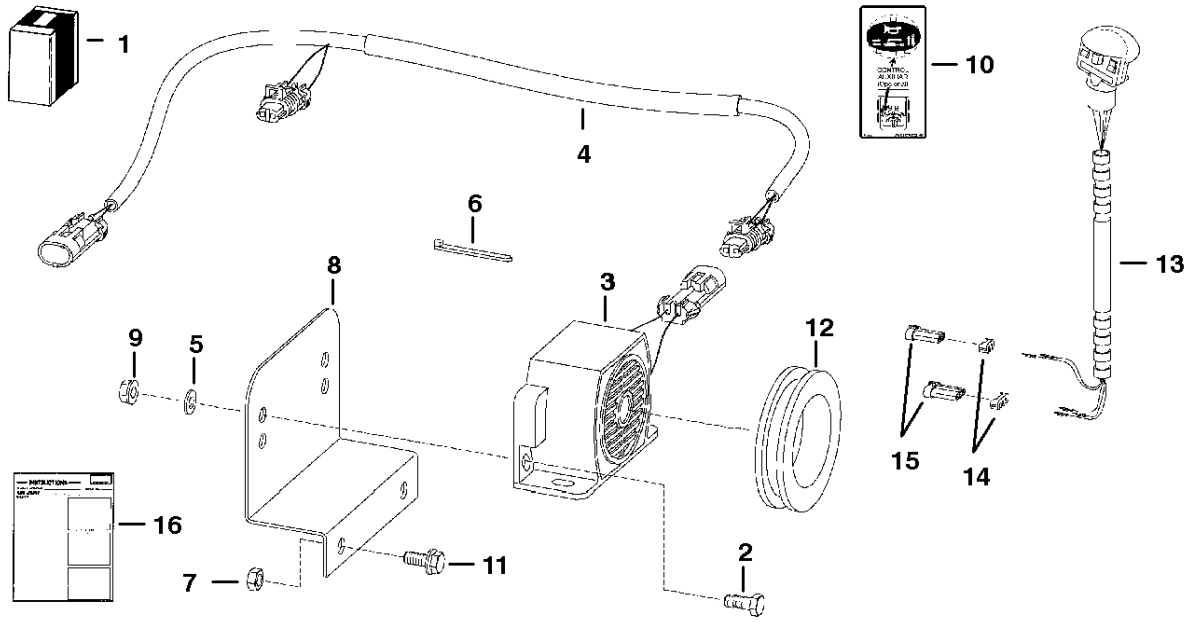

NOTE: Requires multi-switch handle.

TS-1987

www.youfixthis.com

HORN KIT

Ref.N°	Part N°	Description	Remarks	Serial N°	Qty.
1	6727995	HORN KIT	Ref. HORN KIT(2)-HORN KIT(12) & HORN KIT(16)		1
2	17C-410	BOLT			2
3	6675099	HORN			1
4	6727498	HARNESS	56.5'(1435 mm) long		1
5	25E-13	WASHER			1
6	6610510	NYLON TIE			1
7	83D-5	NUT			2
8	6733970	MOUNT			1
9	83D-4	NUT			2
10	6703727	DECAL			1
11	35C-512	BOLT			2
12	6577545	GROMMET			1
13	6680414	HANDLE ASSY.	Not in Kit		1
13	6640690	PIN	Not in Kit		5
13	6641176	SEAL	Not in Kit		5
14	6641180	LOCK	2 - pin - Not in Kit		2
14	6640700	LOCK	3 - pin - Not in Kit		2
15	6641179	CONNECTOR	2 - pin - Not in Kit		2
15	6640699	CONNECTOR	3 - pin - Not in Kit		2
16	6901146	INSTRUCTIONS			1

www.youfixthis.com

LIFT KIT
(Four Point - .75" Thick Lift Eye)

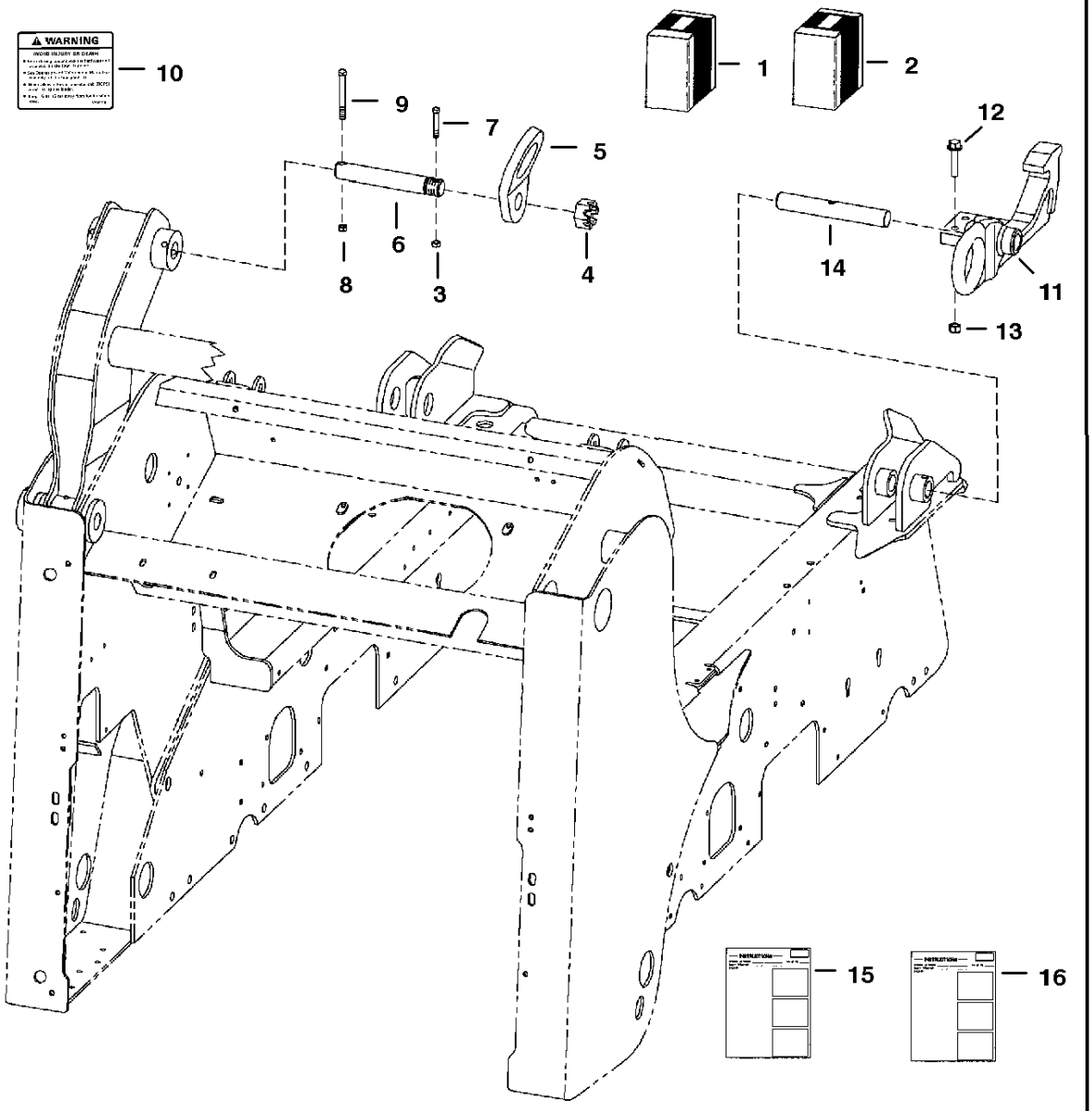

NOTE: The Four Point Lift Kit requires the Backhoe Mounting Kit, which is available from Gwinner Sales #6718155.

PE-1383

www.youfixthis.com

LIFT KIT

Ref.N°	Part N°	Description	Remarks	Serial N°	Qty.
1	6727993	KIT	lift - Ref. LIFT KIT(3)-LIFT KIT(10) & LIFT KIT(16) - SEE NOTE		1
2	SALES	KIT	backhoe mounting - Ref. LIFT KIT(11)-LIFT KIT(15) - SEE NOTE		1
3	87D-5	NUT			2
4	4D-20	NUT			2
5	6706825	LIFT EYE	rear		2
6	6706807	PIN			2
7	17C-540	BOLT			2
8	85D-6	NUT	Not in Kit		2
9	17C-640	BOLT	Not in Kit		2
10	6726423	DECAL			2
11	6718122	MOUNT	L.H.		1
11	6717293	MOUNT	R.H.		1
12	31C-836	BOLT			4
13	63D-8	NUT			4
14	6717707	PIN			1
15	6900827	INSTRUCTIONS	For Ref. LIFT KIT(2)		1
16	6901203	INSTRUCTIONS	For Ref. LIFT KIT(1)		1

www.youfixthis.com

LIFT KIT
(Single Point)

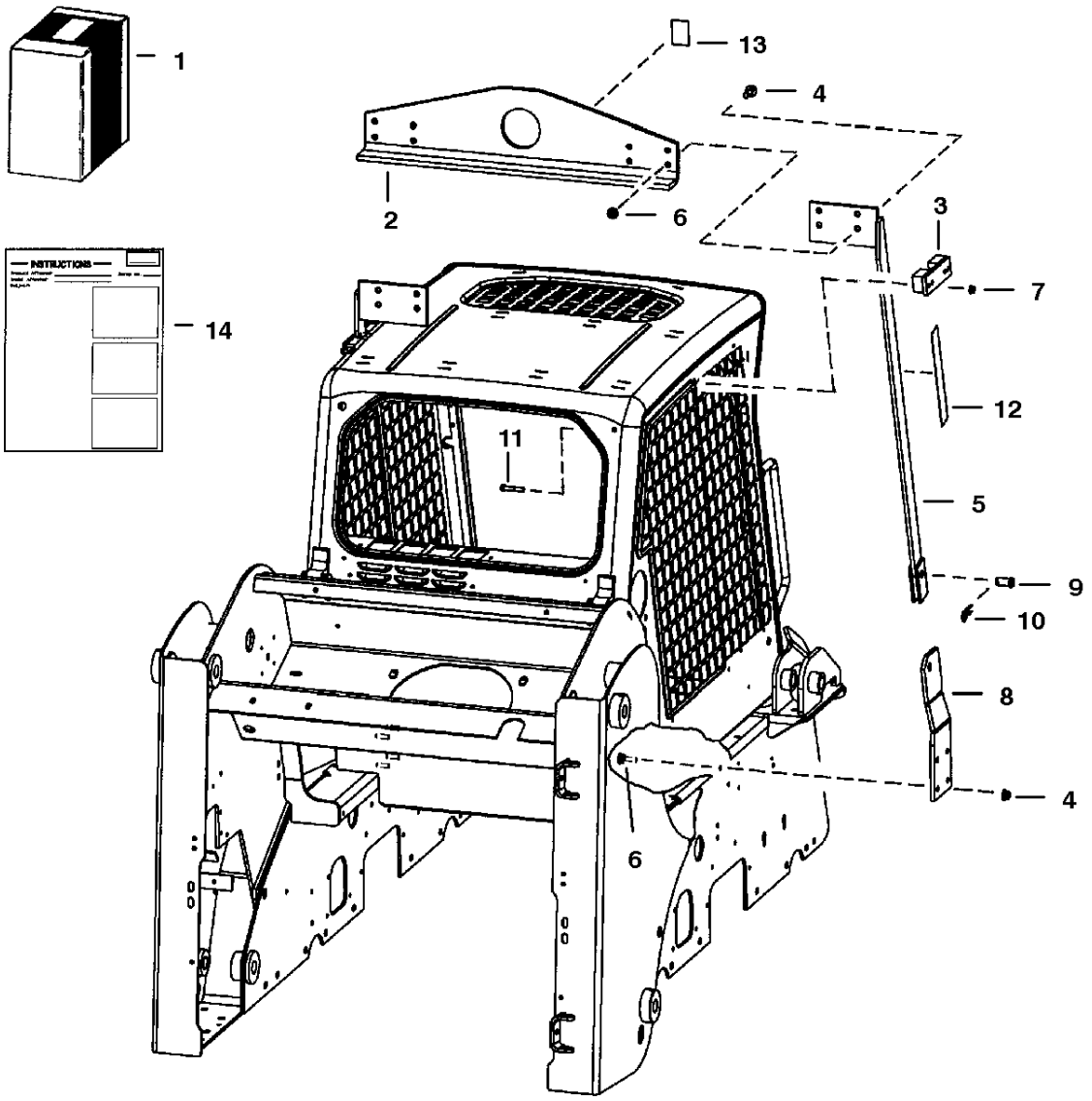

PE-1504

www.youfixthis.com

LIFT KIT

Ref.N°	Part N°	Description	Remarks	Serial N°	Qty.
1	6719264	KIT	Ref. LIFT KIT(2) - LIFT KIT(14)		1
2	6567827	ANGLE			1
3	6719184	BRACKET	L.H.		1
3	6719185	BRACKET	R.H.		1
4	31C-824	BOLT			16
5	6704146	BRACKET	R.H.		1
5	6704147	BRACKET	L.H.		1
6	57D-8	NUT			16
7	57D-6	NUT			8
8	6731658	BRACKET	R.H.		1
8	6731657	BRACKET	L.H.		1
9	6567838	PIN			2
10	1320075	COTTER PIN			2
11	17C-632	BOLT			8
12	6704786	DECAL	warning		2
13	6533898	DECAL	hook		1
14	6900888	INSTRUCTIONS			1

www.youfixthis.com

LIGHT KIT

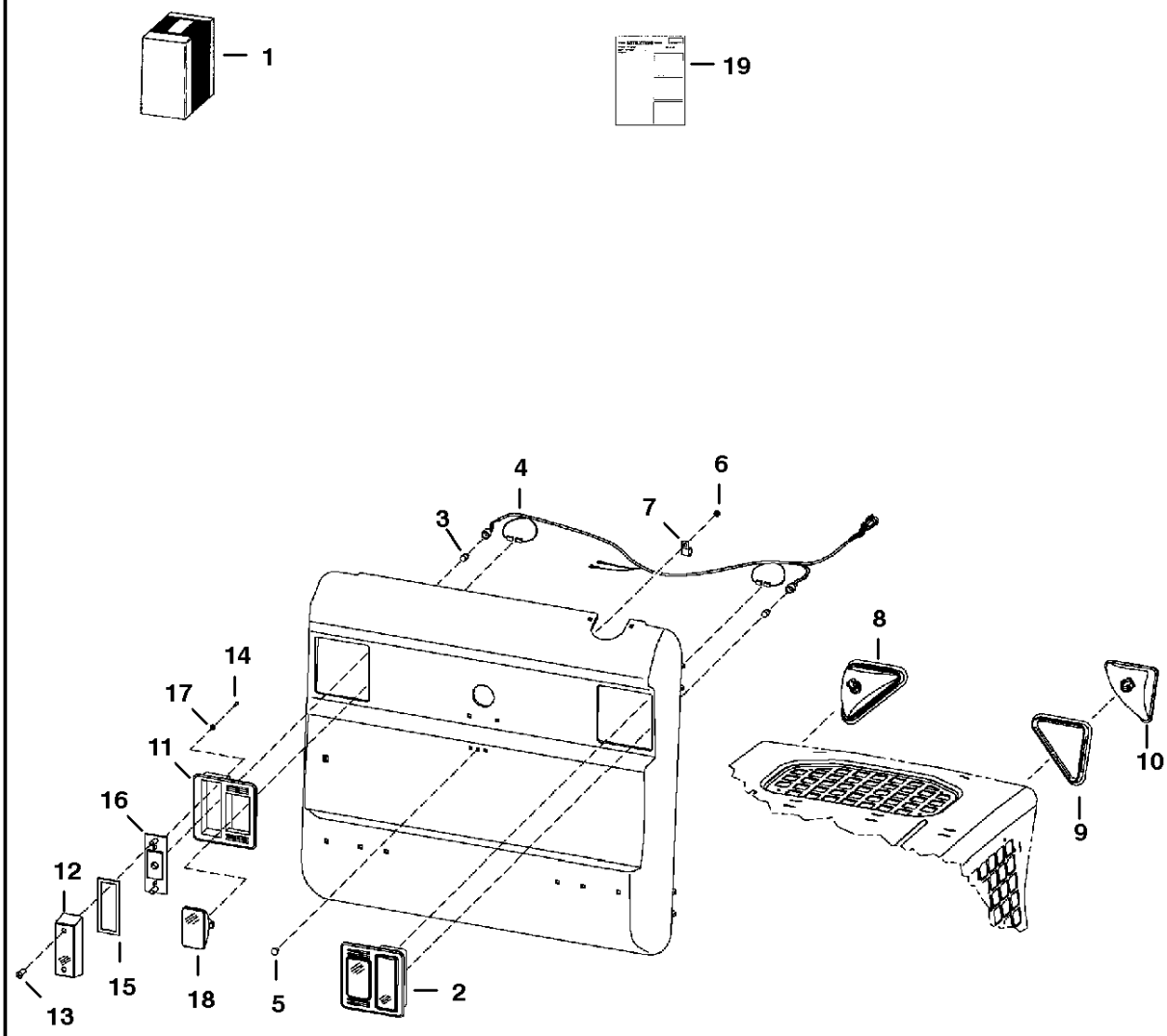

www.youfixthis.com

LIGHT KIT

Ref.N°	Part N°	Description	Remarks	Serial N°	Qty.
1	NAP	KIT	Order components		1
2	6670284	LIGHT	rear		2
3	6649481	BULB			2
4	6716419	HARNESS			1
5	37C-512	BOLT			1
6	85D-5	NUT			1
7	30H-42	CLAMP			1
8	NAP	LIGHT ASSY	R.H. - Ref. LIGHT KIT(9) & LIGHT KIT(10)		1
8	NAP	LIGHT ASSY	L.H. - Ref. LIGHT KIT(9) & LIGHT KIT(10)		1
9	6674402	MOUNT	rubber		1
10	6674401	HOUSING	R.H.		1
10	6675336	BULB	55 watt		1
10	6674400	HOUSING	L.H.		1
10	6675336	BULB	55 watt		1
11	6672279	MOUNT	rubber		2
12	6672276	LENS	red		2
13	6672274	SCREW			4
14	6672273	SCREW			2
15	6672275	GASKET			2
16	6672277	BRACKET			2
17	6672272	WASHER			4
18	6661353	LIGHT ASSY	W/bulb - white work		2
18	898731	LIGHT BULB			2
19	NAP	INSTRUCTIONS			1

www.youfixthis.com

MUFFLER/PURIFIER KIT

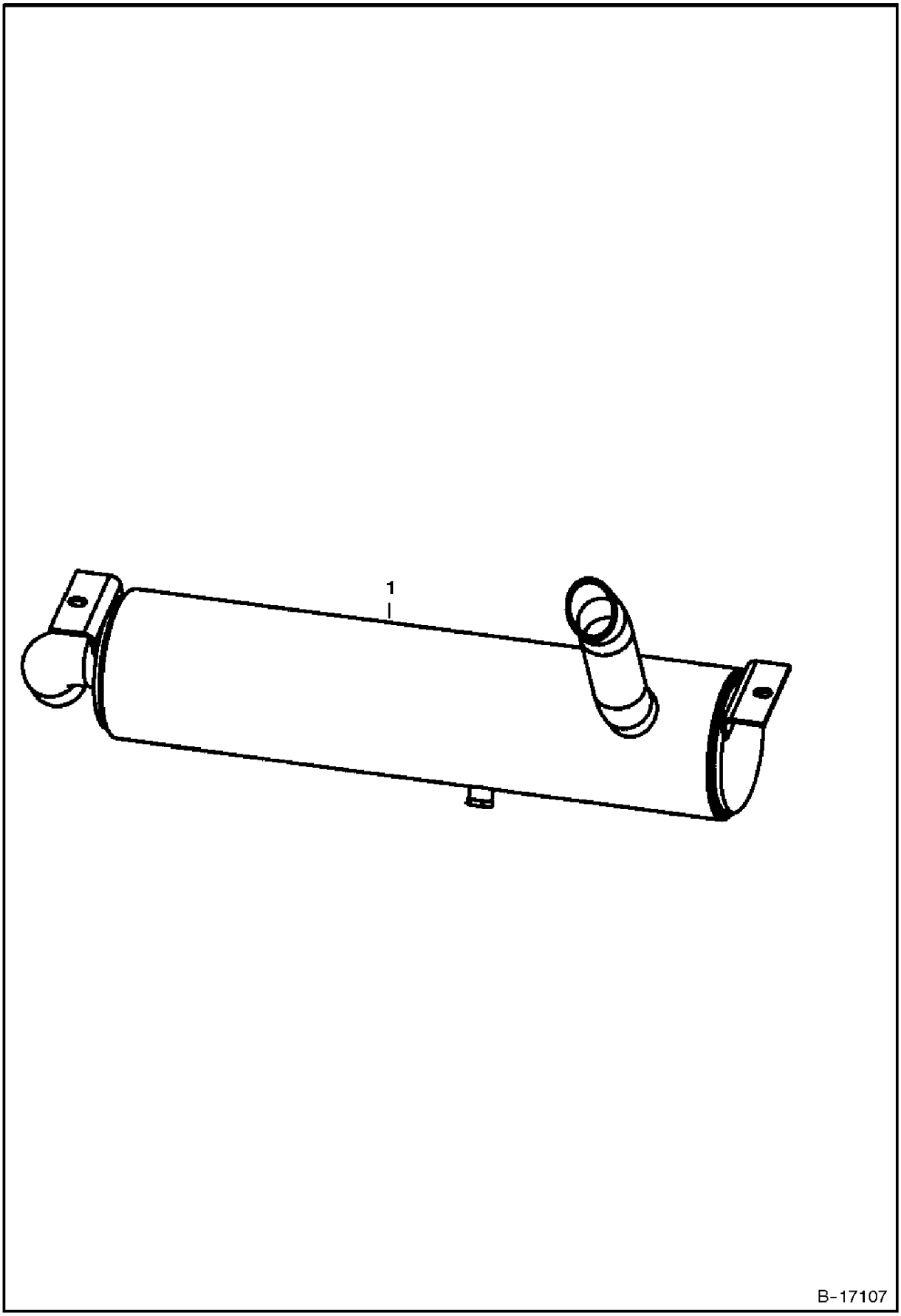

www.youfixthis.com

MUFFLER/PURIFIER KIT

Ref.N°	Part N°	Description	Remarks	Serial N°	Qty.
1		MUFFLER			1

www.youfixthis.com

POWER BOB-TACH KIT
(Hydraulic Assisted)

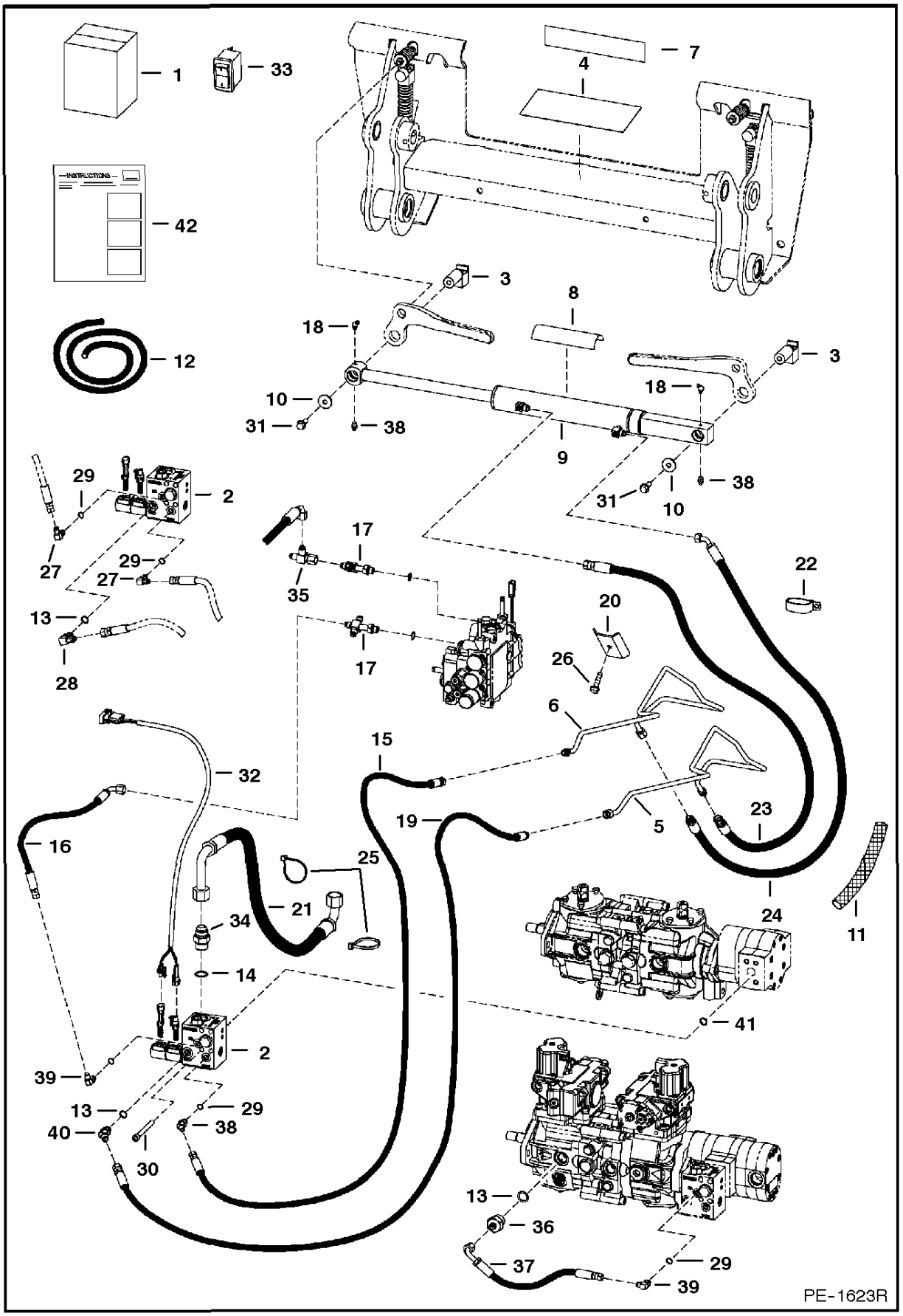

www.youfixthis.com

POWER

Ref.N°	Part N°	Description	Remarks	Serial N°	Qty.
1	6735465	KIT	power Bob-Tach		1
2		VALVE	See Page POWER BOB-TACH(1)		1
3	6714576	PIVOT			2
4	6719888	DECAL	Power Bobtach		1
5	6725552	TUBE			1
6	6725553	TUBE			1
7	6725907	DECAL			1
8	6554100	SAFETY TREAD			1
9		CYLINDER	See Page POWER BOB-TACH(1)		1
10	619021	WASHER			2
11	NAP	COVER	32'(813 mm) long - Order Ref. POWER BOB-TACH KIT(12)		1
12	6656155	COVER	1.25' I.D. - bulk - Sold Per Foot		x
13	79K-6	O-RING			x
14	79K-12	O-RING			x
15	6719451	HOSE			1
16	6731662	HOSE			1
17		CROSS	Not in Kit - See Page HYDRAULIC CONTROL VALVE(1) Ref. HYDRAULIC CONTROL VALVE(54)		1
18	10H-35	GREASE ZERK			2
19	6718358	HOSE			1
20	6719884	BRACKET			1
21	6737503	HOSE	Models S175 S185 T190 773G		1
21	6681868	HOSE	A205		1
22	31H-49	CLAMP			1
23	6729202	HOSE			1
24	6729203	HOSE			1
25	6624289	STA-STRAP			6
26	84G-3724	BOLT			1
27	17KB-404	ELBOW	W/Ref. POWER BOB-TACH KIT(29)		1
28	17KB-606	ELBOW	W/Ref. POWER BOB-TACH KIT(13)		1
29	79K-4	O-RING			x
30	73G-656	BOLT			4
31	35C-616	BOLT			2
32	6730770	HARNESS			1
33	6676732	SWITCH	vertical		1
34	15KB-1212	ADAPTER	W/Ref. POWER BOB-TACH KIT(14)		1
35	13K-5	TEE	W/O flared end O-rings - Used W/Rear Aux. Option - connects to Ref. MANUAL LIFT RELEASE SYSTEM(13) See Page MANUAL LIFT RELEASE		1
36	15KB-612	ADAPTER	W/Ref. POWER BOB-TACH KIT(13)		1
37	6806403	HOSE			1
38	18KB-404	ELBOW	W/Ref. POWER BOB-TACH KIT(29)		1
39	17KB-404	ELBOW	W/Ref. POWER BOB-TACH KIT(29)		1
40	18KB-606	ELBOW	W/Ref. POWER BOB-TACH KIT(13)		1
41	55K-214	O-RING			1
42	6902421	INSTRUCTIONS			1

www.youfixthis.com

POWER BOB-TACH
(Cylinder)

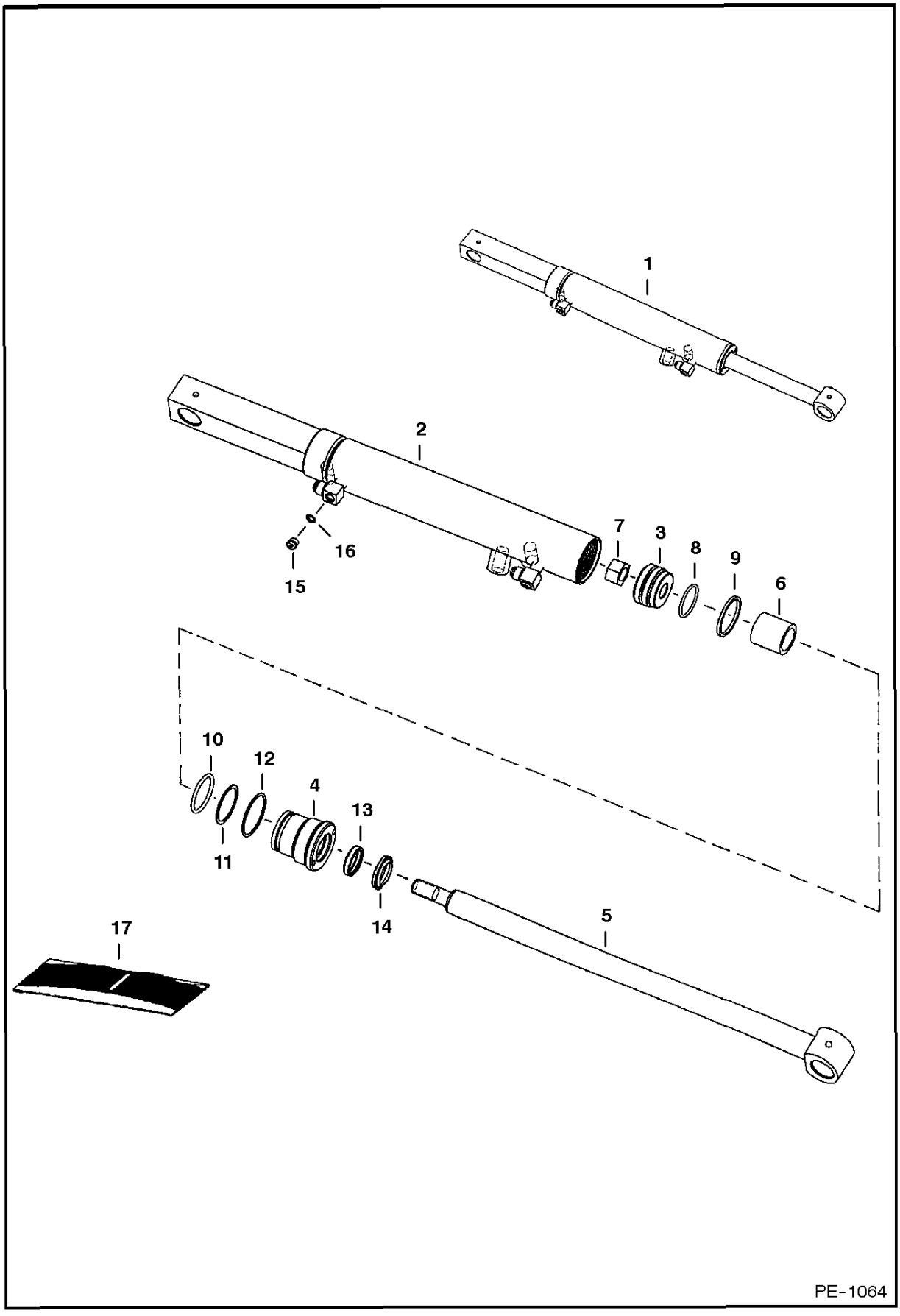

www.youfixthis.com

POWER BOB-TACH

Ref.N°	Part N°	Description	Remarks	Serial N°	Qty.
1	6810611	CYLINDER	Ref. POWER BOB-TACH(2) - POWER BOB-TACH(16)		1
2	6810349	CASE	1.75'(45 mm) I.D.		1
3	6586543	PISTON			1
4	6586542	HEAD			1
5	6810612	ROD			1
6	6810356	SPACER			1
7	92D-10	NUT			1
8	54K-30110	O-RING			1
9	6532453	RING			1
10	54K-40116	O-RING			1
11	73K-222	WASHER	back-up		1
12	58K-132	O-RING			1
13	6667323	SEAL	rod		1
14	6666542	SEAL	wiper		1
15	6812170	PLUG	W/Ref. POWER BOB-TACH(16) - hex head		2
16	75K-3	O-RING			2
17	6803473	SEAL KIT	Ref. POWER BOB-TACH(7) - POWER BOB-TACH(14)		1

www.youfixthis.com

POWER BOB-TACH
(Valve Assembly)

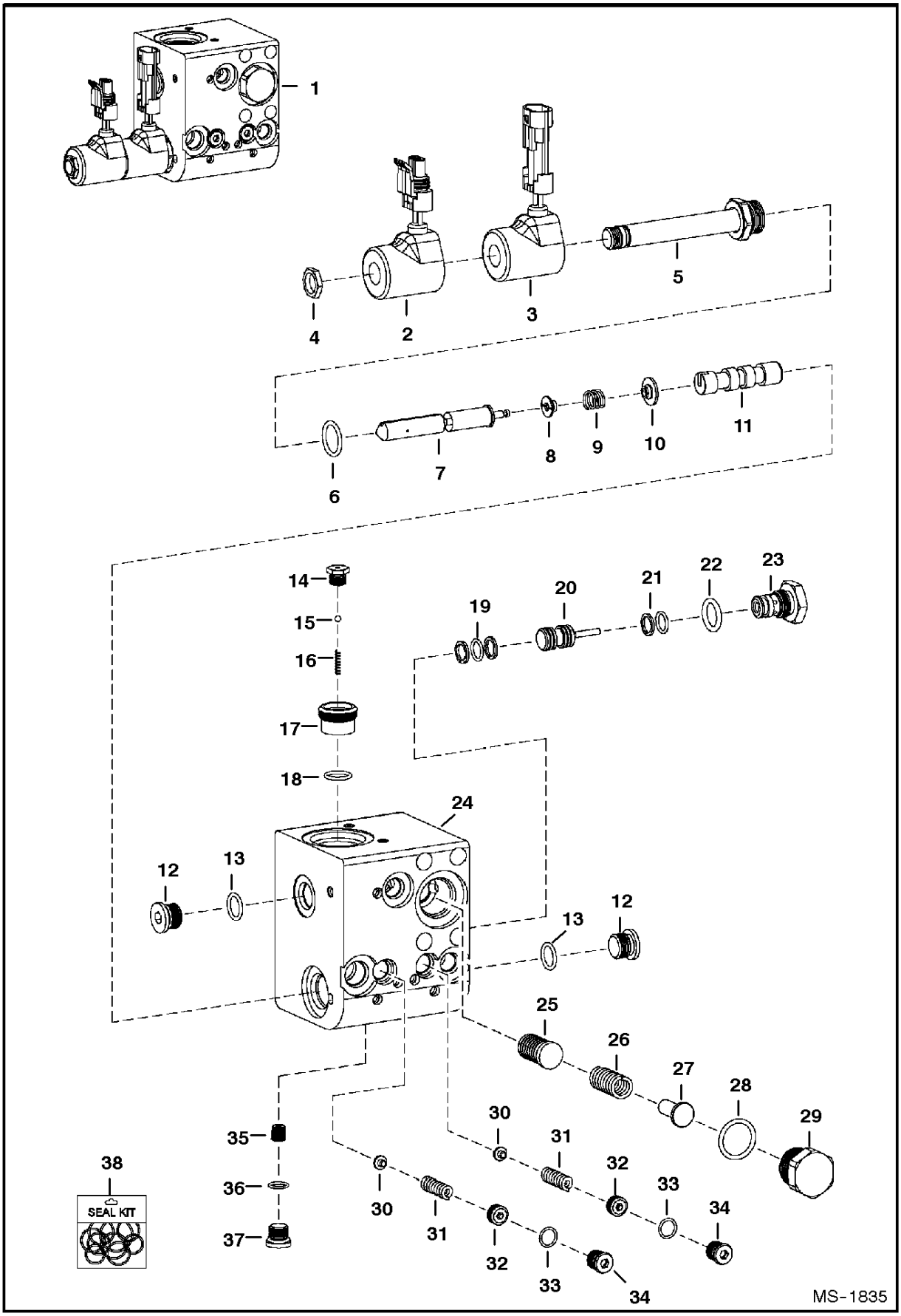

www.youfixthis.com

POWER BOB-TACH

Ref.N°	Part N°	Description	Remarks	Serial N°	Qty.
1	6685311	VALVE			1
2	6684743	SOLENOID	W/male connector		1
3	6684744	SOLENOID	W/female connector		1
4	6684742	NUT			1
5	NSS	STEM			x
6	79K-8	O-RING			x
7	NSS	STEM			x
8	NSS	RETAINER			x
9	NSS	SPRING			x
10	NSS	WASHER			x
11	NSS	PISTON			x
12	NSS	PLUG			x
13	NSS	O-RING			x
14	NSS	PLUG			x
15	NSS	BALL			x
16	NSS	SPRING			x
17	NSS	VALVE			x
18	NSS	O-RING			x
19	NSS	RINGS			x
20	6684745	PISTON			1
21	NSS	RINGS			x
22	79K-7	O-RING			x
23	6684746	CHECK VALVE	W/Ref. POWER BOB-TACH(22)		1
24	NSS	BLOCK			x
25	NSS	STEM			x
26	NSS	SPRING			x
27	NSS	POPPET			x
28	79K-10	O-RING			x
29	NSS	PLUG			x
30	NSS	POPPET			x
31	NSS	SPRING			x
32	NSS	PLUG			x
33	NSS	O-RING			x
34	NSS	PLUG			x
35	NSS	POPPET			x
36	NSS	O-RING			x
37	NSS	PLUG			x
38	6684747	SEAL KIT	complete		1

www.youfixthis.com

RADIATOR SCREEN KIT

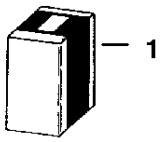

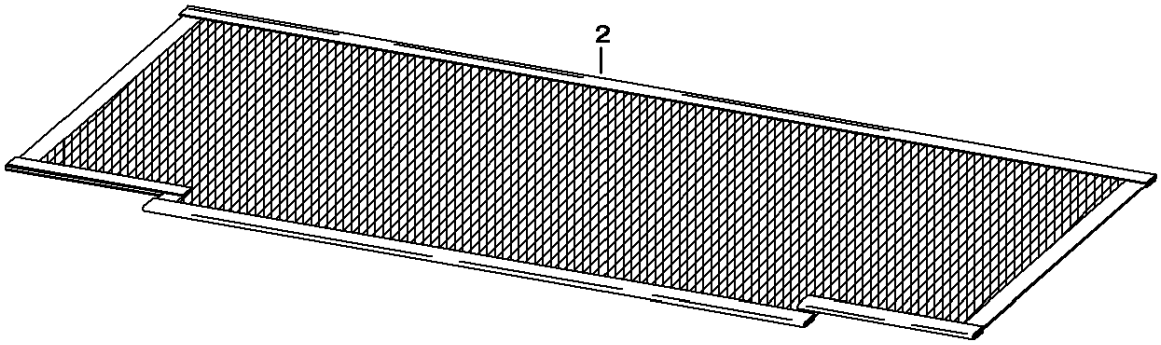

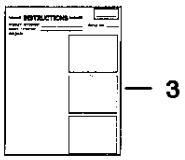

TS-1188

www.youfixthis.com

RADIATOR SCREEN KIT

Ref.N°	Part N°	Description	Remarks	Serial N°	Qty.
1	6706939	KIT	Ref. RADIATOR SCREEN KIT(2) & RADIATOR SCREEN KIT(3)		1
2	6706285	SCREEN			1
3	6722861	INSTRUCTIONS			1

www.youfixthis.com

REAR AUXILIARY

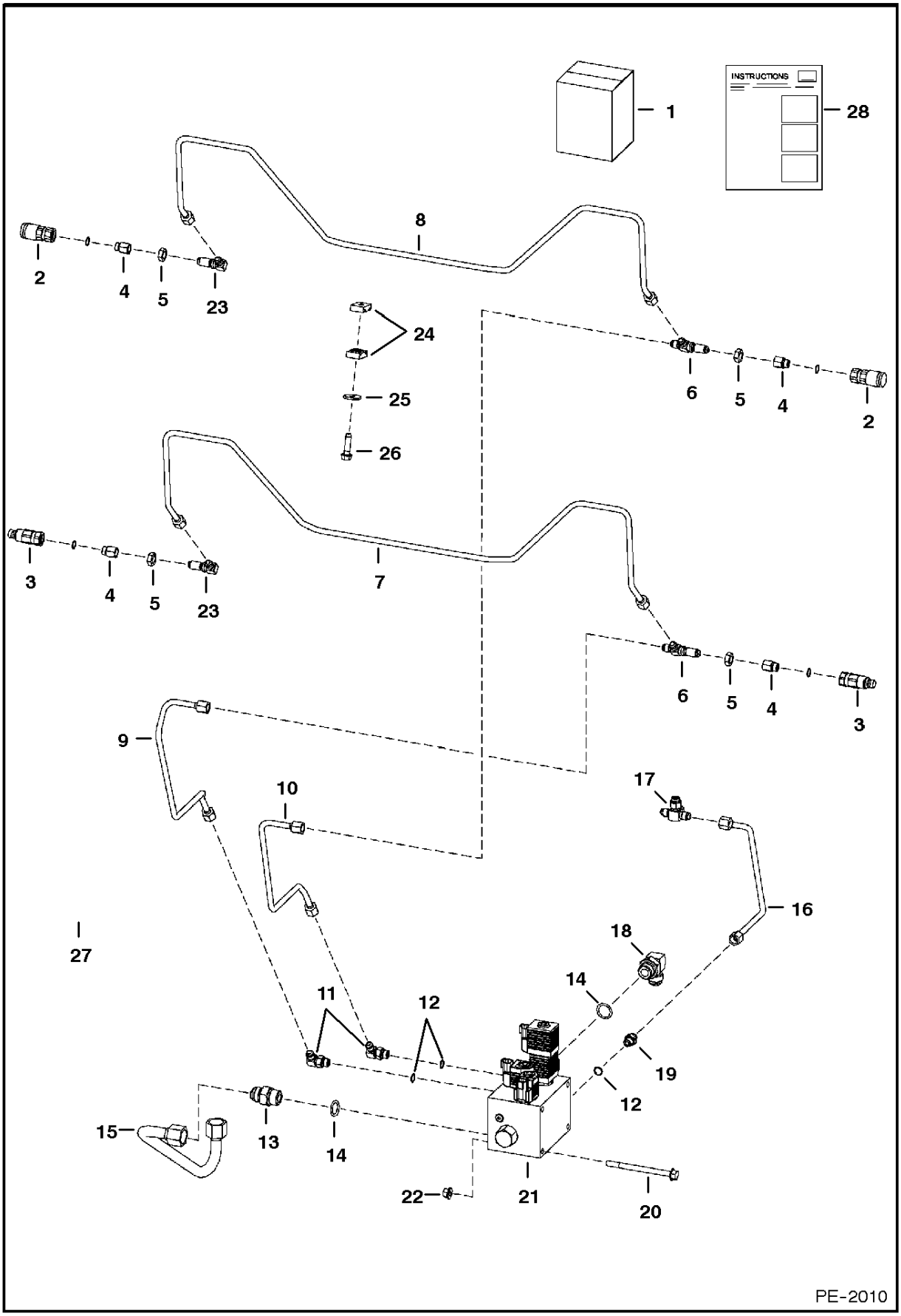

www.youfixthis.com

REAR AUXILIARY

Ref.N°	Part N°	Description	Remarks	Serial N°	Qty.
1	6735724	KIT	Ref. REAR AUXILIARY(2) - REAR AUXILIARY(28)		1
2	6667803	QUICK COUPLER	female		2
3	6667804	QUICK COUPLER	male		2
3	6669657	O-RING			x
4	6706633	CONNECTOR			4
5	86F-5	NUT			4
6	91K-5	TEE			2
7	6726273	TUBE			1
8	6726272	TUBE			1
9	6735828	TUBE			1
10	6735829	TUBE			1
11	17KB-606	ELBOW	W/Ref. REAR AUXILIARY(12)		2
12	79K-6	O-RING			x
13	15KB-1212	ADAPTER	W/Ref. REAR AUXILIARY(14)		1
14	79K-12	O-RING			x
15	6737254	TUBE			1
16	6735830	TUBE			1
17	6725497	CROSS			1
18	17KB-1212	ELBOW	W/Ref. REAR AUXILIARY(14)		2
19	15KB-606	ADAPTER	W/Ref. REAR AUXILIARY(12)		3
20	17C-680	BOLT			3
21	6683251	VALVE	See Page REAR AUXILIARY VALVE(2)		1
22	83D-6	NUT			3
23	88F-5	ELBOW			3
24	6726277	CLAMP			2
25	619021	WASHER			1
26	84G-3724	BOLT			1
27	7101973	HARNESS	jumper		1
28	6902363	INSTRUCTIONS			1

www.youfixthis.com

REAR AUXILIARY
(High Flow Hydraulics)

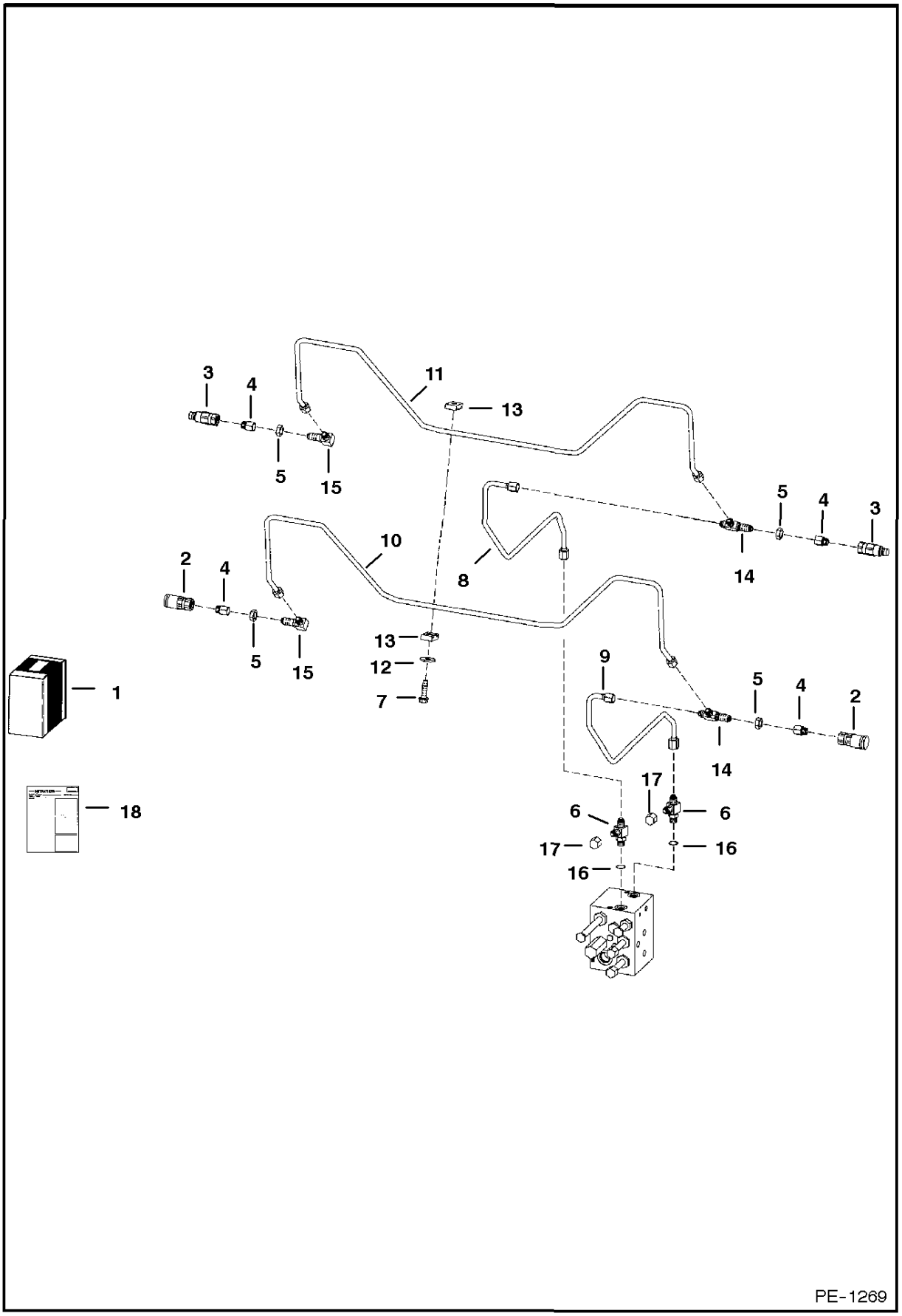

www.youfixthis.com

REAR AUXILIARY

Ref.N°	Part N°	Description	Remarks	Serial N°	Qty.
1	6726288	KIT	Ref. REAR AUXILIARY(2) - REAR AUXILIARY(18)		1
2	6667803	QUICK COUPLER	female		1
3	6667804	QUICK COUPLER	male		1
3	6669657	O-RING			x
4	6706633	CONNECTOR			4
5	86F-5	NUT			4
6	21KB-606	TEE	W/Ref. REAR AUXILIARY(16)		2
7	84G-3724	BOLT			1
8	6726275	TUBE			1
9	6726274	TUBE			1
10	6726273	TUBE			1
11	6726272	TUBE			1
12	619021	WASHER			1
13	6578870	CLAMP			2
14	91K-5	TEE			2
15	88F-5	ELBOW			2
16	99K-10	O-RING			x
17	36K-5	CAP	Not used if loader is equipped W/R.H. Front Aux.		2
18	6901097	INSTRUCTIONS			1

www.youfixthis.com

REAR AUXILIARY VALVE

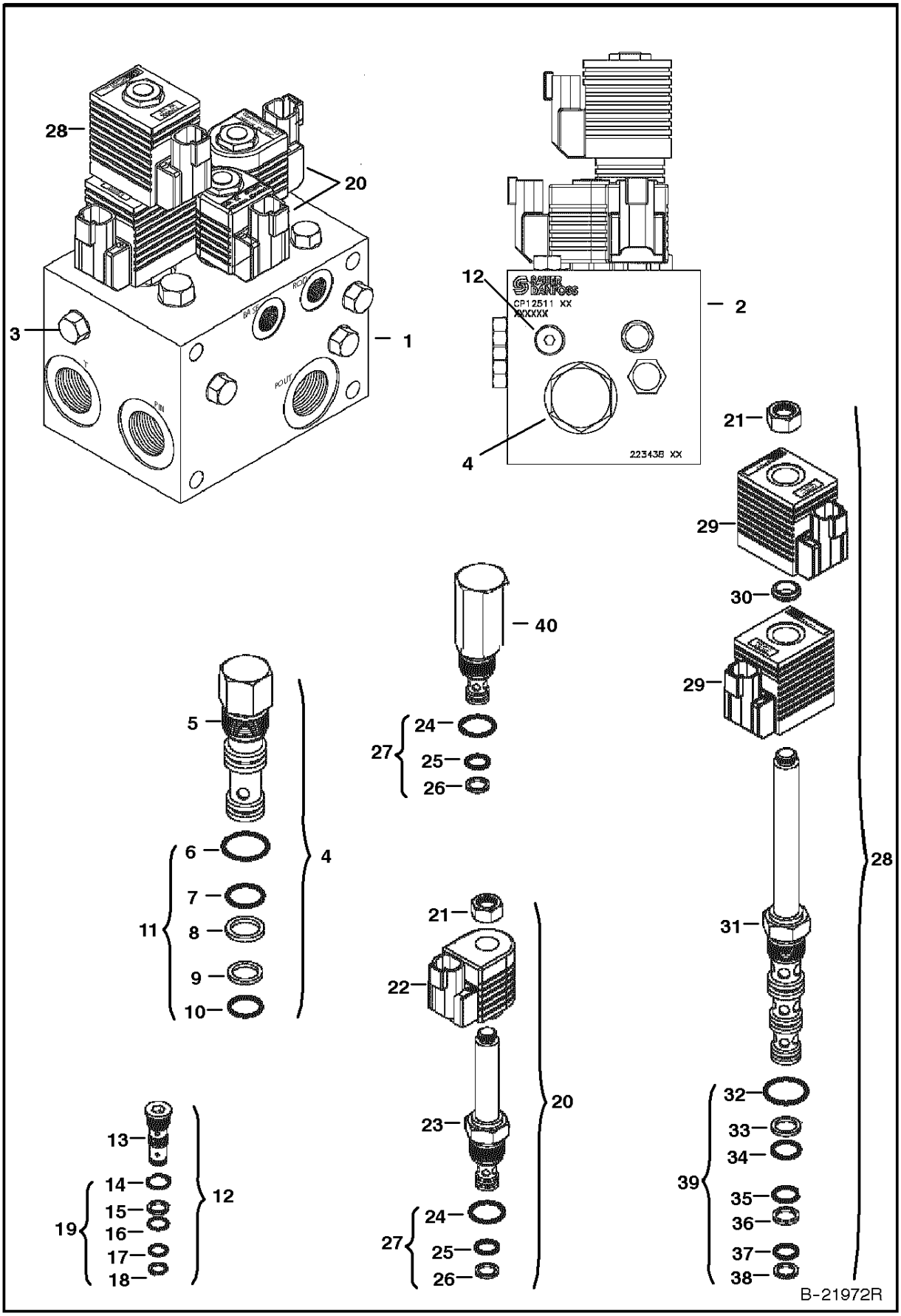

www.youfixthis.com

REAR AUXILIARY VALVE

Ref.N°	Part N°	Description	Remarks	Serial N°	Qty.
1	6683251	VALVE			1
2	NSS	BLOCK			1
3		PLUG			x
4	6684044	VALVE	assy. - Ref. REAR AUXILIARY VALVE(5)-REAR AUXILIARY VALVE(10) - differential sensing		1
5	NSS	VALVE	Order Ref. REAR AUXILIARY VALVE(4)		1
6	6684046	O-RING			1
7	6684048	O-RING			1
8	6684047	BACKAUP RING			1
9	6684050	BACKAUP RING			1
10	6684049	O-RING			1
11	6684045	SEAL KIT	Ref. REAR AUXILIARY VALVE(6)-REAR AUXILIARY VALVE(10)		1
12	6684061	VALVE	shuttle - Ref. REAR AUXILIARY VALVE(13)-REAR AUXILIARY VALVE(18)		1
13	NSS	VALVE	Order Ref. REAR AUXILIARY VALVE(12)		1
14	6684063	O-RING			1
15	6684064	BACKAUP RING			1
16	6684065	O-RING			1
17	6684066	O-RING			1
18	6684067	BACKAUP RING			1
19	6684062	SEAL KIT	Ref. REAR AUXILIARY VALVE(14)-REAR AUXILIARY VALVE(18)		1
20	6685061	VALVE	solenoid - Ref. REAR AUXILIARY VALVE(21)-REAR AUXILIARY VALVE(26)		2
21	6684060	NUT			2
22	6684073	COIL	12 volt		2
23	NSS	VALVE	Order Ref. REAR AUXILIARY VALVE(20)		2
24	6684070	O-RING			2
25	6684071	O-RING			2
26	6684072	BACKAUP RING			2
27	6684069	SEAL KIT	Ref. REAR AUXILIARY VALVE(24)-REAR AUXILIARY VALVE(26)		2
28	6684051	VALVE	solenoid - Ref. REAR AUXILIARY VALVE(21) & REAR AUXILIARY VALVE(29)-REAR AUXILIARY VALVE(39)		1
29	6684058	COIL			2
30	6684059	SPACER			1
31	NSS	VALVE	Order Ref. REAR AUXILIARY VALVE(28)		1
32	6681489	O-RING			1
33	6684053	BACKAUP RING			1
34	6684054	O-RING			1
35	6684056	O-RING			1
36	6684055	BACKAUP RING			1
37	6681487	O-RING			1
38	6684057	BACKAUP RING			1
39	6684052	SEAL KIT	Ref. REAR AUXILIARY VALVE(32)-REAR AUXILIARY VALVE(38)		1
40	6685328	RELIEF VALVE	W/Ref. REAR AUXILIARY VALVE(24)-REAR AUXILIARY VALVE(26)		1

www.youfixthis.com

REAR DOOR LOCK

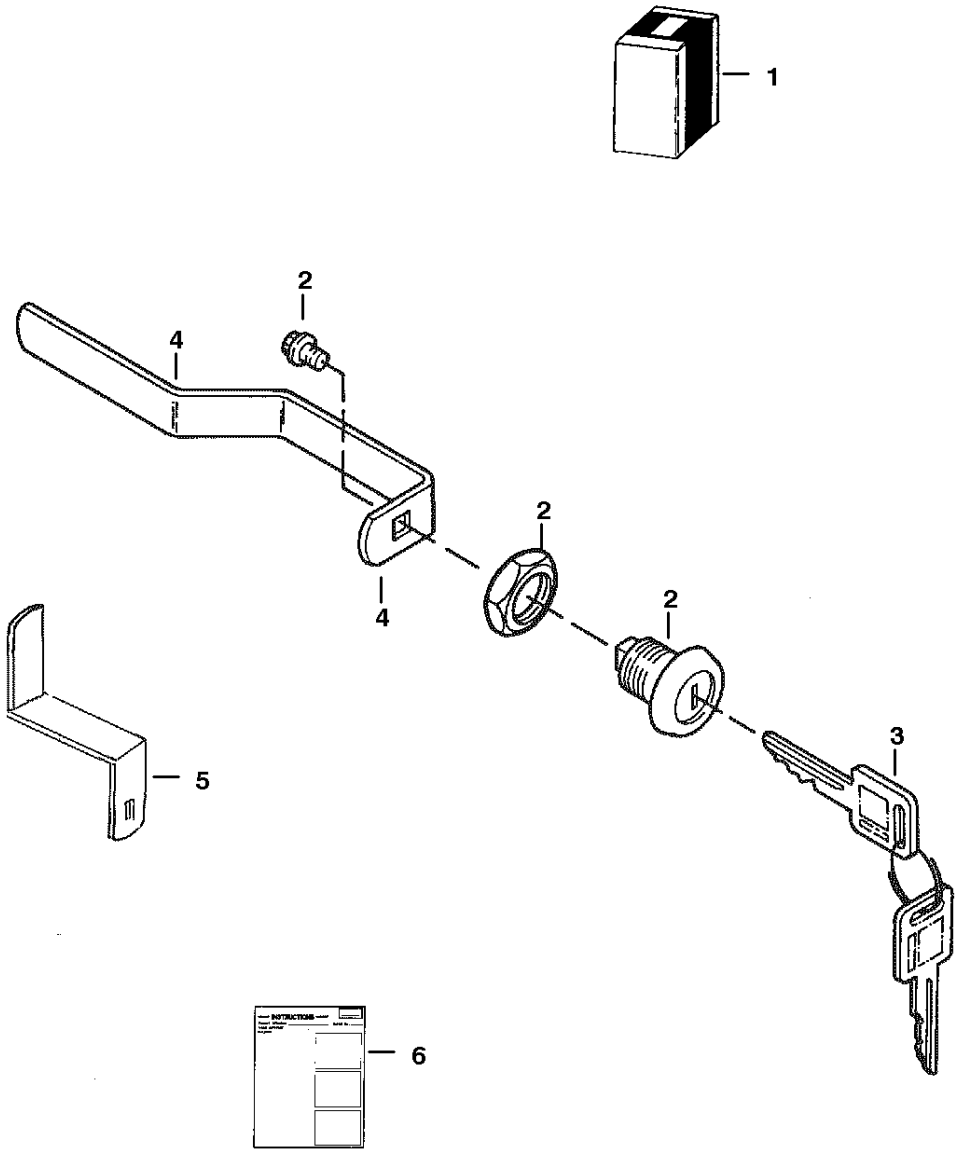

B-15018R

www.youfixthis.com

REAR DOOR LOCK

Ref.N°	Part N°	Description	Remarks	Serial N°	Qty.
1	6732001	KIT	lock - Ref. REAR DOOR LOCK(2) - REAR DOOR LOCK(6)		1
2	6670726	LOCK			1
3	6709527	KEY	ignition		1
4	6714037,	LATCH	Use W/6711524inD1}? Rear Door		1
5	6729688	LATCH	Use W/6729991inD1}; Rear Door		1
6	6901656	INSTRUCTIONS			1

www.youfixthis.com

REAR WIPER

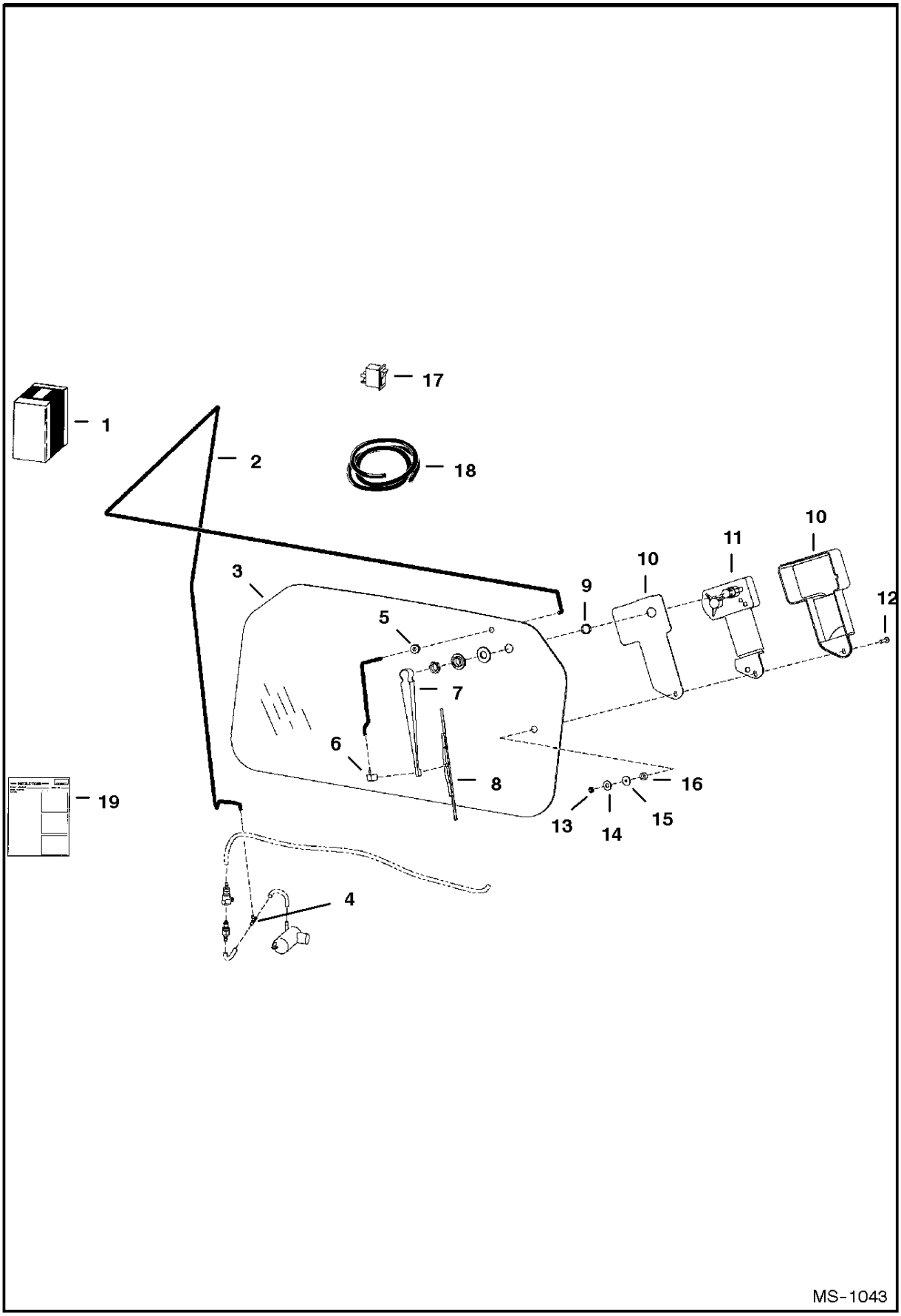

www.youfixthis.com

REAR WIPER

Ref.N°	Part N°	Description	Remarks	Serial N°	Qty.
1	6726655	KIT	rear wiper		1
2	NAP	HOSE	96'(2438,4 mm) long - Order Ref. REAR WIPER(18)		1
3	6719317	WINDOW			1
4	6676000	TEE			1
5	6557493	GROMMET			1
6	6676028	NOZZLE			1
7	6676001	ARM			1
8	6676002	BLADE			1
9	6667201	SPACER	nylon		1
10	6664097	COVER	wiper		1
11	6665602	MOTOR			1
12	6664566	SCREW			1
13	6664103	NUT			1
14	6664065	WASHER	nylon		1
15	6801059	WASHER	neoprene		1
16	6664085	BUSHING	nylon		1
17	6675999	SWITCH			1
18	6676003	HOSE	bulk - Sold Per Foot		x
19	6901061	INSTRUCTIONS			1

www.youfixthis.com

SEAL ENCLOSURE KIT

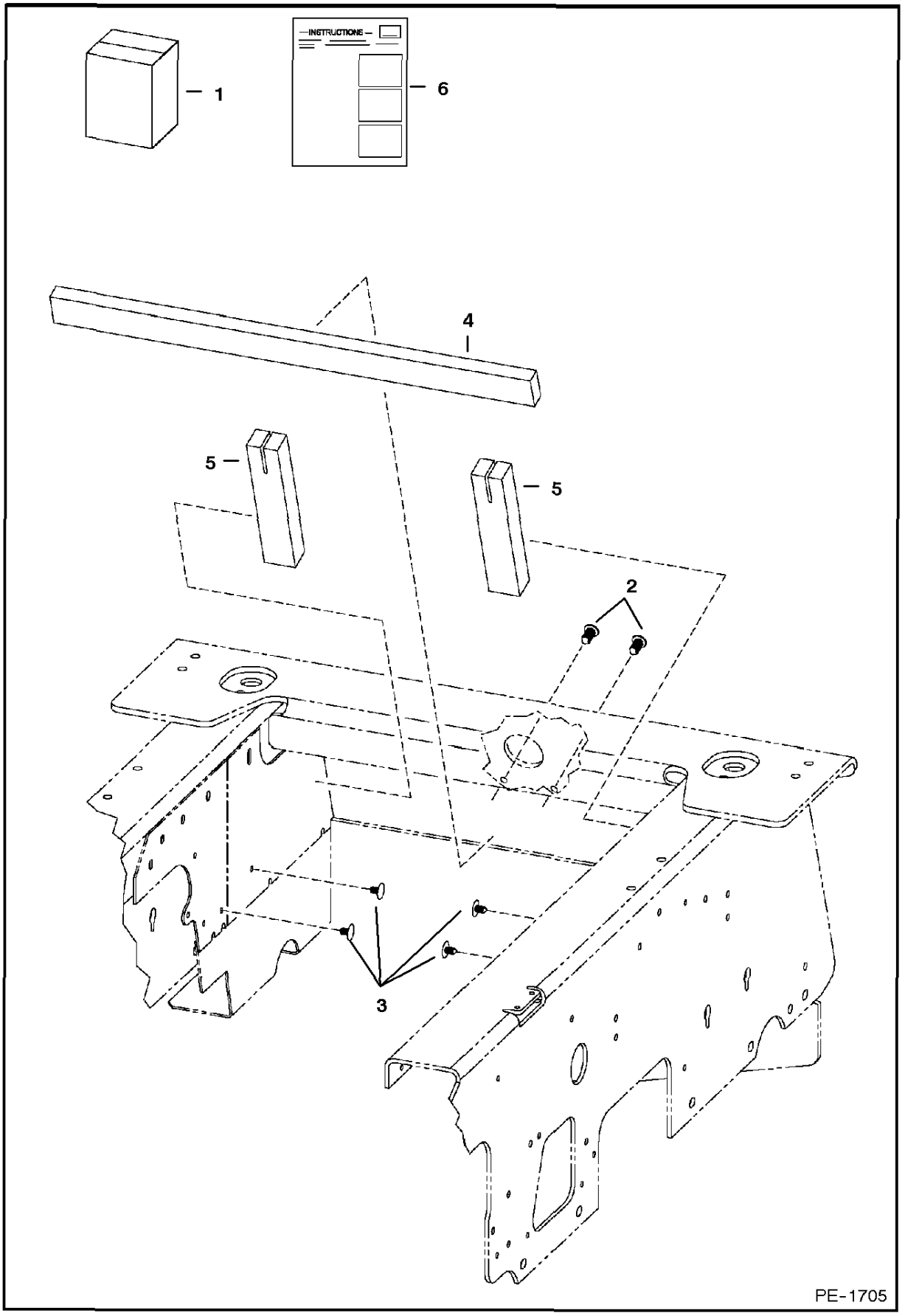

www.youfixthis.com

SEAL ENCLOSURE KIT

Ref.N°	Part N°	Description	Remarks	Serial N°	Qty.
1	6732718	KIT	enclosure		1
2	6669308	RETAINER			2
3	6674895	RETAINER			4
4	6731108	SEAL	retainer		1
5	6732619	SEAL	panel		2
6	6901774	INSTRUCTIONS			1

www.youfixthis.com

SEAT
(Suspension - Sears)

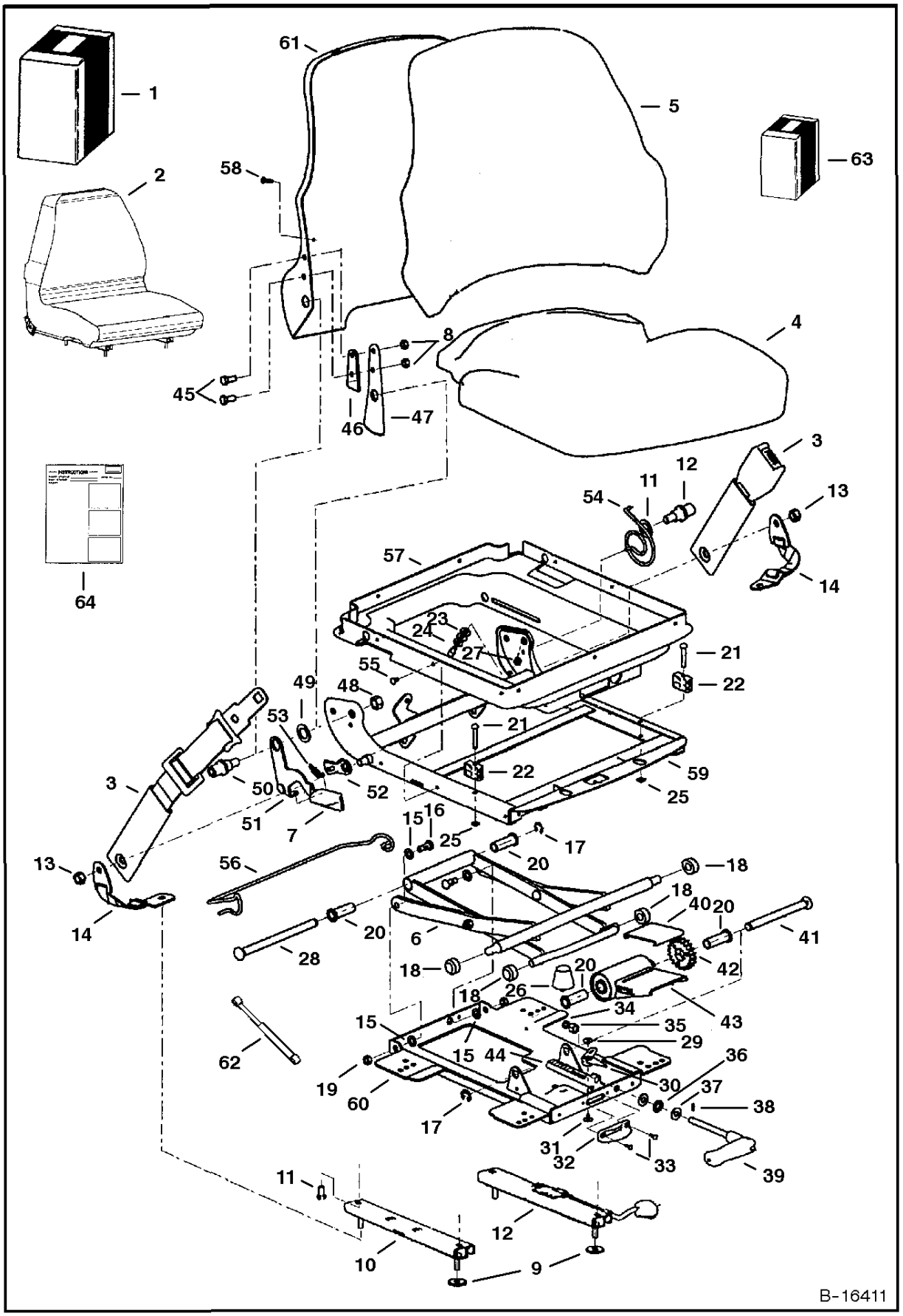

www.youfixthis.com

SEAT

Ref.N°	Part N°	Description	Remarks	Serial N°	Qty.
1	NAP	KIT	vinyl seat - Order Ref. SEAT(2), SEAT(3) & SEAT(64)		1
1	NAP	KIT	fabric seat - Order Ref. SEAT(2), SEAT(3) & SEAT(64)		1
2	6675595	SEAT	vinyl - W/L.H. recliner lever -		1
2	6675596	SEAT	fabric - W/L.H. recliner lever		1
3	6675170	SEAT BELT	lap		1
4	6675320	SEAT	seat - fabric		1
4	6675322	SEAT	seat - vinyl		1
5	6675319	SEAT	backrest - fabric - W/Ref. SEAT(58)		1
5	6675321	SEAT	backrest - vinyl - W/Ref. SEAT(58)		1
6	6675317	SCISSORS			1
7	6675323	KNOB	recliner		1
8	NSS	NUT			6
9	619021	WASHER			4
10	NSS	SLIDE	slave		1
11	NSS	BOLT			4
12	NSS	SLIDE	locking		1
13	NSS	NUT			2
14	NSS	BELT	tether		2
15	NSS	WASHER	cross pivot		4
16	NSS	BOLT	pivot		2
17	NSS	RING	retaining		2
18	NSS	ROLLER			4
19	NSS	NUT			2
20	NSS	BUSHING	wt adjustment		4
21	NSS	RIVET			2
22	NSS	BLOCK	up stop		2
23	NSS	WASHER			3
24	NSS	STOP	armrest		1
25	NSS	PUSHNUT			2
26	NSS	BUMPER			1
27	NSS	NUT			1
28	NSS	SHAFT	bearing		1
29	NSS	RIVET	female snap		1
30	NSS	INDICATOR	weight		1
31	NSS	RIVET	male snap		1
32	NSS	DIAL	weight indicator		1
33	NSS	POP RIVET			2
34	NSS	SPACER			1
35	NSS	NUT			1
36	NSS	BEARING	thrust		1
37	NSS	RACE	thrust		2
38	NSS	SHEAR PIN			1
39	NSS	HANDLE	weight adjustment		1
40	NSS	PLATE	wear		1
41	NSS	SHAFT	torsion		1
42	NSS	DRIVE GEAR			1
43	NSS	BUSHING	torsion		1
44	NSS	RACK	wt adjustment		1
45	NSS	BOLT			2
46	NSS	SPACER	recliner		1
47	NSS	BRACKET	back tilt		1
48	NSS	NUT			2
49	NSS	WASHER	plastic		2
50	NSS	BOSS	back pan pivot		2
51	NSS	HANDLE	recliner (RH)		1

www.youfixthis.com

SEAT

Ref.N°	Part N°	Description	Remarks	Serial N°	Qty.
52	NSS	LATCH	recliner		1
53	NSS	SPRING	extension		1
54	NSS	SPRING	tilt latch		1
55	NSS	CLIP			6
56	NSS	WIRE	boot support		1
57	NSS	SUSPENSION	boot		1
58	NSS	SCREW			2
59	NSS	HOUSING	upper		1
60	NSS	HOUSING	lower		1
61	NSS	BACK PAN			1
62	6676338	GAS SPRING			1
63	6675309	KIT	slides - W/Ref. SEAT(8) - SEAT(12)		1
63	6675310	KIT	tether belt - W/Ref. SEAT(9), SEAT(13) & SEAT(14)		1
63	6675311	KIT	suspension rollers & bearings - W/Ref. SEAT(15) - SEAT(20)		1
63	6675312	KIT	suspension bumpers & stops - W/Ref. SEAT(21) - SEAT(27)		1
63	6675313	KIT	rear tube - W/Ref. SEAT(17), SEAT(20) & SEAT(28)		1
63	6675314	KIT	weight adj. indicator - W/Ref. SEAT(29) - SEAT(33)		1
63	6675315	KIT	weight adj. handle - W/Ref. SEAT(34) - SEAT(39)		1
63	6675316	KIT	weight adj. - W/Ref. SEAT(17), SEAT(20) & SEAT(40) - SEAT(44)		1
63	6675318	KIT	R.H. recliner - W/Ref. SEAT(7), SEAT(8) & SEAT(45) - SEAT(54)		1
63	6676034	KIT	L.H. recliner - W/Ref. SEAT(7), SEAT(8) & SEAT(45) - SEAT(54)		1
63	6675308	KIT	susp. boot - W/Ref. SEAT(55) - SEAT(57)		1
64	6900861	INSTRUCTIONS			1

www.youfixthis.com

SEAT BELT
(Three Point Retractable)

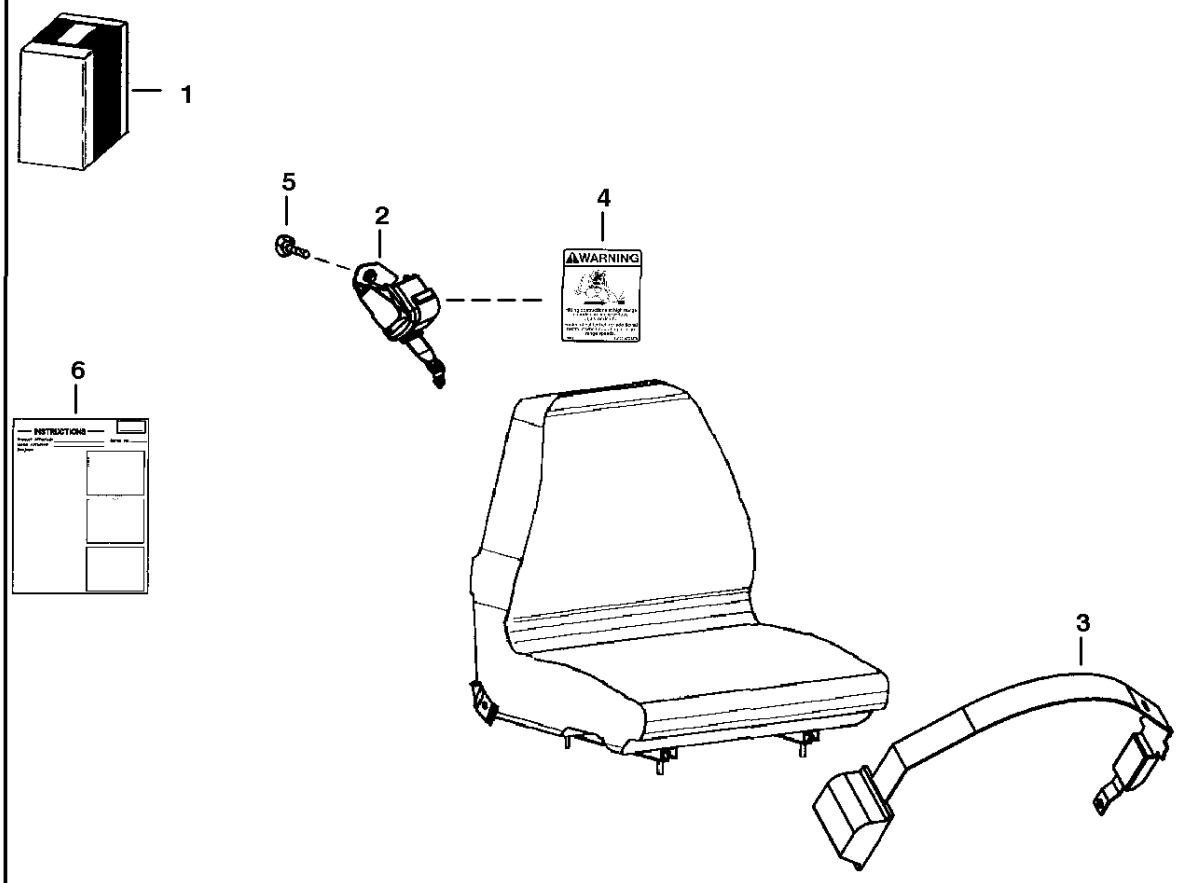

PE-1507

www.youfixthis.com

SEAT BELT

Ref.N°	Part N°	Description	Remarks	Serial N°	Qty.
1	6732219	KIT	three point retractable seat belt - Use W/Sears brand Suspension Seat W/L.H. recliner lever - See Page SEAT(1)		1
2	6674407	SHOULDER BELT			1
3	6679308	SEAT BELT			1
4	6725370	DECAL			1
5	35C-612	BOLT			1
6	6901010	INSTRUCTIONS			1

www.youfixthis.com

SEAT BELT
(3" Wide Retractable)

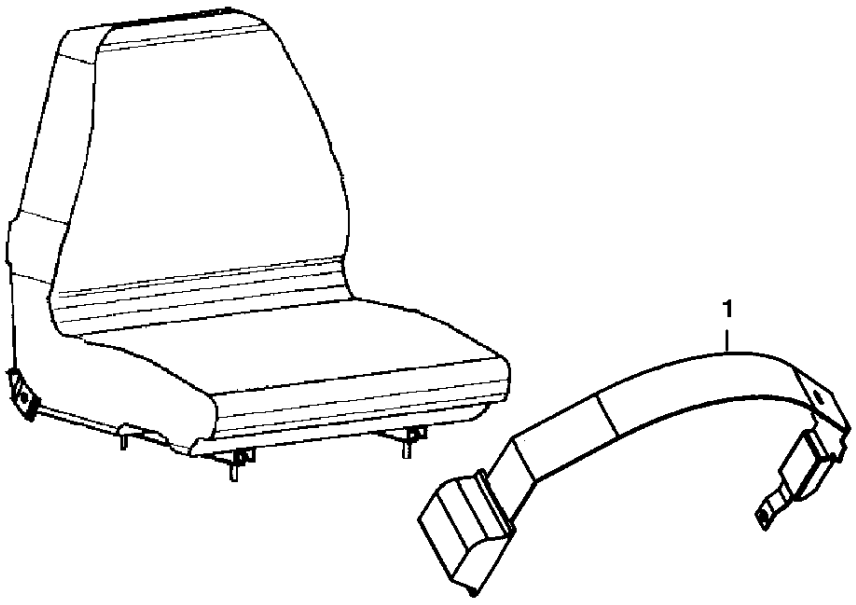

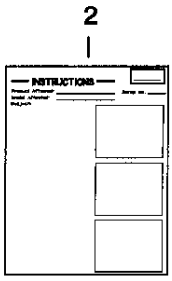

PE-1508

www.youfixthis.com

SEAT BELT

Ref.N°	Part N°	Description	Remarks	Serial N°	Qty.
1	6675562	SEAT BELT	3' wide retractable- Use W/Sears brand suspension seat W/L.H. reliner lever - See Page SEAT(1)		1
2	6901011	INSTRUCTIONS			1

www.youfixthis.com

SOUND REDUCTION HARDHAT

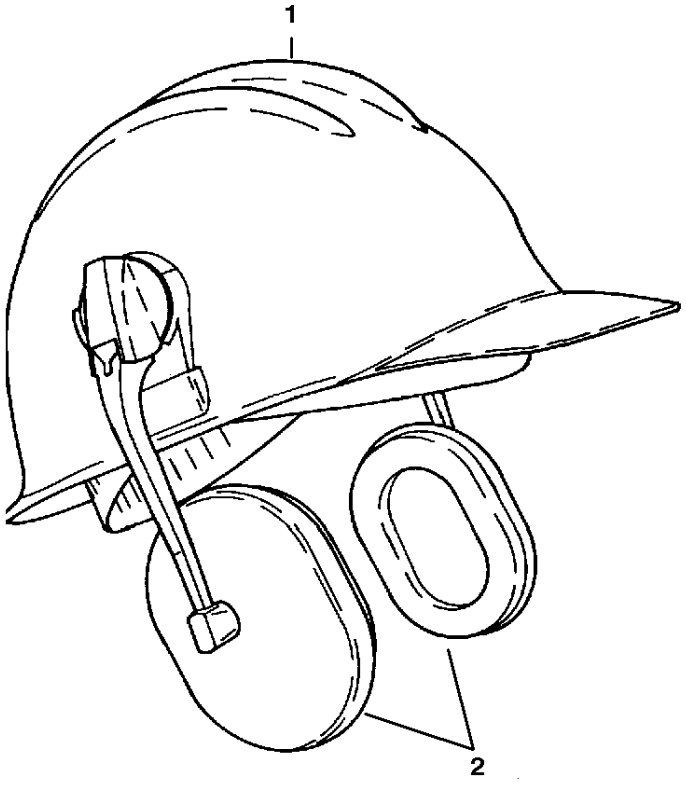

B-3111

www.youfixthis.com

SOUND REDUCTION HARDHAT

Ref.N°	Part N°	Description	Remarks	Serial N°	Qty.
1	6559552	HARDHAT			1
2	6559775	EARMUFFS			1

www.youfixthis.com

STROBE LIGHT

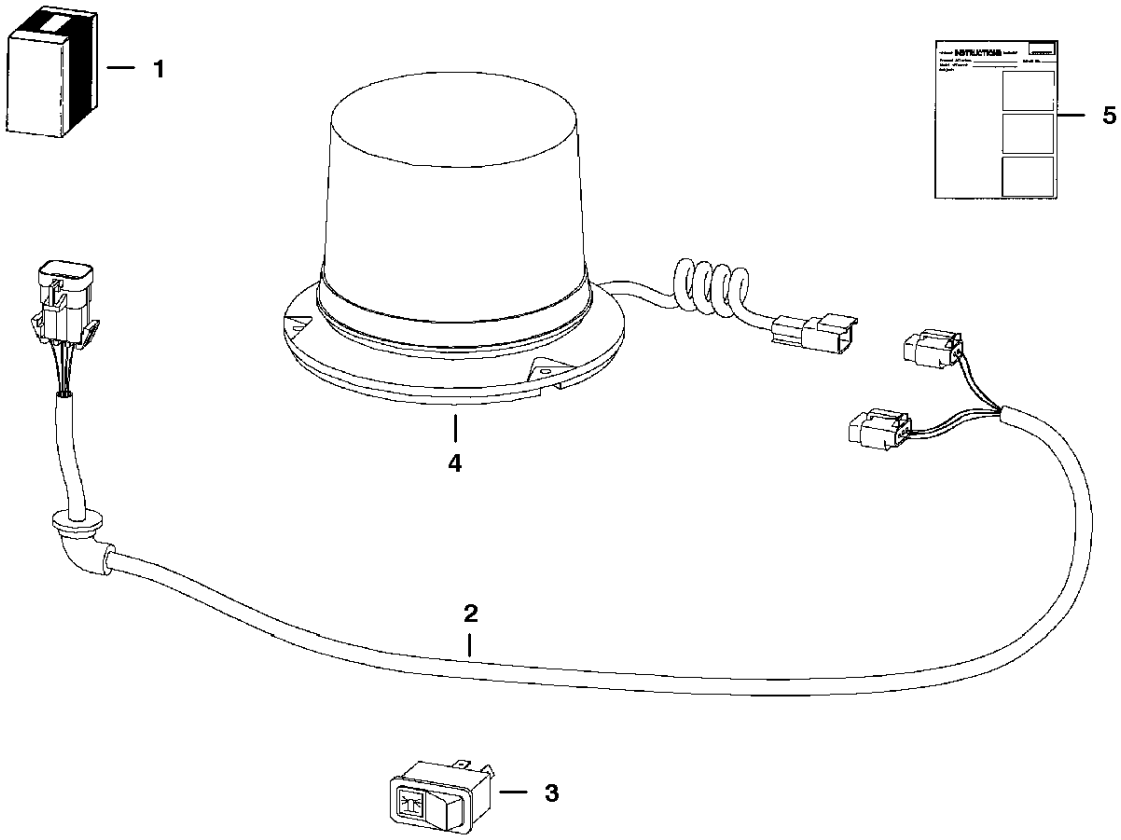

TS-1977

www.youfixthis.com

STROBE LIGHT

Ref.N°	Part N°	Description	Remarks	Serial N°	Qty.
1	6719857	KIT	strobe light - If loader is not equipped W/Deluxe Cab Option, Also Order 6727468 Harness - See Page ACCESSORIES HARNESS(1)		1
2	6718872	HARNESS			1
3	6665317	SWITCH	horizontal		1
3	6668816	SWITCH	vertical		1
4	6675522	STROBE			1
4	6675858	FLASH TUBE			1
5	6900992	INSTRUCTIONS			1

www.youfixthis.com

BULK ITEMS
(SEE NOTE)

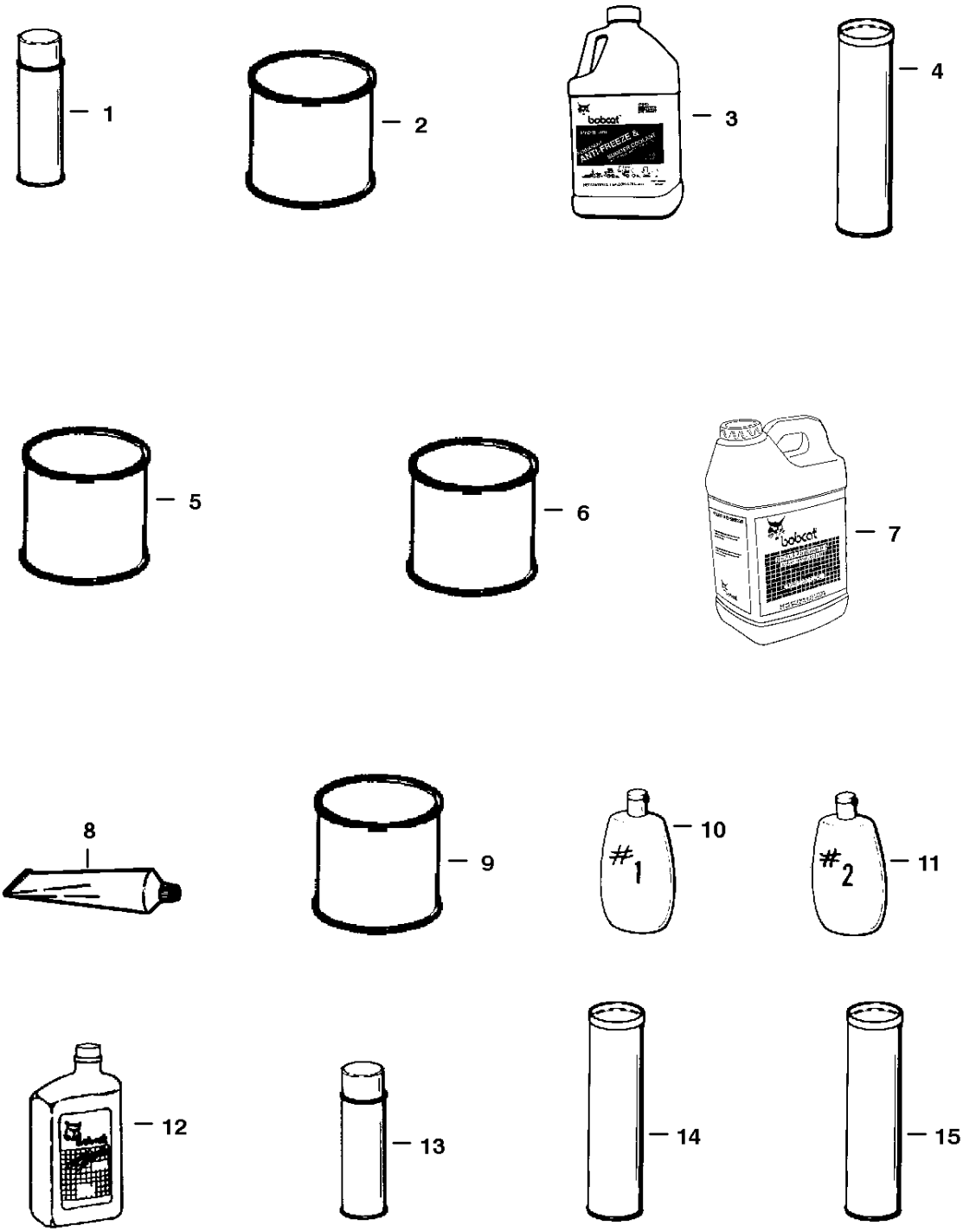

NOTE: Some of these bulk items may not be used on this particular model Bobcat.

NOTE: See Merchandising catalog for more products & information.

NOTE: Paint spray cans are packaged 6 per box.
Motor oil quarts are packaged 12 per box.
Motor oil 5 qt. jugs are packaged 4 per box.
Motor oil 2.5 gal. jugs are packaged 2 per box.

B-16462R

www.youfixthis.com

BULK ITEMS

Ref.N°	Part N°	Description	Remarks	Serial N°	Qty.
1	6902228	PAINT	orange - Spray Can - SEE NOTE		x
1	6902229	PAINT	charcoal - Spray Can-SEE NOTE		x
1	6902230	PAINT	white - Spray Can - SEE NOTE		x
2	6902233	PAINT	orange - Qt.		x
2	6902234	PAINT	charcoal - Qt.		x
2	6902235	PAINT	white - Qt.		x
3	6724094	ANTI-FREEEZE	Gal. - Premixed PG		x
3	6724354	ANTI-FREEZE	Gal. - PG concentrate		x
4	6633583	SEALANT	chaincase covers		x
5	NAP	REDUCER	Gal.		x
6	NAP	PRIMER	Gal.		x
6	6902232	PRIMER	spray can (16 oz)		x
7	6563328	BLACK GOLD	Hydraulic/Hydrostatic Transmission Fluid - 5 Gal. - 2-2 1/2 Gal. Containers		x
7	6722344	BLACK GOLD	Hydraulic/Hydrostatic Transmission Fluid - 5 Gal. Conta iner		x
7	6563330	BLACK GOLD	55 Gal. Drum		x
8	6599360	SEALANT	electrical - 3 oz. tube		x
9	6634393	LUBRICANT	90 wt. gear - pint - For use in cooling fan drive assy.		x
10	6630188	POLISH	window-1 (8 oz.)		x
11	6630189	POLISH	window-2 (8 oz.) - scratch remover		x
12	6657303	MOTOR OIL	30 CE/SG - 1 Qt. - SEE NOTE		x
13	6724559	MOTOR OIL	SAE 30 - 1 Gal.		x
13	6674206	MOTOR OIL	SAE 30 - 2.5 Gal. - SEE NOTE		x
13	6657301	MOTOR OIL	10W30 CE/SG - 1 Qt. -SEE NOTE		x
13	6724557	MOTOR OIL	SAE 10W30 - 1 Gal.		x
13	6674205	MOTOR OIL	SAE 10W30 - 2.5 Gal.-SEE NOTE		x
13	6657299	MOTOR OIL	15W40 CE/SG - 1 Qt. -SEE NOTE		x
13	6724558	MOTOR OIL	SAE 15W40 - 1 Gal.		x
13	6674204	MOTOR OIL	SAE 15W40 - 2.5 Gal.-SEE NOTE		x
14	6675380	ADHESIVE	insulation - spray can		x
15	6658266	GREASE	general purpose		x
16	6599719	GREASE	14.5 oz. cartridge - For fan idler bearing & spring loaded drive idler		x
17	6650407	ADHESIVE	1 oz. tube		x
18	6650388	SEALANT	flange		x
19	6736644	PAINT	orange - .5 oz. spray can		x
19	6736641	PAINT	charcoal - .5 oz. spray can		x
19	6736642	PAINT	white - .5 oz. spray can		x
19	6736645	PAINT	red - .5 oz. spray can		x

www.youfixthis.com

NUMERICAL INDEX

Part No.	Description	Was	Code	Page
225855	SEAL			58, 62, 66, 70
225855	SEAL			54, 58
614142	SLEEVE			276
616783	WASHER			126
619021	WASHER			24, 38, 54, 58, 70, 320, 328, 330, 340
654299	BEARING			110, 114
658128	SNAP RING			110, 114
669863	SNAP RING			110, 114
743332	GREASE ZERK			38
774220	NUT			216, 286
799119	SNAP RING			72
866028	CLAMP			208
872229	WASHER			54, 58, 64
898731	BULB			316
1306637	PIN			70
1313995	STUD			36
1320075	COTTER PIN			314
3974037	PIN			166
3974095	GASKET			160, 190
3974192	BOLT			194
3974260	SCREW			204
3974366	BOLT			202
3974368	GASKET			202
3974381	SEAT			202
3974382	SPRING			202
3974383	SEAT			202
3974384	SHIM			202
3974385	TAPPET			202
3974389	CAP			166
3974393	PIN			166
3974394	PIN			166
3974395	PIN			162, 166
3974432	CAP			172
3974433	CAP			172
3974462	STUD			188
3974514	SPRING			170
3974515	RETAINER			170
3974516	COLLET			170
3974518	CAP			170
3974521	BRACKET			170
3974524	WASHER			170
3974546	KEY			180
3974547	STOPPER			180
3974577	O-RING			160, 176
3974618	CIR-CLIP			178
3974620	CIR-CLIP			178
3974626	SHIM			200
3974671	NUT			176
3974787	RACK			202
3974868	PIN			166
3974882	HOOK			172

Code for disposition of old part number

A — Use up

B — Use on other application (See PNI)

C — File PDR Report with Bobcat Parts Sales

D — Part Number Error

www.youfixthis.com

NUMERICAL INDEX (Cont'd)

Part No.	Description	Was	Code	Page
3974893	SEAT			162
3974894	FLANGE			162
3974916	STUD			186
3974920	SCREW			170
3974928	SCREW			168
3974971	NUT			196
3974972	GASKET			186, 196
3974991	BEARING			182
3974996	COVER			178
3975337	COLLAR			176
3975441	GEAR			166
5289686	PLUG			250
6510470	RING GEAR			150
6511855	FOAM STRIP			146
6512026	BUSHING			70
6513152	SEAL			228, 234, 286
6513495	COTTER PIN			70
6513707	JOINT			200
6515131	TERMINAL			276
6515576	CLAMP			300
6515817	WASHER			24
6516229	O-RING			66
6517516	LIGHT			276
6519178	BUMPER			28
6530859	HOSE			92
6531270	SLEEVE			72
6532127	BOOT			32, 134, 282
6532347	SPACER			36
6532453	RING SEAL			322
6533898	DECAL			314
6535451	HOSE			62
6539645	SPACER			68
6542731	SAFETY TREAD			228, 234
6544654	BUSHING			70
6553411	BUSHING			40
6553709	WASHER			24, 54, 58, 64
6553976	SAFETY TREAD			246
6554100	SAFETY TREAD			246, 320
6554149	CORD			228, 236, 242, 250
6555351	SEAL			242
6557224	DECAL			248
6557291	BALL JOINT			156
6557493	GROMMET			336
6557831	WASHER			98, 302, 304
6557904	FLASHER			268, 276
6558309	WIRE ROPE			246
6558310	SLEEVE			246
6559515	EXIT TAG			242, 250
6559552	HARDHAT			348
6559775	EARMUFFS			348
6560172	COVER			126

Code for disposition of old part number

A — Use up

B — Use on other application (See PNI)

C — File PDR Report with Bobcat Parts Sales

D — Part Number Error

www.youfixthis.com

NUMERICAL INDEX (Cont'd)

Part No.	Description	Was	Code	Page
6560573	DECAL			248
6560633	DAMPENER			24
6561383	DECAL			246
6562018	SPRING			38
6562602	BUSHING			24
6563328	FLUID			2, 10, 352
6563330	FLUID			2, 10, 352
6563445	HOSE			154
6563914	WASHER			70
6564343	BUSHING			156
6564452	GRIP			34, 156
6564654	PIN			70
6564657	PIN			70, 212
6565170	CABLE			126
6565200	DECAL			248
6565990	DECAL			248
6567743	PIN			24, 280
6567827	ANGLE			314
6567838	PIN			314
6567962	WASHER			156
6569203	CLAMP			126, 252
6569219	SCREEN			40
6576033	WASHER			150
6576261	COVER			156
6576262	MOUNT			156
6576280	BOLT			126, 252
6576302	BAR			70
6577058	PIN			98
6577382	SPACER			144
6577545	GROMMET			216, 310
6577690	TUBE			74, 78, 90
6577754	DECAL			248
6577821	HOSE			42
6577822	HOSE			42, 146
6577954	PIN			36
6577961	GROMMET			32, 70
6578139	LEVER			222
6578140	LEVER			222
6578169	HOSE			40
6578172	HOSE			40, 90, 146
6578268	BELLCRANK			156
6578278	PAD			40
6578284	SHIM			158
6578368	DECAL			248
6578870	CLAMP			330
6579385	DECAL			270
6579406	INSULATION			270
6579613	STOP			24, 144
6579641	HOUSING			158
6586542	HEAD			322
6586543	PISTON			322

Code for disposition of old part number

A — Use up

B — Use on other application (See PNI)

C — File PDR Report with Bobcat Parts Sales

D — Part Number Error

www.youfixthis.com

NUMERICAL INDEX (Cont'd)

Part No.	Description	Was	Code	Page
6586918	SCREW			72
6587458	KEY			40
6587523	WASHER			72, 78
6587575	ADAPTER			72
6587580	SPRING			72, 78
6587633	BONNET			72, 78
6587763	BOOT			72, 76, 138
6588074	SPOOL			72, 76
6588781	END CAP			72, 76
6589226	BONNET			72
6589564	RETAINER			72, 76
6589565	RETAINER			76
6592098	WASHER			72
6592100	COLLAR			72, 78
6592105	BALL			72
6592107	SPRING			72
6592109	ADAPTER			72, 78
6592115	SEAT			72, 76
6592116	NUT			72, 76
6592117	SPRING			72, 76
6592506	CLAMP			64
6592720	PLUG			74
6595014	DECAL			248
6595663	BUSHING			72, 76
6595951	SLEEVE			74, 78
6596332	SPRING			74, 78
6596807	PLUG			72
6598098	PIN			196
6598099	KEY			178
6598102	COCK			200
6598116	PLUG			172
6598146	PIPE			204
6598155	PULLEY			182
6598156	STUD			172
6598158	CIR-CLIP			178
6598187	PLUG			166
6598275	BOLT			150
6598362	CARTRIDGE			2, 208
6598492	CARTRIDGE			2, 208
6599084	SCREW			202
6599118	GASKET			200
6599119	GASKET			202
6599136	CLIP			204
6599360	SEALANT			352
6599365	KIT			122
6599719	GREASE			150, 352
6599741	WASHER			98
6599744	ROD END			98, 132, 254
6599931	ALARM			216
6610510	TIE			90, 250, 284, 310

Code for disposition of old part number

A — Use up

B — Use on other application (See PNI)

C — File PDR Report with Bobcat Parts Sales

D — Part Number Error

www.youfixthis.com

NUMERICAL INDEX (Cont'd)

Part No.	Description	Was	Code	Page
6624289	TIE			54, 58, 64, 84, 128, 144, 212, 258, 260, 262, 268, 298, 302, 304, 320
6626631	CLAMP			144
6628571	VALVE			62, 72, 80
6630188	POLISH			352
6630189	POLISH			352
6630207	RIVET			32
6630945	WASHER			156
6631046	GASKET			160, 174
6631418	PIN			24, 28, 280
6631561	NUT			226
6631664	SEAL			176
6632279	SEAL KIT			74, 78
6633583	SEALANT			352
6634393	LUBRICANT			6, 158, 352
6640690	PIN			130, 134, 282, 284, 310
6640692	CONNECTOR			130, 134, 282, 284
6640694	LOCK			130, 134, 282, 284
6640699	CONNECTOR			134, 282, 286, 300, 310
6640700	LOCK			134, 282, 310
6641174	CONNECTOR			300
6641176	SEAL			130, 134, 282, 284, 310
6641179	CONNECTOR			130, 134, 282, 310
6641180	LOCK			130, 134, 282, 310
6645080	O-RING			114
6645081	O-RING			110
6645086	PLUG			110, 114
6645090	SEAL			110
6645812	BLEEDER			46
6646383	CONNECTOR			128
6646582	PLUG			134, 282, 284
6646627	BEARING			158
6646705	MOULDING			146
6646781	SWITCH			216
6647777	PIN			226
6647778	CAP			226
6647780	PLUG			226
6647783	LOAD CHECK			226
6647784	PLUG			226
6647785	SPRING			226
6647786	SEAL KIT			226
6648293	SCREW			226
6648294	SPRING			226
6648307	CONNECTOR			284, 302, 304
6648308	CONNECTOR			302, 304
6648330	TERMINAL			128
6648348	PLUG			32
6649244	BALL STUD			228, 234
6649245	RETAINER			228, 234
6649481	BULB			316
6649551	DAMPENER			98, 132, 254

Code for disposition of old part number

A — Use up

B — Use on other application (See PNI)

C — File PDR Report with Bobcat Parts Sales

D — Part Number Error

www.youfixthis.com

NUMERICAL INDEX (Cont'd)

Part No.	Description	Was	Code	Page
6649949	PLUG			250
6650388	SEALANT			352
6650407	ADHESIVE			146, 352
6650627	PLATE			110, 114
6650629	PIN			110, 114
6650630	RETAINER			110, 114
6650634	GASKET			110, 114
6650635	BEARING			110, 114
6650636	PIN			110, 114
6650637	BOLT			110, 114
6650646	O-RING			110
6650647	O-RING			110
6650648	PLUG			110
6650652	POPPET			110
6650668	BOLT			110, 114
6650675	COUPLER			110
6651489	COVER			184
6651709	SEAL			38
6651934	RIVET			178
6652018	BOLT			114
6652574	PLUG			166
6652575	PLUG			166
6652580	BOLT			166, 182
6652633	PLUG			176, 180
6652652	SPRING			162
6652653	CAP			168
6652670	STUD			184, 200
6652682	BOLT			198
6652688	CLAMP			204
6652689	CLAMP			204
6652748	CLAMP			164
6652762	BOLT			182
6652764	STUD			192, 196
6652792	NUT			172, 182, 184, 188
6652918	NUT			154, 264
6653561	NUT			196, 198
6653702	SEAL			158
6653757	SNAP RING			158
6653758	SNAP RING			158
6653798	BOLT			174
6653807	BOLT			162
6653808	BOLT			162
6653821	BOLT			176
6653830	SEAL			170
6653833	SPRING			170
6653859	SLEEVE			176
6653861	SLINGER			176
6653888	NUT			166
6653894	SLEEVE			202
6653916	WASHER			194
6653946	STUD			182

Code for disposition of old part number

A — Use up

B — Use on other application (See PNI)

C — File PDR Report with Bobcat Parts Sales

D — Part Number Error

www.youfixthis.com

NUMERICAL INDEX (Cont'd)

Part No.	Description	Was	Code	Page
6654139	MOULDING			132, 154, 282
6654170	STRIKER BOLT			234
6654718	CLIP			204
6654806	FUSE			128
6655154	GUIDE			172
6655155	SEAT			170
6655156	SEAT			170
6655158	BOLT			172
6655160	PLUG			172
6655161	WASHER			172
6655179	PIN			176
6655180	CIR-CLIP			176
6655183	BEARING			176
6655195	BOLT			166
6655197	PIPE ASSY			200
6655201	ELEMENT			202
6655202	VALVE			202
6655203	SPRING			202
6655204	HOLDER			202
6655205	PLATE ASSY			202
6655206	BOLT			202
6655207	PLATE			202
6655209	PLATE			202
6655210	SHIM			200
6655213	SLEEVE			178
6655214	CASE			178
6655215	BALL			178
6655216	FUEL PUMP			200
6655218	GASKET			206
6655223	NUT			196
6655236	BEARING			176
6655237	BEARING			176
6655384	CAMSHAFT			180
6655498	BOLT			176
6655518	O-RING			202
6655752	GREASE ZERK			46
6655781	BEARING			150
6655870	ARM			170
6655872	HEAT SEAL			206
6655873	PIECE			206
6655874	CLIP			200
6655880	PIPE			168
6655893	STUD			186
6655938	VALVE			208
6656126	WASHER			206
6656127	WASHER			206
6656128	WASHER			206
6656129	WASHER			206
6656130	WASHER			206
6656131	WASHER			206
6656132	WASHER			206

Code for disposition of old part number

A — Use up

B — Use on other application (See PNI)

C — File PDR Report with Bobcat Parts Sales

D — Part Number Error

www.youfixthis.com

NUMERICAL INDEX (Cont'd)

Part No.	Description	Was	Code	Page
6656155	COVER			320
6657028	O-RING			110, 116
6657067	COVER			112, 114
6657068	COVER			110, 114
6657299	OIL			2, 4, 6, 352
6657301	OIL			2, 4, 6, 352
6657303	OIL			2, 4, 6, 352
6657376	ELBOW			144
6657415	BOLT			184
6657416	BOLT			188
6657422	O-RING			162, 164
6657460	NUT			206
6657463	WASHER			206
6657663	PLUG			166
6657719	PLUG			32, 242, 250
6657734	PUMP			40
6657742	KIT			206
6658180	PLUG			40
6658266	GREASE			6, 352
6658301	SPRING			112
6658536	SNAP RING			150
6658847	SNAP RING			150
6660260	SWITCH			122
6660644	CAP			72
6660814	O-RING			110, 114
6660995	RING			150
6661022	FILTER			10, 90, 120
6661062	PLUG			148
6661112	SEAL			152
6661114	CAP			40
6661150	SWITCH			268
6661213	CLAMP			40
6661242	COVER			208
6661243	WING NUT			208
6661244	WASHER			208
6661248	ELEMENT			2, 8, 94, 122
6661353	LIGHT ASSY			316
6661481	O-RING			112
6661696	CAP			40
6661785	MOUNT			154
6661787	WASHER			154, 264
6661807	KIT			120
6661808	KIT			120
6662848	CAP			74, 78
6662997	PULLEY			150
6664035	CAP			262
6664036	NUT			262
6664037	WASHER			262
6664040	PIN			262
6664065	WASHER			336
6664085	BUSHING			232, 242, 250, 336

Code for disposition of old part number

A — Use up

B — Use on other application (See PNI)

C — File PDR Report with Bobcat Parts Sales

D — Part Number Error

www.youfixthis.com

NUMERICAL INDEX (Cont'd)

Part No.	Description	Was	Code	Page
6664097	COVER			336
6664103	NUT			336
6664209	SEAL			152
6664221	RETAINER			250
6664223	OUTLET			250
6664224	CAP			250
6664554	PUMP			230
6664566	SCREW			336
6665000	CLIP			134, 230, 282
6665086	SEAL			68
6665314	PLUG			124, 250
6665316	SWITCH			276
6665317	SWITCH			350
6665321	RIVET			134, 228, 282
6665322	RIVET			134, 228, 282
6665367	BULB			250
6665371	SWITCH			208
6665568	SEAL			228, 236
6665569	WASHER			72, 76
6665570	RING			72, 76
6665602	MOTOR			336
6665701	BUSHING			70
6665707	SWITCH			228
6665727	LIGHT			268
6665728	LIGHT			268
6665729	LIGHT			268
6665839	BOLT			70
6665846	SEAL			76
6665860	KIT			268
6665915	SIGHT GAUGE			90
6666338	WASHER			110, 114
6666339	BOLT			114
6666341	VALVE			60, 224, 226
6666542	SEAL			322
6666543	SEAL			66
6666568	BULB			266
6666571	BULB			218
6666766	GROMMET			230
6666782	GASKET			160, 166
6666802	GASKET			160, 184
6666814	GASKET			176
6667144	CONNECTOR			130, 134, 282
6667145	LOCK			130, 282
6667176	PLUG			226
6667201	SPACER			336
6667323	SEAL			322
6667325	SEAL			66
6667326	SEAL			68
6667352	ELEMENT			2, 6, 40
6667353	FILTER ASSY			40
6667418	PLUG			166

Code for disposition of old part number

A — Use up

B — Use on other application (See PNI)

C — File PDR Report with Bobcat Parts Sales

D — Part Number Error

www.youfixthis.com

NUMERICAL INDEX (Cont'd)

Part No.	Description	Was	Code	Page
6667419	WASHER			194
6667420	BOLT			174, 178
6667421	BOLT			172
6667422	WASHER			162, 170, 172, 182, 184, 188
6667428	TAPPET			180
6667433	CIR-CLIP			180
6667451	WASHER			170
6667457	CLAMP			204
6667461	PIN			170
6667533	COVER			84
6667549	VALVE			72, 76
6667569	CONNECTOR			262
6667676	COVER			226
6667677	O-RING			226
6667680	SNAP RING			226
6667687	STEM			80
6667803	QUICK COUPLER			278, 328, 330
6667804	QUICK COUPLER			278, 328, 330
6667844	VALVE			62, 82
6667887	BULB			266
6668004	SEAL			46
6668007	SCREW			266
6668010	LENS			266
6668104	MOUNT			264
6668114	BEARING			150
6668742	SWITCH			250
6668765	VALVE			80
6668791	ORIFICE			62, 74, 80
6668815	SWITCH			268, 276
6668816	SWITCH			218, 268, 350
6668820	NUT			80, 96
6668879	DECAL			216
6668881	CORD			220
6668953	BRACKET			30
6669057	CHECK VALVE			80
6669085	VALVE			82
6669087	SEAL KIT			82
6669089	TRACK			30
6669091	CLIP			250, 286, 300
6669135	SEAT			26, 28, 30
6669203	VALVE			278
6669224	BOLT			250, 286, 300
6669308	RETAINER			338
6669384	SPEEDY SLEEVE			158
6669402	HOUSING			112
6669403	HOUSING			114
6669405	END CAP			114
6669406	END PLATE			110
6669407	SHAFT			114
6669409	WASHER			110
6669410	SHIM KIT			112

Code for disposition of old part number

A — Use up

B — Use on other application (See PNI)

C — File PDR Report with Bobcat Parts Sales

D — Part Number Error

www.youfixthis.com

NUMERICAL INDEX (Cont'd)

Part No.	Description	Was	Code	Page
6669411	BEARING			110, 114
6669549	SOCKET			84, 256, 258, 262
6669657	O-RING			278, 328, 330
6669732	SEAL KIT			80
6669733	SEAL KIT			80
6669734	SEAL KIT			80
6670160	CUSHION			30
6670251	BATTERY			252
6670284	LIGHT			316
6670287	COVER			34
6670312	SOLENOID			268, 286
6670472	NUT			204
6670634	SEAL KIT			224
6670682	BEARING			150
6670684	CHECK VALVE			112, 116
6670706	CONNECTOR			134, 282
6670707	CONNECTOR			134, 284
6670709	CONNECTOR			284
6670710	LOCK			134, 282
6670711	LOCK			134, 136, 284
6670714	PIN			282
6670715	PIN			134, 136, 284
6670726	LOCK			334
6670759	SEAL			234
6670769	GASKET			160, 204
6670785	PIPE			182
6670831	ELBOW			94
6671025	COIL			80
6671027	LIGHT			266
6671106	HORN			268
6671509	COUPLER			114
6671510	RELIEF VALVE			112, 116
6671512	BLOCK ASSY			112, 114
6671513	SWASH PLATE			110, 114
6671516	SEAL KIT			112, 116
6671518	BOLT			110
6671527	NUT			224
6672190	VALVE			164, 166
6672272	WASHER			316
6672273	SCREW			316
6672274	SCREW			316
6672275	GASKET			316
6672276	LENS			316
6672277	BRACKET			316
6672279	MOUNT			316
6672338	O-RING			46
6672342	WASHER			46
6672360	PLUG			162
6672471	SOLENOID			80
6672486	SEALANT			158
6672491	CAP			148

Code for disposition of old part number

A — Use up

B — Use on other application (See PNI)

C — File PDR Report with Bobcat Parts Sales

D — Part Number Error

www.youfixthis.com

NUMERICAL INDEX (Cont'd)

Part No.	Description	Was	Code	Page
6672492	RETAINER			216
6672515	SEAL KIT			86
6672756	SEAL KIT			96
6672863	SOLENOID			224
6673200	FUSE BLOCK			128
6673710	BEARING			98, 132
6673789	BEARING			98, 132
6673828	HOSE			94
6673881	SEAL			110, 116
6674000	CLAMP			130
6674013	TRACK			30
6674037	SPRING			108
6674184	PISTON			108
6674194	WASHER			104
6674202	NUT			124
6674204	OIL			2, 4, 6, 352
6674205	OIL			2, 4, 6, 352
6674206	OIL			2, 4, 6, 352
6674228	PANEL			286, 300
6674231	VENT			286, 300
6674235	RECEIVER DRIER			300, 304
6674315	SWITCH			126
6674316	SWITCH			126
6674344	SPRING			102
6674345	PLUG			102
6674400	HOUSING			316
6674401	HOUSING			316
6674402	MOUNT			316
6674403	COVER			26, 124
6674407	SHOULDER BELT			344
6674519	WINDOW			242
6674520	WINDOW			242
6674521	WINDOW			242
6674522	WINDOW			242
6674666	LATCH			228, 234
6674667	HANDLE			228, 234
6674687	BATTERY			2, 126
6674713	DISC			104
6674714	DISC			104
6674722	SHIM			104
6674723	SHIM			104
6674734	BUSHING			104
6674741	KNOB			242
6674798	REPAIR KIT			94
6674799	ADAPTER			84, 258
6674802	CONNECTOR			84, 256, 258, 262
6674808	SPOOL			72
6674809	SPOOL			72
6674810	SPOOL			72
6674814	SPOOL			72
6674815	SPOOL			72

Code for disposition of old part number

A — Use up

B — Use on other application (See PNI)

C — File PDR Report with Bobcat Parts Sales

D — Part Number Error

www.youfixthis.com

NUMERICAL INDEX (Cont'd)

Part No.	Description	Was	Code	Page
6674816	SPOOL			72
6674895	RETAINER			250, 338
6674905	HOSE			302
6674993	CAP			230
6675020	BOLT			102
6675026	CAP			84, 256, 258, 262
6675033	INSERT			24, 26, 124
6675064	TERMINAL			268
6675074	SEAT BELT			26
6675075	HOSE			302, 304
6675093	O-RING			102, 108
6675099	HORN			310
6675134	GAS SPRING			24
6675135	GAS SPRING			24
6675136	GAS SPRING			24
6675140	SNAP RING			24
6675154	HOLDER			126
6675155	FUSE			126
6675170	SEAT BELT			340
6675171	CLAMP			124, 128
6675172	BRACKET			286, 300
6675173	ACTUATOR			286, 300
6675174	BODY			286, 300
6675175	BRACKET			286, 300
6675176	SWITCH			286, 300
6675177	KNOB			286, 300
6675179	FLANGE			286, 300
6675181	PLUG			286, 300
6675189	PIN			108
6675212	RETAINER			242
6675221	BOLT			154
6675227	SEAL			108
6675228	SEAL			108
6675229	SEAL			108
6675257	ROD END			24
6675273	WASHER			34
6675281	MOUNT			262
6675298	COUPLER			230
6675299	COUPLER			230
6675308	KIT			342
6675309	KIT			342
6675310	KIT			342
6675311	KIT			342
6675312	KIT			342
6675313	KIT			342
6675314	KIT			342
6675315	KIT			342
6675316	KIT			342
6675317	SCISSORS			340
6675318	KIT			342
6675319	SEAT			340

Code for disposition of old part number

A — Use up

B — Use on other application (See PNI)

C — File PDR Report with Bobcat Parts Sales

D — Part Number Error

www.youfixthis.com

NUMERICAL INDEX (Cont'd)

Part No.	Description	Was	Code	Page
6675320	SEAT			340
6675321	SEAT			340
6675322	SEAT			340
6675323	KNOB			340
6675336	BULB			316
6675339	VALVE PLATE			114
6675340	VALVE PLATE			110
6675342	PIN			110, 114
6675378	CLIP			230
6675380	ADHESIVE			352
6675387	EXTRUSION			242, 250
6675497	BLOWER			290, 292, 308
6675503	HOUSING			292
6675504	RING			292
6675505	BLOWER WHEEL			292
6675506	MOUNT			292
6675507	COVER			292
6675509	MOTOR			292
6675510	CLAMP			290, 308
6675511	DRAIN VALVE			290, 308
6675512	CLAMP			290, 308
6675513	GROMMET			290, 308
6675517	FILTER			2, 4, 6, 162
6675522	STROBE			350
6675523	BEACON			218, 268
6675524	CLIP			26
6675534	BLOCK VALVE			300, 304, 308
6675538	O-RING			306, 308
6675544	VINYL CAB			238
6675545	GROMMET			242, 250
6675558	SEAL			228, 234
6675562	SEAT BELT			346
6675581	EXTINGUISHER			272
6675590	DOOR			238
6675591	HINGE KIT			238
6675595	SEAT			340
6675596	SEAT			340
6675611	SEAL			294
6675618	CLAMP			184, 190
6675622	BOLT			190
6675623	GASKET			190
6675636	GASKET			188
6675637	GASKET			188
6675681	ADAPTER			162
6675683	PIN			190
6675684	VALVE			300
6675731	COIL			96
6675734	TIE			144
6675779	SWITCH			302, 304
6675824	O-RING			304
6675825	O-RING			306

Code for disposition of old part number

A — Use up

B — Use on other application (See PNI)

C — File PDR Report with Bobcat Parts Sales

D — Part Number Error

www.youfixthis.com

NUMERICAL INDEX (Cont'd)

Part No.	Description	Was	Code	Page
6675833	SEAL			242
6675835	TURN SIGNAL			276
6675837	BELT			6, 154
6675838	BUSHING			154
6675846	POTENTIOMETER			286, 300
6675858	FLASH TUBE			350
6675863	QUAD RING			102
6675864	QUAD RING			102
6675866	SPOOL			102
6675869	O-RING			102
6675964	GASKET			190
6675982	PLUG			124
6675999	SWITCH			336
6676000	TEE			336
6676001	ARM			336
6676002	BLADE			336
6676003	HOSE			228, 232, 336
6676028	NOZZLE			336
6676029	SOLENOID			132, 134, 138, 212
6676034	KIT			342
6676062	VALVE			304
6676338	GAS SPRING			342
6676400	CONNECTOR			128
6676407	HOSE			92
6676408	HOSE			92
6676499	GROMMET			228
6676500	ELBOW			228
6676516	NUT			286
6676536	SWITCH			124
6676537	SWITCH			132, 212
6676538	INSULATION			296, 304
6676539	CLIP			290, 304, 308
6676562	HEATER			290, 300
6676604	COVER			296
6676606	SPACER			296
6676618	CLIP			290, 308
6676623	HOSE			300
6676640	SEAL			136, 284
6676653	SCREW			296
6676732	SWITCH			320
6676870	CONNECTOR			136, 284
6676872	TURN SIGNAL			268, 276
6676917	ELBOW			230
6676918	HOSE			228
6676952	PLUG			104
6676969	FILTER ASSY			122
6676984	BRACKET			304, 308
6677105	COVER			304, 308
6677108	HOUSING			290, 308
6677111	SEAL			290, 294, 308
6677113	TIE			308

Code for disposition of old part number

A — Use up

B — Use on other application (See PNI)

C — File PDR Report with Bobcat Parts Sales

D — Part Number Error

www.youfixthis.com

NUMERICAL INDEX (Cont'd)

Part No.	Description	Was	Code	Page
6677115	RECEPTACLE			290, 308
6677116	RETAINER			290, 308
6677117	SCREW			290, 308
6677118	SCREW			290, 308
6677119	SCREW			290, 308
6677120	COVER			290
6677122	CAP			304
6677136	SOCKET			84, 256, 258, 262
6677192	MAGNET			230
6677193	RIVET			230
6677194	STRIKER BOLT			228
6677198	CAP			242
6677203	TUBE			174
6677204	TRACK			44
6677216	CONNECTOR			128
6677363	CLAMP			148
6677364	CONNECTOR			284
6677383	SOLENOID			74
6677485	SPACER			140
6677486	NUT			140
6677487	COVER			140
6677488	RECTIFER			140
6677489	REGULATOR			140
6677490	BRACKET			140
6677491	BRACKET			140
6677492	ROTOR			140
6677493	STATOR			140
6677494	BOLT			140
6677495	SPACER			140
6677496	PULLEY			140
6677497	NUT			140
6677504	COVER			290, 308
6677579	SCREW			296
6677647	PUMP			92
6677817	BOLT			140
6677818	BEARING			140
6677819	RETAINER			140
6677820	BEARING			140
6677828	SEAL			104
6677833	ARM ASSY			228, 232
6677834	BLADE			232
6677836	COVER			232
6677837	BOLT			232
6677839	GASKET			232
6677840	SWIVEL ASSY			232
6677841	WASHER			232
6677842	NUT			232
6677843	NUT			232
6677844	NUT			232
6677845	ADAPTER			232
6677847	GROMMET			232

Code for disposition of old part number

A — Use up

B — Use on other application (See PNI)

C — File PDR Report with Bobcat Parts Sales

D — Part Number Error

www.youfixthis.com

NUMERICAL INDEX (Cont'd)

Part No.	Description	Was	Code	Page
6677849	RING			106
6677973	PLUG			242
6677983	FILTER			286
6678076	BLOCK ASSY			64
6678113	BOLT			104
6678114	O-RING			104
6678115	PLUG			108
6678116	WASHER			106
6678117	WASHER			106
6678118	WASHER			106
6678119	WASHER			106
6678120	WASHER			106
6678121	WASHER			104
6678122	SHAFT			104
6678123	POPPET			102
6678124	SPRING			102
6678125	SPRING			102
6678126	HOUSING			108
6678127	COVER			104
6678128	HOUSING			104
6678132	CAM			102
6678133	SNAP RING			104
6678135	SEAL			106
6678137	WASHER			102
6678138	O-RING			104
6678139	WASHER			104
6678140	CASE			102, 108
6678141	BRAKE			102, 104
6678142	SEAL KIT			102
6678145	ROLL PIN			104
6678146	ROLL PIN			104
6678149	PLUG			102, 108
6678151	COVER			290, 308
6678152	FLANGE			290, 308
6678198	BOLT			232
6678205	ALTERNATOR			140, 154
6678207	FILTER			286, 300
6678239	VALVE			96
6678283	HANDLE			242
6678292	GAS SPRING			280
6678465	BEARING			106
6678548	SOCKET			228, 234
6678552	VALVE			74
6678574	VALVE			72, 76
6678666	MOUNT			128, 144
6678667	MOUNT			126
6678668	STRAP			126
6678669	STRAP			126, 252
6678674	CONTROLLER			126
6678675	CONTROLLER			260, 262
6678680	PANEL			124

Code for disposition of old part number

A — Use up

B — Use on other application (See PNI)

C — File PDR Report with Bobcat Parts Sales

D — Part Number Error

www.youfixthis.com

NUMERICAL INDEX (Cont'd)

Part No.	Description	Was	Code	Page
6678681	PANEL			124
6678733	SEAL KIT			88
6678739	WASHER			232
6678891	COIL			76
6678893	SOLENOID			76
6678920	NOZZLE			228, 232
6678921	GUIDE			232
6678946	FITTING			164, 166
6678959	BOLT			102
6678974	MOUNT			252
6679034	MOUNT			126
6679130	KNOB			36
6679145	CLUTCH			302, 304
6679308	SEAT BELT			344
6679476	MOTOR			228, 232
6679770	STEM			96
6679771	CHECK VALVE			96
6679772	RELIEF VALVE			96
6679773	SOLENOID			96
6679820	SWITCH			128
6679836	KIT			64
6679837	KIT			64
6679838	KIT			64
6679839	KIT			64
6679840	SEAL			64
6679841	SEAL			64
6679842	SWITCH			124
6679845	CROSSMEMBER			124
6679855	BULB			124
6679856	ALARM			124
6679881	SEAL			52
6679882	SEAL			48, 50
6679883	BEARING			52
6679884	BEARING			48, 50
6679917	PUMP			84
6679990	CLIP			24
6679991	SEAL			144
6679994	SEAL			24
6680018	KIT			64
6680019	PLUG			106
6680020	SEAL KIT			64
6680054	ACTUATOR			286
6680161	TRACK			44
6680326	LIGHT			250
6680355	BOOT			142
6680356	BOLT			142
6680358	RING			142
6680359	STOP RING			142
6680360	STOP			142
6680361	SPRING			142
6680362	BALL			142

Code for disposition of old part number

A — Use up

B — Use on other application (See PNI)

C — File PDR Report with Bobcat Parts Sales

D — Part Number Error

www.youfixthis.com

NUMERICAL INDEX (Cont'd)

Part No.	Description	Was	Code	Page
6680363	WASHER			142
6680365	SHAFT			142
6680366	GEAR			142
6680367	GEAR			142
6680368	STOP RING			142
6680369	SEAL			142
6680371	LEVER			142
6680372	BRACKET			142
6680373	YOKE			142
6680374	ARMATURE			142
6680375	SHAFT			142
6680376	SWITCH			142
6680377	HOLDER			142
6680378	WASHER			142
6680379	SEAL			142
6680380	SEAL			142
6680383	BOLT			142
6680384	BOLT			142
6680388	BRACKET			142
6680389	BRACKET			142
6680390	GEAR			142
6680410	CONTROLLER			132
6680414	HANDLE ASSY			310
6680415	HANDLE			130
6680417	HANDLE			134, 282
6680418	HANDLE ASSY			130
6680419	HANDLE ASSY			130
6680429	SENSOR			28
6680436	SENSOR			126
6680441	BUSHING			28
6680443	BUSHING			28
6680447	DECAL			130
6680462	HANDLE			134
6680468	MOUNT			136, 212
6680469	SPACER			134, 212, 282
6680470	SPRING			134, 212
6680471	COVER			134, 282
6680477	STRAP			134, 212
6680480	CHANNEL			134, 282
6680481	CHANNEL			134, 282
6680550	CLAMP			188
6680564	STUD			188
6680567	PLUG			174
6680628	CLAMP			198
6680639	CAP			166
6680663	NUT			200
6680685	BOLT			170
6680692	COVER			168
6680706	BOLT			194
6680779	GASKET			204
6680801	BOLT			200

Code for disposition of old part number

A — Use up

B — Use on other application (See PNI)

C — File PDR Report with Bobcat Parts Sales

D — Part Number Error

www.youfixthis.com

NUMERICAL INDEX (Cont'd)

Part No.	Description	Was	Code	Page
6680821	CIR-CLIP			198
6680830	BOLT			194
6680970	BREATHER			144
6681462	ELBOW			40
6681487	O-RING			332
6681489	O-RING			332
6681492	NUT			86
6681493	MOTOR			102
6681581	SEAL KIT			118
6681594	PUMP			88
6681602	PUMP			118
6681614	KNOB			242, 250, 286, 300
6681868	HOSE			320
6681932	SHIM			74
6681944	HOSE			94
6681945	ELBOW			94
6681980	CASE			102, 106
6681981	ROTOR			102
6681982	SHAFT			106
6681983	CASE			106
6681984	BUSHING			106
6681985	BEARING			106
6681986	O-RING			106
6681987	SEAL			106
6681988	PISTON			104
6682442	BEARING			150
6682498	OIL PUMP			166
6682500	OIL FILTER			174
6682515	SHIM			200
6682532	NUT			186
6682546	OIL			102, 106
6682586	GAS SPRING			228, 234
6683001	HVAC ASSY			300, 308
6683003	COIL			304, 308
6683004	THERMOSTAT			304, 308
6683159	BOLT			184
6683251	VALVE			328, 332
6683274	SEAL			72
6683395	PANEL			124, 250
6683819	VALVE			84, 86
6683820	PIPE			148
6683915	MUFFLER			148
6684033	NUT			28, 144
6684037	SENSOR			126
6684044	VALVE			332
6684045	SEAL KIT			332
6684046	O-RING			332
6684047	BACK-UP RING			332
6684048	O-RING			332
6684049	O-RING			332
6684050	BACK-UP RING			332

Code for disposition of old part number

A — Use up

B — Use on other application (See PNI)

C — File PDR Report with Bobcat Parts Sales

D — Part Number Error

www.youfixthis.com

NUMERICAL INDEX (Cont'd)

Part No.	Description	Was	Code	Page
6684051	VALVE			332
6684052	SEAL KIT			332
6684053	BACK-UP RING			332
6684054	O-RING			332
6684055	BACK-UP RING			332
6684056	O-RING			332
6684057	BACK-UP RING			332
6684058	COIL			86, 332
6684059	SPACER			332
6684060	NUT			332
6684061	VALVE			332
6684062	SEAL KIT			332
6684063	O-RING			332
6684064	BACK-UP RING			332
6684065	O-RING			332
6684066	O-RING			332
6684067	BACK-UP RING			332
6684069	SEAL KIT			332
6684070	O-RING			332
6684071	O-RING			332
6684072	BACK-UP RING			332
6684073	COIL			332
6684742	NUT			324
6684743	SOLENOID			324
6684744	SOLENOID			324
6684745	PISTON			324
6684746	CHECK VALVE			324
6684747	SEAL KIT			324
6684752	GASKET			166
6684753	GASKET			160, 174
6684754	O-RING			160, 174
6684755	HEAD			172
6684756	GUIDE			172
6684770	GASKET			160, 162
6684772	BOLT			162
6684774	GASKET			162
6684776	CLAMP			168
6684777	CLAMP			168
6684778	CLAMP			168
6684779	SHIELD			168
6684780	GASKET			160, 168
6684781	BOLT			168
6684782	O-RING			160, 168
6684785	PLUG			174
6684788	GASKET			176
6684789	SEAL			176
6684791	CAMSHAFT			180
6684792	GEAR			180
6684793	GEAR ASSY			180
6684794	BUSHING			180
6684795	COLLAR			180

Code for disposition of old part number

A — Use up

B — Use on other application (See PNI)

C — File PDR Report with Bobcat Parts Sales

D — Part Number Error

www.youfixthis.com

NUMERICAL INDEX (Cont'd)

Part No.	Description	Was	Code	Page
6684808	GEAR			176
6684809	KEY			176
6684813	GASKET			178
6684815	APPARATUS			192
6684816	BOLT ASSY			192
6684817	NUT			192
6684818	GASKET			192
6684819	CAP			192
6684823	SPRING			196
6684824	GASKET			160, 196, 198
6684825	GUIDE			192
6684826	SOLENOID			126, 192
6684827	NUT			192
6684828	PUMP			200
6684829	SHIM			200
6684830	BOLT			200
6684832	LEVER			194
6684833	SHAFT			194
6684836	BOLT			196
6684838	LEVER			194, 196
6684839	LEVER			196
6684842	PIPE			204
6684844	BOLT			204
6684845	CLAMP			204
6684846	PIPE			204
6684847	PIPE			204
6684848	PIPE			204
6684849	PIPE			204
6684850	GLOW PLUG			204
6684851	CORD			204
6684855	FLANGE			184
6684856	FLANGE			184
6684857	PLUG			184
6684862	PIPE			184
6684863	GASKET			160, 184
6684865	WATER PUMP			182
6684866	BODY			182
6684867	IMPELLER			182
6684868	SET SEAL			182
6684869	FLANGE			182
6684870	GASKET			160, 182
6684872	VALVE			170
6684873	VALVE			170
6684875	SHAFT			170
6684877	GASKET			160, 186
6684879	GASKET			160, 186
6684880	GASKET			186
6684884	PIPE			190
6684889	CLAMP			184
6684891	NUT			192
6684910	SENSOR			134, 282

Code for disposition of old part number

A — Use up

B — Use on other application (See PNI)

C — File PDR Report with Bobcat Parts Sales

D — Part Number Error

www.youfixthis.com

NUMERICAL INDEX (Cont'd)

Part No.	Description	Was	Code	Page
6684911	SENSOR			132, 138, 212
6684912	SENSOR			132, 138, 212
6684913	LEVER			282
6684914	LEVER			282
6684915	LEVER			132, 134
6684916	LEVER			132, 134
6684923	CAP			8, 90
6685017	VALVE			76
6685033	PUMP			84
6685061	VALVE			332
6685077	GASKET			172
6685078	GASKET			172
6685079	GASKET			172
6685080	GASKET			172
6685081	GASKET			172
6685104	BOLT			184
6685183	SOLENOID			86
6685184	SEAL KIT			86
6685185	RELIEF VALVE			86
6685186	CHECK VALVE			86
6685190	STARTER			142, 150, 154
6685198	CAP			304
6685199	CAP			304
6685311	VALVE			324
6685464	BOLT			194
6685465	O-RING			192
6685466	O-RING			162
6685467	O-RING			162
6685468	O-RING			160, 162
6685469	KEY			176
6685472	CAP			166
6685473	JOINT			200
6685476	SEAL			196
6685477	PLUG			166
6685478	FLANGE			166
6685482	BOLT			176
6685486	BEARING			176
6685487	BEARING			176
6685488	WASHER			176
6685489	WASHER			176
6685490	BEARING			176
6685491	BEARING			176
6685492	BEARING			176
6685493	BEARING			176
6685494	WASHER			176
6685495	WASHER			176
6685496	WASHER			176
6685497	WASHER			176
6685498	GASKET			204
6685499	DIPSTICK			174
6685500	COVER			198

Code for disposition of old part number

A — Use up

B — Use on other application (See PNI)

C — File PDR Report with Bobcat Parts Sales

D — Part Number Error

www.youfixthis.com

NUMERICAL INDEX (Cont'd)

Part No.	Description	Was	Code	Page
6685511	PUMP			202
6685514	SPRING			194
6685515	COVER			176
6685518	OIL PAN			174
6685519	SHAFT			180
6685520	THERMOSTAT			184
6685521	PULLEY			176
6685526	PLATE			196
6685580	TUBE			168
6685581	O-RING			168
6685583	CASE			176
6685584	CASE			176
6685585	CASE			176
6685586	CASE			176
6685592	MANIFOLD			186
6685593	TURBO			190
6685594	HOSE			188
6685595	FLANGE			188
6685596	HOSE			188
6685598	BOLT			190
6685599	PIPE			190
6685600	PIPE			190
6685601	CLAMP			190
6685603	SEAL KIT			76
6685633	WASHER			198
6685634	GASKET			198
6685635	TUBE			198
6685636	SPRING			194
6685637	COLLAR			162
6685639	STUD			198
6685640	MANIFOLD			186
6685641	OIL COOLER			162, 164
6685642	HOSE			164
6685643	HOSE			164
6685644	SCREW			186
6685645	PIPE ASSY			198
6686031	ENGINE			148, 150, 154, 160
6686034	BOLT			198
6686035	PUSH ROD			180
6686036	BALL BEARING			178
6686037	GASKET			200
6686038	CAMSHAFT			178
6686039	GEAR			178
6686040	CRANKSHAFT			176
6686041	COLLAR			178
6686042	BALL BEARING			178
6686043	BOLT			188
6686044	CRANKCASE			166
6686045	GEAR CASE			162
6686046	CLAMP			188
6686047	STOPPER			178

Code for disposition of old part number

A — Use up

B — Use on other application (See PNI)

C — File PDR Report with Bobcat Parts Sales

D — Part Number Error

www.youfixthis.com

NUMERICAL INDEX (Cont'd)

Part No.	Description	Was	Code	Page
6686048	TURBO			148, 188
6686049	RINGS			176
6686050	RINGS			176
6686051	PISTON			176
6686052	PISTON			176
6686053	BUSHING			176
6686054	ROD			176
6686055	PIPE			190
6686056	HOLDER KIT			204
6686057	COMPENSATOR			198
6686058	LEVER			194
6700115	SPRING			150
6700170	WASHER			156
6700535	SPACER			154
6700711	AIR CLEANER			148, 208
6700782	CAP			158
6701039	HOSE			96
6701097	WASHER			144
6701123	BOLT			148
6701159	SHIM			158
6701174	WASHER			24
6701449	FILLER TUBE			40
6701535	SPRING			28, 98
6701893	CLAMP			54, 58
6702102	GEAR			158
6702103	GEAR			158
6702135	SHAFT			158
6702137	SHAFT			158
6702144	SHIM			158
6702165	SHIM			158
6702166	SHIM			158
6702397	ROD			156
6702402	SHIELD			274
6702444	FUSE			128
6702474	RETAINER			150
6702543	LEVER			98
6702593	SPACER			216
6702621	GRIP			130
6702650	MOUNT			268
6702716	BLOCK			98
6702903	LEVER			38
6702904	LEVER			38
6702958	BUSHING			38
6702971	BOLT			24
6702977	HOUSING			144
6702990	BUSHING			134, 282
6703022	CLIP			150
6703140	WASHER			154
6703168	BEARING			152
6703331	INSULATION			270
6703471	BRACKET			144

Code for disposition of old part number

A — Use up

B — Use on other application (See PNI)

C — File PDR Report with Bobcat Parts Sales

D — Part Number Error

www.youfixthis.com

NUMERICAL INDEX (Cont'd)

Part No.	Description	Was	Code	Page
6703483	PULLEY			270
6703507	IDLER ARM			150
6703727	DECAL			310
6703879	BUSHING			98
6703981	MOUNT			154
6704146	BRACKET			314
6704147	BRACKET			314
6704248	PIVOT			38
6704391	PULLEY			152
6704443	BUSHING			150
6704444	WASHER			150
6704484	WASHER			150
6704769	INSULATION			270
6704786	DECAL			314
6704820	O-RING			150
6704892	RIVET			260, 262
6705106	WASHER			154, 264
6705231	WASHER			150
6705232	WASHER			150
6705452	LEVER			156
6705491	SPRING			152
6706043	BUSHING			154
6706098	GUIDE			98
6706104	RETAINING NUT			70
6706105	YOKE			70
6706106	MOUNT			98
6706285	SCREEN			326
6706349	MOUNT			24
6706517	SCREW			40, 144
6706572	SET SCREW			156
6706633	CONNECTOR			328, 330
6706807	PIN			312
6706825	LIFT EYE			312
6706939	KIT			326
6707040	ELBOW			126
6707077	HOUSING ASSY			158
6707078	HOUSING ASSY			158
6707101	SEAL			62, 82
6707789	LIGHT			266
6707804	HOUSING			268
6707852	DECAL			228
6708009	LINK			70
6708043	BUSHING			70
6708189	TUBE			24
6708310	HOSE			230
6708770	CAP			150
6708929	DECAL			248
6708987	BRACKET			22
6709022	LEVER			156
6709030	DECAL			150, 248
6709166	HOSE			96

Code for disposition of old part number

A — Use up

B — Use on other application (See PNI)

C — File PDR Report with Bobcat Parts Sales

D — Part Number Error

www.youfixthis.com

NUMERICAL INDEX (Cont'd)

Part No.	Description	Was	Code	Page
6709527	KEY			124, 228, 234, 334
6710449	DECAL			26, 246
6710585	WASHER			150
6710659	BUSHING			28
6711524	REAR DOOR			334
6711527	LATCH PLATE			34
6711632	KIT			264
6711643	CAM			98
6711674	BRACKET			278
6711699	HUB ASSY			152
6711840	DECAL			246
6712161	MOUNT			154
6712791	SAFETY TREAD			246
6712970	PULLEY			270
6713040	SPRING			38
6713043	SPACER			134
6713150	MOUNT			268
6713151	MOUNT			268
6713370	PIN			150
6713507	DECAL			246
6713589	CLEVIS			28
6713736	BRACKET			268
6713793	BRACKET			216
6713840	DECAL			268
6713841	SHIELD			268
6713887	BOLT			28
6713993	HARNESS			268
6713994	HARNESS			268
6714037	LATCH			334
6714126	DOOR STOP			34
6714212	PULLEY ASSY			150
6714576	PIVOT ASSY			38, 320
6714726	PLUG			132
6714820	SHIELD			268
6714901	ELBOW			94
6714904	TEE			84
6714979	BRACKET			126
6715106	INSULATION			270
6715132	RETAINER			126
6715142	FAN			144
6715143	SET SCREW			144
6715163	BUSHING			98
6715164	SLEEVE			98
6715190	ELBOW			90
6715191	ELBOW			90
6715193	ELBOW			40
6715197	CLAMP			126
6715287	SPACER			264
6715365	HARNESS			249, 250
6715428	DECAL			270
6715653	TEE			94

Code for disposition of old part number

A — Use up

B — Use on other application (See PNI)

C — File PDR Report with Bobcat Parts Sales

D — Part Number Error

www.youfixthis.com

NUMERICAL INDEX (Cont'd)

Part No.	Description	Was	Code	Page
6715659	HARNESS			216
6715860	SEAT BAR			26, 28
6715863	BRACKET			28
6715864	BUSHING			28
6715865	BUSHING			28
6715866	BUSHING			28
6716010	COVER			44
6716061	TEE			54, 58
6716089	CONNECTOR			278
6716419	HARNESS			316
6716545	ROD			98
6716571	LOUVER			144
6716573	LOUVER			144
6716621	COVER			32
6716916	WASHER			132
6716977	BELLCRANK			132
6717025	BUSHING			36
6717026	BUSHING			36
6717039	BUSHING			36
6717041	BUSHING			36
6717146	SPACER			228, 234
6717151	MOUNT			62
6717208	SHIELD			32
6717246	BUSHING			36
6717259	BUSHING			38
6717260	BUSHING			38
6717277	BUSHING			22
6717278	BUSHING			22
6717293	MOUNT			312
6717343	DECAL			246
6717356	BUSHING			22
6717358	BUSHING			22
6717369	BRACKET			228, 234
6717393	LEVER			132
6717401	PLUG			40
6717402	BUSHING			40
6717478	INLET			144
6717515	INSULATION			250
6717517	INSULATION			250
6717518	INSULATION			250
6717519	INSULATION			250
6717520	INSULATION			250
6717560	PIN			36
6717562	BUSHING			36
6717579	GASKET			126
6717591	HOSE			148
6717592	HOSE			148
6717593	HINGE			230, 234
6717639	DECAL			246
6717643	DUCT			300
6717644	DUCT			300

Code for disposition of old part number
A — Use up
B — Use on other application (See PNI)
C — File PDR Report with Bobcat Parts Sales
D — Part Number Error

www.youfixthis.com

NUMERICAL INDEX (Cont'd)

Part No.	Description	Was	Code	Page
6717674	HOSE			148
6717679	DECAL			248
6717704	HOSE			40
6717707	PIN			312
6717820	BAR			70
6717827	CAP			90
6717830	TUBE			90
6717870	TRACK			242
6717871	TRACK			242
6717872	TRACK			242
6717873	TRACK			242
6717874	WINDOW			242, 250
6717890	COVER			32
6717905	HOSE			90
6717907	DECAL			248
6717933	CLAMP			54, 58
6717951	CLAMP			64
6717961	GUSSET			36
6717987	HOSE			302
6718020	HOSE			90
6718030	TUBE			54, 58
6718034	FUSE			128
6718066	HOSE			54, 58
6718067	HOSE			54, 58
6718080	ELBOW			84
6718101	COVER			26
6718122	MOUNT			312
6718175	SCREEN			286, 300
6718198	HARNESS			266
6718238	BRACKET			54, 58
6718244	TUBE			278
6718245	TUBE			278
6718260	BATTERY PAN			126
6718312	STOP			36
6718326	MOUNT			276
6718358	HOSE			320
6718376	HINGE			230, 234
6718391	DECAL			246
6718392	DECAL			246
6718393	DECAL			246
6718396	DECAL			246
6718411	KIT			276
6718415	SWITCH			126
6718426	HARNESS			84, 258
6718454	HOSE			278
6718489	INSULATION			26
6718506	PIN			132
6718520	COVER			234
6718521	HANDLE			230, 234
6718578	TEE			302
6718579	DECAL			286, 300

Code for disposition of old part number

A — Use up

B — Use on other application (See PNI)

C — File PDR Report with Bobcat Parts Sales

D — Part Number Error

www.youfixthis.com

NUMERICAL INDEX (Cont'd)

Part No.	Description	Was	Code	Page
6718580	PANEL			250
6718648	RADIATOR			148
6718659	HOUSING			126
6718703	DECAL			246
6718730	BELT			144, 150
6718750	MOUNT			84, 258
6718772	GASKET			90
6718774	DECAL			32, 128, 246
6718784	COVER			24
6718789	PIN			36
6718796	PLUG			22, 34
6718820	HARNESS			216
6718822	KIT			216
6718833	BRACKET			274
6718834	BRACKET			274
6718837	SPACER			286, 300
6718872	HARNESS			218, 268, 276, 350
6718873	HARNESS			276
6718879	GUSSET			36
6718880	GUSSET			36
6718887	PANEL			286, 300
6718924	KIT			274
6718942	NUT			36
6719018	DECAL			248
6719037	STRIKER			242
6719063	STOP			242
6719064	MOUNT			24, 280
6719065	COVER			242
6719080	HOSE			302
6719084	BOLT			124
6719144	HOSE			298, 300
6719176	SWITCH			300, 304
6719184	BRACKET			314
6719185	BRACKET			314
6719201	COVER			22
6719264	KIT			314
6719317	WINDOW			336
6719332	INSULATION			270
6719333	INSULATION			270
6719334	INSULATION			270
6719413	WINDOW			242
6719424	TEE			54
6719439	HOSE			54, 58
6719448	MAGNET			260, 262
6719451	HOSE			320
6719503	CONTAINER			26
6719504	INSULATION			26
6719525	BAR			34
6719563	KIT			284
6719574	DECAL			248
6719672	OPERATOR CAB			24, 26

Code for disposition of old part number

A — Use up

B — Use on other application (See PNI)

C — File PDR Report with Bobcat Parts Sales

D — Part Number Error

www.youfixthis.com

NUMERICAL INDEX (Cont'd)

Part No.	Description	Was	Code	Page
6719766	STOP			34
6719825	BOLT			150
6719826	BOLT			154
6719827	BOLT			154
6719828	BOLT			150, 154
6719829	BOLT			154
6719834	SPACER			134, 282
6719835	SLEEVE			134, 282
6719851	SHIELD			144
6719854	KIT			218
6719857	KIT			350
6719884	BRACKET			320
6719888	DECAL			320
6719951	HANDBOOK			2
6720038	INSTRUCTIONS			220
6720592	INSTRUCTIONS			274
6720736	HEATER			220
6722147	HOLDER			206
6722344	FLUID			2, 10, 352
6722597	VELCRO			238
6722861	INSTRUCTIONS			326
6724094	ANTI-FREEZE			352
6724354	ANTI-FREEZE			352
6724482	INSTRUCTION			264
6724557	OIL			2, 4, 6, 352
6724558	OIL			2, 4, 6, 352
6724559	OIL			2, 4, 6, 352
6725128	ADAPTER			132
6725182	TEE			96
6725273	HARNESS			286
6725301	COVER			26
6725302	GASKET			32
6725303	FRAME			26
6725337	TUBE			54, 58
6725370	DECAL			344
6725373	SPRING PLATE			26
6725421	HANDLE			244
6725427	BRACKET			154
6725497	CROSS			96, 328
6725502	ELBOW			208
6725513	PACKAGE			286
6725552	TUBE			320
6725553	TUBE			320
6725898	KIT			272
6725906	BRACKET			272
6725907	DECAL			320
6725933	HARNESS			286, 300, 304
6725937	CLAMP			234
6725938	CLAMP			234
6725946	KIT			244
6726028	FRAME			44

Code for disposition of old part number

A — Use up

B — Use on other application (See PNI)

C — File PDR Report with Bobcat Parts Sales

D — Part Number Error

www.youfixthis.com

NUMERICAL INDEX (Cont'd)

Part No.	Description	Was	Code	Page
6726029	FRAME			44
6726052	SPROCKET			44
6726053	RECOIL SPRING			44, 46
6726055	TUBE			46
6726063	SHIELD			22
6726064	SHIELD			22
6726065	SHIELD			22
6726066	STOP			44
6726100	DRIVECASE			44
6726159	TUBE			90
6726160	ELBOW			92
6726162	BRACKET			90
6726166	TUBE			54
6726167	TUBE			56, 60
6726168	TUBE			54, 58
6726180	TUBE			60, 224
6726199	HOSE			56, 60
6726222	INSULATION			270
6726223	INSULATION			270
6726224	INSULATION			270
6726225	INSULATION			270
6726226	INSULATION			270
6726227	INSULATION			270
6726228	INSULATION			270
6726229	INSULATION			270
6726230	INSULATION			270
6726231	INSULATION			270
6726251	HOSE			90
6726253	MOUNT			54, 58
6726254	BRACKET			90
6726255	PAD			90
6726271	HOSE			90
6726272	TUBE			328, 330
6726273	TUBE			328, 330
6726274	TUBE			330
6726275	TUBE			330
6726276	HOSE			92
6726277	CLAMP			54, 58, 328
6726288	KIT			330
6726303	DECAL			244
6726386	KNOB			288
6726423	DECAL			312
6726427	KIT			236
6726430	HARNESS			268
6726433	SPACER			144, 148
6726435	DOOR			228
6726539	PULLEY			150
6726573	BRACKET			132, 212
6726620	BRACKET			300, 304
6726621	SCREW			294, 304, 308
6726623	HOSE			304

Code for disposition of old part number

A — Use up

B — Use on other application (See PNI)

C — File PDR Report with Bobcat Parts Sales

D — Part Number Error

www.youfixthis.com

NUMERICAL INDEX (Cont'd)

Part No.	Description	Was	Code	Page
6726648	BRACKET			302, 304
6726655	KIT			336
6726656	HOSE			302, 304
6726661	HOSE			302, 304
6726679	MOUNT			70, 212
6726680	PEDAL			70, 212
6726681	LINK			132, 212
6726888	HARNESS			302, 304
6726898	BELT			6
6726932	DOOR			234
6726937	SHIELD			302, 304
6726938	SHIELD			150
6726945	MOUNT			262
6726988	BELT			302, 304
6727065	BOLT			134, 212, 282
6727155	DECAL			284
6727176	KIT			256
6727178	HARNESS			124
6727190	HARNESS			250
6727243	DECAL			284
6727298	KIT			282
6727299	INSULATION			250
6727310	DECAL			246
6727311	DECAL			248
6727328	HARNESS			284
6727414	HOSE			300, 304
6727468	HARNESS			214
6727496	PIN			132, 212
6727498	HARNESS			310
6727508	BRACKET			126, 252
6727595	DECAL			248
6727637	ELBOW			90
6727638	TEE			54, 58
6727640	TUBE			94
6727643	HOSE			94
6727646	BRACKET			224
6727647	TUBE			94
6727656	HOSE			90
6727657	HOSE			64
6727705	HOSE			56, 60
6727707	CLAMP			54, 58
6727708	CLAMP			56, 60
6727739	KIT			262
6727753	GASKET			148
6727786	KIT			296
6727847	COVER			286
6727863	ROD LINK			36
6727869	SENDER			126
6727913	DECAL			84, 246, 248
6727926	DECAL			212, 246
6727941	DECAL			132, 212

Code for disposition of old part number

A — Use up

B — Use on other application (See PNI)

C — File PDR Report with Bobcat Parts Sales

D — Part Number Error

www.youfixthis.com

NUMERICAL INDEX (Cont'd)

Part No.	Description	Was	Code	Page
6727993	KIT			312
6727995	HORN KIT			310
6728011	BRACKET			300, 304
6728045	DECAL			212
6728062	MOUNT			150, 154
6728473	BOLT			38
6728539	DECAL			212
6728540	DECAL			212, 246
6728567	KIT			294
6728607	KIT			246
6728626	HARNESS			128
6728629	WINDOW			242, 250
6728673	TANK			90
6728742	HARNESS			284
6729008	CABLE			126
6729009	SEAL			242
6729010	SEAL			242
6729011	SEAL			242
6729012	INSULATION			24
6729013	INSULATION			24
6729052	HOSE			90
6729077	DECAL			306
6729082	MOUNT			94
6729083	MOUNT			94
6729141	MOUNT			280
6729202	HOSE			320
6729203	HOSE			320
6729233	KIT			250
6729380	HARNESS			262
6729467	SPACER			132, 212
6729473	DECAL			246, 248
6729594	HANDLE			134, 282
6729595	HANDLE			134, 282
6729688	LATCH			334
6729776	WINDOW			228, 232
6729909	TUBE			56, 60
6729939	LATCH PLATE			34
6729982	SCREEN			90
6729991	REAR DOOR			34, 334
6730142	TEE			54, 58
6730192	KIT			90
6730202	TUBE			54, 58
6730203	TUBE			54, 58
6730209	TUBE			60, 224
6730227	COVER			48
6730228	COVER			50
6730229	COVER			52
6730290	BOLT			36
6730291	BRACKET			262
6730770	HARNESS			320
6730816	SHIELD			228, 234

Code for disposition of old part number

A — Use up

B — Use on other application (See PNI)

C — File PDR Report with Bobcat Parts Sales

D — Part Number Error

www.youfixthis.com

NUMERICAL INDEX (Cont'd)

Part No.	Description	Was	Code	Page
6730822	KIT			228
6730823	KIT			234
6730867	BRACKET			154
6730882	INSULATION			270
6730883	INSULATION			270
6730885	HARNESS			230
6730886	KIT			224
6730909	DECAL			248
6730910	DECAL			248
6730967	BRACKET			48
6730996	HOSE			298
6730997	BUSHING			38
6730998	HOSE			298
6730999	TUBE ASSY			148
6731049	ADAPTER			298
6731060	SHIELD			154
6731085	ELBOW			298
6731108	SEAL			338
6731151	KIT			212
6731158	KIT			298
6731160	WASHER			36
6731212	SENSOR			230
6731222	PIN			268
6731228	TUBE			64
6731229	TUBE			64
6731230	TUBE			64
6731231	TUBE			64
6731239	HARNESS			268
6731256	CABLE			126
6731275	INSULATION			32
6731336	DECAL			248
6731495	SHIELD			302, 304
6731507	DECAL			248
6731508	DECAL			246
6731524	KIT			278
6731578	BUSHING			22
6731617	PAN			252
6731657	BRACKET			314
6731658	BRACKET			314
6731662	HOSE			320
6731665	CABLE			252
6731666	CABLE			252
6731694	KIT			252
6731746	BRACKET			252
6731757	DECAL			246
6731819	STRAP			268
6731911AR	KIT			246, 248
6731911BR	KIT			246, 248
6731911JP	KIT			246, 248
6731912AR	KIT			246, 248
6731912BR	KIT			246, 248

Code for disposition of old part number

A — Use up

B — Use on other application (See PNI)

C — File PDR Report with Bobcat Parts Sales

D — Part Number Error

www.youfixthis.com

NUMERICAL INDEX (Cont'd)

Part No.	Description	Was	Code	Page
6731973	HOLDER			268
6731979	BUSHING			38
6731996	DECAL			270
6732001	KIT			334
6732023	CONNECTOR			298
6732114	BRACKET			96
6732115	HOSE			96
6732116	HOSE			96
6732117	HOSE			96
6732118	HOSE			96
6732199	GASKET			298
6732206	SPACER			268
6732219	KIT			344
6732225	SPACER			22
6732264	FRAME LINK			36
6732265	BUSHING			36
6732318	SPACER			144
6732350	WINDOW			236
6732351	WINDOW			234
6732375	TANK			144
6732423	DECAL			248
6732443	CUP			38
6732457	WASHER			144
6732486	CONDENSER			300
6732537	BOB-TACH			38
6732619	SEAL			338
6732620	PANEL			32
6732621	PANEL			32
6732715	LATCH			34
6732718	KIT			338
6732730	HARNESS			260
6732732	BUSHING			302, 306
6732781	HARNESS			96
6732870	MOUNT			144
6732874	AXLE			52
6732875	AXLE			48
6732876	AXLE			50
6732901	ROLLER ASSY			52
6732902	IDLER ASSY			48
6732903	IDLER ASSY			50
6732904	ROLLER			52
6732905	IDLER			48
6732906	IDLER			50
6732928	KIT			280
6732975	DECAL			228
6732997	U-BOLT			98
6733001	CONDENSER			304
6733002	MAIN FRAME			22
6733022	BRACKET			98
6733024	BRACKET			98
6733107	PLUG ASSY			24

Code for disposition of old part number

A — Use up

B — Use on other application (See PNI)

C — File PDR Report with Bobcat Parts Sales

D — Part Number Error

www.youfixthis.com

NUMERICAL INDEX (Cont'd)

Part No.	Description	Was	Code	Page
6733136	KIT			260
6733142	KIT			258
6733144	MOUNT			260
6733429	CAP			144
6733447	TEE			84
6733529	SEAL			32
6733575	HINGE			34
6733616	BUMPER			34
6733655	COMPRESSOR			302, 304
6733667	LATCH			34
6733683	TUBE			64
6733684	TUBE			60, 224
6733804	GRILL			144
6733886	BOLT			144
6733970	MOUNT			216, 310
6734048	TEE			92
6734100	RADIATOR			144
6734104	HOUSING ASSY			144, 158
6734236	ADAPTER			144
6734432	SPACER			154
6734534	DECAL			248
6734561	WASHER			90
6734563	WASHER KIT			90
6734664	HOSE			64
6734743	OIL COOLER			94
6735140	DECAL			246
6735204	SCREEN			144
6735245	DUCT			286
6735246	DUCT			286
6735255	DECAL			246
6735256	DECAL			246
6735465	KIT			320
6735724	KIT			328
6735773	HEATER KIT			286
6735825	SPACER			268
6735828	TUBE			328
6735829	TUBE			328
6735830	TUBE			328
6735837	TUBE			62
6735839	HOSE			90
6735862	DECAL			246
6735864	DECAL			248
6735883	BRACKET			150
6735884	IDLER ASSY			150
6735901	DECAL			248
6735986	MOUNT			156
6736071	KIT			32
6736195	ROD			156
6736205	TUBE			84
6736206	BRACKET			84
6736207	BRACKET			84

Code for disposition of old part number

A — Use up

B — Use on other application (See PNI)

C — File PDR Report with Bobcat Parts Sales

D — Part Number Error

www.youfixthis.com

NUMERICAL INDEX (Cont'd)

Part No.	Description	Was	Code	Page
6736210	HOSE			84
6736586	ELBOW			84
6736641	PAINT			352
6736642	PAINT			352
6736644	PAINT			352
6736645	PAINT			352
6736647	HOSE			84
6736685	TUBE			84
6736775	BELT			150
6736807	FLYWHEEL ASSY			150
6736817	MOUNT			154
6736875	TANK			230
6737182	LIFT ARM			36
6737254	TUBE			328
6737261	KIT			304
6737355	HOSE			148
6737453	ELBOW			90
6737503	HOSE			320
6737524	KNOB			62, 82
6737648	HOSE			54, 58
6800124	RESTRICTOR			76
6801059	WASHER			232, 336
6801167	PLUG			76
6803092	BONNET			76
6803473	SEAL KIT			322
6803932	DECAL			246
6804114	DECAL			246
6804790	DECAL			26
6805087	CASE			68
6805102	BUSHING			74
6805241	CROSS			90
6805453	BUSHING			66
6806007	SPRING			74
6806124	HEAD			68
6806315	PISTON			66
6806330	SEAL KIT			66
6806332	HEAD			66
6806403	HOSE			320
6808831	WIRE ROPE			302
6809425	SEAL KIT			78
6809511	DECAL			56, 60
6809726	ROLLER			34
6809727	CHANNEL			34
6809734	BUSHING			34
6809845	BOLT			34
6810132	SPRING			34
6810141	SPRING			34
6810349	CASE			322
6810356	SPACER			322
6810430	ROD			68
6810539	NUT			68

Code for disposition of old part number

A — Use up

B — Use on other application (See PNI)

C — File PDR Report with Bobcat Parts Sales

D — Part Number Error

www.youfixthis.com

NUMERICAL INDEX (Cont'd)

Part No.	Description	Was	Code	Page
6810611	CYLINDER			322
6810612	ROD			322
6811995	CYLINDER			68
6812031	BLOCK			72
6812170	PLUG			322
6814531	ELBOW			54, 58
6814925	VALVE			72
6816525	SEAL KIT			74
6816537	SEAL KIT			68
6817553	CROSS			74, 76
6817566	BUSHING			154
6900827	INSTRUCTIONS			312
6900838	INSTRUCTIONS			224
6900848	INSTRUCTIONS			276
6900850	INSTRUCTIONS			288, 298
6900851	INSTRUCTIONS			250
6900853	INSTRUCTIONS			242
6900857	INSTRUCTIONS			216
6900861	INSTRUCTIONS			342
6900888	INSTRUCTIONS			314
6900991	INSTRUCTIONS			218
6900992	INSTRUCTIONS			350
6901010	INSTRUCTIONS			344
6901011	INSTRUCTIONS			346
6901013	INSTRUCTIONS			230, 234, 242
6901025	INSTRUCTIONS			272
6901029	INSTRUCTIONS			244
6901036	INSTRUCTIONS			236
6901061	INSTRUCTIONS			336
6901076	INSTRUCTIONS			256
6901097	INSTRUCTIONS			330
6901100	INSTRUCTIONS			284
6901116	INSTRUCTIONS			262
6901120	INSTRUCTIONS			296
6901146	INSTRUCTIONS			310
6901203	INSTRUCTIONS			312
6901213	INSTRUCTIONS			294
6901224	INSTRUCTIONS			306
6901380	KIT			246, 248
6901492	INSTRUCTIONS			212
6901515	INSTRUCTIONS			278
6901602	INSTRUCTIONS			252
6901656	INSTRUCTIONS			334
6901663	INSTRUCTIONS			268
6901774	INSTRUCTIONS			338
6901816	INSTRUCTIONS			280
6901871	INSTRUCTIONS			258
6901872	INSTRUCTIONS			260
6902228	PAINT			352
6902229	PAINT			352
6902230	PAINT			352

Code for disposition of old part number

A — Use up

B — Use on other application (See PNI)

C — File PDR Report with Bobcat Parts Sales

D — Part Number Error

www.youfixthis.com

NUMERICAL INDEX (Cont'd)

Part No.	Description	Was	Code	Page
6902232	PRIMER			352
6902233	PAINT			352
6902234	PAINT			352
6902235	PAINT			352
6902356	INSTRUCTIONS			288
6902363	INSTRUCTIONS			328
6902421	INSTRUCTIONS			320
6902692	MANUAL			2
6902734	MANUAL			2
6902814	INSTRUCTIONS			254
7000010	SPACER			30
7100019	VALVE			286
7100024	HOSE			148
7100034	PULLEY			144
7100153	MOUNT			216
7101311	HARNESS			126
7101640	BRACKET			132, 254
7101641	BRACKET			132, 254
7101670	KIT			254
7101973	HARNESS			328
1CM-620	BOLT			228, 234
1CM-635	BOLT			234, 304, 308
1CM-640	BOLT			228, 234
1CM-8100	BOLT			154
1CM-820	BOLT			98, 302
1CM-835	BOLT			162, 184
1CM-860	BOLT			298
1CM-870	BOLT			162
1CM-875	BOLT			184
1CM-890	BOLT			154
2DM-8	NUT			170
2DM-10	NUT			302, 304
2EM-8	WASHER			172
2GM-1035	BOLT			302, 304
2JM-1090	ROLL PIN			48
3GM-820	BOLT			104
4CM-20	BOLT			196
4CM-616	BOLT			200
4CM-620	BOLT			162, 190
4CM-635	BOLT			228
4CM-818	BOLT			180
4CM-822	BOLT			168, 186
4CM-825	BOLT			176
4CM-828	BOLT			176, 182
4D-20	NUT			312
4DM-5	NUT			266
4DM-10	NUT			126
4DM-6	NUT			228, 234
4F-6106	PIN			28
5CM-812	BOLT			170
5CM-1080	BOLT			302, 304

Code for disposition of old part number

A — Use up

B — Use on other application (See PNI)

C — File PDR Report with Bobcat Parts Sales

D — Part Number Error

www.youfixthis.com

NUMERICAL INDEX (Cont'd)

Part No.	Description	Was	Code	Page
5HM-13	CLAMP			40
5HM-14	CLAMP			40, 144
5HM-20	CLAMP			298, 302
5HM-24	CLAMP			40, 90, 144
5HM-27	CLAMP			84
5HM-42	CLAMP			90, 148
5HM-58	CLAMP			40
5JM-24	CIR-CLIP			178
6E-4	WASHER			216
6E-5	WASHER			124, 126, 154, 276
6E-6	WASHER			126
6EM-60	WASHER			228, 234
6EM-80	WASHER			298
6J-807	KEY			150
7D-4	NUT			62
7J-2010	KEY			158
7J-2108	KEY			144
7JM-72	SNAP RING			52
7JM-80	SNAP RING			48, 50
8D-6	NUT			98, 132, 254
9G-512	SCREW			158
10C-410	BOLT			242
10C-412	BOLT			242
10C-616	BOLT			28
10H-25	GREASE ZERK			36
10H-35	GREASE ZERK			38, 98, 320
10J-5	BALL			178
10J-13	BALL			162
10K-7	TEE			58
11H-15	GREASE ZERK			36
12D-6	NUT			268
12D-8	NUT			268
12D-10	NUT			272
12H-15	GREASE ZERK			36
12K-6	INDEX			300
13K-5	TEE			320
14J-5032	PIN			38
15JM-410	KEY			166
15KB-606	ADAPTER			62, 64, 90, 96, 328
15KB-612	ADAPTER			320
15KB-1212	ADAPTER			56, 60, 64, 90, 320, 328
16F-2	PLUG			166
16F-8	PLUG			158
17C-410	BOLT			216, 268, 310
17C-412	BOLT			126, 216
17C-420	BOLT			228, 234, 252
17C-428	BOLT			62
17C-508	BOLT			268
17C-512	BOLT			128, 230, 234, 246, 268
17C-514	BOLT			132, 212
17C-516	BOLT			252

Code for disposition of old part number

A — Use up

B — Use on other application (See PNI)

C — File PDR Report with Bobcat Parts Sales

D — Part Number Error

www.youfixthis.com

NUMERICAL INDEX (Cont'd)

Part No.	Description	Was	Code	Page
17C-520	BOLT			252
17C-540	BOLT			126, 312
17C-556	BOLT			154
17C-608	BOLT			132, 212
17C-610	BOLT			40, 94, 150
17C-612	BOLT			26, 62, 96, 98, 148, 230, 234
17C-614	BOLT			92
17C-616	BOLT			90, 96, 98, 132, 144, 274
17C-620	BOLT			54, 58, 70, 92, 98, 150, 158
17C-624	BOLT			62, 70, 234
17C-628	BOLT			44, 54, 58, 98, 234
17C-632	BOLT			314
17C-640	BOLT			28, 36, 312
17C-644	BOLT			54, 84
17C-648	BOLT			36
17C-656	BOLT			36
17C-660	BOLT			36, 38
17C-680	BOLT			98, 328
17C-716	BOLT			26
17C-820	BOLT			34
17C-828	BOLT			150, 154
17C-1056	BOLT			24
17C-6116	BOLT			144
17KB-404	ELBOW			320
17KB-606	ELBOW			62, 90, 92, 96, 278, 320, 328
17KB-810	ELBOW			58, 224
17KB-1010	ELBOW			58, 84, 94, 224
17KB-1212	ELBOW			328
18C-616	BOLT			132, 254
18KB-404	ELBOW			320
18KB-606	ELBOW			92, 320
19J-12	CLAMP			92
19KB-1210	TEE			84
21G-804	BOLT			280
21KB-606	TEE			92, 330
21KB-610	TEE			58, 224
21KB-1010	TEE			54
24K-5	PLUG			90
25E-11	WASHER			266
25E-13	WASHER			134, 138, 212, 216, 310
25E-14	WASHER			242
25E-15	WASHER			126, 252
25E-16	WASHER			228, 234, 252
25E-17	WASHER			98, 132
25E-18	WASHER			156
25E-21	WASHER			154
25G-512	BOLT			24, 30
25G-520	BOLT			30
25G-612	BOLT			260, 262
25GT-410	BOLT			134, 282
25K-20016	O-RING			72, 76

Code for disposition of old part number

A — Use up

B — Use on other application (See PNI)

C — File PDR Report with Bobcat Parts Sales

D — Part Number Error

www.youfixthis.com

NUMERICAL INDEX (Cont'd)

Part No.	Description	Was	Code	Page
25K-30118	O-RING			90
27E-6	WASHER			54, 58
29CM-820	BOLT			154
29G-412	BOLT			76
29G-416	BOLT			72, 76
29G-444	BOLT			72
30G-416	BOLT			72
30H-19	CLAMP			216
30H-21	CLAMP			276
30H-23	CLAMP			156
30H-27	CLIP			258
30H-42	CLAMP			316
30H-44	CLAMP			94
30H-45	CLAMP			54, 298
30H-50	CLAMP			260, 298, 300, 304
30H-62	CLAMP			132, 212
30H-64	CLAMP			302
31C-410	BOLT			272
31C-820	BOLT			22
31C-824	BOLT			314
31C-828	BOLT			22
31C-836	BOLT			312
31C-1032	BOLT			44
31C-1220	BOLT			44
31C-1224	BOLT			44
31C-1228	BOLT			44
31H-27	CLAMP			40
31H-46	CLAMP			300, 304
31H-49	CLAMP			320
35C-408	BOLT			230
35C-410	BOLT			216, 268, 286, 300
35C-412	BOLT			28, 276
35C-508	BOLT			144
35C-512	BOLT			262, 310
35C-516	BOLT			154, 300, 304
35C-536	BOLT			224, 268
35C-610	BOLT			44
35C-612	BOLT			70, 148
35C-616	BOLT			54, 58, 128, 320
35C-620	BOLT			126, 150, 154, 302, 304
35C-624	BOLT			302, 306
36K-5	CAP			54, 58, 90, 330
36K-6	CAP			154
36K-7	CAP			54
36K-8	CAP			54, 58
37C-412	BOLT			276
37C-424	BOLT			286, 300
37C-512	BOLT			286, 300, 316
37C-620	BOLT			70, 212
37C-888	BOLT			22
38C-610	BOLT			156

Code for disposition of old part number

A — Use up

B — Use on other application (See PNI)

C — File PDR Report with Bobcat Parts Sales

D — Part Number Error

www.youfixthis.com

NUMERICAL INDEX (Cont'd)

Part No.	Description	Was	Code	Page
38C-820	BOLT			150
38C-824	BOLT			34
38C-840	BOLT			34
40K-6	PLUG			148
42H-10	CLAMP			40
42H-32	CLAMP			40
42HL-300	CLAMP			148
42HL-325	CLAMP			148
42HS-4	CLAMP			40
43C-408	BOLT			132, 138
43C-524	BOLT			80
43C-532	BOLT			62, 80
43C-616	BOLT			126
43C-852	BOLT			154, 264
43DM-8	NUT			126
44H-48	CLAMP			304
45C-620	BOLT			98
45G-1006	BOLT			272
46D-5	NUT			228, 234
47K-8	PLUG			110, 114
47K-10	PLUG			90
53D-6	NUT			24, 28
53D-10	NUT			24
53DM-8	NUT			154
54K-20002	O-RING			74, 76
54K-20028	O-RING			80
54K-30110	O-RING			322
54K-30210	O-RING			66
54K-40116	O-RING			322
54K-40208	O-RING			68
54K-40224	O-RING			66
54K-60212	O-RING			66
55D-5	NUT			268
55D-6	NUT			234
55K-204	O-RING			74, 76, 80
55K-212	O-RING			74, 76, 80
55K-214	O-RING			320
57D-5	NUT			58, 154, 224
57D-6	NUT			70, 212, 314
57D-8	NUT			314
57G-608	SCREW			286, 300
58K-14	O-RING			72, 76
58K-17	O-RING			72, 76
58K-120	O-RING			132
58K-124	O-RING			72, 78
58K-127	O-RING			74, 76
58K-132	O-RING			322
58K-214	O-RING			92
58K-230	O-RING			68
59D-4	NUT			156, 242, 276
59D-5	NUT			24, 126, 230, 234, 252, 286, 300

Code for disposition of old part number

A — Use up

B — Use on other application (See PNI)

C — File PDR Report with Bobcat Parts Sales

D — Part Number Error

www.youfixthis.com

NUMERICAL INDEX (Cont'd)

Part No.	Description	Was	Code	Page
59D-6	NUT			34, 54, 58
59D-8	NUT			24, 54, 58, 64
59G-616	BOLT			216
61D-4	NUT			216, 228, 234, 252
61D-5	NUT			34, 216, 230, 234, 246
61D-6	NUT			22, 90, 96, 144, 148, 150, 230
62D-6	NUT			98, 132, 254
63D-8	NUT			312
69G-436	BOLT			132
72F-1	DRAIN COCK			40
73G-656	BOLT			150, 320
73G-824	BOLT			98
73K-222	WASHER			322
73K-228	WASHER			68
75K-3	O-RING			66, 68, 322
75K-6	O-RING			94
75K-12	O-RING			74, 92
79K-2	O-RING			146
79K-20	O-RING			84
79K-4	O-RING			320
79K-6	O-RING			62, 74, 90, 96, 226, 320, 328
79K-7	O-RING			76, 324
79K-8	O-RING			72, 76, 110, 114, 154, 226, 324
79K-10	O-RING			54, 58, 72, 76, 84, 94, 112, 224, 324
79K-12	O-RING			56, 60, 64, 90, 94, 112, 116, 320, 328
79K-16	O-RING			84, 90
80K-14	WASHER			72, 76
80K-116	RING			226
80K-332	WASHER			66
83D-4	NUT			28, 62, 126, 268, 286, 300, 310
83D-5	NUT			300, 304, 310
83D-6	NUT			54, 58, 62, 70, 98, 260, 262, 274, 328
83D-6□	NUT			84
83D-8	NUT			22, 154
83D-10	NUT			44
83D-12	NUT			44
84G-3112	BOLT			24, 32, 84, 146, 216, 246, 258, 260, 262
84G-3708	BOLT			94, 148
84G-3710	BOLT			90, 132, 212, 300, 304
84G-3712	BOLT			22, 32, 40, 44, 54, 58, 94, 124, 126, 148, 154, 156, 224, 268, 278
84G-3716	BOLT			90, 126, 154, 156, 268, 298, 300, 304
84G-3720	BOLT			54, 58, 84
84G-3724	BOLT			54, 58, 156, 320, 328, 330
84G-3728	BOLT			56, 60
84G-3736	BOLT			64
84G-3740	BOLT			64
85D-4	NUT			268
85D-5	NUT			128, 156, 316
85D-6	NUT			26, 34, 36, 38, 44, 312

Code for disposition of old part number

A — Use up

B — Use on other application (See PNI)

C — File PDR Report with Bobcat Parts Sales

D — Part Number Error

www.youfixthis.com

NUMERICAL INDEX (Cont'd)

Part No.	Description	Was	Code	Page
85D-7	NUT			26
85D-8	NUT			24, 150, 154
85G-616	BOLT			268
85G-808	BOLT			268
86F-5	NUT			278, 328, 330
86F-8	NUT			94
87D-5	NUT			312
88F-5	ELBOW			328, 330
90K-5	PLUG			94
90K-8	PLUG			74
91D-6	NUT			98, 128
91D-7	NUT			228, 234
91G-416	BOLT			242
91G-420	BOLT			242, 250
91K-5	TEE			328, 330
92D-10	NUT			322
92D-12	NUT			150
92D-16	NUT			66
95D-5	NUT			24, 126, 132, 212
95D-6	NUT			70, 132, 158, 234
95K-6	O-RING			90
96D-8	NUT			146
97D-4	NUT			216
97D-5	NUT			252
97D-6	NUT			302, 306
97D-8	NUT			24, 280
97K-6	O-RING			78
97K-12	O-RING			90
98D-6	NUT			98, 132
98G-412	BOLT			138
99K-5	O-RING			40
99K-6	O-RING			96
99K-10	O-RING			278, 330

Code for disposition of old part number

A — Use up

B — Use on other application (See PNI)

C — File PDR Report with Bobcat Parts Sales

D — Part Number Error