RUTHZIL TRATOR COMERCIAL DE PEÇAS LTDA 11 97083-6812 ROLANDO CITRANGULO

Bobcat®

T250

TURBO

Parts Manual

S/N 5231 11001 & Above
S/N 5230 11001 & Above
S/N 5256 11001 & Above
S/N 5257 11001 & Above

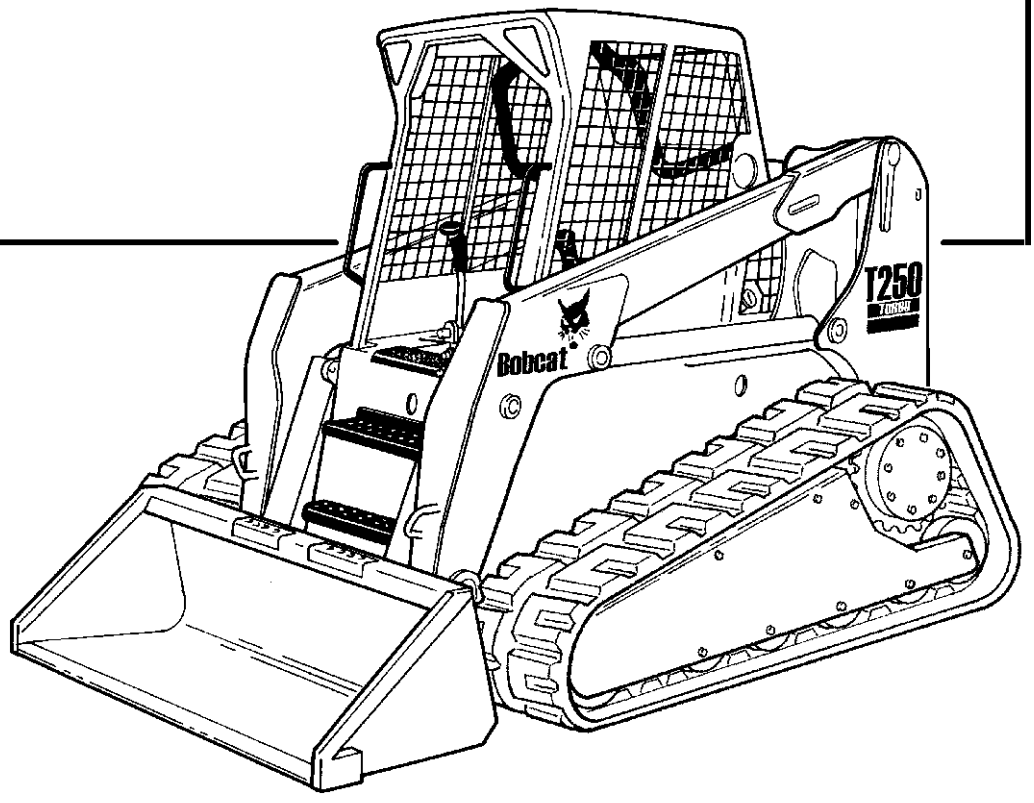

An Ingersoll Rand business

6902636 (8-03) U.S.A.

● Bobcat Company 2003

T250 CONTENTS

MAINTENANCE ITEMS 11-18
MAINTENANCE ITEMS 11-12
SERVICE SCHEDULE ITEMS 13-18
MAIN FRAME 19-44
MAIN FRAME 19-20
OPERATOR CAB 21-26
SEAT & SEAT BAR 27-28
SEAT 29-32
REAR DOOR 33-34
LIFT ARMS & BOBTACH 35-36
BOB-TACH 37-38
PANELS 39-42
FUEL SYSTEM 43-44
DRIVE TRAIN 45-54
DRIVE TRAIN 45-46
TRACK TENSIONER 47-48
FRONT IDLER 49-50
REAR IDLER 51-52
TRACK ROLLER 53-54
HYDRAULIC SYSTEM 55-80
HYDRAULIC CIRCUITRY 55-56
LIFT & TILT CONTROL CIRCUITRY 57-58
AUXILIARY HYDRAULICS 59-60
TILT CYLINDER 61-62
LIFT CYLINDER 63-64
MANUAL LIFT RELEASE VALVE 65-66
CONTROL PEDALS 67-68
HYDRAULIC CONTROL VALVE 69-72
BICS CONTROL VALVE 73-74
HYDRAULIC CONTROL VALVE 75-78
BUCKET POSITIONING VALVE 79-80
HIGH HORSEPOWER HYDRAULICS 81-86
HIGH HORSEPOWER HYDRAULICS 81-86
HYDROSTATIC SYSTEM 87-122
HYDROSTATIC CIRCUITRY 87-92
HAND CONTROLS 93-94
HYDROSTATIC MOTOR & BRAKE 95-98
HYDROSTATIC PUMP 97-112
GEAR PUMP 113-117
HYDROSTATIC OIL FILTER 117-120
BRAKE VALVE 121-122
ELECTRICAL SYSTEM 123-144
CAB ELECTRICAL CIRCUITRY 123-124
ENGINE ELECTRICAL 125-128
CONTROLS ELECTRICAL 129-140
ALTERNATOR 141-142
STARTER 143-144
POWER UNIT 145-236
COOLING SYSTEM 145-150
ENGINE & ATTACHING PARTS 151-160
ENGINE SPEED CONTROL 161-164
COOLING FAN DRIVE ASSY. 165-166
ENGINE & GASKET KITS 167-168
MANIFOLDS 169-170

T250 CONTENTS (Cont'd)

POWER UNIT (CONT'D) 145-236

TURBOCHARGER 171-172
CYLINDER HEAD & COVER 173-174
CYLINDER HEAD 175-176
OIL PAN 177-178
PISTON & CRANKSHAFT 179-180
CAMSHAFT 181-182
FRONT COVER 183-184
WATER PUIMP & THERMOSTAT 185-186
WATER PUMP 187-188
FUEL INJECTION SYSTEM 189-192
FUEL INJECTION PUMP 193-194
GOVERNOR 195-198
AIR CLEANER 199-200
* ENGINE 201-202
* MANIFOLDS 203-204
* TURBOCHARGER 205-206
* CYLINDER HEAD & COVER 207-208
* CYLINDER HEAD 209-210
* OIL PAN 211-212
* PISTON & CRANKSHAFT 213-214
* CAMSHAFT 215-216
* FRONT COVER 217-218
* WATER PUMP & THEMOSTAT 219-220
* WATER PUMP 221-222
* FUEL INJECTION SYSTEM 223-226
* FUEL INJECTION PUMP 227-228
* GOVERNOR 229-234
* AIR CLEANER 235-236

ACCESSORIES & OPTIONS 240-351

ACS CONVERSION KIT 240-241
BACK-UP ALARM KIT 242-245
BEACON 246-247
BLOCK HEATER 248-249
BUCKET POSITIONING KIT 250-251
CAB DOOR 252-261
CAB ENCLOSURE 262-265
CAB WINDOWS 266-269
DEBRIS SHIELD KIT 270-271
ELECTRICAL CONNECTOR KIT 272-273
ELECTRICAL CONTROLS KIT 274-277
EUROPEAN ACCESSORIES 278-281
FIRE EXTINGUISHER 282-283
FLASHER LIGHTS 284-285
F.O.P.S. KIT 286-287
FRONT AUXILIARY 288-289
GAS SPRING KIT 290-291
HEATER & A/C 292-309
HORN KIT 310-313
LIFT KIT 314-317
LIGHT KIT 318-319
NOISE REDUCTION KIT 320-321
POWER BOB-TACH KIT 322-323
POWER BOB-TACH CYLINDER 324-325
POWER BOB-TACH 326-327

T250 CONTENTS (Cont'd)

ACCESSORIES & OPTIONS (CONT'D) 240-351

PURIFIER 328-329
RADIATOR SCREEN KIT 330-331
REAR AUXILIARY HYDRAULICS 332-333
REAR AUXILIARY VALVE 334-335
REAR DOOR LOCK 336-337
REAR WIPER 338-339
SEAT BELT 340-345
STEERING DAMPENING KIT 346-347
STROBE LIGHT 348-349
BULK ITEMS 350-351

T250 CONTENTS

MAINTENANCE ITEMS 11-18
MAINTENANCE ITEMS 11-12
SERVICE SCHEDULE ITEMS 13-18
MAIN FRAME 19-44
MAIN FRAME 19-20
OPERATOR CAB 21-26
SEAT & SEAT BAR 27-28
SEAT 29-32
REAR DOOR 33-34
LIFT ARMS & BOBTACH 35-36
BOB-TACH 37-38
PANELS 39-42
FUEL SYSTEM 43-44
DRIVE TRAIN 45-54
DRIVE TRAIN 45-46
TRACK TENSIONER 47-48
FRONT IDLER 49-50
REAR IDLER 51-52
TRACK ROLLER 53-54
HYDRAULIC SYSTEM 55-80
HYDRAULIC CIRCUITRY 55-56
LIFT & TILT CONTROL CIRCUITRY 57-58
AUXILIARY HYDRAULICS 59-60
TILT CYLINDER 61-62
LIFT CYLINDER 63-64
MANUAL LIFT RELEASE VALVE 65-66
CONTROL PEDALS 67-68
HYDRAULIC CONTROL VALVE 69-72
BICS CONTROL VALVE 73-74
HYDRAULIC CONTROL VALVE 75-78
BUCKET POSITIONING VALVE 79-80
HIGH HORSEPOWER HYDRAULICS 81-86
HIGH HORSEPOWER HYDRAULICS 81-86
HYDROSTATIC SYSTEM 87-122
HYDROSTATIC CIRCUITRY 87-92
HAND CONTROLS 93-94
HYDROSTATIC MOTOR & BRAKE 95-98
HYDROSTATIC PUMP 97-112
GEAR PUMP 113-117
HYDROSTATIC OIL FILTER 117-120
BRAKE VALVE 121-122
ELECTRICAL SYSTEM 123-144
CAB ELECTRICAL CIRCUITRY 123-124
ENGINE ELECTRICAL 125-128
CONTROLS ELECTRICAL 129-140
ALTERNATOR 141-142
STARTER 143-144
POWER UNIT 145-236
COOLING SYSTEM 145-150
ENGINE & ATTACHING PARTS 151-160
ENGINE SPEED CONTROL 161-164
COOLING FAN DRIVE ASSY. 165-166
ENGINE & GASKET KITS 167-168
MANIFOLDS 169-170

T250 CONTENTS (Cont'd)

POWER UNIT (CONT'D) 145-236

TURBOCHARGER 171-172
CYLINDER HEAD & COVER 173-174
CYLINDER HEAD 175-176
OIL PAN 177-178
PISTON & CRANKSHAFT 179-180
CAMSHAFT 181-182
FRONT COVER 183-184
WATER PUIMP & THERMOSTAT 185-186
WATER PUMP 187-188
FUEL INJECTION SYSTEM 189-192
FUEL INJECTION PUMP 193-194
GOVERNOR 195-198
AIR CLEANER 199-200
* ENGINE 201-202
* MANIFOLDS 203-204
* TURBOCHARGER 205-206
* CYLINDER HEAD & COVER 207-208
* CYLINDER HEAD 209-210
* OIL PAN 211-212
* PISTON & CRANKSHAFT 213-214
* CAMSHAFT 215-217
* FRONT COVER 217-218
* WATER PUMP & THEMOSTAT 219-220
* WATER PUMP 221-222
* FUEL INJECTION SYSTEM 223-226
* FUEL INJECTION PUMP 227-228
* GOVERNOR 229-234
* AIR CLEANER 235-236

ACCESSORIES & OPTIONS 240-351

ACS CONVERSION KIT 240-241
BACK-UP ALARM KIT 242-245
BEACON 246-247
BLOCK HEATER 248-249
BUCKET POSITIONING KIT 250-251
CAB DOOR 252-261
CAB ENCLOSURE 262-265
CAB WINDOWS 266-269
DEBRIS SHIELD KIT 270-271
ELECTRICAL CONNECTOR KIT 272-273
ELECTRICAL CONTROLS KIT 274-277
EUROPEAN ACCESSORIES 278-281
FIRE EXTINGUISHER 282-283
FLASHER LIGHTS 284-285
F.O.P.S. KIT 286-287
FRONT AUXILIARY 288-289
GAS SPRING KIT 290-291
HEATER & A/C 292-309
HORN KIT 310-313
LIFT KIT 314-317
LIGHT KIT 318-319
NOISE REDUCTION KIT 320-321
POWER BOB-TACH KIT 322-323
POWER BOB-TACH CYLINDER 324-325
POWER BOB-TACH 326-327

T250 CONTENTS (Cont'd)

ACCESSORIES & OPTIONS (CONT'D) 240-351

PURIFIER 328-329
RADIATOR SCREEN KIT 330-331
REAR AUXILIARY HYDRAULICS 332-333
REAR AUXILIARY VALVE 334-335
REAR DOOR LOCK 336-337
REAR WIPER 338-339
SEAT BELT 340-345
STEERING DAMPENING KIT 346-347
STROBE LIGHT 348-349
BULK ITEMS 350-351

GENERAL INFORMATION

When using the machine serial number, use the complete number.

Some Serial Number breaks are not available at time of printing. These are listed as & Below or & Above.

The number shown in the quantity column in this manual is the number of parts needed for the illustration on the page. For some parts an "x" will be shown in the quantity column. This "x" indicates that the quantity to be used is "As Needed".

When references L.H. and R.H. are used in this manual, it is done from the operator's seat in the forward operating position.

To find the size and kind of bolt use the Bobcat Standard Microfiche (P/N 6566077).

Some of the illustrations and information found in this parts manual were supplied to Bobcat by machine component companies.

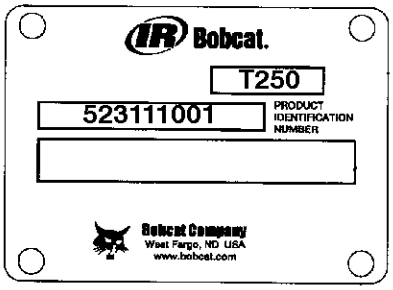

DOMESTIC

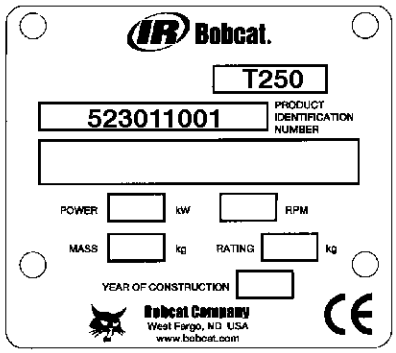

EXPORT

ABBREVIATIONS & SYMBOLS

SALES = Order from Gwinner Sales Department

NSS = Not Serviced Seperately

NAP = Not Available as Parts

***** = Changed or Added Sections, Pages or Part Numbers

Disposition Code Definition (Found in the Remarks Column)

[A] = Use Up

[B] = Use Up on Other Appplication (See PNI)

[C] = File PDR Report With Bobcat Parts Sales

[D] = Part Number Error

Explications en francais	Grid Nb	3
Erklärungen auf deutsch	Grid Nb	4
Spiegazioni in italiano	Grid Nb	5
Explicaciones en espanol	Grid Nb	6
Verklaring in het Nederlands	Grid Nb	7

NOTE D'INFORMATION

Pour toute référence au numéro de série de l'engin, toujours donner le numéro complet.

Le chiffré apparaissant dans la colonne des quantités de ce manuel représentent le nombre de pièces nécessaires pour l'illustration reprise sur la page. Dans certains cas, on lira un "x" dans la colonne des quantités. Cet "x" indique que la quantité nécessaire est "selon besoin".

Pour toute référence vers la GAUCHE ou la DROITE dans ce manuel, considérer que la personne se trouve assise dans le siège de l'opérateur, en position de fonctionnement en marche avant.

Certaines illustrations et informations reprises dans ce manuel de pièces de rechange ont été fournies à Bobcat, par des fabricants de composants.

ABREVIATIONS & SYMBOLES

SALES	= Commander au Service Ventes à Bruxelles
NSS	= Pas vendu séparément
NAP	= Non disponible comme pièce de rechange
*	= Chapitre, page ou numéro de pièce modifié ou supplémentaire
BTI	= Bobcat Technical Information Bulletin : voir à la fin de la microfiché du modèle concerné ou la microfiche générale reprenant l' ensemble des "BTI".
was 6535403	= était avant 6535403
adj. (adjustment)	= réglage
Assembly	= ensemble
available W/Ref.	= disponible avec réf.
bulk/sold per foot	= en vrac/vendu par pied
does not include	= ne comprend pas
included with	= compris dans
I.D.	= D.I. (diamètre intérieur)
O.D.	= D.E. (diamètre extérieur)
not in kit	= pas en kit
W/ - WO/	= inclus/ - non inclus/
Qty	= quantité requise
see page/ref.	= voir page/réf.
used with ref/	= utilisé avec réf.
0,05 inch thickness	= 0,05 pouce d'épaisseur (un pouce = 25.4 mm)
weld on	= à souder

ALLGEMEINE INFORMATIONEN

Bei Angabe der Maschinen-Seriennummer stets die komplette Nummer angeben.

Bei der in der Mengenspalte (Anzahl) in diesem Handbuch angegebenen Zahl handelt es sich um die Anzahl von Teilen, die für die Abbildung auf der betreffenden Seite benötigt werden. Bei manchen Teilen in der Mengenspalte ist ein “x” angegeben. Dieses “x” weist darauf hin, dass sich die Anzahl der verwendeten Teile auf den “Bedarf” bezieht.

Bei Verwendung der Seitenangaben links und rechts in diesem Handbuch gelten diese für die Blickrichtung vom Fahrersitz aus, und zwar in Vorwärts-Betriebsrichtung.

Einige der in diesem Ersatzteilhandbuch aufgeführten Abbildungen und Informationen wurden der Bobcat, von den Herstellern von Maschinenbauteilen zur Verfügung gestellt.

ABKÜRZUNGEN UND SYMBOLE

SALES	= Bestellung bei der Verkaufsabteilung in Brüssel
NSS	= Nicht einzeln erhältlich
NAP	= Nicht als Ersatzteil erhältlich
*****	= Geänderte oder hinzugefügte Abschnitte, Seiten oder Teilenummern
BTI	= Bobcat Technical Information Bulletin : Siehe am Ende der Mikrokarte des jeweiligen Modells oder der allgemeinen Mikrokarte der BTI.
was 6535403	= War 6535403
adj.	= Einstellung
Assembly	= Baugruppe
available W/Ref.	= erhältlich mit der Referenz
bulk/sold per foot	= Mengenabnahme / Verkauf pro Fuss
does not include	= beinhaltet nicht
included with	= enthalten in
I.D.	= Innendurchmesser
O.D.	= Aussendurchmesser
not in kit	= nicht in Bausatz
W/ - WO/	= mit/ - ohne/
Qty	= Anzahl
see page/ref.	= Siehe Seite / Referenz
used with ref.	= verwendet mit Referenz
0.05 inch thickness	= Dicke : 0.05 Zoll (ein Zoll = 25.4 mm)
weld on	= anschweissen

INFORMAZIONI GENERALI

Quando si usa il numero di serie della macchina usare il numero completo.

Il numero mostrato nella colonna della quantità di questo manuale corrisponde al numero di componenti necessari per l'illustrazione della pagina. Per alcuni componenti appare "X" nella colonna delle quantità. Questa "X" indica che la quantità da usare è "come necessario".

See in questo manuale si fa riferimento alla parte destra o sinistra, si intende dal sedile dell'operatore nella posizione in avanti di funzionamento.

Alcune delle illustrazioni e informazioni trovate in questo manuale di componenti sono state fornite alla Bobcat, da società di componenti di macchine.

SIMBOLI E ABBREVIAZIONI

SALES	= Ordinare al servizio vendite di Bruxelles
NSS	= Non vendute separatamente
NAP	= Non disponibile come componente
*	= Sezioni, pagine o numeri di componente cambiati o aggiunti
BTI	= (Bobcat Technical information) Ved. al termine del microfiche del modello relativo oppure microfiche generale
was 6535403	= era 6535403
adj. (adjustment)	= regol. (regolazione)
Assembly	= Complessivo
available W/Ref.	= disponibile con rif.
bulk/sold per foot	= alla rinfusa/venduto al piede
does not include	= non comprende
Included with	= compreso con
I.D.	= d. i.
O.D.	= d. e.
not in kit	= non fa parte del kit
W/ - WO/	= con - senza
Qty	= Qtà
see page/ref	= ved. pagina/rif.
used with ref.	= usato con il rif.
0,05 inch thickness	= spessore 0,05 pollici (un pollice = 25,4 mm)
weld on	= a saldare

INFORMACION GENERAL

Al utilizar el número de serie de la máquina, debe emplearse el número completo.

El número que figura en la columna de “Unidades” en este manual es el número de piezas que se necesitan para la ilustración que consta en la página. En algunas piezas aparece una “x” en la columna de “Unidades”. Esta “x” indica que las unidades a utilizar son “según sea necesario”.

Cuando se empleen las referencias izq. y dcha., éstas se entienden mirando desde el asiento del conductor, en posición de marcha adelante.

Algunas de las ilustraciones y la información que figuran en este manual de piezas han sido facilitadas a Bobcat, por empresas de componentes de máquinas.

ABREVIATURAS Y SIMBOLOS

VENTAS	= Pedido al Departamento de Ventas de Bruselas
NSS	= No se vende por separado
NAP	= No disponible como pieza de repuesto
*	= Secciones, páginas o referencias modificadas o añadidas
BTI	= (Bobcat Tecnical Information) Ver al final de la microficha del modelo afectado o en la microficha general “Boletín de Información Técnica Bobcat”.
was 6535403	= era anteriormente el 6535403
adj. (adjustment)	= ajuste
assembly	= conjunto
available W/Ref.	= disponible con la ref.
bulk/sold per foot	= a granel/vendido por pies
does not include	= no incluye
included with	= incluido en
I.D.	= diámetro interior
O.D.	= diámetro exterior
not in kit	= no en el kit
W/ - WO/	= con/ - sin
Qty	= Unidades
see page /ref.	= ver página/ref.
used with ref.	= empleado con la ref.
0,05 inch thickness	= 0,05 pulgadas de espesor (1 pulgada = 25,4 mm)
weld on	= debe ser soldado

ALGEMENE INFORMATIE

Als u het serienummer van de machine gebruikt, geef dan het gehele serienummer.

Het cijfer dat voorkomt in de kolom “Aantal”, in deze handleiding, is het aantal onderdelen dat nodig is van de illustratie op de pagina. Voor sommige onderdelen staat er een “x” in de kolom “Aantal”. Deze “x” betekent dat er een aantal “zoals nodig” vereist is.

Wanneer er in deze handleiding naar “links” en naar “rechts” gerefereerd wordt, moet dit verstaan worden voor een bestuurder die in de bestuurdersstoel zit in de voorwaartse bedrijfsstand.

Sommige van de illustraties en informatie in deze onderdelen-handleiding werden door firma’s van machine-componenten geleverd aan Bobcat.

AFKORTINGEN EN SYMBOLEN

SALES	= Bestellen bij de Verkoopafdeling te Brussel
NSS	= Niet afzonderlijk te verkrijgen
NAP	= Niet beschikbaar als onderdeel
*****	= Gewijzigde of toegevoegde paragrafen, pagina’s of onderdeelnummers
BTI	= Bobcat Technical Information Bulletin : Zie einde van de microfiche van het desbetreffende model of einde van de algemene microfiche die het geheel van alle “BTI” herneemt.
was 6535403	= was vroeger 6535403
adj. (adjustment)	= afstelling
Assembly	= geheel
available W/Ref.	= beschikbaar met ref.
bulk/sold per foot	= bulk/aan de meter verkocht
does not include	= bevat niet
includes with	= is bevat in
I.D.	= ϕ inw. (inwendige diameter)
O.D.	= ϕ uitw. (uitwendige diameter)
not in kit	= niet in de kit
W/ - WO/	= met/ - zonder/
Qty	= vereiste aantal
see page/ref.	= zie pagina/ref.
used with ref/	= gebruikt met ref.
0,05 inch thickness	= 0.05 inch dik (een inch = 25.4 mm)
weld on	= te lassen

Use only Bobcat belts and hoses to maintain maximum service life.

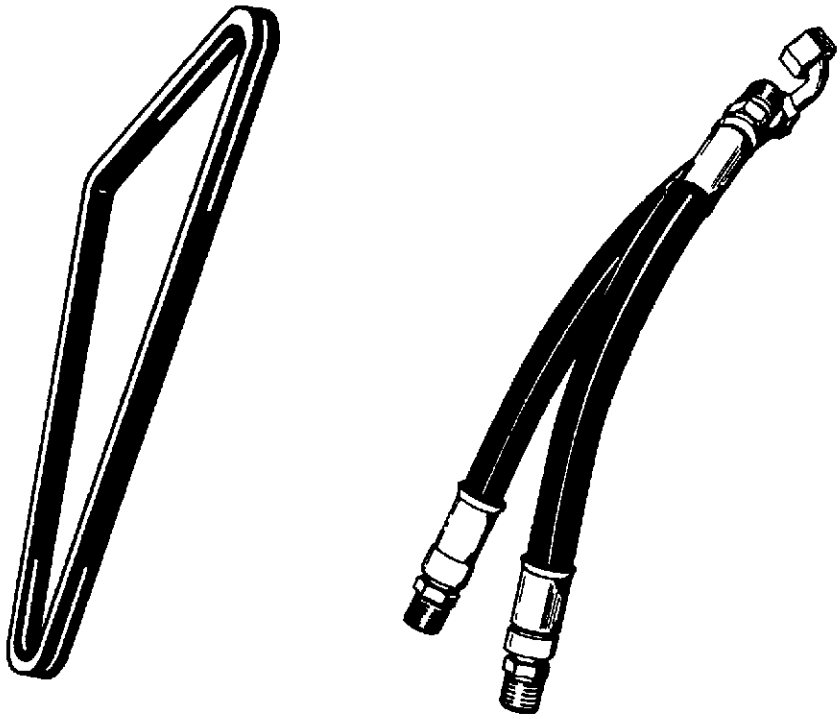

Available from Bobcat Parts.

Bobcat

MAINTENANCE ITEMS
(Model T250)

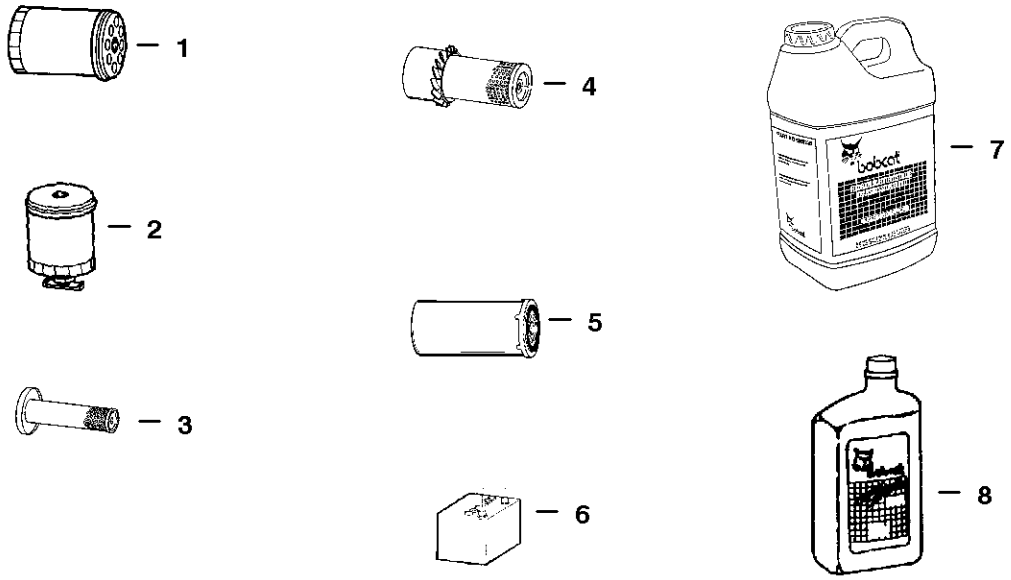

B-21592

MAINTENANCE ITEMS

Ref.N°	Part N°	Description	Remarks	Serial N°	Qty.
1	6678233	FILTER	Engine Oil (6 Pack) - See Page OIL PAN(6)		x
2	6667352	FILTER	Fuel - See Page FUEL SYSTEM(27)		x
3	6681474	CARTRIDGE	Inner Air Cleaner - See Page AIR CLEANER(13)		x
4	6681475	CARTRIDGE	Outer Air Cleaner - See Page AIR CLEANER(13)		x
5	6661248	ELEMENT	Hydrostatic # 3 Media - See Page HYDROSTATIC OIL FILTER(5)		x
6	6665427	BATTERY	950 AMP - See Page		x
7	6563328	BLACK GOLD	Hyd./Hydro. - (2) 2.5 Gal. - (5 Gal.) - See Page NO PAGE(7)		x
7	6722344	BLACK GOLD	Hyd./Hydro. - (5 Gal.) - See Page NO PAGE(7)		x
7	6563330	BLACK GOLD	Hyd./Hydro. - 55 Gallon Drum - See Page NO PAGE(12)		x
8	6657301	MOTOR OIL	10W30 CE/SG - 1 Qt. - See Page NO PAGE(12)		x
8	6657299	MOTOR OIL	15W40 CE/SG - 1 Qt. - See Page NO PAGE(12)		x
8	6657303	MOTOR OIL	30 CE/SG - 1 Qt. - See Page NO PAGE(12)		x
8	6724558	MOTOR OIL	15W40 CE/SG - 1 Gallon - See Page NO PAGE(12)		x
8	6724557	MOTOR OIL	10W30 CE/SG - 1 Gallon - See Page NO PAGE(12)		x
8	6724559	MOTOR OIL	30 CE/SG - 1 Gallon - See Page NO PAGE(12)		x
8	6674205	MOTOR OIL	10W30 CE/SG - 2.5 Gal. - See Page NO PAGE(12)		x
8	6674204	MOTOR OIL	15W40 CE/SG - 2.5 Gal. - See Page NO PAGE(12)		x
8	6674206	MOTOR OIL	30 CE/SG - 2.5 Gal. - See Page NO PAGE(12)		x

SERVICE SCHEDULE ITEMS

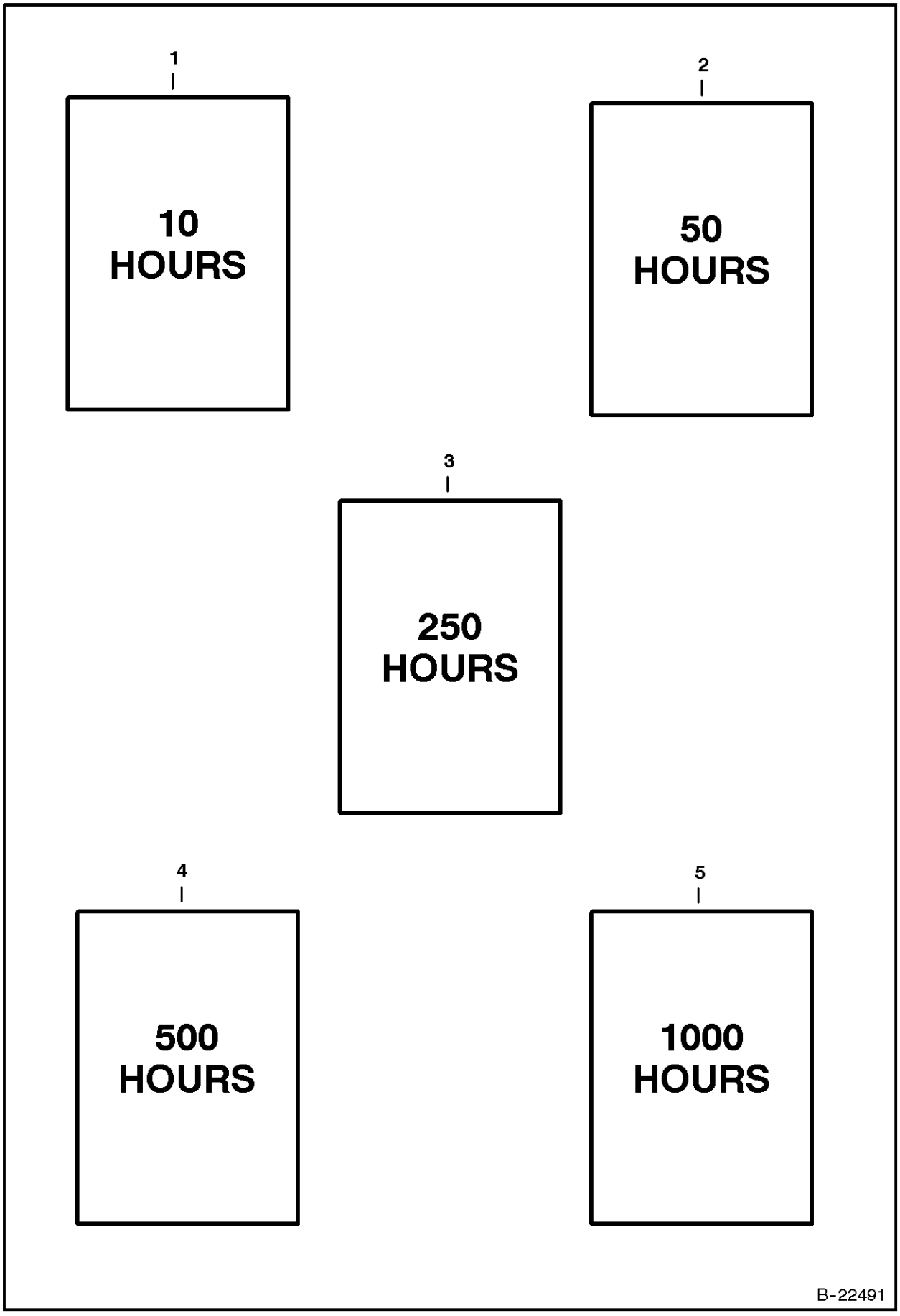

SERVICE SCHEDULE ITEMS

Ref.N°	Part N°	Description	Remarks	Serial N°	Qty.
1		SERVICE	10 hour interval - items that need to be checked/serviced		1
1	6657301	MOTOR OIL	10W30 CE/SG - 1 Qt.		x
1	6657299	MOTOR OIL	15W40 CE/SG - 1 Qt.		x
1	6657303	MOTOR OIL	30 CE/SG - 1 Qt.		x
1	6724558	MOTOR OIL	15W40 CE/SG - 1 Gallon		x
1	6724557	MOTOR OIL	10W30 CE/SG - 1 Gallon		x
1	6724559	MOTOR OIL	30 CE/SG - 1 Gallon		x
1	6674205	MOTOR OIL	10W30 CE/SG - 2.5 Gal.		x
1	6674204	MOTOR OIL	15W40 CE/SG - 2.5 Gal.		x
1	6674206	MOTOR OIL	30 CE/SG - 2.5 Gal.		x
1	6658266	GREASE	general purpose		x
1	6681474	CARTRIDGE	Inner Air Cleaner		x
1	6681475	CARTRIDGE	Outer Air Cleaner		x
1	6677983	FILTER	HVAC		x
2		SERVICE	50 hour interval - items that need to be checked/serviced		1
2	6657301	MOTOR OIL	10W30 CE/SG - 1 Qt.		x
2	6657299	MOTOR OIL	15W40 CE/SG - 1 Qt.		x
2	6657303	MOTOR OIL	30 CE/SG - 1 Qt.		x
2	6724558	MOTOR OIL	15W40 CE/SG - 1 Gallon		x
2	6724557	MOTOR OIL	10W30 CE/SG - 1 Gallon		x
2	6724559	MOTOR OIL	30 CE/SG - 1 Gallon		x
2	6674205	MOTOR OIL	10W30 CE/SG - 2.5 Gal.		x
2	6674204	MOTOR OIL	15W40 CE/SG - 2.5 Gal.		x
2	6674206	MOTOR OIL	30 CE/SG - 2.5 Gal.		x
2	6658266	GREASE	general purpose		x
2	6681474	CARTRIDGE	Inner Air Cleaner		x
2	6681475	CARTRIDGE	Outer Air Cleaner		x
2	6677983	FILTER	HVAC		x
2	6563328	BLACK GOLD	Hyd./Hydro. - (2) 2.5 Gal.		x
2	6722344	BLACK GOLD	Hyd./Hydro. - 5 Gal.		x
2	6563330	BLACK GOLD	Hyd./Hydro. - 55 Gallon Drum		x
2	6678233	FILTER	Engine Oil (6 Pack) - change oil after the first 50 hours and every 500 hours thereafter		x
3		SERVICE	250 hour interval - items that need to be checked/serviced		1
3	6657301	MOTOR OIL	10W30 CE/SG - 1 Qt.		x
3	6657299	MOTOR OIL	15W40 CE/SG - 1 Qt.		x
3	6657303	MOTOR OIL	30 CE/SG - 1 Qt.		x
3	6724558	MOTOR OIL	15W40 CE/SG - 1 Gallon		x
3	6724557	MOTOR OIL	10W30 CE/SG - 1 Gallon		x
3	6724559	MOTOR OIL	30 CE/SG - 1 Gallon		x
3	6674205	MOTOR OIL	10W30 CE/SG - 2.5 Gal.		x
3	6674204	MOTOR OIL	15W40 CE/SG - 2.5 Gal.		x
3	6674206	MOTOR OIL	30 CE/SG - 2.5 Gal.		x
3	6658266	GREASE	general purpose		x
3	6681474	CARTRIDGE	Inner Air Cleaner		x
3	6681475	CARTRIDGE	Outer Air Cleaner		x
3	6677983	FILTER	HVAC		x
3	6563328	BLACK GOLD	Hyd./Hydro. - (2) 2.5 Gal.		x

SERVICE SCHEDULE ITEMS

Ref.N°	Part N°	Description	Remarks	Serial N°	Qty.
3	6722344	BLACK GOLD	Hyd./Hydro. - 5 Gal.		x
3	6563330	BLACK GOLD	Hyd./Hydro. - 55 Gallon Drum		x
3	6672152	BELT	drive		1
3	6730819	BELT	air conditioner		1
3	6667352	FILTER	Fuel		1
4		SERVICE	500 hour interval - items that need to be checked/serviced		1
4	6657301	MOTOR OIL	10W30 CE/SG - 1 Qt.		x
4	6657299	MOTOR OIL	15W40 CE/SG - 1 Qt.		x
4	6657303	MOTOR OIL	30 CE/SG - 1 Qt.		x
4	6724558	MOTOR OIL	15W40 CE/SG - 1 Gallon		x
4	6724557	MOTOR OIL	10W30 CE/SG - 1 Gallon		x
4	6724559	MOTOR OIL	30 CE/SG - 1 Gallon		x
4	6674205	MOTOR OIL	10W30 CE/SG - 2.5 Gal.		x
4	6674204	MOTOR OIL	15W40 CE/SG - 2.5 Gal.		x
4	6674206	MOTOR OIL	30 CE/SG - 2.5 Gal.		x
4	6658266	GREASE	general purpose		x
4	6681474	CARTRIDGE	Inner Air Cleaner		x
4	6681475	CARTRIDGE	Outer Air Cleaner		x
4	6677983	FILTER	HVAC		x
4	6563328	BLACK GOLD	Hyd./Hydro. - (2) 2.5 Gal.		x
4	6722344	BLACK GOLD	Hyd./Hydro. - 5 Gal.		x
4	6563330	BLACK GOLD	Hyd./Hydro. - 55 Gallon Drum		x
4	6678233	FILTER	Engine Oil (6 Pack)		x
4	6672152	BELT	drive		1
4	6730819	BELT	air conditioner		1
4	6667352	FILTER	Fuel		1
4	6727475	CAP	hydrostatic tank		1
4	6661248	ELEMENT	Hydrostatic # 3 Media		x
5		SERVICE	1000 hour interval - items that need to be checked/serviced		1
5	6657301	MOTOR OIL	10W30 CE/SG - 1 Qt.		x
5	6657299	MOTOR OIL	15W40 CE/SG - 1 Qt.		x
5	6657303	MOTOR OIL	30 CE/SG - 1 Qt.		x
5	6724558	MOTOR OIL	15W40 CE/SG - 1 Gallon		x
5	6724557	MOTOR OIL	10W30 CE/SG - 1 Gallon		x
5	6724559	MOTOR OIL	30 CE/SG - 1 Gallon		x
5	6674205	MOTOR OIL	10W30 CE/SG - 2.5 Gal.		x
5	6674204	MOTOR OIL	15W40 CE/SG - 2.5 Gal.		x
5	6674206	MOTOR OIL	30 CE/SG - 2.5 Gal.		x
5	6658266	GREASE	general purpose		x
5	6681474	CARTRIDGE	Inner Air Cleaner		x
5	6681475	CARTRIDGE	Outer Air Cleaner		x
5	6677983	FILTER	HVAC		x
5	6563328	BLACK GOLD	Hyd./Hydro. - (2) 2.5 Gal.		x
5	6722344	BLACK GOLD	Hyd./Hydro. - 5 Gal.		x
5	6563330	BLACK GOLD	Hyd./Hydro. - 55 Gallon Drum		x
5	6678233	FILTER	Engine Oil (6 Pack)		x
5	6672152	BELT	drive		1
5	6730819	BELT	air conditioner		1
5	6667352	FILTER	Fuel		1

SERVICE SCHEDULE ITEMS

Ref.N°	Part N°	Description	Remarks	Serial N°	Qty.
5	6727475	CAP	hydrostatic tank		1
5	6661248	ELEMENT	Hydrostatic # 3 Media		x
5	6661807	KIT	element		1

MAIN FRAME

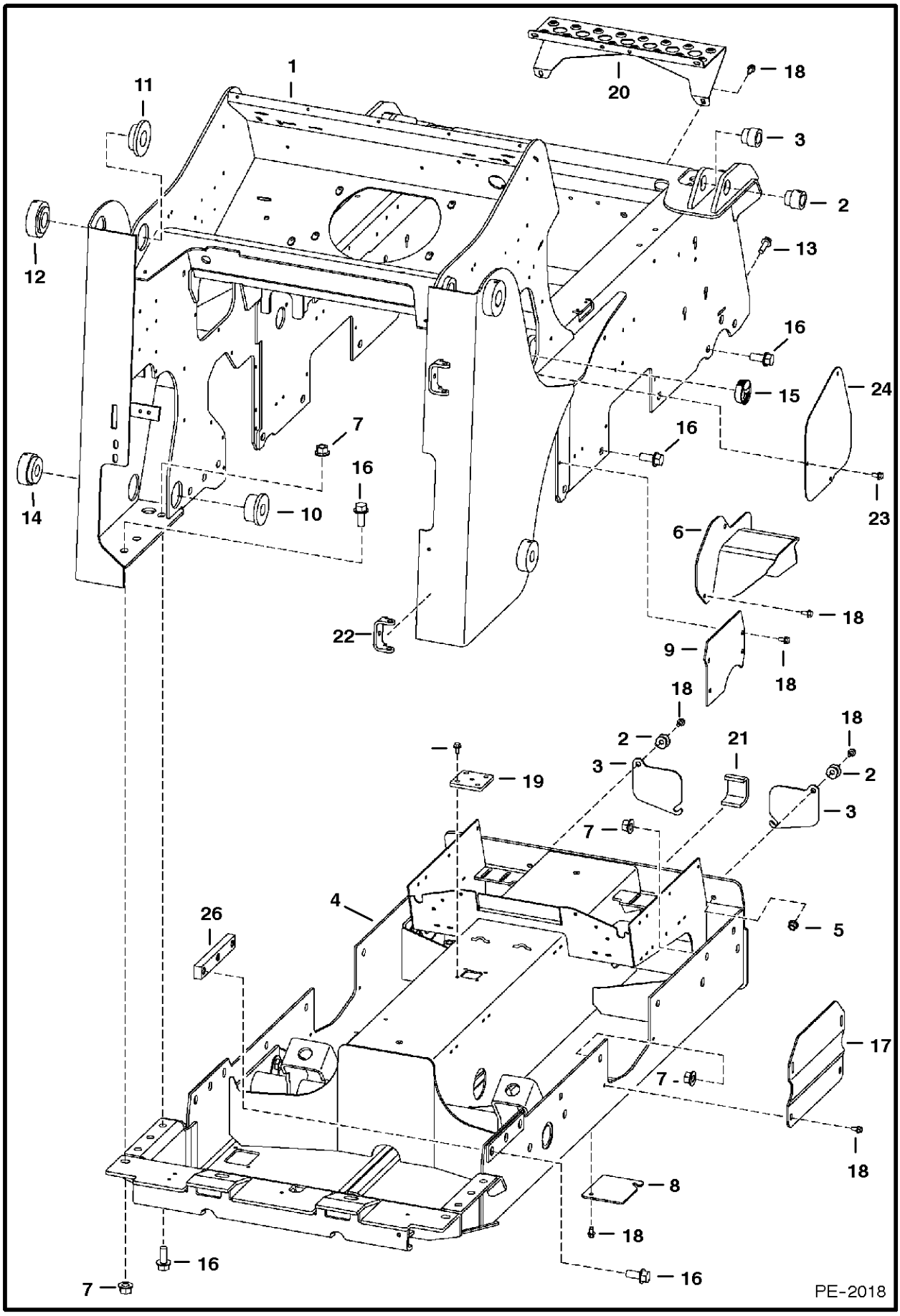
1
11
20
18
3
2
12
13
16
15
24
7
16
16
14
10
23
6
22
18
9
18
18
18
2
21
2
19
3
3
7
4
26
5
17
7
18
8
18
16
7
16
PE-2018

MAIN FRAME

Ref.N°	Part N°	Description	Remarks	Serial N°	Qty.
1	6733718	MAIN FRAME			1
2	6562619	BUSHING			2
3	6577812	COVER			2
4		DRIVECASE	See Page DRIVE TRAIN(1) - frame only		1
5	83D-8	NUT			4
6	6736769	COVER	R.H.		1
6	6736770	COVER	L.H.		1
7	83D-12	NUT			19
8	6716010	COVER			8
9	6736772	COVER			2
10	6730785	BUSHING	inside upright weldAon		2
11	6729401	BUSHING	inside upright weldAon		2
12	6729402	BUSHING	outside upright weldAon		2
13	31C-824	BOLT			4
14	6730784	BUSHING	outside upright weldAon		2
15	6718796	PLUG	Bobcat head		1
16	31C-1228	BOLT			24
17	6719201	COVER			2
18	84G-3712	BOLT			27
19	6730378	COVER			1
20	6732577	STEP			1
21	6706485	HOOK	tie down - weldAon		2
22	6708987	BRACKET	weldAon		2
23	84G-3708	BOLT			4
24	6733740	COVER			2
25	6729774	COVER			2
26	6706857	BLOCK	threaded		2

OPERATOR CAB

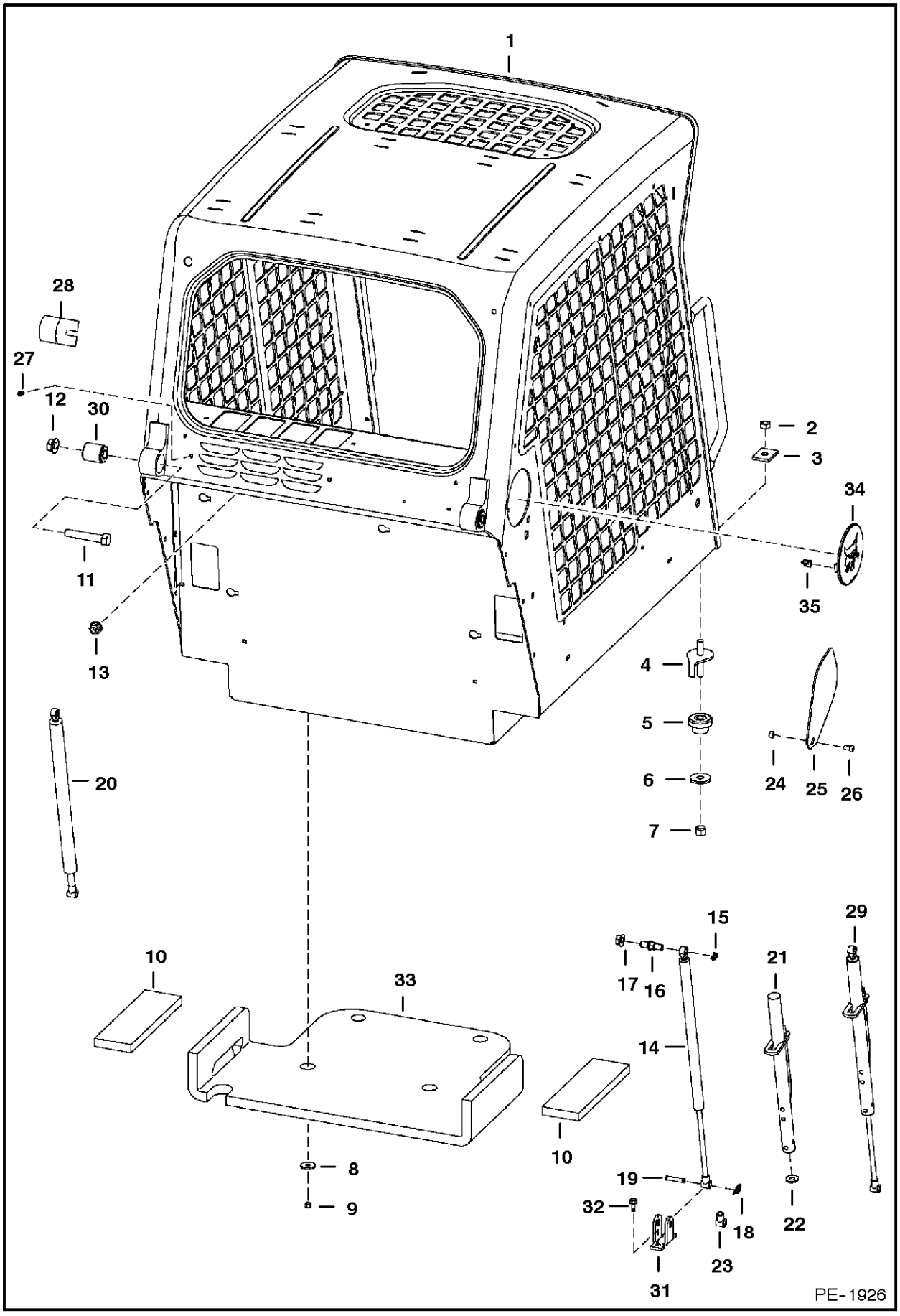

OPERATOR CAB

Ref.N°	Part N°	Description	Remarks	Serial N°	Qty.
1	6719672	OPERATOR CAB	does not include cab decals		1
2	59D-8	NUT			2
3	6553709	WASHER	rectangular		2
4	6702971	BOLT			2
5	6560633	MOUNT			2
6	6515817	WASHER			2
7	85D-8	NUT			2
8	619021	WASHER			4
9	59D-5	NUT			4
10	6729012	INSULATION	seat pan		2
11	17C-1056	BOLT			2
12	53D-10	NUT			2
13	53D-6	NUT			4
14	6675135	GAS SPRING	R.H.		1
15	6675140	SNAP RING			2
16	6719064	MOUNT			2
17	97D-8	NUT			2
18	6631418	PIN	ring		2
19	6567743	PIN			2
20	6675137	GAS SPRING	L.H.		1
20	6675139	GAS SPRING	L.H. - for cab W/ enclosure		1
21	6708189	TUBE	stop - R.H.		1
22	6701174	WASHER			1
23	6675258	CLEVIS			1
24	95D-5	NUT			2
25	6718784	COVER			2
26	25G-512	BOLT			2
27	6675033	INSERT			x
28	6579613	STOP			2
29	NAP	GAS SPRING	R.H. - W/ latch - Order Ref. OPERATOR CAB(14) & OPERATOR CAB(21)-OPERATOR CAB(23)		1
30	6562602	BUSHING			2
31	6706349	MOUNT	gas spring		2
32	84G-3112	BOLT			4
33	6729013	INSULATION	seat pan		1
34	6733107	PLUG	W/ Bobcat head - W/Ref. OPERATOR CAB(35)		2
35	6679990	CLIP			6

OPERATOR CAB

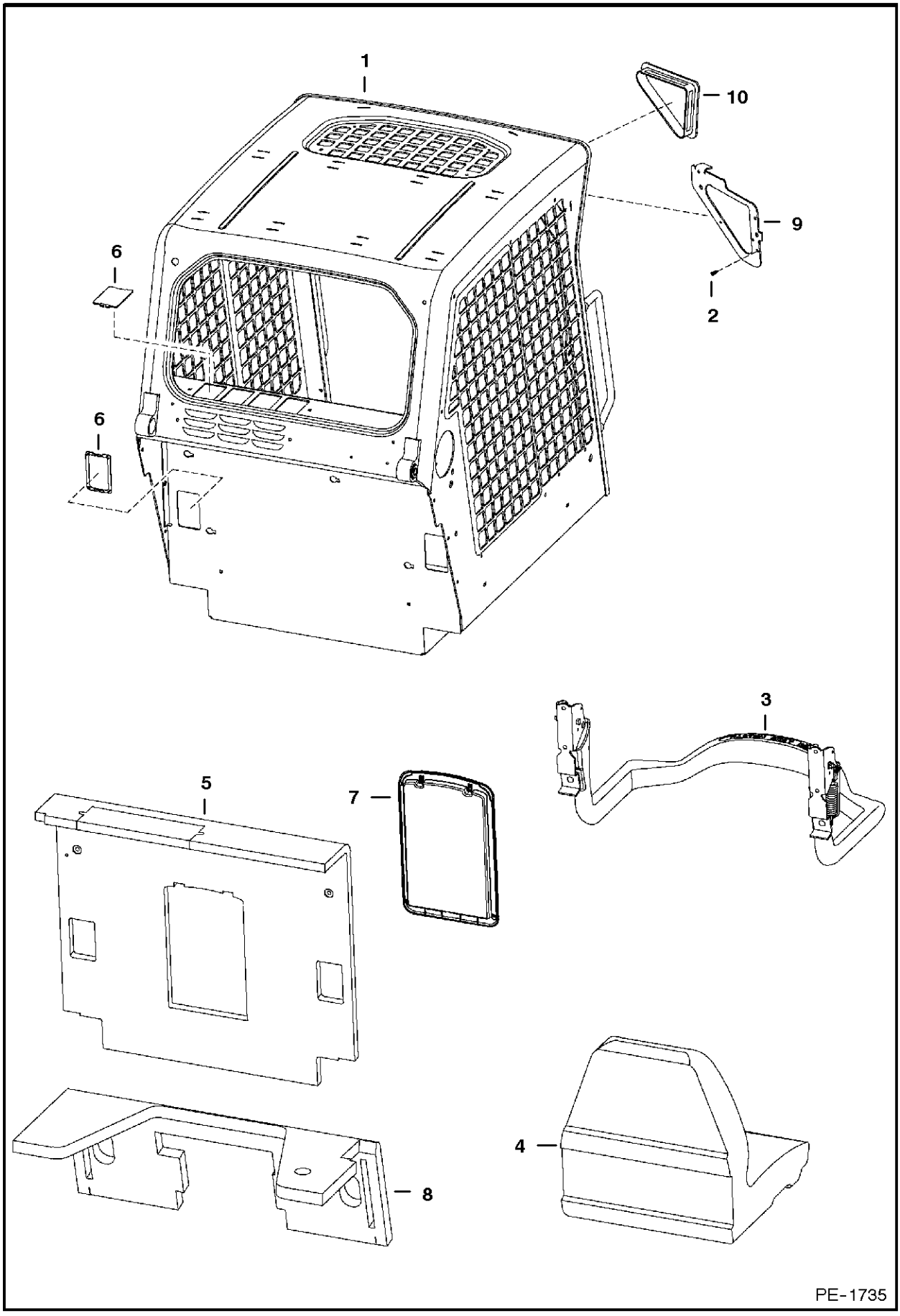

OPERATOR CAB

Ref.N°	Part N°	Description	Remarks	Serial N°	Qty.
1	6719672	OPERATOR CAB	does not include cab decals		1
2	6675033	INSERT			6
3		SEAT BAR	See Page SEAT & SEAT BAR(2)		1
4		SEAT	See Page SEAT(3)		1
5	6717516	INSULATION			1
6	6718101	COVER			6
7	6719503	CONTAINER	manuals		1
7	6675524	CLIP			2
7	6725301	COVER			1
7	6725303	FRAME			1
8	6716800	INSULATION			1
9	NSS	FRAME	L.H. - weldAon		1
9	NSS	FRAME	R.H. - weldAon		1
10	6674403	COVER	no lights		2

OPERATOR CAB

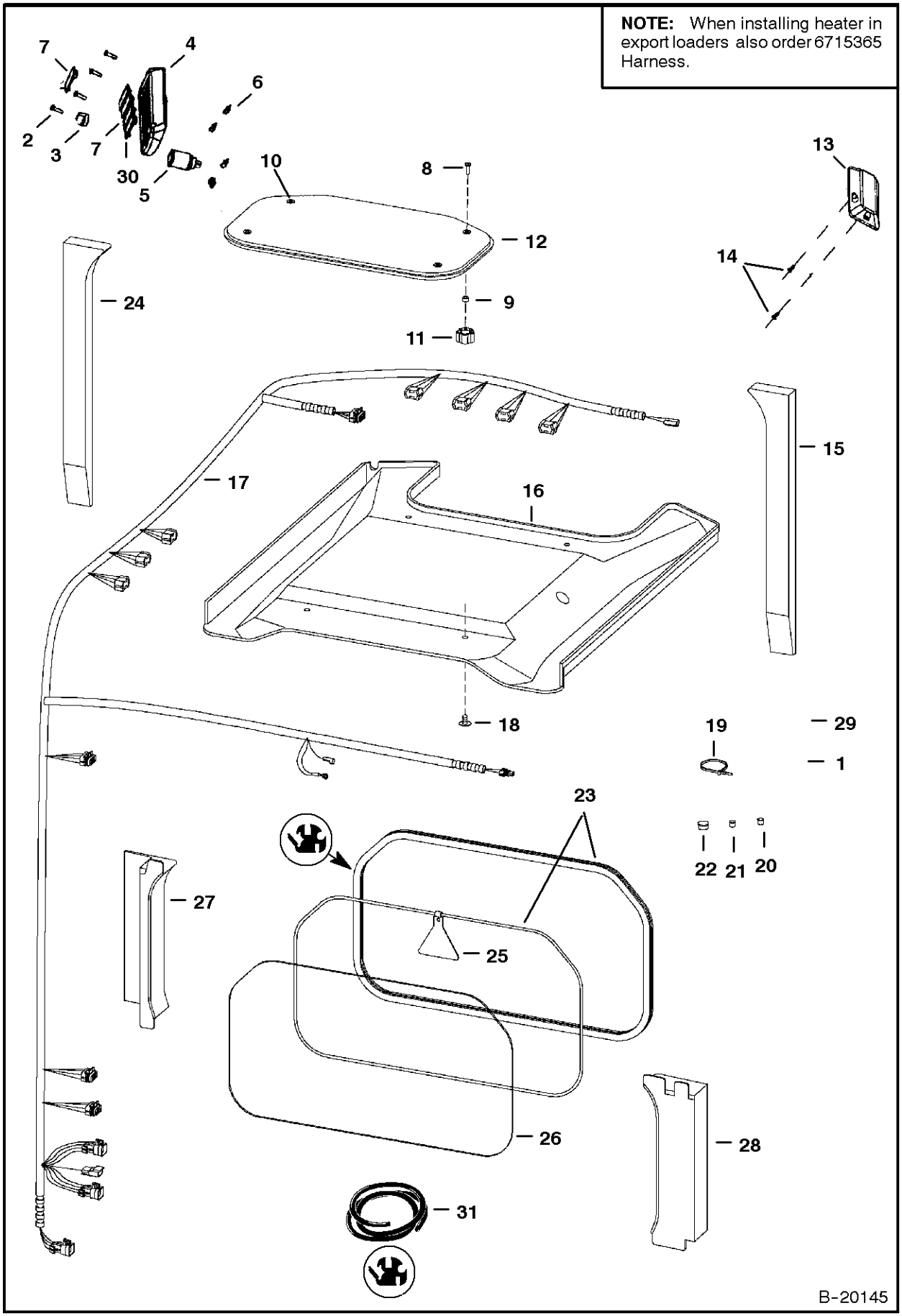

OPERATOR CAB

Ref.N°	Part N°	Description	Remarks	Serial N°	Qty.
1	6727299	INSULATION	cab back		1
2	6669224	BOLT			4
3	6664224	CAP			1
4	6718580	PANEL			1
5	6664223	OUTLET			1
6	6669091	CLIP			4
7	6665314	PLUG			5
8	91G-420	BOLT			4
9	6664085	BUSHING	nylon		4
10	6675545	GROMMET			4
11	6681614	KNOB			4
12	6728629	WINDOW	top - lexan - assy. - W/seal & grommets		1
13	6680326	LIGHT	dome		1
13	6665367	BULB			1
14	6664221	RETAINER	snap in		2
15	6717520	INSULATION			1
16	6717515	INSULATION	headliner		1
17	6727190	HARNESS	%accessories		1
17	6715365	HARNESS	%accessories - Export - SEE NOTE		1
18	6674895	RETAINER	snap in		4
19	6610510	NYLON TIE			6
20	5289686	PLUG	black		5
21	6649949	PLUG			2
22	6657719	PLUG			1
23	NAP	EXTRUSION	75.75' (1924mm) long - Order Ref. OPERATOR CAB(31)		x
23	NAP	CORD	75.75' (1924mm) long - Order Ref. OPERATOR CAB(31)		x
24	6717519	INSULATION			1
25	6559515	EXIT TAG			1
26	6717874	WINDOW	rear		1
27	6717517	INSULATION			1
28	6717518	INSULATION			1
29	6683395	PANEL	R.H. - deluxe - keyless		1
30	6668742	SWITCH	travel control - Export		1
31	6675387	SEA;	bulk - Sold Per Foot		x
31	6554149	CORD	bulk - Sold Per Foot		x

SEAT & SEAT BAR

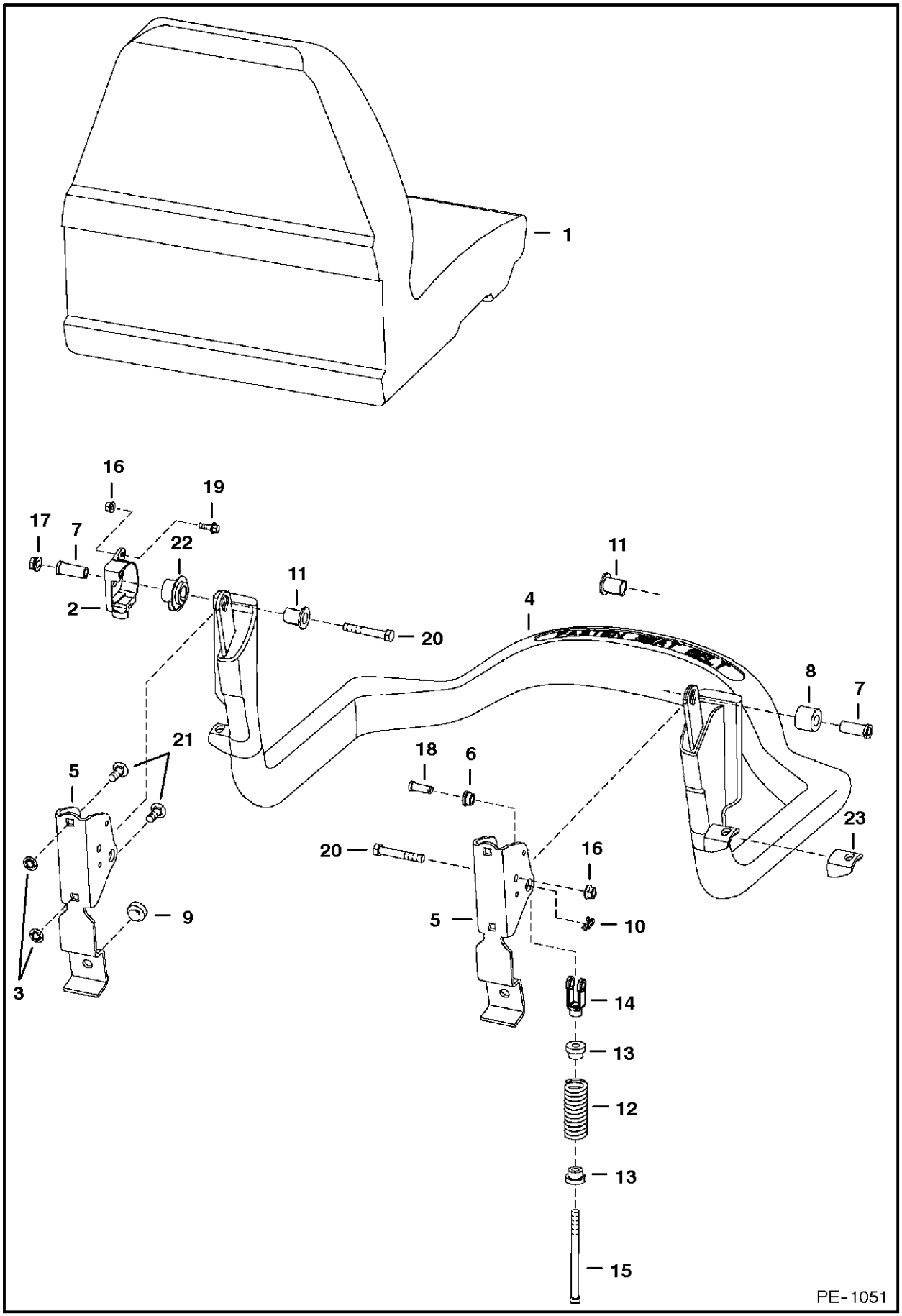

SEAT & SEAT BAR

Ref.N°	Part N°	Description	Remarks	Serial N°	Qty.
1		SEAT	See Page SEAT(3)		1
2	6674406	SENSOR			1
3	6684033	NUT			4
4	6715860	SEAT BAR			1
5	6715863	BRACKET			1
6	6715864	BUSHING			2
7	6715865	BUSHING			2
8	6715866	BUSHING			1
9	6519178	BUMPER			2
10	6631418	PIN	ring		2
11	6664882	BUSHING	keyed		2
12	6701535	SPRING			2
13	6710659	BUSHING			2
14	6713589	CLEVIS			2
15	6713887	BOLT			2
16	83D-4	NUT			1
17	53D-6	NUT			2
18	4F-6106	PIN			2
19	35C-412	BOLT			1
20	17C-640	BOLT			2
21	10C-616	BOLT			4
22	6674405	BUSHING			1
23	NAP	MOUNT	Order Ref. SEAT & SEAT BAR(4)		2

SEAT
(Suspension - Sears)

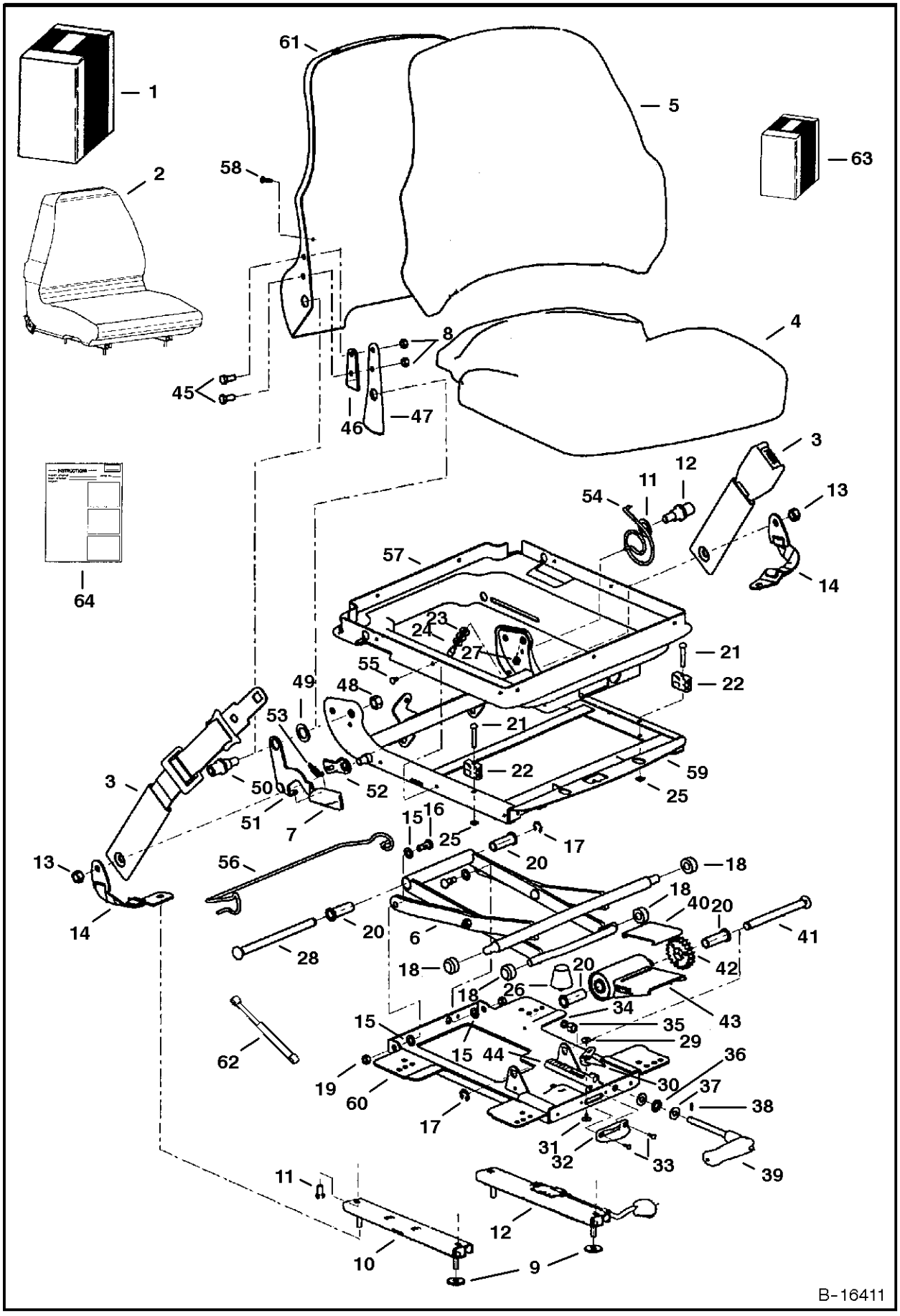

SEAT

Ref.N°	Part N°	Description	Remarks	Serial N°	Qty.
1	NAP	KIT	vinyl seat - Order Ref. SEAT(2), SEAT(3) & SEAT(64) - Was 6718868 [A]		1
1	NAP	KIT	fabric seat - Order Ref. SEAT(2), SEAT(3) & SEAT(64) - Was 6718869 [A]Ucom3WG }H~10{M		x
2	6675595	SEAT	vinyl - L.H. recliner lever		1
2	6675596	SEAT	fabric - L.H. recliner lever		1
3	6675170	SEAT BELT	lap		1
4	6675320	SEAT	seat - fabric		1
4	6675322	SEAT	seat - vinyl		1
5	6675319	SEAT	backrest - fabric - W/Ref. SEAT(58)		1
5	6675321	SEAT	backrest - vinyl - W/Ref. SEAT(58)		1
6	6675317	SCISSORS			1
7	6675323	KNOB	recliner		1
8	NSS	NUT			6
9	619021	WASHER			4
10	NSS	SLIDE	slave		1
11	NSS	BOLT			4
12	NSS	SLIDE	locking		1
13	NSS	NUT			2
14	NSS	BELT	tether		2
15	NSS	WASHER	cross pivot		4
16	NSS	BOLT	pivot		2
17	NSS	RING	retaining		2
18	NSS	ROLLER			4
19	NSS	NUT			2
20	NSS	BUSHING	wt adjustment		4
21	NSS	RIVET			2
22	NSS	BLOCK	up stop		2
23	NSS	WASHER			3
24	NSS	STOP	armrest		1
25	NSS	PUSHNUT			2
26	NSS	BUMPER			1
27	NSS	NUT			1
28	NSS	SHAFT	bearing		1
29	NSS	RIVET	female snap		1
30	NSS	INDICATOR	weight		1
31	NSS	RIVET	male snap		1
32	NSS	DIAL	weight indicator		1
33	NSS	POP RIVET			2
34	NSS	SPACER			1
35	NSS	NUT			1
36	NSS	BEARING	thrust		1
37	NSS	RACE	thrust		2
38	NSS	SHEAR PIN			1
39	NSS	HANDLE	weight adjustment		1
40	NSS	PLATE	wear		1
41	NSS	SHAFT	torsion		1
42	NSS	DRIVE GEAR			1
43	NSS	BUSHING	torsion		1
44	NSS	RACK	wt adjustment		1
45	NSS	BOLT			2

SEAT

Ref.N°	Part N°	Description	Remarks	Serial N°	Qty.
46	NSS	SPACER	recliner		1
47	NSS	BRACKET	back tilt		1
48	NSS	NUT			2
49	NSS	WASHER	plastic		2
50	NSS	BOSS	back pan pivot		2
51	NSS	HANDLE	recliner (RH)		1
52	NSS	LATCH	recliner		1
53	NSS	SPRING	extension		1
54	NSS	SPRING	tilt latch		1
55	NSS	CLIP			6
56	NSS	WIRE	boot support		1
57	NSS	SUSPENSION	boot		1
58	NSS	SCREW			2
59	NSS	HOUSING	upper		1
60	NSS	HOUSING	lower		1
61	NSS	BACK PAN			1
62	6676338	GAS SPRING			1
63	6675309	KIT	slides - W/Ref. SEAT(8)-SEAT(12)		1
63	6675310	KIT	tether belt - W/Ref. SEAT(9), SEAT(13) & SEAT(14)		1
63	6675311	KIT	suspension rollers & bearings - W/Ref. SEAT(15)-SEAT(20)		1
63	6675312	KIT	suspension bumpers & stops - W/Ref. SEAT(21)-SEAT(27)		1
63	6675313	KIT	rear tube - W/Ref. SEAT(17), SEAT(20) & SEAT(28)		1
63	6675314	KIT	weight adj. indicator - W/Ref. SEAT(29)-SEAT(33)		1
63	6675315	KIT	weight adj. handle - W/Ref. SEAT(34)-SEAT(39)		1
63	6675316	KIT	weight adj. - W/Ref. SEAT(17), SEAT(20) & SEAT(40)-SEAT(44)		1
63	6675318	KIT	R.H. recliner - W/Ref. SEAT(7),SEAT(8) & SEAT(45)-SEAT(54)		1
63	6676034	KIT	L.H. recliner - W/Ref. SEAT(7),SEAT(8) & SEAT(45)-SEAT(54)		1
63	6675308	KIT	susp. boot - W/Ref. SEAT(55)-SEAT(57)		1
64	6900861	INSTRUCTIONS			1

REAR DOOR

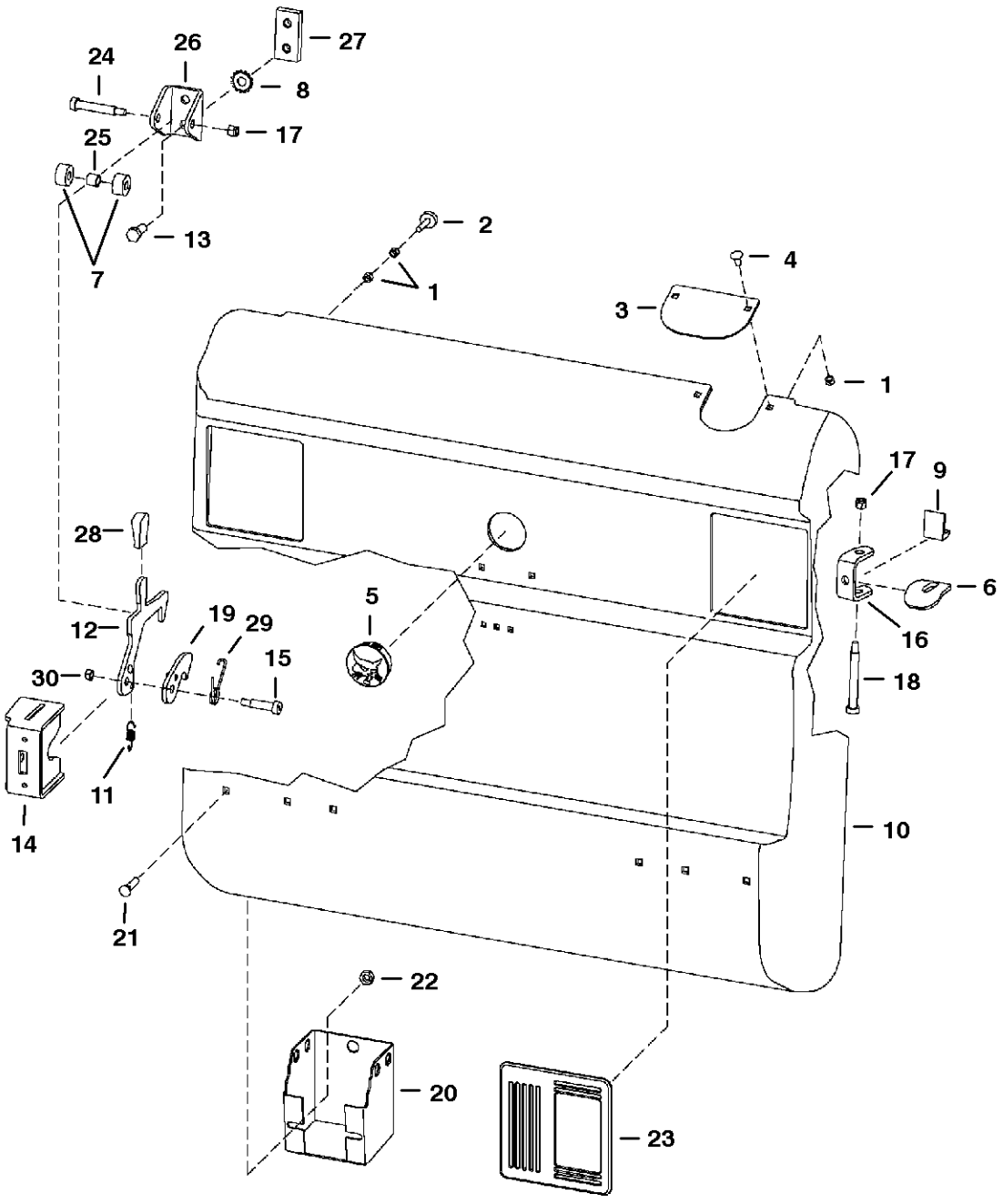

PE-1723

REAR DOOR

Ref.N°	Part N°	Description	Remarks	Serial N°	Qty.
1	61D-5	NUT			2
2	6733616	BUMPER			2
3	6714509	COVER	exhaust		1
4	37C-512	BOLT			2
5	6718796	PLUG	backAup alarm		1
6	6714126	DOOR STOP			1
7	6809726	ROLLER			2
8	6675273	WASHER	lock		2
9	6719766	STOP			1
10	6729991	REAR DOOR	W/Ref. REAR DOOR(11), REAR DOOR(12), REAR DOOR(14)-REAR DOOR(16), REAR DOOR(19), REAR DOOR(29) & REAR DOOR(30)		1
11	6810141	SPRING			1
12	6732715	LATCH			1
13	17C-820	BOLT			2
14	6729939	LATCH PLATE	weldAon		1
15	38C-824	SCREW			1
16	6711526	HINGE	weldAon		2
17	59D-6	NUT			3
18	6809845	SCREW			2
19	6811910	LATCH			1
20	6715318	TOOL HOLDER	Europe		1
21	37C-612	BOLT			2
22	55D-6	NUT			2
23	6670287	COVER			2
24	38C-840	BOLT	carriage		1
25	6809734	BUSHING	striker		1
26	6809727	CHANNEL			1
27	6719525	BAR	threaded striker		1
28	6564452	GRIP			1
29	6810132	SPRING			1
30	85D-6	NUT			1

LIFT ARMS & BOBTACH

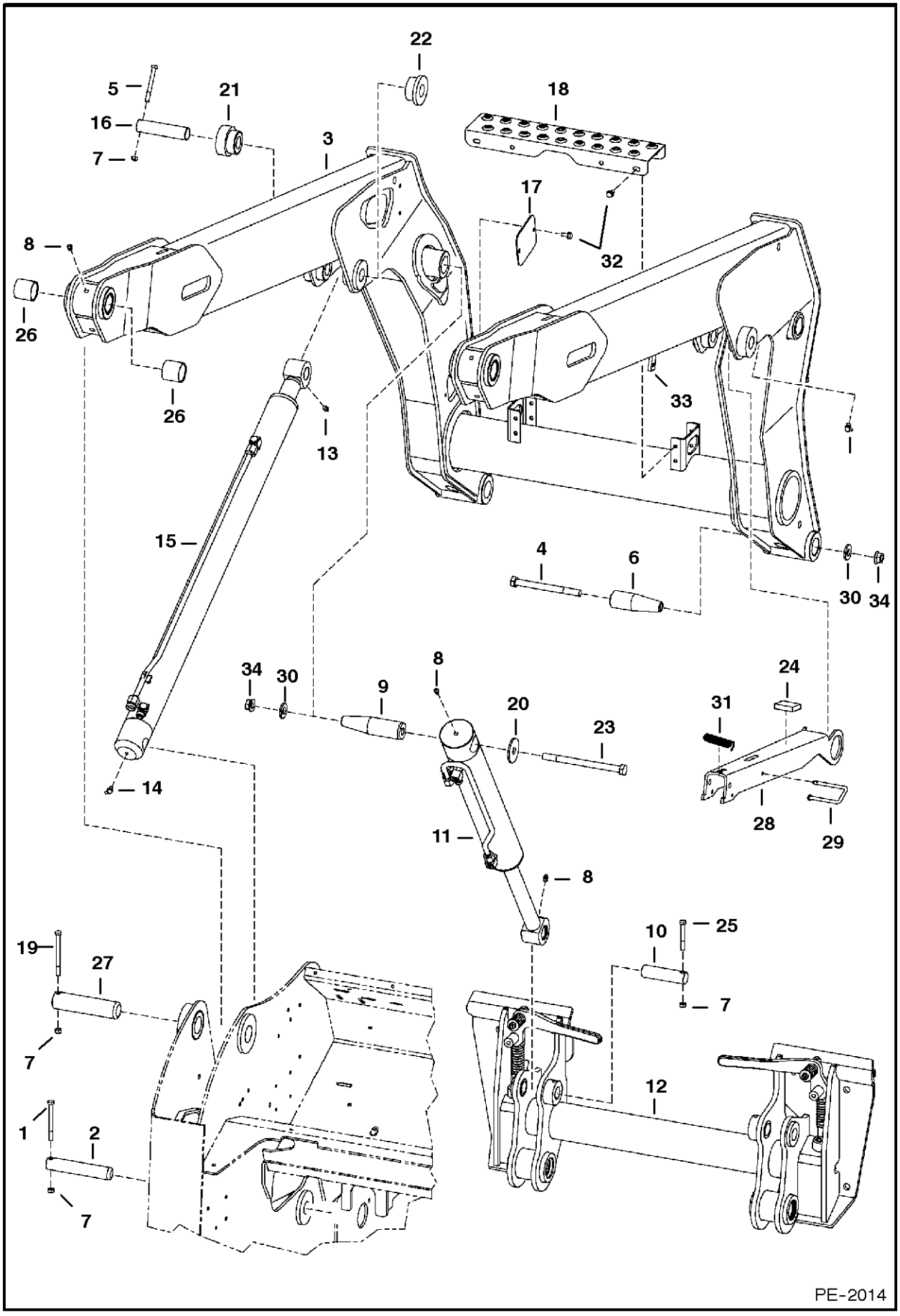

LIFT ARMS & BOBTACH

Ref.N°	Part N°	Description	Remarks	Serial N°	Qty.
1	17C-664	BOLT			2
2	6730887	PIN			2
3	6733707	LIFT ARM			1
4	17C-10112	BOLT			2
5	17C-656	BOLT			2
6	6729358	PIN			2
7	85D-6	NUT			8
8	10H-25	GREASE ZERK			6
9	6728971	PIN			2
10	6577954	PIN			2
11		CYLINDER	tilt - See Page TILT CYLINDER(2)		2
12		BOB-TACH	See Page BOB-TACH(4)		1
13	12H-15	GREASE ZERK			2
14	11H-15	GREASE ZERK			2
15		CYLINDER	lift - See Page LIFT CYLINDER(3)		2
16	6729007	PIN			2
17	6731179	COVER			1
18	6729888	STEP			1
19	17C-672	BOLT			2
20	6731160	WASHER			2
21	6729005	BUSHING	weldAon		2
22	6735946	BUSHING	weldAon		2
23	17C-10136	BOLT			2
24	6704436	PAD	rubber - self adhesive		1
25	17C-648	BOLT			1
26	6730995	BUSHING			2
27	6728819	PIN			2
28	6736732	LIFT ARM STOP	assy		1
29	6714810	PIN	retainer		1
30	27E-10	WASHER			4
31	6579072	SPRING			1
32	84G-3112	BOLT			6
33	6705091	TAB	weldAon		1
34	57D-10	NUT			4

BOB-TACH

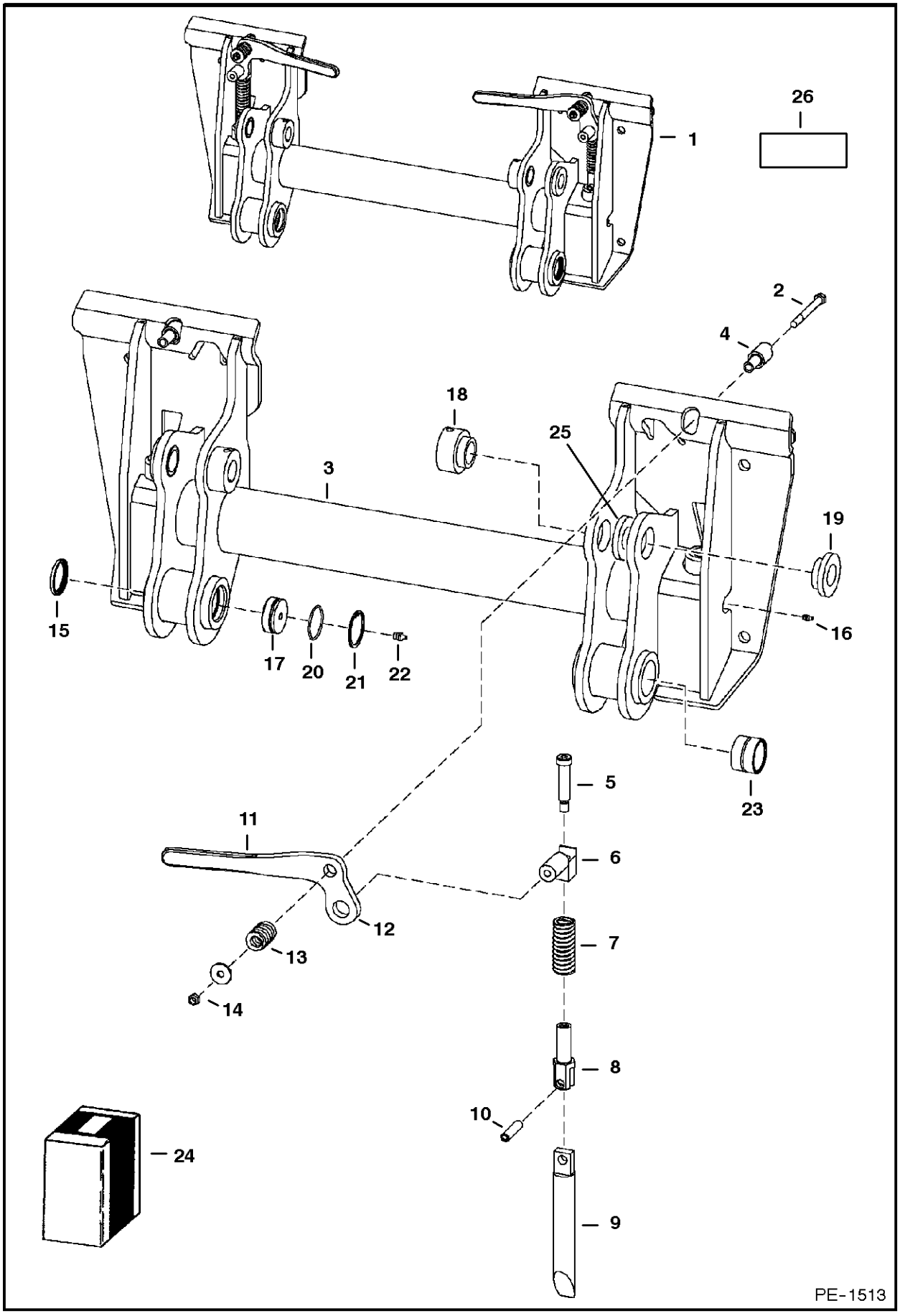

BOB-TACH

Ref.N°	Part N°	Description	Remarks	Serial N°	Qty.
1	6729029	BOB-TACH	Ref. BOB-TACH (2)-BOB-TACH (22) - also Order Ref. BOB-TACH (26)		1
2	17C-660	BOLT			2
3	NAP	FRAME			1
4	6702958	BUSHING	weldAon		2
5	6728473	SCREW	shoulder		2
6	6731119	PIVOT ASSY			2
7	6562018	SPRING			2
8	6704248	PIVOT	wedge		2
9	6704242	WEDGE ASSY.			2
10	14J-5032	PIN			2
11	6702904	LEVER	R.H.		1
11	6702903	LEVER	L.H.		1
12	6713040	SPRING			2
13	619021	WASHER			2
14	85D-6	NUT			2
15	6678960	SEAL			2
16	10H-35	GREASE ZERK			2
17	6729491	PLUG			2
18	6717260	BUSHING	weldAon		2
19	6717259	BUSHING	weldAon		2
20	25K-30126	O-RING			2
21	7JM-50	SNAP RING			2
22	10H-25	GREASE ZERK			2
23	6718329	BUSHING	wear		2
24	6724775	LEVER KIT	R.H. Bob-tach - Ref. BOB-TACH (2) & BOB-TACH (5) - BOB-TACH (14)		1
24	6724776	LEVER KIT	L.H. Bob-tach - Ref. BOB-TACH (2) & BOB-TACH (5) - BOB-TACH (14)		1
25	6734146	WASHER			2
26	6561383	DECAL			1

PANELS

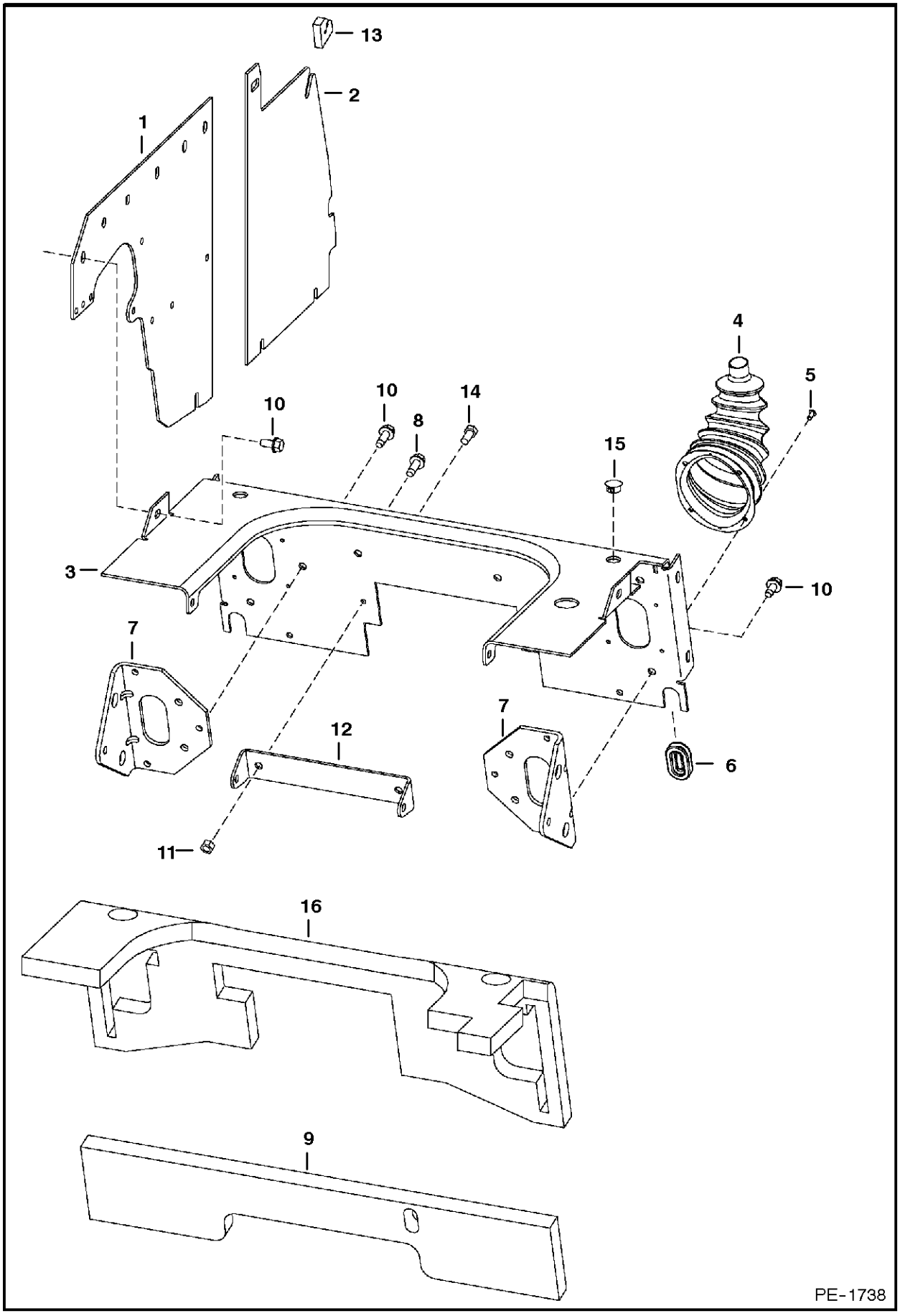

PANELS

Ref.N°	Part N°	Description	Remarks	Serial N°	Qty.
1	6731899	PANEL			2
2	6732177	PANEL			2
3	6718305	SHIELD			1
4	6532127	BOOT			2
5	6630207	RIVET			8
6	6577961	GROMMET			2
7	6733022	BRACKET	steering - R.H.		2
7	6733024	BRACKET	steering - L.H.		1
8	84G-3716	BOLT			2
9	6701674	INSULATION			1
10	84G-3712	BOLT			30
11	95D-6	NUT			2
12	6706106	MOUNT	damper		1
13	6733529	SEAL			2
14	17C-612	BOLT			1
15	6657719	PLUG	for .75' dia. hole		2
15	6648348	PLUG	for .812' dia. hole		2
16	6716800	INSULATION			1

PANELS
(W/Joystick Controls)

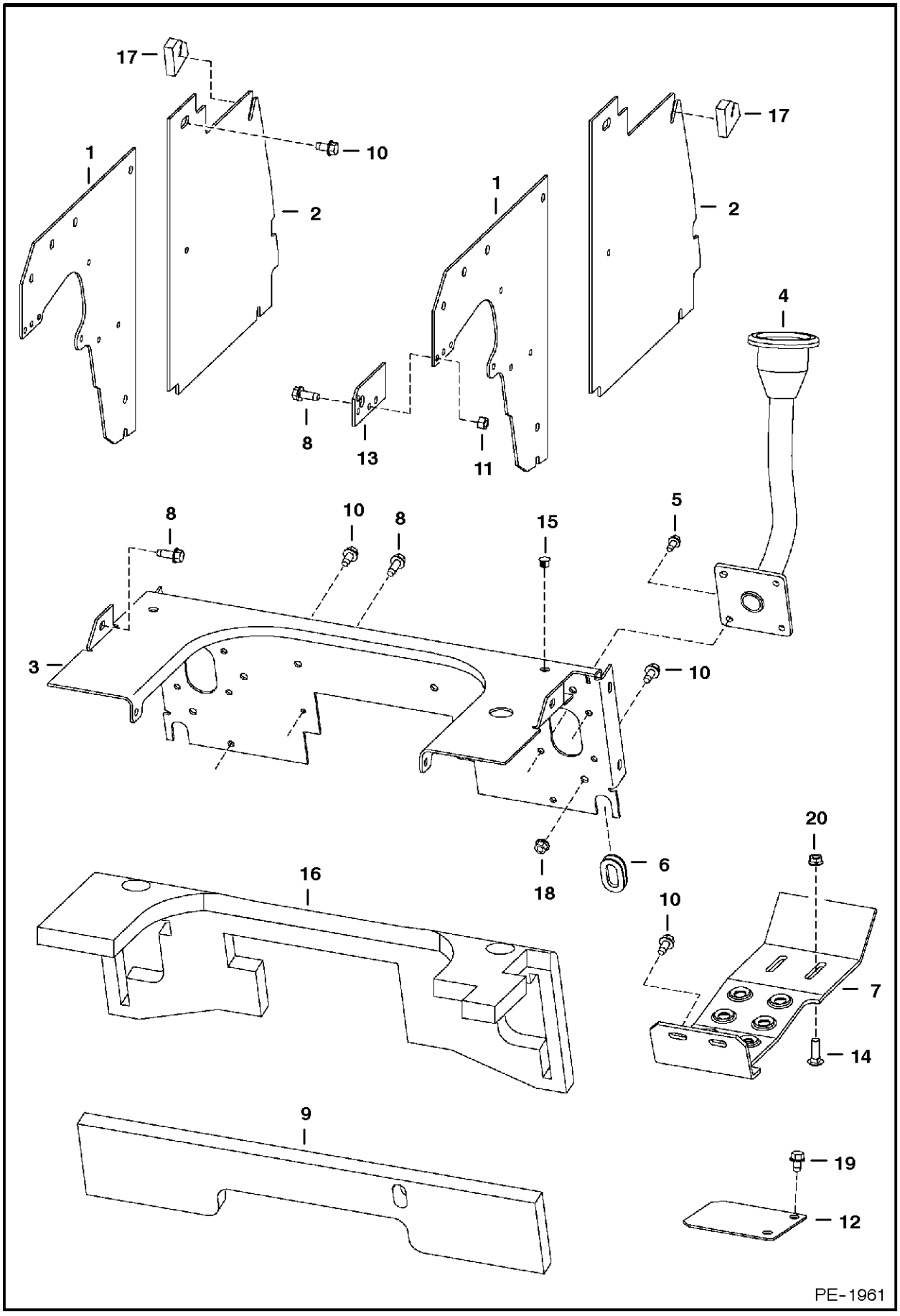

PANELS

Ref.N°	Part N°	Description	Remarks	Serial N°	Qty.
1	6734521	PANEL			2
2	6734602	PANEL			2
3	6729899	PANEL			1
4	6729791	LEVER	R.H. joystick - See Page CONTROLS ELECTRICAL(1)		1
4	6729792	LEVER	L.H. joystick - See Page CONTROLS ELECTRICAL(1)		1
5	35C-512	BOLT			4
6	6714726	PLUG			1
7	6729237	STEP			2
8	84G-3716	BOLT			4
9	6701674	INSULATION			1
10	84G-3712	BOLT			22
11	95D-6	NUT			2
12	6729774	COVER	cylinder access		2
13	6732449	PLATE	cable		1
14	37C-620	BOLT			4
15	6649949	PLUG			2
16	6716800	INSULATION			1
17	6733529	SEAL	panel		2
18	89D-5	NUT			4
19	84G-3710	BOLT			4
20	57D-6	NUT			4

FUEL SYSTEM

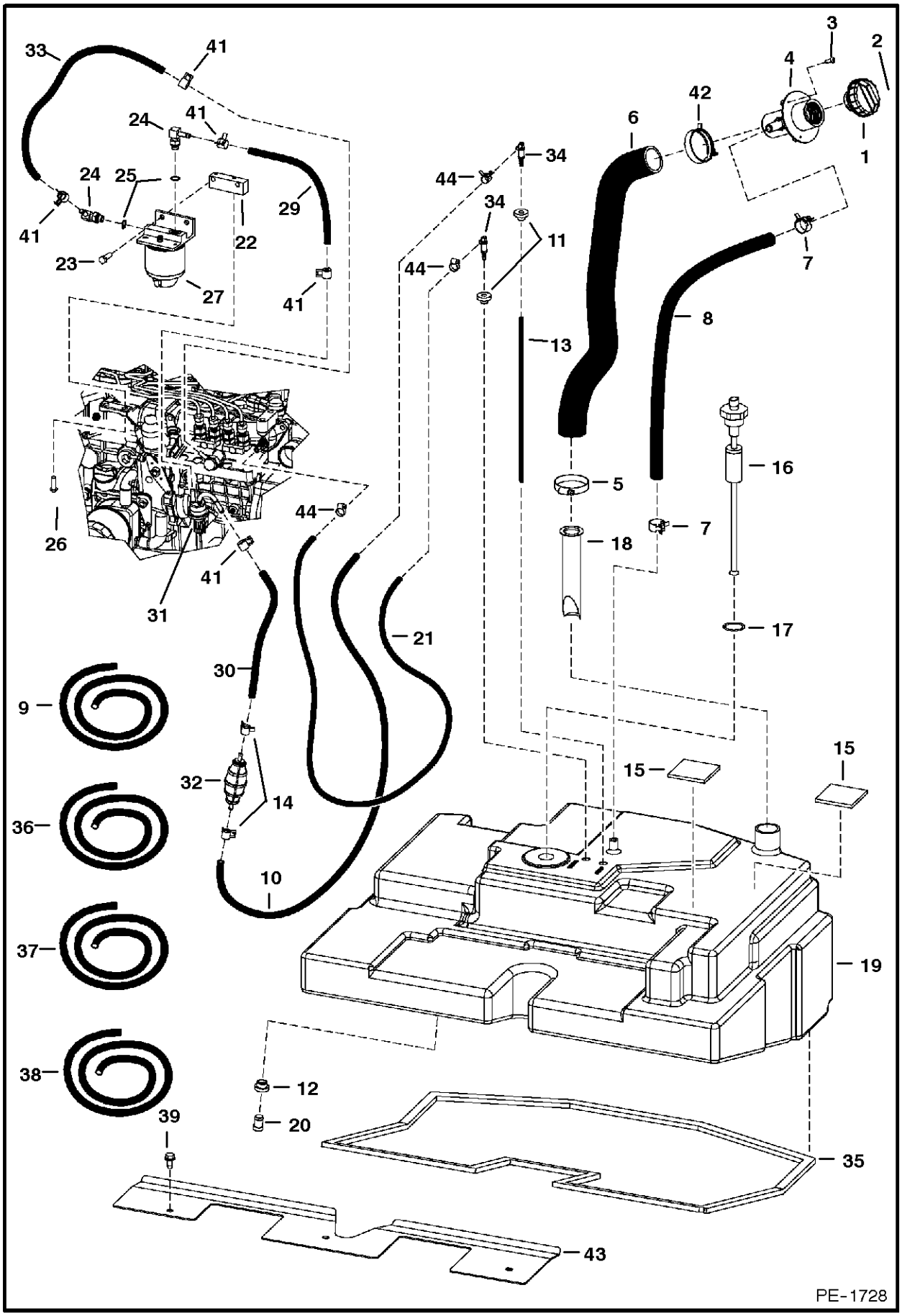
33
41
24
41
24
25
41
23
22
29
27
41
26
31
44
41
34
44
34
11
44
13
6
42
4
3
2
1
7
8
16
5
7
18
17
21
30
9
32
14
36
10
37
38
39
12
20
15
15
19
35
43
PE-1728

FUEL SYSTEM

Ref.N°	Part N°	Description	Remarks	Serial N°	Qty.
1	6661114	CAP	green fuel fill		1
1	6661696	FUEL CAP	locking - W/Ref. FUEL SYSTEM(2) - Code PK510		1
2	6587458	KEY SET	Code PK510		1
3	6706517	SCREW			3
4	6701449	FILLER TUBE			1
5	42HC-250	CLAMP			2
6	6730532	HOSE			1
7	5HM-24	CLAMP			2
8	NAP	HOSE	32" (813mm) long - Order Ref. FUEL SYSTEM(36)		1
9	6578169	HOSE	Bulk - sold per foot		x
10	NAP	HOSE	29.5' (749mm) long - Order Ref. FUEL SYSTEM(38)		1
11	6735696	BUSHING	.37' (9,4mm) ID		2
12	6717402	BUSHING	.54' (13,7mm) ID		1
13	6735249	HOSE	13.75' (350mm) long		2
14	5HM-13	CLAMP			3
15	6578278	PAD	self adhesive one side		2
16	6680438	SENSOR	fuel - W/Ref. FUEL SYSTEM(17)		1
17	6717579	GASKET			1
18	6569219	SCREEN			1
19	6735615	TANK			1
20	6717401	PLUG	.75' shoulder		1
21	NAP	HOSE	53' (1346mm) long - Order Ref. FUEL SYSTEM(9)		1
22	6731152	MOUNT			1
23	43C-516	BOLT			2
24	6715183	ELBOW	W/Ref. FUEL SYSTEM(25)		2
25	79K-5	O-RING			x
26	53C-516	BOLT			2
27	6667353	FILTER ASSY			1
27	6667352	FILTER			1
27	72F-1	DRAIN COCK			1
28	6658180	PLUG	plug		1
29	NAP	HOSE	%11.25" (286mm) long - Order Ref. FUEL SYSTEM(37)		1
30	NAP	HOSE	%12" (305mm) long - Order Ref. FUEL SYSTEM(38)		1
31		FUEL PUMP	See Page FUEL INJECTION PUMP(11)		1
32	6657734	PUMP	hand primer		1
33	NAP	HOSE	14%.5" (368mm) long Order Ref. FUEL SYSTEM(37)		1
34	6681462	ELBOW			2
35	6726218	GASKET			1
36	6578172	HOSE	bulk - Sold Per Foot		x
37	6577822	HOSE	.375 I.D. - bulk - Sold Per Foot		x
38	6577821	HOSE	.25" I.D. - bulk - Sold Per Foot		x
39	84G-3712	BOLT			3
40	6610510	NYLON TIE			1
41	5HM-14	CLAMP			5
42	5HM-58	CLAMP			1
43	6730552	BRACKET			1
44	42HS-04	CLAMP			2

DRIVE TRAIN

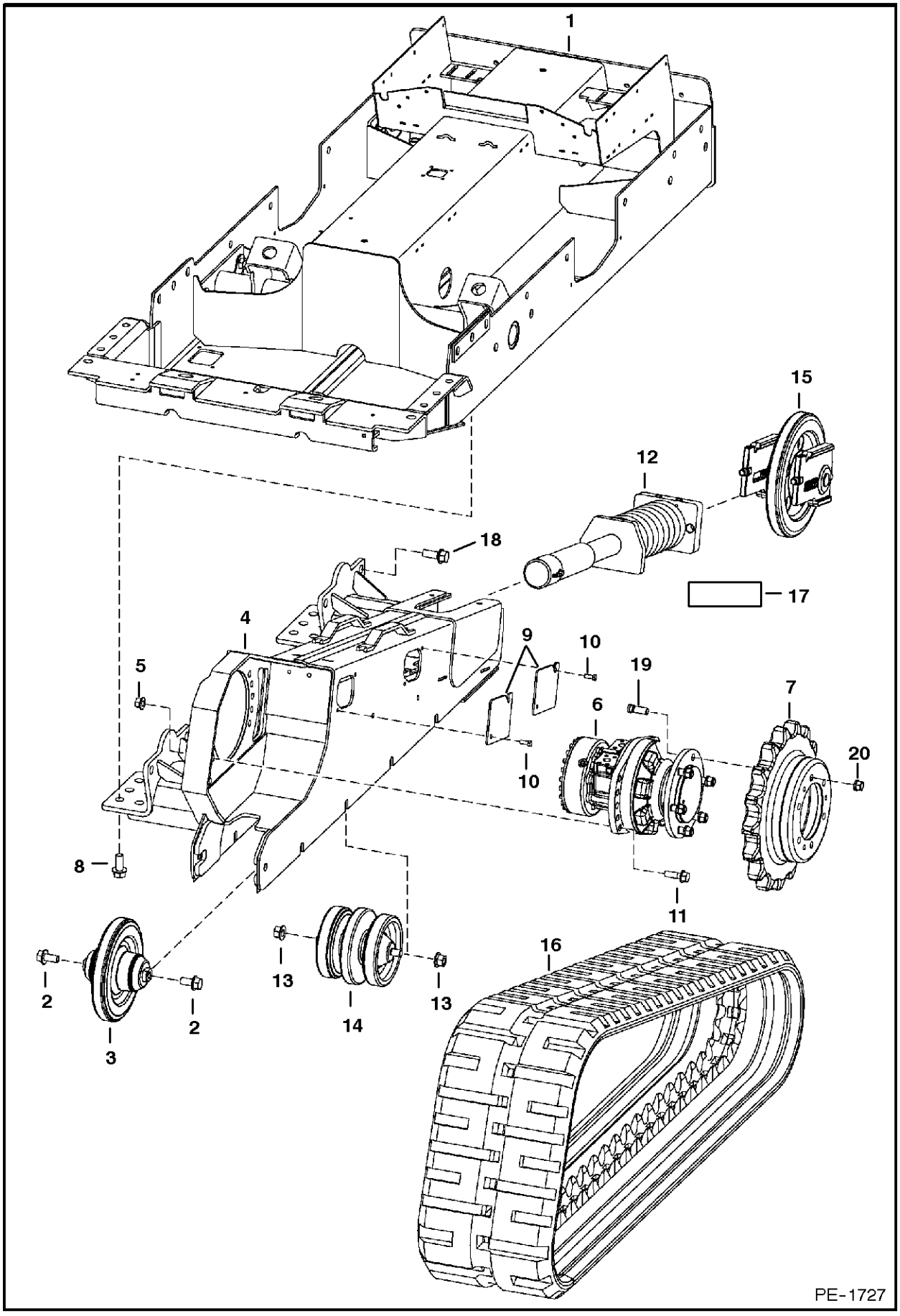

DRIVE TRAIN

Ref.N°	Part N°	Description	Remarks	Serial N°	Qty.
1	6730373	DRIVECASE			1
2	31C-1224	BOLT			4
3	6732903	IDLER ASSY	rear - See Page REAR IDLER(1)		2
4	6736031	FRAME	track - R.H.		1
4	6736032	FRAME	track - L.H.		1
5	83D-10	NUT			20
6		MOTOR	See Page HYDROSTATIC MOTOR & BRAKE(2)		2
7	6715821	SPROCKET			2
8	31C-1228	BOLT			24
9	6716010	COVER			8
10	84G-3712	BOLT			16
11	31C-1032	BOLT			20
12	6730468	TRACK TENSIONER	See Page TRACK TENSIONER(2)		2
13	83D-12	NUT			16
14	6732901	ROLLER ASSY	See Page TRACK ROLLER(6)		8
15	6732902	IDLER ASSY	front - See Page FRONT IDLER(5)		2
16	6678749	TRACK	18' (457mm) wide - half pitch - Bridgestone		2
17	6804114	DECAL	Warning - Grease		2
18	31C-1232	BOLT			8
19	6674706	STUD			6
20	6674724	NUT			6

TRACK TENSIONER

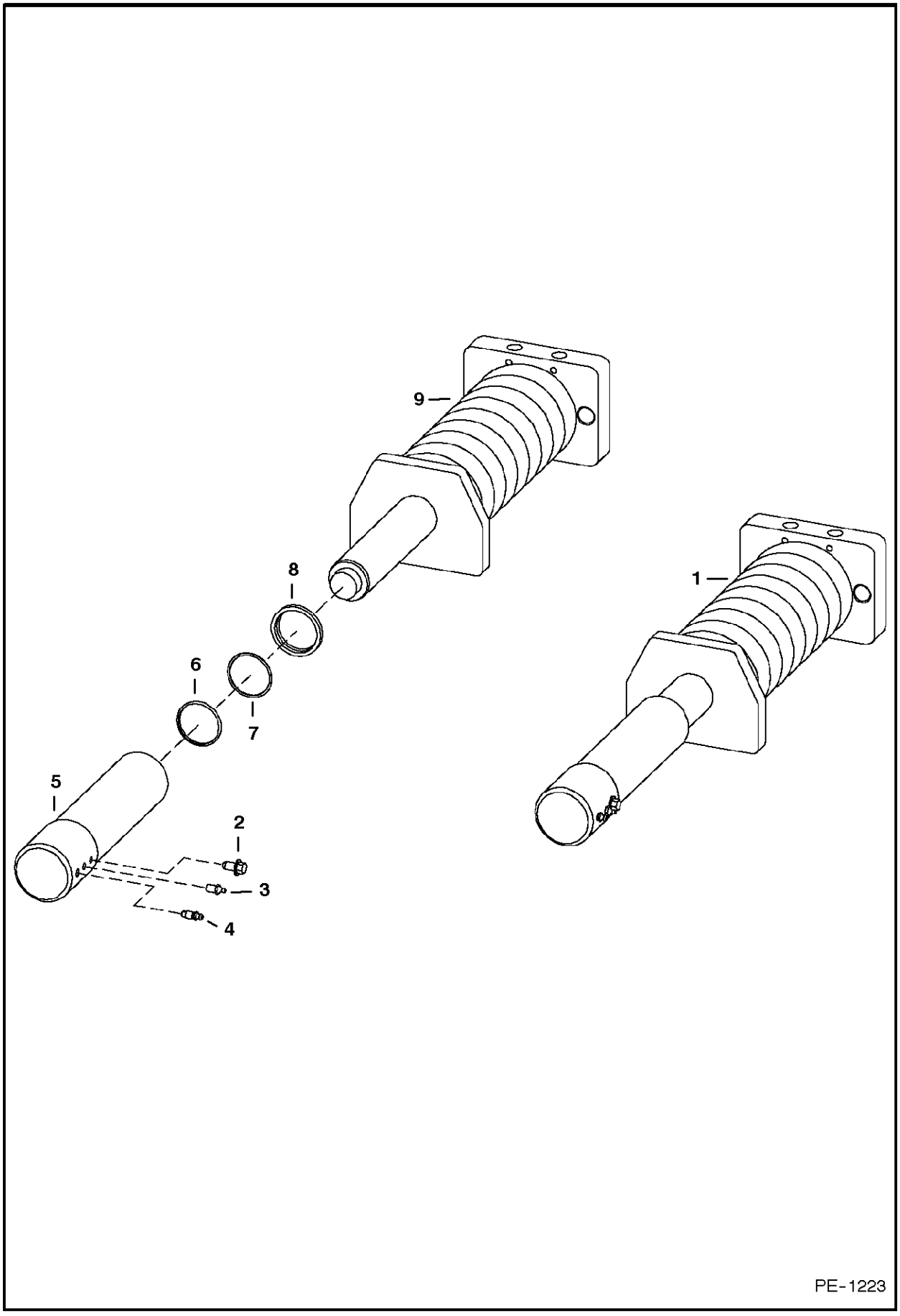

TRACK TENSIONER

Ref.N°	Part N°	Description	Remarks	Serial N°	Qty.
1	6730468	TRACK TENSIONER	Ref. BRAKE VALVE(3)-TRACK TENSIONER(9)		1
2	26GM-10020	SCREW			1
3	6655752	GREASE ZERK	Must be rated 10,000 psi - Do not substitute!		1
4	6645812	BLEEDER			1
5	6716011	TUBE			1
6	6672338	O-RING			1
7	6672342	WASHER	backAup		1
8	6668004	SEAL	wiper		1
9	NSS	COIL SPRING ASSY	Order Ref. TRACK TENSIONER(1)		1

FRONT IDLER

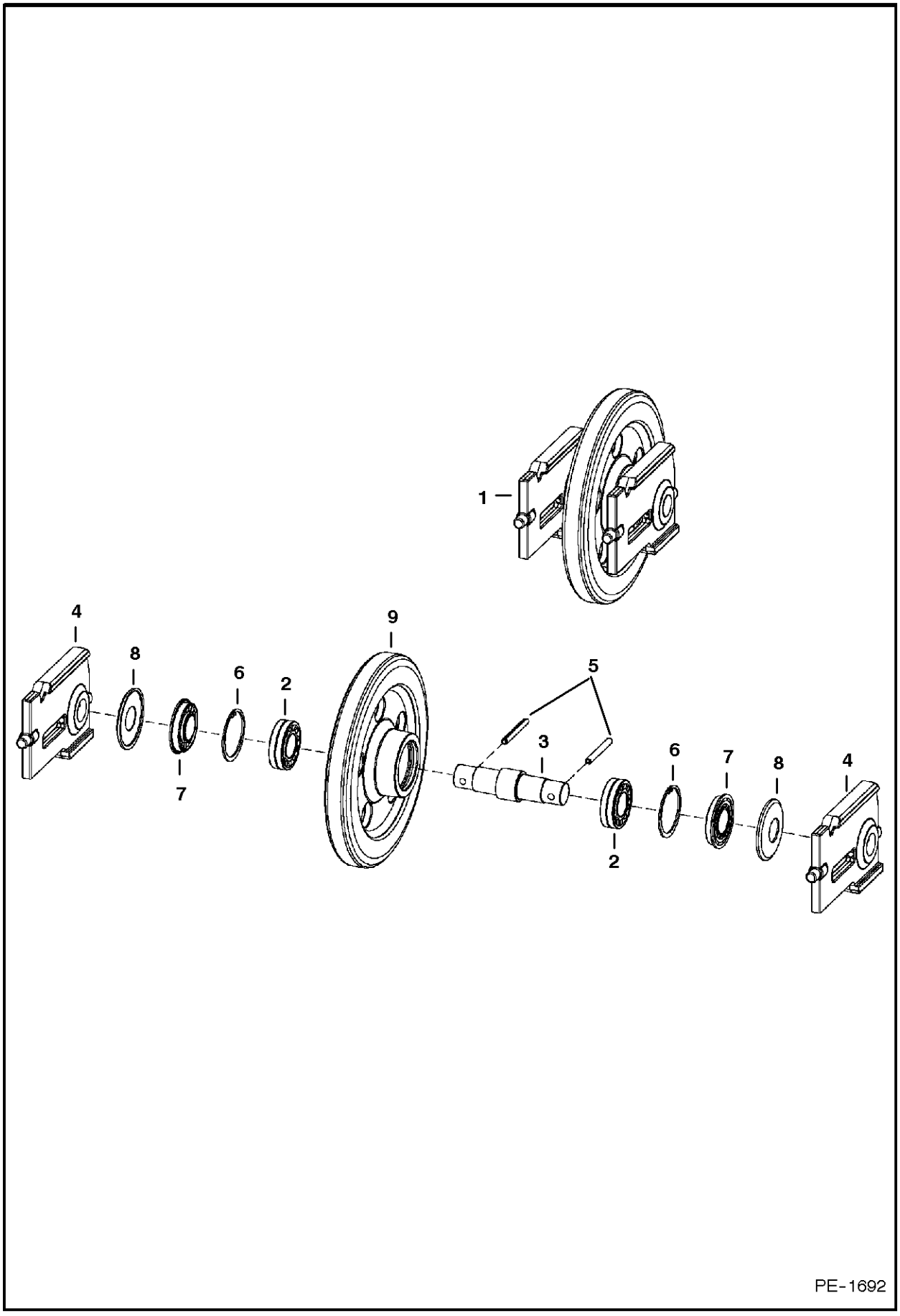

FRONT IDLER

Ref.N°	Part N°	Description	Remarks	Serial N°	Qty.
1	6732902	IDLER ASSY	front - Ref. FRONT IDLER(2)-FRONT IDLER(9)		1
2	6679884	BEARING			2
3	6732875	AXLE	shaft		1
4	6730967	BRACKET	use W/Ref. FRONT IDLER(8)		2
5	2JM-1090	ROLL PIN			2
6	7JM-80	SNAP RING			2
7	6679882	SEAL			2
8	6730227	COVER	seal		2
9	6732905	IDLER			1

REAR IDLER

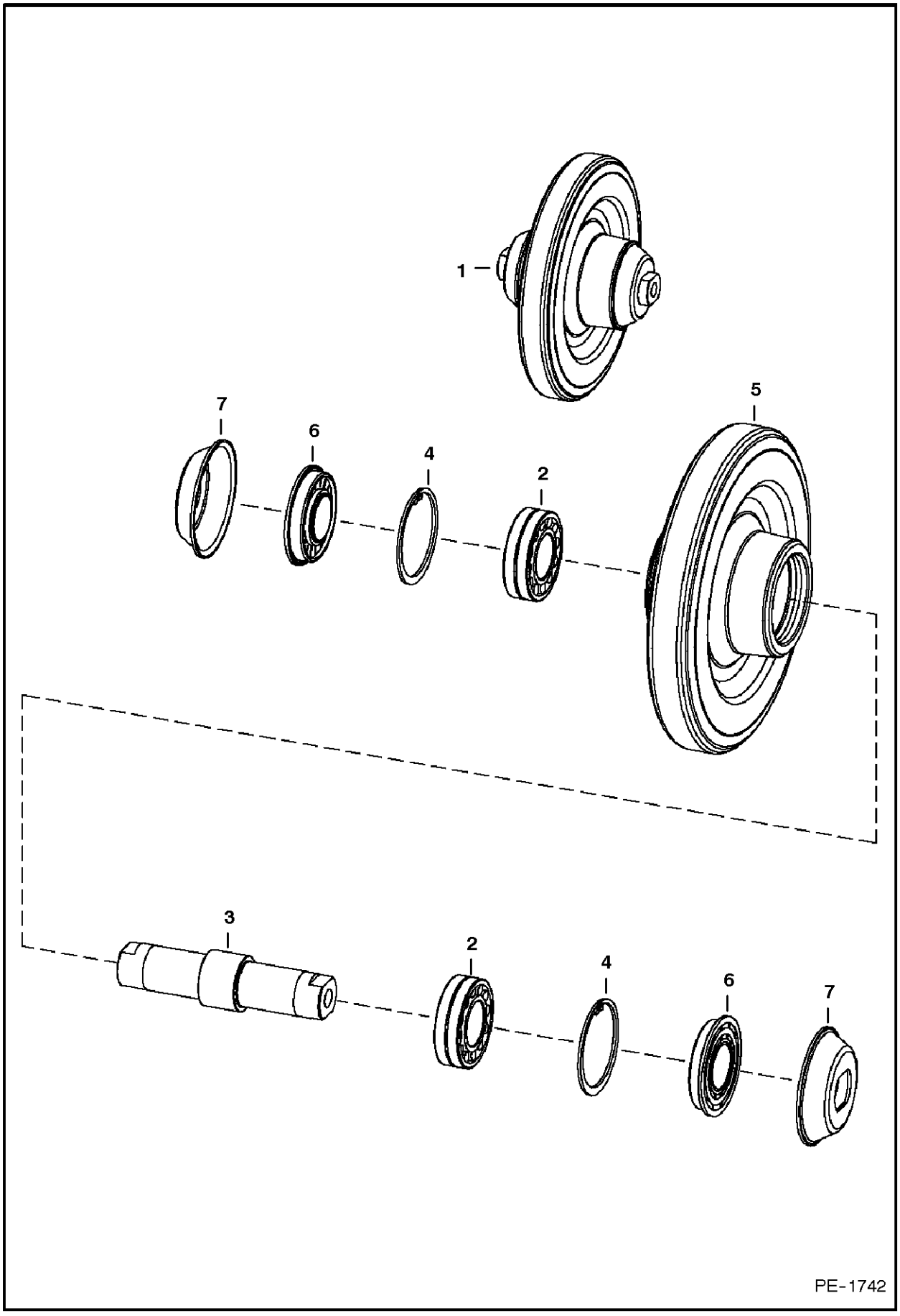

REAR IDLER

Ref.N°	Part N°	Description	Remarks	Serial N°	Qty.
1	6732903	IDLER ASSY	rear - W/Ref. REAR IDLER(2)-REAR IDLER(6)		1
2	6679884	BEARING			2
3	6732876	AXLE	shaft		1
4	7JM-80	SNAP RING			2
5	6732906	IDLER			1
6	6679882	SEAL			2
7	6730228	COVER	seal		2

TRACK ROLLER

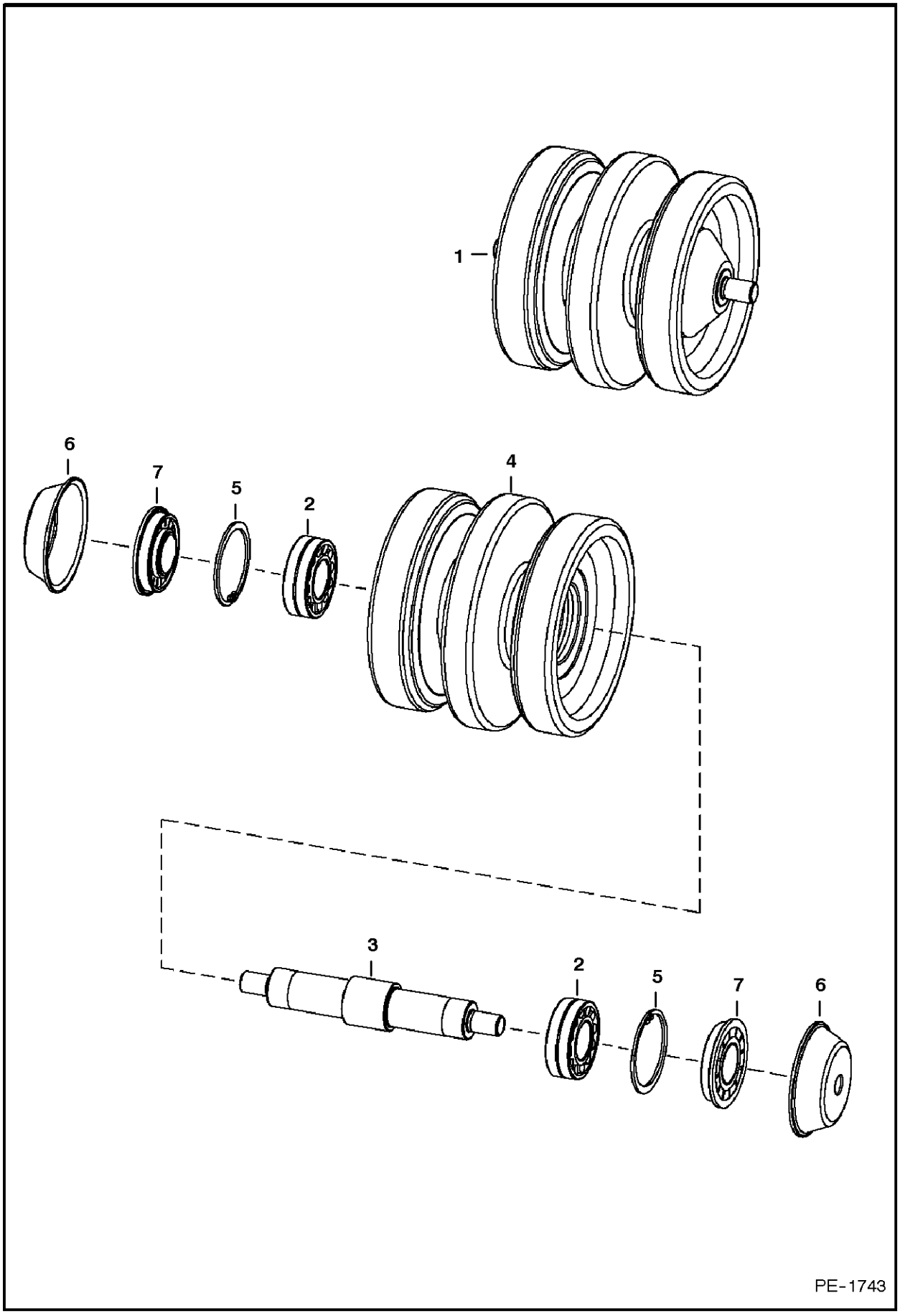

TRACK ROLLER

Ref.N°	Part N°	Description	Remarks	Serial N°	Qty.
1	6732901	ROLLER ASSY	track - W/Ref. TRACK ROLLER(2)-TRACK ROLLER(7)		1
2	6679883	BEARING			2
3	6732874	AXLE	shaft		1
4	6732904	ROLLER			1
5	7JM-72	SNAP RING			2
6	6730229	COVER	seal		2
7	6679881	SEAL			2

HYDRAULIC CIRCUITRY
(W/O Bucket Positioning Valve)

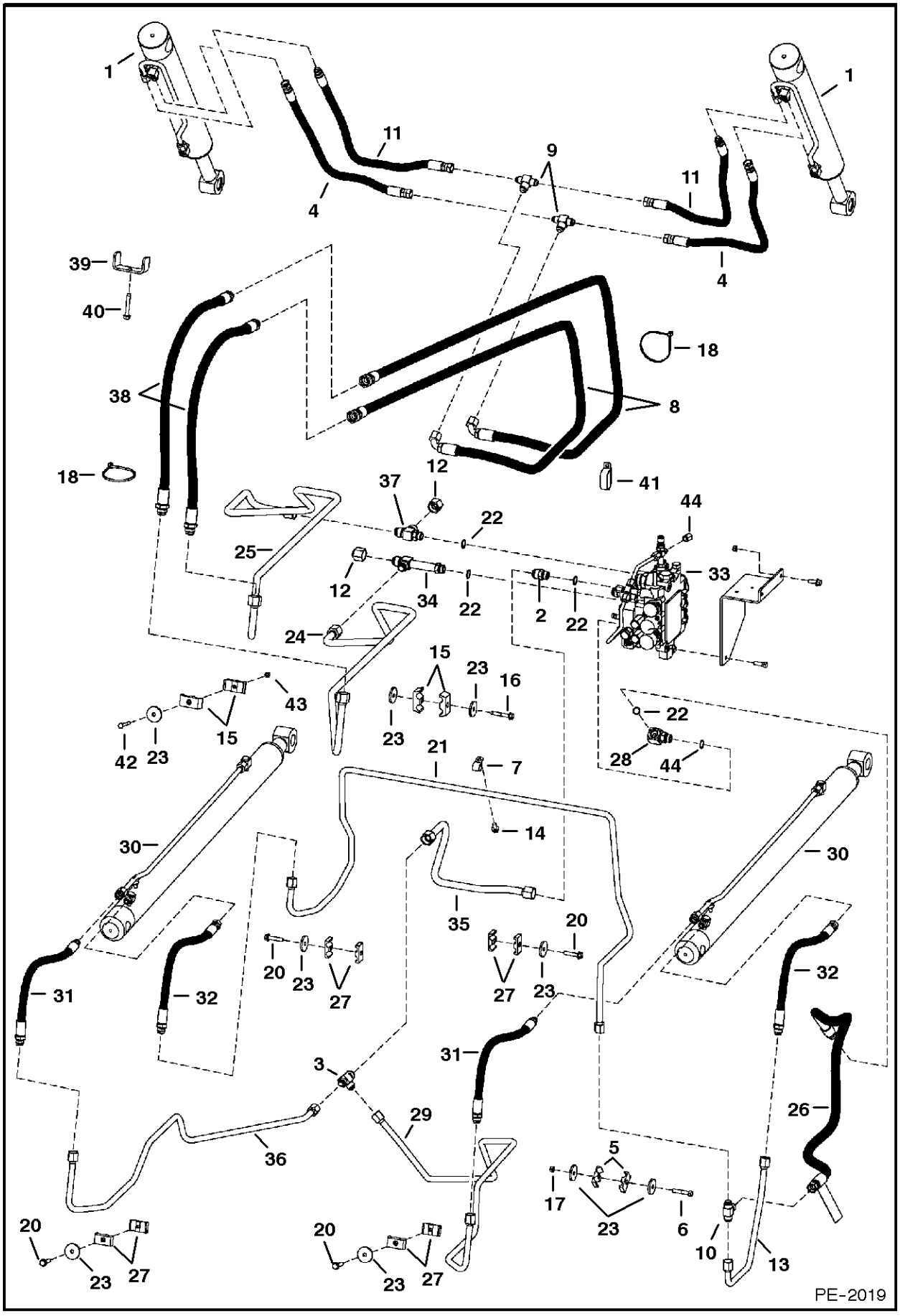

HYDRAULIC CIRCUITRY

Ref.N°	Part N°	Description	Remarks	Serial N°	Qty.
1		CYLINDER	tilt - See Page TILT CYLINDER(2)		1
2	6682411	ADAPTER	W/Ref. HYDRAULIC CIRCUITRY(22)		1
3	6729686	TEE			1
4	6729729	HOSE			2
5	6729702	CLAMP			2
6	17C-632	BOLT			1
7	30H-38	CLAMP			1
8	6736353	HOSE			2
9	6716061	TEE			2
9	97K-8	O-RING	flared end		x
9	97K-10	O-RING	flared end		x
10	6729694	TEE			1
11	6729728	HOSE			2
12	36K-8	CAP			2
13	6730858	TUBELINE			1
14	84G-3712	BOLT			1
15	6592506	CLAMP			4
16	84G-3736	BOLT			2
17	85D-6	NUT			1
18	6624289	STA-STRAP			2
19	6729320	CLAMP			2
20	84G-3728	BOLT			4
21	6730857	TUBELINE			1
22	79K-10	O-RING			x
23	872229	WASHER			10
24	6733819	TUBELINE	tilt		1
25	6733818	TUBELINE	tilt		1
26	6729604	HOSE	W/Ref. HYDRAULIC CIRCUITRY(22)		1
26	6809511	DECAL	danger		2
27	6701893	CLAMP			8
28	6729357	ELBOW	W/Ref. HYDRAULIC CIRCUITRY(22)		1
29	6734761	TUBELINE	lift		1
30		CYLINDER	lift - See Page LIFT CYLINDER(3)		2
31	6733816	HOSE			2
32	6733815	HOSE			2
33		VALVE	See Page HYDRAULIC CONTROL VALVE(4) or HYDRAULIC CONTROL VALVE(6)		1
34	6730914	TEE	W/Ref. HYDRAULIC CIRCUITRY(22)		1
34	97K-12	O-RING	flared end		x
35	6730837	TUBELINE	lift		1
36	6730836	TUBELINE	lift		1
37	21KB-1210	TEE	W/Ref. HYDRAULIC CIRCUITRY(22)		1
38	6736352	HOSE			2
39	6735796	CLAMP			1
40	84G-3740	BOLT			1
41	31H-49	CLAMP			1
42	17C-536	BOLT			1
43	61D-5	NUT			1
44	36K-5	CAP			1

LIFT & TILT CONTROL CIRCUITRY

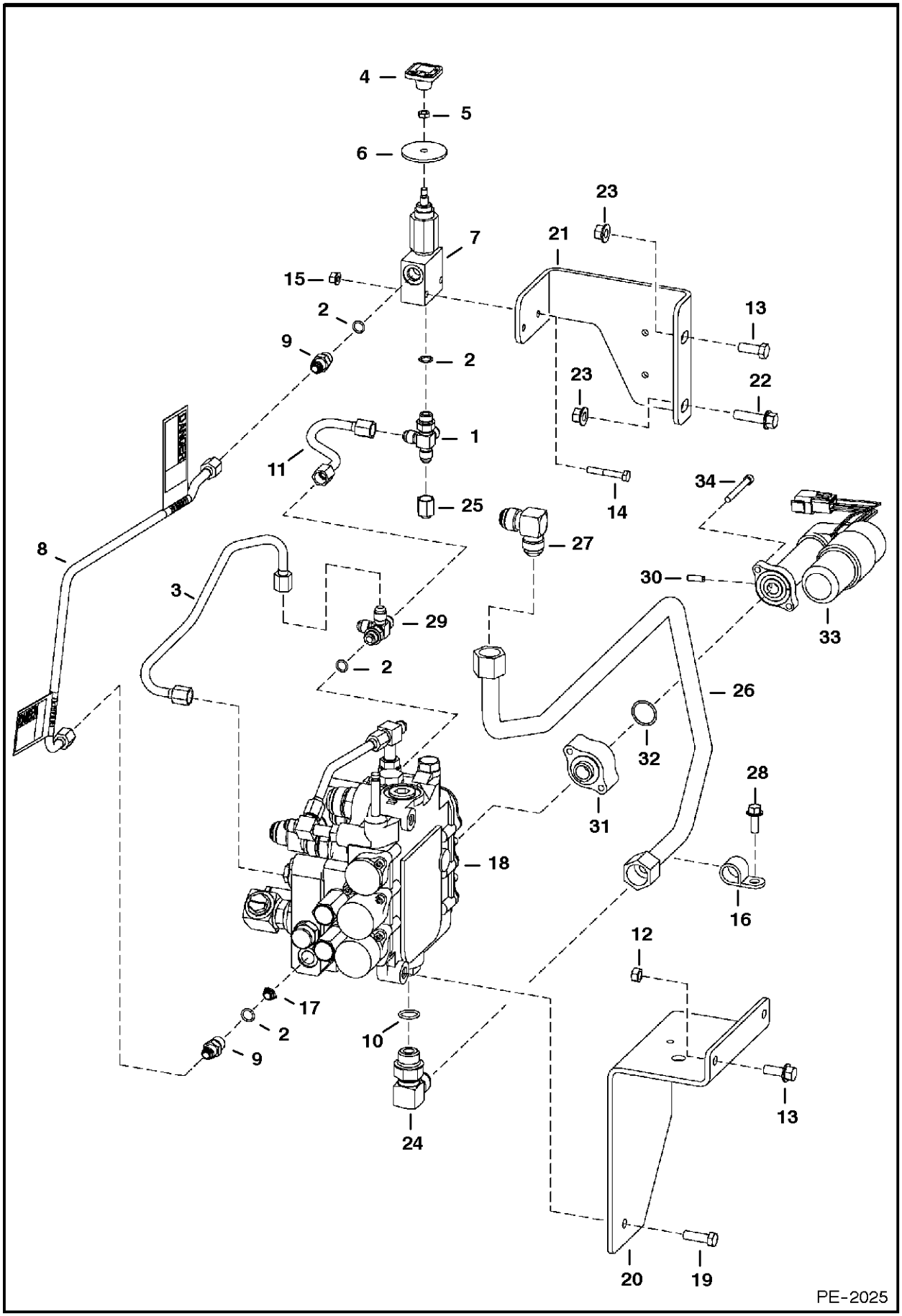

LIFT & TILT CONTROL CIRCUITRY

Ref.N°	Part N°	Description	Remarks	Serial N°	Qty.
1	6725182	TEE	W/Ref. LIFT & TILT CONTROL CIRCUITRY(2)		1
2	79K-6	O-RING			x
3	6732458	TUBELINE			1
4	6668913	KNOB			1
5	7D-4	NUT			1
6	6707101	WASHER	neoprene		1
7	6667844	VALVE	manual lift - See Page MANUAL LIFT RELEASE VALVE(1)		1
8	6732455	TUBELINE	W/ decals		1
8	6809511	DECAL	danger		2
9	15KB-606	ADAPTER	W/Ref. LIFT & TILT CONTROL CIRCUITRY(2)		2
10	79K-12	O-RING			x
11	6732464	TUBELINE			1
12	85D-6	NUT			2
13	35C-616	BOLT			3
14	17C-428	BOLT			2
15	83D-4	NUT			2
16	30H-46	CLAMP			1
17	6668791	ORIFICE			1
18		VALVE	control - See Page HYDRAULIC CONTROL VALVE(4) or HYDRAULIC CONTROL VALVE(6)		1
19	17C-620	BOLT			2
20	6735728	MOUNT			1
21	6718881	BRACKET			1
22	17C-624	BOLT			1
23	83D-6	NUT			2
24	17KB-1212	ELBOW	W/Ref. LIFT & TILT CONTROL CIRCUITRY(10)		1
25	36K-5	CAP			1
26	6735295	TUBELINE			1
27	77F-8	ELBOW			1
28	84G-3716	BOLT			1
29	6718031	CROSS	W/Ref. LIFT & TILT CONTROL CIRCUITRY(2)		1
30	6718506	PIN	joystick controls		2
31	6725128	ADAPTER	w/ oAring groove - joystick controls		1
31	7101705	ADAPTER	w/o oAring groove - joystick controls		1
32	58K-120	O-RING	use w/ 6725128 adapter - joystick controls		2
32	6686220	O-RING	use w/ 7101705 adapter - joystick controls		2
33	NAP	ACTUATOR	Order 7103129 - also Order 7101705 adapter (Ref. LIFT & TILT CONTROL CIRCUITRY(31)) - joystick controls - Was 6678775 [A]		2
33	7103129	ACTUATOR	W/Ref. LIFT & TILT CONTROL CIRCUITRY(32) (6686 220)		2
34	69G-436	BOLT	joystick controls		4

AUXILIARY HYDRAULICS

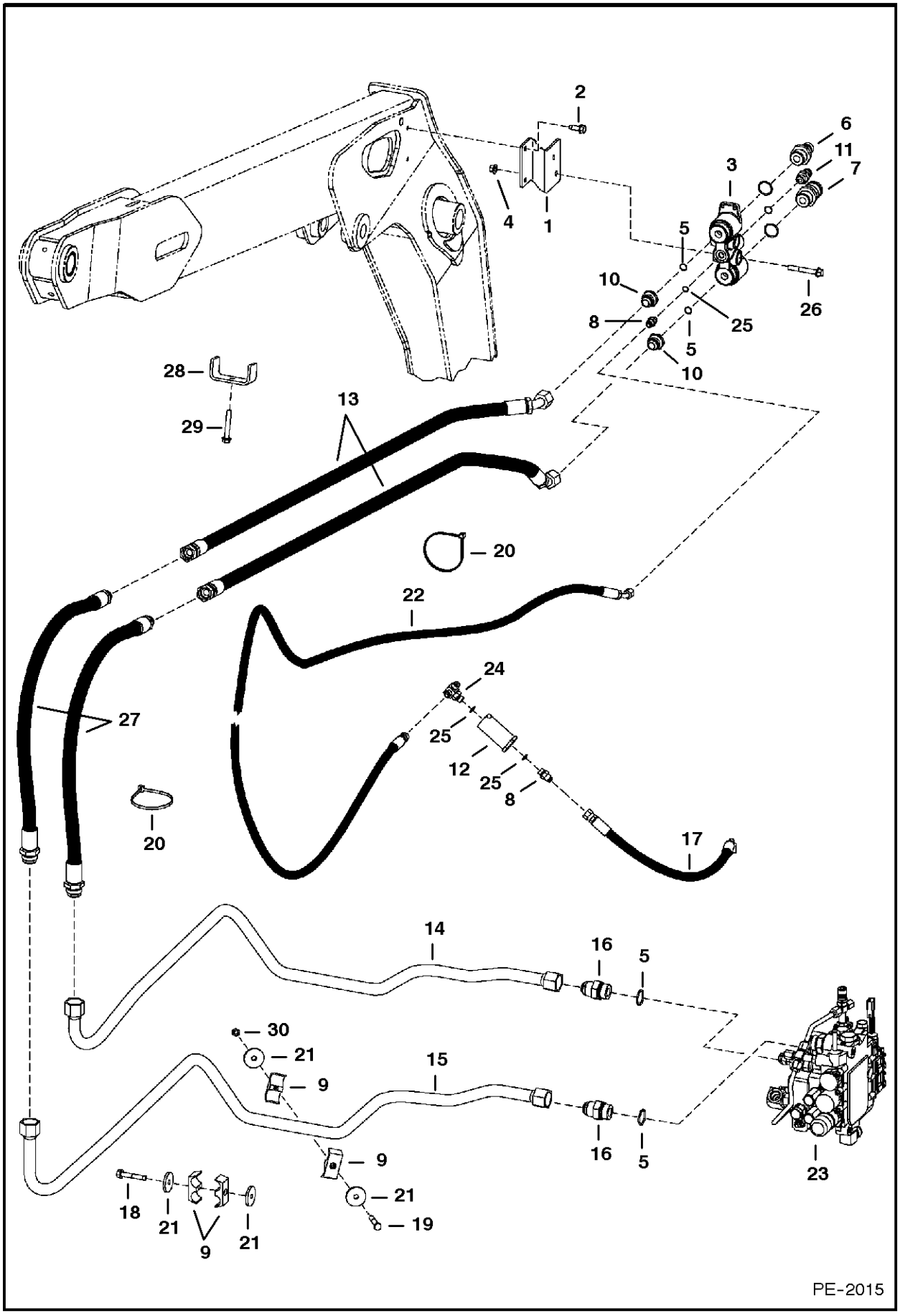

AUXILIARY HYDRAULICS

Ref.N°	Part N°	Description	Remarks	Serial N°	Qty.
1	6731199	BRACKET			1
2	84G-3716	BOLT			2
3	6678076	BLOCK ASSY.	W/Ref. AUXILIARY HYDRAULICS(6), AUXILIARY HYDRAULICS(7) & AUXILIARY HYDRAULICS(11)		1
4	83D-6	NUT			2
5	79K-12	O-RING			2
6	6679837	KIT	male		1
6	6679841	SEAL KIT	blue - front		1
6	6680020	SEAL KIT	3 O-rings & backAup washers		1
7	6679839	KIT	female		1
7	6680020	SEAL KIT	3 O-rings & backAup washers		1
8	15KB-606	ADAPTER	W/Ref. AUXILIARY HYDRAULICS(25)		2
9	6729320	CLAMP			4
10	6679836	KIT	W/ spring & Ref. AUXILIARY HYDRAULICS(5)		2
11	6679838	KIT	male - casedrain - W/ spring, valve, seal & O-ring		1
11	6679840	SEAL KIT	blue - front		1
12	6661022	FILTER	See Page HYDROSTATIC OIL FILTER(1)		1
13	6736351	HOSE			2
14	6733823	TUBELINE			1
15	6733824	TUBELINE			1
16	15KB-1612	ADAPTER	W/Ref. AUXILIARY HYDRAULICS(5)		2
17	6702079	HOSE			1
18	84G-3736	BOLT			1
19	17C-640	BOLT			1
20	6624289	STA-STRAP			2
21	872229	WASHER			5
22	6729746	HOSE			1
23		VALVE	control - See Page HYDRAULIC CONTROL VALVE(4) or HYDRAULIC CONTROL VALVE(6)		1
24	6725182	TEE	W/Ref. AUXILIARY HYDRAULICS(25)		1
25	79K-6	O-RING			x
26	31C-644	BOLT			2
27	6736350	HOSE			1
28	6735796	CLAMP			1
29	84G-3740	BOLT			1
30	85D-6	NUT			1

TILT CYLINDER

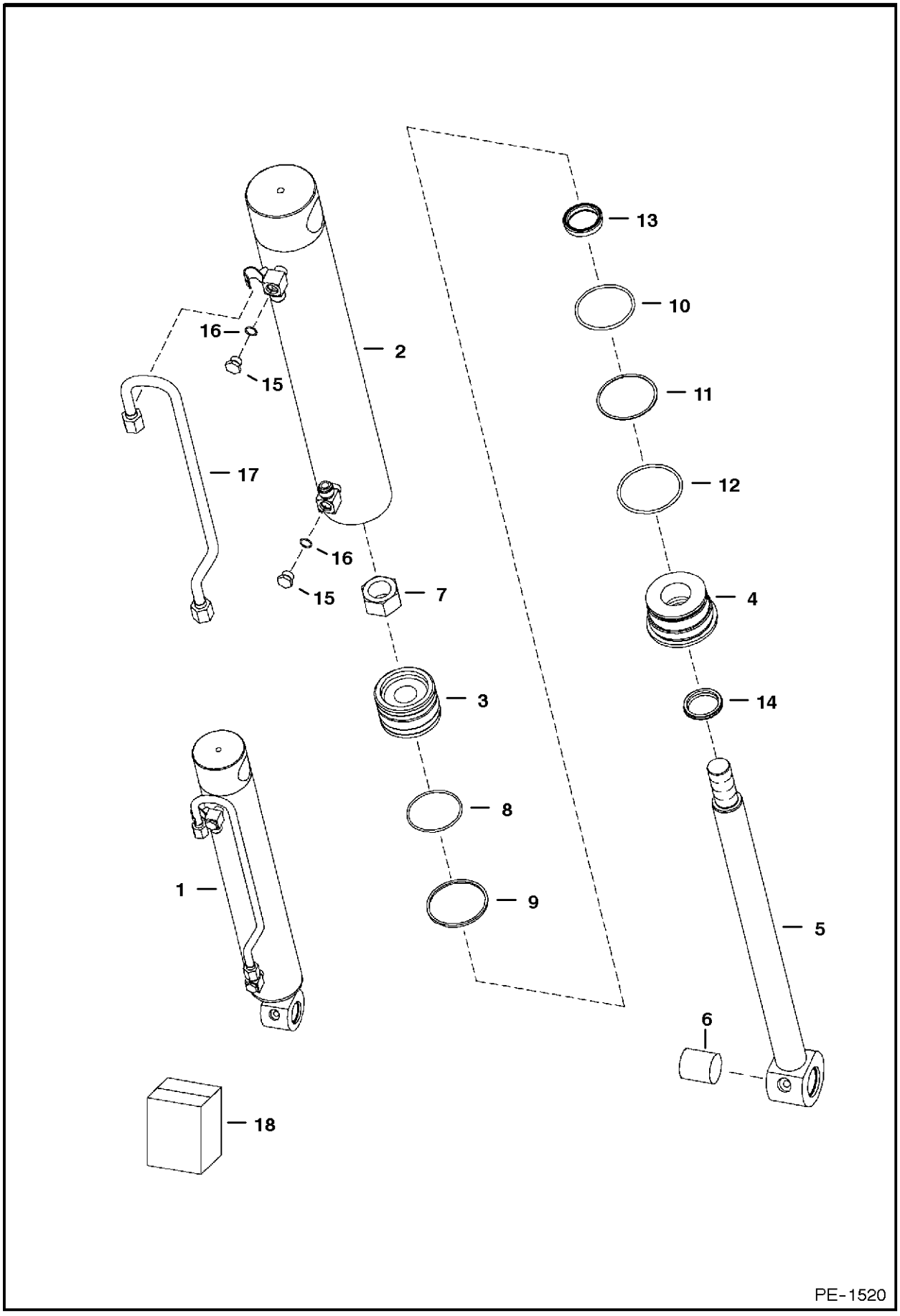

TILT CYLINDER

Ref.N°	Part N°	Description	Remarks	Serial N°	Qty.
1	6810233	CYLINDER	tilt - Ref. TILT CYLINDER(2)-TILT CYLINDER(16)		1
2	6810234	CASE	3' (76,2mm) I.D.		1
3	6810237	PISTON			1
4	6538367	HEAD			1
5	6810235	ROD	W/Ref. TILT CYLINDER(6) - 1.625' (41,3mm) O.D.		1
6	6805453	BUSHING			1
7	6810539	NUT			1
8	54K-30218	O-RING			1
9	947088	SEAL			1
10	54K-40224	O-RING			1
11	73K-232	O-RING	backAup		1
12	54K-40300	O-RING			1
13	6667326	SEAL			1
14	6665086	SEAL	wiper		1
15	6812171	PLUG	W/Ref. TILT CYLINDER(16)		2
16	75K-6	O-RING			x
17	6810213	TUBELINE			1
18	6816325	SEAL KIT	Ref. TILT CYLINDER(7)-TILT CYLINDER(14)		1

LIFT CYLINDER

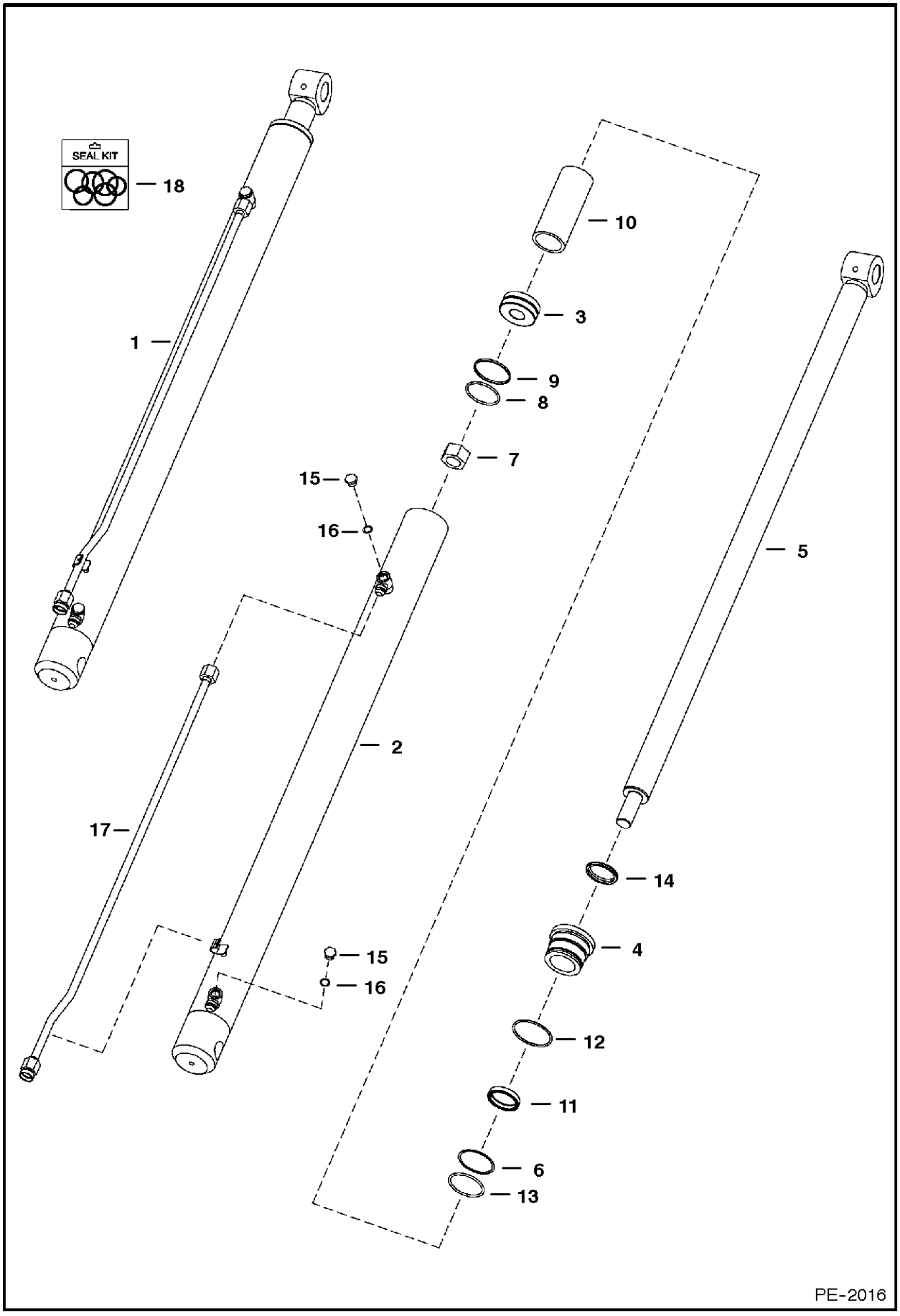

LIFT CYLINDER

Ref.N°	Part N°	Description	Remarks	Serial N°	Qty.
1	6815757	CYLINDER	lift - Ref. TILT CYLINDER(2)-TILT CYLINDER(16)		1
2	6815759	CASE			1
3	6667291	PISTON	W/Ref. LIFT CYLINDER(8) & LIFT CYLINDER(9)		1
4	6597009	HEAD			1
5	6597015	ROD	W/Ref. TILT CYLINDER(6)		1
6	54K-40208	O-RING			1
7	92D-16	NUT			1
8	1522534	RING			1
9	25K-30202	O-RING			1
10	6592776	SPACER			1
11	73K-228	WASHER	backAup		1
12	58K-230	O-RING			1
13	6667327	SEAL	rod		1
14	6666544	SEAL	wiper		1
15	6812171	PLUG	W/Ref. TILT CYLINDER(16)		2
16	75K-6	O-RING			x
17	6800974	TUBE			1
18	6803312	SEAL KIT	Ref. LIFT CYLINDER(6)-LIFT CYLINDER(9) & LIFT CYLINDER(11)-TILT CYLINDER(14)		1

MANUAL LIFT RELEASE VALVE

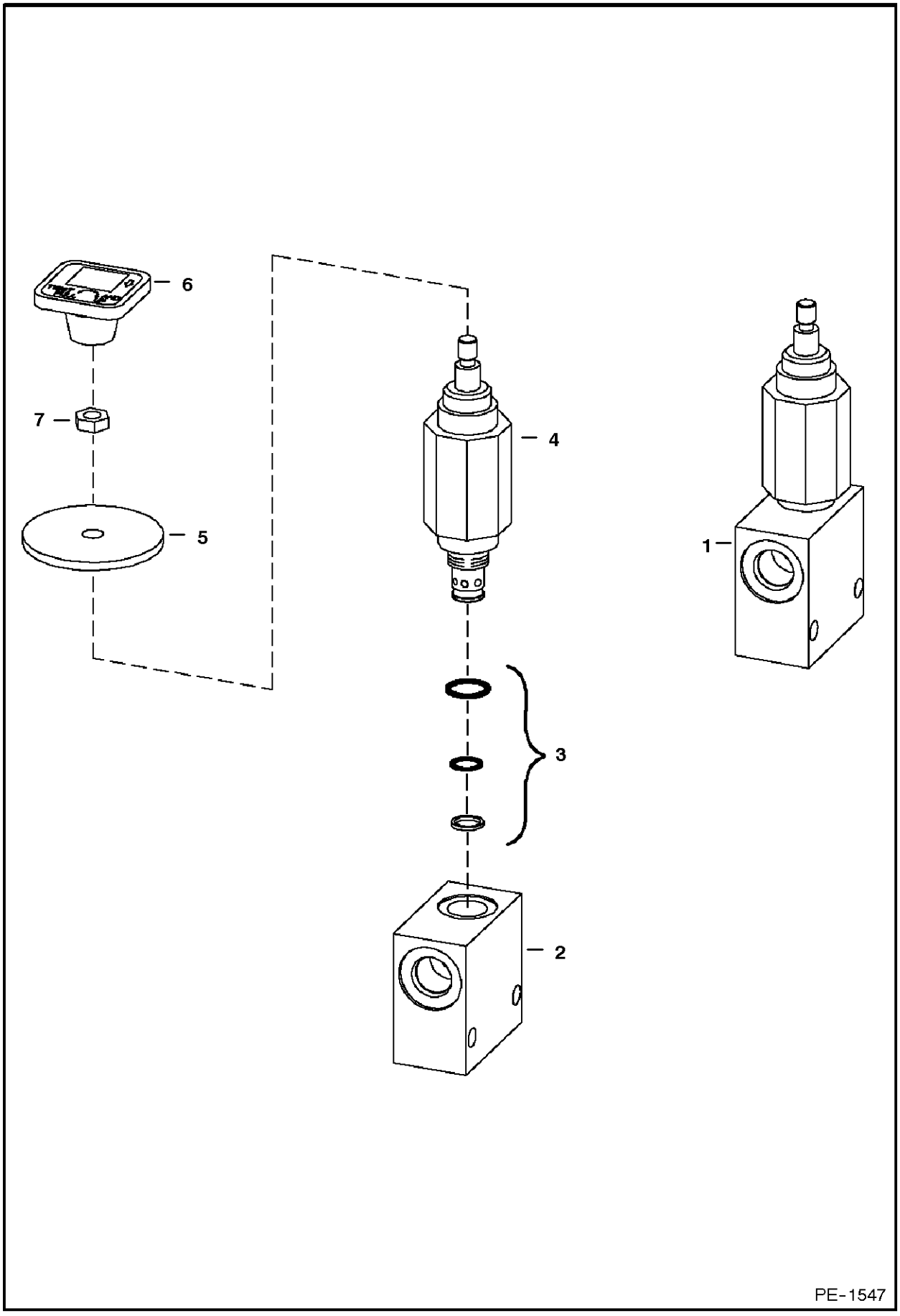

MANUAL LIFT RELEASE VALVE

Ref.N°	Part N°	Description	Remarks	Serial N°	Qty.
1	6667844	VALVE	Ref. MANUAL LIFT RELEASE VALVE(2)-MANUAL LIFT RELEASE VALVE(4)		1
2	NSS	BLOCK			1
3	6669087	SEAL KIT			1
4	6669085	VALVE			1
5	6707101	WASHER	neoprene		1
6	6668913	KNOB	red square		1
7	7D-4	NUT			1

CONTROL PEDALS

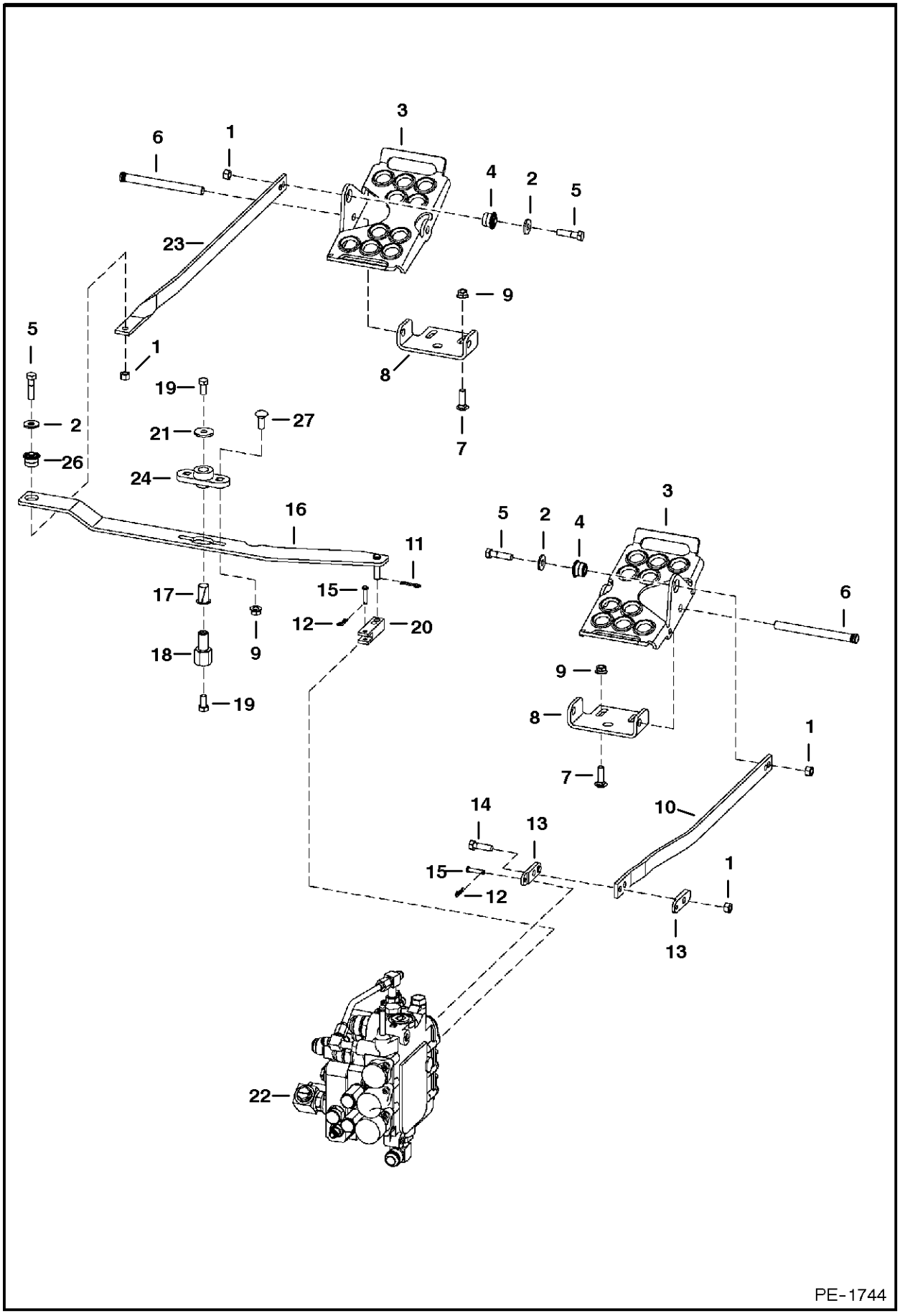

CONTROL PEDALS

Ref.N°	Part N°	Description	Remarks	Serial N°	Qty.
1	95D-6	NUT			5
2	6563914	WASHER			3
3	6726680	PEDAL			2
4	6665701	BUSHING			3
5	17C-624	BOLT			3
6	6564657	PIN			2
7	37C-620	BOLT			4
8	6726679	BRACKET			2
9	57D-6	NUT			4
10	6731251	BAR			1
11	1306637	PIN			2
12	6513495	COTTER PIN			2
13	6708009	LINK			2
14	17C-620	BOLT			1
15	6564654	PIN			2
16	6718285	LEVER			1
17	6512026	BUSHING			1
18	6718283	RETAINING NUT			1
19	17C-612	BOLT			2
20	6706105	YOKE			1
21	619021	WASHER			1
22		VALVE	control - See Page HYDRAULIC CONTROL VALVE(4) or HYDRAULIC CONTROL VALVE(6)		1
23	6731252	BAR			1
24	6708043	BUSHING			1
25	6577961	GROMMET			2
26	6678067	BUSHING			1
27	37C-616	BOLT			2

HYDRAULIC CONTROL VALVE
(Spool Lock) (W/ BICS Control Valve)

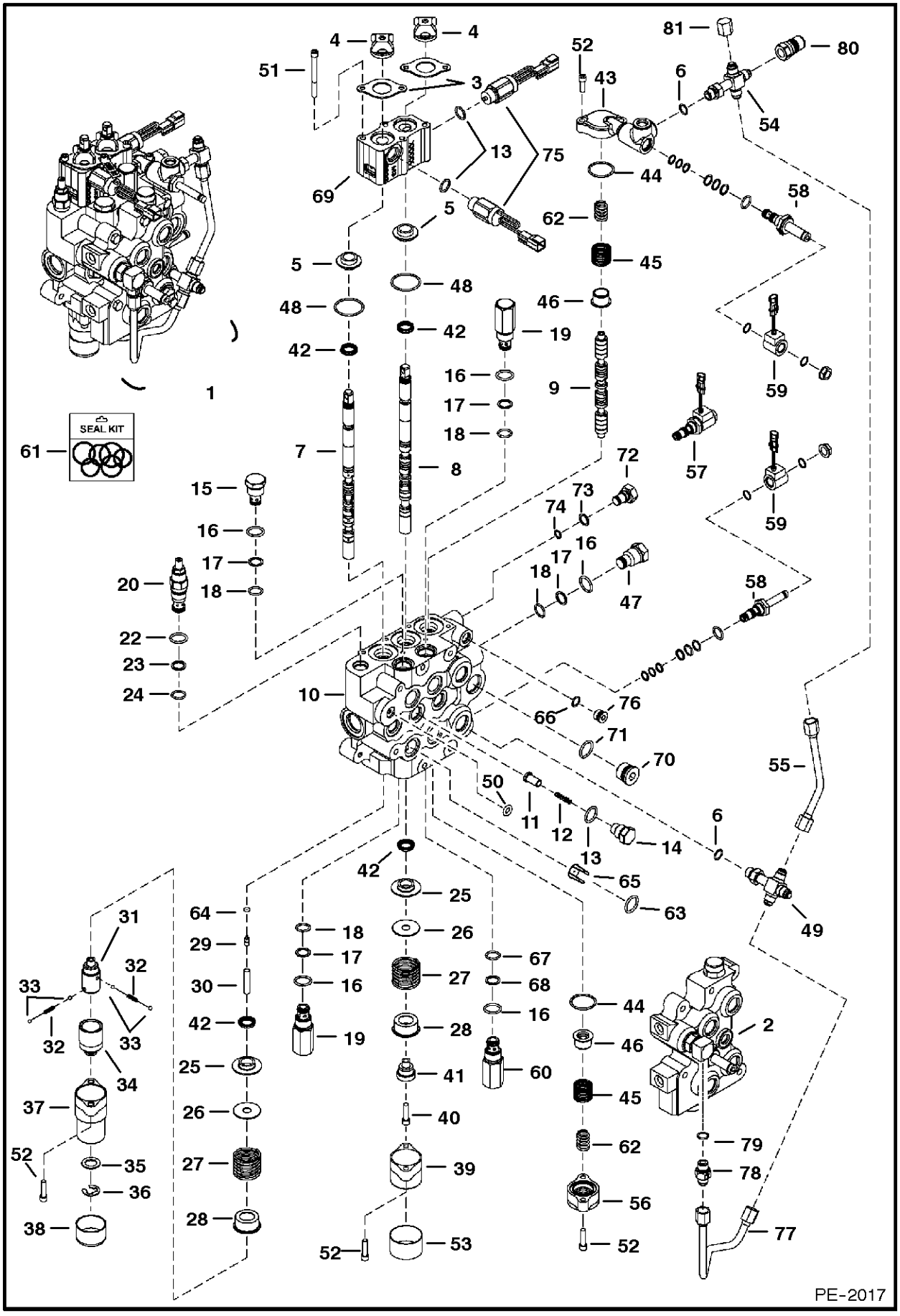

HYDRAULIC CONTROL VALVE

Ref.N°	Part N°	Description	Remarks	Serial N°	Qty.
1	6815990	VALVE	W/Fittings - Ref. HYDRAULIC CONTROL VALVE(2)-HYDRAULIC CONTROL VALVE(81)		1
2	6814269	VALVE ASSY	BICS control - See Page BICS CONTROL VALVE(1)		1
3	6589564	RETAINER			2
4	6587763	BOOT			2
5	6805102	BUSHING	alignment		2
6	99K-6	O-RING			x
7	6814511	SPOOL	lift		1
8	6814512	SPOOL	tilt		1
9	6588074	SPOOL	auxiliary		3
10	NSS	BODY			1
11	6592115	SEAT	load check		3
12	6592117	SPRING			3
13	79K-8	O-RING			3
14	6592116	NUT	load check		3
15	6667549	VALVE	antiAcavity check - W/Ref. HYDRAULIC CONTROL VALVE(16)-HYDRAULIC CONTROL VALVE(18)		1
16	79K-10	O-RING			2
17	80K-14	WASHER	backAup		x
18	58K-14	O-RING	backAup ring required		5
18	6677106	O-RING	backAup ring not required		5
19	6679757	VALVE	port relief - W/Ref. HYDRAULIC CONTROL VALVE(16)-HYDRAULIC CONTROL VALVE(18) - 4000 PSI		2
20	6684701	VALVE	main relief - W/Ref. HYDRAULIC CONTROL VALVE(21)-HYDRAULIC CONTROL VALVE(24) - 3170 PSI		1
21	58K-17	O-RING			1
22	6665569	WASHER	backAup		1
23	25K-20016	O-RING			1
24	6665570	RING	glide		1
25	6595663	BUSHING			2
26	6587523	WASHER			2
27	6587580	SPRING			2
28	6592100	COLLAR			2
29	6596807	PLUG			1
30	6586918	SCREW			1
31	6587575	ADAPTER			1
32	6592107	SPRING			2
33	6592105	BALL			4
34	6531270	SLEEVE			1
35	6592098	WASHER			1
36	799119	RETAINER			1
37	6589226	BONNET	.625' flange		1
38	6660644	CAP			1
39	6587633	BONNET			1
40	30G-416	SCREW			1
41	6592109	ADAPTER			1
42	6683274	SEAL			4
43	6805651	BLOCK	aux		2
44	58K-124	O-RING			2
45	6596332	SPRING			2
46	6595951	SLEEVE			2

HYDRAULIC CONTROL VALVE

Ref.N°	Part N°	Description	Remarks	Serial N°	Qty.
47	6592720	PLUG	W/Ref. HYDRAULIC CONTROL VALVE(16)-HYDRAULIC CONTROL VALVE(18)		1
48	58K-127	O-RING			2
49	6817553	CROSS	W/Ref. HYDRAULIC CONTROL VALVE(6)		1
50	55K-204	O-RING			1
51	29G-444	BOLT			4
52	29G-416	SCREW	1' long		8
53	6662848	CAP			1
54	6816350	TEE	W/Ref. HYDRAULIC CONTROL VALVE(6) - tapered boss face		2
55	6806496	TUBELINE			1
56	6588781	END CAP			1
57	NAP	SOLENOID	Order Ref. HYDRAULIC CONTROL VALVE(58) & HYDRAULIC CONTROL VALVE(59)		2
58	6676249	STEM			2
58	6586459	SEAL KIT			x
59	6717706	COIL	W/ nut - 10 volt - pwm		2
60	6678552	VALVE	#port relief & antiAcav. - W/Ref. HYDRAULIC CONTROL VALVE(16) - 3500 PSI - use in tilt cylinder base end port		1
60	6673904	SEAL KIT	W/Ref. HYDRAULIC CONTROL VALVE(16), HYDRAULIC CONTROL VALVE(67) & HYDRAULIC CONTROL VALVE(68)<com3 R }H~10{M		x
61	6816252	SEAL KIT	two spool - Ref. HYDRAULIC CONTROL VALVE(4), HYDRAULIC CONTROL VALVE(42) & HYDRAULIC CONTROL VALVE(51)		x
61	6816253	SEAL KIT	complete - Ref. HYDRAULIC CONTROL VALVE(4), HYDRAULIC CONTROL VALVE(13), HYDRAULIC CONTROL VALVE(16)-HYDRAULIC CONTROL VALVE(18)		x
61	6661328	SEAL KIT	main relief - Ref. HYDRAULIC CONTROL VALVE(21)-HYDRAULIC CONTROL VALVE(24)		x
61	6809425	SEAL KIT	upper deck - Ref. HYDRAULIC CONTROL VALVE(13) & HYDRAULIC CONTROL VALVE(16)-HYDRAULIC CONTROL VALVE(18)		x
62	6595131	SPRING	.72' O.D.		2
63	55K-212	O-RING			4
64	54K-20002	O-RING			1
65	6800124	RESTRICTOR			1
66	95K-6	O-RING			2
67	NSS	O-RING	Order Ref. HYDRAULIC CONTROL VALVE(60) kit		x
68	NSS	O-RING	Order Ref. HYDRAULIC CONTROL VALVE(60) kit		x
69	6812031	BLOCK	lift and tilt lock		1
70	90KV-8	PLUG	W/Ref. HYDRAULIC CONTROL VALVE(71)		1
71	95K-12	O-RING			x
72	6806561	PLUG	aux lock - W/Ref. HYDRAULIC CONTROL VALVE(73) & HYDRAULIC CONTROL VALVE(74)		1
73	79K-7	O-RING			x
74	25K-20012	O-RING			x
75	6677383	SOLENOID	spool lock - W/Ref. HYDRAULIC CONTROL VALVE(13) - 5' (127mm) wire		2
76	90KV-5	PLUG	W/Ref. HYDRAULIC CONTROL VALVE(66)		1
77	6734058	TUBELINE			1
78	6681933	CHECK VALVE	3000 PSI - W/screen - W/Ref. HYDRAULIC CONTROL VALVE(79)		1
79	79K-6	O-RING			x

HYDRAULIC CONTROL VALVE

Ref.N°	Part N°	Description	Remarks	Serial N°	Qty.
80	6684125	COUPLER	male		1
81	36K-5	CAP			1

BICS CONTROL VALVE

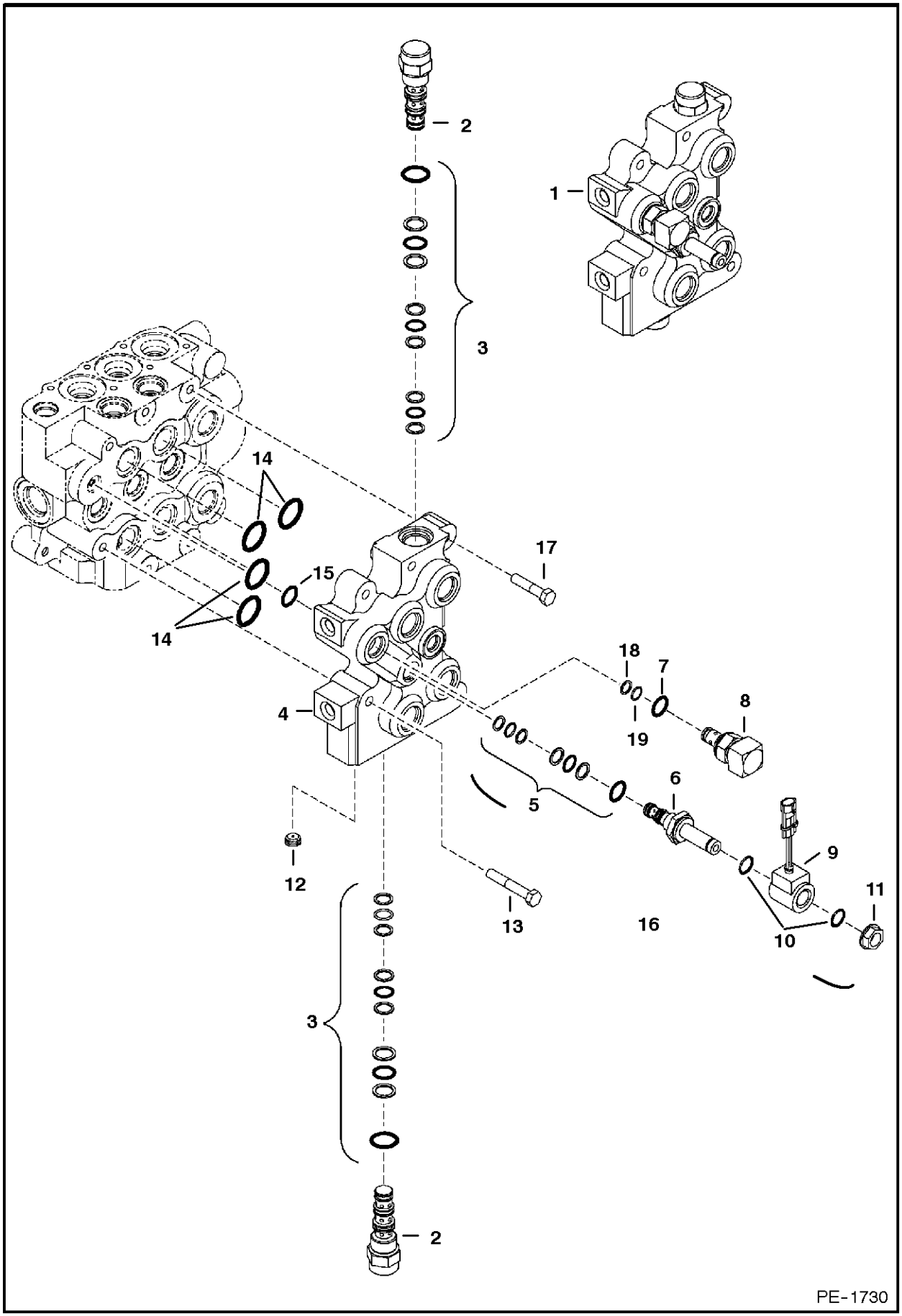

BICS CONTROL VALVE

Ref.N°	Part N°	Description	Remarks	Serial N°	Qty.
1	6814269	VALVE ASSY	Ref. BICS CONTROL VALVE(2)-BICS CONTROL VALVE(8)		1
2	6668765	VALVE	pilot operated		2
3	6669734	SEAL KIT			x
4	NSS	BODY			1
5	6669732	SEAL KIT			x
6	6665004	STEM	solenoid valve		1
7	79K-8	O-RING			x
8	6814247	FITTING	W/Ref. BICS CONTROL VALVE(7), BICS CONTROL VALVE(18) & BICS CONTROL VALVE(19)		1
9	6671025	COIL			1
10	54K-20028	O-RING			2
11	6668820	NUT			1
12	6668791	ORIFICE			1
13	43C-532	BOLT			4
14	55K-212	O-RING			4
15	55K-204	O-RING			1
16	6672471	SOLENOID	assy. - Ref. BICS CONTROL VALVE(5), BICS CONTROL VALVE(6) & BICS CONTROL VALVE(9)-BICS CONTROL VALVE(11)		1
17	43C-524	BOLT			2
18	58K-12	O-RING			x
19	80K-12	BACK-UP RING	backAup		x

HYDRAULIC CONTROL VALVE
(Advanced Hand Control System)

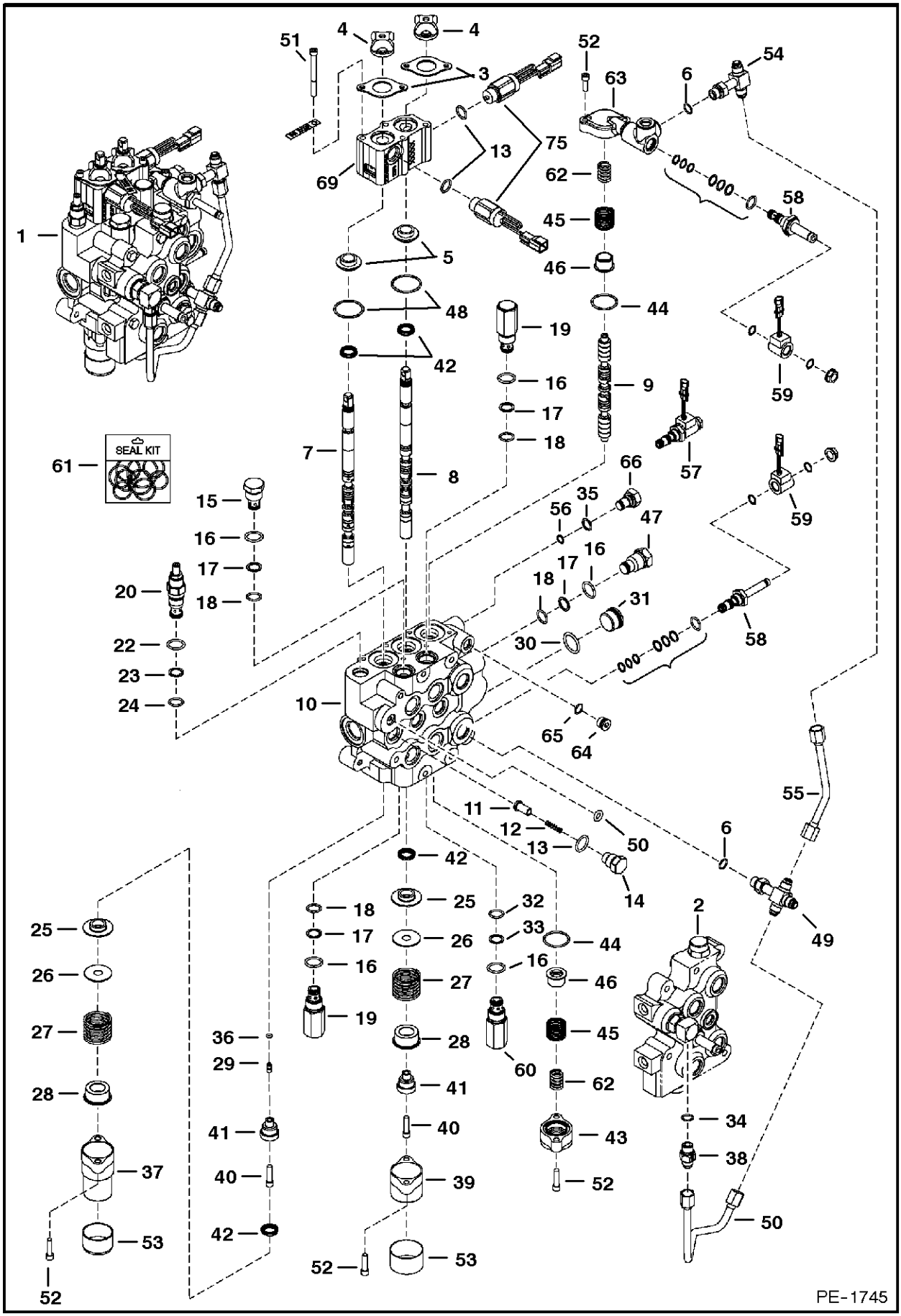

HYDRAULIC CONTROL VALVE

Ref.N°	Part N°	Description	Remarks	Serial N°	Qty.
1	6814506	VALVE	AHC - W/ fittings - Ref. HYDRAULIC CONTROL VALVE(2)-HYDRAULIC CONTROL VALVE(60)		1
2	6814269	VALVE ASSY	BICS control - See Page BICS CONTROL VALVE(1)		1
3	6589564	RETAINER			2
4	6587763	BOOT			2
5	6589565	RETAINER			2
6	99K-6	O-RING	tapered boss face		x
7	6677660	SPOOL	lift - # 1 or Red		1
7	6677661	SPOOL	lift - # 2 or Green		1
8	6677662	SPOOL	tilt - # 1 or Red		1
8	6677663	SPOOL	tilt - # 2 or Green		1
9	6588074	SPOOL	auxiliary		3
10	NSS	BODY	valve		1
11	6592115	SEAT	load check		3
12	6592117	SPRING			3
13	79K-8	O-RING			3
14	6592116	NUT	load check - W/Ref. HYDRAULIC CONTROL VALVE(13)		3
15	6667549	VALVE	antiAcavity check - W/Ref. HYDRAULIC CONTROL VALVE(16)-HYDRAULIC CONTROL VALVE(18)		1
16	79K-10	O-RING			2
17	80K-14	WASHER	backAup		5
18	6677106	O-RING	backAup washer not required		5
19	6679757	VALVE	port relief - W/Ref. HYDRAULIC CONTROL VALVE(16)-HYDRAULIC CONTROL VALVE(18) - 4000 PSI		2
20	6677984	VALVE	main relief - W/Ref. HYDRAULIC CONTROL VALVE(2 1)-HYDRAULIC CONTROL VALVE(24)		1
21	58K-17	O-RING			1
22	6665569	WASHER	back-up		1
23	25K-20016	O-RING			1
24	6665570	RING	glide		1
25	6595663	BUSHING			2
26	6587523	WASHER			2
27	6587580	SPRING			2
28	6592100	COLLAR			2
29	6801167	PLUG	spool		1
30	95K-12	O-RING			1
31	90KV-8	PLUG	W/Ref. HYDRAULIC CONTROL VALVE(30) - socket head		1
32	NSS	O-RING	Order Ref. HYDRAULIC CONTROL VALVE(60) - kit		1
33	NSS	O-RING	Order Ref. HYDRAULIC CONTROL VALVE(60) - kit		1
34	79K-6	O-RING			x
35	25K-20012	O-RING			1
36	54K-20002	O-RING			1
37	6803092	BONNET	.625 flange		1
38	6681933	CHECK VALVE	3000 PSI - W/screen - W/Ref. HYDRAULIC CONTRO L VALVE(34)		1
39	6587633	BONNET			1
40	30G-416	SCREW			2
41	6592109	ADAPTER			1
42	6683274	SEAL	lip		4
43	6588781	END CAP	.87' thick		2

HYDRAULIC CONTROL VALVE

Ref.N°	Part N°	Description	Remarks	Serial N°	Qty.
44	58K-124	O-RING			2
45	6596332	SPRING			2
46	6595951	SLEEVE			2
47	6592720	PLUG	W/Ref. HYDRAULIC CONTROL VALVE(16)-HYDRAULIC CONTROL VALVE(18)		1
48	58K-127	O-RING			2
49	6805241	CROSS	W/Ref. HYDRAULIC CONTROL VALVE(6)		1
50	6734058	TUBELINE			1
51	29G-412	SCREW			4
52	29G-416	SCREW	1' long		8
53	6662848	CAP			2
54	6805696	TEE	W/Ref. HYDRAULIC CONTROL VALVE(6)		2
54	97K-6	O-RING	flared end		x
55	6806496	TUBELINE			1
56	79K-7	O-RING			1
57	6677201	SOLENOID	W/Ref. HYDRAULIC CONTROL VALVE(58) & HYDRAULIC CONTROL VALVE(59)		2
58	6676249	STEM			2
58	6586459	SEAL KIT			x
59	6717706	COIL	w/nut - pwm - 10 volt		2
60	6678552	VALVE	#port relief & antiAcav. - W/Ref. HYDRAULIC CONTROL VALVE(16), $HYDRAULIC CONTROL VALVE(32) & HYDRAULIC CONTROL VALVE(33) - 3500		1
60	6673904	SEAL KIT	W/Ref. HYDRAULIC CONTROL VALVE(16),$ HYDRAULIC CONTROL VALVE(32) & HYDRAULIC CONTROL VALVE(33)		1
61	6816252	SEAL KIT	one spool - Ref. HYDRAULIC CONTROL VALVE(4), HYDRAULIC CONTROL VALVE(42) & HYDRAULIC CONTROL VALVE(51)		x
61	6816253	SEAL KIT	complete - Ref. HYDRAULIC CONTROL VALVE(4), HYDRAULIC CONTROL VALVE(13), HYDRAULIC CONTROL VALVE(16)-HYDRAULIC CONTROL VALVE(18)		x
61	6661328	SEAL KIT	main relief - Ref. HYDRAULIC CONTROL VALVE(21)-HYDRAULIC CONTROL VALVE(24)		x
61	6809425	SEAL KIT	Ref. HYDRAULIC CONTROL VALVE(13) & HYDRAULIC CONTROL VALVE(16)-HYDRAULIC CONTROL VALVE(18)		x
61	6586459	SEAL KIT	W/Ref. HYDRAULIC CONTROL VALVE(16),$ HYDRAULIC CONTROL VALVE(32) & HYDRAULIC CONTROL VALVE(33)$		1
62	6595131	SPRING	.72' O.D.		2
63	6805651	BLOCK	aux		1
64	90KV-5	PLUG	W/Ref. HYDRAULIC CONTROL VALVE(65)		2
65	95K-6	O-RING			2
66	6806561	PLUG	W/Ref. HYDRAULIC CONTROL VALVE(35) & HYDRAULIC CONTROL VALVE(56)		1

BUCKET POSITIONING VALVE

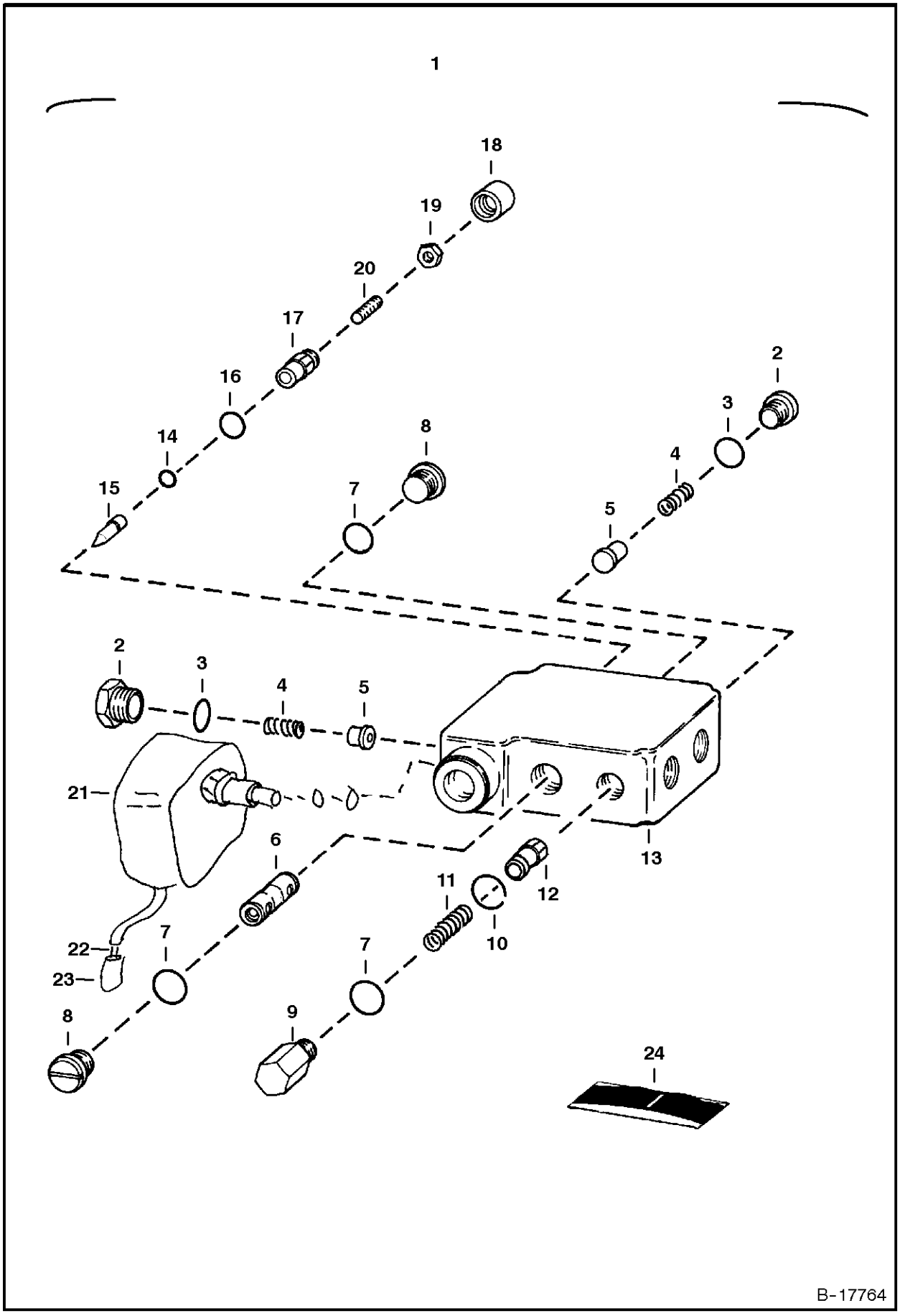

BUCKET POSITIONING VALVE

Ref.N°	Part N°	Description	Remarks	Serial N°	Qty.
1	6675669	VALVE	primer red - Ref. BUCKET POSITIONING VALVE(2)-BUCKET POSITIONING VALVE(21)		1
2	6647784	PLUG	W/Ref. BUCKET POSITIONING VALVE(3)		2
3	79K-8	O-RING			2
4	6647785	SPRING			2
5	6647783	LOAD CHECK			2
6	NSS	SPOOL			1
7	58K-116	O-RING			3
8	6676543	PLUG	W/Ref. BUCKET POSITIONING VALVE(7)		2
9	6667176	PLUG	W/Ref. BUCKET POSITIONING VALVE(7)		1
10	6667680	SNAP RING			1
11	6676544	SPRING			1
12	NSS	SPOOL			1
13	NSS	BODY			1
14	6667677	O-RING			1
15	6647777	PIN			1
16	6634874	O-RING			1
17	6676542	CAP			1
18	6667676	COVER			1
19	6631561	NUT			1
20	6648293	SCREW			1
21	6672863	SOLENOID			1
21	6671527	NUT			1
21	6670634	SEAL KIT			1
21	6674331	COIL			1
21	6676545	CARTRIDGE			1
22	6641180	LOCK	2pin		1
23	6641179	CONNECTOR	2pin		1
24	6667185	SEAL KIT	Ref. BUCKET POSITIONING VALVE(3), BUCKET POSITIONING VALVE(7), BUCKET POSITIONING VALVE(14), BUCKET POSITIONING VALVE(16) & BUCK		1

HIGH HORSEPOWER HYDRAULICS

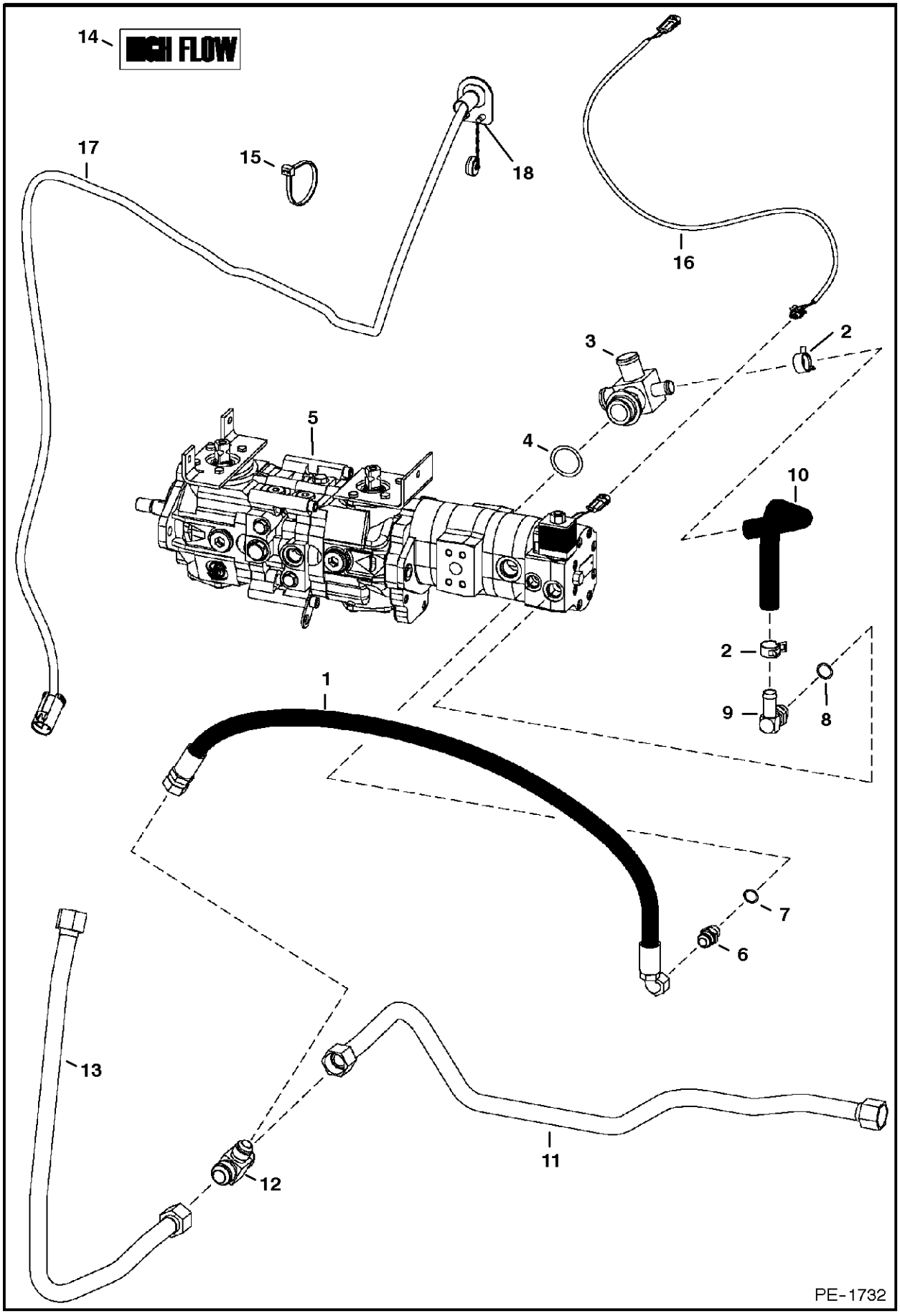

HIGH HORSEPOWER HYDRAULICS

Ref.N°	Part N°	Description	Remarks	Serial N°	Qty.
1	6737190	HOSE			1
2	5HM-24	CLAMP			2
3	6733163	TEE	W/Ref. HIGH HORSEPOWER HYDRAULICS(4) - for manual controls		1
3	6736409	TEE	W/Ref. HIGH HORSEPOWER HYDRAULICS(4) - for joystick controls		1
4	99K-16	O-RING			x
5		PUMP	See Page HYDROSTATIC PUMP(3) for manual controls See Page HYDROSTATIC PUMP(5) for joystick controls		1
6	6679943	CHECK VALVE	W/Ref. HIGH HORSEPOWER HYDRAULICS(7)		1
7	79K-8	O-RING			x
8	79K-10	O-RING			x
9	6717885	ELBOW	W/Ref. HIGH HORSEPOWER HYDRAULICS(8)		1
10	6733164	HOSE			1
11	6733308	TUBELINE			1
12	6730143	TEE	bulkhead		1
13	6735866	TUBELINE			1
14	6727913	DECAL	high flow		2
15	6624289	STA-STRAP			12
16	6733137	HARNESS			1
17		HARNESS	attachment control - See Page ELECTRICAL CONTROLS KIT(3)		1
18	84G-3112	BOLT			2

HIGH HORSEPOWER HYDRAULICS
(Gear Pump)

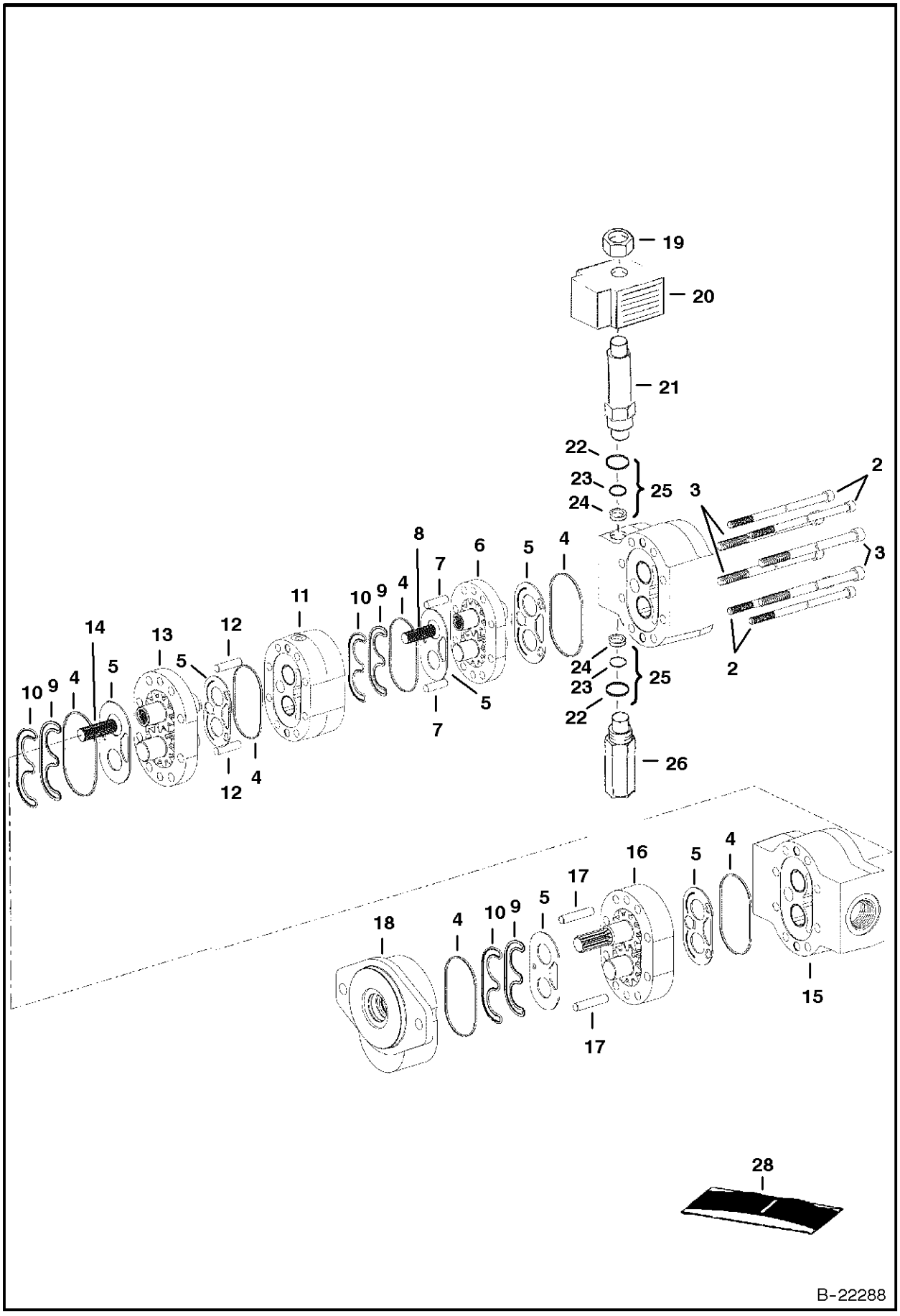

HIGH HORSEPOWER HYDRAULICS

Ref.N°	Part N°	Description	Remarks	Serial N°	Qty.
1	6684635	PUMP	163D1372 - for hydrostatic pump 4445157		1
2	NSS	BOLT			4
3	NSS	BOLT			4
4	NSS	SEAL	section		6
5	NSS	WEAR PLATE			6
6	NSS	SECTION			1
7	NSS	PIN			2
8	NSS	SHAFT			1
9	NSS	SEAL	load		3
10	NSS	SEAL	preAload		3
11	NSS	BODY			1
12	NSS	PIN			2
13	NSS	SECTION			1
14	NSS	SHAFT			1
15	NSS	BODY			1
16	NSS	SECTION			1
17	NSS	PIN			2
18	NSS	END CAP			1
19	NSS	NUT			1
20	6684590	COIL			1
21	6685027	VALVE	solenoid		1
22	NSS	O-RING			2
23	NSS	O-RING			2
24	NSS	WASHER	backAup		2
25	6683206	SEAL KIT	Ref. HIGH HORSEPOWER HYDRAULICS(22)-HIGH HORSEPOWER HYDRAULICS(24)		1
26	6685026	VALVE	relief		1
27	NSS	BODY			1
28	6682259	SEAL KIT	Ref. HIGH HORSEPOWER HYDRAULICS(4), HIGH HORSEPOWER HYDRAULICS(5), HIGH HORSEPOWER HYDRAULICS(9) & HIGH HORSEPOWER HYDRAULICS(10		1

HIGH HORSEPOWER HYDRAULICS
(Double Gear Pump) (Joystick Controls)

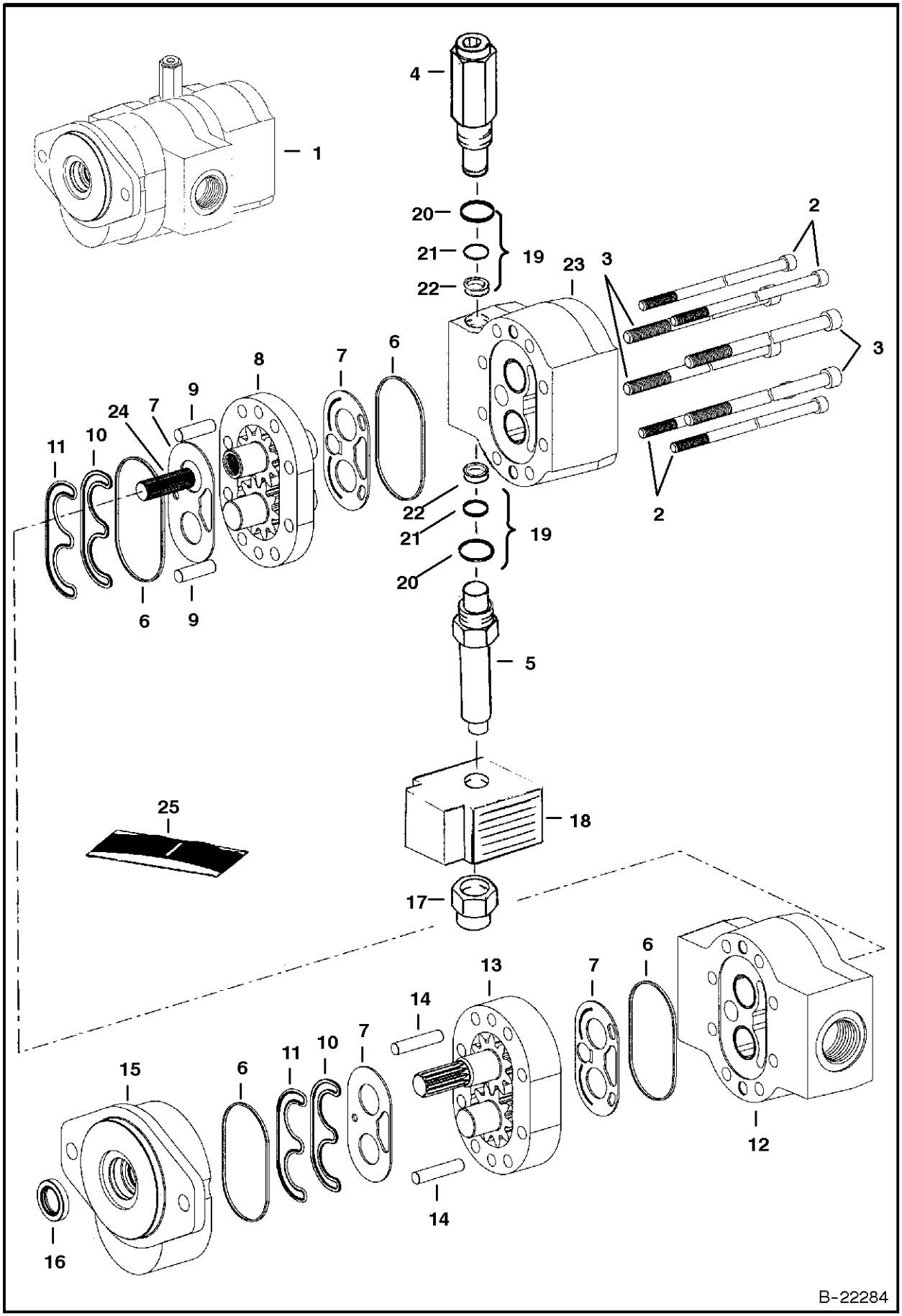

HIGH HORSEPOWER HYDRAULICS

Ref.N°	Part N°	Description	Remarks	Serial N°	Qty.
1	6684387	PUMP	gear - model 163D1358 - for model 4412929		1
2	NSS	BOLT			4
3	NSS	BOLT			4
4	6685026	VALVE	relief - W/Ref. HIGH HORSEPOWER HYDRAULICS(20)-HIGH HORSEPOWER HYDRAULICS(22)		1
5	6685027	VALVE	solenoid - W/Ref. HIGH HORSEPOWER HYDRAULICS(17), HIGH HORSEPOWER HYDRAULICS(18) & HIGH HORSEPOWER HYDRAULICS(20)-HIGH HORSEPOWE		1
6	NSS	SEAL	section		3
7	NSS	WEAR PLATE			4
8	NSS	SECTION			1
9	NSS	PIN			2
10	NSS	SEAL	load		2
11	NSS	SEAL	preAload		2
12	NSS	BODY			1
13	NSS	SECTION			1
14	NSS	PIN			2
15	NSS	COVER			1
16	NSS	SEAL	shaft		1
17	NSS	NUT			1
18	6684590	COIL			1
19	6683206	SEAL KIT	Ref. HIGH HORSEPOWER HYDRAULICS(20)-HIGH HORSEPOWER HYDRAULICS(22)		x
20	NSS	O-RING			x
21	NSS	O-RING			x
22	NSS	BACK-UP RING			x
23	NSS	BODY			1
24	NSS	SHAFT			1
25	6685025	SEAL KIT	Ref. HIGH HORSEPOWER HYDRAULICS(6), HIGH HORSEPOWER HYDRAULICS(7), HIGH HORSEPOWER HYDRAULICS(10), HIGH HORSEPOWER HYDRAULICS(11		1

HYDROSTATIC CIRCUITRY
(W/Tank)

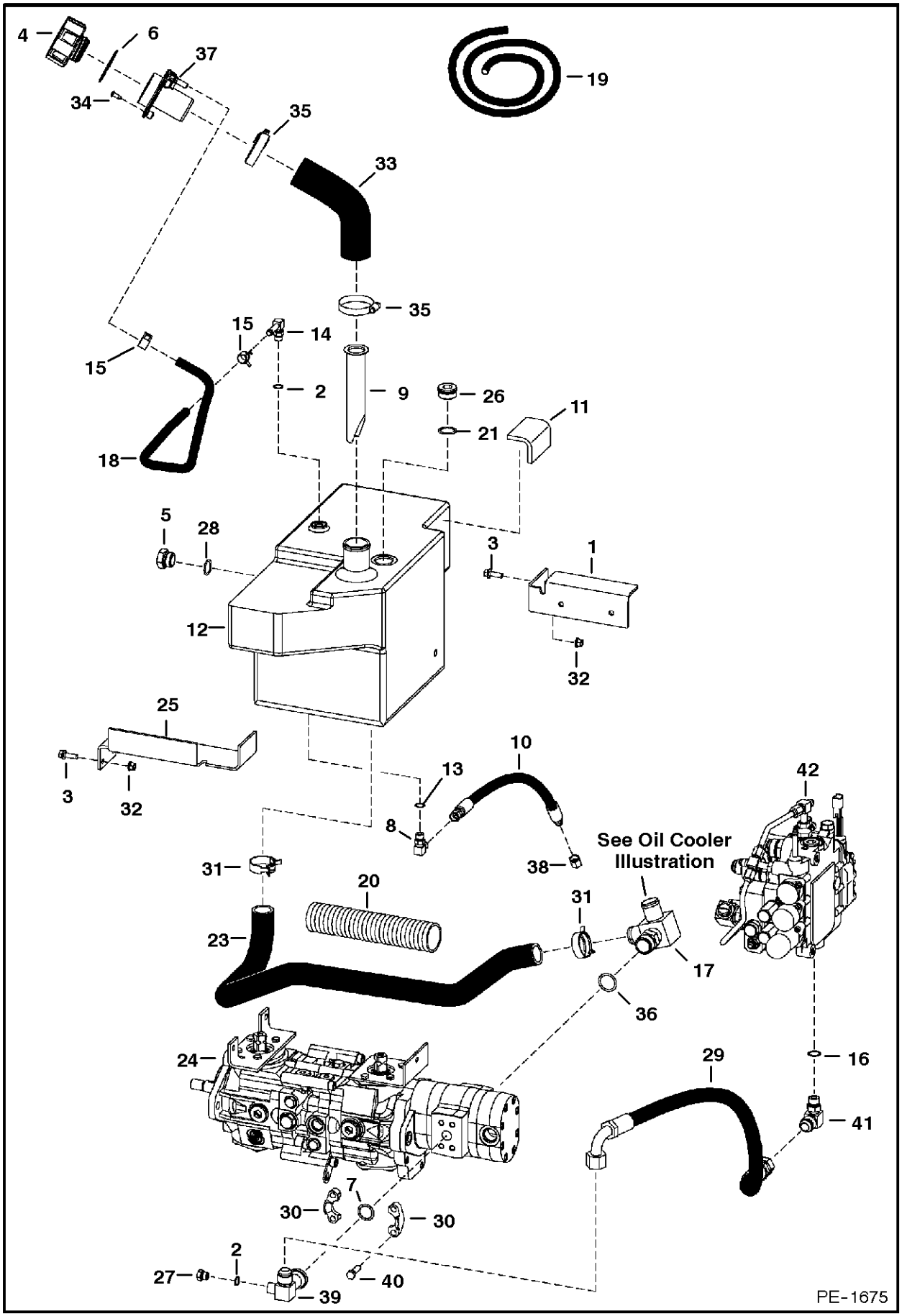

HYDROSTATIC CIRCUITRY

Ref.N°	Part N°	Description	Remarks	Serial N°	Qty.
1	6718851	BRACKET			1
2	79K-6	O-RING			x
3	35C-516	BOLT			4
4	6727475	CAP	breather & fill - Also Order Ref. HYDROSTATIC CIRCUITRY(6)		1
5	6665915	SIGHT GAUGE	sight - W/Ref. HYDROSTATIC CIRCUITRY(28)		1
6	6700631	GASKET			2
7	55K-214	O-RING			1
8	17KV-5	ELBOW	W/Ref. HYDROSTATIC CIRCUITRY(13) - tapered boss face		1
8	97K-6	O-RING	flared end		x
9	6569219	SCREEN			1
10	6530859	HOSE			1
11	6578278	PAD			1
12	6731209	TANK	hydraulic		1
13	99K-6	O-RING	tapered boss face		x
14	6727313	FITTING			1
15	5HM-15	CLAMP			2
16	79K-12	O-RING			x
17	6732586	TEE	W/Ref. HYDROSTATIC CIRCUITRY(36) - tapered boss face		1
17	97K-6	O-RING	flared end		x
18	NAP	HOSE	23' (584mm) long - Order Ref. HYDROSTATIC CIRCUITRY(19)		1
19	6586251	HOSE	Bulk - sold per foot		x
20	NAP	SHIELD	10' (254mm) long - Order Ref. HYDROSTATIC CIRCUITRY(22)		1
21	79K-16	O-RING			x
22	6705749	COVER	bulk - sold by the foot		x
23	6730345	HOSE			1
24		PUMP	See Page HYDROSTATIC PUMP(4)		1
25	6718850	BRACKET			1
26	47K-10	PLUG	W/Ref. HYDROSTATIC CIRCUITRY(21) - for the tank flushing hole		1
27	24K-5	PLUG	W/Ref. HYDROSTATIC CIRCUITRY(2)		1
28	99K-6	O-RING	flat boss face		1
29	6729160	HOSE			1
30	19J-12	CLAMP			2
31	5HM-42	CLAMP			2
32	83D-5	NUT			4
33	6731638	HOSE			1
34	6706517	SCREW			3
35	42HL-250	CLAMP			2
36	99K-16	O-RING	tapered boss face		x
37	6727354	INLET			1
38	36K-5	CAP			2
39	6734048	TEE	split flange		1
40	17C-620	BOLT			4
41	17KB-1212	ELBOW	W/Ref. HYDROSTATIC CIRCUITRY(16)		1
42		VALVE	See Page HYDRAULIC CONTROL VALVE(4)		1

HYDROSTATIC CIRCUITRY
(W/Motors)

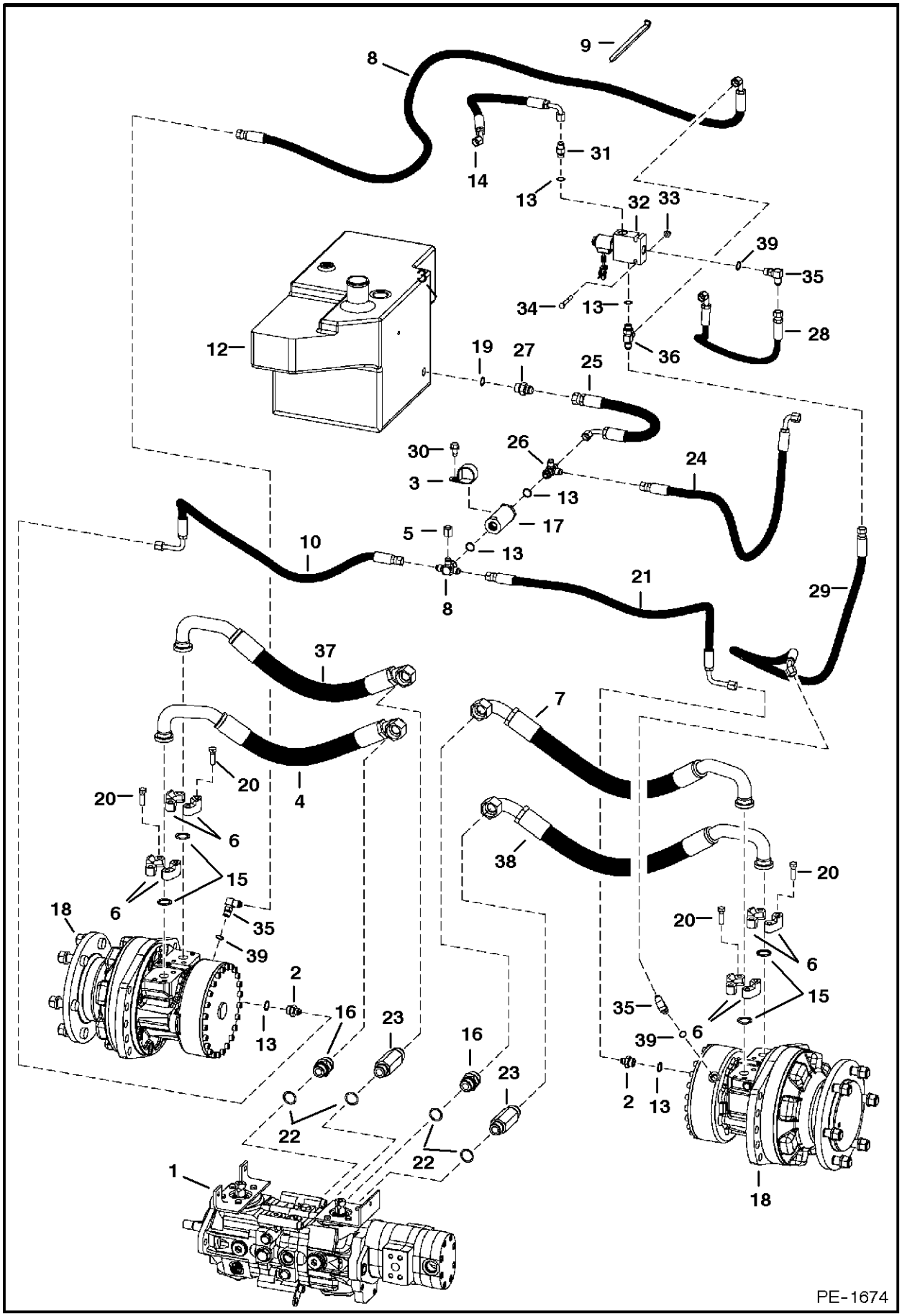

HYDROSTATIC CIRCUITRY

Ref.N°	Part N°	Description	Remarks	Serial N°	Qty.
1		PUMP	See Page HYDROSTATIC PUMP(3) & HYDROSTATIC PUMP(4)		1
2	743108	CONNECTOR	W/Ref. HYDROSTATIC CIRCUITRY(13)		2
3	30H-79	CLIP			1
4	6678955	HOSE	mega seal		1
5	36K-5	CAP			1
6	20J-12	CLAMP			8
7	6678956	HOSE	mega seal		1
8	6730329	HOSE			1
9	6624289	STA-STRAP			2
10	6730326	HOSE			1
11	6725182	TEE	W/Ref. HYDROSTATIC CIRCUITRY(13)		1
12		TANK	hydraulic - See Page HYDROSTATIC CIRCUITRY(1)		1
13	79K-6	O-RING	tapered boss face		x
14	6627313	HOSE			1
15	55K-214	O-RING			4
16	15KB-1612	ADAPTER	W/Ref. HYDROSTATIC CIRCUITRY(22)		2
17	6661022	FILTER	inAline - 90 micron - See Page HYDROSTATIC OIL FILTER(1)		1
18		MOTOR	See Page HYDROSTATIC MOTOR & BRAKE(2)		2
19	79K-8	O-RING			x
20	17C-620	BOLT			16
21	6730323	HOSE			1
22	79K-12	O-RING			x
23	6716243	CONNECTOR	W/Ref. HYDROSTATIC CIRCUITRY(22)		2
24	6732483	HOSE			1
25	6733219	HOSE			1
26	6718031	CROSS	W/Ref. HYDROSTATIC CIRCUITRY(13)		1
27	15KB-808	ADAPTER	W/Ref. HYDROSTATIC CIRCUITRY(19)		1
28	6716463	HOSE			1
29	6719460	HOSE			1
30	84G-3712	BOLT			1
31	6669676	VALVE	inAline - W/Ref. HYDROSTATIC CIRCUITRY(13)		1
32	6679103	VALVE ASSY	brake - See Page BRAKE VALVE(8)		1
33	83D-4	NUT			2
34	17C-432	BOLT			2
35	17KN-5	ELBOW	W/Ref. HYDROSTATIC CIRCUITRY(39)		2
36	21KB-606	TEE	W/Ref. HYDROSTATIC CIRCUITRY(13)		1
37	6678954	HOSE			1
38	6718781	HOSE			1
39	99K-6	O-RING			x

HYDROSTATIC CIRCUITRY
(W/Cooler)

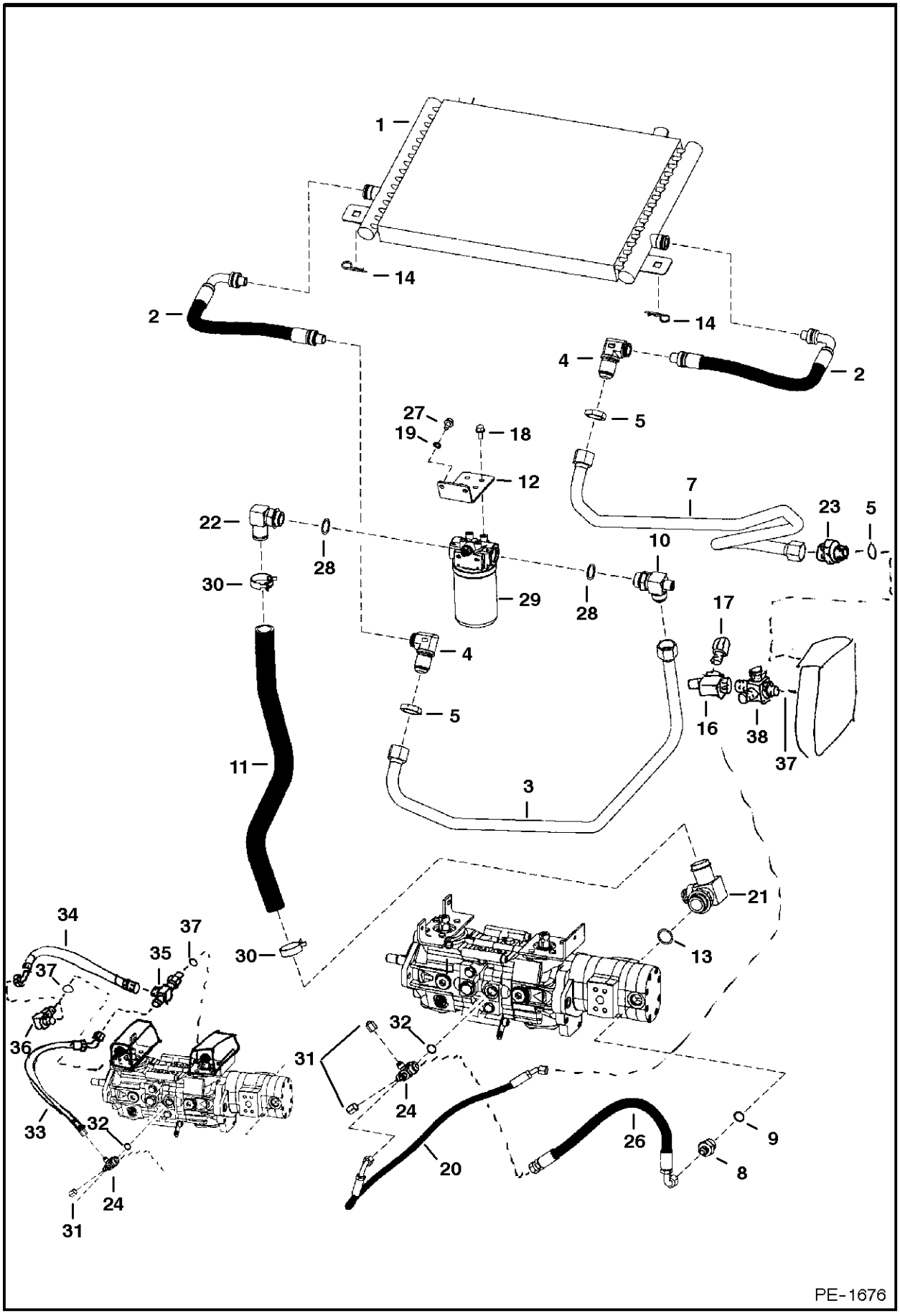

HYDROSTATIC CIRCUITRY

Ref.N°	Part N°	Description	Remarks	Serial N°	Qty.
1	6678156	COOLER	oil		1
1	6681501	SEAL KIT			1
2	6678969	HOSE			2
2	6681501	SEAL KIT			x
3	6731111	TUBELINE			1
4	6678970	ELBOW			1
4	6681501	SEAL KIT			x
5	86F-10	NUT			2
6		PUMP	See Page HYDROSTATIC PUMP(3) & HYDROSTATIC PUMP(4)		1
7	6731110	TUBELINE			1
8	15KB-812	ADAPTER	W/Ref. HYDROSTATIC CIRCUITRY(9)		1
9	79K-12	O-RING			x
10	6731527	TEE	W/Ref. HYDROSTATIC CIRCUITRY(28)		1
11	6731923	HOSE			1
12	6719446	MOUNT			1
13	79K-20	O-RING	tapered boss face		x
14	1318565	PIN			2
15		VALVE	See Page HYDRAULIC CONTROL VALVE(4)		1
16	6718660	TEE			1
17	6563922	SNUBBER			1
18	35C-612	BOLT			4
19	6E-6	WASHER			2
20	6725090	HOSE			1
21	6732586	TEE	W/Ref. HYDROSTATIC CIRCUITRY(13)		1
22	6729306	ELBOW	W/Ref. HYDROSTATIC CIRCUITRY(28)		1
23	15KB-1612	ADAPTER			1
24	6731925	ADAPTER	W/Ref. HYDROSTATIC CIRCUITRY(32)		1
25	79K-12	O-RING			x
26	6731935	HOSE			1
27	84G-3710	BOLT			2
28	79K-16	O-RING			x
29	6678155	FILTER ASSY	See Page HYDROSTATIC OIL FILTER(1)		1
29	6661248	ELEMENT			x
30	5HM-42	CLAMP			4
31	36K-5	CAP			2
32	79K-10	O-RING			x
33	6706790	HOSE	joystick controls		1
34	6704787	HOSE	joystick controls		1
35	6733376	TEE	W/Ref. HYDROSTATIC CIRCUITRY(37) - joystick controls		1
36	17KB-606	ELBOW	W/Ref. HYDROSTATIC CIRCUITRY(37) - joystick controls		1
37	79K-6	O-RING			x
38	6805241	CROSS	W/Ref. HYDROSTATIC CIRCUITRY(37)		1

HAND CONTROLS

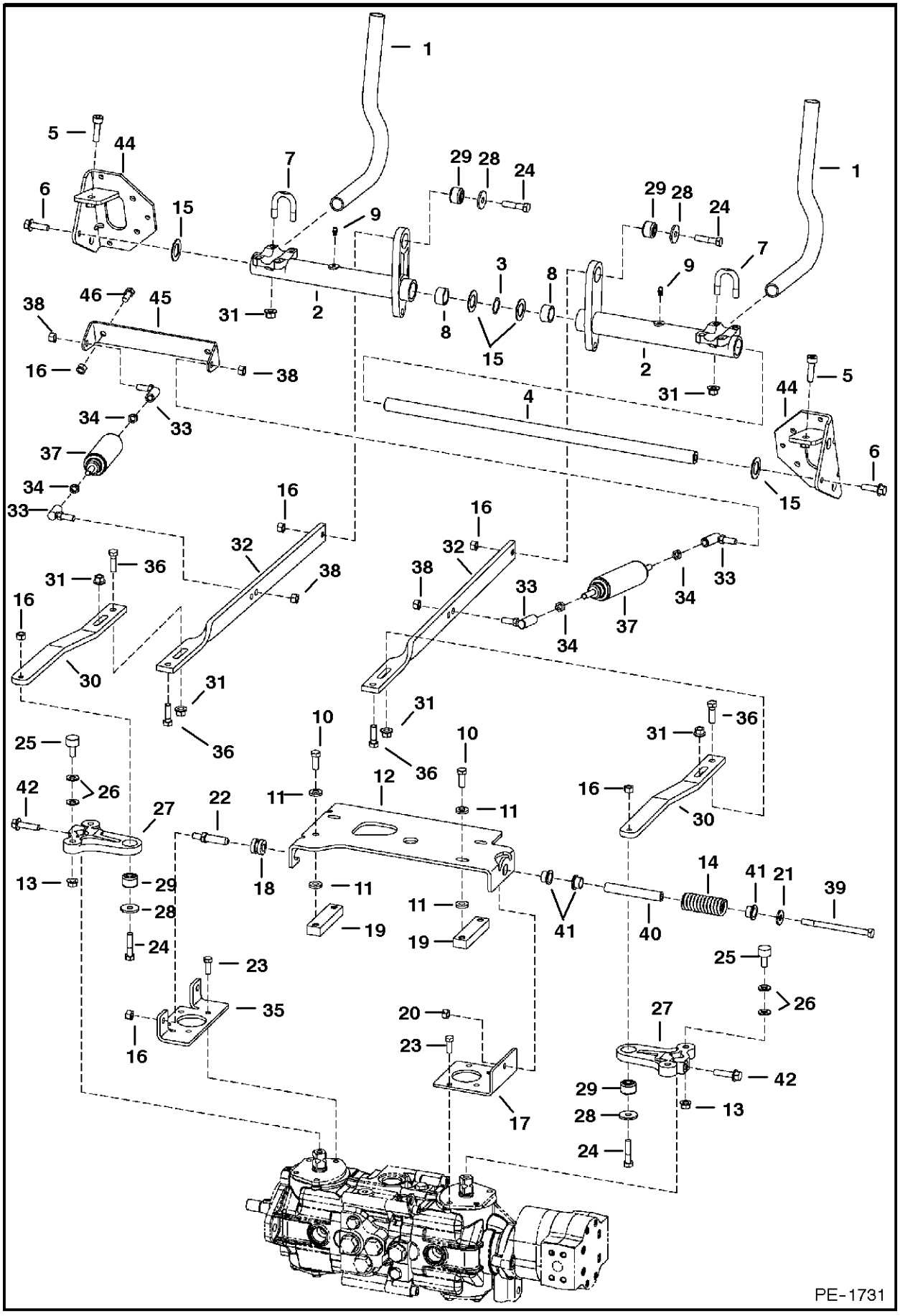

HAND CONTROLS

Ref.N°	Part N°	Description	Remarks	Serial N°	Qty.
1	6702543	LEVER			2
2	6730264	BELLCRANK			2
3	6599741	WASHER	wave		1
4	6716545	ROD			1
5	73G-824	BOLT			2
6	45C-620	BOLT			2
7	6732997	U-BOLT			4
8	6673710	BEARING			4
9	6518200	GREASE ZERK			2
10	8C-616	BOLT			4
11	6557831	WASHER			8
12	6706095	MOUNT			1
13	98D-6	NUT			4
14	6701535	SPRING			1
15	6716916	WASHER			4
16	95D-6	NUT			12
17	6576196	BRACKET			1
18	6706098	GUIDE			2
19	6702716	BLOCK			2
20	57D-6	NUT			1
21	6563914	WASHER			1
22	6577058	PIN			2
23	1CM-820	BOLT			8
24	17C-626	BOLT			4
25	6673789	BEARING			4
26	25E-17	WASHER			8
27	6729956	LEVER			2
28	619021	WASHER			4
29	6678067	BUSHING	torsion - 1.055' (26,8mm) O.D.		4
30	6731253	LINK			2
31	83D-6	NUT			8
32	6716117	LINK			2
33	6599744	BALL JOINT			4
34	8D-6	NUT			4
35	6706096	MOUNT			1
36	17C-620	BOLT			4
37	6649551	DAMPENER			2
38	96D-6	NUT			4
39	17C-680	BOLT			1
40	6715164	SLEEVE			1
41	6715163	BUSHING			3
42	35C-624	BOLT			2
43	25E-24	WASHER	for AHC		1
44	6733022	BRACKET	R.H.		1
44	6733024	BRACKET	L.H.		1
45	6706106	MOUNT	damper		1
46	17C-612	BOLT			2

HYDROSTATIC MOTOR & BRAKE

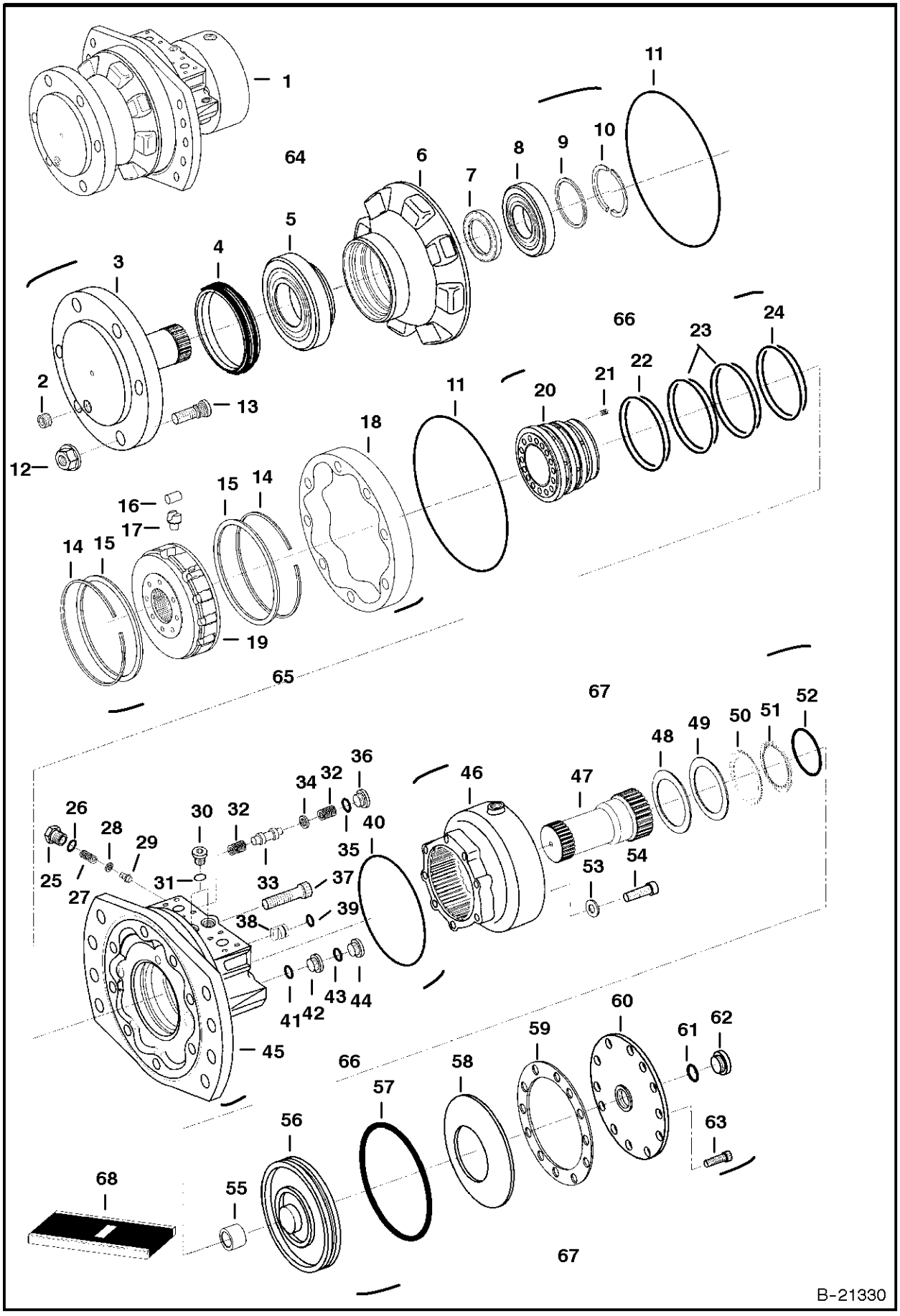

HYDROSTATIC MOTOR & BRAKE

Ref.N°	Part N°	Description	Remarks	Serial N°	Qty.
1	6680250	MOTOR	model 80687532 - W/twin distributor seals		1
2	6680019	PLUG			1
3	6681620	SHAFT			1
4	6674727	SEAL			1
5	6674725	BEARING			1
6	6681621	HOUSING			1
7	6674056	SEAL			1
8	6660018	BEARING			1
9	6674058	WASHER	preload - .083' (2,1mm) thick		1
9	6674059	WASHER	preload - .091' (2,3mm) thick		1
9	6674060	WASHER	preload - .098' (2,5mm) thick		1
9	6674061	WASHER	preload - .108' (2,75mm) thick		1
10	6660016	SPLIT RING			1
11	6676597	O-RING			2
12	6674724	NUT			6
13	6674706	STUD			6
14	NSS	SNAP RING	Order Ref. HYDROSTATIC MOTOR & BRAKE(19)		2
15	NSS	RETAINER	Order Ref. HYDROSTATIC MOTOR & BRAKE(19)		2
16	NSS	ROLLER	Order Ref. HYDROSTATIC MOTOR & BRAKE(19)		10
17	NSS	PISTON	Order Ref. HYDROSTATIC MOTOR & BRAKE(19)		10
18	6675234	CAM			1
19	6676907	BLOCK	W/Ref. HYDROSTATIC MOTOR & BRAKE(14)-HYDROSTATIC MOTOR & BRAKE(17)		1
20	6676909	DISTRIBUTOR			1
21	6660033	SPRING			12
22	6674848	SEAL	W/ OAring		1
23	6676910	SEAL	W/ OAring		2
24	6674846	SEAL	W/ OAring		1
25	6674345	PLUG			1
26	6674851	O-RING			1
27	6674344	SPRING			1
28	6674343	SHIM	.024' (0,6mm) thick		1
29	6674853	POPPET			1
30	6674839	PLUG	W/Ref. HYDROSTATIC MOTOR & BRAKE(31)		2
31	NSS	O-RING			2
32	6674841	SPRING			2
33	6675866	SPOOL			1
34	6675867	WASHER			1
35	6671749	O-RING			2
36	6674852	PLUG	W/Ref. HYDROSTATIC MOTOR & BRAKE(35)		1
37	6674704	BOLT			8
38	6660032	STOP PIN			1
39	6674850	O-RING			1
40	6674066	SEAL			1
41	6671758	O-RING			2
42	6666364	PLUG	W/Ref. HYDROSTATIC MOTOR & BRAKE(41)		2
43	NSS	O-RING	Order Ref. HYDROSTATIC MOTOR & BRAKE(44)		1
44	6674017	PLUG	W/Ref. HYDROSTATIC MOTOR & BRAKE(43)		1
45	6676908	HOUSING			1
46	6678779	HOUSING			1

HYDROSTATIC MOTOR & BRAKE

Ref.N°	Part N°	Description	Remarks	Serial N°	Qty.
47	6681622	SHAFT			1
48	6674722	SHIM	.004' (0,1mm) thick		1
49	6674723	SHIM	.012' (0,3mm) thick		1
50	6674714	DISC	outer brake		21
51	6674713	DISC	inner brake		15
52	6677828	SEAL	green W/ metal washer		1
53	6674708	WASHER			8
54	6674703	BOLT			8
55	6674734	BUSHING			1
56	6681638	PISTON	brake		1
57	6674066	SEAL			1
58	6678780	WASHER			1
59	6674720	GASKET			1
60	6674716	COVER			1
61	6674705	O-RING			1
62	6674707	PLUG			1
63	6674702	BOLT			24
64	6681585	HOUSING ASSY	front - Ref. HYDROSTATIC MOTOR & BRAKE(2)-HYDROSTATIC MOTOR & BRAKE(10)		1
64	6682546	OIL	Qt.		1
65	NAP	ROTATING GROUP	Ref. HYDROSTATIC MOTOR & BRAKE(14)-HYDROSTATIC MOTOR & BRAKE(19) - Order Ref. HYDROSTATIC MOTOR & BRAKE(1)		1
66	NAP	HOUSING ASSY	rear - Ref. HYDROSTATIC MOTOR & BRAKE(20)-HYDROSTATIC MOTOR & BRAKE(45) - Order Ref. HYDROSTATIC MOTOR & BRAKE(1)		1
67	6681637	BRAKE ASSY	Ref. HYDROSTATIC MOTOR & BRAKE(46)-HYDROSTATIC MOTOR & BRAKE(63)		1
68	6678778	SEAL KIT	W/Ref. HYDROSTATIC MOTOR & BRAKE(7), HYDROSTATIC MOTOR & BRAKE(11), HYDROSTATIC MOTOR & BRAKE(22), HYDROSTATIC MOTOR & BRAKE(23)		1

HYDROSTATIC PUMP
(Left Half)

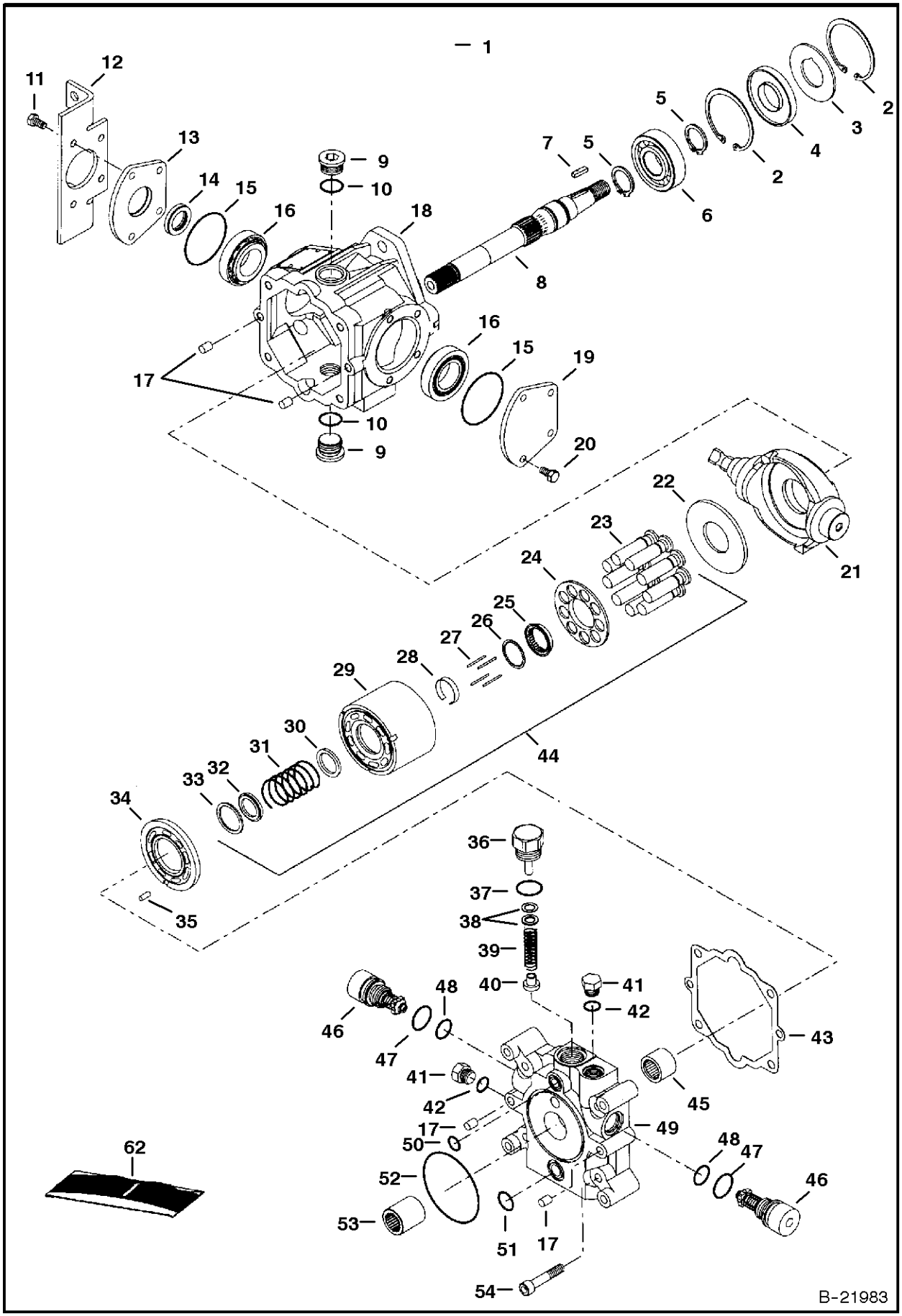

HYDROSTATIC PUMP

Ref.N°	Part N°	Description	Remarks	Serial N°	Qty.
1	6682984	PUMP	complete W/ gear pump - model 4445143 - standard flow		1
1	6684625	PUMP	complete W/ gear pump - model 4445158 - high flow		1
2	669863	SNAP RING			2
3	6669409	WASHER			1
4	6645090	SEAL			1
5	658128	SNAP RING			2
6	654299	BEARING			1
7	6682261	KEY			1
8	6682260	SHAFT			1
9	47K-8	PLUG	W/Ref. HYDROSTATIC PUMP(10)		2
10	79K-12	O-RING			2
11	6671518	BOLT			4
12	6796096	BRACKET			1
13	6657067	COVER	W/Ref. HYDROSTATIC PUMP(14)		1
14	6678226	SEAL			1
15	6660814	O-RING			2
16	6669411	BEARING			2
17	6675342	PIN			4
18	6669402	HOUSING			1
19	6657068	COVER			1
20	6650668	BOLT			4
21	6671513	SWASH PLATE			1
22	6650627	PLATE			1
23	NSS	PISTON ASSY.	Order Ref. HYDROSTATIC PUMP(44)		1
24	NSS	RETAINER	Order Ref. HYDROSTATIC PUMP(44)		1
25	NSS	RETAINER	guide - Order Ref. HYDROSTATIC PUMP(44)		1
26	NSS	WASHER	Order Ref. HYDROSTATIC PUMP(44)		1
27	6650629	PIN	hold down		4
28	6650630	RETAINER			1
29	NSS	BLOCK	Order Ref. HYDROSTATIC PUMP(44)		1
30	NSS	WASHER	Order Ref. HYDROSTATIC PUMP(44)		1
31	NSS	SPRING	Order Ref. HYDROSTATIC PUMP(44)		1
32	NSS	WASHER	Order Ref. HYDROSTATIC PUMP(44)		1
33	NSS	RETAINING RING	Order Ref. HYDROSTATIC PUMP(44)		1
34	6676147	VALVE PLATE			1
35	6650636	PIN	spring		1
36	6650648	PLUG	charge relief - W/Ref. HYDROSTATIC PUMP(37)		1
37	79K-10	O-RING			1
38	6669410	SHIM KIT	charge relief		1
39	6673882	SPRING			1
40	6650652	RELIEF	charge relief		1
41	6645086	PLUG	W/Ref. HYDROSTATIC PUMP(42)		2
42	6661481	O-RING			x
43	6650634	GASKET			1
44	6675341	BLOCK ASSY.	W/Ref. HYDROSTATIC PUMP(23)-HYDROSTATIC PUMP(33)		1
45	6650635	BEARING			1
46	6670685	RELIEF VALVE	5000 PSI (345 bar) - W/Ref. HYDROSTATIC PUMP(47) & HYDROSTATIC PUMP(48)		2
47	6657028	O-RING			x

HYDROSTATIC PUMP

Ref.N°	Part N°	Description	Remarks	Serial N°	Qty.
48	79K-8	O-RING			x
49	6669406	END PLATE			1
50	6650646	O-RING			1
51	6650647	O-RING			1
52	6645081	O-RING			1
53	6650675	COUPLER			1
54	6650637	BOLT			4

HYDROSTATIC PUMP
(Right Half)

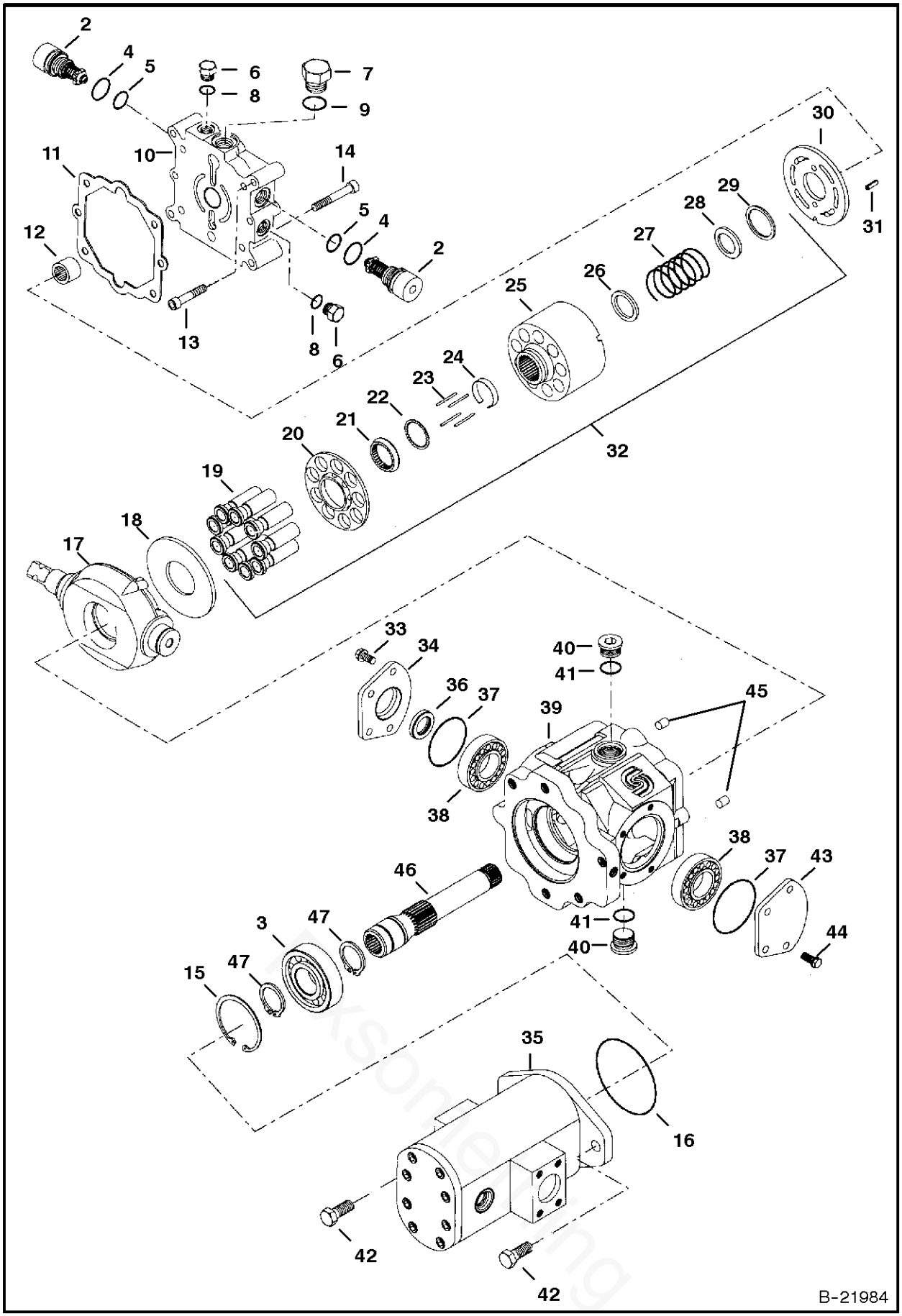

HYDROSTATIC PUMP

Ref.N°	Part N°	Description	Remarks	Serial N°	Qty.
1	6682984	PUMP	complete W/ gear pump - model 4445143 - standard flow		1
1	6684625	PUMP	complete W/ gear pump - model 4445158 - high flow		1
2	6670685	RELIEF VALVE	5000 PSI (345 bar)		2
3	654299	BEARING			1
4	6657028	O-RING			2
5	79K-8	O-RING			2
6	6645086	PLUG	W/Ref. HYDROSTATIC PUMP(8)		2
7		PLUG	W/Ref. HYDROSTATIC PUMP(9)		1
8	6661481	O-RING			x
9		O-RING			x
10	6669405	END CAP			1
11	6650634	GASKET			1
12	6650635	BEARING			1
13	6652018	BOLT			4
14	6650674	BOLT			2
15	669863	SNAP RING			1
16	6671520	O-RING			1
17	6671513	SWASH PLATE			1
18	6650627	PLATE			1
19	NSS	PISTON ASSY.	Order Ref. HYDROSTATIC PUMP(32)		1
20	NSS	RETAINER	Order Ref. HYDROSTATIC PUMP(32)		1
21	NSS	RETAINER	Order Ref. HYDROSTATIC PUMP(32)		1
22	NSS	WASHER	Order Ref. HYDROSTATIC PUMP(32)		1
23	6650629	PIN			4
24	6650630	RETAINER			1
25	NSS	BLOCK	Order Ref. HYDROSTATIC PUMP(32)		1
26	NSS	WASHER	Order Ref. HYDROSTATIC PUMP(32)		1
27	NSS	SPRING	Order Ref. HYDROSTATIC PUMP(32)		1
28	NSS	WASHER	Order Ref. HYDROSTATIC PUMP(32)		1
29	NSS	RETAINER	Order Ref. HYDROSTATIC PUMP(32)		1
30	6676148	VALVE PLATE			1
31	6650636	PIN	spring		2
32	6675341	BLOCK ASSY.	Ref. HYDROSTATIC PUMP(19)-HYDROSTATIC PUMP(29)		1
33		SCREW			8
34	6657067	COVER	assy. - W/Ref. HYDROSTATIC PUMP(36)		1
35		GEAR PUMP	standard flow - See Page GEAR PUMP(6)		1
35		GEAR PUMP	high flow - See Page HIGH HORSEPOWER HYDRAULICS(2)		1
36	6678226	SEAL			1
37	6660814	O-RING			2
38	6669411	BEARING			2
39	6682262	HOUSING			1
40	47K-8	PLUG	W/Ref. HYDROSTATIC PUMP(41)		1
41	6645083	O-RING			1
42	6682263	BOLT			2
43	6657068	COVER			1
44	6650668	BOLT			4
45	6675342	PIN			2
46	6682264	SHAFT			1

HYDROSTATIC PUMP

Ref.N°	Part N°	Description	Remarks	Serial N°	Qty.
47	658128	SNAP RING			2

Fixsomething

HYDROSTATIC PUMP
(Joystick Controls) (Servo Assisted Steering) (Right Half)

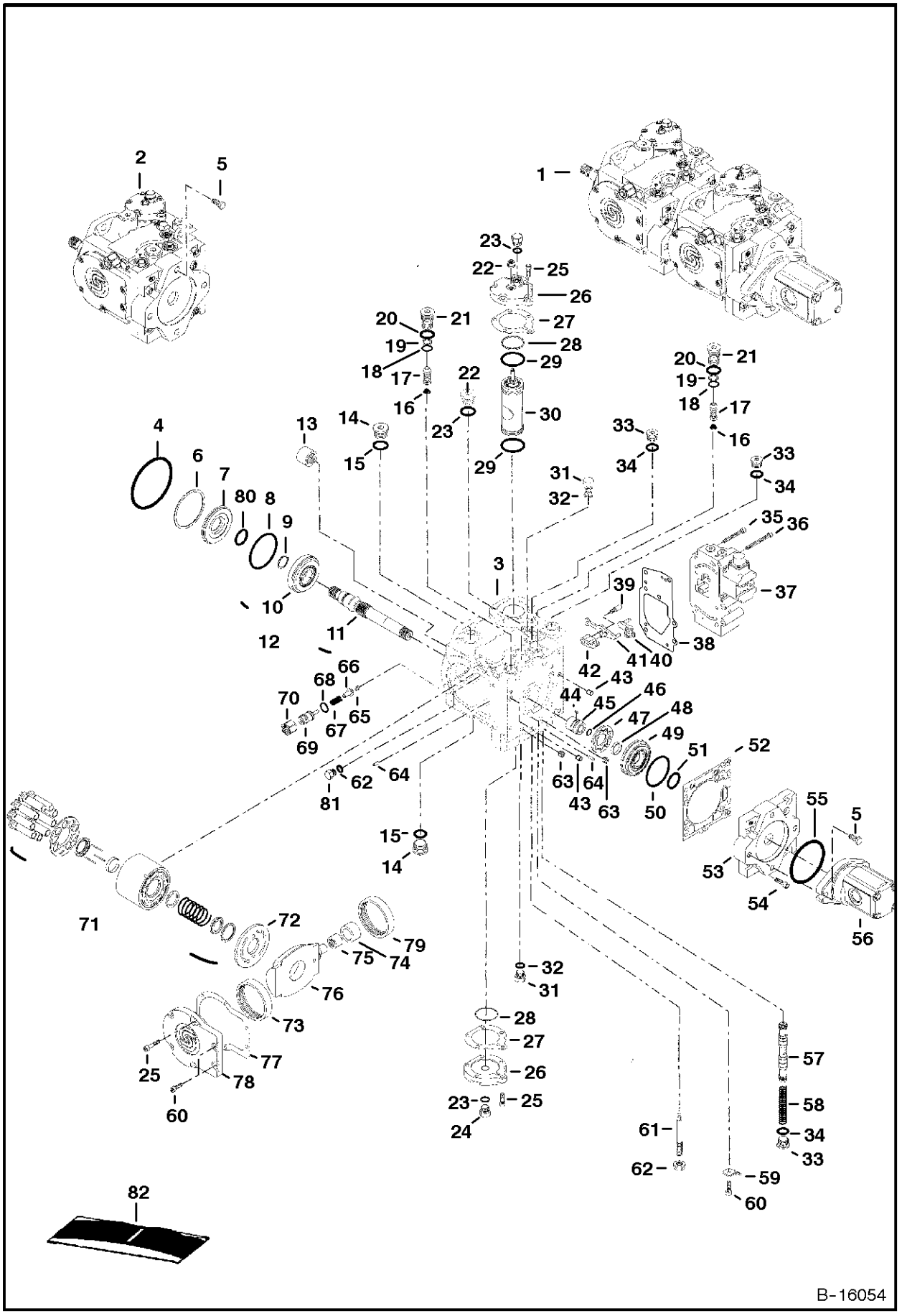

HYDROSTATIC PUMP

Ref.N°	Part N°	Description	Remarks	Serial N°	Qty.
1	6684042	PUMP	Model 4412928 - complete W/ 6684386 gear pump - standard flow		1
1	6684043	PUMP	Model 4412929 - complete W/ 6684387 gear pump - high flow		1
2	6680434	PUMP	right half - Ref. HYDROSTATIC PUMP(3)-HYDROSTATIC PUMP(78)		1
3	NSS	HOUSING	W/Ref. HYDROSTATIC PUMP(13), HYDROSTATIC PUMP(63), HYDROSTATIC PUMP(65) & HYDROSTATIC PUMP(79)		1
4	6678384	O-RING			1
5	6678385	BOLT			4
6	6678354	SNAP RING	internal		1
7	6678332	SEAL	shaft		1
8	6678331	O-RING			1
9	6678328	SNAP RING			1
10	6678329	BEARING	roller		1
11	6678389	SHAFT			1
12	6678390	SHAFT	assy - Ref. HYDROSTATIC PUMP(9)-HYDROSTATIC PUMP(11)		1
13	6650635	BEARING	needle		1
14	6678353	PLUG			2
15	6662198	O-RING			x
16	6678364	SPRING			2
17	6680294	VALVE	relief - 5220 PSI (360 bar)		2
18	6678366	O-RING			2
19	6631468	WASHER	backAup		2
20	79K-10	O-RING			2
21	6678365	VALVE	byApass		2
22	6678338	NUT			1
23	6661481	O-RING			2
24	6645086	PLUG	W/Ref. HYDROSTATIC PUMP(23)		2
25	6678352	SCREW			10
26	6678367	COVER	servo		1
27	6678350	GASKET			2
28	6678375	RING	piston		2
29	6678374	O-RING			2
30	6678372	SERVO	W/Ref. HYDROSTATIC PUMP(28) & HYDROSTATIC PUMP(29)		1
30	6678373	KIT	ring - Ref. HYDROSTATIC PUMP(28) (2) & HYDROSTATIC PUMP(29) (2)		x
31	6645086	PLUG	W/Ref. HYDROSTATIC PUMP(32)		4
32	6661481	O-RING			x
33	6667402	PLUG	W/Ref. HYDROSTATIC PUMP(34)		1
34	79K-8	O-RING			x
35	6678340	SCREW			4
36	6678341	SCREW			3
37	6678339	CONTROL	W/Ref. HYDROSTATIC PUMP(35) & HYDROSTATIC PUMP(36)		1
38	6678344	GASKET			1
39	6678333	SCREW			1
40	6678334	LINK	summing		1
41	6678335	LINK	feedback		1
42	6678336	LINK	neutral adjust		1

Engineering

HYDROSTATIC PUMP

Ref.N°	Part N°	Description	Remarks	Serial N°	Qty.
43	6518460	PIN			2
44	6678358	KEY			1
45	6678381	COUPLER			1
46	6678359	SNAP RING			1
47	6678360	GEROTOR			1
48	6678858	BEARING			1
49	6678361	COVER	gerotor - W/Ref. HYDROSTATIC PUMP(48)		1
50	6678362	O-RING			1
51	6678363	O-RING			1
52	6685021	GASKET			1
53	6678383	COVER	charge pump		1
54	6678382	SCREW			1
55	6678384	O-RING			1
56		GEAR PUMP	See Page GEAR PUMP(7)		1
57	6678342	SPOOL			1
58	6685020	SPRING			1
59	6678355	BRACKET			1
60	6678348	SCREW			2
61	6678337	SCREW	neutral adjust		1
62	6678371	O-RING			1
63	6518510	PLUG	pipe		2
64	6678347	PIN			1
65	6678351	FILTER	screen		1
66	6661717	POPPET	charge relief		1
67	6661716	SPRING			1
68	6678377	O-RING			1
69	6678376	ADJUSTER	charge relief		1
70	6661718	NUT			1
71	6678386	ROTATING PIECE			1
72	6678369	VALVE PLATE			1
73	NSS	BEARING	Order Ref. HYDROSTATIC PUMP(78)		2
74	6678379	CAM	W/Ref. HYDROSTATIC PUMP(75)		1
75	6678380	BEARING			1
76	6678378	SWASHPLATE			1
77	6678349	GASKET			1
78	6678346	COVER	W/Ref. HYDROSTATIC PUMP(73)		1
79	NSS	BEARING	Order Ref. HYDROSTATIC PUMP(3)		1
80	6650626	SEAL	shaft		1
81	6678370	PLUG			1
82	6678388	SEAL KIT	HYDROSTATIC PUMP(8), HYDROSTATIC PUMP(15)(2), HYDROSTATIC PUMP(18)-HYDROSTATIC PUMP(20), HYDROSTATIC PUMP(22), HYDROSTATIC PUMP		1

HYDROSTATIC PUMP
(Joystick Controls) (Servo Assisted Steering) (Left Half)

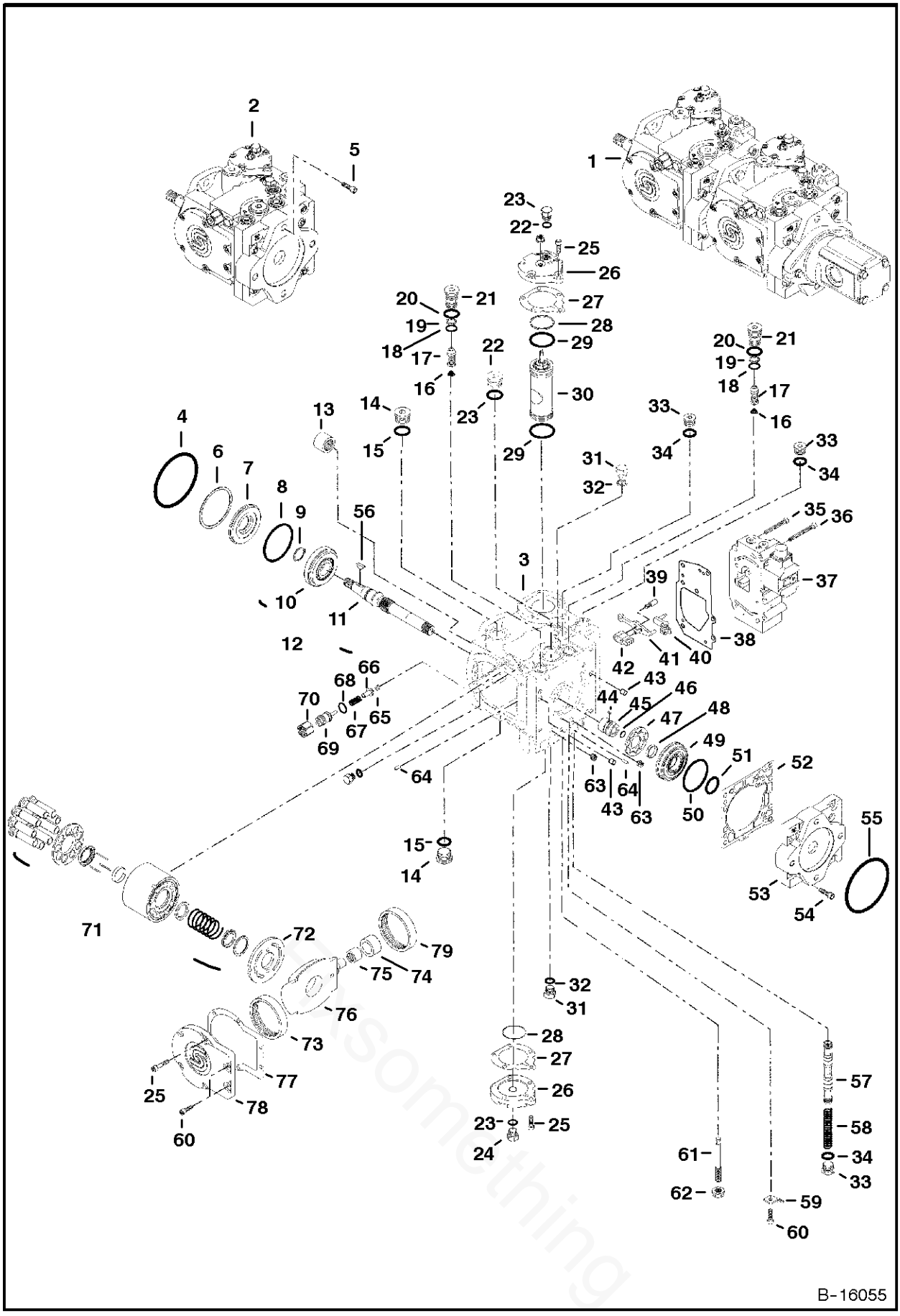

Parsomething

HYDROSTATIC PUMP

Ref.N°	Part N°	Description	Remarks	Serial N°	Qty.
1	6684042	PUMP	Model 4412928 - complete W/ 6684386 gear pump - standard flow		1
1	6684043	PUMP	Model 4412929 - complete W/ 6684387 gear pump - high flow		1
2	6680433	PUMP	left half - Ref. HYDROSTATIC PUMP(3)-HYDROSTATIC PUMP(78)		1
3	NSS	HOUSING	W/Ref. HYDROSTATIC PUMP(13), HYDROSTATIC PUMP(63), HYDROSTATIC PUMP(65) & HYDROSTATIC PUMP(79)		1
4	6678384	O-RING			1
5	6678385	BOLT			4
6	6678354	SNAP RING	internal		1
7	6678332	SEAL	shaft		1
8	6678331	O-RING			1
9	6678328	SNAP RING			1
10	6678329	BEARING	rocker		1
11	6678327	SHAFT			1
12	6678330	SHAFT	assy - Ref. HYDROSTATIC PUMP(9)-HYDROSTATIC PUMP(11)		1
13	6650635	BEARING			1
14	6678353	PLUG			2
15	6662198	O-RING			x
16	6678364	SPRING			2
17	6680294	VALVE	relief - 5220 PSI (360 bar)		2
18	6678366	O-RING			2
19	6631468	WASHER	backAup		2
20	79K-10	O-RING			2
21	6678365	VALVE	byApass		2
22	6678338	NUT			1
23	6661481	O-RING			2
24	6645086	PLUG			2
25	6678352	SCREW			10
26	6678367	COVER	servo		1
27	6678350	GASKET			2
28	6678375	RING	piston		2
29	6678374	O-RING			2
30	6678372	SERVO	W/Ref. HYDROSTATIC PUMP(28) & HYDROSTATIC PUMP(29)		1
30	6678373	KIT	ring - Ref. HYDROSTATIC PUMP(28) (2) & HYDROSTATIC PUMP(29) (2)		x
31	6645086	PLUG	W/Ref. HYDROSTATIC PUMP(32)		4
32	6661481	O-RING			x
33	6667402	PLUG	W/Ref. HYDROSTATIC PUMP(34)		1
34	79K-8	O-RING			x
35	6678340	SCREW			4
36	6678341	SCREW			3
37	6678339	CONTROL	W/Ref. HYDROSTATIC PUMP(35) & HYDROSTATIC PUMP(36)		1
38	6678344	GASKET			1
39	6678333	SCREW			1
40	6678334	LINK	summing		1
41	6678335	LINK	feedback		1
42	6678336	LINK	neutral adjust		1

HYDROSTATIC PUMP

Ref.N°	Part N°	Description	Remarks	Serial N°	Qty.
43	6518460	PIN			2
44	6678358	KEY			1
45	6678381	COUPLER			1
46	6678359	SNAP RING			1
47	6678360	GEROTOR			1
48	6678858	BEARING			1
49	6678361	COVER	gerotor - W/Ref. HYDROSTATIC PUMP(48)		1
50	6678362	O-RING			1
51	6678363	O-RING			1
52	6685021	GASKET			1
53	6678383	COVER	charge pump		1
54	6678382	SCREW			1
55	6678384	O-RING			1
56	6J-807	KEY			1
57	6678342	SPOOL			1
58	6685020	SPRING			1
59	6678355	BRACKET			1
60	6678348	SCREW			2
61	6678337	SCREW	neutral adjust		1
62	6678338	NUT			1
63	6518510	PLUG	pipe		2
64	6678347	PIN			1
65	6678351	FILTER	screen		1
66	6661717	POPPET	charge relief		1
67	6661716	SPRING			1
68	6678377	O-RING			1
69	6678376	ADJUSTER	charge relief		1
70	6661718	NUT			1
71	6678386	ROTATING PIECE			1
72	6678369	VALVE PLATE			1
73	NSS	BEARING	Order Ref. HYDROSTATIC PUMP(78)		2
74	6678379	CAM	W/Ref. HYDROSTATIC PUMP(75)		1
75	6678380	BEARING			1
76	6678378	SWASHPLATE			1
77	6678349	GASKET			1
78	6678346	COVER	W/Ref. HYDROSTATIC PUMP(73)		1
79	NSS	BEARING	Order Ref. HYDROSTATIC PUMP(3)		1

Fix Something

GEAR PUMP

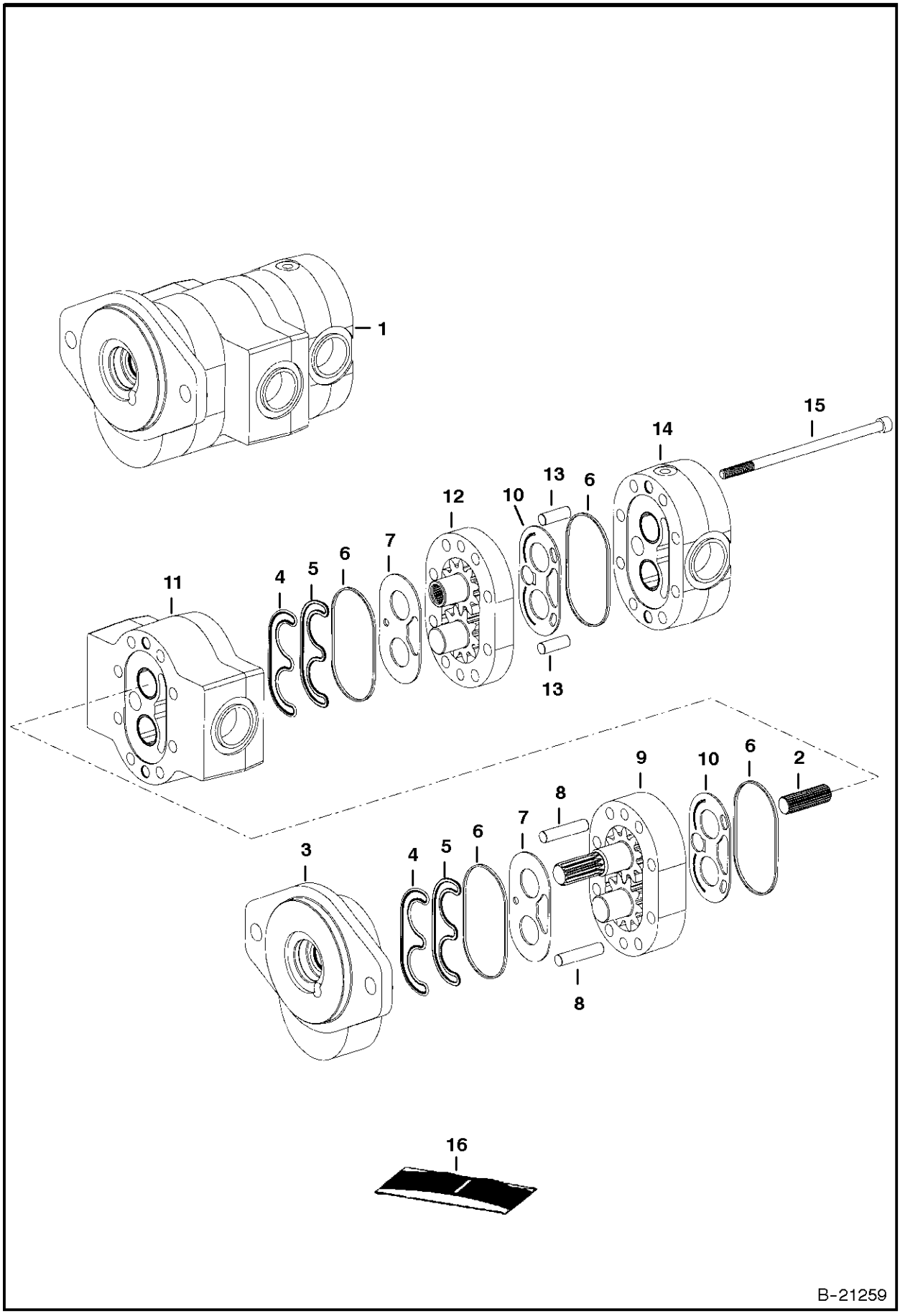

GEAR PUMP

Ref.N°	Part N°	Description	Remarks	Serial N°	Qty.
1	6684454	GEAR PUMP	standard flow - model 163D1316 - for pump 4445143		1
2	NSS	COVER			1
3	NSS	SNAP RING			1
4	NSS	SEAL	backAup		1
5	NSS	SEAL	load		1
6	NSS	SEAL			2
7	NSS	WEAR PLATE			1
8	NSS	PIN			2
9	NSS	SECTION			1
10	NSS	WEAR PLATE			1
11	NSS	BODY			1
12	NSS	SECTION			1
13	NSS	PIN			2
14	NSS	SECTION			1
15	NSS	BOLT			8
16	6682265	SEAL KIT	Ref. GEAR PUMP(4)-GEAR PUMP(7) & GEAR PUMP(10)		1

Fixsomething

GEAR PUMP
(Joystick Controls) (W/External Charge Pump)

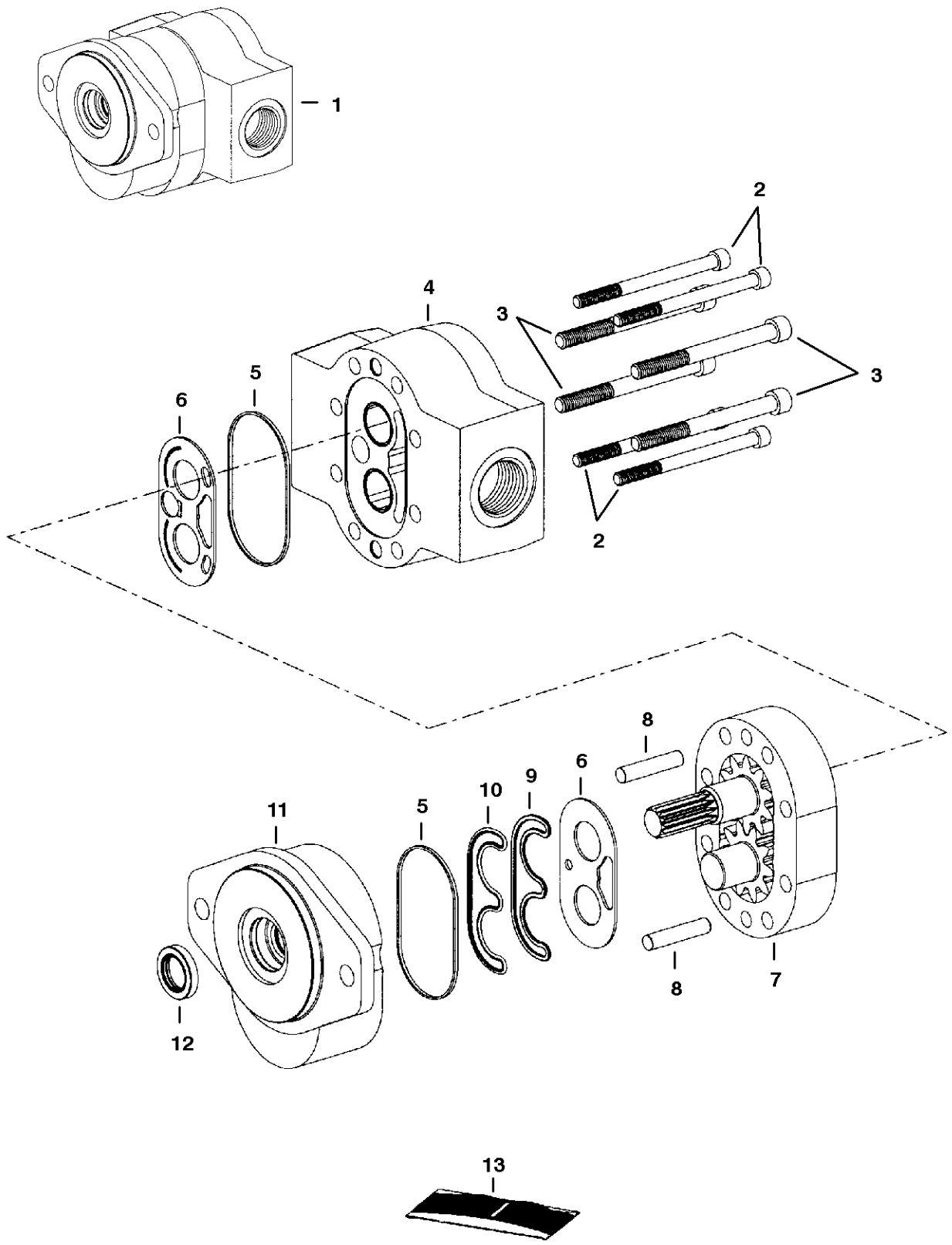

GEAR PUMP

Ref.N°	Part N°	Description	Remarks	Serial N°	Qty.
1	6684386	PUMP	gear - model 163D1357 - for model 4412928		1
2	NSS	BOLT			4
3	NSS	BOLT			4
4	NSS	BODY			1
5	NSS	SEAL			2
6	NSS	WEAR PLATE			2
7	NSS	SECTION			1
8	NSS	PIN			2
9	NSS	SEAL	load		1
10	NSS	SEAL	preAload		1
11	NSS	COVER			1
12	NSS	SEAL	shaft		1
13	6685028	SEAL KIT	Ref. GEAR PUMP(5), GEAR PUMP(6), GEAR PUMP(9), GEAR PUMP(10) & GEAR PUMP(12)		1

Fixsomething

HYDROSTATIC OIL FILTER
(In-Line)

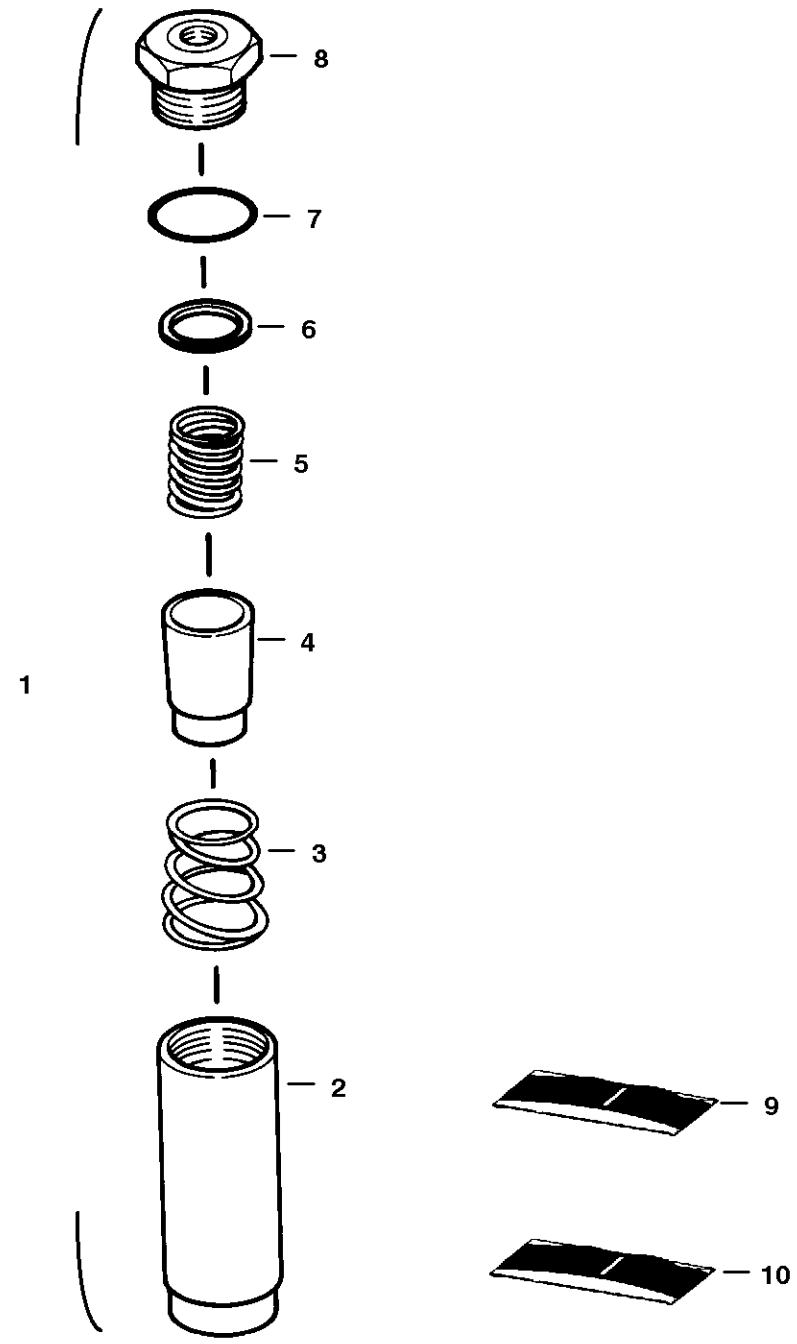

HYDROSTATIC OIL FILTER

Ref.N°	Part N°	Description	Remarks	Serial N°	Qty.
1	6661022	FILTER	Ref. HYDROSTATIC OIL FILTER(2)-HYDROSTATIC OIL FILTER(8)		1
2	NSS	HOUSING			1
3	NSS	SPRING			1
4	NSS	ELEMENT			1
5	NSS	SPRING			1
6	NSS	GASKET			1
7	NSS	O-RING			1
8	NSS	PLUG			1
9	6661807	KIT	element - Ref. HYDROSTATIC OIL FILTER(4), HYDROSTATIC OIL FILTER(6) & HYDROSTATIC OIL FILTER(7)		1
10	6661808	KIT	spring - Ref. HYDROSTATIC OIL FILTER(3) & HYDROSTATIC OIL FILTER(5)		1

Fixsomething

HYDROSTATIC OIL FILTER

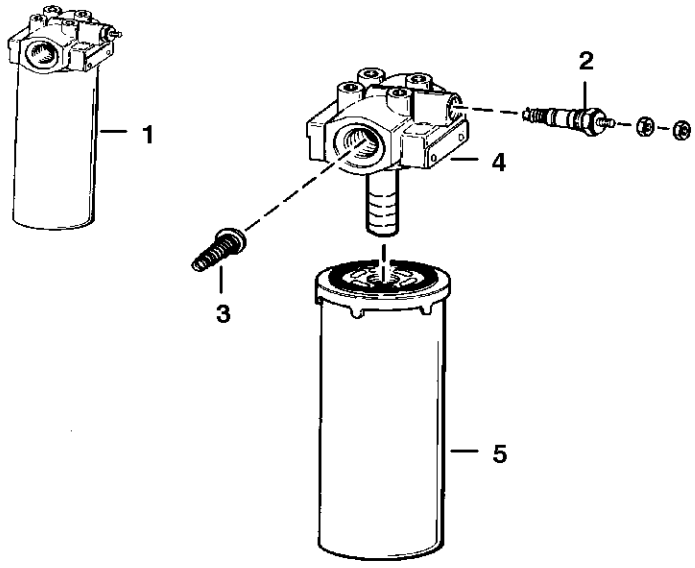

C-2818

HYDROSTATIC OIL FILTER

Ref.N°	Part N°	Description	Remarks	Serial N°	Qty.
1	6676495	VALVE ASSY	W/Ref. HYDROSTATIC OIL FILTER(2)-HYDROSTATIC OIL FILTER(5) - 50 PSI byApass & switch		1
2	6660260	SWITCH	pressure - normally closed		1
2	6599365	KIT	nut, washer & OArings for switch		1
3	NAP	VALVE	byApass - 50 PSI - Order Ref. HYDROSTATIC OIL FILTER(1)		1
4	NSS	HEAD	Order Ref. HYDROSTATIC OIL FILTER(1) filter assy.		1
5	6661248	ELEMENT			1

Fixsomething

BRAKE VALVE

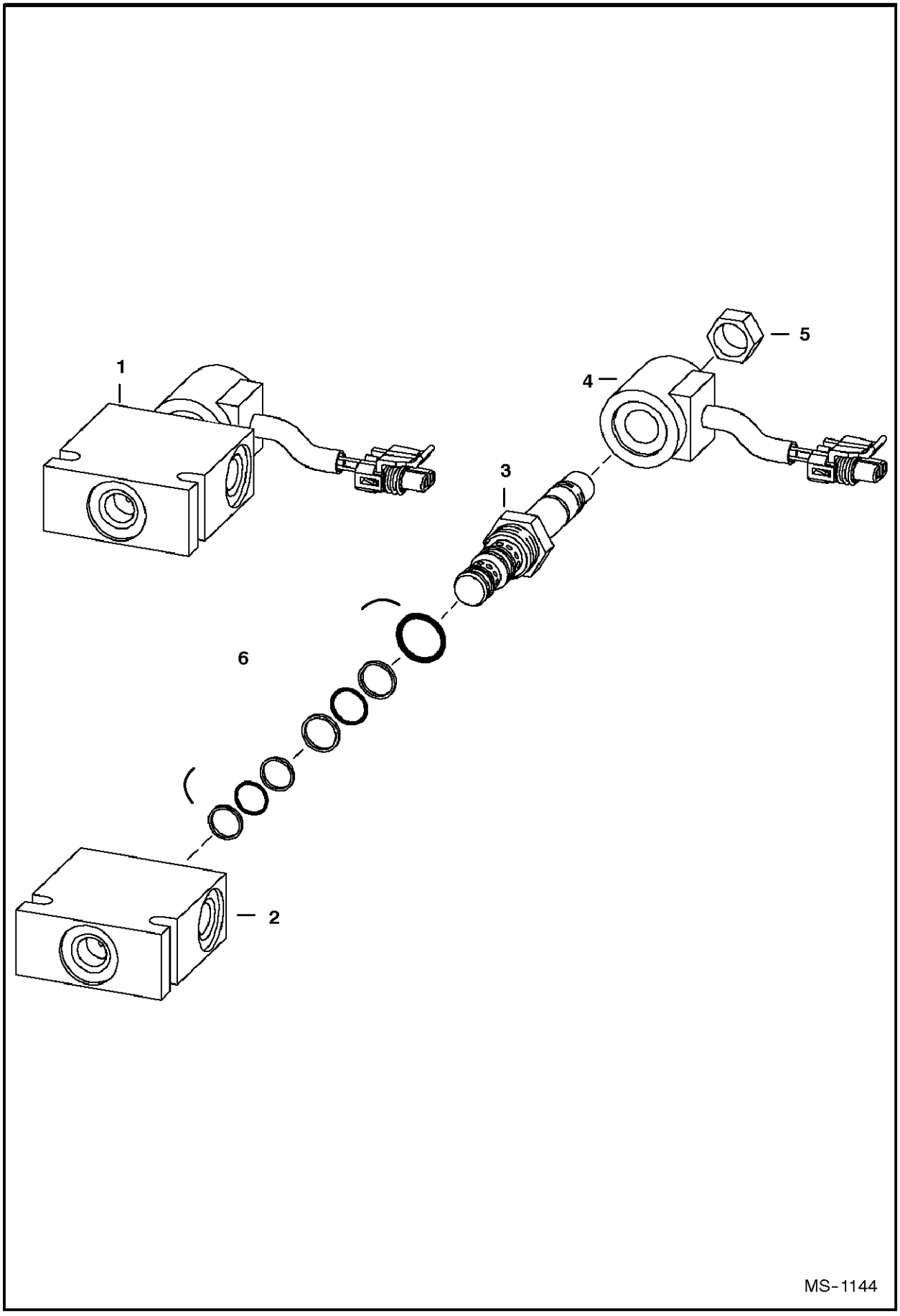

BRAKE VALVE

Ref.N°	Part N°	Description	Remarks	Serial N°	Qty.
1	6679103	VALVE ASSY	Ref. BRAKE VALVE(2)-BRAKE VALVE(6)		1
2	NSS	BLOCK	Order Ref. BRAKE VALVE(1)		1
3	6676509	STEM	W/Ref. BRAKE VALVE(5)		1
4	6675731	COIL			1
5	6675663	NUT			1
6	6669736	SEAL KIT	(3) OArings & (4) backAup rings		1

Fixsomething

CAB ELECTRICAL CIRCUITRY

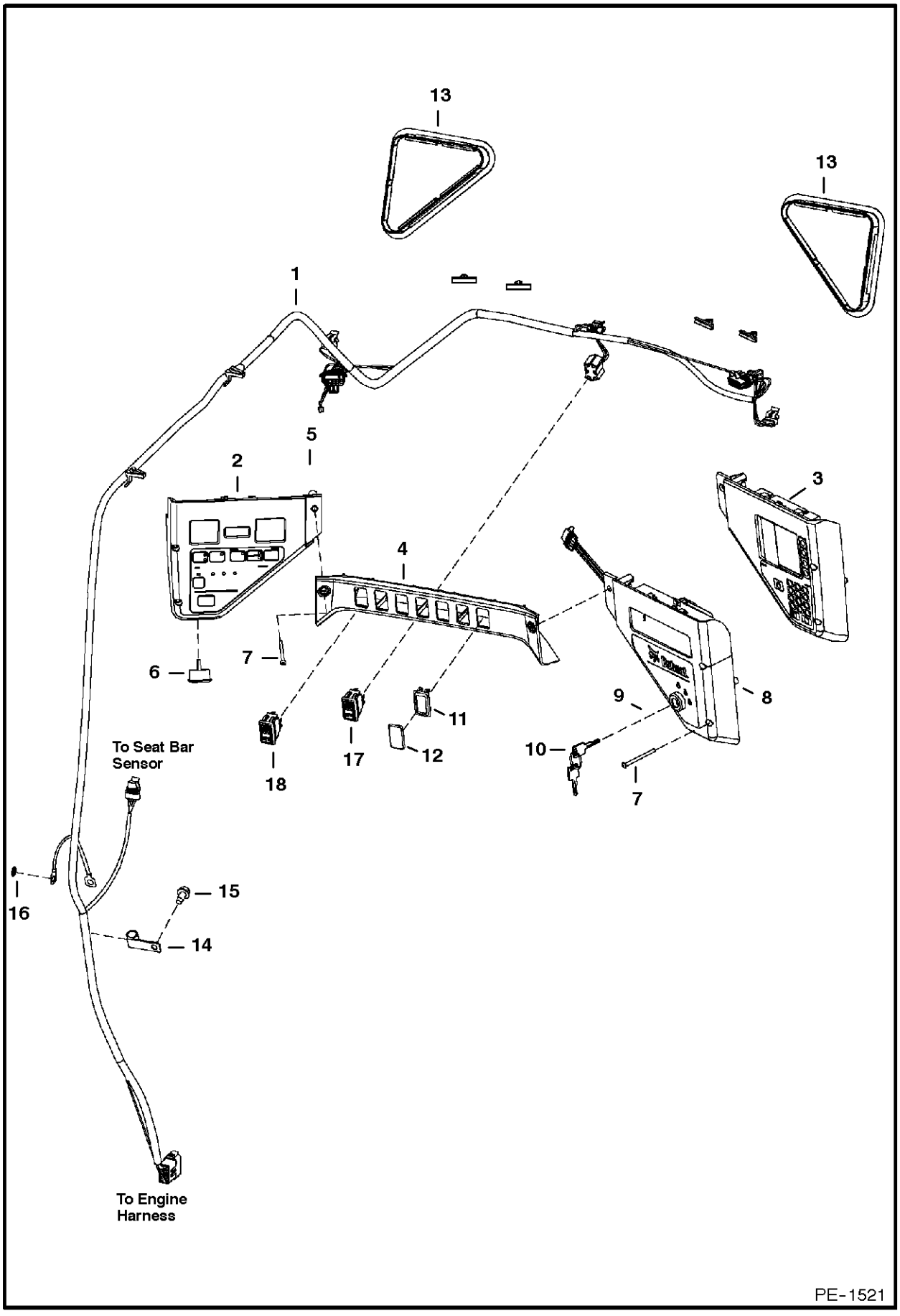

CAB ELECTRICAL CIRCUITRY

Ref.N°	Part N°	Description	Remarks	Serial N°	Qty.
1	6727178	HARNESS			1
2	6678680	PANEL	L.H.		1
2	6675982	PLUG	service part - covers the backlighting service hole		1
2	6679855	BULB			2
3	6678681	PANEL	R.H. - keyed		1
3	6683395	PANEL	R.H. - deluxe - keyless		1
4	6679845	CROSSMEMBER			1
5	6675033	INSERT	threaded		6
6	6679856	ALARM	W/nut		1
7	6719084	BOLT			6
8	6679842	SWITCH	ignition - W/Ref. CAB ELECTRICAL CIRCUITRY(9) & CAB ELECTRICAL CIRCUITRY(10)		1
9	6674202	NUT			2
10	6709527	KEY	ignition		1
11	6665314	PLUG			1
12	6665314	PLUG			x
13	6674403	COVER			2
14	6675171	CLAMP			1
15	84G-3712	BOLT			1
16	6E-5	WASHER			1
17	6676536	SWITCH	park brake		1
18	6681457	SWITCH	joystick control		1

Fixsomething

ENGINE ELECTRICAL

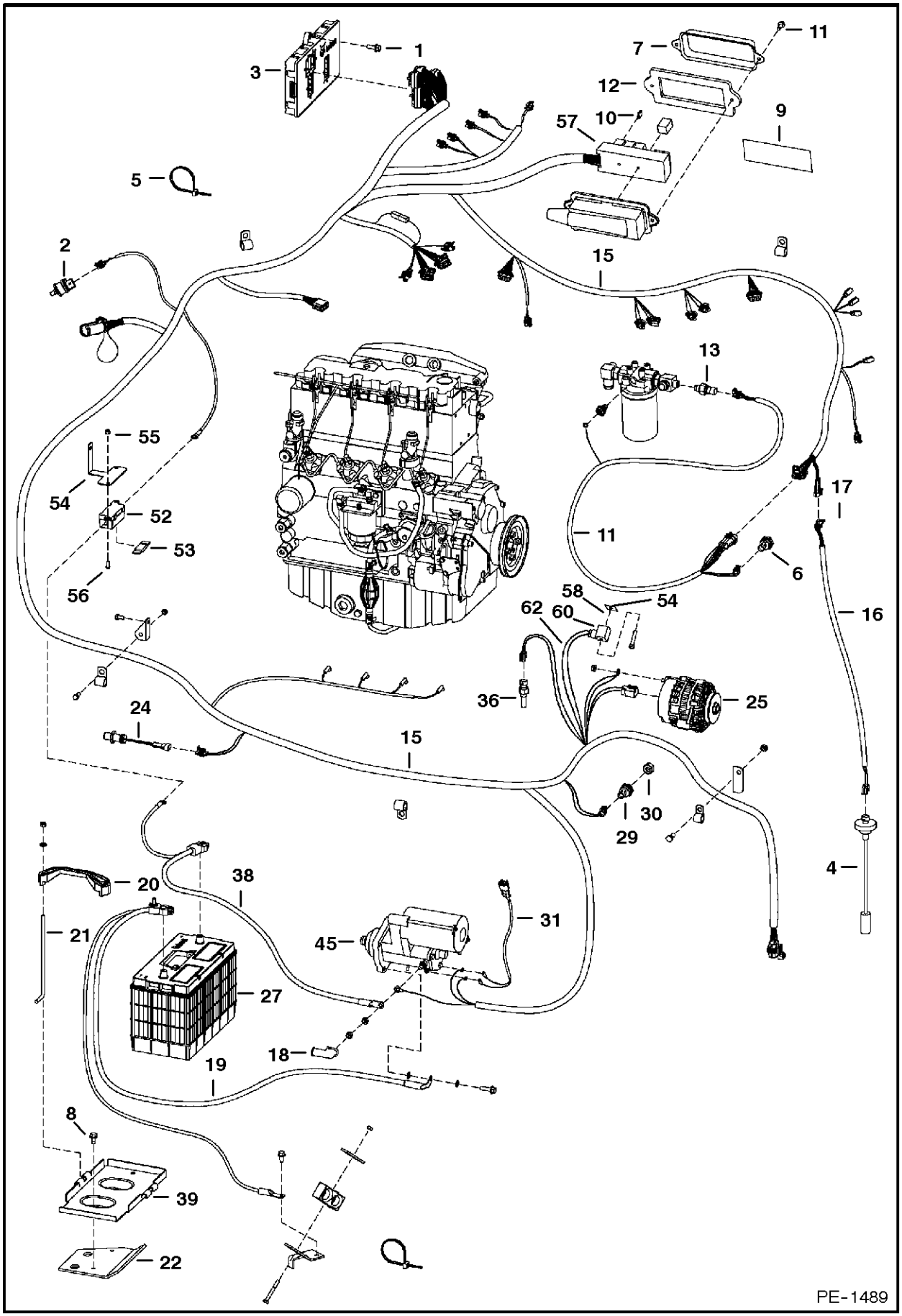

ENGINE ELECTRICAL

Ref.N°	Part N°	Description	Remarks	Serial N°	Qty.
1	43C-616	BOLT			3
2	6665371	SWITCH	vacuum		1
3	6682422	CONTROLLER			1
4	6680438	SENSOR	fuel - W/gasket		1
4	6717579	GASKET			1
5	6624289	STA-STRAP			6
6	6674316	SWITCH	hyd. charge pressure		1
7	6716621	COVER	fuse box		1
7	6736071	KIT	extreme application - W/decal & insulation		1
7	6718774	DECAL	fuse/relay		1
7	6731275	INSULATION			1
8	84G-3712	BOLT			3
9	6718774	DECAL	fuse/relay - 2' x 7' (50,8mm x 178mm)		1
10	35C-616	BOLT			1
11	6717247	HARNESS	filter		1
12	6725302	GASKET	fuse cover		1
13	6718417	SENDER	hyd temp		1
14	6718948	ADAPTER			1
14	6675278	FILTER			1
15	6730292	HARNESS	loader		1
16	6719422	HARNESS	fuel sender		1
17	85D-6	NUT			2
18	6560172	COVER	terminal		1
19	6727803	CABLE	negative		1
20	6569203	CLAMP	battery		1
21	6576280	BOLT	battery hold down		2
22	6579989	BRACKET			1
23	6610510	NYLON TIE			2
24	6684037	SENSOR	rpm		1
25		ALTERNATOR	See Page ALTERNATOR(2)		1
26	6718796	PLUG	horn		2
27	6665427	BATTERY			1
28	6670287	COVER	light		2
29	6674315	SWITCH	engine pressure		1
30	6708580	ADAPTER			1
30	6666699	SEAL RING	brass - 10mm x 15mm		1
31	6733370	HARNESS	starter		1
32	6714979	BRACKET	harness		2
33	6715131	BRACE			1
34	6715132	RETAINER			1
35	6715197	CLAMP			1
36	6718414	SENDER	engine temp		1
37	6668761	BOLT			1
38	6719141	CABLE	positive		1
39	6712536	MOUNT	battery		1
40	6726504	BRACKET	harness		1
41	95D-5	NUT			1
42	35C-620	BOLT	battery pan		1
43	17C-512	BOLT			2
44	85D-5	NUT			2

ENGINE ELECTRICAL

Ref.N°	Part N°	Description	Remarks	Serial N°	Qty.
45		STARTER	See Page STARTER(3)		1
46	53D-6	NUT			1
47	4DM-5	NUT			1
48	59D-6	NUT			1
49	17C-540	BOLT			1
50	6513763	WASHER			1
51	6664972	NUT			1
52	6675154	HOLDER	fuse		1
53	6675155	FUSE	100 amp		1
54	6726504	BRACKET			1
55	59D-4	NUT			2
56	25G-410	BOLT			2
57	6718659	HOUSING	fuse		1
57	6654806	FUSE	15 amp		x
57	6702444	FUSE	25 amp		1
57	6718034	FUSE	30 amp		1
57	6674376	SWITCH	switch		7
58	6664971	WASHER			1
59	6675734	TIE STRAP			1
60	6665659	CONNECTOR	fuel shutdown		1
61	6668760	SEAL			1
62	6736515	HARNESS	fuel shutdown		1
63	6E-4	WASHER	star		1
63	6624289	STA-STRAP	(to connect harness w/sender)		1

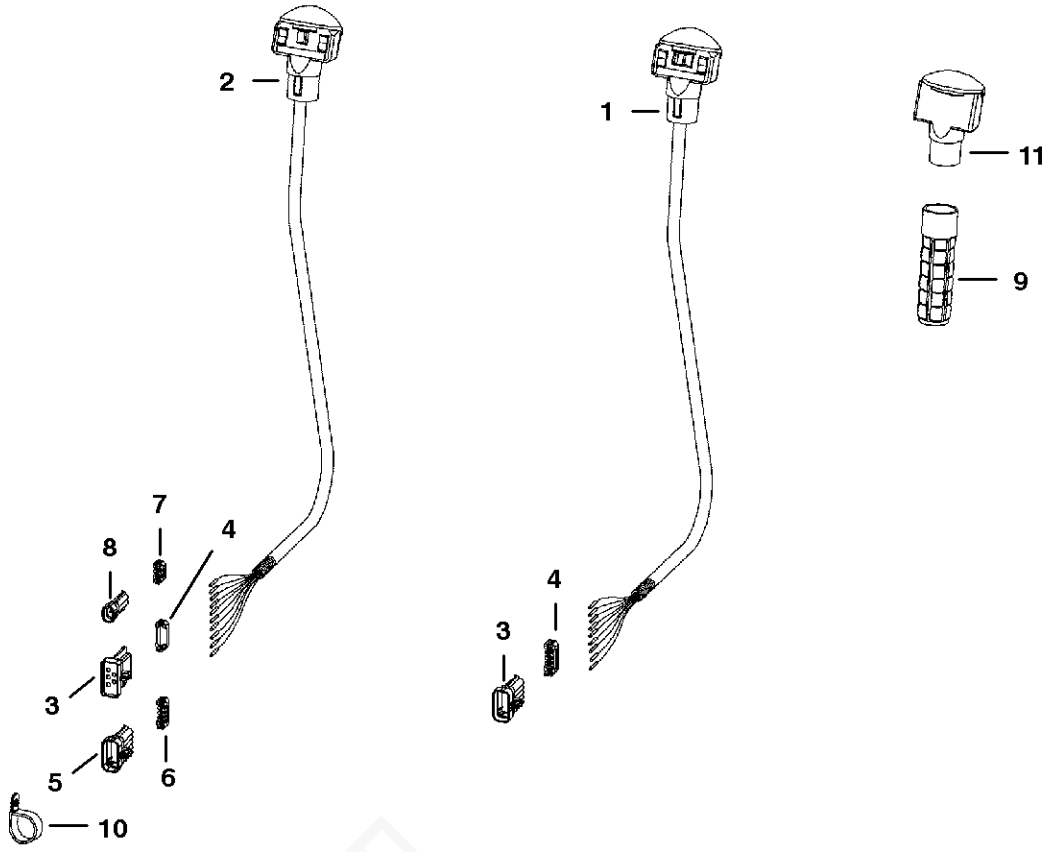

PE-1041

Fixsomething

CONTROLS ELECTRICAL

Ref.N°	Part N°	Description	Remarks	Serial N°	Qty.
1	6680418	HANDLE ASSY.	R.H. - $Also Order Ref. CONTROLS ELECTRICAL(3) & CONTROLS ELECTRICAL(4)$		1
1	6640690	PIN			9
1	6641176	SEAL			9
2	6680419	HANDLE ASSY.	L.H. - Also Order Ref. $CONTROLS ELECTRICAL(3), CONTROLS ELECTRICAL(4), CONTROLS ELECTRICAL(6) & CONTROLS ELECTRICAL(9)		1
2	6640690	PIN			10
2	6641176	SEAL			10
2	6680447	DECAL			1
3	6640692	CONNECTOR	10-pin		1
4	6640694	LOCK	10-pin		1
5	6667144	CONNECTOR	5 - way		1
6	6667145	LOCK	5 - way		1
7	6641180	LOCK	2 - pin		1
8	6641179	CONNECTOR	2 - pin		2
9	6702621	GRIP			2
10	6674000	CLAMP			2
11	6680415	HANDLE	L.H. - blank		2

CONTROLS ELECTRICAL
(Joystick Controls)

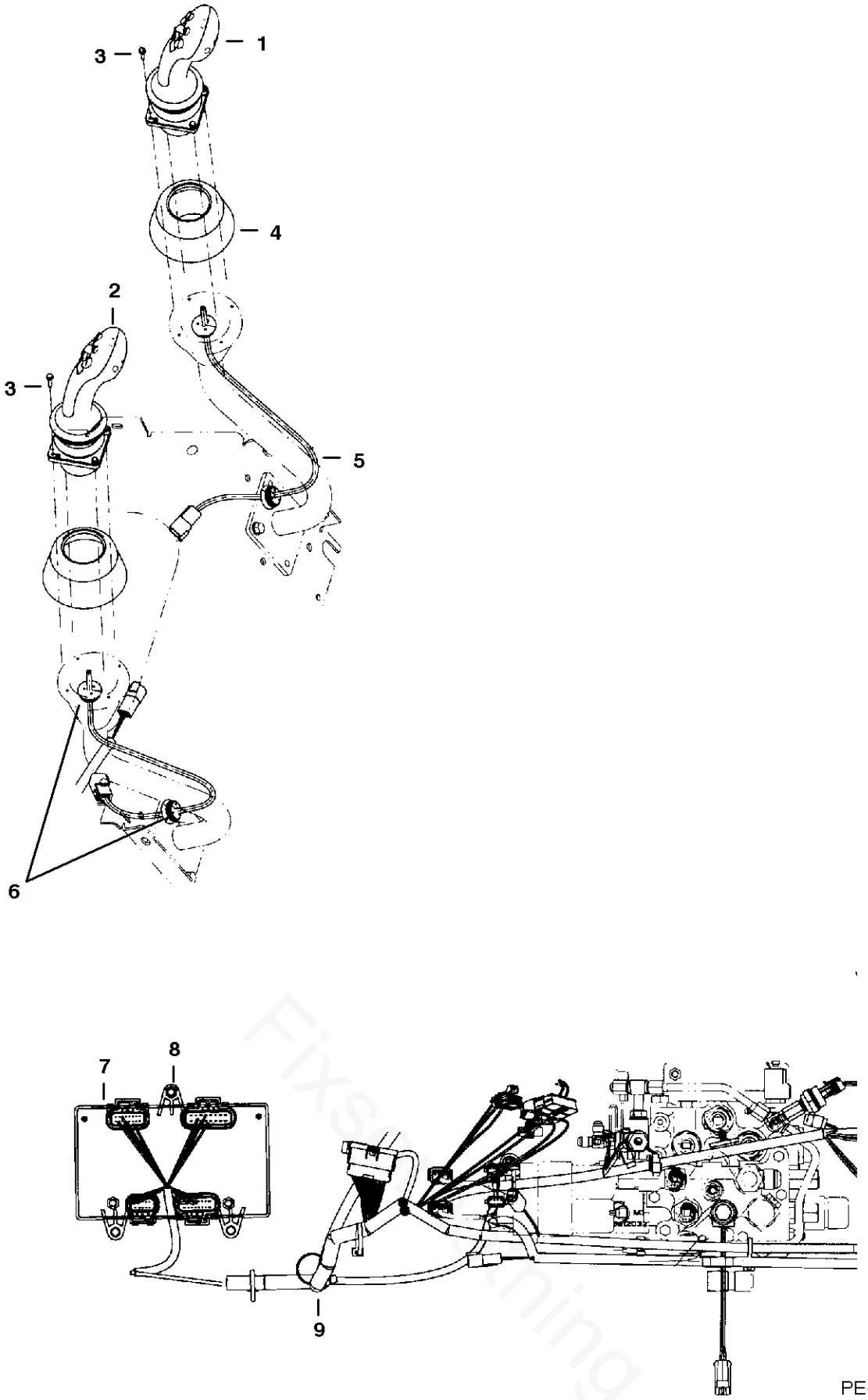

Fixs Farming

CONTROLS ELECTRICAL

Ref.N°	Part N°	Description	Remarks	Serial N°	Qty.
1	6680182	JOYSTICK	L.H.		1
2	6680181	JOYSTICK	R.H.		1
3	6678659	BOLT			8
4	6678903	COVER	joystick		2
5	6729397	HARNESS	joystick		2
6	6684294	GROMMET	joystick		4
7	6683608	CONTROLLER	joystick		1
8	43C-616	BOLT			3
9	6729397	HARNESS	joystick control		1

CONTROLS ELECTRICAL
(ACS)

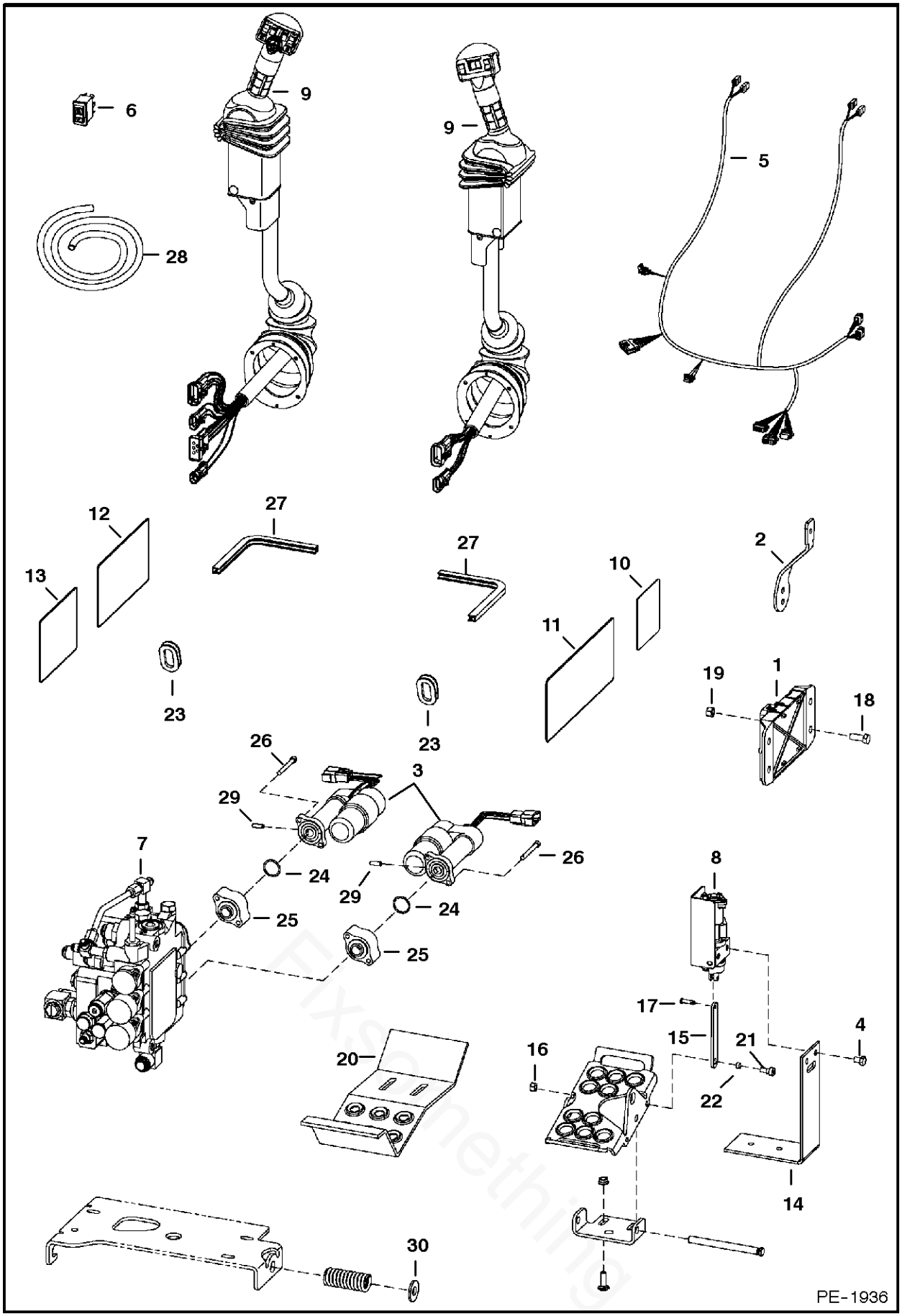

Fixyourthing

CONTROLS ELECTRICAL

Ref.N°	Part N°	Description	Remarks	Serial N°	Qty.
1	6676337	CONTROLLER	metal		1
2	6717393	LEVER	throttle		1
3	6678775	ACTUATOR			2
4	17C-608	BOLT			4
5	6733292	HARNESS			1
6	6676537	SWITCH			1
7		VALVE	ACS control		1
8	6676493	SENSOR	foot pedal - R.H. - See Page CONTROLS ELECTRICAL(1)		1
8	6676029	SOLENOID			1
8	6676492	SENSOR	foot pedal - L.H. - See Page CONTROLS ELECTRICAL(1)		1
8	6676029	SOLENOID			1
9	6680424	LEVER	ACS - tilt - R.H. - See Page CONTROLS ELECTRICAL(1)		1
9	6680423	LEVER	ACS - lift - L.H. - See Page CONTROLS ELECTRICAL(1)		1
10	6718706	DECAL	used on S250 S300 ACS		1
11	6728539	DECAL	used on S250 S300 ACS		1
12	6727926	DECAL	operations AHC		1
13	6728328	DECAL	operations AHC		1
13	6718704	DECAL	operations AHC		1
14	6726573	BRACKET			2
15	6726681	LINK			2
16	95D-5	NUT			2
17	6727496	PIN			2
18	17C-616	BOLT			2
19	95D-6	NUT			2
20	6712365	STEP	AHC		2
21	35C-514	BOLT			2
22	6729467	SPACER			2
23	6714726	PLUG			2
24	58K-120	O-RING			2
25	6725128	ADAPTER			2
26	69G-436	BOLT			4
27	NAP	MOULDING	$10.5' (267mm) long - Order Ref. CONTROLS ELECTRICAL(28)		1
28	6654139	MOULDING	bulk - Sold Per Foot		x
29	6718506	PIN			2
30	25E-24	WASHER			1

CONTROLS ELECTRICAL
(ACS) (Handle Assembly)

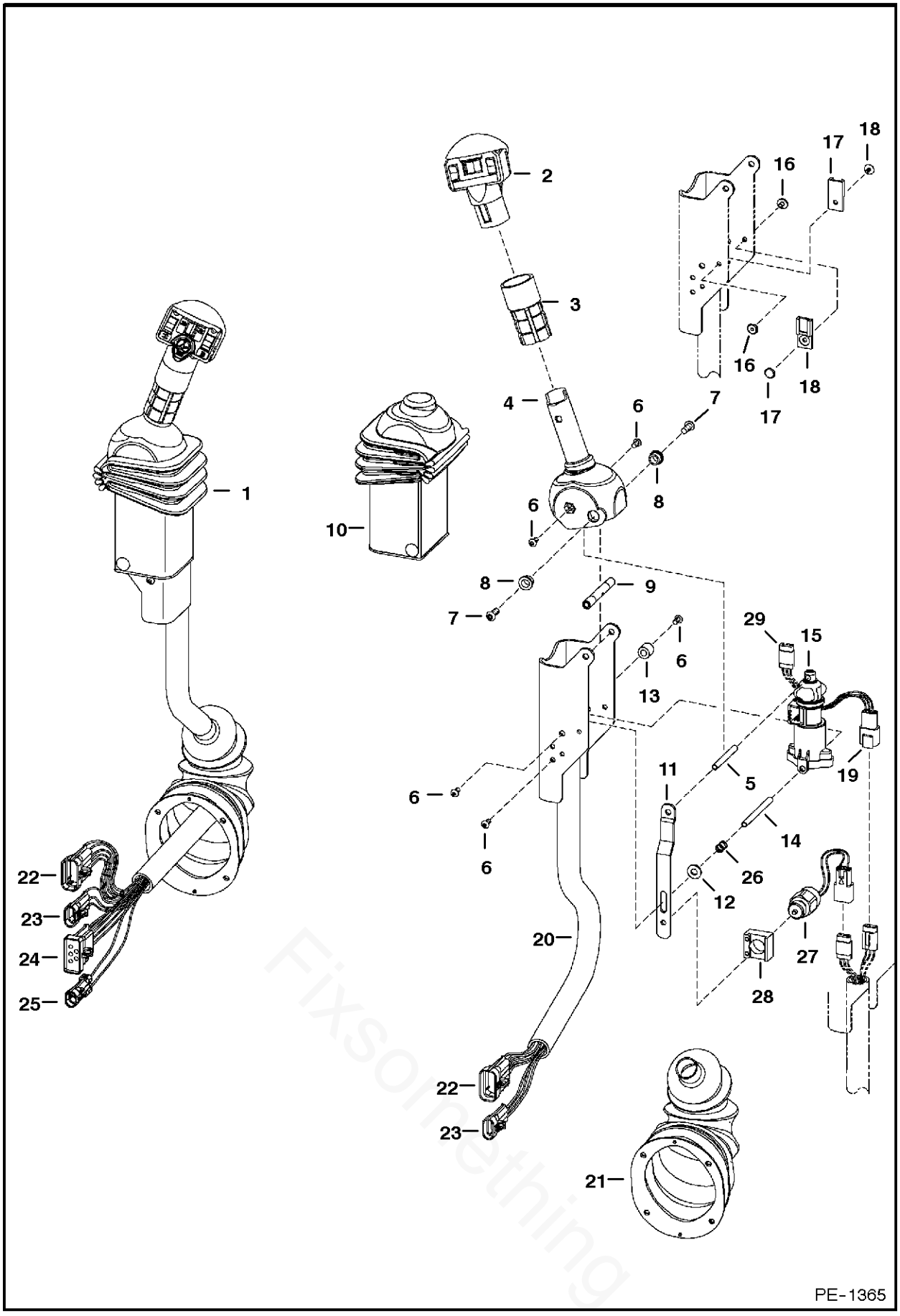

Fixsoftening

CONTROLS ELECTRICAL

Ref.N°	Part N°	Description	Remarks	Serial N°	Qty.
1	6680424	LEVER	tilt - R.H.		1
1	6680423	LEVER	lift - L.H.		1
2	6680462	HANDLE	lift - R.H.		1
2	6680417	HANDLE	lift - L.H.		1
3	NAP	GRIP	Order 6702621 grip & cut to 2.8' (71,1mm) long		2
4	6729594	HANDLE	R.H.		1
4	6729595	HANDLE	L.H.		1
5	6680469	SPACER	threaded		1
6	6727065	BOLT			6
7	25GT-410	BOLT			8
8	6702990	BUSHING			4
9	6713043	SPACER			4
10	6680471	COVER			2
11	6680477	STRAP	stop		1
12	25E-13	WASHER			1
13	6719835	SLEEVE			4
14	6719834	SPACER	threaded		2
15	6680422	SENSOR			2
15	6670706	CONNECTOR			1
15	6670715	SOCKET			3
15	6670710	LOCK			1
16	6665322	RIVET	female		2
17	6665321	RIVET	male		2
18	6665000	CLIP			2
19	6670707	CONNECTOR			1
19	6670715	SOCKET			3
19	6670711	LOCK			1
20	6680481	CHANNEL	R.H.		1
20	6680480	CHANNEL	L.H.		1
21	6532127	BOOT			2
22	6640692	CONNECTOR	10-pin		1
22	6640690	PIN			8
22	6640694	LOCK			1
22	6641176	SEAL			8
22	6646582	PLUG	cavity		1
23	6640699	CONNECTOR	3-pin		2
23	6640690	PIN			3
23	6641176	SEAL			3
23	6640700	LOCK			3
24	6667144	CONNECTOR	5-pin		2
24	6640690	PIN			3
24	6641176	SEAL			3
24	6646582	PLUG	cavity		1
24	6641180	LOCK			1
25	6641179	CONNECTOR	2-pin		1
25	6640690	PIN			2
25	6641176	SEAL			2
25	6641180	LOCK			1
26	6680470	SPRING			1
27	6676029	SOLENOID			1

CONTROLS ELECTRICAL

Ref.N°	Part N°	Description	Remarks	Serial N°	Qty.
28	6680468	MOUNT			1
29	6676870	CONNECTOR	3-pin		1
29	6670711	LOCK			1
29	6670715	SOCKET			1
29	6676640	SEAL			5

Fixsomething

CONTROLS ELECTRICAL
(ACS) (Foot Pedal Assemblies)

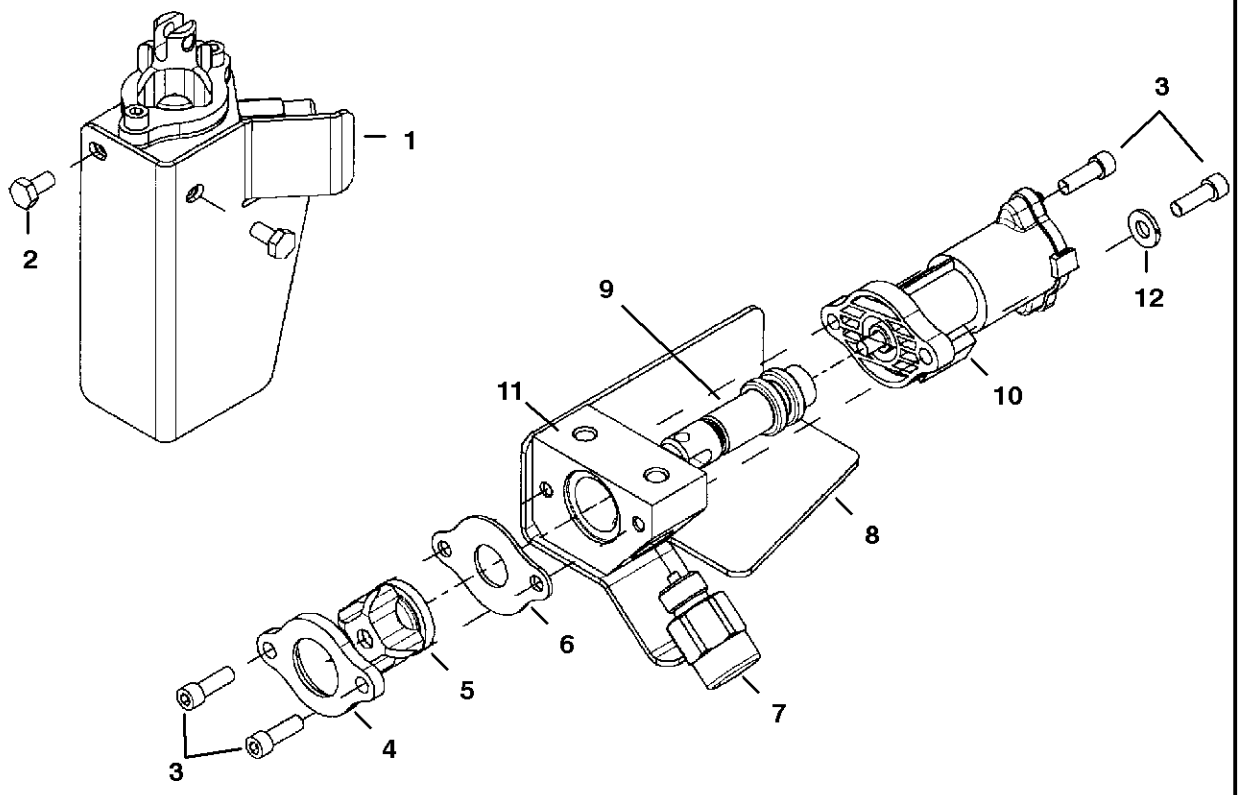

PE-1553

CONTROLS ELECTRICAL

Ref.N°	Part N°	Description	Remarks	Serial N°	Qty.
1	6680420	SENSOR	foot pedal - R.H.		1
1	6680421	SENSOR	foot pedal - L.H.		1
2	43C-408	BOLT			2
3	98G-412	BOLT			4
4	NAP	RETAINER	boot		1
5	6587763	BOOT			1
6	NAP	STOP PLATE			1
7	6676029	SOLENOID			1
8	6680478	SHIELD	R.H.		1
8	6680479	SHIELD	L.H.		1
9	NSS	SPOOL			1
10	NSS	SENSOR			1
11	NSS	BLOCK			1
12	25E-13	WASHER			2

Fixsomething

ALTERNATOR
(90 Amp)

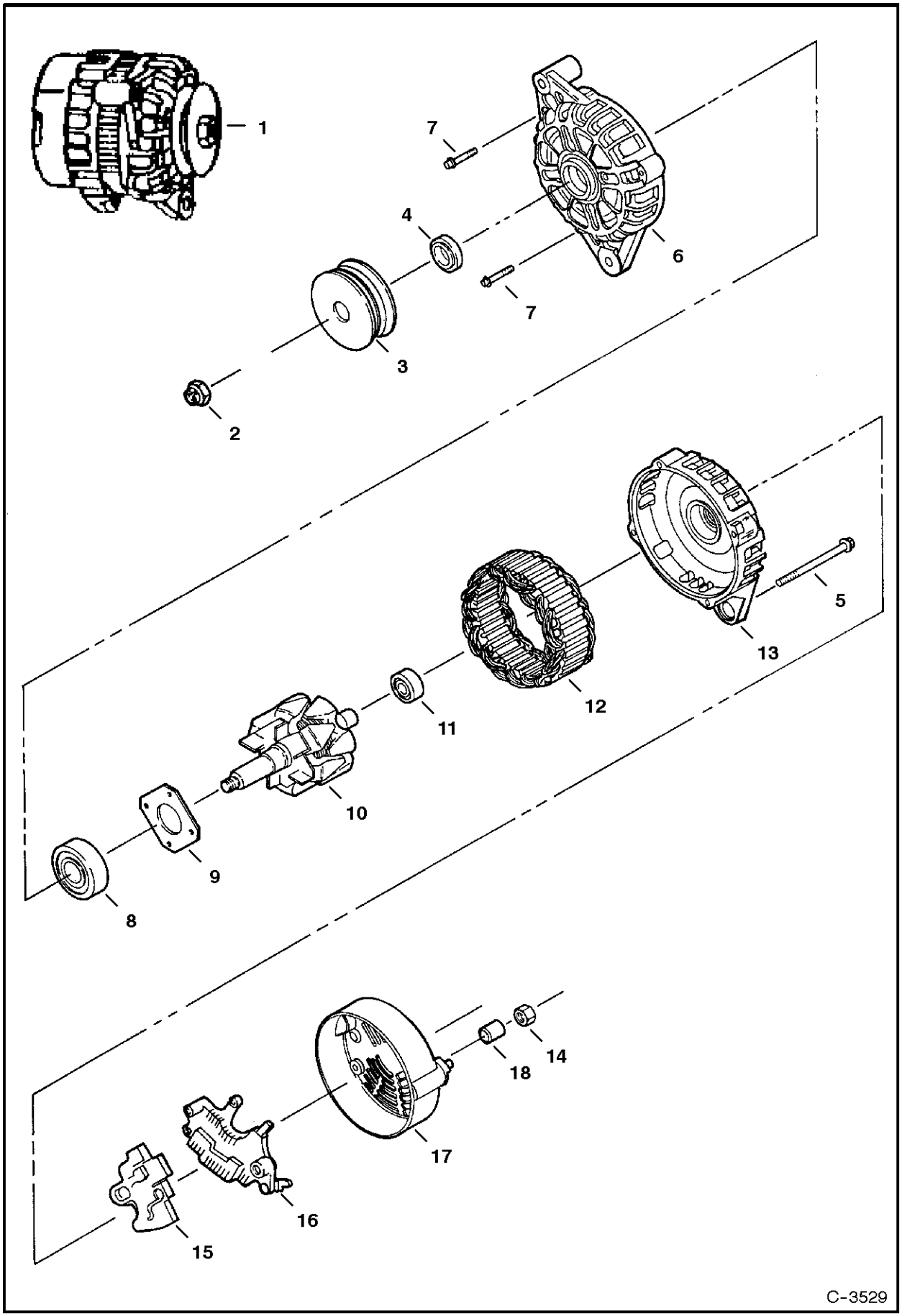

ALTERNATOR

Ref.N°	Part N°	Description	Remarks	Serial N°	Qty.
1	6678205	ALTERNATOR	90 amp - Ref. ALTERNATOR(2)-ALTERNATOR(14)		1
2	6677497	NUT			1
3	6677496	PULLEY			1
4	6677495	SPACER			1
5	6677494	BOLT			4
6	6677491	BRACKET	front		1
7	6677817	BOLT			4
8	6677818	BEARING			1
9	6677819	RETAINER			1
10	6677492	ROTOR ASSY			1
11	6677820	BEARING			1
12	6677493	STATOR ASSY			1
13	6677490	BRACKET			1
14	6677486	NUT			1
15	NSS	%REGULATOR	Order Ref. ALTERNATOR(1)		1
16	6677488	RECTIFIER ASSY			1
17	6677487	COVER			1
18	6677485	SPACER			1

Fixsomething

STARTER
(Valeo)

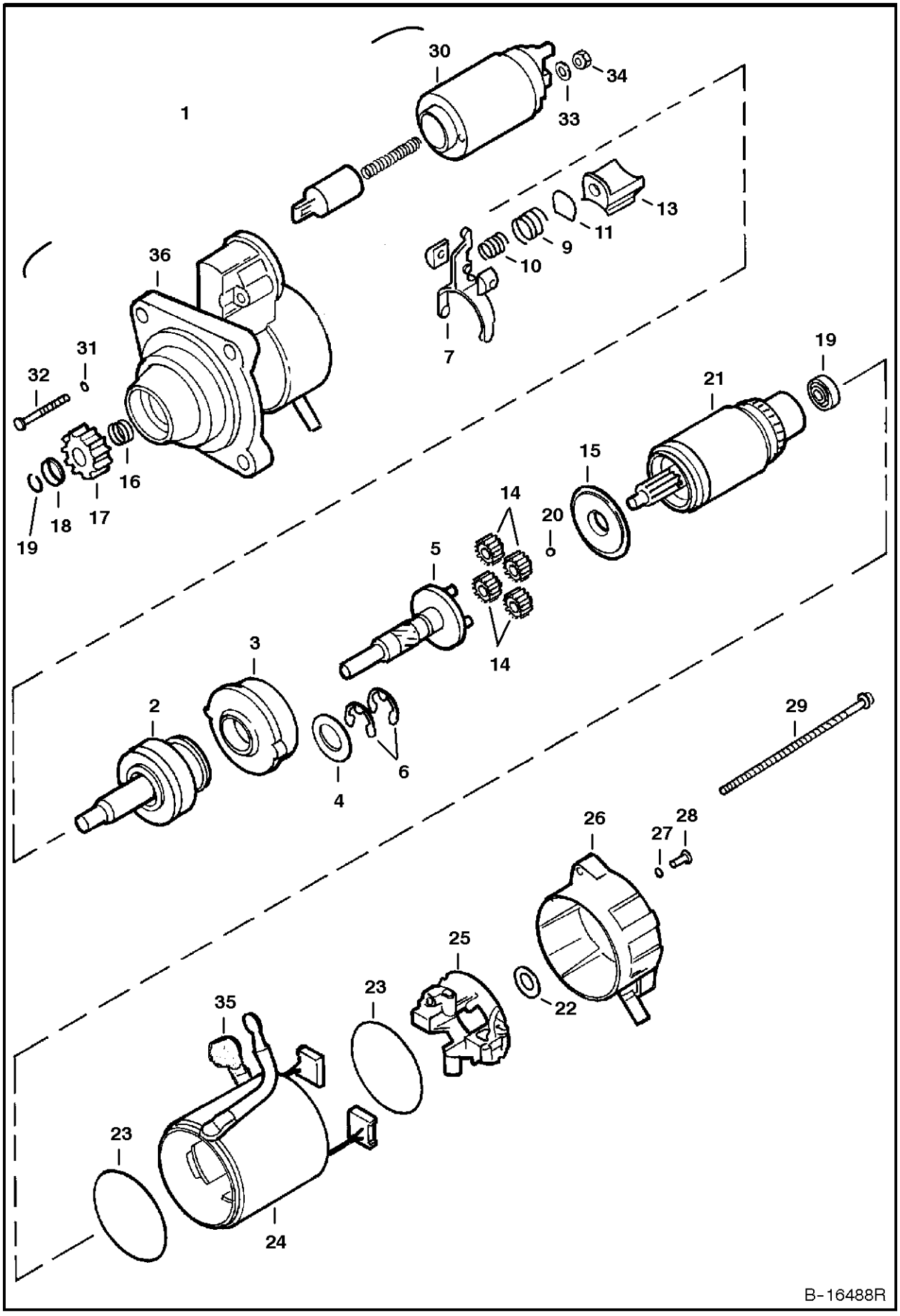

STARTER

Ref.N°	Part N°	Description	Remarks	Serial N°	Qty.
1	6676957	STARTER			1
2	6680375	SHAFT	O.R.C. assy.		1
3	6680367	GEAR			1
4	6680378	WASHER			1
5	6680365	SHAFT			1
6	6680368	STOP RING			2
7	6680364	LEVER			1
8	6680357	HOLDER			2
9	6680381	SPRING			1
10	6680382	SPRING			1
11	6680370	PLATE			1
12	6680369	SEAL			1
13	6680371	LEVER			1
14	6680366	GEAR			4
15	6680372	BRACKET			1
16	6680361	SPRING			1
17	6680390	GEAR			1
18	6680360	STOP			1
19	6680359	STOP RING			1
20	6680362	BALL			1
21	6680374	ARMATURE			1
22	6680363	WASHER			1
23	6680380	SEAL			2
24	6680373	YOKE			1
25	6680377	HOLDER			1
26	6680389	BRACKET			1
27	6680358	RING	rubber		2
28	6680384	BOLT			2
29	6680356	BOLT			2
30	6680376	SWITCH			1
31	6680379	SEAL			2
32	6680383	BOLT			2
33	6EM-80	WASHER			1
34	4DM-8	NUT			1
35	6680355	BOOT			1
36	6680388	BRACKET			1

Fixsomething

COOLING SYSTEM

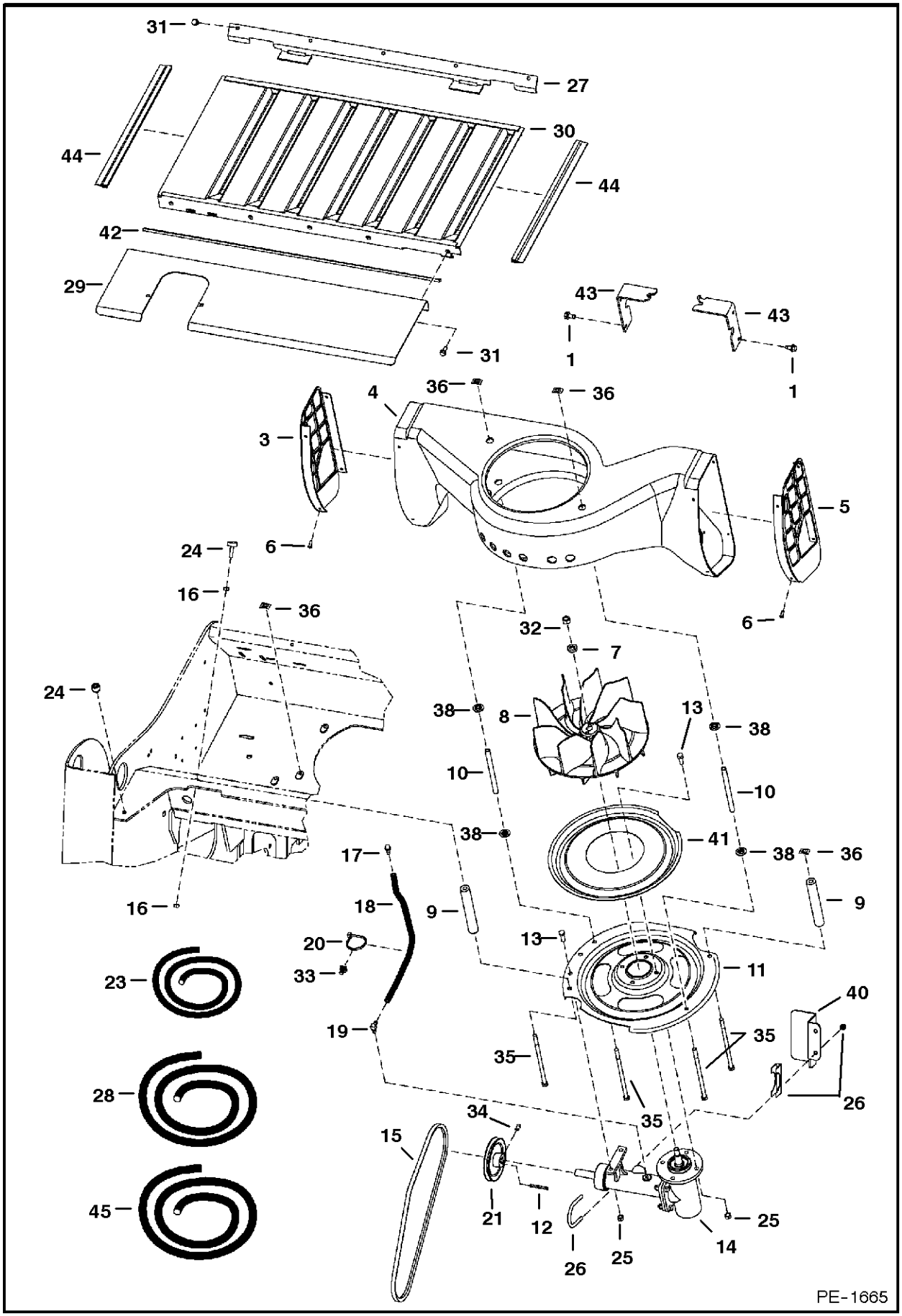

COOLING SYSTEM

Ref.N°	Part N°	Description	Remarks	Serial N°	Qty.
1	84G-3712	BOLT			4
2	6624289	STA-STRAP			1
3	6716574	LOUVER	L.H. - plastic		1
4	6732931	HOUSING			1
5	6716572	LOUVER	R.H. - plastic		1
6	6706517	SCREW			8
7	6701097	WASHER			1
8	6715142	FAN			1
9	6577382	SPACER			2
10	6732318	SPACER			2
11	6717478	INLET	4 slot		1
12	7J-2208	KEY			1
13	17C-616	BOLT			6
14	6681888	HOUSING ASSY	See Page COOLING FAN DRIVE ASSY.(2)		1
15	6715546	BELT	45.25' (1149mm)	5231, 5256	1
15	6725905	BELT	46' (1168mm)	5230, 5257	1
15	6732453	BELT	45.875' (1165mm) - joystick controls	5230, 5257	1
16	61D-5	NUT			4
17	6680970	BREATHER			1
18	NAP	HOSE	16.5' - 19.5' (419mm - 495mm) long - Order Ref. COOLING SYSTEM(23)		1
19	6657376	ELBOW			1
20	6610510	NYLON TIE			1
21	6712970	PULLEY	4.75' (120,6mm) O.D.	5231, 5256	1
21	6579541	PULLEY	5.75' (146mm) O.D.	5230, 5257	1
21	6712971	PULLEY	5' (127mm) O.D. - joystick controls	5230, 5257	1
22	35C-612	BOLT			4
23	6577822	HOSE	bulk - Sold Per Foot		x
24	6655399	BUMPER			4
25	61D-6	NUT			10
26	1318565	PIN			2
27	6731915	BRACKET			1
28	6511855	FOAM STRIP	bulk - sold per foot		x
29	6731916	SHIELD			1
30	6731078	GRILL			1
31	84G-3112	BOLT			8
32	96D-8	NUT			1
33	6678666	MOUNT			1
34	6715143	SET SCREW			1
35	17C-6116	BOLT			4
36	6684033	NUT	spring		4
37	6579613	STOP	cab tilt		2
38	6732457	WASHER	step		4
39	6626631	CLAMP			1
40	6719429	SHIELD	belt		1
41	6735204	SCREEN	inlet		1
42	NAP	SEAL	34.5' (900mm) long - Order Ref. COOLING SYSTEM(28)		2
43	6731970	BRACKET			2
44	NAP	SEAL	19' (483mm) long - Order Ref. COOLING SYSTEM(45)		2

Fixsomething

COOLING SYSTEM

Ref.N°	Part N°	Description	Remarks	Serial N°	Qty.
45	6646705	MOULDING	bulk - sold per foot		x

COOLING SYSTEM

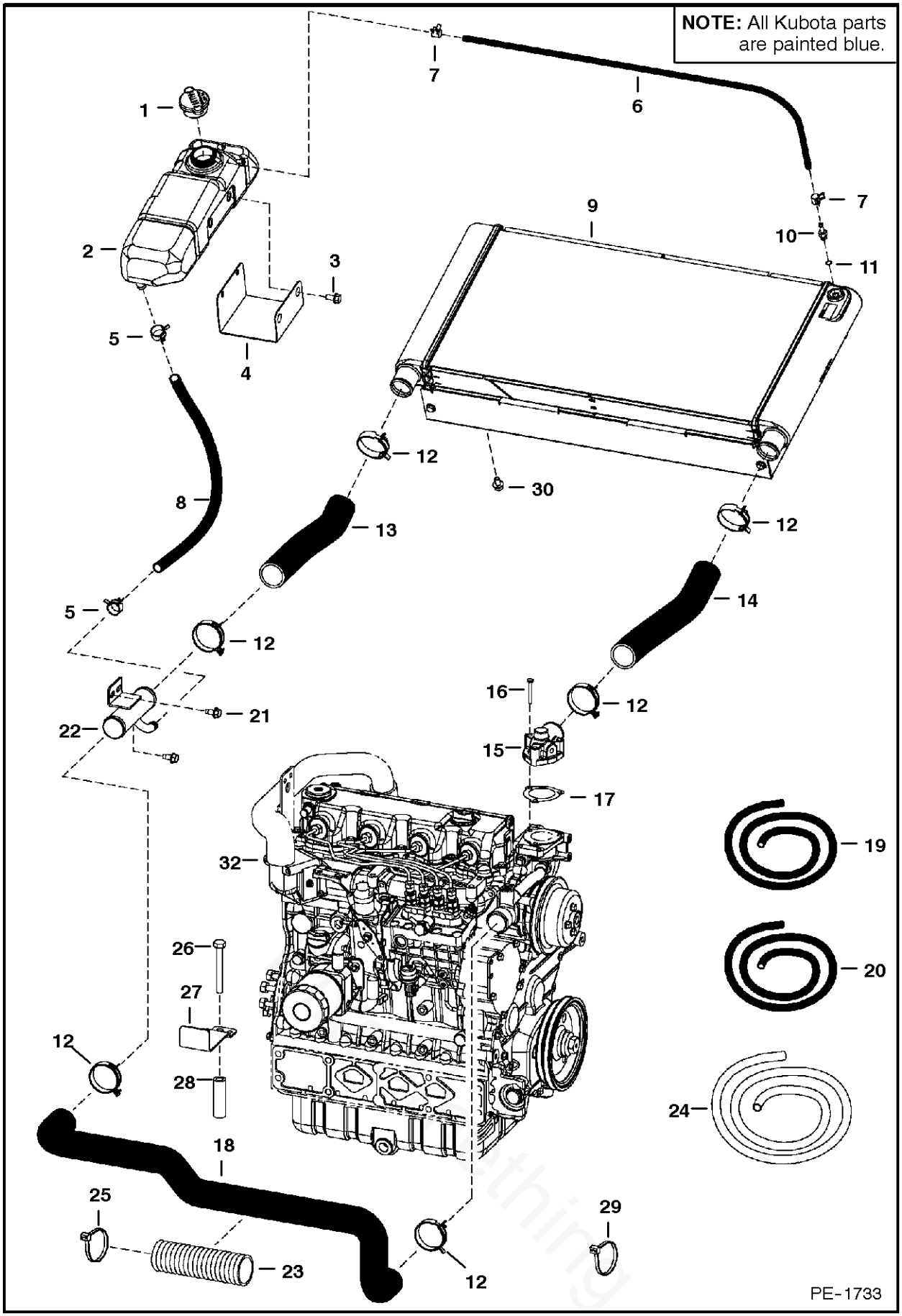

COOLING SYSTEM

Ref.N°	Part N°	Description	Remarks	Serial N°	Qty.
1	6733429	CAP			1
1	6733996	DECAL	14 psi		1
2	6732375	TANK			1
3	6733886	BOLT			2
4	6732870	MOUNT			1
5	5HM-23	CLAMP			2
6	NAP	HOSE	.3125' I.D. - 36' (914mm) long - Order Ref. COOLING SYSTEM(19)		1
7	5HM-14	CLAMP			2
8	NAP	HOSE	.63' I.D. - 18.75' (476mm) long - Order Ref. COOLING SYSTEM(20)		1
9	6728747	RADIATOR			1
10	6734090	ADAPTER	W/Ref. COOLING SYSTEM(11)		1
11	79K-4	O-RING			x
12	5HM-55	CLAMP			6
13	6728749	HOSE			1
14	6729310	HOSE			1
15	6680843	COVER	thermostat - See Page WATER PUMP & THERMOSTAT(8)		1
16	6680845	BOLT	See Page WATER PUMP & THERMOSTAT(8)		3
17	6680844	GASKET	See Page WATER PUMP & THERMOSTAT(8)		1
18	6728750	HOSE			1
19	6577822	HOSE	bulk - sold per foot		x
20	6578172	HOSE	bulk - sold per foot		x
21	84G-3712	BOLT			2
22	6730766	TUBE			1
23	NAP	GUARD	hose - 5.7' (145mm) long		1
24	6733885	GUARD	hose - bulk - sold per foot		x
25	6624289	STA-STRAP			1
26	6731198	BOLT			1
27	6731103	BRACKET			1
28	6731109	SPACER			1
29	6610510	NYLON TIE			1
30	35C-516	BOLT			4
31	6513471	CLAMP			1
32		ENGINE	See Page ENGINE & GASKET KITS(3)		1

ENGINE & ATTACHING PARTS
(Air Cleaner, Muffler)

NOTE: All Kubota parts are painted blue.

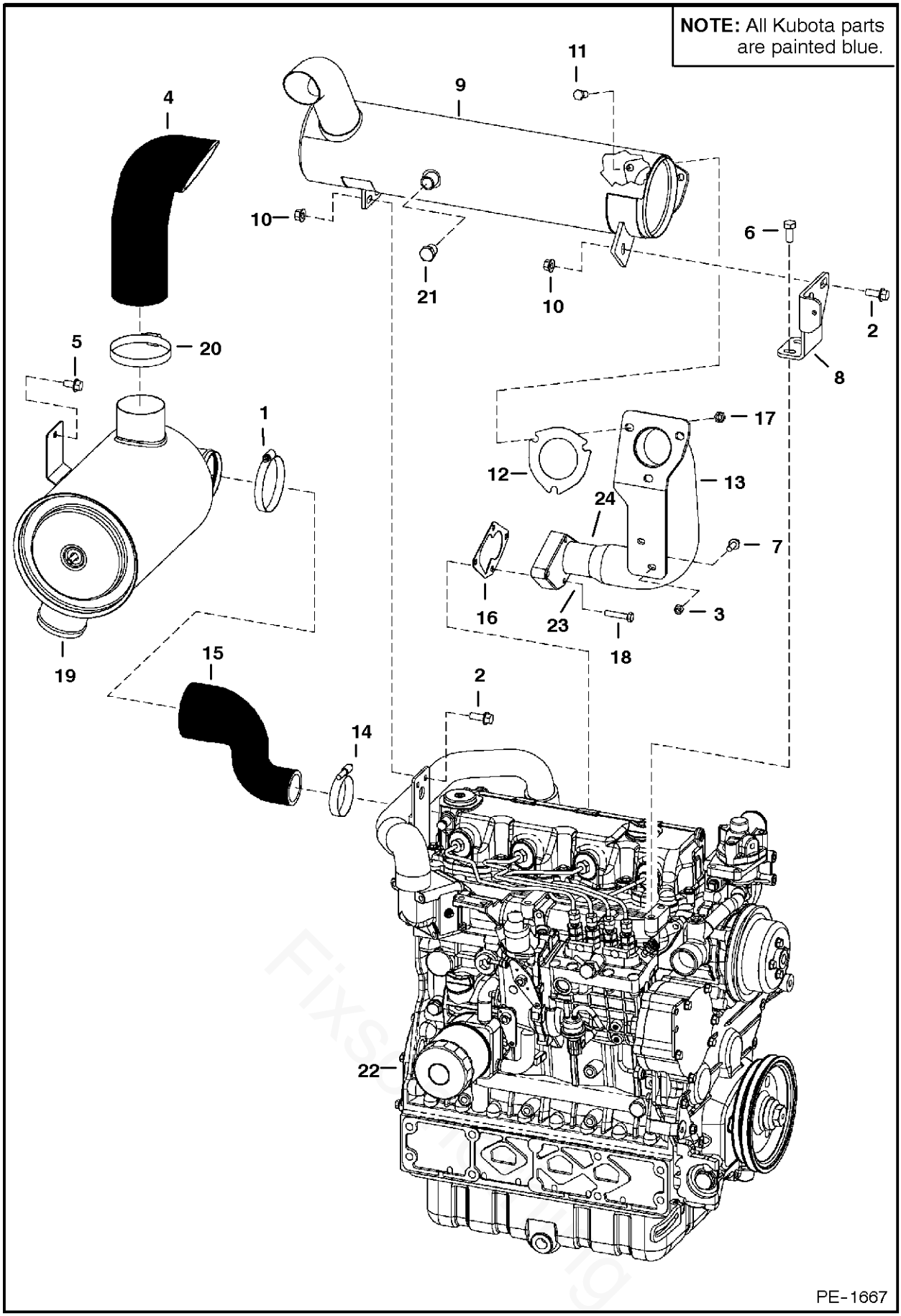

ENGINE & ATTACHING PARTS

Ref.N°	Part N°	Description	Remarks	Serial N°	Qty.
1	42HC-375	CLAMP			1
2	45C-616	BOLT			3
3	53DM-8	NUT			1
4	6730726	HOSE	air intake		1
5	84G-3712	BOLT			2
6	6719825	BOLT			2
7	29CM-820	BOLT			1
8	6730753	SHIELD	muffler		1
9	6684001	MUFFLER	double insulated - Was 6677373 [A]		1
10	83D-6	NUT			3
11	17C-616	BOLT			3
12	6732032	GASKET	exhaust		1
13	6729803	TUBE	exhaust - irregular bolt pattern	& Bel	1
13	7102368	TUBE	exhaust - square bolt pattern	& Abv	1
14	42HC-250	CLAMP			1
15	6734114	HOSE			1
16	6729875	GASKET	irregular bolt pattern	& Bel	1
16	7102747	GASKET	square bolt pattern	& Abv	1
17	85D-6	NUT			3
18	5CM-1020	BOLT	Was 6733143 [A]		4
19		AIR CLEANER	See Page AIR CLEANER(13)		1
20	42H-52	CLAMP			1
21	6661062	PLUG	brass - 3/8' straight pipe thread		1
22		ENGINE	See Page		1
23	7102034	TAB			1
24	7102035	TAB			1

ENGINE & ATTACHING PARTS
(Belt Drive System)

NOTE: All Kubota parts are painted blue.

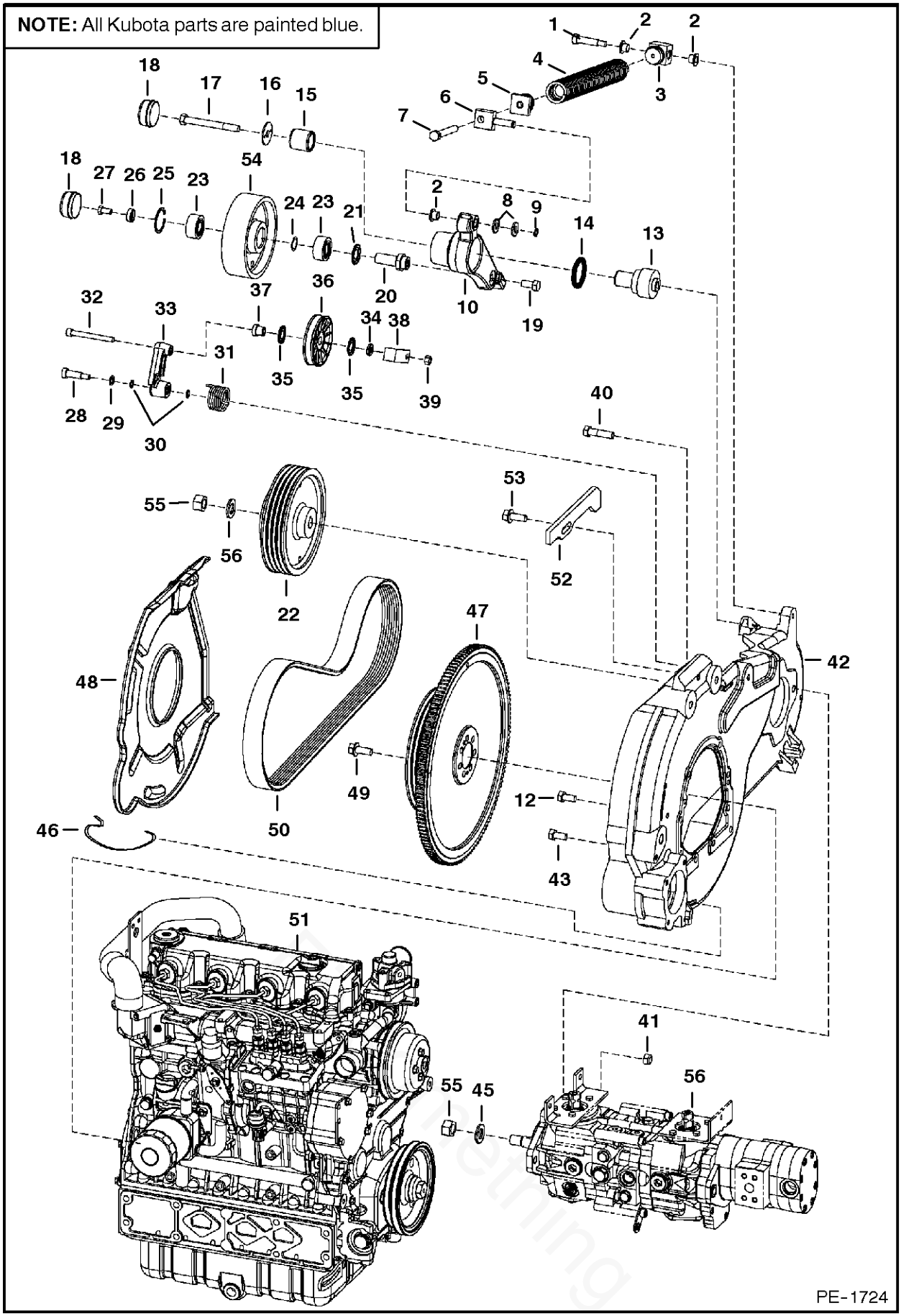

ENGINE & ATTACHING PARTS

Ref.N°	Part N°	Description	Remarks	Serial N°	Qty.
1	38C-828	BOLT	shoulder		1
2	1313116	BUSHING			4
3	6568424	ADAPTER			1
4	6569498	SPRING ASSY			1
5	6568425	STOP			1
6	6587182	PIN			1
7	6586710	BOLT			1
8	25E-21	WASHER			2
9	6518955	RETAINER			1
10	6735709	IDLER			1
11	6670682	BEARING	nylon		1
12	6730894	BOLT			2
13	6707699	PIVOT			1
14	6661377	SEAL			1
15	6587765	BUSHING			1
16	6707698	WASHER			1
17	17C-872	BOLT			1
18	6660967	CAP	grease		2
19	17C-816	BOLT			1
20	6707654	IDLER			1
21	6665307	SEAL			1
22	6713342	PULLEY	pump - 8' (203mm) O.D.		1
22	6713287	PULLEY	pump - 8.5' (216mm) O.D. - joystick controls		1
23	6661229	BEARING			2
24	6701159	SHIM			1
25	6665308	RETAINER			1
26	6707697	WASHER			1
27	17C-612	BOLT			1
28	38C-820	BOLT			1
29	6655781	BEARING	thrust		1
30	6704820	O-RING			2
31	6700115	SPRING			1
32	73G-656	BOLT			1
33	6725212	IDLER ARM	W/Ref. ENGINE & ATTACHING PARTS(11)		1
34	6704444	WASHER			1
35	6660995	RING			2
36	6662997	PULLEY			1
37	6704443	BUSHING			1
38	6702474	RETAINER			1
39	61D-6	NUT			1
40	17C-832	BOLT	hydrostatic pump mount		2
41	85D-8	NUT			2
42	6730020	MOUNT	See Page ENGINE & ATTACHING PARTS(1)		1
43	6719828	BOLT			10
44		STARTER	See Page STARTER(3)		1
45	6576033	WASHER			1
46	6701160	CLIP			3
47	7100860	FLYWHEEL ASSY	w/ring gear - Was 6733399 [A]		1
47	7100859	FLYWHEEL ASSY	w/ring gear - joystick controls		1
47	6665222	RING GEAR			1

ENGINE & ATTACHING PARTS

Ref.N°	Part N°	Description	Remarks	Serial N°	Qty.
48	6731100	SHIELD			1
49	6680747	BOLT			6
50	6672152	BELT	pump drive		1
50	6662855	BELT	pump drive - joystick controls		1
51		ENGINE	See Page ENGINE & GASKET KITS(3)		1
52	6729944	STOP	idler		1
53	31C-820	BOLT			1
54	6708445	PULLEY	drive idler		1
55	92D-12	NUT			1
56		PUMP	See Page HYDROSTATIC PUMP(3)		1
57	14J-3112	PIN			1

Fixsomething

ENGINE & ATTACHING PARTS
(Engine Mounts)

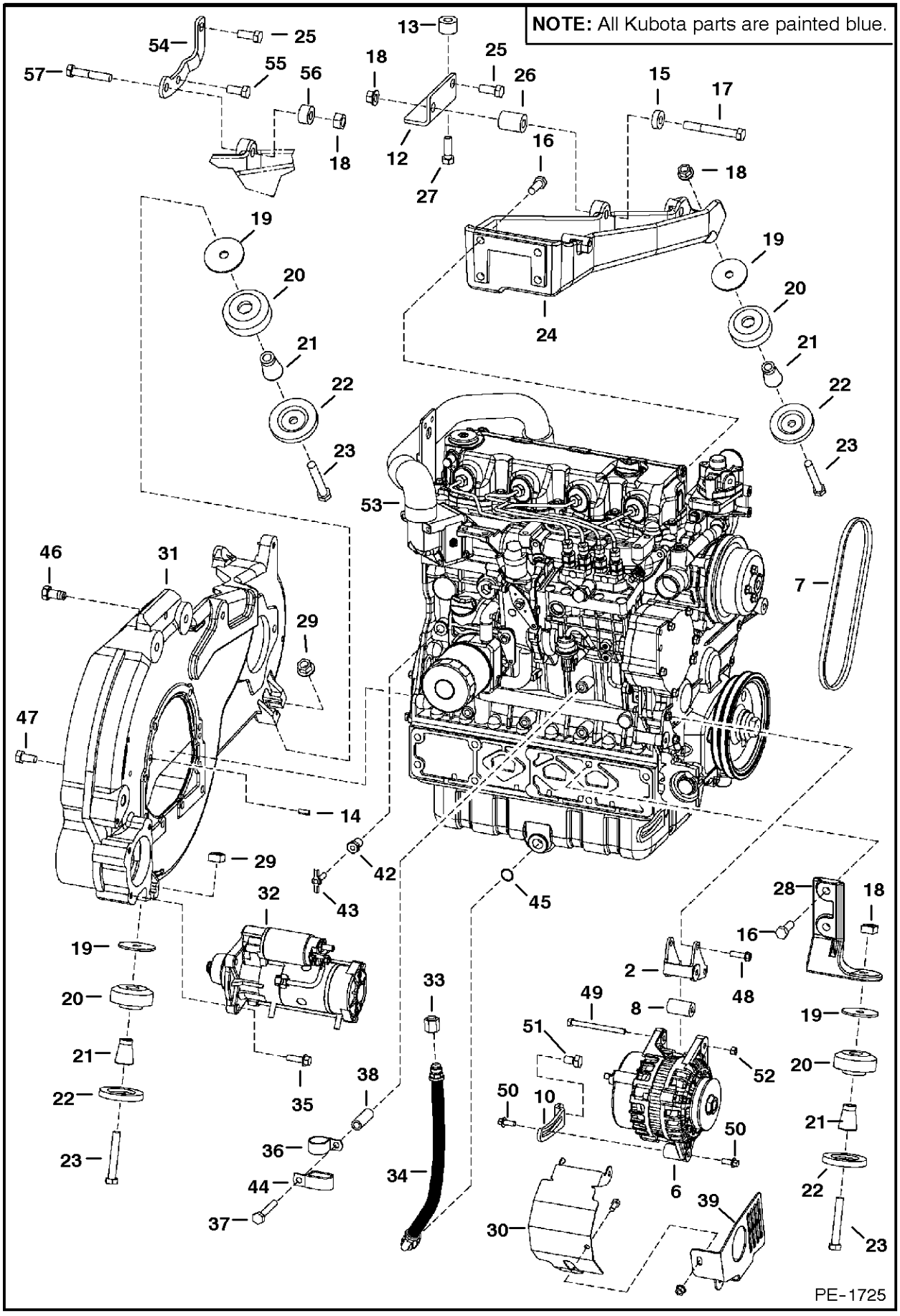

ENGINE & ATTACHING PARTS

Ref.N°	Part N°	Description	Remarks	Serial N°	Qty.
1		ENGINE	See Page ENGINE & GASKET KITS(4)		1
2	6680839	BRACKET	alternator - See Page FRONT COVER(7)		2
3	6680687	BOLT			2
4	1CM-8100	BOLT			1
5	81D-6	NUT			1
6		ALTERNATOR	See Page ALTERNATOR(2)		1
7	6677824	BELTinD1}j	alternator		1
8	6732206	SPACER	alternator -tier I		1
9	25E-17	WASHER			2
10	6732193	BRACKET			1
11	1CM-1020	BOLT			1
12	6735727	BRACKET			1
13	6732575	SPACER			3
14	14J-3112	PIN			2
15	6716408	WASHER			1
16	6719829	BOLT			6
17	17C-888	BOLT			1
18	83D-8	NUT			3
19	6705106	WASHER	3' (76,2mm) O.D.		4
20	6668104	MOUNT			4
21	6715287	SPACER			4
22	6661787	WASHER			4
23	43C-852	BOLT			4
24	6729942	MOUNT			1
25	17C-820	BOLT			1
26	6735729	SPACER	2.94' (74,7mm) long		1
27	17C-824	BOLT			3
28	6735346	MOUNT	cast		2
29	6652918	NUT			2
30	6733873	SHIELD	alternator		1
31	6735980	MOUNT	Was 6730020 [A]		1
32		STARTER	See Page STARTER(3)		1
33	36K-6	CAP			1
34	6732476	HOSE	15.5' (394mm) long - tier I		1
34	6734573	HOSE	12.5' (318mm) long - tier II		1
35	45C-620	BOLT			3
36	30H-73	CLAMP			1
37	6731198	BOLT			1
38	6731109	SPACER			1
39	6734436	SHIELD	alternator belt		1
40	17C-510	BOLT			1
41	83D-5	NUT			1
42	7101136	BUSHING	Was 19F-2 [A]		1
43	72F-1	DRAIN COCK			1
44	31H-38	CLAMP			1
45	79K-8	O-RING			x
46	31C-820	BOLT			1
47	6719828	BOLT			10
48	6680687	BOLT			2
49	1CM-8100	BOLT			1

Partsomething

ENGINE & ATTACHING PARTS

Ref.N°	Part N°	Description	Remarks	Serial N°	Qty.
50	29CM-820	BOLT			2
51	6CM-1220	BOLT			1
52	53DM-8	NUT			1
53		ENGINE	See Page ENGINE & GASKET KITS(3)		1
54	6735979	BRACKET	pump - for joystick control		1
55	17C-816	BOLT	for joystick control		1
56	6736349	SPACER	for joystick control		1
57	6675221	BOLT	for joystick control		1
58	20JM-1025	PIN			2

ENGINE SPEED CONTROL

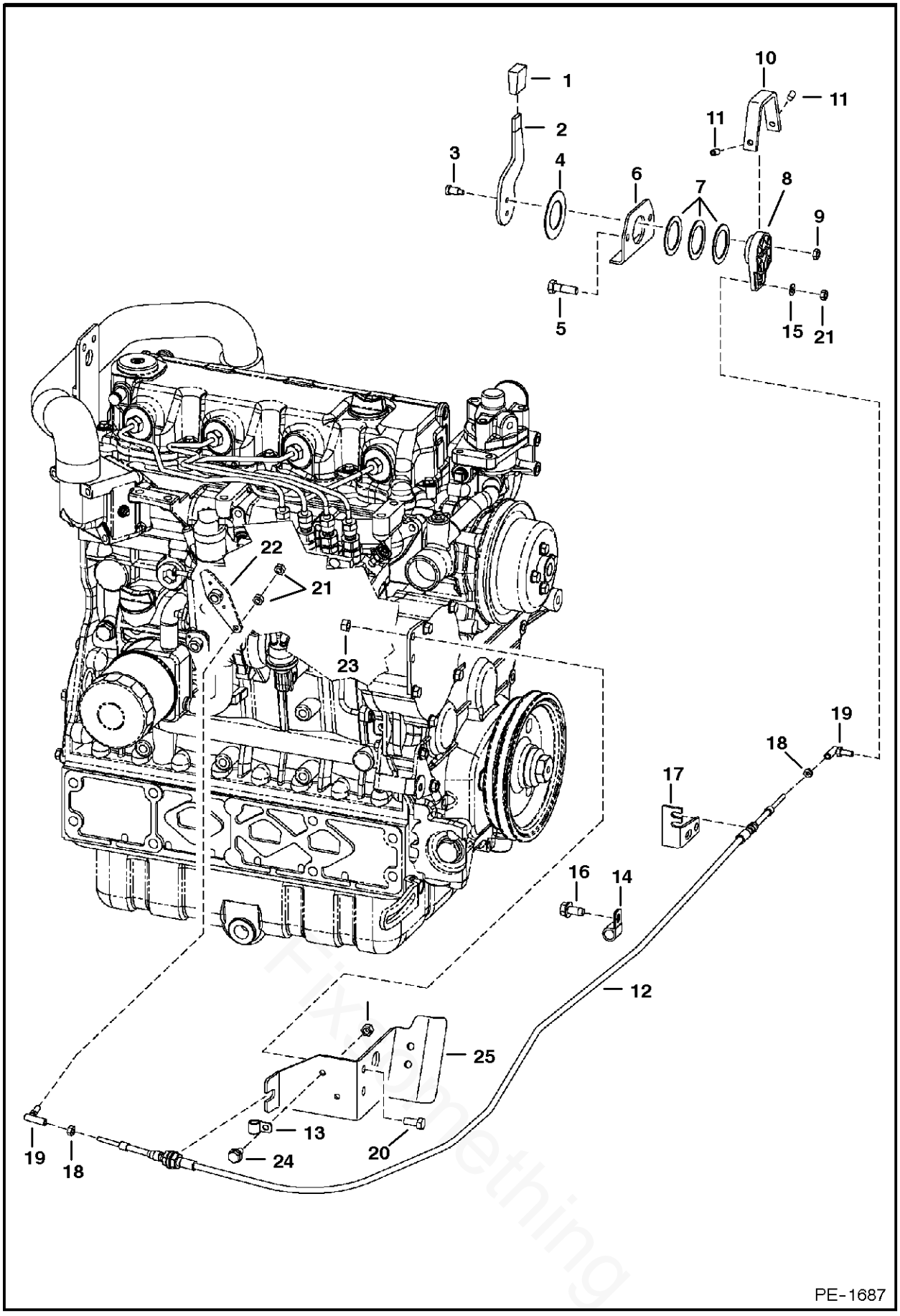

ENGINE SPEED CONTROL

Ref.N°	Part N°	Description	Remarks	Serial N°	Qty.
1	6564452	GRIP			1
2	6705452	LEVER			1
3	38C-610	BOLT	shoulder		2
4	6567962	WASHER			1
5	84G-3724	BOLT			2
6	6576262	MOUNT			1
7	6630945	WASHER			3
8	6709022	LEVER			1
9	85D-5	NUT			6
10	6576261	COVER			1
11	6706572	SET SCREW			2
12	6675668	CABLE			1
13	30H-21	CLAMP			1
14	30H-31	CLAMP			1
15	25E-11	WASHER			1
16	84G-3712	BOLT			1
17	6732450	BRACKET			1
18	14D-10	NUT			2
19	6644965	BALL JOINT			1
20	17C-512	BOLT			2
21	62D-4	NUT			3
22		LEVER	See Page GOVERNOR(12) Ref. GOVERNOR(3)		1
23	95D-5	NUT			2
24	84G-3110	BOLT			1
25	6734437	MOUNT	tier I		1
25	6734772	MOUNT	tier II		1

ENGINE SPEED CONTROL
(W/ Joystick Controls)

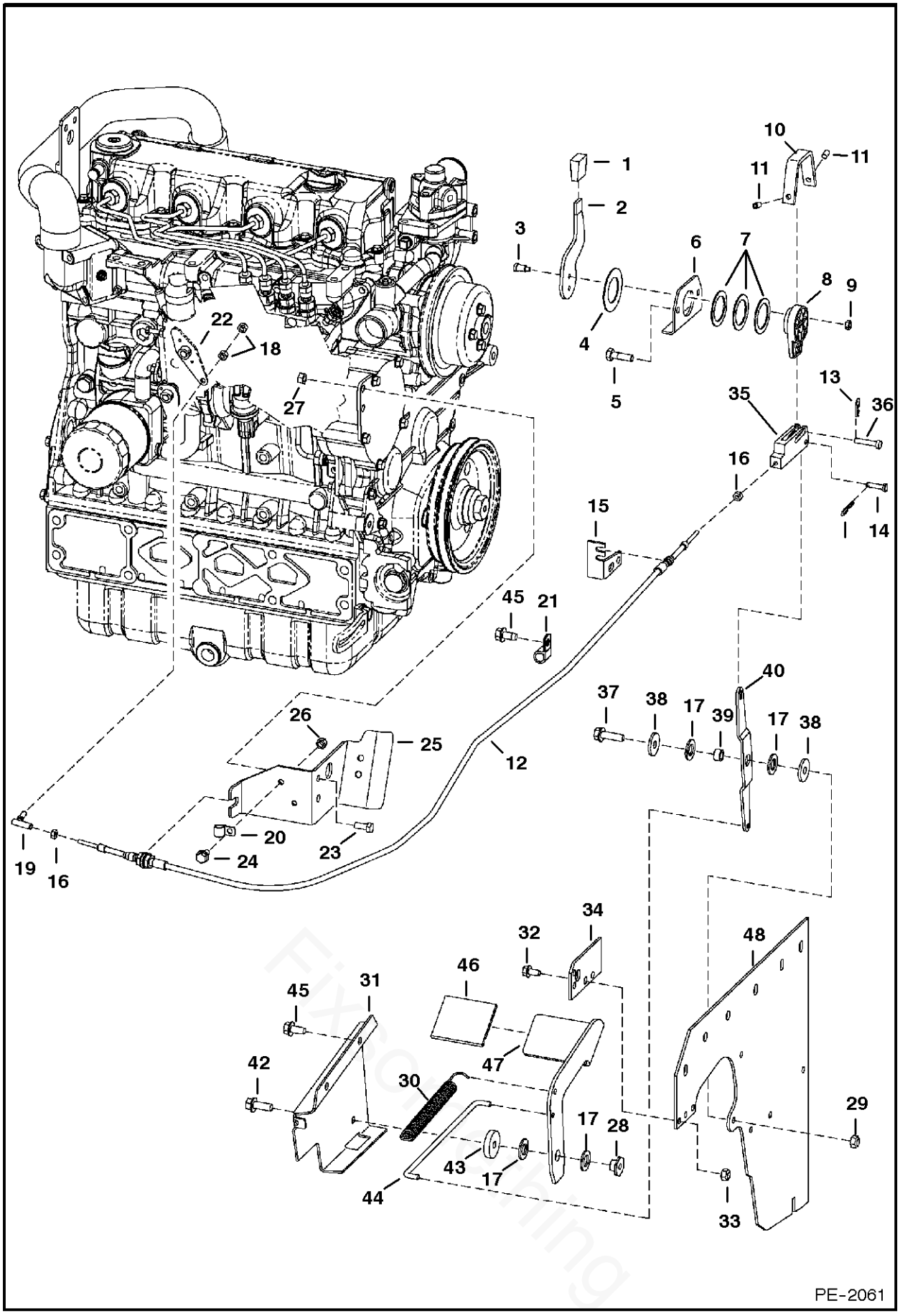

Fixed Wing

ENGINE SPEED CONTROL

Ref.N°	Part N°	Description	Remarks	Serial N°	Qty.
1	6564452	GRIP			1
2	6730270	LEVER			1
3	38C-610	BOLT	shoulder		2
4	6567962	WASHER			1
5	84G-3724	BOLT			2
6	6576262	MOUNT			1
7	6630945	WASHER			3
8	6734416	LEVER			1
9	85D-5	NUT			6
10	6734520	COVER			1
11	6706572	SET SCREW			2
12	6675668	CABLE			1
13	6513495	COTTER PIN			1
14	2F-4051	PIN			1
15	6732450	BRACKET			1
16	14D-10	NUT			2
17	6700170	WASHER	plastic		4
18	62D-4	NUT			2
19	6644965	BALL JOINT			1
20	30H-21	CLAMP			1
21	30H-31	CLAMP			1
22	6680768	LEVER	See Page GOVERNOR(12) Ref. GOVERNOR(3)		1
23	17C-512	BOLT			2
24	84G-3110	BOLT			1
25	6734437	MOUNT	tier I		1
25	6734772	MOUNT	tier II		1
26		NUT			1
27	95D-5	NUT			2
28	6559479	NUT	retaining		1
29	85D-6	NUT			1
30	6700743	SPRING			1
31	6732323	BRACKET			1
32	84G-3716	BOLT			2
33	95D-6	NUT			2
34	6732449	PLATE	cable		1
35	6731901	CLEVIS			1
36	1304227	PIN			1
37	84G-3720	BOLT			1
38	619021	WASHER			2
39	6564343	BUSHING			1
40	6734417	LEVER			1
41	6577961	GROMMET			1
42	45C-616	BOLT			1
43	6732322	SPACER			1
44	6731900	ROD			1
45	84G-3712	BOLT			2
46	6554100	SAFETY TREAD	safety		1
47	6731898	PEDAL			1
48		PANEL	See Page PANELS(5)		1

COOLING FAN DRIVE ASSY.

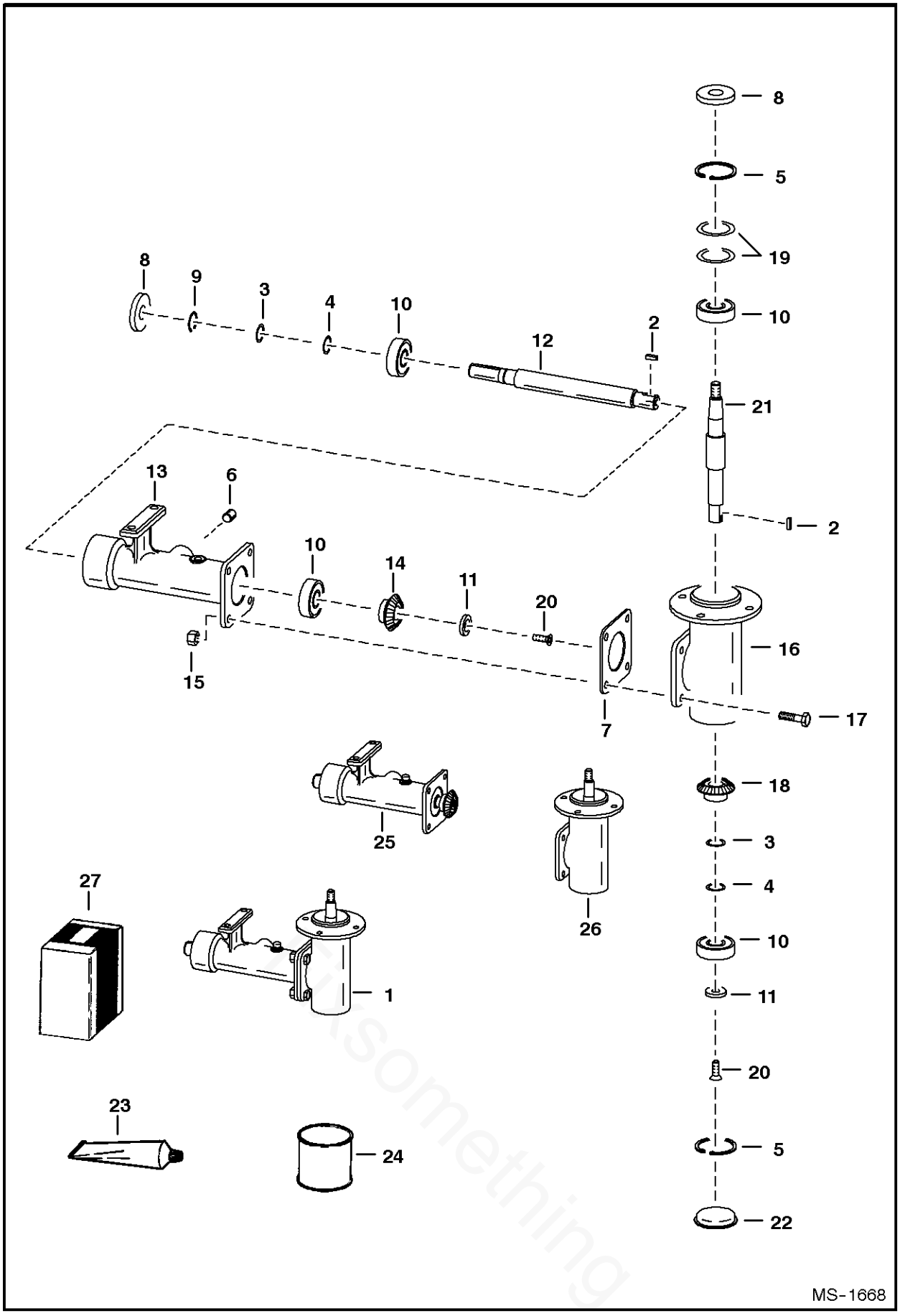

Fixsomething

COOLING FAN DRIVE ASSY.

Ref.N°	Part N°	Description	Remarks	Serial N°	Qty.
1	6681888	HOUSING ASSY	Ref. COOLING FAN DRIVE ASSY.(2)-COOLING FAN DRIVE ASSY.(22)		1
2	7J-2010	KEY			2
3	6702165	SHIM	.002' (0,05mm) thickness - 1' (25,4mm) O.D.		x
4	6701159	SHIM	.005'(0,13 mm) thickness - 1' (25,4mm) O.D.		x
5	6653758	SNAP RING			2
6	16F-8	PLUG			1
7	6578284	SHIM	.003'' (0,08 mm) thickness		x
8	6653702	SEAL			2
9	6653757	SNAP RING			1
10	6646627%	BEARING			4
11	6702140	WASHER	countersink		2
12	6730804	SHAFT	keyed		1
13	6579641	HOUSING			1
14	6702103	GEAR	keyed		1
15	95D-6	NUT			4
16	NSS	HOUSING	&Order 6702138 housing or Ref. COOLING FAN DRIVE ASSY.(26)		1
17	17C-620	BOLT			4
18	6702102	GEAR	keyed		1
19	6702166	SHIM	.002'' (0,05mm) thickness - 2' (50,8mm) O.D.		x
19	6702144	SHIM	.005'' (0,13mm) thickness - 2' (50,8mm) O.D.		x
20	9G-512	SCREW			2
21	6702135	SHAFT	keyed		1
22	6700782	CAP	grease		1
23	6672486	SEALANT	polyurethane - Use W/Ref. COOLING FAN DRIVE ASSY.(7) & COOLING FAN DRIVE ASSY.(22)		x
24	6634393	LUBRICANT	gear - 1 pint		x
25	6731102	HOUSING ASSY.	half		1
26	6707077	HOUSING ASSY.	half		1
27	6669384	SPEEDY SLEEVE	repair kit		1

ENGINE & GASKET KITS
(S/N 5231, 5230) (V3300 DI T Kubota) (Tier I)

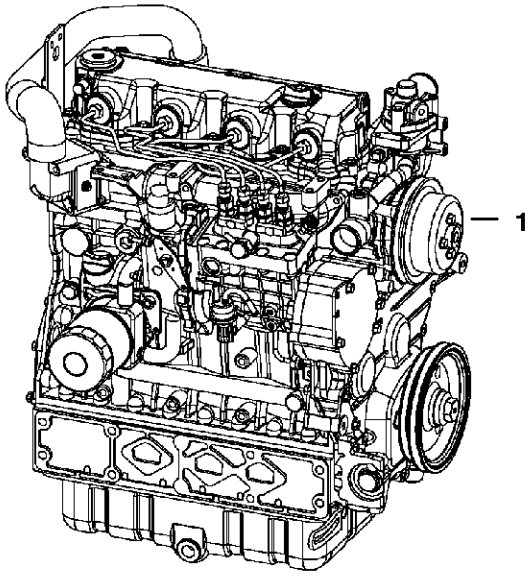

B-18620

Fixsomething

ENGINE & GASKET KITS

Ref.N°	Part N°	Description	Remarks	Serial N°	Qty.
1	6677372	ENGINE	80.8 HP - Order 6684577, also Order 29' (737mm) of 6577822, 9.25' (235mm) of 6577821, 50' (1270mm) of 6578169, 6734573 oi		1

MANIFOLDS
(S/N 5231, 5230) (V3300 DI T Kubota) (Tier I)

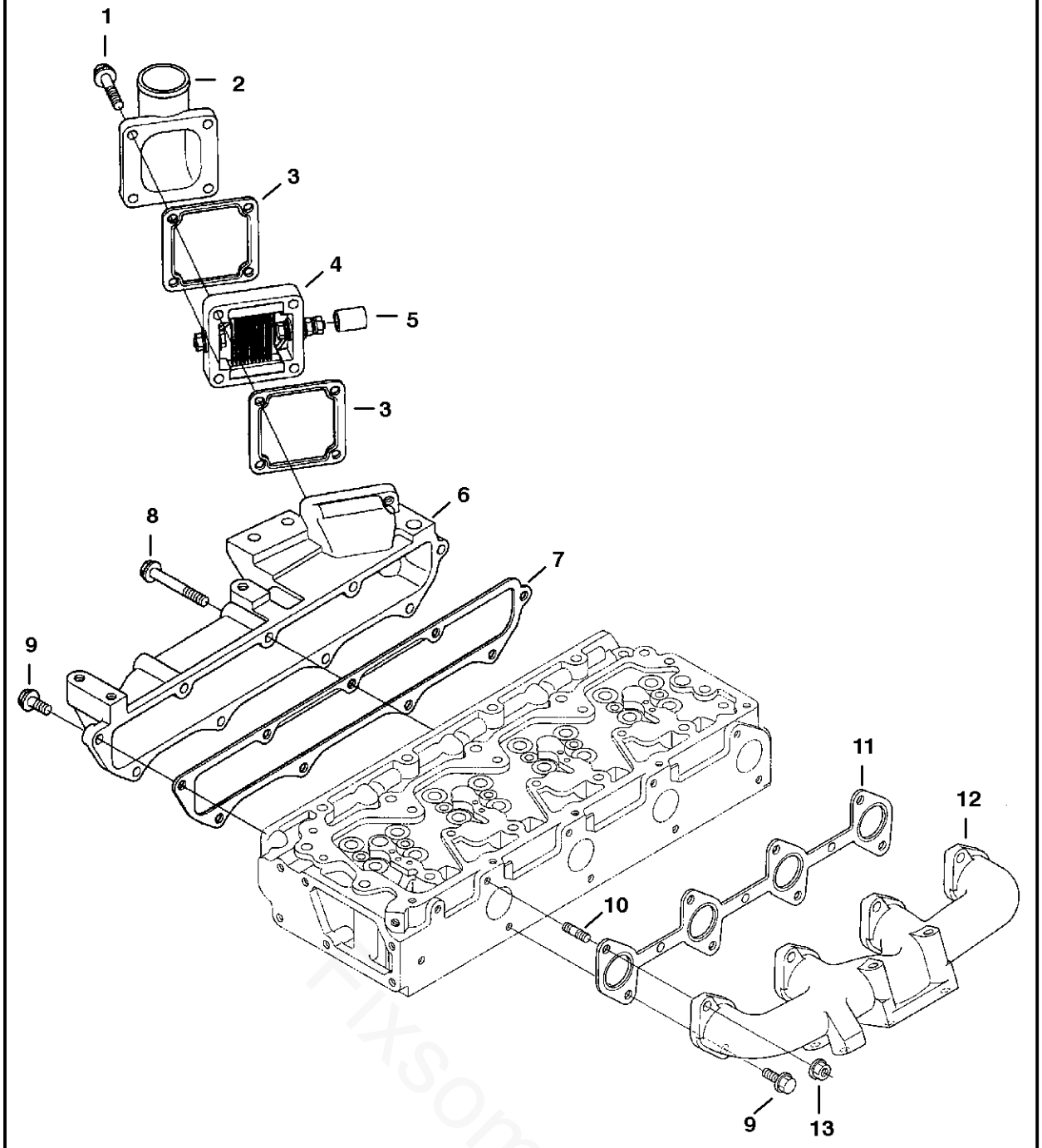

Fixsomething

MANIFOLDS

Ref.N°	Part N°	Description	Remarks	Serial N°	Qty.
1	6680851	BOLT			4
2	6680886	FLANGE			1
3	6680887	GASKET			1
4	6680888	HEATER			1
5	6598112	CAP			1
6	6680883	MANIFOLD	intake		1
7	6680884	GASKET	manifold		1
8	6680885	BOLT			3
9	6680801	BOLT			10
10	3974916	STUD			4
11	6680891	GASKET	manifold		1
12	6680890	MANIFOLD	exhaust		1
13	6680663	NUT			1

TURBOCHARGER
(S/N 5231, 5230) (V3300 DI T Kubota) (Tier I)

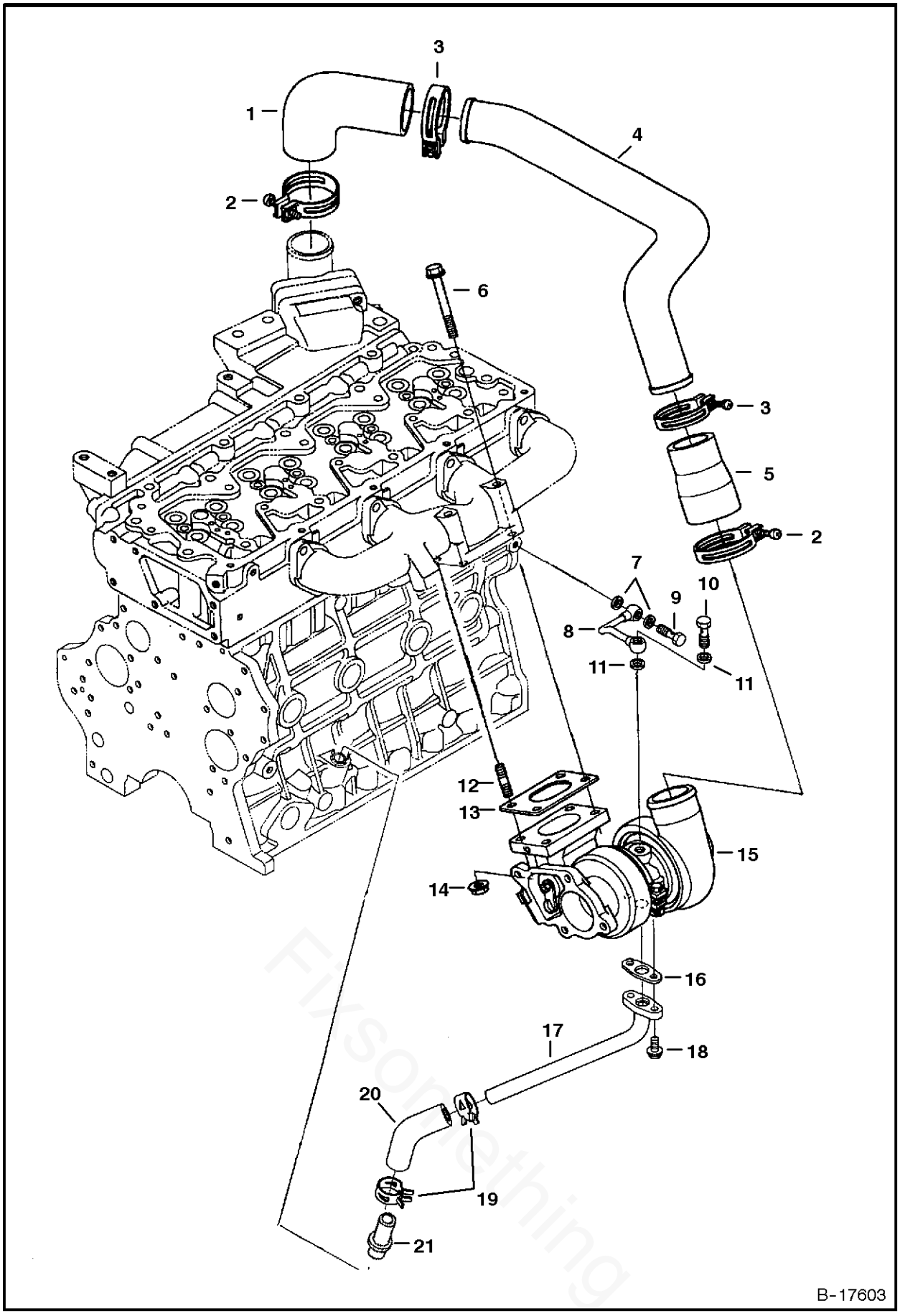

Fixsomething

TURBOCHARGER

Ref.N°	Part N°	Description	Remarks	Serial N°	Qty.
1	6680896	HOSE			1
2	6680897	CLAMP			2
3	6680898	CLAMP			2
4	6680895	HOSE			1
5	6680894	HOSE			1
6	6680802	BOLT			2
7	3974095	GASKET			2
8	6680899	TUBE			1
9	6680791	BOLT	hollow		1
10	6680900	BOLT	hollow		1
11	6675623	GASKET			2
12	6680564	STUD			2
13	6680893	GASKET			1
14	6680663	NUT			2
15	6680892	TURBOCHARGER			1
16	6680570	GASKET			1
17	6680901	PIPE			1
18	6680830	BOLT			2
19	6680903	CLAMP			2
20	6680902	HOSE			1
21	6680649	TUBE			1

CYLINDER HEAD & COVER
(S/N 5231, 5230) (V3300 DI T Kubota) (Tier I)

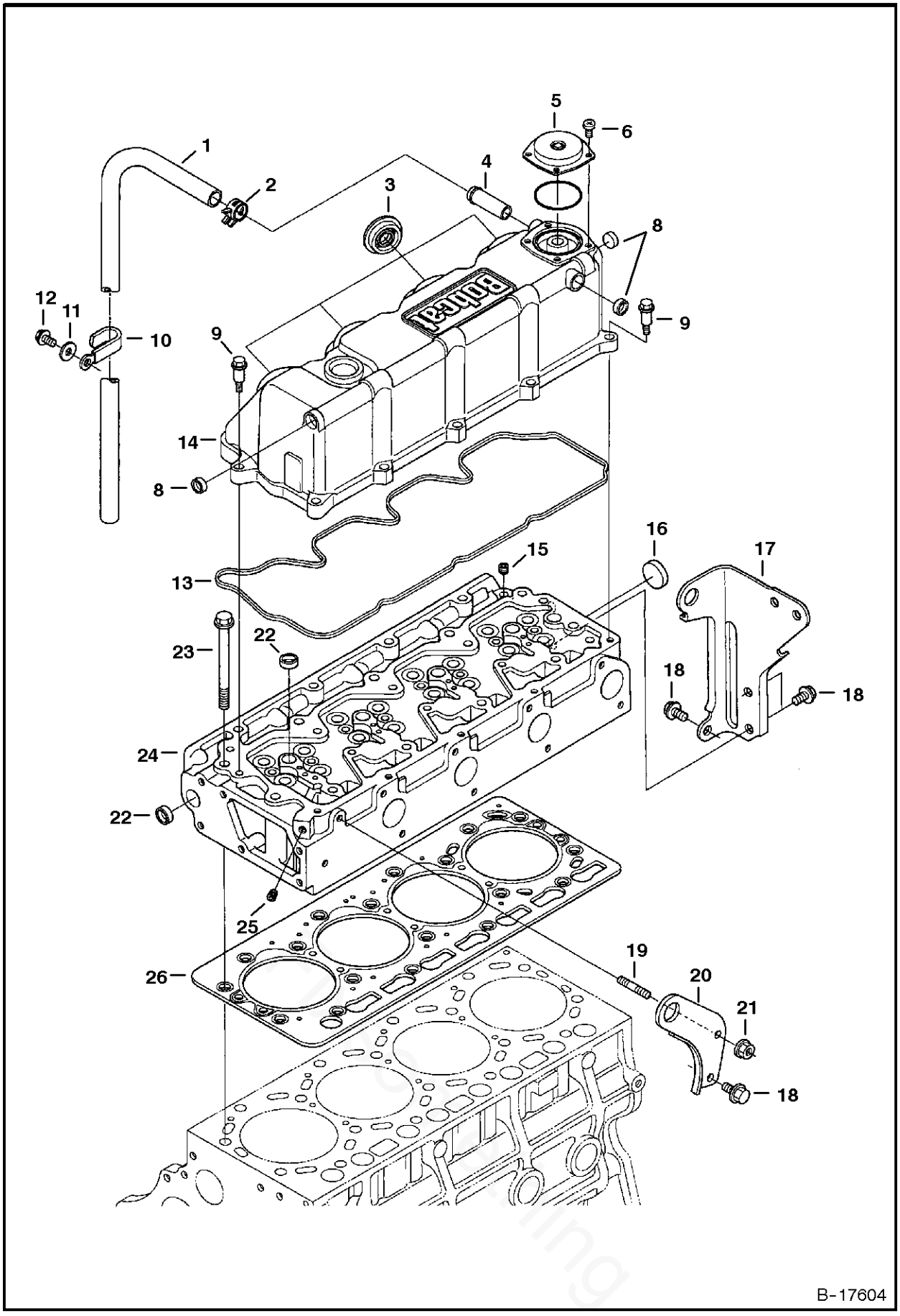

CYLINDER HEAD & COVER

Ref.N°	Part N°	Description	Remarks	Serial N°	Qty.
1	6680697	HOSE			1
2	6680698	CLAMP			1
3	6680695	SEAL	injection tube		4
4	6680689	TUBE			1
5	6680692	COVER	breather		1
6	6680693	SCREW			4
7	6680691	O-RING			1
8	6680694	PLUG			3
9	6680696	BOLT			10
10	6680699	CLAMP			1
11	6680700	WASHER			1
12	6680658	BOLT			1
13	6680690	GASKET			1
14	6680688	HEAD COVER	W/Ref. CYLINDER HEAD & COVER(3)-CYLINDER HEAD & COVER(8) & CYLINDER HEAD & COVER(13)		1
15	6598169	PLUG			1
16	6680666	PLUG			1
17	6680974	BRACKET			1
18	6680662	BOLT			4
19	3974916	STUD			1
20	6598133	BRACKET			1
21	6680663	NUT			1
22	6680665	PLUG			5
23	6680668	BOLT			18
24	6680664	HEAD	W/Ref.		1
25	6680667	PLUG			1
26	6680669	HEAD GASKET	0.80mm - .0315' thick tightened - 2 notch		1
26	6680670	HEAD GASKET	0.90mm - .0354' thick tightened - 1 notch		1
26	6680671	HEAD GASKET	0.95mm - .0374' thick tightened - 0 notch		1

CYLINDER HEAD
(S/N 5231, 5230) (V3300 DI T Kubota) (Tier I)

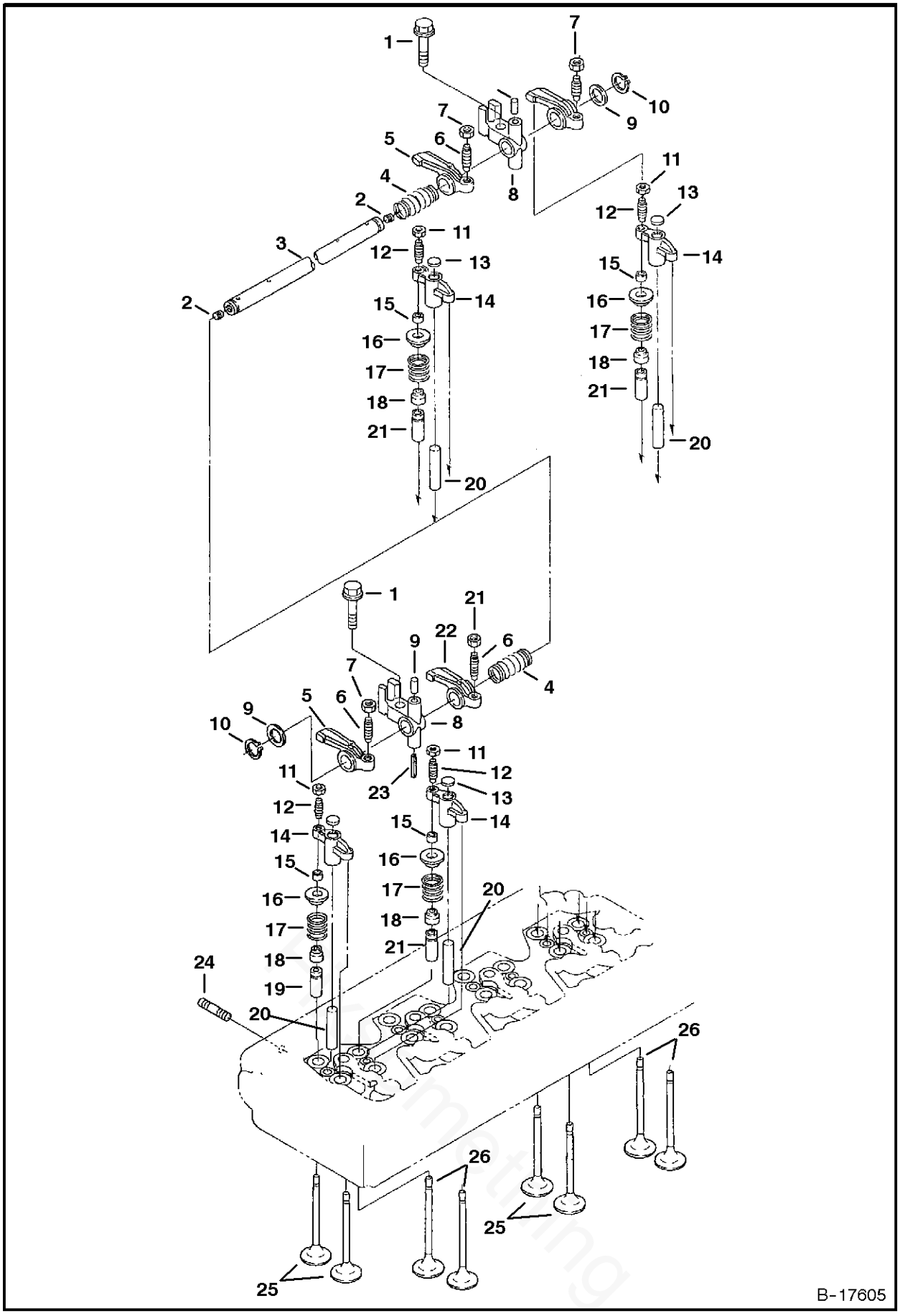

CYLINDER HEAD

Ref.N°	Part N°	Description	Remarks	Serial N°	Qty.
1	6680878	BOLT			4
2	6655894	SET SCREW			2
3	6680868	SHAFT	W/Ref. CYLINDER HEAD(2)		1
4	6680872	SPRING			3
5	6680873	ROCKER ARM	intake - W/Ref. CYLINDER HEAD(6) & CYLINDER HEAD(7)		4
6	3974920	SCREW	adjusting		4
7	6680874	NUT			4
8	6680869	BRACKET	rocker arm		4
9	6680870	WASHER			2
10	6680871	SNAP RING			2
11	6680881	NUT			8
12	6680880	SCREW	adjusting		8
13	6680882	PAD			8
14	6680879	ARM	valve bridge - W/Ref. CYLINDER HEAD(11) & CYLINDER HEAD(12)		8
15	6680865	COLLET	valve spring		16
16	6680864	RETAINER	valve spring		16
17	6680863	VALVE SPRING			16
18	6672436	SEAL	valve stem		16
19	6680859	GUIDE	inlet valve		8
20	6680866	SHAFT	valve		8
21	6680860	GUIDE	exhaust valve		8
22	6680875	ROCKER ARM	exhaust - W/Ref. CYLINDER HEAD(6) & CYLINDER HEAD(7)		4
23	6667461	ORIFICE			1
24	6680867	STUD			4
25	6680861	VALVE	inlet		8
26	6680862	VALVE	exhaust		8

OIL PAN
(S/N 5231, 5230) (V3300 DI T Kubota) (Tier I)

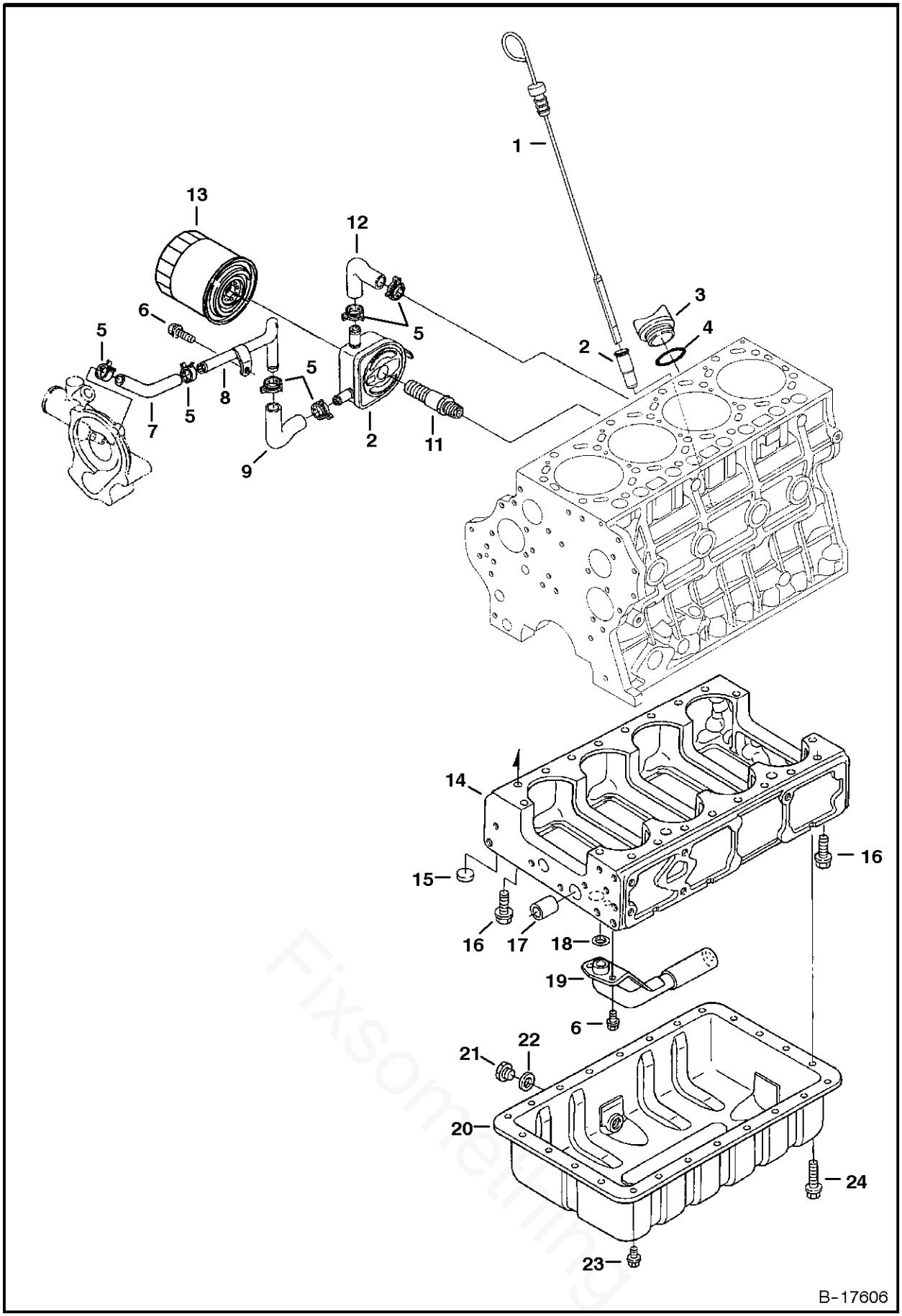

Fixsomething

OIL PAN

Ref.N°	Part N°	Description	Remarks	Serial N°	Qty.
1	6680703	DIPSTICK			1
2	6680702	TUBE	dipstick		1
3	6680908	CAP			1
4	3966602	O-RING			1
5	6675618	CLAMP			6
6	6680662	BOLT			3
7	6680913	HOSE			1
8	6680912	TUBE			1
9	6680914	HOSE			1
10	6680909	OIL COOLER			1
11	6680910	ADAPTER			1
12	6680911	HOSE			1
13	6678233	FILTER			1
14	6680652	CRANKCASE			1
15	6680638	PLUG			10
16	6680654	BOLT			16
17	6680655	PIN	gear case		1
18	6680661	O-RING			1
19	6680660	OIL SUMP			1
20	6680656	OIL PAN	W/Ref. OIL PAN(21) & OIL PAN(22)		1
21	6680657	PLUG	oil		1
22	6631046	GASKET	rubber		1
23	6680658	BOLT			20
24	6680659	BOLT			4

PISTON & CRANKSHAFT
(S/N 5231, 5230) (V3300 DI T Kubota) (Tier I)

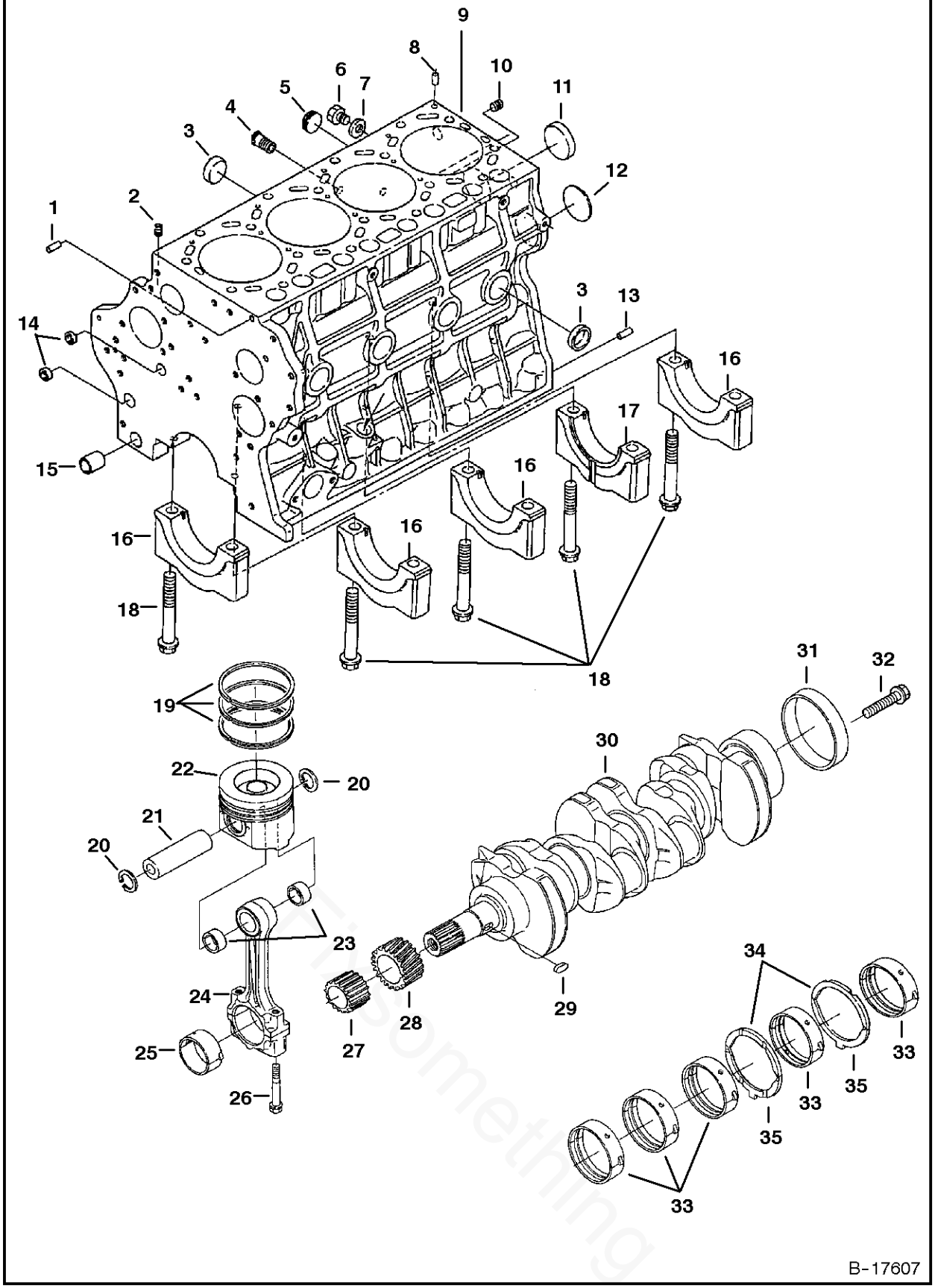

Printed by Something

PISTON & CRANKSHAFT

Ref.N°	Part N°	Description	Remarks	Serial N°	Qty.
1	6680641	PIN			1
2	6598169	PLUG			3
3	6680638	PLUG			10
4	6680646	ADAPTER			1
5	6672354	PLUG			1
6	6652750	PLUG			1
7	6680647	GASKET			1
8	6680643	PIN			2
9	6680635	CRANKCASE	W/Ref.		1
10	6680636	PLUG			1
11	6680639	PLUG			1
12	6680640	PLUG			1
13	6680642	PIN			2
14	6680637	PLUG			4
15	6680644	PIN			1
16	NSS	CAP	main bearing - Order Ref. PISTON & CRANKSHAFT(9)		4
17	NSS	CAP	main bearing - Order Ref. PISTON & CRANKSHAFT(9)		1
18	6680645	BOLT			10
19	6680723	PISTON RINGS	standard		4
19	6680724	PISTON RINGS	0.50mm oversized		4
20	6680726	SNAP RING	internal		8
21	6680725	PIN			4
22	6680721	PISTON	standard		4
22	6680722	PISTON	0.50mm oversized		4
23	6680728	BUSHING			8
24	6680727	ROD	connecting - W/Ref. PISTON & CRANKSHAFT(23), PISTON & CRANKSHAFT(25) & PISTON & CRANKS HAFT(26) - marked blue, yellow or w/o col		4
25	6680730	BEARING	rod - set - blue		4
25	6680731	BEARING	rod - set - yellow or w/o color		4
25	6680732	BEARING	rod - set - 0.20 mm		4
25	6680733	BEARING	rod - set - 0.40 mm		4
26	6680729	BOLT			8
27	6680737	GEAR	oil pump		1
28	6680736	GEAR	crankshaft		1
29	3974226	KEY			1
30	6680734	CRANKSHAFT	W/Ref. PISTON & CRANKSHAFT(27)-PISTON & CRANKSHAFT(29) & PISTON & CRANKSHAFT(31)		1
31	6680735	SLEEVE	crankshaft		1
32	6680747	BOLT	flywheel		7
33	6680738	MAIN BEARING	standard - set		5
33	6680739	MAIN BEARING	0.20mm undersized - set		5
33	6680740	MAIN BEARING	0.40mm undersized - set		5
34	6680741	THRUST WASHER	standard		2
34	6680742	THRUST WASHER	0.20mm oversized		2
34	6680743	THRUST WASHER	0.40mm oversized		2
35	6680744	THRUST WASHER	standard		2
35	6680745	THRUST WASHER	0.20mm oversized		2
35	6680746	THRUST WASHER	0.40mm oversized		2

CAMSHAFT
(S/N 5231, 5230) (V3300 DI T Kubota) (Tier I)

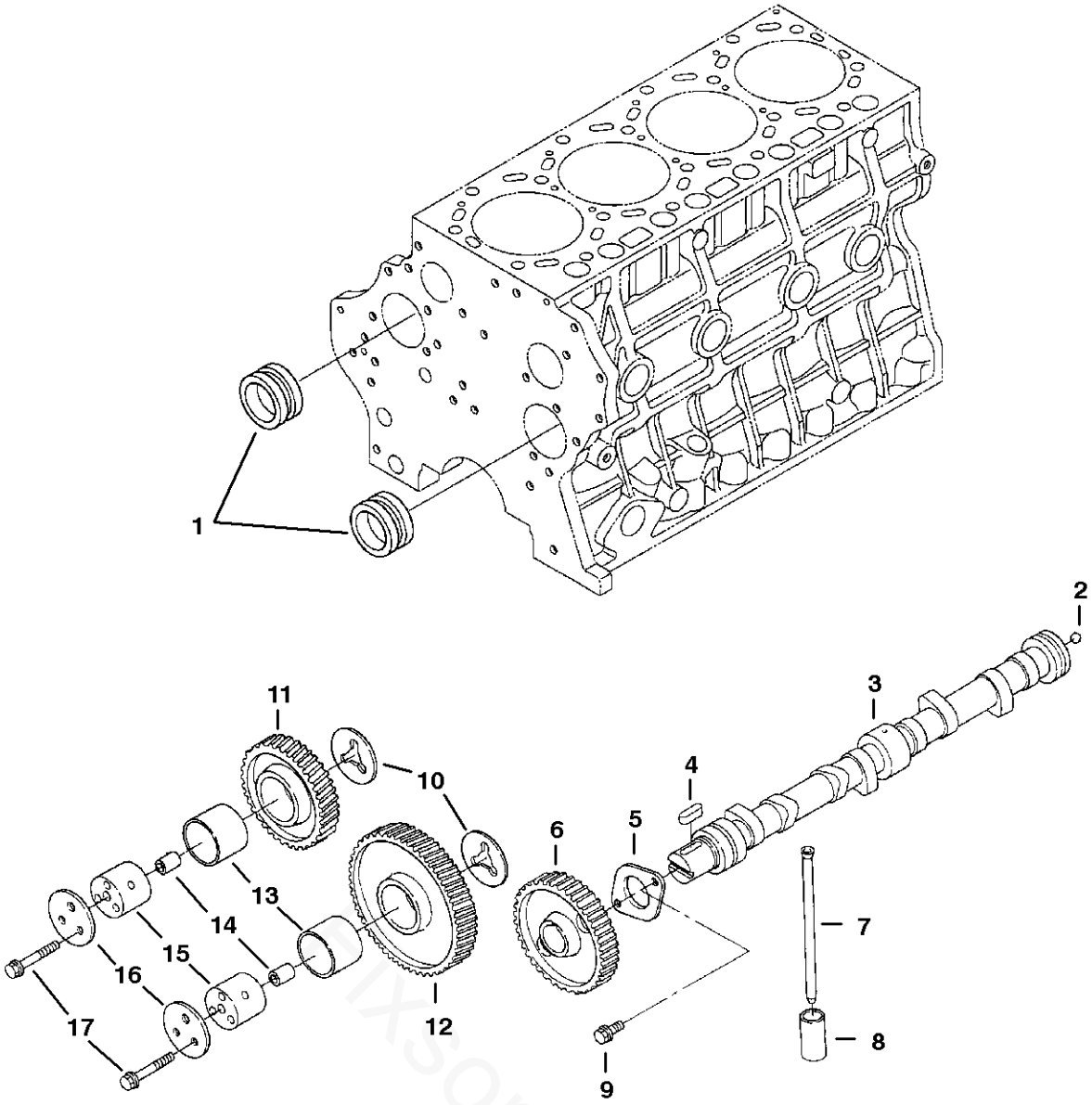

fixsomething

CAMSHAFT

Ref.N°	Part N°	Description	Remarks	Serial N°	Qty.
1	6680748	BALANCER			2
2	6680710	BALL			1
3	6680709	CAMSHAFT			1
4	6652679	KEY			1
5	6680712	FLANGE			1
6	6680711	GEAR	cam		1
7	6680708	PUSH ROD			8
8	6680707	TAPPET			8
9	6653579	BOLT			2
10	6680716	COLLAR			1
11	6680719	GEAR	W/Ref. CAMSHAFT(13)		1
12	6680718	GEAR	W/Ref. CAMSHAFT(13)		1
13	6680720	BUSHING			2
14	6680715	PIN			2
15	6680714	SHAFT	idler gear		2
16	6680717	COLLAR			2
17	6680685	BOLT			6

FRONT COVER
(S/N 5231, 5230) (V3300 DI T Kubota) (Tier I)

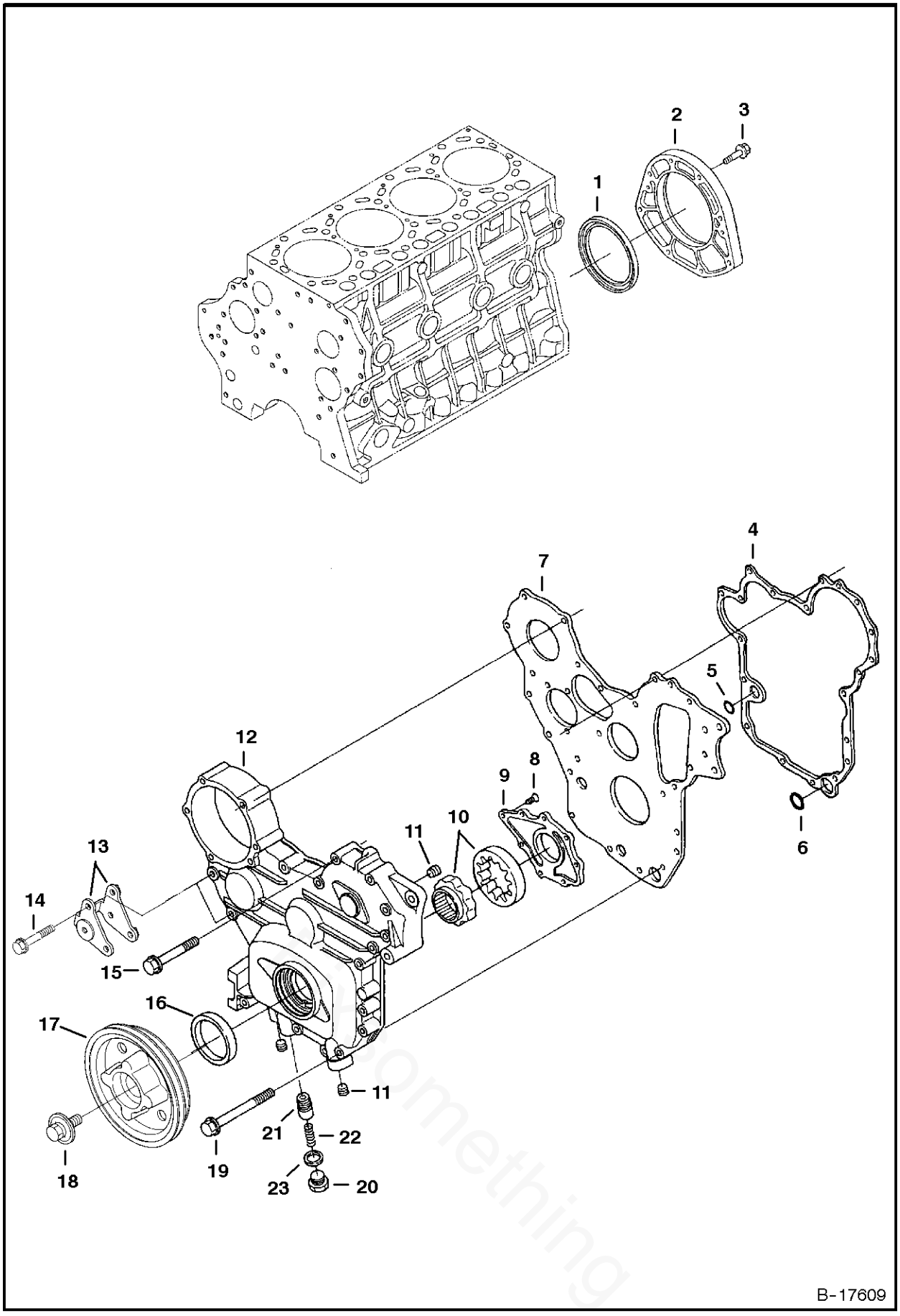

FRONT COVER

Ref.N°	Part N°	Description	Remarks	Serial N°	Qty.
1	6680705	SEAL	rear		1
2	6680704	COVER	W/Ref. FRONT COVER(1)		1
3	6680706	BOLT			8
4	6680683	GASKET			1
5	6680681	O-RING			1
6	6680682	O-RING			1
7	6680684	PLATE			1
8	6680678	SCREW			8
9	6680677	COVER	oil pump		1
10	6680676	ROTOR	oil pump		1
11	6680679	PLUG			3
12	6680672	COVER	front - W/Ref. FRONT COVER(8)-FRONT COVER(11) & FRONT COVER(20)-FRONT COVER(23)		1
13	6680839	BRACKET	alternator		2
14	6680687	BOLT			2
15	6680685	BOLT			13
16	6680680	SEAL			1
17	6680840	PULLEY	fan		1
18	6680841	BOLT			1
19	6680686	BOLT			2
20	6680675	PLUG			1
21	6680674	RELIEF VALVE			1
22	6680673	SPRING			1
23	6670347	GASKET			1

WATER PUMP & THERMOSTAT
(S/N 5231, 5230) (V3300 DI T Kubota) (Tier I)

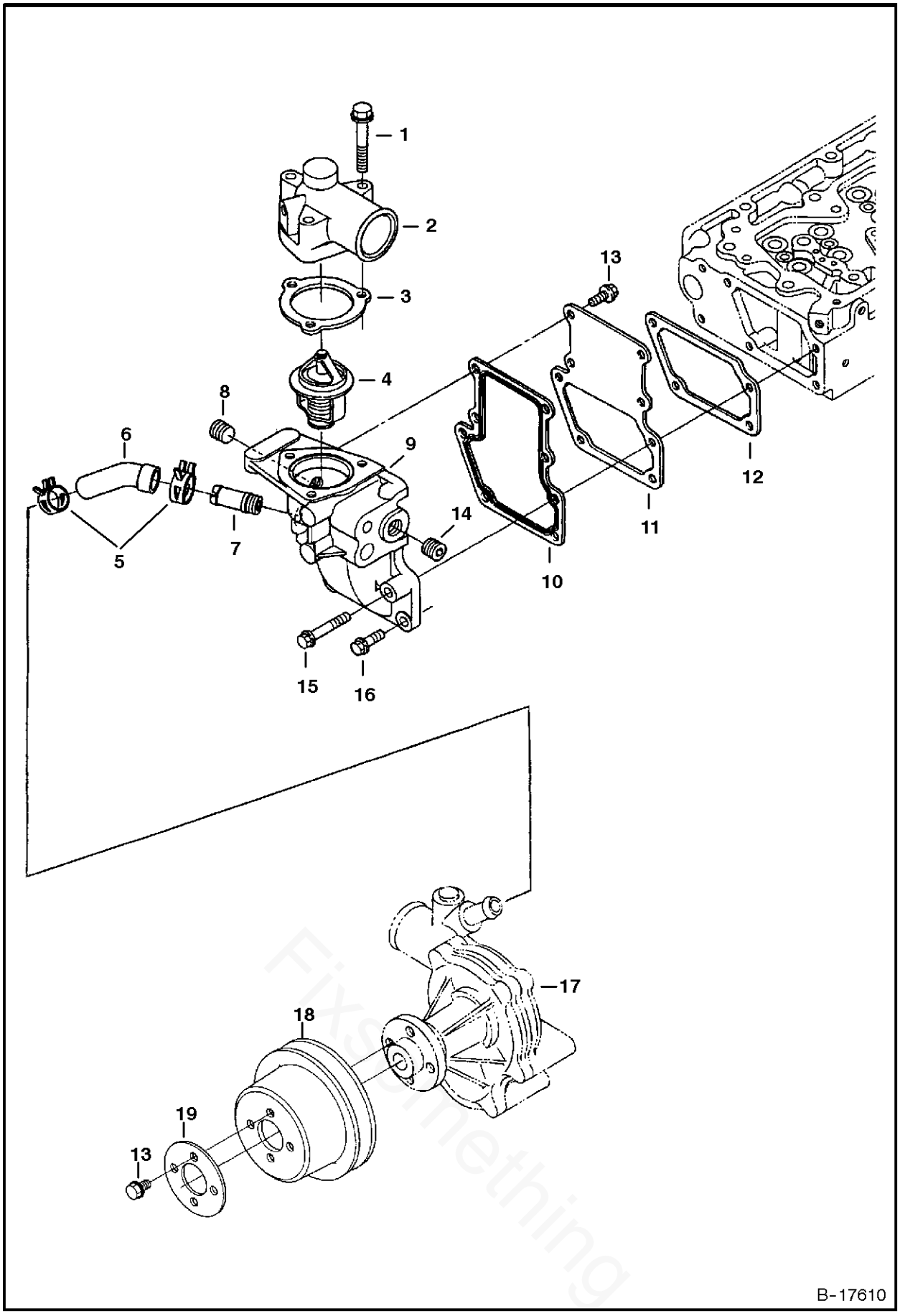

Fix Something

WATER PUMP & THERMOSTAT

Ref.N°	Part N°	Description	Remarks	Serial N°	Qty.
1	6680845	BOLT			3
2	6680843	COVER	thermostat		1
3	6680844	GASKET			1
4	6680850	THERMOSTAT			1
5	6675618	CLAMP			2
6	6680842	HOSE			1
7	6680646	ADAPTER			1
8	6672360	PLUG			2
9	6680846	HOUSING	thermostat - W/Ref. WATER PUMP & THERMOSTAT(7), WATER PUMP & THERMOSTAT(10), WATER PUMP & THERMOSTAT(11) & WATER PUMP & THERMOST		1
10	6680848	GASKET			1
11	6680847	COVER			1
12	6680849	GASKET			1
13	6653579	BOLT			8
14	6672360	PLUG			2
15	6680851	BOLT			1
16	6680755	BOLT			3
17		WATER PUMP	See Page WATER PUMP(10)		1
18	6680857	PULLEY	fan		1
19	6680858	WASHER			1

WATER PUMP
(S/N 5231, 5230) (V3300 DI T Kubota) (Tier I)

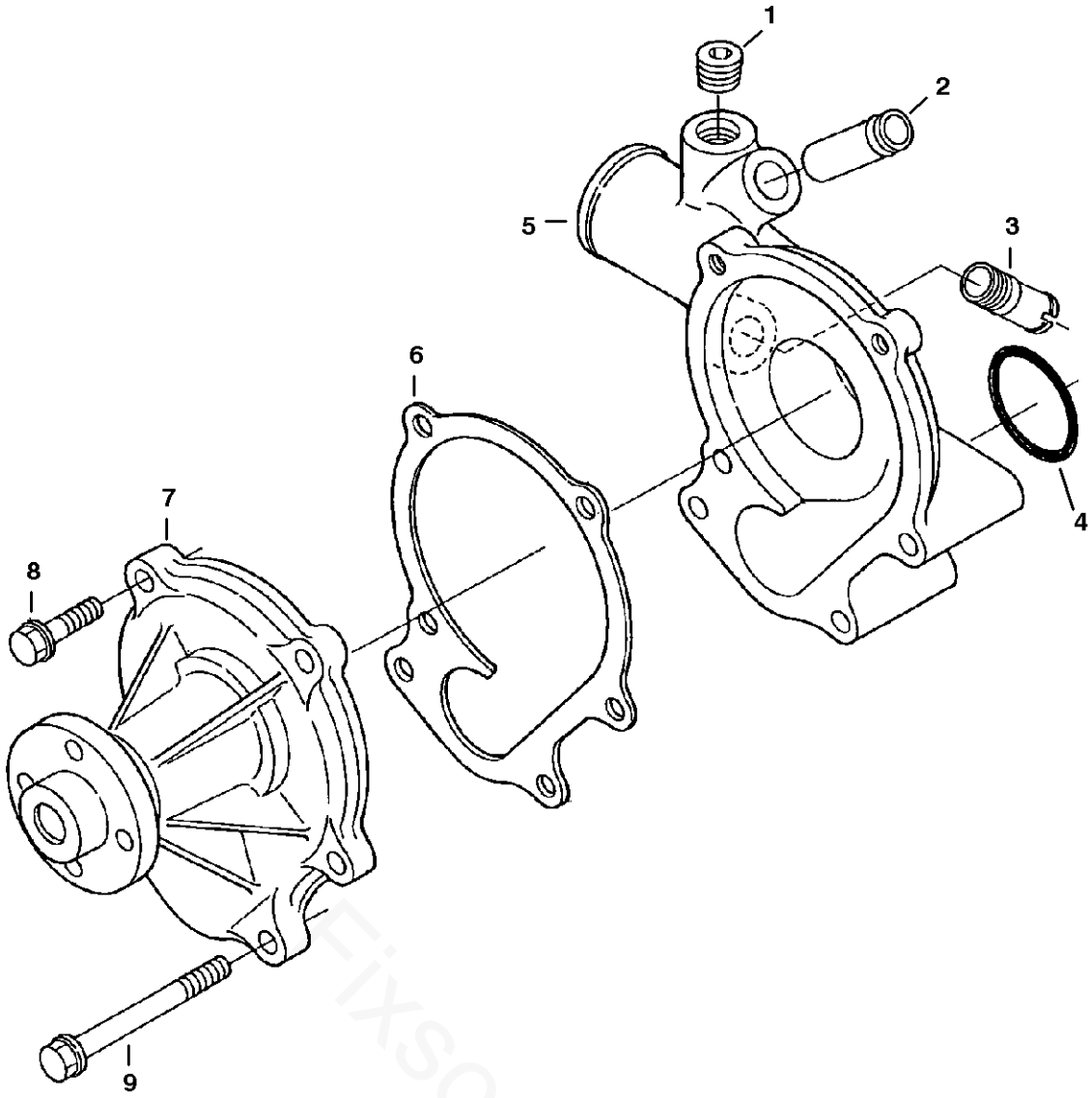

B-17611

Fixsomething

WATER PUMP

Ref.N°	Part N°	Description	Remarks	Serial N°	Qty.
1	6672360	PLUG			1
2	6680689	TUBE			1
3	6680646	ADAPTER			1
4	6680855	O-RING			1
5	6680854	HOUSING			1
6	6680853	GASKET			1
7	6680852	COVER			1
8	6680706	BOLT			2
9	6680856	BOLT			4

FUEL INJECTION SYSTEM
(S/N 5231, 5230) (V3300 DI T Kubota) (Tier I)

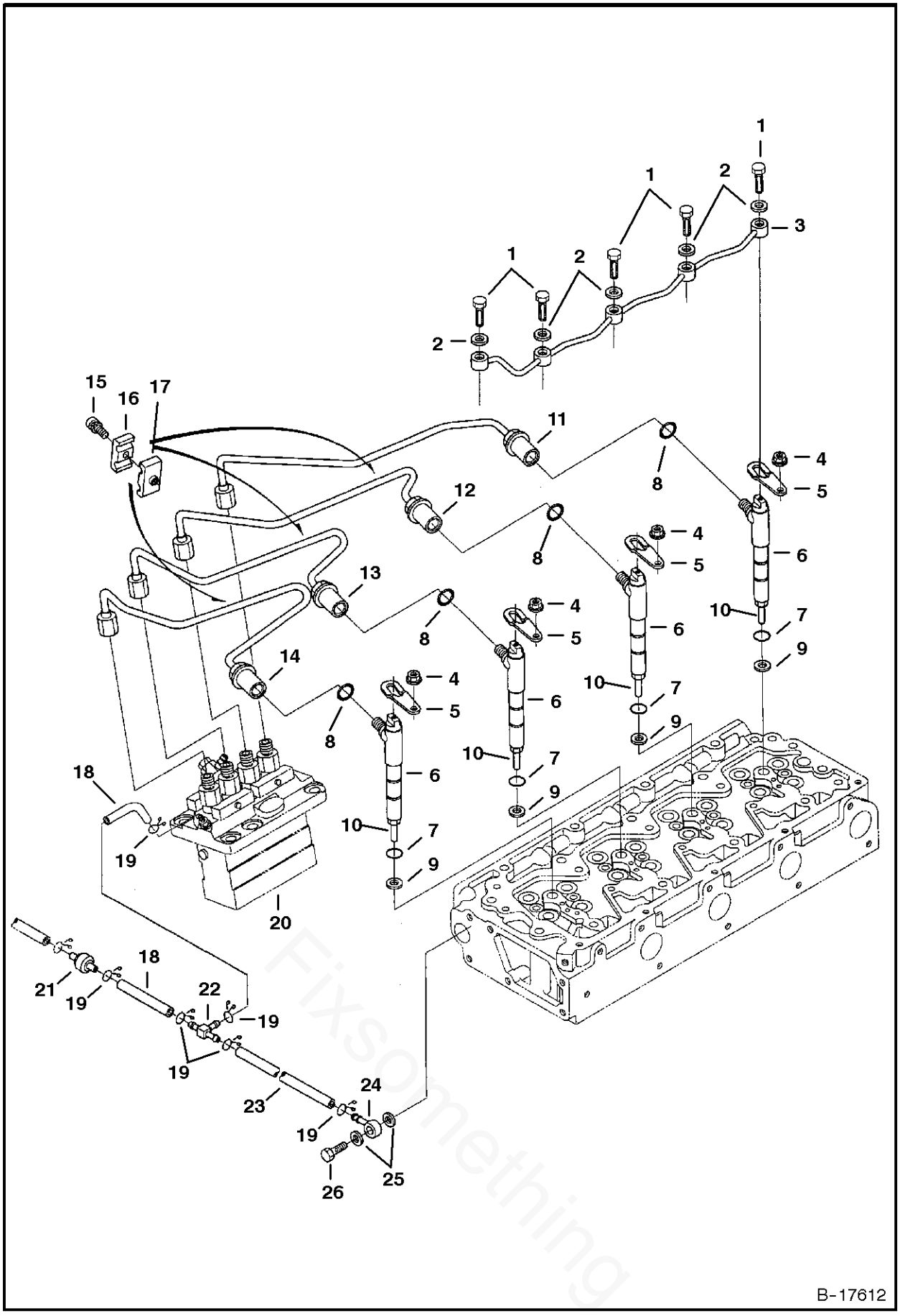

Fixsomething

FUEL INJECTION SYSTEM

Ref.N°	Part N°	Description	Remarks	Serial N°	Qty.
1	6680788	BOLT			5
2	6680789	GASKET			5
3	6680787	PIPE			1
4	6680663	NUT			4
5	6680780	CLAMP	hold down		4
6	6680776	INJECTOR	W/Ref. FUEL INJECTION SYSTEM(10)		4
7	6670769	O-RING			4
8	6680778	O-RING			4
9	6680779	GASKET			4
10	6680777	NOZZLE			4
11	6680784	TUBE			1
12	6680783	TUBE			1
13	6680782	TUBE			1
14	6680781	TUBE			1
15	3974260	SCREW			3
16	6680786	CLAMP			3
17	6680785	CLAMP			3
18	6680794	HOSE			2
19	6680795	CLAMP			6
20		PUMP	injection - See Page FUEL INJECTION PUMP(11)		1
21	6680796	VALVE	check		1
22	6680797	TEE			1
23	6680793	HOSE			1
24	6680790	FITTING			1
25	3974095	GASKET			2
26	6680791	BOLT	hollow		1

FUEL INJECTION SYSTEM
(S/N 5231, 5230) (V3300 DI T Kubota) (Tier I)

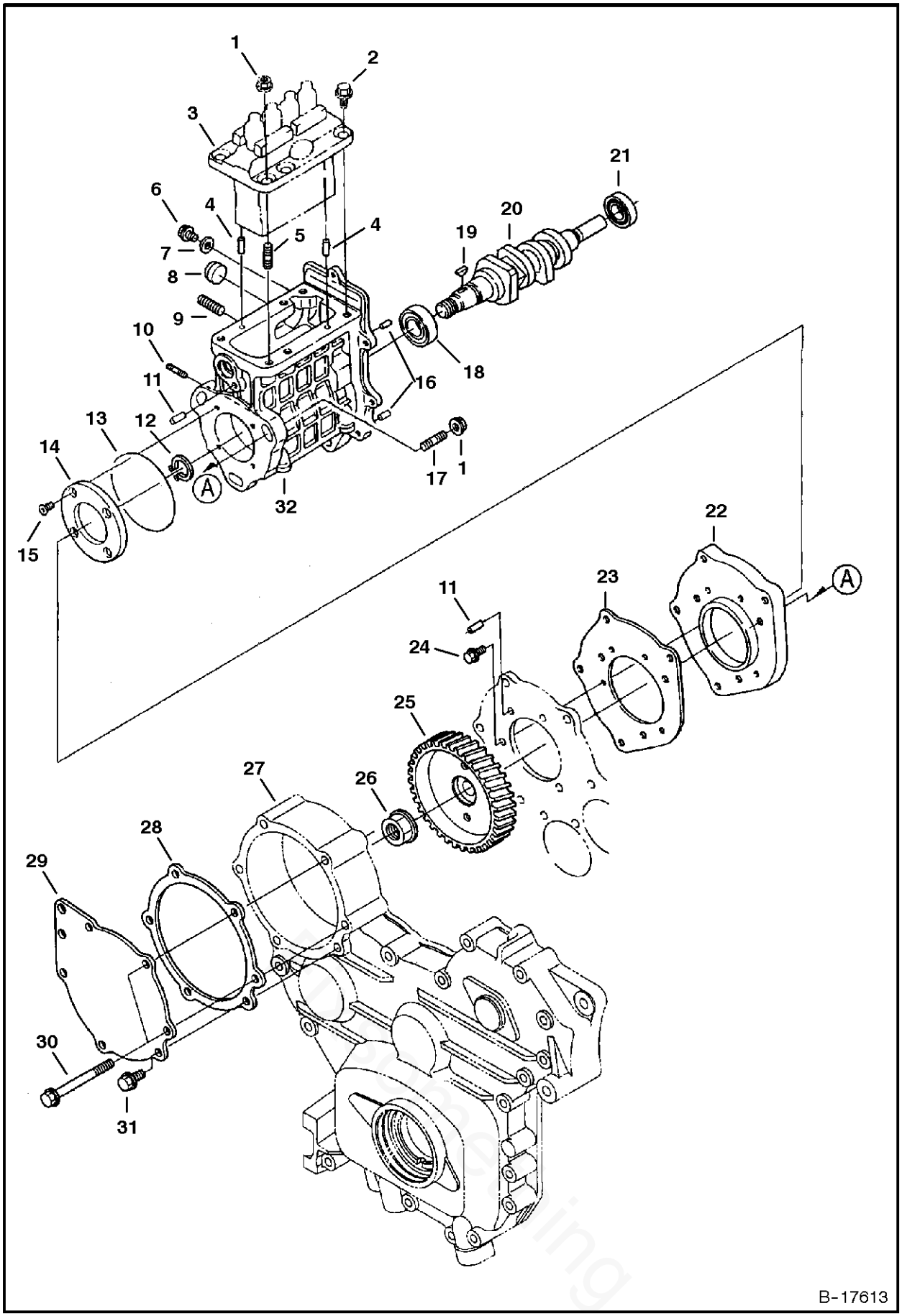

FUEL INJECTION SYSTEM

Ref.N°	Part N°	Description	Remarks	Serial N°	Qty.
1	6680663	NUT			6
2	6680755	BOLT			5
3		INJECTION PUMP	See Page FUEL INJECTION PUMP(11)		1
4	3974394	PIN			2
5	6680807	STUD			3
6	6680662	BOLT			2
7	3974095	GASKET			2
8	6680808	PLUG			1
9	6680815	SET SCREW			2
10	3974503	STUD			2
11	21JM-20	PIN			2
12	5JM-20	CIR-CLIP			1
13	6680816	GASKET			1
14	6680814	FLANGE			1
15	6680678	SCREW			4
16	6680809	PIN			2
17	6680799	STUD			3
18	6680811	BEARING			1
19	6680813	KEY	woodruff		1
20	6680810	CAMSHAFT	fuel		1
21	6680812	BEARING			1
22	6680798	COVER			1
23	6680800	GASKET			1
24	6680803	BOLT			3
25	6680817	GEAR			1
26	6680818	NUT			1
27		FRONT COVER	See Page FRONT COVER(7)		1
28	6680805	GASKET			1
29	6680804	COVER			1
30	6680802	BOLT			5
31	6680801	BOLT			1
32	6680806	HOUSING	W/Ref. FUEL INJECTION SYSTEM(4), FUEL INJECTI ON SYSTEM(5), FUEL INJECTION SYSTEM(8), FUEL INJECTION SYSTEM(10) & FUEL INJECTION		1

FUEL INJECTION PUMP
(S/N 5231, 5230) (V3300 DI T Kubota) (Tier I)

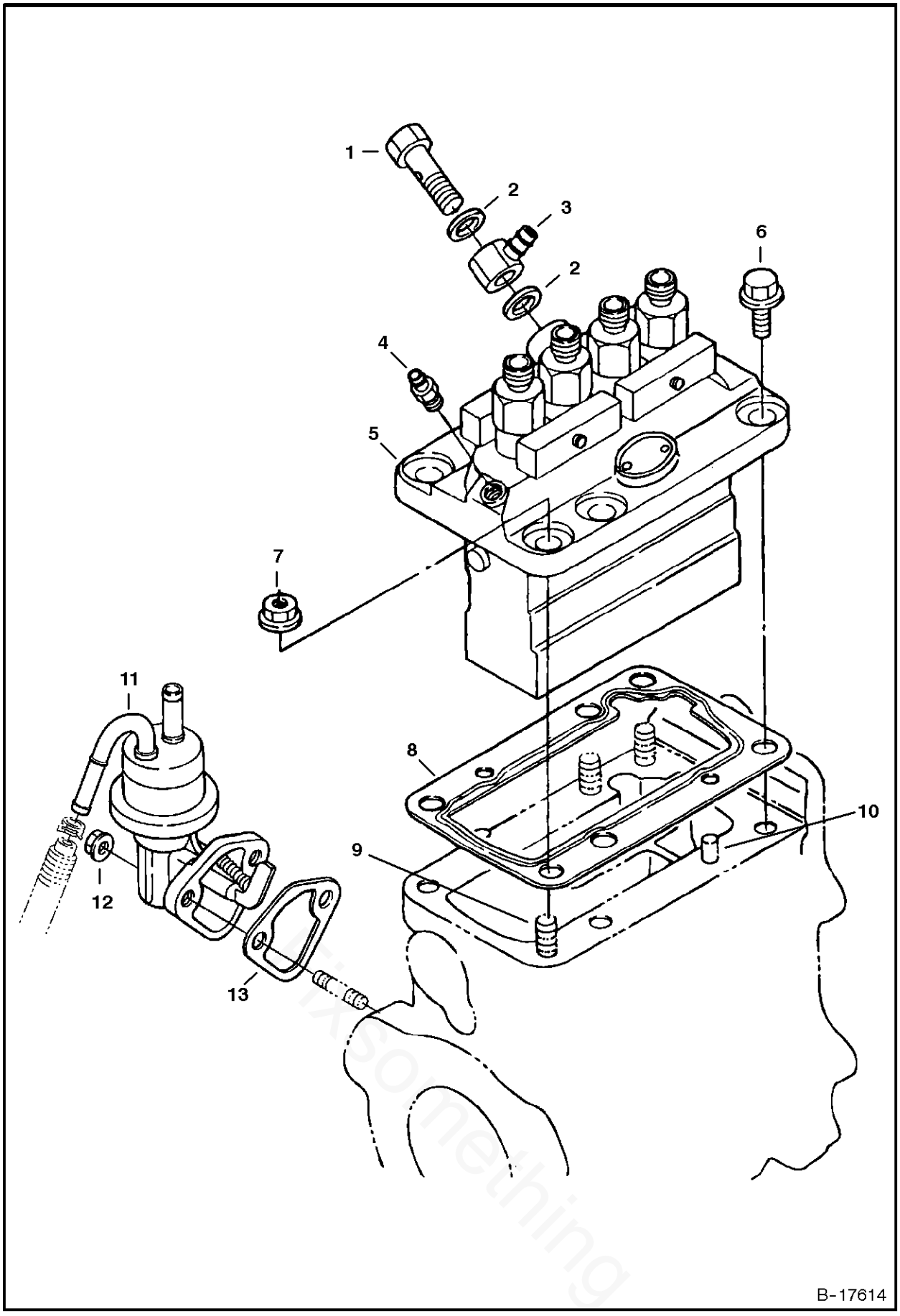

Dixsomething

FUEL INJECTION PUMP

Ref.N°	Part N°	Description	Remarks	Serial N°	Qty.
1	6680752	BOLT			1
2	3974389	CAP			2
3	3974500	JOINT	eye		1
4	6680756	SCREW	air		1
5	6680751	PUMP	injection - W/Ref. FUEL INJECTION PUMP(1) & FUEL INJECTION PUMP(2)		1
6	6680755	BOLT			5
7	6680663	NUT			3
8	6680754	SHIM			1
9	6680807	STUD			3
10	3974394	PIN			2
11	6680838	FUEL PUMP			1
12	6653561	NUT			2
13	6670782	GASKET			1

GOVERNOR
(S/N 5231, 5230) (V3300 DI T Kubota) (Tier I)

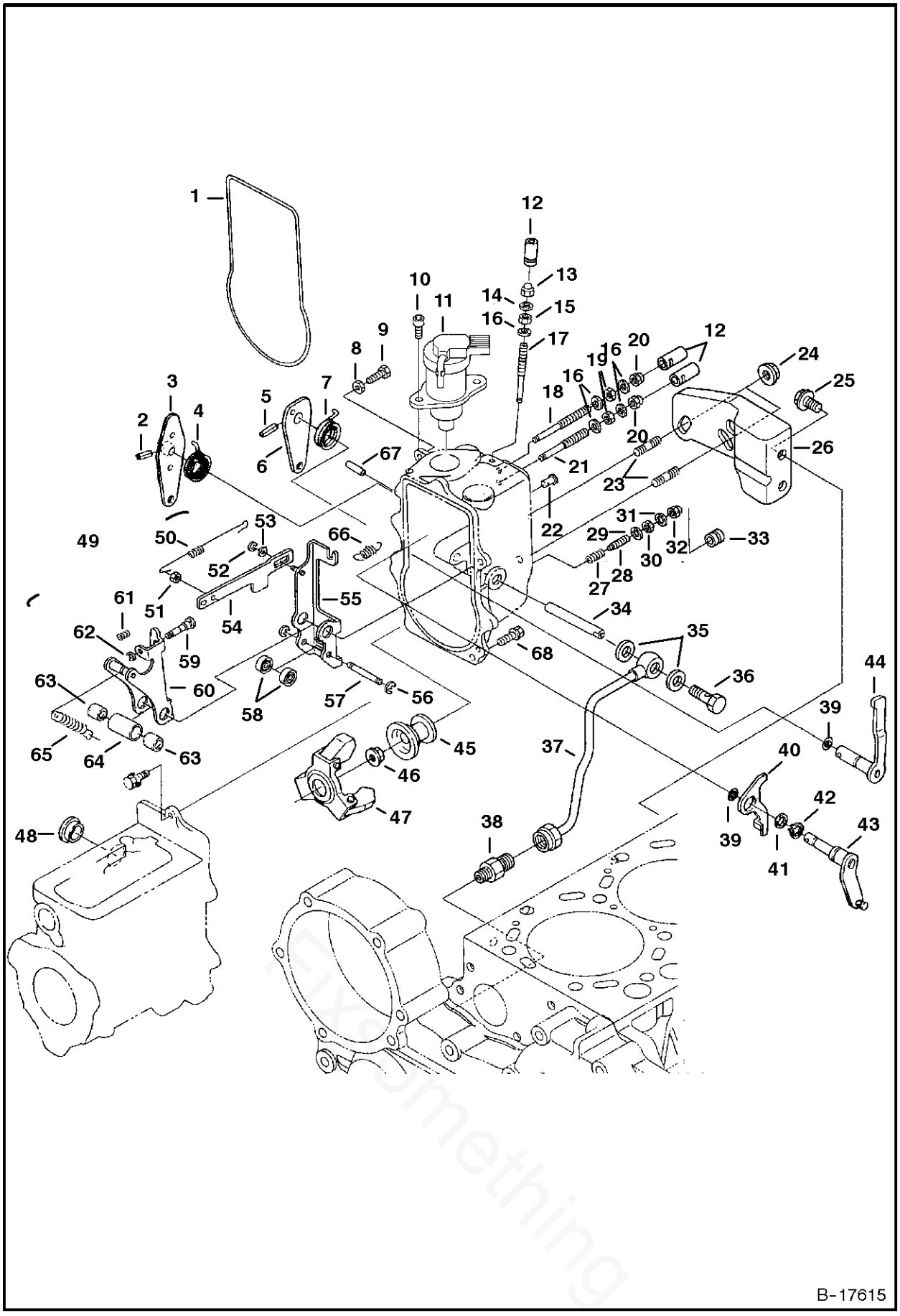

GOVERNOR

Ref.N°	Part N°	Description	Remarks	Serial N°	Qty.
1	6680829	GASKET			1
2	6680769	PIN			1
3	6680768	LEVER	speed control		1
4	6680767	SPRING			1
5	6680773	PIN			1
6	6680772	LEVER	engine stop		1
7	6680771	SPRING			1
8	1DM-6	NUT			1
9	6680834	STOPPER			1
10	6680750	SCREW			2
11	6680749	SOLENOID	fuel shutAoff		1
12	6672384	CAP			1
13	6670426	NUT			1
14	3974095	GASKET			1
15	6680499	NUT			1
16	3974972	GASKET			5
17	3974970	BOLT	adjusting		1
18	6680833	SCREW	adjusting		1
19	6680272	NUT			2
20	6670462	NUT			2
21	6680832	SCREW	adjusting		1
22	6670774	GASKET			1
23	6680828	STUD			2
24	6680663	NUT			2
25	6653579	BOLT			2
26	6680907	BRACKET	injection pump		1
27	6680835	SPRING			1
28	6670425	SCREW	adjusting - W/Ref. GOVERNOR(27)		1
29	6680792	GASKET			1
30	6680836	NUT			1
31	3974972	GASKET			1
32	6670462	NUT			1
33	6670427	CAP			1
34	6680824	SHAFT			1
35	6675623	GASKET			2
36	6680906	BOLT			1
37	6680905	TUBE			1
38	6680904	ADAPTER			1
39	3974280	O-RING			2
40	6680764	LEVER	stop		1
41	6680766	WASHER			1
42	6680765	SNAP RING			1
43	6680763	LEVER			1
44	6680770	LEVER	engine stop		1
45	6680761	SLEEVE	governor		1
46	6680759	NUT			1
47	6680758	WEIGHT			1
48	6680757	COVER			1
49	6680819	LEVER	assy. - Ref. GOVERNOR(50)-GOVERNOR(65)		1
50	6680826	SPRING			1

GOVERNOR

Ref.N°	Part N°	Description	Remarks	Serial N°	Qty.
51	6680831	NUT			1
52	6680821	SNAP RING			1
53	6680820	WASHER			1
54	NSS	BRACKET			1
55	NSS	LEVER			1
56	6680822	SNAP RING			2
57	NSS	ROD			1
58	NSS	BEARING			2
59	NSS	BOLT			1
60	NSS	LEVER			1
61	NSS	SPRING			1
62	6680823	SNAP RING			1
63	NSS	BUSHING			2
64	NSS	TUBE			1
65	6680825	SPRING			1
66	6680827	SPRING			1
67	6680775	PIN			1
68	6680830	BOLT			7

Fixsomething

AIR CLEANER
(S/N 5231, 5230) (V3300 DI T Kubota) (Tier I)

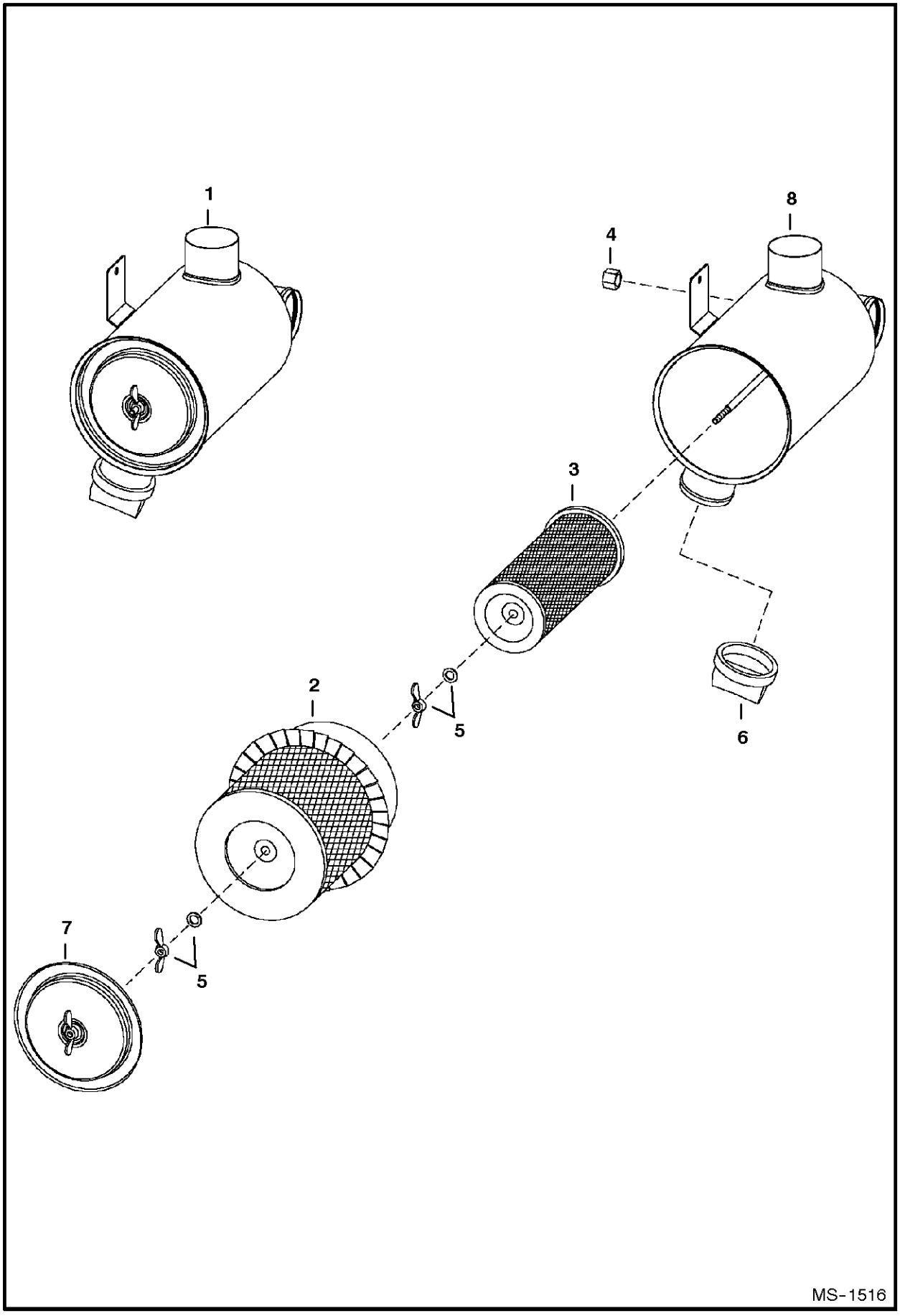

AIR CLEANER

Ref.N°	Part N°	Description	Remarks	Serial N°	Qty.
1	6678066	AIR CLEANER	W/Ref. AIR CLEANER(2)-AIR CLEANER(8)		1
2	6681474	CARTRIDGE	outer		1
3	6681475	CARTRIDGE	inner		1
4	6681476	CAP			1
5	3291290	WING NUT	W/ washer		2
6	6652373	VALVE	dust unloader		1
7	6681477	COVER			1
8	NSS	TANK			1

Fixsomething

* ENGINE
(S/N 5256 & 5257) (V3300 DI T Kubota) (Tier II)

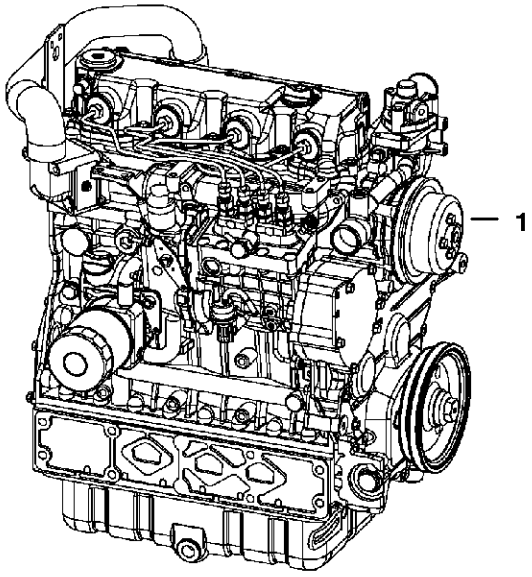

B-18620A

* ENGINE

Ref.N°	Part N°	Description	Remarks	Serial N°	Qty.
1	6684577	ENGINE	80.8 HP		1

Fixsomething

* MANIFOLDS
(S/N 5256 & 5257) (V3300 DI T Kubota) (Tier II)

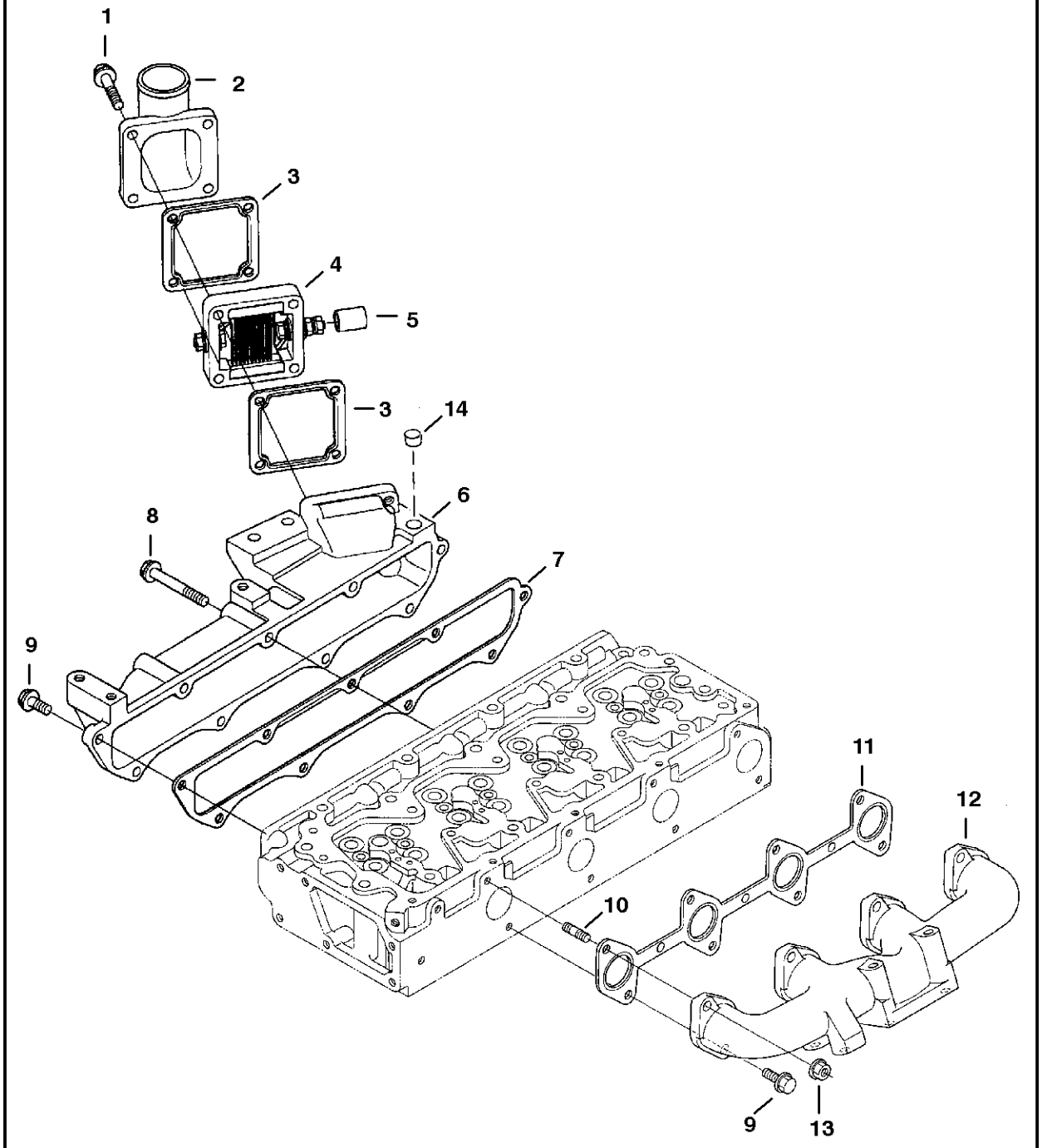

* MANIFOLDS

Ref.N°	Part N°	Description	Remarks	Serial N°	Qty.
1	6680851	BOLT			4
2	6680886	FLANGE			1
3	6685960	GASKET			1
4	6680888	HEATER			1
5	6598112	CAP			1
6	6680883	MANIFOLD	intake		1
7	6680884	GASKET	manifold		1
8	6680885	BOLT			3
9	6680801	BOLT			10
10	3974916	STUD			4
11	6680891	GASKET	manifold		1
12	6680890	MANIFOLD	exhaust		1
13	6680663	NUT			1
14	6685961	PLUG			1

Fixsomething

* TURBOCHARGER
(S/N 5256 & 5257) (V3300 DI T Kubota) (Tier II)

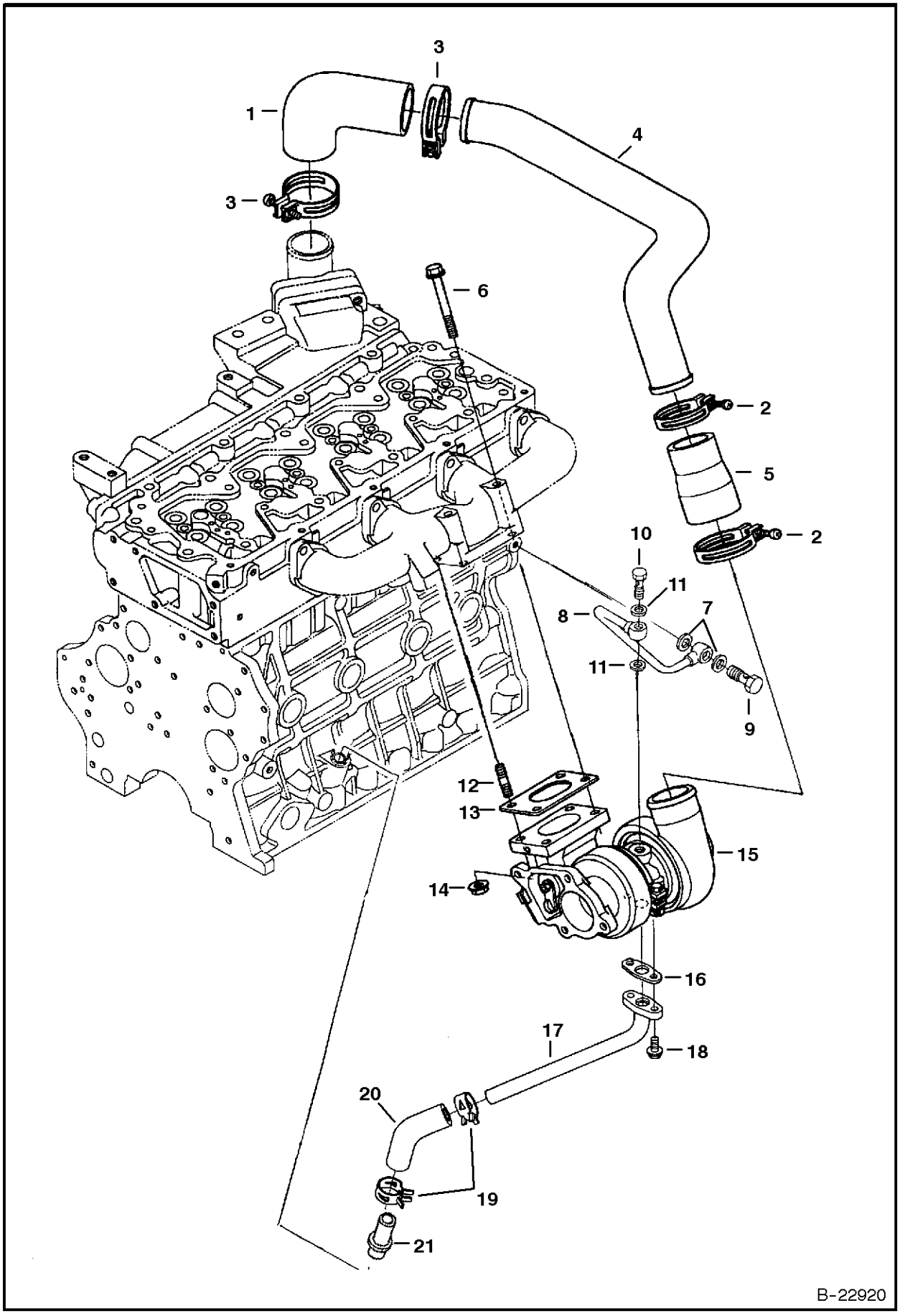

* TURBOCHARGER

Ref.N°	Part N°	Description	Remarks	Serial N°	Qty.
1	6680896	HOSE			1
2	6680897	CLAMP			2
3	6680898	CLAMP			2
4	6680895	HOSE			1
5	6680894	HOSE			1
6	6680802	BOLT			2
7	6680792	GASKET			2
8	6680899	TUBE			1
9	6680791	BOLT	hollow		1
10	6680900	BOLT	hollow		1
11	6685962	GASKET			2
12	6680564	STUD			2
13	6680893	GASKET			1
14	6680663	NUT			2
15	6680892	TURBOCHARGER			1
16	6685964	GASKET			1
17	6685963	PIPE			1
18	6652762	BOLT			2
19	6680903	CLAMP			2
20	6685965	HOSE			1
21	6680649	TUBE			1

Fixsomething

* CYLINDER HEAD & COVER
(S/N 5256 & 5257) (V3300 DI T Kubota) (Tier II)

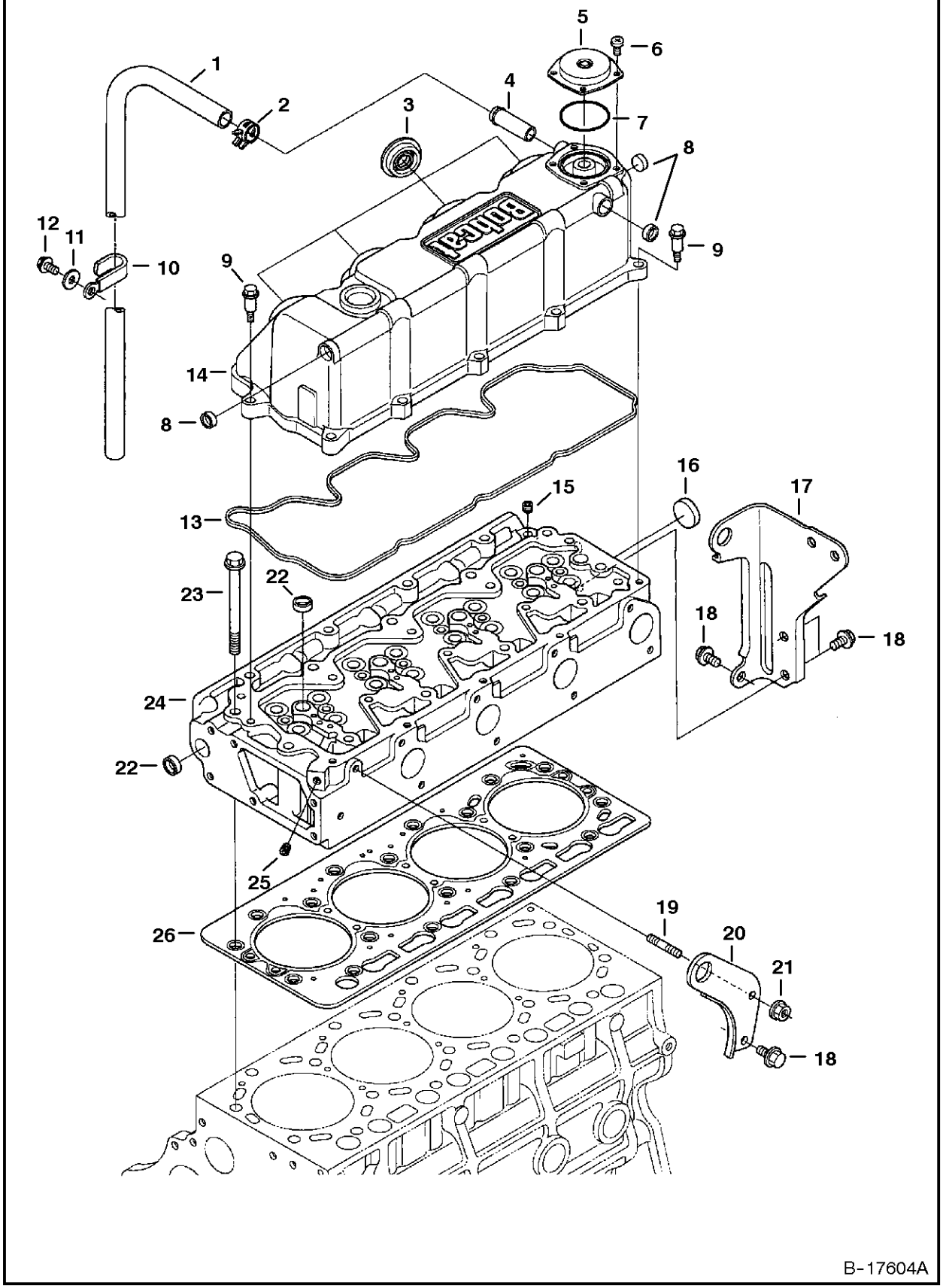

* CYLINDER HEAD & COVER

Ref.N°	Part N°	Description	Remarks	Serial N°	Qty.
1	6685930	HOSE			1
2	6680698	CLAMP			1
3	6680695	SEAL	injection tube		4
4	6680689	TUBE			1
5	6680692	COVER	breather		1
6	6680693	SCREW			4
7	6680691	O-RING			1
8	6680694	PLUG			3
9	6680696	BOLT			10
10	6680699	CLAMP			1
11	6680700	WASHER			1
12	6680658	BOLT			1
13	6680690	GASKET			1
14	6680688	HEAD COVER	W/Ref. CYLINDER HEAD & COVER(3)-CYLINDER HEAD & COVER(8) & CYLINDER HEAD & COVER(13)		1
15	6598169	PLUG			1
16	6680666	PLUG			1
17	6685926	BRACKET			1
18	6680662	BOLT			4
19	3974916	STUD			1
20	6598133	BRACKET			1
21	6680663	NUT			1
22	6680665	PLUG			5
23	6680668	BOLT			18
24	6685927	HEAD	W/Ref. * CYLINDER HEAD & COVER(15), * CYLINDE R HEAD & COVER(16), * CYLINDER HEAD & COVER(22) & See Page * CYLINDER HEAD(15) Ref		1
25	6680667	PLUG			1
26	6680669	HEAD GASKET	0.80mm - .0315' thick tightened - 2 notch		1
26	6680670	HEAD GASKET	0.90mm - .0354' thick tightened - 1 notch		1
26	6680671	HEAD GASKET	0.95mm - .0374' thick tightened - 0 notch		1

Fixsomething

* CYLINDER HEAD
(S/N 5256 & 5257) (V3300 DI T Kubota) (Tier II)

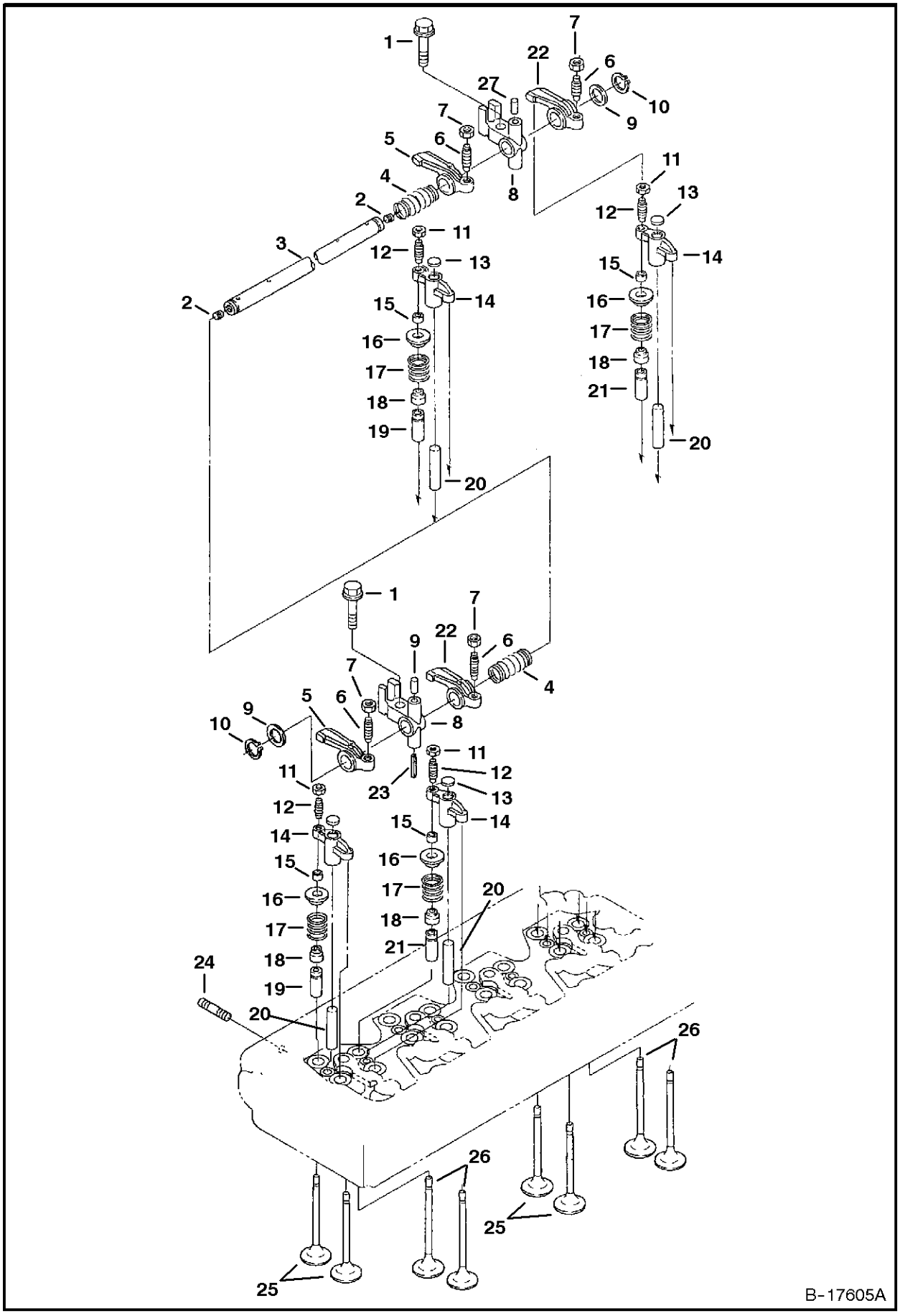

* CYLINDER HEAD

Ref.N°	Part N°	Description	Remarks	Serial N°	Qty.
1	6680878	BOLT			4
2	25GM-8010	SET SCREW			2
3	6680868	SHAFT	W/Ref. CYLINDER HEAD(2)		1
4	6680872	SPRING			3
5	6680873	ROCKER ARM	intake - W/Ref. CYLINDER HEAD(6) & CYLINDER HEAD(7)		4
6	3974920	SCREW	adjusting		4
7	6680874	NUT			4
8	6680869	BRACKET	rocker arm		4
9	6680870	WASHER			2
10	6680871	SNAP RING			2
11	6680881	NUT			8
12	6680880	SCREW	adjusting		8
13	6680882	PAD			8
14	6680879	ARM	valve bridge - W/Ref. CYLINDER HEAD(11) & CYLINDER HEAD(12)		8
15	6680865	COLLET	valve spring - set		16
16	6685959	RETAINER	valve spring		16
17	6680863	VALVE SPRING			16
18	6672436	SEAL	valve stem		16
19	6685957	GUIDE	inlet valve		8
20	6680866	SHAFT	valve		8
21	6685958	GUIDE	exhaust valve		8
22	6680875	ROCKER ARM	exhaust - W/Ref. CYLINDER HEAD(6) & CYLINDER HEAD(7)		4
23	6667461	ORIFICE			1
24	6680867	STUD			4
25	6680861	VALVE	inlet		8
26	6680862	VALVE	exhaust		8
27	6680877	PIN			4

* OIL PAN
(S/N 5256 & 5257) (V3300 DI T Kubota) (Tier II)

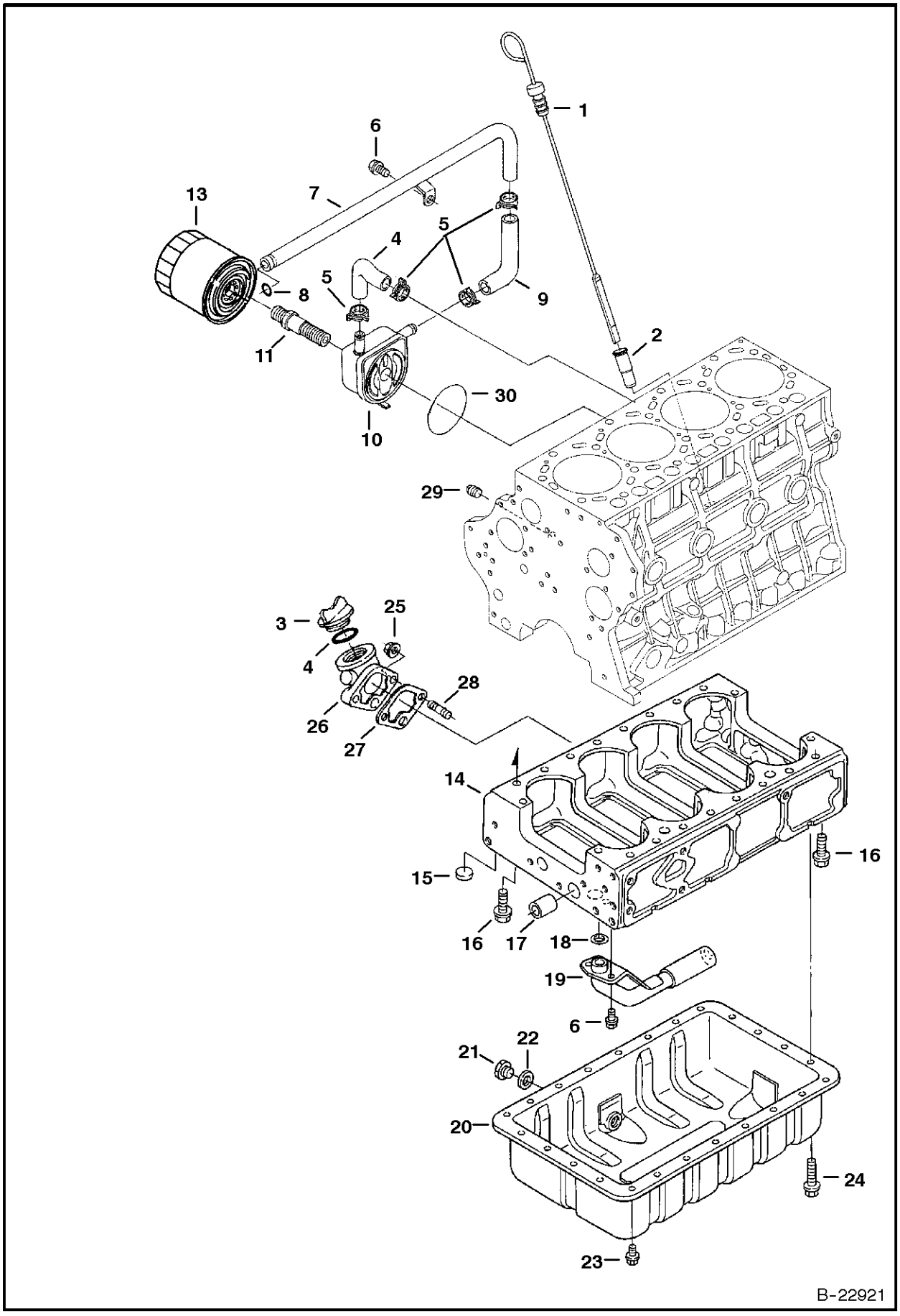

* OIL PAN

Ref.N°	Part N°	Description	Remarks	Serial N°	Qty.
1	6680703	DIPSTICK			1
2	6680702	TUBE	dipstick		1
3	6685924	CAP			1
4	3966602	O-RING			1
5	6675618	CLAMP			4
6	6680662	BOLT			3
7	6685970	HOSE			1
8	6685971	O-RING			1
9	6685972	HOSE			1
10	6680909	OIL COOLER			1
11	6680910	ADAPTER			1
12	6685969	HOSE			1
13	6678233	FILTER			1
14	6685921	CRANKCASE			1
15	6680638	PLUG			10
16	6680654	BOLT			16
17	6680655	PIN	gear case		1
18	6680661	O-RING			1
19	6680660	OIL SUMP			1
20	6680656	OIL PAN	W/Ref. OIL PAN(21) & OIL PAN(22)		1
21	6680657	PLUG	oil		1
22	6631046	GASKET	rubber		1
23	6685925	BOLT			20
24	6680659	BOLT			4
25	6680663	NUT			2
26	6685922	FLANGE	oil fill		1
27	6685923	GASKET			1
28	3974916	STUD			2
29	16F-2	PLUG			1
30	6686402	SEAL			1

* PISTON & CRANKSHAFT
(S/N 5256 & 5257) (V3300 DI T Kubota) (Tier II)

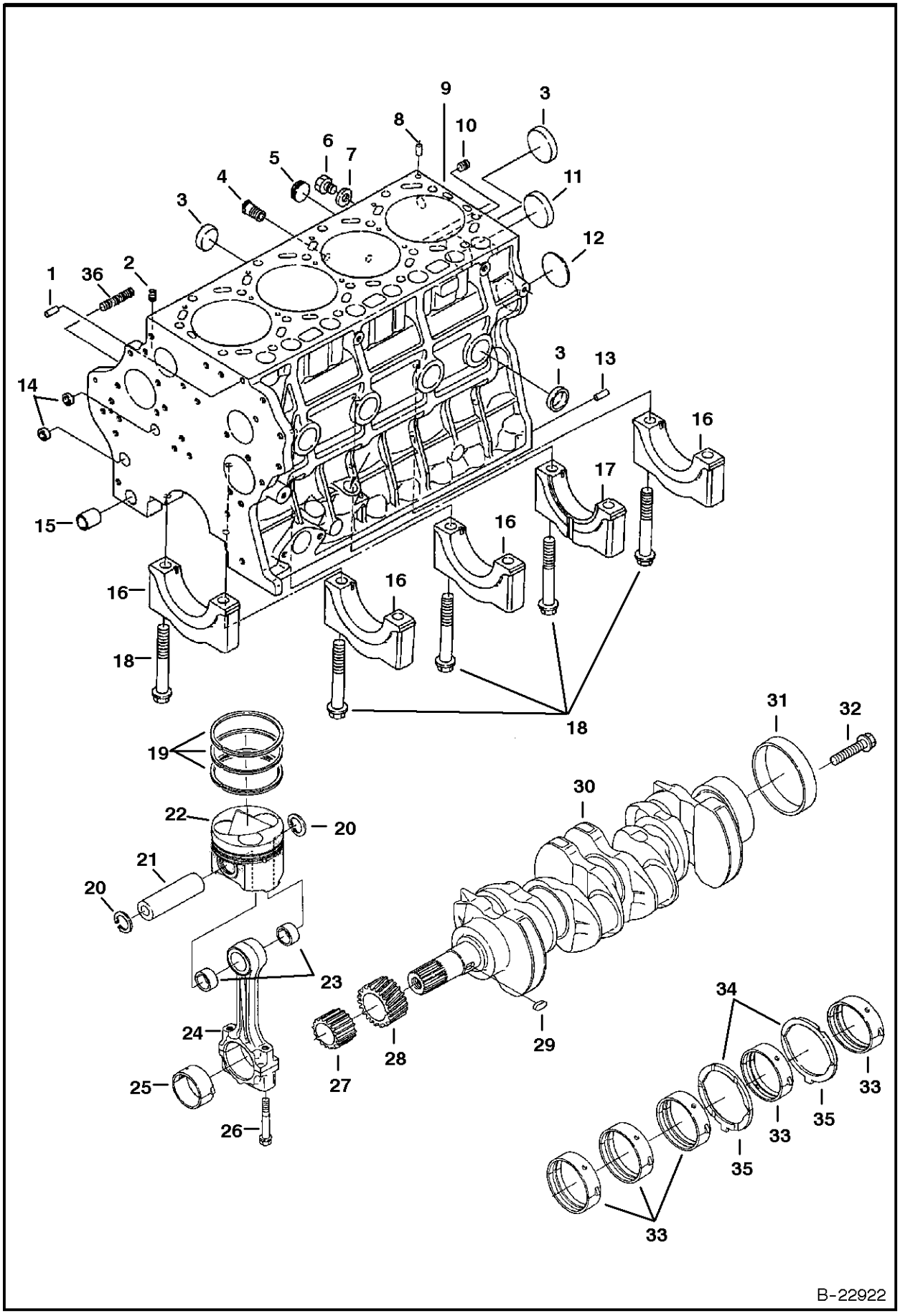

* PISTON & CRANKSHAFT

Ref.N°	Part N°	Description	Remarks	Serial N°	Qty.
1	21JM-814	PIN			1
2	6598169	PLUG			3
3	6680638	PLUG			7
4	6685920	ADAPTER			1
5	6672354	PLUG			1
6	6652750	PLUG			1
7	6652751	GASKET			1
8	6680643	PIN			2
9	6685917	CRANKCASE	W/Ref. * PISTON & CRANKSHAFT(1)-* PISTON & CRANKSHAFT(3), * PISTON & CRANKSHAFT(5), * PISTON & CRANKSHAFT(8), * PISTON & CRANKSH		1
10	6680636	PLUG			1
11	6680639	PLUG			1
12	6680640	PLUG			1
13	6685918	PIN			2
14	6680637	PLUG			2
15	6680644	PIN			1
16	NSS	CAP	main bearing - Order Ref. PISTON & CRANKSHAFT(9)		4
17	NSS	CAP	main bearing - Order Ref. PISTON & CRANKSHAFT(9)		1
18	6680645	BOLT			10
19	6680723	PISTON RINGS	standard		4
19	6680724	PISTON RINGS	0.50mm oversized		4
20	6680726	SNAP RING	internal		8
21	6680725	PIN			4
22	6685933	PISTON	standard		4
22	6685934	PISTON	0.50mm oversized		4
23	6680728	BUSHING			8
24	6680727	ROD	connecting - W/Ref. PISTON & CRANKSHAFT(23), PISTON & CRANKSHAFT(25) & PISTON & CRANKSHAFT(26) - marked blue, yellow or w/o col		4
25	6680730	BEARING	rod - set - blue		4
25	6680731	BEARING	rod - set - yellow or w/o color		4
25	6680732	BEARING	rod - set - 0.20 mm		4
25	6680733	BEARING	rod - set - 0.40 mm		4
26	6680729	BOLT			8
27	6680737	GEAR	oil pump		1
28	6680736	GEAR	crankshaft		1
29	3974226	KEY			1
30	6680734	CRANKSHAFT	W/Ref. PISTON & CRANKSHAFT(27)-PISTON & CRANKSHAFT(29) & PISTON & CRANKSHAFT(31)		1
31	6680735	SLEEVE	crankshaft		1
32	6680747	BOLT	flywheel		7
33	6680738	MAIN BEARING	standard - set		5
33	6680739	MAIN BEARING	0.20mm undersized - set		5
33	6680740	MAIN BEARING	0.40mm undersized - set		5
34	6680741	THRUST WASHER	standard		2
34	6680742	THRUST WASHER	0.20mm oversized		2
34	6680743	THRUST WASHER	0.40mm oversized		2
35	6680744	THRUST WASHER	standard		2
35	6680745	THRUST WASHER	0.20mm oversized		2

* PISTON & CRANKSHAFT

Ref.N°	Part N°	Description	Remarks	Serial N°	Qty.
35	6680746	THRUST WASHER	0.40mm oversized		2
36	6685919	STUD			3

* CAMSHAFT
(S/N 5256 & 5257) (V3300 DI T Kubota) (Tier II)

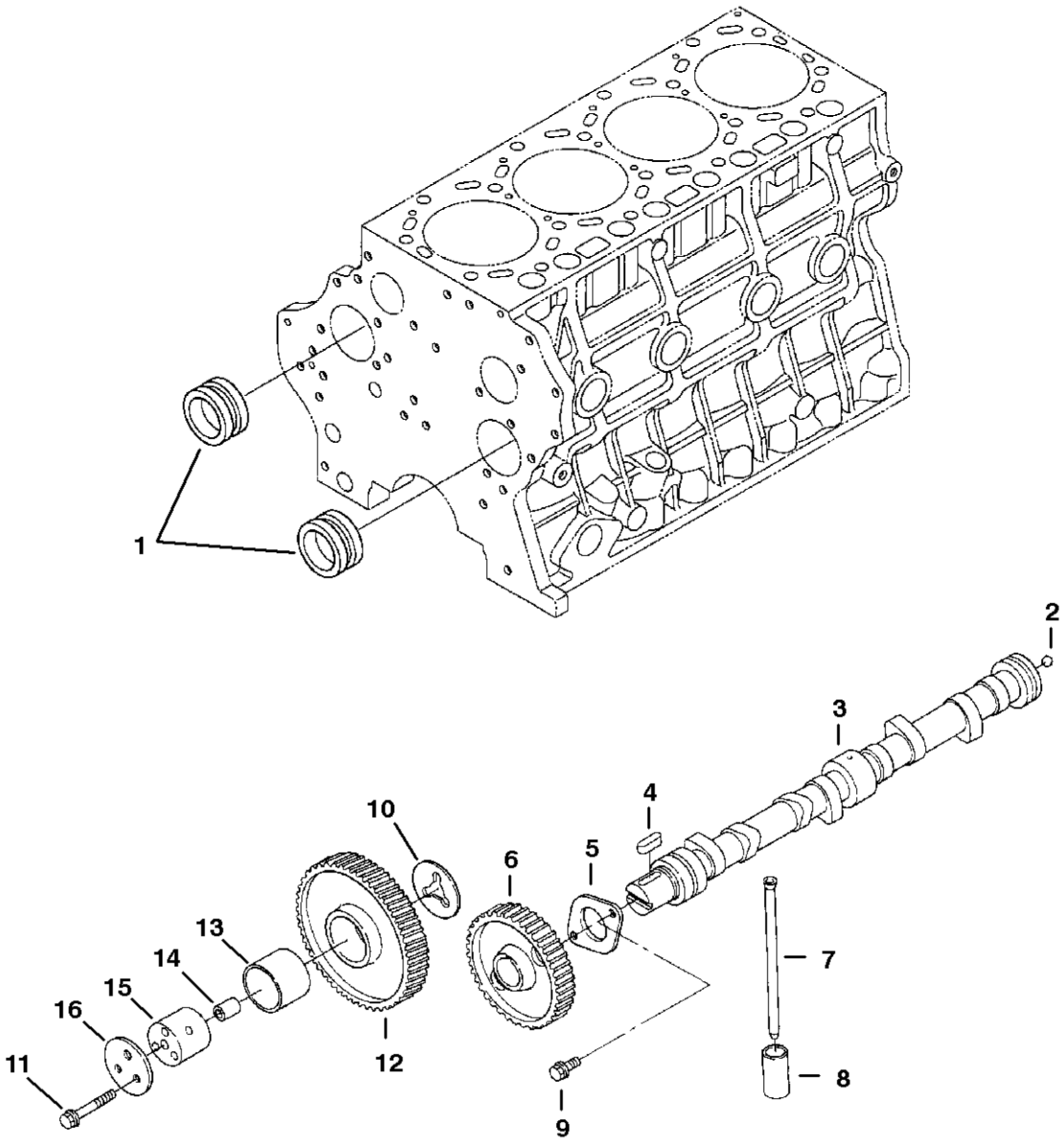

* CAMSHAFT

Ref.N°	Part N°	Description	Remarks	Serial N°	Qty.
1	6680748	BALANCER			2
2	6680710	BALL			1
3	6680709	CAMSHAFT	W/Ref. * CAMSHAFT(2) & * CAMSHAFT(4)-* CAMSHAFT(6)		1
4	6652679	KEY			1
5	6680712	FLANGE			1
6	6680711	GEAR	cam		1
7	6680708	PUSH ROD			8
8	6680707	TAPPET			8
9	6680662	BOLT			2
10	6680716	COLLAR			1
11	6680685	BOLT			6
12	6685932	GEAR	W/Ref. CAMSHAFT(13)		1
13	6680720	BUSHING			2
14	6680715	PIN			2
15	6680714	SHAFT	idler gear		2
16	6680717	COLLAR			2

* FRONT COVER
(S/N 5256 & 5257) (V3300 DI T Kubota) (Tier II)

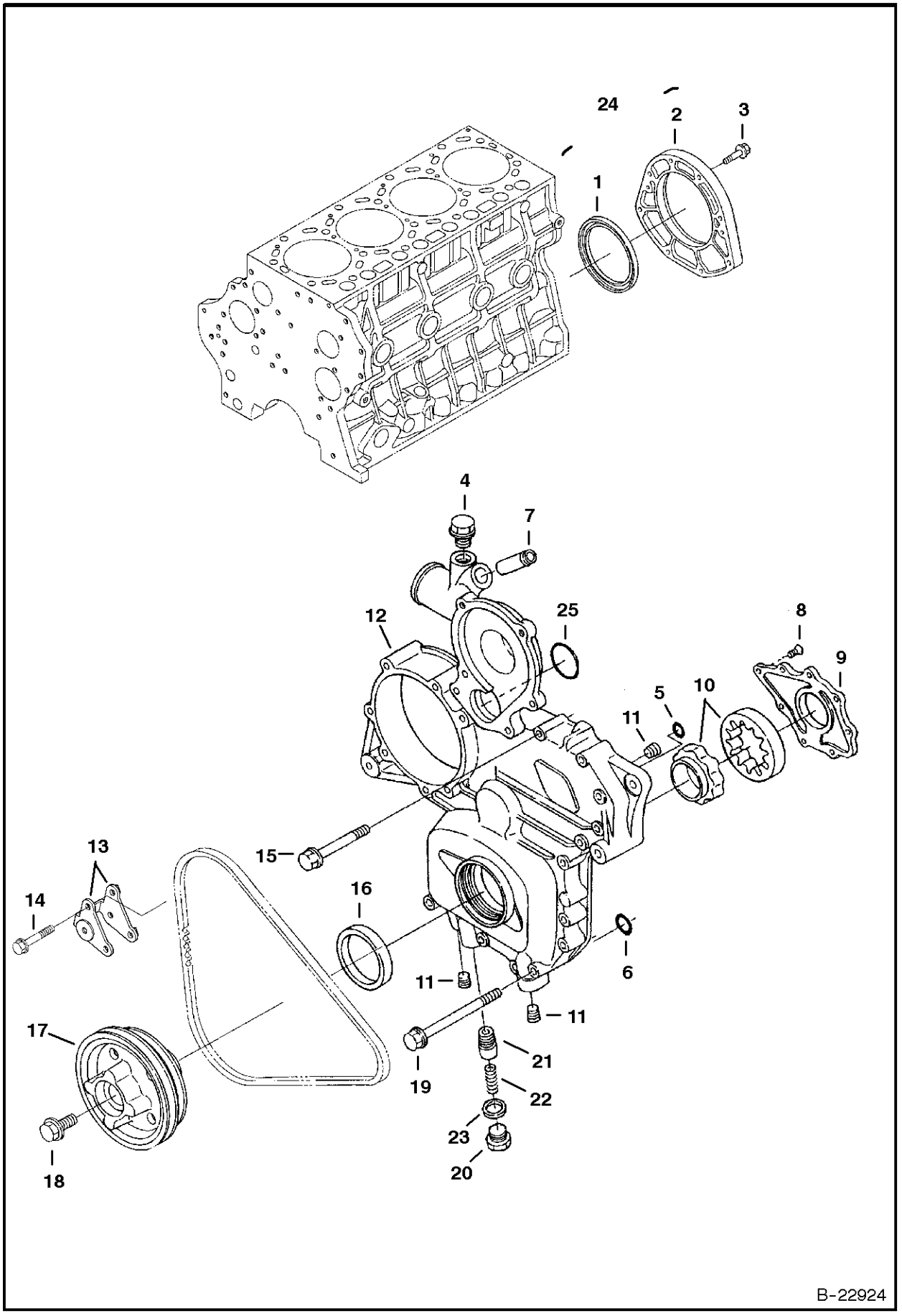

* FRONT COVER

Ref.N°	Part N°	Description	Remarks	Serial N°	Qty.
1	6680705	SEAL	rear		1
2	6685931	COVER	W/Ref. FRONT COVER(1)		1
3	6680706	BOLT			8
4	6670504	PLUG			1
5	6680681	O-RING			1
6	6680682	O-RING			1
7	6680689	TUBE			1
8	6680678	SCREW			8
9	6680677	COVER	oil pump		1
10	6680676	ROTOR	oil pump		1
11	6680679	PLUG			3
12	6685928	COVER	front - W/Ref. * FRONT COVER(4), * FRONT COVER(7)-FRONT COVER(11) & FRONT COVER(20)-FRONT COVER(23)		1
13	6680839	BRACKET	alternator		2
14	6680687	BOLT			2
15	6680685	BOLT			13
16	6680680	SEAL			1
17	6685953	PULLEY	fan		1
18	6680841	BOLT			1
19	6680686	BOLT			2
20	6680675	PLUG			1
21	6685929	RELIEF VALVE			1
22	6680673	SPRING			1
23	6670347	GASKET			1
24	6680704	COVER	Ref. FRONT COVER(1) & * FRONT COVER(2)		1
25	6680855	O-RING			1

* WATER PUMP & THERMOSTAT
(S/N 5256 & 5257) (V3300 DI T Kubota) (Tier II)

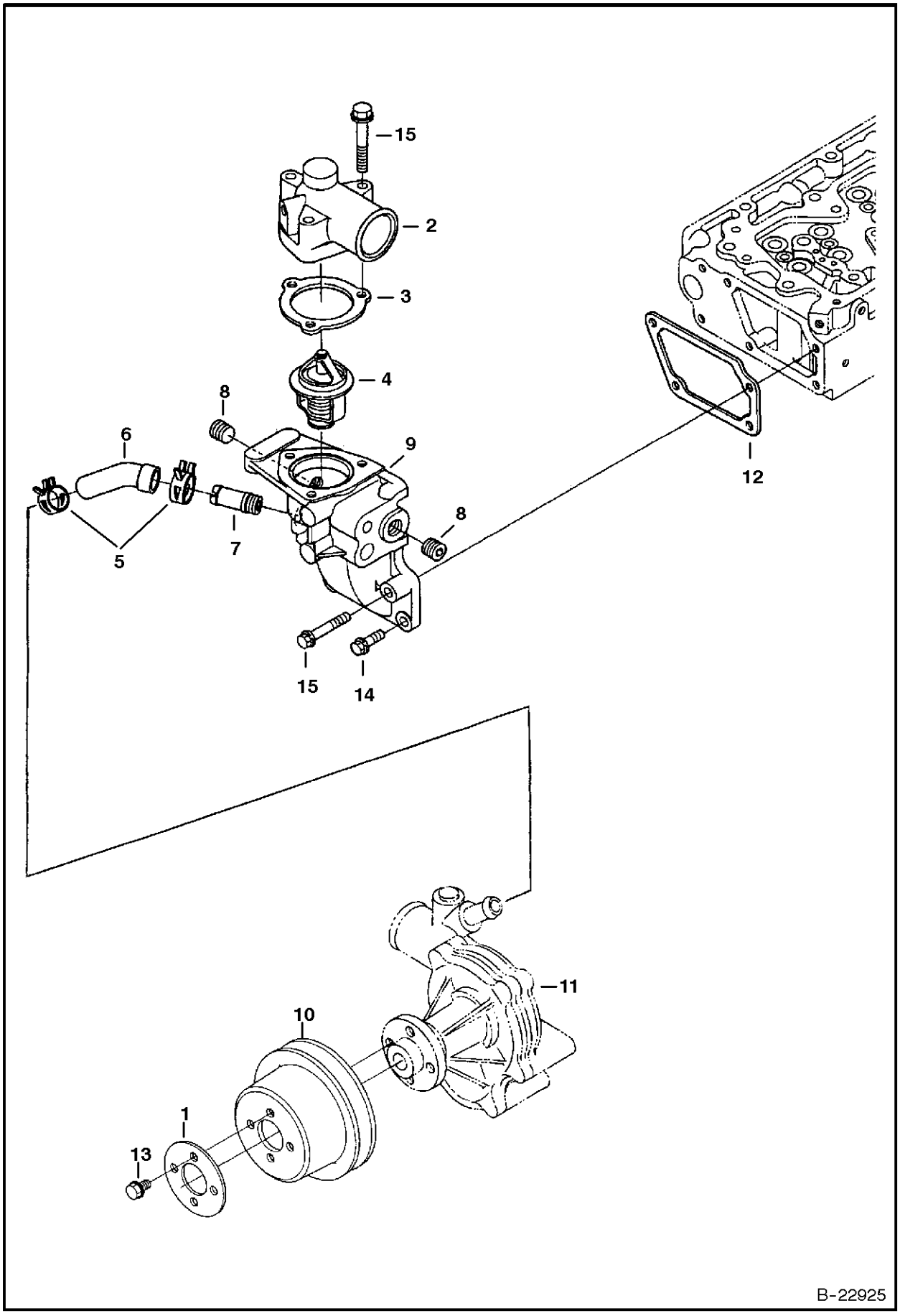

* WATER PUMP & THERMOSTAT

Ref.N°	Part N°	Description	Remarks	Serial N°	Qty.
1	6680858	WASHER			1
2	6685954	COVER	thermostat		1
3	6685955	GASKET			1
4	6680850	THERMOSTAT			1
5	6675618	CLAMP			2
6	6680842	HOSE			1
7	6685920	ADAPTER			1
8	6670504	PLUG			2
9	6685956	HOUSING	thermostat - W/Ref. WATER PUMP & THERMOSTAT(7) & * WATER PUMP & THERMOSTAT(8)		1
10	6680857	PULLEY	fan		1
11		WATER PUMP	See Page * WATER PUMP(3)		1
12	6680849	GASKET			1
13	6680662	BOLT			4
14	6680755	BOLT			3
15	6680851	BOLT			4

* WATER PUMP
(S/N 5256 & 5257) (V3300 DI T Kubota) (Tier II)

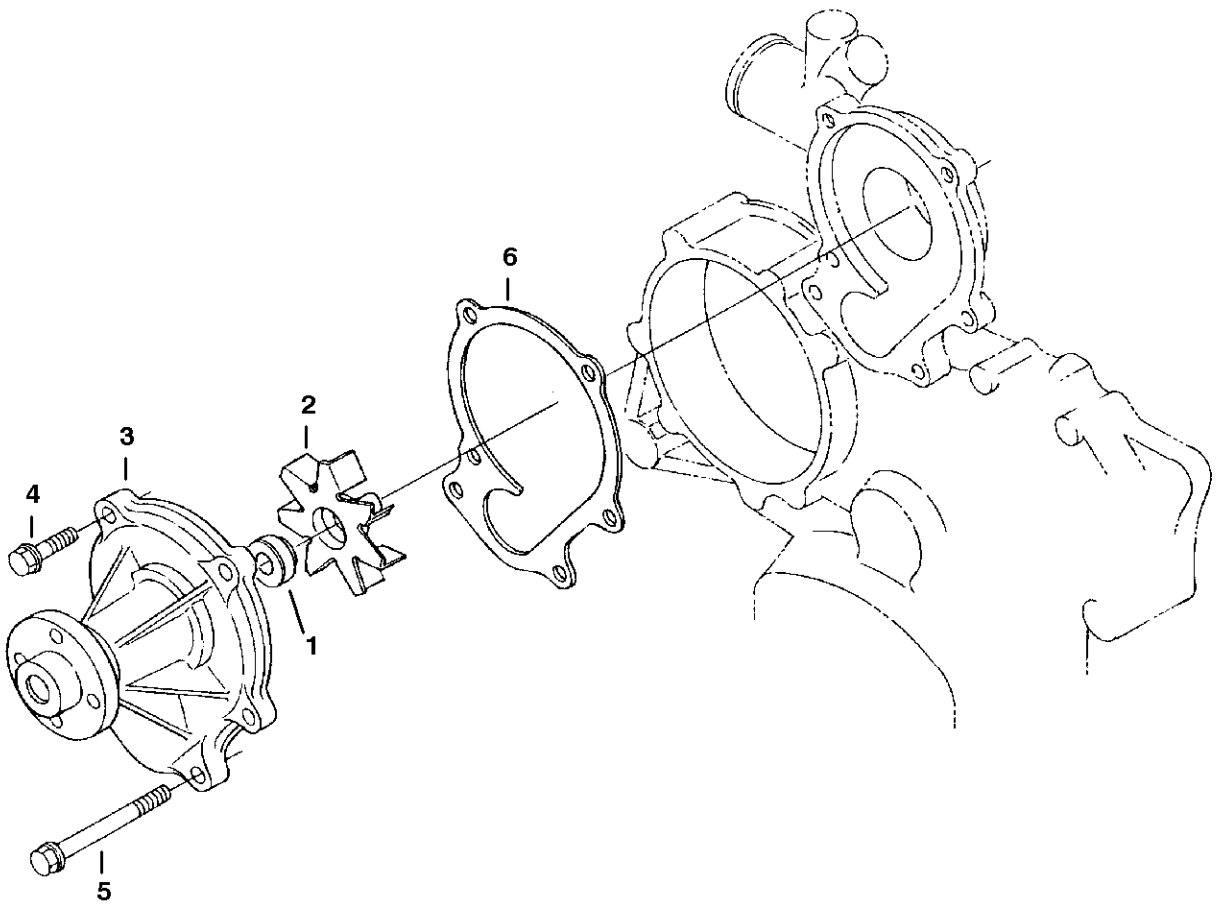

B-22926

* WATER PUMP

Ref.N°	Part N°	Description	Remarks	Serial N°	Qty.
1	6680280	SEAL			1
2	NSS	IMPELLER	Order Ref. * WATER PUMP(3)		1
3	6680852	COVER	water - W/Ref. * WATER PUMP(1) & * WATER PUMP(2)		1
4	6680706	BOLT			2
5	6680856	BOLT			4
6	6680853	GASKET			1

* FUEL INJECTION SYSTEM
(S/N 5256 & 5257) (V3300 DI T Kubota) (Tier II)

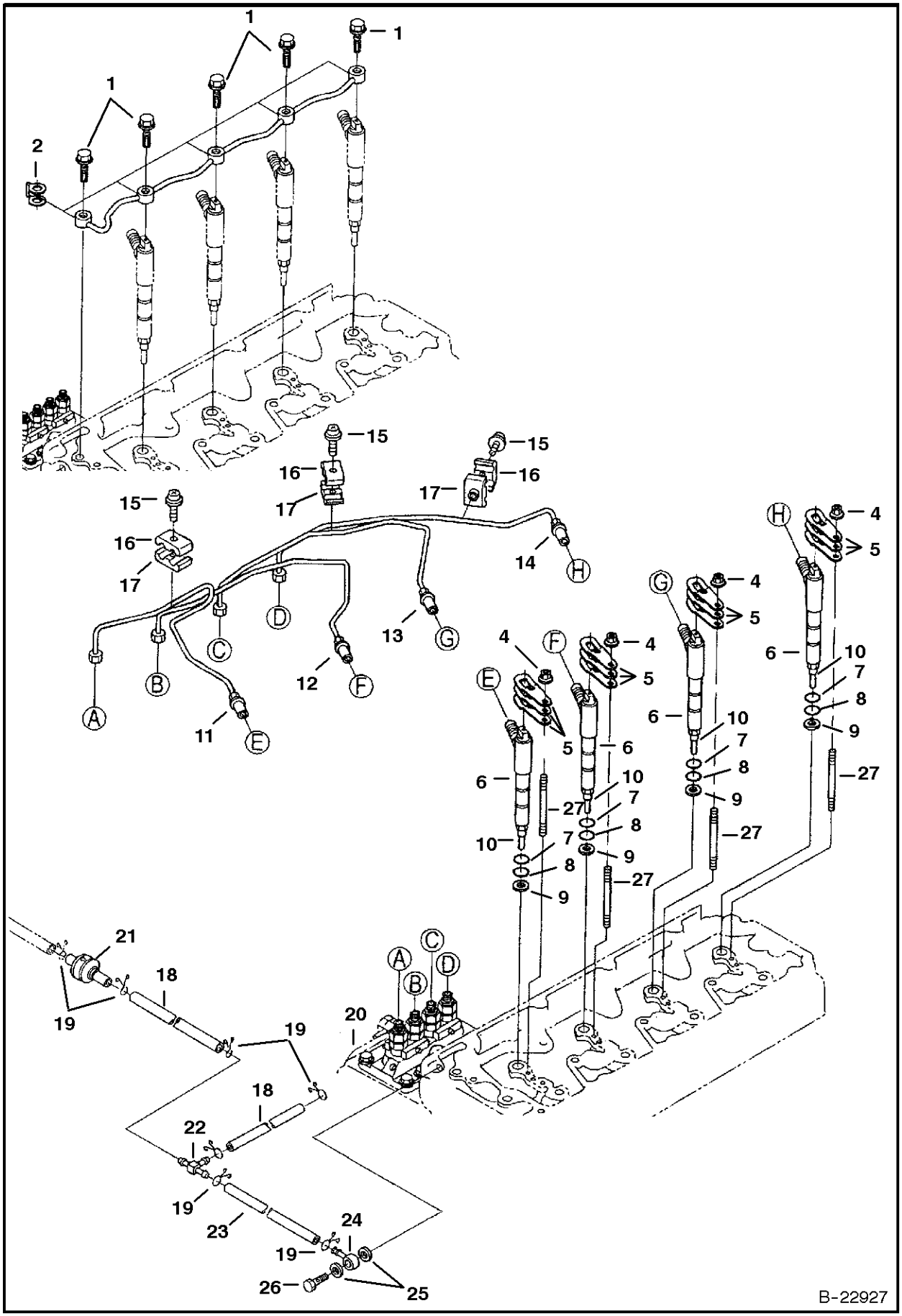

* FUEL INJECTION SYSTEM

Ref.N°	Part N°	Description	Remarks	Serial N°	Qty.
1	6680788	BOLT			5
2	6685498	GASKET			5
3	6680787	PIPE			1
4	6680663	NUT			4
5	6680780	CLAMP	hold down		12
6	6685854	INJECTOR	W/Ref. FUEL INJECTION SYSTEM(10)		4
7	6670769	O-RING			4
8	6680778	O-RING			4
9	6680779	GASKET			4
10	6680777	NOZZLE			4
11	6685940	TUBE			1
12	6685941	TUBE			1
13	6685942	TUBE			1
14	6685943	TUBE			1
15	3974260	SCREW			3
16	6680786	CLAMP			3
17	6680785	CLAMP			3
18	6685945	HOSE			2
19	6680795	CLAMP			6
20		PUMP	injection - See Page * FUEL INJECTION PUMP(5)		1
21	6680796	VALVE	check		1
22	6680797	TEE			1
23	6685944	HOSE			1
24	6680790	FITTING			1
25	6680792	GASKET			2
26	6680791	BOLT	hollow		1
27	6680867	STUD			4

* FUEL INJECTION SYSTEM
(S/N 5256 & 5257) (V3300 DI T Kubota) (Tier II)

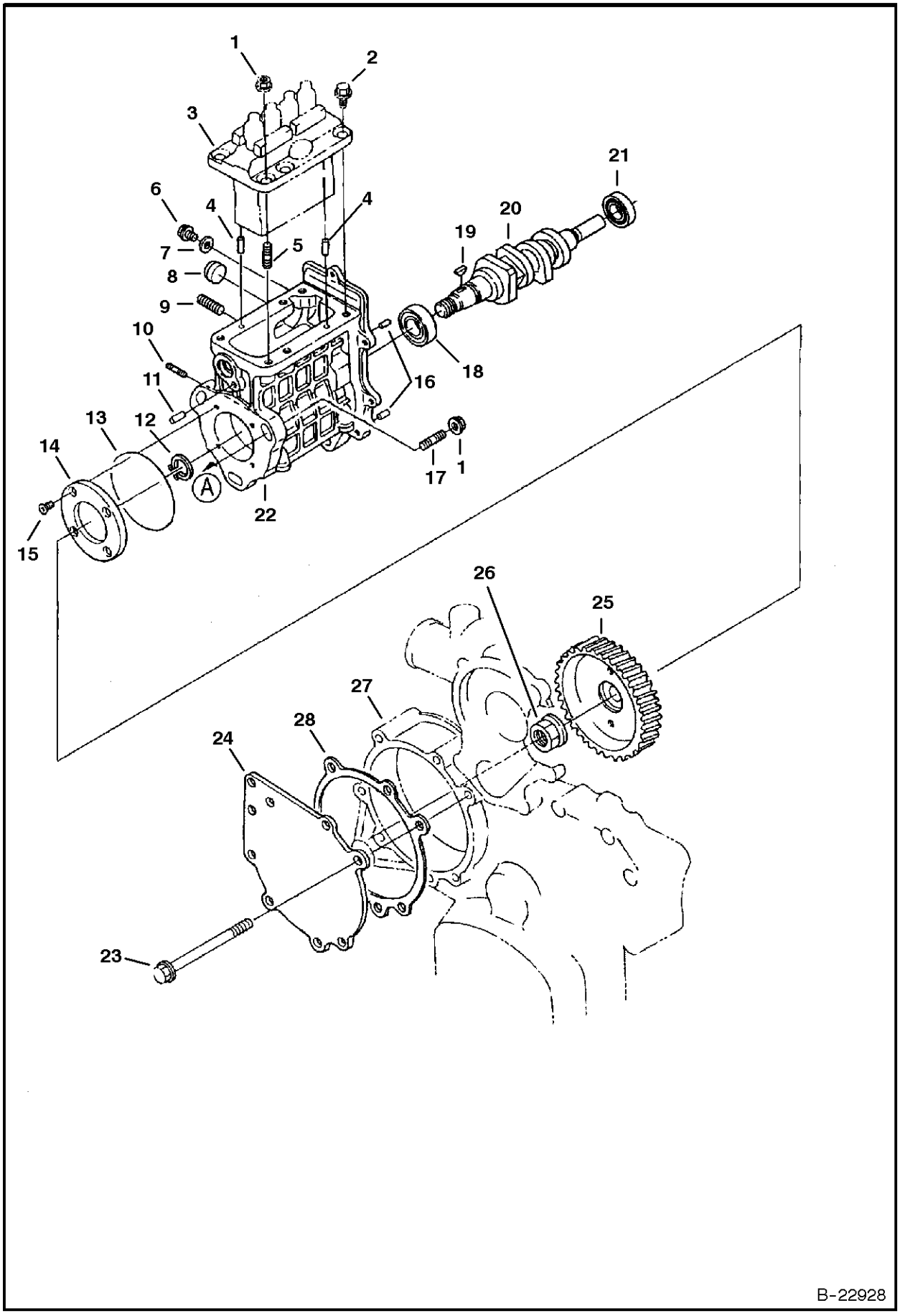

* FUEL INJECTION SYSTEM

Ref.N°	Part N°	Description	Remarks	Serial N°	Qty.
1	6680663	NUT			6
2	6680801	BOLT			5
3		INJECTION PUMP	See Page * FUEL INJECTION PUMP(5)		1
4	3974394	PIN			2
5	6680807	STUD			3
6	6680815	SET SCREW			2
7	3974095	GASKET			2
8	6680808	PLUG			1
9	6680815	SET SCREW			2
10	3974503	STUD			2
11	21JM-20	PIN			2
12	5JM-20	CIR-CLIP			1
13	6680816	GASKET			1
14	6680814	FLANGE			1
15	6680678	SCREW			4
16	6680809	PIN			2
17	6680799	STUD			3
18	6685950	BEARING			1
19	6680813	KEY	woodruff		1
20	6685949	CAMSHAFT	fuel		1
21	6680812	BEARING			1
22	6680806	HOUSING	W/Ref. * FUEL INJECTION SYSTEM(4), * FUEL INJECTION SYSTEM(5), * FUEL INJECTION SYSTEM(8), * FUEL INJECTION SYSTEM(10) & * FUEL		1
23	6680802	BOLT			7
24	6685947	COVER			1
25	6685946	GEAR			1
26	6680818	NUT			1
27		FRONT COVER	See Page * FRONT COVER(12)		1
28	6685948	GASKET			1
29	6685935	INJECTION PUMP	complete w/housing, fuel pump, camshaft, injection pump & governor		1

* FUEL INJECTION PUMP
(S/N 5256 & 5257) (V3300 DI T Kubota) (Tier II)

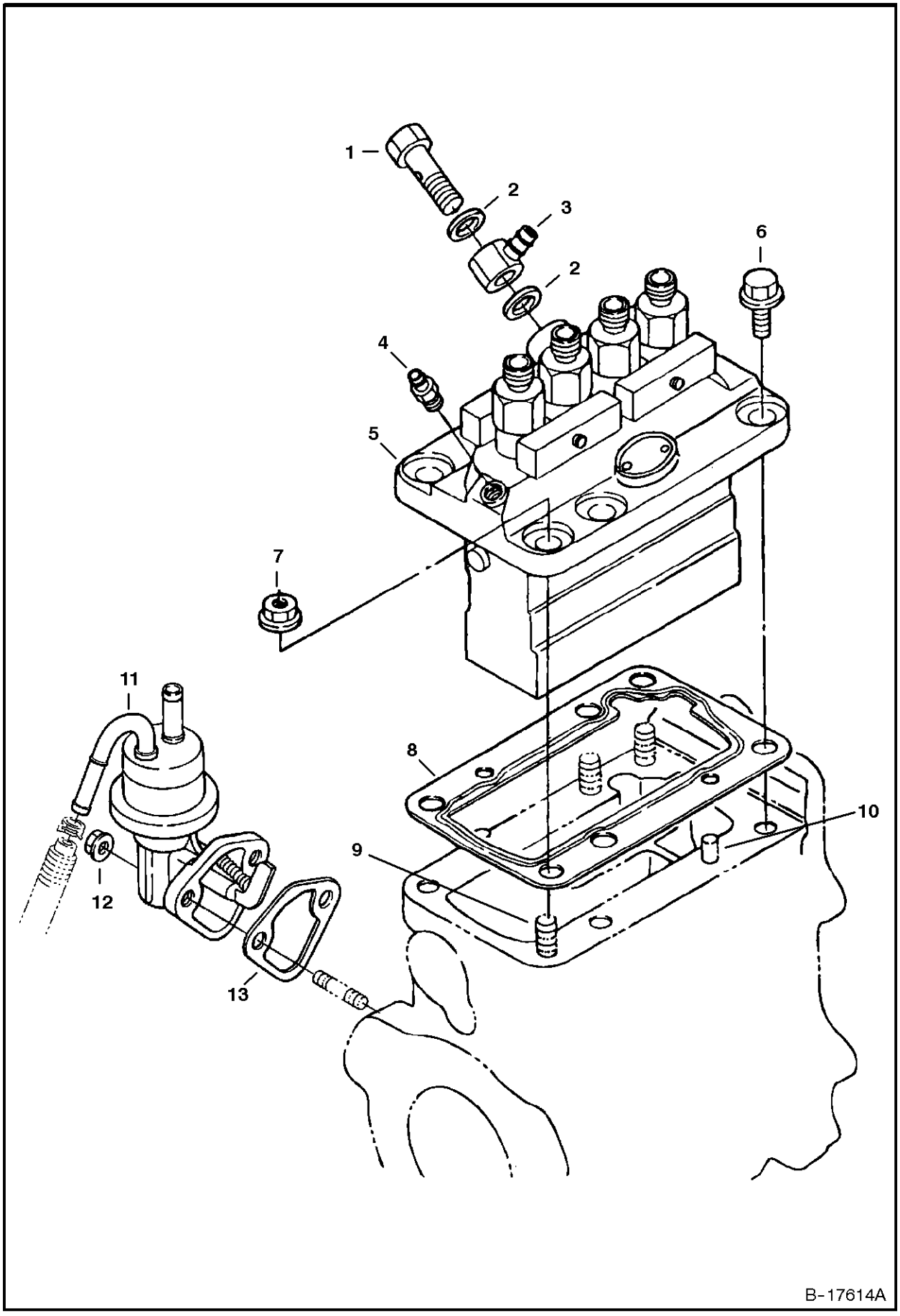

* FUEL INJECTION PUMP

Ref.N°	Part N°	Description	Remarks	Serial N°	Qty.
1	6680752	BOLT			1
2	6680753	GASKET			2
3	3974500	JOINT	eye		1
4	6680756	SCREW	air		1
5	6685936	PUMP	injection - W/Ref. FUEL INJECTION PUMP(1) & FUEL INJECTION PUMP(2)		1
6	6680755	BOLT			5
7	6680663	NUT			3
8	NSS	SHIM	Order Ref. * FUEL INJECTION SYSTEM(29) - See Page * FUEL INJECTION SYSTEM(29)		1
9	6680807	STUD			3
10	3974394	PIN			2
11	6680838	FUEL PUMP			1
12	6653561	NUT			2
13	6670782	GASKET			1

* GOVERNOR
(S/N 5256 & 5257) (V3300 DI T Kubota) (Tier II)

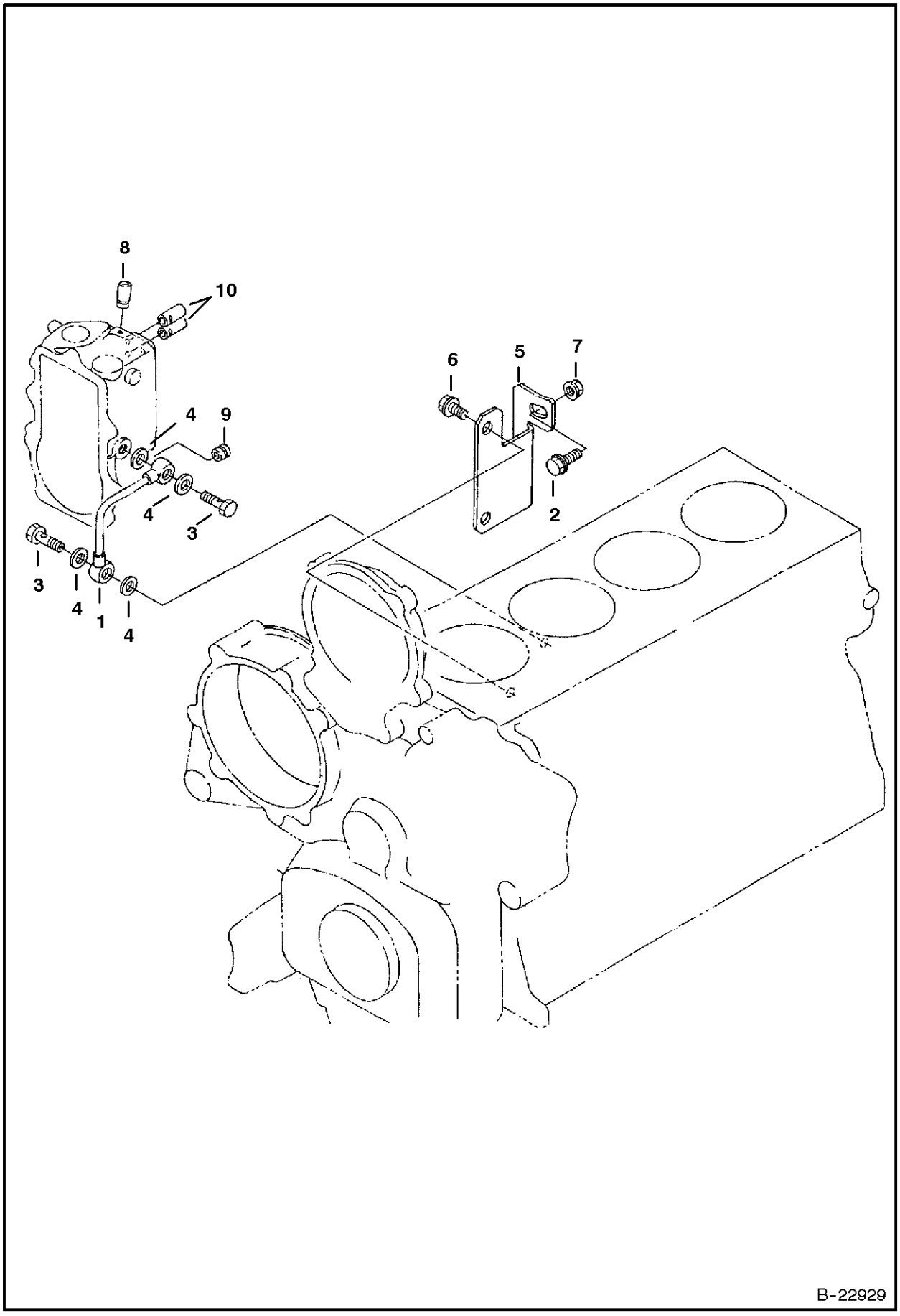

* GOVERNOR

Ref.N°	Part N°	Description	Remarks	Serial N°	Qty.
1	6680905	TUBE			1
2	6680654	BOLT			1
3	6680906	BOLT			1
4	6685962	GASKET			2
5	6685967	BRACKET	injection pump		1
6	6680658	BOLT			2
7	6685968	NUT			1
8	6672384	CAP			1
9	6670427	CAP			1
10	6598112	CAP			2

* GOVERNOR
(S/N 5256 & 5257) (V3300 DI T Kubota) (Tier II)

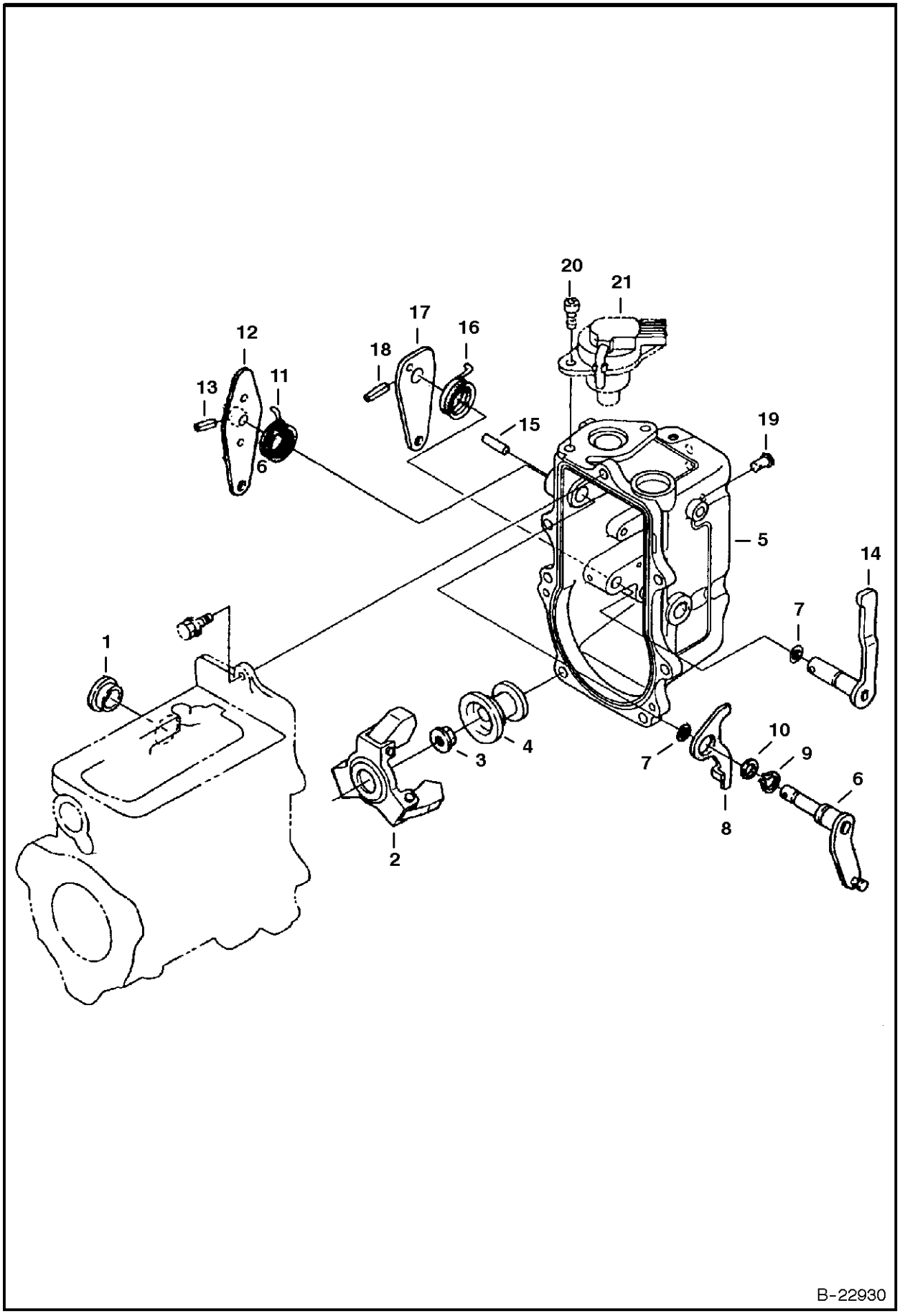

* GOVERNOR

Ref.N°	Part N°	Description	Remarks	Serial N°	Qty.
1	6680757	COVER			1
2	6680759	NUT			1
3	6680758	WEIGHT			1
4	6680761	SLEEVE	governor		1
5	6685937	HOUSING			1
6	6680763	LEVER			1
7	6683023	O-RING			3
8	6680764	LEVER	stop		1
9	6680765	SNAP RING			1
10	6680766	WASHER			1
11	6685938	SPRING			1
12	6685939	LEVER	speed control		1
13	6680769	PIN			1
14	6680770	LEVER	engine stop		1
15	6680775	PIN			1
16	6680771	SPRING			1
17	6680772	LEVER	engine stop		1
18	6680773	PIN			1
19	6670774	GASKET			1
20	6680750	SCREW			2
21	6680749	SOLENOID	fuel shutAoff		1

* GOVERNOR
(S/N 5256 & 5257) (V3300 DI T Kubota) (Tier II)

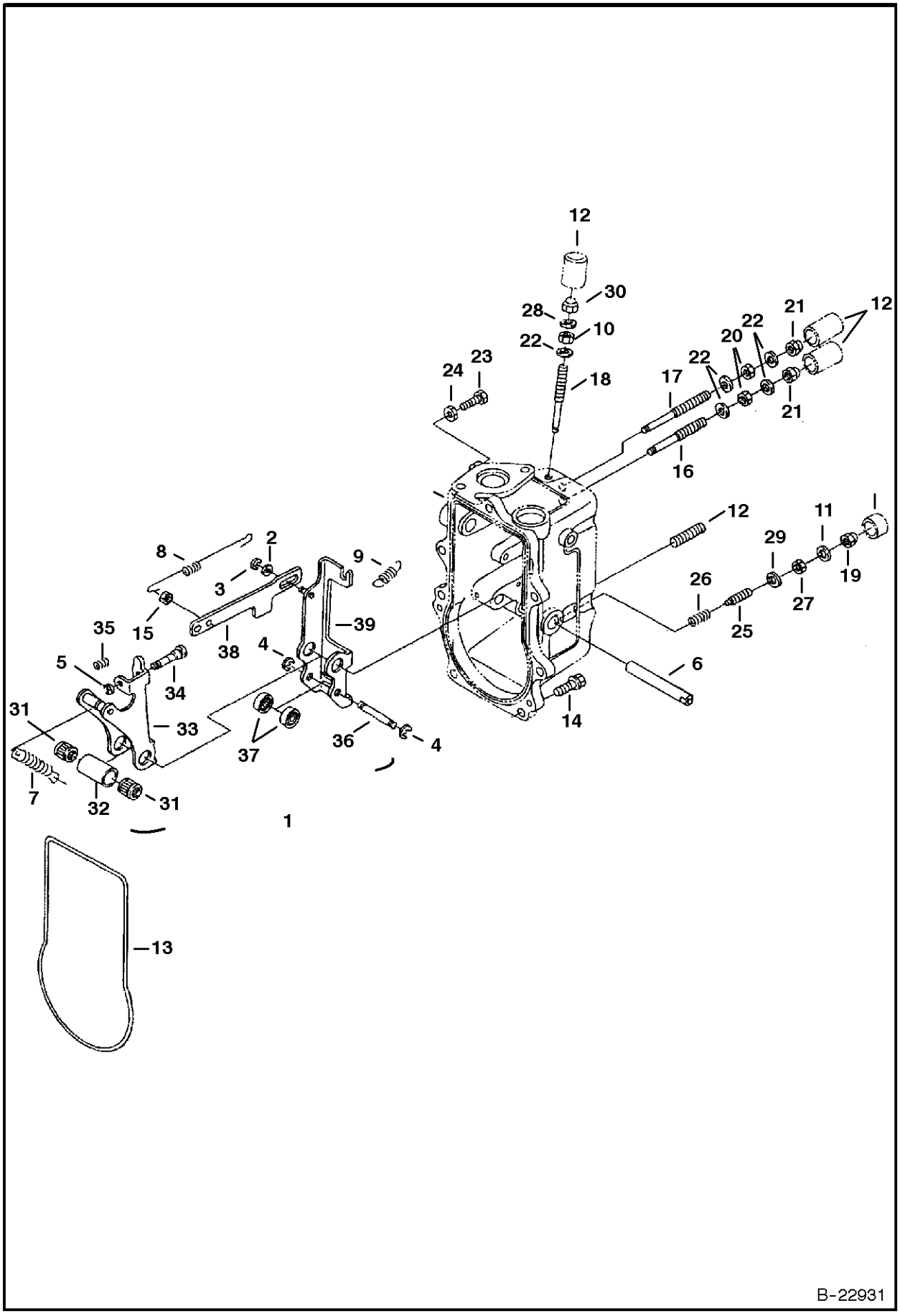

* GOVERNOR

Ref.N°	Part N°	Description	Remarks	Serial N°	Qty.
1	6685951	LEVER	assy. - Ref. * GOVERNOR(2)-* GOVERNOR(5), GOVERNOR(65)-* GOVERNOR(9), * GOVERNOR(15) & * GOVERNOR(31)-* GOVERNOR(39)		1
2	6680820	WASHER			1
3	6680821	SNAP RING			1
4	6680822	SNAP RING			2
5	6680823	SNAP RING			1
6	6680824	SHAFT			1
7	6680825	SPRING			1
8	6680826	SPRING			1
9	6680827	SPRING			1
10	6680272	NUT			2
11	6680792	GASKET			1
12	6680828	STUD			2
13	6680829	GASKET			1
14	6680830	BOLT			7
15	6685952	NUT			1
16	6680832	SCREW	adjusting		1
17	3974970	BOLT	adjusting		1
18	6680833	SCREW	adjusting		1
19	6670426	NUT			1
20	6680499	NUT			1
21	6670462	NUT			2
22	3974972	GASKET			1
23	6680834	STOPPER			1
24	1DM-6	NUT			1
25	6670425	SCREW	adjusting - W/Ref. GOVERNOR(27)		1
26	6680835	SPRING			1
27	6680836	NUT			1
28	3974972	GASKET			5
29	3974095	GASKET			1
30	6670462	NUT			1
31	NSS	BUSHING			2
32	NSS	TUBE			1
33	NSS	LEVER			1
34	NSS	BOLT			1
35	NSS	SPRING			1
36	NSS	ROD			1
37	NSS	BEARING			2
38	NSS	BRACKET			1
39	NSS	LEVER			1
40	6670427	CAP			1

* AIR CLEANER
(S/N 5256 & 5257) (V3300 DI T Kubota) (Tier II)

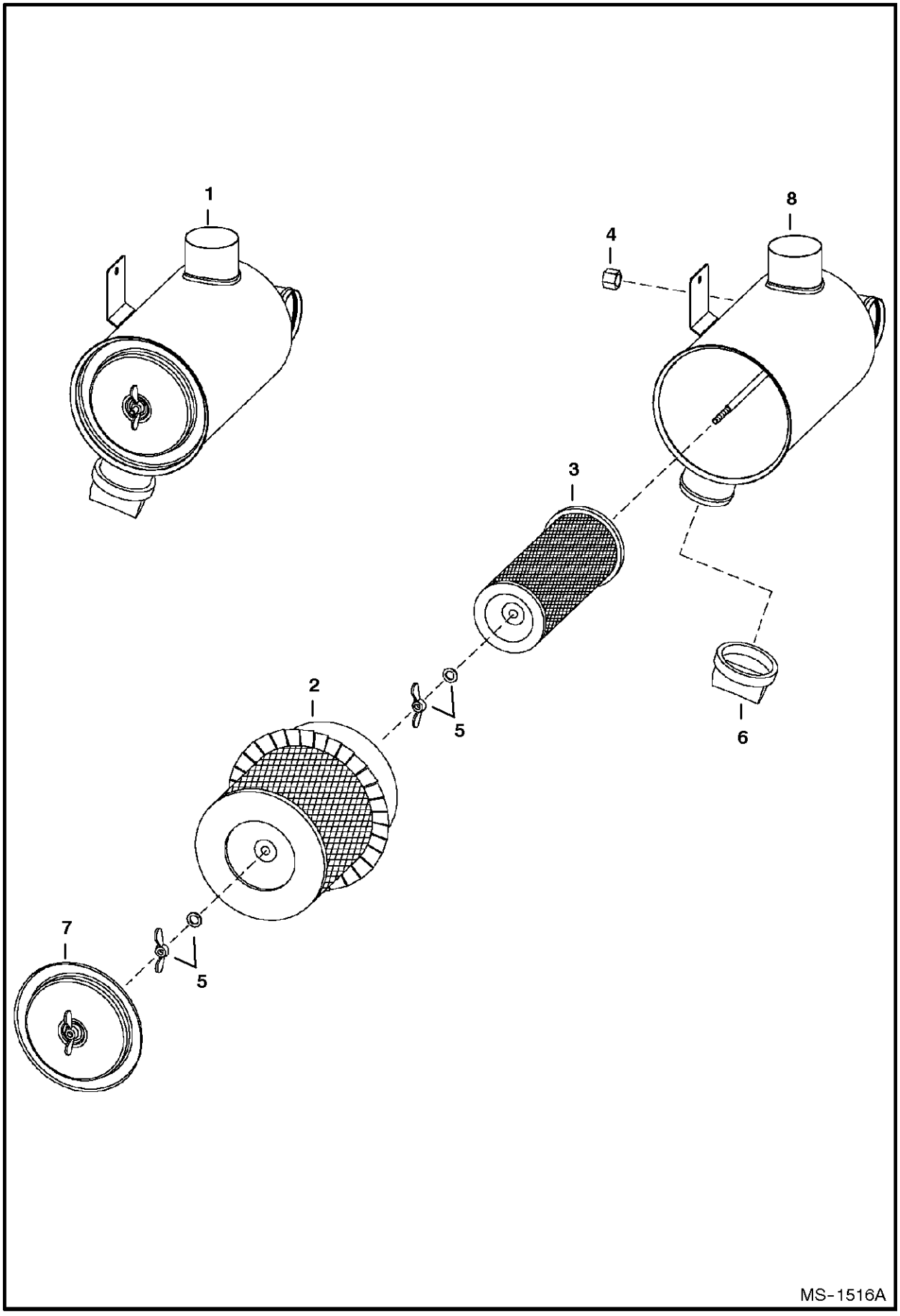

* AIR CLEANER

Ref.N°	Part N°	Description	Remarks	Serial N°	Qty.
1	6678066	AIR CLEANER	W/Ref. AIR CLEANER(2)-AIR CLEANER(8)		1
2	6681474	CARTRIDGE	outer		1
3	6681475	CARTRIDGE	inner		1
4	6681476	CAP			1
5	3291290	WING NUT	W/ washer		2
6	6652373	VALVE	dust unloader		1
7	6681477	COVER			1
8	NSS	TANK			1

ACS CONVERSION KIT

NOTE: Loader must be equipped W/Advanced Hand Control Option for this kit to function.

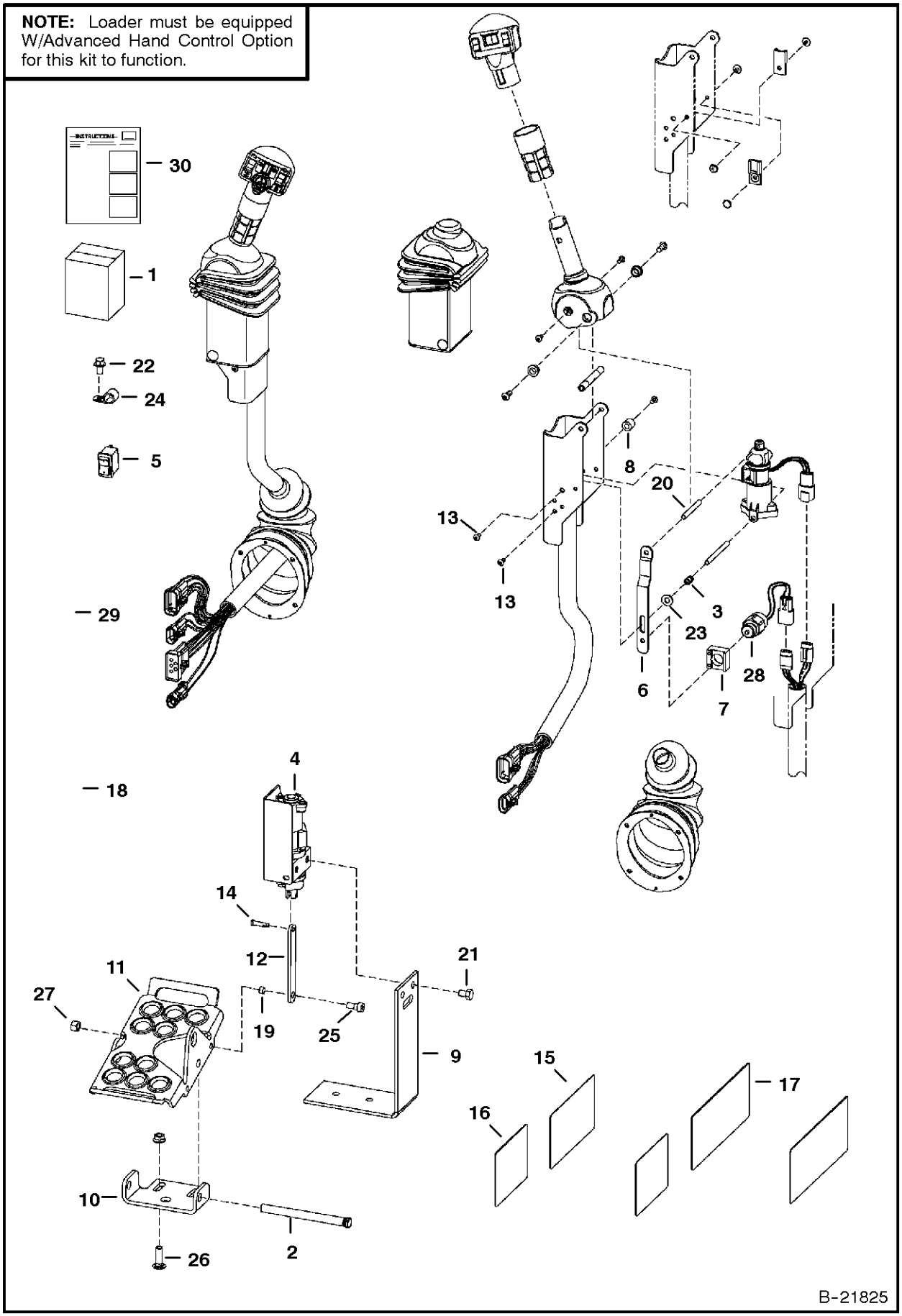

ACS CONVERSION KIT

Ref.N°	Part N°	Description	Remarks	Serial N°	Qty.
1	6731151	KIT	foot control - SEE NOTE - Ref. ACS CONVERSION KIT(2)-ACS CONVERSION KIT(14) & ACS CONVERSION KIT(17)-ACS CONVERSION KIT(30)		1
2	6564657	PIN			2
3	6680470	SPRING			2
4	6680420	SENSOR	foot pedal - R.H.		1
4	6676029	SOLENOID			1
4	6680421	SENSOR	foot pedal - L.H.		1
4	6676029	SOLENOID			1
5	6676537	SWITCH			2
6	6680477	STRAP			2
7	6680468	MOUNT	solenoid		2
8	6719834	SPACER			2
9	6726573	BRACKET			2
10	6726679	BRACKET	pedal		2
11	6726680	PEDAL			2
12	6726681	LINK			2
13	6727065	BOLT			12
14	6727496	PIN			2
15	6727926	DECAL	operations - 773G, 863G, 873G, 883, 963G		1
15	6728045	DECAL	operations - T190, T200, T300		1
16	6727941	DECAL	ACS operations		1
17	6728539	DECAL	warning - 773G, 863G, 873G, 883, 963G		1
17	6728540	DECAL	warning - T190, T200, T300		1
18	6624289	STA-STRAP			2
19	6729467	SPACER			2
20	6680469	SPACER	threaded		2
21	17C-608	BOLT			4
22	84G-3710	BOLT			2
23	25E-13	WASHER			2
24	30H-62	CLIP			2
25	17C-514	BOLT			2
26	37C-620	BOLT			4
27	95D-5	NUT			2
28	6676029	SOLENOID			2
29	57D-6	NUT			4
30	6901492	INSTRUCTIONS			1

BACK-UP ALARM KIT

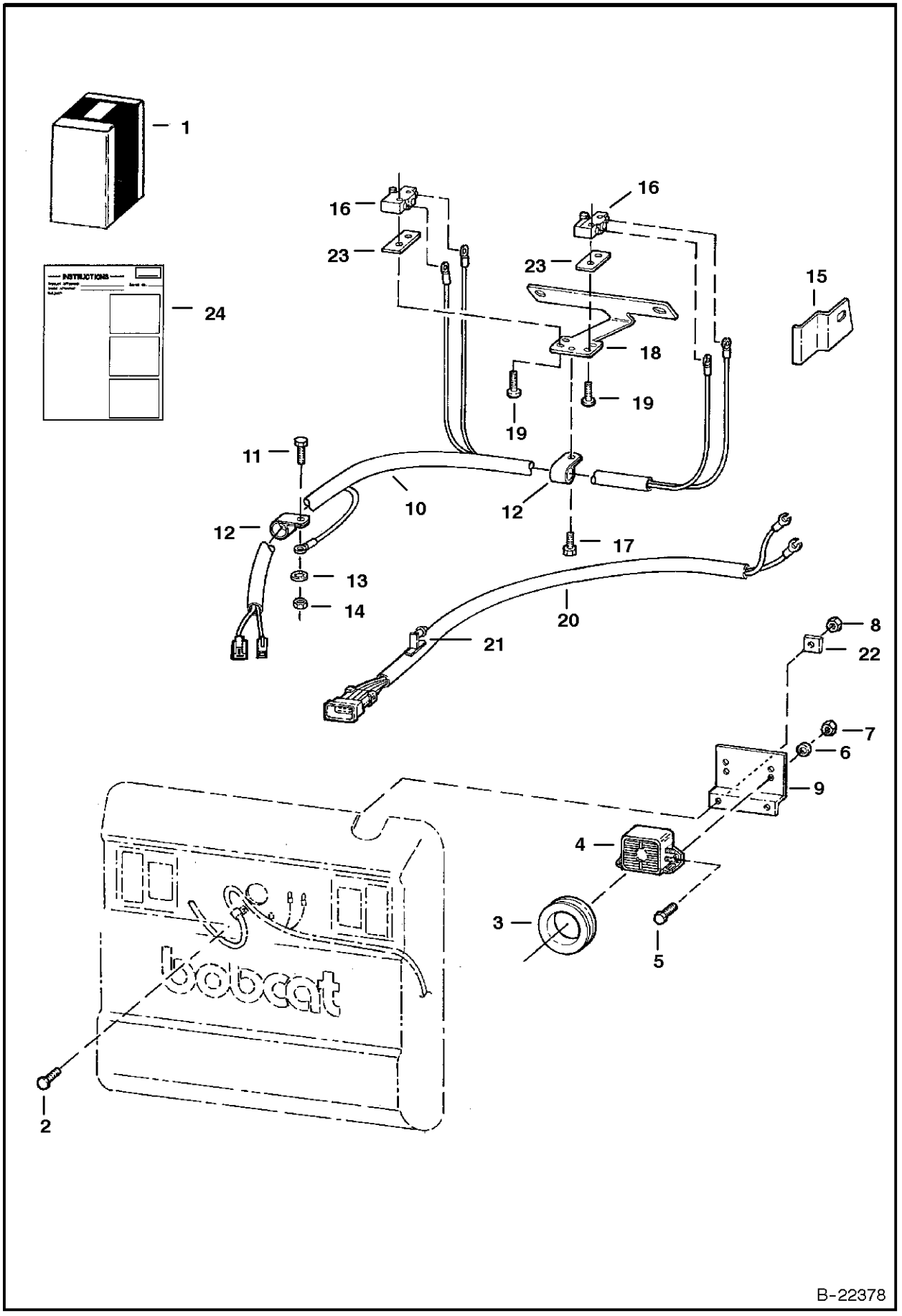

BACK-UP ALARM KIT

Ref.N°	Part N°	Description	Remarks	Serial N°	Qty.
1	6718822	KIT	backAup alarm - Ref. BACK-UP ALARM KIT(2)-BACK-UP ALARM KIT(24)		1
2	37C-512	BOLT			2
3	6577545	GROMMET			1
4	6599931	ALARM	backAup		1
4	6668879	DECAL			1
5	35C-410	BOLT			2
6	25E-13	WASHER			2
7	61D-5	NUT			2
8	97D-4	NUT			2
9	6733970	MOUNT			1
10	6718820	HARNESS			1
11	17C-412	BOLT	not in kit		1
12	30H-19	CLAMP	insulated		2
13	6E-4	WASHER	not in kit		1
14	61D-4	NUT	not in kit		1
15	6713793	BRACKET	switch		2
16	6646781	SWITCH	alarm		2
17	84G-3112	BOLT			1
18	6713792	MOUNT	switch		1
19	59G-616	BOLT			4
20	6715659	HARNESS	used on machines W/O rear lights - W/Ref. BACK-UP ALARM KIT(21)		1
21	6672492	RETAINER			1
22	774220	NUT			2
23	6702593	SPACER			2
24	6900857	INSTRUCTIONS			1

BACK-UP ALARM KIT
(W/Joystick Controls)

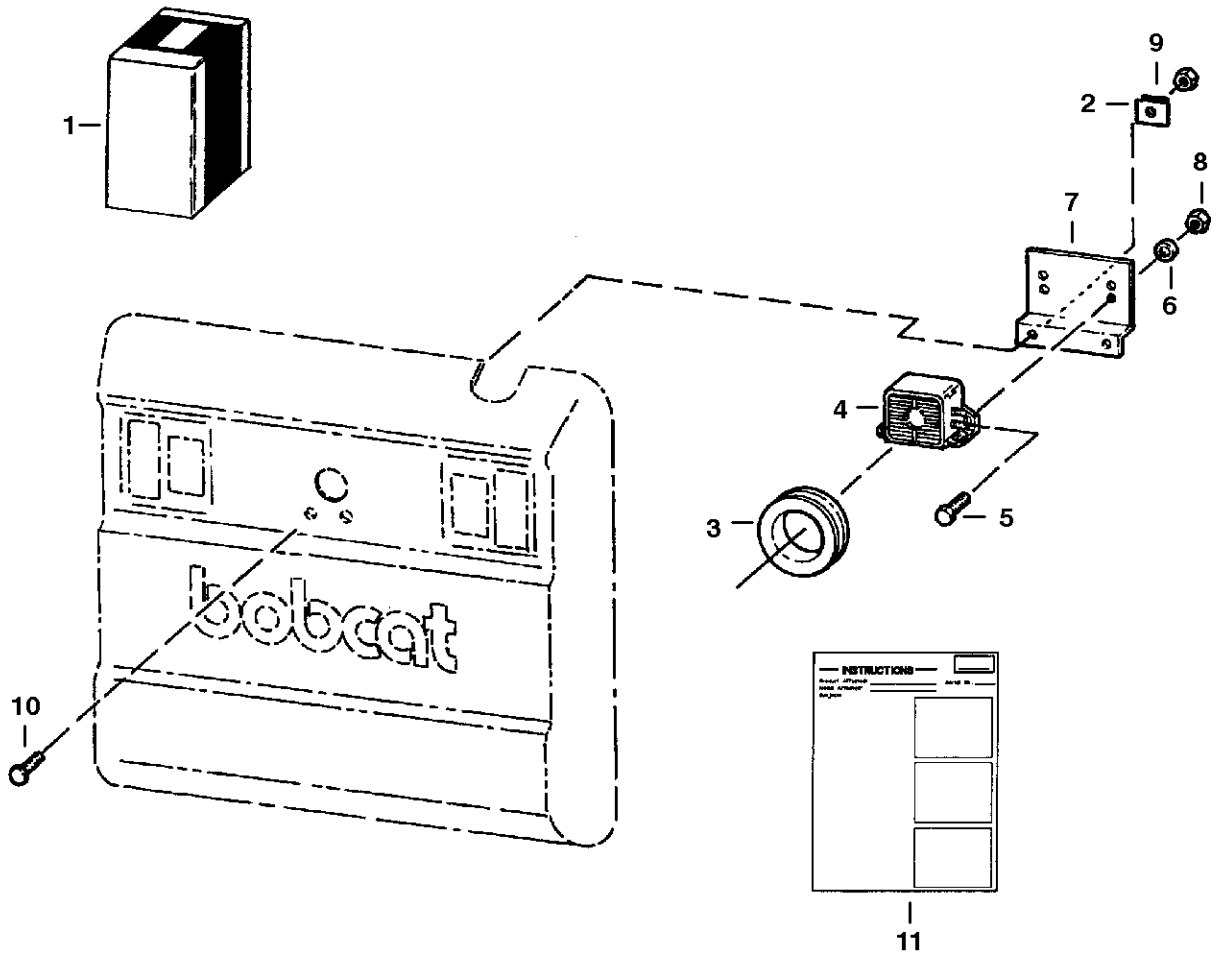

B-16152

BACK-UP ALARM KIT

Ref.N°	Part N°	Description	Remarks	Serial N°	Qty.
1	6732235	KIT	Ref. BACK-UP ALARM KIT(2)-BACK-UP ALARM KIT(11)		1
2	774220	NUT	spring		2
3	6577545	GROMMET			1
4	6599931	ALARM			1
5	17C-410	BOLT			2
6	25E-13	WASHER			2
7	6733970	MOUNT			1
8	83D-4	NUT			2
9	61D-5	NUT			2
10	37C-512	BOLT			2
11	6901690	INSTRUCTIONS			1

BEACON

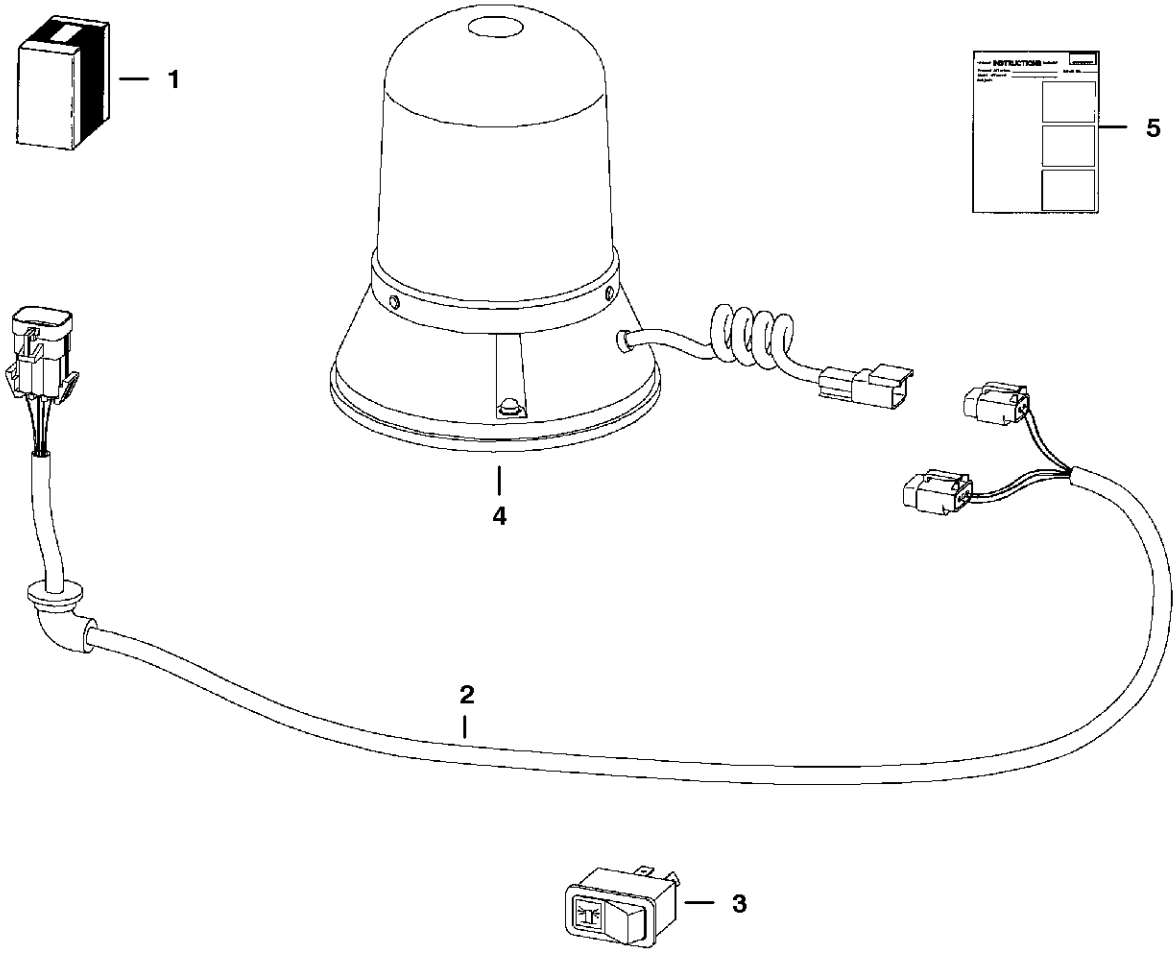

TS-1978

BEACON

Ref.N°	Part N°	Description	Remarks	Serial N°	Qty.
1	6719854	KIT	rotating beacon		1
2	6718872	HARNESS			1
3	6665317	SWITCH	horizontal		1
3	6668816	SWITCH	vertical		1
4	6675523	BEACON			1
4	6666571	BULB			1
5	6900991	INSTRUCTIONS			1

BLOCK HEATER
(Engine)

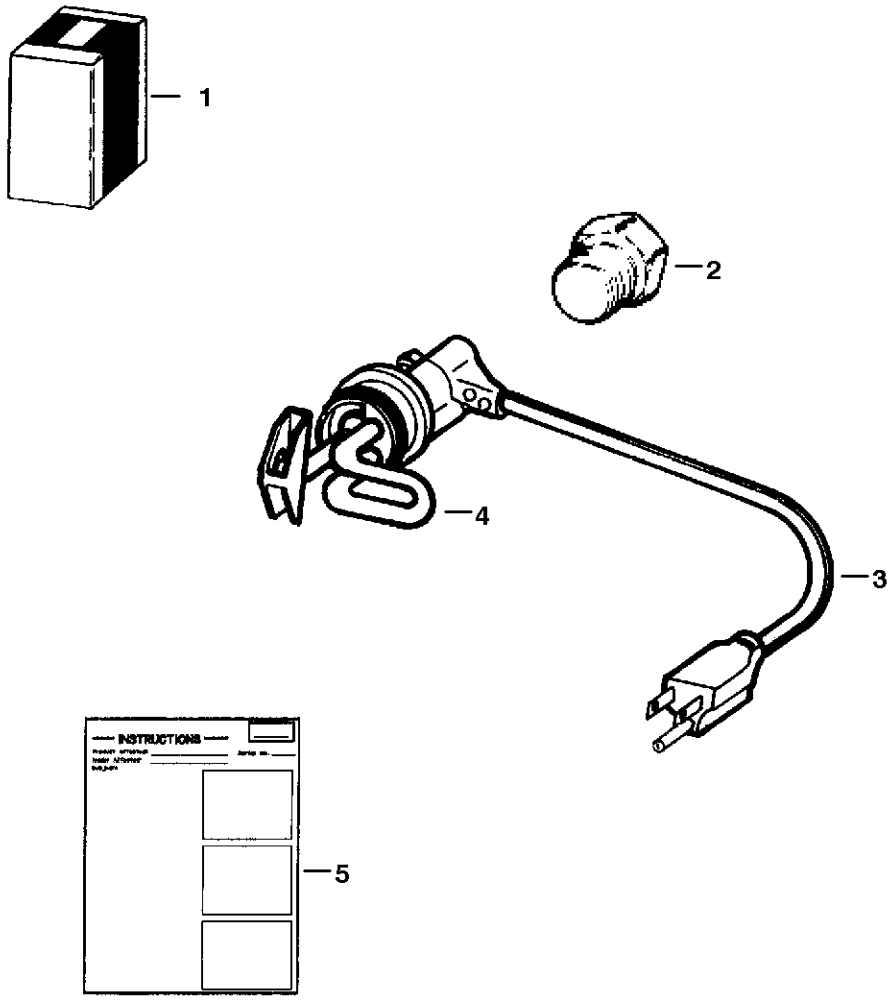

PE-1762

BLOCK HEATER

Ref.N°	Part N°	Description	Remarks	Serial N°	Qty.
1	6720808	HEATER	W/Ref. BLOCK HEATER(2), BLOCK HEATER(4) & BLOCK HEATER(5)		1
2	19F-12	BUSHING			1
3	6668881	CORD			1
4	6659369	HEATER	W/Ref. BLOCK HEATER(3)		1
5	6720038	INSTRUCTIONS			1

BUCKET POSITIONING KIT

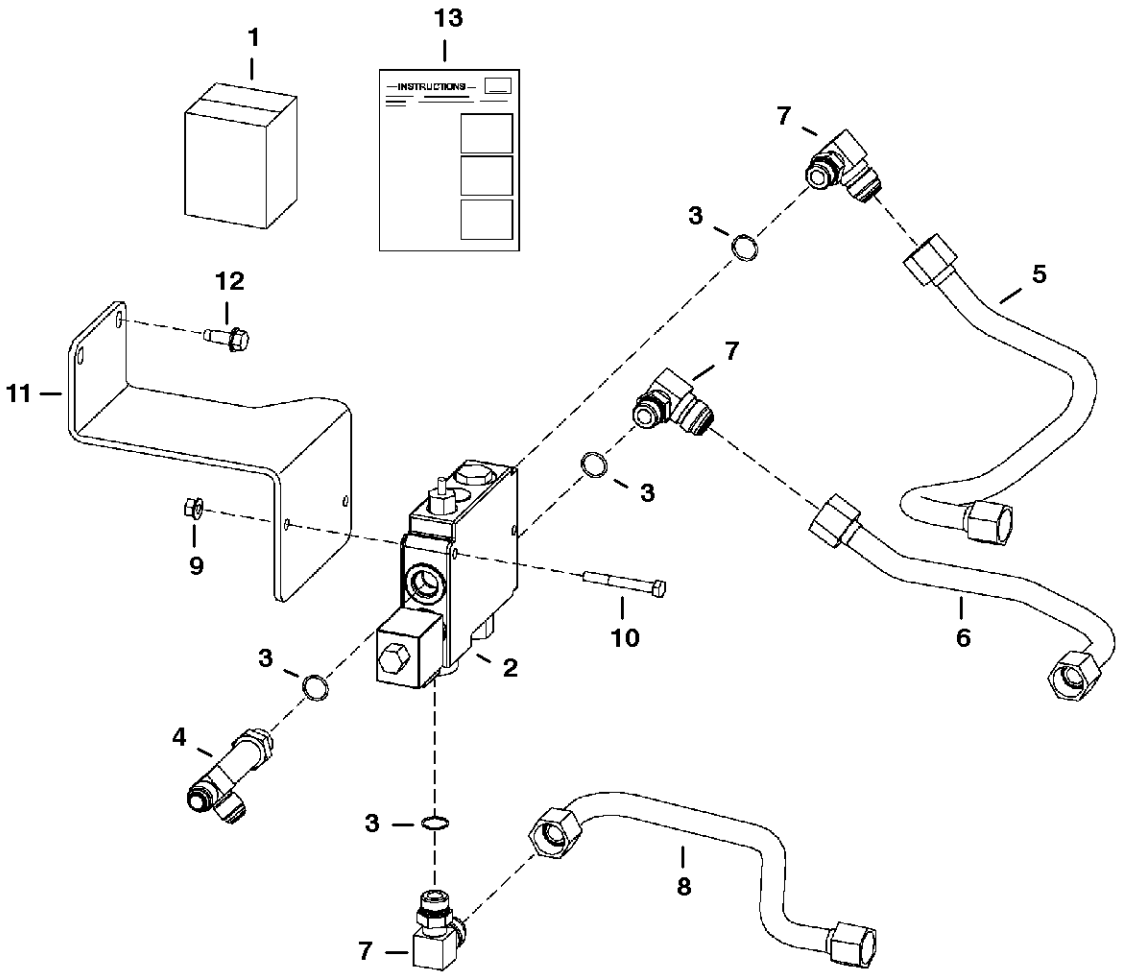

PE-1529

BUCKET POSITIONING KIT

Ref.N°	Part N°	Description	Remarks	Serial N°	Qty.
1	6732354	KIT	Ref. BUCKET POSITIONING KIT(2)-BUCKET POSITIONING KIT(13)		1
2	6675669	VALVE	painted primer red - See Page BUCKET POSITIONING VALVE(7)		1
3	79K-10	O-RING			x
4	6730077	TEE	W/Ref. BUCKET POSITIONING KIT(3)		1
5	6728180	TUBELINE			1
6	6730810	TUBELINE			1
7	17KB-1210	ELBOW	W/Ref. BUCKET POSITIONING KIT(3)		3
8	6730812	TUBELINE			1
9	83D-5	NUT			2
10	17C-540	BOLT			2
11	6730898	MOUNT	BPV		1
12	84G-3716	BOLT			2
13	6901709	INSTRUCTIONS			1

CAB DOOR

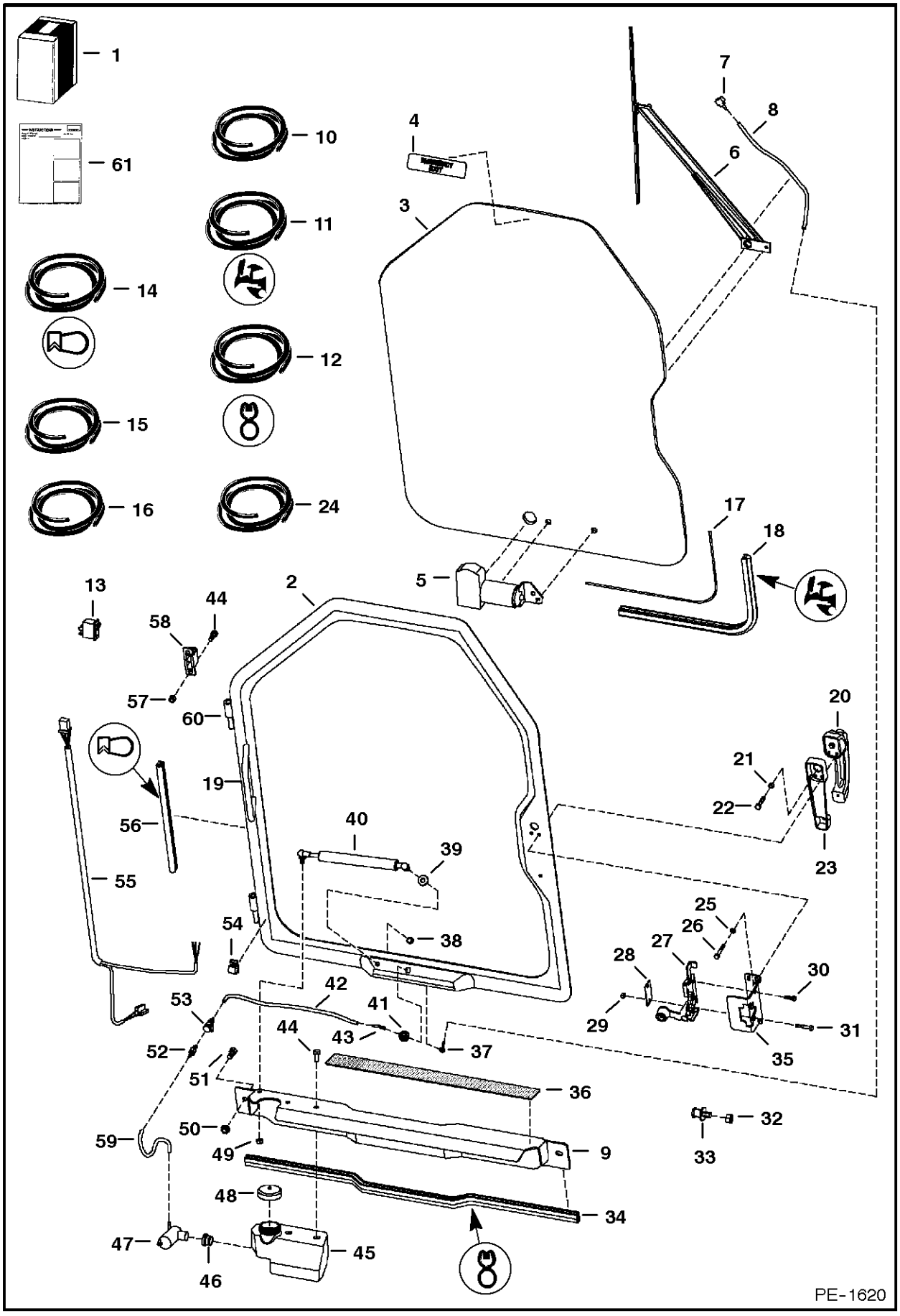
1
61
10
11
14
12
15
24
16
4
7
8
6
3
17
18
5
13
2
44
58
57
60
20
21
22
23
19
56
40
39
55
54
38
25
26
27
28
30
29
31
35
42
53
41
44
43
37
52
51
36
32
33
59
50
49
9
48
34
47
45
46
PE-1620

CAB DOOR

Ref.N°	Part N°	Description	Remarks	Serial N°	Qty.
1	6730822	KIT	door		1
2	6726435	DOOR	W/Ref. CAB DOOR(60) & CAB DOOR(19)		1
3		WINDOW	.25' thick glass - See Page CAB DOOR(1)		1
4	6707852	DECAL	exit		1
5		MOTOR	See Page CAB DOOR(1)		1
6		ARM ASSY	See Page CAB DOOR(1)		1
7		NOZZLE$	wiper arm mounted - See Page CAB DOOR(1)		1
8		HOSE	See Page CAB DOOR(1)		1
9	6730816	SHIELD			1
10	6676918	HOSE	50' (15.24meter) long roll - .125' I.D. - black		1
11	6665568	SEAL	bulk - Sold Per Foot		x
12	6513152	SEAL	bulk - Sold Per Foot		x
13	6665707	SWITCH	front wiper		1
14	6675558	SEAL	bulk - Sold Per Foot		1
15	6554149	CORD	bulk - Sold Per Foot		x
16	6676003	HOSE	bulk - Sold Per Foot - .109' I.D. - black		x
17	NAP	CORD	window - 113' (2878mm) - Order Ref. CAB DOOR(15)		1
18	NAP	SEAL	window - 113' (2878mm) - Order Ref. CAB DOOR(11)		1
19	6718521	HANDLE	grab		1
20	6674667	HANDLE			1
20	6709527	KEY	ignition/rear door		1
21	61D-4	NUT			1
22	17C-420	BOLT			1
23	6717146	SPACER	handle		1
24	6708310	HOSE	bulk - Sold Per Foot - .149 I.D. - clear		x
25	6EM-60	WASHER			3
26	1CM-640	BOLT			3
27	6674666	LATCH			1
28	6718520	COVER	latch		1
29	4DM-6	NUT			2
30	1CM-620	BOLT			2
31	1CM-635	BOLT			2
32	91D-7	NUT			1
33	6677194	BOLT	striker		1
34	NAP	SEAL	threshold - 36' (914mm) - Order Ref. CAB DOOR(12)		1
35	6717369	BRACKET	latch		1
36	6542731	SAFETY TREAD			1
37	6676500	ELBOW			1
38	46D-5	NUT	acorn		1
39	25E-16	WASHER			1
40	6682586	GAS SPRING			1
40	6678548	SOCKET	ball		2
40	6649245	CLIP	spring		2
41	6676499	GROMMET	wiper		1
42	NAP	HOSE	18.25' (464mm) - Order Ref. CAB DOOR(16)		1
43	6676917	ELBOW			1
44	17C-512	BOLT			6
45	6730830	TANK	washer		1
46	6666766	GROMMET			1
47	6664554	PUMP	washer bottle		1

CAB DOOR

Ref.N°	Part N°	Description	Remarks	Serial N°	Qty.
48	6674993	CAP	vented		1
49	61D-5	NUT			1
50	61D-6	NUT			2
51	17C-612	BOLT			2
52	6675299	COUPLER	insert		1
53	6675298	COUPLER	body		1
54	6675378	CLIP	Use W/Ref. CAB DOOR(7)		1
55	6729739	HARNESS	wiper - W/fuse		1
56	NAP	SEAL	127.3' (3233mm) - Order Ref. CAB DOOR(14)		1
57	59D-5	NUT			4
58	6717593	HINGE	base		2
59	NAP	HOSE	4.25' (108mm) long - Order Ref. CAB DOOR(24)		1
60	6718376	HINGE	door		2
61	6677192	MAGNET			1
62	6731212	SWITCH	door		1
63	6677193	RIVET	plastic		2
64	6665321	RIVET	male - plastic		1
65	6665322	RIVET	female - plastic		1
66	6732975	DECAL	door - switch		1
67	6901013	INSTRUCTIONS			1

CAB DOOR
(Window & Wiper)

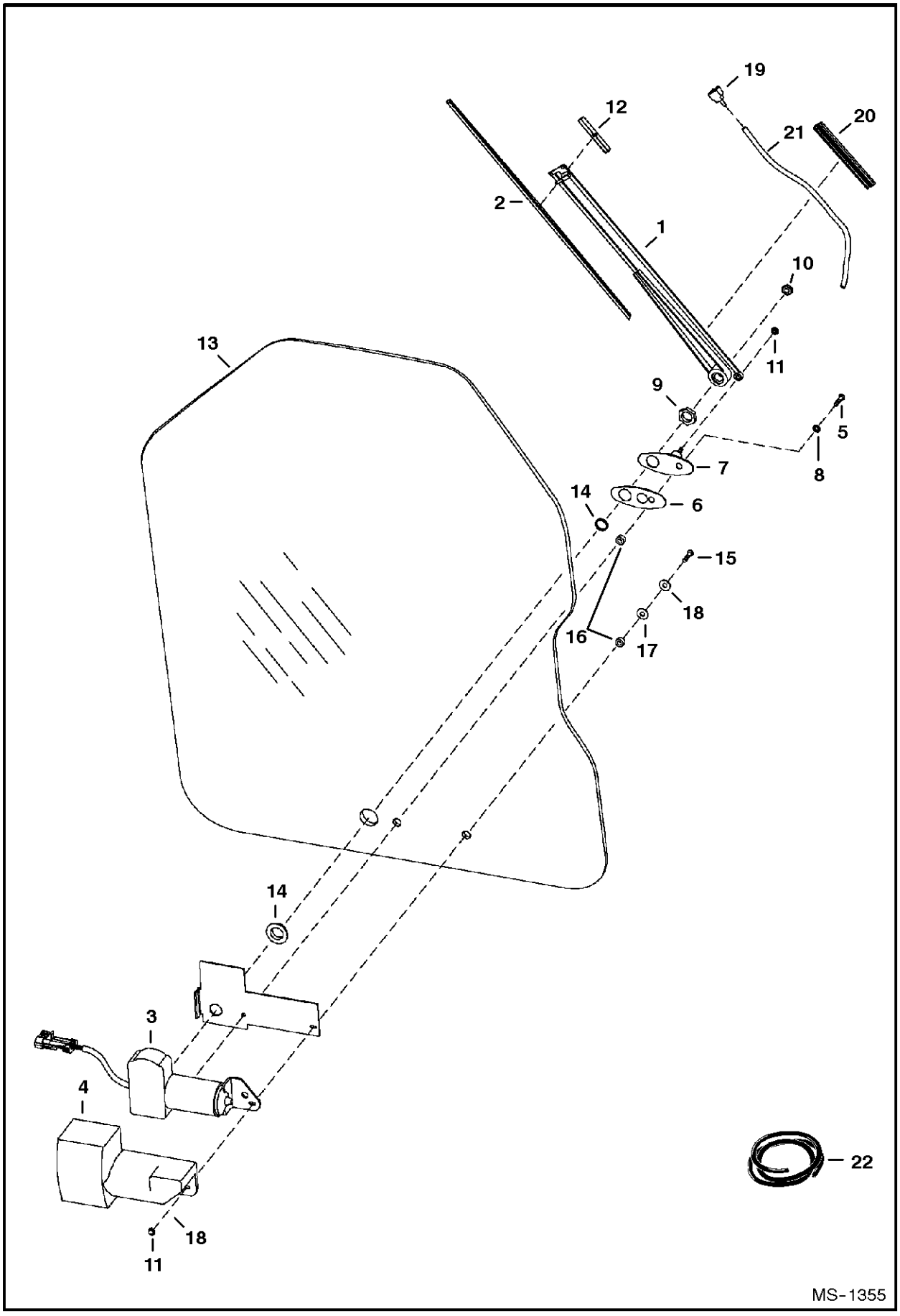

CAB DOOR

Ref.N°	Part N°	Description	Remarks	Serial N°	Qty.
1	6677833	ARM ASSY	W/Ref. CAB DOOR(19)-CAB DOOR(21)		1
2	6677834	BLADE	also Order Ref. CAB DOOR(12)		1
3	6677835	COVER	W/threaded shaft end & built in fuse		1
4	6677836	MOTOR			1
5	6677837	BOLT			1
6	6677839	GASKET			1
7	6677840	SWIVEL ASSY			1
8	6677841	WASHER	tooth lock		1
9	6677842	NUT			1
10	6677843	NUT			1
11	6677844	NUT			2
12	6677845	ADAPTER	arm		1
13	6729776	WINDOW	.25' thick glass w/1.00' dia. wiper motor shaft hole		1
14	6677847	GROMMET	rubber		1
15	6678198	BOLT			1
16	6664085	BUSHING	nylon		2
17	6801059	WASHER	neoprene		1
18	6678739	WASHER	steel		2
19	6678920	NOZZLE	For Ref. CAB DOOR(1)		1
20	6678921	GUIDE	hose		1
21	NAP	HOSE	18' (457mm) long - Order Ref. CAB DOOR(22)		x
22	6676003	HOSE	bulk - Sold Per Foot - .109' I.D. - black		x

CAB DOOR
(Special Applications)

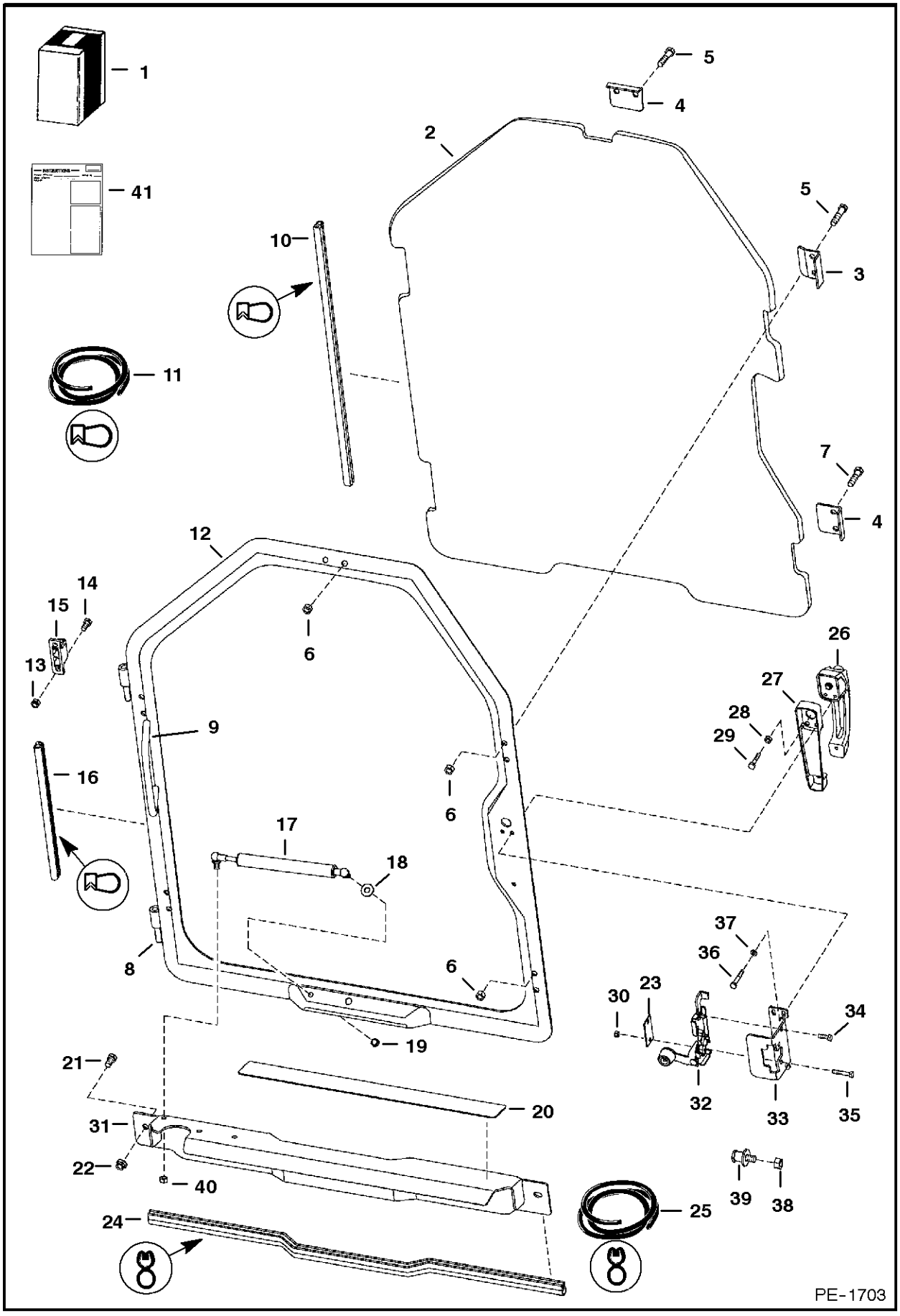

CAB DOOR

Ref.N°	Part N°	Description	Remarks	Serial N°	Qty.
1	6730823	KIT	door		1
2	6732351	WINDOW	.5' thick polycarbonate - w/top notch		1
3	6725938	CLAMP			2
4	6725937	CLAMP			3
5	17C-628	BOLT			6
6	95D-6	NUT			10
7	17C-624	BOLT			4
8	6718376	HINGE	door		2
9	6718521	HANDLE	grab		1
10	NAP	SEAL$	115' (2921mm) long -Order Ref. CAB DOOR(11)		1
11	6675558	SEAL	bulk - Sold Per Foot		x
12	6726932	DOOR	W/Ref. CAB DOOR(8)		1
13	59D-5	NUT			4
14	17C-512	BOLT			4
15	6717593	HINGE	base		2
16	NAP	SEAL	127' (3233mm) long - Order Ref. CAB DOOR(11)		1
17	6682586	GAS SPRING			1
17	6678548	SOCKET	ball		2
17	6649244	BALL STUD	ball		2
17	6649245	CLIP	spring		2
18	25E-16	WASHER			1
19	46D-5	NUT	acorn		1
20	6542731	SAFETY TREAD			1
21	55D-6	NUT			2
22	17C-612	BOLT			2
23	6718520	COVER	latch		1
24	NAP	SEAL$	36' (914mm) long - Order Ref. CAB DOOR(25)		1
25	6513152	SEAL	bulk - Sold Per Foot		x
26	6674667	HANDLE			1
26	6709527	KEY	ignition & rear door		1
27	6717146	SPACER	handle		1
28	61D-4	NUT			1
29	17C-420	BOLT			1
30	4DM-6	NUT			2
31	6730816	SHIELD			1
32	6674666	LATCH			1
33	6717369	BRACKET	latch		1
34	1CM-620	BOLT			2
35	1CM-635	BOLT			2
36	1CM-640	BOLT			3
37	6EM-60	WASHER			3
38	91D-7	NUT			1
39	6654170	STRIKER BOLT			1
40	61D-5	NUT			1
41	6901013	INSTRUCTIONS			1

CAB DOOR
(Lexan Window)

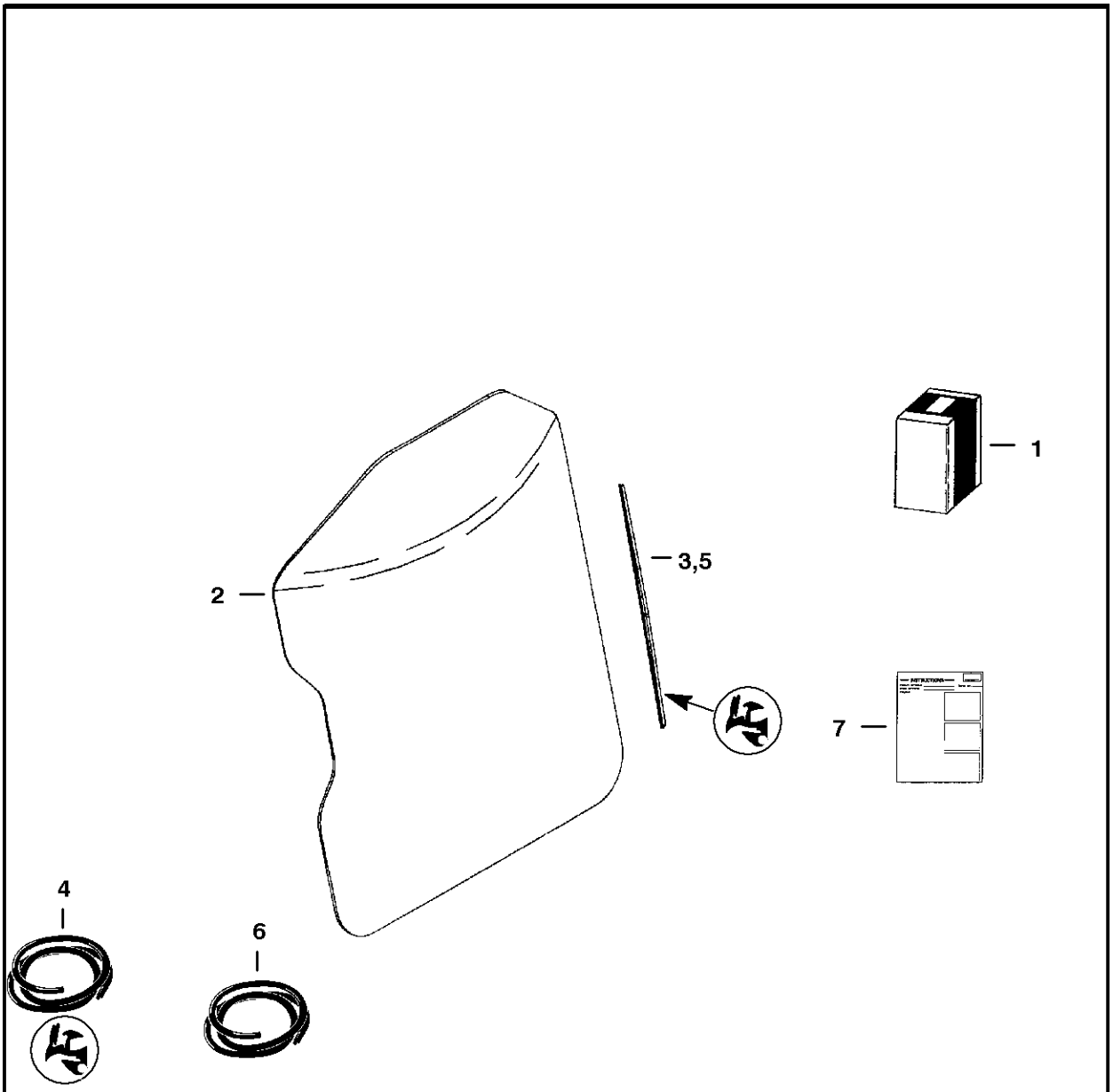

NOTE: This Lexan window in NOT approved as a Special Applications Kit. This window does not provide additional protection from materials entering cab openings.

PE-1558

CAB DOOR

Ref.N°	Part N°	Description	Remarks	Serial N°	Qty.
1	6726427	KIT	Ref. CAB DOOR(2)-CAB DOOR(7)		1
2	6675215	WINDOW	lexan		1
3	NAP	SEAL	113' (2878mm) long - Order Ref. CAB DOOR(4)		1
4	6665568	SEAL	bulk - Sold Per Foot		x
5	NAP	CORD	113' (2878mm) long - Order Ref. CAB DOOR(6)		1
6	6554149	CORD	bulk - Sold Per Foot		x
7	6901036	INSTRUCTIONS			1

CAB ENCLOSURE

NOTE: Order Cab Enclosure Kit from Gwinner SALES #6719666.
Order Special Applications Kit from Gwinner SALES # 6719326.

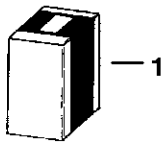

B-17100

CAB ENCLOSURE

Ref.N°	Part N°	Description	Remarks	Serial N°	Qty.
1	SALES	KIT	cab enclosure - SEE NOTE - includes items See Page CAB DOOR(1) & CAB WINDOWS(2)		1
1	SALES	KIT	special cab enclosure - SEE NOTE - includes items See Page CAB DOOR(1) & CAB WINDOWS(2)		1

CAB ENCLOSURE
(Envelope)

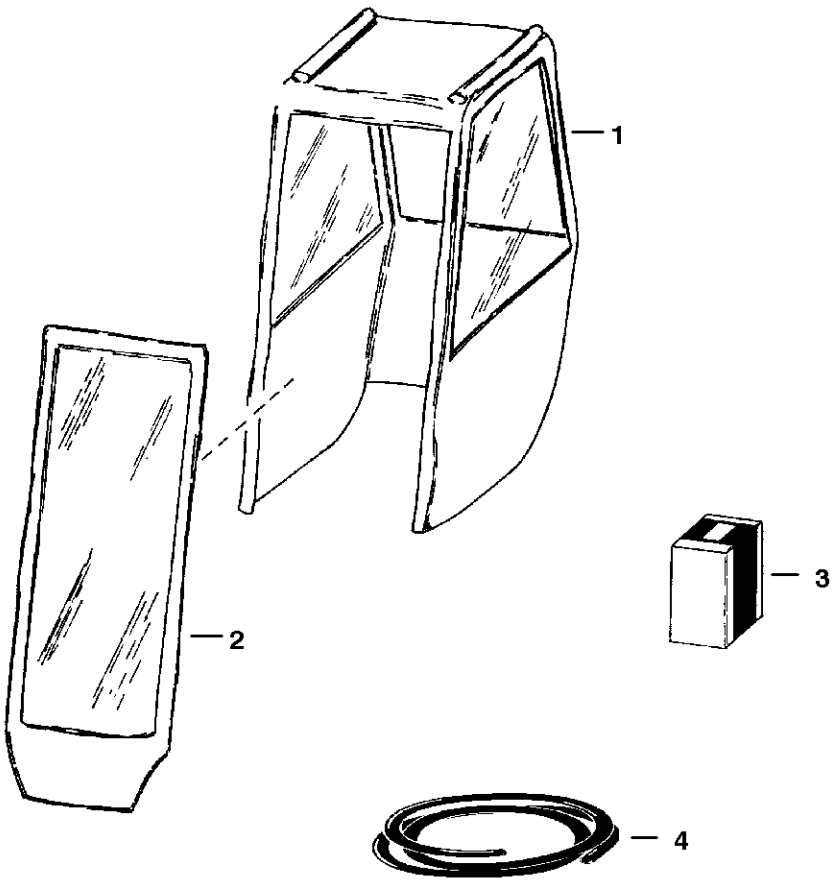

B-1413

CAB ENCLOSURE

Ref.N°	Part N°	Description	Remarks	Serial N°	Qty.
1	6675544	VINYLCAB	fits over cab - W/Ref. CAB ENCLOSURE(2) & CAB ENCLOSURE(3)		1
2	6675590	DOOR	vinyl		1
3	6675591	HINGE KIT			1
4	6722597	VELCRO	27 feet (8,2meters) long		1

CAB WINDOWS
(Rear Window Removal Kit)

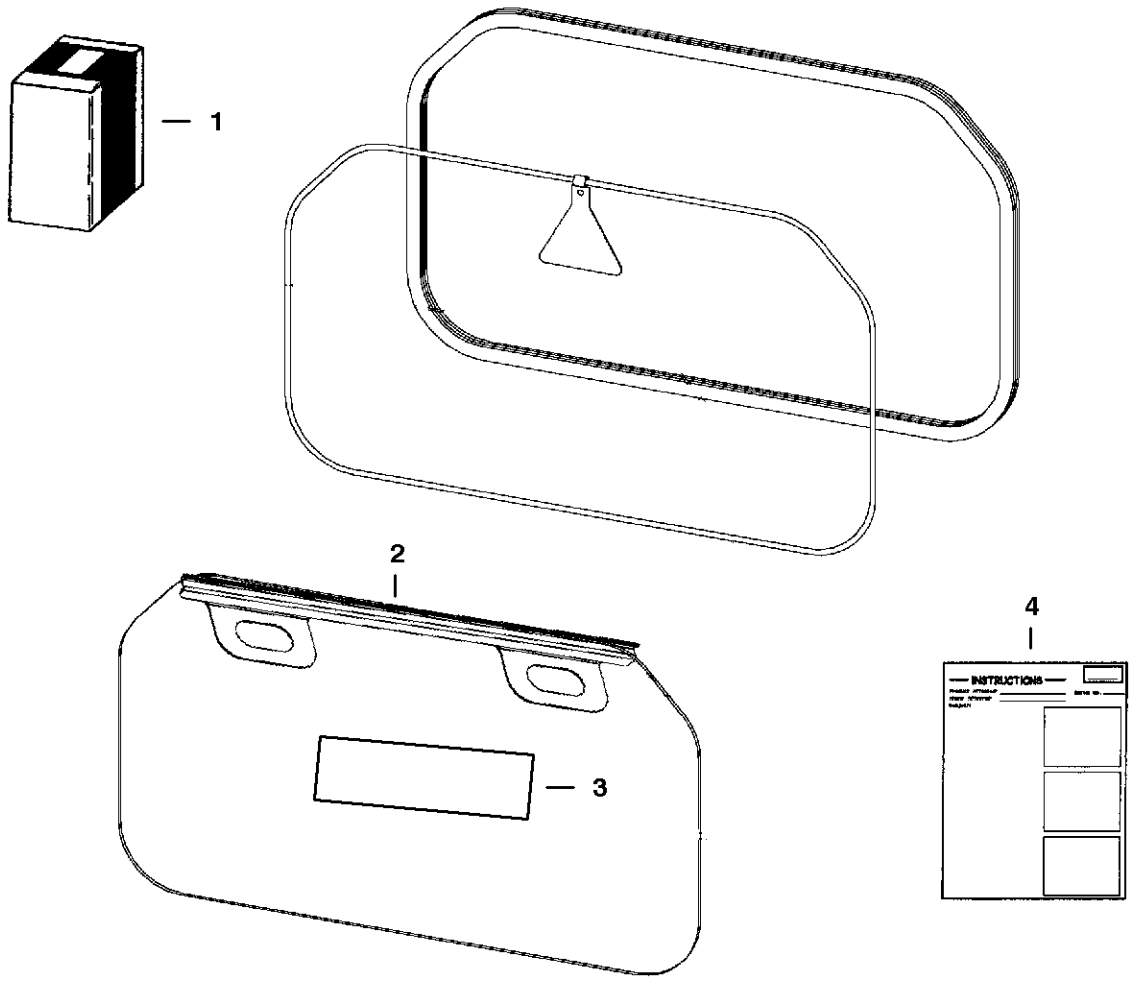

TS-2006

CAB WINDOWS

Ref.N°	Part N°	Description	Remarks	Serial N°	Qty.
1	6725946	KIT	Ref. CAB WINDOWS(2)-CAB WINDOWS(4)		1
2	6725421	HANDLE			1
3	6726303	DECAL			1
4	6901029	INSTRUCTIONS			1

CAB WINDOWS
(Top, Rear & Side)

NOTE: Order Top & Rear WIndow Kit from Gwinner Sales # 6718805.
Order Side Window Kit from Gwinner Sales # 6718806.

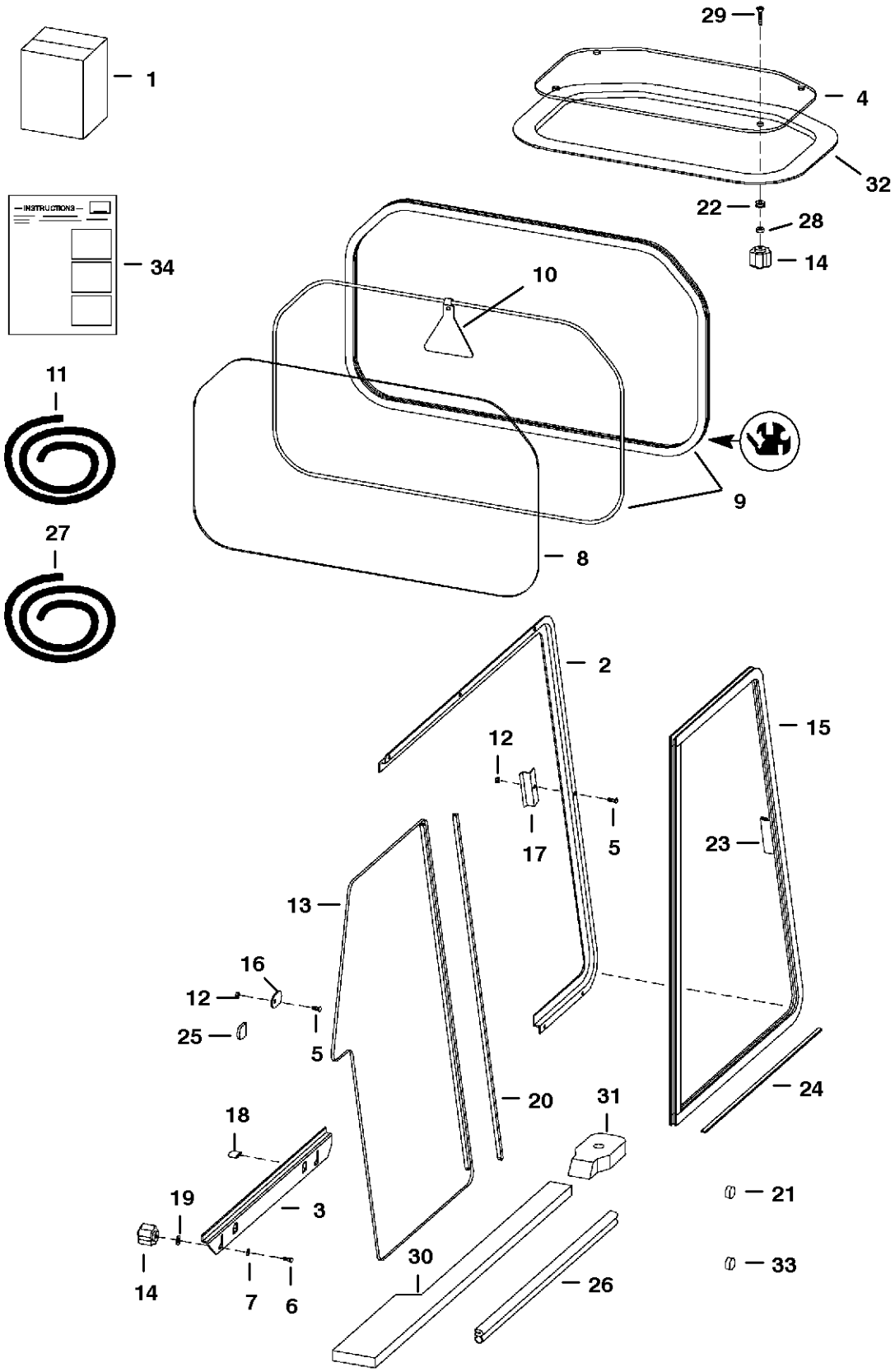

MS-1340

CAB WINDOWS

Ref.N°	Part N°	Description	Remarks	Serial N°	Qty.
1	SALES	KIT	top & rear window		1
1	SALES	KIT	side windows		1
2	6717870	TRACK	L.H. side		1
2	6717872	TRACK	R.H. side		1
3	6717871	TRACK	L.H. bottom		1
3	6717873	TRACK	R.H. bottom		1
4	6728629	WINDOW	assy. - w/seal & grommets		1
5	10C-410	BOLT			18
6	10C-416	BOLT			4
7	25E-14	WASHER			4
8	6717874	WINDOW	rear - 3/16' thick		1
8	6719413	WINDOW	rear - lexan		1
9	NAP	EXTRUSION	75.75' (1924mm) long - Order Ref. CAB WINDOWS(11)		1
9	NAP	CORD	75.75' (1924mm) long - Order Ref. CAB WINDOWS(11)		1
10	6559515	EXIT TAG			1
11	6675387	SEA;	bulk - sold per foot		x
11	6554149	CORD	bulk - sold per foot		x
12	59D-4	NUT			18
13	6674520	WINDOW	L.H. rear - W/Ref. CAB WINDOWS(24)		1
13	6674522	WINDOW	R.H. rear - W/Ref. CAB WINDOWS(24)		1
14	6681614	KNOB			8
15	6674519	WINDOW	L.H. front		1
15	6674521	WINDOW	R.H. front		1
16	6719063	STOP	window		2
17	6719037	STRIKER			2
18	6719065	COVER			4
19	6675212	RETAINER	tab bolt		4
20	6675833	SEAL	rear window - dual wiper w/tape		2
21	6657719	PLUG	for .75' dia. hole		2
22	6675545	GROMMET			4
23	6678283	HANDLE	side window - W/ tape & vendor instructions		2
24	6676927	FELT STRIP	20.38' (518mm) long		2
25	6677198	CAP	cab		2
26	NAP	SEAL	24' (609mm) long - Order Ref. CAB WINDOWS(27)		2
27	6555351	SEAL	bulk - sold per foot		x
28	6664085	BUSHING	nylon		4
29	91G-420	BOLT			4
30	6729010	SEAL	cab - main frame - L.H. - foam		1
30	6729009	SEAL	cab - main frame - R.H. - foam		1
31	6729011	SEAL	cab mount		2
32	NAP	SEAL	Order Ref. CAB WINDOWS(4)		1
33	6677973	PLUG	for .22' dia. hole		2
34	6901013	INSTRUCTIONS	top & rear windows		1
34	6900853	INSTRUCTIONS	side windows		1

DEBRIS SHIELD KIT

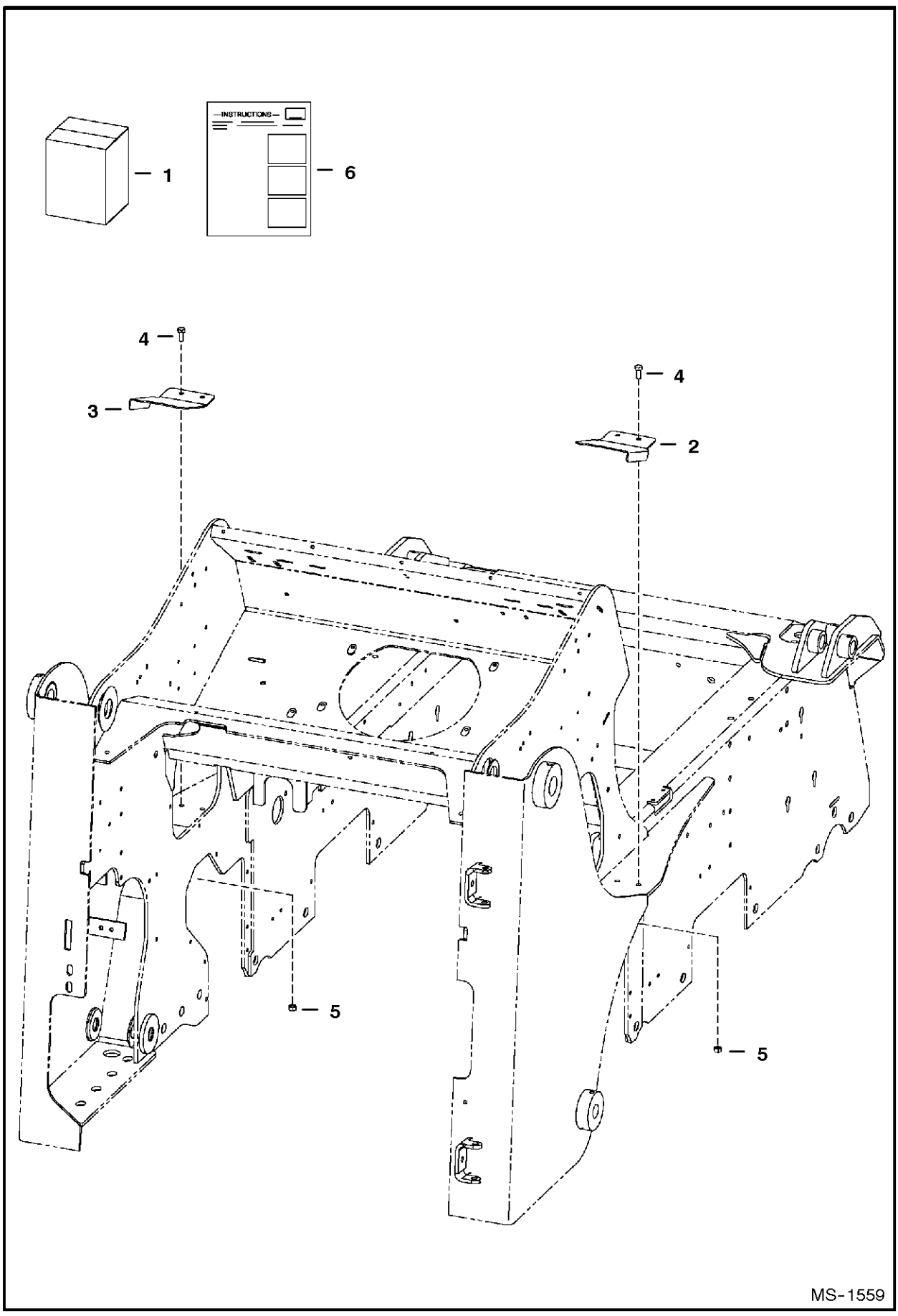

DEBRIS SHIELD KIT

Ref.N°	Part N°	Description	Remarks	Serial N°	Qty.
1	6734461	KIT	Ref. DEBRIS SHIELD KIT(2)-DEBRIS SHIELD KIT(6)		1
2	6734447	SHIELD	R.H.		1
3	6734446	SHIELD	L.H.		1
4	17C-614	BOLT			4
5	61D-6	NUT			4
6	6902252	INSTRUCTIONS			1

ELECTRICAL CONNECTOR KIT
(7-Pin)

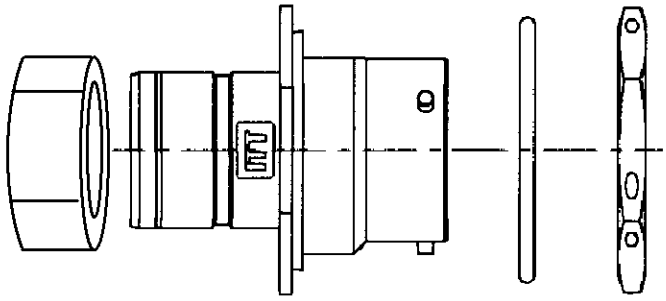

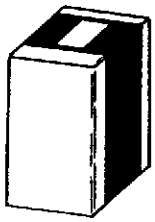

3

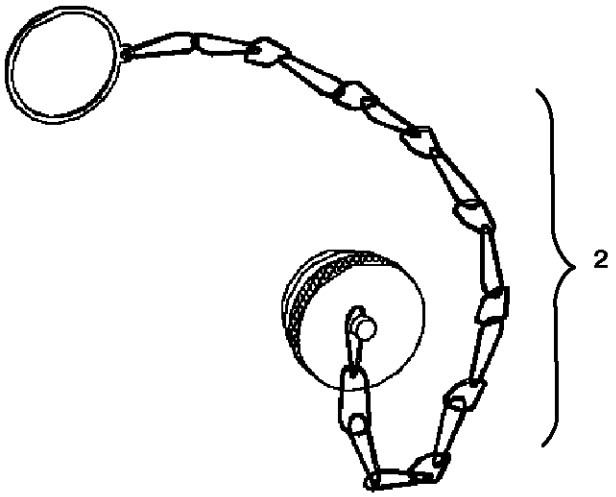

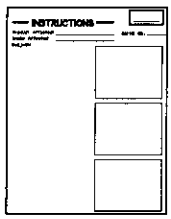

P-16385

ELECTRICAL CONNECTOR KIT

Ref.N°	Part N°	Description	Remarks	Serial N°	Qty.
1	6727176	KIT	Ref. ELECTRICAL CONNECTOR KIT(2)-ELECTRICAL CONNECTOR KIT(4)		1
2	6675026	CAP			1
3	6674802	CONNECTOR	7pin		1
4	6901076	INSTRUCTIONS			1

ELECTRICAL CONTROLS KIT
(7 Pin Attachments)

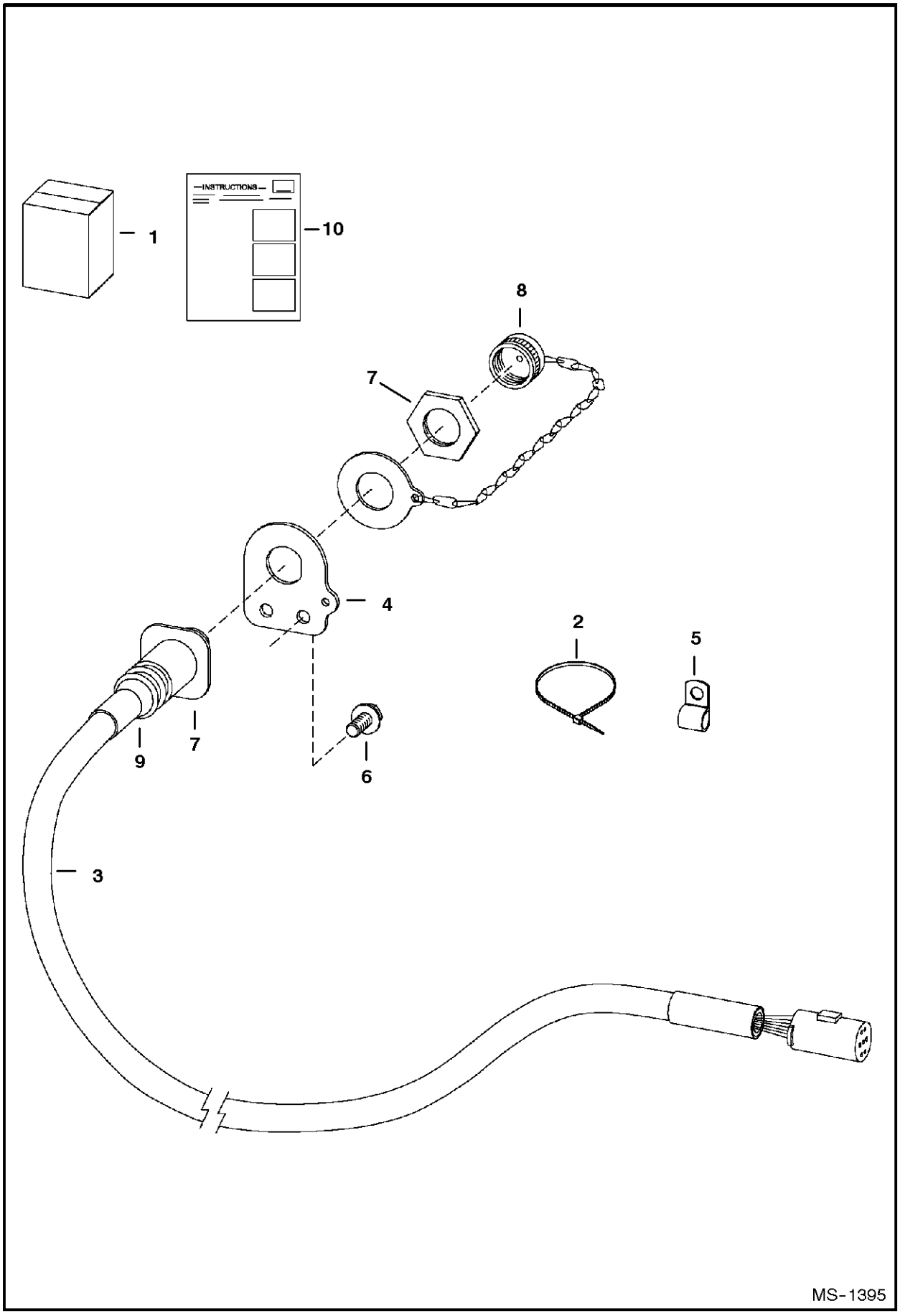

ELECTRICAL CONTROLS KIT

Ref.N°	Part N°	Description	Remarks	Serial N°	Qty.
1	6733142	KIT	Ref. ELECTRICAL CONTROLS KIT(3)-ELECTRICAL CONTROLS KIT(10)		1
2	6624289	STA-STRAP			4
3	6718426	HARNESS	W/Ref. ELECTRICAL CONTROLS KIT(4)		1
4	6718750	MOUNT			1
5	30H-27	CLAMP			6
6	84G-3112	BOLT			8
7	6674802	CONNECTOR	7pin - See Page ELECTRICAL CONNECTOR KIT(1)		1
7	6669549	SOCKET	small		4
7	6677136	SOCKET	large - 12 ga.		3
7	NSS	NUT	Order 6674802		1
8	6675026	CAP			1
9	6674799	ADAPTER	heat shrink		1
10	6901871	INSTRUCTIONS			1

ELECTRICAL CONTROLS KIT
(14 Pin Attachments)

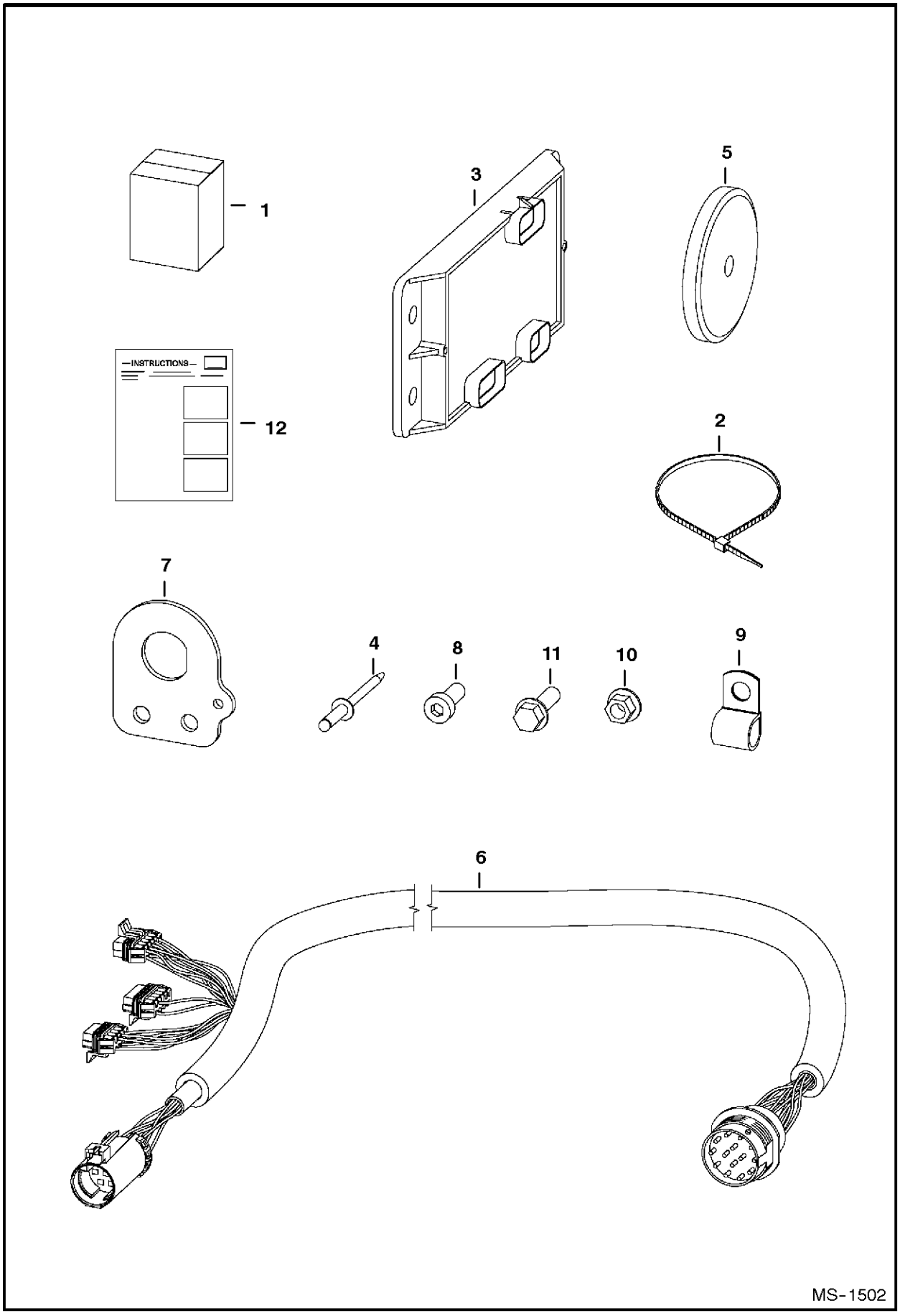

ELECTRICAL CONTROLS KIT

Ref.N°	Part N°	Description	Remarks	Serial N°	Qty.
1	6733136	KIT			1
2	6624289	STA-STRAP			4
3	6678675	CONTROLLER			1
4	6704892	RIVET			1
5	6719448	MAGNET			2
6	6732730	HARNESS			1
7	6733144	MOUNT			1
8	25G-612	BOLT			2
9	30H-50	CLAMP			6
10	83D-6	NUT			2
11	84G-3112	BOLT			8
12	6901872	INSTRUCTIONS			1

EUROPEAN ACCESSORIES
(Pedal Extenders)

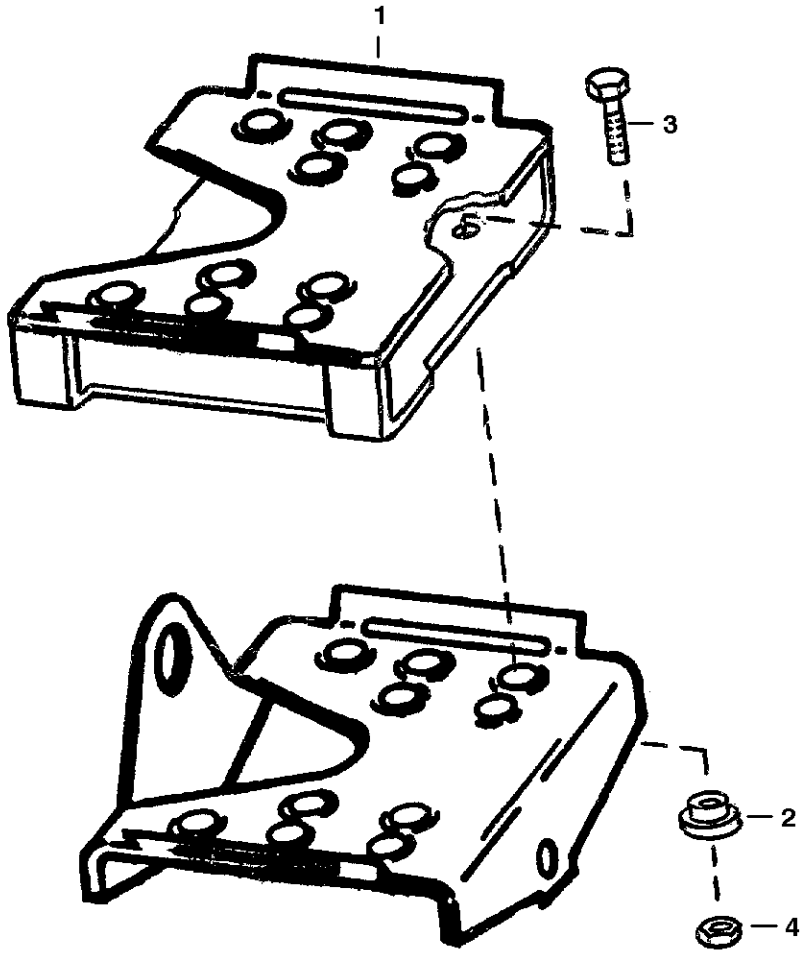

B-14856

EUROPEAN ACCESSORIES

Ref.N°	Part N°	Description	Remarks	Serial N°	Qty.
1	6713115	PEDAL	extender		2
2	6713116	BUSHING			8
3	17C-516	BOLT			8
4	85D-5	NUT			8

EUROPEAN ACCESSORIES
(Road Kit)

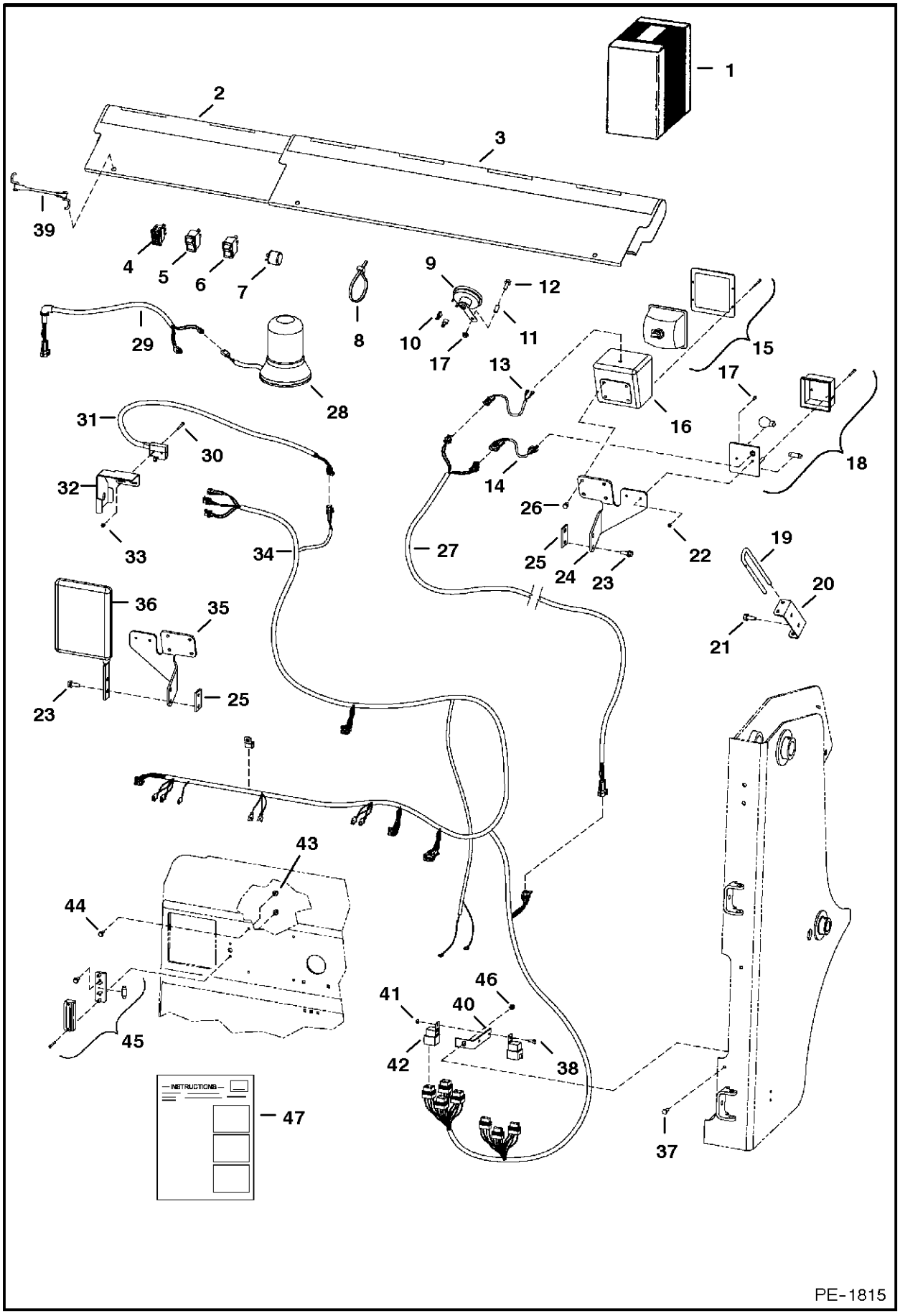

EUROPEAN ACCESSORIES

Ref.N°	Part N°	Description	Remarks	Serial N°	Qty.
1	SALES	KIT	Order 6731237 from SALES		1
2	6713841	SHIELD	bucket		1
3	6714820	SHIELD	bucket		1
3	6713840	DECAL			1
4	6676872	TURN SIGNAL			1
5	6668815	SWITCH	hazard		1
6	6668816	SWITCH	beacon		1
7	6557904	FLASHER			1
8	6624289	STA-STRAP			26
9	6671106	HORN			1
10	6675064	TERMINAL			2
11	6732206	SPACER			1
12	35C-536	BOLT			1
13	6713994	ADAPTER	adapter - headlight		2
14	6713993	ADAPTER	adapter - light		2
15	6665728	LIGHT	front		2
16	6707804	HOUSING			2
17	85G-808	SCREW			4
18	6665727	LIGHT	front turn		2
19	6731222	PIN	Bob-tach		1
20	6731973	HOLDER	pin		1
21	84G-3712	BOLT			2
22	12D-8	NUT			4
23	84G-3716	BOLT			4
24	6713151	MOUNT	light - R.H.		1
25	6735825	SPACER			2
26	17C-508	BOLT			8
27	6731239	HARNESS	boom light		2
28	6675523	BEACON	light		1
29	6718872	HARNESS	cab exterior		1
30	85G-616	BOLT			2
31	6661150	SWITCH			1
32	6713736	BRACKET			1
33	12D-6	NUT			2
34	6726430	HARNESS	engine/tail - Italian		1
35	6713150	MOUNT	light - L.H.		1
36	6665860	SIDE MIRROR	side mirror		1
37	17C-512	BOLT			1
38	17C-410	BOLT			2
39	6731819	STRAP	rubber		3
40	6702650	BRACKET	fuse		1
41	85D-4	NUT			2
42	6670312	SOLENOID	magnetic		4
43	83D-4	NUT			4
44	35C-410	BOLT			4
45	6665729	LIGHT	license plate		1
46	55D-5	NUT			2
47	6901663	INSTRUCTIONS			1

FIRE EXTINGUISHER

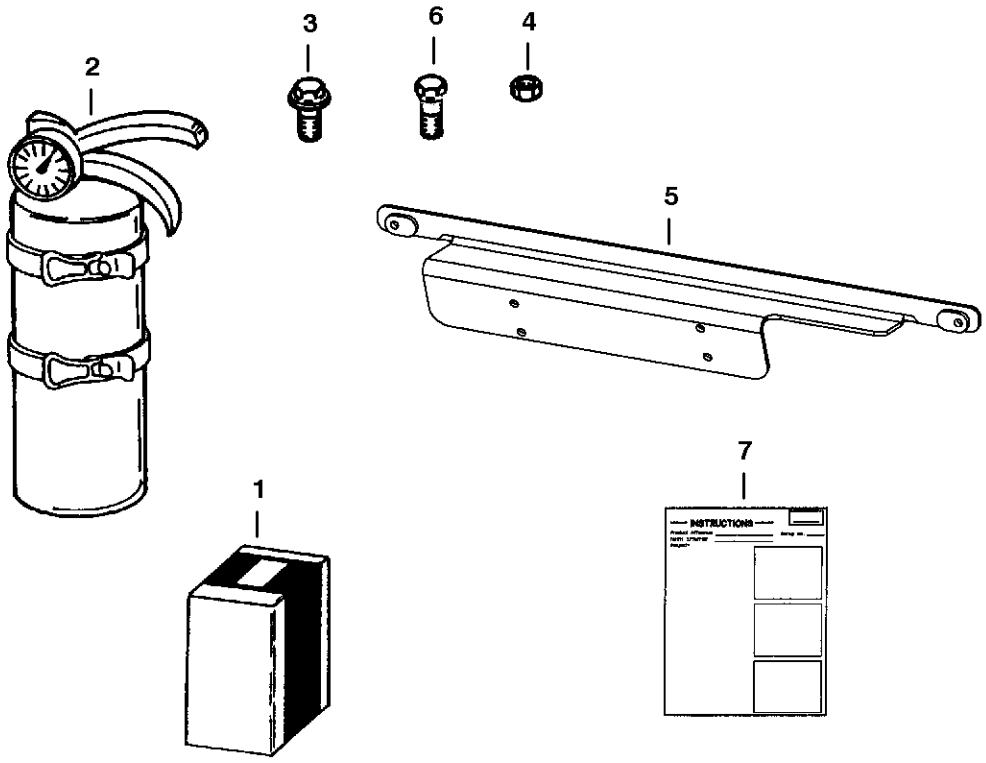

A-2386

FIRE EXTINGUISHER

Ref.N°	Part N°	Description	Remarks	Serial N°	Qty.
1	6725898	KIT	fire extinguisher - Ref. FIRE EXTINGUISHER(2)-FIRE EXTINGUISHER(7)		1
2	6675581	EXTINGUISHER			1
3	45G-1006	BOLT			4
4	12D-10	NUT			4
5	6725906	BRACKET			1
6	31C-410	BOLT			2
7	6901025	INSTRUCTIONS			1

FLASHER LIGHTS
(4-Way) (Turn Indicators)

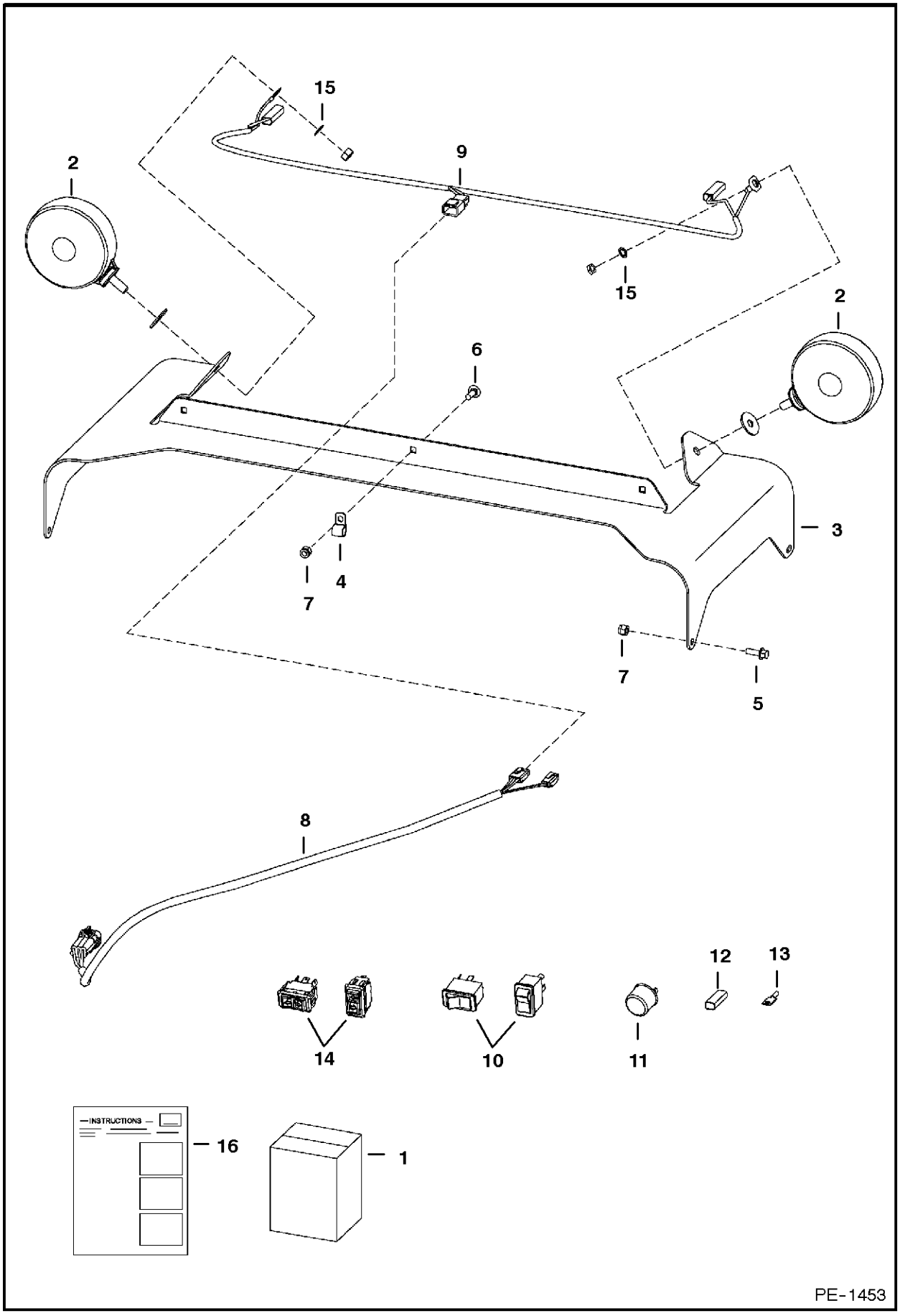

FLASHER LIGHTS

Ref.N°	Part N°	Description	Remarks	Serial N°	Qty.
1	6718411	KIT	Ref. FLASHER LIGHTS (2), FLASHER LIGHTS (3) & FLASHER LIGHTS (5)-FLASHER LIGHTS (16)		1
2	6517516	LIGHT			2
3	6718326	MOUNT			1
4	30H-21	CLAMP	not in kit		3
5	35C-412	BOLT			4
6	37C-412	BOLT			3
7	59D-4	NUT			7
8	6718872	HARNESS	ext. cab		1
9	6718873	HARNESS	4-way flasher		1
10	6665316	SWITCH	horizontal		1
10	6668815	SWITCH	vertical		1
11	6557904	FLASHER			1
12	614142	SLEEVE			1
13	6515131	TERMINAL			1
14	6675835	TURN SIGNAL	horizontal		1
14	6676872	TURN SIGNAL	vertical		1
15	6E-5	WASHER	lock		2
16	6900848	INSTRUCTIONS			1

F.O.P.S. KIT

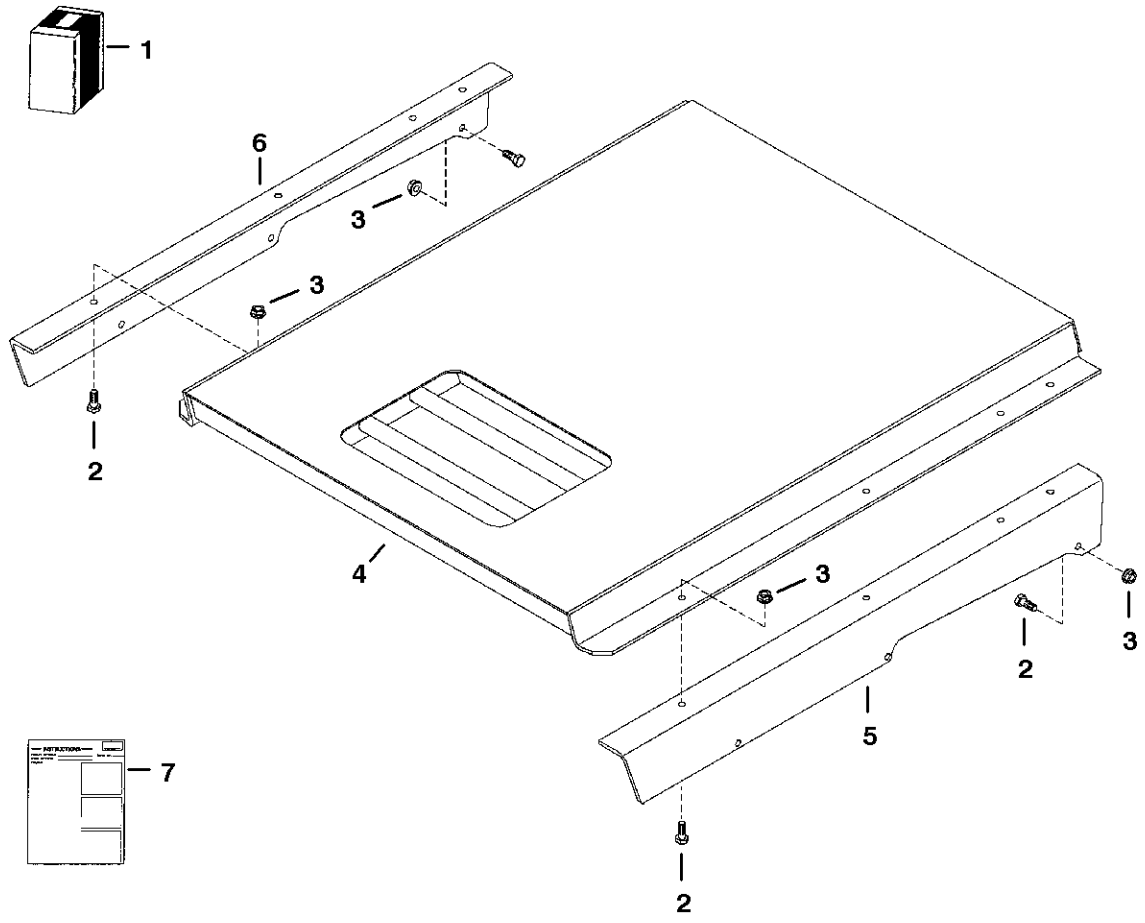

TS-2052

F.O.P.S. KIT

Ref.N°	Part N°	Description	Remarks	Serial N°	Qty.
1	6718924	KIT	Ref. F.O.P.S. KIT(2)-F.O.P.S. KIT(7)		1
2	17C-616	BOLT			14
3	83D-6	NUT			14
4	6702402	SHIELD			1
5	6718833	BRACKET	L.H.		1
6	6718834	BRACKET	R.H.		1
7	6720592	INSTRUCTIONS			1

FRONT AUXILIARY
(Right Hand Kit)

NOTE: This front aux kit requires the rear aux kit (6732356) or factory installed option in order to operate.

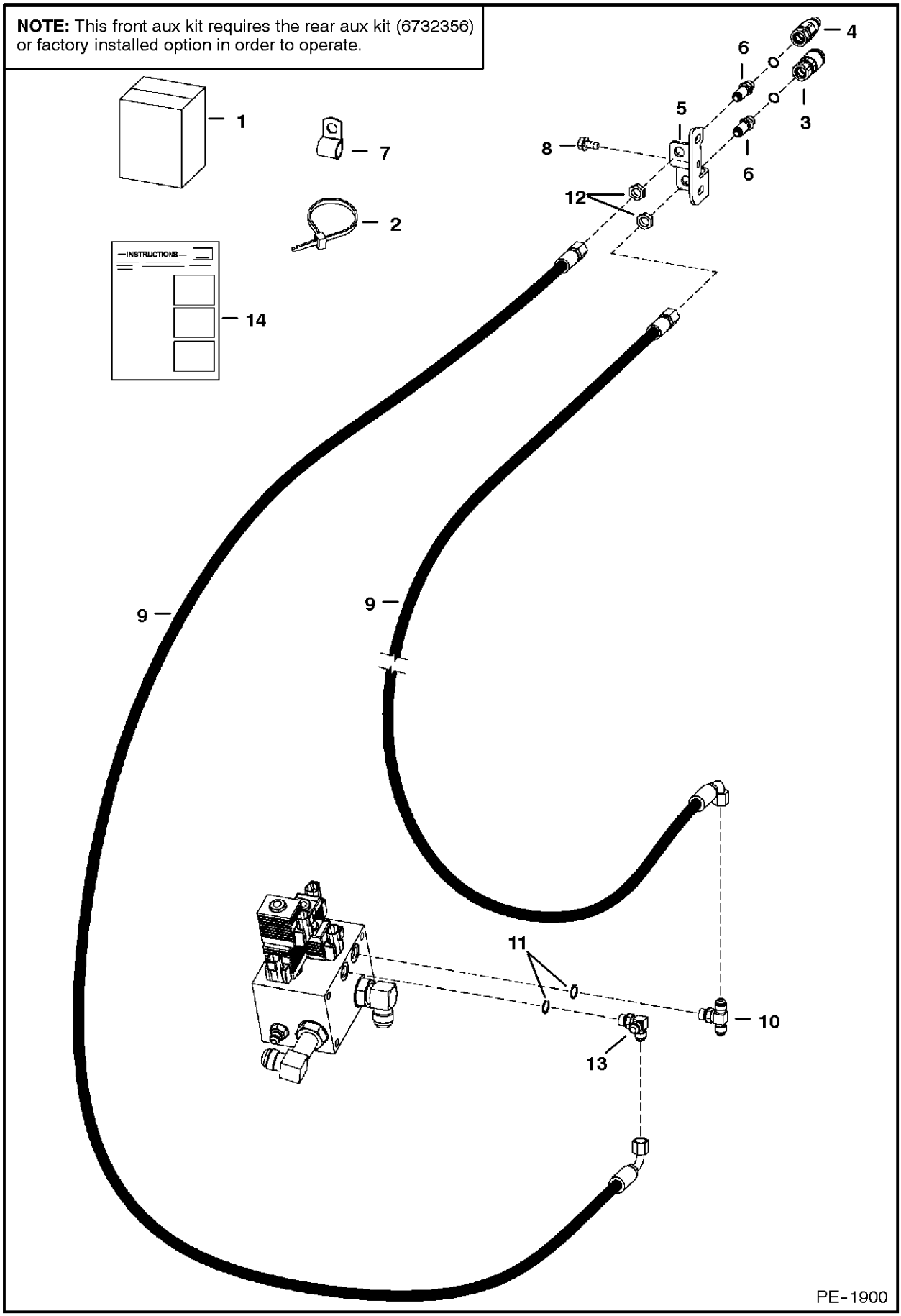

FRONT AUXILIARY

Ref.N°	Part N°	Description	Remarks	Serial N°	Qty.
1	6736655	KIT			1
2	6624289	STA-STRAP			10
3	6667803	QUICK COUPLER	female		1
4	6667804	QUICK COUPLER	male		1
4	6669657	O-RING			x
5	6711674	BRACKET	quick coupler		1
6	6716089	CONNECTOR	bulkhead		2
7	31H-42	CLAMP			4
8	84G-3716	BOLT			6
9	6736664	HOSE			2
10	19KB-606	TEE	W/Ref. FRONT AUXILIARY(11)		2
11	79K-6	O-RING			x
12	86F-5	NUT			2
13	6725182	TEE	W/Ref. FRONT AUXILIARY(11)		1
14	6901916	INSTRUCTIONS			1

GAS SPRING KIT

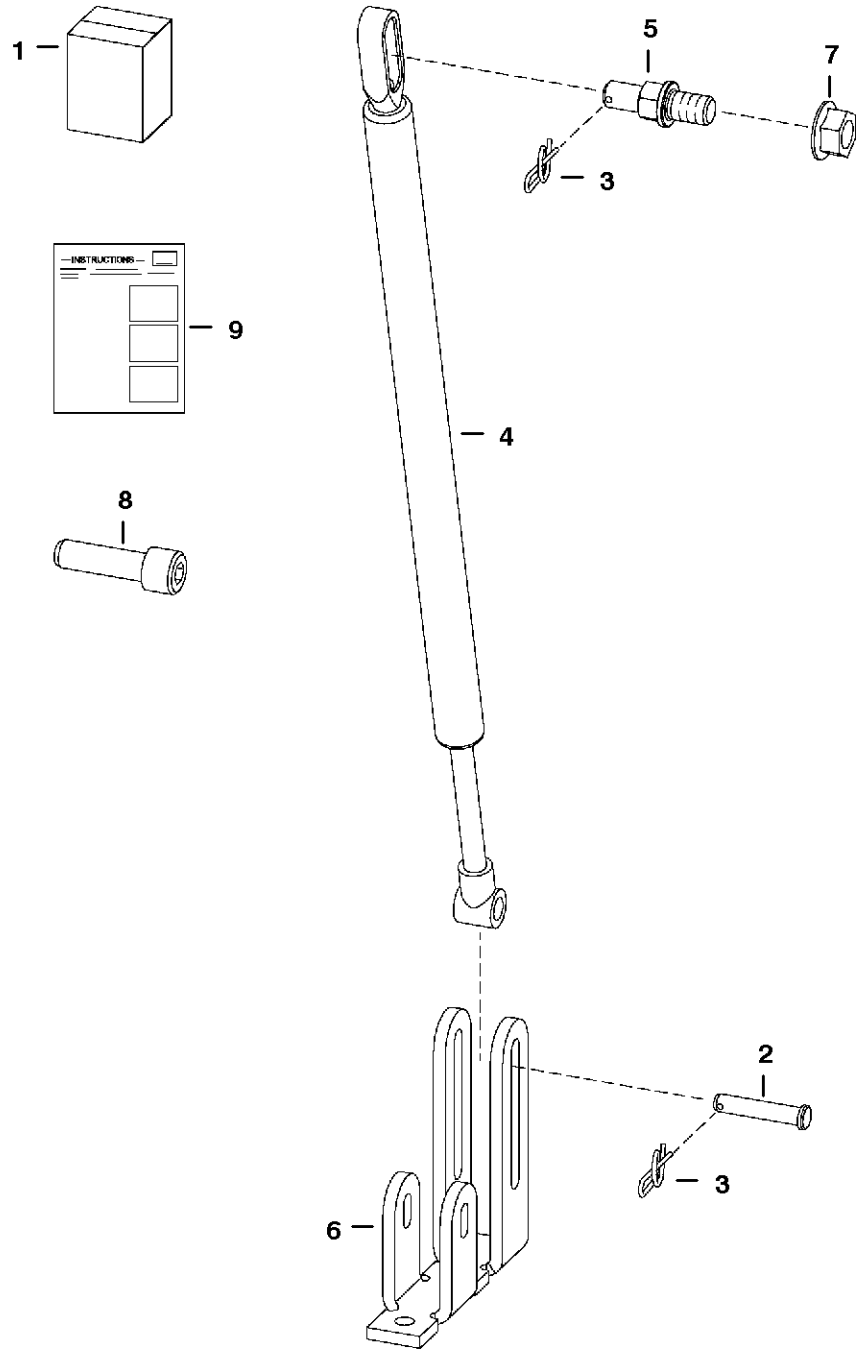

PE-1710

GAS SPRING KIT

Ref.N°	Part N°	Description	Remarks	Serial N°	Qty.
1	6732928	KIT			1
2	6567743	PIN			1
3	6631418	PIN			2
4	6678292	GAS SPRING			1
5	6719064	MOUNT			1
6	6729141	MOUNT			1
7	97D-8	NUT			1
8	21G-804	BOLT			1
9	6901816	INSTRUCTIONS			1

HEATER & A/C
(Heater Plumbing Kit)

NOTE: For Heater Kit See Page 294.

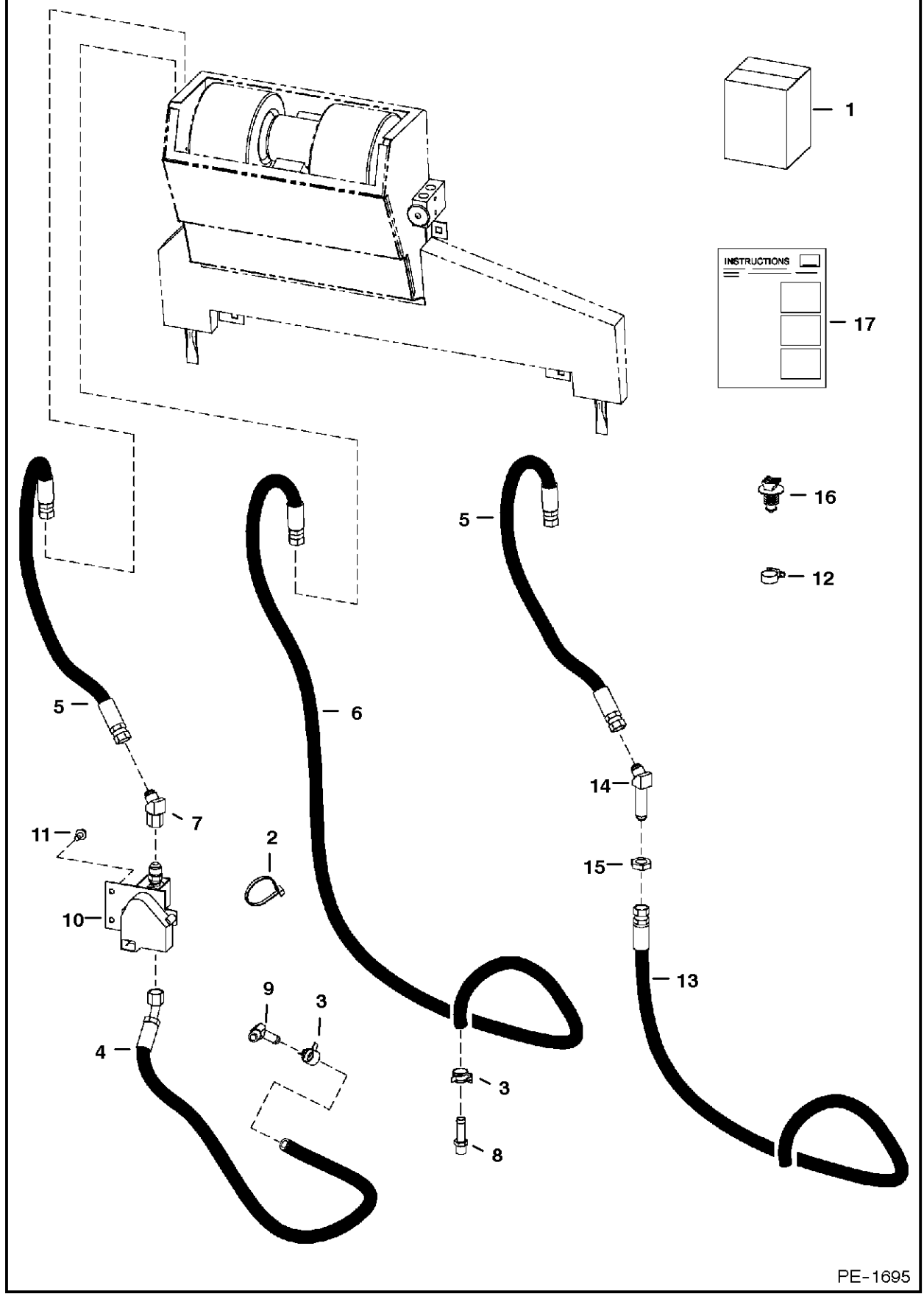

HEATER & A/C

Ref.N°	Part N°	Description	Remarks	Serial N°	Qty.
1	6733960	KIT	Ref. HEATER & A/C(2) - HEATER & A/C(7)		1
2	6624289	STA-STRAP			3
3	5HM-20	CLAMP			2
4	6733432	HOSE			1
5	6732817	HOSE		& Bel.	1
5	6732817	HOSE	not in kit	& Abv.	2
6	6733433	HOSE		& Bel.	1
7	12K-6	ELBOW		& Abv.	1
8	6731084	CONNECTOR			1
9	6731085	ELBOW			1
10		VALVE	heater - not in kit - See Page HEATER & A/C(4)		1
11	84G-3110	BOLT	not in kit		2
12	6669091	CLIP			5
13	6734519	HOSE	not in kit		1
14	46K-6	ELBOW	45 degrees - not in kit		1
15	86F-6	NUT	not in kit		1
16	6678666	MOUNT			2
17	6902356	INSTRUCTIONS			1

HEATER & A/C
(Heater Kit)

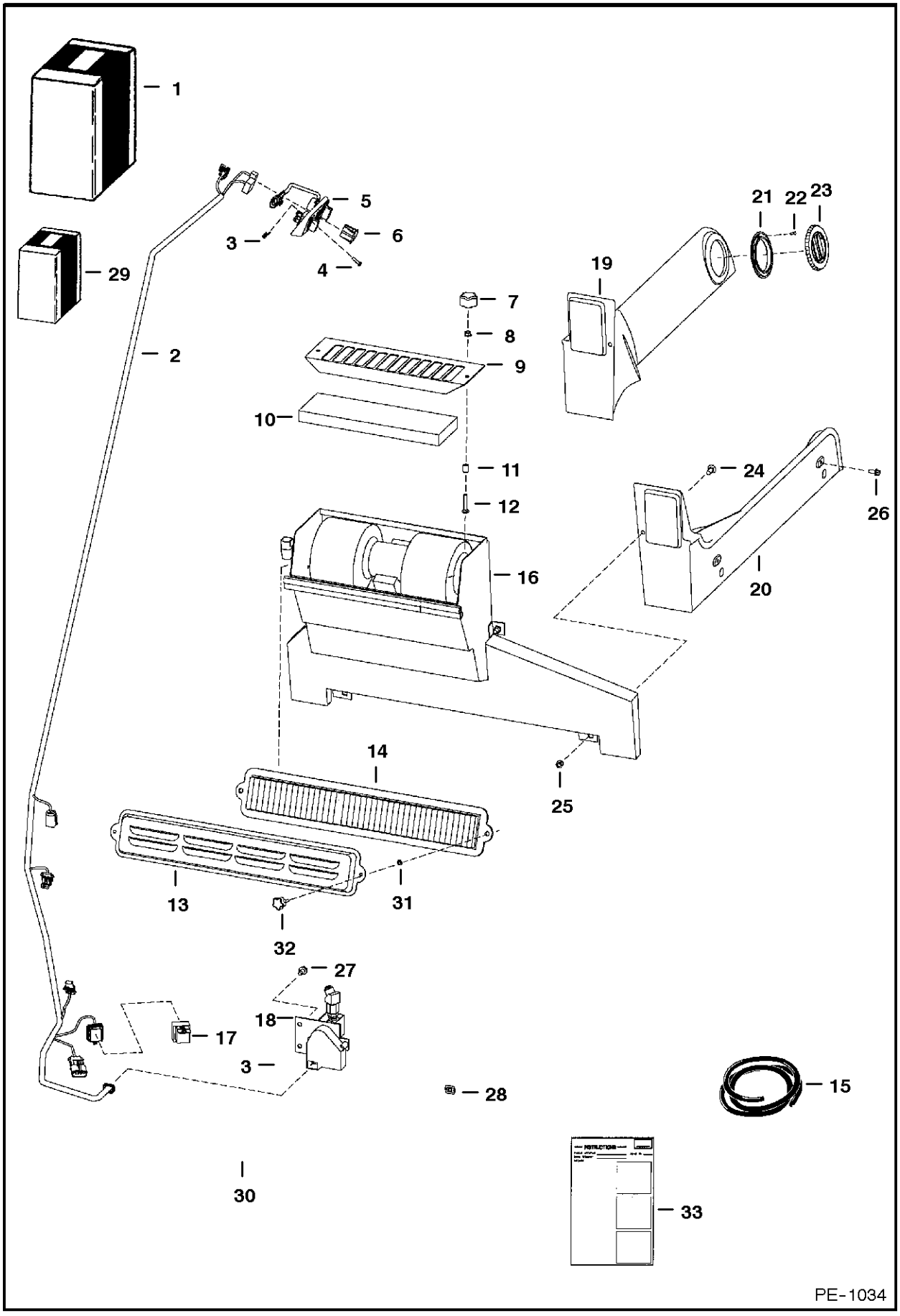

HEATER & A/C

Ref.N°	Part N°	Description	Remarks	Serial N°	Qty.
1	6718803	HEATER KIT	Ref. HEATER & A/C(2)-HEATER & A/C(28) & HEATE R & A/C(33)		1
2	6725933	HARNESS	HVAC - W/Ref. HEATER & A/C(17)		1
2	6725273	HARNESS	AHC		1
3	6669091	CLIP	retainer		3
4	6669224	BOLT			3
5	6675176	SWITCH	blower		1
5	6675177	KNOB			1
5	6675846	POTENTIOMETER			1
5	6674228	PANEL	control		1
5	6640699	CONNECTOR			1
5	6718579	DECAL			1
5	6718887	PANEL			1
6	6675181	PLUG	switch hole - AC		1
7	6681614	KNOB			2
8	83D-4	NUT			2
9	6718175	SCREEN	filter		1
10	6678207	FILTER	recirculation		1
11	6718837	SPACER			2
12	37C-424	BOLT			2
13	6727847	COVER			1
14	6677983	FILTER			1
15	6513152	SEAL	bulk - Sold Per Foot		x
16		HEATER	See Page HEATER & A/C(5)		1
17	6670312	SOLENOID	relay		1
18	6682459	VALVE			1
18	6675175	BRACKET			1
18	6675172	BRACKET			1
18	6680054	ACTUATOR			1
18	6675174	BODY			1
18	6677628	SHAFT ADAPTER			1
19	6717644	DUCT	L.H.		1
20	6717643	DUCT	R.H.		1
21	6675179	FLANGE	round		4
22	57G-608	SCREW			16
23	6674231	VENT	round		4
24	37C-512	BOLT			4
25	59D-5	NUT			4
26	35C-410	BOLT			4
27	84G-3110	BOLT			2
28	774220	NUT	spring		2
29	6725513	DECAL PACKAGE	decal		1
30	NAP	SEAL	16.25' (413mm) long - Order Ref. HEATER & A/C(15)		1
31	6676516	NUT	push		2
32	6726386	KNOB			2
33	6900850	INSTRUCTIONS			1

HEATER & A/C
(Heater Assembly)

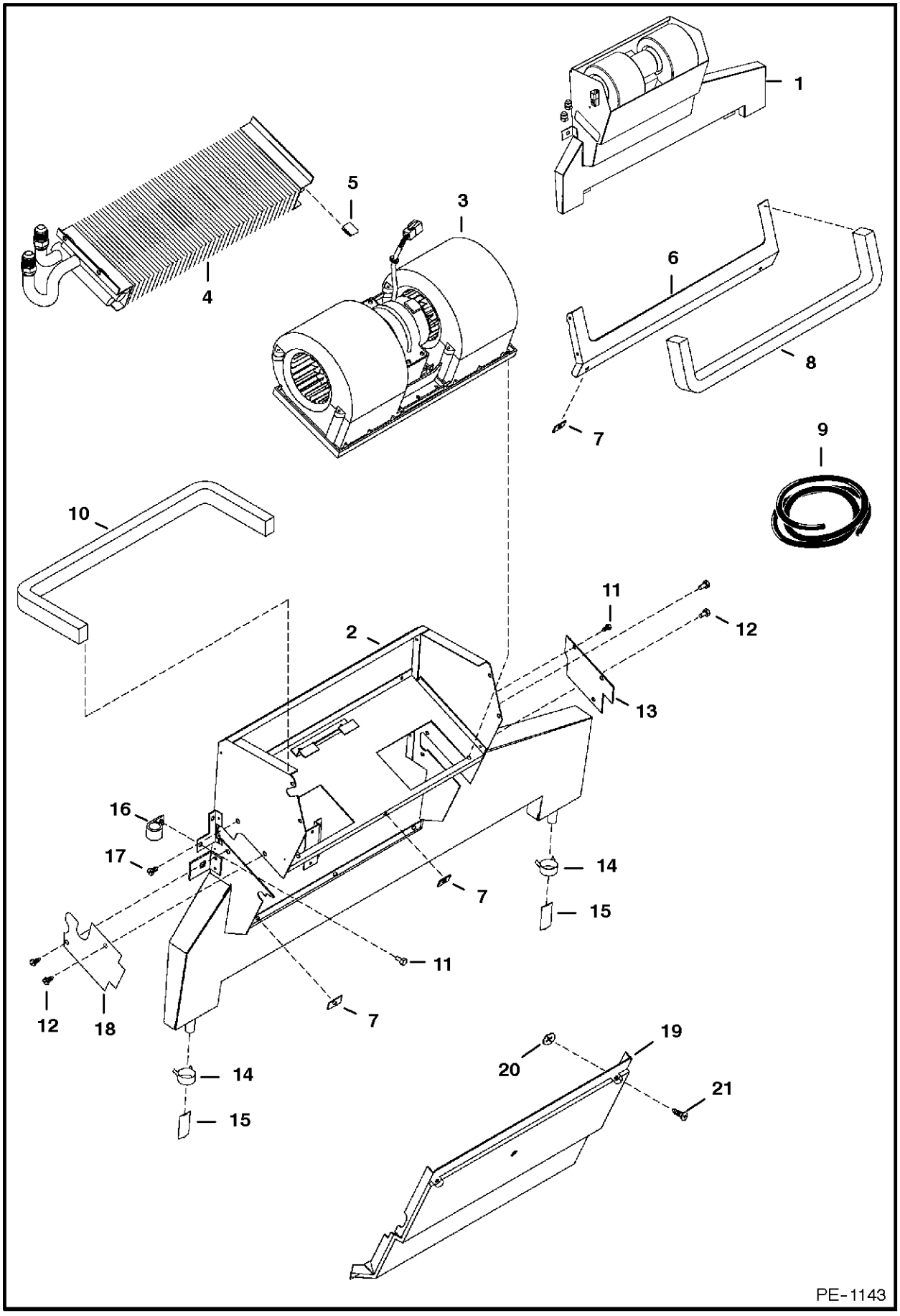

HEATER & A/C

Ref.N°	Part N°	Description	Remarks	Serial N°	Qty.
1	6676562	HEATER	assy - Ref. HEATER & A/C(2)-HEATER & A/C(11)		1
2	6677108	HOUSING			1
3	6675497	BLOWER	assy - See Page HEATER & A/C(6)		1
4	NAP	COIL	heater - See Page HEATER & A/C(9)		1
5	6676539	CLIP			2
6	6678152	SEAL			1
7	6677115	RECEPTACLE			6
8	NAP	SEAL'	22.6' (575mm) long - Order Ref. HEATER & A/C(9)		1
9	6677111	SEAL	bulk - Sold Per Foot		x
10	NAP	SEAL	25' (635mm) long - Order Ref. HEATER & A/C(9)		1
11	6677118	SCREW	w/washer		3
12	6677119	SCREW	sheetmetal		7
13	6677105	COVER			1
14	6675510	CLAMP	drain hose		2
15	6675511	DRAIN VALVE			2
16	6675512	CLAMP	hose		2
17	6676653	SCREW			1
18	6677504	COVER			1
19	6678151	COVER			1
20	6677116	RETAINER			6
21	6677117	SCREW	captive		6
22	6676606	SPACER			1

HEATER & A/C
(Blower Assembly)

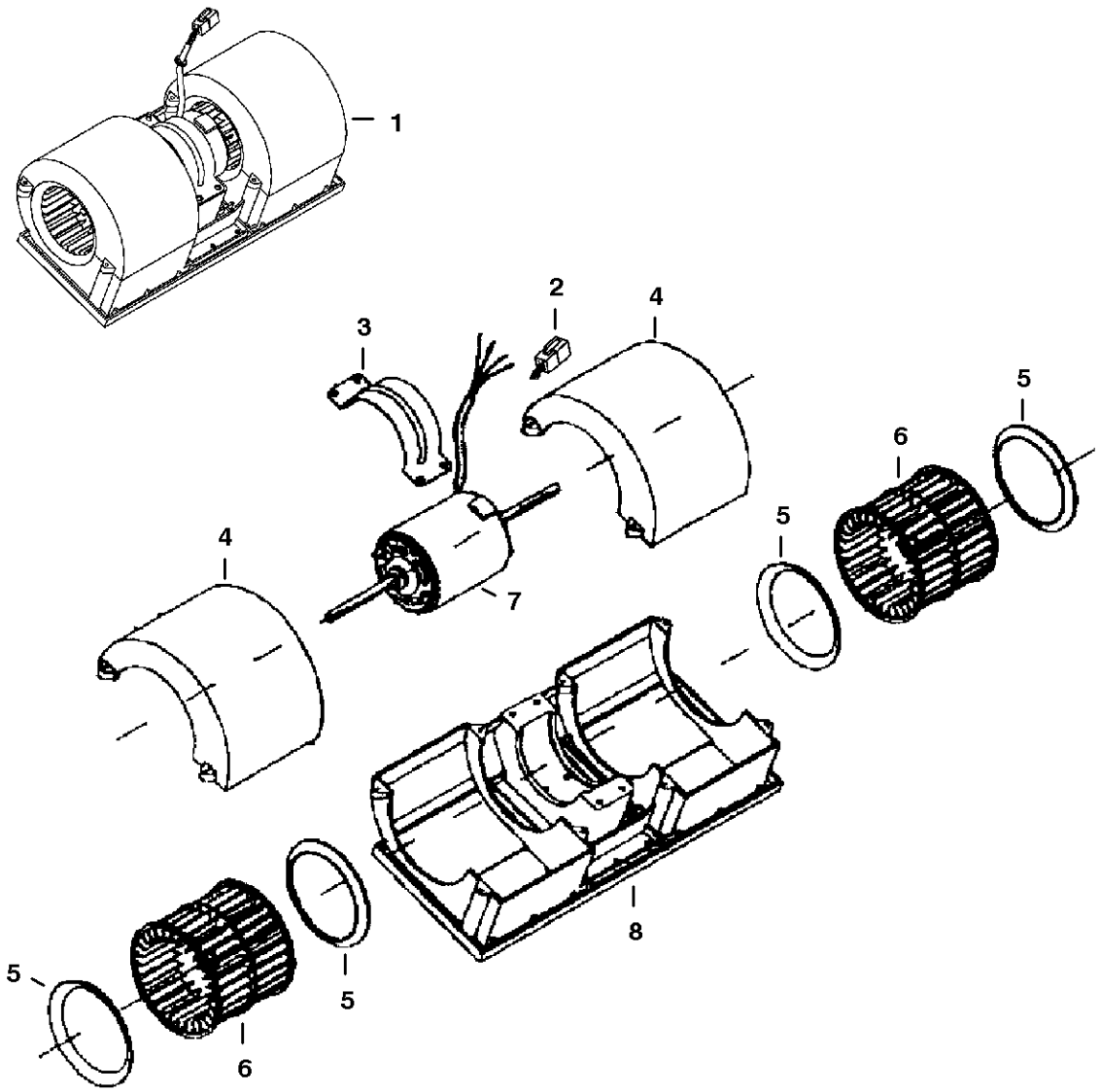

HEATER & A/C

Ref.N°	Part N°	Description	Remarks	Serial N°	Qty.
1	6675497	BLOWER	Ref. HEATER & A/C(2)-HEATER & A/C(8)		1
2	6662246	CONNECTOR	6pin		1
2	6662252	LOCK	6pin		1
2	6662257	PIN			4
2	6665370	PLUG			2
3	6675506	MOUNT			1
4	6675507	COVER			2
5	6675504	RING			4
6	6675505	BLOWER WHEEL			2
6	6676618	CLIP			2
7	6675509	MOTOR	W/Ref. HEATER & A/C(2)		1
8	6675503	HOUSING			1

HEATER & A/C
(Blower Seal Kit)

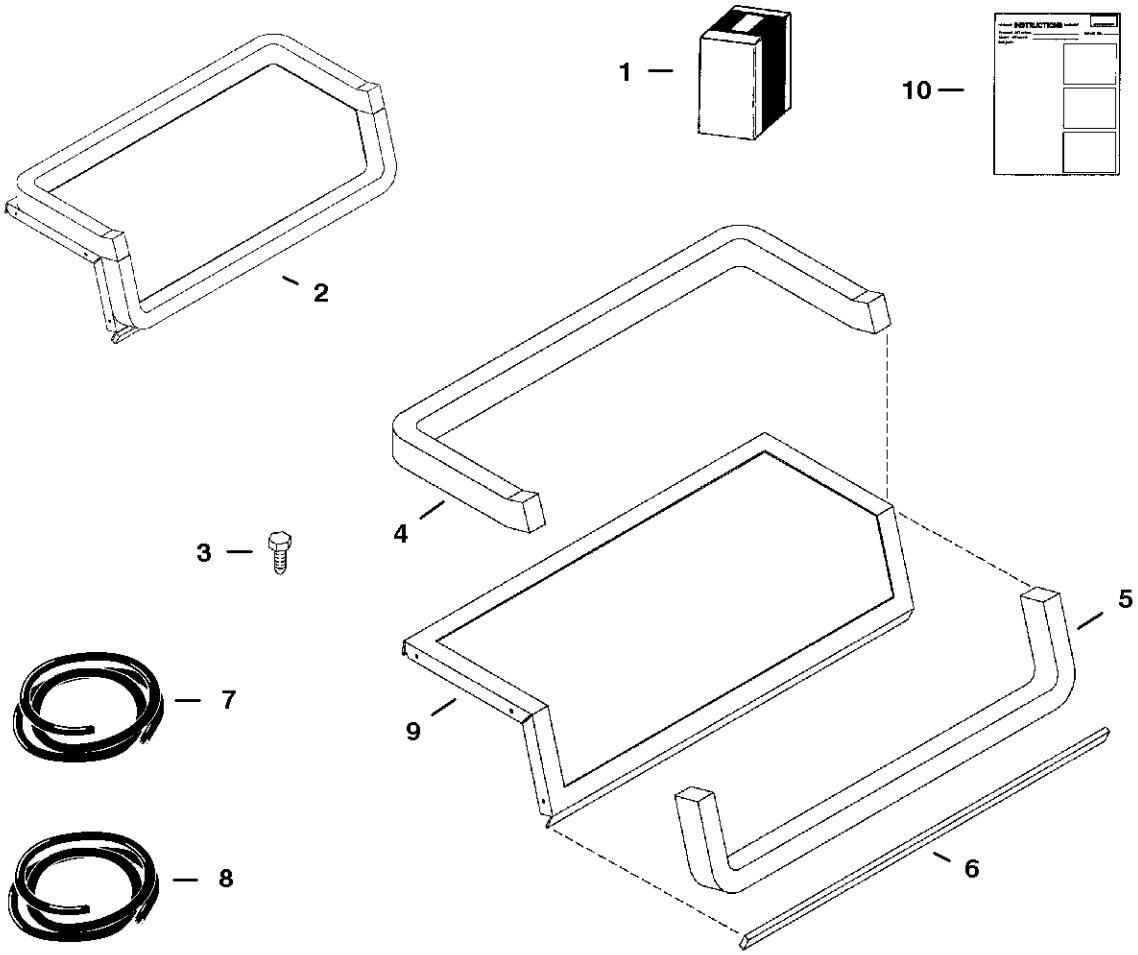

PE-1151

HEATER & A/C

Ref.N°	Part N°	Description	Remarks	Serial N°	Qty.
1	6728567	KIT	blower seal - W/Ref. HEATER & A/C(2), HEATER & A/C(3) & HEATER & A/C(10)		1
2	NSS	FLANGE SEAL	assy - Ref. HEATER & A/C(4), HEATER & A/C(5), HEATER & A/C(6) & HEATER & A/C(9) - Order Ref. HEATER & A/C(1)		1
3	6726621	SCREW			7
4	NAP	SEAL	27' (686mm) long - Order Ref. HEATER & A/C(8)		1
5	NAP	SEAL	21' (534mm) long - Order Ref. HEATER & A/C(8)		1
6	NAP	SEAL	15' (384mm) long - Order Ref. HEATER & A/C(7)		1
7	6675611	SEAL	bulk - Sold Per Foot		x
8	6677111	SEAL	bulk - Sold Per Foot		x
9	NSS	FLANGE	Order Ref. HEATER & A/C(1)		1
10	6901213	INSTRUCTIONS			1

HEATER & A/C
(Insulation)

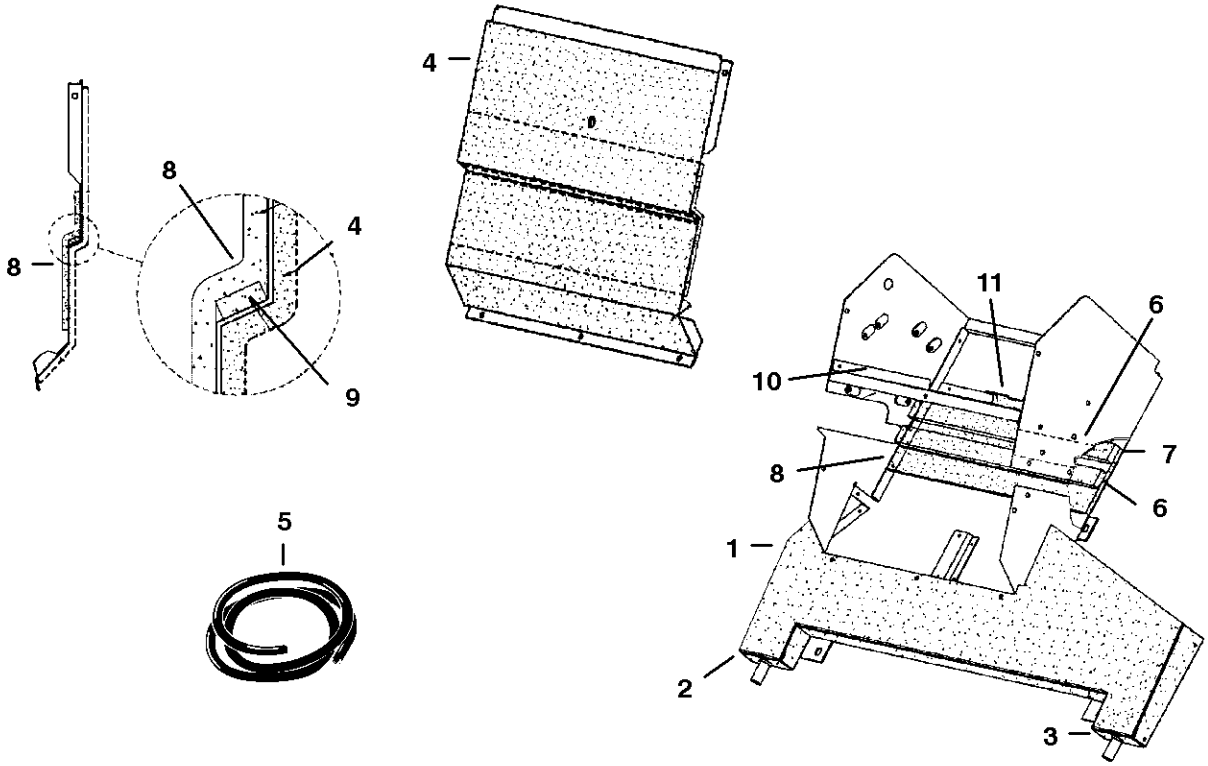

B-16402

HEATER & A/C

Ref.N°	Part N°	Description	Remarks	Serial N°	Qty.
1	6675607	INSULATION			1
2	6675608	INSULATION			1
3	6675609	INSULATION			1
4	6675610	INSULATION			1
5	6675611	SEAL	bulk - Sold Per Foot		x
6	6675612	INSULATION			2
7	6675613	INSULATION			1
8	6675614	INSULATION			2
9	NAP	SEAL	15' (381mm) long - Order Ref. HEATER & A/C(5)		1
10	NAP	SEAL	5.5' (140mm) long - Order Ref. HEATER & A/C(5)		1
11	NAP	SEAL	4' (102mm) long - Order Ref. HEATER & A/C(5)		1

HEATER & A/C
(Heater Coil Kit)

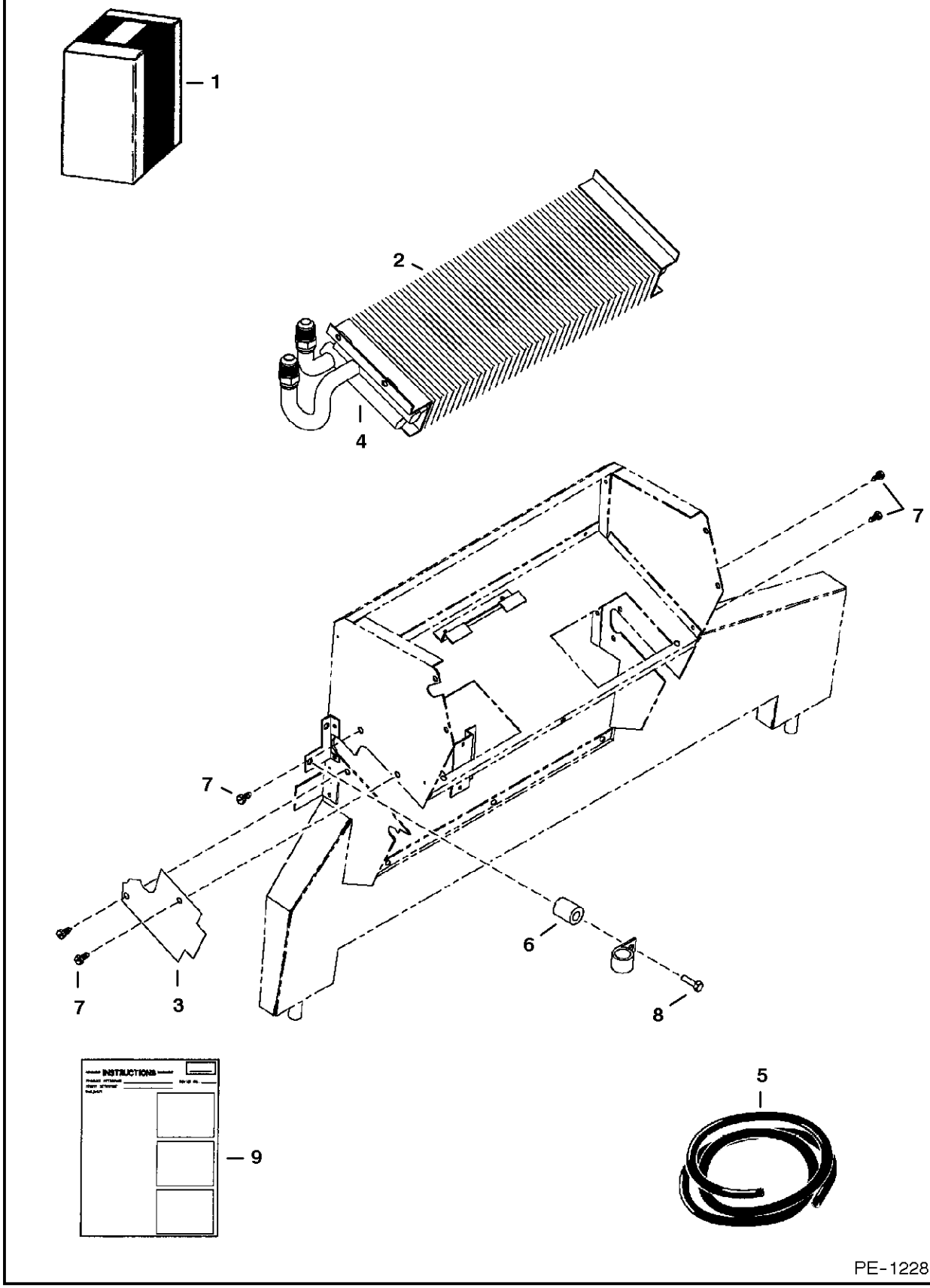

HEATER & A/C

Ref.N°	Part N°	Description	Remarks	Serial N°	Qty.
1	6728990	KIT	heater coil - W/Ref. HEATER & A/C(2)-HEATER & A/C(9)		1
2	NAP	HEATER COIL	Order 6728990		1
3	6676604	COVER	.279' (7,1mm) thick		1
4	NAP	INSULATION	6 (152mm) long - Order Ref. HEATER & A/C(5)		1
5	6676538	INSULATION	bulk - Sold Per Foot		x
6	6676606	SPACER			1
7	6677579	SCREW			4
8	6676653	SCREW			1
9	6901120	INSTRUCTIONS			1

HEATER & A/C
(A/C Kit)

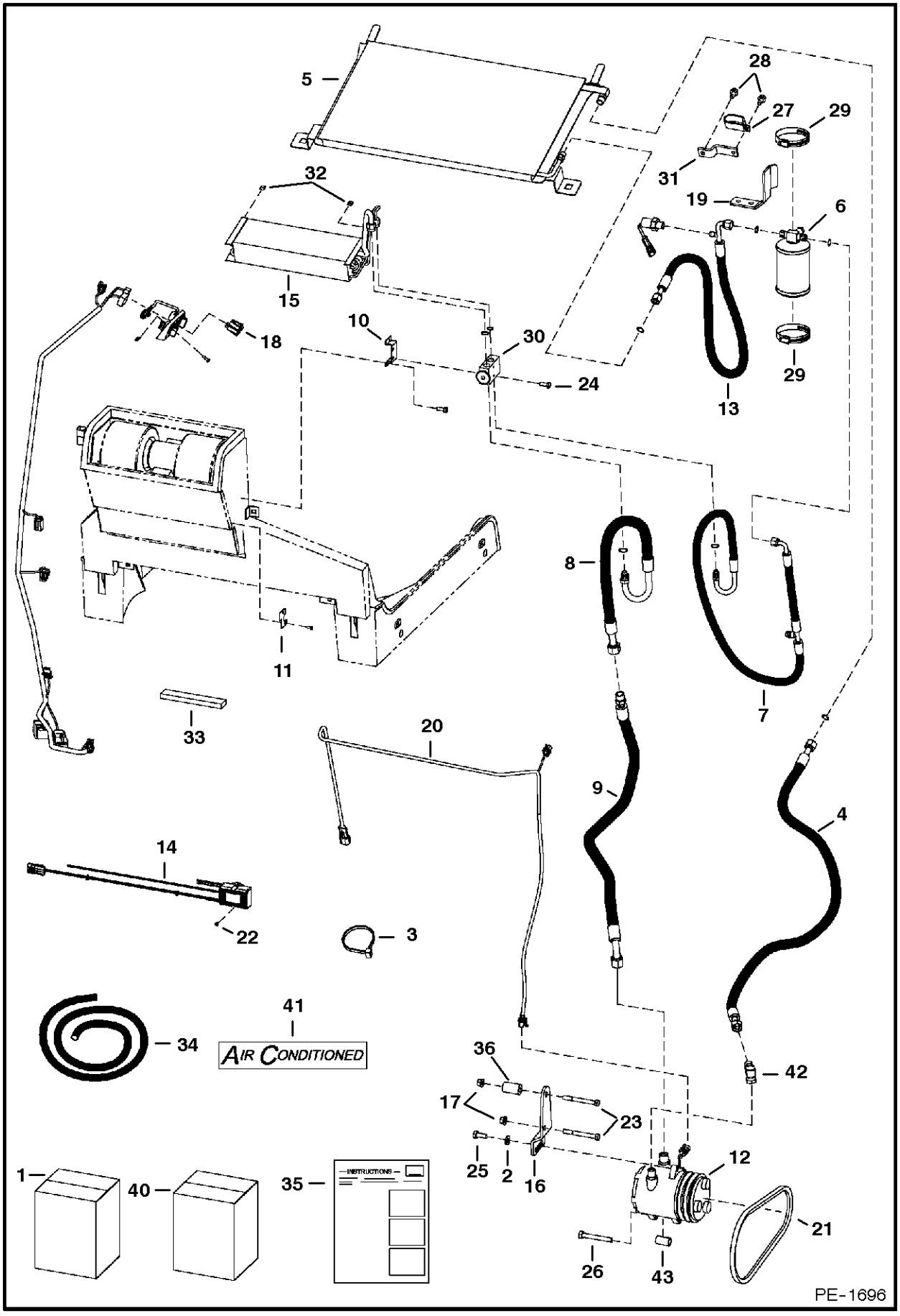

HEATER & A/C

Ref.N°	Part N°	Description	Remarks	Serial N°	Qty.
1	6734109	KIT	Ref. HEATER & A/C(2)-HEATER & A/C(35)		1
2	6557831	WASHER			1
3	6624289	STA-STRAP			1
4	6678284	HOSE	AC		1
5	6674234	CONDENSER			1
6	6674235	RECEIVER DRIER	reciever		1
6	6676062	RELIEF VALVE	relief		1
7	6675075	HOSE	AC - W/Ref. HEATER & A/C(37)		1
7	6677122	CAP			1
8	6675076	HOSE	AC - W/Ref. HEATER & A/C(39)		1
8	6677121	CAP			1
9	6678285	HOSE	AC - W/Ref. HEATER & A/C(39)		1
10	6676984	BRACKET	valve		1
11	6677105	COVER	plate		1
12	6733655	COMPRESSOR	w/Ref. HEATER & A/C(43)		1
12		CLUTCH			1
13	6675685	HOSE	AC - W/Ref. HEATER & A/C(37)		1
13	6675779	SWITCH	W/harness		1
13	6676399	VALVE CORE			1
14	6683004	THERMOSTAT			1
15	6683003	COIL	evaporator		1
16	6730265	MOUNT	compressor		1
17	83D-6	NUT			2
18	6719176	SWITCH	rocker		1
19	6719459	MOUNT	reciever drier		1
20	6719630	HARNESS	AC		1
21	6730819	BELT	compressor		1
22	6726621	SCREW			2
23	1CM-635	BOLT			2
24	17C-656	BOLT			2
25	5CM-1025	BOLT			1
26	5CM-1080	BOLT			1
27	31H-42	CLAMP			1
28	84G-3710	BOLT			2
29	44H-48	CLAMP			2
30	6675534	BLOCK VALVE			1
31	6727326	MOUNT	clamp		1
32	6676539	CLIP			2
33	NAP	INSULATION	tape - 6' (152mm) long - Order Ref. HEATER & A/C(34)		1
34	6676538	INSULATION	bulk - sold per foot		x
35	6902295	INSTRUCTIONS			1
36	6730266	SPACER			1
37	6675824	O-RING	#6		x
38	6675538	O-RING	#8		x
39	6675825	O-RING	#10		x
40	6676063	KIT	fitting caps		1
41	6729077	DECAL	air conditioned		2
42	6731255	ELBOW			1
43	6732732	BUSHING			1

HEATER & A/C
(HVAC Assembly)

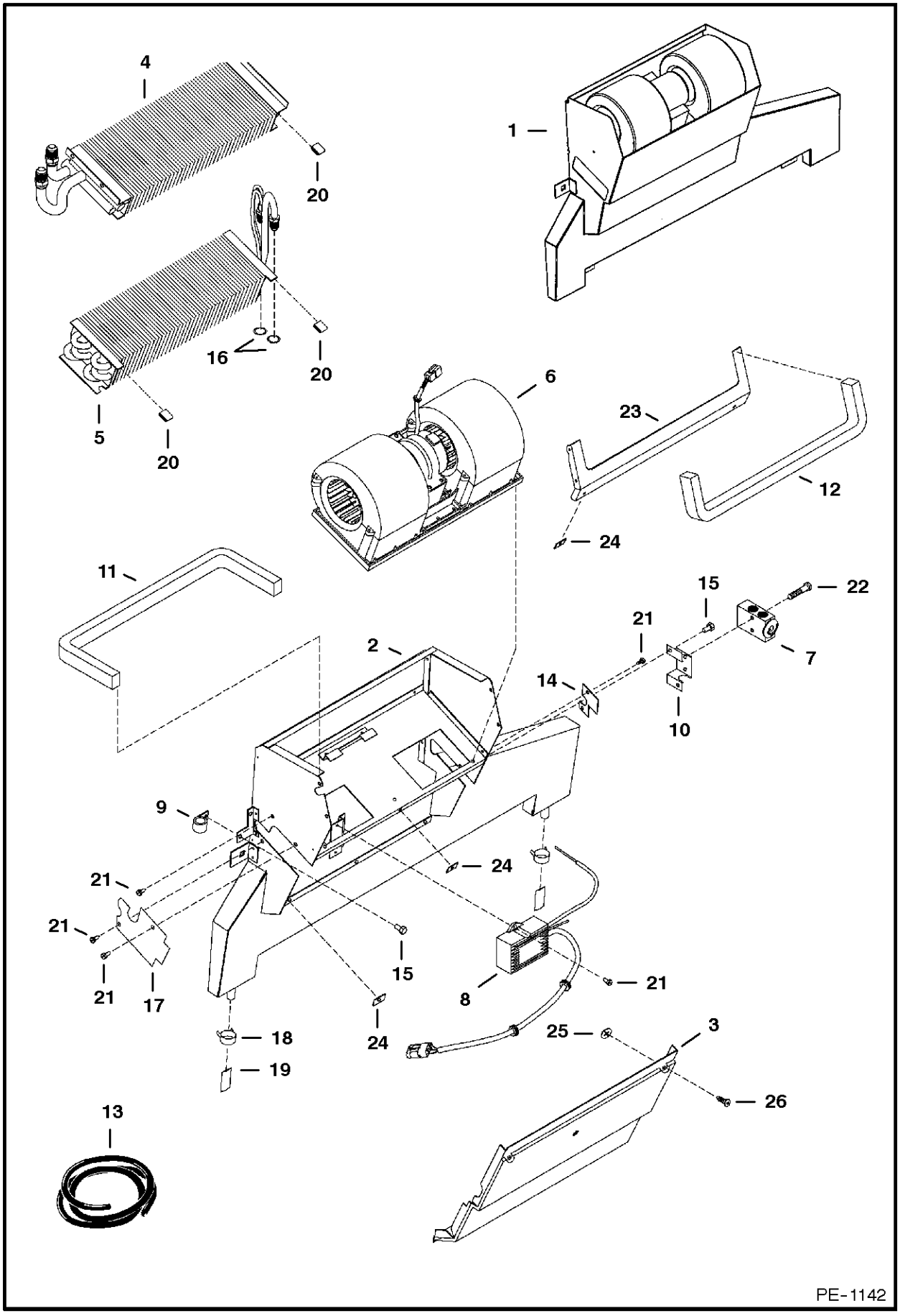

HEATER & A/C

Ref.N°	Part N°	Description	Remarks	Serial N°	Qty.
1	6683001	HVAC ASSY	assy - Ref. HEATER & A/C(2)-HEATER & A/C(26)		1
2	6677108	HOUSING			1
3	6678151	COVER			1
4	NAP	COIL	heater - Order 6727786 heater coil kit		1
5	6683003	COIL	evaporator		1
6	6675497	BLOWER	assy - See Page HEATER & A/C(6)		1
7	6675534	BLOCK VALVE			1
8	6683004	THERMOSTAT			1
9	6675512	CLAMP	hose		2
10	6676984	BRACKET	valve		1
11	NAP	SEAL	25' (635mm) long - Order Ref. HEATER & A/C(13)		1
12	NAP	SEAL$	22.6' (575mm) long - Order Ref. HEATER & A/C(13)		1
13	6677111	SEAL	bulk - Sold Per Foot		x
14	6677105	COVER			1
15	6677118	SCREW	w/washer		4
16	6675538	O-RING			2
17	6677504	COVER	cover		1
18	6675510	CLAMP	drain hose		2
19	6675511	DRAIN VALVE			2
20	6676539	CLIP			3
21	6726621	SCREW	sheet metal		7
22	1CM-635	BOLT			2
23	6678152	SEAL			1
24	6677115	RECEPTACLE			6
25	6677116	RETAINER			6
26	6677117	SCREW	captive		6

HORN KIT

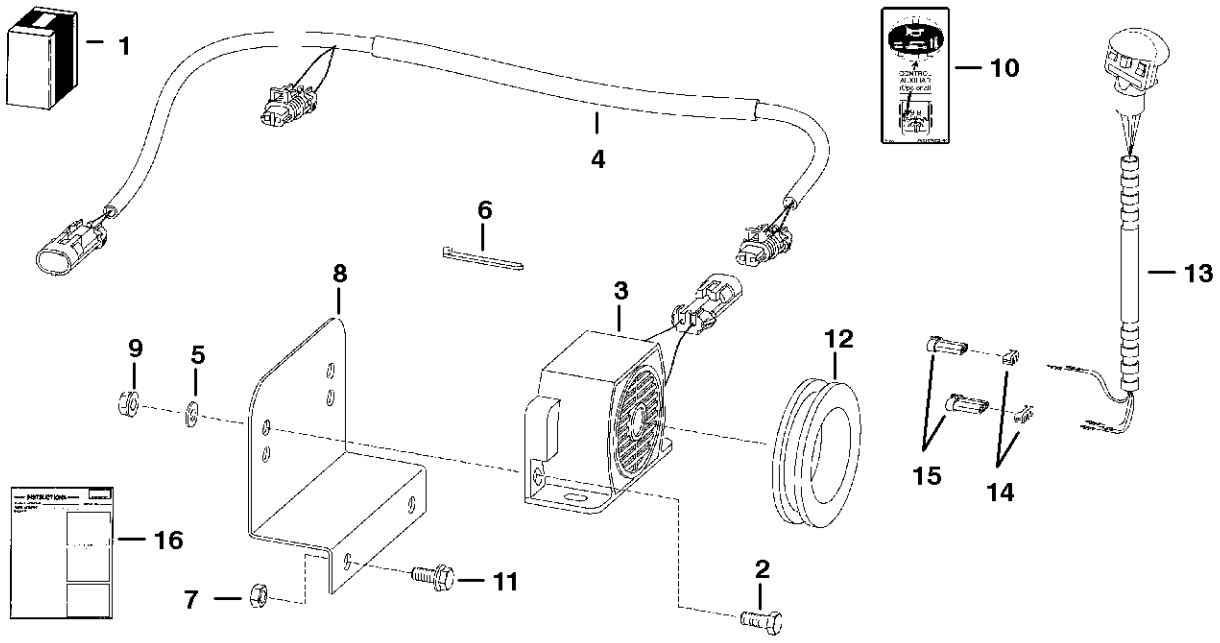

NOTE: Requires multi-switch handle.

TS-1987

HORN KIT

Ref.N°	Part N°	Description	Remarks	Serial N°	Qty.
1	6727995	HORN KIT	Ref. HORN KIT(2)-HORN KIT(16)		1
2	17C-410	BOLT			2
3	6675099	HORN			1
4	6727498	HARNESS	W/ metal tube		1
5	25E-13	WASHER			1
6	30H-23	CLAMP			1
7	83D-5	NUT			2
8	6733970	MOUNT			1
9	83D-4	NUT			2
10	6703727	DECAL			1
11	35C-512	BOLT			2
12	6577545	GROMMET			1
13	6680414	HANDLE ASSY.			1
13	6640690	PIN			5
13	6641176	SEAL			5
14	6641180	LOCK	2pin		2
14	6640700	LOCK	3pin		2
15	6641179	CONNECTOR	2pin		2
15	6640699	CONNECTOR	3pin		2
16	6901146	INSTRUCTIONS			1

HORN KIT
(Joystick Controls)

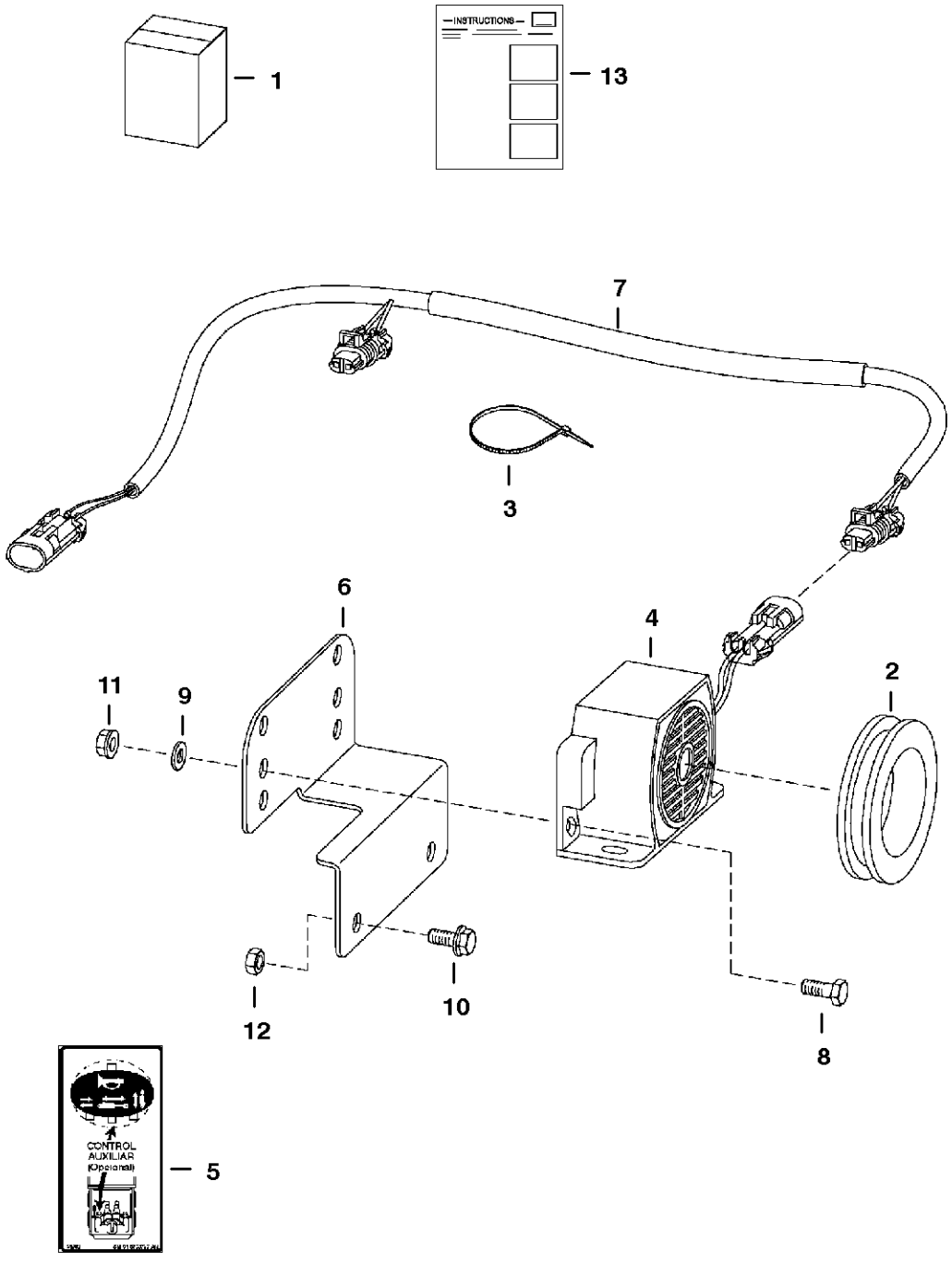

MS-1813

HORN KIT

Ref.N°	Part N°	Description	Remarks	Serial N°	Qty.
1	6732234	KIT	horn - Ref. HORN KIT(2)-HORN KIT(13)		1
2	6577545	GROMMET			1
3	6610510	NYLON TIE			3
4	6675099	HORN	alarm		1
5	6703727	DECAL	horn/aux.		1
6	6707726	MOUNT	alarm		1
7	6726662	HARNESS			1
8	17C-410	BOLT			2
9	25E-13	WASHER			2
10	35C-512	BOLT			2
11	83D-4	NUT			2
12	83D-5	NUT			2
13	6901691	INSTRUCTIONS			1

LIFT KIT
(Four Point)

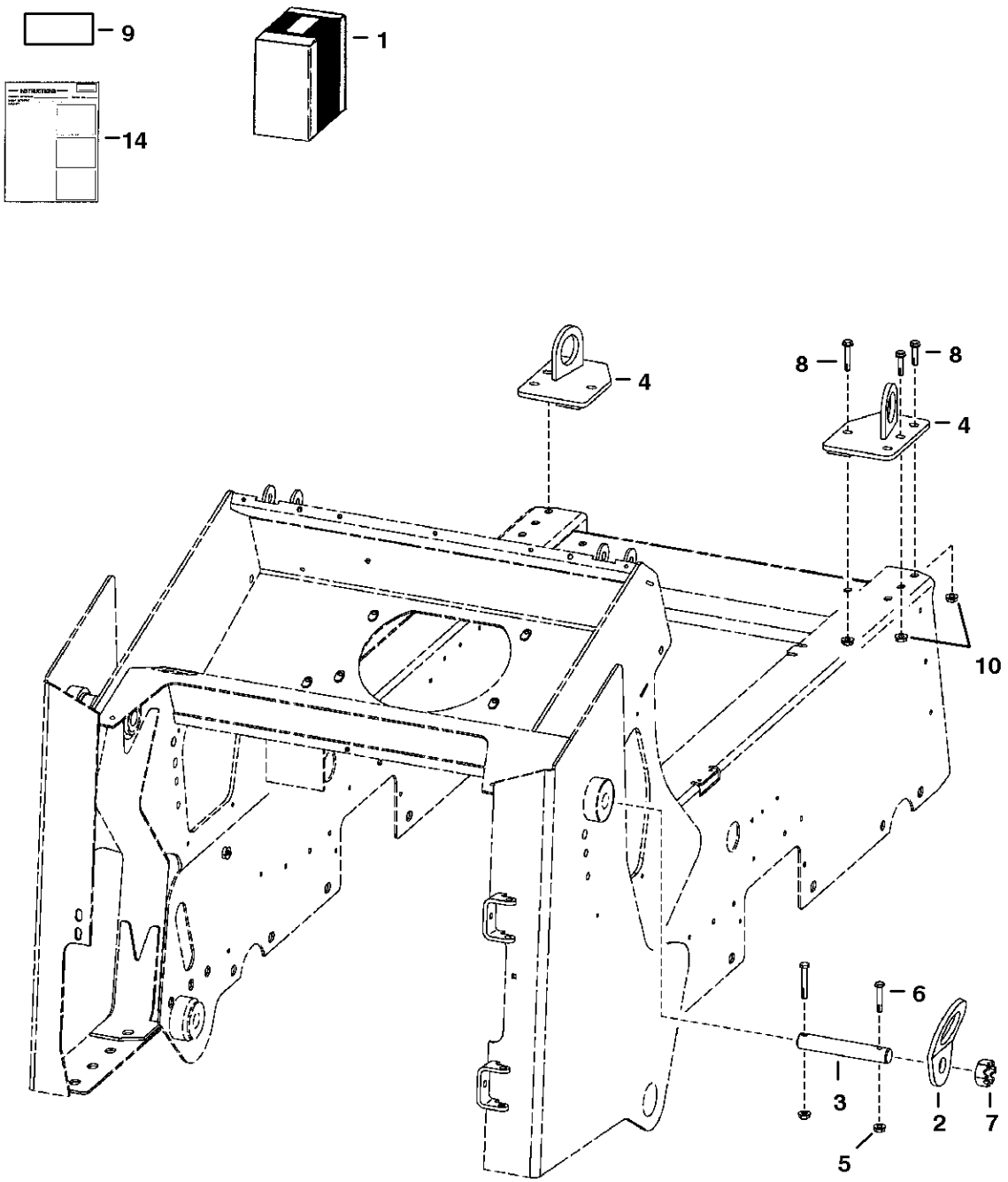

TS-1343

LIFT KIT

Ref.N°	Part N°	Description	Remarks	Serial N°	Qty.
1	6732678	KIT	lift - Ref. LIFT KIT(4) - LIFT KIT(14)		1
2	6726908	LIFT EYE			2
3	6732687	PIN			2
4	6734108	BRACKET	L.H.		2
5	87D-6	NUT			2
6	17C-652	BOLT			2
7	4D-28	NUT			2
8	17C-1028	BOLT			8
9	6726423	DECAL			1
10	83D-10	NUT			8
11	17C-616	BOLT			4
12	95D-6	NUT			4
13	6813078	STEP			1
14	6901772	INSTRUCTIONS			1

LIFT KIT
(Single Point)

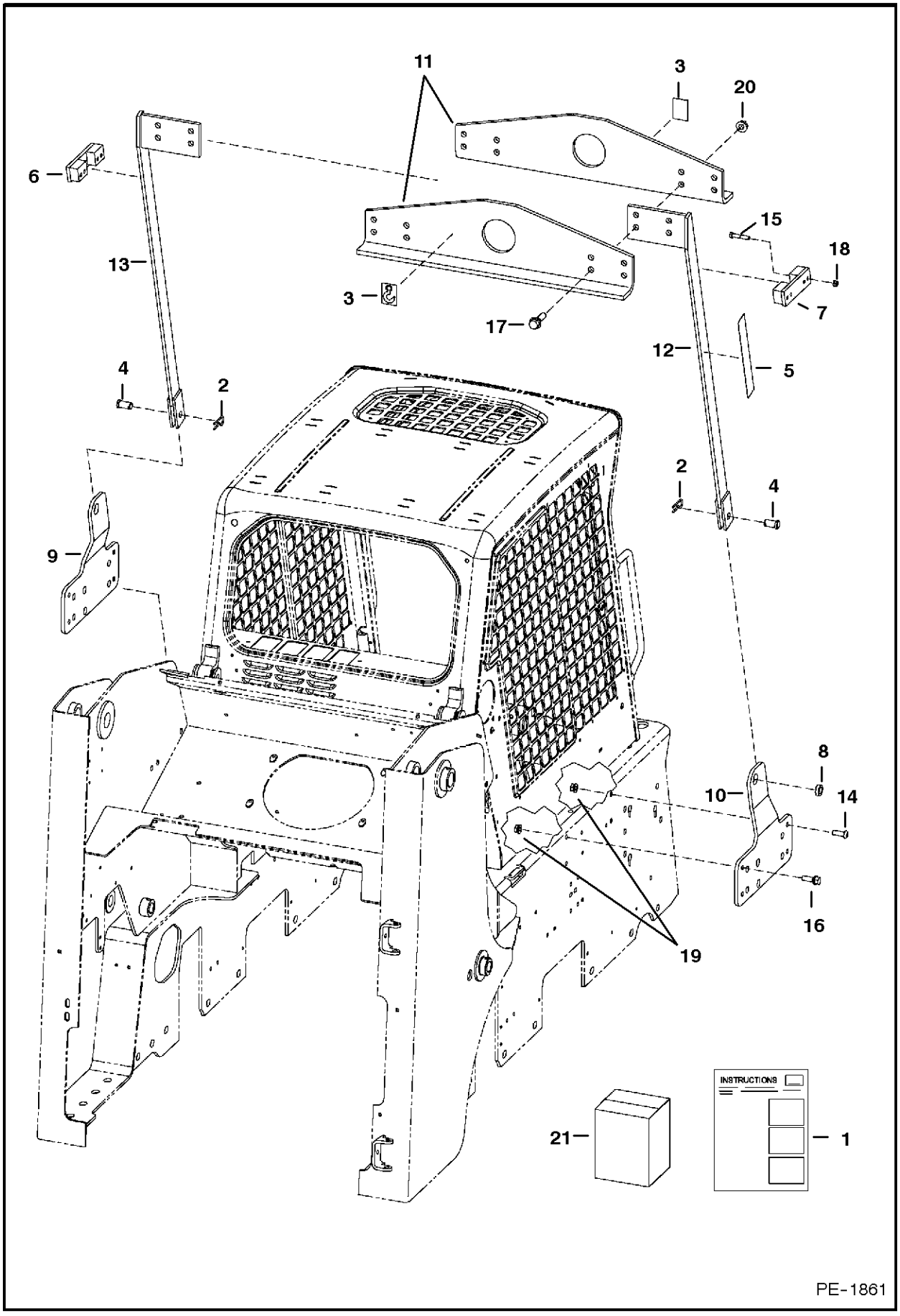

LIFT KIT

Ref.N°	Part N°	Description	Remarks	Serial N°	Qty.
1	6735279	KIT	Ref. LIFT KIT(2)-LIFT KIT(21)		1
2	1320075	COTTER PIN			2
3	6533898	DECAL	hook		2
4	6567838	PIN			2
5	6704786	DECAL	safety		2
6	6719184	BRACKET	L.H.		1
7	6719185	BRACKET	R.H.		1
8	6734560	BUSHING			2
9	6734627	MOUNT	L.H.		1
10	6734628	MOUNT	R.H.		1
11	6734657	ANGLE			2
12	6734666	ARM	R.H.		1
13	6734667	ARM	L.H.		1
14	6735282	SCREW	socket head		2
15	17C-632	BOLT			8
16	31C-824	BOLT			6
17	31C-1036	BOLT			8
18	57D-6	NUT			8
19	57D-8	NUT			8
20	57D-10	NUT			8
21	6900888	INSTRUCTIONS			1

LIGHT KIT

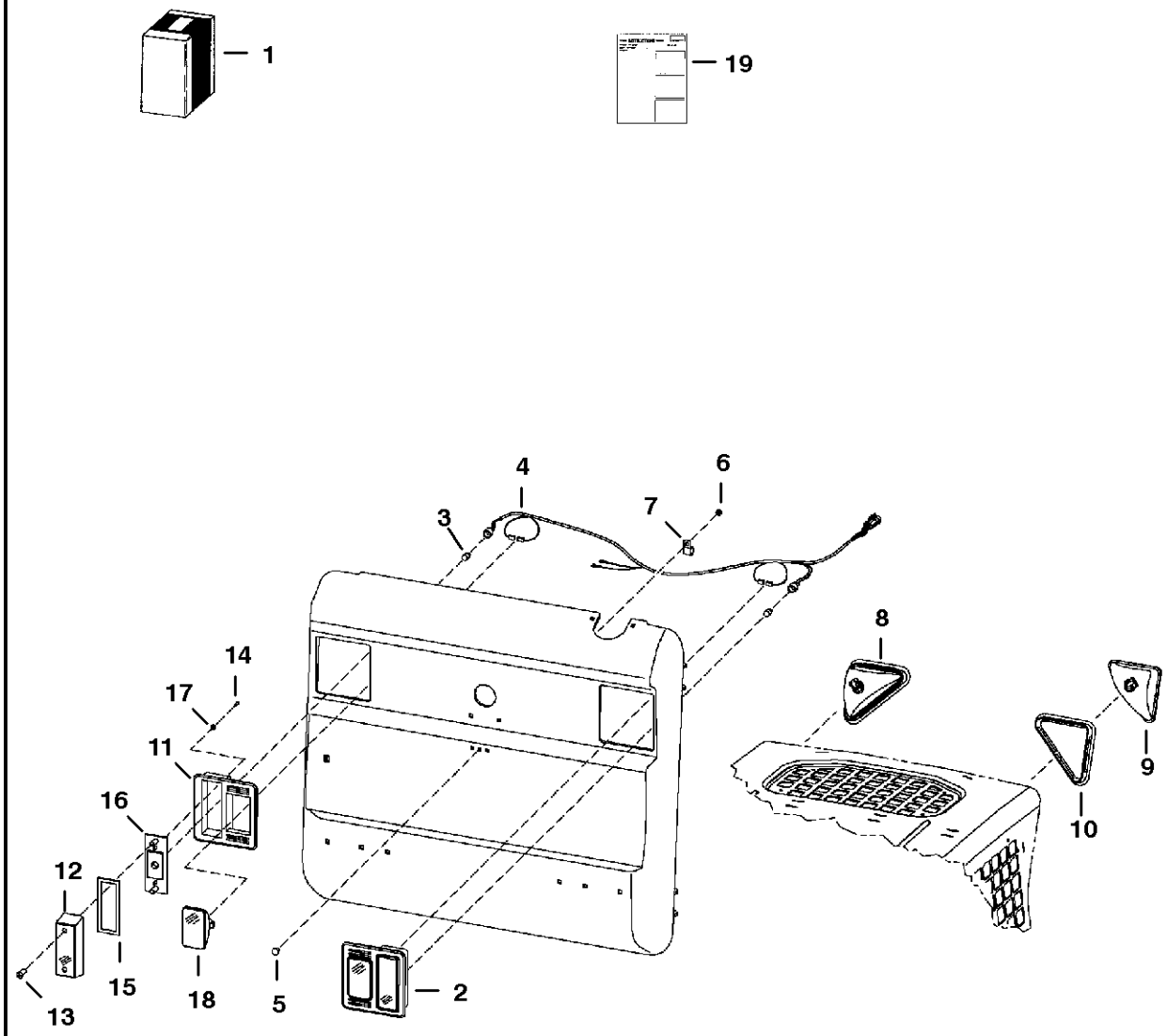

PE-1062

LIGHT KIT

Ref.N°	Part N°	Description	Remarks	Serial N°	Qty.
1	NAP	KIT	Order components		1
2	6670284	LIGHT	rear		2
3	6649481	BULB			2
4	6716419	HARNESS			1
5	37C-512	BOLT			1
6	85D-5	NUT			1
7	30H-42	CLAMP			1
8	NAP	LIGHT ASSY	R.H. - Ref. LIGHT KIT(9) & LIGHT KIT(10)		1
8	NAP	LIGHT ASSY	L.H. - Ref. LIGHT KIT(9) & LIGHT KIT(10)		1
9	6674401	HOUSING	R.H.		1
9	6675336	BULB	55 watt		1
9	6674400	HOUSING	L.H.		1
9	6675336	BULB	55 watt		1
10	6674402	MOUNT			1
11	6672279	MOUNT	rubber		2
12	6672276	LENS	red		2
13	6672274	SCREW			4
14	6672273	SCREW			2
15	6672275	GASKET			2
16	6672277	BRACKET			2
17	6672272	WASHER			4
18	6661353	LIGHT ASSY	W/bulb - white		2
18	898731	LIGHT BULB			2
19	NAP	INSTRUCTIONS			1

NOISE REDUCTION KIT

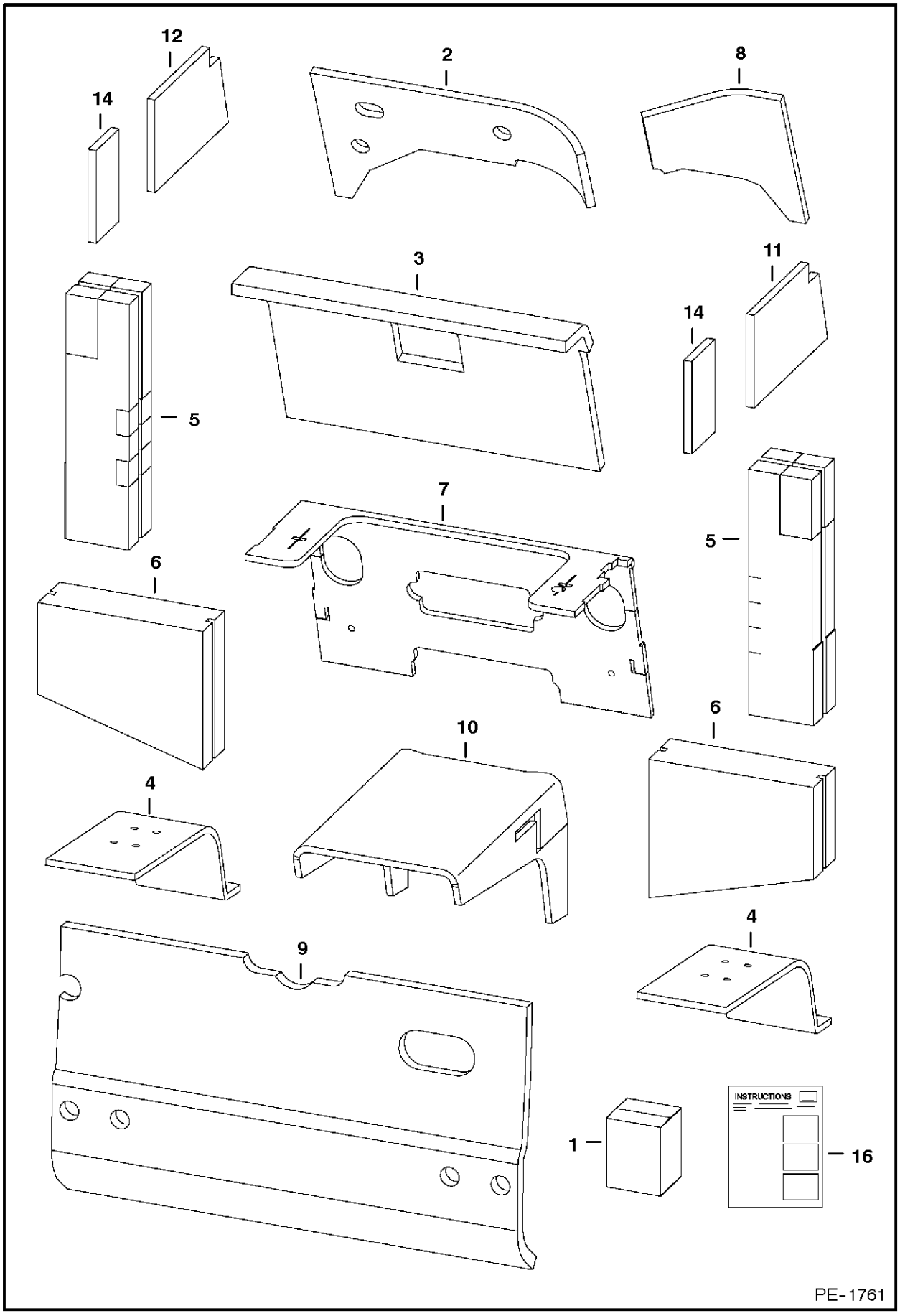

NOISE REDUCTION KIT

Ref.N°	Part N°	Description	Remarks	Serial N°	Qty.
1	6736894	KIT			1
2	6719332	INSULATION	blower housing		1
3	6732571	INSULATION	crossmember		1
4	6732583	INSULATION	pedal shield		2
5	6703967	INSULATION	fender		2
6	6730573	INSULATION	transmission		2
7	6715195	INSULATION	steering panel		1
8	6719333	INSULATION	blower housing		1
9	6715106	INSULATION	rear door		1
10	6732582	INSULATION	transmission		1
11	6732580	INSULATION	panel shield - R.H.		2
12	6732581	INSULATION	panel shield - L.H.		1
13	6734534	DECAL	service		1
14	6732595	INSULATION	panel shield		2
15	6648348	PLUG			1
16	6902478	INSTRUCTIONS			1

POWER BOB-TACH KIT
(Hydraulic Assisted)

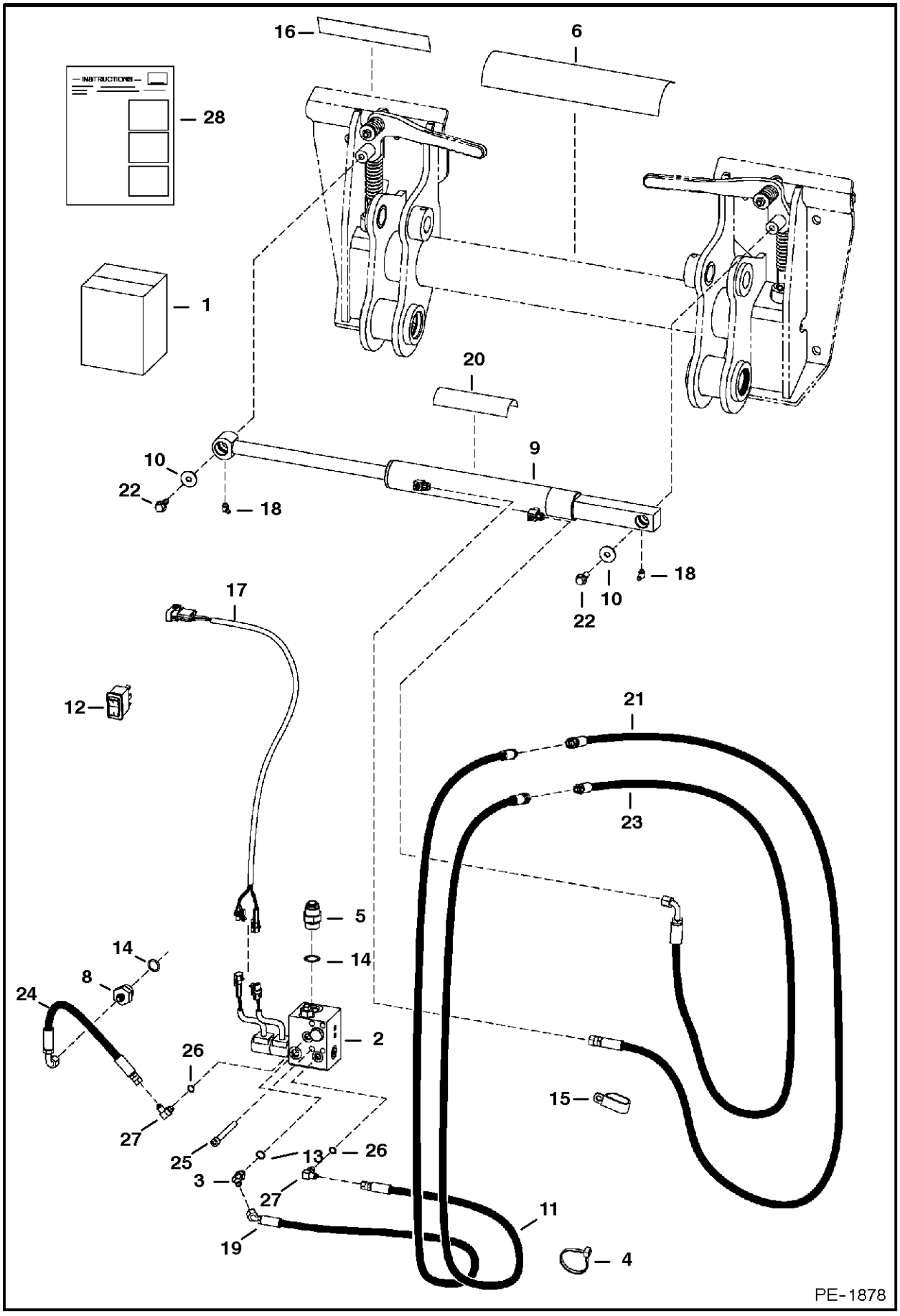

POWER BOB-TACH KIT

Ref.N°	Part N°	Description	Remarks	Serial N°	Qty.
1	6735477	KIT	Ref. POWER BOB-TACH KIT (2)-POWER BOB-TACH KIT (28)		1
2		MANIFOLD	See Page POWER BOB-TACH(1)		1
3	17KB-606	ELBOW	W/Ref. POWER BOB-TACH KIT (13)		1
4	6624289	STA-STRAP			1
5	15KB-1212	ADAPTER	W/Ref. POWER BOB-TACH KIT (14)		1
6	6725907	DECAL			1
7	14K-5	TEE	for standard machine W/ rear auxiliaries		1
8	15KB-612	ADAPTER	W/Ref. POWER BOB-TACH KIT (13)		1
9		CYLINDER	See Page POWER BOB-TACH CYLINDER(12)		1
10	619021	WASHER			2
11	6726987	HOSE			1
12	6676732	SWITCH	vertical		1
13	79K-6	O-RING			x
14	79K-12	O-RING			x
15	31H-42	CLAMP			1
16	6719888	DECAL			1
17	6730770	HARNESS			3
18	12H-25	GREASE ZERK			2
19	6735475	HOSE			1
20	6554100	SAFETY TREAD	safety		1
21	6733629	HOSE			1
22	35C-612	BOLT			2
23	6733630	HOSE			1
24	6806403	HOSE			1
25	73G-656	BOLT			4
26	79K-4	O-RING			x
27	17KB-404	ELBOW	W/Ref. POWER BOB-TACH KIT (26)		2
28	6902361	INSTRUCTIONS			1

POWER BOB-TACH CYLINDER

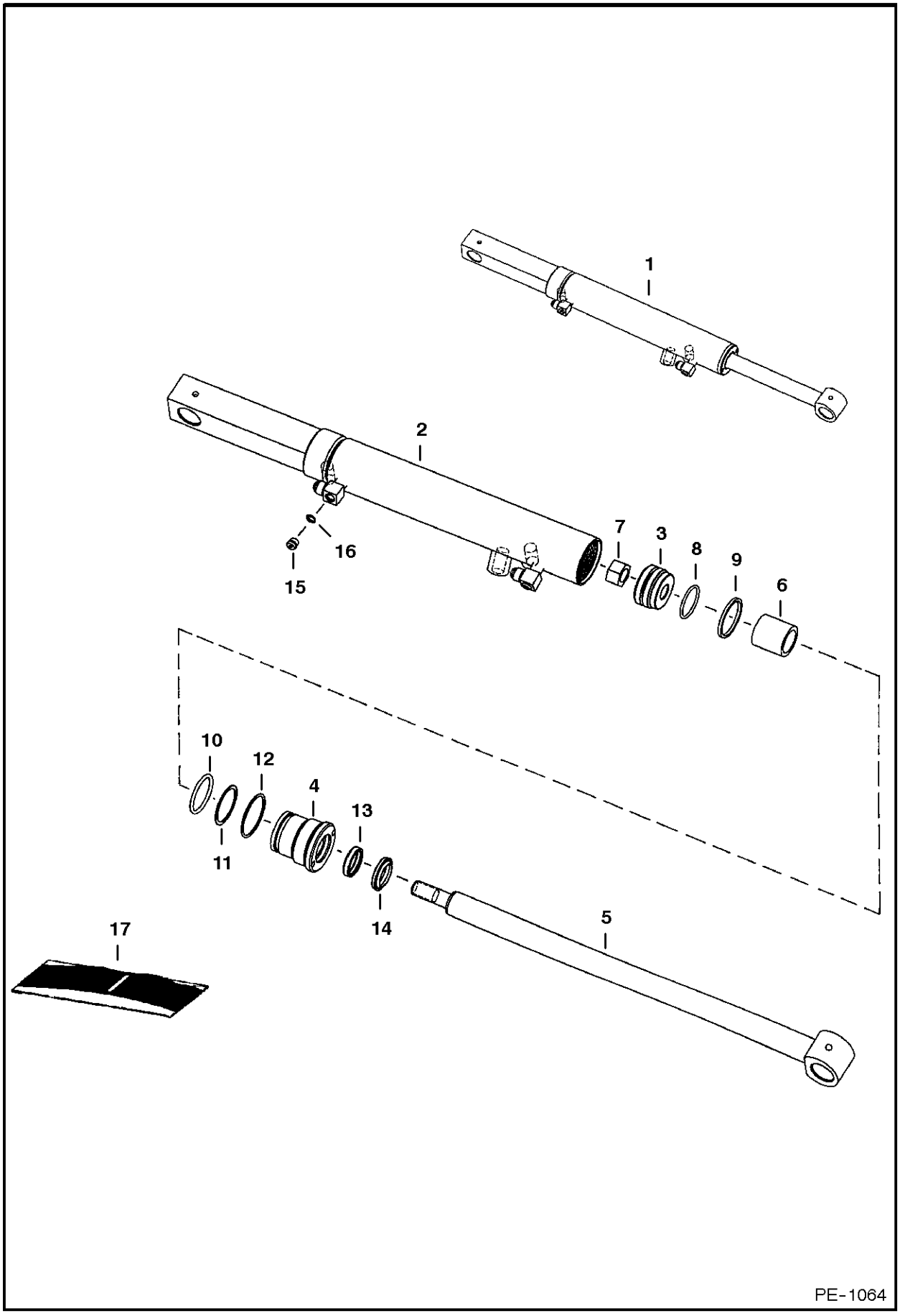

POWER BOB-TACH CYLINDER

Ref.N°	Part N°	Description	Remarks	Serial N°	Qty.
1	6810611	CYLINDER	Ref. POWER BOB-TACH CYLINDER(2)-POWER BOB-TACH CYLINDER(16)		1
2	6810349	CASE	1.75' (45mm) I.D.		1
3	6586543	PISTON			1
4	6586542	HEAD			1
5	6810612	ROD	W/ .25' grease zerk hole		1
6	6810356	SPACER			1
7	92D-10	NUT			1
8	54K-30110	O-RING			1
9	6532453	RING			1
10	54K-40116	O-RING			1
11	73K-222	WASHER	backAup		1
12	58K-132	O-RING			1
13	6667323	SEAL	rod		1
14	6666542	SEAL	wiper		1
15	90KV-2	PLUG	W/Ref. POWER BOB-TACH CYLINDER(16)		2
16	79K-3	O-RING			2
17	6803473	SEAL KIT	Ref. POWER BOB-TACH CYLINDER(7)-POWER BOB-TACH CYLINDER(14)		1

POWER BOB-TACH
(Valve Assembly)

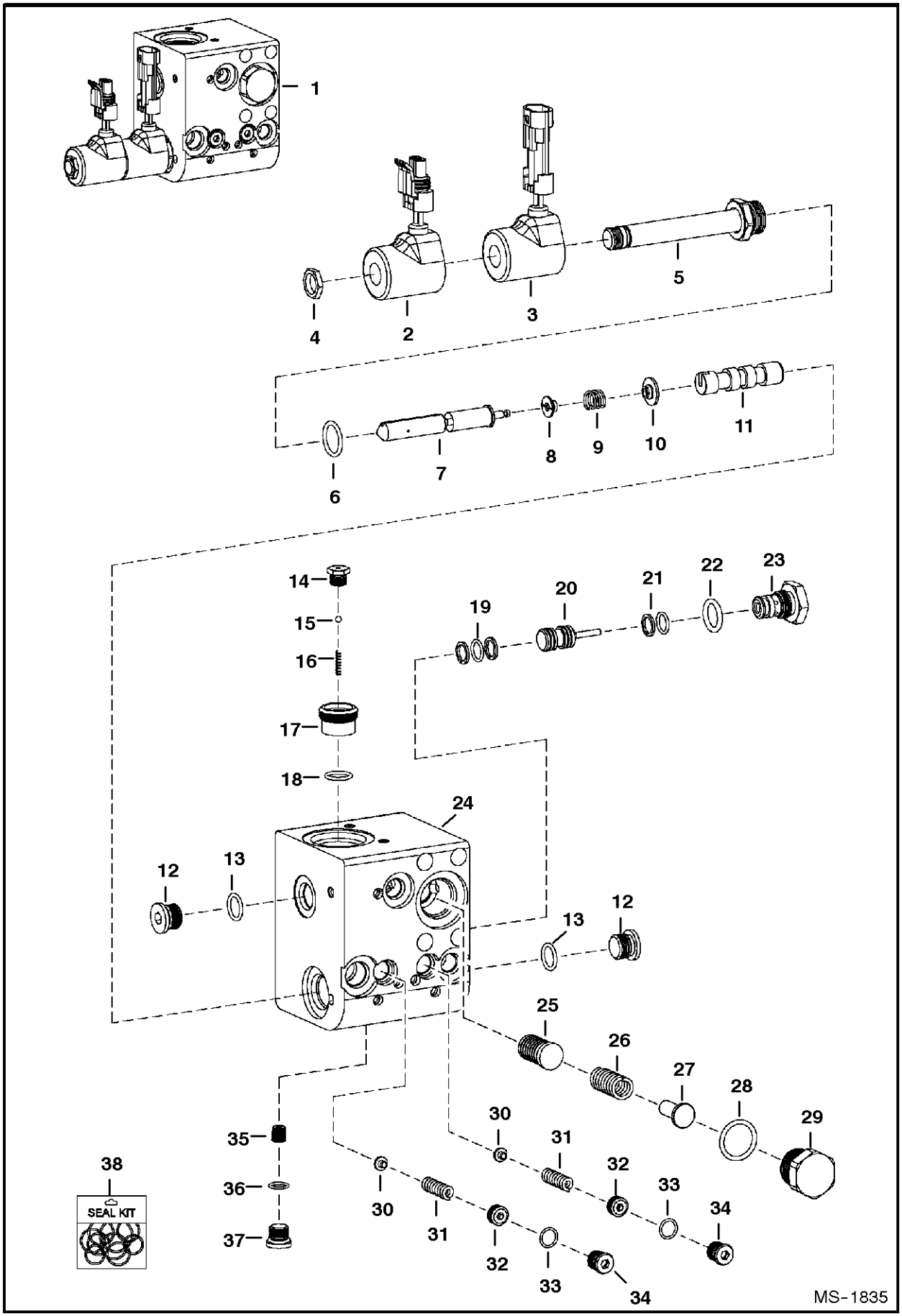

POWER BOB-TACH

Ref.N°	Part N°	Description	Remarks	Serial N°	Qty.
1	6681864	VALVE			1
2	6684743	SOLENOID	W/male connector		1
3	6684744	SOLENOID	W/female connector		1
4	6684742	NUT			1
5	NSS	STEM			x
6	79K-8	O-RING			x
7	NSS	STEM			x
8	NSS	RETAINER			x
9	NSS	SPRING			x
10	NSS	WASHER			x
11	NSS	PISTON			x
12	NSS	PLUG			x
13	NSS	O-RING			x
14	NSS	PLUG			x
15	NSS	BALL			x
16	NSS	SPRING			x
17	NSS	VALVE			x
18	NSS	O-RING			x
19	NSS	RINGS			x
20	6684745	PISTON			1
21	NSS	RINGS			x
22	79K-7	O-RING			x
23	6684746	CHECK VALVE	W/Ref. POWER BOB-TACH(22)		1
24	NSS	BLOCK			x
25	NSS	STEM			x
26	NSS	SPRING			x
27	NSS	POPPET			x
28	79K-10	O-RING			x
29	NSS	PLUG			x
30	NSS	POPPET			x
31	NSS	SPRING			x
32	NSS	PLUG			x
33	NSS	O-RING			x
34	NSS	PLUG			x
35	NSS	POPPET			x
36	NSS	O-RING			x
37	NSS	PLUG			x
38	6684747	SEAL KIT	complete		1

PURIFIER

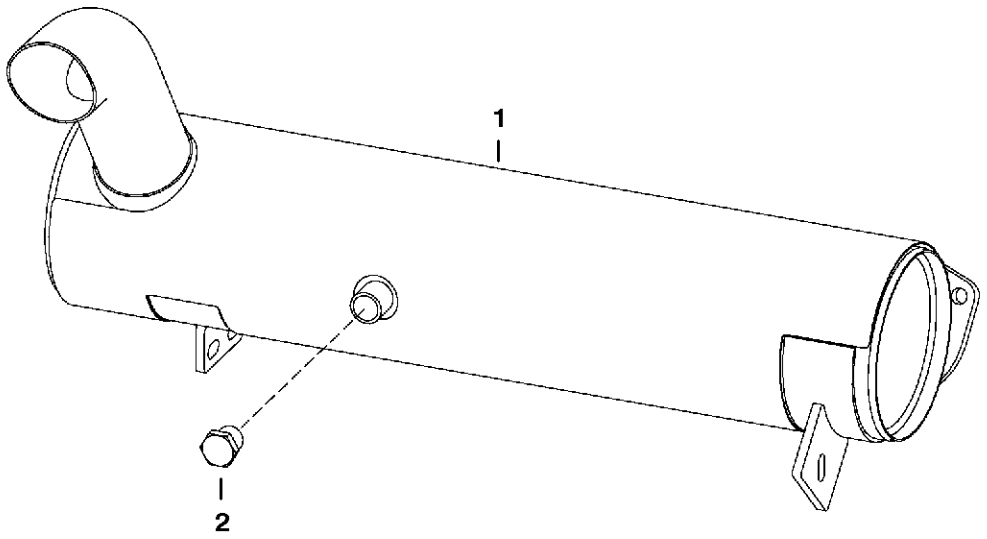

PE-1923

PURIFIER

Ref.N°	Part N°	Description	Remarks	Serial N°	Qty.
1	6681460	MUFFLER	purifier		1
2	6661062	PLUG	3/8' - brass		1
3	6659543	PLUG	1/8' - brass		1

RADIATOR SCREEN KIT

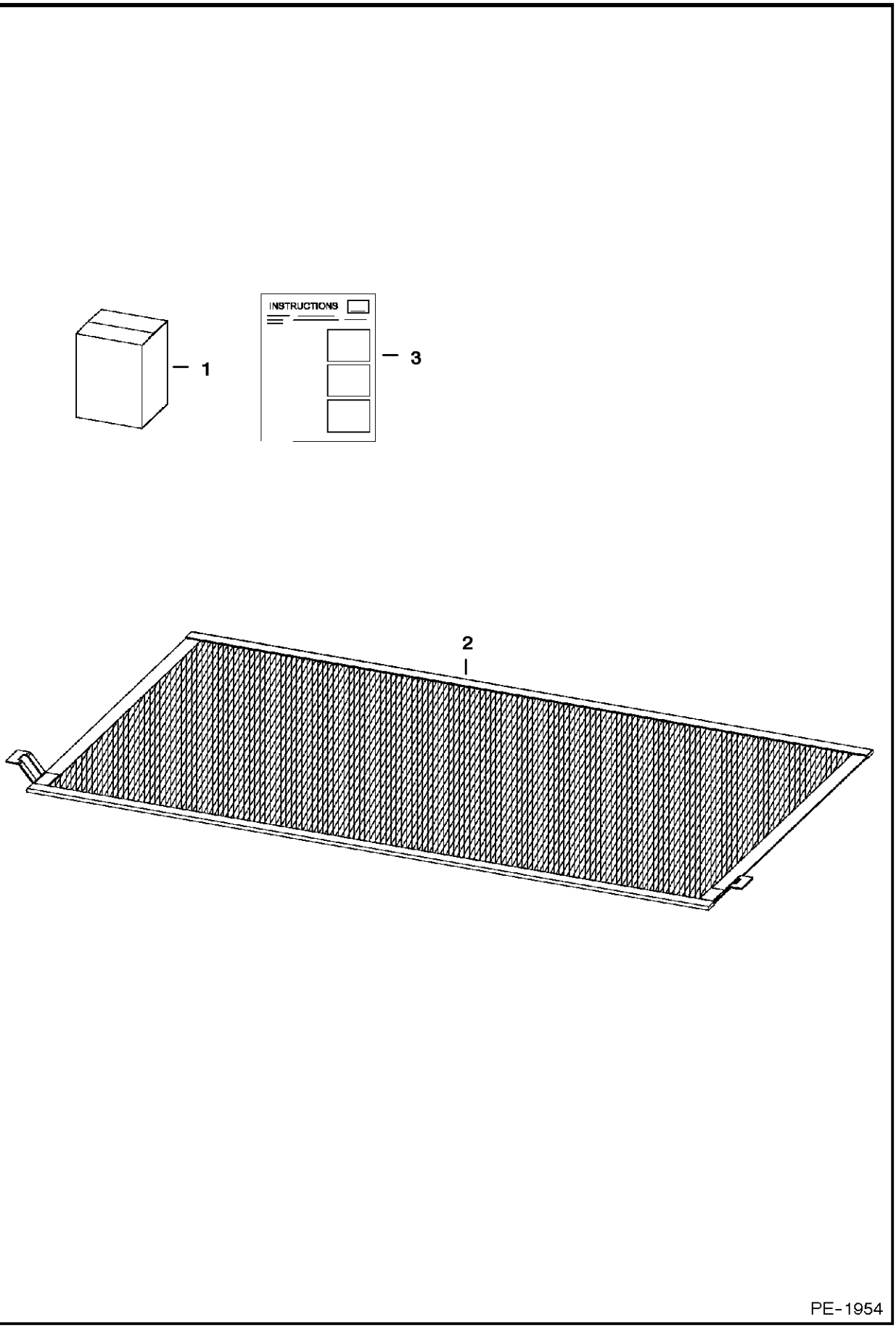

RADIATOR SCREEN KIT

Ref.N°	Part N°	Description	Remarks	Serial N°	Qty.
1	6734696	KIT	Ref. RADIATOR SCREEN KIT(2) & RADIATOR SCREEN KIT(3)		1
2	6734697	SCREEN			1
3	6902288	INSTRUCTIONS			1

REAR AUXILIARY HYDRAULICS

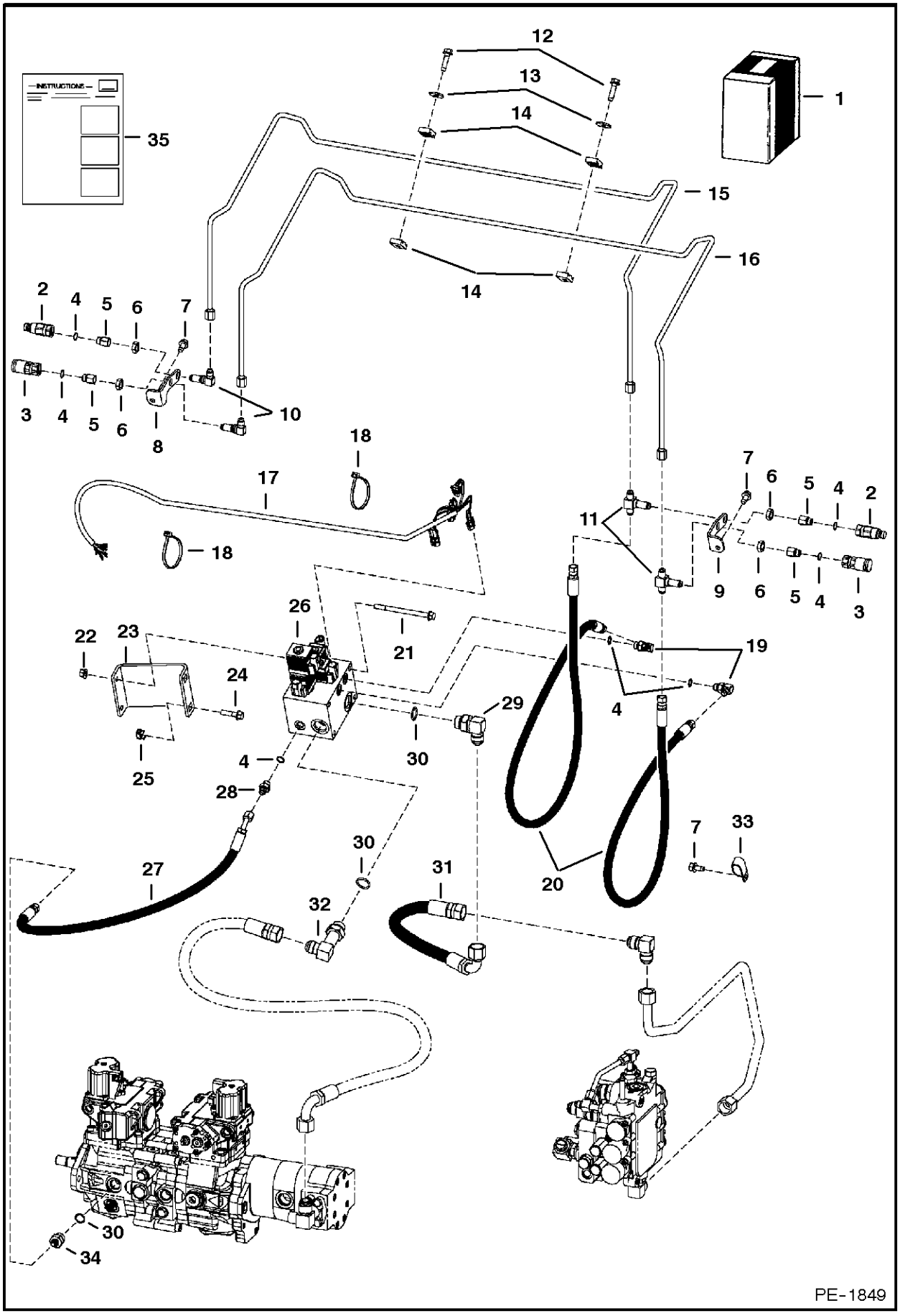

REAR AUXILIARY HYDRAULICS

Ref.N°	Part N°	Description	Remarks	Serial N°	Qty.
1	6735919	KIT	Ref. REAR AUXILIARY HYDRAULICS(2)-REAR AUXILIARY HYDRAULICS(35)		1
2	6667804	QUICK COUPLER	male		2
3	6667803	QUICK COUPLER	female		2
4	79K-6	O-RING			x
5	6706633	CONNECTOR	W/Ref. REAR AUXILIARY HYDRAULICS(4)		4
6	86F-5	NUT			4
7	84G-3712	BOLT			3
8	6735640	MOUNT	L.H.		1
9	6735639	MOUNT	R.H.		1
10	88F-5	ELBOW	bulkhead		2
11	90F-5	TEE	bulkhead		2
12	84G-3724	BOLT			2
13	619021	WASHER			2
14	6726277	CLAMP			4
15	6735643	TUBELINE			1
16	6735642	TUBELINE			1
17	6736011	HARNESS			1
18	6624289	STA-STRAP			5
19	17KB-606	ELBOW	W/Ref. REAR AUXILIARY HYDRAULICS(4)		2
20	6735684	HOSE			2
21	35C-680	BOLT			2
22	83D-6	NUT			2
23	6735641	MOUNT			1
24	35C-624	BOLT			2
25	6678785	NUT			2
26		VALVE	rear aux. - See Page REAR AUXILIARY VALVE(2)		1
27	6735685	HOSE			1
28	15KB-606	ADAPTER	W/Ref. REAR AUXILIARY HYDRAULICS(4)		1
29	17KB-1212	ELBOW	W/Ref. REAR AUXILIARY HYDRAULICS(30)		1
30	79K-12	O-RING			x
31	6735683	HOSE			1
32	6716443	ELBOW	W/Ref. REAR AUXILIARY HYDRAULICS(30)		1
33	31H-38	CLAMP			1
34	15KB-612	ADAPTER	W/Ref. REAR AUXILIARY HYDRAULICS(30)		1
35	6902409	INSTRUCTIONS			1

REAR AUXILIARY VALVE

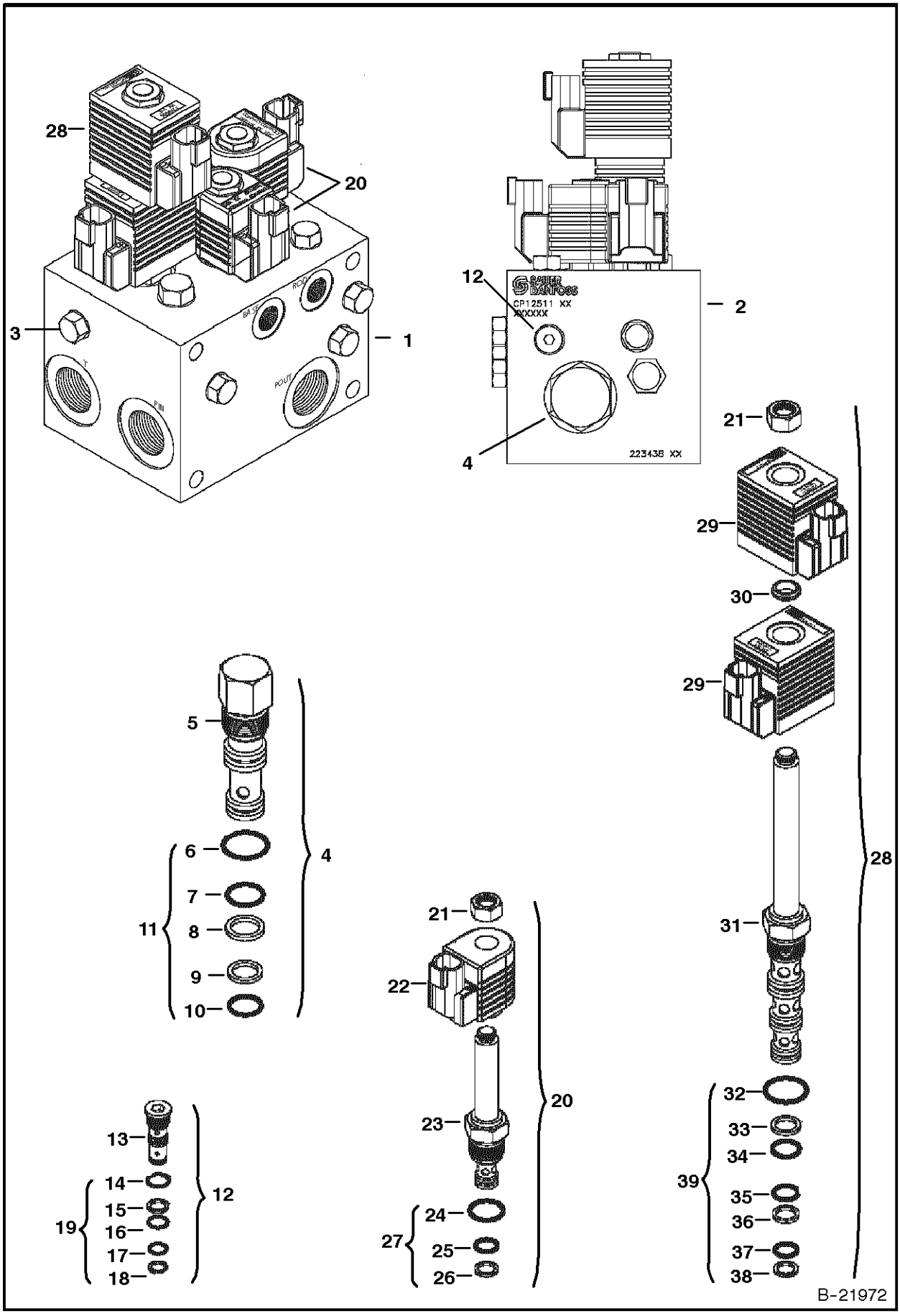

REAR AUXILIARY VALVE

Ref.N°	Part N°	Description	Remarks	Serial N°	Qty.
1	6683251	VALVE			1
2	NSS	BLOCK			1
3		PLUG			x
4	6684044	VALVE	assy. - Ref. REAR AUXILIARY VALVE(5)-REAR AUXILIARY VALVE(10) - differential sensing		1
5	NSS	VALVE	Order Ref. REAR AUXILIARY VALVE(4)		1
6	6684046	O-RING			1
7	6684048	O-RING			1
8	6684047	BACKAUP RING			1
9	6684050	BACKAUP RING			1
10	6684049	O-RING			1
11	6684045	SEAL KIT	Ref. REAR AUXILIARY VALVE(6)-REAR AUXILIARY VALVE(10)		1
12	6684061	VALVE	shuttle - Ref. REAR AUXILIARY VALVE(13)-REAR AUXILIARY VALVE(18)		1
13	NSS	VALVE	Order Ref. REAR AUXILIARY VALVE(12)		1
14	6684063	O-RING			1
15	6684064	BACKAUP RING			1
16	6684065	O-RING			1
17	6684066	O-RING			1
18	6684067	BACKAUP RING			1
19	6684062	SEAL KIT	Ref. REAR AUXILIARY VALVE(14)-REAR AUXILIARY VALVE(18)		1
20	6685061	VALVE	solenoid - Ref. REAR AUXILIARY VALVE(21)-REAR AUXILIARY VALVE(26)		2
21	6684060	NUT			2
22	6684073	COIL	12 volt		2
23	NSS	VALVE	Order Ref. REAR AUXILIARY VALVE(20)		2
24	6684070	O-RING			2
25	6684071	O-RING			2
26	6684072	BACKAUP RING			2
27	6684069	SEAL KIT	Ref. REAR AUXILIARY VALVE(24)-REAR AUXILIARY VALVE(26)		2
28	6684051	VALVE	solenoid - Ref. REAR AUXILIARY VALVE(21) & REAR AUXILIARY VALVE(29)-REAR AUXILIARY VALVE(39)		1
29	6684058	COIL			2
30	6684059	SPACER			1
31	NSS	VALVE	Order Ref. REAR AUXILIARY VALVE(28)		1
32	6681489	O-RING			1
33	6684053	BACKAUP RING			1
34	6684054	O-RING			1
35	6684056	O-RING			1
36	6684055	BACKAUP RING			1
37	6681487	O-RING			1
38	6684057	BACKAUP RING			1
39	6684052	SEAL KIT	Ref. REAR AUXILIARY VALVE(32)-REAR AUXILIARY VALVE(38)		1

REAR DOOR LOCK

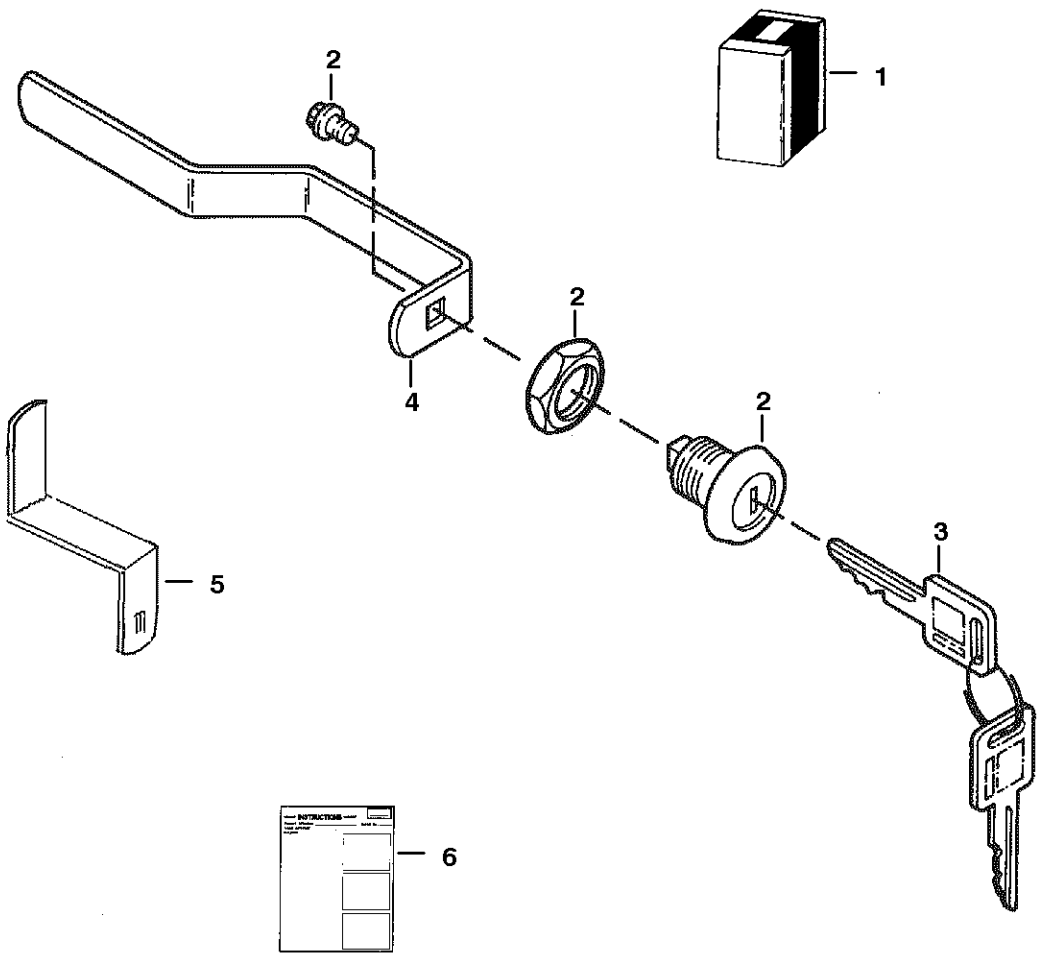

REAR DOOR LOCK

Ref.N°	Part N°	Description	Remarks	Serial N°	Qty.
1	6732001	KIT	lock - Ref. REAR DOOR LOCK(2)-REAR DOOR LOCK(6)		1
2	6670726	LOCK			1
3	6709527	KEY	ignition		1
4	6714037(	LATCH			1
5	6729688	LATCH			1
6	6901656	INSTRUCTIONS			1

REAR WIPER

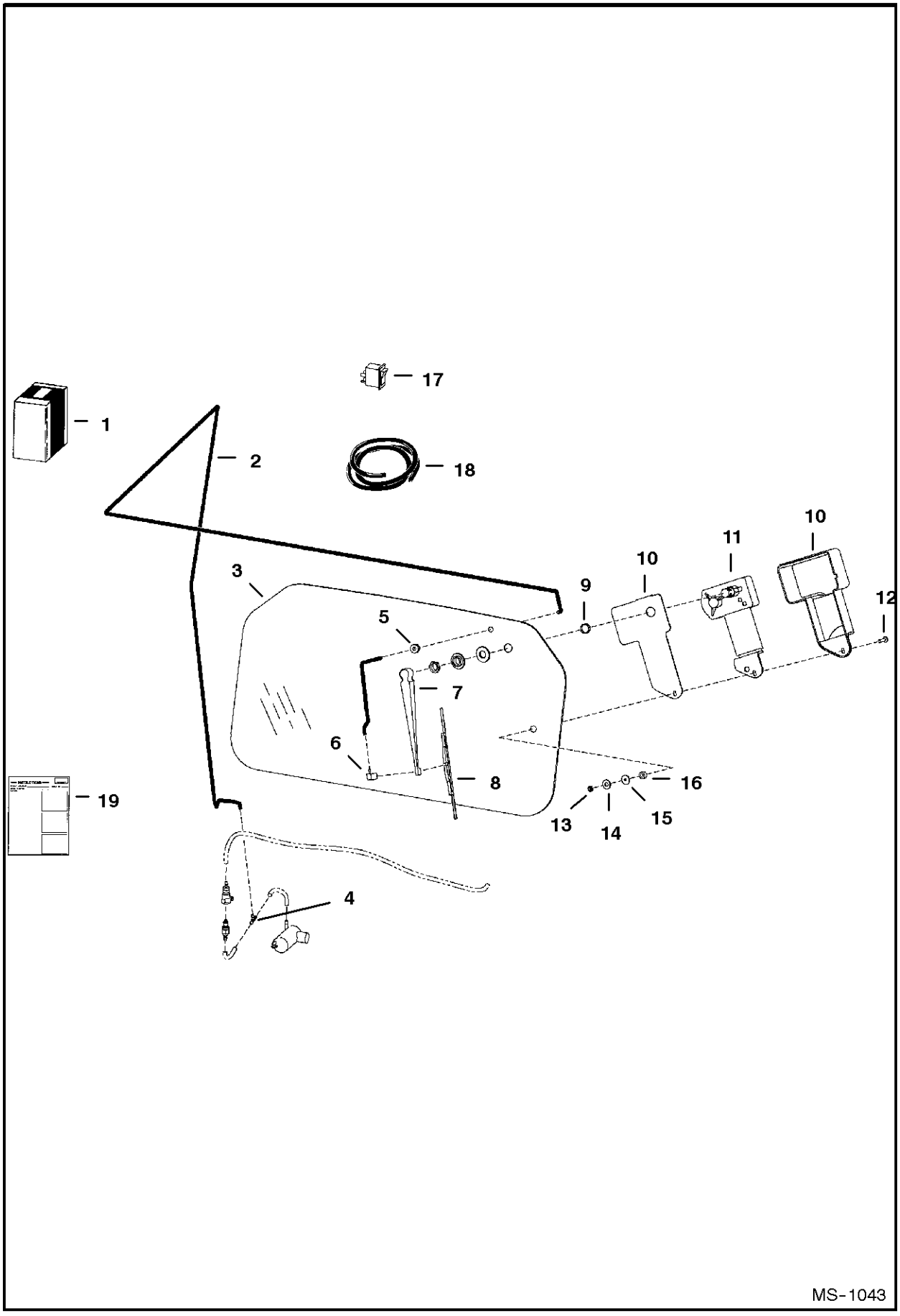

REAR WIPER

Ref.N°	Part N°	Description	Remarks	Serial N°	Qty.
1	6726655	KIT	rear wiper		1
2	NAP	HOSE	96' (2438mm) long - Order Ref. REAR WIPER(18)		1
3	6719317	WINDOW			1
4	6676000	TEE			1
5	6557493	GROMMET			1
6	6676028	NOZZLE			1
7	6676001	ARM			1
8	6676002	BLADE			1
9	6667201	SPACER	nylon		1
10	6664097	COVER	wiper		1
11	6665602	MOTOR			1
12	6664566	SCREW			1
13	6664103	NUT			1
14	6664065	WASHER	nylon		1
15	6801059	WASHER	neoprene		1
16	6664085	BUSHING	nylon		1
17	6675999	SWITCH			1
18	6676003	HOSE	bulk - Sold Per Foot		x
19	6901061	INSTRUCTIONS			1

SEAT BELT
(Three Point Retractable)

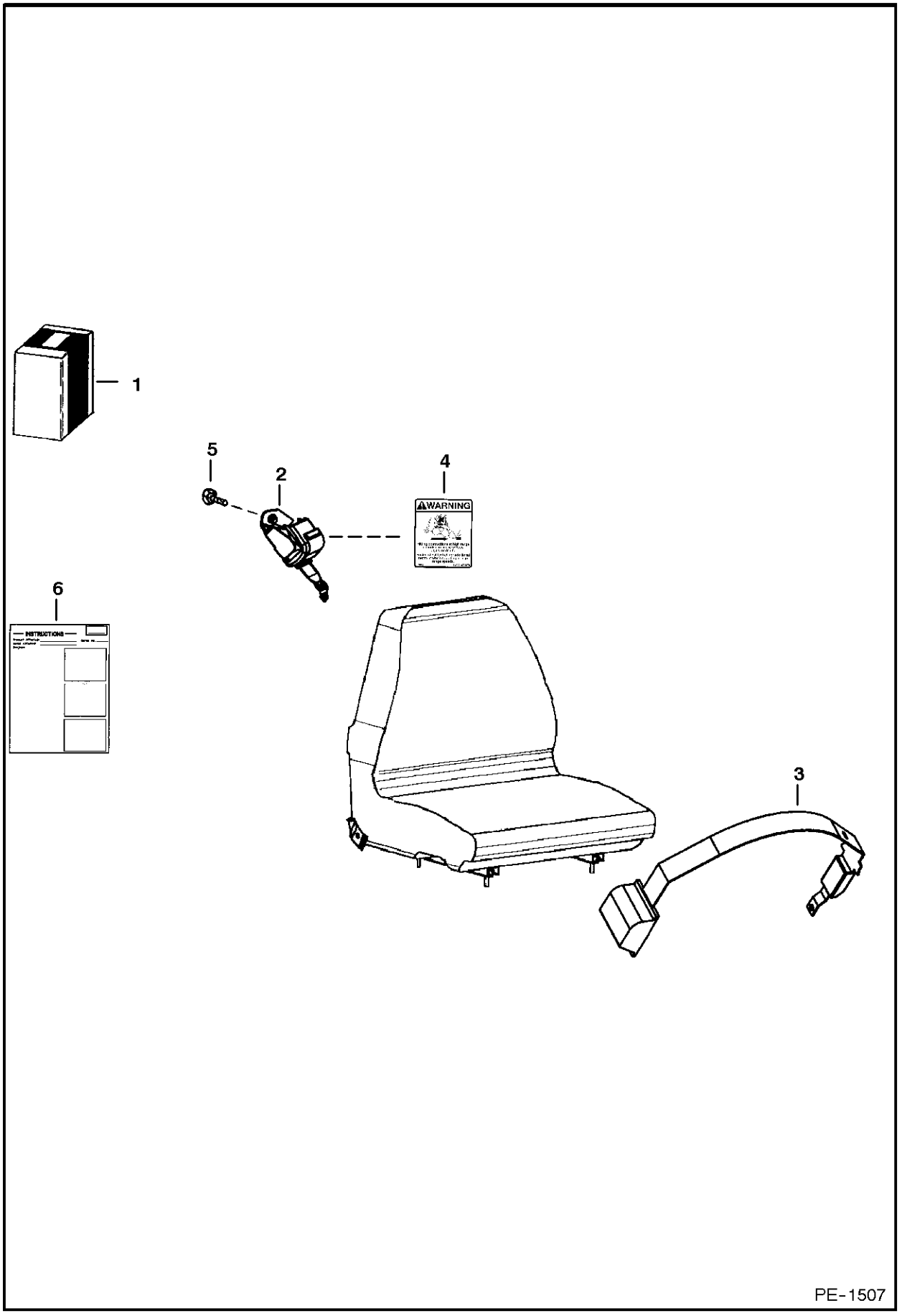

SEAT BELT

Ref.N°	Part N°	Description	Remarks	Serial N°	Qty.
1	6732219	KIT	three point retractable seat belt		1
2	6674407	SHOULDER BELT			1
3	6679308	SEAT BELT			1
4	6725370	DECAL			1
5	35C-612	BOLT			1
6	6901010	INSTRUCTIONS			1

SEAT BELT
(3" Wide Retractable)

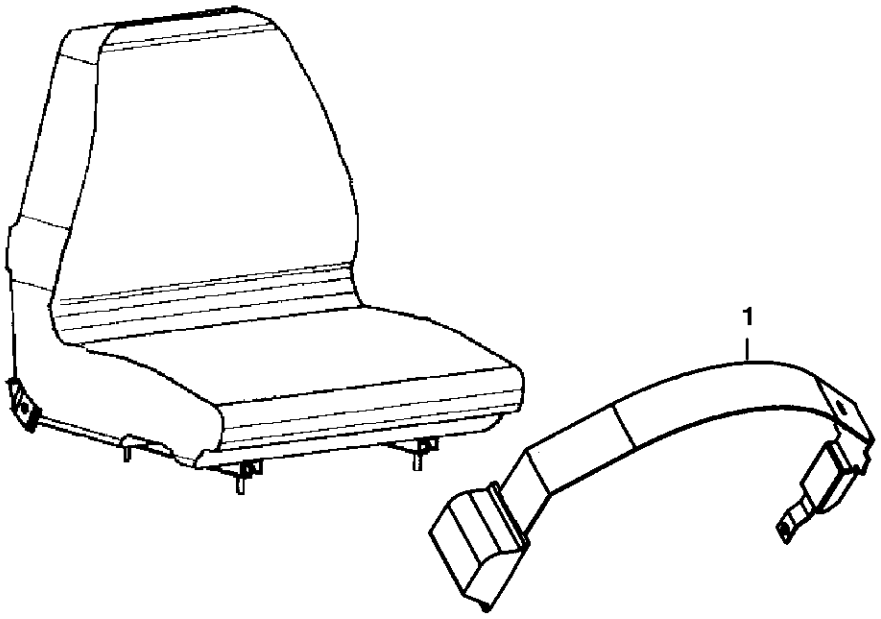

PE-1508

SEAT BELT

Ref.N°	Part N°	Description	Remarks	Serial N°	Qty.
1	6675562	SEAT BELT	3' wide retractable		1
2	6901011	INSTRUCTIONS			1

SEAT BELT
(3" Wide)

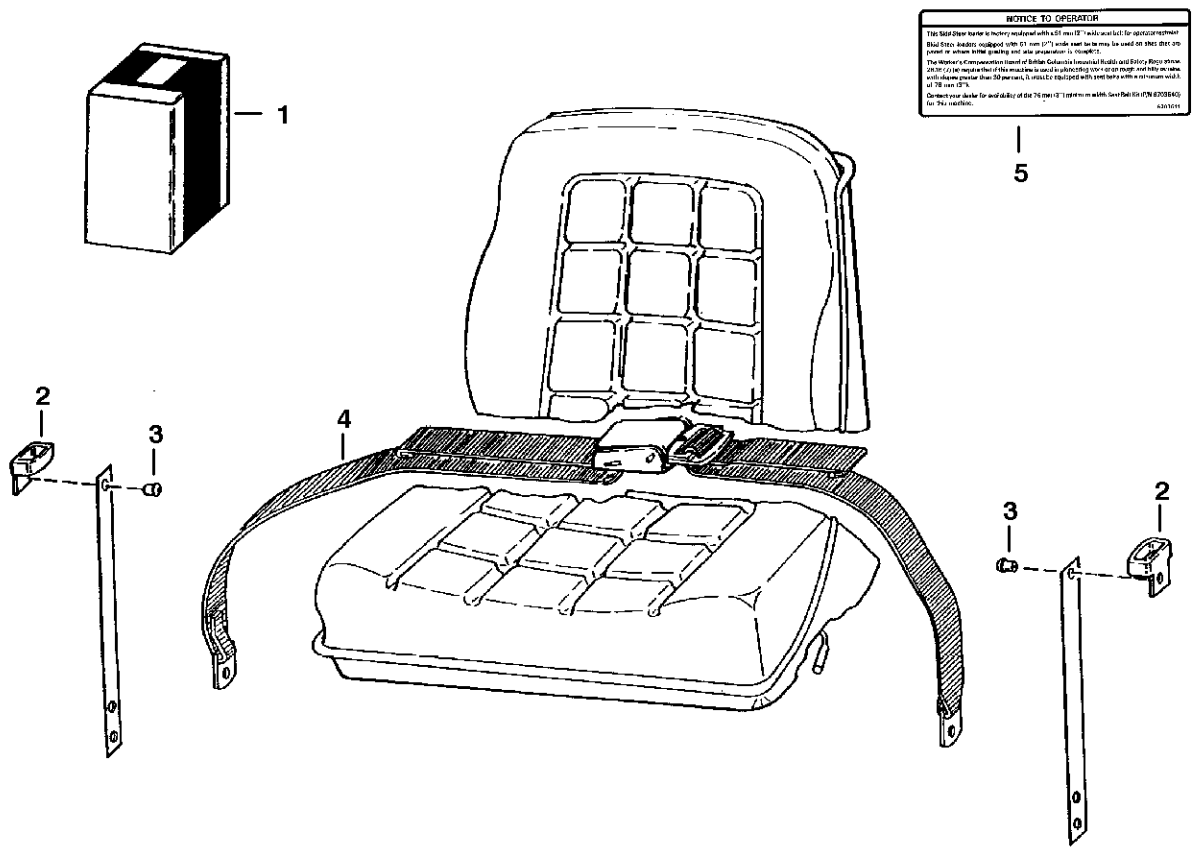

NOTE: Complies with British Columbia Industrial Health and Safety Regulations 26.16 (7) (a).

B-13601

SEAT BELT

Ref.N°	Part N°	Description	Remarks	Serial N°	Qty.
1	6703640	KIT	W/Ref. 2-5		1
2	6703703	GUIDE			2
3	6512797	RIVET			4
4	6659999	BELT			1
5	6703641	DECAL			x

STEERING DAMPENING KIT

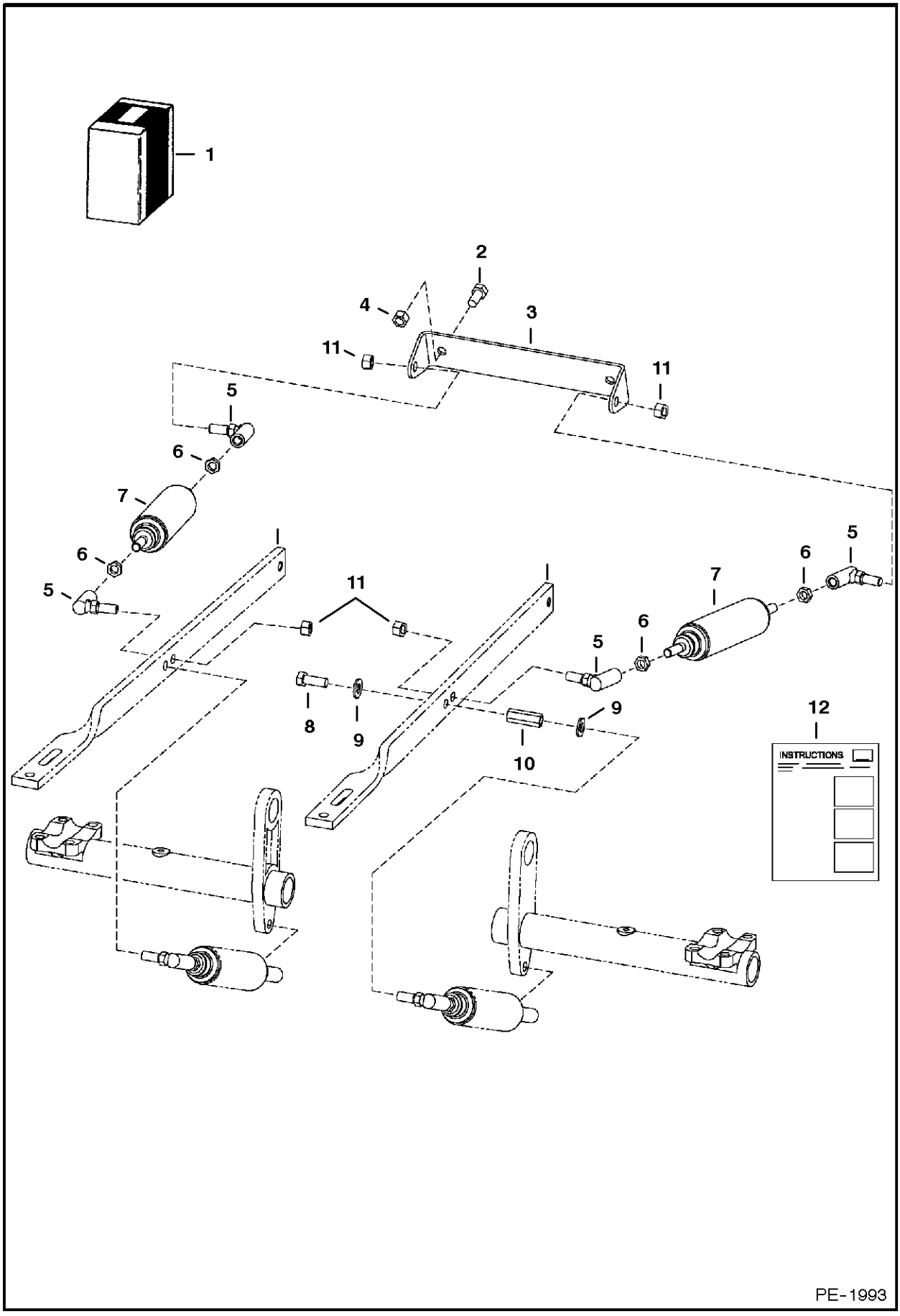

STEERING DAMPENING KIT

Ref.N°	Part N°	Description	Remarks	Serial N°	Qty.
1	6737490	KIT	Ref. STEERING DAMPENING KIT(2)-STEERING DAMPENING KIT(12)		1
2	17C-612	BOLT			2
3	6706106	MOUNT			1
4	95D-6	NUT			4
5	6599744	BALL JOINT			4
6	8D-6	NUT			4
7	6649551	DAMPENER	damper		2
8	18C-616	BOLT			1
9	25E-17	WASHER			2
10	6737444	SPACER			1
11	96D-6	NUT			4
12	6902619	INSTRUCTIONS			1

STROBE LIGHT

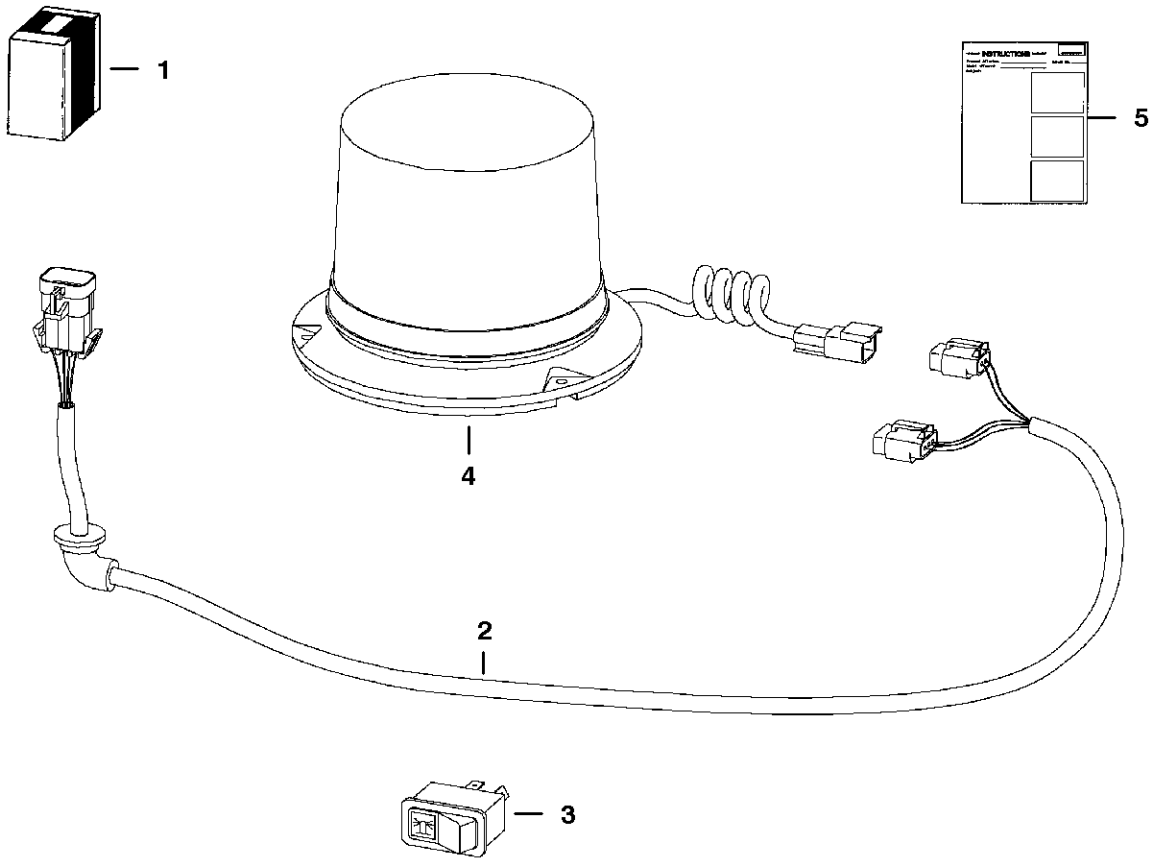

TS-1977

STROBE LIGHT

Ref.N°	Part N°	Description	Remarks	Serial N°	Qty.
1	6719857	KIT	strobe light		1
2	6718872	HARNESS			1
3	6665317	SWITCH	horizontal		1
3	6668816	SWITCH	vertical		1
4	6675522	STROBE			1
4	6675858	FLASH TUBE			1
5	6900992	INSTRUCTIONS			1

BULK ITEMS
(See Note)

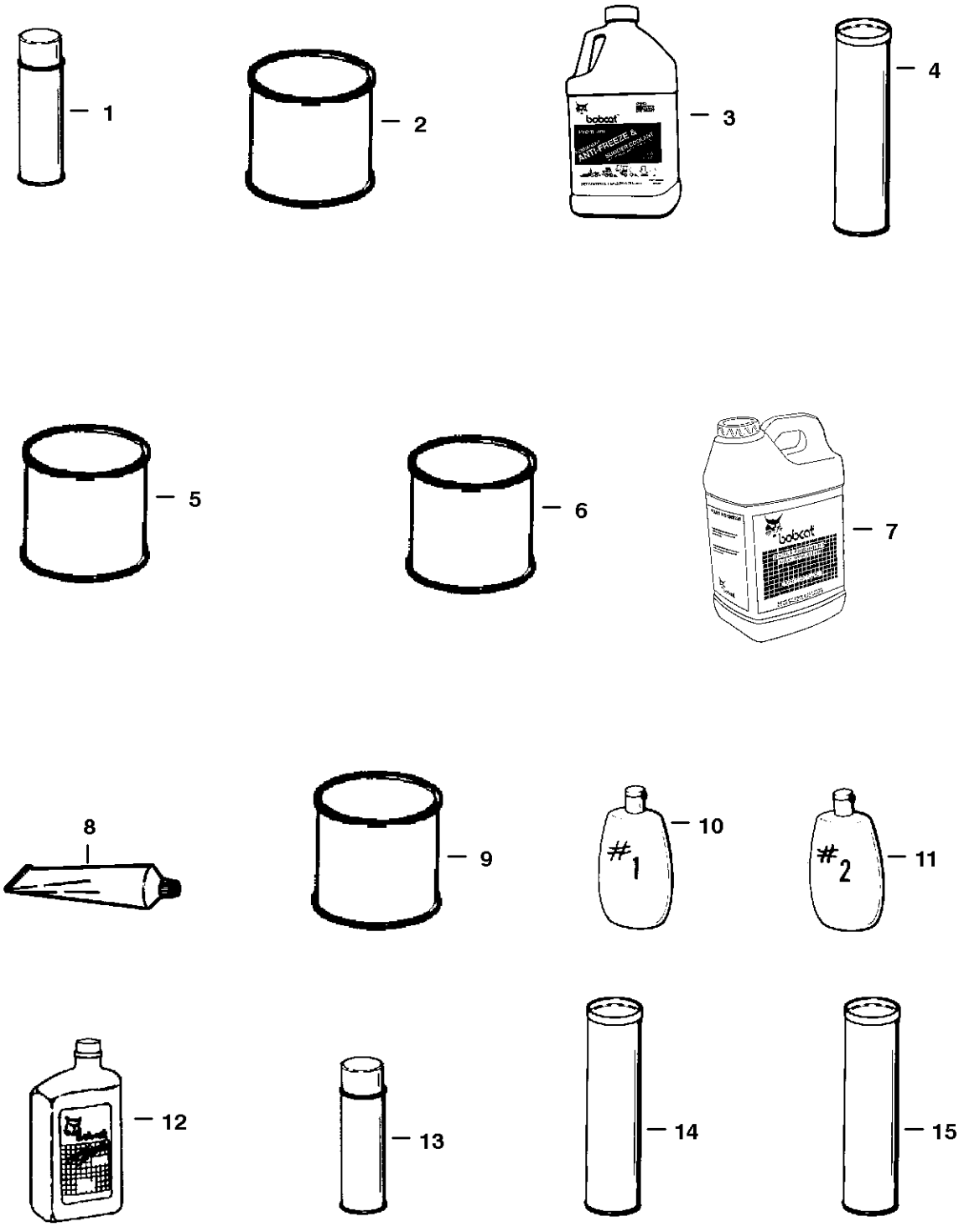

NOTE: Some of these bulk items may not be used on this particular model Bobcat.

NOTE: See Merchandising catalog for more products & information.

NOTE: Paint spray cans are packaged 6 per box.
Motor oil quarts are packaged 12 per box.
Motor oil 5 qt. jugs are packaged 4 per box.
Motor oil 2.5 gal. jugs are packaged 2 per box.

B-16462

BULK ITEMS

Ref.N°	Part N°	Description	Remarks	Serial N°	Qty.
1	6902228	PAINT	orange - spray can - SEE NOTE		x
1	6902229	PAINT	charcoal - spray can - SEE NOTE		x
1	6902230	PAINT	white - spray can - SEE NOTE		x
2	6902233	PAINT	orange - Qt. - spray gun ready		x
2	6902234	PAINT	charcoal - Qt. - spray gun ready		x
2	6902235	PAINT	white - Qt. - spray gun ready		x
3	6724094	ANTI-FREEEZE	Gal. - Premixed PG		x
3	6724354	ANTI-FREEZE	Gal. - PG concentrate		x
4	6633583	SEALANT	chaincase covers		x
5	NAP	REDUCER	gallon		x
6	6653519	PRIMER	Qt.		x
7	6563328	BLACK GOLD	hydraulic / hydrostatic transmission fluid - 5 gallons - 2 - 2 1/2 gallon containers		x
7	6722344	BLACK GOLD	hydraulic / hydrostatic transmission fluid - 5 gallons container		x
7	6563330	BLACK GOLD	55 gallon drum		x
8	6599360	SEALANT	electrical - 3 oz. tube		x
9	6634393	LUBRICANT	90 wt. gear - pint - for use in cooling fan drive assy.		x
10	6630188	POLISH	window #1 (8 oz.)		x
11	6630189	POLISH	window #2 (8 oz.) - scratch remover		x
12	6657303	MOTOR OIL	30 CE/SG - 1 Qt. - SEE NOTE		x
12	6657301	MOTOR OIL	10W30 CE/SG - 1 Qt. - SEE NOTE		x
12	6657299	MOTOR OIL	15W40 CE/SG - 1 Qt. - SEE NOTE		x
12	6724557	MOTOR OIL	SAE 10W30 - 1 gallon		x
12	6724558	MOTOR OIL	SAE 15W40 - 1 gallon		x
12	6724559	MOTOR OIL	SAE 30 - 1 gallon		x
12	6674204	MOTOR OIL	15W-40 - 2.5 gallon		x
12	6674205	MOTOR OIL	10W-30 - 2.5 gallon		x
12	6674206	MOTOR OIL	30W - 2.5 gallon		x
13	6675380	ADHESIVE	insulation - spray can		x
14	6658266	GREASE	general purpose		x
15	6599719	GREASE	14.5 oz. cartridge - for fan idler bearing		x
16	6650407	ADHESIVE	1 oz. tube		x
17	6650388	SEALANT	flange		x
18	6736644	PAINT	orange - .5oz. spray can		x
18	6736641	PAINT	charcoal - .5oz. spray can		x
18	6736642	PAINT	white - .5oz. spray can		x
18	6736645	PAINT	red - .5oz. spray can		x