RUTHZIL TRATOR COMERCIAL DE PEÇAS LTDA 11 97083-6812 ROLANDO

T300

Bobcat®

Parts Manual

S/N 5320 11001 & Above
S/N 5321 11001 & Above

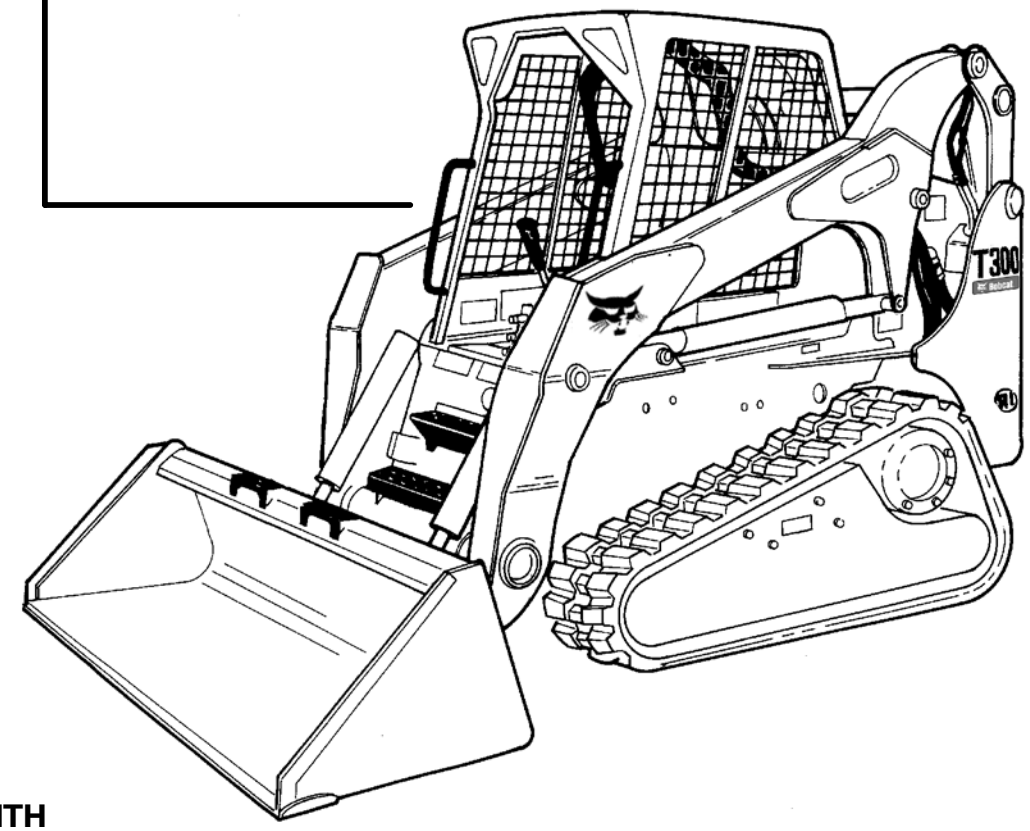

EQUIPPED WITH BOBCAT INTERLOCK CONTROL SYSTEM (BICS™)

An IR Ingersoll-Rand business

6904246 (11-05)

Printed in U.S.A.

© Bobcat Company 2005

GENERAL INFORMATION

Before ordering parts, ALWAYS provide dealer with your product model number and complete serial number information. Before ordering parts, verify correct part numbers and/or serial numbers with your dealer. When using the machine serial number, use the complete number.

Some Serial Number breaks are not available at time of printing.
These are listed as & Bel or & Abv or - (thru)

The number shown in the quantity column in this manual is the number of parts needed for the illustration on the page. For some parts an "x" will be shown in the quantity column. This "x" indicates that the quantity to be used is "As Needed".

When references L.H. (Left Hand) and R.H. (Right Hand) are used in this manual, it is done from the operator's seat in the forward operating position.

When "See Illustration...." appears in the remarks column, refer to the contents page for the illustration title to find page number location.

Some of the illustrations and information found in this parts manual were supplied to Bobcat by machine component companies.

For additional information on the Bobcat website visit www.bobcat.com

ABBREVIATIONS

SALES	=	Order from Gwinner Sales Department	W/	=	With
NSS	=	Not Serviced Seperately	W/O	=	Without
NAP	=	Not Available as Parts	I.D.	=	Inside Diameter
BTI	=	Bobcat Technical Information Bulletin	O.D.	=	Outside Diameter
P/M	=	Parts Manual	"	=	Inches
O/M	=	Operation & Maintenance Manual	'	=	Feet
S/M	=	Service Manual	mm	=	Millimeters
S/L	=	Service Letter			

DISPOSITION CODE DEFINITIONS

(Found in Remarks Column)

[A]	=	Use Up
[B]	=	Use Up on Other Application
[C]	=	File PDR Report with Bobcat Parts Sales
[D]	=	Part Number Error

NOTE D'INFORMATION

Pour toute référence au numéro de série de l'engin, toujours donner le numéro complet.

Le chiffré apparaissant dans la colonne des quantités de ce manuel représentent le nombre de pièces nécessaires pour l'illustration reprise sur la page. Dans certains cas, on lira un "x" dans la colonne des quantités. Cet "x" indique que la quantité nécessaire est "selon besoin".

Pour toute référence vers la GAUCHE ou la DROITE dans ce manuel, considérer que la personne se trouve assise dans le siège de l'opérateur, en position de fonctionnement en marche avant.

Certaines illustrations et informations reprises dans ce manuel de pièces de rechange ont été fournies à Bobcat/Ingersoll–Rand par des fabricants de composants.

ABREVIATIONS & SYMBOLES

SALES	= Commander au Service Ventes à Bruxelles
NSS	= Pas vendu séparément
NAP	= Non disponible comme pièce de rechange
*****	= Chapitre, page ou numéro de pièce modifié ou supplémentaire
BTI	= Bobcat Technical Information Bulletin : voir à la fin de la microfiché du modèle concerné ou la microfiche générale reprenant l' ensemble des "BTI".
was 6535403	= était avant 6535403
adj. (adjustment)	= réglage
Assembly	= ensemble
available W/Ref.	= disponible avec réf.
bulk/sold per foot	= en vrac/vendu par pied
does not include	= ne comprend pas
included with	= compris dans
I.D.	= D.I. (diamètre intérieur)
O.D.	= D.E. (diamètre extérieur)
not in kit	= pas en kit
W/ – WO/	= inclus/ – non inclus/
Qty	= quantité requise
see page/ref.	= voir page/réf.
used with ref/	= utilisé avec réf.
0,05 inch thickness	= 0,05 pouce d'épaisseur (un pouce = 25.4 mm)
weld on	= à souder

ALLGEMEINE INFORMATIONEN

Bei Angabe der Maschinen-Seriennummer stets die komplette Nummer angeben.

Bei der in der Mengenspalte (Anzahl) in diesem Handbuch angegebenen Zahl handelt es sich um die Anzahl von Teilen, die für die Abbildung auf der betreffenden Seite benötigt werden. Bei manchen Teilen in der Mengenspalte ist ein “x” angegeben. Dieses “x” weist darauf hin, dass sich die Anzahl der verwendeten Teile auf den “Bedarf” bezieht.

Bei Verwendung der Seitenangaben links und rechts in diesem Handbuch gelten diese für die Blickrichtung vom Fahrersitz aus, und zwar in Vorwärts-Betriebsrichtung.

Einige der in diesem Ersatzteilhandbuch aufgeführten Abbildungen und Informationen wurden der Bobcat/Ingersoll-Rand von den Herstellern von Maschinenbauteilen zur Verfügung gestellt.

ABKÜRZUNGEN UND SYMBOLE

SALES	= Bestellung bei der Verkaufsabteilung in Brüssel
NSS	= Nicht einzeln erhältlich
NAP	= Nicht als Ersatzteil erhältlich
*****	= Geänderte oder hinzugefügte Abschnitte, Seiten oder Teilenummern
BTI	= Bobcat Technical Information Bulletin : Siehe am Ende der Mikrokarte des jeweiligen Modells oder der allgemeinen Mikrokarte der BTI.
was 6535403	= War 6535403
adj.	= Einstellung
Assembly	= Baugruppe
available W/Ref.	= erhältlich mit der Referenz
bulk/sold per foot	= Mengenabnahme / Verkauf pro Fuss
does not include	= beinhaltet nicht
included with	= enthalten in
I.D.	= Innendurchmesser
O.D.	= Aussendurchmesser
not in kit	= nicht in Bausatz
W/ - WO/	= mit/ - ohne/
Qty	= Anzahl
see page/ref.	= Siehe Seite / Referenz
used with ref.	= verwendet mit Referenz
0.05 inch thickness	= Dicke : 0.05 Zoll (ein Zoll = 25.4 mm)
weld on	= anschweissen

INFORMAZIONI GENERALI

Quando si usa il numero di serie della macchina usare il numero completo.

Il numero mostrato nella colonna della quantità di questo manuale corrisponde al numero di componenti necessari per l'illustrazione della pagina. Per alcuni componenti appare "X" nella colonna delle quantità. Questa "X" indica che la quantità da usare è "come necessario".

See in questo manuale si fa riferimento alla parte destra o sinistra, si intende dal sedile dell'operatore nella posizione in avanti di funzionamento.

Alcune delle illustrazioni e informazioni trovate in questo manuale di componenti sono state fornite alla Bobcat/Ingersoll–Rand da società di componenti di macchine.

SIMBOLI E ABBREVIAZIONI

SALES	= Ordinare al servizio vendite di Bruxelles
NSS	= Non vendute separatamente
NAP	= Non disponibile come componente
*****	= Sezioni, pagine o numeri di componente cambiati o aggiunti
BTI	= (Bobcat Technical information) Ved. al termine del microfiche del modello relativo oppure microfiche generale
was 6535403	= era 6535403
adj. (adjustment)	= regol. (regolazione)
Assembly	= Complessivo
available W/Ref.	= disponibile con rif.
bulk/sold per foot	= alla rinfusa/venduto al piede
does not include	= non comprende
Included with	= compreso con
I.D.	= d. i.
O.D.	= d. e.
not in kit	= non fa parte del kit
W/ – WO/	= con – senza
Qty	= Qtà
see page/ref	= ved. pagina/rif.
used with ref.	= usato con il rif.
0,05 inch thickness	= spessore 0,05 pollici (un pollice = 25,4 mm)
weld on	= a saldare

INFORMACION GENERAL

Al utilizar el número de serie de la máquina, debe emplearse el número completo.

El número que figura en la columna de “Unidades” en este manual es el número de piezas que se necesitan para la ilustración que consta en la página. En algunas piezas aparece una “x” en la columna de “Unidades”. Esta “x” indica que las unidades a utilizar son “según sea necesario”.

Cuando se empleen las referencias izq. y dcha., éstas se entienden mirando desde el asiento del conductor, en posición de marcha adelante.

Algunas de las ilustraciones y la información que figuran en este manual de piezas han sido facilitadas a Bobcat/Ingersoll–Rand por empresas de componentes de máquinas.

ABREVIATURAS Y SIMBOLOS

VENTAS	= Pedido al Departamento de Ventas de Bruselas
NSS	= No se vende por separado
NAP	= No disponible como pieza de repuesto
*****	= Secciones, páginas o referencias modificadas o añadidas
BTI	= (Bobcat Tecnical Information) Ver al final de la microficha del modelo afectado o en la microficha general “Boletín de Información Técnica Bobcat”.
was 6535403	= era anteriormente el 6535403
adj. (adjustment)	= ajuste
assembly	= conjunto
available W/Ref.	= disponible con la ref.
bulk/sold per foot	= a granel/vendido por pies
does not include	= no incluye
included with	= incluido en
I.D.	= diámetro interior
O.D.	= diámetro exterior
not in kit	= no en el kit
W/ – WO/	= con/ – sin
Qty	= Unidades
see page /ref.	= ver página/ref.
used with ref.	= empleado con la ref.
0,05 inch thickness	= 0,05 pulgadas de espesor (1 pulgada = 25,4 mm)
weld on	= debe ser soldado

ALGEMENE INFORMATIE

Als u het serienummer van de machine gebruikt, geef dan het gehele serienummer.

Het cijfer dat voorkomt in de kolom “Aantal”, in deze handleiding, is het aantal onderdelen dat nodig is van de illustratie op de pagina. Voor sommige onderdelen staat er een “x” in de kolom “Aantal”. Deze “x” betekent dat er een aantal “zoals nodig” vereist is.

Wanneer er in deze handleiding naar “links” en naar “rechts” gerefereerd wordt, moet dit verstaan worden voor een bestuurder die in de bestuurdersstoel zit in de voorwaartse bedrijfsstand.

Sommige van de illustraties en informatie in deze onderdelen–handleiding werden door firma’s van machine–componenten geleverd aan Bobcat/Ingersoll–Rand.

AFKORTINGEN EN SYMBOLEN

SALES	= Bestellen bij de Verkoopafdeling te Brussel
NSS	= Niet afzonderlijk te verkrijgen
NAP	= Niet beschikbaar als onderdeel
*****	= Gewijzigde of toegevoegde paragrafen, pagina’s of onderdeelnummers
BTI	= Bobcat Technical Information Bulletin : Zie einde van de microfiche van het desbetreffende model of einde van de algemene microfiche die het geheel van alle “BTI” herneemt.
was 6535403	= was vroeger 6535403
adj. (adjustment)	= afstelling
Assembly	= geheel
available W/Ref.	= beschikbaar met ref.
bulk/sold per foot	= bulk/aan de meter verkocht
does not include	= bevat niet
includes with	= is bevat in
I.D.	= ϕ inw. (inwendige diameter)
O.D.	= ϕ uitw. (uitwendige diameter)
not in kit	= niet in de kit
W/ – WO/	= met/ – zonder/
Qty	= vereiste aantal
see page/ref.	= zie pagina/ref.
used with ref/	= gebruikt met ref.
0,05 inch thickness	= 0.05 inch dik (een inch = 25.4 mm)
weld on	= te lassen

Use only Bobcat belts and hoses to maintain maximum service life.

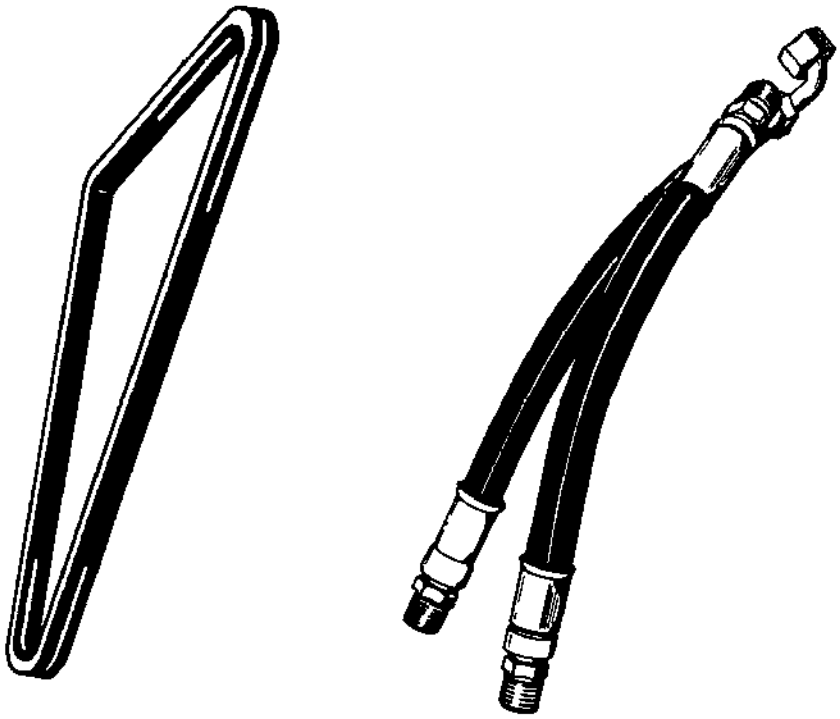

Available from Bobcat Parts.

Bobcat

CONTENTS

MAINTENANCE ITEMS 1-10
MAINTENANCE ITEMS 1
SCHEDULED MAINTENANCE ITEMS 3-10

MAIN FRAME 11-36
MAIN FRAME 11
OPERATOR CAB 13-18
SEAT & SEAT BAR 19
SEAT 21-24
REAR DOOR 25
LIFT ARMS & BOBTACH 27
BOB-TACH 29
PANELS 31-34
FUEL SYSTEM 35

DRIVE TRAIN 37-46
DRIVE TRAIN 37
TRACK TENSIONER 39
FRONT IDLER 41
REAR IDLER 43
TRACK ROLLER 45

HYDRAULIC SYSTEM 47-72
HYDRAULIC CIRCUITRY 47-50
LIFT & TILT CONTROL CIRCUITRY 51
AUXILIARY HYDRAULICS 53
TILT CYLINDER 55
LIFT CYLINDER 57
MANUAL LIFT RELEASE VALVE 59
CONTROL PEDALS 61
HYDRAULIC CONTROL VALVE 63-70
BUCKET POSITIONING VALVE 71

HIGH FLOW HYDRAULICS 73-78
HIGH FLOW HYDRAULICS 73-78

HYDROSTATIC SYSTEM 79-120
HYDROSTATIC PUMP/GEAR PUMP 109
GEAR PUMP 111
MOTOR 113
HYDROSTATIC OIL FILTER 115-118
BRAKE VALVE 119
HYDROSTATIC CIRCUITRY 79-84
HAND CONTROLS 85
HYDROSTATIC MOTOR & BRAKE 87-90
HYDROSTATIC PUMP 91-108

ELECTRICAL SYSTEM 121-142
CAB ELECTRICAL CIRCUITRY 121
ENGINE ELECTRICAL 123-126
CONTROLS ELECTRICAL 127-138
ALTERNATOR 139
STARTER 141

POWER UNIT 143-194
COOLING SYSTEM 143-146
ENGINE & ATTACHING PARTS 147-154
ENGINE SPEED CONTROL 155-158
ENGINE 159

CONTENTS (Cont'd)

POWER UNIT
MANIFOLDS 161
TURBOCHARGER 163
CYLINDER HEAD & COVER 165
CYLINDER HEAD 167
OIL PAN 169
PISTON & CRANKSHAFT 171
CAMSHAFT 173
FRONT COVER 175
WATER PUMP & THERMOSTAT 177
WATER PUMP 179
FUEL INJECTION SYSTEM 181-184
FUEL INJECTION PUMP 185
GOVERNOR 187-192
AIR CLEANER 193

ACCESSORIES & OPTIONS 195-324
ACS CONVERSION KIT 195
BACK-UP ALARM KIT 197-200
BEACON 201
BLOCK HEATER 203
BUCKET POSITIONING KIT 205
CAB DOOR 207-216
CAB ENCLOSURE 217-220
CAB WINDOWS 221-224
DEBRIS SHIELD KIT 225
DECALS 227-230
ELECTRICAL CONNECTOR KIT 231
ELECTRICAL CONTROLS KIT 233-236
EXPORT ACCESSORIES 237-240
EUROPEAN ACCESSORIES 241-246
FIRE EXTINGUISHER 247
FLASHER LIGHTS 249
F.O.P.S. KIT 251
FRONT AUXILIARY 253
GAS SPRING KIT 255
HEATER & A/C 257-280
HEATER & AC 259
HEATER 261
HORN KIT 281-284
LIFT KIT 285-288
LIGHT KIT 289
OPERATOR EAR NOISE REDUCTION 291-294
POWER BOB-TACH KIT 295
POWER BOB-TACH CYLINDER 297
POWER BOB-TACH 299
PURIFIER 301
RADIATOR SCREEN KIT 303
REAR AUXILIARY HYDRAULICS 305
REAR AUXILIARY VALVE 307
REAR DOOR LOCK 309
REAR WIPER 311
SEAT BELT 313-318

CONTENTS (Cont'd)

ACCESSORIES & OPTIONS
STEERING DAMPENING KIT 319
STROBE LIGHT 321
BULK ITEMS 323
NUMERICAL INDEX 326-370

MAINTENANCE ITEMS

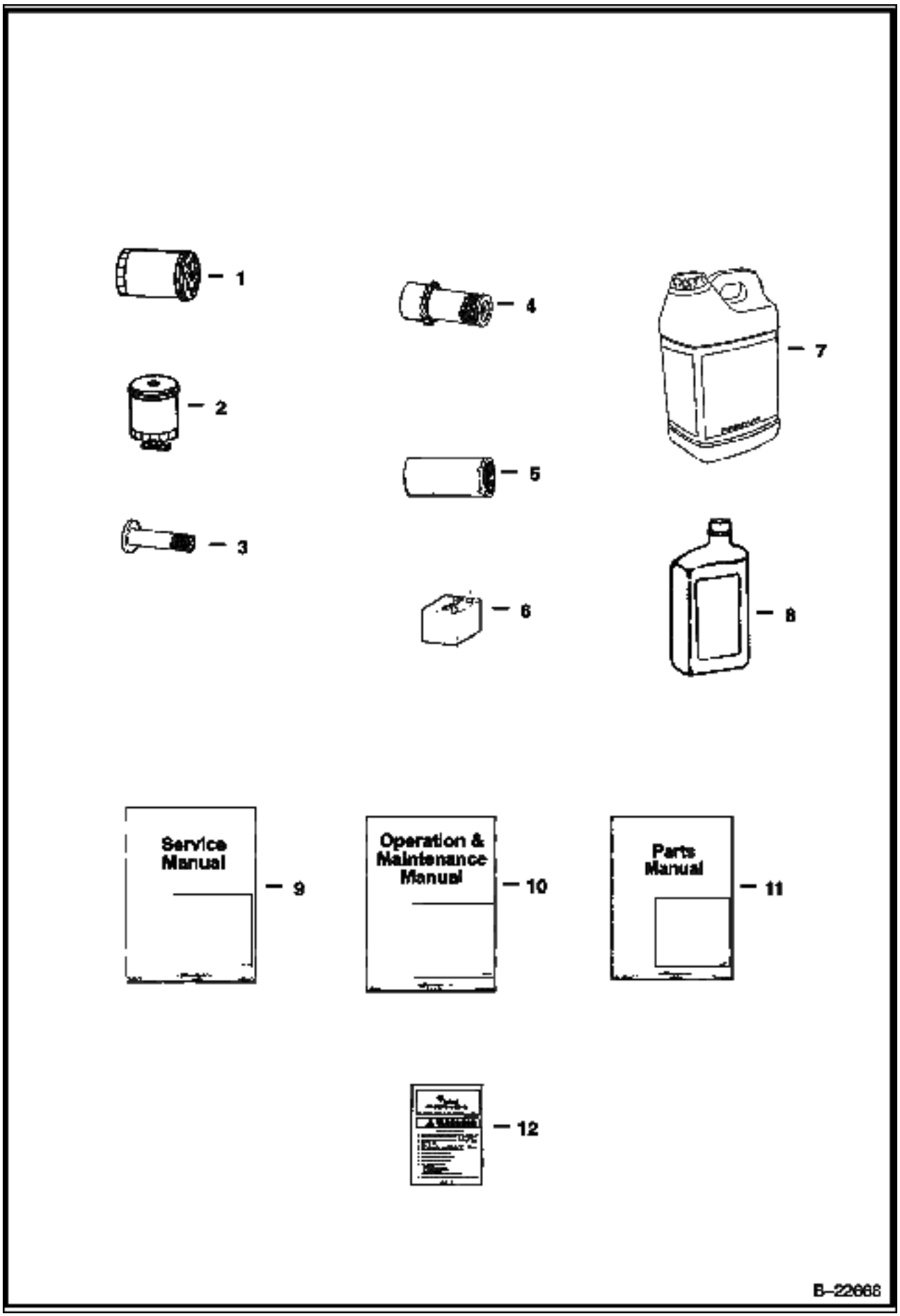

MAINTENANCE ITEMS (Cont'd)

Ref No	Part Number	Description	Remarks	Serial Number	Qty
1	6678233	OIL FILTER	See Illustration OIL PAN/ B17606 ENGINE OIL (6 PACK)		x
2	6667352	FILTER FUEL	See Illustration FUEL SYSTEM/ PE1728 FUEL		x
3	6681475	CARTRIDGE	See Illustration AIR CLEANER/ MS1516 INNER AIR CLEANER		x
4	6681474	CARTRIDGE	See Illustration AIR CLEANER/ MS1516 OUTER AIR CLEANER		x
5	6661248	ELEMENT	See Illustration HYDROSTATIC OIL FILTER/ C2818 HYDROSTATIC # 3 MEDIA		x
6	6665427	BATTERY	See Illustration ENGINE ELECTRICAL/ PE1489R 950 AMP		x
7	6903117	HYD FLUID 2.5 GAL. 2	See Illustration BULK ITEMS/ B16462R		x
7	6903118	HYD. FLUID 5GAL	See Illustration BULK ITEMS/ B16462R		x
7	6903119	HYD. FLUID 55GAL	See Illustration BULK ITEMS/ B16462R		x
8	6903107	OIL 10W30 QT. 12	See Illustration BULK ITEMS/ B16462R		x
8	6903105	OIL 15W40 QT. 12	See Illustration BULK ITEMS/ B16462R		x
8	6903109	OIL 30W QT. 12	See Illustration BULK ITEMS/ B16462R		x
8	6903106	OIL 15W40 GAL. 6	See Illustration BULK ITEMS/ B16462R		x
8	6903108	OIL 10W30 GAL. 6	See Illustration BULK ITEMS/ B16462R		x
8	6903110	OIL 30W GAL. 6	See Illustration BULK ITEMS/ B16462R		x
8	6903112	OIL 10W30 2.5 GAL 2	See Illustration BULK ITEMS/ B16462R		x
8	6903113	OIL 15W40 2.5 GAL. 2	See Illustration BULK ITEMS/ B16462R		x
8	6903111	OIL 30W 2.5 GAL 2	See Illustration BULK ITEMS/ B16462R		x
9	6904168	MANUAL	service		1
10	6904166	MANUAL	operation & maintenance		1
11	6904246	P/M T300K	parts manual		1
12	6728607	KIT	See Illustration DECALS/ PE2814 handbook		1

SCHEDULED MAINTENANCE ITEMS
(50 Hour)

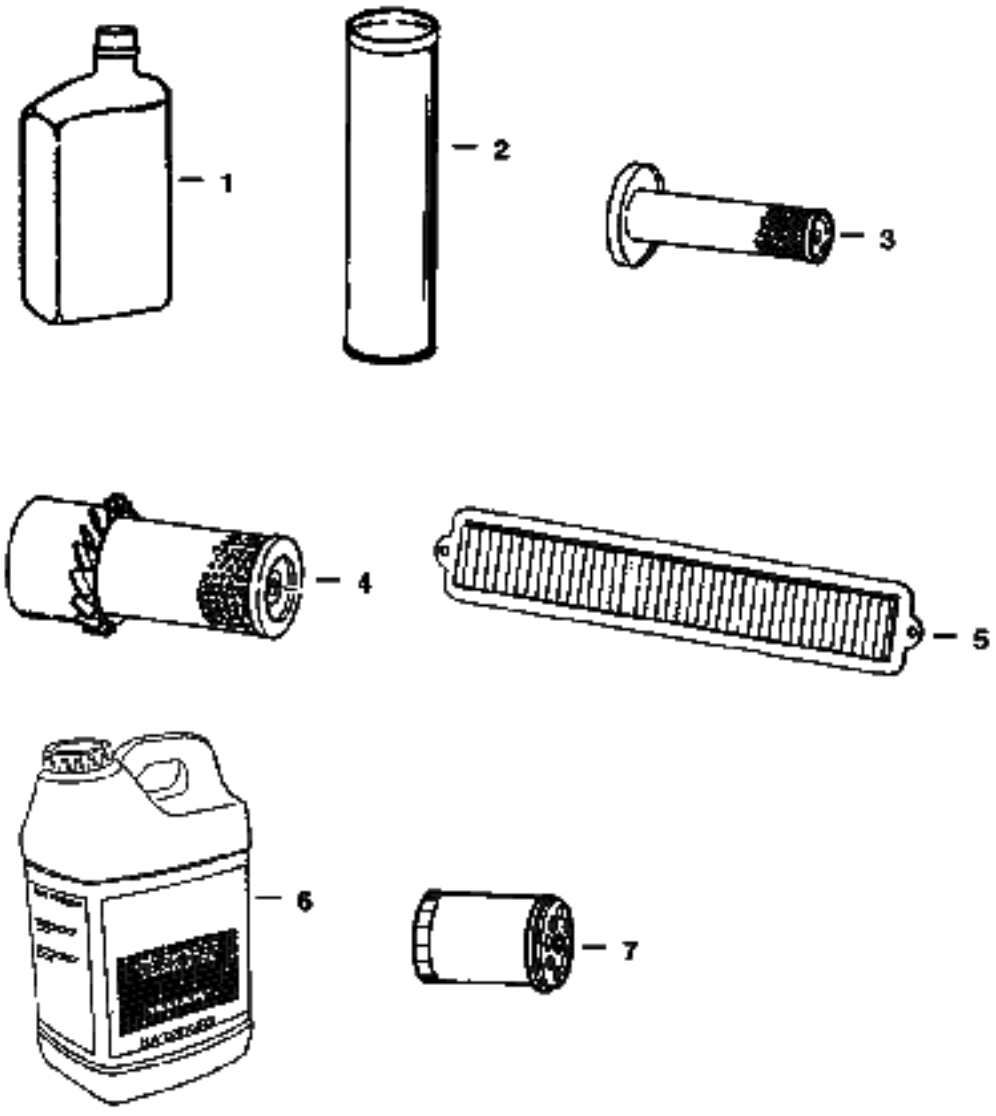

SCHEDULED MAINTENANCE ITEMS (Cont'd)
(50 Hour)

Ref No	Part Number	Description	Remarks	Serial Number	Qty
1	6903107	OIL 10W30 QT. 12			x
1	6903105	OIL 15W40 QT. 12			x
1	6903109	OIL 30W QT. 12			x
1	6903106	OIL 15W40 GAL. 6			x
1	6903108	OIL 10W30 GAL. 6			x
1	6903110	OIL 30W GAL. 6			x
1	6903112	OIL 10W30 2.5 GAL 2			x
1	6903113	OIL 15W40 2.5 GAL. 2			x
1	6903111	OIL 30W 2.5 GAL 2			x
2	6903122	GREASE 10			x
3	6681475	CARTRIDGE	Inner Air Cleaner		x
4	6681474	CARTRIDGE	Outer Air Cleaner		x
5	6677983	FILTER	HVAC		x
6	6903117	HYD FLUID 2.5 GAL. 2			x
6	6903118	HYD. FLUID 5GAL			x
6	6903119	HYD. FLUID 55GAL			x
7	6678233	OIL FILTER	Engine Oil (6 Pack)		x

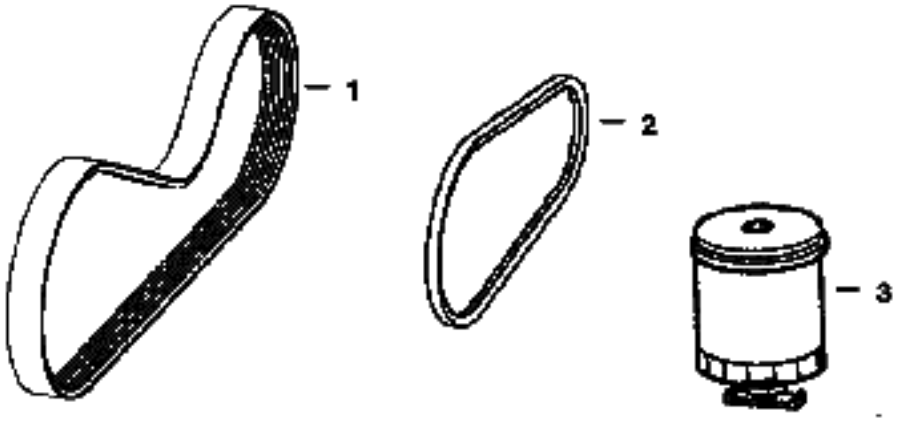

B–25008

SCHEDULED MAINTENANCE ITEMS (Cont'd)
(250 Hour)

Ref No	Part Number	Description	Remarks	Serial Number	Qty
1	6662855	BELT	drive - std controls		x
1	6672152	BELT	drive - selectable joystick controls		1
2	6730819	BELT	air conditioner		x
3	6667352	FILTER FUEL			x



B–22778

SCHEDULED MAINTENANCE ITEMS (Cont'd)
(500 HOUR)

Ref No	Part Number	Description	Remarks	Serial Number	Qty
1	6727475	CAP	HYD. RESERVOIR BREATHER [A]		x
2	6661248	ELEMENT	HYD./HYDRO.		x

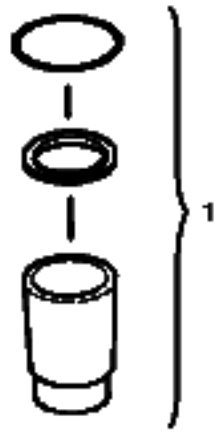

B–25009

SCHEDULED MAINTENANCE ITEMS (Cont'd)
(1000 Hour)

Ref No	Part Number	Description	Remarks	Serial Number	Qty
1	6661807	KIT	in-line filter		x

MAIN FRAME

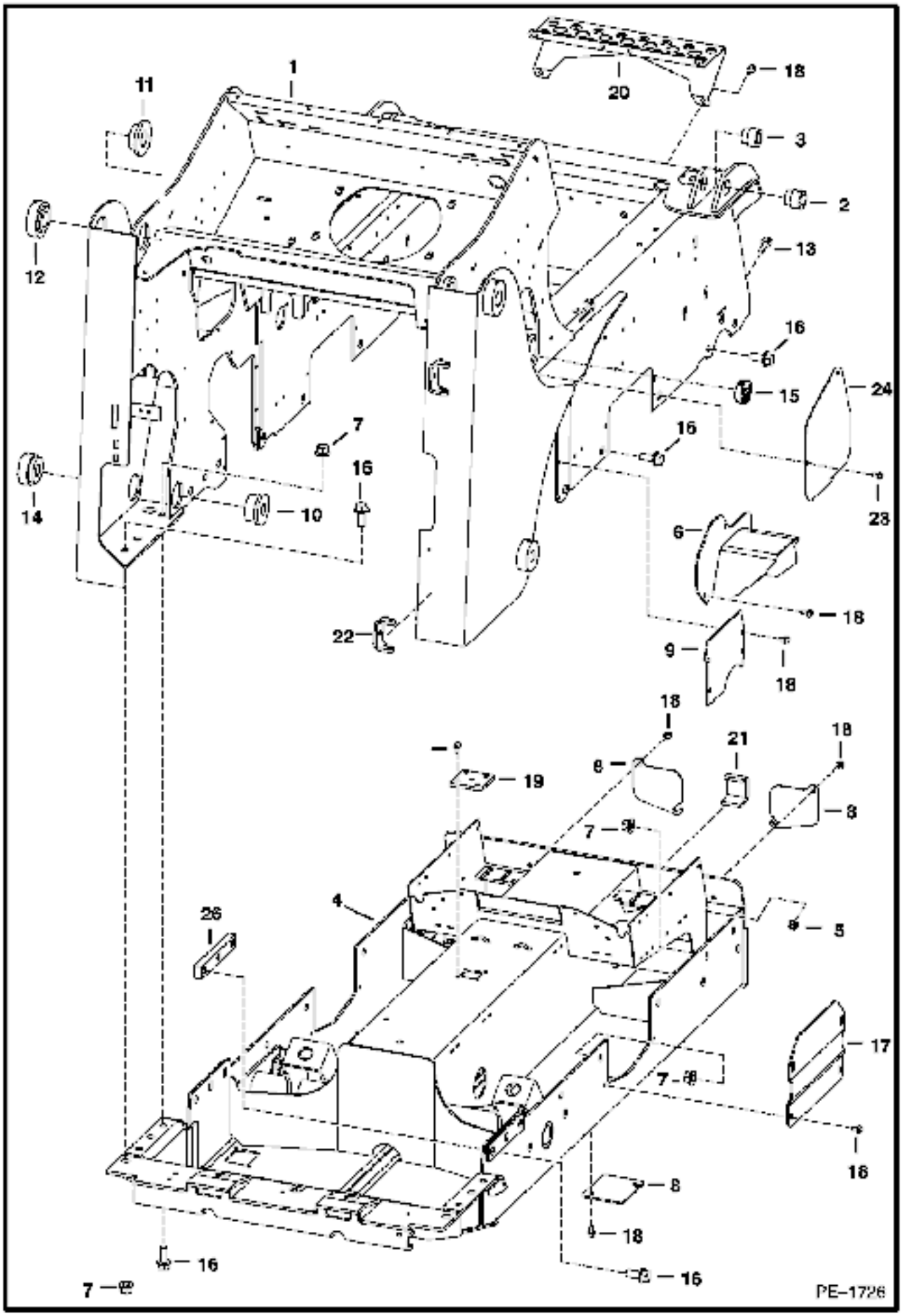

MAIN FRAME (Cont'd)

Ref No	Part Number	Description	Remarks	Serial Number	Qty
1	7101453	MAIN FRAME			1
2	6717277	BUSHING	weld-on		2
3	6717278	BUSHING	weld-on		2
4		DRIVECASE	See Illustration DRIVE TRAIN/ PE1727 FRAME ONLY		1
5	83D000008B	NUT			4
6	6736769	COVER	R.H.		1
6	6736770	COVER	L.H.		1
7	53D000012B	NUT			19
8	6716010	COVER			8
9	6736772	COVER			2
10	6730785	BUSHING	inside upright weld-on		2
11	6729401	BUSHING	inside upright weld-on		2
12	6729402	BUSHING	outside upright weld-on		2
13	31C000824B	BOLT			4
14	6730784	BUSHING	outside upright weld-on		2
15	6718796	PLUG	Bobcat head		1
16	31C001228B	BOLT			24
17	6719201	COVER			2
18	84G003712B	BOLT			27
19	6730378	COVER			1
20	6732577	STEP			1
21	6706485	HOOK	tie down - weld-on		2
22	6708987	HINGE	weld-on		2
23	84G003708B	BOLT			6
24	6730783	COVER			2
25	6729774	COVER			2
26	6706857	BLOCK	threaded		2
27	6562619	BUSHING			2
28	6577812	COVER			2

OPERATOR CAB

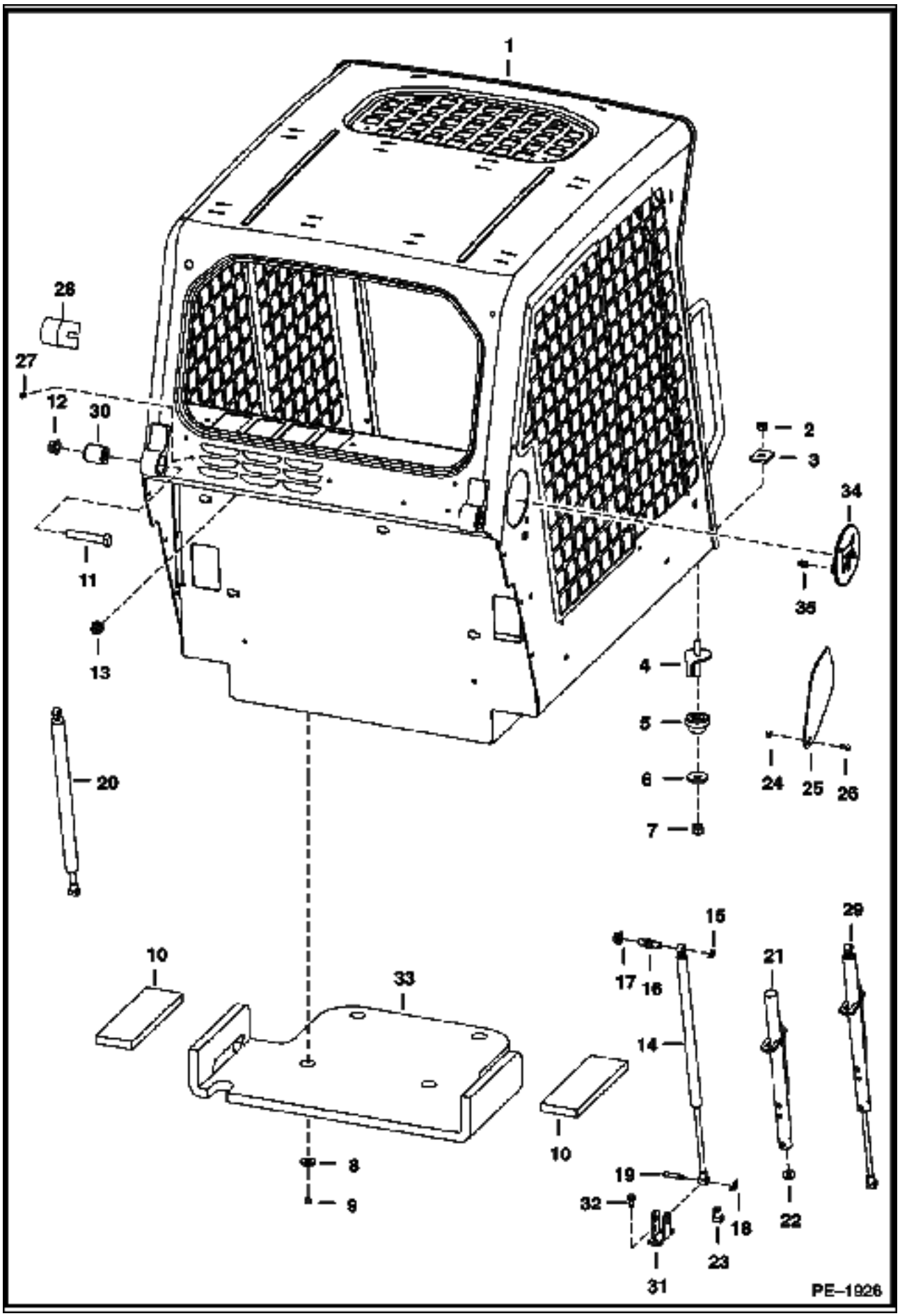

Ref No	Part Number	Description	Remarks	Serial Number	Qty
1	6719672	OPERATOR CAB	Does not include cab decals		1
2	59D000008B	NUT			2
3	6553709	WASHER	rectangular		2
4	6702971	BOLT			2
5	6560633	DAMPENER			2
6	6515817	WASHER			2
7	85D000008B	NUT			2
8	619021B	WASHER			4
9	59D000005B	NUT			4
10	6729012	INSULATION	seat pan		2
11	17C001056B	BOLT			2
12	53D000010B	NUT			2
13	53D000006B	NUT			4
14	6675135	GAS SPRING	R.H.		1
15	6675140	SNAP RING			2
16	6719064	MOUNT			2
17	97D000008B	NUT			2
18	6631418	PIN	ring		2
19	6567743	PIN			2
20	6675137	GAS SPRING	L.H.		1
20	6675139	GAS SPRING	L.H. - for cab W/ enclosure		1
21	6708189	TUBE	stop - R.H.		1
22	6701174	WASHER			1
23	6675258	CLEVIS			1
24	95D000005B	NUT			2
25	6718784	COVER			2
26	25G000512B	BOLT			2
27	6675033	INSERT			x
28	6579613	STOP			2
29		GAS SPRING	NAP - R.H. - W/ latch - Order Ref. 14 & 21-23		1
30	6562602	BUSHING			2
31	6706349	MOUNT	gas spring		2
32	84G003112B	BOLT			4
33	6729013	INSULATION	seat pan		1
34		PLUG ASSY	NAP - W/ Bobcat head - W/Ref. 35		2
35	6679990	CLIP			6

OPERATOR CAB

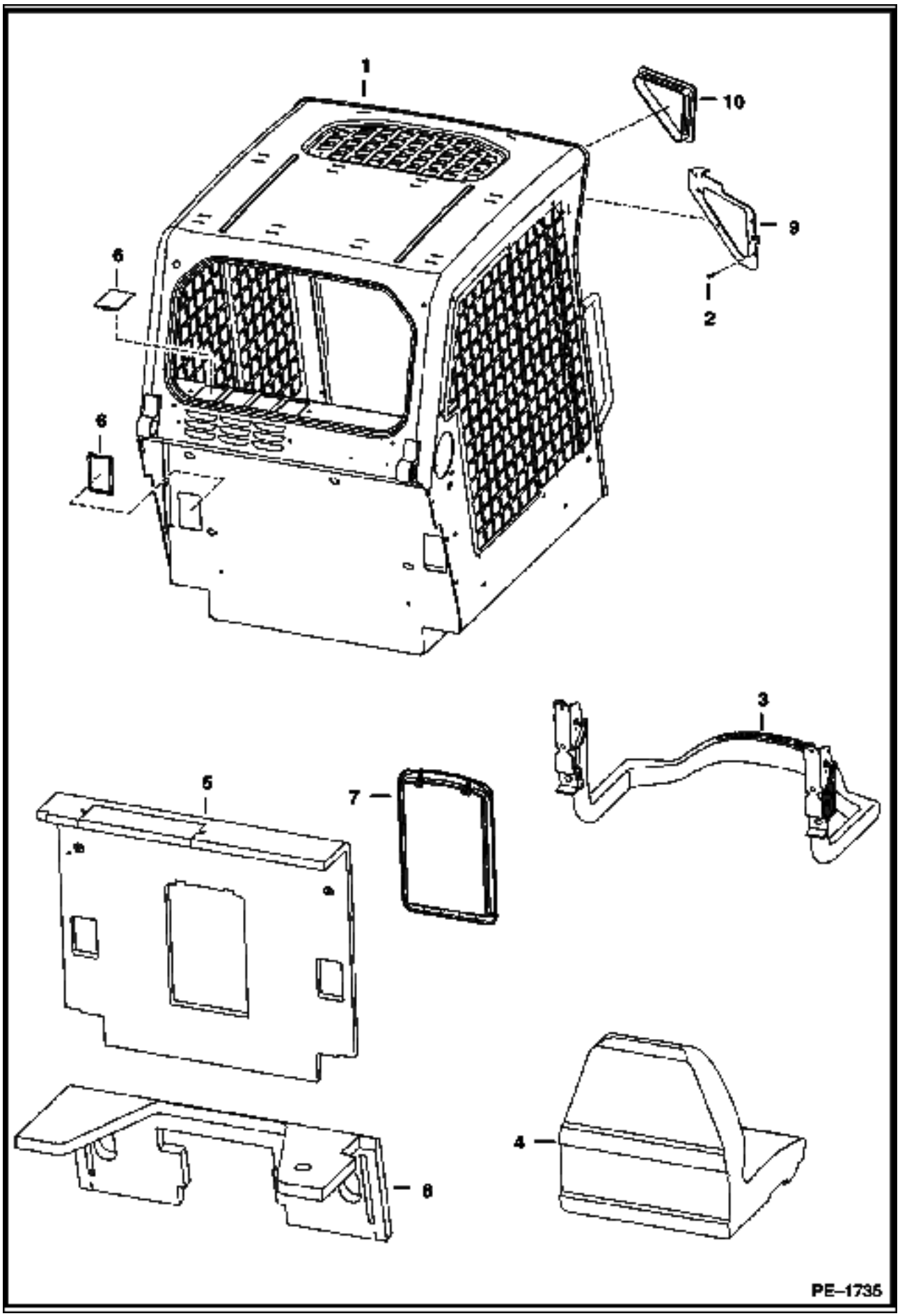

Ref No	Part Number	Description	Remarks	Serial Number	Qty
1	6719672	OPERATOR CAB	Does not include cab decals		1
2	6675033	INSERT			6
3		SEAT BAR	See Illustration SEAT & SEAT BAR/ PE1051		1
4		SEAT	See Illustration SEAT/ B25136		1
5	6719504	INSULATION			1
6	6718101	COVER			6
7		CONTAINER	NAP - manuals		1
7	6675524	CLIP			2
7	6725301	COVER			1
7	6725303	FRAME			1
8	6716800	INSULATION			1
9		FRAME	NSS - L.H. - weld-on		1
9		FRAME	NSS - R.H. - weld-on		1
10	6674403	COVER	no lights		2

OPERATOR CAB
(Deluxe)

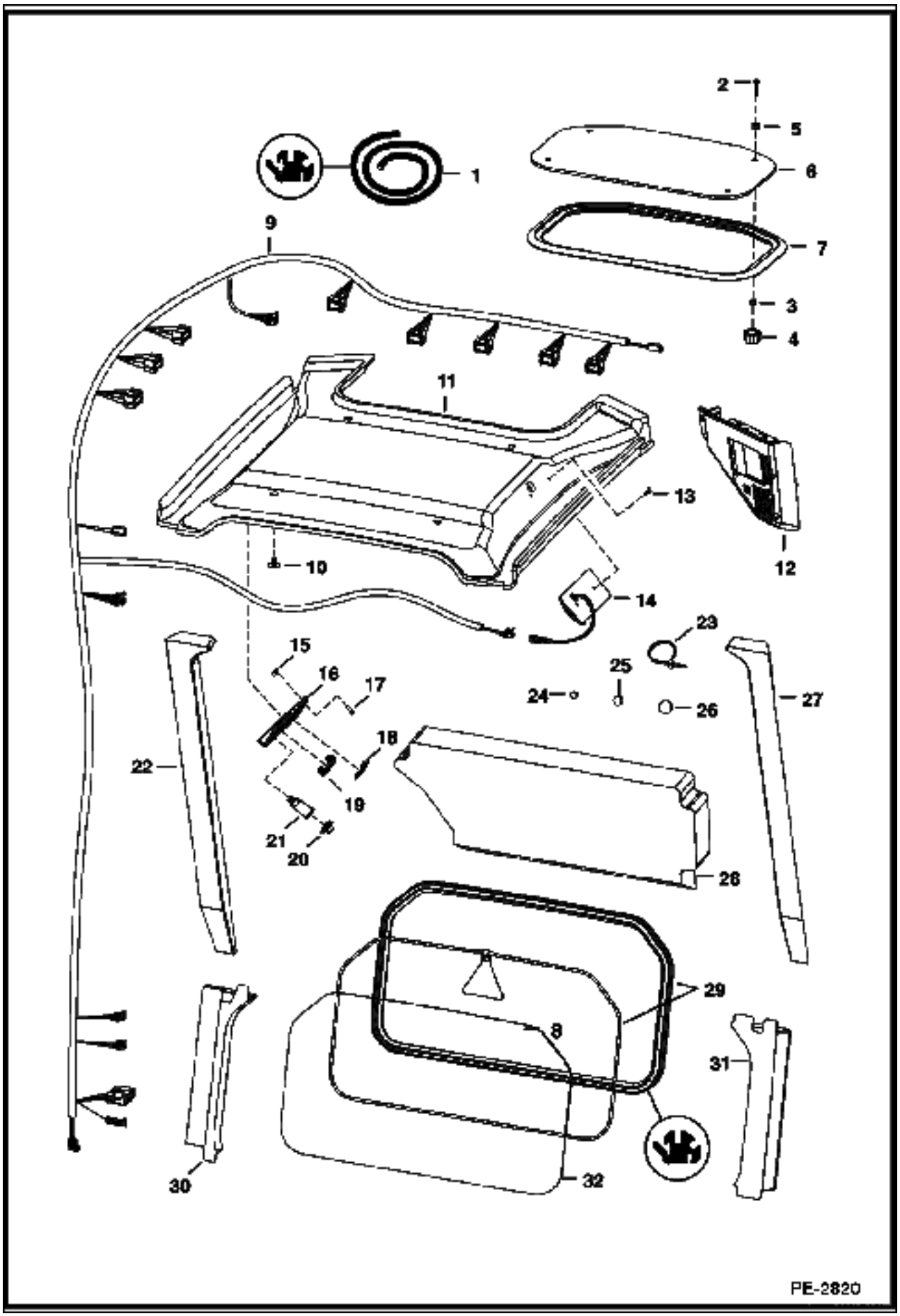

OPERATOR CAB (Cont'd)
(Deluxe)

Ref No	Part Number	Description	Remarks	Serial Number	Qty
1	6675387	EXTRUSION	bulk - Sold Per Foot		x
1	6554149	CORD	bulk - Sold Per Foot		x
2	91G000420B	BOLT			4
3	6664085	BUSHING	nylon		4
4	6681614	KNOB	11/16" deep thread		4
5	6675545	GROMMET			4
6	7105035	WINDOW	assy. - W/ Ref. 2, 3, 5 & 7		1
7		SEAL	NAP - Order Ref. 6		1
8	6731478	EXIT TAG			1
9	7116260	HARNESS	deluxe		1
9	7116261	HARNESS	standard		1
10	6674895	RETAINER	snap in		4
11	6737704	INSULATION	headliner		1
12	6688403	PANEL	R.H. - deluxe - keyless - export		1
13	6664221	RETAINER	snap in		2
14	6680326	LIGHT	dome		1
14	6665367	BULB			1
15	6669091	CLIP			4
16	6718580	PANEL			1
17	6669224	BOLT			4
18	6665314	PLUG	switch		5
19	6668742	SWITCH	travel control - export		1
20	6664224	CAP			1
21	6664223	OUTLET			1
22	6717519	INSULATION			1
23	6610510	TIE			6
24	5289686B	PLUG	black - .375" hole		1
25	6649949	PLUG	.5" hole		2
26	6657719	PLUG	.75" hole		1
27	6717520	INSULATION			1
28	6727299	INSULATION	cab back		1
29		EXTRUSION	NAP - 75.75" (1924mm) long - Order Ref. 1		x
29		CORD	NAP - 75.75" (1924mm) long - Order Ref. 1		x
30	6717517	INSULATION			1
31	6717518	INSULATION			1
32	6717874	WINDOW	rear		1

SEAT & SEAT BAR

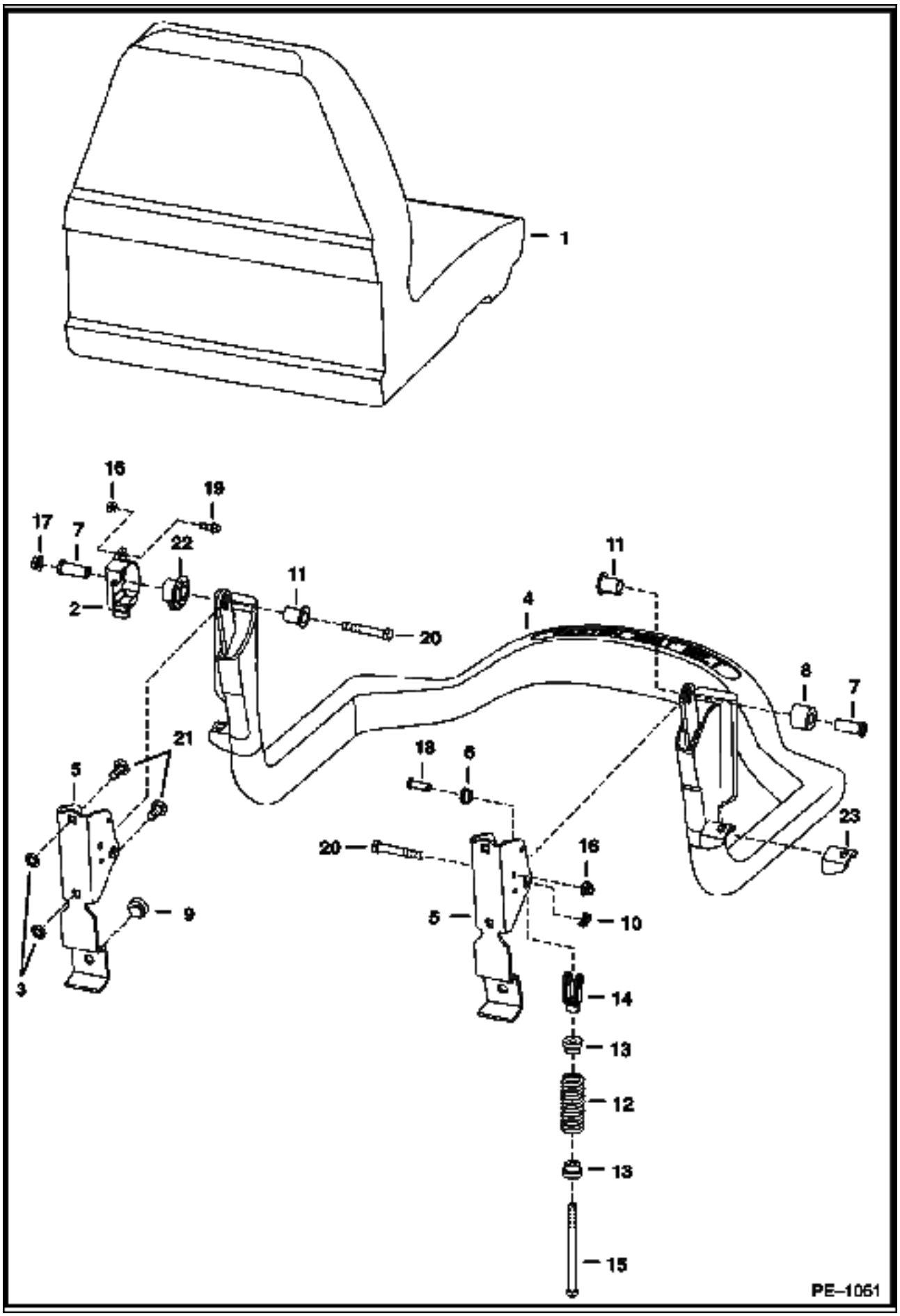

Ref No	Part Number	Description	Remarks	Serial Number	Qty
1		SEAT	See Illustration SEAT/ B25136		1
2	6674406	SENSOR			1
3	6674894	NUT			4
4	6715860	SEAT BAR			1
5	6715863	BRACKET			1
6	6715864	BUSHING			2
7	6715865	BUSHING			2
8	6715866	BUSHING			1
9	6519178	BUMPER			2
10	6631418	PIN	ring		2
11	6680441	BUSHING	keyed		2
12	6701535	SPRING			2
13	6710659	BUSHING			2
14	6713589	CLEVIS			2
15	6713887	BOLT			2
16	83D000004B	NUT			1
17	53D000006B	NUT			2
18	4F006106B	PIN			2
19	35C000412B	BOLT			1
20	17C000640B	BOLT			2
21	10C000616B	BOLT			4
22	6674405	BUSHING			1
23		MOUNT	NAP - Order Ref. 4		2

SEAT
(Suspension - Sears)

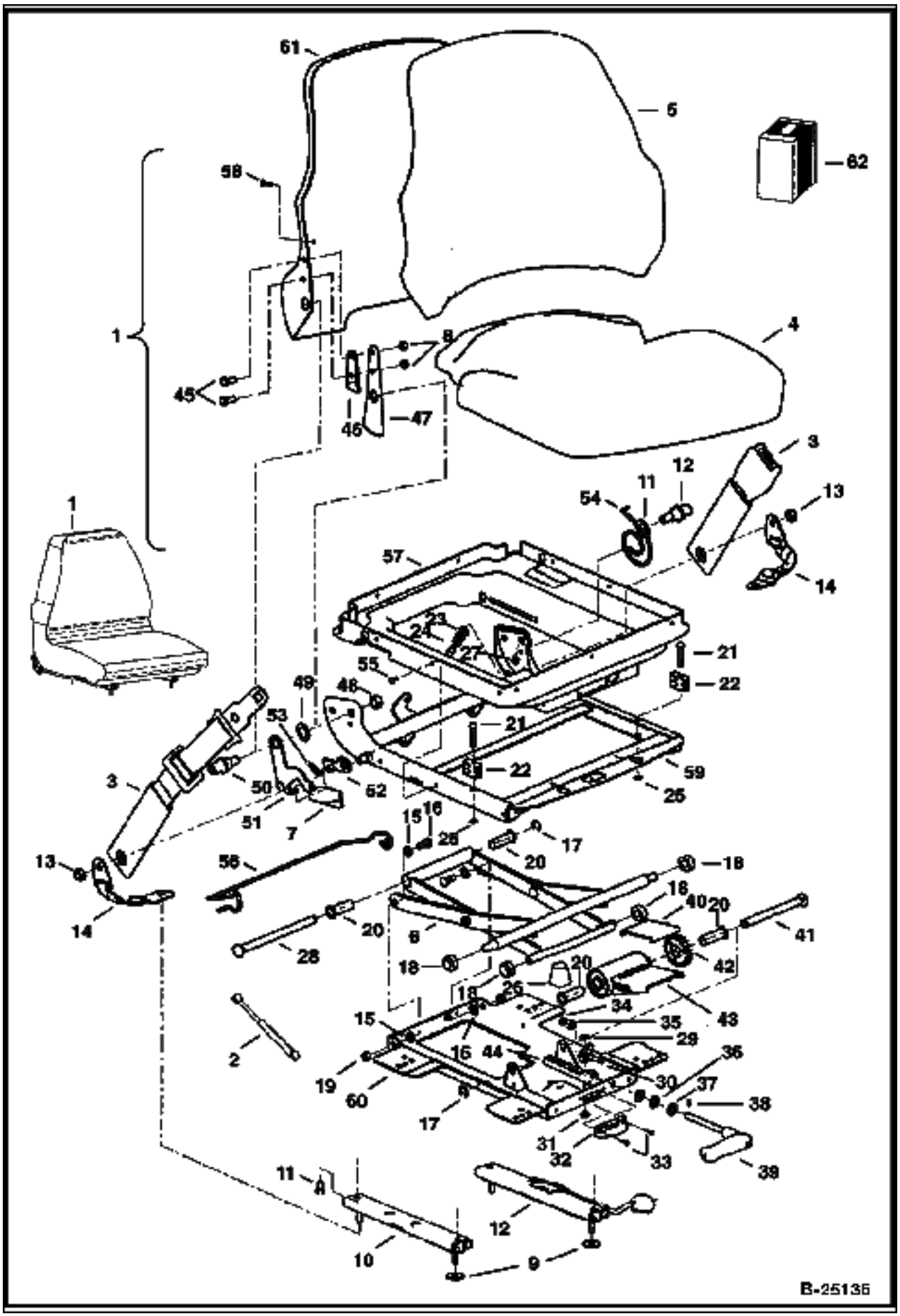

SEAT (Cont'd)
(Suspension - Sears)

Ref No	Part Number	Description	Remarks	Serial Number	Qty
1	6675595	SEAT	vinyl - L.H. recliner lever		1
1	6675596	SEAT	fabric - L.H. recliner lever		1
2	6676338	GAS SPRING			1
3	6675170	SEAT BELT	lap		1
4	6675320	SEAT	seat - fabric		1
4	6675322	SEAT	seat - vinyl		1
5	6675319	SEAT	backrest - fabric - W/Ref. 58		1
5	6675321	SEAT	backrest - vinyl - W/Ref. 58		1
6	6675317	SCISSORS			1
7	6675323	KNOB	recliner		1
8		NUT	NSS		6
9	619021B	WASHER			4
10		SLIDE	NSS - slave		1
11		BOLT	NSS		4
12		SLIDE	NSS - locking		1
13		NUT	NSS		2
14		BELT	NSS - tether		2
15		WASHER	NSS - cross pivot		4
16		BOLT	NSS - pivot		2
17		RING	NSS - retaining		2
18		ROLLER	NSS		4
19		NUT	NSS		2
20		BUSHING	NSS - wt adjustment		4
21		RIVET	NSS		2
22		BLOCK	NSS - up stop		2
23		WASHER	NSS		3
24		STOP	NSS - armrest		1
25		PUSHNUT	NSS		2
26		BUMPER	NSS		1
27		NUT	NSS		1
28		SHAFT	NSS - bearing		1
29		RIVET	NSS - female snap		1
30		INDICATOR	NSS - weight		1
31		RIVET	NSS - male snap		1
32		DIAL	NSS - weight indicator		1
33		POP RIVET	NSS		2
34		SPACER	NSS		1
35		NUT	NSS		1
36		BEARING	NSS - thrust		1
37		RACE	NSS - thrust		2
38		SHEAR PIN	NSS		1
39		HANDLE	NSS - weight adjustment		1
40		PLATE	NSS - wear		1
41		SHAFT	NSS - torsion		1
42		DRIVE GEAR	NSS		1
43		BUSHING	NSS - torsion		1
44		RACK	NSS - wt adjustment		1
45		BOLT	NSS		2
46		SPACER	NSS - recliner		1
47		BRACKET	NSS - back tilt		1
48		NUT	NSS		2
49		WASHER	NSS - plastic		2
50		BOSS	NSS - back pan pivot		2
51		HANDLE	NSS - recliner (RH)		1

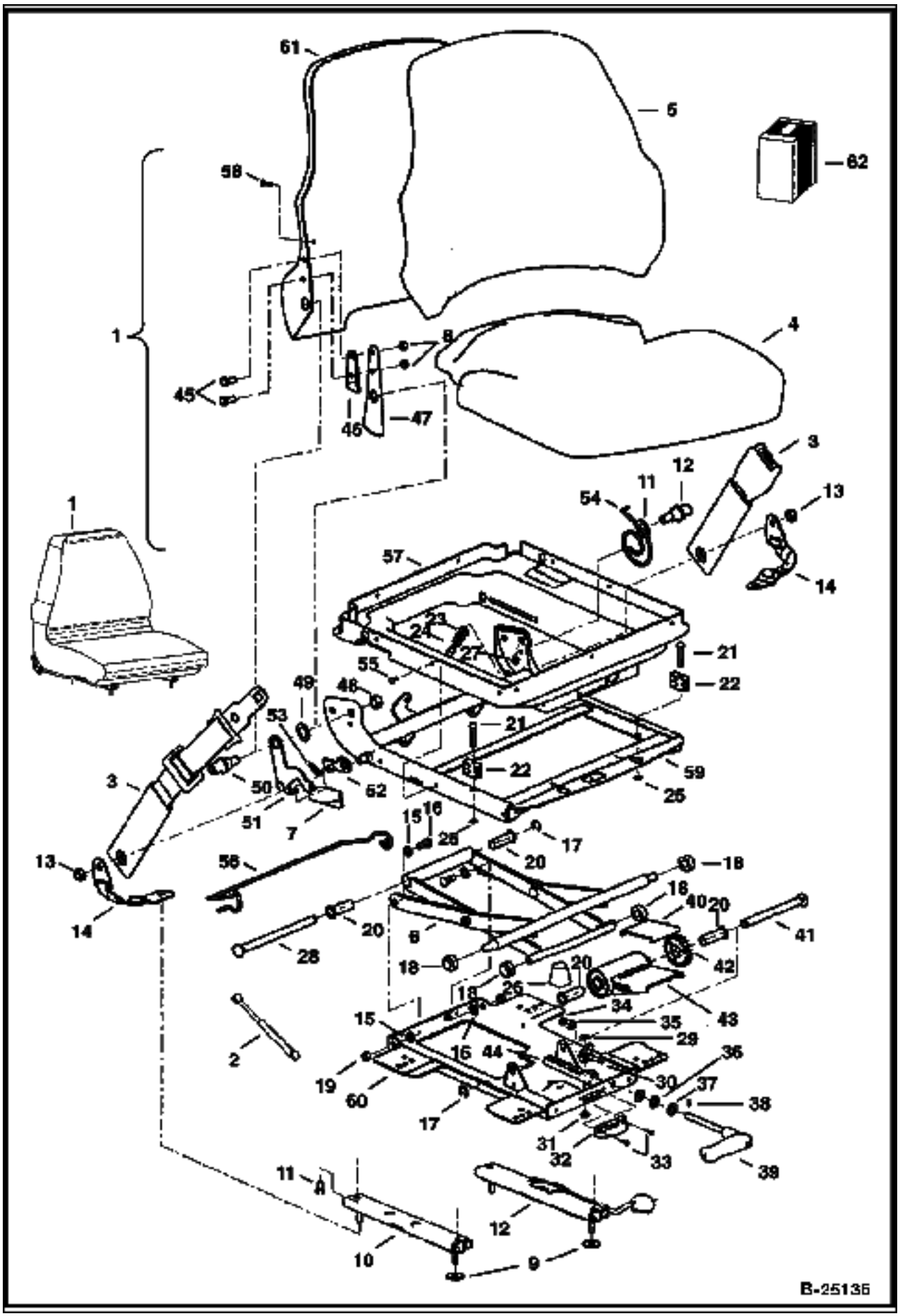
B-25136

SEAT (Cont'd)
(Suspension - Sears)

Ref No	Part Number	Description	Remarks	Serial Number	Qty
52		LATCH	NSS - recliner		1
53		SPRING	NSS - extension		1
54		SPRING	NSS - tilt latch		1
55		CLIP	NSS		6
56		WIRE	NSS - boot support		1
57		SUSPENSION	NSS - boot		1
58		SCREW	NSS		2
59		HOUSING	NSS - upper		1
60		HOUSING	NSS - lower		1
61		BACK PAN	NSS		1
62	6675309	KIT	slides - W/Ref. 8-12		1
62	6675310	KIT	tether belt - W/Ref. 9, 13 & 14		1
62	6675311	KIT	suspension rollers & bearings - W/Ref. 15-20		1
62	6675312	KIT	suspension bumpers & stops - W/Ref. 21-27		1
62	6675313	KIT	rear tube - W/Ref. 17, 20 & 28		1
62	6675314	KIT	weight adj. indicator - W/Ref. 29-33		1
62	6675315	KIT	weight adj. handle - W/Ref. 34-39		1
62	6675316	KIT	weight adj. - W/Ref. 17, 20 & 40-44		1
62	6675318	KIT	R.H. recliner - W/Ref. 7,8 & 45-54		1
62	6676034	KIT	L.H. recliner - W/Ref. 7,8 & 45-54		1
62	6675308	KIT	susp. boot - W/Ref. 55-57		1

REAR DOOR

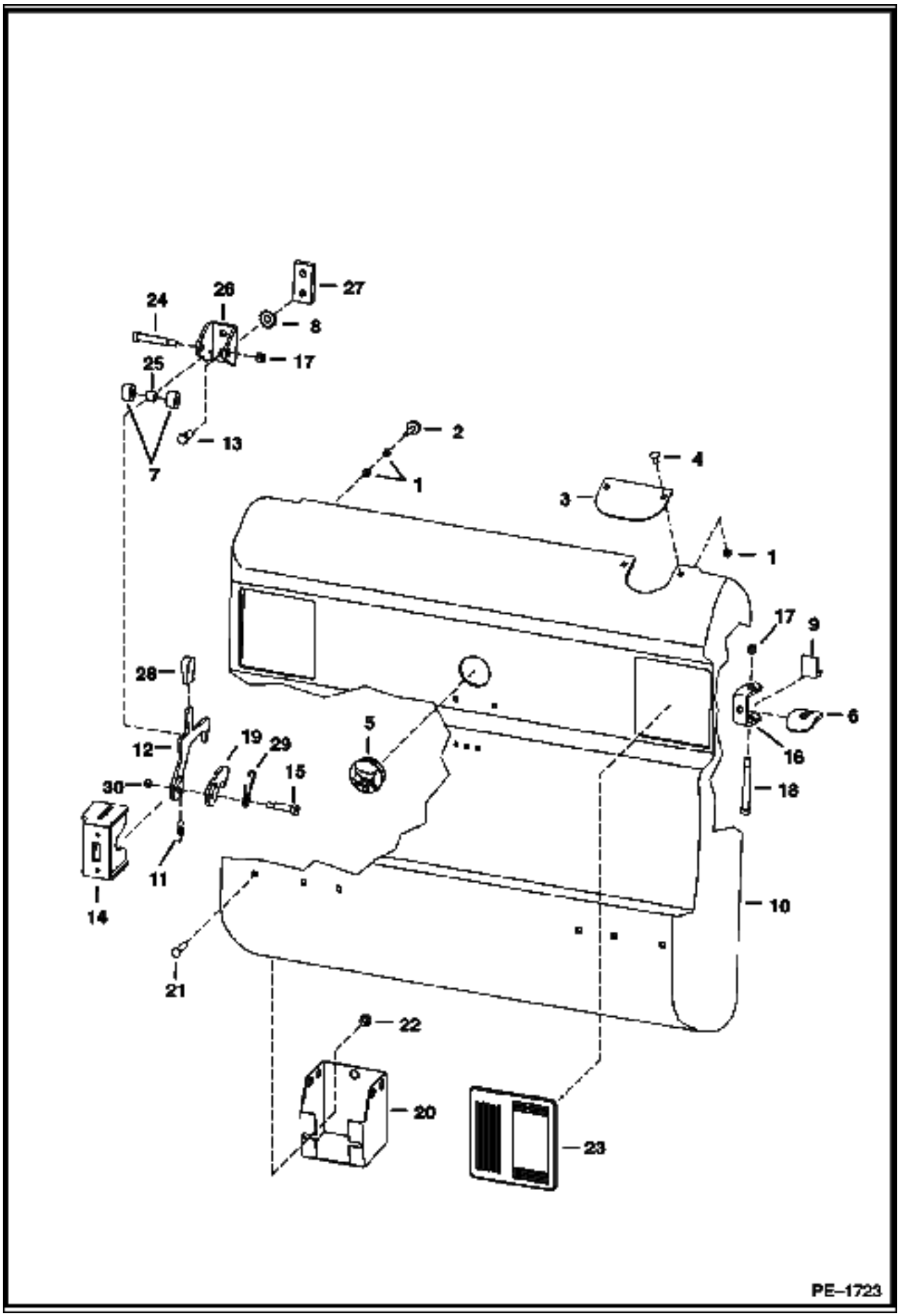
24
26
27
8
17
25
13
7
2
1
4
3
1
17
9
6
16
18
28
12
19
29
15
30
5
11
14
10
21
22
20
23
PE–1723

REAR DOOR (Cont'd)

Ref No	Part Number	Description	Remarks	Serial Number	Qty
1	61D000005B	NUT			2
2	6733616	BUMPER			2
3	6714509	COVER	exhaust		1
4	37C000512B	BOLT			2
5	6718796	PLUG	back-up alarm		1
6	6714126	DOOR STOP			1
7	6809726	ROLLER			2
8	6675273	WASHER	lock		2
9	6719766	STOP			1
10	6729991	REAR DOOR	W/Ref. 11, 12, 14-16, 19, 29 & 30		1
11	6810141	SPRING			1
12	6732715	LATCH			1
13	17C000820B	BOLT			2
14	6729939	LATCH PLATE	weld-on		1
15	38C000824B	BOLT			1
16	6711526	HINGE	weld-on		2
17	59D000006B	NUT			3
18	6809845	BOLT			2
19	6811910	LATCH			1
20	6715318	TOOL HOLDER	Europe		1
21	37C000612B	BOLT			2
22	55D000006B	NUT			2
23	6670287	COVER			2
24	38C000840B	BOLT	carriage		1
25	6809734	BUSHING	striker		1
26	6809727	CHANNEL			1
27	6719525	BAR	threaded striker		1
28	6564452	GRIP			1
29	6810132	SPRING			1
30	85D000006B	NUT			1

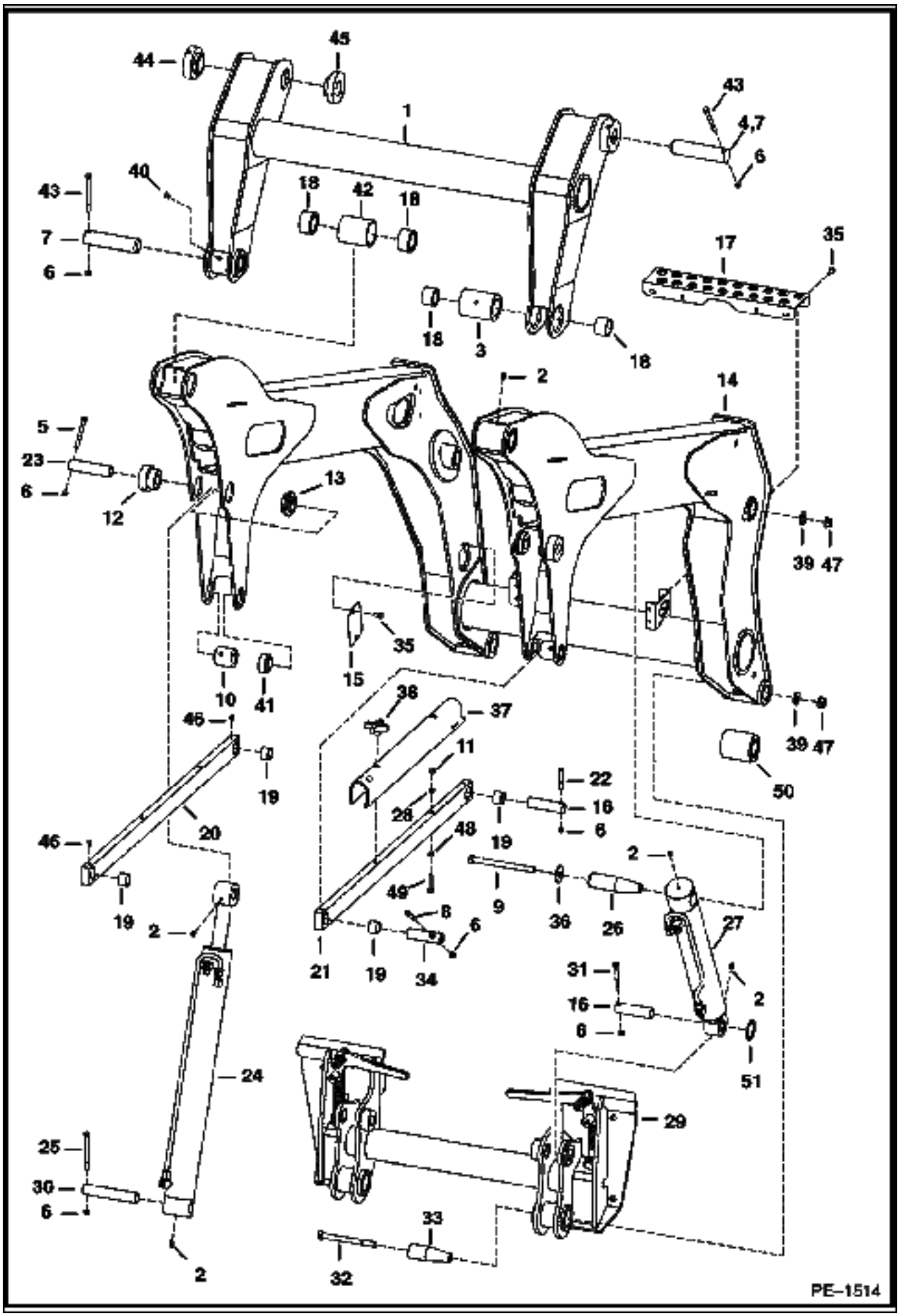
PE–1514

Ref No	Part Number	Description	Remarks	Serial Number	Qty
1	6726966	FRAME LINK	H-Frame		1
2	15H000015B	GREASE ZERK	65 degree		2
2	12H000015B	GREASE ZERK	90 degree		2
3	6728800	BUSHING			4
4	6728820	PIN	7.118" Long		2
5	17C000656B	BOLT			2
6	85D000006B	NUT			14
7	6728819	PIN	6.9" Long		2
8	17C000644B	BOLT			2
9	17C010136B	BOLT			2
10	6729423	BUSHING	weld-on		2
11	6718942	NUT			2
12	6729005	BUSHING	weld-on		2
13	6729006	BUSHING	weld-on		2
14	6726965	LIFT ARM			1
15	6731179	COVER			1
16	6577954	PIN			4
17	6729888	STEP			1
18	6730995	BUSHING	wear		8
19	6731647	BUSHING	wear		x
20	6729468	LINK ASSY	L.H.		1
21	6726969	LINK ASSY	R.H.		1
22	17C000640B	BOLT			2
23	6729007	PIN			2
24		CYLINDER	See Illustration LIFT CYLINDER/ PE1519 LIFT		2
25	17C000664B	BOLT			2
26	6728971	PIN			2
27		CYLINDER	See Illustration TILT CYLINDER/ PE1520 TILT		1
28	6532347	SPACER			2
29		BOB-TACH	See Illustration BOB-TACH/ PE1513		1
30	6730887	PIN			2
31	17C000648B	BOLT			2
32	17C010112B	BOLT			2
33	6729358	PIN			2
34	6731139	PIN			2
35	84G003112B	BOLT			6
36	6731160	WASHER			2
37	6731569	STOP	lift arm		1
38	6684932	KNOB			2
39	27E000010B	WASHER			4
40	11H000015B	GREASE ZERK	45 degree		2
41	6731138	BUSHING			4
42	6728972	BUSHING	weld-on		2
43	17C000672B	BOLT			4
44	6727525	BUSHING	weld-on		2
45	6727832	BUSHING	weld-on		2
46	12H000015B	GREASE ZERK	90 degree		4
47	57D000010B	NUT			4
48	25E000015B	WASHER			2
49	6731646	BOLT	stainless steel		2
50	6728999	BUSHING	Weld-on		2
51	255855B	SEAL	Grease		4

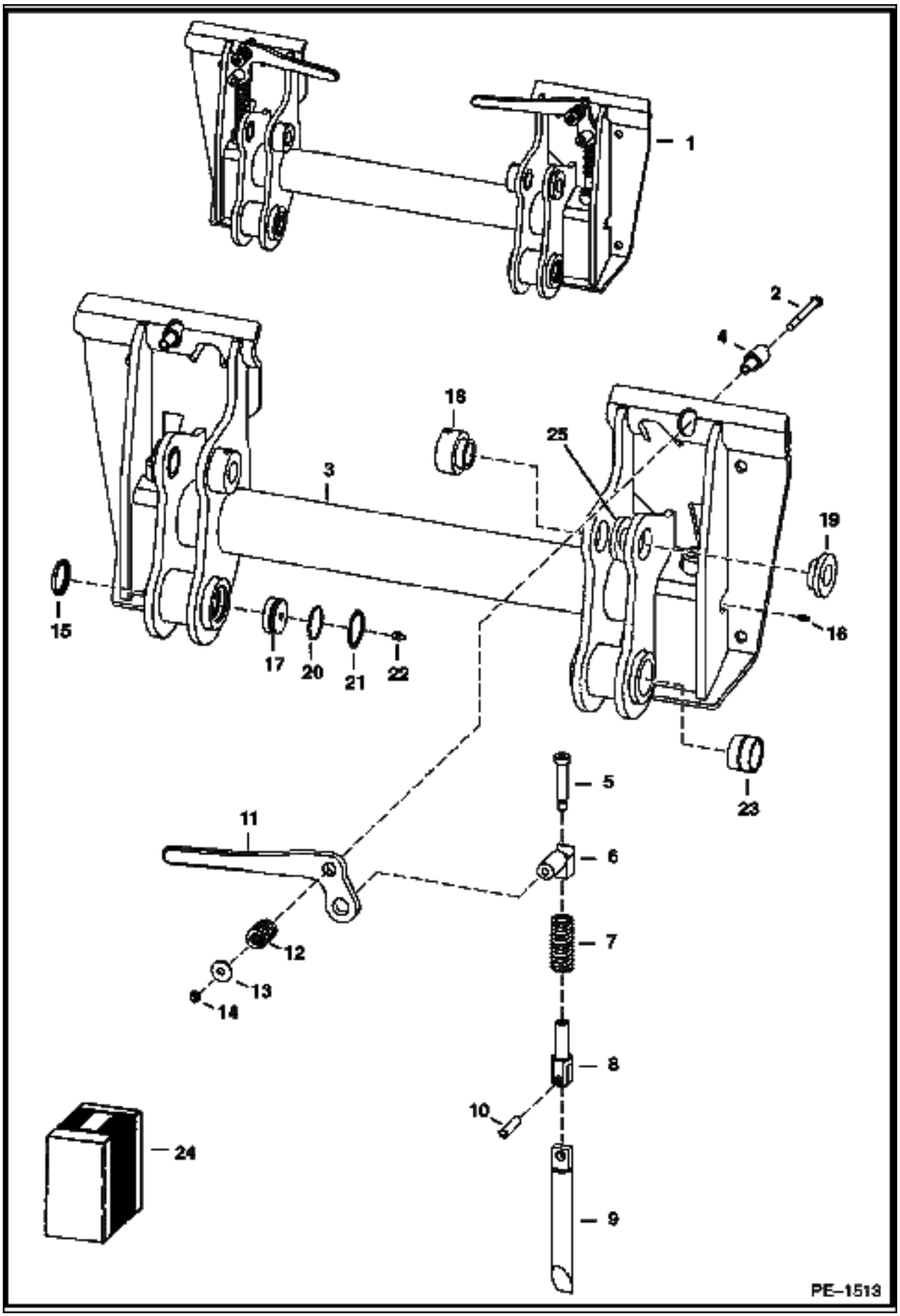
1
2
4
18
25
3
19
15
16
17
20
21
22
23
5
11
6
12
7
13
14
8
10
24
9
PE–1513

Ref No	Part Number	Description	Remarks	Serial Number	Qty
1	6729029	BOB-TACH	Ref. 2-22		1
2	17C000660B	BOLT			2
3		FRAME	NAP		1
4	6702958	BUSHING	weld-on		2
5	6728473	BOLT	shoulder		2
6	6731119	PIVOT ASSY			2
7	6562018	SPRING			2
8	6704248	PIVOT	wedge		2
9	6737191	WEDGE			2
10	14J005032B	PIN			2
11	6702904	LEVER	R.H.		1
11	6702903	LEVER	L.H.		1
12	6713040	SPRING			2
13	619021B	WASHER			2
14	85D000006B	NUT			2
15	6678960	SEAL			2
16	10H000035B	GREASE ZERK			2
17	6729491	PLUG			2
18	6717260	BUSHING	weld-on		2
19	6717259	BUSHING	weld-on		2
20	25K030126B	O-RING			2
21	7105856	SNAP RING			2
22	10H000025B	GREASE ZERK			2
23	6718329	BUSHING	wear		2
24	6724775	LEVER KIT	R.H. Bob-tach - Ref. 2 & 5 - 14		1
24	6724776	LEVER KIT	L.H. Bob-tach - Ref. 2 & 5 - 14		1

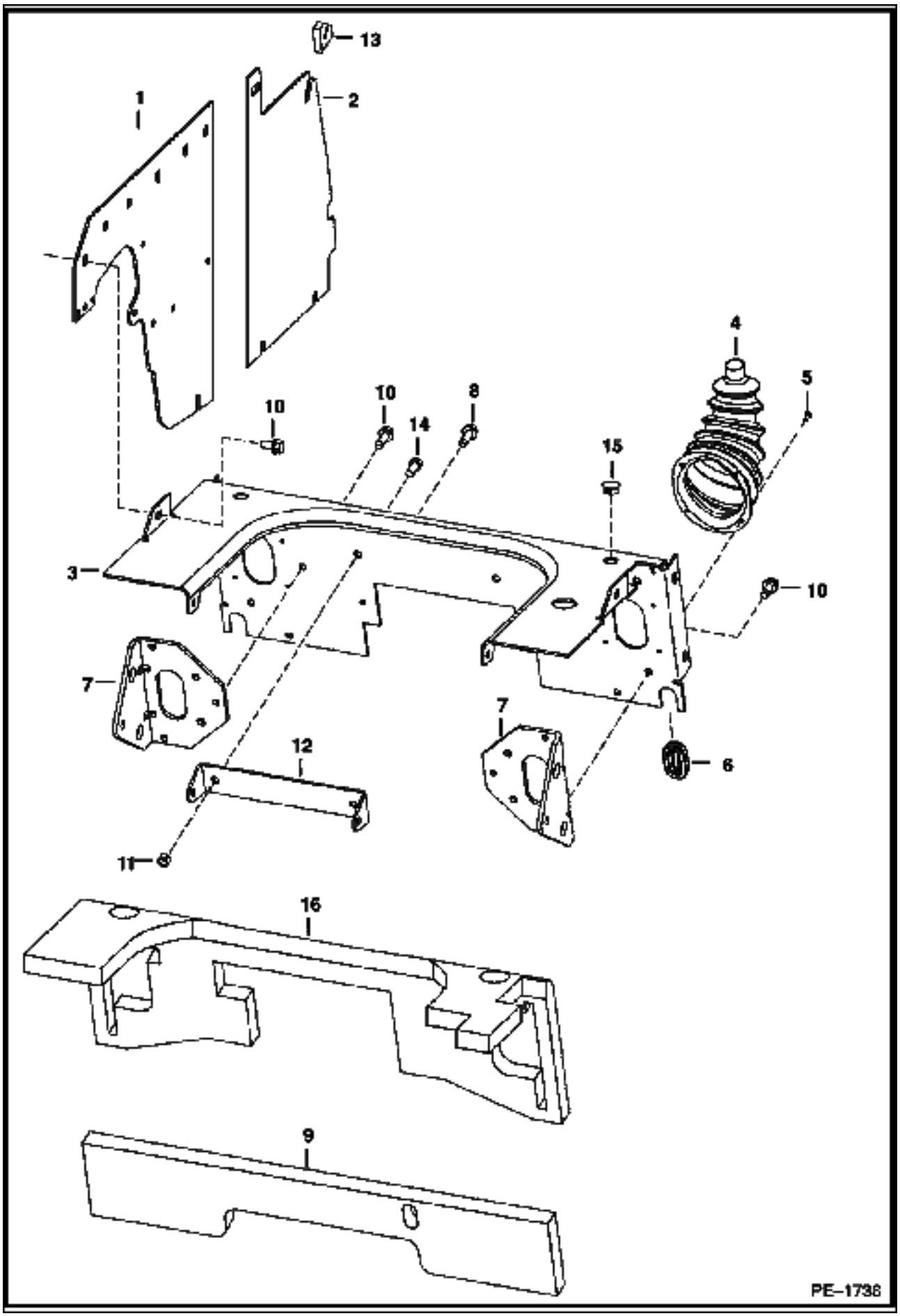
13
1
2
4
5
10
10
8
14
15
3
10
7
7
12
6
11
16
9
PE–1738

Ref No	Part Number	Description	Remarks	Serial Number	Qty
1	6734521	PANEL	16.33" Tall 15.25" Long		2
2	7101804	PANEL	12.13" Tall		2
3	6718305	PANEL			1
4	6532127	BOOT			2
5	6630207	RIVET			8
6	6577961	GROMMET			2
7	6733022	BRACKET	steering - R.H.		2
7	6733024	BRACKET	steering - L.H.		1
8	84G003716B	BOLT			2
9	6701674	INSULATION			1
10	84G003712B	BOLT			30
11	95D000006B	NUT	W/ACS		2
12	6706106	MOUNT	damper - W/ACS		1
13	6733529	SEAL			2
14	17C000612B	BOLT	W/ACS		1
15	6657719	PLUG	for .75" dia. hole		2
15	6648348	PLUG	for .812" dia. hole		2
16	6716800	INSULATION			1

PANELS
(W/Joystick Controls)

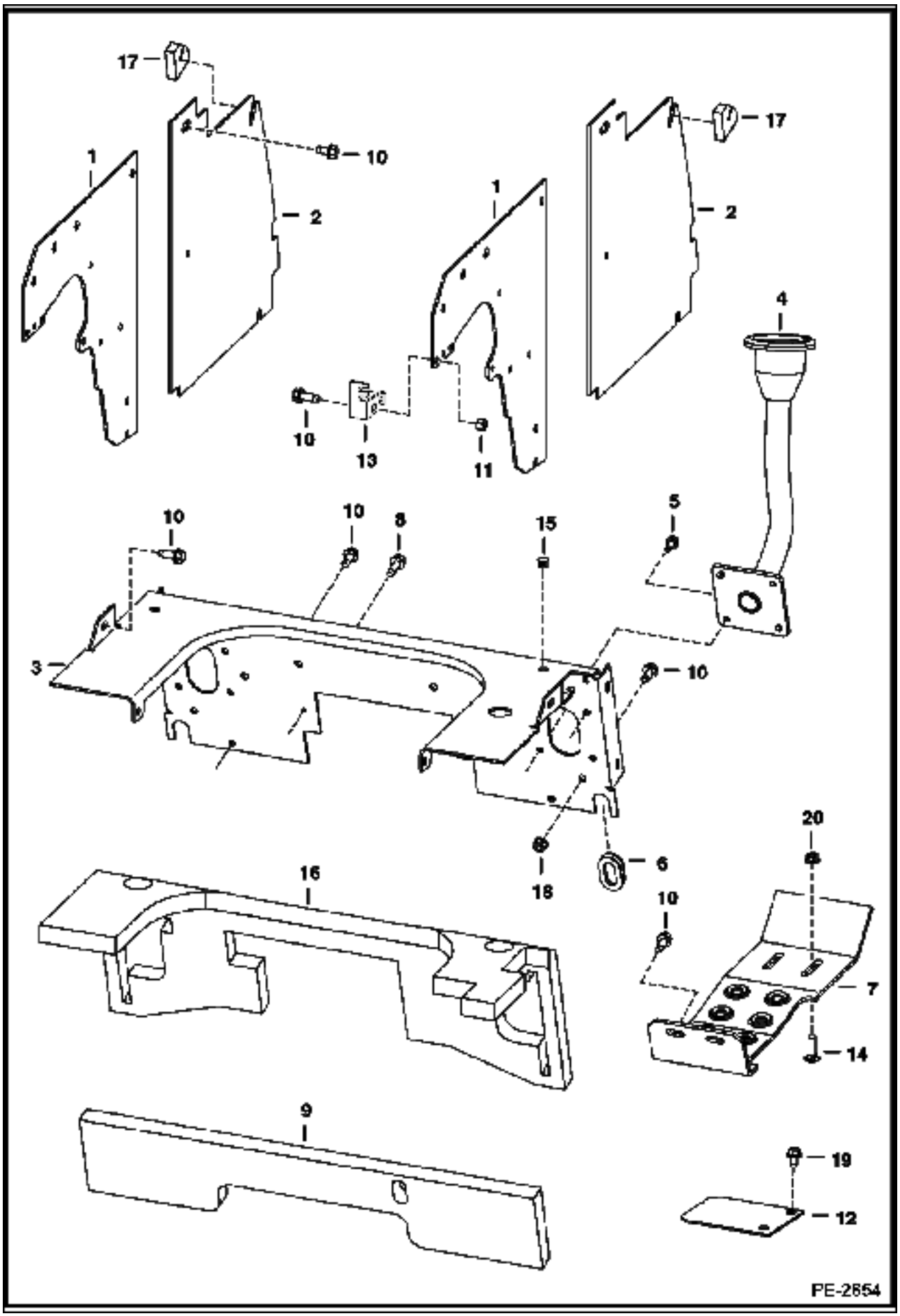

PANELS (Cont'd)
(W/Joystick Controls)

Ref No	Part Number	Description	Remarks	Serial Number	Qty
1	6734521	PANEL			2
2	7101804	PANEL			2
3	6729899	PANEL			1
4	6729791	HANDLE	See Illustration CONTROLS ELECTRICAL/ PE2024 R.H. JOYSTICK		1
4	6729792	HANDLE	See Illustration CONTROLS ELECTRICAL/ PE2024 L.H. JOYSTICK		1
5	35C000512B	BOLT			4
6	6714726	GROMMET			1
7	6729237	STEP			2
8	84G003716B	BOLT			2
9	6701674	INSULATION			1
10	84G003712B	BOLT			28
11	95D000006B	NUT			2
12	6729774	COVER	cylinder access		2
13	6732450	BRACKET	cable		1
14	37C000620B	BOLT			4
15	6649949	PLUG			2
16	6716800	INSULATION			1
17	6733529	SEAL	panel		2
18	89D000005B	NUT			4
19	84G003710B	BOLT			4
20	57D000006B	NUT			4

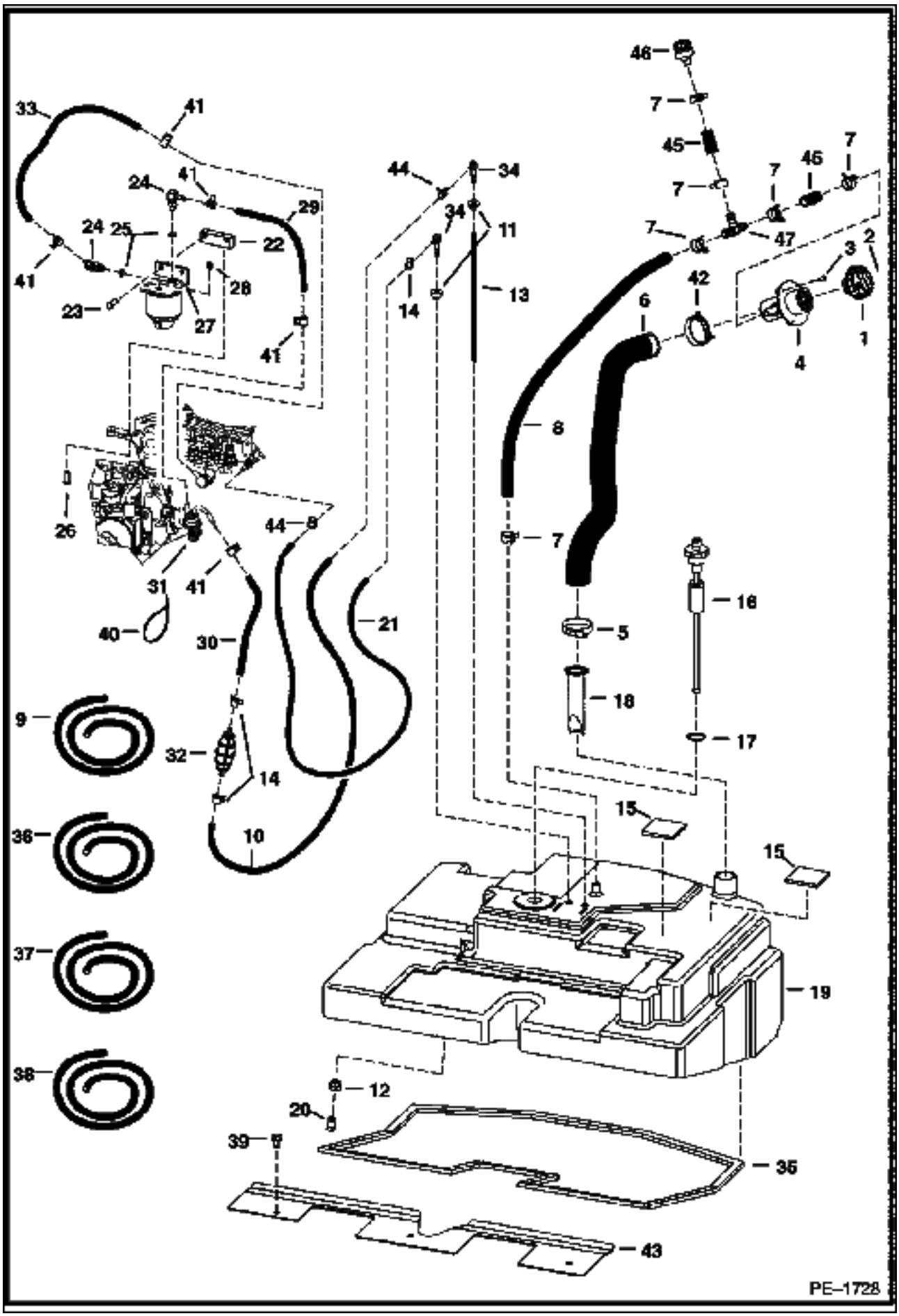
PE–1728

Ref No	Part Number	Description	Remarks	Serial Number	Qty
1	6661114	CAP	green fuel fill		1
1	6661696	CAP	locking - W/Ref. 2 - Code PK510		1
2	6587458	KEY	Code PK510		1
3	6706517	SCREW			3
4	6701449	FILLER TUBE			1
5	42HC00250B	CLAMP			2
6	6730532	HOSE			1
7	5HM00024B	CLAMP			6
8		HOSE	NAP - 25.4" (645mm) long - Order Ref. 36		1
9	6578169	HOSE	Bulk - sold per foot		x
10		HOSE	NAP - 29.5" (749mm) long - Order Ref. 38		1
11	6735696	BUSHING	.37" (9,4mm) ID		2
12	6717402	BUSHING	.54" (13,7mm) ID		1
13	6735249	HOSE	11.8" (300mm) long		2
14	5HM00013B	CLAMP			3
15	6578278	PAD	self adhesive one side		2
16	6680439	SENSOR	fuel - W/Ref. 17 - 14.75" (375mm) long		1
16	6680438	SENSOR	W/Ref. 17 - FUEL - 11" (279MM) LONG		1
17	6717579	GASKET			1
18	6569219	SCREEN			1
19	6735615	TANK	used W/ 6680438 fuel sensor		1
20	6717401	PLUG	.75" shoulder		1
21		HOSE	NAP - 50" (1270mm) long - Order Ref. 9		1
22	6731152	MOUNT			1
23	43C000516B	BOLT			2
24	6715183	ELBOW	W/Ref. 25 - check boss face to determine correct replacement o-ring		2
25	99K000005B	O-RING	for tapered boss face		x
25	79K000005B	O-RING	for flat boss face		x
26	53C000516B	BOLT			2
27	6667353	FILTER ASSY			1
27	6667352	FILTER FUEL			1
27	72F000001B	DRAIN COCK			1
28	6658180	BREATHER	plug		1
29		HOSE	NAP - 13" (330mm) long - Order Ref. 37		1
30		HOSE	NAP - 9.25" (235mm) long - Order Ref. 38		1
31		FUEL PUMP	See Illustration FUEL INJECTION PUMP/ B17614		1
32	6657734	PUMP	hand primer		1
33		HOSE	NAP - 16" (406mm) long - Order Ref. 37		1
34	7101291	ELBOW			2
35	6726218	GASKET			1
36	6578172	HOSE	bulk - Sold Per Foot		x
37	6577822	HOSE	.375 I.D. - bulk - Sold Per Foot		x
38	6577821	HOSE	.25'' I.D. - bulk - Sold Per Foot		x
39	84G003712B	BOLT			3
40	6610510	TIE			1
41	5HM00014B	CLAMP			5
42	5HM00058B	CLAMP			1
43	6730552	BRACKET			1
44	42HS00004B	CLAMP			2
45		HOSE	NAP - 2" (51mm) long - Order Ref. 36		2
46	6684923	BREATHER	vent		1
47	7102705	TEE			1

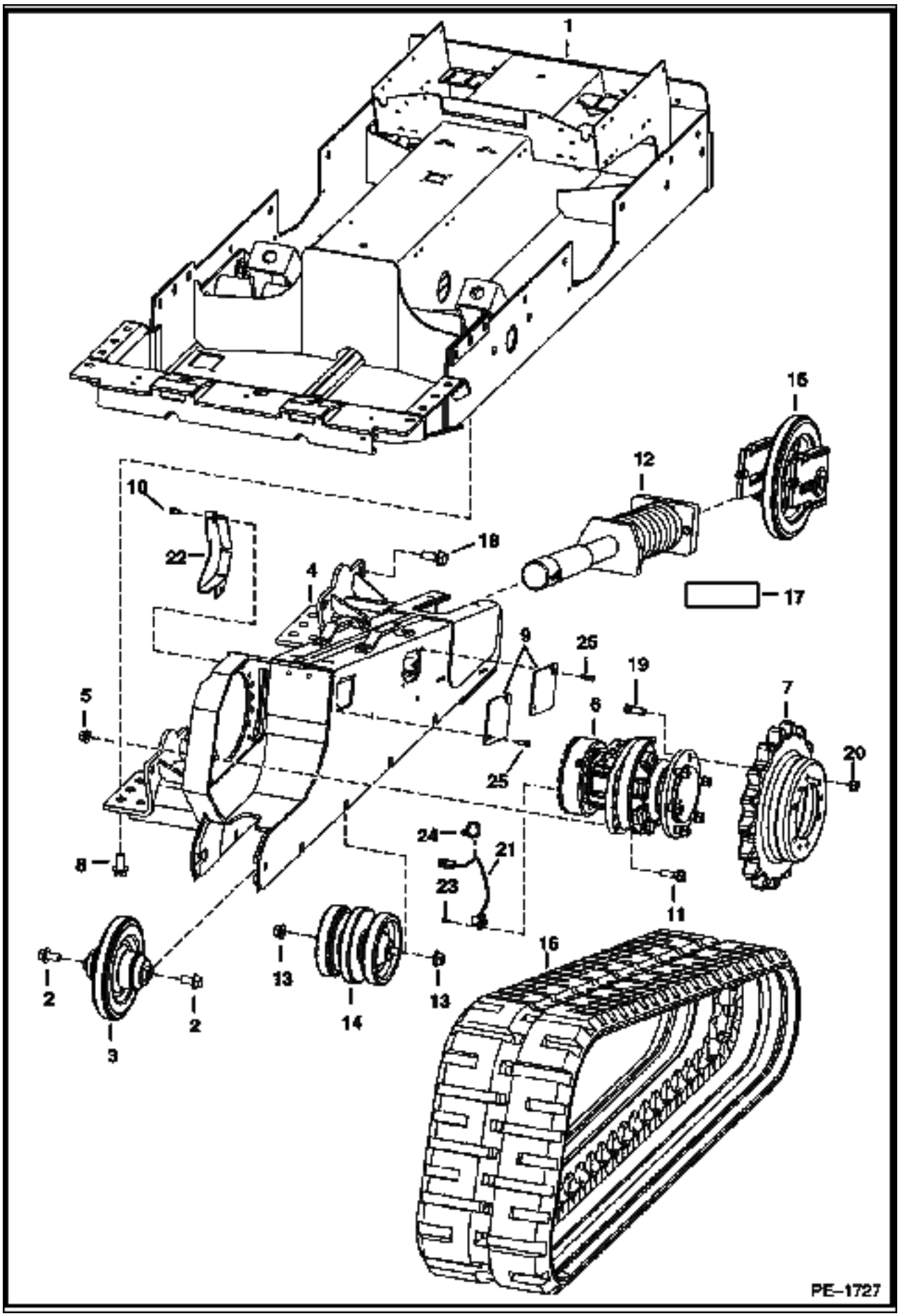
1
16
12
10
22
18
4
17
9
25
19
5
6
7
25
20
24
21
8
23
11
2
13
16
2
13
14
3
PE–1727

Ref No	Part Number	Description	Remarks	Serial Number	Qty
1	6730373	DRIVECASE			1
2	31C001224B	BOLT			4
3	6732903	IDLER ASSY	See Illustration REAR IDLER/ PE1742 REAR		2
4	6736032	FRAME	track - L.H.		1
4	6736031	FRAME	track - RH		1
5	53D000010B	NUT			20
6		MOTOR	See Illustration HYDROSTATIC MOTOR & BRAKE/ B21330 See Illustration HYDROSTATIC MOTOR & BRAKE/ B22650		2
7	7107787	SPROCKET	for 7109868 motor		2
8	31C001228B	BOLT			24
9	6716010	COVER			8
10	84G003712B	BOLT			16
11	31C001032B	BOLT			20
12	6730468	TRACK TENSIONER	See Illustration TRACK TENSIONER/ PE1223		2
13	53D000012B	NUT			16
14	6732901	ROLLER ASSY	See Illustration TRACK ROLLER/ PE1743		8
15	6732902	IDLER ASSY	See Illustration FRONT IDLER/ PE1692 FRONT		2
16	6678749	TRACK	18" (457mm) wide - half pitch - Bridgestone		2
16	6678748	TRACK, 12" (T300)	12" (304,8 mm) wide - half pitch - Bridgestone		2
17	6804114	DECAL	Warning - Grease		2
18	31C001232B	BOLT			8
19	6674706	STUD			6
20	6674724	NUT			6
21	6684443	SENSOR	Joystick Control		2
21	75K000005B	O-RING			x
22	6737543	COVER	R.H. - wheel speed sensor - Joystick Control		1
22	6737417	COVER	L.H. - wheel speed sensor - Joystick Control		1
23	7102184	SCREW	Joystick Control		4
24	6678669	STRAP	Joystick Control		2
25	17C000616B	BOLT			8

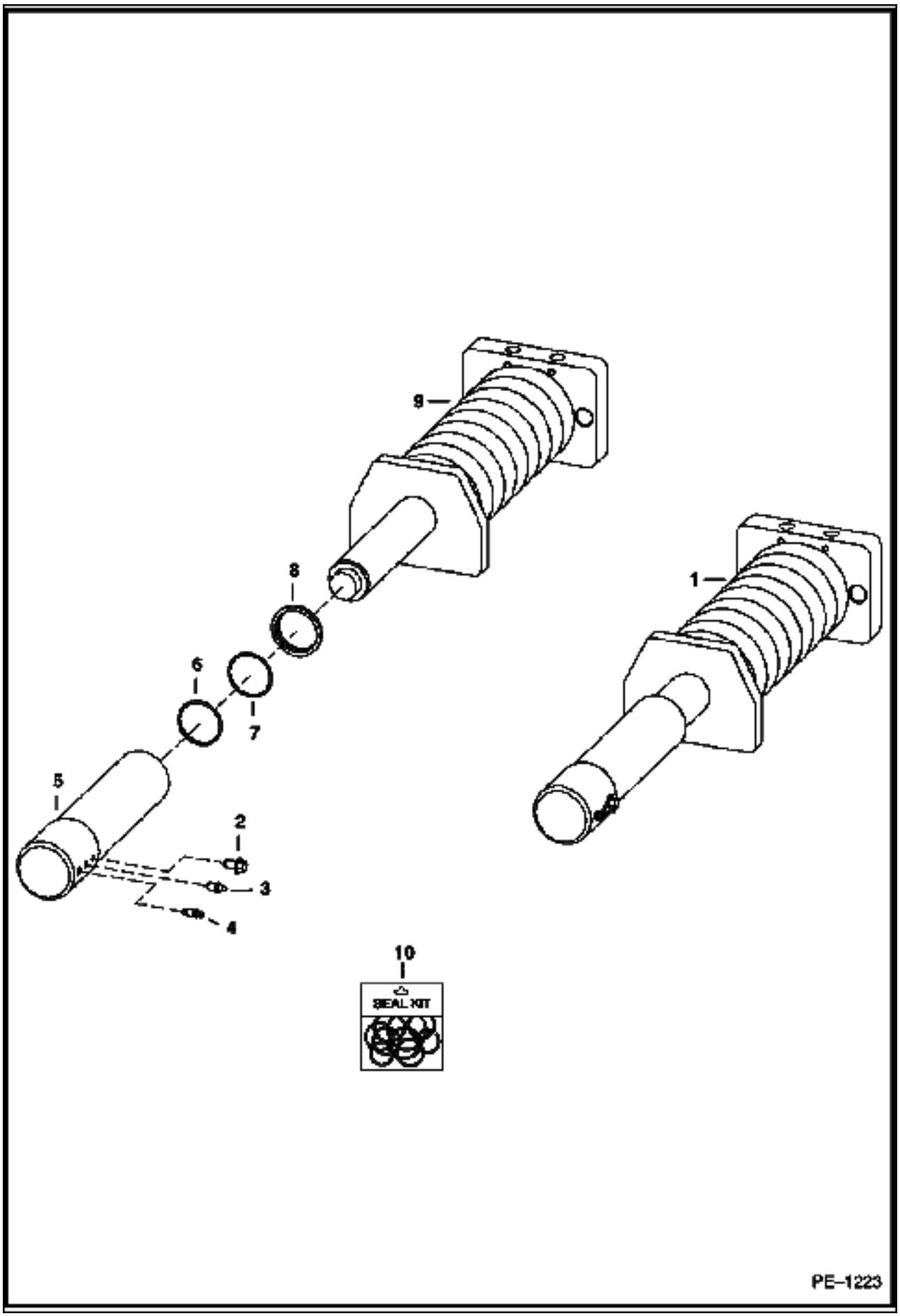
9
8
6
7
5
2
3
4
1
10
SEAL KIT
PE–1223

Ref No	Part Number	Description	Remarks	Serial Number	Qty
1	6730468	TRACK TENSIONER	Ref. 2-9		1
2	26GM10020B	SCREW			1
3	6655752	FITTING	Must be rated 10,000 psi - Do not substitute!		1
4	6645812	SCREW			1
5	6716011	TUBE			1
6	6672338	O-RING			1
7	6685154	O-RING	back-up		1
8	6686968	WIPER	wiper		1
9		COIL SPRING ASSY	NSS - Order Ref. 1		1
10	7116335	SEAL KIT	Ref. 6-8		1

FRONT IDLER

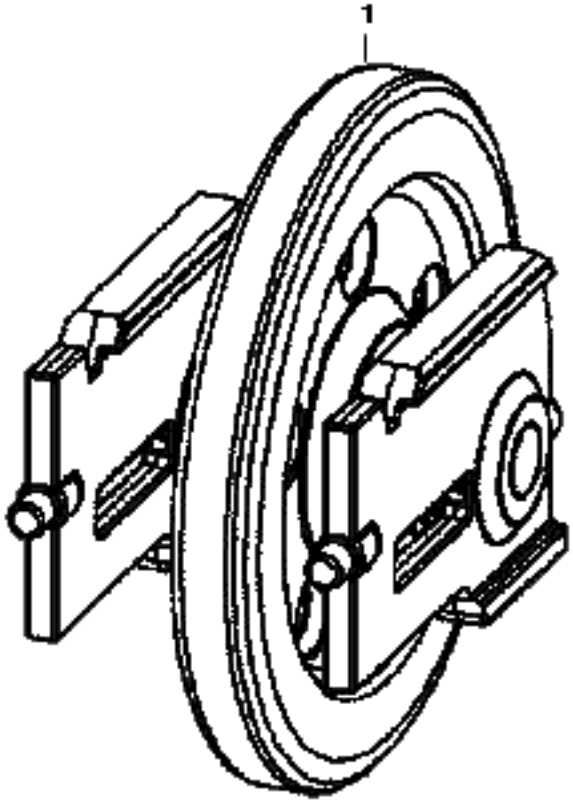

PE–2554

Ref No	Part Number	Description	Remarks	Serial Number	Qty
1	6686633	FRONT IDLER	FRONT		1

REAR IDLER

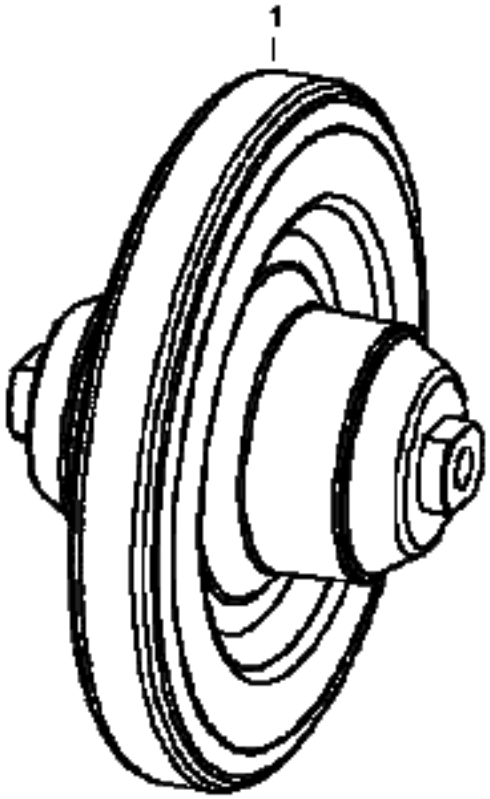

PE–2556

Ref No	Part Number	Description	Remarks	Serial Number	Qty
1	6686635	REAR IDLER	rear		1

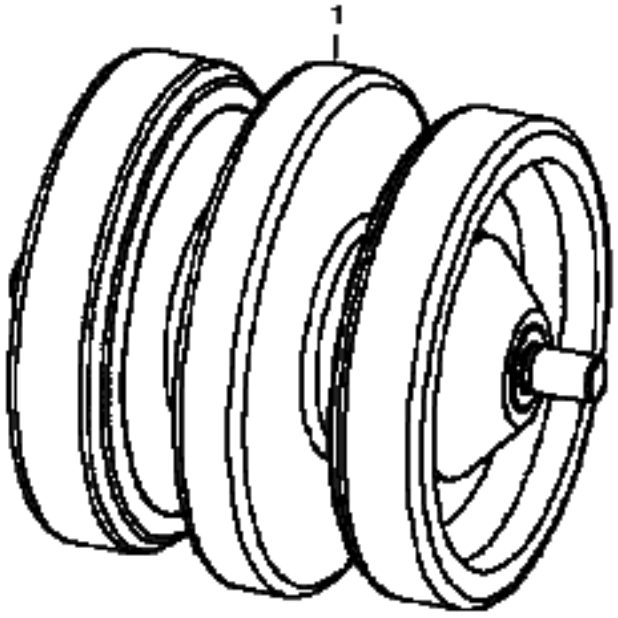

PE–2558

Ref No	Part Number	Description	Remarks	Serial Number	Qty
1	6686632	ROLLER ASSY	track		1

HYDRAULIC CIRCUITRY
(W/O Bucket Positioning Valve)

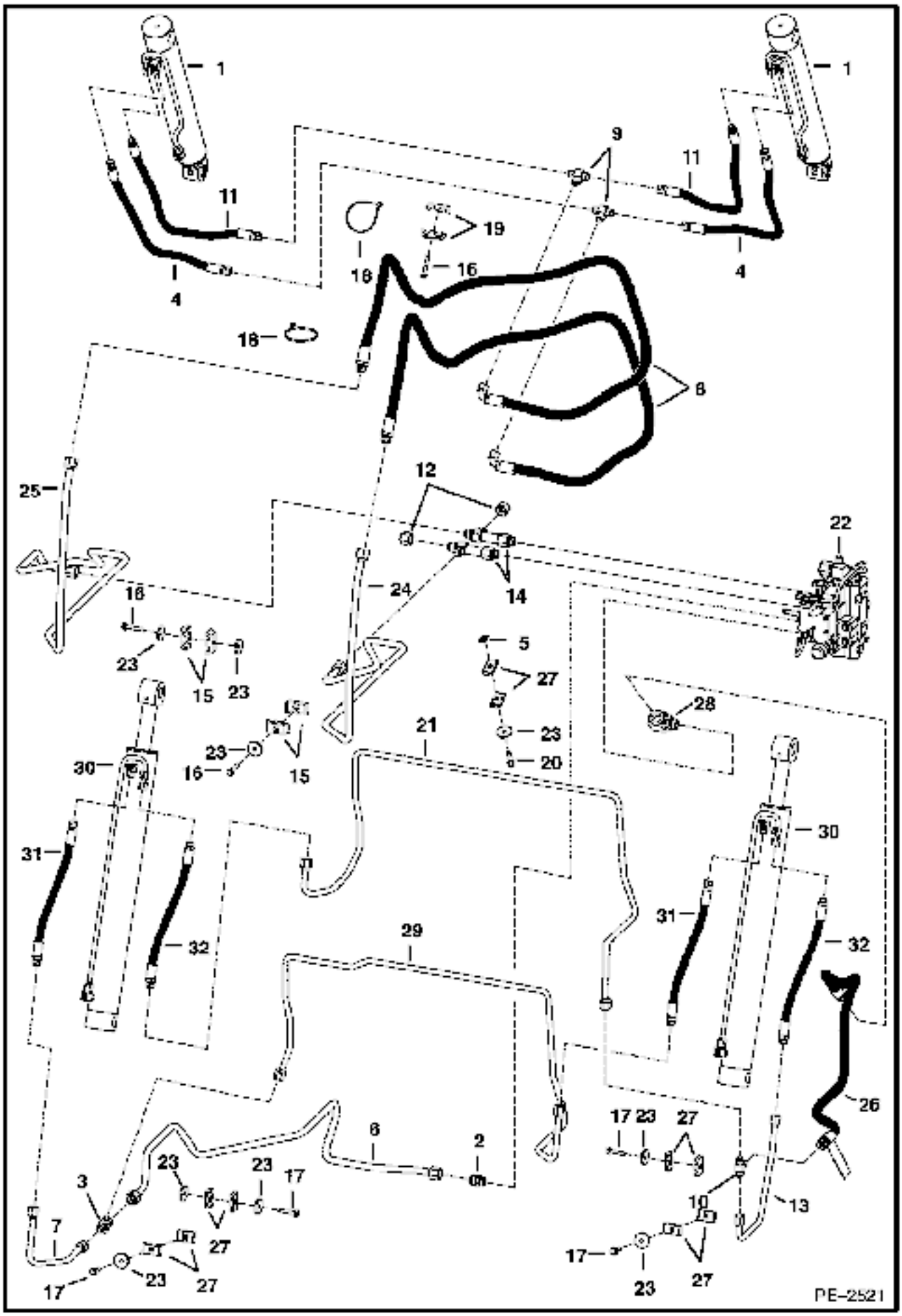

HYDRAULIC CIRCUITRY (Cont'd)
(W/O Bucket Positioning Valve)

Ref No	Part Number	Description	Remarks	Serial Number	Qty
1		CYLINDER	See Illustration TILT CYLINDER/ PE1520 See Illustration TILT CYLINDER/ PE1520 tilt		2
2	6682411	ADAPTER			1
2	79K000010B	O-RING			x
3	6729686	TEE			1
4	7102090	HOSE			2
5	6684033	NUT			2
6	6732950	TUBELINE			1
7	6734201	TUBELINE			1
8	6729721	HOSE			2
9	6716061	TEE			2
10	6729694	TEE			1
11	7102089	HOSE			2
12	36K000008B	CAP			2
13	6730858	TUBELINE			1
14	6730914	TEE			2
14	79K000010B	O-RING			x
15	6592506	CLAMP			4
16	84G003740B	BOLT			3
17	84G003732B	BOLT			4
18	6624289	STA STRAP			3
19	6729320	CLAMP			2
20	84G003728B	BOLT			4
21	7114821	TUBELINE			1
22		VALVE	See Illustration HYDRAULIC CONTROL VALVE/ PE2378 See Illustration HYDRAULIC CONTROL VALVE/ PE2379 See Illustration HYDRAULIC CONTROL VALVE/ PE2378		1
23	872229B	WASHER			10
24	6732953	TUBELINE	tilt		1
25	6732952	TUBELINE	tilt		1
26	6729604	HOSE			1
26	79K000010B	O-RING			x
26	6809511	DECAL	danger		2
27	6701893	CLAMP			8
28	6817335	ELBOW			1
28	79K000010B	O-RING			x
29	7114813	TUBELINE	lift		1
30		CYLINDER	lift		2
31	7102337	HOSE			2
32	7102336	HOSE			2

HYDRAULIC CIRCUITRY
(W/Bucket Positioning Valve)

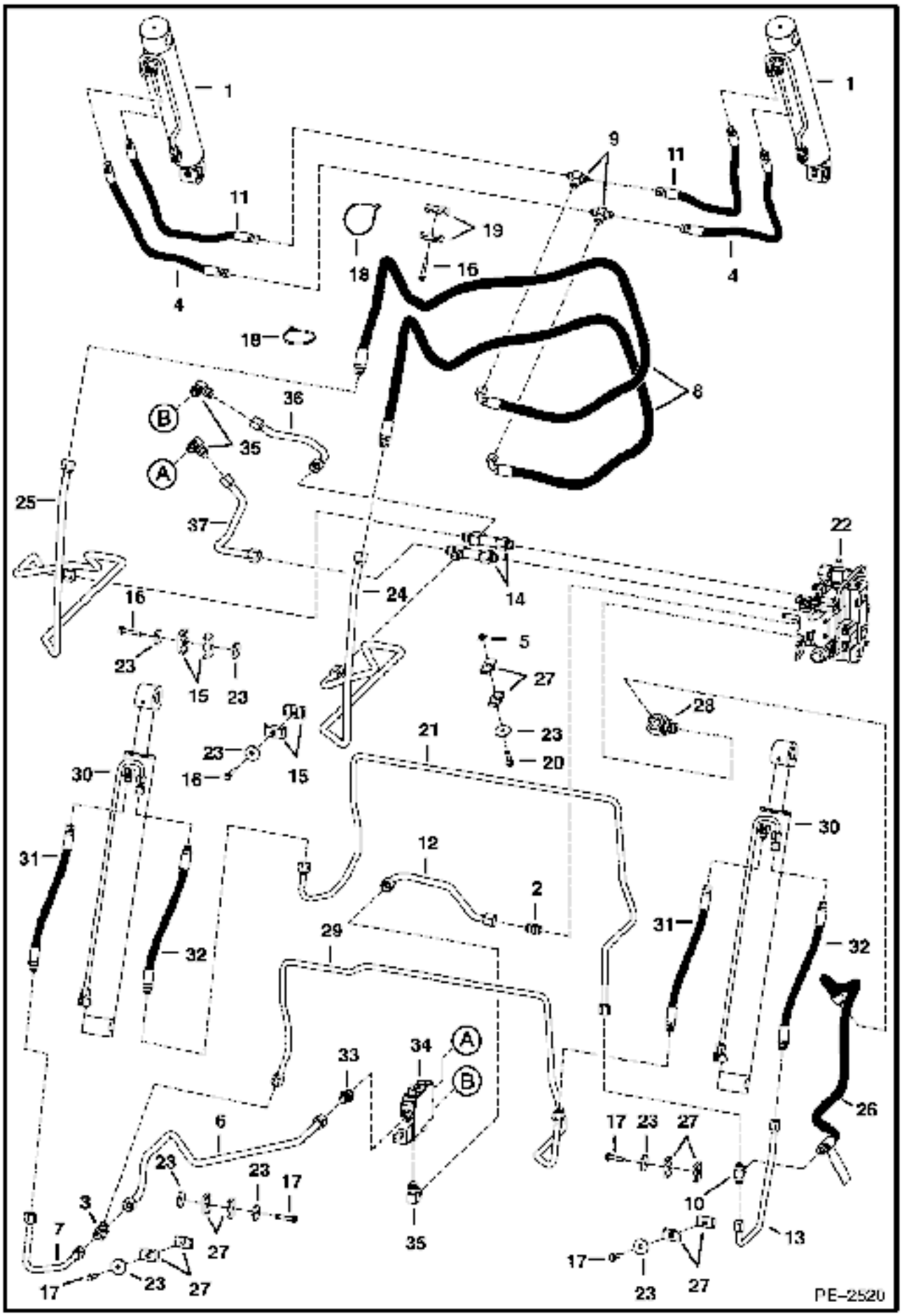

HYDRAULIC CIRCUITRY (Cont'd)
(W/Bucket Positioning Valve)

Ref No	Part Number	Description	Remarks	Serial Number	Qty
1		CYLINDER	tilt		2
2	6682411	ADAPTER			1
2	79K000010B	O-RING			x
3	6729686	TEE			1
4	7102090	HOSE			2
5	6684033	NUT			2
6	6734208	TUBELINE			1
7	6734201	TUBELINE			1
8	6729721	HOSE			2
9	6716061	TEE			2
10	6729694	TEE			1
11	7102089	HOSE			2
12	6732992	TUBELINE			1
13	6730858	TUBELINE			1
14	6730914	TEE			1
14	79K000010B	O-RING			x
15	6592506	CLAMP			4
16	84G003740B	BOLT			3
17	84G003732B	BOLT			4
18	6624289	STA STRAP			3
19	6729320	CLAMP			2
20	84G003728B	BOLT			4
21	7114821	TUBELINE			1
22		VALVE	See Illustration HYDRAULIC CONTROL VALVE/ PE2378 See Illustration HYDRAULIC CONTROL VALVE/ PE2379 See Illustration HYDRAULIC CONTROL VALVE/ PE2378		1
23	872229B	WASHER			10
24	6732953	TUBELINE	tilt		1
25	6732952	TUBELINE	tilt		1
26	6729604	HOSE			1
26	79K000010B	O-RING			x
26	6809511	DECAL	danger		2
27	6701893	CLAMP			8
28	6817335	ELBOW			1
28	79K000010B	O-RING			x
29	7114813	TUBELINE	lift		1
30		CYLINDER	lift		2
31	7102337	HOSE			2
32	7102336	HOSE			2
33	15KB01210B	ADAPTER			1
33	79K000010B	O-RING			x
34		VALVE	BPV		1
35	17KB01210B	ELBOW			3
35	79K000010B	O-RING			x
36	6734200	TUBELINE			1
37	6732991	TUBELINE			1

LIFT & TILT CONTROL CIRCUITRY

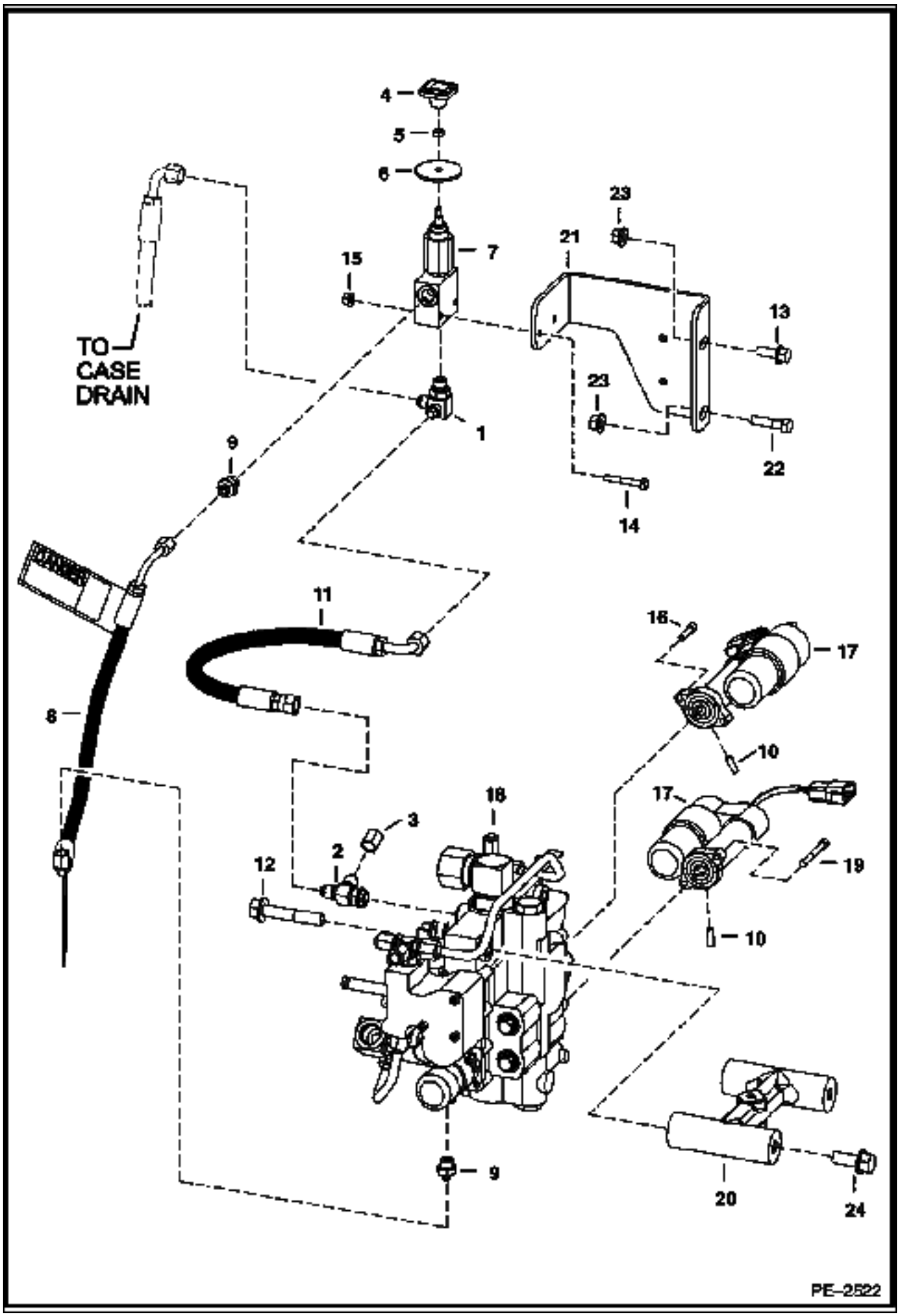

LIFT & TILT CONTROL CIRCUITRY (Cont'd)

Ref No	Part Number	Description	Remarks	Serial Number	Qty
1	6725182	TEE			1
1	79K000006B	O-RING			x
2	21KB00606B	TEE			1
2	79K000006B	O-RING			x
3	36K000005B	CAP			1
4	6737524	KNOB			1
5	7D000004B	NUT			1
6	6707101	SEAL	noeprene		1
7	6667844	VALVE ASSY	manual lift		1
8	7103172	HOSE			1
8	6809511	DECAL	danger		2
9	15KB00406B	ADAPTER			2
9	79K000006B	O-RING			x
10	7108236	PIN	selectable joystick controls		2
11	7110284	HOSE			1
12	35C000844B	BOLT			2
13	35C000616B	BOLT			3
14	17C000428B	BOLT			2
15	83D000004B	NUT			2
16	7101672	ACTUATOR	selectable joystick controls		2
17	6814021	BOLT	selectable joystick controls		2
18		VALVE	control		1
19	69G000436B	BOLT	selectable joystick controls		2
20	7109934	MOUNT			1
21	6718881	BRACKET			1
22	17C000624B	BOLT			1
23	83D000006B	NUT			2
24	35C000820B	BOLT			2

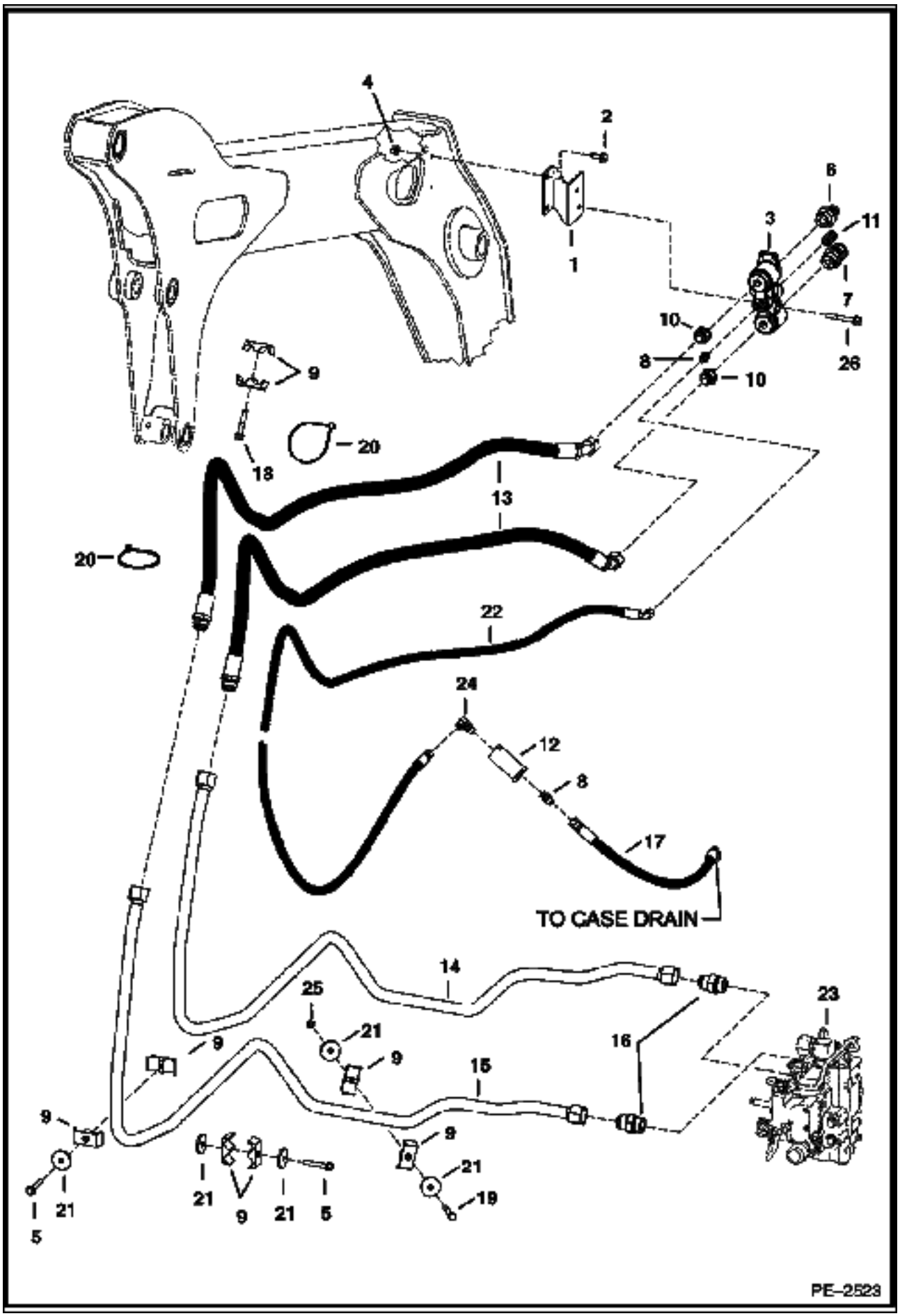
4
2
1
6
11
3
7
26
10
8
10
9
18
20
13
20
22
24
12
8
17
TO CASE DRAIN
14
25
21
9
16
23
15
9
9
21
5
21
9
21
5
9
21
19
PE-2523

Ref No	Part Number	Description	Remarks	Serial Number	Qty
1	7102414	BRACKET			1
2	84G003716B	BOLT			2
3	6678076	BLOCK	Ref. 6, 7 & 11		1
4	83D000006B	NUT			2
5	84G003740B	BOLT			2
6	6679837	COUPLER	male		1
6	6679841	SEAL	blue - front		1
6	6680020	SEAL KIT	3 o-rings & back-up washers		1
7	6679839	COUPLER	female		1
7	6680020	SEAL KIT	3 o-rings & back-up washers		1
8	15KB00606B	ADAPTER			2
8	79K000006B	O-RING			x
9	6729320	CLAMP			8
10	6679836	ADAPTER	W/spring,& Ref. 5		2
11	6679838	COUPLER	male - casedrain - W/spring, valve, seat & o-ring		1
11	6679840	SEAL	blue - front		1
12	6661022	FILTER			1
13	6734769	HOSE			2
14	6732954	TUBELINE			1
15	6732955	TUBELINE			1
16	15KB01616B	CONNECTOR			2
16	79K000016B	O-RING			x
17	7106215	HOSE			2
18	84G003736B	BOLT			3
19	17C000640B	BOLT			1
20	6624289	STA STRAP			2
21	872229B	WASHER			5
22	6729746	HOSE			1
23		VALVE	control		1
24	17KB00606B	ELBOW			1
24	79K000006B	O-RING			x
25	85D000006B	NUT			1
26	31C000644B	BOLT			2

TILT CYLINDER

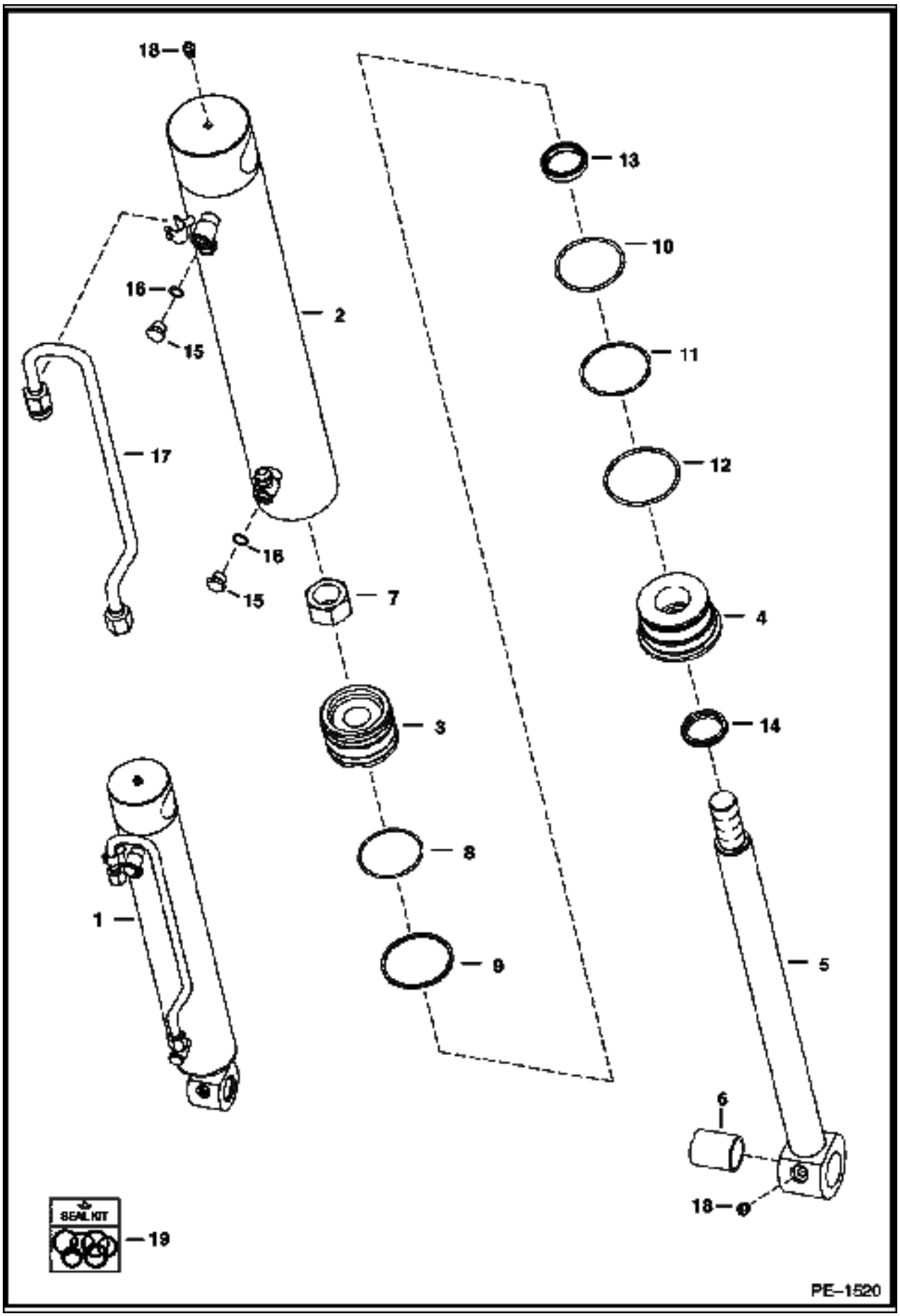

Ref No	Part Number	Description	Remarks	Serial Number	Qty
1	6810233	CYLINDER	tilt - Ref. 2-18		1
2	6810234	CASE	3" (76,2mm) I.D.		1
3	6810237	PISTON			1
4	6538367	HEAD			1
5	6810235	ROD	W/Ref. 6 - 1.50" (38,1 mm) O.D.		1
6	6805453	BUSHING			1
7	6810539	NUT			1
8	54K030218B	O-RING			1
9	947088B	SEAL			1
10	54K040224B	O-RING			1
11	73K000232B	WASHER	back-up		1
12	54K040300B	O-RING			1
13	6667326	SEAL			1
14	6665086	SEAL	wiper		1
15	6812171	PLUG	W/Ref. 16		2
16	75K000006B	O-RING			x
17	6810213	TUBELINE			1
18	10H000025B	GREASE ZERK	grease		2
19	6816325	SEAL KIT	Ref. 7-14		1

LIFT CYLINDER

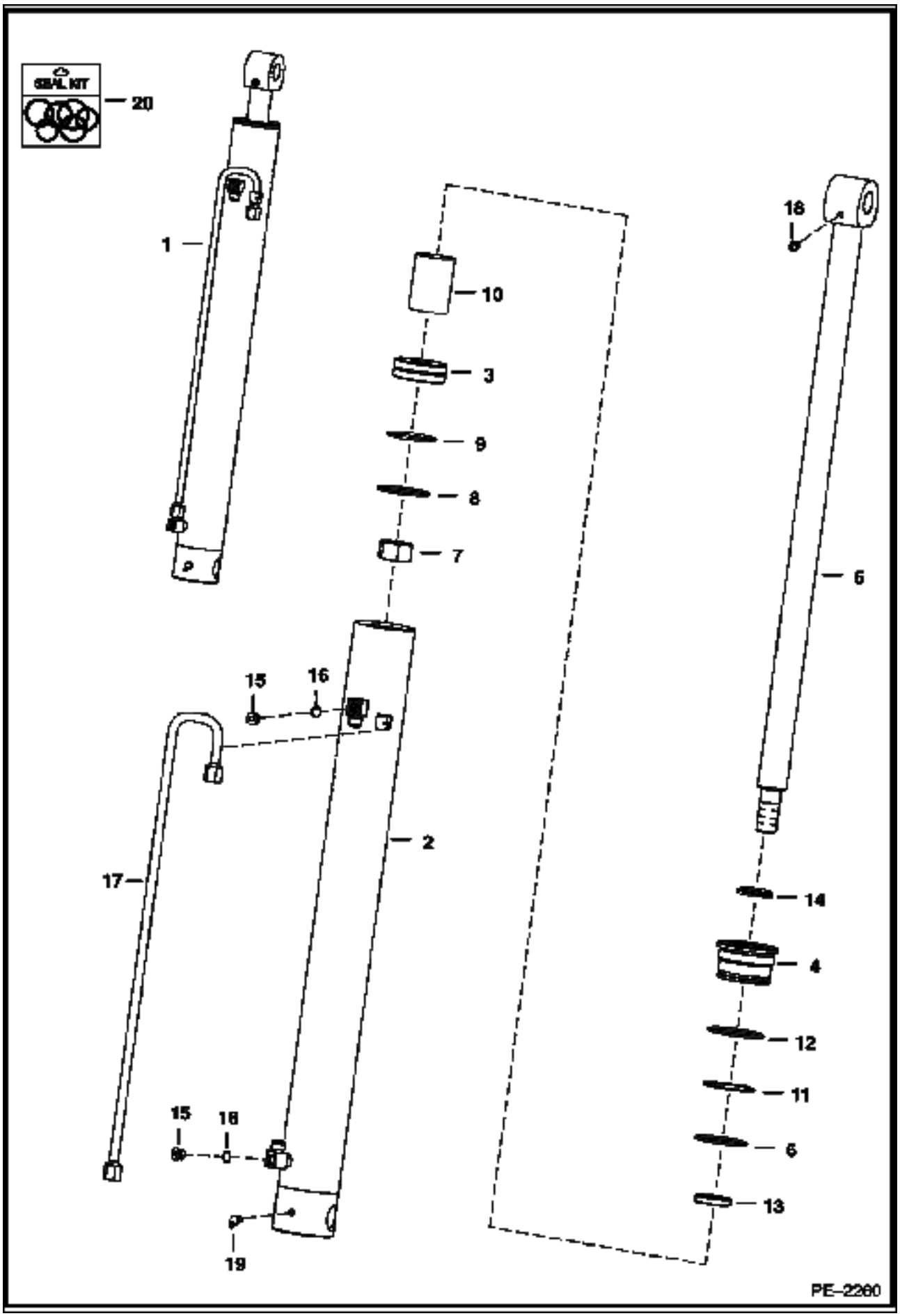

Ref No	Part Number	Description	Remarks	Serial Number	Qty
1	6817310	CYLINDER	lift - Ref. 2-16		1
2	6817311	CASE			1
3	6678933	PISTON			1
4	6804427	HEAD			1
5	6810188	ROD	W/Ref. 6		1
6	54K040224B	O-RING			1
7	6810539	NUT			1
8	947088B	SEAL			1
9	25K030218B	O-RING			1
10	6808235	SPACER			1
11	73K000232B	WASHER	back-up		1
12	54K040300B	O-RING			1
13	6669267	SEAL	rod		1
14	6669268	SEAL	wiper		1
15	6812171	PLUG	W/Ref. 16		2
16	75K000006B	O-RING			x
17	6810741	TUBELINE			1
18	10H000025B	GREASE ZERK			1
19	12H000015B	GREASE ZERK	90 degree		1
20	6816536	SEAL KIT	Ref. 7-14		1

MANUAL LIFT RELEASE VALVE

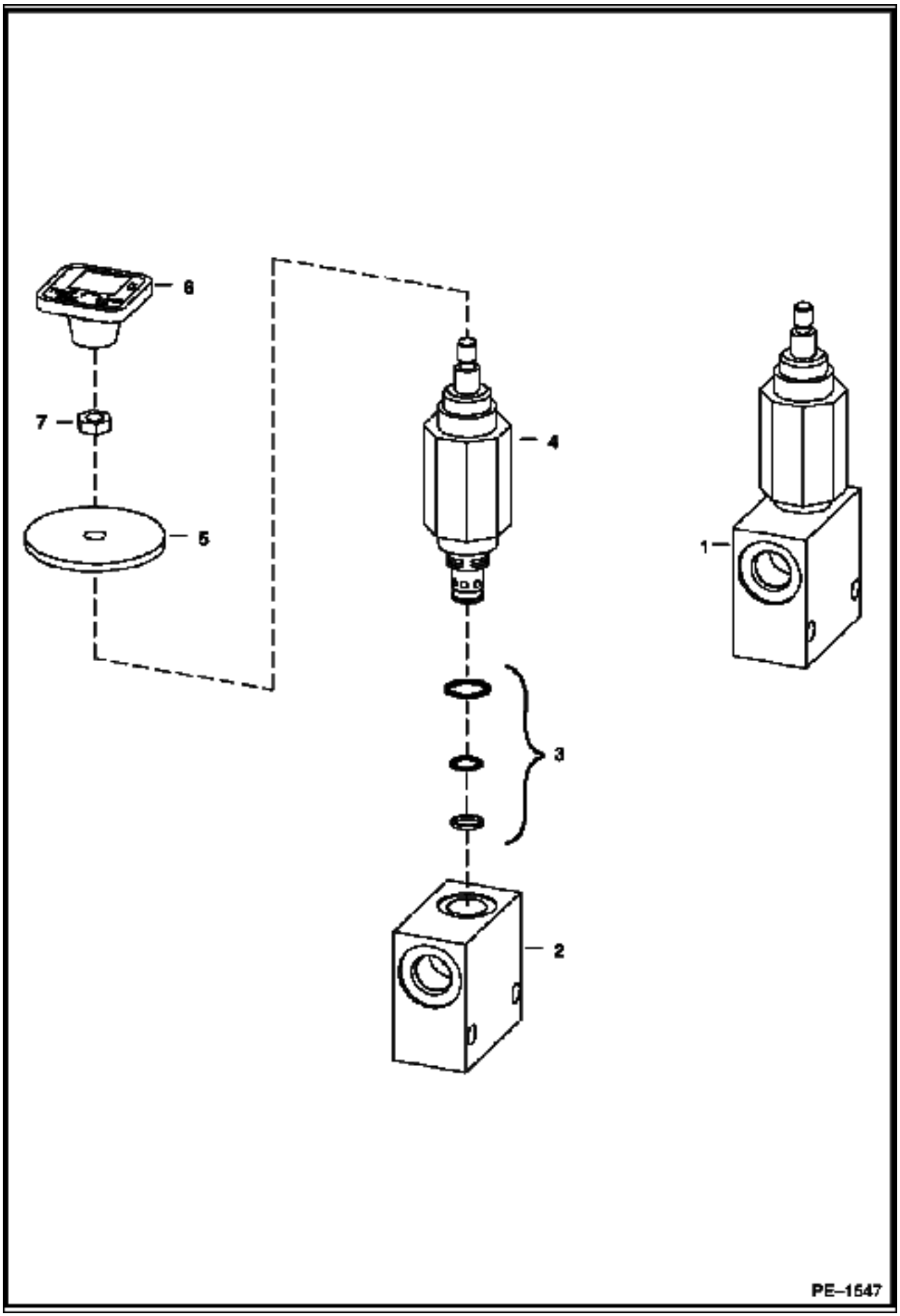

MANUAL LIFT RELEASE VALVE (Cont'd)

Ref No	Part Number	Description	Remarks	Serial Number	Qty
1	6667844	VALVE ASSY	Ref. 2-4		1
2		BLOCK	NSS		1
3	6669087	SEAL KIT			1
4	6669085	VALVE			1
5	6707101	SEAL	neoprene		1
6	6737524	KNOB	red square		1
7	7D000004B	NUT			1

CONTROL PEDALS

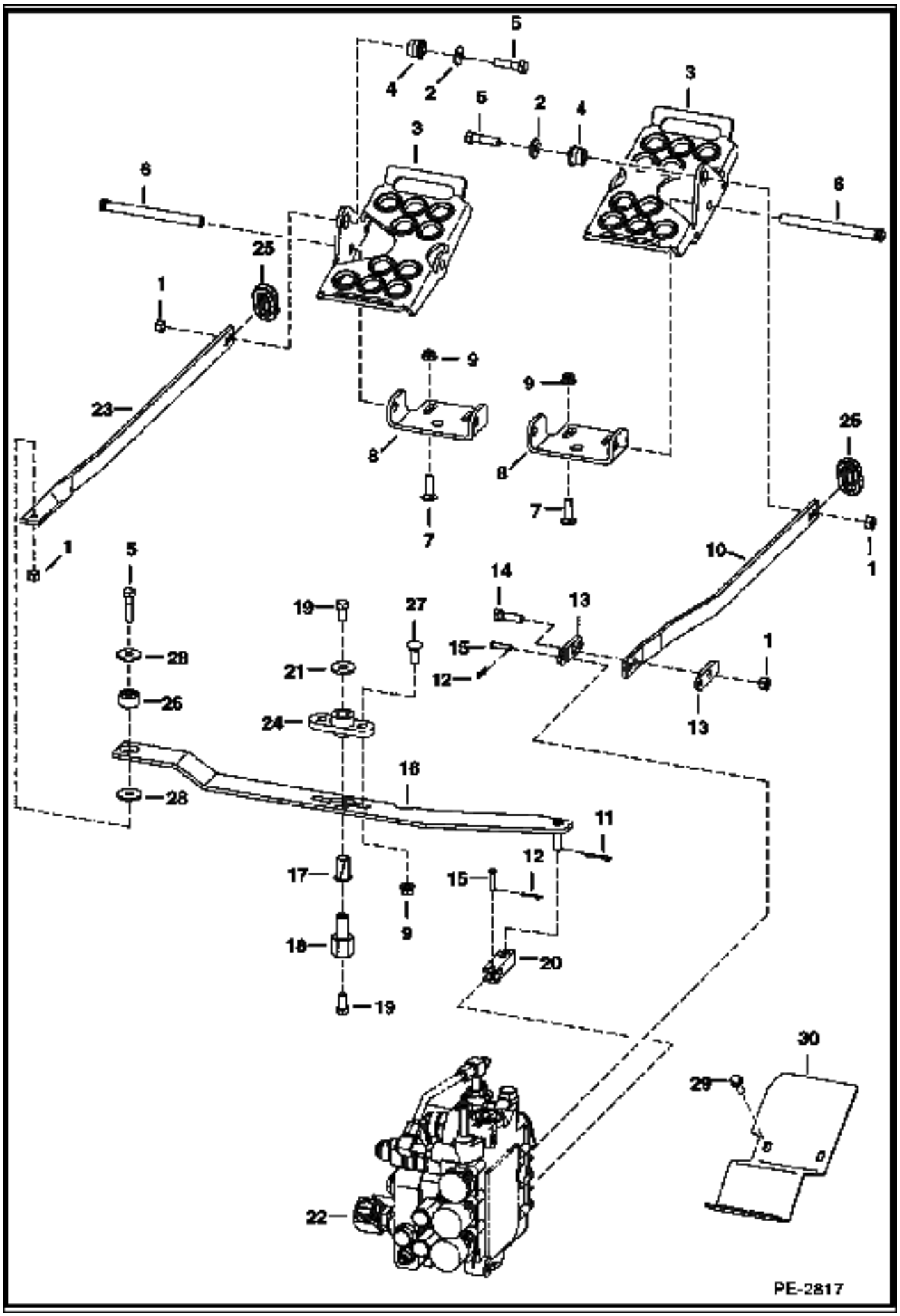

Ref No	Part Number	Description	Remarks	Serial Number	Qty
1	95D000006B	NUT			5
2	6563914	WASHER			2
3	6726680	PEDAL			2
4	6665701	BUSHING			3
5	17C000624B	BOLT			3
6	6564657	PIN			2
7	37C000620B	BOLT			4
8	6726679	MOUNT			2
9	57D000006B	NUT			4
10	6731251	BAR			1
11	1306637B	PIN			2
12	6513495	COTTER PIN			2
13	6708009	LINK			2
14	17C000620B	BOLT			1
15		PIN	NAP		2
16	6718285	LEVER			1
17	6512026	BUSHING			1
18	6718283	RETAINING NUT			1
19	17C000612B	BOLT			2
20	6706105	YOKE			1
21	619021B	WASHER			1
22		VALVE	See Illustration HYDRAULIC CONTROL VALVE/ PE1745 See Illustration HYDRAULIC CONTROL VALVE/ PE1729 CONTROL		1
23	6731252	BAR			1
24	6708043	BUSHING			1
25	6577961	GROMMET			2
26	6685060	BUSHING			1
27	37C000616B	BOLT			2
28	6737388	WASHER			2
29	84G003712B	BOLT			4
30	6737095	STEP	Rest - RH		1
30	6737120	STEP	Rest - LH		1

HYDRAULIC CONTROL VALVE
(Spool Lock) (D Series)

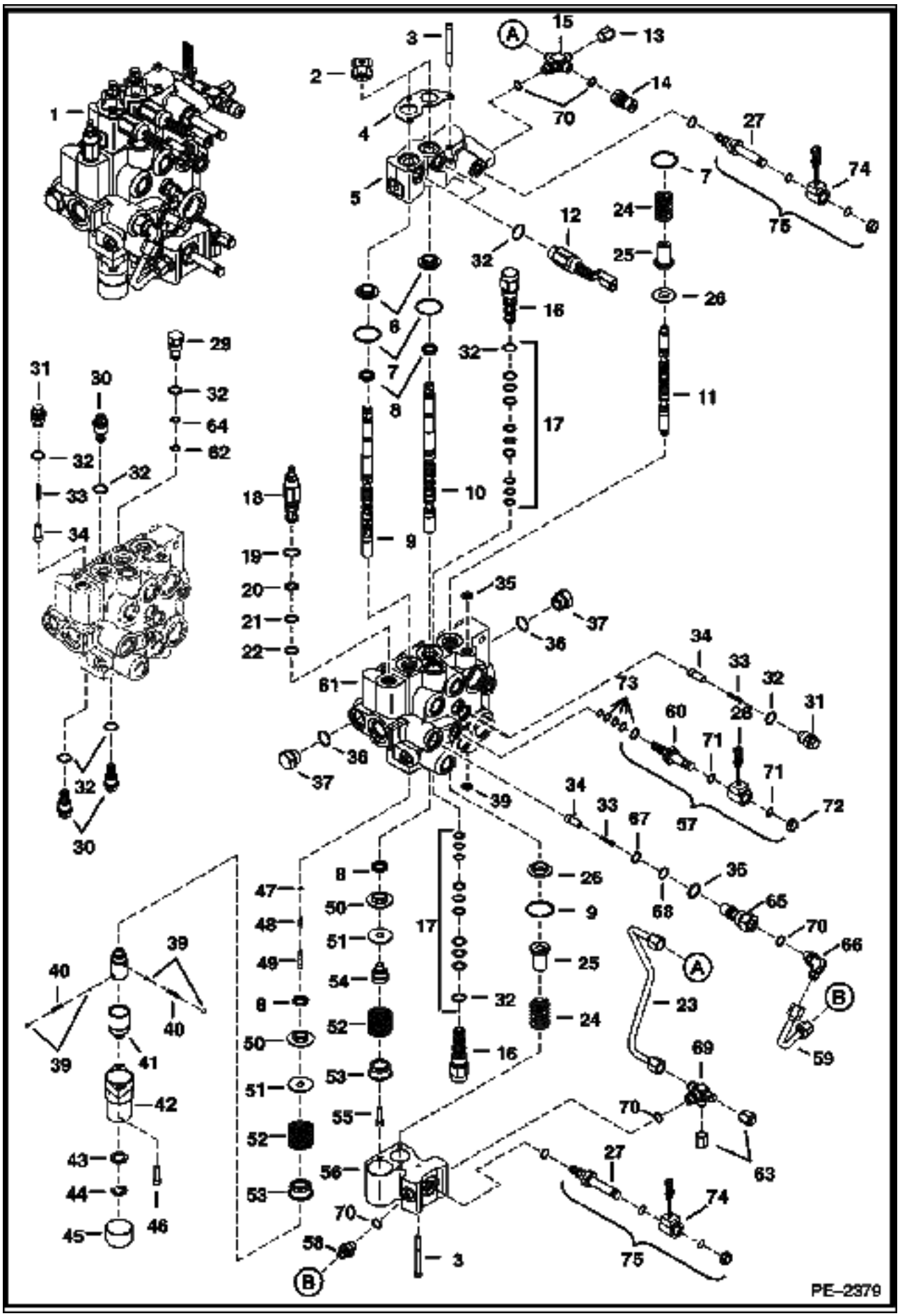

HYDRAULIC CONTROL VALVE (Cont'd)
(Spool Lock) (D Series)

Ref No	Part Number	Description	Remarks	Serial Number	Qty
1	6813080	VALVE ASSY			1
2	6587763	BOOT			2
3	29G000444B	BOLT			7
4	6813153	PLATE	retainer		1
5	6817003	BODY			1
6	6805102	BUSHING			2
7	58K000127B	O-RING			x
8	6683274	SEAL			4
9	7108781	SPOOL	lift		1
10	6815152	SPOOL			1
11	6814323	SPOOL			1
12	6677383	SOLENOID	W/Ref. 32		2
13	36K000005B	CAP			1
14	6684125	COUPLER	male		1
15	7102066	CROSS	W/Ref. 70		1
16	6668765	VALVE	W/Ref. 36		2
17	6669734	SEAL KIT			1
18	6686360	VALVE	W/Ref. 19-22		1
19	58K000017B	O-RING			x
20	6665569	WASHER	back-up		x
21	25K020016B	O-RING			x
22	6665570	RING	guide		x
23	6815031	TUBELINE			1
24	6810950	SPRING			2
25	6814694	RETAINER			2
26	6804920	BUSHING			2
27	6688397	STEM			2
28	6671025	COIL			1
29	6816549	PLUG	port relief - W/Ref. 32, 62, 64		1
30	6684646	VALVE	anti-cav - W/Ref. 32		3
31	6817707	PLUG	check valve - W/Ref. 32		3
32	79K000008B	O-RING			x
33	6592117	SPRING			4
34	7106712	SEAT			4
35	55K000204B	O-RING			x
36	79K000010B	O-RING			x
37	24K000007B	PLUG	W/Ref. 36		2
38	6587575	ADAPTER			1
39	6592105	BALL			4
40	6592107	SPRING			2
41	6531270	SLEEVE			1
42	6589226	BONNET			1
43	6592098	WASHER			1
44	799119B	SNAP RING			1
45	6660644	CAP			1
46	29G000416B	SCREW			2
47	54K020002B	O-RING			x
48	6596807	PLUG			1
49	6586918	SCREW			1
50	6595663	BUSHING			2
51	6587523	WASHER			2
52	6587580	SPRING			2
53	6592100	COLLAR			2
54	6592100	COLLAR			1

HYDRAULIC CONTROL VALVE (Cont'd)
(Spool Lock) (D Series)

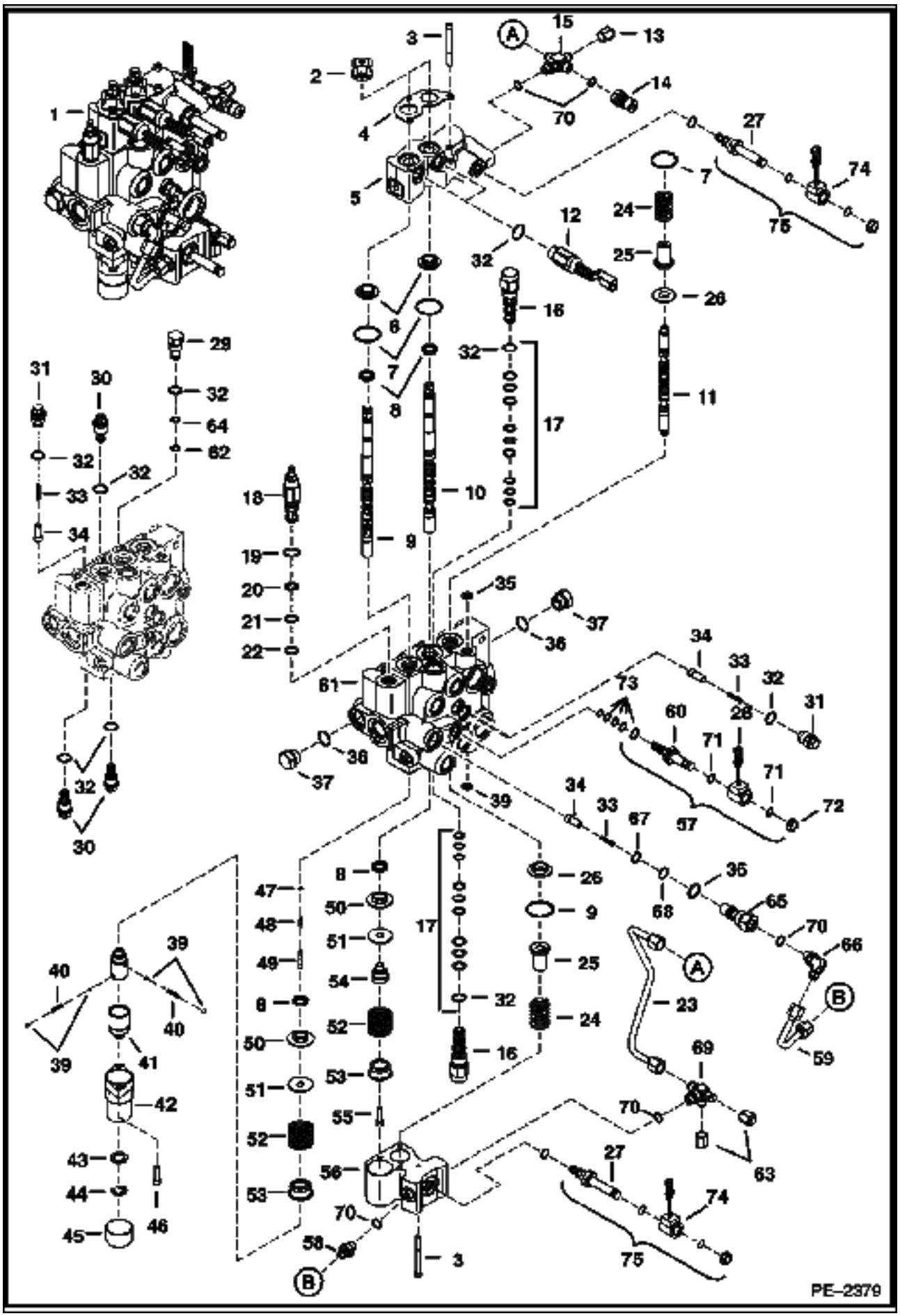

HYDRAULIC CONTROL VALVE (Cont'd)
(Spool Lock) (D Series)

Ref No	Part Number	Description	Remarks	Serial Number	Qty
55	30G000416B	BOLT			1
56	6814279	BLOCK			1
57	6672471	VALVE	W/Ref. 28, 60 & 70-73		1
58	15KB00606B	ADAPTER	W/Ref. 70		1
59	6815032	TUBELINE			1
60	6667687	STEM			1
61		VALVE BODY	NSS		1
62	73K000013B	O-RING			x
63	36K000005B	CAP			2
64	58K000013B	O-RING			x
65	6815014	CHECK VALVE	W/Ref. 36, 67 & 68		1
66	6682549	ELBOW	W/Ref. 70		1
67	58K000016B	O-RING			x
68	73K000016B	RING	back-up		x
69	7102019	FITTING	W/Ref. 70		1
70	79K000006B	O-RING			x
71	54K020028B	O-RING			x
72	6668820	NUT			1
73	6669732	SEAL KIT			1
74	6678891	COIL			2
75	6678893	SOLENOID	W/Ref 27 & 74		2

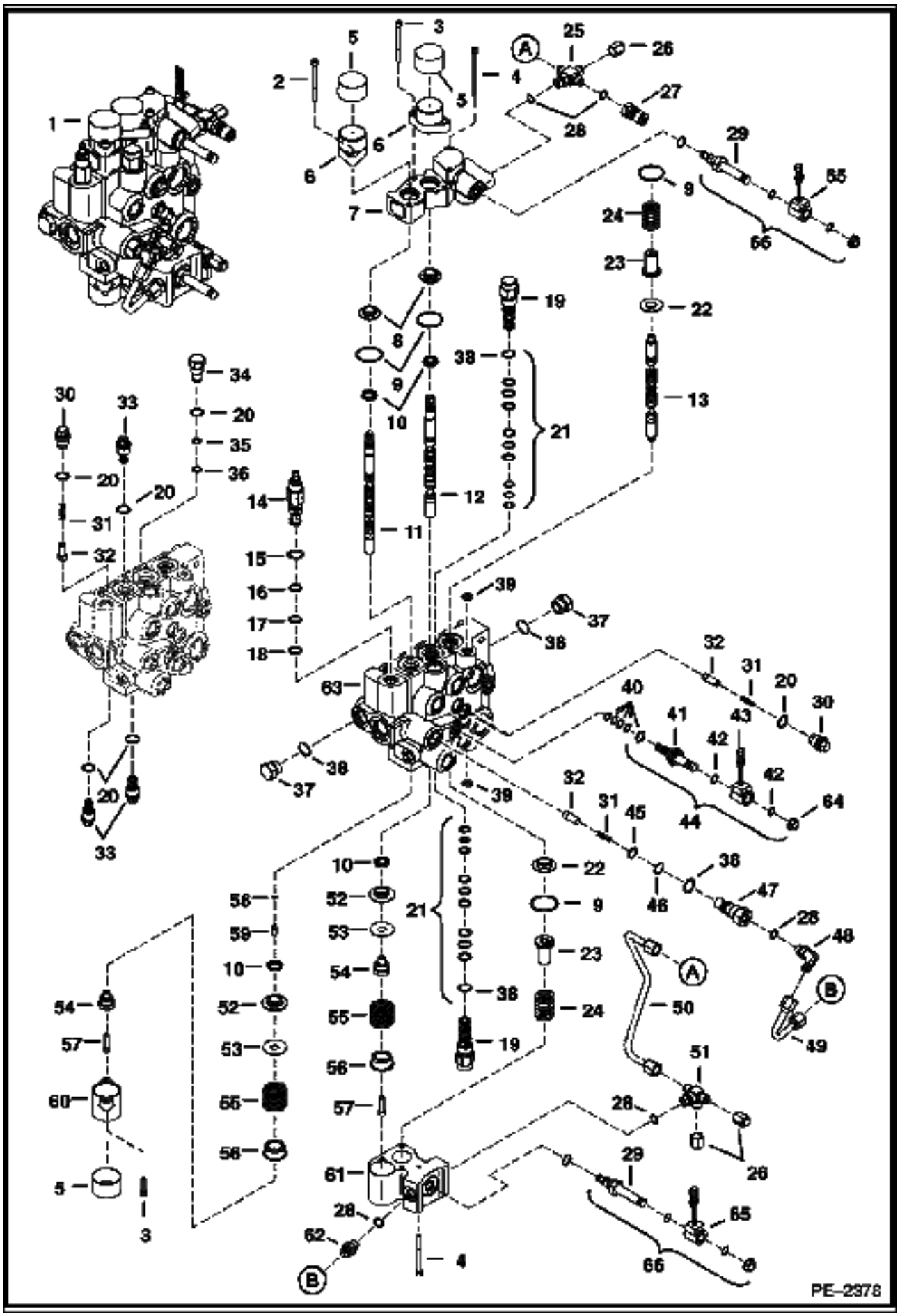
PE-2378

HYDRAULIC CONTROL VALVE (Cont'd)
(ACS) (D-Series)

Ref No	Part Number	Description	Remarks	Serial Number	Qty
1	6814600	VALVE			1
2	69G000436B	BOLT			2
3	29G000416B	SCREW			4
4	29G000444B	BOLT			5
5	6662848	CAP			3
6	7101345	BONNET			2
7	6817004	BODY			1
8	6805102	BUSHING			2
9	58K000127B	O-RING			4
10	6683274	SEAL			4
11	7108241	SPOOL	lift		1
12	7108242	SPOOL	tilt		1
13	6814323	SPOOL			1
14	6686360	VALVE	W/Ref. 15-18		1
15	58K000017B	O-RING			x
16	6665569	WASHER	back-up		x
17	25K020016B	O-RING			x
18	6665570	RING	guide		x
19	6668765	VALVE	W/Ref. 38		2
20	79K000008B	O-RING			x
21	6669734	SEAL KIT			1
22	6804920	BUSHING			2
23	6814694	RETAINER			2
24	6810950	SPRING			2
25	7102066	CROSS	W/Ref. 28		1
26	36K000005B	CAP			2
27	6684125	COUPLER	male		1
28	79K000006B	O-RING			x
29	6688397	STEM			2
30	6817707	PLUG	check valve - W/Ref. 20		3
31	6592117	SPRING			4
32	7106712	SEAT			4
33	6684646	VALVE	W/Ref. 20		3
34	6816549	PLUG	W/Ref. 20, 35 & 36		1
35	58K000013B	O-RING			x
36	73K000013B	O-RING			x
37	24K000007B	PLUG	W/Ref. 38		2
38	79K000010B	O-RING			x
39	55K000204B	O-RING			x
40	6669732	SEAL KIT			1
41	6667687	STEM			1
42	54K020028B	O-RING			x
43	6671025	COIL			1
44	6672471	VALVE	W/Ref. 40-43 & 64		1
45	58K000016B	O-RING			x
46	73K000016B	RING	back-up		x
47	6815014	CHECK VALVE	W/Ref. 38, 45 & 46		1
48	6682549	ELBOW	W/Ref. 28		1
49	6815032	TUBELINE			1
50	7110914	TUBELINE			1
51	7102018	TEE	W/Ref. 28		1
52	6595663	BUSHING			2
53	6587523	WASHER			2
54	6592109	ADAPTER			2

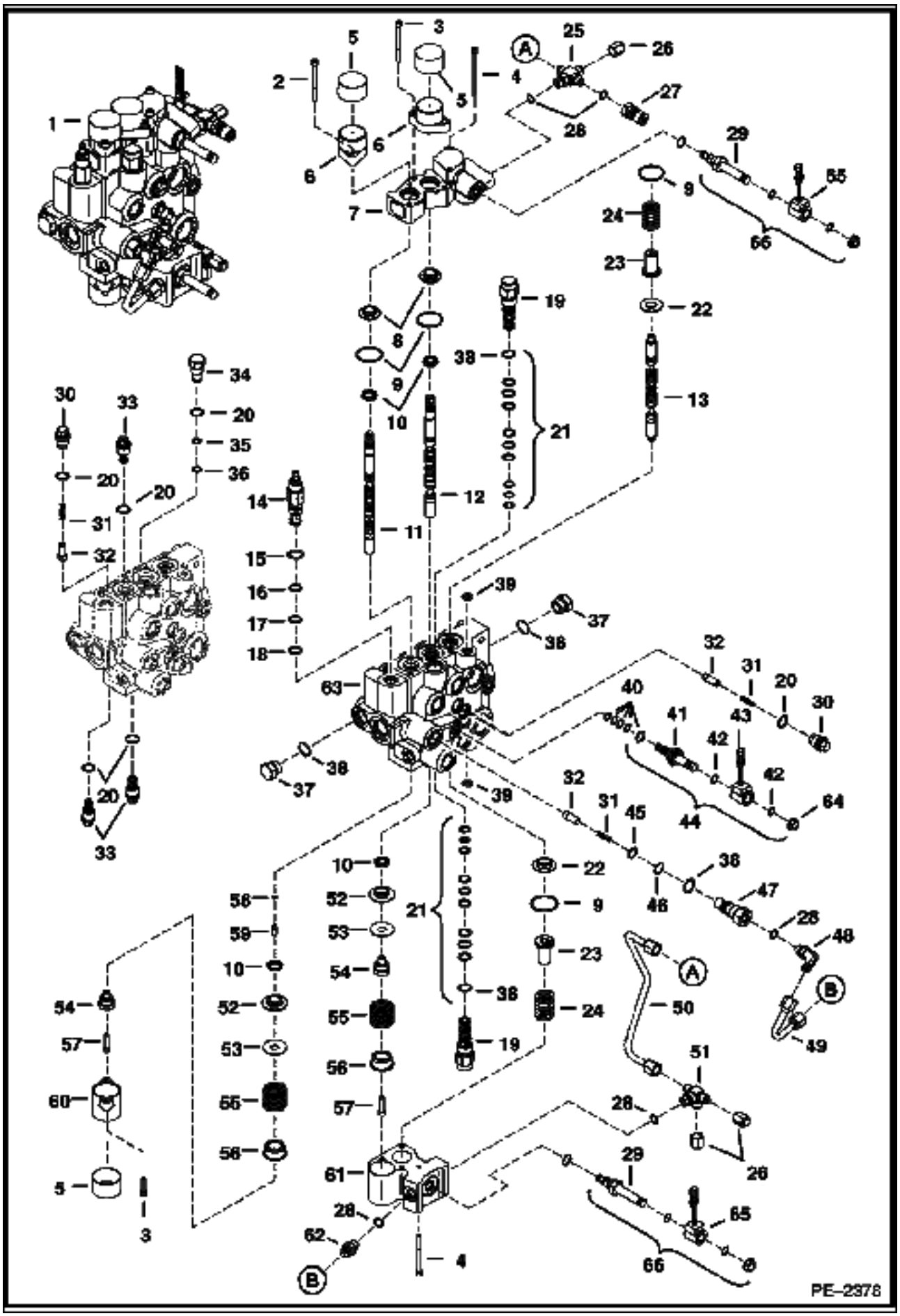
PE-2378

HYDRAULIC CONTROL VALVE (Cont'd)
(ACS) (D-Series)

Ref No	Part Number	Description	Remarks	Serial Number	Qty
55	6587580	SPRING			2
56	6592100	COLLAR			2
57	7102652	SCREW			2
58	54K020002B	O-RING			x
59	6801167	PLUG			1
60	6803092	BONNET			1
61	6814279	BLOCK			1
62	15KB00606B	ADAPTER	W/Ref. 28		1
63		BODY	NSS		1
64	6668820	NUT			1
65	6678891	COIL			2
66	6678893	SOLENOID	W/Ref 29 & 65		2

BUCKET POSITIONING VALVE

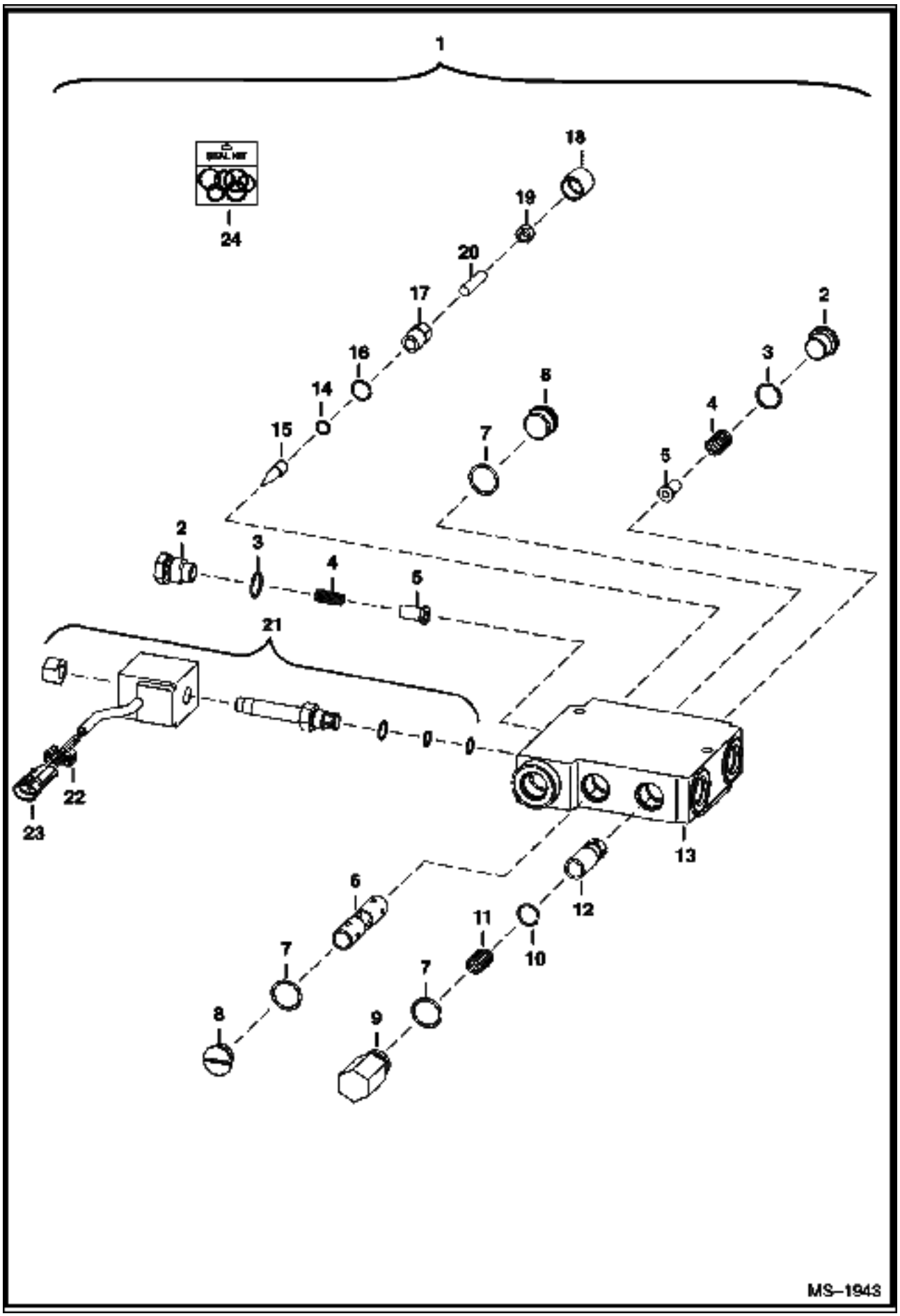

BUCKET POSITIONING VALVE (Cont'd)

Ref No	Part Number	Description	Remarks	Serial Number	Qty
1	6675669	VALVE	primer red - Ref. 2-21		1
2	6647784	PLUG	W/Ref. 3		2
3	79K000008B	O-RING			2
4	6647785	SPRING			2
5	6647783	LOAD CHECK			2
6		SPOOL	NSS		1
7	58K000116B	O-RING			3
8	6676543	PLUG	W/Ref. 7		2
9	6667176	PLUG	W/Ref. 7		1
10	6667680	SNAP RING			1
11	6676544	SPRING			1
12		SPOOL	NSS		1
13		BODY	NSS		1
14	6667677	O-RING			1
15	6647777	PIN			1
16	79K000006B	O-RING			1
17	6676542	CAP			1
18	6667676	COVER			1
19	6631561	NUT			1
20	6648293	SCREW			1
21	6672863	SOLENOID			1
21	6671527	NUT			1
21	6670634	SEAL KIT			1
21	6674331	COIL	W/Ref. 22 & 23		1
21	6676545	CARTRIDGE			1
22	6641180	LOCK	2-pin		1
23	6641179	CONNECTOR	2-pin		1
24	6667185	SEAL KIT	Ref. 3, 7, 14, 16 & 18		1

HIGH FLOW HYDRAULICS
(40 GPM) (Non - Selectable Joystick Controlled)

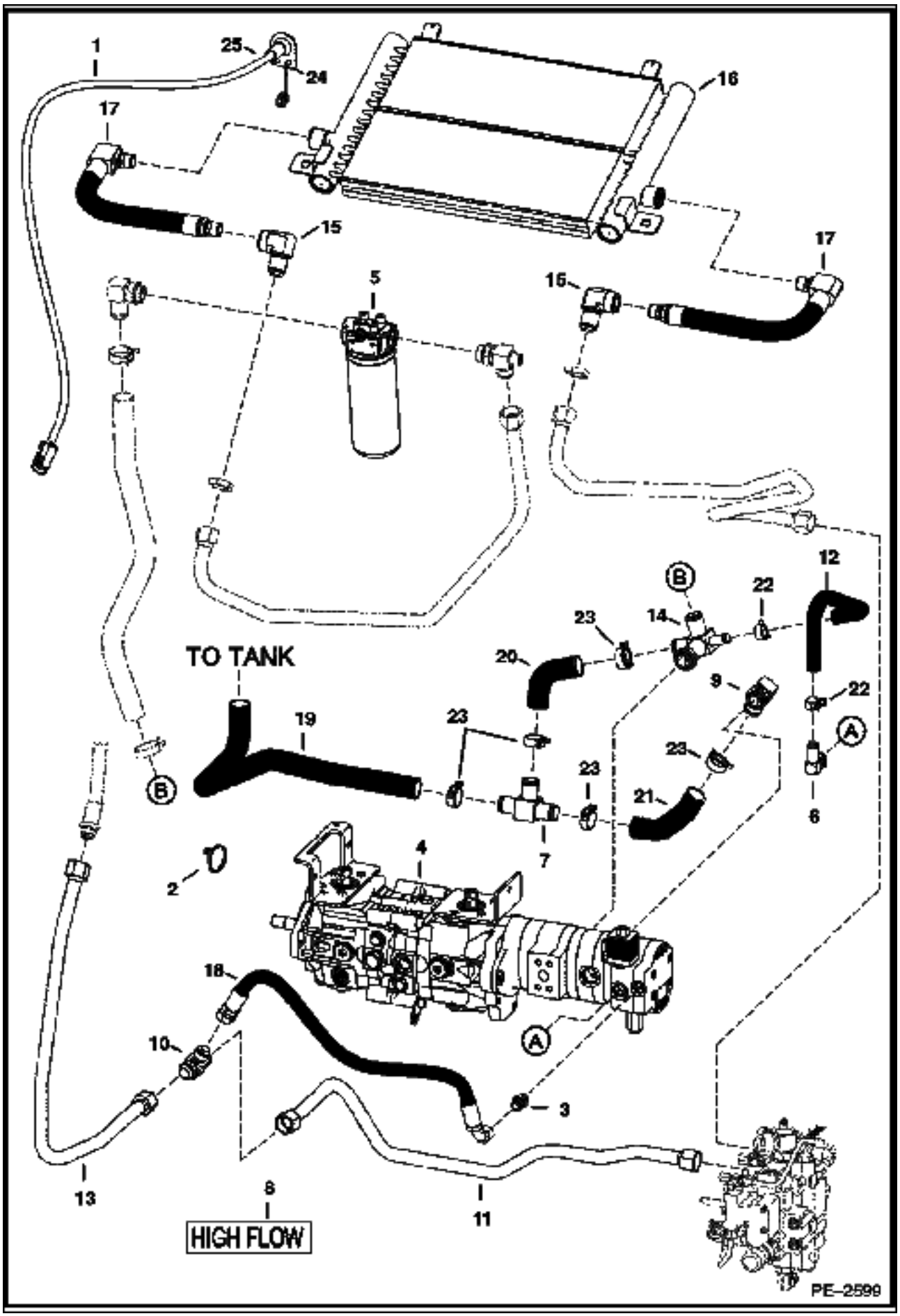

HIGH FLOW HYDRAULICS (Cont'd)
(40 GPM) (Non - Selectable Joystick Controlled)

Ref No	Part Number	Description	Remarks	Serial Number	Qty
1	6718426	HARNESS	attachment control		1
2	6624289	STA STRAP			14
3	6679943	VALVE			1
3	79K000008B	O-RING			x
4		PUMP	See Illustration HYDROSTATIC PUMP/ MS1452 See Illustration HIGH FLOW HYDRAULICS/ MS1457		1
5		FILTER	See Illustration HYDROSTATIC OIL FILTER/ C2818		1
6	6717885	ELBOW			1
6	79K000010B	O-RING			x
7	6727064	TEE			1
8	7120602	DECAL	high flow		2
9	6729306	ELBOW			1
9	79K000016B	O-RING			x
10	6730143	TEE			1
11	6732993	TUBELINE			1
12	6733137	HARNESS			1
13	6733164	HOSE			1
14	6733309	TUBELINE			1
15	7102399	TEE			1
15	79K000016B	O-RING			x
16	7103749	ELBOW			2
16	6688523	SEAL KIT			x
17	7103750	EXCHANGER			1
17	6688523	SEAL KIT			x
18	7103751	HOSE			2
18	6688523	SEAL KIT			x
19	7109144	hose			1
19	6688523	SEAL KIT			x
20	7110205	HOSE			1
21	7110286	HOSE			1
22	7110339	HOSE			1
23	5HM00024B	CLAMP			2
24	5HM00035B	CLAMP			4
25	84G003112B	BOLT			2
26	30H000035B	CLAMP			1
27	7113512	DECAL	approved attachments only		1

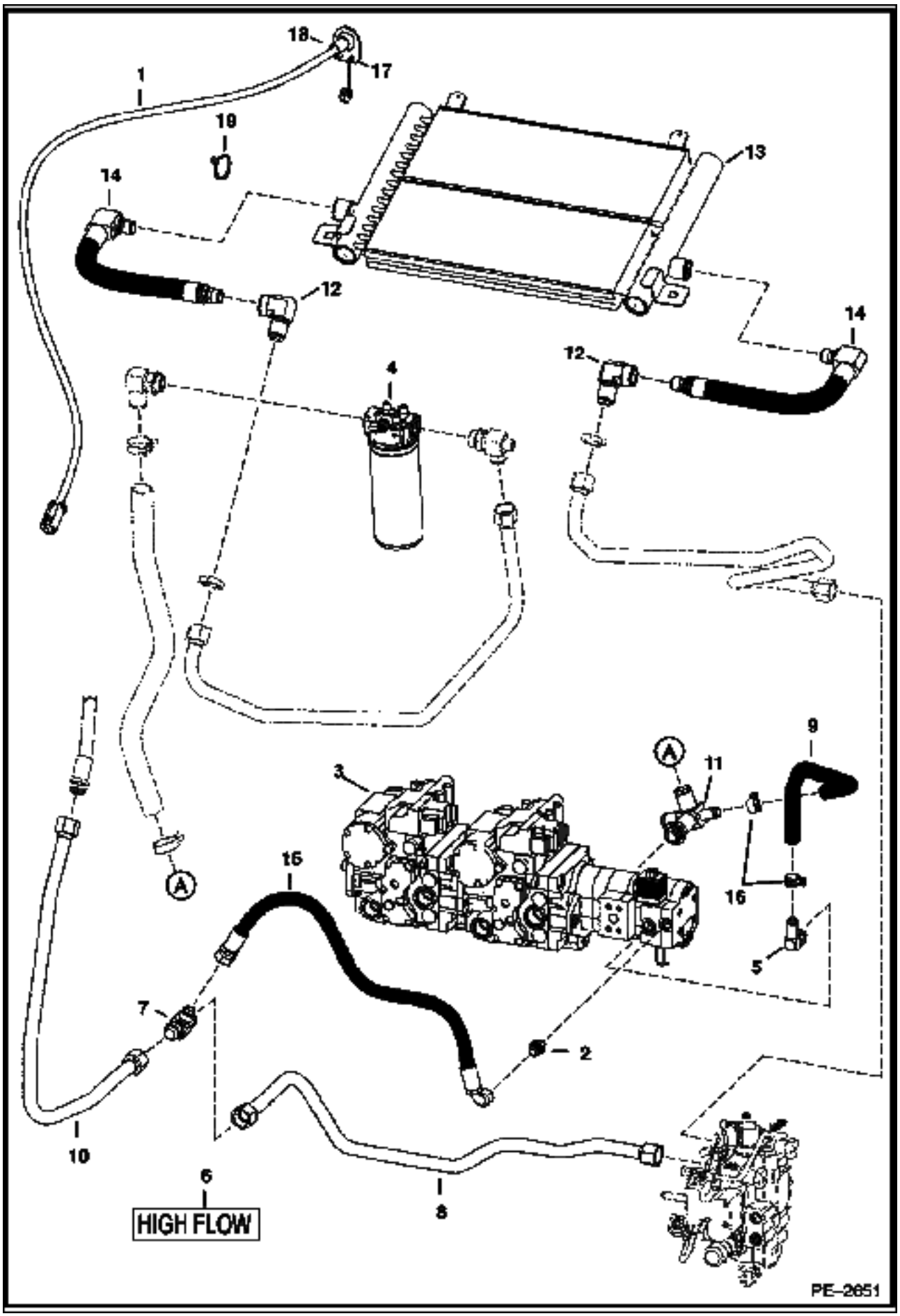
18
17
1
19
14
13
12
14
12
4
9
A
11
3
15
A
16
5
7
2
10
6
8
HIGH FLOW
PE-2651

Ref No	Part Number	Description	Remarks	Serial Number	Qty
1	6718426	HARNESS	attachment control		1
2	6624289	STA STRAP			14
3	6679943	VALVE			1
3	79K000008B	O-RING			x
4		PUMP	See Illustration HYDROSTATIC PUMP/ B16054		1
5	79K000010B	O-RING			x
5		FILTER	See Illustration HYDROSTATIC OIL FILTER/ C2818		1
6	7120602	DECAL	high flow		2
6	6717885	ELBOW			1
7	6730143	TEE			1
8	6732993	TUBELINE			1
9	6733164	HOSE			1
10	6733309	TUBELINE			1
11	7102399	TEE			1
11	79K000016B	O-RING			x
12	7103749	ELBOW			2
13	7103750	EXCHANGER			1
14	7103751	HOSE			2
15	7109144	hose			1
16	5HM00024B	CLAMP			2
25	84G003112B	BOLT			2
26	30H000035B	CLAMP			1
27	7113512	DECAL	approved attachments only		1

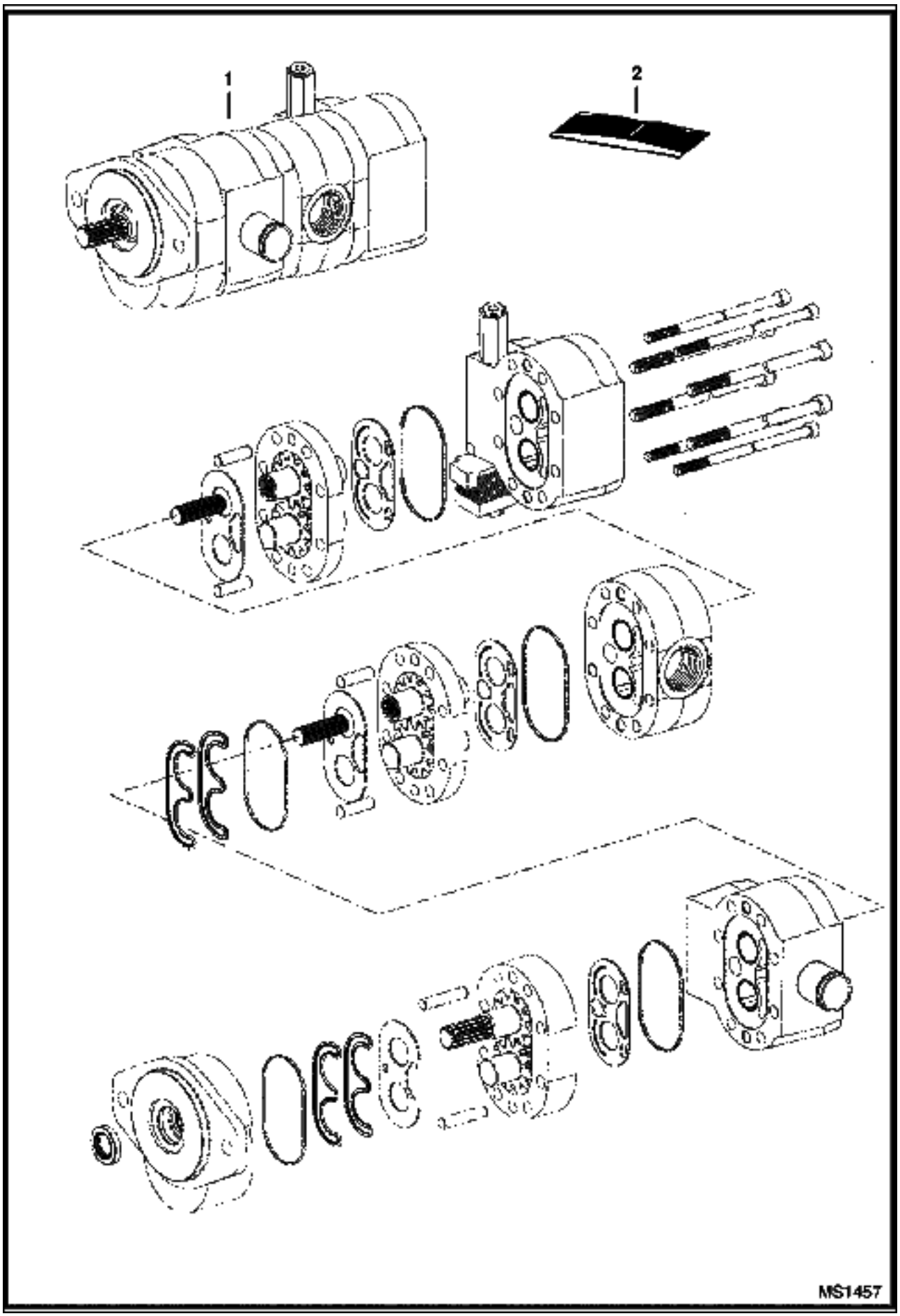
1
2
MS1457

Ref No	Part Number	Description	Remarks	Serial Number	Qty
1	6688714	GEAR PUMP	163D72024		1

HYDROSTATIC CIRCUITRY
(W/Tank)

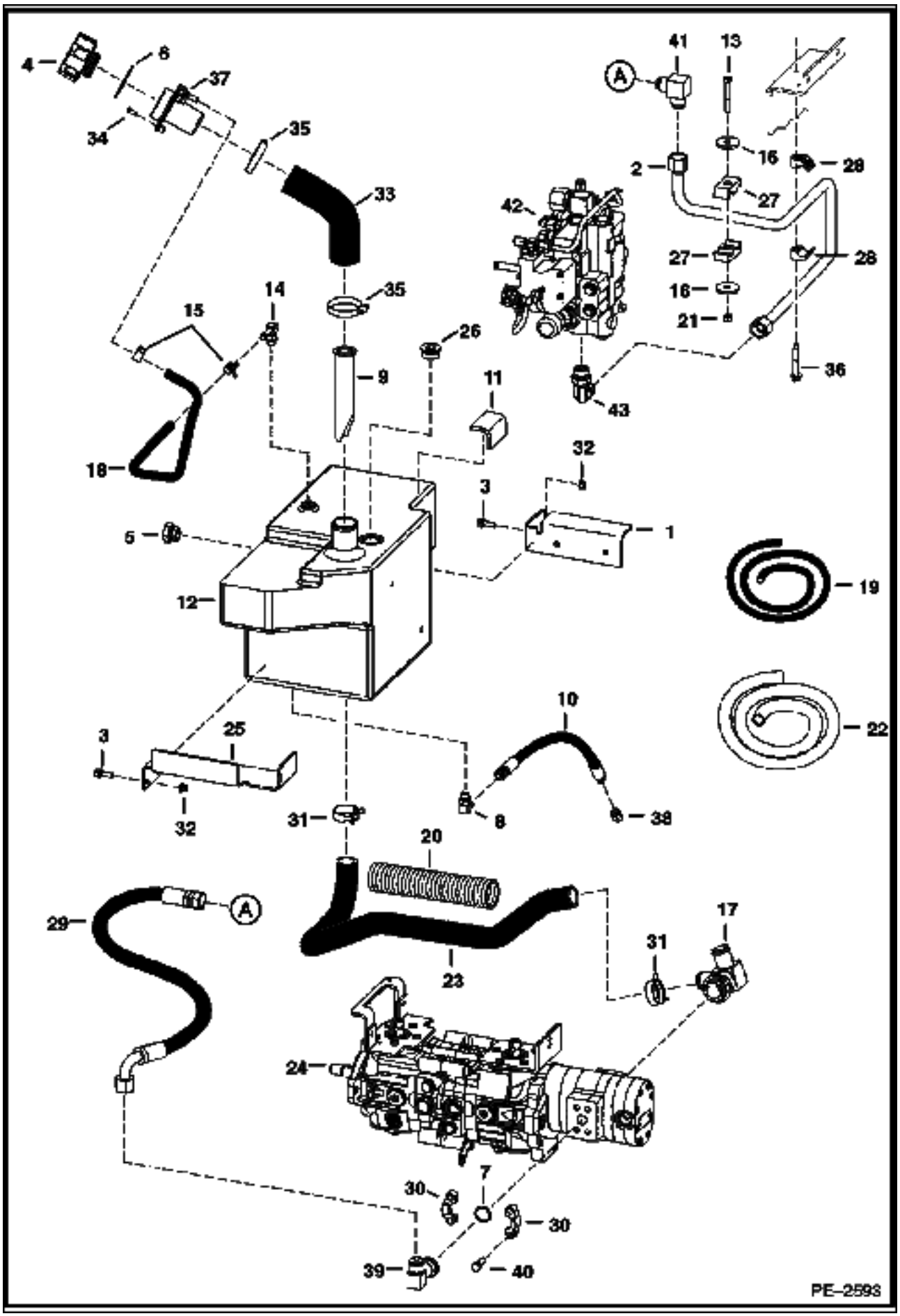

HYDROSTATIC CIRCUITRY (Cont'd)
(W/Tank)

Ref No	Part Number	Description	Remarks	Serial Number	Qty
1	6718851	BRACKET			1
2	6736656	TUBELINE			1
3	35C000516B	BOLT			4
4	6727475	CAP	breather & fill - Also Order Ref. 6		1
5	6665915	GAUGE	sight		1
5	79K000006B	O-RING			x
6	6700631	GASKET			2
7	55K000214B	O-RING			1
8	17KB00606B	ELBOW			1
8	79K000006B	O-RING			x
9	6569219	SCREEN			1
10	7106212	HOSE			1
11	6578278	PAD			1
12	6731209	TANK	hydraulic		1
13	17C000640B	BOLT			x
14	6727313	ELBOW			1
15	5HM00015B	CLAMP			2
16	872229B	WASHER			2
17	6732586	TEE			1
17	79K000006B	O-RING			x
18		HOSE	NAP - 23" (584mm) long - Order Ref. 19		1
19	6586251	HOSE	Bulk - sold per foot		x
20		SHIELD	NAP - 10" (254mm) long - Order Ref. 22		1
21	85D000006B	NUT			1
22	6705749	SHIELD	bulk - sold by the foot		x
23	6730345	HOSE			1
24		PUMP	See Illustration HYDROSTATIC PUMP/ MS1452 See Illustration HYDROSTATIC PUMP/ B25010		1
25	6718850	BRACKET			1
26	47K000010B	PLUG	for the tank flushing hole		1
27	6592506	CLAMP			2
28	7100462	CLAMP			2
29	6736649	HOSE			1
30	19J000012B	CLAMP			2
31	5HM00042B	CLAMP			2
32	83D000005B	NUT			4
33	6731638	HOSE			1
34	6706517	SCREW			3
35	42HL00250B	CLAMP			2
36	35C000632B	BOLT			1
37	6727354	INLET			1
38	36K000005B	CAP			2
39	7106040	TEE	split flange [A]		1
40	17C000620B	BOLT			4
41	77F000008B	ELBOW			1
42		VALVE	See Illustration HYDRAULIC CONTROL VALVE/ PE2379 See Illustration HYDRAULIC CONTROL VALVE/ PE2378 control		1
43	7101797	ELBOW			1
43	79K000012B	O-RING			x

HYDROSTATIC CIRCUITRY
(W/Motors)

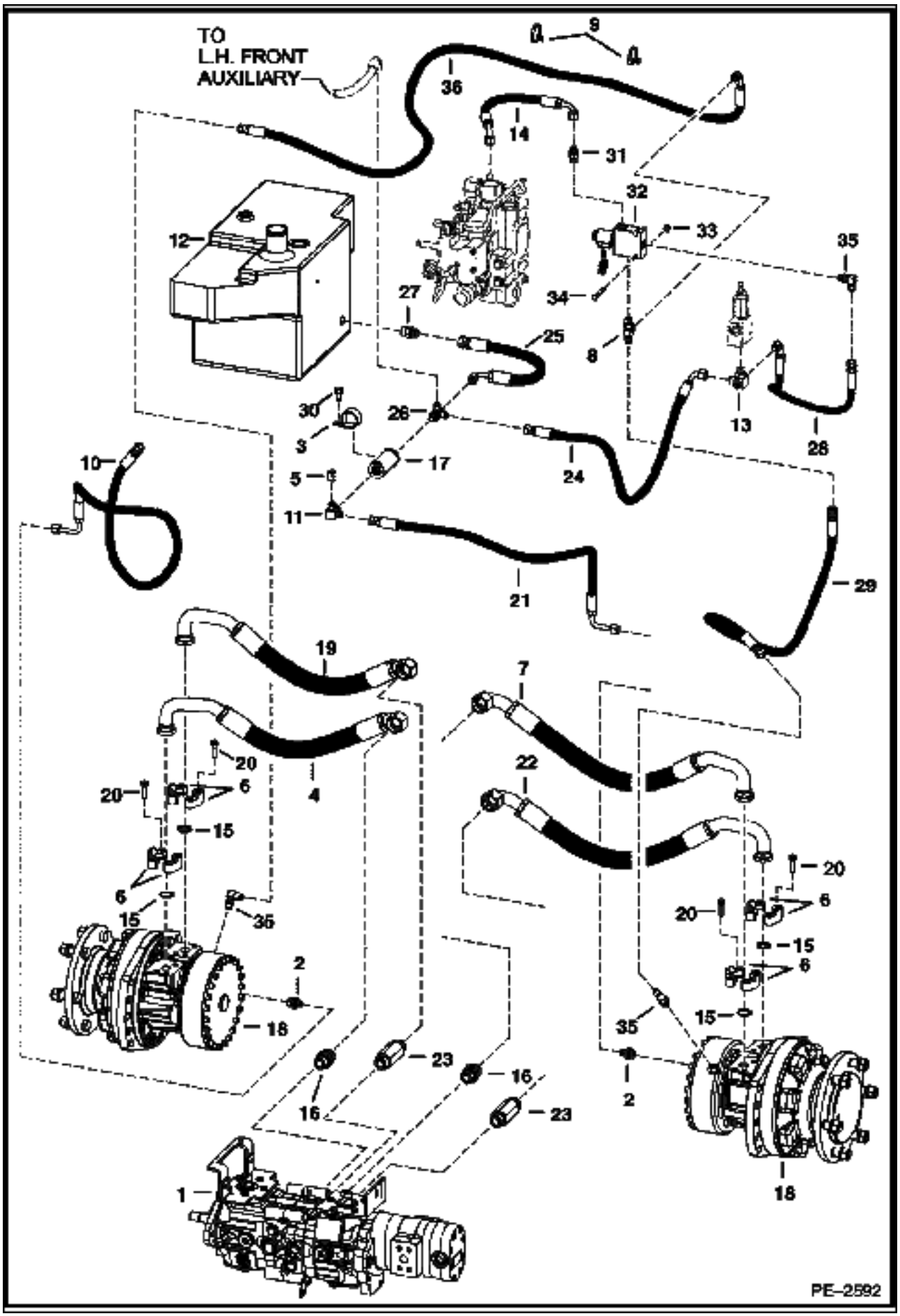

HYDROSTATIC CIRCUITRY (Cont'd)
(W/Motors)

Ref No	Part Number	Description	Remarks	Serial Number	Qty
1		PUMP	See Illustration HYDROSTATIC PUMP/ MS1452 See Illustration HYDROSTATIC PUMP/ B25010		1
2	743108B	ADAPTER			2
2	79K000006B	O-RING			x
3	30H000079B	CLAMP			1
4	6685342	HOSE	mega seal		1
5	36K000005B	CAP			1
6	20J000012B	CLAMP			8
7	6685340	HOSE	mega seal		1
8	21KB00606B	TEE			1
8	79K000006B	O-RING			x
9	6624289	STA STRAP			2
10	6730326	HOSE			1
11	6725182	TEE			1
11	79K000006B	O-RING			x
12		TANK	See Illustration HYDROSTATIC CIRCUITRY/ PE2593 hydraulic		1
13	7102019	FITTING			1
14	7103901	HOSE			1
15	55K000214B	O-RING			4
16	15KB01612B	ADAPTER			2
16	79K000012B	O-RING			x
17	6661022	FILTER	See Illustration HYDROSTATIC OIL FILTER/ B13527 in-line - 90 micron		1
18		MOTOR	See Illustration HYDROSTATIC MOTOR & BRAKE/ B21330 See Illustration HYDROSTATIC MOTOR & BRAKE/ B22650		2
19	6685341	HOSE			1
20	17C000620B	BOLT			16
21	6730323	HOSE			1
22	6685339	HOSE			1
23	6716243	ADAPTER			2
23	79K000012B	O-RING			x
24	6732483	HOSE			1
25	6733219	HOSE			1
26	6718031	TEE			1
26	79K000006B	O-RING			x
27	15KB00808B	ADAPTER			1
27	79K000008B	O-RING			x
28	6716463	HOSE			1
29	6736814	HOSE			1
30	84G003712B	BOLT			1
31	6669676	CHECK VALVE	in-line		1
31	79K000006B	O-RING			x
32	6679103	VALVE ASSY	See Illustration BRAKE VALVE/ MS1144 brake		1
33	83D000004B	NUT			2
34	17C000432B	BOLT			2
35	17KB00606B	ELBOW			2
36	6730329	HOSE			1

HYDROSTATIC CIRCUITRY
(W/Cooler)

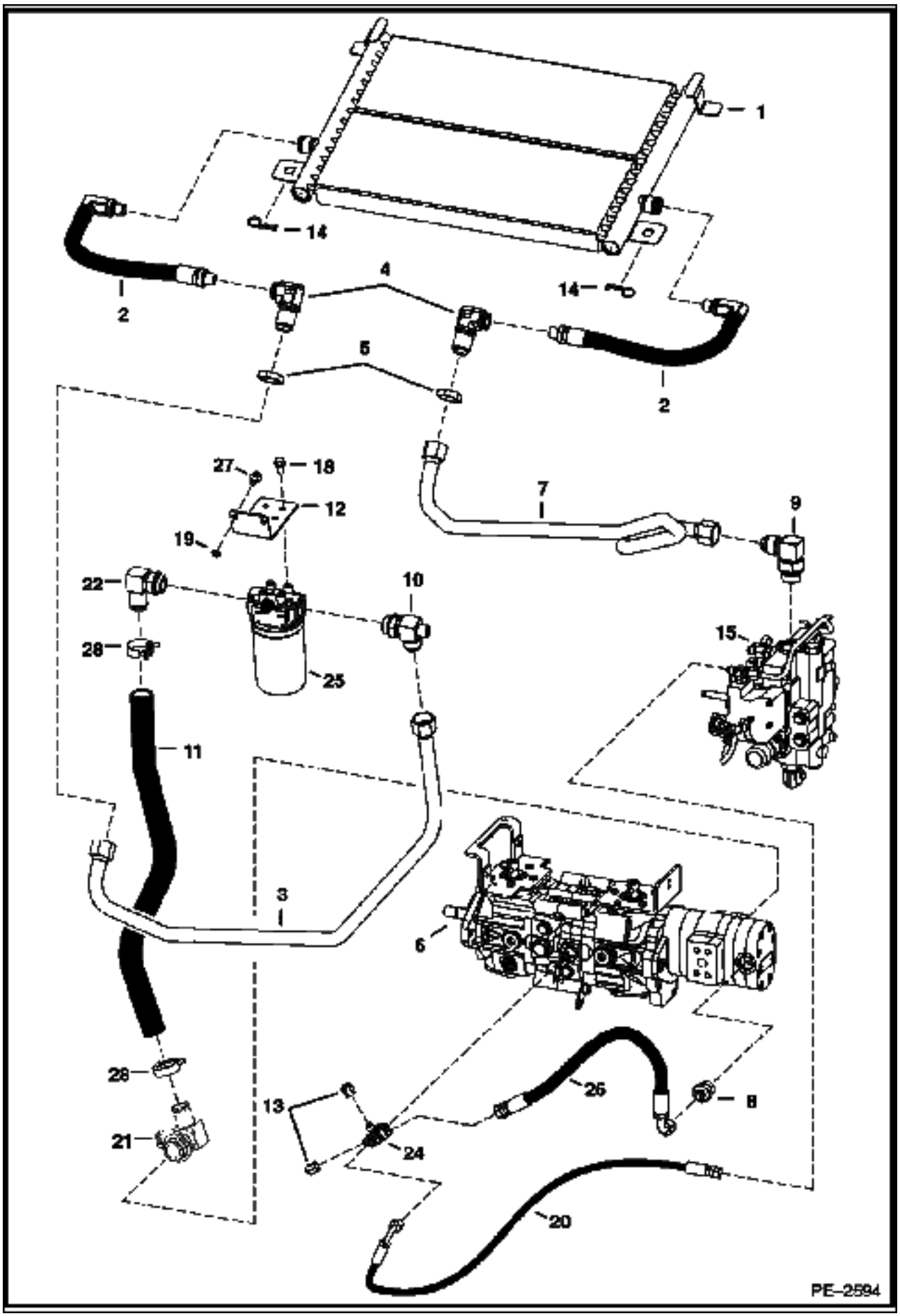

HYDROSTATIC CIRCUITRY (Cont'd)
(W/Cooler)

Ref No	Part Number	Description	Remarks	Serial Number	Qty
1	6678156	COOLER	oil		1
1	6681501	SEAL KIT			1
2	6684457	HOSE			2
2	6681501	SEAL KIT			x
3	7113355	TUBELINE			1
4	6678970	ELBOW			1
4	6681501	SEAL KIT			x
5	86F000010B	NUT			2
6		PUMP	See Illustration HYDROSTATIC PUMP/ MS1452 See Illustration HYDROSTATIC PUMP/ B25010		1
7	7115091	TUBELINE			1
8	15KB00812B	ADAPTER			1
8	79K000012B	O-RING			x
9	6813964	ELBOW			1
10	6731527	TEE			1
10	79K000016B	O-RING			x
11	7114884	HOSE			1
12	7103903	MOUNT			1
13	36K000005B	CAP			2
14	1318565B	PIN			2
15		VALVE			1
16	6736258	TEE			1
17	6718948	SNUBBER	.375" UNF Thread - W/Ref. 29		1
18	35C000612B	BOLT			4
19	6E000006B	WASHER			2
20	6628810	HOSE			1
21	6732586	TEE			1
21	79K000020B	O-RING			x
22	6729306	ELBOW			1
22	79K000016B	O-RING			x
23	6817553	ADAPTER			1
23	79K000006B	O-RING			x
24	6731925	TEE			1
24	79K000010B	O-RING			x
25	6678155	FILTER ASSY	See Illustration HYDROSTATIC OIL FILTER/ C2818		1
25	6661248	ELEMENT			x
26	6731935	HOSE			1
27	84G003710B	BOLT			2
28	5HM00042B	CLAMP			4
29	6675278	FILTER			1

DRAWING NOT AVAILABLE AT TIME OF PRINTING

PE-2395

Ref No	Part Number	Description	Remarks	Serial Number	Qty
1	6702543	LEVER			2
2	6730264	BELLCRANK			2
3	6599741	WASHER	wave		1
4	6716545	ROD			1
5	73G000824B	BOLT			2
6	45C000620B	BOLT			2
7	6732997	U-BOLT			4
8	6673710	BEARING			4
9	6518200	GREASE ZERK			2
10	7105192	BOLT			4
11	6557831	WASHER	.15" thick		8
12	6706095	MOUNT			1
13	98D000006B	NUT			4
14	6701535	SPRING			1
15	6716916	WASHER			4
16	95D000006B	NUT			12
17	6734742	BRACKET			1
18	6706098	GUIDE			2
19	6702716	BLOCK			2
20	57D000006B	NUT			1
21	6563914	WASHER			1
22	6577058	PIN			2
23	1CM00820B	BOLT			8
24	17C000626B	BOLT			4
25	6673789	BEARING			4
26	7100699	WASHER			8
27	7110365	PINTLE ARM			2
28	619021B	WASHER			4
29	6678067	BUSHING	torsion - 1.055" (26,8mm) O.D.		4
30	6731253	LINK			2
31	83D000006B	NUT			8
32	6716117	LINK			2
33	6599744	BALL JOINT			4
34	8D000006B	NUT			4
35	7103314	BRACKET			1
36	17C000620B	BOLT			4
37	6649551	SHOCK			2
38	96D000006B	NUT			4
39	17C000680B	BOLT			1
40	6715164	SLEEVE			1
41	6715163	BUSHING			3
42	35C000624B	BOLT			2
43	25E000024B	WASHER	for AHC		1
44	6733022	BRACKET	R.H.		1
44	6733024	BRACKET	L.H.		1
45	7100795	MOUNT	damper		1
46	17C000612B	BOLT			2
47	7105193	BOLT			4
48	7103708	BRACKET	centering		2
49	7103711	BOLT			2
50	7105194	BOLT	Was 7105194 [A]		2
51	7105223	SPACER			2
52	7103271	WASHER	.065 in thick		8

HYDROSTATIC MOTOR & BRAKE
(Selectable Joystick Option)

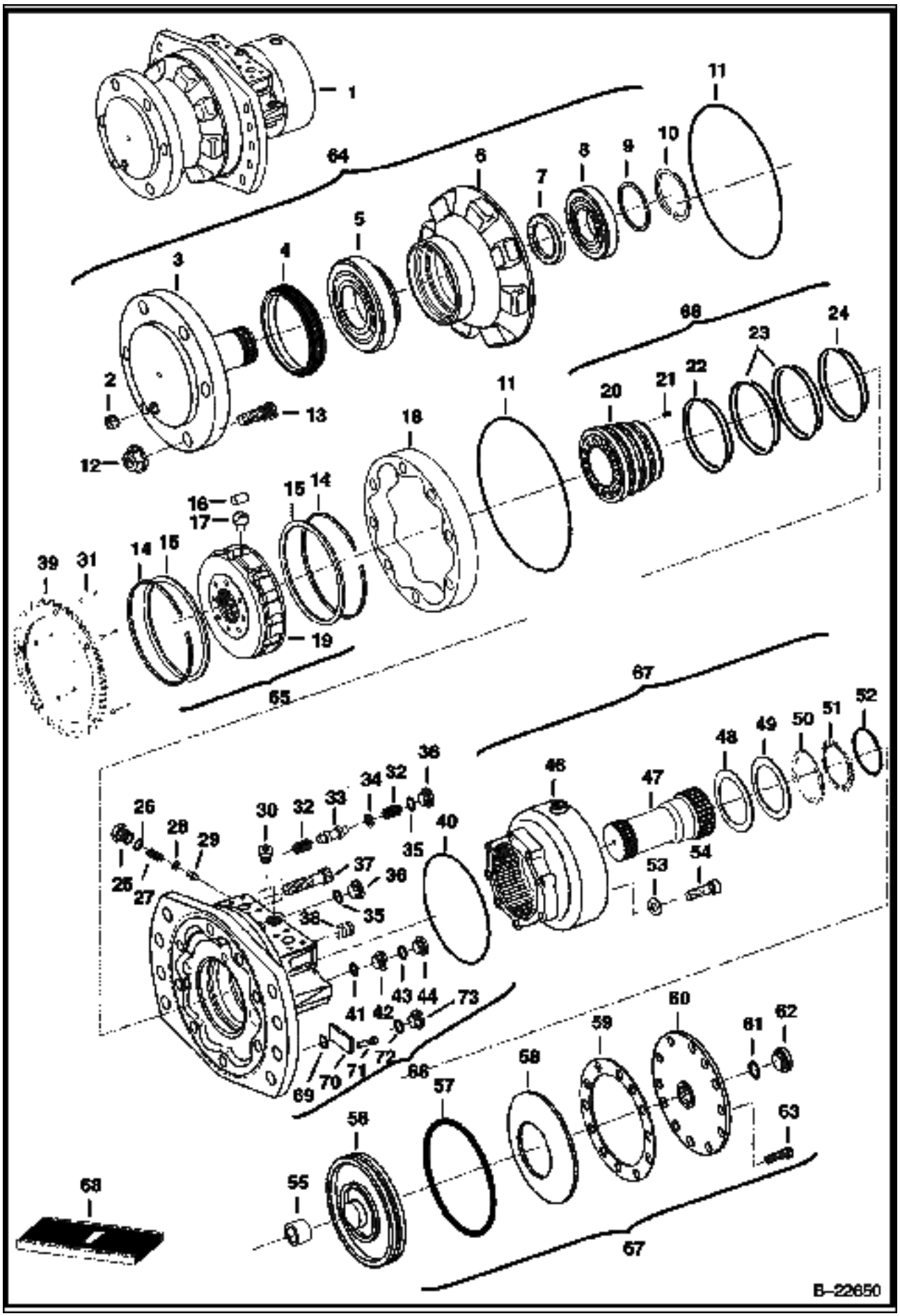

HYDROSTATIC MOTOR & BRAKE (Cont'd)
(Selectable Joystick Option)

Ref No	Part Number	Description	Remarks	Serial Number	Qty
1	7109868	MOTOR	model R921810313 - W/twin distributor seals		1
2	6680019	PLUG			1
3	6681620	SHAFT			1
4	6674727	SEAL			1
5	6684933	BEARING			1
6	6681621	HOUSING			1
7	6674056	SEAL			1
8	6660018	BEARING			1
9	6674058	WASHER	preload - .087" (2,2mm) thick		1
9	6674059	WASHER	preload - .091" (2,3mm) thick		1
9	6674060	WASHER	preload - .098" (2,5mm) thick		1
9	6674061	WASHER	preload - .108" (2,75mm) thick		1
10	6660016	RINGS			1
11	6676597	O-RING			2
12	6674724	NUT			6
13	6674706	STUD			6
14		SNAP RING	NSS - Order Ref. 19		2
15		RETAINER	NSS - Order Ref. 19		2
16		ROLLER	NSS - Order Ref. 19		10
17		PISTON	NSS - Order Ref. 19		10
18	6674065	CAM			1
19		BLOCK	NAP - Order Ref. 65		1
20	6676909	DISTRIBUTOR			1
21	6660033	SPRING			12
22	6674848	SEAL	W/ O-ring		1
23	6676910	SEAL	W/ O-ring		2
24	6674846	SEAL	W/ O-ring		1
25	6674345	PLUG			1
26	6675869	O-RING			1
27	6674344	SPRING			1
28	6674343	SHIM	.024" (0,6mm) thick		1
29	6674853	POPPET			1
30	6685437	PLUG			1
31	6685433	SPRING PIN			5
32	6674841	SPRING			2
33	6675866	SPOOL			1
34	6675867	WASHER			1
35	6676023	O-RING			2
36	6676952	PLUG	W/Ref. 35		2
37	6685435	BOLT			8
38	6660032	PIN			1
39	6685434	DISK	RPM target		1
40	6674066	SEAL			1
41	6685460	O-RING			2
42	6666364	PLUG	W/Ref. 41		2
43		SEAL	NSS - Order Ref. 44		1
44	6685438	PLUG	W/Ref. 43		1
45	6685436	HOUSING			1
46	6678779	HOUSING			1
47	6681622	SHAFT			1
48	6674722	SHIM	.004" (0,1mm) thick		1
49	6674723	SHIM	.012" (0,3mm) thick		1
50	6674714	DISC	outer brake		21
51	6674713	DISC	inner brake		15

HYDROSTATIC MOTOR & BRAKE (Cont'd)
(Selectable Joystick Option)

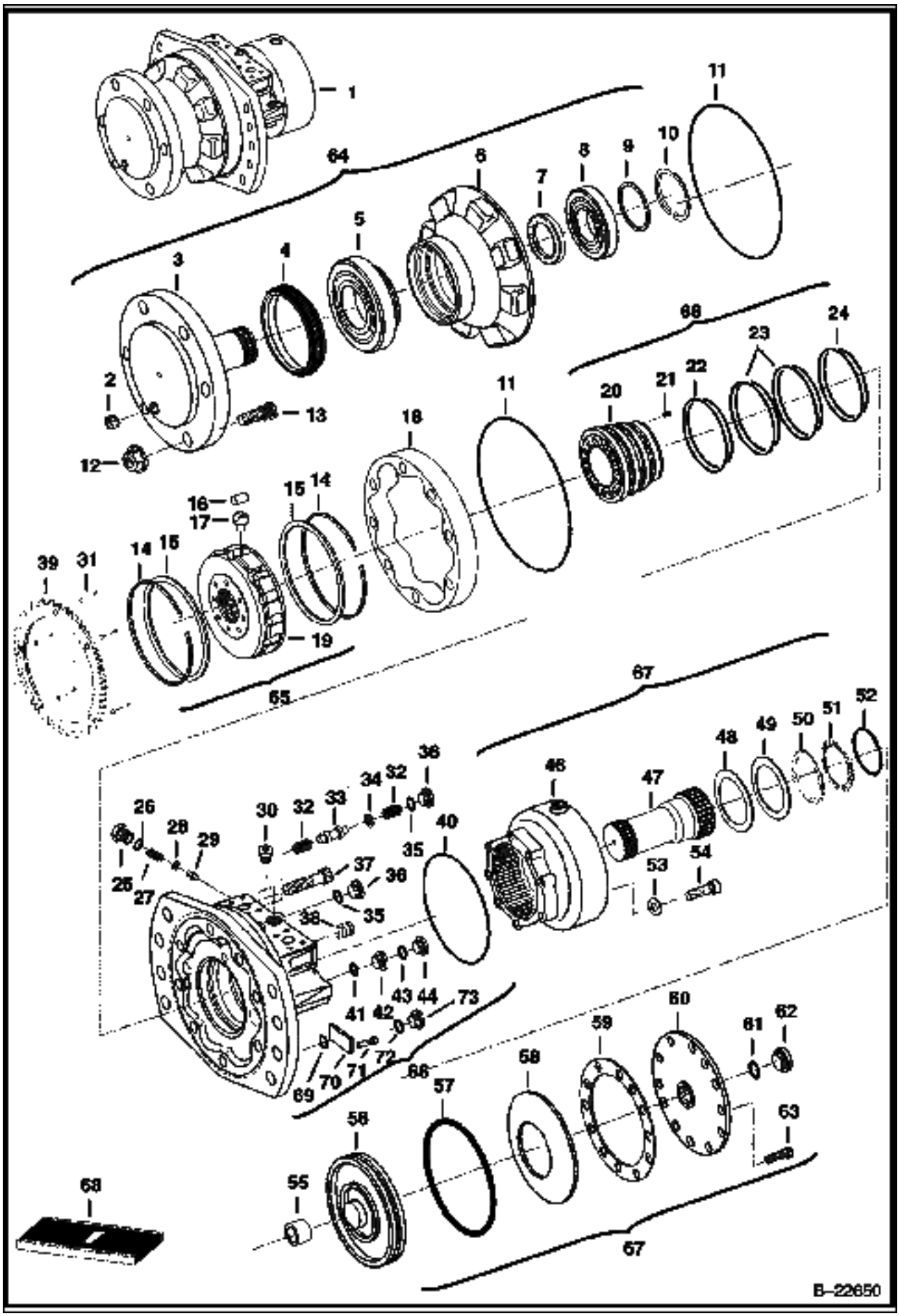

HYDROSTATIC MOTOR & BRAKE (Cont'd)
(Selectable Joystick Option)

Ref No	Part Number	Description	Remarks	Serial Number	Qty
52	6677828	SEAL	green W/ metal washer		1
53	6674708	WASHER			8
54	6685440	BOLT			8
55	6674734	BUSHING			1
56	6681638	PISTON	brake		1
57	6674728	SEAL			1
58	6678780	WASHER			1
59		GASKET	NAP		1
60	6674716	COVER			1
61	6685456	O-RING			1
62	6674707	PLUG			1
63	6685441	BOLT			24
64		HOUSING ASSY	NAP - front - Ref. 2-10 - Order 6689067, also Order 7107787 sprocket		1
64		OIL	NAP - Qt.		1
65	6685430	ROTATING GROUP	Ref. 14-17 & 19		1
66	6685432	HOUSING ASSY	rear - Ref. 20-45		1
67		BRAKE ASSY	NAP - Ref. 46-63		1
68		SEAL KIT	NAP - W/Ref. 4, 7, 11, 22, 23 (2), 24, 26, 40, 52, 57, 59 & 61		1
69		O-RING	NAP - Order Ref. 72		1
70		PLATE	NAP - Speed Sensor - Order Ref. 72		1
71		SCREW	NAP - Order Ref. 72		2
72	90KV00005B	PLUG	W/Ref. 73		1
73	95K000006B	O-RING			x

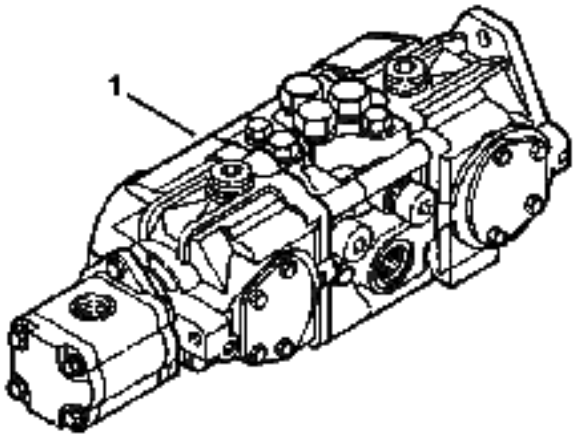

MS–1452

HYDROSTATIC PUMP (Cont'd)
Manual Control

Ref No	Part Number	Description	Remarks	Serial Number	Qty
1	6687832	PUMP	model 4445208 - standard flow		1

HYDROSTATIC PUMP
(Selectable Joystick Controls)

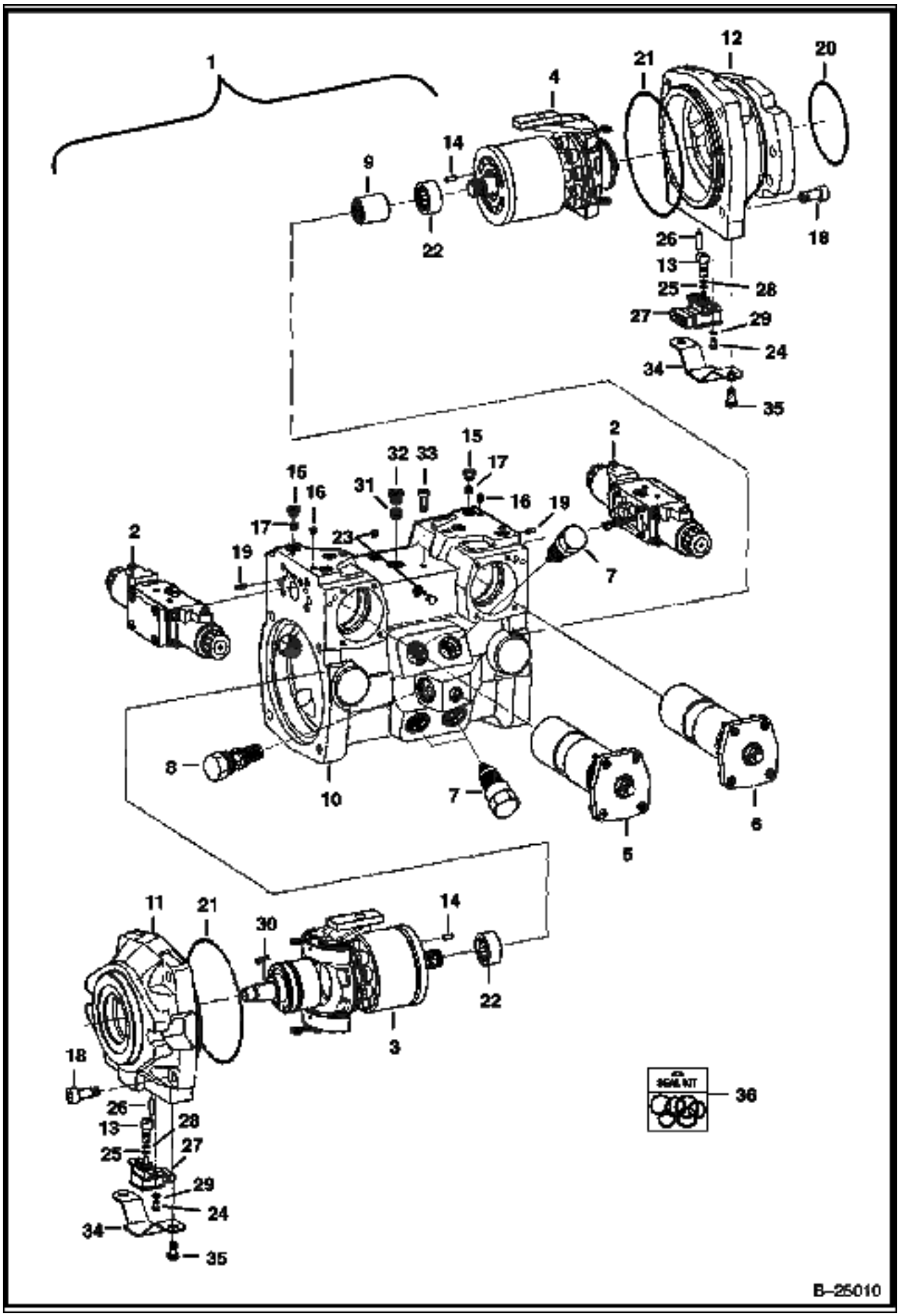

HYDROSTATIC PUMP (Cont'd)
(Selectable Joystick Controls)

Ref No	Part Number	Description	Remarks	Serial Number	Qty
1	6686267	PUMP			1
2	6687970	MODULATOR	See Illustration HYDROSTATIC PUMP/ B25016		2
3	6687957	GROUP	See Illustration HYDROSTATIC PUMP/ B25011 L.H. rotation		1
4	6687958	GROUP	See Illustration HYDROSTATIC PUMP/ B25012 R.H. rotation		1
5	6687960	CONTROL	See Illustration HYDROSTATIC PUMP/ B25013		1
6	6687961	CONTROL	See Illustration HYDROSTATIC PUMP/ B25013A		1
7	6687924	VALVE	See Illustration HYDROSTATIC PUMP/ B25014		4
8	6687938	VALVE	See Illustration HYDROSTATIC PUMP/ B25015		1
9	6687941	COUPLER			1
10	6687964	HOUSING			1
11	6687973	FLANGE			1
12	6687974	FLANGE			1
13	6687965	SHAFT			2
14	6688011	PIN			2
15	6688016	SCREW			11
16	6688039	PIN			3
17	6688020	ORIFICE			4
18	6688008	SCREW			8
19	6686934	PIN			2
20	6688019	SEAL			1
21	6688009	SEAL			2
22	6688040	BEARING			2
23	6687932	PIN			2
24	6687994	SCREW			4
25	6687990	RING			2
26	6688014	PIN			2
27	6687984	SENSOR			2
28	6688007	SEAL			2
29	6687998	SHIM			4
30	6687991	KEY			1
31	6687988	FILTER			1
32	6688015	SCREW			1
33	6687992	SCREW			1
34	6687993	COVER			2
35	6688003	SCREW			4
36	6689021	SEAL KIT	complete		1

HYDROSTATIC PUMP
(Rotary Group - L.H.)
(Selectable Joystick Controls)

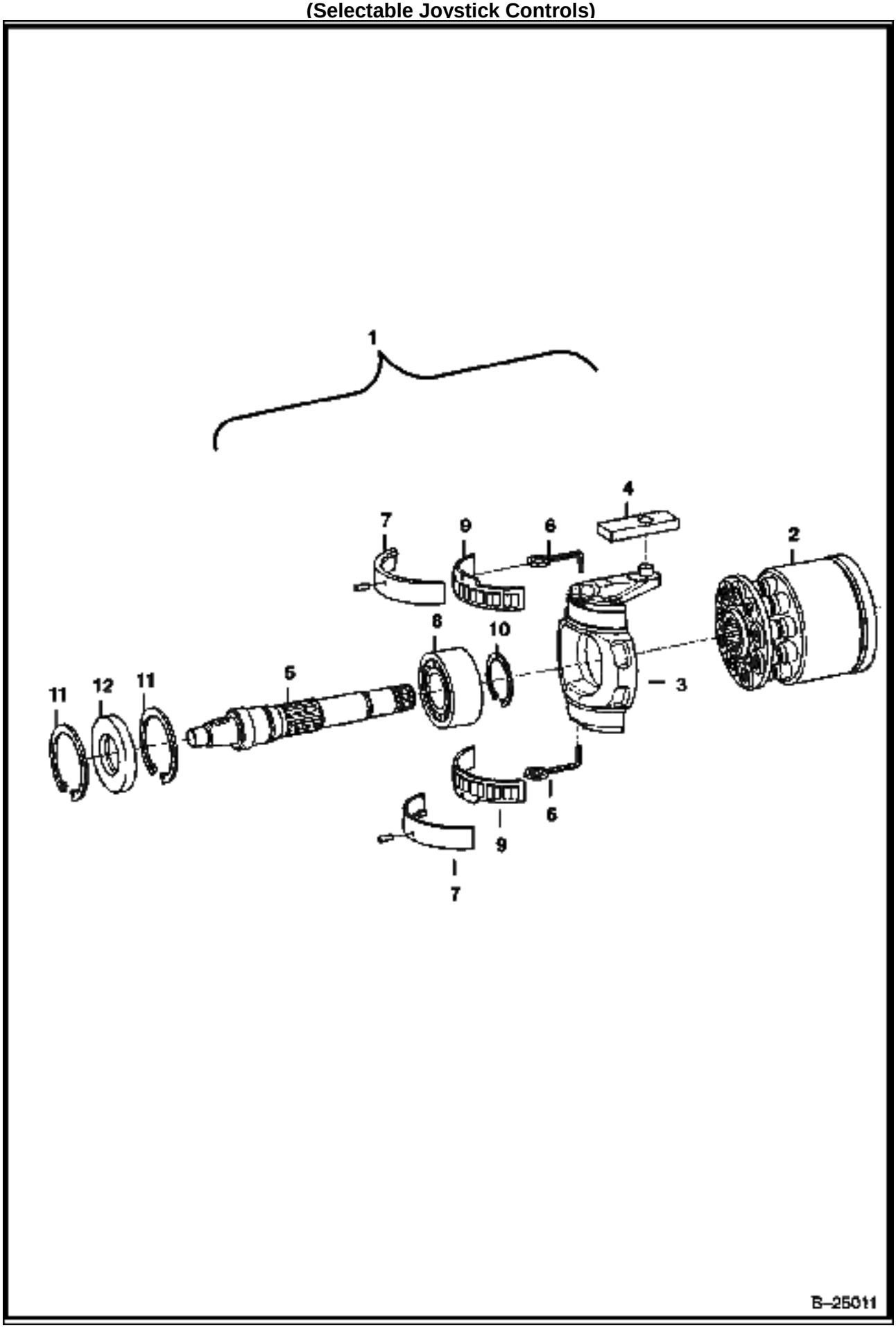

HYDROSTATIC PUMP (Cont'd)
(Rotary Group - L.H.)
(Selectable Jovstick Controls)

Ref No	Part Number	Description	Remarks	Serial Number	Qty
1	6687957	GROUP	L.H. rotation		1
2	6687977	GROUP			1
2	6687979	GROUP			1
2	6687976	PLATE			1
3	6687951	BRACKET			1
4	6687940	RING			1
5	6687959	SHAFT			1
6	6687930	WIRE			2
7	6687956	BEARING			1
8	6688018	BEARING			1
9	6687987	BEARING			1
10	6687999	RING			1
11	6688042	RING			2
12	6688038	RING			1

HYDROSTATIC PUMP
(Rotary Group - R.H.)
(Selectable Joystick Controls)

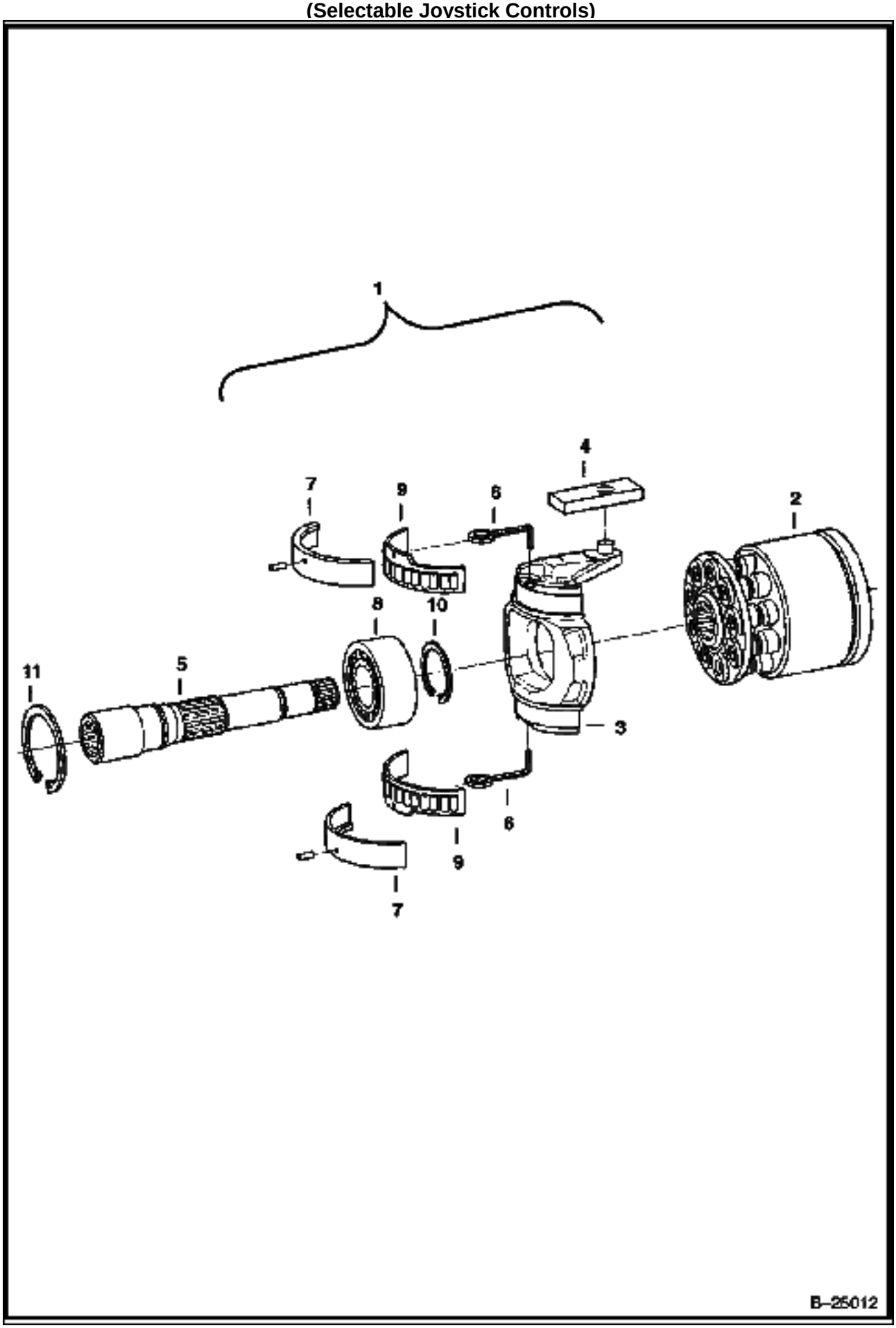

HYDROSTATIC PUMP (Cont'd)
(Rotary Group - R.H.)
(Selectable Jovstick Controls)

Ref No	Part Number	Description	Remarks	Serial Number	Qty
1	6687958	GROUP	R.H. rotation		1
2	6687978	GROUP			1
2	6687979	GROUP			1
2	6687975	PLATE			1
3	6687951	BRACKET			1
4	6687940	RING			1
5	6687943	SHAFT			1
6	6687930	WIRE			2
7	6687956	BEARING			1
8	6688018	BEARING			1
9	6687987	BEARING			1
10	6687999	RING			1
11	6688042	RING			2

HYDROSTATIC PUMP
(Control)
(Selectable Joystick Controls)

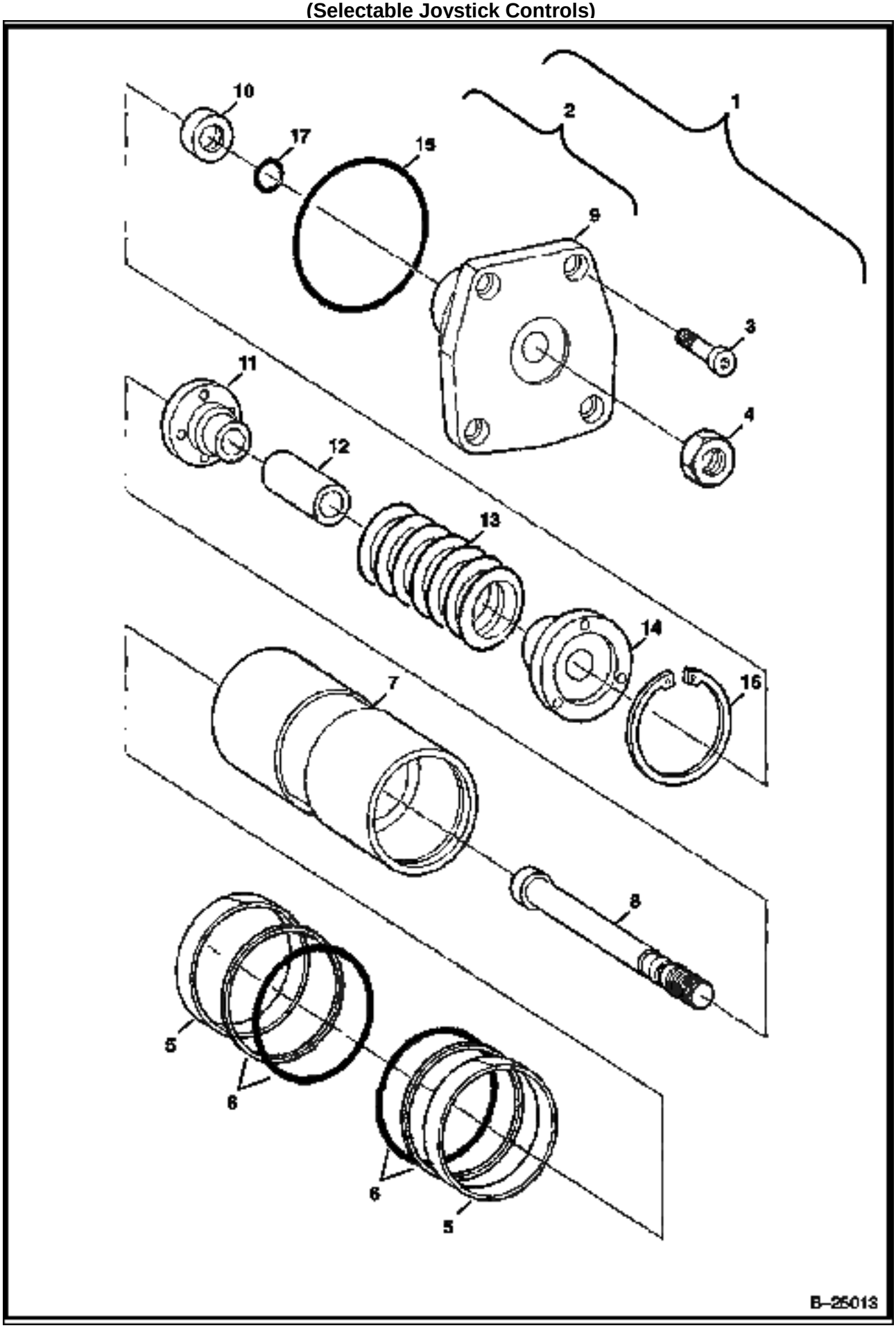

HYDROSTATIC PUMP (Cont'd)
(Control)
(Selectable Jovstick Controls)

Ref No	Part Number	Description	Remarks	Serial Number	Qty
1	6687960	CONTROL			1
2	6687962	PISTON			1
3	6687995	SCREW			4
4	6674907	NUT	Was 6687925 [A]		1
5	6687985	RING			2
6	6687986	KIT			2
7	6687953	PISTON			1
8	6688031	ROD			1
9	6688024	COVER			1
10	6688037	RING	6,70 mm		1
10	6688036	RING	6,75 mm		1
10	6688035	RING	6,80 mm		1
10	6688025	RING	6,85 mm		1
10	6688026	RING	6,90 mm		1
10	6688027	RING	6,95 mm		1
10	6688028	RING	7,00 mm		1
10	6688029	RING	7,05 mm		1
10	6688030	RING	7,10 mm		1
11	6687926	COLLAR			1
12	6688033	SPACER	54,60 cm		1
12	6687942	SPACER	54,65 cm		1
12	6688032	SPACER	54,70 cm		1
12	6687948	SPACER	54,75 cm		1
12	6687949	SPACER	54,80 cm		1
13	6687928	SPRING			1
14	6687927	COLLAR			1
15	6688005	SEAL			1
16	6688002	RING			1
17	6688006	SEAL			1

HYDROSTATIC PUMP
(Control)

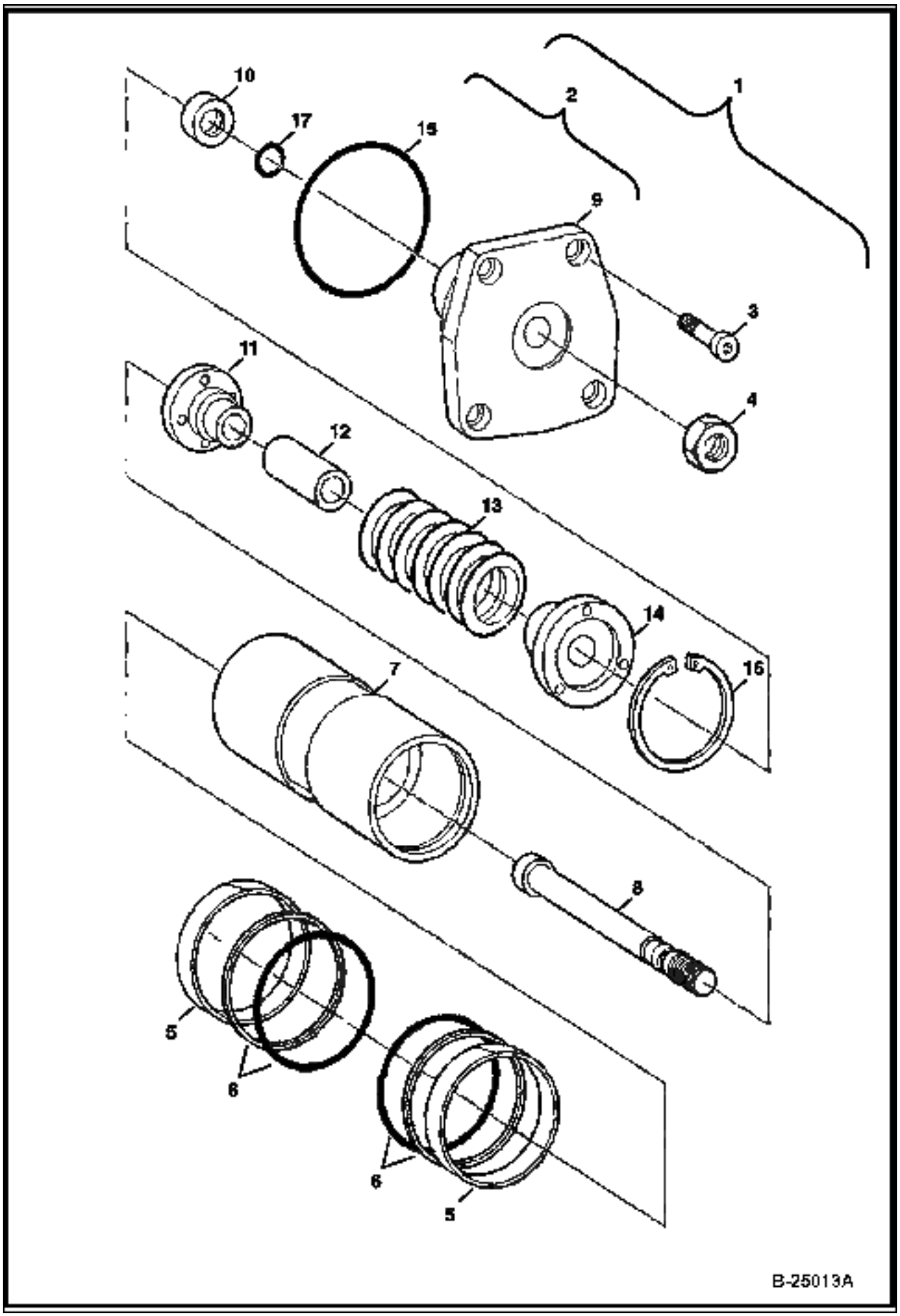

HYDROSTATIC PUMP (Cont'd)
(Control)

Ref No	Part Number	Description	Remarks	Serial Number	Qty
1	6687961	CONTROL			1
2	6687963	PISTON			1
3	6687995	SCREW			4
4	6674907	NUT	Was 6687925 [A]		1
5	6687985	RING			2
6	6687986	KIT			2
7	6687953	PISTON			1
8	6688031	ROD			1
9	6688024	COVER			1
10	6688037	RING	6,70 mm		1
10	6688036	RING	6,75 mm		1
10	6688035	RING	6,80 mm		1
10	6688025	RING	6,85 mm		1
10	6688026	RING	6,90 mm		1
10	6688027	RING	6,95 mm		1
10	6688028	RING	7,00 mm		1
10	6688029	RING	7,05 mm		1
10	6688030	RING	7,10 mm		1
11	6687926	COLLAR			1
12	6688033	SPACER	54,60 cm		1
12	6687942	SPACER	54,65 cm		1
12	6688032	SPACER	54,70 cm		1
12	6687948	SPACER	54,75 cm		1
12	6687949	SPACER	54,80 cm		1
13	6687928	SPRING			1
14	6687927	COLLAR			1
15	6688005	SEAL			1
16	6688002	RING			1
17	6688006	SEAL			1

HYDROSTATIC PUMP
(Pressure Relief Valve)
(Selectable Joystick Controls)

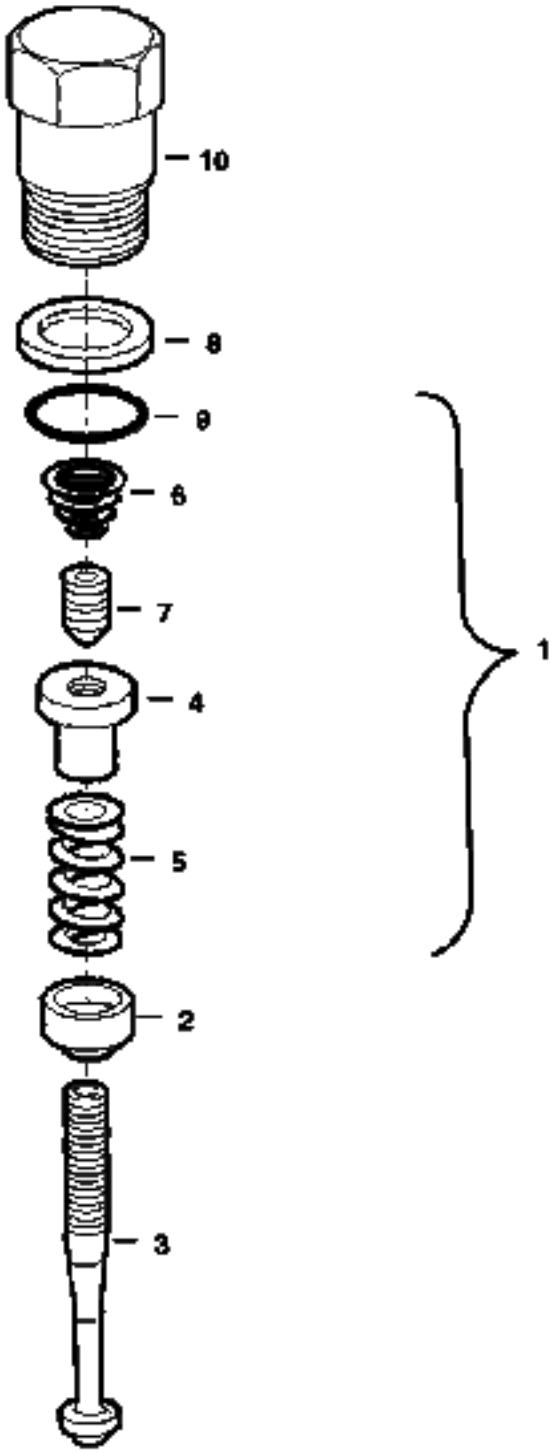

HYDROSTATIC PUMP (Cont'd)
(Pressure Relief Valve)
(Selectable Jovstick Controls)

Ref No	Part Number	Description	Remarks	Serial Number	Qty
1	6687924	VALVE			1
2	6687921	COLLAR			1
3	6687920	SPINDLE			1
4	6687922	NUT			1
5	6688043	SPRING			1
6	6688021	SPRING			1
7	6687923	PIN			1
8	6688041	RING			1
9	6688000	SEAL			1
10	6688034	SCREW			1

HYDROSTATIC PUMP
(Pressure Relief Valve)
(Selectable Joystick Controls)

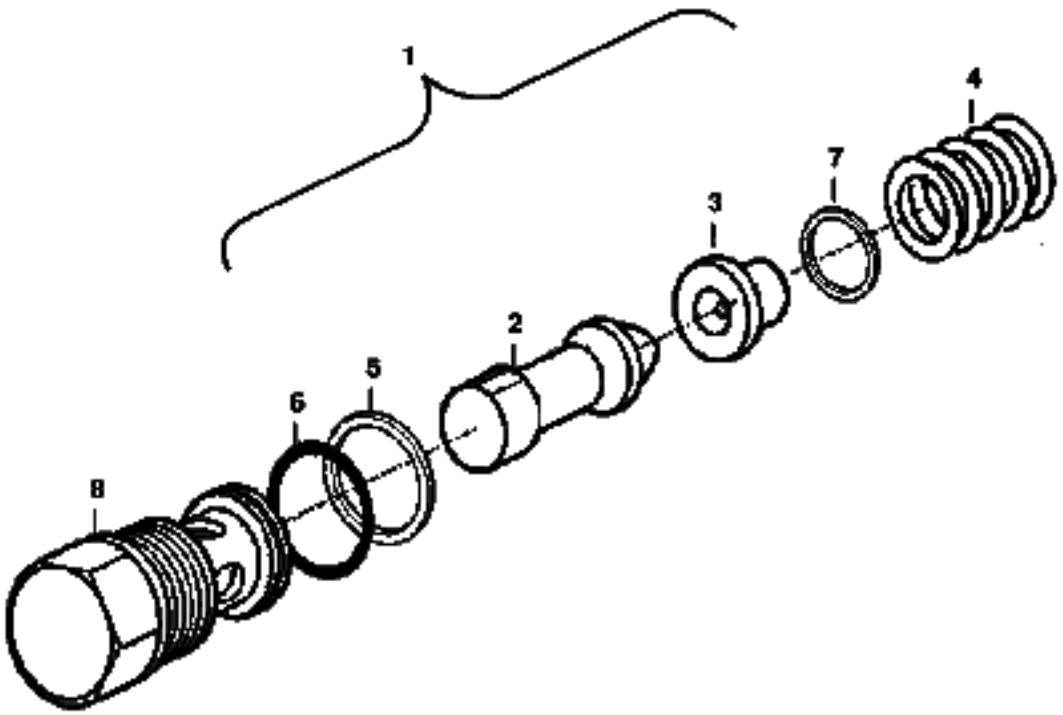

B–25015

HYDROSTATIC PUMP (Cont'd)
(Pressure Relief Valve)
(Selectable Jovstick Controls)

Ref No	Part Number	Description	Remarks	Serial Number	Qty
1	6687938	VALVE			1
2	6688022	PISTON			1
3	6687919	COLLAR			1
4	6688023	SPRING			1
5	6687983	RING			1
6	6688013	SEAL			1
7	6688017	SHIM			1
8	6687939	SCREW			1

HYDROSTATIC PUMP
(Control Module)
(Selectable Joystick Controls)

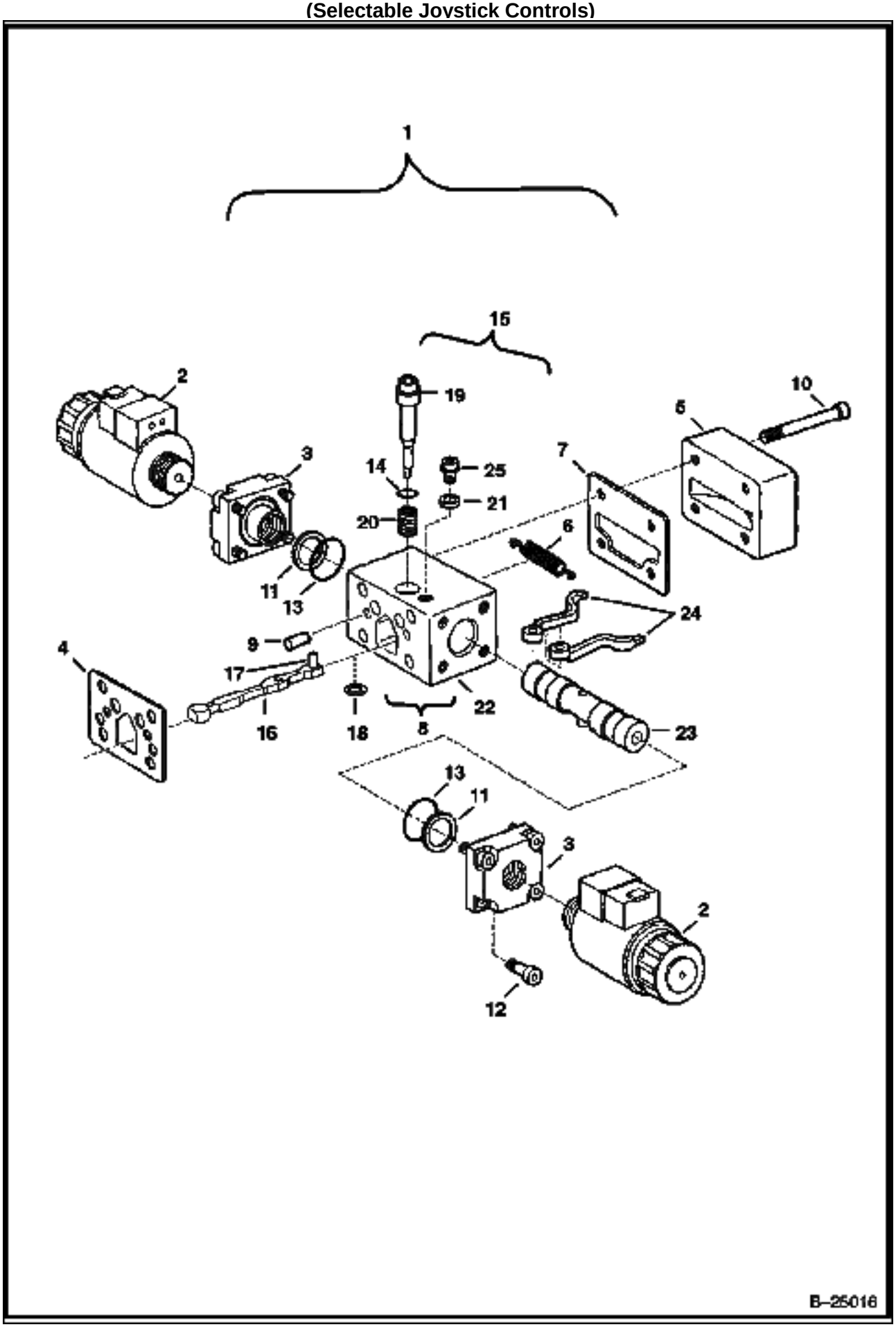

HYDROSTATIC PUMP (Cont'd)
(Control Module)
(Selectable Jovstick Controls)

Ref No	Part Number	Description	Remarks	Serial Number	Qty
1	6687970	MODULATOR			2
2	6687989	SOLENOID			2
3	6687931	BUSHING			2
4	6687954	GASKET			1
5	6687969	COVER			1
6	6687967	SPRING			1
7	6687950	GASKET			1
8	6687972	MODULE	Ref. 15-18		1
9	6688010	PIN			2
10	6687996	SCREW			4
11	6687982	SPRING			2
12	6687997	SCREW			8
13	6688001	SEAL			2
14	6688004	SEAL			1
15	6687971	ROLLER	Ref. 14 & 19-25		1
16	6687929	LEVER			1
17	6688012	ROLLER			1
18	6687944	SHIM	0,60 mm		1
18	6687933	SHIM	0,80 mm		1
18	6687934	SHIM	1,00 mm		1
18	6687935	SHIM	1,20 mm		1
18	6687936	SHIM	1,40 mm		1
18	6687937	SHIM	1,60 mm		1
19	6687947	PIN			1
20	6687946	SPRING			1
21	6687945	PLATE			1
22	6687955	HOUSING			1
23	6687966	PISTON			1
24	6687968	LEVER			2
25	6687981	SCREW			1

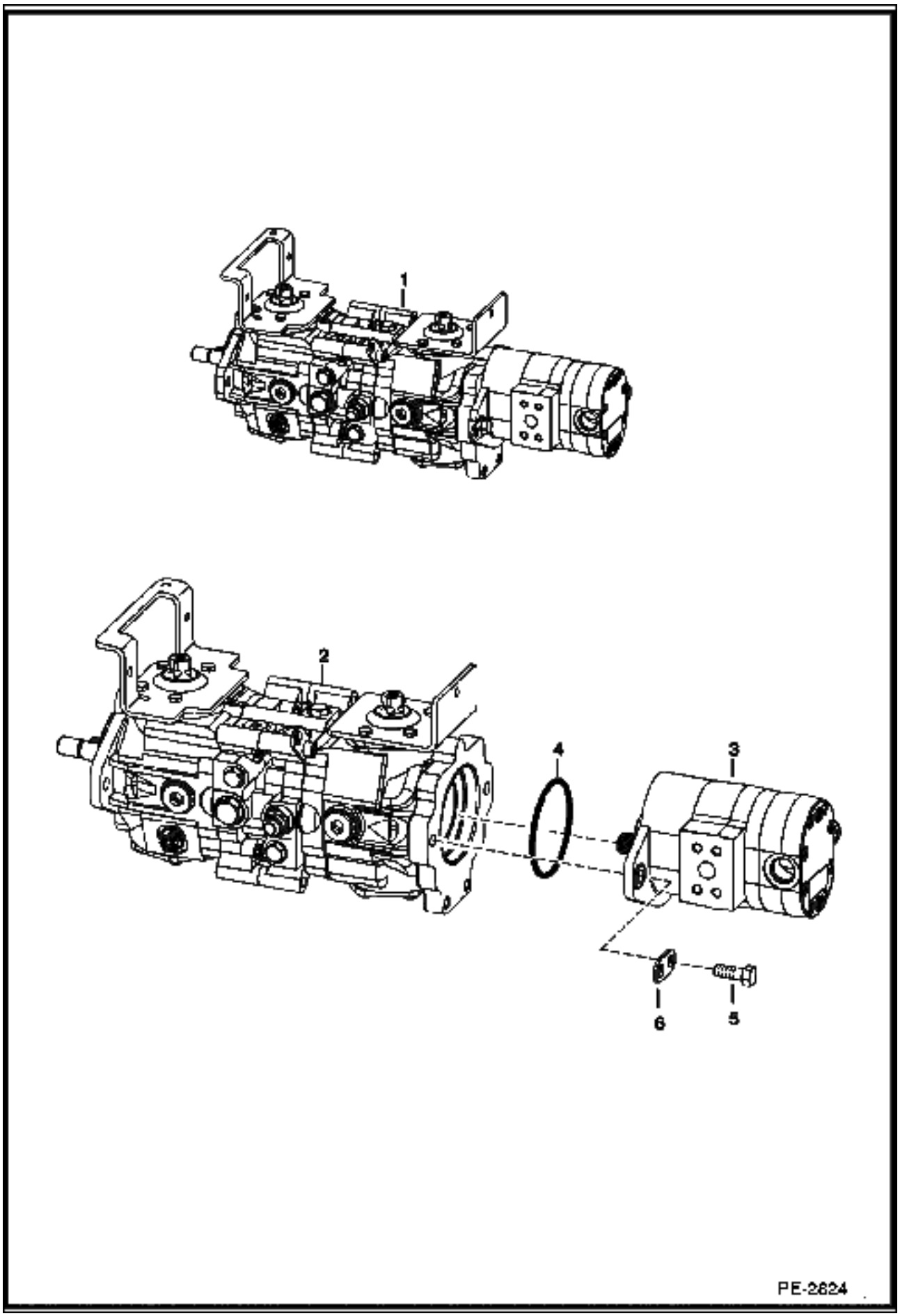
1
2
3
4
5
6
PE-2624

HYDROSTATIC PUMP/GEAR PUMP (Cont'd)
Identification

Ref No	Part Number	Description	Remarks	Serial Number	Qty
1		PUMP ASSY	NAP		1
2		HYDROSTATIC PUMP	See Illustration HYDROSTATIC PUMP/ MS1452 manual hand controls		1
2		HYDROSTATIC PUMP	See Illustration HYDROSTATIC PUMP/ B25010 selectable joystick controls		1
3		GEAR PUMP	See Illustration GEAR PUMP/ MS1455 manual hand controls or selectable joystick controls		1
3		GEAR PUMP	See Illustration HIGH FLOW HYDRAULICS/ MS1457 high flow - manual hand or selectvie joystick controls		1
4	6671520	O-RING	manual hand controls		1
4	6688019	O-RING	selectable joystick controls		1
5	43C820	BOLT			2
6	6631643	PLATE			2

GEAR PUMP

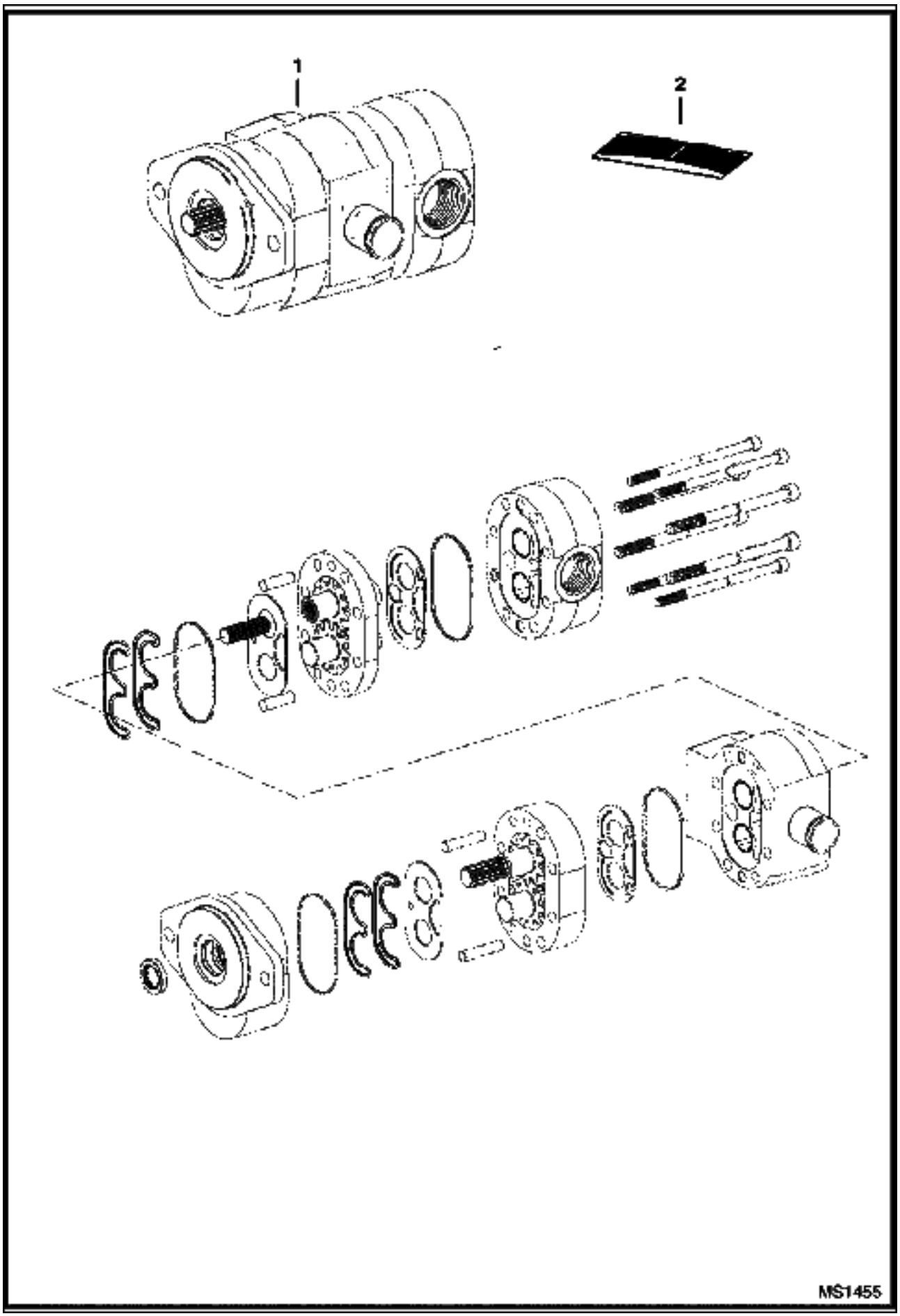

Ref No	Part Number	Description	Remarks	Serial Number	Qty
1	6686887	GEAR PUMP	model 163D71017		1

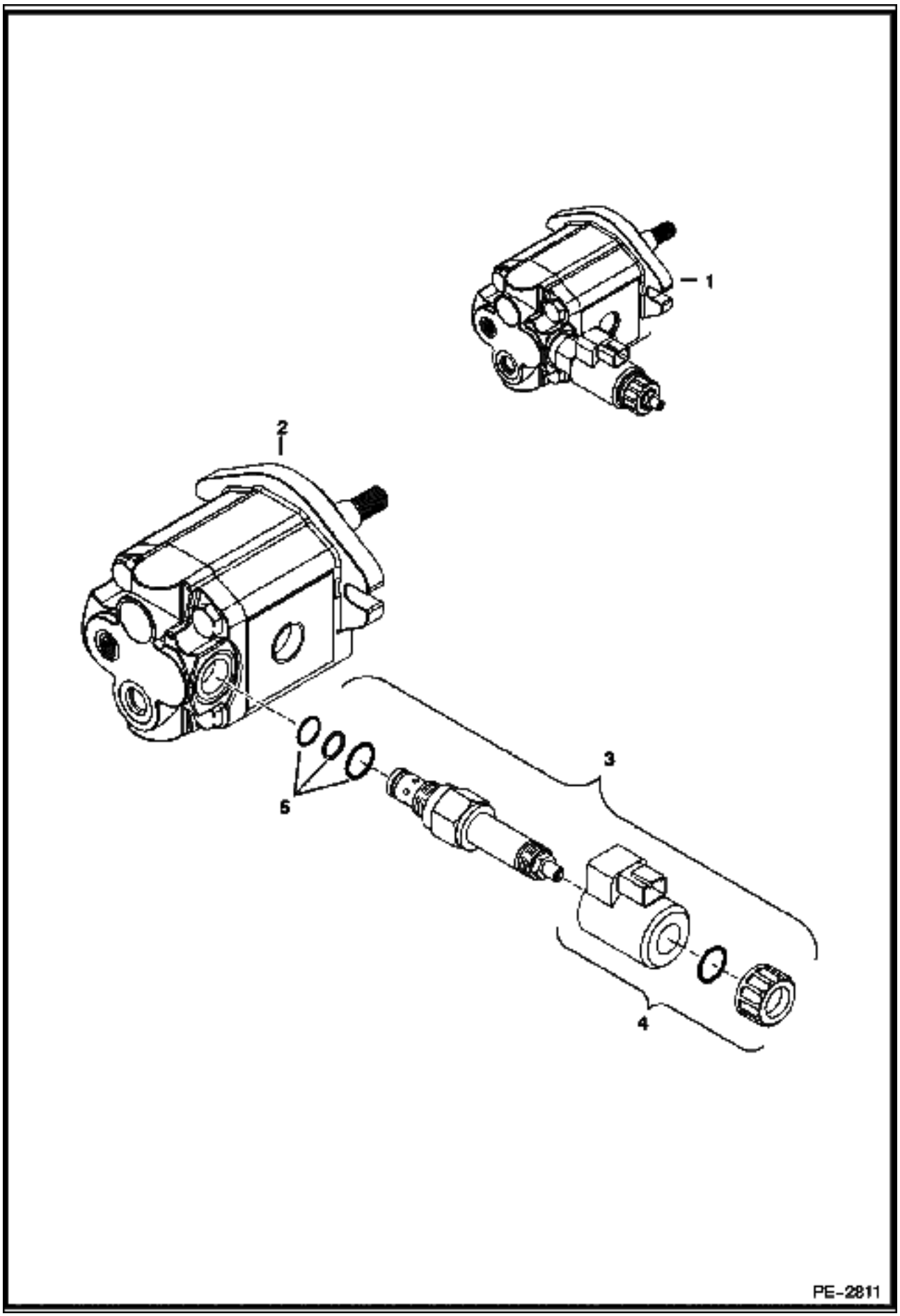
1
2
3
4
5
PE-2811

MOTOR (Cont'd)
Cooling Fan

Ref No	Part Number	Description	Remarks	Serial Number	Qty
1	6687142	MOTOR			1
2	6689058	MOTOR	W/O proportional valve		1
3	6689059	VALVE ASSY			1
4	6689060	COIL ASSY			1
5	6683206	SEAL KIT			1

HYDROSTATIC OIL FILTER
(In-Line)

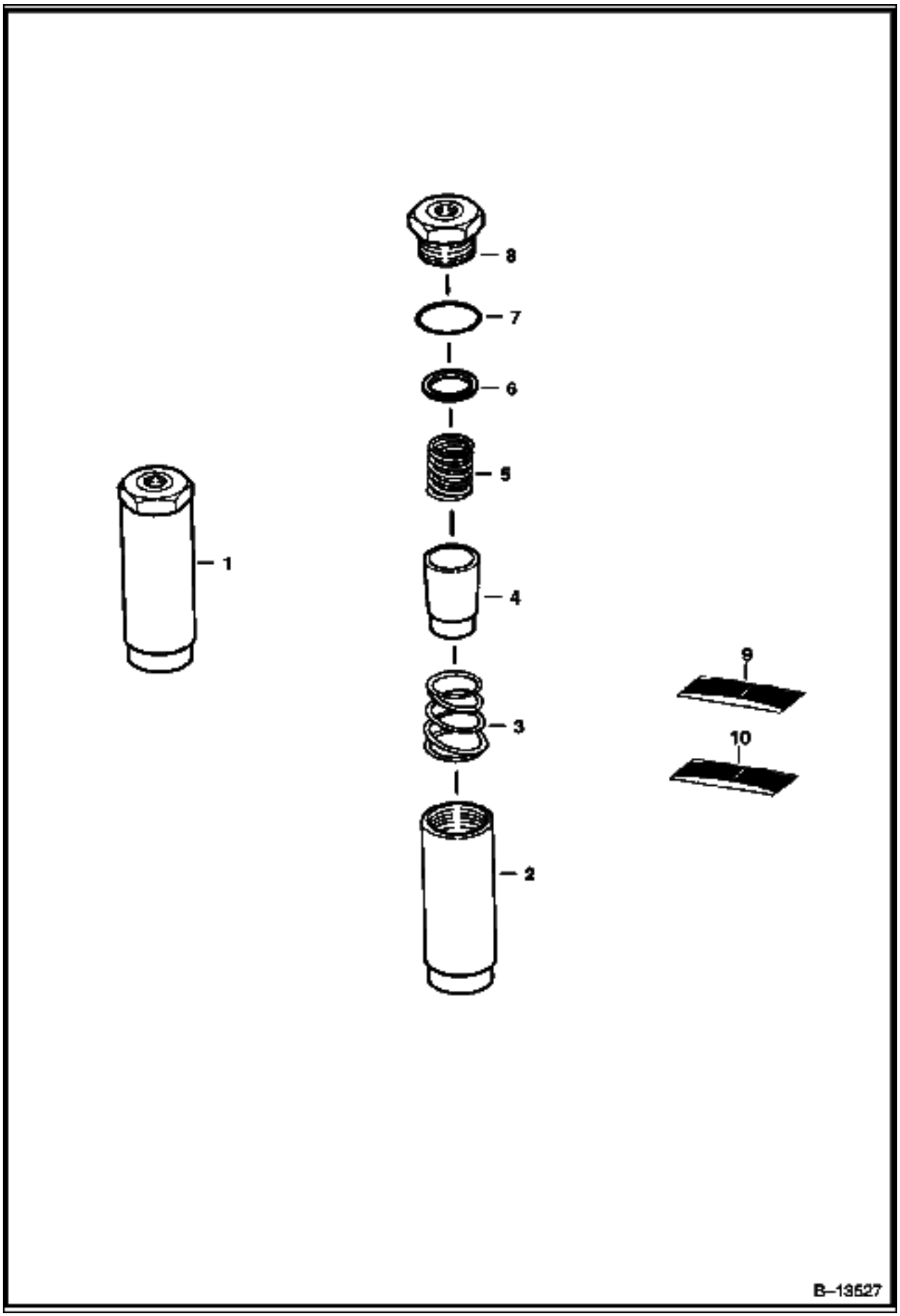

HYDROSTATIC OIL FILTER (Cont'd)
(In-Line)

Ref No	Part Number	Description	Remarks	Serial Number	Qty
1	6661022	FILTER	Ref. 2-8		1
2		HOUSING	NSS		1
3		SPRING	NSS		1
4		ELEMENT	NSS		1
5		SPRING	NSS		1
6		GASKET	NSS		1
7		O-RING	NSS		1
8		PLUG	NSS		1
9	6661807	KIT	element - Ref. 4, 6 & 7		1
10	6661808	KIT	spring - Ref. 3 & 5		1

HYDROSTATIC OIL FILTER

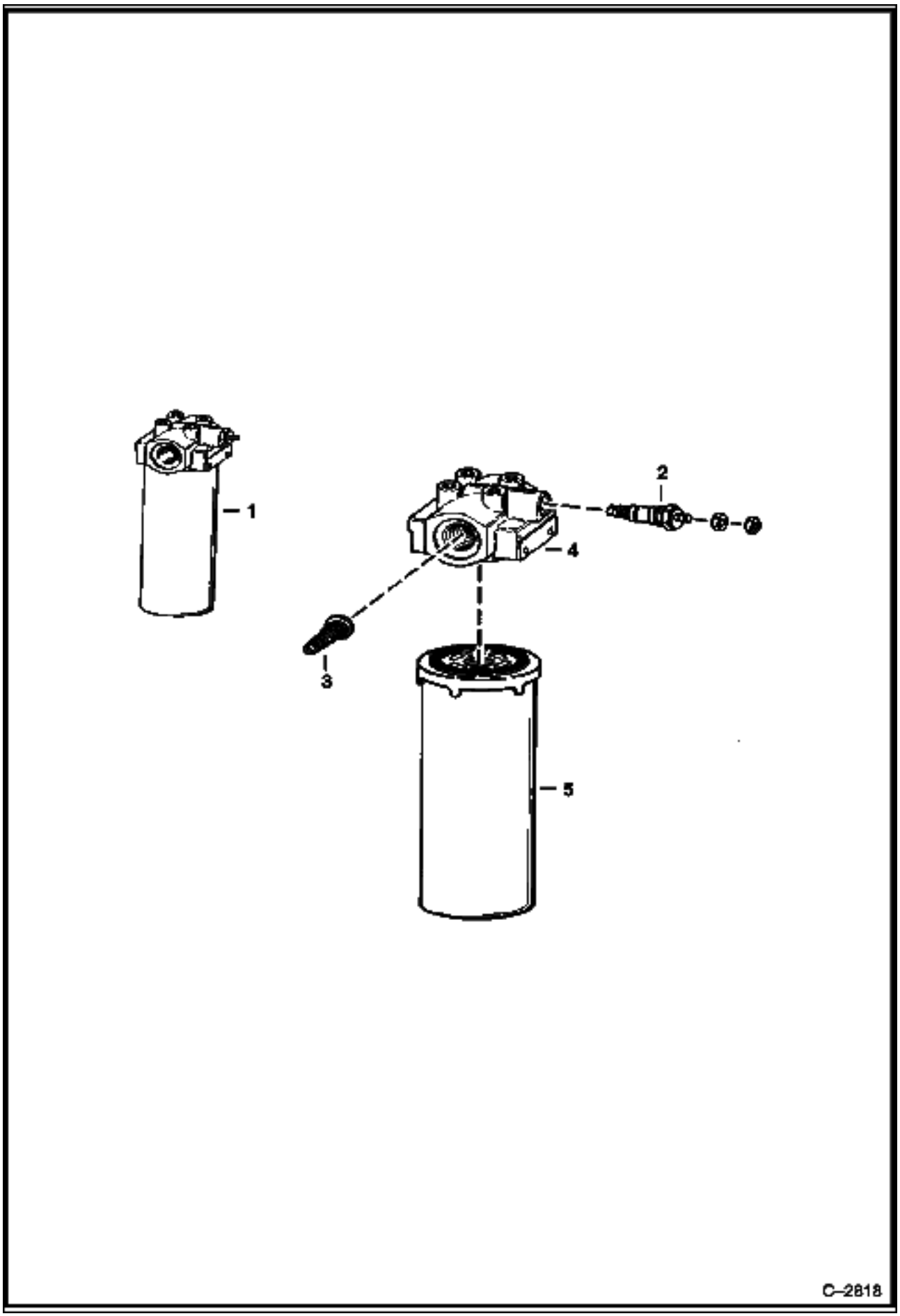

HYDROSTATIC OIL FILTER (Cont'd)

Ref No	Part Number	Description	Remarks	Serial Number	Qty
1	6678155	FILTER ASSY	W/Ref. 2-5 - 50 PSI by-pass & switch		1
1	6685847	FILTER	W/Ref. 2-5 - 50 PSI by-pass & switch - HIGH FLOW		1
2	6660260	SWITCH	pressure - normally closed		1
2	6599365	KIT	nut, washer & O-rings for switch		1
3		VALVE	NAP - by-pass - 50 PSI - Order Ref. 1		1
4		HEAD	NSS - Order Ref. 1 filter assy.		1
5	6661248	ELEMENT	6" long (152,4)		1
5	6668819	FILTER	9.5" long - high flow (241,3)		1

BRAKE VALVE

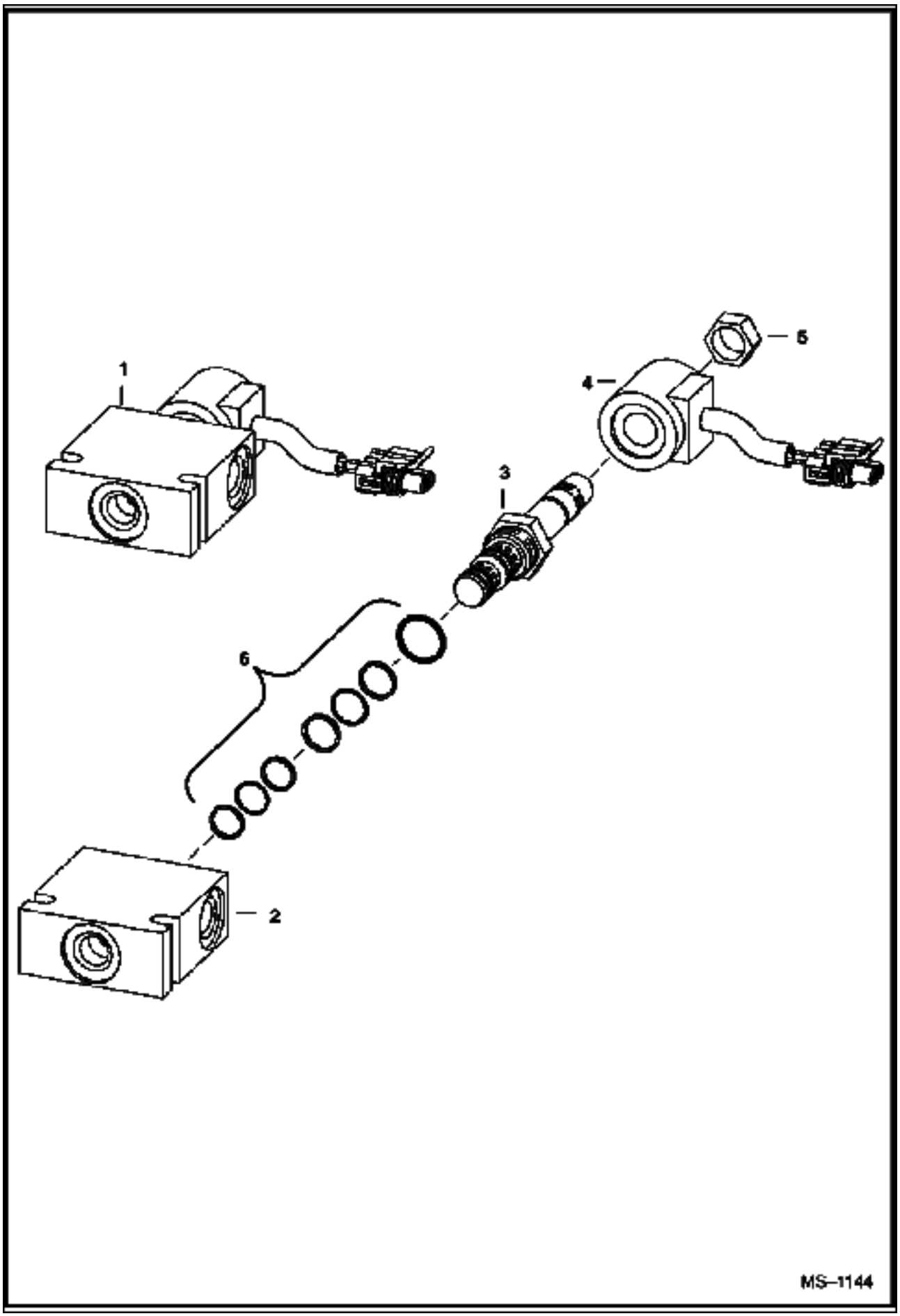

Ref No	Part Number	Description	Remarks	Serial Number	Qty
1	6679103	VALVE ASSY	Ref. 2-6		1
2		BLOCK	NSS - Order Ref. 1		1
3	6676509	STEM	W/Ref. 5		1
4	6675731	COIL			1
5	6675663	NUT			1
6	6669736	SEAL KIT	(3) O-rings & (4) back-up rings		1

CAB ELECTRICAL CIRCUITRY

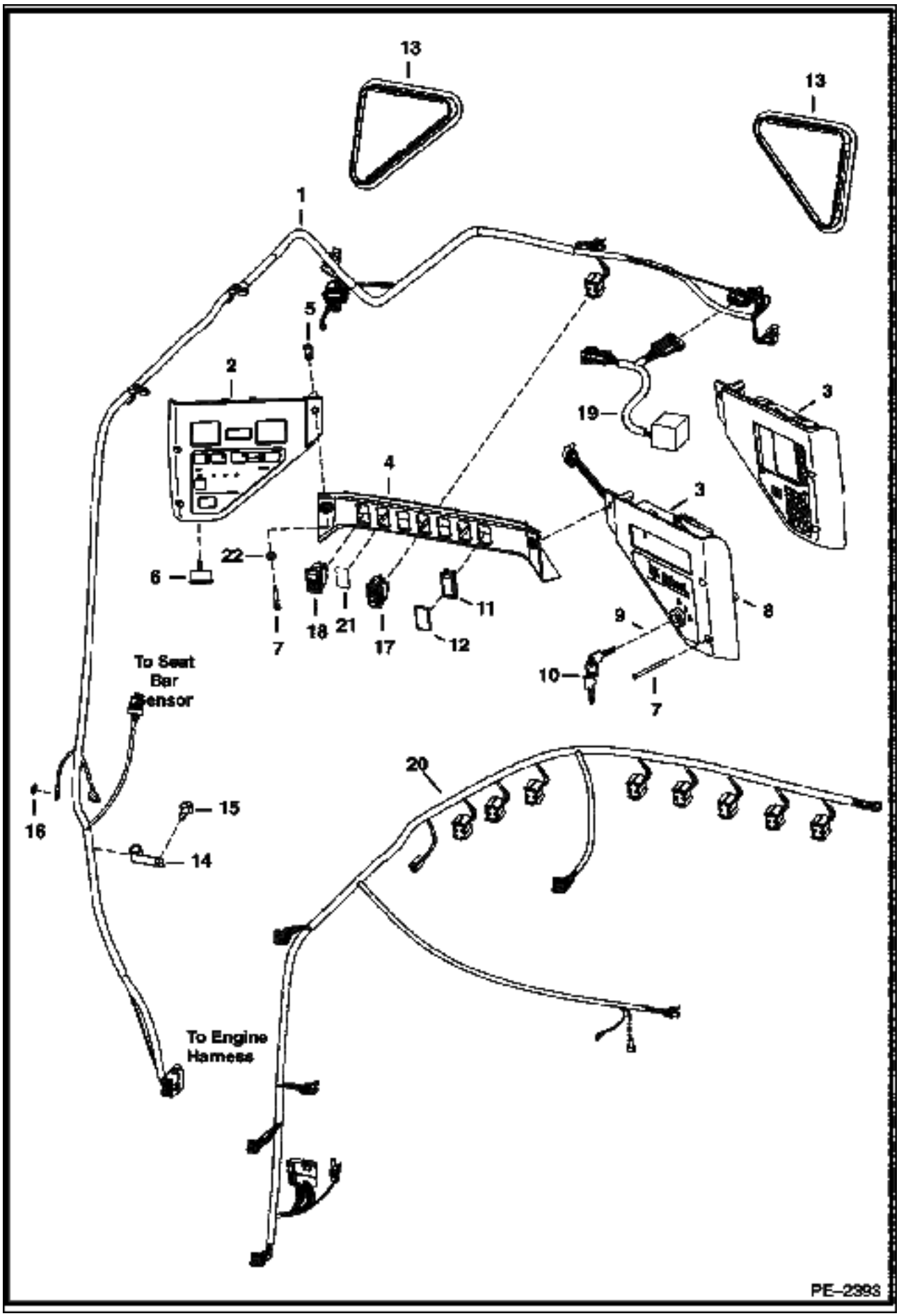

Ref No	Part Number	Description	Remarks	Serial Number	Qty
1	6727178	HARNESS			1
2	6688405	PANEL	L.H.		1
2	6675982	PLUG	service part - covers the backlighting service hole		1
2	6679855	BULB			2
3	6688404	PANEL	R.H. - keyed		1
3	6688403	PANEL	R.H. - deluxe - keyless		1
4	6679845	CROSSMEMBER			1
5	6675033	INSERT	threaded		6
6	6679856	ALARM	W/nut		1
7	7105983	BOLT			6
8	6679842	SWITCH	ignition - W/Ref. 9 & 10		1
9	6674202	NUT			2
10	6709527	KEY	ignition		1
11	6665314	PLUG			1
12	6719038	PLUG			x
13	6674403	COVER			2
14	6675171	CLAMP			1
15	84G003712B	BOLT			1
16	6E000005B	WASHER			1
17	6676536	SWITCH	park brake		1
18	6683812	SWITCH	joystick controls		1
19	6727190	HARNESS	accessories		1
19	6715365	HARNESS	accessories - export		1
20	6737248	DECAL	H pattern/ISO - joystick controls		1
21	25E000010B	WASHER			2

ENGINE ELECTRICAL
(W/Controller)

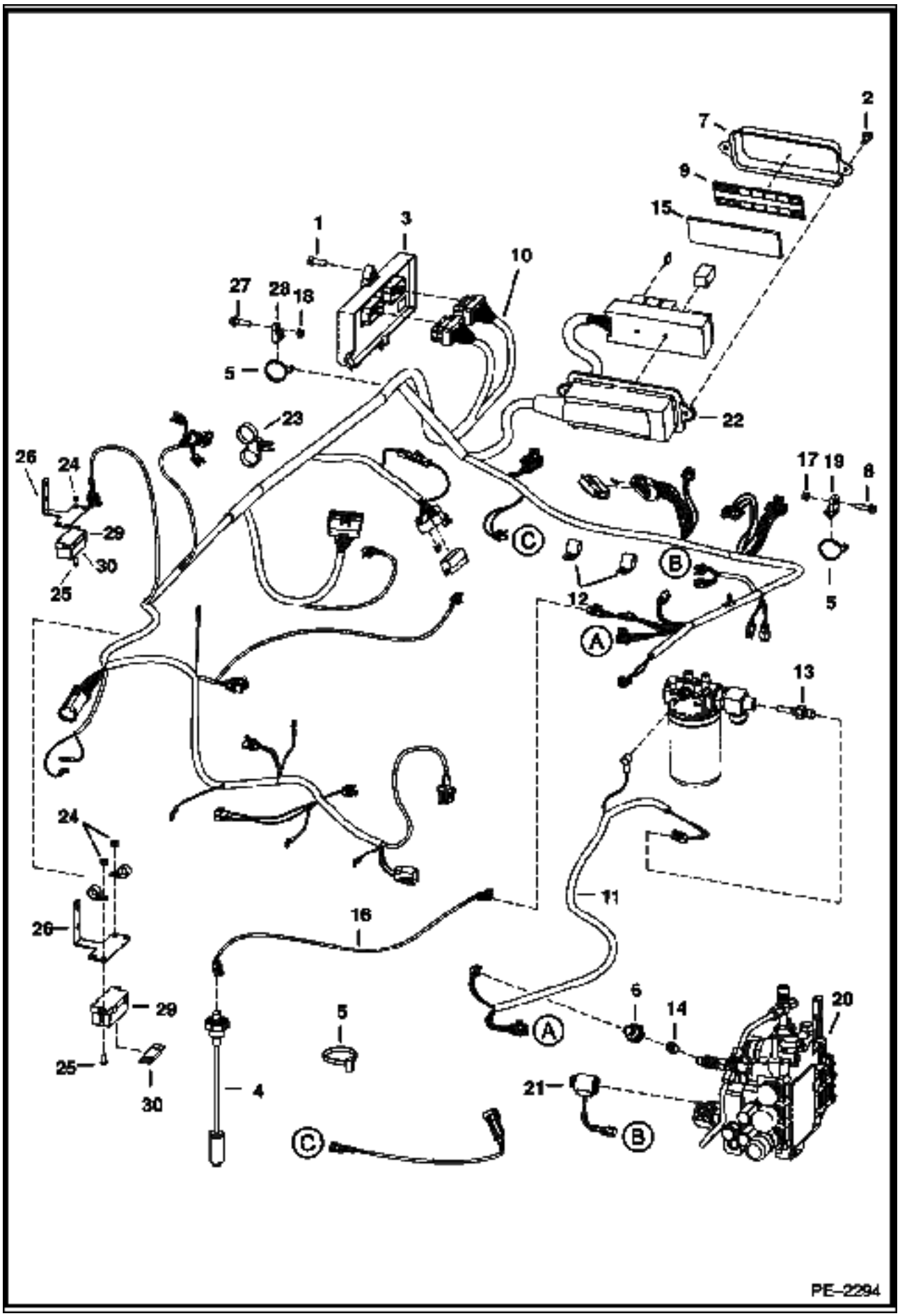

ENGINE ELECTRICAL (Cont'd)
(W/Controller)

Ref No	Part Number	Description	Remarks	Serial Number	Qty
1	43C000616B	BOLT			3
2	84G003112B	BOLT			2
3	6688439	CONTROLLER			1
4	6680438	SENSOR	fuel - W/gasket		1
4	6717579	GASKET			1
5	6624289	STA STRAP			17
6	6674316	SENSOR	hyd. charge pressure		1
7	6716621	COVER	fuse box		1
7	6736071	KIT	extreme application - W/decal & insulation		1
8	84G003712B	BOLT			3
9	7117407	DECAL	fuse/relay - 2" x 7" (50,8 mm x 177,8 mm)		1
10	7105982	MFR HARNESS	loader		1
11	6717247	HARNESS	filter		1
12	30H000046B	CLAMP			2
13	6718417	SENDER	hyd temp		1
14	6718948	SNUBBER			1
14	6675278	FILTER			1
15	6731275	INSULATION			1
16	6719422	HARNESS	fuel sender		1
17	57D000006B	NUT			1
18	97D000005B	NUT			2
19	6679034	MOUNT			1
20	6717706	COIL	10 volt		2
21	6675559	COIL	W/ diode		1
22	6718659	HOUSING	fuse		1
22	6654806	FUSE	15 amp (2)		x
22	6702444	FUSE	25 amp (6)		x
22	6718034	FUSE	30 amp (2)		x
22	6679820	RELAY	switch (7)		x
23	6678668	TIE	Dual		1
24	59D000004B	NUT			3
25	25G000410B	ALTERNATOR			2
26	6728621	BRACKET			1
27	35C000520B	BOLT			1
28	6678667	MOUNT			1
29	6675154	HOLDER	fuse		1
30	6675155	FUSE	100 amp		1

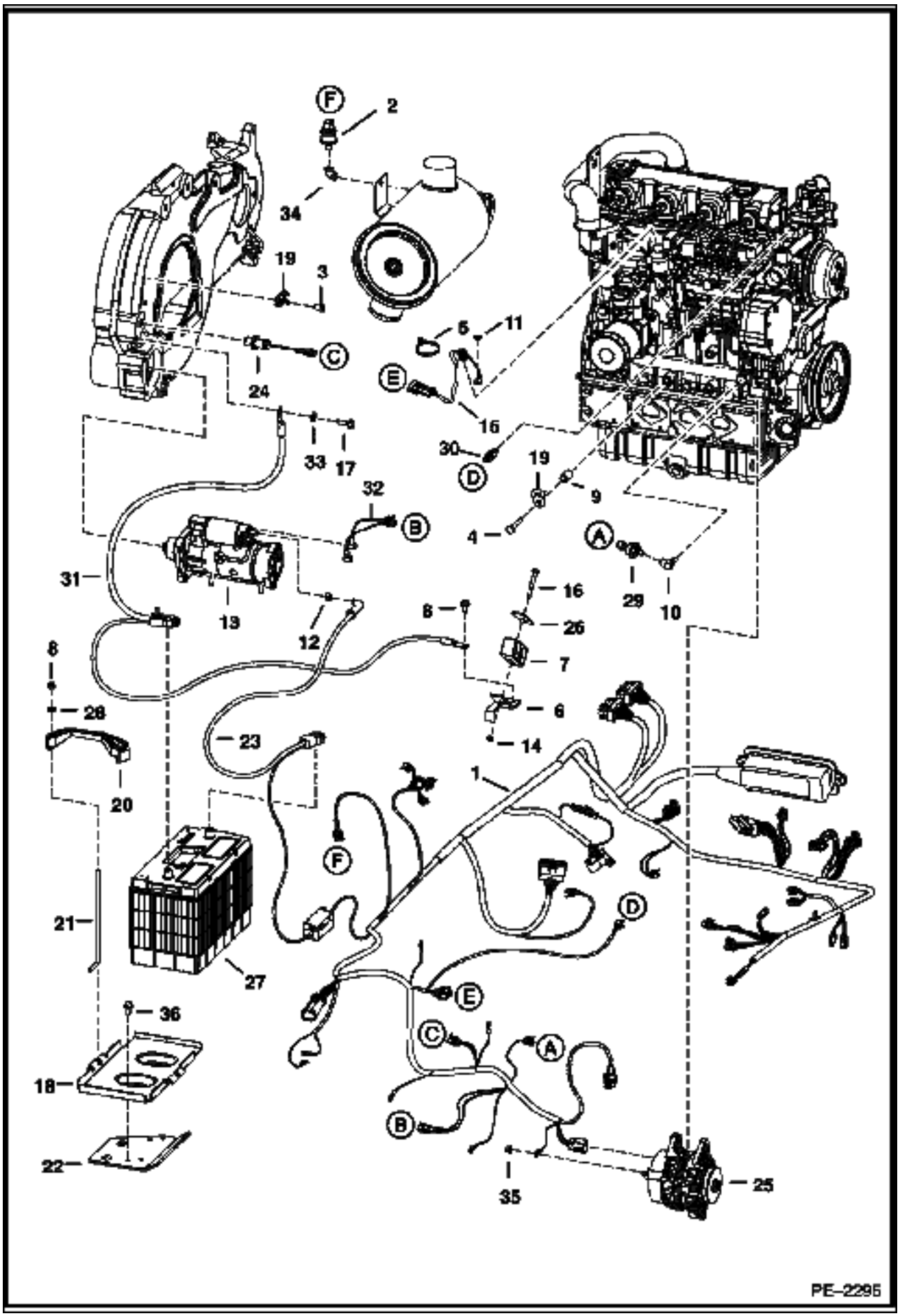
F
2
34
19
3
C
24
33
17
E
5
11
16
30
D
19
9
4
A
29
10
32
B
31
13
12
8
16
26
7
6
14
8
28
20
23
1
F
21
27
D
E
C
A
B
36
18
22
35
25
PE-2295

Ref No	Part Number	Description	Remarks	Serial Number	Qty
1	7105982	MFR HARNESS	loader		1
2	6665371	SWITCH	vacuum		1
3	17C000610B	BOLT			2
4	7101892	BOLT			1
5	6624289	STA STRAP			17
6	6715131	BRACKET			1
7	6715197	CLAMP			1
8	59D000005B	NUT			2
9	7101893	SPACER			1
10	6707040	ELBOW			1
11	6E000004B	WASHER			1
12	4DM00010B	NUT			1
13		STARTER	See Illustration STARTER/ B16488R		1
14	95D000005B	NUT			1
15	6736515	HARNESS	Fuel Shut Off Solenoid		1
16	17C000540B	BOLT			1
17	35C000620B	BOLT	Negative Cable ground		2
18	6712536	PAN	Battery		1
19	6679034	MOUNT			1
20	6569203	CLAMP	battery		1
21	6576280	BOLT	battery hold down		2
22	6579989	BRACKET			1
23	6719141	CABLE	Positive		1
24	6684037	SENSOR	rpm		1
25		ALTERNATOR	See Illustration ALTERNATOR/ C3529		1
26	6715132	RETAINER			1
27	6665427	BATTERY			1
28	25E000015B	WASHER			2
29	6674315	SENSOR	engine pressure		1
30	6718414	SENDER	engine temp.		1
31	6727803	CABLE	negative		1
32	6733370	HARNESS			1
33	6E000006B	WASHER			1
34	24F000001B	BRACKET			1
35	43DM00008B	NUT			1
36	84G003712B	BOLT			2

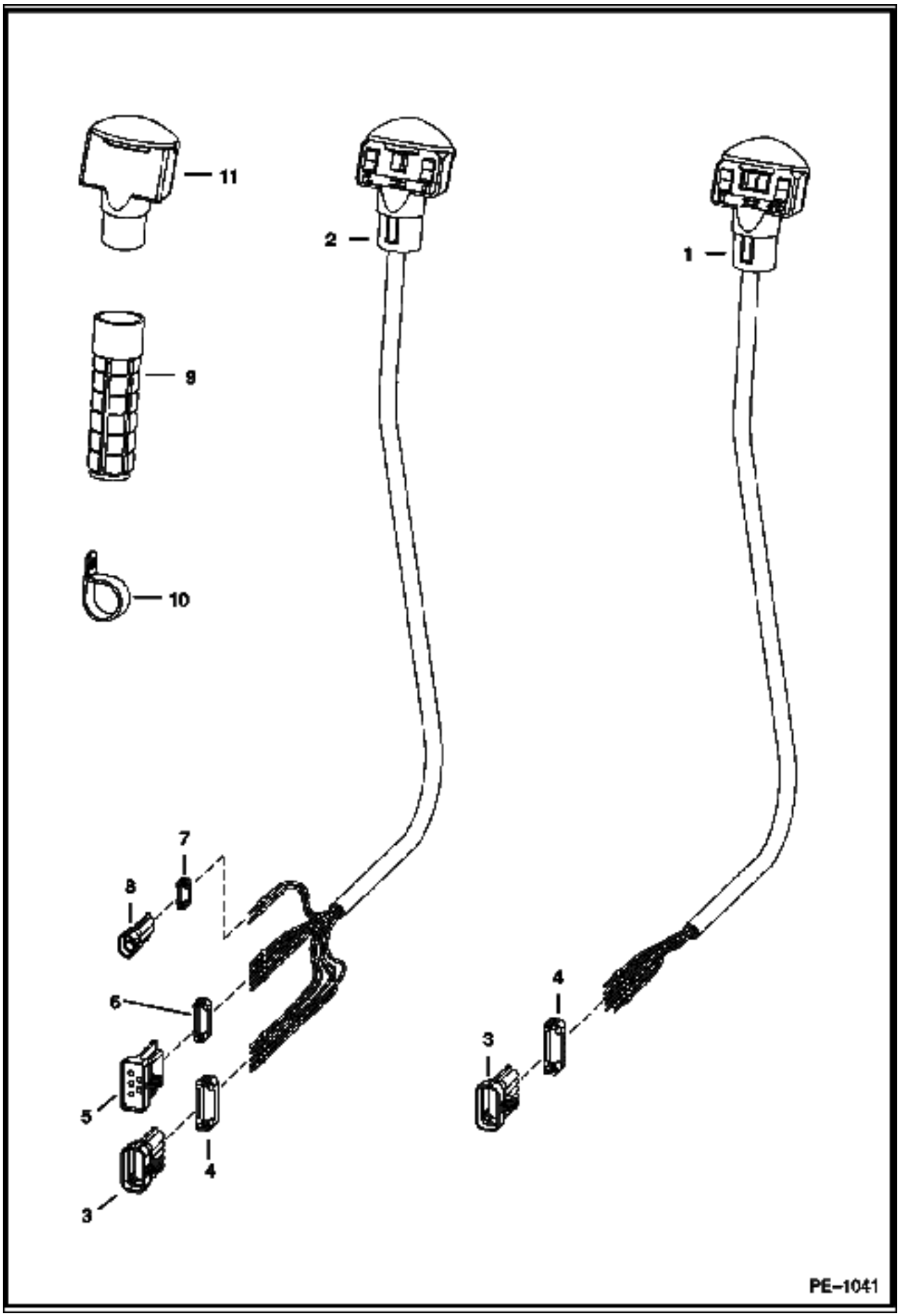
11
2
1
9
10
7
8
6
5
4
3
4
3
PE–1041

Ref No	Part Number	Description	Remarks	Serial Number	Qty
1	6680418	HANDLE ASSY.	R.H. - Also Order Ref. 3 & 4		1
1	6640690	PIN			9
1	6641176	SEAL			9
2	6680419	HANDLE ASSY.	L.H. - Also Order Ref. 3-8		1
2	6640690	PIN			10
2	6641176	SEAL			10
2	6680447	DECAL			1
3	6640692	CONNECTOR	10-pin		1
4	*6640694	LOCK	10-pin		1
5	*6667144	CONNECTOR	5 - way		1
6	*6667145	LOCK	5 - way		1
7	6641180	LOCK	2 - pin		1
8	*6641179	CONNECTOR	2 - pin		2
9	6702621	GRIP			2
10	6674000	CLAMP			2
11	6680415	HANDLE	L.H. - blank		2

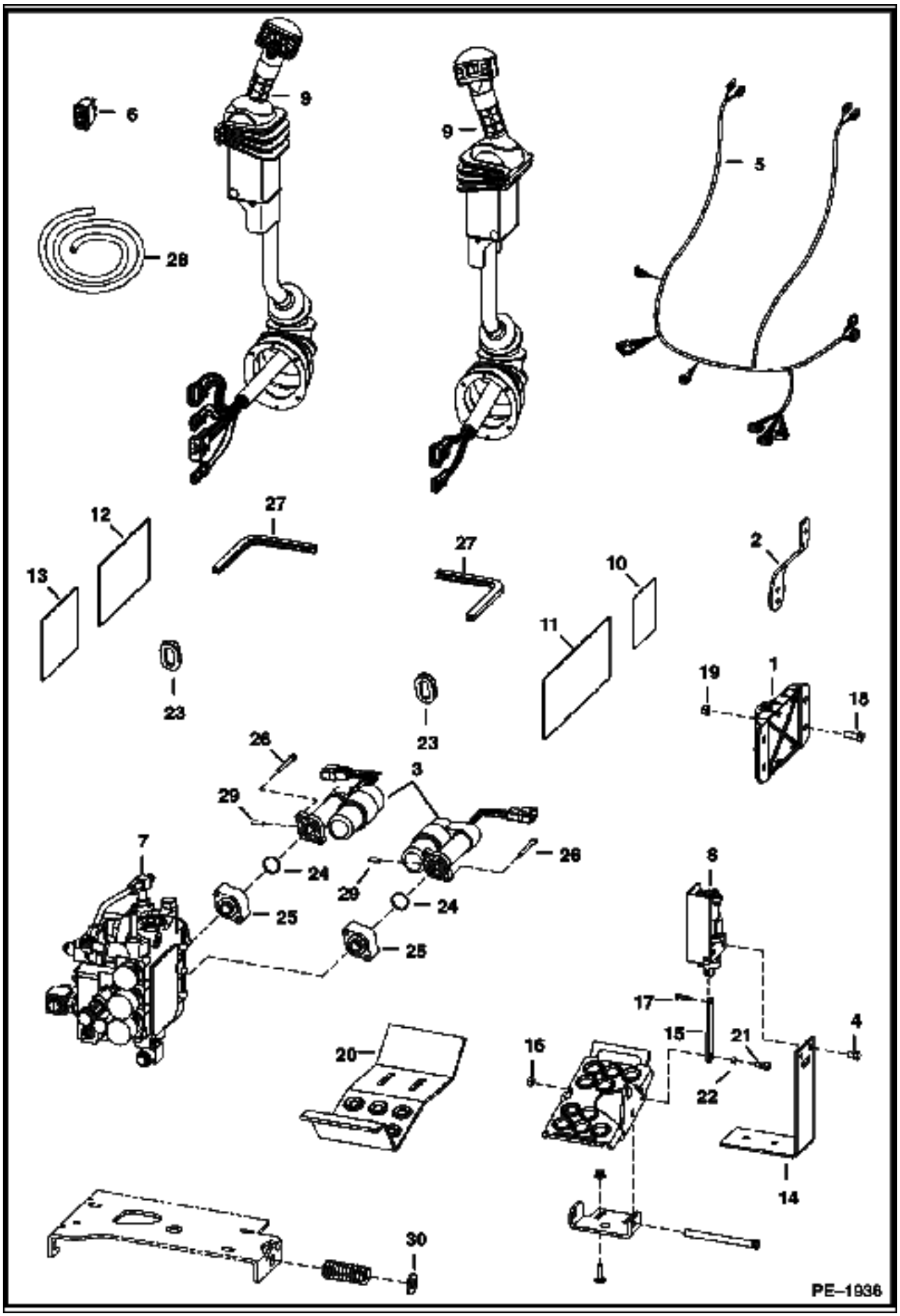
6
9
9
5
28
12
27
27
2
13
10
11
23
23
19
1
18
26
3
29
26
7
24
29
24
25
25
8
17
15
21
4
16
22
20
14
30
PE–1936

CONTROLS ELECTRICAL (Cont'd)
(ACS)

Ref No	Part Number	Description	Remarks	Serial Number	Qty
1	6680410	CONTROLLER	plastic		1
2	6717393	LEVER	throttle		1
3	7101672	ACTUATOR	W/Ref. 24		2
4	17C000608B	BOLT			4
5	6733292	HARNESS			1
6	6676537	SWITCH			1
7		VALVE	ACS control		1
8	6676493	SENSOR	See Illustration CONTROLS ELECTRICAL/ PE1553 FOOT PEDAL - R.H.		1
8	6676029	SOLENOID			1
8	6676492	SENSOR	See Illustration CONTROLS ELECTRICAL/ PE1553 FOOT PEDAL - L.H.		1
8	6676029	SOLENOID			1
9	6684915	LEVER	See Illustration CONTROLS ELECTRICAL/ PE1365 ACS - TILT - R.H.		1
9	6684916	LEVER	See Illustration CONTROLS ELECTRICAL/ PE1365 ACS - LIFT - L.H.		1
10	6718706	DECAL			1
11	6728539	DECAL			1
12	6727926	DECAL	operations AHC		1
13	6728328	DECAL	operations AHC		1
13	6718704	DECAL	operations AHC		1
14	6726573	BRACKET			2
15	6726681	LINK			2
16	95D000005B	NUT			2
17	6727496	PIN			2
18	17C000616B	BOLT			2
19	95D000006B	NUT			2
20	6712365	STEP	AHC		2
21	35C000514B	BOLT			2
22	6729467	SPACER			2
23	6714726	GROMMET			2
24	6686220	O-RING			2
25	7101705	ADAPTER			2
26	69G000436B	BOLT			4
27		MOULDING	NAP - 10.5" (267mm) long - Order Ref. 28		1
28	6654139	MOULDING	bulk - Sold Per Foot		x
29	7108236	PIN			2
30	25E000024B	WASHER			1

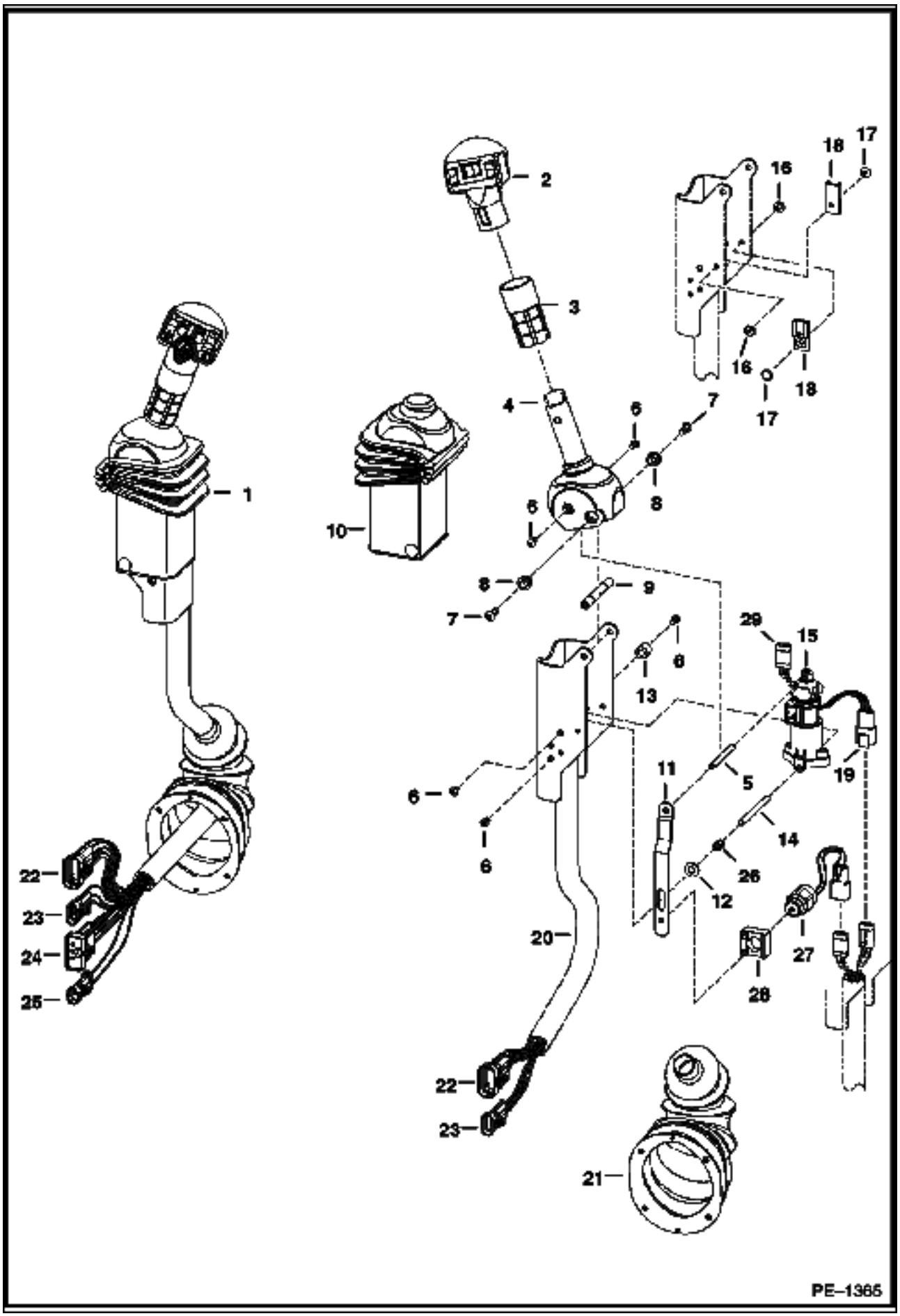
1
2
3
4
5
6
7
8
9
10
11
12
13
14
15
16
17
18
19
20
21
22
23
24
25
26
27
28
29
PE–1365

Ref No	Part Number	Description	Remarks	Serial Number	Qty
1	6684915	LEVER	tilt - R.H.		1
1	6684916	LEVER	lift - L.H.		1
2	6680462	HANDLE	tilt - R.H.		1
2	6680417	HANDLE	lift - L.H.		1
3		GRIP	NAP - Order 6702621 grip & cut to 2.8" (71,1mm) long		2
4	6729594	HANDLE	R.H.		1
4	6729595	HANDLE	L.H.		1
5	6680469	SPACER	threaded		1
6	6727065	BOLT			6
7	25GT00410B	BOLT			8
8	6702990	BUSHING			4
9	6713043	SPACER			4
10	6680471	COVER			2
11	6680477	STRAP	stop		1
12	25E000013B	WASHER			1
13	6719835	SLEEVE			4
14	6719834	SPACER	threaded		2
15	6684910	SENSOR			2
15	6670706	CONNECTOR			1
15	6670715	PIN			3
15	6670710	LOCK			1
16	6665322	RIVET	female		2
17	6665321	RIVET	male		2
18	6665000	CLIP			2
19	6670707	CONNECTOR			1
19	6670715	PIN			3
19	6670711	LOCK			1
20	6680481	CHANNEL	R.H.		1
20	6680480	CHANNEL	L.H.		1
21	6532127	BOOT			2
22	6640692	CONNECTOR	10-pin		1
22	6640690	PIN			8
22	6640694	LOCK			1
22	6641176	SEAL			8
22	6646582	PLUG	cavity		1
23	6640699	CONNECTOR	3-pin		2
23	6640690	PIN			3
23	6641176	SEAL			3
23	6640700	LOCK			3
24	6667144	CONNECTOR	5-pin		2
24	6640690	PIN			3
24	6641176	SEAL			3
24	6646582	PLUG	cavity		1
24	6641180	LOCK			1
25	6641179	CONNECTOR	2-pin		1
25	6640690	PIN			2
25	6641176	SEAL			2
25	6641180	LOCK			1
26	6680470	SPRING			1
27	6676029	SOLENOID			1
28	6680468	MOUNT			1
29	6676870	CONNECTOR	3-pin		1
29	6670711	LOCK			1
29	6670715	PIN			1

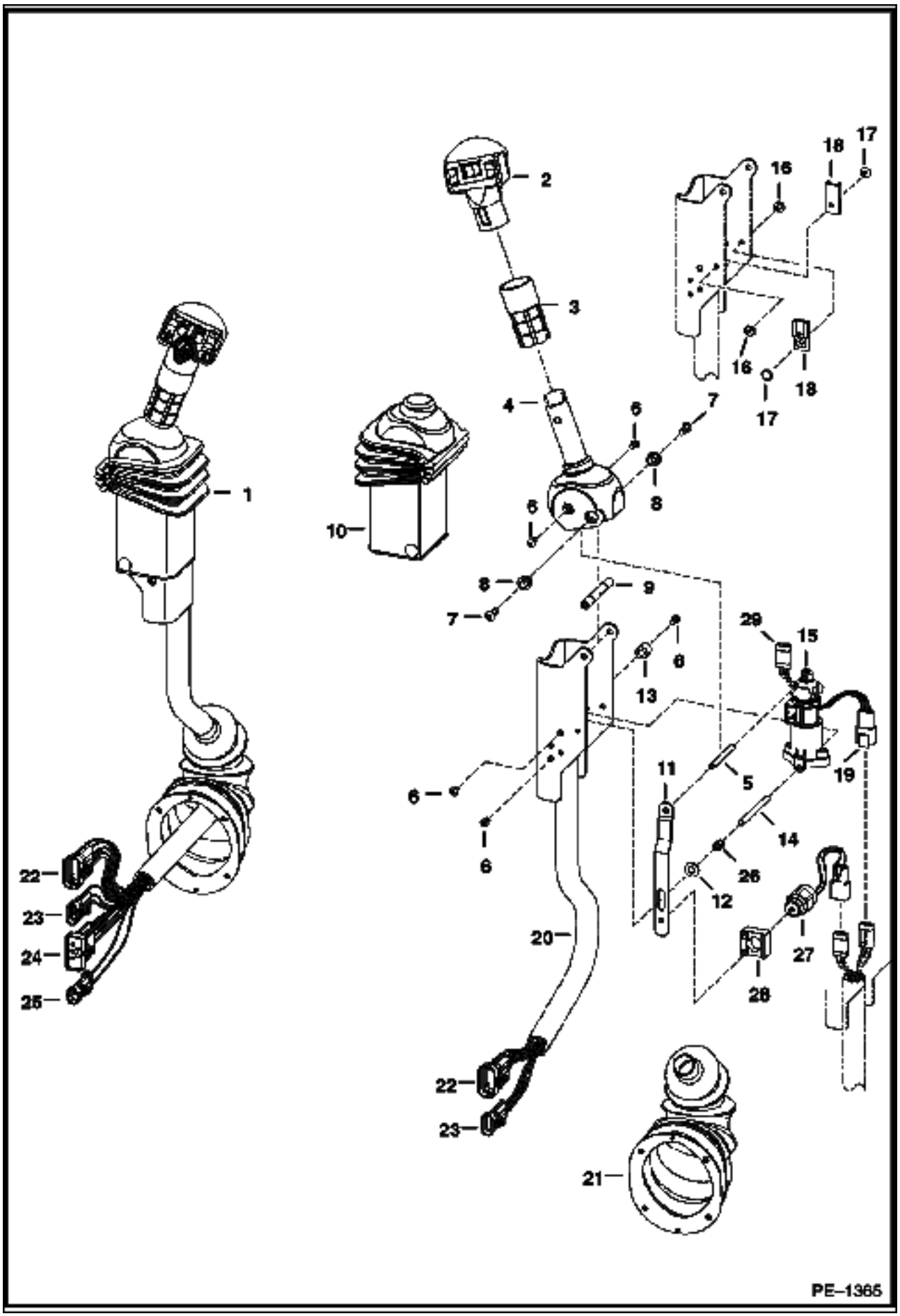
1
2
3
4
5
6
7
8
9
10
11
12
13
14
15
16
17
18
19
20
21
22
23
24
25
26
27
28
29
PE–1365

Ref No	Part Number	Description	Remarks	Serial Number	Qty
29	6676640	SEAL			5

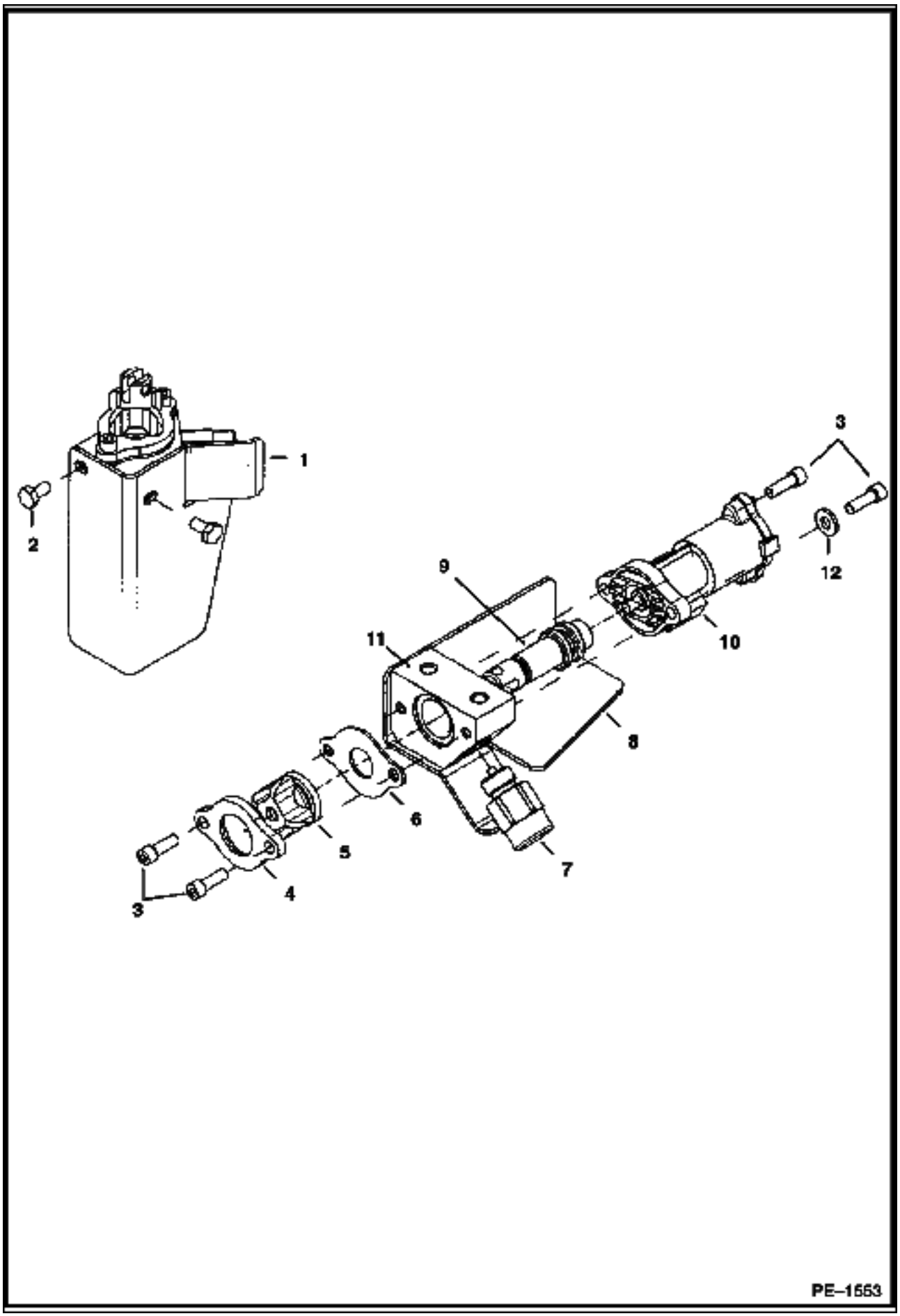
1
2
3
4
5
6
7
8
9
10
11
12
PE–1553

CONTROLS ELECTRICAL (Cont'd)
(ACS) (Foot Pedal Assemblies)

Ref No	Part Number	Description	Remarks	Serial Number	Qty
1	6684912	SENSOR	foot pedal - R.H.		1
1	6684911	SENSOR	foot pedal - L.H.		1
2	43C000408B	BOLT			2
3	98G000412B	BOLT			4
4		RETAINER	NAP - boot		1
5	6587763	BOOT			1
6		STOP PLATE	NAP		1
7	6676029	SOLENOID			1
8	6680478	SHIELD	R.H.		1
8	6680479	SHIELD	L.H.		1
9		SPOOL	NSS		1
10		SENSOR	NSS		1
11		BLOCK	NSS		1
12	25E000013B	WASHER			2

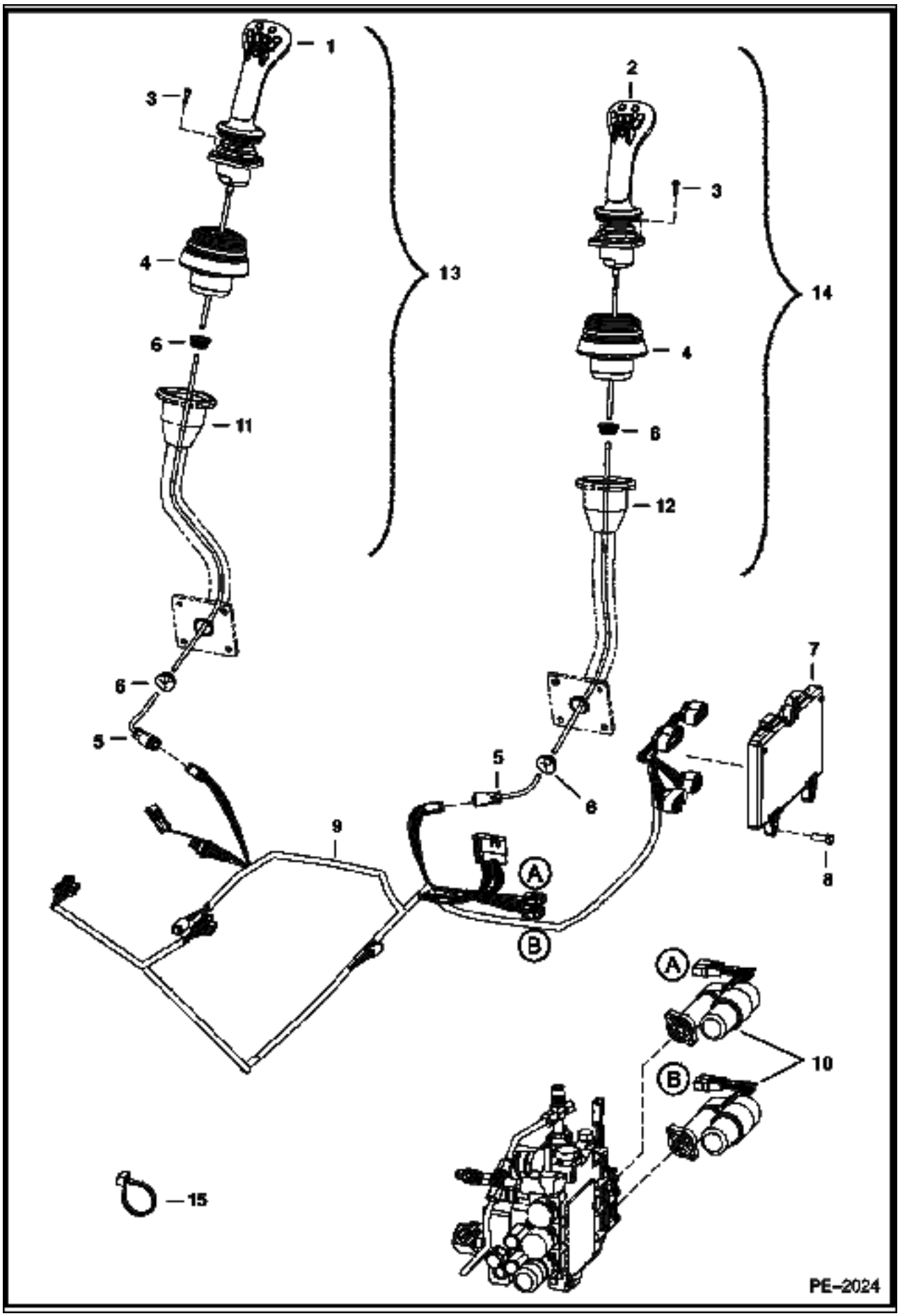
1
2
3
3
4
4
6
6
6
6
11
12
13
14
5
5
6
7
8
9
A
B
A
B
10
15
PE–2024

CONTROLS ELECTRICAL (Cont'd)
(Selectable Joystick Controls)

Ref No	Part Number	Description	Remarks	Serial Number	Qty
1	6687883	JOYSTICK LH			1
2	6687882	JOYSTICK RH			1
3	6678659	BOLT			8
4	6678903	BOOT	joystick		2
5	6729397	HARNESS	joystick		2
6	6684294	GROMMET	joystick		4
7	6683608	CONTROLLER	joystick		1
8	43C000616B	BOLT			3
9	6733293	HARNESS	joystick control		1
10	7101672	ACTUATOR			2
11	6729792	HANDLE	L.H.		1
12	6729791	HANDLE	R.H.		1
13	7111993	JOYSTICK ASMBLY LH	L.H. - Ref. 1, 3-6 & 11		1
14	7111992	JOYSTICK ASMBLY RH	R.H. - Ref. 2-6 & 12		1
15	6624289	STA STRAP			21

ALTERNATOR
(90 Amp)

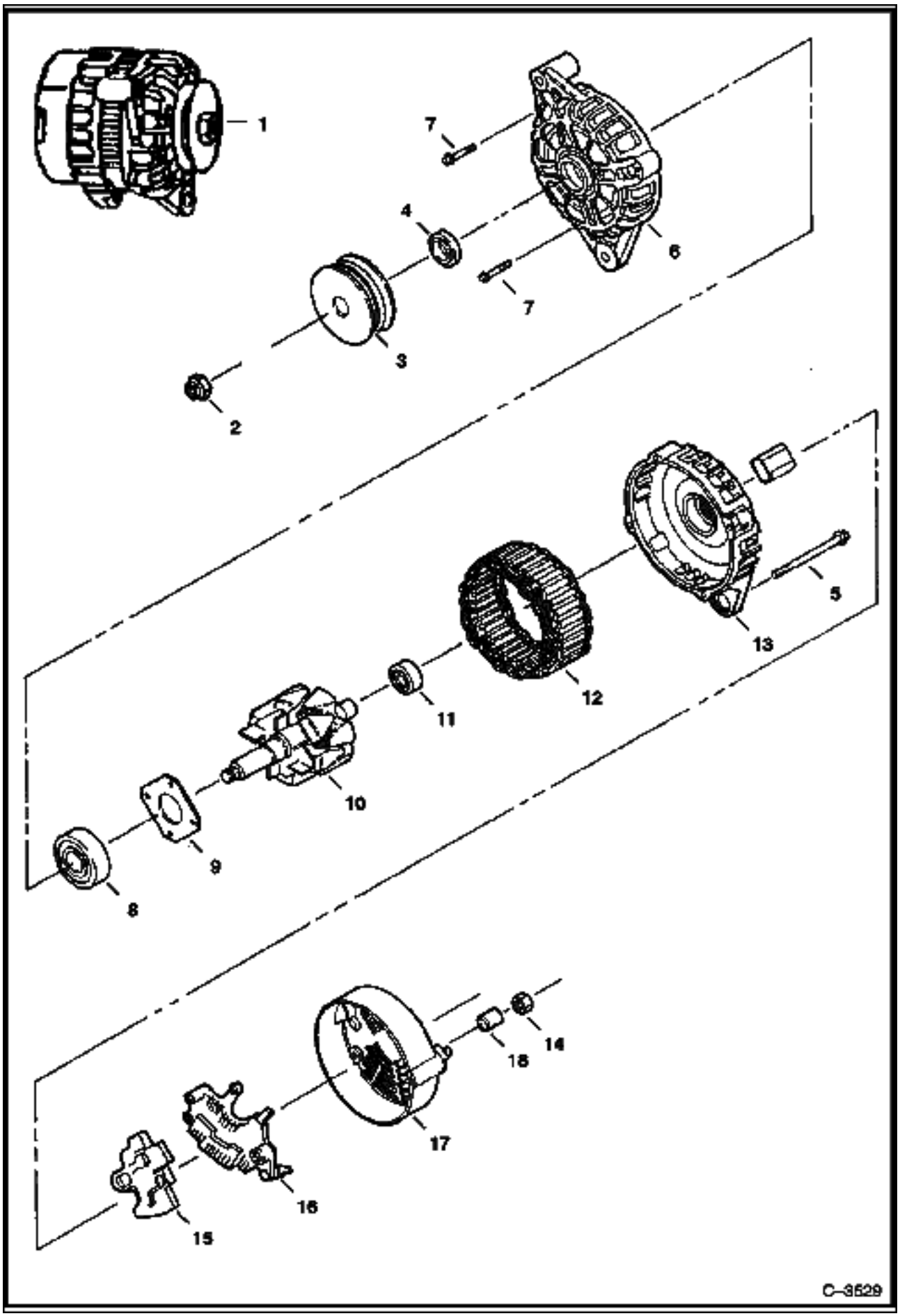

ALTERNATOR (Cont'd)
(90 Amp)

Ref No	Part Number	Description	Remarks	Serial Number	Qty
1	6678205	ALTERNATOR	90 amp - Ref. 2-14		1
2	6677497	NUT			1
3	6677496	PULLEY			1
4	6677495	SPACER			1
5	6677494	BOLT			4
6	6677491	BRACKET	front		1
7	6677817	BOLT			4
8	6677818	BEARING			1
9	6677819	RETAINER			1
10	6677492	ROTOR			1
11	6677820	BEARING			1
12	6677493	STATOR			1
13	6677490	BRACKET			1
14	6677486	NUT			1
15		REGULATOR	NSS - Order Ref. 1		1
16	6677488	RECTIFIER			1
17	6677487	COVER			1
18	6677485	SPACER			1

STARTER
(Valeo)

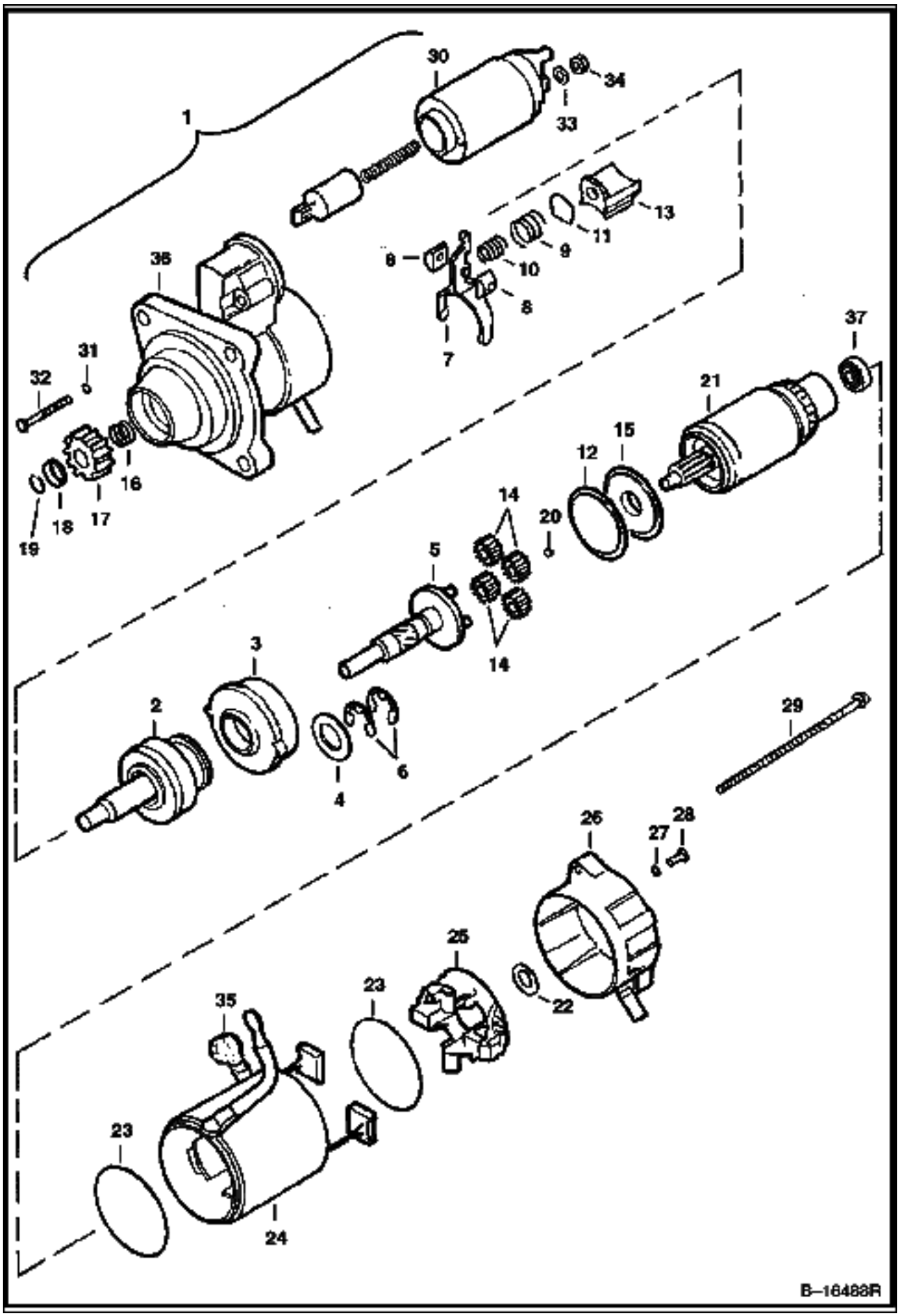

STARTER (Cont'd)
(Valeo)

Ref No	Part Number	Description	Remarks	Serial Number	Qty
1	6685190	STARTER			1
2	6680375	SHAFT	O.R.C. assy.		1
3	6680367	GEAR			1
4	6680378	WASHER			1
5	6680365	SHAFT			1
6	6680368	STOP RING			2
7		LEVER	NSS - Order Ref. 36		1
8		HOLDER	NSS - Order Ref. 36		2
9		SPRING	NSS - Order Ref. 36		1
10		SPRING	NSS - Order Ref. 36		1
11		PLATE	NSS - Order Ref. 36		1
12	6680369	SEAL			1
13	6680371	LEVER			1
14	6680366	GEAR			4
15	6680372	BRACKET			1
16	6680361	SPRING			1
17	6680390	GEAR			1
18	6680360	STOP			1
19	6680359	STOP RING			1
20	6680362	BALL			1
21	6680374	ARMATURE	W/Ref. 37		1
22	6680363	WASHER			1
23	6680380	SEAL			2
24	6680373	YOKE			1
25	6680377	HOLDER			1
26	6680389	BRACKET			1
27	6680358	RING	rubber		2
28	6680384	BOLT			2
29	6680356	BOLT			2
30	6680376	SWITCH			1
31	6680379	SEAL			2
32	6680383	BOLT			2
33	6EM00080B	WASHER			1
34	4DM00008B	NUT			1
35	6680355	BOOT			1
36	6680388	BRACKET	W/Ref. 7-11		1
37	6687631	BEARING			1

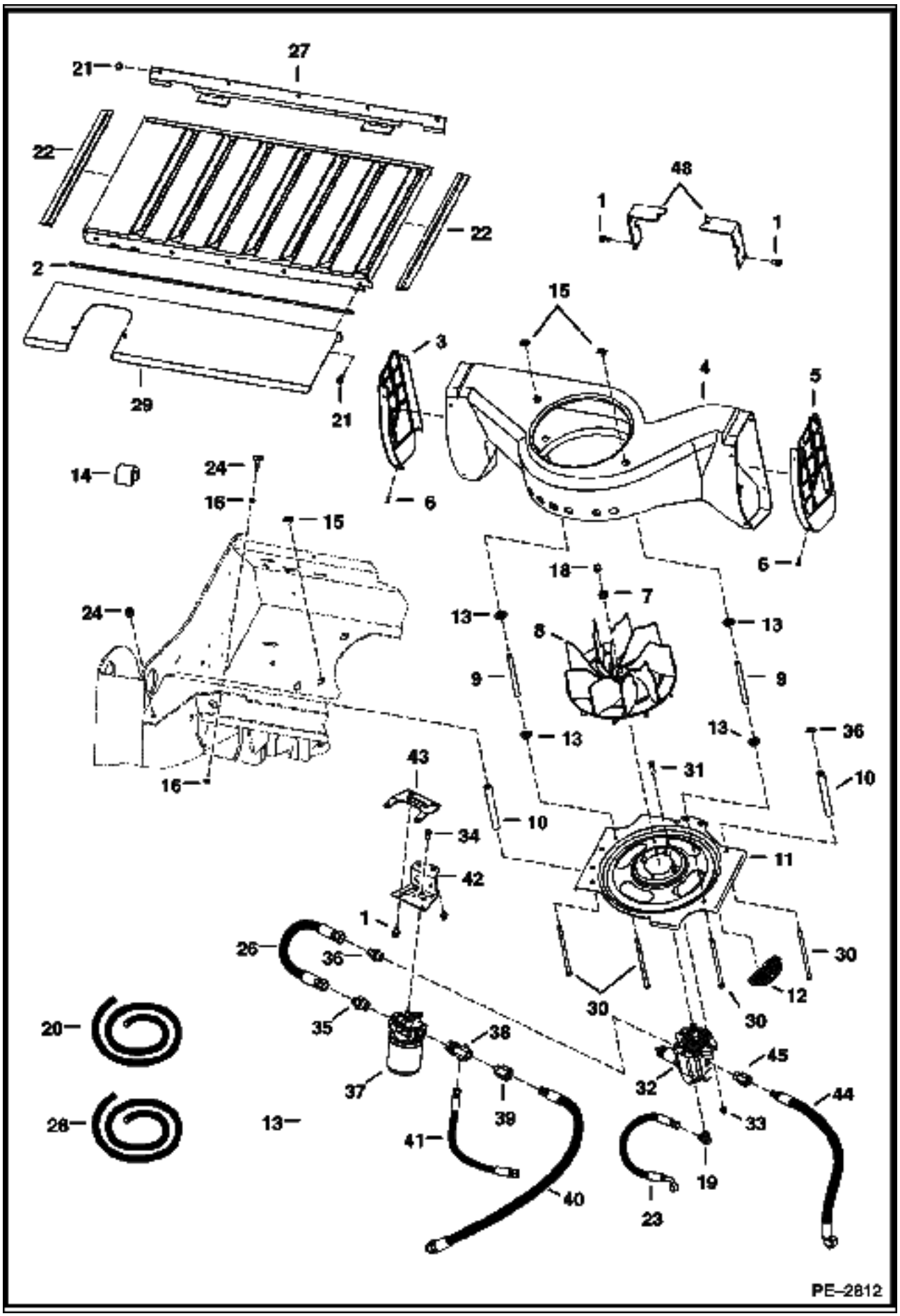
27
21
22
22
2
29
21
48
1
1
15
3
4
5
6
6
14
24
16
15
18
7
24
13
8
13
9
9
13
13
36
16
43
31
10
10
34
11
42
1
26
36
30
12
30
30
35
38
45
20
37
39
32
44
28
13
41
33
19
40
23
PE-2812

Ref No	Part Number	Description	Remarks	Serial Number	Qty
1	84G003712B	BOLT			8
2		SEAL	34.5" (900 mm) long - Order Ref 28		2
3	6716574	LOUVER	L.H. - plastic		1
4	6732931	HOUSING			1
5	6716572	LOUVER	R.H. - plastic		1
6	6706517	SCREW			8
7	6701097	WASHER			1
8	6715142	FAN			1
9	6577382	SPACER			2
10	6732318	SPACER			2
11	7107175	INLET	4 slot		1
12	6684474	INSERT FAN INLET	inlet		4
13	6732457	WASHER	step		4
14	6579613	STOP	cab tilt		2
15	6684033	NUT	spring		4
16	61D000005B	NUT			4
17	17C006116B	BOLT			4
18	96D000008B	NUT			1
19	17KB00606B	ELBOW			1
19	79K000006B	O-RING			x
20	6646705	SEAL	bulk - Order per foot		x
21	84G003112B	BOLT			8
22		SEAL	NAP - 19" (483mm) long - Order Ref. 20		2
23	6578804	HOSE			1
24	6655399	BUMPER			4
25	6731078	GRILL			1
26	7110809	HOSE			1
27	6731915	BRACKET			1
28	6511855	SEAL	bulk - Sold Per Foot		x
29	6731916	SHIELD			1
30	7101373	BOLT			4
31	17C000620B	BOLT			2
32	6687142	MOTOR	See Illustration MOTOR/ PE2811		1
33	95D000006B	NUT			10
34	17C000612B	BOLT			4
35	15KB01010B	ADAPTER			1
35	79K000010B	O-RING			x
36	15KB01012B	ADAPTER			1
36	79K000012B	O-RING			x
37	6687266	FILTER ASSY			1
37	6686926	ELEMENT FILTER			1
38	7108685	HOSE			1
38	79K000012B	O-RING			x
39	78HA01210B	ADAPTER			1
39	79K000010B	O-RING			x
40	7107174	HOSE			1
41	6815887	HOSE			1
42	7110243	SEAL			1
43	7110244	BRACKET			1
44	7107153	HOSE			1
45	78HA01010B	ADAPTER			1
45	79K000010B	O-RING			x
46	84G003716B	BOLT			4
47	6731970	BRACKET			2

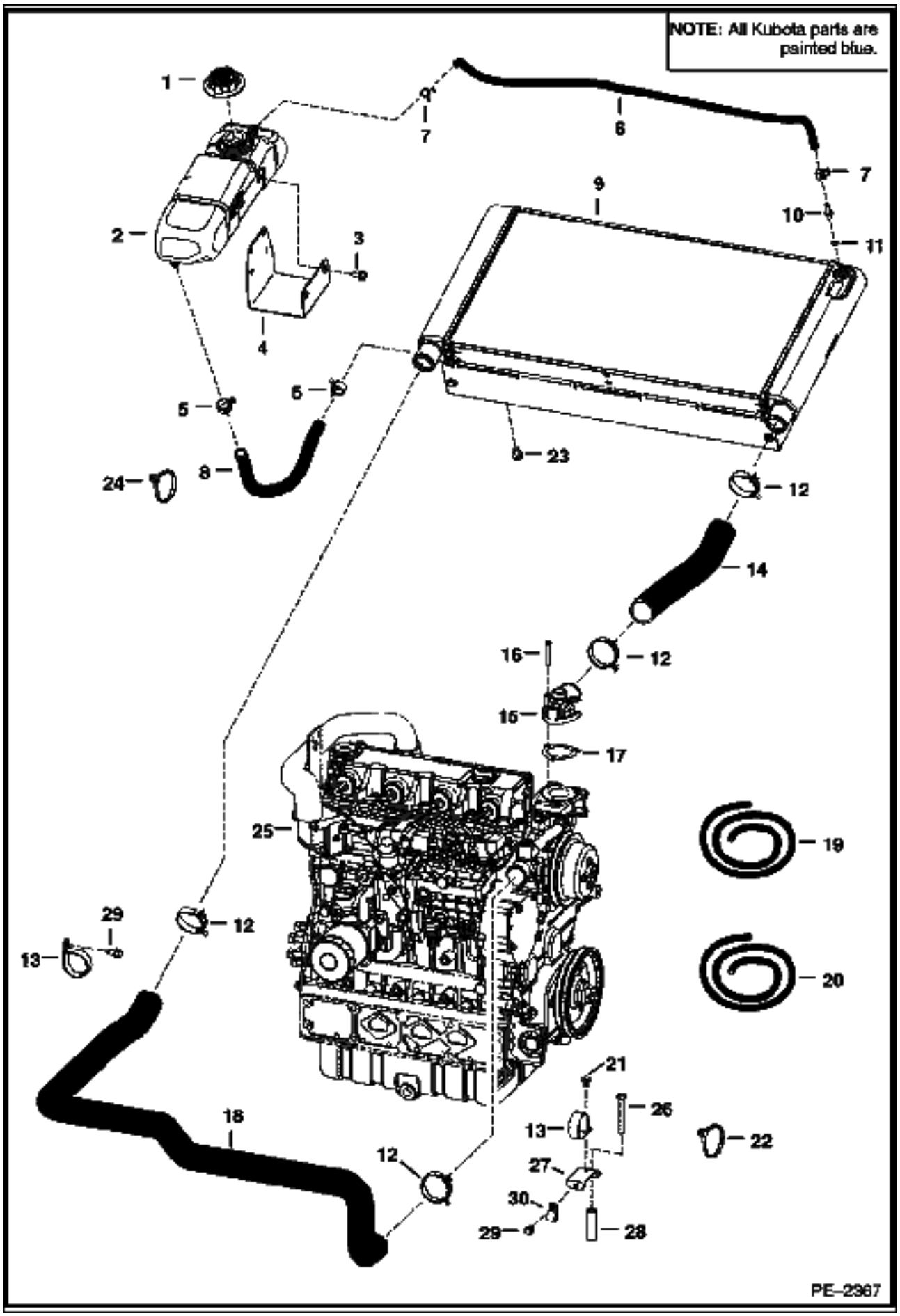
NOTE: All Kubota parts are painted blue.
1
2
3
4
5
6
7
8
9
10
11
12
13
14
15
16
17
18
19
20
21
22
23
24
25
26
27
28
29
30
PE-2367

Ref No	Part Number	Description	Remarks	Serial Number	Qty
1	6733429	CAP			1
1	6733996	DECAL	14 psi		1
2	6732375	TANK			1
3	6733886	BOLT			2
4	6732870	MOUNT			1
5	5HM00023B	CLAMP			2
6		HOSE	NAP - Order Ref. 19 - .25" I.D. - 36" (914mm) long		1
7	5HM00014B	CLAMP			2
8		HOSE	NAP - Order Ref. 20 - .63" I.D. - 20" (508mm) long		1
9	6684367	RADIATOR			1
10	6734090	ADAPTER	W/ Ref. 11		1
11	79K000004B	O-RING			x
12	5HM00055B	CLAMP			4
13	30H000091B	CLAMP			2
14	6729310	HOSE			1
15	6680843	COVER	See Illustration WATER PUMP & THERMOSTAT/ B22925 See Illustration WATER PUMP & THERMOSTAT/ B17610 thermostat		1
16	6680845	BOLT	See Illustration WATER PUMP & THERMOSTAT/ B22925 See Illustration COOLING SYSTEM/ PE1733		3
17	6680844	GASKET	See Illustration WATER PUMP & THERMOSTAT/ B22925 See Illustration COOLING SYSTEM/ PE1733		1
18	6736566	HOSE			1
19	6577822	HOSE	bulk - sold per foot		x
20	6578172	HOSE	bulk - sold per foot		x
21	84G003712B	BOLT			2
22	6610510	TIE			1
23	35C000516B	BOLT			4
24	6513471	CLAMP			1
25		ENGINE	See Illustration ENGINE/ B18620A		1
26	6731198	BOLT			1
27	6737649	BRACKET			1
28	6731109	SPACER			1
29	84G003108B	BOLT			2

ENGINE & ATTACHING PARTS
(Air Cleaner, Muffler)

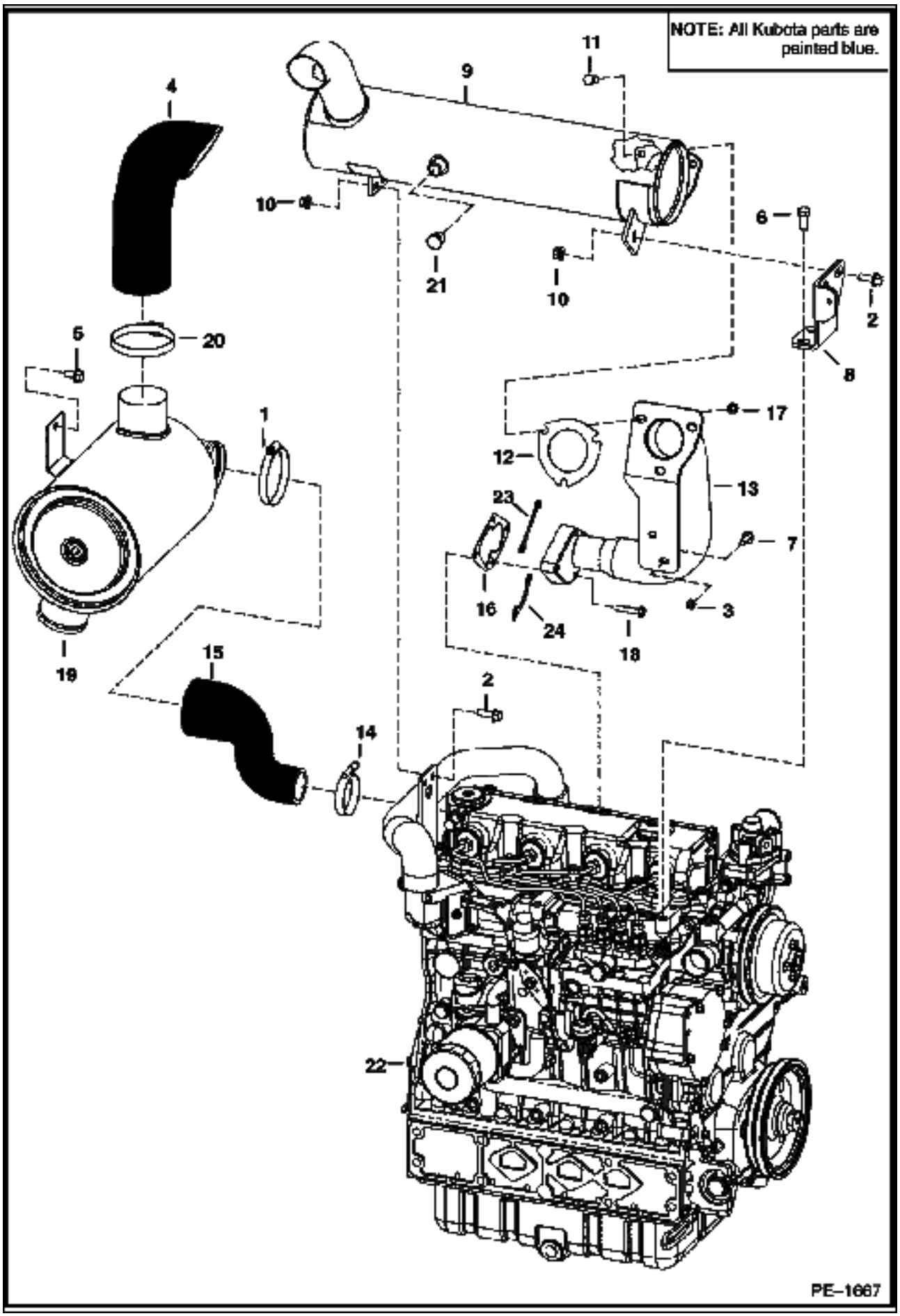

ENGINE & ATTACHING PARTS (Cont'd)
(Air Cleaner, Muffler)

Ref No	Part Number	Description	Remarks	Serial Number	Qty
1	42HC00375B	CLAMP			1
2	45C000616B	BOLT			3
3	53DM00008B	NUT			1
4	6730726	HOSE	air intake		1
5	84G003712B	BOLT			2
6	6719825	BOLT			2
7	29CM00820B	BOLT			1
8	7111805	MOUNT	muffler		1
8	6730753	MOUNT	purifier		1
9	6687887	MUFFLER	double insulated		1
10	83D000006B	NUT			3
11	17C000616B	BOLT			3
12	6732032	GASKET	exhaust		1
13	7102368	TUBE	exhaust - square bolt pattern		1
14	42HC00250B	CLAMP			1
15	6734114	HOSE			1
16	7102747	GASKET	square bolt pattern		1
17	85D000006B	NUT			3
18	5CM01020B	BOLT			4
19		AIR CLEANER	See Illustration AIR CLEANER/ MS1516 See Illustration AIR CLEANER/ MS1516A		1
20	42H000052B	CLAMP			1
21	6661062	PLUG	brass - 3/8" straight pipe thread		1
22		ENGINE	See Illustration ENGINE/ B18620 See Illustration ENGINE/ B18620A		1
23	7102034	TAB	Straight		1
24	7102035	TAB	Curved		1

ENGINE & ATTACHING PARTS
(Belt Drive System)

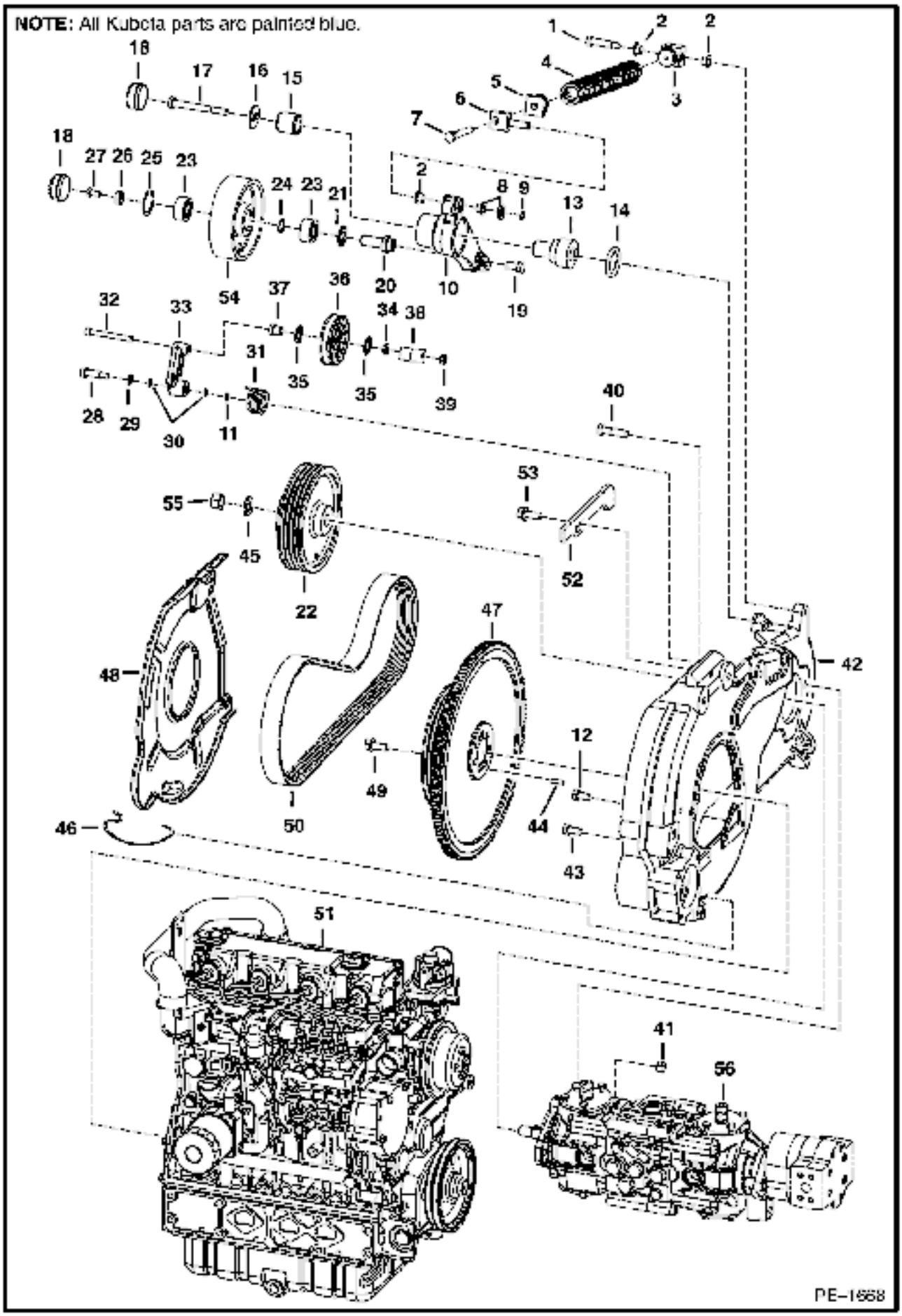

Ref No	Part Number	Description	Remarks	Serial Number	Qty
1	38C000828B	BOLT	shoulder		1
2	1313116	BUSHING			4
3	6568424	ADAPTER			1
4	6569498	SPRING ASSY			1
5	6568425	ADAPTER			1
6	6587182	SWIVEL PIN			1
7	6586710	BOLT			1
8	25E000021B	WASHER			2
9	6518955	SNAP RING			1
10	6735709	IDLER			1
11	6670682	BEARING	nylon		1
12	6730894	BOLT			2
13	6707699	PIVOT			1
14	6661377	SEAL			1
15	6587765	BUSHING			1
16	6707698	WASHER			1
17	17C000872B	BOLT			1
18	6660967	CAP	grease		2
19	17C000816B	BOLT			1
20	6707654	SPINDLE			1
21	6665307	SEAL			1
22	6713342	PULLEY	pump		1
22	6713287	PULLEY	pump - joystick controls		1
23	6661229	BEARING			2
24	6701159	SHIM			1
25	6665308	SNAP RING			1
26	6707697	WASHER			1
27	17C000612B	BOLT			1
28	38C000820B	BOLT			1
29	6655781	BEARING	thrust		1
30	6704820	O-RING			2
31	6700115	SPRING			1
32	73G000656B	BOLT			1
33	6725212	ARM	W/Ref. 11		1
34	6704444	WASHER			1
35	6660995	GREASE RING			2
36	6662997	PULLEY			1
37	6704443	BUSHING			1
38	6702474	RETAINER			1
39	61D000006B	NUT			1
40	17C000832B	BOLT	hydrostatic pump mount		2
41	85D000008B	NUT			2
42	6730020	MOUNT	See Illustration ENGINE & ATTACHING PARTS/ PE1725R		1
43	6719828	BOLT			10
44	14J003112B	PIN			1
45	6576033	WASHER			1
46	6701160	CLIP			3
47	7100860	FLYWHEEL ASSY	w/ring gear		1
47	7100859	FLYWHEEL ASSY	w/ring gear - joystick controls		1
47	6665222	RING GEAR			1
48	6731100	SHIELD			1
49	6680747	BOLT			6
50	6672152	BELT	pump drive		1
50	6662855	BELT	pump drive - joystick controls		1

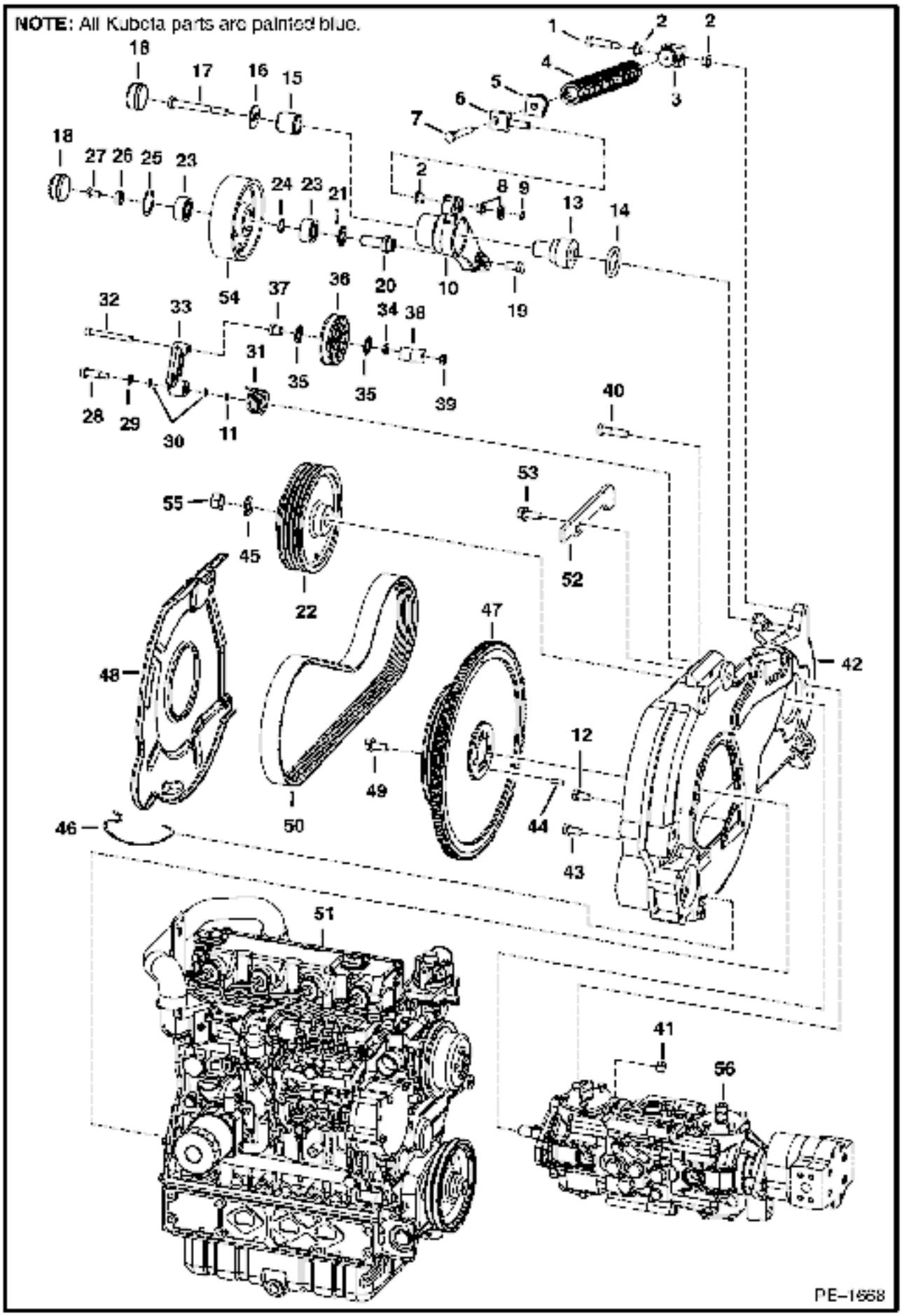
NOTE: All Kubota parts are painted blue.
PE-1668

Ref No	Part Number	Description	Remarks	Serial Number	Qty
51		ENGINE	See Illustration ENGINE/ B18620		1
52	6729944	STOP	idler		1
53	31C000820B	BOLT			1
54	6708445	PULLEY	drive idler		1
55	92D000012B	NUT			1
56		PUMP	See Illustration HYDROSTATIC PUMP/ B21983		1

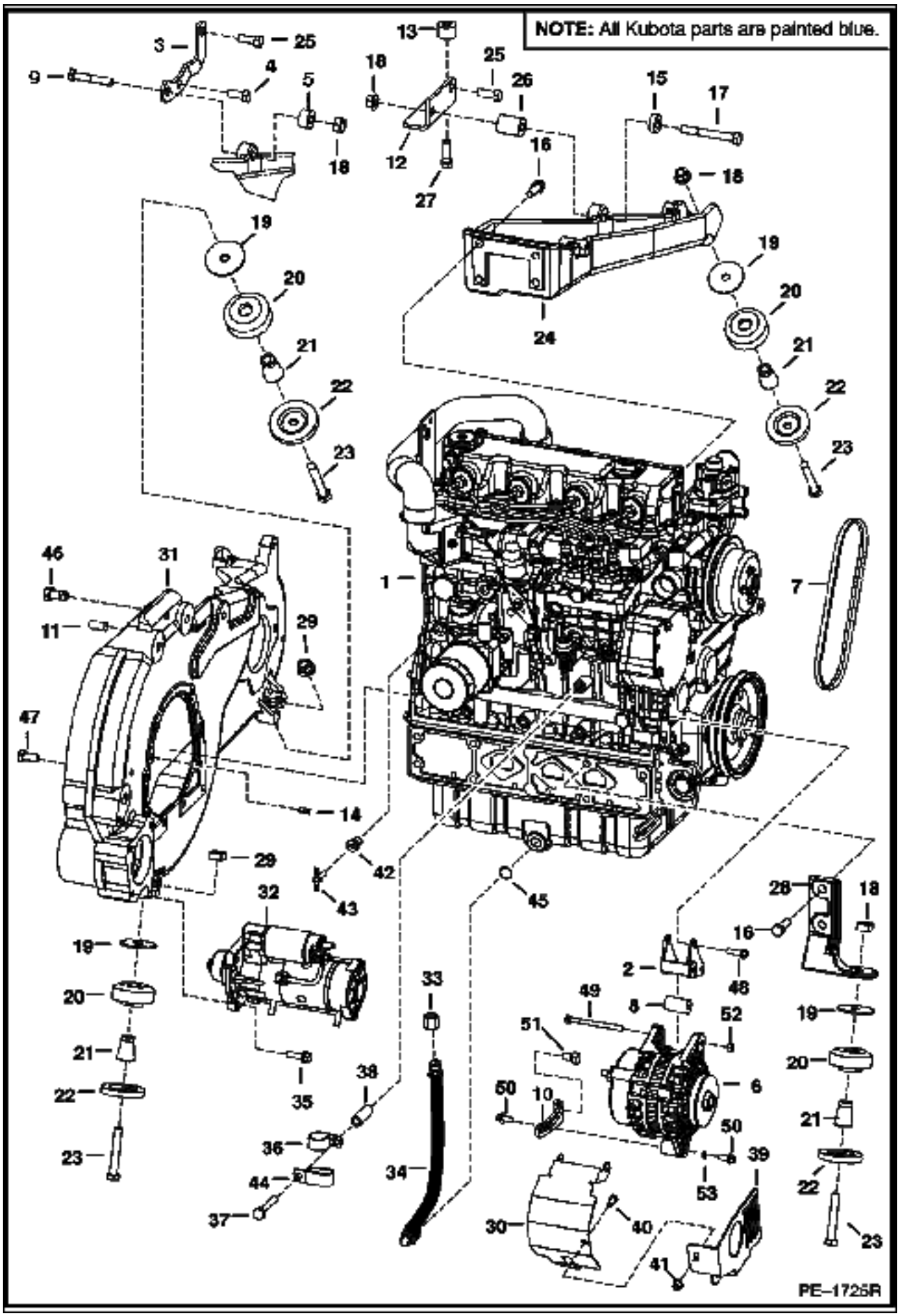
NOTE: All Kubota parts are painted blue.
PE-1725R

ENGINE & ATTACHING PARTS (Cont'd)
(Engine Mounts)

Ref No	Part Number	Description	Remarks	Serial Number	Qty
1		ENGINE	See Illustration ENGINE/ B18620		1
2	6680839	BRACKET	See Illustration FRONT COVER/ B17609 ALTERNATOR		2
3	6735979	BRACKET	pump - joystick controlled machines		1
4	17C000816B	BOLT	pump - joystick controlled machines		1
5	6736349	SPACER	pump - joystick controlled machines		1
6		ALTERNATOR	See Illustration ALTERNATOR/ C3529		1
7	6686655	BELT	alternator / water pump		1
8	6732206	SPACER	alternator		1
9	6675221	BOLT	pump - joystick controlled machines		1
10	6732193	BRACKET			1
11	20JM01025B	PIN			2
12	6735727	BRACKET	W/4 holes		1
13	6732575	SPACER	.64"		3
14	6680642	PIN			2
15	6716408	SPACER			1
16	6719829	BOLT			6
17	17C000888B	BOLT			1
18	83D000008B	NUT			3
19	6705106	WASHER	3" (76,2mm) O.D.		4
20	6668104	MOUNT			4
21	6715287	SPACER			4
22	6661787	WASHER			4
23	43C000852B	BOLT			4
24	6729942	MOUNT			1
25	17C000820B	BOLT			1
26	6735729	SPACER	2.94" (74,7mm) long		1
27	17C000824B	BOLT			3
28	6735346	MOUNT	cast - used W/ 6705106 washer		2
29	6652918	NUT			2
30	6733873	SHIELD	alternator		1
31	6735980	MOUNT			1
32		STARTER	See Illustration STARTER/ B16488R		1
33	36K000006B	CAP			1
34	6734573	HOSE	Tier II - 12.5" (318 mm) long		1
35	45C000620B	BOLT			3
36	30H000073B	CLAMP			1
37	6731198	BOLT			1
38	6731109	SPACER			1
39	6734436	SHIELD	alternator belt		1
40	17C000510B	BOLT			1
41	83D000005B	NUT			1
42	7101136	BUSHING			1
43	72F000001B	DRAIN COCK			1
44	31H000038B	CLAMP			1
45	79K000008B	O-RING			x
46	31C000820B	BOLT			1
47	6719828	BOLT			10
48	6680687	BOLT			2
49	1CM08100B	BOLT			1
50	29CM00820B	BOLT			2
51	6CM01220B	BOLT			1
52	53DM00008B	NUT			1
53	6E000005B	WASHER			1

ENGINE SPEED CONTROL

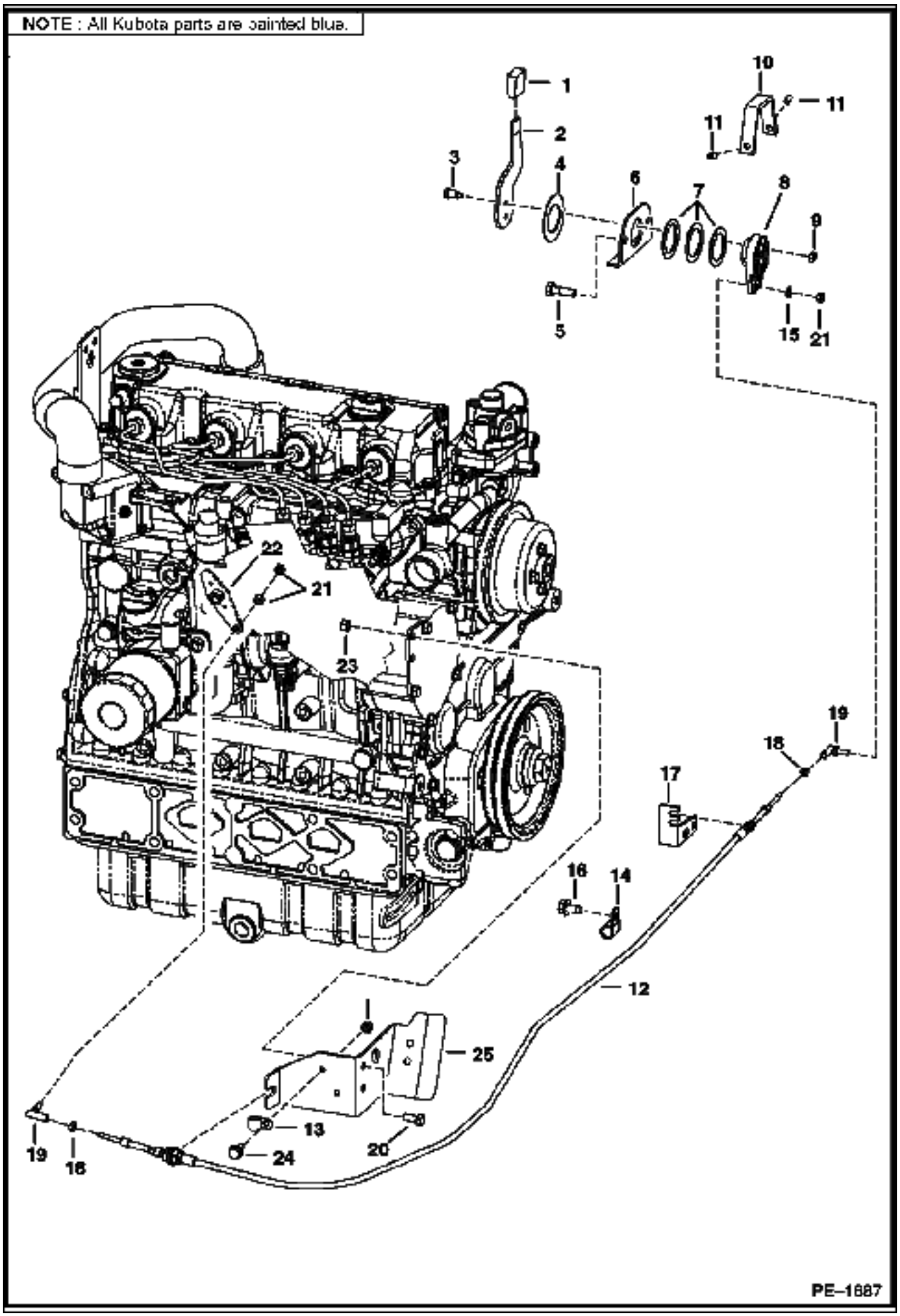

Ref No	Part Number	Description	Remarks	Serial Number	Qty
1	6564452	GRIP			1
2	6705452	LEVER			1
3	38C000610B	BOLT	shoulder		2
4	6567962	WASHER			1
5	84G003724B	BOLT			2
6	6576262	MOUNT			1
7	6630945	WASHER			3
8	6709022	LEVER			1
9	85D000005B	NUT			6
10	6576261	COVER			1
11	6706572	SET SCREW			2
12	6675668	CABLE			1
13	30H000021B	CLAMP			1
14	30H000031B	CLAMP			1
15	25E000011B	WASHER			1
16	84G003712B	BOLT			1
17	6732450	BRACKET			1
18	14D000010B	NUT			2
19	6644965	BALL JOINT			1
20	17C000512B	BOLT			2
21	62D000004B	NUT			3
22		LEVER	See Illustration GOVERNOR/ B17615 Ref. 3		1
23	95D000005B	NUT			2
24	84G003110B	BOLT			1
25	6734772	MOUNT	Tier II		1

ENGINE SPEED CONTROL
(W/ Selectable Joystick Controls)

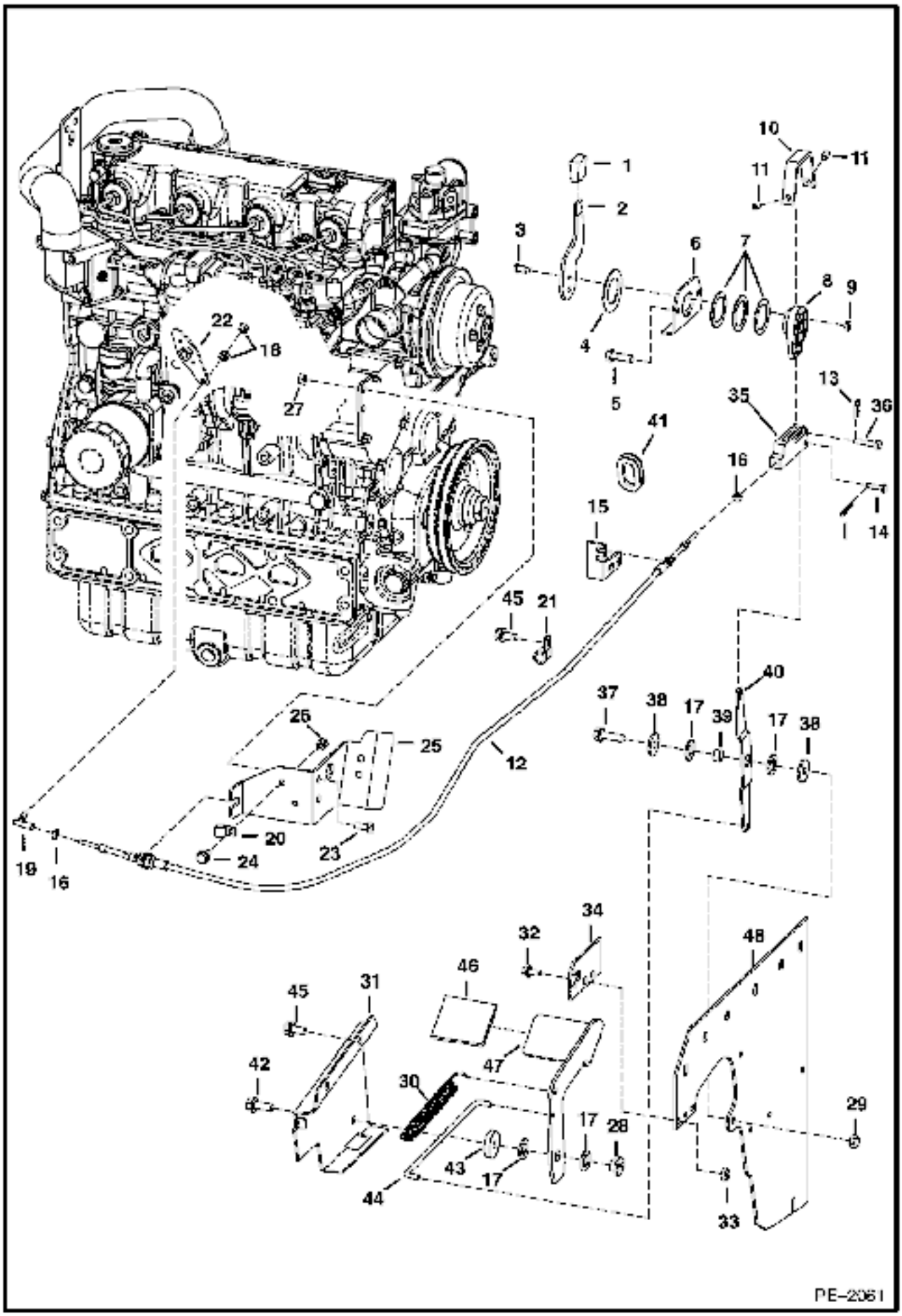

ENGINE SPEED CONTROL (Cont'd)
(W/ Selectable Joystick Controls)

Ref No	Part Number	Description	Remarks	Serial Number	Qty
1	6564452	GRIP			1
2	6730270	LEVER			1
3	38C000610B	BOLT	shoulder		2
4	6567962	WASHER			1
5	84G003724B	BOLT			2
6	6576262	MOUNT			1
7	6630945	WASHER			3
8	6734416	LEVER			1
9	85D000005B	NUT			6
10	6734520	COVER			1
11	6706572	SET SCREW			2
12	6675668	CABLE			1
13	6513495	COTTER PIN			1
14	2F004051B	PIN			1
15	6732450	BRACKET			1
16	14D000010B	NUT			2
17	6700170	WASHER	plastic		4
18	62D000004B	NUT			2
19	6644965	BALL JOINT			1
20	30H000021B	CLAMP			1
21	30H000031B	CLAMP			1
22	6680768	LEVER			1
23	17C000512B	BOLT			2
24	84G003110B	BOLT			1
25	6734772	MOUNT	tier II		1
26		NUT			1
27	95D000005B	NUT			2
28	6559479	NUT	retaining		1
29	85D000006B	NUT			1
30	6700743	SPRING			1
31	6732323	BRACKET			1
32	84G003716B	BOLT			2
33	95D000006B	NUT			2
34	6732449	PLATE	cable		1
35	6734503	CLEVIS			1
36	1304227B	PIN			1
37	84G003720B	BOLT			1
38	619021B	WASHER			2
39	6564343	SPACER			1
40	6734417	LEVER			1
41	6577961	GROMMET			1
42	45C000616B	BOLT			1
43	6732322	SPACER			1
44	6731900	ROD			1
45	84G003712B	BOLT			2
46	6554100	TREAD	safety		1
47	6731898	PEDAL			1
48		PANEL	See Illustration PANELS/ PE2654		1

NOTE: All Kubota parts are painted blue.

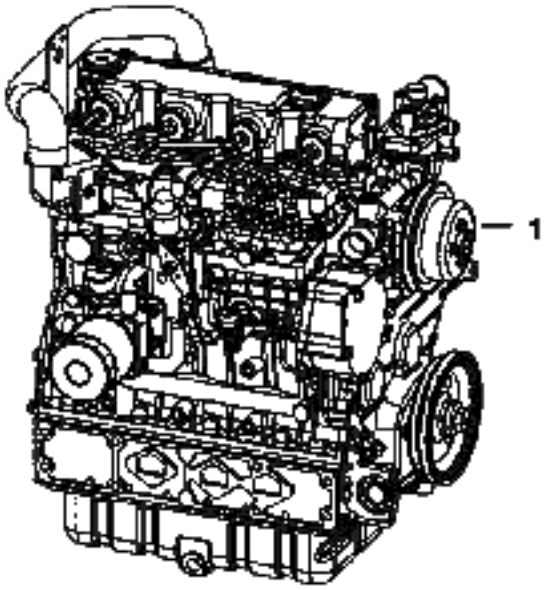

B–18620A

Ref No	Part Number	Description	Remarks	Serial Number	Qty
1	6684577	ENGINE	80.8 HP		1

MANIFOLDS
(V3300 DI T Kubota)

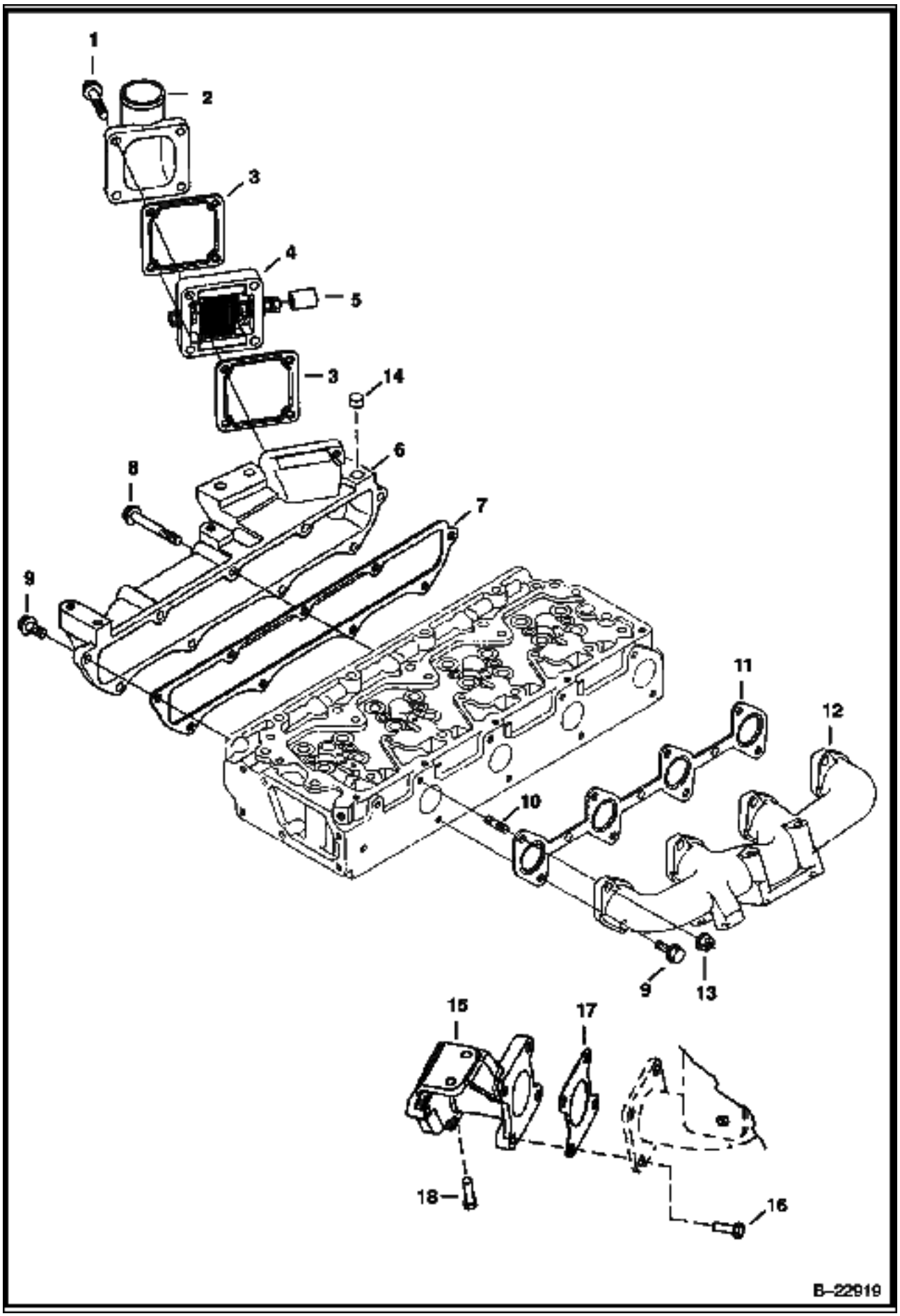

MANIFOLDS (Cont'd)
(V3300 DI T Kubota)

Ref No	Part Number	Description	Remarks	Serial Number	Qty
1	6680851	BOLT			4
2	6680886	FLANGE			1
3	6685960	GASKET			1
4	6680888	HEATER			1
5	6598112	CAP			1
6	6680883	MANIFOLD	intake		1
7	6680884	GASKET	manifold		1
8	6680885	BOLT			3
9	6680801	BOLT			10
10	3974916B	STUD			4
11	6680891	GASKET	manifold		1
12	6680890	MANIFOLD	exhaust		1
13	6680663	NUT			1
14	6685961	PLUG			1
15	6687145	FLANGE	Muffler		1
16	6687146	BOLT			4
17	6687147	GASKET			2
18	6680755	BOLT			2

TURBOCHARGER
(V3300 DI T Kubota)

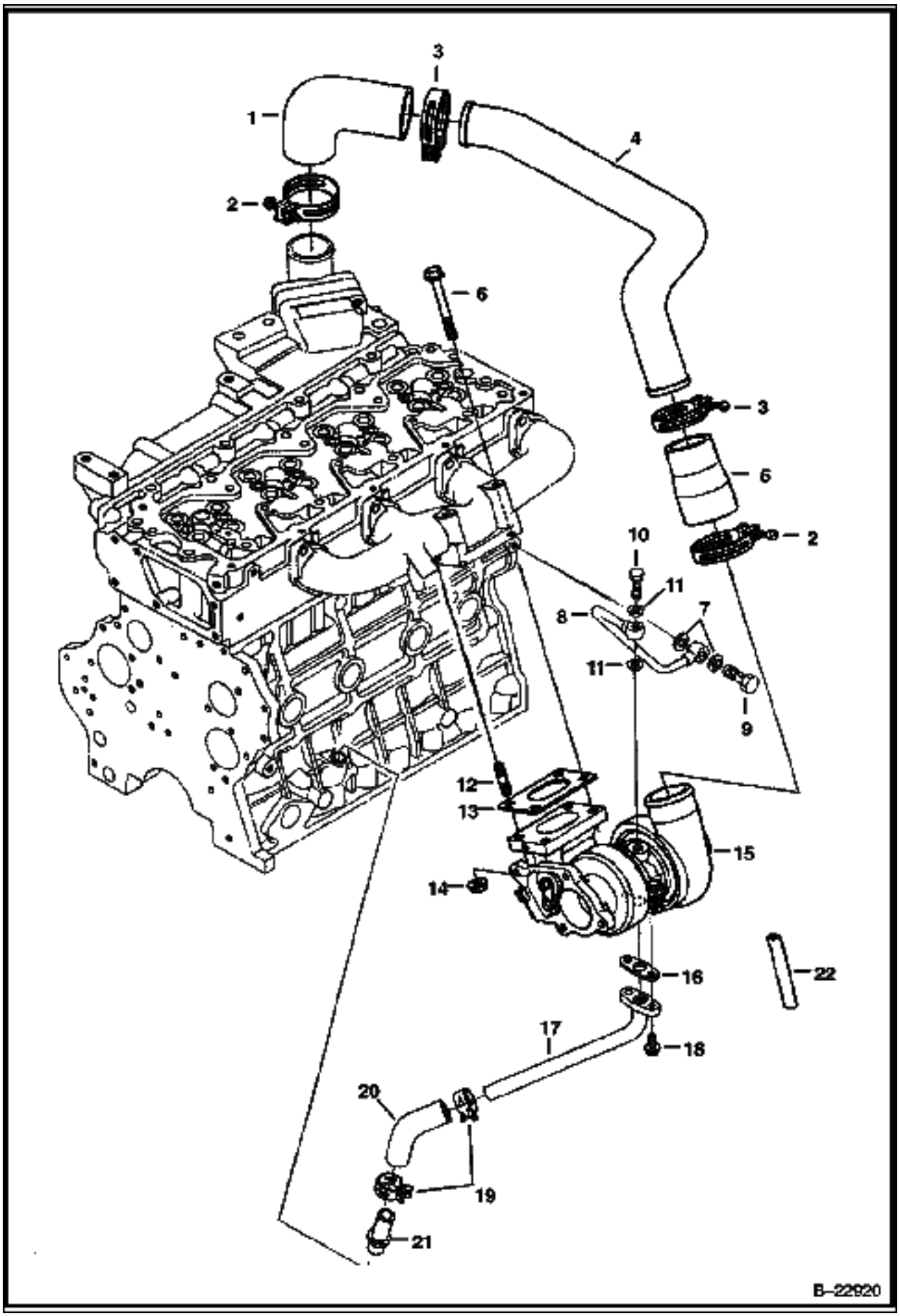

TURBOCHARGER (Cont'd)
(V3300 DI T Kubota)

Ref No	Part Number	Description	Remarks	Serial Number	Qty
1	6680896	HOSE			1
2	6680897	CLAMP			2
3	6680898	CLAMP			2
4	6680895	HOSE			1
5	6680894	HOSE			1
6	6680802	BOLT			2
7	6680792	GASKET			2
8	6680899	TUBE			1
9	6680791	BOLT	hollow		1
10	6680900	BOLT	hollow		1
11	6685962	GASKET			2
12	6680564	STUD			2
13	6680893	GASKET			1
14	6680663	NUT			2
15	6680892	TURBOCHARGER	W/Ref. 22		1
16	6685964	GASKET			1
17	6685963	PIPE			1
18	6652762	BOLT			2
19	6680903	CLAMP			2
20	6685965	HOSE			1
21	6680649	TUBE			1
22	6688069	HOSE	turbo		1

CYLINDER HEAD & COVER
(V3300 DI T Kubota)

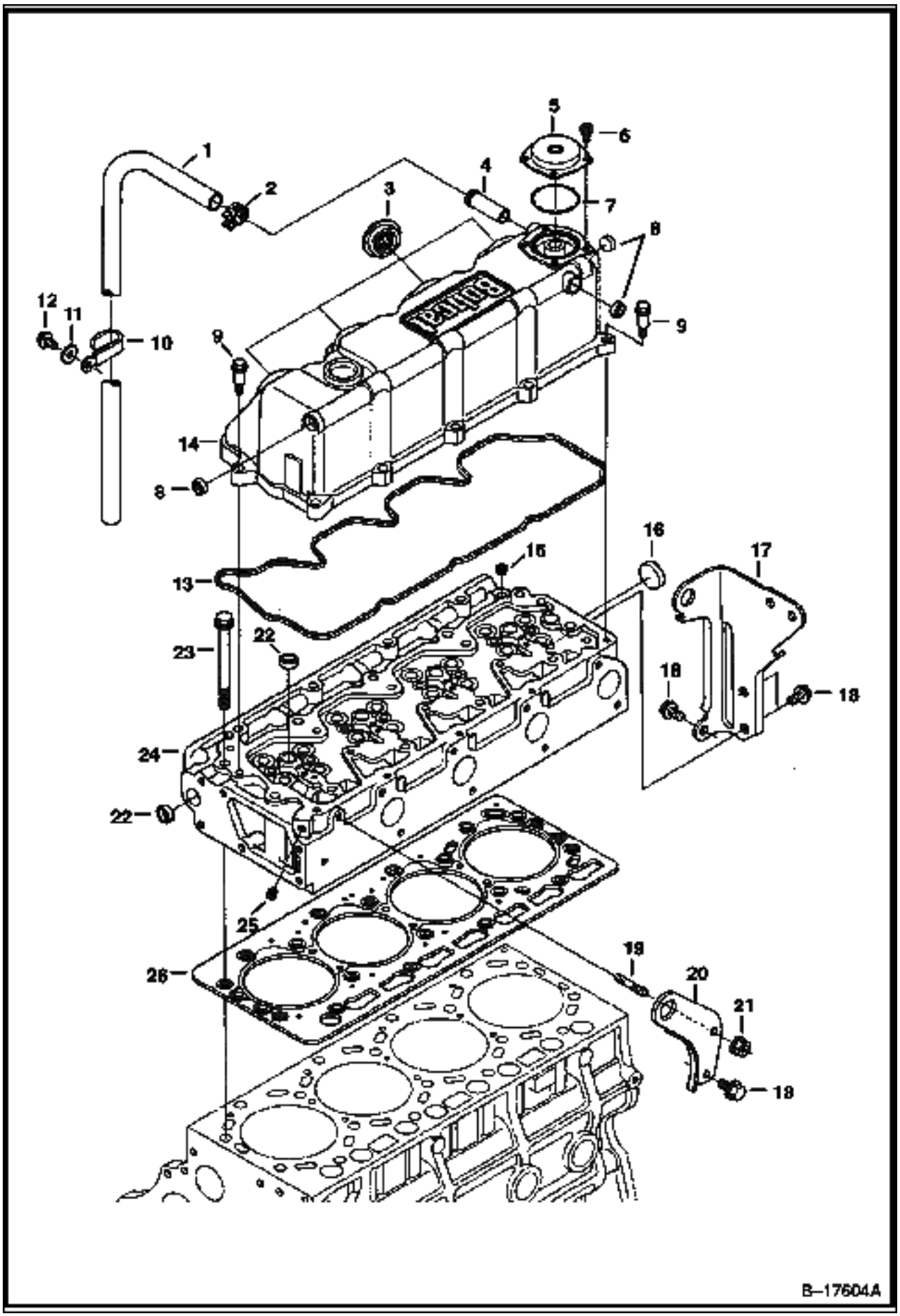

CYLINDER HEAD & COVER (Cont'd)
(V3300 DI T Kubota)

Ref No	Part Number	Description	Remarks	Serial Number	Qty
1	6685930	HOSE			1
2	6680698	CLAMP			1
3	6680695	SEAL	injection tube		4
4	6680689	ADAPTER			1
5	6680692	COVER	breather		1
6	6680693	SCREW			4
7	6680691	O-RING			1
8	6680694	PLUG			3
9	6680696	BOLT			10
10	6680699	CLAMP			1
11	6680700	WASHER			1
12	6680658	BOLT			1
13	6680690	GASKET			1
14	6680688	HEAD COVER	W/Ref. 3-8 & 13		1
15	6598169	PLUG			1
16	6680666	PLUG			1
17	6685926	BRACKET			1
18	6680662	BOLT			4
19	3974916B	STUD			1
20	6598133	BRACKET			1
21	6680663	NUT			1
22	6680665	PLUG			5
23	6680668	BOLT			18
24	6685927	HEAD	W/Ref. 15, 16, 22 & See Illustration CYCLINDER HEAD/ B17605A Ref. 15-21, 25 & 26		1
25	6680667	PLUG			1
26	6680669	HEAD GASKET	0.80mm - .0315" thick tightened - 2 notch		1
26	6680670	HEAD GASKET	0.90mm - .0354" thick tightened - 1 notch		1
26	6680671	HEAD GASKET	0.95mm - .0374" thick tightened - 0 notch		1

CYLINDER HEAD
(V3300 DI T Kubota)

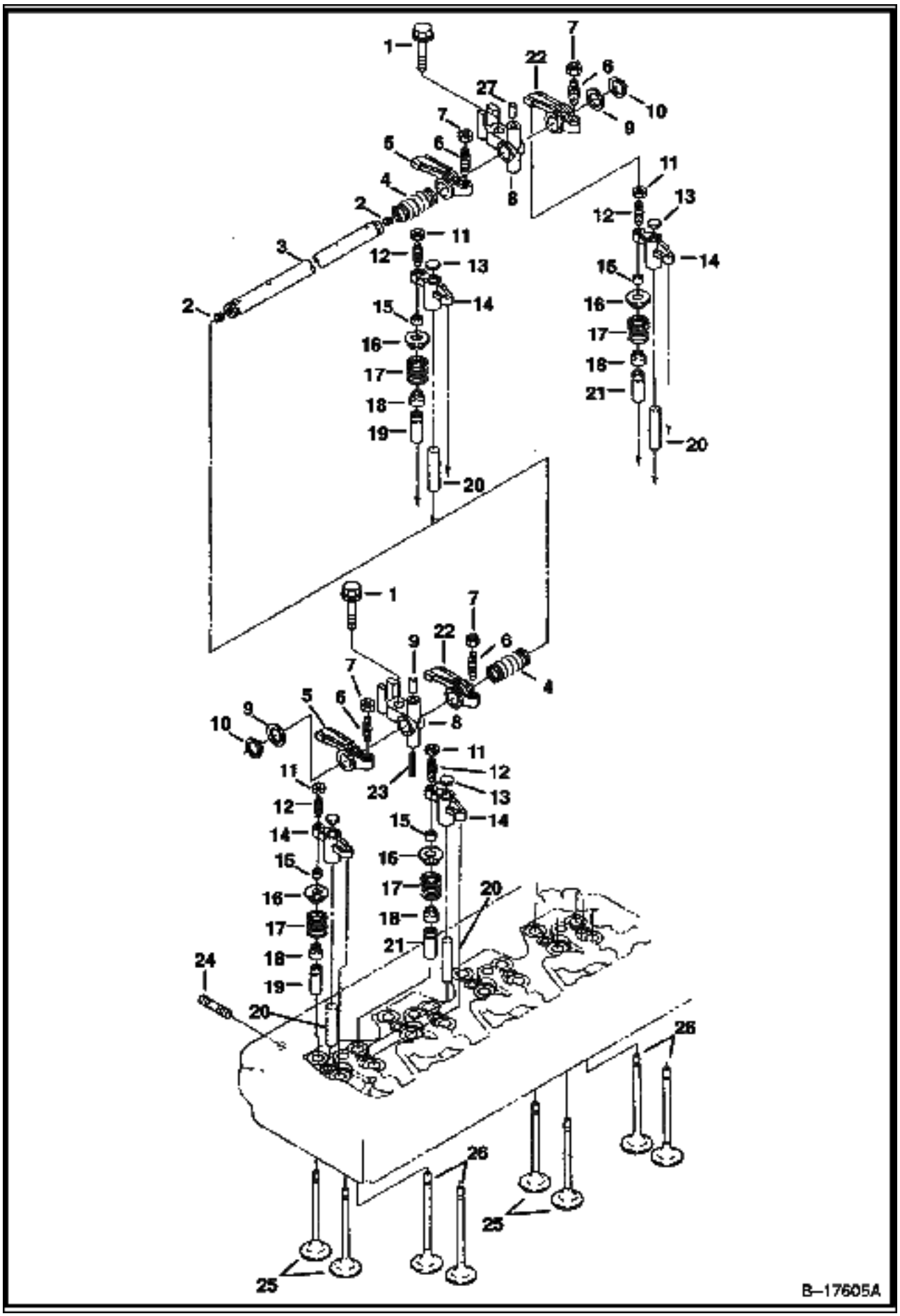

CYLINDER HEAD (Cont'd)
(V3300 DI T Kubota)

Ref No	Part Number	Description	Remarks	Serial Number	Qty
1	6680878	BOLT			4
2	25GM08010B	SET SCREW			2
3	6680868	SHAFT	W/Ref. 2		1
4	6680872	SPRING			3
5	6680873	ROCKER ARM	intake - W/Ref. 6 & 7		4
6	3974920B	SCREW	adjusting		4
7	6680874	NUT			4
8	6680869	BRACKET	rocker arm		4
9	6680870	WASHER			2
10	6680871	SNAP RING			2
11	6680881	NUT			8
12	6680880	SCREW	adjusting		8
13	6680882	PAD			8
14	6680879	ARM	valve bridge - W/Ref. 11 & 12		8
15	6680865	COLLET	valve spring - set		16
16	6685959	RETAINER	valve spring		16
17	6680863	VALVE SPRING			16
18	6672436	SEAL	valve stem		16
19	6685957	GUIDE	inlet valve		8
20	6680866	SHAFT	valve		8
21	6685958	GUIDE	exhaust valve		8
22	6680875	ROCKER ARM	exhaust - W/Ref. 6 & 7		4
23	6667461	PIN			1
24	6680867	STUD			4
25	6680861	VALVE	inlet		8
26	6680862	VALVE	exhaust		8
27	6680877	PIN			4

OIL PAN
(V3300 DI T Kubota)

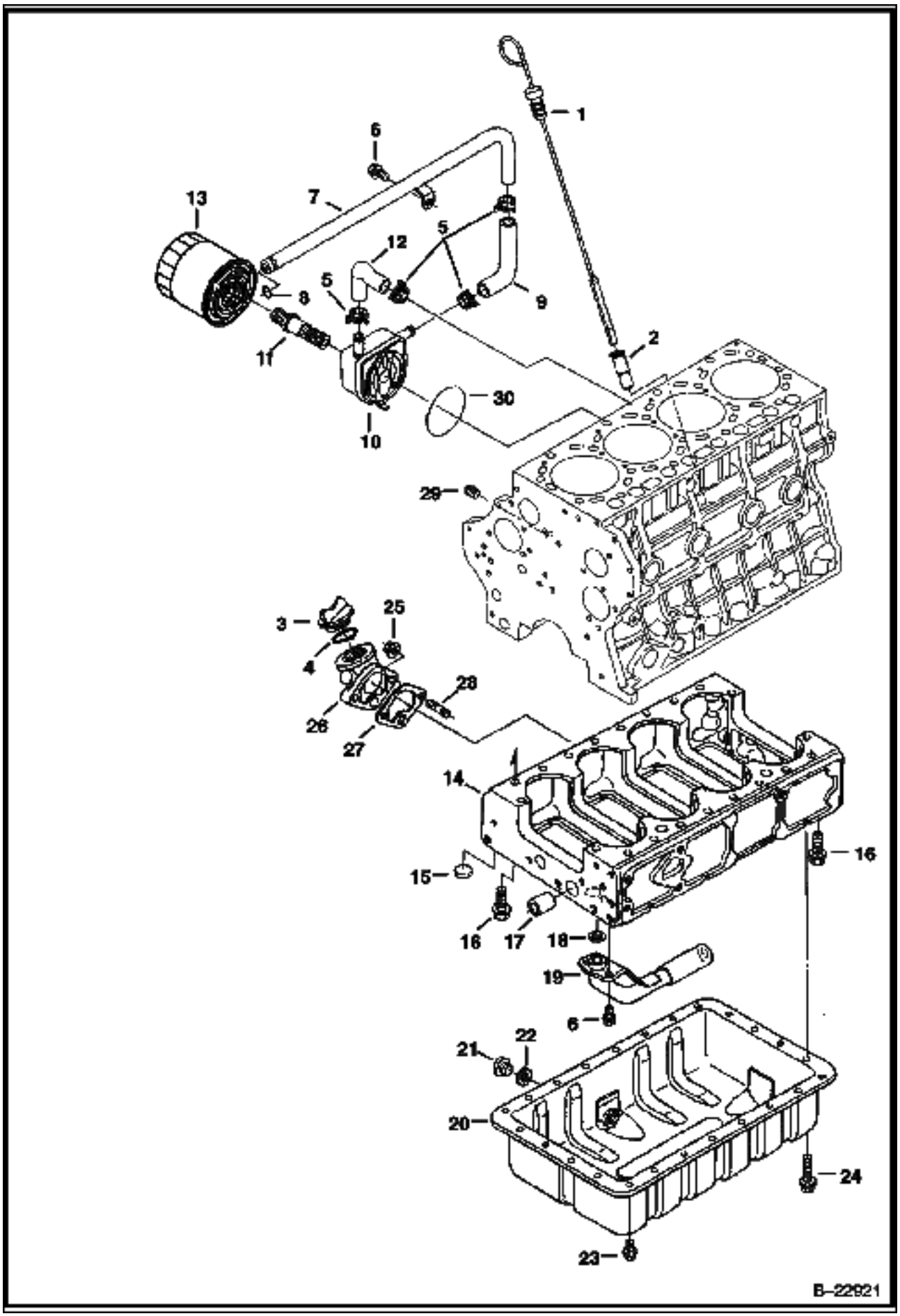

OIL PAN (Cont'd)
(V3300 DI T Kubota)

Ref No	Part Number	Description	Remarks	Serial Number	Qty
1	6680703	DIPSTICK			1
2	6680702	TUBE	dipstick		1
3	6685924	CAP			1
4	3966602B	O-RING			1
5	6675618	CLAMP			4
6	6680662	BOLT			3
7	6685970	HOSE			1
8	6685971	O-RING			1
9	6685972	HOSE			1
10	6680909	OIL COOLER			1
11	6680910	ADAPTER			1
12	6685969	HOSE			1
13	6678233	OIL FILTER			1
14	6685921	CRANKCASE			1
15	6680638	PLUG			10
16	6680654	BOLT			16
17	6680655	PIN	gear case		1
18	6680661	O-RING			1
19	6680660	OIL SUMP			1
20	6680656	OIL PAN	W/Ref. 21 & 22		1
21	6680657	PLUG	oil		1
22	6631046	SEAL	rubber		1
23	6685925	BOLT			20
24	6680659	BOLT			4
25	6680663	NUT			2
26	6685922	FLANGE	oil fill		1
27	6685923	GASKET			1
28	3974916B	STUD			2
29	16F000002B	PLUG			1
30	6686402	SEAL			1

PISTON & CRANKSHAFT
(V3300 DI T Kubota)

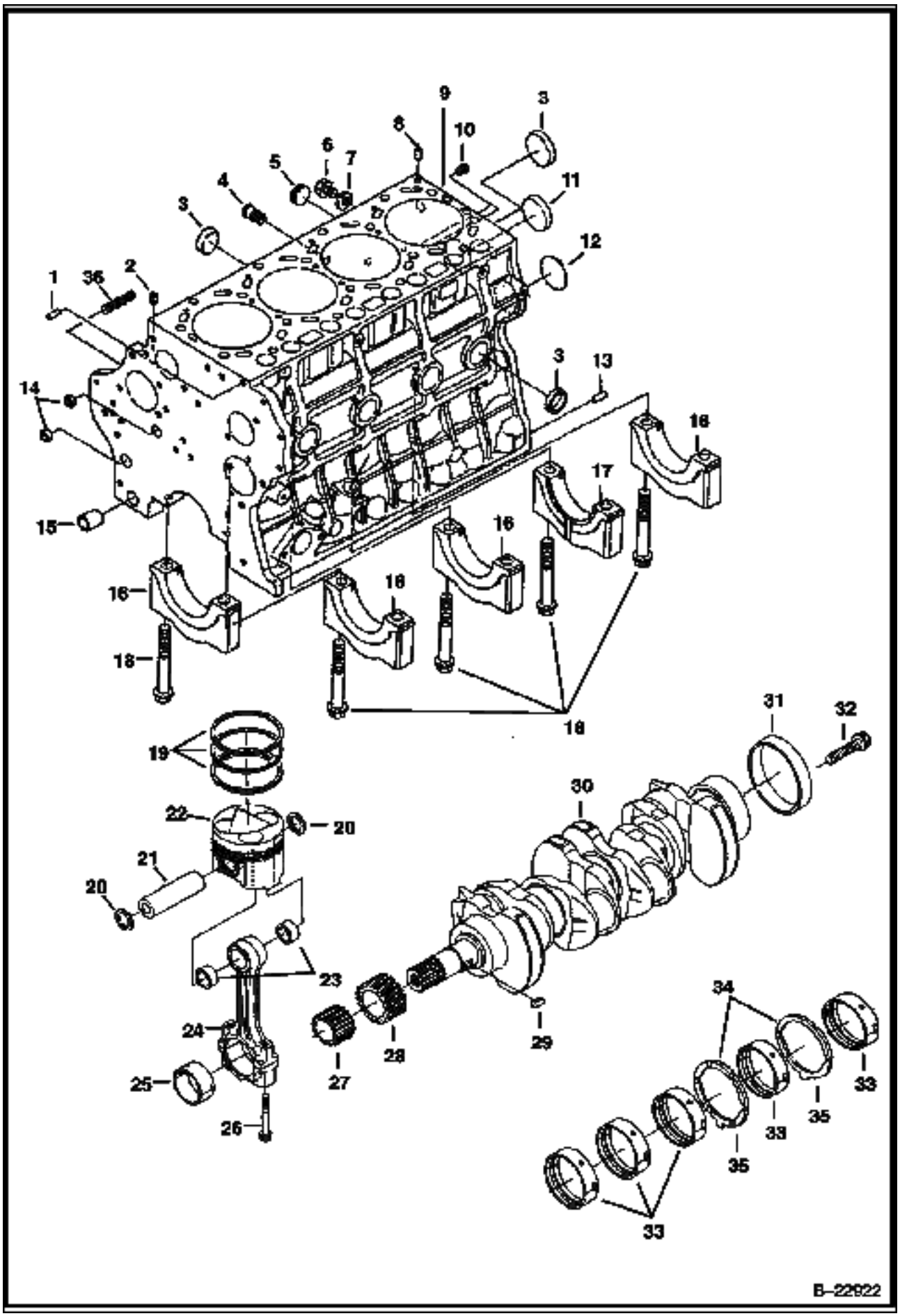

PISTON & CRANKSHAFT (Cont'd)
(V3300 DI T Kubota)

Ref No	Part Number	Description	Remarks	Serial Number	Qty
1	21JM00814B	PIN			1
2	6598169	PLUG			3
3	6680638	PLUG			7
4	6685920	ADAPTER			1
5	6672354	PLUG			1
6	6652750	PLUG			1
7	6652751	GASKET			1
8	6680643	PIN			2
9	6685917	CRANKCASE	W/Ref. 1-3, 5, 8, 10-18 & 36		1
10	6680636	PLUG			1
11	6680639	PLUG			1
12	6680640	PLUG			1
13	6685918	PIN			2
14	6680637	PLUG			2
15	6680644	PIN			1
16		CAP	NSS - main bearing - Order Ref. 9		4
17		CAP	NSS - main bearing - Order Ref. 9		1
18	6680645	BOLT			10
19	6680723	PISTON RINGS	standard		4
19	6680724	PISTON RINGS	0.50mm oversized		4
20	6680726	SNAP RING	internal		8
21	6680725	PIN			4
22	6685933	PISTON	standard		4
22	6685934	PISTON	0.50mm oversized		4
23	6680728	BUSHING			8
24	6680727	ROD	connecting - W/Ref. 23, 25 & 26 - marked blue, yellow or w/o color		4
25	6680730	BEARING	rod - set - blue		4
25	6680731	BEARING	rod - set - yellow or w/o color		4
25	6680732	BEARING	rod - set - 0.20 mm		4
25	6680733	BEARING	rod - set - 0.40 mm		4
26	6680729	BOLT			8
27	6680737	GEAR	oil pump		1
28	6680736	GEAR	crankshaft		1
29	3974226B	KEY			1
30	6680734	CRANKSHAFT	W/Ref. 27-29 & 31		1
31	6680735	SLEEVE	crankshaft		1
32	6680747	BOLT	flywheel		7
33	6680738	MAIN BEARING	standard - set		5
33	6680739	MAIN BEARING	0.20mm undersized - set		5
33	6680740	MAIN BEARING	0.40mm undersized - set		5
34	6680741	THRUST WASHER	standard		2
34	6680742	THRUST WASHER	0.20mm oversized		2
34	6680743	THRUST WASHER	0.40mm oversized		2
35	6680744	THRUST WASHER	standard		2
35	6680745	THRUST WASHER	0.20mm oversized		2
35	6680746	THRUST WASHER	0.40mm oversized		2
36	6685919	STUD			3

CAMSHAFT
(V3300 DI T Kubota)

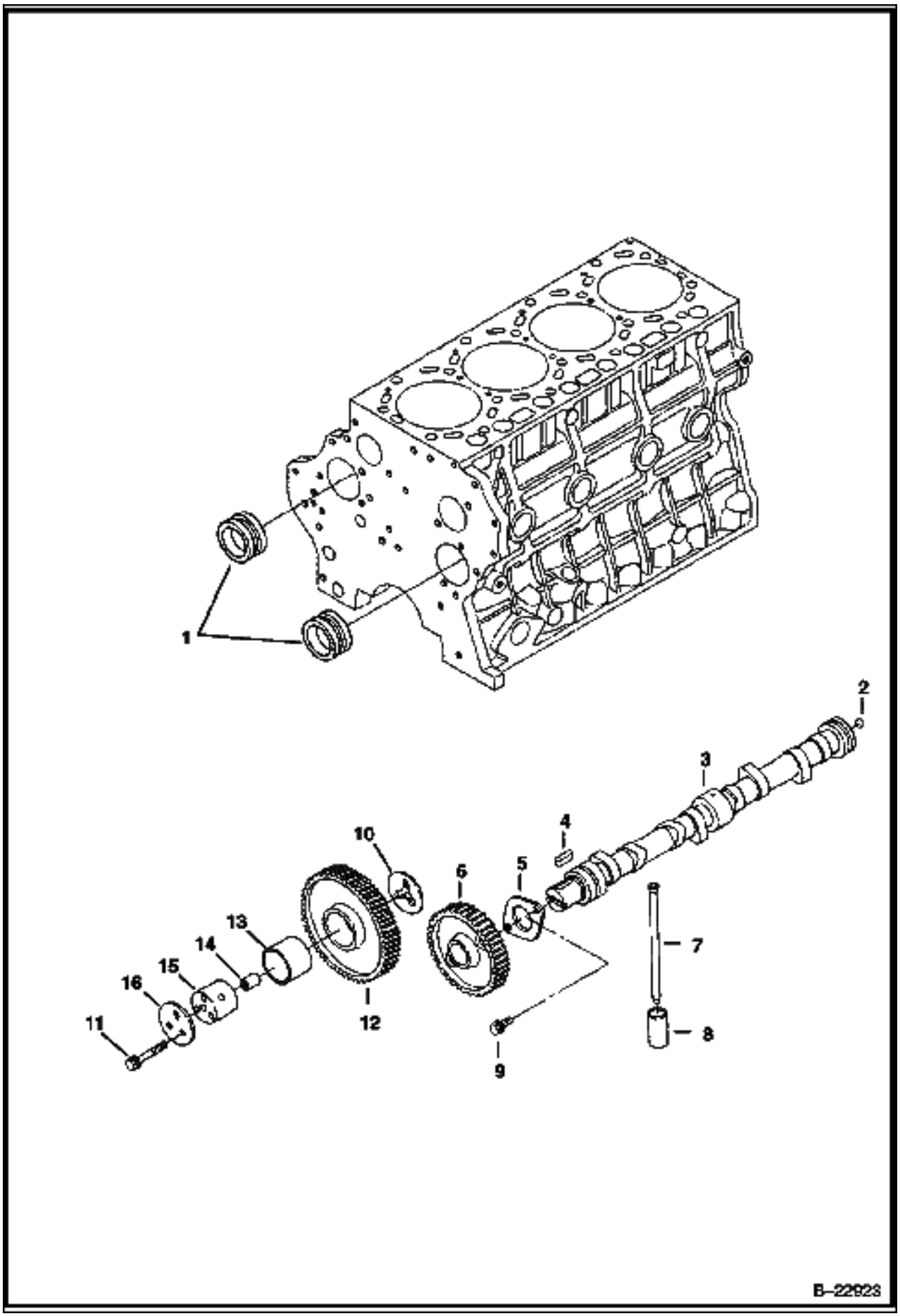

CAMSHAFT (Cont'd)
(V3300 DI T Kubota)

Ref No	Part Number	Description	Remarks	Serial Number	Qty
1	6680748	BALANCER			2
2	6680710	BALL			1
3	6680709	CAMSHAFT	W/Ref. 2 & 4-6		1
4	6652679	KEY			1
5	6680712	FLANGE			1
6	6680711	GEAR	cam		1
7	6680708	PUSH ROD			8
8	6680707	TAPPET			8
9	6680662	BOLT			2
10	6680716	COLLAR			1
11	6680685	BOLT			6
12	6685932	GEAR	W/Ref. 13		1
13	6680720	BUSHING			2
14	6680715	PIN			2
15	6680714	SHAFT	idler gear		2
16	6680717	COLLAR			2

FRONT COVER
(V3300 DI T Kubota)

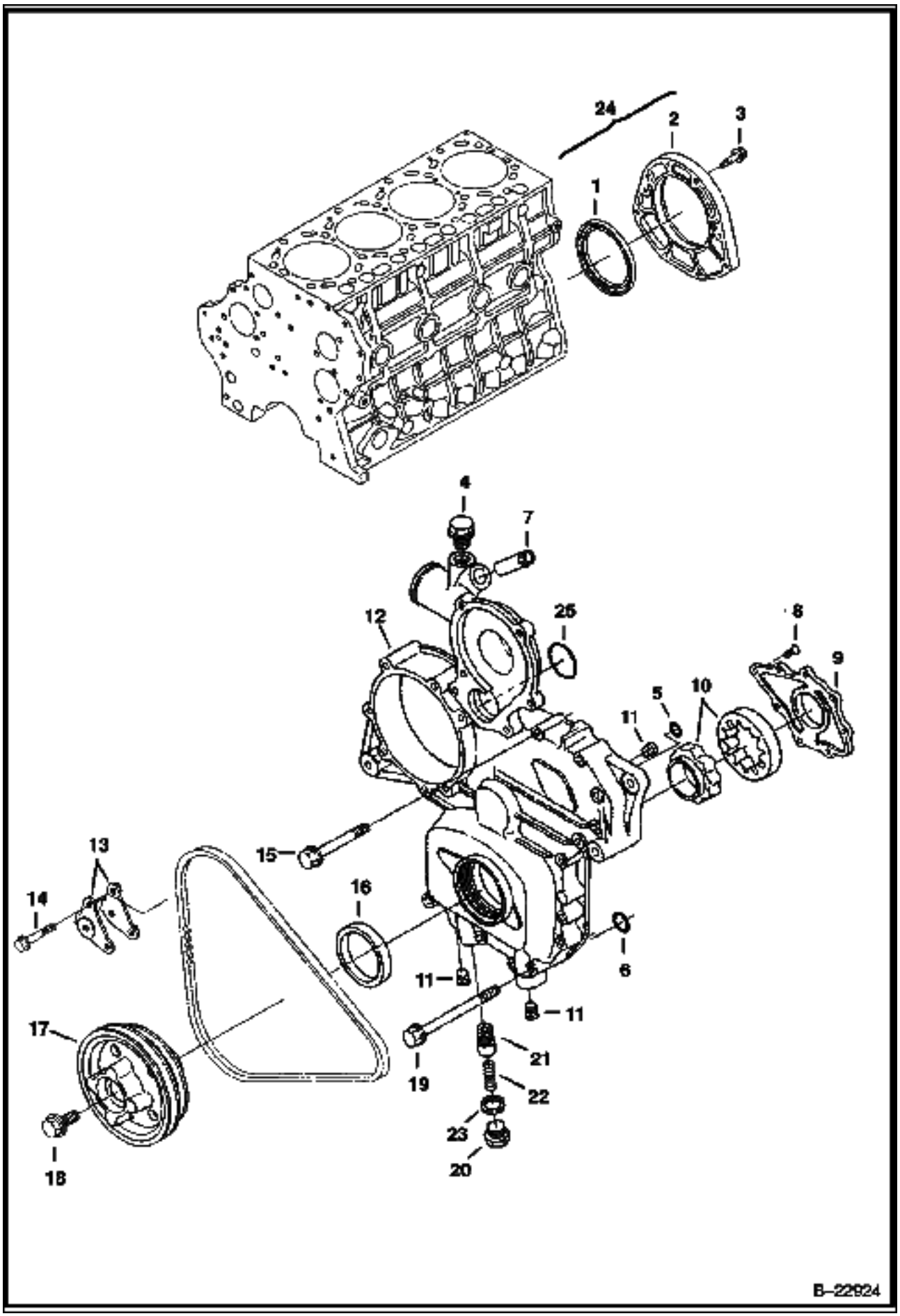

FRONT COVER (Cont'd)
(V3300 DI T Kubota)

Ref No	Part Number	Description	Remarks	Serial Number	Qty
1	6680705	SEAL	rear		1
2	6685931	COVER	W/ Ref. 1		1
3	6680706	BOLT			8
4	6670504	PLUG			1
5	6680681	O-RING			1
6	6680682	O-RING			1
7	6680689	ADAPTER			1
8	6680678	SCREW			8
9	6680677	COVER	oil pump		1
10	6680676	ROTOR	oil pump		1
11	6680679	PLUG			3
12	6685928	COVER	front - W/Ref. 4, 7-11 & 20-23		1
13	6680839	BRACKET	alternator		2
14	6680687	BOLT			2
15	6680685	BOLT			13
16	6680680	SEAL			1
17	6685953	PULLEY	fan		1
18	6680841	BOLT			1
19	6680686	BOLT			2
20	6680675	PLUG			1
21	6685929	RELIEF VALVE			1
22	6680673	SPRING			1
23	6670347	GASKET			1
24	6680704	COVER	W/Ref. 1 & 2		1
25	6680855	O-RING			1

WATER PUMP & THERMOSTAT
(V3300 DI T Kubota)

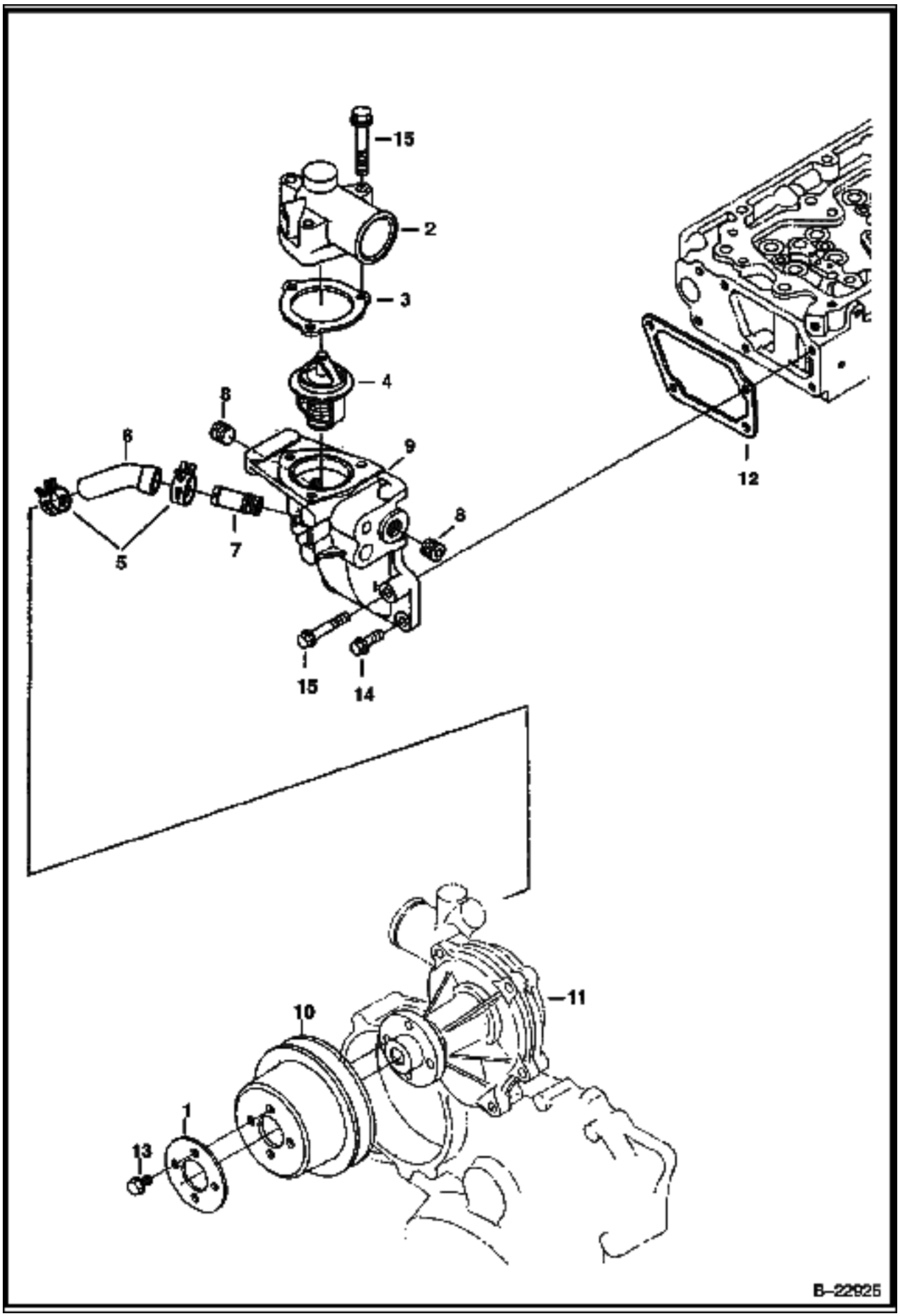

WATER PUMP & THERMOSTAT (Cont'd)
(V3300 DI T Kubota)

Ref No	Part Number	Description	Remarks	Serial Number	Qty
1	6680858	WASHER			1
2	6685954	COVER	thermostat		1
3	6685955	GASKET			1
4	6680850	THERMOSTAT			1
5	6675618	CLAMP			2
6	6680842	HOSE			1
7	6685920	ADAPTER			1
8	6670504	PLUG			2
9	6685956	HOUSING	thermostat - W/Ref. 7 & 8		1
10	6680857	PULLEY	fan		1
11		WATER PUMP	See Illustration WATER PUMP/ B22926		1
12	6680849	GASKET			1
13	6680662	BOLT			4
14	6680755	BOLT			3
15	6680851	BOLT			4

WATER PUMP
(V3300 DI T Kubota)

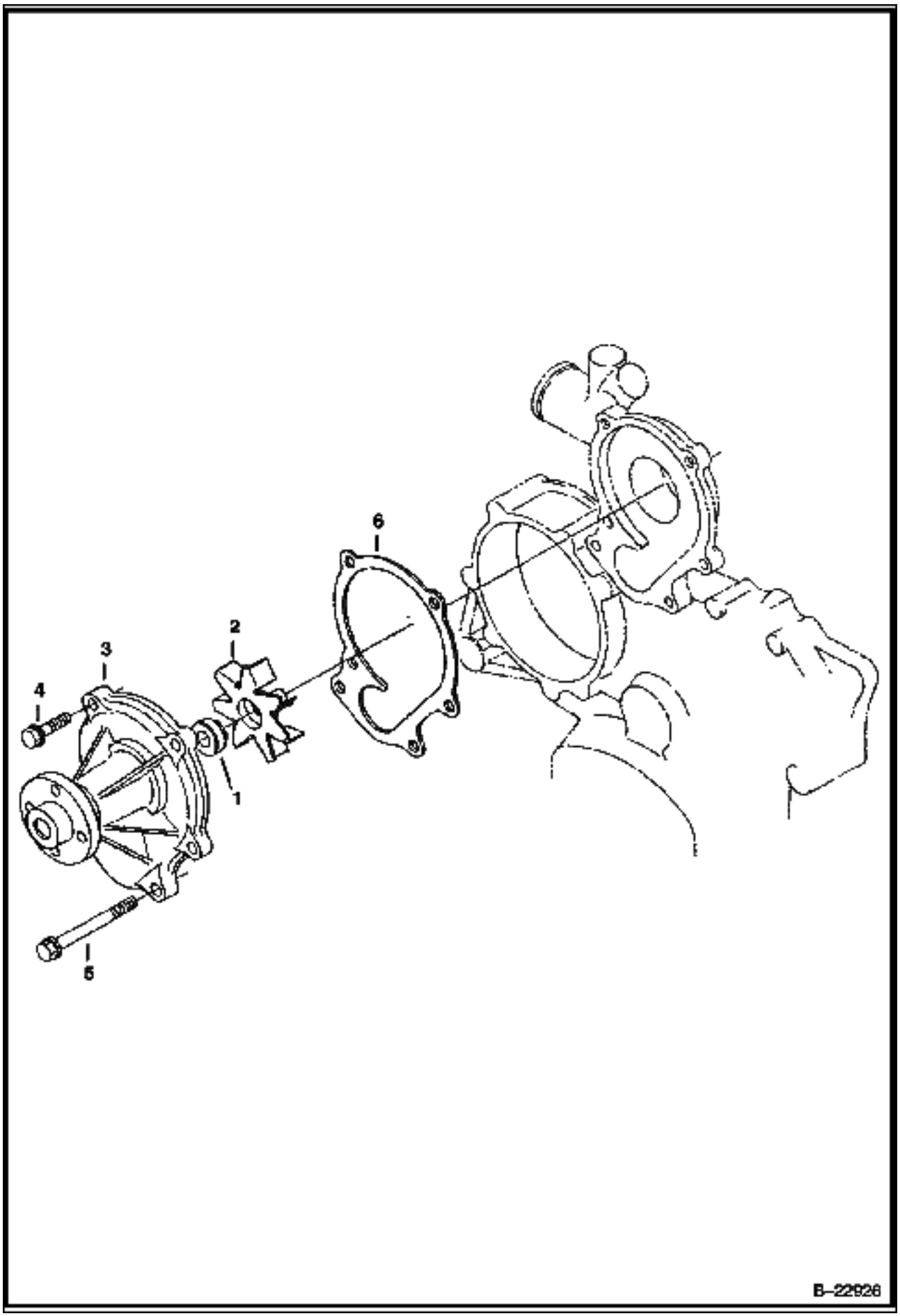

WATER PUMP (Cont'd)
(V3300 DI T Kubota)

Ref No	Part Number	Description	Remarks	Serial Number	Qty
1	6680280	SEAL			1
2		IMPELLER	NSS - Order Ref. 3		1
3	6680852	PUMP	water - W/Ref. 1 & 2		1
4	6680706	BOLT			2
5	6680856	BOLT			4
6	6680853	GASKET			1

FUEL INJECTION SYSTEM
(V3300 DI T Kubota)

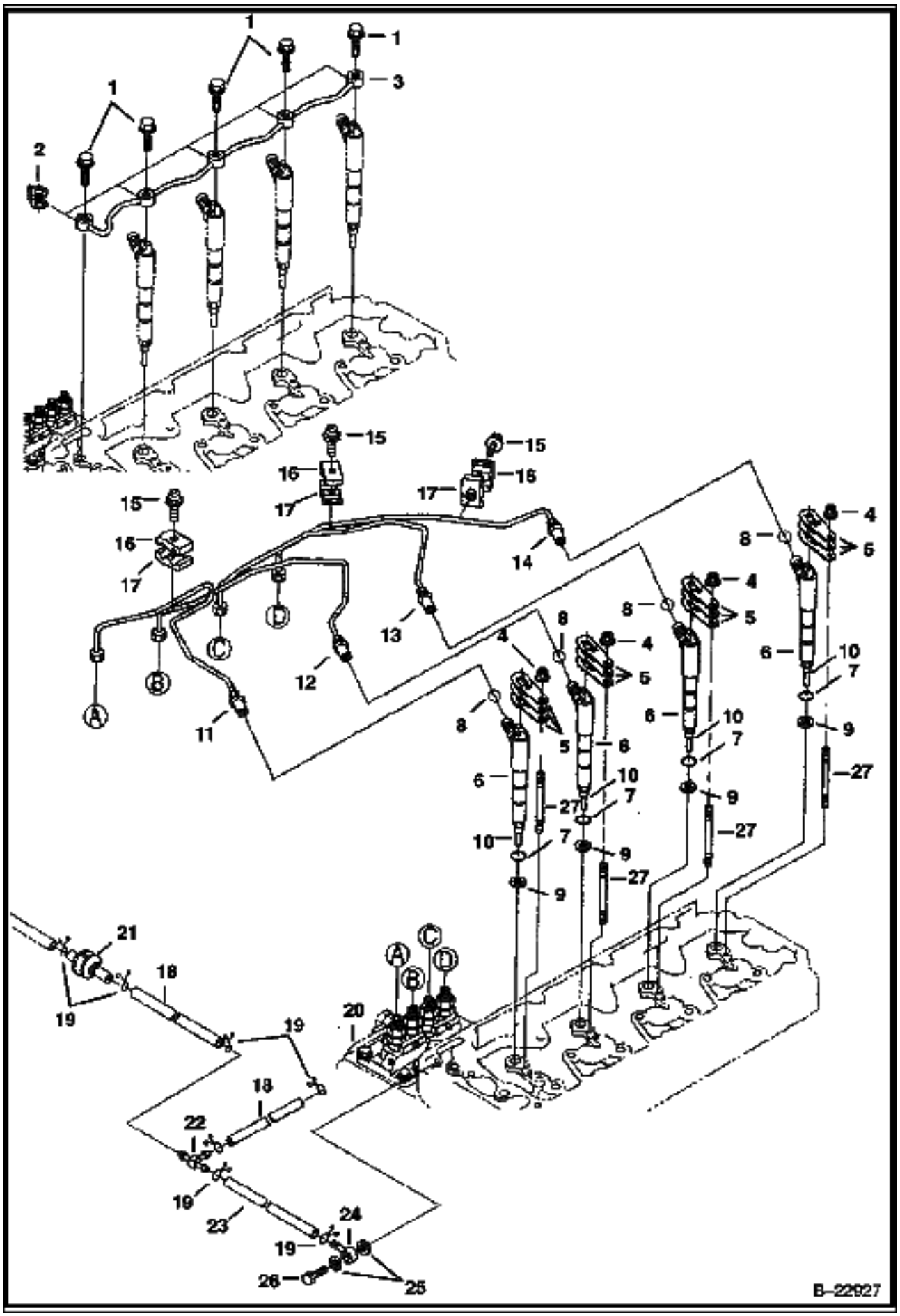

Ref No	Part Number	Description	Remarks	Serial Number	Qty
1	6680788	BOLT			5
2	6685498	GASKET			5
3	6680787	PIPE			1
4	6680663	NUT			4
5	6680780	CLAMP	hold down		12
6	6685854	INJECTOR	W/Ref. 10		4
7	6670769	O-RING			4
8	6680778	O-RING			4
9	6680779	GASKET			4
10	6680777	NOZZLE			4
11	6685940	TUBE			1
12	6685941	TUBE			1
13	6685942	TUBE			1
14	6685943	TUBE			1
15	3974260B	BOLT			3
16	6680786	CLAMP			3
17	6680785	CLAMP			3
18	6685945	HOSE			2
19	6680795	CLAMP			6
20		PUMP	See Illustration FUEL INJECTION PUMP/ B17614A INJECTION		1
21	6680796	VALVE	check		1
22	6680797	TEE			1
23	6685944	HOSE			1
24	6680790	FITTING			1
25	6680792	GASKET			2
26	6680791	BOLT	hollow		1
27	6680867	STUD			4

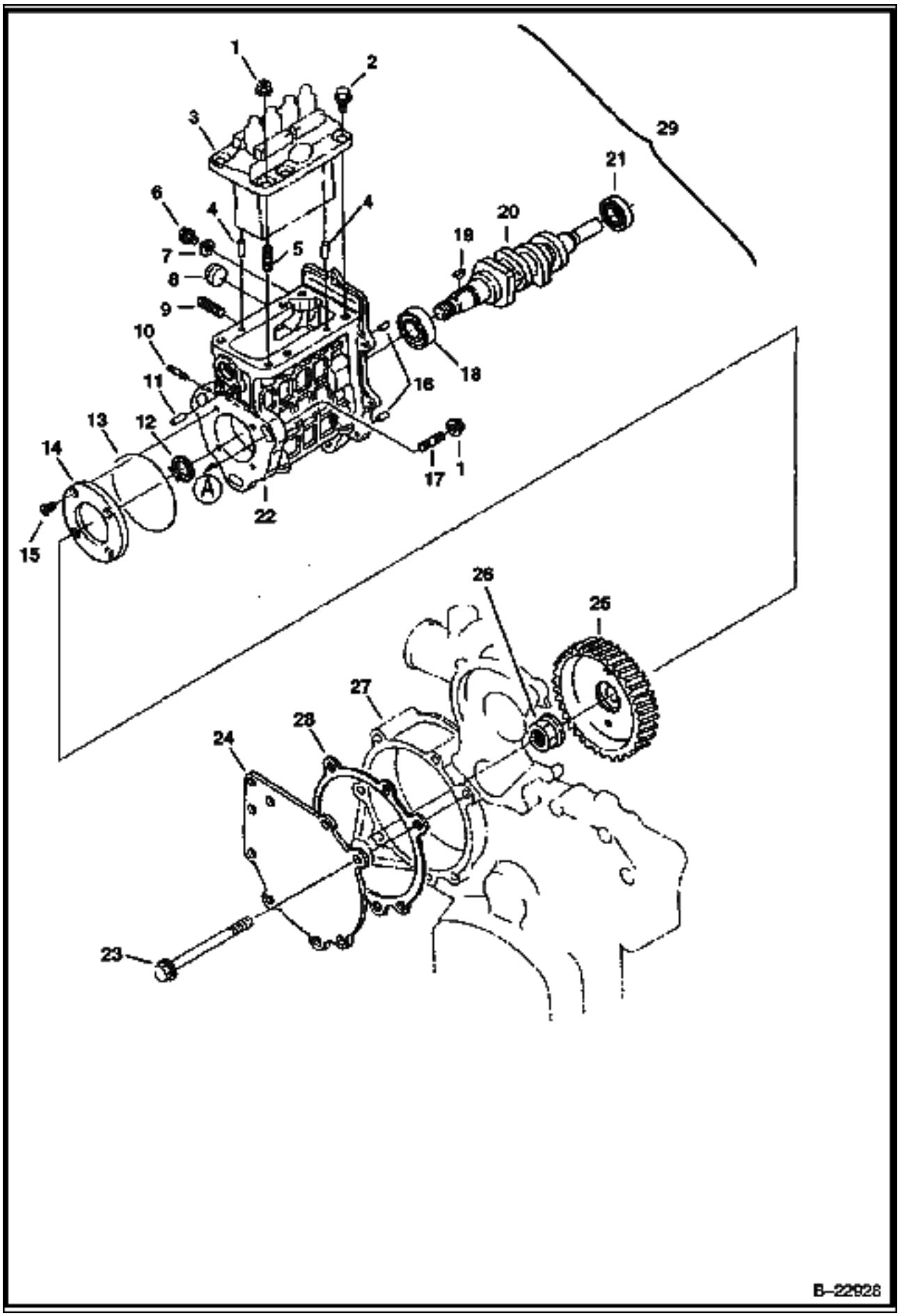
1
2
3
29
21
6
4
4
20
19
7
5
8
9
10
11
13
12
14
18
16
17
1
22
15
26
25
27
28
24
23
B–22928

Ref No	Part Number	Description	Remarks	Serial Number	Qty
1	6680663	NUT			6
2	6680801	BOLT			5
3		INJECTION PUMP	See Illustration FUEL INJECTION PUMP/ B17614A		1
4	3974394B	PIN			2
5	6680807	STUD			3
6	6680815	BOLT			2
7	3974095B	GASKET			2
8	6680808	PLUG			1
9	6680815	BOLT			2
10	3974503B	STUD			2
11	21JM00020B	PIN			2
12	5JM00020B	SNAP RING			1
13	6680816	O-RING			1
14	6680814	FLANGE			1
15	6680678	SCREW			4
16	6680809	PIN			2
17	6680799	STUD			3
18	6685950	BEARING			1
19	6680813	KEY	woodruff		1
20	6685949	CAMSHAFT	fuel		1
21	6680812	BEARING			1
22	6680806	HOUSING	W/Ref. 4, 5, 8, 10, & 16		1
23	6680802	BOLT			7
24	6685947	COVER			1
25	6685946	GEAR			1
26	6680818	NUT			1
27		FRONT COVER	See Illustration FRONT COVER/ B22924		1
28	6685948	GASKET			1
29	6685935	INJECTION PUMP	complete w/housing, fuel pump, camshaft, injection pump & governor		1

FUEL INJECTION PUMP
(V3300 DI T Kubota)

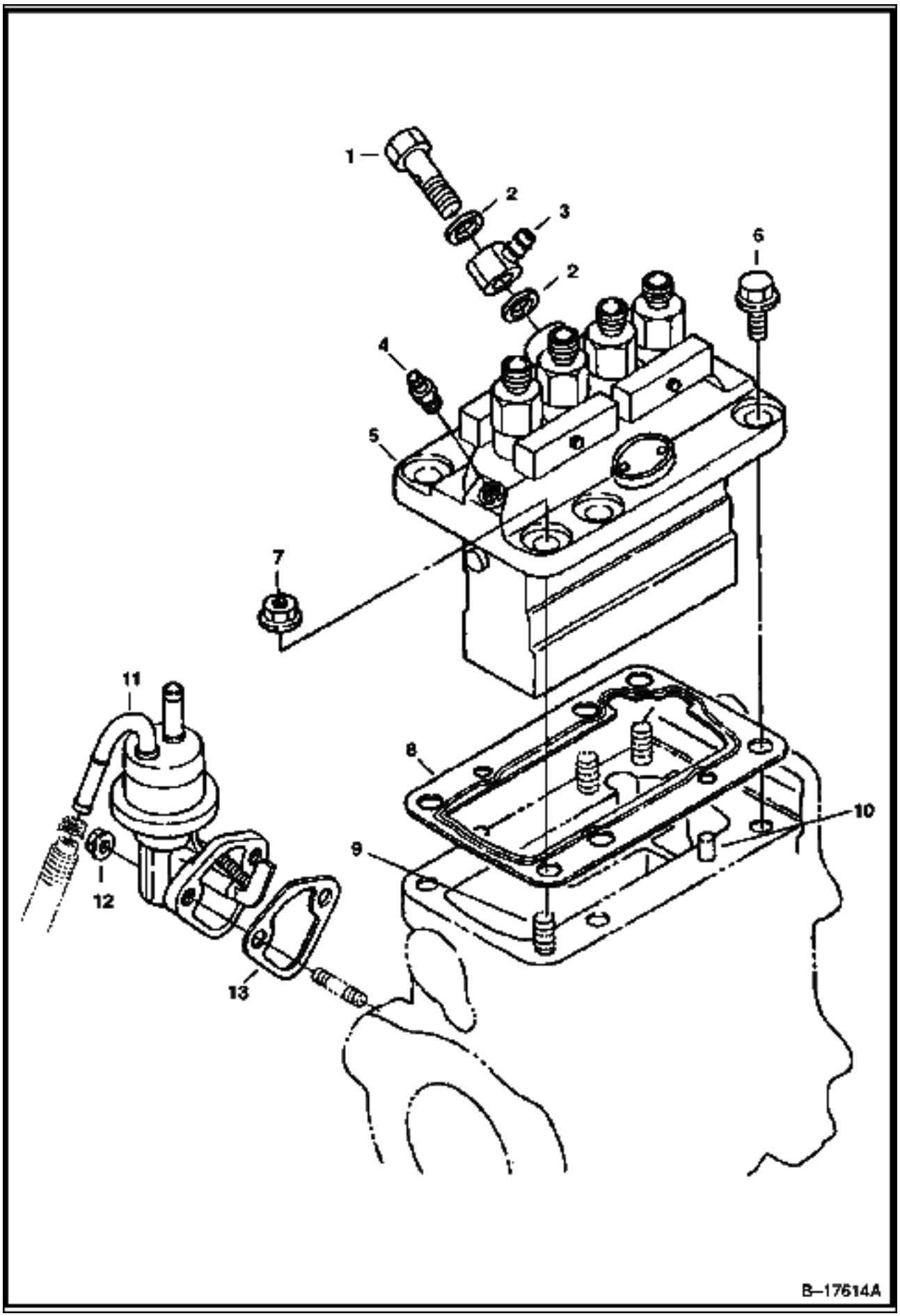

FUEL INJECTION PUMP (Cont'd)
(V3300 DI T Kubota)

Ref No	Part Number	Description	Remarks	Serial Number	Qty
1	6680752	BOLT			1
2	6680753	GASKET			2
3	3974500B	JOINT	eye		1
4	6680756	SCREW	air		1
5	6685936	PUMP	injection - W/Ref. 1 & 2		1
6	6680755	BOLT			5
7	6680663	NUT			3
8		SHIM	See Illustration FUEL INJECTION SYSTEM/ B22928 NSS - Order Ref. 29 - Or see authorized Kubota pump shop		1
9	6680807	STUD			3
10	3974394B	PIN			2
11	6680838	FUEL PUMP			1
12	6670533	NUT			2
13	6670782	GASKET			1

GOVERNOR
(V3300 DI T Kubota)

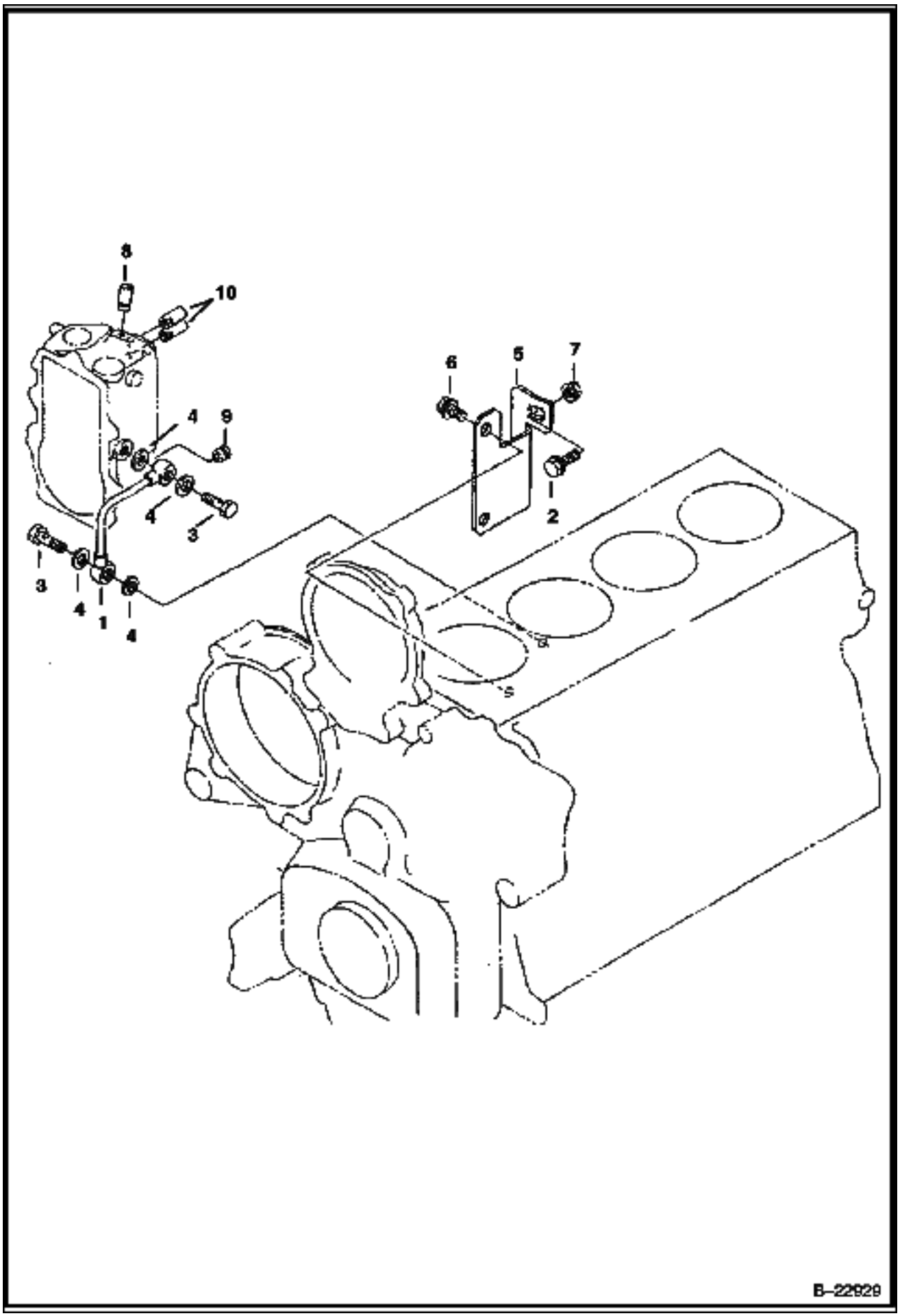

GOVERNOR (Cont'd)
(V3300 DI T Kubota)

Ref No	Part Number	Description	Remarks	Serial Number	Qty
1	6680905	TUBE			1
2	6680654	BOLT			1
3	6680906	BOLT			1
4	6685962	GASKET			2
5	6685967	BRACKET	injection pump		1
6	6680658	BOLT			2
7	6685968	NUT			1
8	6672384	CAP			1
9	6670427	CAP			1
10	6598112	CAP			2

GOVERNOR
(V3300 DI T Kubota)

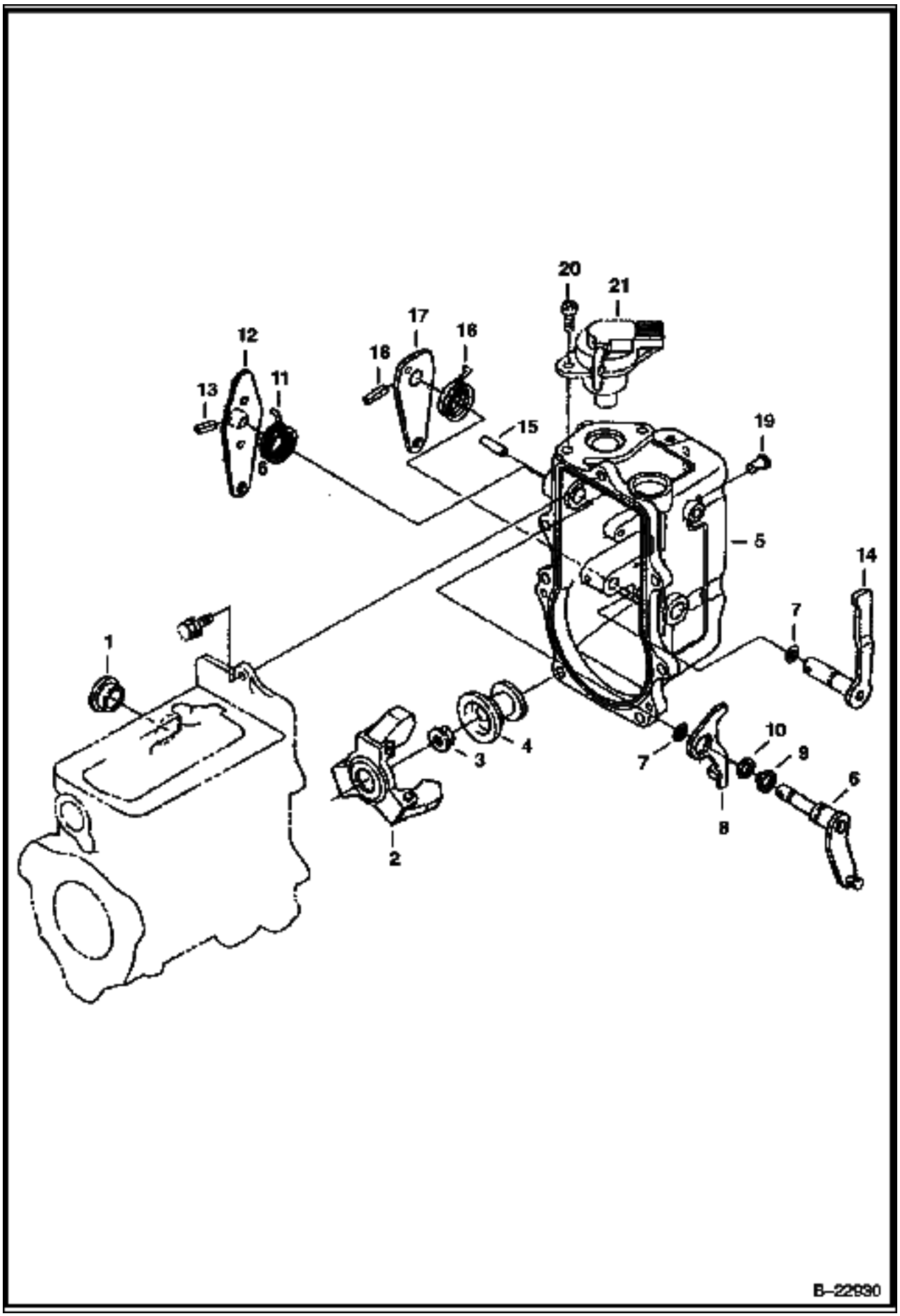

GOVERNOR (Cont'd)
(V3300 DI T Kubota)

Ref No	Part Number	Description	Remarks	Serial Number	Qty
1	6680757	COVER			1
2	6680759	NUT			1
3	6680758	WEIGHT			1
4	6680761	SLEEVE	governor		1
5	6685937	HOUSING			1
6	6680763	LEVER			1
7	6683023	O-RING			3
8	6680764	LEVER	stop		1
9	6680765	SNAP RING			1
10	6680766	WASHER			1
11	6685938	SPRING			1
12	6685939	LEVER	speed control		1
13	6680769	PIN			1
14	6680770	LEVER	engine stop		1
15	6680775	PIN			1
16	6680771	SPRING			1
17	6680772	LEVER	engine stop		1
18	6680773	PIN			1
19	6670774	PIN			1
20	6680750	SCREW			2
21	6680749	SOLENOID	fuel shut-off		1

GOVERNOR
(V3300 DI T Kubota)

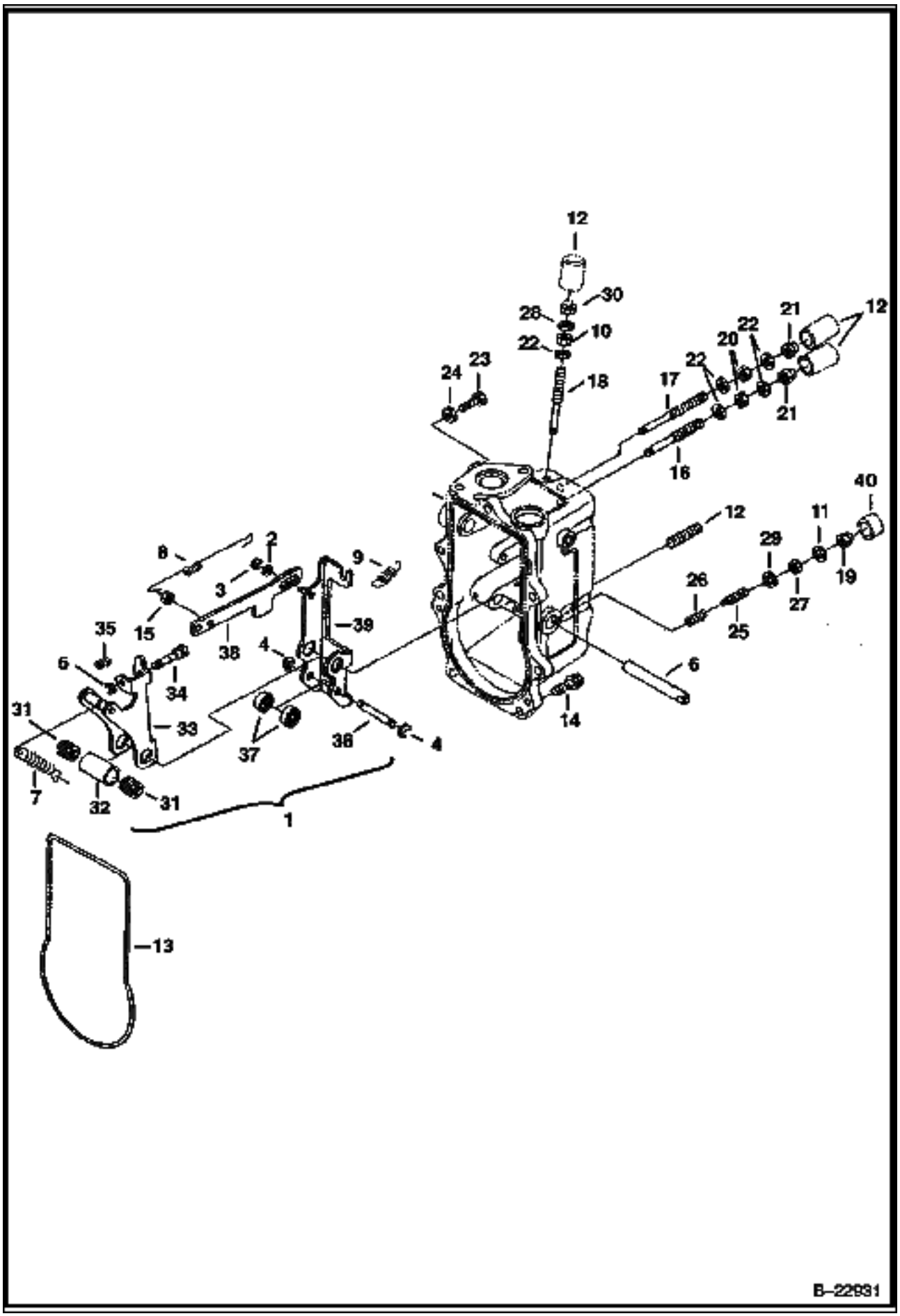

GOVERNOR (Cont'd)
(V3300 DI T Kubota)

Ref No	Part Number	Description	Remarks	Serial Number	Qty
1	6685951	LEVER	assy. - Ref. 2-5, 6-9, 15 & 31-39		1
2	6680820	WASHER			1
3	6680821	SNAP RING			1
4	6680822	SNAP RING			2
5	6680823	SNAP RING			1
6	6680824	SHAFT			1
7	6680825	SPRING			1
8	6680826	SPRING			1
9	6680827	SPRING			1
10	6680272	NUT			2
11	6680792	GASKET			1
12	6680828	STUD			2
13	6680829	GASKET			1
14	6680830	BOLT			7
15	6685952	NUT			1
16	6680832	SCREW	adjusting		1
17	3974970B	SCREW	adjusting		1
18	6680833	SCREW	adjusting		1
19	6670426	NUT			1
20	6680499	NUT			1
21	6670462	NUT			2
22	3974972B	GASKET			1
23	6680834	STOPPER			1
24	1DM00006B	NUT			1
25	6670425	SCREW	adjusting - W/Ref. 27		1
26		SPRING	NAP		1
27	6680836	NUT			1
28	3974972B	GASKET			5
29	3974095B	GASKET			1
30	6670462	NUT			1
31		BUSHING	NSS		2
32		TUBE	NSS		1
33		LEVER	NSS		1
34		BOLT	NSS		1
35		SPRING	NSS		1
36		ROD	NSS		1
37		BEARING	NSS		2
38		BRACKET	NSS		1
39		LEVER	NSS		1
40	6670427	CAP			1

AIR CLEANER
(V3300 DI T Kubota)

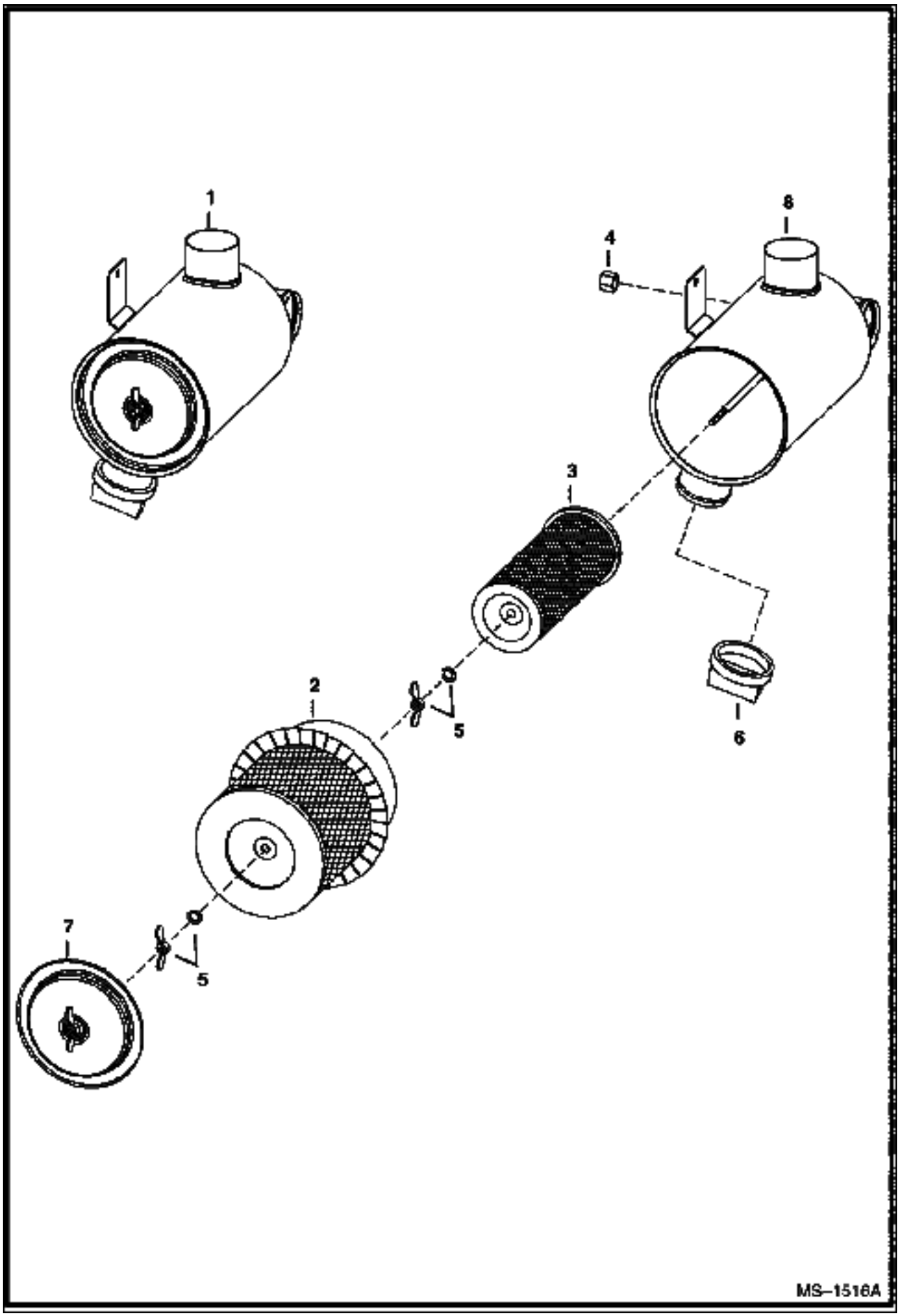

AIR CLEANER (Cont'd)
(V3300 DI T Kubota)

Ref No	Part Number	Description	Remarks	Serial Number	Qty
1	6678066	AIR CLEANER	W/Ref. 2-8		1
2	6681474	CARTRIDGE	outer		1
3	6681475	CARTRIDGE	inner		1
4	6681476	CAP			1
5	3291290B	WING NUT	W/ washer		2
6	6652373	VALVE	dust unloader		1
7	6681477	COVER			1
8		TANK	NSS		1

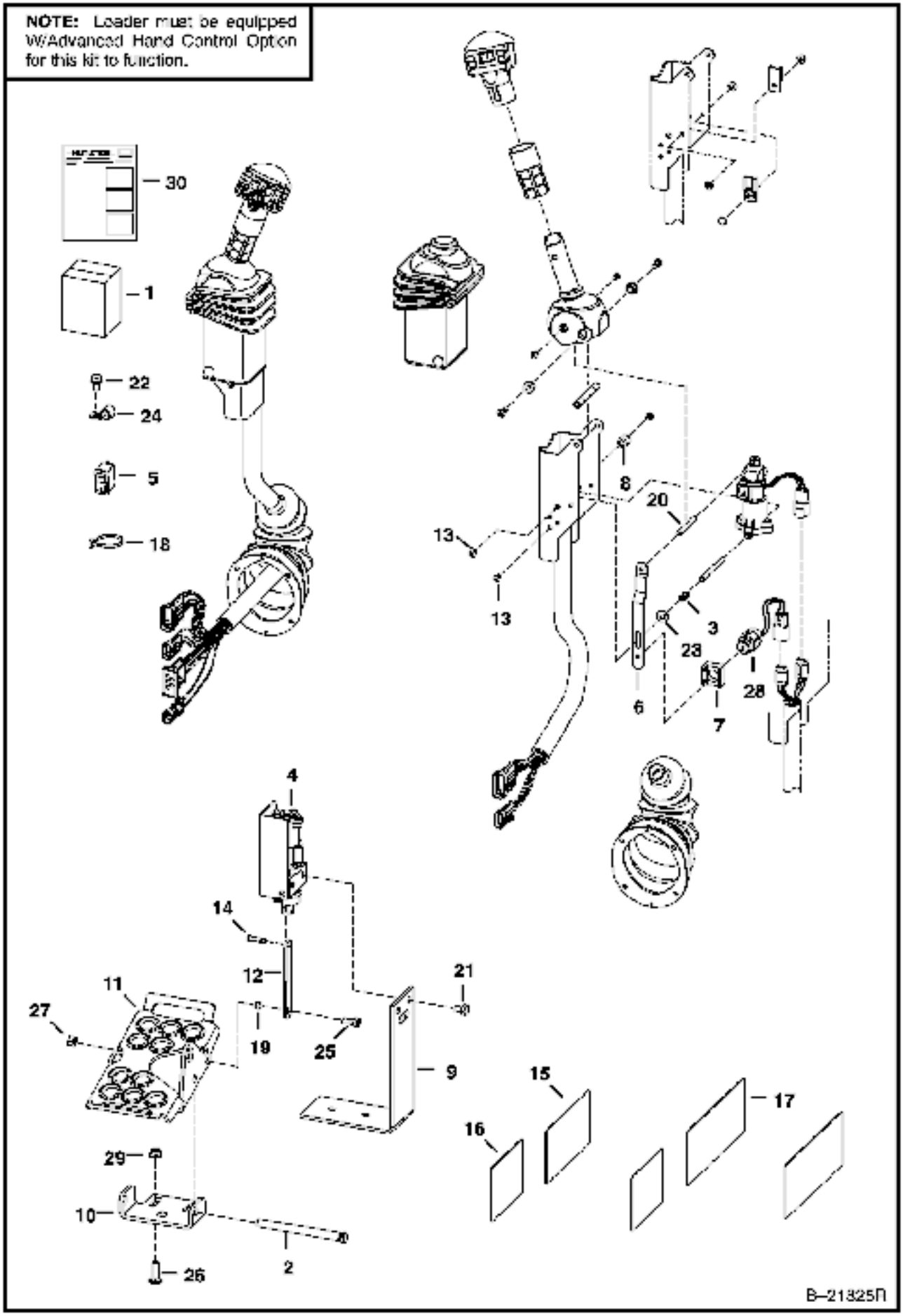
NOTE: Loader must be equipped W/Advanced Hand Control Option for this kit to function.
30
1
22
24
5
18
8
20
13
13
3
23
28
6
7
4
14
12
21
11
27
19
25
9
15
17
16
29
10
26
2
B-21825П

Ref No	Part Number	Description	Remarks	Serial Number	Qty
1	6731151	KIT	foot control - SEE NOTE - Ref. 2-14 & 17-30		1
2	6564657	PIN			2
3	6680470	SPRING			2
4	6684912	SENSOR	foot pedal - R.H.		1
4	6676029	SOLENOID			1
4	6684911	SENSOR	foot pedal - L.H.		1
4	6676029	SOLENOID			1
5	6676537	SWITCH			2
6	6680477	STRAP			2
7	6680468	MOUNT	solenoid		2
8		SLEEVE	NAP		2
8	6719834	SPACER			2
9	6726573	BRACKET			2
10	6726679	MOUNT	pedal		2
11	6726680	PEDAL			2
12	6726681	LINK			2
13	6727065	BOLT			12
14	6727496	PIN			2
15	6727926	DECAL	operations - 773G, 863G, 873G, 883, 963G		1
15	6728045	DECAL	operations - T190, T200, T300		1
16	6727941	DECAL	ACS operations		1
17	6728539	DECAL	warning - 773G, 863G, 873G, 883, 963G		1
17	6728540	DECAL	warning - T190, T200, T300		1
18	6624289	STA STRAP			2
19	6729467	SPACER			2
20	6680469	SPACER	threaded		2
21	17C000608B	BOLT			4
22	84G003710B	BOLT			2
23	25E000013B	WASHER			2
24	30H000062B	CLAMP			2
25	17C000514B	BOLT			2
26	37C000620B	BOLT			4
27	95D000005B	NUT			2
28	6676029	SOLENOID			2
29	57D000006B	NUT			4
30	6901492	INSTRUCTIONS			1

BACK-UP ALARM KIT

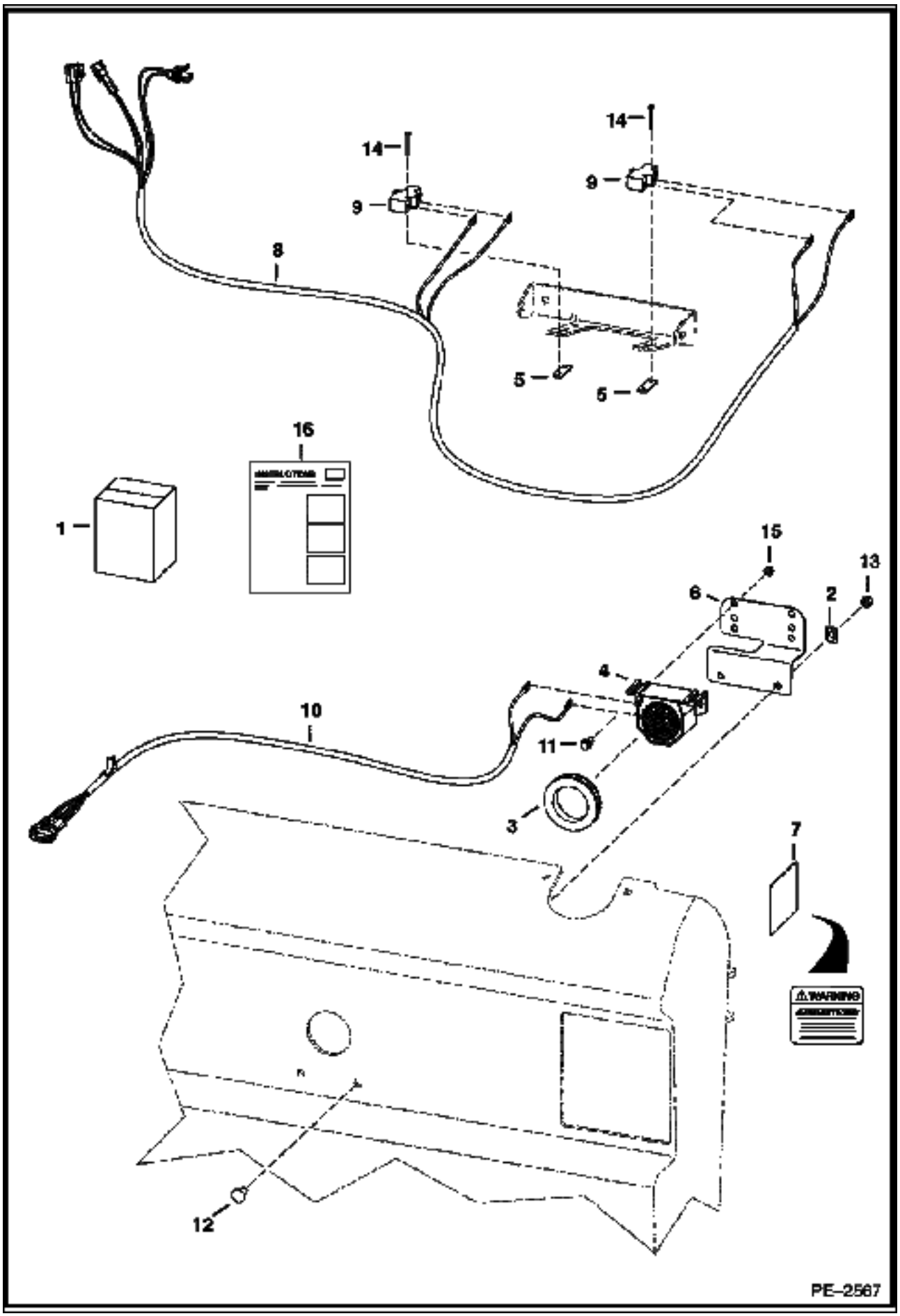

BACK-UP ALARM KIT (Cont'd)

Ref No	Part Number	Description	Remarks	Serial Number	Qty
1	7107829	BACK UP ALARM KIT			1
2	774220	NUT			2
3	6577545	GROMMET			1
4	6599931	ALARM			1
5	6702593	SPACER			2
6	6733970	MOUNT			1
7	6737189	DECAL			1
8	7107544	HARNESS			1
9	6646781	SWITCH			2
10	6715659	HARNESS			1
11	35C000410B	BOLT			2
12	37C000512B	BOLT			2
13	61D000005B	NUT			2
14	84G001320B	BOLT			4
15	97D000004B	NUT			2
16	6903293	INSTRUCTIONS			1

BACK-UP ALARM KIT
(W/Joystick Controls)

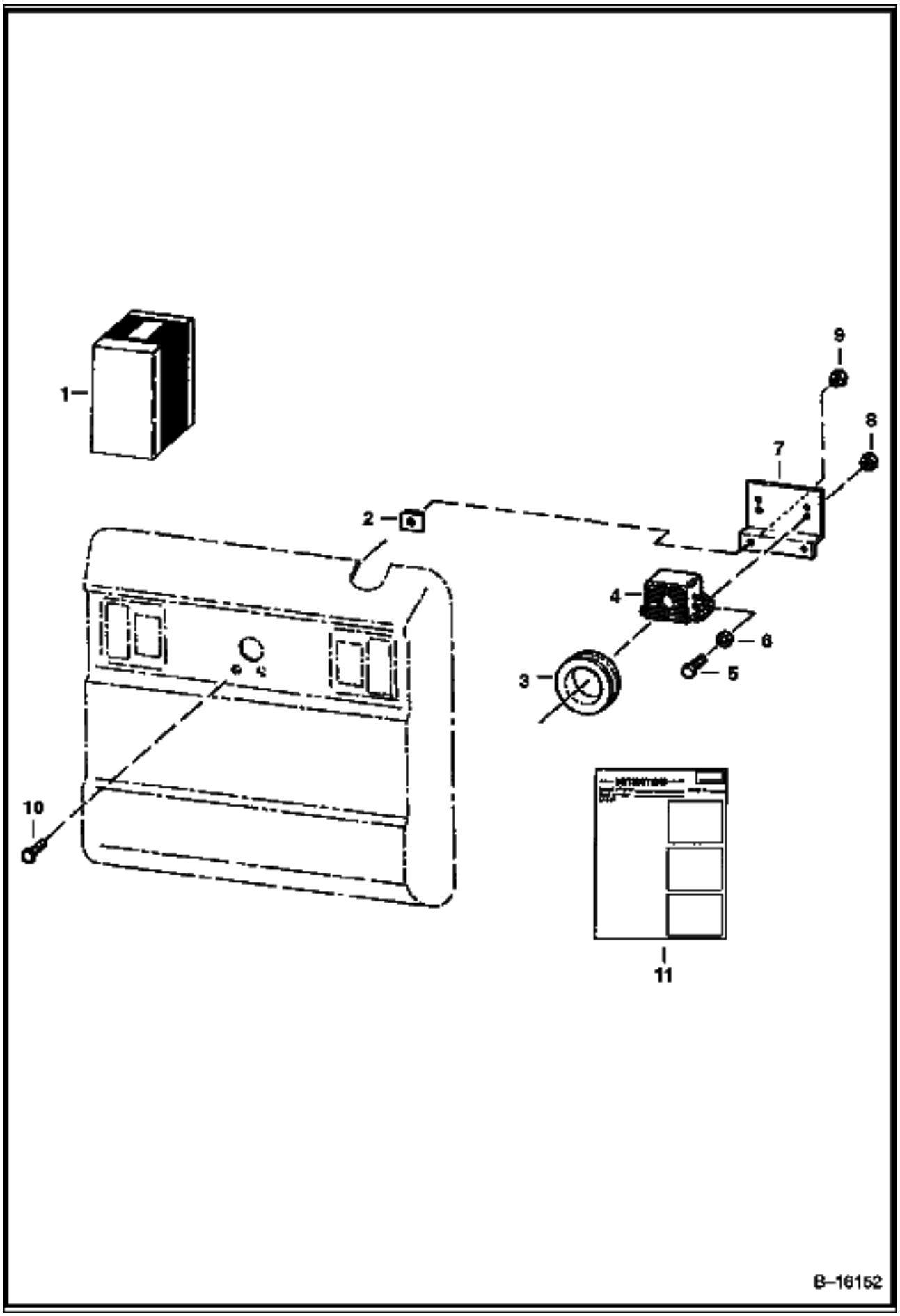

BACK-UP ALARM KIT (Cont'd)
(W/Joystick Controls)

Ref No	Part Number	Description	Remarks	Serial Number	Qty
1	6732235	KIT	Ref. 2-11		1
2	774220	NUT	spring		2
3	6577545	GROMMET			1
4	6599931	ALARM			1
5	17C000410B	BOLT			2
6	25E000013B	WASHER			2
7	6733970	MOUNT			1
8	83D000004B	NUT			2
9	61D000005B	NUT			2
10	37C000512B	BOLT			2
11	6901690	INSTRUCTIONS			1

BEACON

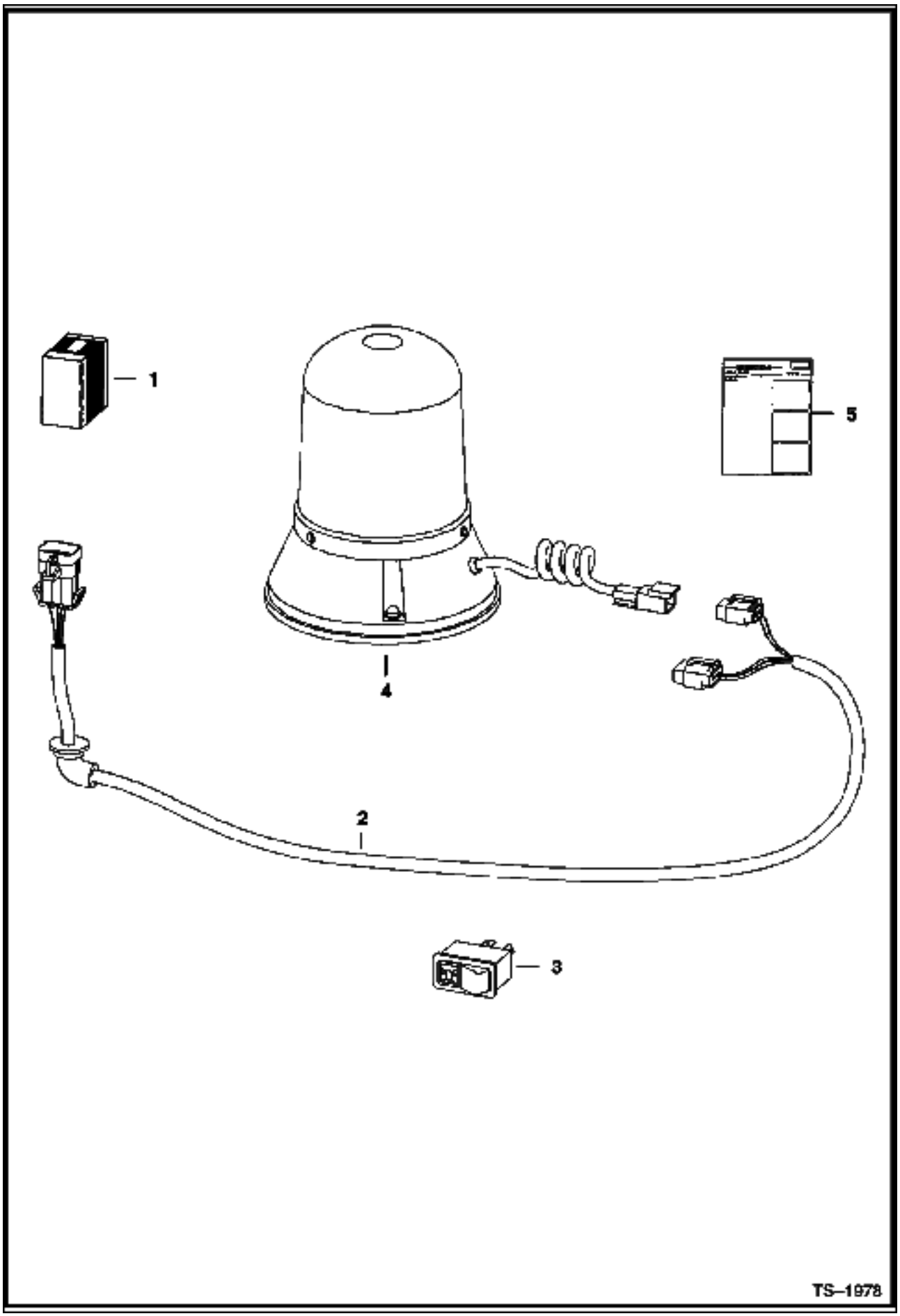

Ref No	Part Number	Description	Remarks	Serial Number	Qty
1	6719854	KIT	rotating beacon		1
2	6718872	HARNESS			1
3	6665317	SWITCH	horizontal		1
3	6668816	SWITCH	vertical		1
4	6675523	BEACON			1
4	6666571	BULB			1
5	6900991	INSTRUCTIONS			1

BLOCK HEATER
(Engine)

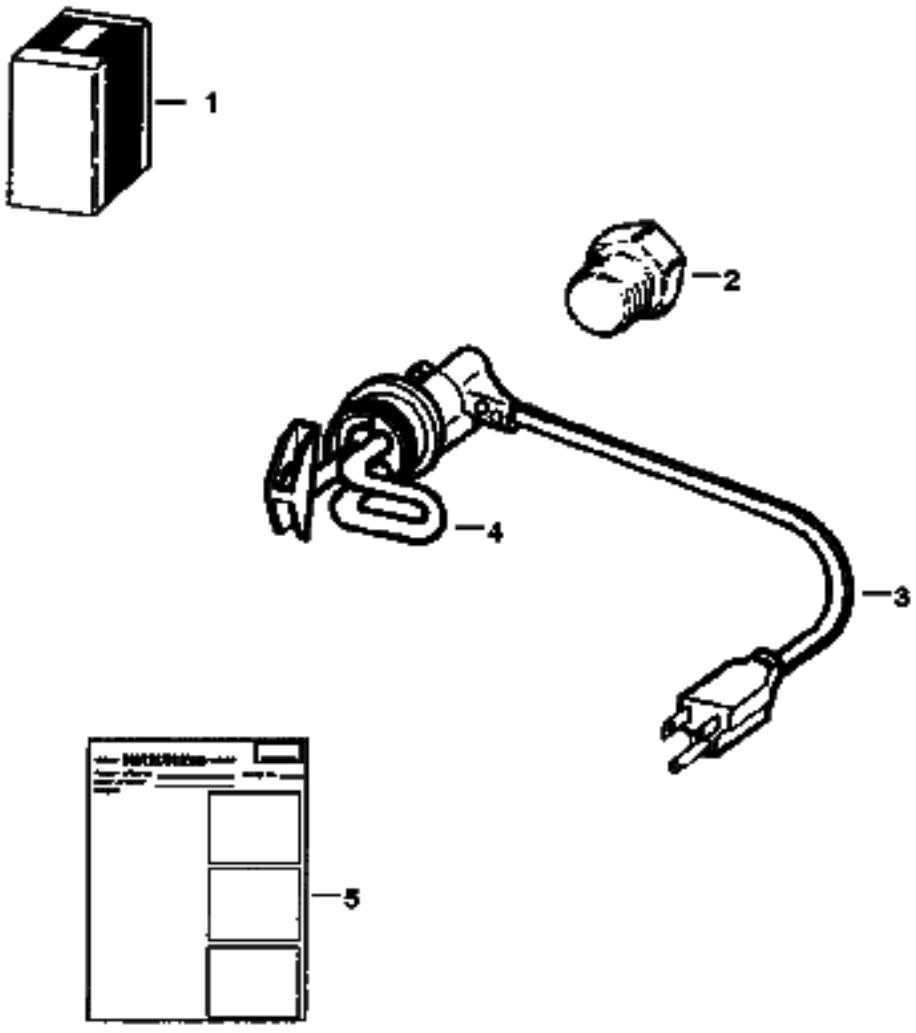

BLOCK HEATER (Cont'd)
(Engine)

Ref No	Part Number	Description	Remarks	Serial Number	Qty
1	6720808	KIT	W/Ref. 2, 4 & 5		1
2	19F000012B	BUSHING			1
3	6685850	CORD			1
4	6659369	HEATER	W/Ref. 3		1
5	6720038	INSTRUCTIONS			1

BUCKET POSITIONING KIT

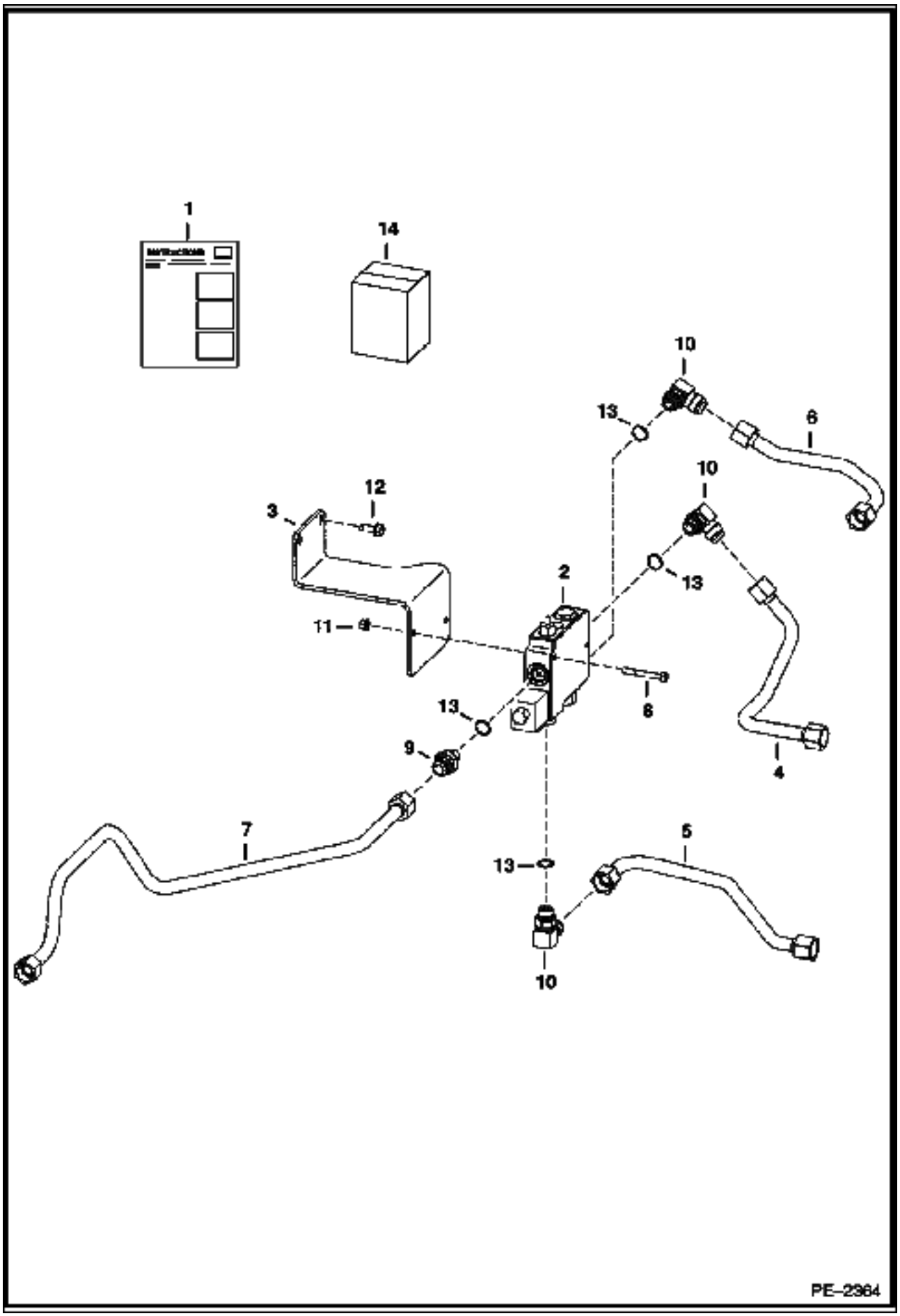

BUCKET POSITIONING KIT (Cont'd)

Ref No	Part Number	Description	Remarks	Serial Number	Qty
1	7104829	KIT	Ref. 2-14		1
2	6675669	VALVE	See Illustration BUCKET POSITIONING VALVE/ MS1943 primer red		1
3	6730898	MOUNT			1
4	6732991	TUBELINE			1
5	6732992	TUBELINE			1
6	6734200	TUBELINE			1
7	6734208	TUBELINE			1
8	17C000540B	BOLT			2
9	15KB01210B	ADAPTER	W/Ref. 13		1
10	17KB01210B	ELBOW	W/Ref. 13		3
11	83D000005B	NUT			2
12	84G003716B	BOLT			2
13	79K000010B	O-RING			x
14	6903132	INSTRUCTIONS			1

CAB DOOR

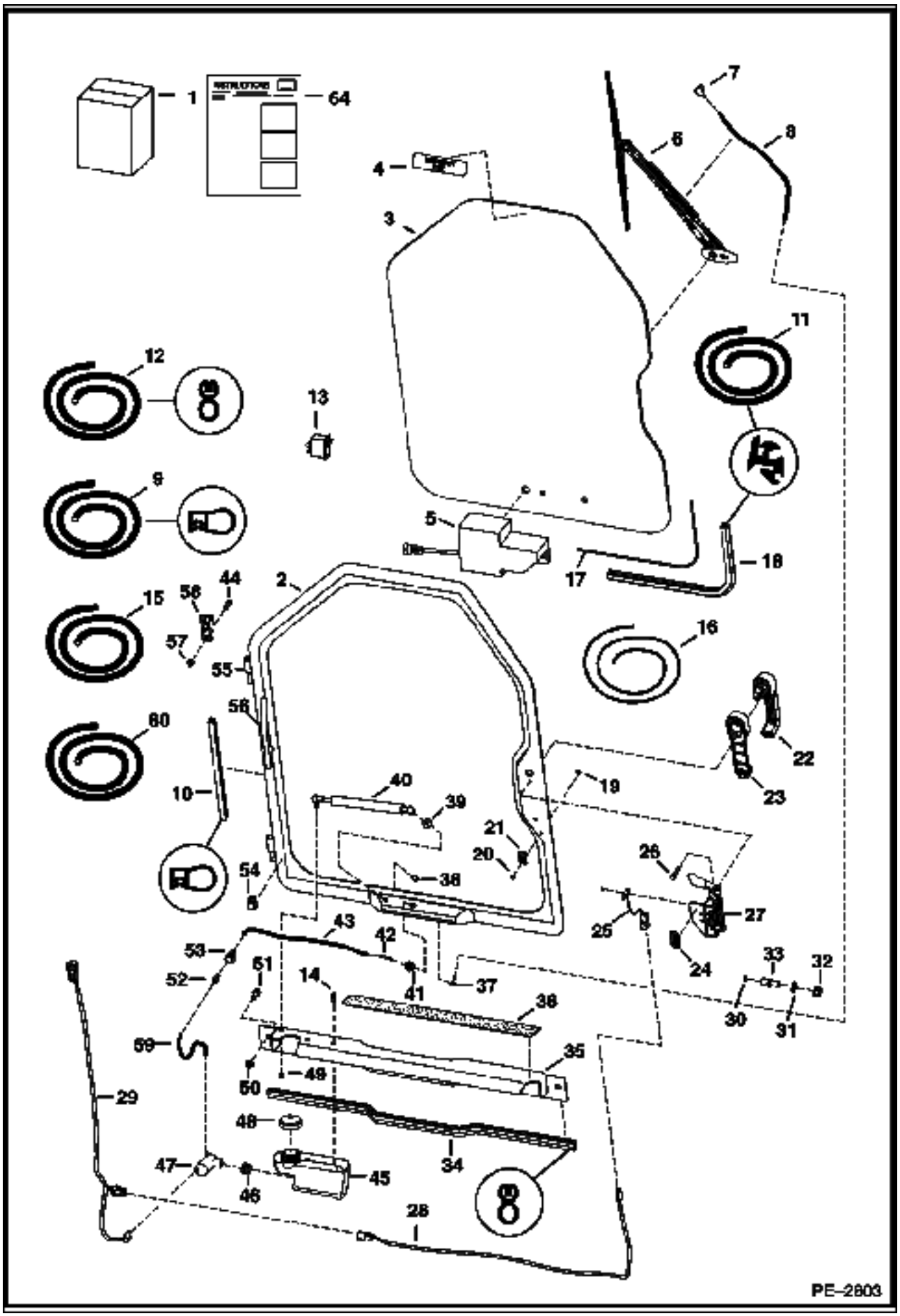
1
64
7
6
8
4
3
11
12
13
9
5
18
17
15
56
44
57
2
16
55
56
60
22
10
40
39
19
23
21
20
26
54
38
27
25
43
42
24
33
32
53
51
52
14
41
37
38
30
31
59
35
50
49
29
48
34
47
46
45
28
PE-2803

Ref No	Part Number	Description	Remarks	Serial Number	Qty
1	6730822	KIT	door - Ref. 2-61 & Ref. 1-21 on ILL. MS1355		1
2	7109665	DOOR	W/Ref. 55 & 56		1
3		WINDOW	See Illustration CAB DOOR/ MS1355 - .25" thick glass		1
4	6707852	DECAL	exit		1
5		MOTOR	See Illustration CAB DOOR/ MS1355 - wiper		1
6		ARM ASSY	See Illustration CAB DOOR/ MS1355 - wiper		1
7		NOZZLE	See Illustration CAB DOOR/ MS1355 - wiper arm mounted		1
8		HOSE	See Illustration CAB DOOR/ MS1355		1
9	6675558	SEAL	bulk - sold per foot		x
10		SEAL	NAP - 127.3" (3233mm) - Order Ref. 9		1
11	6665568	EXTRUSION	bulk - sold per foot		x
12	6513152	SEAL	bulk - sold per foot		x
13	6665707	SWITCH	front wiper		1
14	35C000408B	BOLT			2
15	6676003	HOSE	bulk - sold per foot - .109" I.D. - black		x
16	6554149	CORD	bulk - sold per foot		x
17		CORD	NAP - window - 113" (2878mm) - Order Ref. 16		1
18		SEAL	NAP - window - 113" (2878mm) - Order Ref. 11		1
19	6665321	RIVET	male - plastic		1
20	6665322	RIVET	female - plastic		1
21	6665000	CLIP			1
22	7109662	HANDLE			1
22	6709527	KEY	ignition/rear door		1
23	7109663	SPACER			1
24	7110316	DECAL	door switch		1
25	6728459	DOOR SENSOR			1
25	6677193	RIVET	plastic		2
26	1CM00640B	BOLT			2
27	7109661	DOOR LATCH			1
28	7104465	DOOR SWITCH HARNESS			1
29	7106277	WIPER HARNESS			1
30	6677192	MAGNET			1
31	18EM01224B	WASHER			1
32	51DM12	NUT	12 mm thread		1
33	7109664	BOLT	striker - 12 mm thread		1
34		SEAL	NAP - threshold - 36" (914mm) - Order Ref. 12		1
35	6730816	SHIELD			1
36	6542731	SAFETY TREAD			1
37	6676500	ELBOW			1
38	46D000005B	NUT	acorn		1
39	25E000016B	WASHER			1
40	6682586	GAS SPRING			1
40	6678548	SOCKET	ball		2
40	6649244	STUD			2
40	6649245	RETAINER	spring		2
41	6676499	GROMMET	wiper		1
42	6676917	ELBOW			1
43		HOSE	NAP - 18.25" (464mm) - Order Ref. 15		1
44	17C000512B	BOLT			4
45	6736875	TANK	washer		1
46	6666766	GROMMET			1
47	6664554	PUMP	washer bottle		1
48	6674993	CAP	vented		1
49	61D000005B	NUT			1

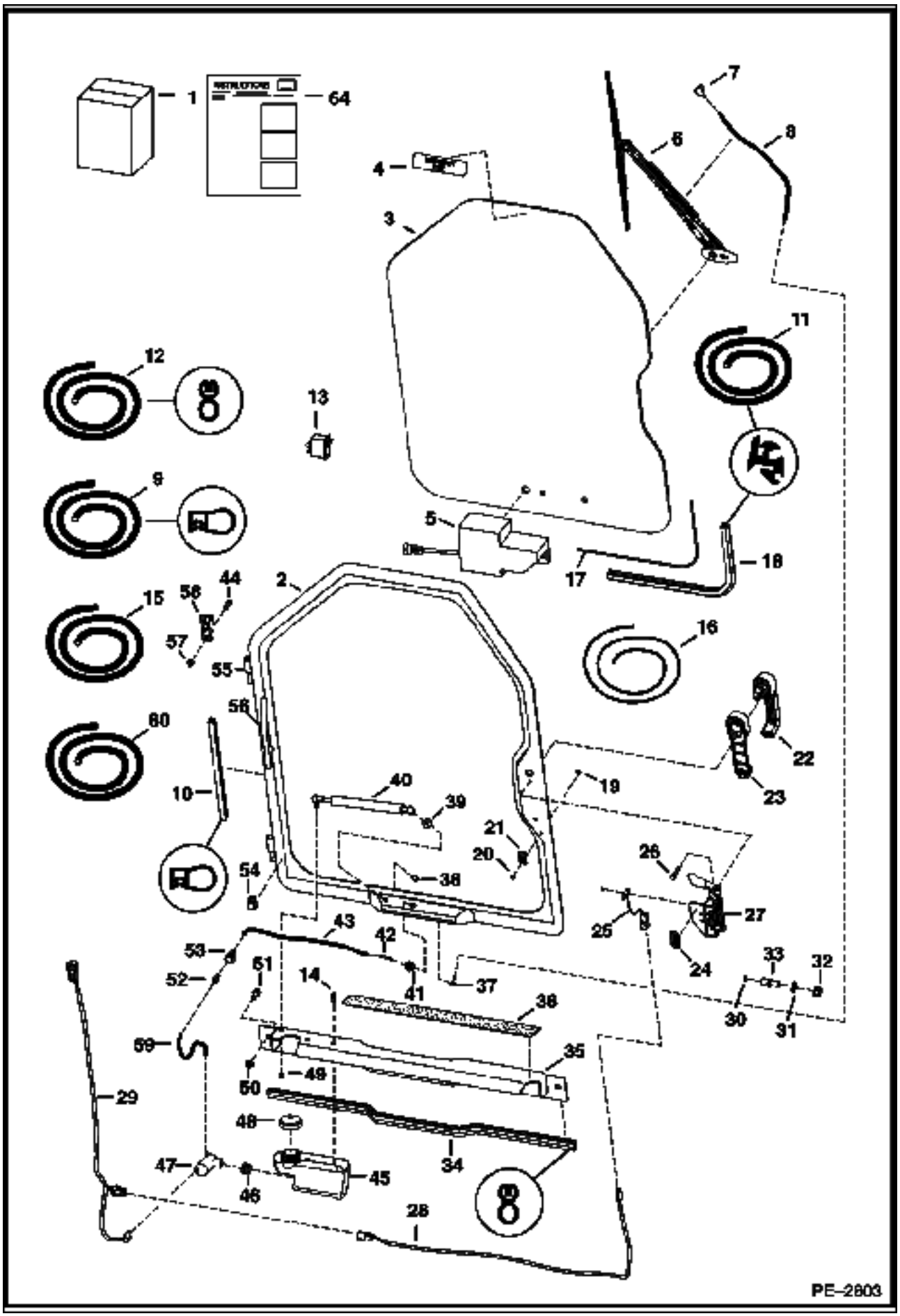
1
64
7
6
8
4
3
11
12
13
9
5
18
17
2
44
56
15
57
55
16
56
60
22
10
40
39
19
23
21
20
26
54
38
27
43
25
42
24
53
51
33
32
52
14
41
37
38
30
31
59
35
50
49
29
48
34
47
46
45
28
PE-2803

Ref No	Part Number	Description	Remarks	Serial Number	Qty
50	61D000006B	NUT			2
51	17C000612B	BOLT			2
52	6675299	COUPLER	insert		1
53	6675298	COUPLER	body		1
54	6675378	CLIP			3
55	6718376	HINGE	door		2
56	6718521	HANDLE	grab		1
57	59D000005B	NUT			4
58	6717593	HINGE	base		2
59		HOSE	NAP - 4.25" (108mm) long - Order Ref. 60		1
60	6708310	HOSE	bulk - sold per foot - .149 I.D. - clear		x
61	6900854	INSTRUCTIONS INSTL	INSTRUCTIONS INSTL		1

CAB DOOR
(Window & Wiper)

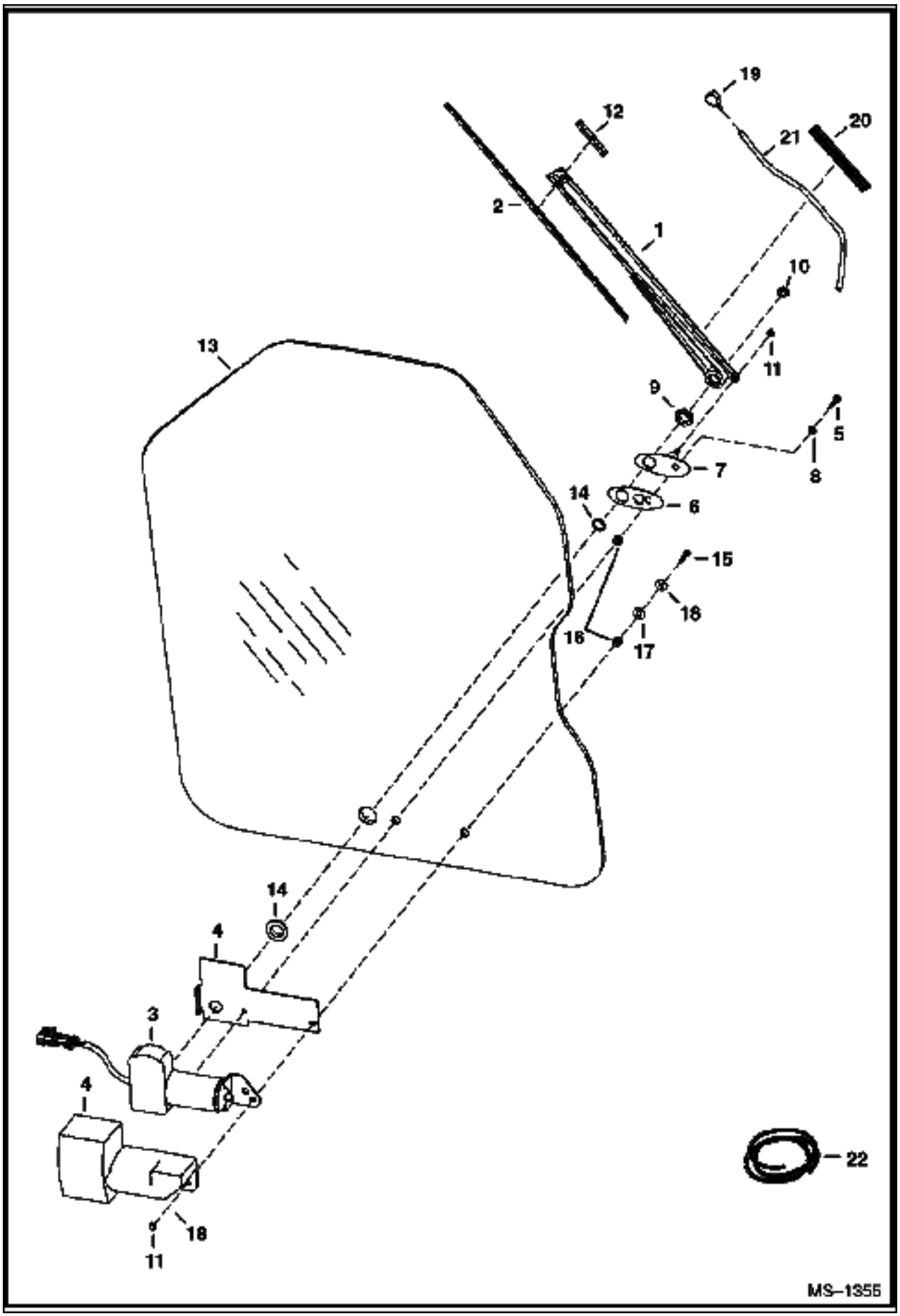

CAB DOOR (Cont'd)
(Window & Wiper)

Ref No	Part Number	Description	Remarks	Serial Number	Qty
1	6677833	ARM ASSY	w/Ref. 19-21		1
2	6677834	BLADE	Also Order Ref. 12		1
3	6679476	MOTOR	W/threaded shaft end & built in fuse		1
4	6677836	COVER			1
5	6677837	BOLT			1
6	6677839	GASKET			1
7	6677840	SWIVEL			1
8	6677841	WASHER	tooth lock		1
9	6677842	NUT			1
10	6677843	NUT			1
11	6677844	NUT			2
12	6677845	ADAPTER	arm		1
13	6729776	WINDOW	.25" thick glass W/1.00" dia. wiper motor shaft hole		1
14	6677847	GROMMET	rubber		1
15	6678198	BOLT			1
16	6664085	BUSHING	nylon		2
17	6801059	WASHER	neoprene		1
18	6678739	WASHER	steel		2
19	6678920	NOZZLE	W/Ref. 1		1
20	6678921	GUIDE	hose		1
21		HOSE	NAP - 18" (457mm) long - Order Ref. 22		x
22	6676003	HOSE	bulk - Sold Per Foot - .109" I.D. - black		x

CAB DOOR
(Special Applications)

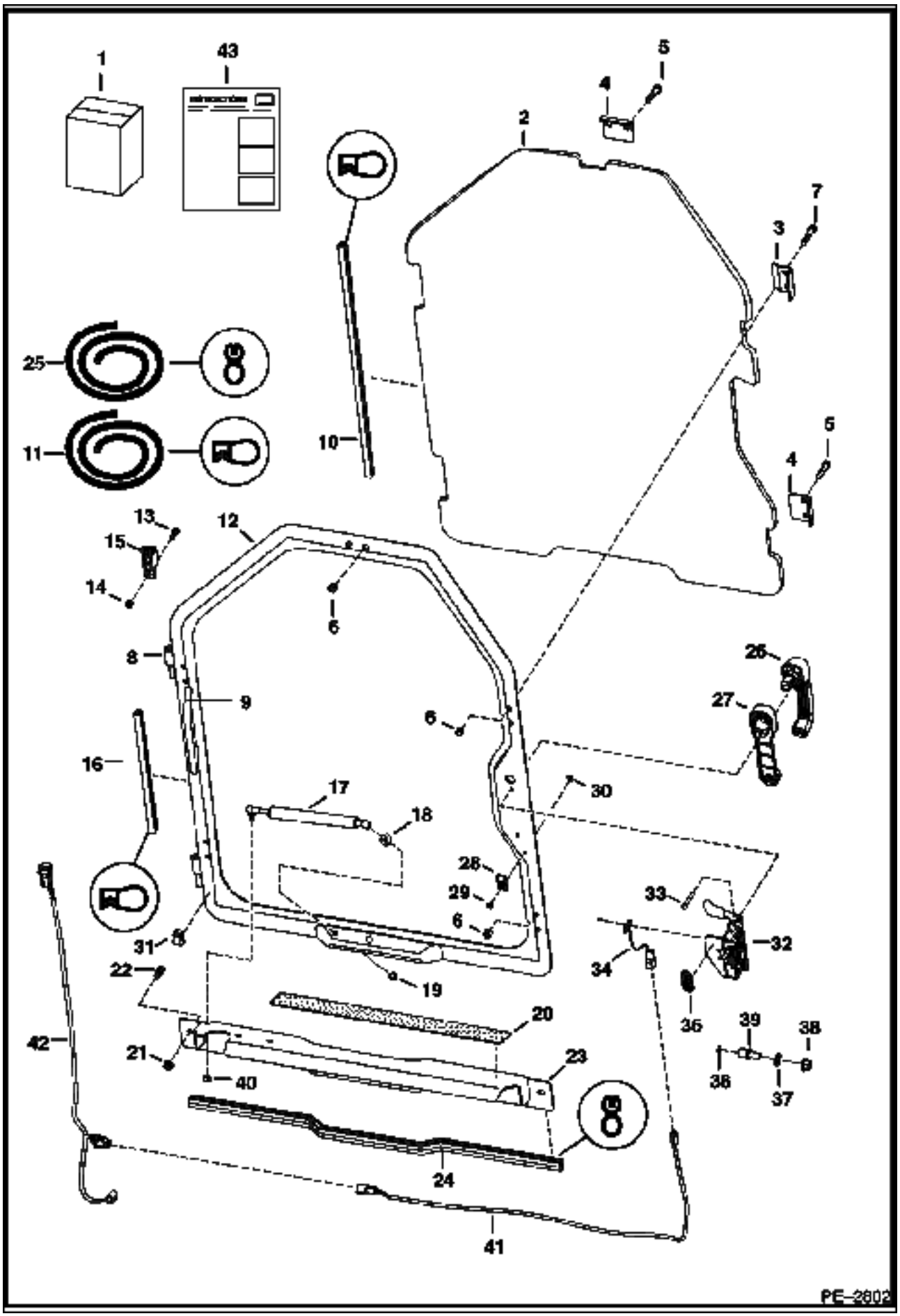

CAB DOOR (Cont'd)
(Special Applications)

Ref No	Part Number	Description	Remarks	Serial Number	Qty
1	6730823	KIT	door - Ref. 2-43		1
2	6732351	WINDOW	.5" thick polycarbonate		1
3	6725938	CLAMP			2
4	6725937	CLAMP			3
5	17C000628B	BOLT			6
6	95D000006B	NUT			10
7	17C000624B	BOLT			4
8	6718376	HINGE	door		2
9	6718521	HANDLE	grab		1
10		SEAL	NAP - 115" (2921 mm) long - Order Ref. 11		1
11	6675558	SEAL	bulk - sold per foot		x
12	7110430	SPECIAL APPS DOOR	W/Ref. 8 & 9		1
13	59D000005B	NUT			4
14	17C000512B	BOLT			4
15	6717593	HINGE	base		2
16		SEAL	NAP - 127.3" (3233,4 mm) long - Order Ref. 11		1
17	6682586	GAS SPRING			1
17	6678548	SOCKET	ball		2
17	6649244	STUD	ball		2
17	6649245	RETAINER	spring		2
18	25E000016B	WASHER			1
19	46D000005B	NUT	acorn		1
20	6542731	SAFETY TREAD			1
21	55D000006B	NUT			2
22	17C000612B	BOLT			2
23	6730816	SHIELD			1
24		SEAL	NAP - 36" (914,4 mm) long - Order Ref 25		1
25	6513152	SEAL	bulk - sold per foot		x
26	7109662	HANDLE			1
26	6709527	KEY	ign. & rear door		1
27	7109663	SPACER			1
28	6665000	CLIP			1
29	6665321	RIVET	male - plastic		1
30	6665322	RIVET	female - plastic		1
31	6675378	CLIP			3
32	7109661	DOOR LATCH			1
33	1CM00640B	BOLT			2
34	6728459	DOOR SENSOR			1
34	6677193	RIVET	plastic		2
35	7110316	DECAL			1
36	6677192	MAGNET			1
37	18EM01224B	WASHER			1
38	51DM00012B	NUT	12 mm thread		1
39	7109664	BOLT	striker - 12 mm thread		1
40	61D000005B	NUT			1
41	7104465	DOOR SWITCH HARNESS	door sensor		1
42	7106277	WIPER HARNESS	wiper		1
43	6901013	INSTRUCTIONS			1

CAB DOOR
(Lexan Window)

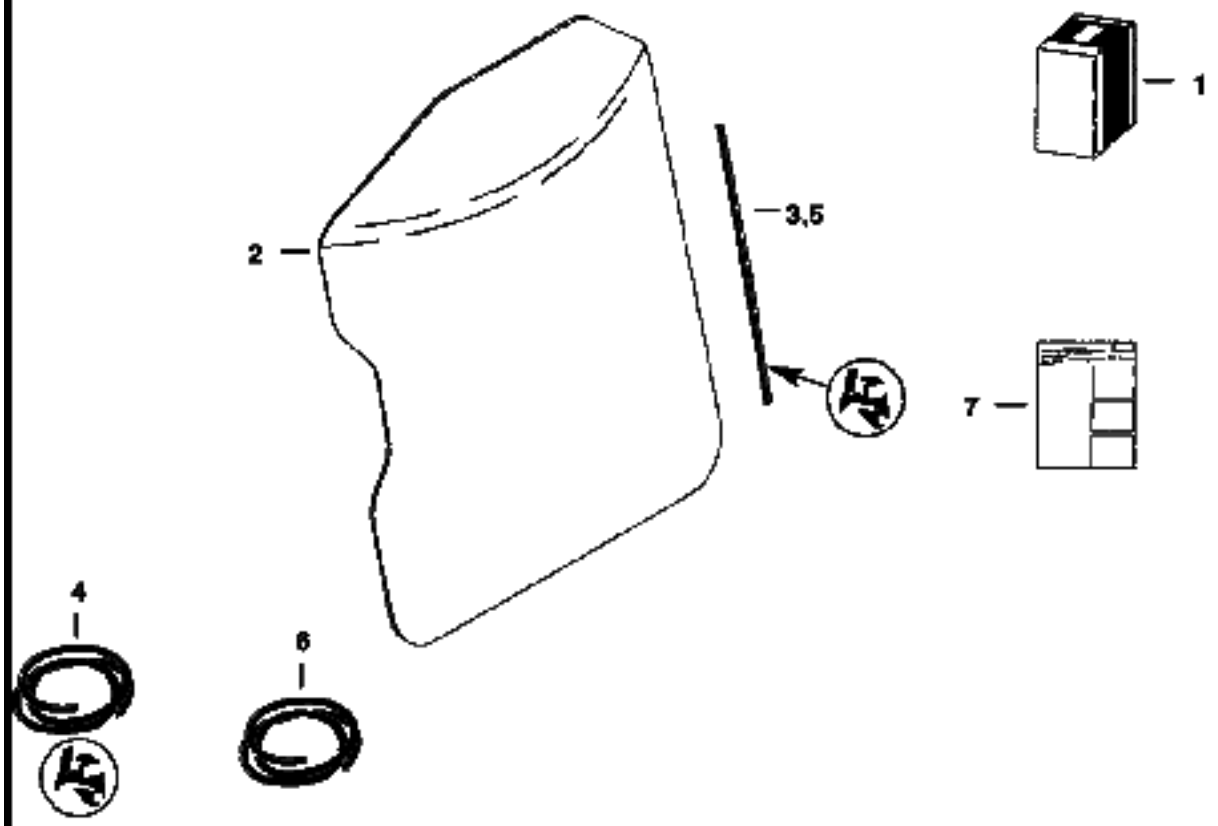

NOTE: This Lexan window is NOT approved as a Special Applications Kit. This window does not provide additional protection from materials entering cab openings.

PE–1558

CAB DOOR (Cont'd)
(Lexan Window)

Ref No	Part Number	Description	Remarks	Serial Number	Qty
1	6726427	KIT	Ref. 2-7		1
2	6675215	WINDOW	lexan		1
3		SEAL	NAP - 113" (2878mm) long - Order W/Ref. 4		1
4	6665568	EXTRUSION	bulk - Sold Per Foot		x
5		CORD	NAP - 113" (2878mm) long - Order W/Ref. 6		1
6	6554149	CORD	bulk - Sold Per Foot		x
7	6901036	INSTRUCTIONS			1



B–17100

Ref No	Part Number	Description	Remarks	Serial Number	Qty
1		KIT	See Illustration CAB WINDOWS/ MS1340 cab enclosure - SALES Kit #6731938		1
1		KIT	See Illustration CAB DOOR/ PE1703 See Illustration CAB WINDOWS/ MS1340 special cab enclosure - SALES Kit #6731937		1

CAB ENCLOSURE
(Envelope)

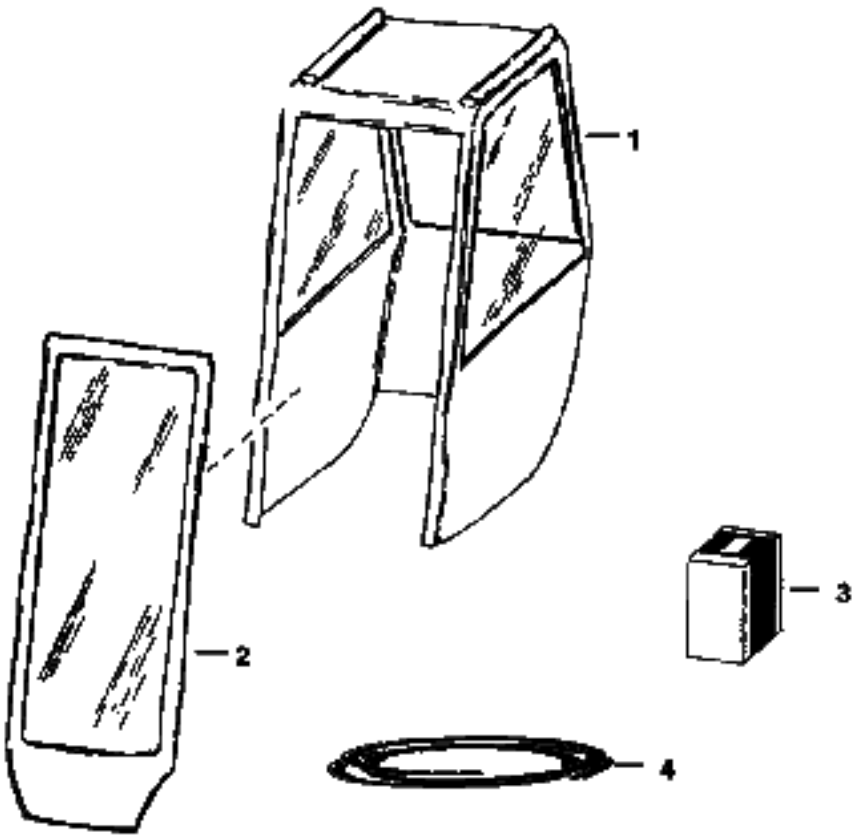

CAB ENCLOSURE (Cont'd)
(Envelope)

Ref No	Part Number	Description	Remarks	Serial Number	Qty
1	6675544	CANVAS CAB	fits over cab - W/Ref. 2 & 3		1
2	6675590	DOOR	vinyl		1
3	6675591	HINGE KIT			1
4	6722597	VELCRO	27 feet (8,2meters) long		1

CAB WINDOWS
(Rear Window Removal Kit)

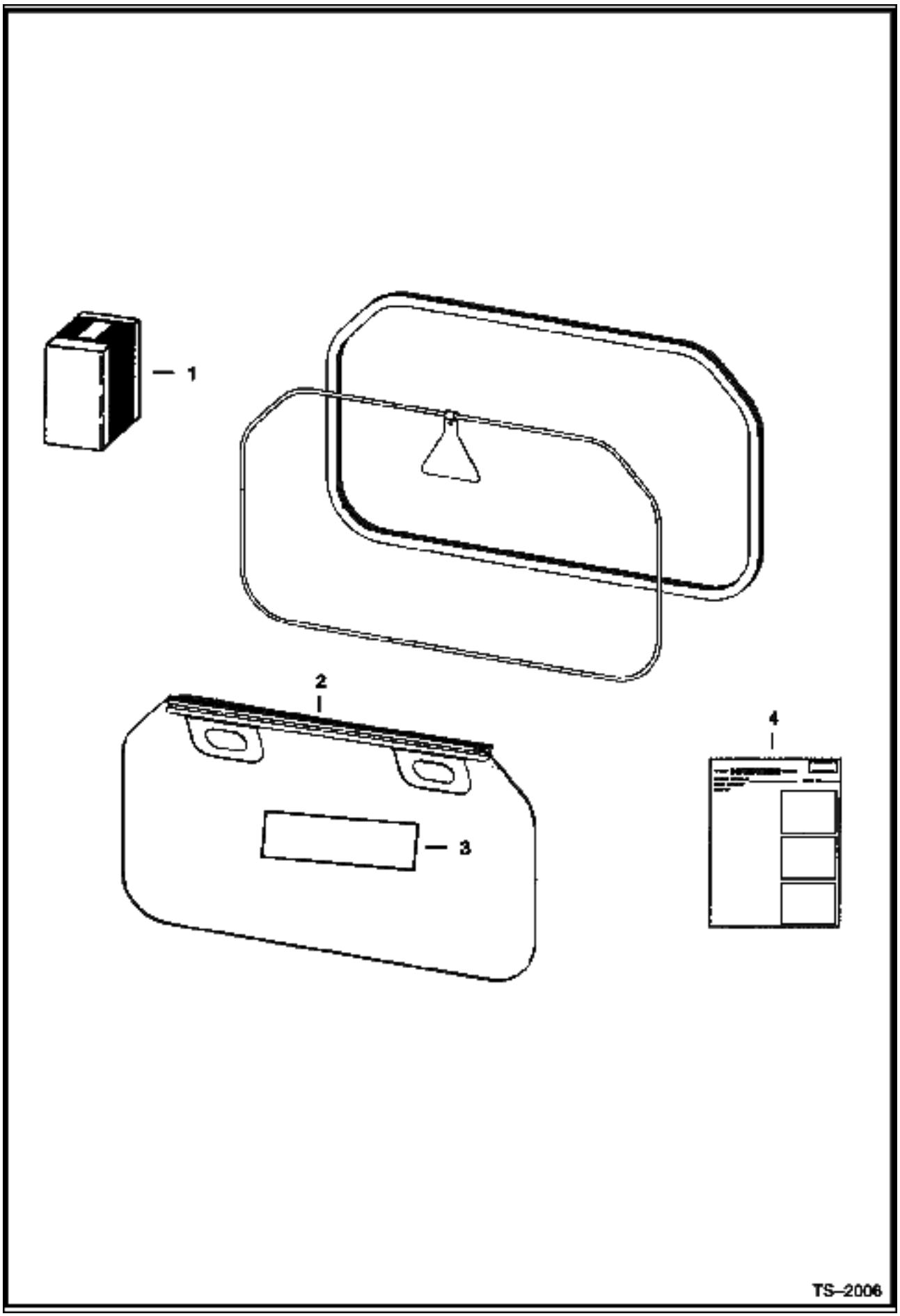

CAB WINDOWS (Cont'd)
(Rear Window Removal Kit)

Ref No	Part Number	Description	Remarks	Serial Number	Qty
1	6725946	KIT	Ref. 2-4		1
2	6725421	HANDLE			1
3	6726303	DECAL			1
4	6901029	INSTRUCTIONS			1

CAB WINDOWS
(Top, Rear & Side)

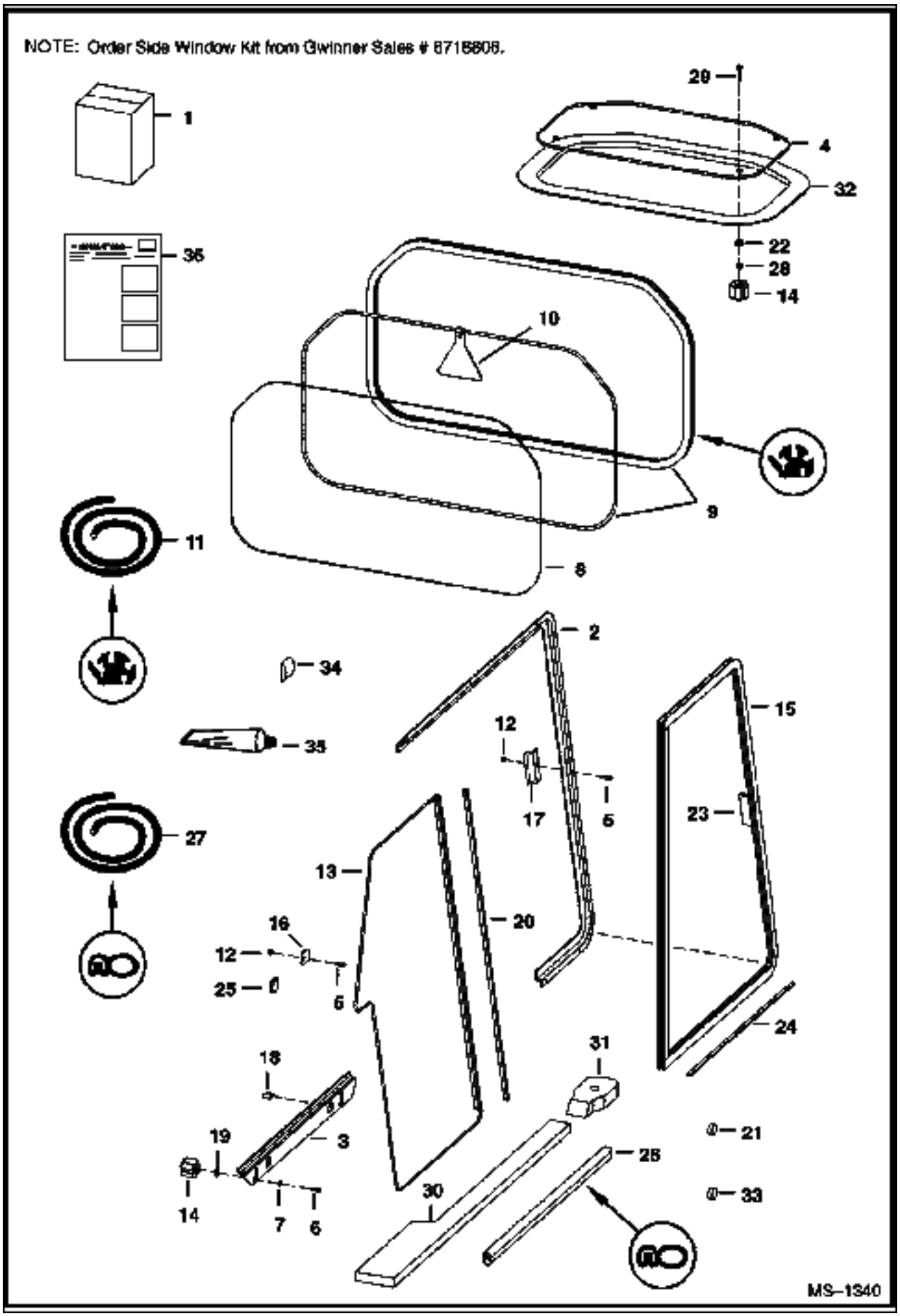

CAB WINDOWS (Cont'd)
(Top, Rear & Side)

Ref No	Part Number	Description	Remarks	Serial Number	Qty
1	6718805	KIT	Top & Rear Window - Ref. 4, 8-10, 14 & 36		1
1		KIT	SALES - side windows - SEE NOTE		1
2	6717870	FRAME	L.H. side		1
2	6717872	FRAME	R.H. side		1
3	6717871	FRAME	L.H. bottom		1
3	6717873	FRAME	R.H. bottom		1
4	7105035	WINDOW	assy. - top - lexan - W/Ref. 22, 28, 29 & 32		1
5	10C000410B	BOLT	carriage		18
6	10C000416B	BOLT	carriage		4
7	25E000014B	WASHER			4
8	6717874	WINDOW	rear - 3/16" thick		1
8	6719413	WINDOW	rear - lexan		1
9		EXTRUSION	NAP - 75.75" (1924mm) long - Order Ref. 11		1
9		CORD	NAP - 75.75" (1924mm) long - Order Ref. 11		1
10	6731478	EXIT TAG			1
11	6675387	EXTRUSION	Bulk - Sold Per Foot		x
11	6554149	CORD	Bulk - Sold Per Foot		x
12	59D000004B	NUT			18
13	6674520	WINDOW	L.H. rear - W/Ref. 20		1
13	6674522	WINDOW	R.H. rear - W/Ref. 20		1
14		KNOB	NAP - .625" (15,9mm) deep threads		8
14	6681614	KNOB	.69" (17,5mm) deep threads		8
15	6674519	WINDOW	L.H. front - W/Ref. 23		1
15	6674521	WINDOW	R.H. front - W/Ref. 23		1
16	6719063	STOP	window		2
17	6719037	STRIKER			2
18	6719065	COVER TAB	tab		4
19	6675212	RETAINER	tab bolt		4
20	6675833	SEAL	rear window - dual wiper W/tape		2
21	6657719	PLUG	for .75" dia. hole		2
22	6675545	GROMMET			4
23	6678283	HANDLE	side window - W/ tape & vendor instructions		2
24	6676927	FELT STRIP	20.38" (518mm) long		2
25	6677198	TAB	cab		2
26		SEAL	NAP - 24" (609mm) long - W/Ref. 27		2
27	6555351	SEAL	bulk - sold per foot		x
28	6664085	BUSHING	nylon		4
29	91G000416B	BOLT	used W/ 6674741 knob		4
29	91G000420B	BOLT	used W/ 6681614 knob		4
30	6729010	SEAL	cab - main frame - L.H. - foam		1
30	6729009	SEAL	cab - main frame - R.H. - foam		1
31	6729011	SEAL	cab mount		2
32		SEAL	NAP - Order Ref. 4		1
33	6677973	PLUG	for .22" dia. hole		2
34	7103075	SEAL	side screen		2
35		ADHESIVE	NAP - 1 oz. - for top window seal Ref. 1		1
36	6900852	INSTRUCTIONS INSTL	INSTRUCTIONS INSTL top & rear window		1
36	6900853	INSTRUCTIONS	INSTRUCTIONS side windows		1

DEBRIS SHIELD KIT

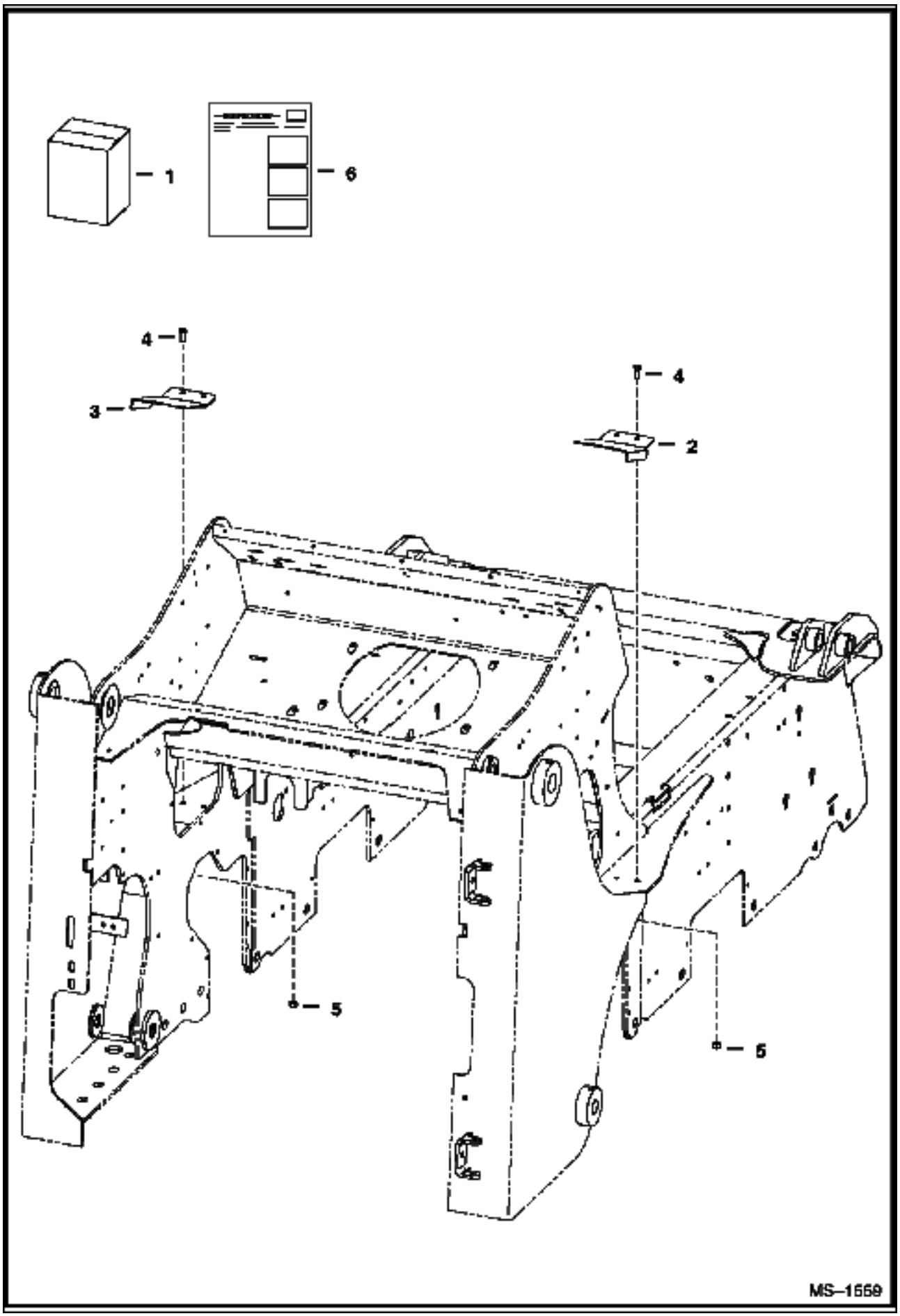

DEBRIS SHIELD KIT (Cont'd)

Ref No	Part Number	Description	Remarks	Serial Number	Qty
1	6734461	KIT	Ref. 2-6		1
2	6734447	SHIELD	R.H.		1
3	6734446	SHIELD	L.H.		1
4	17C000614B	BOLT			4
5	61D000006B	NUT			4
6	6902252	INSTRUCTIONS			1

DECALS
(Front)

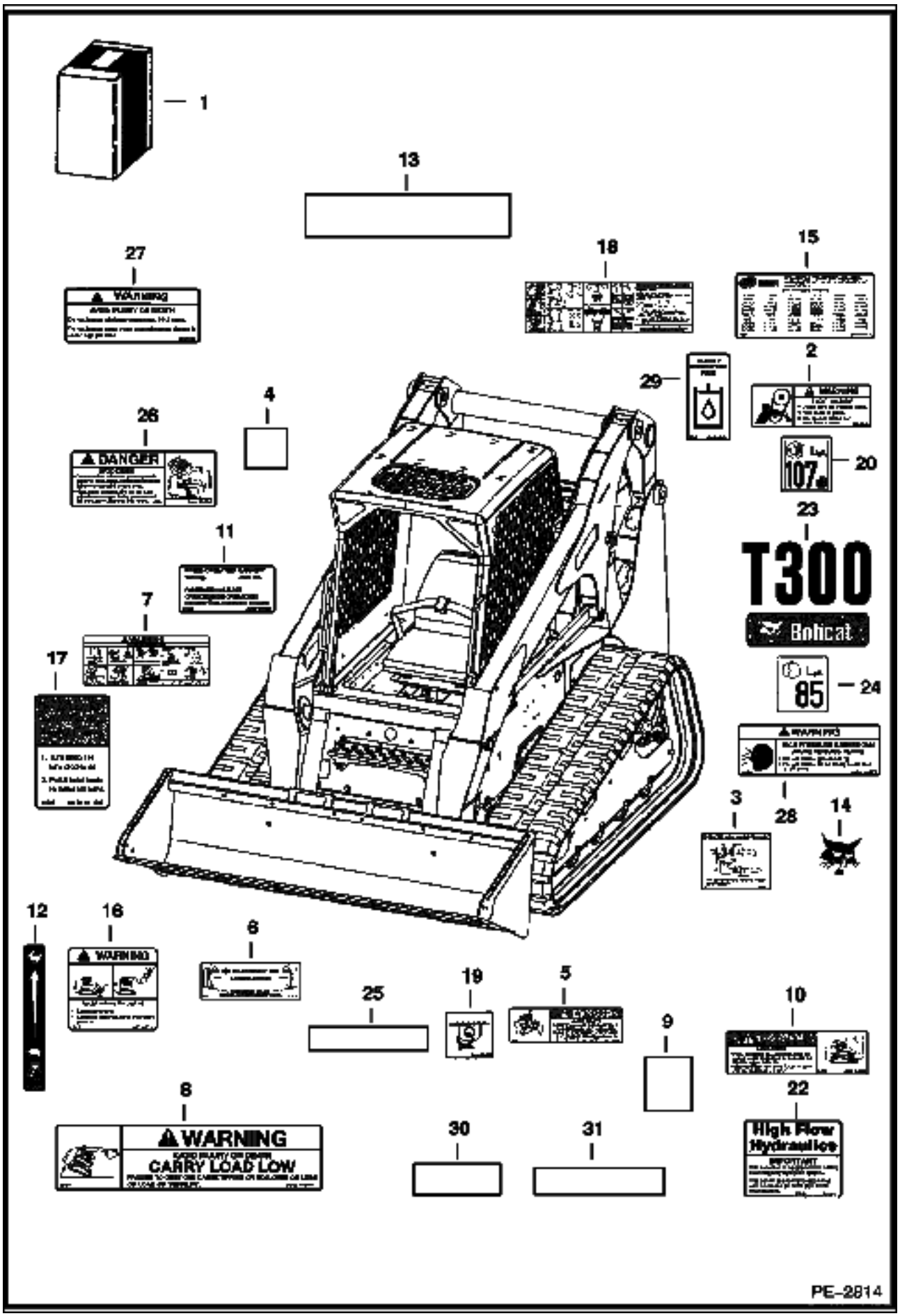

DECALS (Cont'd)
(Front)

Ref No	Part Number	Description	Remarks	Serial Number	Qty
1		KIT			1
1	7120296AR	KIT, TRANSLATION	translation - SEE NOTE		1
1	7120296BR	KIT, TRANSLATION	translation - SEE NOTE		1
1	7120297AR	KIT, DECAL	decal - SEE NOTE		1
1	7120297BR	KIT, DECAL	decal - SEE NOTE		1
1	7120297JP	KIT, DECAL	decal - SEE NOTE		1
2	6708941	DECAL	warning		2
3	6731757	DECAL	front auxiliary coupler block - not in kit		1
4	6554100	TREAD	6" x 6" (153mm x 153mm)		3
5	6718392	DECAL	danger		1
6	6561383	DECAL	Bob-tach - not in kit		1
7	6728540	DECAL	warning - not in kit		1
8	6718391	DECAL	carry load low		1
9	6553976	SAFETY TREAD	5" x 8" (127mm x 203mm)		1
10	6718393	DECAL	danger		1
11	6732698	DECAL	capacity - 3000 lbs.		1
12	6735140	DECAL	throttle		1
13	7108222	SAFETY TREAD	22" X 9.5" (558,8 mm X 241,3 mm)		1
14	7116870	DECAL	Bobcat head		1
15	6557224	DECAL	patent		1
16	6718396	DECAL	warning		1
17	6711840	DECAL	lift lock - not in kit		1
18	6727926	DECAL	seat & seat bar operating - not in kit		1
18	6717639	DECAL	seat & seat bar operating - AHC - W/O seat sensor - not in kit		1
19	6727595	DECAL	tie down		1
20	6734078	DECAL	sound power - Europe - not in kit		1
21	6728607	KIT	handbook - W/Wire Rope		1
21	6558305	WIRE ROPE			1
21	6558309	WIRE ROPE	33" (838,2 mm) long - Bulk - Sold Per Foot - Also Order (2) of 6558310 Sleeve		x
21	6558310	SLEEVE	wire rope		2
21	84G003112B	BOLT			1
22	7120602	DECAL	high flow - not in kit		1
23	7120600	DECAL	model no. T300		1
24	6579385	DECAL	noise warning - Europe only		1
25	6555341	SAFETY TREAD	3" x 12" (72mm x 305 mm)		2
26	6717343	DECAL	danger		2
27	6534739	DECAL	warning - not in kit		2
28	6804114	DECAL	grease		2
29	6565990	DECAL	hydraulic fluid		1
30	6735862	DECAL	Gold Package		1
31	6737626	DECAL	Selectable Joystick Control		1

DECALS
(Back)

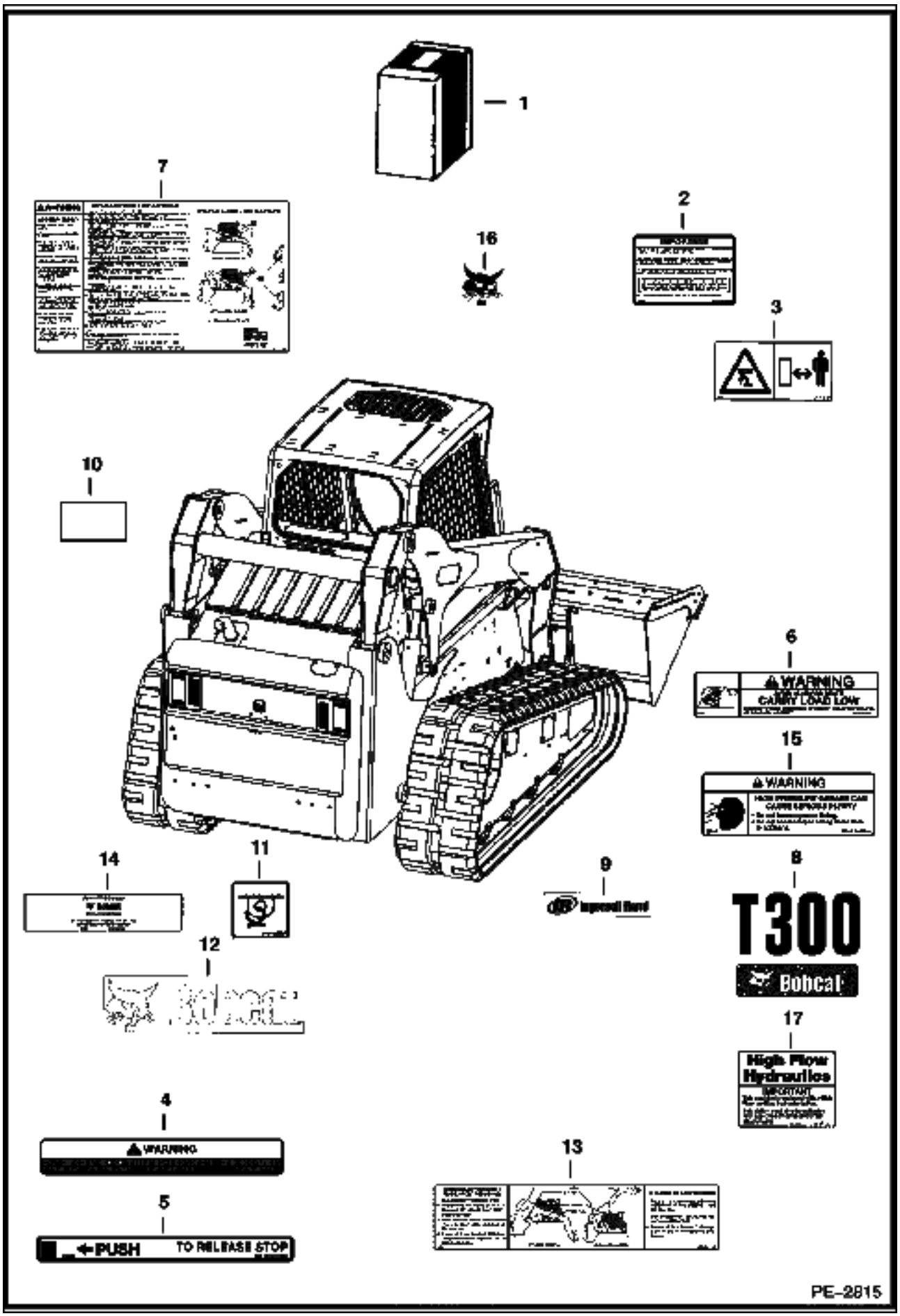
1
7
2
16
3
10
6
WARNING
CARRY LOAD LOW
15
WARNING
14
11
9
8
T300
Bobcat
12
17
High Flow Hydraulics
4
WARNING
13
5
PUSH
TO RELEASE STOP
PE-2815

DECALS (Cont'd)
(Back)

Ref No	Part Number	Description	Remarks	Serial Number	Qty
1		KIT			1
1	7120296AR	KIT, TRANSLATION	translation - SEE NOTE		1
1	7120296BR	KIT, TRANSLATION	translation - SEE NOTE		1
1	7120297AR	KIT, DECAL	decal - SEE NOTE		1
1	7120297BR	KIT, DECAL	decal - SEE NOTE		1
1	7120297JP	KIT, DECAL	decal - SEE NOTE		1
2	6560573	DECAL	spark arrestor		1
3	6713507	DECAL	stay clear - Europe - not in kit		1
4	6577754	DECAL	warning - not in kit		2
5	6578368	DECAL	push - not in kit		1
6	6718391	DECAL	carry load low		1
7	6734534	DECAL	service/warning/filters		1
8	7120600	DECAL	model no. T300		1
9	6735864	DECAL	I.R. - black		1
10	6557224	DECAL	patent		1
11	6727595	DECAL	tie down		2
12	6735901	DECAL	Bobcat w/head - white		1
13	6732774	DECAL	boom stop		1
14	6565200	DECAL	oil filter		1
15	6804114	DECAL	grease		1
16	7116870	DECAL	Bobcat head		1
17	7120602	DECAL	high flow - not in kit		2

ELECTRICAL CONNECTOR KIT
(7-Pin)

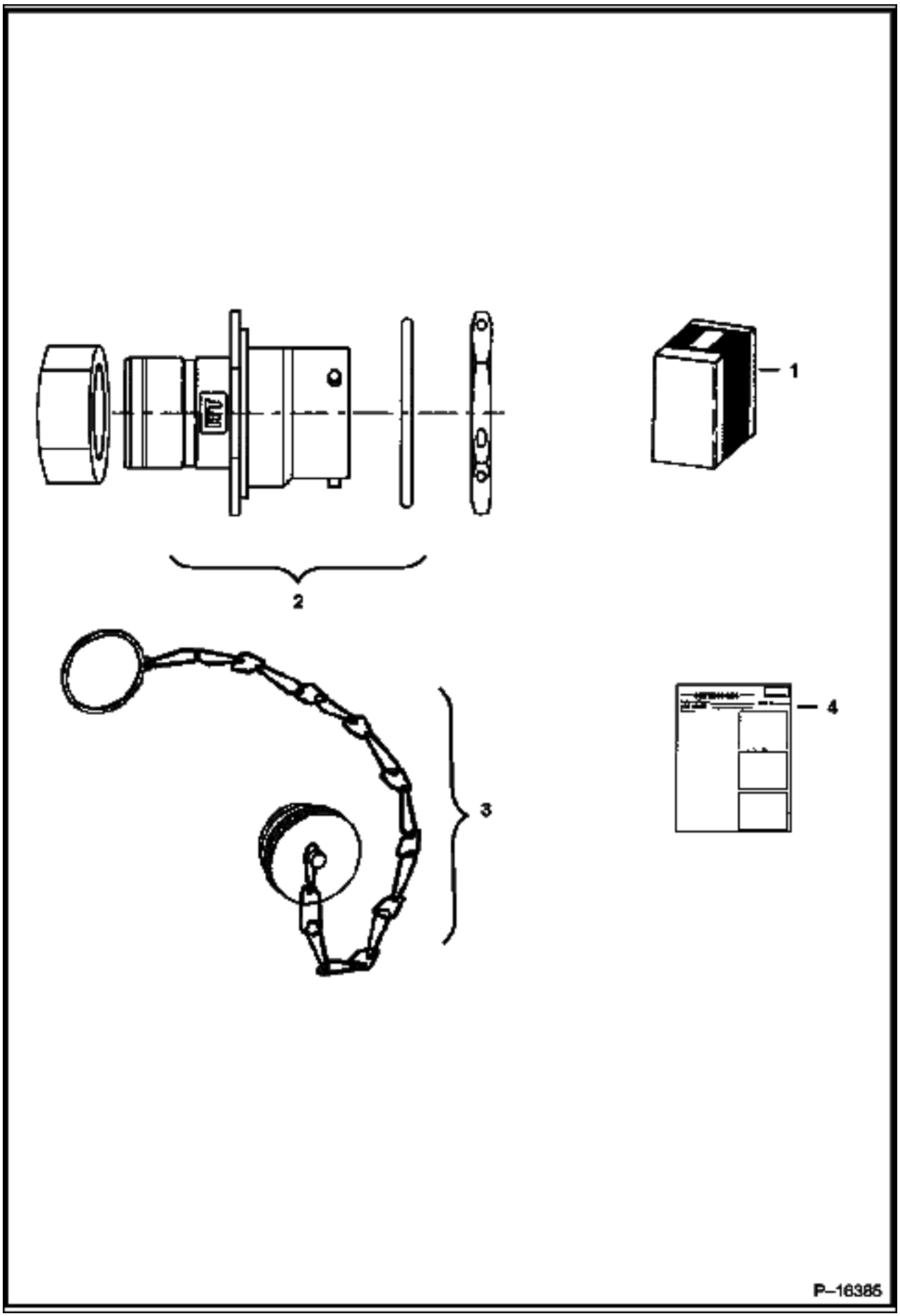

ELECTRICAL CONNECTOR KIT (Cont'd)
(7-Pin)

Ref No	Part Number	Description	Remarks	Serial Number	Qty
1	6727176	KIT	Ref. 2-4		1
2	6674802	CONNECTOR	7-pin		1
3	6675026	CAP			1
4	6901076	INSTRUCTIONS			1

ELECTRICAL CONTROLS KIT
(7 Pin Attachments)

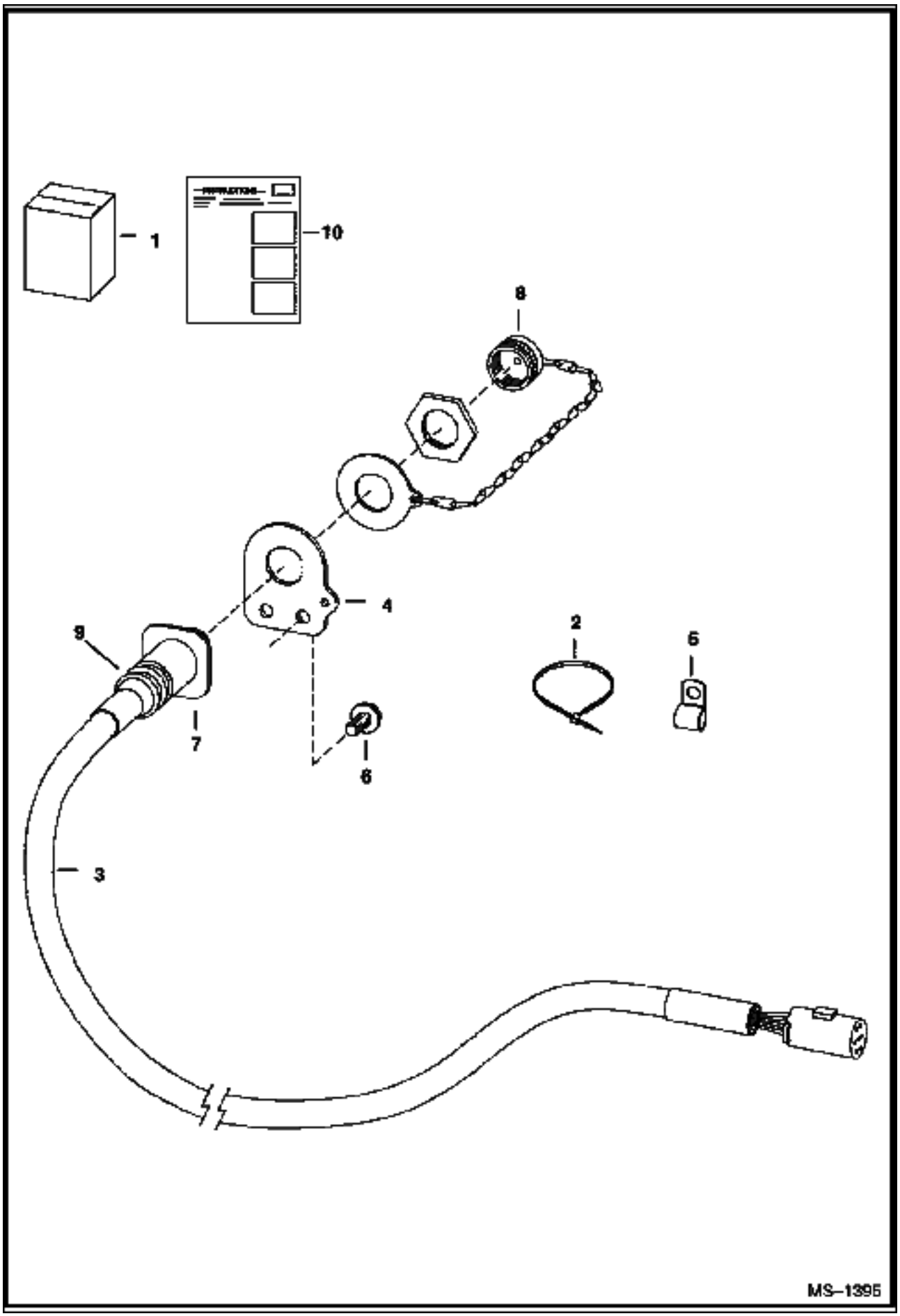

ELECTRICAL CONTROLS KIT (Cont'd)
(7 Pin Attachments)

Ref No	Part Number	Description	Remarks	Serial Number	Qty
1	6733142	KIT	Ref. 3-10		1
2	6624289	STA STRAP			4
3	6718426	HARNESS	W/Ref. 4		1
4	6718750	MOUNT			1
5	30H000027B	CLIP			6
6	84G003112B	BOLT			8
7	6674802	CONNECTOR	See Illustration ELECTRICAL CONNECTOR KIT/ P16385 7-PIN		1
7	6669549	SOCKET	small		4
7	6677136	SOCKET	large - 12 ga.		3
7		NUT	NSS - Order 6674802		1
8	6675026	CAP			1
9	6674799	ADAPTER	heat shrink		1
10	6901871	INSTRUCTIONS			1

ELECTRICAL CONTROLS KIT
(14 Pin Attachments)

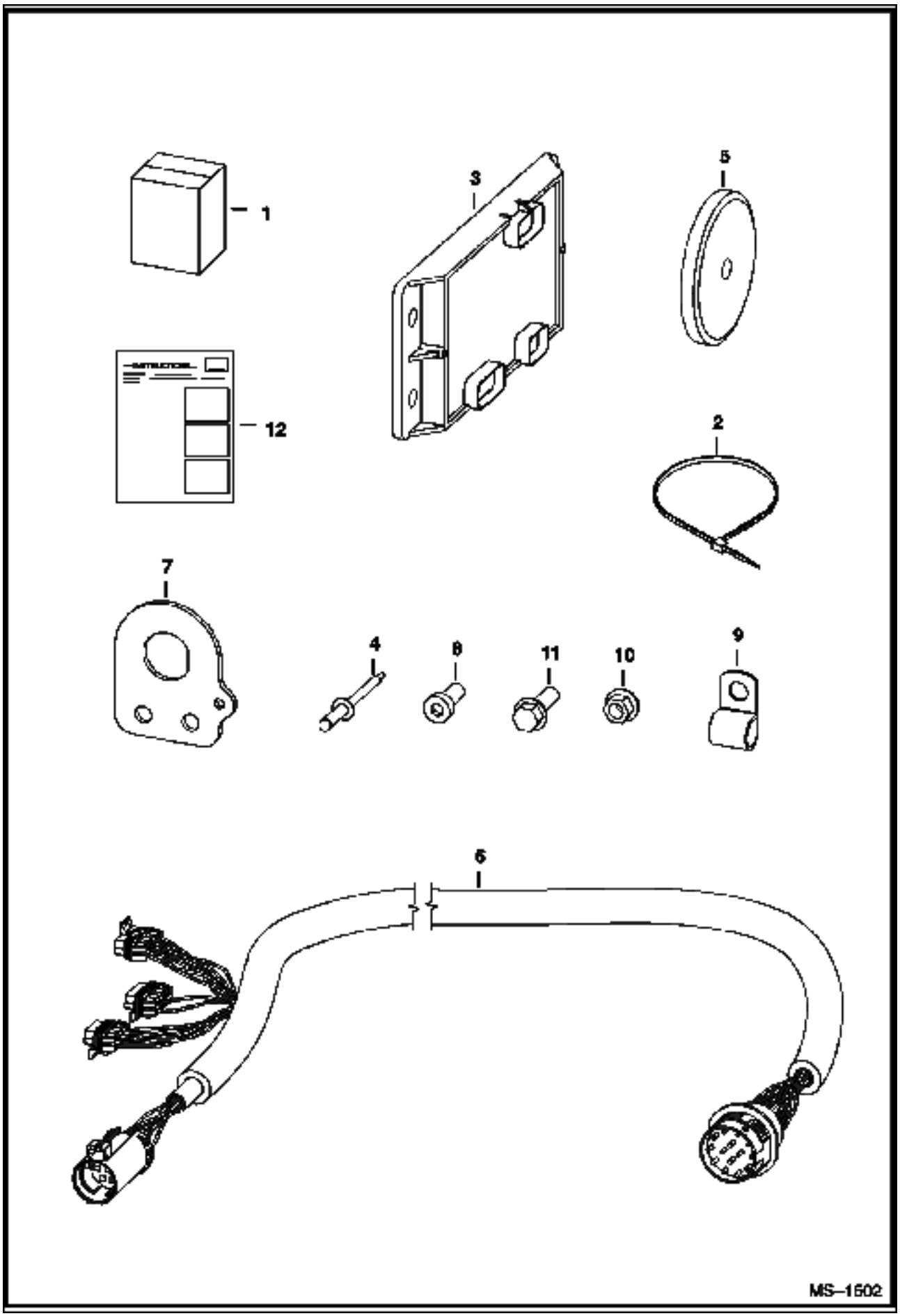

ELECTRICAL CONTROLS KIT (Cont'd)
(14 Pin Attachments)

Ref No	Part Number	Description	Remarks	Serial Number	Qty
1	6733136	KIT			1
2	6624289	STA STRAP			4
3	6678675	CONTROLLER			1
4	6704892	RIVET			1
5	6719448	MAGNET			2
6	6732730	HARNESS			1
7	6733144	MOUNT			1
8	25G000612B	BOLT			2
9	30H000050B	CLAMP			6
10	83D000006B	NUT			2
11	84G003112B	BOLT			8
12	6901872	INSTRUCTIONS			1

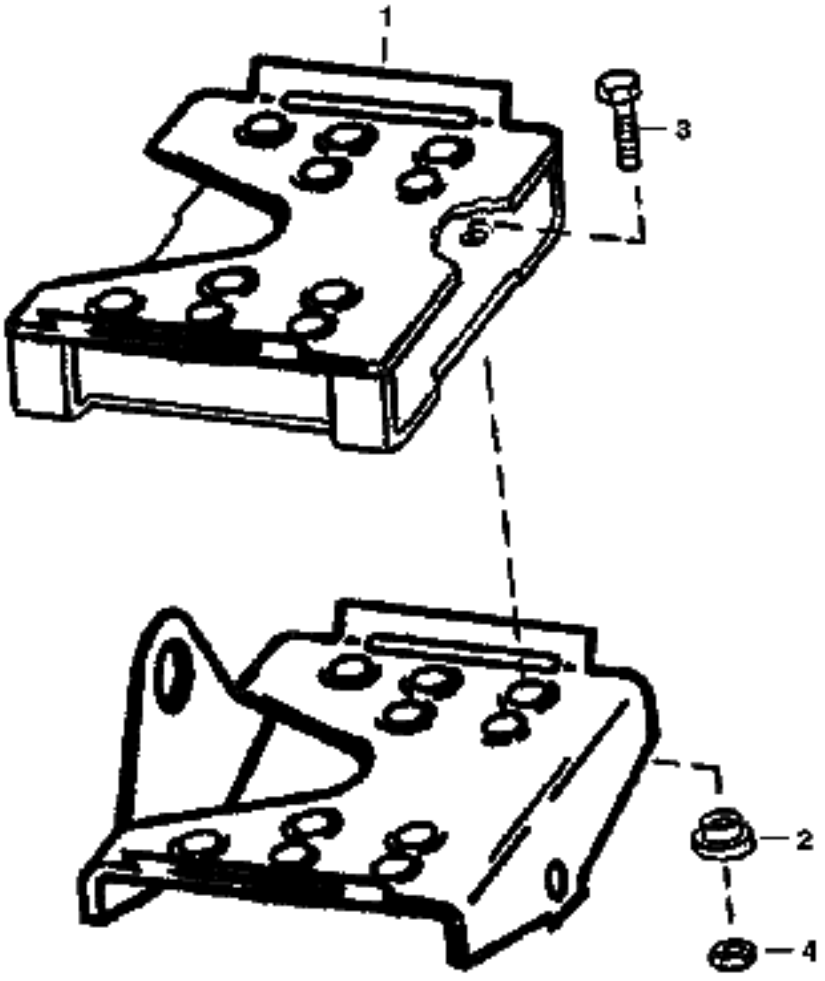
1
3
5
2
4
B–14856

EXPORT ACCESSORIES (Cont'd)
(Pedal Extenders)

Ref No	Part Number	Description	Remarks	Serial Number	Qty
1	6713115	PEDAL	extender		2
2	6713116	BUSHING			8
3	17C000516B	BOLT			8
4	85D000005B	NUT			8

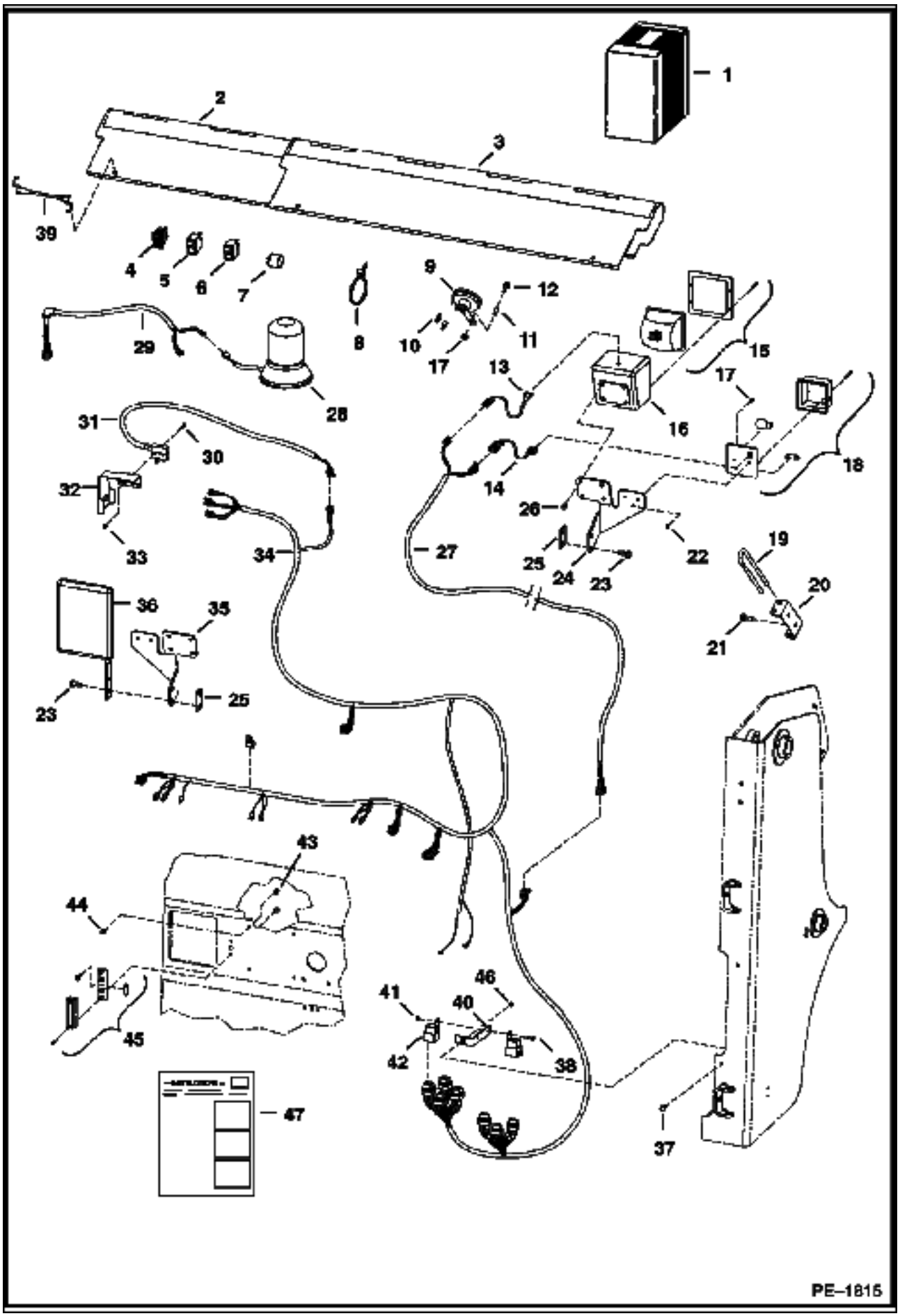
1
2
3
39
4
5
6
7
8
9
10
11
12
17
13
15
16
17
18
14
26
22
19
20
21
29
28
31
30
32
33
34
27
25
24
23
36
35
25
23
43
44
45
41
40
46
42
38
37
47
PE–1815

EXPORT ACCESSORIES (Cont'd)
(Road Kit)

Ref No	Part Number	Description	Remarks	Serial Number	Qty
1		KIT	SALES - Order 6731237 from SALES		1
2	6713841	SHIELD	bucket		1
3	6714820	SHIELD	bucket		1
3	6713840	DECAL			1
4	6676872	TURN SIGNAL			1
5	6668815	SWITCH	hazard		1
6	6668816	SWITCH	beacon		1
7	6557904	FLASHER			1
8	6624289	STA STRAP			26
9	6671106	HORN			1
10	6675064	TERMINAL			2
11	6732206	SPACER			1
12	35C000536B	BOLT			1
13	6713994	HARNESS	adapter - headlight		2
14	6713993	HARNESS	adapter - light		2
15	6665728	LIGHT	front		2
16	6707804	HOUSING			2
17	85G000808B	BOLT			4
18	6665727	LIGHT	front turn		2
19	6731222	PIN	Bob-tach		1
20	6731973	HOLDER	pin		1
21	84G003712B	BOLT			2
22	12D000008B	NUT			4
23	84G003716B	BOLT			4
24	6713151	MOUNT	light - R.H.		1
25	6735825	SPACER			2
26	17C000508B	BOLT			8
27	6731239	HARNESS	boom light		2
28	6675523	BEACON	light		1
29	6718872	HARNESS	cab exterior		1
30	85G000616B	SCREW			2
31	6661150	SWITCH			1
32	6713736	BRACKETS			1
33	12D000006B	NUT			2
34	6726430	HARNESS	engine/tail - Italian		1
35	6713150	MOUNT	light - L.H.		1
36	6665860	KIT	side mirror		1
37	17C000512B	BOLT			1
38	17C000410B	BOLT			2
39	6731819	STRAP	rubber		3
40	6702650	MOUNT	fuse		1
41	85D000004B	NUT			2
42	6670312	SOLENOID	magnetic		4
43	83D000004B	NUT			4
44	35C000410B	BOLT			4
45	6665729	LIGHT	license plate		1
46	55D000005B	NUT			2
47	6901663	INSTRUCTIONS			1

EUROPEAN ACCESSORIES
(Road Kit) (Selectable Joystick Controls)

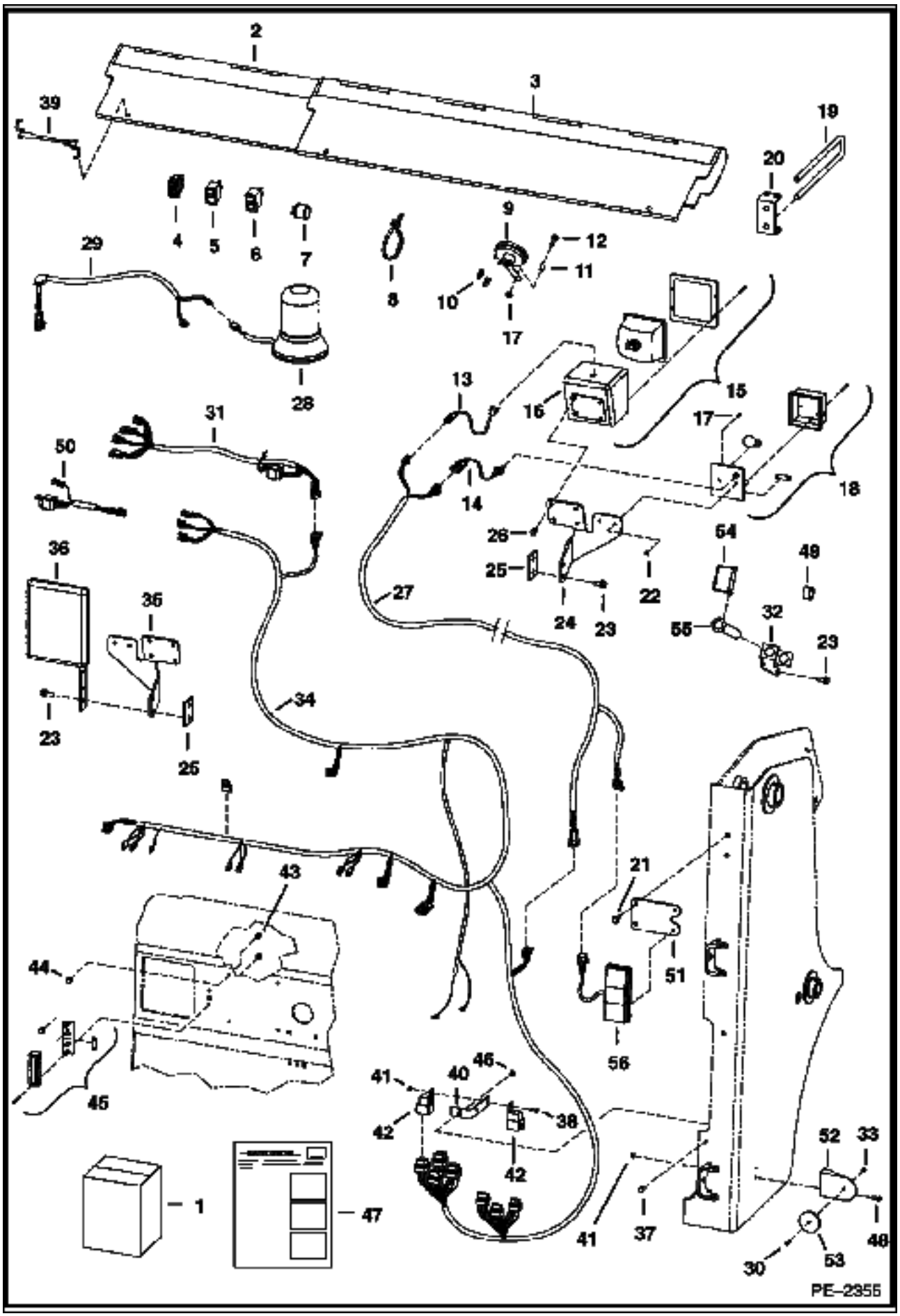

Ref No	Part Number	Description	Remarks	Serial Number	Qty
1		KIT	SALES - Order 6732387 from SALES		1
2	6713841	SHIELD	bucket		1
3	6713842	SHIELD	bucket		1
4	6676872	TURN SIGNAL			1
5	6668815	SWITCH	hazard		1
6	6668816	SWITCH	beacon		1
7	6557904	FLASHER			1
8	6624289	STA STRAP			20
9	6671106	HORN			1
10	6675064	TERMINAL			2
11	6732206	SPACER			1
12	35C000536B	BOLT			1
13	6713994	HARNESS	adapter - headlight		2
14	6713993	HARNESS	adapter - light		2
15	6665728	LIGHT	front		2
16	6707804	HOUSING			2
17	85G000808B	BOLT			4
18	6665727	LIGHT	front turn		2
19	6731222	PIN	Bob-tach		1
20	6731973	HOLDER	pin		1
21	84G003712B	BOLT			4
22	12D000008B	NUT			4
23	84G003716B	BOLT			6
24	6713151	MOUNT	light - R.H.		1
25	6735825	SPACER			2
26	17C000508B	BOLT			8
27	6732081	HARNESS	boom light		2
28	6675523	BEACON	light		1
29	6718872	HARNESS	cab exterior		1
30	85G001010B	BOLT			2
31	6732045	HARNESS	AWS stop lights		1
32	6733296	BRACKET	pin holder		1
33	14D000010B	NUT			2
34	6726430	HARNESS	engine/tail - Italian		1
35	6713150	MOUNT	light - L.H.		1
36	6665860	KIT	side mirror		1
37	17C000512B	BOLT			1
38	17C000410B	BOLT			2
39	6731819	STRAP	rubber		3
40	6702650	MOUNT	fuse		1
41	85D000004B	NUT			6
42	6670312	SOLENOID	magnetic		4
43	83D000004B	NUT			4
44	35C000410B	BOLT			4
45	6665729	LIGHT	license plate		1
46	55D000005B	NUT			2
47	6901909	INSTRUCTIONS			1
48	35C000412B	BOLT			4
49	6733270	MOUNT			1
50	6733851	HARNESS	SJC stop lights		1
51	7101104	MOUNT	rear lights		2
52	6670620	MOUNT	reflector		2
53	6670621	LENS	reflector		2
54	6670668	PIN			1

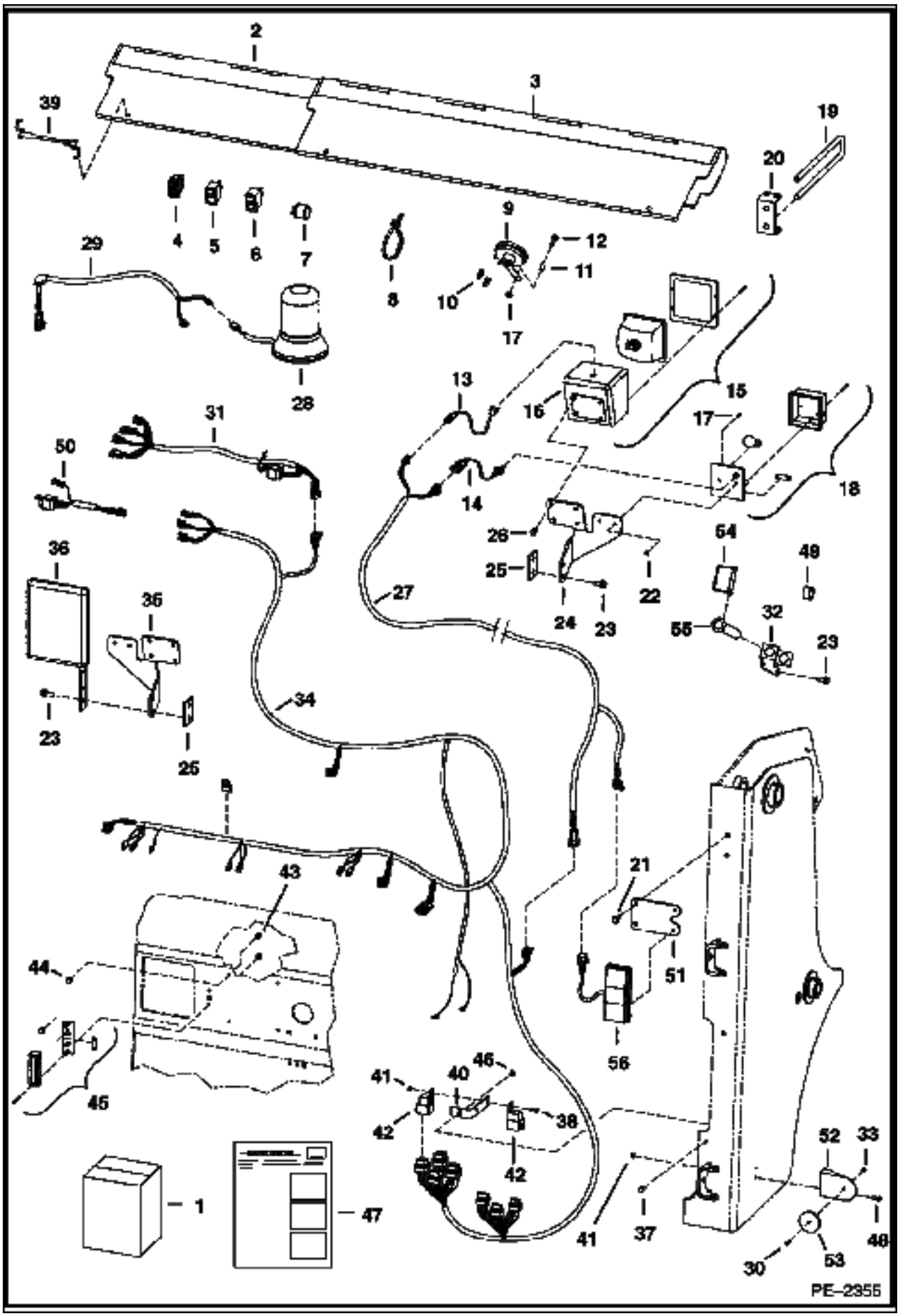
2
3
39
19
20
4
5
6
7
8
9
12
11
10
17
29
28
13
16
15
17
18
31
50
14
26
25
24
23
22
64
49
55
32
23
36
36
23
25
27
34
43
21
44
51
56
45
41
40
46
38
42
42
1
47
41
37
52
33
48
30
53
PE-2355

Ref No	Part Number	Description	Remarks	Serial Number	Qty
55	6713990	PIN	B/T lock		1
56	7101384	LIGHT	rear		2
56	6686096	LENS	amber - turn		1
56	6686097	BULB	turn		1
56	6686098	BULB	stop		1
56	6686099	LENS	red - stop		1
56	6686100	SCREW			2

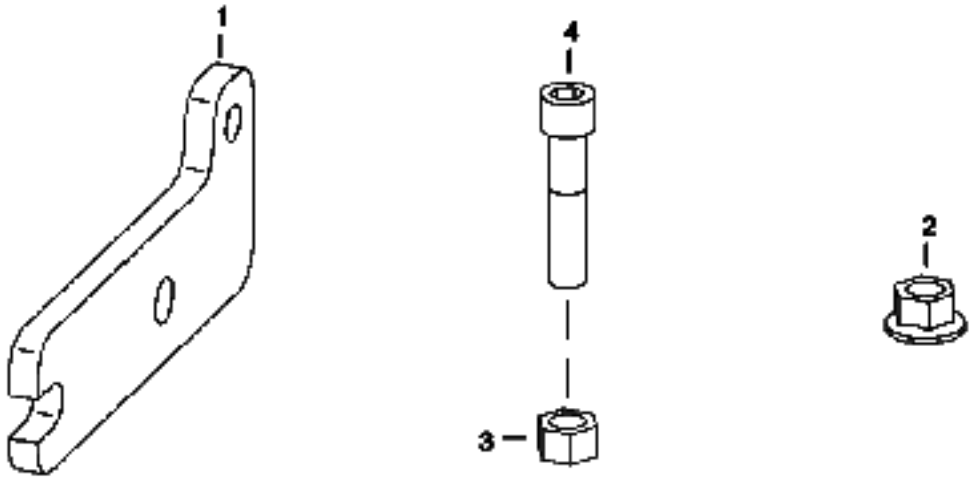

PE–2361

Ref No	Part Number	Description	Remarks	Serial Number	Qty
1	6737528	BRACKET	idle stop		1
2	43DM00008B	NUT			2
3	62D000005B	NUT			1
4	74G000536B	BOLT			1

FIRE EXTINGUISHER

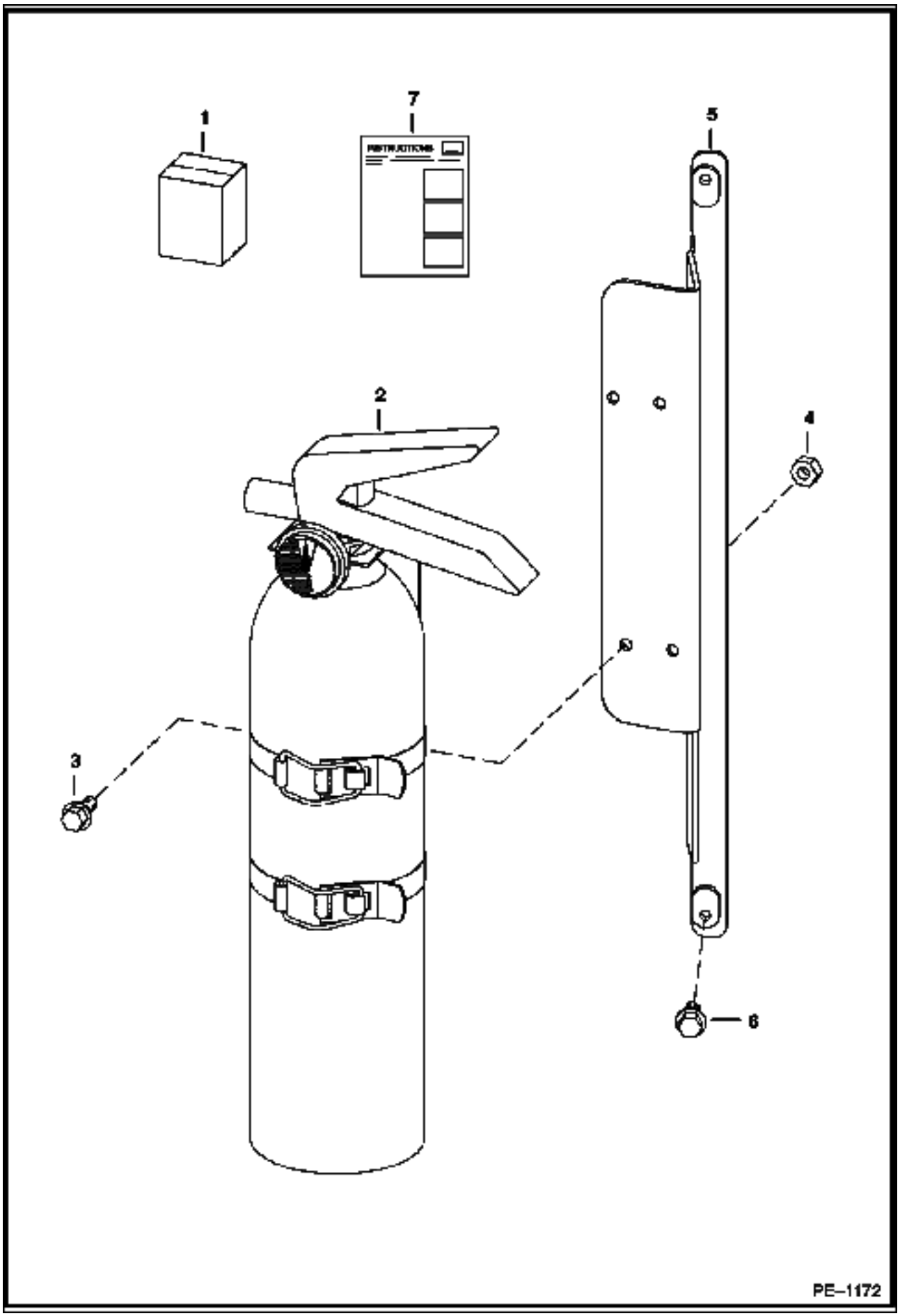

Ref No	Part Number	Description	Remarks	Serial Number	Qty
1	6725898	KIT	fire extinguisher - Ref. 2-7		1
2	6675581	EXTINGUISHER			1
3	45G001006B	BOLT			4
4	12D000010B	NUT			4
5	6725906	BRACKET			1
6	31C000410B	BOLT			2
7	6901025	INSTRUCTIONS			1

FLASHER LIGHTS
(4-Way) (Turn Indicators)

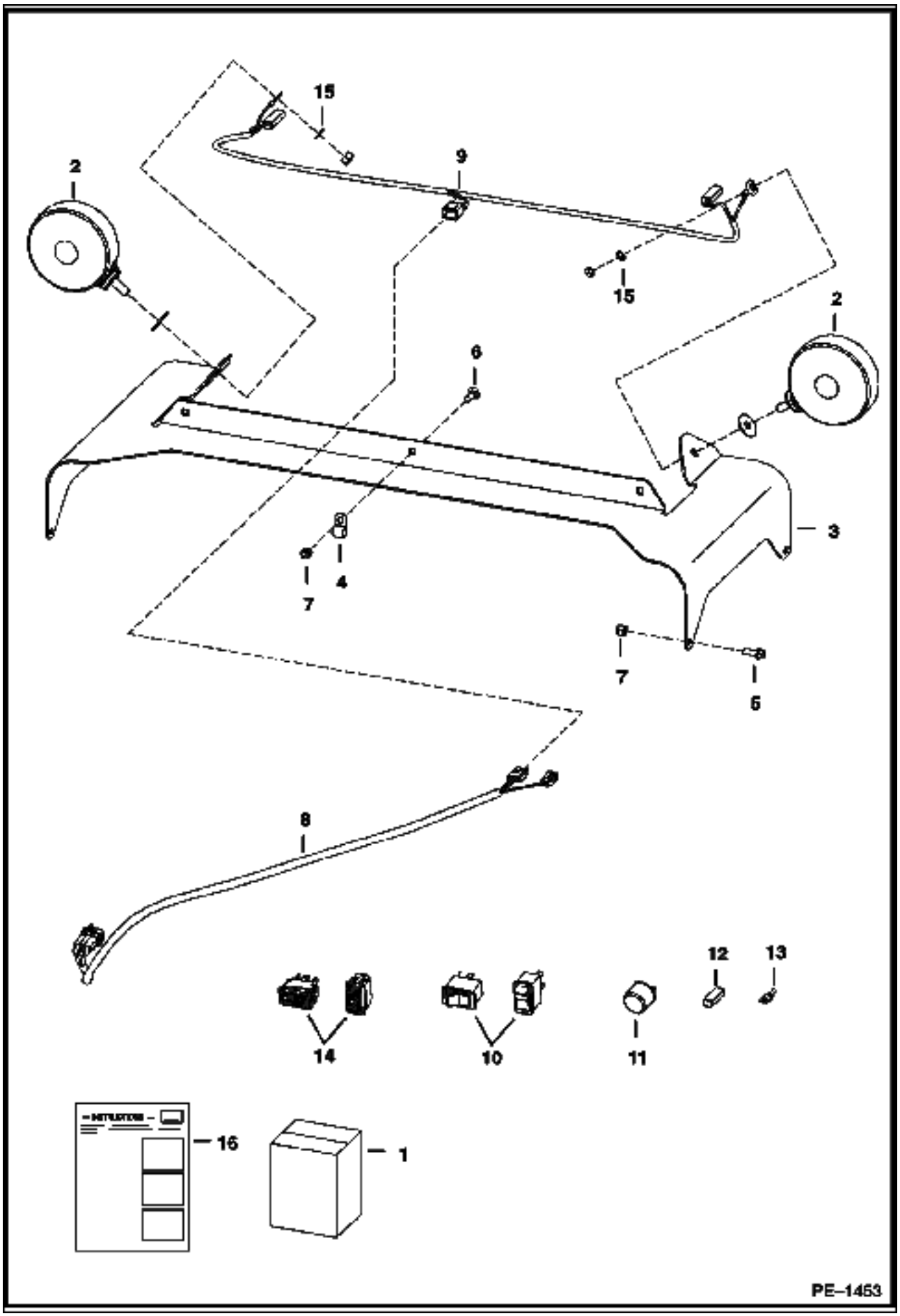

FLASHER LIGHTS (Cont'd)
(4-Way) (Turn Indicators)

Ref No	Part Number	Description	Remarks	Serial Number	Qty
1	6718411	KIT	Ref. 2, 3 & 5-16		1
2	6517516	LIGHT			2
3	6718326	MOUNT			1
4	30H000021B	CLAMP	not in kit		3
5	35C000412B	BOLT			4
6	37C000412B	BOLT			3
7	59D000004B	NUT			7
8	6718872	HARNESS	ext. cab		1
9	6718873	HARNESS	4-way flasher		1
10	6665316	SWITCH	horizontal		1
10	6668815	SWITCH	vertical		1
11	6557904	FLASHER			1
12	614142B	SLEEVE			1
13	6515131	TERMINAL			1
14	6675835	TURN SIGNAL	horizontal		1
14	6676872	TURN SIGNAL	vertical		1
15	6E000005B	WASHER	lock		2
16	6900848	INSTRUCTIONS			1

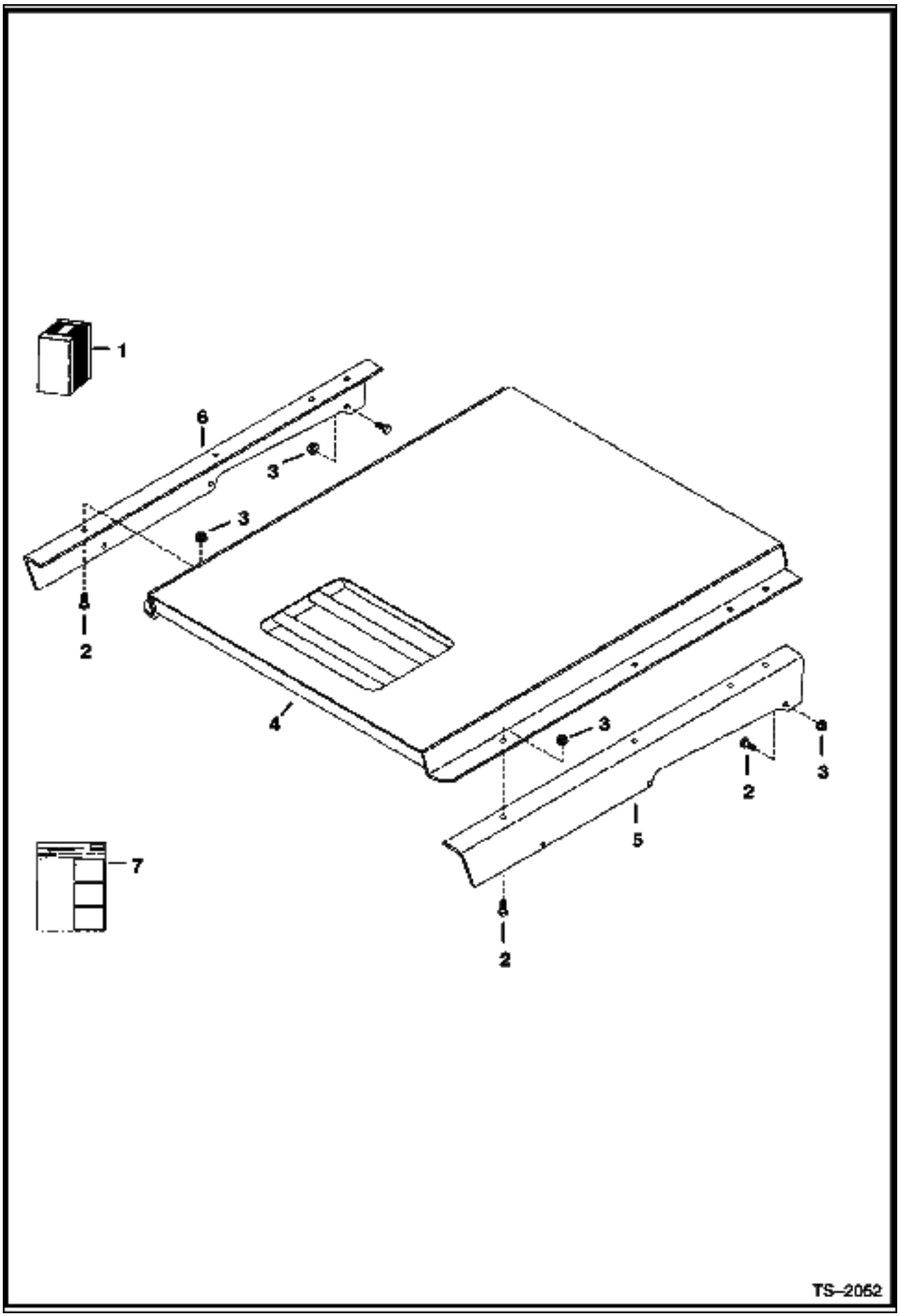
1
6
3
3
2
4
3
2
3
5
7
2
TS–2052

Ref No	Part Number	Description	Remarks	Serial Number	Qty
1	6718924	KIT	Ref. 2-7		1
2	17C000616B	BOLT			14
3	83D000006B	NUT			14
4	6702402	SHIELD			1
5	6718833	BRACKET	L.H.		1
6	6718834	BRACKET	R.H.		1
7	6720592	INSTRUCTIONS			1

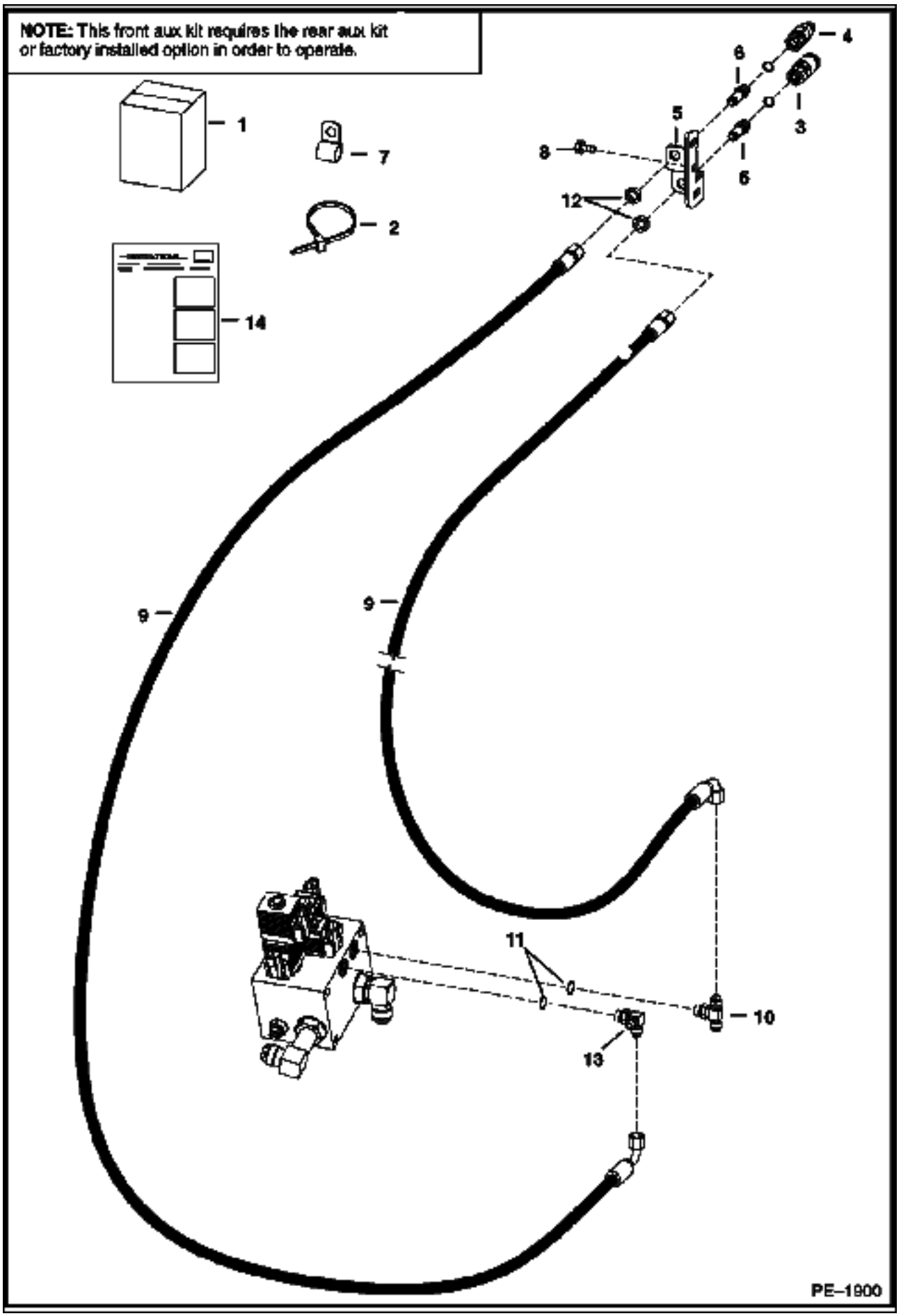
NOTE: This front aux kit requires the rear aux kit or factory installed option in order to operate.
1
7
2
14
4
6
3
5
8
6
12
9
9
11
10
13
PE–1900

FRONT AUXILIARY (Cont'd)
(R.H. Kit)

Ref No	Part Number	Description	Remarks	Serial Number	Qty
1	6736655	KIT	This front aux. kit requires the rear aux. kit (6735919) or factory installed option in order to operate.		1
2	6624289	STA STRAP			10
3	6667803	COUPLER	female		1
4	6667804	COUPLER	male		1
4	6669657	SEAL KIT			x
5	6711674	MOUNT	quick coupler		1
6	6716089	CONNECTOR	bulkhead		2
7	31H000042B	CLIP			4
8	84G003716B	BOLT			6
9	6736664	HOSE			2
10	19KB00606B	TEE	W/Ref. 11		2
11	79K000006B	O-RING			x
12	86F000005B	NUT			2
13	6725182	TEE	W/Ref. 11		1
14	6901916	INSTRUCTIONS			1

GAS SPRING KIT

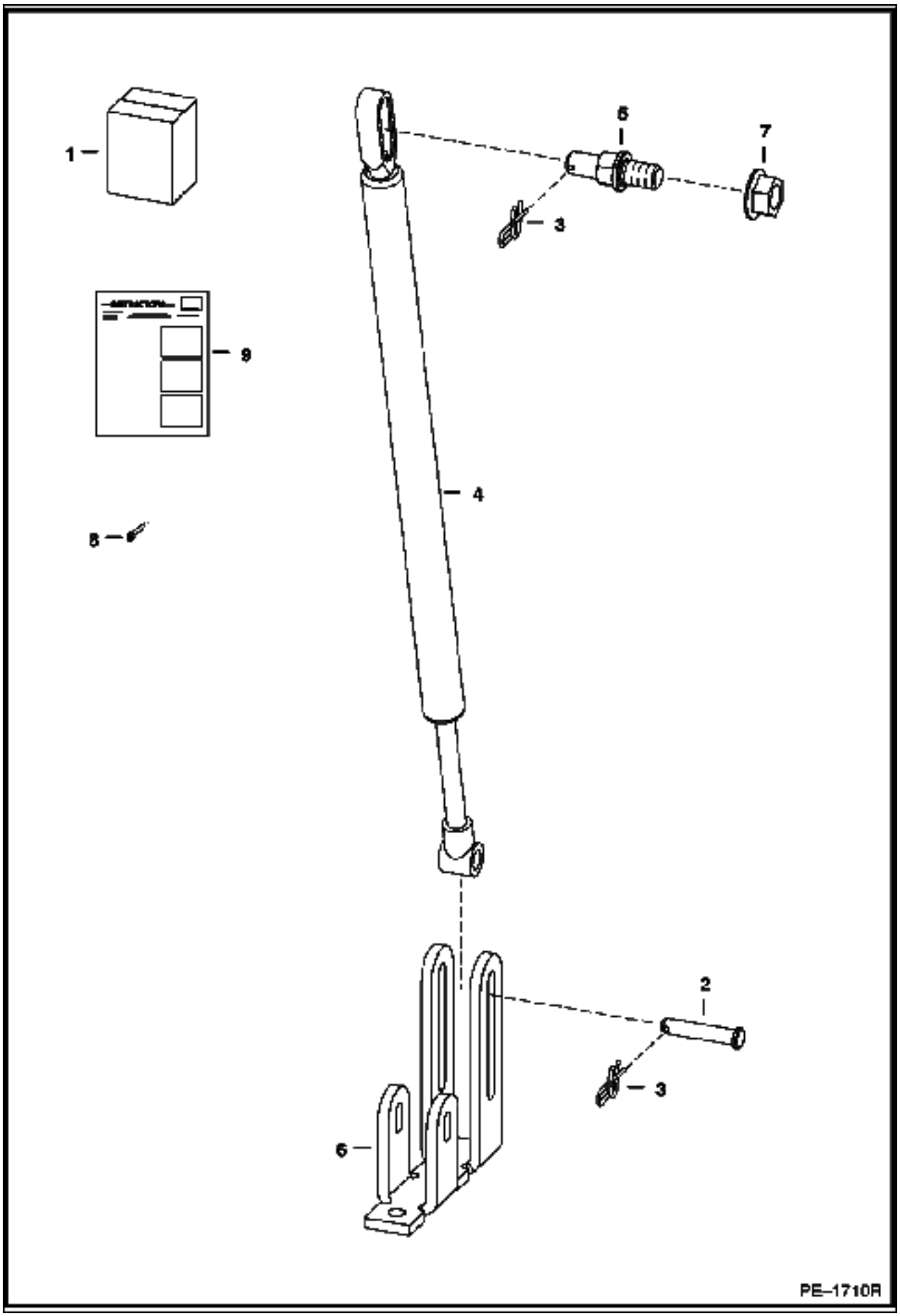

GAS SPRING KIT (Cont'd)

Ref No	Part Number	Description	Remarks	Serial Number	Qty
1	6732928	KIT			1
2	6567743	PIN			1
3	6631418	PIN			2
4	6678292	GAS SPRING			1
5	6719064	MOUNT			1
6	6729141	MOUNT			1
7	97D000008B	NUT			1
8	21G000804B	BOLT			1
9	6901816	INSTRUCTIONS			1

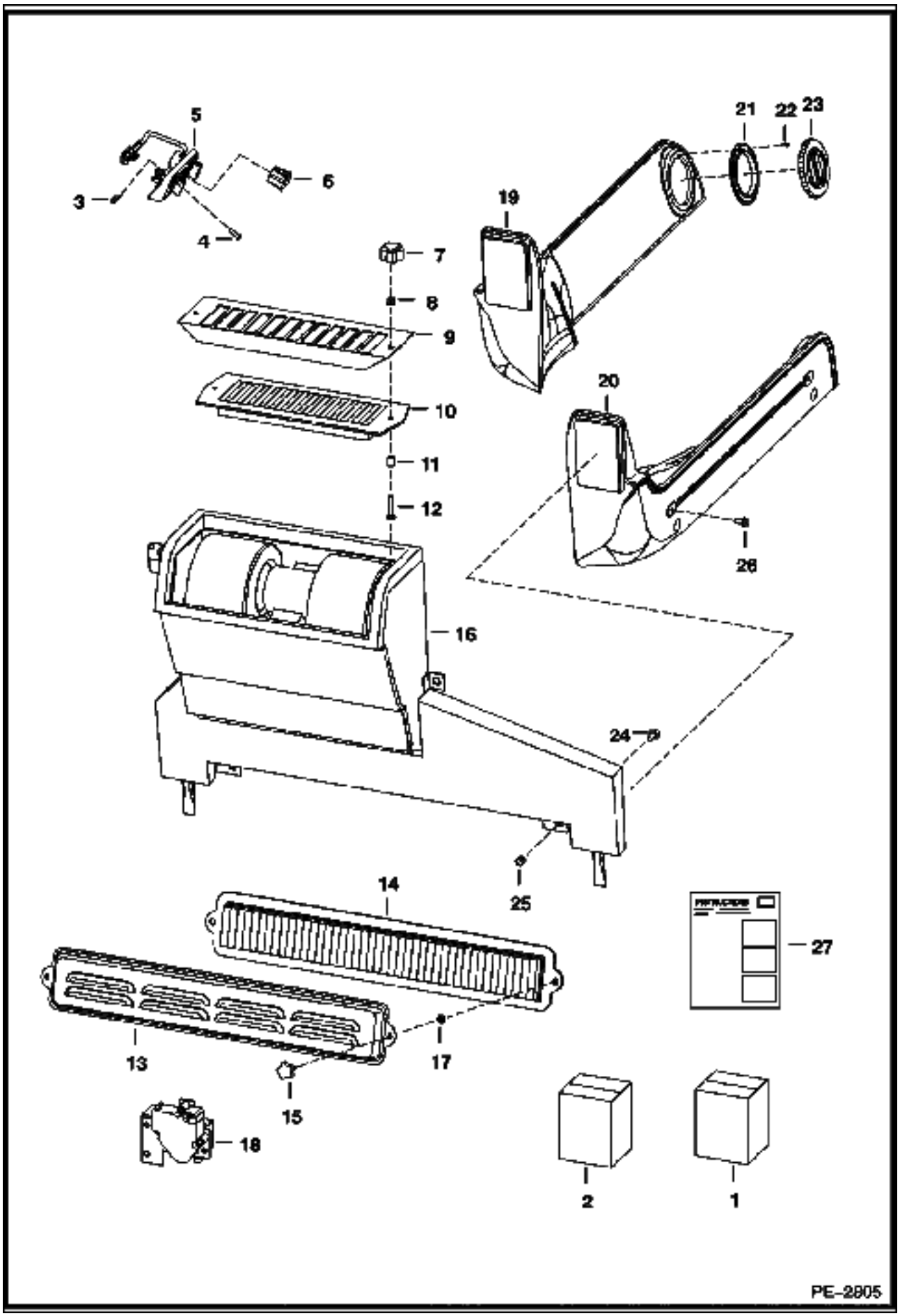
5
6
3
4
7
8
9
10
11
12
16
21
22
23
19
20
26
24
25
14
13
17
15
18
27
2
1
PE-2805

Ref No	Part Number	Description	Remarks	Serial Number	Qty
1	7116899	KIT			1
2	6725513	PACKAGE	Decal		1
3	6669091	CLIP	retainer		3
4	6669224	BOLT			3
5	6674228	PANEL	control		1
5	6640699	CONNECTOR			1
5	6718579	DECAL			1
5	6718887	PANEL			1
5	6675176	SWITCH	blower		1
5	6675177	KNOB			1
5	6675846	POTENTIOMETER			1
6	6675181	PLUG	switch hole - AC		1
7	6681614	KNOB			2
8	83D000004B	NUT			2
9	6718175	SCREEN	filter		1
10	6678207	FILTER	recirculation		1
11	6718837	SPACER			2
12	37C000424B	BOLT			2
13	6727847	COVER			1
14	6677983	FILTER			1
15	6726386	KNOB			2
16	6688543	HEATER	See Illustration HEATER/ PE1143		1
17	6676516	NUT	Push		2
18	7101928	VALVE			1
18	6641174	CONNECTOR	male		1
18	6689635	BRACKET	actuator mounting		1
18	6675172	BRACKET	valve mounting		1
18	6689636	ACTUATOR			1
18	6689637	VALVE			1
19	6735246	DUCT	L.H.		1
20	6735245	DUCT	R.H.		1
21	6675179	FLANGE	round		4
22	57G000608B	SCREW			16
23	6674231	VENT	round		4
24	37C000512B	BOLT			4
25	59D000005B	NUT			4
26	35C000410B	BOLT			4
27	6904255	INSTRUCTIONS			1

DRAWING NOT AVAILABLE AT TIME OF PRINTING

PE-2908

HEATER & AC (Cont'd)
(Heater Plumbing Kit)

Ref No	Part Number	Description	Remarks	Serial Number	Qty
1	7116902	KIT	Ref. 2-9 & 11		1
2		HOSE	NAP - 72 in. (1828,8 mm) long - order Ref. 8 - Was 6733432 [A]		1
3		HOSE	NAP - 84 in. (2133,6 mm) long - order Ref.8 - Was 6732817 [A]		1
4	5HM00020B	CLAMP			7
5	6624289	STA STRAP			8
6	7113208	HOSE			1
7	7113209	HOSE			1
8	6565977	HOSE	bulk - sold per foot		x
9	6678666	TREE MOUNT	tree		2
10	6731084	ADAPTER			1
11		VALVE	heater - not in kit		1
12	6732023	CONNECTOR			2
13	6731085	ELBOW			1
14	6904255	INSTRUCTIONS	Not in Kit - part of heater kit - Was 6903305 [B]		1

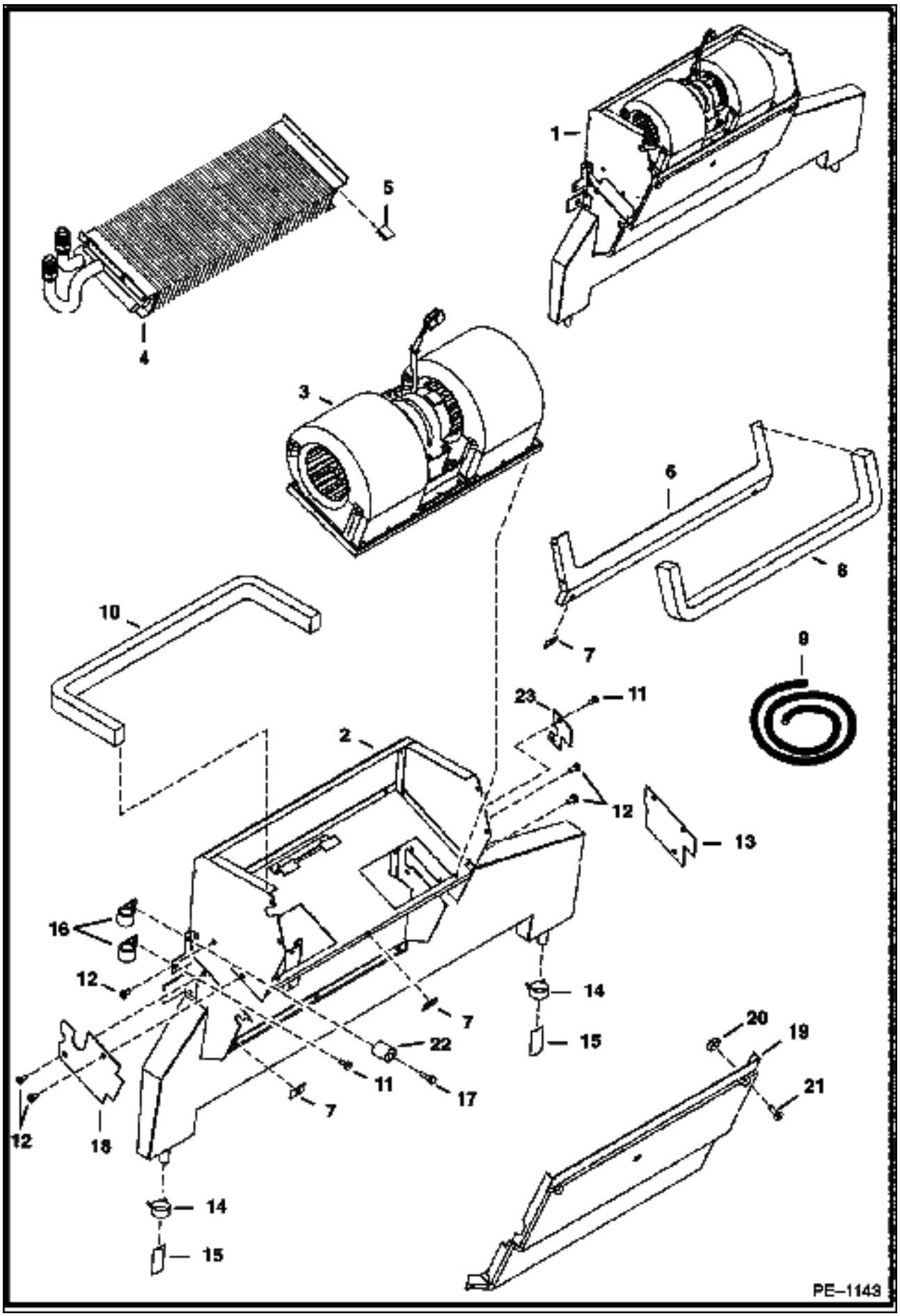
1
2
3
4
5
6
7
8
9
10
11
12
13
14
15
16
17
18
19
20
21
22
23
PE–1143

Ref No	Part Number	Description	Remarks	Serial Number	Qty
1	6688543	HEATER	Ref. 2-23		1
2	6677108	HOUSING			1
3	6675497	BLOWER	See Illustration HEATER & A/C/ B16401 assy		1
4		COIL	See Illustration HEATER & A/C/ PE1228 NAP		1
5	6676539	CLIP			3
6	6678152	SEAL			1
7	6677115	RECEPTACLE			6
8		SEAL	NAP - 22.6"(575mm) long - Order Ref. 9		1
9	6677111	SEAL	bulk - Sold Per Foot		x
10		SEAL	NAP - 25"(635mm) long - Order Ref. 9		1
11	6677119	SCREW	sheetmetal		7
12	6677118	SCREW	w/washer		4
13	6677120	COVER			1
14	6675510	CLAMP	drain hose		2
15	6675511	DRAIN VALVE			2
16	6675512	CLAMP	hose		2
17	6676653	SCREW			1
18	6677504	COVER			1
19	6678151	COVER			1
20	6677116	RETAINER			6
21	6677117	SCREW	captive		6
22	6676606	SPACER			1
23	6677105	COVER			1

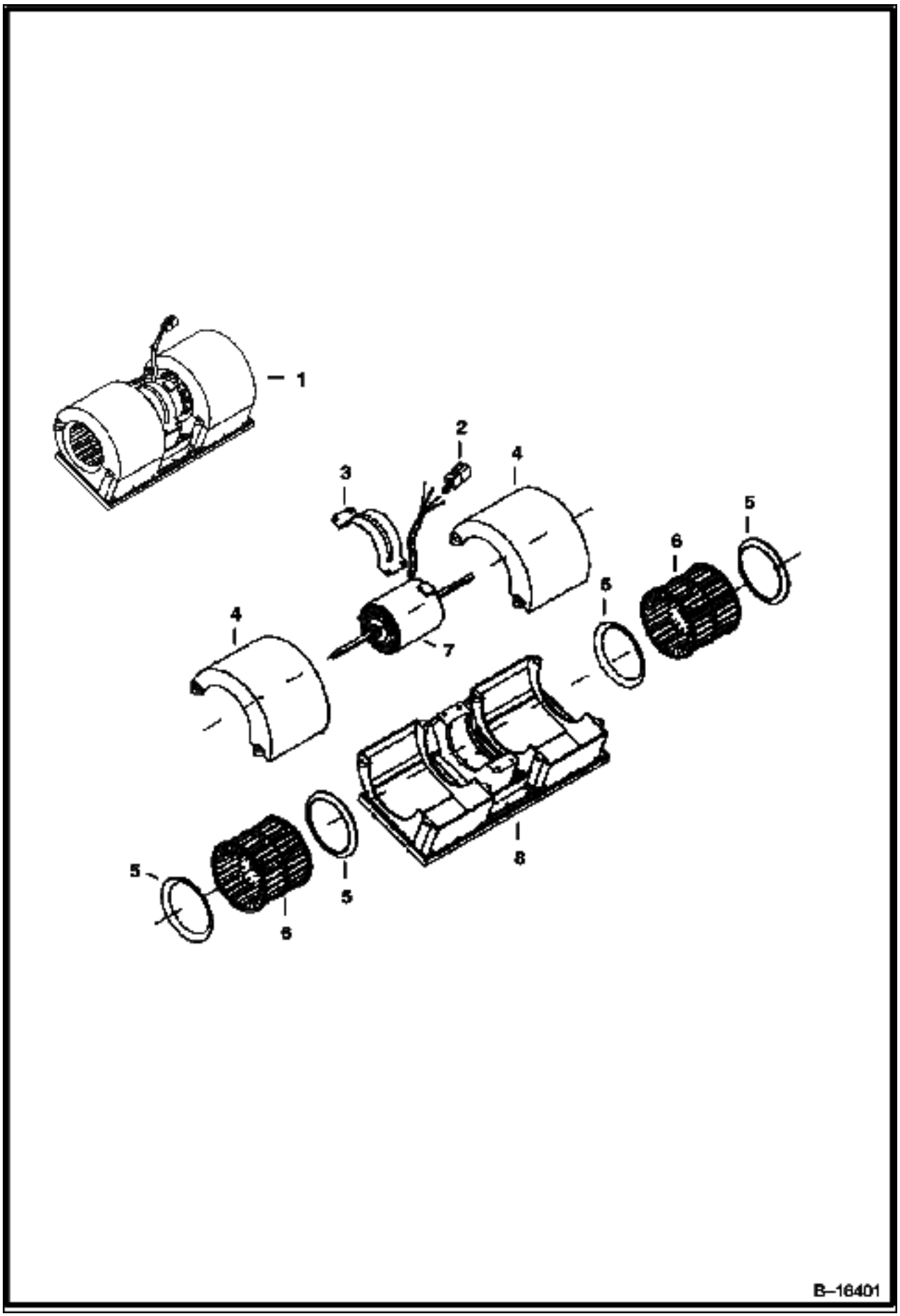
1
2
3
4
4
5
6
5
6
7
8
5
5
6
B–16401

HEATER & A/C (Cont'd)
(Blower Assembly)

Ref No	Part Number	Description	Remarks	Serial Number	Qty
1	6675497	BLOWER	Ref. 2-8		1
2	6662246	CONNECTOR	6-pin		1
2	6662252	LOCK	6-pin		1
2	6662257	PIN			4
2	6665370	PLUG			2
3	6675506	MOUNT			1
4	6675507	COVER			2
5	6675504	RING			4
6	6675505	BLOWER WHEEL			2
6	6676618	CLIP			2
7	6675509	MOTOR	W/Ref. 2		1
8	6675503	HOUSING			1

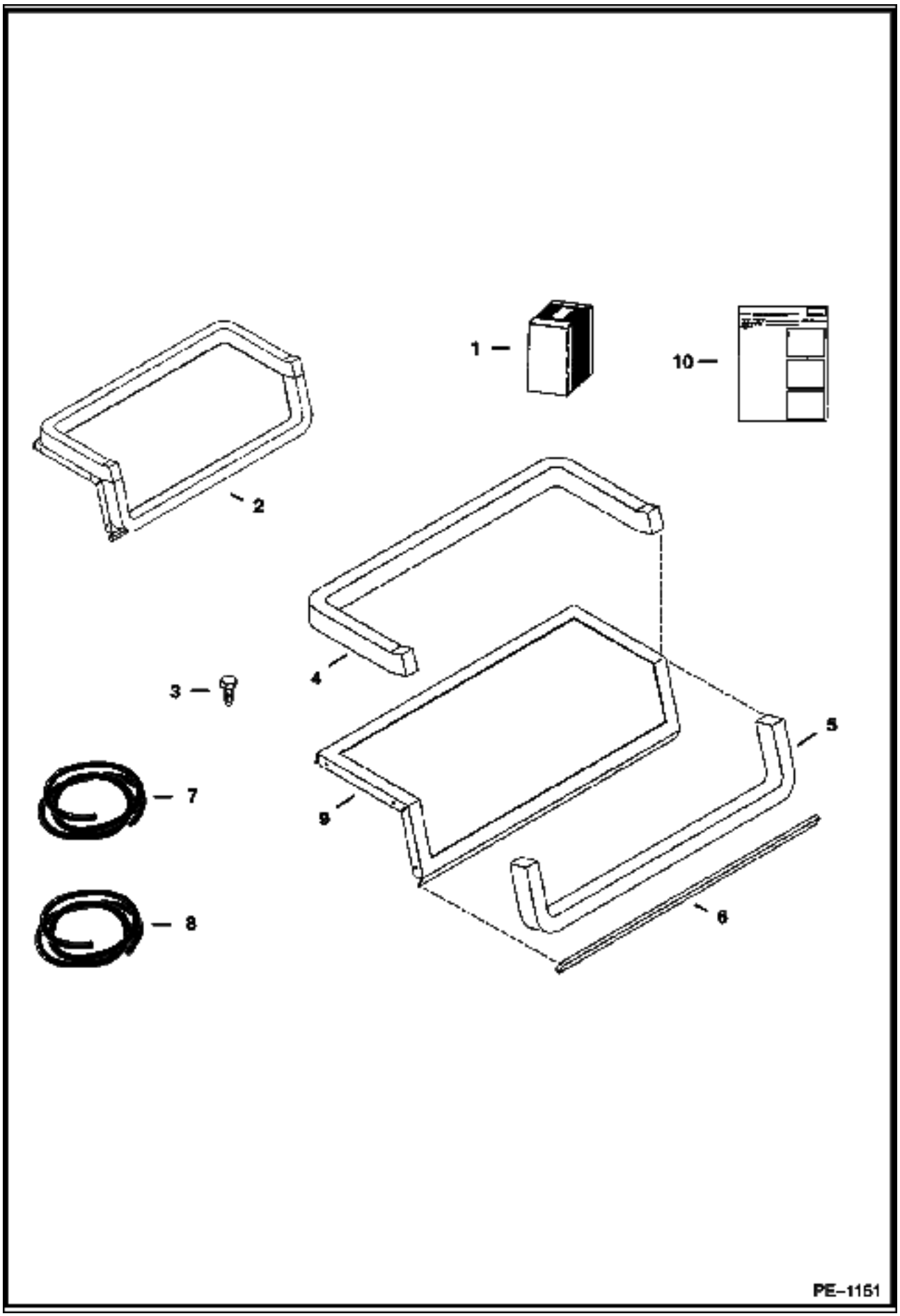
1
10
2
4
3
5
7
9
8
6
PE-1151

Ref No	Part Number	Description	Remarks	Serial Number	Qty
1	6728567	KIT	blower seal - W/Ref. 2, 3 & 10		1
2		FLANGE SEAL	NSS - assy - Ref. 4, 5, 6, & 9 - Order Ref 1.		1
3	6726621	SCREW			7
4		SEAL	NAP - 27" (686mm) long - Order Ref. 8		1
5		SEAL	NAP - 21" (534mm) long - Order Ref. 8		1
6		SEAL	NAP - 15" (384mm) long - Order Ref 7		1
7	6675611	SEAL	bulk - Sold Per Foot		x
8	6677111	SEAL	bulk - Sold Per Foot		x
9		FLANGE	NSS - Order Ref. 1		1
10	6901213	INSTRUCTIONS			1

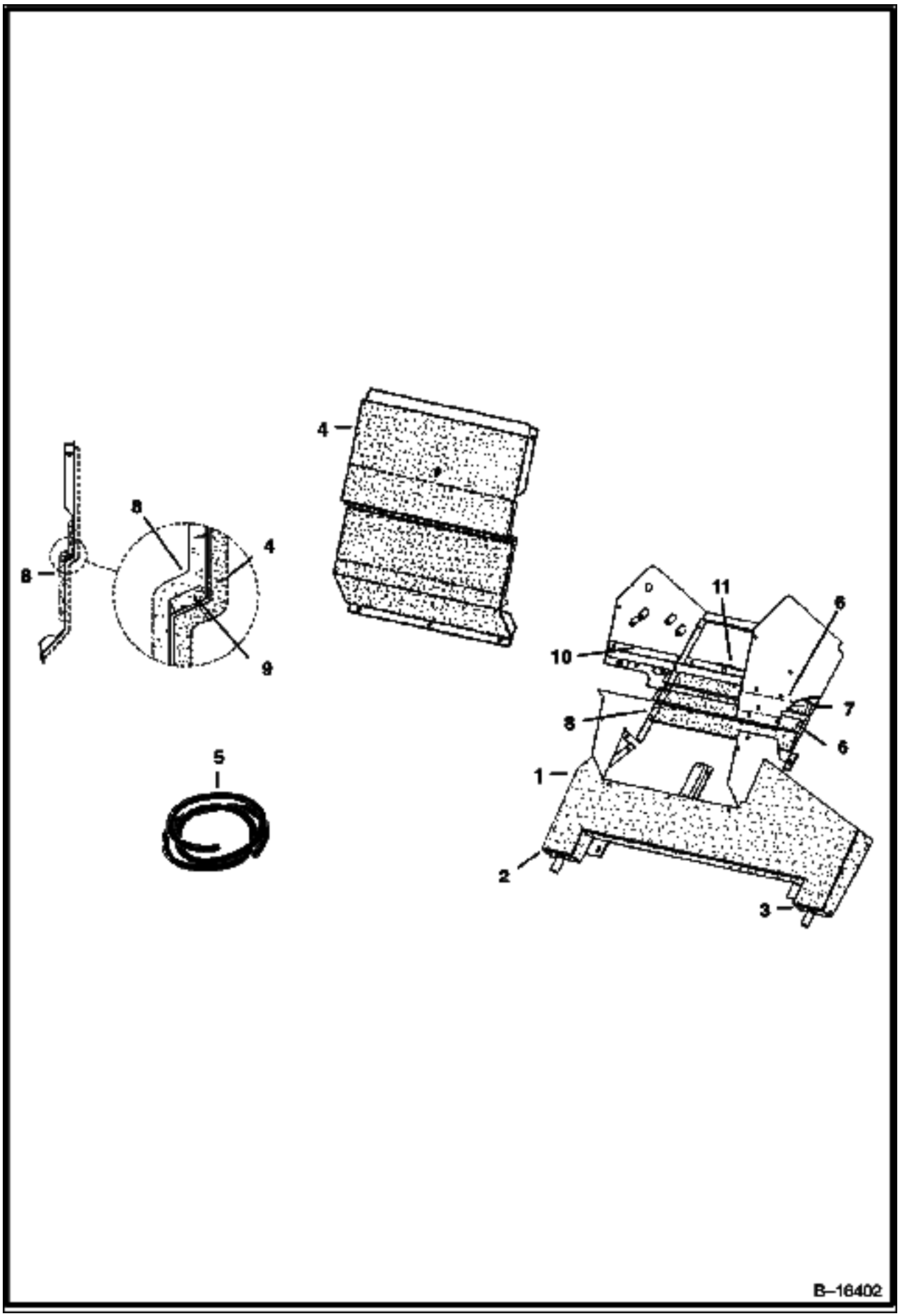
4
8
8
4
9
5
11
6
10
7
8
6
1
2
3
B–16402

Ref No	Part Number	Description	Remarks	Serial Number	Qty
1	6675607	INSULATION			1
2	6675608	INSULATION			1
3	6675609	INSULATION			1
4	6675610	INSULATION			1
5	6675611	SEAL	bulk - Sold Per Foot		x
6	6675612	INSULATION			2
7	6675613	INSULATION			1
8	6675614	INSULATION			2
9		SEAL	NAP - 15" (381mm) long - Order Ref. 5		1
10		SEAL	NAP - 5.5" (140mm) long - Order Ref. 5		1
11		SEAL	NAP - 4" (102mm) long - Order Ref. 5		1

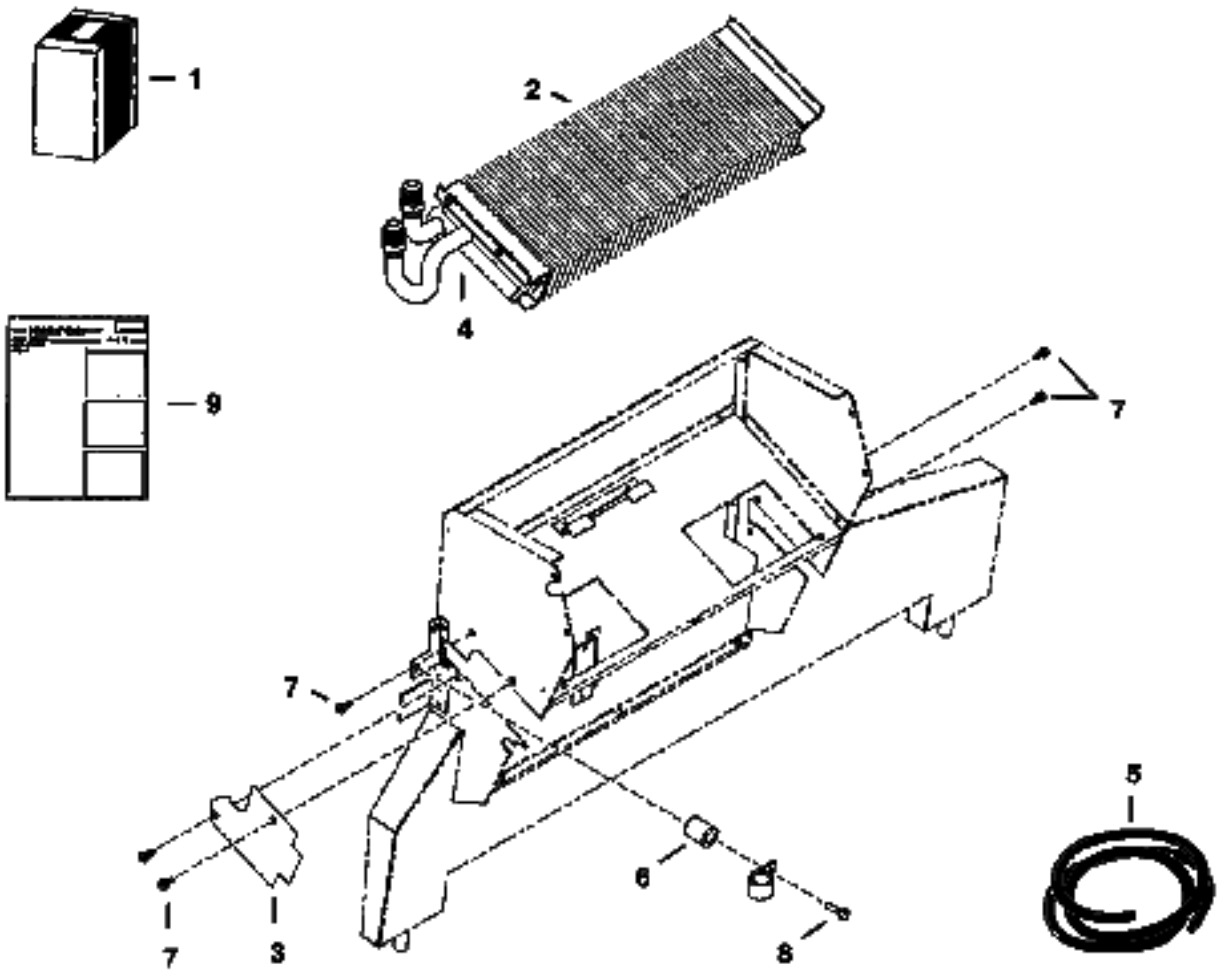

PE–1228

Ref No	Part Number	Description	Remarks	Serial Number	Qty
1	6727786	KIT	heater coil - W/Ref. 2-9		1
2		HEATER COIL	NAP - Order Ref. 1		1
3	6677504	COVER	.279" (7,1 mm) thick		1
4		INSULATION	NAP - 6" (152mm) long - Order Ref. 5		1
5	6676538	INSULATION	bulk - Sold Per Foot		x
6	6676606	SPACER			1
7	6726621	SCREW			2
8	6676653	SCREW			1
9	6901120	INSTRUCTIONS			1

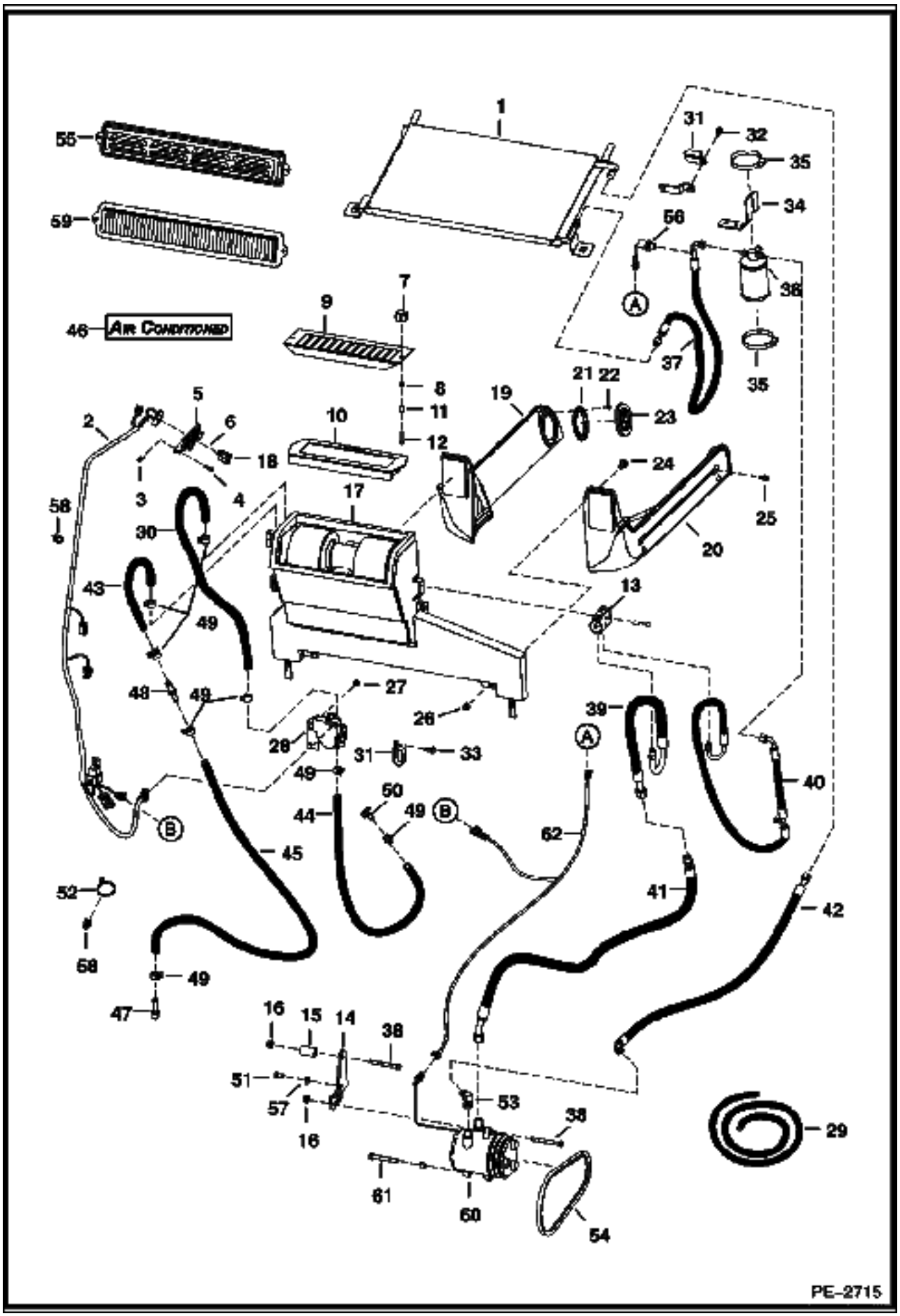
AIR CONDITIONED
PE-2715

Ref No	Part Number	Description	Remarks	Serial Number	Qty
1	6674234	CONDENSER	A/C		1
2	6725933	HARNESS	hvac		1
3	6669091	CLIP	retainer		3
4	6669224	BOLT			3
5	6674228	PANEL	control		1
5	6640699	CONNECTOR			1
5	6718579	DECAL			1
5	6718887	PANEL	A/C		1
5	6675176	SWITCH	blower		1
5	6675177	KNOB			1
5	6675846	POTENTIOMETER			1
6	6675181	PLUG	switch hole		1
7	6681614	KNOB			2
8	59D000004B	NUT			2
9	6718175	SCREEN	filter		1
10	6678207	FILTER	recirculation		1
11	6718837	SPACER			2
12	37C000424B	BOLT			2
13	6727326	MOUNT			1
14	6730265	MOUNT	compressor		1
15	6730266	SPACER			1
16	83D000006B	NUT			2
17	6688542	HVAC ASSY			1
18	6719176	SWITCH			1
19	6735246	DUCT	L.H.		1
20	6735245	DUCT	R.H.		1
21	6675179	FLANGE			4
22	57G000608B	SCREW			16
23	6674231	VENT	round		4
24	37C000512B	BOLT			4
25	35C000410B	BOLT			4
26	59D000005B	NUT			4
27	84G003110B	BOLT			2
28	7101928	VALVE			1
28	6641174	CONNECTOR	male		1
28	6689635	BRACKET	actuator mounting		1
28	6675172	BRACKET	valve mounting		1
28	6689636	ACTUATOR			1
28	6689637	VALVE			1
29	6565977	HOSE	bulk - Sold Per Foot		x
30		HOSE	NAP - 16" (406,4mm) long - Order Ref. 29		1
31	31H000046B	CLAMP			2
32	84G003710B	BOLT			2
33	84G003716B	BOLT			1
34	6719459	MOUNT			1
35	44H000048B	CLAMP			2
36	6674235	RECEIVER DRIER			1
37	6675685	HOSE	W/Ref. 69		1
38	17C000656B	BOLT			2
39	6675076	HOSE			1
40	6675075	HOSE			1
40	6677122	CAP			1
41	6684908	HOSE			1
41	6685199	CAP			1

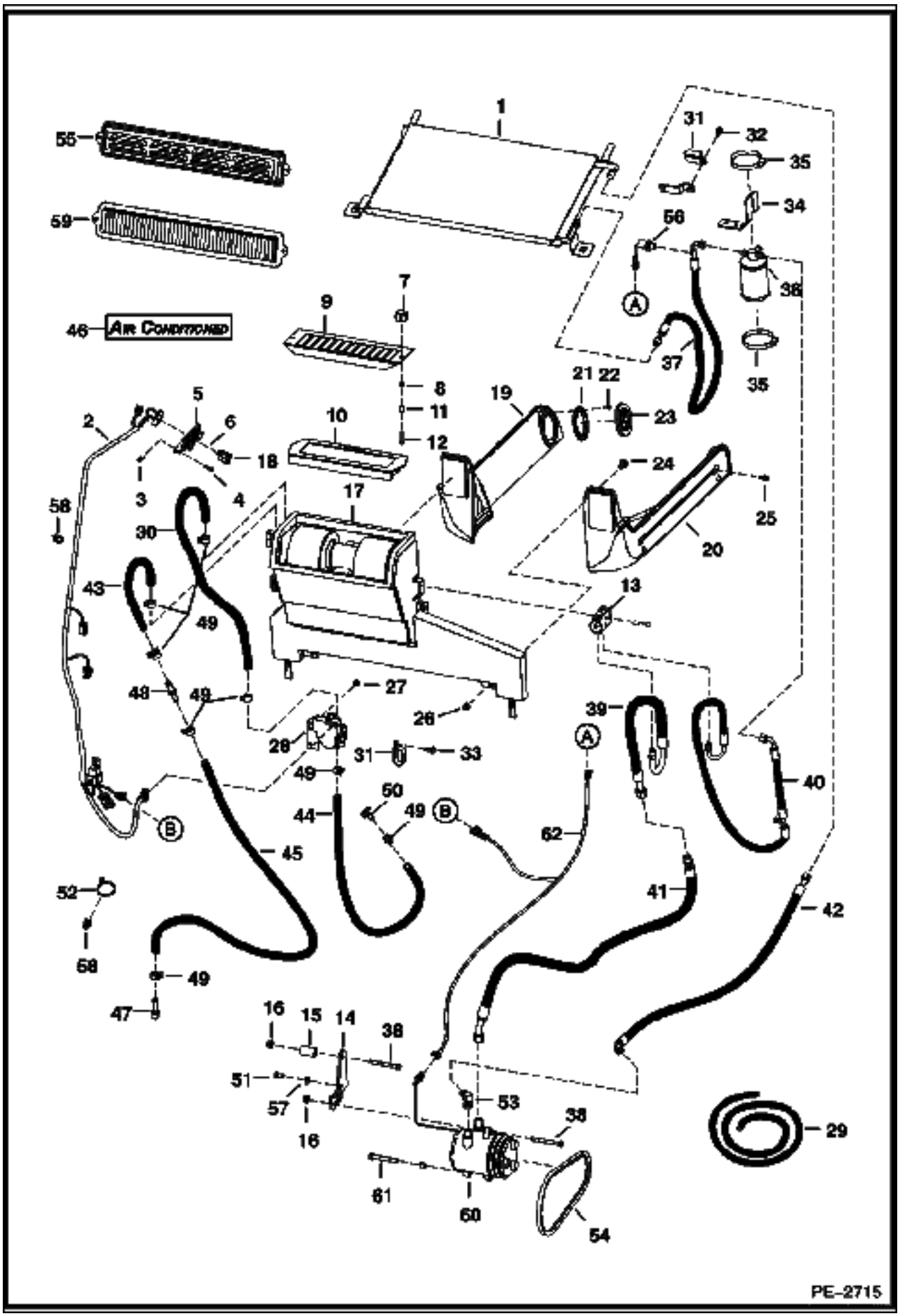
AIR CONDITIONED
PE-2715

Ref No	Part Number	Description	Remarks	Serial Number	Qty
42	6684907	HOSE			1
42	6685198	CAP			1
43		HOSE	NAP - 32" (812,8mm) long - Order Ref. 29		1
44		HOSE	NAP - 84" (2133,6 mm) long - Order Ref. 29		1
45		HOSE	NAP - 54" (1371,6 mm) long - Order Ref. 29		1
46	6729077	DECAL			2
47	6731085	ELBOW			1
48	6732023	CONNECTOR			1
49	5HM00020B	CLAMP			8
50	6731084	ADAPTER			1
51	5CM01020B	BOLT			1
52	6624289	STA STRAP			5
53	6731255	ELBOW			1
54	6730819	BELT	compressor		1
55	6727848	COVER			1
56	6675779	PRESS. SWITCH	W/harness		1
57	6557831	WASHER			1
58	6678666	TREE MOUNT	tree		2
59	6677983	FILTER			1
60	6733655	COMPRESSOR	W/Ref. 68		1
60	6679145	CLUTCH			1
60	6648307	CONNECTOR	2-pin		1
60	6648308	CONNECTOR			1
61	5CM01080B	SCREW			1
62	6719630	HARNESS	ACS		1

DRAWING NOT AVAILABLE AT TIME OF PRINTING

PE-2810

Ref No	Part Number	Description	Remarks	Serial Number	Qty
1	7116904	KIT	Ref. 2-41 & 44		1
2	6557831	WASHER			1
3	6624289	STA STRAP			2
4	6684907	HOSE	AC		1
4	6675538	O-RING	#8		x
5	6674234	CONDENSER			1
6	6674235	RECEIVER DRIER			1
6	6676062	VALVE	relief		1
7	6675075	HOSE	AC		1
7	6677122	CAP			1
7	6675824	O-RING	#6		x
8	6675076	HOSE	AC		1
8	6677121	CAP			1
8	6675825	O-RING	#10		x
9	6684908	HOSE	AC		1
9	6675825	O-RING	#10		x
10	6676984	MOUNT	valve		1
11	6677105	COVER	plate		1
12	6733655	COMPRESSOR	W/Ref. 43		1
12		CLUTCH			1
13	6675685	HOSE	AC		1
13	6675779	PRESS. SWITCH	W/harness		1
13	6676399	VALVE CORE			1
13	6675824	O-RING	#6		x
14	6683004	THERMOSTAT			1
15	6683003	COIL	evaporator		1
16	6730265	MOUNT	compressor		1
17	83D000006B	NUT			2
18	6719176	SWITCH	rocker		1
19	6719459	MOUNT	receiver drier		1
20	6719630	HARNESS	AC - Not in kit		1
21	6730819	BELT	compressor		1
22	6726621	SCREW			2
23	1CM00635B	SCREW			2
24	17C000656B	BOLT			2
25	5CM01025B	SCREW			1
26	5CM01080B	SCREW			1
27	31H000046B	CLAMP			1
28	84G003710B	BOLT			2
29	44H000048B	CLAMP			2
30	6675534	BLOCK VALVE			1
31	6727326	MOUNT	clamp		1
32	6676539	CLIP			2
33	6679034	INSULATION			1
34	6676538	INSULATION	bulk - sold per foot		x
35	6675608	INSULATION			1
36	6730266	SPACER			1
37	6675609	INSULATION			1
38	6689179	INSULATION			1
39	6689180	INSULATION			1
40	6731255	ELBOW			1
41	6729077	DECAL	air conditioned		2
42	6676063	KIT	fitting caps - not in kit		1
43	6732732	BUSHING	not in kit		1

DRAWING NOT AVAILABLE AT TIME OF PRINTING

PE-2810

Ref No	Part Number	Description	Remarks	Serial Number	Qty
44	6904258	INSTRUCTIONS			1

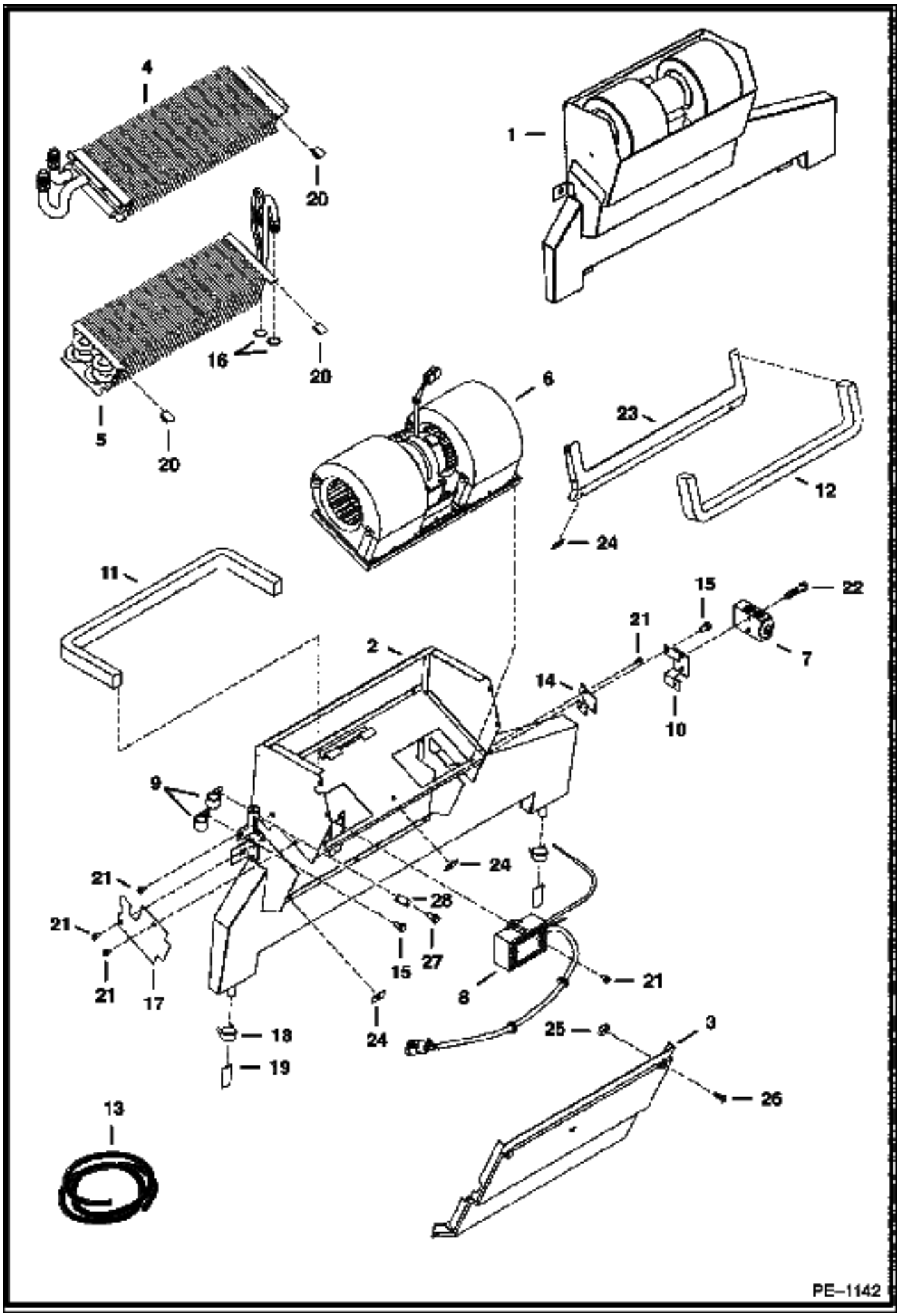
4
20
1
16
20
5
20
6
23
12
24
11
15
22
21
2
7
14
10
9
24
21
28
21
15
27
21
17
8
21
18
24
25
3
19
26
13
PE–1142

Ref No	Part Number	Description	Remarks	Serial Number	Qty
1		HVAC	NAP - assy - Ref. 2-28 - Order 6683001		1
1	6683001	HVAC	assy - Ref. 2-28		1
2	6677108	HOUSING			1
3		COVER	NAP - Order 6678151, Also Order Ref. 23 (6678152)		1
3	6678151	COVER			1
4		COIL	See Illustration HEATER & A/C/ PE1228 NSS - heater - Order 6727786 heater coil kit		1
5	6683003	COIL	evaporator		1
6	6675497	BLOWER	See Illustration HEATER & A/C/ B16401 ASSY		1
7	6675534	BLOCK VALVE			1
8	6683004	THERMOSTAT			1
9	6675512	CLAMP	hose		2
10	6676984	MOUNT	valve		1
11		SEAL	NAP - 25" (635mm) long - Order Ref. 13		1
12		SEAL	NAP - 22.6" (575mm) long - Order Ref. 13		1
13	6677111	SEAL	bulk - Sold Per Foot		x
14	6677105	COVER			1
15	6677118	SCREW	w/washer		3
16	6675538	O-RING			2
17	6677504	COVER	cover		1
18	6675510	CLAMP	drain hose		2
19	6675511	DRAIN VALVE			2
20	6676539	CLIP			2
21	6677119	SCREW	sheet metal		7
22	1CM00635B	SCREW			2
23		SEAL	NAP - Order 6678152, Also Order Ref. 3 (6678151)		1
23	6678152	SEAL			1
24	6677115	RECEPTACLE			6
25	6677116	RETAINER			6
26	6677117	SCREW	captive		6
27	6676653	SCREW			1
28	6676606	SPACER			1

HORN KIT

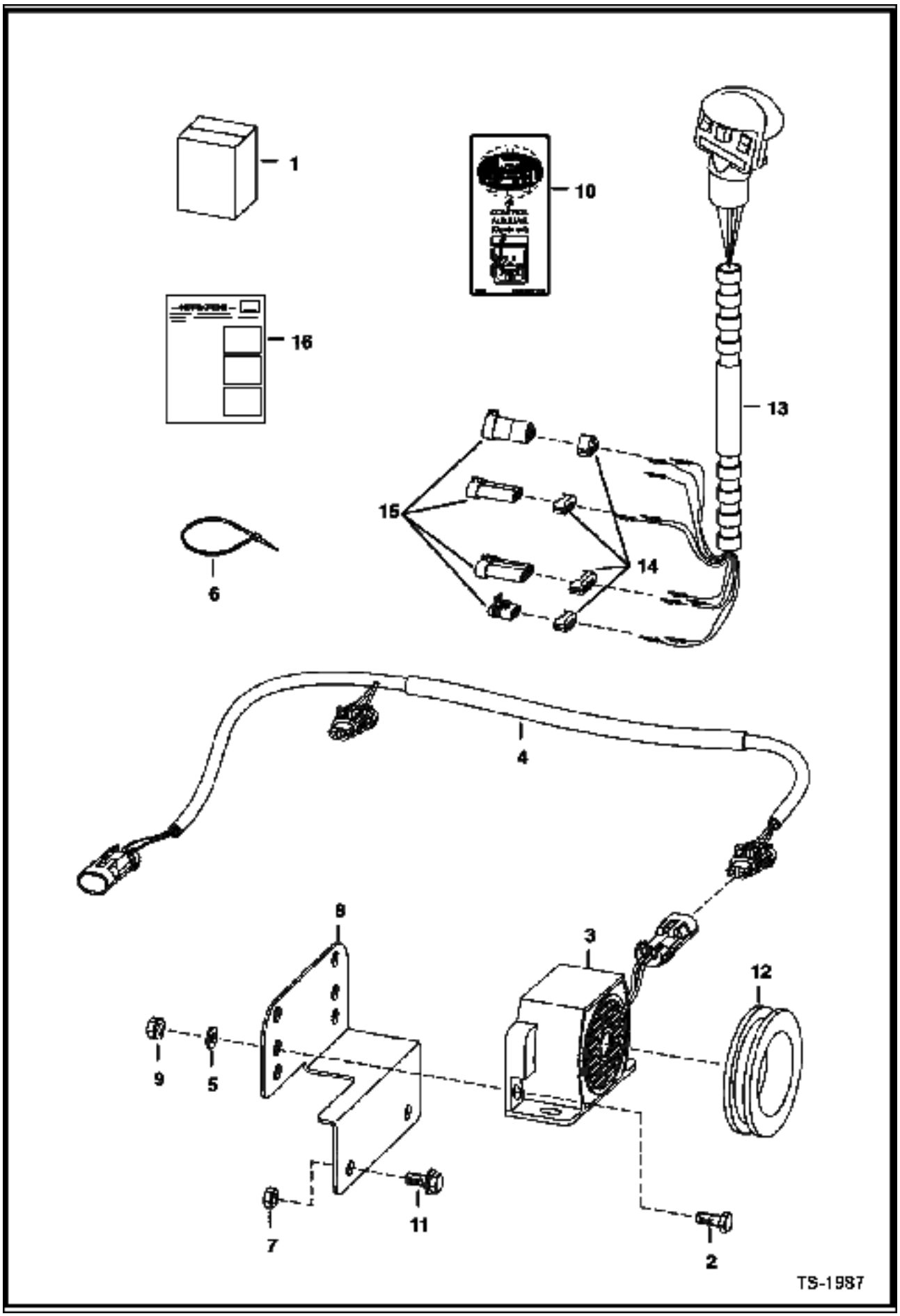

Ref No	Part Number	Description	Remarks	Serial Number	Qty
1	6727995	HORN KIT	Ref. 2-16 - Requires multi-switch handle		1
2	17C000410B	BOLT			2
3	6675099	ALARM			1
4	6727498	HARNESS	W/ metal tube		1
5	25E000013B	WASHER			1
6	30H000023B	CLAMP			1
7	83D000005B	NUT			2
8	6733970	MOUNT			1
9	83D000004B	NUT			2
10	6703727	DECAL			1
11	35C000512B	BOLT			2
12	6577545	GROMMET			1
13	6680414	HANDLE ASSY.			1
13	6640690	PIN			5
13	6641176	SEAL	SEAL		5
14	6641180	LOCK	2-pin		2
14	6640700	LOCK	3-pin		2
15	6641179	CONNECTOR	2-pin		2
15	6640699	CONNECTOR	3-pin		2
16	6901146	INSTRUCTIONS			1

HORN KIT
(Joystick Controls)

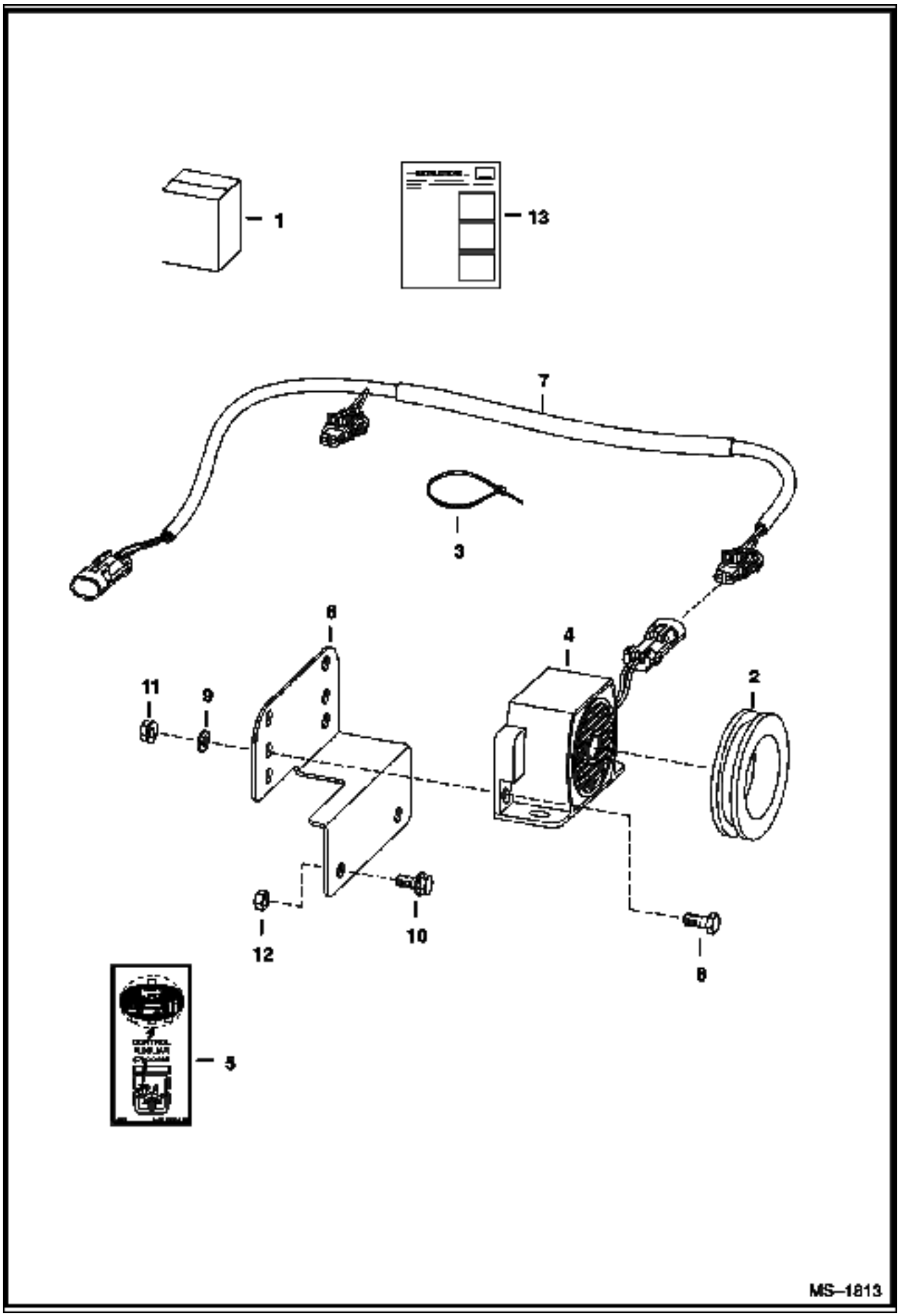

HORN KIT (Cont'd)
(Joystick Controls)

Ref No	Part Number	Description	Remarks	Serial Number	Qty
1	6732234	KIT	horn - Ref. 2-13		1
2	6577545	GROMMET			1
3	6610510	TIE			3
4	6675099	ALARM	alarm		1
5	6703727	DECAL	horn/aux.		1
6	6733970	MOUNT	alarm		1
7	6726662	HARNESS			1
8	17C000410B	BOLT			2
9	25E000013B	WASHER			2
10	35C000512B	BOLT			2
11	83D000004B	NUT			2
12	83D000005B	NUT			2
13	6901691	INSTRUCTIONS			1

LIFT KIT
(Four Point)

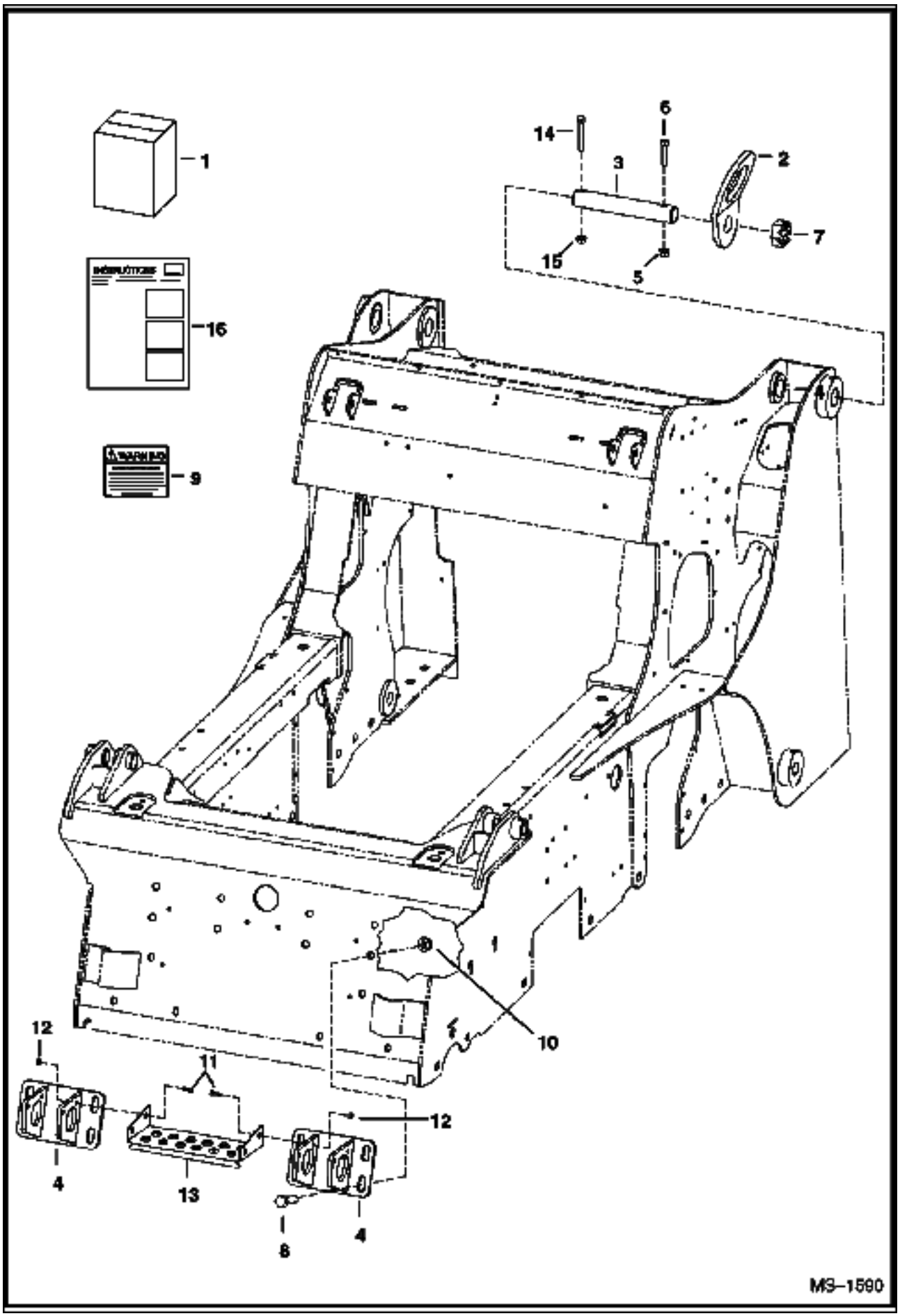

LIFT KIT (Cont'd)
(Four Point)

Ref No	Part Number	Description	Remarks	Serial Number	Qty
1	6732678	KIT	lift - Ref. 4 - 14		1
2	6726908	LIFT EYE			2
3	6732687	PIN			2
4	6734108	BRACKET	L.H.		2
5	87D000006B	NUT			2
6	17C000652B	BOLT			2
7	4D000028B	NUT			2
8	17C001028B	BOLT			8
9	6726423	DECAL			1
10	83D000010B	NUT			8
11	17C000616B	BOLT			4
12	95D000006B	NUT			4
13	6813078	STEP			1
14	17C000672B	BOLT	not in kit		2
15	85D000006B	NUT	not in kit		2
16	6901772	INSTRUCTIONS			1

LIFT KIT
(Single Point)

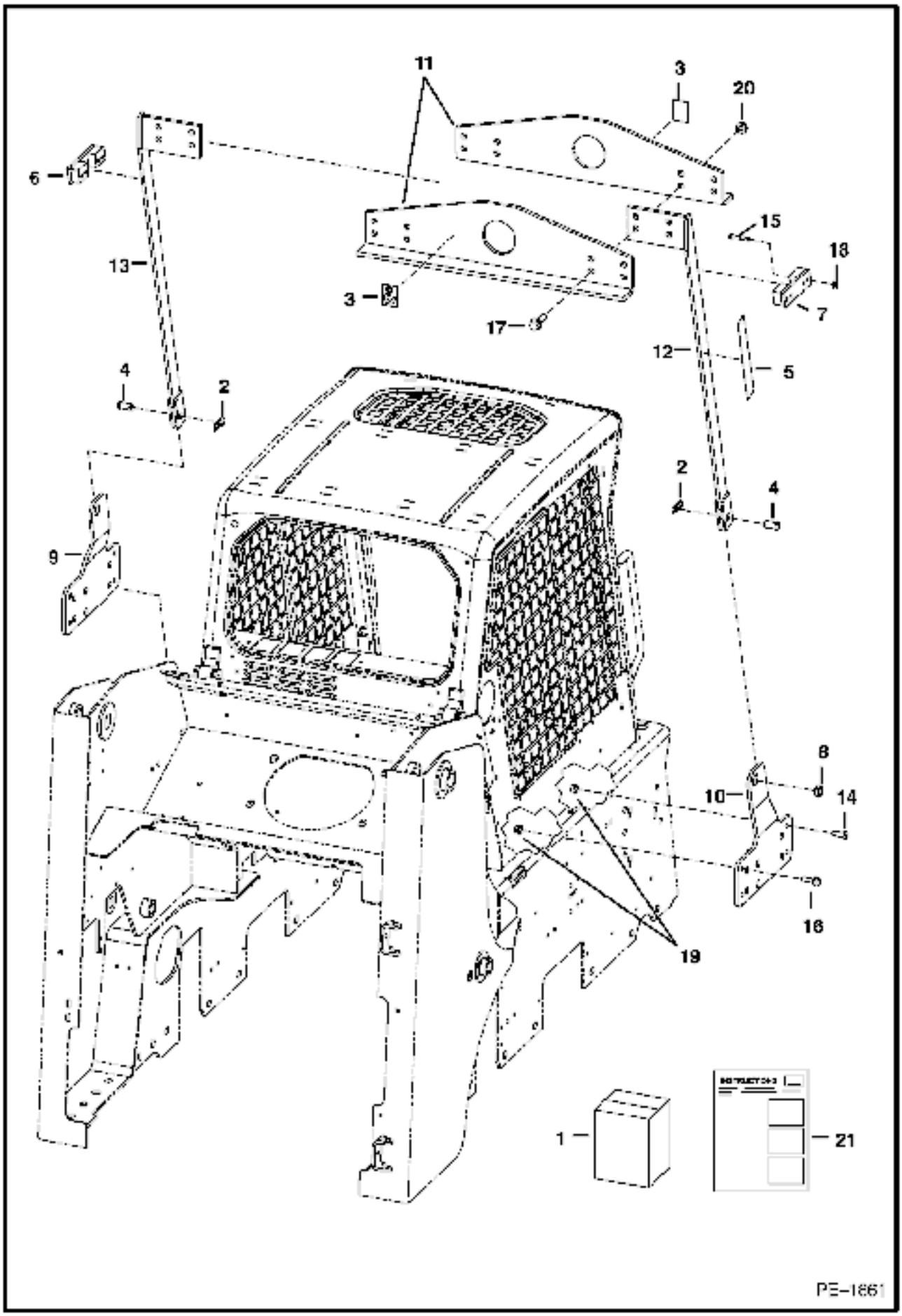

LIFT KIT (Cont'd)
(Single Point)

Ref No	Part Number	Description	Remarks	Serial Number	Qty
1	6735279	KIT	Ref. 2-21		1
2	1320075	COTTER PIN			2
3	6533898	DECAL	hook		2
4	6567838	PIN			2
5	6704786	DECAL	safety		2
6	6719184	MOUNT	L.H.		1
7	6719185	MOUNT	R.H.		1
8	6734560	BUSHING			2
9	6734627	MOUNT	L.H.		1
10	6734628	MOUNT	R.H.		1
11	6734657	ANGLE			2
12	6734666	ARM	R.H.		1
13	6734667	ARM	L.H.		1
14	6735282	SCREW	socket head		2
15	17C000632B	BOLT			8
16	31C000824B	BOLT			6
17	31C001036B	BOLT			8
18	57D000006B	NUT			8
19	57D000008B	NUT			8
20	57D000010B	NUT			8
21	6900888	INSTRUCTIONS			1

LIGHT KIT

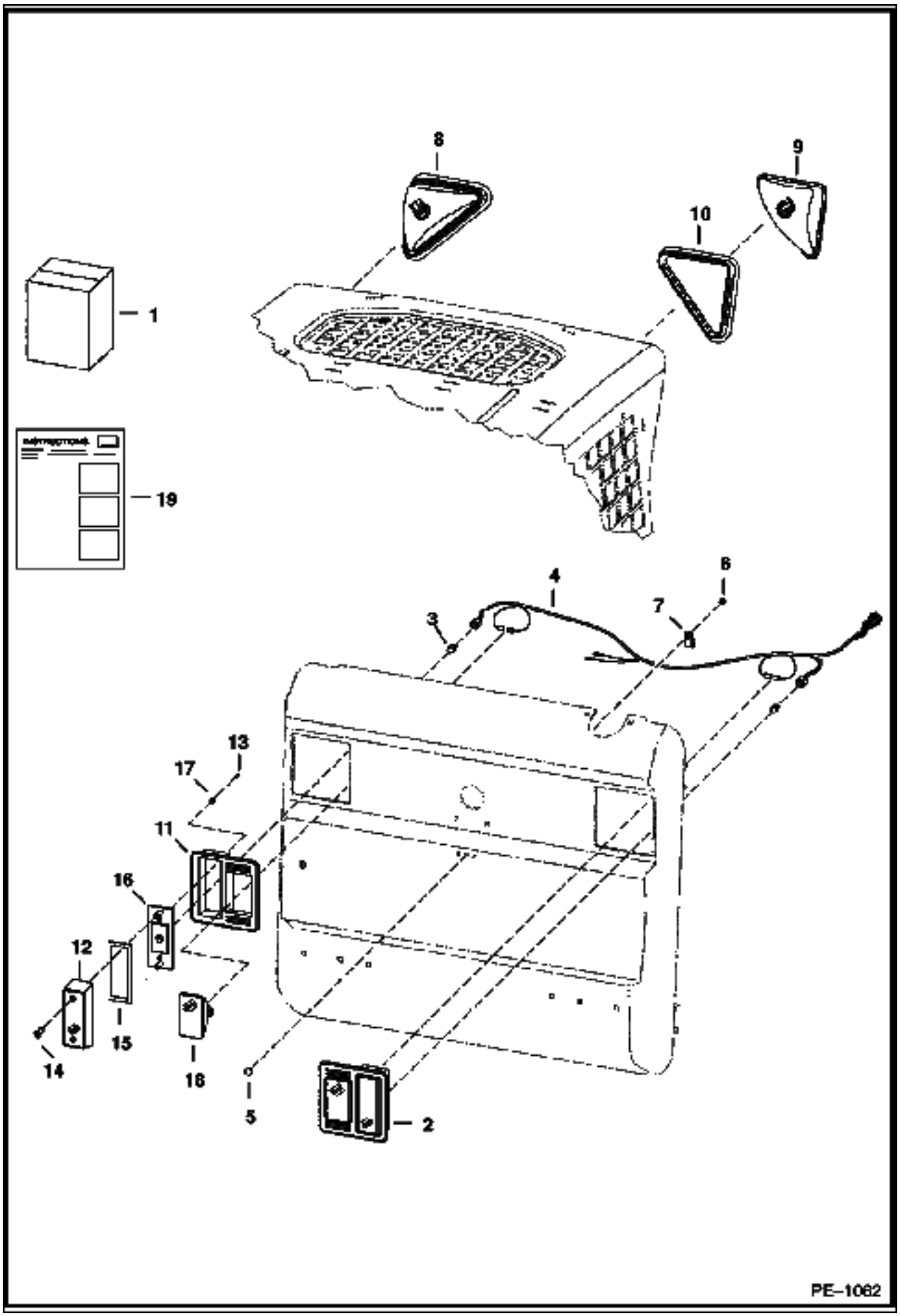

Ref No	Part Number	Description	Remarks	Serial Number	Qty
1		KIT	NAP - Order components		1
2	6670284	LIGHT ASSY	rear		2
3	6649481	BULB			2
4	7109403	HARNESS	standard		1
5	37C000512B	BOLT			1
6	85D000005B	NUT			1
7	30H000042B	CLAMP			1
8		LIGHT ASSY	NAP - R.H. - Order Ref. 9 and 10		1
8		LIGHT ASSY	NAP - L.H. - Order Ref. 9 and 10		1
9	6674401	HOUSING	R.H.		1
9	6675336	BULB	55 watt		1
9	6674400	HOUSING	L.H.		1
9	6675336	BULB	55 watt		1
10	6674402	MOUNT			1
11	6672279	MOUNT	rubber		2
12	6672276	LENS	red		2
13	6672274	SCREW			4
14	6672273	SCREW			2
15	6672275	GASKET			2
16	6672277	BRACKET			2
17	6672272	WASHER			4
18	6661353	LIGHT ASSY	W/bulb - white		2
18	898731B	BULB			2
19		INSTRUCTIONS	NAP		1

OPERATOR EAR NOISE REDUCTION (Cont'd)
Manual Control

Ref No	Part Number	Description	Remarks	Serial Number	Qty
1	6719332	INSULATION	blower housing		1
2	6719333	INSULATION	blower housing		1
3	7101538	INSULATION	crossmember		1
4	7101536	INSULATION	panel shield - L.H.		1
5	7101537	INSULATION	panel shield - R.H.		1
6	7101533	INSULATION	transmission		1
7	6732583	INSULATION	pedal shield		2
8	7101535	INSULATION	steering panel		1
9	6703967	INSULATION	fender		2
10	6730573	INSULATION	transmission		2

OPERATOR EAR NOISE REDUCTION (Cont'd)
Selectable Joystick Control

Ref No	Part Number	Description	Remarks	Serial Number	Qty
1	6719332	INSULATION	blower housing		1
2	6719333	INSULATION	blower housing		1
3	7101538	INSULATION	crossmember		1
4	7101536	INSULATION	panel shield - L.H.		1
5	7101539	INSULATION	panel shield - R.H.		1
6	7101533	INSULATION	transmission		1
7	6732583	INSULATION	pedal shield		2
8	7101534	INSULATION	steering panel		1
9	6703967	INSULATION	fender		2
10	6730573	INSULATION	transmission		2

POWER BOB-TACH KIT
(Hydraulic Assisted)

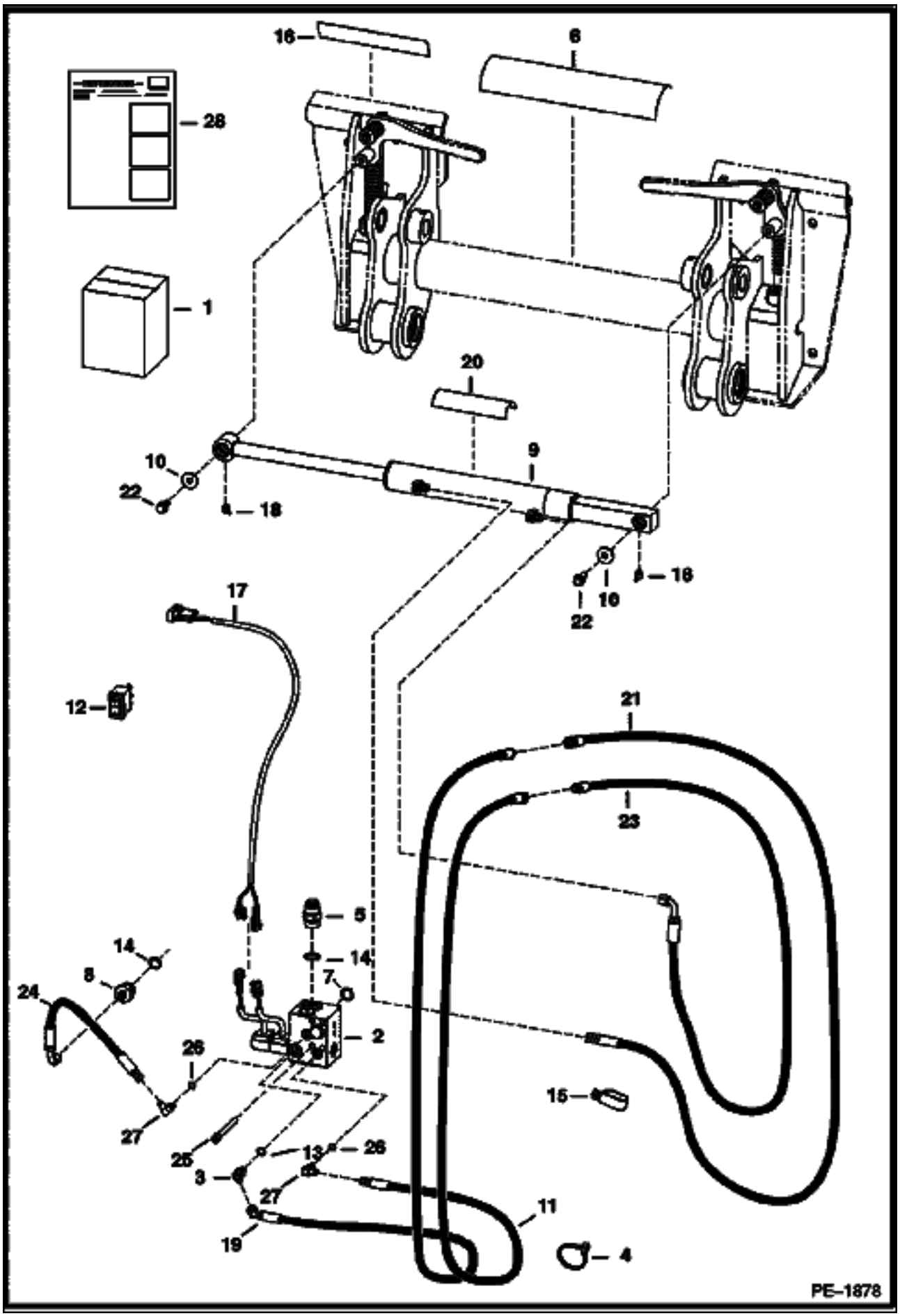

POWER BOB-TACH KIT (Cont'd)
(Hydraulic Assisted)

Ref No	Part Number	Description	Remarks	Serial Number	Qty
1	6735477	KIT	Ref. 2-28		1
2		MANIFOLD	See Illustration POWER BOB-TACH/ MS1835R		1
3	7109881	ELBOW	W/Ref. 13		1
4	6624289	STA STRAP			1
5	15KB01212B	ADAPTER	W/Ref. 14		1
6	6725907	DECAL			1
7	55K000214B	O-RING			1
8	15KB00612B	ADAPTER	W/Ref. 14		1
9		CYLINDER	See Illustration POWER BOB-TACH CYLINDER/ PE1064		1
10	619021B	WASHER			2
11	6726987	HOSE			1
12	6676732	SWITCH	vertical		1
13	79K000006B	O-RING			x
14	79K000012B	O-RING			x
15	31H000042B	CLIP			1
16	6719888	DECAL			1
17	6730770	HARNESS			3
18	12H000025B	GREASE ZERK			2
19	6735475	HOSE			1
20	6554100	TREAD	safety		1
21	6733630	HOSE			1
22	35C000612B	BOLT			2
23	6733629	HOSE			1
24	6806403	HOSE	For loaders equipped W/Manual Controls - 16 in. (406,4 mm) Long		1
24	7110367	HOSE	For loaders equipped W/Selectable Joystick Controls - 45"(1143 mm) long		1
25	73G000656B	BOLT			4
26	79K000004B	O-RING			x
27	7109882	ELBOW	W/Ref. 26		2
28	6902361	INSTRUCTIONS			1

POWER BOB-TACH CYLINDER

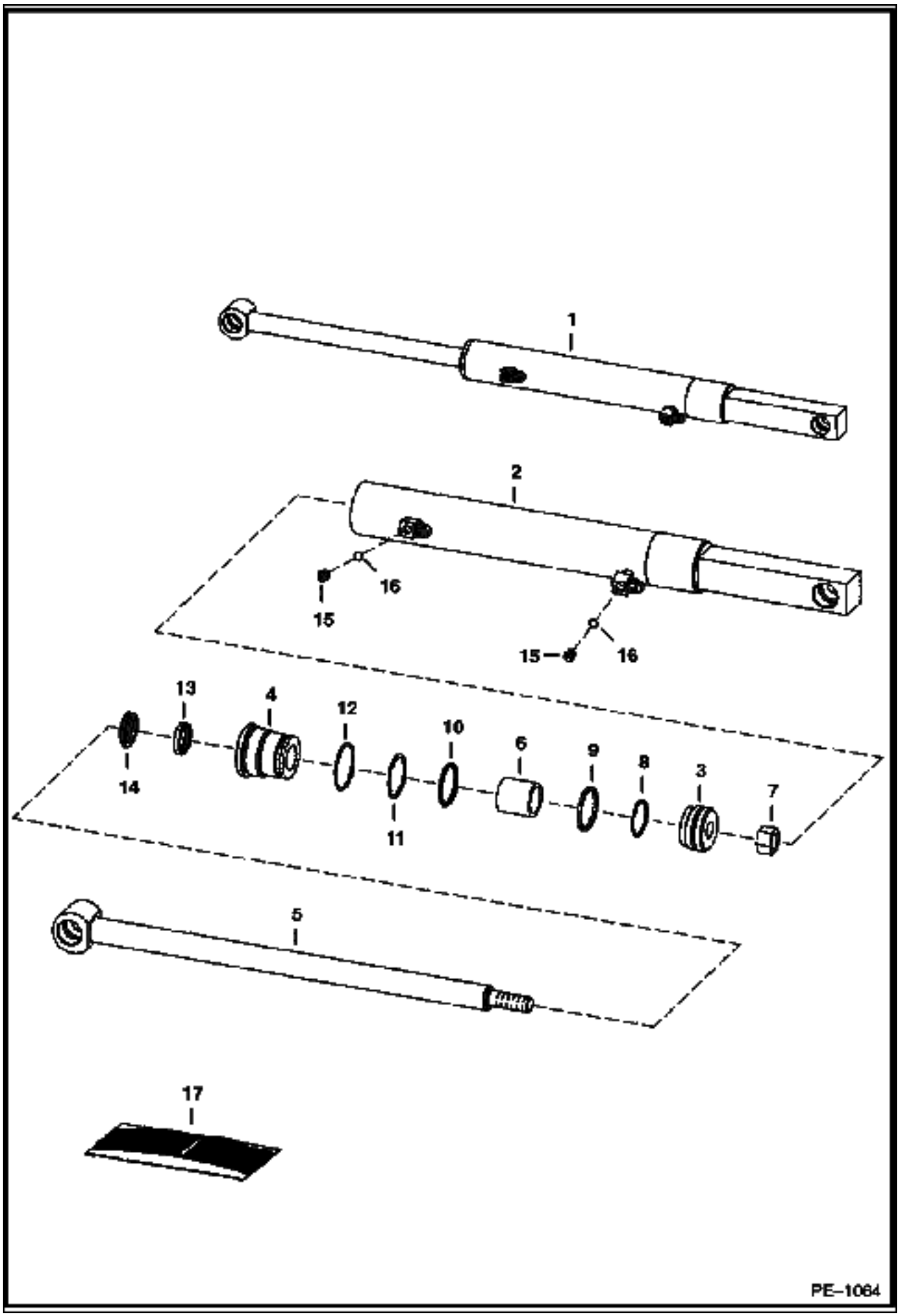

Ref No	Part Number	Description	Remarks	Serial Number	Qty
1	6810611	CYLINDER	Ref. 2-16		1
2	6810349	CASE	1.75" (45mm) I.D.		1
3	6586543	PISTON			1
4	6586542	HEAD			1
5	6810612	ROD	W/ .25" grease zerk hole		1
6	6810356	SPACER			1
7	92D000010B	NUT			1
8	54K030110B	O-RING			1
9	6532453	RING			1
10	54K040116B	O-RING			1
11	73K000222B	WASHER	back-up		1
12	58K000132B	O-RING			1
13	6667323	SEAL	rod		1
14	6666542	SEAL	wiper		1
15	90KV00002B	PLUG	W/ Ref. 16		2
16	79K000003B	O-RING			2
17	6803473	SEAL KIT	Ref. 7-14		1

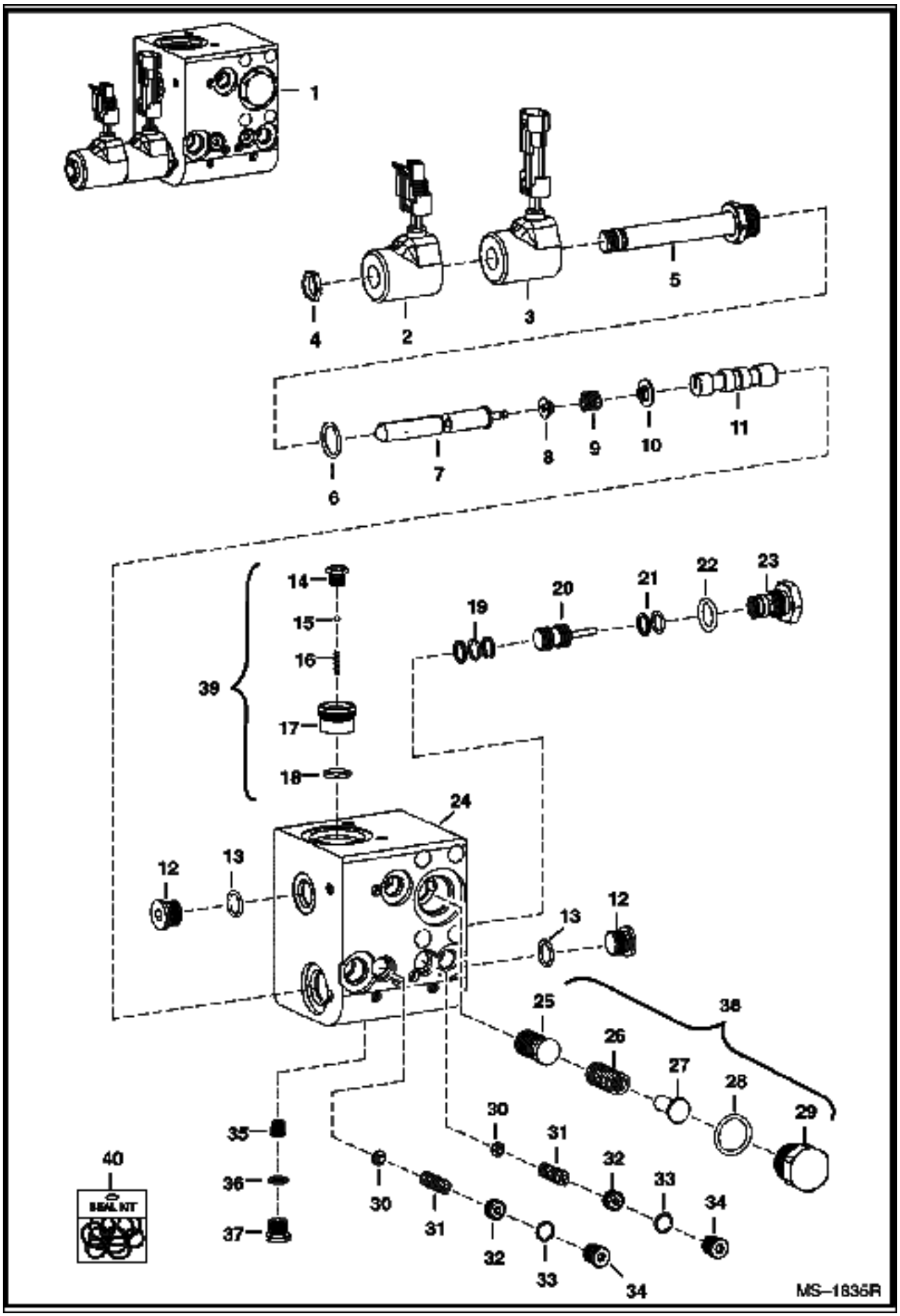
1
2
3
4
5
6
7
8
9
10
11
12
13
14
15
16
17
18
19
20
21
22
23
24
25
26
27
28
29
30
31
32
33
34
35
36
37
38
39
40
SEALANT
MS–1835R

POWER BOB-TACH (Cont'd)
(Valve Assembly)

Ref No	Part Number	Description	Remarks	Serial Number	Qty
1	6686949	VALVE			1
2	6684743	SOLENOID	w/male connector		1
3	6684744	SOLENOID	w/female connector		1
4	6684742	NUT			1
5		STEM	NSS		x
6	79K000008B	O-RING			x
7		STEM	NSS		x
8		RETAINER	NSS		x
9		SPRING	NSS		x
10		WASHER	NSS		x
11	6685540	PISTON			x
12	6685545	PLUG	w/Ref. 13		x
13		O-RING	NSS		x
14		PLUG	NSS		x
15		BALL	NSS		x
16		SPRING	NSS		x
17		VALVE	NSS		x
18	6685542	O-RING			x
19		RINGS	NSS		x
20	6684745	PISTON			1
21		RINGS	NSS		x
22	79K000007B	O-RING			x
23	6684746	CHECK VALVE	W/Ref. 22		1
24		BLOCK	NSS		x
25		STEM	NSS		x
26		SPRING	NSS		x
27		POPPET	NSS		x
28	79K000010B	O-RING			x
29		PLUG	NSS		x
30		POPPET	NSS		x
31		SPRING	NSS		x
32		PLUG	NSS		x
33		O-RING	NSS		x
34		PLUG	NSS		x
35	6685541	POPPET			x
36		O-RING	NSS		x
37	6685546	PLUG			x
38	6685544	COMPENSATOR	assy. - W/Ref. 25-29		1
39	6685543	CHECK VALVE	assy. - W/Ref. 14-18		1
40	6684747	SEAL KIT	complete		1

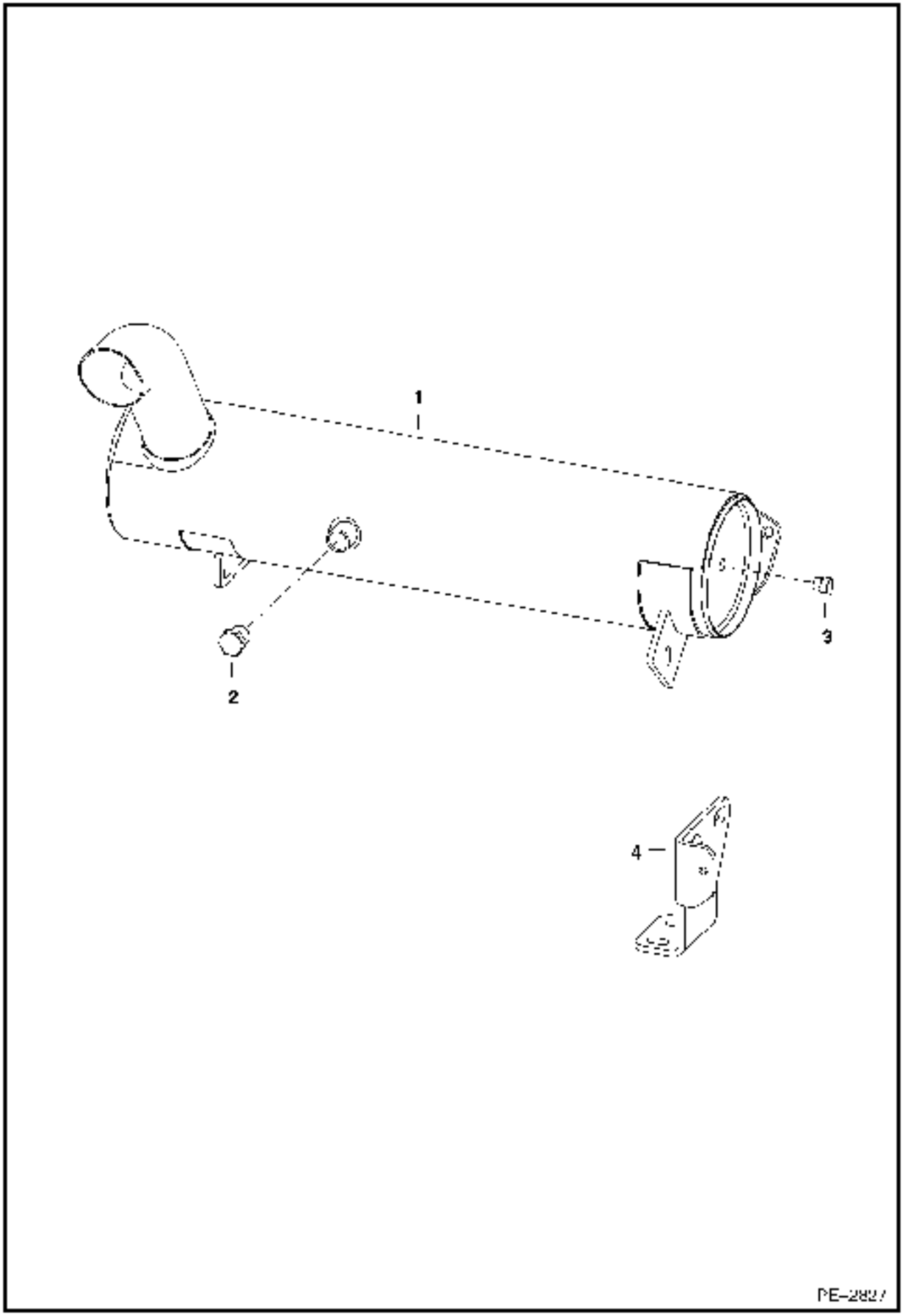
1
2
3
4
PE-2827

Ref No	Part Number	Description	Remarks	Serial Number	Qty
1	6687886	MUFFLER PURIFIER	purifier		1
2	6661062	PLUG	3/8" - brass		1
3	6659543	PLUG	1/8" - brass		1

RADIATOR SCREEN KIT

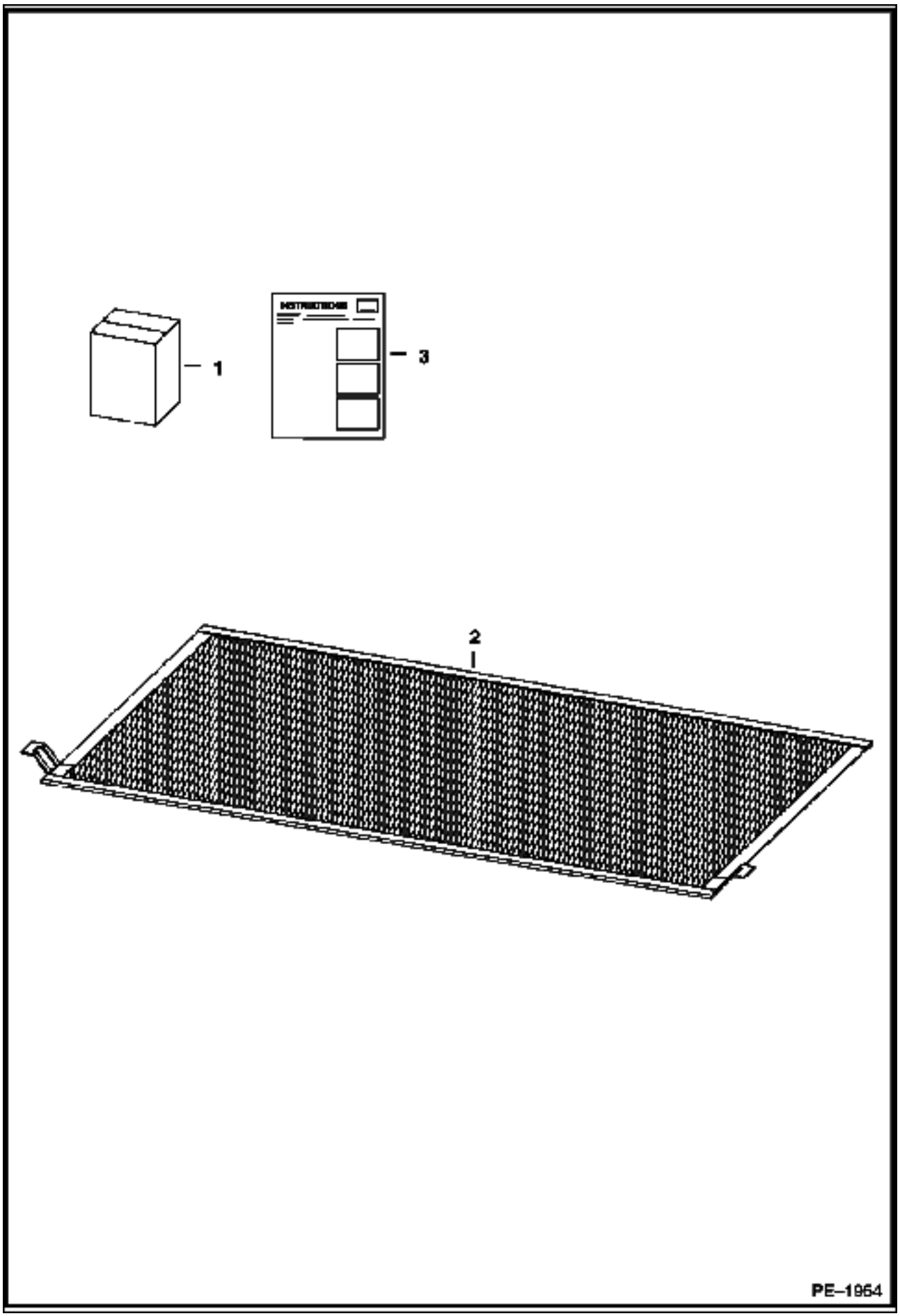

Ref No	Part Number	Description	Remarks	Serial Number	Qty
1	6734696	KIT	Ref. 2 & 3		1
2	6734697	SCREEN			1
3	6902288	INSTRUCTIONS			1

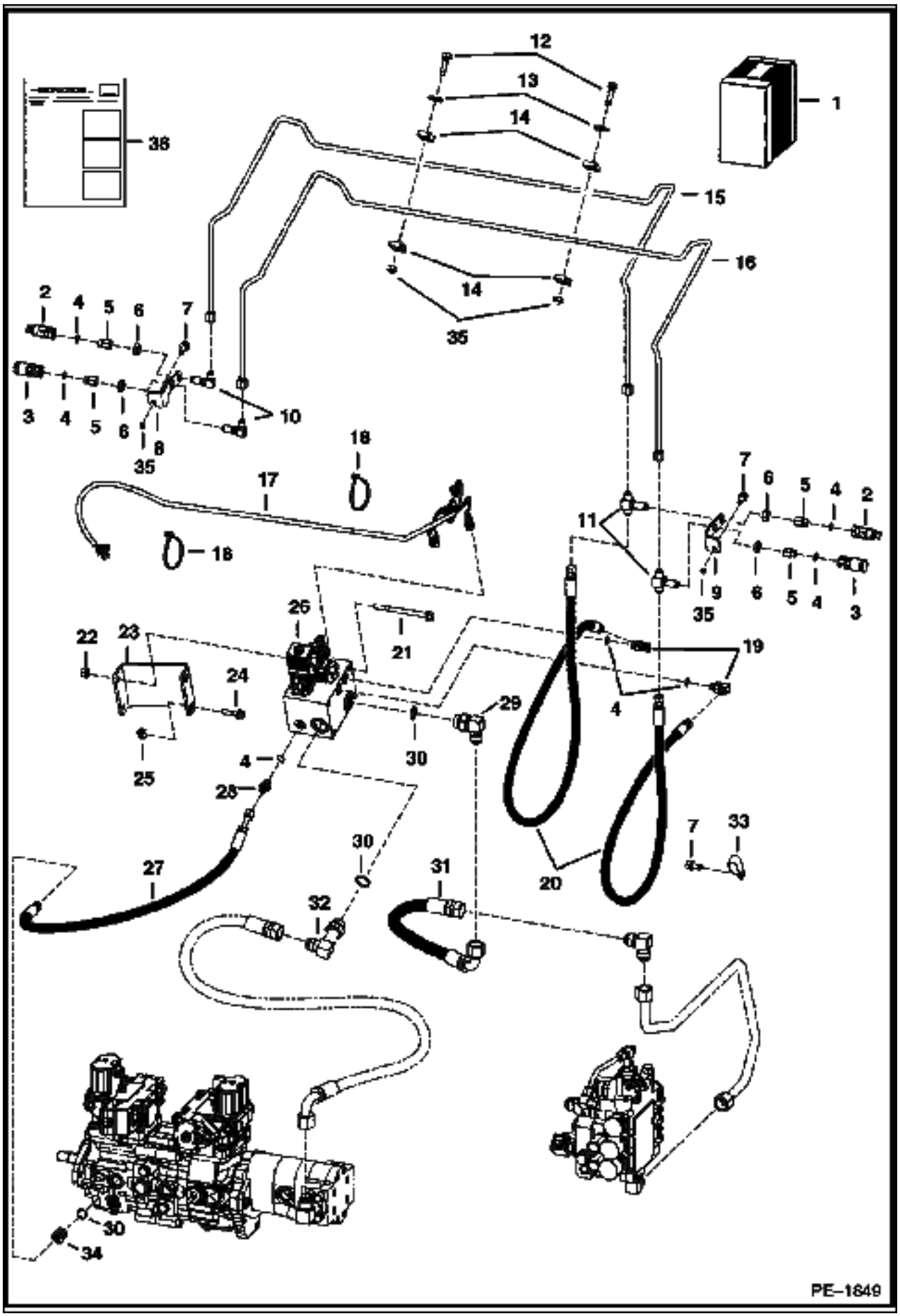
PE–1849

Ref No	Part Number	Description	Remarks	Serial Number	Qty
1	6735919	KIT	Ref. 2-35		1
2	6667804	COUPLER	male		2
3	6667803	COUPLER	female		2
4	79K000006B	O-RING			x
5	6706633	ADAPTER	W/Ref. 4		4
6	86F000005B	NUT			4
7	84G003712B	BOLT			3
8	6735640	MOUNT	L.H.		1
9	6735639	MOUNT	R.H.		1
10	88F000005B	ELBOW	bulkhead		2
11	90F000005B	TEE	bulkhead		2
12	84G003724B	BOLT			2
13	619021B	WASHER			2
14	6726277	CLAMP			4
15	6735643	TUBELINE			1
16	6735642	TUBELINE			1
17	6736011	HARNESS			1
18	6624289	STA STRAP			5
19	17KB00606B	ELBOW	W/Ref. 4		3
20	6735684	HOSE			2
21	35C000680B	BOLT			2
22	83D000006B	NUT			2
23	6735641	MOUNT			1
24	35C000624B	BOLT			2
25	6685663	RETAINER			2
26		VALVE	See Illustration REAR AUXILIARY VALVE/ B21972R REAR AUX.		1
27	6735685	HOSE	45 degrees straight 28" long - not in kit		1
27	6711166	HOSE	90 degrees straight 26" long - not in kit		1
28	15KB00606B	ADAPTER	W/Ref. 4 - not in kit - used W/Ref. 27 (6735685)		1
29	17KB01212B	ELBOW	W/Ref. 30		1
30	79K000012B	O-RING			x
31	6735683	HOSE			1
32	6716443	ELBOW	W/Ref. 30		1
33	31H000038B	CLAMP			1
34	15KB00612B	ADAPTER	W/Ref. 30		1
35	6684033	NUT	Retaining		4
36	6902409	INSTRUCTIONS			1

REAR AUXILIARY VALVE

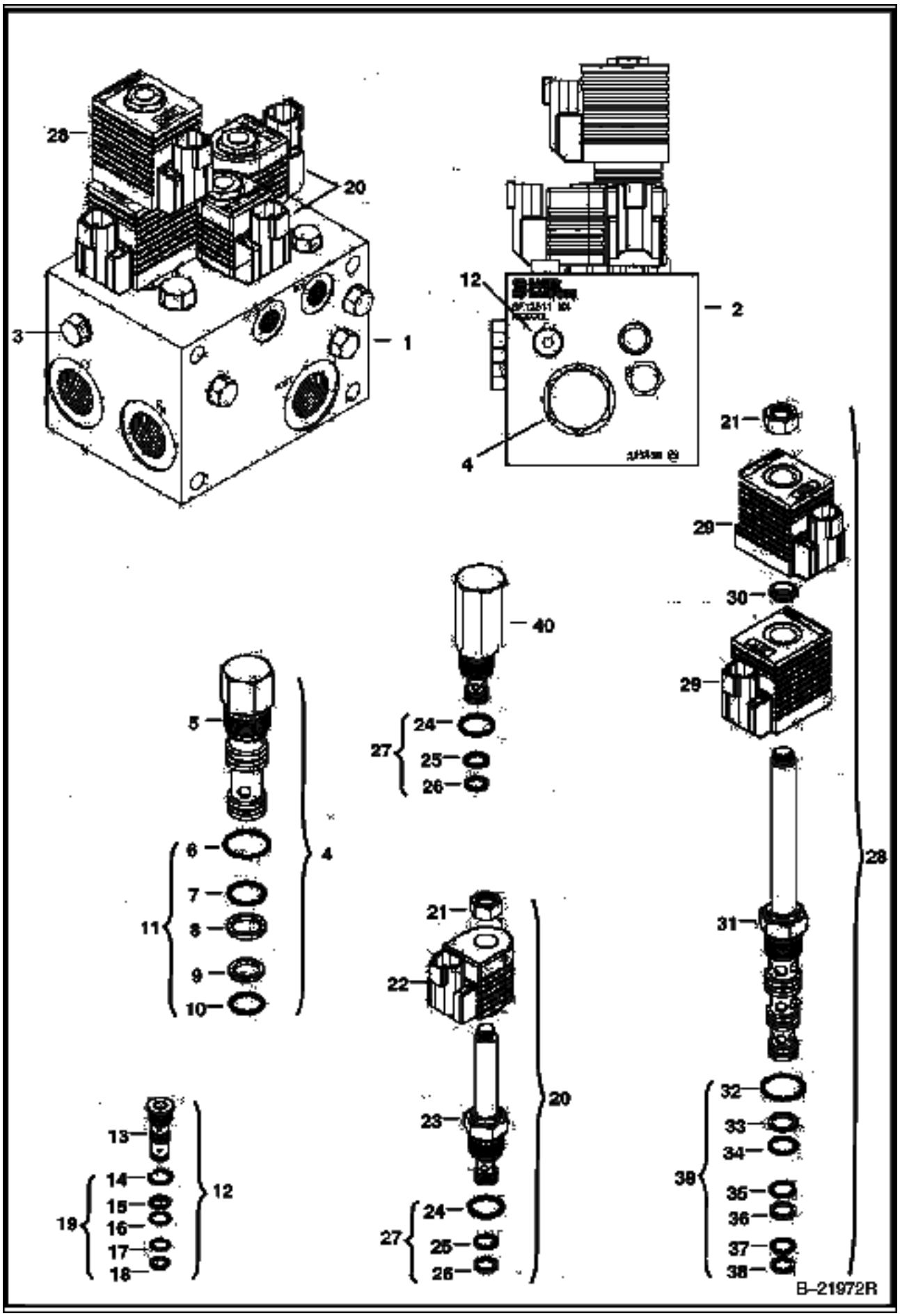

REAR AUXILIARY VALVE (Cont'd)

Ref No	Part Number	Description	Remarks	Serial Number	Qty
1	6685624	CONTROL VALVE	8 GPM		1
2		BLOCK	NSS		1
3		PLUG			x
4	6684044	VALVE	assy. - Ref. 5-10 - differential sensing		1
5		VALVE	NSS - Order Ref. 4		1
6	6684046	O-RING			1
7	6684048	O-RING			1
8	6684047	BACK-UP RING			1
9	6684050	BACK-UP RING			1
10	6684049	O-RING			1
11	6684045	SEAL KIT	Ref. 6-10		1
12	6684061	VALVE	shuttle - Ref. 13-18		1
13		VALVE	NSS - Order Ref. 12		1
14	6684063	O-RING			1
15	6684064	BACK-UP RING			1
16	6684065	O-RING			1
17	6684066	O-RING			1
18	6684067	BACK-UP RING			1
19	6684062	SEAL KIT	Ref. 14-18		1
20	6685061	VALVE	solenoid - Ref. 21-26		2
21	6684060	NUT			2
22	6684073	COIL	12 volt		2
23		VALVE	NSS - Order Ref. 20		2
24	6684070	O-RING			2
25	6684071	O-RING			2
26	6684072	BACK-UP RING			2
27	6684069	SEAL KIT	Ref. 24-26		2
28	6688933	VALVE ASSY	solenoid - Ref. 21 & 29 & 30		1
29	6688934	COIL			2
30	6684059	SPACER			1
31		VALVE	NSS - Order Ref. 28		1
32	6681489	O-RING			1
33	6684053	BACK-UP RING			1
34	6684054	O-RING			1
35	6684056	O-RING			1
36	6684055	BACK-UP RING			1
37	6681487	O-RING			1
38	6684057	BACK-UP RING			1
39	6684052	SEAL KIT	Ref. 32-38		1
40	6685328	RELIEF VALVE	Order Ref. 24-26		1

REAR DOOR LOCK

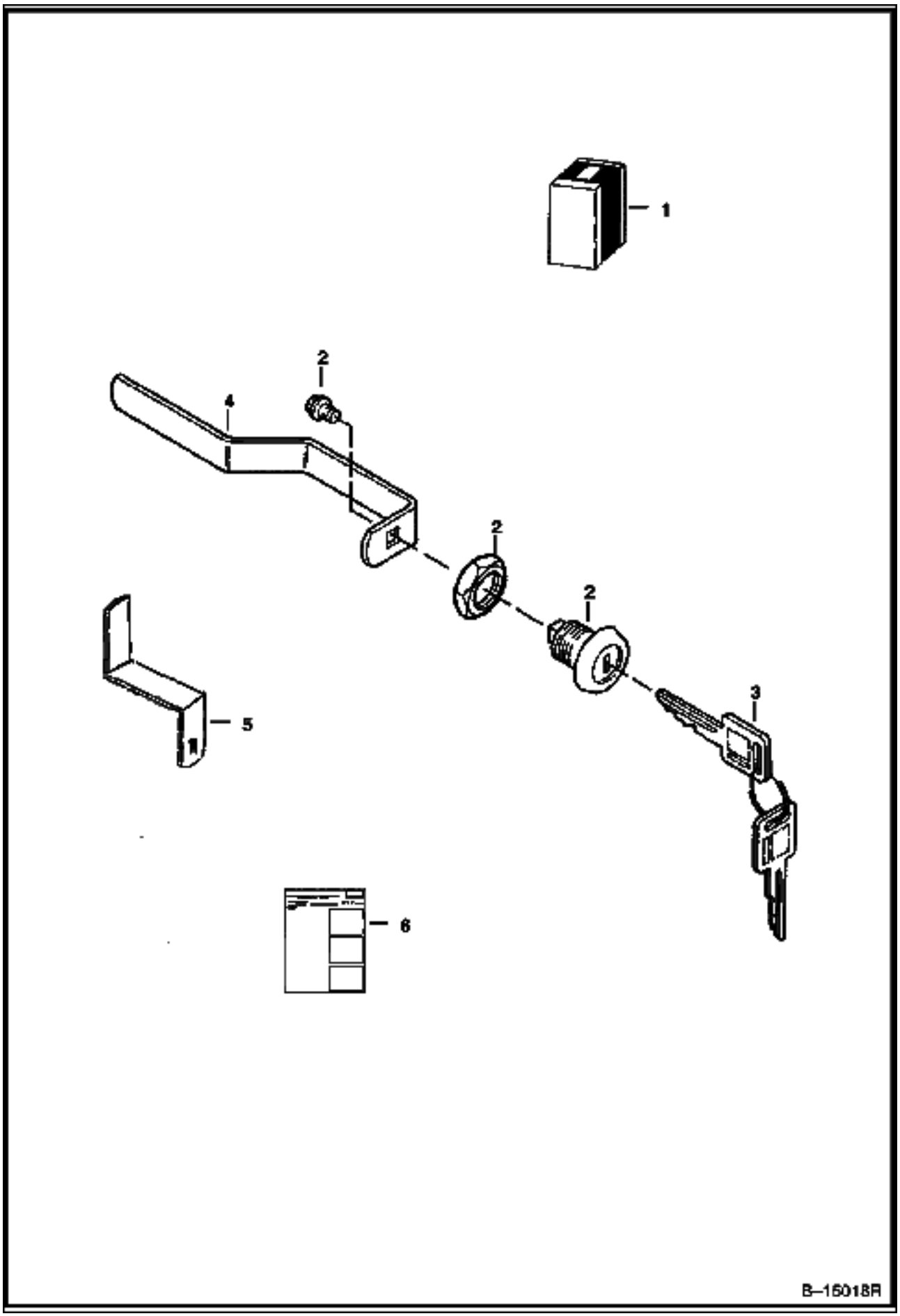

Ref No	Part Number	Description	Remarks	Serial Number	Qty
1	6732001	KIT	lock - Ref. 2-6		1
2	6670726	LOCK			1
3	6709527	KEY	ignition		1
4	6714037	LATCH			1
5	6729688	LATCH			1
6	6901656	INSTRUCTIONS			1

REAR WIPER

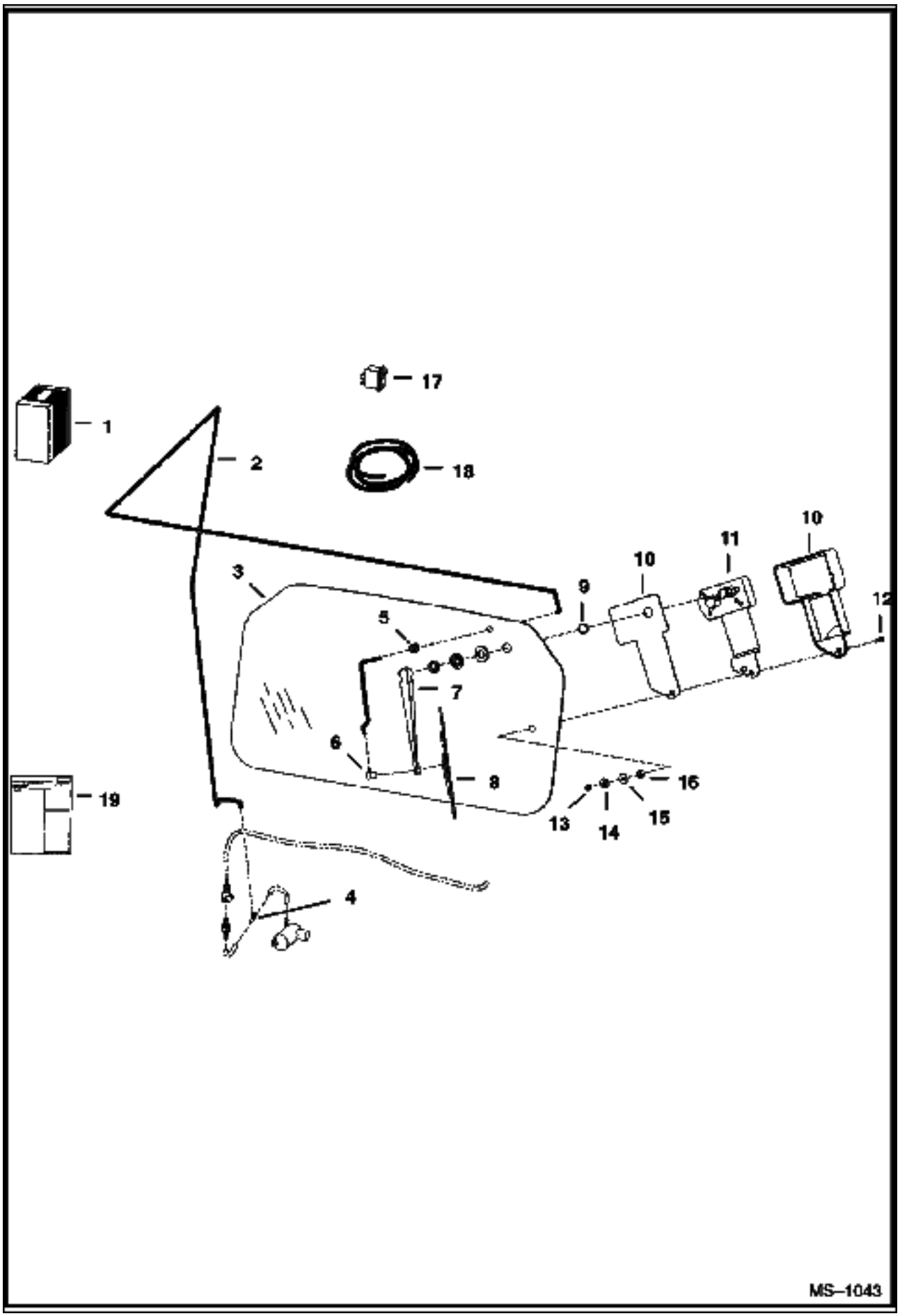

Ref No	Part Number	Description	Remarks	Serial Number	Qty
1	6726655	KIT	rear wiper		1
2		HOSE	NAP - 96" (2438mm) long - Order Ref. 18		1
3	6719317	WINDOW			1
4	6676000	TEE			1
5	6557493	GROMMET			1
6	6676028	NOZZLE			1
7	6676001	ARM			1
8	6676002	BLADE			1
9	6667201	SPACER	nylon		1
10	6664097	COVER	wiper		1
11	6665602	MOTOR			1
12	6664566	BOLT			1
13	6664103	NUT			1
14	6664065	WASHER	nylon		1
15	6801059	WASHER	neoprene		1
16	6664085	BUSHING	nylon		1
17	6675999	SWITCH			1
18	6676003	HOSE	bulk - Sold Per Foot		x
19	6901061	INSTRUCTIONS			1

SEAT BELT
(Three Point Retractable)

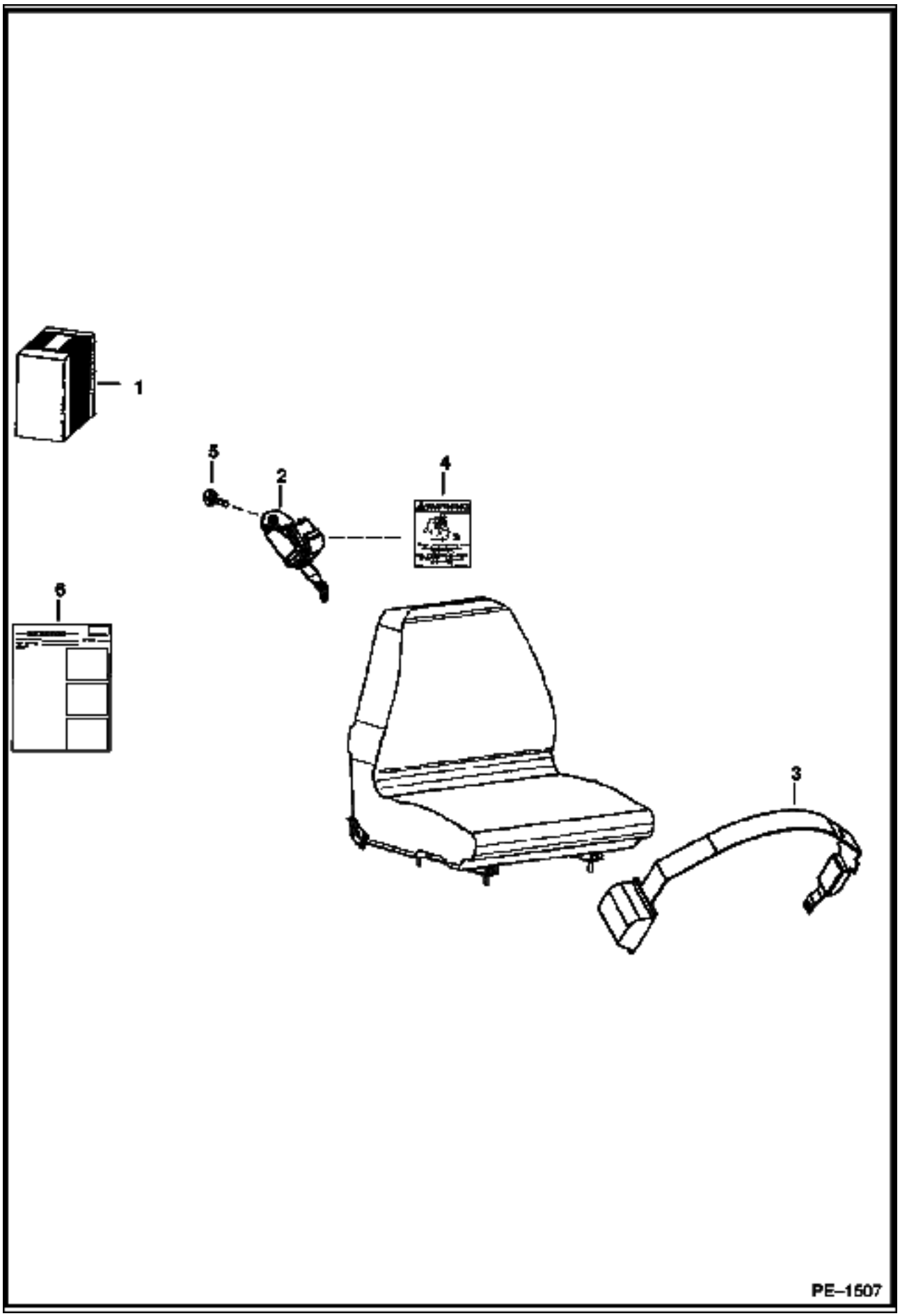

SEAT BELT (Cont'd)
(Three Point Retractable)

Ref No	Part Number	Description	Remarks	Serial Number	Qty
1	6732219	KIT	See Illustration SEAT/ B25136 three point retractable seat belt - Use with Sears brand Suspension Seats with a L.H. recliner lever		1
2	6674407	SHOULDER BELT			1
3	6679308	SEAT BELT			1
4	6725370	DECAL			1
5	35C000612B	BOLT			1
6	6901010	INSTRUCTIONS			1

SEAT BELT
(3" Wide Retractable)

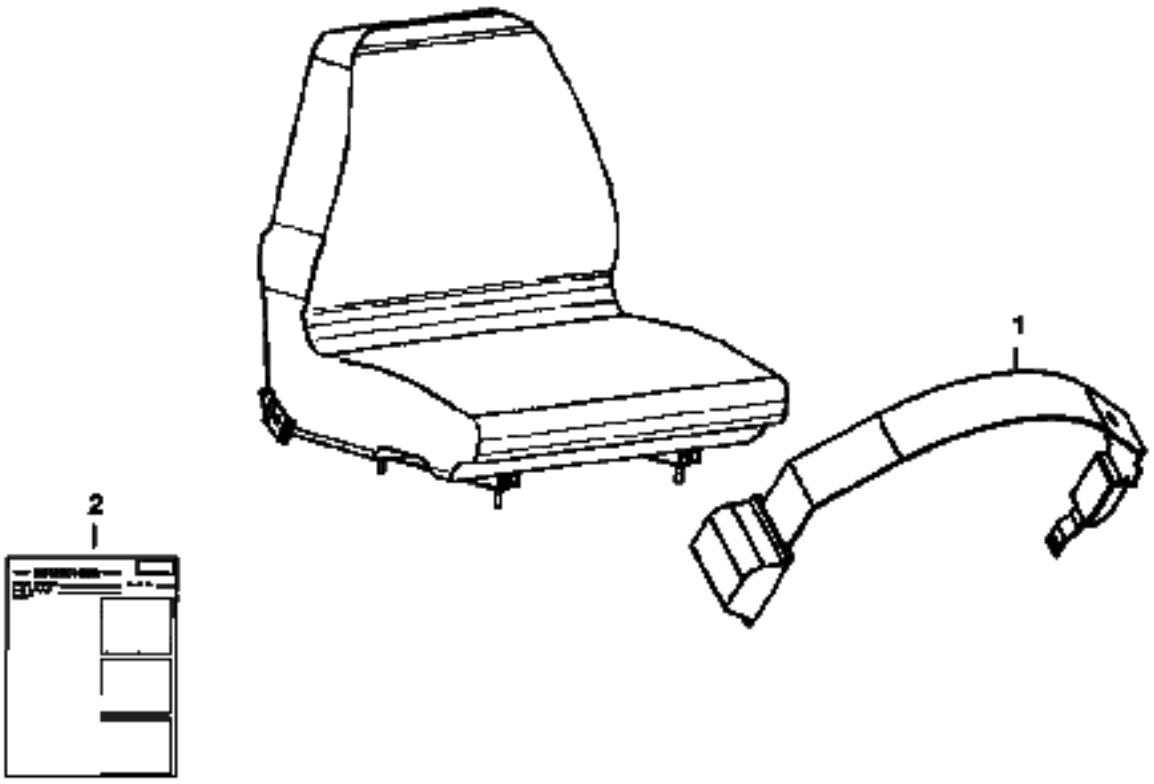

SEAT BELT (Cont'd)
(3" Wide Retractable)

Ref No	Part Number	Description	Remarks	Serial Number	Qty
1	6675562	SEAT BELT	See Illustration SEAT/ B25136 3" wide retractable seat belt - Use with Sears brand Suspension Seats with a L.H. recliner lever		1
2	6901011	INSTRUCTIONS			1

SEAT BELT
(3" Wide)

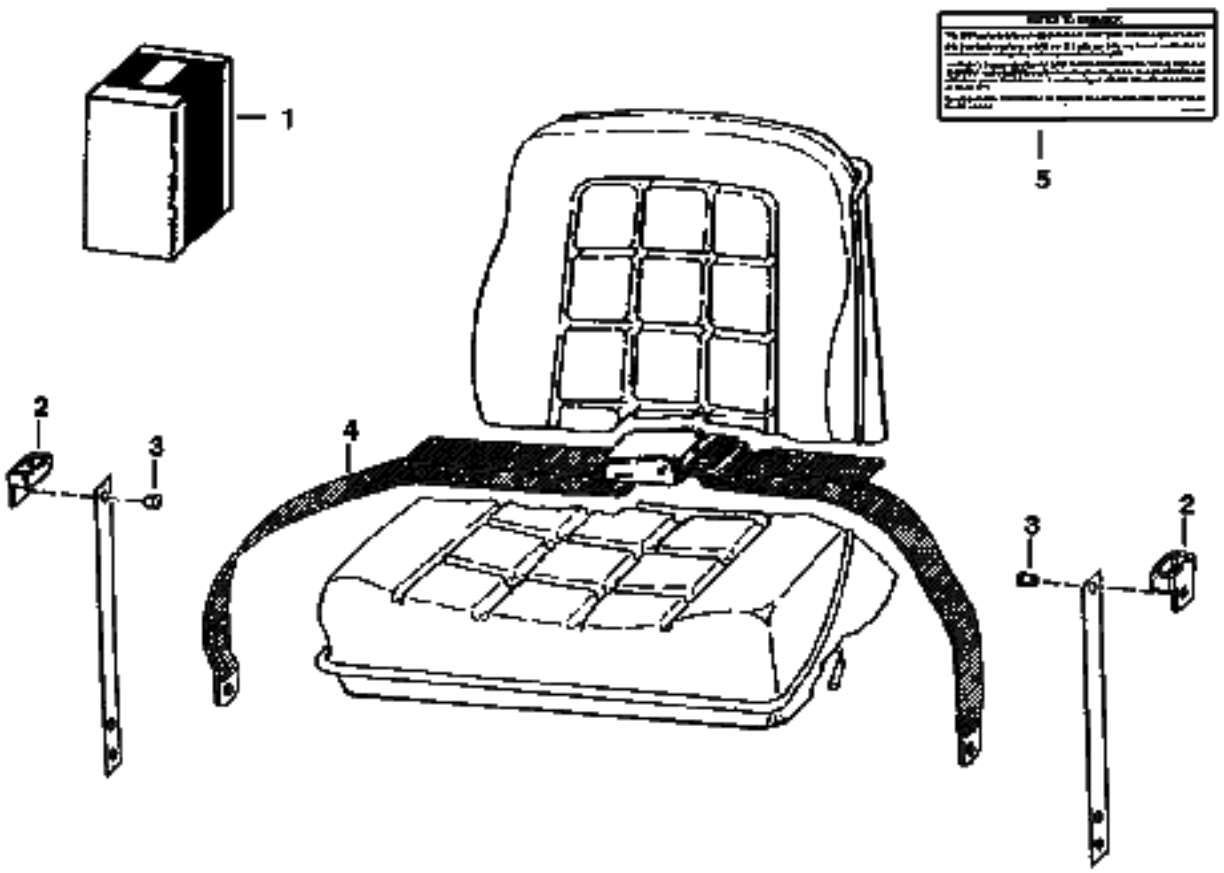

NOTE: Complies with British Columbia Industrial Health and Safety Regulations 26.16 (7) (a).

B–13601

SEAT BELT (Cont'd)
(3" Wide)

Ref No	Part Number	Description	Remarks	Serial Number	Qty
1	6703640	KIT	W/Ref. 2-5		1
2	6703703	GUIDE			2
3	6512797	RIVET			4
4	6659999	BELT			1
5	6703641	DECAL			1

STEERING DAMPENING KIT

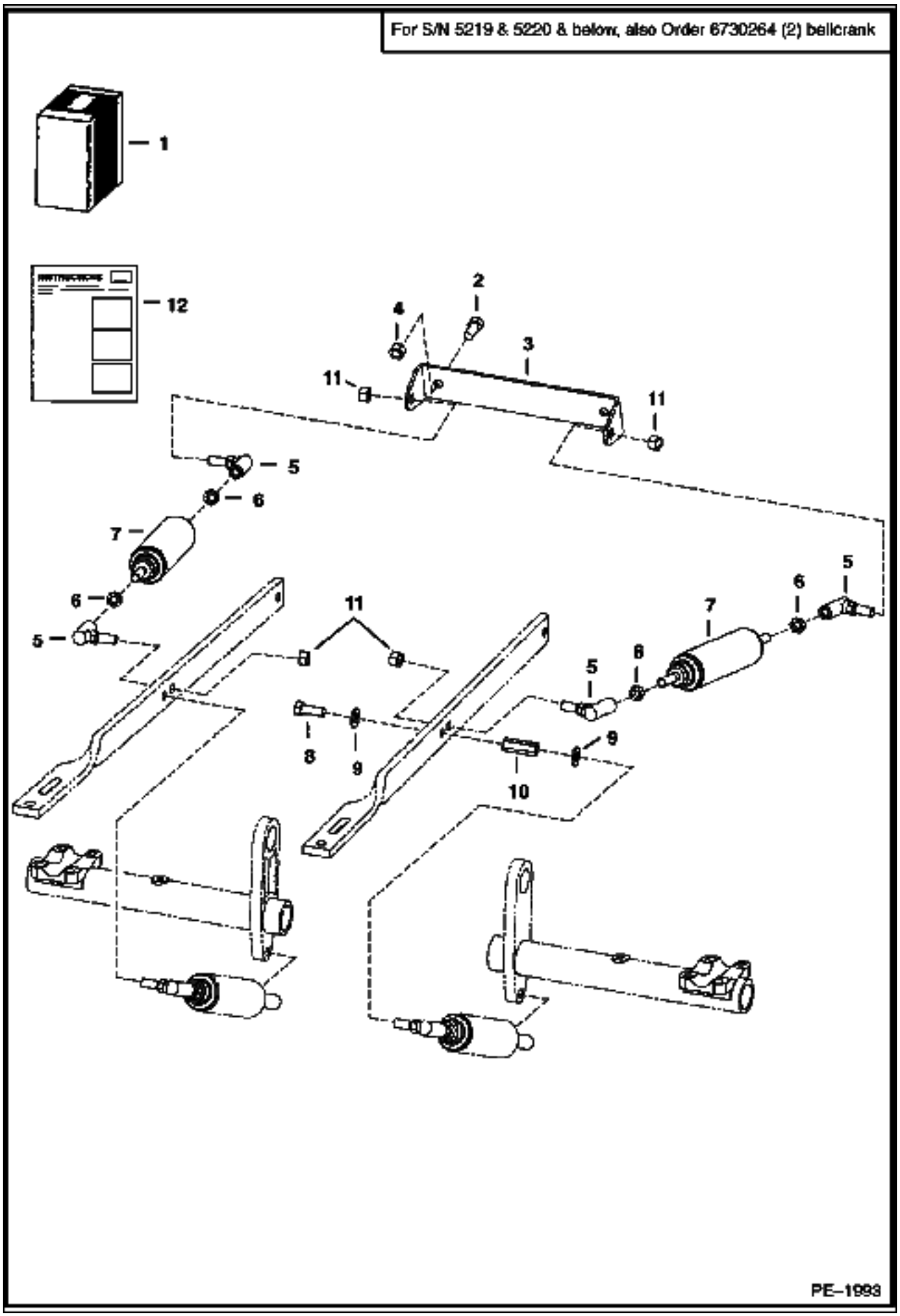

STEERING DAMPENING KIT (Cont'd)

Ref No	Part Number	Description	Remarks	Serial Number	Qty
1	6737490	KIT	Ref. 2-12		1
2	17C000612B	BOLT			2
3	6706106	MOUNT	damper		1
4	95D000006B	NUT			4
5	6599744	BALL JOINT			4
6	8D000006B	NUT			4
7	6649551	SHOCK	damper		2
8	18C000616B	BOLT			1
9	25E000017B	WASHER			2
10	6737444	SPACER	coupling		1
11	96D000006B	NUT			4
12	6902619	INSTRUCTIONS			1

STROBE LIGHT

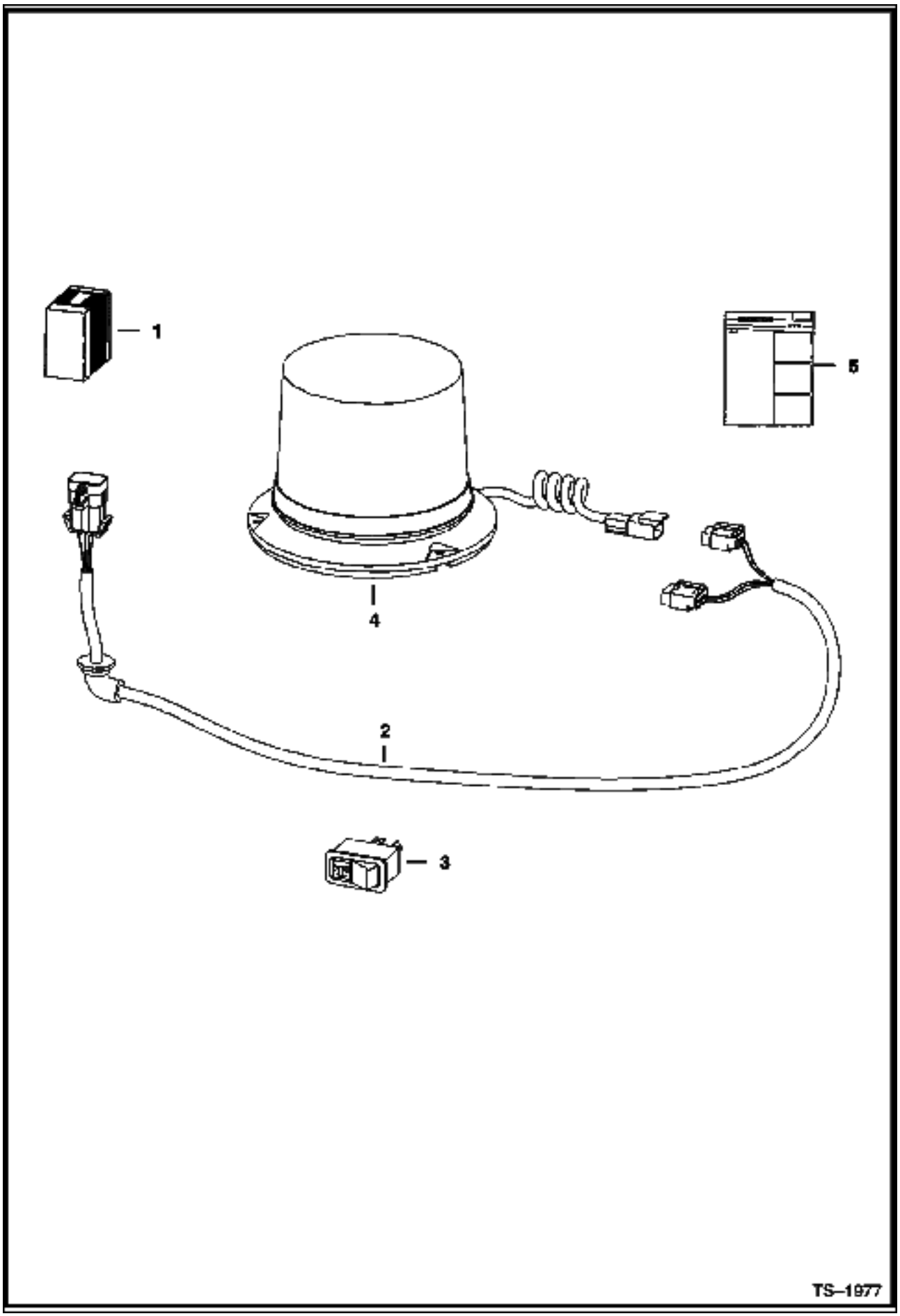

Ref No	Part Number	Description	Remarks	Serial Number	Qty
1	6719857	KIT	strobe light - If loader is not equipped with Deluxe Cab Option, also Order 6727468 Harness		1
2	6718872	HARNESS			1
3	6665317	SWITCH	horizontal		1
3	6668816	SWITCH	vertical		1
4	6675522	STROBE			1
4	6675858	FLASH TUBES			1
5	6900992	INSTRUCTIONS			1

BULK ITEMS
(See Note)

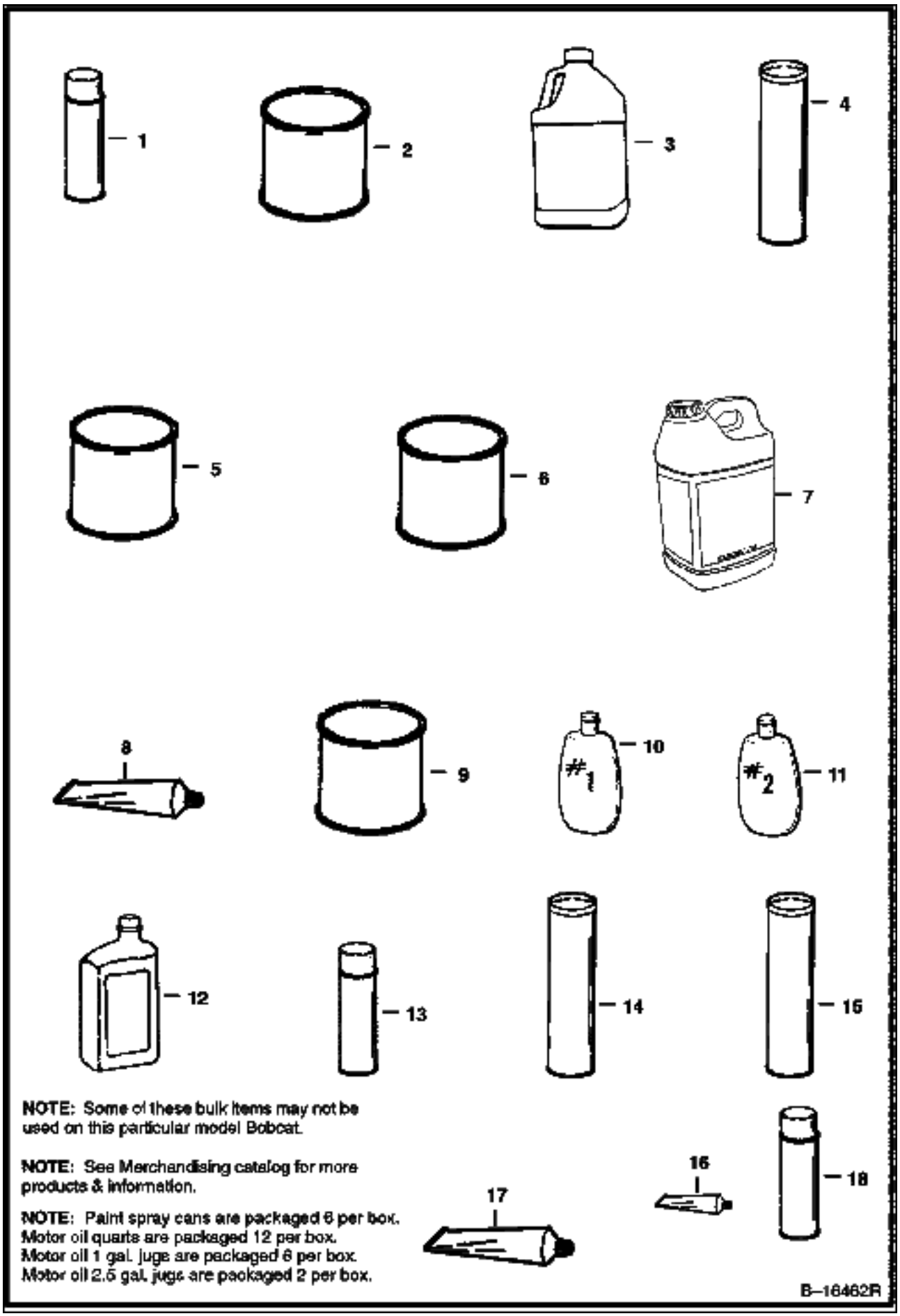

NOTE: Some of these bulk items may not be used on this particular model Bobcat.

NOTE: See Merchandising catalog for more products & information.

NOTE: Paint spray cans are packaged 6 per box.
Motor oil quarts are packaged 12 per box.
Motor oil 1 gal. jugs are packaged 6 per box.
Motor oil 2.5 gal. jugs are packaged 2 per box.

BULK ITEMS (Cont'd)
(See Note)

Ref No	Part Number	Description	Remarks	Serial Number	Qty
1	6902228	PAINT	orange - spray can - SEE NOTE		x
1	6902229	PAINT	charcoal - spray can - SEE NOTE		x
1	6902230	PAINT	white - spray can - SEE NOTE		x
2		PAINT	NAP - ORANGE - GALLON - Also Order Ref. 5		x
2	6902233	PAINT	orange - Qt		x
2		PAINT	NAP - CHARCOAL - GALLON - Also Order Ref. 5		x
2	6902234	PAINT	charcoal - Qt.		x
2		PAINT	NAP - WHITE - GALLON - Also Order Ref. 5		x
2	6902235	PAINT	white - Qt.		x
3	6724094	ANTI-FREEEZE	Gal. - Premixed PG		x
3	6724354	ANTI-FREEZE	Gal. - PG concentrate		x
4	6633583	SEALANT	chaincase covers		x
5		REDUCER	NAP - gallon		x
6		PRIMER	NAP - gallon		x
6	6653519	PRIMER	Qt.		x
7	6903117	HYD FLUID 2.5 GAL. 2			x
7	6903118	HYD. FLUID 5GAL			x
7		FLUID	NAP - 30 gallon drum		x
7	6903119	HYD. FLUID 55GAL			x
8	6599360	SEALANT	electrical - 3 oz. tube		x
9	6903121	GEAR LUBE 12			x
10	6630188	POLISH	window - #1 (8 oz.)		x
11	6630189	POLISH	window - #2 (8 oz.) - scratch remover		x
12	6903109	OIL 30W QT. 12			x
12	6903107	OIL 10W30 QT. 12			x
12	6903105	OIL 15W40 QT. 12			x
12	6903108	OIL 10W30 GAL. 6			x
12	6903106	OIL 15W40 GAL. 6			x
12	6903110	OIL 30W GAL. 6			x
12	6903113	OIL 15W40 2.5 GAL. 2			x
12	6903112	OIL 10W30 2.5 GAL 2			x
12	6903111	OIL 30W 2.5 GAL 2			x
13	6675380	ADHESIVE	insulation - spray can		x
14	6903122	GREASE 10			x
15	6599719	GREASE	14.5 oz. cartridge - for fan idler bearing		x
16	6650407	ADHESIVE	1 oz. tube		x
17	6650388	SEALANT	flange		x
18	6736644	PAINT	orange - .5oz. spray can		x
18	6736641	PAINT	charcoal - .5oz. spray can		x
18	6736642	PAINT	white - .5oz. spray can		x
18	6736645	PAINT	red - .5oz. spray can		x

Part No.	Description	Was	Code	Page
*6640694	LOCK			128
*6641179	CONNECTOR			128
*6667144	CONNECTOR			128
*6667145	LOCK			128
10C000410B	BOLT			224
10C000416B	BOLT			224
10C000616B	BOLT			20
10H000025B	GREASE ZERK			30, 56, 58
10H000035B	GREASE ZERK			30
11H000015B	GREASE ZERK			28
12D000006B	NUT			240
12D000008B	NUT			240, 242
12D000010B	NUT			248
12H000015B	GREASE ZERK			28, 58
12H000025B	GREASE ZERK			296
1304227B	PIN			158
1306637B	PIN			62
1313116	BUSHING			150
1318565B	PIN			84
1320075	COTTER PIN			288
14D000010B	NUT			156, 158, 242
14J003112B	PIN			150
14J005032B	PIN			30
15H000015B	GREASE ZERK			28
15KB00406B	ADAPTER			52
15KB00606B	ADAPTER			54, 66, 70, 306
15KB00612B	ADAPTER			296, 306
15KB00808B	ADAPTER			82
15KB00812B	ADAPTER			84
15KB01010B	ADAPTER			144
15KB01012B	ADAPTER			144
15KB01210B	ADAPTER			50, 206
15KB01212B	ADAPTER			296
15KB01612B	ADAPTER			82
15KB01616B	CONNECTOR			54
16F000002B	PLUG			170
17C000410B	BOLT			200, 240, 242, 282, 284
17C000428B	BOLT			52
17C000432B	BOLT			82
17C000508B	BOLT			240, 242
17C000510B	BOLT			154
17C000512B	BOLT			156, 158, 208, 214, 240, 242
17C000514B	BOLT			196
17C000516B	BOLT			238
17C000540B	BOLT			126, 206
17C000608B	BOLT			130, 196
17C000610B	BOLT			126
17C000612B	BOLT			32, 62, 86, 144, 150, 210, 214, 320
17C000614B	BOLT			226
17C000616B	BOLT			38, 130, 148, 252, 286
17C000620B	BOLT			62, 80, 82, 86, 144
17C000624B	BOLT			52, 62, 214
17C000626B	BOLT			86
17C000628B	BOLT			214

Code for disposition of old part number

A -- Use up
B -- Use on other application (See PNI)
C -- File PDR Report with Bobcat Parts Sales
D -- Part Number Error

Part No.	Description	Was	Code	Page
17C000632B	BOLT			288
17C000640B	BOLT			20, 28, 54, 80
17C000644B	BOLT			28
17C000648B	BOLT			28
17C000652B	BOLT			286
17C000656B	BOLT			28, 272, 276
17C000660B	BOLT			30
17C000664B	BOLT			28
17C000672B	BOLT			28, 286
17C000680B	BOLT			86
17C000816B	BOLT			150, 154
17C000820B	BOLT			26, 154
17C000824B	BOLT			154
17C000832B	BOLT			150
17C000872B	BOLT			150
17C000888B	BOLT			154
17C001028B	BOLT			286
17C001056B	BOLT			14
17C006116B	BOLT			144
17C010112B	BOLT			28
17C010136B	BOLT			28
17KB00606B	ELBOW			54, 80, 82, 144, 306
17KB01210B	ELBOW			50, 206
17KB01212B	ELBOW			306
18C000616B	BOLT			320
18EM01224B	WASHER			208, 214
19F000012B	BUSHING			204
19J000012B	CLAMP			80
19KB00606B	TEE			254
1CM00635B	SCREW			276, 280
1CM00640B	BOLT			208, 214
1CM00820B	BOLT			86
1CM08100B	BOLT			154
1DM00006B	NUT			192
20J000012B	CLAMP			82
20JM01025B	PIN			154
21G000804B	BOLT			256
21JM00020B	PIN			184
21JM00814B	PIN			171, 172
21KB00606B	TEE			52, 82
24F000001B	BRACKET			126
24K000007B	PLUG			64, 68
255855B	SEAL			28
25E000010B	WASHER			122
25E000011B	WASHER			156
25E000013B	WASHER			132, 136, 196, 200, 282, 284
25E000014B	WASHER			224
25E000015B	WASHER			28, 126
25E000016B	WASHER			208, 214
25E000017B	WASHER			320
25E000021B	WASHER			150
25E000024B	WASHER			86, 130
25G000410B	BOLT			124
25G000512B	BOLT			14

Code for disposition of old part number

A -- Use up
B -- Use on other application (See PNI)
C -- File PDR Report with Bobcat Parts Sales
D -- Part Number Error

Part No.	Description	Was	Code	Page
25G000612B	BOLT			236
25GM08010B	SET SCREW			168
25GT00410B	BOLT			132
25K020016B	O-RING			64, 68
25K030126B	O-RING			30
25K030218B	O-RING			58
26GM10020B	SCREW			40
27E000010B	WASHER			28
29CM00820B	BOLT			148, 154
29G000416B	SCREW			64, 68
29G000444B	BOLT			64, 68
2F004051B	PIN			158
30G000416B	BOLT			65, 66
30H000021B	CLAMP			156, 158, 250
30H000023B	CLAMP			282
30H000027B	CLIP			234
30H000031B	CLAMP			156, 158
30H000035B	CLAMP			74, 76
30H000042B	CLAMP			290
30H000046B	CLAMP			124
30H000050B	CLAMP			236
30H000062B	CLAMP			196
30H000073B	CLAMP			154
30H000079B	CLAMP			82
30H000091B	CLAMP			146
31C000410B	BOLT			248
31C000644B	BOLT			54
31C000820B	BOLT			152, 154
31C000824B	BOLT			12, 288
31C001032B	BOLT			38
31C001036B	BOLT			288
31C001224B	BOLT			38
31C001228B	BOLT			12, 38
31C001232B	BOLT			38
31H000038B	CLAMP			154, 306
31H000042B	CLIP			254, 296
31H000046B	CLAMP			272, 276
3291290B	WING NUT			194
35C000408B	BOLT			208
35C000410B	BOLT			198, 240, 242, 258, 272
35C000412B	BOLT			20, 242, 250
35C000512B	BOLT			34, 282, 284
35C000514B	BOLT			130
35C000516B	BOLT			80, 146
35C000520B	BOLT			124
35C000536B	BOLT			240, 242
35C000612B	BOLT			84, 296, 314
35C000616B	BOLT			52
35C000620B	BOLT			126
35C000624B	BOLT			86, 306
35C000632B	BOLT			80
35C000680B	BOLT			306
35C000820B	BOLT			52
35C000844B	BOLT			52

Code for disposition of old part number

A -- Use up
B -- Use on other application (See PNI)
C -- File PDR Report with Bobcat Parts Sales
D -- Part Number Error

Part No.	Description	Was	Code	Page
36K000005B	CAP			52, 64, 66, 68, 80, 82, 84
36K000006B	CAP			154
36K000008B	CAP			48
37C000412B	BOLT			250
37C000424B	BOLT			258, 272
37C000512B	BOLT			26, 198, 200, 258, 272, 290
37C000612B	BOLT			26
37C000616B	BOLT			62
37C000620B	BOLT			34, 62, 196
38C000610B	BOLT			156, 158
38C000820B	BOLT			150
38C000824B	BOLT			26
38C000828B	BOLT			149, 150
38C000840B	BOLT			26
3966602B	O-RING			170
3974095B	GASKET			184, 192
3974226B	KEY			172
3974260B	BOLT			182
3974394B	PIN			184, 186
3974500B	JOINT			186
3974503B	STUD			184
3974916B	STUD			162, 166, 170
3974920B	SCREW			168
3974970B	SCREW			192
3974972B	GASKET			192
42H000052B	CLAMP			148
42HC00250B	CLAMP			36, 148
42HC00375B	CLAMP			147, 148
42HL00250B	CLAMP			80
42HS00004B	CLAMP			36
43C000408B	BOLT			136
43C000516B	BOLT			36
43C000616B	BOLT			123, 124, 138
43C000852B	BOLT			154
43C820	BOLT			110
43DM00008B	NUT			126, 246
44H000048B	CLAMP			272, 276
45C000616B	BOLT			148, 158
45C000620B	BOLT			86, 154
45G001006B	BOLT			248
46D000005B	NUT			208, 214
47K000010B	PLUG			80
4D000028B	NUT			286
4DM00008B	NUT			142
4DM00010B	NUT			126
4F006106B	PIN			20
51DM00012B	NUT			214
51DM12	NUT			208
5289686B	PLUG			18
53C000516B	BOLT			36
53D000006B	NUT			14, 20
53D000010B	NUT			14, 38
53D000012B	NUT			12, 38
53DM00008B	NUT			148, 154

Code for disposition of old part number

A -- Use up
B -- Use on other application (See PNI)
C -- File PDR Report with Bobcat Parts Sales
D -- Part Number Error

Part No.	Description	Was	Code	Page
54K020002B	O-RING			64, 70
54K020028B	O-RING			66, 68
54K030110B	O-RING			298
54K030218B	O-RING			56
54K040116B	O-RING			298
54K040224B	O-RING			56, 58
54K040300B	O-RING			56, 58
55D000005B	NUT			240, 242
55D000006B	NUT			26, 214
55K000204B	O-RING			64, 68
55K000214B	O-RING			80, 82, 296
57D000006B	NUT			34, 62, 86, 124, 196, 288
57D000008B	NUT			288
57D000010B	NUT			28, 288
57G000608B	SCREW			258, 272
58K000013B	O-RING			66, 68
58K000016B	O-RING			66, 68
58K000017B	O-RING			64, 68
58K000116B	O-RING			72
58K000127B	O-RING			64, 68
58K000132B	O-RING			298
59D000004B	NUT			124, 224, 250, 272
59D000005B	NUT			14, 126, 210, 214, 258, 272
59D000006B	NUT			26
59D000008B	NUT			14
5CM01020B	BOLT			148, 274
5CM01025B	SCREW			276
5CM01080B	SCREW			274, 276
5HM00013B	CLAMP			36
5HM00014B	CLAMP			36, 146
5HM00015B	CLAMP			80
5HM00020B	CLAMP			260, 274
5HM00023B	CLAMP			146
5HM00024B	CLAMP			36, 74, 76
5HM00035B	CLAMP			74
5HM00042B	CLAMP			80, 84
5HM00055B	CLAMP			146
5HM00058B	CLAMP			36
5JM00020B	SNAP RING			184
614142B	SLEEVE			250
619021B	WASHER			14, 22, 30, 62, 86, 158, 296, 306
61D000005B	NUT			25, 26, 144, 198, 200, 208, 214
61D000006B	NUT			150, 209, 210, 226
62D000004B	NUT			156, 158
62D000005B	NUT			246
6511855	SEAL			144
6512026	BUSHING			62
6512797	RIVET			318
6513152	SEAL			208, 214
6513471	CLAMP			146
6513495	COTTER PIN			62, 158
6515131	TERMINAL			250
6515817	WASHER			14
6517516	LIGHT			250

Code for disposition of old part number

A -- Use up
B -- Use on other application (See PNI)
C -- File PDR Report with Bobcat Parts Sales
D -- Part Number Error

Part No.	Description	Was	Code	Page
6518200	GREASE ZERK			86
6518955	SNAP RING			150
6519178	BUMPER			20
6531270	SLEEVE			64
6532127	BOOT			32, 132
6532347	SPACER			28
6532453	RING			298
6533898	DECAL			288
6534739	DECAL			228
6538367	HEAD			56
6542731	SAFETY TREAD			208, 214
6553709	WASHER			14
6553976	SAFETY TREAD			228
6554100	TREAD			158, 228, 296
6554149	CORD			18, 208, 216, 224
6555341	SAFETY TREAD			228
6555351	SEAL			224
6557224	DECAL			228, 230
6557493	GROMMET			312
6557831	WASHER			86, 274, 276
6557904	FLASHER			240, 242, 250
6558305	WIRE ROPE			228
6558309	WIRE ROPE			228
6558310	SLEEVE			228
6559479	NUT			158
6560573	DECAL			230
6560633	DAMPENER			14
6561383	DECAL			228
6562018	SPRING			30
6562602	BUSHING			14
6562619	BUSHING			12
6563914	WASHER			62, 86
6564343	SPACER			158
6564452	GRIP			26, 155, 156, 157, 158
6564657	PIN			62, 196
6565200	DECAL			230
6565977	HOSE			260, 272
6565990	DECAL			228
6567743	PIN			14, 256
6567838	PIN			288
6567962	WASHER			156, 158
6568424	ADAPTER			150
6568425	ADAPTER			150
6569203	CLAMP			126
6569219	SCREEN			36, 80
6569498	SPRING ASSY			150
6576033	WASHER			150
6576261	COVER			156
6576262	MOUNT			156, 158
6576280	BOLT			126
6577058	PIN			86
6577382	SPACER			144
6577545	GROMMET			198, 200, 282, 284
6577754	DECAL			230

Code for disposition of old part number

A -- Use up
B -- Use on other application (See PNI)
C -- File PDR Report with Bobcat Parts Sales
D -- Part Number Error

Part No.	Description	Was	Code	Page
6577812	COVER			12
6577821	HOSE			36
6577822	HOSE			36, 146
6577954	PIN			28
6577961	GROMMET			32, 62, 158
6578169	HOSE			36
6578172	HOSE			36, 146
6578278	PAD			36, 80
6578368	DECAL			230
6578804	HOSE			144
6579385	DECAL			228
6579613	STOP			14, 144
6579989	BRACKET			126
6586251	HOSE			80
6586542	HEAD			298
6586543	PISTON			298
6586710	BOLT			150
6586918	SCREW			64
6587182	SWIVEL PIN			150
6587458	KEY			36
6587523	WASHER			64, 68
6587575	ADAPTER			64
6587580	SPRING			64, 69, 70
6587763	BOOT			64, 136
6587765	BUSHING			150
6589226	BONNET			64
6592098	WASHER			64
6592100	COLLAR			64, 70
6592105	BALL			64
6592107	SPRING			64
6592109	ADAPTER			68
6592117	SPRING			64, 68
6592506	CLAMP			48, 50, 80
6595663	BUSHING			64, 68
6596807	PLUG			64
6598112	CAP			162, 188
6598133	BRACKET			166
6598169	PLUG			166, 172
6599360	SEALANT			324
6599365	KIT			118
6599719	GREASE			324
6599741	WASHER			86
6599744	BALL JOINT			86, 320
6599931	ALARM			198, 200
6610510	TIE			18, 36, 146, 284
6624289	STA STRAP			48, 50, 54, 74, 76, 82, 124, 126, 138, 196, 234, 236, 240, 242, 254, 260, 274, 276, 296, 306
6628810	HOSE			84
6630188	POLISH			324
6630189	POLISH			324
6630207	RIVET			32
6630945	WASHER			156, 158
6631046	SEAL			170
6631418	PIN			14, 20, 256
6631561	NUT			72

Code for disposition of old part number

A -- Use up
B -- Use on other application (See PNI)
C -- File PDR Report with Bobcat Parts Sales
D -- Part Number Error

Part No.	Description	Was	Code	Page
6631643	PLATE			110
6633583	SEALANT			324
6640690	PIN			128, 132, 282
6640692	CONNECTOR			128, 132
6640694	LOCK			132
6640699	CONNECTOR			132, 258, 272, 282
6640700	LOCK			132, 282
6641174	CONNECTOR			258, 272
6641176	SEAL			128, 132, 282
6641179	CONNECTOR			72, 132, 282
6641180	LOCK			72, 128, 132, 282
6644965	BALL JOINT			156, 158
6645812	SCREW			40
6646582	PLUG			132
6646705	SEAL			144
6646781	SWITCH			198
6647777	PIN			72
6647783	LOAD CHECK			72
6647784	PLUG			72
6647785	SPRING			72
6648293	SCREW			72
6648307	CONNECTOR			274
6648308	CONNECTOR			274
6648348	PLUG			32
6649244	STUD			208, 214
6649245	RETAINER			208, 214
6649481	BULB			290
6649551	SHOCK			86, 320
6649949	PLUG			18, 34
6650388	SEALANT			324
6650407	ADHESIVE			324
6652373	VALVE			194
6652679	KEY			174
6652750	PLUG			172
6652751	GASKET			172
6652762	BOLT			164
6652918	NUT			154
6653519	PRIMER			324
6654139	MOULDING			130
6654806	FUSE			124
6655399	BUMPER			144
6655752	FITTING			40
6655781	BEARING			150
6657719	PLUG			18, 32, 224
6657734	PUMP			36
6658180	BREATHER			36
6659369	HEATER			204
6659543	PLUG			302
6659999	BELT			318
6660016	RINGS			88
6660018	BEARING			88
6660032	PIN			88
6660033	SPRING			88
6660260	SWITCH			118

Code for disposition of old part number

A -- Use up
B -- Use on other application (See PNI)
C -- File PDR Report with Bobcat Parts Sales
D -- Part Number Error

Part No.	Description	Was	Code	Page
6660644	CAP			64
6660967	CAP			150
6660995	GREASE RING			150
6661022	FILTER			54, 82, 115, 116
6661062	PLUG			148, 302
6661114	CAP			35, 36
6661150	SWITCH			240
6661229	BEARING			150
6661248	ELEMENT			2, 8, 84, 118
6661353	LIGHT ASSY			290
6661377	SEAL			150
6661696	CAP			36
6661787	WASHER			154
6661807	KIT			9, 10, 116
6661808	KIT			116
6662246	CONNECTOR			264
6662252	LOCK			264
6662257	PIN			264
6662848	CAP			68
6662855	BELT			5, 6, 150
6662997	PULLEY			150
6664065	WASHER			312
6664085	BUSHING			18, 212, 224, 312
6664097	COVER			312
6664103	NUT			312
6664221	RETAINER			18
6664223	OUTLET			18
6664224	CAP			18
6664554	PUMP			208
6664566	BOLT			312
6665000	CLIP			132, 208, 214
6665086	SEAL			56
6665222	RING GEAR			150
6665307	SEAL			150
6665308	SNAP RING			150
6665314	PLUG			18, 122
6665316	SWITCH			250
6665317	SWITCH			202, 322
6665321	RIVET			132, 208, 214
6665322	RIVET			132, 208, 214
6665367	BULB			18
6665370	PLUG			264
6665371	SWITCH			126
6665427	BATTERY			2, 126
6665568	EXTRUSION			208, 216
6665569	WASHER			64, 68
6665570	RING			64, 68
6665602	MOTOR			312
6665701	BUSHING			62
6665707	SWITCH			208
6665727	LIGHT			240, 242
6665728	LIGHT			240, 242
6665729	LIGHT			240, 242
6665860	KIT			240, 242

Code for disposition of old part number

A -- Use up
B -- Use on other application (See PNI)
C -- File PDR Report with Bobcat Parts Sales
D -- Part Number Error

Part No.	Description	Was	Code	Page
6665915	GAUGE			80
6666364	PLUG			88
6666542	SEAL			298
6666571	BULB			202
6666766	GROMMET			208
6667144	CONNECTOR			132
6667176	PLUG			72
6667185	SEAL KIT			72
6667201	SPACER			312
6667323	SEAL			298
6667326	SEAL			56
6667352	FILTER FUEL			2, 6, 36
6667353	FILTER ASSY			36
6667461	PIN			168
6667676	COVER			72
6667677	O-RING			72
6667680	SNAP RING			72
6667687	STEM			66, 68
6667803	COUPLER			254, 306
6667804	COUPLER			254, 306
6667844	VALVE ASSY			52, 59, 60
6668104	MOUNT			154
6668742	SWITCH			18
6668765	VALVE			64, 68
6668815	SWITCH			240, 242, 250
6668816	SWITCH			202, 240, 242, 322
6668819	FILTER			118
6668820	NUT			66, 70
6669085	VALVE			60
6669087	SEAL KIT			60
6669091	CLIP			18, 258, 272
6669224	BOLT			18, 258, 272
6669267	SEAL			58
6669268	SEAL			58
6669549	SOCKET			234
6669657	SEAL KIT			254
6669676	CHECK VALVE			82
6669732	SEAL KIT			66, 68
6669734	SEAL KIT			64, 68
6669736	SEAL KIT			120
6670284	LIGHT ASSY			290
6670287	COVER			26
6670312	SOLENOID			240, 242
6670347	GASKET			176
6670425	SCREW			192
6670426	NUT			192
6670427	CAP			188, 192
6670462	NUT			192
6670504	PLUG			176, 178
6670533	NUT			186
6670620	MOUNT			242
6670621	LENS			242
6670634	SEAL KIT			72
6670668	PIN			242

Code for disposition of old part number
A -- Use up
B -- Use on other application (See PNI)
C -- File PDR Report with Bobcat Parts Sales
D -- Part Number Error

Part No.	Description	Was	Code	Page
6670682	BEARING			150
6670706	CONNECTOR			132
6670707	CONNECTOR			132
6670710	LOCK			132
6670711	LOCK			132
6670715	PIN			132
6670726	LOCK			310
6670769	O-RING			182
6670774	PIN			190
6670782	GASKET			186
6671025	COIL			64, 68
6671106	HORN			240, 242
6671520	O-RING			110
6671527	NUT			72
6672152	BELT			6, 150
6672272	WASHER			290
6672273	SCREW			290
6672274	SCREW			290
6672275	GASKET			290
6672276	LENS			290
6672277	BRACKET			290
6672279	MOUNT			290
6672338	O-RING			40
6672354	PLUG			172
6672384	CAP			188
6672436	SEAL			168
6672471	VALVE			66, 68
6672863	SOLENOID			72
6673710	BEARING			86
6673789	BEARING			86
6674000	CLAMP			128
6674056	SEAL			88
6674058	WASHER			88
6674059	WASHER			88
6674060	WASHER			88
6674061	WASHER			88
6674065	CAM			88
6674066	SEAL			88
6674202	NUT			122
6674228	PANEL			258, 272
6674231	VENT			258, 272
6674234	CONDENSER			271, 272, 276
6674235	RECEIVER DRIER			272, 276
6674315	SENSOR			126
6674316	SENSOR			124
6674331	COIL			72
6674343	SHIM			88
6674344	SPRING			88
6674345	PLUG			88
6674400	HOUSING			290
6674401	HOUSING			290
6674402	MOUNT			290
6674403	COVER			16, 122
6674405	BUSHING			20

Code for disposition of old part number

A -- Use up
B -- Use on other application (See PNI)
C -- File PDR Report with Bobcat Parts Sales
D -- Part Number Error

Part No.	Description	Was	Code	Page
6674406	SENSOR			20
6674407	SHOULDER BELT			314
6674519	WINDOW			224
6674520	WINDOW			224
6674521	WINDOW			224
6674522	WINDOW			224
6674706	STUD			38, 88
6674707	PLUG			90
6674708	WASHER			90
6674713	DISC			88
6674714	DISC			88
6674716	COVER			90
6674722	SHIM			88
6674723	SHIM			88
6674724	NUT			38, 88
6674727	SEAL			88
6674728	SEAL			90
6674734	BUSHING			90
6674799	ADAPTER			234
6674802	CONNECTOR			232, 234
6674841	SPRING			88
6674846	SEAL			88
6674848	SEAL			88
6674853	POPPET			88
6674894	NUT			20
6674895	RETAINER			18
6674907	NUT	6687925	A	100, 102
6674993	CAP			208
6675026	CAP			232, 234
6675033	INSERT			14, 16, 122
6675064	TERMINAL			240, 242
6675075	HOSE			272, 276
6675076	HOSE			272, 276
6675099	ALARM			282, 284
6675135	GAS SPRING			14
6675137	GAS SPRING			14
6675139	GAS SPRING			14
6675140	SNAP RING			14
6675154	HOLDER			124
6675155	FUSE			124
6675170	SEAT BELT			22
6675171	CLAMP			122
6675172	BRACKET			258, 272
6675176	SWITCH			258, 272
6675177	KNOB			258, 272
6675179	FLANGE			258, 272
6675181	PLUG			258, 272
6675212	RETAINER			224
6675215	WINDOW			216
6675221	BOLT			154
6675258	CLEVIS			14
6675273	WASHER			26
6675278	FILTER			84, 124
6675298	COUPLER			210

Code for disposition of old part number

A -- Use up
B -- Use on other application (See PNI)
C -- File PDR Report with Bobcat Parts Sales
D -- Part Number Error

Part No.	Description	Was	Code	Page
6675299	COUPLER			210
6675308	KIT			24
6675309	KIT			24
6675310	KIT			24
6675311	KIT			24
6675312	KIT			24
6675313	KIT			24
6675314	KIT			24
6675315	KIT			24
6675316	KIT			24
6675317	SCISSORS			22
6675318	KIT			24
6675319	SEAT			22
6675320	SEAT			22
6675321	SEAT			22
6675322	SEAT			22
6675323	KNOB			22
6675336	BULB			290
6675378	CLIP			210, 214
6675380	ADHESIVE			324
6675387	EXTRUSION			17, 18, 224
6675497	BLOWER			262, 263, 264, 280
6675503	HOUSING			264
6675504	RING			264
6675505	BLOWER WHEEL			264
6675506	MOUNT			264
6675507	COVER			264
6675509	MOTOR			264
6675510	CLAMP			262, 280
6675511	DRAIN VALVE			262, 280
6675512	CLAMP			262, 280
6675522	STROBE			322
6675523	BEACON			202, 240, 242
6675524	CLIP			16
6675534	BLOCK VALVE			276, 280
6675538	O-RING			276, 280
6675544	CANVAS CAB			219, 220
6675545	GROMMET			18, 224
6675558	SEAL			208, 214
6675559	COIL			124
6675562	SEAT BELT			315, 316
6675581	EXTINGUISHER			248
6675590	DOOR			220
6675591	HINGE KIT			220
6675595	SEAT			21, 22
6675596	SEAT			22
6675607	INSULATION			267, 268
6675608	INSULATION			268, 276
6675609	INSULATION			268, 276
6675610	INSULATION			268
6675611	SEAL			266, 268
6675612	INSULATION			268
6675613	INSULATION			268
6675614	INSULATION			268

Code for disposition of old part number

A -- Use up

B -- Use on other application (See PNI)

C -- File PDR Report with Bobcat Parts Sales

D -- Part Number Error

Part No.	Description	Was	Code	Page
6675618	CLAMP			170, 178
6675663	NUT			120
6675668	CABLE			156, 158
6675669	VALVE			71, 72, 206
6675685	HOSE			272, 276
6675731	COIL			120
6675779	PRESS. SWITCH			274, 276
6675824	O-RING			276
6675825	O-RING			276
6675833	SEAL			224
6675835	TURN SIGNAL			250
6675846	POTENTIOMETER			258, 272
6675858	FLASH TUBES			322
6675866	SPOOL			88
6675867	WASHER			88
6675869	O-RING			88
6675982	PLUG			122
6675999	SWITCH			312
6676000	TEE			312
6676001	ARM			312
6676002	BLADE			312
6676003	HOSE			208, 212, 312
6676023	O-RING			88
6676028	NOZZLE			312
6676029	SOLENOID			130, 132, 136, 196
6676034	KIT			24
6676062	VALVE			276
6676063	KIT			276
6676338	GAS SPRING			22
6676399	VALVE CORE			276
6676492	SENSOR			130
6676493	SENSOR			130
6676499	GROMMET			208
6676500	ELBOW			208
6676509	STEM			120
6676516	NUT			258
6676536	SWITCH			122
6676537	SWITCH			130, 196
6676538	INSULATION			270, 276
6676539	CLIP			262, 276, 280
6676542	CAP			72
6676543	PLUG			72
6676544	SPRING			72
6676545	CARTRIDGE			72
6676597	O-RING			88
6676606	SPACER			262, 270, 280
6676618	CLIP			264
6676640	SEAL			133, 134
6676653	SCREW			262, 270, 280
6676732	SWITCH			296
6676870	CONNECTOR			132
6676872	TURN SIGNAL			240, 242, 250
6676909	DISTRIBUTOR			88
6676910	SEAL			88

Code for disposition of old part number

A -- Use up

B -- Use on other application (See PNI)

C -- File PDR Report with Bobcat Parts Sales

D -- Part Number Error

Part No.	Description	Was	Code	Page
6676917	ELBOW			208
6676927	FELT STRIP			224
6676952	PLUG			88
6676984	MOUNT			276, 280
6677105	COVER			262, 276, 280
6677108	HOUSING			262, 280
6677111	SEAL			262, 266, 280
6677115	RECEPTACLE			262, 280
6677116	RETAINER			262, 280
6677117	SCREW			262, 280
6677118	SCREW			262, 280
6677119	SCREW			262, 280
6677120	COVER			262
6677121	CAP			276
6677122	CAP			272, 276
6677136	SOCKET			234
6677192	MAGNET			208, 214
6677193	RIVET			208, 214
6677198	TAB			224
6677383	SOLENOID			64
6677485	SPACER			140
6677486	NUT			140
6677487	COVER			140
6677488	RECTIFIER			140
6677490	BRACKET			140
6677491	BRACKET			140
6677492	ROTOR			140
6677493	STATOR			140
6677494	BOLT			140
6677495	SPACER			140
6677496	PULLEY			140
6677497	NUT			140
6677504	COVER			262, 270, 280
6677817	BOLT			140
6677818	BEARING			140
6677819	RETAINER			140
6677820	BEARING			140
6677828	SEAL			89, 90
6677833	ARM ASSY			211, 212
6677834	BLADE			212
6677836	COVER			212
6677837	BOLT			212
6677839	GASKET			212
6677840	SWIVEL			212
6677841	WASHER			212
6677842	NUT			212
6677843	NUT			212
6677844	NUT			212
6677845	ADAPTER			212
6677847	GROMMET			212
6677973	PLUG			224
6677983	FILTER			4, 258, 274
6678066	AIR CLEANER			193, 194
6678067	BUSHING			86

Code for disposition of old part number

A -- Use up
B -- Use on other application (See PNI)
C -- File PDR Report with Bobcat Parts Sales
D -- Part Number Error

Part No.	Description	Was	Code	Page
6678076	BLOCK			54
6678151	COVER			262, 280
6678152	SEAL			262, 280
6678155	FILTER ASSY			84, 117, 118
6678156	COOLER			83, 84
6678198	BOLT			212
6678205	ALTERNATOR			139, 140
6678207	FILTER			258, 272
6678233	OIL FILTER			1, 2, 4, 170
6678283	HANDLE			224
6678292	GAS SPRING			256
6678548	SOCKET			208, 214
6678659	BOLT			138
6678666	TREE MOUNT			260, 274
6678667	MOUNT			124
6678668	TIE			124
6678669	STRAP			38
6678675	CONTROLLER			236
6678739	WASHER			212
6678748	TRACK, 12" (T300)			38
6678749	TRACK			38
6678779	HOUSING			88
6678780	WASHER			90
6678891	COIL			66, 70
6678893	SOLENOID			66, 70
6678903	BOOT			138
6678920	NOZZLE			212
6678921	GUIDE			212
6678933	PISTON			58
6678960	SEAL			30
6678970	ELBOW			84
6679034	MOUNT			124, 126, 276
6679103	VALVE ASSY			82, 119, 120
6679145	CLUTCH			274
6679308	SEAT BELT			314
6679476	MOTOR			212
6679820	RELAY			124
6679836	ADAPTER			54
6679837	COUPLER			54
6679838	COUPLER			54
6679839	COUPLER			54
6679840	SEAL			54
6679841	SEAL			54
6679842	SWITCH			122
6679845	CROSSMEMBER			122
6679855	BULB			122
6679856	ALARM			122
6679943	CHECK VALVE			74, 76
6679990	CLIP			14
6680019	PLUG			88
6680020	SEAL KIT			54
6680272	NUT			192
6680280	SEAL			179, 180
6680326	LIGHT			18

Code for disposition of old part number

A -- Use up
B -- Use on other application (See PNI)
C -- File PDR Report with Bobcat Parts Sales
D -- Part Number Error

Part No.	Description	Was	Code	Page
6680355	BOOT			142
6680356	BOLT			142
6680358	RING			142
6680359	STOP RING			142
6680360	STOP			142
6680361	SPRING			142
6680362	BALL			142
6680363	WASHER			142
6680365	SHAFT			142
6680366	GEAR			142
6680367	GEAR			142
6680368	STOP RING			142
6680369	SEAL			142
6680371	LEVER			142
6680372	BRACKET			142
6680373	YOKE			142
6680374	ARMATURE			142
6680375	SHAFT			142
6680376	SWITCH			142
6680377	HOLDER			142
6680378	WASHER			142
6680379	SEAL			142
6680380	SEAL			142
6680383	BOLT			142
6680384	BOLT			142
6680388	BRACKET			142
6680389	BRACKET			142
6680390	GEAR			142
6680410	CONTROLLER			129, 130
6680414	HANDLE ASSY.			282
6680415	HANDLE			128
6680417	HANDLE			132
6680418	HANDLE ASSY.			127, 128
6680419	HANDLE ASSY.			128
6680438	SENSOR			36, 124
6680439	SENSOR			36
6680441	BUSHING			20
6680447	DECAL			128
6680462	HANDLE			132
6680468	MOUNT			132, 196
6680469	SPACER			132, 196
6680470	SPRING			132, 196
6680471	COVER			132
6680477	STRAP			132, 196
6680478	SHIELD			136
6680479	SHIELD			136
6680480	CHANNEL			132
6680481	CHANNEL			132
6680499	NUT			192
6680564	STUD			164
6680636	PLUG			172
6680637	PLUG			172
6680638	PLUG			170, 172
6680639	PLUG			172

Code for disposition of old part number

A -- Use up
B -- Use on other application (See PNI)
C -- File PDR Report with Bobcat Parts Sales
D -- Part Number Error

Part No.	Description	Was	Code	Page
6680640	PLUG			172
6680642	PIN			154
6680643	PIN			172
6680644	PIN			172
6680645	BOLT			172
6680649	TUBE			164
6680654	BOLT			170, 188
6680655	PIN			170
6680656	OIL PAN			170
6680657	PLUG			170
6680658	BOLT			166, 188
6680659	BOLT			170
6680660	OIL SUMP			170
6680661	O-RING			170
6680662	BOLT			166, 170, 174, 178
6680663	NUT			162, 164, 166, 170, 182, 183, 184, 186
6680665	PLUG			166
6680666	PLUG			166
6680667	PLUG			166
6680668	BOLT			166
6680669	HEAD GASKET			166
6680670	HEAD GASKET			166
6680671	HEAD GASKET			166
6680673	SPRING			176
6680675	PLUG			176
6680676	ROTOR			176
6680677	COVER			176
6680678	SCREW			176, 184
6680679	PLUG			176
6680680	SEAL			176
6680681	O-RING			176
6680682	O-RING			176
6680685	BOLT			174, 176
6680686	BOLT			176
6680687	BOLT			154, 176
6680688	HEAD COVER			166
6680689	ADAPTER			166, 176
6680690	GASKET			166
6680691	O-RING			166
6680692	COVER			166
6680693	SCREW			166
6680694	PLUG			166
6680695	SEAL			166
6680696	BOLT			166
6680698	CLAMP			166
6680699	CLAMP			166
6680700	WASHER			166
6680702	TUBE			170
6680703	DIPSTICK			169, 170
6680704	COVER			176
6680705	SEAL			175, 176
6680706	BOLT			176, 180
6680707	TAPPET			174
6680708	PUSH ROD			174

Code for disposition of old part number

A -- Use up
B -- Use on other application (See PNI)
C -- File PDR Report with Bobcat Parts Sales
D -- Part Number Error

Part No.	Description	Was	Code	Page
6680709	CAMSHAFT			174
6680710	BALL			174
6680711	GEAR			174
6680712	FLANGE			174
6680714	SHAFT			174
6680715	PIN			174
6680716	COLLAR			174
6680717	COLLAR			174
6680720	BUSHING			174
6680723	PISTON RINGS			172
6680724	PISTON RINGS			172
6680725	PIN			172
6680726	SNAP RING			172
6680727	ROD			172
6680728	BUSHING			172
6680729	BOLT			172
6680730	BEARING			172
6680731	BEARING			172
6680732	BEARING			172
6680733	BEARING			172
6680734	CRANKSHAFT			172
6680735	SLEEVE			172
6680736	GEAR			172
6680737	GEAR			172
6680738	MAIN BEARING			172
6680739	MAIN BEARING			172
6680740	MAIN BEARING			172
6680741	THRUST WASHER			172
6680742	THRUST WASHER			172
6680743	THRUST WASHER			172
6680744	THRUST WASHER			172
6680745	THRUST WASHER			172
6680746	THRUST WASHER			172
6680747	BOLT			150, 172
6680748	BALANCER			173, 174
6680749	SOLENOID			190
6680750	SCREW			190
6680752	BOLT			185, 186
6680753	GASKET			186
6680755	BOLT			162, 178, 186
6680756	SCREW			186
6680757	COVER			189, 190
6680758	WEIGHT			190
6680759	NUT			190
6680761	SLEEVE			190
6680763	LEVER			190
6680764	LEVER			190
6680765	SNAP RING			190
6680766	WASHER			190
6680768	LEVER			158
6680769	PIN			190
6680770	LEVER			190
6680771	SPRING			190
6680772	LEVER			190

Code for disposition of old part number

A -- Use up
B -- Use on other application (See PNI)
C -- File PDR Report with Bobcat Parts Sales
D -- Part Number Error

Part No.	Description	Was	Code	Page
6680773	PIN			190
6680775	PIN			190
6680777	NOZZLE			182
6680778	O-RING			182
6680779	GASKET			182
6680780	CLAMP			182
6680785	CLAMP			182
6680786	CLAMP			182
6680787	PIPE			182
6680788	BOLT			181, 182
6680790	FITTING			182
6680791	BOLT			164, 182
6680792	GASKET			164, 182, 192
6680795	CLAMP			182
6680796	VALVE			182
6680797	TEE			182
6680799	STUD			184
6680801	BOLT			162, 184
6680802	BOLT			164, 184
6680806	HOUSING			184
6680807	STUD			184, 186
6680808	PLUG			184
6680809	PIN			184
6680812	BEARING			184
6680813	KEY			184
6680814	FLANGE			184
6680815	BOLT			184
6680816	O-RING			184
6680818	NUT			184
6680820	WASHER			192
6680821	SNAP RING			192
6680822	SNAP RING			192
6680823	SNAP RING			192
6680824	SHAFT			192
6680825	SPRING			192
6680826	SPRING			192
6680827	SPRING			192
6680828	STUD			192
6680829	GASKET			192
6680830	BOLT			192
6680832	SCREW			192
6680833	SCREW			192
6680834	STOPPER			192
6680836	NUT			192
6680838	FUEL PUMP			186
6680839	BRACKET			154, 176
6680841	BOLT			176
6680842	HOSE			178
6680843	COVER			146
6680844	GASKET			146
6680845	BOLT			146
6680849	GASKET			178
6680850	THERMOSTAT			178
6680851	BOLT			161, 162, 178

Code for disposition of old part number

A -- Use up
B -- Use on other application (See PNI)
C -- File PDR Report with Bobcat Parts Sales
D -- Part Number Error

Part No.	Description	Was	Code	Page
6680852	PUMP			180
6680853	GASKET			180
6680855	O-RING			176
6680856	BOLT			180
6680857	PULLEY			178
6680858	WASHER			177, 178
6680861	VALVE			168
6680862	VALVE			168
6680863	VALVE SPRING			168
6680865	COLLET			168
6680866	SHAFT			168
6680867	STUD			168, 182
6680868	SHAFT			168
6680869	BRACKET			168
6680870	WASHER			168
6680871	SNAP RING			168
6680872	SPRING			168
6680873	ROCKER ARM			168
6680874	NUT			168
6680875	ROCKER ARM			168
6680877	PIN			168
6680878	BOLT			167, 168
6680879	ARM			168
6680880	SCREW			168
6680881	NUT			168
6680882	PAD			168
6680883	MANIFOLD			162
6680884	GASKET			162
6680885	BOLT			162
6680886	FLANGE			162
6680888	HEATER			162
6680890	MANIFOLD			162
6680891	GASKET			162
6680892	TURBOCHARGER			164
6680893	GASKET			164
6680894	HOSE			164
6680895	HOSE			164
6680896	HOSE			163, 164
6680897	CLAMP			164
6680898	CLAMP			164
6680899	TUBE			164
6680900	BOLT			164
6680903	CLAMP			164
6680905	TUBE			187, 188
6680906	BOLT			188
6680909	OIL COOLER			170
6680910	ADAPTER			170
6681474	CARTRIDGE			2, 4, 194
6681475	CARTRIDGE			2, 4, 194
6681476	CAP			194
6681477	COVER			194
6681487	O-RING			308
6681489	O-RING			308
6681501	SEAL KIT			84

Code for disposition of old part number

A -- Use up

B -- Use on other application (See PNI)

C -- File PDR Report with Bobcat Parts Sales

D -- Part Number Error

Part No.	Description	Was	Code	Page
6681614	KNOB			18, 224, 258, 272
6681620	SHAFT			88
6681621	HOUSING			88
6681622	SHAFT			88
6681638	PISTON			90
6682411	ADAPTER			48, 50
6682549	ELBOW			66, 68
6682586	GAS SPRING			208, 214
6683001	HVAC			280
6683003	COIL			276, 280
6683004	THERMOSTAT			276, 280
6683023	O-RING			190
6683206	SEAL KIT			114
6683274	SEAL			64, 68
6683608	CONTROLLER			138
6683812	SWITCH			122
6684033	NUT			48, 50, 144, 306
6684037	SENSOR			126
6684044	VALVE			308
6684045	SEAL KIT			308
6684046	O-RING			308
6684047	BACK-UP RING			308
6684048	O-RING			308
6684049	O-RING			308
6684050	BACK-UP RING			308
6684052	SEAL KIT			308
6684053	BACK-UP RING			308
6684054	O-RING			308
6684055	BACK-UP RING			308
6684056	O-RING			308
6684057	BACK-UP RING			308
6684059	SPACER			308
6684060	NUT			308
6684061	VALVE			308
6684062	SEAL KIT			308
6684063	O-RING			308
6684064	BACK-UP RING			308
6684065	O-RING			308
6684066	O-RING			308
6684067	BACK-UP RING			308
6684069	SEAL KIT			308
6684070	O-RING			308
6684071	O-RING			308
6684072	BACK-UP RING			308
6684073	COIL			308
6684125	COUPLER			64, 68
6684294	GROMMET			138
6684367	RADIATOR			146
6684443	SENSOR			38
6684457	HOSE			84
6684474	INSERT FAN INLET			144
6684577	ENGINE			159, 160
6684646	VALVE			64, 68
6684742	NUT			300

Code for disposition of old part number

A -- Use up
B -- Use on other application (See PNI)
C -- File PDR Report with Bobcat Parts Sales
D -- Part Number Error

Part No.	Description	Was	Code	Page
6684743	SOLENOID			300
6684744	SOLENOID			300
6684745	PISTON			300
6684746	CHECK VALVE			300
6684747	SEAL KIT			300
6684907	HOSE			273, 274, 276
6684908	HOSE			272, 276
6684910	SENSOR			132
6684911	SENSOR			136, 196
6684912	SENSOR			135, 136, 196
6684915	LEVER			130, 131, 132
6684916	LEVER			130, 132
6684923	BREATHER			36
6684932	KNOB			28
6684933	BEARING			88
6685060	BUSHING			62
6685061	VALVE			308
6685154	O-RING			40
6685190	STARTER			141, 142
6685198	CAP			274
6685199	CAP			272
6685328	RELIEF VALVE			308
6685339	HOSE			82
6685340	HOSE			82
6685341	HOSE			82
6685342	HOSE			82
6685430	ROTATING GROUP			90
6685432	HOUSING ASSY			90
6685433	SPRING PIN			88
6685434	DISK			88
6685435	BOLT			88
6685436	HOUSING			88
6685437	PLUG			88
6685438	PLUG			88
6685440	BOLT			90
6685441	BOLT			90
6685456	O-RING			90
6685460	O-RING			88
6685498	GASKET			182
6685540	PISTON			300
6685541	POPPET			300
6685542	O-RING			300
6685543	CHECK VALVE			300
6685544	COMPENSATOR			300
6685545	PLUG			300
6685546	PLUG			300
6685624	CONTROL VALVE			307, 308
6685663	RETAINER			306
6685847	FILTER			118
6685850	CORD			204
6685854	INJECTOR			182
6685917	CRANKCASE			172
6685918	PIN			172
6685919	STUD			172

Code for disposition of old part number

A -- Use up
B -- Use on other application (See PNI)
C -- File PDR Report with Bobcat Parts Sales
D -- Part Number Error

Part No.	Description	Was	Code	Page
6685920	ADAPTER			172, 178
6685921	CRANKCASE			170
6685922	FLANGE			170
6685923	GASKET			170
6685924	CAP			170
6685925	BOLT			170
6685926	BRACKET			166
6685927	HEAD			166
6685928	COVER			176
6685929	RELIEF VALVE			176
6685930	HOSE			165, 166
6685931	COVER			176
6685932	GEAR			174
6685933	PISTON			172
6685934	PISTON			172
6685935	INJECTION PUMP			184
6685936	PUMP			186
6685937	HOUSING			190
6685938	SPRING			190
6685939	LEVER			190
6685940	TUBE			182
6685941	TUBE			182
6685942	TUBE			182
6685943	TUBE			182
6685944	HOSE			182
6685945	HOSE			182
6685946	GEAR			184
6685947	COVER			184
6685948	GASKET			184
6685949	CAMSHAFT			184
6685950	BEARING			184
6685951	LEVER			191, 192
6685952	NUT			192
6685953	PULLEY			176
6685954	COVER			178
6685955	GASKET			178
6685956	HOUSING			178
6685957	GUIDE			168
6685958	GUIDE			168
6685959	RETAINER			168
6685960	GASKET			162
6685961	PLUG			162
6685962	GASKET			164, 188
6685963	PIPE			164
6685964	GASKET			164
6685965	HOSE			164
6685967	BRACKET			188
6685968	NUT			188
6685969	HOSE			170
6685970	HOSE			170
6685971	O-RING			170
6685972	HOSE			170
6686096	LENS			244
6686097	BULB			244

Code for disposition of old part number

A -- Use up

B -- Use on other application (See PNI)

C -- File PDR Report with Bobcat Parts Sales

D -- Part Number Error

Part No.	Description	Was	Code	Page
6686098	BULB			244
6686099	LENS			244
6686100	SCREW			244
6686220	O-RING			130
6686267	PUMP			93, 94
6686360	VALVE			64, 68
6686402	SEAL			170
6686632	ROLLER ASSY			45, 46
6686633	FRONT IDLER			41, 42
6686635	REAR IDLER			43, 44
6686655	BELT			154
6686887	GEAR PUMP			111, 112
6686926	ELEMENT FILTER			144
6686934	PIN			94
6686949	VALVE			299, 300
6686968	WIPER			40
6687142	MOTOR			113, 114, 144
6687145	FLANGE			162
6687146	BOLT			162
6687147	GASKET			162
6687266	FILTER ASSY			144
6687631	BEARING			142
6687832	PUMP			91, 92
6687882	JOYSTICK RH			138
6687883	JOYSTICK LH			137, 138
6687886	MUFFLER PURIFIER			301, 302
6687887	MUFFLER			148
6687919	COLLAR			106
6687920	SPINDLE			104
6687921	COLLAR			104
6687922	NUT			104
6687923	PIN			104
6687924	VALVE			94, 103, 104
6687926	COLLAR			100, 102
6687927	COLLAR			100, 102
6687928	SPRING			100, 102
6687929	LEVER			108
6687930	WIRE			96, 98
6687931	BUSHING			108
6687932	PIN			94
6687933	SHIM			108
6687934	SHIM			108
6687935	SHIM			108
6687936	SHIM			108
6687937	SHIM			108
6687938	VALVE			94, 105, 106
6687939	SCREW			106
6687940	RING			96, 98
6687941	COUPLER			94
6687942	SPACER			100, 102
6687943	SHAFT			98
6687944	SHIM			108
6687945	PLATE			108
6687946	SPRING			108

Code for disposition of old part number

A -- Use up
B -- Use on other application (See PNI)
C -- File PDR Report with Bobcat Parts Sales
D -- Part Number Error

Part No.	Description	Was	Code	Page
6687947	PIN			108
6687948	SPACER			100, 102
6687949	SPACER			100, 102
6687950	GASKET			108
6687951	BRACKET			96, 98
6687953	PISTON			100, 102
6687954	GASKET			108
6687955	HOUSING			108
6687956	BEARING			96, 98
6687957	GROUP			94, 95, 96
6687958	GROUP			94, 97, 98
6687959	SHAFT			96
6687960	CONTROL			94, 99, 100
6687961	CONTROL			94, 101, 102
6687962	PISTON			100
6687963	PISTON			102
6687964	HOUSING			94
6687965	SHAFT			94
6687966	PISTON			108
6687967	SPRING			108
6687968	LEVER			108
6687969	COVER			108
6687970	MODULATOR			94, 107, 108
6687971	ROLLER			108
6687972	MODULE			108
6687973	FLANGE			94
6687974	FLANGE			94
6687975	PLATE			98
6687976	PLATE			96
6687977	GROUP			96
6687978	GROUP			98
6687979	GROUP			96, 98
6687981	SCREW			108
6687982	SPRING			108
6687983	RING			106
6687984	SENSOR			94
6687985	RING			100, 102
6687986	KIT			100, 102
6687987	BEARING			96, 98
6687988	FILTER			94
6687989	SOLENOID			108
6687990	RING			94
6687991	KEY			94
6687992	SCREW			94
6687993	COVER			94
6687994	SCREW			94
6687995	SCREW			100, 102
6687996	SCREW			108
6687997	SCREW			108
6687998	SHIM			94
6687999	RING			96, 98
6688000	SEAL			104
6688001	SEAL			108
6688002	RING			100, 102

Code for disposition of old part number

A -- Use up

B -- Use on other application (See PNI)

C -- File PDR Report with Bobcat Parts Sales

D -- Part Number Error

Part No.	Description	Was	Code	Page
6688003	SCREW			94
6688004	SEAL			108
6688005	SEAL			100, 102
6688006	SEAL			100, 102
6688007	SEAL			94
6688008	SCREW			94
6688009	SEAL			94
6688010	PIN			108
6688011	PIN			94
6688012	ROLLER			108
6688013	SEAL			106
6688014	PIN			94
6688015	SCREW			94
6688016	SCREW			94
6688017	SHIM			106
6688018	BEARING			96, 98
6688019	SEAL			94, 110
6688020	ORIFICE			94
6688021	SPRING			104
6688022	PISTON			106
6688023	SPRING			106
6688024	COVER			100, 102
6688025	RING			100, 102
6688026	RING			100, 102
6688027	RING			100, 102
6688028	RING			100, 102
6688029	RING			100, 102
6688030	RING			100, 102
6688031	ROD			100, 102
6688032	SPACER			100, 102
6688033	SPACER			100, 102
6688034	SCREW			104
6688035	RING			100, 102
6688036	RING			100, 102
6688037	RING			100, 102
6688038	RING			96
6688039	PIN			94
6688040	BEARING			94
6688041	RING			104
6688042	RING			96, 98
6688043	SPRING			104
6688069	HOSE			164
6688397	STEM			64, 68
6688403	PANEL			18, 122
6688404	PANEL			122
6688405	PANEL			122
6688439	CONTROLLER			124
6688523	SEAL KIT			74
6688542	HVAC HEATER			272
6688543	HEATER			258, 261, 262
6688714	GEAR PUMP			77, 78
6688933	VALVE ASSY			308
6688934	COIL			308
6689021	SEAL KIT			94

Code for disposition of old part number

A -- Use up
B -- Use on other application (See PNI)
C -- File PDR Report with Bobcat Parts Sales
D -- Part Number Error

Part No.	Description	Was	Code	Page
6689058	MOTOR			114
6689059	VALVE ASSY			114
6689060	COIL ASSY			114
6689179	INSULATION			276
6689180	INSULATION			276
6689635	BRACKET			258, 272
6689636	ACTUATOR			258, 272
6689637	VALVE			258, 272
6700115	SPRING			150
6700170	WASHER			158
6700631	GASKET			80
6700743	SPRING			158
6701097	WASHER			144
6701159	SHIM			150
6701160	CLIP			150
6701174	WASHER			14
6701449	FILLER TUBE			36
6701535	SPRING			20, 86
6701674	INSULATION			32, 34
6701893	CLAMP			48, 50
6702402	SHIELD			252
6702444	FUSE			124
6702474	RETAINER			150
6702543	LEVER			85, 86
6702593	SPACER			198
6702621	GRIP			128
6702650	MOUNT			240, 242
6702716	BLOCK			86
6702903	LEVER			30
6702904	LEVER			30
6702958	BUSHING			30
6702971	BOLT			14
6702990	BUSHING			132
6703640	KIT			317, 318
6703641	DECAL			318
6703703	GUIDE			318
6703727	DECAL			282, 284
6703967	INSULATION			292, 294
6704248	PIVOT			30
6704443	BUSHING			150
6704444	WASHER			150
6704786	DECAL			288
6704820	O-RING			150
6704892	RIVET			236
6705106	WASHER			154
6705452	LEVER			156
6705749	SHIELD			80
6706095	MOUNT			86
6706098	GUIDE			86
6706105	YOKE			62
6706106	MOUNT			32, 320
6706349	MOUNT			14
6706485	HOOK			12
6706517	SCREW			36, 80, 144

Code for disposition of old part number

A -- Use up
B -- Use on other application (See PNI)
C -- File PDR Report with Bobcat Parts Sales
D -- Part Number Error

Part No.	Description	Was	Code	Page
6706572	SET SCREW			156, 158
6706633	ADAPTER			306
6706857	BLOCK			12
6707040	ELBOW			126
6707101	SEAL			52, 60
6707654	SPINDLE			150
6707697	WASHER			150
6707698	WASHER			150
6707699	PIVOT			150
6707804	HOUSING			240, 242
6707852	DECAL			208
6708009	LINK			62
6708043	BUSHING			62
6708189	TUBE			14
6708310	HOSE			210
6708445	PULLEY			152
6708941	DECAL			228
6708987	HINGE			12
6709022	LEVER			156
6709527	KEY			122, 208, 214, 310
6710659	BUSHING			20
6711166	HOSE			306
6711526	HINGE			26
6711674	MOUNT			254
6711840	DECAL			228
6712365	STEP			130
6712536	PAN			126
6713040	SPRING			30
6713043	SPACER			132
6713115	PEDAL			237, 238
6713116	BUSHING			238
6713150	MOUNT			240, 242
6713151	MOUNT			240, 242
6713287	PULLEY			150
6713342	PULLEY			150
6713507	DECAL			230
6713589	CLEVIS			20
6713736	BRACKETS			240
6713840	DECAL			240
6713841	SHIELD			240, 242
6713842	SHIELD			242
6713887	BOLT			20
6713990	PIN			243, 244
6713993	HARNESS			240, 242
6713994	HARNESS			240, 242
6714037	LATCH			310
6714126	DOOR STOP			26
6714509	COVER			26
6714726	GROMMET			34, 130
6714820	SHIELD			240
6715131	BRACKET			126
6715132	RETAINER			126
6715142	FAN			144
6715163	BUSHING			86

Code for disposition of old part number

A -- Use up
B -- Use on other application (See PNI)
C -- File PDR Report with Bobcat Parts Sales
D -- Part Number Error

Part No.	Description	Was	Code	Page
6715164	SLEEVE			86
6715183	ELBOW			36
6715197	CLAMP			126
6715287	SPACER			154
6715318	TOOL HOLDER			26
6715365	HARNESS			122
6715659	HARNESS			198
6715860	SEAT BAR			20
6715863	BRACKET			20
6715864	BUSHING			20
6715865	BUSHING			20
6715866	BUSHING			20
6716010	COVER			12, 38
6716011	TUBE			40
6716061	TEE			48, 50
6716089	CONNECTOR			254
6716117	LINK			86
6716243	ADAPTER			82
6716408	SPACER			154
6716443	ELBOW			306
6716463	HOSE			82
6716545	ROD			86
6716572	LOUVER			144
6716574	LOUVER			144
6716621	COVER			124
6716800	INSULATION			16, 32, 34
6716916	WASHER			86
6717247	HARNESS			124
6717259	BUSHING			30
6717260	BUSHING			30
6717277	BUSHING			12
6717278	BUSHING			12
6717343	DECAL			228
6717393	LEVER			130
6717401	PLUG			36
6717402	BUSHING			36
6717517	INSULATION			18
6717518	INSULATION			18
6717519	INSULATION			18
6717520	INSULATION			18
6717579	GASKET			36, 124
6717593	HINGE			210, 214
6717639	DECAL			228
6717706	COIL			124
6717870	FRAME			224
6717871	FRAME			224
6717872	FRAME			224
6717873	FRAME			224
6717874	WINDOW			18, 224
6717885	ELBOW			74, 76
6718031	TEE			82
6718034	FUSE			124
6718101	COVER			16
6718175	SCREEN			258, 272

Code for disposition of old part number

A -- Use up
B -- Use on other application (See PNI)
C -- File PDR Report with Bobcat Parts Sales
D -- Part Number Error

Part No.	Description	Was	Code	Page
6718283	RETAINING NUT			62
6718285	LEVER			62
6718305	PANEL			32
6718326	MOUNT			250
6718329	BUSHING			30
6718376	HINGE			210, 214
6718391	DECAL			228, 230
6718392	DECAL			228
6718393	DECAL			228
6718396	DECAL			228
6718411	KIT			249, 250
6718414	SENDER			126
6718417	SENDER			124
6718426	HARNESS			73, 74, 75, 76, 234
6718521	HANDLE			210, 214
6718579	DECAL			258, 272
6718580	PANEL			18
6718659	HOUSING			124
6718704	DECAL			130
6718706	DECAL			130
6718750	MOUNT			234
6718784	COVER			14
6718796	PLUG			12, 26
6718805	KIT			223, 224
6718833	BRACKET			252
6718834	BRACKET			252
6718837	SPACER			258, 272
6718850	BRACKET			80
6718851	BRACKET			79, 80
6718872	HARNESS			202, 240, 242, 250, 322
6718873	HARNESS			250
6718881	BRACKET			52
6718887	PANEL			258, 272
6718924	KIT			251, 252
6718942	NUT			28
6718948	SNUBBER			84, 124
6719037	STRIKER			224
6719038	PLUG			122
6719063	STOP			224
6719064	MOUNT			14, 256
6719065	COVER TAB			224
6719141	CABLE			126
6719176	SWITCH			272, 276
6719184	MOUNT			288
6719185	MOUNT			288
6719201	COVER			12
6719317	WINDOW			312
6719332	INSULATION			291, 292, 293, 294
6719333	INSULATION			292, 294
6719413	WINDOW			224
6719422	HARNESS			124
6719448	MAGNET			236
6719459	MOUNT			272, 276
6719504	INSULATION			16

Code for disposition of old part number

A -- Use up
B -- Use on other application (See PNI)
C -- File PDR Report with Bobcat Parts Sales
D -- Part Number Error

Part No.	Description	Was	Code	Page
6719525	BAR			26
6719630	HARNESS			274, 276
6719672	OPERATOR CAB			13, 14, 15, 16
6719766	STOP			26
6719825	BOLT			148
6719828	BOLT			150, 154
6719829	BOLT			154
6719834	SPACER			132, 196
6719835	SLEEVE			132
6719854	KIT			201, 202
6719857	KIT			321, 322
6719888	DECAL			296
6720038	INSTRUCTIONS			204
6720592	INSTRUCTIONS			252
6720808	KIT			203, 204
6722597	VELCRO			220
6724094	ANTI-FREEEZE			324
6724354	ANTI-FREEZE			324
6724775	LEVER KIT			30
6724776	LEVER KIT			30
6725182	TEE			51, 52, 82, 254
6725212	ARM			150
6725301	COVER			16
6725303	FRAME			16
6725370	DECAL			314
6725421	HANDLE			222
6725513	PACKAGE			258
6725898	KIT			247, 248
6725906	BRACKET			248
6725907	DECAL			296
6725933	HARNESS			272
6725937	CLAMP			214
6725938	CLAMP			214
6725946	KIT			221, 222
6726218	GASKET			36
6726277	CLAMP			306
6726303	DECAL			222
6726386	KNOB			258
6726423	DECAL			286
6726427	KIT			215, 216
6726430	HARNESS			240, 242
6726573	BRACKET			130, 196
6726621	SCREW			266, 270, 276
6726655	KIT			311, 312
6726662	HARNESS			284
6726679	MOUNT			62, 196
6726680	PEDAL			62, 196
6726681	LINK			130, 196
6726908	LIFT EYE			286
6726965	LIFT ARM			28
6726966	FRAME LINK			27, 28
6726969	LINK ASSY			28
6726987	HOSE			296
6727064	TEE			74

Code for disposition of old part number

A -- Use up
B -- Use on other application (See PNI)
C -- File PDR Report with Bobcat Parts Sales
D -- Part Number Error

Part No.	Description	Was	Code	Page
6727065	BOLT			132, 196
6727176	KIT			231, 232
6727178	HARNESS			121, 122
6727190	HARNESS			122
6727299	INSULATION			18
6727313	ELBOW			80
6727326	MOUNT			272, 276
6727354	INLET			80
6727475	CAP		A	7, 8, 80
6727475	CAP			7, 8, 80
6727496	PIN			130, 196
6727498	HARNESS			282
6727525	BUSHING			28
6727595	DECAL			228, 230
6727786	KIT			269, 270
6727803	CABLE			126
6727832	BUSHING			28
6727847	COVER			258
6727848	COVER			274
6727926	DECAL			130, 196, 228
6727941	DECAL			196
6727995	HORN KIT			281, 282
6728045	DECAL			196
6728328	DECAL			130
6728459	DOOR SENSOR			208, 214
6728473	BOLT			30
6728539	DECAL			130, 196
6728540	DECAL			196, 228
6728567	KIT			265, 266
6728607	KIT			2, 228
6728621	BRACKET			124
6728800	BUSHING			28
6728819	PIN			28
6728820	PIN			28
6728971	PIN			28
6728972	BUSHING			28
6728999	BUSHING			28
6729005	BUSHING			28
6729006	BUSHING			28
6729007	PIN			28
6729009	SEAL			224
6729010	SEAL			224
6729011	SEAL			224
6729012	INSULATION			14
6729013	INSULATION			14
6729029	BOB-TACH			29, 30
6729077	DECAL			274, 276
6729141	MOUNT			256
6729237	STEP			34
6729306	ELBOW			74, 84
6729310	HOSE			146
6729320	CLAMP			48, 50, 54
6729358	PIN			28
6729397	HARNESS			138

Code for disposition of old part number

A -- Use up
B -- Use on other application (See PNI)
C -- File PDR Report with Bobcat Parts Sales
D -- Part Number Error

Part No.	Description	Was	Code	Page
6729401	BUSHING			12
6729402	BUSHING			12
6729423	BUSHING			28
6729467	SPACER			130, 196
6729468	LINK ASSY			28
6729491	PLUG			30
6729594	HANDLE			132
6729595	HANDLE			132
6729604	HOSE			48, 50
6729686	TEE			48, 50
6729688	LATCH			310
6729694	TEE			48, 50
6729721	HOSE			48, 50
6729746	HOSE			54
6729774	COVER			12, 34
6729776	WINDOW			212
6729791	HANDLE			34, 138
6729792	HANDLE			34, 138
6729888	STEP			28
6729899	PANEL			34
6729939	LATCH PLATE			26
6729942	MOUNT			154
6729944	STOP			152
6729991	REAR DOOR			26
6730020	MOUNT			150
6730143	TEE			74, 76
6730264	BELLCRANK			86
6730265	MOUNT			272, 276
6730266	SPACER			272, 276
6730270	LEVER			158
6730323	HOSE			82
6730326	HOSE			82
6730329	HOSE			82
6730345	HOSE			80
6730373	DRIVECASE			37, 38
6730378	COVER			12
6730468	TRACK TENSIONER			38, 39, 40
6730532	HOSE			36
6730552	BRACKET			36
6730573	INSULATION			292, 294
6730726	HOSE			148
6730753	MOUNT			148
6730770	HARNESS			296
6730783	COVER			12
6730784	BUSHING			12
6730785	BUSHING			12
6730816	SHIELD			208, 214
6730819	BELT			6, 274, 276
6730822	KIT			207, 208
6730823	KIT			213, 214
6730858	TUBELINE			48, 50
6730887	PIN			28
6730894	BOLT			150
6730898	MOUNT			206

Code for disposition of old part number

A -- Use up

B -- Use on other application (See PNI)

C -- File PDR Report with Bobcat Parts Sales

D -- Part Number Error

Part No.	Description	Was	Code	Page
6730914	TEE			48, 50
6730995	BUSHING			28
6731078	GRILL			144
6731084	ADAPTER			260, 274
6731085	ELBOW			260, 274
6731100	SHIELD			150
6731109	SPACER			146, 154
6731119	PIVOT ASSY			30
6731138	BUSHING			28
6731139	PIN			28
6731151	KIT			195, 196
6731152	MOUNT			36
6731160	WASHER			28
6731179	COVER			28
6731198	BOLT			146, 154
6731209	TANK			80
6731222	PIN			240, 242
6731239	HARNESS			240
6731251	BAR			62
6731252	BAR			62
6731253	LINK			86
6731255	ELBOW			274, 276
6731275	INSULATION			124
6731478	EXIT TAG			18, 224
6731527	TEE			84
6731569	STOP			28
6731638	HOSE			80
6731646	BOLT			28
6731647	BUSHING			28
6731757	DECAL			228
6731819	STRAP			240, 242
6731898	PEDAL			158
6731900	ROD			158
6731915	BRACKET			144
6731916	SHIELD			144
6731925	TEE			84
6731935	HOSE			84
6731970	BRACKET			144
6731973	HOLDER			240, 242
6732001	KIT			309, 310
6732023	CONNECTOR			260, 274
6732032	GASKET			148
6732045	HARNESS			242
6732081	HARNESS			242
6732193	BRACKET			154
6732206	SPACER			154, 240, 242
6732219	KIT			313, 314
6732234	KIT			283, 284
6732235	KIT			199, 200
6732318	SPACER			144
6732322	SPACER			158
6732323	BRACKET			158
6732351	WINDOW			214
6732375	TANK			146

Code for disposition of old part number

A -- Use up
B -- Use on other application (See PNI)
C -- File PDR Report with Bobcat Parts Sales
D -- Part Number Error

Part No.	Description	Was	Code	Page
6732449	PLATE			158
6732450	BRACKET			34, 156, 158
6732457	WASHER			144
6732483	HOSE			82
6732575	SPACER			154
6732577	STEP			12
6732583	INSULATION			292, 294
6732586	TEE			80, 84
6732678	KIT			285, 286
6732687	PIN			286
6732698	DECAL			228
6732715	LATCH			26
6732730	HARNESS			236
6732732	BUSHING			276
6732774	DECAL			230
6732870	MOUNT			146
6732901	ROLLER ASSY			38
6732902	IDLER ASSY			38
6732903	IDLER ASSY			38
6732928	KIT			255, 256
6732931	HOUSING			144
6732950	TUBELINE			48
6732952	TUBELINE			48, 50
6732953	TUBELINE			48, 50
6732954	TUBELINE			54
6732955	TUBELINE			54
6732991	TUBELINE			50, 206
6732992	TUBELINE			50, 206
6732993	TUBELINE			74, 76
6732997	U-BOLT			86
6733022	BRACKET			32, 86
6733024	BRACKET			32, 86
6733136	KIT			235, 236
6733137	HARNESS			74
6733142	KIT			233, 234
6733144	MOUNT			236
6733164	HOSE			74, 76
6733219	HOSE			82
6733270	MOUNT			242
6733292	HARNESS			130
6733293	HARNESS			138
6733296	BRACKET			242
6733309	TUBELINE			74, 76
6733370	HARNESS			126
6733429	CAP			145, 146
6733529	SEAL			32, 34
6733616	BUMPER			26
6733629	HOSE			296
6733630	HOSE			296
6733655	COMPRESSOR			274, 276
6733851	HARNESS			242
6733873	SHIELD			154
6733886	BOLT			146
6733970	MOUNT			198, 200, 282, 284

Code for disposition of old part number

A -- Use up
B -- Use on other application (See PNI)
C -- File PDR Report with Bobcat Parts Sales
D -- Part Number Error

Part No.	Description	Was	Code	Page
6733996	DECAL			146
6734078	DECAL			228
6734090	ADAPTER			146
6734108	BRACKET			286
6734114	HOSE			148
6734200	TUBELINE			50, 206
6734201	TUBELINE			48, 50
6734208	TUBELINE			50, 206
6734416	LEVER			158
6734417	LEVER			158
6734436	SHIELD			154
6734446	SHIELD			226
6734447	SHIELD			226
6734461	KIT			225, 226
6734503	CLEVIS			158
6734520	COVER			158
6734521	PANEL			31, 32, 33, 34
6734534	DECAL			230
6734560	BUSHING			288
6734573	HOSE			154
6734627	MOUNT			288
6734628	MOUNT			288
6734657	ANGLE			288
6734666	ARM			288
6734667	ARM			288
6734696	KIT			303, 304
6734697	SCREEN			304
6734742	BRACKET			86
6734769	HOSE			54
6734772	MOUNT			156, 158
6735140	DECAL			228
6735245	DUCT			258, 272
6735246	DUCT			258, 272
6735249	HOSE			36
6735279	KIT			287, 288
6735282	SCREW			288
6735346	MOUNT			154
6735475	HOSE			296
6735477	KIT			295, 296
6735615	TANK			36
6735639	MOUNT			306
6735640	MOUNT			306
6735641	MOUNT			306
6735642	TUBELINE			306
6735643	TUBELINE			306
6735683	HOSE			306
6735684	HOSE			306
6735685	HOSE			306
6735696	BUSHING			36
6735709	IDLER			150
6735727	BRACKET			154
6735729	SPACER			154
6735825	SPACER			240, 242
6735862	DECAL			228

Code for disposition of old part number

A -- Use up

B -- Use on other application (See PNI)

C -- File PDR Report with Bobcat Parts Sales

D -- Part Number Error

Part No.	Description	Was	Code	Page
6735864	DECAL			230
6735901	DECAL			230
6735919	KIT			305, 306
6735979	BRACKET			154
6735980	MOUNT			154
6736011	HARNESS			306
6736031	FRAME			38
6736032	FRAME			38
6736071	KIT			124
6736258	TEE			84
6736349	SPACER			154
6736515	HARNESS			126
6736566	HOSE			146
6736641	PAINT			324
6736642	PAINT			324
6736644	PAINT			324
6736645	PAINT			324
6736649	HOSE			80
6736655	KIT			253, 254
6736656	TUBELINE			80
6736664	HOSE			254
6736769	COVER			12
6736770	COVER			12
6736772	COVER			12
6736814	HOSE			82
6736875	TANK			208
6737095	STEP			62
6737120	STEP			62
6737189	DECAL			198
6737191	WEDGE			30
6737248	DECAL			122
6737388	WASHER			62
6737417	COVER			38
6737444	SPACER			320
6737490	KIT			319, 320
6737524	KNOB			52, 60
6737528	BRACKET			245, 246
6737543	COVER			38
6737626	DECAL			228
6737649	BRACKET			146
6737704	INSULATION			18
6801059	WASHER			212, 312
6801167	PLUG			70
6803092	BONNET			70
6803473	SEAL KIT			298
6804114	DECAL			38, 228, 230
6804427	HEAD			58
6804920	BUSHING			64, 68
6805102	BUSHING			64, 68
6805453	BUSHING			56
6806403	HOSE			296
6808235	SPACER			58
6809511	DECAL			48, 50, 52
6809726	ROLLER			26

Code for disposition of old part number

A -- Use up
B -- Use on other application (See PNI)
C -- File PDR Report with Bobcat Parts Sales
D -- Part Number Error

Part No.	Description	Was	Code	Page
6809727	CHANNEL			26
6809734	BUSHING			26
6809845	BOLT			26
6810132	SPRING			26
6810141	SPRING			26
6810188	ROD			58
6810213	TUBELINE			56
6810233	CYLINDER			55, 56
6810234	CASE			56
6810235	ROD			56
6810237	PISTON			56
6810349	CASE			298
6810356	SPACER			298
6810539	NUT			56, 58
6810611	CYLINDER			297, 298
6810612	ROD			298
6810741	TUBELINE			58
6810950	SPRING			64, 68
6811910	LATCH			26
6812171	PLUG			56, 58
6813078	STEP			286
6813080	VALVE ASSY			63, 64
6813153	PLATE			64
6813964	ELBOW			84
6814021	BOLT			52
6814279	BLOCK			66, 70
6814323	SPOOL			64, 68
6814600	CONTROL VALVE			67, 68
6814694	RETAINER			64, 68
6815014	CHECK VALVE			66, 68
6815031	TUBELINE			64
6815032	TUBELINE			66, 68
6815152	SPOOL			64
6815887	HOSE			144
6816325	SEAL KIT			56
6816536	SEAL KIT			58
6816549	PLUG			64, 68
6817003	BODY			64
6817004	BODY			68
6817310	CYLINDER			57, 58
6817311	CASE			58
6817335	ELBOW			48, 50
6817553	CROSS			84
6817707	PLUG			64, 68
6900848	INSTRUCTIONS			250
6900852	INSTRUCTIONS INSTL			224
6900853	INSTRUCTIONS			224
6900854	INSTRUCTIONS INSTL			210
6900888	INSTRUCTIONS			288
6900991	INSTRUCTIONS			202
6900992	INSTRUCTIONS			322
6901010	INSTRUCTIONS			314
6901011	INSTRUCTIONS			316

Code for disposition of old part number

A -- Use up

B -- Use on other application (See PNI)

C -- File PDR Report with Bobcat Parts Sales

D -- Part Number Error

Part No.	Description	Was	Code	Page
6901013	INSTRUCTIONS			214
6901025	INSTRUCTIONS			248
6901029	INSTRUCTIONS			222
6901036	INSTRUCTIONS			216
6901061	INSTRUCTIONS			312
6901076	INSTRUCTIONS			232
6901120	INSTRUCTIONS			270
6901146	INSTRUCTIONS			282
6901213	INSTRUCTIONS			266
6901492	INSTRUCTIONS			196
6901656	INSTRUCTIONS			310
6901663	INSTRUCTIONS			240
6901690	INSTRUCTIONS			200
6901691	INSTRUCTIONS			284
6901772	INSTRUCTIONS			286
6901816	INSTRUCTIONS			256
6901871	INSTRUCTIONS			234
6901872	INSTRUCTIONS			236
6901909	INSTRUCTIONS			242
6901916	INSTRUCTIONS			254
6902228	PAINT			323, 324
6902229	PAINT			324
6902230	PAINT			324
6902233	PAINT			324
6902234	PAINT			324
6902235	PAINT			324
6902252	INSTRUCTIONS			226
6902288	INSTRUCTIONS			304
6902361	INSTRUCTIONS			296
6902409	INSTRUCTIONS			306
6902619	INSTRUCTIONS			320
6903105	OIL 15W40 QT. 12			2, 4, 324
6903106	OIL 15W40 GAL. 6			2, 4, 324
6903107	OIL 10W30 QT. 12			2, 3, 4, 324
6903108	OIL 10W30 GAL. 6			2, 4, 324
6903109	OIL 30W QT. 12			2, 4, 324
6903110	OIL 30W GAL. 6			2, 4, 324
6903111	OIL 30W 2.5 GAL 2			2, 4, 324
6903112	OIL 10W30 2.5 GAL 2			2, 4, 324
6903113	OIL 15W40 2.5 GAL. 2			2, 4, 324
6903117	HYD FLUID 2.5 GAL. 2			2, 4, 324
6903118	HYD. FLUID 5GAL			2, 4, 324
6903119	HYD. FLUID 55GAL			2, 4, 324
6903121	GEAR LUBE 12			324
6903122	GREASE 10			4, 324
6903132	INSTRUCTIONS			206
6903293	INSTRUCTIONS			198
6904166	MANUAL			2
6904168	MANUAL			2
6904246	P/M T300K			2
6904255	INSTRUCTIONS	6903305	B	258, 260
6904255	INSTRUCTIONS			258, 260

Code for disposition of old part number

A -- Use up
B -- Use on other application (See PNI)
C -- File PDR Report with Bobcat Parts Sales
D -- Part Number Error

Part No.	Description	Was	Code	Page
6904258	INSTRUCTIONS			277, 278
69G000436B	BOLT			52, 68, 130
6CM01220B	BOLT			154
6E000004B	WASHER			126
6E000005B	WASHER			122, 154, 250
6E000006B	WASHER			84, 126
6EM00080B	WASHER			142
7100462	CLAMP			80
7100699	WASHER			86
7100795	MOUNT			86
7100859	FLYWHEEL ASSY			150
7100860	FLYWHEEL ASSY			150
7101104	MOUNT			242
7101136	BUSHING			154
7101291	ELBOW			36
7101345	BONNET			68
7101373	BOLT			144
7101384	LIGHT			244
7101453	MAIN FRAME			11, 12
7101533	INSULATION			292, 294
7101534	INSULATION			294
7101535	INSULATION			292
7101536	INSULATION			292, 294
7101537	INSULATION			292
7101538	INSULATION			292, 294
7101539	INSULATION			294
7101672	ACTUATOR			52, 130, 138
7101705	ADAPTER			130
7101797	ELBOW			80
7101804	PANEL			32, 34
7101892	BOLT			126
7101893	SPACER			126
7101928	VALVE			258, 272
7102018	TEE			68
7102019	FITTING			66, 82
7102034	TAB			148
7102035	TAB			148
7102066	CROSS			64, 68
7102089	HOSE			48, 50
7102090	HOSE			48, 50
7102184	SCREW			38
7102336	HOSE			48, 50
7102337	HOSE			48, 50
7102368	TUBE			148
7102399	TEE			74, 76
7102414	BRACKET			53, 54
7102652	SCREW			70
7102705	TEE			36
7102747	GASKET			148
7103075	SEAL			224
7103172	HOSE			52
7103271	WASHER			86
7103314	BRACKET			86
7103708	BRACKET			86

Code for disposition of old part number

A -- Use up
B -- Use on other application (See PNI)
C -- File PDR Report with Bobcat Parts Sales
D -- Part Number Error

Part No.	Description	Was	Code	Page
7103711	BOLT			86
7103749	ELBOW			74, 76
7103750	EXCHANGER			74, 76
7103751	HOSE			74, 76
7103901	HOSE			82
7103903	MOUNT			84
7104465	DOOR SWITCH HARNESS			208, 214
7104829	KIT			205, 206
7105035	WINDOW			18, 224
7105192	BOLT			86
7105193	BOLT			86
7105194	BOLT	7105194	A	86
7105223	SPACER			86
7105856	SNAP RING			30
7105982	MFR HARNESS			124, 125, 126
7105983	BOLT			122
7106040	ELBOW		A	80
7106212	HOSE			80
7106215	HOSE			54
7106277	WIPER HARNESS			208, 214
7106712	SEAT			64, 68
7107153	HOSE			144
7107174	HOSE			144
7107175	INLET			144
7107544	HARNESS			198
7107787	SPROCKET			38
7107829	BACK UP ALARM KIT			197, 198
7108222	SAFETY TREAD			228
7108236	PIN			52, 130
7108241	LIFT SPOOL			68
7108242	TILT SPOOL			68
7108685	TEE			144
7108781	SPOOL			64
7109144	HOSE			74, 76
7109403	HARNESS			290
7109661	DOOR LATCH			208, 214
7109662	HANDLE			208, 214
7109663	SPACER			208, 214
7109664	BOLT			208, 214
7109665	DOOR			208
7109868	MOTOR			87, 88
7109881	ELBOW			296
7109882	ELBOW			296
7109934	MOUNT			52
7110205	HOSE			74
7110243	BRACKET			144
7110244	BRACKET			144
7110284	HOSE			52
7110286	HOSE			74
7110316	DECAL			208, 214
7110339	HOSE			74
7110365	PINTLE ARM			86
7110367	HOSE			296

Code for disposition of old part number

A -- Use up
B -- Use on other application (See PNI)
C -- File PDR Report with Bobcat Parts Sales
D -- Part Number Error

Part No.	Description	Was	Code	Page
7110430	SPECIAL APPS DOOR			214
7110809	HOSE			144
7110914	TUBELINE			68
7111805	MOUNT			148
7111992	JOYSTICK ASMBLY RH			138
7111993	JOYSTICK ASMBLY LH			138
7113208	HOSE			260
7113209	HOSE			260
7113355	TUBELINE			84
7113512	DECAL			74, 76
7114813	TUBELINE			48, 50
7114821	TUBELINE			48, 50
7114884	HOSE			84
7115091	TUBELINE			84
7116260	HARNESS			18
7116261	HARNESS			18
7116335	KIT, SEAL			40
7116870	DECAL			228, 230
7116899	KIT			257, 258
7116902	KIT			259, 260
7116904	KIT			275, 276
7117407	DECAL			124
7120296AR	KIT, TRANSLATION			228, 230
7120296BR	KIT, TRANSLATION			228, 230
7120297AR	KIT, DECAL			228, 230
7120297BR	KIT, DECAL			228, 230
7120297JP	KIT, DECAL			228, 230
7120600	DECAL			228, 230
7120602	DECAL			74, 76, 228, 230
72F000001B	DRAIN COCK			36, 154
73G000656B	BOLT			150, 296
73G000824B	BOLT			86
73K000013B	O-RING			66, 68
73K000016B	RING			66, 68
73K000222B	WASHER			298
73K000232B	WASHER			56, 58
743108B	ADAPTER			82
74G000536B	BOLT			246
75K000005B	O-RING			38
75K000006B	O-RING			56, 58
774220	NUT			198, 200
77F000008B	ELBOW			80
78HA01010B	ADAPTER			144
78HA01210B	ADAPTER			144
799119B	SNAP RING			64
79K000003B	O-RING			298
79K000004B	O-RING			146, 296
79K000005B	O-RING			36
79K000006B	O-RING			52, 54, 66, 68, 72, 80, 82, 84, 144, 254, 296, 306
79K000007B	O-RING			300
79K000008B	O-RING			64, 68, 72, 74, 76, 82, 154, 300

Code for disposition of old part number

A -- Use up
B -- Use on other application (See PNI)
C -- File PDR Report with Bobcat Parts Sales
D -- Part Number Error

Part No.	Description	Was	Code	Page
79K000010B	O-RING			48, 50, 64, 68, 74, 76, 84, 144, 206, 300
79K000012B	O-RING			80, 82, 84, 144, 296, 306
79K000016B	O-RING			54, 74, 76, 84
79K000020B	O-RING			84
7D000004B	NUT			52, 60
83D000004B	NUT			20, 52, 82, 200, 240, 242, 258, 282, 284
83D000005B	NUT			80, 154, 206, 282, 284
83D000006B	NUT			52, 54, 86, 148, 236, 252, 272, 276, 306
83D000008B	NUT			12, 154
83D000010B	NUT			286
84G001320B	BOLT			198
84G003108B	BOLT			146
84G003110B	BOLT			156, 158, 272
84G003112B	BOLT			14, 28, 74, 76, 124, 144, 228, 234, 236
84G003708B	BOLT			12
84G003710B	BOLT			34, 84, 196, 272, 276
84G003712B	BOLT			12, 32, 34, 36, 38, 62, 82, 122, 124, 126, 143, 144, 146, 148, 156, 158, 240, 242, 306
84G003716B	BOLT			32, 34, 54, 144, 158, 206, 240, 242, 254, 272
84G003720B	BOLT			158
84G003724B	BOLT			156, 158, 306
84G003728B	BOLT			48, 50
84G003732B	BOLT			48, 50
84G003736B	BOLT			54
84G003740B	BOLT			48, 50, 54
85D000004B	NUT			240, 242
85D000005B	NUT			156, 158, 238, 290
85D000006B	NUT			26, 28, 30, 54, 80, 148, 158, 286
85D000008B	NUT			14, 150
85G000616B	SCREW			240
85G000808B	BOLT			240, 242
85G001010B	BOLT			242
86F000005B	NUT			254, 306
86F000010B	NUT			84
872229B	WASHER			48, 50, 54, 80
87D000006B	NUT			286
88F000005B	ELBOW			306
898731B	BULB			290
89D000005B	NUT			34
8D000006B	NUT			86, 320
90F000005B	TEE			306
90KV00002B	PLUG			298
90KV00005B	PLUG			90
91G000416B	BOLT			224
91G000420B	BOLT			18, 224
92D000010B	NUT			298
92D000012B	NUT			152
947088B	SEAL			56, 58
95D000005B	NUT			14, 126, 130, 156, 158, 196
95D000006B	NUT			32, 34, 61, 62, 86, 130, 144, 158, 214, 286, 320
95K000006B	O-RING			90
96D000006B	NUT			86, 320
96D000008B	NUT			144
97D000004B	NUT			198

Code for disposition of old part number

A -- Use up

B -- Use on other application (See PNI)

C -- File PDR Report with Bobcat Parts Sales

D -- Part Number Error

Part No.	Description	Was	Code	Page
97D000005B	NUT			124
97D000008B	NUT			14, 256
98D000006B	NUT			86
98G000412B	BOLT			136
99K000005B	O-RING			36

Code for disposition of old part number

A -- Use up

B -- Use on other application (See PNI)

C -- File PDR Report with Bobcat Parts Sales

D -- Part Number Error