RUTHZIL TRATOR COMERCIAL DE PEÇAS LTDA 11 97083-6812 ROLANDO

Bobcat®

Parts Manual
T770 Compact Track Loader

S/N A3P811001 & Above
S/N A3P911001 & Above

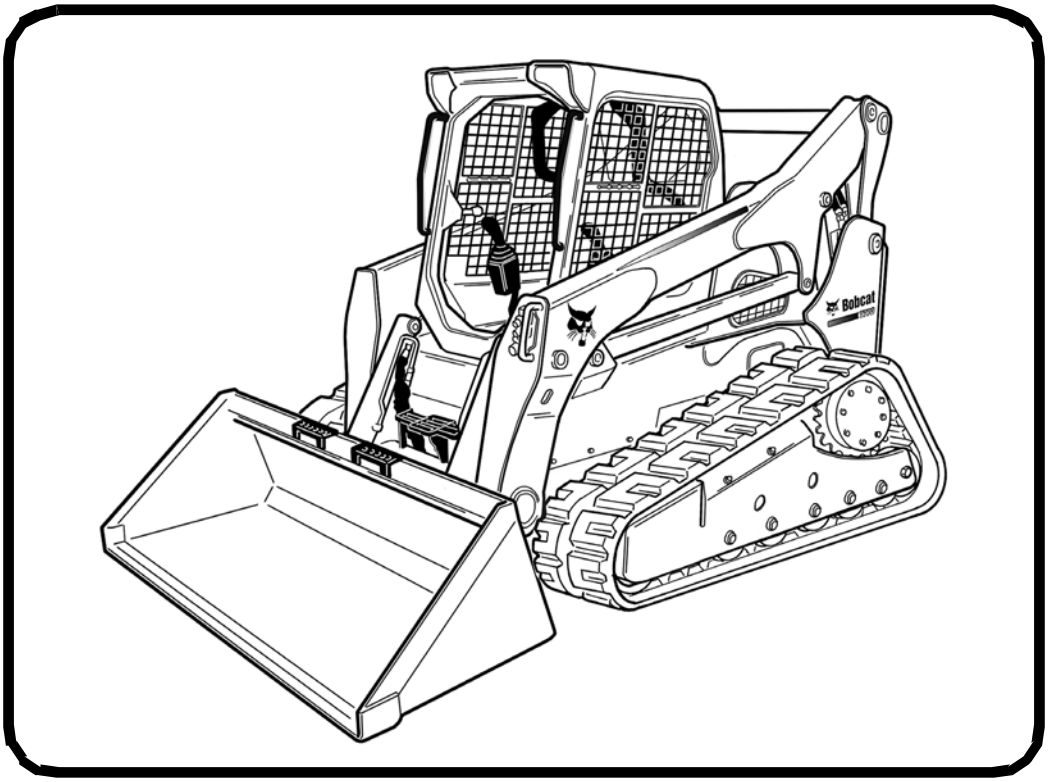

EQUIPPED WITH
BOBCAT INTERLOCK
CONTROL SYSTEM (BICS™)

6989477 (07-17) (C)

Printed in U.S.A.

© Bobcat Company 2017

Page 1 - OSS# 6300322913 - All rights reserved by Bobcat Company - 08/04/2017 - 06:30:16 - Produced by Ken Cook Co. with media1off

GENERAL INFORMATION

Before ordering parts, ALWAYS provide dealer with your product model number and complete serial number information. Before ordering parts, verify correct part numbers and / or serial numbers with your dealer. When using the machine serial number, use the complete number.

The number shown in the quantity column in this manual is the number of parts needed for the illustration on the page. For some parts, an “x” is shown in the quantity column. This “x” indicates that the quantity to be ordered / used is “As Needed”.

When references to LH (Left Hand) and RH (Right Hand) are used in this manual, they apply when an operator is situated in the operator’s seat in the operating position.

When “See Illustration….” appears in the Remarks column, refer to the Contents page for the illustration title to find page number location.

When “See BTI….” appears in the remarks column, contact a Bobcat dealer.

For additional information on the Bobcat website visit:
www.bobcat.com **or** www.bobcat.eu

TRANSLATED DECAL KITS

AR = Argentina (Spanish)
BR = Brazil (Portuguese)
CA = French Canadian
JP = Japanese

DISPOSITION

(Found in the Remarks Column)
[A] = Use Up
[B] = Use Up on Other Applications
[C] = File SDR Report with Bobcat Parts Sales
[D] = Part Number Error

Page 3 - OSS# 6300322913 - All rights reserved by Bobcat Company - 08/04/2017 - 06:30:16 - Produced by Ken Cook Co. with media1off

ABBREVIATIONS/ACRONYM LIST

AC = Air Condition
ACD = Active Center Differential
ACS = Advanced Control System
AGM = Absorbent Glass Mat
AHC = Advanced Hand Controls
AIC = Air Idle Control
ALTNTR = Alternator
AMP = Ampere
ASSY = Assembly
AUX = Auxiliary
AWS = All Wheel Steer
BICS= Bobcat Interlock Control System
BPV = Bucket Positioning Valve
BT = Bluetooth®
BTI = Bobcat Technical Information Bulletin
CD = Compact Disk
C/I = Construction/Industrial
COMPL = Complete
CRS = Common Rail System
CT = Compact Tractor
CTL = Compact Track Loader
CVT = Continuously Variable Transmission
CYL = Cylinder
DEF = Diesel Exhaust Fluid
DIA = Diameter
DIFF = Differential
DIN = (German Institute for Standardization)
DIR = Directory
DLX = Deluxe
DOC = Diesel Oxidation Catalyst
DPF = Diesel Particulate Filter
ECU = Electronic Control Unit
EF = EarthForce™
EGR = Exhaust Gas Recirculation
ELHYD = Electro-Hydraulic
ELEC = Electrical
EMEA = Europe/Middle East/Africa
ENG = Engine
EPA = Environmental Protection Agency
EU = Europe
EXC = Excavator
EXT = Extendable
FF = Flush Face
FM = Front Mounted
FOPS = Falling Object Protective Structure
FSR = Forward, Stop, Reverse
FT = Feet
GA = Gauge
GAL = Gallon
GCR = Grade Control Receiver
GFCI = Ground Fault Circuit Interrupter
GPM = Gallons per Minute
GPS = Global Positioning System
HD = Heavy Duty
HEX = Hexagon
HI-LO = High-Low
HP = Horse Power
HYDRST = Hydrostatic
HVAC = Heating Ventilation & Air Condition
HYDR = Hydraulic
HZ = Hertz
ID = Inside Diameter
IGN = Ignition
IN = Inches
INDL = Industrial
INJ = Injection
ISO = International Organization for Standardization
IT4 = Interim Tier Four
JPS = Joystick Pattern Selector
KG = Kilogram
KM/H = Kilometers per Hour
KW = Kilowatt
L = Liter
LA = Long Arm
LASD = Lift Arm Safety Device
LB = Pound
LCD = Liquid Crystal Display
LDR = Loader
LED = Light Emitting Diode
LF = Large Frame
LH = Left Hand
LORS™ = Lateral Operator Restrain System
L/min. = Liters per Minute
L/P = Low Profile
MAX = Maximum
MEA = Middle East Africa
MNFRM = Main Frame
MID = Middle
MLS = Mita Load Sensing
MM = Millimeters
MSHA = Mine Safety & Health Administration
N/A = Not Applicable
NA = North America
NIA = No Illustration Available
NLA = No Longer Available
NSS = Not Serviced Separately

Page 4 - OSS# 6300322913 - All rights reserved by Bobcat Company - 08/04/2017 - 06:30:16 - Produced by Ken Cook Co. with mediaioff

ABBREVIATIONS/ACRONYM LIST

NO = Number
OD = Outside Diameter
OHB = Operator's Handbook
OM = Operation & Maintenance Manual
OZ = Ounce
PKG = Package
PM = Parts Manual
POLY = Polycarbonate
PRESS = Pressure
PSI = Pounds per Square Inch
PT = Point
PTO = Power Take Off
PVC = Polyvinyl Chloride
PWM = Pulse Width Modulation
QT = Quart
QTY = Quantity
RD = Round Drive
REF = Reference
REM = Remanufactured
RFID = Radio Frequency Identification
RH = Right Hand
ROC = Rated Operating Capacity
ROPS = Rollover Protective Structure
RPM = Revolutions per Minute
SA = Standard Arm
SALES = (Order through Sales Department)
SCPA = Standard Controls W/Power Assist
SCR = Selective Catalytic Reduction
SD = Severe Duty
SDR = Shipping Discrepancy Report
SEA = Southeast Asia
SF = Small Frame
SJC = Selectable Joystick Controls
SL = Service Letter
SM = Service Manual
SSL = Skid Steer Loader
STC = Snap To Connect
STD = Standard
STG = Stage
STRG = Steering
T1 = Tier 1
T2 = Tier 2
T3 = Tier 3
T4 = Tier 4
TEMP = Temperature
THL = (Control Pattern)
THRU = Through
TICS = Toolcat® Interlock Control System
XMSN = Transmission
UBS = Universal Bearing Stress
USB = Universal Serial Bus
UTV = Utility Vehicle
VEH = Vehicle
W/A = Welded Assembly
W/ = With
W/O = Without
WM = Work Machine

Page 5 - OSS# 6300322913 - All rights reserved by Bobcat Company - 08/04/2017 - 06:30:16 - Produced by Ken Cook Co. with mediaioff

CONTENTS

MAINTENANCE ITEMS..... 1-12
MAINTENANCE ITEMS..... 1-12
MAIN FRAME..... 13-64
MAIN FRAME..... 13-28
OPERATOR CAB..... 29-44
SEAT BAR..... 45-48
SEAT & SEAT BELT..... 49
PANELS..... 51-54
REAR DOOR..... 55
LIFT ARM & BOB-TACH..... 57-62
BOB-TACH..... 63
DRIVE TRAIN..... 65-96
DRIVE TRAIN..... 65-80
FRONT IDLER..... 81-84
REAR IDLER..... 85-88
TRACK ROLLER..... 89-92
TRACK TENSIONER..... 93-96
HYDRAULIC SYSTEM..... 97-184
HYDRAULIC CIRCUITRY..... 97-118
MANUAL LIFT RELEASE SYSTEM..... 119
AUXILIARY HYDRAULICS..... 121-128
TILT CYLINDER..... 129-144
LIFT CYLINDER..... 145-148
CONTROL PEDALS..... 149-152
HYDRAULIC CONTROL VALVE..... 153-182
MANUAL LIFT RELEASE VALVE..... 183
HIGH FLOW HYDRAULICS..... 185-188
HIGH FLOW HYDRAULICS..... 185-188
HYDROSTATIC SYSTEM..... 189-324
HYDROSTATIC CIRCUITRY..... 189-228
BRAKE VALVE..... 229
RADIATOR/COOLER ASSEMBLY..... 231-234
HAND CONTROLS..... 235-242
HYDROSTATIC MOTOR..... 243-252
HYDROSTATIC MOTOR & BRAKE..... 253-264
HYDROSTATIC PUMP/GEAR PUMP..... 265
HYDROSTATIC PUMP..... 267-310
HYDROSTATIC PUMP..... 297
GEAR PUMP..... 311
COOLING FAN MOTOR..... 313-320
COOLING FAN MOTOR KIT..... 315
2-SPEED VALVE..... 321-324
ELECTRICAL SYSTEM..... 325-384
CAB ELECTRICAL CIRCUITRY..... 325-332
ENGINE ELECTRICAL CIRCUITRY..... 333-354
CONNECTOR HARNESS ASSEMBLY..... 355
CONTROLS ELECTRICAL..... 357-380
ALTERNATOR..... 381
STARTER..... 383
POWER UNIT..... 385-484
COOLING SYSTEM..... 385-392
ENGINE & ATTACHING PARTS..... 393-432
ENGINE SPEED CONTROL..... 433-442
ENGINE & GASKET KITS..... 443
UPPER GASKET KIT..... 445
LOWER GASKET KIT..... 447
MANIFOLDS..... 449
TURBOCHARGER..... 451
EGR VALVE..... 453
CYLINDER HEAD & COVER..... 455
CYLINDER HEAD..... 457
OIL PAN..... 459

Page 6 - OSS# 6300322913 - All rights reserved by Bobcat Company - 08/04/2017 - 06:30:16 - Produced by Ken Cook Co. with mediaioff

CONTENTS (Cont'd)

POWER UNIT..... 385-484
PISTON & CRANKSHAFT..... 461-464
CAMSHAFT..... 465
FRONT COVER..... 467
WATER PUMP & THERMOSTAT..... 469
FUEL INJECTION SYSTEM..... 471-474
FUEL INJECTION PUMP..... 475
GOVERNOR..... 477-480
AIR CLEANER..... 481-484
ACCESSORIES & OPTIONS..... 485-826
ACCESSORIES HARNESS KIT..... 485
ACS CONVERSION KIT..... 487
AIR DEFLECTOR KIT..... 489
AUXILIARY FLOW KIT..... 491
BACK-UP ALARM KIT..... 493-496
BEACON..... 497
BLOCK HEATER..... 499
BRAKE LIGHTING..... 501
BUCKET POSITION VALVE..... 503
BUCKET POSITION VALVE KIT..... 505-508
BUMPER KIT..... 509
CAB DOOR..... 511-532
CAB ENCLOSURE..... 533
CAB SEAL KIT..... 535
CAB WINDOWS..... 537-546
CHROME PIN KIT..... 547
COUNTERWEIGHT KIT..... 549-554
COUPLER GUARD KIT..... 555
CUP HOLDER KIT..... 557
CYLINDER KIT..... 559
DEBRIS SHIELD KIT..... 561
DECALS..... 563-574
DELUXE HEADLINER KIT..... 575
DELUXE INTERIOR KIT..... 577-588
ELECTRICAL CONTROLS KIT..... 589-592
ENGINE COMPARTMENT SEAL KIT..... 593-596
EUROPEAN ACCESSORIES..... 597-604
EUROPEAN ACCESSORIES..... 605-612
F.O.P.S KIT..... 613
F.O.P.S WINDOW KIT..... 615
FIRE EXTINGUISHER..... 617
FLASHER LIGHTS..... 619
FUEL SEDIMENT BOWL KIT..... 621
GAS SPRING KIT..... 623
HEATER & A/C..... 625-654
HEPA FILTER KIT..... 655
HORN KIT..... 657-664
HOSE GUIDE ASSY..... 665
HOSE GUIDE POST KIT..... 667
INTERMITTENT WIPER KIT..... 669
ISOLATOR MOUNT KIT..... 671
KEYLESS PANEL KIT..... 673-678
KEYLESS PANEL SWITCH..... 679
LIFT CYLINDER CUSHION..... 681
LIFT KIT..... 683-688
LIGHT GUARD KIT..... 689-692
LOADER LED LIGHT KIT..... 693
MAINTENANCE PLATFORM KIT..... 695
MUFFLER GUARD KIT..... 697
MUFFLER/PURIFIER..... 699
NEUTRAL LIGHTING..... 701
NEUTRAL LIGHTING OPTION..... 703

Page 7 - OSS# 6300322913 - All rights reserved by Bobcat Company - 08/04/2017 - 06:30:16 - Produced by Ken Cook Co. with media1off

CONTENTS (Cont'd)

ACCESSORIES & OPTIONS..... 485-826
PEDAL EXTENDERS..... 705
POWER BOB-TACH..... 707-732
POWER BOB-TACH GUARD KIT..... 733
RADIO KIT..... 735
REAR AUXILIARY KIT..... 737-748
REAR AUXILIARY VALVE..... 749
REAR WIPER KIT..... 751-754
REMOTE CONTROL KIT..... 755
RESEALING KIT..... 757
REVERSING FAN KIT..... 759-762
RIDE CONTROL KIT..... 763-768
SEAT..... 769-772
SEAT - 80 mm..... 773-776
SEAT BELT - 2"..... 777-780
SEAT BELT - 3"..... 781-784
SEAT COVERS..... 785
SEAT KIT - 80 mm..... 787-790
SECURITY LOCKS..... 791
SHIELD KIT..... 793-796
SIDE LIGHT KIT..... 797
SOUND/NOISE REDUCTION..... 799
SOUND/NOISE REDUCTION KIT..... 801-806
SOUND/NOISE REDUCTION OPTION..... 807-810
STEERING DAMPENER KIT..... 811
STEERING LINKAGE SUPPORT KIT..... 813
STEERING PATTERN CONTROL KIT..... 815
STROBE LIGHT..... 817
TRACKS..... 819-822
VINYL CAB KIT..... 823
WHITE DECAL KIT..... 825
NUMERICAL INDEX..... 827-907

Page 8 - OSS# 6300322913 - All rights reserved by Bobcat Company - 08/04/2017 - 06:30:16 - Produced by Ken Cook Co. with mediaioff

MAINTENANCE ITEMS
(Service Parts)

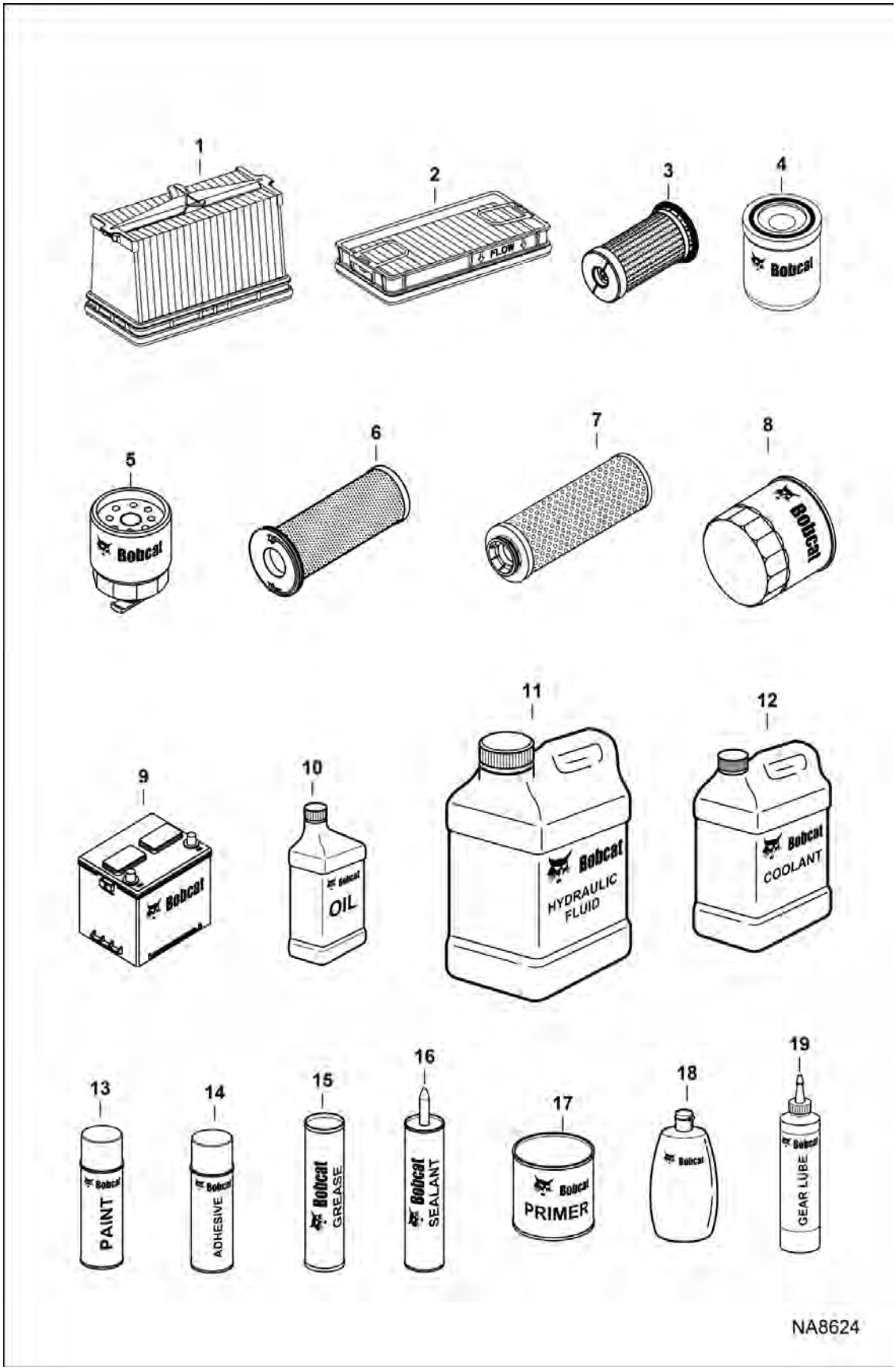

Page 9 - OSS# 6300322913 - All rights reserved by Bobcat Company - 08/04/2017 - 06:30:16 - Produced by Ken Cook Co. with media1off

MAINTENANCE ITEMS (Cont'd)

(Service Parts)

Ref No	Part Number	Description	Remarks	Serial Number	Qty
1	7286652	FILTER, AIR OUTER	See Illustration AIR CLEANER / NA1596 Was 7010030 [A]		1
2	7010031	FILTER, AIR SECONDARY	See Illustration AIR CLEANER / NA1596		1
3	6692337	FILTER, HYD CARTRIDGE	See Illustration COOLING FAN MOTOR / MS2514 - cooling fan motor - canister filter		1
4	6686926	FILTER, OIL HYD			1
5	6667352	FILTER, FUEL W/SEPARATOR 12	See Illustration ENGINE & ATTACHING PARTS / NA2894		1
6	7012314	FILTER, OIL HYD ASSY	See Illustration HYDROSTATIC CIRCUITRY / NA2502	S/N A3P811001 - 14204	1
				S/N A3P911001 - 12726	1
7	7248874	FILTER, OIL HYD	See Illustration HYDROSTATIC CIRCUITRY / NA10258	S/N A3P814205 & Above	1
				S/N A3P912727 & Above	1
8	6678233	FILTER, OIL ENG 12	See Illustration OIL PAN / B27169		1
9	7312553	BATTERY 700 CCA DRY	See Illustration ENGINE ELECTRICAL CIRCUITRY / NA2918 - Was 6665427 [A]		1
9	7269857	BATTERY WET 1000 CCA	See Illustration ENGINE ELECTRICAL CIRCUITRY / NA2918		1
10	7023076	OIL, 10W30 QT 12			x
10	7023077	OIL, 10W30 GAL 6			x
10	7023078	OIL, 10W30 2.5 GAL 2			x
10	7023079	OIL, 10W30 55 GAL DRUM			x
10	7023080	OIL, 15W40 QT 12			x
10	7023081	OIL, 15W40 GAL 6			x
10	7023082	OIL, 15W40 2.5 GAL 2			x
10	7023083	OIL, 15W40 55 GAL DRUM			x
10	7023084	OIL, 15W40 265 GAL TOTE			x
10	6989147	OIL, SYNTHETIC 5W40 QT			x
10	6989148	OIL, SYNTHETIC 5W40 GAL			x
11	6904026	FLUID, OIL HYD 1 GAL			x
11	6903117	FLUID, OIL HYD 2.5 GAL 2			x
11	6903118	FLUID, OIL HYD 5 GAL			x
11	6903119	FLUID, OIL HYD 55 GAL DRUM			x
11	6904027	FLUID, OIL HYD 265 GAL TOTE	contains 260 gallons		x
11	6988778	FLUID, OIL HYD SYNTHETIC GAL			x

Page 18 OSS# 6300322913 - All rights reserved by Bobcat Company - 08/04/2017 - 06:30:16 - Produced by Ken Cook Co. with mediaioff

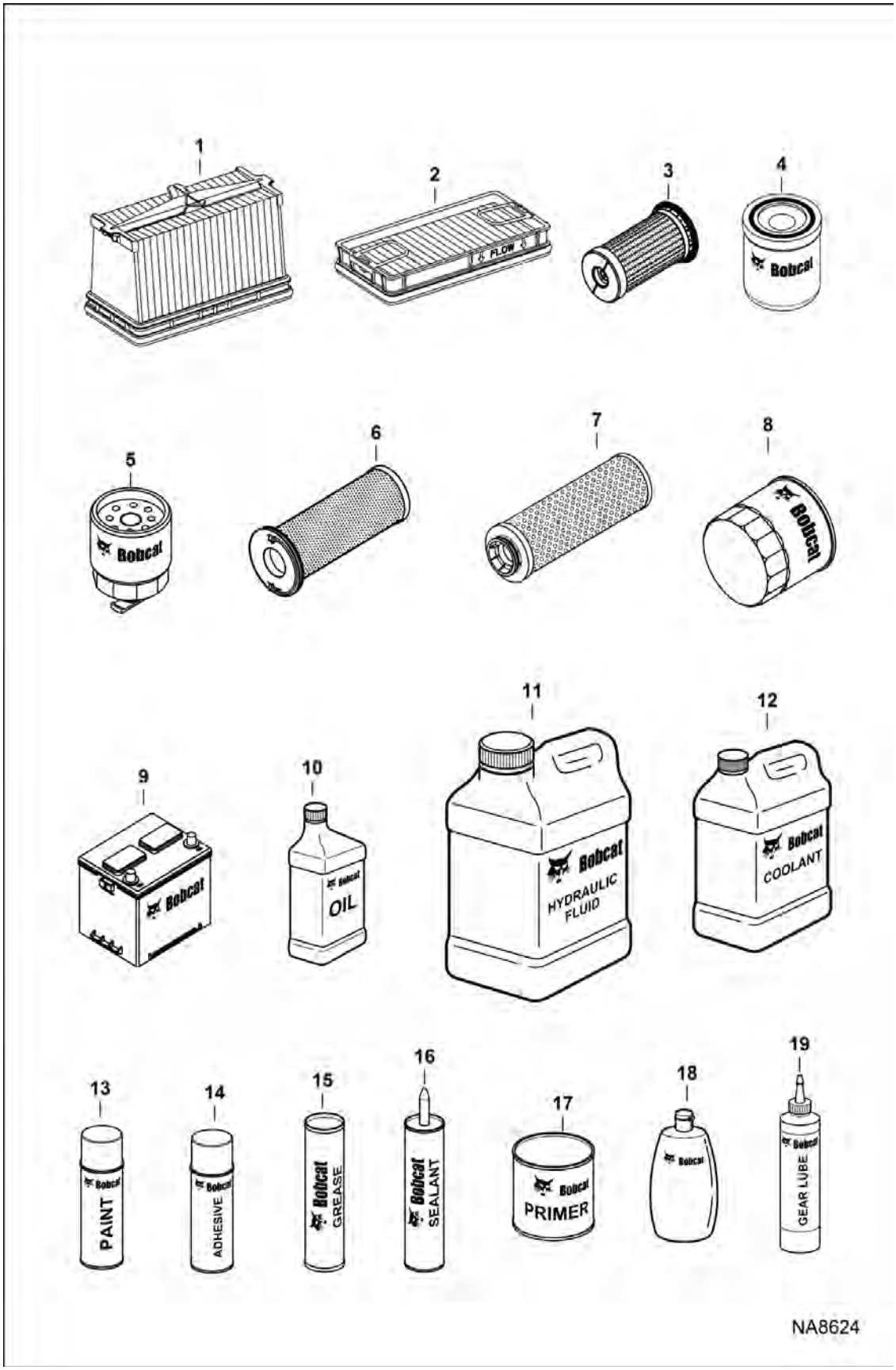

Page 11 - OSS# 6300322913 - All rights reserved by Bobcat Company - 08/04/2017 - 06:30:16 - Produced by Ken Cook Co. with media1off

MAINTENANCE ITEMS (Cont'd)

(Service Parts)

Ref No	Part Number	Description	Remarks	Serial Number	Qty
11	6988779	FLUID, OIL HYD SYNTHETIC 2.5 GAL			x
11	6988439	FLUID, OIL HYD SYNTHETIC 55 GAL DRUM			x
11	6988777	FLUID, OIL HYD BIO GAL			x
11	6988437	FLUID, OIL HYD BIO 55 GAL DRUM			x
12	6983128	ANTIFREEZE/COOLANT, PG 53/47 PREMIX GAL			x
12	6983130	ANTIFREEZE/COOLANT, PG 53/47 PRMX 55GAL			x
12	6988096	ANTIFREEZE/COOLANT, EG PREMIX GAL 6			x
12	6983129	ANTIFREEZE/COOLANT, PG CONCENTRATE GAL			x
12	6983127	ANTIFREEZE/COOLANT, PG CONCEN 55 GAL			x
12	6988097	ANTIFREEZE/COOLANT, EG CONCENTRATE GAL			x
13	6902228	PAINT, ORANGE SPRAY CAN 6	original shade		x
13	7251690	PAINT, ORANGE SPRAY CAN 6	original shade - EMEA		x
13	7305844	PAINT ORANGE SPRAY CAN 6	updated shade		x
13	6736644	PAINT, ORANGE .5 OZ	original shade		x
13	7251691	PAINT, ORANGE .5 OZ	original shade - EMEA		x
13	7305843	PAINT ORANGE .5 OZ	updated shade		x
13	6902233	PAINT, ORANGE QT 6	original shade		x
13	7251689	PAINT, ORANGE QT 6	original shade - EMEA		x
13	7305845	PAINT ORANGE QT 6	updated shade		x
13	7251693	PAINT, CHARCOAL SPRAY CAN 6	Was 6902229 [A]		x
13	7251694	PAINT, CHARCOAL .5 OZ	Was 6736641 [A]		x
13	7251692	PAINT, CHARCOAL QT 6	Was 6902234 [A]		x

Page 12 OSS# 6300322913 - All rights reserved by Bobcat Company - 08/04/2017 - 06:30:16 - Produced by Ken Cook Co. with mediaioff

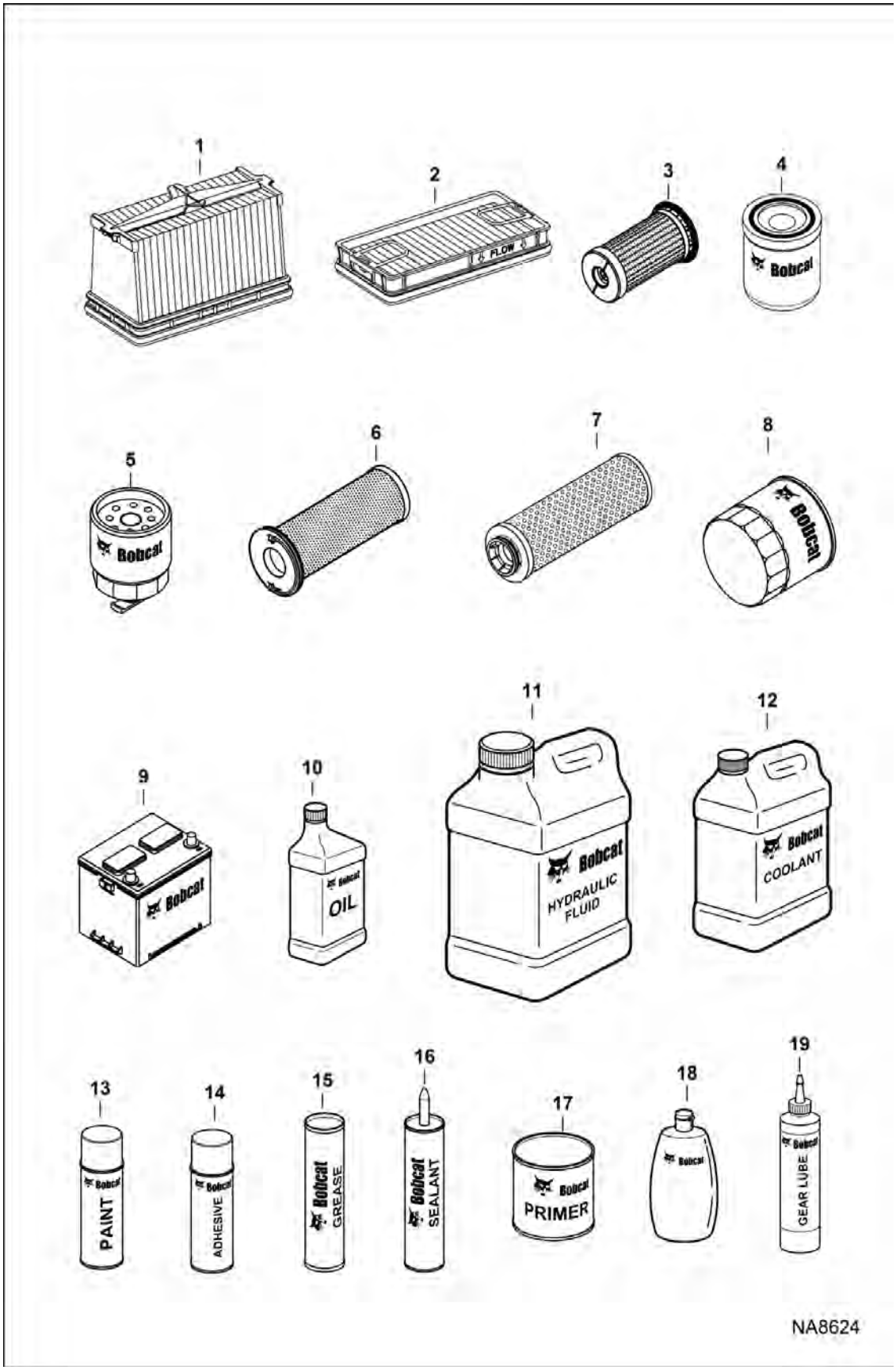

Page 13 - OSS# 6300322913 - All rights reserved by Bobcat Company - 08/04/2017 - 06:30:16 - Produced by Ken Cook Co. with media1off

MAINTENANCE ITEMS (Cont'd)

(Service Parts)

Ref No	Part Number	Description	Remarks	Serial Number	Qty
13	7251701	PAINT, WHITE SPRAY CAN 6	Was 6902230 [A]		x
13	7251702	PAINT, WHITE .5 OZ	Was 6736642 [A]		x
13	7251695	PAINT, WHITE QT 6	Was 6902235 [A]		x
13	7251704	PAINT, RED .5 OZ	Was 6736645 [A]		x
13	6650083	PAINT, SPRAY BLUE CAN			x
14	6675380	ADHESIVE, SPRAY 10.5 oz			x
14	6650407	ADHESIVE			x
15	6903122	GREASE, MULTI PURPOSE			x
15	6687884	GREASE, HD SUPREME 10			x
15	6687885	GREASE, HP EXTREME 10			x
15	6902177	GREASE, METALUBE			x
16	6633583	SEALANT, POLYURETHANE 300 ML			x
16	6650388	SEALANT			x
16	6599360	SEALANT, ELEC .3 OZ			x
16	6685372	SEALANT, GASKET LIQUID 10.1 OZ			x
17	7251706	PRIMER, SPRAY CAN 6	Was 6902232 [A]		x
17	7251705	PRIMER, QT 6	Was 6902236 [A]		x
18	6630188	POLISH			x
18	6630189	POLISH			x
19	7024981	OIL, SYNTHETIC DRIVE MOTOR 4	236 ml (8 oz		x

Page 34 OSS# 6300322913 - All rights reserved by Bobcat Company - 08/04/2017 - 06:30:16 - Produced by Ken Cook Co. with mediaioff

MAINTENANCE ITEMS
(Literature)

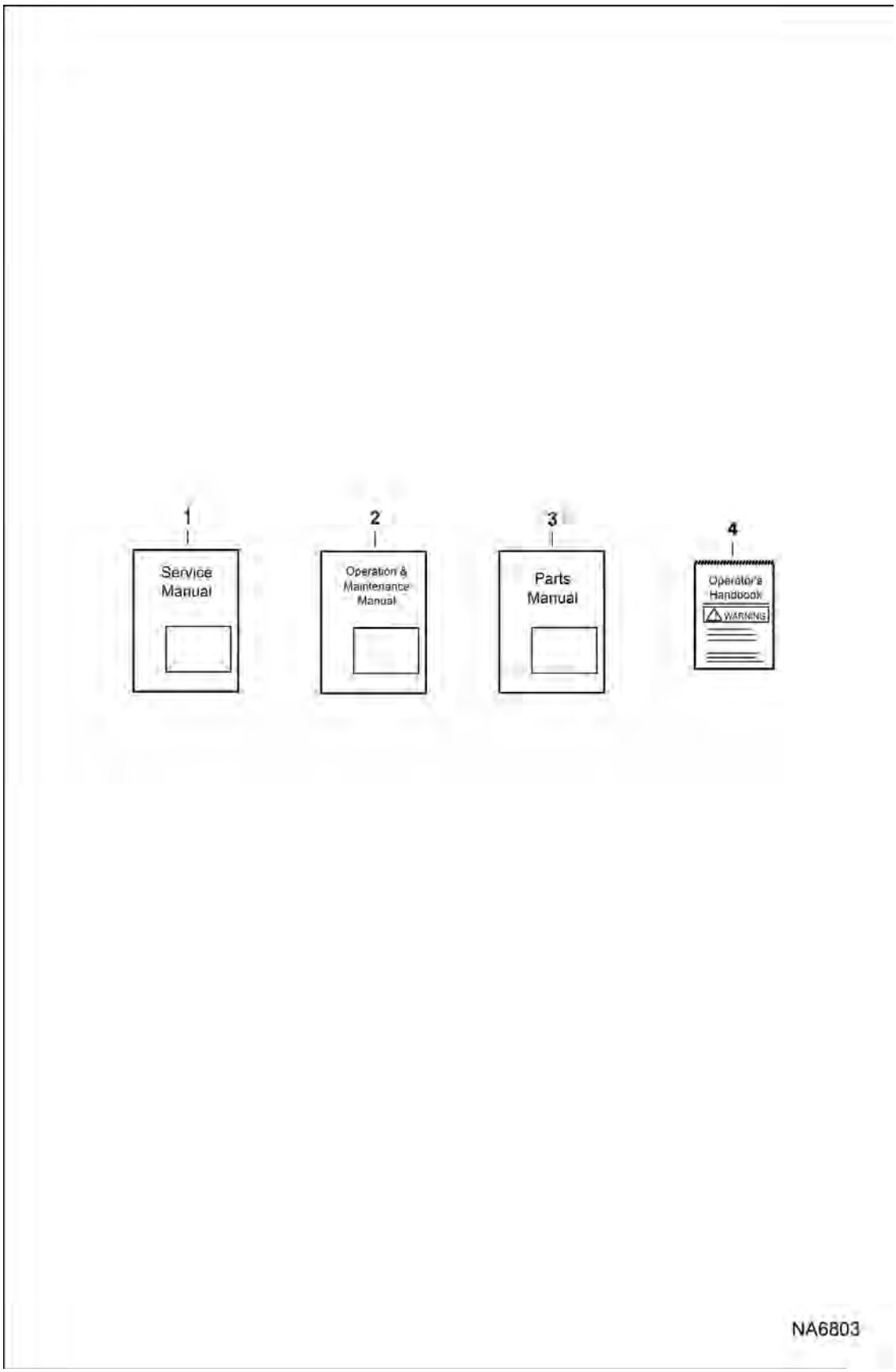

Illustration NA6803

Page 15 - OSS# 6300322913 - All rights reserved by Bobcat Company - 08/04/2017 - 06:30:16 - Produced by Ken Cook Co. with media1off

MAINTENANCE ITEMS (Cont'd)

(Literature)

Ref No	Part Number	Description	Remarks	Serial Number	Qty
1	6989476ENUS	SM, T770 LDR	printed - Was 6989476		1
1	6989476ENUSCD	SM, T770 LDR CD	Was 6989476-CD		1
2	6989475ENUS	OM, T770 LDR	printed - Was 6989475 [A]	A3P811001 - 15999	1
2	6989475ENUSCD	OM, T770 LDR CD	Was 6989475-CD [A]	A3P811001 - 15999	1
2	6989475ESAR	OM T770 LDR SPANISH	printed	A3P811001 - 15999	1
2	6989475ESARCD	OM T770 LDR SPANISH CD		A3P811001 - 15999	1
2	6989475PTBR	OM T770 LDR PORTUGUESE	printed - Was 6989475BR [A]	A3P811001 - 15999	1
2	6989475PTBRCD	OM T770 LDR PORTUGUESE CD	Was 6989475BR-CD [A]	A3P811001 - 15999	1
2	7277313ENUS	OM, T770 LDR	printed	A3P816001 & Above	1
2	7277313ENUSCD	OM, T770 LDR CD		A3P816001 & Above	1
2	7277313ESAR	OM T770 LDR SPANISH	printed	A3P816001 & Above	1
2	7277313ESARCD	OM T770 LDR SPANISH CD		A3P816001 & Above	1
2	7277313PTBR	OM T770 LDR PORTUGUESE	printed	A3P816001 & Above	1
2	7277313PTBRCD	OM T770 LDR PORTUGUESE CD		A3P816001 & Above	1
2	7277313FRCA	OM T770 LDR FRENCH-CANADA	printed	A3P816001 & Above	1
2	7277313FRCACD	OM T770 LDR FRENCH-CANADA CD		A3P816001 & Above	1
2	7277313KOKR	OM T770 LDR KOREAN	printed	A3P816001 & Above	1
2	7277313KOKRCD	OM T770 LDR KOREAN CD		A3P816001 & Above	1
2	6989475ENGB	OM, T770 LDR	printed	A3P911001 - 12999	1
2	7277315ENGB	OM, T770 LDR	printed	A3P913001 & Above	1
2	6990060ENGB	OM, T770 LDR	printed - MEA	A3P911001 & Above	1
2	7277316ENGB	OM, T770 LDR	printed - MEA	A3P913001 & Above	1
2	6990881ENGB	OM, T770 LDR	printed - CHINA	A3P811001 - 15999	1
2	7277317ENGB	OM, T770 LDR	printed - CHINA	A3P816001 & Above	1
3	6989477	PM, T770 LDR	printed		1
3	6989477-CD	PM, T770 LDR CD			1
4	6987175ENUS	OHB, W/WIRE ROPE	Was 6987175 [A]		1

Page 16 OSS# 6300322913 - All rights reserved by Bobcat Company - 08/04/2017 - 06:30:16 - Produced by Ken Cook Co. with mediaioff

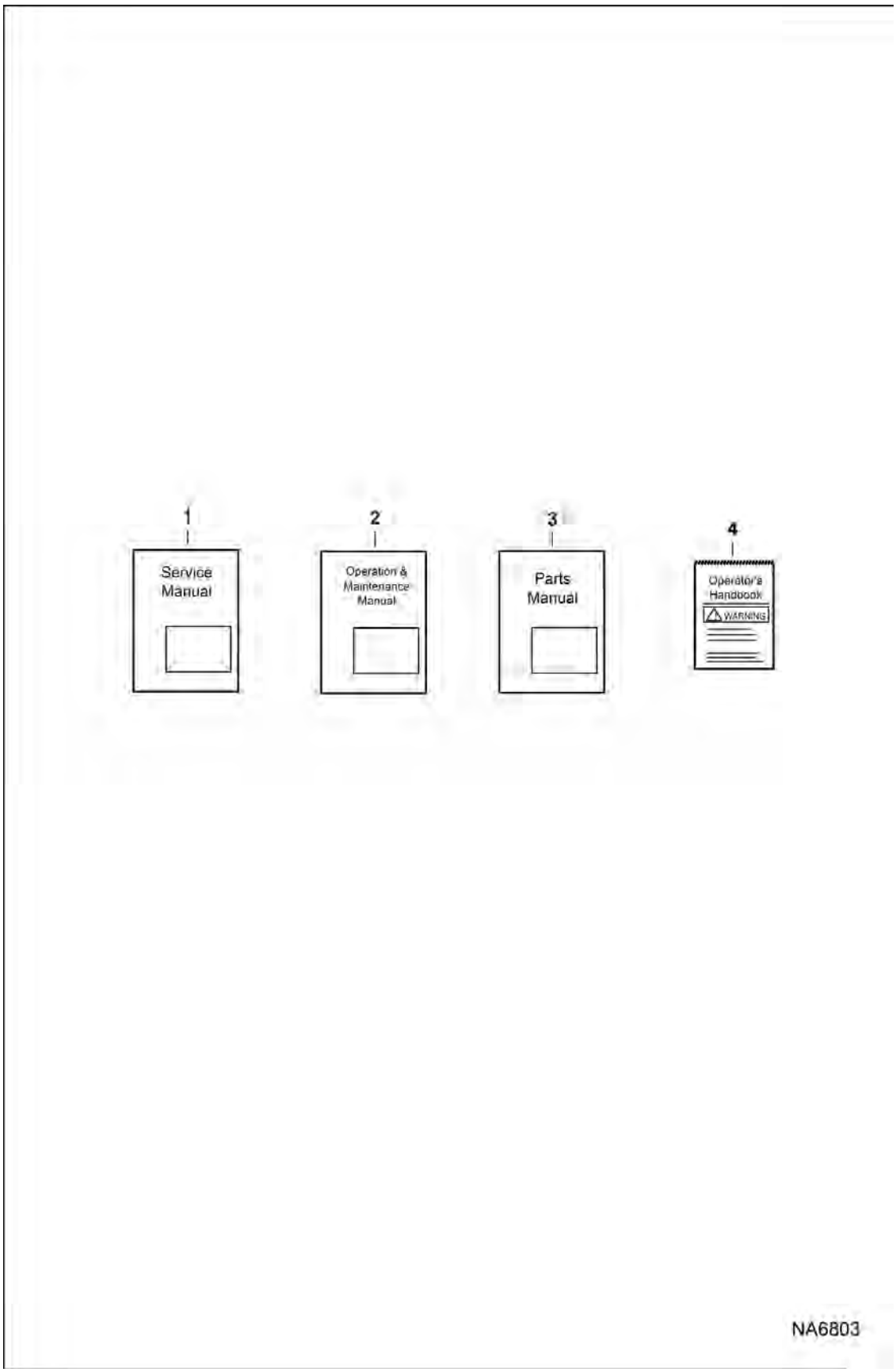

Page 17 - OSS# 6300322913 - All rights reserved by Bobcat Company - 08/04/2017 - 06:30:16 - Produced by Ken Cook Co. with media1off

MAINTENANCE ITEMS (Cont'd)
(Literature)

Ref No	Part Number	Description	Remarks	Serial Number	Qty
4	6987175ESAR	OHB, W/WIRE ROPE	Was 6987175AR [A]		1
4	6987175PTBR	OHB, W/WIRE ROPE	Was 6987175BR [A]		1
4	6987175FRCA	OHB, W/WIRE ROPE	Was 6987175CA [A]		1
4	6987175FRFR	OHB, W/WIRE ROPE			1
4	6987175KOKR	OHB, W/WIRE ROPE			1
4	6987175ENGB	OHB, W/WIRE ROPE			1

Page 18 OSS# 6300322913 - All rights reserved by Bobcat Company - 08/04/2017 - 06:30:16 - Produced by Ken Cook Co. with media1off

MAINTENANCE ITEMS
(Scheduled Maintenance)

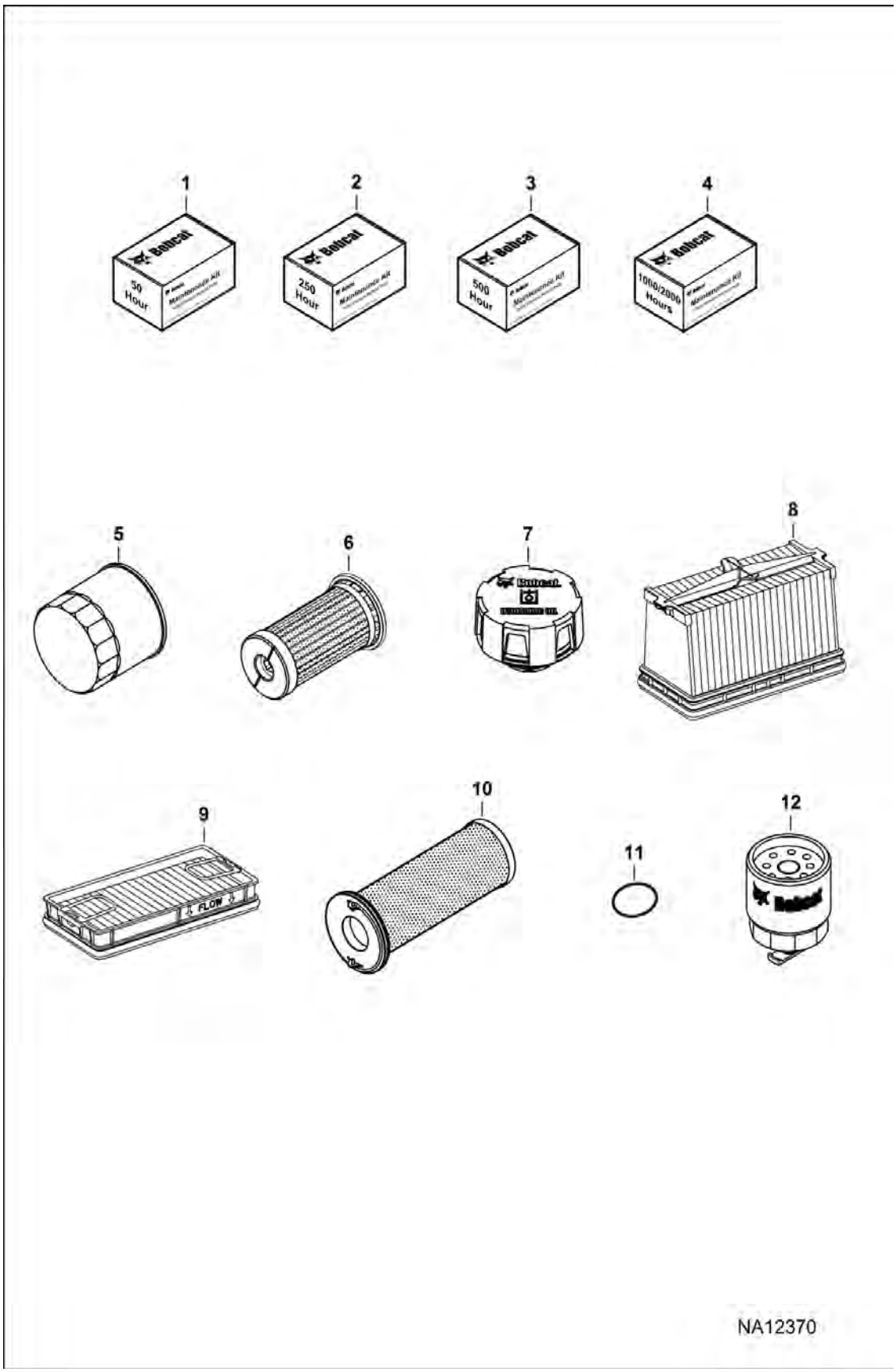

Page 19 - OSS# 6300322913 - All rights reserved by Bobcat Company - 08/04/2017 - 06:30:16 - Produced by Ken Cook Co. with media1off

Illustration NA12370

MAINTENANCE ITEMS (Cont'd)

(Scheduled Maintenance)

Ref No	Part Number	Description	Remarks	Serial Number	Qty
1	7295596	KIT, MAINTENANCE 50 HR	Ref. 5 - Was 7295616 [A]		1
2	7295487	KIT, MAINTENANCE 250 HR	Ref. 5 & 12 - Was 7295617 [A]		1
3	7295603	KIT, MAINTENANCE 500 HR	Ref. 5-8 & 12 - Was 7295618 [A]		1
4	7316228	KIT MAINTENANCE 1000/2000 HR	Ref. 5-12 - Was 7295619 [A]		1
5	6678233	FILTER, OIL ENG 12			1
6	6692337	FILTER, HYD CARTRIDGE	- cooling fan motor - canister filter		1
7	6727475	CAP, OIL HYD			1
8	7286652	FILTER, AIR OUTER			1
9	7010031	FILTER, AIR SECONDARY			1
10	7012314	FILTER, OIL HYD ASSY			1
11	7015308	SEAL			1
12	6667352	FILTER, FUEL W/SEPARATOR 12			1

Page 20 OSS# 6300322913 - All rights reserved by Bobcat Company - 08/04/2017 - 06:30:16 - Produced by Ken Cook Co. with mediaioff

MAIN FRAME

(S/N A3P811001 - A3P812129, A3P911001 - A3P911320)

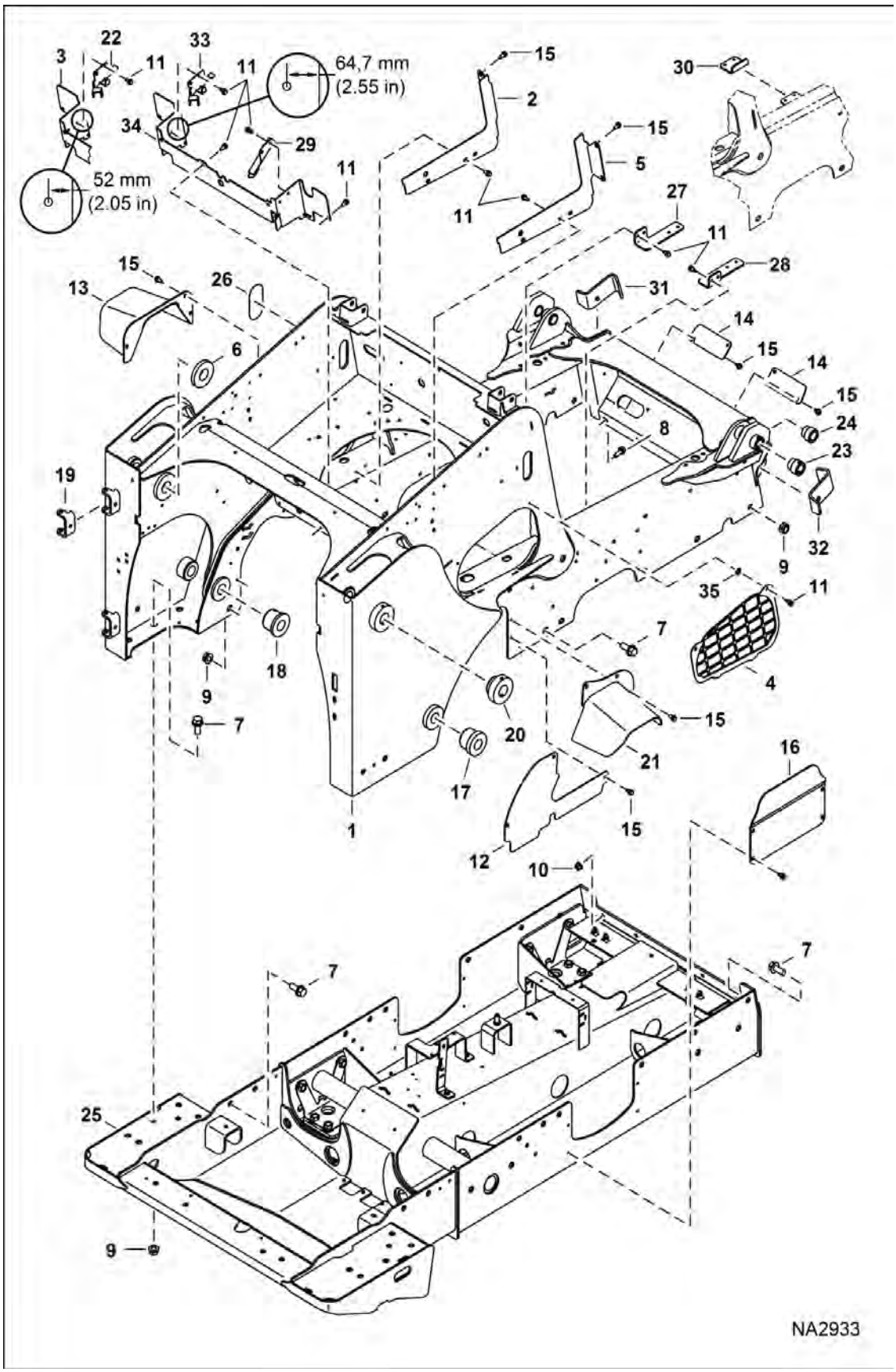

Page 21 - OSS# 6300322913 - All rights reserved by Bobcat Company - 08/04/2017 - 06:30:16 - Produced by Ken Cook Co. with media1off

MAIN FRAME (Cont'd)

(S/N A3P811001 - A3P812129, A3P911001 - A3P911320)

Ref No	Part Number	Description	Remarks	Serial Number	Qty
1	7146294	MAIN FRAME			1
2	7200099	DUCT, AIR	See Illustration COOLING SYSTEM / NA2599 - LH - Was 7147264 [D]		1
3		CROSSMEMBER	NLA - Use W/Ref. 22 - See dimension on illustration - Order Ref. 33 & 34 - Was 7209535 [A]		1
4	7186009	LOUVER, PLASTIC	RH		1
4	7186010	LOUVER, PLASTIC	LH		1
5	7200100	DUCT, AIR	See Illustration COOLING SYSTEM / NA2599 - RH - Was 7200098 [D]		1
6	7134831	BUSHING, WELD-ON	inside upright		2
7	31C1228	BOLT			22
8	31C820	BOLT			4
9	53D12	NUT			20
10	83D8	NUT 5			4
11	84G3712	BOLT 5			19
12	7178451	COVER, SIDE			2
13	7178450	SHIELD, W/A			1
14	7159532	COVER, ACCESS	irregular shape - 182 x 70,1 mm (7.16 x 2.76")		2
14	7240780	COVER, ACCESS	159 x 127 mm (6.25 x 5") - Was 6716010 [A]		2
15	84G3712	BOLT 5			28
16	7136973	COVER			2
17	7141675	BUSHING, WELD-ON	outside upright		2
18	7141674	BUSHING, WELD-ON	inside upright		2
19	6708987	HINGE, WELD-ON			2
20	7145872	BUSHING, WELD-ON	outside upright		2
21	7178842	SHIELD, W/A			1
22		GUIDE, HOSE	NLA - Use W/Ref. 3 - See dimension on illustration - Order Ref. 33 & 34 - Was 7200553 [A]		1
23	7162141	BUSHING, WELD-ON			2
24	6717278	BUSHING, WELD-ON			2
25		DRIVECASE	See Illustration DRIVE TRAIN / NA2950 , See Illustration DRIVE TRAIN / NA2952		1
26	7194975	GAUGE, SIGHT	self adhesive		1
27	7202799	BRACKET, SUPPORT	LH		1
28	7202800	BRACKET, SUPPORT	LH		1
29	7210851	BRACKET			1
30		BRACKET, WELD-ON	NLA - LH - Order Ref. 27		1
30		BRACKET, WELD-ON	NLA - RH - Order Ref. 28		1
31	7155693	GUIDE	LH - weld-on		1
32	7155692	GUIDE	RH - weld-on		1

Page 2 OSS# 6300322913 - All rights reserved by Bobcat Company - 08/04/2017 - 06:30:16 - Produced by Ken Cook Co. with mediaioff

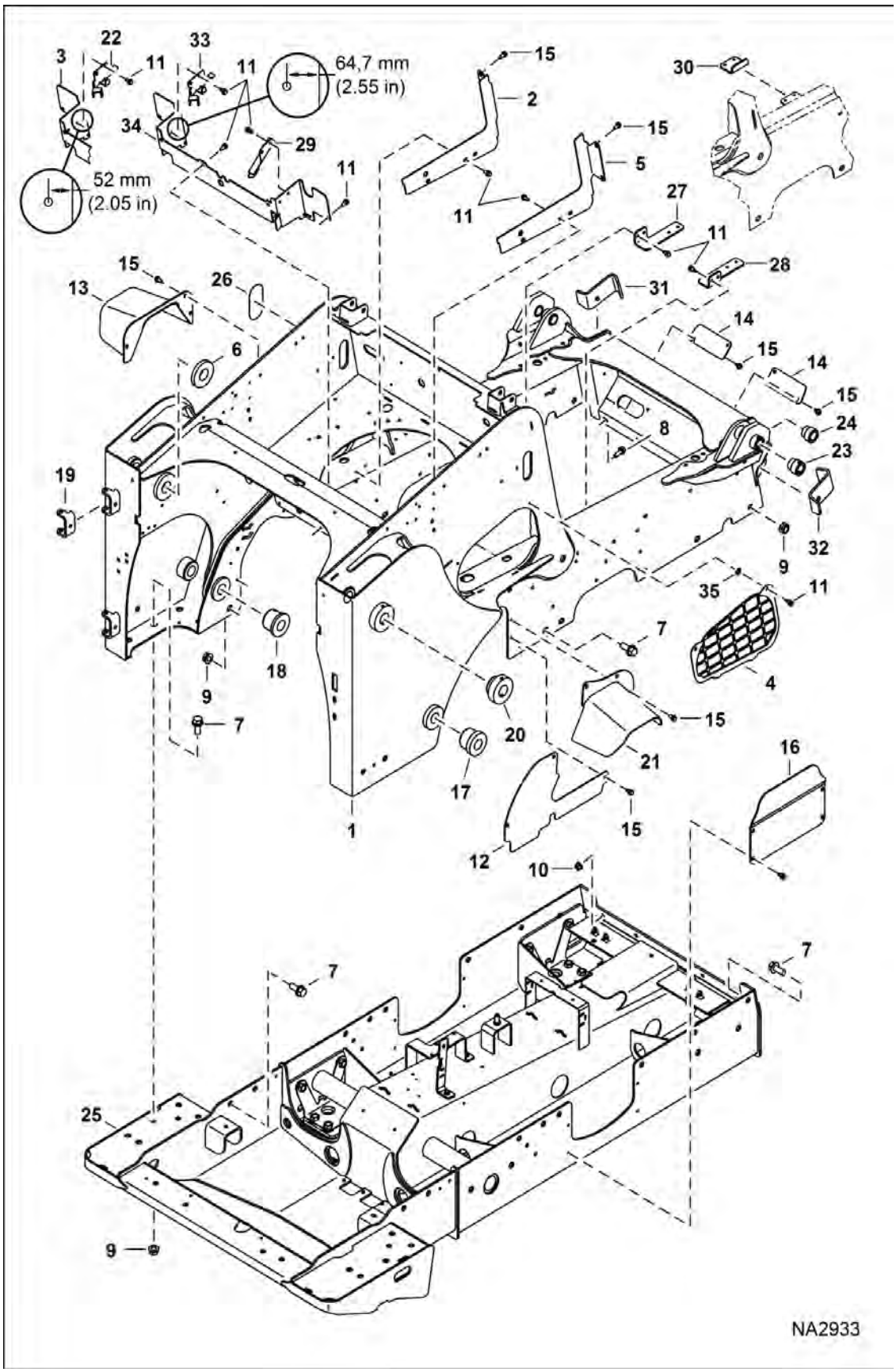

Page 23 - OSS# 6300322913 - All rights reserved by Bobcat Company - 08/04/2017 - 06:30:16 - Produced by Ken Cook Co. with media1off

MAIN FRAME (Cont'd)

(S/N A3P811001 - A3P812129, A3P911001 - A3P911320)

Ref No	Part Number	Description	Remarks	Serial Number	Qty
33	7218782	GUIDE, HOSE	Use W/Ref. 34 - See dimension on illustration		1
34	7218781	CROSSMEMBER	Use W/Ref. 33 - See dimension on illustration		1
35	6674264	RETAINER NUT			2

Page 24 OSS# 6300322913 - All rights reserved by Bobcat Company - 08/04/2017 - 06:30:16 - Produced by Ken Cook Co. with media1off

MAIN FRAME

(S/N A3P812130 - A3P813485, A3P911321 - A3P912191)

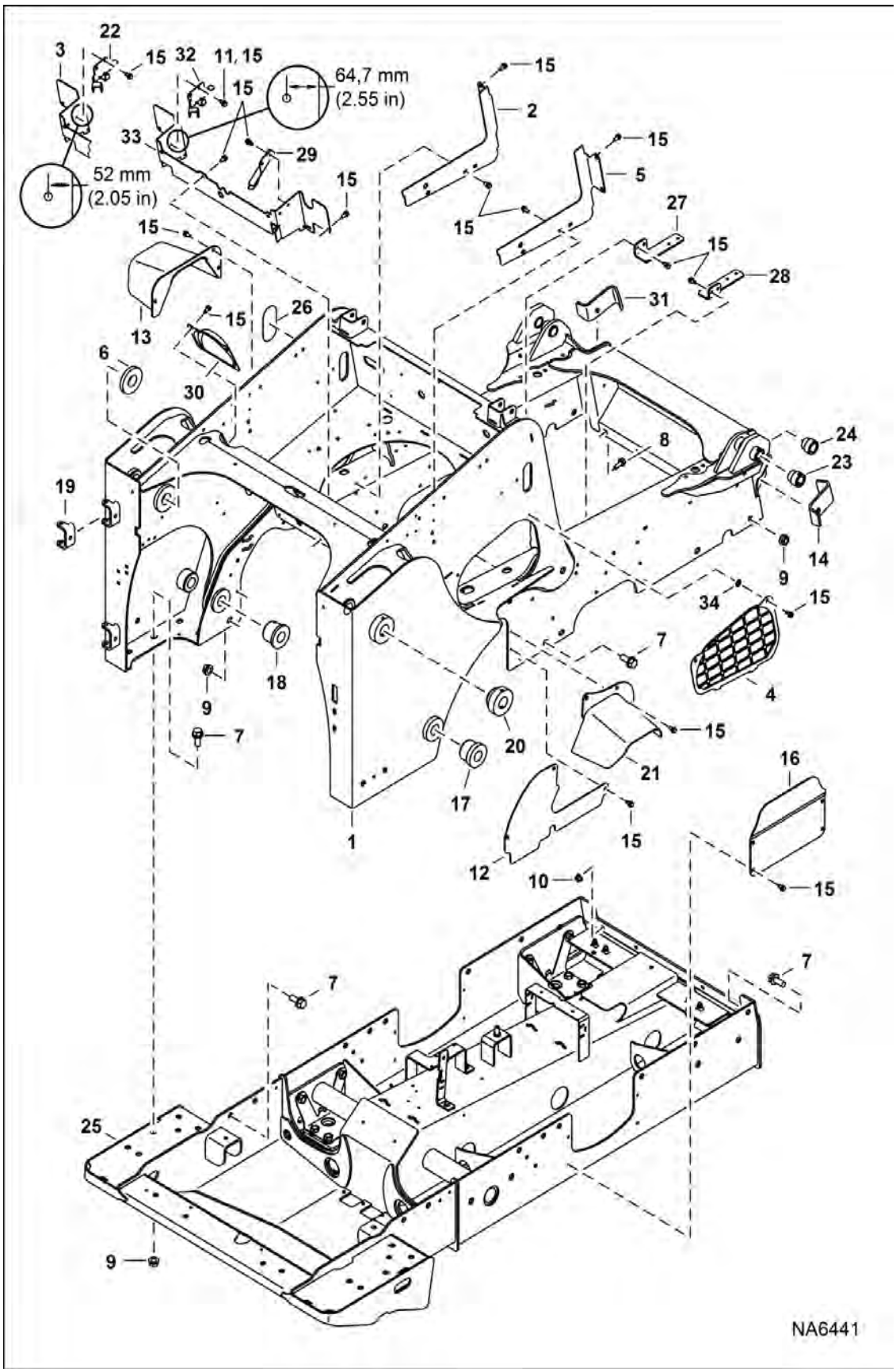

Page 25 - OSS# 6300322913 - All rights reserved by Bobcat Company - 08/04/2017 - 06:30:16 - Produced by Ken Cook Co. with media1off

MAIN FRAME (Cont'd)

(S/N A3P812130 - A3P813485, A3P911321 - A3P912191)

Ref No	Part Number	Description	Remarks	Serial Number	Qty
1	7193370	MAIN FRAME			1
2	7200099	DUCT, AIR	LH		1
3		CROSSMEMBER	NLA - Use W/Ref. 22 - See dimension on illustration - Order Ref. 32 & 33 - Was 7209535 [A]		1
4	7186009	LOUVER, PLASTIC	RH		1
4	7186010	LOUVER, PLASTIC	LH		1
5	7200100	DUCT, AIR	RH		1
6	7134831	BUSHING, WELD-ON	inside upright		2
7	31C1228	BOLT			22
8	31C820	BOLT			4
9	53D12	NUT			20
10	83D8	NUT 5			4
11	84G3708	SCREW			2
12	7178451	COVER, SIDE			2
13	7178450	SHIELD, W/A			1
14	7155692	GUIDE	RH - weld-on		1
15	84G3712	BOLT 5			27
15	84G3712	BOLT 5			25
16	7136973	COVER			2
17	7141675	BUSHING, WELD-ON	outside upright		2
18	7141674	BUSHING, WELD-ON	inside upright		2
19	6708987	HINGE, WELD-ON			2
20	7145872	BUSHING, WELD-ON	outside upright		2
21	7178842	SHIELD, W/A			1
22		GUIDE, HOSE	NLA - Use W/Ref. 3 - See dimension on illustration - Order Ref. 32 & 33 - Was 7200553 [A]		1
23	7162141	BUSHING, WELD-ON			2
24	6717278	BUSHING, WELD-ON			2
25		DRIVECASE	See Illustration DRIVE TRAIN / NA2950 , See Illustration DRIVE TRAIN / NA2952		1
26	7194975	GAUGE, SIGHT	self adhesive		1
27	7202799	BRACKET, SUPPORT	LH		1
28	7202800	BRACKET, SUPPORT	RH		1
29	7210851	BRACKET			1
30	7215602	COVER, FILTER PARTICULATE			1
31	7155693	GUIDE	LH - weld-on		1
32	7218782	GUIDE, HOSE	Use W/Ref. 33 - See dimension on illustration		1
33	7218781	CROSSMEMBER	Use W/Ref. 32 - See dimension on illustration		1
34	6674264	RETAINER NUT			2

Page 26 OSS# 6300322913 - All rights reserved by Bobcat Company - 08/04/2017 - 06:30:16 - Produced by Ken Cook Co. with mediaioff

MAIN FRAME

(S/N A3P813486 - A3P814204, A3P912192 - A3P912726)

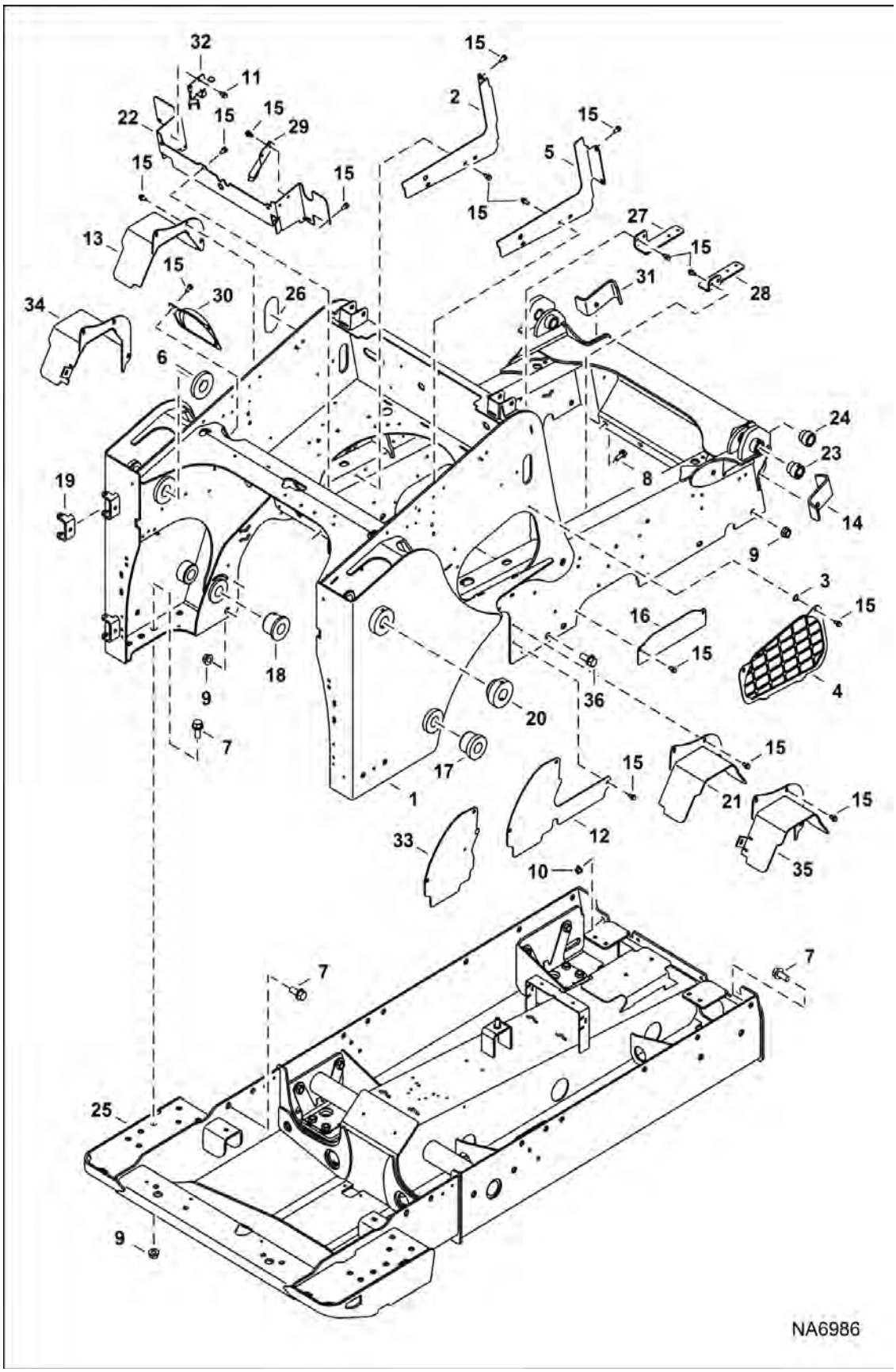

Illustration NA6986

Page 27 - OSS# 6300322913 - All rights reserved by Bobcat Company - 08/04/2017 - 06:30:16 - Produced by Ken Cook Co. with media1off

MAIN FRAME (Cont'd)

(S/N A3P813486 - A3P814204, A3P912192 - A3P912726)

Ref No	Part Number	Description	Remarks	Serial Number	Qty
1	7211868	MAIN FRAME			1
2	7200099	DUCT, AIR	LH		1
3	6674264	RETAINER NUT			2
4	7186009	LOUVER, PLASTIC	RH		1
4	7186010	LOUVER, PLASTIC	LH		1
5	7200100	DUCT, AIR	RH		1
6	7134831	BUSHING, WELD-ON	inside upright		2
7	31C1228	BOLT			22
8	31C820	BOLT			4
9	53D12	NUT			22
10	83D8	NUT 5			4
11	84G3708	SCREW			2
12	7178451	COVER, SIDE			2
13	7221106	SHIELD, LH	1 speed		1
14	7155692	GUIDE	RH - weld-on		1
15	84G3712	BOLT 5			25
16	7210758	COVER, PLATE			2
17	7141675	BUSHING, WELD-ON	outside upright		2
18	7211897	BUSHING, WELD-ON	inside upright		2
19	6708987	HINGE, WELD-ON			2
20	7134830	BUSHING, WELD-ON	outside upright		2
21	7221105	SHIELD, RH	1 speed		1
22	7218781	CROSSMEMBER			1
23	7162141	BUSHING, WELD-ON			2
24	6717278	BUSHING, WELD-ON			2
25		DRIVECASE	See Illustration DRIVE TRAIN / NA6984 , See Illustration DRIVE TRAIN / NA6985		1
26	7194975	GAUGE, SIGHT	self adhesive		1
27	7202799	BRACKET, SUPPORT	LH		1
28	7202800	BRACKET, SUPPORT	RH		1
29	7210851	BRACKET			1
30	7215602	COVER, FILTER PARTICULATE			1
31	7155693	GUIDE	LH - weld-on		1
32	7218782	GUIDE, HOSE			1
33	7227083	COVER, SIDE	2 speed		1
34	7227044	SHIELD, LH	2 speed		1
35	7227043	SHIELD, RH	2 speed		1
36	31C1236	BOLT			2

Page 28 OSS# 6300322913 - All rights reserved by Bobcat Company - 08/04/2017 - 06:30:16 - Produced by Ken Cook Co. with mediaioff

MAIN FRAME
(S/N A3P814205, A3P815999, A3P912727 - A3P912999)

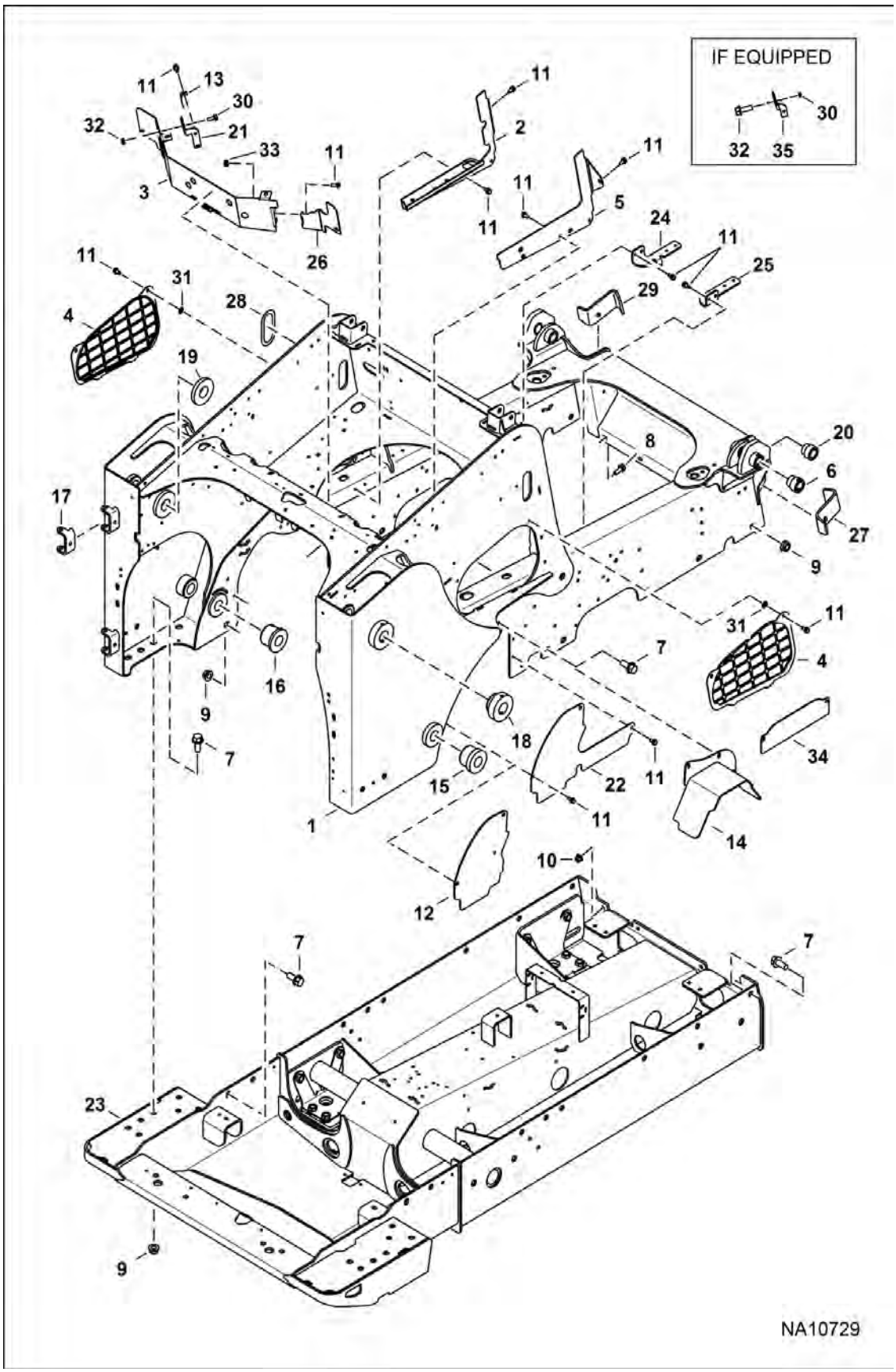

Page 29 - OSS# 6300322913 - All rights reserved by Bobcat Company - 08/04/2017 - 06:30:16 - Produced by Ken Cook Co. with media1off

Illustration NA10729

MAIN FRAME (Cont'd)

(S/N A3P814205, A3P815999, A3P912727 - A3P912999)

Ref No	Part Number	Description	Remarks	Serial Number	Qty
1	7225738	MAIN FRAME		A3P814205 - A3P816076	1
				A3P912727 - A3P913054	1
1	7306106	FRAME MAIN		A3P816077 & Above	1
				A3P913055 & Above	1
2	7251359	PANEL, DUCT LH			1
3	7244116	CROSSMEMBER			1
4	7186009	LOUVER, PLASTIC	RH		1
4	7186010	LOUVER, PLASTIC	LH		1
5	7242275	DUCT	RH		1
6	7162141	BUSHING, WELD-ON	outside link		2
7	31C1228	BOLT			24
8	31C820	BOLT			4
9	53D12	NUT			24
10	83D8	NUT 5			4
11	84G3712	BOLT 5			35
12	7227083	COVER, SIDE	2-speed		2
13	7266399	RETAINER			2
14	7221105	SHIELD, RH			1
14	7221106	SHIELD, LH			1
14	7227043	SHIELD, RH	2-speed		1
14	7227044	SHIELD, LH	2-speed		1
15	7141675	BUSHING, WELD-ON	outside upright		2
16	7211897	BUSHING, WELD-ON	inside upright		2
17	6708987	HINGE, WELD-ON			2
18	7134830	BUSHING, WELD-ON	outside upright		2
19	7134831	BUSHING, WELD-ON	inside upright		2
20	6717278	BUSHING, WELD-ON	inside link		2
21	7266398	BRACKET			1
22	7178451	COVER, SIDE			2
23		DRIVECASE	See Illustration DRIVE TRAIN / NA6985 , See Illustration DRIVE TRAIN / NA6984		1
24	7202799	BRACKET, SUPPORT	LH		1
25	7202800	BRACKET, SUPPORT	RH		1
26	7244117	CROSSMEMBER			1
27	7155692	GUIDE	RH - weld-on		1
28	7194975	GAUGE, SIGHT			1
29	7155693	GUIDE	LH - weld-on		1
30	35C514	BOLT			2

Page 38 OSS# 6300322913 - All rights reserved by Bobcat Company - 08/04/2017 - 06:30:16 - Produced by Ken Cook Co. with mediaioff

MAIN FRAME (Cont'd)

(S/N A3P814205, A3P815999, A3P912727 - A3P912999)

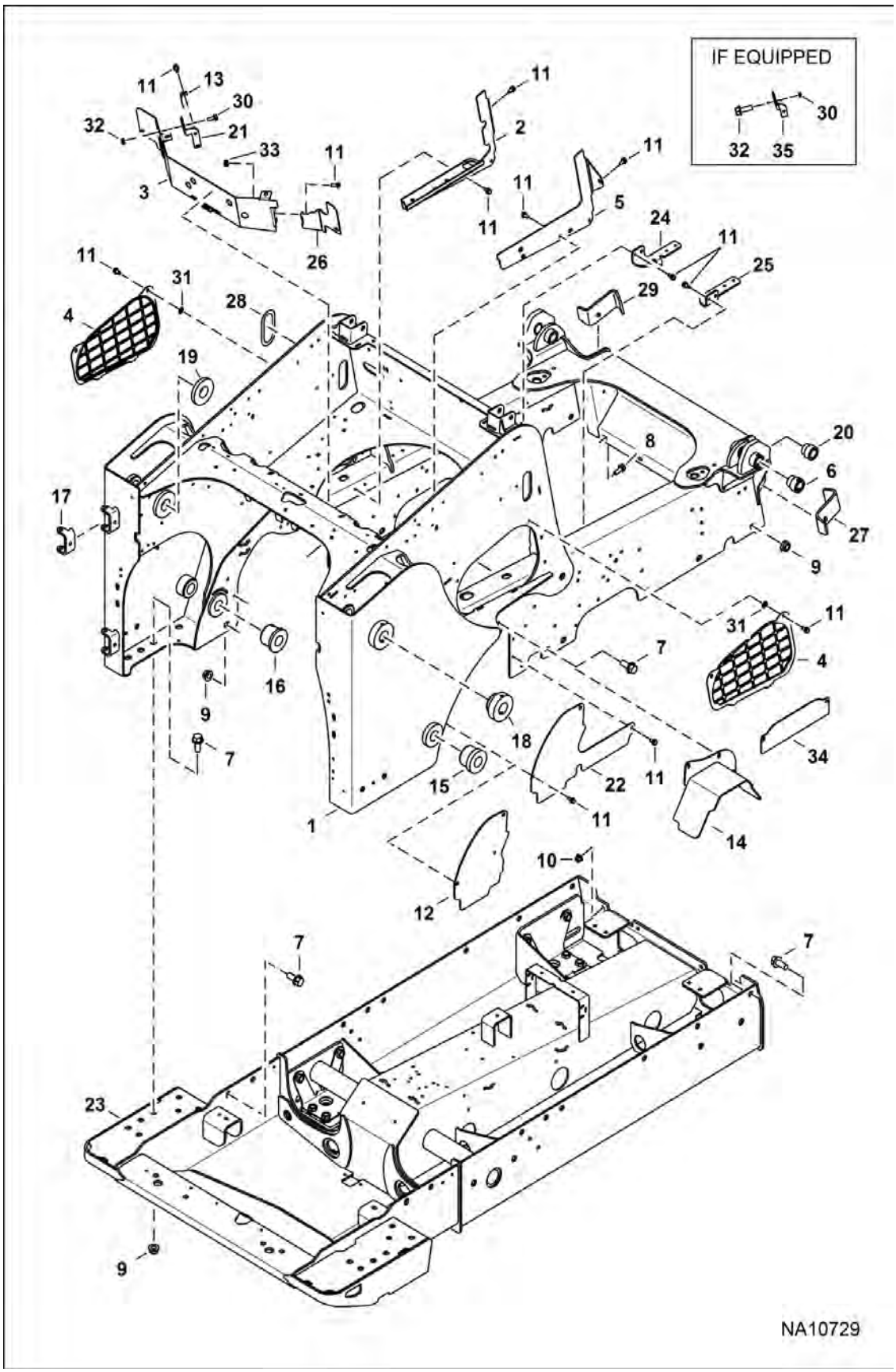

Page 31 - OSS# 6300322913 - All rights reserved by Bobcat Company - 08/04/2017 - 06:30:16 - Produced by Ken Cook Co. with media1off

Illustration NA10729

MAIN FRAME (Cont'd)

(S/N A3P814205, A3P815999, A3P912727 - A3P912999)

Ref No	Part Number	Description	Remarks	Serial Number	Qty
31	6674264	RETAINER NUT			2
32	55D5	NUT			2
33	6678765	NUT			2
34	7210758	COVER, PLATE			2
35		BRACKET	NLA - Order Ref. 11, 13 & 21 - Was 7243107 [A]		1

Page 22 OSS# 6300322913 - All rights reserved by Bobcat Company - 08/04/2017 - 06:30:16 - Produced by Ken Cook Co. with media1off

MAIN FRAME
(S/N A3P816001 & Above, A3P913001 & Above)

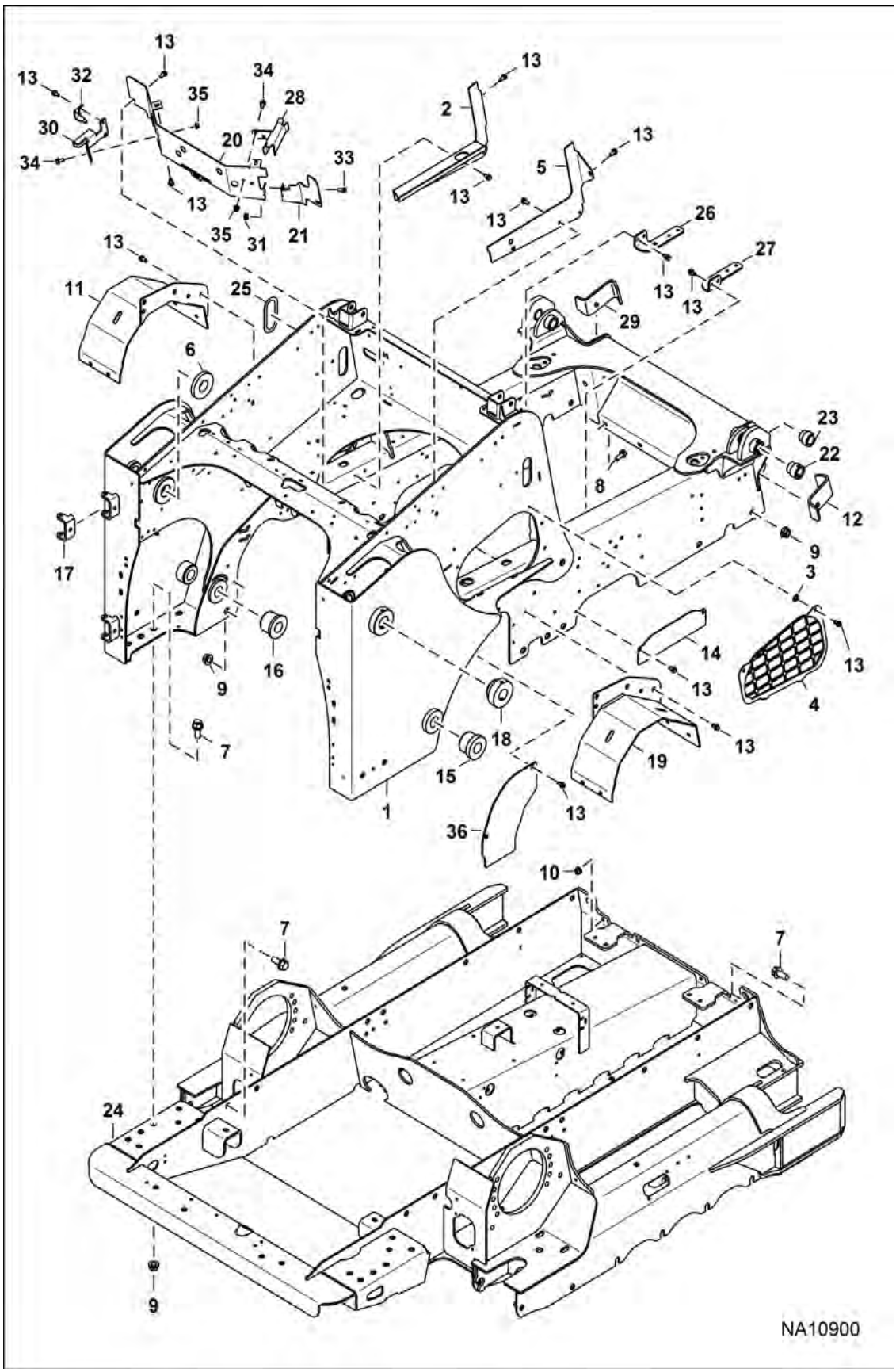

Page 33 - OSS# 6300322913 - All rights reserved by Bobcat Company - 08/04/2017 - 06:30:16 - Produced by Ken Cook Co. with media1off

Illustration NA10900

MAIN FRAME (Cont'd)

(S/N A3P816001 & Above, A3P913001 & Above)

Ref No	Part Number	Description	Remarks	Serial Number	Qty
1	7225738	MAIN FRAME		A3P816001 - A3P816076	1
				A3P913001 - A3P913054	1
1	7306106	FRAME MAIN		A3P816077 & Above	1
				A3P913055 & Above	1
2	7251359	PANEL, DUCT LH	LH		1
3	6674264	RETAINER NUT			2
4	7186009	LOUVER, PLASTIC	RH		1
4	7186010	LOUVER, PLASTIC	LH		1
5	7242275	DUCT	RH		1
6	7134831	BUSHING, WELD-ON	inside upright		2
7	31C1228	BOLT			22
8	31C820	BOLT			4
9	53D12	NUT			22
10	83D8	NUT 5			4
11	7280497	COVER, MOTOR	Was 7241886 [A]		1
12	7155692	GUIDE	RH - weld-on		1
13	84G3712	BOLT 5			25
14	7210758	COVER, PLATE			2
15	7141675	BUSHING, WELD-ON	outside upright		2
16	7211897	BUSHING, WELD-ON	inside upright		2
17	6708987	HINGE, WELD-ON			2
18	7134830	BUSHING, WELD-ON	outside upright		2
19	7280495	COVER, MOTOR	Was 7241885 [A]		1
20	7269863	CROSSMEMBER			1
21	7269864	BRACKET, RH			1
22	7162141	BUSHING, WELD-ON			2
23	6717278	BUSHING, WELD-ON			2
24		DRIVECASE	See Illustration DRIVE TRAIN / NA6984 , See Illustration DRIVE TRAIN / NA6985		1
25	7194975	GAUGE, SIGHT	self adhesive		1
26	7202799	BRACKET, SUPPORT	LH		1
27	7202800	BRACKET, SUPPORT	RH		1
28	7270255	GUIDE, CHANNEL	RH		1
29	7155693	GUIDE	LH - weld-on		1
30	7275459	GUIDE, CHANNEL	LH		1
31	6678765	NUT			1
32	7266399	RETAINER			1
33	35C514	BOLT			1

Page 34 OSS# 6300322913 - All rights reserved by Bobcat Company - 08/04/2017 - 06:30:16 - Produced by Ken Cook Co. with mediaioff

MAIN FRAME (Cont'd)
(S/N A3P816001 & Above, A3P913001 & Above)

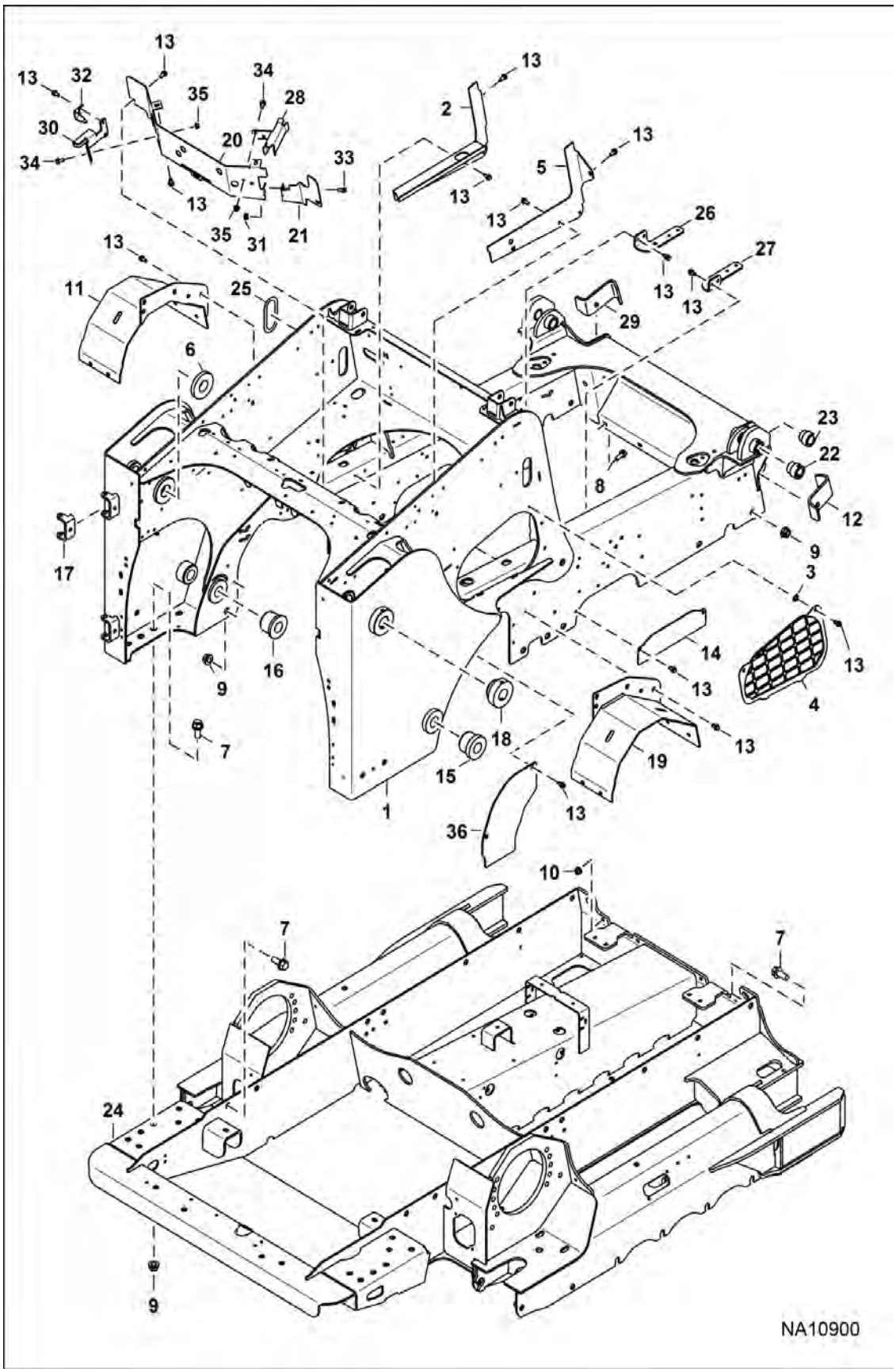

Page 35 - OSS# 6300322913 - All rights reserved by Bobcat Company - 08/04/2017 - 06:30:16 - Produced by Ken Cook Co. with media1off

MAIN FRAME (Cont'd)

(S/N A3P816001 & Above, A3P913001 & Above)

Ref No	Part Number	Description	Remarks	Serial Number	Qty
34	35C612	BOLT 5			4
35	89D6	NUT			4
36	7280443	COVER, MOTOR	Was 7280334 [A]		2

Page 36 OSS# 6300322913 - All rights reserved by Bobcat Company - 08/04/2017 - 06:30:16 - Produced by Ken Cook Co. with media1off

OPERATOR CAB
(Cab Replacement)

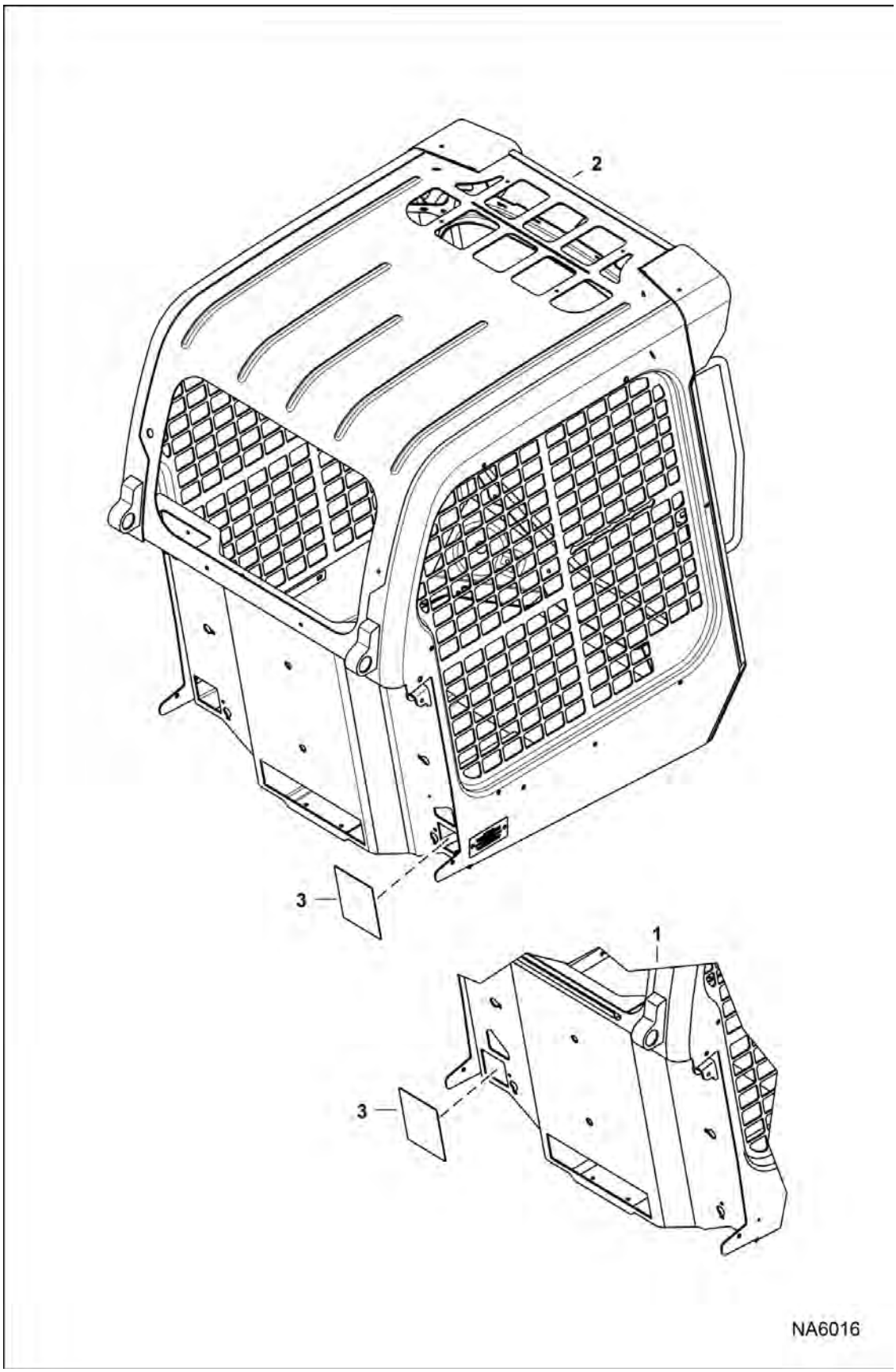

Page 37 - OSS# 6300322913 - All rights reserved by Bobcat Company - 08/04/2017 - 06:30:16 - Produced by Ken Cook Co. with media1off

OPERATOR CAB (Cont'd)

(Cab Replacement)

Ref No	Part Number	Description	Remarks	Serial Number	Qty
1		CAB, ASSY	NLA - does not include cab decals - decals must be installed matching the loaders's rated operating capacity, lift arm type & operation controls thus order decals separately - Order Ref. 2 & 3 - Was 7116111 [A]	A3P811001 - A3P812029	1
				A3P911001 - A3P911293	1
2	7304592	ASSY CAB	does not include cab decals - decals must be installed matching the loaders's rated operating capacity, lift arm type & operation controls thus order decals separately - Was 7215840 [A]	A3P812030 - A3P816076	1
				A3P911294 - A3P913054	1
2	7303703	ASSY CAB	does not include cab decals - decals must be installed matching the loaders's rated operating capacity, lift arm type & operation controls thus order decals separately	A3P816077 & Above	1
				A3P913055 & Above	1
3	7197972	COVER			1

Page 38 OSS# 6300322913 - All rights reserved by Bobcat Company - 08/04/2017 - 06:30:16 - Produced by Ken Cook Co. with media1off

OPERATOR CAB

(Gas Spring)

(S/N A3P811001 - A3P816165, A3P911001 - A3P913089)

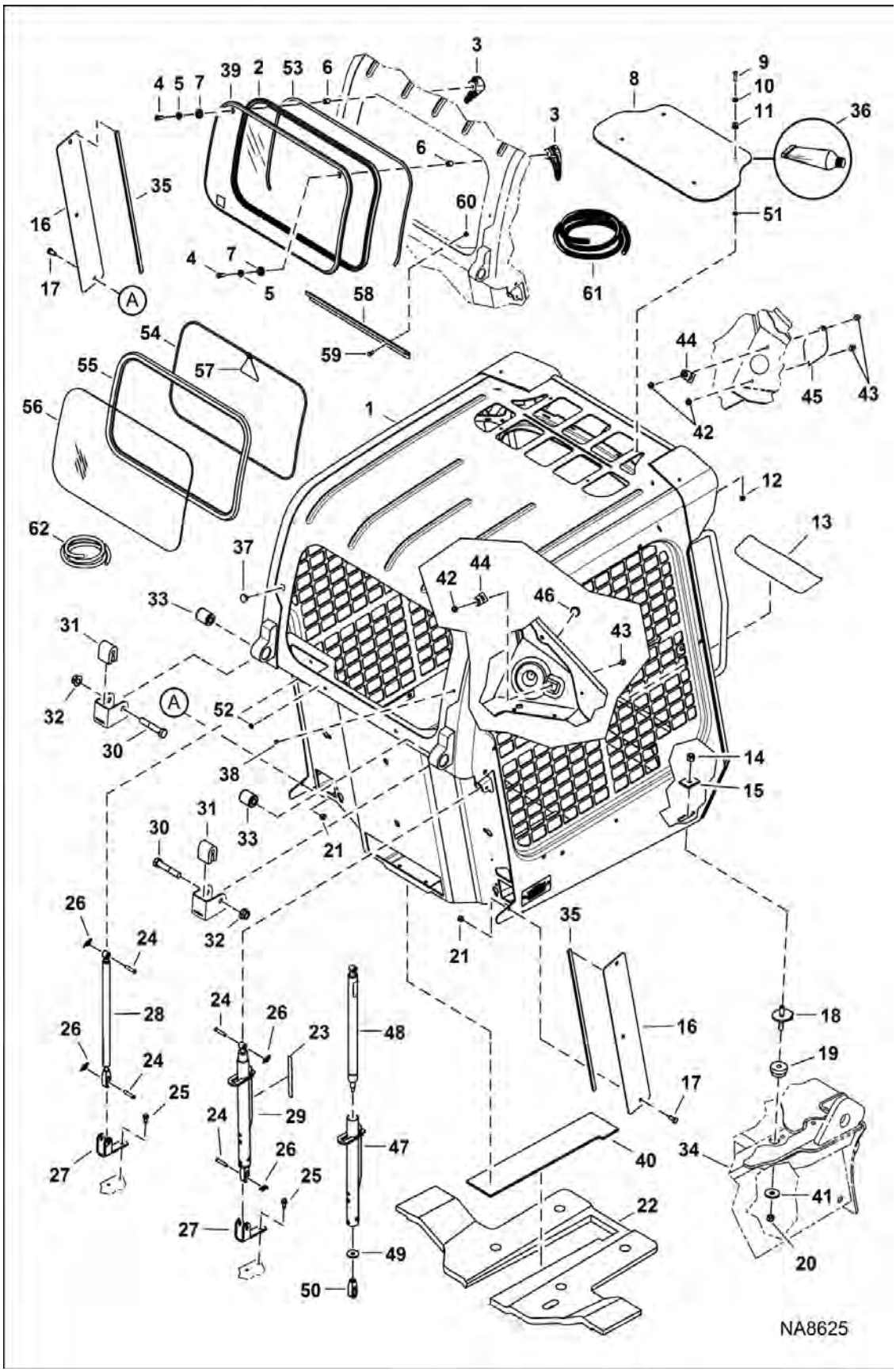

Page 39 - OSS# 6300322913 - All rights reserved by Bobcat Company - 08/04/2017 - 06:30:16 - Produced by Ken Cook Co. with media1off

OPERATOR CAB (Cont'd)

(Gas Spring)

(S/N A3P811001 - A3P816165, A3P911001 - A3P913089)

Ref No	Part Number	Description	Remarks	Serial Number	Qty
1		CAB, ASSY	See Illustration OPERATOR CAB / NA6016 NLA - W/ 15.37"x26.7" rear window opening		1
1		ASSY CAB	See Illustration OPERATOR CAB / NA6016 W/ 14.92"X26.2" rear window opening		1
2	7163988	SEAL, WINDOW REAR			1
3	7150152	LATCH, WINDOW RIGHT			1
3	7150151	LATCH, WINDOW LEFT			1
4	53C512	SCREW			2
5	25E14	WSHR			2
6	6802539	SPACER			2
7	7121425	BUSHING			2
8	7120411	WINDOW, CAB TOP			1
9	1C416	BOLT	Was 53C416 [A]		4
10	25E13	WASHER 5			4
11	6675545	GROMMET			4
12	55D4	NUT			4
13	7169747	TREAD, SAFETY			1
14	59D8	NUT 5			2
15	6553709	WASHER	rectangular		2
16	7166544	COVER, HVAC			2
17	17C612	BOLT 5	Was 31C612 [B]		4
18	6702971	BOLT ASSY			2
19	6560633	DAMPER, VIBRATION			2
20	85D8	NUT, 5			2
21	61D6	NUT 5			4
22	7176603	INSULATION, PANEL SEAT			1
23	7169877	DECAL	push		1
24	6567743	PIN			4
25	84G3712	BOLT 5			4
26	6631418	RING, RETAINING			4
27	7144859	MOUNT, GAS SPRING			2
28	7167437	SPRING, GAS STD	LH - Also Order 7169291 decal		1
29	7234468	GAS SPRING	RH - W/lock - Was 7144862 [A]		1
30	17C1056	BOLT			2
31	6579613	STOP			2
32	53D10	NUT			2
33	6562602	BUSHING		A3P811001 - A3P816076	2
				A3P911001 - A3P913054	2

Page 38 OSS# 6300322913 - All rights reserved by Bobcat Company - 08/04/2017 - 06:30:16 - Produced by Ken Cook Co. with mediaioff

OPERATOR CAB (Cont'd)

(Gas Spring)

(S/N A3P811001 - A3P816165, A3P911001 - A3P913089)

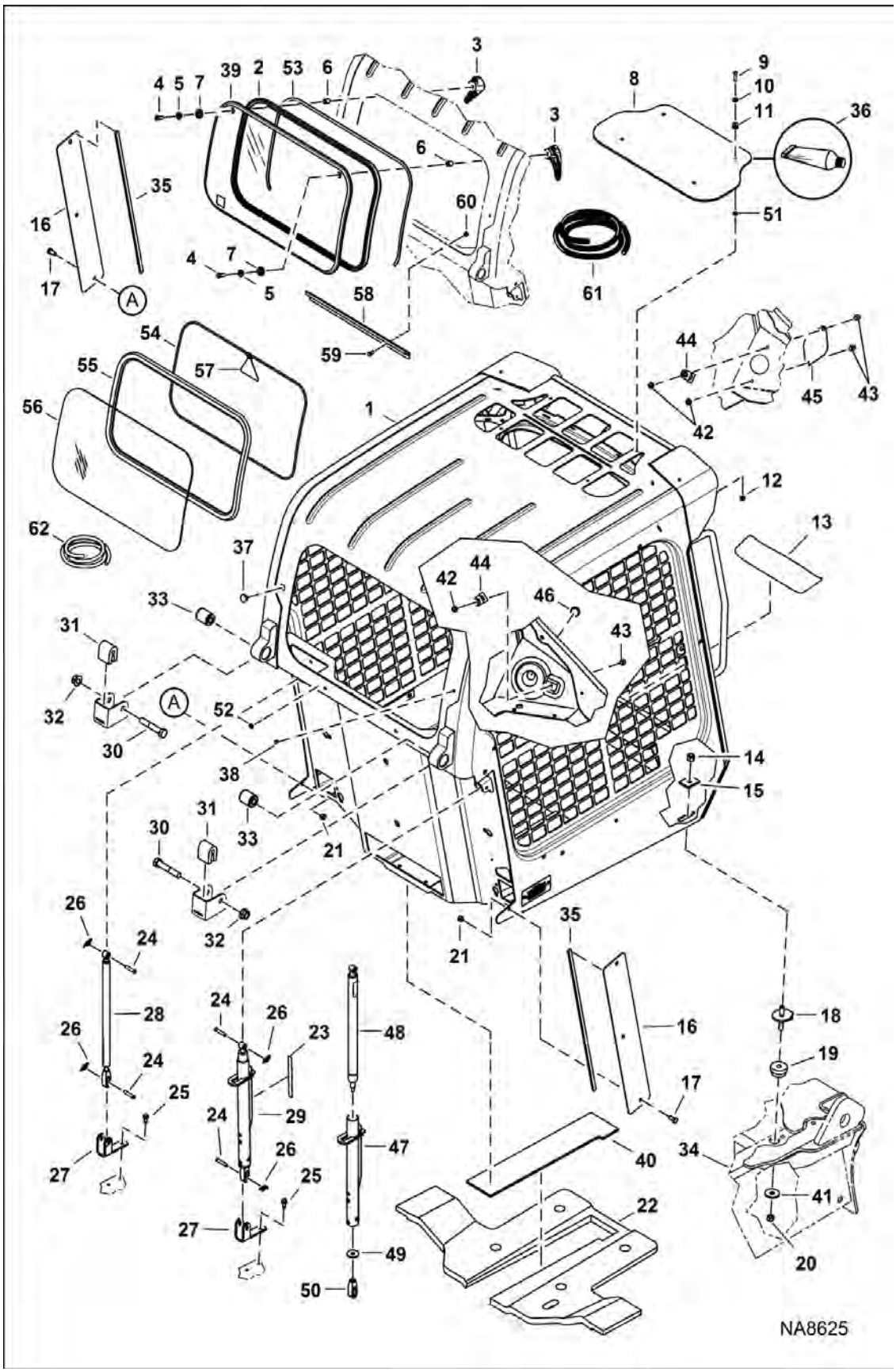

Illustration NA8625

Page 41 - OSS# 6300322913 - All rights reserved by Bobcat Company - 08/04/2017 - 06:30:16 - Produced by Ken Cook Co. with media1off

OPERATOR CAB (Cont'd)

(Gas Spring)

(S/N A3P811001 - A3P816165, A3P911001 - A3P913089)

Ref No	Part Number	Description	Remarks	Serial Number	Qty
33	7286601	ISOLATOR VIBRATION		A3P816077 & Above	2
				A3P913055 & Above	2
34		MAIN FRAME	See Illustration MAIN FRAME / NA2933 , See Illustration MAIN FRAME / NA6441		1
35	7182796	SEAL, FOAM			2
36	7233439	SEALANT, GASKET LIQUID	apply 0.38" bead of sealant to top window 0.50" from the edge of top window - Was 7215541 [A]		1
37	6657719	PLUG	0.75" dia hole		1
38	7188745	PLUG	radio - Was 7174012 [A]		1
39	7138973	WINDOW, REAR	- std - Used W/ Ref. 1 (NLA - 7116111)	A3P811001 - A3P813955	1
39	7214138	WINDOW, CAB REAR	See Illustration CAB WINDOWS / NA2052 - polycarbonate - Used W/ Ref. 1 (NLA - 7116111) - Was 7183022 [A]		1
39	7214138	WINDOW, CAB REAR	See Illustration CAB WINDOWS / NA8179 - polycarbonate - Used W/ Ref. 1 (7215840)		1
40	7174787	INSULATION, PAN SEAT			1
41	6515817	WASHER			2
42	55D5	NUT			1
43	35C516	BOLT 10			1
44	6684641	MOUNT			1
45	7173576	COVER			1
46	6697942	PLUG, NYLON			1
47	7149091	TUBE			1
48	7149093	SPRING			1
49	7157958	WASHER			1
50	7169606	CONNECTOR, SLOTTED			1
51	7215374	BUSHING, NYLON			4
52	7188745	PLUG	- Use W/ std window		2
53		SEAL, FOAM	NLA - 1372 mm (54") long - Order Ref. 61		1
54		CORD	NLA - 1961,4 mm (77.2") long - Order Ref. 62		1
55	7219972	SEAL, WINDOW REAR			1
56	7219974	WINDOW, CAB REAR	- std - Used W/ Ref. 1 (7215840)	A3P813956 & Above	1
57	6731478	TAG EXIT			1
58		CHANNEL	See Illustration CAB WINDOWS / NA8179		1
59		BOLT	See Illustration CAB WINDOWS / NA8179		2
60		NUT	See Illustration CAB WINDOWS / NA8179		2
61	6648416	SEAL BULK /FT	sold per foot		x
62	6554149	CORD, BULK/FT	bulk - sold per foot		x

Page 2 OSS# 6300322913 - All rights reserved by Bobcat Company - 08/04/2017 - 06:30:16 - Produced by Ken Cook Co. with mediaioff

OPERATOR CAB

(Gas Spring)

(S/N A3P816166 & Above, A3P913090 & Above)

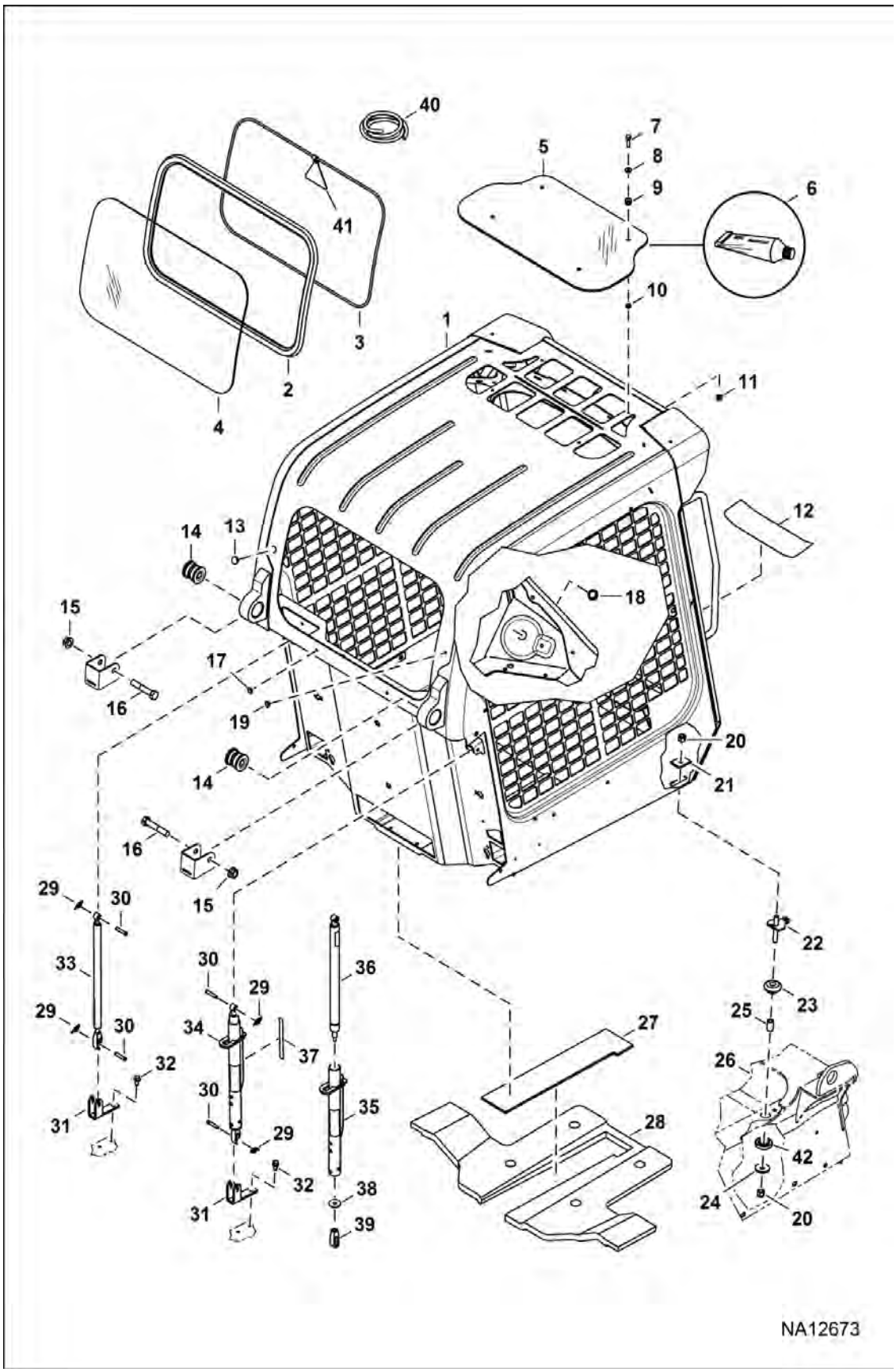

Page 43 - OSS# 6300322913 - All rights reserved by Bobcat Company - 08/04/2017 - 06:30:16 - Produced by Ken Cook Co. with media1off

OPERATOR CAB (Cont'd)

(Gas Spring)

(S/N A3P816166 & Above, A3P913090 & Above)

Ref No	Part Number	Description	Remarks	Serial Number	Qty
1		CAB, ASSY	See Illustration OPERATOR CAB / NA6016		1
2	7219972	SEAL, WINDOW REAR			1
3		CORD	NLA - 1961,4 mm (77.2") long - Order Ref. 43		x
4	7219974	WINDOW, CAB REAR			1
5	7120411	WINDOW, CAB TOP			1
6	7233439	SEALANT, GASKET LIQUID	apply 0.38" bead of sealant to top window 0.50" from the edge of top window		x
7	1C416	BOLT			4
8	25E13	WASHER 5			4
9	6675545	GROMMET			4
10	7215374	BUSHING, NYLON			4
11	55D4	NUT			4
12	7169747	TREAD, SAFETY			1
13	6657719	PLUG	0.75" dia hole		1
14	7286601	ISOLATOR VIBRATION			2
15	53D10	NUT			2
16	1C1056	BOLT			2
17	7188745	PLUG			2
18	6697942	PLUG, NYLON			1
19	7188745	PLUG	radio		1
20	59D8	NUT 5			4
21	6553709	WASHER	rectangular		2
22	7314341	ASSY BOLT W/WASHER			2
23	7286606	ISOLATOR VIBRATION			2
24	6515817	WASHER			2
25	7303649	SPACER TUBE			2
26		MAIN FRAME	See Illustration MAIN FRAME / NA10900		1
27	7174787	INSULATION, PAN SEAT			1
28	7176603	INSULATION, PANEL SEAT			1
29	6631418	RING, RETAINING			4
30	6567743	PIN			4
31	7144859	MOUNT, GAS SPRING			2
32	84G3712	BOLT 5			4
33	7167437	SPRING, GAS STD	LH - Also Order 7169291 decal		1
33	7167438	GAS SPRING	Deluxe Gas Spring		1
34	7234468	GAS SPRING	locking		1
35	7149091	TUBE			1
36	7149093	SPRING			1
37	7169877	DECAL	push		1
38	7157958	WASHER			1

Page 44 OSS# 6300322913 - All rights reserved by Bobcat Company - 08/04/2017 - 06:30:16 - Produced by Ken Cook Co. with mediaioff

OPERATOR CAB (Cont'd)

(Gas Spring)

(S/N A3P816166 & Above, A3P913090 & Above)

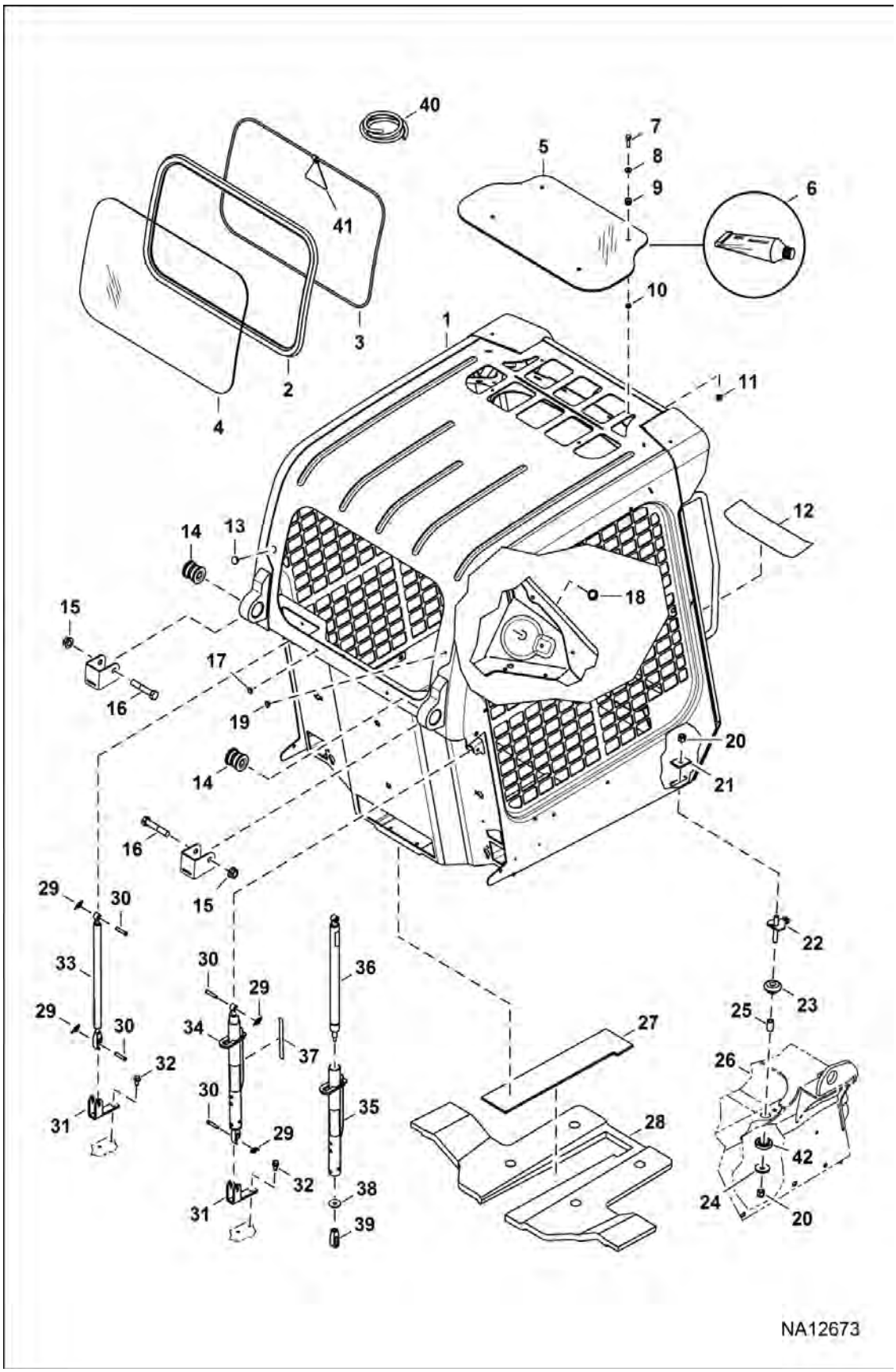

Page 45 - OSS# 6300322913 - All rights reserved by Bobcat Company - 08/04/2017 - 06:30:16 - Produced by Ken Cook Co. with media1off

Illustration NA12673

OPERATOR CAB (Cont'd)

(Gas Spring)

(S/N A3P816166 & Above, A3P913090 & Above)

Ref No	Part Number	Description	Remarks	Serial Number	Qty
39	7169606	CONNECTOR, SLOTTED			1
40	6554149	CORD, BULK/FT	bulk - sold per foot		x
41	6731478	TAG EXIT			1
42	7286607	ISOLATOR VIBRATION			2

Page 46 OSS# 6300322913 - All rights reserved by Bobcat Company - 08/04/2017 - 06:30:16 - Produced by Ken Cook Co. with media1off

OPERATOR CAB
(Cab Interior) (Standard)

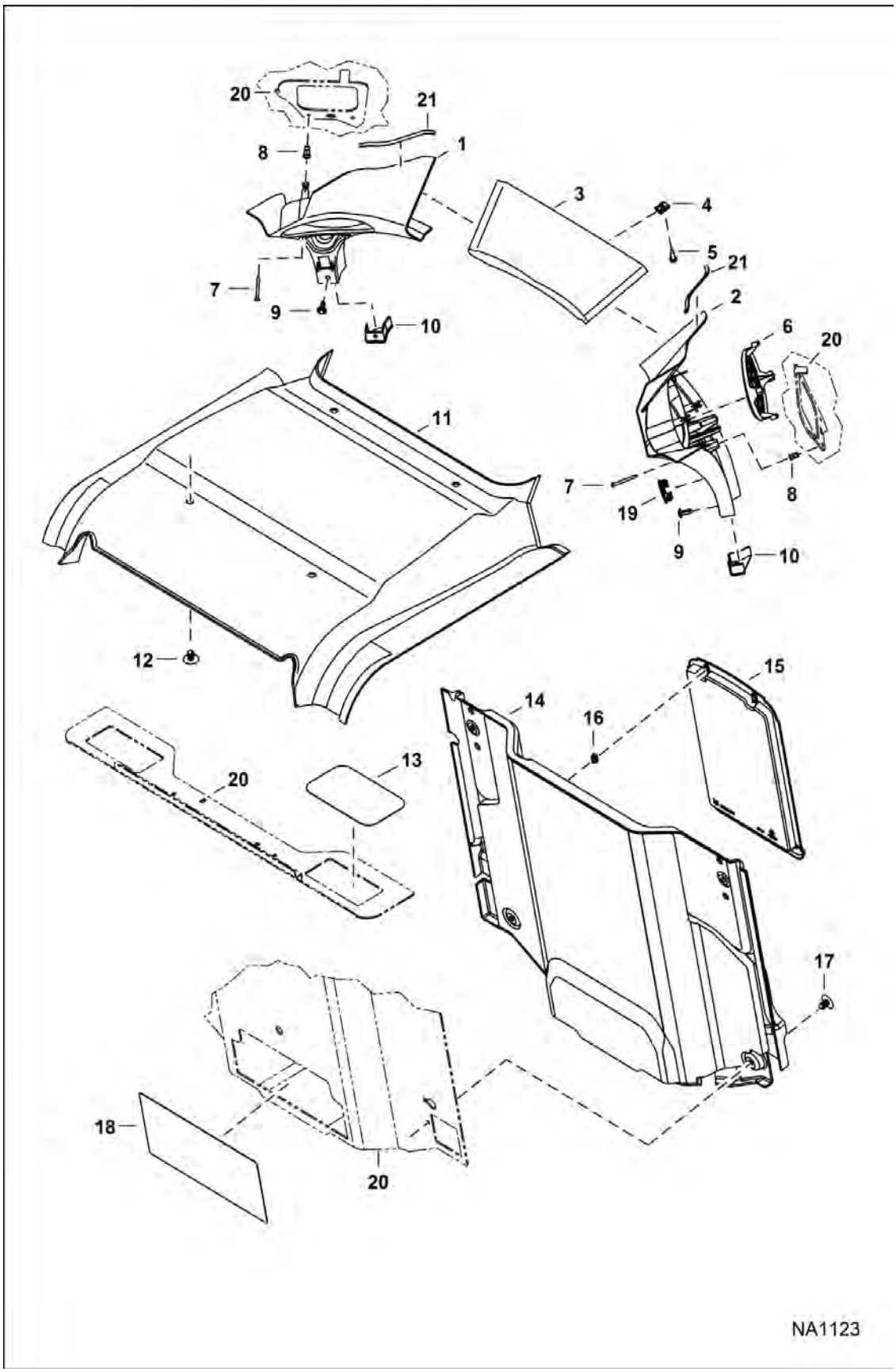

Page 47 - OSS# 6300322913 - All rights reserved by Bobcat Company - 08/04/2017 - 06:30:16 - Produced by Ken Cook Co. with media1off

Illustration NA1123

OPERATOR CAB (Cont'd)

(Cab Interior) (Standard)

Ref No	Part Number	Description	Remarks	Serial Number	Qty
1	7155792	PANEL, LH			1
2	7155791	PANEL, RH			1
3	7223412	PANEL, DASH	Was 7155788 [A]		1
4	7142762	CLIP			2
5	6669224	TAP SCREW			2
6	7002985	INSERT, BLANK	W/Bobcat head - if loader is equipped W/SJC & text decals, Also Order Ref. 2 & 7168114 decal - if loader is equipped W/SJC & no text decals, Also Order Ref. 2 & 7177707 decal		1
7	7165799	SCREW			4
8	6675033	INSERT, THREADED			4
9	7160382	RIVET, BIRD CAGE			2
10	7165037	CAP, INST PANEL RH			1
10	7165038	CAP, INST PANEL LH			1
11	7155786	HEADLINER,STD			1
12	6674895	RETAINER			4
13	7168610	COVER			1
14	7176134	PANEL, CAB INTERIOR			1
15	6725301	COVER,OM			1
15	6725303	PAN, OM			1
15	7259751	NUT, SELF THREADING			7
16	6675524	CLIP			2
17	6674895	RETAINER			4
18	6665314	PLUG			1
19	7178954	COVER, HVAC			1
20		CAB ASSY	See Illustration OPERATOR CAB / NA8625		1
21	7187104	SEAL			2

Page 48 OSS# 6300322913 - All rights reserved by Bobcat Company - 08/04/2017 - 06:30:16 - Produced by Ken Cook Co. with mediaioff

OPERATOR CAB
(Cab Interior) (Deluxe)

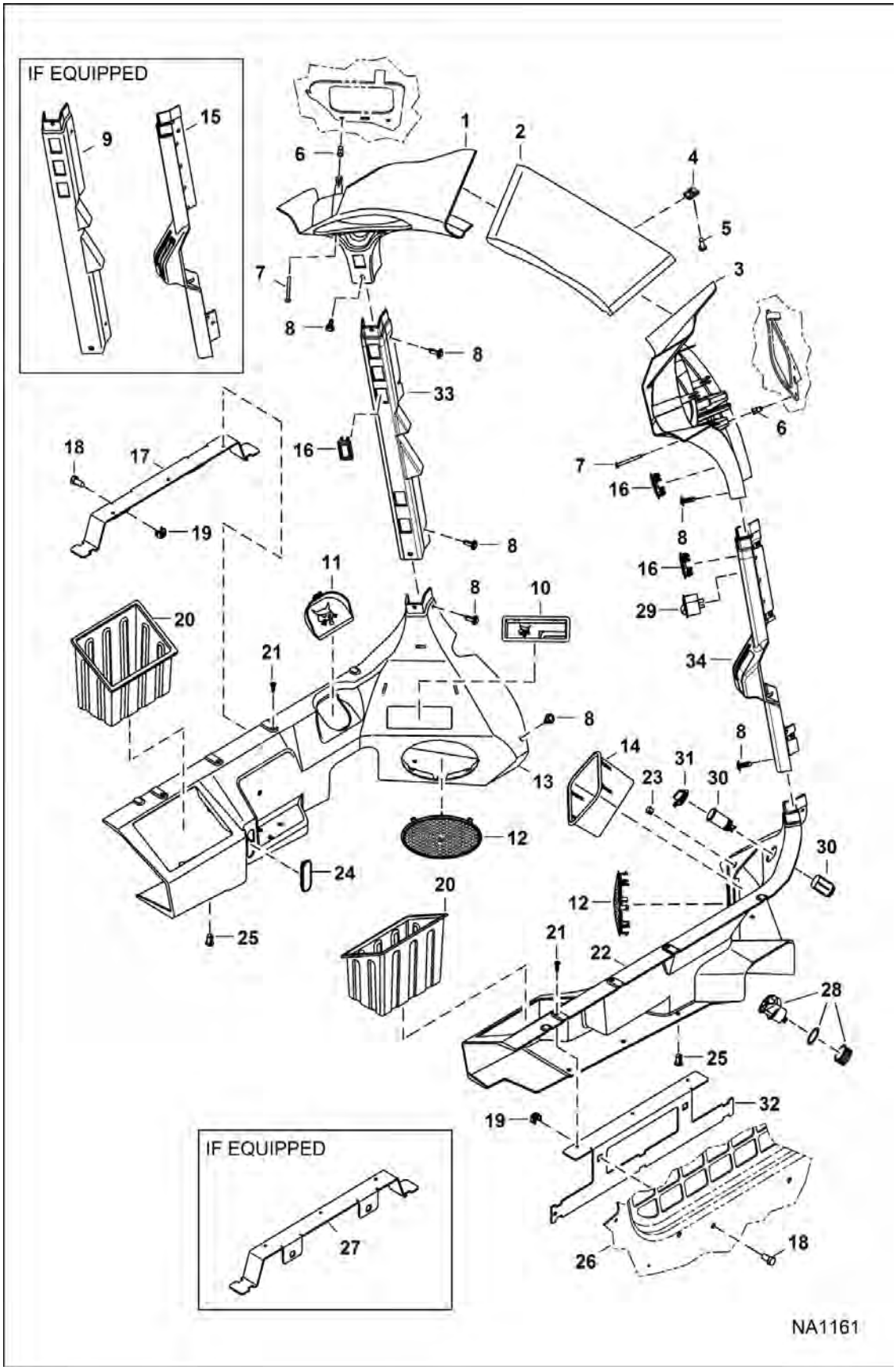

Page 49 - OSS# 6300322913 - All rights reserved by Bobcat Company - 08/04/2017 - 06:30:16 - Produced by Ken Cook Co. with media1off

OPERATOR CAB (Cont'd)

(Cab Interior) (Deluxe)

Ref No	Part Number	Description	Remarks	Serial Number	Qty
1	7155792	PANEL, LH			1
2	7223412	PANEL, DASH	Was 7155788 [A]		1
3	7155791	PANEL, RH			1
4	7142762	CLIP			6
5	6669224	TAP SCREW			6
6	6675033	INSERT, THREADED			4
7	7165799	SCREW			4
8	7160382	RIVET, BIRD CAGE			8
9		COLUMN, FRONT LEFT	NLA - Order Ref 33 - Was 7164348 [A]		1
10	7165344	STORAGE			1
11	7165345	DOOR, COVER			1
12	7161939	GRILL			2
13	7155643	FENDER, PANEL L.H.			1
14	7154285	BOX,RADIO DELETE			1
15		COLUMN, FRONT RIGHT	NLA - Order Ref 34 - Was 7164347 [A]		1
16	6665314	PLUG	Use W/Ref 9, 15		5
16	6665314	PLUG	Use W/Ref 33, 34		8
17	7116118	BRACKET			1
18	17C612	BOLT 5			4
19	7149204	NUT			4
20	7145268	CONTAINER, STORAGE			2
21	7160381	RIVET, BIRD CAGE			6
22	7155642	FENDER, PANEL RH			1
23	7182942	PLUG			1
24	7165346	DOOR, COVER			1
25	7160383	RIVET, BIRD CAGE			10
26		CAB ASSY	See Illustration OPERATOR CAB / NA8625		1
27		BRACKET	NLA - Order Ref. 32 - Was 7127976 [A]		1
28	7001664	PLUG, POWER	W/hinged cover		1
28		WASHER	NSS		1
28		NUT	NSS - plastic		1
29	6668742	SWITCH	EMEA		1
30	6664223	OUTLET			1
31	6664224	CAP			1
32	7193021	BRACKET			2
33	7265545	COLUMN, FRONT LEFT			1
34	7282966	COLUMN, FRONT RIGHT			1

Page 58 OSS# 6300322913 - All rights reserved by Bobcat Company - 08/04/2017 - 06:30:16 - Produced by Ken Cook Co. with mediaioff

OPERATOR CAB
(Cab Interior) (Deluxe) (Headliner)

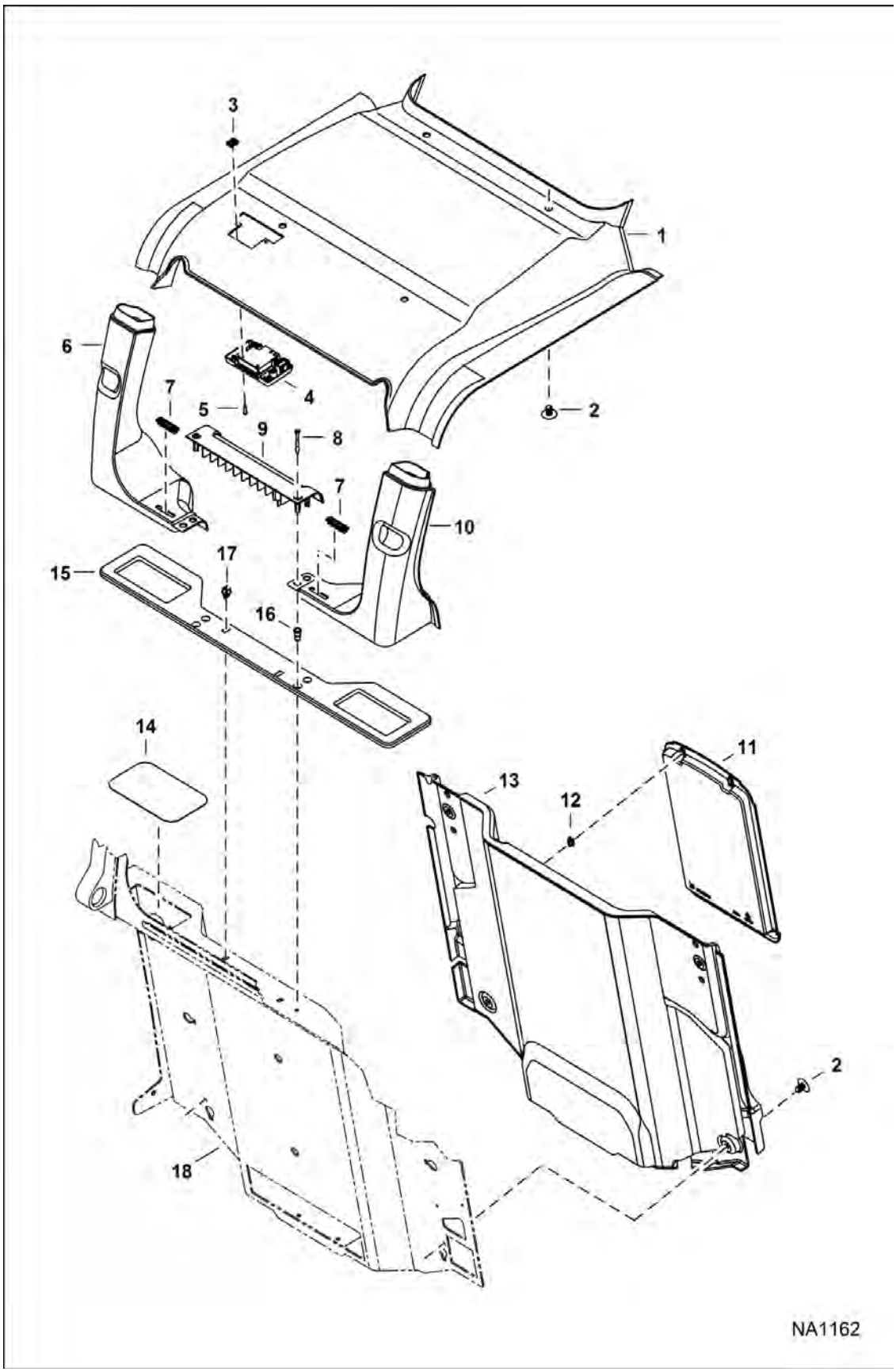

Page 51 - OSS# 6300322913 - All rights reserved by Bobcat Company - 08/04/2017 - 06:30:16 - Produced by Ken Cook Co. with media1off

OPERATOR CAB (Cont'd)
(Cab Interior) (Deluxe) (Headliner)

Ref No	Part Number	Description	Remarks	Serial Number	Qty
1	7155798	HEADLINER, DLX			1
2	6674895	RETAINER			8
3	7142762	CLIP			2
4		LIGHT	NLA - 3-positioin switch - Order 7166629 light - Was 7155797 [A]		1
4	7166629	LIGHT, CAB HEADLINER	2 position switch		1
5	7170114	SCREW			2
6	100334SUB	DUCT, AIR	LH - W/Ref. 3		1
7	7145885	VENT, DEFROST			2
8	7165799	SCREW			2
9	7165332	SHELF, REAR			1
10	100333SUB	DUCT, AIR	RH - W/Ref. 3		1
11	6725301	COVER,OM			1
12	6675524	CLIP			2
13	7176133	PANEL, CAB INTERIOR			1
14	7168610	COVER			2
15	7153832	SEAL, SHELF REAR			1
16	6675033	INSERT, THREADED			2
17	7165333	CLIP			2
18		CAB ASSY	See Illustration OPERATOR CAB / NA8625		1

Page 32 OSS# 6300322913 - All rights reserved by Bobcat Company - 08/04/2017 - 06:30:16 - Produced by Ken Cook Co. with mediaioff

SEAT BAR
(Manual Controls)

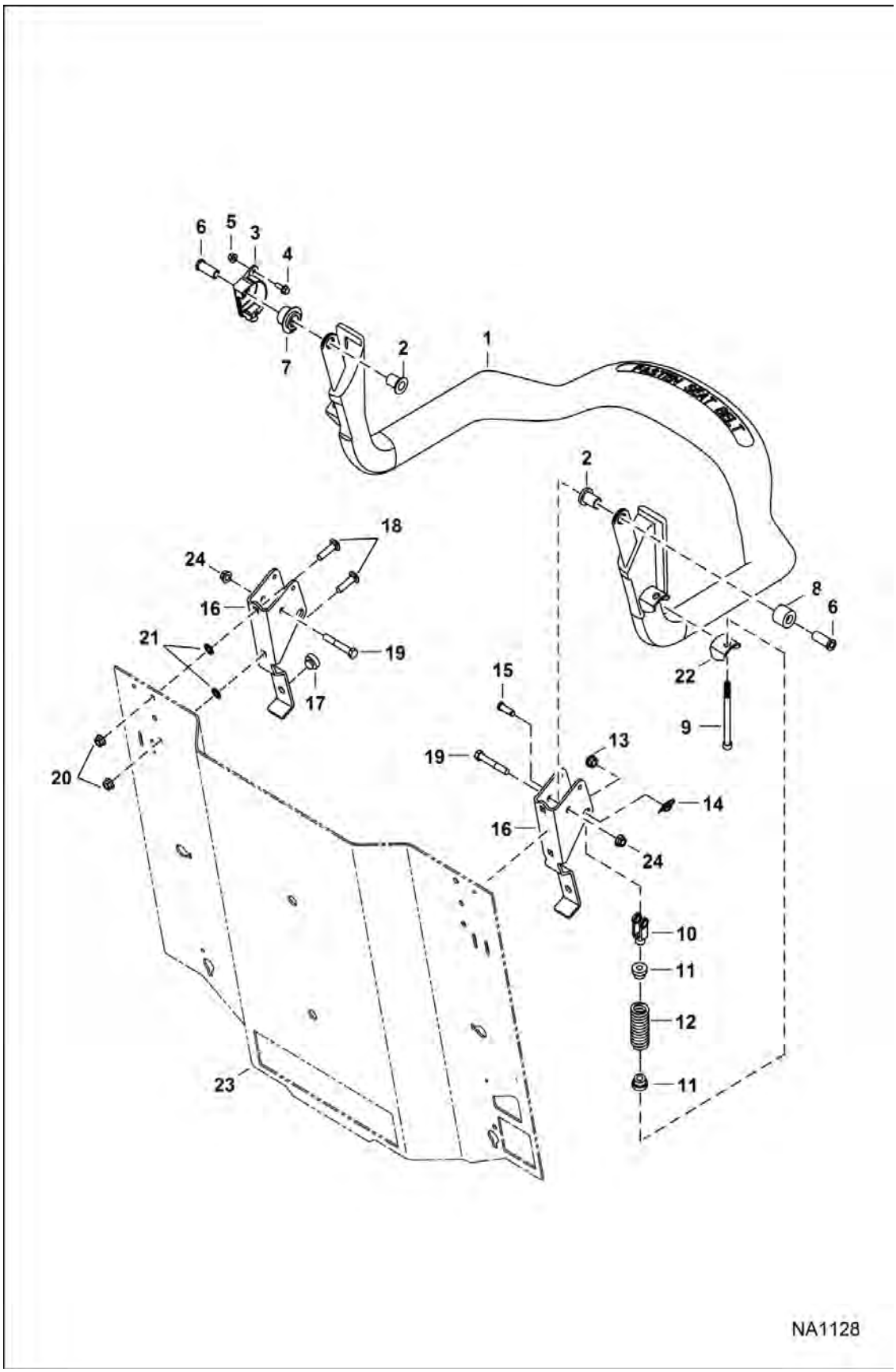

Page 53 - OSS# 6300322913 - All rights reserved by Bobcat Company - 08/04/2017 - 06:30:16 - Produced by Ken Cook Co. with media1off

SEAT BAR (Cont'd)
(Manual Controls)

Ref No	Part Number	Description	Remarks	Serial Number	Qty
1	7143971	SEATBAR			1
2	6680441	BUSHING			2
3	6691714	SENSOR, SEATBAR BICS			1
4	35C412	BOLT			1
5	83D4	NUT 10			1
6	6715865	BUSHING			2
7	6680443	BUSHING, MAGNET			1
8	6715866	BUSHING			1
9	6713887	BOLT			2
10	6713589	CLEVIS			2
11	6710659	BUSHING			4
12	6701535	SPRING, CENTERING			2
13	6715864	BUSHING			2
14	6631418	RING, RETAINING			2
15	4F6106	PIN			2
16	7157719	BRACKET			2
17	6519178	BUMPER			2
18	10C616	BOLT 10			4
19	17C640	BOLT			2
20	53D6	NUT			4
21	6674894	NUT, LOCK			4
22		MOUNT	NLA - Order Ref. 1		1
23		CAB ASSY	See Illustration OPERATOR CAB / NA8625		1
24	97D6	NUT 10			2

Page 54 OSS# 6300322913 - All rights reserved by Bobcat Company - 08/04/2017 - 06:30:16 - Produced by Ken Cook Co. with mediaioff

SEAT BAR
(Selectable Joystick Controls)

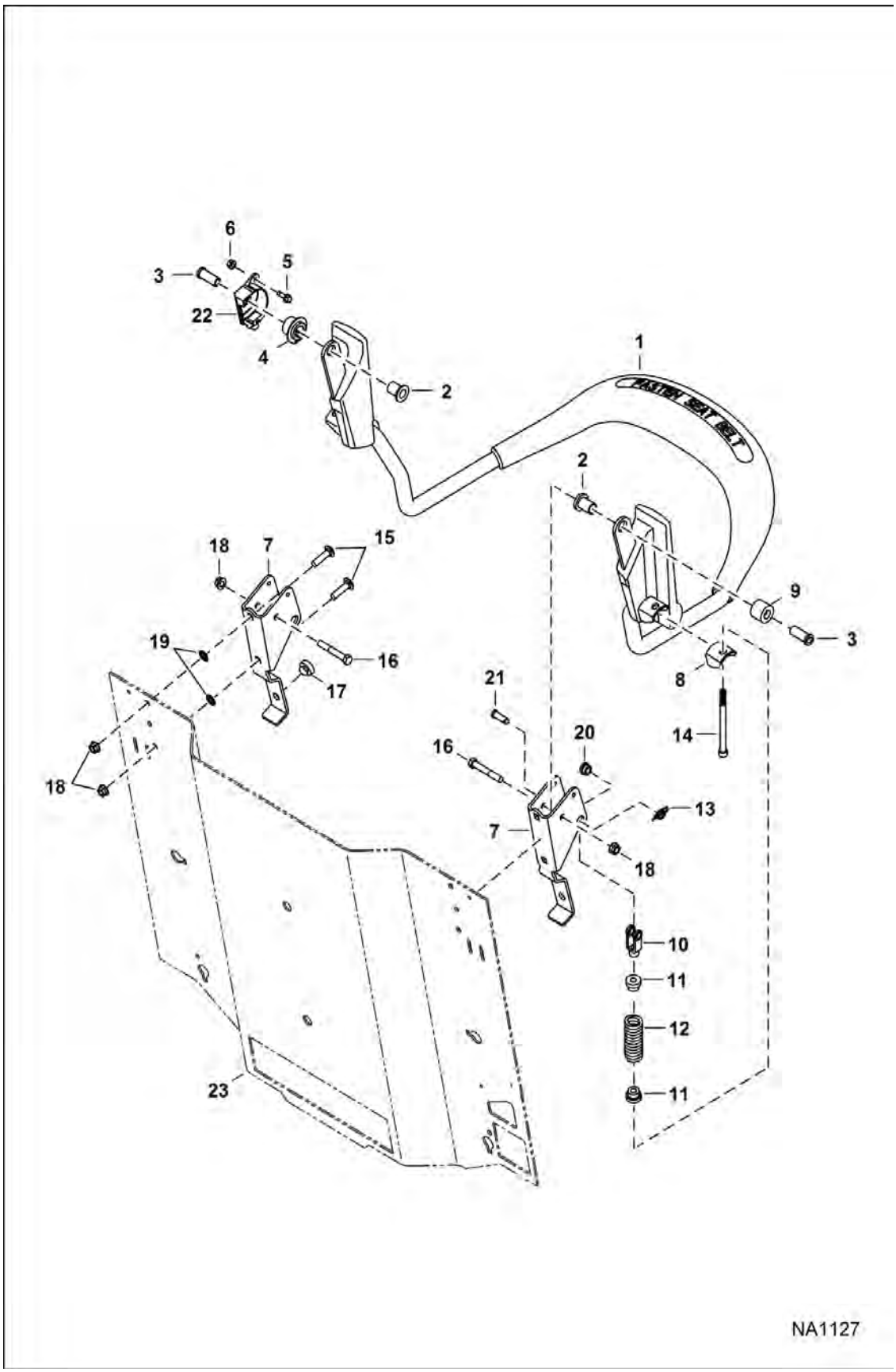

Page 55 - OSS# 6300322913 - All rights reserved by Bobcat Company - 08/04/2017 - 06:30:16 - Produced by Ken Cook Co. with media1off

Illustration NA1127

SEAT BAR (Cont'd)
(Selectable Joystick Controls)

Ref No	Part Number	Description	Remarks	Serial Number	Qty
1	7203389	SEAT BAR	SJC - Was 7153408 [A]		1
2	6680441	BUSHING			2
3	6715865	BUSHING			2
4	6680443	BUSHING, MAGNET			1
5	35C412	BOLT			1
6	83D4	NUT 10			1
7	7157719	BRACKET			2
8		MOUNT	NLA - Order Ref. 1		1
9	6715866	BUSHING			1
10	6713589	CLEVIS			2
11	6710659	BUSHING			4
12	6701535	SPRING, CENTERING			2
13	6631418	RING, RETAINING			2
14	6713887	BOLT			2
15	10C624	BOLT			4
16	17C640	BOLT			2
17	6519178	BUMPER			2
18	53D6	NUT			6
19	6674894	NUT, LOCK			4
20	6715864	BUSHING			2
21	4F6106	PIN			2
22	6691714	SENSOR, SEATBAR BICS			1
23		CAB ASSY	See Illustration OPERATOR CAB / NA8625		1

Page 56 OSS# 6300322913 - All rights reserved by Bobcat Company - 08/04/2017 - 06:30:16 - Produced by Ken Cook Co. with mediaioff

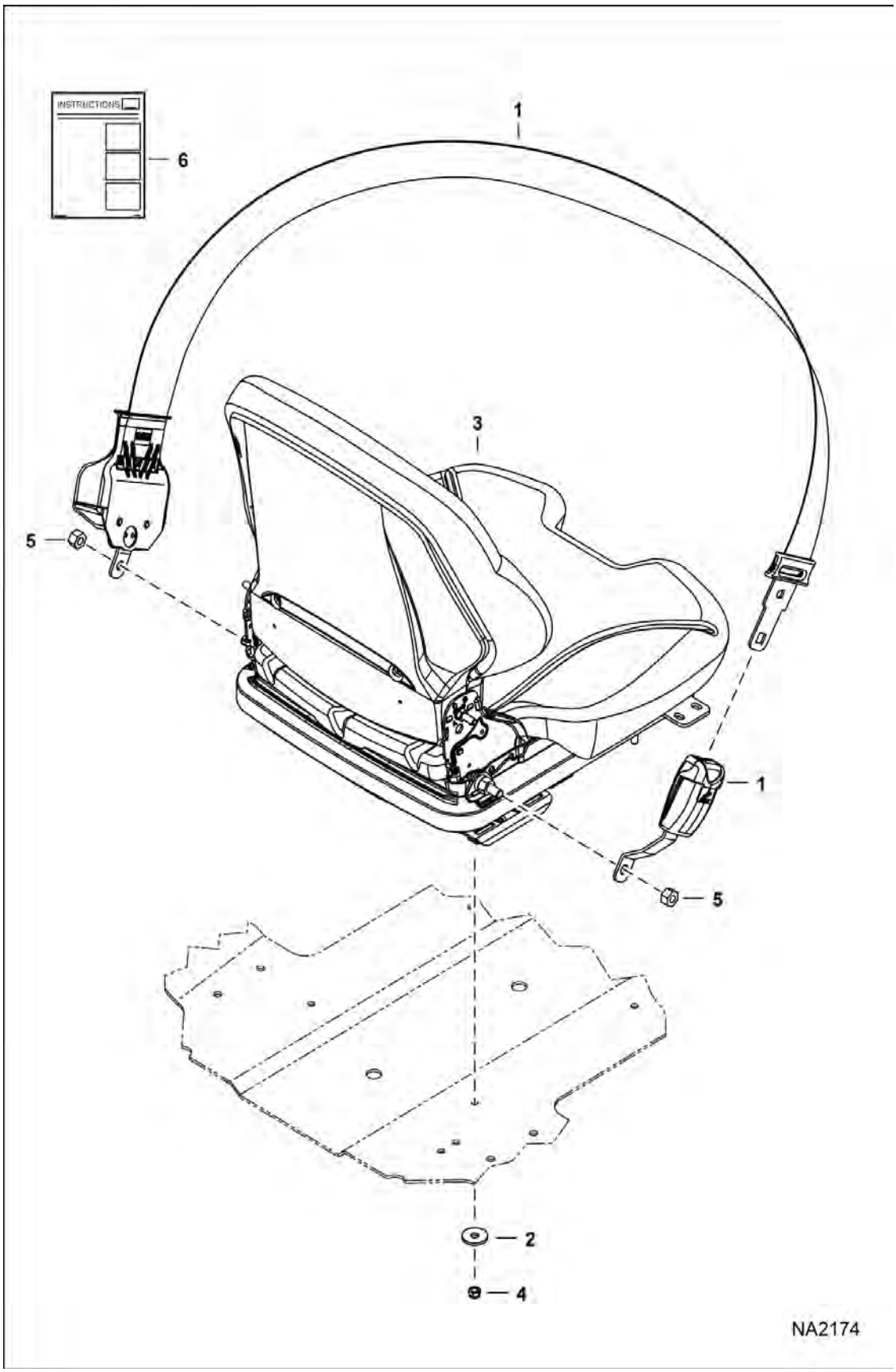

Page 57 - OSS# 6300322913 - All rights reserved by Bobcat Company - 08/04/2017 - 06:30:16 - Produced by Ken Cook Co. with media1off

SEAT & SEAT BELT (Cont'd)

Ref No	Part Number	Description	Remarks	Serial Number	Qty
1		SEAT BELT	See Illustration SEAT BELT - 2" / NA2043A , See Illustration SEAT BELT - 3" / NA2043		1
2	619021	WASHER, 5			4
3		SEAT	See Illustration SEAT - 80 mm / NA2430 - suspension		1
3		SEAT	See Illustration SEAT / NA2429 - air suspension		1
4	59D5	NUT 5			4
5	86D7	NUT			2
6	6987249ENUS	INSTRUCTIONS	Was 6987249 [A]		1

Page 38 OSS# 6300322913 - All rights reserved by Bobcat Company - 08/04/2017 - 06:30:16 - Produced by Ken Cook Co. with media1off

PANELS

(Floor Pan) (Manual Controls, AHC & ACS)

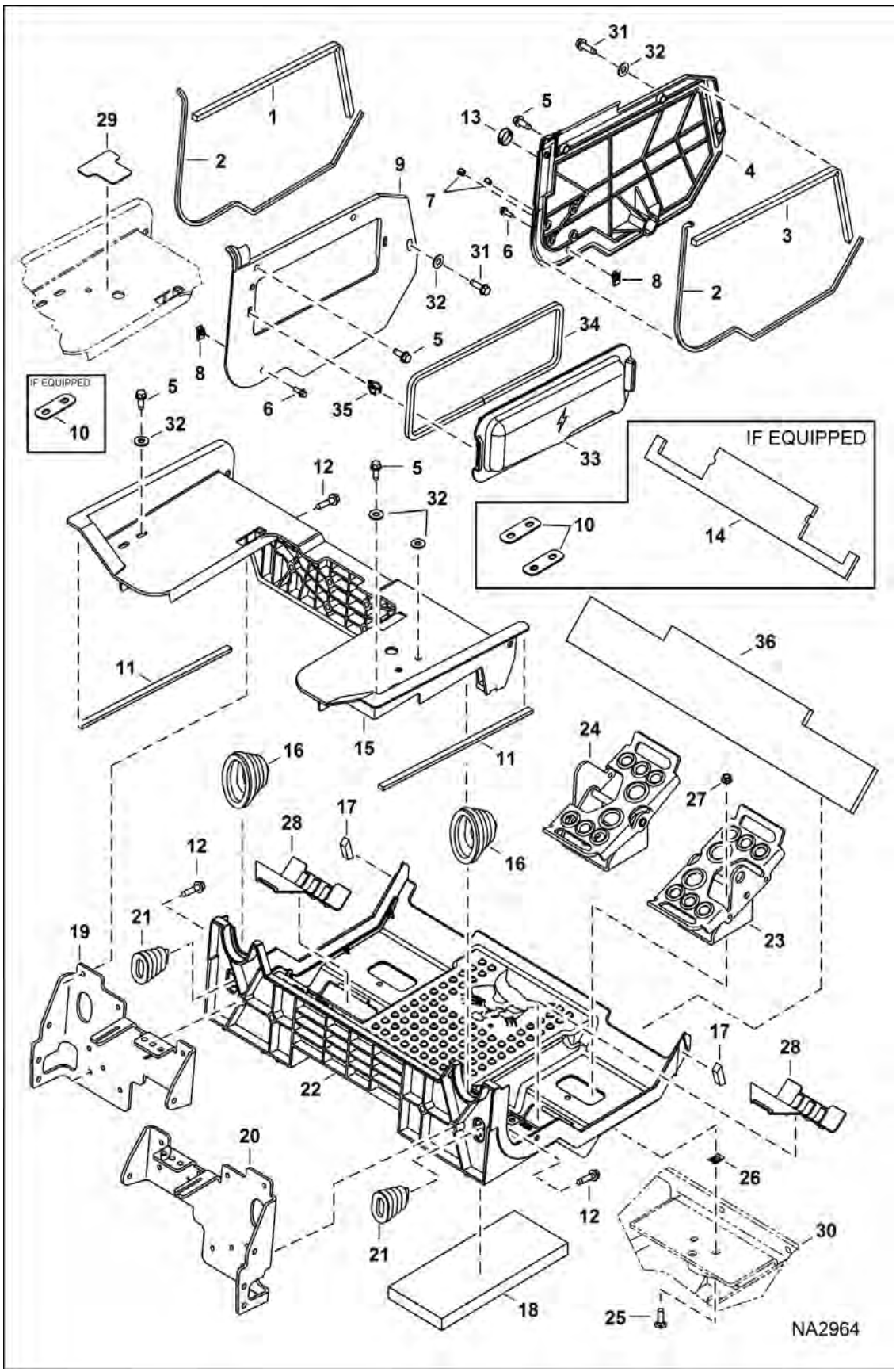

Page 59 - OSS# 6300322913 - All rights reserved by Bobcat Company - 08/04/2017 - 06:30:16 - Produced by Ken Cook Co. with media1off

PANELS (Cont'd)

(Floor Pan) (Manual Controls, AHC & ACS)

Ref No	Part Number	Description	Remarks	Serial Number	Qty
1	7166197	FOAM, PANEL	LH		1
2	7166199	FOAM, EDGE			2
3	7166198	FOAM, PANEL	RH		1
4	7285001	PANEL, RH	Was 7180032 [A]		1
5	84G3716	SCREW 5			8
6	35C412	BOLT			2
7	5289686	PLUG	black - 0.38" dia hole		2
8	7160765	NUT			2
9	7196671	PANEL, LH			1
10		PLATE, WASHER	NLA - Order (2) of Ref. 32 - Was 7167118 [A]		3
11	7166196	FOAM, PANEL			2
12	84G3724	BOLT			12
13	7166315	PLUG			1
14	7163132	FOAM, FRONT			1
15	7185169	PANEL, STEERING	Was 7180037 [A]		1
16	7147815	BOOT			2
17	7166200	FOAM, PAN FLOOR			2
18	7166195	PAD, PAN FLOOR			1
19	7176118	MOUNT			1
20	7176117	MOUNT			1
21	7153503	BOOT	Manual Controls		2
21	7161130	COVER	AHC & ACS		2
22	7266821	PAN, FLOOR	Was 7255133 [A]		1
23	7151871	PEDAL ASSEMBLY CONTROL RH	See Illustration CONTROL PEDALS / NA2998 - RH - Manual Controls		1
23	7250339	PEDAL ASSY LH	fixed - AHC & ACS - Was 7158574 [A]		1
24	7151868	PEDAL ASSEMBLY CONTROL LH	See Illustration CONTROL PEDALS / NA2998 - LH - Manual Controls		1
24	7250339	PEDAL ASSY LH	fixed - AHC & ACS - Was 7158574 [A]		1
25	37C620	BOLT			4
26	6684033	NUT			4
27	57D6	NUT 5			4
28	7164345	COVER, PAN FLOOR			2
29	7185170	COVER	Use W/Ref. 15 to cover three holes if present on the LH side		1
30		DRIVECASE	See Illustration DRIVE TRAIN / NA2950 , See Illustration DRIVE TRAIN / NA2952		1
31	84G3720	BOLT			2
32	25E18	WASHER			8
33	7197082	COVER	W/Ref. 34 & 35 Stamped 7196670 -		1
34	7205329	SEAL, COVER			1
35	7165333	CLIP			2
36	7235751	FOAM, FRONT			1

Page 58 OSS# 6300322913 - All rights reserved by Bobcat Company - 08/04/2017 - 06:30:16 - Produced by Ken Cook Co. with mediaioff

PANELS

(Floor Pan) (Selectable Joystick Controls)

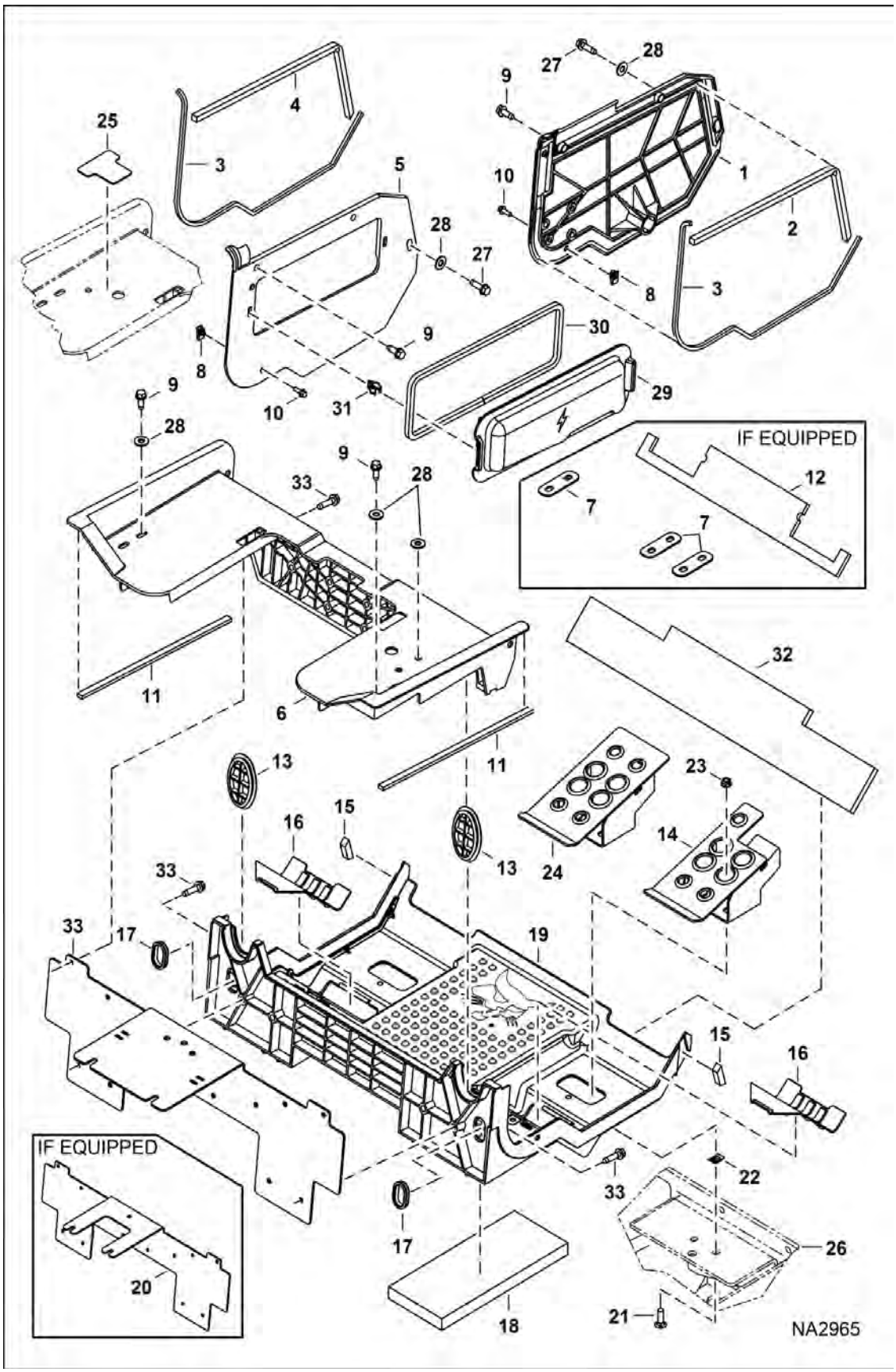

Page 61 - OSS# 6300322913 - All rights reserved by Bobcat Company - 08/04/2017 - 06:30:16 - Produced by Ken Cook Co. with media1off

PANELS (Cont'd)

(Floor Pan) (Selectable Joystick Controls)

Ref No	Part Number	Description	Remarks	Serial Number	Qty
1	7285001	PANEL, RH	Was 7180032 [A]		1
2	7166198	FOAM, PANEL			1
3	7166199	FOAM, EDGE			2
4	7166197	FOAM, PANEL			1
5	7196671	PANEL, LH			1
6	7185169	PANEL, STEERING	Was 7180037 [A]		1
7		PLATE, WASHER	NLA - Order (2) of Ref. 28 - Was 7167118 [A]		3
8	7160765	NUT			2
9	84G3716	SCREW 5			8
10	35C412	BOLT			2
11	7166196	FOAM, PANEL			2
12	7163132	FOAM, FRONT			1
13	7161131	COVER, LEVER			2
14	7250340	PEDAL ASSY RH	RH - Was 7157725 [A]		1
15	7166200	FOAM, PAN FLOOR			2
16	7164345	COVER, PAN FLOOR			2
17	7161130	COVER			2
18	7166195	PAD, PAN FLOOR			1
19	7266821	PAN, FLOOR	Was 7255133 [A]		1
20		PANEL, MOUNTING	NLA - Order Ref. 34 - Was 7191409 [A]		1
21	37C620	BOLT			4
22	6684033	NUT			4
23	57D6	NUT 5			4
24	7250339	PEDAL ASSY LH	LH - Was 7158574 [A]		1
25	7185170	COVER	Use W/Ref. 6 to cover three holes if present on the LH side		1
26		DRIVECASE	See Illustration DRIVE TRAIN / NA2950 , See Illustration DRIVE TRAIN / NA2952		1
27	84G3720	BOLT			2
28	25E18	WASHER			8
29	7197082	COVER	W/Ref. 30 & 31 Stamped 7196670 -		1
30	7205329	SEAL, COVER			1
31	7165333	CLIP			2
32	7235751	FOAM, FRONT			1
33	84G3724	BOLT			14
34	7270080	PANEL, MOUNTING			1

Page 52 OSS# 6300322913 - All rights reserved by Bobcat Company - 08/04/2017 - 06:30:16 - Produced by Ken Cook Co. with mediaioff

REAR DOOR

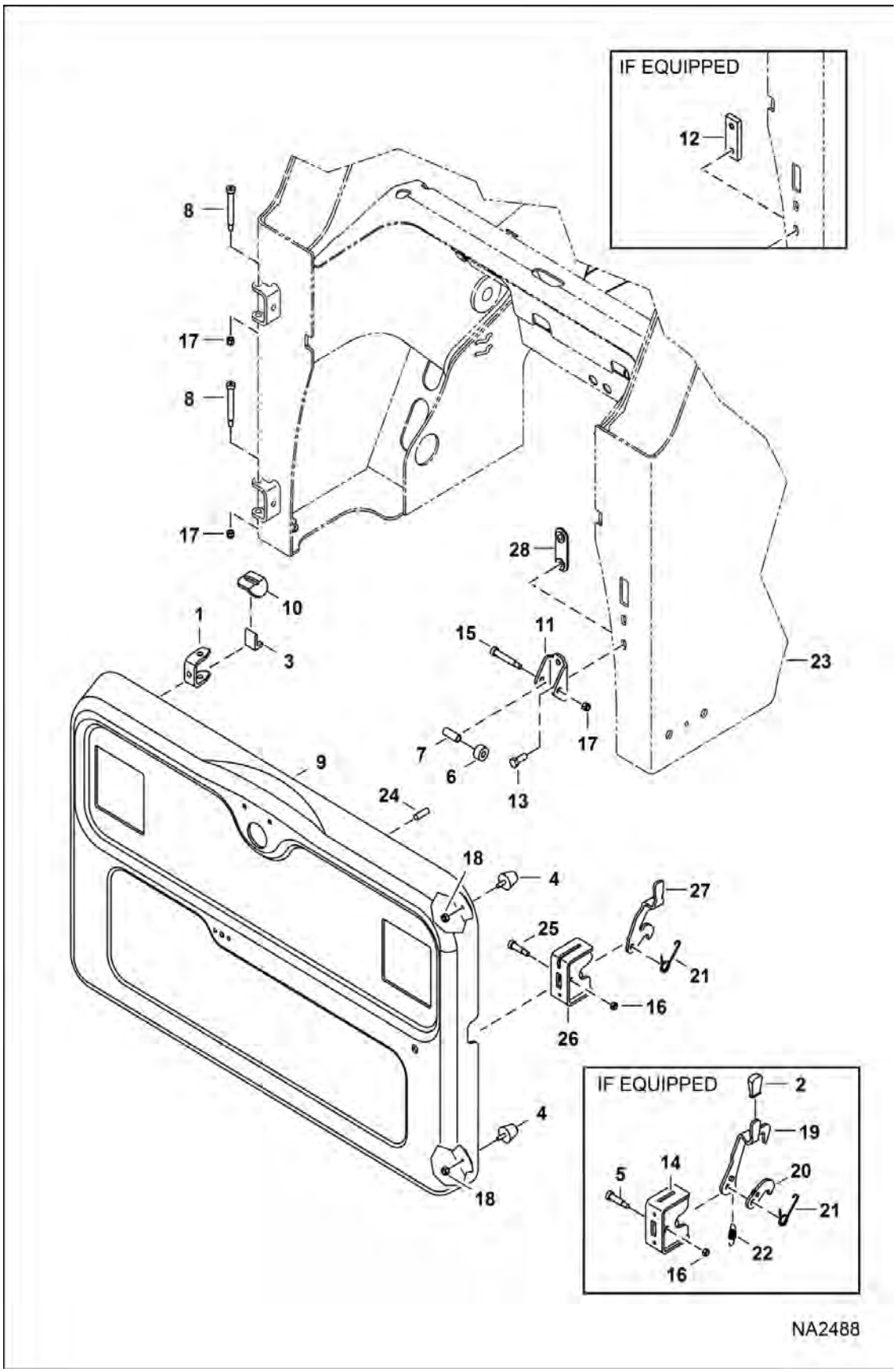

Page 63 - OSS# 6300322913 - All rights reserved by Bobcat Company - 08/04/2017 - 06:30:16 - Produced by Ken Cook Co. with media1off

REAR DOOR (Cont'd)

Ref No	Part Number	Description	Remarks	Serial Number	Qty
1	6733575	HINGE, REAR DOOR	weld-on		2
2	6564452	LEVERGRIP			1
3	6719766	STOP			1
4	6733616	BUMPER			2
5	38C824	SCREW			1
6	6809726	ROLLER			1
7	7184677	BUSHING	striker		1
8	6809845	BOLT			2
9	7144158	REAR DOOR	W/Ref. 1 & 26		1
10	7160704	STOP			1
11	7160705	CHANNEL			1
12		BAR	NLA - threaded striker - Order Ref. 28 - Was 7160706 [A]		1
13	17C820	BOLT 5			2
14		LATCH	NLA - weld-on - Order Ref. 16, 21 & 25-27 - Was 7160698 [A]		1
15	38C840	BOLT	carriage		1
16	85D6	NUT, 5			1
17	59D6	NUT			3
18	61D5	NUT 10			2
19	7160703	HANDLE			1
20	7160701	LATCH			1
21	6810132	SPRING			1
22	6810141	SPRING			1
23		MAIN FRAME	See Illustration MAIN FRAME / NA2933		1
24	56G412	STUD	weld-on		6
25	38C820	SCREW			1
26	7218276	PLATE, LATCH	weld-on - Was 7213527 [D]		1
27	7229411	HANDLE, LATCH DOOR	Was 7213524 [D]		1
28	7247445	NUT BAR ASSY			1

Page 1 of 1 OSS# 6300322913 - All rights reserved by Bobcat Company - 08/04/2017 - 06:30:16 - Produced by Ken Cook Co. with mediaioff

LIFT ARM & BOB-TACH

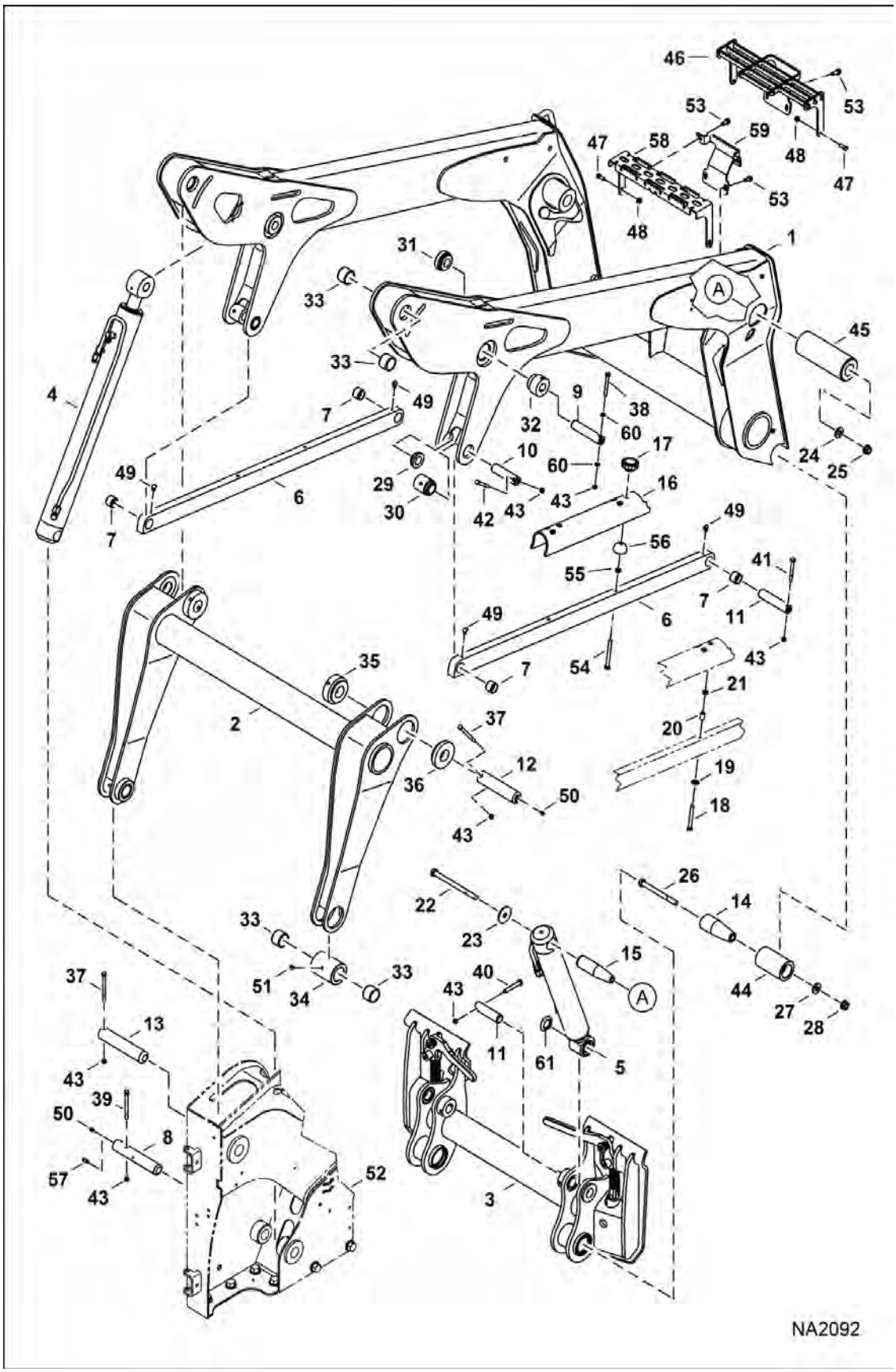

Page 65 - OSS# 6300322913 - All rights reserved by Bobcat Company - 08/04/2017 - 06:30:16 - Produced by Ken Cook Co. with media1off

LIFT ARM & BOB-TACH (Cont'd)

Ref No	Part Number	Description	Remarks	Serial Number	Qty
1	7145287	LIFT ARM			1
2		LINK, LIFT ARM H ASSY	NLA - 9,6 mm (.380") thick sidewalls - Was 7187124 [A]		1
2	7187124	LINK, LIFT ARM H ASSY	10,5 mm (.415") thick sidewalls		1
3		BOB-TACH ASSY	See Illustration BOB-TACH / NA1003		1
4		CYLINDER, LIFT	See Illustration LIFT CYLINDER / NA6139		2
5		CYLINDER, TILT	See Illustration TILT CYLINDER / NA1209 - LH		1
5		CYLINDER, TILT	See Illustration TILT CYLINDER / NA1210 - RH		1
6	7145320	LINK, ASSY	LH - W/Ref. 7 - 356 mm (14") hole pattern	S/N A3P814202 & Below	1
				S/N A3P912727 & Below	1
6	7145320	LINK, ASSY	RH - W/Ref. 7 - 356 mm (14") hole pattern - Also Order (2) each of Ref. 54-56 for mounting Ref. 16 lift arm stop	S/N A3P814202 & Below	1
				S/N A3P912727 & Below	1
6	7252433	ASSY, LINK	LH - W/Ref. 7 - 305 mm (12") hole pattern	S/N A3P814203 & Above	1
				S/N A3P912728 & Above	1
6	7252433	ASSY, LINK	RH - W/Ref. 7 - 305 mm (12") hole pattern - Also Order (2) each of Ref. 54-56 for mounting Ref. 16 lift arm stop	S/N A3P814203 & Above	1
				S/N A3P912728 & Above	1
7	7158128	BUSHING, WEAR			4
8	7175270	PIN, PIVOT			2
9	7147806	PIN, PIVOT			2
10	7143234	PIN, PIVOT			2
11	6577954	PIN, PIVOT			4
12	7144198	PIN, PIVOT			2
13	7147804	PIN			2
14	7170609	PIN, PIVOT TAPERED			2
15	6728971	PIN, PIVOT TAPERED			2
16	7158459	SUPPORT, LIFT ARM	356 mm (14") hole pattern	S/N A3P814202 & Below	1
				S/N A3P912727 & Below	1
16	7249525	SUPPORT, LIFT ARM	305 mm (12") hole pattern	S/N A3P814203 & Above	1
				S/N A3P912728 & Above	1
17	6684932	HANDLE, CLAMPING			2
18	6731646	BOLT	stainless steel		2
19	6E6	WASHER			2
20	6532347	BUSHING, SPACER			2
21	6718942	NUT			2
22	17C10136	BOLT			2
23	6731160	WASHER			2

Page 58 OSS# 6300322913 - All rights reserved by Bobcat Company - 08/04/2017 - 06:30:16 - Produced by Ken Cook Co. with mediaioff

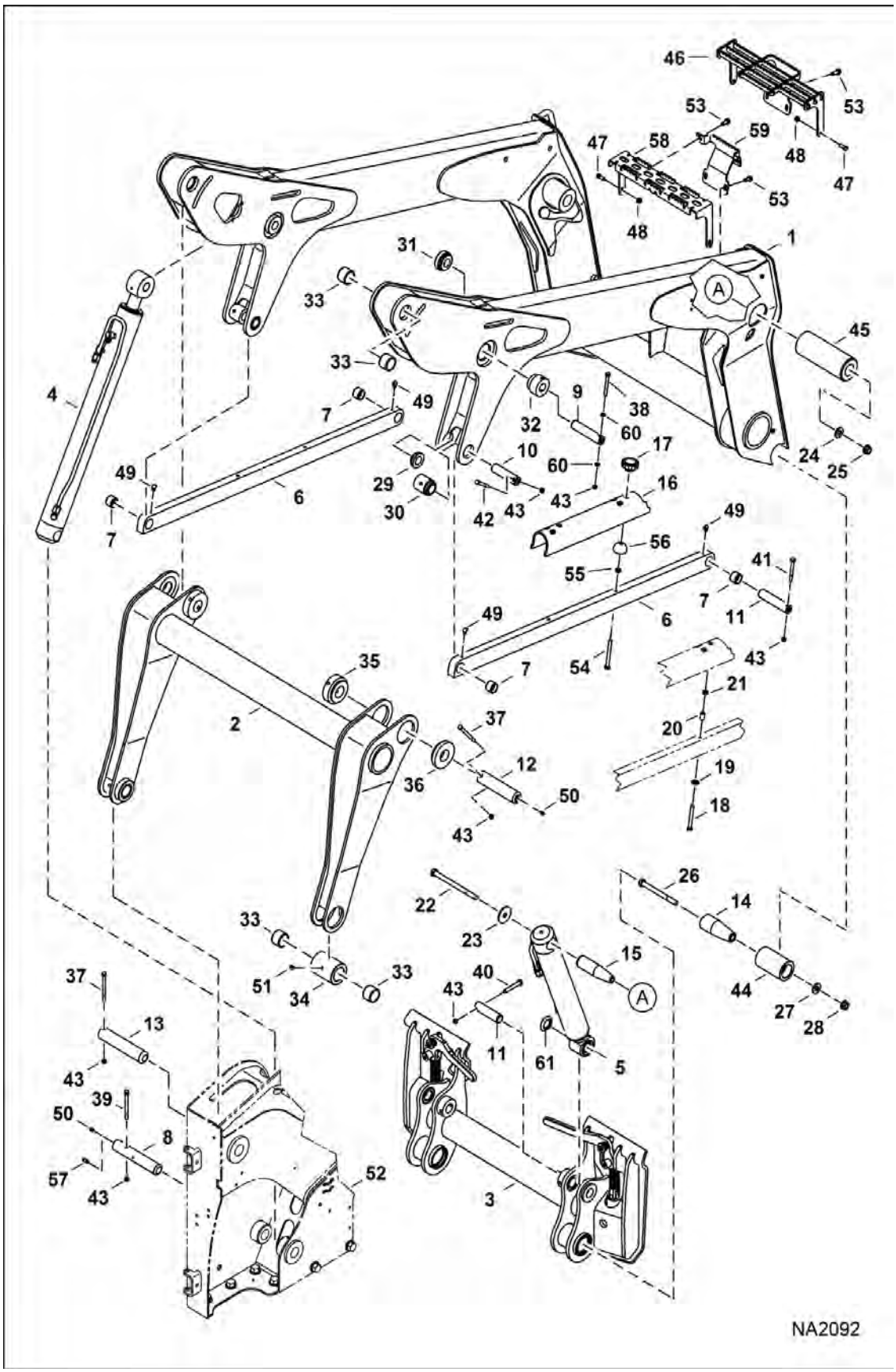

Page 67 - OSS# 6300322913 - All rights reserved by Bobcat Company - 08/04/2017 - 06:30:16 - Produced by Ken Cook Co. with media1off

LIFT ARM & BOB-TACH (Cont'd)

Ref No	Part Number	Description	Remarks	Serial Number	Qty
24	27E10	WASHER			2
25	53D10	NUT			2
26	17C12112	BOLT			2
27	27E12	WASHER			2
28	53D12	NUT			2
29	7143239	BUSHING, WELD-ON			2
30	7143238	BUSHING, WELD-ON			2
31	7143236	BUSHING, WELD-ON			2
32	7145436	BUSHING, WELD-ON			2
33	6730995	BUSHING, WEAR			8
34	7215769	BUSHING, WELD-ON	W/Ref. 33 - Was 7139883		2
35	6727525	BUSHING, WELD-ON	9,6 mm (.380") step length		2
35	7222389	BUSHING, WELD-ON	10,5 mm (.415") step length		2
36	6727832	BUSHING, WELD-ON	9,6 mm (.380") step length		2
36	7222390	BUSHING, WELD-ON	10,5 mm (.415") step length		2
37	17C672	BOLT			4
38	17C652	BOLT	Use W/O Ref. 60		2
38	17C656	BOLT			2
39	17C672	BOLT			2
40	17C648	BOLT 5			2
41	17C640	BOLT			2
42	17C644	BOLT			2
43	85D6	NUT, 5			14
44	7170608	BUSHING, WELD-ON			2
45	7132937	BUSHING, WELD-ON			2
46		STEP, LIFT ARM	NLA - Order Ref. 58, 59 & (2) of Ref. 53 - Was 7159749 [A]		1
47	17C616	BOLT 5			3
48	53D6	NUT			3
49	12H15	FITTING, GREASE 5			4
50	10H25	FITTING, GREASE 5			4
51	11H15	FITTING10			2
52		MAIN FRAME	See Illustration MAIN FRAME / NA2933		1
53	84G3716	SCREW 5			3
54	7197120	BOLT			2
55	7D6	NUT			2
56	7201355	DAMPER			2
57	45H25	FITTING, GREASE			2
58	7233244	STEP, LIFT ARM	Was 7232056 [A]		1

Page 68 OSS# 6300322913 - All rights reserved by Bobcat Company - 08/04/2017 - 06:30:16 - Produced by Ken Cook Co. with mediaioff

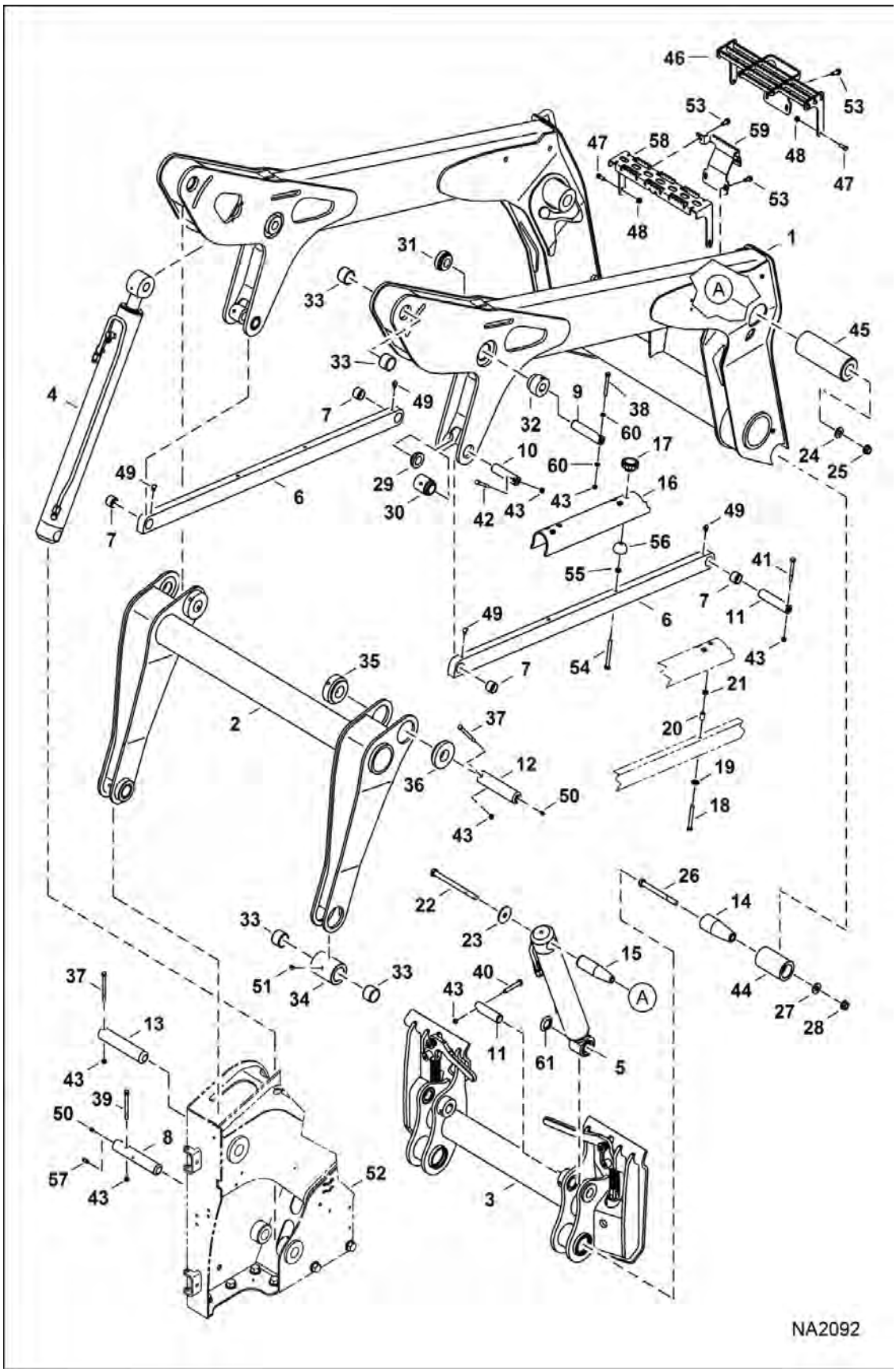

Page 69 - OSS# 6300322913 - All rights reserved by Bobcat Company - 08/04/2017 - 06:30:16 - Produced by Ken Cook Co. with media1off

LIFT ARM & BOB-TACH (Cont'd)

Ref No	Part Number	Description	Remarks	Serial Number	Qty
59	7233245	BRACKET	Was 7232057 [A]		1
60	7218747	WASHER, FLAT			4
61	6689112	SEAL			4

Page 62 OSS# 6300322913 - All rights reserved by Bobcat Company - 08/04/2017 - 06:30:16 - Produced by Ken Cook Co. with media1off

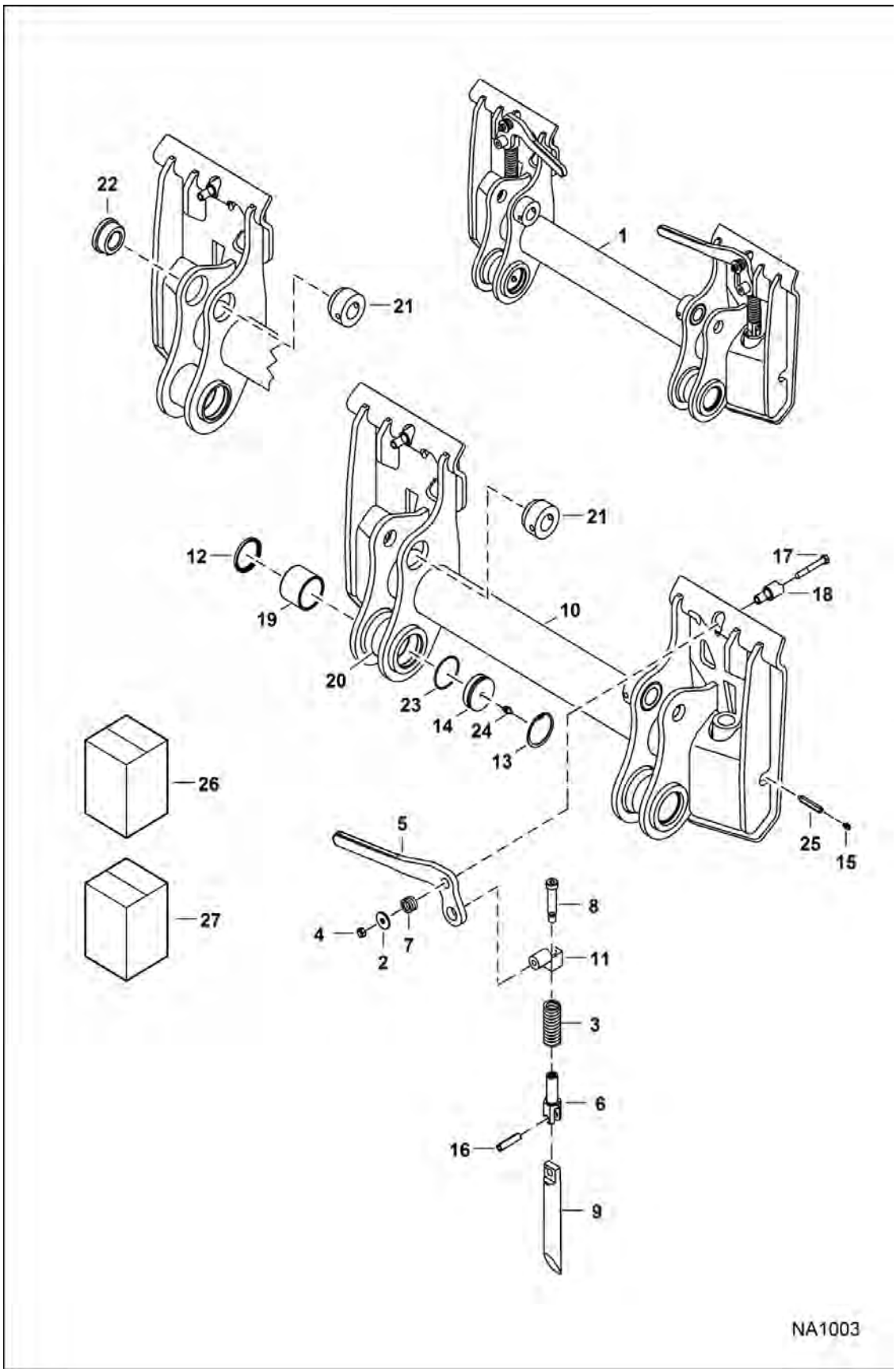

Page 71 - OSS# 6300322913 - All rights reserved by Bobcat Company - 08/04/2017 - 06:30:16 - Produced by Ken Cook Co. with media1off

BOB-TACH (Cont'd)

Ref No	Part Number	Description	Remarks	Serial Number	Qty
1	7128962	BOB-TACH	Ref. 2-25		1
2	619021	WASHER, 5			2
3	6578253	SPRING, COMPRESSION			2
4	85D6	NUT, 5	Was 83D6 [B]		2
5	6702904	LEVER, BOB-TACH RH			1
5	6702903	LEVER, BOB-TACH LH			1
6	7252989	PIVOT, WEDGE	Was 6704248 [A]		2
6	7252989	PIVOT, WEDGE	156 mm (6.15") long - Use W/Ref. 8 (7255136 screw) - Was 6704248 [A]		2
7		SPRING	NLA - 19,18 mm (.755") long - Order 7221255 spring & Ref. 17 (17C652 bolt) - Was 6704453 [B]		2
7	7221255	SPRING	34,22 mm (1.347") long		2
8	6728473	BOLT, SHOULDER	57,15 mm (2.25") shoulder - pre-applied thread locker - Use W/Ref. 6 (6704248 pivot)		2
8	7255136	SCREW, SOCKET HEAD	28,58 mm (1.125") long - Use W/Ref. 6 (7252989 pivot)		2
9	6737191	WEDGE, BOB-TACH			2
10		FRAME	NLA		1
11	7146538	PIVOT BOB-TACH			2
12	7170611	SEAL	install flush to Ref. 19		2
13	7170614	SNAP RING			2
14	7170613	PLUG			1
15	10H35	FITTING, GREASE 10			2
16	7277777	PIN	Was 14J5032 [B]		2
17		BOLT	NLA - Order 17C652 bolt & Ref. 7 (7221255 spring) - Was 17C644 [B]		2
17	17C652	BOLT	Use W/Ref. 7 (7221255 spring)		2
18	6702958	BUSHING, WELD-ON			2
19	7170615	BUSHING, WEAR			2
20	7215408	BUSHING, WELD-ON	W/Ref. 19 - Was 7170610 [A]		2
21	7136465	BUSHING, WELD-ON			2
22	7136464	BUSHING, WELD-ON			2
23	25K30210	RING,O			1
24	10H25	FITTING, GREASE 5			1
25	7209911	EXTENSION, FITTING GREASE			2
26		KIT, LEVER	NLA		1
27	7302297	KIT BOB-TACH UPPER (M SERIES)	Ref. 2, 4, 7, 17 & 18		1
27		KIT PIVOT BOB-TACH	NLA - Ref. 6 (6704248 pivot), 8 (6728473 bolt) & 16 (14J5032 pin) - Order 7302293 kit - Was 7302293 [B]		1
27	7302293	KIT PIVOT BOB-TACH	Ref. 6 (7252989 pivot), 8 (7255136 screw) & 16 (7277777 pin)		1

Page 2 OSS# 6300322913 - All rights reserved by Bobcat Company - 08/04/2017 - 06:30:16 - Produced by Ken Cook Co. with mediaioff

DRIVE TRAIN

(Solid Mount) (Rubber Track)
(S/N A3P811001 - A3P813485, A3P911001 - A3P912191)

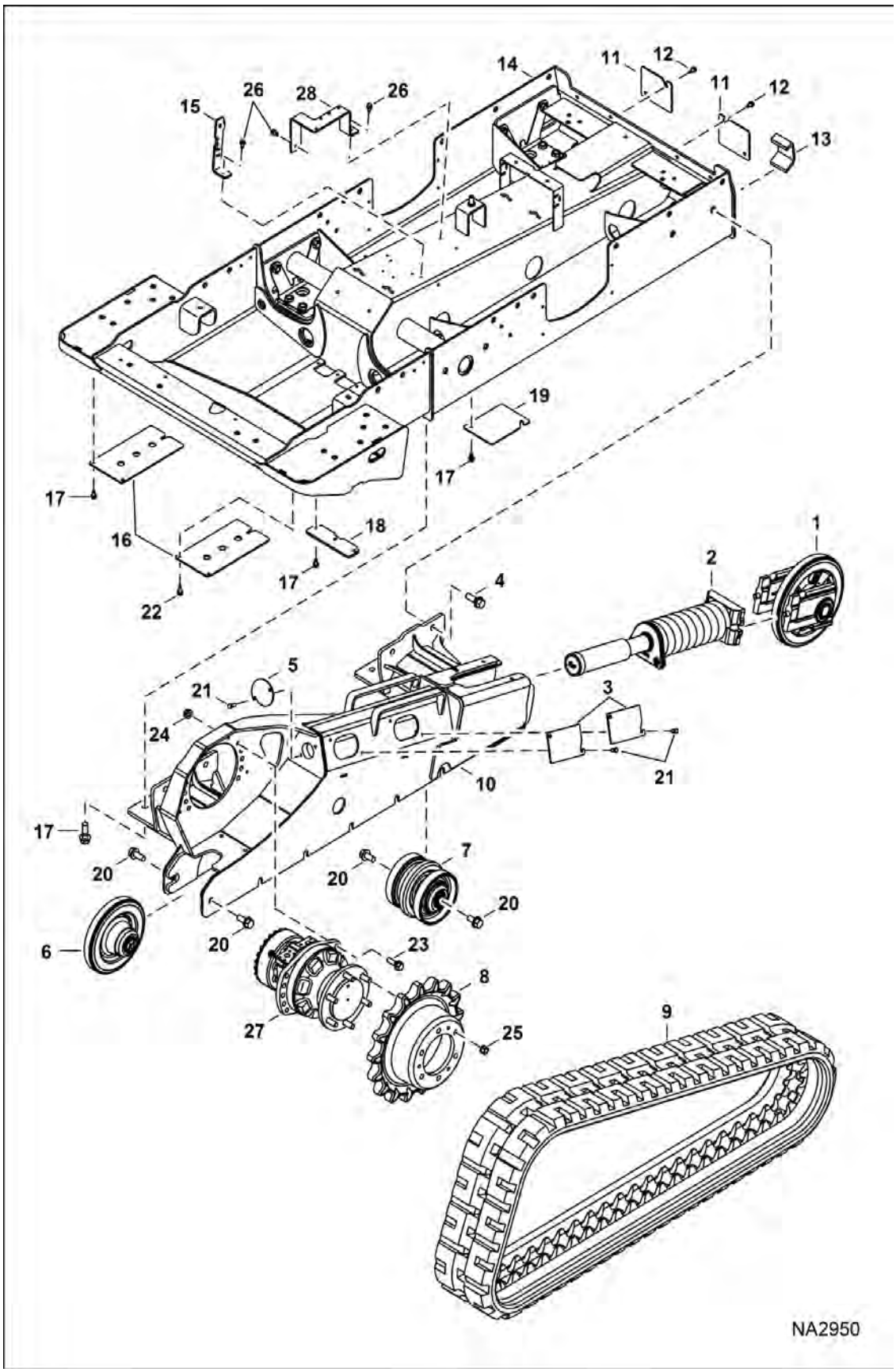

Page 73 - OSS# 6300322913 - All rights reserved by Bobcat Company - 08/04/2017 - 06:30:16 - Produced by Ken Cook Co. with media1off

Illustration NA2950

DRIVE TRAIN (Cont'd)

(Solid Mount) (Rubber Track)
(S/N A3P811001 - A3P813485, A3P911001 - A3P912191)

Ref No	Part Number	Description	Remarks	Serial Number	Qty
1		IDLER, FRONT	See Illustration FRONT IDLER / PE2554		2
2		TENSIONER, TRACK ASSY	See Illustration TRACK TENSIONER / NA2949		2
3	7137132	COVER			2
4	31C1236	BOLT			24
5	7233452	COVER ACCESS	Was 7143346 [A]		2
6		IDLER, REAR	See Illustration REAR IDLER / PE2555		2
7		ROLLER, TRACK	See Illustration TRACK ROLLER / PE2556		8
8	7165109	SPROCKET, MOTOR DRIVE TRACK	single speed - 6 hole		2
8	7196807	SPROCKET, MOTOR DRIVE TRACK	2-speed - 8 hole		2
9		TRACK, RUBBER	See Illustration TRACKS / NA6162		2
10	7172412	FRAME, TRACK	RH		1
10	7172413	FRAME, TRACK	LH		1
11	6737088	COVER, ACCESS	irregular shape - 146 x 127 mm (5.75 x 5")		2
11	7240780	COVER, ACCESS	159 x 127 mm (6.25 x 5") - Was 6716010 [A]		2
12	84G3712	BOLT 5			4
13	7134445	BRACKET, TIE-DOWN	weld-on		1
14	7139798	DRIVECASE			1
15	7156252	MOUNT			1
16	7145347	COVER			2
17	84G3712	BOLT 5			10
18	7159094	COVER, DRAIN			1
19	7158703	COVER, ACCESS			4
20	31C1224	BOLT	services 31C1228 in this application		20
21	17C616	BOLT 5			4
22	35C612	BOLT 5			3
23	31C1032	BOLT			20
24	53D10	NUT			20
25	6674724	NUT	single speed motor		12
25	7020903	NUT	2-speed motor		16
26	84G3716	SCREW 5			3
27		MOTOR, DRIVE HYD	See Illustration HYDROSTATIC MOTOR / NA1304 single speed		2
27		MOTOR, DRIVE HYD 2-SPD	See Illustration HYDROSTATIC MOTOR & BRAKE / NA2870 Model R921810899		2
28	7156246	MOUNT			1

Page 74 OSS# 6300322913 - All rights reserved by Bobcat Company - 08/04/2017 - 06:30:16 - Produced by Ken Cook Co. with mediaioff

DRIVE TRAIN

(Solid Mount) (Rubber Track)

(S/N A3P813486 - A3P815999, A3P912192 - A3P912999)

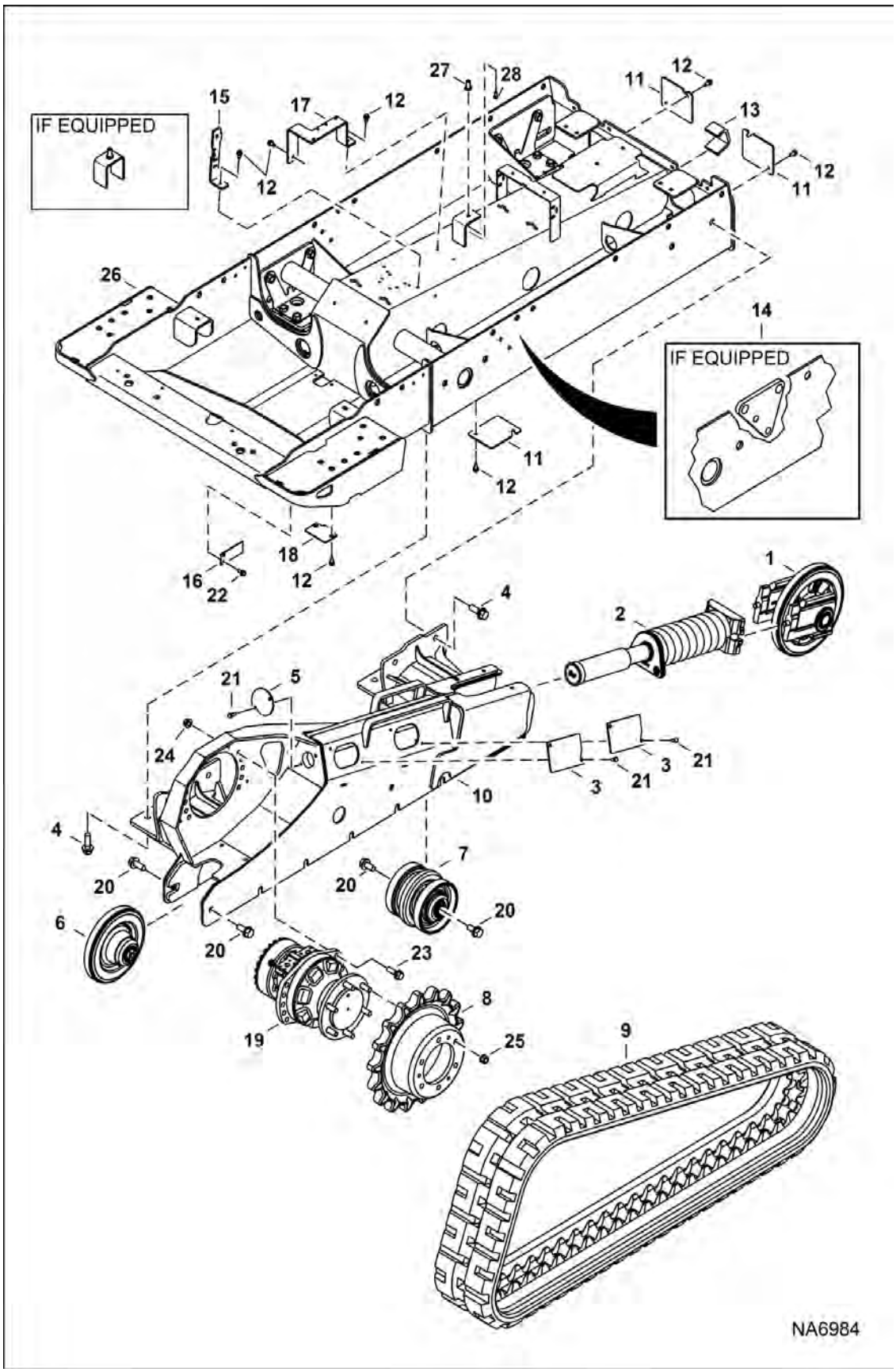

Page 75 - OSS# 6300322913 - All rights reserved by Bobcat Company - 08/04/2017 - 06:30:16 - Produced by Ken Cook Co. with media1off

DRIVE TRAIN (Cont'd)

(Solid Mount) (Rubber Track)

(S/N A3P813486 - A3P815999, A3P912192 - A3P912999)

Ref No	Part Number	Description	Remarks	Serial Number	Qty
1		IDLER, FRONT	See Illustration FRONT IDLER / PE2554		2
2		TENSIONER, TRACK ASSY	See Illustration TRACK TENSIONER / NA2949		2
3	7137132	COVER			2
4	31C1236	BOLT			24
5	7233452	COVER ACCESS	Was 7143346 [A]		2
6		IDLER, REAR	See Illustration REAR IDLER / PE2555		2
7		ROLLER, TRACK	See Illustration TRACK ROLLER / PE2556		8
8	7165109	SPROCKET, MOTOR DRIVE TRACK	single speed - 6 hole		2
8	7196807	SPROCKET, MOTOR DRIVE TRACK	2-speed - 8 hole		2
9		TRACK, RUBBER	See Illustration TRACKS / NA6162		2
10	7226843	FRAME, TRACK	RH		1
10	7226844	FRAME, TRACK	LH		1
11	7240780	COVER, ACCESS	159 x 127 mm (6.25 x 5") - Was 6716010 [A]		3
12	84G3712	BOLT 5			14
13	6706485	BRACKET	weld-on		1
14		DRIVECASE	NLA - W/ .5" hyd control valve drivecase weld-on spacer plate - Order Ref. 26 W/ 7220859 valve mount & (2) ea of 31C824 bolt & 53D8 nut - Was 7217298		1
15	7156252	MOUNT			1
16	7223183	COVER, DRAIN			2
17	7181085	BRACKET			1
18	7190754	COVER, DRAIN			1
19		MOTOR, DRIVE HYD	single speed		2
19		MOTOR, DRIVE	See Illustration HYDROSTATIC MOTOR & BRAKE / NA6935 2-SPD		2
20	31C1224	BOLT	services 31C1228 in this application		20
21	17C616	BOLT 5			4
22	35C612	BOLT 5			2
23	31C1032	BOLT			20
24	53D10	NUT			20
25	6674724	NUT	single speed motor		12
25	7020903	NUT	2-speed motor		16
26	7217298	DRIVECASE	W/O .5" hyd control valve drivecase weld-on spacer plate		1
27	6706104	NUT, RETAINING			1
28	43C612	BOLT			1

Page 68 OSS# 6300322913 - All rights reserved by Bobcat Company - 08/04/2017 - 06:30:16 - Produced by Ken Cook Co. with mediaioff

DRIVE TRAIN

(Solid Mount)(Rubber Track)
(S/N A3P816001 & Above, A3P913001 & Above)

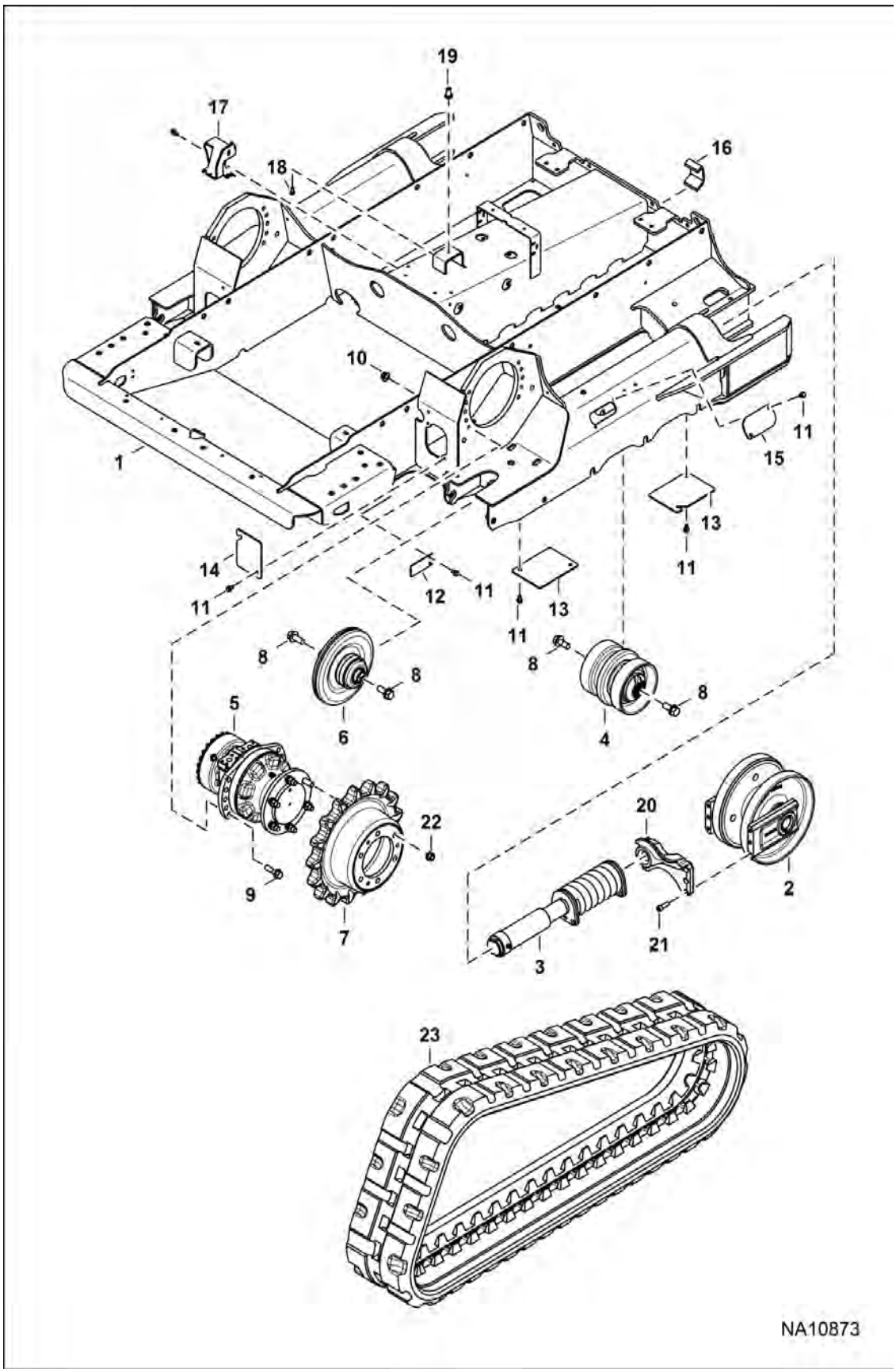

Page 77 - OSS# 6300322913 - All rights reserved by Bobcat Company - 08/04/2017 - 06:30:16 - Produced by Ken Cook Co. with media1off

DRIVE TRAIN (Cont'd)

(Solid Mount)(Rubber Track)
(S/N A3P816001 & Above, A3P913001 & Above)

Ref No	Part Number	Description	Remarks	Serial Number	Qty
1	7241882	UNDERCARRIAGE			1
2		IDLER, FRONT	See Illustration FRONT IDLER / NA10336		2
3		TENSIONER, TRACK	See Illustration TRACK TENSIONER / NA10862		2
4		ROLLER, TRACK	See Illustration TRACK ROLLER / NA10339		8
5		MOTOR, DRIVE			2
6		IDLER, REAR	See Illustration REAR IDLER / NA10338		2
7	7165109	SPROCKET, MOTOR DRIVE TRACK			2
7	7196807	SPROCKET, MOTOR DRIVE TRACK	2-speed		2
8	31C1228	BOLT			24
9	7251862	SCREW			20
10	7251863	NUT			20
11	84G3712	BOLT 5			36
12	7223183	COVER, DRAIN			2
13	7158703	COVER, ACCESS			4
14	7240780	COVER, ACCESS			2
15	7246880	COVER, ACCESS			2
16	6706485	BRACKET	weld-on		1
17	7274808	BRACKET			1
18	43C612	BOLT			1
19	6706104	NUT, RETAINING			1
20	7241637	GUIDE			2
21	73G824	BOLT			12
22			NUT		6
23		TRACK, RUBBER	See Illustration TRACKS / NA6162		2

Page 78 OSS# 6300322913 - All rights reserved by Bobcat Company - 08/04/2017 - 06:30:16 - Produced by Ken Cook Co. with mediaioff

DRIVE TRAIN
(Solid Mount) (Steel Track)

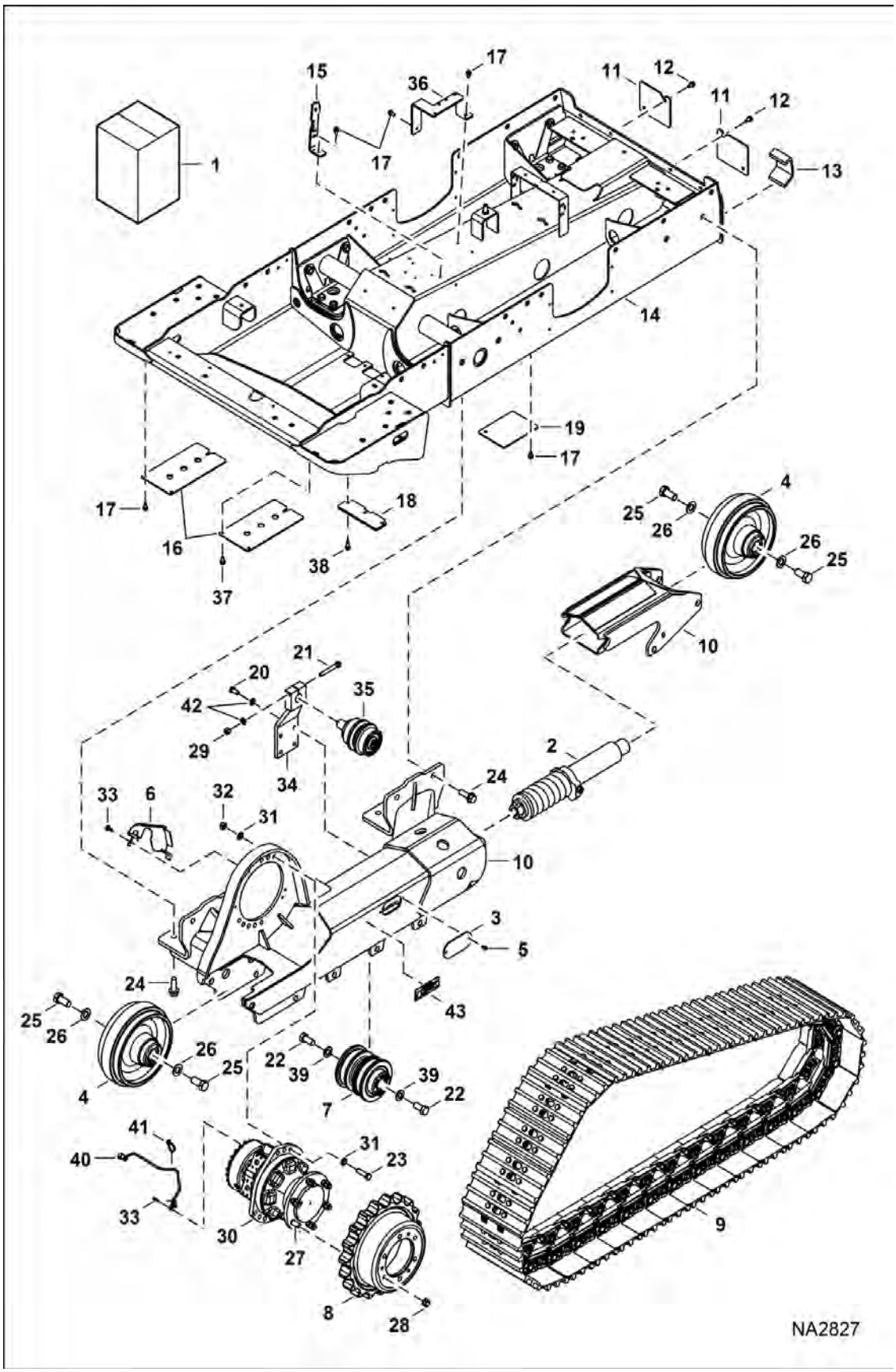

Page 79 - OSS# 6300322913 - All rights reserved by Bobcat Company - 08/04/2017 - 06:30:16 - Produced by Ken Cook Co. with media1off

DRIVE TRAIN (Cont'd)
(Solid Mount) (Steel Track)

Ref No	Part Number	Description	Remarks	Serial Number	Qty
1	7183185	FRAME, TRACK			1
1	7183186	FRAME, TRACK			1
2	7020400	TENSIONER, TRACK ASSY	RH		2
2	7009222	TENSIONER, TRACK ASSY	LH		2
3	7010243	COVER, ACCESS			2
4	7009219	IDLER, ASSY			4
5	7010244	SCREW			4
6	7166712	COVER	SJC		2
7	7011072	ROLLER, TRACK			8
8	7009231	SPROCKET, MOTOR DRIVE TRACK	Was 7020401 [A]		2
9		TRACK, STEEL	See Illustration TRACKS / NA2120		2
10	7020399	FRAME, TRACK	RH		1
10	7020398	FRAME, TRACK	LH		1
11	6737088	COVER, ACCESS	irregular shape - 146 x 127 mm (5.75 x 5")		2
11	7240780	COVER, ACCESS	159 x 127 mm (6.25 x 5") - Was 6716010 [A]		2
12	84G3720	BOLT			4
13	7134445	BRACKET, TIE-DOWN	weld-on		1
14	7139798	DRIVECASE			1
15	7156252	MOUNT			1
16	7145347	COVER			2
17	84G3712	BOLT 5			10
18	7159094	COVER, DRAIN			1
19	7158703	COVER, ACCESS			4
20	7009227	BOLT			4
21	7009228	BOLT			2
22	7010567	BOLT			20
23	7009233	BOLT			10
24	31C1236	BOLT			24
25	7009221	BOLT			8
26	7009220	WASHER			8
27	6674706	STUD			6
28	6691215	NUT			12
29	7009230	NUT			2
30		MOTOR, DRIVE HYD	See Illustration HYDROSTATIC MOTOR / NA1304		2
31	7009232	WASHER, LOCK			20
32	7009234	NUT			10
33	7102184	SCREW	SJC		4
34	7009225	SUPPORT			2
35	7009226	ROLLER, UPPER			8
36	7181085	BRACKET			1
37	35C612	BOLT 5			3
38	84G3716	SCREW 5			3
39	7010566	WASHER			20

Page 78 OSS# 6300322913 - All rights reserved by Bobcat Company - 08/04/2017 - 06:30:16 - Produced by Ken Cook Co. with mediaioff

DRIVE TRAIN (Cont'd)
(Solid Mount) (Steel Track)

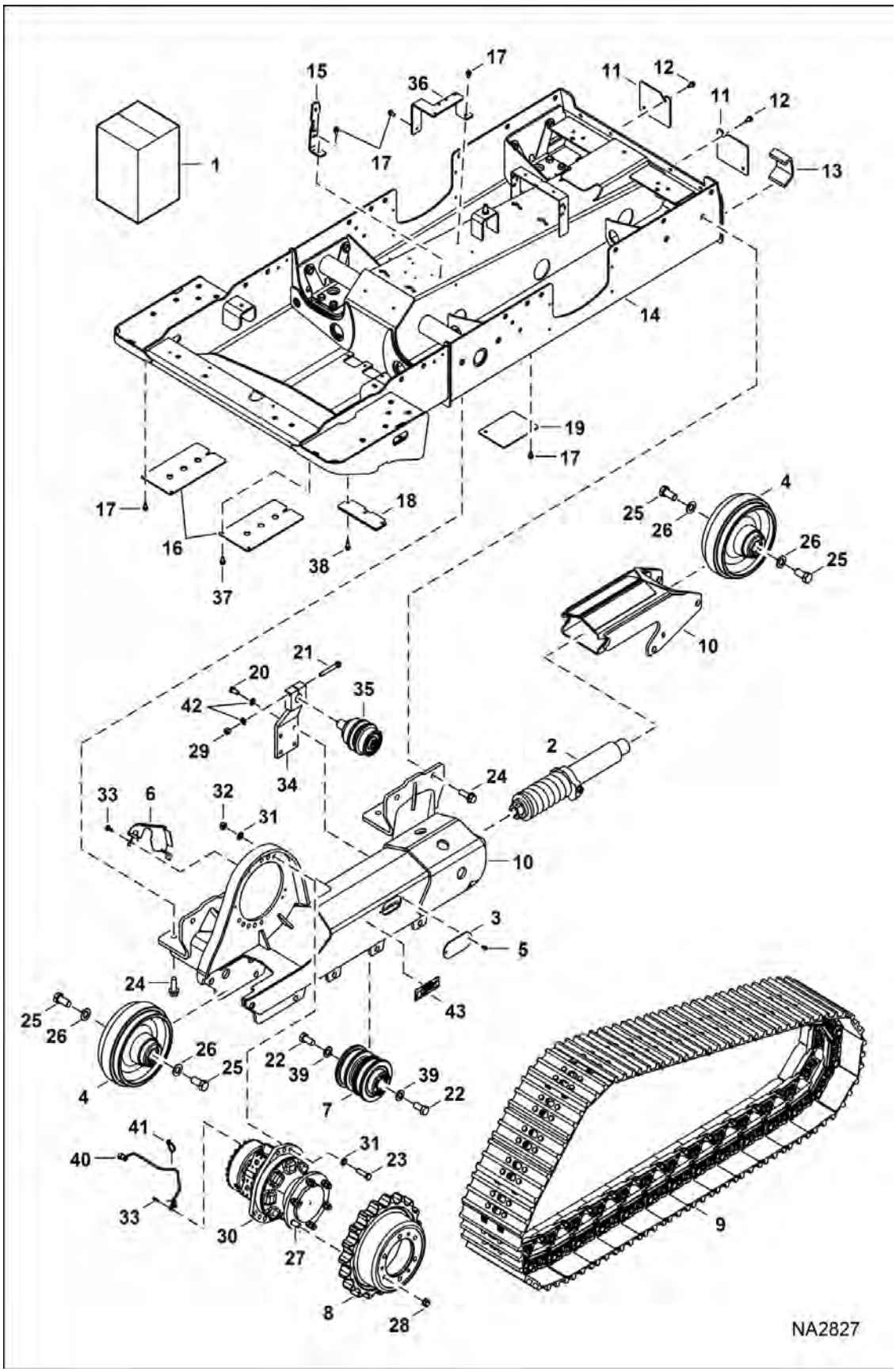

Page 81 - OSS# 6300322913 - All rights reserved by Bobcat Company - 08/04/2017 - 06:30:16 - Produced by Ken Cook Co. with media1off

DRIVE TRAIN (Cont'd)
(Solid Mount) (Steel Track)

Ref No	Part Number	Description	Remarks	Serial Number	Qty
40		SENSOR, SPEED	Contact your Local Dealer for Bobcat Technical Information BTI419 - NLA - Was 7139902		2
40	75K5	O-RING			2
41	6624289	STRAP, TIE			2
42	7009229	WASHER			5
43	6804114	DECAL, WARNING			2

Page 72 OSS# 6300322913 - All rights reserved by Bobcat Company - 08/04/2017 - 06:30:16 - Produced by Ken Cook Co. with media1off

DRIVE TRAIN

(Suspension)

(S/N A3P811001 - A3P813485, A3P911001 - A3P912191)

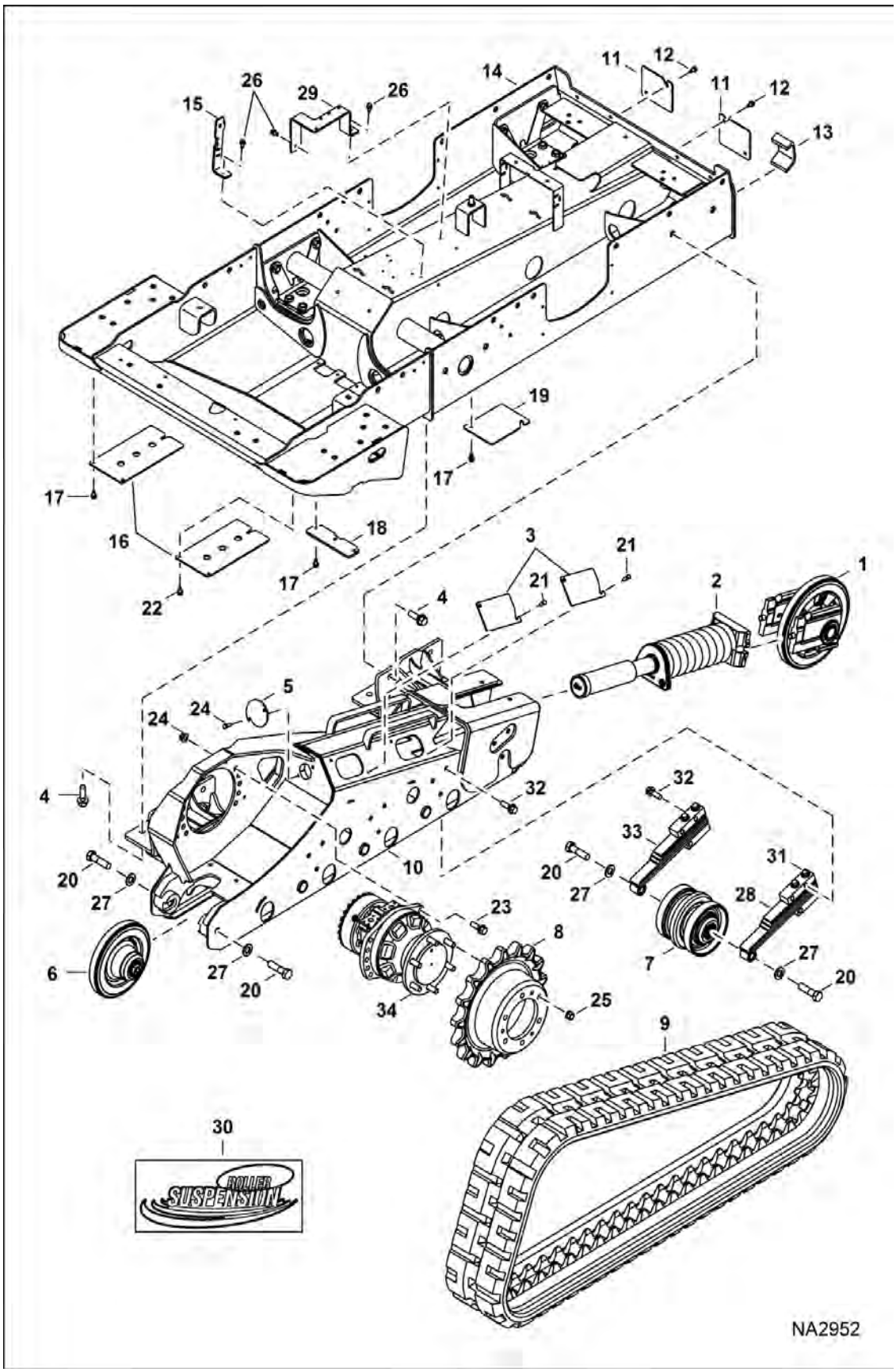

Page 83 - OSS# 6300322913 - All rights reserved by Bobcat Company - 08/04/2017 - 06:30:16 - Produced by Ken Cook Co. with media1off

DRIVE TRAIN (Cont'd)

(Suspension)

(S/N A3P811001 - A3P813485, A3P911001 - A3P912191)

Ref No	Part Number	Description	Remarks	Serial Number	Qty
1		IDLER, FRONT	See Illustration FRONT IDLER / PE2554		2
2		TENSIONER, TRACK ASSY	See Illustration TRACK TENSIONER / NA2949		2
3	7137132	COVER			2
4	31C1236	BOLT			24
5	7233452	COVER ACCESS	Was 7143346 [A]		2
6		IDLER REAR	See Illustration REAR IDLER / PE2555		2
7		ROLLER ASSY	See Illustration TRACK ROLLER / PE2556		8
8	7165109	SPROCKET, MOTOR DRIVE TRACK	single speed - 6 hole		2
8	7196807	SPROCKET, MOTOR DRIVE TRACK	2-speed - 8 hole		2
9		TRACK, RUBBER	See Illustration TRACKS / NA6162		2
10	7154208	FRAME, TRACK	RH		1
10	7154209	FRAME, TRACK	LH		1
11	6737088	COVER, ACCESS	irregular shape - 146 x 127 mm (5.75 x 5")		2
11	7240780	COVER, ACCESS	159 x 127 mm (6.25 x 5") - Was 6716010 [A]		2
12	84G3720	BOLT			4
13	7134445	BRACKET, TIE-DOWN	weld-on		1
14	7139798	DRIVECASE			1
15	7151466	BRACKET			1
16	7145347	COVER			2
17	84G3712	BOLT 5			10
18	7159094	COVER, DRAIN			1
19	7158703	COVER, ACCESS			4
20	7143955	BOLT			20
21	17C616	BOLT 5			12
22	35C612	BOLT 5			3
23	31C1032	BOLT			20
24	53D10	NUT			20
25	6674724	NUT	single speed motor		12
25	7020903	NUT	2-speed motor		16
26	84G3716	SCREW 5			3
27	28E14	WASHER			20
28	7131652	SPRING, SUSPENSION	RH		8
29	7181085	BRACKET			1
30	7146178	DECAL	roller suspension		2
31	7141349	BOLT			32
32	7139763	SCREW			48
33	7131653	SPRING, SUSPENSION	LH		8
34		MOTOR, DRIVE HYD	See Illustration HYDROSTATIC MOTOR / NA1304 single speed		2
34		MOTOR, DRIVE HYD 2-SPD	See Illustration HYDROSTATIC MOTOR & BRAKE / NA2870		2

Page 84 OSS# 6300322913 - All rights reserved by Bobcat Company - 08/04/2017 - 06:30:16 - Produced by Ken Cook Co. with mediaioff

DRIVE TRAIN

(Suspension)

(S/N A3P813486 - A3P815999, A3P912192 - A3P912999)

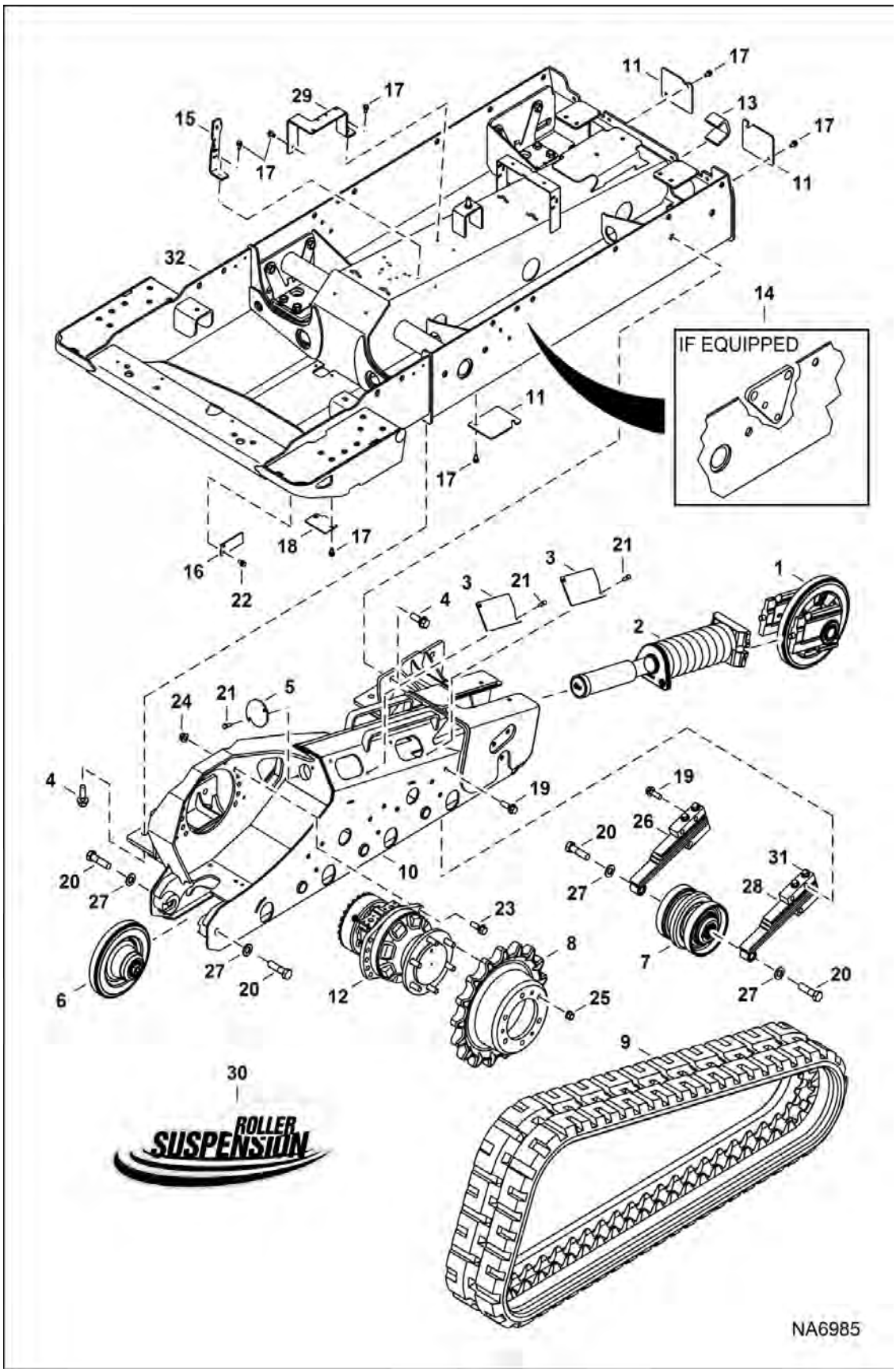

Page 85 - OSS# 6300322913 - All rights reserved by Bobcat Company - 08/04/2017 - 06:30:16 - Produced by Ken Cook Co. with media1off

DRIVE TRAIN (Cont'd)

(Suspension)

(S/N A3P813486 - A3P815999, A3P912192 - A3P912999)

Ref No	Part Number	Description	Remarks	Serial Number	Qty
1		IDLER, FRONT	See Illustration DRIVE TRAIN / NA2952		2
2		TENSIONER, TRACK ASSY	See Illustration TRACK TENSIONER / NA2949		2
3	7137132	COVER			2
4	31C1236	BOLT			24
5	7233452	COVER ACCESS	Was 7143346 [A]		2
6		IDLER REAR	See Illustration REAR IDLER / PE2555		2
7		ROLLER ASSY	See Illustration TRACK ROLLER / PE2556		8
8	7165109	SPROCKET, MOTOR DRIVE TRACK	single speed - 6 hole		2
8	7196807	SPROCKET, MOTOR DRIVE TRACK	2-speed - 8 hole		2
9		TRACK, RUBBER	See Illustration TRACKS / NA6162		2
10	7226847	FRAME, TRACK	RH		1
10	7226848	FRAME, TRACK	LH		1
11	7240780	COVER, ACCESS	159 x 127 mm (6.25 x 5") - Was 6716010 [A]		3
12		MOTOR, DRIVE HYD	single speed		2
12		MOTOR, DRIVE	See Illustration HYDROSTATIC MOTOR & BRAKE / NA6935 2-SPD		2
13	6706485	BRACKET	weld-on		1
14		DRIVECASE	NLA - W/ .5" hyd control valve drivecase weld-on spacer plate - Order Ref. 32 W/ 7220859 valve mount & (2) ea of 31C824 bolt & 53D8 nut - Was 7217298		1
15	7156252	MOUNT			1
16	7223183	COVER, DRAIN			2
17	84G3712	BOLT 5			14
18	7190754	COVER, DRAIN			1
19	7139763	SCREW			48
20	7143955	BOLT			20
21	17C616	BOLT 5			12
22	35C612	BOLT 5			3
23	31C1032	BOLT			20
24	53D10	NUT			20
25	6674724	NUT	single speed motor		12
25	7020903	NUT	2-speed motor		16
26	7131653	SPRING, SUSPENSION	LH		8
27	28E14	WASHER			20
28	7131652	SPRING, SUSPENSION	RH		8
29	7181085	BRACKET			1
30	7146178	DECAL	roller suspension		2
31	7141349	BOLT			32
32	7217298	DRIVECASE	W/O .5" hyd control valve drivecase weld-on spacer plate		1

Page 78 OSS# 6300322913 - All rights reserved by Bobcat Company - 08/04/2017 - 06:30:16 - Produced by Ken Cook Co. with mediaioff

DRIVE TRAIN
(Suspension)
(S/N A3P816001 & Above, A3P913001 & Above)

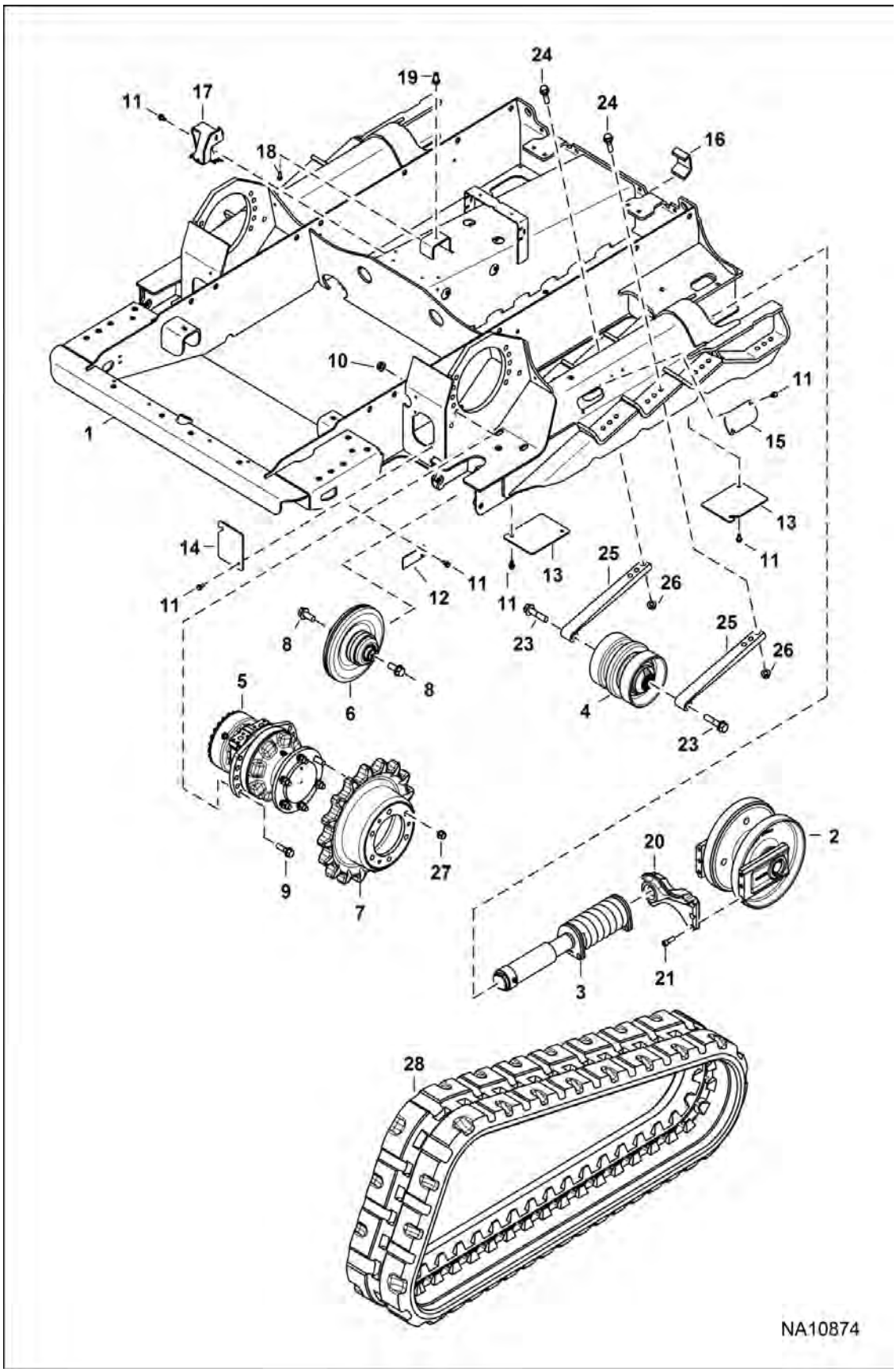

Page 87 - OSS# 6300322913 - All rights reserved by Bobcat Company - 08/04/2017 - 06:30:16 - Produced by Ken Cook Co. with media1off

Illustration NA10874

DRIVE TRAIN (Cont'd)

(Suspension)

(S/N A3P816001 & Above, A3P913001 & Above)

Ref No	Part Number	Description	Remarks	Serial Number	Qty
1	7241884	UNDERCARRIAGE			1
2		IDLER, FRONT	See Illustration FRONT IDLER / NA10336		2
3		TENSIONER, TRACK	See Illustration TRACK TENSIONER / NA10862		2
4		ROLLER, TRACK	See Illustration TRACK ROLLER / NA10339		8
5		MOTOR, DRIVE			2
6		IDLER, REAR	See Illustration REAR IDLER / NA10338		2
7	7165109	SPROCKET, MOTOR DRIVE TRACK			2
7	7196807	SPROCKET, MOTOR DRIVE TRACK	2-speed		2
8	31C1228	BOLT	Was 49C1228 [B]		4
9	7251862	SCREW			20
10	7251863	NUT			20
11	84G3712	BOLT 5			32
12	7223183	COVER, DRAIN			2
13	7158703	COVER, ACCESS			4
14	7240780	COVER, ACCESS			2
15	7246880	COVER, ACCESS			2
16	6706485	BRACKET	weld-on		1
17	7274808	BRACKET			1
18	43C612	BOLT			1
19	6706104	NUT, RETAINING			1
20	7241637	GUIDE			2
21	73G824	BOLT			12
22	84G3710	SCREW			4
23	31C1252	BOLT	Was 49C1252 [B]		16
24	7251862	SCREW			48
25	7227414	SPRING SUSPENSION			16
26	7251863	NUT			48
27		NUT			6
28		TRACK, RUBBER	See Illustration TRACKS / NA6162		2

Page 78 OSS# 6300322913 - All rights reserved by Bobcat Company - 08/04/2017 - 06:30:16 - Produced by Ken Cook Co. with mediaioff

FRONT IDLER
(S/N A3P811001 - A3P815999, A3P911001 - A3P812999)

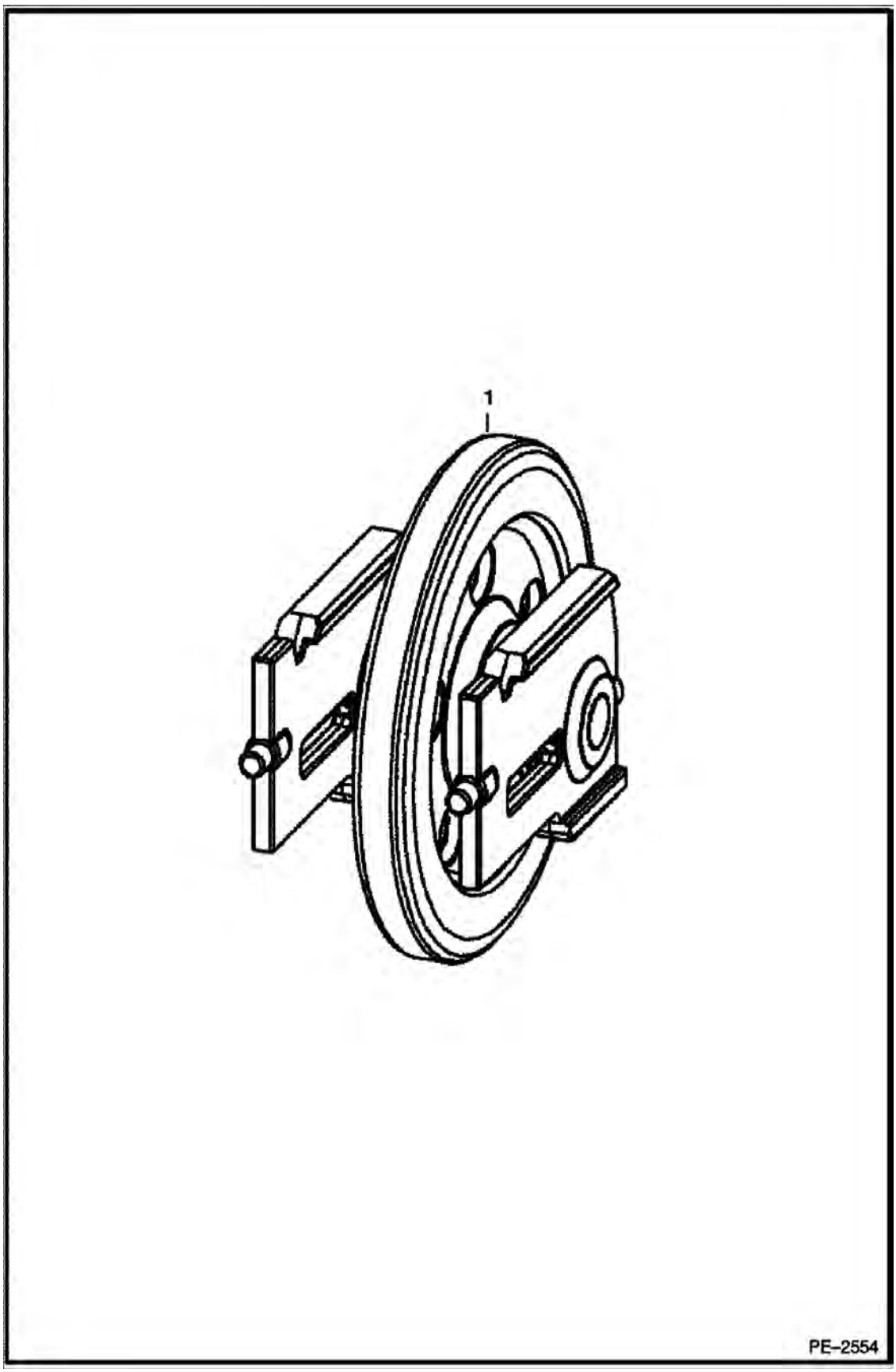

Illustration PE2554

Page 89 - OSS# 6300322913 - All rights reserved by Bobcat Company - 08/04/2017 - 06:30:16 - Produced by Ken Cook Co. with media1off

FRONT IDLER (Cont'd)

(S/N A3P811001 - A3P815999, A3P911001 - A3P812999)

Ref No	Part Number	Description	Remarks	Serial Number	Qty
1	6693237	IDLER, FRONT 2			1

Page 88 OSS# 6300322913 - All rights reserved by Bobcat Company - 08/04/2017 - 06:30:16 - Produced by Ken Cook Co. with media1off

FRONT IDLER
(S/N A3P816001 & Above, A3P913001 & Above)

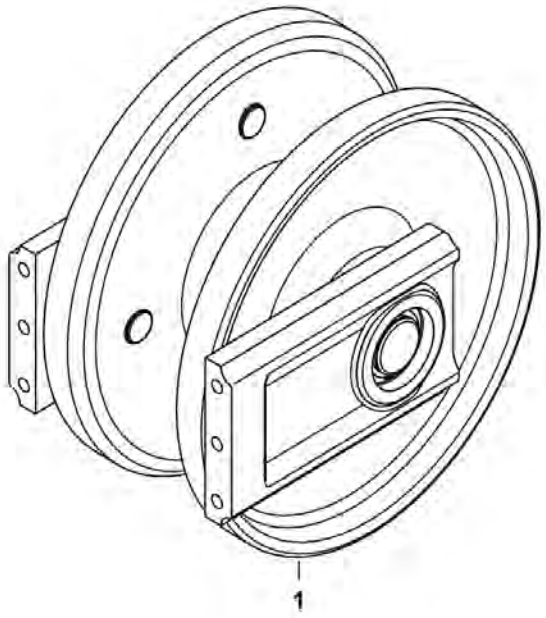

NA10336

Page 91 - OSS# 6300322913 - All rights reserved by Bobcat Company - 08/04/2017 - 06:30:16 - Produced by Ken Cook Co. with media1off

FRONT IDLER (Cont'd)

(S/N A3P816001 & Above, A3P913001 & Above)

Ref No	Part Number	Description	Remarks	Serial Number	Qty
1	7240006	IDLER, ASSY	front		1

Page 92 OSS# 6300322913 - All rights reserved by Bobcat Company - 08/04/2017 - 06:30:16 - Produced by Ken Cook Co. with media1off

REAR IDLER
(S/N A3P811001 - A3P815999, A3P911001 - A3P912999)

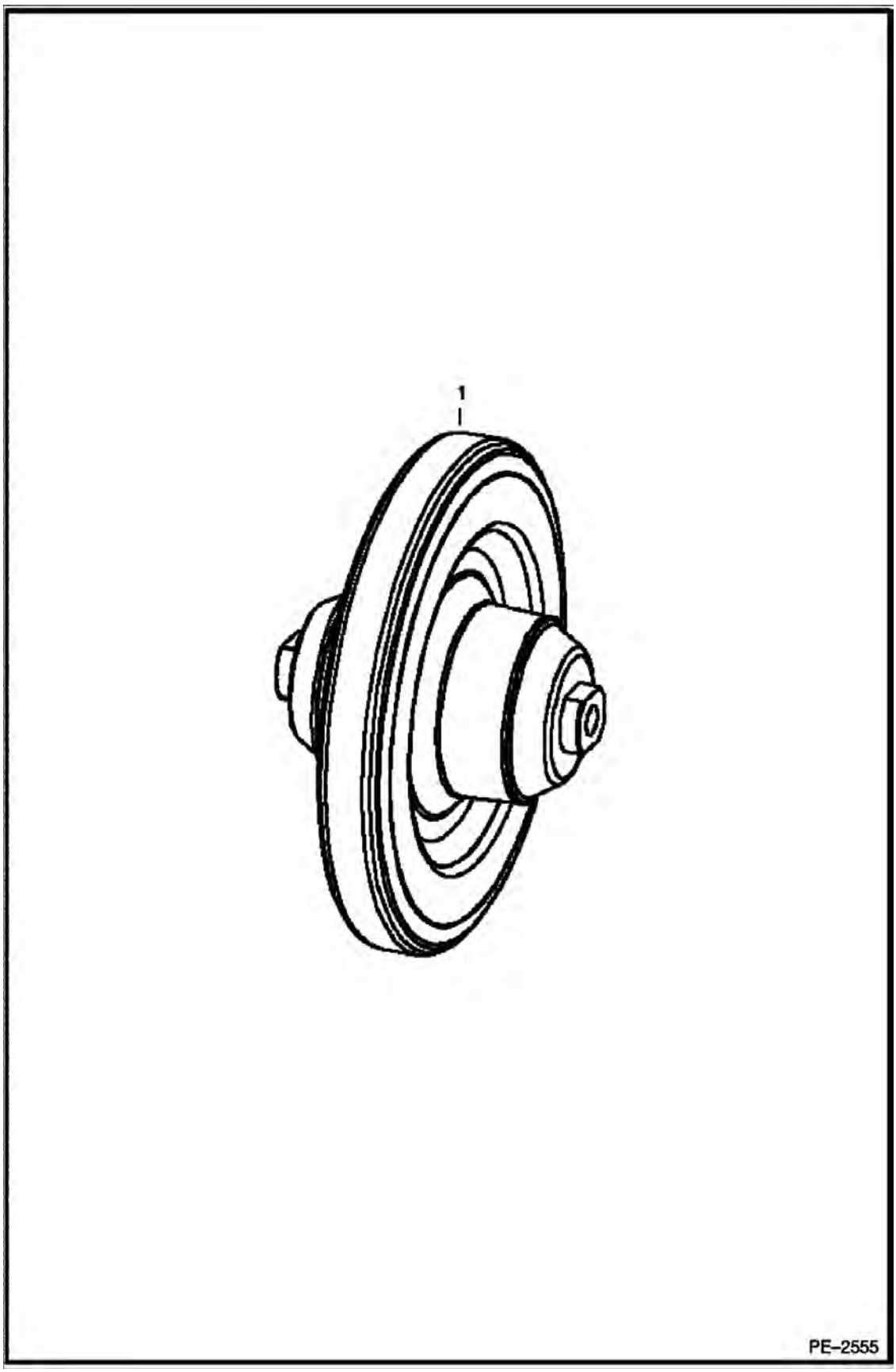

Page 93 - OSS# 6300322913 - All rights reserved by Bobcat Company - 08/04/2017 - 06:30:16 - Produced by Ken Cook Co. with media1off

REAR IDLER (Cont'd)

(S/N A3P811001 - A3P815999, A3P911001 - A3P912999)

Ref No	Part Number	Description	Remarks	Serial Number	Qty
1	6693238	IDLER, REAR 2	solid mount track frame		1
1	6697933	IDLER REAR	roller suspension track frame		1

Page 1 OSS# 6300322913 - All rights reserved by Bobcat Company - 08/04/2017 - 06:30:16 - Produced by Ken Cook Co. with media1off

REAR IDLER
(S/N A3P816001 & Above, A3P913001 & Above)

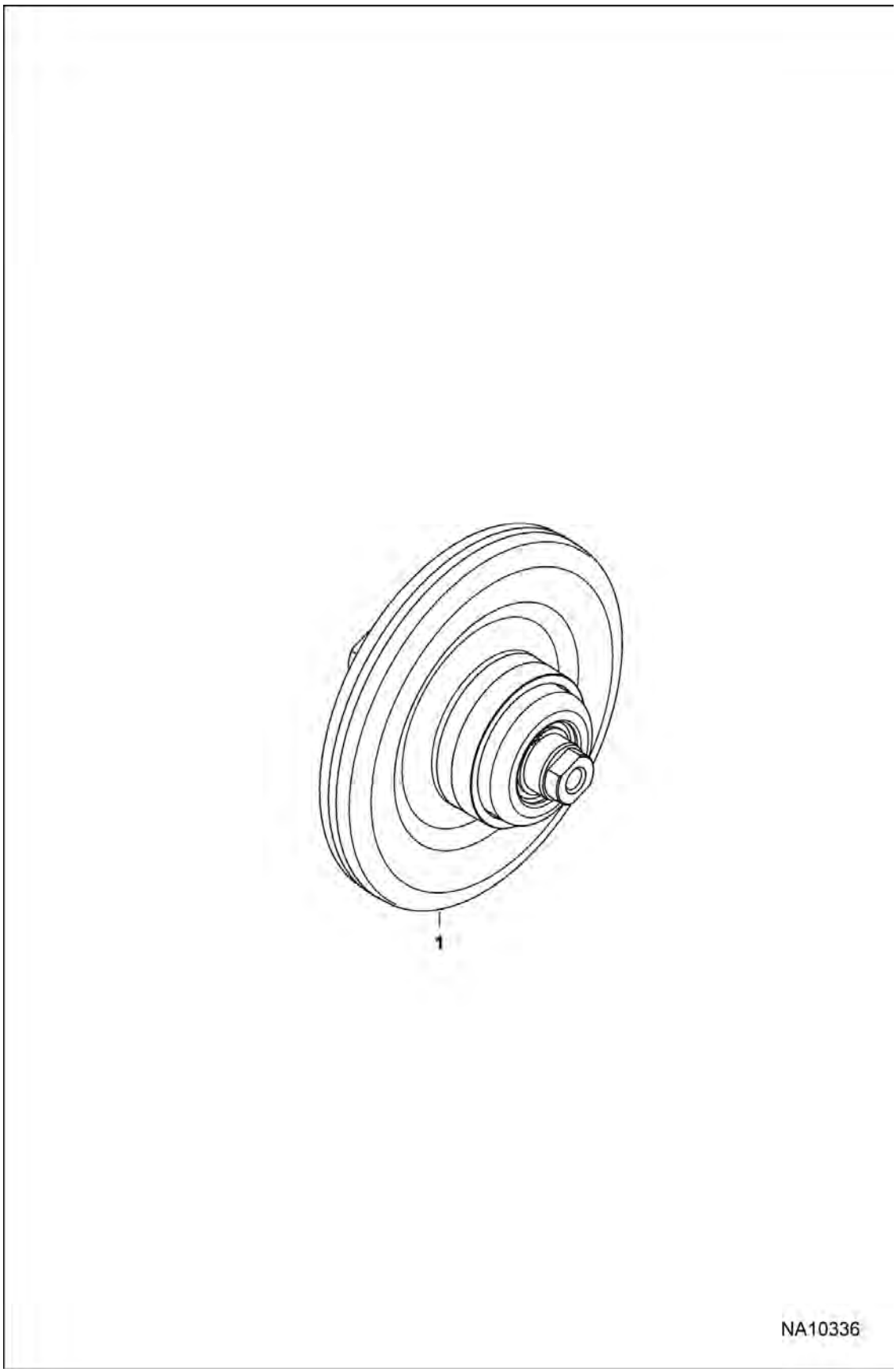

Illustration NA10338

Page 95 - OSS# 6300322913 - All rights reserved by Bobcat Company - 08/04/2017 - 06:30:16 - Produced by Ken Cook Co. with media1off

REAR IDLER (Cont'd)

(S/N A3P816001 & Above, A3P913001 & Above)

Ref No	Part Number	Description	Remarks	Serial Number	Qty
1	7233630	IDLER, REAR	rear		1

Page 86 OSS# 6300322913 - All rights reserved by Bobcat Company - 08/04/2017 - 06:30:16 - Produced by Ken Cook Co. with media1off

TRACK ROLLER
(S/N A3P811001 - A3P815999, A3P911001 - A3P912999)

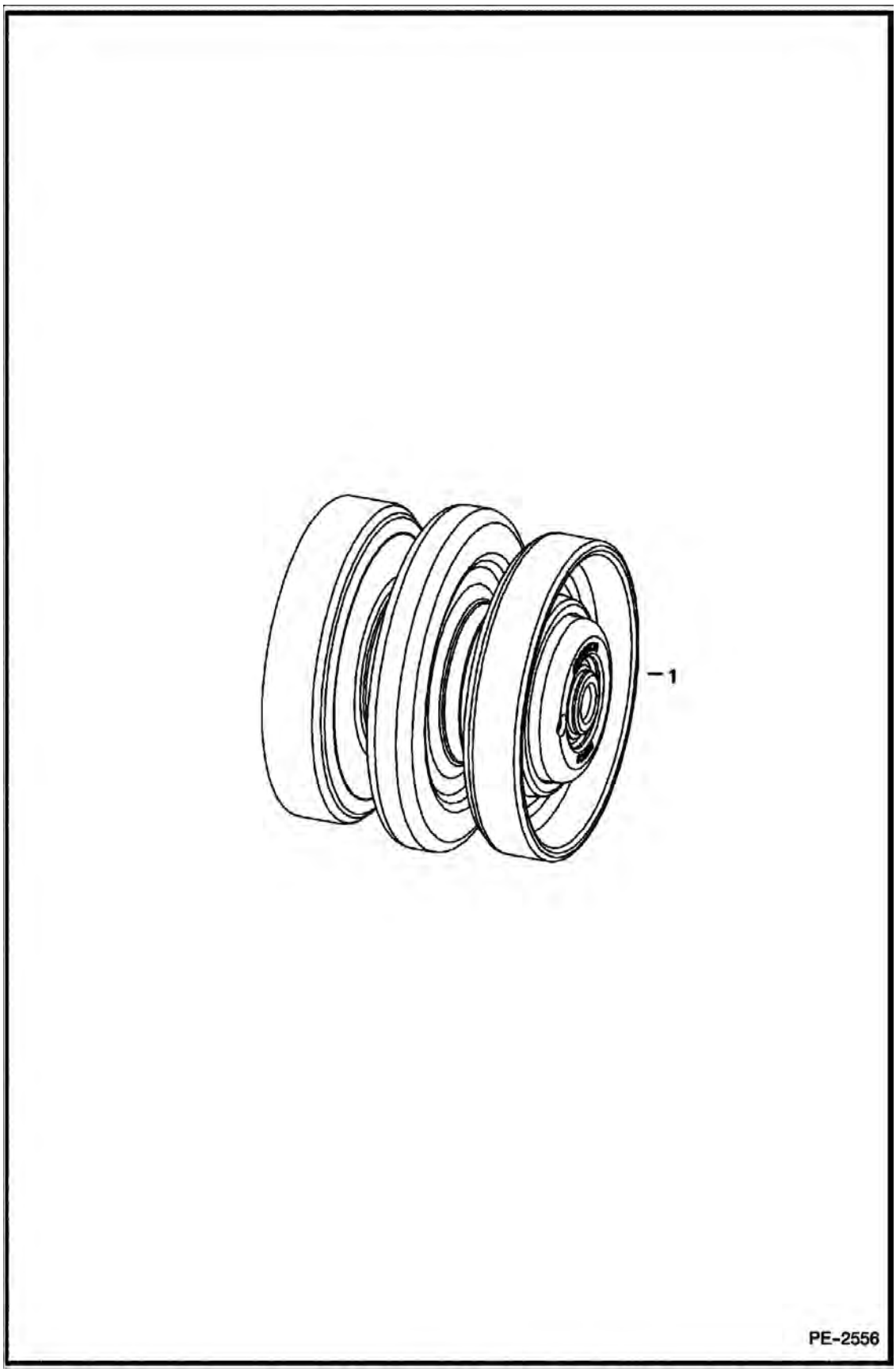

Page 97 - OSS# 6300322913 - All rights reserved by Bobcat Company - 08/04/2017 - 06:30:16 - Produced by Ken Cook Co. with media1off

TRACK ROLLER (Cont'd)

(S/N A3P811001 - A3P815999, A3P911001 - A3P912999)

Ref No	Part Number	Description	Remarks	Serial Number	Qty
1	6689371	ROLLER, TRACK 2	solid mount track frame		1
1	6693239	ROLLER ASSY	roller suspension track frame		1

Page 98 OSS# 6300322913 - All rights reserved by Bobcat Company - 08/04/2017 - 06:30:16 - Produced by Ken Cook Co. with media1off

TRACK ROLLER
(S/N A3P816001 & Above, A3P913001 & Above)

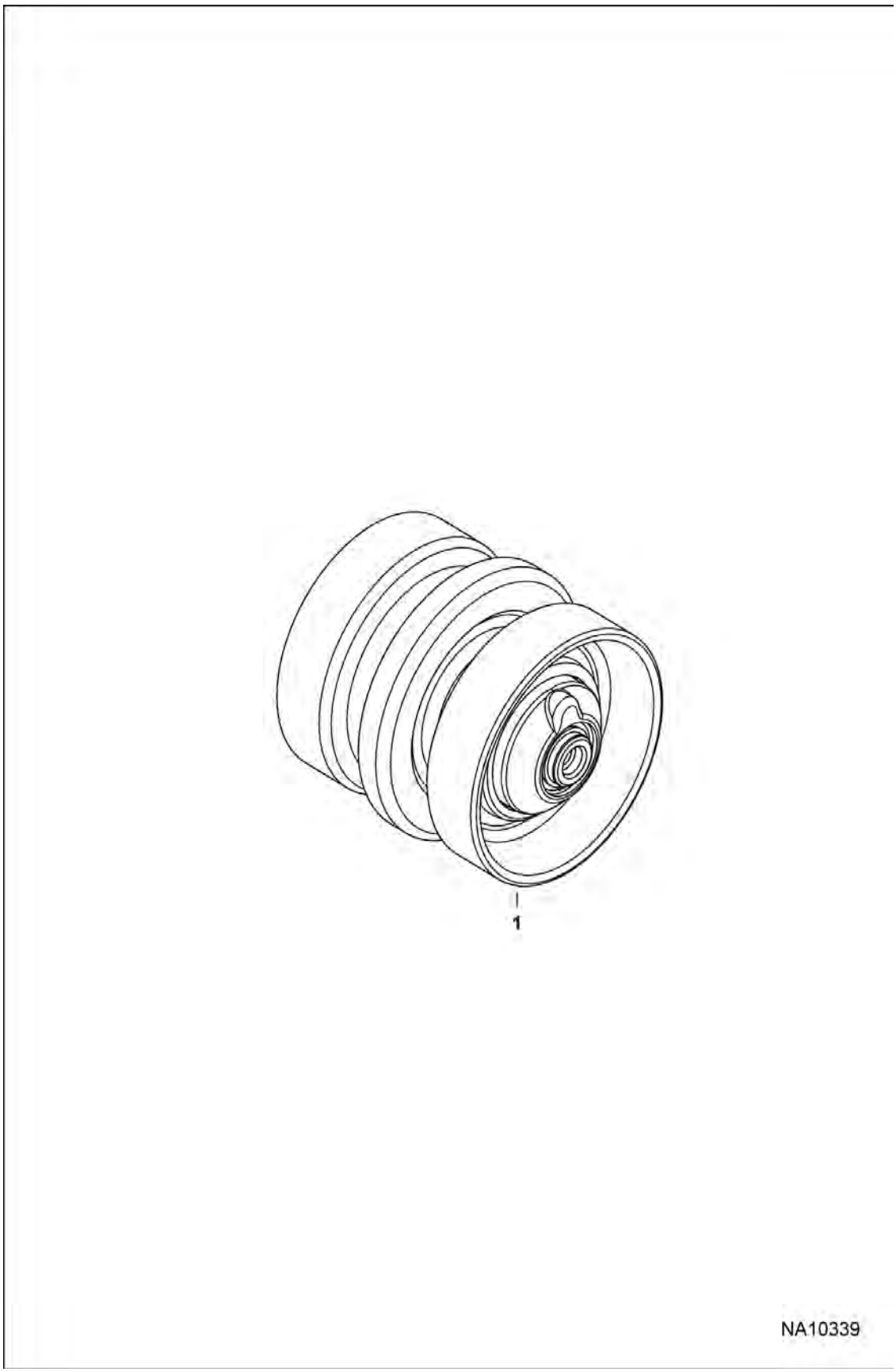

Page 99 - OSS# 6300322913 - All rights reserved by Bobcat Company - 08/04/2017 - 06:30:16 - Produced by Ken Cook Co. with media1off

TRACK ROLLER (Cont'd)

(S/N A3P816001 & Above, A3P913001 & Above)

Ref No	Part Number	Description	Remarks	Serial Number	Qty
1	7243576	ROLLER, TRACK	suspension		1
1	7228629	ROLLER, TRACK	solid mount		1

Page 1004 OSS# 6300322913 - All rights reserved by Bobcat Company - 08/04/2017 - 06:30:16 - Produced by Ken Cook Co. with mediaioff

TRACK TENSIONER
(S/N A3P811001 - A3P815999, A3P911001 - A3P912999)

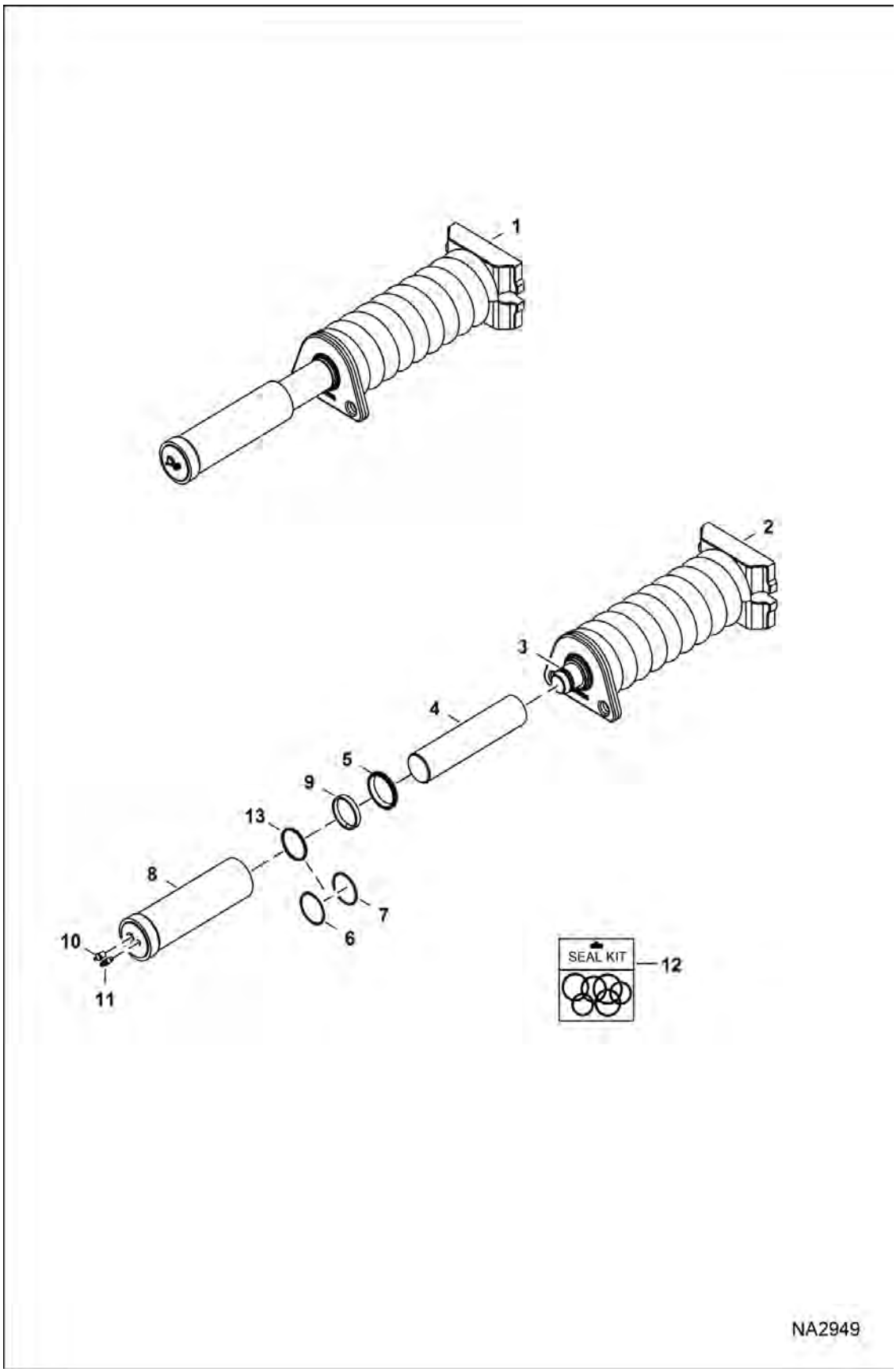

Page 101 - OSS# 6300322913 - All rights reserved by Bobcat Company - 08/04/2017 - 06:30:16 - Produced by Ken Cook Co. with mediaioff

TRACK TENSIONER (Cont'd)

(S/N A3P811001 - A3P815999, A3P911001 - A3P912999)

Ref No	Part Number	Description	Remarks	Serial Number	Qty
1	7227895	TENSIONER, TRACK ASSY	Ref. 2-11 - Was 7180674 [A]		1
2		COIL SPRING ASSY	NSS - Order Ref. 1		1
3	25K30118	O RING 10	not in seal kit		1
4	7227906	SHAFT, CHROME			1
5	6686968	SEAL, WIPER ROD			1
6	6685154	RING, BACK-UP			1
7	6672338	O-RING			1
8	7180325	TUBE, TENSIONER			1
9	6688839	WEAR RING	9,53 mm (0.38") wide		1
10	6655752	FITTING, GREASE	68,900 kpa (10,000 psi) - DO NOT SUBSTITUTE		1
11	6645812	SCREW,BLD			1
12	7163219	KIT, SEAL	Ref. 5-7 & 9		1
13		SEAL, RING	NLA - Was 7271027 [B]		1

Page 124 OSS# 6300322913 - All rights reserved by Bobcat Company - 08/04/2017 - 06:30:16 - Produced by Ken Cook Co. with mediaioff

TRACK TENSIONER
(S/N A3P816001 & Above, A3P913001 & Above)

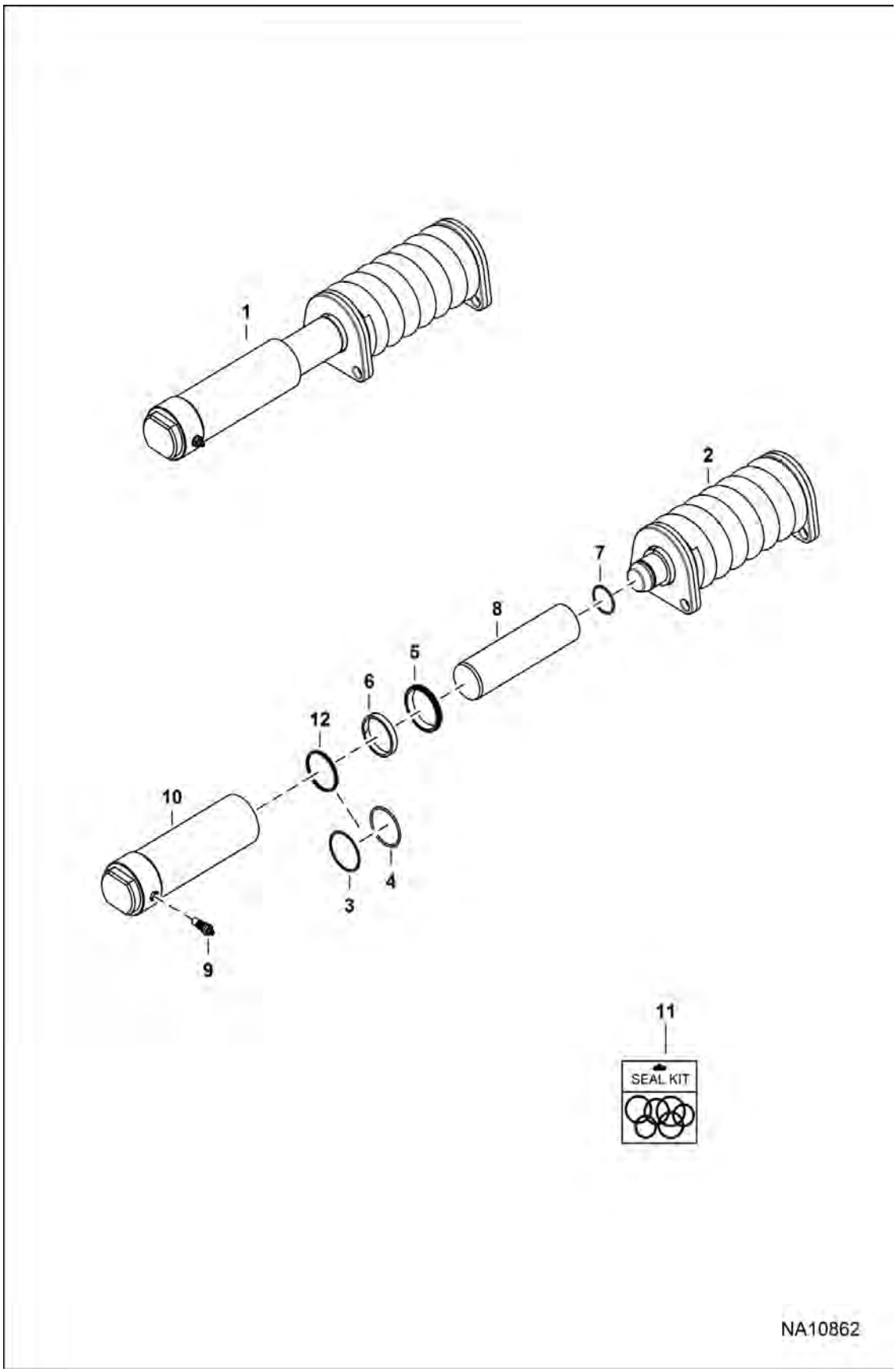

Page 103 - OSS# 6300322913 - All rights reserved by Bobcat Company - 08/04/2017 - 06:30:16 - Produced by Ken Cook Co. with mediaioff

TRACK TENSIONER (Cont'd)

(S/N A3P816001 & Above, A3P913001 & Above)

Ref No	Part Number	Description	Remarks	Serial Number	Qty
1	7271023	CYLINDER, GREASE	Ref. 2-10		1
2		COIL SPRING ASSY	NSS - Order Ref. 1		1
3	6672338	O-RING			1
4	6685154	RING, BACK-UP			1
5	6686968	SEAL, WIPER ROD			1
6	6688839	WEAR RING			1
7	25K30118	O RING 10			1
8	7135356	SHAFT, CHROME			1
9	7311865	FITTING GREASE	Was 7234675 [A]		1
10	7246605	TUBE CYL W/A			1
11	7163219	KIT, SEAL	Ref. 3-6		1
12		SEAL, RING	NLA - Was 7271027 [B]		1

Page 104 OSS# 6300322913 - All rights reserved by Bobcat Company - 08/04/2017 - 06:30:16 - Produced by Ken Cook Co. with mediaioff

HYDRAULIC CIRCUITRY

(W/O BPV Junction Block)

(S/N A3P811001 - A3P812129, A3P911001 - A3P911320)

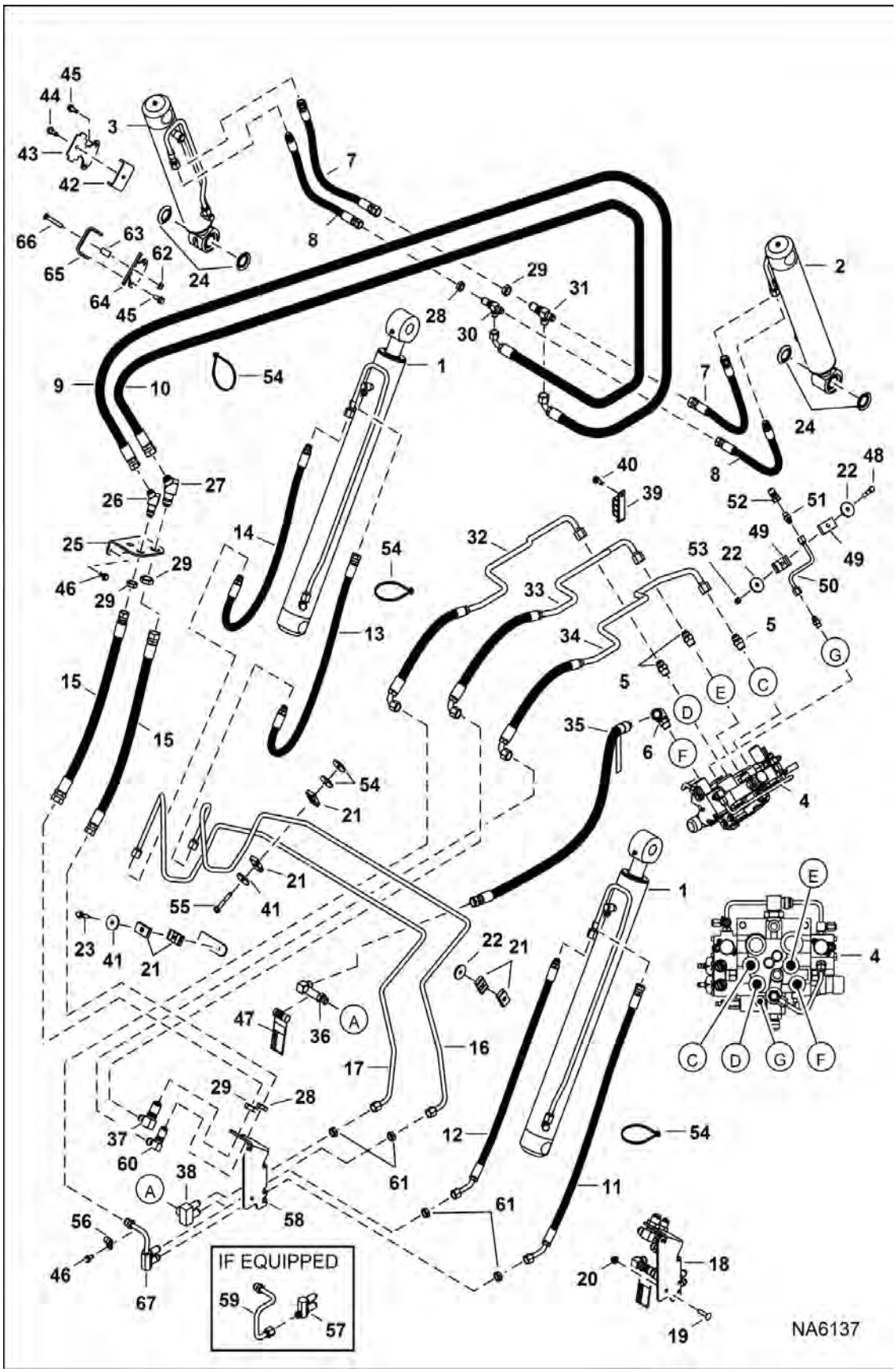

Page 105 - OSS# 6300322913 - All rights reserved by Bobcat Company - 08/04/2017 - 06:30:16 - Produced by Ken Cook Co. with mediaioff

HYDRAULIC CIRCUITRY (Cont'd)

(W/O BPV Junction Block)

(S/N A3P811001 - A3P812129, A3P911001 - A3P911320)

Ref No	Part Number	Description	Remarks	Serial Number	Qty
1		CYLINDER, LIFT	See Illustration LIFT CYLINDER / NA6139		2
2		CYLINDER, TILT	See Illustration TILT CYLINDER / NA6008 - RH		1
3		CYLINDER, TILT	See Illustration TILT CYLINDER / NA6007 - LH		1
4		VALVE, CONTROL	See Illustration HYDRAULIC CONTROL VALVE / NA1216 - manual controls		1
4		VALVE, CONTROL	See Illustration HYDRAULIC CONTROL VALVE / NA1217 - ACS, SJC		1
5	15KB1010	FITTING, HYD CONNECTOR			8
5	79K10	O RING 10			x
6	7109623	ELBOW			1
6	79K10	O RING 10			1
7	7153006	HOSE, HYD			2
8	7153008	HOSE, HYD			2
9	7249151	HOSE, HYD ASSY	Was 7162867 [A]		1
10	7162868	HOSE, HYD ASSY			1
11	7155829	HOSE, HYD			1
12	7155830	HOSE, HYD			1
13	7198280	HOSE, HYD	901,7 mm (35.5") long		1
13	7204727	HOSE, HYD	641,4 mm (25.25") long		1
14	7198281	HOSE, HYD			1
15	7156319	HOSE, HYD			2
16	7198225	TUBELINE, HYD			1
17	7198226	TUBELINE, HYD			1
18		VALVE, LEVEL SELF NO	Ref. 28, 29, 36-38, 46 & 56-61 - Was 7204131 [A]		1
19	37C620	BOLT			2
20	83D6	NUT 5			2
21	6701892	CLAMP			6
22	619021	WASHER, 5	0.13" thick - 32 mm (1.25") OD		2
23	84G3728	BOLT			2
24	6689112	SEAL			4
25	7156362	MOUNT, BLKHD			1
26	46K7	ELBOW			1
27	46K8	ELBOW			1
28	86F7	NUT 5			1
29	86F8	NUT 5			3
30	91K6	TEE			1
31	91K7	FITTING			1
32	7152003	HOSE, HYD			1
33	7152004	HOSE, HYD			1
34	7152005	HOSE, HYD			1
35	7168336	HOSE, HYD	available only as an assembly W/one danger decal installed near the male threaded end of the hose		1
35	7170355	DECAL, DANGER			1
36	7183605	KIT, FITTING W/DECAL	W/Ref. 47 - this elbow must always display the danger decal		1
36	79K10	O RING 10			x
37	7193758	FITTING, HYD ELBOW			4

Page 1068 OSS# 6300322913 - All rights reserved by Bobcat Company - 08/04/2017 - 06:30:16 - Produced by Ken Cook Co. with mediaioff

HYDRAULIC CIRCUITRY (Cont'd)

(W/O BPV Junction Block)

(S/N A3P811001 - A3P812129, A3P911001 - A3P911320)

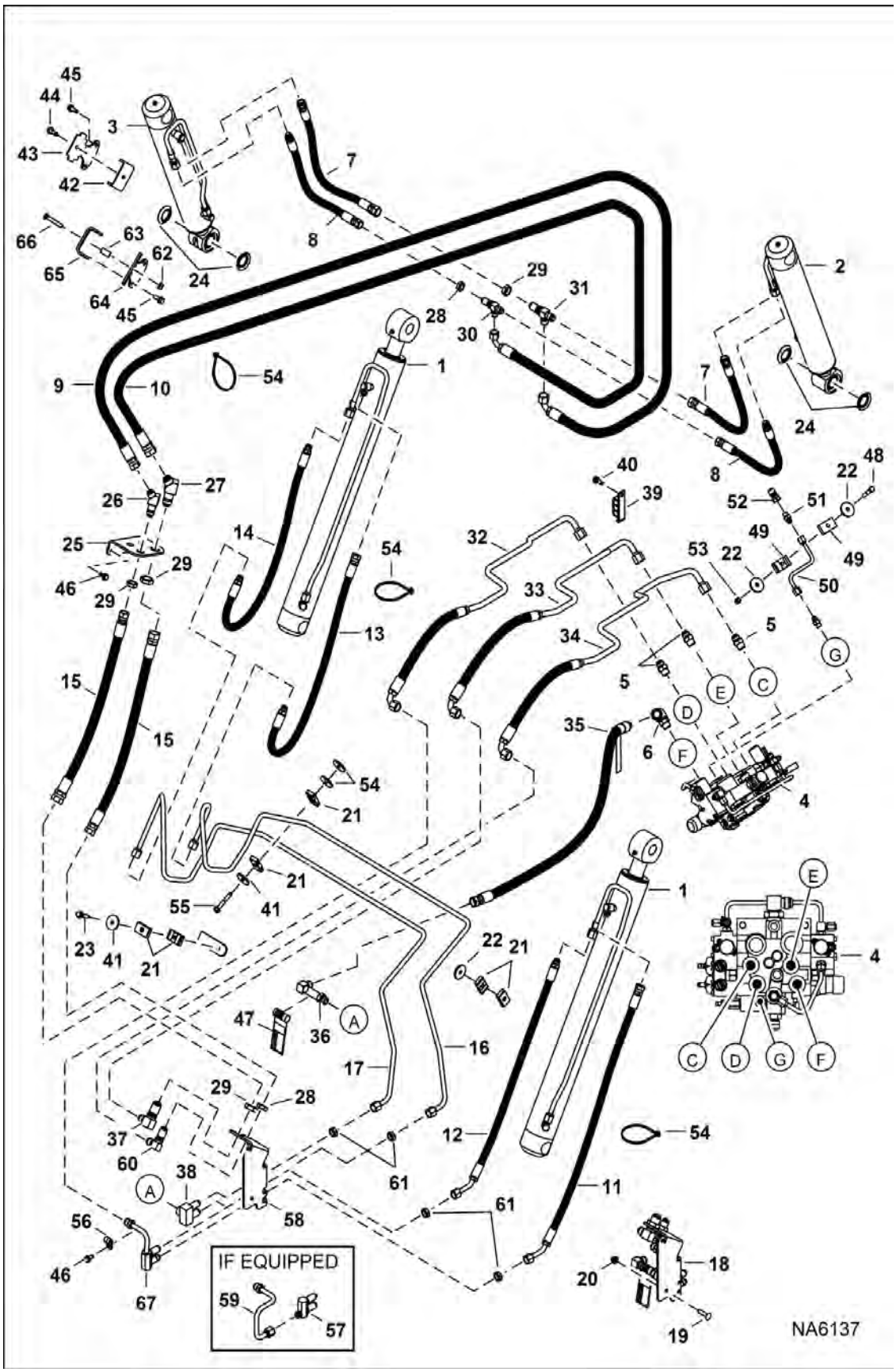

Page 197 - OSS# 6300322913 - All rights reserved by Bobcat Company - 08/04/2017 - 06:30:16 - Produced by Ken Cook Co. with mediaioff

HYDRAULIC CIRCUITRY (Cont'd)

(W/O BPV Junction Block)

(S/N A3P811001 - A3P812129, A3P911001 - A3P911320)

Ref No	Part Number	Description	Remarks	Serial Number	Qty
38	7203490	FITTING, HYD CONNECTOR			1
39	7157358	CLAMP			1
40	35C616	BOLT 5	Was 84G3716 [B]		1
41	872229	WASHER	0.19" thick - 44.5 mm (1.75") OD		6
42		CLAMP, HOSE	NLA - Order Ref. 62-66 - Was 7161042 [A]		1
43		CLAMP, HOSE	NLA - Order Ref. 62-66 - Was 7161043 [A]		1
44	84G3732	BOLT	[B]		2
45	35C616	BOLT 5	Was 84G3716 [B]		2
46	84G3716	SCREW 5	Was 84G3712 [B]		3
47	7170355	DECAL, DANGER			1
48	17C632	BOLT 5			1
49	7183298	CLAMP			2
50	7182882	TUBELINE, HYD			1
51	15KB0606	FITTING, HYD CONNECTOR			2
51	79K6	O RING 10			x
52	6684125	COUPLER			1
53	85D6	NUT, 5			1
54	6624289	STRAP, TIE			8
55	84G3740	BOLT			1
56	30H31	CLAMP 10			1
57		FITTING, HYD CONNECTOR	NLA - if equipped - Use W/Ref. 59 (NLA / 7203506 tubeline) - Was 7203489 [A]		1
58	7232934	BRACKET, JUNCTION	Was 7203491 [C]		1
59		TUBELINE, HYD	NLA - if equipped - Use W/Ref. 57 (NLA / 7203489 fitting) - Was 7203506 [A]		1
60	88F7	ELBOW			4
61	86F6	NUT			5
62	53D6	NUT	Was 89D6 [B]		2
63	7199872	SPACER, TUBE			1
64	7199814	CLAMP, HOSE			1
65	7199815	CLAMP, HOSE			1
66	7199946	BOLT			1
67	7249264	TUBELINE, HYD			1

Page 1 of 1 OSS# 6300322913 - All rights reserved by Bobcat Company - 08/04/2017 - 06:30:16 - Produced by Ken Cook Co. with mediaoff

HYDRAULIC CIRCUITRY

(W/BPV Junction Block)

(S/N A3P811001 - A3P812129, A3P911001 - A3P911320)

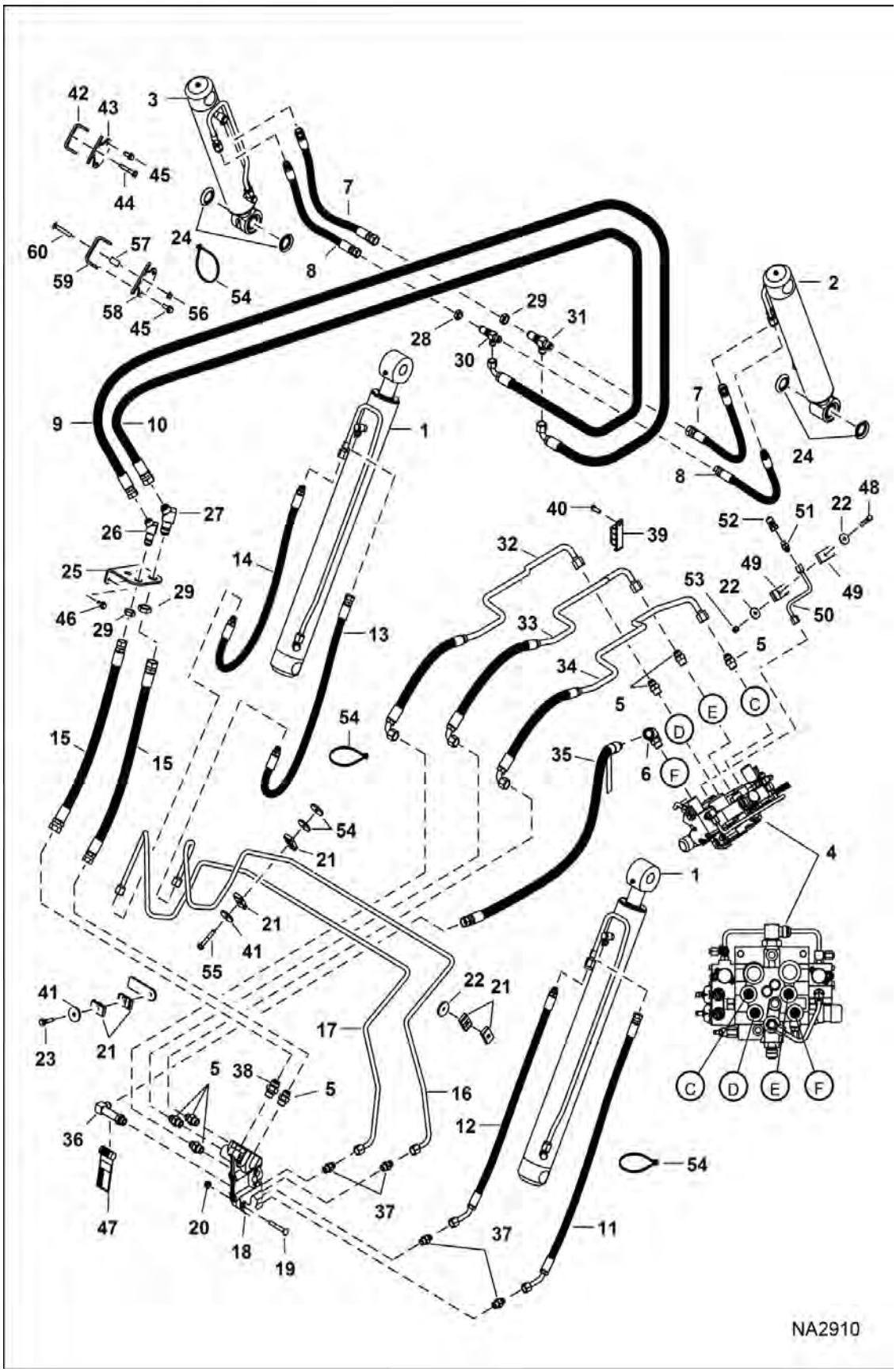

Page 109 - OSS# 6300322913 - All rights reserved by Bobcat Company - 08/04/2017 - 06:30:16 - Produced by Ken Cook Co. with mediaioff

Illustration NA2910

HYDRAULIC CIRCUITRY (Cont'd)

(W/BPV Junction Block)

(S/N A3P811001 - A3P812129, A3P911001 - A3P911320)

Ref No	Part Number	Description	Remarks	Serial Number	Qty
1		CYLINDER, LIFT	See Illustration LIFT CYLINDER / NA6139		2
2		CYLINDER, TILT	See Illustration TILT CYLINDER / NA1210 - RH		1
3		CYLINDER, TILT	See Illustration TILT CYLINDER / NA1209 - LH		1
4		VALVE, CONTROL	See Illustration HYDRAULIC CONTROL VALVE / NA1216 - manual controls		1
4		VALVE, CONTROL	See Illustration HYDRAULIC CONTROL VALVE / NA1217 - ACS, AHC & SJC		1
5	15KB1010	FITTING, HYD CONNECTOR			8
5	79K10	O RING 10			x
6	7109623	ELBOW			1
6	79K10	O RING 10			1
7	7153006	HOSE, HYD			2
8	7153008	HOSE, HYD			2
9	7249151	HOSE, HYD ASSY	Was 7162867 [A]		1
10	7162868	HOSE, HYD ASSY			1
11	7155829	HOSE, HYD			1
12	7155830	HOSE, HYD			1
13	7198280	HOSE, HYD	901,7 mm (35.5") long		1
13	7204727	HOSE, HYD	641,4 mm (25.25") long		1
14	7198281	HOSE, HYD			1
15	7156319	HOSE, HYD			2
16	7198225	TUBELINE, HYD			1
17	7198226	TUBELINE, HYD			1
18		VALVE, LEVEL SELF NO	NLA - Order components - Was 7001921 NLA - Order components - Was 7204131		1
19	37C644	BOLT			2
20	83D6	NUT 5			2
21	6701892	CLAMP			6
22	619021	WASHER, 5	0.13" thick - 32 mm (1.25") OD		2
23	84G3728	BOLT			2
24	6689112	SEAL			4
25	7156362	MOUNT, BLKHD			1
26	46K7	ELBOW			1
27	46K8	ELBOW			1
28	86F7	NUT 5			1
29	86F8	NUT 5			3
30	91K6	TEE			1
31	91K7	FITTING			1
32	7152003	HOSE, HYD			1
33	7152004	HOSE, HYD			1
34	7152005	HOSE, HYD			1
35	7168336	HOSE, HYD	available only as an assembly W/one danger decal installed near the male threaded end of the hose		1
35	7170355	DECAL, DANGER			1
36	7183605	KIT, FITTING W/DECAL	W/Ref. 47 - this elbow must always display the danger decal		1
36	79K10	O RING 10			x
37	15KB0808	FITTING, HYD CONNECTOR			4

Page 1 of 1 OSS# 6300322913 - All rights reserved by Bobcat Company - 08/04/2017 - 06:30:16 - Produced by Ken Cook Co. with mediaioff

HYDRAULIC CIRCUITRY (Cont'd)

(W/BPV Junction Block)

(S/N A3P811001 - A3P812129, A3P911001 - A3P911320)

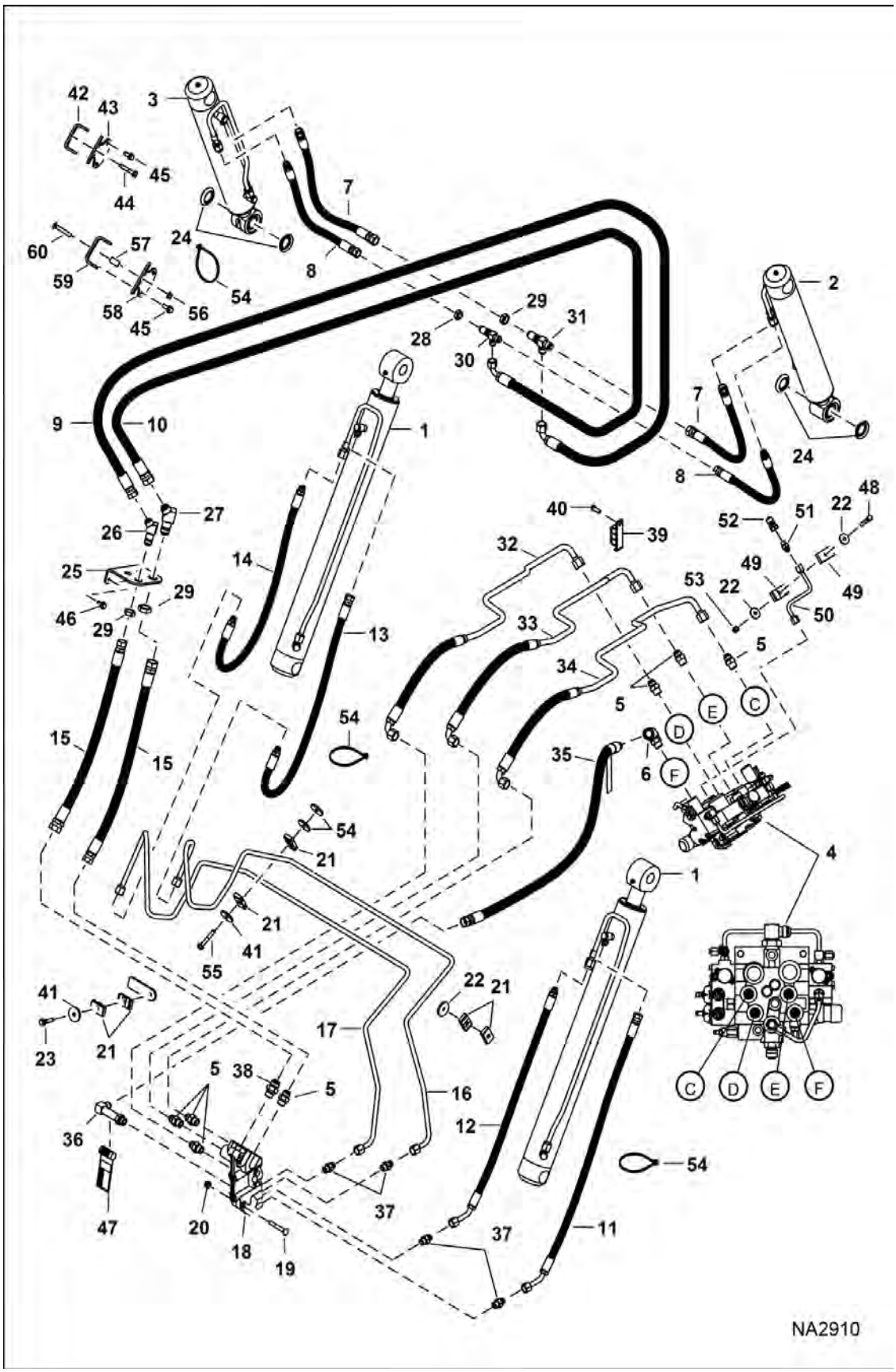

Page 111 - OSS# 6300322913 - All rights reserved by Bobcat Company - 08/04/2017 - 06:30:16 - Produced by Ken Cook Co. with mediaioff

HYDRAULIC CIRCUITRY (Cont'd)

(W/BPV Junction Block)

(S/N A3P811001 - A3P812129, A3P911001 - A3P911320)

Ref No	Part Number	Description	Remarks	Serial Number	Qty
37	79K8	O RING 10			x
38	15KB1210	FITTING, HYD CONNECTOR			1
38	79K12	O RING 10			x
39	7157358	CLAMP			1
40	35C616	BOLT 5	Was 84G3716 [B]		1
41	872229	WASHER	0.19" thick - 44.5 mm (1.75") OD		6
42		CLAMP, HOSE	NLA - Order Ref. 56-60 - Was 7161042 [A]		1
43		CLAMP, HOSE	NLA - Order Ref. 56-60 - Was 7161043 [A]		1
44	84G3732	BOLT	Was 84G3732 [B]		2
45	35C616	BOLT 5	Was 84G3716 [B]		2
46	84G3716	SCREW 5	Was 84G3712 [B]		2
47	7170355	DECAL, DANGER			1
48	17C632	BOLT 5			1
49	7183298	CLAMP			2
50	7182882	TUBELINE, HYD			1
51	15KB0606	FITTING, HYD CONNECTOR			1
51	79K6	O RING 10			x
52	6684125	COUPLER			1
53	85D6	NUT, 5			1
54	6624289	STRAP, TIE			8
55	84G3740	BOLT			1
56	53D6	NUT	Was 89D6 [B]		2
57	7199872	SPACER, TUBE			1
58	7199814	CLAMP, HOSE			1
59	7199815	CLAMP, HOSE			1
60	7199946	BOLT			1

Page 1.2 OSS# 6300322913 - All rights reserved by Bobcat Company - 08/04/2017 - 06:30:16 - Produced by Ken Cook Co. with mediaoff!

HYDRAULIC CIRCUITRY

(W/O BPV Junction Block)

(S/N A3P812130 & Above, A3P911321 & Above)

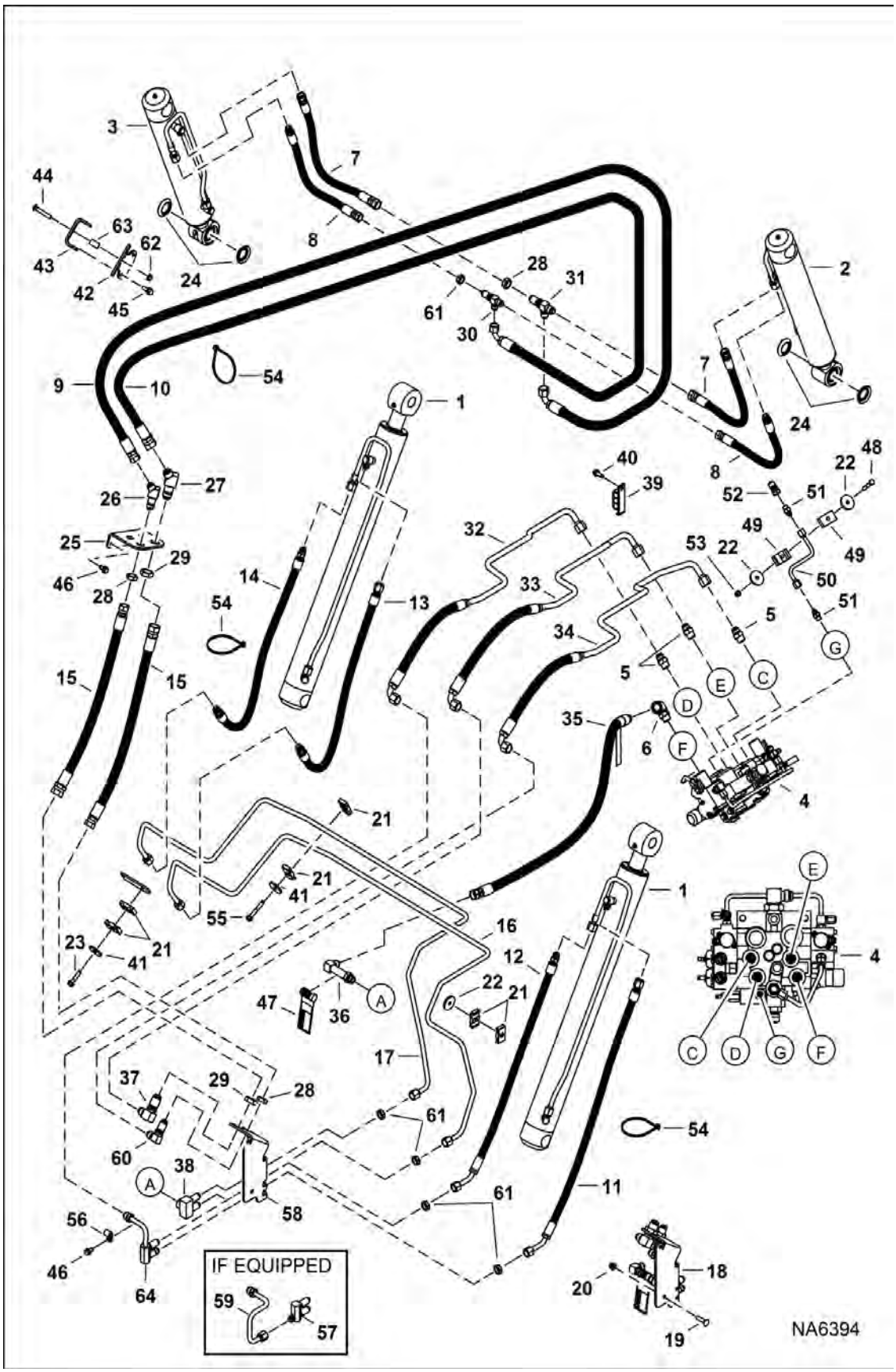

Page 113 - OSS# 6300322913 - All rights reserved by Bobcat Company - 08/04/2017 - 06:30:16 - Produced by Ken Cook Co. with mediaioff

HYDRAULIC CIRCUITRY (Cont'd)

(W/O BPV Junction Block)
(S/N A3P812130 & Above, A3P911321 & Above)

Ref No	Part Number	Description	Remarks	Serial Number	Qty
1		CYLINDER, LIFT	See Illustration LIFT CYLINDER / NA6139		2
2		CYLINDER, TILT	- RH		1
3		CYLINDER, TILT	- LH		1
4		VALVE, CONTROL	See Illustration HYDRAULIC CONTROL VALVE / NA6557 - manual controls		1
4		VALVE, CONTROL	See Illustration HYDRAULIC CONTROL VALVE / NA6558 - ACS, SJC		1
5	15KB1010	FITTING, HYD CONNECTOR			8
5	79K10	O RING 10			x
6	7109623	ELBOW	Use W/hose 7168336	A3P812130 - A3P816045	1
				A3P911321 - A3P913027	1
6	6814531	ELBOW	Use W/hose 7280706	A3P816046 & Above	1
				A3P913028 & Above	1
6	79K10	O RING 10			1
7	7153006	HOSE, HYD			2
8	7153008	HOSE, HYD			2
9	7249151	HOSE, HYD ASSY	Was 7162867 [A]		1
10	7162868	HOSE, HYD ASSY			1
11	7155829	HOSE, HYD			1
12	7155830	HOSE, HYD			1
13	7212038	HOSE, HYD			1
14	7212037	HOSE, HYD			1
15	7156319	HOSE, HYD			2
16	7211820	TUBELINE, HYD		A3P812130 -	1
				A3P911321 -	1
16	7280684	TUBELINE, HYD	Was 7247351 [A]	A3P8 & Above	1
				A3P9 & Above	1
16		TUBELINE HYD ASSY	See Illustration HYDRAULIC CIRCUITRY / NA12941 - one piece tubeline W/inline tee - ride control option		1
17	7211821	TUBELINE, HYD		A3P812130 -	1
				A3P911321 -	1
17	7280683	TUBELINE, HYD	Was 7247350 [A]	A3P8 & Above	1
				A3P9 & Above	1
17		TUBELINE HYD ASSY	See Illustration HYDRAULIC CIRCUITRY / NA12941 - one piece tubeline W/inline tee - ride control option		1
18		VALVE, LEVEL SELF NO	Ref. 28, 29, 36-38, 46 & 56-61 - Was 7204131 [A]		1
19	37C620	BOLT			2
20	83D6	NUT 5			2
21	6701892	CLAMP			6
22	619021	WASHER, 5	0.13" thick - 32 mm (1.25") OD		2
23	84G3728	BOLT			2
24	6689112	SEAL			4
25	7156362	MOUNT, BLKHD			1
26	46K7	ELBOW			1

Page 1 of 1 OSS# 6300322913 - All rights reserved by Bobcat Company - 08/04/2017 - 06:30:16 - Produced by Ken Cook Co. with mediaoff

HYDRAULIC CIRCUITRY (Cont'd)

(W/O BPV Junction Block)

(S/N A3P812130 & Above, A3P911321 & Above)

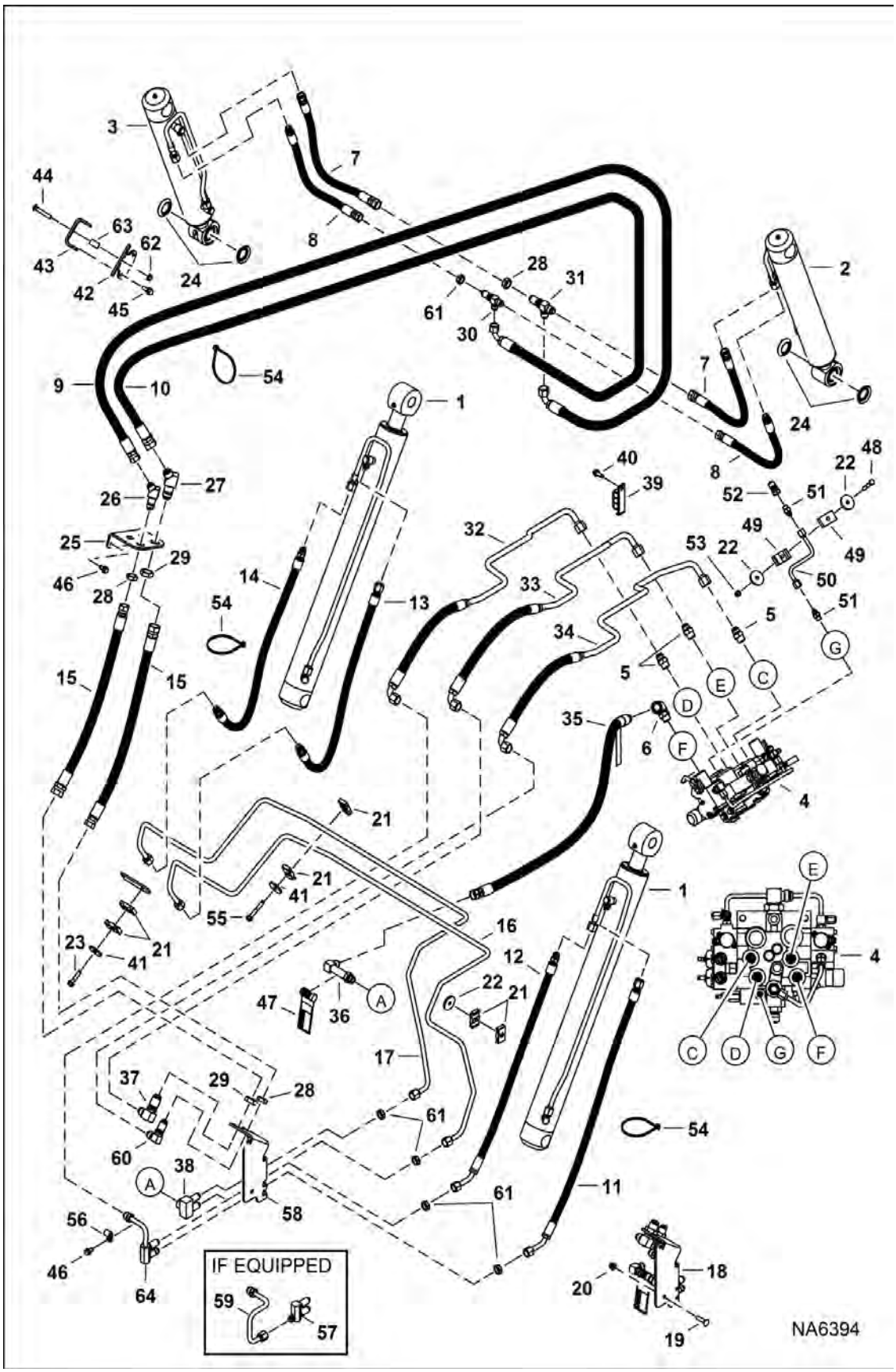

Page 115 - OSS# 6300322913 - All rights reserved by Bobcat Company - 08/04/2017 - 06:30:16 - Produced by Ken Cook Co. with mediaioff

HYDRAULIC CIRCUITRY (Cont'd)

(W/O BPV Junction Block)
(S/N A3P812130 & Above, A3P911321 & Above)

Ref No	Part Number	Description	Remarks	Serial Number	Qty
27	46K8	ELBOW			1
28	86F7	NUT 5			1
29	86F8	NUT 5			3
30	91K6	TEE			1
31	91K7	FITTING			1
32	7152003	HOSE, HYD			1
33	7152004	HOSE, HYD			1
34	7152005	HOSE, HYD			1
35	7168336	HOSE, HYD	1079,5 mm (42.5") long - available only as an assembly W/one danger decal installed near the male threaded end of the hose	A3P812130 - A3P816045	1
				A3P911321 - A3P913027	1
35	7280706	HOSE, HYD ASSY	1134,6 mm (44.67") long - available only as an assembly W/one danger decal installed near the male threaded end of the hose	A3P816046 & Above	1
				A3P913028 & Above	1
36	7183605	KIT, FITTING W/DECAL	Use - W/hose 7168336 - W/Ref. 47 - this elbow must always display the danger decal	A3P812130 - A3P816045	1
				A3P911321 - A3P913027	1
36	7211446	KIT, FITTING W/DECAL	Use W/hose 7280706 - W/Ref. 47 - this elbow must always display the danger decal	A3P816046 & Above	1
				A3P913028 & Above	1
36	79K10	O RING 10			x
37	7193758	FITTING, HYD ELBOW			4
38	7203490	FITTING, HYD CONNECTOR			1
39	7157358	CLAMP			1
40	35C616	BOLT 5			1
41	872229	WASHER	0.19" thick - 44.5 mm (1.75") OD		6
42	7199814	CLAMP, HOSE			1
43	7199815	CLAMP, HOSE			1
44	7199946	BOLT			1
45	35C616	BOLT 5			2
46	84G3716	SCREW 5			3
47	7170355	DECAL, DANGER			1
48	17C632	BOLT 5			1
49	7183298	CLAMP			2
50	7182882	TUBELINE, HYD			1
51	15KB0606	FITTING, HYD CONNECTOR			2
51	79K6	O RING 10			x
52	6684125	COUPLER			1
53	85D6	NUT, 5			1
54	6624289	STRAP, TIE			8
55	84G3740	BOLT			1
56	30H31	CLAMP 10			1
57		FITTING, HYD CONNECTOR	NLA - if equipped - Use W/Ref. 59 (NLA / 7203506 tubeline) - Was 7203489 [A]		1

Page 1 of 1 OSS# 6300322913 - All rights reserved by Bobcat Company - 08/04/2017 - 06:30:16 - Produced by Ken Cook Co. with mediaoff

HYDRAULIC CIRCUITRY (Cont'd)

(W/O BPV Junction Block)

(S/N A3P812130 & Above, A3P911321 & Above)

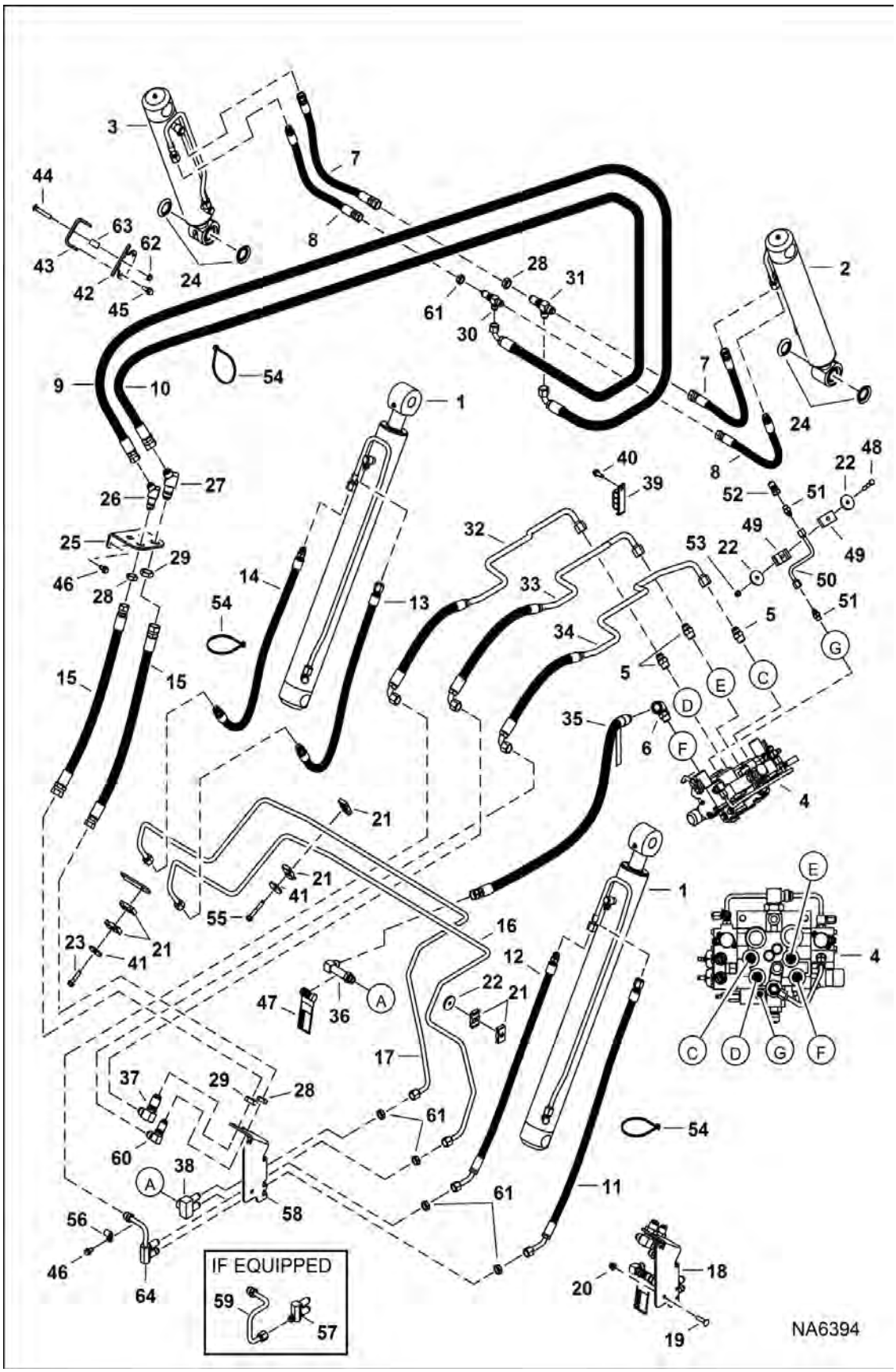

Page 117 - OSS# 6300322913 - All rights reserved by Bobcat Company - 08/04/2017 - 06:30:16 - Produced by Ken Cook Co. with mediaioff

HYDRAULIC CIRCUITRY (Cont'd)

(W/O BPV Junction Block)

(S/N A3P812130 & Above, A3P911321 & Above)

Ref No	Part Number	Description	Remarks	Serial Number	Qty
58	7232934	BRACKET, JUNCTION	Was 7203491 [C]		1
59		TUBELINE, HYD	NLA - if equipped - Use W/Ref. 57 (NLA / 7203489 fitting) - Was 7203506 [A]		1
60	88F7	ELBOW			4
61	86F6	NUT			5
62	53D6	NUT	Was 89D6 [B]		2
63	7199872	SPACER, TUBE			1
64	7249264	TUBELINE, HYD			1

Page 114 OSS# 6300322913 - All rights reserved by Bobcat Company - 08/04/2017 - 06:30:16 - Produced by Ken Cook Co. with mediaioff

HYDRAULIC CIRCUITRY

(W/BPV Junction Block)

(S/N A3P812130 & Above, A3P911321 & Above)

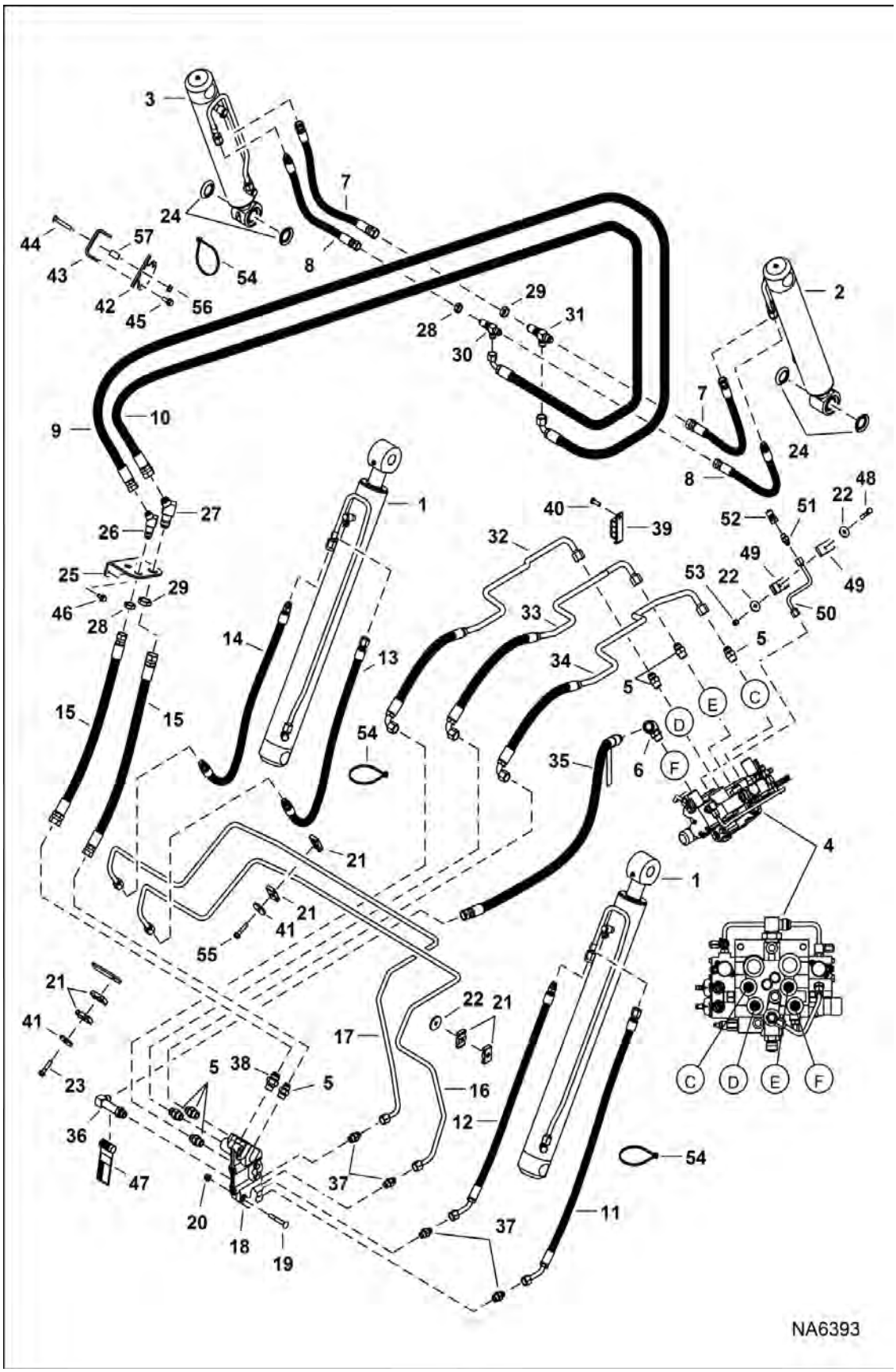

Page 119 - OSS# 6300322913 - All rights reserved by Bobcat Company - 08/04/2017 - 06:30:16 - Produced by Ken Cook Co. with mediaioff

HYDRAULIC CIRCUITRY (Cont'd)

(W/BPV Junction Block)
(S/N A3P812130 & Above, A3P911321 & Above)

Ref No	Part Number	Description	Remarks	Serial Number	Qty
1		CYLINDER, LIFT	See Illustration LIFT CYLINDER / NA6139		2
2		CYLINDER, TILT	- RH		1
3		CYLINDER, TILT	- LH		1
4		VALVE, CONTROL	See Illustration HYDRAULIC CONTROL VALVE / NA6557 - manual controls		1
4		VALVE, CONTROL	See Illustration HYDRAULIC CONTROL VALVE / NA6558 - ACS, SJC		1
5	15KB1010	FITTING, HYD CONNECTOR			8
5	79K10	O RING 10			x
6	7109623	ELBOW	Use W/hose 7168336	A3P812130 - A3P816045	1
				A3P911321 - A3P913027	1
6	6814531	ELBOW	Use W/hose 7280706	A3P816046 & Above	1
				A3P913028 & Above	1
6	79K10	O RING 10			1
7	7153006	HOSE, HYD			2
8	7153008	HOSE, HYD			2
9	7249151	HOSE, HYD ASSY	Was 7162867 [A]		1
10	7162868	HOSE, HYD ASSY			1
11	7155829	HOSE, HYD			1
12	7155830	HOSE, HYD			1
13	7212038	HOSE, HYD			1
14	7212037	HOSE, HYD			1
15	7156319	HOSE, HYD			2
16	7211820	TUBELINE, HYD		A3P812130 -	1
				A3P911321 -	1
16	7280684	TUBELINE, HYD	Was 7247351 [A]	A3P8 & Above	1
				A3P9 & Above	1
16		TUBELINE HYD ASSY	See Illustration HYDRAULIC CIRCUITRY / NA12941 - one piece tubeline W/inline tee - ride control option		1
17	7211821	TUBELINE, HYD		A3P812130 -	1
				A3P911321 -	1
17	7280683	TUBELINE, HYD	Was 7247350 [A]	A3P8 & Above	1
				A3P9 & Above	1
17		TUBELINE HYD ASSY	See Illustration HYDRAULIC CIRCUITRY / NA12941 - one piece tubeline W/inline tee - ride control option		1
18		VALVE, BPV	See Illustration BUCKET POSITION VALVE / NA2550		1
19	37C644	BOLT			2
20	83D6	NUT 5			2
21	6701892	CLAMP			6
22	619021	WASHER, 5			2
23	84G3728	BOLT			2
24	6689112	SEAL			4
25	7156362	MOUNT, BLKHD			1
26	46K7	ELBOW			1
27	46K8	ELBOW			1

Page 1 of 1 OSS# 6300322913 - All rights reserved by Bobcat Company - 08/04/2017 - 06:30:16 - Produced by Ken Cook Co. with mediaoff

HYDRAULIC CIRCUITRY (Cont'd)

(W/BPV Junction Block)

(S/N A3P812130 & Above, A3P911321 & Above)

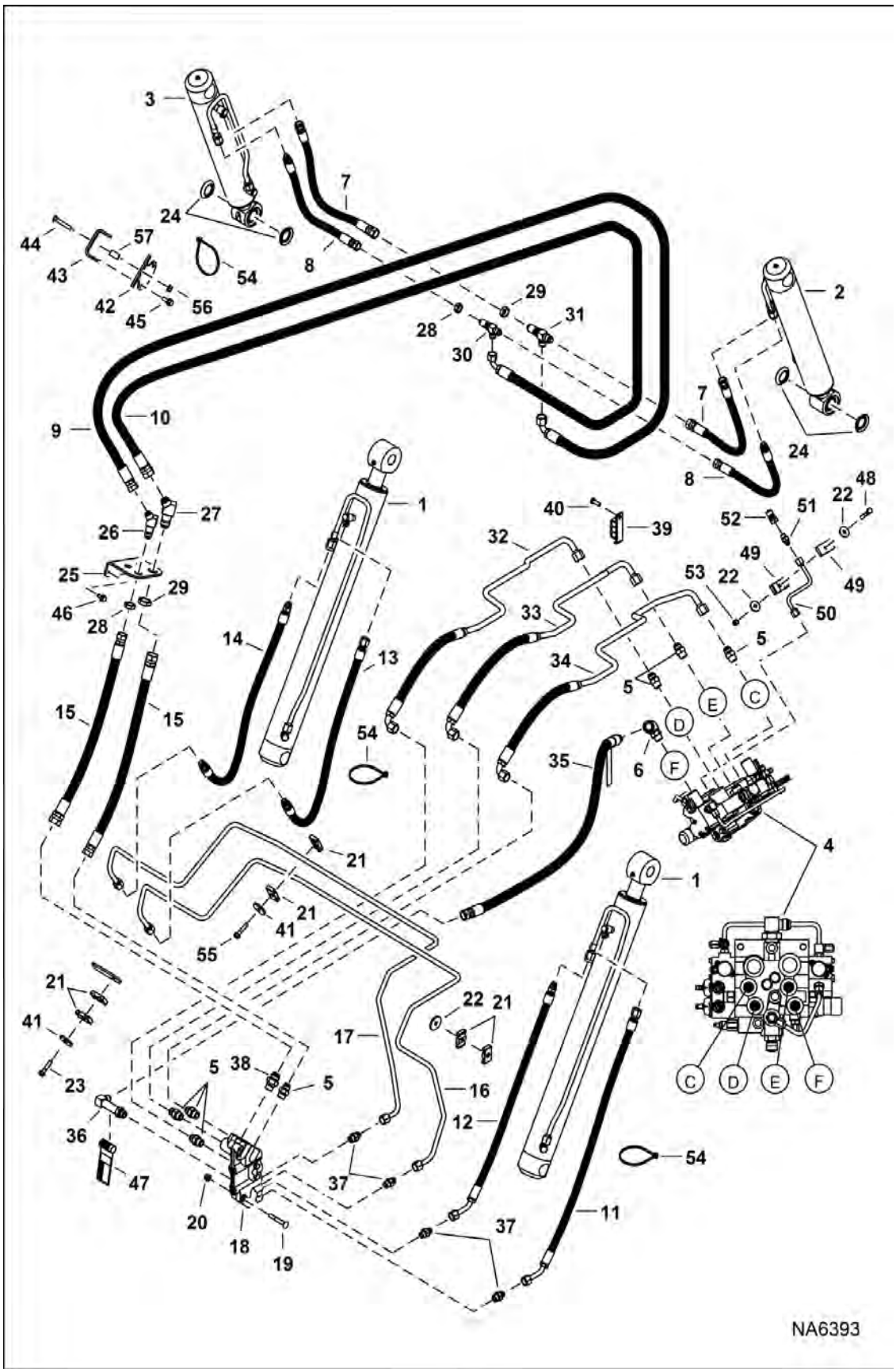

Page 121 - OSS# 6300322913 - All rights reserved by Bobcat Company - 08/04/2017 - 06:30:16 - Produced by Ken Cook Co. with mediaioff

HYDRAULIC CIRCUITRY (Cont'd)

(W/BPV Junction Block)
(S/N A3P812130 & Above, A3P911321 & Above)

Ref No	Part Number	Description	Remarks	Serial Number	Qty
28	86F7	NUT 5			1
29	86F8	NUT 5			3
30	91K6	TEE			1
31	91K7	FITTING			1
32	7152003	HOSE, HYD			1
33	7152004	HOSE, HYD			1
34	7152005	HOSE, HYD			1
35	7168336	HOSE, HYD	1079,5 mm (42.5") long - available only as an assembly W/one danger decal installed near the male threaded end of the hose	A3P812130 - A3P816045	1
				A3P911321 - A3P913027	1
35	7280706	HOSE, HYD ASSY	1134,6 mm (44.67") long - available only as an assembly W/one danger decal installed near the male threaded end of the hose	A3P816046 & Above	1
				A3P913028 & Above	1
36	7183605	KIT, FITTING W/DECAL	Use W/hose 7168336 - W/Ref. 47 - this elbow must always display the danger decal	A3P812130 - A3P816045	1
				A3P911321 - A3P913027	1
36	7211446	KIT, FITTING W/DECAL	Use W/hose 7280706 - W/Ref. 47 - this elbow must always display the danger decal	A3P816046 & Above	1
				A3P913028 & Above	1
36	79K10	O RING 10			x
37	15KB0808	FITTING, HYD CONNECTOR			4
37	79K8	O RING 10			x
38	15KB1210	FITTING, HYD CONNECTOR			1
38	79K12	O RING 10			x
39	7157358	CLAMP			1
40	35C616	BOLT 5			1
41	872229	WASHER			6
42	7199814	CLAMP, HOSE			1
43	7199815	CLAMP, HOSE			1
44	7199946	BOLT			1
45	35C616	BOLT 5			2
46	84G3716	SCREW 5			2
47	7170355	DECAL, DANGER			1
48	17C632	BOLT 5			1
49	7183298	CLAMP			2
50	7182882	TUBELINE, HYD			1
51	15KB0606	FITTING, HYD CONNECTOR			1
51	79K6	O RING 10			x
52	6684125	COUPLER			1
53	85D6	NUT, 5			1
54	6624289	STRAP, TIE			8
55	84G3740	BOLT			1
56	53D6	NUT	Was 89D6 [B]		2

Page 120 OSS# 6300322913 - All rights reserved by Bobcat Company - 08/04/2017 - 06:30:16 - Produced by Ken Cook Co. with mediaioff

HYDRAULIC CIRCUITRY (Cont'd)

(W/BPV Junction Block)

(S/N A3P812130 & Above, A3P911321 & Above)

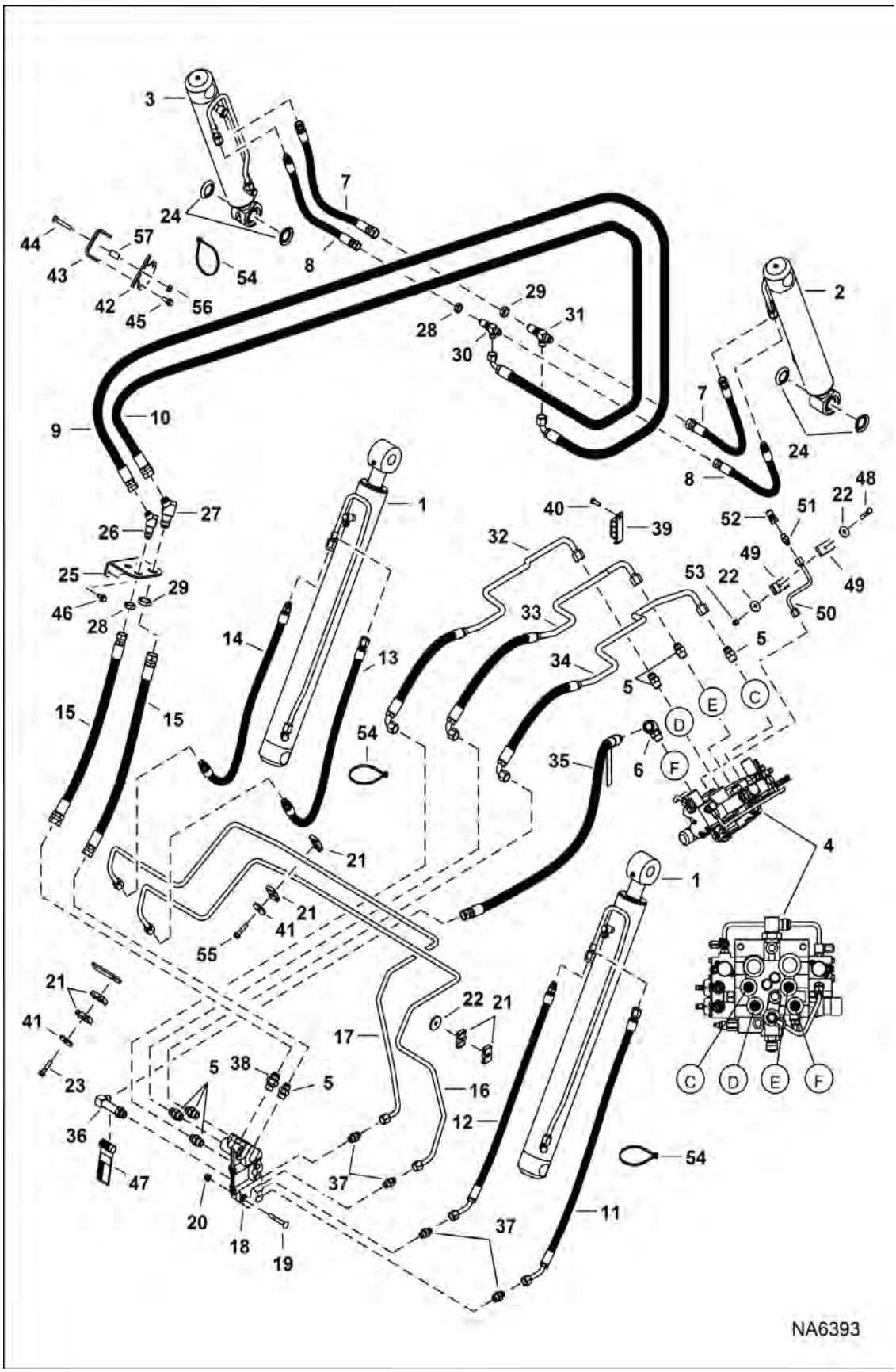

Page 123 - OSS# 6300322913 - All rights reserved by Bobcat Company - 08/04/2017 - 06:30:16 - Produced by Ken Cook Co. with mediaioff

HYDRAULIC CIRCUITRY (Cont'd)

(W/BPV Junction Block)

(S/N A3P812130 & Above, A3P911321 & Above)

Ref No	Part Number	Description	Remarks	Serial Number	Qty
57	7199872	SPACER, TUBE			1

Page 124 OSS# 6300322913 - All rights reserved by Bobcat Company - 08/04/2017 - 06:30:16 - Produced by Ken Cook Co. with mediaioff

HYDRAULIC CIRCUITRY

(Ride Control Option)

(S/N A3P816156 & Above, A3P913076 & Above)

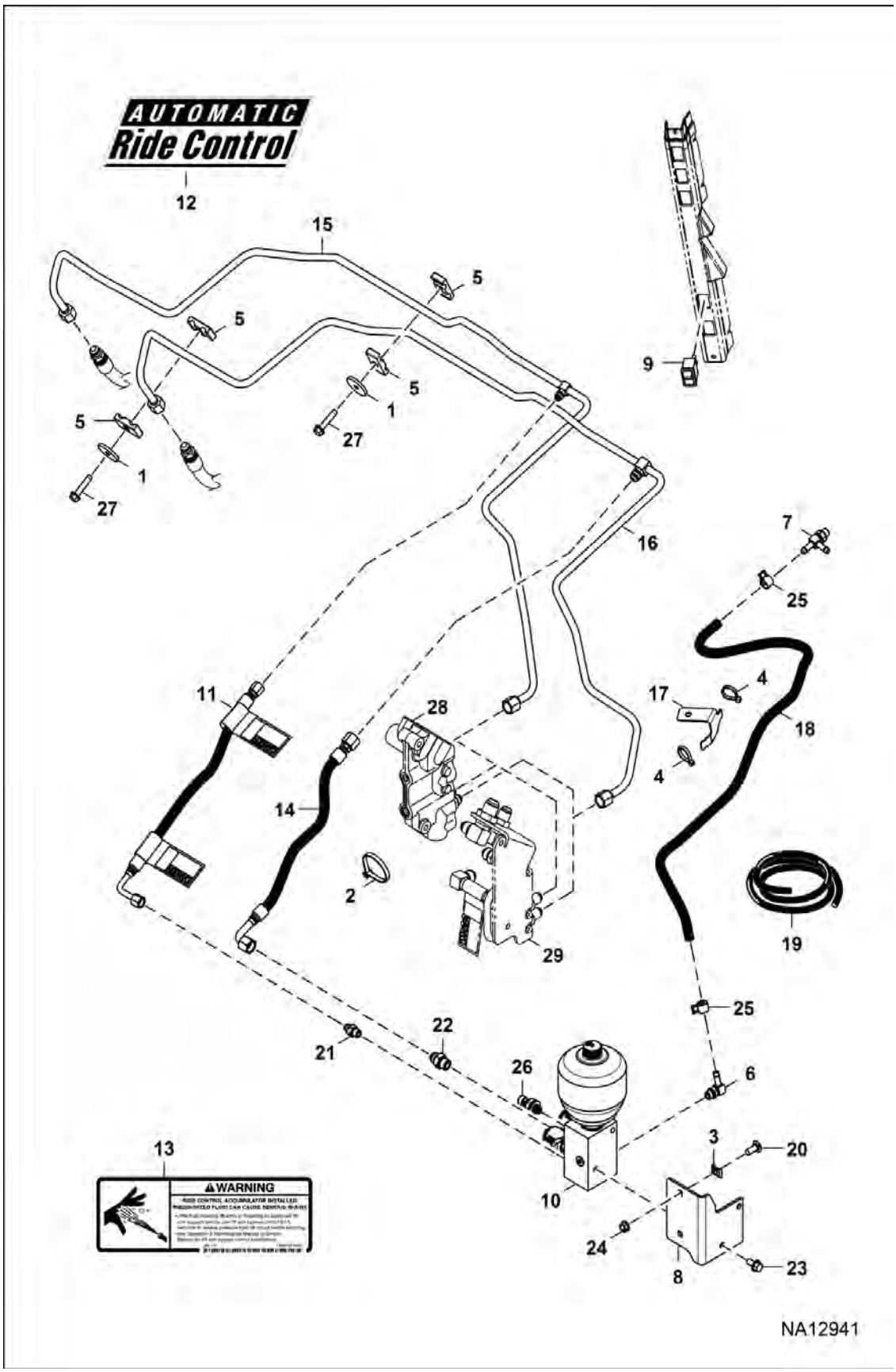

Page 125 - OSS# 6300322913 - All rights reserved by Bobcat Company - 08/04/2017 - 06:30:16 - Produced by Ken Cook Co. with mediaioff

Illustration NA12941

HYDRAULIC CIRCUITRY (Cont'd)

(Ride Control Option)

(S/N A3P816156 & Above, A3P913076 & Above)

Ref No	Part Number	Description	Remarks	Serial Number	Qty
1	872229	WASHER			2
2	6624289	STRAP, TIE			1
3	6684033	NUT			2
4	6690690	STRAP, TIE			2
5	6701892	CLAMP			4
6	7174807	ELBOW			1
7	7246193	FITTING, HYD TEE			1
8	7286484	BRACKET			1
9	7294390	SWITCH, ROCKER			1
10	7301823	MANIFOLD			1
11	7302003	HOSE, HYD ASSY			1
12	7308285	DECAL CONTROL			1
13	7308738	DECAL SAFETY			2
14	7302676	HOSE, HYD ASSY			1
15	7305890	TUBELINE HYD ASSY	Was - 7305889 [B]		1
16	7305889	TUBELINE HYD ASSY	Was - 7305890 [B]		1
17	7309870	BRACKET TANK			1
18		HOSE	NLA - 1168,4 mm (46") long - Order Ref. 19		1
19	6586251	HOSE, BULK	sold per foot		x
20	10C616	BOLT 10			2
21	15KB0606	FITTING, HYD CONNECTOR			1
22	15KB0808	FITTING, HYD CONNECTOR			1
23	35C612	BOLT 5			2
24	97D6	NUT 10			2
25	5HM16	CLAMP			2
26	7320663	SENSOR PRESS	Was 7025582 [A]		1
27	84G3728	BOLT			2
28		VALVE, BPV	See Illustration HYDRAULIC CIRCUITRY / NA6393 - W/BPV		1
29		VALVE, LEVEL SELF NO	See Illustration HYDRAULIC CIRCUITRY / NA6394 - W/O BPV		1

Page 1 of 1 OSS# 6300322913 - All rights reserved by Bobcat Company - 08/04/2017 - 06:30:16 - Produced by Ken Cook Co. with mediaoff

MANUAL LIFT RELEASE SYSTEM

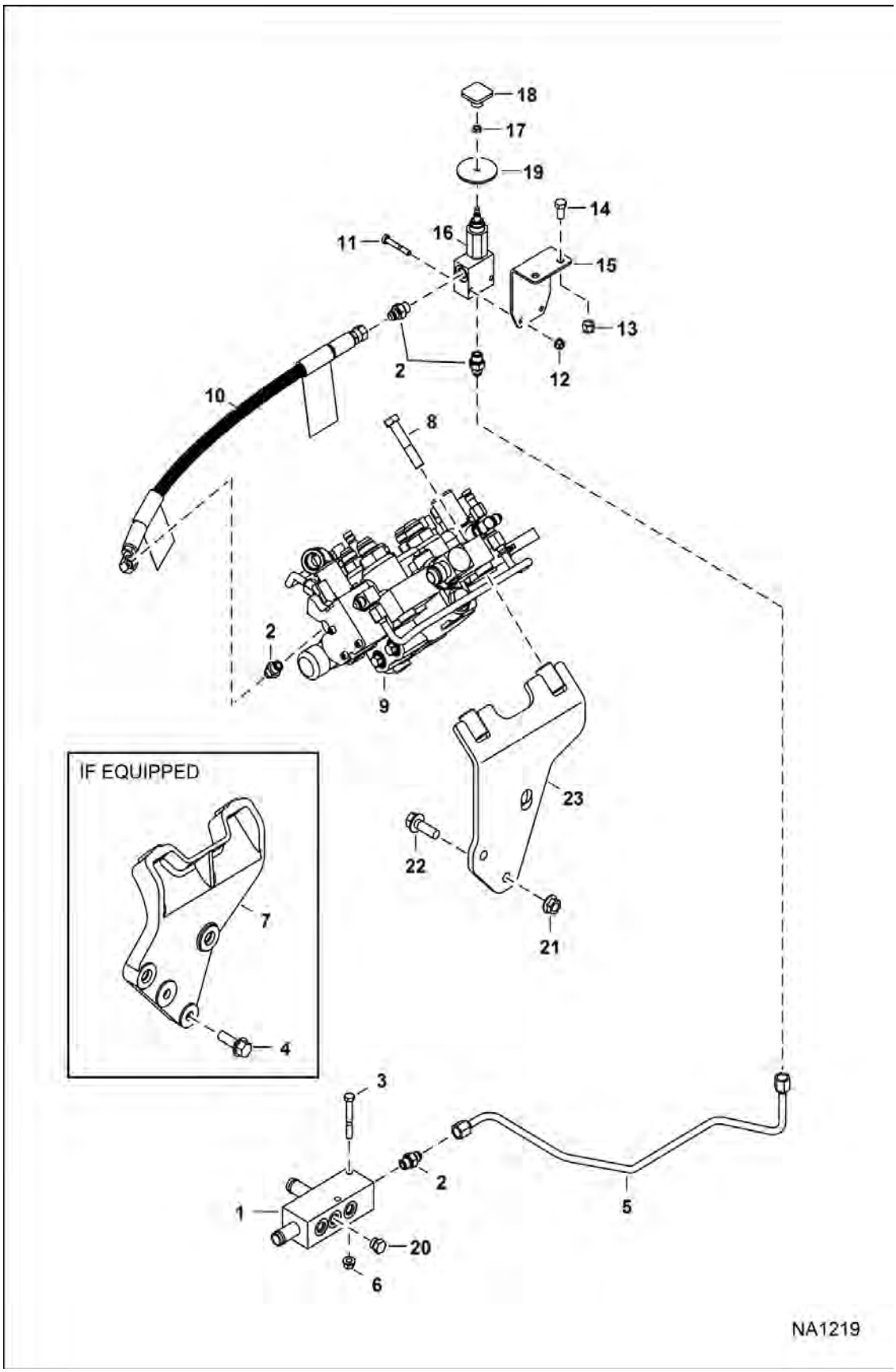

Page 127 - OSS# 6300322913 - All rights reserved by Bobcat Company - 08/04/2017 - 06:30:16 - Produced by Ken Cook Co. with mediaioff

MANUAL LIFT RELEASE SYSTEM (Cont'd)

Ref No	Part Number	Description	Remarks	Serial Number	Qty
1	7201981	MANIFOLD, DRAIN CASE			1
2	15KB0606	FITTING, HYD CONNECTOR			4
2	79K6	O RING 10			x
3	17C536	BOLT	Was 17C540 [B]		2
4	31C832	BOLT	Was 31C824 [B]		2
5	7178137	TUBELINE, HYD			1
6	83D5	NUT 5			2
7		MOUNT	NLA - Order Ref. 23 (7217054 valve mount) - Was 7156150 [A]		1
8	17C844	BOLT			2
9		VALVE, CONTROL	See Illustration HYDRAULIC CONTROL VALVE / NA1216 - manual controls		1
9		VALVE, CONTROL	See Illustration HYDRAULIC CONTROL VALVE / NA1217 - AHC, ACS & SJC		1
10	7178139	HOSE, HYD	available only as an assembly W/two danger decals installed		1
10	7170355	DECAL, DANGER			2
11	17C428	BOLT			2
12	83D4	NUT 10			2
13	59D6	NUT			2
14	35C616	BOLT 5			2
15	7149166	MOUNT, BOOM DOWN			1
16		VALVE, LIFT MANUAL	See Illustration MANUAL LIFT RELEASE VALVE / PE1547 - manual lift		1
17	7D4	NUT			1
18	6737524	KNOB			1
19	6707101	SEAL	neoprene		1
20	24K5	PLUG			1
20		FITTING, HYD CONNECTOR	See Illustration POWER BOB-TACH / NA2819		1
20	79K6	O RING 10			x
21	53D8	NUT			2
22	31C824	BOLT 10			2
23	7217054	MOUNT, VALVE	Use W/ .5" hyd control valve drivecase weld-on spacer plate		1
23	7220859	MOUNT, VALVE	Use W/O .5" hyd control valve drivecase weld-on spacer plate		1
23	7228740	VALVE		A3P816001 & Above	1
				A3P913001 & Above	1

Page 1 of 1 OSS# 6300322913 - All rights reserved by Bobcat Company - 08/04/2017 - 06:30:16 - Produced by Ken Cook Co. with mediaoff

AUXILIARY HYDRAULICS
(S/N A3P811001 - A3P812129, A3P911001 - A3P911320)

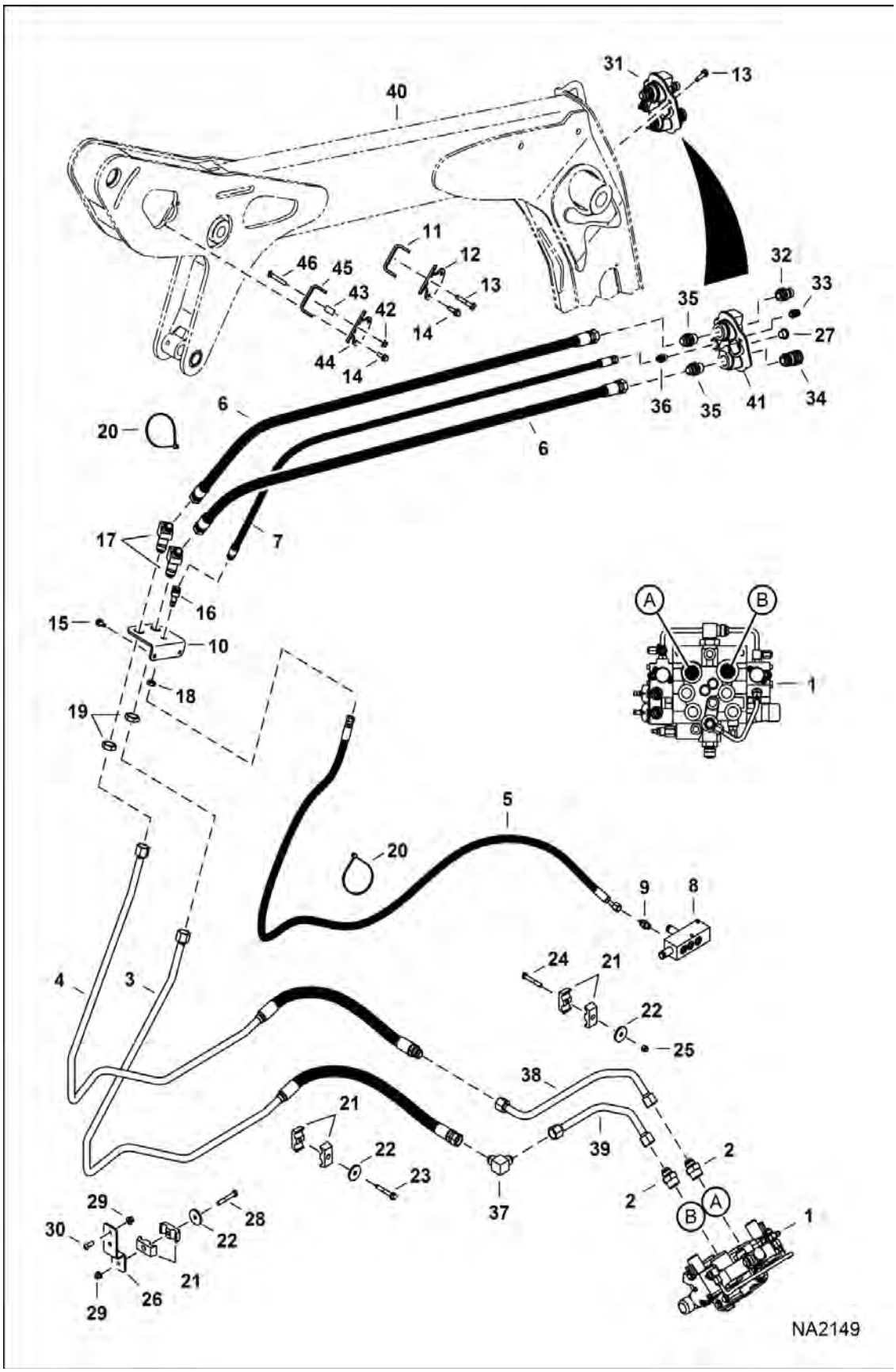

Page 129 - OSS# 6300322913 - All rights reserved by Bobcat Company - 08/04/2017 - 06:30:16 - Produced by Ken Cook Co. with mediaioff

AUXILIARY HYDRAULICS (Cont'd)

(S/N A3P811001 - A3P812129, A3P911001 - A3P911320)

Ref No	Part Number	Description	Remarks	Serial Number	Qty
1		VALVE, CONTROL	See Illustration HYDRAULIC CONTROL VALVE / NA1216 - manual controls		1
1		VALVE, CONTROL	See Illustration HYDRAULIC CONTROL VALVE / NA1217 - AHC, ACS & SJC		1
2	15KB1216	FITTING, HYD CONNECTOR			2
2	79K16	O RING 10			x
3	7178418	HOSE, HYD ASSY			1
4	7178419	HOSE, HYD ASSY			1
5	7175559	HOSE, HYD			1
6	7162864	HOSE, HYD ASSY			2
7	7213215	HOSE HYDRAULIC ASSY	Was 7162866 [A]		1
8	7201981	MANIFOLD, DRAIN CASE			1
9	15KB0606	FITTING, HYD CONNECTOR			1
9	79K6	O RING 10			x
10	7156363	MOUNT, BLKHD			1
11		CLAMP, HOSE	NLA - Order Ref. 42-46 - Was 7161042 [A]		1
12		CLAMP, HOSE	NLA - Order Ref. 42-46 - Was 7161043 [A]		1
13	35C616	BOLT 5	Was 84G3716 [B]		4
14	84G3732	BOLT			2
15	84G3712	BOLT 5			2
16	46K5	ELBOW			1
17	46K8	ELBOW			2
18	86F5	NUT			1
19	86F8	NUT 5			2
20	6624289	STRAP, TIE			8
21	6592506	CLAMP			6
22	872229	WASHER			3
23	84G3740	BOLT			1
24	17C640	BOLT			1
25	59D6	NUT			1
26	7178141	MOUNT, HOSE			1
27	6697942	PLUG, NYLON			1
28	17C644	BOLT			1
29	57D6	NUT 5			3
30	10C616	BOLT 10			2
31		BLOCK, COUPLER ASSY	Contact your Local Dealer for Bobcat Technical Information BTI435ldr - Ref. 22 & 32-36 - 7246784 or 7141939 [A]		1
32		COUPLER, FF MALE	Contact your Local Dealer for Bobcat Technical Information BTI435ldr - 7246799 or 6679837		1
33		COUPLER, FF MALE	Contact your Local Dealer for Bobcat Technical Information BTI435ldr - casedrain - W/valve, spring, seal & O-ring - 7246798 or 6679838		1
34		COUPLER, FF FEMALE	Contact your Local Dealer for Bobcat Technical Information BTI435ldr - 7246802 or 6680018		1

Page 1 of 1 OSS# 6300322913 - All rights reserved by Bobcat Company - 08/04/2017 - 06:30:16 - Produced by Ken Cook Co. with mediaoff

AUXILIARY HYDRAULICS (Cont'd)
(S/N A3P811001 - A3P812129, A3P911001 - A3P911320)

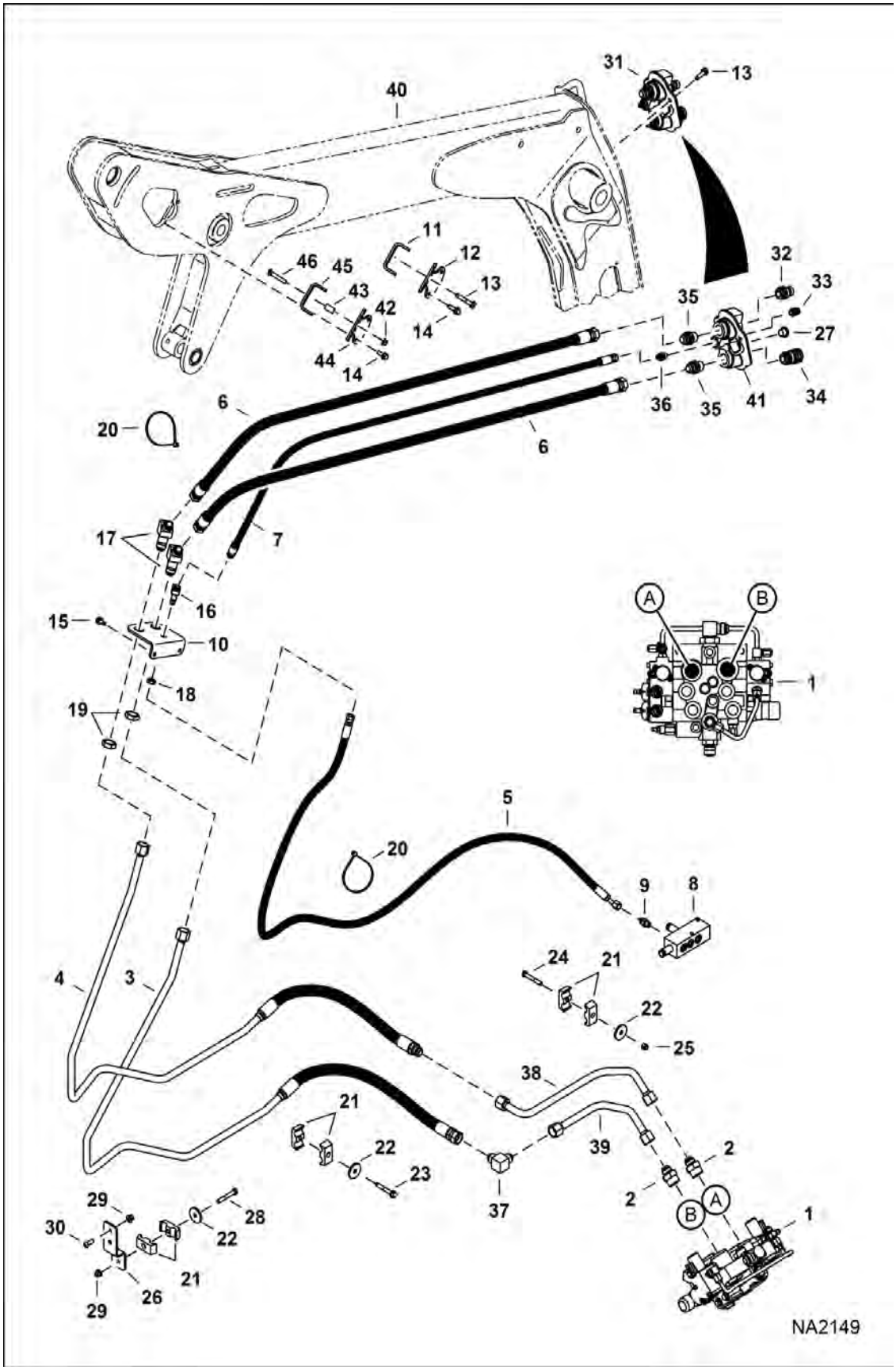

Illustration NA2149

Page 131 - OSS# 6300322913 - All rights reserved by Bobcat Company - 08/04/2017 - 06:30:16 - Produced by Ken Cook Co. with mediaioff

AUXILIARY HYDRAULICS (Cont'd)

(S/N A3P811001 - A3P812129, A3P911001 - A3P911320)

Ref No	Part Number	Description	Remarks	Serial Number	Qty
35		FITTING, HYD CONNECTOR	Contact your Local Dealer for Bobcat Technical Information BTI435ldr - W/spring - 7246801 or 6679836		2
36	15KB0606	FITTING, HYD CONNECTOR			1
36	79K6	O RING 10			x
37	77F8	ELBOW			1
38	7154522	TUBELINE			1
39	7154523	TUBELINE			1
40		ARM, LIFT ASSY	See Illustration LIFT ARM & BOB-TACH / NA2092		1
41		BLOCK	NSS - Order Ref. 31		1
42	53D6	NUT	Was 89D6 [B]		2
43	7199872	SPACER, TUBE			1
44	7199814	CLAMP, HOSE			1
45	7199815	CLAMP, HOSE			1
46	7199946	BOLT			1

Page 124 OSS# 6300322913 - All rights reserved by Bobcat Company - 08/04/2017 - 06:30:16 - Produced by Ken Cook Co. with mediaioff

AUXILIARY HYDRAULICS
(S/N A3P812130 & Above, A3P911321 & Above)

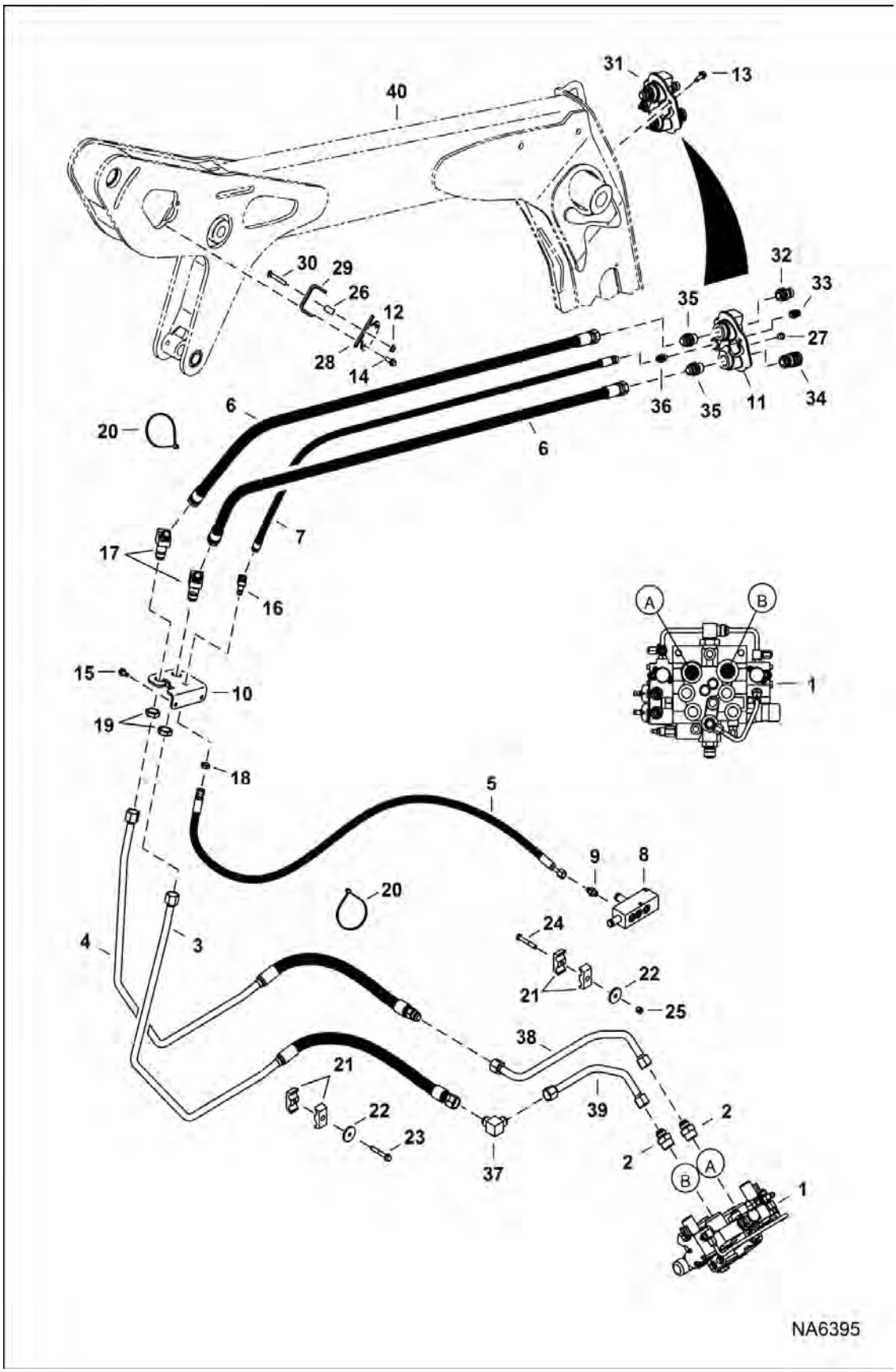

Page 133 - OSS# 6300322913 - All rights reserved by Bobcat Company - 08/04/2017 - 06:30:16 - Produced by Ken Cook Co. with mediaioff

AUXILIARY HYDRAULICS (Cont'd)

(S/N A3P812130 & Above, A3P911321 & Above)

Ref No	Part Number	Description	Remarks	Serial Number	Qty
1		VALVE, CONTROL	See Illustration HYDRAULIC CONTROL VALVE / NA6558		1
2	15KB1216	FITTING, HYD CONNECTOR			2
2	79K16	O RING 10			x
3	7211830	HOSE, HYD		A3P811001 - A3P813485	1
				A3P911001 - A3P912191	1
3	7225569	HOSE, HYD		A3P813486 - A3P816056	1
				A3P912192 - A3P913054	1
4	7211829	HOSE, HYD		A3P811001 - A3P813485	1
				A3P911001 - A3P912191	1
4	7225570	HOSE, HYD		A3P813486 - A3P816056	1
				A3P912192 - A3P913054	1
5	6732083	HOSE			1
6	7162864	HOSE, HYD ASSY			2
7	7213215	HOSE HYDRAULIC ASSY			1
8	7201981	MANIFOLD, DRAIN CASE			1
9	15KB0606	FITTING, HYD CONNECTOR			1
9	79K6	O RING 10			x
10	7156363	MOUNT, BLKHD		A3P811001 - A3P816056	1
				A3P911001 - A3P913054	1
11		BLOCK	NSS - Order Ref. 31		1
12	53D6	NUT	Was 89D6 [B]		2
13	35C616	BOLT 5			4
14	84G3732	BOLT			2
15	84G3712	BOLT 5			2
16	46K5	ELBOW			1
17	46K8	ELBOW			2
18	86F5	NUT			1
19	86F8	NUT 5			2
20	6624289	STRAP, TIE			8
21	6592506	CLAMP			4
22	872229	WASHER			2
23	84G3740	BOLT			1
24	17C640	BOLT			1
25	59D6	NUT			1
26	7199872	SPACER, TUBE			1
27	6697942	PLUG, NYLON			1

Page 1 of 1 OSS# 6300322913 - All rights reserved by Bobcat Company - 08/04/2017 - 06:30:16 - Produced by Ken Cook Co. with mediaoff

AUXILIARY HYDRAULICS (Cont'd)
(S/N A3P812130 & Above, A3P911321 & Above)

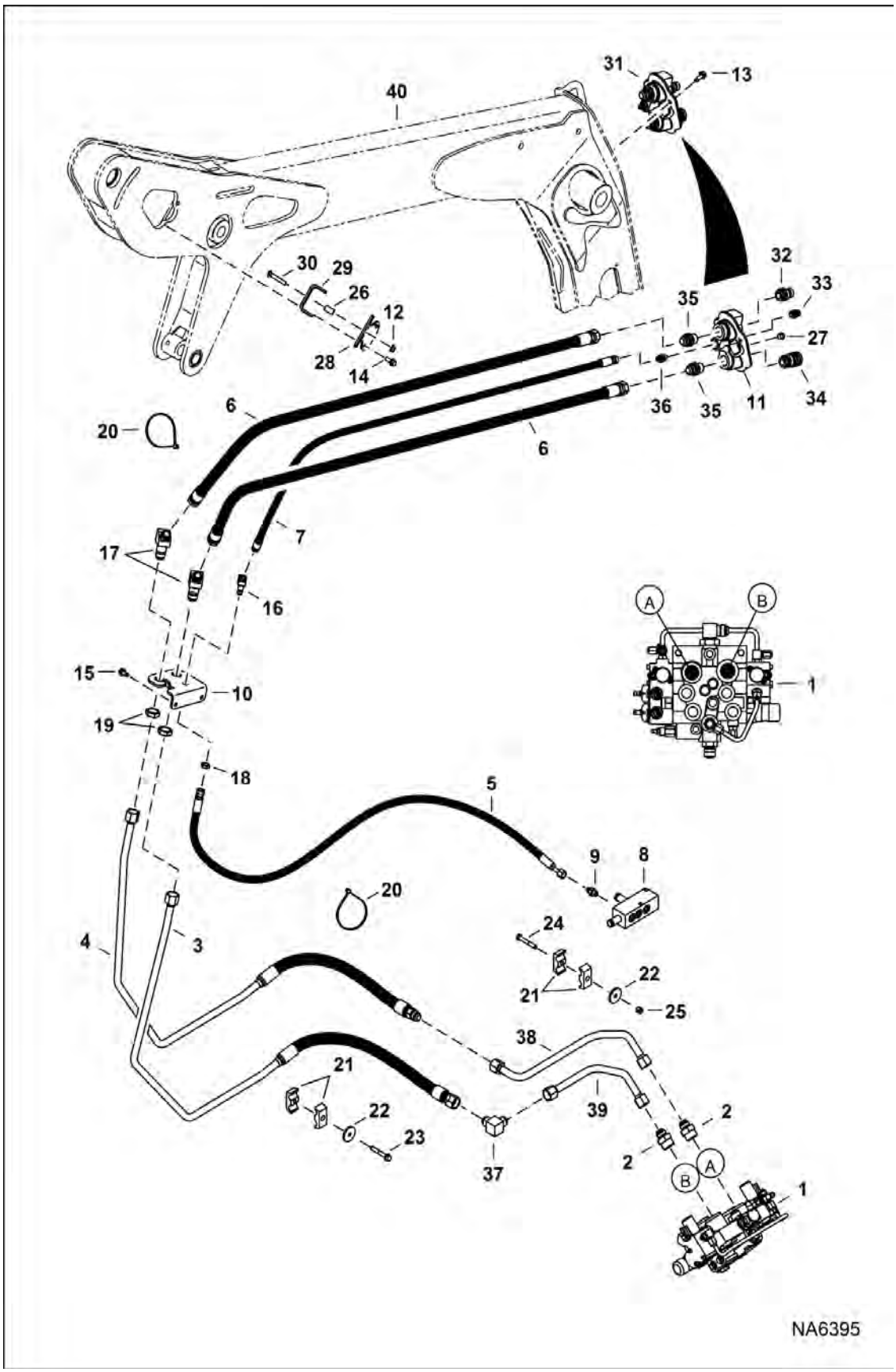

Page 135 - OSS# 6300322913 - All rights reserved by Bobcat Company - 08/04/2017 - 06:30:16 - Produced by Ken Cook Co. with mediaioff

AUXILIARY HYDRAULICS (Cont'd)

(S/N A3P812130 & Above, A3P911321 & Above)

Ref No	Part Number	Description	Remarks	Serial Number	Qty
28	7199814	CLAMP, HOSE			1
29	7199815	CLAMP, HOSE			1
30	7199946	BOLT			1
31		BLOCK, COUPLER ASSY	Contact your Local Dealer for Bobcat Technical Information BTI435ldr - Ref. 11 & 32-36 - 7246784 or 7141939 [A]		1
32		COUPLER, FF MALE	Contact your Local Dealer for Bobcat Technical Information BTI435ldr - 7246799 or 6679837		1
33		COUPLER, FF MALE	Contact your Local Dealer for Bobcat Technical Information BTI435ldr - casedrain - W/valve, spring, seal & O-ring - 7246798 or 6679838		1
34		COUPLER, FF FEMALE	Contact your Local Dealer for Bobcat Technical Information BTI435ldr - 7246802 or 6680018		1
35		FITTING, HYD CONNECTOR	Contact your Local Dealer for Bobcat Technical Information BTI435ldr - W/spring - 7246801 or 6679836		2
36	15KB0606	FITTING, HYD CONNECTOR			1
36	79K6	O RING 10			x
37	77F8	ELBOW			1
38	7154522	TUBELINE			1
39	7154523	TUBELINE			1
40		ARM, LIFT ASSY			1

Page 1 of 1 OSS# 6300322913 - All rights reserved by Bobcat Company - 08/04/2017 - 06:30:16 - Produced by Ken Cook Co. with mediaioff

TILT CYLINDER
(LH) (516,4 mm - 20.33" Case Tube Length)

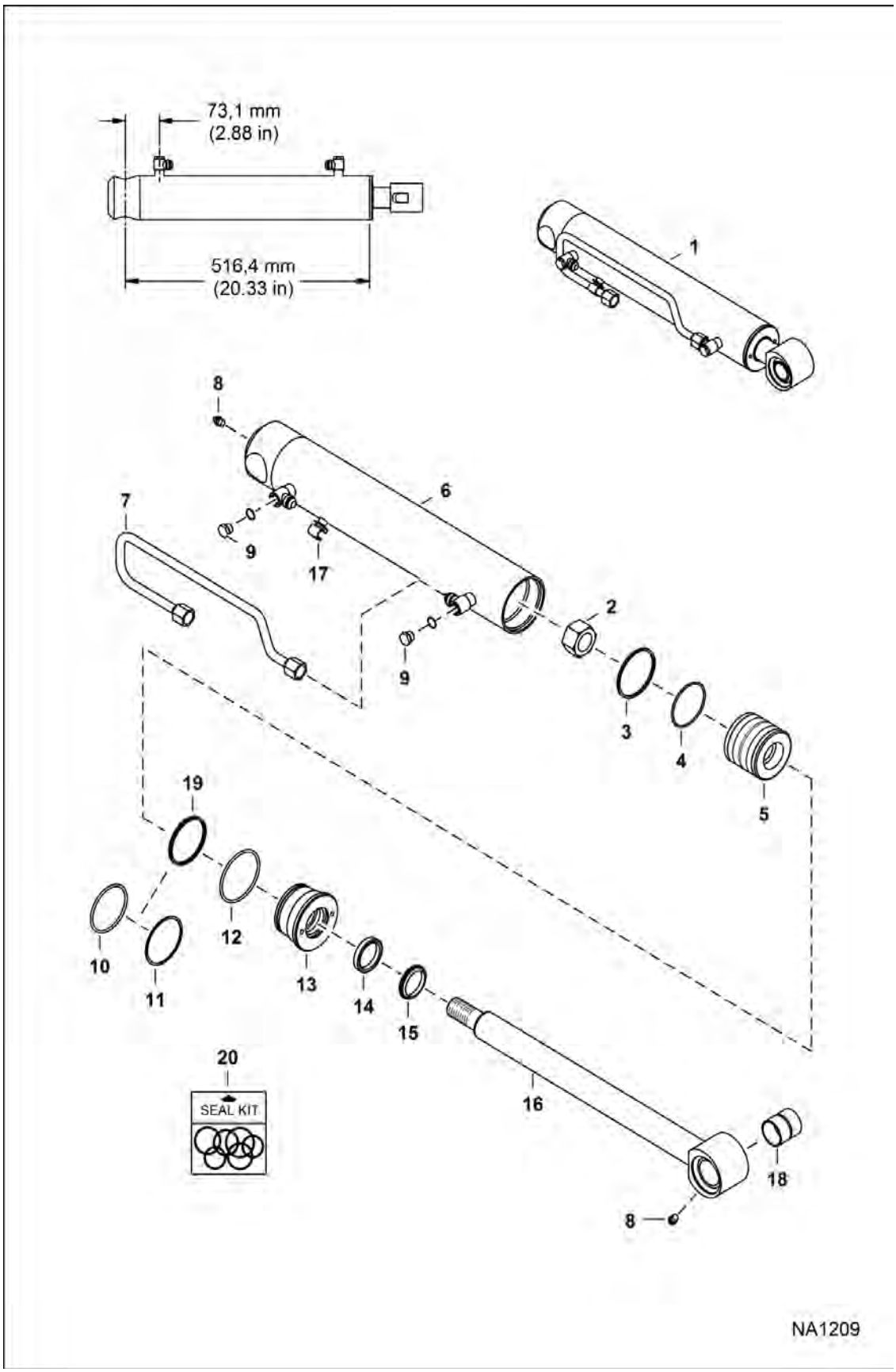

Page 137 - OSS# 6300322913 - All rights reserved by Bobcat Company - 08/04/2017 - 06:30:16 - Produced by Ken Cook Co. with mediaioff

TILT CYLINDER (Cont'd)

(LH) (516,4 mm - 20.33" Case Tube Length)

Ref No	Part Number	Description	Remarks	Serial Number	Qty
1		CYLINDER, TILT	NLA - Ref. 2-19 - Order 7235736 & 7235738 tilt cylinder - before ordering repair parts, make sure that this is the correct style cylinder - note the length shown on the drawing page - Was 7150357 [A]		1
2	6810539	NUT			1
3	947088	RING, BACK-UP			1
4	54K30218	0-RING			1
5		PISTON, CYL TILT	NLA - Order 7235736 & 7235738 tilt cylinder - Was 7152338 [A]		1
6		TUBE, CASE CYL	NLA - Order 7235736 & 7235738 tilt cylinder - Was 7150358 [A]		1
7	7150467	TUBELINE, HYD			1
8	10H25	FITTING, GREASE 5			2
9	6812171	PLUG			2
10	25K40224	RING,O	Was 54K40224 [A]		1
11	73K232	RING, BACK-UP	back-up		1
12	54K40300	O-RING	Was 58K234 [B]		1
13		HEAD, CYL LIFT	NLA - Order 7235736 & 7235738 tilt cylinder - Was 6804427 [A]		1
14	6669267	SEAL			1
15	6687000	WIPER ROD			1
16		SHAFT	NLA - Order 7235736 & 7235738 tilt cylinder - Was 7150539 [A]		1
17	6690911	CLAMP			1
18	7150182	BUSHING	wear		1
19	7008355	SEAL, QUAD			1
20	7137939	KIT, SEAL	Ref. 2-4, 12, 14, 15 & 19		1

Page 1884 OSS# 6300322913 - All rights reserved by Bobcat Company - 08/04/2017 - 06:30:16 - Produced by Ken Cook Co. with mediaoff

TILT CYLINDER

(LH) (538,7 mm - 21.21" Case Tube Length) (41,3 mm - 1.625" OD Shaft)
(S/N A3P811001 - A3P813246, A3P911001 - A3P912057)

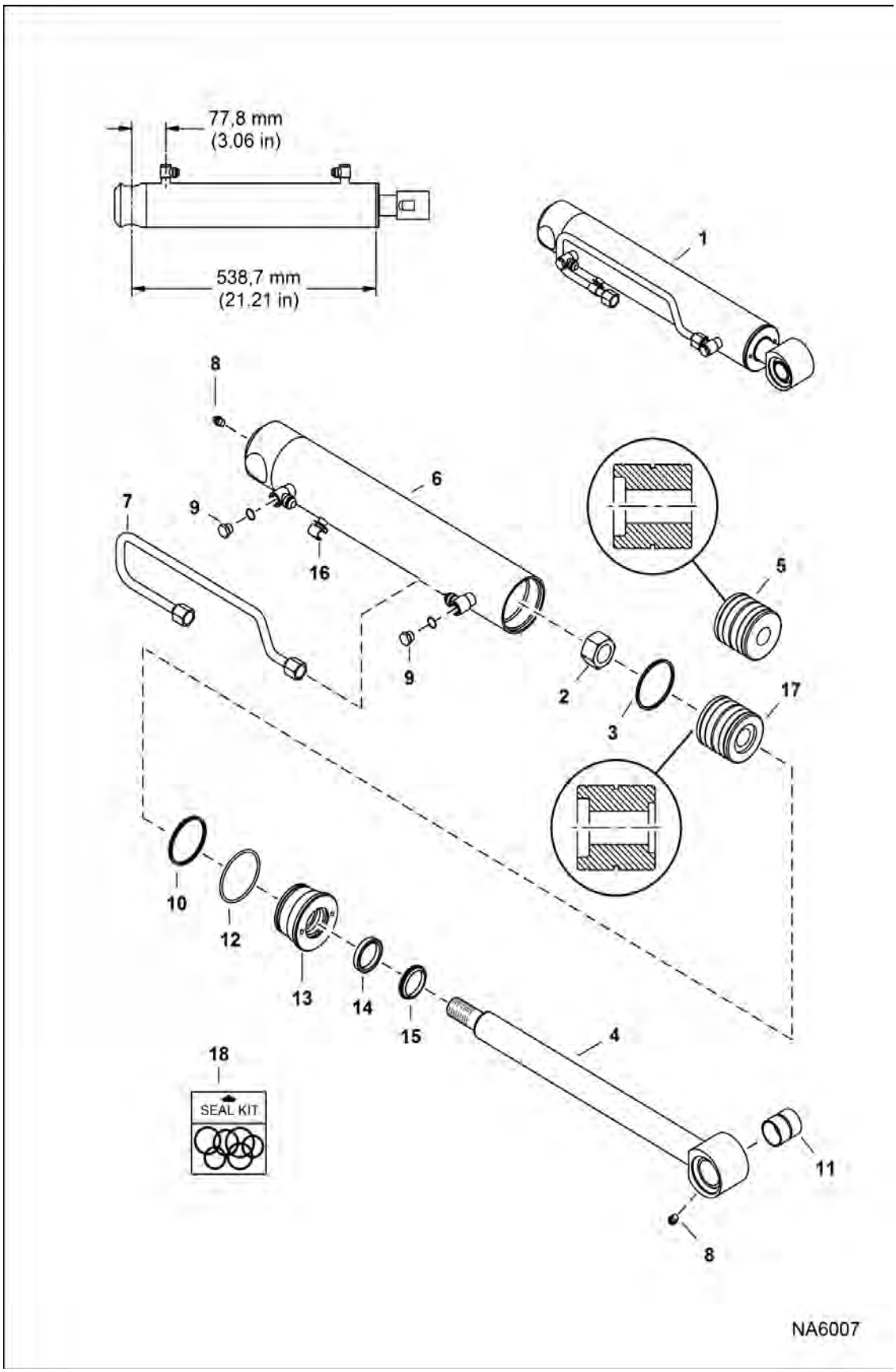

Page 139 - OSS# 6300322913 - All rights reserved by Bobcat Company - 08/04/2017 - 06:30:16 - Produced by Ken Cook Co. with mediaioff

TILT CYLINDER (Cont'd)

(LH) (538,7 mm - 21.21" Case Tube Length) (41,3 mm - 1.625" OD Shaft)
(S/N A3P811001 - A3P813246, A3P911001 - A3P912057)

Ref No	Part Number	Description	Remarks	Serial Number	Qty
1		CYLINDER, TILT	NLA - Ref. 2-16 - before ordering repair parts, make sure that this is the correct style cylinder - note the length shown on the drawing page - extended shaft length 950,7 mm (37.43") - Order 7205266 cylinder - Was 7201527 [A]		1
1		CYLINDER, TILT	Contact your Local Dealer for Bobcat Technical Information BTI428 - NLA - Ref. 2-4 & 6-17 - before ordering repair parts, make sure that this is the correct style cylinder - note the length shown on the drawing page - extended shaft length 947,9 mm (37.32") - Was 7205266 [C]		1
2	6810539	NUT			1
3	6692325	SEAL, PISTON	66,68 mm (2.63") ID		1
4		SHAFT, ROD CYL	Contact your Local Dealer for Bobcat Technical Information BTI428 - NLA - Was 7202032 [C]		1
5		PISTON, CYL TILT	NLA - Order Ref. 17 - W/O shaft inset - Was 7202085 [A]		1
6	7222705	TUBE, CASE CYL TILT	Was 7202033 [B,D]		1
7	7150467	TUBELINE, HYD			1
8	10H25	FITTING, GREASE 5			2
9	6812171	PLUG			2
10	7008355	SEAL, QUAD			1
11	7150182	BUSHING	wear		1
12	54K40300	O-RING	Was 58K234 [B]		1
13		HEAD, CYL TILT	Contact your Local Dealer for Bobcat Technical Information BTI428 - NLA - Was 7202036 [C]		1
14	6669267	SEAL			1
15	6687000	WIPER ROD			1
16	6690911	CLAMP			1
17		PISTON, CYL TILT	Contact your Local Dealer for Bobcat Technical Information BTI428 - NLA - W/shaft insert - Was 7205268 [C]		1
18	7202518	KIT, SEAL	Ref. 2, 3, 10, 12, 14 & 15 [A]		1

Page 1 of 1 OSS# 6300322913 - All rights reserved by Bobcat Company - 08/04/2017 - 06:30:16 - Produced by Ken Cook Co. with mediaoff

TILT CYLINDER

(LH) (538,7 mm - 21.21" Case Tube Length) (38,1 mm - 1.5" OD Shaft)
(W/O Piston Collar)

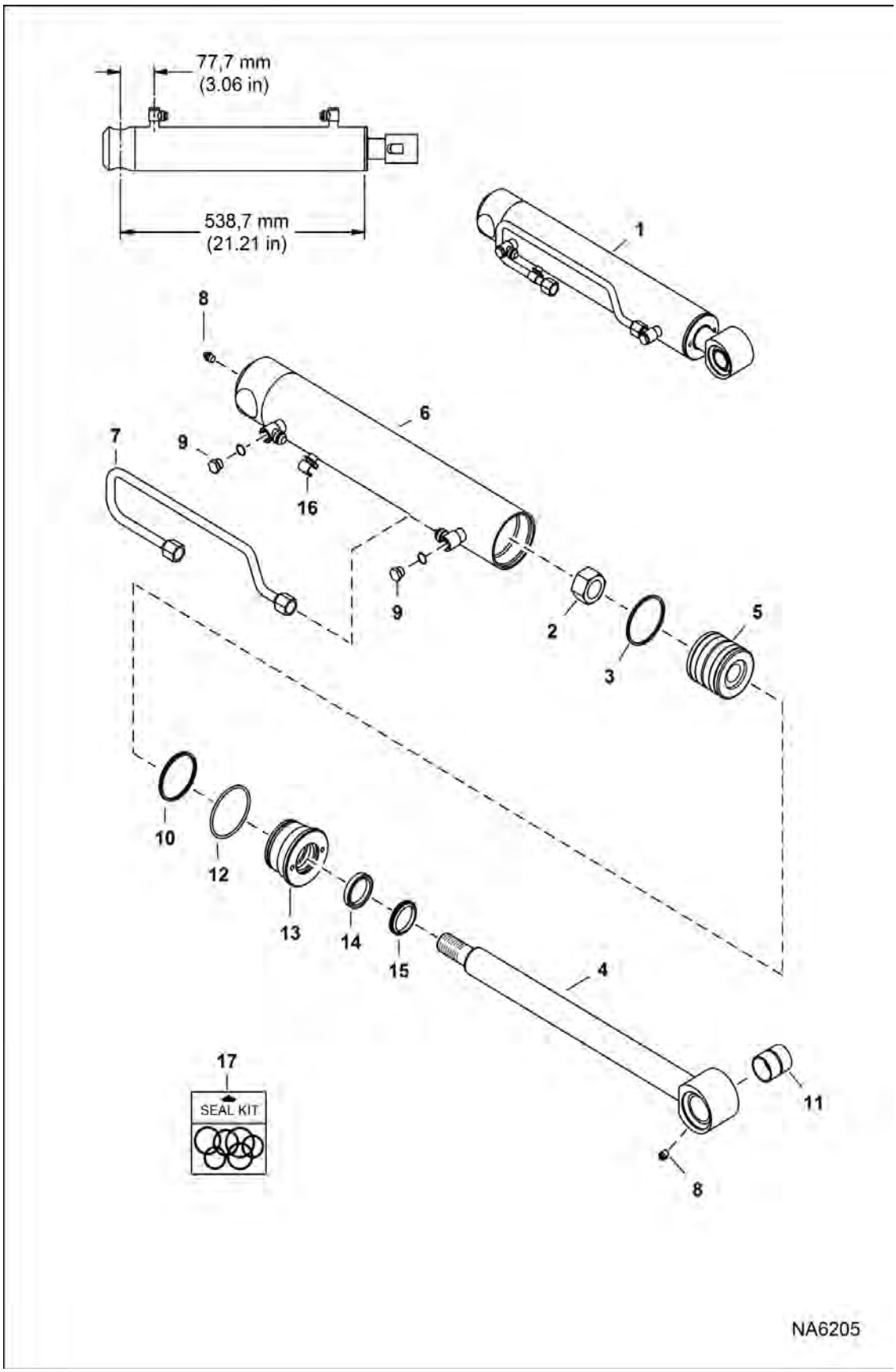

Page 141 - OSS# 6300322913 - All rights reserved by Bobcat Company - 08/04/2017 - 06:30:16 - Produced by Ken Cook Co. with mediaioff

TILT CYLINDER (Cont'd)

(LH) (538,7 mm - 21.21" Case Tube Length) (38,1 mm - 1.5" OD Shaft)
(W/O Piston Collar)

Ref No	Part Number	Description	Remarks	Serial Number	Qty
1		CYLINDER, TILT	Contact your Local Dealer for Bobcat Technical Information BTI428 - NLA - Was 7222704 [C]		1
2	6810539	NUT			1
3	6692325	SEAL, PISTON	66,68 mm (2.63") ID		1
4		SHAFT, ROD CYL	Contact your Local Dealer for Bobcat Technical Information BTI428 - NLA - Was 7222646 [C]		1
5		PISTON, CYL TILT	Contact your Local Dealer for Bobcat Technical Information BTI428 - NLA - Was 7222649 [C]		1
6	7222705	TUBE, CASE CYL TILT	Was 7202033 [B,D]		1
7	7150467	TUBELINE, HYD			1
8	10H25	FITTING, GREASE 5			2
9	6812171	PLUG			2
10	7008355	SEAL, QUAD			1
11	7150182	BUSHING	wear		1
12	54K40300	O-RING	Was 58K234 [B]		1
13	7222644	HEAD, CYL TILT	Was 7202036 [B,D]		1
14	6667326	SEAL			1
15	6690707	WIPER, ROD CYL			1
16	6690911	CLAMP			1
17	7225491	KIT, SEAL	Ref. 2, 3, 10, 12, 14 & 15 - Was 7202518 [B,D]		1

Page 142 OSS# 6300322913 - All rights reserved by Bobcat Company - 08/04/2017 - 06:30:16 - Produced by Ken Cook Co. with mediaioff

TILT CYLINDER

(LH) (538,7mm - 21.21" Tube Length) (38,1mm - 1.5" OD) (W/Piston Collar)
(S/N A3P813246 & Above, A3P912058 & Above)

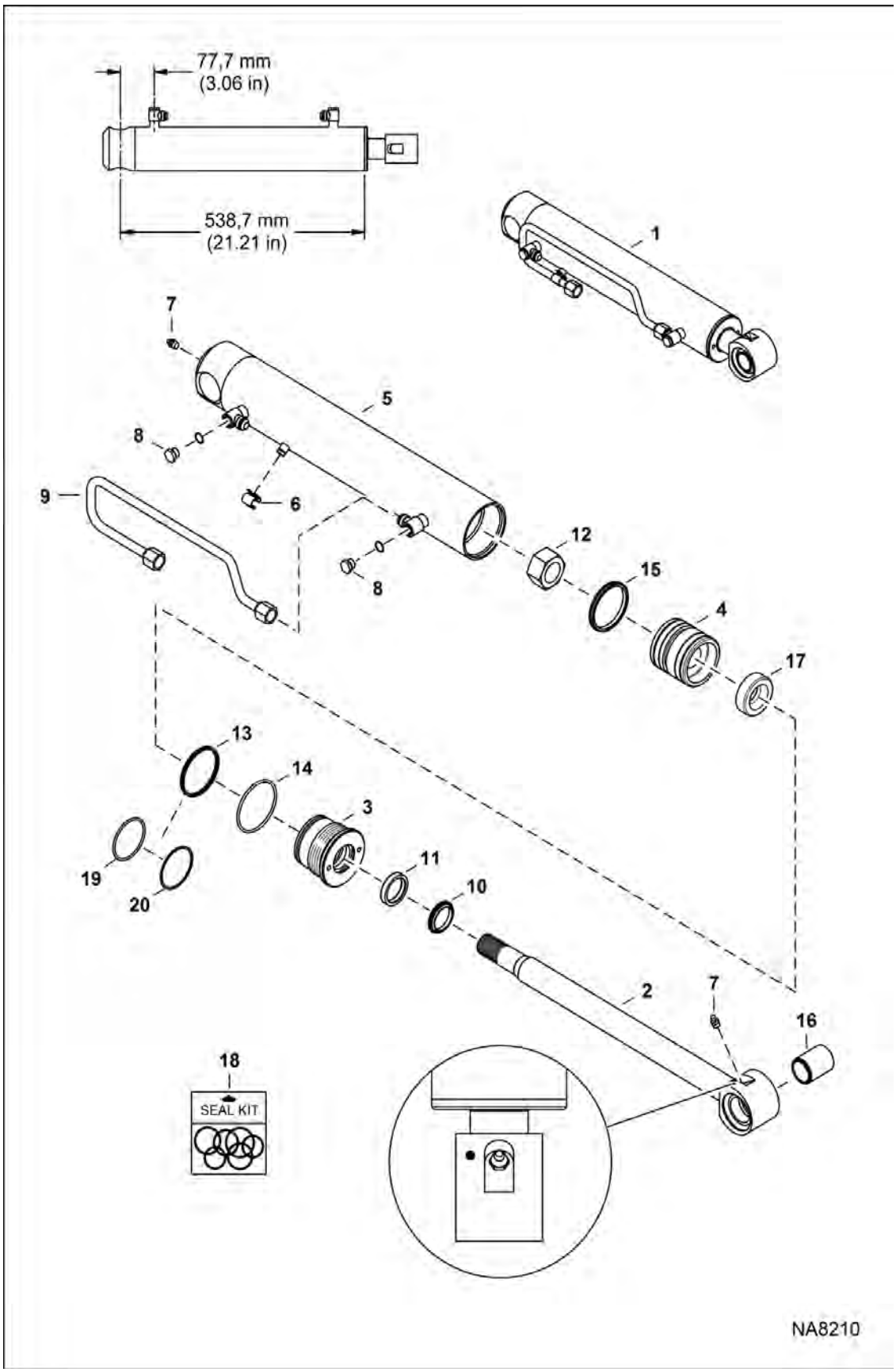

Page 143 - OSS# 6300322913 - All rights reserved by Bobcat Company - 08/04/2017 - 06:30:16 - Produced by Ken Cook Co. with mediaioff

TILT CYLINDER (Cont'd)

(LH) (538,7mm - 21.21" Tube Length) (38,1mm - 1.5" OD) (W/Piston Collar)
(S/N A3P813246 & Above, A3P912058 & Above)

Ref No	Part Number	Description	Remarks	Serial Number	Qty
1	7235738	CYLINDER, TILT	Ref. 2-17 - before ordering repair parts, make sure that this is the correct style cylinder - note the length shown on the drawing page		1
2	7230899	SHAFT, ROD CYL TILT			1
3	7222644	HEAD, CYL TILT			1
4	7230902	PISTON, CYL TILT			1
5	7222705	TUBE, CASE CYL TILT			1
6	6690911	CLAMP			1
7	10H25	FITTING, GREASE 5			2
8	6812171	PLUG			2
9	7150467	TUBELINE, HYD			1
10	6690707	WIPER, ROD CYL			1
11	6667326	SEAL			1
12	6810540	NUT			1
13	7008355	SEAL, QUAD			1
14	54K40300	O-RING	Was 58K234 [B]		1
15	6692325	SEAL, PISTON	66,68 mm (2.63") ID		1
16	7150182	BUSHING	wear		1
17	7230901	COLLAR			1
18	7225491	KIT, SEAL	Ref. 10-15		1
19	25K40224	RING,O	Was 54K40224 [A]		1
20	73K232	RING, BACK-UP			1

Page 144 OSS# 6300322913 - All rights reserved by Bobcat Company - 08/04/2017 - 06:30:16 - Produced by Ken Cook Co. with mediaoff

TILT CYLINDER
(RH) (516,4 mm - 20.33" Case Tube Length)

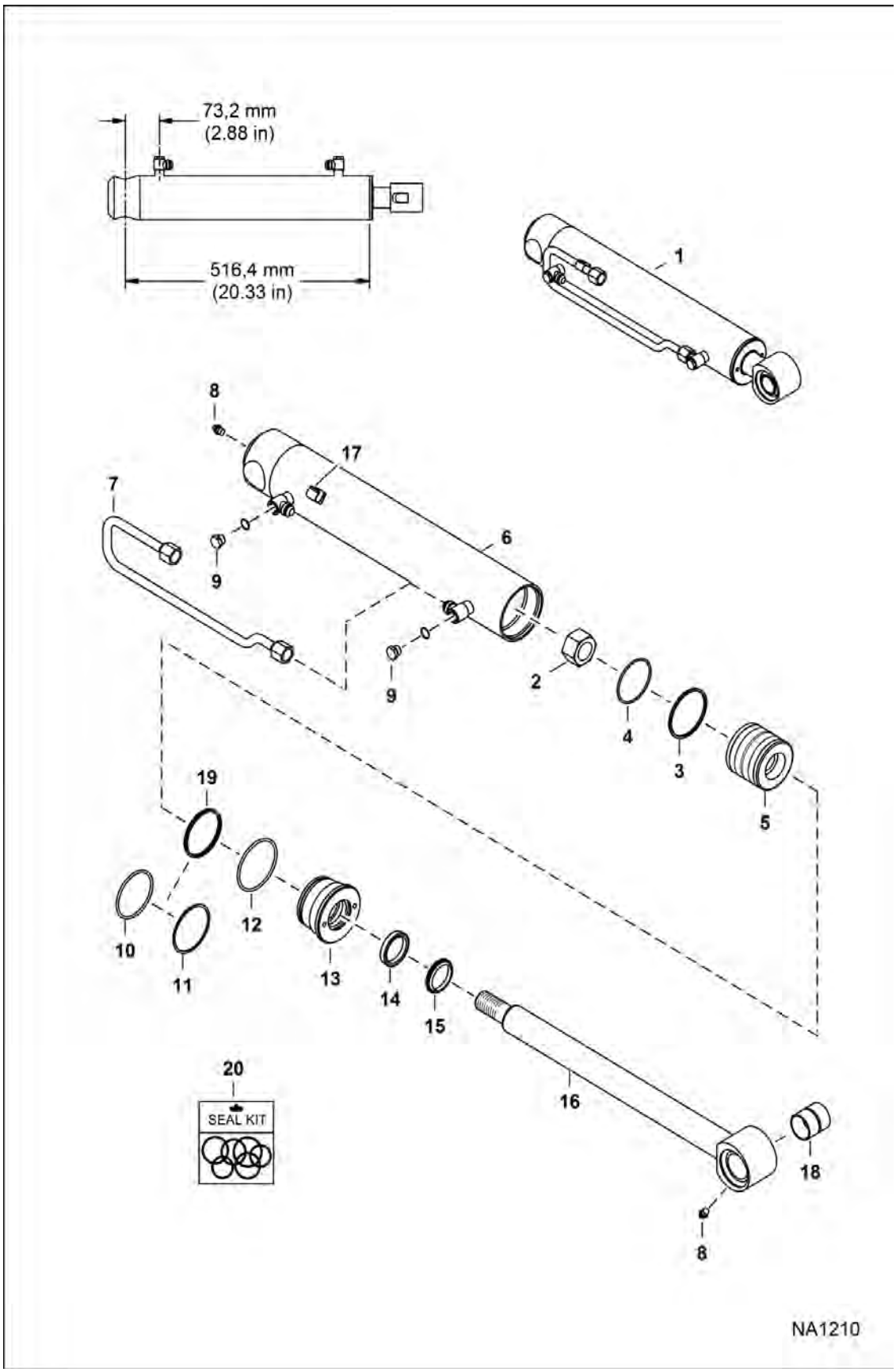

Page 145 - OSS# 6300322913 - All rights reserved by Bobcat Company - 08/04/2017 - 06:30:16 - Produced by Ken Cook Co. with mediaioff

TILT CYLINDER (Cont'd)

(RH) (516,4 mm - 20.33" Case Tube Length)

Ref No	Part Number	Description	Remarks	Serial Number	Qty
1		CYLINDER, TILT	NLA - Ref. 2-19 - Order 7235736 & 7235738 tilt cylinder - before ordering repair parts, make sure that this is the correct style cylinder - note the length shown on the drawing page - Was 7154161 [A]		1
2	6810539	NUT			1
3	947088	RING, BACK-UP			1
4	54K30218	0-RING			1
5		PISTON, CYL TILT	NLA - Order 7235736 & 7235738 tilt cylinder - Was 7152338 [A]		1
6		TUBE, CASE CYL	NLA - Order 7235736 & 7235738 tilt cylinder - Was 7154162 [A]		1
7	7154163	TUBELINE, HYD			1
8	10H25	FITTING, GREASE 5			2
9	6812171	PLUG			2
10	25K40224	RING,O	Was 54K40224 [A]		1
11	73K232	RING, BACK-UP	back-up		1
12	54K40300	O-RING	Was 58K234 [B]		1
13		HEAD, CYL LIFT	NLA - Order 7235736 & 7235738 tilt cylinder - Was 6804427 [A]		1
14	6669267	SEAL			1
15	6687000	WIPER ROD			1
16		SHAFT	NLA - Order 7235736 & 7235738 tilt cylinder - Was 7150359 [A]		1
17	6690911	CLAMP			1
18	7150182	BUSHING	wear		1
19	7008355	SEAL, QUAD			1
20	7137939	KIT, SEAL	Ref. 2-4, 12, 14, 15 & 19		1

Page Modified OSS# 6300322913 - All rights reserved by Bobcat Company - 08/04/2017 - 06:30:16 - Produced by Ken Cook Co. with mediaoff

TILT CYLINDER

(RH) (538,7 mm - 21.21" Case Tube Length) (41,3 mm - 1.625" OD Shaft)
(S/N A3P811001 - A3P813246, A3P911001 - A3P912057)

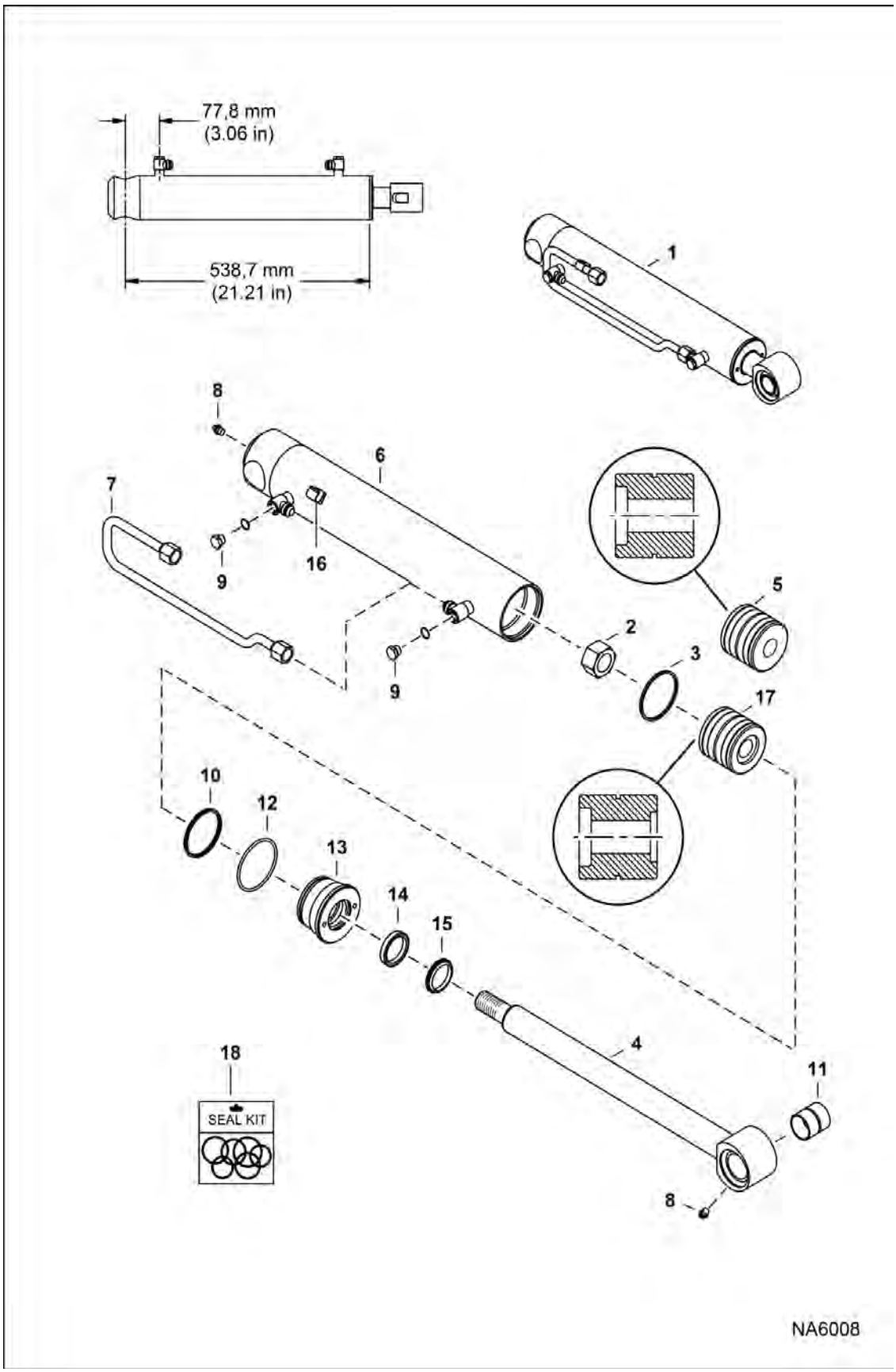

Page 147 - OSS# 6300322913 - All rights reserved by Bobcat Company - 08/04/2017 - 06:30:16 - Produced by Ken Cook Co. with mediaioff

TILT CYLINDER (Cont'd)

(RH) (538,7 mm - 21.21" Case Tube Length) (41,3 mm - 1.625" OD Shaft)
(S/N A3P811001 - A3P813246, A3P911001 - A3P912057)

Ref No	Part Number	Description	Remarks	Serial Number	Qty
1		CYLINDER, TILT	NLA - Ref. 2-16 - before ordering repair parts, make sure that this is the correct style cylinder - note the length shown on the drawing page - extended shaft length 950,7 mm (37.43") - Order 7205267 cylinder - Was 7202031 [A]		1
1		CYLINDER, TILT	Contact your Local Dealer for Bobcat Technical Information BTI428 - NLA - Ref. 2-4 & 6-17 - before ordering repair parts, make sure that this is the correct style cylinder - note the length shown on the drawing page - extended shaft length 947,9 mm (37.32") - Was 7205267 [C]		1
2	6810539	NUT			1
3	947088	RING, BACK-UP			1
4		SHAFT, ROD CYL	Contact your Local Dealer for Bobcat Technical Information BTI428 - NLA - Was 7202032 [C]		1
5		PISTON, CYL TILT	NLA - Order Ref. 17 - W/O shaft inset - Was 7202085 [A]		1
6	7222703	TUBE, CASE CYL TILT	Was 7202033 [B,D]		1
7	7154163	TUBELINE, HYD			1
8	10H25	FITTING, GREASE 5			2
9	6812171	PLUG			2
10	7008355	SEAL, QUAD			1
11	7150182	BUSHING	wear		1
12	54K40300	O-RING	Was 58K234 [B]		1
13		HEAD, CYL TILT	Contact your Local Dealer for Bobcat Technical Information BTI428 - NLA - Was 7202036 [C]		1
14	6669267	SEAL			1
15	6687000	WIPER ROD			1
16	6690911	CLAMP			1
17		PISTON, CYL TILT	Contact your Local Dealer for Bobcat Technical Information BTI428 - NLA - W/shaft insert - Was 7205268 [C]		1
18	7202518	KIT, SEAL	Ref. 2, 3, 10, 12, 14 & 15 [A]		1

Page 140 OSS# 6300322913 - All rights reserved by Bobcat Company - 08/04/2017 - 06:30:16 - Produced by Ken Cook Co. with mediaoff

TILT CYLINDER

(RH) (538,7 mm - 21.21" Case Tube Length) (38,1 mm - 1.5" OD Shaft)
(W/O Piston Collar)

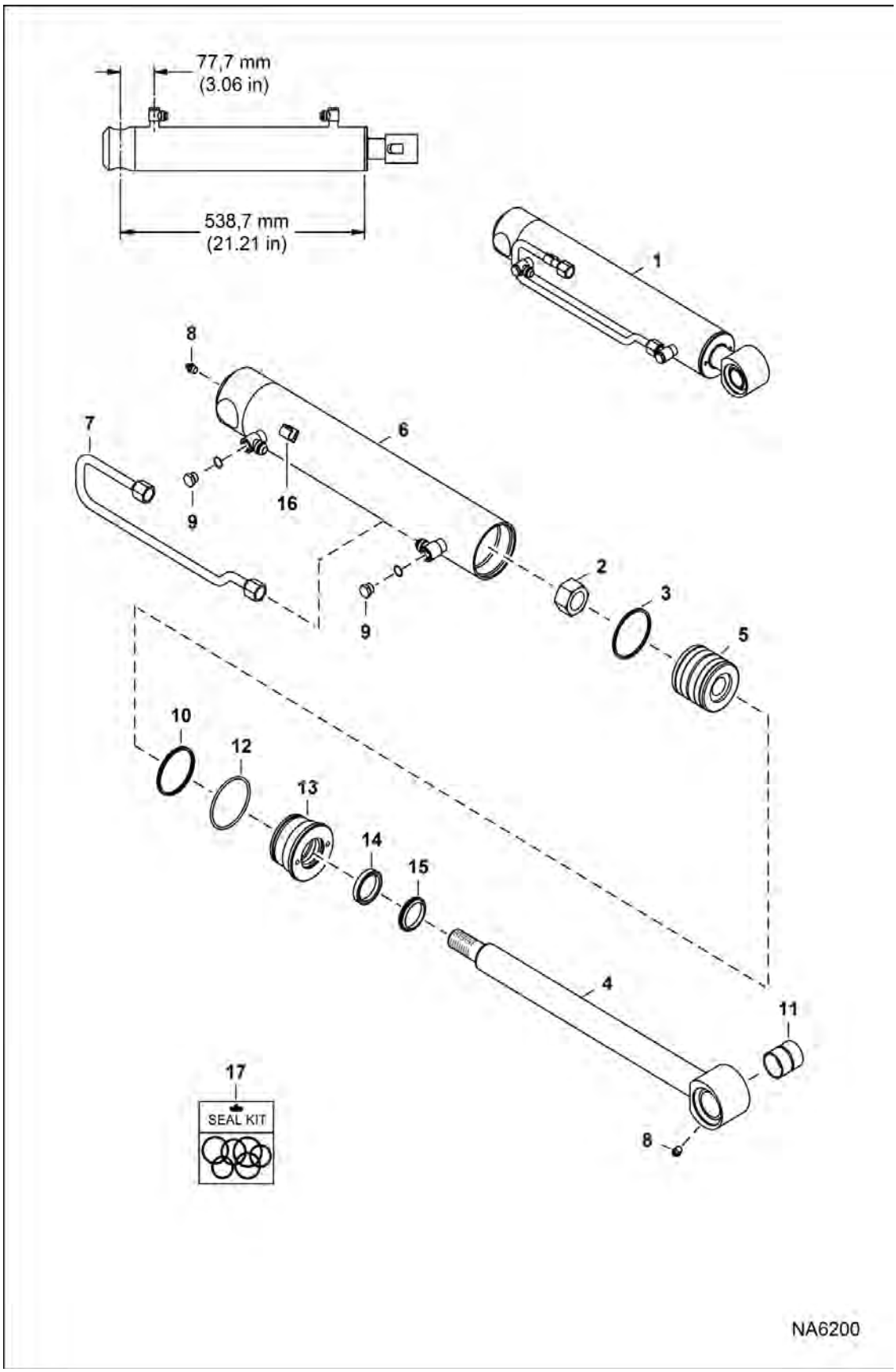

Page 149 - OSS# 6300322913 - All rights reserved by Bobcat Company - 08/04/2017 - 06:30:16 - Produced by Ken Cook Co. with mediaioff

TILT CYLINDER (Cont'd)

(RH) (538,7 mm - 21.21" Case Tube Length) (38,1 mm - 1.5" OD Shaft)
(W/O Piston Collar)

Ref No	Part Number	Description	Remarks	Serial Number	Qty
1		CYLINDER, TILT	Contact your Local Dealer for Bobcat Technical Information BTI428 - NLA - Was 7222483 [C]		1
2	6810539	NUT			1
3	6692325	SEAL, PISTON	66,68 mm (2.63") ID		1
4		SHAFT, ROD CYL	Contact your Local Dealer for Bobcat Technical Information BTI428 - NLA - Was 7222646 [C]		1
5		PISTON, CYL TILT	Contact your Local Dealer for Bobcat Technical Information BTI428 - NLA - Was 7222649 [C]		1
6	7222703	TUBE, CASE CYL TILT			1
7	7154163	TUBELINE, HYD			1
8	10H25	FITTING, GREASE 5			2
9	6812171	PLUG			2
10	7008355	SEAL, QUAD			1
11	7150182	BUSHING	wear		1
12	54K40300	O-RING	Was 58K234 [B]		1
13	7222644	HEAD, CYL TILT			1
14	6667326	SEAL			1
15	6690707	WIPER, ROD CYL			1
16	6690911	CLAMP			1
17	7225491	KIT, SEAL	Ref. 2, 3, 10, 12, 14 & 15		1

Page 1606 OSS# 6300322913 - All rights reserved by Bobcat Company - 08/04/2017 - 06:30:16 - Produced by Ken Cook Co. with mediaioff

TILT CYLINDER

(RH) (538,7mm - 21.21" Tube Length) (38,1mm - 1.5" OD) (W/Piston Collar)
(S/N A3P813246 & Above, A3P912058 & Above)

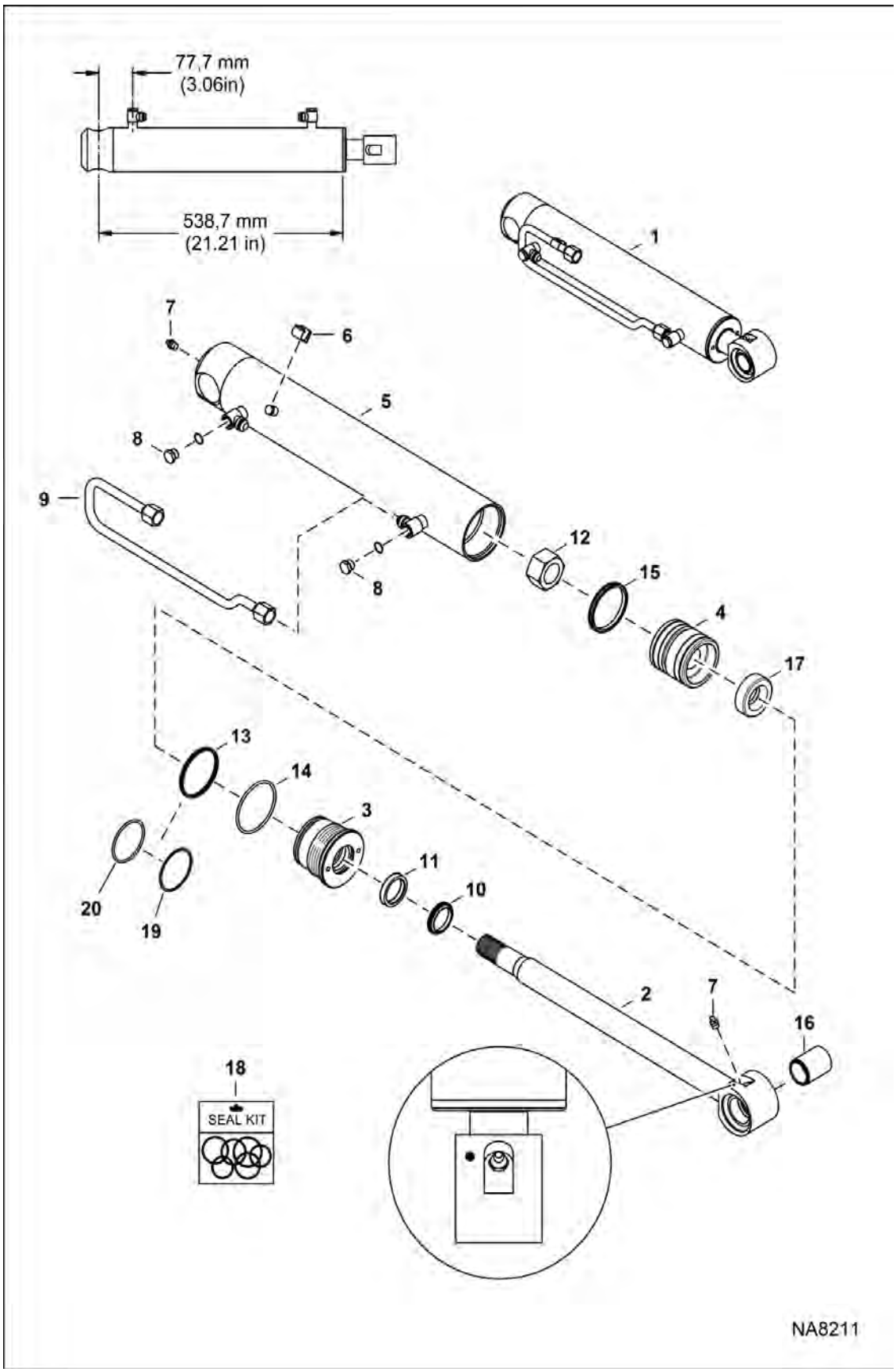

Page 151 - OSS# 6300322913 - All rights reserved by Bobcat Company - 08/04/2017 - 06:30:16 - Produced by Ken Cook Co. with mediaioff

TILT CYLINDER (Cont'd)

(RH) (538,7mm - 21.21" Tube Length) (38,1mm - 1.5" OD) (W/Piston Collar)
(S/N A3P813246 & Above, A3P912058 & Above)

Ref No	Part Number	Description	Remarks	Serial Number	Qty
1	7235736	CYLINDER, TILT	Ref. 2-17 - before ordering repair parts, make sure that this is the correct style cylinder - note the length shown on the drawing page		1
2	7230899	SHAFT, ROD CYL TILT			1
3	7222644	HEAD, CYL TILT			1
4	7230902	PISTON, CYL TILT			1
5	7222703	TUBE, CASE CYL TILT			1
6	6690911	CLAMP			1
7	10H25	FITTING, GREASE 5			2
8	6812171	PLUG			2
9	7154163	TUBELINE, HYD			1
10	6690707	WIPER, ROD CYL			1
11	6667326	SEAL			1
12	6810540	NUT			1
13	7008355	SEAL, QUAD			1
14	54K40300	O-RING	Was 58K234 [B]		1
15	6692325	SEAL, PISTON	66,68 mm (2.63") ID		1
16	7150182	BUSHING	wear		1
17	7230901	COLLAR			1
18	7225491	KIT, SEAL	Ref. 10-15		1
19	73K232	RING, BACK-UP			1
20	25K40224	RING,O	Was 54K40224 [A]		1

Page 1:1 OSS# 6300322913 - All rights reserved by Bobcat Company - 08/04/2017 - 06:30:16 - Produced by Ken Cook Co. with mediaoff

LIFT CYLINDER
(76,2 mm) (3") Dia Bore

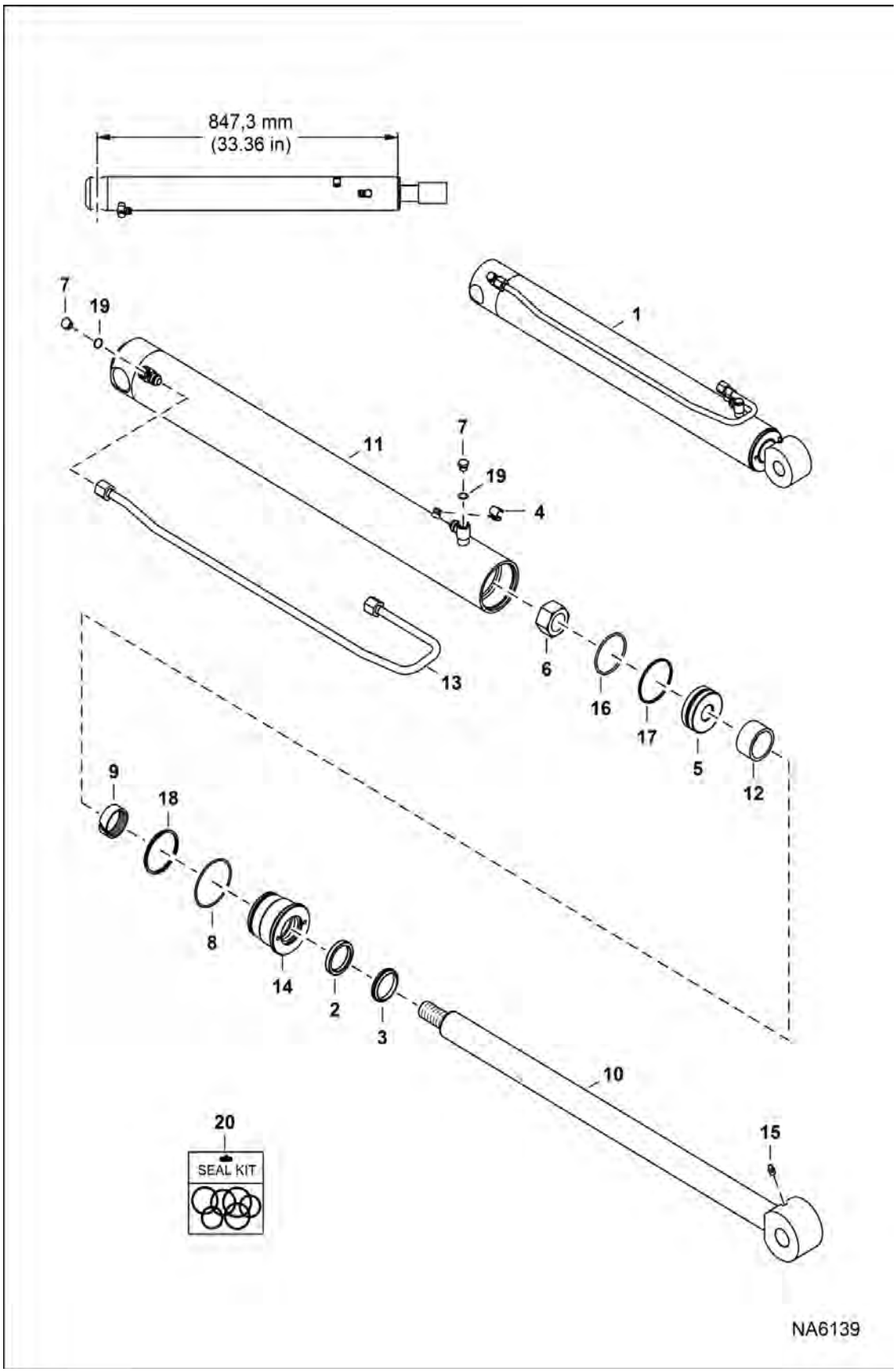

Page 153 - OSS# 6300322913 - All rights reserved by Bobcat Company - 08/04/2017 - 06:30:16 - Produced by Ken Cook Co. with mediaioff

LIFT CYLINDER (Cont'd)
(76,2 mm) (3") Dia Bore

Ref No	Part Number	Description	Remarks	Serial Number	Qty
1	7203494	CYLINDER, LIFT	Ref. 2-18		1
2	6667327	SEAL,ROD			1
3	6686999	WIPER, ROD CYL			1
4	6690911	CLAMP			1
5	6697863	PISTON, ASSY	25,4 mm (1") long - LH and RH lift cylinders must be serviced with same size pistons - W/Ref. 16 & 17		1
5		PISTON, ASSY	See Illustration LIFT CYLINDER CUSHION / NA6760 - if equipped - 63,5 mm (2.5") long - W/Ref. 16 & 17		2
6	6810540	NUT			1
7	6812171	PLUG			2
8	54K40300	O-RING	Was 58K234 [B]		1
9	7000771	RING, WEAR			1
10	7150823	SHAFT, ROD CYL LIFT			1
11	7203497	TUBE, CASE CYL			1
12	7203492	SPACER			1
13	7151520	TUBELINE, HYD			1
14	6817562	HEAD			1
15	10H25	FITTING, GREASE 5			1
16	25K30218	O RING 10			1
17	947088	RING, BACK-UP			1
18	7008355	SEAL, QUAD			1
19	75K6	O-RING	W/Ref. 7		1
20	7225639	KIT, SEAL	Ref. 2, 3, 6, 8, 9 & 16-18 - Was 7137945 [B]		1

Page 164 OSS# 6300322913 - All rights reserved by Bobcat Company - 08/04/2017 - 06:30:16 - Produced by Ken Cook Co. with mediaoff

LIFT CYLINDER
(82,6 mm) (3.25") Dia Bore

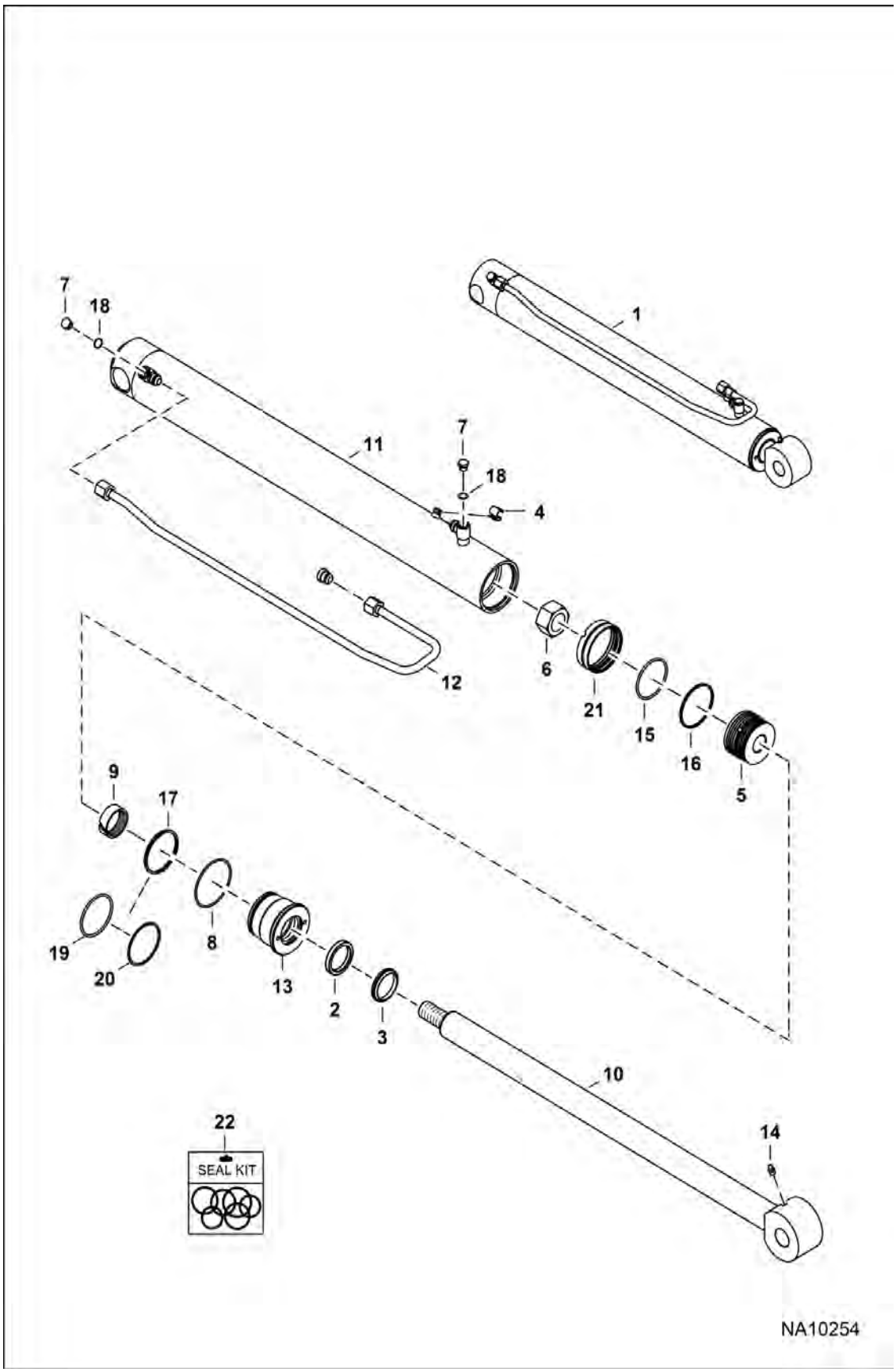

Page 155 - OSS# 6300322913 - All rights reserved by Bobcat Company - 08/04/2017 - 06:30:16 - Produced by Ken Cook Co. with mediaioff

Illustration NA10254

LIFT CYLINDER (Cont'd)
(82,6 mm) (3.25") Dia Bore

Ref No	Part Number	Description	Remarks	Serial Number	Qty
1	7245374	CYLINDER, HYD	Ref. 2-16 & 18-21		1
2	6667328	SEAL			1
3	6686998	WIPER, ROD CYL			1
4	6690911	CLAMP			1
5	7249242	PISTON, CYL LIFT	W/Ref. 15, 16 & 21		1
6	6810540	NUT			1
7	6812171	PLUG	W/Ref. 18		2
8	82K236	RING,O			1
9	7000772	RING, WEAR			1
10	7245375	SHAFT			1
11	7256291	TUBE			1
12	7251003	TUBELINE, HYD			1
13	7244219	HEAD			1
14	10H25	FITTING, GREASE 5			1
15	25K30226	O RING 10			1
16	6513466	PISTON RG			1
17		SEAL, QUAD	NLA - Order Ref. 19 & 20 - Was 7008354 [A]		1
18	75K6	O-RING			2
19	25K40300	O RING 10	Was 54K40300 [A]		1
20	73K234	RING, BACK-UP			1
21		RING WEAR	NSS - Order Ref. 5		2
22	7161903	KIT, SEAL	Ref. 2, 3, 6, 8, 9, 15, 19 & 20		1

Page 156 OSS# 6300322913 - All rights reserved by Bobcat Company - 08/04/2017 - 06:30:16 - Produced by Ken Cook Co. with mediaoff

CONTROL PEDALS
(Manual Controls)
(S/N A3P811001 - A3P814204, A3P911001 - A3P912726)

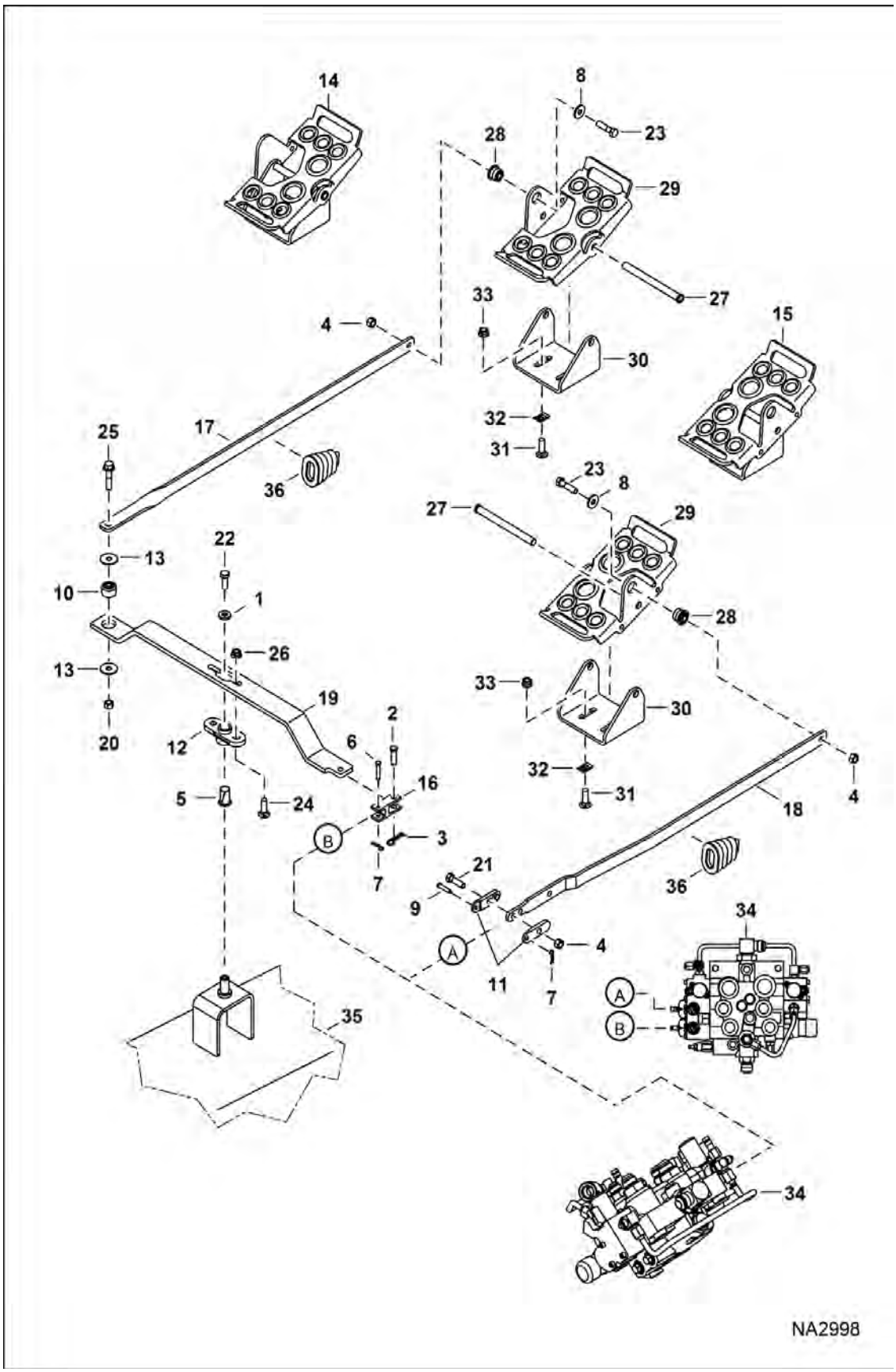

Page 157 - OSS# 6300322913 - All rights reserved by Bobcat Company - 08/04/2017 - 06:30:16 - Produced by Ken Cook Co. with mediaioff

CONTROL PEDALS (Cont'd)

(Manual Controls)

(S/N A3P811001 - A3P814204, A3P911001 - A3P912726)

Ref No	Part Number	Description	Remarks	Serial Number	Qty
1	6557831	WASHER			1
2	7191333	PIN, CLEVIS			1
3	1306637	CLIP			1
4	95D6	NUT			3
5	6512026	BUSHING			1
6	7191334	PIN, CLEVIS			1
7	6513495	PIN 5			2
8	6563914	WASHER			2
9	6564654	PIN, CLEVIS			1
10	6685060	BUSHING, TORSION			1
11	6708009	LINK			2
12	6708043	FLANGE			1
13	6737388	WASHER			2
14	7151868	PEDAL ASSEMBLY CONTROL LH	LH - Ref. 27-30		1
15	7151871	PEDAL ASSEMBLY CONTROL RH	RH - Ref. 27-30		1
17	7174046	LINK, BELLCRANK			1
18	7174044	LINK, PEDAL			1
19	7174045	LINK, PEDAL			1
20	63D6	NUT			1
21	17C620	BOLT			1
22	17C616	BOLT 5			1
23	17C624	BOLT 5			2
24	37C620	BOLT			2
25	49C628	BOLT			1
26	53D6	NUT			2
27		PIN	NLA - Order Ref. 14 or Ref. 15		2
28	6665701	BUSHING, PRESS FIT			2
29		PEDAL	NLA - Order Ref. 14 or Ref. 15		2
30	7157611	MOUNT			2
31	37C620	BOLT			4
32	6684033	NUT			4
33	57D6	NUT 5			4
34		VALVE, CONTROL	See Illustration HYDRAULIC CONTROL VALVE / NA1216 - manual controls		1
34		VALVE, CONTROL	See Illustration HYDRAULIC CONTROL VALVE / NA1217 - AHC, ACS & SJC		1
35		DRIVECASE	See Illustration DRIVE TRAIN / NA2950 rubber track		1
35		DRIVECASE	See Illustration DRIVE TRAIN / NA2827 steel track		1
36	7153503	BOOT			2

Page 150 OSS# 6300322913 - All rights reserved by Bobcat Company - 08/04/2017 - 06:30:16 - Produced by Ken Cook Co. with mediaoff

CONTROL PEDALS

(Manual Controls)

(S/N A3P814205 & Above, A3P912727 & Above)

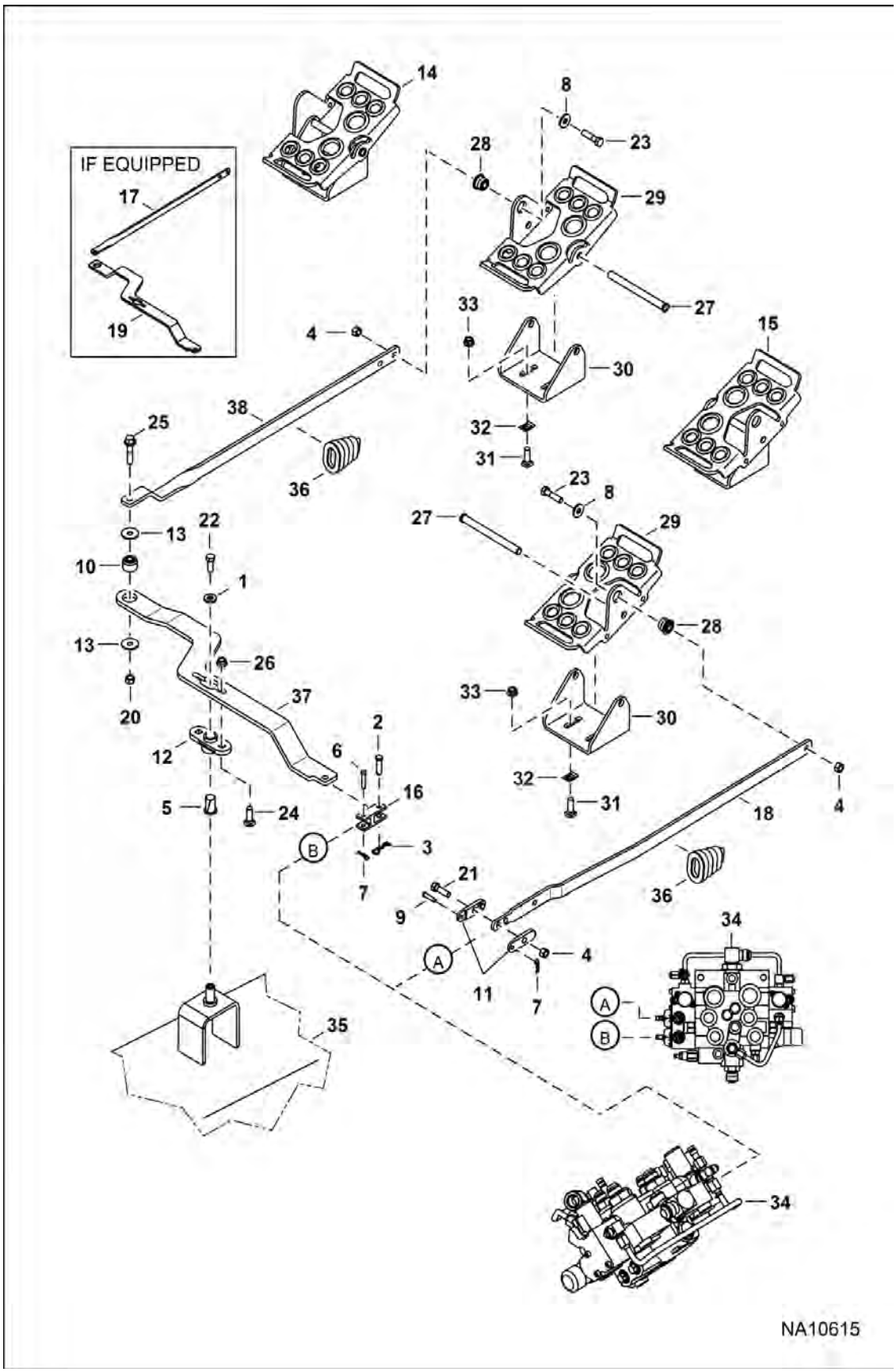

Page 159 - OSS# 6300322913 - All rights reserved by Bobcat Company - 08/04/2017 - 06:30:16 - Produced by Ken Cook Co. with mediaioff

Illustration NA10615

CONTROL PEDALS (Cont'd)

(Manual Controls)

(S/N A3P814205 & Above, A3P912727 & Above)

Ref No	Part Number	Description	Remarks	Serial Number	Qty
1	6557831	WASHER			1
2	7191333	PIN, CLEVIS			1
3	1306637	CLIP			1
4	95D6	NUT			3
5	6512026	BUSHING			1
6	7191334	PIN, CLEVIS			1
7	6513495	PIN 5			2
8	6563914	WASHER			2
9	6564654	PIN, CLEVIS			1
10	6685060	BUSHING, TORSION			1
11	6708009	LINK			2
12	6708043	FLANGE			1
13	6737388	WASHER			2
14	7151868	PEDAL ASSEMBLY CONTROL LH	LH - Ref. 27-30		1
15	7151871	PEDAL ASSEMBLY CONTROL RH	RH - Ref. 27-30		1
16	7191332	YOKE, FLANGE			1
17	7228554	LINK, PEDAL	If equipped		1
18	7174044	LINK, PEDAL			1
19	7227053	LINK, BELLCRANK	If equipped		1
20	63D6	NUT			1
21	17C620	BOLT			1
22	17C616	BOLT 5			1
23	17C624	BOLT 5			2
24	37C620	BOLT			2
25	49C628	BOLT			1
26	53D6	NUT			2
27		PIN	NLA - Order Ref. 14 or Ref. 15		2
28	6665701	BUSHING, PRESS FIT			2
29		PEDAL	NLA - Order Ref. 14 or Ref. 15		2
30	7157611	MOUNT			2
31	37C620	BOLT			4
32	6684033	NUT			4
33	57D6	NUT 5			4
34		VALVE, CONTROL	See Illustration HYDRAULIC CONTROL VALVE / NA6557 - manual controls		1
34		VALVE, CONTROL	See Illustration HYDRAULIC CONTROL VALVE / NA6558 - AHC, ACS & SJC		1
35		DRIVECASE			1
36	7153503	BOOT			2
37	7280922	LINK, BELLCRANK			1
38	7280923	LINK, PEDAL			1

Page 166 OSS# 6300322913 - All rights reserved by Bobcat Company - 08/04/2017 - 06:30:16 - Produced by Ken Cook Co. with mediaoff

HYDRAULIC CONTROL VALVE

(Manual Controls) (Two Piece Detent Block)
(S/N A3P811001 - A3P813237, A3P911001 - A3P912042)

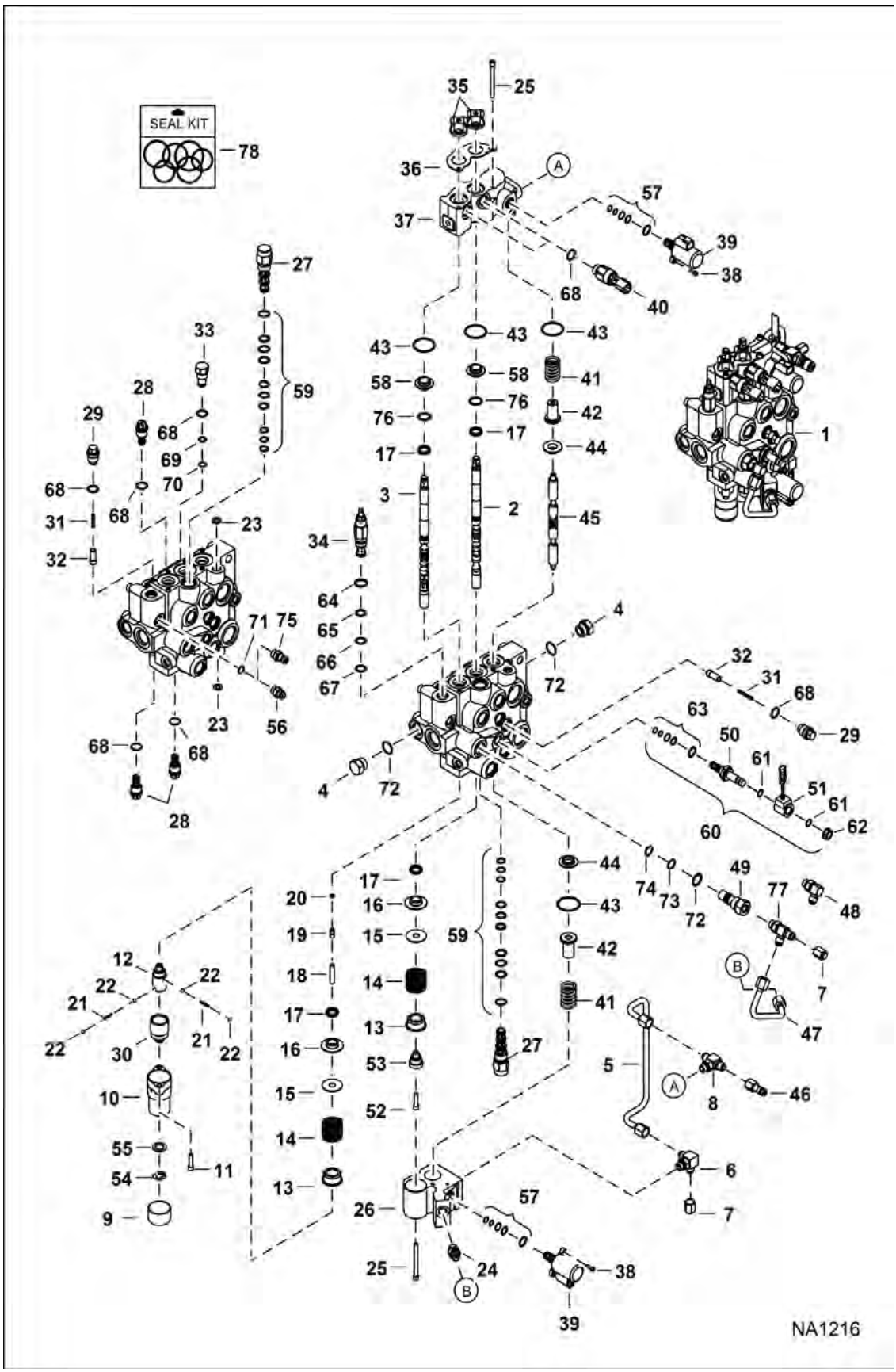

Page 161 - OSS# 6300322913 - All rights reserved by Bobcat Company - 08/04/2017 - 06:30:16 - Produced by Ken Cook Co. with mediaioff

HYDRAULIC CONTROL VALVE (Cont'd)

(Manual Controls) (Two Piece Detent Block)
(S/N A3P811001 - A3P813237, A3P911001 - A3P912042)

Ref No	Part Number	Description	Remarks	Serial Number	Qty
1		VALVE, CONTROL	See Illustration HYDRAULIC CONTROL VALVE / NA6557 - NLA - Ref. 2-77 - Was 7168276 [A]		1
2	6815152	SPOOL, TILT			1
3	7266558	SPOOL, LIFT LOCK	Was 7209460 [A]		1
4	24K7	PLUG	W/Ref. 72		2
5	7157291	TUBELINE			1
6	6725182	TEE	Was 7166338 [A]		1
7	36K5	CAP			2
8	7180987	FITTING, CROSS			1
8	79K6	O RING 10			2
9	6660644	CAP			1
10	6589226	COVER, END	0.63" flange		1
11	29G416	BOLT			2
12	6587575	ADAPTER			1
13	6592100	COLLAR			2
14	6587580	SPRING			2
15	7211397	WASHER, SPRING	Was 6587523 [A]		2
16	7191332	YOKE, FLANGE	Ref. 2-75		1
16	6595663	BUSHING			2
17	6683274	SEAL, SPOOL 10			4
18	6586918	SCREW, DETENT			1
19	6596807	PLUG	plastic - 0.46" long		1
20	58K004	O-RING			1
21	6592107	SPRING, DETENT 5			2
22	6592105	BALL 5			4
23	55K204	O RING 10			2
24	6688845	VALVE	check		1
25	29G444	BOLT	Was 6814022 [A]		7
26	7157289	BLOCK			1
27	6689739	VALVE	W/Ref. 59		2
28	6684646	VALVE, ANTI-CAV	anti-cav - W/Ref. 68		x
29	7134520	PLUG	check valve - W/Ref. 68		3
29		VALVE, ANTI-CAV	See attachment Operation & Maintenance manual for correct relief valve combination		x
30	6531270	SLEEVE, DETENT			1
31	7166339	SPRING, LOAD CHECK	44,4 mm (1.75") long - Was 7239824 [C]		4
32	7166047	SEAT, CHECK VALVE			4
33	6816549	PLUG ASSY PORT RLF	W/Ref. 68-70		1
34	7219324	VALVE, RELIEF	W/ O-rings - pressure to be set in field - Was 6686360 [A]		1
35	6587763	BOOT			2
36	6813153	PLATE	retainer		1
37	7157286	BODY			1

Page 154 OSS# 6300322913 - All rights reserved by Bobcat Company - 08/04/2017 - 06:30:16 - Produced by Ken Cook Co. with mediaioff

HYDRAULIC CONTROL VALVE (Cont'd)

(Manual Controls) (Two Piece Detent Block)
(S/N A3P811001 - A3P813237, A3P911001 - A3P912042)

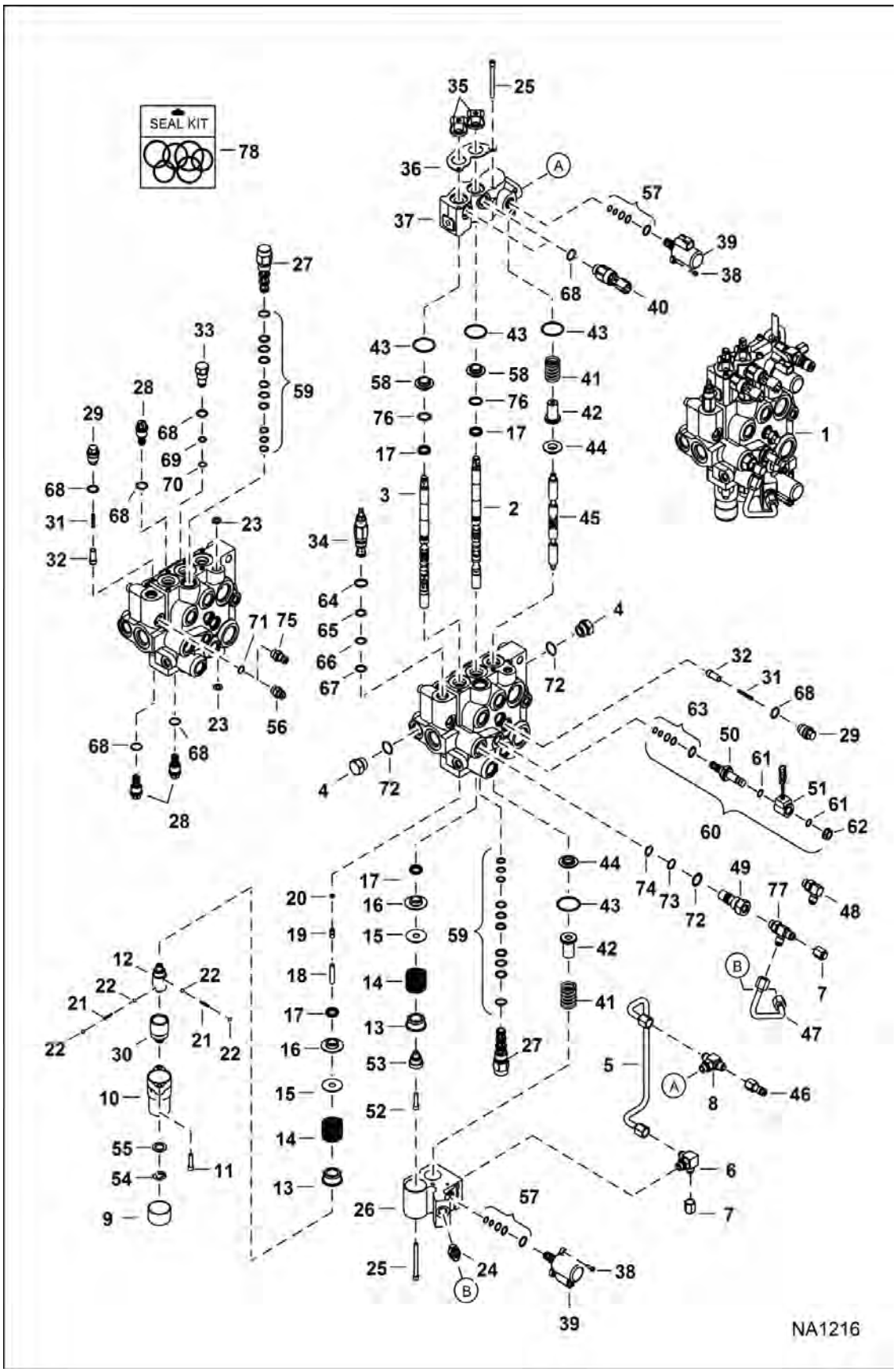

Page 163 - OSS# 6300322913 - All rights reserved by Bobcat Company - 08/04/2017 - 06:30:16 - Produced by Ken Cook Co. with mediaioff

HYDRAULIC CONTROL VALVE (Cont'd)

(Manual Controls) (Two Piece Detent Block)

(S/N A3P811001 - A3P813237, A3P911001 - A3P912042)

Ref No	Part Number	Description	Remarks	Serial Number	Qty
38	7002716	SCREW			4
39	6698434	VALVE, PROPORTIONAL			2
40	6676029	SOLENOID, LOCK SPOOL	W/Ref. 68		2
41	7121399	SPRING			2
42	6814694	RETAINER			2
43	1K127	O-RING 10			4
44	7138376	BUSHING			2
45	7112383	AUX SPOOL			1
46	6684125	COUPLER			1
47	7157290	TUBELINE			1
48	17KB0606	FITTING			1
49	7134522	PLUG	W/Ref. 72-74		1
50	6667687	VALVE, STEM SOLENOID			1
51	6675559	COIL	W/Ref. 61 & 62 - D series - black case - metri pack connector		1
52	7102652	SCREW			1
53	6592109	ADAPTER			1
54	799119	RING			1
55	6592098	WASHER			1
56	6630168	COUPLER, DIAGNOSTIC			1
57	7008771	KIT, SEAL			2
58	7202038	BUSHING, ALIGNMENT	Also Order 82K019 alignment O-ring - Was 6805102 [A]		2
59	6690431	KIT, SEAL	Was 6669734 [A]		x
60	6672471	VALVE, SOLENOID			1
61	54K20028	O RING 10			2
62	6668820	NUT	Was 6691022 [B,D]		1
63	6669732	KIT, SEAL			1
64	58K017	O-RING 10			1
65	6665569	RING, BACK-UP			1
66	25K20016	O RING 10			1
67	6665570	CLYD RING			1
68	79K8	O RING 10			x
69	58K013	O-RING 10			1
70	73K013	RING, BACK-UP			1
71	79K6	O RING 10			x
72	79K10	O RING 10			x
73	73K016	RING, BACK-UP			1
74	58K016	O-RING 10			1
75	15KB0606	FITTING, HYD CONNECTOR			1
76	82K019	O-RING	alignment		2
77	7214512	FITTING, HYD TEE			1
78	7123964	KIT, SEAL			1

Page 156 OSS# 6300322913 - All rights reserved by Bobcat Company - 08/04/2017 - 06:30:16 - Produced by Ken Cook Co. with mediaoff

HYDRAULIC CONTROL VALVE (Cont'd)

(Manual Controls) (Two Piece Detent Block)
(S/N A3P811001 - A3P813237, A3P911001 - A3P912042)

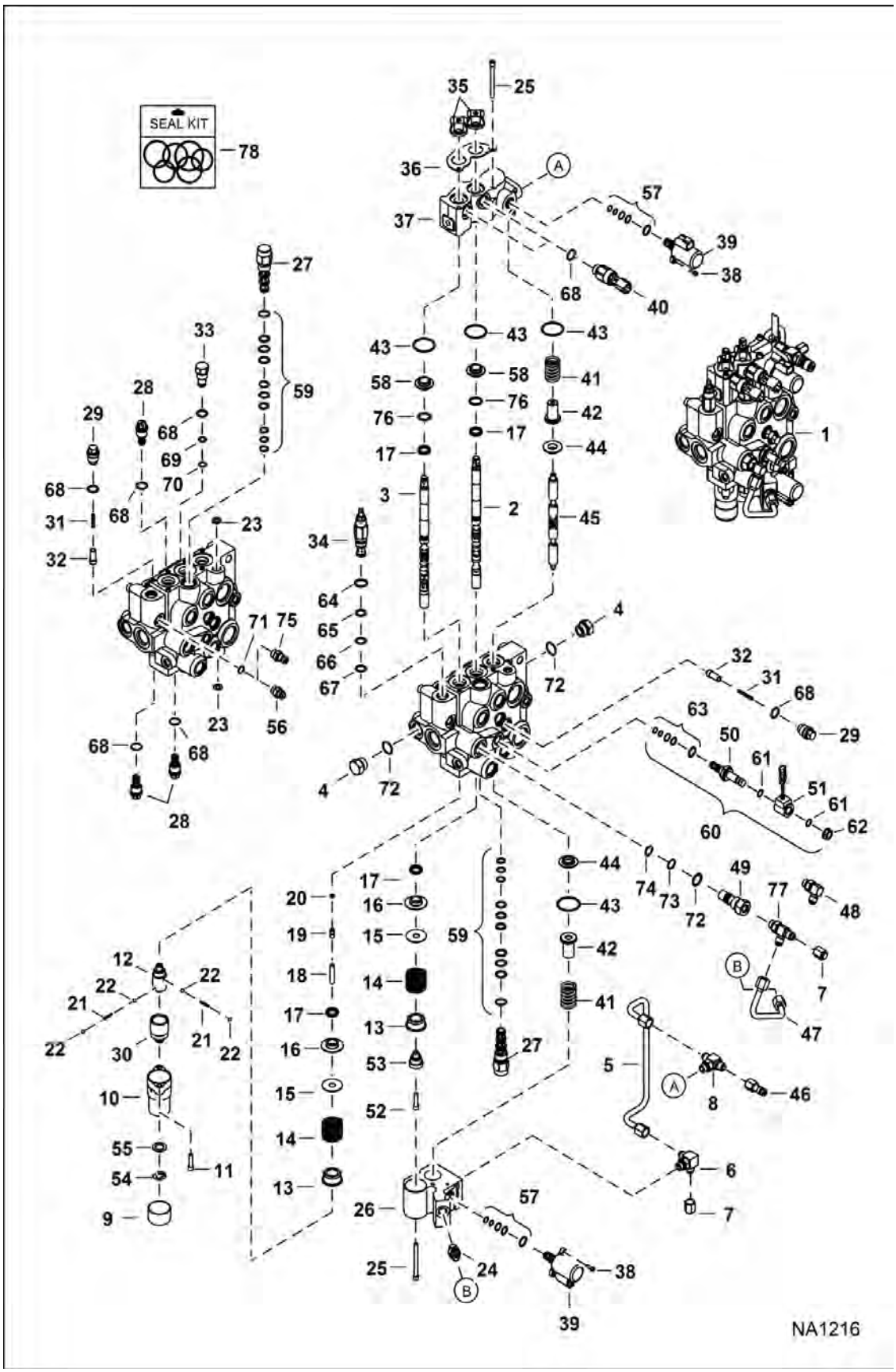

Page 165 - OSS# 6300322913 - All rights reserved by Bobcat Company - 08/04/2017 - 06:30:16 - Produced by Ken Cook Co. with mediaioff

HYDRAULIC CONTROL VALVE (Cont'd)

(Manual Controls) (Two Piece Detent Block)
(S/N A3P811001 - A3P813237, A3P911001 - A3P912042)

Ref No	Part Number	Description	Remarks	Serial Number	Qty
78	6632279	KIT, SEAL	main relief - Ref. 64-67		x
78	6669732	KIT, SEAL	solenoid valve - Ref. 63		x
78	6690431	KIT, SEAL	Was 6669734 [A]		x
78	7008771	KIT, SEAL	proportional valve - Ref. 57		x

Page 158 OSS# 6300322913 - All rights reserved by Bobcat Company - 08/04/2017 - 06:30:16 - Produced by Ken Cook Co. with mediaioff

HYDRAULIC CONTROL VALVE
(Manual Controls) (D Series Coil)

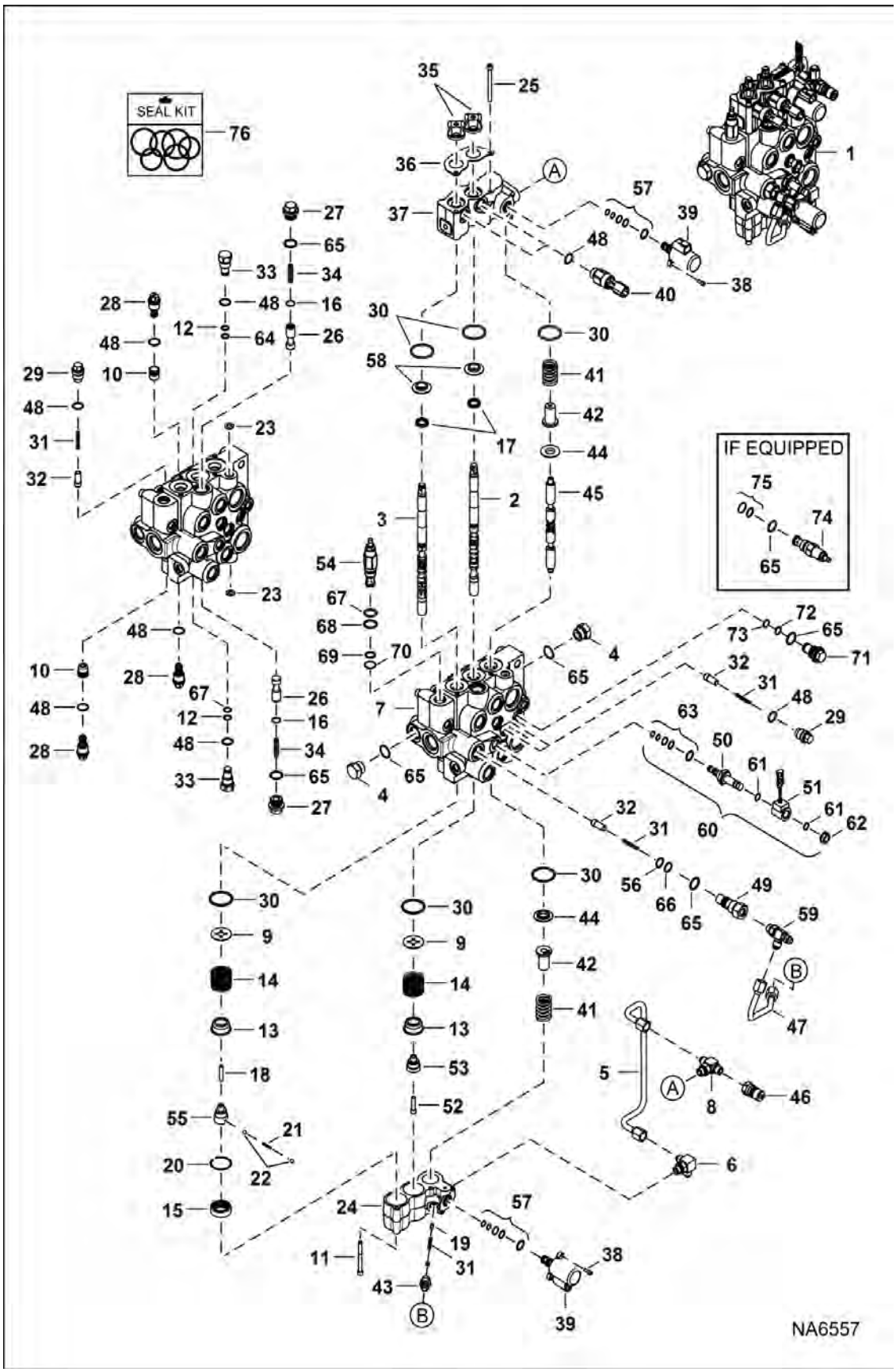

Page 167 - OSS# 6300322913 - All rights reserved by Bobcat Company - 08/04/2017 - 06:30:16 - Produced by Ken Cook Co. with mediaioff

Illustration NA6557

Model T770 MT3
6989477

HYDRAULIC CONTROL VALVE (Cont'd)

(Manual Controls) (D Series Coil)

Ref No	Part Number	Description	Remarks	Serial Number	Qty
1		VALVE, CONTROL	See Illustration HYDRAULIC CONTROL VALVE / NA12529 - NLA - Ref. 2-50, 52-59 & 63-73 - Order 7297072 control valve & 7272732 coil - Was 7216113 [A]		1
2	6815152	SPOOL, TILT			1
3	7266558	SPOOL, LIFT LOCK	Was 7209460		1
4	24K7	PLUG	W/Ref. 65		2
5	7157291	TUBELINE			1
6	6725182	TEE	Was 7166338 [A]		1
7		BODY	NSS		1
8	7180987	FITTING, CROSS			1
8	79K6	O RING 10			2
9	7211397	WASHER, SPRING			2
10	7208227	SEAT, RELIEF PORT			2
11	29G444	BOLT	Was 6814022 [A]		4
12	58K013	O-RING 10			2
13	6592100	COLLAR			2
14	6587580	SPRING			2
15	7211400	SLEEVE, DETENT			1
16	7214312	RING, RETAINING			2
17	7031367	SEAL, SPOOL	Was 6683274 [B]		2
18	6586918	SCREW, DETENT			1
19	7280785	VALVE, POPPET	Was 7214722 [A]		1
20	7214856	RING, RETAINING			1
21	6592107	SPRING, DETENT 5			1
22	6592105	BALL 5			2
23	55K204	O RING 10			2
24	7214959	BLOCK, VALVE CONTROL HYD			1
25	29G444	BOLT			4
26	7217075	SPOOL, BICS			2
27	7219703	PLUG, BICS	W/Ref. 65		2
28	6684646	VALVE, ANTI-CAV	anti-cav - W/Ref. 48		x
29	7134520	PLUG	check valve		3
29		VALVE, ANTI-CAV	See attachment Operation & Maintenance manual for correct relief valve combination		x
30	7219080	O-RING			6
31	7166339	SPRING, LOAD CHECK	44,4 mm (1.75") long - Was 7239824 [C]		5
32	7166047	SEAT, CHECK VALVE			4
33	6816549	PLUG ASSY PORT RLF	W/Ref. 12, 48 & 64		2
34	7203643	SPRING, VALVE			2
35	6587763	BOOT			2
36	6813153	PLATE	retainer		1
37	7157286	BODY			1

Page 1 of 1 OSS# 6300322913 - All rights reserved by Bobcat Company - 08/04/2017 - 06:30:16 - Produced by Ken Cook Co. with mediaioff

HYDRAULIC CONTROL VALVE (Cont'd)
(Manual Controls) (D Series Coil)

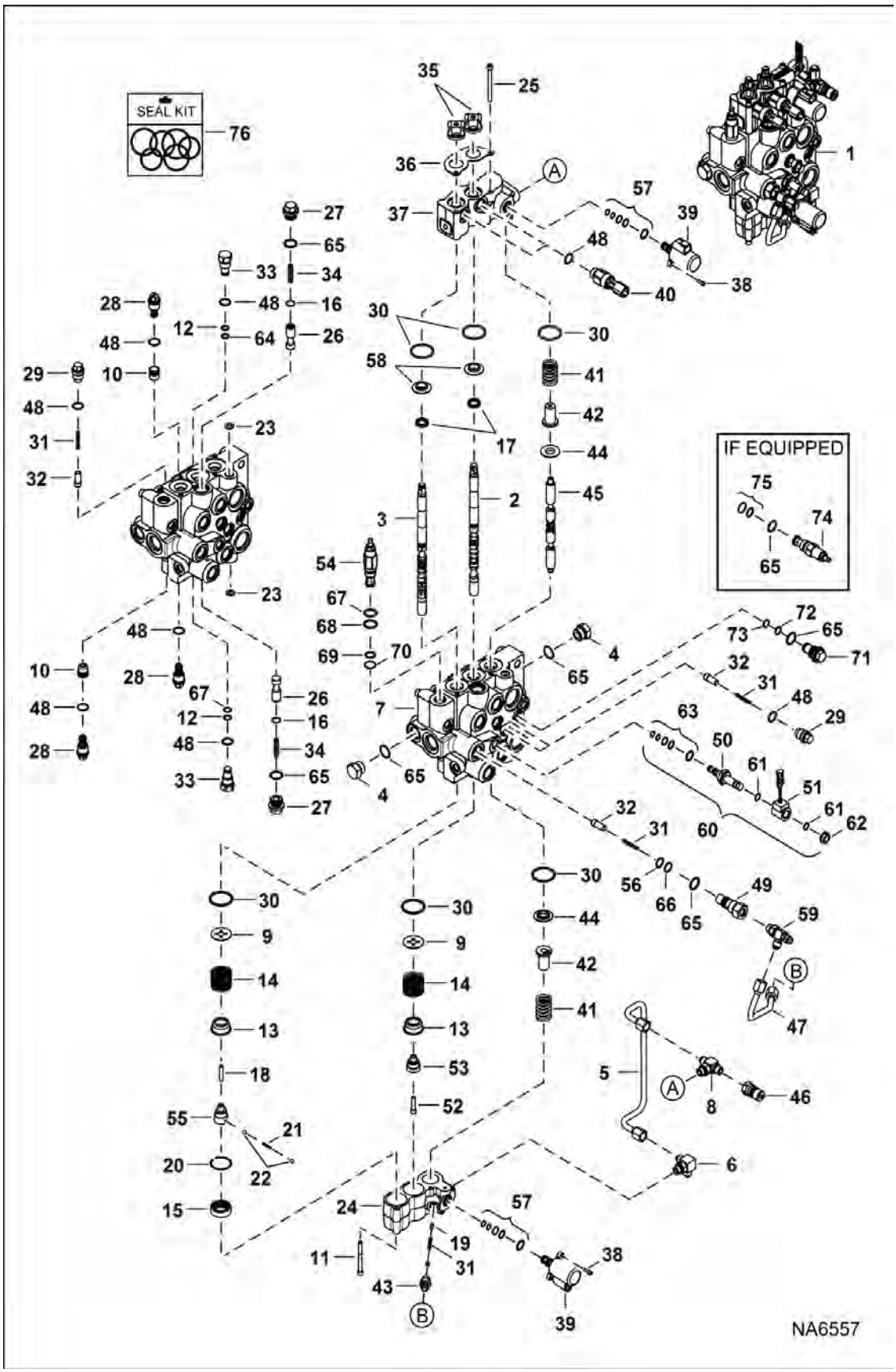

Page 169 - OSS# 6300322913 - All rights reserved by Bobcat Company - 08/04/2017 - 06:30:16 - Produced by Ken Cook Co. with mediaioff

HYDRAULIC CONTROL VALVE (Cont'd)

(Manual Controls) (D Series Coil)

Ref No	Part Number	Description	Remarks	Serial Number	Qty
38	7002716	SCREW			4
39	6698434	VALVE, PROPORTIONAL			2
40	6676029	SOLENOID, LOCK SPOOL			2
41	7121399	SPRING			2
42	6814694	RETAINER			2
43	7202329	FITTING, HYD CONNECTOR W/SCREEN			1
43	79K6	O RING 10			1
44	7138376	BUSHING			2
45	7112383	AUX SPOOL			1
46	6684125	COUPLER			1
47	7202325	TUBELINE, HYD VALVE CONTROL			1
48	79K8	O RING 10			x
49	7134522	PLUG	W/Ref. 56, 65 & 66		1
50	6667687	VALVE, STEM SOLENOID	W/Ref. 63		1
51	6675559	COIL	W/Ref. 61 & 62 - D series - black case - metri pack connector		1
52	7102652	SCREW			1
53	6592109	ADAPTER			1
54	7219324	VALVE, RELIEF	W/ O-rings - pressure to be set in field - Was 6686360 [A]		1
55	7211394	ADAPTER, DETENT			1
56	58K016	O-RING 10			1
57	7008771	KIT, SEAL			2
58	7211393	RETAINER, SEAL			2
59	7214512	FITTING, HYD TEE			1
60	6672471	VALVE, SOLENOID	Ref. 50, 51 & 61-63		1
61	54K20028	O RING 10			2
62	6668820	NUT			1
63	6669732	KIT, SEAL			1
64	73K013	RING, BACK-UP			2
65	79K10	O RING 10			x
66	73K016	RING, BACK-UP			1
67	58K017	O-RING 10			1
68	6665569	RING, BACK-UP			1
69	25K20016	O RING 10			1
70	6665570	CLYD RING			1
71		PLUG, AUX	NLA - Order Ref. 65, 72 & 73 - Was 7221370		1
72	58K014	O-RING 10			1
73	73K014	RING, BACK-UP 5			1
74	7025564	VALVE, RELIEF	Contact your Local Dealer for Bobcat Technical Information BTI423 - W/Ref. 65 & 75 - Was 7024940 [A]		1
75	6670634	SEAL KIT	For Ref. 74 - Was 7024825 [A]		1

Page 1 of 1 OSS# 6390322913 - All rights reserved by Bobcat Company - 08/04/2017 - 06:30:16 - Produced by Ken Cook Co. with mediaoff

HYDRAULIC CONTROL VALVE (Cont'd)

(Manual Controls) (D Series Coil)

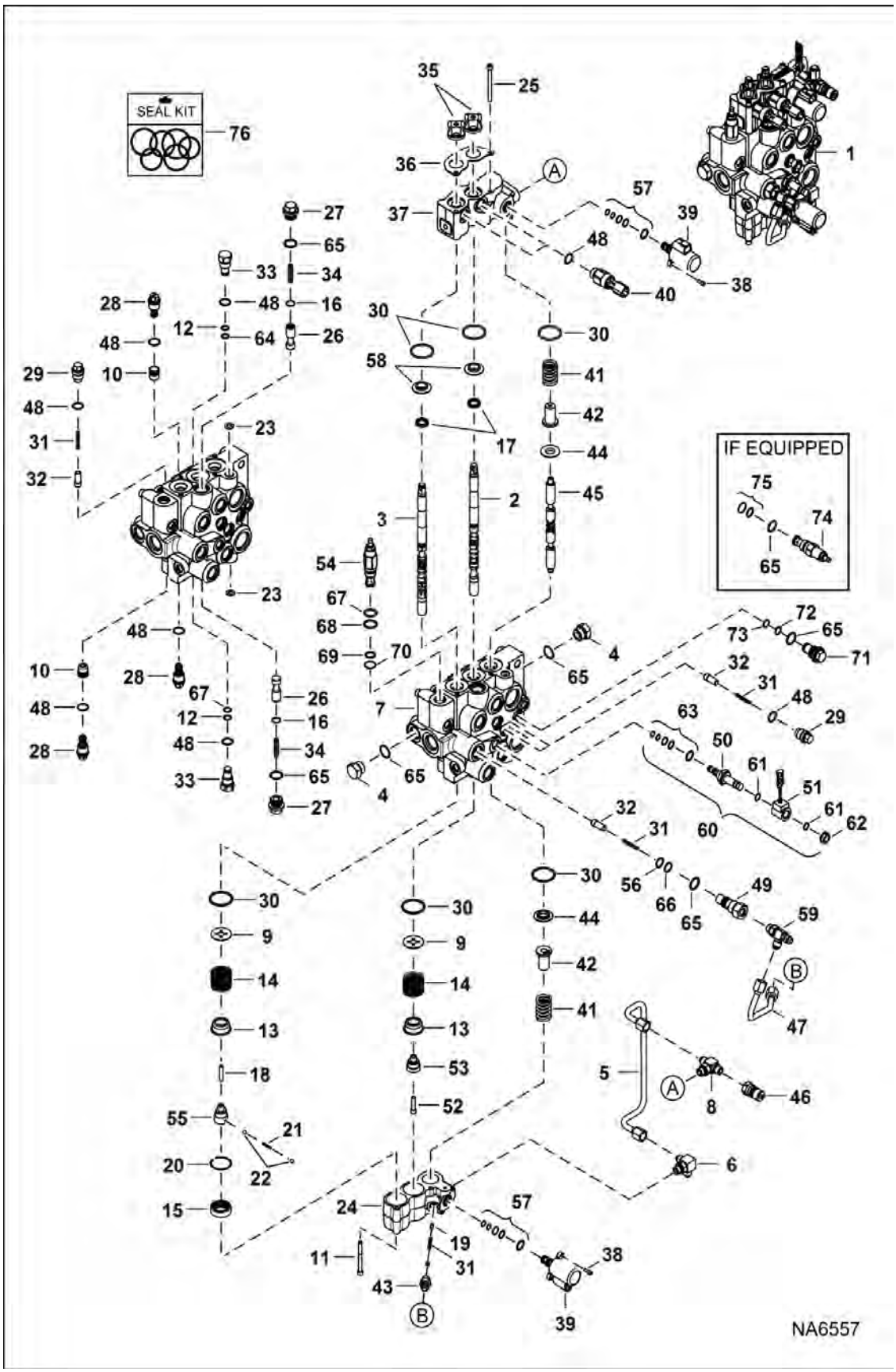

Page 171 - OSS# 6300322913 - All rights reserved by Bobcat Company - 08/04/2017 - 06:30:16 - Produced by Ken Cook Co. with mediaioff

HYDRAULIC CONTROL VALVE (Cont'd)

(Manual Controls) (D Series Coil)

Ref No	Part Number	Description	Remarks	Serial Number	Qty
76	7218923	KIT, SEAL COMPLETE			1
76	7218924	KIT, SEAL	Ref. 17, 23, 30, 35 & 48		1
76	7123965	KIT, SEAL	external fitting - Ref. 48, 49, 61 & 64-66		1

Page 174 OSS# 6300322913 - All rights reserved by Bobcat Company - 08/04/2017 - 06:30:16 - Produced by Ken Cook Co. with mediaioff

HYDRAULIC CONTROL VALVE
(Manual Controls) (E Series Coil)

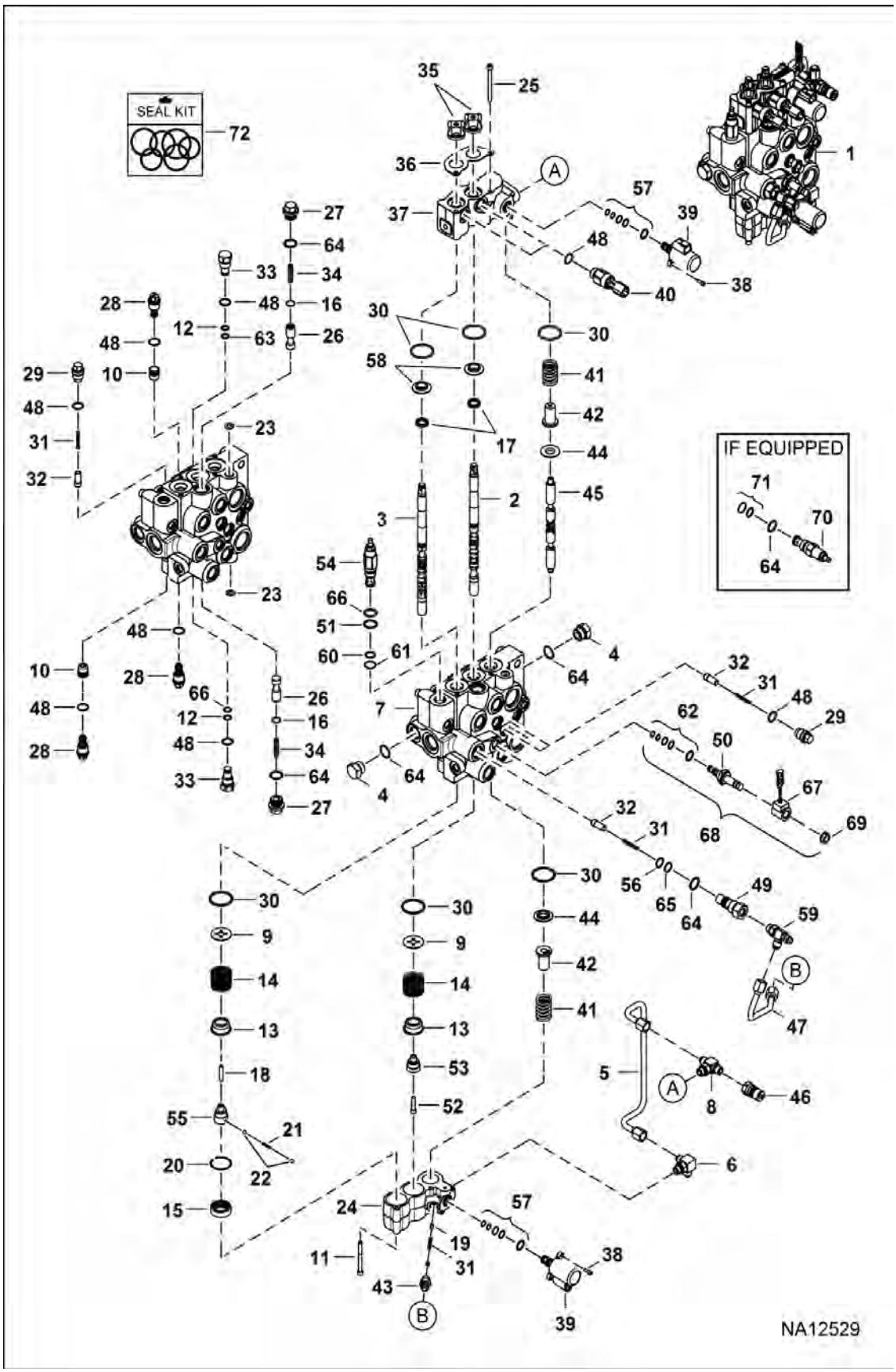

Page 173 - OSS# 6300322913 - All rights reserved by Bobcat Company - 08/04/2017 - 06:30:16 - Produced by Ken Cook Co. with mediaioff

HYDRAULIC CONTROL VALVE (Cont'd)

(Manual Controls) (E Series Coil)

Ref No	Part Number	Description	Remarks	Serial Number	Qty
1	7297072	VALVE, CONTROL	Ref. 2-66		1
2	6815152	SPOOL, TILT			1
3	7266558	SPOOL, LIFT LOCK			1
4	24K7	PLUG	W/Ref. 65		2
5	7157291	TUBELINE			1
6	6725182	TEE	Was 7166338 [A]		1
7		BODY	NSS		1
8	7180987	FITTING, CROSS			1
8	79K6	O RING 10			2
9	7211397	WASHER, SPRING			2
10	7208227	SEAT, RELIEF PORT			2
11	29G444	BOLT	Was 6814022 [A]		4
12	58K013	O-RING 10			2
13	6592100	COLLAR			2
14	6587580	SPRING			2
15	7211400	SLEEVE, DETENT			1
16	7214312	RING, RETAINING			2
17	7031367	SEAL, SPOOL	Was 6683274 [B]		2
18	6586918	SCREW, DETENT			1
19	7280785	VALVE, POPPET	Was 7214722 [A]		1
20	7214856	RING, RETAINING			1
21	6592107	SPRING, DETENT 5			1
22	6592105	BALL 5			2
23	55K204	O RING 10			2
24	7214959	BLOCK, VALVE CONTROL HYD			1
25	29G444	BOLT			4
26	7217075	SPOOL, BICS			2
27	7219703	PLUG, BICS	W/Ref. 65		2
28	6684646	VALVE, ANTI-CAV	anti-cav - W/Ref. 48		x
29	7134520	PLUG	check valve		3
30	7219080	O-RING			6
31	7166339	SPRING, LOAD CHECK	44,4 mm (1.75") long - Was 7239824 [C]		5
32	7166047	SEAT, CHECK VALVE			4
33	6816549	PLUG ASSY PORT RLF	W/Ref. 12, 48 & 63		2
34	7203643	SPRING, VALVE			2
35	6587763	BOOT			2
36	6813153	PLATE	retainer		1
37	7157286	BODY			1
38	7002716	SCREW			4
39	6698434	VALVE, PROPORTIONAL			2

Page 4 of 4 OSS# 6300322913 - All rights reserved by Bobcat Company - 08/04/2017 - 06:30:16 - Produced by Ken Cook Co. with mediaioff

HYDRAULIC CONTROL VALVE (Cont'd)

(Manual Controls) (E Series Coil)

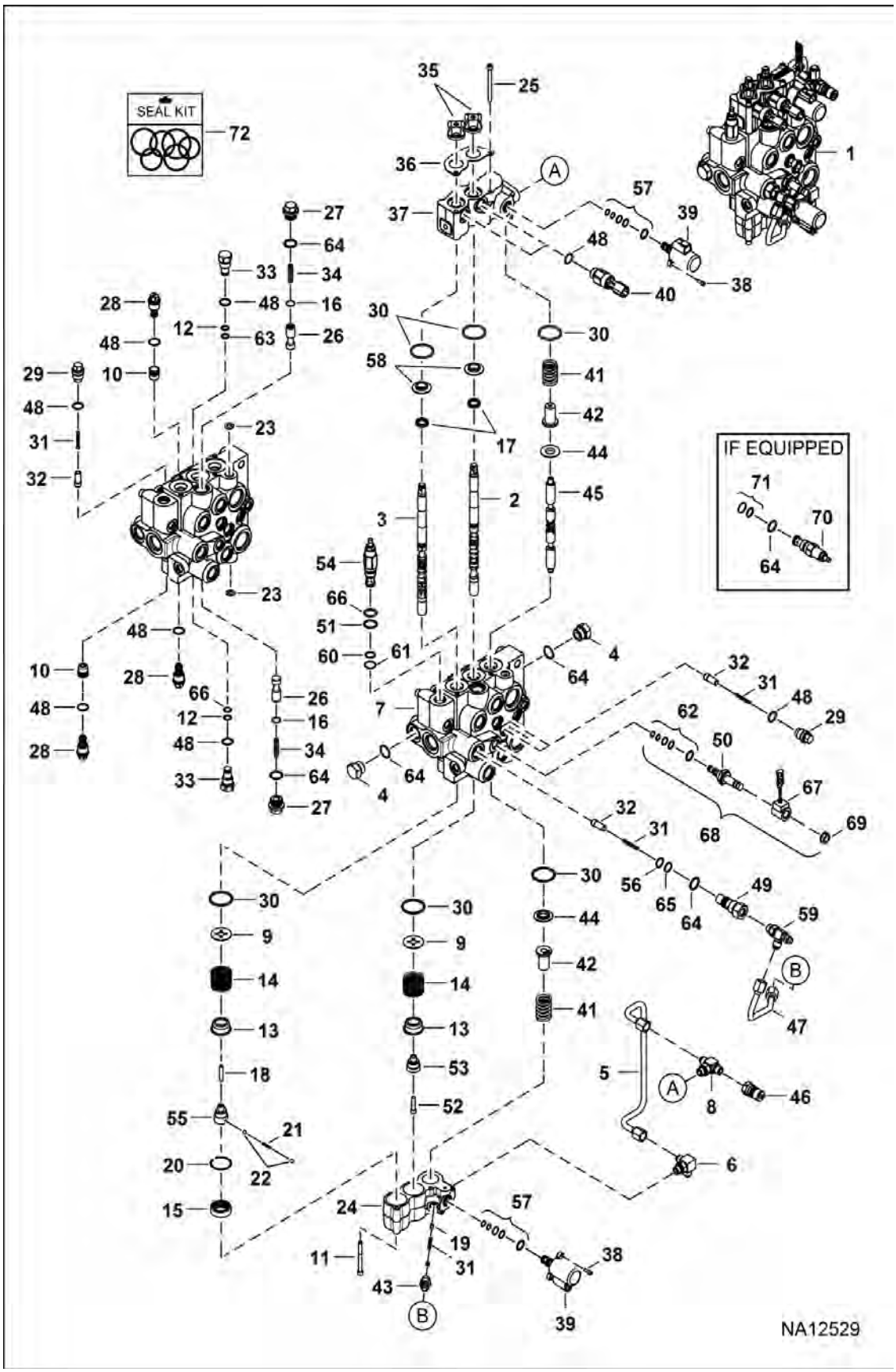

Page 175 - OSS# 6300322913 - All rights reserved by Bobcat Company - 08/04/2017 - 06:30:16 - Produced by Ken Cook Co. with mediaioff

HYDRAULIC CONTROL VALVE (Cont'd)

(Manual Controls) (E Series Coil)

Ref No	Part Number	Description	Remarks	Serial Number	Qty
40	6676029	SOLENOID, LOCK SPOOL			2
41	7121399	SPRING			2
42	6814694	RETAINER			2
43	7202329	FITTING, HYD CONNECTOR W/SCREEN			1
43	79K6	O RING 10			1
44	7138376	BUSHING			2
45	7112383	AUX SPOOL			1
46	6684125	COUPLER			1
47	7202325	TUBELINE, HYD VALVE CONTROL			1
48	79K8	O RING 10			x
49	7134522	PLUG	W/Ref. 56, 64 & 65		1
50	7272731	VALVE, SOLENOID	W/Ref. 62		1
51	6665569	RING, BACK-UP			1
52	7102652	SCREW			1
53	6592109	ADAPTER			1
54	7219324	VALVE, RELIEF	W/ O-rings - pressure to be set in field - Was 6686360 [A]		1
55	7211394	ADAPTER, DETENT			1
56	58K016	O-RING 10			1
57	7008771	KIT, SEAL			2
58	7211393	RETAINER, SEAL			2
59	7214512	FITTING, HYD TEE			1
60	25K20016	O RING 10			1
61	6665570	CLYD RING			1
62	6669732	KIT, SEAL			1
63	73K013	RING, BACK-UP			2
64	79K10	O RING 10			x
65	73K016	RING, BACK-UP			1
66	58K017	O-RING 10			1
67	7272732	ASSY, COIL SOLENOID	W/Ref. 69 - E series - silver case - 208 mm (8.2") lead - metri pack connector		1
67	7301672	COIL SOLENOID	W/Ref. 69 - E series - silver case - integrated Deutsch connector		1
68	7304852	VALVE, CARTRIDGE	Ref. 50, 62, 67 (7272732 coil) & 69		1
68	7314079	VALVE CARTRIDGE	Ref. 50, 62, 67 (7301672 coil) & 69		1
69	7020647	NUT			1
70	7025564	VALVE, RELIEF	Contact your Local Dealer for Bobcat Technical Information BTI423 - W/Ref. 64 & 71 - Was 7024940 [A]		1
71	6670634	SEAL KIT	Was 7024825 [A]		1
72	7218923	KIT, SEAL COMPLETE			1
72	7218924	KIT, SEAL	Ref. 17, 23, 30, 35 & 48		1

Page 1 of 1 OSS# 6300322913 - All rights reserved by Bobcat Company - 08/04/2017 - 06:30:16 - Produced by Ken Cook Co. with mediaoff

HYDRAULIC CONTROL VALVE (Cont'd)

(Manual Controls) (E Series Coil)

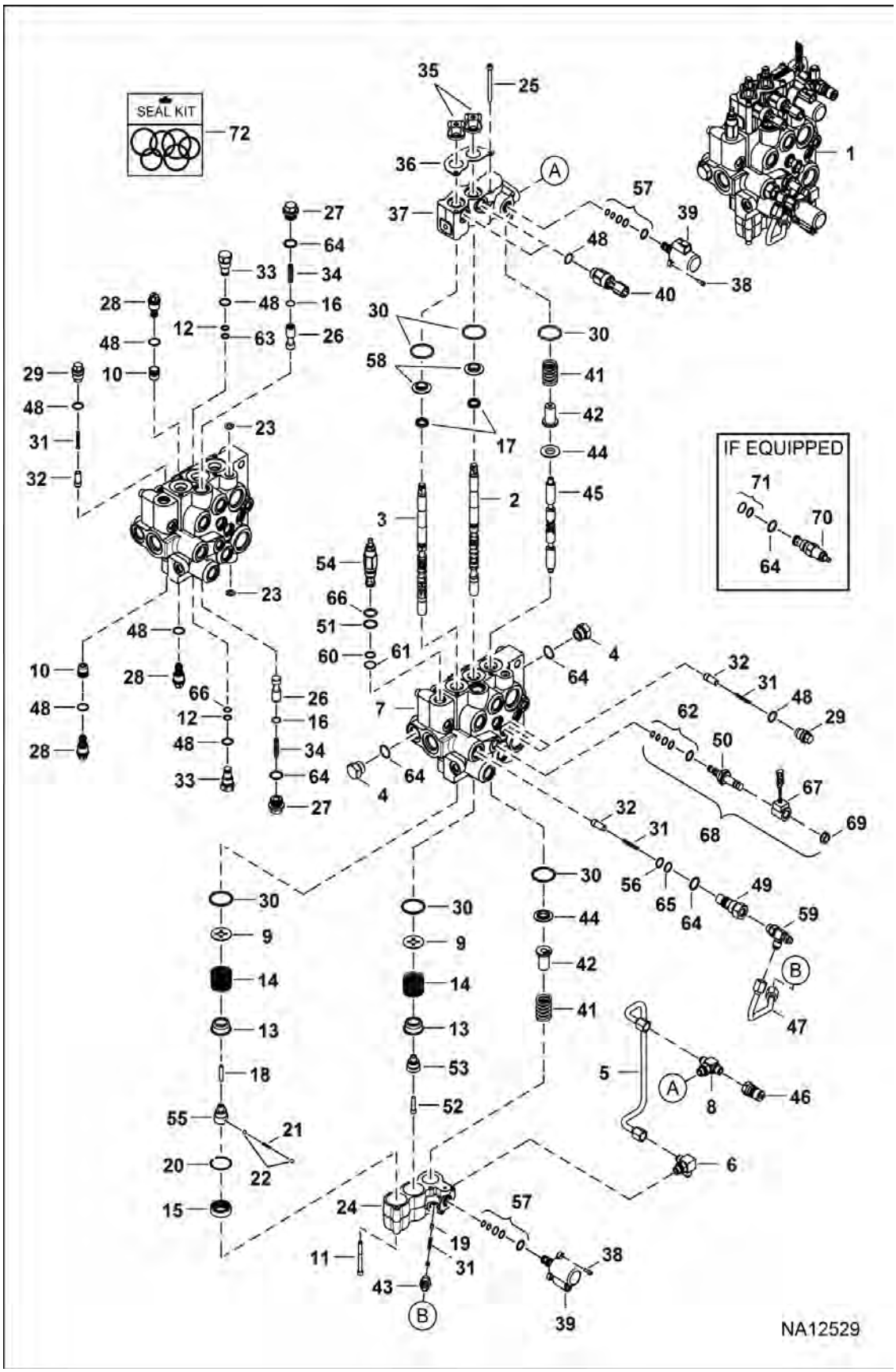

Page 177 - OSS# 6300322913 - All rights reserved by Bobcat Company - 08/04/2017 - 06:30:16 - Produced by Ken Cook Co. with mediaioff

HYDRAULIC CONTROL VALVE (Cont'd)

(Manual Controls) (E Series Coil)

Ref No	Part Number	Description	Remarks	Serial Number	Qty
72	7123965	KIT, SEAL	external fitting - Ref. 48, 49, 60 & 64-66		1

Page 4 of 4 OSS# 6300322913 - All rights reserved by Bobcat Company - 08/04/2017 - 06:30:16 - Produced by Ken Cook Co. with mediaioff

HYDRAULIC CONTROL VALVE

(AHC, ACS & SJC) (Two Piece Detent Block)
(S/N A3P811001 - A3P813237, A3P911001 - A3P912042)

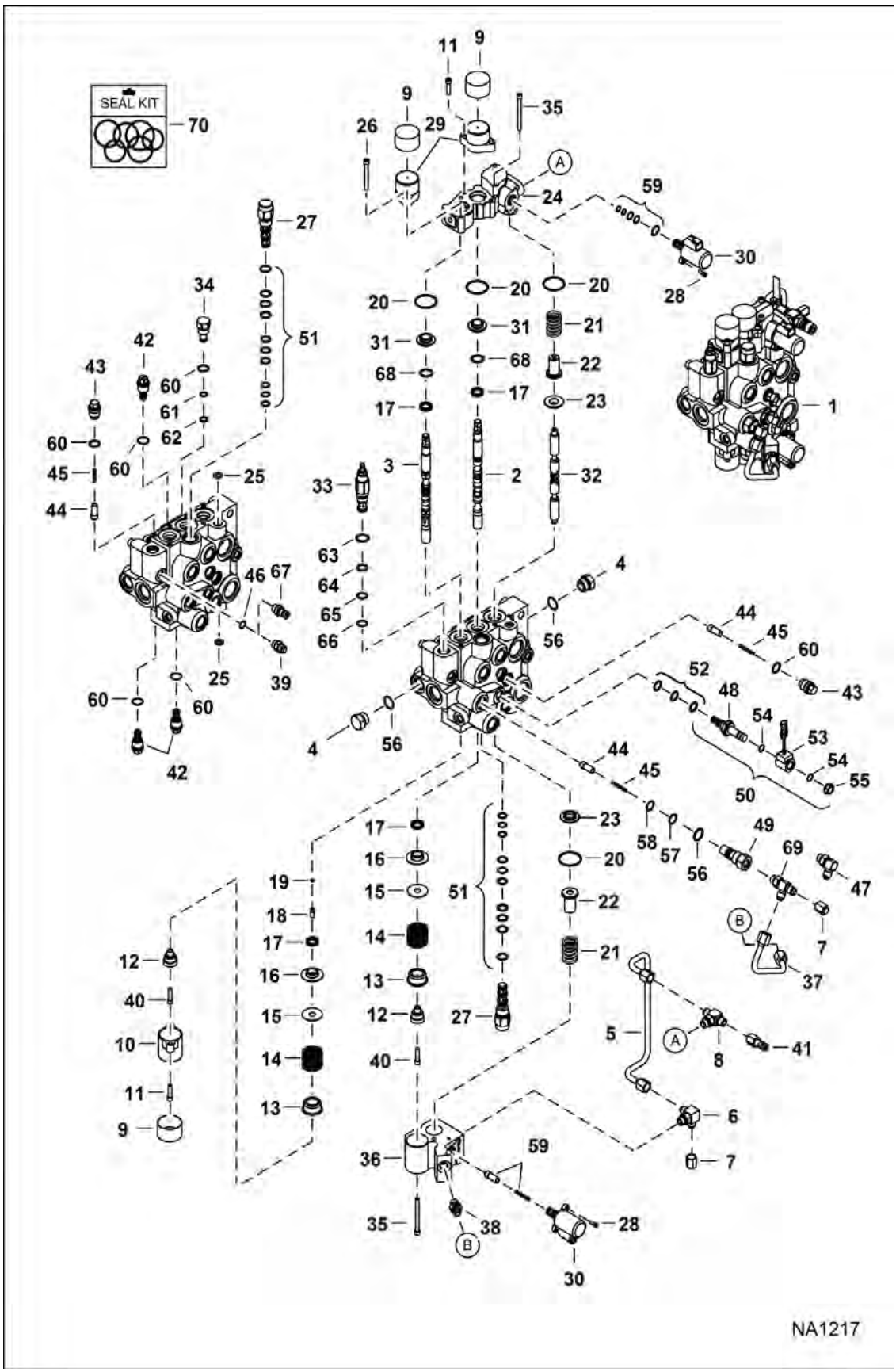

Page 179 - OSS# 6300322913 - All rights reserved by Bobcat Company - 08/04/2017 - 06:30:16 - Produced by Ken Cook Co. with mediaioff

HYDRAULIC CONTROL VALVE (Cont'd)

(AHC, ACS & SJC) (Two Piece Detent Block)
(S/N A3P811001 - A3P813237, A3P911001 - A3P912042)

Ref No	Part Number	Description	Remarks	Serial Number	Qty
1		VALVE, CONTROL	See Illustration HYDRAULIC CONTROL VALVE / NA6558 - NLA - Ref. 2-69 - Was 7166283 [A]		1
2	7108242	SPOOL, TILT			1
3	7266560	SPOOL, LIFT	Was 7209496 [A]		1
4	24K7	PLUG	W/Ref. 72		2
5	7157291	TUBELINE			1
6	6725182	TEE	Was 7166338 [A]		1
7	36K5	CAP			2
8	7180987	FITTING, CROSS			1
9	6662848	CAP			3
10	6803092	BONNET			1
11	29G416	BOLT			4
12	6592109	ADAPTER			2
13	6592100	COLLAR			2
14	6587580	SPRING			2
15	7211397	WASHER, SPRING	Was 6587523 [A]		2
16	6595663	BUSHING			2
17	6683274	SEAL, SPOOL 10			4
18	6801167	SPOOLPLUG			1
19	58K004	O-RING			1
20	1K127	O-RING 10			4
21	7121399	SPRING			2
22	6814694	RETAINER			2
23	7138376	BUSHING			2
24	7157293	BODY			1
25	55K204	O RING 10			2
26	69G436	BOLT			2
27	6689739	VALVE	pilot operated		2
28	7002716	SCREW			4
29	7101345	BONNET, DETENT HYD VALVE			2
30	6698434	VALVE, PROPORTIONAL			2
31	7202038	BUSHING, ALIGNMENT	Also Order 82K019 alignment O-ring - Was 6805102 [A]		2
32	7112383	AUX SPOOL			1
33	7219324	VALVE, RELIEF	W/ O-rings - pressure to be set in field - Was 6686360 [A]		1
34	6816549	PLUG ASSY PORT RLF	W/Ref. 68-70		1
35	29G444	BOLT	Was 6814022 [A]		5
36	7157289	BLOCK			1
37	7157290	TUBELINE			1
38	6688845	VALVE			1
39	6630168	COUPLER, DIAGNOSTIC			1
40	7102652	SCREW			2
41	6684125	COUPLER			1

Page 1806 OSS# 6300322913 - All rights reserved by Bobcat Company - 08/04/2017 - 06:30:16 - Produced by Ken Cook Co. with mediaoff

HYDRAULIC CONTROL VALVE (Cont'd)

(AHC, ACS & SJC) (Two Piece Detent Block)
(S/N A3P811001 - A3P813237, A3P911001 - A3P912042)

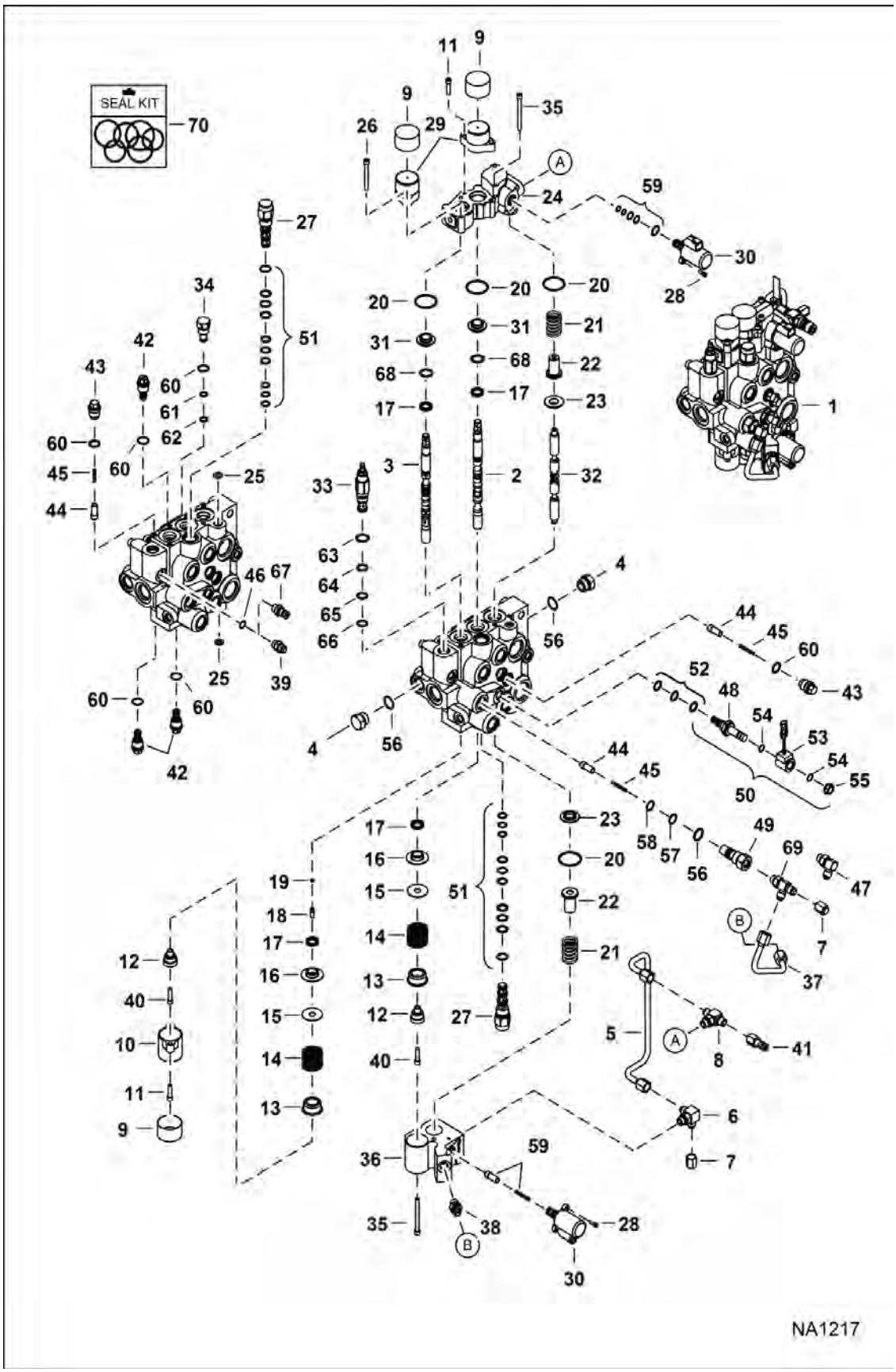

Page 181 - OSS# 6300322913 - All rights reserved by Bobcat Company - 08/04/2017 - 06:30:16 - Produced by Ken Cook Co. with mediaioff

HYDRAULIC CONTROL VALVE (Cont'd)

(AHC, ACS & SJC) (Two Piece Detent Block)
(S/N A3P811001 - A3P813237, A3P911001 - A3P912042)

Ref No	Part Number	Description	Remarks	Serial Number	Qty
42	6684646	VALVE, ANTI-CAV	anti-cav - W/Ref. 68		x
43	7134520	PLUG	check valve - W/Ref. 68		3
43		VALVE, ANTI-CAV	See attachment Operation & Maintenance manual for correct relief valve combination		x
44	7166047	SEAT, CHECK VALVE			4
45	7166339	SPRING, LOAD CHECK	44,4 mm (1.75") long - Was 7239824 [C]		4
46	79K6	O RING 10			x
47	17KB0606	FITTING			1
48	6667687	VALVE, STEM SOLENOID			1
49	7134522	PLUG	W/Ref. 72-74		1
50	6672471	VALVE, SOLENOID			1
51	6690431	KIT, SEAL	Was 6669734 [A]		X
52	6669732	KIT, SEAL			1
53	6675559	COIL	W/Ref. 54 & 55 - D series - black case - metri pack connector		1
54	54K20028	O RING 10			2
55	6668820	NUT	Was 6691022 [B,D]		1
56	79K10	O RING 10			x
57	73K016	RING, BACK-UP			1
58	58K016	O-RING 10			1
59	7008771	KIT, SEAL			2
60	79K8	O RING 10			x
61	58K013	O-RING 10			1
62	73K013	RING, BACK-UP			1
63	58K017	O-RING 10			1
64	6665569	RING, BACK-UP			1
65	25K20016	O RING 10			1
66	6665570	CLYD RING			1
67	15KB0606	FITTING, HYD CONNECTOR			1
68	82K019	O-RING	alignment		2
69	7214512	FITTING, HYD TEE			1
70	7123964	KIT, SEAL			x
70	6632279	KIT, SEAL	main relief - Ref. 63-66		x
70	6669732	KIT, SEAL	solenoid valve - Ref. 52		x
70	6690431	KIT, SEAL	Was 6669734 [A]		x
70	7008771	KIT, SEAL	proportional valve - Ref. 59		x

Page 182 OSS# 6300322913 - All rights reserved by Bobcat Company - 08/04/2017 - 06:30:16 - Produced by Ken Cook Co. with mediaoff

HYDRAULIC CONTROL VALVE
(AHC, ACS & SJC) (D Series Coil)

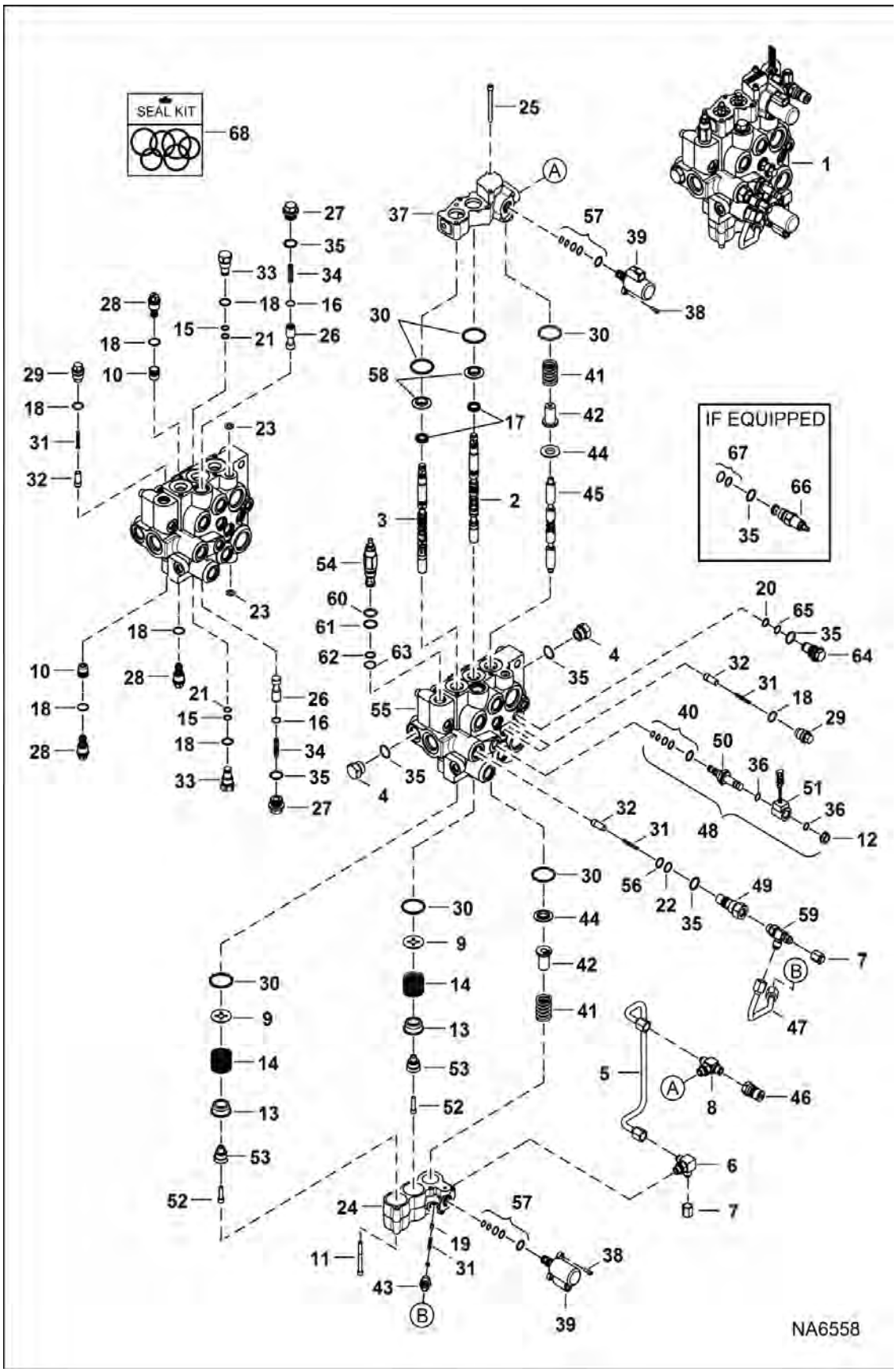

Page 193 - OSS# 6300322913 - All rights reserved by Bobcat Company - 08/04/2017 - 06:30:16 - Produced by Ken Cook Co. with mediaioff

HYDRAULIC CONTROL VALVE (Cont'd)

(AHC, ACS & SJC) (D Series Coil)

Ref No	Part Number	Description	Remarks	Serial Number	Qty
1		VALVE, CONTROL	See Illustration HYDRAULIC CONTROL VALVE / NA12589 - NLA - Ref. 2-11, 13-35, 37-47, 49, 50 & 52-65 - Order 7297080 control valve & 7272732 coil - Was 7216110 [A]		1
2	7108242	SPOOL, TILT			1
3	7266560	SPOOL, LIFT	Was 7209496 [A]		1
4	24K7	PLUG	W/Ref. 35		2
5	7157291	TUBELINE			1
6	6725182	TEE	Was 7166338 [A]		1
7	36K5	CAP			3
8	7180987	FITTING, CROSS			1
8	79K6	O RING 10			1
9	7211397	WASHER, SPRING			2
10	7208227	SEAT, RELIEF PORT			2
11	29G444	BOLT	Was 6814022 [A]		4
12	6668820	NUT			1
13	6592100	COLLAR			2
14	6587580	SPRING			2
15	58K013	O-RING 10			2
16	7214312	RING, RETAINING			2
17	7031367	SEAL, SPOOL	Was 6683274 [B]		2
18	79K8	O RING 10			x
19	7280785	VALVE, POPPET	Was 7214722 [A]		1
20	73K014	RING, BACK-UP 5			1
21	73K013	RING, BACK-UP			2
22	73K016	RING, BACK-UP			1
23	55K204	O RING 10			2
24	7222562	BLOCK, VALVE CONTROL HYD	Was 7214959 [A]		1
25	29G444	BOLT			2
26	7217075	SPOOL, BICS			2
27	7219703	PLUG, BICS	W/Ref. 35		2
28	6684646	VALVE, ANTI-CAV	anti-cav - W/Ref. 18		x
29	7134520	PLUG	check valve - W/Ref. 18		3
29		VALVE, ANTI-CAV	See attachment Operation & Maintenance manual for correct relief valve combination		x
30	7219080	O-RING			6
31	7166339	SPRING, LOAD CHECK	44,4 mm (1.75") long - Was 7239824 [C]		5
32	7166047	SEAT, CHECK VALVE			4
33	6816549	PLUG ASSY PORT RLF	W/Ref. 15, 18 & 21		2
34	7203643	SPRING, VALVE			2
35	79K10	O RING 10			x
36	54K20028	O RING 10			2
37	7157293	BODY			1
38	7002716	SCREW			4

Page 1 of 1 OSS# 6300322913 - All rights reserved by Bobcat Company - 08/04/2017 - 06:30:16 - Produced by Ken Cook Co. with mediaoff

HYDRAULIC CONTROL VALVE (Cont'd)
(AHC, ACS & SJC) (D Series Coil)

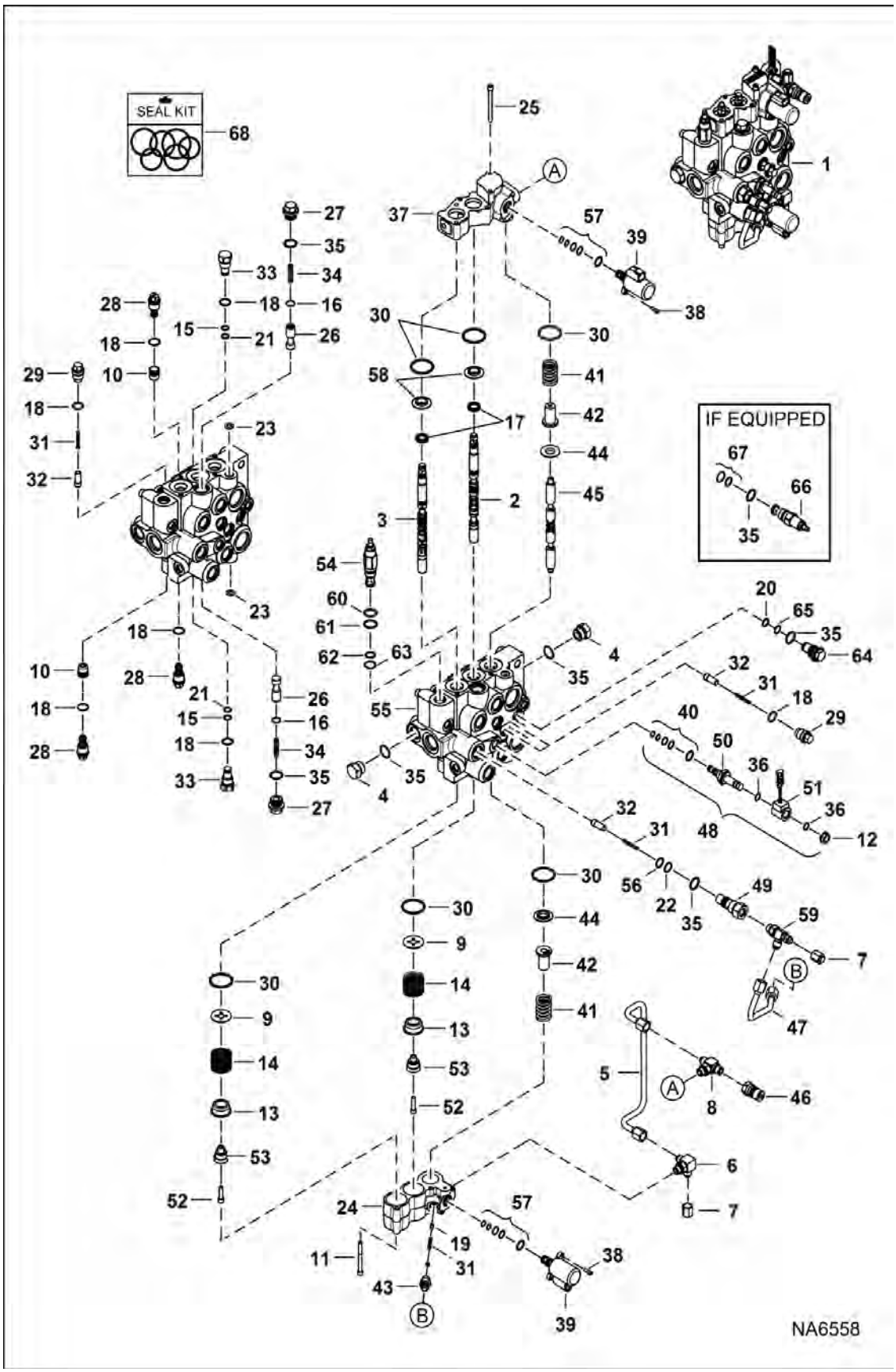

Page 195 - OSS# 6300322913 - All rights reserved by Bobcat Company - 08/04/2017 - 06:30:16 - Produced by Ken Cook Co. with mediaioff

HYDRAULIC CONTROL VALVE (Cont'd)
(AHC, ACS & SJC) (D Series Coil)

Ref No	Part Number	Description	Remarks	Serial Number	Qty
39	6698434	VALVE, PROPORTIONAL			2
40	6669732	KIT, SEAL			1
41	7121399	SPRING			2
42	6814694	RETAINER			2
43	7202329	FITTING, HYD CONNECTOR W/SCREEN			1
44	7138376	BUSHING			2
45	7112383	AUX SPOOL			1
46	6684125	COUPLER			1
47	7202325	TUBELINE, HYD VALVE CONTROL			1
48	6672471	VALVE, SOLENOID	Ref. 50 & 51		1
49	7134522	PLUG	W/Ref. 22, 35 & 56		1
50	6667687	VALVE, STEM SOLENOID	W/Ref. 40		1
51	6675559	COIL	W/Ref. 12 & 36 - D series - black case - metri pack connector		1
52	7102652	SCREW			2
53	6592109	ADAPTER			2
54	7219324	VALVE, RELIEF	W/ O-rings - pressure to be set in field - Was 6686360 [A]		1
55		BODY	NLA		1
56	58K016	O-RING 10			1
57	7008771	KIT, SEAL			2
58	7211393	RETAINER, SEAL			2
59	7214512	FITTING, HYD TEE			1
60	58K017	O-RING 10			1
61	6665569	RING, BACK-UP			1
62	25K20016	O RING 10			1
63	6665570	CLYD RING			1
64		PLUG, AUX	NLA - Order Ref. 20, 35 & 65 - Was 7221370		1
65	58K014	O-RING 10			1
66	7025564	VALVE, RELIEF	Contact your Local Dealer for Bobcat Technical Information BTI423 - W/Ref. 35 & 67 - Was 7024940 [A]		1
67	6670634	SEAL KIT	For Ref. 66 - Was 7024825 [A]		1
68	7218923	KIT, SEAL COMPLETE			1
68	7218924	KIT, SEAL	Ref. 17, 18, 23 & 30		1
68	7123965	KIT, SEAL	external fitting - Ref. 15, 18, 21, 22 & 35		1

Page 1 of 1 OSS# 6300322913 - All rights reserved by Bobcat Company - 08/04/2017 - 06:30:16 - Produced by Ken Cook Co. with mediaoff

HYDRAULIC CONTROL VALVE
(AHC, ACS & SJC) (E Series Coil)

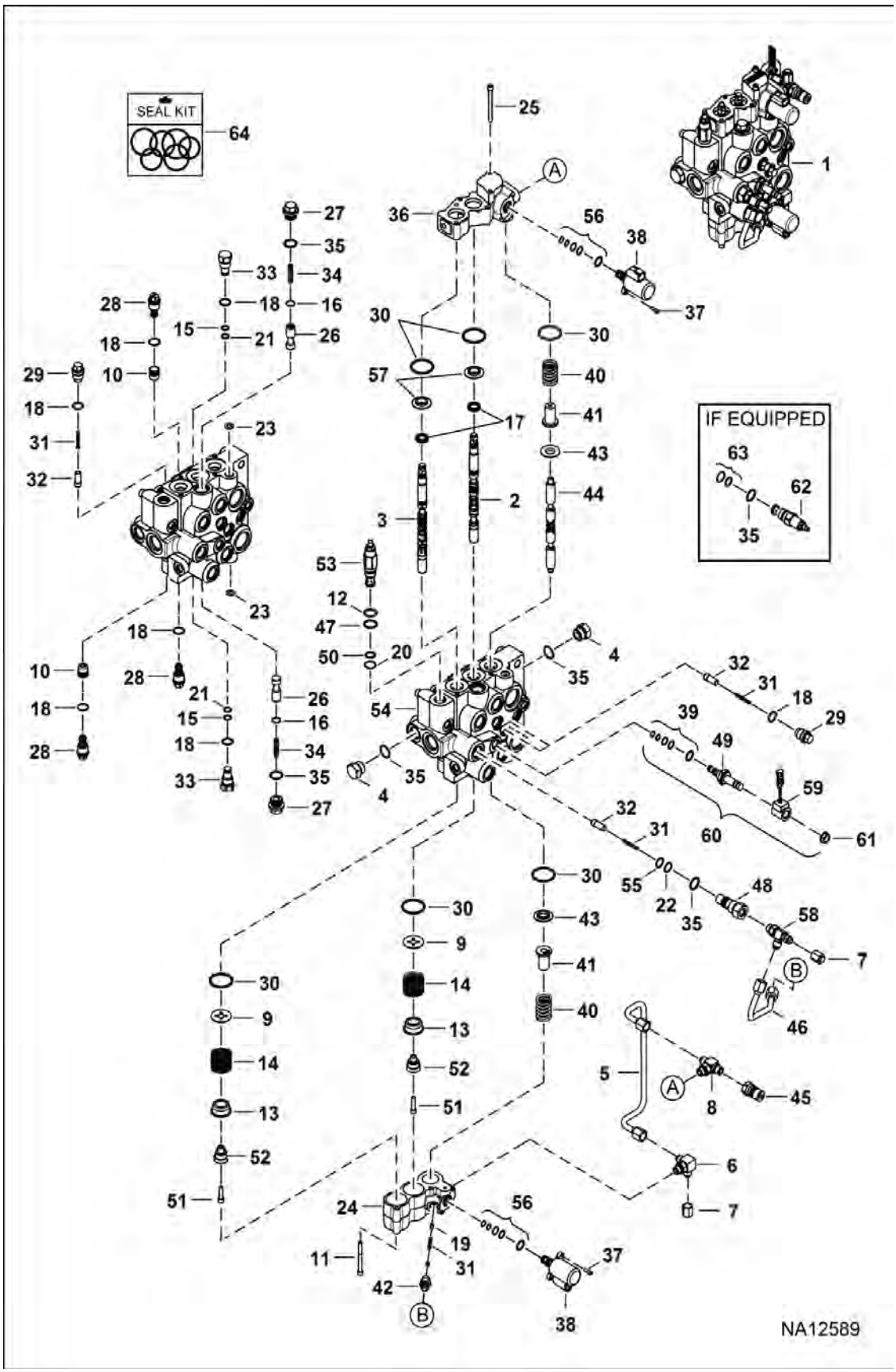

Page 187 - OSS# 6300322913 - All rights reserved by Bobcat Company - 08/04/2017 - 06:30:16 - Produced by Ken Cook Co. with mediaioff

HYDRAULIC CONTROL VALVE (Cont'd)

(AHC, ACS & SJC) (E Series Coil)

Ref No	Part Number	Description	Remarks	Serial Number	Qty
1	7297080	VALVE	Ref. 2-58		1
2	7108242	SPOOL, TILT			1
3	7266560	SPOOL, LIFT	Was 7209496 [A]		1
4	24K7	PLUG	W/Ref. 35		2
5	7157291	TUBELINE			1
6	6725182	TEE	Was 7166338 [A]		1
7	36K5	CAP			3
8	7232515	FITTING, HYD TEE			1
8	79K6	O RING 10			1
9	7211397	WASHER, SPRING			2
10	7208227	SEAT, RELIEF PORT			2
11	29G444	BOLT	Was 6814022 [A]		4
12	58K017	O-RING 10			1
13	6592100	COLLAR			2
14	6587580	SPRING			2
15	58K013	O-RING 10			2
16	7214312	RING, RETAINING			2
17	7031367	SEAL, SPOOL	Was 6683274 [B]		2
18	79K8	O RING 10			x
19	7280785	VALVE, POPPET	Was 7214722 [A]		1
20	6665570	CLYD RING			1
21	73K013	RING, BACK-UP			2
22	73K016	RING, BACK-UP			1
23	55K204	O RING 10			2
24	7222562	BLOCK, VALVE CONTROL HYD	Was 7214959 [A]		1
25	29G444	BOLT			6
26	7217075	SPOOL, BICS			2
27	7219703	PLUG, BICS	W/Ref. 35		2
28	6684646	VALVE, ANTI-CAV	anti-cav - W/Ref. 18		3
29	7134520	PLUG	check valve - W/Ref. 18		3
29		VALVE, ANTI-CAV	See attachment Operation & Maintenance manual for correct relief valve combination		x
30	7219080	O-RING			6
31	7166339	SPRING, LOAD CHECK	44,4 mm (1.75") long - Was 7239824 [C]		5
32	7166047	SEAT, CHECK VALVE			4
33	6816549	PLUG ASSY PORT RLF	W/Ref. 15, 18 & 21		2
34	7203643	SPRING, VALVE			2
35	79K10	O RING 10			x
36	7157293	BODY			1
37	7002716	SCREW			4
38	6698434	VALVE, PROPORTIONAL			2
39	6669732	KIT, SEAL			1

Page 180 OSS# 6300322913 - All rights reserved by Bobcat Company - 08/04/2017 - 06:30:16 - Produced by Ken Cook Co. with mediaoff

HYDRAULIC CONTROL VALVE (Cont'd)
(AHC, ACS & SJC) (E Series Coil)

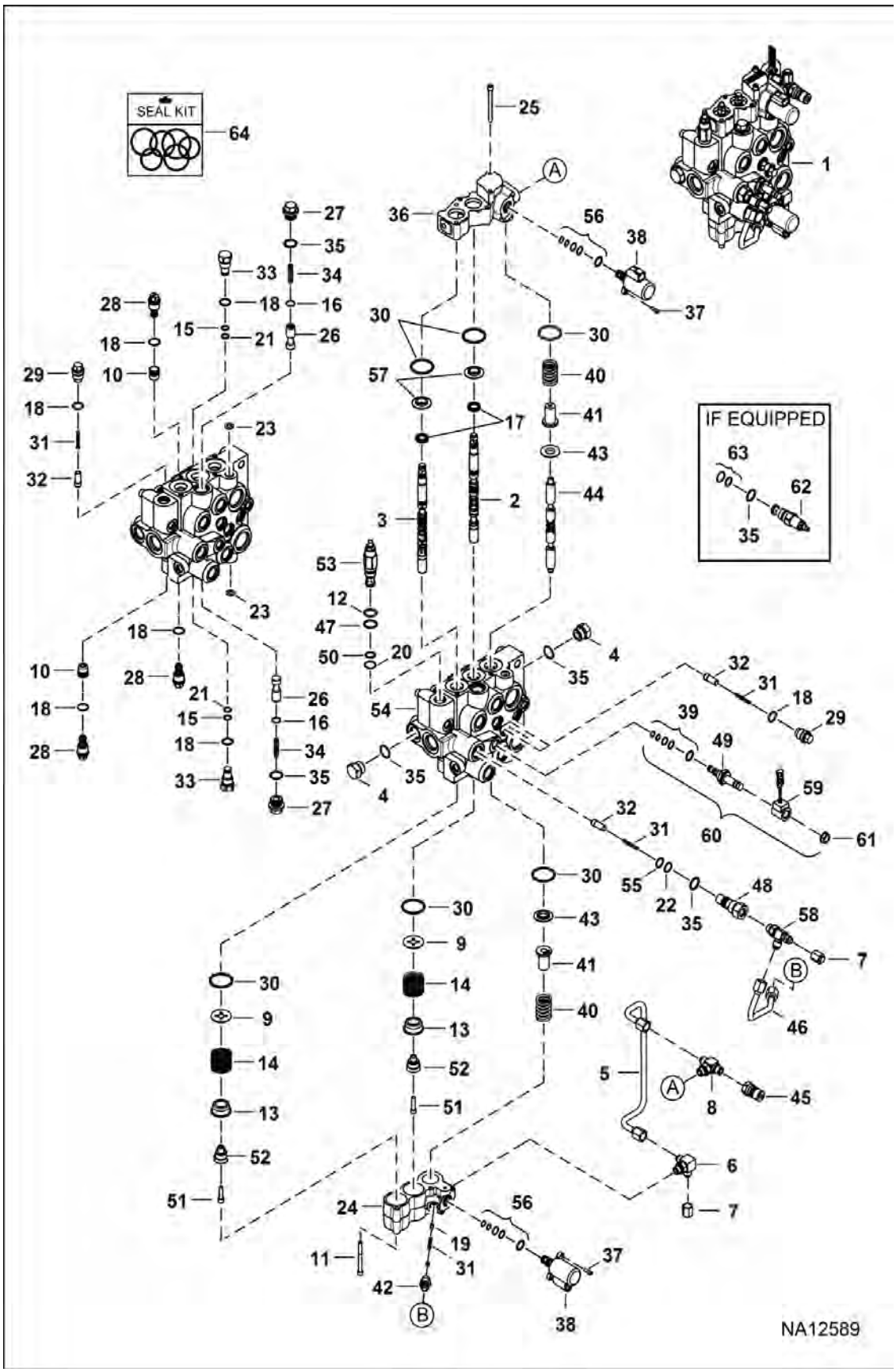

Page 189 - OSS# 6300322913 - All rights reserved by Bobcat Company - 08/04/2017 - 06:30:16 - Produced by Ken Cook Co. with mediaioff

HYDRAULIC CONTROL VALVE (Cont'd)

(AHC, ACS & SJC) (E Series Coil)

Ref No	Part Number	Description	Remarks	Serial Number	Qty
40	7121399	SPRING			2
41	6814694	RETAINER			2
42	7202329	FITTING, HYD CONNECTOR W/SCREEN			1
43	7138376	BUSHING			2
44	7112383	AUX SPOOL			1
45	6684125	COUPLER			1
46	7202325	TUBELINE, HYD VALVE CONTROL			1
47	6665569	RING, BACK-UP			1
48	7134522	PLUG	W/Ref. 22, 35 & 55		1
49	7272731	VALVE, SOLENOID	W/Ref. 39		1
50	25K20016	O RING 10			1
51	7102652	SCREW			2
52	6592109	ADAPTER			2
53	7219324	VALVE, RELIEF	W/ O-rings - pressure to be set in field - Was 6686360 [A]		1
54		BODY	NLA		1
55	58K016	O-RING 10			1
56	7008771	KIT, SEAL			2
57	7211393	RETAINER, SEAL			2
58	7214512	FITTING, HYD TEE			1
59	7272732	ASSY, COIL SOLENOID	W/Ref. 61 - E series - silver case - 208 mm (8.2") lead - metri pack connector		1
59	7301672	COIL SOLENOID	W/Ref. 61 - E series - silver case - integrated Deutsch connector		1
60	7304852	VALVE, CARTRIDGE	Ref. 39, 49, 59 (7272732 coil) & 61		1
60	7314079	VALVE CARTRIDGE	Ref. 39, 49, 59 (7301672 coil) & 61		1
61	7020647	NUT	Was 6668820 [B,D]		1
62	7025564	VALVE, RELIEF	Contact your Local Dealer for Bobcat Technical Information BTI423 - W/Ref. 35 & 67 - Was 7024940 [A]		1
63	6670634	SEAL KIT	For Ref. 62 - Was 7024825 [A]		1
64	7218923	KIT, SEAL COMPLETE			1
64	7218924	KIT, SEAL	Ref. 17, 18, 23 & 30		1
64	7123965	KIT, SEAL	external fitting - Ref. 15, 18, 21, 22 & 35		1

Page 1 of 1 OSS# 6300322913 - All rights reserved by Bobcat Company - 08/04/2017 - 06:30:16 - Produced by Ken Cook Co. with mediaoff

MANUAL LIFT RELEASE VALVE

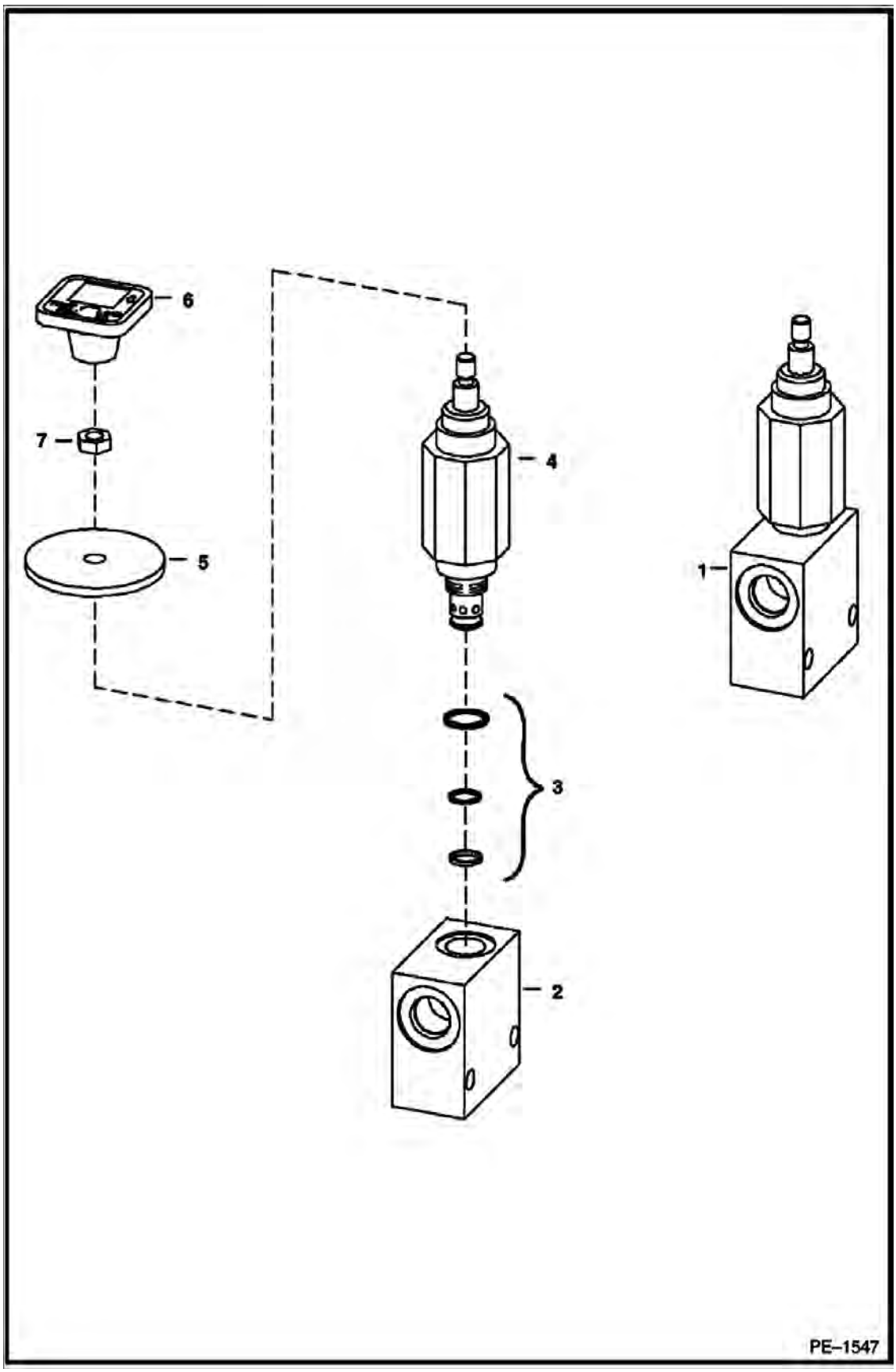

Page 191 - OSS# 6300322913 - All rights reserved by Bobcat Company - 08/04/2017 - 06:30:16 - Produced by Ken Cook Co. with mediaioff

MANUAL LIFT RELEASE VALVE (Cont'd)

Ref No	Part Number	Description	Remarks	Serial Number	Qty
1	7230495	VALVE, LIFT MANUAL	Ref. 2-4 - Was 6667844 [A]		1
2		BLOCK	NSS		1
3	6669087	SEAL KIT			1
4		VALVE	NSS - Order Ref. 1		1
5	6707101	SEAL	neoprene		1
6	6737524	KNOB	red square		1
7	7D4	NUT			1

Page 1224 OSS# 6300322913 - All rights reserved by Bobcat Company - 08/04/2017 - 06:30:16 - Produced by Ken Cook Co. with mediaioff

HIGH FLOW HYDRAULICS

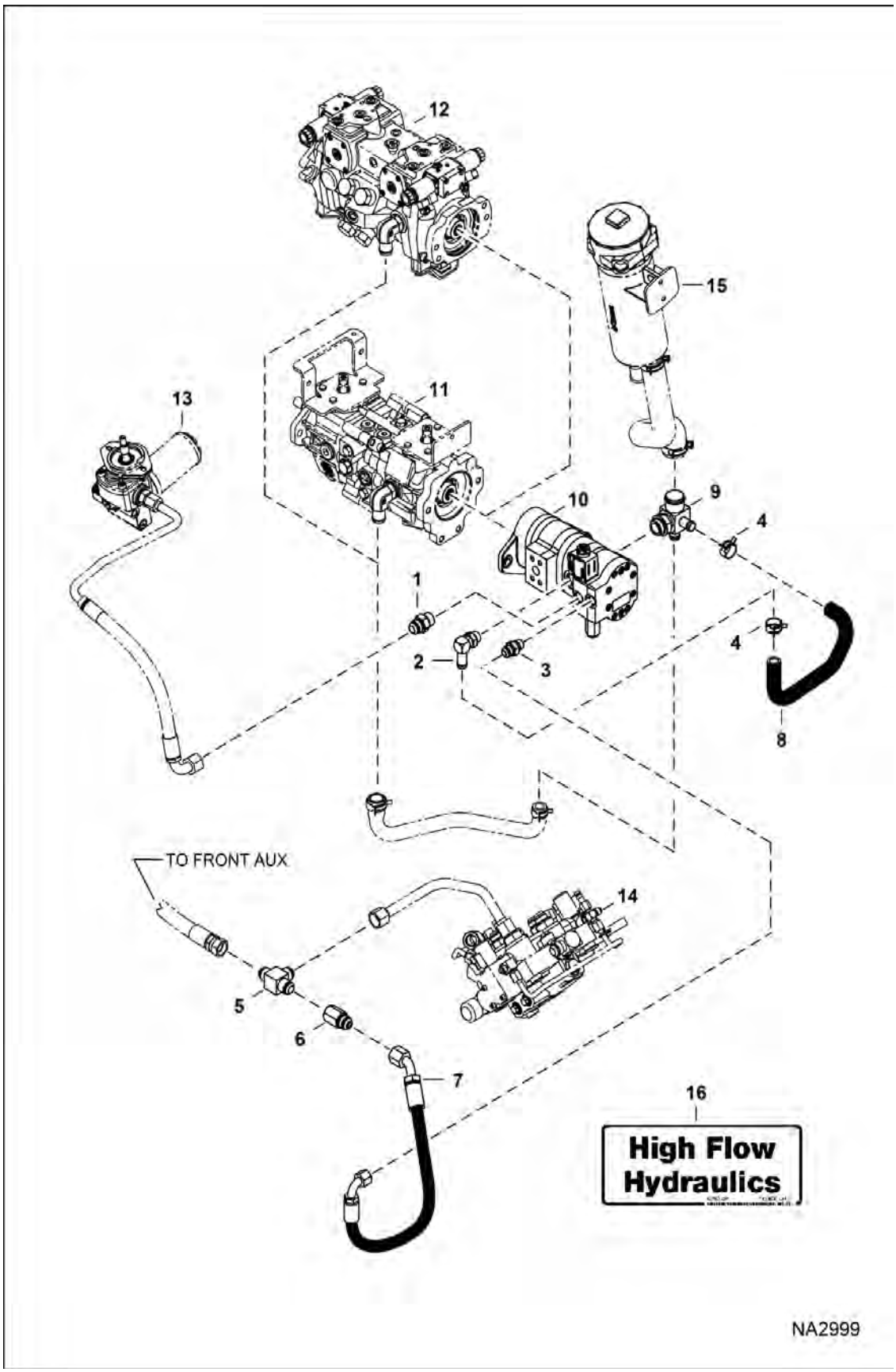

Page 193 - OSS# 6300322913 - All rights reserved by Bobcat Company - 08/04/2017 - 06:30:16 - Produced by Ken Cook Co. with mediaioff

HIGH FLOW HYDRAULICS (Cont'd)

Ref No	Part Number	Description	Remarks	Serial Number	Qty
1	15KB1012	FITTING, HYD CONNECTOR			1
1	79K12	O RING 10			x
2	6717885	ELBOW			1
2	79K10	O RING 10			x
3	15KB1008	FITTING, HYD CONNECTOR			1
3	79K8	O RING 10			x
4	5HM27	CLAMP			2
5	10K8	TEE			1
6	7010242	VALVE, CHECK	in-line		1
7	7181050	HOSE, HYD			1
8	7155661	HOSE			1
9	7155660	FITTING			1
10		PUMP, GEAR TRIPLE	See Illustration HIGH FLOW HYDRAULICS / NA5151		1
11		PUMP, HYD	See Illustration HYDROSTATIC PUMP/GEAR PUMP / NA1309 - manual controls, AHC & ACS		1
12		PUMP, HYD	See Illustration HYDROSTATIC PUMP/GEAR PUMP / NA1309 - SJC		1
13		MOTOR, HYD FAN COOLING	See Illustration COOLING FAN MOTOR / MS2514		1
14		VALVE, CONTROL	See Illustration HYDRAULIC CONTROL VALVE / NA1216 - manual controls		1
14		VALVE, CONTROL	See Illustration HYDRAULIC CONTROL VALVE / NA1217 - ACS, SJC & AHC		1
15		FILTER, HYDRO ASSY	See Illustration HYDROSTATIC CIRCUITRY / NA2502		1
16	7120693	DECAL	high flow		1

Page 1 of 1 OSS# 6300322913 - All rights reserved by Bobcat Company - 08/04/2017 - 06:30:16 - Produced by Ken Cook Co. with mediaoff

HIGH FLOW HYDRAULICS
(Gear Pump)

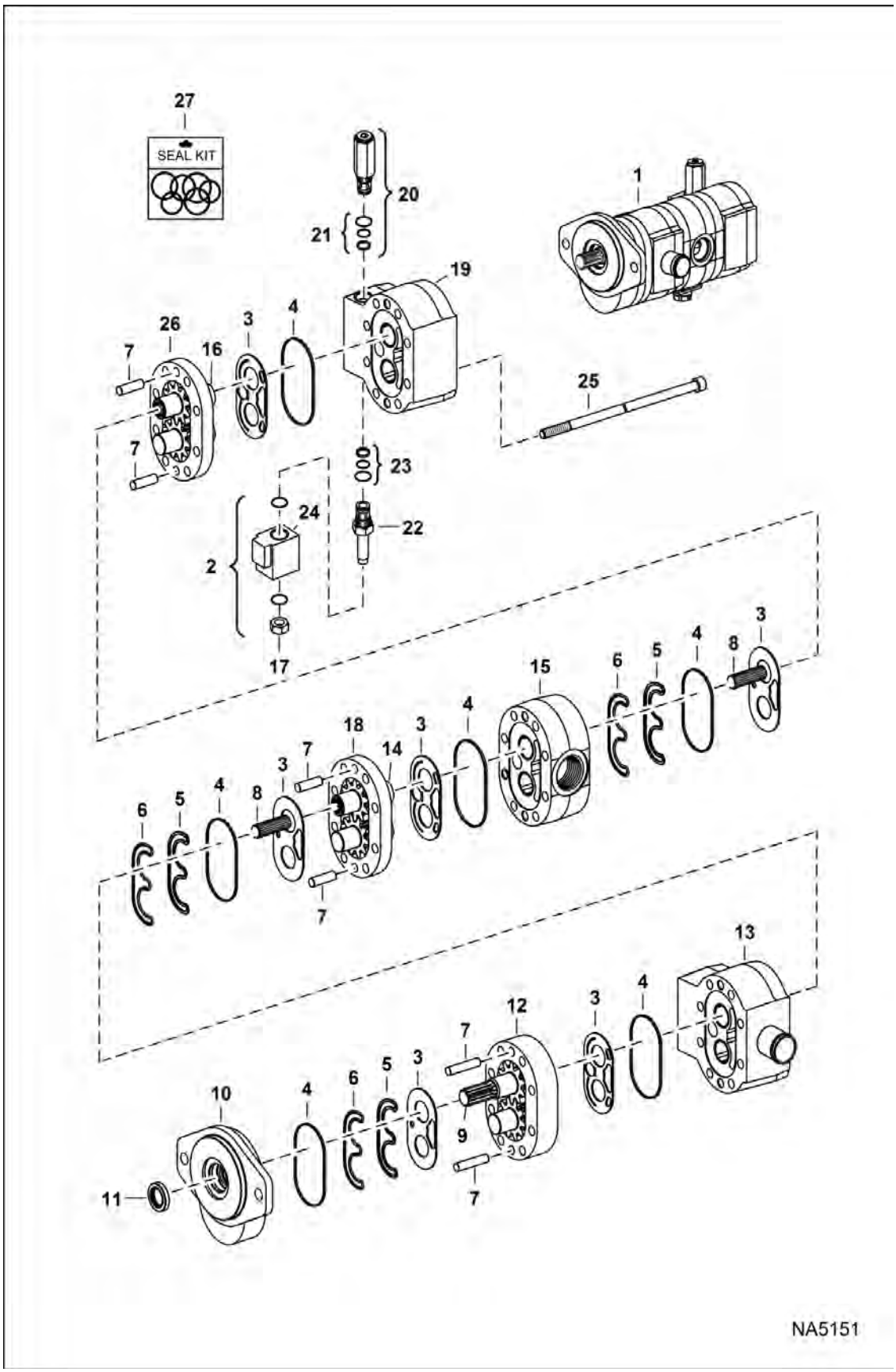

Illustration NA5151

Model T770 MT3
6989477

Page 195 - OSS# 6300322913 - All rights reserved by Bobcat Company - 08/04/2017 - 06:30:16 - Produced by Ken Cook Co. with mediaioff

HIGH FLOW HYDRAULICS (Cont'd)
(Gear Pump)

Ref No	Part Number	Description	Remarks	Serial Number	Qty
1		PUMP, GEAR QUAD	NLA - Model 83005637 - light gray [B]		1
1	7010171	PUMP, GEAR TRIPLE	Model 83012402 - dark gray		1
2	7008832	VALVE, SOLENOID	Ref. 17 & 22-24		1
3		PLATE, WEAR	NSS		6
4		SEAL	NSS		6
5		SEAL, LOAD	NSS		3
6		SEAL, PRE-LOAD	NSS		3
7		PIN	NSS		6
8		CONNECTOR, SPLINE	NSS		2
9		GEAR SET	NSS - drive		1
10		HOUSING, FRONT	NSS		1
11		SEAL, SHAFT	NSS		1
12		HOUSING, GEAR	NSS - #1		1
13		HOUSING, CENTER	NSS		1
14		GEAR SET	NSS - #1		1
15		HOUSING, CENTER	NSS		1
16		GEAR SET	NSS - #2		1
17	6690104	NUT			1
18		HOUSING, GEAR	NSS - #2		1
19		HOUSING, REAR	NSS		1
20	7008831	VALVE, RELIEF	Was 7008831 [A]		1
21	6683206	SEAL KIT			1
22	7008830	VALVE, SOLENOID			2
23	7010749	KIT, SEAL			1
24	7008829	COIL			1
25		BOLT	NSS		8
25	7305587	KIT, BOLT PUMP GEAR	includes (8) bolts		1
26		HOUSING, GEAR	NSS - #3		1
27	6688321	SEAL KIT	Ref. 3-6 & 11		1

Page 188 OSS# 6300322913 - All rights reserved by Bobcat Company - 08/04/2017 - 06:30:16 - Produced by Ken Cook Co. with mediaoff

HYDROSTATIC CIRCUITRY

(Tank & Filter)

(S/N A3P811001 - A3P814204, A3P911001 - A3P912726)

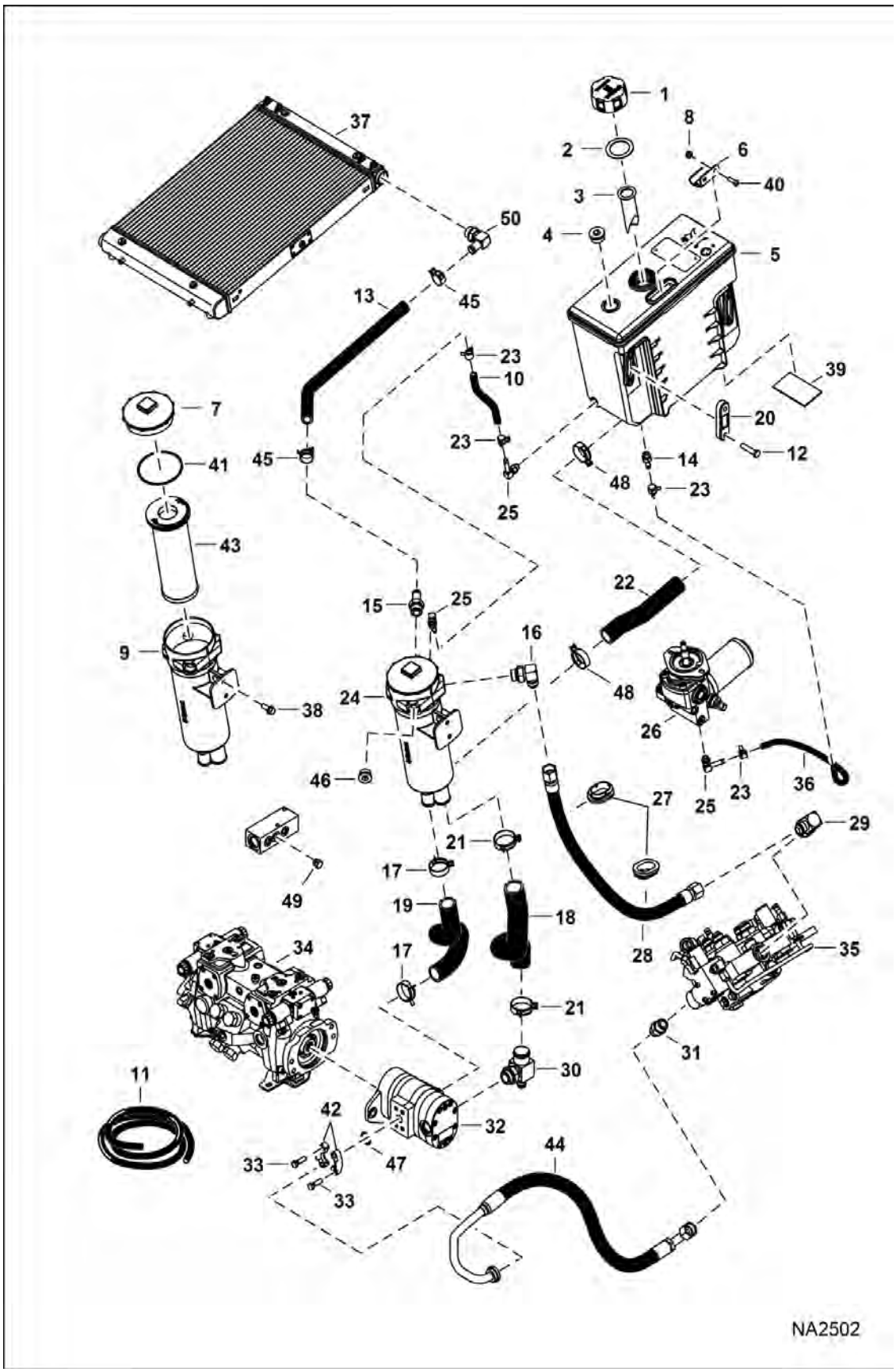

Page 197 - OSS# 6300322913 - All rights reserved by Bobcat Company - 08/04/2017 - 06:30:16 - Produced by Ken Cook Co. with mediaioff

HYDROSTATIC CIRCUITRY (Cont'd)

(Tank & Filter)

(S/N A3P811001 - A3P814204, A3P911001 - A3P912726)

Ref No	Part Number	Description	Remarks	Serial Number	Qty
1	6727475	CAP, OIL HYD			1
2	6700631	GASKET CAP TANK HYDR			1
3	7003487	SCREEN			1
4	47K10	PLUG			1
4	78K10	O RING			1
5	7177110	TANK, OIL HYD			1
6	7165806	BRACKET			1
7	7012315	CAP, FILTER	W/Ref. 41		1
8	57D5	NUT			2
9		TANK, HYD FILTERED	NLA - Order Ref. 24		1
10		HOSE	NLA - 185 mm (7.3") long - Order Ref. 11		1
11	6586251	HOSE, BULK	sold per foot		x
12		BOLT	NSS - Order Ref. 20		2
13	7188701	HOSE, HYD FORMED			1
14	7158632	CONNECTOR			2
14	79K4	O RING 10			1
15	6812865	FITTING			1
15	79K12	O RING 10			1
16	17KB1212	FITTING, HYD ELBOW			1
16	79K12	O RING 10			1
17	5HM42	HOSECLAMP			2
18	7188780	HOSE, HYD FORMED			1
19	7188781	HOSE, HYD FORMED			1
20	7001421	GUAGE, SIGHT			1
21	5HM47	CLAMP			4
22	7189371	HOSE, HYD FORMED			1
23	5HM16	CLAMP			4
24	7012312	FILTER, OIL HYD TANK ASSY	Ref. 7, 9, 41 & 43		1
25	6727313	FITTING, ELBOW			3
25	79K6	O RING 10			1
26		MOTOR, FAN DRIVE	See Illustration COOLING FAN MOTOR / MS2514		1
26		MOTOR, FAN DRIVE			1
27	7002740	GROMMET			2
28	7177326	HOSE, HYD			1
29	7101371	ELBOW			1
29	58K022	O-RING 10			1
29	79K16	O RING 10			1
30	7158921	FITTING			1
30	79K16	O RING 10			1

Page 1 of 1 OSS# 6300322913 - All rights reserved by Bobcat Company - 08/04/2017 - 06:30:16 - Produced by Ken Cook Co. with mediaioff

HYDROSTATIC CIRCUITRY (Cont'd)

(Tank & Filter)

(S/N A3P811001 - A3P814204, A3P911001 - A3P912726)

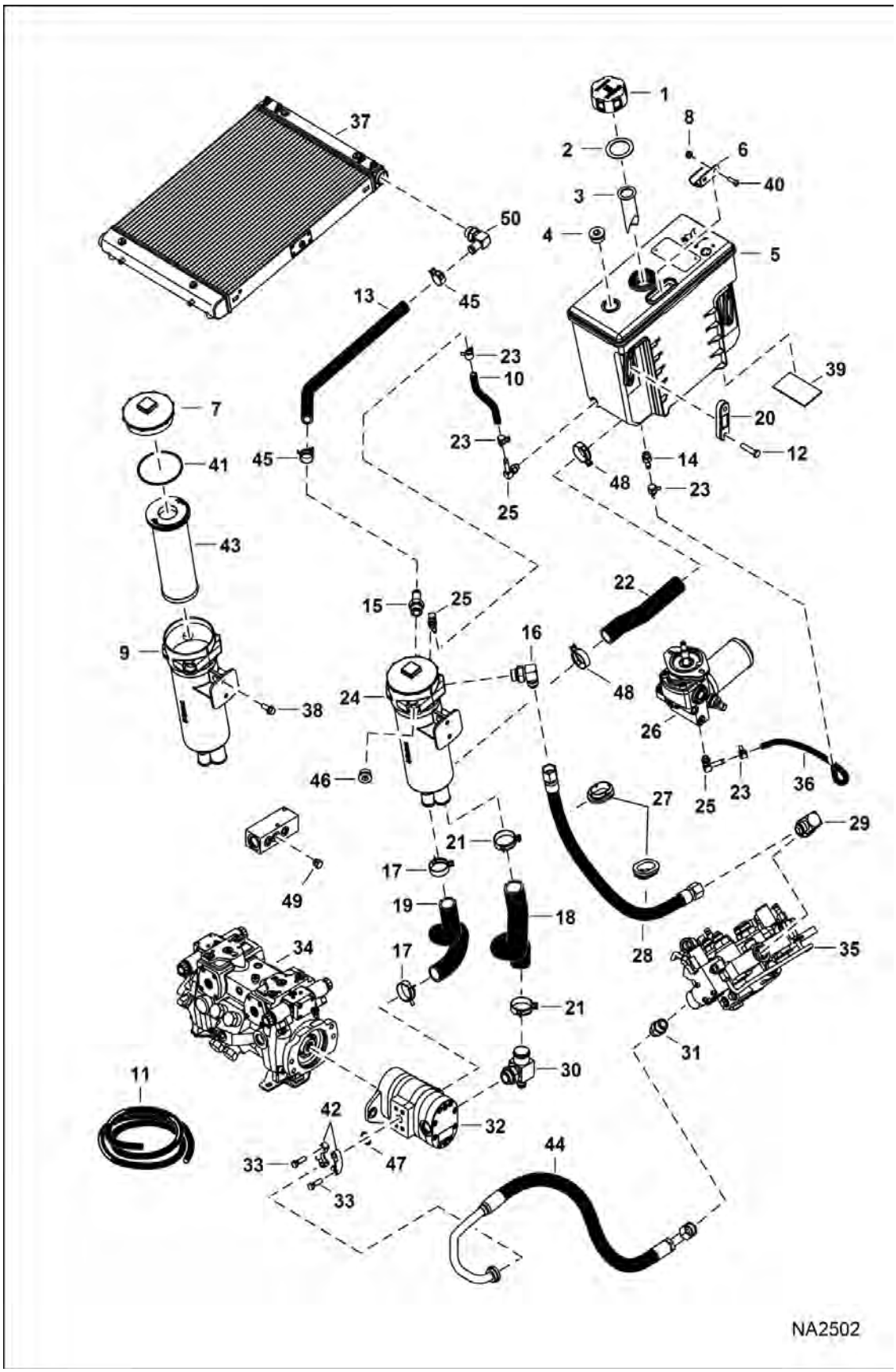

Page 199 - OSS# 6300322913 - All rights reserved by Bobcat Company - 08/04/2017 - 06:30:16 - Produced by Ken Cook Co. with mediaioff

HYDROSTATIC CIRCUITRY (Cont'd)

(Tank & Filter)

(S/N A3P811001 - A3P814204, A3P911001 - A3P912726)

Ref No	Part Number	Description	Remarks	Serial Number	Qty
31	15KB1212	FITTING, HYD CONNECTOR			2
31	79K12	O RING 10			1
32		PUMP, GEAR	See Illustration GEAR PUMP / MS1454 , See Illustration HIGH FLOW HYDRAULICS / NA5151		1
33	17C620	BOLT			4
34		PUMP, HYD	See Illustration HYDROSTATIC PUMP/GEAR PUMP / NA1309		1
35		VALVE, CONTROL	See Illustration HYDRAULIC CONTROL VALVE / NA1216 - manual controls		1
35		VALVE, CONTROL	See Illustration HYDRAULIC CONTROL VALVE / NA1217 - SJC, ACS & AHC		1
36		HOSE	NLA - 605 mm (23.8") long - Order Ref. 11		1
37		EXCHANGER, OIL COOLER	See Illustration RADIATOR/COOLER ASSEMBLY / NA2506 W/Ref. 50		1
38	35C616	BOLT 5			2
39	7181309	PAD, WEAR			2
40	53C516	BOLT			2
41	7015308	SEAL			1
42	19J12	CLAMP			2
43	7012314	FILTER, OIL HYD ASSY	Also Order Ref. 41		1
44	7241991	HOSE, HYD	Was 7159044 [A]		1
45	5HM27	CLAMP			2
46	47K8	PLUG			1
46	78K8	O RING			1
47	55K214	O-RING			1
48	5HM42	HOSECLAMP			2
49	24K5	PLUG			1
49	79K6	O RING 10			1
49	6727313	FITTING, ELBOW	See Illustration POWER BOB-TACH / NA2819		1
50		FITTING, ELBOW	NLA - Order Ref. 37 - Was 7022635 [A]		1
50	79K12	O RING 10			1

Page 2006 OSS# 6300322913 - All rights reserved by Bobcat Company - 08/04/2017 - 06:30:16 - Produced by Ken Cook Co. with mediaoff

HYDROSTATIC CIRCUITRY

(Tank & Filter)

(S/N A3P814205 & Above, A3P912727 & Above)

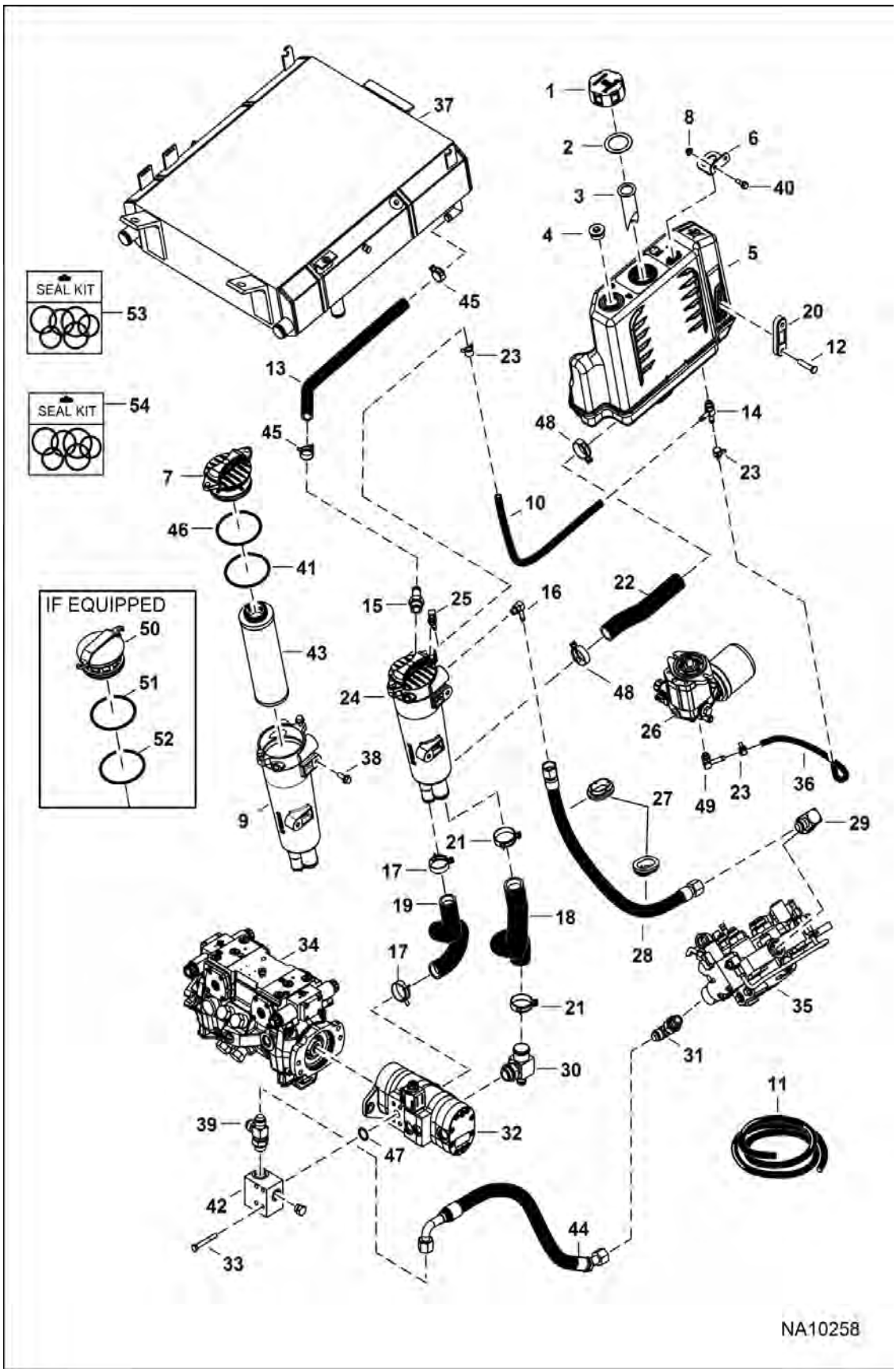

Page 201 - OSS# 6300322913 - All rights reserved by Bobcat Company - 08/04/2017 - 06:30:16 - Produced by Ken Cook Co. with mediaioff

Illustration NA10258

HYDROSTATIC CIRCUITRY (Cont'd)

(Tank & Filter)

(S/N A3P814205 & Above, A3P912727 & Above)

Ref No	Part Number	Description	Remarks	Serial Number	Qty
1	6727475	CAP, OIL HYD			1
2	6700631	GASKET CAP TANK HYDR			1
3	7003487	SCREEN			1
4	47K10	PLUG			1
4	78K10	O RING			1
5	7248868	TANK, HYD ASSY			1
6	7260909	BRACKET			1
7	7248873	CAP	W/Ref. 41 & 46		1
8	57D5	NUT			2
9		TANK, HYD FILTERED	NLA - Order Ref. 24		1
10		HOSE	NLA - 559 mm (22") long - Order Ref. 11		1
11	6586251	HOSE, BULK	sold per foot		x
12		BOLT	NSS - Order Ref. 20		2
13	7248942	HOSE, HYD FORMED			1
14	7246193	FITTING, HYD TEE			1
14	79K4	O RING 10			1
15	6812865	FITTING			1
15	79K12	O RING 10			1
16	17KB1212	FITTING, HYD ELBOW			1
16	79K12	O RING 10			1
17	5HM42	HOSECLAMP			2
18	7245954	HOSE, HYD FORMED			1
19	7243733	HOSE, HYD FORMED			1
20	7001421	GUAGE, SIGHT			1
21	5HM47	CLAMP			4
22	7189371	HOSE, HYD FORMED			1
23	5HM16	CLAMP			4
24	7248871	FILTER, OIL HYD ASSY	Ref. 7, 9, 41, 43 & 46		1
25	7230514	FITTING			3
25	79K6	O RING 10			1
26		MOTOR, FAN	See Illustration COOLING FAN MOTOR / MS2514 , See Illustration COOLING FAN MOTOR / NA10570		1
27	7002740	GROMMET			2
28	7171394	HOSE			1
29	7101371	ELBOW			1
29	58K022	O-RING 10			1
29	79K16	O RING 10			1
30	7158921	FITTING			1
30	79K16	O RING 10			1
31	7101797	ELBOW			2
31	79K12	O RING 10			1

Page 2020 OSS# 6300322913 - All rights reserved by Bobcat Company - 08/04/2017 - 06:30:16 - Produced by Ken Cook Co. with mediaoff

HYDROSTATIC CIRCUITRY (Cont'd)

(Tank & Filter)

(S/N A3P814205 & Above, A3P912727 & Above)

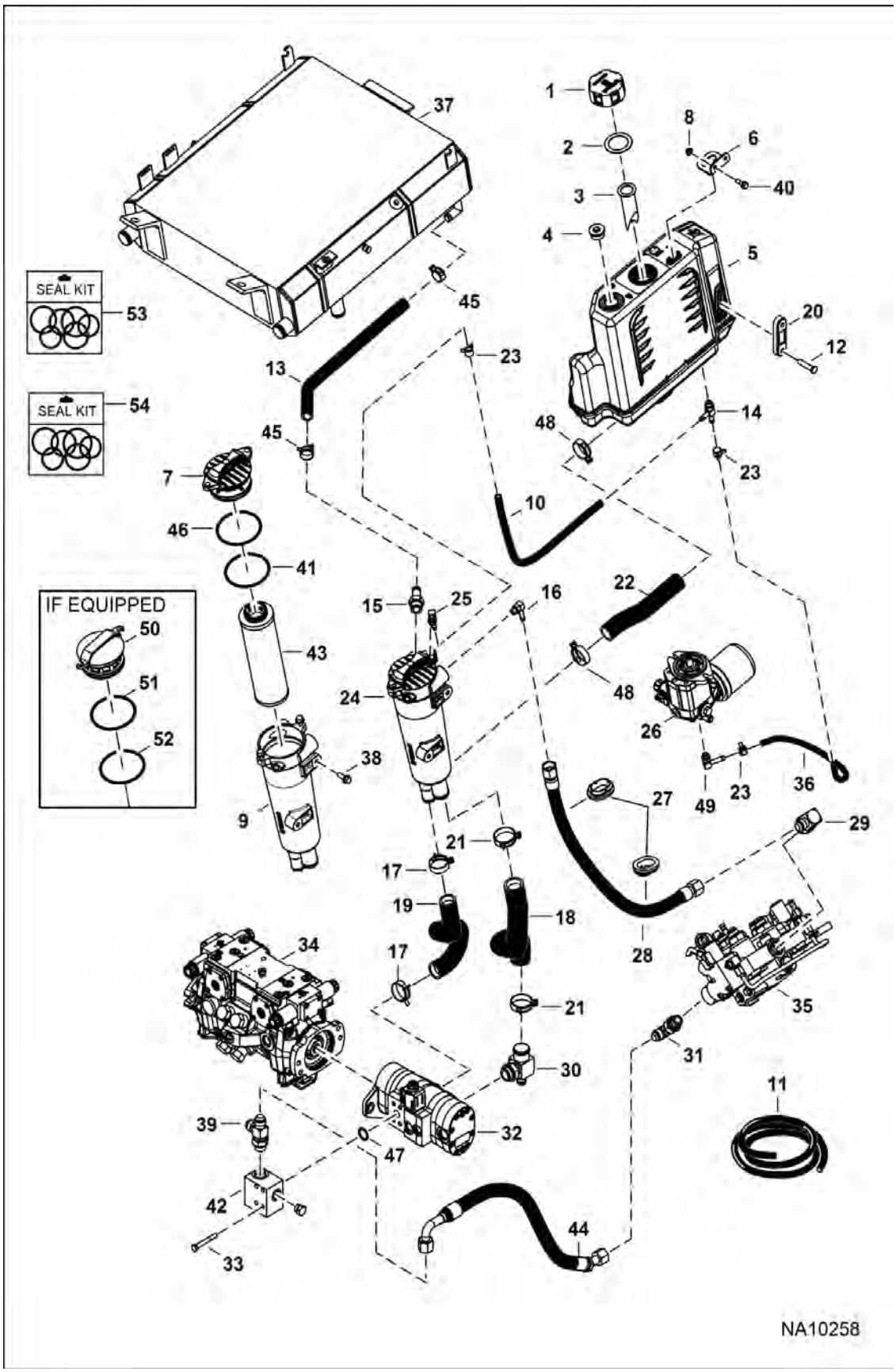

Page 203 - OSS# 6300322913 - All rights reserved by Bobcat Company - 08/04/2017 - 06:30:16 - Produced by Ken Cook Co. with mediaioff

HYDROSTATIC CIRCUITRY (Cont'd)

(Tank & Filter)

(S/N A3P814205 & Above, A3P912727 & Above)

Ref No	Part Number	Description	Remarks	Serial Number	Qty
32		PUMP, GEAR			1
33	17C644	BOLT			4
34		PUMP, TANDEM			1
35		VALVE, CONTROL	See Illustration HYDRAULIC CONTROL VALVE / NA6558		1
36		HOSE	NLA - 610 mm (24") long - Order Ref. 11		1
37		EXCHANGER, OIL WATER AIR	See Illustration HYDROSTATIC CIRCUITRY / NA10259		1
38	35C616	BOLT 5			2
39	21KB1212	FITTING, HYD TEE			1
40	35C512	BOLT			2
41		O-RING	NSS - blue - Order Ref. 53 - Was 7282661 [A]		1
42	7226207	MANIFOLD, OUTLET PUMP			2
43	7248874	FILTER, OIL HYD	Also Order Ref. 50		1
44	7180964	HOSE, HYD			1
45	5HM27	CLAMP			2
46		O-RING	NSS - black - Order Ref. 53 - Was 7282660 [A]		1
47	55K214	O-RING			1
48	5HM42	HOSECLAMP			2
49	6727313	FITTING, ELBOW			1
50	7024038	FILTER, OIL HYD CANISTER COVER	if equipped - W/Ref. 51 & 52		1
51		O-RING	NSS - Order Ref. 54 - O-Ring if equipped		1
52		O-RING	NSS - if equipped - Order Ref. 54 - Was 7025124 [A]		1
53	7309469	KIT SEAL	W/Ref. 41 & 46		1
54	7309470	KIT SEAL	W/Ref. 51 & 52		1

Page 2 OSS# 6300322913 - All rights reserved by Bobcat Company - 08/04/2017 - 06:30:16 - Produced by Ken Cook Co. with mediaoff

HYDROSTATIC CIRCUITRY

(Cooler)

(S/N A3P811001 - A3P814204, A3P911001 - A3P912726)

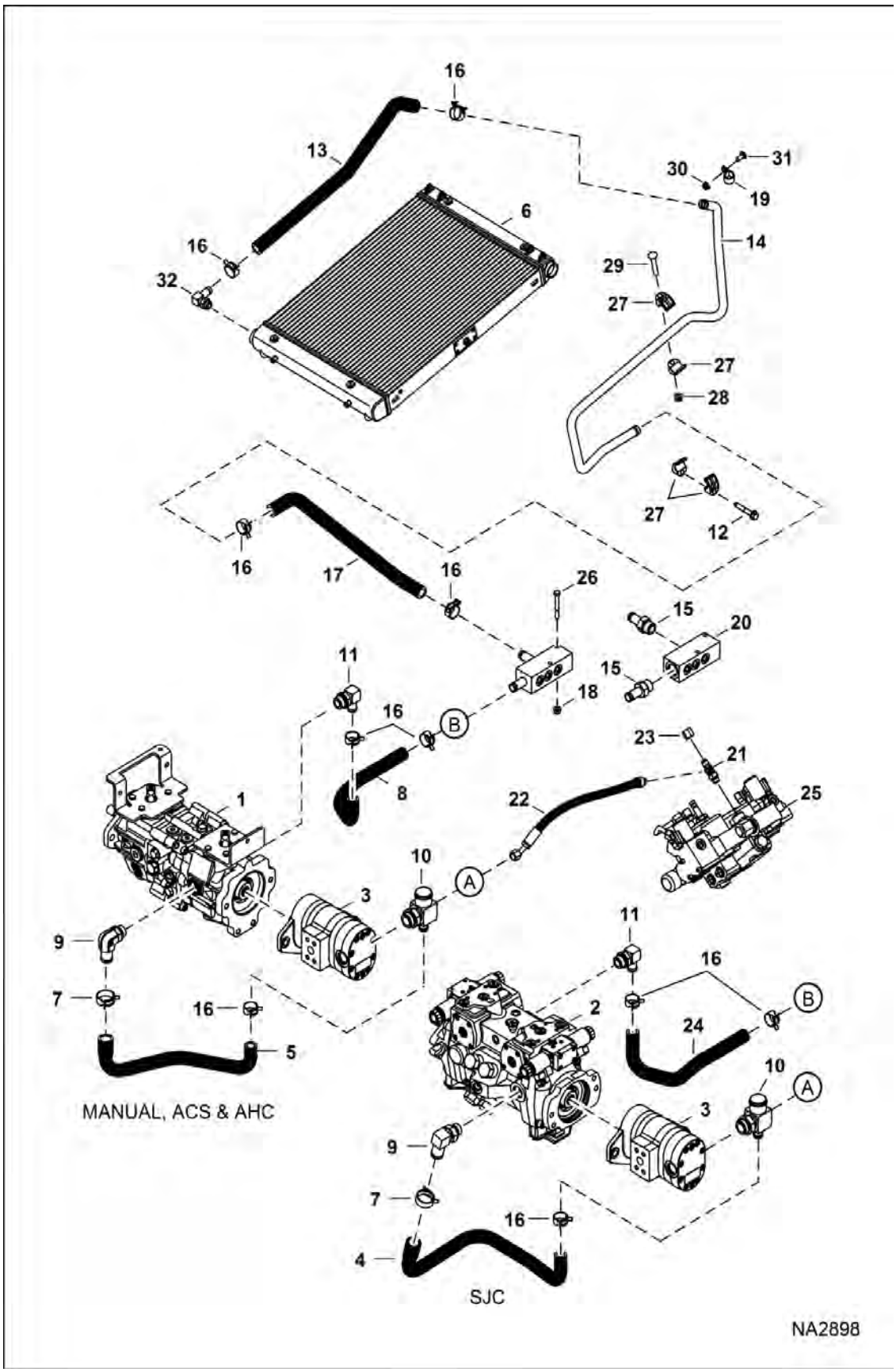

Page 205 - OSS# 6300322913 - All rights reserved by Bobcat Company - 08/04/2017 - 06:30:16 - Produced by Ken Cook Co. with mediaioff

HYDROSTATIC CIRCUITRY (Cont'd)

(Cooler)

(S/N A3P811001 - A3P814204, A3P911001 - A3P912726)

Ref No	Part Number	Description	Remarks	Serial Number	Qty
1		PUMP, HYD	See Illustration HYDROSTATIC PUMP/GEAR PUMP / NA1309 - manual controls, AHC & ACS		1
2		PUMP, HYD	See Illustration HYDROSTATIC PUMP/GEAR PUMP / NA1309 - SJC		1
3		PUMP, GEAR	See Illustration GEAR PUMP / MS1454 - standard flow hydraulics		1
3		PUMP, GEAR	See Illustration HIGH FLOW HYDRAULICS / NA5151 - high flow hydraulics		1
4	7268914	HOSE, HYD FORMED	Was 7178518 [A]		1
5	7268914	HOSE, HYD FORMED	Was 7165205 [A]		1
6		EXCHANGER, OIL COOLER	See Illustration RADIATOR/COOLER ASSEMBLY / NA2506 W/Ref. 32		1
7	5HM35	HOSECLAMP			1
8	7178574	HOSE, HYD			1
9	7015518	VALVE, CHECK			1
10	7158921	FITTING	See Illustration HYDROSTATIC CIRCUITRY / NA2502		1
10	79K16	O RING 10			x
11	7113631	ELBOW			1
11	79K12	O RING 10			x
12	84G3736	BOLT			1
13	7212684	HOSE, HYD FORMED	Was 7186873 [A]		1
14	7190648	TUBELINE, HYD			1
15	6812865	FITTING			1
15	79K12	O RING 10			x
16	5HM27	CLAMP			10
17	7186874	HOSE, HYD FORMED			1
18	83D5	NUT 5			2
19	30H65	CLIP			2
20	7201981	MANIFOLD, DRAIN CASE			1
21	21KB0606	FITTING, HYD TEE			1
21	79K6	O RING 10			x
22	7235459	HOSE, HYD	Was 7159735 [A]		1
23	36K5	CAP			1
24	7178573	HOSE, HYD			1
25		VALVE, CONTROL	See Illustration HYDRAULIC CONTROL VALVE / NA1216 - manual controls		1
25		VALVE, CONTROL	See Illustration HYDRAULIC CONTROL VALVE / NA1217 - ACS, AHC & SJC		1
26	17C540	BOLT			2
27	7100462	CLAMP			4
28	55D6	NUT			1
29	7199946	BOLT			1
30	55D5	NUT			1
31	10C512	BOLT			1
32		FITTING, ELBOW	NLA - Order Ref. 6 - Was 7022635 [A]		1

Page 206 OSS# 6300322913 - All rights reserved by Bobcat Company - 08/04/2017 - 06:30:16 - Produced by Ken Cook Co. with mediaioff

HYDROSTATIC CIRCUITRY
(Cooler)
(S/N A3P814205 & Above, A3P912727 & Above)

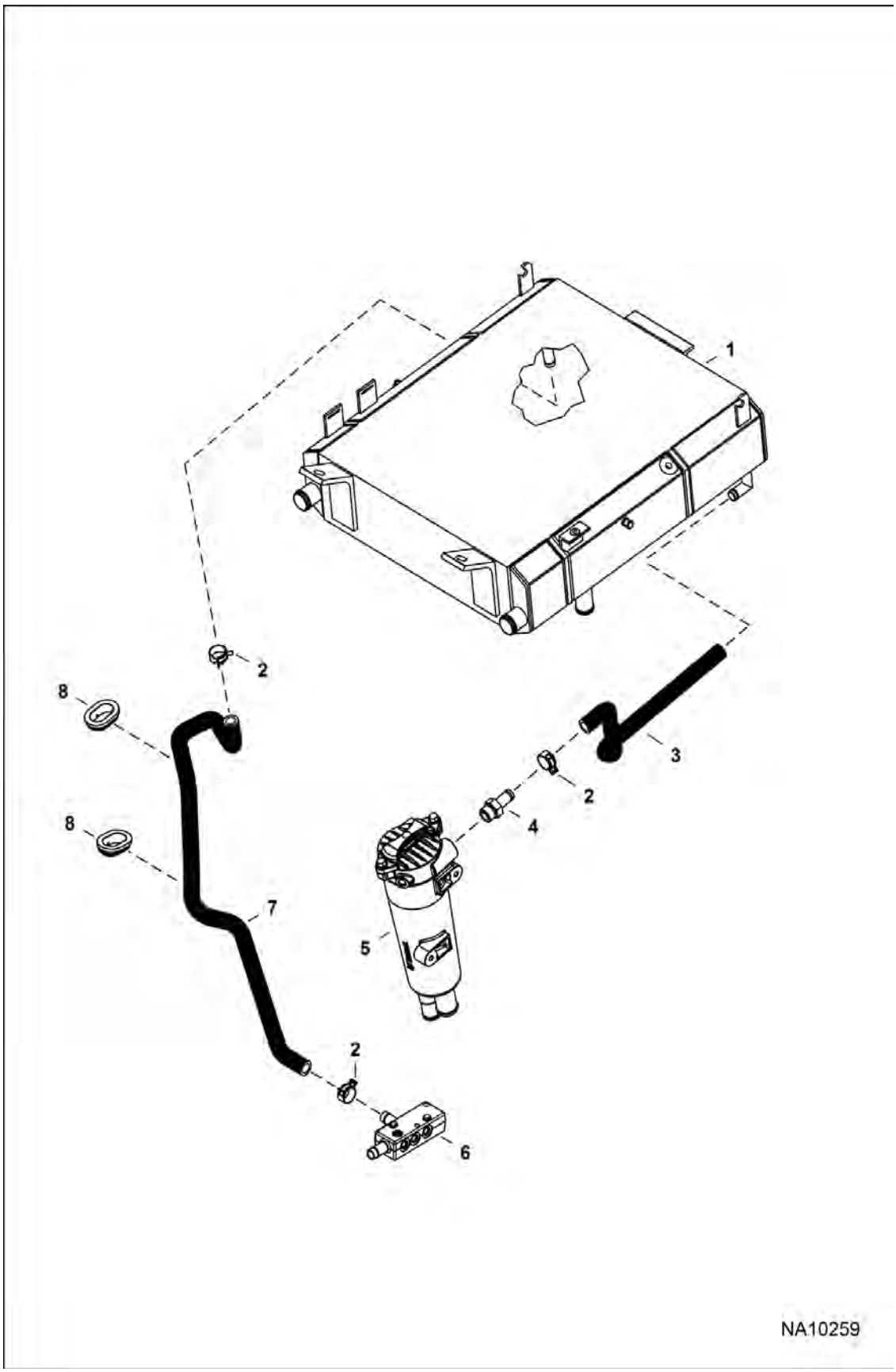

Page 207 - OSS# 6300322913 - All rights reserved by Bobcat Company - 08/04/2017 - 06:30:16 - Produced by Ken Cook Co. with mediaioff

HYDROSTATIC CIRCUITRY (Cont'd)

(Cooler)

(S/N A3P814205 & Above, A3P912727 & Above)

Ref No	Part Number	Description	Remarks	Serial Number	Qty
1	7265453	EXCHANGER, OIL WATER	See Illustration ENGINE & ATTACHING PARTS / NA10675		1
2	5HM27	CLAMP			4
3	7248942	HOSE, HYD FORMED			1
4	17KB1212	FITTING, HYD ELBOW			1
4	79K12	O RING 10			x
5	7248871	FILTER, OIL HYD ASSY	See Illustration HYDROSTATIC CIRCUITRY / NA10258		1
6		MAINFOLD, DRAIN CASE			1
7	7228545	HOSE, HYD FORMED			1
8	7002740	GROMMET			2

Page 2 of 3 OSS# 6300322913 - All rights reserved by Bobcat Company - 08/04/2017 - 06:30:16 - Produced by Ken Cook Co. with mediaioff

HYDROSTATIC CIRCUITRY

(Hydrostatic Pump) (Case Drain Manifold)
(S/N A3P816057 & Above, A3P913055 & Above)

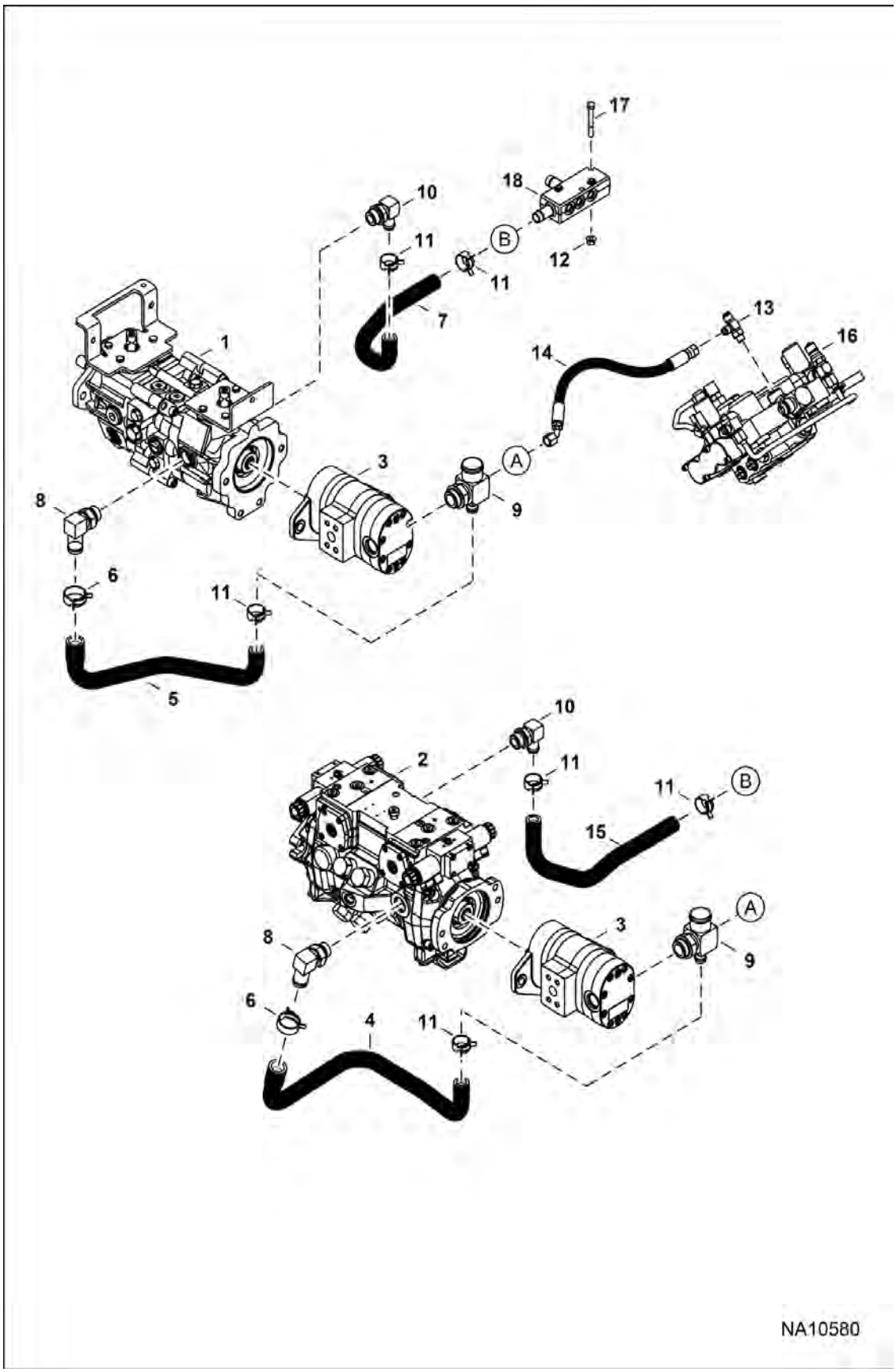

Illustration NA10580

Page 209 - OSS# 6300322913 - All rights reserved by Bobcat Company - 08/04/2017 - 06:30:16 - Produced by Ken Cook Co. with mediaioff

HYDROSTATIC CIRCUITRY (Cont'd)

(Hydrostatic Pump) (Case Drain Manifold)
(S/N A3P816057 & Above, A3P913055 & Above)

Ref No	Part Number	Description	Remarks	Serial Number	Qty
1		PUMP, HYD	- manual controls, AHC, ACS		1
2		PUMP, HYD	- SJC		1
3		PUMP, GEAR	See Illustration GEAR PUMP / MS1454 - standard flow hydraulics		1
4	7268914	HOSE, HYD FORMED	Was 7178518 [A]		1
5	7268914	HOSE, HYD FORMED	Was 7165205 [A]		1
6	5HM35	HOSECLAMP			1
7	7178574	HOSE, HYD			1
8	7015518	VALVE, CHECK			1
8	79K12	O RING 10			1
9	7158921	FITTING			1
9	79K12	O RING 10			x
10	7113631	ELBOW			1
10	79K12	O RING 10			x
11	5HM27	CLAMP			7
12	83D5	NUT 5			2
13	21KB0606	FITTING, HYD TEE			1
13	79K6	O RING 10			x
14	7235459	HOSE, HYD	Was 7266974 [D]		1
15	7178573	HOSE, HYD			1
16		VALVE, CONTROL	See Illustration HYDRAULIC CONTROL VALVE / NA6557 - manual controls		1
16		VALVE, CONTROL	See Illustration HYDRAULIC CONTROL VALVE / NA6558 - ACS, AHC & SJC		1
17	17C536	BOLT			2
18	7201981	MANIFOLD, DRAIN CASE			1

Page 202 OSS# 6300322913 - All rights reserved by Bobcat Company - 08/04/2017 - 06:30:16 - Produced by Ken Cook Co. with mediaioff

HYDROSTATIC CIRCUITRY

(Cooling Fan)

(S/N A3P811001 - A3P814127, A3P911001 - A3P912598)

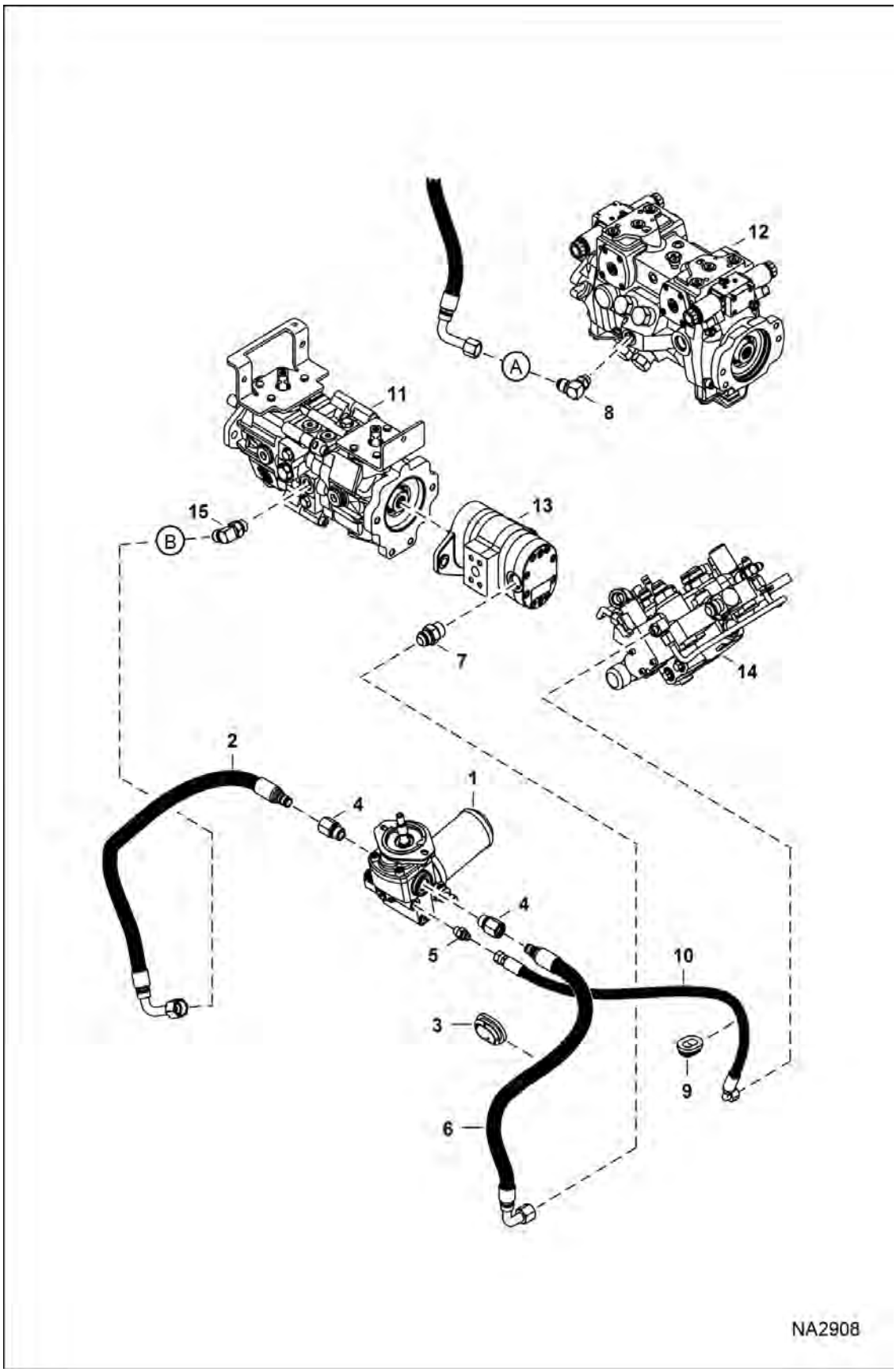

Page 211 - OSS# 6300322913 - All rights reserved by Bobcat Company - 08/04/2017 - 06:30:16 - Produced by Ken Cook Co. with media1off

Illustration NA2908

HYDROSTATIC CIRCUITRY (Cont'd)

(Cooling Fan)

(S/N A3P811001 - A3P814127, A3P911001 - A3P912598)

Ref No	Part Number	Description	Remarks	Serial Number	Qty
1		MOTOR, HYD COOLING FAN	See Illustration COOLING FAN MOTOR / MS2514		1
2	7200551	HOSE, HYD ASSY STC	Also Order Ref. 4		1
3	7002740	GROMMET			1
4	15HB1010	ADAPTER, COUPLER	quick lock - Also Order Ref. 2 or 6		2
4	78K10	O RING			x
5	15KB0606	FITTING, HYD CONNECTOR			1
5	79K6	O RING 10			x
6	7200552	HOSE, HYD ASSY STC	Also Order Ref. 4		1
7	15KB1012	FITTING, HYD CONNECTOR			1
7	79K12	O RING 10			x
8	17KB1008	FITTING, HYD ELBOW	SJC		1
8	79K8	O RING 10			x
9	7002739	GROMMET			1
10	7235469	HOSE, HYD	Was 7183112 [A]		1
11		PUMP, HYD	See Illustration HYDROSTATIC PUMP/GEAR PUMP / NA1309 - manual controls, AHC & ACS		1
12		PUMP, HYD	See Illustration HYDROSTATIC PUMP/GEAR PUMP / NA1309 - SJC		1
13		PUMP, GEAR	See Illustration GEAR PUMP / MS1454 - standard flow hydraulics		1
13		PUMP, GEAR	See Illustration HIGH FLOW HYDRAULICS / NA5151 - high flow hydraulics		1
14		VALVE, CONTROL	See Illustration HYDRAULIC CONTROL VALVE / NA1216 - manual controls		1
14		VALVE, CONTROL	See Illustration HYDRAULIC CONTROL VALVE / NA1217 - AHC, ACS & SJC		1
15	17KB1010	FITTING, HYD ELBOW	manual controls, AHC & ACS		1
15	79K10	O RING 10			1
16	6727313	FITTING, ELBOW	See Illustration HYDROSTATIC CIRCUITRY / NA2502		1

Page 204 OSS# 6300322913 - All rights reserved by Bobcat Company - 08/04/2017 - 06:30:16 - Produced by Ken Cook Co. with mediaoff

HYDROSTATIC CIRCUITRY

(Cooling Fan)

(S/N A3P814128 & Above, A3P912599 & Above)

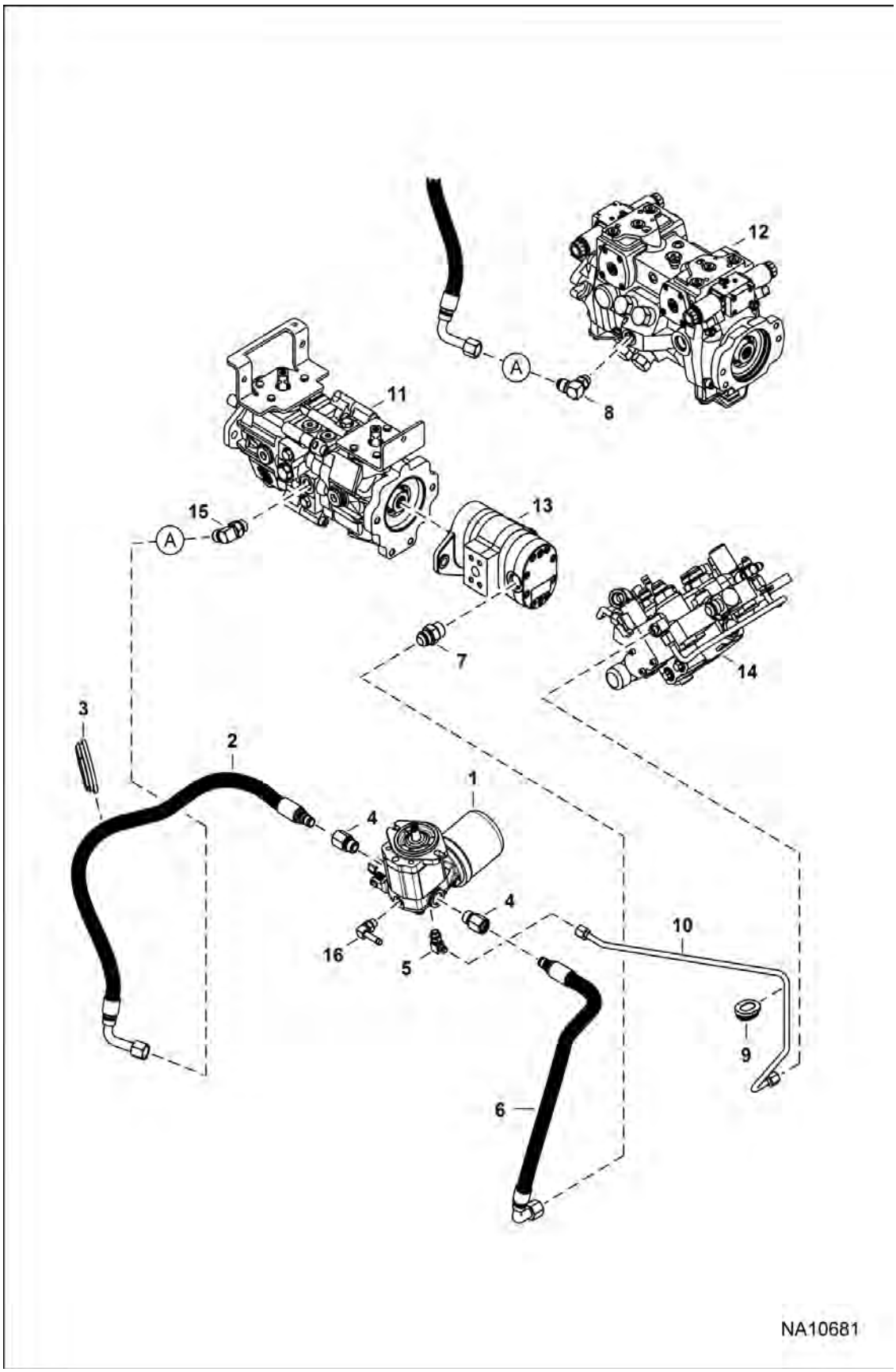

Page 213 - OSS# 6300322913 - All rights reserved by Bobcat Company - 08/04/2017 - 06:30:16 - Produced by Ken Cook Co. with mediaioff

Illustration NA10681

HYDROSTATIC CIRCUITRY (Cont'd)

(Cooling Fan)

(S/N A3P814128 & Above, A3P912599 & Above)

Ref No	Part Number	Description	Remarks	Serial Number	Qty
1		MOTOR, FAN DRIVE	See Illustration COOLING FAN MOTOR / NA10570 standard fan		1
1		MOTOR	See Illustration COOLING FAN MOTOR / NA12818 reversing fan		1
2	7244998	HOSE, HYD	Also Order Ref. 4 - Was 7247640 [B,D]		1
3	7219416	GROMMET			1
4	15HB1010	ADAPTER, COUPLER	quick lock - Also Order Ref. 2 or 6		2
4	78K10	O RING			x
5	7236735	FITTING, HYD ELBOW			1
5		O RING 10	NSS		x
6	7200552	HOSE, HYD ASSY STC	Also Order Ref. 4		1
7	15KB1012	FITTING, HYD CONNECTOR			1
7	79K12	O RING 10			x
8	17KB1008	FITTING, HYD ELBOW	SJC		1
8	79K8	O RING 10			x
9	7002739	GROMMET			1
10	7256350	TUBELINE	standard fan		1
10	7280471	TUBELINE, HYD	See Illustration REVERSING FAN KIT / NA12743 reversing fan		1
11		PUMP, HYD	See Illustration HYDROSTATIC PUMP/GEAR PUMP / NA1309 - manual controls, AHC & ACS		1
12		PUMP, HYD	See Illustration HYDROSTATIC PUMP/GEAR PUMP / NA1309 - SJC		1
13		PUMP, GEAR	See Illustration HYDROSTATIC PUMP/GEAR PUMP / NA1309 - standard flow hydraulics		1
13		PUMP, GEAR	See Illustration HYDROSTATIC PUMP/GEAR PUMP / NA1309 - high flow hydraulics		1
14		VALVE, CONTROL	See Illustration HYDRAULIC CONTROL VALVE / NA1216 - manual controls		1
14		VALVE, CONTROL	See Illustration HYDRAULIC CONTROL VALVE / NA1217 - AHC, ACS & SJC		1
15	17KB1010	FITTING, HYD ELBOW	manual controls, AHC & ACS		1
15	79K10	O RING 10			1
16	6727313	FITTING, ELBOW	See Illustration HYDROSTATIC CIRCUITRY / NA2502		1

Page 214 OSS# 6300322913 - All rights reserved by Bobcat Company - 08/04/2017 - 06:30:16 - Produced by Ken Cook Co. with mediaioff

HYDROSTATIC CIRCUITRY

(Single Speed Motors) (Rubber Tracks)
(S/N A3P811001 - A3P816063, A3P911001 - A3P913054)

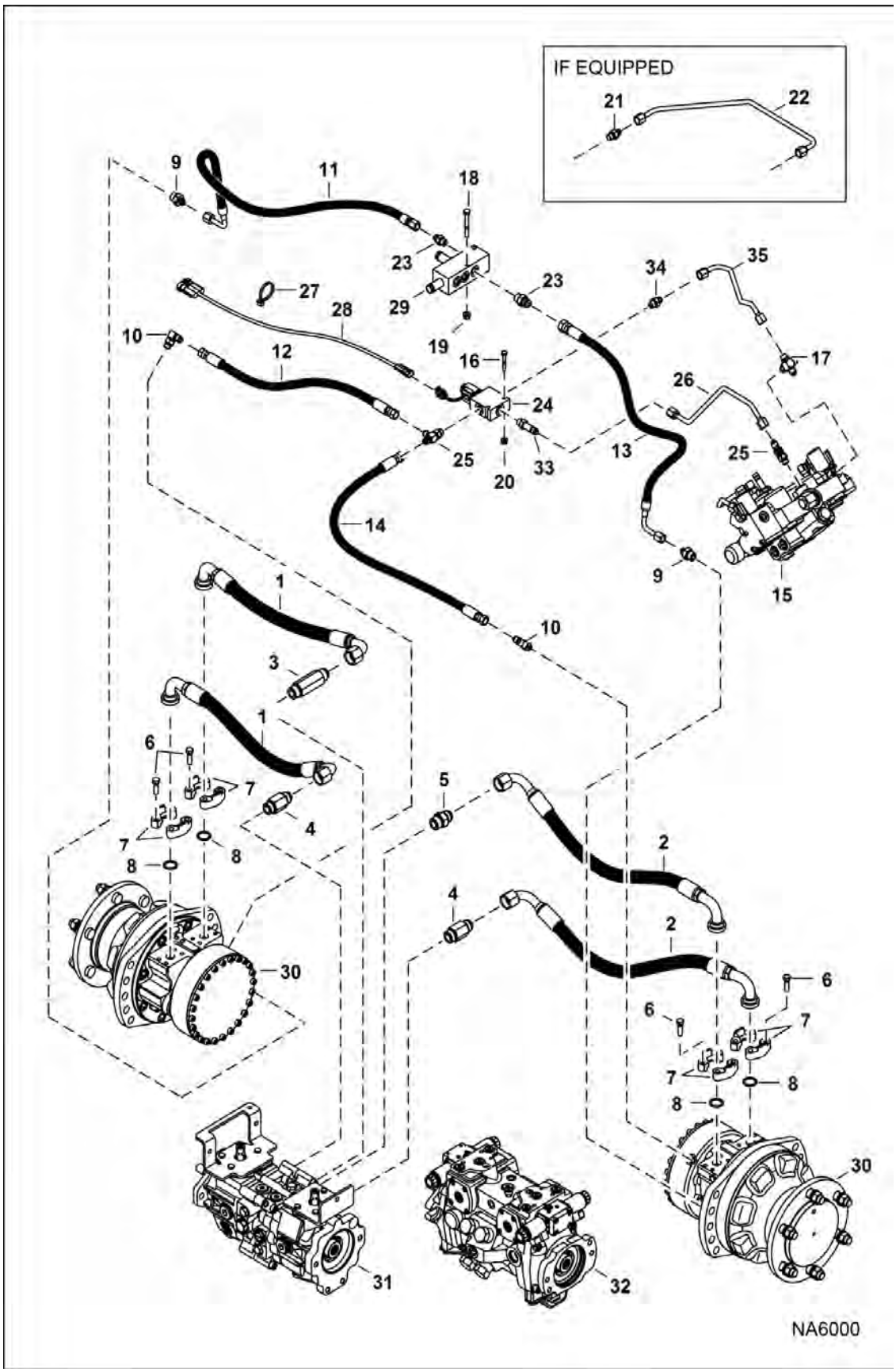

Page 215 - OSS# 6300322913 - All rights reserved by Bobcat Company - 08/04/2017 - 06:30:16 - Produced by Ken Cook Co. with mediaioff

HYDROSTATIC CIRCUITRY (Cont'd)

(Single Speed Motors) (Rubber Tracks)
(S/N A3P811001 - A3P816063, A3P911001 - A3P913054)

Ref No	Part Number	Description	Remarks	Serial Number	Qty
1	7011081	HOSE, HYD			2
2	7011082	HOSE, HYD			2
3	6735511	ADAPTER			1
4	6815223	FITTING			2
4	79K12	O RING 10			1
5	15KB1212	FITTING, HYD CONNECTOR			1
5	79K12	O RING 10			1
6	17C620	BOLT			16
7	20J12	FLANGE			8
8	55K214	O-RING			4
9	15KB0608	FITTING, HYD CONNECTOR			2
9	79K8	O RING 10			1
10	17KB0606	FITTING			2
10	79K6	O RING 10			1
11	7159731	HOSE, HYD			1
12	7159730	HOSE, HYD			1
13	7159733	HOSE, HYD			1
14	7159732	HOSE, HYD			1
15		VALVE, CONTROL	See Illustration HYDRAULIC CONTROL VALVE / NA1216 - manual controls		1
15		VALVE, CONTROL	See Illustration HYDRAULIC CONTROL VALVE / NA1217 - ACS, AHC & SJC		1
16	17C428	BOLT			2
17	7180987	FITTING, CROSS			1
18	17C540	BOLT			1
19	83D5	NUT 5			2
20	83D4	NUT 10			2
21	6669676	VALVE, CHECK	37,3 mm (1.47") long - Use W/Ref. 22	A3P811001 - 13246	1
				A3P911001 - 12054	1
22	7182087	TUBELINE, HYD	Use W/Ref. 21	A3P811001 - 13246	1
				A3P911001 - 12054	1
23	15KB0606	FITTING, HYD CONNECTOR			2
23	79K6	O RING 10			1
24		VALVE ASSY	See Illustration BRAKE VALVE / MS1144		1
25	21KB0606	FITTING, HYD TEE			2
25	79K6	O RING 10			1
26	7182088	TUBE DRAIN			1
27	6624289	STRAP, TIE			2
28	7165061	HARNESS, ADAPTER BRAKE			1
29	7201981	MANIFOLD, DRAIN CASE			1

Page 208 OSS# 6300322913 - All rights reserved by Bobcat Company - 08/04/2017 - 06:30:16 - Produced by Ken Cook Co. with mediaoff

HYDROSTATIC CIRCUITRY (Cont'd)

(Single Speed Motors) (Rubber Tracks)
(S/N A3P811001 - A3P816063, A3P911001 - A3P913054)

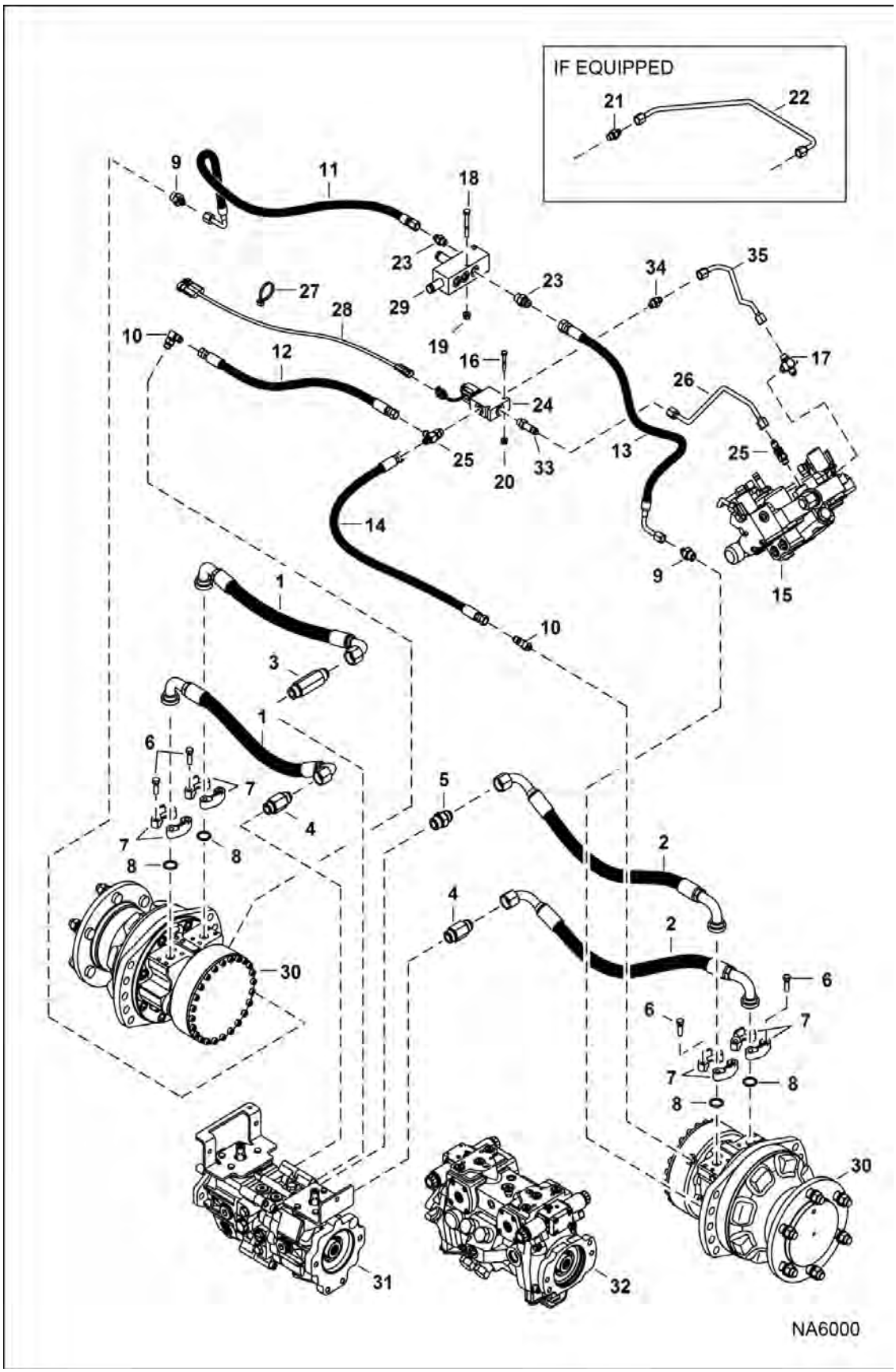

Page 217 - OSS# 6300322913 - All rights reserved by Bobcat Company - 08/04/2017 - 06:30:16 - Produced by Ken Cook Co. with mediaioff

HYDROSTATIC CIRCUITRY (Cont'd)

(Single Speed Motors) (Rubber Tracks)
(S/N A3P811001 - A3P816063, A3P911001 - A3P913054)

Ref No	Part Number	Description	Remarks	Serial Number	Qty
30		MOTOR, DRIVE HYD	See Illustration HYDROSTATIC MOTOR / NA1304		2
31		PUMP, HYD	See Illustration HYDROSTATIC PUMP/GEAR PUMP / NA1309 - manual controls, AHC, ACS		1
32		PUMP, HYD	See Illustration HYDROSTATIC PUMP/GEAR PUMP / NA1309 - SJC		1
33	16KB0606	FITTING, HYD CONNECTOR			1
33	79K6	O RING 10			1
34	15KB0606	FITTING, HYD CONNECTOR	34,8 mm (1.37") long - Use W/Ref. 35	A3P813247 & Above	1
				A3P912055 & Above	1
35	7218908	TUBELINE, HYD	Use W/Ref. 34	A3P813247 & Above	1
				A3P912055 & Above	1

Page 2 of 4 OSS# 6300322913 - All rights reserved by Bobcat Company - 08/04/2017 - 06:30:16 - Produced by Ken Cook Co. with mediaioff

HYDROSTATIC CIRCUITRY

(Single Speed Motor)

(S/N A3P816064 & Above, A3P913055 & Above)

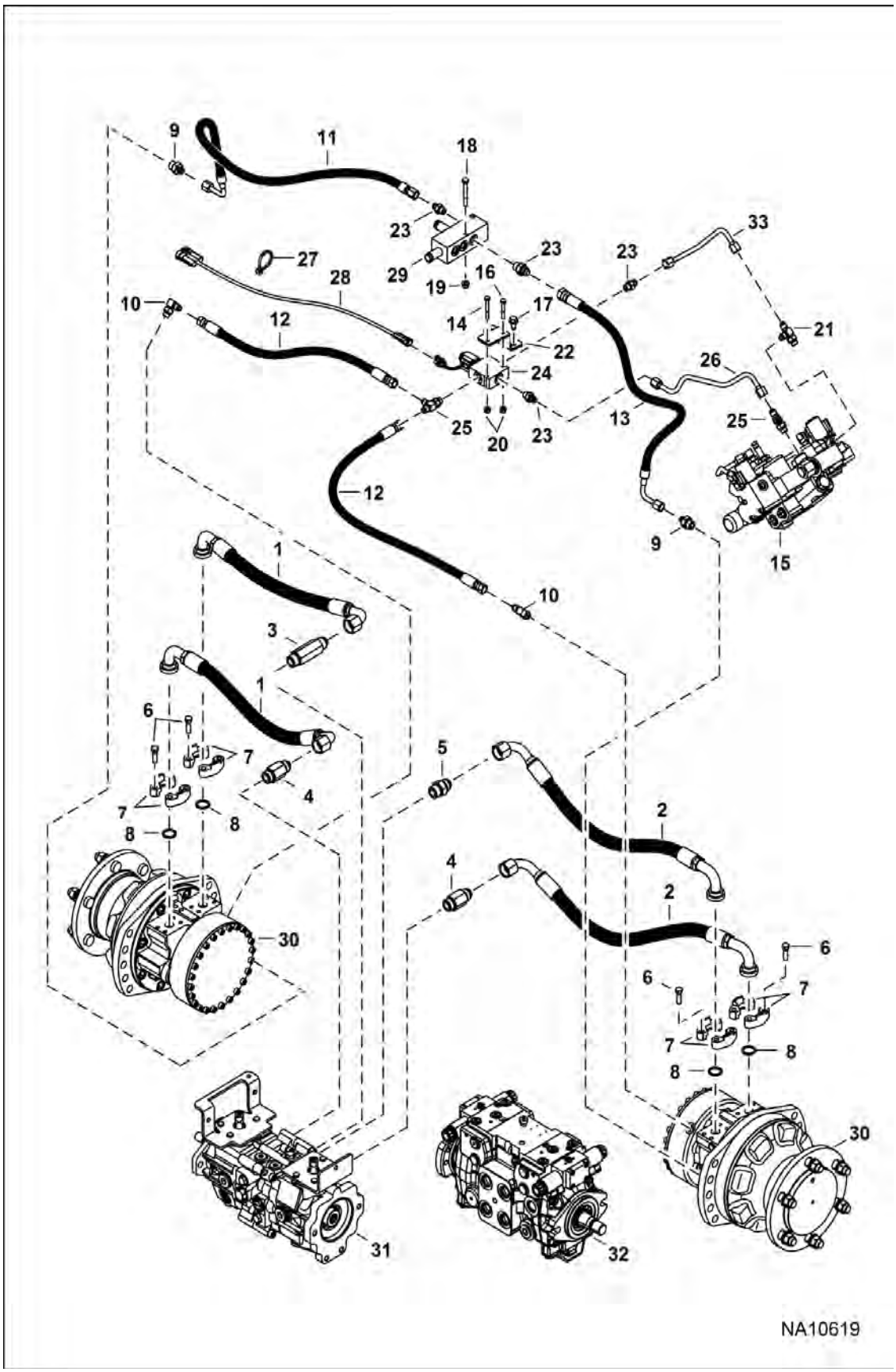

Page 219 - OSS# 6300322913 - All rights reserved by Bobcat Company - 08/04/2017 - 06:30:16 - Produced by Ken Cook Co. with mediaioff

Illustration NA10619

HYDROSTATIC CIRCUITRY (Cont'd)

(Single Speed Motor)

(S/N A3P816064 & Above, A3P913055 & Above)

Ref No	Part Number	Description	Remarks	Serial Number	Qty
1	7011081	HOSE, HYD		A3P816064 - A3P816172	2
				A3P913055 - A3P913090	2
1	7312185	HOSE HYDRAULIC ASSY		A3P816173 & Above	2
				A3P913091 & Above	2
2	7011082	HOSE, HYD			2
3	6735511	ADAPTER			1
4	6815223	FITTING			2
4	79K12	O RING 10			1
5	15KB1212	FITTING, HYD CONNECTOR			1
5	79K12	O RING 10			1
6	17C620	BOLT			16
7	20J12	FLANGE			8
8	55K214	O-RING			4
9	15KB0608	FITTING, HYD CONNECTOR			2
9	79K8	O RING 10			1
10	17KB0606	FITTING			2
10	79K6	O RING 10			1
11	7159731	HOSE, HYD			1
12	7239276	HOSE, HYD ASSY			1
13	7159733	HOSE, HYD			1
14	17C432	BOLT			1
15		VALVE, CONTROL	See Illustration HYDRAULIC CONTROL VALVE / NA6557 - manual controls		1
15		VALVE, CONTROL	See Illustration HYDRAULIC CONTROL VALVE / NA6558 - ACS, AHC & SJC		1
16	17C428	BOLT			2
17	84G3712	BOLT 5			2
18	17C540	BOLT			1
19	83D5	NUT 5			2
20	83D4	NUT 10			2
21	21KB0606	FITTING, HYD TEE			2
22	7239227	MOUNT, VALVE			1
23	15KB0606	FITTING, HYD CONNECTOR			4
23	79K6	O RING 10			1
24		VALVE ASSY	See Illustration BRAKE VALVE / MS1144		1
25	19KB0606	FITTING, HYD TEE			2
25	79K6	O RING 10			1
26	7239272	TUBELINE, HYD			1
27	6624289	STRAP, TIE			4
28	7234968	HARNESS, BRAKE ADAPTER			1

Page 2 of 2 OSS# 6300322913 - All rights reserved by Bobcat Company - 08/04/2017 - 06:30:16 - Produced by Ken Cook Co. with mediaoff

HYDROSTATIC CIRCUITRY (Cont'd)

(Single Speed Motor)
(S/N A3P816064 & Above, A3P913055 & Above)

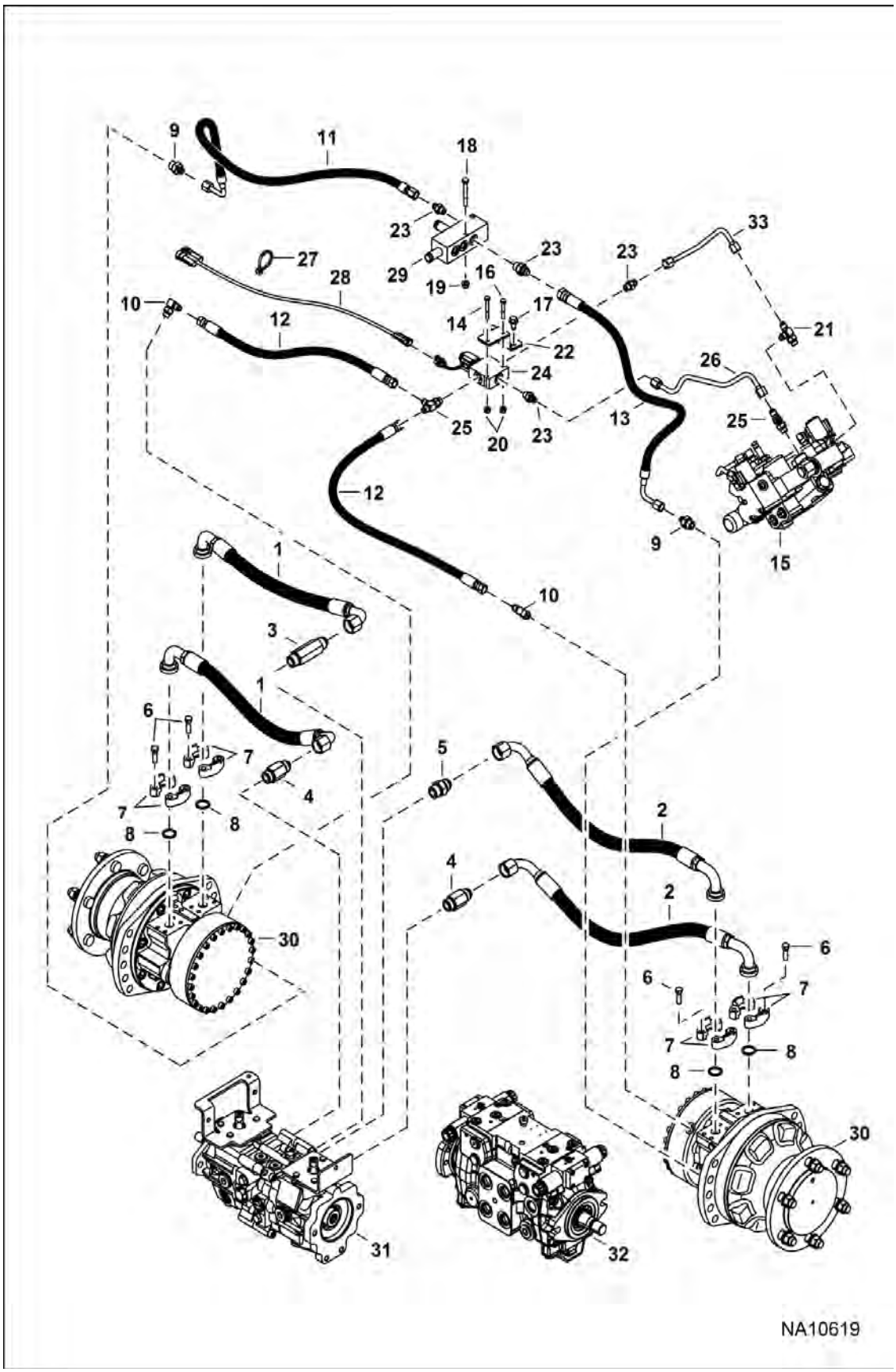

Page 221 - OSS# 6300322913 - All rights reserved by Bobcat Company - 08/04/2017 - 06:30:16 - Produced by Ken Cook Co. with mediaioff

Illustration NA10619

HYDROSTATIC CIRCUITRY (Cont'd)

(Single Speed Motor)

(S/N A3P816064 & Above, A3P913055 & Above)

Ref No	Part Number	Description	Remarks	Serial Number	Qty
29	7201981	MANIFOLD, DRAIN CASE			1
30		MOTOR, DRIVE HYD	See Illustration HYDROSTATIC MOTOR / NA6934		2
31		PUMP, HYD	- manual controls, AHC, ACS		1
32		PUMP, HYD	- SJC		1
33	7239273	TUBELINE, HYD			1

Page 224 OSS# 6300322913 - All rights reserved by Bobcat Company - 08/04/2017 - 06:30:16 - Produced by Ken Cook Co. with mediaioff

HYDROSTATIC CIRCUITRY
(Single Speed Motors) (Steel Tracks)

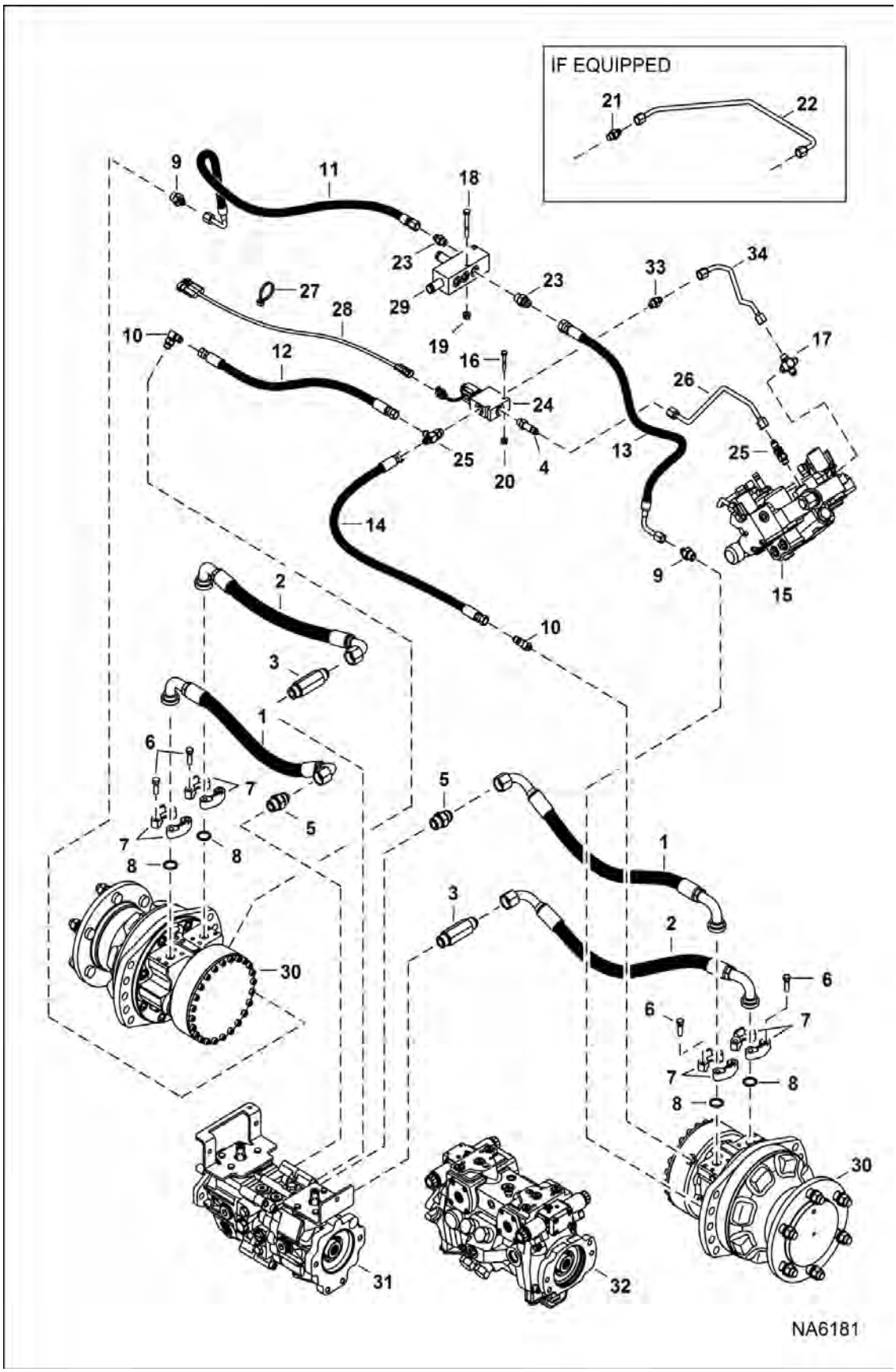

Page 223 - OSS# 6300322913 - All rights reserved by Bobcat Company - 08/04/2017 - 06:30:16 - Produced by Ken Cook Co. with mediaioff

HYDROSTATIC CIRCUITRY (Cont'd)

(Single Speed Motors) (Steel Tracks)

Ref No	Part Number	Description	Remarks	Serial Number	Qty
1	7199266	HOSE, HYD			2
2	7199265	HOSE, HYD			2
3	6735511	ADAPTER			2
4	79K6	O RING 10			1
4	16KB0606	FITTING, HYD CONNECTOR			1
5	15KB1212	FITTING, HYD CONNECTOR			2
5	79K12	O RING 10			2
6	17C620	BOLT			16
7	20J12	FLANGE			8
8	55K214	O-RING			4
9	15KB0608	FITTING, HYD CONNECTOR			2
9	79K8	O RING 10			1
10	17KB0606	FITTING			2
10	79K6	O RING 10			1
11	7159731	HOSE, HYD			1
12	7159730	HOSE, HYD			1
13	7159733	HOSE, HYD			1
14	7159732	HOSE, HYD			1
15		VALVE, CONTROL	See Illustration HYDRAULIC CONTROL VALVE / NA1216 - manual controls		1
15		VALVE, CONTROL	See Illustration HYDRAULIC CONTROL VALVE / NA1217 - ACS, AHC & SJC		1
16	17C428	BOLT			2
17	7180987	FITTING, CROSS			1
18	17C540	BOLT			1
19	83D5	NUT 5			2
20	83D4	NUT 10			2
21	6669676	VALVE, CHECK	37,3 mm (1.47") long - Use W/Ref. 22	A3P811001 - 13246	1
				A3P911001 - 12054	1
22	7182087	TUBELINE, HYD	Use W/Ref. 21	A3P811001 - 13246	1
				A3P911001 - 12054	1
23	15KB0606	FITTING, HYD CONNECTOR			2
23	79K6	O RING 10			1
24		VALVE ASSY	See Illustration BRAKE VALVE / MS1144		1
25	21KB0606	FITTING, HYD TEE			2
25	79K6	O RING 10			1
26	7182088	TUBE DRAIN			1
27	6624289	STRAP, TIE			4
28	7165061	HARNESS, ADAPTER BRAKE			1
29	7201981	MANIFOLD, DRAIN CASE			1

Page 224 OSS# 6300322913 - All rights reserved by Bobcat Company - 08/04/2017 - 06:30:16 - Produced by Ken Cook Co. with mediaoff

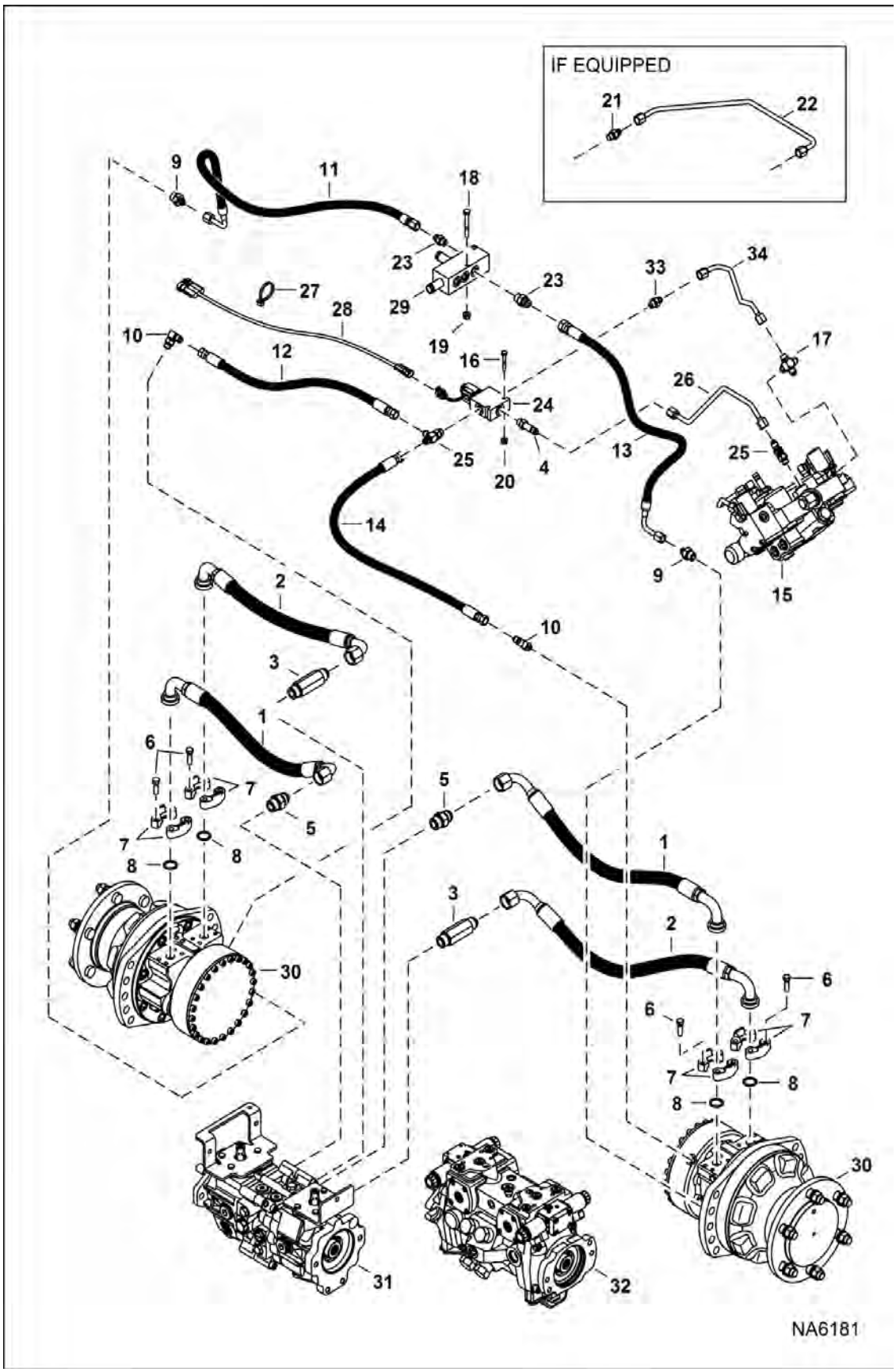

Page 225 - OSS# 6300322913 - All rights reserved by Bobcat Company - 08/04/2017 - 06:30:16 - Produced by Ken Cook Co. with mediaioff

HYDROSTATIC CIRCUITRY (Cont'd)

(Single Speed Motors) (Steel Tracks)

Ref No	Part Number	Description	Remarks	Serial Number	Qty
30		MOTOR, DRIVE HYD	See Illustration HYDROSTATIC MOTOR / NA1304		2
31		PUMP, HYD	See Illustration HYDROSTATIC PUMP/GEAR PUMP / NA1309 - manual controls, AHC, ACS		1
32		PUMP, HYD	See Illustration HYDROSTATIC PUMP/GEAR PUMP / NA1309 - SJC		1
33	15KB0606	FITTING, HYD CONNECTOR	34,8 mm (1.37") long - Use W/Ref. 34	A3P813247 & Above	1
				A3P912055 & Above	1
34	7218908	TUBELINE, HYD	Use W/Ref. 33	A3P813247 & Above	1
				A3P912055 & Above	1

Page 2 of 2 OSS# 6300322913 - All rights reserved by Bobcat Company - 08/04/2017 - 06:30:16 - Produced by Ken Cook Co. with mediaioff

HYDROSTATIC CIRCUITRY

(2-Speed Motor)

(S/N A3P811001 - A3P813174, A3P911001 - A3P912024)

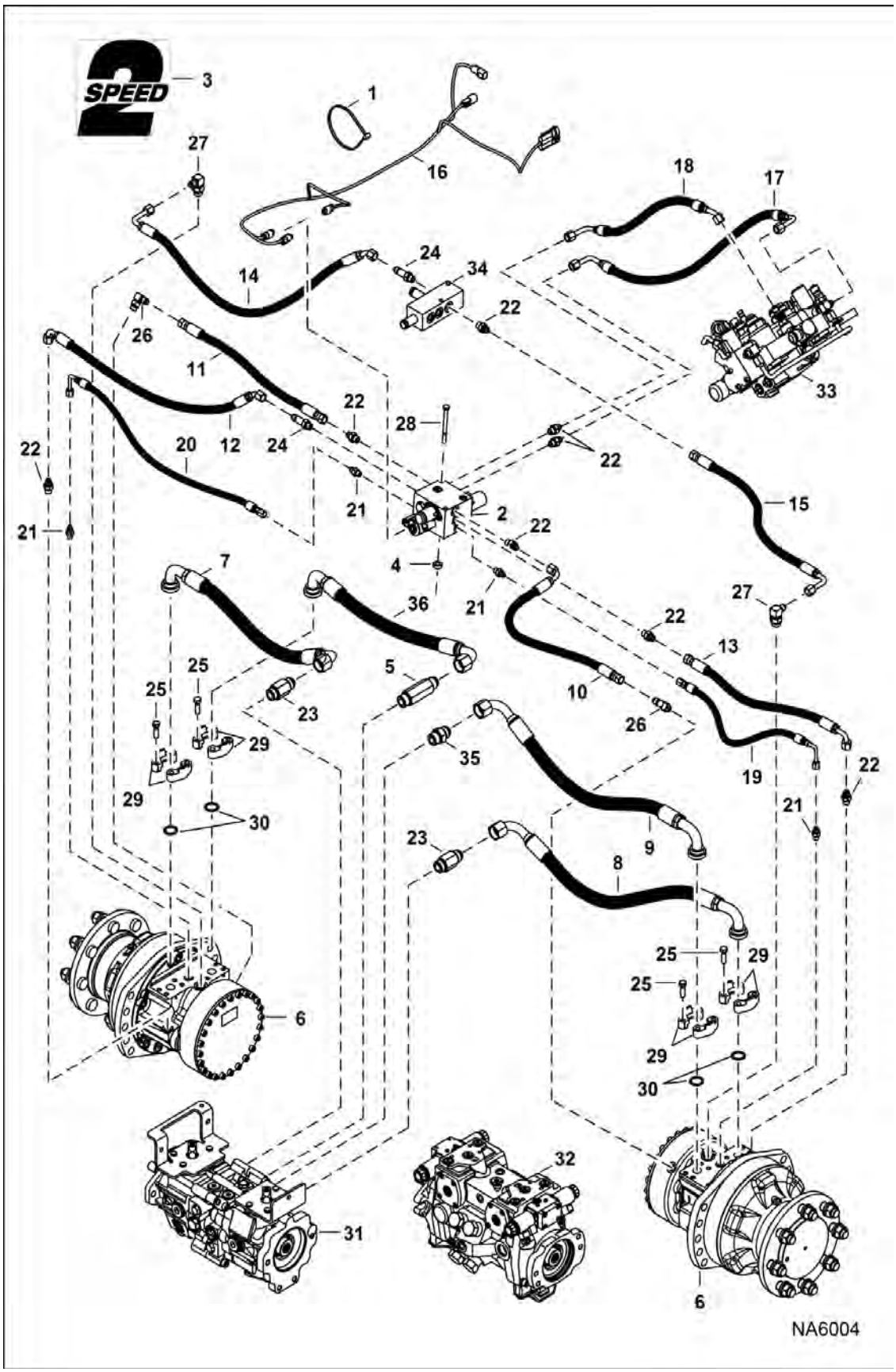

Page 227 - OSS# 6300322913 - All rights reserved by Bobcat Company - 08/04/2017 - 06:30:16 - Produced by Ken Cook Co. with mediaioff

HYDROSTATIC CIRCUITRY (Cont'd)

(2-Speed Motor)

(S/N A3P811001 - A3P813174, A3P911001 - A3P912024)

Ref No	Part Number	Description	Remarks	Serial Number	Qty
1	6624289	STRAP, TIE			7
2		VALVE, 2-SPEED	See Illustration 2-SPEED VALVE / NA2164		1
3	6729078	DECAL	2-speed		2
4	25E16	WSHR			2
5	6735511	ADAPTER			1
6		MOTOR, DRIVE	See Illustration HYDROSTATIC MOTOR & BRAKE / NA2870		2
7	7011081	HOSE, HYD			1
8	7011082	HOSE, HYD			1
9	7011084	HOSE, HYD			1
10	7173008	HOSE, HYD			1
11	7173009	HOSE, HYD			1
12	7173010	HOSE, HYD			1
13	7202343	HOSE, HYD			1
14	7173012	HOSE, HYD			1
15	7173013	HOSE, HYD			1
16	7177692	HARNESS, 2-SPD			1
17	7195109	HOSE, HYD			1
18	7195110	HOSE, HYD			1
19	7196359	HOSE, HYD			1
20	7196360	HOSE, HYD			1
21	15KB0404	FITTING, HYD CONNECTOR			4
21	79K4	O RING 10			x
22	15KB0606	FITTING, HYD CONNECTOR			7
22	79K6	O RING 10			x
23	6815223	FITTING			2
23	79K12	O RING 10			x
24	16KB0606	FITTING, HYD CONNECTOR			2
24	79K6	O RING 10			x
25	17C620	BOLT			16
26	17KB0606	FITTING	Was 17KB606 [A]		2
26	79K6	O RING 10			x
27	17KB608	FITTING, HYD ELBOW			2
27	79K8	O RING 10			x
28	1C556	SCREW HEX CAP			2
29	20J12	FLANGE			8
30	55K214	O-RING			4
31		PUMP, HYD	See Illustration HYDROSTATIC PUMP/GEAR PUMP / NA1309 - manual, ACS & AHC		1
32		PUMP, HYD	See Illustration HYDROSTATIC PUMP/GEAR PUMP / NA1309 - SJC		1
33		VALVE, CONTROL	See Illustration HYDRAULIC CONTROL VALVE / NA1216 - manual controls		1
33		VALVE, CONTROL	See Illustration HYDRAULIC CONTROL VALVE / NA1217 - AHC, ACS & SJC		1

Page 220 OSS# 6300322913 - All rights reserved by Bobcat Company - 08/04/2017 - 06:30:16 - Produced by Ken Cook Co. with mediaioff

HYDROSTATIC CIRCUITRY (Cont'd)

(2-Speed Motor)

(S/N A3P811001 - A3P813174, A3P911001 - A3P912024)

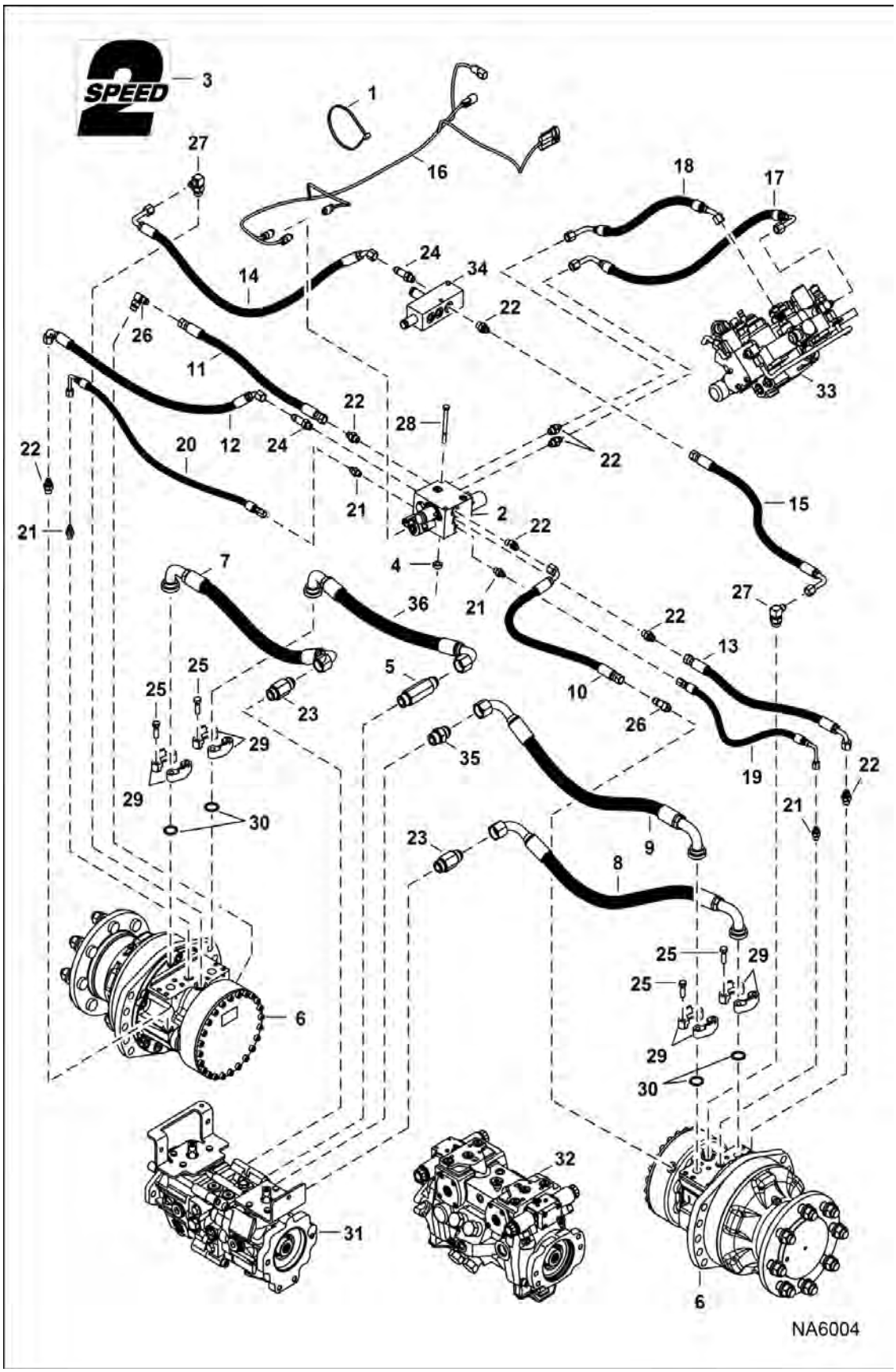

Page 229 - OSS# 6300322913 - All rights reserved by Bobcat Company - 08/04/2017 - 06:30:16 - Produced by Ken Cook Co. with mediaioff

HYDROSTATIC CIRCUITRY (Cont'd)

(2-Speed Motor)

(S/N A3P811001 - A3P813174, A3P911001 - A3P912024)

Ref No	Part Number	Description	Remarks	Serial Number	Qty
34		MANIFOLD	See Illustration MANUAL LIFT RELEASE SYSTEM / NA1219		1
35	15KB1212	FITTING, HYD CONNECTOR			1
35	79K12	O RING 10			x
36	7011083	HOSE, HYD			1

Page 2004 OSS# 6300322913 - All rights reserved by Bobcat Company - 08/04/2017 - 06:30:16 - Produced by Ken Cook Co. with mediaioff

HYDROSTATIC CIRCUITRY

(2-Speed Motor)

(S/N A3P813175 - A3P815999, A3P912025 - A3P912999)

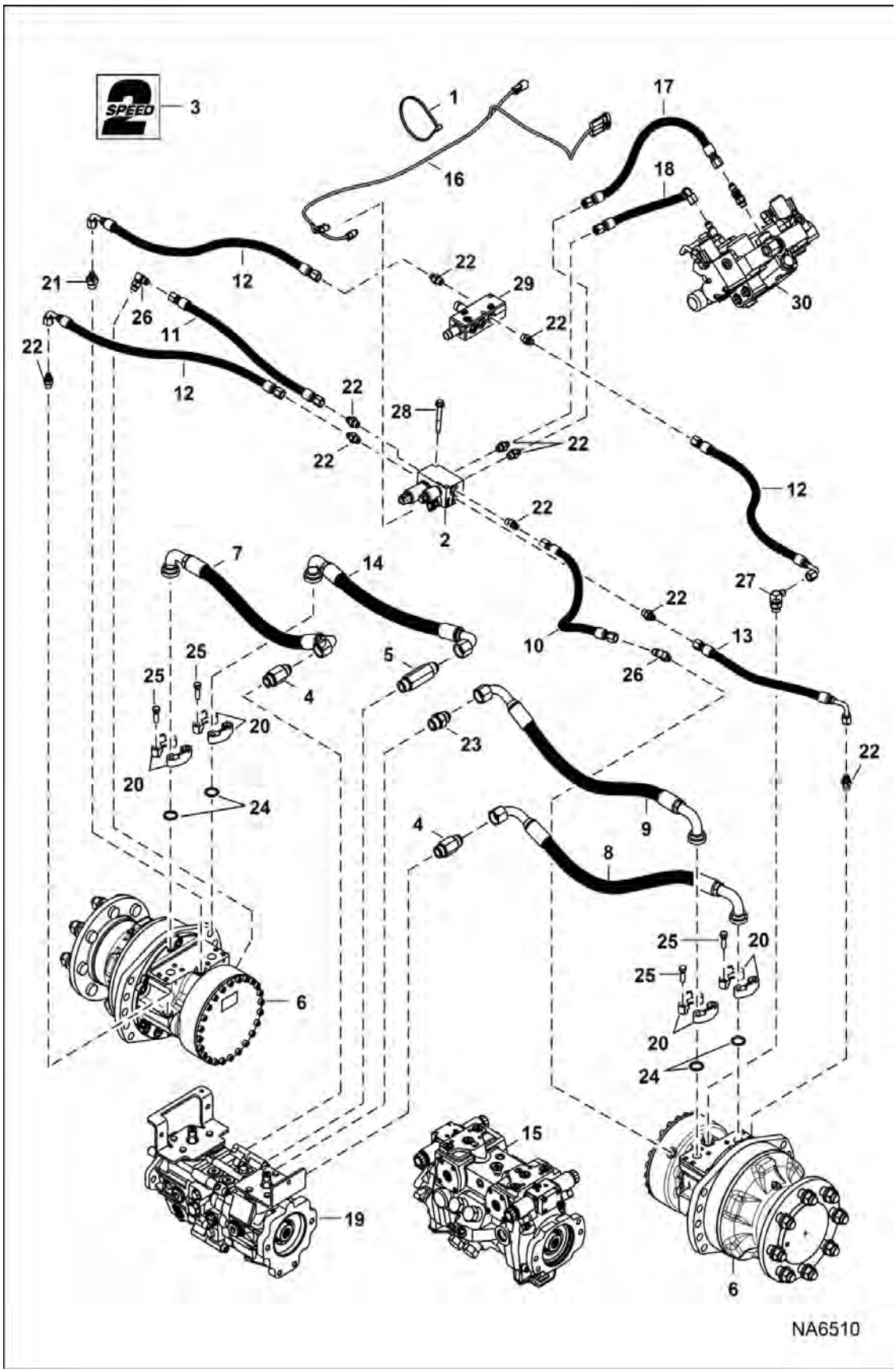

Page 231 - OSS# 6300322913 - All rights reserved by Bobcat Company - 08/04/2017 - 06:30:16 - Produced by Ken Cook Co. with mediaioff

HYDROSTATIC CIRCUITRY (Cont'd)

(2-Speed Motor)

(S/N A3P813175 - A3P815999, A3P912025 - A3P912999)

Ref No	Part Number	Description	Remarks	Serial Number	Qty
1	6624289	STRAP, TIE			7
2		VALVE, 2-SPEED	See Illustration 2-SPEED VALVE / NA6501 NLA - Was 7211449 [A]		1
3	6729078	DECAL	2-speed		2
4	6735511	ADAPTER			1
5	6815223	FITTING			2
6		MOTOR, DRIVE HYD 2-SPD	See Illustration HYDROSTATIC MOTOR & BRAKE / NA6498		2
7	7011081	HOSE, HYD			1
8	7011082	HOSE, HYD			1
9	7011084	HOSE, HYD			1
10	7173008	HOSE, HYD			1
11	7125723	HOSE			1
12	7235457	HOSE, HYD	Was 6727045 [A]		3
13	7212792	HOSE, HYD			1
14	7011083	HOSE, HYD			1
15		PUMP, HYD	See Illustration HYDROSTATIC PUMP/GEAR PUMP / NA1309 - SJC		1
16	7214626	HARNESS, 2-SPD			1
17	7212793	HOSE, HYD			1
18	7201263	HOSE, HYD	Was 7126166 [B]		1
19		PUMP, HYD	See Illustration HYDROSTATIC PUMP/GEAR PUMP / NA1309 - manual, ACS & AHC		1
20	20J12	FLANGE			8
21	15KB0608	FITTING, HYD CONNECTOR			4
21	79K8	O RING 10			4
22	15KB0606	FITTING, HYD CONNECTOR			9
22	79K6	O RING 10			9
23	15KB1212	FITTING, HYD CONNECTOR			1
23	79K12	O RING 10			1
24	55K214	O-RING			4
25	17C620	BOLT			16
26	17KB0606	FITTING	Was 17KB606 [A]		2
26	79K6	O RING 10			2
27	17KB608	FITTING, HYD ELBOW			1
27	79K8	O RING 10			1
28	84G3744	BOLT			2
29	7201981	MANIFOLD, DRAIN CASE	See Illustration HYDROSTATIC CIRCUITRY / NA2898		1
30		VALVE, CONTROL	See Illustration HYDRAULIC CONTROL VALVE / NA1216 - manual controls		1
30		VALVE, CONTROL	See Illustration HYDRAULIC CONTROL VALVE / NA1217 - AHC, ACS & SJC		1

Page 224 OSS# 6300322913 - All rights reserved by Bobcat Company - 08/04/2017 - 06:30:16 - Produced by Ken Cook Co. with mediaioff

HYDROSTATIC CIRCUITRY

(2-Speed Motor)

(S/N A3P816001 & Above, A3P913001 & Above)

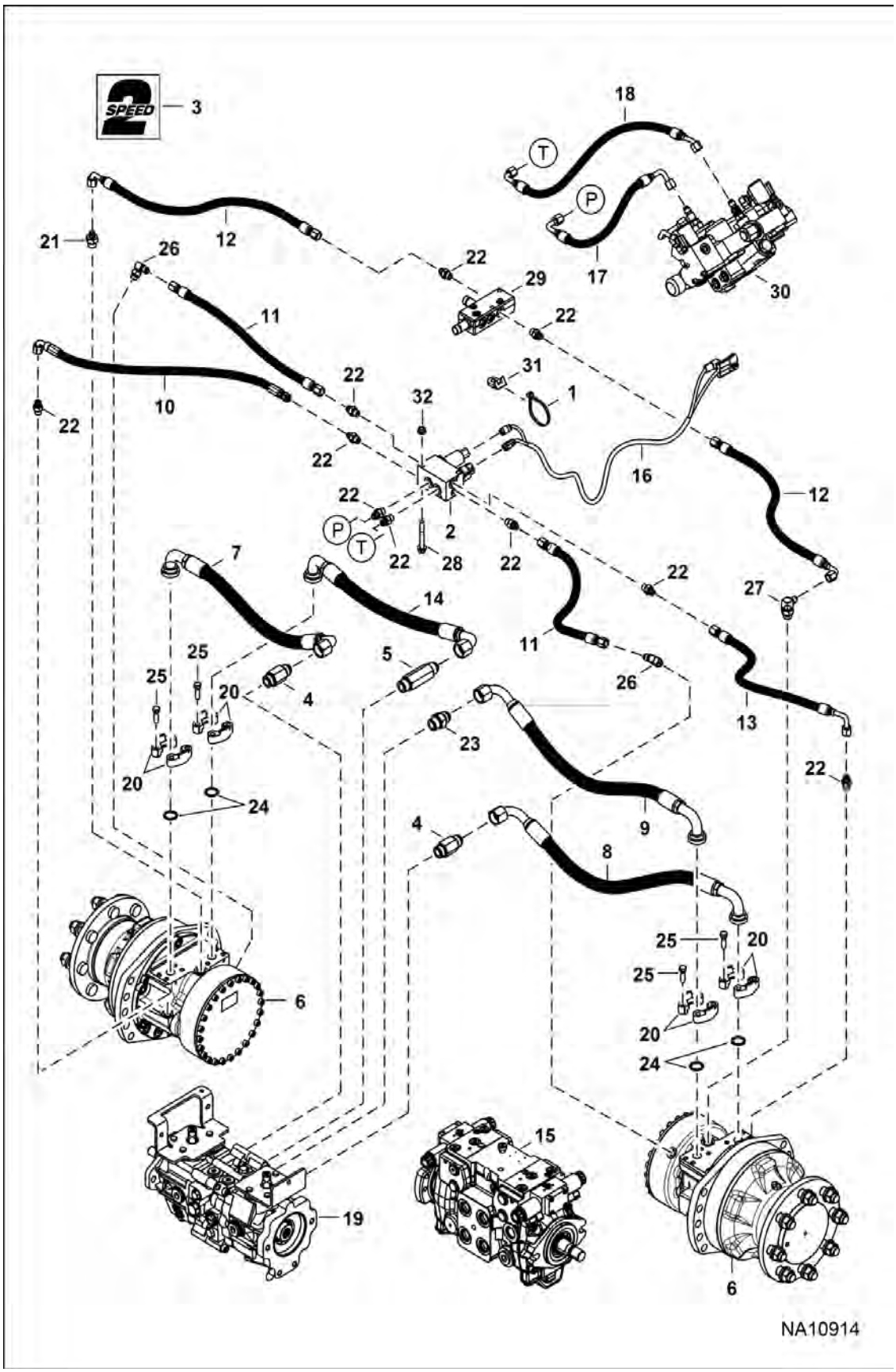

Page 233 - OSS# 6300322913 - All rights reserved by Bobcat Company - 08/04/2017 - 06:30:16 - Produced by Ken Cook Co. with mediaioff

Illustration NA10914

HYDROSTATIC CIRCUITRY (Cont'd)

(2-Speed Motor)

(S/N A3P816001 & Above, A3P913001 & Above)

Ref No	Part Number	Description	Remarks	Serial Number	Qty
1	6624289	STRAP, TIE			4
2		VALVE, 2-SPEED	See Illustration 2-SPEED VALVE / NA6501		1
3	6729078	DECAL	2-speed		2
4	6815223	FITTING			2
4	79K12	O RING 10			x
5	6735511	ADAPTER			1
5	79K12	O RING 10			x
6		MOTOR, DRIVE HYD 2-SPD	See Illustration HYDROSTATIC MOTOR & BRAKE / NA6935		2
7	7011081	HOSE, HYD		A3P816001 - A3P816172	1
				A3P913001 - A3P913090	1
7	7312186	HOSE HYDRAULIC ASSY		A3P816173 & Above	1
				A3P913091 & Above	1
8	7011082	HOSE, HYD			1
9	7011084	HOSE, HYD			1
10	7212770	HOSE, HYD			1
11	7212767	HOSE, HYD			2
12	7235457	HOSE, HYD			2
13	7212792	HOSE, HYD			1
14	7011081	HOSE, HYD	Was 7011083 [D]	A3P816001 - A3P816172	1
				A3P913001 - A3P913090	1
14	7312185	HOSE HYDRAULIC ASSY		A3P816173 & Above	1
				A3P913091 & Above	1
15		PUMP, HYD	See Illustration HYDROSTATIC PUMP/GEAR PUMP / NA1309 - SJC		1
16	7243409	HARNESS, 2 SPEED TRACK			1
17	7276051	HOSE HYDRAULIC ASSY	Was 7276144 [A]		1
18	7276050	HOSE HYDRAULIC ASSY	Was 7276143 [A]		1
19		PUMP, HYD	See Illustration HYDROSTATIC PUMP/GEAR PUMP / NA1309 - manual, ACS & AHC		1
20	20J12	FLANGE			8
21	15KB0608	FITTING, HYD CONNECTOR			4
21	79K8	O RING 10			4
22	15KB0606	FITTING, HYD CONNECTOR			9
22	79K6	O RING 10			9
23	15KB1212	FITTING, HYD CONNECTOR			1

Page 228 OSS# 6300322913 - All rights reserved by Bobcat Company - 08/04/2017 - 06:30:16 - Produced by Ken Cook Co. with mediaoff

HYDROSTATIC CIRCUITRY (Cont'd)

(2-Speed Motor)

(S/N A3P816001 & Above, A3P913001 & Above)

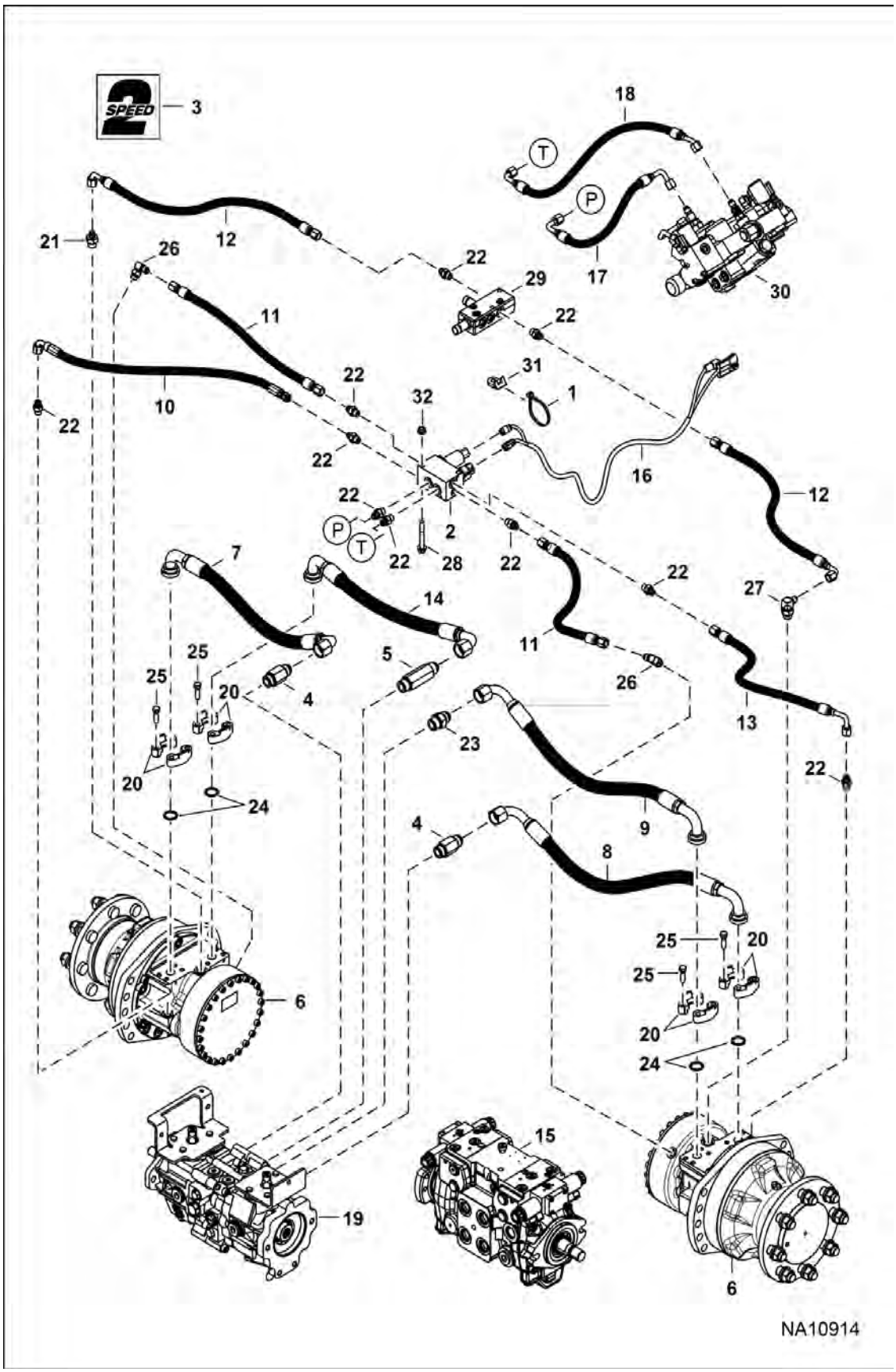

Page 235 - OSS# 6300322913 - All rights reserved by Bobcat Company - 08/04/2017 - 06:30:16 - Produced by Ken Cook Co. with mediaioff

Illustration NA10914

HYDROSTATIC CIRCUITRY (Cont'd)

(2-Speed Motor)

(S/N A3P816001 & Above, A3P913001 & Above)

Ref No	Part Number	Description	Remarks	Serial Number	Qty
23	79K12	O RING 10			1
24	55K214	O-RING			4
25	17C620	BOLT			16
26	17KB0606	FITTING			2
26	79K6	O RING 10			2
27	17KB0608	FITTING, HYD ELBOW			1
27	79K8	O RING 10			1
28	84G3744	BOLT			2
29	7201981	MANIFOLD, DRAIN CASE	See Illustration HYDROSTATIC CIRCUITRY / NA10580		1
30		VALVE, CONTROL	See Illustration HYDRAULIC CONTROL VALVE / NA6557 - manual controls		1
30		VALVE, CONTROL	See Illustration HYDRAULIC CONTROL VALVE / NA6558 - AHC, ACS & SJC		1
31	6679034	MOUNT			1
32	57D6	NUT 5			2

Page 2804 OSS# 6300322913 - All rights reserved by Bobcat Company - 08/04/2017 - 06:30:16 - Produced by Ken Cook Co. with mediaioff

BRAKE VALVE

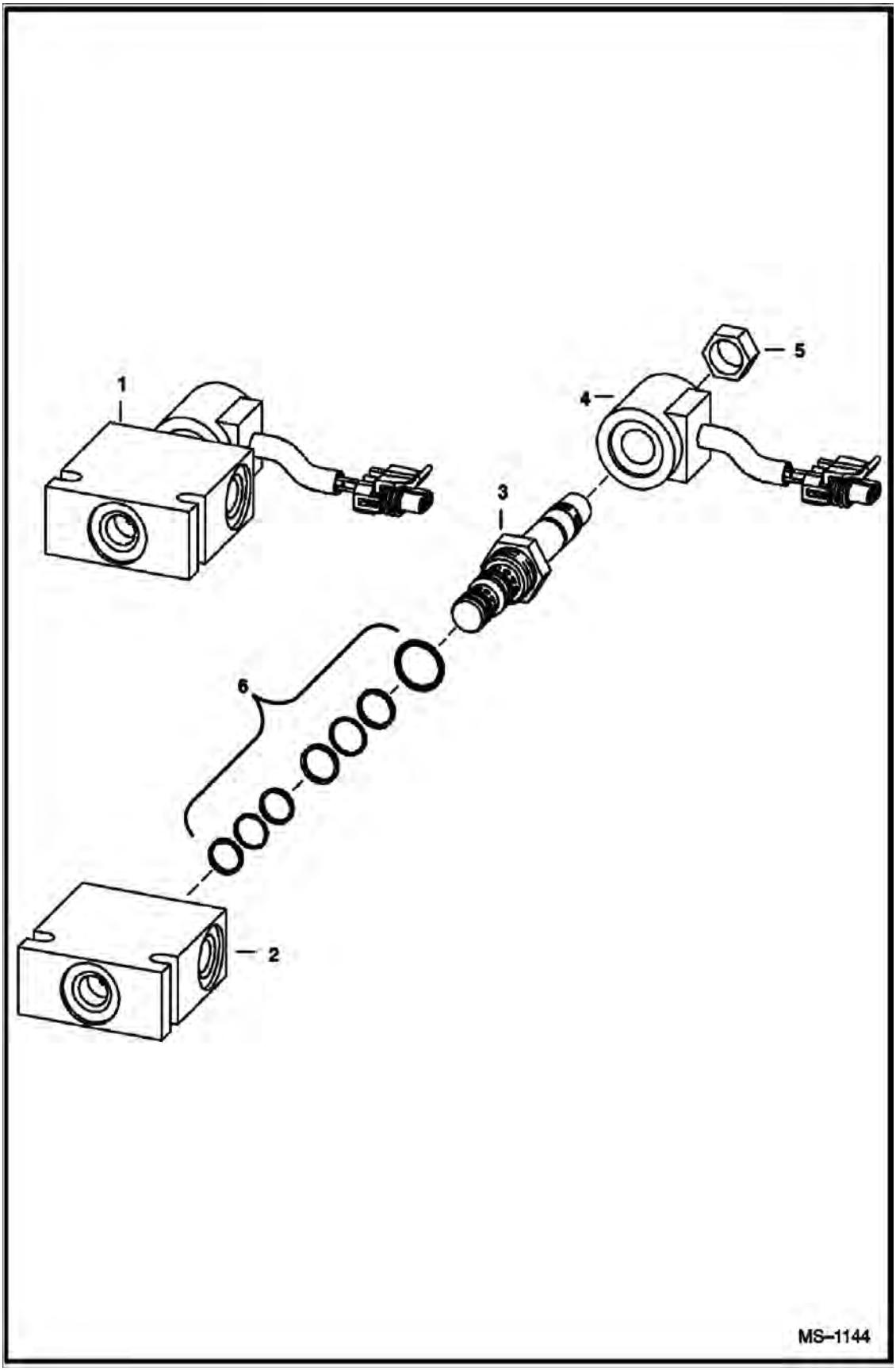

Page 237 - OSS# 6300322913 - All rights reserved by Bobcat Company - 08/04/2017 - 06:30:16 - Produced by Ken Cook Co. with mediaioff

BRAKE VALVE (Cont'd)

Ref No	Part Number	Description	Remarks	Serial Number	Qty
1	6679103	VALVE, BRAKE	Ref. 2-6		1
2		BLOCK	NSS - Order Ref. 1		1
3	6680403	VALVE	W/Ref. 5		1
4	6675731	COIL			1
5	6668820	NUT			1
6	6673188	SEAL KIT	(3) O-rings & (4) back-up rings		1

Page 2884 OSS# 6300322913 - All rights reserved by Bobcat Company - 08/04/2017 - 06:30:16 - Produced by Ken Cook Co. with mediaioff

RADIATOR/COOLER ASSEMBLY

(Bolt Mounted Radiator)

(S/N A3P811001 - A3P811789, A3P911001 - A3P911237)

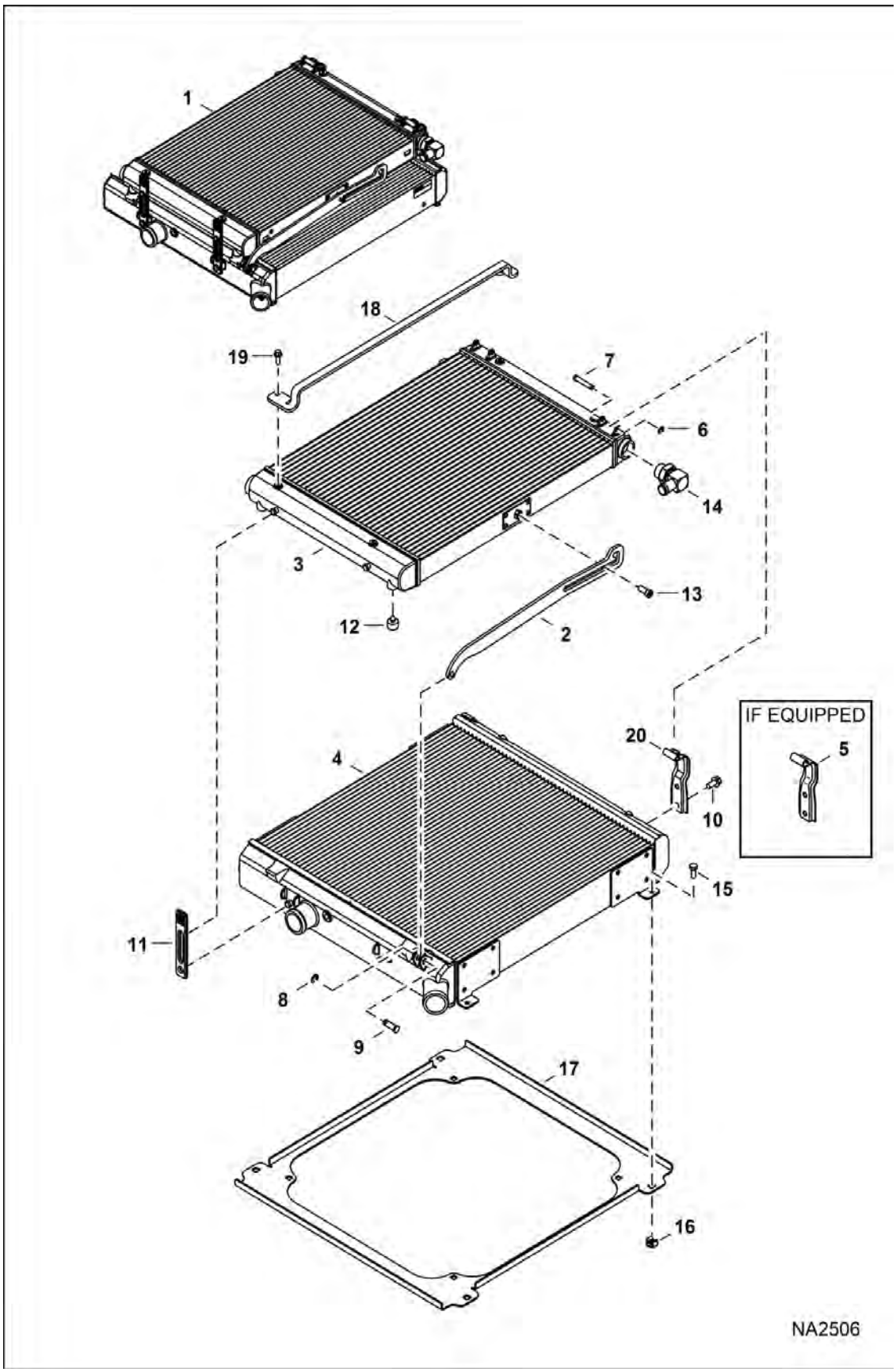

Page 239 - OSS# 6300322913 - All rights reserved by Bobcat Company - 08/04/2017 - 06:30:16 - Produced by Ken Cook Co. with mediaioff

RADIATOR/COOLER ASSEMBLY (Cont'd)

(Bolt Mounted Radiator)

(S/N A3P811001 - A3P811789, A3P911001 - A3P911237)

Ref No	Part Number	Description	Remarks	Serial Number	Qty
1		EXCHANGER, OIL WATER	NLA - Was 7178606 [A]		1
2	7012612	ROD, PROP UP			2
3		EXCHANGER, OIL COOLER	See Illustration RADIATOR/COOLER ASSEMBLY / NA6372 - NLA - Was 7012614 [A]		1
4		EXCHANGER, WATER RADIATOR	Contact your Local Dealer for Bobcat Technical Information BTI420 - NLA - Was 7021027 [A]		1
5	7009263	BRACKET, HINGE FORMED	14 gage - .074" thickness - Was 7012610 [A]		2
6	7009258	RING, RETAINER			2
7	7009259	PIN			2
8	7009261	RING, RETAINER			1
9	7009260	PIN			1
10	7009256	BOLT, FLANGE			4
11	7012611	STRAP, HOLD DOWN			2
12	7012613	BUMPER, RUBBER			2
13	7010126	BOLT			1
14		FITTING, ELBOW	NLA - Order Ref. 3 - Was 7022635 [A]		1
15	45C512	BOLT			4
16	6678765	NUT			4
17	7142223	MOUNT, EXCHANGER OIL			1
18	7169118	GUARD, CONDENSER			2
19	49C412	BOLT			4
20	7025588	BRACKET, HINGE FORMED	11 gage - .119" thickness		2

Page 1 of 1 OSS# 6300322913 - All rights reserved by Bobcat Company - 08/04/2017 - 06:30:16 - Produced by Ken Cook Co. with mediaoff

RADIATOR/COOLER ASSEMBLY

(Stud Mount Radiator)
(S/N A3P811790 & Above, A3P911238 & Above)

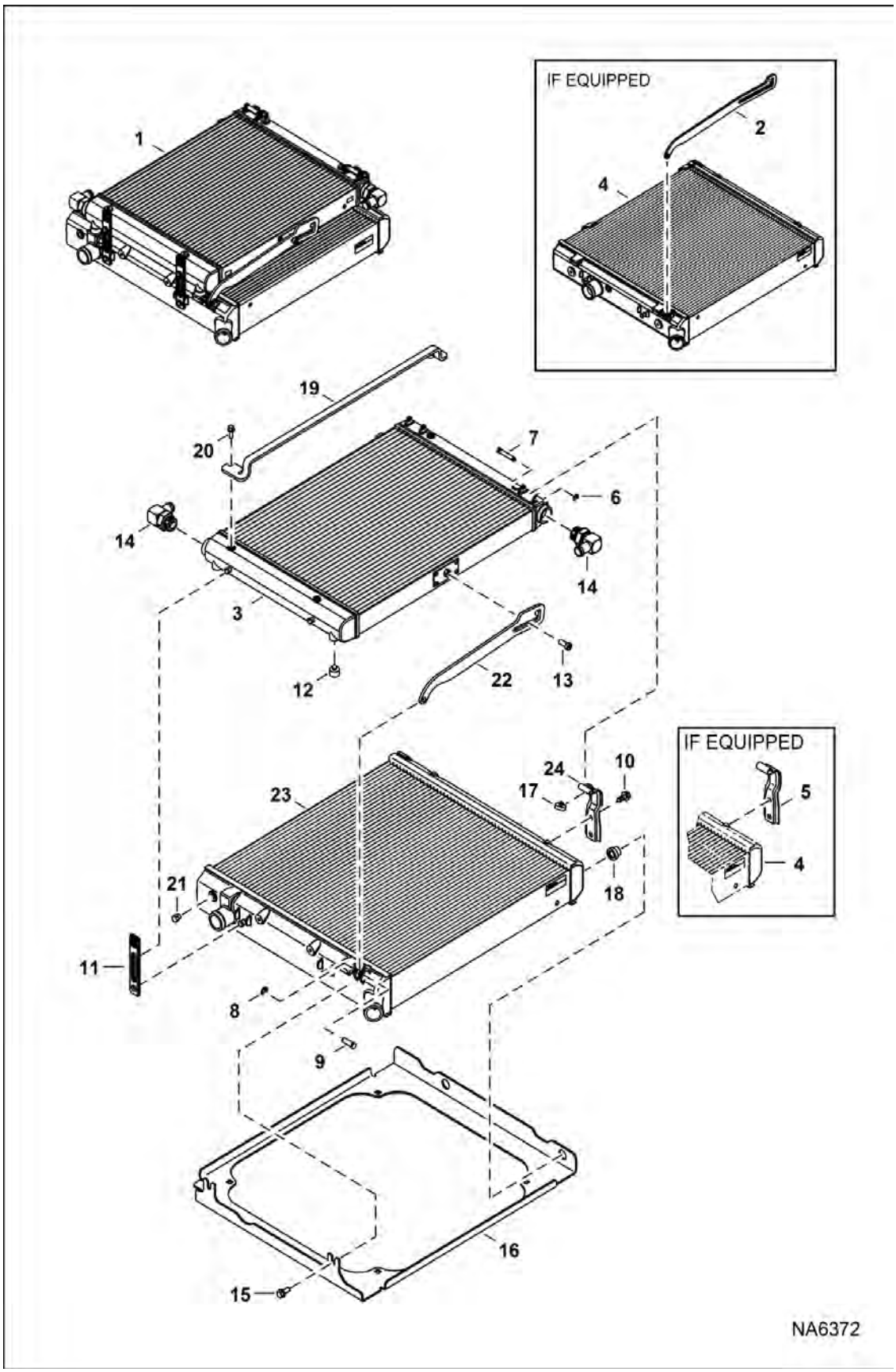

Page 241 - OSS# 6300322913 - All rights reserved by Bobcat Company - 08/04/2017 - 06:30:16 - Produced by Ken Cook Co. with mediaioff

RADIATOR/COOLER ASSEMBLY (Cont'd)

(Stud Mount Radiator)
(S/N A3P811790 & Above, A3P911238 & Above)

Ref No	Part Number	Description	Remarks	Serial Number	Qty
1		EXCHANGER, OIL WATER	NLA - Was 7022727 [A]		1
1		EXCHANGER, OIL WATER	NLA - Was 7222868 [A]		1
2	7012612	ROD, PROP UP	Use W/Ref. 4		1
3	7012614	EXCHANGER, OIL COOLER			1
4		EXCHANGER, WATER RADIATOR	NLA - Was 7024102 [A]		1
5	7009263	BRACKET, HINGE FORMED	14 gage - .074" thickness - Was 7012610 [A]		2
6	7009258	RING, RETAINER			2
7	7024103	PIN			1
8	7009261	RING, RETAINER			1
9	7024104	PIN			1
10	7009256	BOLT, FLANGE			4
11	7012611	STRAP, HOLD DOWN			2
12	7024107	BUMPER			2
13	7010126	BOLT			1
14		FITTING, ELBOW	NLA - Order Ref. 3 - Was 7022635 [A]		2
15	45C512	BOLT			2
16	7207437	MOUNT, RADIATOR			1
17	7012613	BUMPER, RUBBER			2
18	7208181	BUSHING			2
19	7169118	GUARD, CONDENSER			2
20	49C412	BOLT			4
21	24K4	PLUG			1
22	7025104	ROD, PROP UP	Use W/Ref. 23		1
23	7025103	EXCHANGER, WATER RADIATOR			1
24	7025588	BRACKET, HINGE FORMED	11 gage - .119" thickness		2

Page 2 of 2 OSS# 6300322913 - All rights reserved by Bobcat Company - 08/04/2017 - 06:30:16 - Produced by Ken Cook Co. with mediaoff

HAND CONTROLS
(One Piece Strg Mount)

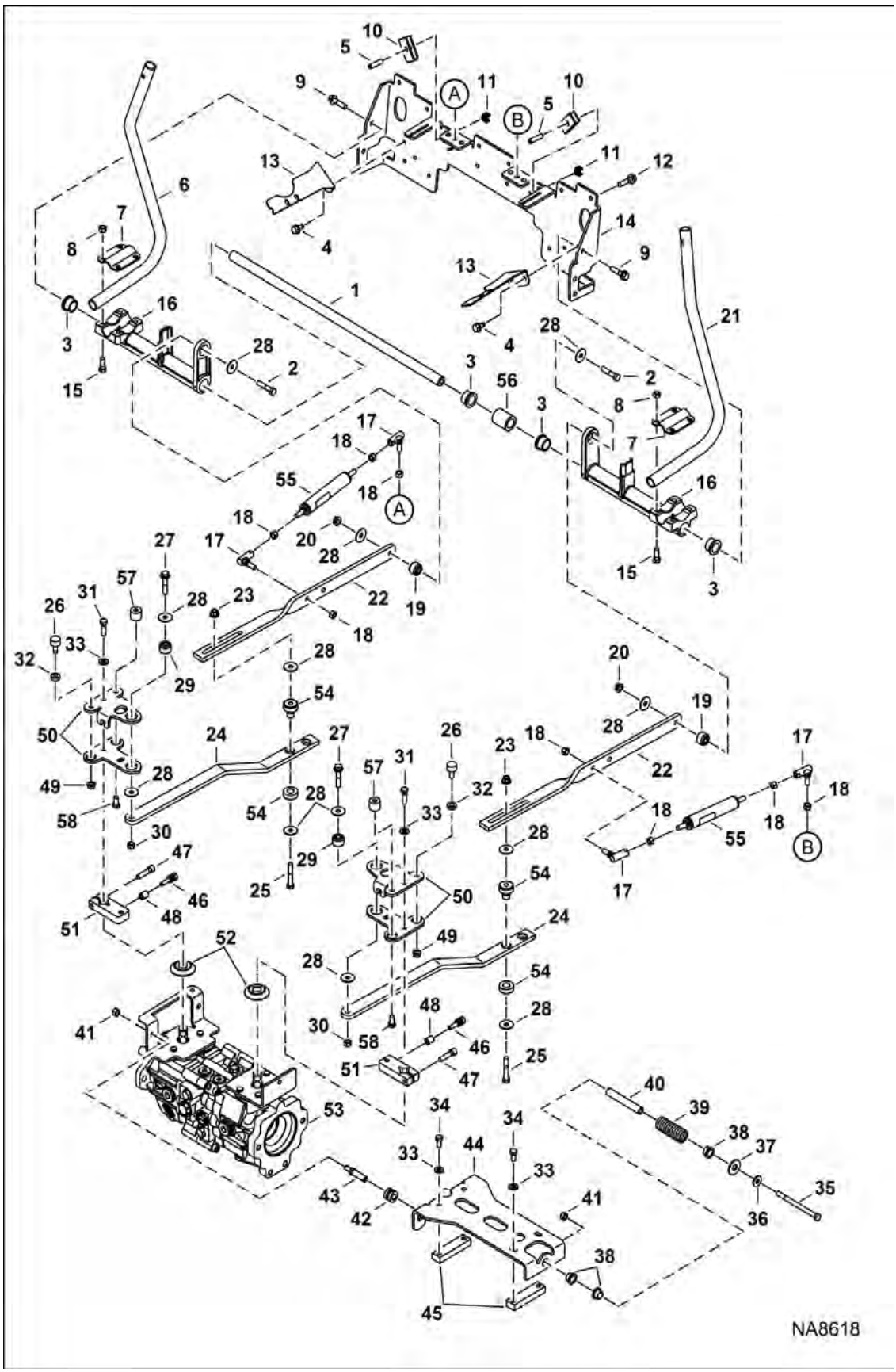

Page 243 - OSS# 6300322913 - All rights reserved by Bobcat Company - 08/04/2017 - 06:30:16 - Produced by Ken Cook Co. with mediaioff

HAND CONTROLS (Cont'd)
(One Piece Strg Mount)

Ref No	Part Number	Description	Remarks	Serial Number	Qty
1	7189893	SHAFT, STEERING			1
2	17C628	BOLT			2
3	7159624	BUSHING			4
4	84G3712	BOLT 5			4
5	15G628	SCREW			2
6	7153379	LEVER, STEERING	LH		1
7	7156761	PLATE			2
8	95D6	NUT			8
9	49C624	SCREW			2
10	7247290	RETAINER, BOLT			2
11	6685663	NUT, RETAINING			2
12	84G3724	BOLT			12
13	7163216	BRACKET			2
14	7189892	MOUNT, BELLCRANK			1
15	17C616	BOLT 5			8
16	7151889	BELLCRANK			2
17	6599744	BALL, JOINT			4
18	62D6	NUT 5			8
19	6685060	BUSHING, TORSION			2
20	53D6	NUT			2
21	7145147	LEVER, STEERING	RH		1
22	7231591	LINK, STEERING			2
23	83D6	NUT 5			4
24	7286537	LINK, CENTERING	Was 7183821 [B]		2
25	17C636	BOLT			4
26	6673789	BEARING, ROLLER			2
27	17C628	BOLT			2
28	6737388	WASHER			12
29	6685060	BUSHING, TORSION			2
30	53D6	NUT			2
31	47C620	BOLT			4
32	7100699	WASHER			2
33	7103217	WASHER			8
34	17C616	BOLT 5			4
35	17C680	BOLT			1
36	6563914	WASHER			1
37	25E24	WASHER	AHC & ACS		1
38	6715163	BUSHING, PRESS FIT			3
39	6701535	SPRING, CENTERING			1
40	6715164	SLEEVE, SPRING			1
41	95D6	NUT			3

Page 244 OSS# 6300322913 - All rights reserved by Bobcat Company - 08/04/2017 - 06:30:16 - Produced by Ken Cook Co. with mediaioff

HAND CONTROLS (Cont'd)
(One Piece Strg Mount)

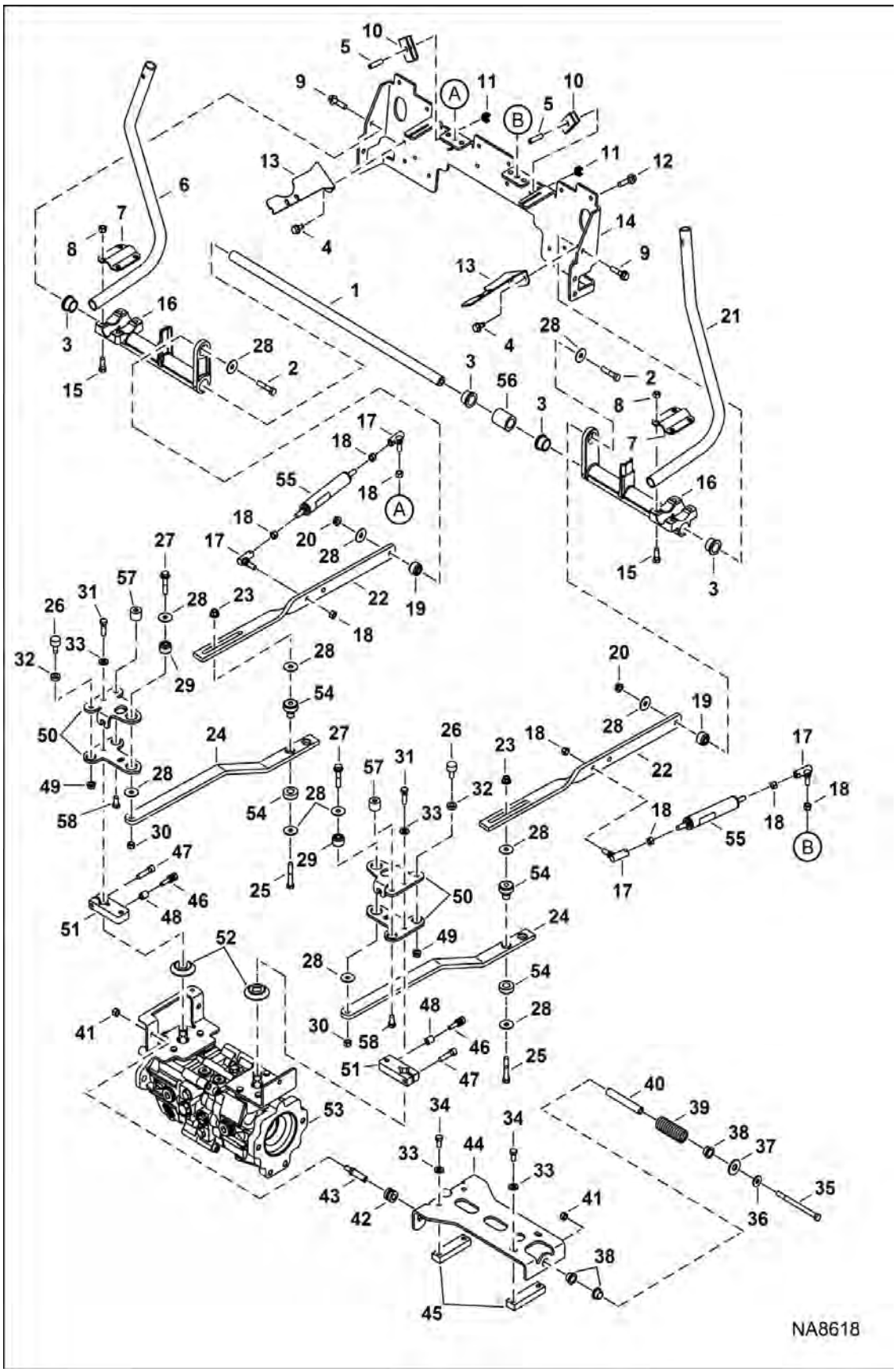

Page 245 - OSS# 6300322913 - All rights reserved by Bobcat Company - 08/04/2017 - 06:30:16 - Produced by Ken Cook Co. with mediaioff

HAND CONTROLS (Cont'd)
(One Piece Strg Mount)

Ref No	Part Number	Description	Remarks	Serial Number	Qty
42	6706098	GUIDE, PRESS FIT			2
43	6577058	PIN, HAND CONTROL			2
44	6734298	BRACKET			1
45	6702716	BLOCK, WEAR			2
46	7103711	BOLT			2
47	73G624	BOLT			2
48	7105223	SPACER			2
49	98D6	NUT			2
50	7110365	ARM, PINTLE			2
51	7103708	BRACKET	pintle arm		2
52	6687913	SEAL			2
53		PUMP, HYD	- manual controls, AHC & ACS		1
53		PUMP, HYD	See Illustration HYDROSTATIC PUMP / NA8924 - SJC		1
54	7169932	MOUNT			4
55	7188108	GAS SPRING			2
56	7316249	SPACER STEERING	Was 7189894 [A]		1
57	6711643	CAM, WEAR			2
58	17C612	BOLT 5			2

Page Added OSS# 6300322913 - All rights reserved by Bobcat Company - 08/04/2017 - 06:30:16 - Produced by Ken Cook Co. with mediaioff

HAND CONTROLS
(Two Piece Strg Mount)

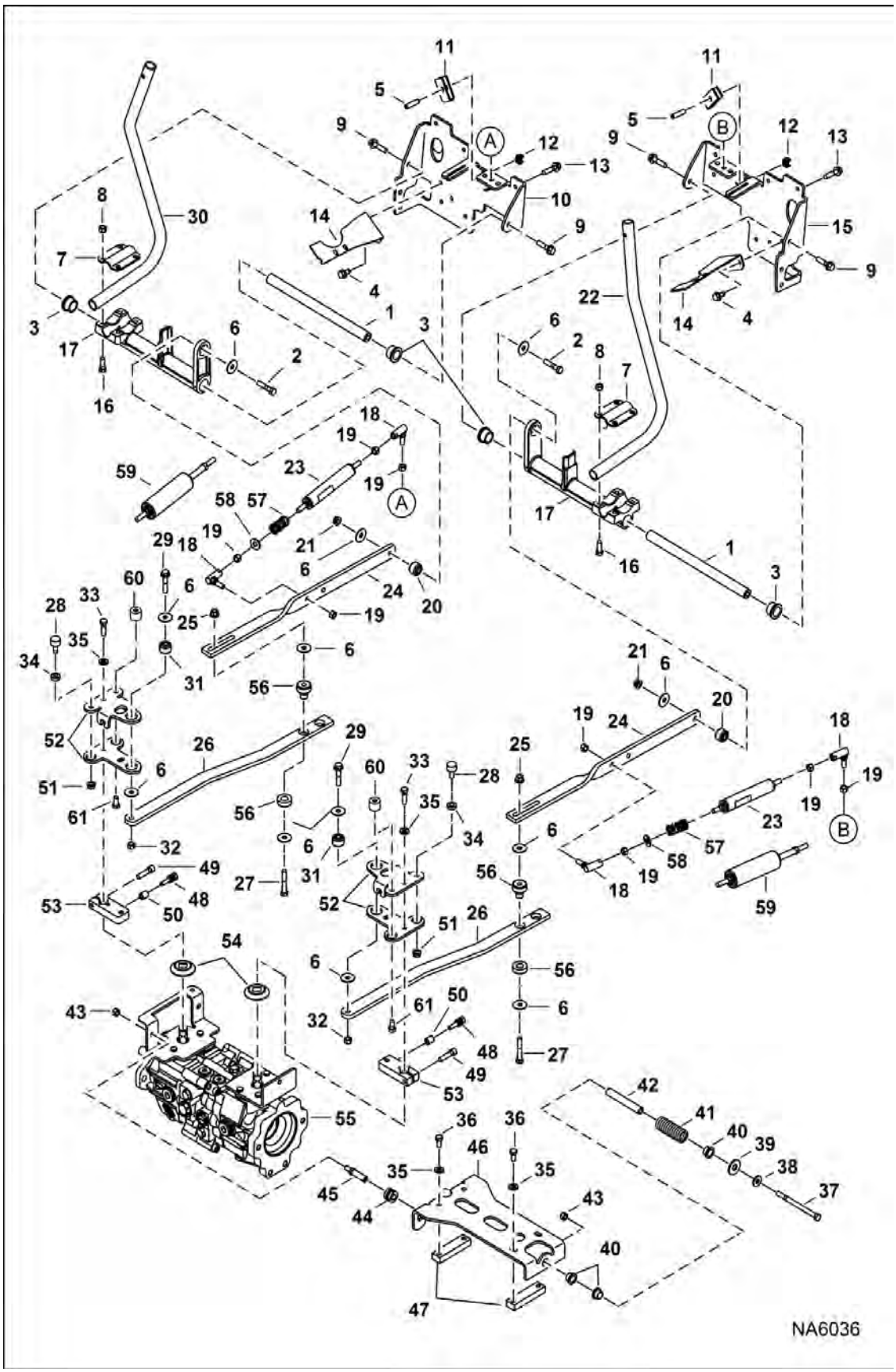

Page 247 - OSS# 6300322913 - All rights reserved by Bobcat Company - 08/04/2017 - 06:30:16 - Produced by Ken Cook Co. with mediaioff

HAND CONTROLS (Cont'd)
(Two Piece Strg Mount)

Ref No	Part Number	Description	Remarks	Serial Number	Qty
1	7145149	SHAFT, STEERING			2
2	17C628	BOLT			2
3	7159624	BUSHING			4
4	84G3712	BOLT 5			4
5	15G628	SCREW			2
6	6737388	WASHER			12
7	7156761	PLATE			2
8	95D6	NUT			8
9	49C624	SCREW			4
10	7176118	MOUNT			1
11	7247290	RETAINER, BOLT	Was 7121779 [B]		2
12	6685663	NUT, RETAINING			2
13	84G3724	BOLT			12
14	7163216	BRACKET			2
15	7176117	MOUNT			1
16	17C616	BOLT 5			8
17	7151889	BELLCRANK			2
18	6599744	BALL, JOINT			4
19	62D6	NUT 5			8
20	6685060	BUSHING, TORSION			2
21	53D6	NUT			2
22	7145147	LEVER, STEERING	RH		1
23		GAS SPRING	NLA - Japan Option - Order Ref. 59 - Was 6649551 [A]		2
24	7231591	LINK, STEERING	Was 7183799 [A]		2
25	83D6	NUT 5			4
26	7286537	LINK, CENTERING	Was 7183821 [B]		2
27	17C636	BOLT			4
28	6673789	BEARING, ROLLER			2
29	17C628	BOLT	Was 49C628 [B]		2
30	7153379	LEVER, STEERING	LH		1
31	6685060	BUSHING, TORSION			2
32	53D6	NUT	Was 63D6 [B]		2
33	47C620	BOLT			4
34	7100699	WASHER			2
35	7103217	WASHER			8
36	17C616	BOLT 5	Was 7105192 [B]		4
37	17C680	BOLT			1
38	6563914	WASHER			1
39	25E24	WASHER	AHC & ACS		1
40	6715163	BUSHING, PRESS FIT			3
41	6701535	SPRING, CENTERING			1
42	6715164	SLEEVE, SPRING			1

Page 240 OSS# 6300322913 - All rights reserved by Bobcat Company - 08/04/2017 - 06:30:16 - Produced by Ken Cook Co. with mediaoff

HAND CONTROLS (Cont'd)
(Two Piece Strg Mount)

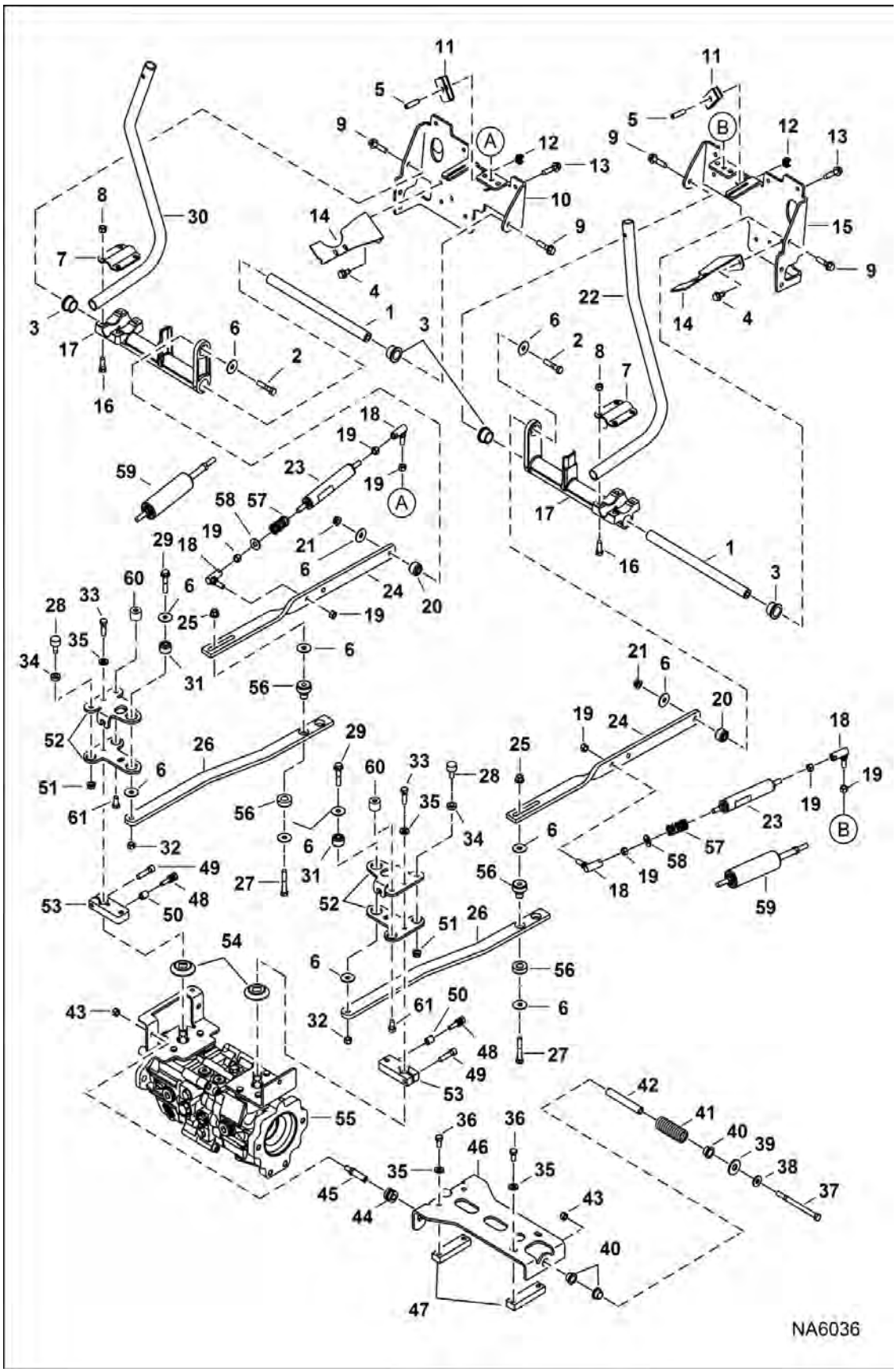

Page 249 - OSS# 6300322913 - All rights reserved by Bobcat Company - 08/04/2017 - 06:30:16 - Produced by Ken Cook Co. with mediaioff

HAND CONTROLS (Cont'd)
(Two Piece Strg Mount)

Ref No	Part Number	Description	Remarks	Serial Number	Qty
43	95D6	NUT			3
44	6706098	GUIDE, PRESS FIT			2
45	6577058	PIN, HAND CONTROL			2
46	6734298	BRACKET			1
47	6702716	BLOCK, WEAR			2
48	7103711	BOLT			2
49	73G624	BOLT			2
50	7105223	SPACER			2
51	98D6	NUT			2
52	7110365	ARM, PINTLE			2
53	7103708	BRACKET	pintle arm		2
54	6687913	SEAL			2
55		PUMP, HYD	See Illustration HYDROSTATIC PUMP/GEAR PUMP / NA1309 - manual controls, AHC & ACS		1
56	7169932	MOUNT			4
57	6690564	SPRING, COMPRESSION			2
58	25E18	WASHER			2
59	7188108	GAS SPRING			2
60	6711643	CAM, WEAR			2
61	17C612	BOLT 5			2

Page 260 OSS# 6300322913 - All rights reserved by Bobcat Company - 08/04/2017 - 06:30:16 - Produced by Ken Cook Co. with mediaioff

HYDROSTATIC MOTOR
(Single Speed)

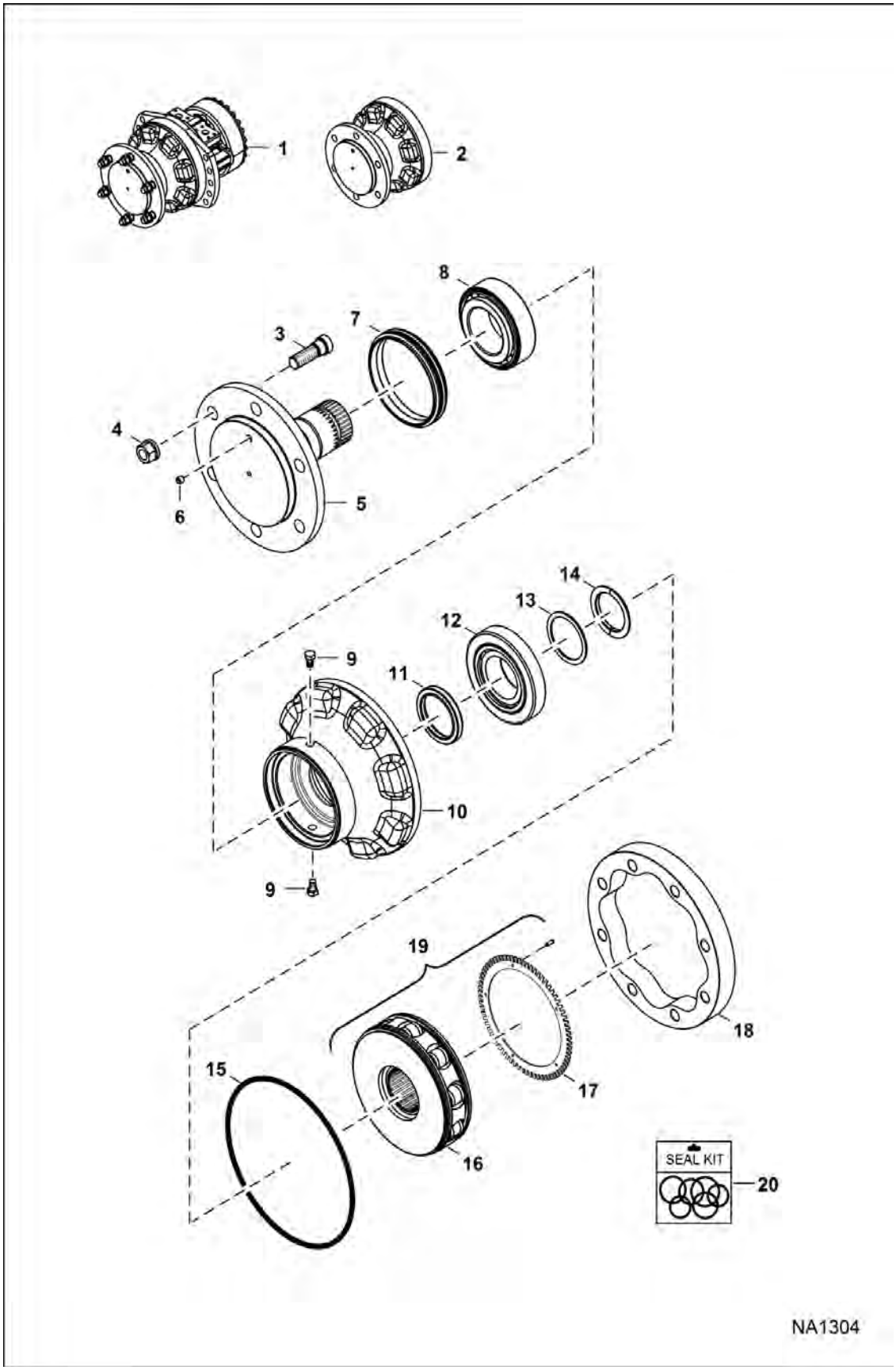

Page 251 - OSS# 6300322913 - All rights reserved by Bobcat Company - 08/04/2017 - 06:30:16 - Produced by Ken Cook Co. with mediaioff

HYDROSTATIC MOTOR (Cont'd)
(Single Speed)

Ref No	Part Number	Description	Remarks	Serial Number	Qty
1		MOTOR, DRIVE HYD	Contact your Local Dealer for Bobcat Technical Information BTI419 - Model R921810767 - Was 6698328 [A]		1
1	6698328REM	MOTOR, DRIVE HYD			1
2	7008041	CASE, FRONT ASSEMBLY			1
3	6674706	STUD	Was 6691214 [A]		6
4	6674724	NUT	Was 6691215 [B]		6
5		SHAFT	NLA - Order Ref. 1 - Was 6689114 [A]		1
6	6680019	PLUG	Was 6691209 [D]		1
7	6691211	SEAL			1
8	6660017	BEARING	Was 6689117 [A]		1
9	7008700	PLUG	magnetic		2
10	7008042	CASE, FRONT			1
11	6674056	SEAL	Was 6691212 [A]		1
12	6660018	BEARING, MOTOR DRIVE	shaft		1
13	6691208	WASHER, KIT	bearing - contains 13 washers from .077" to .12" - Was 6692444 [D]		1
14	6660016	RING, SPLIT	Was 6691210 [D]		1
15	6676597	O-RING	Was 6691216 [D]		1
16		ROTARY GROUP	NSS - Order Ref. 19		1
17		DISK	NSS - Order Ref. 19		1
18	7009545	CAM			1
19	6689124	ROTATING GROUP	Was 6691213 [D]		1
20	6691249	KIT, SEAL	See Illustration HYDROSTATIC MOTOR / NA1305 Ref. 6-8, 21, 23, 29, 39, 42, 46 & 48 - Also includes Ref. 7, 11 & 15 on this page		1

Page 2020 OSS# 6300322913 - All rights reserved by Bobcat Company - 08/04/2017 - 06:30:16 - Produced by Ken Cook Co. With mediaioff

HYDROSTATIC MOTOR
(Single Speed)

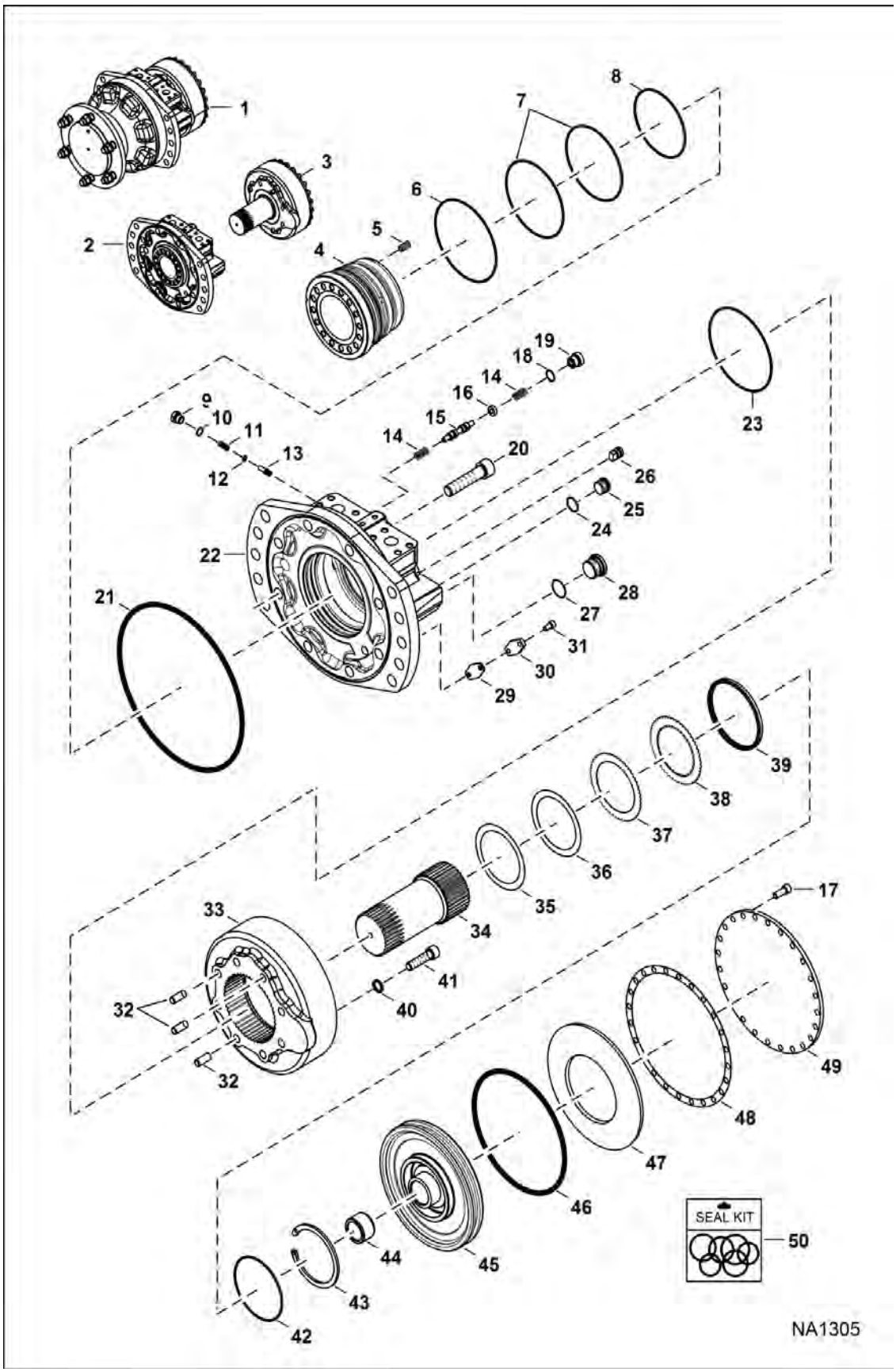

Page 253 - OSS# 6300322913 - All rights reserved by Bobcat Company - 08/04/2017 - 06:30:16 - Produced by Ken Cook Co. with mediaioff

HYDROSTATIC MOTOR (Cont'd)
(Single Speed)

Ref No	Part Number	Description	Remarks	Serial Number	Qty
1		MOTOR, DRIVE HYD	Contact your Local Dealer for Bobcat Technical Information BTI419 - Model R921810767 - Order 7223481 - Was 6698328 [A]		1
1	6698328REM	MOTOR, DRIVE HYD			1
2		REAR CASE ASSY	NLA - Order 7253552 & 7253551 - Was 6691259		1
3	6691260	BRAKE ASSY			1
4	6676909	DISTRIBUTOR	Was 6691219 [D]		1
5	6660033	SPRING	Was 6691221 [A]		12
6	6660034	SEAL	Was 6691222 [D]		1
7	6676910	SEAL	Was 6691248 [D]		2
8	6660037	SEAL	Was 6691223		1
9	6674345	PLUG	Was 6690047 [D]		1
10	6676038	O-RING	Was 6689132 [D]		1
11	6674344	SPRING	Was 6690046 [D]		1
12	6674343	SHIM	Was 6690044 [D]		1
13	6674853	POPPET	Was 6691226 [A]		1
14	6674841	SPRING	Was 6690042 [D]		2
15	6675866	SPOOL	Was 6690041 [A]		1
16	6675867	WASHER	Was 6690043 [D]		1
17	6689128	BOLT	Was 6691240 [D]		24
18	6689133	RING,O			1
19	6691227	PLUG			1
20	6691217	SCREW			8
21	6676597	O-RING	Was 6691216 [D]		2
22		REAR CASE ASSY	NLA - Order 7253552 & 7253551 - Was 6691259		1
23	6691224	SEAL			1
24		O-RING	NSS - Order Ref. 25		1
25	6689129	PLUG			1
26	6660032	STOP PIN	Was 6691220 [D]		1
27		O-RING	NSS - Order Ref. 28		1
28	6691225	PLUG			1
29	6688717	GASKET			1
30	6688716	COVER			1
31	6688718	BOLT			2
32	6691244	PIN			3
33	6691228	HOUSING			1
34	6681622	SHAFT BRAKE	Was 6691229 [A]		1
35	6674722	SHIM	Was 6691235 [A]		1
36	6691236	SHIM			1
37	6674714	BRAKE, DISC	Was 6691233 [A]		22
38	6674713	BRAKE, DISC	Was 6691234 [A]		15
39	6691247	SEAL			1
40	6674708	WASHER	Was 6691239 [D]		5
41	6691238	BOLT			5
42	6691245	O-RING			1
43	6691246	SNAP RING	W/O pin holes		1
44	6674734	BUSHING	Was 6691243 [D]		1

Page 246 OSS# 6300322913 - All rights reserved by Bobcat Company - 08/04/2017 - 06:30:16 - Produced by Ken Cook Co. with mediaioff

HYDROSTATIC MOTOR (Cont'd)
(Single Speed)

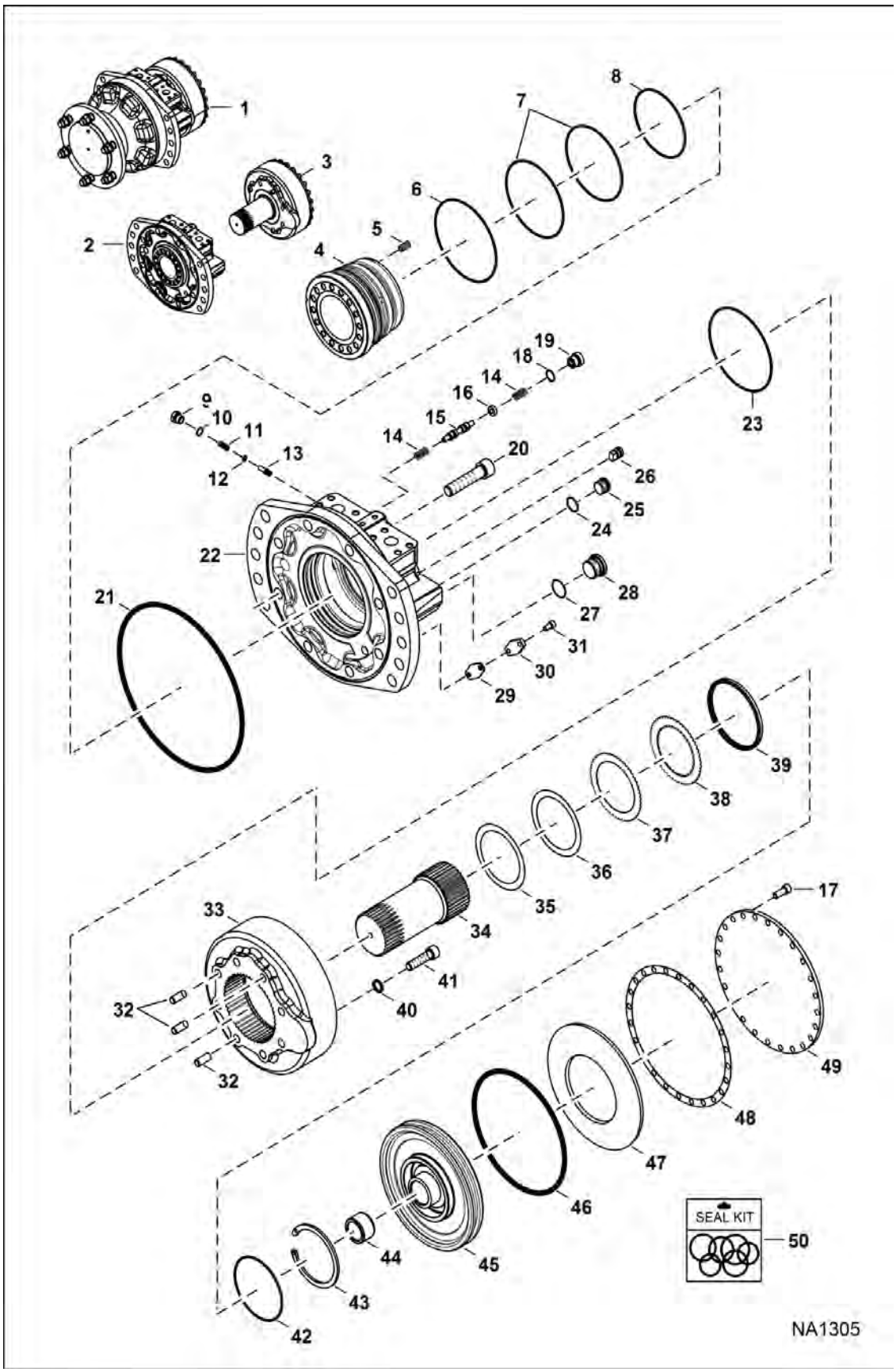

Page 255 - OSS# 6300322913 - All rights reserved by Bobcat Company - 08/04/2017 - 06:30:16 - Produced by Ken Cook Co. with mediaioff

HYDROSTATIC MOTOR (Cont'd)
(Single Speed)

Ref No	Part Number	Description	Remarks	Serial Number	Qty
45	6681638	PISTON	Was 6691230 [A]		1
46	6674728	SEAL, RING	Was 6691237 [A]		1
47	6678780	WASHER	Was 6691241 [D]		1
48	6674720	GASKET, MOTOR HYD	Was 6691232 [D]		1
49	6691098	COVER	Was 6691231 [D]		1
50	6691249	KIT, SEAL	See Illustration HYDROSTATIC MOTOR / NA1304 Ref. 7, 11 & 15 - Also includes Ref. 6-8, 21, 23, 29, 39, 42, 46 & 48 on this page		1

Page 256 OSS# 6300322913 - All rights reserved by Bobcat Company - 08/04/2017 - 06:30:16 - Produced by Ken Cook Co. with mediaioff

HYDROSTATIC MOTOR
(Single Speed)

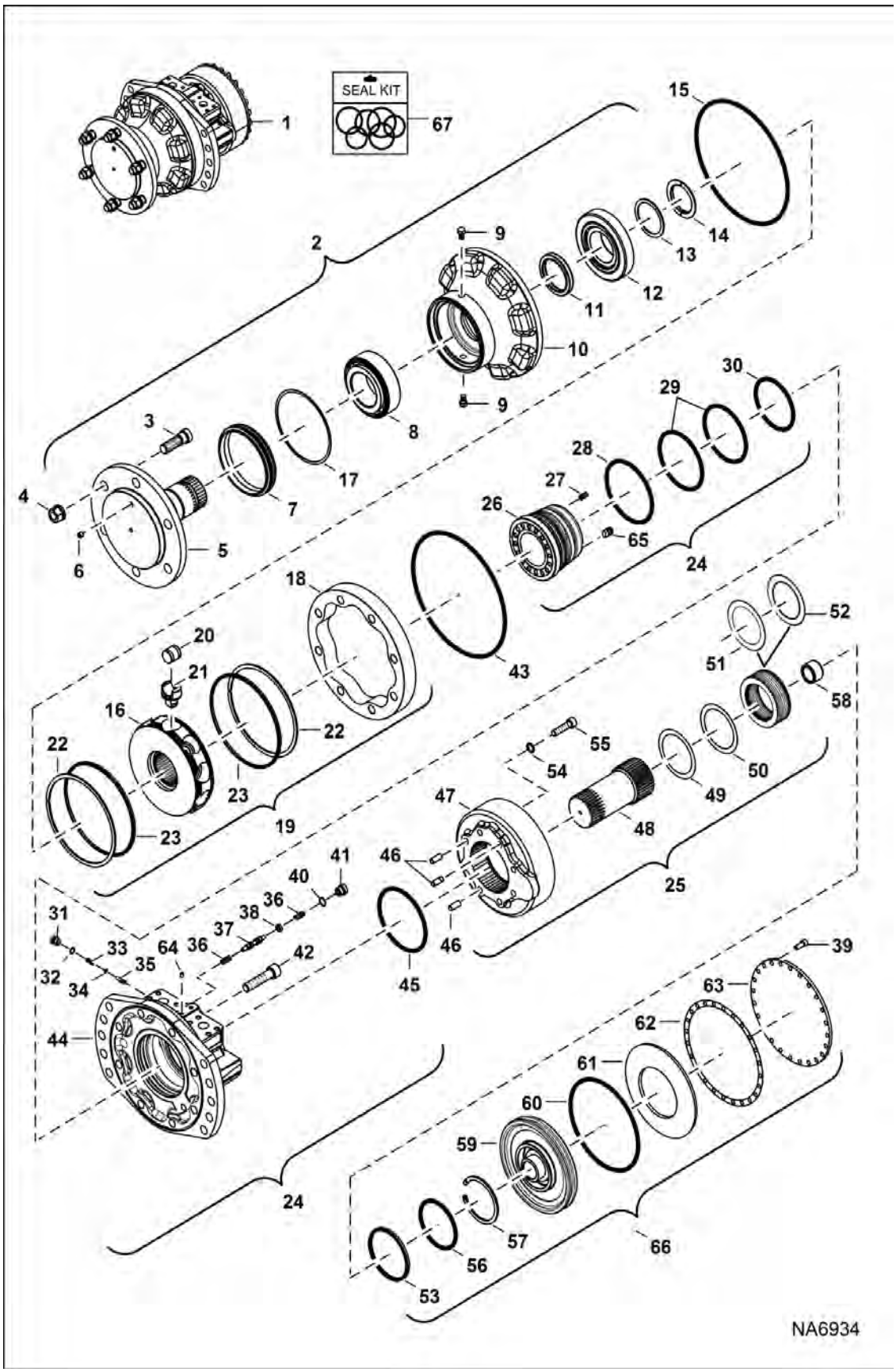

Page 257 - OSS# 6300322913 - All rights reserved by Bobcat Company - 08/04/2017 - 06:30:16 - Produced by Ken Cook Co. with mediaioff

HYDROSTATIC MOTOR (Cont'd)
(Single Speed)

Ref No	Part Number	Description	Remarks	Serial Number	Qty
1		MOTOR, DRIVE HYD	NLA - Model R921811356 - Ref. 2-64 - Was 7223481		1
1	7299300	MOTOR, DRIVE	Model R921812275 - Ref. 2-64		1
2	7026578	CASE, FRONT ASSY			1
3	6674706	STUD	Was 6691214 [A]		6
4	6674724	NUT			6
5		SHAFT	NLA - Order Ref. 1		1
6	6680019	PLUG			1
7	6691211	SEAL			1
8	6660017	BEARING	Was 6689117 [A]		1
9	7008700	PLUG	magnetic		2
10	7008042	CASE, FRONT			1
11	7026581	SEAL, SHAFT			1
12	6660018	BEARING, MOTOR DRIVE	shaft		1
13	6691208	WASHER, KIT	bearing - contains 13 washers from .077" to .12"		1
14	6660016	RING, SPLIT			1
15	7026582	O-RING			1
16	7026583	GROUP, ROTARY	NSS - Order Ref. 19		1
17	6689121	O-RING			1
18	7009545	CAM	Use W/Motor 7223481		1
18	7313463	CAM ROTOR	Use W/Motor 7299300		1
19	7026579	GROUP, ROTATING			1
20	6690022	ROLLER			1
21	6689126	PISTON			1
22	7021782	RING, SNAP			1
23	7024973	RING, RETAINING			1
24	7026580	CASE, REAR ASSY			1
25	6691260	BRAKE ASSY			1
26	6676909	DISTRIBUTOR			1
27	6660033	SPRING	Was 6691221 [A]		12
28	6660034	SEAL			1
29	6676910	SEAL			2
30	6660037	SEAL			1
31	6674345	PLUG			1
32	6676038	O-RING			1
33	6674344	SPRING			1
34	6674343	SHIM			1
35	6674853	POPPET	Was 6691226 [A]		1
36	6674841	SPRING			2
37	6675866	SPOOL	Was 6690041 [A]		1
38	6675867	WASHER			1
39	6689128	BOLT			24
40	6689133	RING,O			1
41	6691227	PLUG			1
42	6691217	SCREW			8
43	7026582	O-RING			2

Page 250 OSS# 6300322913 - All rights reserved by Bobcat Company - 08/04/2017 - 06:30:16 - Produced by Ken Cook Co. with mediaoff!

HYDROSTATIC MOTOR (Cont'd)
(Single Speed)

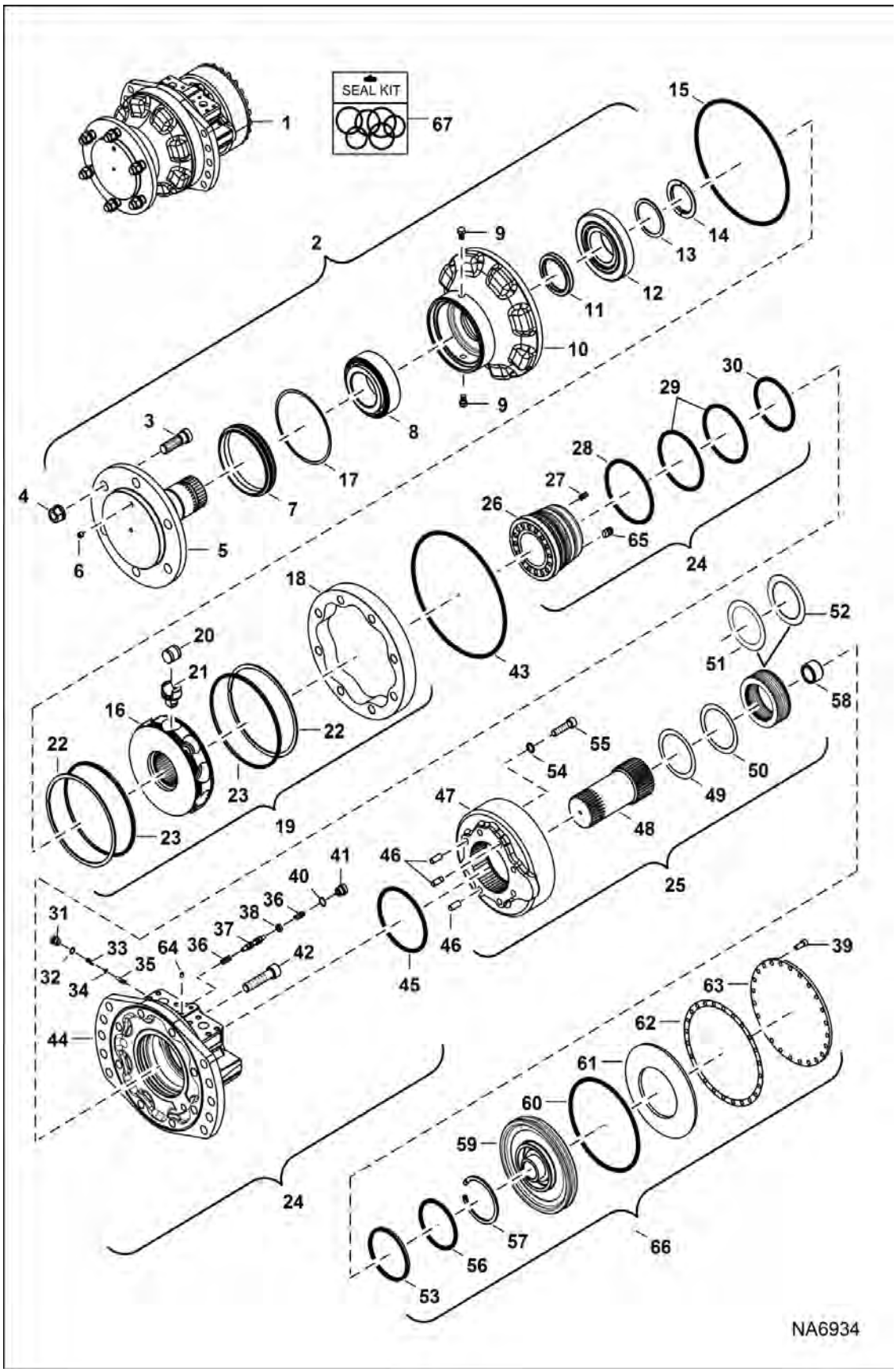

Page 259 - OSS# 6300322913 - All rights reserved by Bobcat Company - 08/04/2017 - 06:30:16 - Produced by Ken Cook Co. with mediaioff

Illustration NA6934

HYDROSTATIC MOTOR (Cont'd)
(Single Speed)

Ref No	Part Number	Description	Remarks	Serial Number	Qty
44	7026584	CASE, REAR			1
45	7020916	SEAL			1
46	6691244	PIN			3
47	6691228	HOUSING			1
48	6681622	SHAFT BRAKE			1
49	6674722	SHIM			1
50	6691236	SHIM			1
51	6674714	BRAKE, DISC			22
52	6674713	BRAKE, DISC			15
53	6691247	SEAL			1
54	6674708	WASHER			5
55	6691238	BOLT			5
56	6691245	O-RING			1
57	6691246	SNAP RING	W/O pin holes		1
58	6674734	BUSHING			1
59	6681638	PISTON			1
60	6678138	O-RING	- Was 7026585		1
61	6678780	WASHER			1
62	6674720	GASKET, MOTOR HYD			1
63	6691098	COVER			1
64		PLUG	NLA		1
65	6660032	STOP PIN			1
66	7020896	BRAKE, ASSY	Ref. 39, 53, 56, 57, 59 & 60-63		1
67	6691249	KIT, SEAL	Ref. 7, 11, 15, 28-30, 32, 40, 43, 45, 56, 60 & 62		1

Page 2603 OSS# 6300322913 - All rights reserved by Bobcat Company - 08/04/2017 - 06:30:16 - Produced by Ken Cook Co. with mediaioff

HYDROSTATIC MOTOR & BRAKE

(2-Speed)

(S/N A3P811001 - A3P813174, A3P911001 - A3P912024)

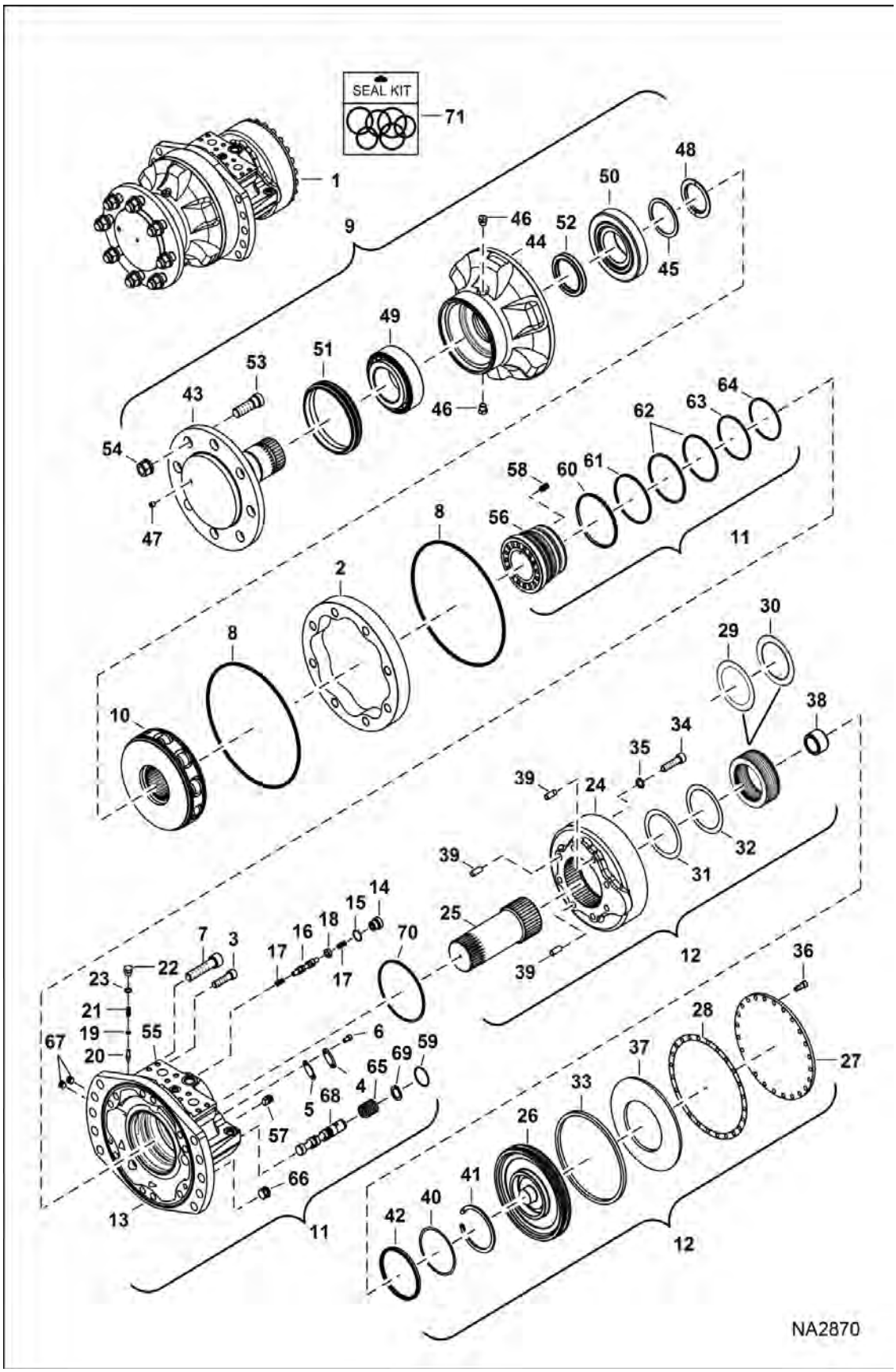

Page 261 - OSS# 6300322913 - All rights reserved by Bobcat Company - 08/04/2017 - 06:30:16 - Produced by Ken Cook Co. with mediaioff

Illustration NA2870

HYDROSTATIC MOTOR & BRAKE (Cont'd)

(2-Speed)

(S/N A3P811001 - A3P813174, A3P911001 - A3P912024)

Ref No	Part Number	Description	Remarks	Serial Number	Qty
1		MOTOR, DRIVE HYD 2-SPD	Model R921810899 - Ref. 2-70 - NLA - Use 7010257REM - Was 7010257 [A]	A3P811001 - 13175	1
1	7010257REM	MOTOR, DRIVE HYD 2-SPD			1
1		MOTOR, DRIVE HYD 2-SPD	NLA - Model R921812129 - Ref. 2-70 - Was 7281453 [D]	A3P813175 & Above	1
2	7020889	CAM			1
3	7020890	BOLT			2
4	6688716	COVER			1
5	6688717	GASKET			1
6	7020891	BOLT			2
7	7020892	BOLT			10
8	6676597	O-RING	Was 6691216 [A]		2
9	7020893	CASE, FRONT ASSY	Ref. 44-52 - does not include Ref. 53 or 54		1
10	7273676	ROTOR, ASSY	Was 7024971 [A]		1
11	7020895	HOUSING, ASSY	Ref. 56-70		1
12	7020896	BRAKE, ASSY	Ref. 24-42		1
13	7020897	HOUSING			1
14	6691227	PLUG			1
15	6689133	RING,O			1
16	6675866	SPOOL	Was 6690041 [A]		1
17	6674841	SPRING	Was 6690042 [D]		2
18	6675867	WASHER	Was 6690043 [D]		1
19	6674343	SHIM	Was 6690044 [D]		1
20	6675868	POPPET	Was 6690045 [A]		1
21	6674344	SPRING	Was 6690046 [D]		1
22	6674345	PLUG	Was 6690047 [D]		1
23	6676038	O-RING	Was 6689132 [D]		1
24	7020898	HOUSING			1
25	7020899	SHAFT			1
26	6681638	PISTON	Was 6691230 [A]		1
27	6691098	COVER	Was 6691231 [A]		1
28	6674720	GASKET, MOTOR HYD	Was 6691232		1
29	6674713	BRAKE, DISC	inner		16
30	6674714	BRAKE, DISC	outer		21
31	6674722	SHIM	Was 6691235 [A]		1
32	6691236	SHIM			1
33	6674728	SEAL, RING	Was 6691237 [A]		1
34	6691238	BOLT			5
35	6674708	WASHER	Was 6691239 [A]		5
36	6689128	BOLT	Was 6691240 [A]		24
37	6678780	WASHER	Was 6691241 [A]		1
38	6674734	BUSHING	Was 6691243 [A]		1
39	6691244	PIN			3
40	6691245	O-RING			1
41	6691246	SNAP RING	W/O pin holes		1
42	6691247	SEAL			1

Page 254 OSS# 6300322913 - All rights reserved by Bobcat Company - 08/04/2017 - 06:30:16 - Produced by Ken Cook Co. with mediaioff

HYDROSTATIC MOTOR & BRAKE (Cont'd)

(2-Speed)

(S/N A3P811001 - A3P813174, A3P911001 - A3P912024)

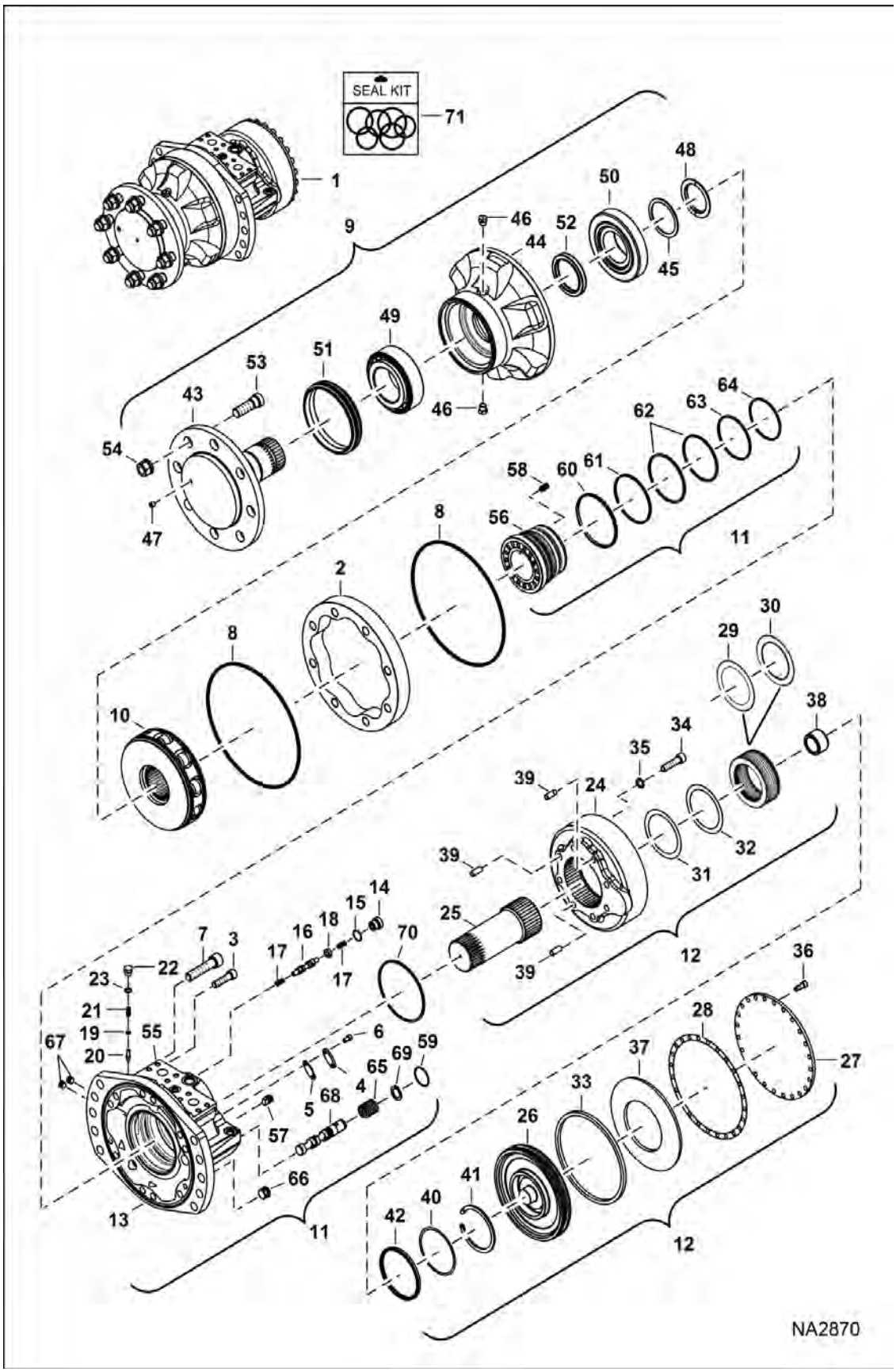

Page 263 - OSS# 6300322913 - All rights reserved by Bobcat Company - 08/04/2017 - 06:30:16 - Produced by Ken Cook Co. with mediaioff

HYDROSTATIC MOTOR & BRAKE (Cont'd)

(2-Speed)

(S/N A3P811001 - A3P813174, A3P911001 - A3P912024)

Ref No	Part Number	Description	Remarks	Serial Number	Qty
43	6674054	SHAFT	Was 7020900 [A]		1
44	7020901	HOUSING			1
45	6691208	WASHER, KIT			1
46	7008700	PLUG			2
47	6680019	PLUG	Was 6691209 [A]		1
48	6660016	RING, SPLIT	Was 6691210 [A]		1
49	6660017	BEARING	Was 6689117 [A]		1
50	6660018	BEARING, MOTOR DRIVE	Was 6689118 [A]		1
51	6691211	SEAL			1
52	6674056	SEAL	Was 6691212 [A]		1
53	7020902	STUD			8
54	7020903	NUT			8
55	7020904	ROLLER			8
56	7020905	DISTRIBUTOR			1
57	6660032	STOP PIN	Was 6691220 [A]		1
58	6660033	SPRING	Was 6691221 [A]		16
59	7020906	SEAL	Was 7020706 [B,D]		1
60	7020907	SEAL			1
61	7020908	SEAL			1
62	7020909	SEAL			2
63	7020910	SEAL			1
64	7020911	SEAL			1
65	7020912	SPRING			1
66	6689129	PLUG			1
67	7020913	PLUG			2
68	7020914	SPOOL			1
69	7020915	CLIP			1
70	7020916	SEAL			1
71	7024970	KIT, SEAL	Ref. 8, 15, 23, 28, 33, 40, 51, 52, 59-64 & 70		1

Page 256 OSS# 6300322913 - All rights reserved by Bobcat Company - 08/04/2017 - 06:30:16 - Produced by Ken Cook Co. with mediaoff

HYDROSTATIC MOTOR & BRAKE

(2-Speed)

(S/N A3P813175 - A3P815999, A3P912025 - A3P912999)

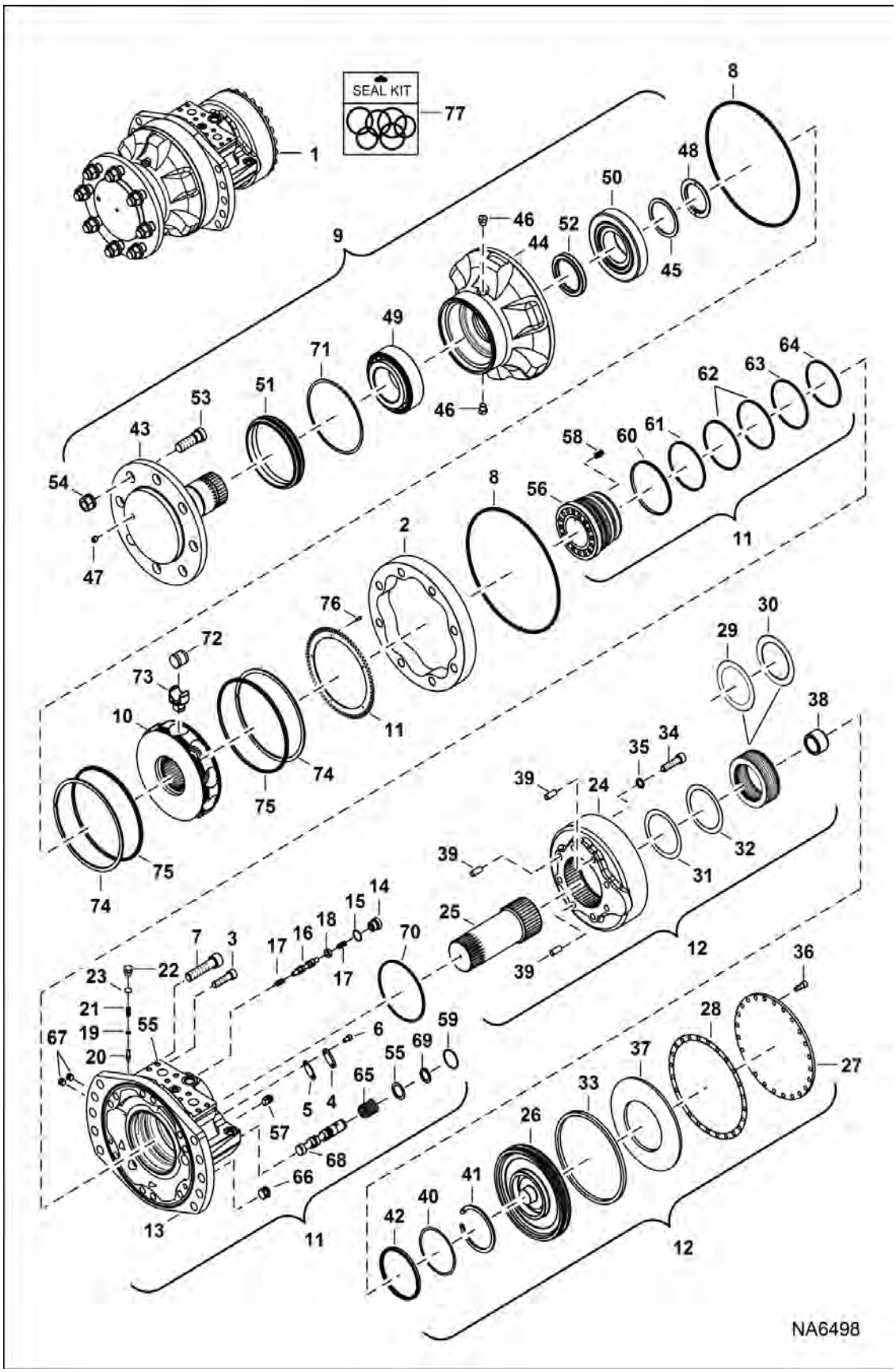

Page 265 - OSS# 6300322913 - All rights reserved by Bobcat Company - 08/04/2017 - 06:30:16 - Produced by Ken Cook Co. with mediaioff

HYDROSTATIC MOTOR & BRAKE (Cont'd)

(2-Speed)

(S/N A3P813175 - A3P815999, A3P912025 - A3P912999)

Ref No	Part Number	Description	Remarks	Serial Number	Qty
1		MOTOR, DRIVE HYD 2-SPD	Contact your Local Dealer for Bobcat Technical Information BTI419 - Model R921811217 - Ref. 2-76 - Was 7023318 [A]		1
2	7020889	CAM			1
3	7020890	BOLT			2
4	6688716	COVER			1
5	6688717	GASKET			1
6	7020891	BOLT			2
7	7020892	BOLT			10
8	6676597	O-RING	Was 6691216 [A]		2
9	7020893	CASE, FRONT ASSY	Ref. 44-52 - does not include Ref. 53 or 54		1
10	7273676	ROTOR, ASSY	Was 7024971 [A]		1
11	7025147	DISC, MOTOR HYD	Ref. 56-70 - Was 7024975 [D]		1
12	7020896	BRAKE, ASSY	Ref. 24-42		1
13		HOUSING, MOTOR HYD	NLA - Order Ref. 11 - Was 7024976 [A]		1
14	6691227	PLUG			1
15	6689133	RING,O			1
16	6675866	SPOOL	Was 6690041 [A]		1
17	6674841	SPRING	Was 6690042 [A]		2
18	6675867	WASHER	Was 6690043 [A]		1
19	6674343	SHIM	Was 6690044 [A]		1
20	6675868	POPPET	Was 6690045 [A]		1
21	6674344	SPRING	Was 6690046 [A]		1
22	6674345	PLUG	Was 6690047 [A]		1
23	6676038	O-RING			1
24	7020898	HOUSING			1
25	7020899	SHAFT			1
26	6681638	PISTON			1
27	6691098	COVER			1
28	6674720	GASKET, MOTOR HYD			1
29	6674713	BRAKE, DISC	inner		16
30	6674714	BRAKE, DISC	outer		21
31	6674722	SHIM			1
32	6691236	SHIM			1
33	6674728	SEAL, RING			1
34	6691238	BOLT			5
35	6674708	WASHER			5
36	6689128	BOLT			24
37	6678780	WASHER			1
38	6674734	BUSHING			1
39	6691244	PIN			3
40	6691245	O-RING			1
41	6691246	SNAP RING	W/O pin holes		1
42	6691247	SEAL			1
43	6674054	SHAFT	Was 7020900 [A]		1

Page 258 OSS# 6300322913 - All rights reserved by Bobcat Company - 08/04/2017 - 06:30:16 - Produced by Ken Cook Co. with mediaoff

HYDROSTATIC MOTOR & BRAKE (Cont'd)

(2-Speed)

(S/N A3P813175 - A3P815999, A3P912025 - A3P912999)

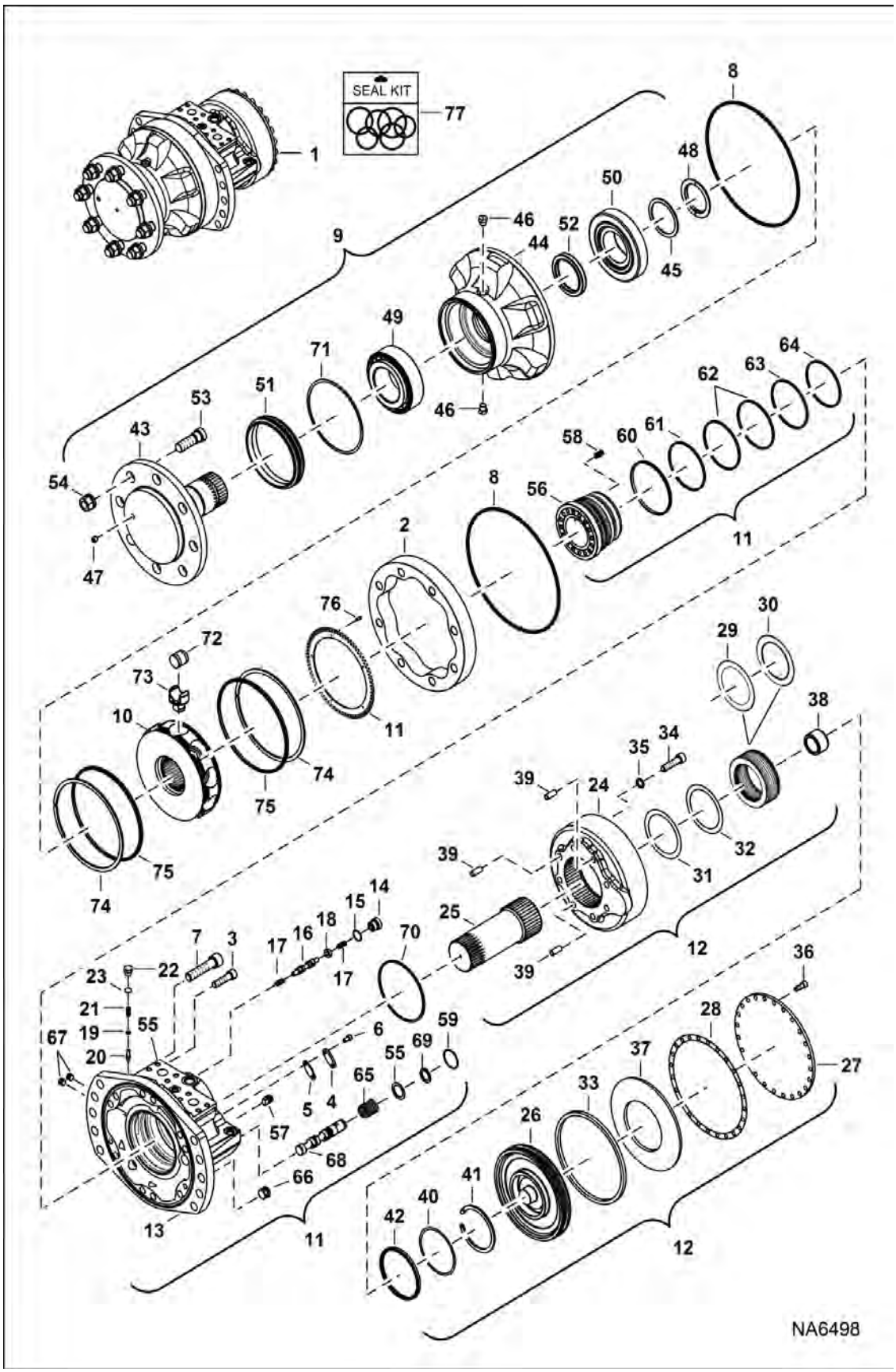

Page 267 - OSS# 6300322913 - All rights reserved by Bobcat Company - 08/04/2017 - 06:30:16 - Produced by Ken Cook Co. with mediaioff

HYDROSTATIC MOTOR & BRAKE (Cont'd)

(2-Speed)

(S/N A3P813175 - A3P815999, A3P912025 - A3P912999)

Ref No	Part Number	Description	Remarks	Serial Number	Qty
44	7020901	HOUSING			1
45	6691208	WASHER, KIT			1
46	7008700	PLUG			2
47	6680019	PLUG	Was 6691209 [A]		1
48	6660016	RING, SPLIT	Was 6691210 [A]		1
49	6660017	BEARING	Was 6689117 [A]		1
50	6660018	BEARING, MOTOR DRIVE	Was 6689118 [A]		1
51	6691211	SEAL			1
52	6674056	SEAL	Was 6691212 [A]		1
53	7020902	STUD			8
54	7020903	NUT			8
55		WASHER, RETAINING	NLA - Order Ref. 11 - Was 7024978 [A]		1
56	7020905	DISTRIBUTOR			1
57	6660032	STOP PIN	Was 6691220 [A]		1
58	6660033	SPRING	Was 6691221 [A]		16
59	7020906	SEAL			1
60	7020907	SEAL			1
61	7020908	SEAL			1
62	7020909	SEAL			2
63	7020910	SEAL			1
64	7020911	SEAL			1
65		SPRING, SPOOL	NLA - Order Ref. 11 - Was 7024979 [A]		1
66	6689129	PLUG			1
67	7020913	PLUG			2
68		SPOOL, MOTOR	NLA - Order Ref. 11 - Was 7024977 [A]		1
69		RING, SNAP	NLA - Order Ref. 11 - Was 7024980 [A]		1
70	7020916	SEAL			1
71	6689121	O-RING			1
72	7020904	ROLLER			8
73	7024972	PISTON, MOTOR			8
74	7021782	RING, SNAP			2
75	7024973	RING, RETAINING			2
76	6685433	SPRING PIN	Was 7024974 [A]		4
77	7024970	KIT, SEAL	Ref. 8, 15, 23, 28, 33, 40, 51, 52, 59-64 & 70		1

Page 260 OSS# 6300322913 - All rights reserved by Bobcat Company - 08/04/2017 - 06:30:16 - Produced by Ken Cook Co. with mediaoff!

HYDROSTATIC MOTOR & BRAKE

(2-Speed)

(S/N A3P816001 & Above, A3P913001 & Above)

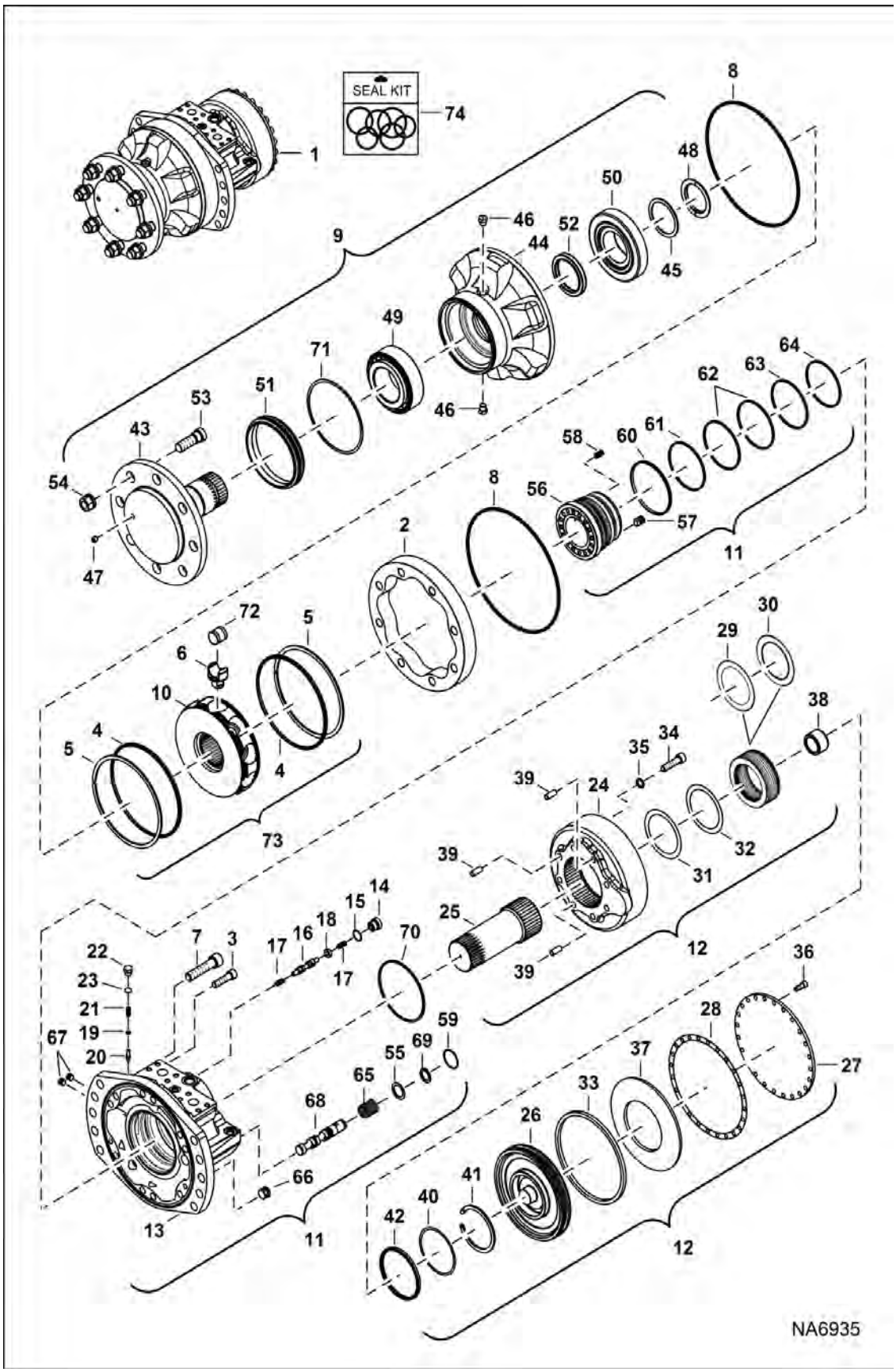

Page 269 - OSS# 6300322913 - All rights reserved by Bobcat Company - 08/04/2017 - 06:30:16 - Produced by Ken Cook Co. with mediaioff

HYDROSTATIC MOTOR & BRAKE (Cont'd)

(2-Speed)

(S/N A3P816001 & Above, A3P913001 & Above)

Ref No	Part Number	Description	Remarks	Serial Number	Qty
1		MOTOR, DRIVE	NLA - Model R921811946 - Ref. 2-73 - Was 7277873 [A]	A3P816001 - A3P816150	1
				A3P913001 - A3P913075	1
1	7299301	MOTOR, DRIVE	Model R921812276 - Ref. 2-73	A3P816151 & Above	1
				A3P913076 & Above	1
2		CAM	NLA - Use W/Ref. 1 (NLA/ 7277873 motor) - Order 7299301 motor - Was 7020889 [A]		1
2	7313256	CAM ROTOR	Use W/Ref. 1 (7299301 motor)		1
3	7020890	BOLT			2
4	7024973	RING, RETAINING			2
5	7021782	RING, SNAP			2
6	7024972	PISTON, MOTOR			8
7	7020892	BOLT			10
8	6676597	O-RING	Was 6691216 [A]		2
9	7020893	CASE, FRONT ASSY	Ref. 44-52 - does not include Ref. 53 or 54		1
10	7273676	ROTOR, ASSY	Was 7024971 [A]		1
11	7026587	CASE, REAR ASSY	Ref. 56-70		1
12	7020896	BRAKE, ASSY	Ref. 24-42		1
13	7026588	CASE, REAR	[A]		1
14	6691227	PLUG			1
15	6689133	RING,O			1
16	6675866	SPOOL	Was 6690041 [A]		1
17	6674841	SPRING	Was 6690042 [A]		2
18	6675867	WASHER	Was 6690043 [A]		1
19	6674343	SHIM	Was 6690044 [A]		1
20	6675868	POPPET	Was 6690045 [A]		1
21	6674344	SPRING	Was 6690046 [A]		1
22	6674345	PLUG	Was 6690047 [A]		1
23	6676038	O-RING			1
24	7020898	HOUSING			1
25	7020899	SHAFT			1
26	6681638	PISTON			1
27	6691098	COVER			1
28	6674720	GASKET, MOTOR HYD			1
29	6674713	BRAKE, DISC	inner		16
30	6674714	BRAKE, DISC	outer		21
31	6674722	SHIM			1
32	6691236	SHIM			1
33	6678138	O-RING	- Was 7026585		1
34	6691238	BOLT			5
35	6674708	WASHER			5
36	6689128	BOLT			24
37	6678780	WASHER			1
38	6674734	BUSHING			1

Page 2 of 2 OSS# 6300322913 - All rights reserved by Bobcat Company - 08/04/2017 - 06:30:16 - Produced by Ken Cook Co. with mediaoff

HYDROSTATIC MOTOR & BRAKE (Cont'd)

(2-Speed)

(S/N A3P816001 & Above, A3P913001 & Above)

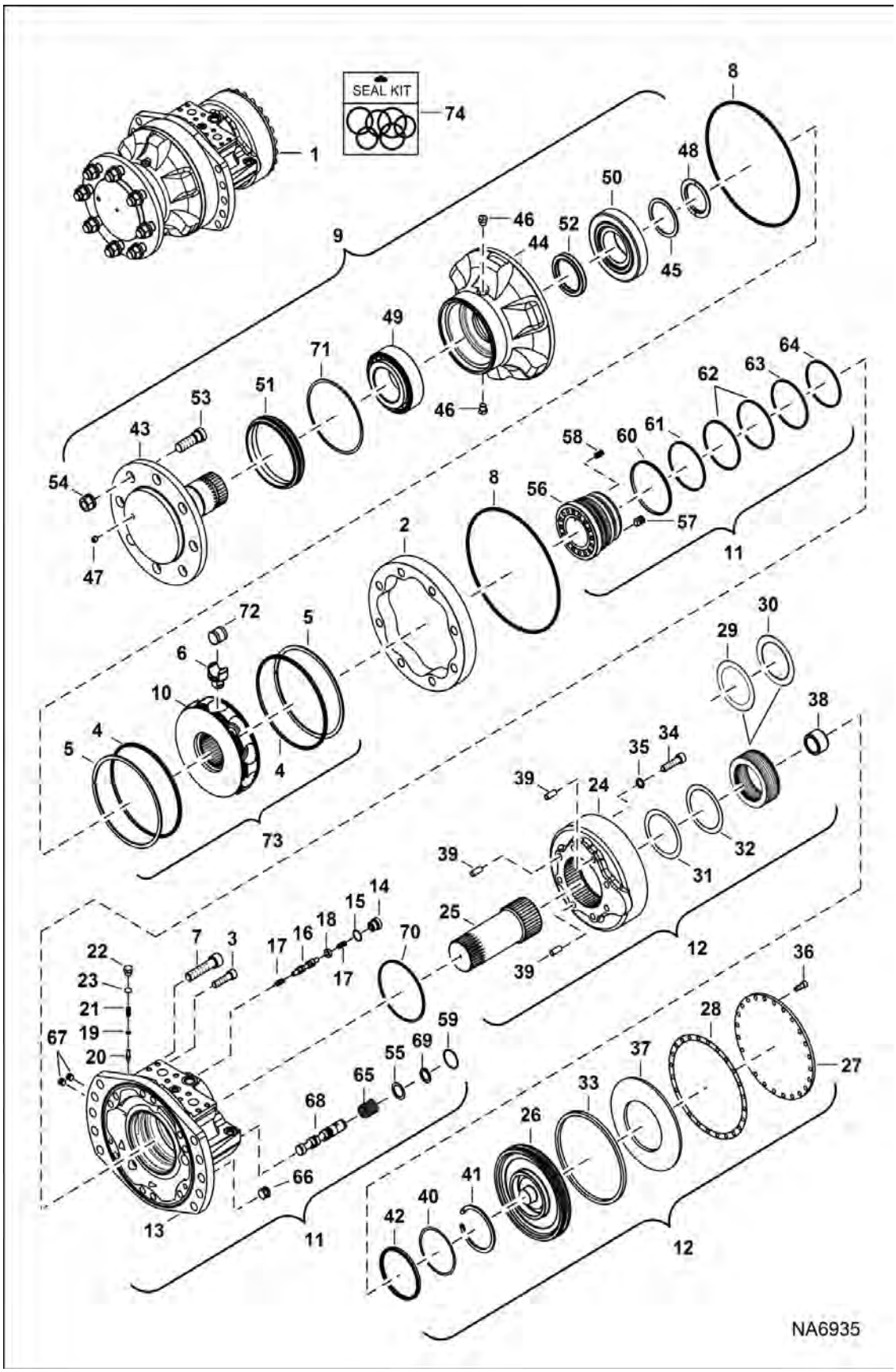

Page 271 - OSS# 6300322913 - All rights reserved by Bobcat Company - 08/04/2017 - 06:30:16 - Produced by Ken Cook Co. with mediaioff

HYDROSTATIC MOTOR & BRAKE (Cont'd)

(2-Speed)

(S/N A3P816001 & Above, A3P913001 & Above)

Ref No	Part Number	Description	Remarks	Serial Number	Qty
39	6691244	PIN			3
40	6691245	O-RING			1
41	6691246	SNAP RING	W/O pin holes		1
42	6691247	SEAL			1
43	6674054	SHAFT	Was 7020900 [A]		1
44	7020901	HOUSING	Use W/ 7277873	A3P8 -	1
				A3P9 -	1
44	7313253	CASE FRONT	Use W/ 7299301	A3P8 & Above	1
				A3P9 & Above	1
45	6691208	WASHER, KIT			1
46	7008700	PLUG			2
47	6680019	PLUG	Was 6691209 [A]		1
48	6660016	RING, SPLIT	Was 6691210 [A]		1
49	6660017	BEARING	Was 6689117 [A]		1
50	6660018	BEARING, MOTOR DRIVE	Was 6689118 [A]		1
51	6691211	SEAL			1
52	6674056	SEAL	Was 6691212 [A]		1
53	7020902	STUD			8
54	7020903	NUT			8
55		WASHER, RETAINING	NLA - Order Ref. 11		1
56	7020905	DISTRIBUTOR			1
57	6660032	STOP PIN	Was 6691220 [A]		1
58	6660033	SPRING	Was 6691221 [A]		16
59	7020906	SEAL			1
60	7020907	SEAL			1
61	7020908	SEAL			1
62	7020909	SEAL			2
63	7020910	SEAL			1
64	7020911	SEAL			1
65		SPRING, SPOOL	NLA - Order Ref. 11		1
66	6689129	PLUG			1
67	7020913	PLUG			2
68	7026589	SPOOL, MOTOR			1
69		RING, SNAP	NLA - Order Ref. 11		1
70	7020916	SEAL			1
71	6689121	O-RING			1
72	7020904	ROLLER			8
73	7026586	GROUP, ROTATING			1
74	7024970	KIT, SEAL	Ref. 8, 15, 23, 28, 33, 40, 51, 52, 59-64 & 70		1

Page 2 of 2 OSS# 6300322913 - All rights reserved by Bobcat Company - 08/04/2017 - 06:30:16 - Produced by Ken Cook Co. with mediaoff

HYDROSTATIC PUMP/GEAR PUMP
(Identification)

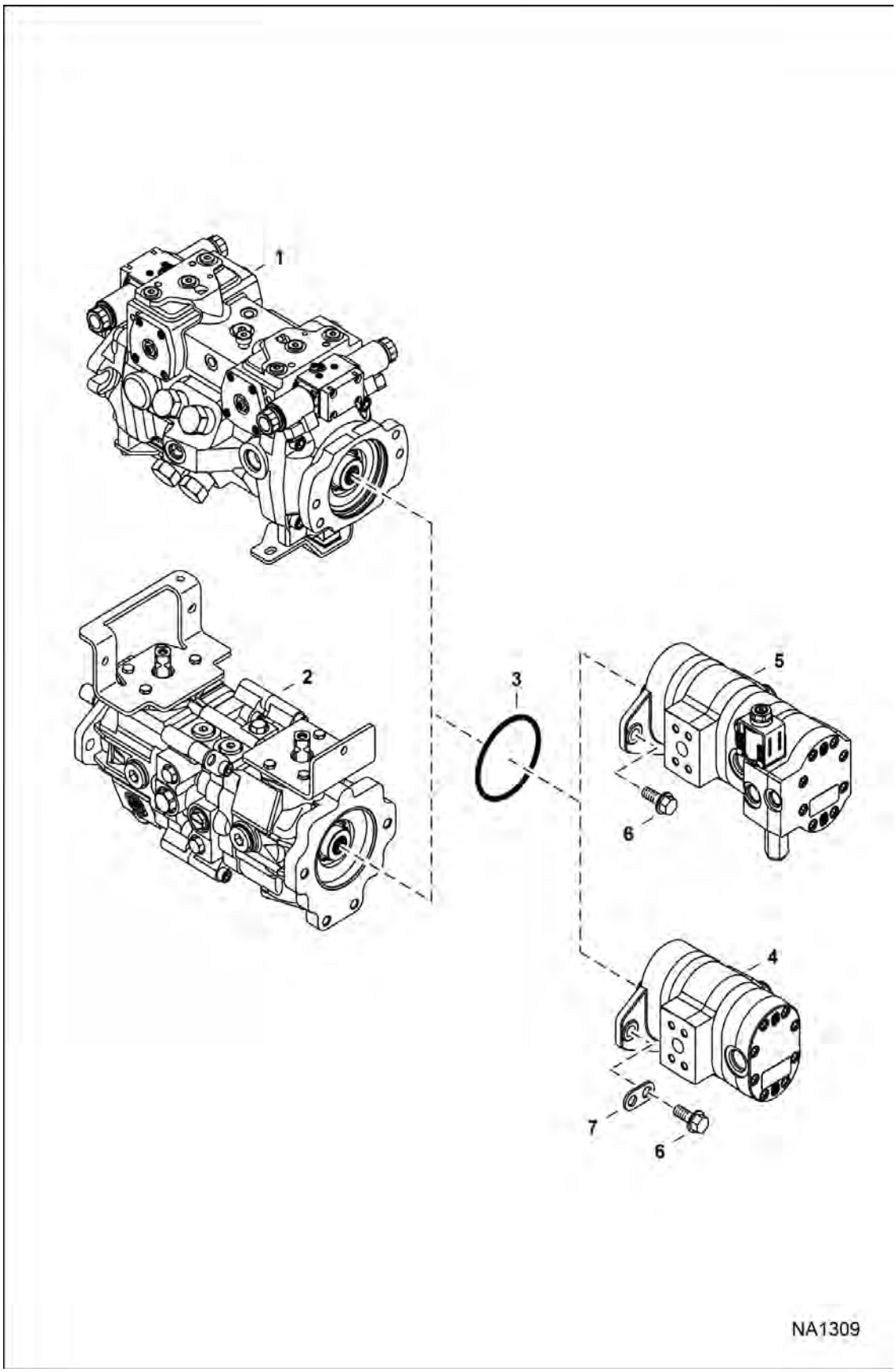

Page 273 - OSS# 6300322913 - All rights reserved by Bobcat Company - 08/04/2017 - 06:30:16 - Produced by Ken Cook Co. with mediaioff

Illustration NA1309

HYDROSTATIC PUMP/GEAR PUMP (Cont'd)
(Identification)

Ref No	Part Number	Description	Remarks	Serial Number	Qty
1		PUMP, HYD	See Illustration HYDROSTATIC PUMP / NA2992 - SJC		1
2		PUMP, HYD	See Illustration HYDROSTATIC PUMP / MS2183 manual controls, AHC & ACS , See Illustration HYDROSTATIC PUMP / MS2184 manual controls, AHC & ACS	A3P811001 - A3P816155	1
				A3P911001 - A3P913075	1
2		PUMP HYDROSTATIC	See Illustration HYDROSTATIC PUMP / NA12681 manual controls, AHC & ACS , See Illustration HYDROSTATIC PUMP / NA12682 manual controls, AHC & ACS	A3P816156 & Above	1
				A3P913076 & Above	1
3	6671520	O-RING	manual controls & ACS		1
3	6682949	O-RING	SJC		1
4		PUMP, GEAR DOUBLE	See Illustration GEAR PUMP / MS1454 - standard flow hydraulics		1
5		PUMP, GEAR QUAD	See Illustration HIGH FLOW HYDRAULICS / NA5151 - high flow hydraulics		1
6	45C828	BOLT	manual controls & ACS - Was 45C824 [B]		2
6	7131273	SCREW	SJC - Was 59CM1240 [B]		2
7	6662126	BRACKET			2

Page 274 OSS# 6300322913 - All rights reserved by Bobcat Company - 08/04/2017 - 06:30:16 - Produced by Ken Cook Co. with mediaioff

HYDROSTATIC PUMP

(Manual Controls, AHC & ACS) (Left Half)
(S/N A3P811001 - A3P816155, A3P911001 - A3P913075)

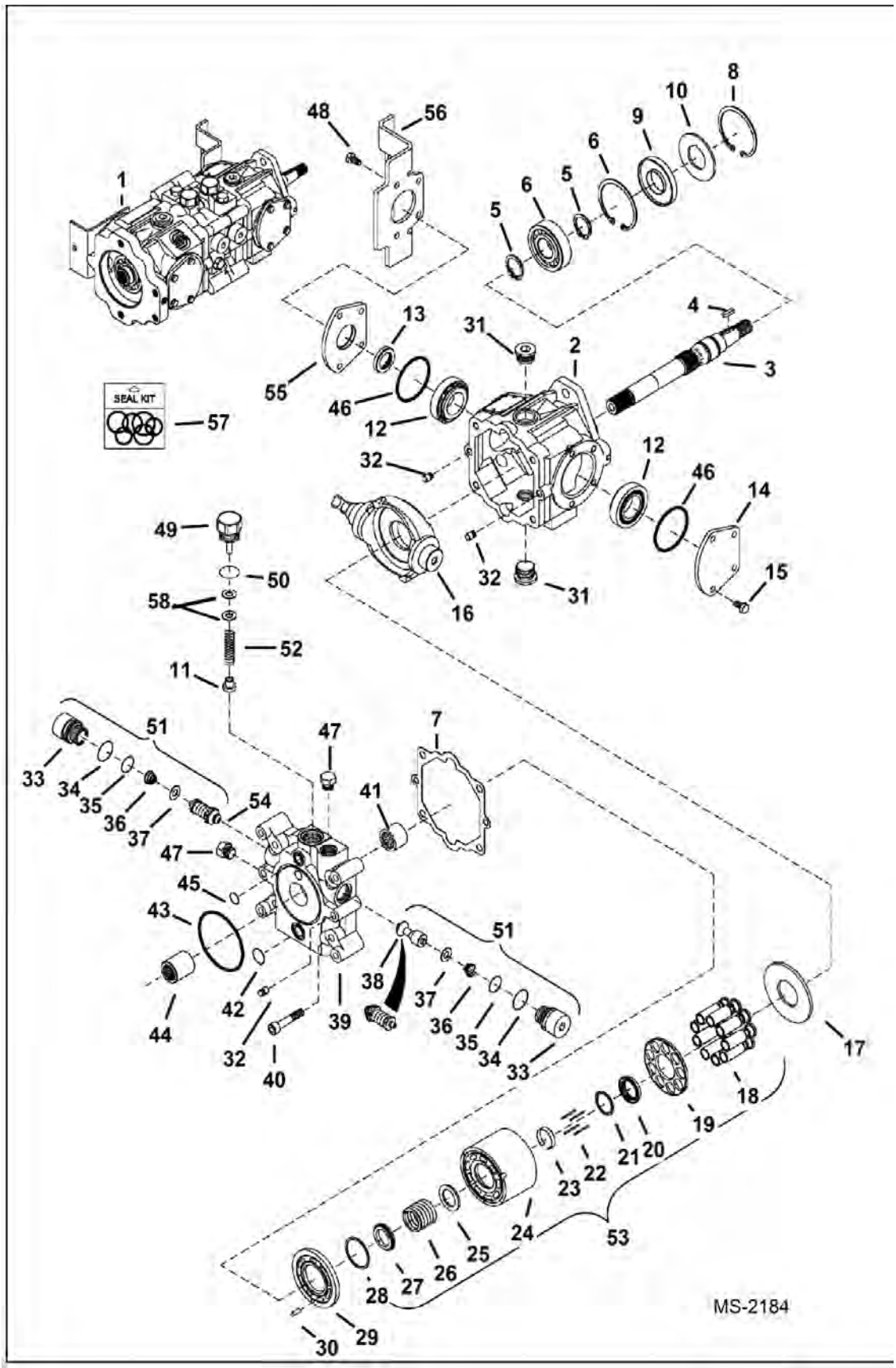

Page 275 - OSS# 6300322913 - All rights reserved by Bobcat Company - 08/04/2017 - 06:30:16 - Produced by Ken Cook Co. with mediaioff

HYDROSTATIC PUMP (Cont'd)

(Manual Controls, AHC & ACS) (Left Half)

(S/N A3P811001 - A3P816155, A3P911001 - A3P913075)

Ref No	Part Number	Description	Remarks	Serial Number	Qty
1	7001896	PUMP, HYD	Model 83001946		1
2	6669402	HOUSING			1
3	6682260	FRONT SHAFT	W/square key		1
4	6682261	KEY			1
5	658128	RING, SNAP			2
6	6921584	BEARING	Was 654299 [B,D]		1
7	6650634	GASKET			1
8	669863	RING, SNAP			2
9	7296603	SEAL, SHAFT	Was 6687191 [A]		1
10	7024884	WASHER	Was 6669409 [A]		1
11	6650652	CH.RELIEF	charge relief		1
12	6669411	BEARING			2
13	6678226	SEAL, OIL			2
14	6657068	COVER			2
15	6650668	BOLT			4
16	7284937	SWASHPLATE	W/threaded shaft hole - Was 6685344 [A]		1
17	6650627	PLATE THR			1
18	6683168	PISTON ASSEMBLY			9
19		RETAINER	NLA - Order Ref. 53		1
20		RETAINER	NLA - Order Ref. 53		1
21	6666338	WASHER			1
22	6650629	PIN			4
23	6650630	RETAINER			1
24	6683167	CYLINDER BLOCK			1
25		WASHER	NLA - Order Ref. 53		1
26		SPRING	NLA - Order Ref. 53		1
27		WASHER	NLA - Order Ref. 53		1
28		RETAINER	NLA - Order Ref. 53		1
29	6676147	PLATE, VALVE			1
30	6650636	PIN			1
31	47K8	PLUG			2
31	79K12	O RING 10			2
32	6675342	PIN			4
33		PLUG	NLA - Order Ref. 51		2
34	6657028	O-RING			2
35	79K8	O RING 10			2
36		SPRING	NLA - Order Ref. 51		2
37		RETAINER	NLA - Order Ref. 51		2
38		CHECK VALVE	NLA - poppet - Order Ref. 51		1
39	7023162	CAP, END	Model 83002049 - Was 6669406 [A]		1
39	7023162	CAP, END	Model 83001946		1
40	6650637	BOLT			4
41	6650635	BEARING			1
42	6650647	O-RING			1
43	6645081	O-RING			1
44	6650675	COUPLER			1
45	6650646	O-RING			1

Page 268 OSS# 630032913 - All rights reserved by Bobcat Company - 08/04/2017 - 06:30:16 - Produced by Ken Cook Co. with mediaioff

HYDROSTATIC PUMP (Cont'd)

(Manual Controls, AHC & ACS) (Left Half)
(S/N A3P811001 - A3P816155, A3P911001 - A3P913075)

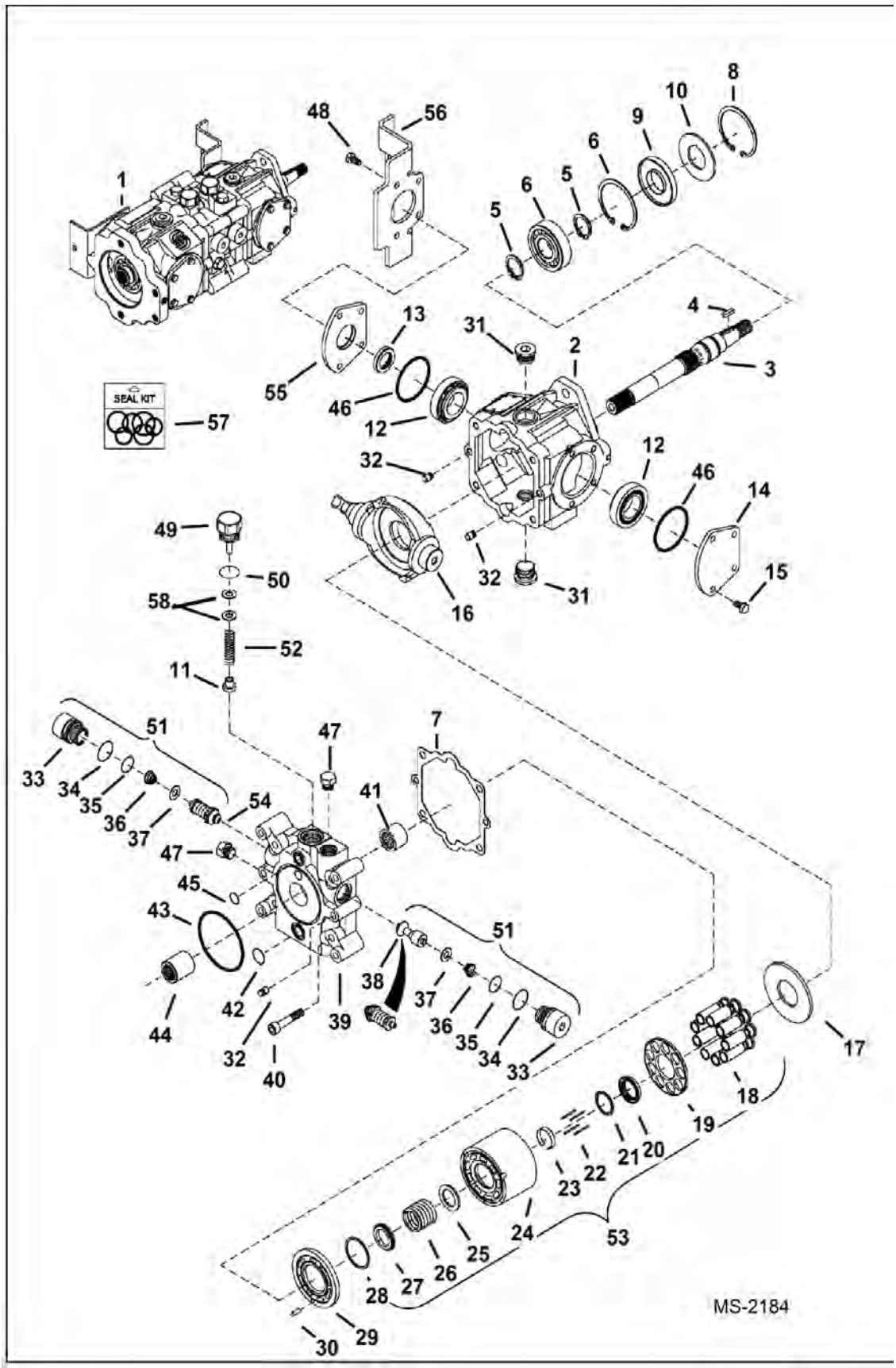

Page 277 - OSS# 6300322913 - All rights reserved by Bobcat Company - 08/04/2017 - 06:30:16 - Produced by Ken Cook Co. with mediaioff

HYDROSTATIC PUMP (Cont'd)

(Manual Controls, AHC & ACS) (Left Half)

(S/N A3P811001 - A3P816155, A3P911001 - A3P913075)

Ref No	Part Number	Description	Remarks	Serial Number	Qty
46	6660814	RING, QUAD			2
47	6645086	PLUG			2
47	6661481	O-RING			1
48	6671518	BOLT			4
49	6650648	PLUG	charge relief - W/Ref. 50		1
50	79K10	O RING 10			1
51	6684565	VALVE, RELIEF	Ref. 33-37 & 54		2
52	6673882	SPRING			1
53	6675341	GROUP, ROTARY			1
54		VALVE, RELIEF	NLA - 5000 PSI (345 bar) - Order Ref. 51		1
55	6657067	COVER	W/Ref. 46		1
56	7109905	BRACKET			1
57	6671516	KIT, SEAL	See Illustration HYDROSTATIC PUMP / MS2183 - Ref. 2, 3, 12, 31 & 41 - Also includes Ref. 7, 9, 13, 34, 35, 42, 43, 45, 46 & 50 on this page - Was 7296604 [A]		1
58	6669410	KIT, SHIM	for Ref. 49 - (2) each of .010, .020 and .050 thick		1

Page 4 of 4 OSS# 6300322913 - All rights reserved by Bobcat Company - 08/04/2017 - 06:30:16 - Produced by Ken Cook Co. with mediaioff

HYDROSTATIC PUMP

(Manual Controls, AHC & ACS) (Left Half)
(S/N A3P816156 & Above, A3P913076 & Above)

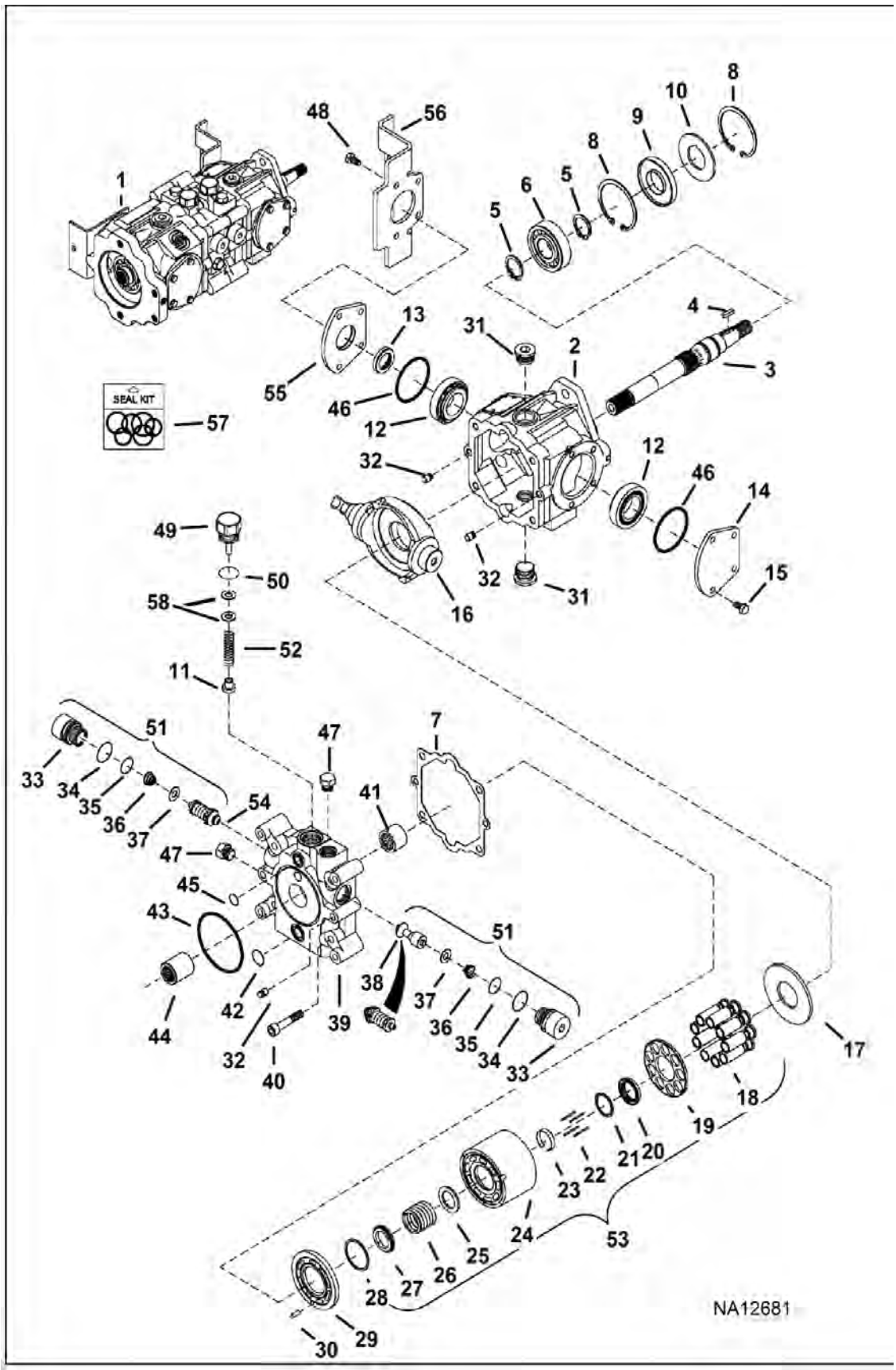

Illustration NA12681

Model T770 MT3
6989477

Page 279 - OSS# 6300322913 - All rights reserved by Bobcat Company - 08/04/2017 - 06:30:16 - Produced by Ken Cook Co. with mediaioff

HYDROSTATIC PUMP (Cont'd)

(Manual Controls, AHC & ACS) (Left Half)
(S/N A3P816156 & Above, A3P913076 & Above)

Ref No	Part Number	Description	Remarks	Serial Number	Qty
1	7275322	PUMP	Model 8304910		1
2	6669402	HOUSING			1
3	6682260	FRONT SHAFT	W/square key		1
4	6682261	KEY			1
5	6921585	RING RETAINING			2
6	6693868	BEARING			1
7	6650634	GASKET			1
8	669863	RING, SNAP			2
9	7296603	SEAL, SHAFT			1
10	7024884	WASHER			1
11	6650652	CH.RELIEF	charge relief		1
12	6669411	BEARING			2
13	6678226	SEAL, OIL			2
14	6657068	COVER			2
15	6650668	BOLT			4
16	7284937	SWASHPLATE	W/threaded shaft hole		1
17	6650627	PLATE THR			1
18	6683168	PISTON ASSEMBLY			9
19		RETAINER	NSS - Order Ref. 53		1
20		RETAINER	NSS - Order Ref. 53		1
21	6666338	WASHER			1
22	6650629	PIN			4
23	6650630	RETAINER			1
24	6683167	CYLINDER BLOCK			1
25		WASHER	NSS - Order Ref. 53		1
26		SPRING	NSS - Order Ref. 53		1
27		WASHER	NSS - Order Ref. 53		1
28		RETAINER	NSS - Order Ref. 53		1
29	7313732	PLATE VALVE			1
30	6650636	PIN			1
31	47K8	PLUG			2
31	79K12	O RING 10			2
32	6675342	PIN			4
33		PLUG	NSS - Order Ref. 51		2
34	6657028	O-RING			2
35	79K8	O RING 10			2
36		SPRING	NSS - Order Ref. 51		2
37		RETAINER	NSS - Order Ref. 51		2
38		CHECK VALVE	NSS - poppet - Order Ref. 51		1
39	7023162	CAP, END			1
40	6650637	BOLT			4
41	6650635	BEARING			1
42	6650647	O-RING			1
43	6645081	O-RING			1
44	6650675	COUPLER			1
45	6650646	O-RING			1
46	6660814	RING, QUAD			2

Page 2 of 6 OSS# 6300322913 - All rights reserved by Bobcat Company - 08/04/2017 - 06:30:16 - Produced by Ken Cook Co. with mediaoff

HYDROSTATIC PUMP (Cont'd)

(Manual Controls, AHC & ACS) (Left Half)
(S/N A3P816156 & Above, A3P913076 & Above)

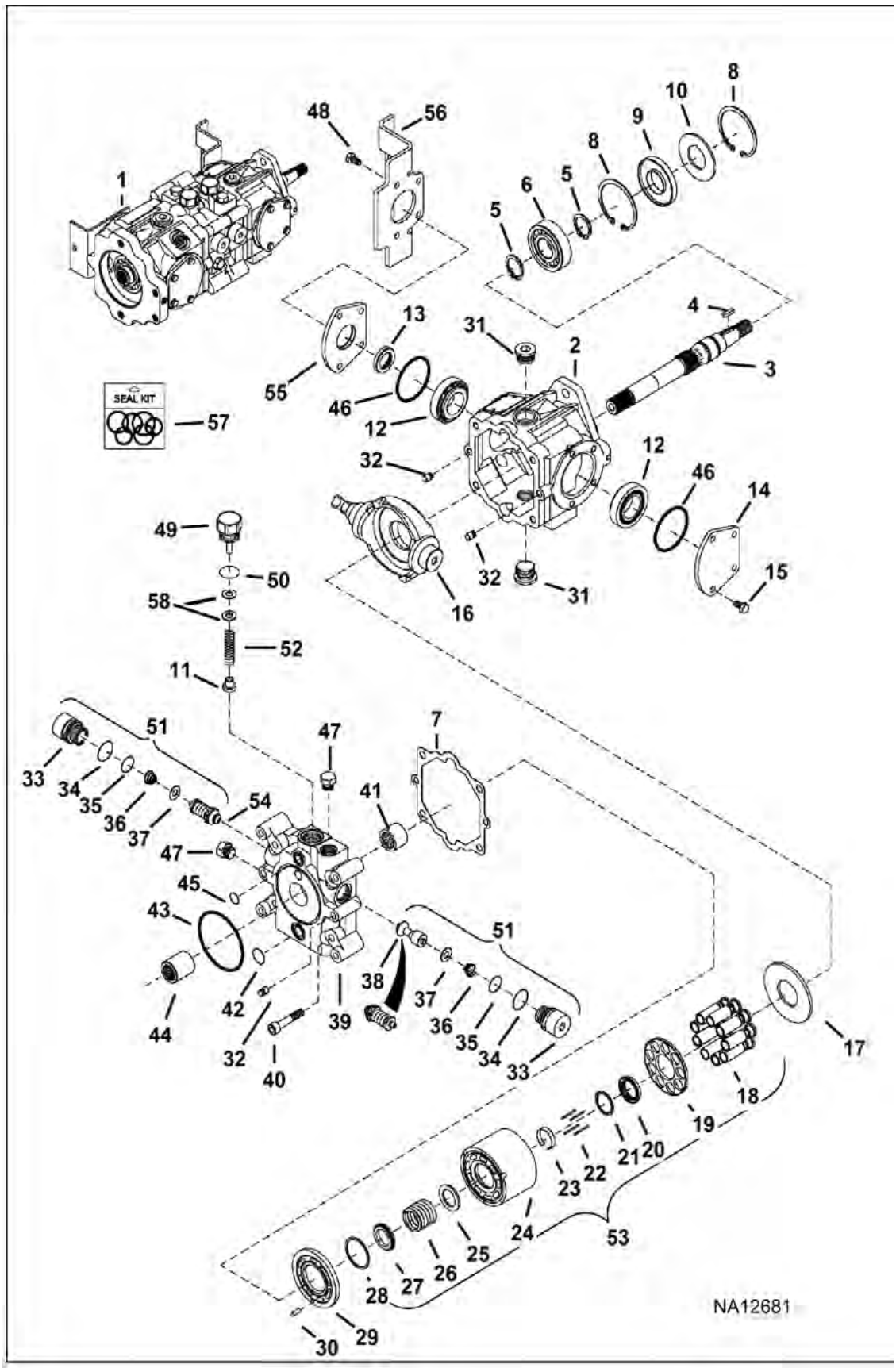

Illustration NA12681

Model T770 MT3
6989477

Page 281 - OSS# 6300322913 - All rights reserved by Bobcat Company - 08/04/2017 - 06:30:16 - Produced by Ken Cook Co. with mediaioff

HYDROSTATIC PUMP (Cont'd)

(Manual Controls, AHC & ACS) (Left Half)
(S/N A3P816156 & Above, A3P913076 & Above)

Ref No	Part Number	Description	Remarks	Serial Number	Qty
47	6645086	PLUG			2
47	6661481	O-RING			1
48	6671518	BOLT			4
49	6650648	PLUG	charge relief - W/Ref. 50		1
50	79K10	O RING 10			1
51	6684565	VALVE, RELIEF	Ref. 33-37 & 54		1
52	7008823	SPRING			1
53	6675341	GROUP, ROTARY			1
54		VALVE, RELIEF	NLA - 5000 PSI (345 bar) - Order Ref. 51		1
55	6657067	COVER	W/Ref. 46		1
56	7109905	BRACKET			1
57	6671516	KIT, SEAL	See Illustration HYDROSTATIC PUMP / MS2183 - Ref. 2, 3, 12, 31 & 41 - Also includes Ref. 7, 9, 13, 34, 35, 42, 43, 45, 46 & 50 on this page - Was 7296604 [A]		1
58	6669410	KIT, SHIM	for Ref. 49 - (2) each of .010, .020 and .050 thick		1

Page 234 OSS# 6300322913 - All rights reserved by Bobcat Company - 08/04/2017 - 06:30:16 - Produced by Ken Cook Co. with mediaioff

HYDROSTATIC PUMP

(Manual Controls, AHC & ACS) (Right Half)
(S/N A3P811001 - A3P816155, A3P911001 - A3P913075)

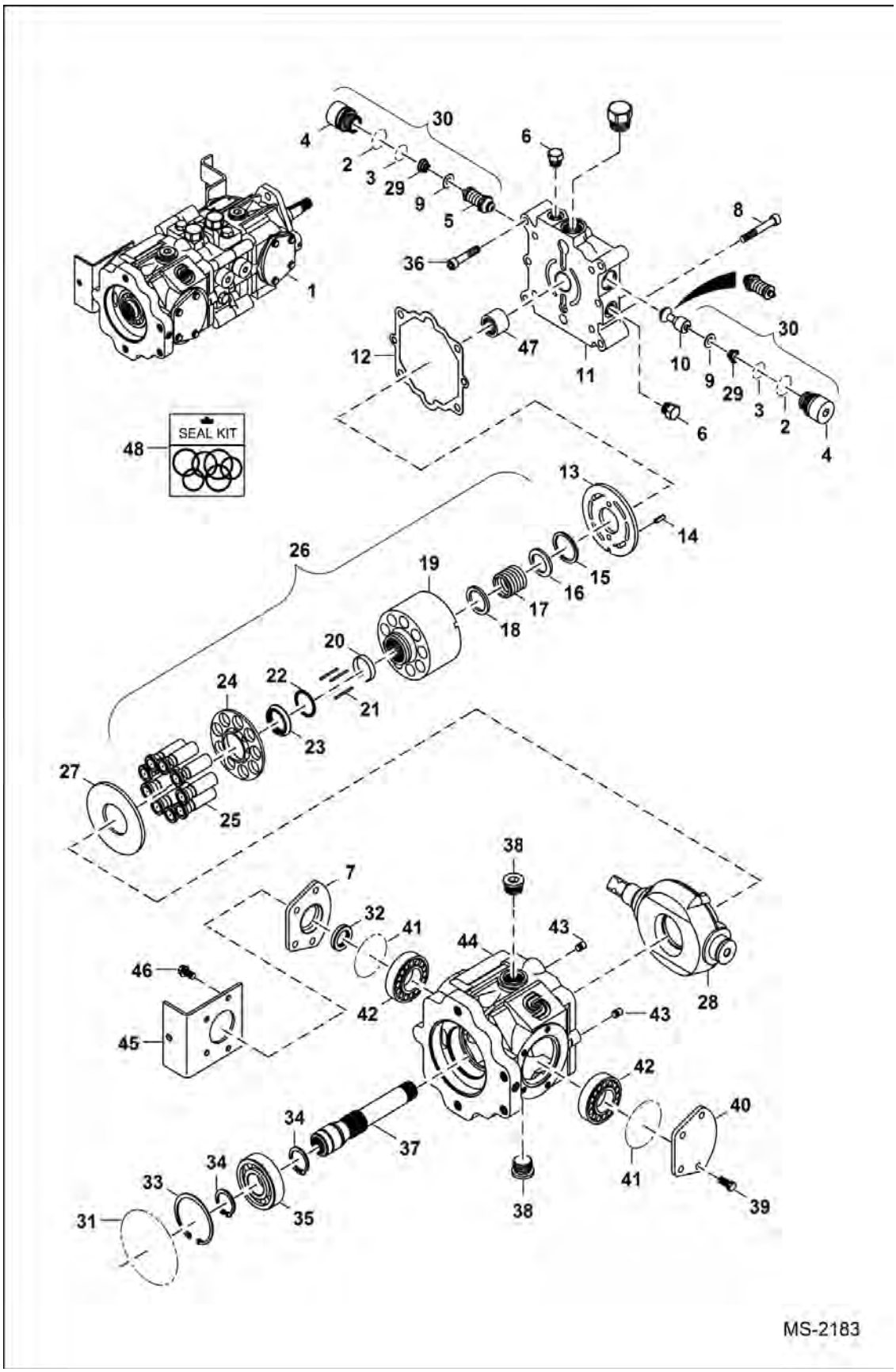

Page 283 - OSS# 6300322913 - All rights reserved by Bobcat Company - 08/04/2017 - 06:30:16 - Produced by Ken Cook Co. with mediaioff

HYDROSTATIC PUMP (Cont'd)

(Manual Controls, AHC & ACS) (Right Half)

(S/N A3P811001 - A3P816155, A3P911001 - A3P913075)

Ref No	Part Number	Description	Remarks	Serial Number	Qty
1	7001896	PUMP, HYD	Model 83001946		1
2	6657028	O-RING			2
3	79K8	O RING 10			2
4		PLUG	NLA - Order Ref. 30		2
5		VALVE, RELIEF	NLA - 5000 PSI (345 bar) - Order Ref. 30		2
6	6645086	PLUG			4
7	6657067	COVER	W/Ref. 32		1
8	6650637	BOLT			2
9		RETAINER	NLA - Order Ref. 30		4
10		VALVE, CHECK	NLA - poppet - Order Ref. 30		1
11	6669405	CAP, END			1
12	6650634	GASKET			1
13	6676148	PLATE, VALVE			1
14	6650636	PIN			2
15		RETAINER	NLA - Order Ref. 26		1
16		WASHER	NLA - Order Ref. 26		1
17		SPRING	NLA - Order Ref. 26		1
18		WASHER	NLA - Order Ref. 26		1
19	6683167	CYLINDER BLOCK			1
20	6650630	RETAINER			1
21	6650629	PIN			4
22	6666338	WASHER			1
23		RETAINER	NLA - Order Ref. 26		1
24		RETAINER	NLA - Order Ref. 26		1
25	6683168	PISTON ASSEMBLY			9
26	6675341	GROUP, ROTARY	W/Ref. 15-25		1
27	6650627	PLATE THR			1
28	7284937	SWASHPLATE	W/threaded shaft hole - Was 6685344 [A]		1
29		SPRING	NLA - Order Ref. 30		2
30	6684565	VALVE, RELIEF	Ref. 2-5, 9, 10 & 29 - Was 7008822 [A]		2
31	6671520	O-RING			1
32	6678226	SEAL, OIL			1
33	669863	RING, SNAP			1
34	658128	RING, SNAP			2
35	6921584	BEARING	Was 654299 [B,D]		1
36	6652018	BOLT			4
37	6682264	SHAFT REAR			1
38	47K8	PLUG			1
38	79K12	O RING 10			2
39	6650668	BOLT			4
40	6657068	COVER			1
41	6660814	RING, QUAD			2
42	6669411	BEARING			2
43	6675342	PIN			2
44	6682262	HOUSING	Was 6693867 [A]		1
45	7109904	BRACKET			1
46	6671518	BOLT			4

Page 2 of 2 OSS# 630032913 - All rights reserved by Bobcat Company - 08/04/2017 - 06:30:16 - Produced by Ken Cook Co. with mediaoff

HYDROSTATIC PUMP (Cont'd)

(Manual Controls, AHC & ACS) (Right Half)
(S/N A3P811001 - A3P816155, A3P911001 - A3P913075)

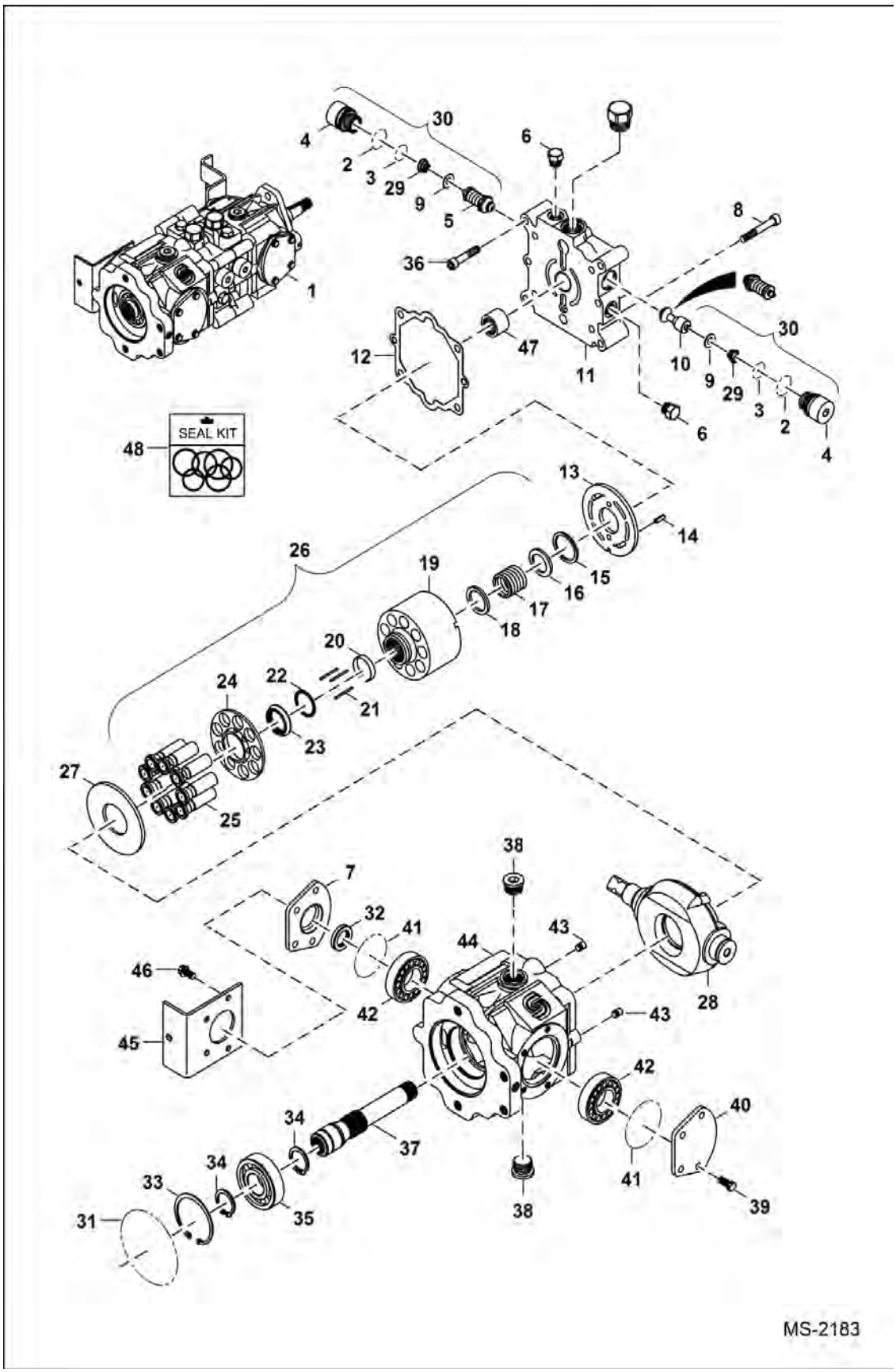

Page 295 - OSS# 6300322913 - All rights reserved by Bobcat Company - 08/04/2017 - 06:30:16 - Produced by Ken Cook Co. with mediaioff

HYDROSTATIC PUMP (Cont'd)

(Manual Controls, AHC & ACS) (Right Half)

(S/N A3P811001 - A3P816155, A3P911001 - A3P913075)

Ref No	Part Number	Description	Remarks	Serial Number	Qty
47	6650635	BEARING			1
48	6671516	KIT, SEAL	See Illustration HYDROSTATIC PUMP / MS2184 - Ref. 7, 9, 13, 34, 35, 42, 43, 45, 46 & 50 - Also includes Ref. 2, 3, 12, 31 & 41 on this page - Was 7296604 [A]		1

Page 2804 OSS# 6300322913 - All rights reserved by Bobcat Company - 08/04/2017 - 06:30:16 - Produced by Ken Cook Co. with mediaioff

HYDROSTATIC PUMP
(Manual Controls & ACS) (Right Half)
(S/N A3P816156 & Above, A3P913076 & Above)

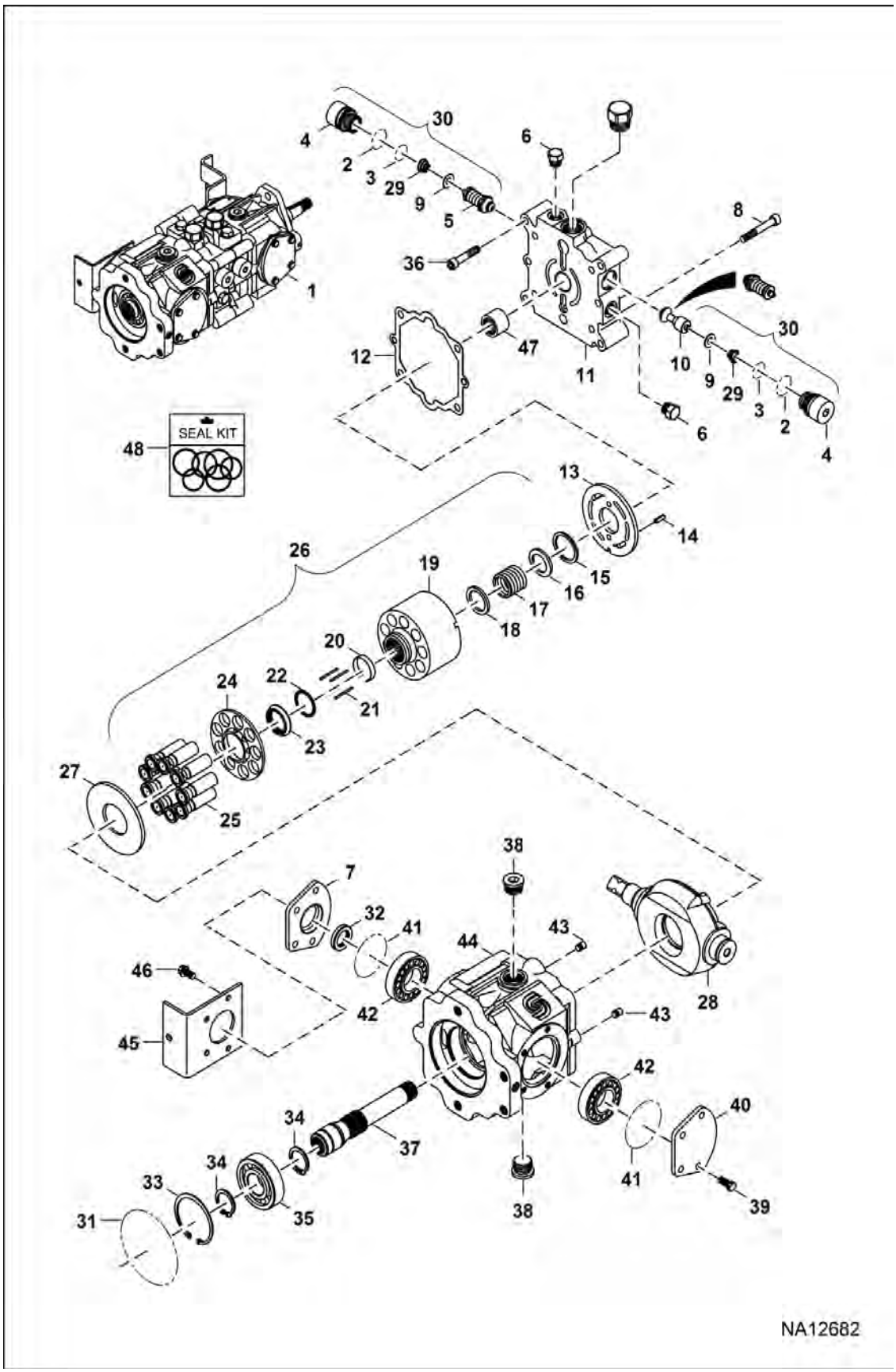

Page 287 - OSS# 6300322913 - All rights reserved by Bobcat Company - 08/04/2017 - 06:30:16 - Produced by Ken Cook Co. with mediaioff

HYDROSTATIC PUMP (Cont'd)

(Manual Controls & ACS) (Right Half)
(S/N A3P816156 & Above, A3P913076 & Above)

Ref No	Part Number	Description	Remarks	Serial Number	Qty
1	7275322	PUMP	Model 83049010		1
2	6657028	O-RING			2
3	79K8	O RING 10			2
4		PLUG	NSS - Order Ref. 30		2
5		VALVE, RELIEF	NSS - 5000 PSI (345 bar) - Order Ref. 30		2
6	6645086	PLUG			4
7	6657067	COVER	W/Ref. 32		1
8	6650637	BOLT			2
9		RETAINER	NSS - Order Ref. 30		4
10		VALVE, CHECK	NSS - poppet - Order Ref. 30		1
11	6669405	CAP, END			1
12	6650634	GASKET			1
13	7313733	PLATE VALVE			1
14	6650636	PIN			2
15		RETAINER	NSS - Order Ref. 26		1
16		WASHER	NSS - Order Ref. 26		1
17		SPRING	NSS - Order Ref. 26		1
18		WASHER	NSS - Order Ref. 26		1
19	6683167	CYLINDER BLOCK			1
20	6650630	RETAINER			1
21	6650629	PIN			4
22	6666338	WASHER			1
23		RETAINER	NSS - Order Ref. 26		1
24		RETAINER	NSS - Order Ref. 26		1
25	6683168	PISTON ASSEMBLY			9
26	6675341	GROUP, ROTARY	W/Ref. 15-25		1
27	6650627	PLATE THR			1
28	7284937	SWASHPLATE	W/threaded shaft hole		1
29		SPRING	NSS - Order Ref. 30		2
30	6684565	VALVE, RELIEF	Ref. 2-5, 9, 10 & 29		2
31	7024888	SEAL			1
32	6678226	SEAL, OIL			1
33	669863	RING, SNAP			1
34	6921585	RING RETAINING			2
35	7021795	BEARING			1
36	7024885	BOLT			4
37	6682264	SHAFT REAR			1
38	47K8	PLUG			1
38	79K12	O RING 10			2
39	6650668	BOLT			4
40	6657068	COVER			1
41	6660814	RING, QUAD			2
42	6669411	BEARING			2
43	6675342	PIN			2
44	6682262	HOUSING			1
45	7109904	BRACKET			1
46	6671518	BOLT			4

Page 280 OSS# 630032913 - All rights reserved by Bobcat Company - 08/04/2017 - 06:30:16 - Produced by Ken Cook Co. with mediaioff

HYDROSTATIC PUMP (Cont'd)

(Manual Controls & ACS) (Right Half)
(S/N A3P816156 & Above, A3P913076 & Above)

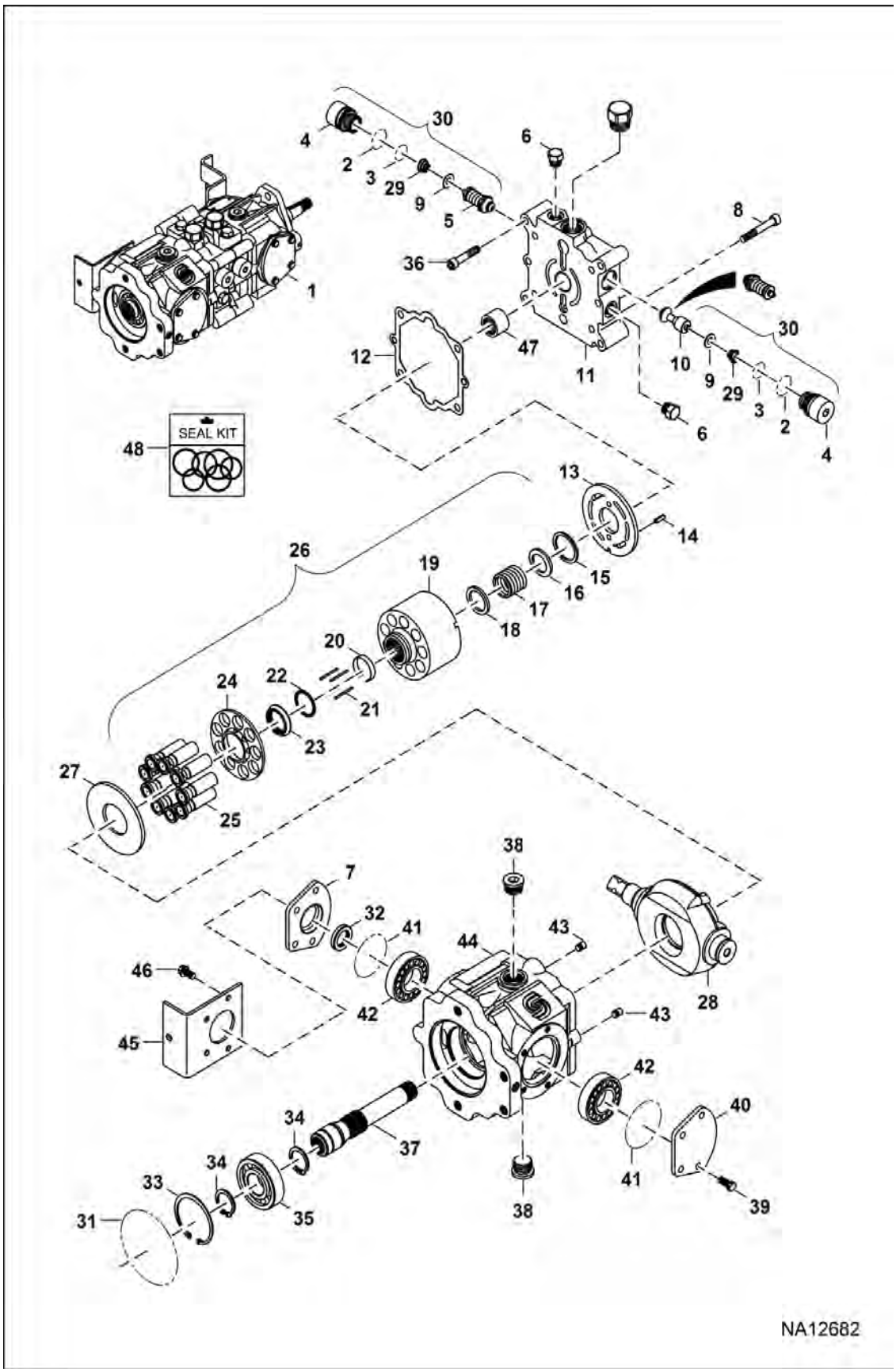

Illustration NA12682

Page 289 - OSS# 6300322913 - All rights reserved by Bobcat Company - 08/04/2017 - 06:30:16 - Produced by Ken Cook Co. with mediaioff

HYDROSTATIC PUMP (Cont'd)
(Manual Controls & ACS) (Right Half)
(S/N A3P816156 & Above, A3P913076 & Above)

Ref No	Part Number	Description	Remarks	Serial Number	Qty
47	6650635	BEARING			1
48	6671516	KIT, SEAL	See Illustration HYDROSTATIC PUMP / NA12681 - Ref. 7, 9, 13, 34, 35, 42, 43, 45, 46 & 50 - Also includes Ref. 2, 3, 12, 31 & 41 on this page - Was 7296604 [A]		1

Page 2004 OSS# 6300322913 - All rights reserved by Bobcat Company - 08/04/2017 - 06:30:16 - Produced by Ken Cook Co. with mediaioff

HYDROSTATIC PUMP
(Selectable Joystick Controls)
(R902103468)

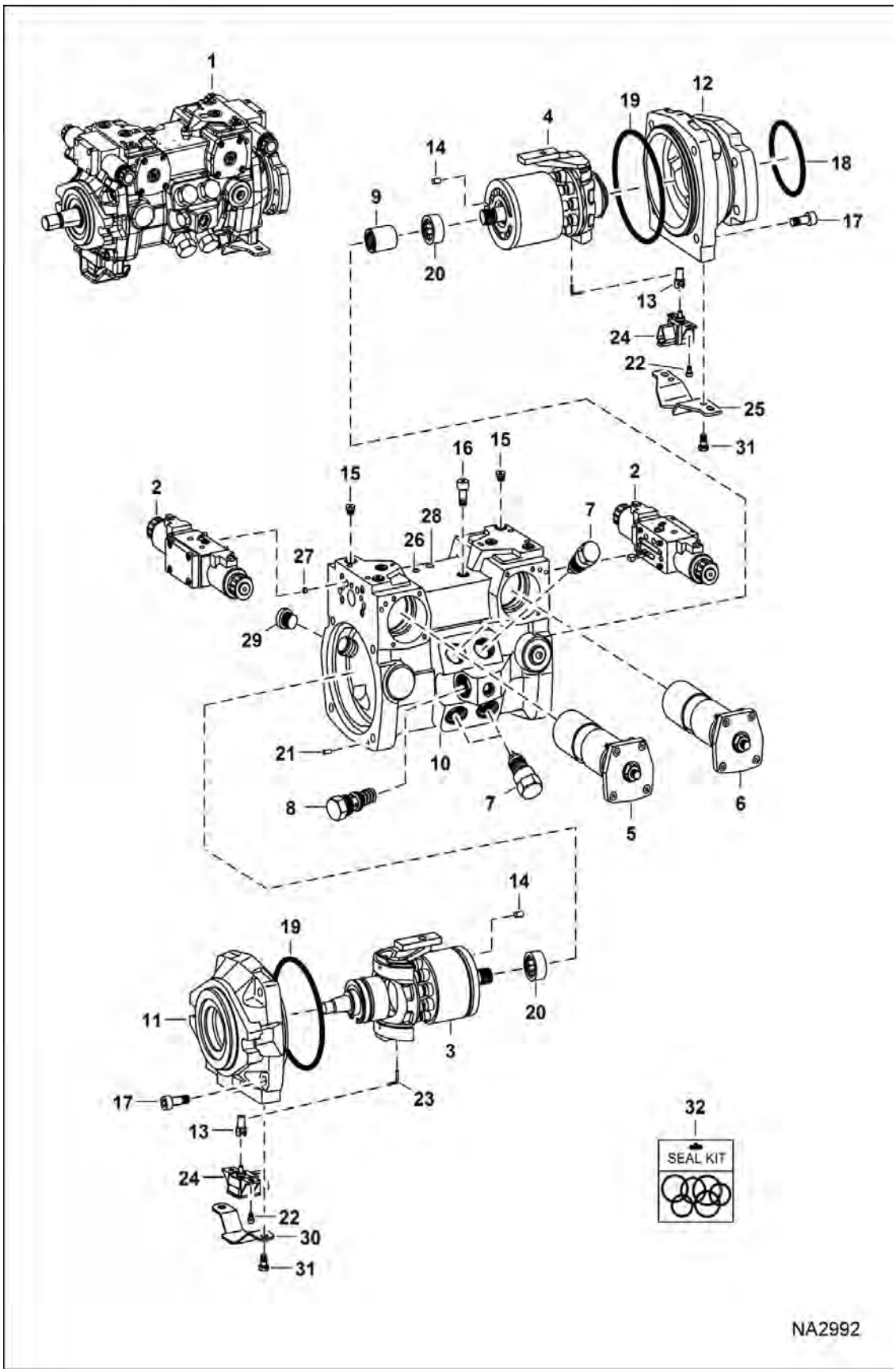

Page 291 - OSS# 6300322913 - All rights reserved by Bobcat Company - 08/04/2017 - 06:30:16 - Produced by Ken Cook Co. with mediaioff

HYDROSTATIC PUMP (Cont'd)

(Selectable Joystick Controls)
(R902103468)

Ref No	Part Number	Description	Remarks	Serial Number	Qty
1		PUMP, TANDEM	NLA - Model R902103468 - Ref. 2-31 - Order 7013178 pump & Ref. 25 - Was 6698594 [A]		1
1		PUMP, HYD TANDEM	See Illustration HYDROSTATIC PUMP / NA8924 NLA - Model R902148155 - Ref. 2-31 - Was 7013178 [A]		1
2	7008109	MODULE, CONTROL	See Illustration HYDROSTATIC PUMP / B25016		2
3		GROUP, ROTATING LH	See Illustration HYDROSTATIC PUMP / B25011 - LH rotation		1
4		GROUP ROTATING RH	See Illustration HYDROSTATIC PUMP / B25012 - RH rotation		1
5		CONTROL	See Illustration HYDROSTATIC PUMP / B25013 - LH - assy		1
6		CONTROL	See Illustration HYDROSTATIC PUMP / B25013A - RH - assy		1
7	7283467	VALVE, RELIEF	preset at 350 bar preset at 350 bar Was 7008124		4
8		VALVE	See Illustration HYDROSTATIC PUMP / B25015A - charge pressure relief 15-30 bar		1
9	6687941	COUPLER			1
10	7008110	HOUSING	W/Ref. 16		1
11	7008111	FLANGE, LH			1
12	7008112	FLANGE, RH			1
13	7254838	SHAFT	Was 7008113		2
14	6688011	PIN			2
15	6682875	PLUG	Was 6688016 [A]		11
16	6687992	SCREW			3
17	6688008	SCREW			8
18	6671520	O-RING			1
19	6688009	SEAL			2
20	6688040	BEARING			2
21	6686934	PIN			2
22	7008114	SCREW			4
23	6688014	PIN			2
24	7008115	SENSOR	triangle connector		2
25	7010368	COVER	Use W/Ref. 1 (NLA/ 6698594 pump) - Was 7194123 [A]		1
26	6687932	PIN			2
27	7008116	FILTER			6
28	6688015	SCREW			1
29	6685390	SCREW			1
30	7010227	COVER	Use W/Ref. 1 (NLA/ 6698594 pump)		1
30	7010227	COVER	Use W/Ref. 1 (7013178 pump)		2
31	6688003	SCREW			4
32	6689021	SEAL KIT			1

Page 282 OSS# 6300322913 - All rights reserved by Bobcat Company - 08/04/2017 - 06:30:16 - Produced by Ken Cook Co. with mediaioff

HYDROSTATIC PUMP
(Rotary Group) (LH) (Selectable Joystick Controls)
(R902103468)

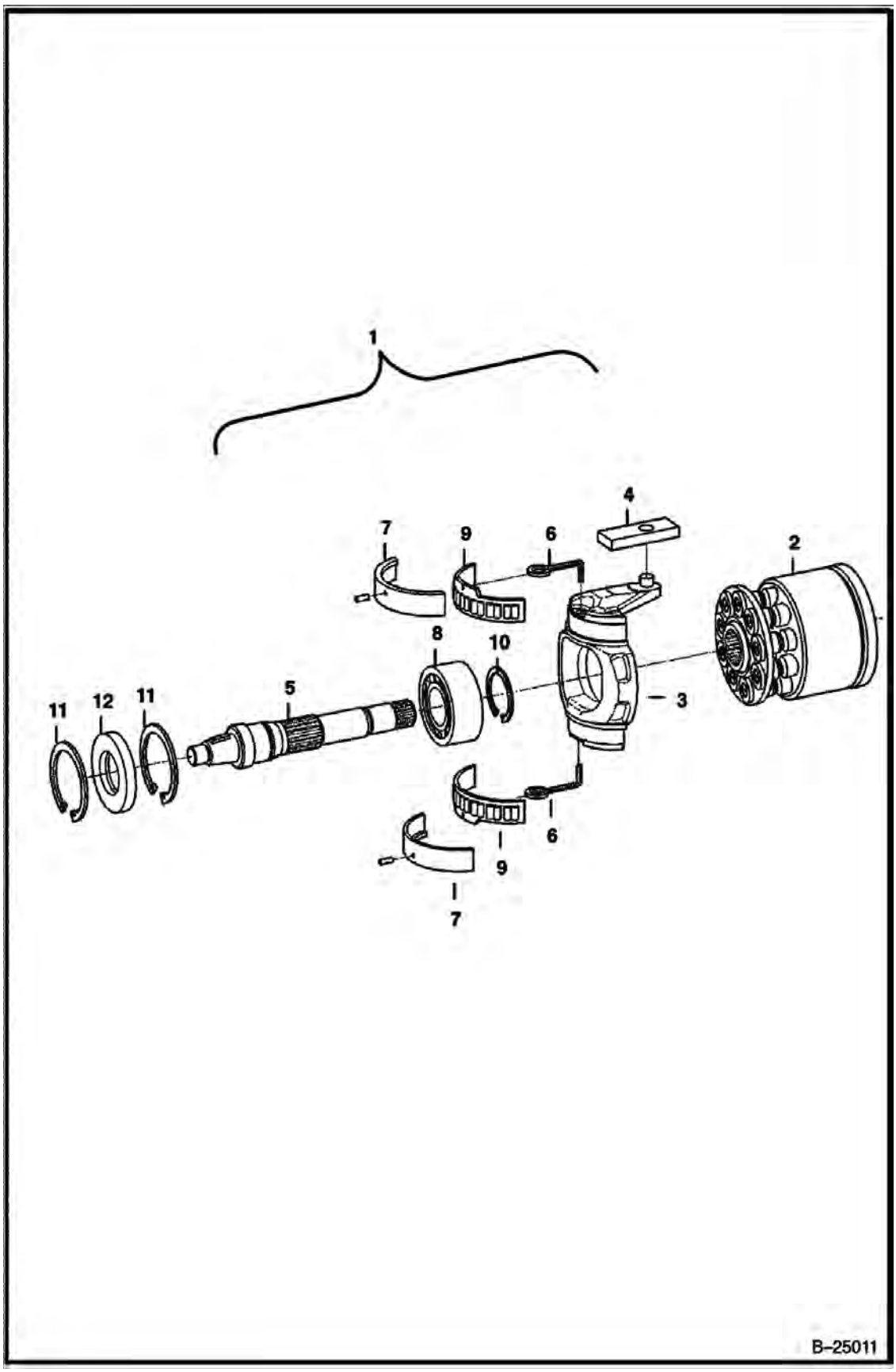

Page 293 - OSS# 6300322913 - All rights reserved by Bobcat Company - 08/04/2017 - 06:30:16 - Produced by Ken Cook Co. with mediaioff

HYDROSTATIC PUMP (Cont'd)

(Rotary Group) (LH) (Selectable Joystick Controls)
(R902103468)

Ref No	Part Number	Description	Remarks	Serial Number	Qty
1	7008807	GROUP, ROTATING	Ref. 2-12 - LH rotation		1
2		GROUP, ROTARY	NLA - W/control plate - Order 6693869 & 6687976 - Was 6693873 [A]		1
2	6693869	GROUP, ROTARY	W/O control plate		1
2	6687976	PLATE	control		1
3	7008117	SWASHPLATE			1
4	6687940	PLATE			1
5	7001120	SHAFT, DRIVE			1
6	6687930	WIRE			2
7	6687956	2 HALF BEARINGS			1
8	6688018	BEARING			1
9	7008118	BEARING			1
10	6687999	RING, SNAP			1
11	6671741	SNAP RING	Was 6688042 [A]		2
12	6693876	SEAL, SHAFT			1

Page 286 OSS# 6300322913 - All rights reserved by Bobcat Company - 08/04/2017 - 06:30:16 - Produced by Ken Cook Co. with mediaioff

HYDROSTATIC PUMP
(Rotary Group) (RH) (Selectable Joystick Controls)
(R902103468)

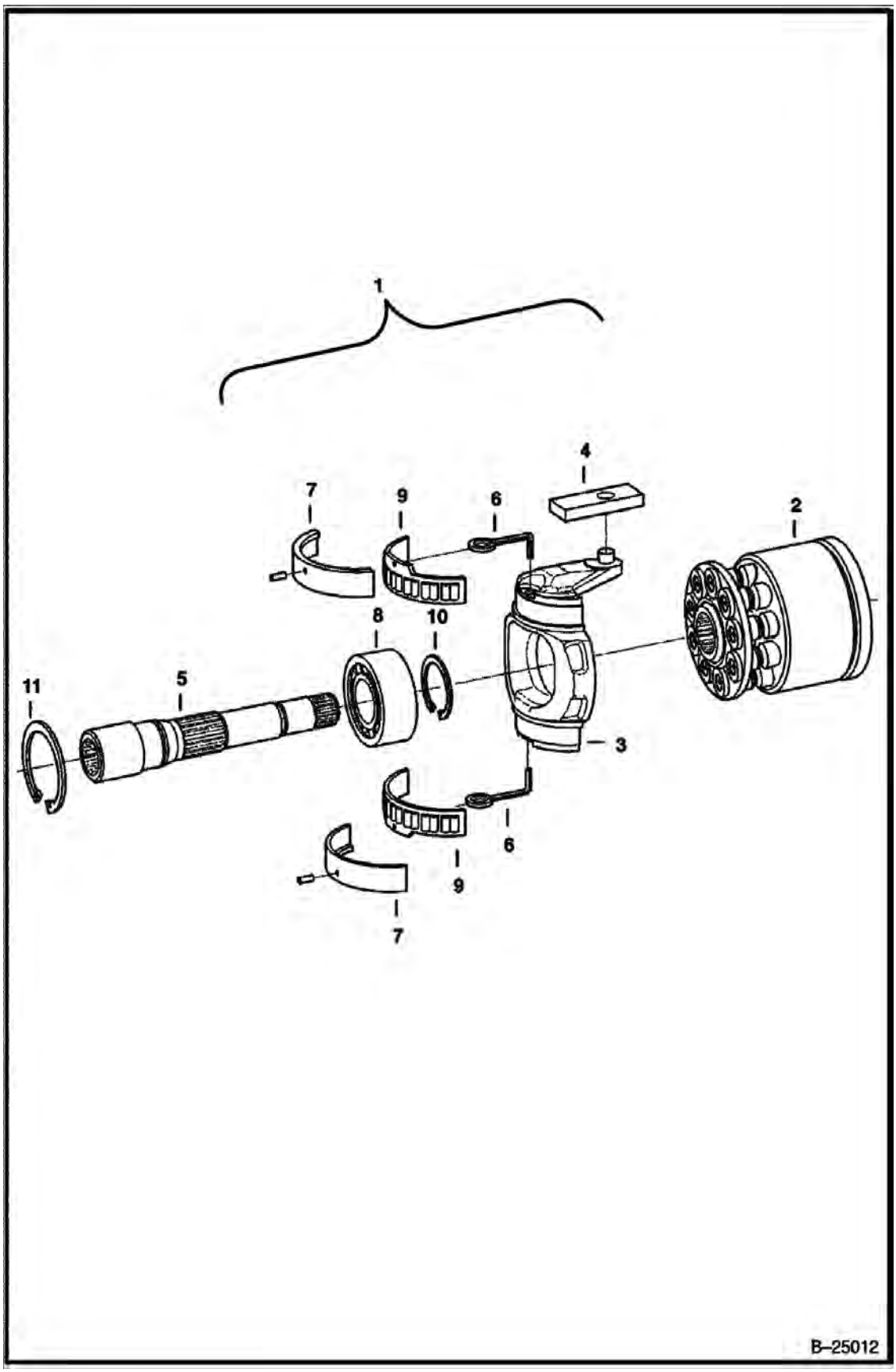

Page 295 - OSS# 6300322913 - All rights reserved by Bobcat Company - 08/04/2017 - 06:30:16 - Produced by Ken Cook Co. with mediaioff

HYDROSTATIC PUMP (Cont'd)

(Rotary Group) (RH) (Selectable Joystick Controls)
(R902103468)

Ref No	Part Number	Description	Remarks	Serial Number	Qty
1	7008106	GROUP ROTATING RH	Ref. 2-11 - RH rotation		1
2	6693874	GROUP, ROTARY			1
3	7008117	SWASHPLATE			1
4	6687940	PLATE			1
5	6687943	SHAFT			1
6	6687930	WIRE			2
7	6687956	2 HALF BEARINGS			1
8	6688018	BEARING			1
9	6687987	2 HALF BEARINGS			1
10	6687999	RING, SNAP			1
11	6671741	SNAP RING			2

Page 2004 OSS# 6300322913 - All rights reserved by Bobcat Company - 08/04/2017 - 06:30:16 - Produced by Ken Cook Co. with mediaioff

HYDROSTATIC PUMP
(Control) (LH) (Selectable Joystick Controls)
(R902103468)

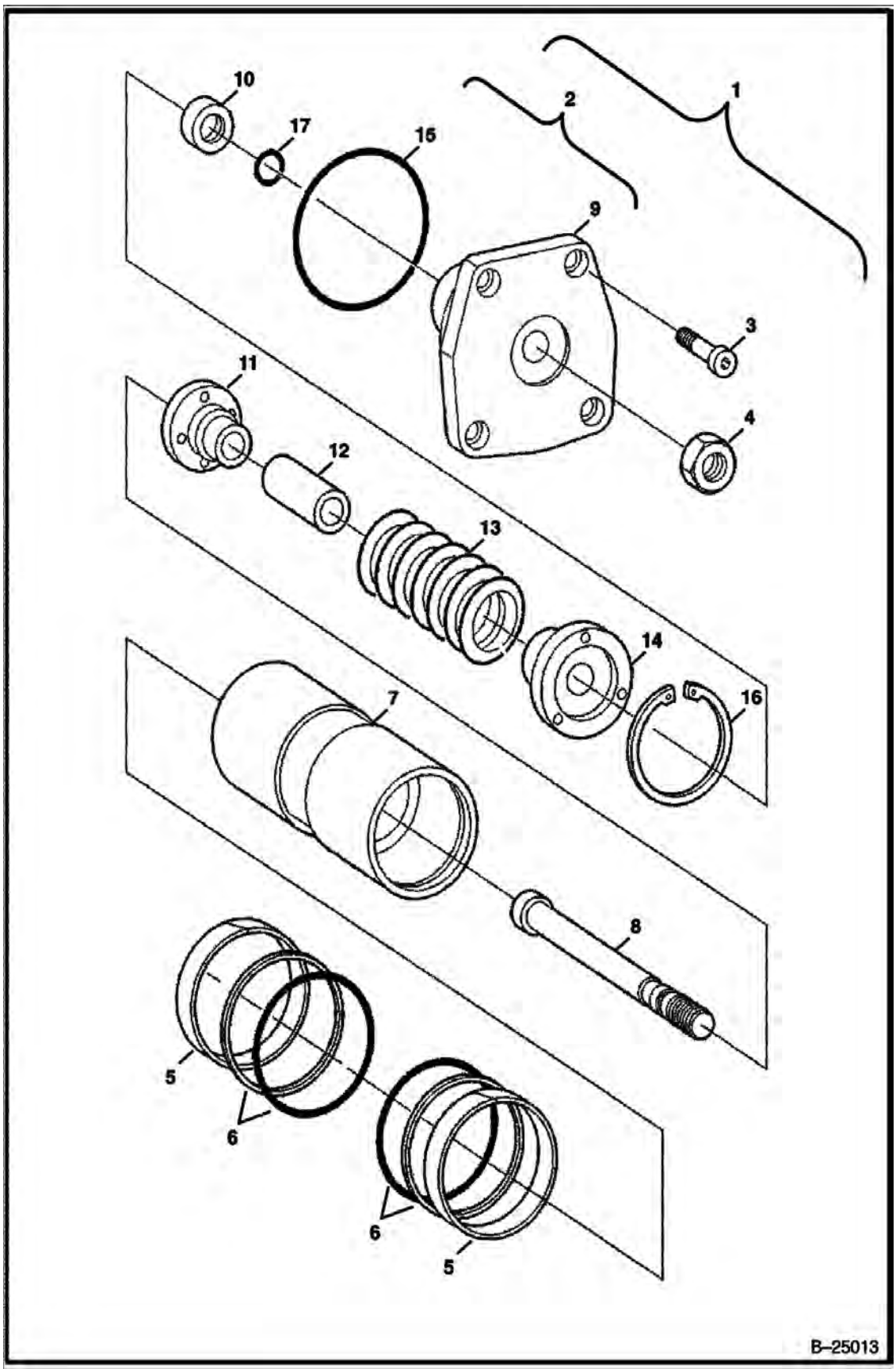

Page 297 - OSS# 6300322913 - All rights reserved by Bobcat Company - 08/04/2017 - 06:30:16 - Produced by Ken Cook Co. with mediaioff

HYDROSTATIC PUMP (Cont'd)

(Control) (LH) (Selectable Joystick Controls)
(R902103468)

Ref No	Part Number	Description	Remarks	Serial Number	Qty
1	7008107	CONTROL	Model R902124951 - Ref. 2-17		1
2	6671760	COVER			1
3	6682968	SCREW	Was 6687995 [A]		1
4	6674907	NUT	Was 6687925 [A]		1
5	7008119	RING			2
6	6687986	KIT			1
7	6687962	PISTON			1
8		ROD	NSS		1
9	6671760	COVER			1
10		RING	NSS		1
11		COLLAR	NSS		1
12		SPACER	NSS		1
13		SPRING	NSS		1
14		COLLAR	NSS		1
15	6688005	SEAL			1
16		RING	NSS		1
17	6688006	SEAL			1

Page 290 OSS# 6300322913 - All rights reserved by Bobcat Company - 08/04/2017 - 06:30:16 - Produced by Ken Cook Co. with mediaioff

HYDROSTATIC PUMP
(Control) (RH) (Selectable Joystick Controls)
(R902103468)

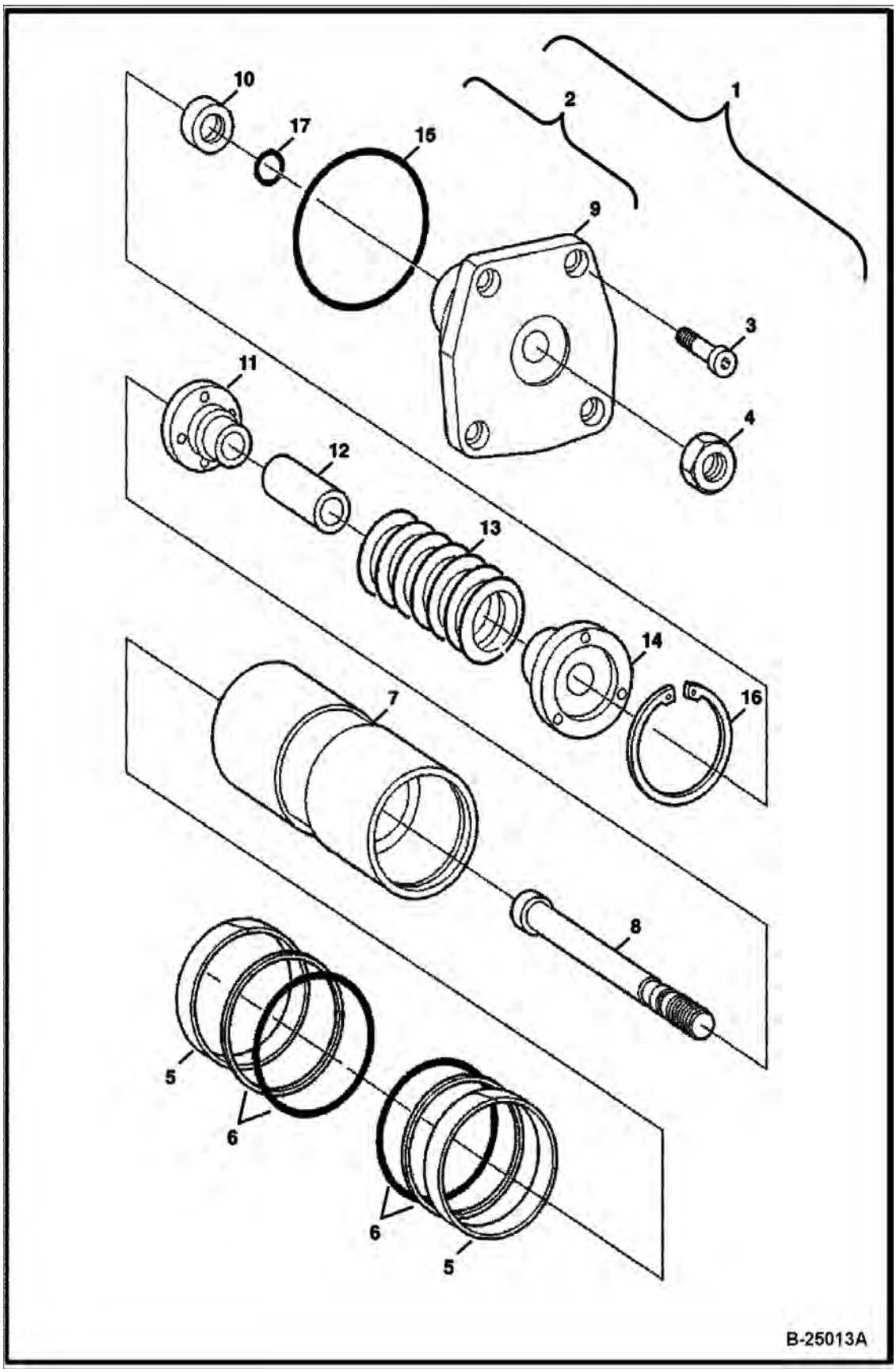

Page 299 - OSS# 6300322913 - All rights reserved by Bobcat Company - 08/04/2017 - 06:30:16 - Produced by Ken Cook Co. with mediaioff

HYDROSTATIC PUMP (Cont'd)

(Control) (RH) (Selectable Joystick Controls)
(R902103468)

Ref No	Part Number	Description	Remarks	Serial Number	Qty
1	7008108	CONTROL	Model R902124952 - Ref. 2-17		1
2	6671760	COVER			1
3	6682968	SCREW	Was 6687995 [A]		1
4	6674907	NUT	Was 6687925 [A]		1
5	7008119	RING			2
6	6687986	KIT			1
7	6687962	PISTON			1
8		ROD	NSS		1
9	6671760	COVER			1
10		RING	NSS		1
11		COLLAR	NSS		1
12		SPACER	NSS		1
13		SPRING	NSS		1
14		COLLAR	NSS		1
15	6688005	SEAL			1
16		RING	NSS		1
17	6688006	SEAL			1

Page 300 OSS# 6300322913 - All rights reserved by Bobcat Company - 08/04/2017 - 06:30:16 - Produced by Ken Cook Co. with mediaioff

HYDROSTATIC PUMP
(Control Module) (Selectable Joystick Controls)
(R902103468)

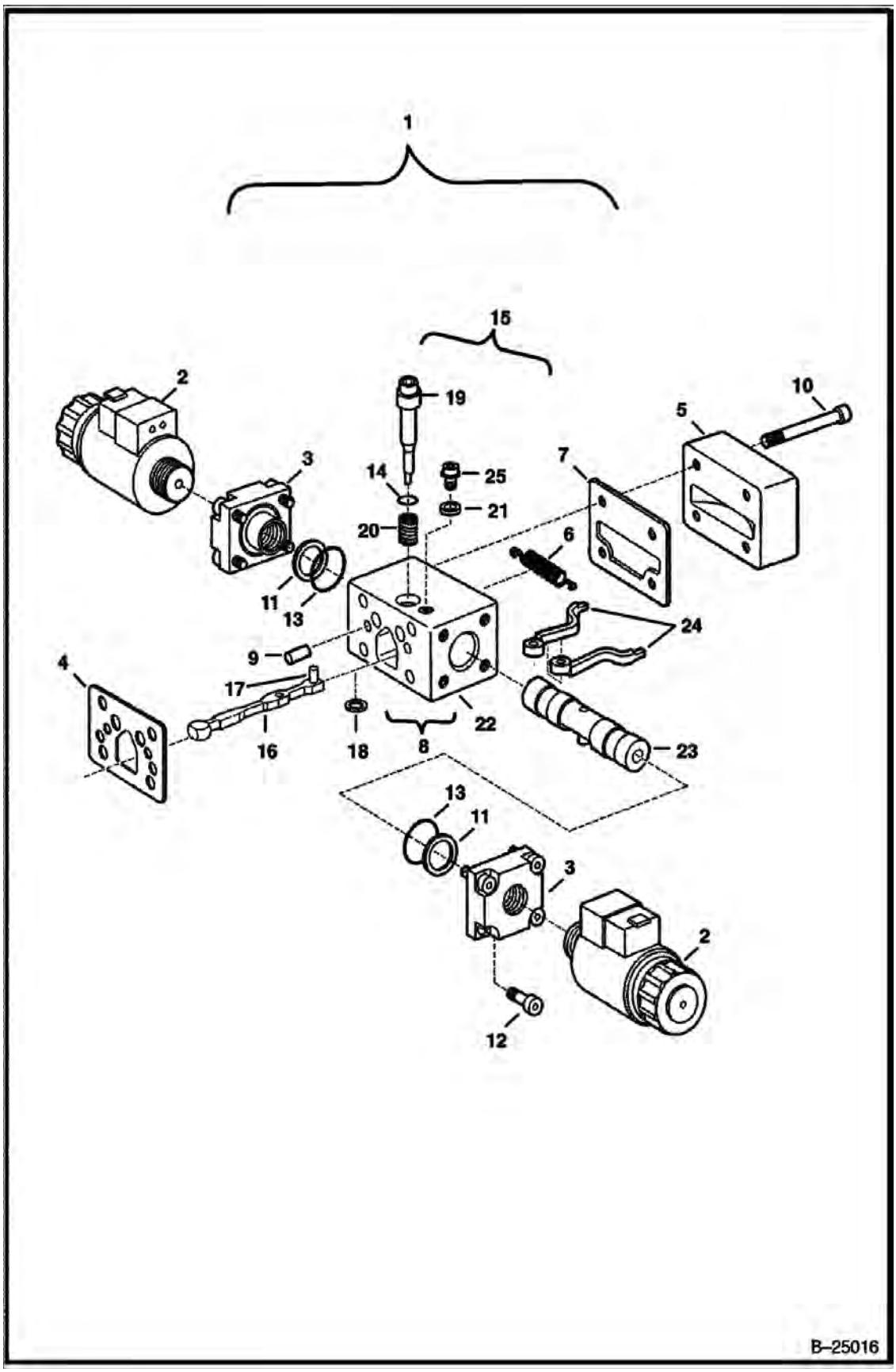

Page 301 - OSS# 6300322913 - All rights reserved by Bobcat Company - 08/04/2017 - 06:30:16 - Produced by Ken Cook Co. with mediaioff

HYDROSTATIC PUMP (Cont'd)

(Control Module) (Selectable Joystick Controls)
(R902103468)

Ref No	Part Number	Description	Remarks	Serial Number	Qty
1	7008109	MODULE, CONTROL	Ref. 2-25 - Model R902105250		2
2	6697960	SOLENOID	W/ O-Ring - Solenoid Nut 7021343		2
3		BUSHING	NSS		2
4	7008806	GASKET	Was 7008121 [A]		1
5	7008122	COVER			1
6	6687967	SPRING			1
7	7008123	GASKET			1
8	7008120	HOUSING			1
9	6688010	PIN			2
10	6671725	BOLT	Was 6687996 [A]		4
11		SPRING	NSS		2
12	6687997	SCREW			8
13		SEAL KIT	NSS		2
14		SEAL	NSS - Order Ref. 8		1
15		ROLLER	NSS		1
16		LEVER	NSS		1
17		ROLLER	NSS		1
18		SHIM	NSS		1
19		PIN	NSS - Order Ref. 8		1
20		SPRING	NSS - Order Ref. 8		1
21		PLATE	NSS - Order Ref. 8		1
22		HOUSING	NSS - Order Ref. 8		1
23		SPOOL	NSS - Order Ref. 8		1
24		LEVER	NSS		2
25		SCREW	NSS - Order Ref. 8		1

Page 294 OSS# 6300322913 - All rights reserved by Bobcat Company - 08/04/2017 - 06:30:16 - Produced by Ken Cook Co. with mediaoff

HYDROSTATIC PUMP
(Charge Pressure Relief Valve)
(R902103468)

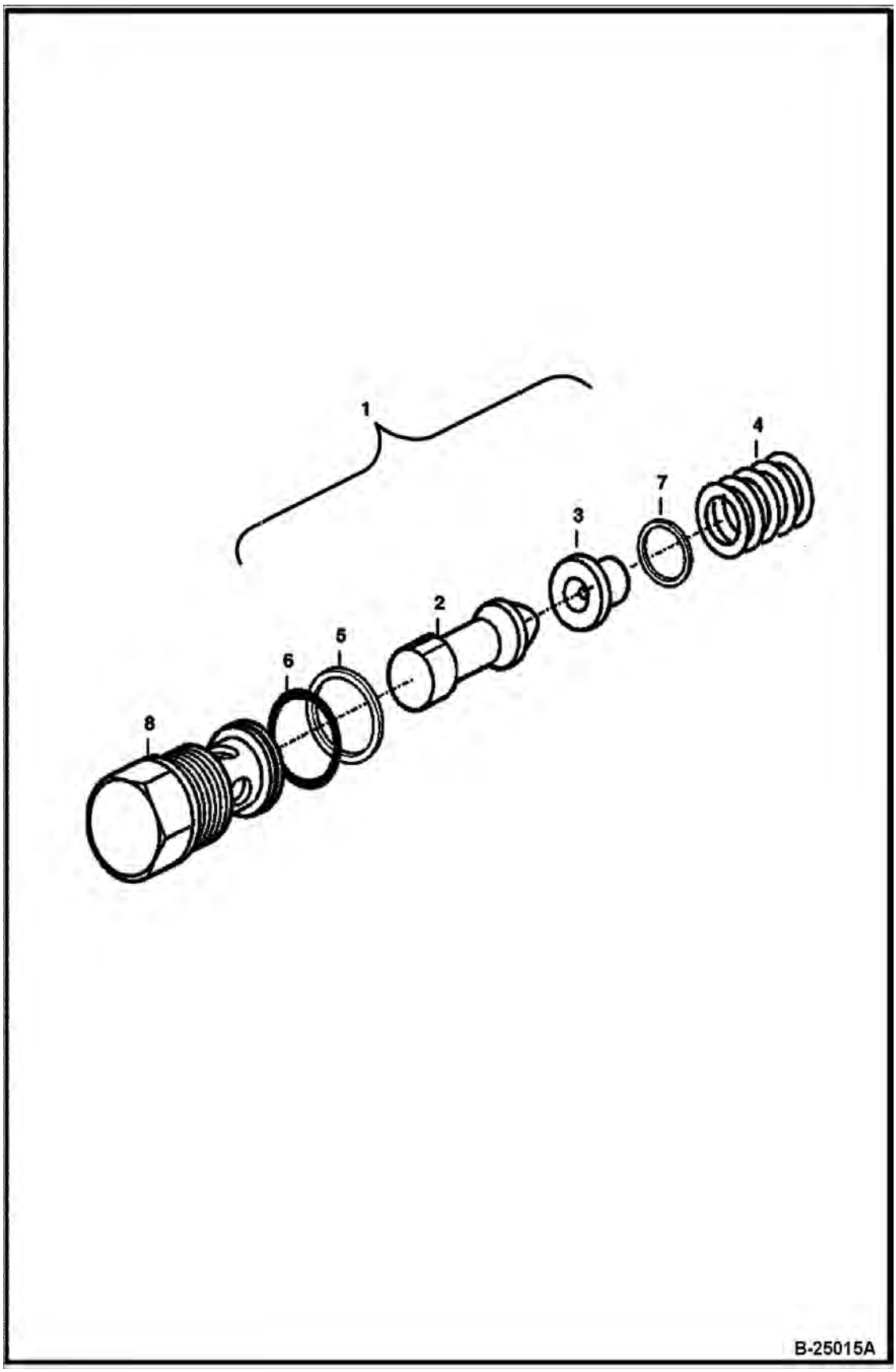

Page 303 - OSS# 6300322913 - All rights reserved by Bobcat Company - 08/04/2017 - 06:30:16 - Produced by Ken Cook Co. with mediaioff

HYDROSTATIC PUMP (Cont'd)

(Charge Pressure Relief Valve)
(R902103468)

Ref No	Part Number	Description	Remarks	Serial Number	Qty
1	6687938	VALVE	Ref. 2-8		1
2	6967534	PISTON			1
3	6967535	COLLAR			1
4	6967536	SPRING			1
5		RING	NLA		1
6	6682936	O-RING			1
7	6688017	SHIM	0,3 mm		1
7	6967539	SHIM	0.5 mm - Was 7008766 [A]		1
7	7008767	SHIM	1.0 mm		1
8		SCREW	NLA - Was 6687939 [A]		1

Page 304 OSS# 6300322913 - All rights reserved by Bobcat Company - 08/04/2017 - 06:30:16 - Produced by Ken Cook Co. with mediaioff

HYDROSTATIC PUMP
(Selectable Joystick Control)
(R902202753)

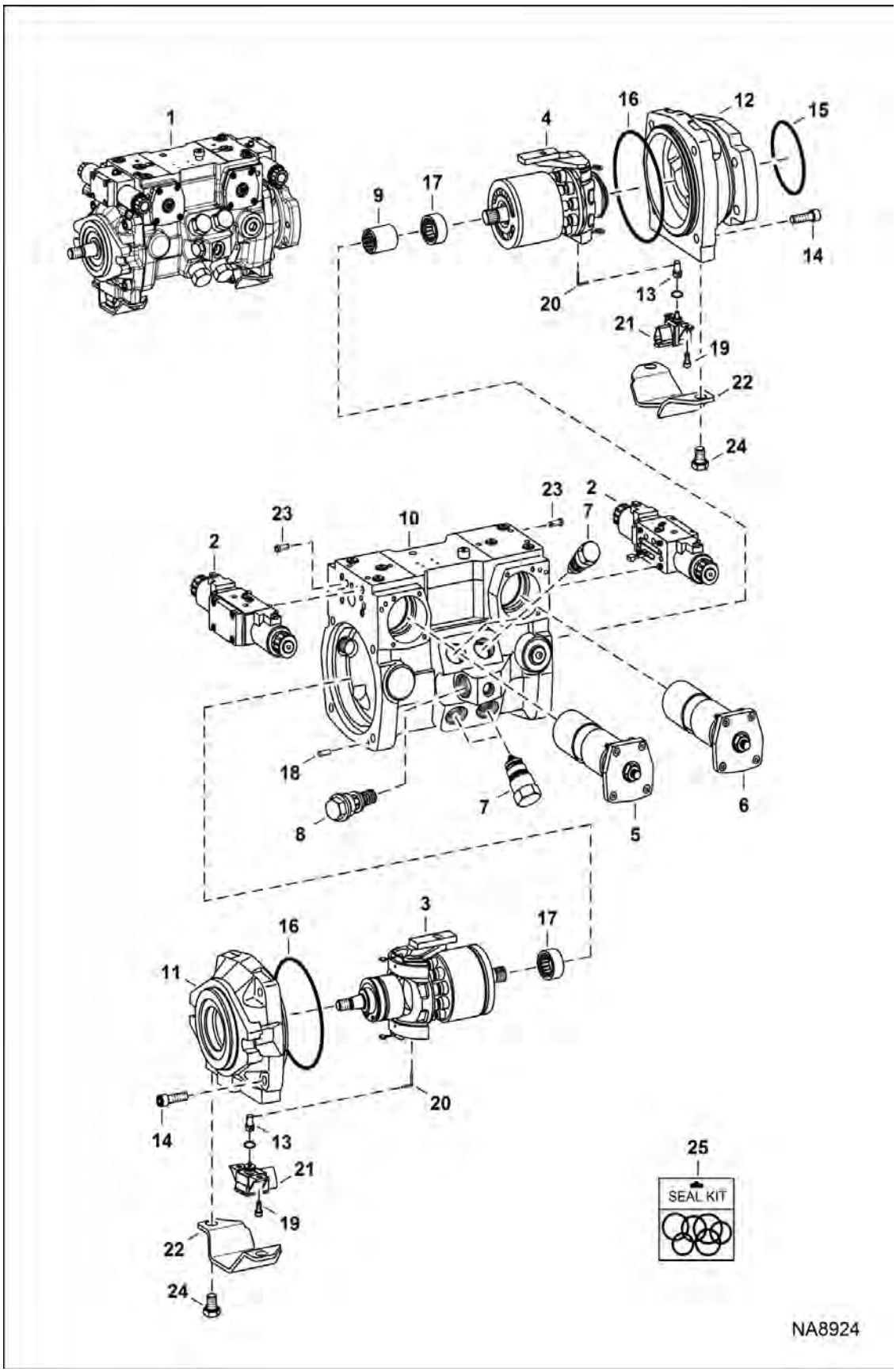

Page 305 - OSS# 6300322913 - All rights reserved by Bobcat Company - 08/04/2017 - 06:30:16 - Produced by Ken Cook Co. with mediaioff

HYDROSTATIC PUMP (Cont'd)

(Selectable Joystick Control)
(R902202753)

Ref No	Part Number	Description	Remarks	Serial Number	Qty
1	7023793	PUMP, HYD TANDEM W/O GEAR PUMP	Model R902202753 - Ref. 2-25		1
2		MODULE, CONTROL	See Illustration HYDROSTATIC PUMP / B25016A		2
3		GROUP, ROTATING	See Illustration HYDROSTATIC PUMP / NA8907 - LH rotation		1
4		GROUP, ROTATING	See Illustration HYDROSTATIC PUMP / NA8908 - RH rotation		1
5		CONTROL	See Illustration HYDROSTATIC PUMP / NA8910 - LH assy		1
6		CONTROL	See Illustration HYDROSTATIC PUMP / NA8911 - RH assy		1
7		VALVE	See Illustration HYDROSTATIC PUMP / B25014		4
8	6687938	VALVE	Uses O-ring 6682936 - Was 7254834 [A]		1
9	7254835	COUPLER			1
10		HOUSING	NLA - Was 7254833 [A]		1
11	7008111	FLANGE, LH			1
12	7008112	FLANGE, RH			1
13	7254838	SHAFT			1
14	6688008	SCREW			8
15	6682949	O-RING	Was 6688019 [A]		1
16	6688009	SEAL			2
17	6688040	BEARING			2
18	7254837	PIN			2
19	7008114	SCREW			4
20	7008802	WIRE			2
21	7008115	SENSOR	triangle connector		2
22	7010227	COVER			2
23	7254836	FILTER			6
24	6688003	SCREW			4
25	7254817	KIT, SEAL			1

Page 298 OSS# 6300322913 - All rights reserved by Bobcat Company - 08/04/2017 - 06:30:16 - Produced by Ken Cook Co. with mediaoff

HYDROSTATIC PUMP
(Rotary Group) (LH) (Selectable Joystick Controls)
(R902202753)

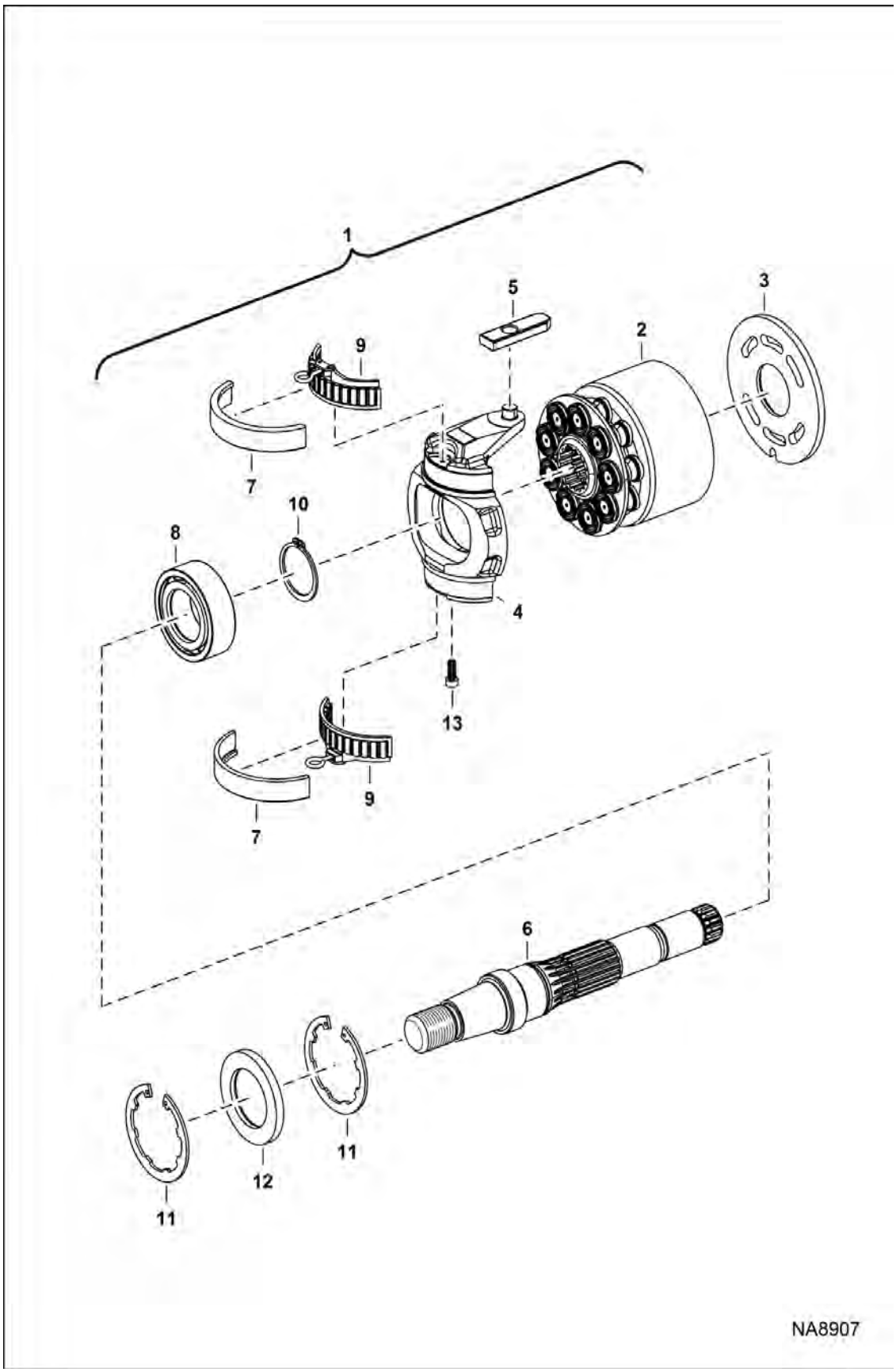

Page 307 - OSS# 6300322913 - All rights reserved by Bobcat Company - 08/04/2017 - 06:30:16 - Produced by Ken Cook Co. with mediaioff

HYDROSTATIC PUMP (Cont'd)

(Rotary Group) (LH) (Selectable Joystick Controls)
(R902202753)

Ref No	Part Number	Description	Remarks	Serial Number	Qty
1	7254810	GROUP, ROTATING	Ref. 2-12 - LH rotation		1
2	7254822	GROUP, ROTATING	W/Ref. 3		1
3	7254831	PLATE, CONTROL			1
4	7008117	SWASHPLATE	Was 7254828 [A]		1
5	6687940	PLATE			1
6	7001120	SHAFT, DRIVE	Was 7254826 [A]		1
7	6687956	2 HALF BEARINGS			2
8	7254827	BEARING			1
9	7008118	BEARING			2
10	6687999	RING, SNAP			1
11	6671741	SNAP RING	Was 6688042 [A]		2
12	6693876	SEAL, SHAFT			1
13	7254829	BUSHING			1

Page 300 OSS# 6300322913 - All rights reserved by Bobcat Company - 08/04/2017 - 06:30:16 - Produced by Ken Cook Co. with mediaioff

HYDROSTATIC PUMP
(Rotary Group) (RH) (Selectable Joystick Controls)
(R902202753)

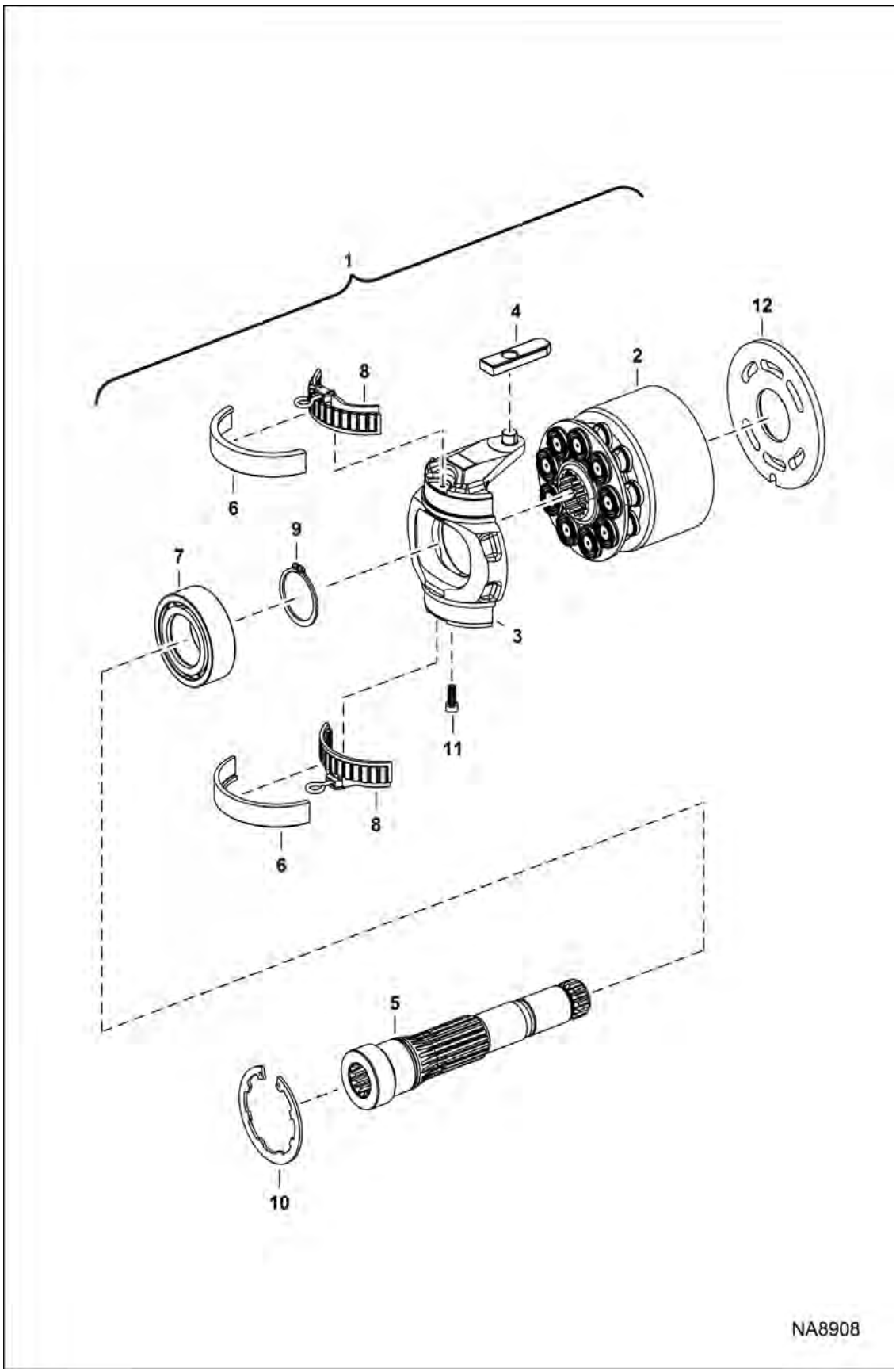

Page 309 - OSS# 6300322913 - All rights reserved by Bobcat Company - 08/04/2017 - 06:30:16 - Produced by Ken Cook Co. with mediaioff

HYDROSTATIC PUMP (Cont'd)

(Rotary Group) (RH) (Selectable Joystick Controls)
(R902202753)

Ref No	Part Number	Description	Remarks	Serial Number	Qty
1	7254811	GROUP, ROTATING	Ref. 2-11 - RH rotation		1
2	7254825	GROUP, ROTATING	W/Ref. 12		1
3	7008117	SWASHPLATE	Was 7254828 [A]		1
4	6687940	PLATE			1
5	6687943	SHAFT			1
6	6687956	2 HALF BEARINGS			2
7	7254827	BEARING			1
8	7008118	BEARING			2
9	6687999	RING, SNAP			1
10	6671741	SNAP RING	Was 6688042 [A]		1
11	7254829	BUSHING			1
12	7254832	PLATE, CONTROL			1

Page 302 OSS# 6300322913 - All rights reserved by Bobcat Company - 08/04/2017 - 06:30:16 - Produced by Ken Cook Co. with mediaioff

HYDROSTATIC PUMP
(Control) (LH) (Selectable Joystick Controls)
(R902202753)

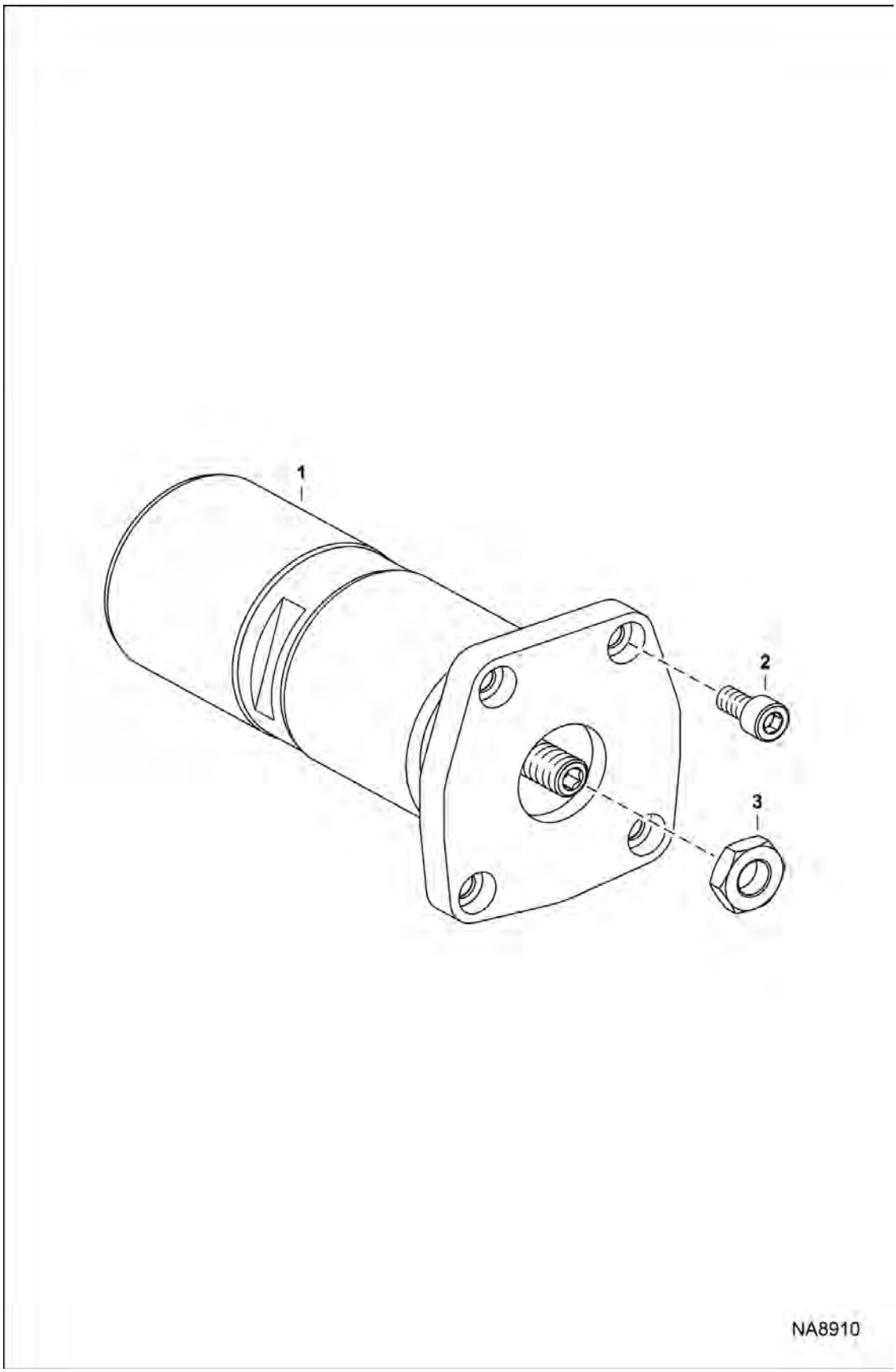

Page 311 - OSS# 6300322913 - All rights reserved by Bobcat Company - 08/04/2017 - 06:30:16 - Produced by Ken Cook Co. with mediaioff

HYDROSTATIC PUMP (Cont'd)
(Control) (LH) (Selectable Joystick Controls)
(R902202753)

Ref No	Part Number	Description	Remarks	Serial Number	Qty
1	7254812	CONTROL	W/Ref. 2 & 3		1
2	6682968	SCREW	Was 6687995 [A]		4
3	6674907	NUT	Was 6687925 [A]		1

Page 1.2 OSS# 6300322913 - All rights reserved by Bobcat Company - 08/04/2017 - 06:30:16 - Produced by Ken Cook Co. with mediaioff

HYDROSTATIC PUMP
(Control) (RH) (Selectable Joystick Controls)
(R902202753)

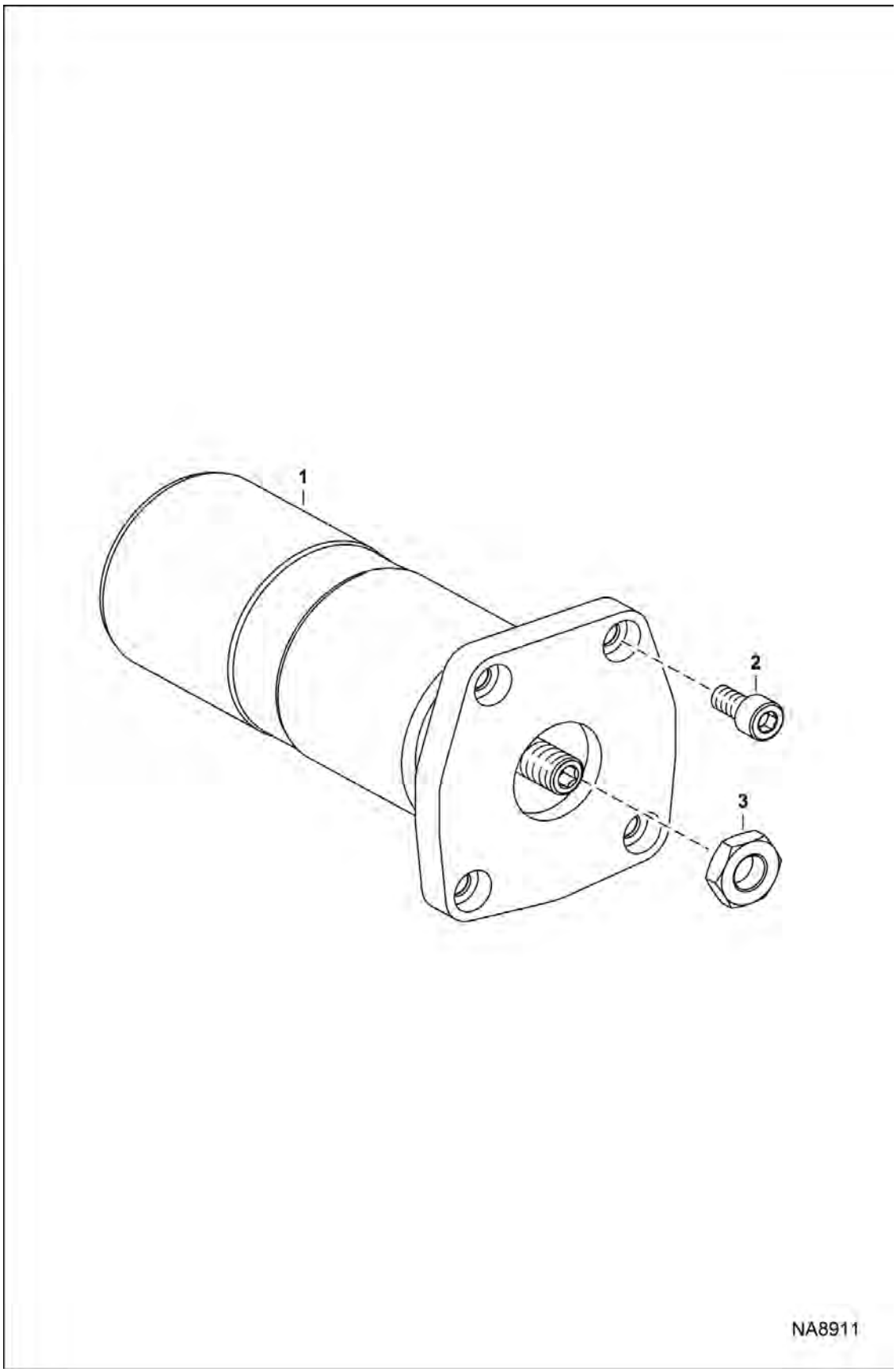

Illustration NA8911

Page 313 - OSS# 6300322913 - All rights reserved by Bobcat Company - 08/04/2017 - 06:30:16 - Produced by Ken Cook Co. with mediaioff

HYDROSTATIC PUMP (Cont'd)
(Control) (RH) (Selectable Joystick Controls)
(R902202753)

Ref No	Part Number	Description	Remarks	Serial Number	Qty
1	7254813	CONTROL	W/ Ref. 2-3		1
2	6682968	SCREW	Was 6687995 [A]		4
3	6674907	NUT	Was 6687925 [A]		1

Page 314 OSS# 6300322913 - All rights reserved by Bobcat Company - 08/04/2017 - 06:30:16 - Produced by Ken Cook Co. with mediaioff

HYDROSTATIC PUMP
(Control Module) (Selectable Joystick Controls)
(R902202753)

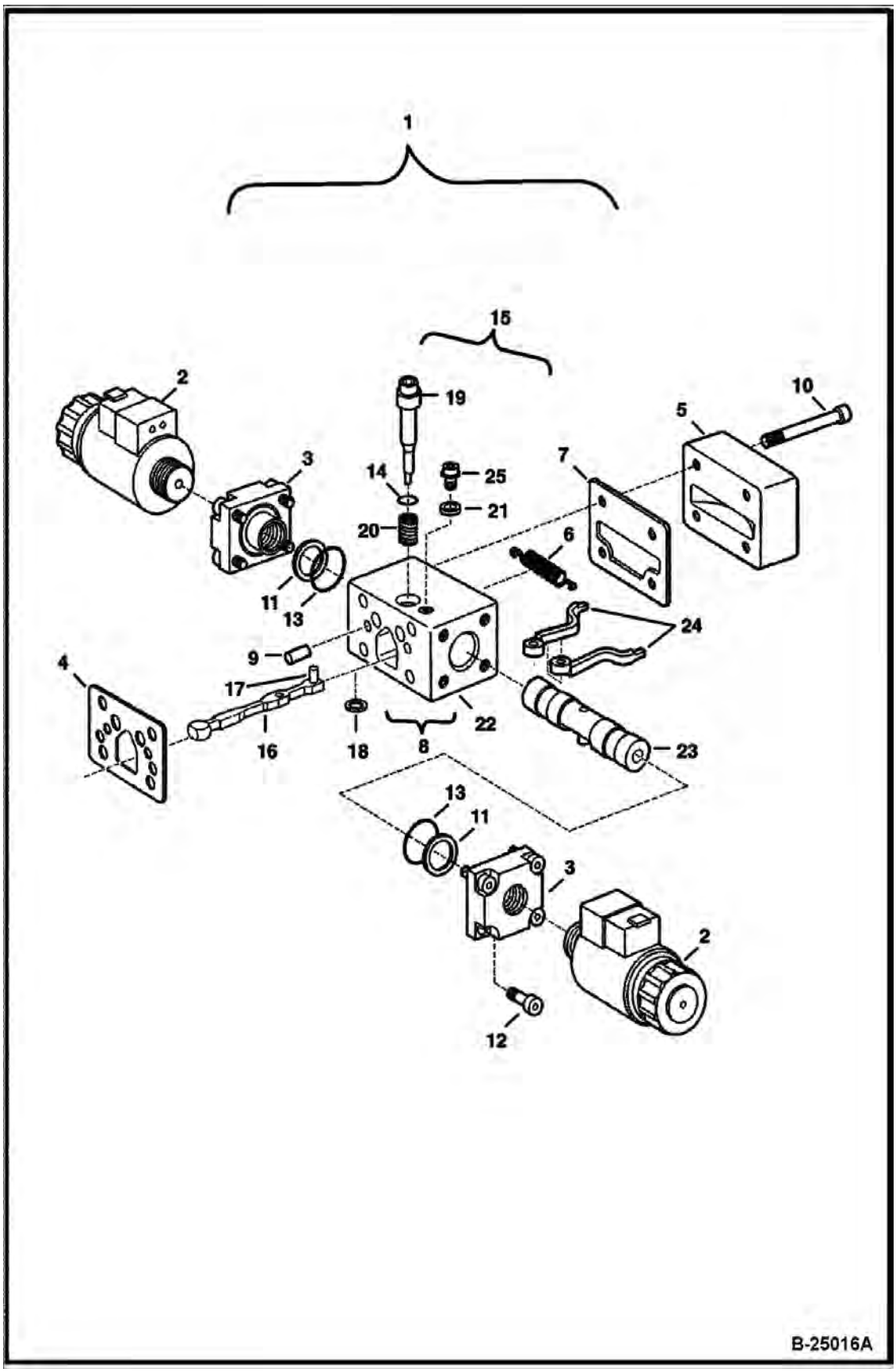

Page 315 - OSS# 6300322913 - All rights reserved by Bobcat Company - 08/04/2017 - 06:30:16 - Produced by Ken Cook Co. with mediaioff

HYDROSTATIC PUMP (Cont'd)

(Control Module) (Selectable Joystick Controls)
(R902202753)

Ref No	Part Number	Description	Remarks	Serial Number	Qty
1	7008109	MODULE, CONTROL	Ref. 2-25		2
2	6697960	SOLENOID	W/ O-Ring - Solenoid Nut 7021343		2
3	6687931	BUSHING	NSS		2
4	7008806	GASKET	Was 7008121 [A]		1
5	7008122	COVER			1
6	6687967	SPRING			1
7	7008123	GASKET			1
8	7008120	HOUSING			1
9	6688010	PIN			2
10	6671725	BOLT	Was 6687996 [A]		4
11		SPRING	NSS		2
12	6687997	SCREW			8
13		SEAL KIT	NSS		2
14		SEAL	NSS - Order Ref. 8		1
15		ROLLER			1
16		LEVER	NSS		1
17		ROLLER	NSS		1
18		SHIM	NSS		1
19		PIN	NSS - Order Ref. 8		1
20		SPRING	NSS - Order Ref. 8		1
21		PLATE	NSS - Order Ref. 8		1
22		HOUSING	NSS - Order Ref. 8		1
23		SPOOL	NSS - Order Ref. 8		1
24		LEVER	NSS		2
25		SCREW	NSS - Order Ref. 8		1

Page 308 OSS# 6300322913 - All rights reserved by Bobcat Company - 08/04/2017 - 06:30:16 - Produced by Ken Cook Co. with mediaoff

HYDROSTATIC PUMP
(Charge Pressure Relief Valve)
(R902202753)

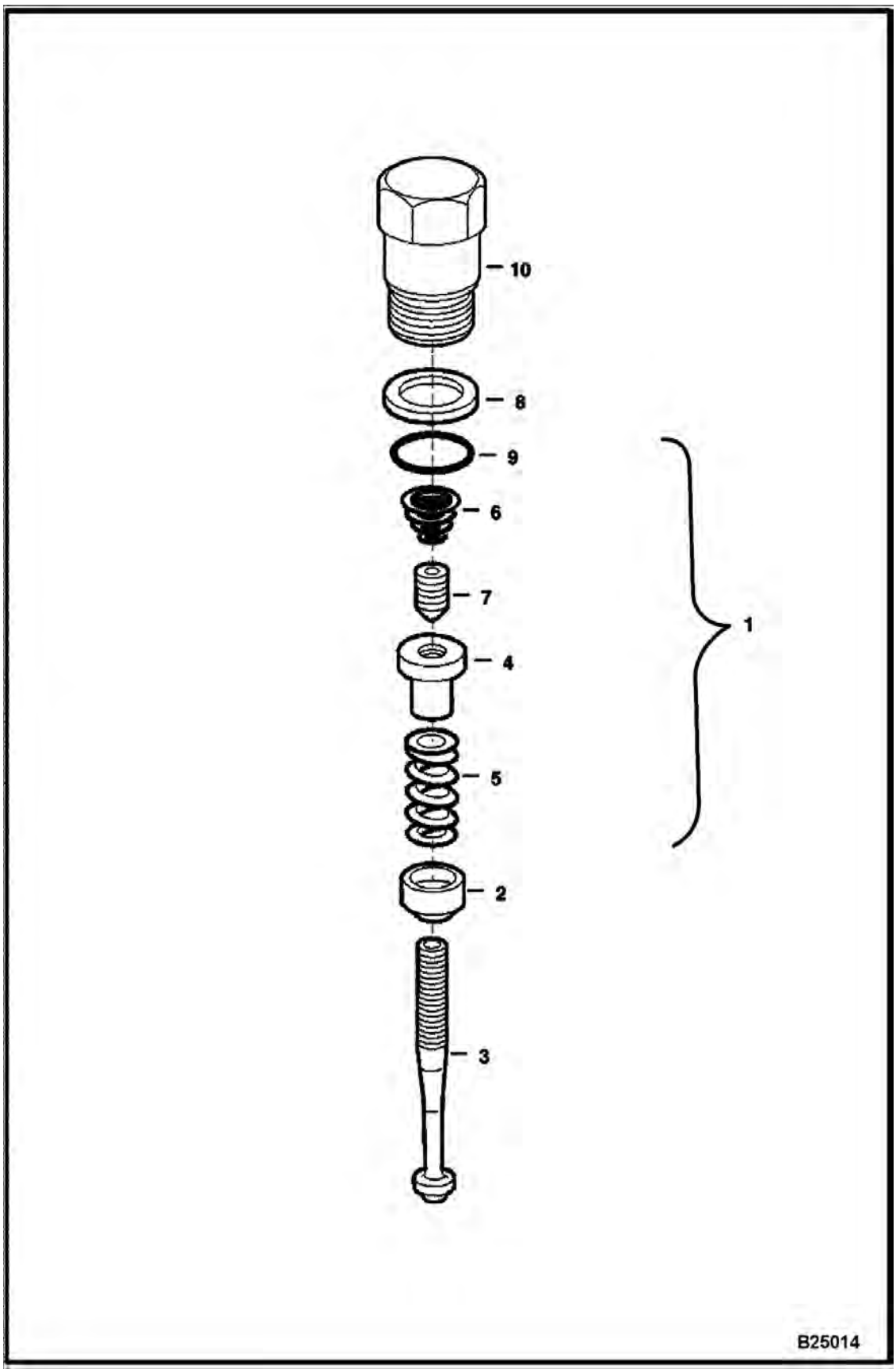

Illustration B25014

Page 317 - OSS# 6300322913 - All rights reserved by Bobcat Company - 08/04/2017 - 06:30:16 - Produced by Ken Cook Co. with mediaioff

HYDROSTATIC PUMP (Cont'd)

(Charge Pressure Relief Valve)
(R902202753)

Ref No	Part Number	Description	Remarks	Serial Number	Qty
1	7283468	VALVE, RELIEF	preset at 350 bar - Was 6692332 [A]		1
2	6687921	COLLAR			1
3	6967523	SPINDLE	Was 6687920 [A]		1
4	6687922	NUT			1
5	6967525	SPRING	Was 6688043 [A]		1
6	6967526	SPRING	Was 6688021 [A]		1
7	6967527	PIN	Was 6687923 [A]		1
8	6682930	RING, BACK-UP	Was 6688041 [A]		1
9	6682929	O-RING	Was 6688000 [A]		1
10	6688034	SCREW			1

Page 1 of 1 OSS# 6300322913 - All rights reserved by Bobcat Company - 08/04/2017 - 06:30:16 - Produced by Ken Cook Co. with mediaioff

GEAR PUMP
(Double)

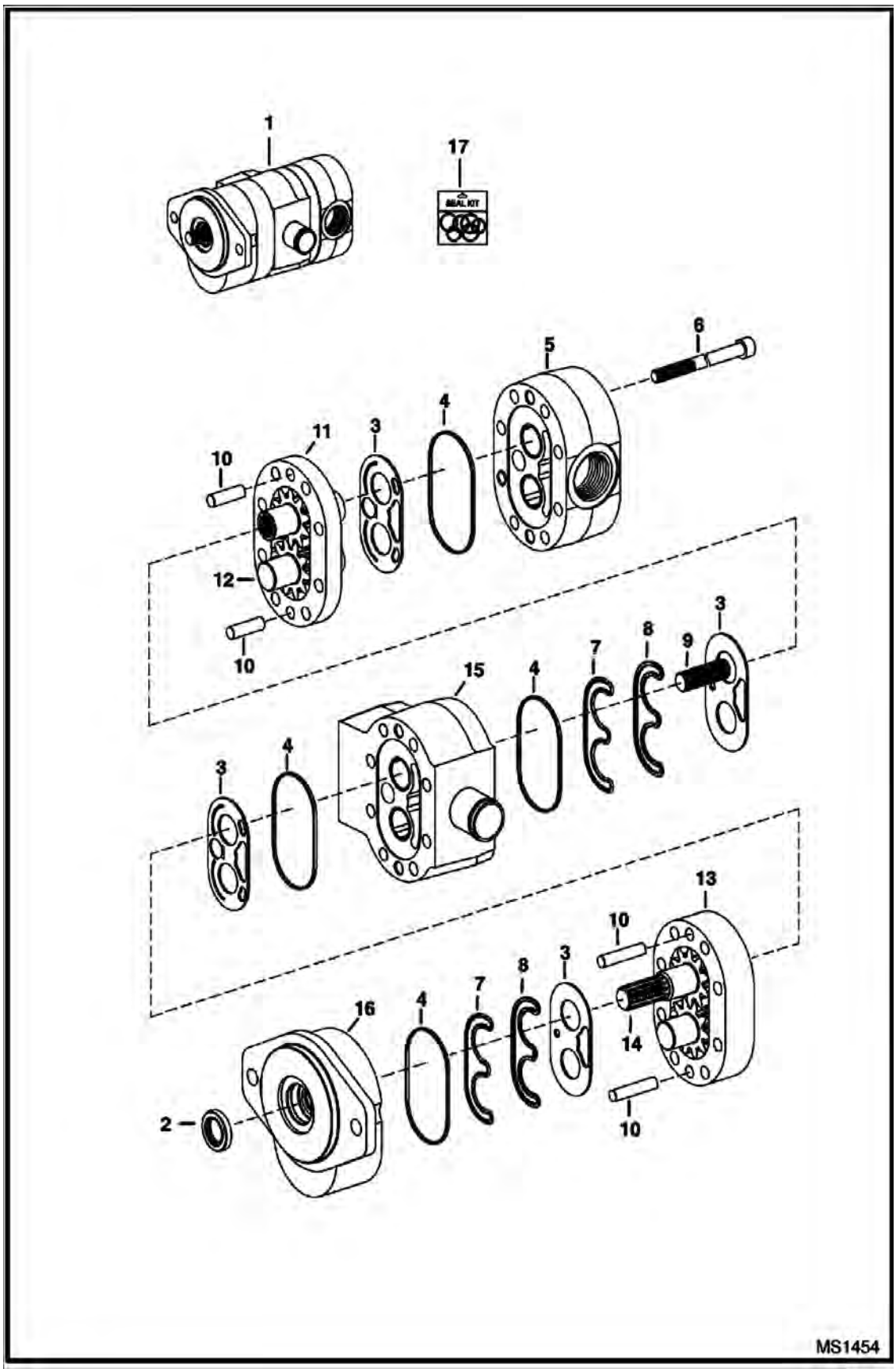

Illustration MS1454

Model T770 MT3
6989477

Page 319 - OSS# 6300322913 - All rights reserved by Bobcat Company - 08/04/2017 - 06:30:16 - Produced by Ken Cook Co. with mediaioff

GEAR PUMP (Cont'd)
(Double)

Ref No	Part Number	Description	Remarks	Serial Number	Qty
1		PUMP, GEAR DOUBLE	NLA - Ref. 2-16 - Model 83001779 - Order 7010172 pump - Was 7001435 [A]		1
1	7010172	PUMP, GEAR DOUBLE	Model 83005638		1
2		SEAL, SHAFT	NSS		1
3		WEAR PLATE	NSS		6
4		SEAL, SECTION	NSS		6
5		HOUSING, REAR	NSS		1
6		BOLT	NSS		8
6	7305588	KIT, BOLT PUMP GEAR	includes (8) bolts		1
7		SEAL, PRE-LOAD	NSS		6
8		SEAL, LOAD	NSS		6
9		CONNECTOR, SPLINE	NSS		2
10		PIN	NSS		6
11		HOUSING, GEAR	NSS - #2		1
12		GEAR SET	NSS - #2		1
13		HOUSING, GEAR	NSS - #1		1
14		GEAR SET	NSS - drive		1
15		HOUSING, CENTER	NSS		1
16		HOUSING, FRONT	NSS		1
17	6687866	KIT, SEAL	Ref. 2-4, 7 & 8		1

Page Generated for OSS# 6300322913 - All rights reserved by Bobcat Company - 08/04/2017 - 06:30:16 - Produced by Ken Cook Co. with mediaoff

COOLING FAN MOTOR
(Canister Element) (Square Solenoid Coil)

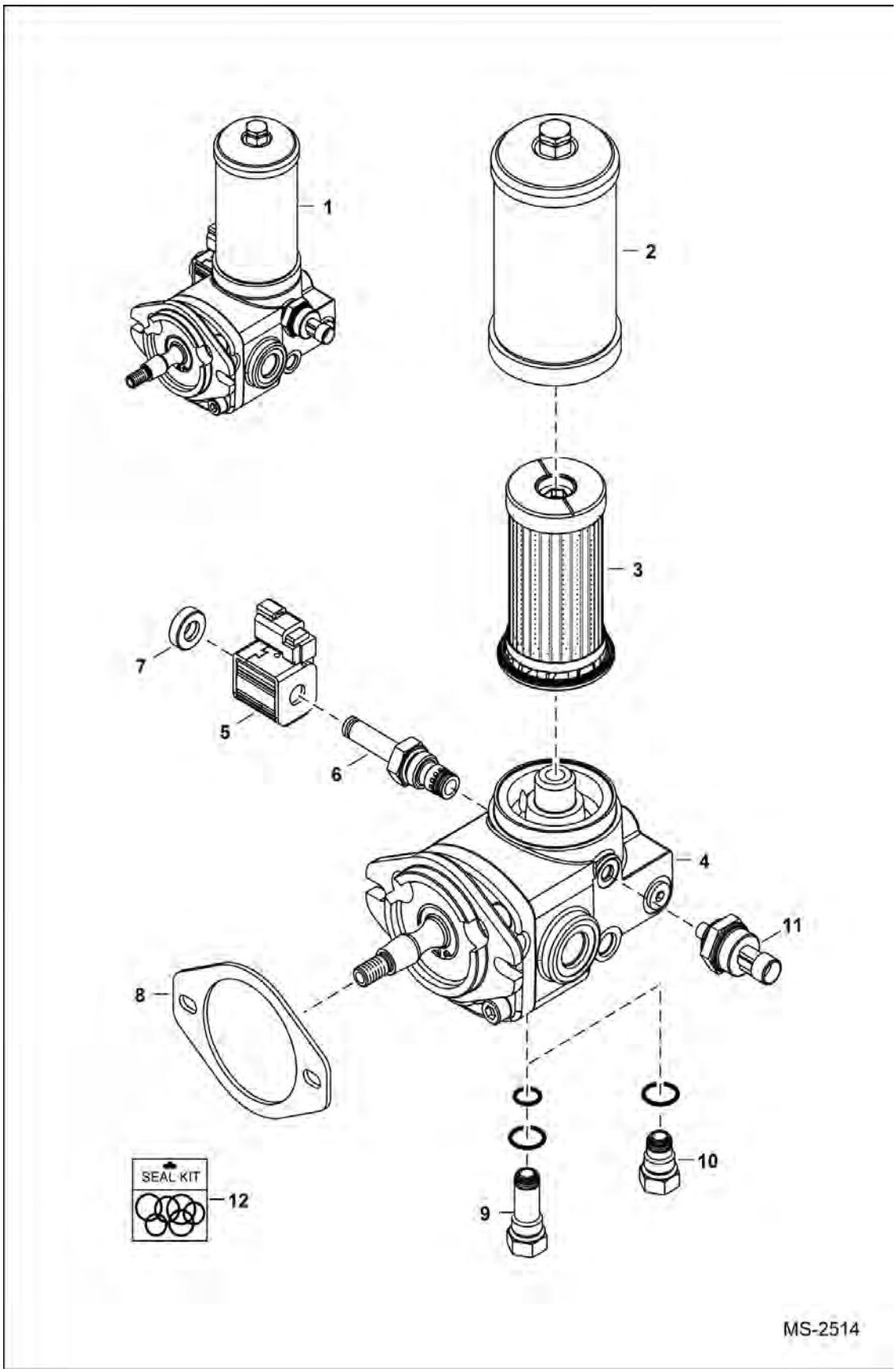

Page 321 - OSS# 6300322913 - All rights reserved by Bobcat Company - 08/04/2017 - 06:30:16 - Produced by Ken Cook Co. with mediaioff

COOLING FAN MOTOR (Cont'd)

(Canister Element) (Square Solenoid Coil)

Ref No	Part Number	Description	Remarks	Serial Number	Qty
1		MOTOR, FAN	See Illustration COOLING FAN MOTOR KIT / NA10758 - NLA - cast iron - Ref. 2-11 - Order 7267114 kit - Was 7010793 [A]		1
2	6698066	HOUSING, FILTER CARTRIDGE			1
3	6692337	FILTER, HYD CARTRIDGE	- cooling fan motor - canister filter		1
4		MOTOR	NSS - Order Ref. 1		1
5	6698065	COIL, CPP012H			1
6	7008810	VALVE, SOLENOID	cartridge - W/Ref. 7		1
6	6698591	KIT, SEAL			1
7		NUT, COIL SOLENOID	NLA - Was 6698352 [A]		1
8	6698062	GASKET, MOTOR			1
9	7000973	PLUG, MOTOR			1
10	7000974	PLUG, MOTOR			1
11	6674316	SWITCH, PRESS OIL HYD	3-pin molded connector		1
12		KIT, SEAL	NSS - Order Ref. 1		1

Page 324 OSS# 6300322913 - All rights reserved by Bobcat Company - 08/04/2017 - 06:30:16 - Produced by Ken Cook Co. with mediaioff

COOLING FAN MOTOR KIT

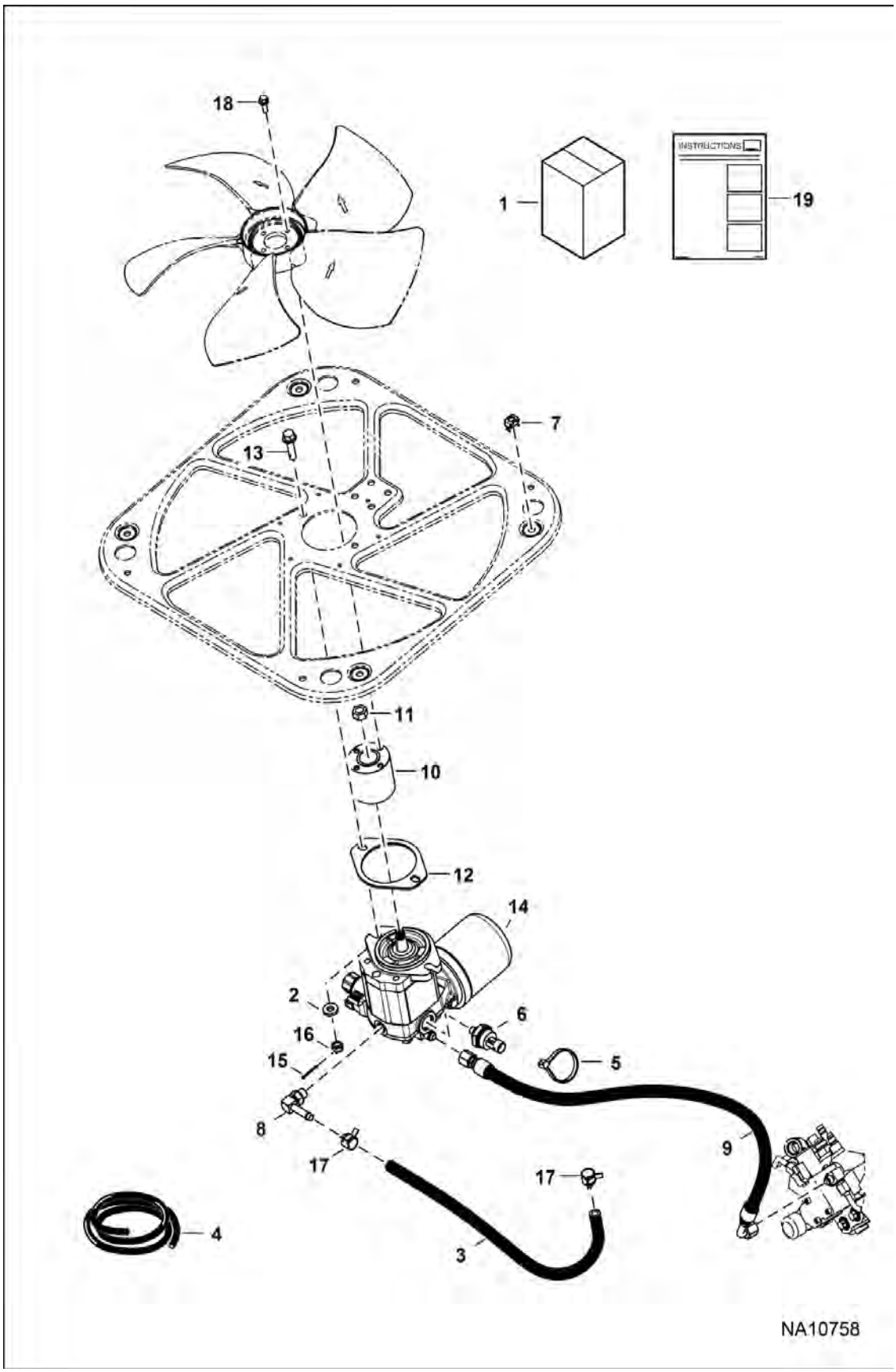

Page 323 - OSS# 6300322913 - All rights reserved by Bobcat Company - 08/04/2017 - 06:30:16 - Produced by Ken Cook Co. with mediaioff

COOLING FAN MOTOR KIT (Cont'd)

Ref No	Part Number	Description	Remarks	Serial Number	Qty
1	7267114	KIT, MOTOR FAN	Ref. 2-19		1
2	6557831	WASHER			2
3		HOSE	NLA - 508 mm (20") long - Order Ref. 3		1
4	6586251	HOSE, BULK	sold per foot		x
5	6624289	STRAP, TIE			2
6	6674316	SWITCH, PRESS OIL HYD			1
7	6678785	NUT, SELF RETAINING			4
8	6727313	FITTING, ELBOW			1
9	7182044	HOSE, HYD			1
10	7233891	HUB			1
11	7240968	NUT			1
12	7242068	GASKET			1
13	7249974	BOLT			2
14	7265577	MOTOR, FAN DRIVE	See Illustration COOLING FAN MOTOR / NA10570		1
15	1F316	PIN			2
16	3D6	NUT			2
17	5HM16	CLAMP			2
18	49C412	BOLT			4
19	7267884ENUS	INSTRUCTIONS	Was 7267884 [A]		1

Page 224 OSS# 6300322913 - All rights reserved by Bobcat Company - 08/04/2017 - 06:30:16 - Produced by Ken Cook Co. with mediaioff

COOLING FAN MOTOR
(Spin-on Element) (Square Solenoid Coil)

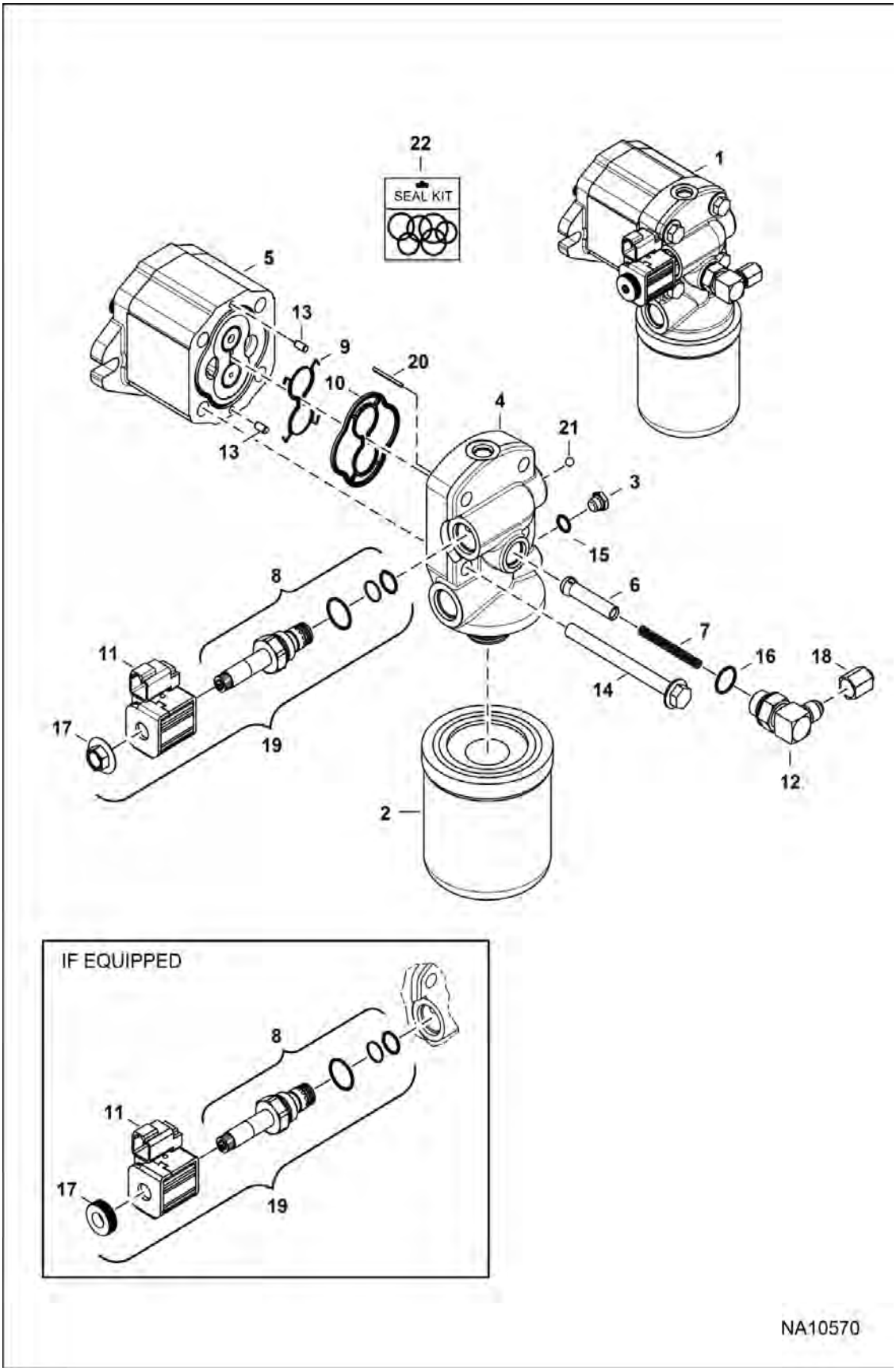

Page 325 - OSS# 6300322913 - All rights reserved by Bobcat Company - 08/04/2017 - 06:30:16 - Produced by Ken Cook Co. with mediaioff

COOLING FAN MOTOR (Cont'd)

(Spin-on Element) (Square Solenoid Coil)

Ref No	Part Number	Description	Remarks	Serial Number	Qty
1	7265577	MOTOR, FAN DRIVE	Ref. 2-21		1
2	6686926	FILTER, OIL HYD			1
3	6812170	PLUG	W/Ref. 15		1
4	7314404	BLOCK FILTER	Was 7231189 [A]		1
5	7302973	MOTOR, FAN	Was 7231471 [A]		1
6	7235925	VALVE, CHECK			1
7	7239168	SPRING			1
8	7008810	VALVE, SOLENOID	cartridge - W/Ref. 17		1
8	6698591	KIT, SEAL			1
9		SEAL	NSS - Order Ref. 22		1
10		SEAL	NSS - Order Ref. 22		1
11	6698065	COIL, CPP012H			1
12	7236735	FITTING, HYD ELBOW	W/Ref. 16		1
13	21JM510	PIN			2
14	29CM10110	BOLT			4
15	75K3	RING,O			1
16	79K12	O RING 10			1
17		NUT	NSS - knurled nut - Order Ref. 8		1
17		NUT	NSS - hex nut - Order Ref. 8		1
18	36K5	CAP			1
19	7270873	ASSY, VALVE	Ref. 8, 11 & 17		1
20	14J0715	PIN			1
21	6592105	BALL 5			1
22	7250289	KIT, SEAL	Ref. 9 & 10		1

Page Built - OSS# 6300322913 - All rights reserved by Bobcat Company - 08/04/2017 - 06:30:16 - Produced by Ken Cook Co. with mediaoff

COOLING FAN MOTOR
(Reversing Fan)

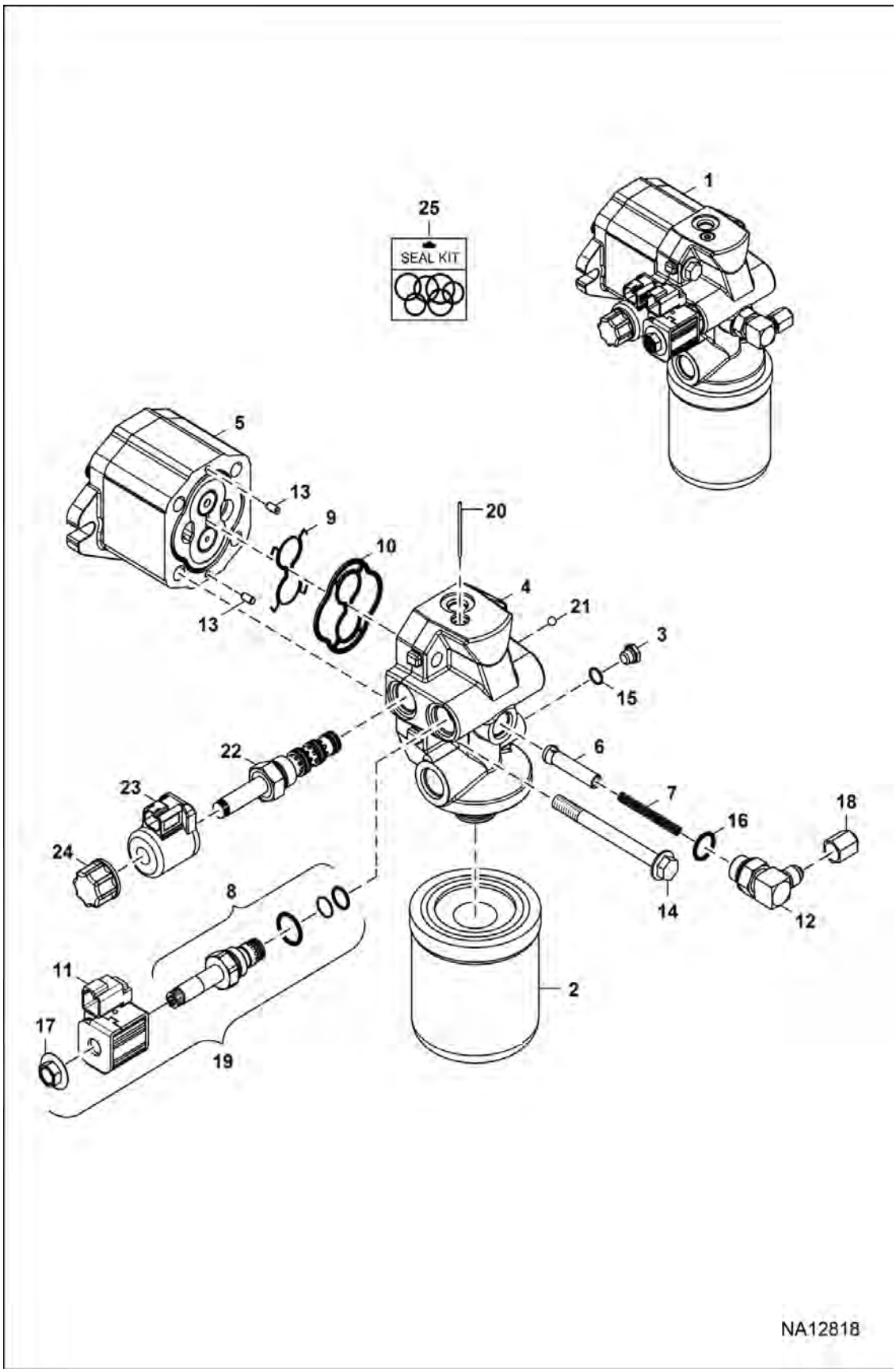

Page 327 - OSS# 6300322913 - All rights reserved by Bobcat Company - 08/04/2017 - 06:30:16 - Produced by Ken Cook Co. with mediaioff

COOLING FAN MOTOR (Cont'd)
(Reversing Fan)

Ref No	Part Number	Description	Remarks	Serial Number	Qty
1	7280087	MOTOR			1
2	6686926	FILTER, OIL HYD			1
3	6812170	PLUG	W/Ref. 15		1
4	7277566	BLOCK			1
5	7302973	MOTOR, FAN			1
6	7235925	VALVE, CHECK			1
7	7239168	SPRING			1
8	7308657	VALVE PROPORTIONAL	cartridge - W/Ref. 17		1
8	6698591	KIT, SEAL			1
9		SEAL	NSS - Order Ref. 22		1
10		SEAL	NSS - Order Ref. 22		1
11	6698065	COIL, CPP012H			1
12	7236735	FITTING, HYD ELBOW	W/Ref. 16		1
13	21JM510	PIN			2
14	29CM10110	BOLT			4
15	75K3	RING,O			1
16	79K12	O RING 10			1
17		NUT	NSS - hex nut - Order Ref. 8		1
18	36K5	CAP			1
19	7308659	VALVE PROPORTIONAL	Ref. 8, 11 & 17		1
20	7280134	PIN, STRAIGHT			1
21	6592105	BALL 5			1
22	7280317	SOLENOID			1
23	7274493	COIL, SOLENOID			1
24		NUT	NSS - Order Ref. 22		1
25	7250289	KIT, SEAL	Ref. 9 & 10		1

Page Text OSS# 6300322913 - All rights reserved by Bobcat Company - 08/04/2017 - 06:30:16 - Produced by Ken Cook Co. with mediaoff

2-SPEED VALVE
(S/N A3P811001 - A3P813174, A3P911001 - A3P912024)

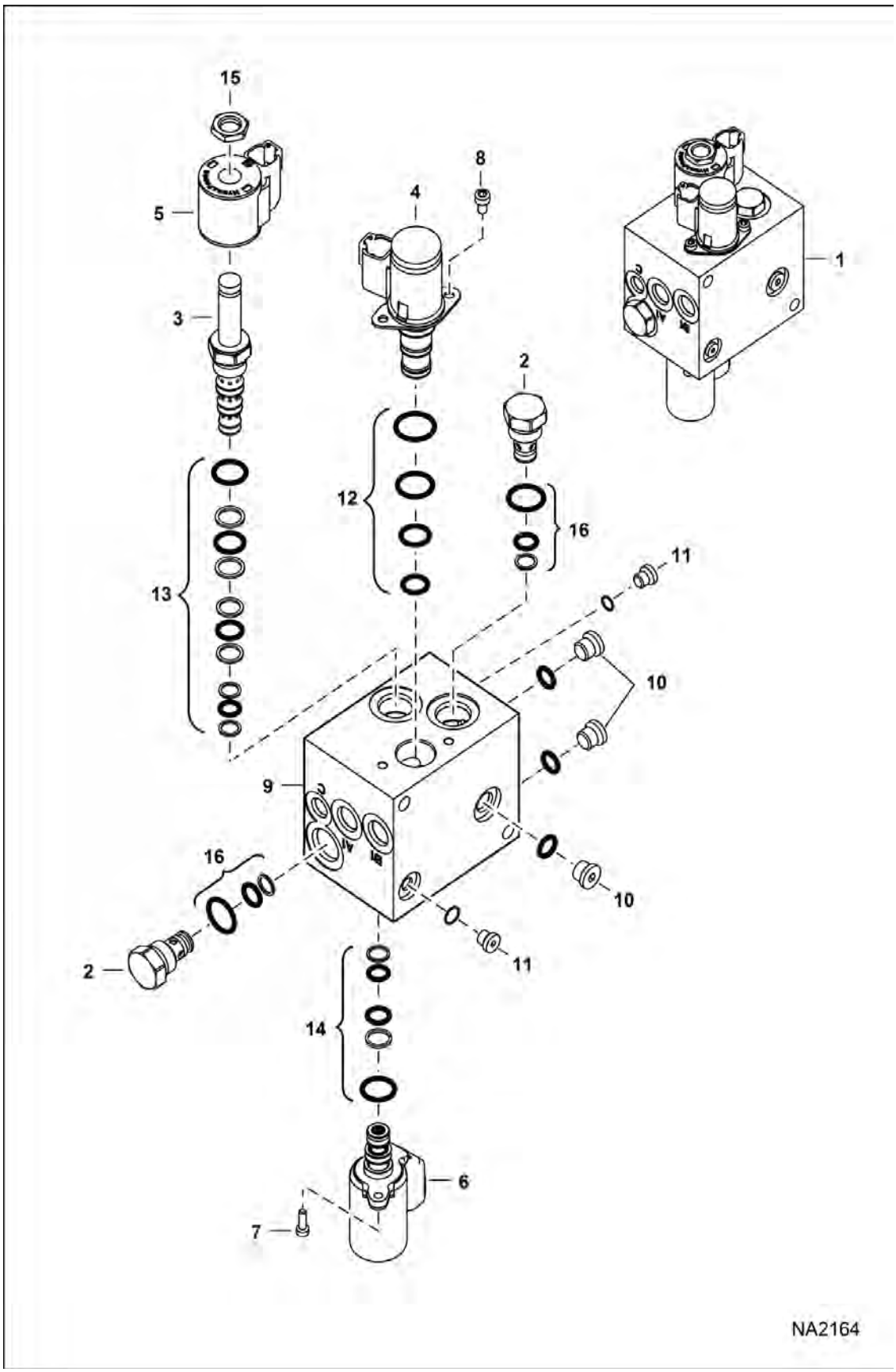

Page 329 - OSS# 6300322913 - All rights reserved by Bobcat Company - 08/04/2017 - 06:30:16 - Produced by Ken Cook Co. with mediaioff

2-SPEED VALVE (Cont'd)

(S/N A3P811001 - A3P813174, A3P911001 - A3P912024)

Ref No	Part Number	Description	Remarks	Serial Number	Qty
1	6697971	VALVE, 2 SPEED	Ref. 2-15		1
2	7010003	VALVE, CHECK			2
3	7010004	CARTRIDGE	make-up		1
4	7010005	CARTRIDGE	brake		1
5	7010006	COIL			1
6	7010007	CARTRIDGE	2-speed		1
7	7010008	BOLT			2
8	7010009	BOLT			2
9	7010010	BLOCK, PORT			1
10	6672762	PLUG			3
11	6677177	PLUG			2
12	7008771	KIT, SEAL			1
13	6672756	KIT, SEAL			1
14	7008771	KIT, SEAL	Was - 7010029 [B,D]		1
15	6676246	NUT			1
16	6672515	KIT, SEAL			2

Page 3804 OSS# 6300322913 - All rights reserved by Bobcat Company - 08/04/2017 - 06:30:16 - Produced by Ken Cook Co. with mediaioff

2-SPEED VALVE
(S/N A3P813175 & Above, A3P912025 & Above)

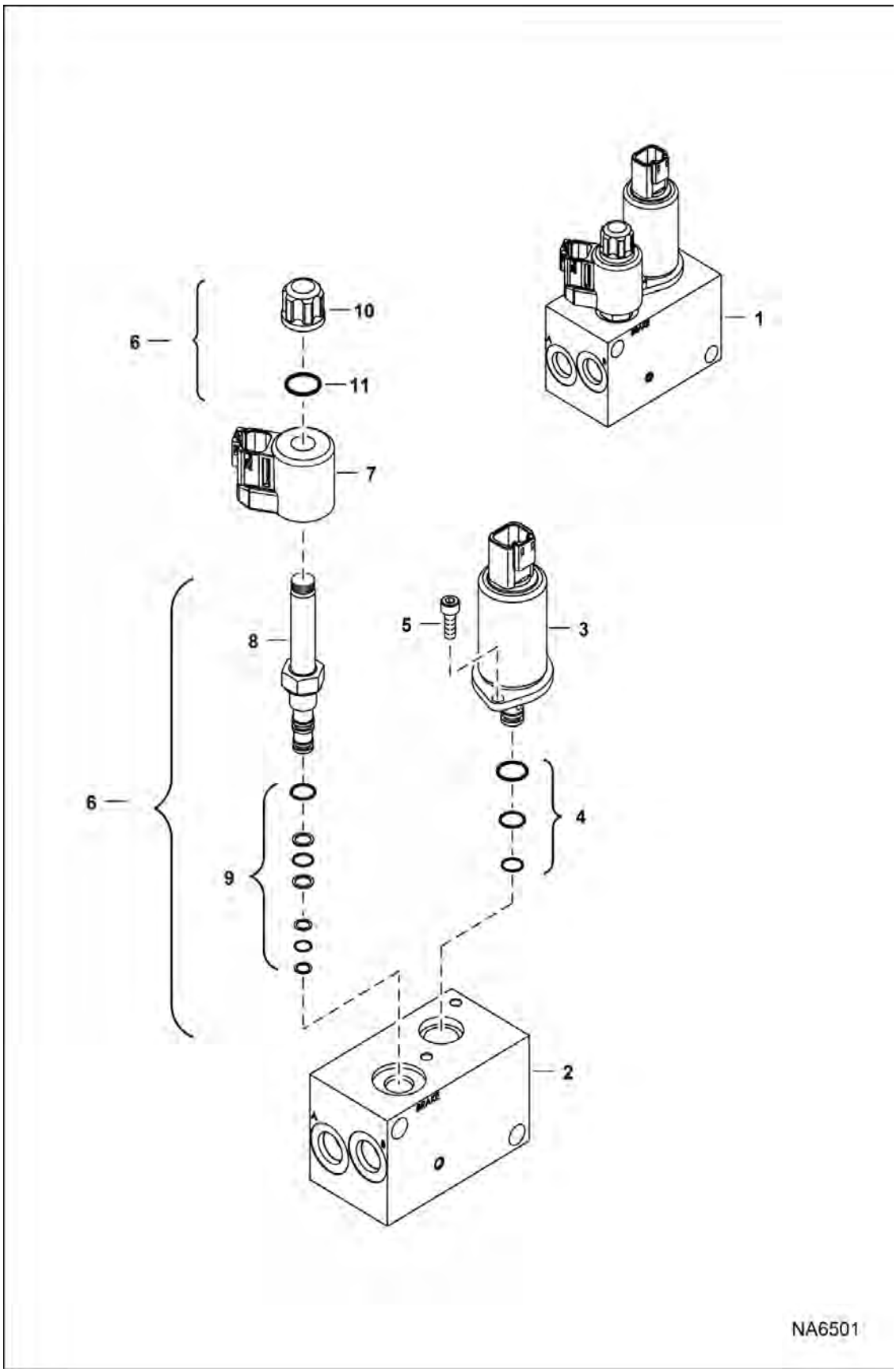

Page 331 - OSS# 6300322913 - All rights reserved by Bobcat Company - 08/04/2017 - 06:30:16 - Produced by Ken Cook Co. with mediaioff

2-SPEED VALVE (Cont'd)

(S/N A3P813175 & Above, A3P912025 & Above)

Ref No	Part Number	Description	Remarks	Serial Number	Qty
1		VALVE, 2-SPEED	NLA - Ref. 2, 3, 5-8, 10 & 11 - W/O brake - Was 7211449 [A]		1
1	7231377	VALVE, 2-SPEED	Ref. 2, 3, 5-8, 10 & 11 - W/brake		1
2		BODY	NSS		1
3	7024902	SOLENOID			1
4	7024903	KIT, SEAL			1
5	7024904	BOLT			2
6	7025092	SOLENOID, LOCK BRAKE	Ref. 8-11		1
7	7025094	COIL, SOLENOID			1
8		STEM	NSS		1
9	7025093	KIT, SEAL			1
10		NUT	NSS		1
11		O-RING	NSS		1

Page 324 OSS# 6300322913 - All rights reserved by Bobcat Company - 08/04/2017 - 06:30:16 - Produced by Ken Cook Co. with mediaioff

CAB ELECTRICAL CIRCUITRY
(Standard)

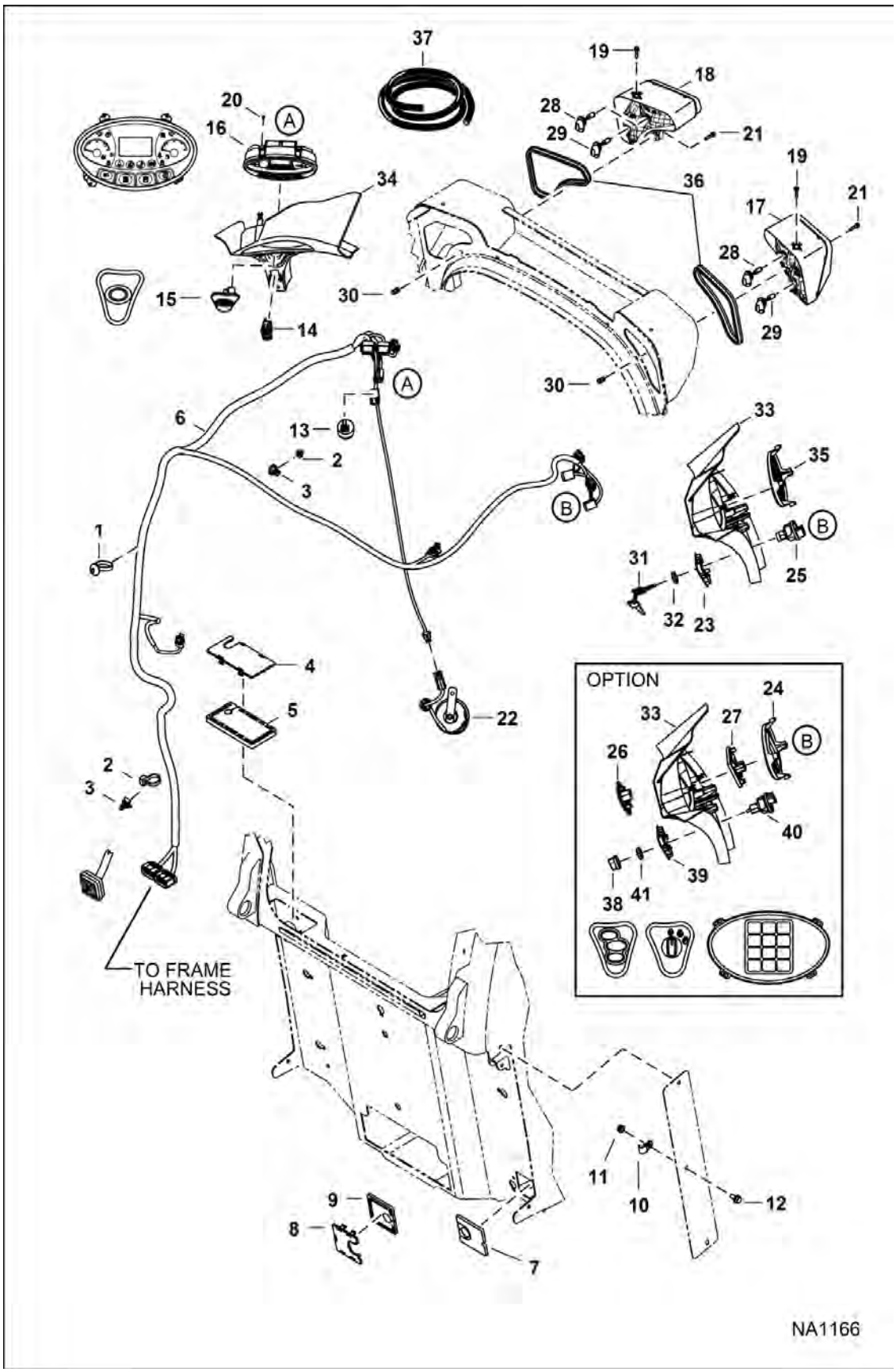

Page 333 - OSS# 6300322913 - All rights reserved by Bobcat Company - 08/04/2017 - 06:30:16 - Produced by Ken Cook Co. with mediaioff

CAB ELECTRICAL CIRCUITRY (Cont'd)
(Standard)

Ref No	Part Number	Description	Remarks	Serial Number	Qty
1	6675734	TIE STRAP			1
2	6624289	STRAP, TIE			5
3	7015668	MOUNT, STRAP TIE	push in - Use W/tie strap		1
4	7179136	PLUG, HARNESS CAB STD			1
5	7179137	FOAM			1
6	7165991	HARNESS, CAB STD	one connector to main frame harness	A3P811001 -	1
6	7210557	HARNESS, CAB	two connectors to main frame harness	A3P8 & Above	1
7	7185150	PLUG, HARNESS CAB	replaces both Ref. 8 & 9		2
8		PLUG, HARNESS CAB DLX	NLA - Order Ref. 7 - Was 7179115 [A]		1
9		FOAM	NLA - Order Ref. 7 - Was 7179116 [A]		1
10	30H20	CLIP			1
11	57D6	NUT 5			1
12	31C612	BOLT			1
13	6692489	ALARM, BUZZER			1
14	6690948	SWITCH PARK BRAKE			1
15	7003032	SWITCH, OVERRIDE TRACTION			1
16	7025320	DISPLAY, DLX	Was 7022670		1
17	7251340	ASSY, LIGHT HEAD RH	Was 7138040 [C]		1
17	7008814	BULB, 37.5W	Was 7276034 - 37.5W		x
18	7251341	ASSY, LIGHT HEAD LH	Was 7138041 [A]		1
18	7008814	BULB, 37.5W	Was 7276034 - 37.5W		x
19	35C410	BOLT 5			2
20	7179008	SCREW, PLASTIC			3
21	31C420	BOLT 5			2
22		HORN, ALARM	See Illustration HORN KIT / NA2213 manual controls, AHC & ACS		1
22		HORN, ALARM	See Illustration HORN KIT / NA2212 selectable joystick controls		1
23	7163589	INSERT, SWITCH			1
24	7003027	INSERT, KEYPAD	if loader is equipped W/SJC & text decals, Also Order Ref. 40 & 7168114 decal - if loader is equipped W/SJC & no text decals, Also Order Ref. 40 & 7177707 decal		1
25	6693245	SWITCH, IGN	W/Ref. 32		1
26		SWITCH, IGN	NLA - Was 7003033 [A]		1
27	6693712	KEYPAD, PANEL			1
28	7008814	BULB, 37.5W	- 37.5W		2
29	6675336	LIGHT, BULB 50W			2
30	7154910	INSERT, THREADED			2
31	6693241	KEY (2)	ignition - single key W/O ring		1

Page 326 OSS# 6300322913 - All rights reserved by Bobcat Company - 08/04/2017 - 06:30:16 - Produced by Ken Cook Co. with mediaoff

CAB ELECTRICAL CIRCUITRY (Cont'd)
(Standard)

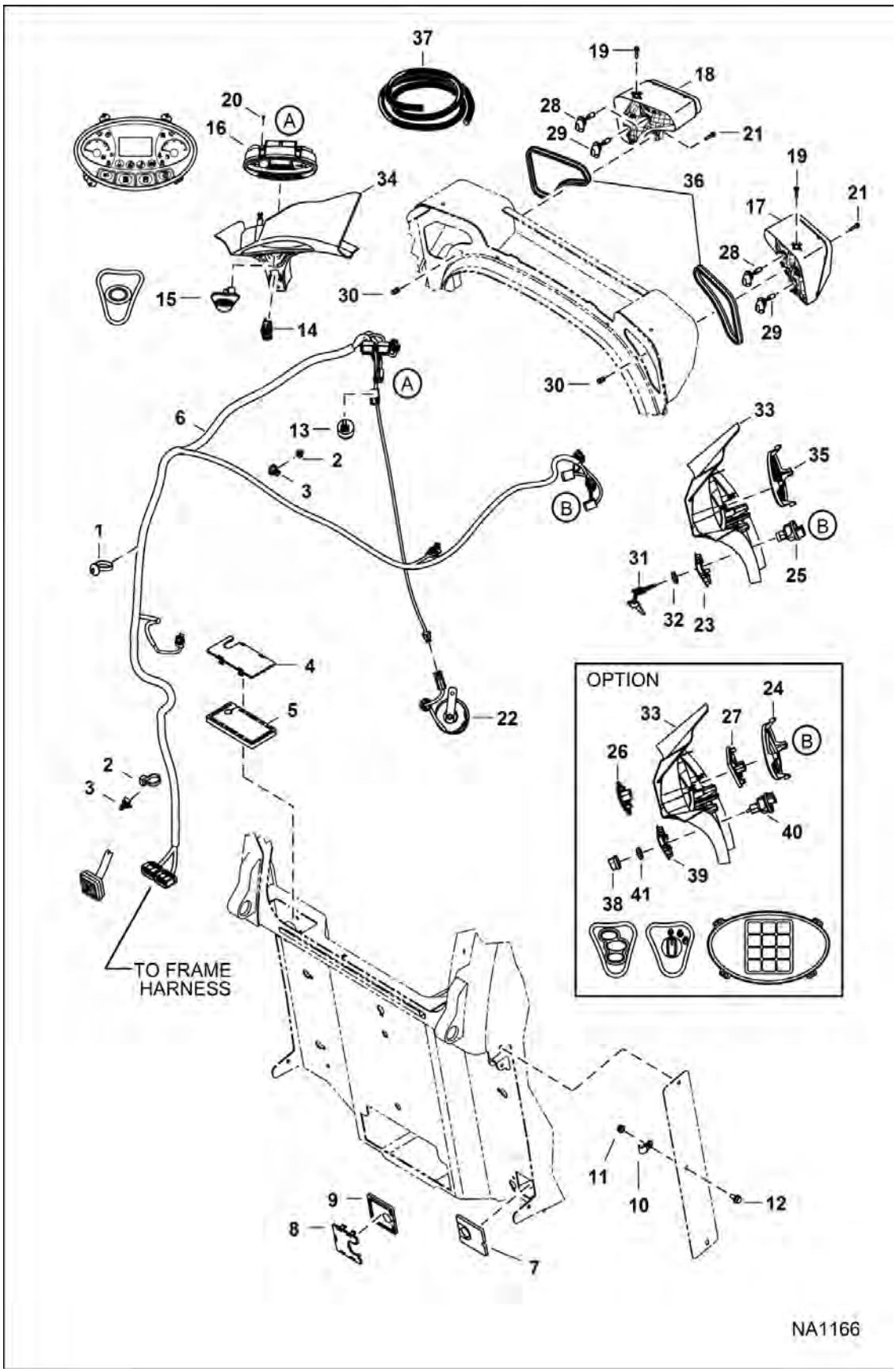

Page 335 - OSS# 6300322913 - All rights reserved by Bobcat Company - 08/04/2017 - 06:30:16 - Produced by Ken Cook Co. with mediaioff

CAB ELECTRICAL CIRCUITRY (Cont'd)

(Standard)

Ref No	Part Number	Description	Remarks	Serial Number	Qty
32	7009081	NUT			1
33	7155791	PANEL, RH			1
34	7155792	PANEL, LH			1
35	7002985	INSERT, BLANK	W/Bobcat head - if loader is equipped W/SJC & text decals, Also Order Ref. 33 & 7168114 decal - if loader is equipped W/SJC & no text decals, Also Order Ref. 33 & 7177707 decal		1
36		SEAL	NLA - 609,6 mm (24") long - Order Ref. 37		2
37	7202956	SEAL, BULK	bulk - sold per foot		x
38	7023588	KNOB			1
39	7163589	INSERT, SWITCH			1
40	7023022	SWITCH ROTARY	W/Ref. 41		1
41	7009081	NUT			1

Page 1864 OSS# 6300322913 - All rights reserved by Bobcat Company - 08/04/2017 - 06:30:16 - Produced by Ken Cook Co. with mediaioff

CAB ELECTRICAL CIRCUITRY
(Deluxe)

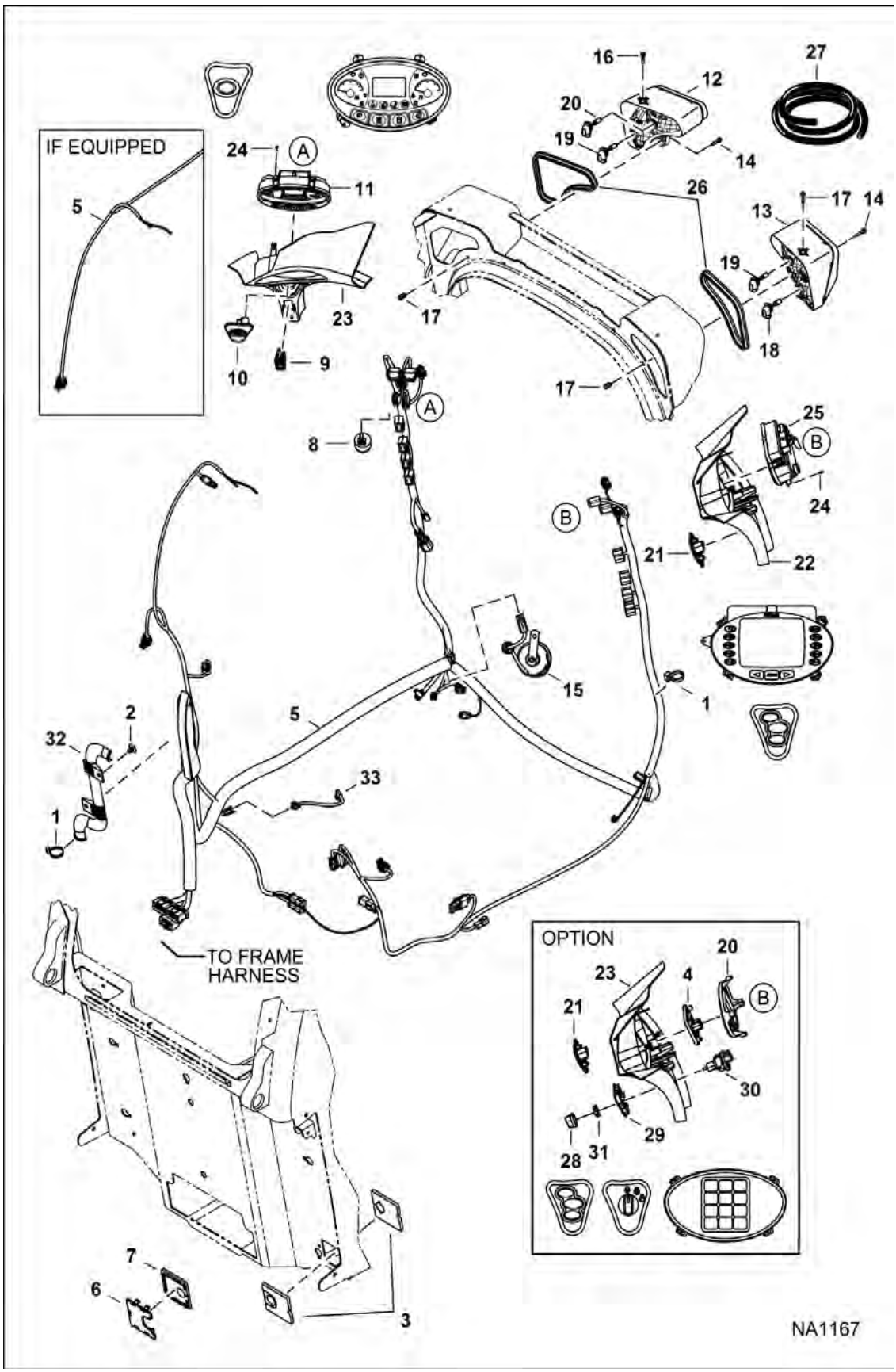

Page 337 - OSS# 6300322913 - All rights reserved by Bobcat Company - 08/04/2017 - 06:30:16 - Produced by Ken Cook Co. with mediaioff

CAB ELECTRICAL CIRCUITRY (Cont'd)
(Deluxe)

Ref No	Part Number	Description	Remarks	Serial Number	Qty
1	6624289	STRAP, TIE			15
2	6674895	RETAINER			2
3	7185150	PLUG, HARNESS CAB	replaces both Ref. 7 & 8		2
4	6693712	KEYPAD, PANEL			1
5	7196753	HARNESS, CAB DLX	one connector to main frame harness	A3P811001 - A3P813712	1
				A3P911001 - A3P912303	1
5	7231782	HARNESS, CAB DLX	three connectors to main frame harness - one connector to dome light - Was 7210556 [A]	A3P813713 - A3P813968	1
				A3P912304 - A3P912386	1
5	7234737	HARNESS, CAB DLX	two connectors to dome light	A3P813969 - A3P814202	1
				A3P912387 - A3P912727	1
5	7304511	HARNESS CAB DLX	Also Order Ref. 33 - Was 7253409 [A]	A3P814203 & Above	1
				A3P912728 & Above	1
6		PLUG, HARNESS CAB DLX	NLA - Order Ref. 3 - Was 7179115 [A]		1
7		FOAM	NLA - Order Ref. 3 - Was 7179116 [A]		1
8	6692489	ALARM, BUZZER			1
9	6690948	SWITCH PARK BRAKE			1
10	7003032	SWITCH, OVERRIDE TRACTION			1
11	7025320	DISPLAY, DLX	Was 7022670		1
12	7251341	ASSY, LIGHT HEAD LH	Was 7138041 [A]		1
12	7008814	BULB, 37.5W	Was 7276034 - 37.5W		x
13	7251340	ASSY, LIGHT HEAD RH	Was 7138040 [C]		1
13	7008814	BULB, 37.5W	Was 7276034 - 37.5W		x
14	31C420	BOLT 5			2
15		HORN, ALARM	See Illustration HORN KIT / NA2213 manual controls, AHC & ACS		1
15		HORN, ALARM	See Illustration HORN KIT / NA2212 selectable joystick controls		1
16	35C410	BOLT 5			2
17	7154910	INSERT, THREADED			2
18	6675336	LIGHT, BULB 50W			2
19	7008814	BULB, 37.5W	- 37.5W		2
20	7003027	INSERT, KEYPAD	if loader is equipped W/SJC & text decals, Also Order Ref. 23 & 7168114 decal - if loader is equipped W/SJC & no text decals, Also Order Ref. 23 & 7177707 decal		1
21		SWITCH, IGN	NLA - Was 7003033 [A]		1

Page 3880 OSS# 6300322913 - All rights reserved by Bobcat Company - 08/04/2017 - 06:30:16 - Produced by Ken Cook Co. with mediaoff

CAB ELECTRICAL CIRCUITRY (Cont'd)
(Deluxe)

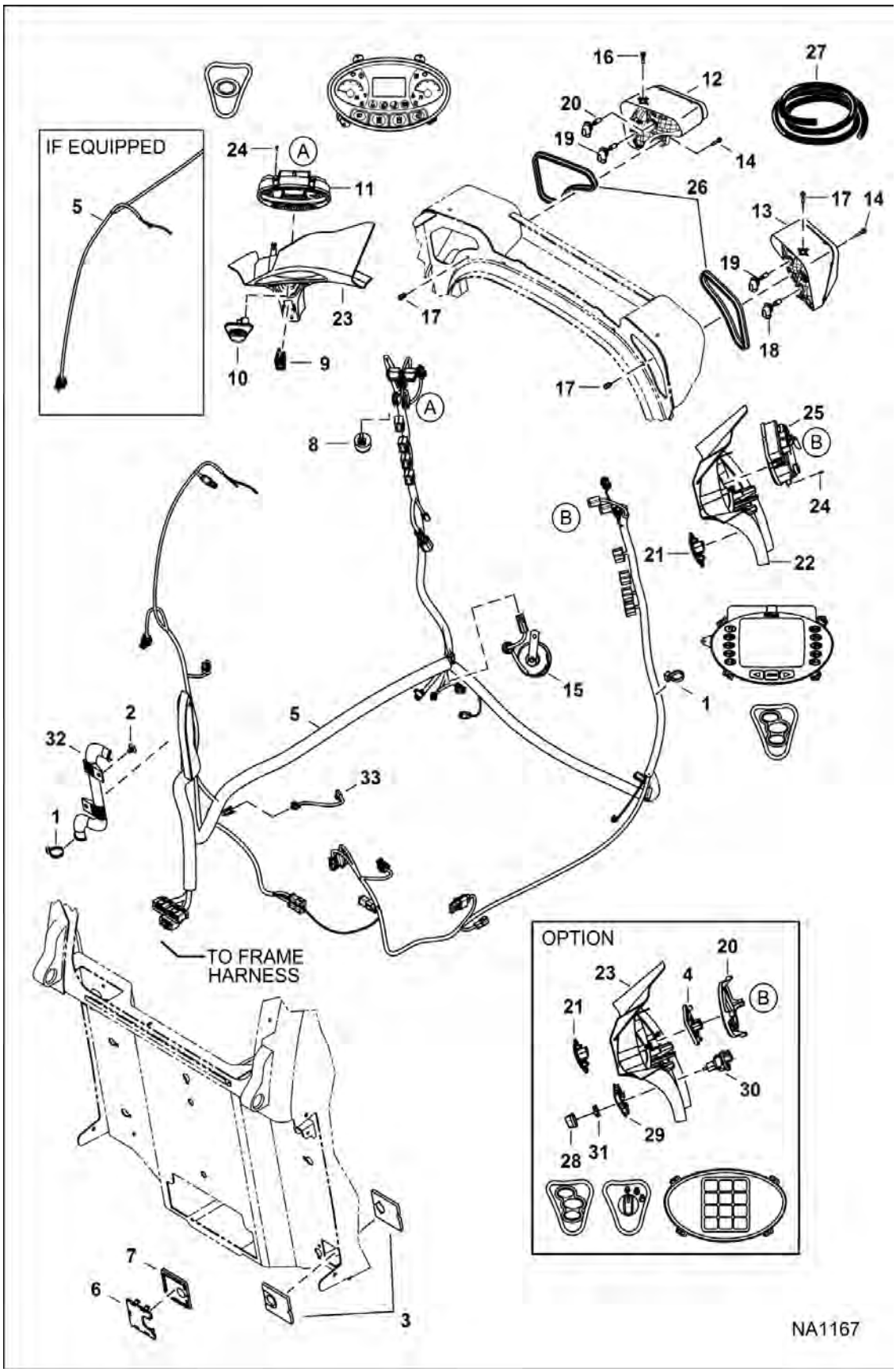

Page 339 - OSS# 6300322913 - All rights reserved by Bobcat Company - 08/04/2017 - 06:30:16 - Produced by Ken Cook Co. with mediaioff

CAB ELECTRICAL CIRCUITRY (Cont'd)
(Deluxe)

Ref No	Part Number	Description	Remarks	Serial Number	Qty
22	7155791	PANEL, RH			1
23	7155792	PANEL, LH			1
24	7179008	SCREW, PLASTIC			6
25	6693413	DISPLAY, DLX			1
26		SEAL	NLA - 609,6 mm (24") long - Order Ref. 28		2
27	7202956	SEAL, BULK	bulk - sold per foot		x
28	7023588	KNOB			1
29	7163589	INSERT, SWITCH			1
30	7023022	SWITCH ROTARY	W/Ref. 32		1
31	7009081	NUT			1
32	7164073	GUIDE			1
33	7253378	HARNESS, JUMPER	washer bottle pump		1

Page Added OSS# 6300322913 - All rights reserved by Bobcat Company - 08/04/2017 - 06:30:16 - Produced by Ken Cook Co. with mediaioff

ENGINE ELECTRICAL CIRCUITRY

(Frame Harness & Filter Sensors)
(S/N A3P811001 - A3P813210, A3P911001 - A3P9112033)

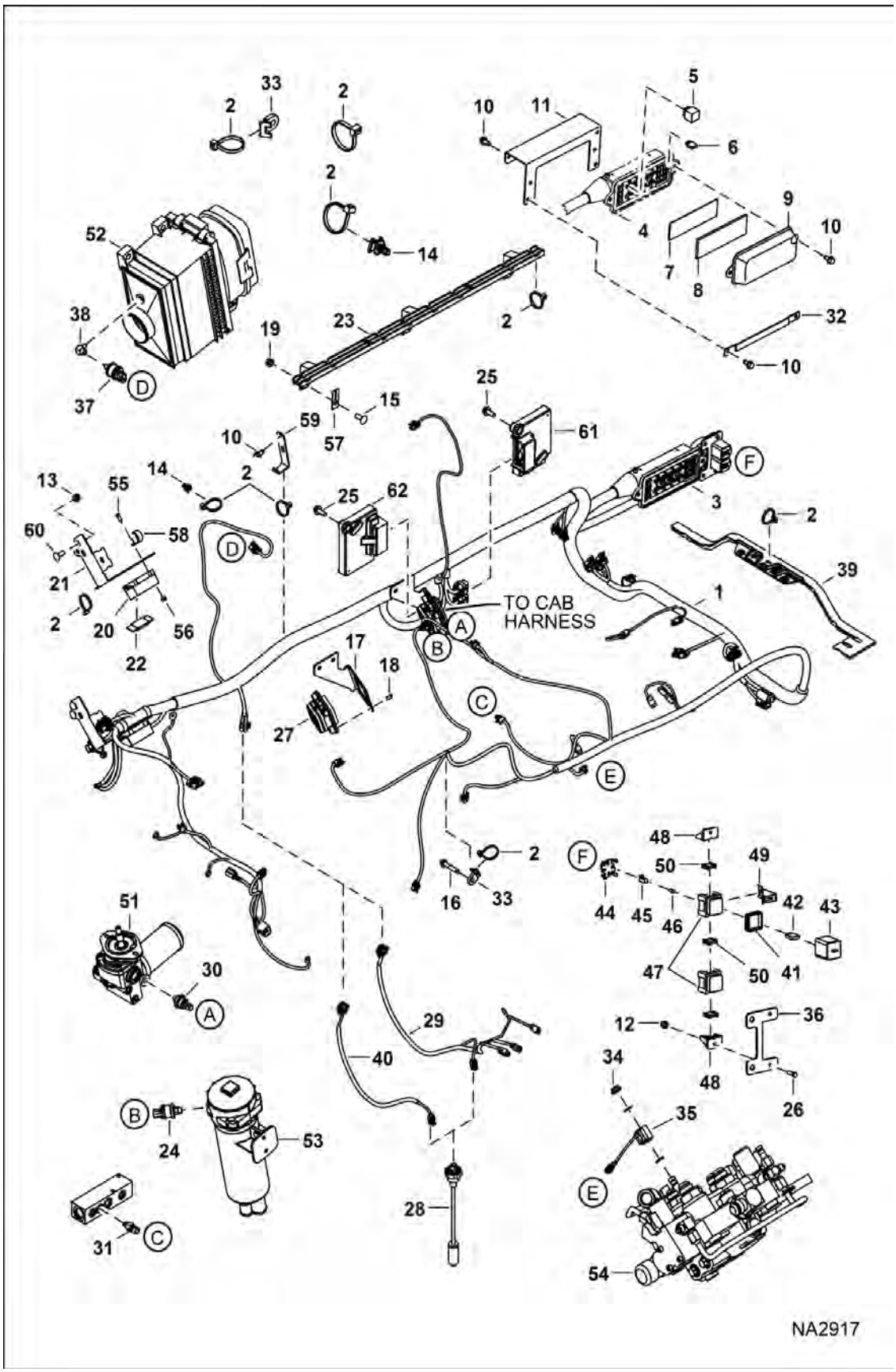

Page 341 - OSS# 6300322913 - All rights reserved by Bobcat Company - 08/04/2017 - 06:30:16 - Produced by Ken Cook Co. with mediaioff

ENGINE ELECTRICAL CIRCUITRY (Cont'd)

(Frame Harness & Filter Sensors)

(S/N A3P811001 - A3P813210, A3P911001 - A3P9112033)

Ref No	Part Number	Description	Remarks	Serial Number	Qty
1	7196823	HARNESS, MFR	- manual controls		1
1	7196824	HARNESS, MFR	- AHC, ACS & SJC		1
2	6624289	STRAP, TIE			32
3	7155390	HOUSING, FUSE RELAY			1
4	6673200	FUSE BLOCK			1
5	6679820	SWITCH, RELAY MAGNETIC			8
6	6663289	FUSE, 5A			1
6	6654806	FUSE, 15A			3
6	6707621	FUSE, 15A MINI 5			1
6	6625575	FUSE, 20A			1
6	6702444	FUSE 25A 5			5
6	6707623	FUSE, 25A MINI 5			4
6	6718034	FUSE, 30A			2
7	7167945	DECAL, FUSE RELAY			1
8	6731275	INSULATION			1
9	6716621	COVER, FUSE			1
10	84G3712	BOLT 5			8
11	7196673	BRACKET			1
12	50D12	NUT			2
13	57D6	NUT 5			2
14	7015668	MOUNT, STRAP TIE	push in - Use W/tie strap		3
15	37C620	BOLT			1
16	84G3740	BOLT	W/Ref. 15 & 59		1
17	7166489	BRACKET, CAB			1
18	6688980	BOLT	connector		4
19	97D6	NUT 10			7
20	6675154	HOLDER	high amp fuse		1
21	7177235	BRACKET, HARNESS	mega fuse		1
22	6675155	FUSE, 100A	mega		1
23	7131254	BRACKET, MOLDED SKI	W/Ref. 15 & 59		1
24	7002980	SWITCH, PRESSURE			1
25	7168429	BOLT, CONTROLLER			4
26	45G1212	BOLT			2
27		CONNECTOR			1
28	7286464	SENSOR, FUEL	Was 7179839 [A]		1
28	6717579	GASKET			1
29	7266824	HARNESS, FUEL DLX	Was 7240781 [A]		1
30	6674316	SWITCH, PRESS OIL HYD	3-pin molded connector		1
31	6727869	SENDER,HYD TEMP			1

Page 342 OSS# 6300322913 - All rights reserved by Bobcat Company - 08/04/2017 - 06:30:16 - Produced by Ken Cook Co. with mediaioff

ENGINE ELECTRICAL CIRCUITRY (Cont'd)

(Frame Harness & Filter Sensors)
(S/N A3P811001 - A3P813210, A3P911001 - A3P9112033)

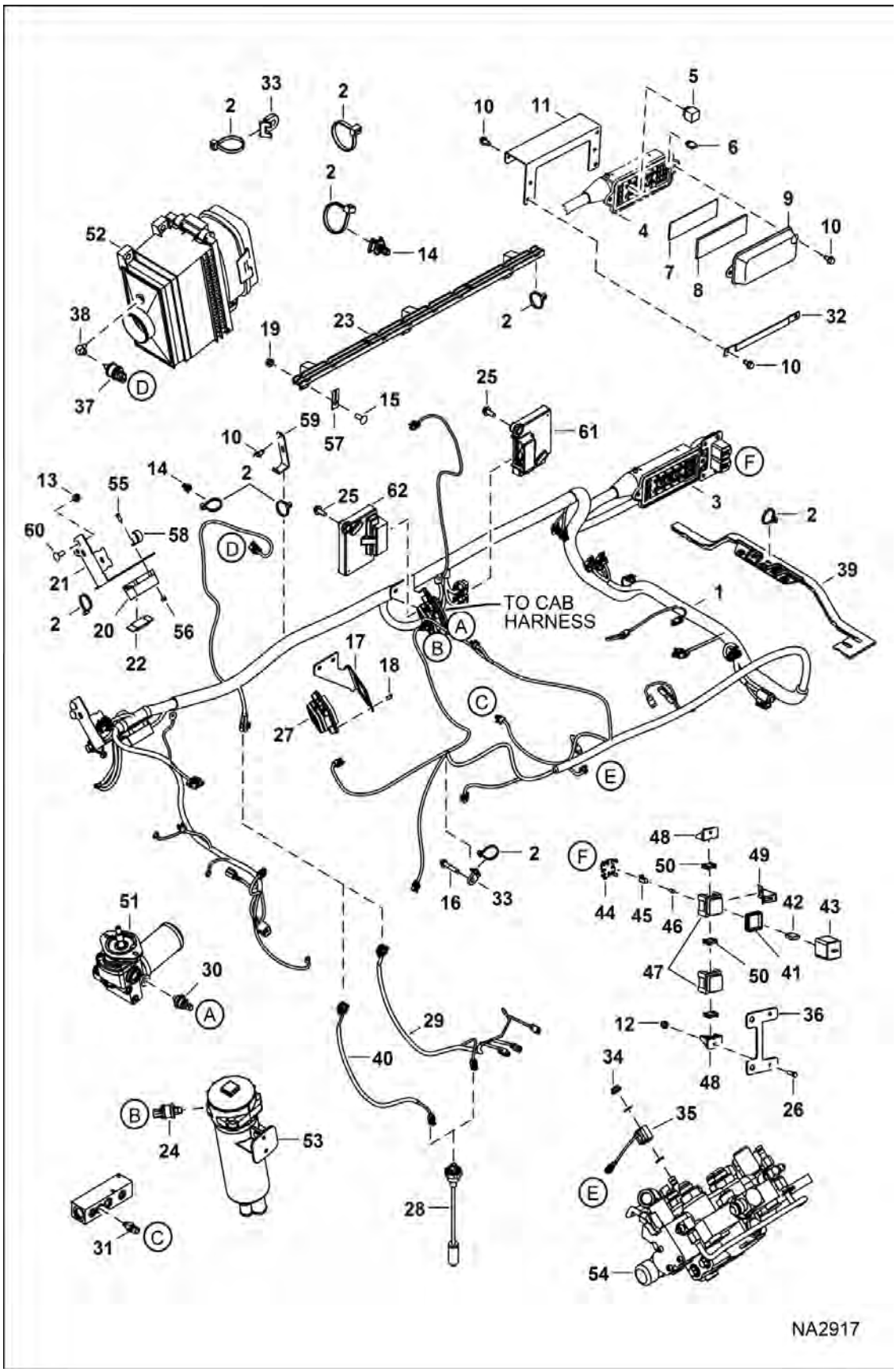

Page 343 - OSS# 6300322913 - All rights reserved by Bobcat Company - 08/04/2017 - 06:30:16 - Produced by Ken Cook Co. with mediaioff

ENGINE ELECTRICAL CIRCUITRY (Cont'd)

(Frame Harness & Filter Sensors)

(S/N A3P811001 - A3P813210, A3P911001 - A3P9112033)

Ref No	Part Number	Description	Remarks	Serial Number	Qty
32	7168173	BRACKET, COVER			1
33	6679034	MOUNT			3
34	6691022	NUT			1
35	6675559	COIL	See Illustration HYDRAULIC CONTROL VALVE / NA6557 - D series - black case - metri pack connector , See Illustration HYDRAULIC CONTROL VALVE / NA6558 - D series - black case - metri pack connector		1
35	7272732	ASSY, COIL SOLENOID	See Illustration HYDRAULIC CONTROL VALVE / NA12529 - E series - silver case - 208 mm (8.2") lead - metri pack connector , See Illustration HYDRAULIC CONTROL VALVE / NA12589 - E series - silver case - 208 mm (8.2") lead - metri pack connector		1
36	7166445	BRACKET, BLOCK DILL			1
37	6665371	SWITCH, VACUUM			1
38	7191672	ELBOW			1
39	7171188	BRACKET	plastic		1
40	7149219	HARNESS, FUEL	std cab		1
41	6671528	CONN SEAL	green square		1
42	6707620	FUSE, 10A MINI 5			x
42	6707621	FUSE, 15A MINI 5			x
42	6707623	FUSE, 25A MINI 5			x
42	6674099	BREAKER, 25A			x
43	6665358	COVER , FUSE			2
44	6665357	2ND LOCK	yellow		2
45		PIN	NLA - female - Order 6668719 pin for 16 guage wire - Order 6668720 pin for 14 guage wire		16
46	6650107	SEAL			16
47	6665356	FUSEBLOCK	fuse - W/Ref. 41		2
48	6665909	MOUNT, FUSE			2
49	6708437	SPRG CLIP			2
50	6665411	WEDGE	red		3
51		MOTOR, HYD COOLING FAN	See Illustration COOLING FAN MOTOR / MS2514		1
52		FILTER, AIR CLEANER ASSY	See Illustration AIR CLEANER / NA1596		1
53		FILTER, HYD ASSY	See Illustration HYDROSTATIC CIRCUITRY / NA2502		1
54		VALVE, CONTROL	See Illustration HYDRAULIC CONTROL VALVE / NA1216 - manual controls		1
54		VALVE, CONTROL	See Illustration HYDRAULIC CONTROL VALVE / NA1217 - SJC		1
55	25G410	CAPSCREW			2
56	59D4	NUT 5			2
57		PLATE, REINFORCEMENT	NLA		6
58	30H50	CLAMP			1
59	7161098	BRACKET			1

Page 344 OSS# 6300322913 - All rights reserved by Bobcat Company - 08/04/2017 - 06:30:16 - Produced by Ken Cook Co. with mediaioff

ENGINE ELECTRICAL CIRCUITRY (Cont'd)

(Frame Harness & Filter Sensors)
(S/N A3P811001 - A3P813210, A3P911001 - A3P9112033)

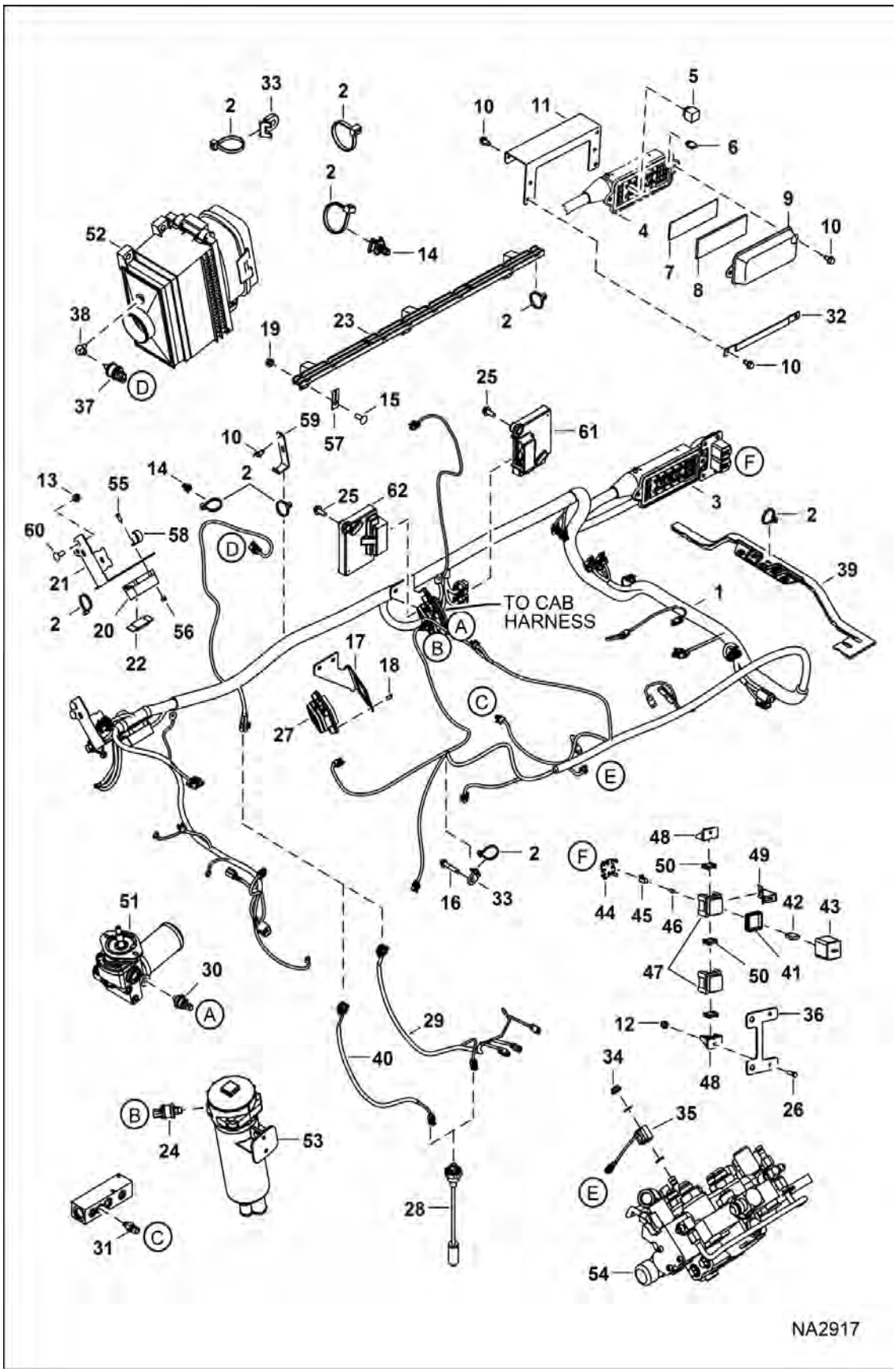

Page 345 - OSS# 6300322913 - All rights reserved by Bobcat Company - 08/04/2017 - 06:30:16 - Produced by Ken Cook Co. with mediaioff

ENGINE ELECTRICAL CIRCUITRY (Cont'd)

(Frame Harness & Filter Sensors)

(S/N A3P811001 - A3P813210, A3P911001 - A3P9112033)

Ref No	Part Number	Description	Remarks	Serial Number	Qty
60	10C616	BOLT 10			2
61	7260936	CONTROLLER, GATEWAY	Bobcat - Was 6693353 [A]		1
62	7260937	CONTROLLER, AUX CONTROL	Was 6691288 [A]		1

Page Added OSS# 6300322913 - All rights reserved by Bobcat Company - 08/04/2017 - 06:30:16 - Produced by Ken Cook Co. with mediaioff

ENGINE ELECTRICAL CIRCUITRY

(Frame Harness & Filter Sensors)

(S/N A3P813211- A3P816152, A3P912034 - A3P913075)

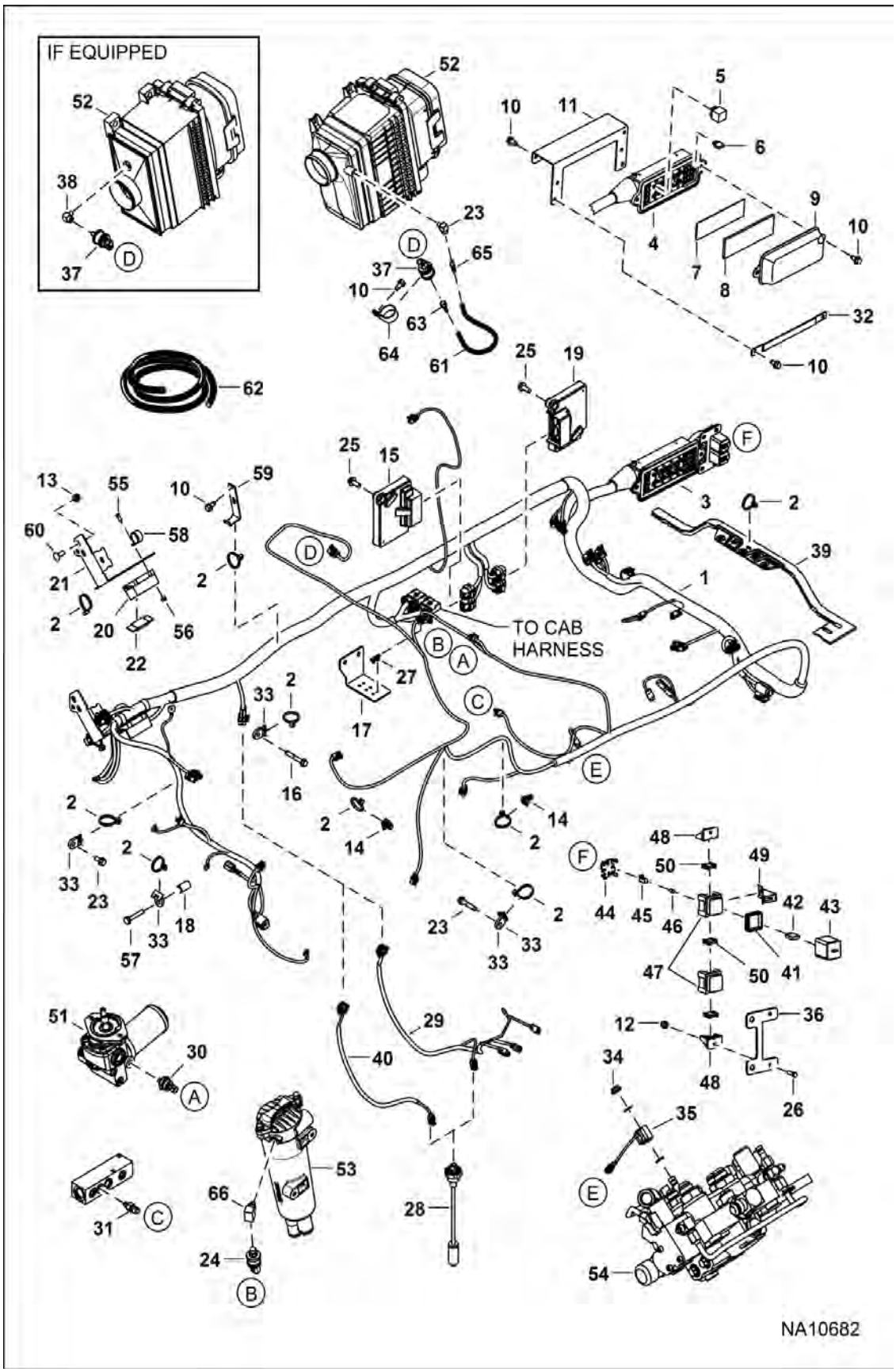

Page 347 - OSS# 6300322913 - All rights reserved by Bobcat Company - 08/04/2017 - 06:30:16 - Produced by Ken Cook Co. with mediaioff

ENGINE ELECTRICAL CIRCUITRY (Cont'd)

(Frame Harness & Filter Sensors)

(S/N A3P813211- A3P816152, A3P912034 - A3P913075)

Ref No	Part Number	Description	Remarks	Serial Number	Qty
1	7210768	HARNESS, MFR	- manual controls		1
1	7210769	HARNESS, MFR	- AHC, ACS & SJC		1
2	6624289	STRAP, TIE			37
3	7155390	HOUSING, FUSE RELAY			1
4	6673200	FUSE BLOCK			1
5	6679820	SWITCH, RELAY MAGNETIC			8
6	6663289	FUSE, 5A			1
6	6654806	FUSE, 15A			3
6	6707621	FUSE, 15A MINI 5			1
6	6625575	FUSE, 20A			1
6	6702444	FUSE 25A 5			5
6	6707623	FUSE, 25A MINI 5			4
6	6718034	FUSE, 30A			2
7	7167945	DECAL, FUSE RELAY			1
8	6731275	INSULATION			1
9	6716621	COVER, FUSE			1
10	84G3712	BOLT 5			8
11	7196673	BRACKET			1
12	50D12	NUT			2
13	57D6	NUT 5			2
14	7015668	MOUNT, STRAP TIE	Was 6678666 [B]		2
15	7260937	CONTROLLER, AUX CONTROL	Was 6691288 [A]	A3P811001 - A3P816060	1
				A3P911001 - A3P913054	1
15	7277987	CONTROLLER, AUX CONTROL		A3P816061 & Above	1
				A3P913055 & Above	1
16	84G3740	BOLT	W/Ref. 15 & 59		1
17	7212967	BRACKET, HARNESS			1
18	7101893	SPACER			1
19	7260936	CONTROLLER, GATEWAY	Bobcat - Was 6693353 [A]		1
20	6675154	HOLDER	high amp fuse		1
21	7177235	BRACKET, HARNESS	mega fuse		1
22	6675155	FUSE, 100A	mega		1
23	35C612	BOLT 5			1
24	7002980	SWITCH, PRESSURE			1
25	7168429	BOLT, CONTROLLER			4
26	45G1212	BOLT			2
27	7023598	CLIP, NYLON			3
28	7286464	SENSOR, FUEL	Was 7179839 [A]		1

Page 340 OSS# 6300322913 - All rights reserved by Bobcat Company - 08/04/2017 - 06:30:16 - Produced by Ken Cook Co. with mediaioff

ENGINE ELECTRICAL CIRCUITRY (Cont'd)

(Frame Harness & Filter Sensors)
(S/N A3P813211- A3P816152, A3P912034 - A3P913075)

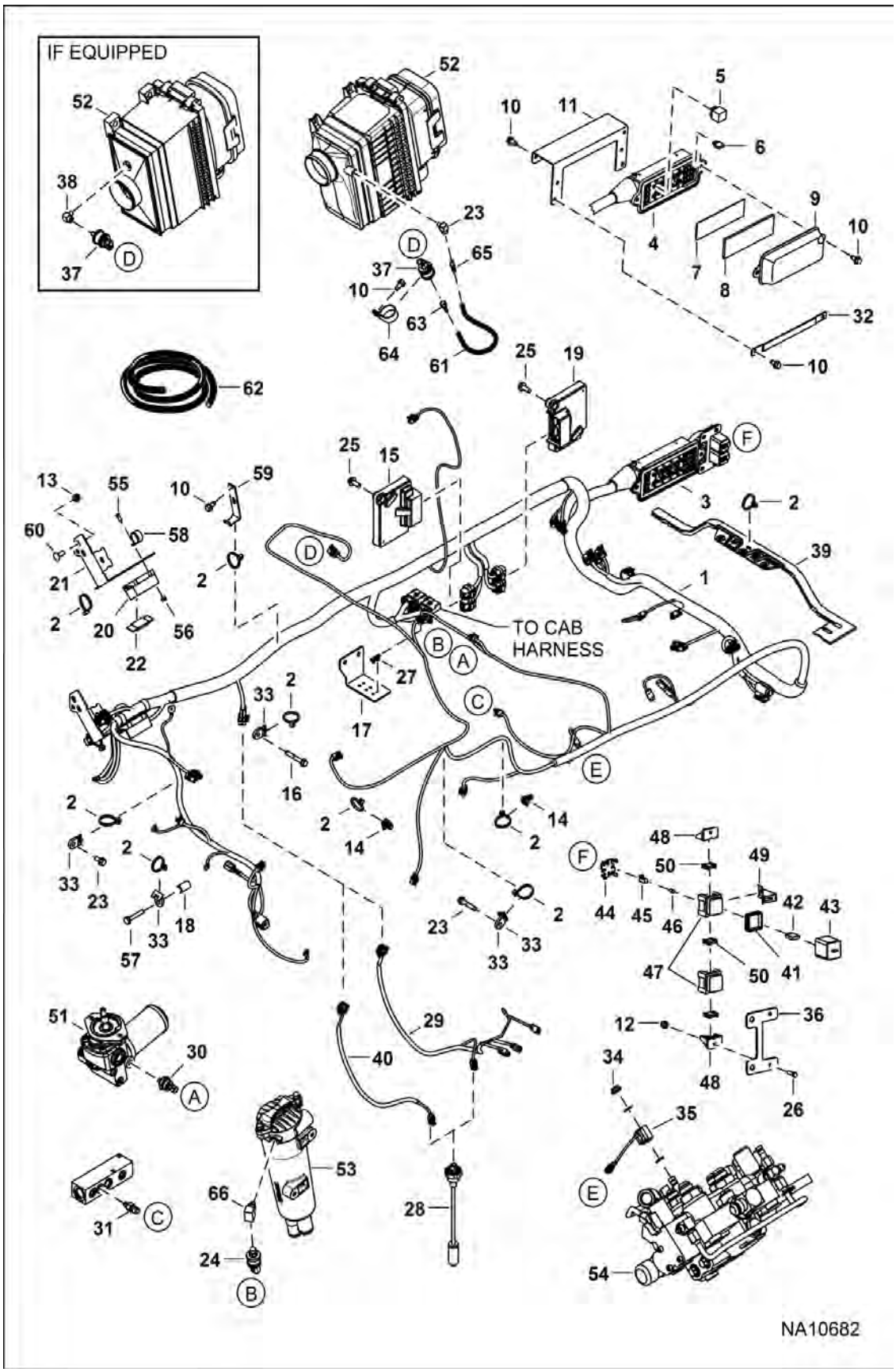

Page 349 - OSS# 6300322913 - All rights reserved by Bobcat Company - 08/04/2017 - 06:30:16 - Produced by Ken Cook Co. with mediaioff

ENGINE ELECTRICAL CIRCUITRY (Cont'd)

(Frame Harness & Filter Sensors)

(S/N A3P813211- A3P816152, A3P912034 - A3P913075)

Ref No	Part Number	Description	Remarks	Serial Number	Qty
28	6717579	GASKET			1
29	7266824	HARNESS, FUEL DLX	Was 7240781 [A]		1
30	6674316	SWITCH, PRESS OIL HYD	3-pin molded connector		1
31	6727869	SENDER,HYD TEMP			1
32	7168173	BRACKET, COVER			1
33	6679034	MOUNT			4
34	6691022	NUT			1
35	6675559	COIL	See Illustration HYDRAULIC CONTROL VALVE / NA6557 - D series - black case - metri pack connector , See Illustration HYDRAULIC CONTROL VALVE / NA6558 - D series - black case - metri pack connector		1
35	7272732	ASSY, COIL SOLENOID	See Illustration HYDRAULIC CONTROL VALVE / NA12529 - E series - silver case - 208 mm (8.2") lead - metri pack connector , See Illustration HYDRAULIC CONTROL VALVE / NA12589 - E series - silver case - 208 mm (8.2") lead - metri pack connector		1
36	7166445	BRACKET, BLOCK DILL			1
37	6665371	SWITCH, VACUUM			1
38	7191672	ELBOW			1
39	7171188	BRACKET	plastic		1
40	7149219	HARNESS, FUEL	std cab		1
41	6671528	CONN SEAL	green square		1
42	6707620	FUSE, 10A MINI 5			x
42	6707621	FUSE, 15A MINI 5			x
42	6707623	FUSE, 25A MINI 5			x
42	6674099	BREAKER, 25A			x
43	6665358	COVER , FUSE			2
44	6665357	2ND LOCK	yellow		2
45		PIN	NLA - female - Order 6668719 pin for 16 guage wire - Order 6668720 pin for 14 guage wire		16
46	6650107	SEAL			16
47	6665356	FUSEBLOCK	fuse - W/Ref. 41		2
48	6665909	MOUNT, FUSE			2
49	6708437	SPRG CLIP			2
50	6665411	WEDGE	red		3
51		MOTOR, HYD COOLING FAN	See Illustration COOLING FAN MOTOR / MS2514		1
52		FILTER, AIR CLEANER ASSY	See Illustration AIR CLEANER / NA1596		1
53		FILTER, HYD ASSY	See Illustration HYDROSTATIC CIRCUITRY / NA2502		1
54		VALVE, CONTROL	See Illustration HYDRAULIC CONTROL VALVE / NA1216 - manual controls		1
54		VALVE, CONTROL	See Illustration HYDRAULIC CONTROL VALVE / NA1217 - AHC, ACS & SJC		1

Page 360 OSS# 6300322913 - All rights reserved by Bobcat Company - 08/04/2017 - 06:30:16 - Produced by Ken Cook Co. with mediaioff

ENGINE ELECTRICAL CIRCUITRY (Cont'd)

(Frame Harness & Filter Sensors)
(S/N A3P813211- A3P816152, A3P912034 - A3P913075)

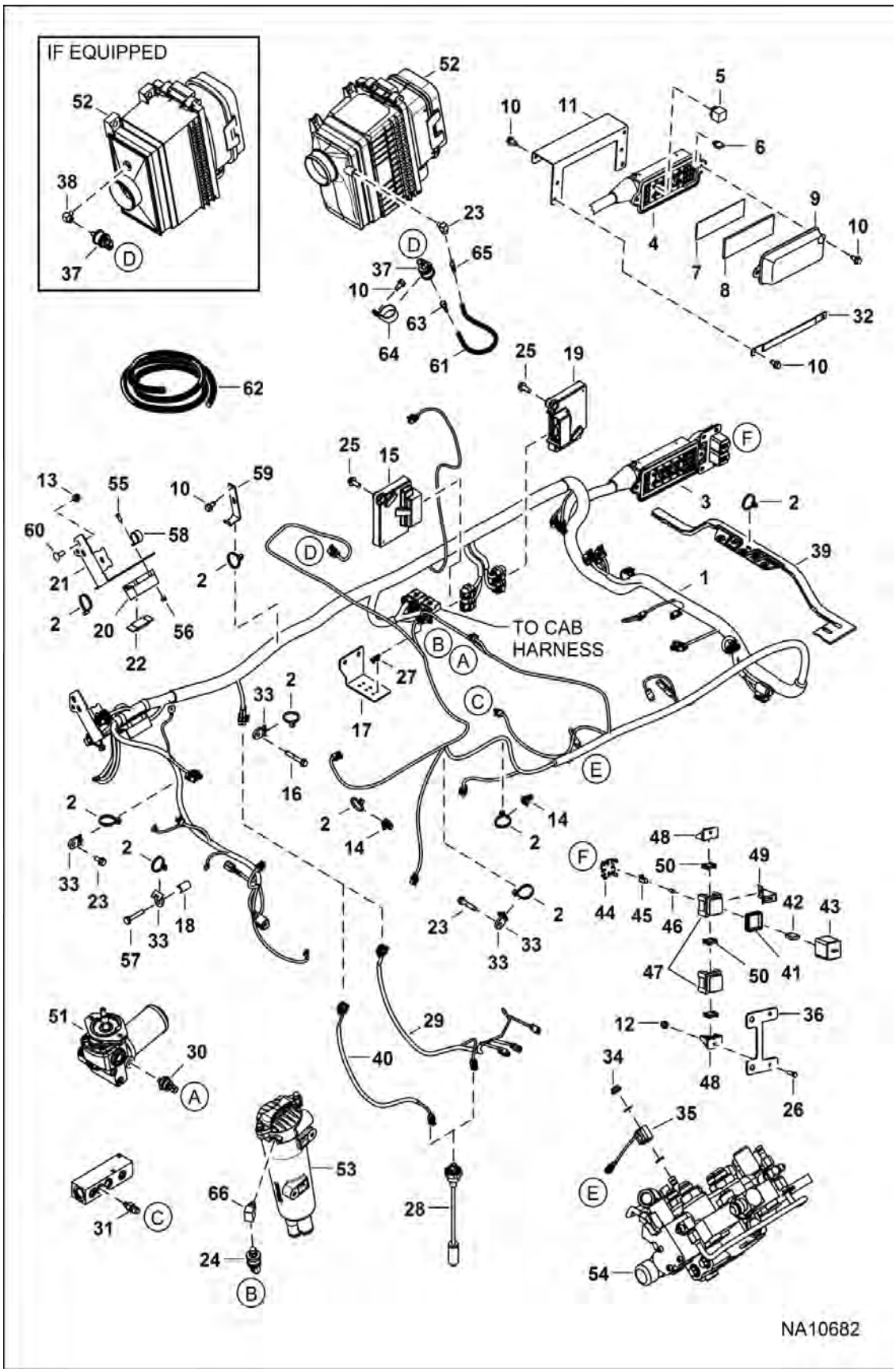

Page 351 - OSS# 6300322913 - All rights reserved by Bobcat Company - 08/04/2017 - 06:30:16 - Produced by Ken Cook Co. with mediaioff

ENGINE ELECTRICAL CIRCUITRY (Cont'd)

(Frame Harness & Filter Sensors)

(S/N A3P813211- A3P816152, A3P912034 - A3P913075)

Ref No	Part Number	Description	Remarks	Serial Number	Qty
55	25G410	CAPSCREW			2
56	59D4	NUT 5			2
57	7110310	SCREW			1
58	30H50	CLAMP			1
59	7161098	BRACKET			1
60	10C616	BOLT 10			2
61		HOSE	NLA - 305 mm (12") long - Order Ref. 62		1
62	6557720	HOSE, BULK	sold per foot		x
63	6563452	ADAPTER			1
64	30H60	CLIP			1
65	6505813	ADAPTER			1
66	7232654	ELBOW		A3P8 & Above	1
				A3P9 & Above	1

Page 326 OSS# 6300322913 - All rights reserved by Bobcat Company - 08/04/2017 - 06:30:16 - Produced by Ken Cook Co. with mediaioff

ENGINE ELECTRICAL CIRCUITRY

(Frame Harness & Filter Sensors)
(S/N A3P816153 & Above, A3P913076 & Above)

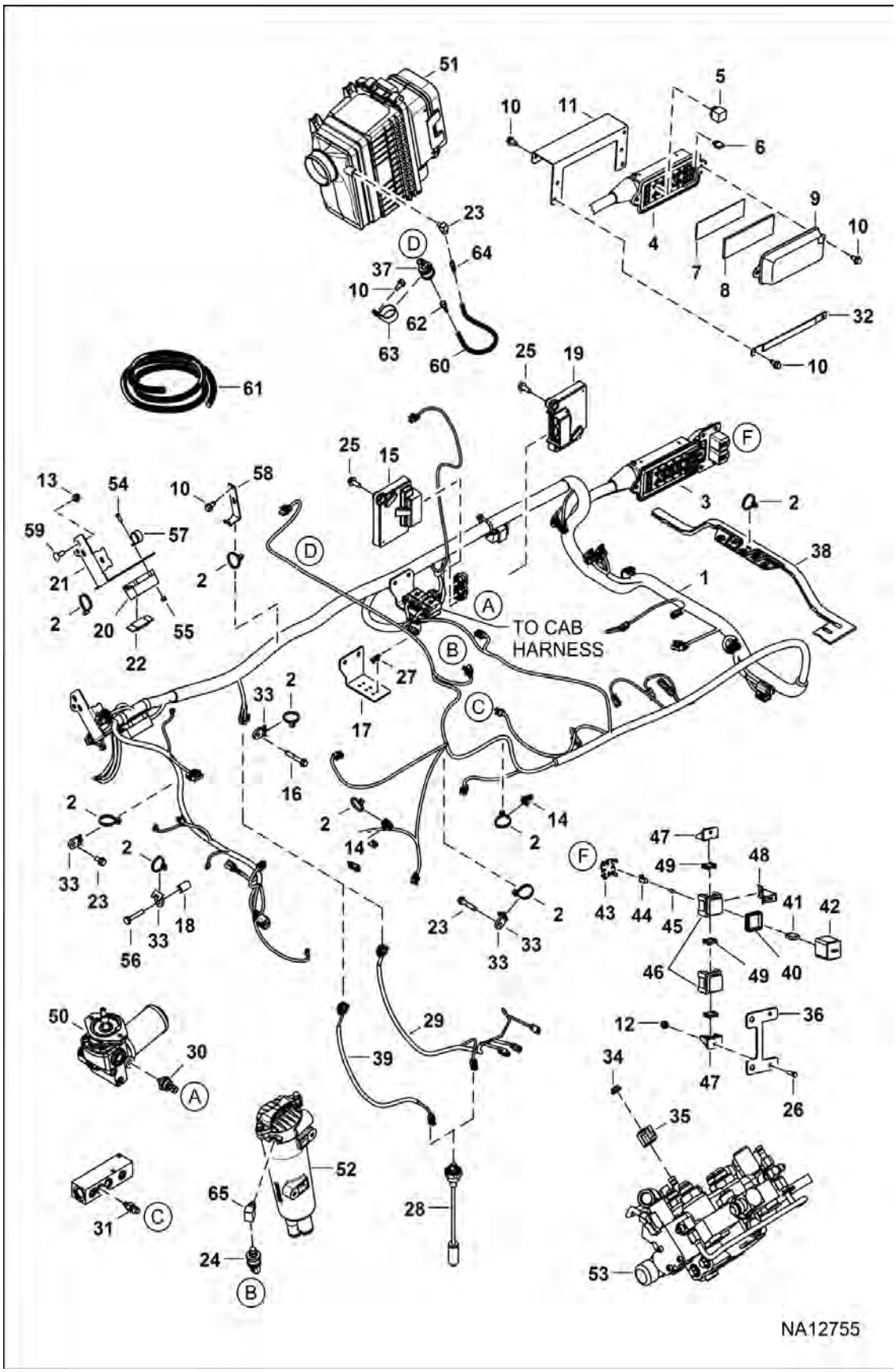

Page 353 - OSS# 6300322913 - All rights reserved by Bobcat Company - 08/04/2017 - 06:30:16 - Produced by Ken Cook Co. with mediaioff

ENGINE ELECTRICAL CIRCUITRY (Cont'd)

(Frame Harness & Filter Sensors)
(S/N A3P816153 & Above, A3P913076 & Above)

Ref No	Part Number	Description	Remarks	Serial Number	Qty
1	7304757	HARNESS MFR LF MANUAL	manual controls		1
1	7304712	HARNESS MFR LF CONTROL	AHC, ACS & SJC		1
2	6624289	STRAP, TIE			37
3	7155390	HOUSING, FUSE RELAY			1
4	6673200	FUSE BLOCK			1
5	6679820	SWITCH, RELAY MAGNETIC			8
6	6663289	FUSE, 5A			1
6	6654806	FUSE, 15A			3
6	6707621	FUSE, 15A MINI 5			1
6	6625575	FUSE, 20A			1
6	6702444	FUSE 25A 5			5
6	6707623	FUSE, 25A MINI 5			4
6	6718034	FUSE, 30A			2
7	7167945	DECAL, FUSE RELAY			1
8	6731275	INSULATION			1
9	6716621	COVER, FUSE			1
10	84G3712	BOLT 5			8
11	7196673	BRACKET			1
12	50D12	NUT			2
13	57D6	NUT 5			2
14	7015668	MOUNT, STRAP TIE			2
15	7277987	CONTROLLER, AUX CONTROL			1
16	84G3740	BOLT	W/Ref. 15 & 59		1
17	7212967	BRACKET, HARNESS			1
18	7101893	SPACER			1
19	7260936	CONTROLLER, GATEWAY			1
20	6675154	HOLDER	high amp fuse		1
21	7177235	BRACKET, HARNESS	mega fuse		1
22	6675155	FUSE, 100A	mega		1
23	35C612	BOLT 5			1
24	7002980	SWITCH, PRESSURE			1
25	7168429	BOLT, CONTROLLER			4
26	45G1212	BOLT			2
27	7023598	CLIP, NYLON			3
28	7286464	SENSOR, FUEL			1
28	6717579	GASKET			1
29	7266824	HARNESS, FUEL DLX			1

Page 346 OSS# 6300322913 - All rights reserved by Bobcat Company - 08/04/2017 - 06:30:16 - Produced by Ken Cook Co. with mediaioff

ENGINE ELECTRICAL CIRCUITRY (Cont'd)

(Frame Harness & Filter Sensors)
(S/N A3P816153 & Above, A3P913076 & Above)

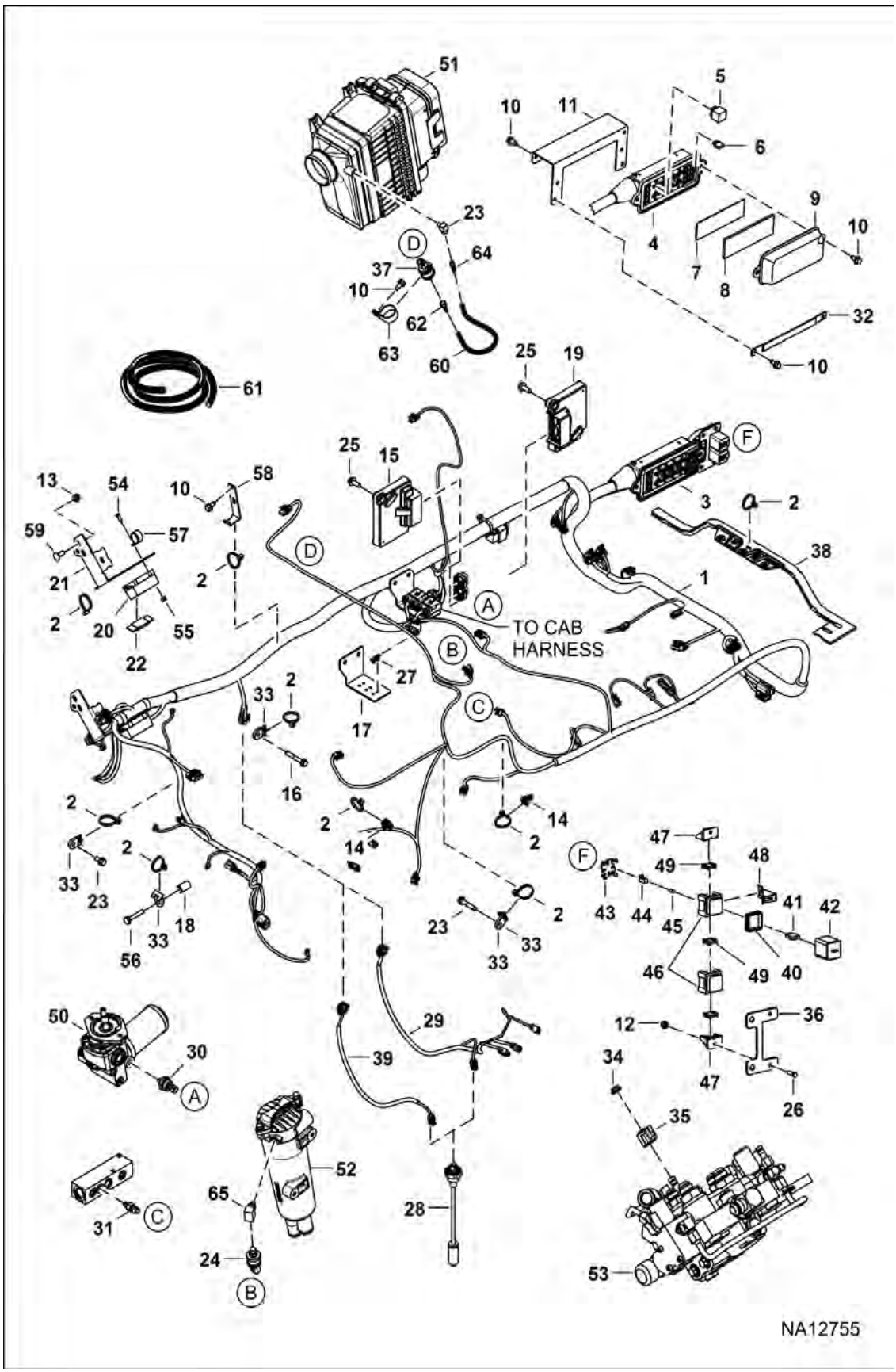

Illustration NA12755

Model T770 MT3
6989477

Page 355 - OSS# 6300322913 - All rights reserved by Bobcat Company - 08/04/2017 - 06:30:16 - Produced by Ken Cook Co. with mediaioff

ENGINE ELECTRICAL CIRCUITRY (Cont'd)

(Frame Harness & Filter Sensors)
(S/N A3P816153 & Above, A3P913076 & Above)

Ref No	Part Number	Description	Remarks	Serial Number	Qty
30	6674316	SWITCH, PRESS OIL HYD	3-pin molded connector		1
31	6727869	SENDER,HYD TEMP			1
32	7168173	BRACKET, COVER			1
33	6679034	MOUNT			4
34	7020647	NUT			1
35	7301672	COIL SOLENOID	E series - silver case - integrated Deutsch connector		1
36	7166445	BRACKET, BLOCK DILL			1
37	6665371	SWITCH, VACUUM			1
38	7191672	ELBOW			1
39	7171188	BRACKET	plastic		1
40	7149219	HARNESS, FUEL	std cab		1
41	6671528	CONN SEAL	green square		1
42	6707620	FUSE, 10A MINI 5			x
42	6707621	FUSE, 15A MINI 5			x
42	6707623	FUSE, 25A MINI 5			x
42	6674099	BREAKER, 25A			x
43	6665358	COVER , FUSE			2
44	6665357	2ND LOCK	yellow		2
45		PIN	NLA - female - Order 6668719 pin for 16 guage wire - Order 6668720 pin for 14 guage wire		16
46	6650107	SEAL			16
47	6665356	FUSEBLOCK	fuse - W/Ref. 41		2
48	6665909	MOUNT, FUSE			2
49	6708437	SPRG CLIP			2
50	6665411	WEDGE	red		3
51		MOTOR, HYD COOLING FAN	See Illustration COOLING FAN MOTOR / MS2514		1
52		FILTER, AIR CLEANER ASSY	See Illustration AIR CLEANER / NA1596		1
53		FILTER, HYD ASSY	See Illustration HYDROSTATIC CIRCUITRY / NA2502		1
54		VALVE, CONTROL	See Illustration HYDRAULIC CONTROL VALVE / NA1216 - manual controls		1
54		VALVE, CONTROL	See Illustration HYDRAULIC CONTROL VALVE / NA1217 - AHC, ACS & SJC		1
55	25G410	CAPSCREW			2
56	59D4	NUT 5			2
57	7110310	SCREW			1
58	30H50	CLAMP			1
59	7161098	BRACKET			1
60	10C616	BOLT 10			2
61		HOSE	NLA - 305 mm (12") long - Order Ref. 62		1
62	6557720	HOSE, BULK	sold per foot		x
63	6563452	ADAPTER			1
64	30H60	CLIP			1

Page 366 OSS# 6300322913 - All rights reserved by Bobcat Company - 08/04/2017 - 06:30:16 - Produced by Ken Cook Co. with mediaoff

ENGINE ELECTRICAL CIRCUITRY (Cont'd)

(Frame Harness & Filter Sensors)
(S/N A3P816153 & Above, A3P913076 & Above)

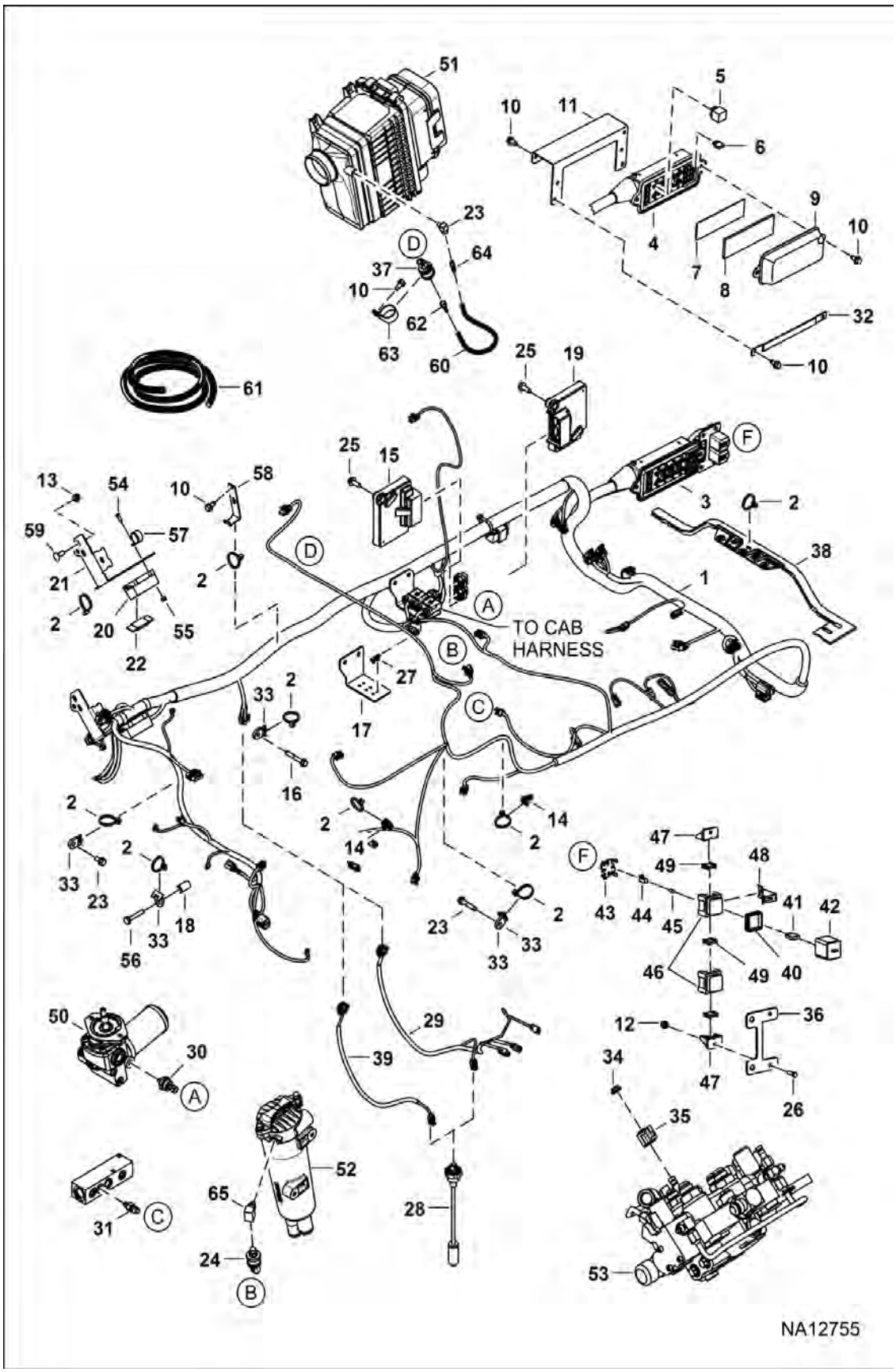

Page 357 - OSS# 6300322913 - All rights reserved by Bobcat Company - 08/04/2017 - 06:30:16 - Produced by Ken Cook Co. with mediaioff

ENGINE ELECTRICAL CIRCUITRY (Cont'd)

(Frame Harness & Filter Sensors)

(S/N A3P816153 & Above, A3P913076 & Above)

Ref No	Part Number	Description	Remarks	Serial Number	Qty
65	6505813	ADAPTER			1
66	7232654	ELBOW			1

Page 350 OSS# 6300322913 - All rights reserved by Bobcat Company - 08/04/2017 - 06:30:16 - Produced by Ken Cook Co. with mediaioff

ENGINE ELECTRICAL CIRCUITRY
(Engine Sensors, Battery, Alt & Starter)

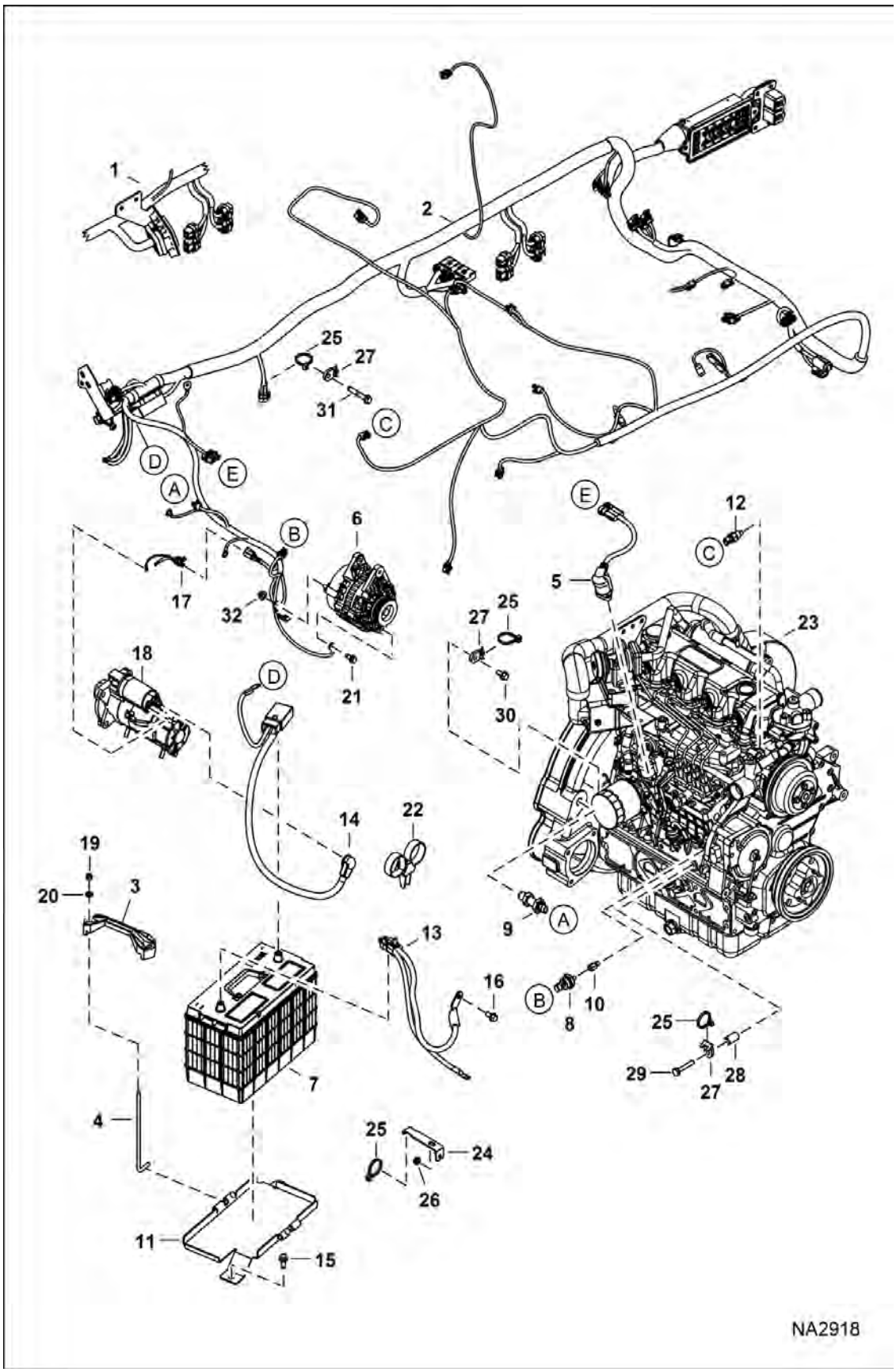

Page 359 - OSS# 6300322913 - All rights reserved by Bobcat Company - 08/04/2017 - 06:30:16 - Produced by Ken Cook Co. with mediaioff

ENGINE ELECTRICAL CIRCUITRY (Cont'd)

(Engine Sensors, Battery, Alt & Starter)

Ref No	Part Number	Description	Remarks	Serial Number	Qty
1		HARNESS, MFR	See Illustration ENGINE ELECTRICAL CIRCUITRY / NA2917	A3P811001 - A3P813210	1
				A3P911001 - A3P9112033	1
2		HARNESS, MFR	See Illustration ENGINE ELECTRICAL CIRCUITRY / NA10682	A3P813211- A3P816152	1
				A3P912034 - A3P913075	1
2		HARNESS MFR	See Illustration ENGINE ELECTRICAL CIRCUITRY / NA12755	A3P816153 & Above	1
				A3P913076 & Above	1
3	6569203	CLAMP			1
4	6576280	BOLT			2
5		SOLENOID, SHUFOFF FUEL	See Illustration GOVERNOR / B27176		1
6		ALTERNATOR	See Illustration ALTERNATOR / B22386		1
7	7312553	BATTERY 700 CCA DRY	- Was 6665427 [A]		1
7	7269857	BATTERY WET 1000 CCA			1
8	6697920	SENSOR, PRESS OIL ENG			1
9	6693921	SENSOR, RPM			1
10	7102451	FITTING			1
11	7159352	PAN, BATTERY			1
12	6718414	SENDER, TEMP ENG			1
13	7170798	CABLE, NEGATIVE			1
14	7162967	CABLE, POSITIVE			1
15	84G3716	SCREW 5			2
16	35C612	BOLT 5			1
17	6733370	HARNESS			1
18		STARTER	See Illustration STARTER / B16488R		1
19	59D5	NUT 5			2
20	25E15	WASHER 5			2
21	45C620	BOLT			3
22	6678668	STRAP			2
23		ENGINE			1
24	7120084	BRACKET			1
25	6624289	STRAP, TIE			3
26	51DM8	NUT			1
27	6679034	MOUNT			2
28	7101893	SPACER			1
29	7110310	SCREW			1
30	35C612	BOLT 5			1
31	29CM820	SCREW			1
32	43DM8	NUT			1

Page 360 OSS# 6300322913 - All rights reserved by Bobcat Company - 08/04/2017 - 06:30:16 - Produced by Ken Cook Co. with mediaoff

ENGINE ELECTRICAL CIRCUITRY
(Rear Lights & Back-up Alarm)

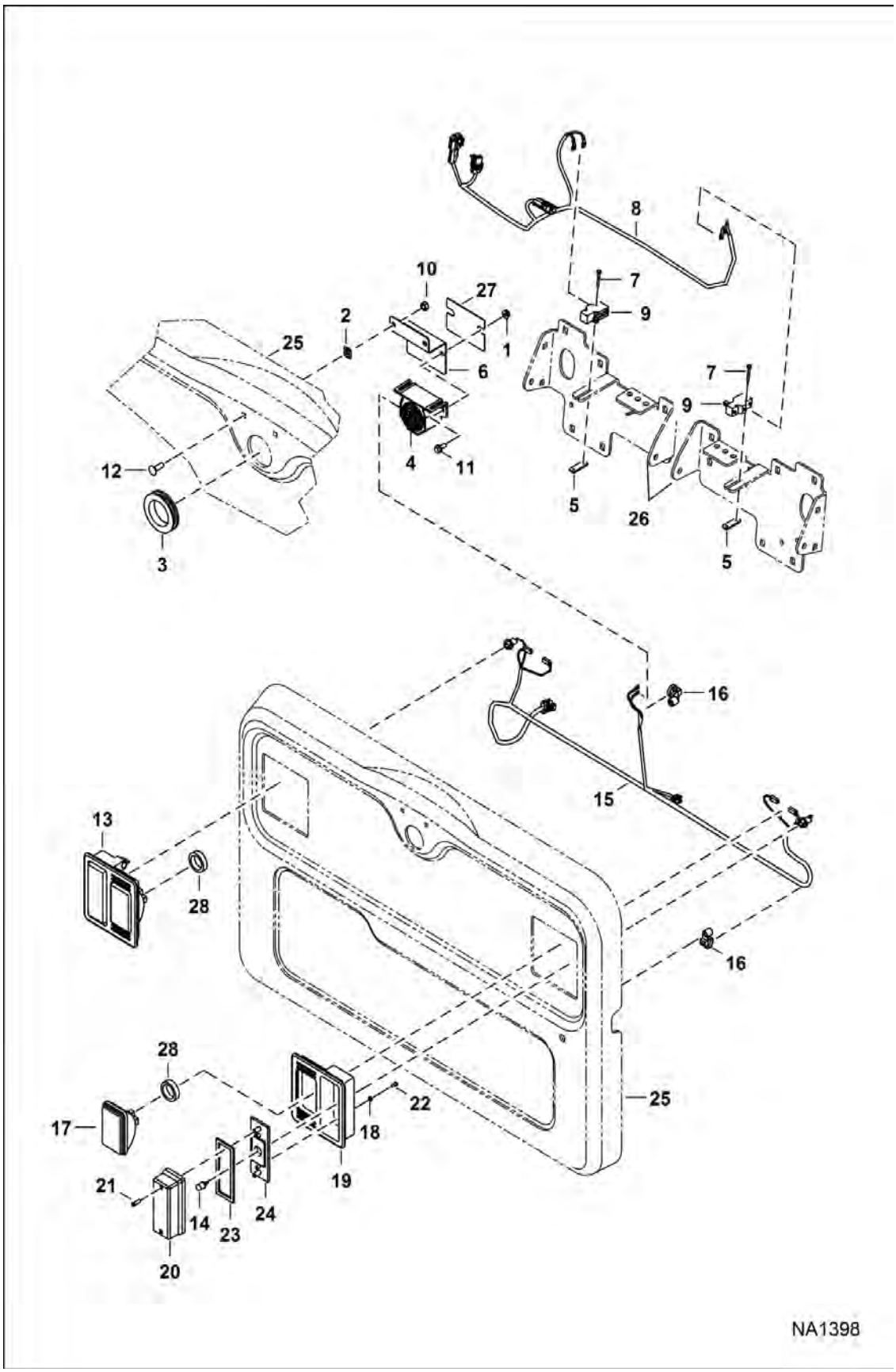

Page 361 - OSS# 6300322913 - All rights reserved by Bobcat Company - 08/04/2017 - 06:30:16 - Produced by Ken Cook Co. with mediaioff

ENGINE ELECTRICAL CIRCUITRY (Cont'd)

(Rear Lights & Back-up Alarm)

Ref No	Part Number	Description	Remarks	Serial Number	Qty
1	97D4	NUT			2
2	774220	NUT			2
3	6577545	GROMMET			1
4	6651512	ALARM, BACK-UP			1
4	6737189	DECAL, WARNING	backup alarm		1
5	6702593	SPACER			2
6	7189077	MOUNT			1
7	84G1320	BOLT			4
8	7175017	HARNESS, ALARM BACK-UP			1
9	6646781	SWITCH, ALARM BACK-UP			2
10	57D5	NUT			2
11	35C410	BOLT 5			2
12	37C516	BOLT			2
13	6670284	LIGHT, REAR ASSY			2
14	6649481	LIGHT, WEDGE BASE			2
15	7217484	HARNESS, REAR DOOR	Was 7175271		1
16	7002988	TIE, STUD MOUNT			1
17	6661353	LIGHT, HOUSING ASSY	W/bulb - white		2
17	898731	1156 BULB			2
18	6672272	WASHER			4
19	6672279	MOUNT, LIGHT RUBBER			2
20	6672276	LENS, LIGHT RED			2
21	6672274	SCREW			4
22	6672273	SCREW			4
23	6672275	GASKET			2
24	6672277	BRACKET			2
25		REAR DOOR	See Illustration REAR DOOR / NA2488		1
26		MOUNT	See Illustration PANELS / NA2964 , See Illustration PANELS / NA2965		2
27	7191385	SHIELD, ALARM			1
28	7310945	WASHER DIVERTER	Was 7305994		2

Page 354 OSS# 6300322913 - All rights reserved by Bobcat Company - 08/04/2017 - 06:30:16 - Produced by Ken Cook Co. with mediaoff

CONNECTOR HARNESS ASSEMBLY

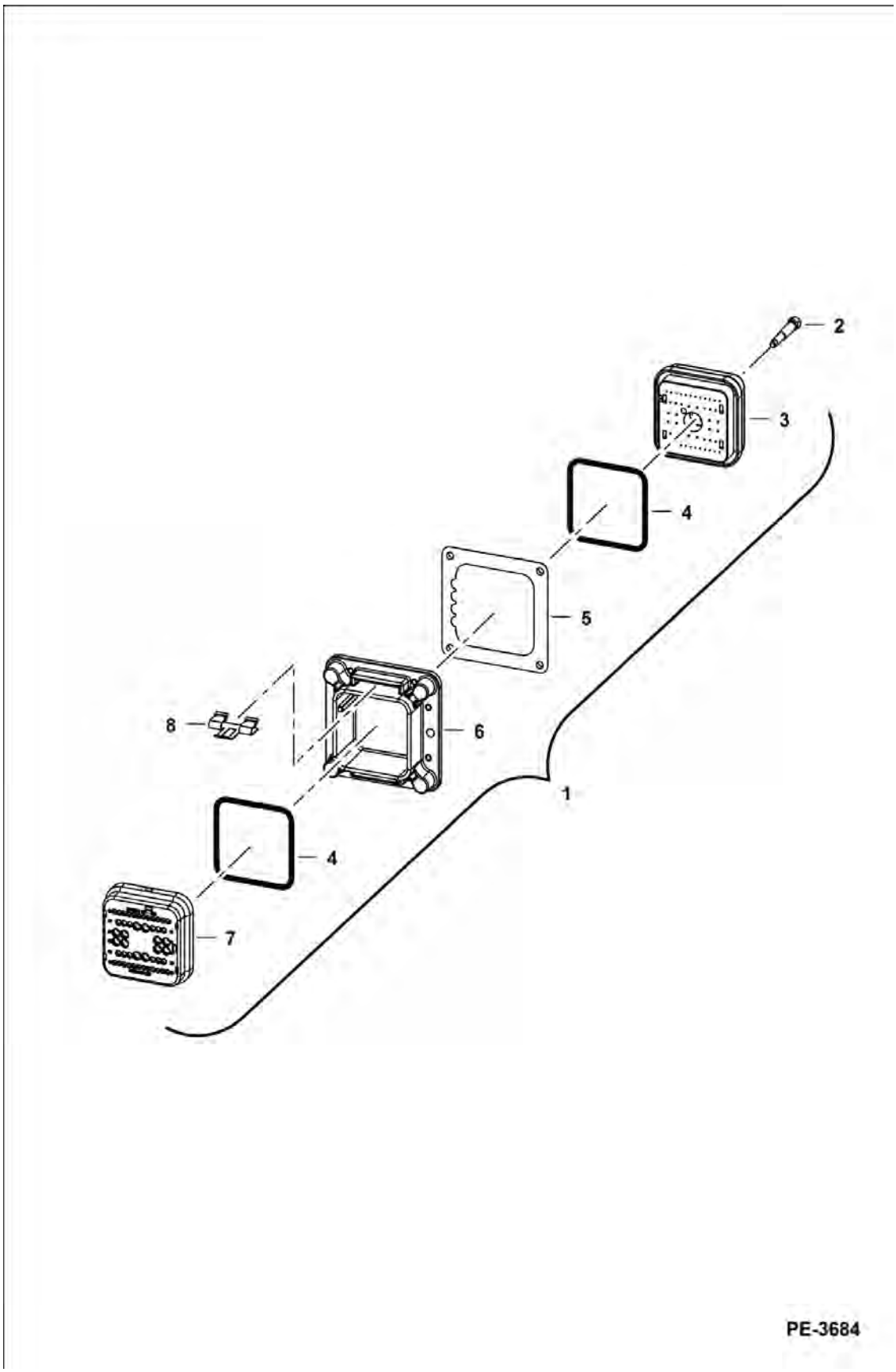

Page 363 - OSS# 6300322913 - All rights reserved by Bobcat Company - 08/04/2017 - 06:30:16 - Produced by Ken Cook Co. with mediaioff

CONNECTOR HARNESS ASSEMBLY (Cont'd)

Ref No	Part Number	Description	Remarks	Serial Number	Qty
1		CONNECTOR	NSS - Order components		1
2		BOLT	NSS - Order Ref. 3		1
3	6688834	CONNECTOR	cab - W/Ref. 2 & 4		1
4		SEAL	NSS - Order Ref. 3 or 7		1
5		SEAL	NSS - Order Ref. 6		1
6	6688836	FLANGE	W/Ref. 5 & 8		1
7	6688833	CONNECTOR	engine - W/Ref. 4		1
8		CLIP	NSS - metal - Order Ref. 6		2

Page 364 OSS# 6300322913 - All rights reserved by Bobcat Company - 08/04/2017 - 06:30:16 - Produced by Ken Cook Co. with mediaioff

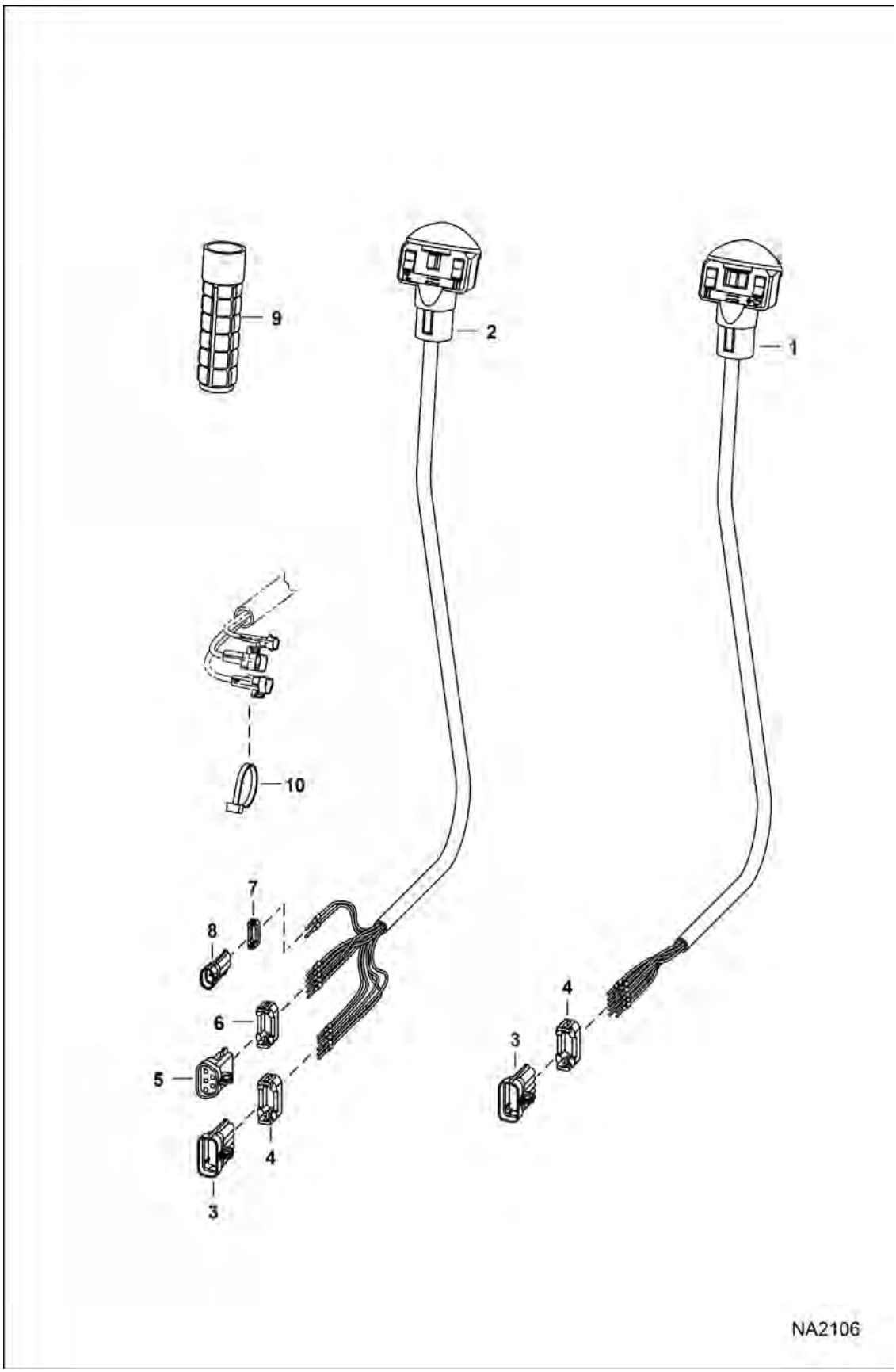

Page 365 - OSS# 6300322913 - All rights reserved by Bobcat Company - 08/04/2017 - 06:30:16 - Produced by Ken Cook Co. with mediaioff

CONTROLS ELECTRICAL (Cont'd)

(Manual Controls)

Ref No	Part Number	Description	Remarks	Serial Number	Qty
1	6680418	ASSY, HANDLE	RH - Also Order Ref. 3 & 4		1
1	6640690	PIN			9
1	6641176	SEAL			9
2	6680419	HANDLE	LH - Also Order Ref. 3-8		1
2	6640690	PIN			10
2	6641176	SEAL			10
2	6680447	DECAL			1
3	6640692	CONNECTOR	10-pin		2
4	6640694	LOCK	Use W/ 10-pin connector		2
5	6667144	CONNECTOR	5-pin		1
6	6667145	LOCK	Use W/ 5-pin connector		1
7	6641180	LOCK 5	Use W/ 2-pin connector		1
8	6641179	CONECTR 5	2-pin		2
9	6702621	GRIP			2
10	6624289	STRAP, TIE			3

Page 360 OSS# 6300322913 - All rights reserved by Bobcat Company - 08/04/2017 - 06:30:16 - Produced by Ken Cook Co. with mediaioff

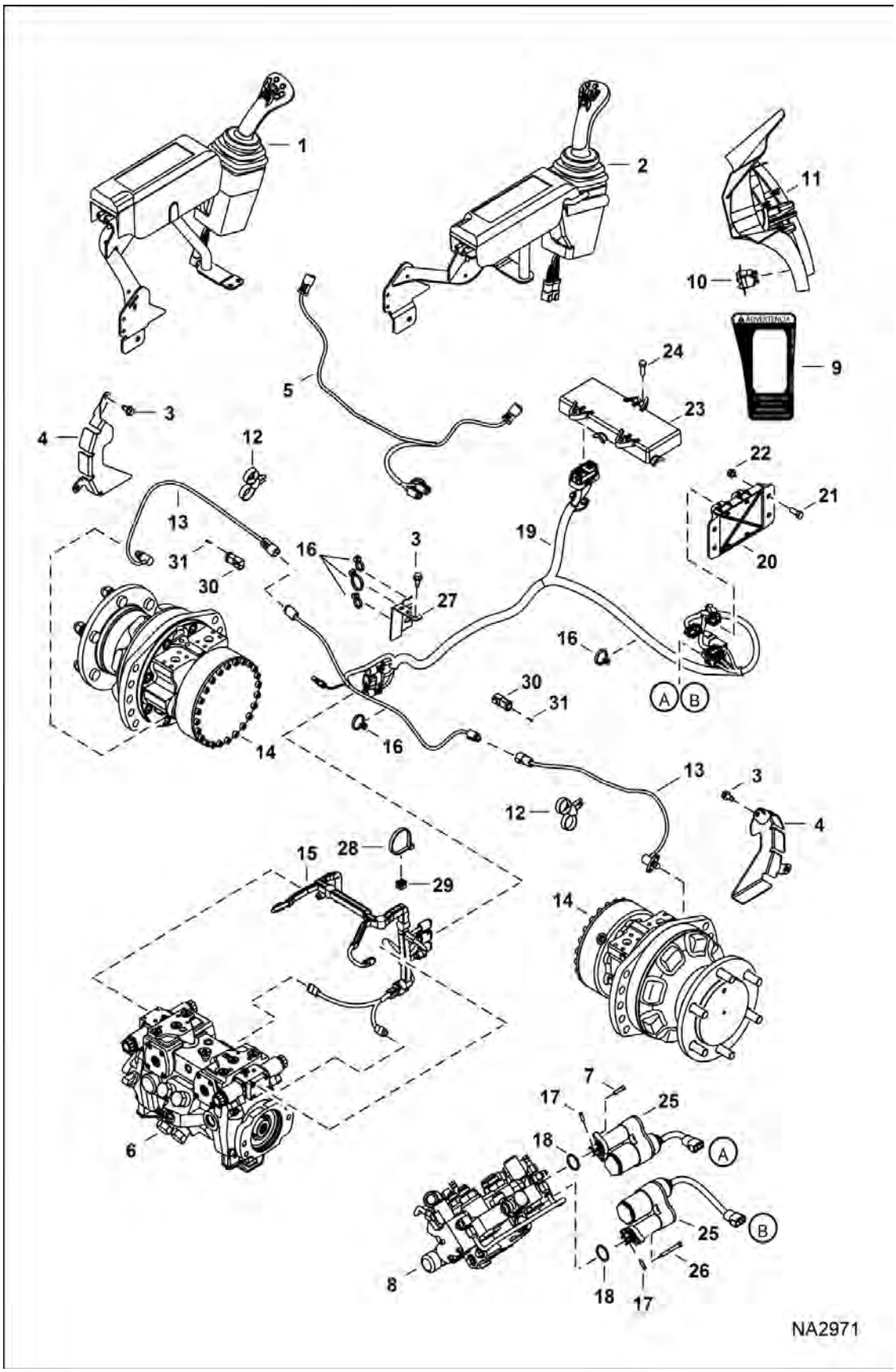

Page 367 - OSS# 6300322913 - All rights reserved by Bobcat Company - 08/04/2017 - 06:30:16 - Produced by Ken Cook Co. with mediaioff

CONTROLS ELECTRICAL (Cont'd)

(Selectable Joystick Controls)

Ref No	Part Number	Description	Remarks	Serial Number	Qty
1		JOYSTICK, SJC LH	See Illustration CONTROLS ELECTRICAL / NA2977 NLA		1
2		JOYSTICK, SJC RH	See Illustration CONTROLS ELECTRICAL / NA2977 NLA		1
3	84G3712	BOLT 5			5
4	7143444	COVER, SENSOR SPEED			2
4	7189826	COVER	2-Speed		2
5	7163706	HARNESS, JOYSTICK			1
6		PUMP, HYD	See Illustration HYDROSTATIC PUMP/GEAR PUMP / NA1309		1
7	29G416	BOLT			2
8		VALVE, CONTROL	See Illustration HYDRAULIC CONTROL VALVE / NA1217		1
9	7168114	DECAL, SWITCH			1
10	7001710	SWITCH, ISO			1
11		PANEL, RH	See Illustration OPERATOR CAB / NA1161		1
12	6678668	STRAP			2
13		SENSOR, SPEED	Contact your Local Dealer for Bobcat Technical Information BTI419 - NLA - Was 7139902		2
13	25K20016	O RING 10			2
14		MOTOR, DRIVE HYD	See Illustration HYDROSTATIC MOTOR / NA1304		2
15	7188448	HARNESS, PUMP			1
16	6624289	STRAP, TIE			7
17	7108236	PIN			2
18	58K120	O-RING			2
19		HARNESS, SJC	Contact your Local Dealer for Bobcat Technical Information BTI419 - NLA - W/Speed sensor connectors - Was 7159458 [A]		1
19	7210504	HARNESS, SJC	W/O speed sensor connectors		1
20	6680410	CONTROLLER, ACS	plastic - W/ 3-connector plug		1
21	17C616	BOLT 5			2
22	97D6	NUT 10			2
23	6679485	CONTROLLER, DRIVE			1
24	43C616	BOLT			3
25	7101672	ACTUATOR	W/Ref. 18		2
26	69G436	BOLT			2
27	7122359	BRACKET			1
28	6690690	STRAP, TIE			10
29	6690688	TREE MOUNT			4
30	6691419	CONNECTOR, ELECTRICAL			2
31	6665370	PLUG			8

Page 360 OSS# 6300322913 - All rights reserved by Bobcat Company - 08/04/2017 - 06:30:16 - Produced by Ken Cook Co. with mediaoff

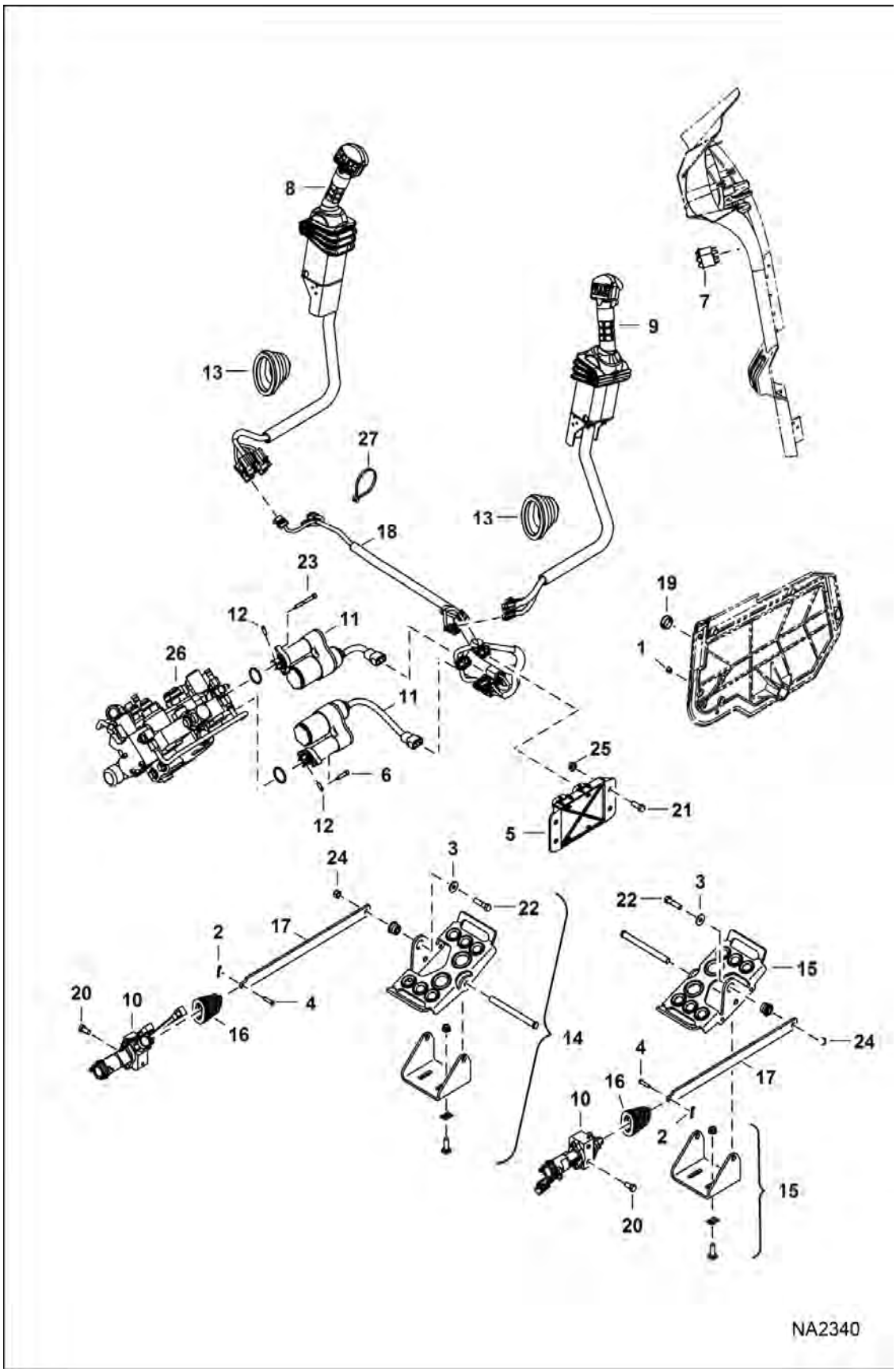

Page 369 - OSS# 6300322913 - All rights reserved by Bobcat Company - 08/04/2017 - 06:30:16 - Produced by Ken Cook Co. with mediaioff

CONTROLS ELECTRICAL (Cont'd)
(ACS)

Ref No	Part Number	Description	Remarks	Serial Number	Qty
1	5289686	PLUG	black - 0.38" dia hole		2
2	6513495	PIN 5			2
3	6563914	WASHER			2
4	6564654	PIN, CLEVIS			2
5	6680410	CONTROLLER, ACS	plastic - W/ 3-connector plug		1
6	29G416	BOLT			2
7	7001713	SWITCH			1
8		LEVER, RH	See Illustration CONTROLS ELECTRICAL / NA2799		1
9		LEVER, LH	See Illustration CONTROLS ELECTRICAL / NA2799		1
10	7003496	SENSOR			2
11	7101672	ACTUATOR			2
12	7108236	PIN			2
13	7147815	BOOT			2
14		PEDAL ASSY	See Illustration CONTROL PEDALS / NA2998 - LH		1
15		PEDAL ASSY	See Illustration CONTROL PEDALS / NA2998 - RH		1
16	7153503	BOOT			2
17	7154903	LINK			2
18	7164144	HARNESS			1
19	7166315	PLUG			1
20	1C612	BOLT			4
21	1C616	BOLT			2
22	1C624	BOLT			2
23	69G436	BOLT			2
24	95D6	NUT			2
25	97D6	NUT 10			2
26		VALVE, CONTOL	See Illustration HYDRAULIC CONTROL VALVE / NA1217		1
27	6624289	STRAP, TIE			3

Page 362 OSS# 6300322913 - All rights reserved by Bobcat Company - 08/04/2017 - 06:30:16 - Produced by Ken Cook Co. with mediaioff

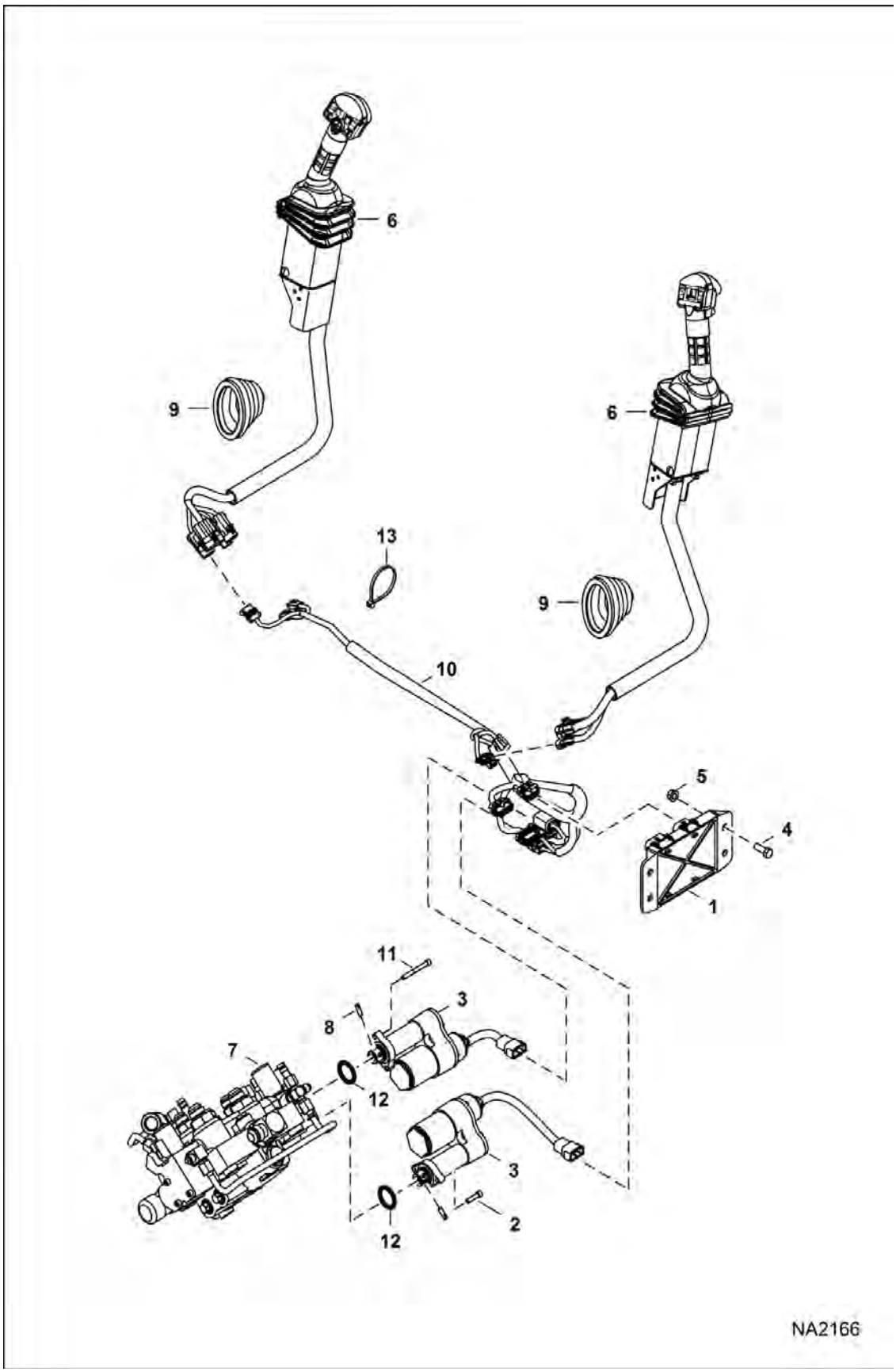

Page 371 - OSS# 6300322913 - All rights reserved by Bobcat Company - 08/04/2017 - 06:30:16 - Produced by Ken Cook Co. with mediaioff

CONTROLS ELECTRICAL (Cont'd)
(AHC)

Ref No	Part Number	Description	Remarks	Serial Number	Qty
1	6680410	CONTROLLER, ACS	plastic - W/ 3-connector plug		1
2	29G416	BOLT			2
3	7101672	ACTUATOR	W/Ref. 12		2
4	17C616	BOLT 5			2
5	95D6	NUT			2
6		LEVER, AHC	See Illustration CONTROLS ELECTRICAL / NA2798 RH		1
6		LEVER, AHC	See Illustration CONTROLS ELECTRICAL / NA2798 LH		1
7		VALVE, CONTROL	See Illustration HYDRAULIC CONTROL VALVE / NA1217		1
8	7108236	PIN			2
9	7147815	BOOT			2
10	7164144	HARNESS			1
11	69G436	BOLT			2
12	58K120	O-RING			2
13	6624289	STRAP, TIE			3

Page 1 of 2 OSS# 6300322913 - All rights reserved by Bobcat Company - 08/04/2017 - 06:30:16 - Produced by Ken Cook Co. with mediaioff

CONTROLS ELECTRICAL

(SJC)(Armrest Assembly)

(S/N A3P811001 - A3P816028, A3P911001 - A3P912750)

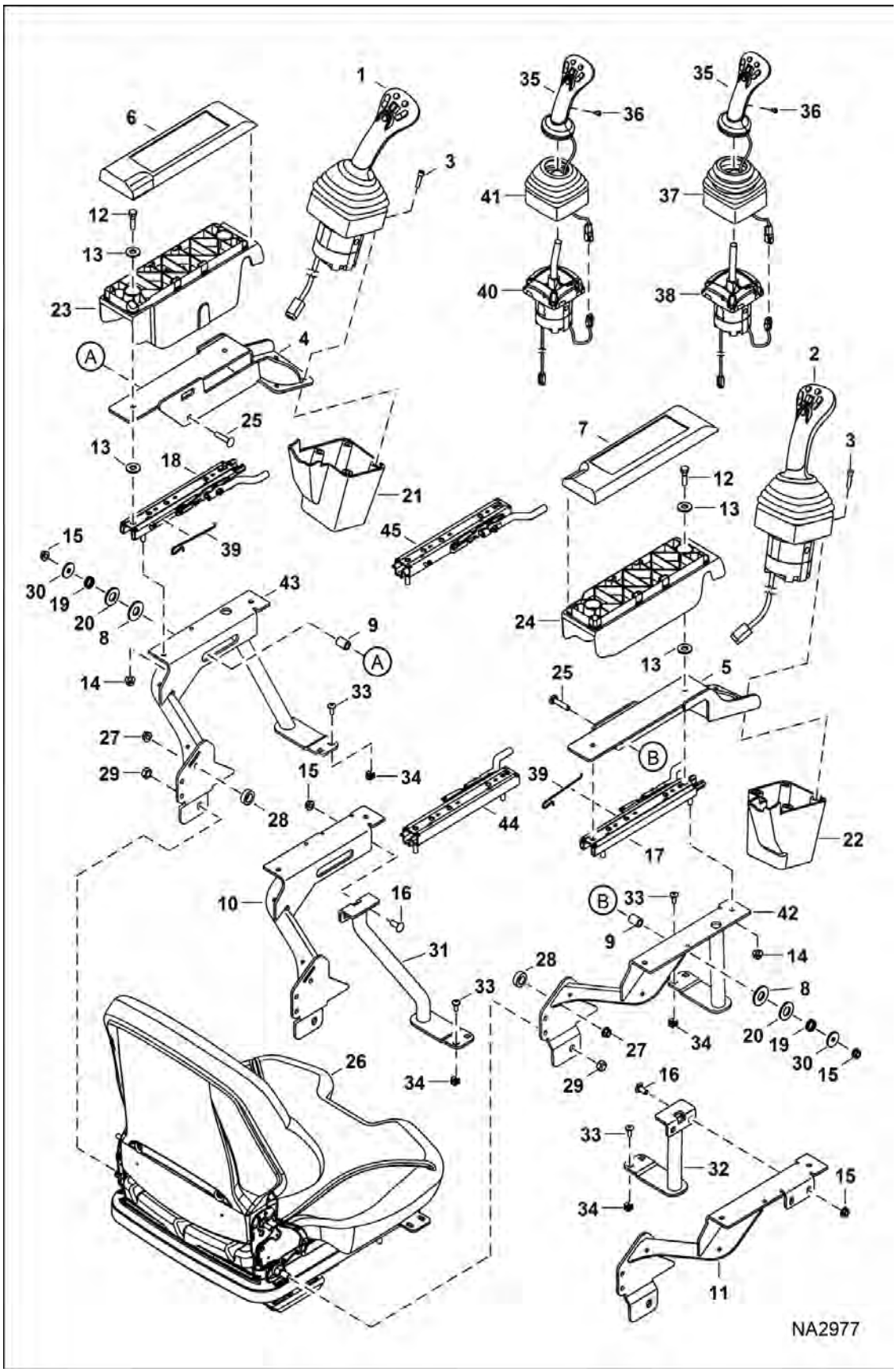

Page 373 - OSS# 6300322913 - All rights reserved by Bobcat Company - 08/04/2017 - 06:30:16 - Produced by Ken Cook Co. with mediaioff

CONTROLS ELECTRICAL (Cont'd)

(SJC)(Armrest Assembly)

(S/N A3P811001 - A3P816028, A3P911001 - A3P912750)

Ref No	Part Number	Description	Remarks	Serial Number	Qty
1	7003628	JOYSTICK, LH	11 degree travel - 3 pleat boot - Ref. 35 - 38		1
1	7023150	JOYSTICK, LH ASSY	17 degree travel - 4 pleat boot - Ref. 35, 36, 40 & 41		1
2	7003629	JOYSTICK, RH	11 degree travel - 3 pleat boot - Ref. 35 - 38		1
2	7023149	JOYSTICK, RH ASSY	17 degree travel - 4 pleat boot - Ref. 35, 36, 40 & 41		1
3	29G416	BOLT			8
4	7197922	MOUNT, CONTROLS LH			1
5	7197921	MOUNT, CONTROLS RH			1
6	7157704	COVER ARMREST LH			1
7	7157671	COVER ARMREST, RH			1
8	7165634	WASHER, PLASTIC			2
9	7197916	SPACER			2
10		MOUNT, SEAT LH	NLA - Order Ref. 43 & (2) each of Ref. 33 & 34 - Was 7197919 [A]		1
11		MOUNT, SEAT RH	NLA - Order Ref. 42 & (2) each of Ref. 33 & 34 - Was 7197917 [A]		1
12	1CM830	SCREW			2
13	25E18	WASHER			8
14	51DM8	NUT			4
15	97D5	NUT			4
16	10C512	BOLT			4
17		SLIDE	NLA - W/torsion spring - Order 7200887 slide & Ref. 39 - Was 7177169 [A]		1
17	7200887	SLIDE	long release lever - W/O torsion spring - Also Order Ref. 39		1
18		SLIDE	NLA - W/torsion spring - Order 7200888 slide & Ref. 39 - Was 7177170 [A]		1
18	7200888	SLIDE	long release lever - W/O torsion spring - Also Order Ref. 39		1
19	7197915	SPRING, COMPRESSION			2
20	6701174	WASHER			2
21	7146265	COVER, LH SJC			1
22	7146264	COVER, RH SJC			1
23	7177197	SHELL, ARMREST LH			1
24	7177196	SHELL, ARMREST RH			1
25	10C524	BOLT			2
26		SEAT	See Illustration SEAT - 80 mm / NA2430 - suspension		1
26		SEAT	See Illustration SEAT / NA2429 - air suspension		1
27	51DM8	NUT			4
28	7162176	SPACER			2
29	86D7	NUT			2
30	25E25	WASHER 10			2

Page 1 of 1 OSS# 6300322913 - All rights reserved by Bobcat Company - 08/04/2017 - 06:30:16 - Produced by Ken Cook Co. with mediaioff

CONTROLS ELECTRICAL (Cont'd)

(SJC)(Armrest Assembly)

(S/N A3P811001 - A3P816028, A3P911001 - A3P912750)

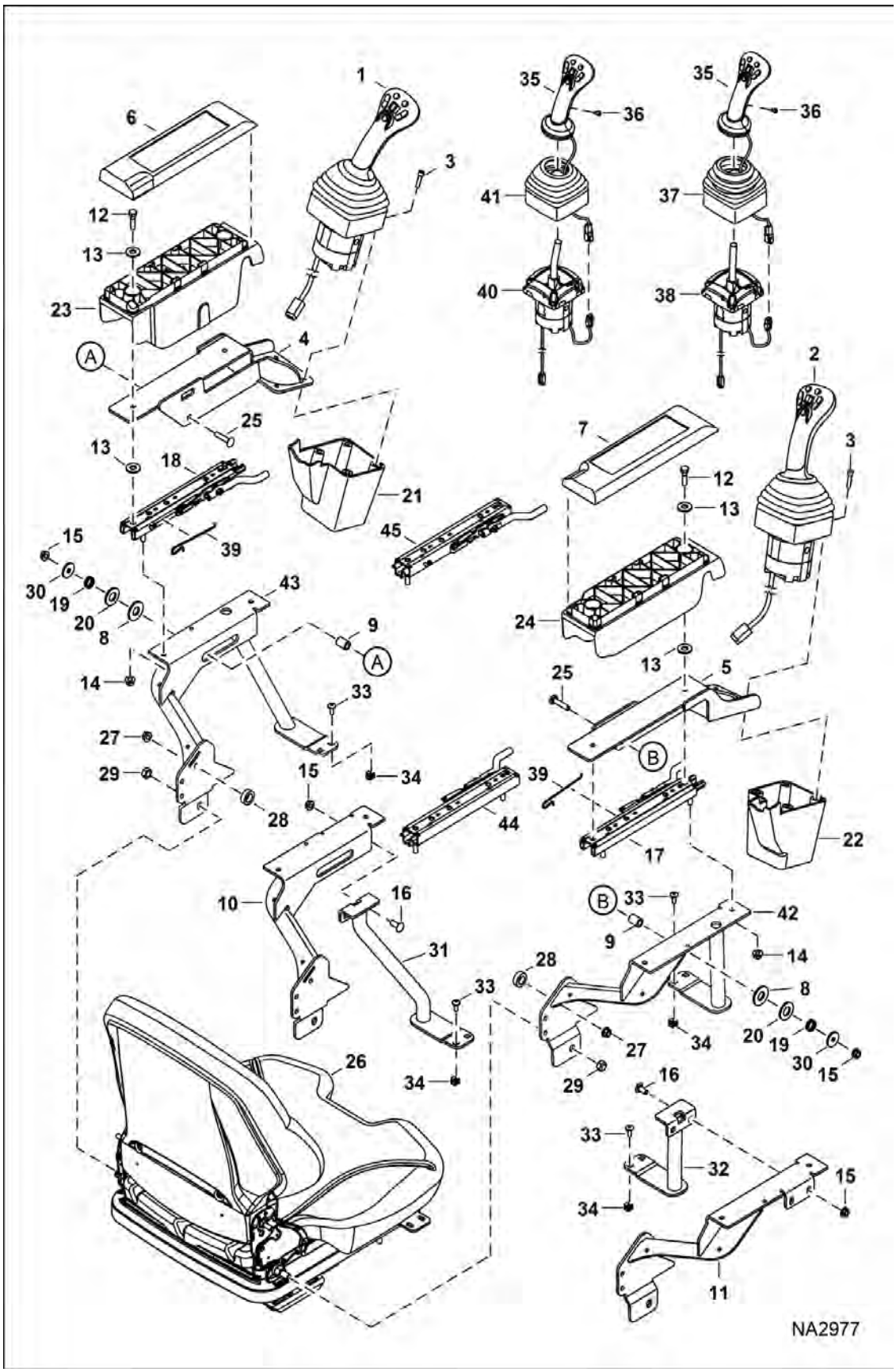

Page 375 - OSS# 6300322913 - All rights reserved by Bobcat Company - 08/04/2017 - 06:30:16 - Produced by Ken Cook Co. with mediaioff

CONTROLS ELECTRICAL (Cont'd)

(SJC)(Armrest Assembly)

(S/N A3P811001 - A3P816028, A3P911001 - A3P912750)

Ref No	Part Number	Description	Remarks	Serial Number	Qty
31		SUPPORT, TUBE LH	NLA - Order Ref. 43 & (2) each of Ref. 33 & 34 - Was 7168849 [A]		1
32		SUPPORT, TUBE RH	NLA - Order Ref. 42 & (2) each of Ref. 33 & 34 - Was 7168848 [A]		1
33	6803202	SCREW			4
34	7170765	NUT			4
35	6689922	HANDLE	LH		1
35	6689923	HANDLE	RH		1
36	6689927	BOLT			2
37	7003698	BOOT, RUBBER	3 pleat boot		2
38	6697938	BASE, JOYSTICK	LH		1
38	6697939	BASE, JOYSTICK	RH		1
39	7199853	SPRING, TORSION			1
40	7023152	BASE, JOYSTICK LH	LH		1
40	7023151	BASE, JOYSTICK RH	RH		1
41	7023154	BOOT, RUBBER LH	LH - 4 pleat boot		1
41	7023153	BOOT, RUBBER RH	RH - 4 pleat boot		1
42	7229391	ARMREST RH	Was 7220855 [A]		1
43	7229392	ARMREST LH	Was 7220856 [A]		1
44	7242905	SLIDE	short release lever - W/O torsion spring - Also Order Ref. 39		1
45	7242906	SLIDE	short release lever - W/O torsion spring - Also Order Ref. 39		1

Page 368 OSS# 6300322913 - All rights reserved by Bobcat Company - 08/04/2017 - 06:30:16 - Produced by Ken Cook Co. with mediaoff

CONTROLS ELECTRICAL

(SJC) (Armrest Assembly)

(S/N A3P816029 & Above, A3P912751 & Above)

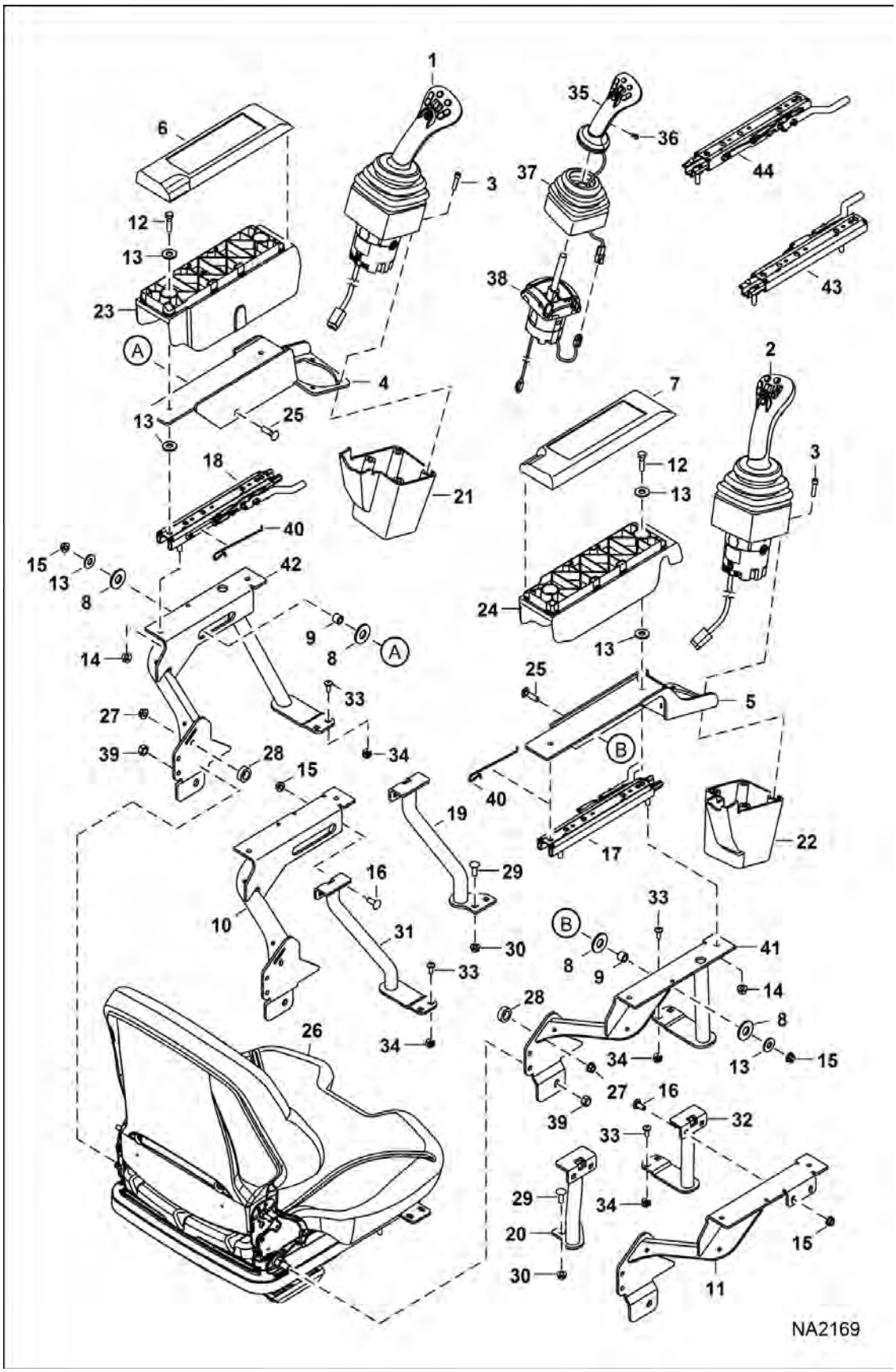

Page 377 - OSS# 6300322913 - All rights reserved by Bobcat Company - 08/04/2017 - 06:30:16 - Produced by Ken Cook Co. with mediaioff

CONTROLS ELECTRICAL (Cont'd)

(SJC) (Armrest Assembly)
(S/N A3P816029 & Above, A3P912751 & Above)

Ref No	Part Number	Description	Remarks	Serial Number	Qty
1	7003628	JOYSTICK, LH	Ref. 35,36,37 & 6697938 base		1
1	7266825	JOYSTICK, LH ASSY	Ref. 32,33,36 & 7266827 base		1
2	7003629	JOYSTICK, RH	Ref. 35,36,37 & 6697939 base		1
2	7266826	JOYSTICK, RH ASSY	Ref. 32,33,36 & 7266828 base		1
3	29G416	BOLT			8
4	7177417	MOUNT, CONTROLS LH	Was 7153506 [A]		1
5	7177418	MOUNT, CONTROLS RH	Was 7156842 [A]		1
6	7157704	COVER ARMREST LH			1
7	7157671	COVER ARMREST, RH			1
8	7165634	WASHER, PLASTIC			4
9	7165635	SPACER, SJC			2
10	7168863	MOUNT, ARMREST			1
11	7168862	MOUNT, ARMREST			1
12	1CM830	SCREW			2
13	25E18	WASHER			10
14	51DM8	NUT			4
15	97D5	NUT			4
16	10C512	BOLT			4
17		SLIDE	NLA - W/torsion spring - Order 7200887 slide & Ref. 40 - Was 7177169 [A]		1
17	7200887	SLIDE	long release lever - W/O torsion spring - Also Order Ref. 40		1
18		SLIDE	NLA - W/torsion spring - Order 7200888 slide & Ref. 40 - Was 7177170 [A]		1
18	7200888	SLIDE	long release lever - W/O torsion spring - Also Order Ref. 40		1
19		SUPPORT, TUBE LH	See Illustration SEAT - 80 mm / NA2430 & discard Ref. 47 - Order Ref. 31 & (2) each of Ref. 33 & 34 from this page - NLA - Was 7168849 [D]		1
20		SUPPORT, TUBE RH	See Illustration SEAT - 80 mm / NA2430 & discard Ref. 47 - Order Ref. 32 & (2) each of Ref. 33 & 34 from this page - NLA - Was 7168848 [D]		1
21	7146265	COVER, LH SJC			1
22	7146264	COVER, RH SJC			1
23	7177197	SHELL, ARMREST LH	Was 7157703 [A]		1
24	7177196	SHELL, ARMREST RH	Was 7157670 [A]		1
25	10C520	BOLT			2
26		SEAT	- std.		1
26		SEAT	See Illustration SEAT KIT - 80 mm / NA2042 - suspension		1

Page 1 of 1 OSS# 6300322913 - All rights reserved by Bobcat Company - 08/04/2017 - 06:30:16 - Produced by Ken Cook Co. with mediaoff

CONTROLS ELECTRICAL (Cont'd)

(SJC) (Armrest Assembly)

(S/N A3P816029 & Above, A3P912751 & Above)

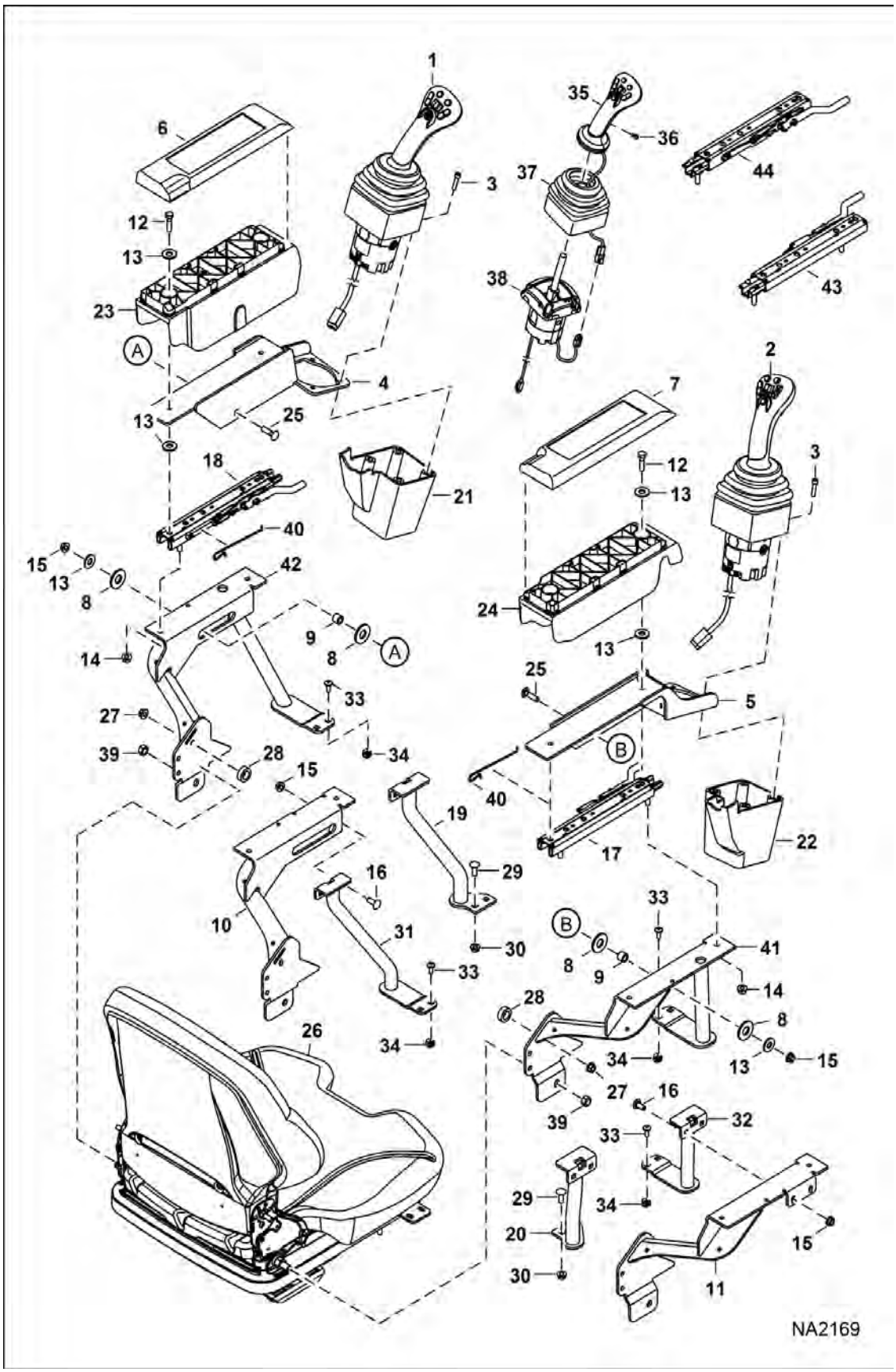

Page 379 - OSS# 6300322913 - All rights reserved by Bobcat Company - 08/04/2017 - 06:30:16 - Produced by Ken Cook Co. with mediaioff

Illustration NA2169

CONTROLS ELECTRICAL (Cont'd)

(SJC) (Armrest Assembly)
(S/N A3P816029 & Above, A3P912751 & Above)

Ref No	Part Number	Description	Remarks	Serial Number	Qty
26		SEAT	See Illustration SEAT KIT - 80 mm / NA2427 - air suspension		1
27	51DM8	NUT			4
28	7162176	SPACER			2
29	10C512	BOLT			4
30	97D5	NUT			4
31		SUPPORT, TUBE LH	NLA - Order Ref. 42 & (2) each of Ref. 33 & 34 - Was 7168849 [A]		1
32		SUPPORT, TUBE RH	NLA - Order Ref. 41 & (2) each of Ref. 33 & 34 - Was 7168848 [A]		1
33	6803202	SCREW			4
34	7170765	NUT			4
35	6689922	HANDLE	LH		1
35	6689923	HANDLE	RH		1
36	6689927	BOLT			2
37	7003698	BOOT, RUBBER			2
38	6697938	BASE, JOYSTICK	LH		1
38	7266827	BASE, JOYSTICK LH	LH - use with 7266825 joystick		1
38	6697939	BASE, JOYSTICK	RH		1
38	7266828	BASE, JOYSTICK RH	RH - use with 7266826 joystick		1
39	86D7	NUT			2
40	7199853	SPRING, TORSION			1
41	7229391	ARMREST RH	Was 7220855 [A]		1
42	7229392	ARMREST LH	Was 7220856 [A]		1
43	7242905	SLIDE	short release lever - W/O torsion spring - Also Order Ref. 40		1
44	7242906	SLIDE	short release lever - W/O torsion spring - Also Order Ref. 40		1

Page 372 OSS# 6300322913 - All rights reserved by Bobcat Company - 08/04/2017 - 06:30:16 - Produced by Ken Cook Co. with mediaioff

CONTROLS ELECTRICAL
(AHC) (Handle Assembly)

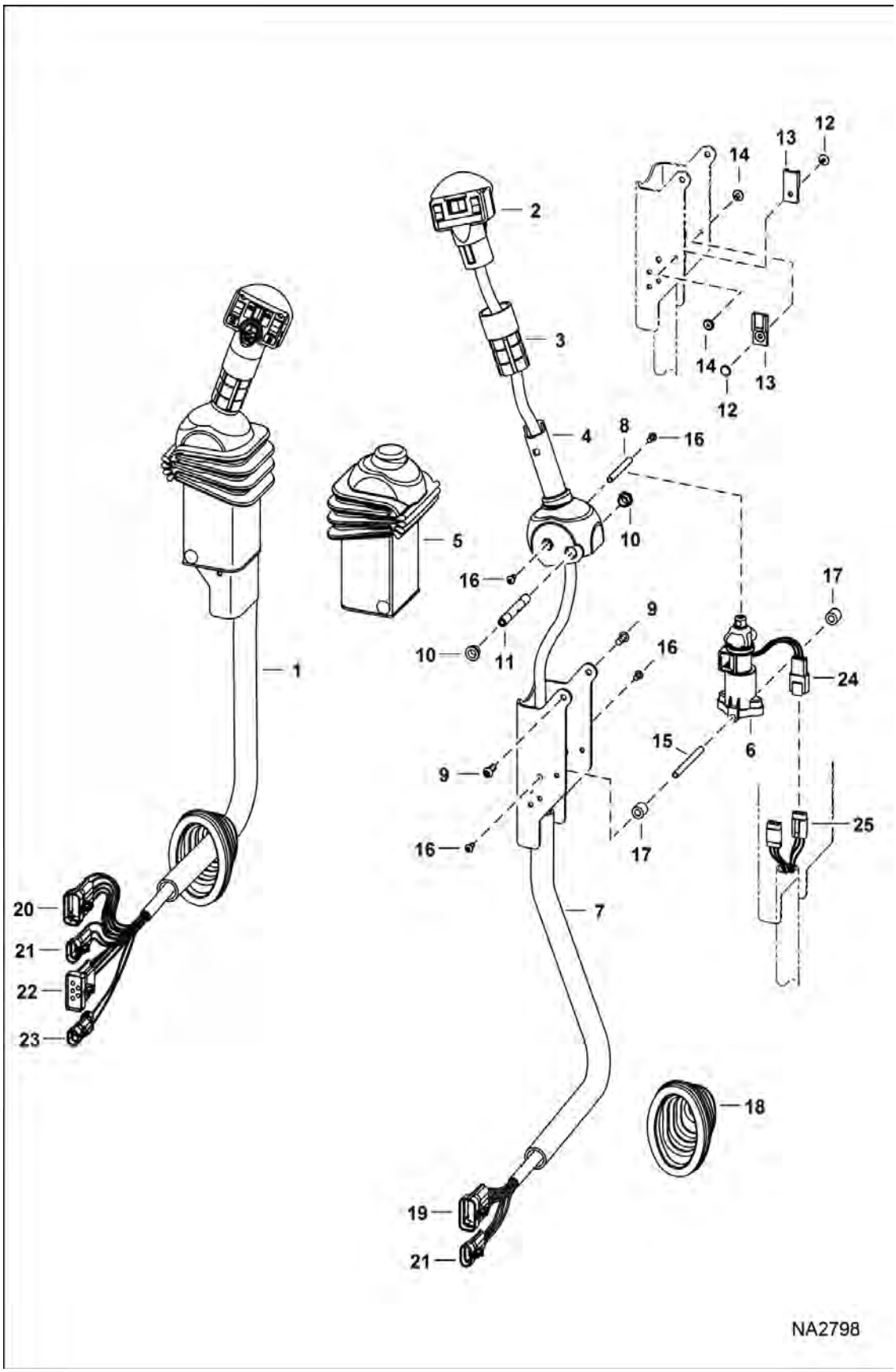

Page 381 - OSS# 6300322913 - All rights reserved by Bobcat Company - 08/04/2017 - 06:30:16 - Produced by Ken Cook Co. with mediaioff

CONTROLS ELECTRICAL (Cont'd)
(AHC) (Handle Assembly)

Ref No	Part Number	Description	Remarks	Serial Number	Qty
1	7008319	LEVER, AHC	tilt - RH		1
1	7008318	LEVER, AHC	lift - LH		1
2	6680462	HANDLE, ACS RH	tilt - RH		1
2	6680417	HANDLE, AHC	lift - LH		1
3	6702621	GRIP			2
4	6729594	HANDLE	RH		1
4	6729595	HANDLE	LH		1
5	6680471	BOOT			2
6	6684910	SENSOR, ELEC AHC			2
6	6670706	CONNECTOR	3-pin		1
6	6670714	PIN TERMINAL			3
6	6670710	PLUG			1
7	7018011	CHANNEL	RH		1
7	7018012	CHANNEL	LH		1
8	6680469	SPACER			1
9	25GT410	SCREW			4
10	6702990	BUSHING			4
11	6713043	SPACER			2
12	6665321	RIVET	male		4
13	6665000	CLIP			4
14	6665322	RIVET	female		4
15	6719834	SPACER	threaded		2
16	6727065	SCREW			8
17	6719835	SLEEVE			4
18	7147815	BOOT			2
19	6640692	CONNECTOR	10-pin		1
19	6640690	PIN			8
19	6640694	LOCK	Use W/ 10-pin connector		1
19	6641176	SEAL			8
19	6646582	PLUG	cavity		2
20	6640692	CONNECTOR	10-pin		1
20	6640690	PIN			6
20	6640694	LOCK	Use W/ 10-pin connector		1
20	6641176	SEAL			6
20	6646582	PLUG	cavity		4
21	6640699	CONECTR 5	3-pin - RH & LH		2
21	6640690	PIN			3
21	6641176	SEAL			3
21	6640700	LOCK 5			1
22	6667144	CONNECTOR	5-pin		1
22	6640690	PIN			3
22	6641176	SEAL			3
22	6646582	PLUG	cavity		1
22	6667145	LOCK	Use W/ 5-pin connector		1
23	6641179	CONECTR 5	2-pin		1
23	6640690	PIN			2
23	6641176	SEAL			2
23	6641180	LOCK 5	Use W/ 2-pin connector		1

Page 326 OSS# 6300322913 - All rights reserved by Bobcat Company - 08/04/2017 - 06:30:16 - Produced by Ken Cook Co. with mediaioff

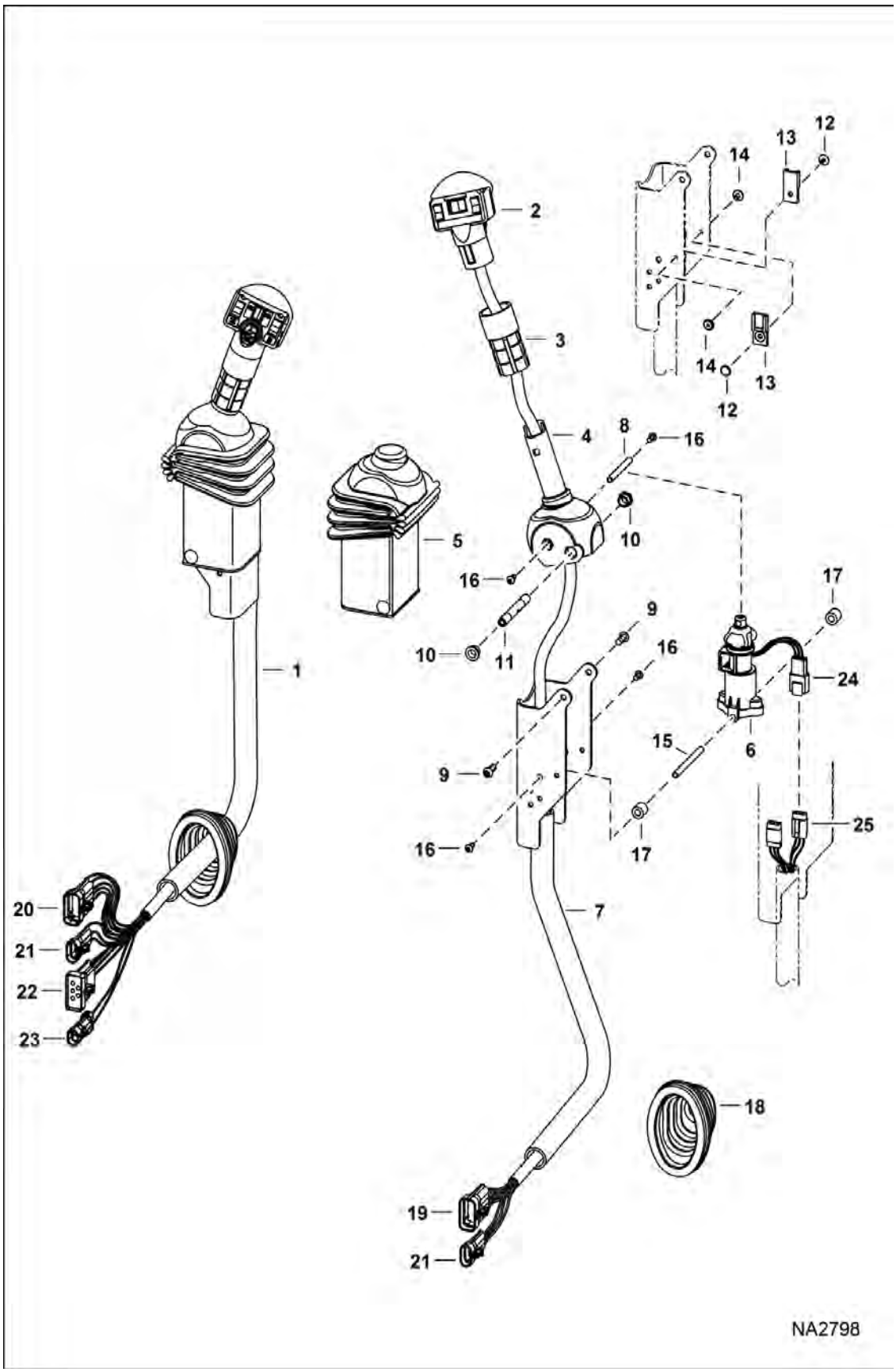

Page 393 - OSS# 6300322913 - All rights reserved by Bobcat Company - 08/04/2017 - 06:30:16 - Produced by Ken Cook Co. with mediaioff

CONTROLS ELECTRICAL (Cont'd)

(AHC) (Handle Assembly)

Ref No	Part Number	Description	Remarks	Serial Number	Qty
24	6670707	CONNECTOR	3-pin		1
24	6670715	SOCKET			3
24	6670711	LOCK			1
25	6676870	CONNECTOR	3 - pin		1
25	6670711	LOCK			1
25	6670715	SOCKET			3
25	6676640	PLUG,SEAL	plug		1

Page 384 OSS# 6300322913 - All rights reserved by Bobcat Company - 08/04/2017 - 06:30:16 - Produced by Ken Cook Co. with mediaioff

CONTROLS ELECTRICAL
(ACS) (Handle Assembly)

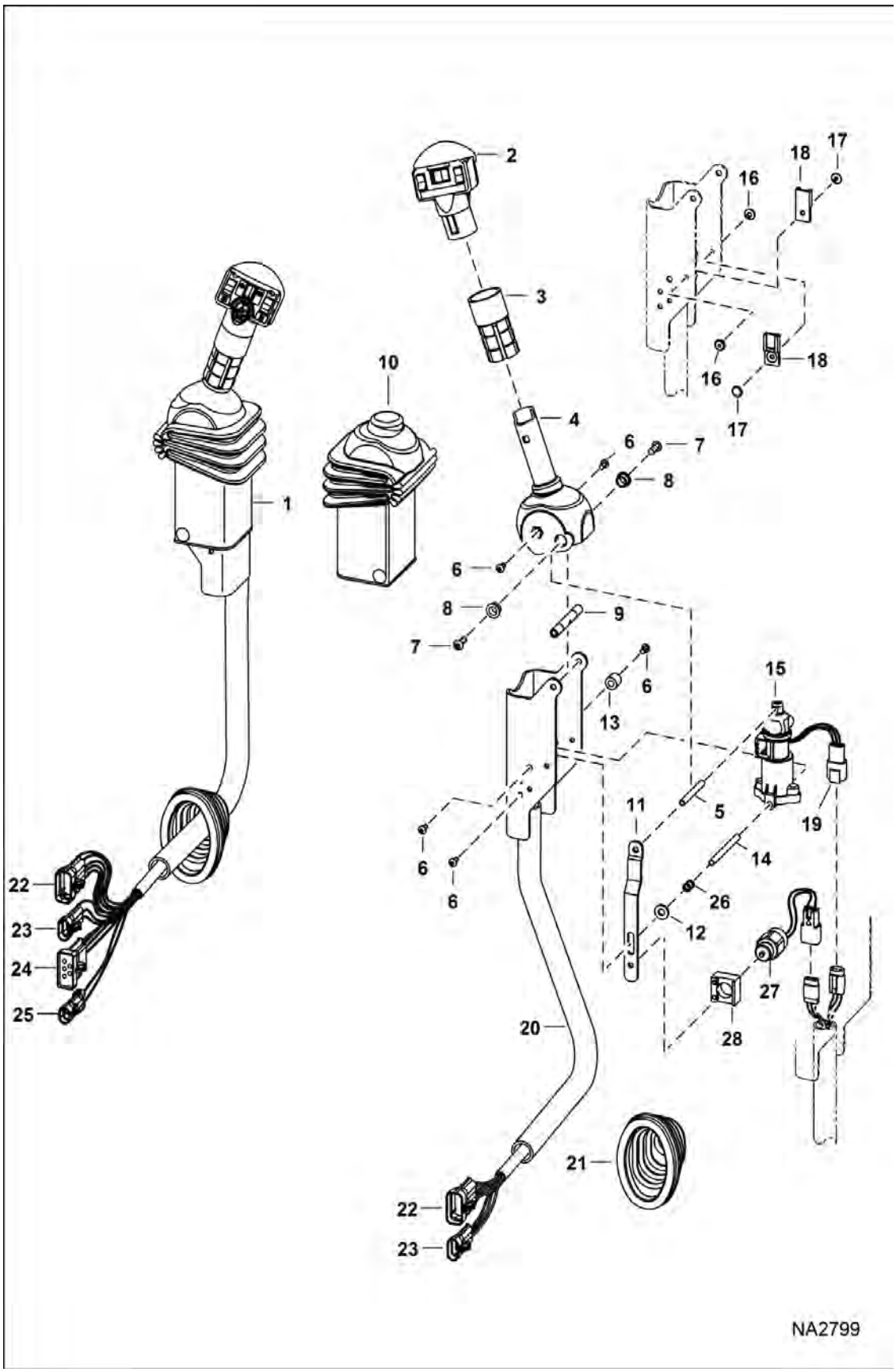

Page 395 - OSS# 6300322913 - All rights reserved by Bobcat Company - 08/04/2017 - 06:30:16 - Produced by Ken Cook Co. with mediaioff

Illustration NA2799

CONTROLS ELECTRICAL (Cont'd)
(ACS) (Handle Assembly)

Ref No	Part Number	Description	Remarks	Serial Number	Qty
1	7003495	LEVER, LH	lift		1
1	7003494	LEVER, RH	tilt		1
2	6680462	HANDLE, ACS RH	tilt - RH		1
2	6680417	HANDLE, AHC	lift - LH		1
3		GRIP	NLA - Order 6702621 grip & cut to 71,1 mm (2.8") long		2
4	6729594	HANDLE	RH		1
4	6729595	HANDLE	LH		1
5	6680469	SPACER	threaded		1
6	6727065	SCREW			6
7	25GT410	SCREW			8
8	6702990	BUSHING			4
9	6713043	SPACER			4
10	6680471	BOOT			2
11	6680477	STRAP	stop		1
12	25E13	WASHER 5			1
13	6719835	SLEEVE			4
14	6719834	SPACER	threaded		2
15	6684910	SENSOR, ELEC AHC			2
15	6670706	CONNECTOR			1
15	6670715	SOCKET			3
15	6670710	PLUG			1
16	6665322	RIVET	female		2
17	6665321	RIVET	male		2
18	6665000	CLIP			2
19	6670707	CONNECTOR			1
19	6670715	SOCKET			3
19	6670711	LOCK			1
20	7018011	CHANNEL	RH		1
20	7018012	CHANNEL	LH		1
21	7147815	BOOT			2
22	6640692	CONNECTOR	10-pin		1
22	6640690	PIN			8
22	6640694	LOCK	Use W/ 10-pin connector		1
22	6641176	SEAL			8
22	6646582	PLUG	cavity		1
23	6640699	CONECTR 5	3-pin		2
23	6640690	PIN			3
23	6641176	SEAL			3
23	6640700	LOCK 5			3
24	6667144	CONNECTOR	5-pin		2
24	6640690	PIN			3
24	6641176	SEAL			3
24	6646582	PLUG	cavity		1
24	6641180	LOCK 5	Use W/ 2-pin connector		1
25	6641179	CONECTR 5	2-pin		1
25	6640690	PIN			2
25	6641176	SEAL			2
25	6641180	LOCK 5	Use W/ 2-pin connector		1

Page Rendered OSS# 6390322913 - All rights reserved by Bobcat Company - 08/04/2017 - 06:30:16 - Produced by Ken Cook Co. with mediaioff

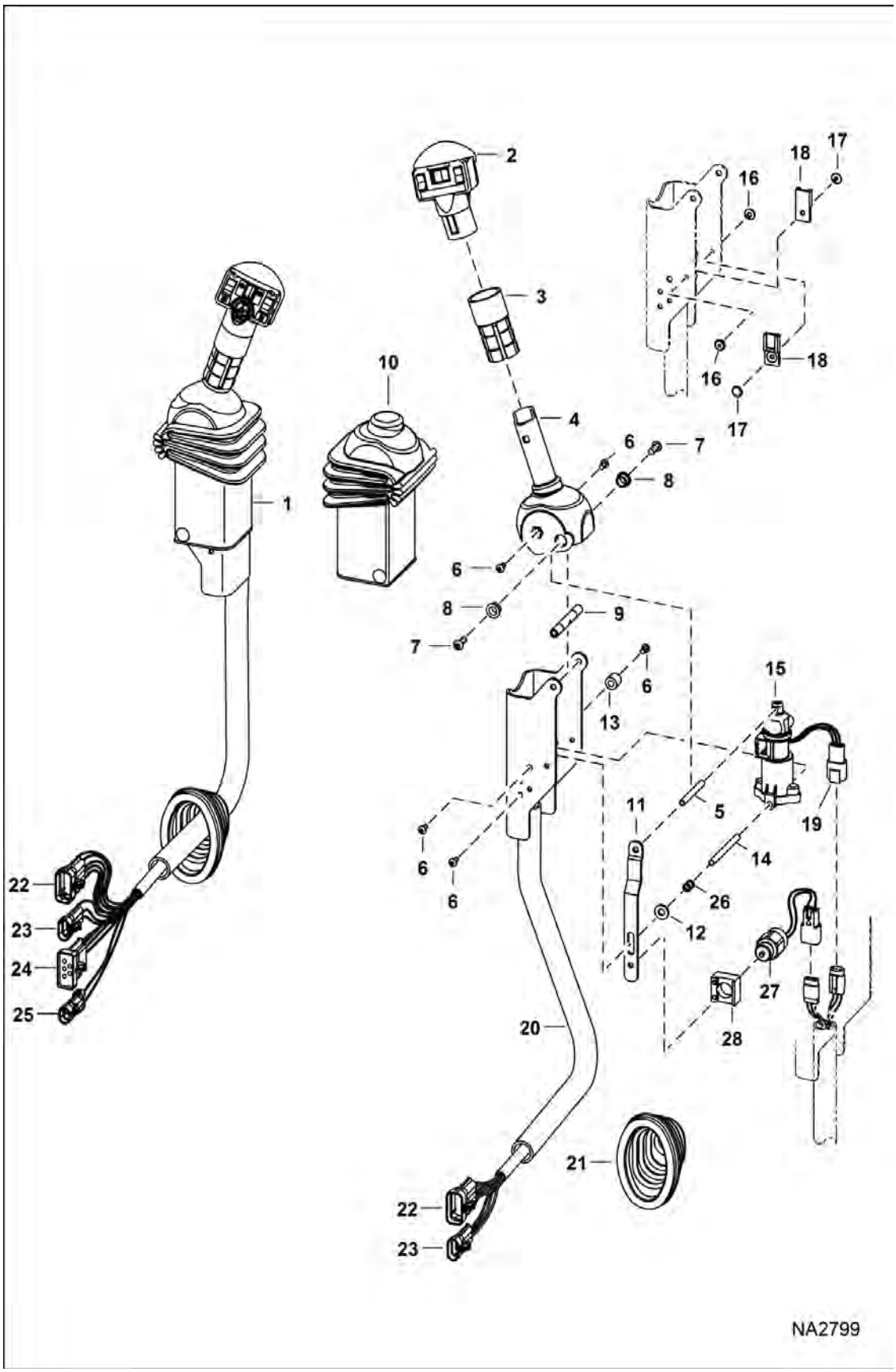

Page 387 - OSS# 6300322913 - All rights reserved by Bobcat Company - 08/04/2017 - 06:30:16 - Produced by Ken Cook Co. with mediaioff

Ref No	Part Number	Description	Remarks	Serial Number	Qty
26	6680470	SPRING			1
27	6676029	SOLENOID, LOCK SPOOL			1
28	6680468	STRAP			1

Page 380 OSS# 6300322913 - All rights reserved by Bobcat Company - 08/04/2017 - 06:30:16 - Produced by Ken Cook Co. with mediaioff

ALTERNATOR

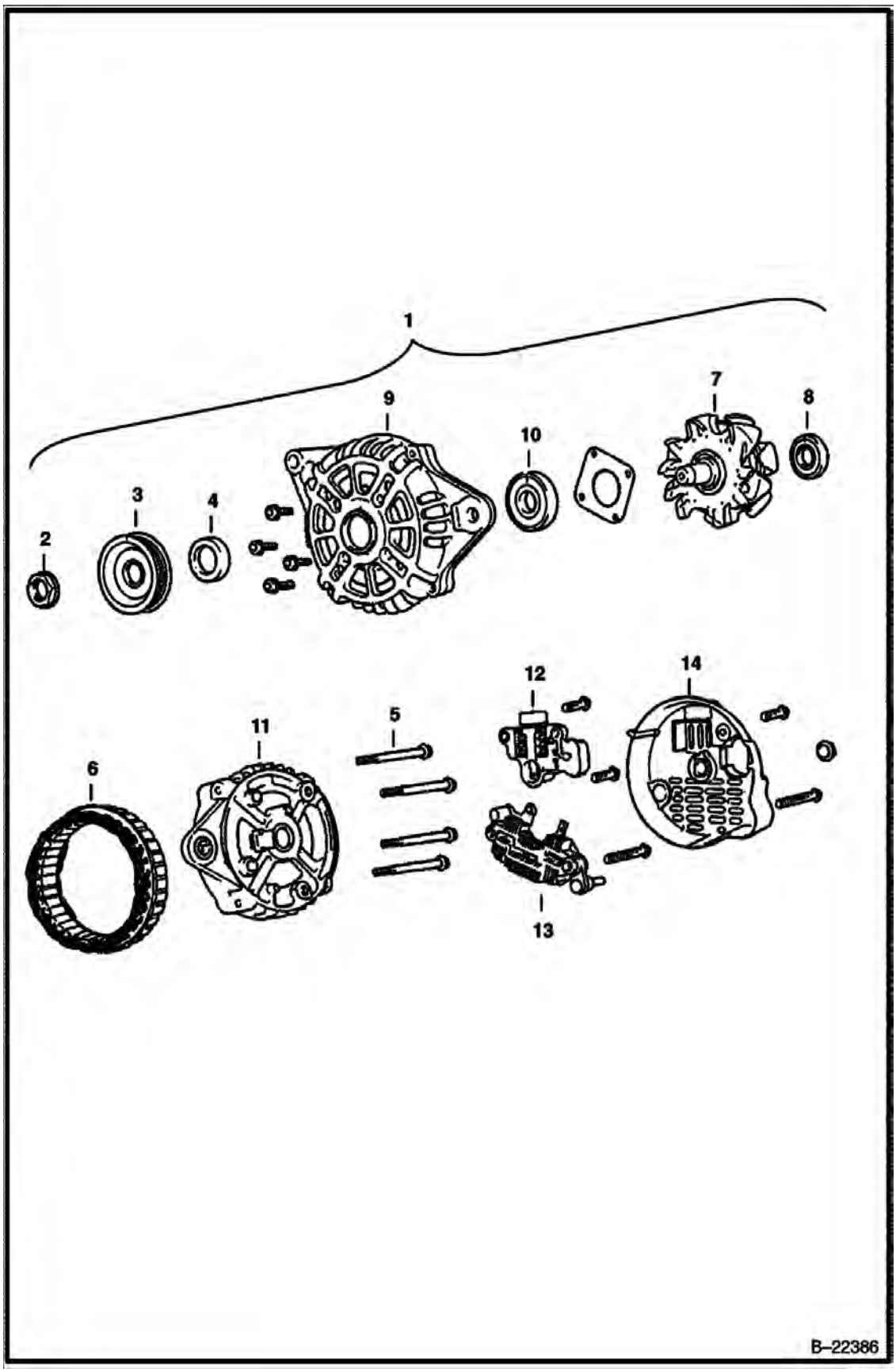

Page 389 - OSS# 6300322913 - All rights reserved by Bobcat Company - 08/04/2017 - 06:30:16 - Produced by Ken Cook Co. with mediaioff

ALTERNATOR (Cont'd)

Ref No	Part Number	Description	Remarks	Serial Number	Qty
1	6681857	ALTERNATOR			1
2	6677497	NUT	Was 6677497 [A]		1
3	6684653	PULLEY			1
4	6677495	SPACER			1
5	6684397	BOLT	Was 6677494 [B]		4
6	6677493	STATOR			1
7	6677492	ASSY, ROTOR			1
8	6684652	BEARING,REAR	rear - Was 6684652 [A]		1
9	6677491	BRACKETFRT			1
10	6684651	BEARING,FRONT	front		1
11	6677490	BRACKETREAR	rear		1
12	6684650	REGULATOR ASSY			1
13	6677488	RECTIFIRE ASSY			1
14	6677487	COVER			1

Page 382 OSS# 6300322913 - All rights reserved by Bobcat Company - 08/04/2017 - 06:30:16 - Produced by Ken Cook Co. with mediaioff

STARTER
(Valeo)

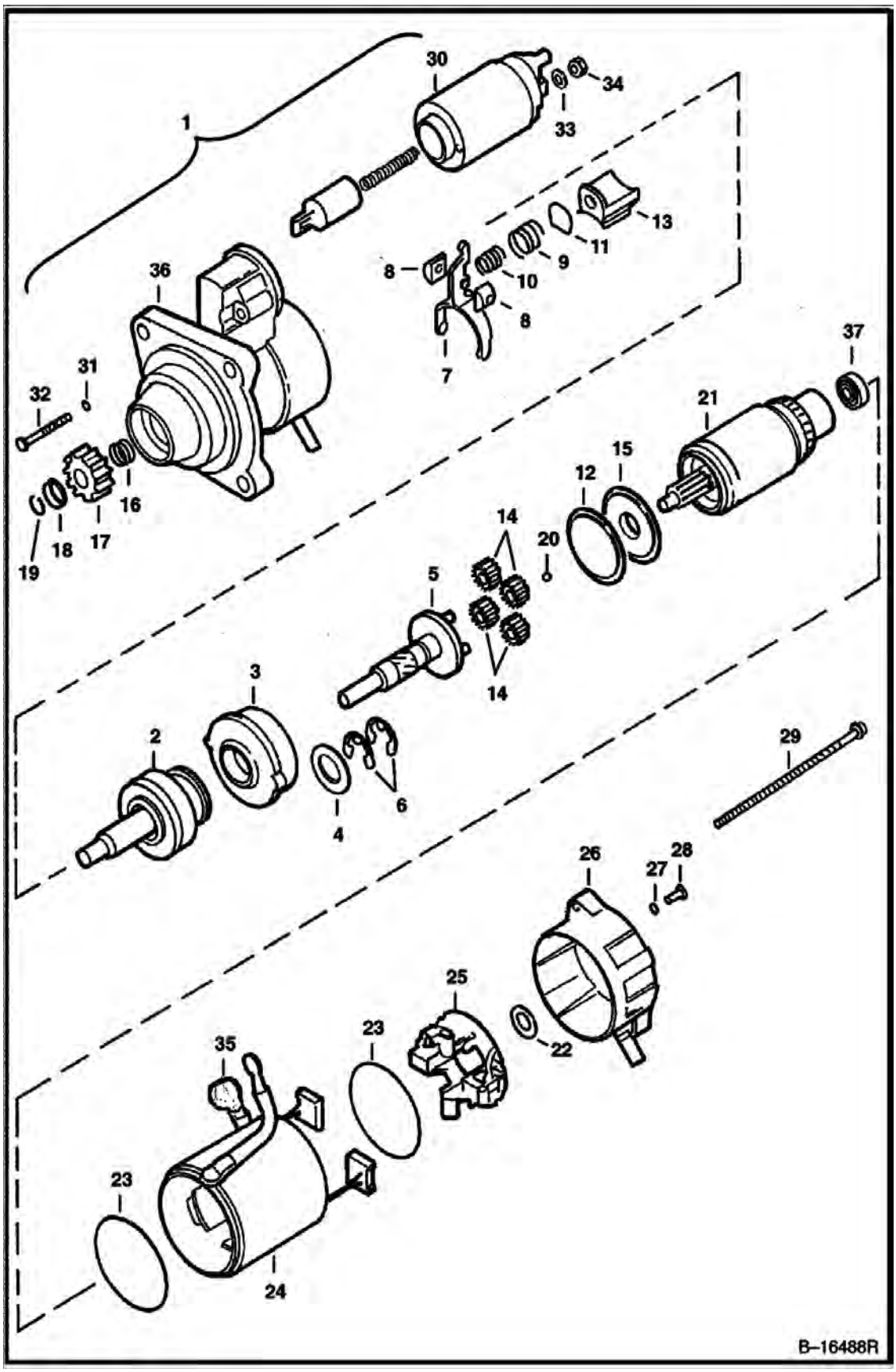

Page 391 - OSS# 6300322913 - All rights reserved by Bobcat Company - 08/04/2017 - 06:30:16 - Produced by Ken Cook Co. with mediaioff

STARTER (Cont'd)
(Valeo)

Ref No	Part Number	Description	Remarks	Serial Number	Qty
1	6685190	STARTER			1
1	6685190REM	STARTER			1
1	6685190	STARTER	Was 6685190EF		1
2	6680375	SHAFT ORC ASSY	ORC assy		1
3	6680367	GEAR			1
4	6680378	WASHER			1
5	6680365	SHAFT			1
6	6680368	RING STOP			2
7	6680364	LEVER			1
8	6680357	HOLDER			2
9	6680381	SPRING			1
10	6680382	SPRING			1
11	6680370	PLATE			1
12	6680369	SEAL			1
13	6680371	LEVER			1
14	6680366	GEAR			4
15	6680372	BRACKET			1
16	6680361	SPRING			1
17	6680390	GEAR			1
18	6680360	STOP			1
19	6680359	RING STOP			1
20	6680362	BALL			1
21	6680374	ARMATURE	W/Ref. 37		1
22	6680363	WASHER			1
23	6680380	SEAL			2
24	6680373	YOKE			1
25	6680377	HOLDER			1
26	6680389	BRACKET			1
27	6680358	RING RUBBER	rubber		2
28	6680384	BOLT			2
29	6680356	BOLT			2
30	6680376	SWITCH			1
31	6680379	SEAL			2
32	6680383	BOLT			2
33	6EM80	WASHER, SPRING			1
34	4DM8	NUT			1
35	6680355	CAP			1
36	6680388	BRACKET	includes ball bearing, drain tube, front bracket & oil seal		1
37		BEARING	NLA - Order Ref. 21		1

Page 328 OSS# 6300322913 - All rights reserved by Bobcat Company - 08/04/2017 - 06:30:16 - Produced by Ken Cook Co. with mediaioff

COOLING SYSTEM
(S/N A3P811001 - A3P813660, A3P911001 - A3P912295)

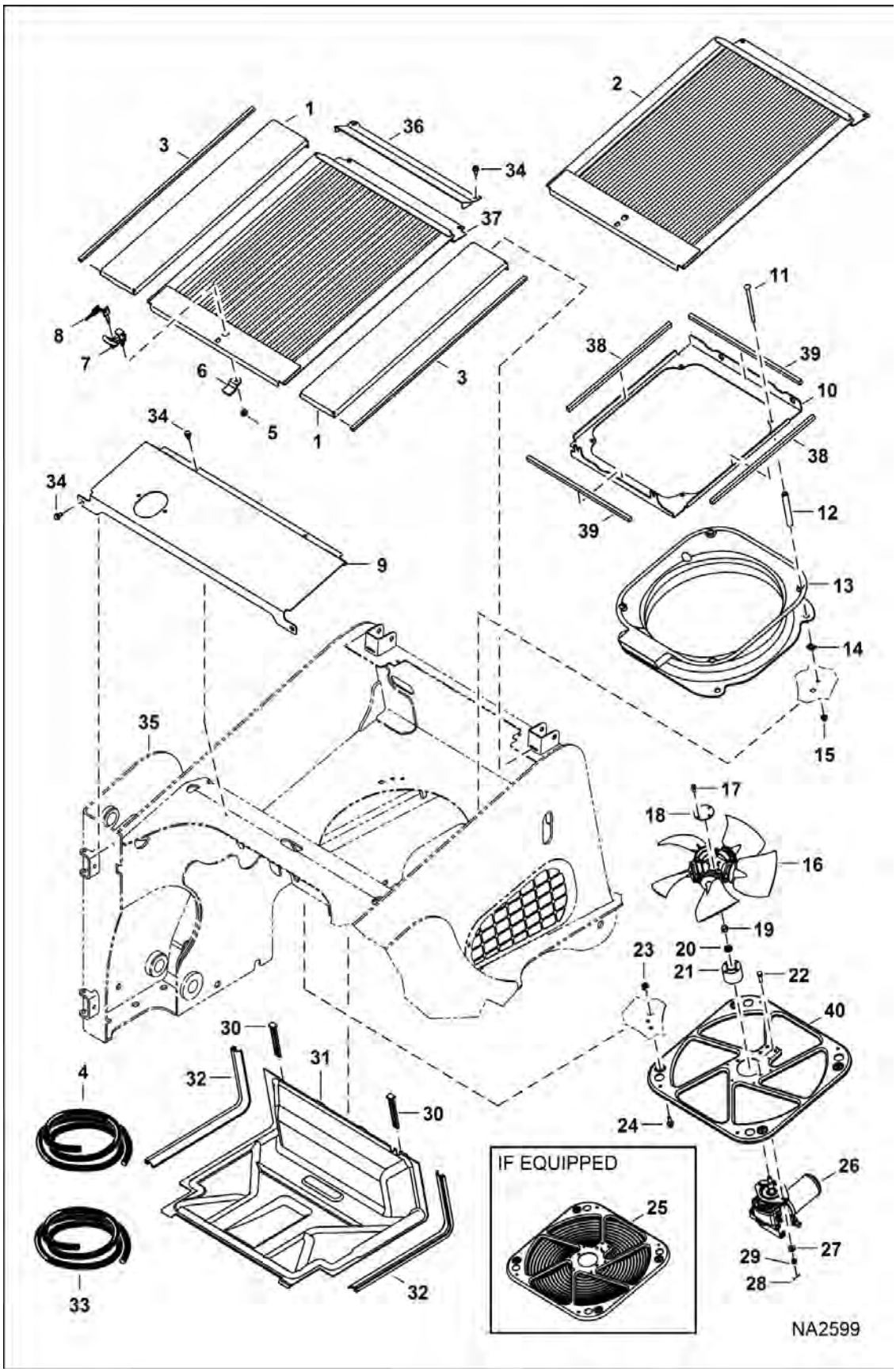

Page 393 - OSS# 6300322913 - All rights reserved by Bobcat Company - 08/04/2017 - 06:30:16 - Produced by Ken Cook Co. with mediaioff

COOLING SYSTEM (Cont'd)

(S/N A3P811001 - A3P813660, A3P911001 - A3P912295)

Ref No	Part Number	Description	Remarks	Serial Number	Qty
1	7161424	COVER, HOOD			2
2		SCREEN, RADIATOR	Order Ref. 37 - Was 7161423 [B]		1
3		SEAL	NLA - 729 mm (28.7") long - Order Ref. 4		2
4	6511855	TAPE BULK/FT 25'	self adhesive - sold per foot		x
5	26DM12	NUT			1
6	7002737	LATCH, PAWL			1
7	7002736	LATCH, DRAW			1
8	6693241	KEY (2)	ignition - single key W/O ring		1
9	7221425	COVER, ENG	Was 7161417 [A]		1
10		MOUNT, EXCHANGER OIL	See Illustration ENGINE & ATTACHING PARTS / NA2600		1
11	10C696	BOLT			4
12	7136113	BUSHING			4
13		SHROUD, FAN			1
14	6684033	NUT			4
15	97D6	NUT 10			4
16	7170674	FAN, ENG COOLANT			1
17	49C412	BOLT			4
18	7125948	PLATE			1
19	96D8	NUT			1
20	6701097	WASHER			1
21	7130834	HUB, FAN			1
22	7147826	BOLT, CROSS DRILLED			2
23	6678785	NUT, SELF RETAINING			4
24	49C616	BOLT			4
25		MOUNT, MOTOR ASSY	NLA - W/grill - Order Ref. 40 - Was 7136375 [A]		1
26		MOTOR, HYD COOLING FAN	See Illustration COOLING FAN MOTOR / MS2514		1
27	6557831	WASHER			2
28	1F316	PIN			2
29	3D6	NUT			2
30	7316774	STRAP, RUBBER	Was 7141906 [A]		4
31	7135745	DUCT, AIR			1
32		SEAL	NLA - 673,1 mm (26.5") long - Order Ref. 33		2
33	7169778	SEAL, BULK/FT	- sold per foot		x
34	84G3712	BOLT 5			4
35		MAIN FRAME	See Illustration MAIN FRAME / NA2933		1
36	7221437	SHIELD, HOOD			1
37	7161423	SCREEN, RADIATOR			1
38	7221433	SEAL, FOAM	529 mm (20.83") long		2
39		SEAL, FOAM	NLA - 523,2 mm (20.6") long - Order Ref. 38 - Was 7221435 [D]		2
40	7136376	MOUNT, MOTOR ASSY			1

Page 386 OSS# 6300322913 - All rights reserved by Bobcat Company - 08/04/2017 - 06:30:16 -- Produced by Ken Cook Co. with mediaioff

COOLING SYSTEM
(S/N A3P813661 - A3P814204 , A3P912296 - A3P912726)

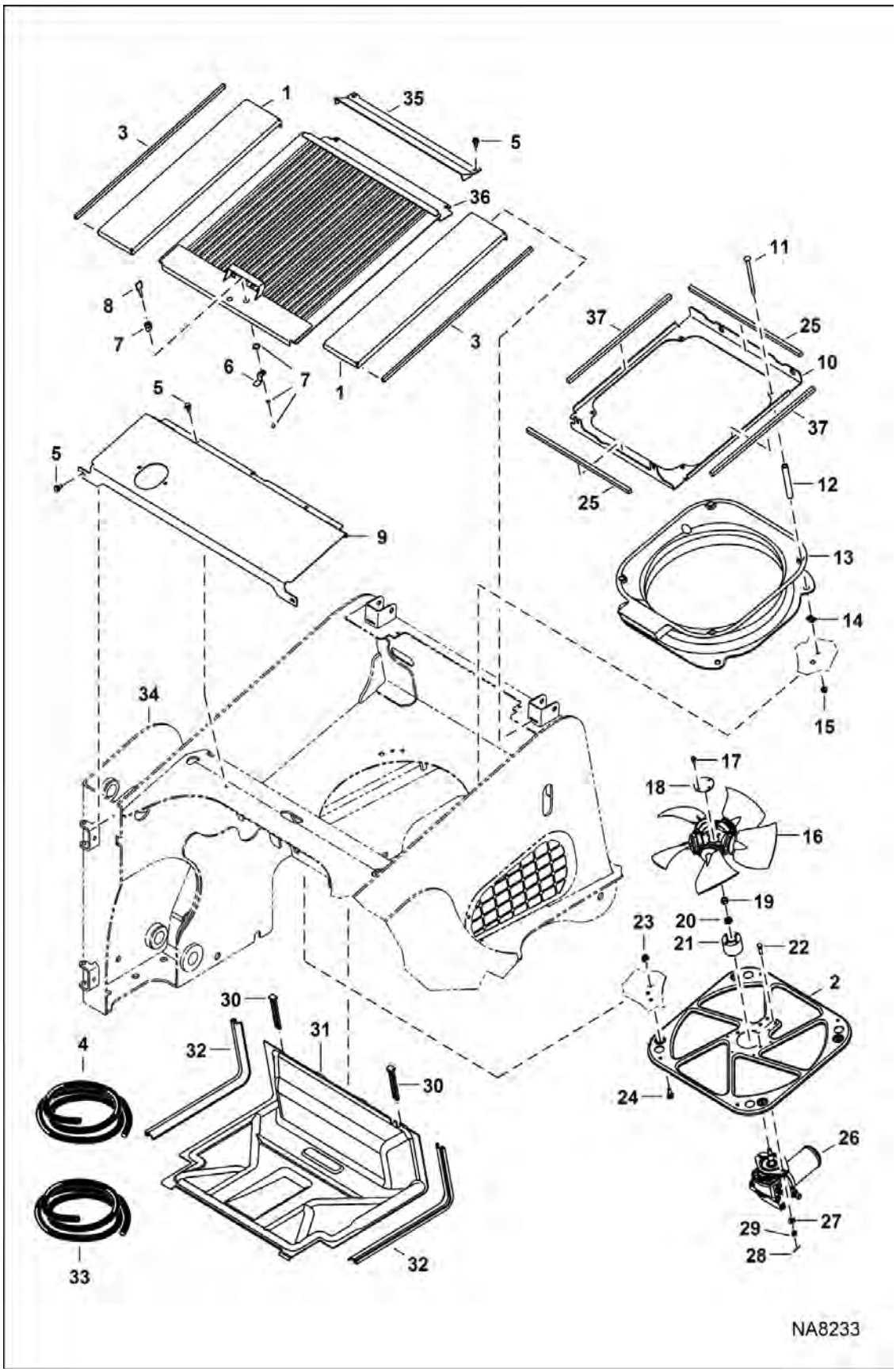

Page 395 - OSS# 6300322913 - All rights reserved by Bobcat Company - 08/04/2017 - 06:30:16 - Produced by Ken Cook Co. with mediaioff

Illustration NA8233

COOLING SYSTEM (Cont'd)

(S/N A3P813661 - A3P814204 , A3P912296 - A3P912726)

Ref No	Part Number	Description	Remarks	Serial Number	Qty
1		COVER, HOOD ASSY	See Illustration COOLING SYSTEM / NA8233 - NLA - Order 7244125 cover - Was 7227183 [A]		2
2	7136376	MOUNT, MOTOR ASSY			1
3		SEAL	NLA - 848 mm (33.39") - Order Ref. 4		2
4	6511855	TAPE BULK/FT 25'	self adhesive - sold per foot		x
5	84G3712	BOLT 5			6
6	7149056	LATCH, CAM			1
7	6670726	LOCK ONLY			1
8	6693241	KEY (2)	ignition - single key W/O ring		1
9	7221425	COVER, ENG	Was 7161417 [B,D]		1
10		MOUNT, EXCHANGER OIL	See Illustration ENGINE & ATTACHING PARTS / NA2600		1
11	10C696	BOLT			4
12	7136113	BUSHING			4
13		SHROUD, FAN	See Illustration ENGINE & ATTACHING PARTS / NA2595		1
14	6684033	NUT			4
15	97D6	NUT 10			4
16	7170674	FAN, ENG COOLANT			1
17	49C412	BOLT			4
18	7125948	PLATE			1
19	96D8	NUT			1
20	6701097	WASHER			1
21	7130834	HUB, FAN			1
22	7147826	BOLT, CROSS DRILLED			2
23	6678785	NUT, SELF RETAINING			4
24	49C616	BOLT			4
25		SEAL, FOAM			2
26		MOTOR, HYD COOLING FAN	See Illustration COOLING FAN MOTOR / MS2514		1
27	6557831	WASHER			2
28	1F316	PIN			2
29	3D6	NUT			2
30	7316774	STRAP, RUBBER	Was 7141906 [A]		4
31	7135745	DUCT, AIR			1
32		SEAL	NLA - 673 mm (26.5") - Order Ref. 33		2
33	7169778	SEAL, BULK/FT	- sold per foot		x
34		MAIN FRAME			1
35	7221437	SHIELD, HOOD			1
36	7227149	SCREEN, EXCHANGER	Was 7153365 [B,D]		1
37	7221433	SEAL, FOAM	529 mm (20.83") long		2

Page 388 OSS# 6300322913 - All rights reserved by Bobcat Company - 08/04/2017 - 06:30:16 - Produced by Ken Cook Co. with mediaoff

COOLING SYSTEM
(S/N A3P814205 & Above, A3P912727 & Above)

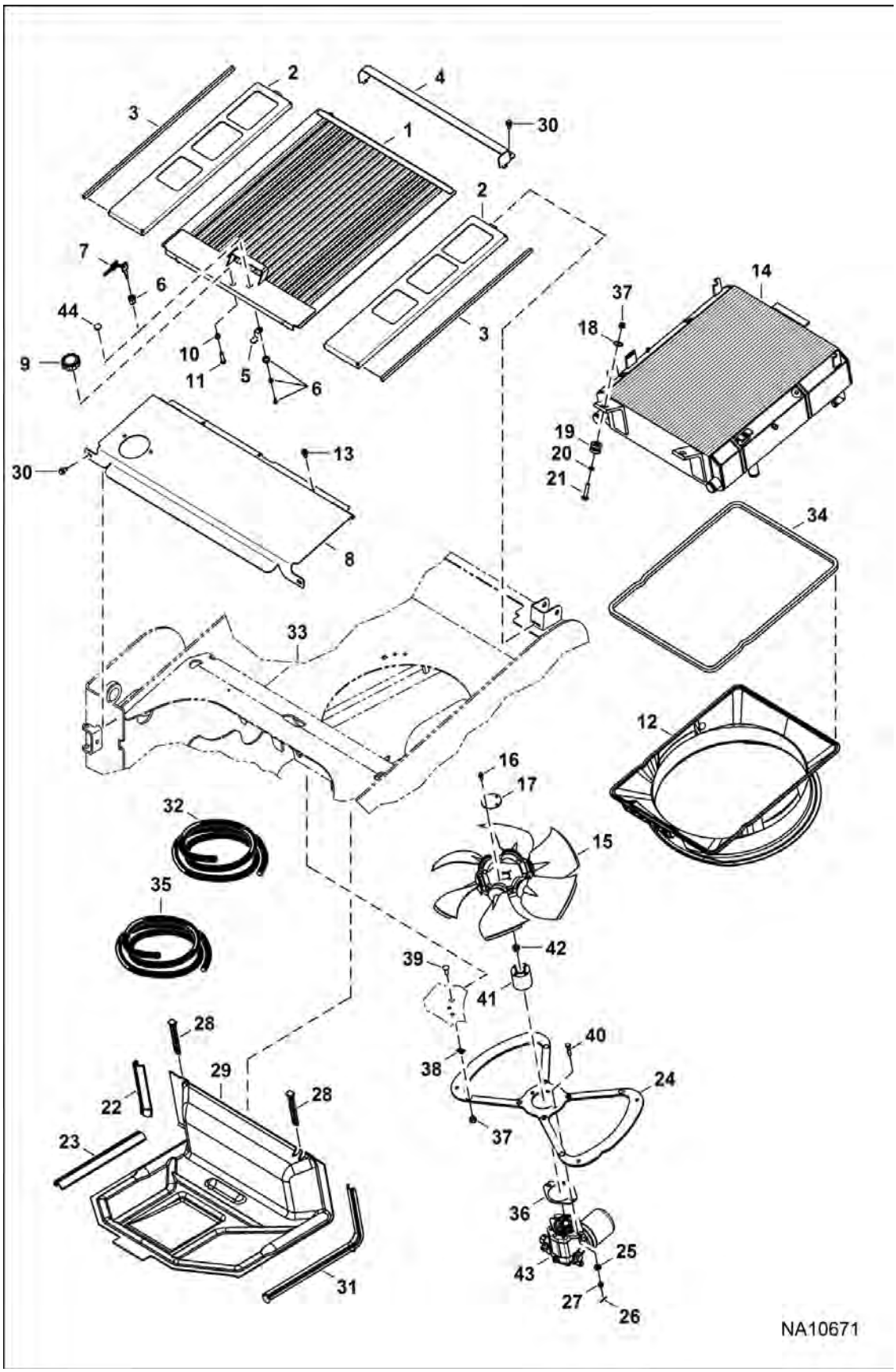

Page 397 - OSS# 6300322913 - All rights reserved by Bobcat Company - 08/04/2017 - 06:30:16 - Produced by Ken Cook Co. with mediaioff

COOLING SYSTEM (Cont'd)

(S/N A3P814205 & Above, A3P912727 & Above)

Ref No	Part Number	Description	Remarks	Serial Number	Qty
1	7227149	SCREEN, EXCHANGER			1
2	7244125	COVER, HOOD ASSY			2
3		SEAL	NLA - 729 mm (28.7") long - Order Ref. 34		2
4	7248835	SHIELD, HOOD			1
5	7149056	LATCH, CAM			1
6	6670726	LOCK ONLY			1
7	6693241	KEY (2)	ignition - single key W/O ring		1
8	7221425	COVER, ENG	Was 7246313 [D]		1
9	6684932	HANDLE, CLAMPING			1
10	61D6	NUT 5			1
11	7213188	SCREW			1
12	7243138	SHROUD, FAN			1
13	84G3712	BOLT 5			8
14	7265451	EXCHANGER, OIL WATER AIR			1
15	7250831	FAN, COOLING			1
16	49C412	BOLT			4
17	7125948	PLATE			1
18	6737388	WASHER			2
19	7244210	MOUNT, ISOLATOR			2
20	6674894	NUT, LOCK			2
21	7255609	BOLT			2
22	7313334	SEAL DUCT	Was bulk seal [A]		1
23	7313335	SEAL DUCT	Was bulk seal [A]		1
24	7244196	MOUNT			1
25	25E17	WASHER 5			2
26	1F316	PIN			2
27	3D6	NUT			2
28	7316774	STRAP, RUBBER	Was 7141906 [A]		4
29	7227907	DUCT, AIR	W/O insulation mounting holes	A3P811001 & Above	1
				A3P911001 - A3P913089	1
29	7313341	DUCT AIR	W/ insulation mounting holes	A3P913090 & Above	1
30	84G3712	BOLT 5			8
31	7313333	SEAL DUCT	Was bulk seal [A]		1
32	6511855	TAPE BULK/FT 25'	self adhesive - sold per foot		x
33		MAIN FRAME			1
34		SEAL, FOAM	NSS - 2228.9 mm (87.75") long - Order Ref. 37		1
35	7243938	SEAL, BULK	sold per foot		x
36	7242068	GASKET			1
37	89D6	NUT			6
38	6684033	NUT			4
39	10C616	BOLT 10			4
40	7249974	BOLT			2

Page 390 OSS# 6300322913 - All rights reserved by Bobcat Company - 08/04/2017 - 06:30:16 - Produced by Ken Cook Co. with mediaioff

COOLING SYSTEM (Cont'd)
(S/N A3P814205 & Above, A3P912727 & Above)

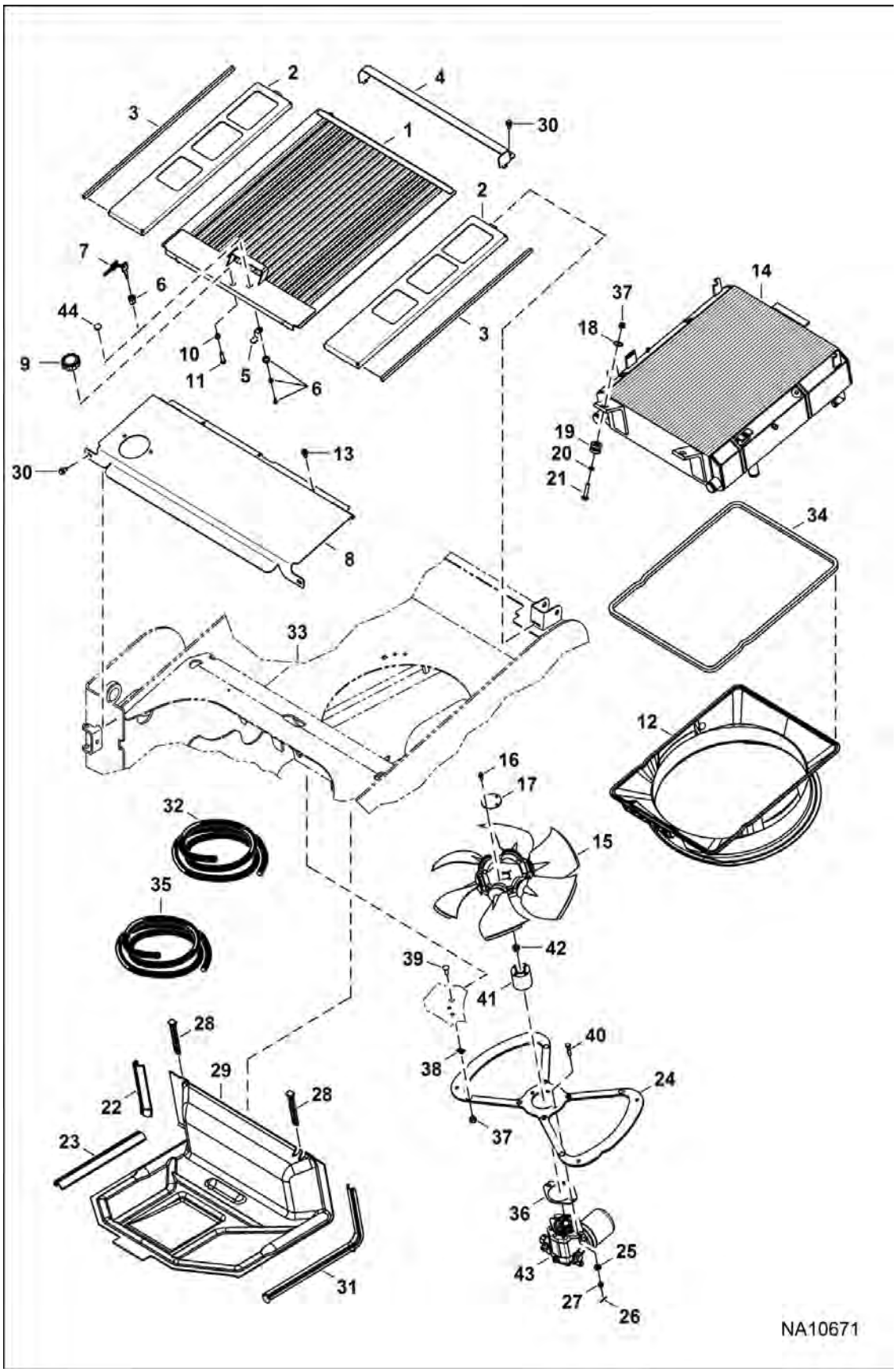

Page 399 - OSS# 6300322913 - All rights reserved by Bobcat Company - 08/04/2017 - 06:30:16 - Produced by Ken Cook Co. with mediaioff

COOLING SYSTEM (Cont'd)
(S/N A3P814205 & Above, A3P912727 & Above)

Ref No	Part Number	Description	Remarks	Serial Number	Qty
41	7249438	HUB			1
42	7240968	NUT			1
43		MOTOR, FAN DRIVE			1
44	7025310	PLUG, NYLON			1

Page 1804 OSS# 6300322913 - All rights reserved by Bobcat Company - 08/04/2017 - 06:30:16 - Produced by Ken Cook Co. with mediaioff

ENGINE & ATTACHING PARTS

(Radiator Water Exchanger)

(S/N A3P811001 - A3P814204, A3P911001 - A3P912726)

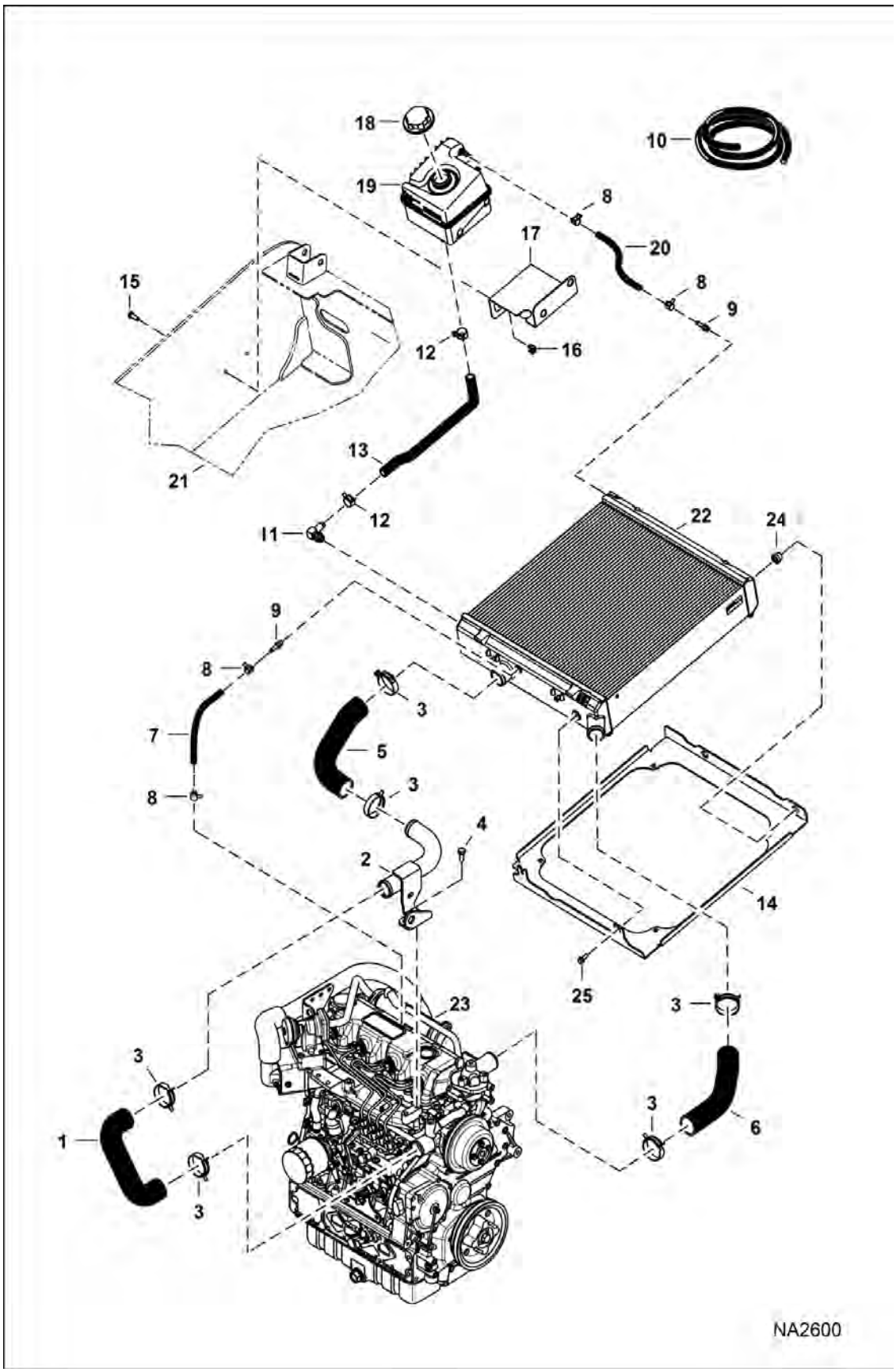

Page 491 - OSS# 6300322913 - All rights reserved by Bobcat Company - 08/04/2017 - 06:30:16 - Produced by Ken Cook Co. with mediaioff

ENGINE & ATTACHING PARTS (Cont'd)

(Radiator Water Exchanger)

(S/N A3P811001 - A3P814204, A3P911001 - A3P912726)

Ref No	Part Number	Description	Remarks	Serial Number	Qty
1	7143880	HOSE, WATER FORMED			1
2	7154005	TUBE, COOLING			1
3	5HM55	CLAMP			6
4	6719825	BOLT			2
5	7143881	HOSE, WATER FORMED			1
6	7149473	HOSE, WATER FORMED			1
7		HOSE	NLA - 231 mm (9.1") long - Order Ref. 10		1
8	5HM14	CLAMP			4
9	6734090	ADAPTER			2
10	6577822	HOSE, BULK	sold per foot		x
11	6680952	FITTING 90 DEG BARB			1
11	79K8	O RING 10			1
12	5HM23	CLAMP			2
13	7170588	HOSE, WATER FORMED			1
14		MOUNT, EXCHANGER OIL	See Illustration RADIATOR/COOLER ASSEMBLY / NA2506		1
14		MOUNT, EXCHANGER OIL	See Illustration RADIATOR/COOLER ASSEMBLY / NA6372		1
15	53C516	BOLT			2
16	6678765	NUT			2
17	7144265	MOUNT, TANK			1
18	6733429	CAP			1
19	7137747	TANK, EXPANSION			1
20		HOSE	NLA - 203 mm (8") long - Order Ref. 10		1
21		MAIN FRAME	See Illustration MAIN FRAME / NA2933		1
22		EXCHANGER, OIL COOLER	See Illustration RADIATOR/COOLER ASSEMBLY / NA2506		1
23		ENGINE	See Illustration ENGINE & GASKET KITS / NA5149		1
24	7208181	BUSHING			2
25	45C512	BOLT			2

Page 1 of 2 OSS# 6300322913 - All rights reserved by Bobcat Company - 08/04/2017 - 06:30:16 - Produced by Ken Cook Co. with mediaoff

ENGINE & ATTACHING PARTS

(Radiator Water Exchanger)
(S/N A3P814205 & Above, A3P912727 & Above)

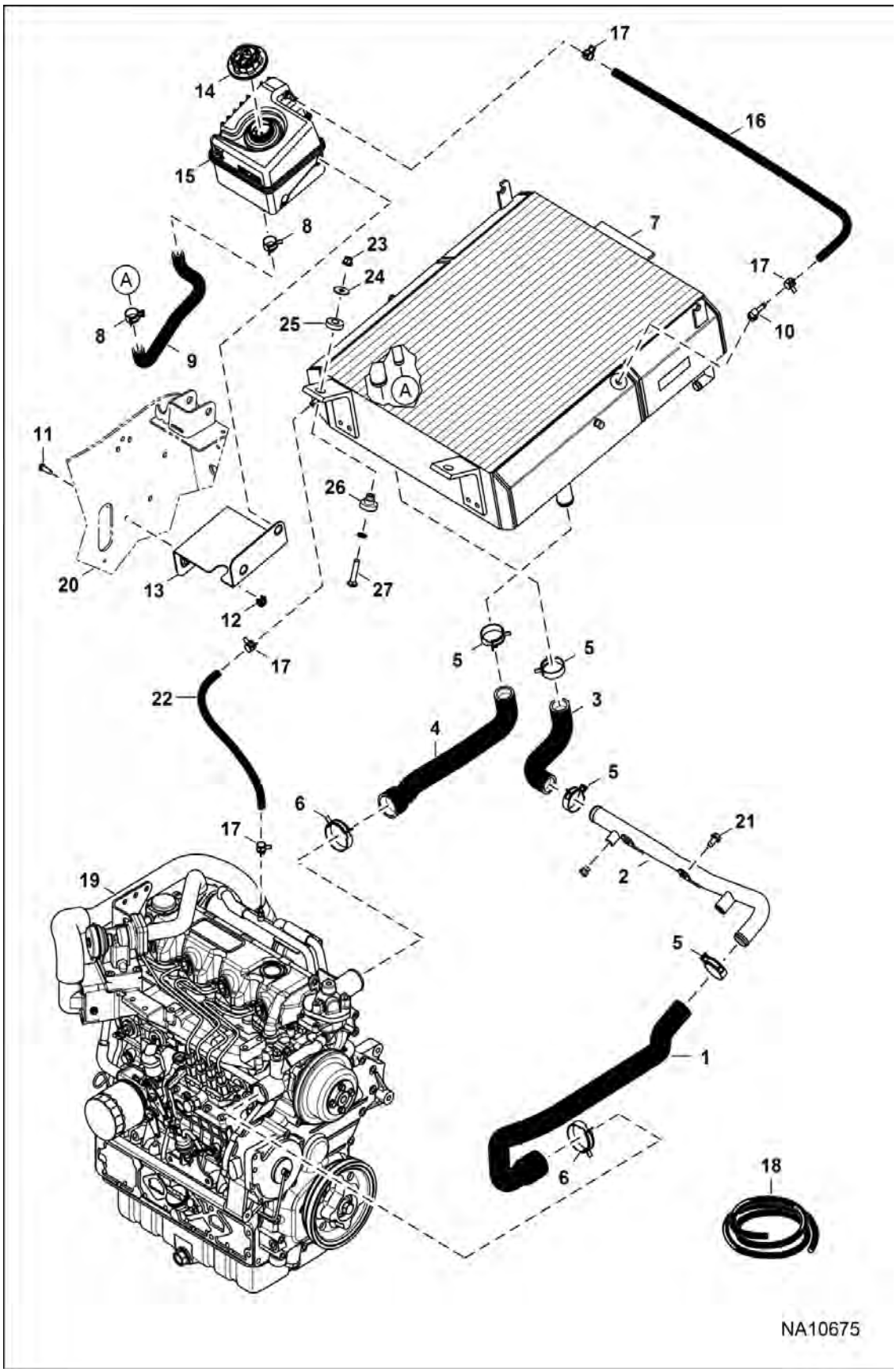

Page 403 - OSS# 6300322913 - All rights reserved by Bobcat Company - 08/04/2017 - 06:30:16 - Produced by Ken Cook Co. with mediaioff

ENGINE & ATTACHING PARTS (Cont'd)

(Radiator Water Exchanger)

(S/N A3P814205 & Above, A3P912727 & Above)

Ref No	Part Number	Description	Remarks	Serial Number	Qty
1	7244574	HOSE, WATER FORMED			1
2	7243104	TUBE, COOLING			1
3	7226475	HOSE, WATER FORMED			1
4	7244573	HOSE, WATER FORMED			1
5	5HM42	HOSECLAMP			4
6	5HM55	CLAMP			2
7	7265453	EXCHANGER, OIL WATER	See Illustration HYDROSTATIC CIRCUITRY / NA10259		1
8	5HM24	CLAMP			2
9	7243352	HOSE, WATER FORMED			1
10	7259282	FITTING, ELBOW			1
11	25G514	BOLT			2
12	6678765	NUT			2
13	7144265	MOUNT, TANK			1
14	6733429	CAP			1
15	7137747	TANK, EXPANSION			1
16		HOSE	NLA - 940 mm (37") long - Order Ref. 18		1
17	5HM14	CLAMP			4
18	6577822	HOSE, BULK	sold per foot		x
19		ENGINE			1
20		MAIN FRAME			1
21	84G3712	BOLT 5			1
22		HOSE	NLA - 394 mm (15.5") long - Order Ref. 18		1

Page 1 of 1 OSS# 6300322913 - All rights reserved by Bobcat Company - 08/04/2017 - 06:30:16 - Produced by Ken Cook Co. With mediaoff

ENGINE & ATTACHING PARTS

(Air Cleaner & Muffler)

(S/N A3P811001 - A3P812129, A3P911001 - A3P911320)

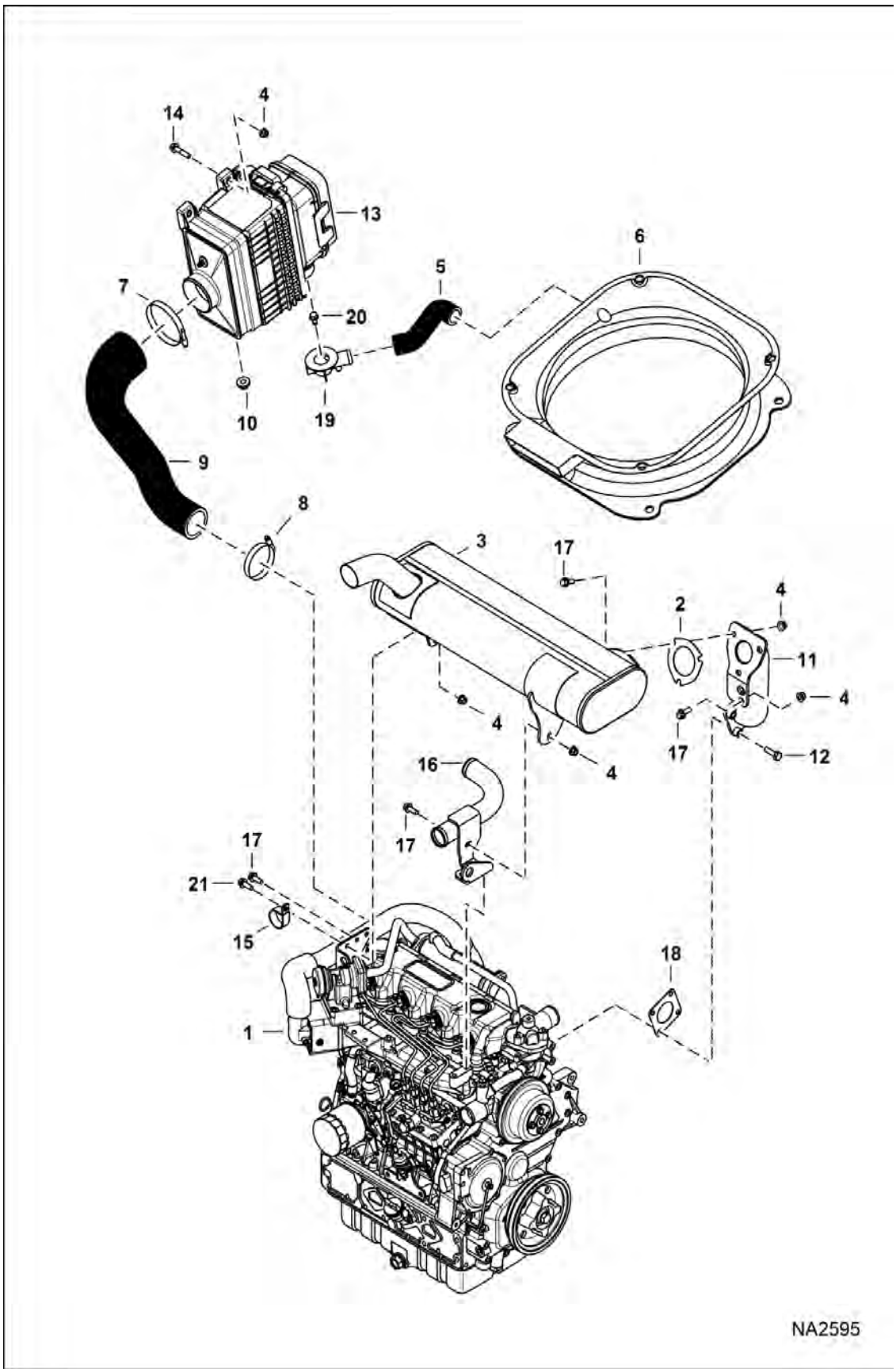

Page 405 - OSS# 6300322913 - All rights reserved by Bobcat Company - 08/04/2017 - 06:30:16 - Produced by Ken Cook Co. with mediaioff

Illustration NA2595

ENGINE & ATTACHING PARTS (Cont'd)

(Air Cleaner & Muffler)

(S/N A3P811001 - A3P812129, A3P911001 - A3P911320)

Ref No	Part Number	Description	Remarks	Serial Number	Qty
1		ENGINE	See Illustration ENGINE & GASKET KITS / NA5149		1
2	6732032	GASKET			1
3	7175098	MUFFLER, EXHAUST			1
4	89D6	NUT			9
5	7154198	HOSE, AIR FORMED			1
6	7135715	SHROUD, FAN			1
7	42HC425	CLAMP, HOSE			1
8	42HC325	CLAMP			1
9	7154197	HOSE, AIR INTAKE			1
10	7178214	GROMMET			1
11	7141726	TUBE, EXHAUST			1
12	5CM1035	BOLT			4
13		FILTER, AIR CLEANER ASSY	See Illustration AIR CLEANER / NA1596		1
14	35C628	BOLT			2
15	30H82	CLAMP INSULATED			1
16	7154005	TUBE, COOLING			1
17	35C616	BOLT 5			6
18	7102747	GASKET			1
19		CONNECTOR, FILTER	See Illustration AIR CLEANER / NA1596		1
20	84G3712	BOLT 5			1
21	35C620	BOLT 5			1

Page 398 OSS# 6300322913 - All rights reserved by Bobcat Company - 08/04/2017 - 06:30:16 - Produced by Ken Cook Co. with mediaoff

ENGINE & ATTACHING PARTS

(Air Cleaner & Muffler)

(S/N A3P812130 & Above, A3P911321 & Above)

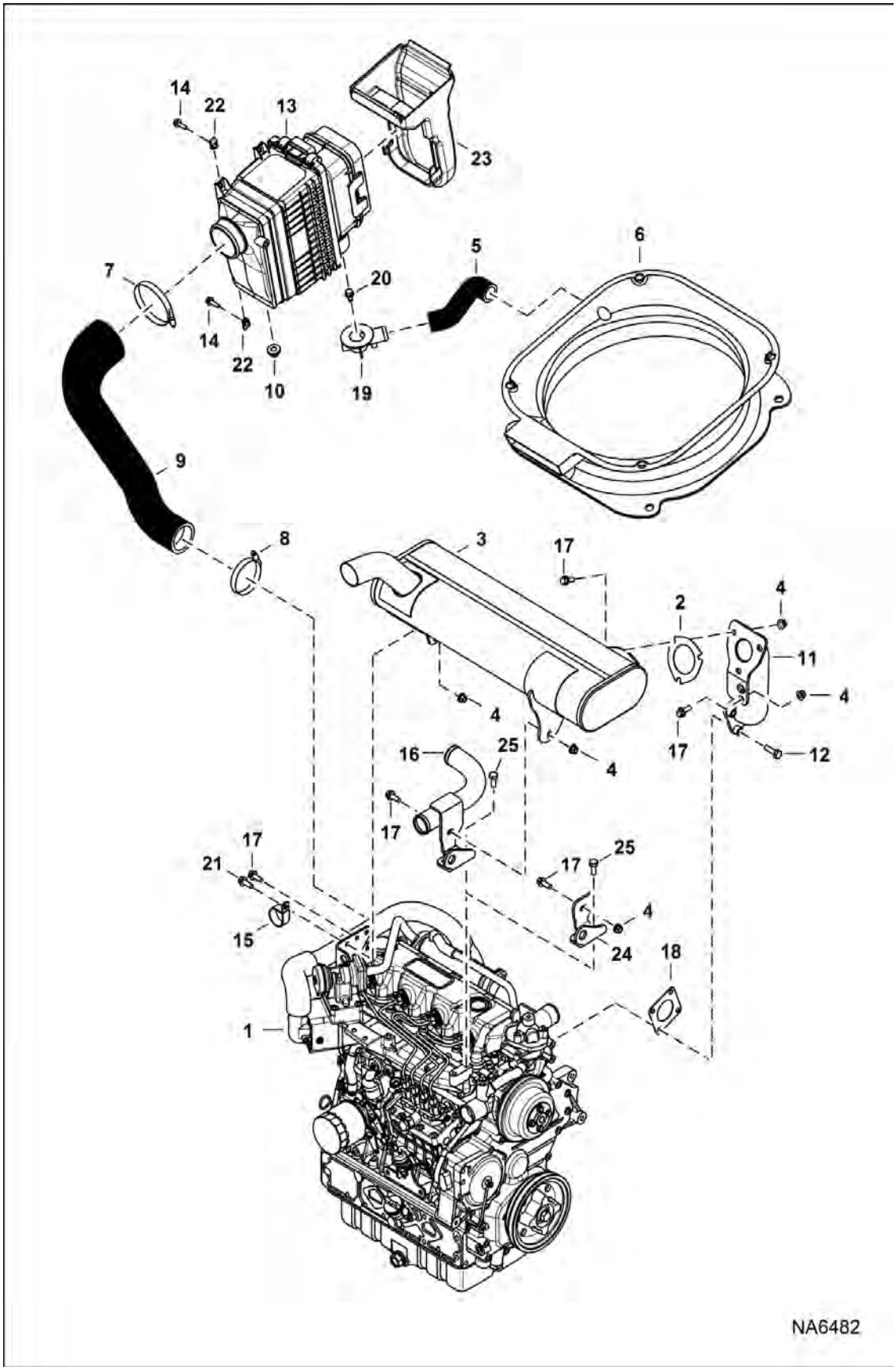

Page 407 - OSS# 6300322913 - All rights reserved by Bobcat Company - 08/04/2017 - 06:30:16 - Produced by Ken Cook Co. with mediaioff

ENGINE & ATTACHING PARTS (Cont'd)

(Air Cleaner & Muffler)

(S/N A3P812130 & Above, A3P911321 & Above)

Ref No	Part Number	Description	Remarks	Serial Number	Qty
1		ENGINE	See Illustration ENGINE & GASKET KITS / NA5149		1
2	6732032	GASKET			1
3	7175098	MUFFLER, EXHAUST	Was 7141744 [A]		1
4	89D6	NUT			7
5	7154198	HOSE, AIR FORMED		A3P812130 -	1
				A3P911321 -	1
5	7273399	HOSE, AIR FORMED	Was 7243351 [A]	A3P8 & Above	1
				A3P9 & Above	1
6	7135715	SHROUD, FAN			1
7	42HC425	CLAMP, HOSE			1
8	42HC325	CLAMP			1
9	7214591	HOSE, AIR FORMED			1
10	7178214	GROMMET			1
11	7141726	TUBE, EXHAUST			1
12	5CM1035	BOLT			4
13	7286651	FILTER, AIR	See Illustration AIR CLEANER / NA6481 Was 7197235 [A]		1
14	29CM830	CAPSCREW	Was 29CM825 [B]		4
15	30H82	CLAMP INSULATED			1
16	7154005	TUBE, COOLING			1
17	35C616	BOLT 5			6
18	7102747	GASKET			1
19	7178213	CONNECTOR, FILTER			1
20	84G3712	BOLT 5			1
21	35C620	BOLT 5			1
22		NUT, J	NLA		4
23	7261162	BOOT		A3P8 & Above	1
				A3P9 & Above	1
24	7235325	MOUNT		A3P8 & Above	1
				A3P9 & Above	1
25	6719825	BOLT		A3P8 & Above	2
				A3P9 & Above	2

Page 400 OSS# 6300322913 - All rights reserved by Bobcat Company - 08/04/2017 - 06:30:16 - Produced by Ken Cook Co. with mediaioff

ENGINE & ATTACHING PARTS

(Belt Drive)

(S/N A3P811001 - A3P812129)

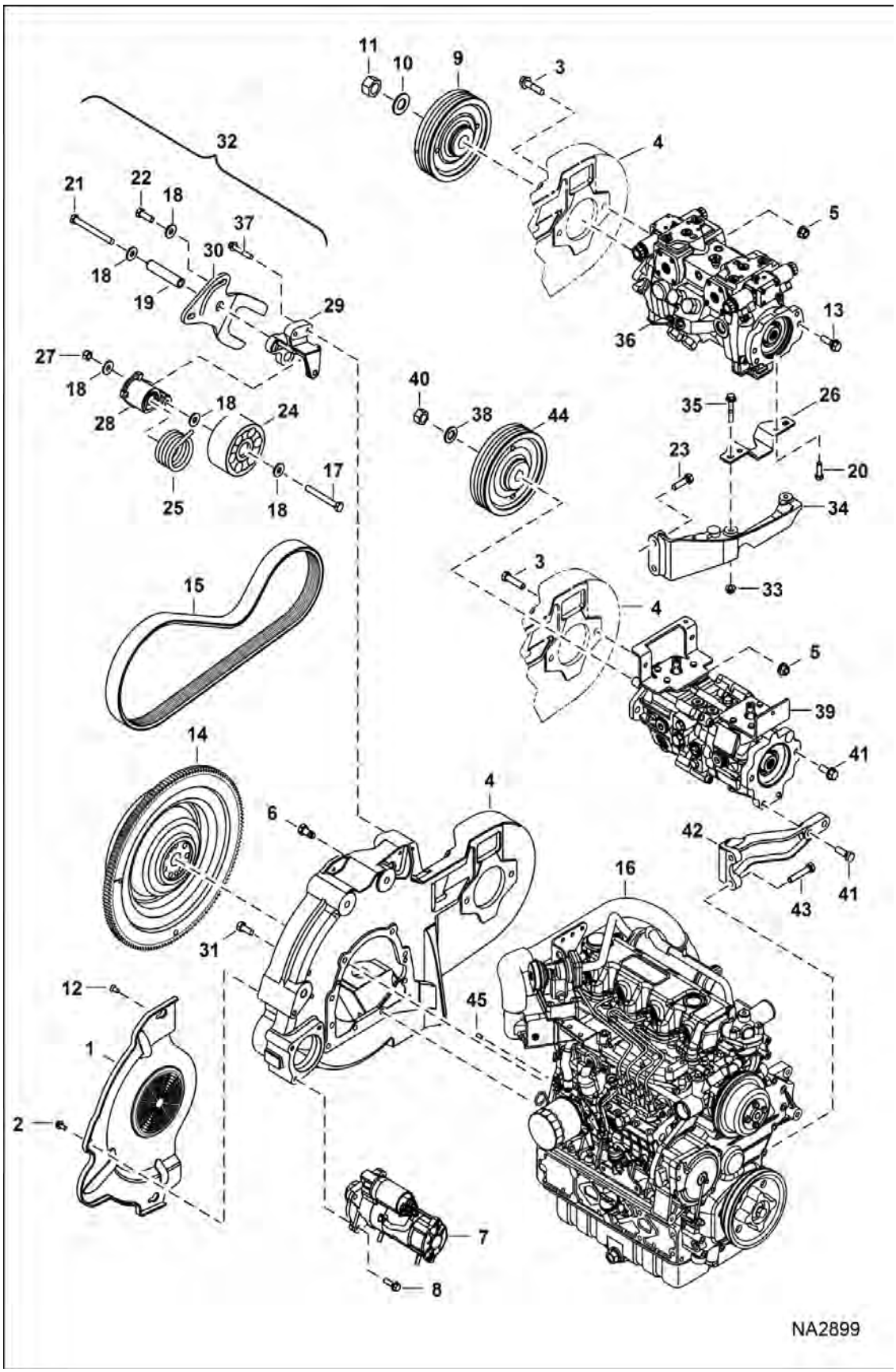

Page 409 - OSS# 6300322913 - All rights reserved by Bobcat Company - 08/04/2017 - 06:30:16 - Produced by Ken Cook Co. with mediaioff

Illustration NA2899

ENGINE & ATTACHING PARTS (Cont'd)

(Belt Drive)

(S/N A3P811001 - A3P812129)

Ref No	Part Number	Description	Remarks	Serial Number	Qty
1	7167651	SHIELD, BELT			1
2	59CM816	BOLT			5
3	31C832	BOLT			2
4	7141037	MOUNT, ENG/PUMP			1
5	83D8	NUT 5			3
6	6730894	BOLT			2
7		STARTER	See Illustration STARTER / B16488R		1
8	45C620	BOLT			3
9	7139655	PULLEY, PUMP HYD	SJC		1
10	6805550	WASHER			1
11	96D16	NUT			1
12	7155238	BOLT			2
13	7131273	SCREW			2
14	7140925	FLYWHEEL, ENG ASSY	W/ring gear		1
14	6665222	GEAR, RING STARTER			1
15	7197894	BELT, DRIVE			1
16		ENGINE	See Illustration ENGINE & GASKET KITS / NA5149		1
17	7CM12100	BOLT			1
18	7152658	WASHER			5
19	7152605	SLEEVE			1
20	6688003	SCREW			2
21	55CM12120	BOLT			1
22	55CM1235	BOLT			1
23	7135124	SCREW			4
24	7167165	TENSIONER WHEEL			1
25	7145358	SPRING			1
26	7010368	COVER	Was 7194123 [A]		1
27	53DM12	NUT			1
28	7274780	ARM, TENSIONER	Was 7167164 [A]		1
29	7131211	MOUNT			1
30	7269058	ARM, IDLER	Was 7174407 [A]		1
31	6719828	BOLT			10
32	7269057	ASSY, IDLER	Ref. 17-19, 21, 22, 24, 25 & 27-30 - Was 7141788 [A]		1
33	43DM10	NUT			2
34	7141475	MOUNT, PUMP			1
35	59CM1060	SCREW			2
36		PUMP, HYD	See Illustration HYDROSTATIC PUMP/GEAR PUMP / NA1309 SJC		1
37	49C636	BOLT			2
38	6576033	WASHER 5			1
39		PUMP, HYD	See Illustration HYDROSTATIC PUMP/GEAR PUMP / NA1309 - manual controls, AHC & ACS		1
40	96D12	NUT			1
41	45C828	BOLT	Was 45C824 [B]		4

Page Modified OSS# 6300322913 - All rights reserved by Bobcat Company - 08/04/2017 - 06:30:16 - Produced by Ken Cook Co. with mediaioff

ENGINE & ATTACHING PARTS (Cont'd)

(Belt Drive)

(S/N A3P811001 - A3P812129)

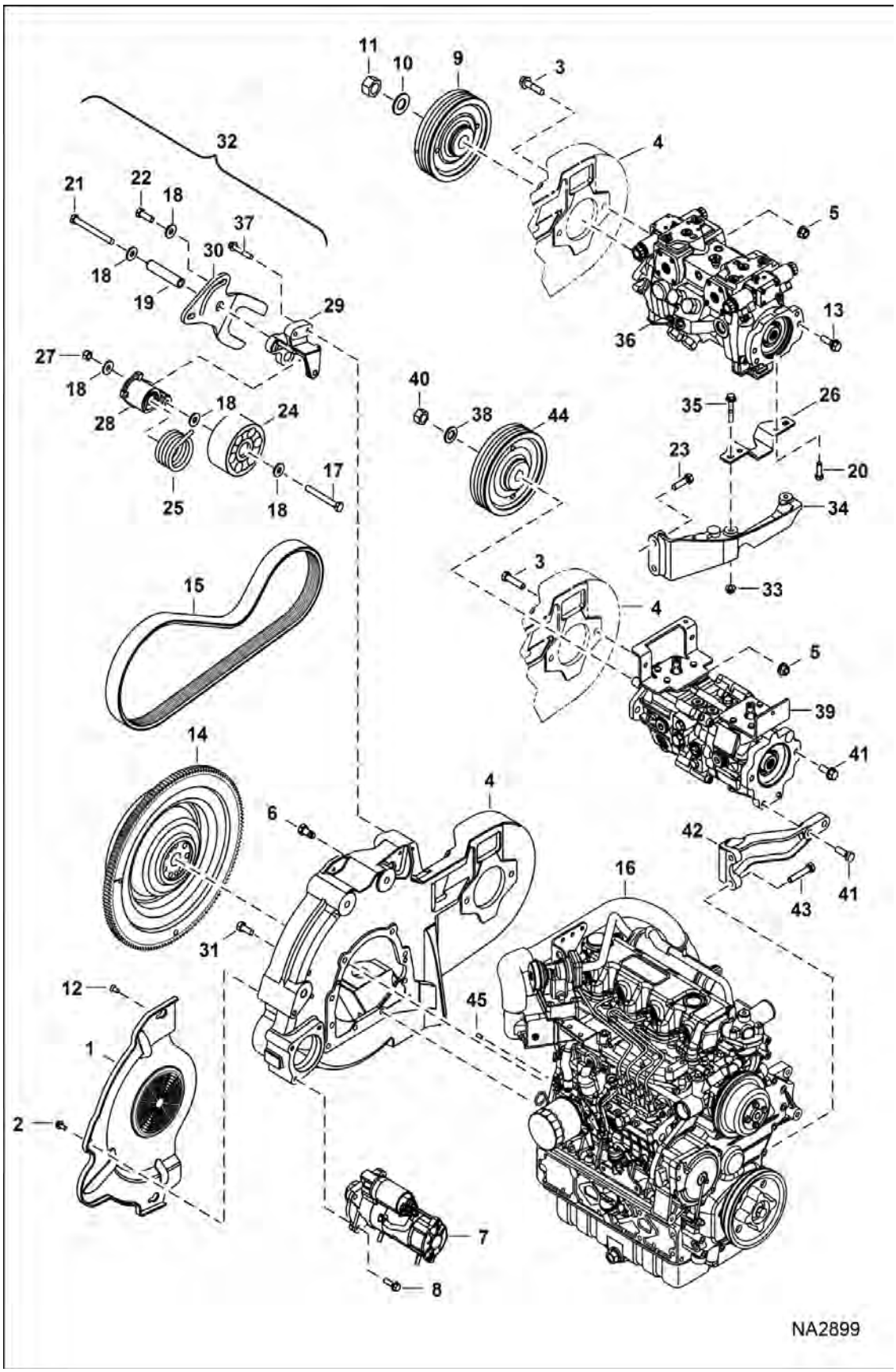

Page 411 - OSS# 6300322913 - All rights reserved by Bobcat Company - 08/04/2017 - 06:30:16 - Produced by Ken Cook Co. with mediaioff

Illustration NA2899

ENGINE & ATTACHING PARTS (Cont'd)

(Belt Drive)

(S/N A3P811001 - A3P812129)

Ref No	Part Number	Description	Remarks	Serial Number	Qty
42	7141600	MOUNT			1
43	7134822	BOLT	pre-applied thread lock		2
44	7141909	PULLEY, PUMP HYD	manual controls, AHC & ACS		1
45	23JM0820	PIN			2

Page 124 OSS# 6300322913 - All rights reserved by Bobcat Company - 08/04/2017 - 06:30:16 - Produced by Ken Cook Co. with mediaioff

ENGINE & ATTACHING PARTS

(Belt Drive)

(S/N A3P812130 & Above)

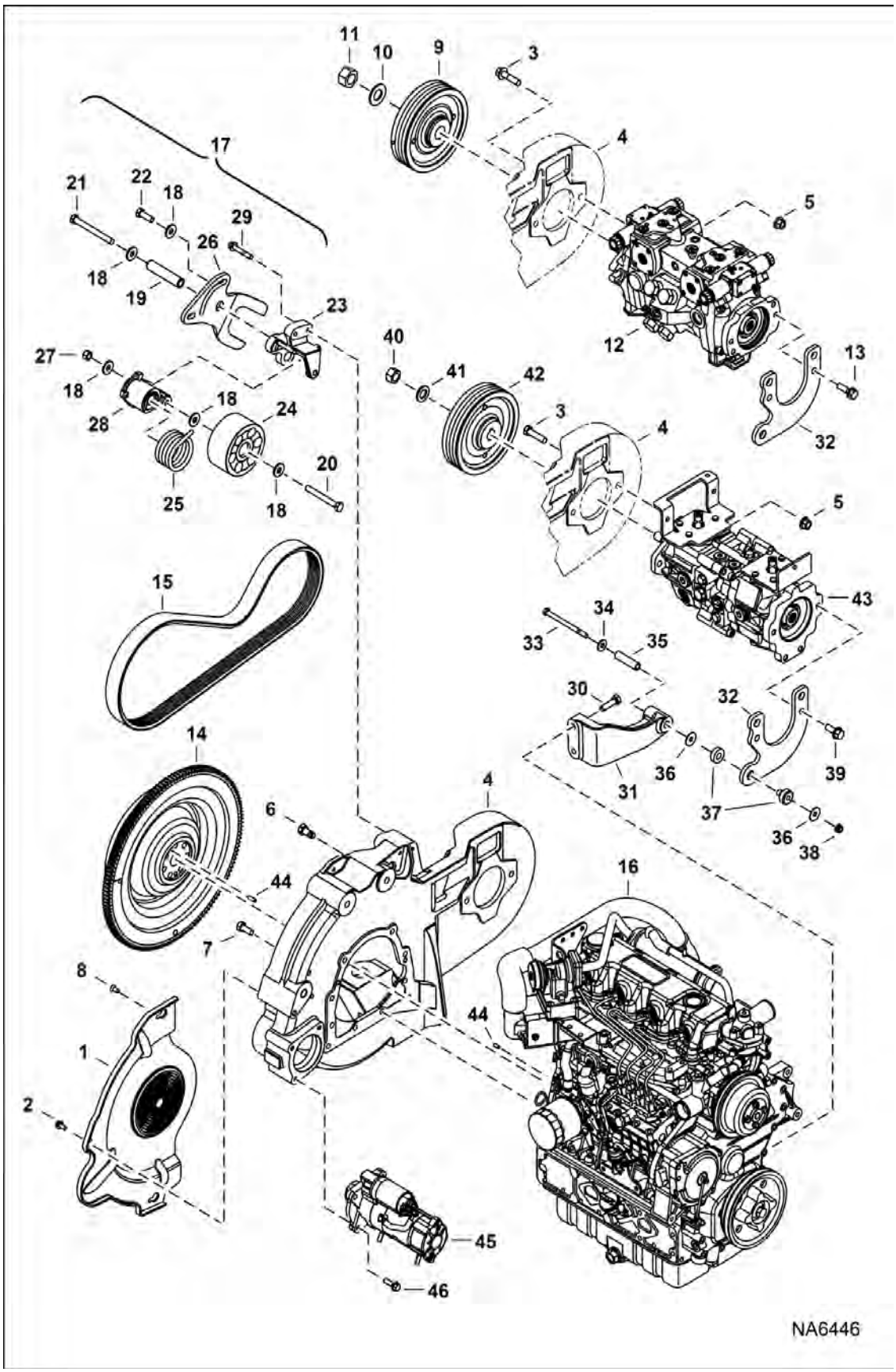

Page 413 - OSS# 6300322913 - All rights reserved by Bobcat Company - 08/04/2017 - 06:30:16 - Produced by Ken Cook Co. with mediaioff

ENGINE & ATTACHING PARTS (Cont'd)

(Belt Drive)

(S/N A3P812130 & Above)

Ref No	Part Number	Description	Remarks	Serial Number	Qty
1	7167651	SHIELD, BELT			1
2	59CM816	BOLT			5
3	31C832	BOLT			2
4	7204291	MOUNT, ENG/PUMP			1
5	83D8	NUT 5			3
6	6730894	BOLT			2
7	6719828	BOLT			10
8	7155238	BOLT			2
9	7139655	PULLEY, PUMP HYD	SJC		1
10	6805550	WASHER			1
11	96D16	NUT			1
12		PUMP, HYD	See Illustration HYDROSTATIC PUMP/GEAR PUMP / NA1309 - SJC		1
13	7131273	SCREW			2
14	7140925	FLYWHEEL, ENG ASSY	W/ring gear		1
14	6665222	GEAR, RING STARTER			1
15	7197894	BELT, DRIVE			1
16	6692834	ENG, V3800DIT 92 HP EPA T3 / EU STG IIIA	See Illustration ENGINE & GASKET KITS / NA5149		1
16	6692834REM	ENG, V3800DIT 92 HP EPA T3 / EU STG IIIA			1
17	7269057	ASSY, IDLER	Ref. 18-28 - Was 7141788 [A]		1
18	7152658	WASHER			5
19	7152605	SLEEVE			1
20	7CM12100	BOLT			1
21	55CM12120	BOLT			1
22	55CM1235	BOLT			1
23	7131211	MOUNT			1
24	7167165	TENSIONER WHEEL			1
25	7145358	SPRING			1
26	7269058	ARM, IDLER	Was 7174407 [A]		1
27	53DM12	NUT			1
28	7274780	ARM, TENSIONER	Was 7167164 [A]		1
29	49C636	BOLT			2
30	7135124	SCREW			4
31	7196558	MOUNT, PUMP			1
32	7193687	BRACKET, MOUNTING			1
33	17C680	BOLT			1
34	27E6	WASHER 5			1
35	7147350	SPACER, TUBE			1
36	6737388	WASHER			2

Page 1 of 1 OSS# 6300322913 - All rights reserved by Bobcat Company - 08/04/2017 - 06:30:16 - Produced by Ken Cook Co. with mediaioff

ENGINE & ATTACHING PARTS (Cont'd)

(Belt Drive)

(S/N A3P812130 & Above)

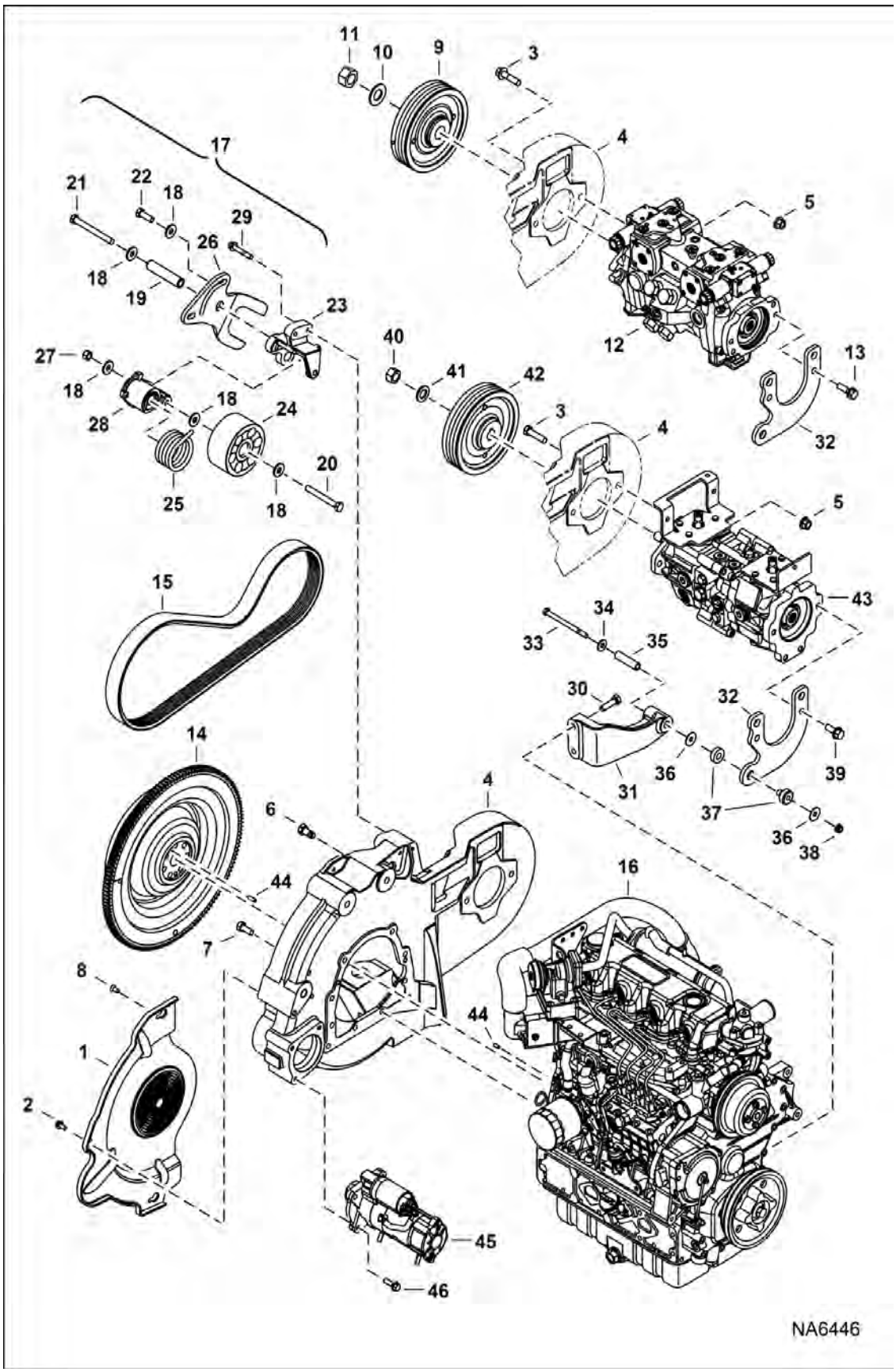

Page 415 - OSS# 6300322913 - All rights reserved by Bobcat Company - 08/04/2017 - 06:30:16 - Produced by Ken Cook Co. with mediaioff

Illustration NA6446

ENGINE & ATTACHING PARTS (Cont'd)

(Belt Drive)

(S/N A3P812130 & Above)

Ref No	Part Number	Description	Remarks	Serial Number	Qty
37	7149357	MOUNT, LOAD ISOLATOR			1
38	83D6	NUT 5			1
39	45C828	BOLT	Was 45C824 [B]		4
40	96D12	NUT			1
41	6576033	WASHER 5			1
42	7141909	PULLEY, PUMP HYD	manual contols, AHC & ACS		1
43		PUMP, HYD	See Illustration HYDROSTATIC PUMP/GEAR PUMP / NA1309 - manual controls, AHC & ACS		1
44	23JM0820	PIN			2
45		STARTER	See Illustration STARTER / B16488R		1
46	45C620	BOLT			3

Page Built: OSS# 6300322913 - All rights reserved by Bobcat Company - 08/04/2017 - 06:30:16 - Produced by Ken Cook Co. with mediaioff

ENGINE & ATTACHING PARTS
(Engine Mounts)

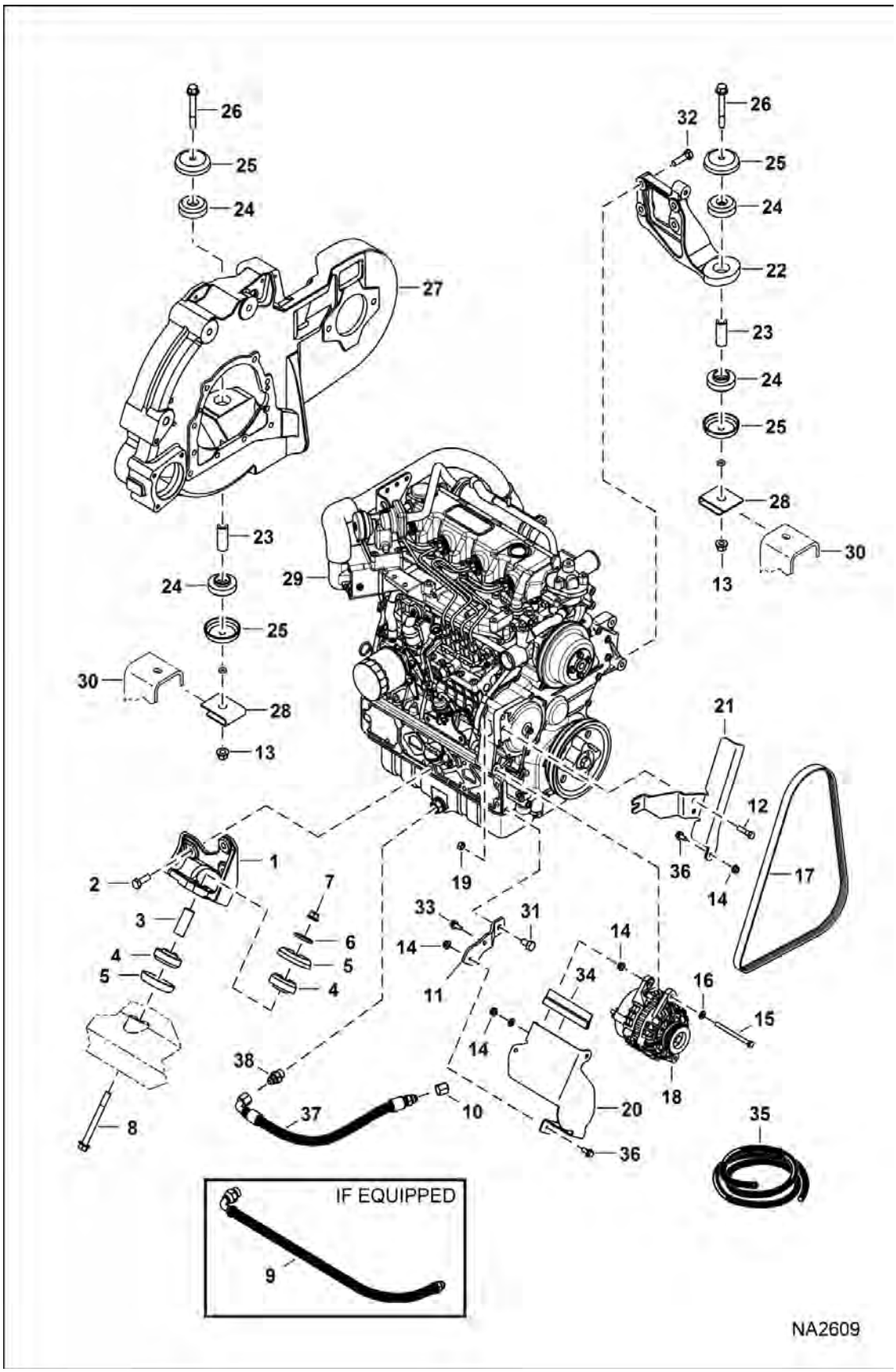

Page 417 - OSS# 6300322913 - All rights reserved by Bobcat Company - 08/04/2017 - 06:30:16 - Produced by Ken Cook Co. with mediaioff

ENGINE & ATTACHING PARTS (Cont'd)

(Engine Mounts)

Ref No	Part Number	Description	Remarks	Serial Number	Qty
1	7140797	MOUNT, ENG		S/N & Below	1
1	7202298	MOUNT, ENG		S/N & Above	1
2	6719829	BOLT			3
3	7141405	BUSHING	Was 7146236 [B,D]		1
4	7000488	DAMPER			2
5	7127305	WASHER			2
6	6515817	WASHER			1
7	83D8	NUT 5			1
8	31C880	SCREW			1
9	7136111	HOSE, DRAIN OIL			1
10	36K6	CAP			1
11	7141420	BRACKET, ALT			1
12	59CM1040	SCREW HX FLNG W/T8.8	Use W/Ref. 19 (43DM10 nut)		2
12	17C624	BOLT 5	Use W/Ref. 19 (95D6 nut)		2
13	83D8	NUT 5			2
14	43DM8	NUT			6
15	1CM8110	CAP,HEX			1
16	25E15	WASHER 5			1
17	7174706	BELT, ALT			1
18		ALTERNATOR	See Illustration ALTERNATOR / B22386		1
19	43DM10	NUT	Use W/Ref. 12 (59CM1040 screw)		2
19	95D6	NUT	Use W/Ref. 12 (17C624 bolt)		2
20	7194433	SHIELD, ALT	Was 7162022 [A]		1
21	7183046	COVER, BELT		ACS711001 - 11003	1
				ACSL11001	1
21	7196287	COVER, BELT		ACS711004 & Above	1
				ACSL11002 & Above	1
22	7141383	MOUNT, ENG		S/N & Below	1
22	7202296	MOUNT, ENG		S/N & Above	1
23	7141405	BUSHING			2
24	7000489	DAMPER			4
25	7116851	CUP			4
26	31C864	BOLT	Was 31C860 [B]		2
27	7141037	MOUNT, ENG/PUMP		A3P811001 - 12129	1
27	7204291	MOUNT, ENG/PUMP		A3P812130 & Above	1
28	7152037	NUT, RETAINING	W/Ref. 13		2
29		ENGINE	See Illustration ENGINE & GASKET KITS / NA5149		1
30		MAIN FRAME			1
31	6CM1220	BOLT			1
32	7135124	SCREW			2
33	59CM820	SCREW HX FLNG W/T 8.8			2
34		SEAL, RUBBER	NLA - 5.5" (139,7 mm) long - Order Ref. 35		1
35	7167241	SEAL, BULK	- sold per foot - Was 6646705 [B,D]		x

Page 1 of 1 OSS# 6300322913 - All rights reserved by Bobcat Company - 08/04/2017 - 06:30:16 - Produced by Ken Cook Co. with mediaoff

ENGINE & ATTACHING PARTS (Cont'd)
(Engine Mounts)

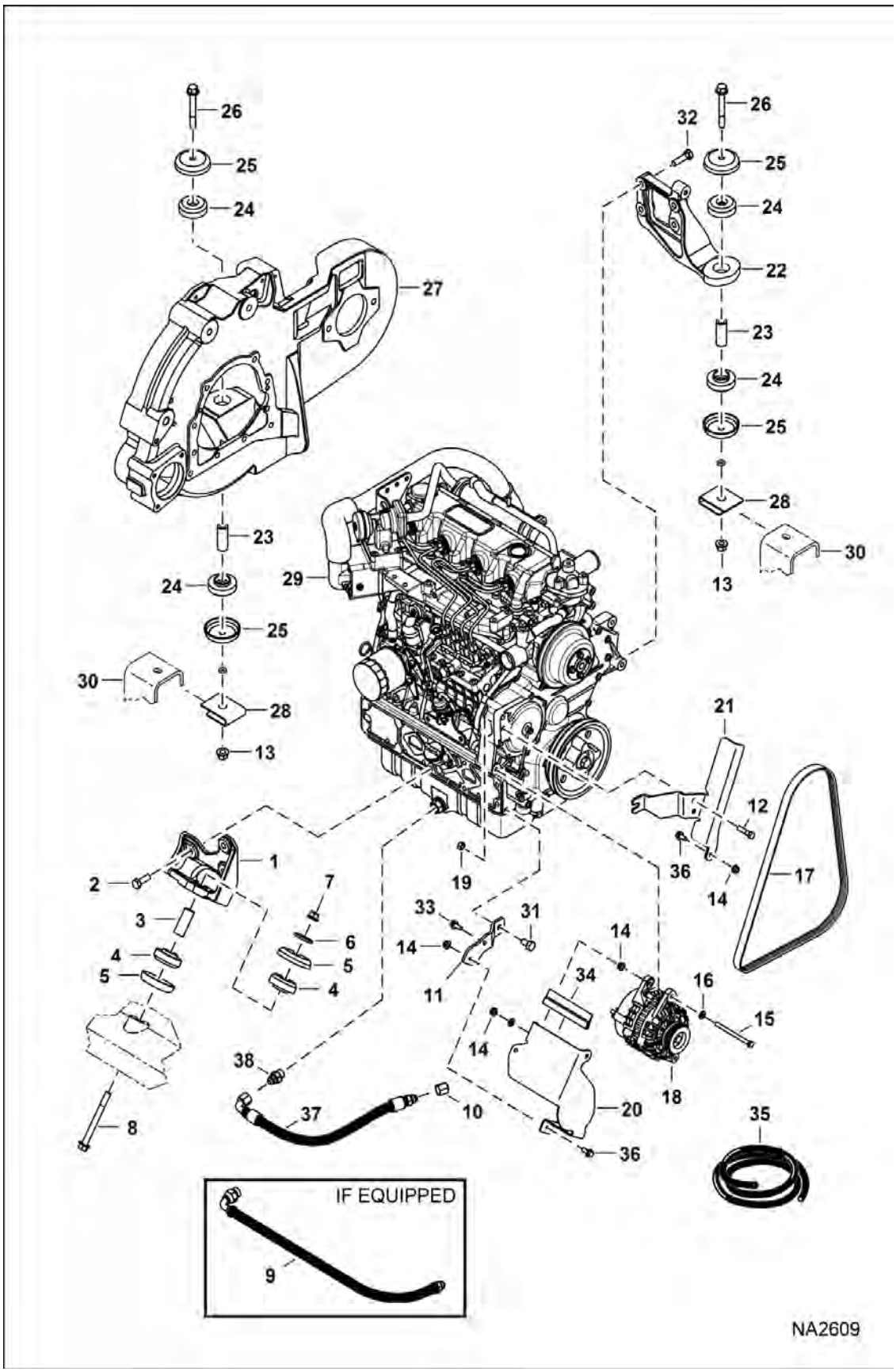

Page 419 - OSS# 6300322913 - All rights reserved by Bobcat Company - 08/04/2017 - 06:30:16 - Produced by Ken Cook Co. with mediaioff

ENGINE & ATTACHING PARTS (Cont'd)

(Engine Mounts)

Ref No	Part Number	Description	Remarks	Serial Number	Qty
36	59CM816	BOLT			2
37	7234109	HOSE, DRAIN			1
38	15KB0808	FITTING, HYD CONNECTOR			1

Page Built: OSS# 6300322913 - All rights reserved by Bobcat Company - 08/04/2017 - 06:30:16 - Produced by Ken Cook Co. with mediaioff

ENGINE & ATTACHING PARTS

(Fuel System) (Single Tank)

(S/N A3P811001 - A3P814202, A3P911001 - A3P912727)

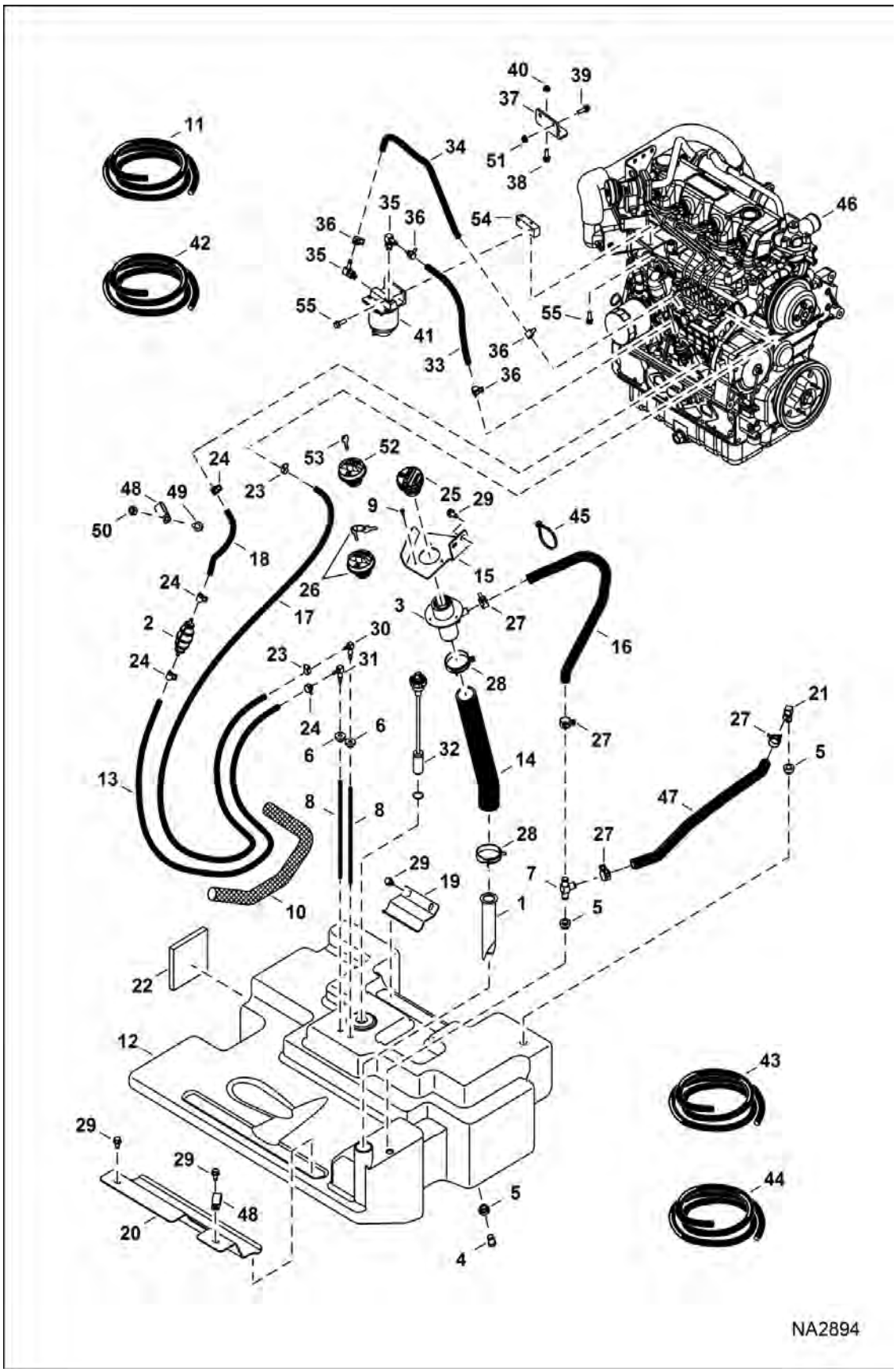

Illustration NA2894

Page 421 - OSS# 6300322913 - All rights reserved by Bobcat Company - 08/04/2017 - 06:30:16 - Produced by Ken Cook Co. with mediaioff

ENGINE & ATTACHING PARTS (Cont'd)

(Fuel System) (Single Tank)

(S/N A3P811001 - A3P814202, A3P911001 - A3P912727)

Ref No	Part Number	Description	Remarks	Serial Number	Qty
1	7120881	SCREEN, FILLER			1
2	6657734	PUMP, PRIMER HAND	barbed fittings for 6,35 mm (.25") ID hose - barbed fittings for 6,35 mm (.25") ID hose		1
3	6701449	FLR.TUBE			1
4	7203382	PLUG, STEEL	Was 6717404 [A]		1
5	6717402	BUSHING	0.54" ID		2
6	6735696	GROMMET	0.560" OD		2
6	7266067	GROMMET	0.780" OD		2
7	7256098	TEE	Was 7203385 [A]		1
8	6735249	HOSE, FUEL			2
9	7106279	SCREW			3
10	7178623	COVER, HOSE			1
11	6577822	HOSE, BULK	sold per foot		1
12	7130652	TANK, FUEL			1
13		HOSE	NLA - 889 mm (35") long - Order Ref. 42		1
14	7163770	HOSE, FUEL			1
15	7163769	BRACKET, FUEL			1
16		HOSE	NLA - 609,6 mm (24") long - Order Ref. 43		1
17		HOSE	NLA - 1231,9 mm (48.5") long - Order Ref. 44		1
18		HOSE	NLA - 203,2 mm (8") long - Order Ref. 42		1
19	7163768	BRACKET, FUEL			1
20		BRACKET, FUEL	NLA - 88,9 mm (3.5") cutout - Was 7168928		1
20	7234561	BRACKET, FUEL	139,7 mm (5.5") cutout		1
21	7256099	ELBOW BARB 90 DEGREE	90 degree - Was 7203383 [A]		1
22	7170635	INSULATION, TANK FUEL	19 mm (.75") thick		1
22	7224427	INSULATION, TANK FUEL	31,8 mm (1.25") thick		1
23	42HS04	CLAMP, HOSE			2
24	5HM13	CLAMP			4
25	7113340	CAP, DIESEL 3 PSI			1
26	7121223	CAP, DIESEL LOCKING			1
27	5HM24	CLAMP			4
28	5HM58	CLAMP			2
29	84G3712	BOLT 5			6
30	7101291	ELBOW	3 barb on outlet end		1
31	6598908	ELBOW			1
32	7286464	SENSOR, FUEL	Was 7179839 [A]		1
33		HOSE	NLA - 355,6 mm (14") long - Order Ref. 11		1
34		HOSE	NLA - 393,7 mm (15.5") long - Order Ref. 11		1
35	6715183	ELBOW			2
36	5HM14	CLAMP			4
37	7153500	MOUNT, FILTER FUEL			1
38	35C620	BOLT 5			2
39	35C514	BOLT			2
40	89D6	NUT			2

Page 126 OSS# 6300322913 - All rights reserved by Bobcat Company - 08/04/2017 - 06:30:16 - Produced by Ken Cook Co. with mediaoff

ENGINE & ATTACHING PARTS (Cont'd)

(Fuel System) (Single Tank)

(S/N A3P811001 - A3P814202, A3P911001 - A3P912727)

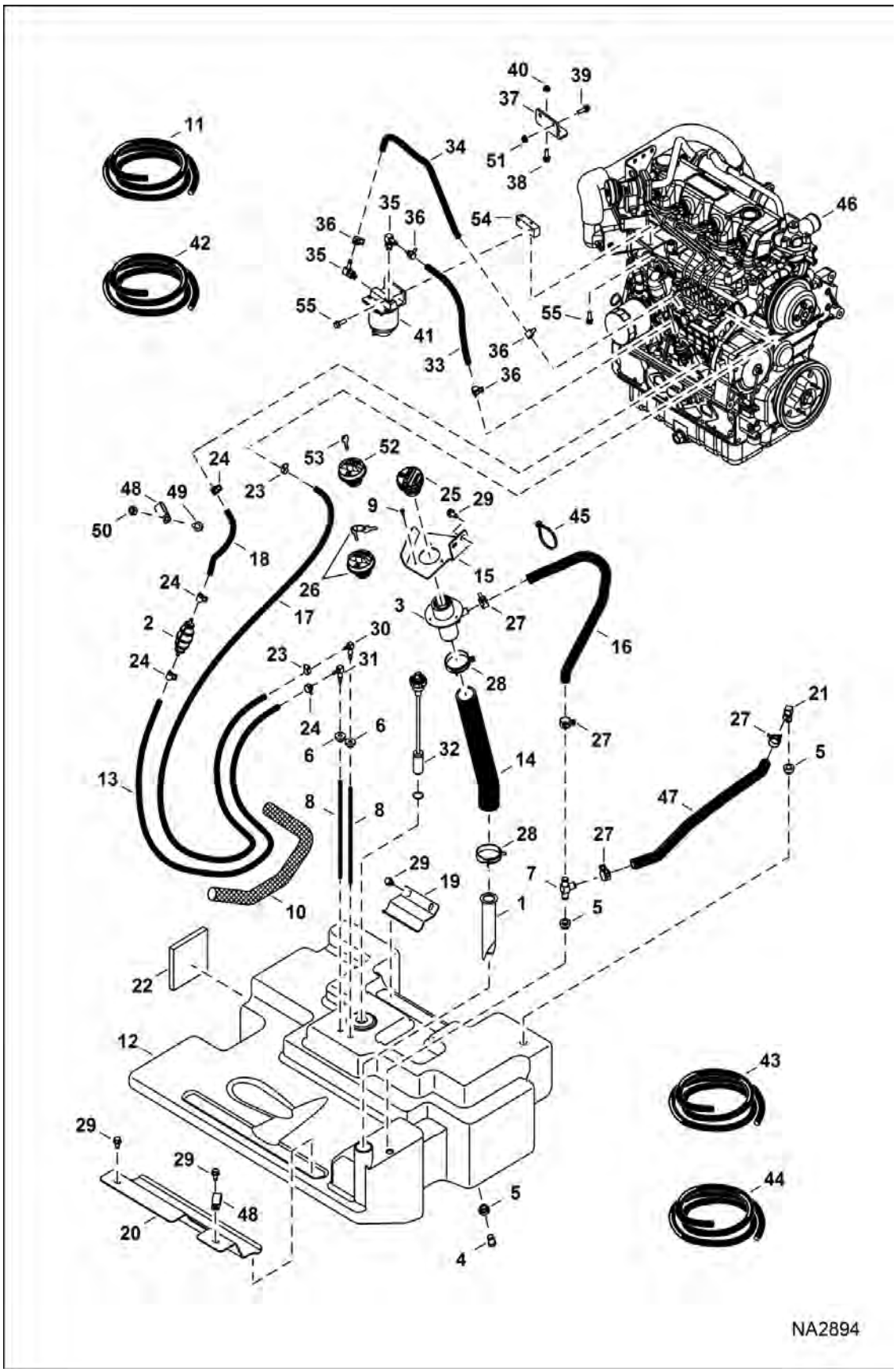

Page 423 - OSS# 6300322913 - All rights reserved by Bobcat Company - 08/04/2017 - 06:30:16 - Produced by Ken Cook Co. with mediaioff

ENGINE & ATTACHING PARTS (Cont'd)

(Fuel System) (Single Tank)

(S/N A3P811001 - A3P814202, A3P911001 - A3P912727)

Ref No	Part Number	Description	Remarks	Serial Number	Qty
41	6667353	FILTER, FUEL ASSY			1
41	6667352	FILTER, FUEL W/SEPARATOR 12			1
41	6658180	PLUG, BLEED			1
42	6577821	HOSE, BULK	sold per foot		x
43	6578172	HOSE, BULK	sold per foot		x
44	6578169	HOSE, BULK/FT	sold per foot - 0.19" ID		x
45	6624289	STRAP, TIE			4
46		ENGINE	See Illustration ENGINE & GASKET KITS / NA5149		1
47		HOSE	NLA - 609,6 mm (24") long - Order Ref. 42		1
48	31H31	CLIP			2
49	59CM816	BOLT			1
50	43DM8	NUT			1
51	89D5	NUT			2
52	7023550	CAP, DIESEL LOCKING			1
53	6693241	KEY (2)	ignition - single key W/O ring		1
54	6731152	MOUNT			1
55	45C516	SCREW			4

Page 424 OSS# 6300322913 - All rights reserved by Bobcat Company - 08/04/2017 - 06:30:16 - Produced by Ken Cook Co. with mediaioff

ENGINE & ATTACHING PARTS

(Fuel System) (Single Tank)

(S/N A3P814203 - A3P815999, A3P912728 - A3P912999)

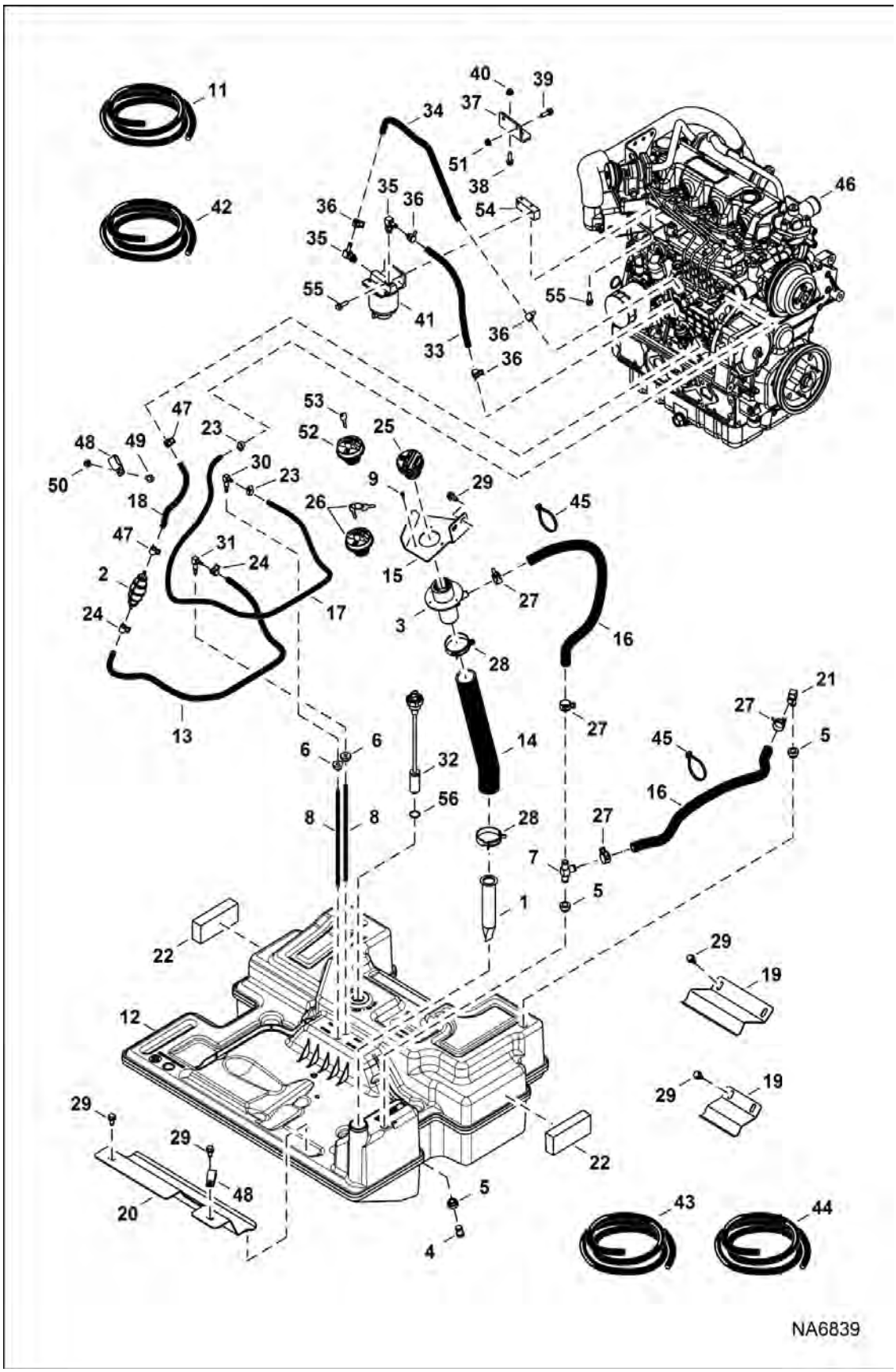

Page 425 - OSS# 6300322913 - All rights reserved by Bobcat Company - 08/04/2017 - 06:30:16 - Produced by Ken Cook Co. with mediaioff

ENGINE & ATTACHING PARTS (Cont'd)

(Fuel System) (Single Tank)

(S/N A3P814203 - A3P815999, A3P912728 - A3P912999)

Ref No	Part Number	Description	Remarks	Serial Number	Qty
1	7120881	SCREEN, FILLER			1
2	7219755	PUMP, PRIMER HAND	(1) barbed fitting for 6,35 mm (.25") ID hose & (1) barbed fitting for 7,94 mm (.3125") ID hose		1
3	6701449	FLR.TUBE			1
4	7203382	PLUG, STEEL			1
5	6717402	BUSHING	0.54" ID		2
6	7266067	GROMMET	Was 6735696		2
7	7256098	TEE	Was 7203385 [A]		1
8	7226149	FUEL, TUBE	Was 7226147 [A]		2
9	7106279	SCREW			3
10	6717579	GASKET			1
11	6577822	HOSE, BULK	sold per foot		1
12	7180679	TANK, FUEL			1
13		HOSE	NLA - 952 mm (37.5") long - Order Ref. 42		1
14	7163770	HOSE, FUEL			1
15	7163769	BRACKET, FUEL			1
16		HOSE	NLA - 609,6 mm (24") long - Order Ref. 43		2
17		HOSE	NLA - 1346 mm (53") long - Order Ref. 44		1
18		HOSE	NLA - 184 mm (7.25") long - Order Ref. 11		1
19	7177132	BRACKET, TANK FUEL	127 mm (5") wide		1
19	7177133	BRACKET, TANK FUEL	203 mm (8") wide		1
20		BRACKET, FUEL	NLA - 88,9 mm (3.5") cutout - Was 7168928		1
20	7234561	BRACKET, FUEL	139,7 mm (5.5") cutout		1
21	7256099	ELBOW BARB 90 DEGREE	90 degree - Was 7203383 [A]		1
22	7228241	INSULATION, TANK FUEL			2
23	42HS04	CLAMP, HOSE			2
24	5HM13	CLAMP			2
25	7113340	CAP, DIESEL 3 PSI			1
26	7121223	CAP, DIESEL LOCKING			1
27	5HM24	CLAMP			4
28	5HM58	CLAMP			2
29	84G3712	BOLT 5			6
30	6598908	ELBOW			1
31	7101291	ELBOW			1
32	7286464	SENSOR, FUEL	W/Ref. 56 - Was 7179839 [A]		1
33		HOSE	NLA - 355,6 mm (14") long - Order Ref. 11		1
34		HOSE	NLA - 393,7 mm (15.5") long - Order Ref. 11		1
35	6715183	ELBOW			2
36	5HM14	CLAMP			4
37	7153500	MOUNT, FILTER FUEL			1
38	59CM830	SCREW			2
39	59CM820	SCREW HX FLNG W/T 8.8			2

Page Produced OSS# 6300322913 - All rights reserved by Bobcat Company - 08/04/2017 - 06:30:16 - Produced by Ken Cook Co. with mediaoff

ENGINE & ATTACHING PARTS (Cont'd)

(Fuel System) (Single Tank)

(S/N A3P814203 - A3P815999, A3P912728 - A3P912999)

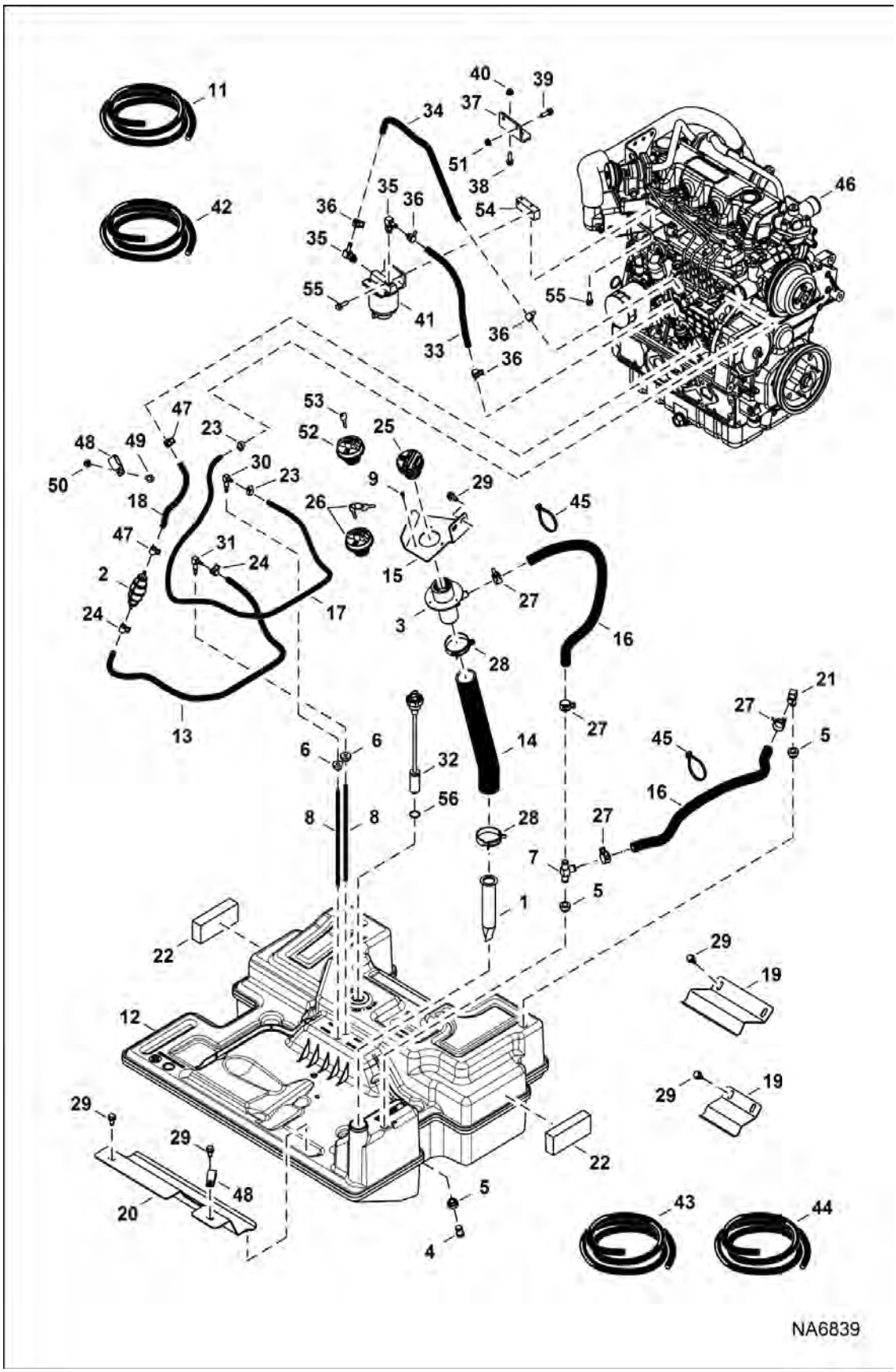

Page 427 - OSS# 6300322913 - All rights reserved by Bobcat Company - 08/04/2017 - 06:30:16 - Produced by Ken Cook Co. with mediaioff

ENGINE & ATTACHING PARTS (Cont'd)

(Fuel System) (Single Tank)

(S/N A3P814203 - A3P815999, A3P912728 - A3P912999)

Ref No	Part Number	Description	Remarks	Serial Number	Qty
40	43DM8	NUT			1
41	6667353	FILTER, FUEL ASSY			1
41	6667352	FILTER, FUEL W/SEPARATOR 12			1
41	6658180	PLUG, BLEED			1
42	6577821	HOSE, BULK	sold per foot		x
43	6578172	HOSE, BULK	sold per foot		x
44	6578169	HOSE, BULK/FT	sold per foot - 0.19" ID		x
45	6624289	STRAP, TIE			7
46		ENGINE			1
47	5HM15	CLAMP			2
48	31H31	CLIP			2
49	59CM816	BOLT			1
50	43DM8	NUT			1
51	89D5	NUT			2
52	7023550	CAP, DIESEL LOCKING			1
53	6693241	KEY (2)	ignition - single key W/O ring		1
54	6731152	MOUNT			1
55	45C516	SCREW			4
56	6717579	GASKET			1

Page 420 OSS# 6300322913 - All rights reserved by Bobcat Company - 08/04/2017 - 06:30:16 - Produced by Ken Cook Co. with mediaioff

ENGINE & ATTACHING PARTS

(Fuel System) (Single Tank)
(S/N A3P816001 & Above, A3P913001 & Above)

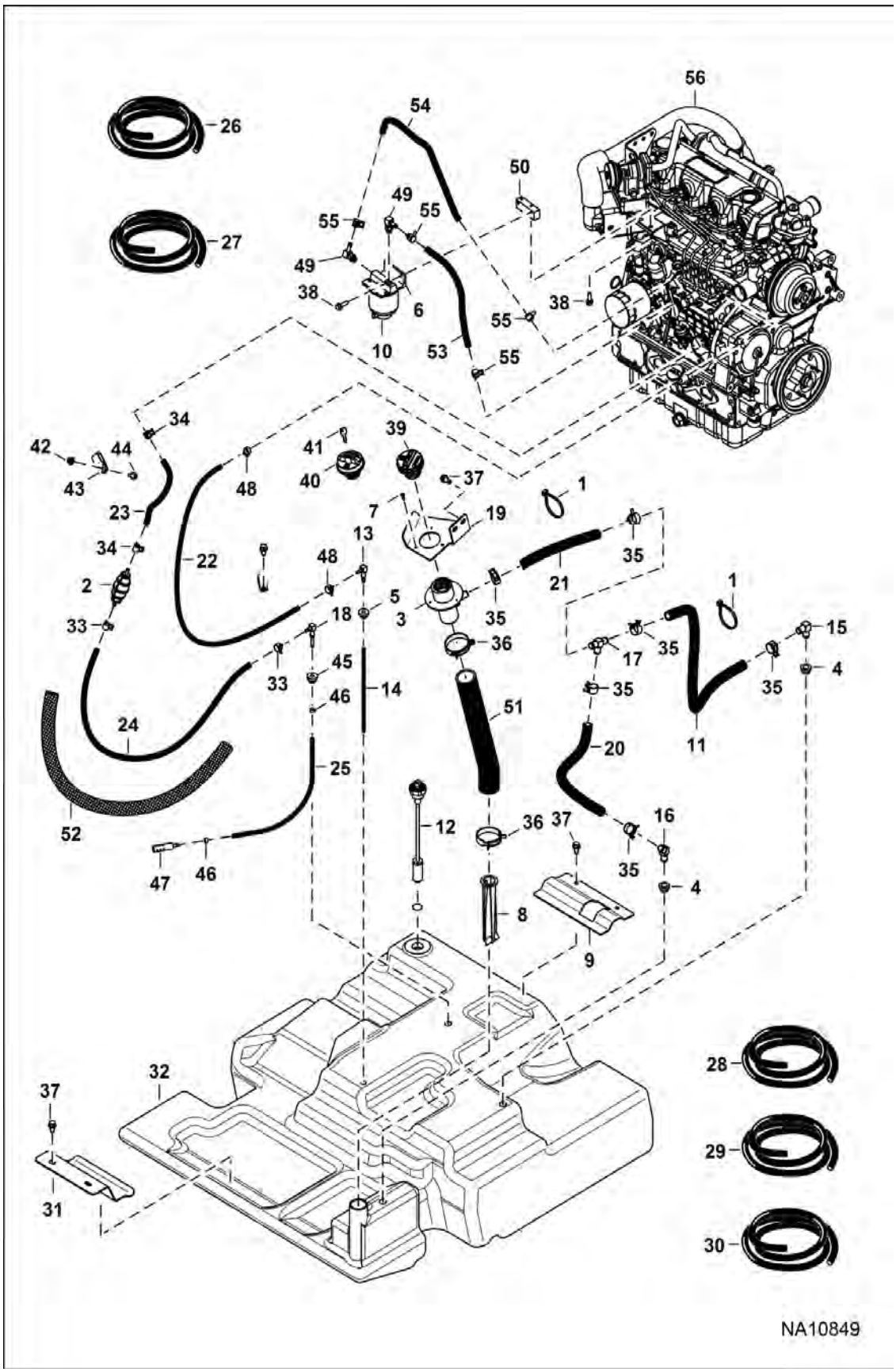

Page 429 - OSS# 6300322913 - All rights reserved by Bobcat Company - 08/04/2017 - 06:30:16 - Produced by Ken Cook Co. with mediaioff

ENGINE & ATTACHING PARTS (Cont'd)

(Fuel System) (Single Tank)
(S/N A3P816001 & Above, A3P913001 & Above)

Ref No	Part Number	Description	Remarks	Serial Number	Qty
1	6624289	STRAP, TIE			3
2	7219755	PUMP, PRIMER HAND	(1) barbed fitting for 6,35 mm (.25") ID hose & (1) barbed fitting for 7,94 mm (.3125") ID hose		1
3	6701449	FLR.TUBE			1
4	6717402	BUSHING			2
5	7266067	GROMMET	Was 6735696 [A]		1
6	6667353	FILTER, FUEL ASSY			1
7	7106279	SCREW			3
8	7120881	SCREEN, FILLER			1
9	7252627	BRACKET			1
10	6667352	FILTER, FUEL W/SEPARATOR 12			1
11		HOSE, BREATHER	NLA - 762 mm (30") long - Order Ref. 26		1
12	7238662	SENSOR, FUEL			1
13	7101291	ELBOW			1
14	7226149	FUEL, TUBE	W/Ref. 13 - Was 7226147 [A]		1
15	7256099	ELBOW BARB 90 DEGREE	90 degree - Was 7203383 [A]		1
16	7256100	ELBOW	45 degree - Was 7203384 [A]		1
17	7256098	TEE	Was 7203385 [A]		1
18	7265204	ELBOW BARBED			1
19	7163769	BRACKET, FUEL			1
20		HOSE, FUEL	NLA - 508 mm (20") long - Order Ref. 26		1
21		HOSE, FUEL	NLA - 254 mm (10") long - Order Ref. 26		1
22		HOSE, FUEL	NLA - 1333,5 mm (52.5") long - Order Ref. 27		1
23		HOSE, FUEL	NLA - 184,2 mm (7.25") long - Order Ref. 28		1
24		HOSE, FUEL	NLA - 1244,6 mm (49") long - Order Ref. 29		1
25		HOSE, FUEL	NLA - 418,7 mm (16.49") long - Order Ref. 30		1
26	6578172	HOSE, BULK	sold per foot - 0.625" ID		x
27	6578169	HOSE, BULK/FT	sold per foot - 0.19" ID		x
28	6577822	HOSE, BULK	sold per foot - .3125" ID		x
29	6577821	HOSE, BULK	sold per foot - 0.25" ID		x
30	6569752	HOSE BULK/FT	sold per foot - 0.25" ID		x
31	7248580	BRACKET, FUEL			1
32	7227360	TANK, FUEL			1
33	5HM13	CLAMP			2
34	5HM15	CLAMP			2
35	5HM24	CLAMP			6
36	5HM58	CLAMP			2
37	84G3712	BOLT 5			7
38	45C516	SCREW			4
39	7113340	CAP, DIESEL 3 PSI			1
40	7023550	CAP, DIESEL LOCKING			1
41	6693241	KEY (2)			1
42	43DM8	NUT			1

Page Base OSS# 6300322913 - All rights reserved by Bobcat Company - 08/04/2017 - 06:30:16 - Produced by Ken Cook Co. with mediaoff

ENGINE & ATTACHING PARTS (Cont'd)

(Fuel System) (Single Tank)
(S/N A3P816001 & Above, A3P913001 & Above)

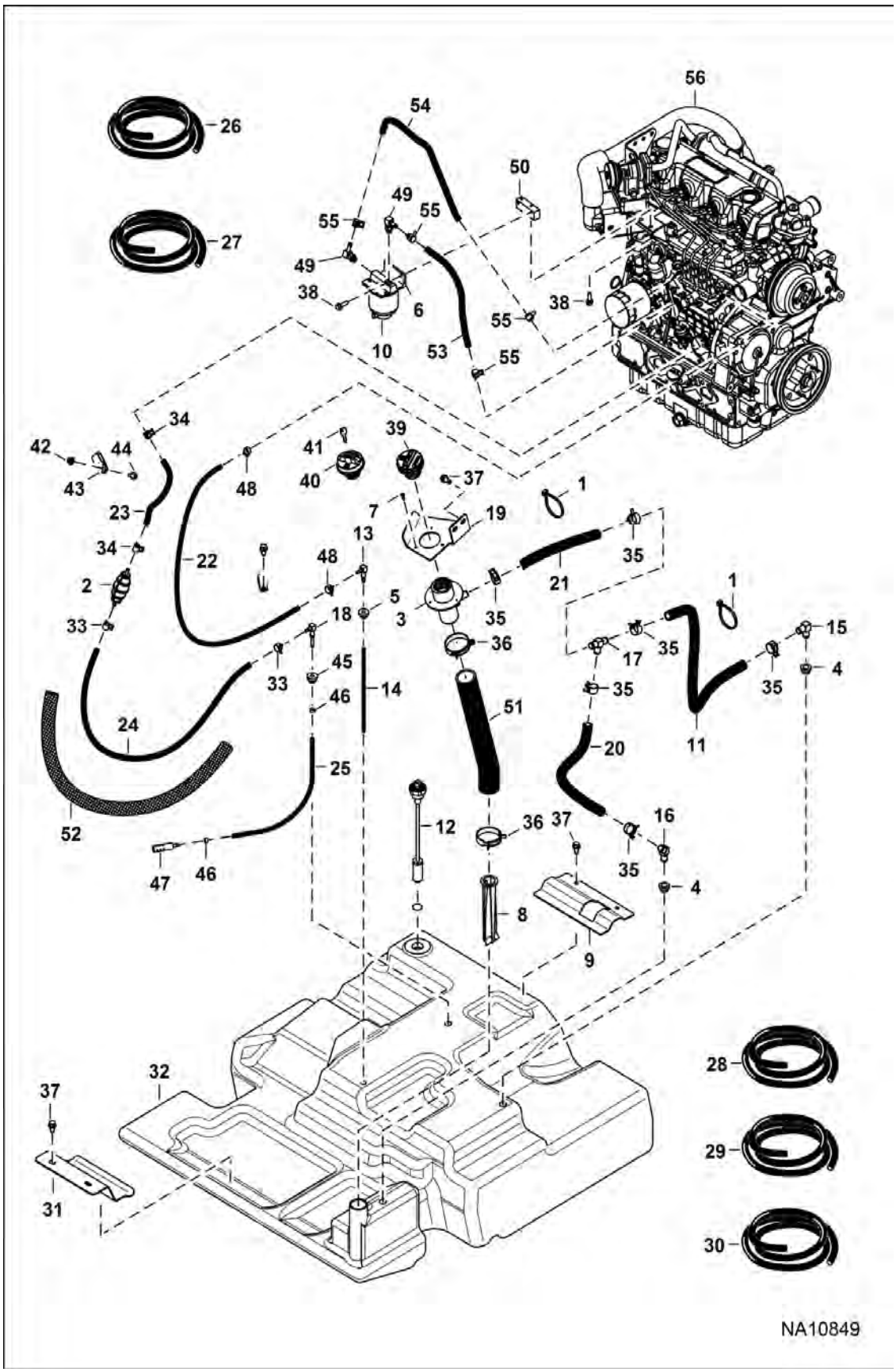

Page 431 - OSS# 6300322913 - All rights reserved by Bobcat Company - 08/04/2017 - 06:30:16 - Produced by Ken Cook Co. with mediaioff

ENGINE & ATTACHING PARTS (Cont'd)

(Fuel System) (Single Tank)
(S/N A3P816001 & Above, A3P913001 & Above)

Ref No	Part Number	Description	Remarks	Serial Number	Qty
43	31H31	CLIP			1
44	59CM816	BOLT			1
45	7266067	GROMMET	Was 7242050 [A]		1
46	7259181	RING, COMPRESSION			1
47	7257435	FUEL, TUBE			1
48	42HS04	CLAMP, HOSE			2
49	6715183	ELBOW			2
50	6731152	MOUNT			1
51	7163770	HOSE, FUEL			1
52	7178623	COVER, HOSE			1
53		HOSE, FUEL	NLA - 355,6 mm (14") long - Order Ref. 28		x
54		HOSE, FUEL	NLA - 393.7 mm (15.5") long - Order Ref. 28		x
55	5HM14	CLAMP			4
56		ENGINE	See Illustration ENGINE & GASKET KITS / NA5149		1

Page 424 OSS# 6300322913 - All rights reserved by Bobcat Company - 08/04/2017 - 06:30:16 - Produced by Ken Cook Co. with mediaioff

ENGINE & ATTACHING PARTS

(Fuel System) (Dual Tank)

(S/N A3P811001 - A3P815999, A3P911001 - A3P912999)

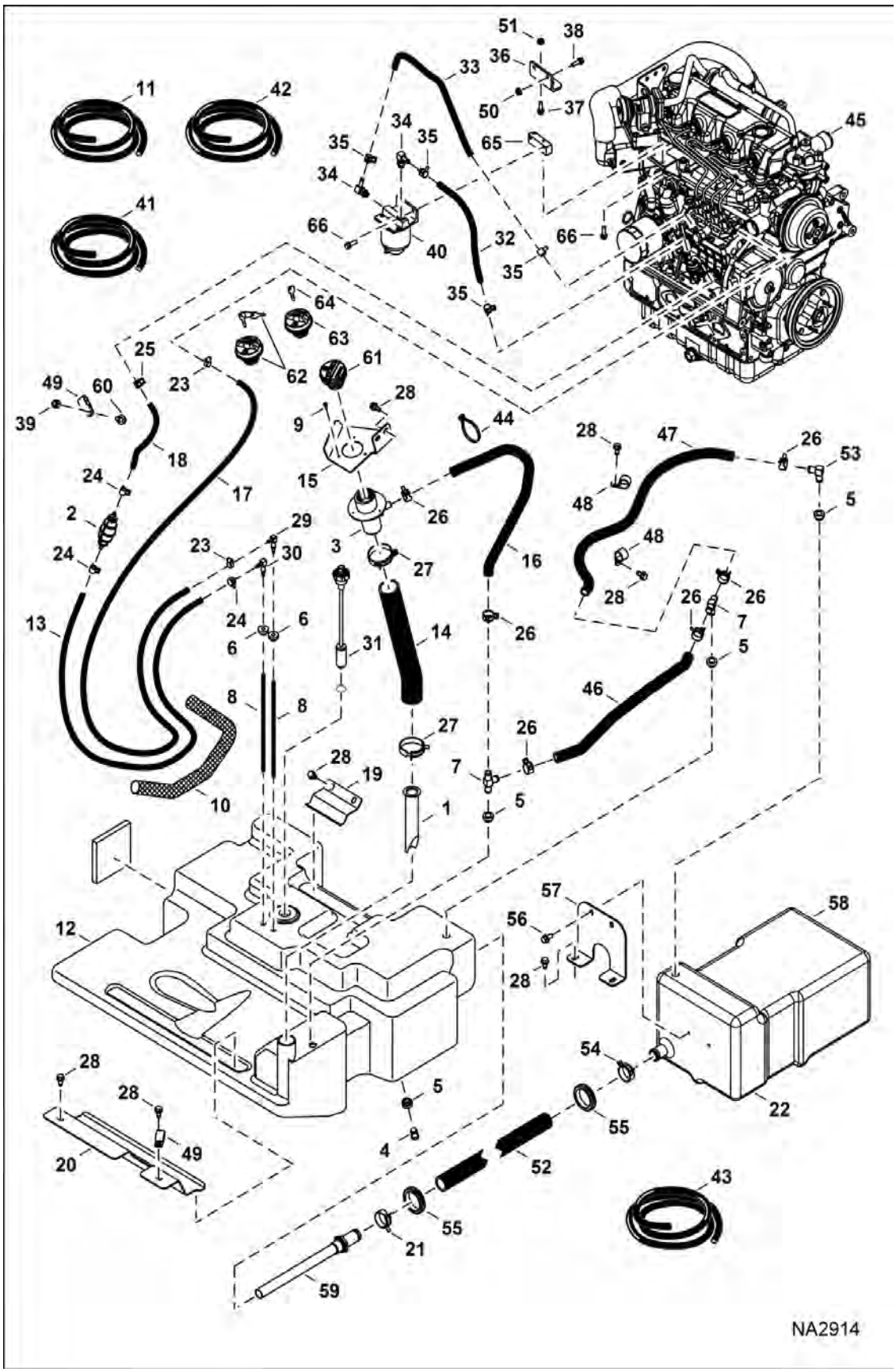

Page 433 - OSS# 6300322913 - All rights reserved by Bobcat Company - 08/04/2017 - 06:30:16 - Produced by Ken Cook Co. with mediaioff

ENGINE & ATTACHING PARTS (Cont'd)

(Fuel System) (Dual Tank)

(S/N A3P811001 - A3P815999, A3P911001 - A3P912999)

Ref No	Part Number	Description	Remarks	Serial Number	Qty
1	7120881	SCREEN, FILLER			1
2	6657734	PUMP, PRIMER HAND	barbed fittings for 6,35 mm (.25") ID hose - barbed fittings for 6,35 mm (.25") ID hose		1
3	6701449	FLR.TUBE			1
4	7203382	PLUG, STEEL	Was 6717404 [A]		1
5	6717402	BUSHING	0.54" ID		2
6	7266067	GROMMET	Was 6735696		2
7	7256098	TEE	Was 7203385 [A]		2
8	6735249	HOSE, FUEL			3
9	7106279	SCREW			3
10	7178623	COVER, HOSE			1
11	6577822	HOSE, BULK	sold per foot		x
12	7170486	TANK, FUEL			1
13		HOSE	NLA - 889 mm (35") long - Order Ref. 41		1
14	7163770	HOSE, FUEL			1
15	7163769	BRACKET, FUEL			1
16		HOSE	NLA - 609,6 mm (24") long - Order Ref. 42		1
17		HOSE	NLA - 1232 mm (48.5") long - Order Ref. 43		1
18		HOSE	NLA - 203,2 mm (8") long - Order Ref. 41		1
19	7163768	BRACKET, FUEL			1
20		BRACKET, FUEL	NLA - 88,9 mm (3.5") cutout - Was 7168928		1
20	7234561	BRACKET, FUEL	139,7 mm (5.5") cutout		1
21	5HM38	CLAMP, HOSE			1
22	7170635	INSULATION, TANK FUEL			2
23	42HS04	CLAMP, HOSE			2
24	5HM13	CLAMP			3
25	5HM13	CLAMP			1
26	5HM24	CLAMP			6
27	5HM58	CLAMP			2
28	84G3712	BOLT 5			9
29	7101291	ELBOW	3 barb on outlet end		1
30	6598908	ELBOW			1
31	7286464	SENSOR, FUEL	Was 7179839 [A]		1
32		HOSE	NLA - 355,6 mm (14") long - Order Ref. 11		1
33		HOSE	NLA - 393,7 mm (15.5") long - Order Ref. 11		1
34	6715183	ELBOW			2
35	5HM14	CLAMP			4
36	7153500	MOUNT, FILTER FUEL			1
37	35C620	BOLT 5			2
38	35C514	BOLT			2
39	43DM8	NUT			4
40	6667353	FILTER, FUEL ASSY			1
40	6667352	FILTER, FUEL W/SEPARATOR 12			1
40	6658180	PLUG, BLEED			1

Page 434 OSS# 6300322913 - All rights reserved by Bobcat Company - 08/04/2017 - 06:30:16 - Produced by Ken Cook Co. with mediaioff

ENGINE & ATTACHING PARTS (Cont'd)

(Fuel System) (Dual Tank)

(S/N A3P811001 - A3P815999, A3P911001 - A3P912999)

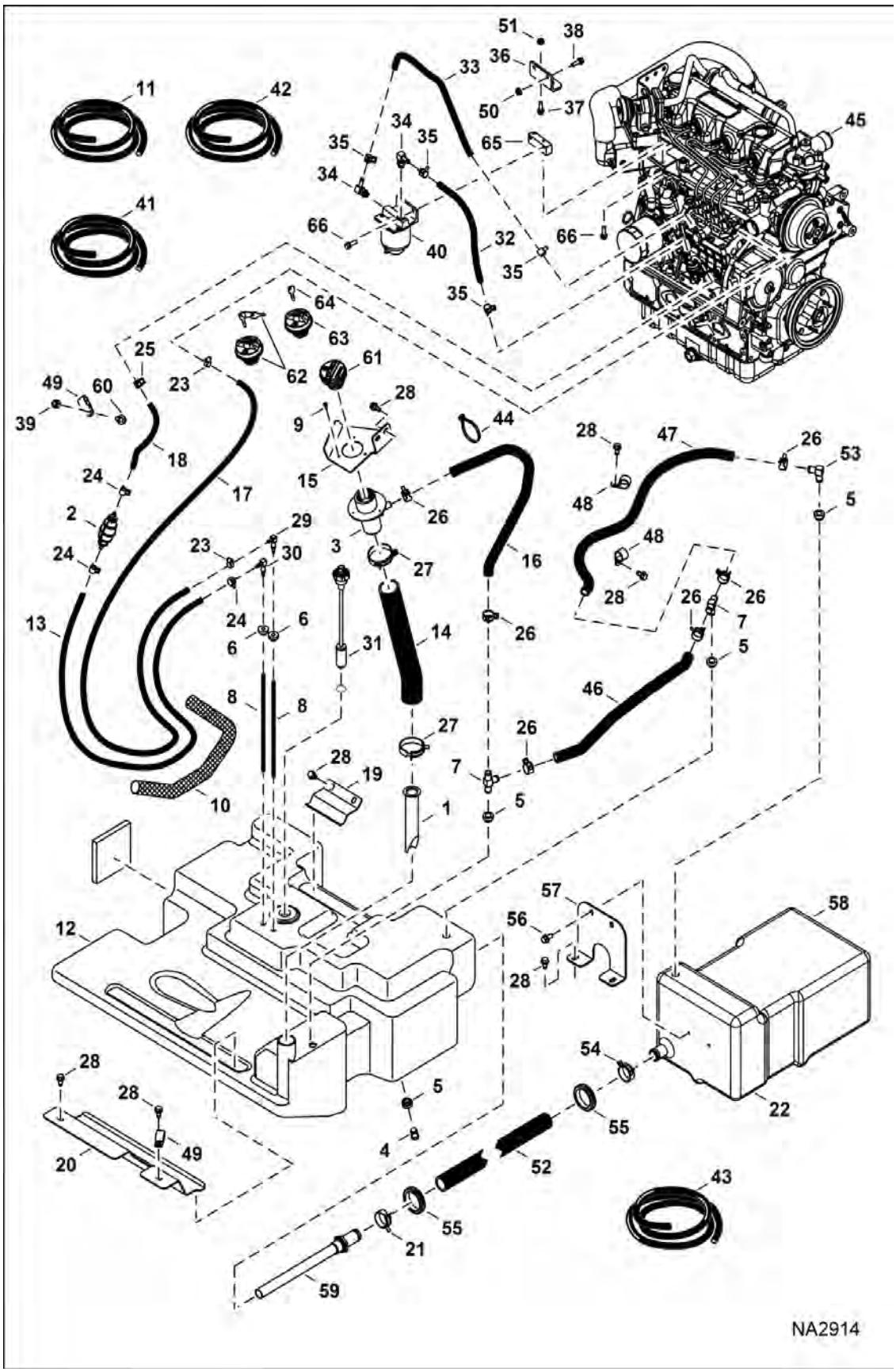

Page 435 - OSS# 6300322913 - All rights reserved by Bobcat Company - 08/04/2017 - 06:30:16 - Produced by Ken Cook Co. with mediaioff

ENGINE & ATTACHING PARTS (Cont'd)

(Fuel System) (Dual Tank)

(S/N A3P811001 - A3P815999, A3P911001 - A3P912999)

Ref No	Part Number	Description	Remarks	Serial Number	Qty
41	6577821	HOSE, BULK	sold per foot		x
42	6578172	HOSE, BULK	sold per foot		x
43	6578169	HOSE, BULK/FT	sold per foot - 0.19" ID		x
44	6624289	STRAP, TIE			2
45		ENGINE	See Illustration ENGINE & GASKET KITS / NA5149		1
46		HOSE	NLA - 609,6 mm (24") long - Order Ref. 42		1
47		HOSE	NLA - 876,3 mm (34.5") long - Order Ref. 42		1
48	30H50	CLAMP			1
49	30H31	CLAMP 10			2
50	89D5	NUT			2
51	89D6	NUT			2
52	7178810	HOSE, HYD			1
53	7256099	ELBOW BARB 90 DEGREE	90 degree - Was 7203383 [A]		1
54	5HM38	CLAMP, HOSE			2
55	7150486	GROMMET			1
56	31C612	BOLT			2
57	7130982	BRACKET			1
58	7171962	TANK, FUEL AUX			1
59	7213030	TUBE, FUEL	Was 7178507 [A]		1
60	59CM816	BOLT			1
61	7113340	CAP, DIESEL 3 PSI			1
62	7121223	CAP, DIESEL LOCKING			1
63	7023550	CAP, DIESEL LOCKING			1
64	6693241	KEY (2)	ignition - single key W/O ring		1
65	6731152	MOUNT			1
66	45C516	SCREW			4

Page 1 of 1 OSS# 6300322913 - All rights reserved by Bobcat Company - 08/04/2017 - 06:30:16 - Produced by Ken Cook Co. with mediaoff

ENGINE & ATTACHING PARTS

(Fuel System) (Dual Tank)

(S/N A3P816001 & Above, A3P913001 & Above)

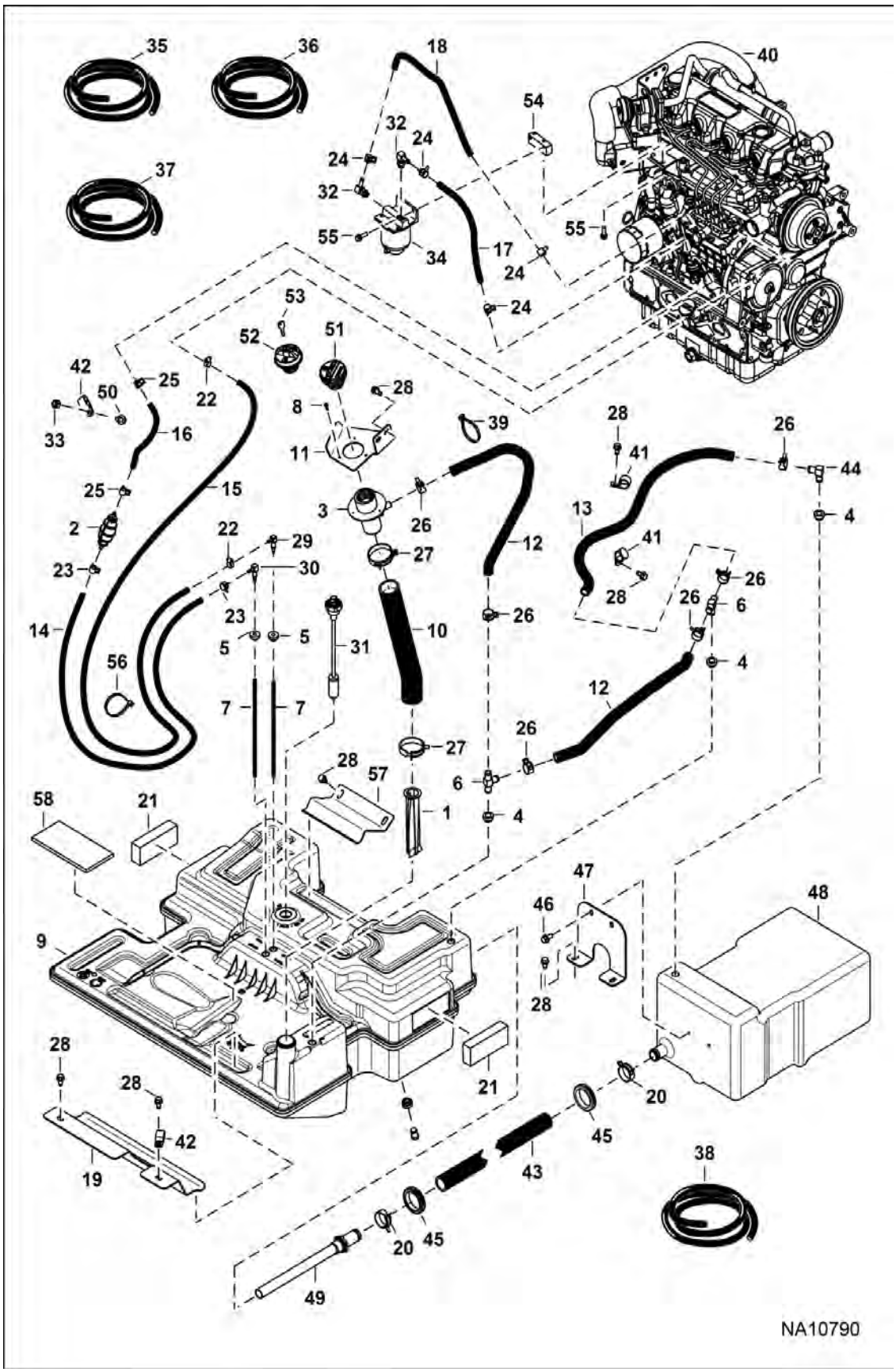

Page 437 - OSS# 6300322913 - All rights reserved by Bobcat Company - 08/04/2017 - 06:30:16 - Produced by Ken Cook Co. with mediaioff

ENGINE & ATTACHING PARTS (Cont'd)

(Fuel System) (Dual Tank)
(S/N A3P816001 & Above, A3P913001 & Above)

Ref No	Part Number	Description	Remarks	Serial Number	Qty
1	7120881	SCREEN, FILLER			1
2	7219755	PUMP, PRIMER HAND	(1) barbed fitting for 6,35 mm (.25") ID hose & (1) barbed fitting for 7,94 mm (.3125") ID hose		1
3	6701449	FLR.TUBE			1
4	6717402	BUSHING	0.54" ID		2
5	7266067	GROMMET	Was 6735696		2
6	7256098	TEE	Was 7203385 [A]		2
7	7226148	FUEL, TUBE	W/Ref. 30 - Was 7226147 [A]		1
7	7226149	FUEL, TUBE	W/Ref. 29 - Was 7226147 [A]		1
8	7106279	SCREW			3
9	7180680	TANK, FUEL			1
10	7163770	HOSE, FUEL			1
11	7163769	BRACKET, FUEL			1
12		HOSE, BREATHER	NLA - 609,6 mm (24") long - Order Ref. 36		2
13		HOSE, BREATHER	NLA - 876,3 mm (34.5") long - Order Ref. 36		1
14		HOSE, FUEL	NLA - 952,5 mm (37.5") long - Order Ref. 35		1
15		HOSE, RETURN	NLA - 1346,2 mm (53") long - Order Ref. 37		1
16		HOSE, FUEL	NLA - 184,2 mm (7.25") long - Order Ref. 38		1
17		HOSE, FUEL	NLA - 355,6 mm (14") long - Order Ref. 38		1
18		HOSE, FUEL	NLA - 393,7 mm (15.5") long - Order Ref. 38		1
19	7234561	BRACKET, FUEL	139,7 mm (5.5") cutout		1
20	5HM38	CLAMP, HOSE			2
21	7228241	INSULATION, TANK FUEL			2
22	42HS04	CLAMP, HOSE			2
23	5HM13	CLAMP			2
24	5HM14	CLAMP			4
25	5HM15	CLAMP			2
26	5HM24	CLAMP			6
27	5HM58	CLAMP			2
28	84G3712	BOLT 5			10
29	7101291	ELBOW	3 barb on outlet end		1
30	7213028	FITTING, ELBOW			1
31	7286464	SENSOR, FUEL	Was 7179839 [A]		1
32	6715183	ELBOW			2
33	43DM8	NUT			4
34	6667353	FILTER, FUEL ASSY			1
34	6667352	FILTER, FUEL W/SEPARATOR 12			1
34	6658180	PLUG, BLEED			1
35	6577821	HOSE, BULK	sold per foot		x
36	6578172	HOSE, BULK	sold per foot		x
37	6578169	HOSE, BULK/FT	sold per foot - 0.19" ID		x
38	6577822	HOSE, BULK	sold per foot		x
39	6624289	STRAP, TIE			2
40		ENGINE	See Illustration ENGINE & GASKET KITS / NA5149		1

Page 488 OSS# 6300322913 - All rights reserved by Bobcat Company - 08/04/2017 - 06:30:16 - Produced by Ken Cook Co. with mediaioff

ENGINE & ATTACHING PARTS (Cont'd)

(Fuel System) (Dual Tank)
(S/N A3P816001 & Above, A3P913001 & Above)

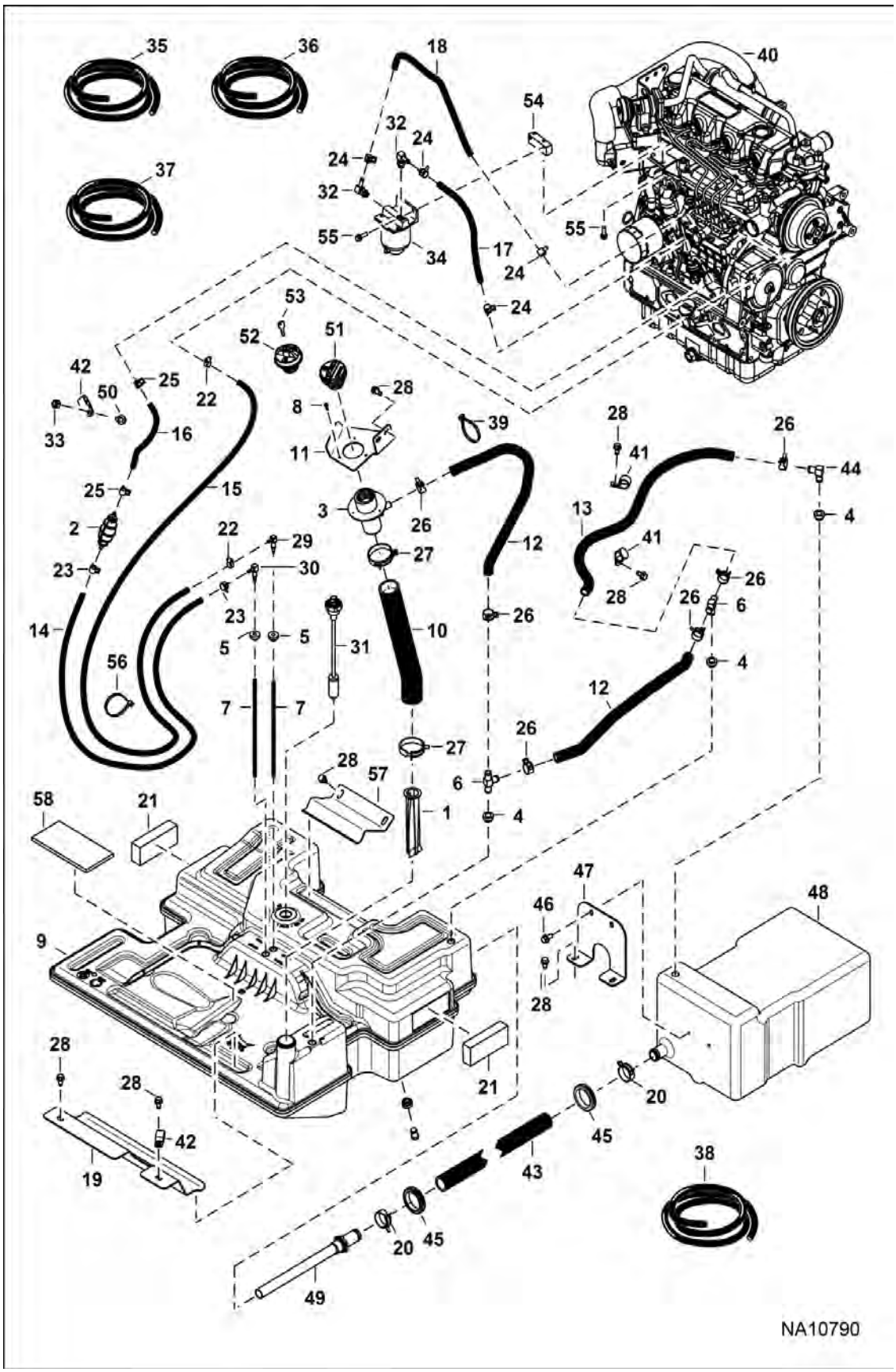

Page 439 - OSS# 6300322913 - All rights reserved by Bobcat Company - 08/04/2017 - 06:30:16 - Produced by Ken Cook Co. with mediaioff

ENGINE & ATTACHING PARTS (Cont'd)

(Fuel System) (Dual Tank)

(S/N A3P816001 & Above, A3P913001 & Above)

Ref No	Part Number	Description	Remarks	Serial Number	Qty
41	30H50	CLAMP			1
42	31H31	CLIP			2
43	7254999	HOSE, HYD FORMED			1
44	7256099	ELBOW BARB 90 DEGREE	90 degree - Was 7203383 [A]		1
45	7150486	GROMMET			1
46	31C612	BOLT			2
47	7130982	BRACKET			1
48	7171962	TANK, FUEL AUX			1
49	7213030	TUBE, FUEL			1
50	59CM816	BOLT			1
51	7113340	CAP, DIESEL 3 PSI			1
52	7023550	CAP, DIESEL LOCKING			1
53	6693241	KEY (2)	ignition - single key W/O ring		1
54	6731152	MOUNT			1
55	45C516	SCREW			4
56	6690690	STRAP, TIE			3
57	7177133	BRACKET, TANK FUEL			1
58	7256412	SUPPORT, TANK			1

Page 1 of 1 OSS# 6300322913 - All rights reserved by Bobcat Company - 08/04/2017 - 06:30:16 - Produced by Ken Cook Co. with mediaioff

ENGINE SPEED CONTROL
(Manual Controls)

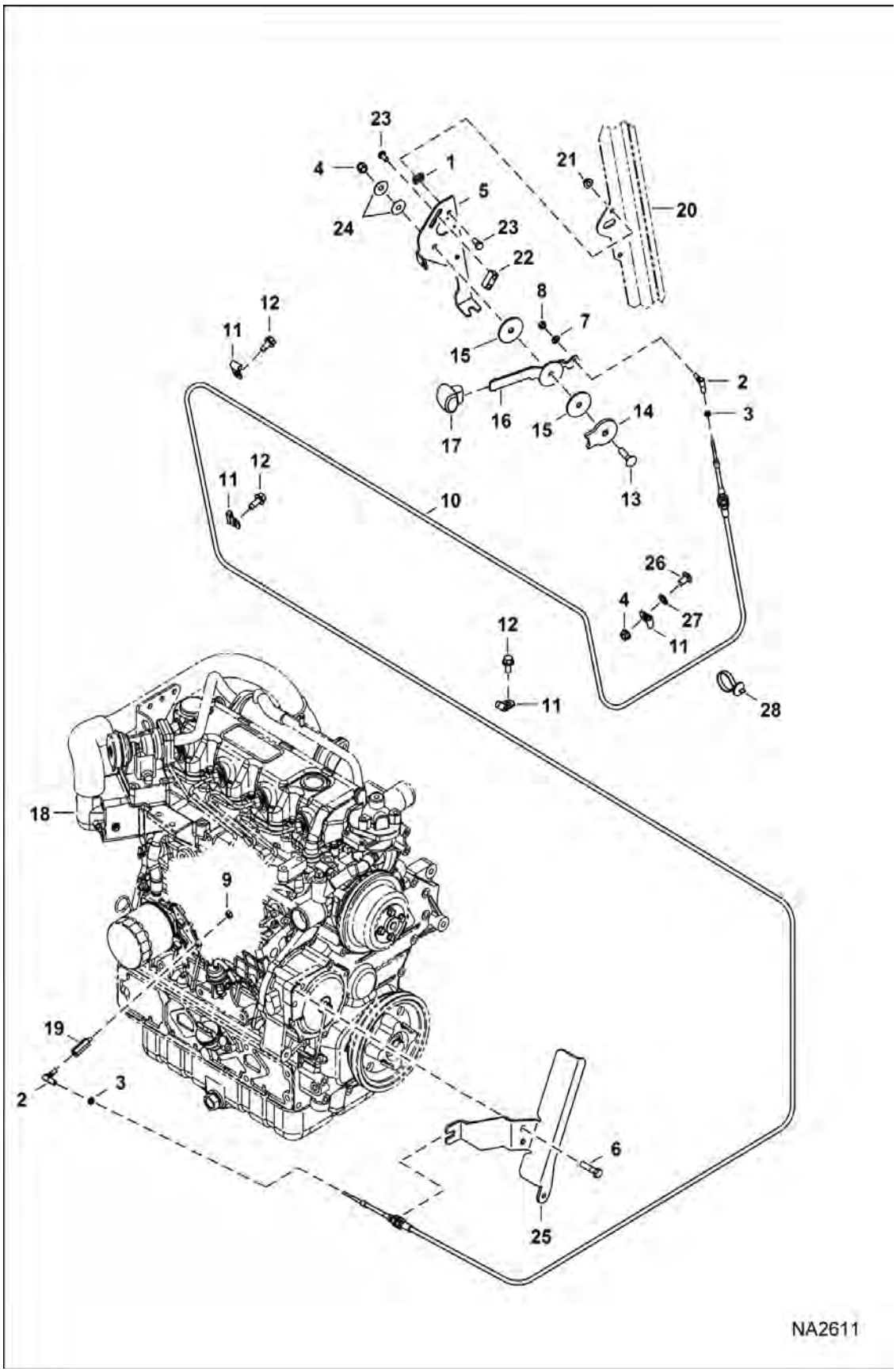

Page 441 - OSS# 6300322913 - All rights reserved by Bobcat Company - 08/04/2017 - 06:30:16 - Produced by Ken Cook Co. with mediaioff

ENGINE SPEED CONTROL (Cont'd)
(Manual Controls)

Ref No	Part Number	Description	Remarks	Serial Number	Qty
1	774220	NUT			2
2	6644965	BALL JOINT			2
3	14D10	NUT			2
4	59D6	NUT			2
5	7166171	BRACKET			1
6	7131273	SCREW	SJC - Was 59CM1240 [B]		2
7	25E11	WASHER			1
8	62D4	NUT			4
9	95D4	NUT			1
10	7159993	CABLE, THROTTLE			1
11	30H20	CLIP			4
12	84G3712	BOLT 5			3
13	37C624	BOLT			2
14	7166269	WASHER			1
15	7159386	WASHER			2
16	7166172	HANDLE			1
17	7166173	HANDLE	black - no longer orange		1
18		ENGINE	See Illustration ENGINE & GASKET KITS / NA5149		1
19	7183048	SPACER			1
20		CAB, ASSY	See Illustration OPERATOR CAB / NA6016		1
21	55D5	NUT			2
22	7166174	BLOCK			1
23	25G510	BOLT			2
24	6630038	WASHER			2
25		GUARD, BELT			1
26	10C612	BOLT			1
27	6674894	NUT, LOCK			1
28	6675734	TIE STRAP			1

Page 1 of 2 OSS# 6300322913 - All rights reserved by Bobcat Company - 08/04/2017 - 06:30:16 - Produced by Ken Cook Co. with mediaioff

ENGINE SPEED CONTROL

(SJC) (4616 mm) (181.7") Hand Cable - (2515 mm) (99") Foot Cable

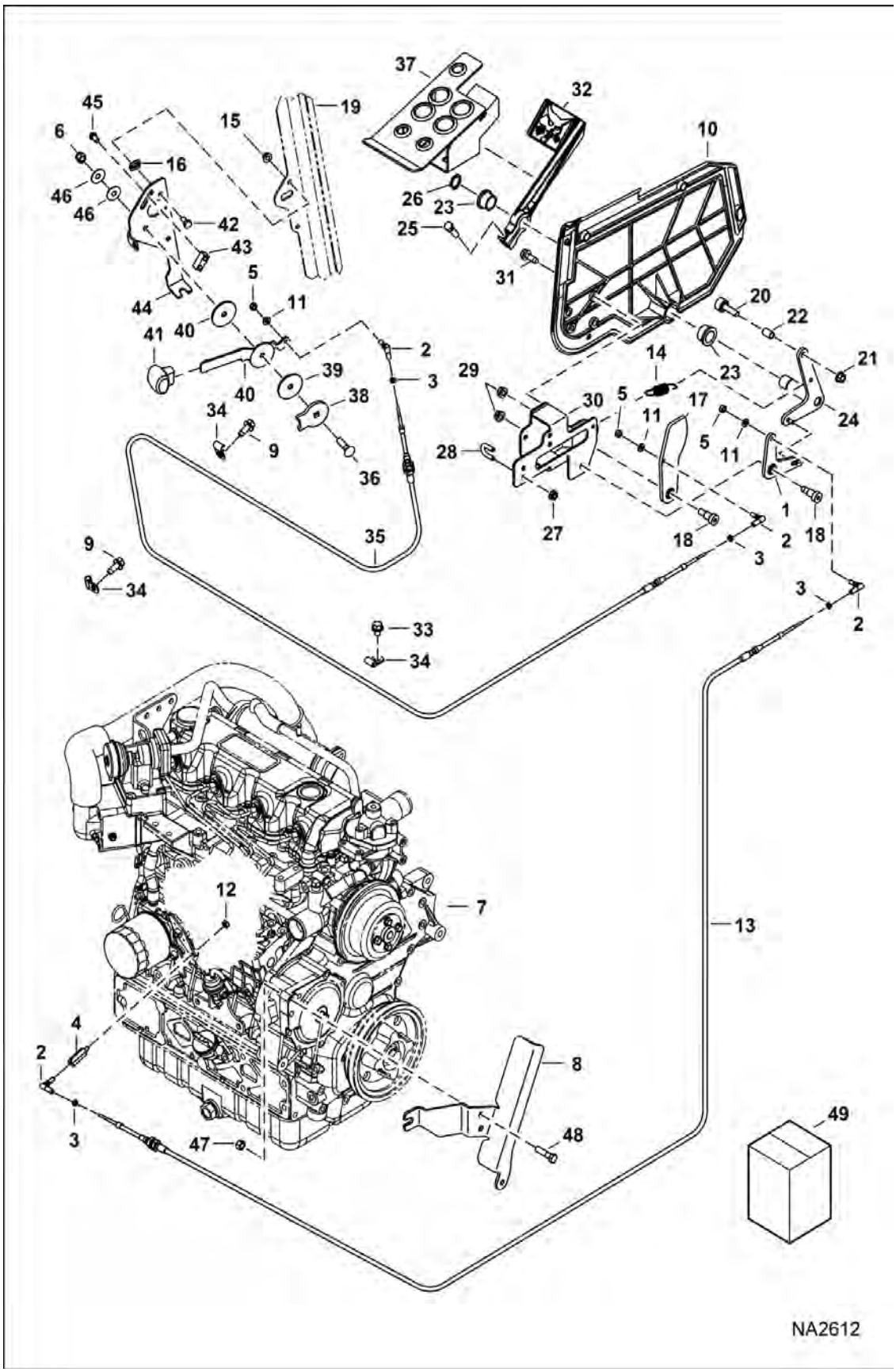

Page 443 - OSS# 6300322913 - All rights reserved by Bobcat Company - 08/04/2017 - 06:30:16 - Produced by Ken Cook Co. with mediaioff

ENGINE SPEED CONTROL (Cont'd)

(SJC) (4616 mm) (181.7") Hand Cable - (2515 mm) (99") Foot Cable

Ref No	Part Number	Description	Remarks	Serial Number	Qty
1		LEVER	Contact your Local Dealer for Bobcat Technical Information BTI426 - NLA - Was 7191528 [A]		1
2	6644965	BALL JOINT			4
3	14D10	NUT			4
4	7183048	SPACER			1
5	62D4	NUT			3
6	17C624	BOLT 5			2
7		ENGINE	See Illustration ENGINE & GASKET KITS / NA5149		1
8	7196287	COVER, BELT			1
9	84G3712	BOLT 5			2
10	7285001	PANEL, RH	Was 7180032 [A]		1
11	25E11	WASHER			3
12	95D4	NUT			6
13		CABLE, THROTTLE	Contact your Local Dealer for Bobcat Technical Information BTI426 - NLA - foot cable - 2515 mm (99") - Was 7159994 [A]		1
14	7285000	SPRING, EXTENSION	Was 7188749 [A]		1
15	55D5	NUT			2
16	774220	NUT			1
17		CAM, LEVER	Contact your Local Dealer for Bobcat Technical Information BTI426 - NLA - Was 7176043 [A]		1
18	38C810	BOLT			2
19		CAB, ASSY	See Illustration OPERATOR CAB / NA6016		1
20	6737692	BEARING ROLLER			1
21	98D6	NUT			1
22	6737693	SPACER			1
23	7159624	BUSHING			2
24		LEVER	Contact your Local Dealer for Bobcat Technical Information BTI426 - NLA - Was 7176039 [A]		1
25	17C620	BOLT			1
26	6534668	SNAP RING			1
27	57D5	NUT			4
28	6592766	U-BOLT			2
29	57D6	NUT 5			2
30		MOUNT	Contact your Local Dealer for Bobcat Technical Information BTI426 - NLA - Was 7176037 [A]		1
31	84G3716	SCREW 5			2
32	7164294	PEDAL, FOOT THROTTLE			1
33	31C612	BOLT			1
34	30H20	CLIP			4
35		CABLE	Contact your Local Dealer for Bobcat Technical Information BTI426 - NLA - hand cable - 4616 mm (181.7") - Was 7166623 [A]		1
36	37C624	BOLT			1
37	7250340	PEDAL ASSY RH	Was 7157725 [A]		1
38	7166269	WASHER			1
39	7159386	WASHER			2
40	7166172	HANDLE			1

Page 444 OSS# 6300322913 - All rights reserved by Bobcat Company - 08/04/2017 - 06:30:16 - Produced by Ken Cook Co. with mediaoff

ENGINE SPEED CONTROL (Cont'd)

(SJC) (4616 mm) (181.7") Hand Cable - (2515 mm) (99") Foot Cable

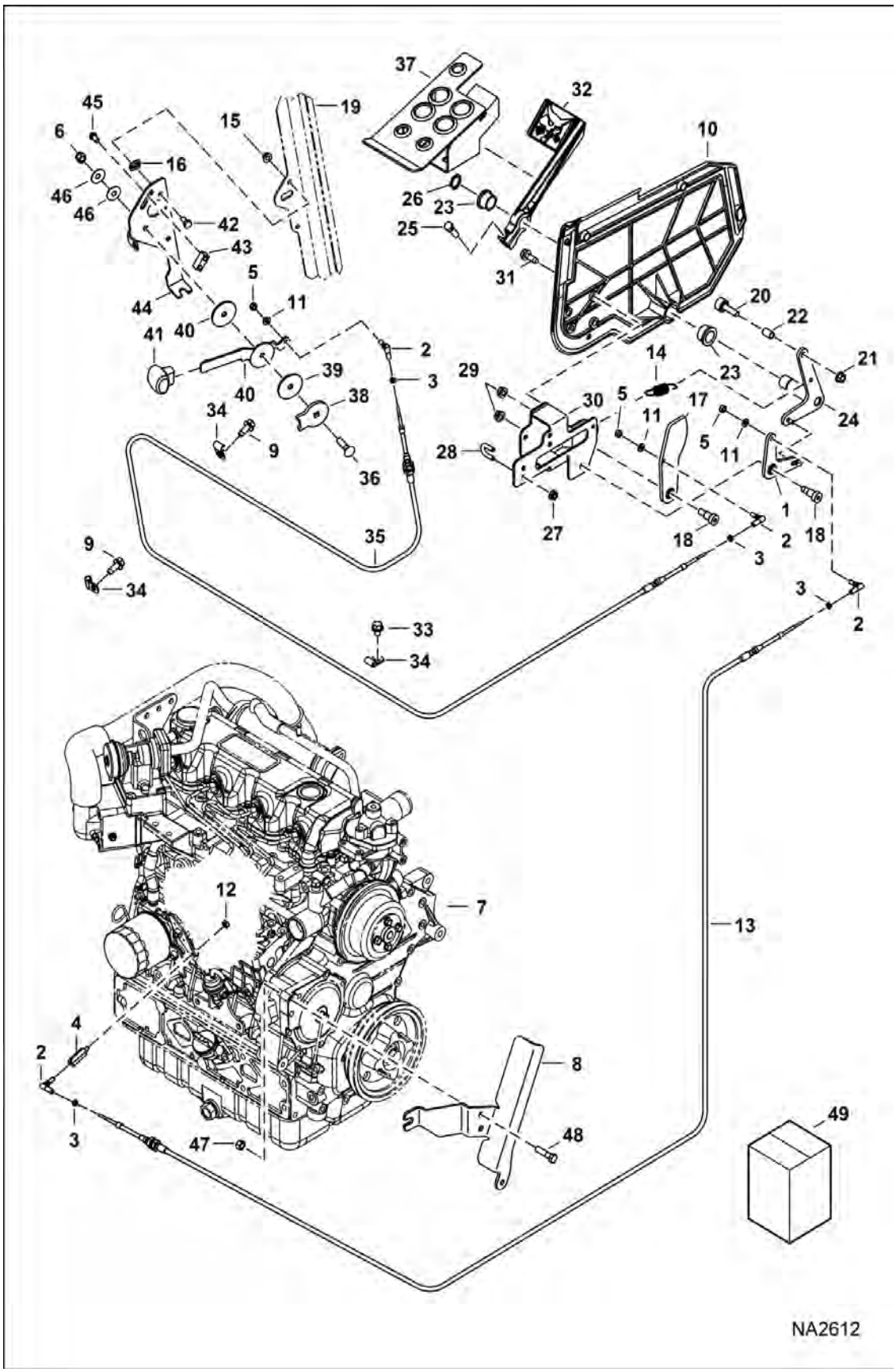

Illustration NA2612

Page 445 - OSS# 6300322913 - All rights reserved by Bobcat Company - 08/04/2017 - 06:30:16 - Produced by Ken Cook Co. with mediaioff

ENGINE SPEED CONTROL (Cont'd)

(SJC) (4616 mm) (181.7") Hand Cable - (2515 mm) (99") Foot Cable

Ref No	Part Number	Description	Remarks	Serial Number	Qty
41	7166173	HANDLE	black - no longer orange		1
42	17C510	BOLT			2
43	7166174	BLOCK			1
44	7166171	BRACKET			1
45	25G510	BOLT			2
46	6630038	WASHER			2
47	95D6	NUT			2
48	7131273	SCREW	SJC - Was 59CM1240 [B]		2
49		KIT, THROTTLE FOOT	Contact your Local Dealer for Bobcat Technical Information BTI426 - NLA - Was 7213423 [B]		1

Page Built: OSS# 6300322913 - All rights reserved by Bobcat Company - 08/04/2017 - 06:30:16 - Produced by Ken Cook Co. with mediaioff

ENGINE SPEED CONTROL

(SJC) (4724 mm) (186") Hand Cable - (2692 mm) (106") Foot Cable

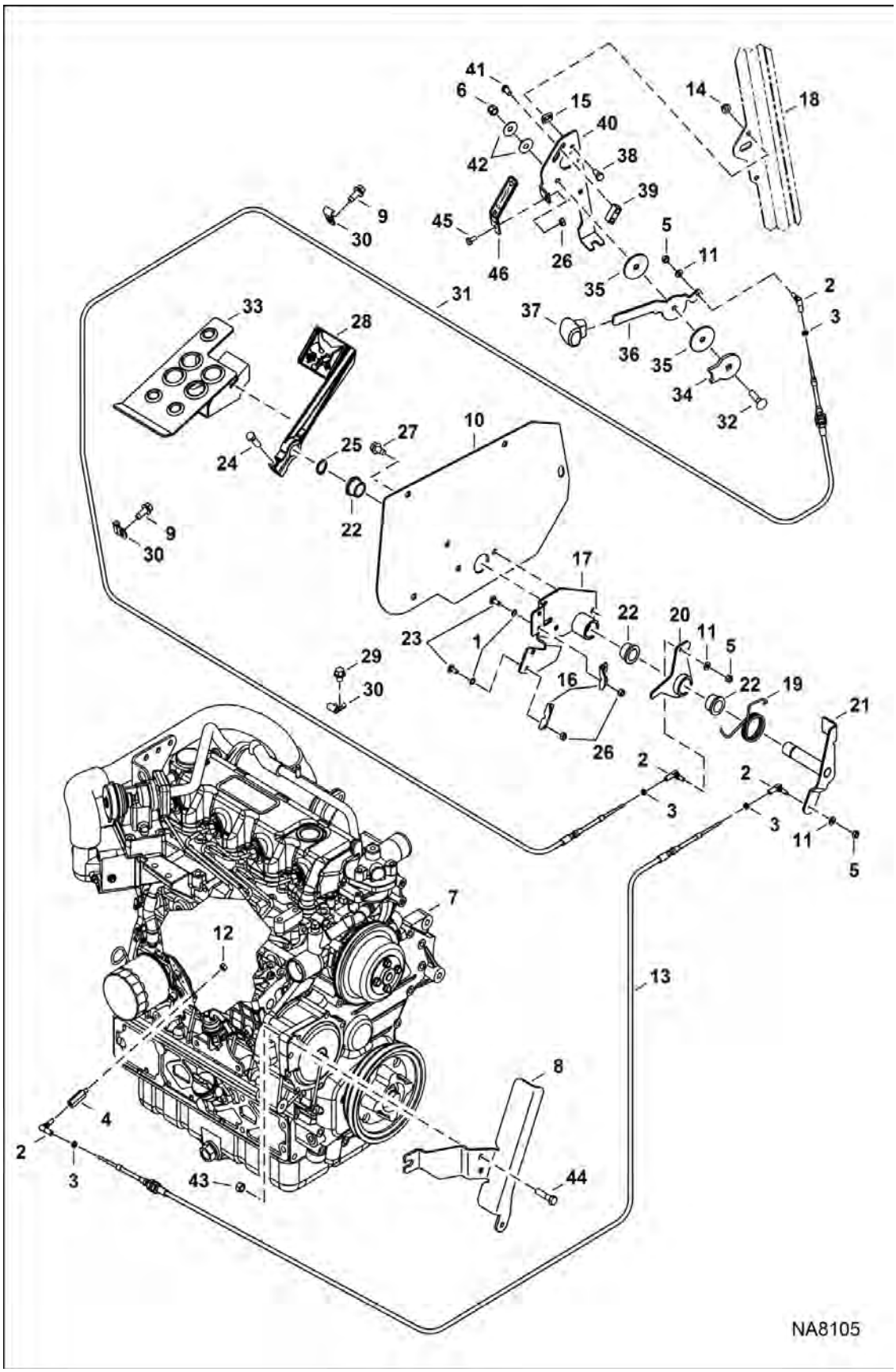

Page 447 - OSS# 6300322913 - All rights reserved by Bobcat Company - 08/04/2017 - 06:30:16 - Produced by Ken Cook Co. with mediaioff

ENGINE SPEED CONTROL (Cont'd)

(SJC) (4724 mm) (186") Hand Cable - (2692 mm) (106") Foot Cable

Ref No	Part Number	Description	Remarks	Serial Number	Qty
1	6675212	RETAINER, BOLT			4
2	6644965	BALL JOINT			4
3	14D10	NUT			4
4	7183048	SPACER			1
5	62D4	NUT			3
6	17C624	BOLT 5			2
7		ENGINE	See Illustration ENGINE & GASKET KITS / NA5149		1
8	7196287	COVER, BELT			1
9	84G3712	BOLT 5			5
10	7213394	PANEL, RH			1
11	25E11	WASHER			3
12	95D4	NUT			1
13	7213429	CABLE, THROTTLE	foot cable - 2692 mm (106")		1
14	55D5	NUT			2
15	774220	NUT			2
16	7213396	CLAMP, CABLE			2
17	7213407	BRACKET, THROTTLE			1
18		CAB, ASSY	See Illustration OPERATOR CAB / NA8625		1
19	7213411	SPRING, TORSION			1
20	7213412	LEVER			1
21	7213415	LEVER			1
22	7159624	BUSHING			2
23	10C410	BOLT			4
24	17C620	BOLT			1
25	6534668	SNAP RING			1
26	61D4	NUT 5			4
27	84G3716	SCREW 5			2
28	7164294	PEDAL, FOOT THROTTLE			1
29	31C612	BOLT			1
30	30H20	CLIP			4
31	7213435	CABLE, THROTTLE	hand cable - 4724 mm (186")		1
32	37C624	BOLT			1
33	7250340	PEDAL ASSY RH	Was 7157725 [A]		1
34	7166269	WASHER			1
35	7159386	WASHER			2
36	7166172	HANDLE			1
37	7166173	HANDLE			1
38	17C510	BOLT			2
39	7166174	BLOCK			1
40	7166171	BRACKET			1
41	25G510	BOLT			2
42	6630038	WASHER			2
43	95D6	NUT			2
44	7131273	SCREW			2
45	17C408	BOLT			1

Page 448 OSS# 6300322913 - All rights reserved by Bobcat Company - 08/04/2017 - 06:30:16 - Produced by Ken Cook Co. with mediaoff

ENGINE SPEED CONTROL (Cont'd)

(SJC) (4724 mm) (186") Hand Cable - (2692 mm) (106") Foot Cable

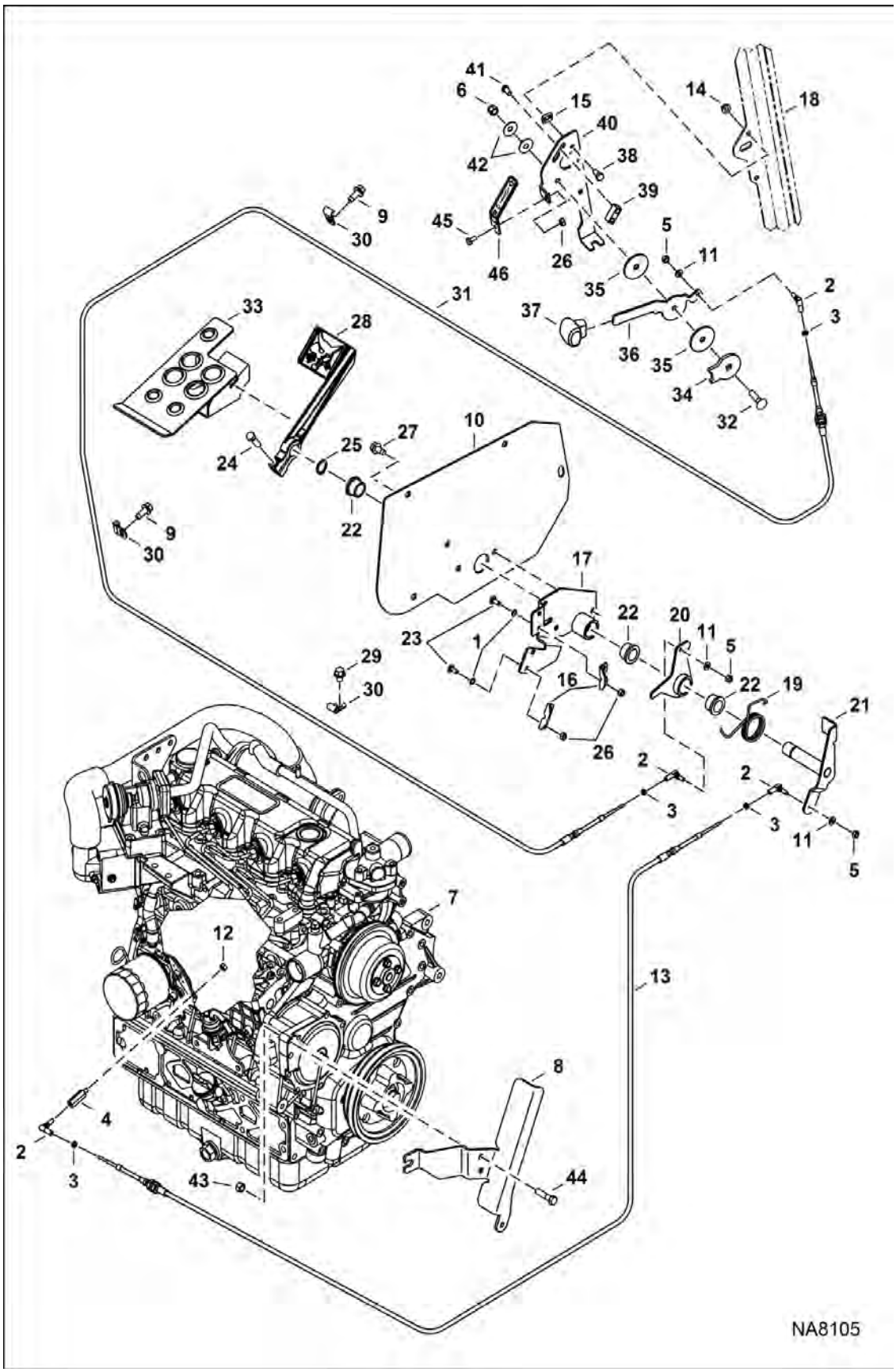

Page 449 - OSS# 6300322913 - All rights reserved by Bobcat Company - 08/04/2017 - 06:30:16 - Produced by Ken Cook Co. with mediaioff

Illustration NA8105

ENGINE SPEED CONTROL (Cont'd)

(SJC) (4724 mm) (186") Hand Cable - (2692 mm) (106") Foot Cable

Ref No	Part Number	Description	Remarks	Serial Number	Qty
46	7169911	DECAL PLATE			1

Page 1 of 1 OSS# 6300322913 - All rights reserved by Bobcat Company - 08/04/2017 - 06:30:16 - Produced by Ken Cook Co. with mediaioff

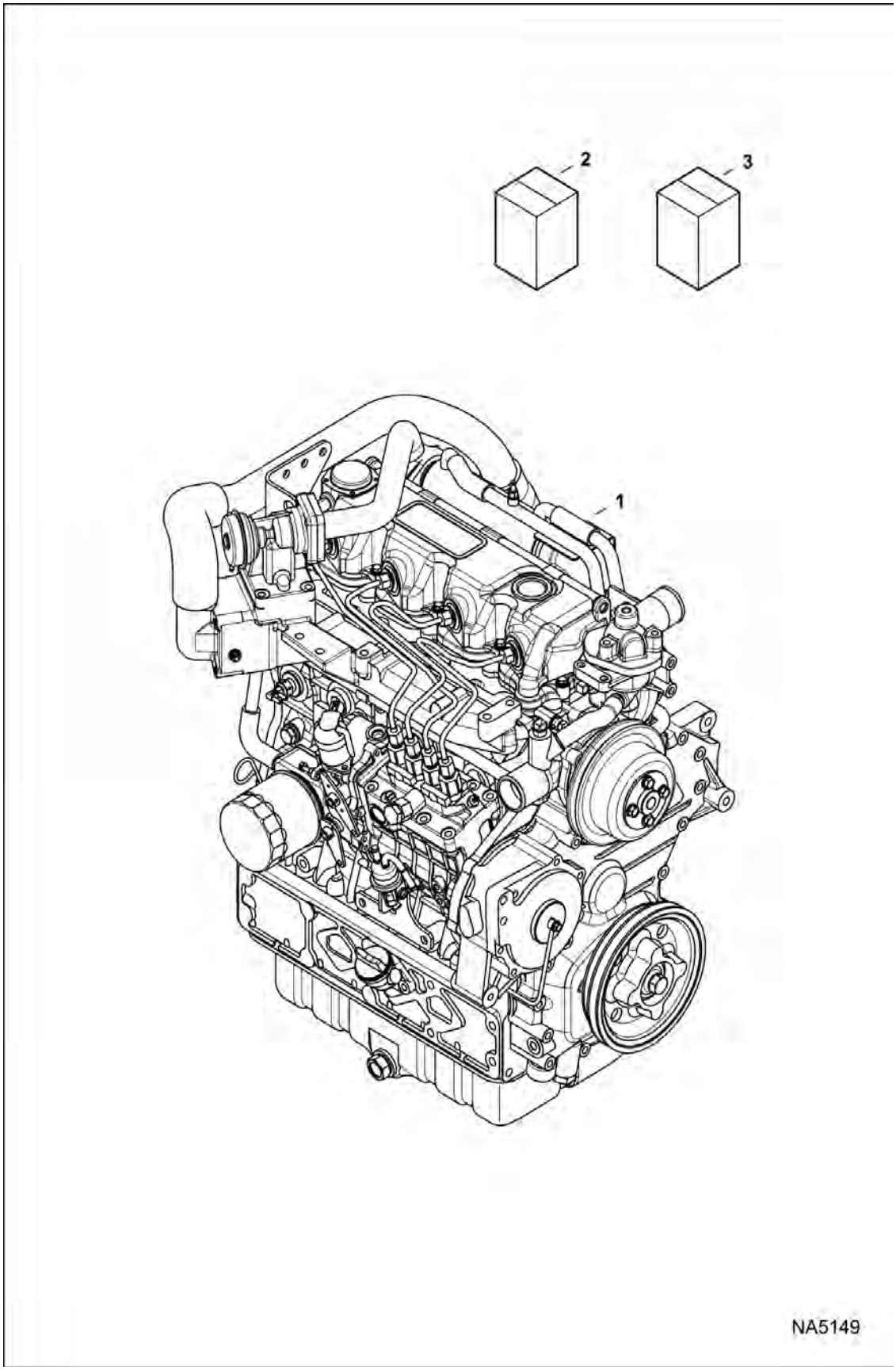

Page 451 - OSS# 6300322913 - All rights reserved by Bobcat Company - 08/04/2017 - 06:30:16 - Produced by Ken Cook Co. with mediaioff

ENGINE & GASKET KITS (Cont'd)

Ref No	Part Number	Description	Remarks	Serial Number	Qty
1	6692834	ENG, V3800DIT 92 HP EPA T3 / EU STG IIIA			1
1	6692834REM	ENG, V3800DIT 92 HP EPA T3 / EU STG IIIA			1
2		KIT, UPPER GASKET	See Illustration UPPER GASKET KIT / B27162		1
3		KIT, GASKET ENG LOWER	See Illustration LOWER GASKET KIT / B27163		1

Page 124 OSS# 6300322913 - All rights reserved by Bobcat Company - 08/04/2017 - 06:30:16 - Produced by Ken Cook Co. with mediaioff

UPPER GASKET KIT

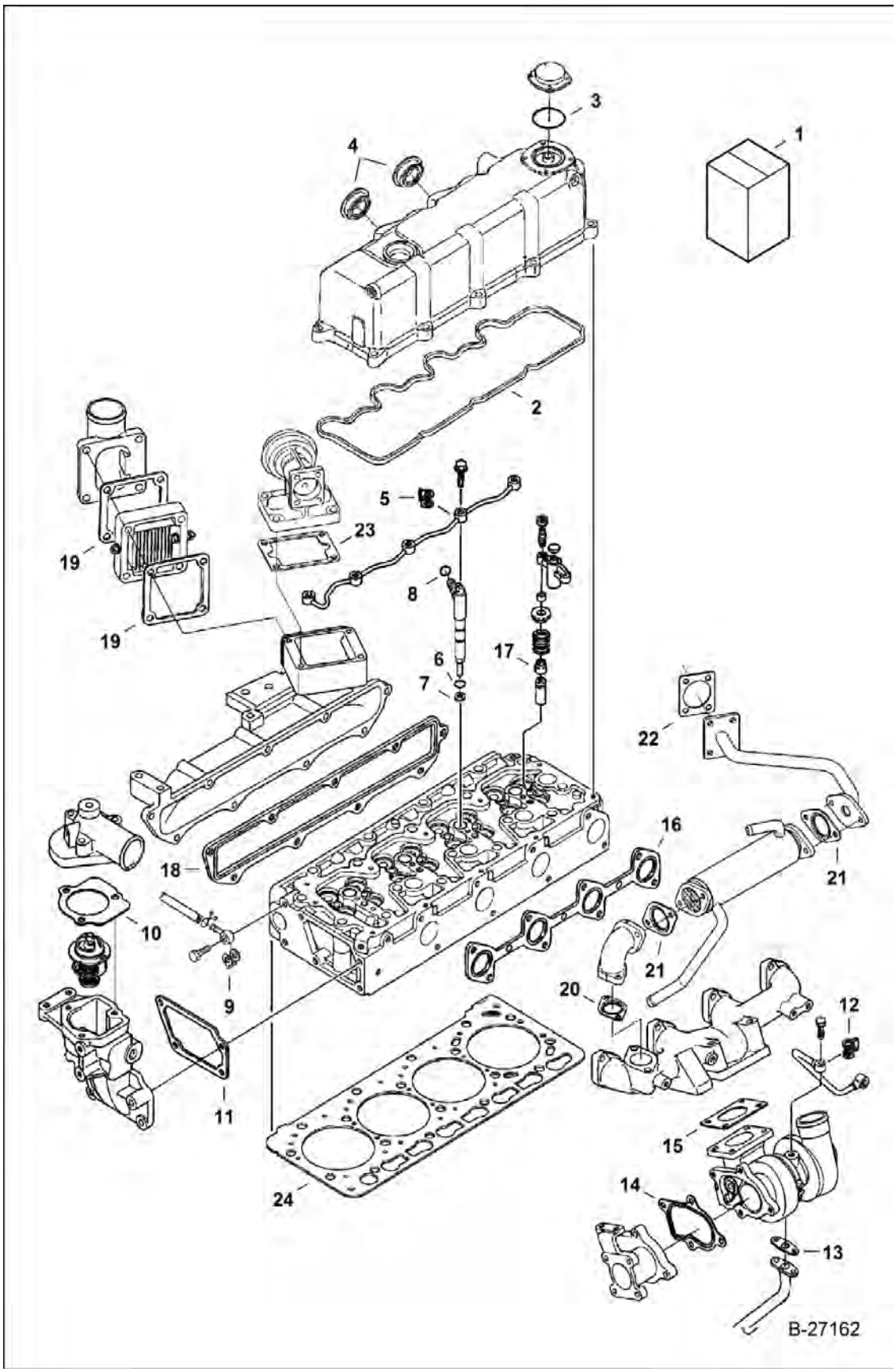

Page 453 - OSS# 6300322913 - All rights reserved by Bobcat Company - 08/04/2017 - 06:30:16 - Produced by Ken Cook Co. with mediaioff

UPPER GASKET KIT (Cont'd)

Ref No	Part Number	Description	Remarks	Serial Number	Qty
1	6689756	KIT, GASKET ENG UPPER	Ref. 2-19 - Also Order Ref. 20-24		1
2	6680690	GASKET	See Illustration CYLINDER HEAD & COVER / B27167 - valve cover		1
3	6680691	RING,O	See Illustration CYLINDER HEAD & COVER / B27167 - breather		1
4	6680695	SEAL	See Illustration CYLINDER HEAD & COVER / B27167 - injector line		4
5	6685498	GASKET	See Illustration FUEL INJECTION SYSTEM / B27174 - injector line		5
6	6670769	O-RING	See Illustration FUEL INJECTION SYSTEM / B27174 - injector nozzle		4
7	6969824	GASKET, NOZZLE INJ	See Illustration FUEL INJECTION SYSTEM / B27174 - injector nozzle		4
8	6680778	RING,O	See Illustration FUEL INJECTION SYSTEM / B27174 - injector line		4
9	6698528	WASHER, SEALING	See Illustration FUEL INJECTION SYSTEM / B27174 - fuel return line		1
10	6685955	GASKET	See Illustration WATER PUMP & THERMOSTAT / NA2747 - thermostat cover		1
11	6680849	GASKET	See Illustration WATER PUMP & THERMOSTAT / NA2747 - thermostat housing		1
12	7000642	WASHER, SEALING COPPER	See Illustration TURBOCHARGER / NA2745 - oil supply tube		1
13	6680570	GASKET	See Illustration TURBOCHARGER / NA2745 - oil return		1
14	6691588	GASKET	See Illustration TURBOCHARGER / NA2745 - turbocharger flange		1
15	7008514	GASKET, TURBO	See Illustration TURBOCHARGER / NA2745 - turbocharger		1
16	6680891	GASKET	See Illustration MANIFOLDS / NA2816 - exhaust manifold		1
17	6672436	SEAL	See Illustration CYLINDER HEAD / B27168 - valve stem		16
18	6680884	GASKET	See Illustration MANIFOLDS / NA2816 - intake manifold		1
19	6680887	GASKET	See Illustration MANIFOLDS / NA2816 - intake flange		2
20	6698583	GASKET, EGR FLANGE	See Illustration EGR VALVE / B27166 not in kit - Was 6698583		1
21	6698582	GASKET, EGR PIPE	See Illustration EGR VALVE / B27166 - not in kit		2
22	6698534	GASKET, EXHAUST	See Illustration EGR VALVE / B27166 - not in kit		1
23	6698581	GASKET, EGR VALVE	See Illustration EGR VALVE / B27166 - not in kit		1
24		GASKET, HEAD CYL	See Illustration CYLINDER HEAD & COVER / B27167 - not in kit		1

Page 1 of 1 OSS# 6300322913 - All rights reserved by Bobcat Company - 08/04/2017 - 06:30:16 - Produced by Ken Cook Co. with mediaoff

LOWER GASKET KIT

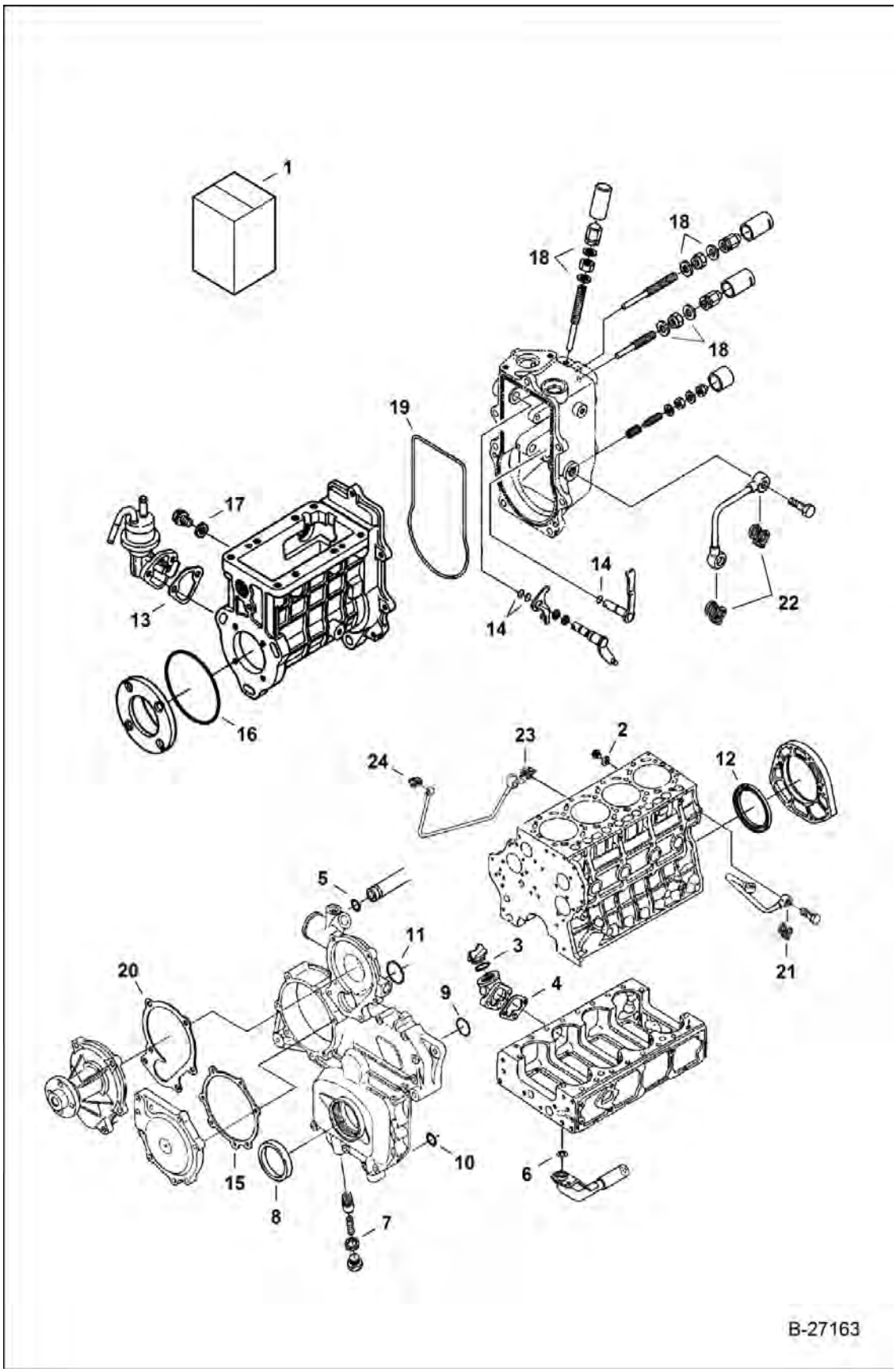

Page 455 - OSS# 6300322913 - All rights reserved by Bobcat Company - 08/04/2017 - 06:30:16 - Produced by Ken Cook Co. with mediaioff

LOWER GASKET KIT (Cont'd)

Ref No	Part Number	Description	Remarks	Serial Number	Qty
1	6698579	KIT, GASKET ENG LOWER	Ref. 2-22 - Also Order Ref. 23 & 24		1
2	6652751	GASKET	See Illustration PISTON & CRANKSHAFT / B27170		1
3	6684782	O-RING	See Illustration OIL PAN / B27169 - oil filler cap		1
4	6685923	GASKET	See Illustration OIL PAN / B27169 - oil filler flange		1
5	6685971	O-RING	See Illustration OIL PAN / B27169		1
6	6680661	RING,O	See Illustration OIL PAN / B27169		1
7	6670347	GASKET	See Illustration FRONT COVER / NA2746		1
8	6680680	SEAL	See Illustration FRONT COVER / NA2746 - front oil		1
9	6680681	RING,O	See Illustration FRONT COVER / NA2746		1
10	6680682	RING,O	See Illustration FRONT COVER / NA2746		1
11	6680855	RING,O	See Illustration FRONT COVER / NA2746		1
12	6680705	REAR SEAL	See Illustration FRONT COVER / NA2746 - rear oil		1
13	7010133	GASKET, PUMP FUEL	See Illustration FUEL INJECTION SYSTEM / B27293		1
14	6683023	O-RING	See Illustration GOVERNOR / B27176		3
15	6685948	GASKET	See Illustration FUEL INJECTION SYSTEM / B27293 - front cover		1
16	6698539	GASKET, PUMP INJ	See Illustration FUEL INJECTION SYSTEM / B27293		1
17	3974095	GASKET, METAL	See Illustration FUEL INJECTION PUMP / NA2848		4
18	3974972	GASKET	See Illustration GOVERNOR / B27177		6
19	6680829	GASKET	See Illustration FUEL INJECTION PUMP / NA2848 - governor housing		1
20	6680853	GASKET	See Illustration WATER PUMP & THERMOSTAT / NA2747 - water pump		1
21	6689331	GASKET	See Illustration TURBOCHARGER / NA2745 - oil supply tube		1
22	7000642	WASHER, SEALING COPPER	See Illustration GOVERNOR / B27176 - oil pipe		2
23	7000642	WASHER, SEALING COPPER	See Illustration FUEL INJECTION SYSTEM / B27293 - oil pipe - not in kit		1
24	6685498	GASKET	See Illustration FUEL INJECTION SYSTEM / B27293 - oil pipe - not in kit		1

Page 448 OSS# 6300322913 - All rights reserved by Bobcat Company - 08/04/2017 - 06:30:16 - Produced by Ken Cook Co. with mediaoff

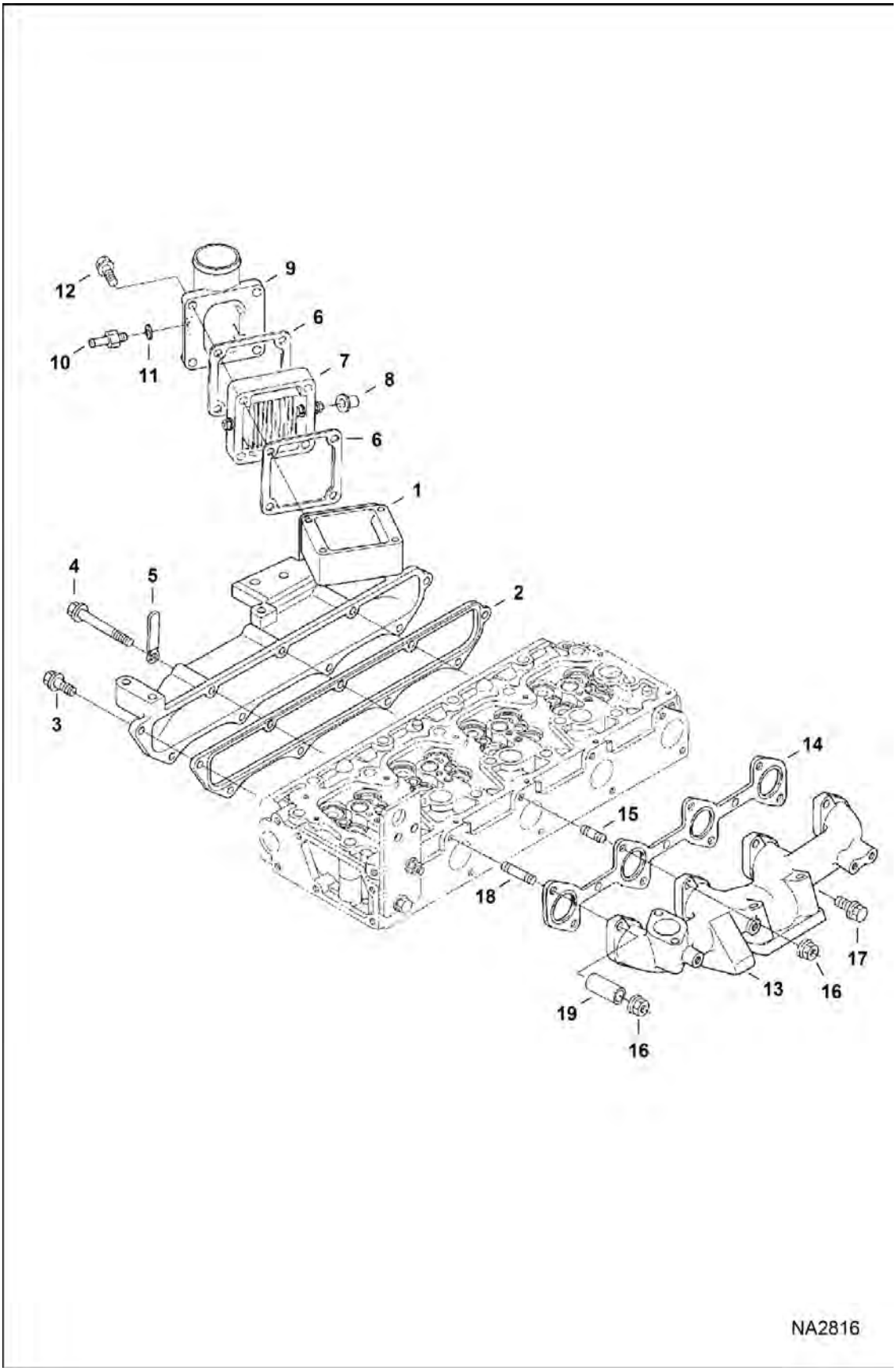

Page 457 - OSS# 6300322913 - All rights reserved by Bobcat Company - 08/04/2017 - 06:30:16 - Produced by Ken Cook Co. with mediaioff

MANIFOLDS (Cont'd)

Ref No	Part Number	Description	Remarks	Serial Number	Qty
1	6698550	MANIFOLD, INTAKE			1
2	6680884	GASKET			1
3	6680801	BOLT			6
4	6680885	BOLT			3
5	6698521	BRACKET, TIEDOWN			1
6	6680887	GASKET			2
7	6680888	HEATER			1
8	3974409	PLUG			1
9	6698547	FLANGE, INTAKE			1
10	6657446	SCREW	air bleeder		1
11	3974972	GASKET			1
12	6680851	BOLT			4
13	6698551	MANIFOLD, EXHAUST			1
14	6680891	GASKET			1
15	6652670	STUD 5			2
16	6969819	NUT, FLANGE			6
17	6680801	BOLT			2
18	6653827	STUD			4
19	7019303	SPACER			4

Page 450 OSS# 6300322913 - All rights reserved by Bobcat Company - 08/04/2017 - 06:30:16 - Produced by Ken Cook Co. with mediaioff

TURBOCHARGER

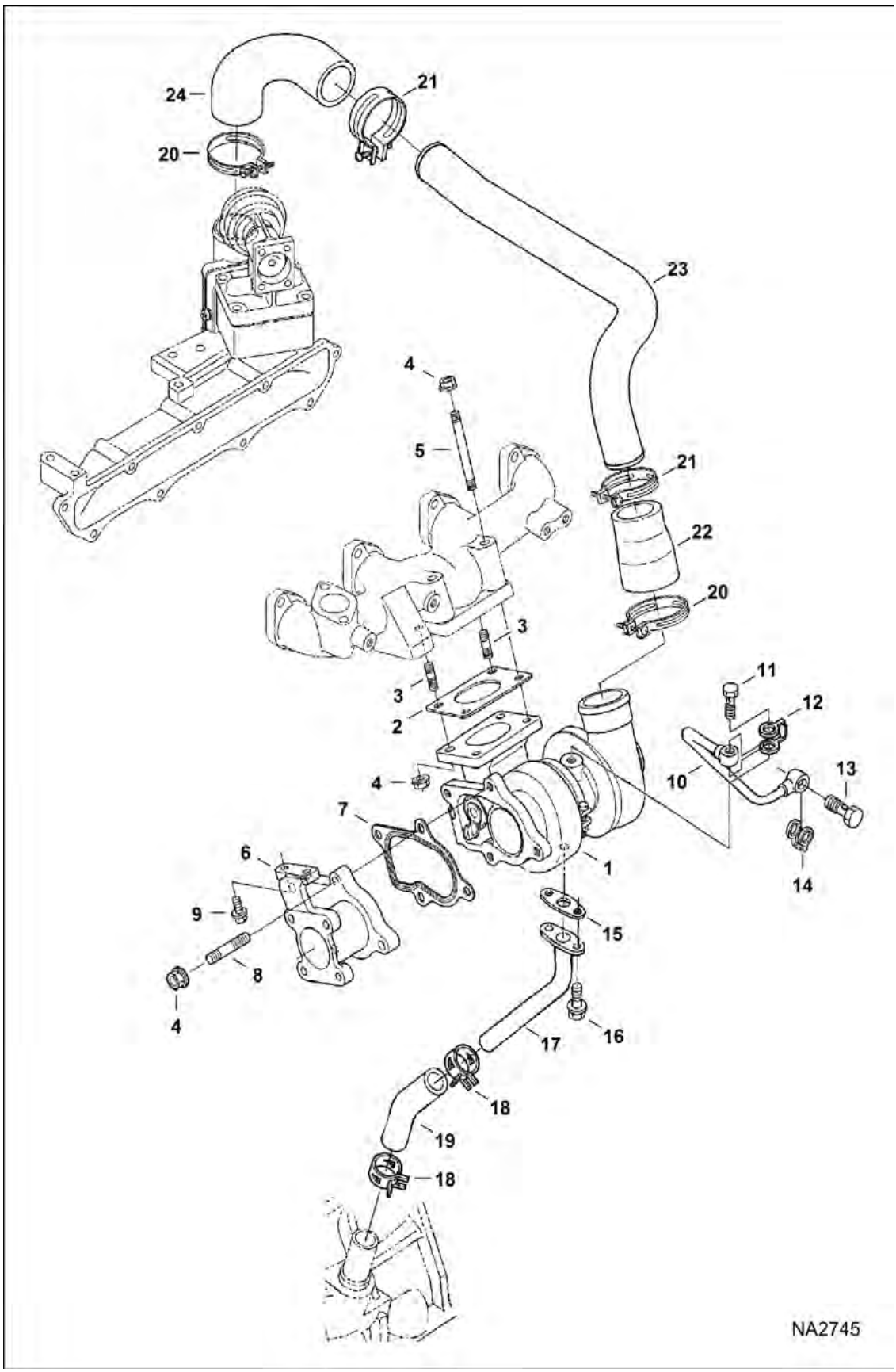

Page 459 - OSS# 6300322913 - All rights reserved by Bobcat Company - 08/04/2017 - 06:30:16 - Produced by Ken Cook Co. with mediaioff

TURBOCHARGER (Cont'd)

Ref No	Part Number	Description	Remarks	Serial Number	Qty
1	7017202	TURBOCHARGER			1
1	7017202EF	TURBOCHARGER			1
1	7017202REM	TURBOCHARGER			1
2	7008514	GASKET, TURBO			1
3	7010134	STUD			2
4	7010135	NUT			8
5	7010136	STUD			2
6	6698525	FLANGE, MUFFLER			1
7	6691588	GASKET			1
8	7010137	STUD			4
9	7010138	BOLT, FLANGE			2
10	6680899	TUBE			1
11	6680900	BOLT			1
12	7000642	WASHER, SEALING COPPER	- oil supply tube - top		1
13	7022765	BOLT, EYE	Was 7022765 [A]		1
14	6689331	GASKET			1
15	7008516	GASKET	oil return tube		1
16	29CM612	BOLT, FLANGED			2
17	6685963	TUBE			1
18	6680903	CLAMP			2
19	6685965	HOSE			1
20	6653993	CLAMP			2
21	3974143	BAND,PIPE			2
22	6680894	HOSE			1
23	6698548	PIPE, INTAKE			1
24	6698549	HOSE, AIR FORMED			1

Page 452 OSS# 6300322913 - All rights reserved by Bobcat Company - 08/04/2017 - 06:30:16 - Produced by Ken Cook Co. with mediaioff

EGR VALVE

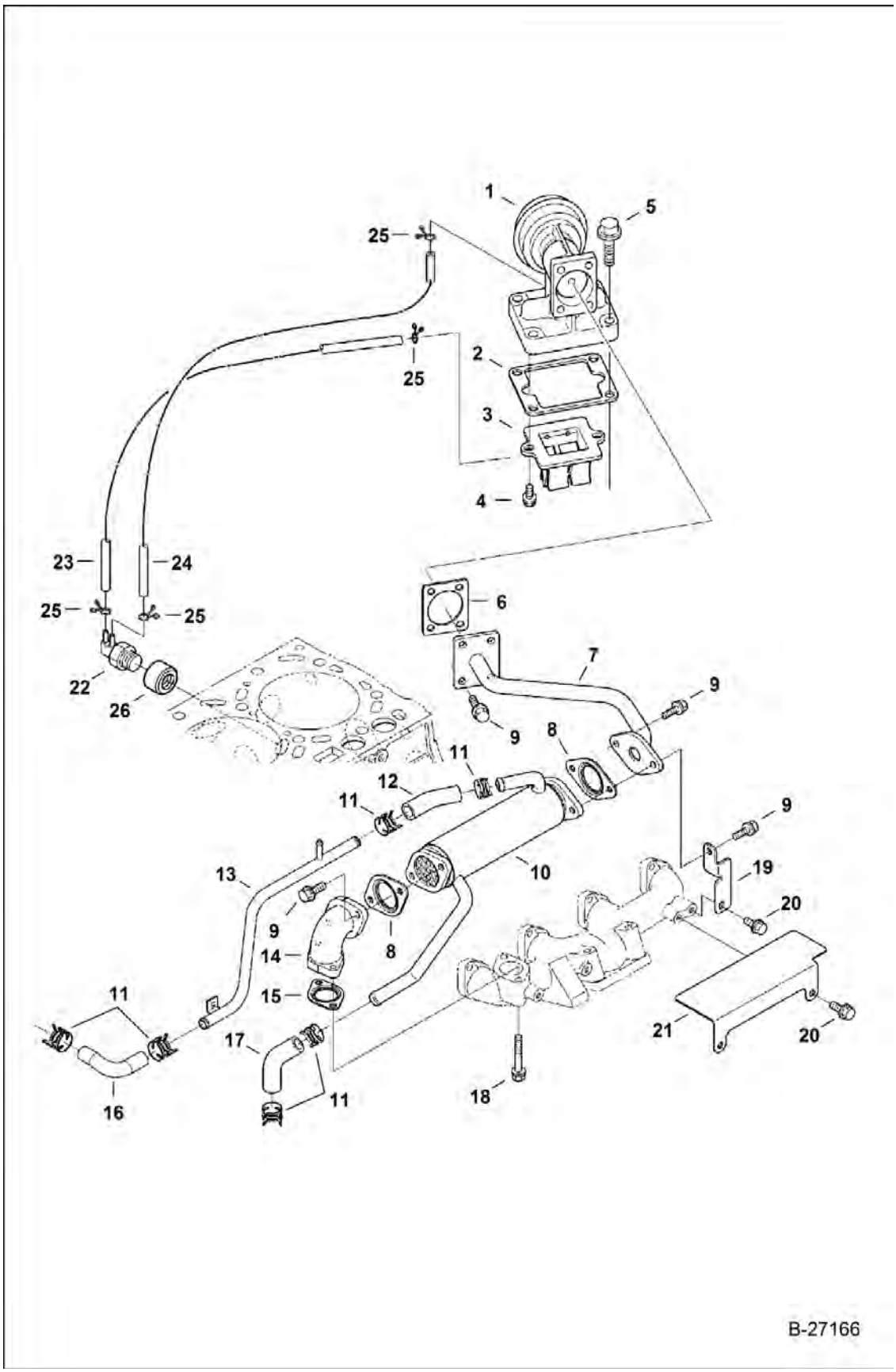

Page 461 - OSS# 6300322913 - All rights reserved by Bobcat Company - 08/04/2017 - 06:30:16 - Produced by Ken Cook Co. with mediaioff

EGR VALVE (Cont'd)

Ref No	Part Number	Description	Remarks	Serial Number	Qty
1	7012295	VALVE, EGR			1
2	6698581	GASKET, EGR VALVE			1
3	6698580	VALVE, LEAD			1
4	29CM612	BOLT, FLANGED			2
5	6680706	BOLT			4
6	6698534	GASKET, EXHAUST			1
7	6698553	PIPE, TUBE EXHAUST			1
8	6698582	GASKET, EGR PIPE			2
9	6680801	BOLT			8
10	6698570	EXCHANGER, EGR			1
11	6675618	CLAMP			6
12	6698572	HOSE, WATER FORMED			1
13	6698573	PIPE, WATER EGR			1
14	6698552	FLANGE, EGR			1
15	7024928	GASKET, EGR FLANGE	Was 6698583 [A]		1
16	6698574	HOSE, WATER FORMED			1
17	6698575	HOSE, WATER FORMED			1
18	6693483	BOLT			2
19	6698571	BRACKET, EXCHANGER			1
20	6685109	BOLT FLANGE			4
21	6698554	SHIELD, HEAT			1
22	6698585	VALVE, THERMOSTATIC			1
23	6698576	HOSE, VACUUM			1
24	6698577	HOSE, VACUUM			1
25	6654718	CLAMP 5			4
26	7017205	ADAPTER, PIPE			1

Page 2 OSS# 6300322913 - All rights reserved by Bobcat Company - 08/04/2017 - 06:30:16 - Produced by Ken Cook Co. with mediaoff

CYLINDER HEAD & COVER

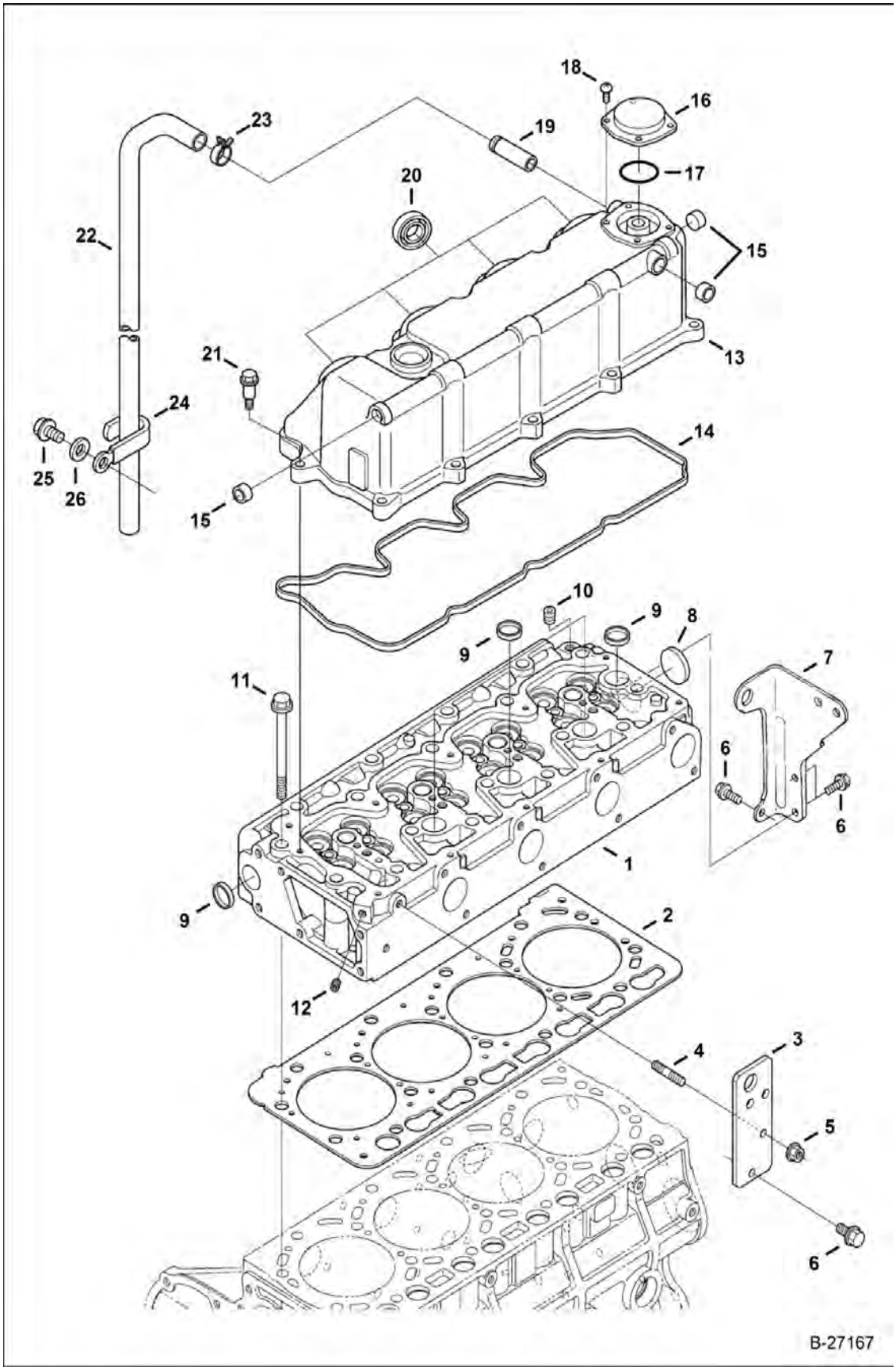

Page 463 - OSS# 6300322913 - All rights reserved by Bobcat Company - 08/04/2017 - 06:30:16 - Produced by Ken Cook Co. with mediaioff

CYLINDER HEAD & COVER (Cont'd)

Ref No	Part Number	Description	Remarks	Serial Number	Qty
1	7020950	HEAD, CYL ENG	See Illustration CYLINDER HEAD / B27168		1
2	6698597	GASKET, HEAD CYL	std - 2 notch		1
2	6698598	GASKET, HEAD CYL	suitability - 1 notch		1
2	6698589	GASKET, HEAD CYL	suit ability - no notch		1
3	6698545	HOOK, LIFT ENG			1
4	6652670	STUD 5			1
5	6969819	NUT, FLANGE			1
6	6680662	BOLT			4
7	6698526	HOOK, LIFT ENG			1
8	3974433	PLUG			1
9	3974432	PLUG			5
10	6680667	PLUG			1
11	6680668	BOLT			18
12	6652574	PLUG			1
13	6680688	HEAD COVER			1
14	6680690	GASKET			1
15	6680694	CAP			3
16	6688655	BREATHER COVER			1
17	6680691	RING,O			1
18	6680693	SCREW			4
19	6680689	ADAPTER			1
20	6680695	SEAL			4
21	6680696	BOLT			10
22	6685930	HOSE			1
23	6680698	CLAMP			1
24	6680699	CLAMP			1
25	6680658	BOLT			1
26	6680700	WASHER			1

Page 456 OSS# 6300322913 - All rights reserved by Bobcat Company - 08/04/2017 - 06:30:16 - Produced by Ken Cook Co. with mediaoff

CYLINDER HEAD

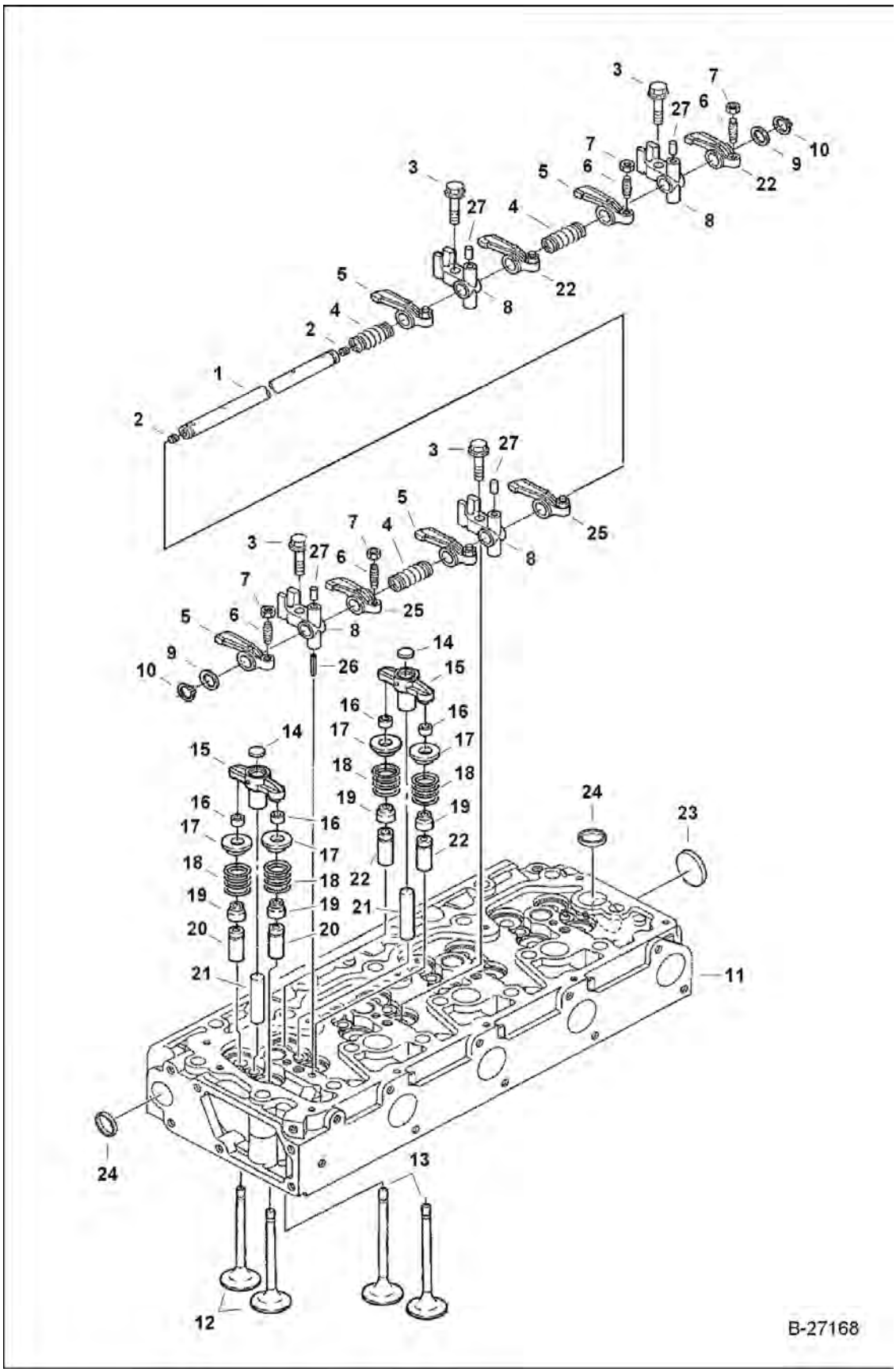

Page 465 - OSS# 6300322913 - All rights reserved by Bobcat Company - 08/04/2017 - 06:30:16 - Produced by Ken Cook Co. with mediaioff

CYLINDER HEAD (Cont'd)

Ref No	Part Number	Description	Remarks	Serial Number	Qty
1	6680868	SHAFT	W/Ref. 2		1
2	25GM8010	SCREW	set		2
3	6680878	BOLT			4
4	6680872	SPRING			3
5	6680873	ROCKER ARM	W/Ref. 6-7		4
6	3974920	SCREW			8
7	2DM8	NUT			8
8	7017201	BRACKET, ROCKER ARM	W/Ref. 27		4
9	6680870	WASHER			2
10	6680871	SNAP RING			2
11	7020950	HEAD, CYL ENG	W/Ref. 12, 13 & 16-24 - Was 6693482 [A]		1
12	6680861	INTAKE VALVE	intake		8
13	6680862	VALVE, EXHAUST	exhaust		8
14	7000665	PAD, WEAR	Was 6680882 [A]		8
15	6698524	ARM, VALVE BRIDGE			8
16	7008389	RETAINER, VALVE SPRING	set of 2		16
17	6685959	RETAINER			16
18	6680863	SPRING, VALVE			16
19	6672436	SEAL	valve stem		16
20	6680859	GUIDE	valve		8
21	6680866	VALVE SHAFT			8
22	6685958	GUIDE	exhaust valve		8
23	3974433	PLUG			1
24	3974432	PLUG			5
25	6680875	ROCKER ARM	W/Ref. 6-7		4
26	6667461	SPRNG PIN			1
27		PIN	NSS - Order Ref. 8		4

Page 458 OSS# 6300322913 - All rights reserved by Bobcat Company - 08/04/2017 - 06:30:16 - Produced by Ken Cook Co. with mediaoff

OIL PAN

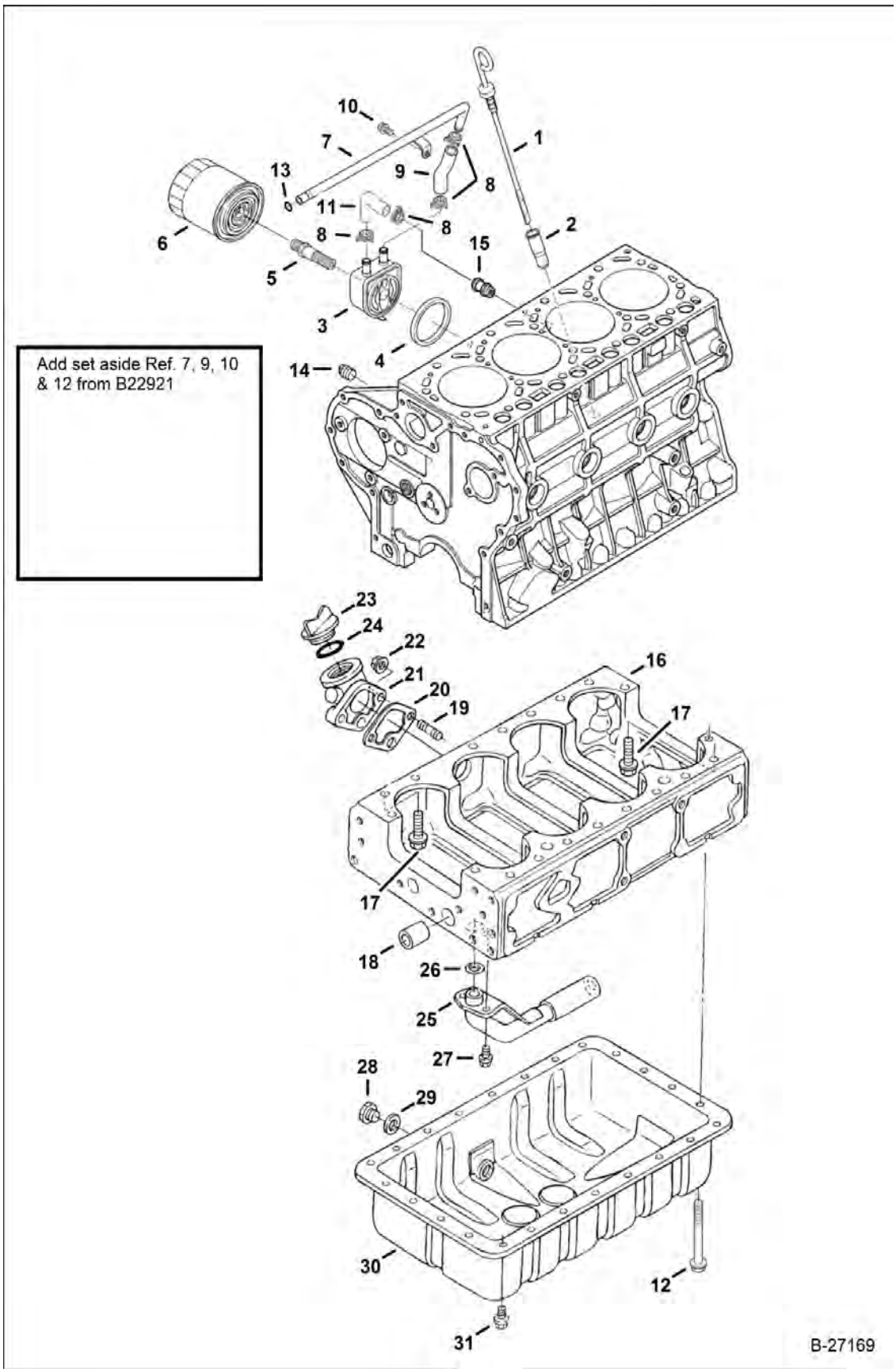

Page 467 - OSS# 6300322913 - All rights reserved by Bobcat Company - 08/04/2017 - 06:30:16 - Produced by Ken Cook Co. with mediaioff

OIL PAN (Cont'd)

Ref No	Part Number	Description	Remarks	Serial Number	Qty
1	7020951	DIPSTICK, OIL ENG	Was 6690692 [B]		1
2	6680702	TUBE, DIPSTICK			1
3	6698523	EXCHANGER, OIL COOLER			1
4	6686402	SEAL			1
5	7012202	ADAPTER			1
6	6678233	FILTER, OIL ENG 12			1
7	6698558	PIPE, OIL			1
8	6675618	CLAMP			4
9	6698559	HOSE, RUBBER			1
10	6680662	BOLT			1
11	6685969	HOSE			1
12	6680659	BOLT			2
13	6685971	O-RING			1
14	16F2	PLUG			1
15	6680646	ADAPTER			1
16	6698527	BLOCK ENGINE LOWER	Was 6685921 [A]		1
17	6680654	BOLT			16
18	7017199	PIN, STRAIGHT			1
19	6652670	STUD 5			2
20	6685923	GASKET			1
21	6685922	OIL FILL FLANGE			1
22	6969819	NUT, FLANGE			2
23	6685924	OIL FILL CAP			1
24	6684782	O-RING			1
25	6680660	FILTER, OIL			1
26	6680661	RING,O			1
27	6680662	BOLT			2
28	6680657	PLUG			1
29	6631046	GASKET			1
30	6680656	OIL PAN ASSY			1
31	6685925	OIL PAN BOLT			20

Page 460 OSS# 6300322913 - All rights reserved by Bobcat Company - 08/04/2017 - 06:30:16 - Produced by Ken Cook Co. with mediaoff

PISTON & CRANKSHAFT

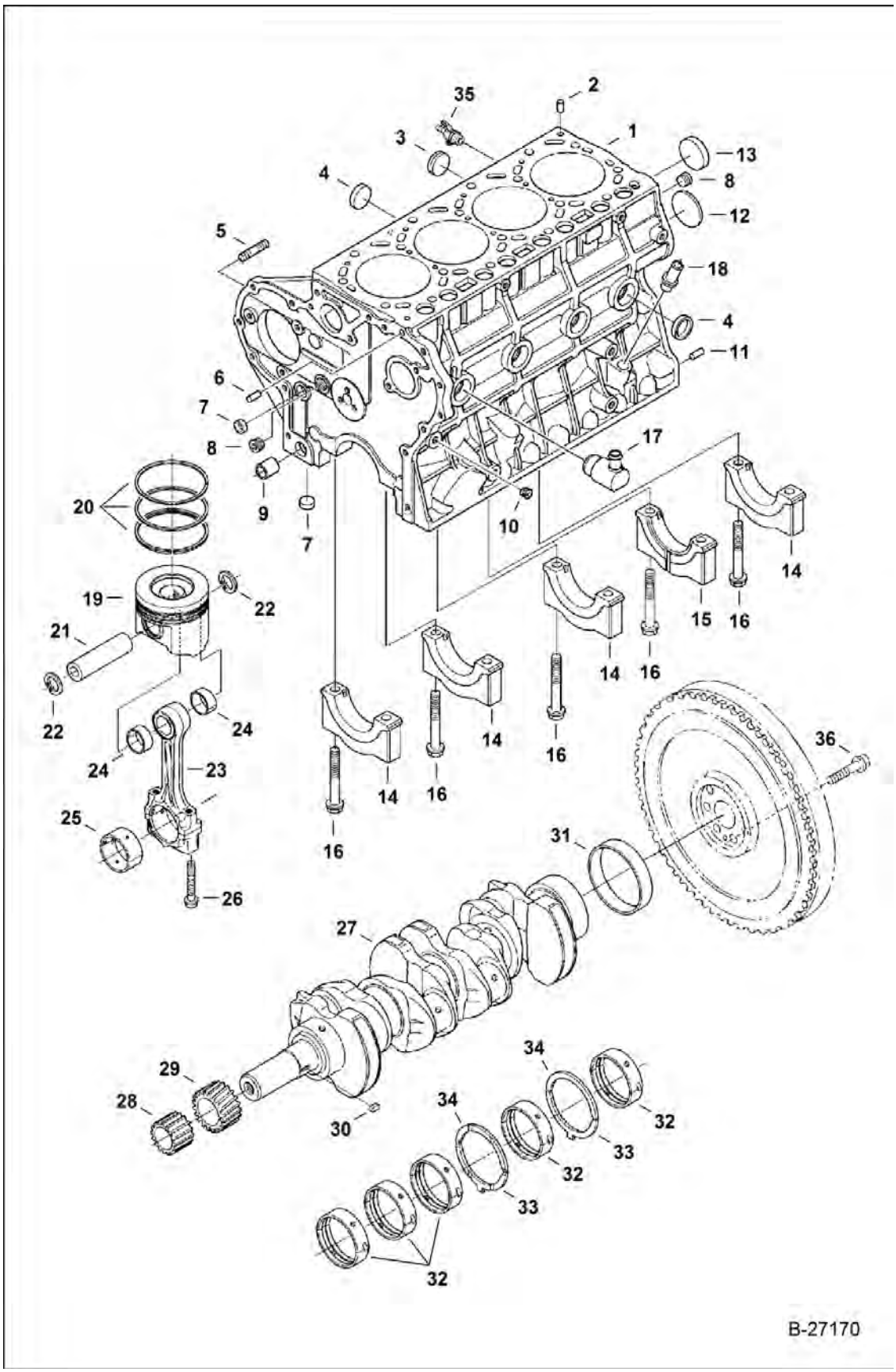

Page 469 - OSS# 6300322913 - All rights reserved by Bobcat Company - 08/04/2017 - 06:30:16 - Produced by Ken Cook Co. with mediaioff

PISTON & CRANKSHAFT (Cont'd)

Ref No	Part Number	Description	Remarks	Serial Number	Qty
1	6698544	BLOCK ENGINE			1
2	3974037	PIN			2
3	6672354	PLUG			1
4	3974389	PLUG			5
5	6698578	STUD			3
6	21JM814	PIN			1
7	3974056	CAP			2
8	6680636	PLUG			2
9	7017198	PIN, STRAIGHT			1
10	6680667	PLUG			1
11	6685918	PIN			4
12	6680640	PLUG			1
13	3974390	PLUG			1
14		CAP, MAIN BRG	NLA - Order Ref. 1		4
15		CAP, MAIN BRG	NLA - Order Ref. 1		1
16	6680645	BOLT			10
17	7017204	TUBE, WATER ELBOW			1
18	6680649	TUBE			1
19	6698535	PISTON, ENG	std (1J550-2111)		4
19	6698536	PISTON, ENG OS	+0,50 mm (1J550-2111 OS50)		4
20	6692364	PISTON RING	std		4
20	7024329	RING, PISTON	+0,50 mm - Was 6692365 [A]		4
21	6680725	PIN			4
22	6680726	SNAP RING			8
23	6692366	ROD	W/Ref. 24-26		4
24	6680728	BUSHING			8
25	6680730	ROD BEARING	std/blue/set		4
25	6680731	BEARING, ROD CONNECTING	std/set		4
25	6680732	ROD BEARING	-0,20 mm/green/set		4
25	6680733	ROD BEARING	-0,40mm/red/set		4
26	6698599	BOLT			8
27	6698555	CRANKSHAFT, ENGINE			1
28	6680737	GEAR			1
29	6680736	GEAR			1
30	3974226	KEY			1
31	6680735	SLEEVE			1
32	6680738	BEARING MAIN	std set		5
32	6680739	BEARING MAIN	-0,20 mm set		5
32	6680740	BEARING MAIN	-0,40 mm set		5
33	6680744	THRUST WASHER	std		2
33	6680745	THRUST WASHER	+0,20 mm		2
33	6680746	THRUST WASHER	+0,40 mm		2
34	6680741	THRUST WASHER	std		2

Page 1 of 1 OSS# 6300322913 - All rights reserved by Bobcat Company - 08/04/2017 - 06:30:16 - Produced by Ken Cook Co. with mediaioff

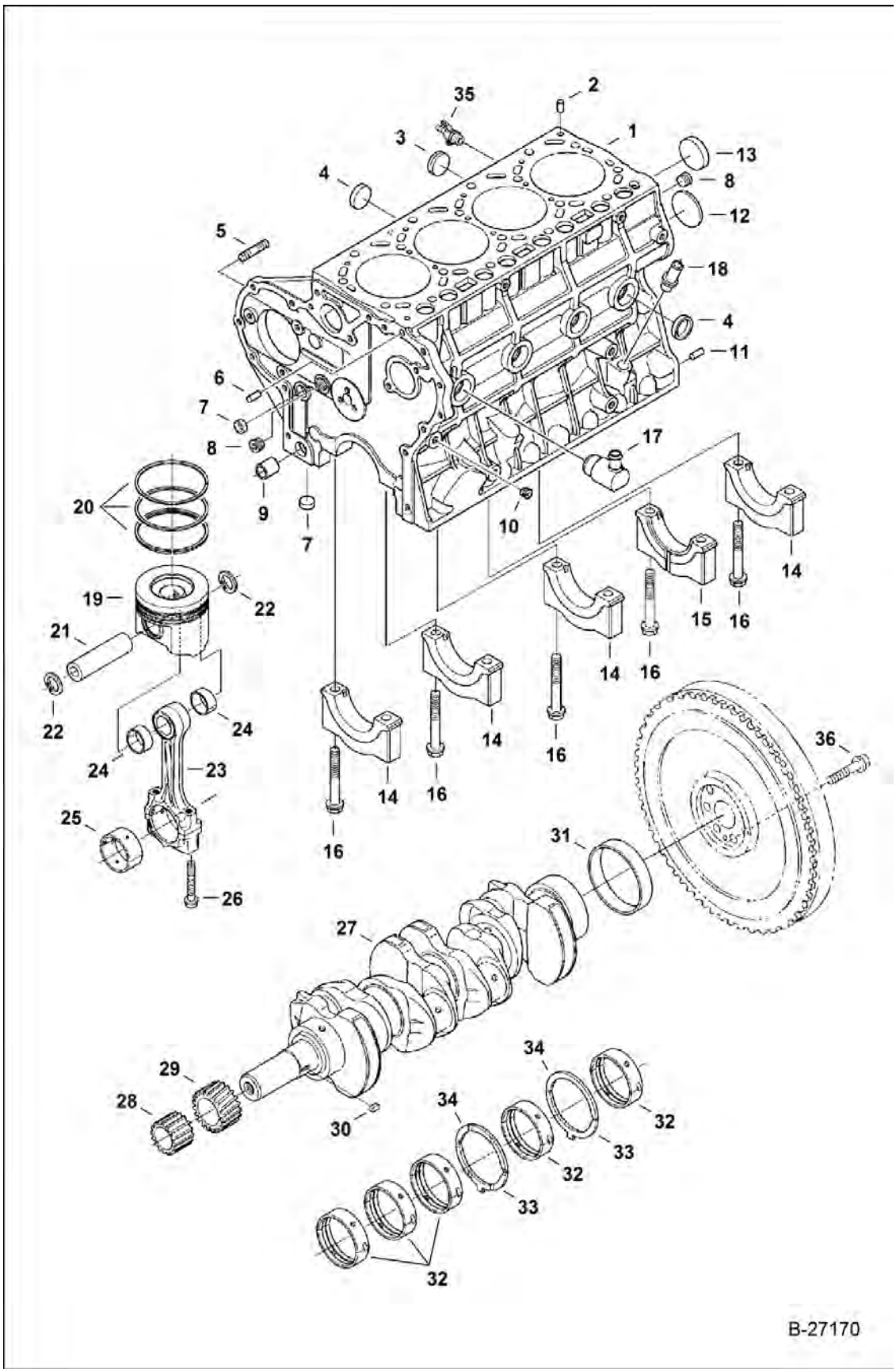

Page 471 - OSS# 6300322913 - All rights reserved by Bobcat Company - 08/04/2017 - 06:30:16 - Produced by Ken Cook Co. with mediaioff

PISTON & CRANKSHAFT (Cont'd)

Ref No	Part Number	Description	Remarks	Serial Number	Qty
34	6680742	THRUST WASHER	+0.20 mm		2
34	6680743	THRUST WASHER	+0.40 mm		2
35	6698522	VALVE, DRAIN			1
36	6680747	BOLT, FLYWHEEL			7

Page 1 of 2 OSS# 6300322913 - All rights reserved by Bobcat Company - 08/04/2017 - 06:30:16 - Produced by Ken Cook Co. with mediaioff

CAMSHAFT

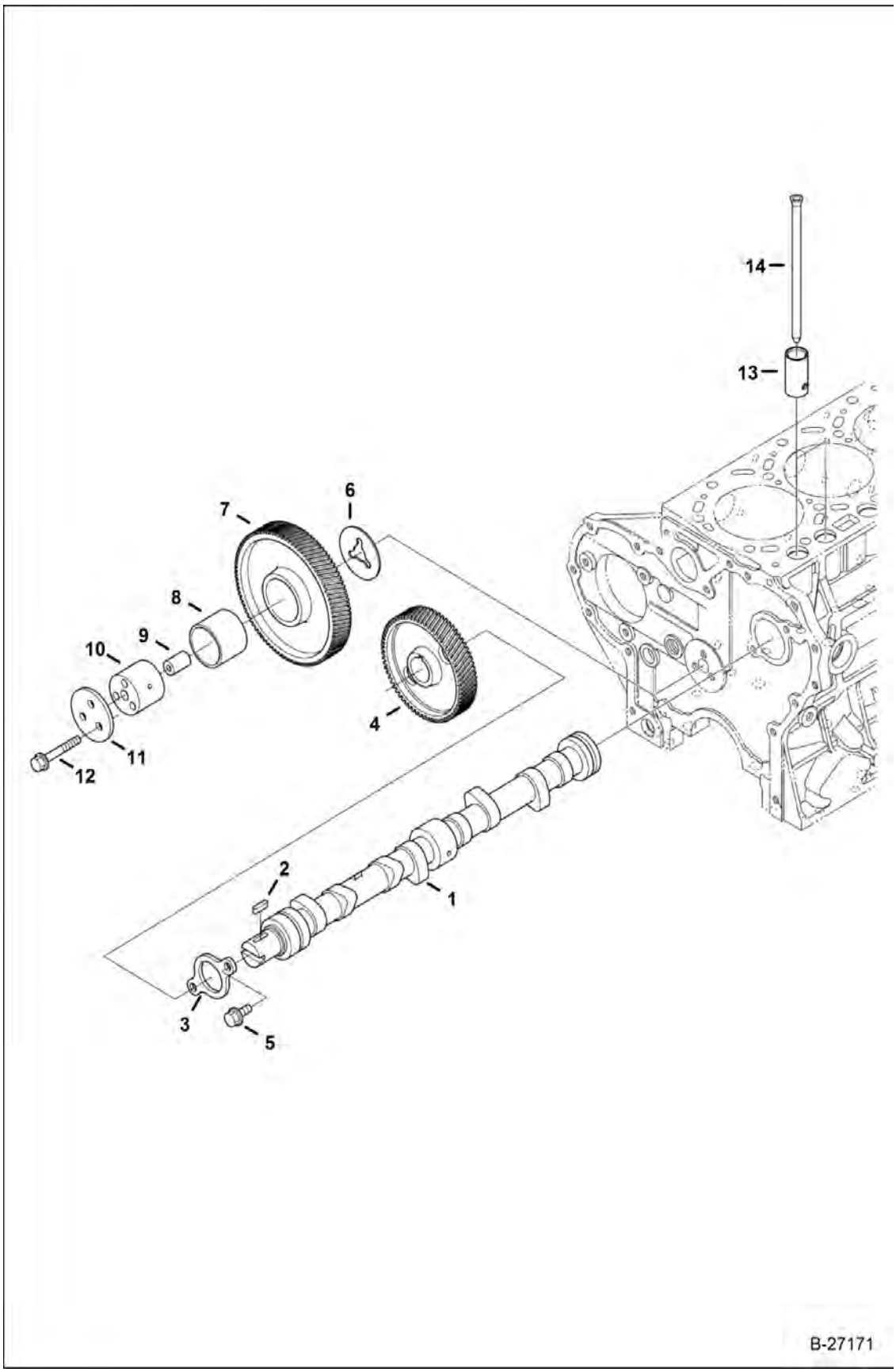

Page 473 - OSS# 6300322913 - All rights reserved by Bobcat Company - 08/04/2017 - 06:30:16 - Produced by Ken Cook Co. with mediaioff

CAMSHAFT (Cont'd)

Ref No	Part Number	Description	Remarks	Serial Number	Qty
1	7017203	CAMSHAFT, VALVE	W/Ref. 2-4		1
2	6652679	KEY			1
3	6680712	FLANGE			1
4	7017197	GEAR, CAMSHAFT			1
5	6680662	BOLT			2
6	6680716	COLLAR			1
7	7017200	GEAR, IDLER	W/Ref. 8		1
8	6680720	BUSHING			1
9	6680715	PIN			1
10	6680714	SHAFT			1
11	6680717	COLLAR			1
12	6680685	BOLT			3
13	7015269	TAPPET			8
14	6680708	PUSH ROD			8

Page 1 of 1 OSS# 6300322913 - All rights reserved by Bobcat Company - 08/04/2017 - 06:30:16 - Produced by Ken Cook Co. with mediaioff

FRONT COVER

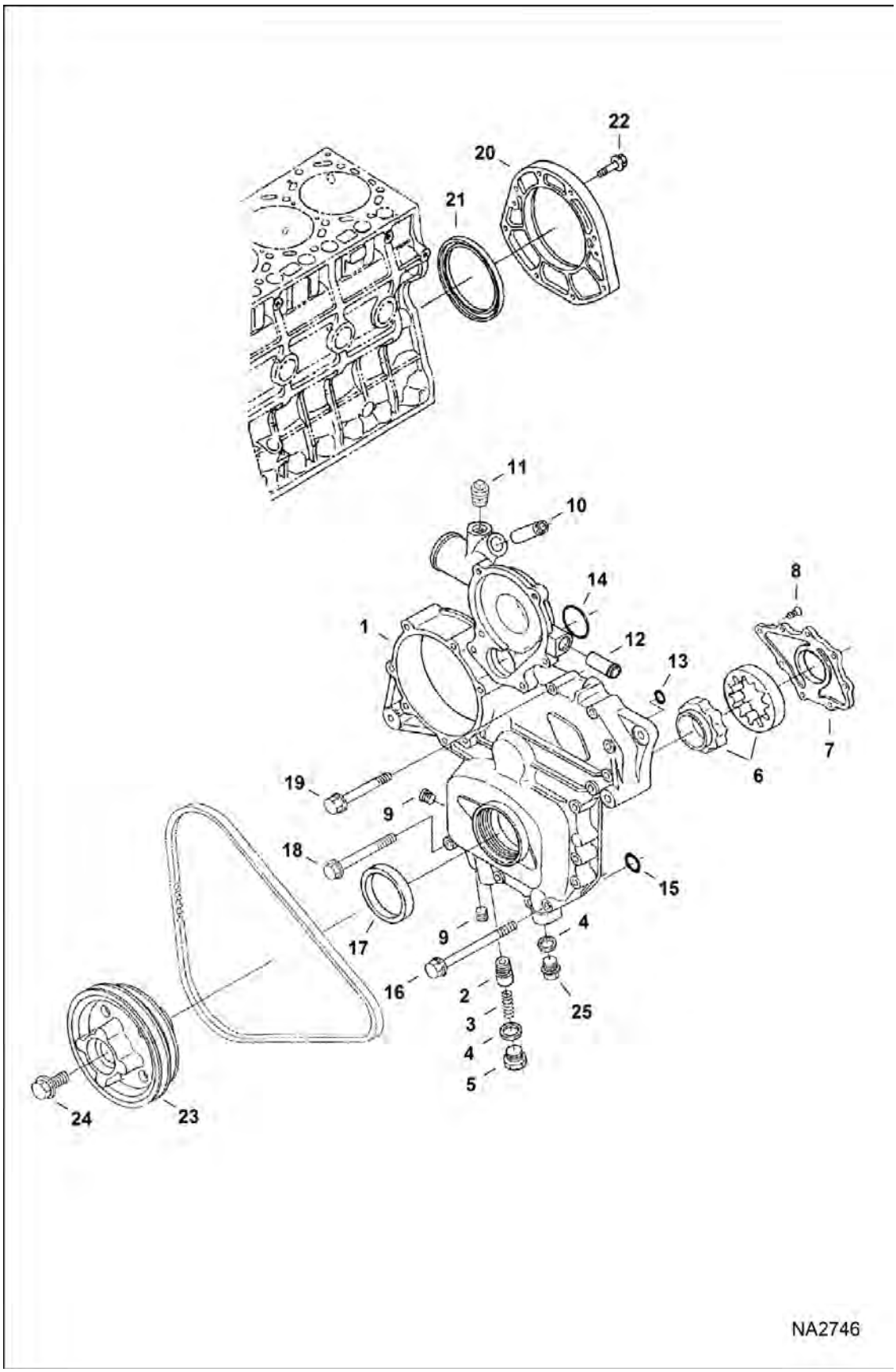

Page 475 - OSS# 6300322913 - All rights reserved by Bobcat Company - 08/04/2017 - 06:30:16 - Produced by Ken Cook Co. with mediaioff

FRONT COVER (Cont'd)

Ref No	Part Number	Description	Remarks	Serial Number	Qty
1	6698546	HOUSING, GEAR ASSY	W/Ref. 2-12		1
2	6685929	RELIEF VALVE			1
3	6680673	SPRING			1
4	6691295	GASKET			2
5	6680675	PLUG			1
6	6680676	ROTOR			1
7	6680677	COVER			1
8	6680678	SCREW			8
9	6680679	PLUG			2
10	6680689	ADAPTER			1
11	6684857	PLUG			1
12	6680689	ADAPTER			1
13	6680681	RING,O			1
14	7012203	GASKET			1
15	6680682	RING,O			1
16	6693484	BOLT			1
17	6680680	SEAL			1
18	6693485	BOLT			2
19	6693483	BOLT			11
20	6680704	COVER	W/Ref. 21		1
21	6680705	REAR SEAL			1
22	6680706	BOLT			8
23	7017208	PULLEY, DRIVE	W/ 85 mm (3.35") mounting bolt circle for accessory pulley	E/ BB9999 & Below	1
23	7022346	PULLEY, DRIVE	W/ 102 mm (4") mounting bolt circle for accessory pulley	E/ BC0001 & Above	1
24	7020991	BOLT	W/washer - Was 7000748		1
25	6691294	PLUG			1

Page Built OSS# 6300322913 - All rights reserved by Bobcat Company - 08/04/2017 - 06:30:16 - Produced by Ken Cook Co. with mediaoff

WATER PUMP & THERMOSTAT

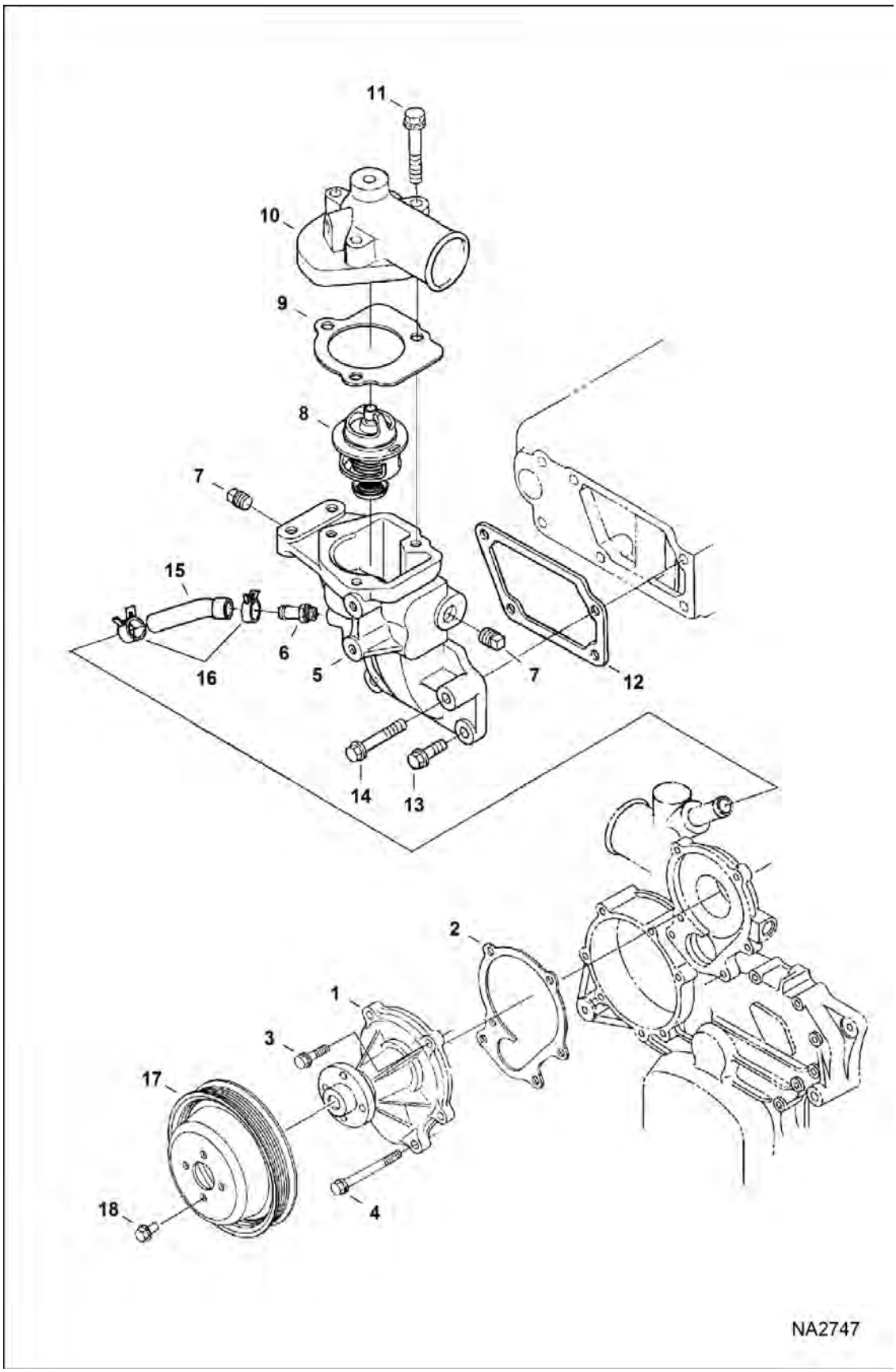

Page 477 - OSS# 6300322913 - All rights reserved by Bobcat Company - 08/04/2017 - 06:30:16 - Produced by Ken Cook Co. with mediaioff

WATER PUMP & THERMOSTAT (Cont'd)

Ref No	Part Number	Description	Remarks	Serial Number	Qty
1	6680852	PUMP, WATER			1
2	6680853	GASKET			1
3	6680706	BOLT			2
4	6680856	BOLT			4
5	7008573	FLANGE, WATER	W/Ref. 6 & 7	E/ AT9999 & Below	1
5	7022347	FLANGE, WATER	W/Ref. 6 & 7	E/ AU0001 & Above	1
6	6680646	ADAPTER		E/ AT9999 & Below	1
6	6680689	ADAPTER		E/ AU0001 & Above	1
7	6684857	PLUG			2
8	6680850	THERMOSTAT			1
9	6685955	GASKET	thermostat cover		1
10	6685954	COVER	thermostat		1
11	6680851	BOLT			3
12	6680849	GASKET			1
13	6680755	BOLT			3
14	6680851	BOLT			1
15	6680842	HOSE		E/ AT9999 & Below	1
15	7022348	HOSE, WATER FORMED		E/ AU0001 & Above	1
16	6675618	CLAMP			2
17	7135539	PULLEY			1
18	59CM816	BOLT			4

Page Generated for OSS# 6300322913 - All rights reserved by Bobcat Company - 08/04/2017 - 06:30:16 - Produced by Ken Cook Co. with mediaioff

FUEL INJECTION SYSTEM
(Injectors)

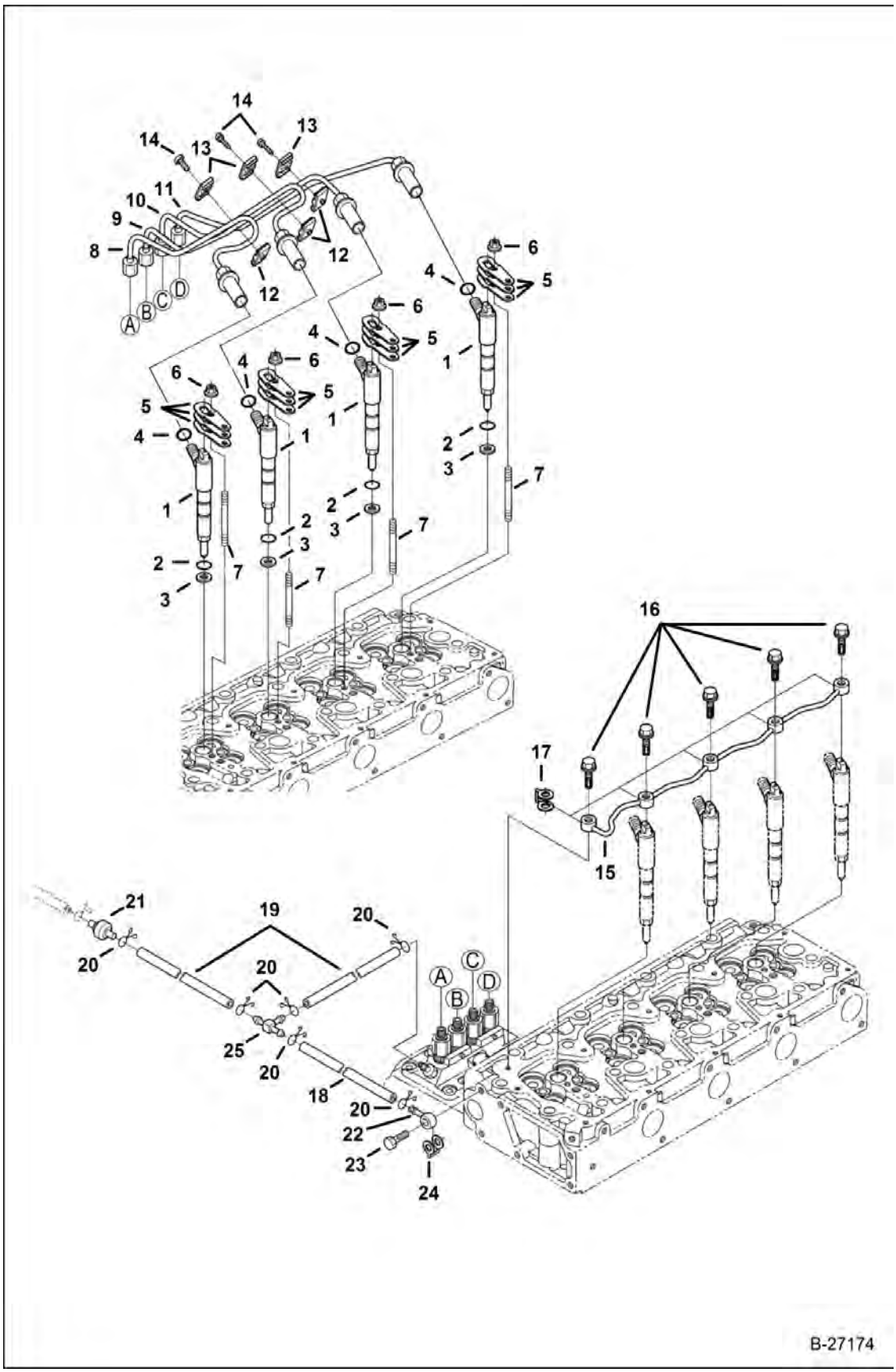

Page 479 - OSS# 6300322913 - All rights reserved by Bobcat Company - 08/04/2017 - 06:30:16 - Produced by Ken Cook Co. with mediaioff

FUEL INJECTION SYSTEM (Cont'd)
(Injectors)

Ref No	Part Number	Description	Remarks	Serial Number	Qty
1	6698542	INJECTOR, FUEL ASSY			4
2	6670769	O-RING			4
3	6969824	GASKET, NOZZLE INJ			4
4	6680778	RING,O			4
5	7008644	CLAMP, INJECTION			12
6	6969819	NUT, FLANGE			4
7	6680867	STUD			4
8	6698565	PIPE, INJECTION			1
9	6698567	PIPE, INJECTION			1
10	6698566	PIPE, INJECTION			1
11	6698568	PIPE, INJECTION			1
12	6652688	CLAMP			3
13	6652689	CLAMP			3
14	3974260	SCREW			3
15	6680787	FUEL LINE			1
16	6680788	BOLT			5
17	6685498	GASKET			5
18	6685944	TUBE			1
19	6685945	TUBE			2
20	6654718	CLAMP 5			6
21	6680796	VALVE, CHECK			1
22	6680790	JOINT			1
23	7022765	BOLT, EYE	Was 7022765 [A]		1
24	6698528	WASHER, SEALING			1
25	6680797	TEE			1

Page 1800 OSS# 6300322913 - All rights reserved by Bobcat Company - 08/04/2017 - 06:30:16 - Produced by Ken Cook Co. with mediaoff

FUEL INJECTION SYSTEM
(Fuel & Injection Pumps)

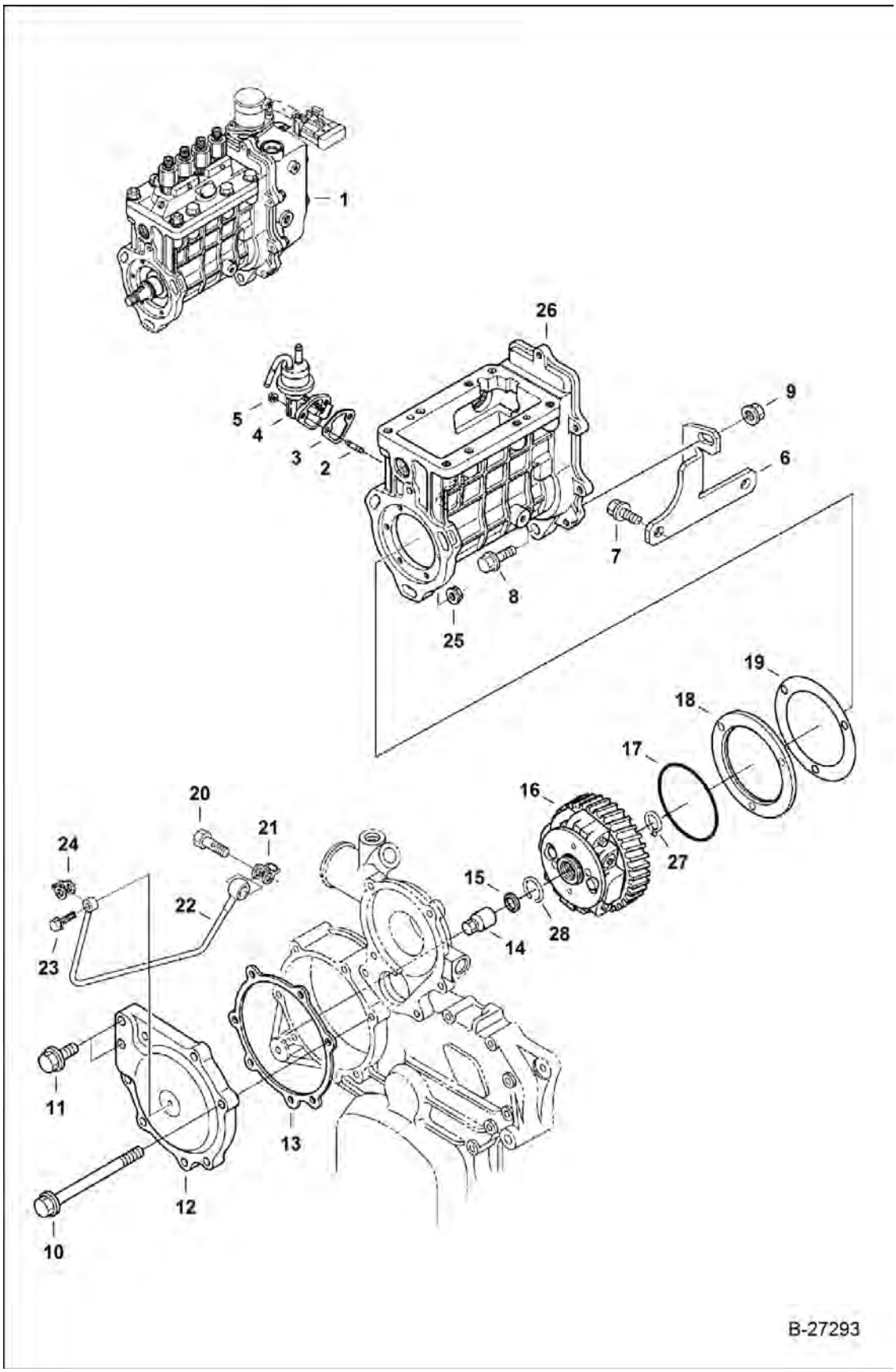

Page 481 - OSS# 6300322913 - All rights reserved by Bobcat Company - 08/04/2017 - 06:30:16 - Produced by Ken Cook Co. with mediaioff

FUEL INJECTION SYSTEM (Cont'd)
(Fuel & Injection Pumps)

Ref No	Part Number	Description	Remarks	Serial Number	Qty
1		PUMP, FUEL INJ ASSY	See Illustration FUEL INJECTION PUMP / NA2848		1
2	6680264	STUD			2
3	7010133	GASKET, PUMP FUEL			1
4	7011982	PUMP, FUEL			1
5	6670533	NUT			2
6	6698561	BRACKET, PUMP INJ			1
7	6680658	BOLT			2
8	6652656	NUT			1
9	6680654	BOLT			1
10	6680856	BOLT			5
11	6680706	BOLT			2
12	6698562	COVER, PUMP INJ			1
13	6685948	GASKET			1
14	6698540	NUT			1
15	6698541	WASHER, SPRING			1
16	6698560	GEAR, MECHANICAL TIMER			1
17	6698539	GASKET, PUMP INJ			1
18	6698563	SPACER			1
19	6698564	GASKET, PUMP INJ			1
20	6680568	BOLT			1
21	7000642	WASHER, SEALING COPPER			1
22	6698556	PIPE, OIL			1
23	7010144	BOLT, EYE JOINT			1
24	6685498	GASKET			1
25	6969819	NUT, FLANGE			3
26	6698537	HOUSING, PUMP INJ			1
27	7017210	CIRCLIP	Was 6698519 [B,D]		1
28	6698519	CIRCLIP	Was 7017210 [B,D]		1

Page 4824 OSS# 6300322913 - All rights reserved by Bobcat Company - 08/04/2017 - 06:30:16 - Produced by Ken Cook Co. with mediaoff

FUEL INJECTION PUMP

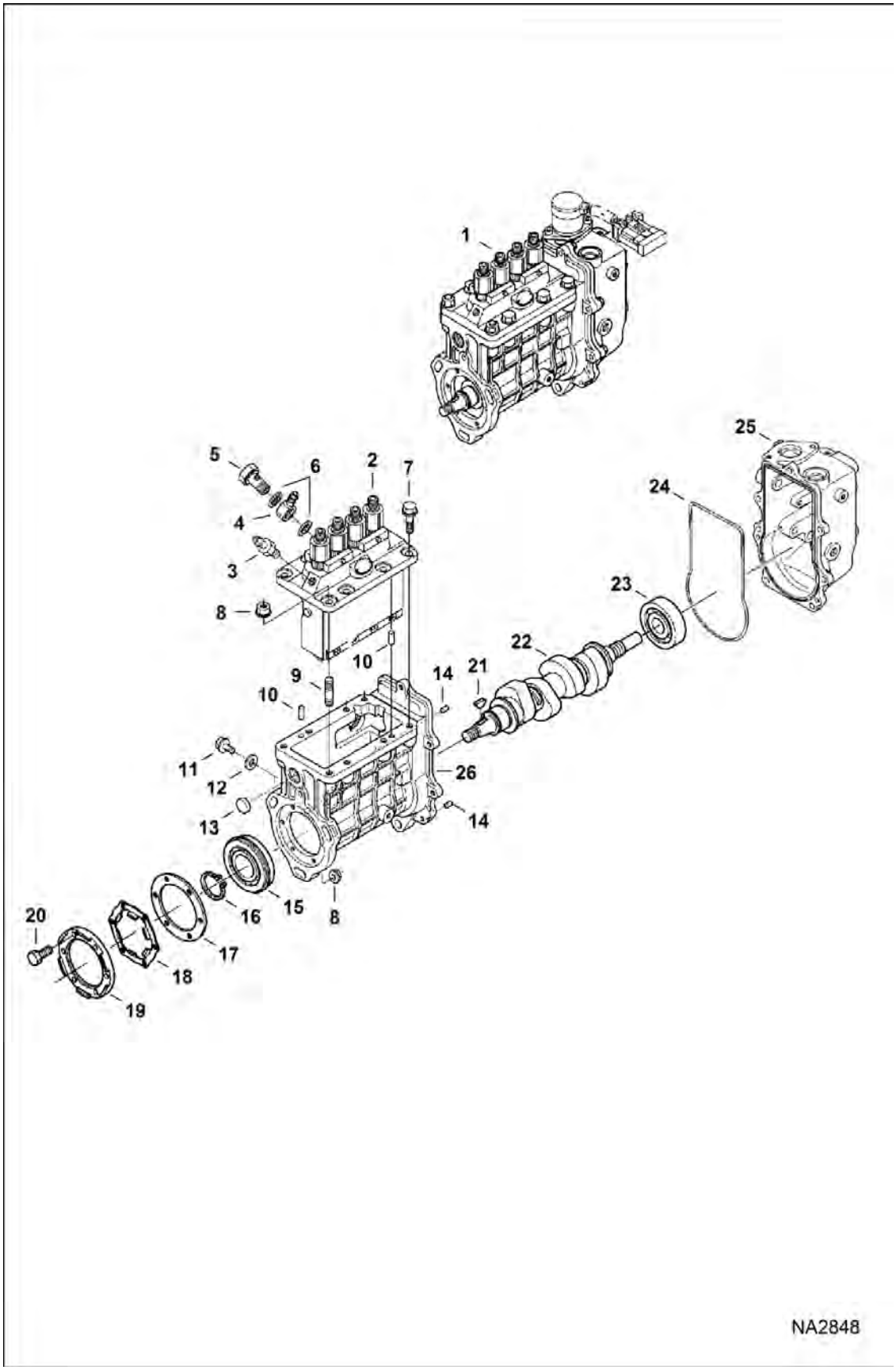

Page 493 - OSS# 6300322913 - All rights reserved by Bobcat Company - 08/04/2017 - 06:30:16 - Produced by Ken Cook Co. with mediaioff

FUEL INJECTION PUMP (Cont'd)

Ref No	Part Number	Description	Remarks	Serial Number	Qty
1	7017209	PUMP, FUEL INJ UNIT			1
2	6698538	PUMP, FUEL INJ			1
3	6680756	SCREW			1
4	6655515	FITTING, BANJO			1
5	6680752	SCREW			1
6	6698120	GASKET			2
7	6680755	BOLT			5
8	6969819	NUT, FLANGE			6
9	6598156	STUD			3
10	3974394	PIN			2
11	6680662	BOLT			2
12	3974095	GASKET, METAL			2
13	6680808	PLUG			1
14	6680809	PIN			2
15	6698532	BEARING, BALL			1
16	6698519	CIRCLIP			1
17	6698531	SPACER, PUMP INJ			1
18	7020953	RETAINER			1
19	7020954	RETAINER			1
20	1CM620	BOLT	Was 4CM620 [A]		6
21	6680813	KEY			1
22	6698529	CAMSHAFT, FUEL			1
23	7010145	BEARING			1
24	6680829	GASKET			1
25		GOVERNOR	See Illustration GOVERNOR / B27176		1
26	6698537	HOUSING, PUMP INJ			1

Page 1 OSS# 6300322913 - All rights reserved by Bobcat Company - 08/04/2017 - 06:30:16 - Produced by Ken Cook Co. With mediaoff

GOVERNOR

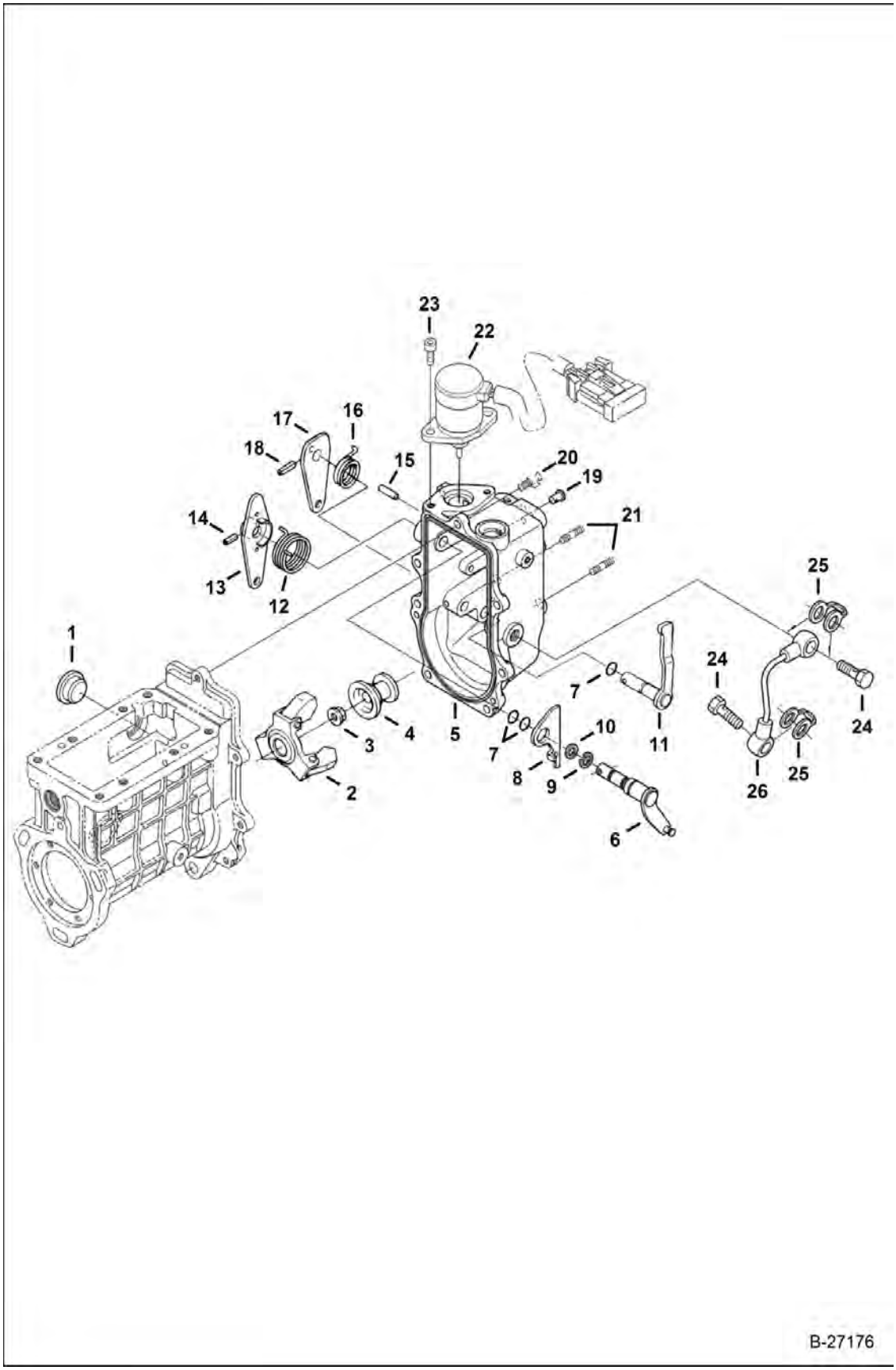

Page 495 - OSS# 6300322913 - All rights reserved by Bobcat Company - 08/04/2017 - 06:30:16 - Produced by Ken Cook Co. with mediaioff

GOVERNOR (Cont'd)

Ref No	Part Number	Description	Remarks	Serial Number	Qty
1	6680757	COVER			1
2	6698600	WEIGHT, GOVERNOR			1
3	6680759	NUT			1
4	6680761	SLEEVE			1
5	6680762	HOUSING			1
6	6680763	LEVER			1
7	6683023	O-RING			3
8	6698601	LEVER, STOP			1
9	6680765	SNAP RING			1
10	3974524	WASHER			1
11	6680770	LEVER			1
12	6693488	SPRING			1
13	6685939	LEVER			1
14	6680769	PIN			1
15	6680775	PIN			1
16	6598702	SPRING			1
17	6680772	LEVER			1
18	6680769	PIN			1
19	6652592	PIN			1
20	6680830	BOLT			7
21	6680828	STUD			2
22	6689034	SOLENOID, SHUTOFF FUEL	3-pin connector		1
23	6680750	BOLT			2
24	6680900	BOLT			2
25	7000642	WASHER, SEALING COPPER			2
26	6698557	PIPE, OIL			1

Page 1 of 1 OSS# 6300322913 - All rights reserved by Bobcat Company - 08/04/2017 - 06:30:16 - Produced by Ken Cook Co. with mediaioff

GOVERNOR

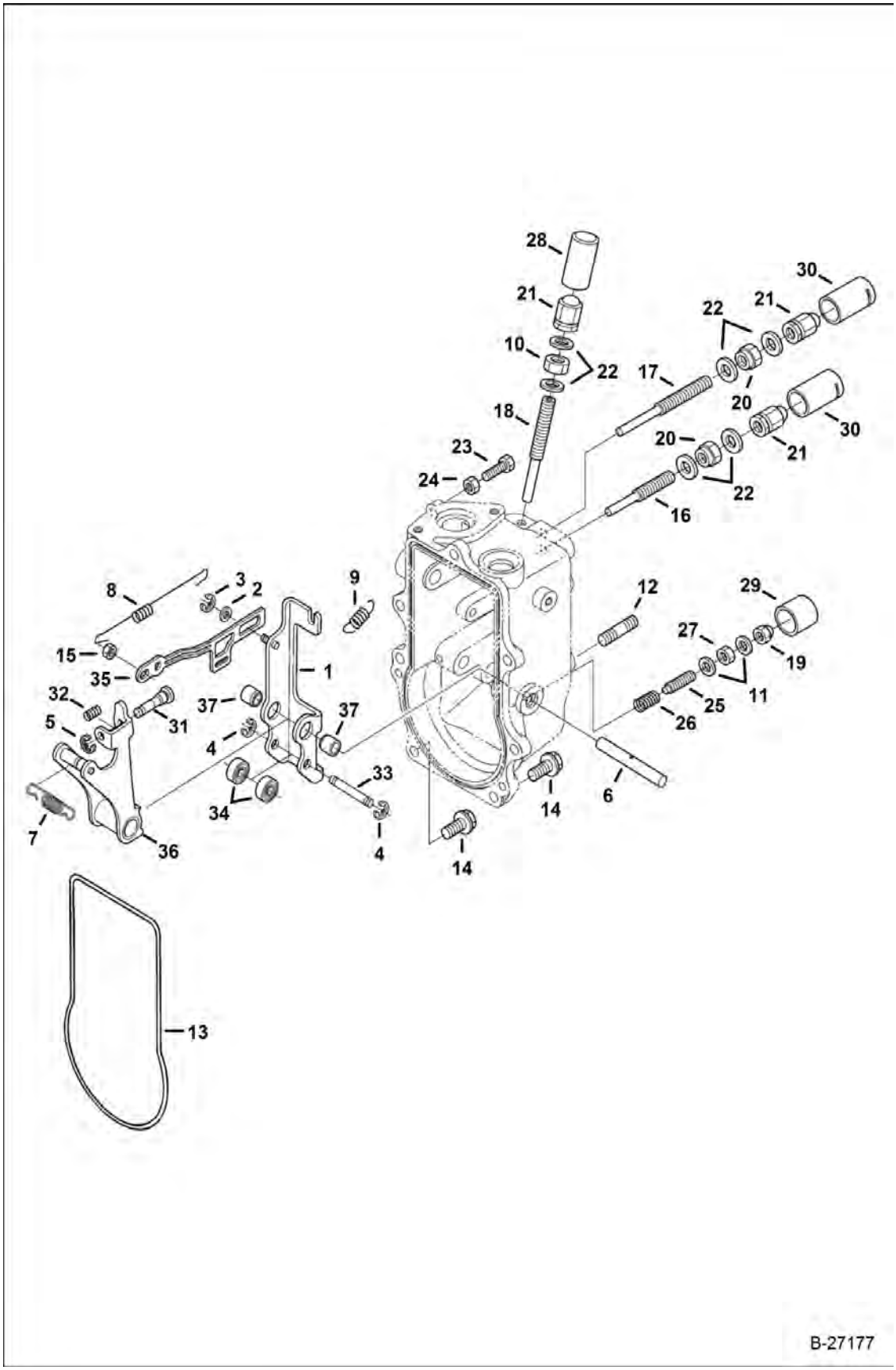

Page 487 - OSS# 6300322913 - All rights reserved by Bobcat Company - 08/04/2017 - 06:30:16 - Produced by Ken Cook Co. with mediaioff

Illustration B27177

GOVERNOR (Cont'd)

Ref No	Part Number	Description	Remarks	Serial Number	Qty
1	7008576	LEVER	assy - W/Ref. 2-5 & 31-37		1
2	6680820	WASHER			1
3	6680821	SNAP RING			1
4	6680822	SNAP RING			2
5	6680823	SNAP RING			1
6	6689318	SHAFT			1
7	7008575	SPRING, GOVERNOR			1
8	6689316	SPRING, START			1
9	6680827	SPRING			1
10	6657459	NUT			1
11	3974095	GASKET, METAL			2
12	6680828	STUD			2
13	6680829	GASKET			1
14	6680830	BOLT			7
15	6685952	NUT			1
16	7008627	BOLT, ADJUSTING			1
17	6680833	BOLT			1
18	6686985	BOLT			1
19	6670426	NUT, CAP			1
20	6680272	NUT			2
21	6657470	NUT			3
22	3974972	GASKET			6
23	6652712	BOLT			1
24	1DM6	NUT			1
25	7010190	BOLT, ADJUSTMENT	W/Ref. 26-27		1
26		SPRING	NSS - Order Ref. 25		1
27	6599085	NUT			1
28	6672384	CAP			1
29	6670427	CAP			1
30		CAP	NLA		2
31		BOLT	NSS - Order Ref. 1		1
32		SPRING	NSS - Order Ref. 1		1
33		ROD	NSS - Order Ref. 1		1
34		BEARING	NSS - Order Ref. 1		2
35		BRACKET	NSS - Order Ref. 1		1
36		LEVER	NSS - Order Ref. 1		1
37		BUSHING	NSS - Order Ref. 1		2

Page 480 OSS# 6300322913 - All rights reserved by Bobcat Company - 08/04/2017 - 06:30:16 - Produced by Ken Cook Co. with mediaioff

AIR CLEANER

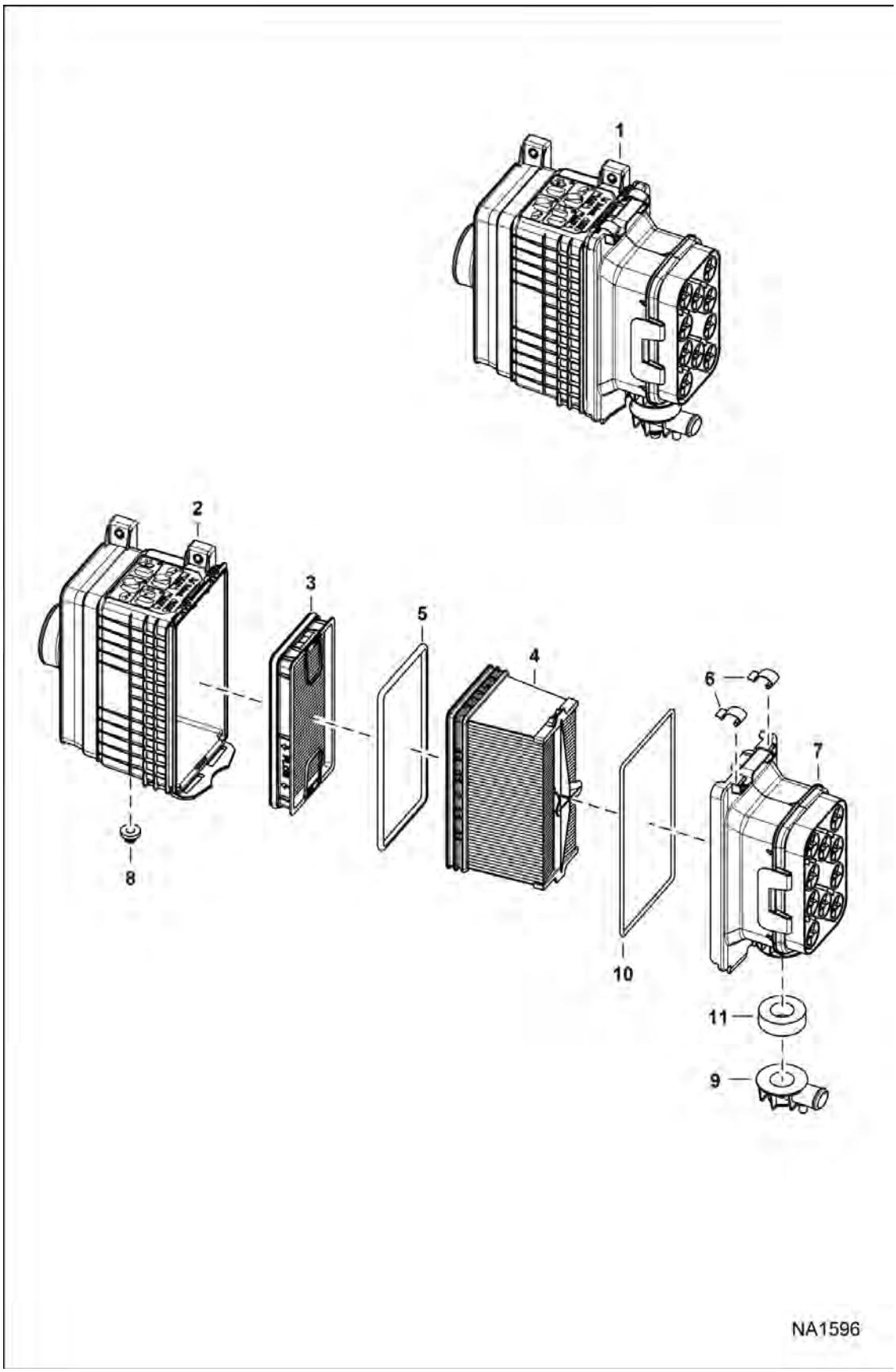

Page 489 - OSS# 6300322913 - All rights reserved by Bobcat Company - 08/04/2017 - 06:30:16 - Produced by Ken Cook Co. with mediaioff

AIR CLEANER (Cont'd)

Ref No	Part Number	Description	Remarks	Serial Number	Qty
1		FILTER, AIR CLEANER ASSY	Ref. 2-11 - W/ 1/8" nipple - Order 7141342 filter & 7191672 elbow - Was 7141342 [B,D]		1
1	7141342	FILTER, AIR CLEANER ASSY	Ref. 2-11 - W/ 1/8" socket		1
2		HOUSING	NLA - Order Ref. 1		1
3	7010031	FILTER, AIR SECONDARY			1
4	7286652	FILTER, AIR OUTER	W/Ref. 5 - Was 7010030 [A]		1
5		SEAL	NLA - Order Ref. 4		1
6		CLIP	NSS		2
7		COVER	NLA - W/Ref. 6 - Order Ref. 1		1
8	7178214	GROMMET			1
9	7178213	CONNECTOR, FILTER			1
10	7024160	GASKET, COVER FILTER			1
11	7024846	GASKET			1

Page Built - OSS# 6300322913 - All rights reserved by Bobcat Company - 08/04/2017 - 06:30:16 - Produced by Ken Cook Co. with mediaioff

AIR CLEANER

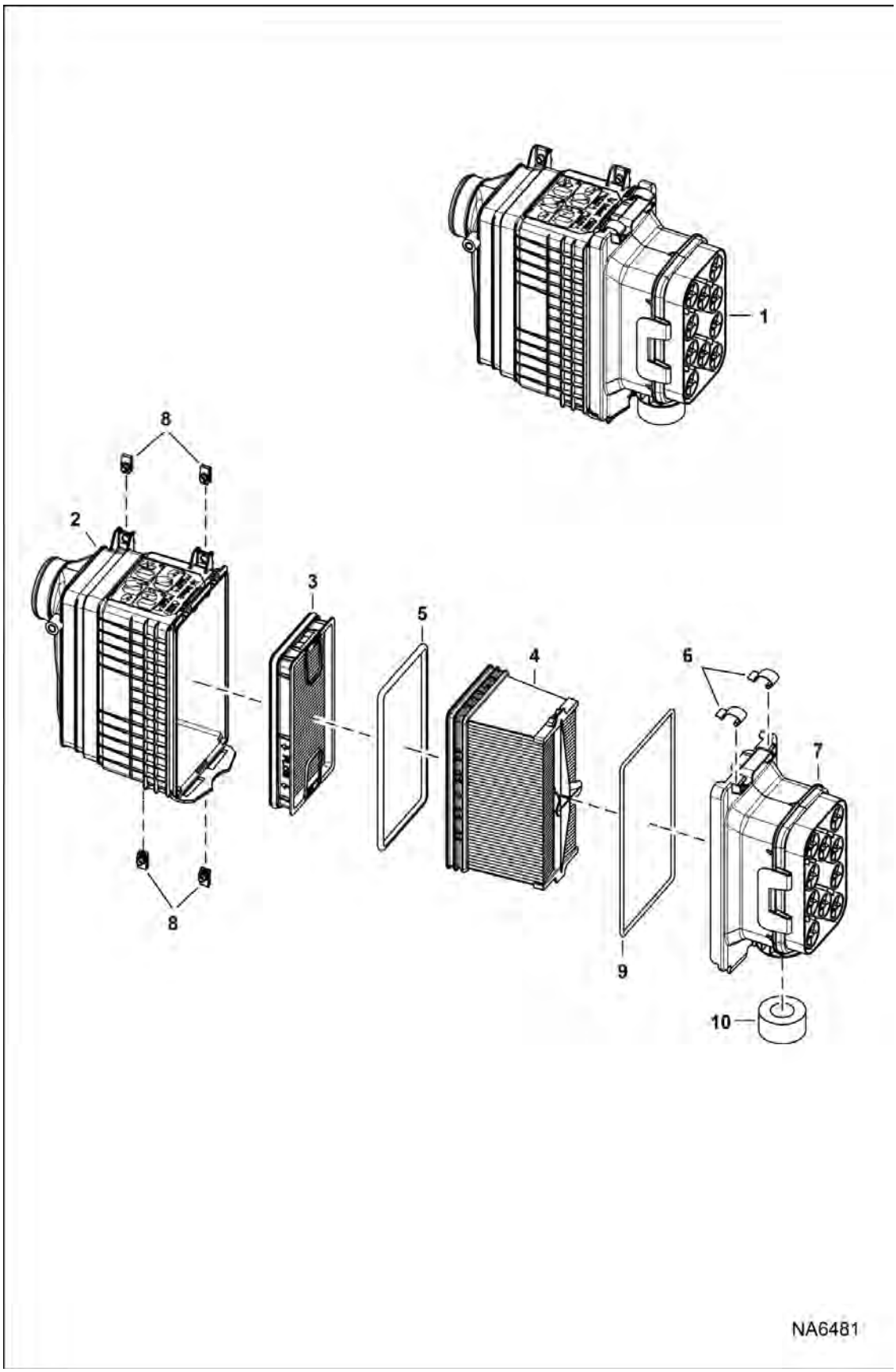

Page 491 - OSS# 6300322913 - All rights reserved by Bobcat Company - 08/04/2017 - 06:30:16 - Produced by Ken Cook Co. with mediaioff

AIR CLEANER (Cont'd)

Ref No	Part Number	Description	Remarks	Serial Number	Qty
1	7286651	FILTER, AIR	Ref. 2-10 - Was 7197235 [A]		1
2		HOUSING	NLA - Order Ref. 1		1
3	7010031	FILTER, AIR SECONDARY			1
4	7286652	FILTER, AIR OUTER	W/Ref. 5 - Was 7010030 [A]		1
5		SEAL	NLA - Order Ref. 4		1
6		CLIP	NSS		2
7		COVER	NLA - W/Ref. 6 - Order Ref. 1		1
8	6676169	NUT			4
9	7024160	GASKET, COVER FILTER			1
10	7024845	GASKET			1

Page 122 OSS# 6300322913 - All rights reserved by Bobcat Company - 08/04/2017 - 06:30:16 - Produced by Ken Cook Co. with mediaioff

ACCESSORIES HARNESS KIT

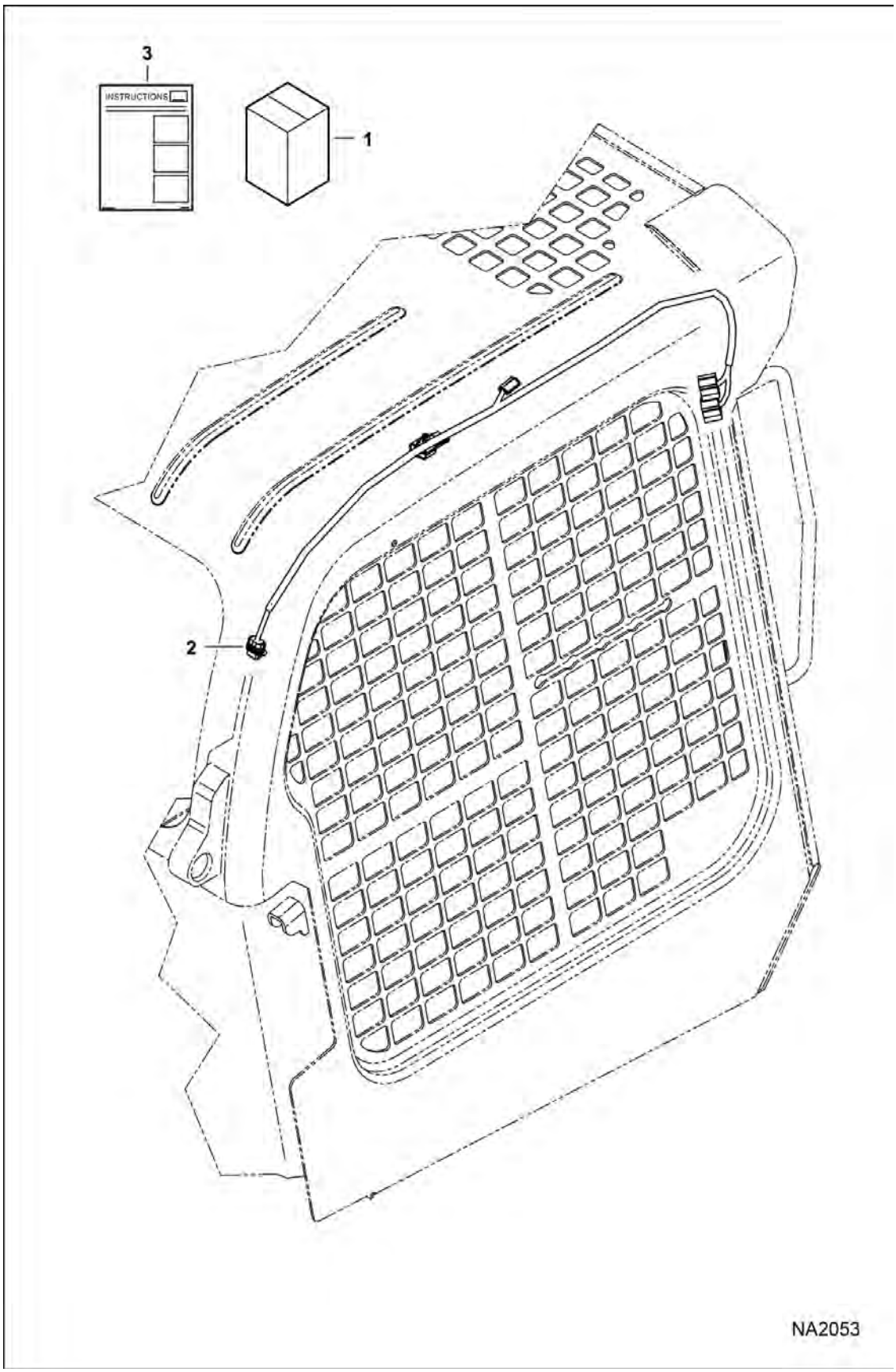

Page 493 - OSS# 6300322913 - All rights reserved by Bobcat Company - 08/04/2017 - 06:30:16 - Produced by Ken Cook Co. with mediaioff

ACCESSORIES HARNESS KIT (Cont'd)

Ref No	Part Number	Description	Remarks	Serial Number	Qty
1		KIT, STD OPT ADAPTER	NLA - Order components - Was 7169103 [D]		1
2	7169130	HARNESS ACCESSORY			1
3	6987252ENUS	INSTRUCTIONS	Was 6987252 [A]		1

Page 1 OSS# 6300322913 - All rights reserved by Bobcat Company - 08/04/2017 - 06:30:16 - Produced by Ken Cook Co. with mediaioff

ACS CONVERSION KIT

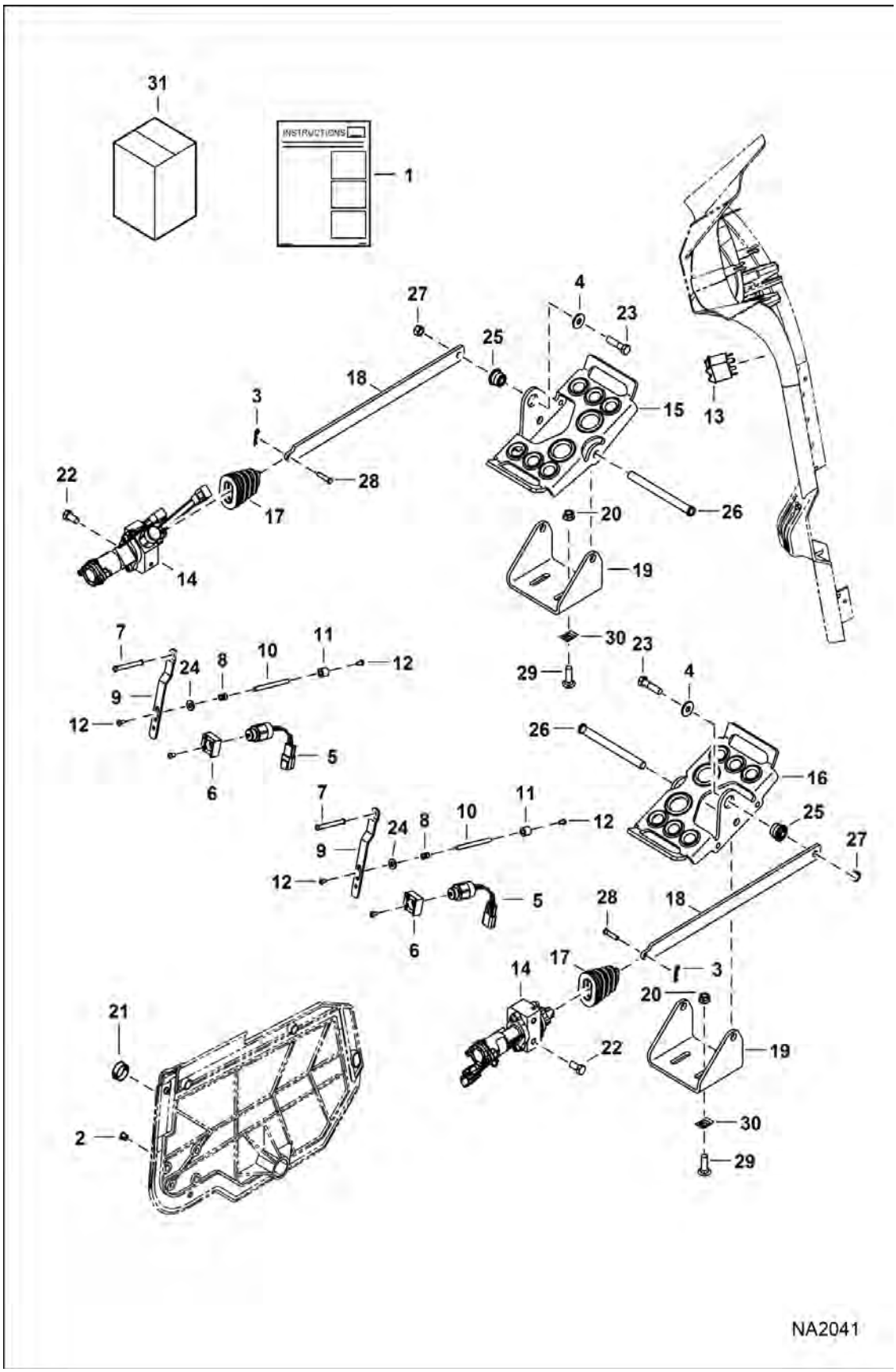

Page 495 - OSS# 6300322913 - All rights reserved by Bobcat Company - 08/04/2017 - 06:30:16 - Produced by Ken Cook Co. with mediaioff

ACS CONVERSION KIT (Cont'd)

Ref No	Part Number	Description	Remarks	Serial Number	Qty
1	7129371	KIT, ACS	Ref. 2-18, 21-24, 28 & 31		1
2	5289686	PLUG	black - 0.38" dia hole		2
3	6513495	PIN 5			2
4	6563914	WASHER			2
5	6676029	SOLENOID, LOCK SPOOL			2
6	6680468	STRAP			2
7	6680469	SPACER			2
8	6680470	SPRING			2
9	6680477	STRAP			2
10	6719834	SPACER			2
11	6719835	SLEEVE			2
12	6727065	SCREW			12
13	7001713	SWITCH			1
14	7003496	SENSOR			2
15	7151868	PEDAL ASSEMBLY CONTROL LH	LH		1
16	7151871	PEDAL ASSEMBLY CONTROL RH	RH		1
17	7153503	BOOT			2
18	7154903	LINK			2
19	7157611	MOUNT			2
20	57D6	NUT 5			2
21	7166315	PLUG			1
22	17C612	BOLT 5			4
23	17C624	BOLT 5			2
24	25E13	WASHER 5			2
25	6665701	BUSHING, PRESS FIT			1
26		PIN	NLA - Order Ref. 15 or 16		2
27	95D6	NUT			2
28	6564654	PIN, CLEVIS			2
29	37C620	BOLT			4
30	6684033	NUT			4
31	6987236ENUS	INSTRUCTIONS	Was 6987236 [A]		1

Page Built: OSS# 6300322913 - All rights reserved by Bobcat Company - 08/04/2017 - 06:30:16 - Produced by Ken Cook Co. with mediaioff

AIR DEFLECTOR KIT

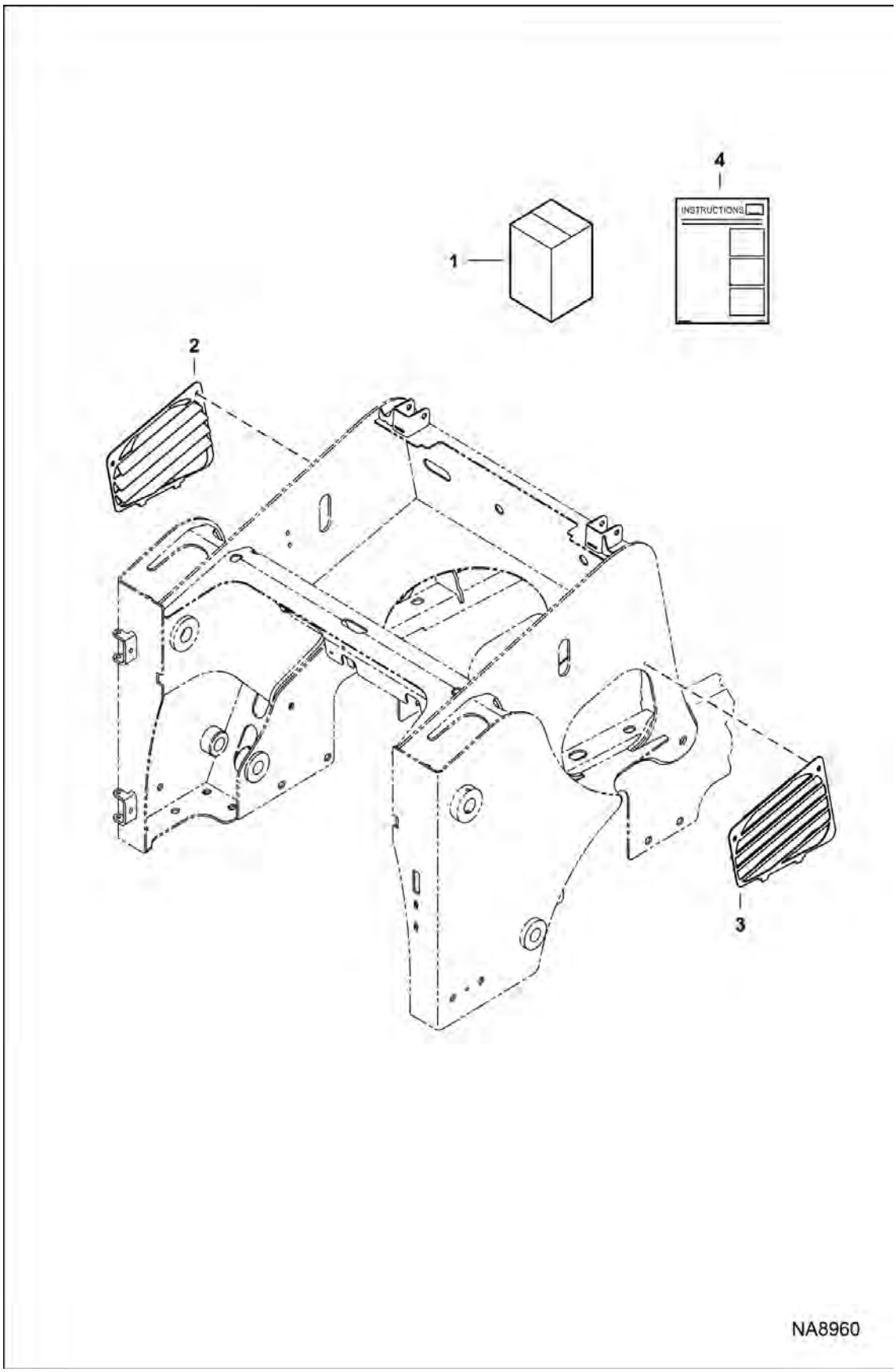

Page 497 - OSS# 6300322913 - All rights reserved by Bobcat Company - 08/04/2017 - 06:30:16 - Produced by Ken Cook Co. with mediaioff

AIR DEFLECTOR KIT (Cont'd)

Ref No	Part Number	Description	Remarks	Serial Number	Qty
1		KIT, AIR DEFLECTOR	NLA - Order components - W/ Ref. 2-4 - Was 7257437 [A]		1
2	7247756	LOUVER, LH			1
3	7247755	LOUVER, RH			1
4	7256422ENUS	INSTRUCTIONS			1

Page 1 of 1 OSS# 6300322913 - All rights reserved by Bobcat Company - 08/04/2017 - 06:30:16 - Produced by Ken Cook Co. with mediaioff

AUXILIARY FLOW KIT

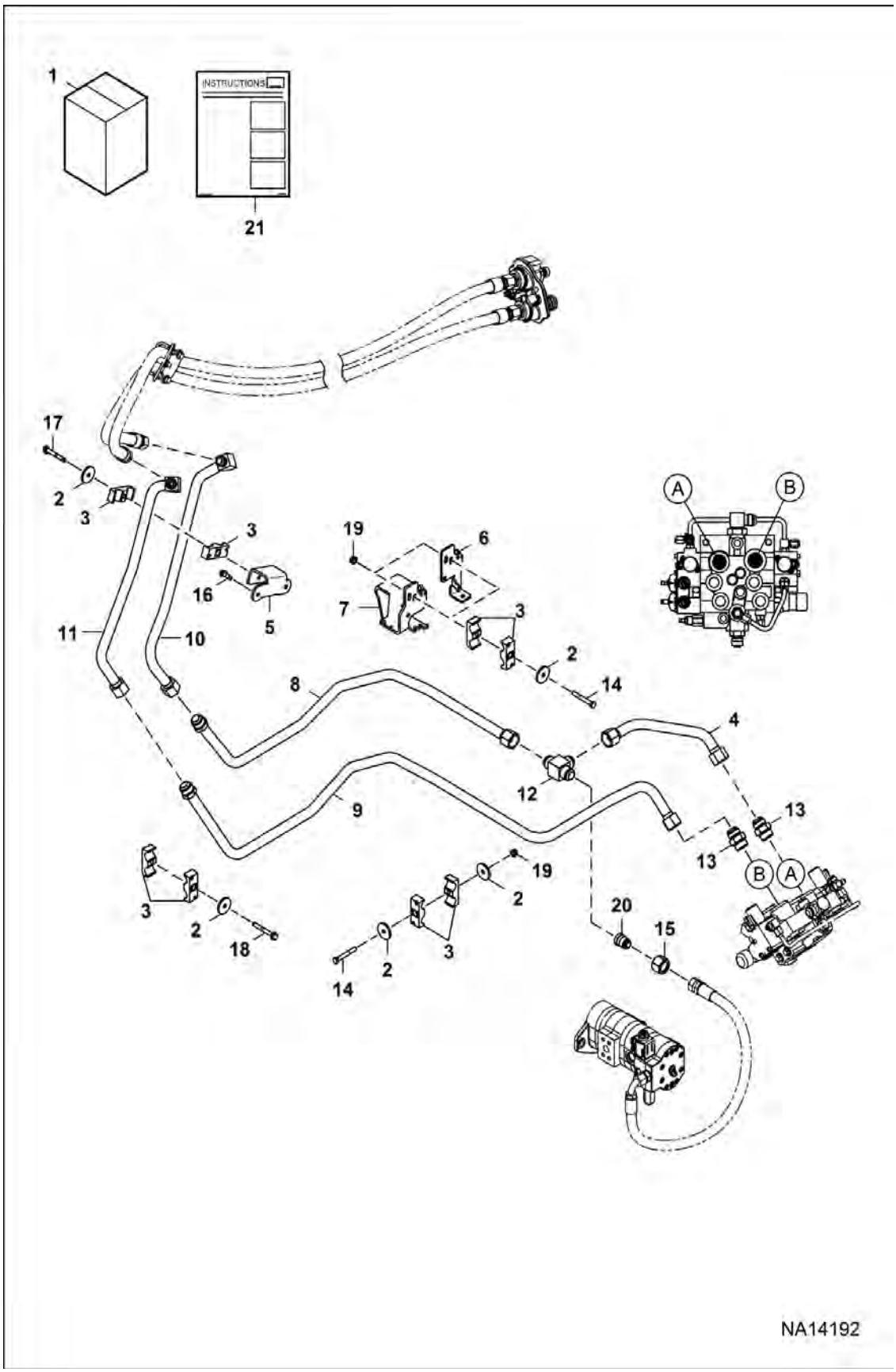

Page 499 - OSS# 6300322913 - All rights reserved by Bobcat Company - 08/04/2017 - 06:30:16 - Produced by Ken Cook Co. with mediaioff

AUXILIARY FLOW KIT (Cont'd)

Ref No	Part Number	Description	Remarks	Serial Number	Qty
1	7330595	KIT FLOW AUX	Ref. 2-21		1
2	872229	WASHER			5
3	6679025	CLAMP 2			8
4	7318633	TUBELINE HYDRAULIC			1
5	7318675	MOUNT TUBELINE			1
6	7319273	BRACKET TUBE			1
7	7319274	BRACKET MANIFOLD HYDRAULIC			1
8	7327341	TUBELINE HYDRAULIC			1
9	7327342	TUBELINE HYDRAULIC			1
10	7327343	TUBELINE AUX			1
11	7327344	TUBELINE AUX			1
12	10K10	FITTING			1
13	15KB1616	FITTING, HYD CONNECTOR			2
14	1C644	CANOPY BOLT 4			2
15	80F10	ADAPTER HYDRAULIC			1
16	84G3716	SCREW 5			2
17	84G3744	BOLT			1
18	84G3748	BOLT			1
19	97D6	NUT 10			2
20	9K9	ADAPTER HYDRAULIC			1
21	7330600	INSTRUCTIONS INSTALL			1

Page 3800 OSS# 6300322913 - All rights reserved by Bobcat Company - 08/04/2017 - 06:30:16 - Produced by Ken Cook Co. with mediaioff

BACK-UP ALARM KIT
(Manual Controls)

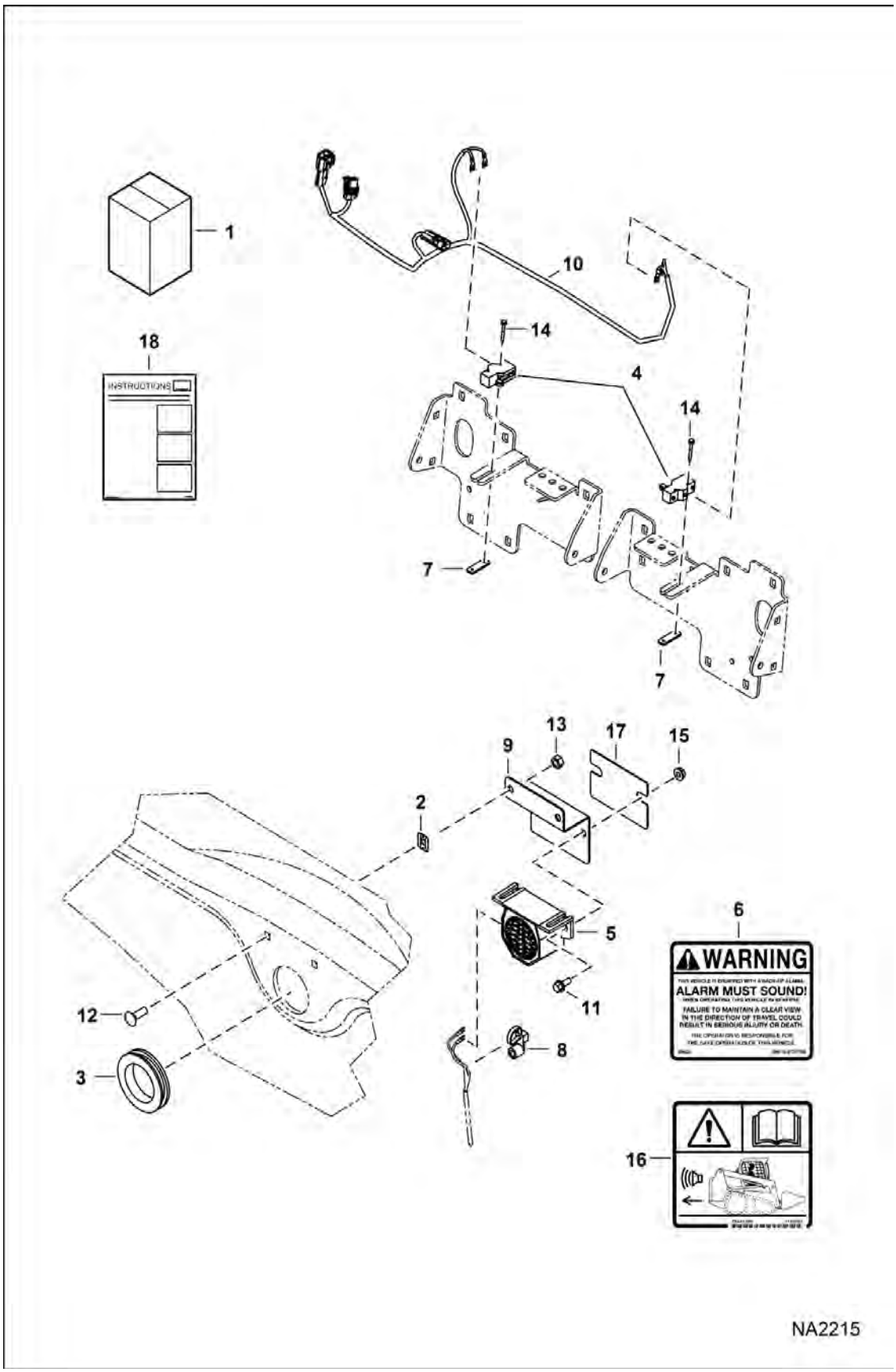

Page 501 - OSS# 6300322913 - All rights reserved by Bobcat Company - 08/04/2017 - 06:30:16 - Produced by Ken Cook Co. with mediaioff

BACK-UP ALARM KIT (Cont'd)
(Manual Controls)

Ref No	Part Number	Description	Remarks	Serial Number	Qty
1	7173592	KIT, ALARM BACK-UP	Ref, 2 & 4-18		1
2	774220	NUT			2
3	6577545	GROMMET	not in kit		1
4	6646781	SWITCH, ALARM BACK-UP			2
5	6651512	ALARM, BACK-UP			1
6	6737189	DECAL, WARNING	backup alarm		1
7	6702593	SPACER			2
8	7002988	TIE, STUD MOUNT			1
9	7189077	MOUNT			1
10	7175017	HARNESS, ALARM BACK-UP			1
11	35C410	BOLT 5			2
12	37C516	BOLT			2
13	61D5	NUT 10			2
14	84G1320	BOLT			4
15	97D4	NUT			2
16	7180087	DECAL, WARNING			1
17	7191385	SHIELD, ALARM			1
18	6987235ENUS	INSTRUCTIONS	WAS 6987235 [A]		1

Page 326 OSS# 6300322913 - All rights reserved by Bobcat Company - 08/04/2017 - 06:30:16 - Produced by Ken Cook Co. with mediaoff

BACK-UP ALARM KIT
(Selectable Joystick Controls)

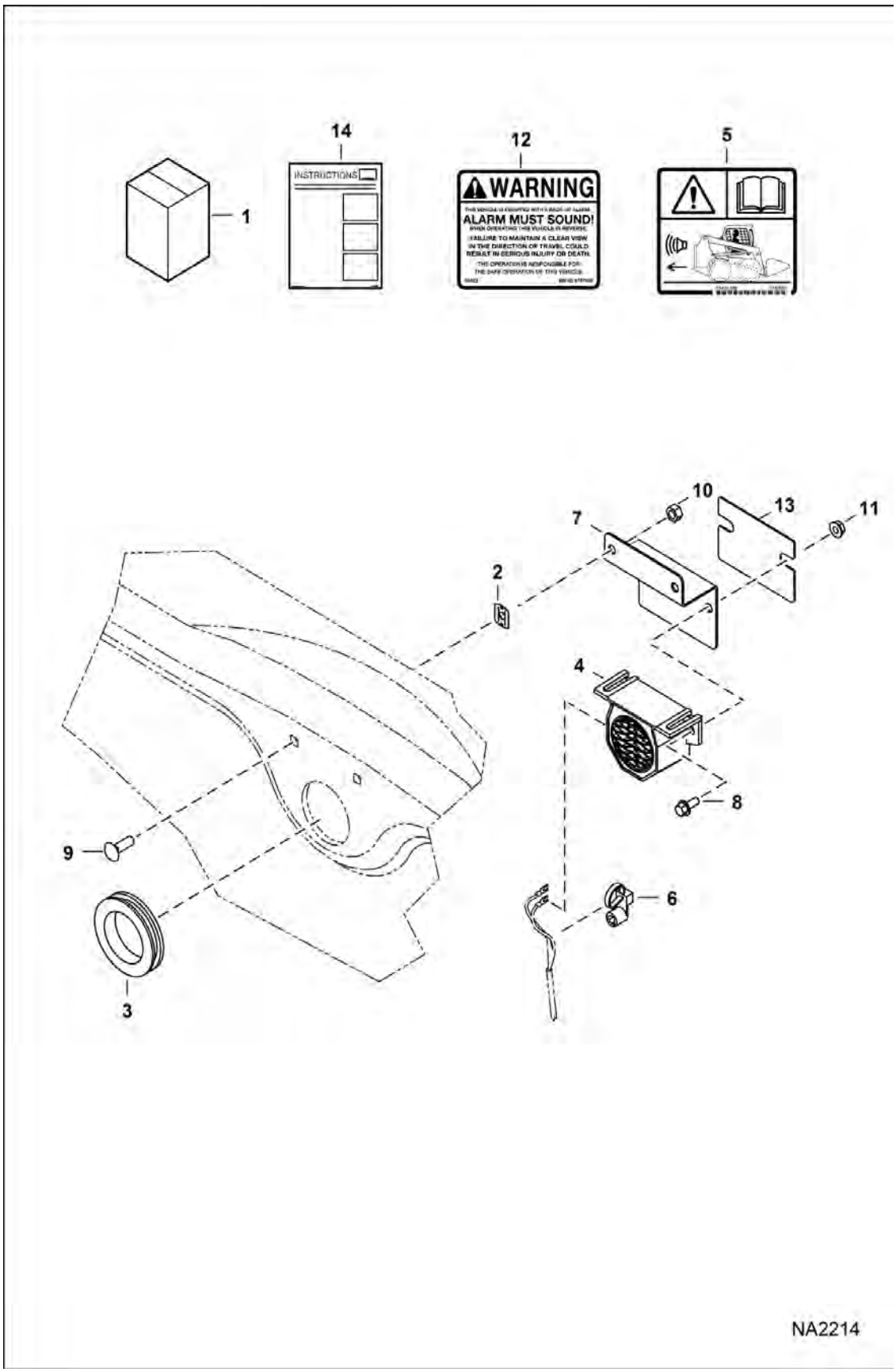

Page 503 - OSS# 6300322913 - All rights reserved by Bobcat Company - 08/04/2017 - 06:30:16 - Produced by Ken Cook Co. with mediaioff

BACK-UP ALARM KIT (Cont'd)
(Selectable Joystick Controls)

Ref No	Part Number	Description	Remarks	Serial Number	Qty
1	7173593	KIT, ALARM BACK-UP	Ref. 2 & 4-14		1
2	774220	NUT			2
3	6577545	GROMMET	not in kit		1
4	6651512	ALARM, BACK-UP			1
5	6737189	DECAL, WARNING	backup alarm		1
6	7002988	TIE, STUD MOUNT			1
7	7189077	MOUNT			1
8	35C410	BOLT 5			2
9	37C516	BOLT			2
10	61D5	NUT 10			2
11	97D4	NUT			2
12	7180087	DECAL, WARNING			1
13	7191385	SHIELD, ALARM			1
14	6987235ENUS	INSTRUCTIONS	WAS 6987235 [A]		1

Page 504 OSS# 6300322913 - All rights reserved by Bobcat Company - 08/04/2017 - 06:30:16 - Produced by Ken Cook Co. with mediaioff

BEACON

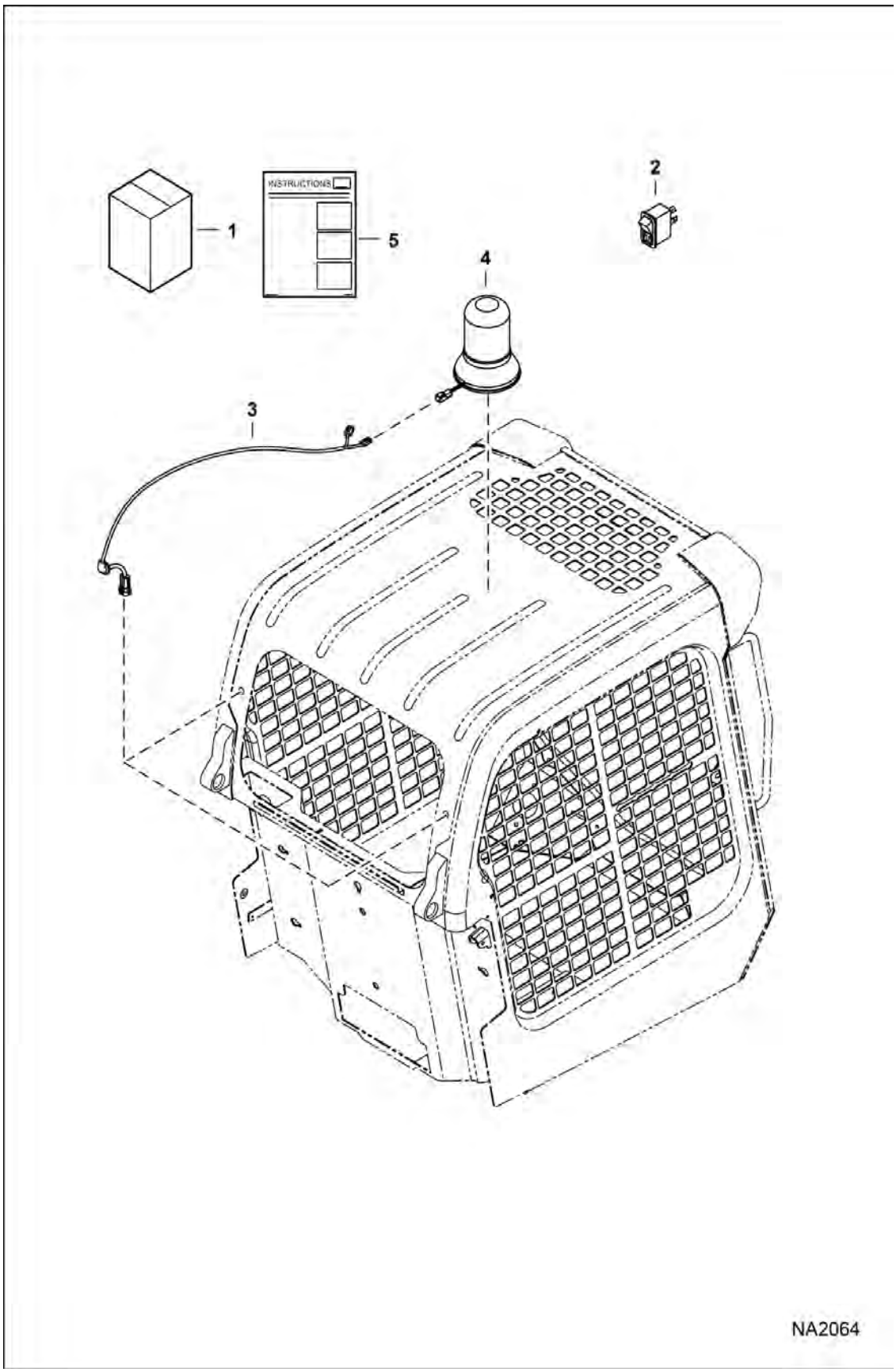

Page 505 - OSS# 6300322913 - All rights reserved by Bobcat Company - 08/04/2017 - 06:30:16 - Produced by Ken Cook Co. with mediaioff

BEACON (Cont'd)

Ref No	Part Number	Description	Remarks	Serial Number	Qty
1	7129299	KIT, BEACON LIGHT	Ref. 2-5		1
2	6668816	SWITCH			1
3	6718872	HARNESS			1
4	6675523	LIGHT EC BEACON			1
5	6987225ENUS	INSTRUCTIONS	WAS 6987225 [A]		1

Page 498 OSS# 6300322913 - All rights reserved by Bobcat Company - 08/04/2017 - 06:30:16 - Produced by Ken Cook Co. with mediaioff

BLOCK HEATER
(Engine)

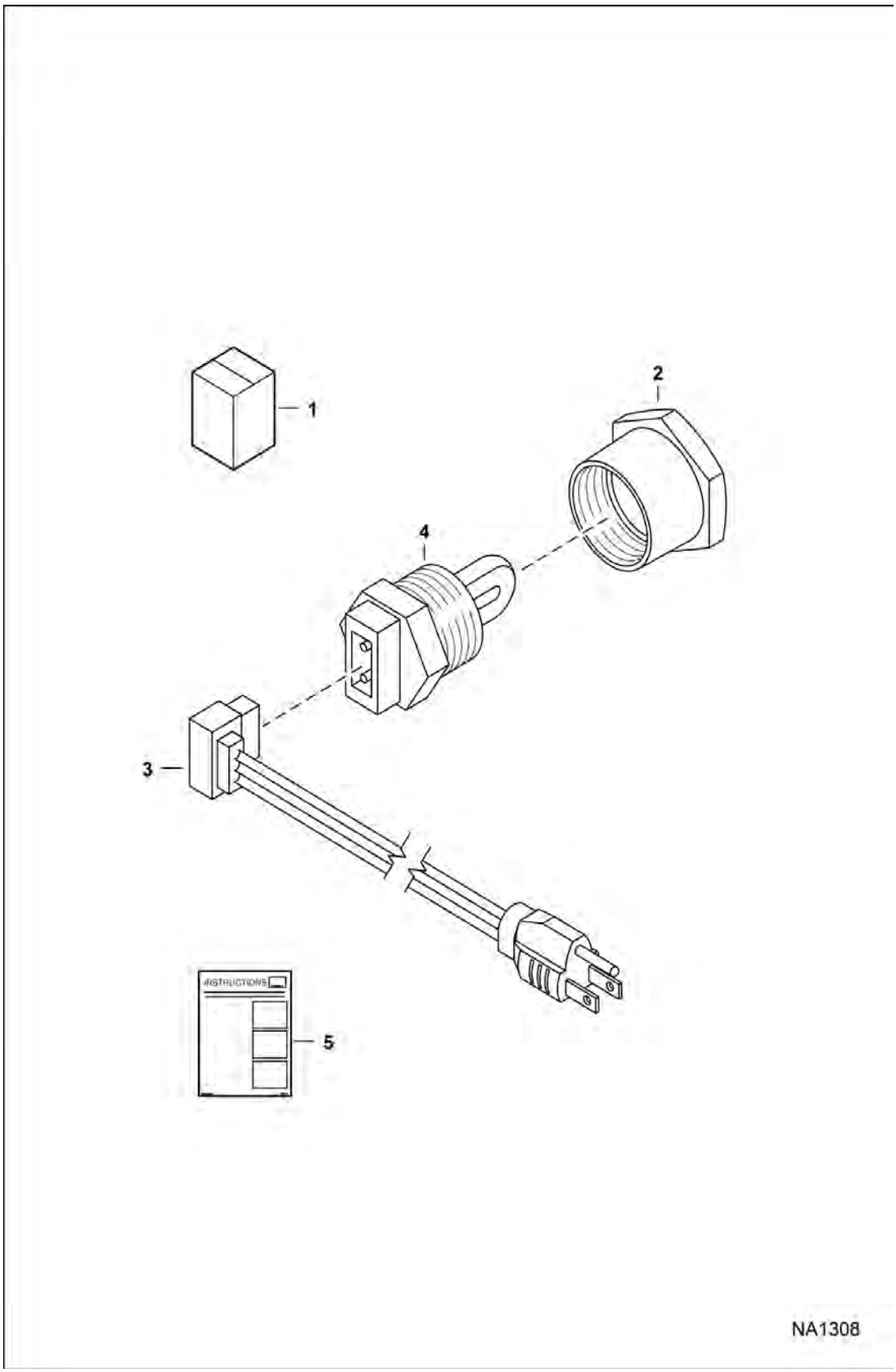

Page 507 - OSS# 6300322913 - All rights reserved by Bobcat Company - 08/04/2017 - 06:30:16 - Produced by Ken Cook Co. with mediaioff

BLOCK HEATER (Cont'd)
(Engine)

Ref No	Part Number	Description	Remarks	Serial Number	Qty
1	6720808	KIT, HEATER ENG BLOCK	Ref. 2-5		1
2	19F12	BUSHING			1
3	7021791	CORD, HEATER BLOCK ENG			1
4	6659369	HEATER, BLOCK ENG PLUG SOFT	W/Ref. 3		1
5	6720038ENUS	INSTRUCTIONS	- Was 6720038 [C]		1

Page 3084 OSS# 6300322913 - All rights reserved by Bobcat Company - 08/04/2017 - 06:30:16 - Produced by Ken Cook Co. with mediaioff

BRAKE LIGHTING

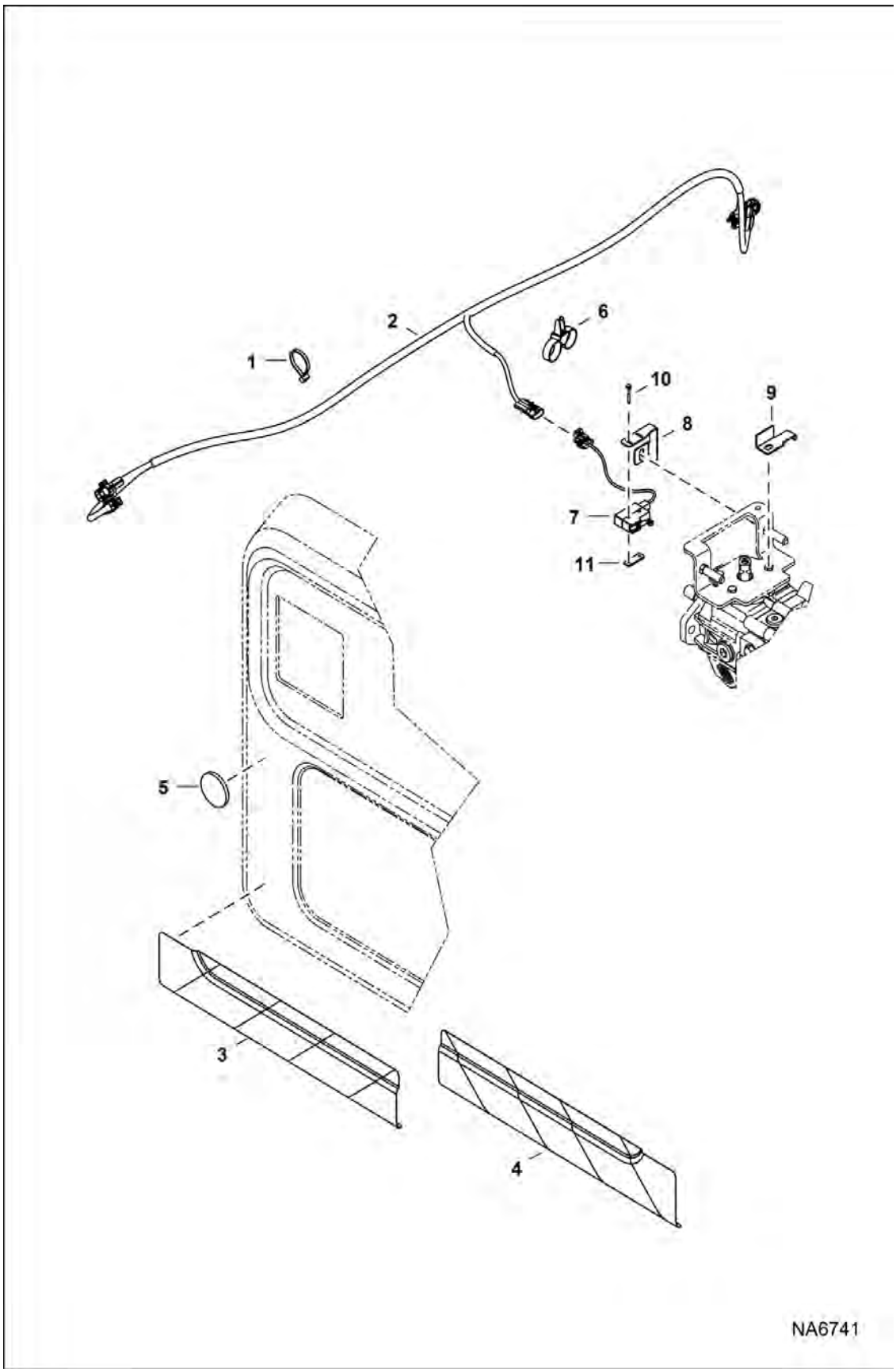

Page 509 - OSS# 6300322913 - All rights reserved by Bobcat Company - 08/04/2017 - 06:30:16 - Produced by Ken Cook Co. with mediaioff

BRAKE LIGHTING (Cont'd)

Ref No	Part Number	Description	Remarks	Serial Number	Qty
1	6624289	STRAP, TIE			11
2	7219294	HARNESS, SWITCH NEUTRAL			1
3	7220344	DECAL, REFLECTIVE			1
4	7220348	DECAL, REFLECTIVE			1
5	7191035	LENS, REFLECTIVE			2
6	6678668	STRAP			1
7	6661150	SWITCH, ROLLER MICRO			1
8	7214874	BRACKET, SWITCH			1
9	7214875	BRACKET, CENTERING			1
10	84G1320	BOLT			2
11	6702593	SPACER			1

Page 1 of 1 OSS# 6300322913 - All rights reserved by Bobcat Company - 08/04/2017 - 06:30:16 - Produced by Ken Cook Co. with mediaioff

BUCKET POSITION VALVE

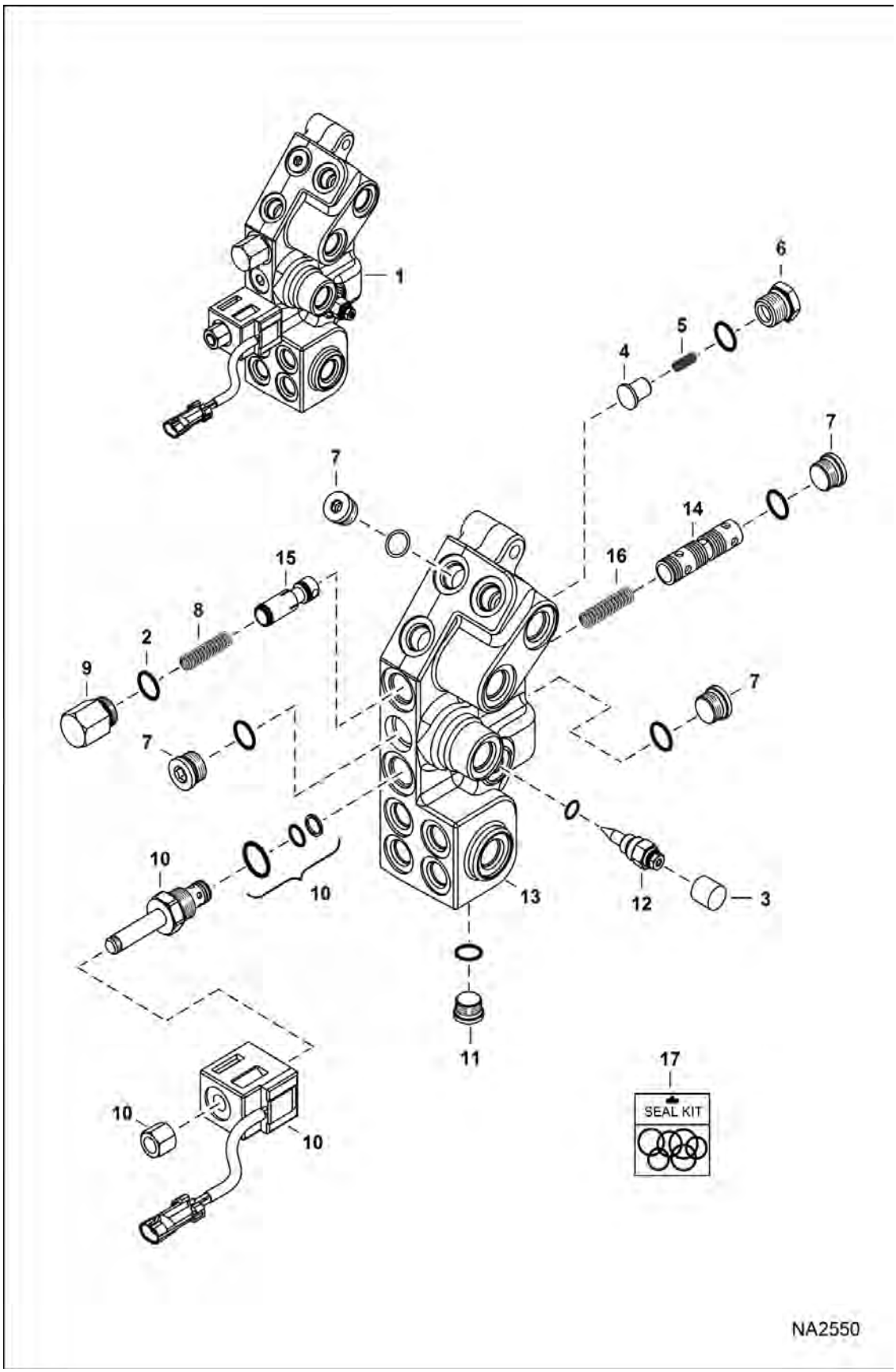

Page 511 - OSS# 6300322913 - All rights reserved by Bobcat Company - 08/04/2017 - 06:30:16 - Produced by Ken Cook Co. with mediaioff

BUCKET POSITION VALVE (Cont'd)

Ref No	Part Number	Description	Remarks	Serial Number	Qty
1	7011040	VALVE, BPV	Ref. 2-16 - Was 7011060 [D]		1
2	6667680	SNAP RING			1
3	6667676	COVER			1
4	6647783	LOADCHECK			1
5	6647785	SPRING			1
6	6647784	PLUG			1
6	79K10	O RING 10			x
7	6676543	PLUG			4
8	6648294	SPRING			1
9	6667176	PLUG			1
10	6672863	VALVE, SOLENOID			1
10	6671527	NUT			1
10	6670634	SEAL KIT			1
10	6675781	Coil			1
10	6675780	Cartridge			1
11	7013201	PLUG			2
12	7010283	VALVE, REGULATOR			1
13		BLOCK	NSS - Order Ref. 1		1
14		SPOOL	NSS - Order Ref. 1		1
15		SPOOL	NSS - Order Ref. 1		1
16	6660775	SPRING			1
17	7013203	KIT, SEAL			1

Page 1.2 OSS# 6300322913 - All rights reserved by Bobcat Company - 08/04/2017 - 06:30:16 - Produced by Ken Cook Co. with mediaioff

BUCKET POSITION VALVE KIT

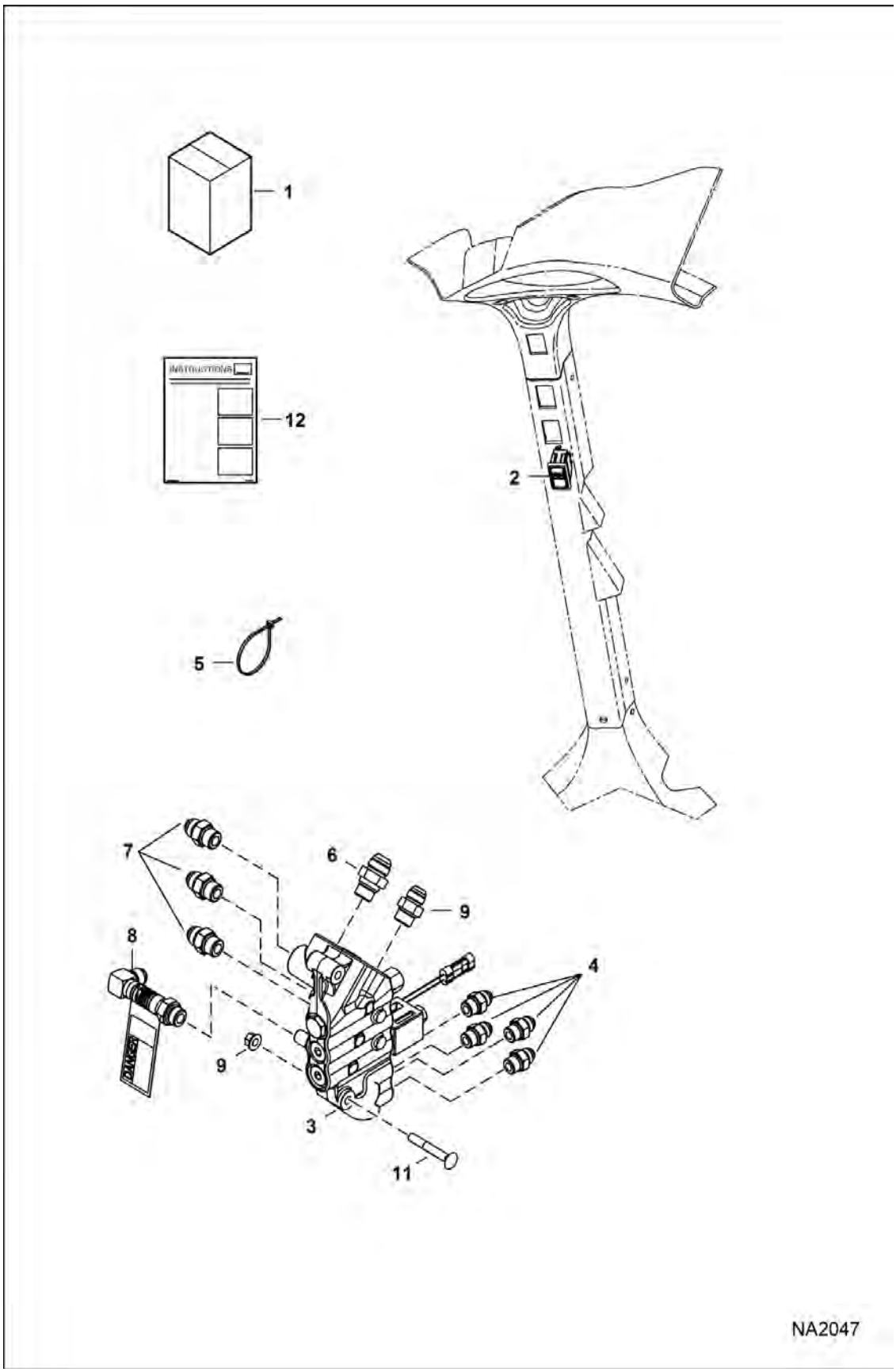

Page 513 - OSS# 6300322913 - All rights reserved by Bobcat Company - 08/04/2017 - 06:30:16 - Produced by Ken Cook Co. with mediaioff

BUCKET POSITION VALVE KIT (Cont'd)

Ref No	Part Number	Description	Remarks	Serial Number	Qty
1	7128442	KIT, BPV	Ref. 2-9, 11 & 12		1
2	6690947	SWITCH, BPV			1
3	7011040	VALVE, BPV	See Illustration BUCKET POSITION VALVE / NA2550 Was 7011060 [D]		1
4	15KB0808	FITTING, HYD CONNECTOR	600 & 700 models		4
4	79K8	O RING 10			x
4	15KB0608	FITTING, HYD CONNECTOR	500 models		4
4	79K8	O RING 10			x
5	6624289	STRAP, TIE			1
6	15KB1210	FITTING, HYD CONNECTOR	600 & 700 models		1
6	79K10	O RING 10			x
6	15KB1010	FITTING, HYD CONNECTOR	500 models		1
6	79K10	O RING 10			x
7	15KB1010	FITTING, HYD CONNECTOR			3
7	79K10	O RING 10			x
8	7183605	KIT, FITTING W/DECAL	600 & 700 models		1
8	7211446	KIT, FITTING W/DECAL	500 models		1
9	15KB1010	FITTING, HYD CONNECTOR	600 & 700 models		1
9	79K10	O RING 10			x
9	15KB0810	FITTING, HYD CONNECTOR	500 models		1
9	79K10	O RING 10			x
10	83D6	NUT 5	See Illustration HYDRAULIC CIRCUITRY / NA2910 - not in kit		2
11	37C644	BOLT	See Illustration HYDRAULIC CIRCUITRY / NA2910		2
12	6987250ENUS	INSTRUCTIONS	Was 6987250 [A]		1

Page 514 OSS# 6300322913 - All rights reserved by Bobcat Company - 08/04/2017 - 06:30:16 - Produced by Ken Cook Co. with mediaioff

BUCKET POSITION VALVE KIT

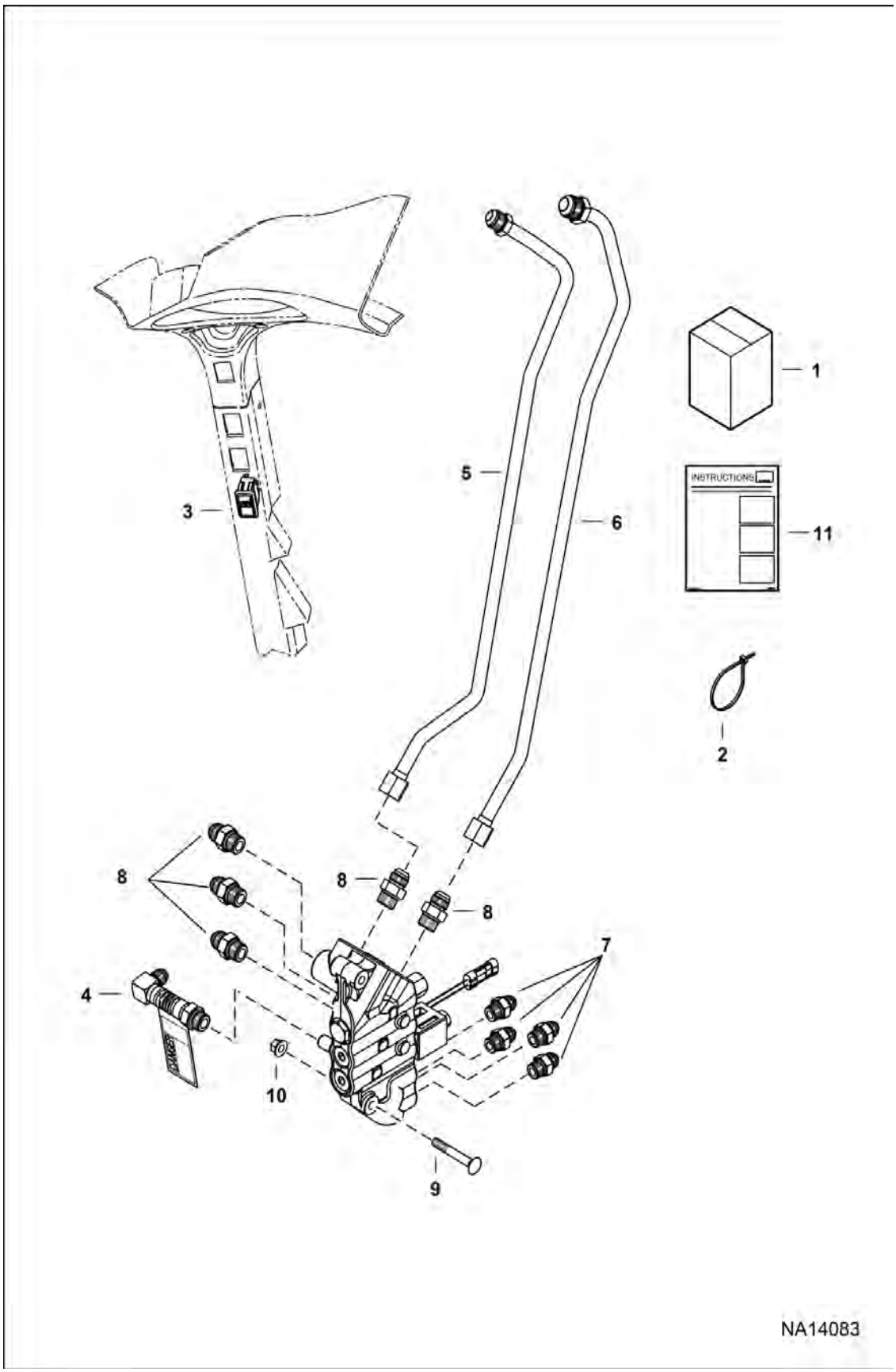

Page 515 - OSS# 6300322913 - All rights reserved by Bobcat Company - 08/04/2017 - 06:30:16 - Produced by Ken Cook Co. with mediaioff

BUCKET POSITION VALVE KIT (Cont'd)

Ref No	Part Number	Description	Remarks	Serial Number	Qty
1	7310240	KIT BUCKET POSITION			1
2	6624289	STRAP, TIE			1
3	6690947	SWITCH, BPV			1
4	7211446	KIT, FITTING W/DECAL			1
5	7309709	TUBELINE HYDRAULIC			1
6	7309710	TUBELINE HYDRAULIC			1
7	15KB0808	FITTING, HYD CONNECTOR			4
8	15KB1010	FITTING, HYD CONNECTOR			5
9	37C644	BOLT			2
10	83D6	NUT 5			2
11	6987250ENUS	INSTRUCTIONS			1

Page 508 OSS# 6300322913 - All rights reserved by Bobcat Company - 08/04/2017 - 06:30:16 - Produced by Ken Cook Co. with mediaioff

BUMPER KIT
(Rear)

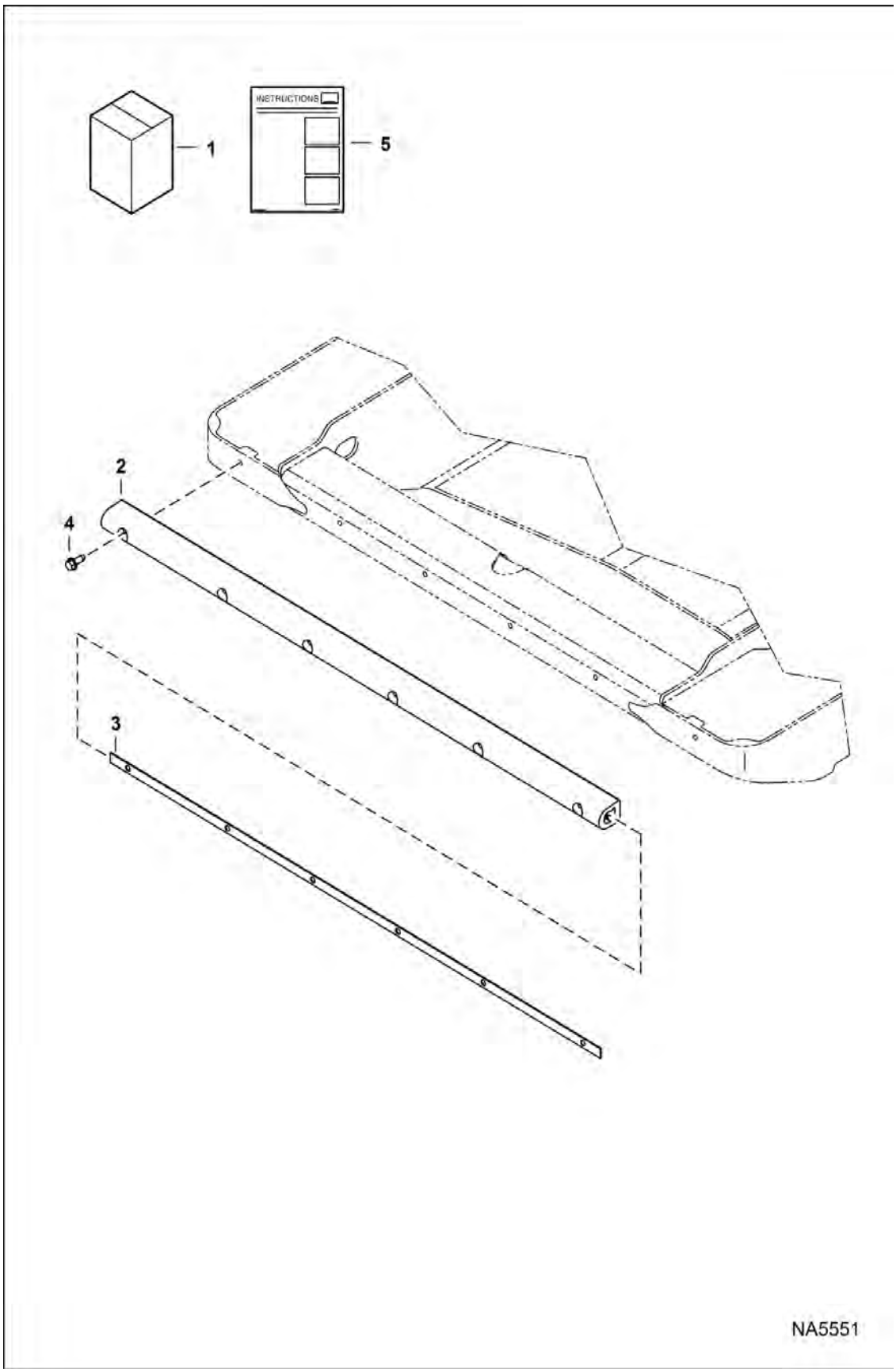

Page 517 - OSS# 6300322913 - All rights reserved by Bobcat Company - 08/04/2017 - 06:30:16 - Produced by Ken Cook Co. with mediaioff

BUMPER KIT (Cont'd)
(Rear)

Ref No	Part Number	Description	Remarks	Serial Number	Qty
1	7203665	KIT, BUMPER	Ref. 2-5		1
2	7194160	BUMPER, RUBBER 'M' SERIES			1
3	7201515	RETAINING PLATE, RUBBER BUMPER			1
4	84G3716	SCREW 5			6
5	6990126ENUS	INSTRUCTIONS	WAS 6990126 [A]		1

Page 1 of 1 OSS# 6300322913 - All rights reserved by Bobcat Company - 08/04/2017 - 06:30:16 - Produced by Ken Cook Co. with mediaioff

CAB DOOR

(175 mm) (6.90”) Wiper Motor Mounting Bracket

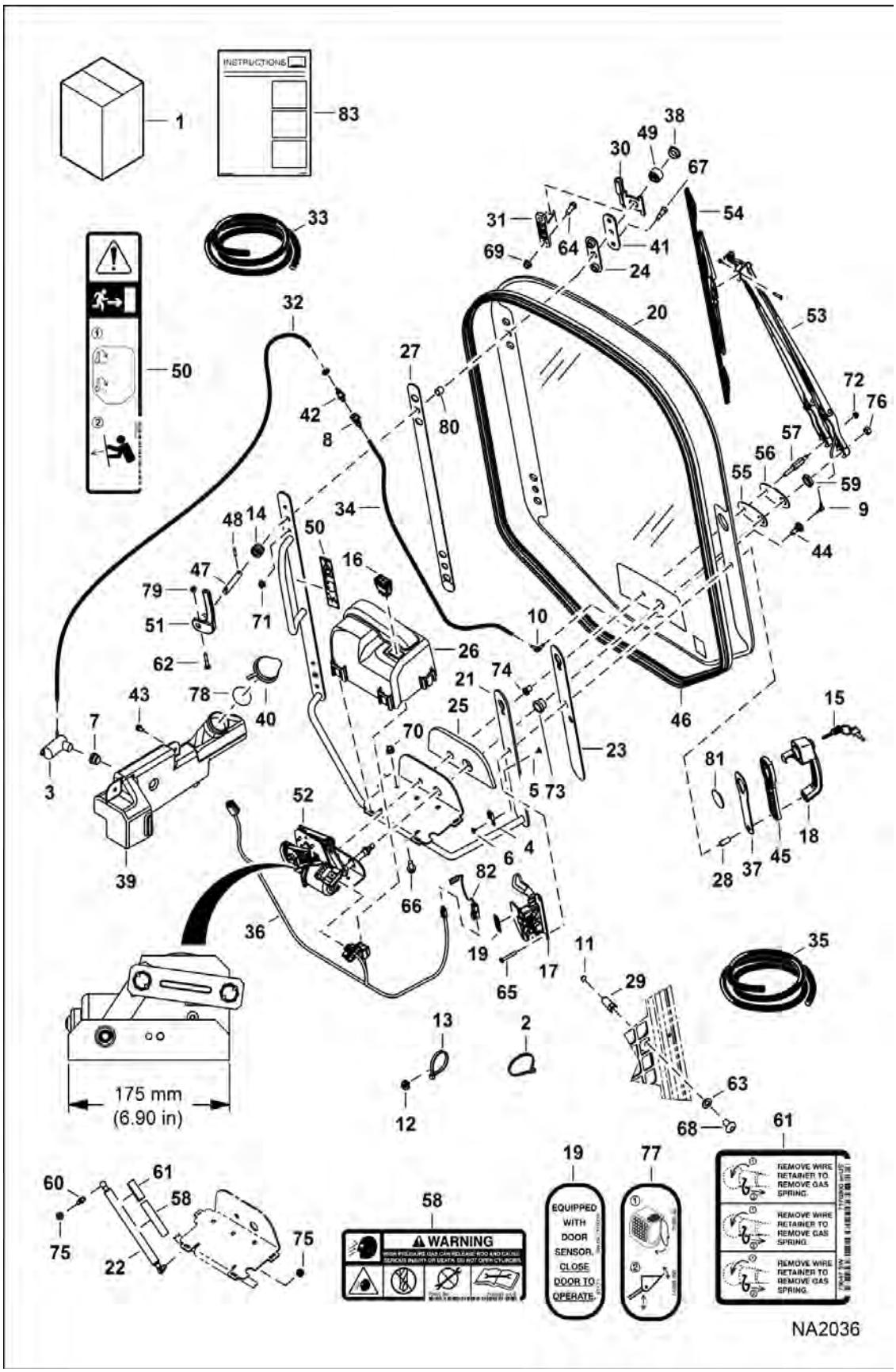

Page 519 - OSS# 6300322913 - All rights reserved by Bobcat Company - 08/04/2017 - 06:30:16 - Produced by Ken Cook Co. with mediaioff

CAB DOOR (Cont'd)

(175 mm) (6.90”) Wiper Motor Mounting Bracket

Ref No	Part Number	Description	Remarks	Serial Number	Qty
1		KIT, DOOR	See Illustration CAB DOOR / NA11055 - NLA -Ref. 2-83 - Was 7128393 [A]		1
2	6610510	STRAP, TIE 10			3
3	6664554	PUMP, WIPER WASHER			1
4	6665000	CLIP			1
5	6665321	RIVET			1
6	6665322	RIVET			1
7	6666766	GROMMET			1
8	6675298	COUPLER, BODY			1
9	6676500	ELBOW			1
10	6676917	ELBOW			1
11	6677192	SENSOR, MAGNETIC			1
12	6690688	TREE MOUNT			6
13	6690690	STRAP, TIE	203 mm (8") long - not in kit		10
13	6624289	STRAP, TIE	387,4 mm (15.25") long		5
14	6704453	SPRING 5			1
15	6693241	KEY (2)	ignition - single key W/O ring		1
16	7001709	SWITCH FRONT WIPER			1
17	7109661	LATCH, DOOR W/SENSOR	W/Ref. 82		1
18	7109662	HANDLE, LATCH DOOR			1
19		DECAL, SAFETY	NLA - door sensor - Was 7110316 [A]		1
20	7120401	GLASS, DOOR	Also Order 7258389 plug		1
20	7120401PK	GLASS DOOR (25)	bulk - sold per package of 25		1
21	7120402	FRAME, DOOR CAB			1
22	7142371	SPRING GAS DOOR	Also Order Ref. 58 & 61		1
23	7148287	SEAL DOOR HANDLE			1
24	7148289	SEAL DOOR HINGE			2
25	7174837	GASKET, WIPER			1
26	7149827	COVER, WIPER			1
27	7150719	SEAL DOOR FRAME			1
28	7174841	SPACER, HANDLE			2
29	7175151	STRIKER, DOOR			1
30	7193725	HINGE, DOOR CAB			2
31	7305580	HINGE	Was 7176593 [A]		2
32		HOSE	NLA - 1219 mm (48") long - Order Ref. 33		1
33	6708310	HOSE, BULK/FT 100	clear - 0.154" ID - sold per foot		x
34		HOSE	NLA - 787 mm (31") long - Order Ref. 35		1
35	6676003	HOSE, BULK/FT	black - 0.109" ID - sold per foot		x

Page Built 08/04/2017 - 06:30:16 - Produced by Ken Cook Co. with mediaoff OSS# 6300322913 - All rights reserved by Bobcat Company

CAB DOOR (Cont'd)

(175 mm) (6.90”) Wiper Motor Mounting Bracket

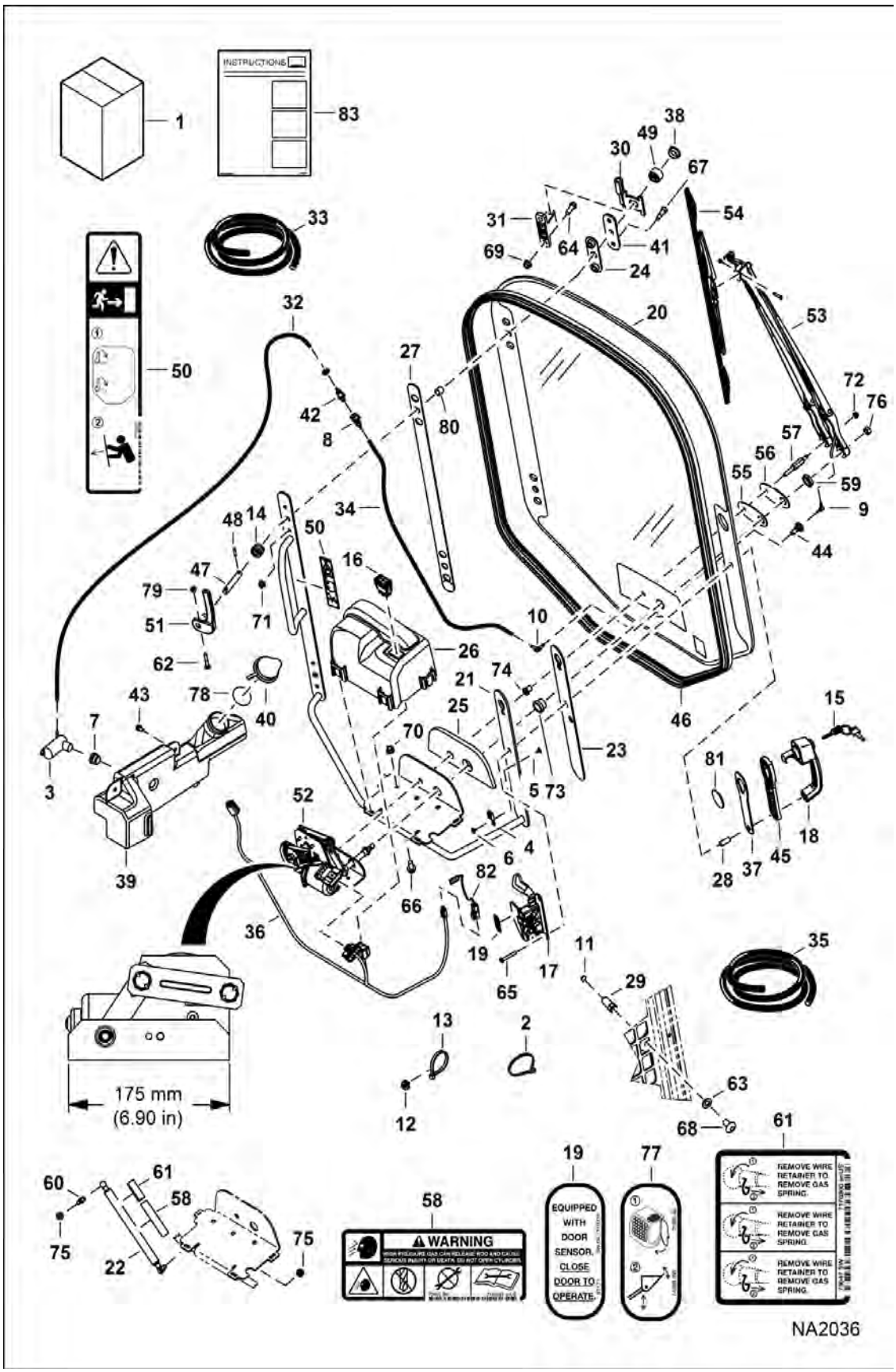

Page 521 - OSS# 6300322913 - All rights reserved by Bobcat Company - 08/04/2017 - 06:30:16 - Produced by Ken Cook Co. with mediaioff

CAB DOOR (Cont'd)

(175 mm) (6.90”) Wiper Motor Mounting Bracket

Ref No	Part Number	Description	Remarks	Serial Number	Qty
36	7155024	HARNESS DOOR			1
37	7160841	SEAL HANDLE DOOR			1
38	7161429	PLUG			2
39	7232658	TANK, WASHER	Was 7163259 [A]		1
40	7163263	CAP WASHER BOTTLE			1
41	7283637	PLATE, DOOR	Was 7164590 [A]		2
42	7165972	COUPLER INSERT			2
43	7166190	SCREW THREAD ROLLING			3
44	7167177	GROMMET WIPER			1
45	7166205	SPACER HANDLE			1
46	7281063	SEAL, DOOR	Was 7222790 [A]		1
47	7167844	SHAFT			2
48	7167845	PIN			2
49	7167846	WASHER CAST			2
50	7168025	DECAL EMERGENCY DOOR			1
51	7186972	LEVER			2
52	7168952	WIPER MOTOR	175 mm (6.90”) long mounting bracket		1
53	7168953	ARM WIPER ASSY			1
54	7168954	BLADE WIPER ASSY			1
55	7168955	GASKET			1
56	7168956	PLATE ADAPTOR			1
57	7168957	PLATE STUD ADAPTOR			1
58	7169291	DECAL	warning		1
59	6681905	NUT			1
60	7169849	FITTING BALLSTUD			1
61	7170360	DECAL, SPRING REMOVAL			1
62	17C428	BOLT			2
63	18EM1224	WASHER			1
64	35C516	BOLT 10	Was 17C516 [B]		4
65	1CM640	SCREW			2
66	31C612	BOLT			3
67	38C612	BOLT	Was 38C610 [B]		4
68	10C816	BOLT			1
69	59D5	NUT 5			4
70	97D6	NUT 10			3
71	97D5	NUT			4
72	51DM6	NUT			1
73	7174838	SPACER			1
74	7174839	SPACER			1

Page 520 OSS# 6300322913 - All rights reserved by Bobcat Company - 08/04/2017 - 06:30:16 - Produced by Ken Cook Co. with mediaioff

CAB DOOR (Cont'd)

(175 mm) (6.90”) Wiper Motor Mounting Bracket

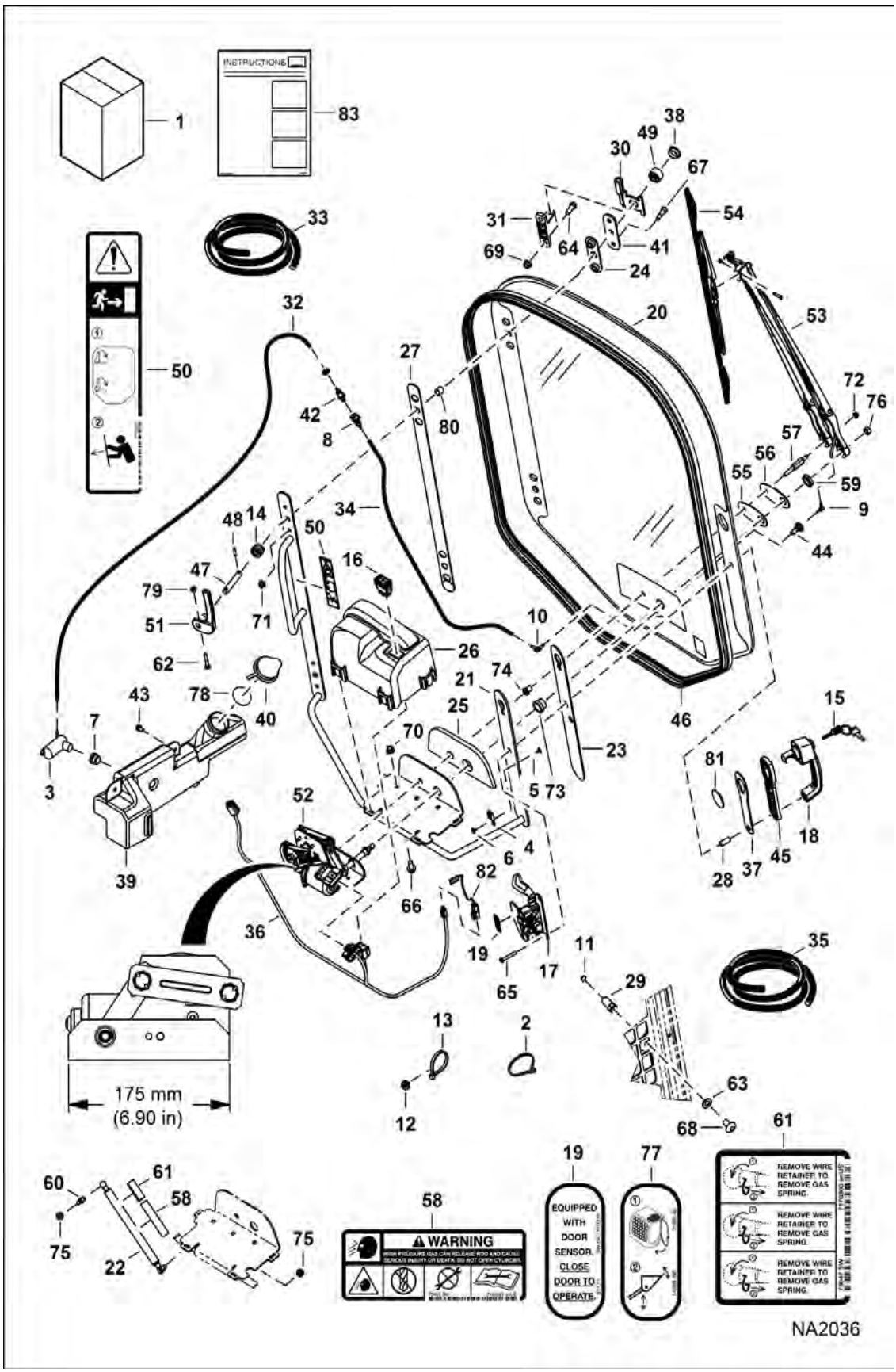

Page 523 - OSS# 6300322913 - All rights reserved by Bobcat Company - 08/04/2017 - 06:30:16 - Produced by Ken Cook Co. with mediaioff

CAB DOOR (Cont'd)

(175 mm) (6.90”) Wiper Motor Mounting Bracket

Ref No	Part Number	Description	Remarks	Serial Number	Qty
75	59D5	NUT 5	Was 61D5 [B]		2
76	2DM10	NUT			1
77		DECAL, SAFETY	NLA - EMEA - no-text - Was 7168146 [A]		1
78	7188097	SEAL			1
79	59D4	NUT 5			2
80	7196015	BUSHING, PLASTIC			2
81	7196017	DISK, PLASTIC			1
82	6728459	SENSOR, DOOR	Also Order (2) 6677193 rivet		1
82	6677193	RIVET			2
83	6987230ENUS	INSTRUCTIONS	Was 7278971ENUS [B,D]		1

Page 324 OSS# 6300322913 - All rights reserved by Bobcat Company - 08/04/2017 - 06:30:16 - Produced by Ken Cook Co. with mediaioff

CAB DOOR

(159 mm) (6.25”) Wiper Motor Mounting Bracket
(Bottom Mounted Washer Nozzle)

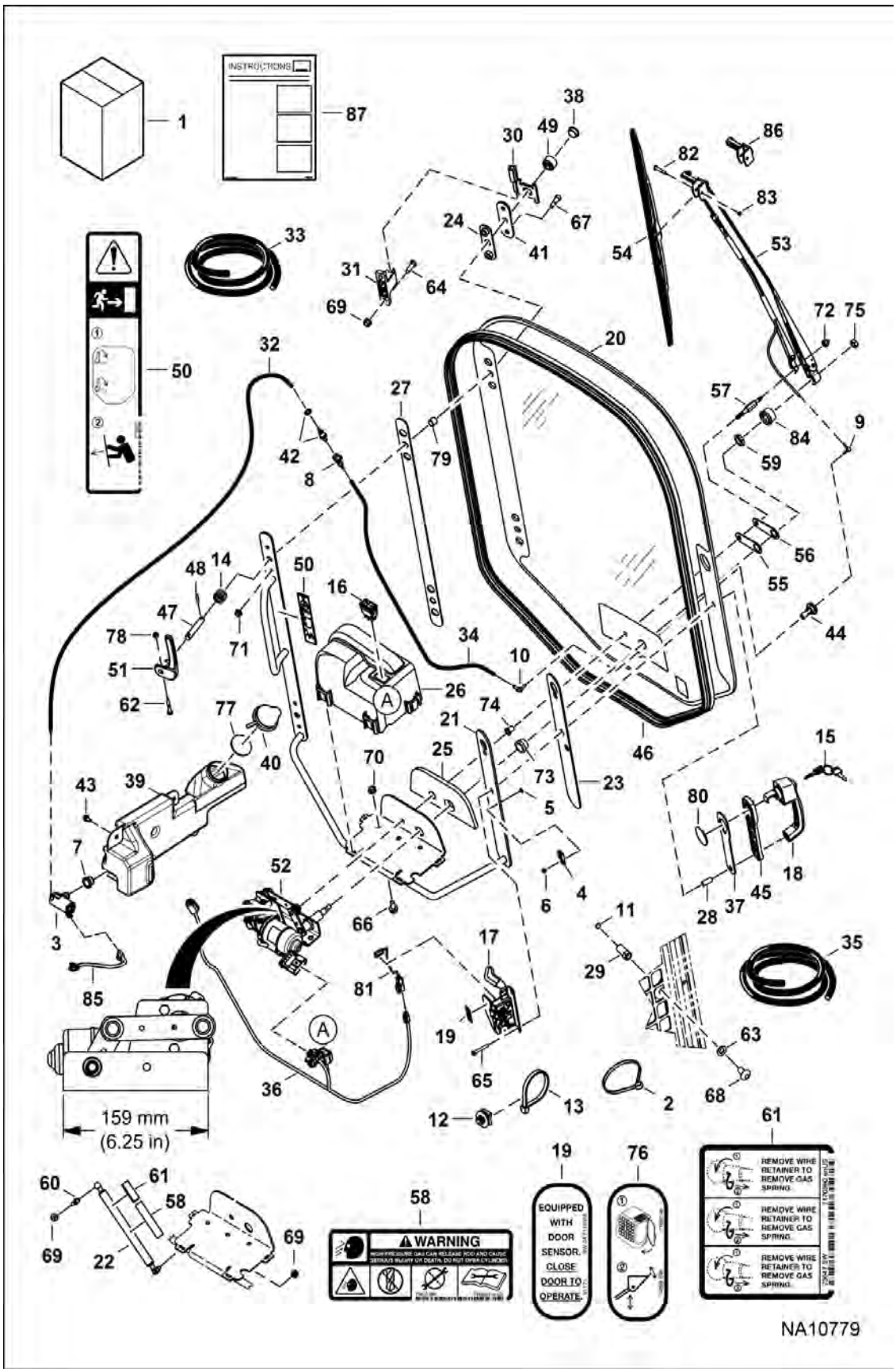

Page 525 - OSS# 6300322913 - All rights reserved by Bobcat Company - 08/04/2017 - 06:30:16 - Produced by Ken Cook Co. with mediaioff

Illustration NA10779

CAB DOOR (Cont'd)

(159 mm) (6.25”) Wiper Motor Mounting Bracket
(Bottom Mounted Washer Nozzle)

Ref No	Part Number	Description	Remarks	Serial Number	Qty
1		KIT, DOOR	See Illustration CAB DOOR / NA11055 - NLA - Ref. 2-86 - Was 7128393 [A]		1
1	100644SUB	ASSY DOOR	Ref. 4-6, 13-28, 30, 36-38, 41, 45-62, 65-67, 69-75 & 78-84 - fully assembled		1
2	6610510	STRAP, TIE 10			3
3	6664554	PUMP, WIPER WASHER			1
4	6665000	CLIP			1
5	6665321	RIVET			1
6	6665322	RIVET			1
7	6666766	GROMMET			1
8	6675298	COUPLER, BODY			1
9	6676500	ELBOW			1
10	6676917	ELBOW			1
11	6677192	SENSOR, MAGNETIC			1
12	6690688	TREE MOUNT			6
13	6690690	STRAP, TIE	203 mm (8") long - not in kit		10
13	6624289	STRAP, TIE	387,4 mm (15.25") long		5
14	6704453	SPRING 5			2
15	6693241	KEY (2)	ignition - single key W/O ring		1
16	7001709	SWITCH FRONT WIPER			1
17	7109661	LATCH, DOOR W/SENSOR	W/Ref. 81		1
18	7109662	HANDLE, LATCH DOOR			1
19		DECAL, SAFETY	NLA - door sensor - Was 7110316 [A]		1
20	7120401	GLASS, DOOR	Also Order 7258389 plug		1
20	7120401PK	GLASS DOOR (25)	bulk – sold per package of 25		1
21	7120402	FRAME, DOOR CAB			1
22	7142371	SPRING GAS DOOR	Also Order Ref. 58 & 61		1
23	7148287	SEAL DOOR HANDLE			1
24	7148289	SEAL DOOR HINGE			2
25	7174837	GASKET, WIPER			1
26	7149827	COVER, WIPER			1
27	7150719	SEAL DOOR FRAME			1
28	7174841	SPACER, HANDLE			2
29	7175151	STRIKER, DOOR			1
30	7193725	HINGE, DOOR CAB	Was 7150817 [A]		2
31	7305580	HINGE	Was 7176593 [A]		2
32		HOSE	NLA - 1219 mm (48") long - Order Ref. 33		1

Page Generated OSS# 6300322913 - All rights reserved by Bobcat Company - 08/04/2017 - 06:30:16 - Produced by Ken Cook Co. with mediaioff

CAB DOOR (Cont'd)

(159 mm) (6.25”) Wiper Motor Mounting Bracket
(Bottom Mounted Washer Nozzle)

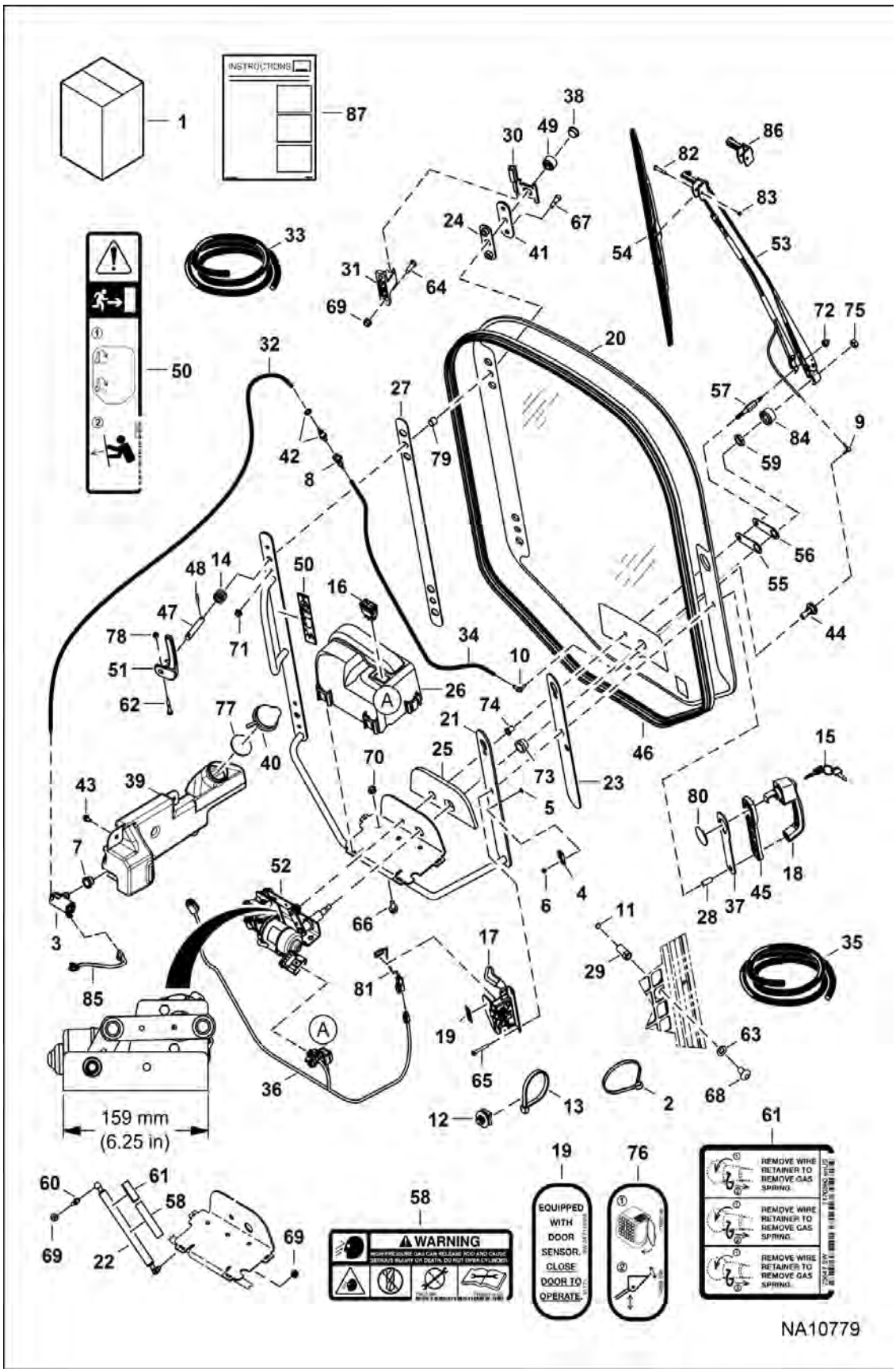

Illustration NA10779

Model T770 MT3
6989477

Page 527 - OSS# 6300322913 - All rights reserved by Bobcat Company - 08/04/2017 - 06:30:16 - Produced by Ken Cook Co. with mediaioff

CAB DOOR (Cont'd)

(159 mm) (6.25”) Wiper Motor Mounting Bracket
(Bottom Mounted Washer Nozzle)

Ref No	Part Number	Description	Remarks	Serial Number	Qty
33	6708310	HOSE, BULK/FT 100	clear - 0.154" ID - sold per foot		x
34		HOSE	NLA - 787 mm (31") long - Order Ref. 35		1
35	6676003	HOSE, BULK/FT	black - 0.109" ID - sold per foot		x
36	7155024	HARNESS DOOR			1
37	7160841	SEAL HANDLE DOOR			1
38	7161429	PLUG			2
39	7232658	TANK, WASHER	Was 7163259 [A]		1
40	7163263	CAP WASHER BOTTLE			1
41		DOOR PLATE	NLA - Order 7283637 plate & (2) of Ref. 67 (38C612 bolt) - Was 7164590		2
41	7283637	PLATE, DOOR			2
42	7165972	COUPLER INSERT			2
43	7166190	SCREW THREAD ROLLING			3
44	7167177	GROMMET WIPER			1
45	7166205	SPACER HANDLE			1
46	7281063	SEAL, DOOR	Was 7222790 [A]		1
47	7167844	SHAFT			2
48	7167845	PIN			2
49	7167846	WASHER CAST			2
50	7168025	DECAL EMERGENCY DOOR			1
51	7186972	LEVER	Was 7168288 [A]		2
52	7234174	MOTOR, WIPER	159 mm (6.25”) long mounting bracket		1
53	7251263	ASSY, WIPER ARM	W/Ref. 86		1
54	7251264	BLADE, WIPER			1
55	7251265	GASKET			1
56	7251266	PLATE, ADAPTER			1
57	7251267	STUD			1
58	7169291	DECAL	warning		1
59	7251279	NUT			1
60	7169849	FITTING BALLSTUD			1
61	7170360	DECAL, SPRING REMOVAL			1
62	17C428	BOLT	Was 17C424 [B]		2
63	18EM1224	WASHER			1
64	35C516	BOLT 10	Was 17C516 [B]		4
65	1CM640	SCREW			2
66	31C612	BOLT			3
67	38C610	BOLT	Use W/Ref. 41 (NLA/ 7164590 plate)		4
67	38C612	BOLT	Use W/Ref. 41 (7283637 plate)		4
68	10C816	BOLT			1

Page Base OSS# 6300322913 - All rights reserved by Bobcat Company - 08/04/2017 - 06:30:16 - Produced by Ken Cook Co. with medialoft

CAB DOOR (Cont'd)

(159 mm) (6.25”) Wiper Motor Mounting Bracket
(Bottom Mounted Washer Nozzle)

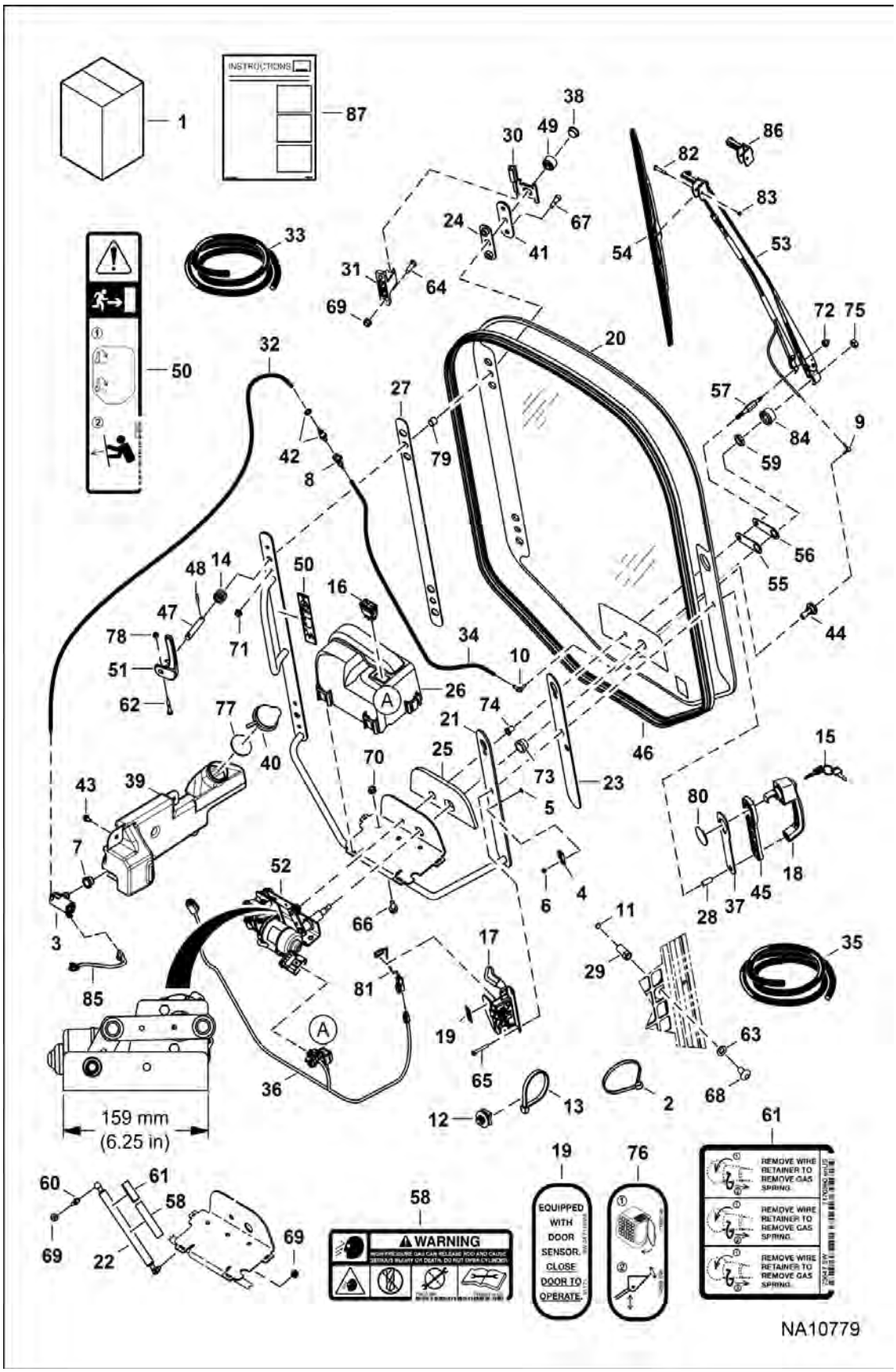

Page 529 - OSS# 6300322913 - All rights reserved by Bobcat Company - 08/04/2017 - 06:30:16 - Produced by Ken Cook Co. with mediaioff

CAB DOOR (Cont'd)

(159 mm) (6.25”) Wiper Motor Mounting Bracket (Bottom Mounted Washer Nozzle)

Ref No	Part Number	Description	Remarks	Serial Number	Qty
69	59D5	NUT 5			6
70	97D6	NUT 10			3
71	97D5	NUT			4
72	7251278	NUT			1
73	7174838	SPACER			1
74	7174839	SPACER			1
75	2DM10	NUT			1
76		DECAL, SAFETY	NLA - EMEA - no-text - Was 7168146 [A]		1
77	7188097	SEAL			1
78	59D4	NUT 5			2
79	7196015	BUSHING, PLASTIC			2
80	7196017	DISK, PLASTIC			1
81	6728459	SENSOR, DOOR	Also Order (2) 6677193 rivet		1
81	6677193	RIVET			2
82	7274763	SCREW			1
83	7274762	NUT, HEX			1
84	7254248	BUSHING			1
85	7253378	HARNESS, JUMPER			1
86	7319634	SADDLE WIPER			1
87	6987230ENUS	INSTRUCTIONS			1

Page 1 of 1 OSS# 6300322913 - All rights reserved by Bobcat Company - 08/04/2017 - 06:30:16 - Produced by Ken Cook Co. with mediaioff

CAB DOOR

(159 mm) (6.25”) Wiper Motor Mounting Bracket
(Top Mounted Washer Nozzle)

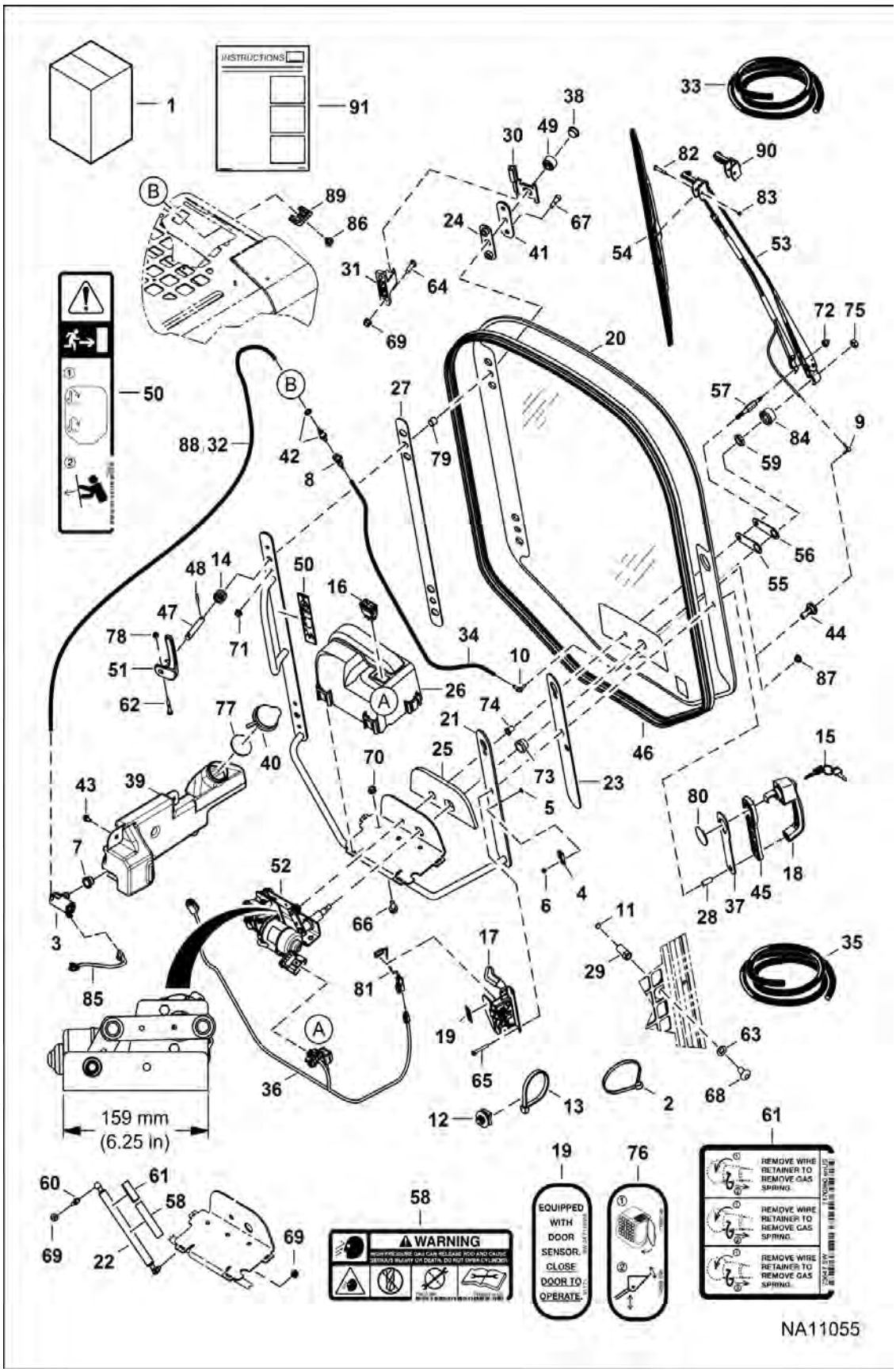

Page 531 - OSS# 6300322913 - All rights reserved by Bobcat Company - 08/04/2017 - 06:30:16 - Produced by Ken Cook Co. with mediaioff

Illustration NA11055

CAB DOOR (Cont'd)

(159 mm) (6.25”) Wiper Motor Mounting Bracket
(Top Mounted Washer Nozzle)

Ref No	Part Number	Description	Remarks	Serial Number	Qty
1	7279636	KIT, DOOR CAB	Ref. 2-91		1
1	100644SUB	ASSY DOOR	Ref. 4-6, 12-28, 30, 36-38, 41, 45-62, 65-67, 69-75 & 78-84 - fully assembled		1
2	6610510	STRAP, TIE 10			3
3	6664554	PUMP, WIPER WASHER			1
4	6665000	CLIP			1
5	6665321	RIVET			1
6	6665322	RIVET			1
7	6666766	GROMMET			1
8	6675298	COUPLER, BODY			1
9	6676500	ELBOW			1
10	6676917	ELBOW			1
11	6677192	SENSOR, MAGNETIC			1
12	6690688	TREE MOUNT			6
13	6690690	STRAP, TIE	203 mm (8") long		10
13	6624289	STRAP, TIE	387,4 mm (15.25") long		5
14	6704453	SPRING 5			2
15	6693241	KEY (2)	ignition - single key W/O ring		1
16	7001709	SWITCH FRONT WIPER			1
17	7109661	LATCH, DOOR W/SENSOR	W/Ref. 81		1
18	7109662	HANDLE, LATCH DOOR			1
19		DECAL, SAFETY	NLA - door sensor - Was 7110316 [A]		1
20	7120401	GLASS, DOOR	Also Order Ref. 87		1
20	7120401PK	GLASS DOOR (25)	bulk - sold per package of 25		1
21	7120402	FRAME, DOOR CAB			1
22	7142371	SPRING GAS DOOR	Also Order Ref. 58 & 61		1
23	7148287	SEAL DOOR HANDLE			1
24	7148289	SEAL DOOR HINGE			2
25	7174837	GASKET, WIPER			1
26	7149827	COVER, WIPER			1
27	7150719	SEAL DOOR FRAME			1
28	7174841	SPACER, HANDLE			2
29	7175151	STRIKER, DOOR			1
30	7193725	HINGE, DOOR CAB	Was 7150817 [A]		2
31	7305580	HINGE	Was 7176593 [A]		2
32		HOSE	NLA - 1219 mm (48") long - Order Ref. 33		1
33	6708310	HOSE, BULK/FT 100	clear - 0.154" ID - sold per foot		x

Page 524 OSS# 6390322913 - All rights reserved by Bobcat Company - 08/04/2017 - 06:30:16 - Produced by Ken Cook Co. with mediaioff

CAB DOOR (Cont'd)

(159 mm) (6.25”) Wiper Motor Mounting Bracket
(Top Mounted Washer Nozzle)

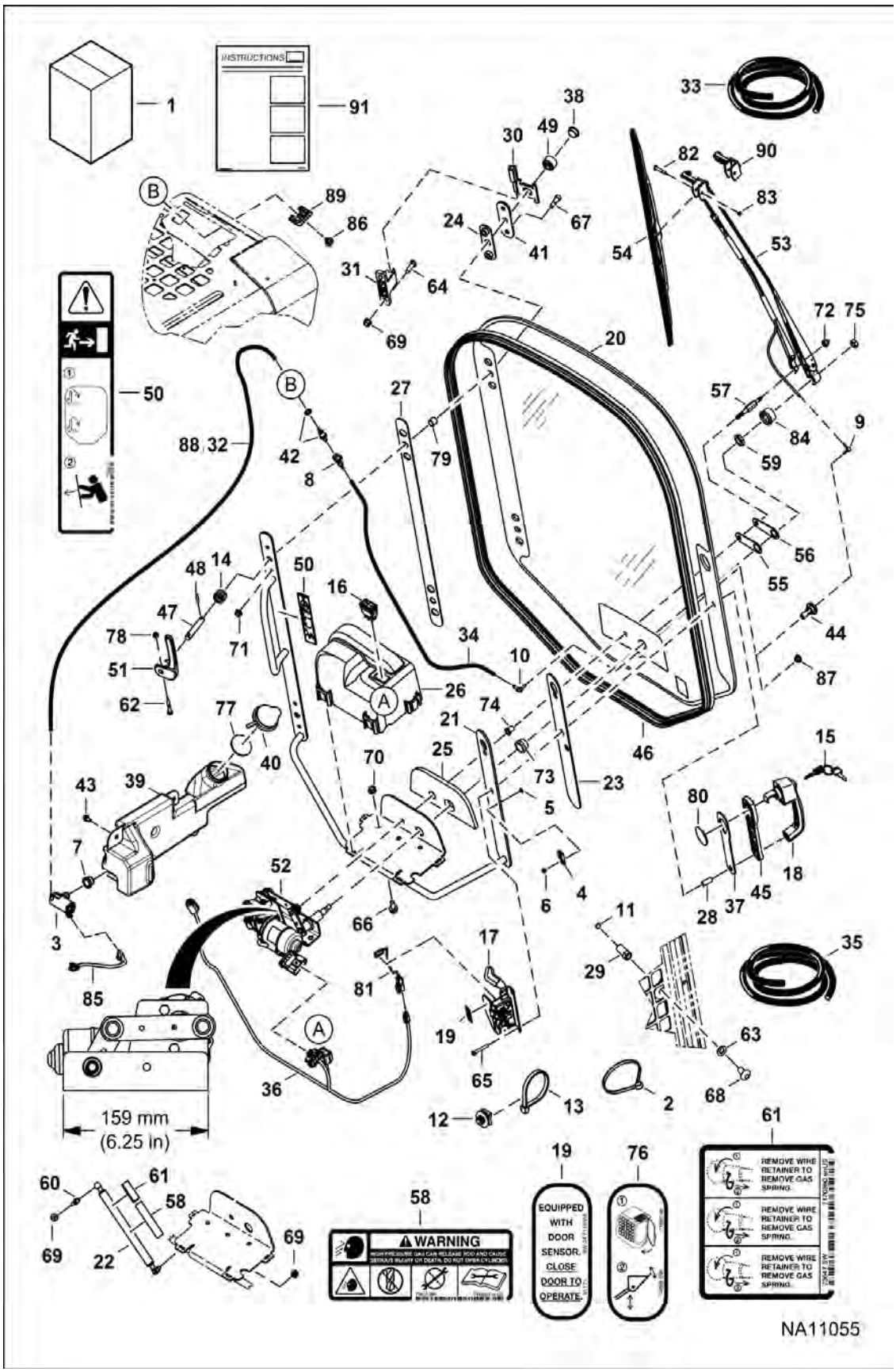

Page 533 - OSS# 6300322913 - All rights reserved by Bobcat Company - 08/04/2017 - 06:30:16 - Produced by Ken Cook Co. with mediaioff

Illustration NA11055

CAB DOOR (Cont'd)

(159 mm) (6.25”) Wiper Motor Mounting Bracket
(Top Mounted Washer Nozzle)

Ref No	Part Number	Description	Remarks	Serial Number	Qty
34		HOSE	NLA - 787 mm (31") long - Order Ref. 35		1
35	6676003	HOSE, BULK/FT	black - 0.109" ID - sold per foot		x
36	7155024	HARNESS DOOR			1
37	7160841	SEAL HANDLE DOOR			1
38	7161429	PLUG			2
39	7232658	TANK, WASHER	Was 7163259 [A]		1
40	7163263	CAP WASHER BOTTLE			1
41	7283637	PLATE, DOOR	Was 7164590 [A]		2
42	7165972	COUPLER INSERT			2
43	7166190	SCREW THREAD ROLLING			3
44	7167177	GROMMET WIPER			1
45	7166205	SPACER HANDLE			1
46	7281063	SEAL, DOOR	Was 7222790 [A]		1
47	7167844	SHAFT			2
48	7167845	PIN			2
49	7167846	WASHER CAST			2
50	7168025	DECAL EMERGENCY DOOR			1
51	7186972	LEVER	Was 7168288 [A]		2
52	7234174	MOTOR, WIPER	159 mm (6.25”) long mounting bracket		1
53	7251263	ASSY, WIPER ARM	W/Ref. 90		1
54	7251264	BLADE, WIPER			1
55	7251265	GASKET			1
56	7251266	PLATE, ADAPTER			1
57	7251267	STUD			1
58	7169291	DECAL	warning		1
59	7251279	NUT			1
60	7169849	FITTING BALLSTUD			1
61	7170360	DECAL, SPRING REMOVAL			1
62	17C428	BOLT	Was 17C424 [B]		2
63	18EM1224	WASHER			1
64	35C516	BOLT 10	Was 17C516 [B]		4
65	1CM640	SCREW			2
66	31C612	BOLT			3
67	38C612	BOLT	Was 38C610 [B]		4
68	10C816	BOLT			1
69	59D5	NUT 5			6
70	97D6	NUT 10			3
71	97D5	NUT			4
72	7251278	NUT			1

Page 384 OSS# 6300322913 - All rights reserved by Bobcat Company - 08/04/2017 - 06:30:16 - Produced by Ken Cook Co. with mediaioff

CAB DOOR (Cont'd)

(159 mm) (6.25”) Wiper Motor Mounting Bracket
(Top Mounted Washer Nozzle)

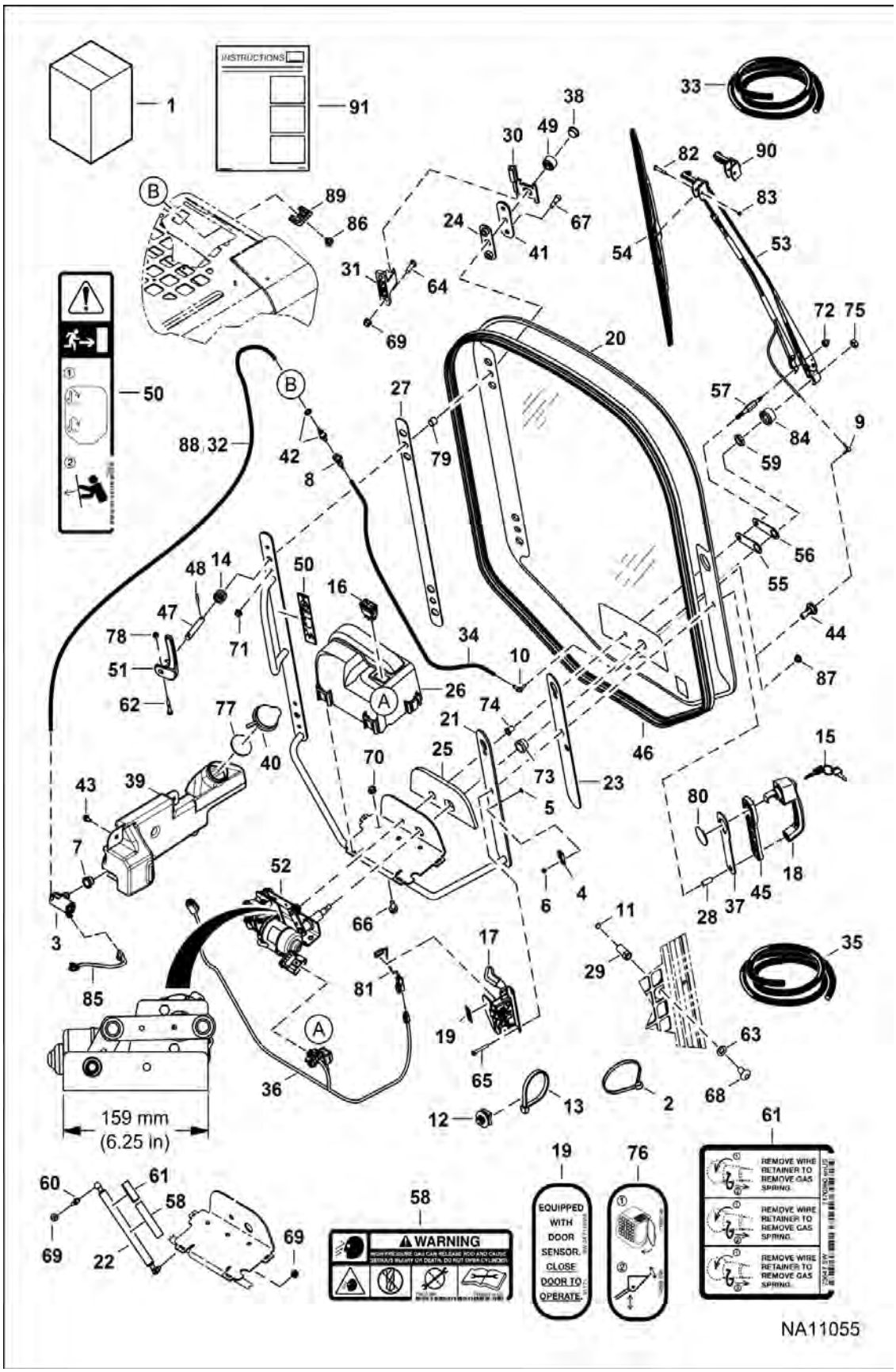

Page 535 - OSS# 6300322913 - All rights reserved by Bobcat Company - 08/04/2017 - 06:30:16 - Produced by Ken Cook Co. with mediaioff

CAB DOOR (Cont'd)

(159 mm) (6.25”) Wiper Motor Mounting Bracket (Top Mounted Washer Nozzle)

Ref No	Part Number	Description	Remarks	Serial Number	Qty
73	7174838	SPACER			1
74	7174839	SPACER			1
75	2DM10	NUT			1
76		DECAL, SAFETY	NLA - EMEA - no-text - Was 7168146 [A]		1
77	7188097	SEAL			1
78	59D4	NUT 5			2
79	7196015	BUSHING, PLASTIC			2
80	7196017	DISK, PLASTIC			1
81	6728459	SENSOR, DOOR	Also Order (2) 6677193 rivet		1
81	6677193	RIVET			2
82	7274763	SCREW			1
83	7274762	NUT, HEX			1
84	7254248	BUSHING			1
85	7253378	HARNESS, JUMPER			1
86	7253043	NOZZLE, SPRAY			1
87	7258389	PLUG			1
88		HOSE	NLA - 2007 mm (79") long - Order Ref. 33		1
89	7250870	GROMMET			1
90	7319634	SADDLE WIPER			1
91	7278971ENUS	INSTRUCTIONS	Was 7278971 [A]		1

Page 1868 OSS# 6300322913 - All rights reserved by Bobcat Company - 08/04/2017 - 06:30:16 - Produced by Ken Cook Co. with mediaioff

CAB DOOR
(Special Applications)

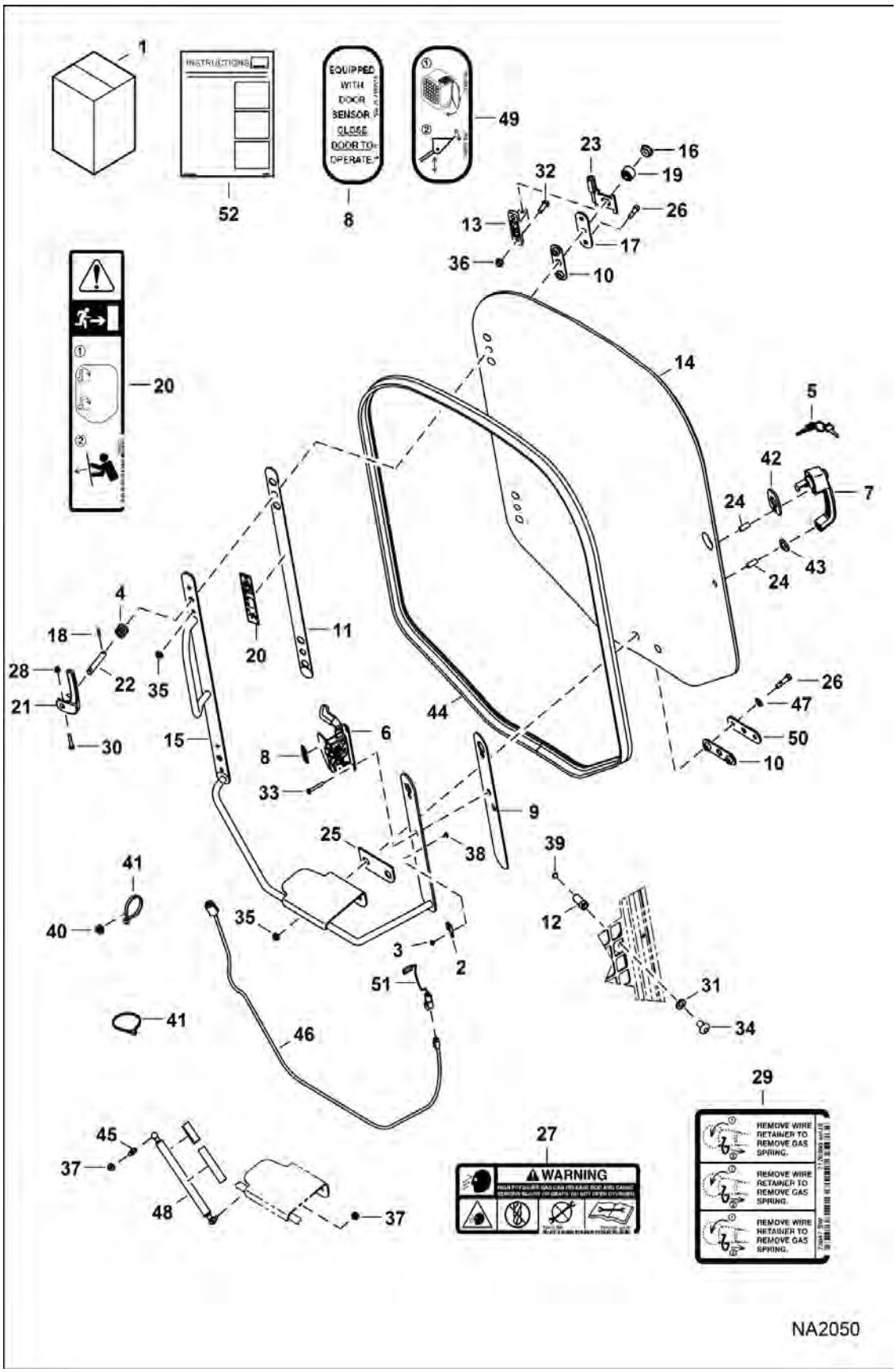

Page 537 - OSS# 6300322913 - All rights reserved by Bobcat Company - 08/04/2017 - 06:30:16 - Produced by Ken Cook Co. with mediaioff

CAB DOOR (Cont'd)
(Special Applications)

Ref No	Part Number	Description	Remarks	Serial Number	Qty
1	7128395	KIT, DOOR CAB SPECIAL APPS	Ref. 2-52		1
2	6665000	CLIP			1
3	6665322	RIVET			1
4	6704453	SPRING 5			2
5	6693241	KEY (2)	ignition - single key W/O ring - Was 6693241		1
6	7109661	LATCH, DOOR W/SENSOR	W/Ref. 51		1
7	7109662	HANDLE, LATCH DOOR			1
8		DECAL, SAFETY	NLA - door sensor - Was 7110316 [A]		1
9	7148287	SEAL DOOR HANDLE			1
10	7148289	SEAL DOOR HINGE			3
11	7150719	SEAL DOOR FRAME			1
12	7175151	STRIKER, DOOR			1
13	7305580	HINGE	Was 7176593 [A]		2
14	7155308	WINDOW			1
15	7155359	FRAME, DOOR CAB			1
16	7161429	PLUG			2
17	7283637	PLATE, DOOR	Was 7164590 [A]		3
18	7167845	PIN			2
19	7167846	WASHER CAST			2
20	7168025	DECAL EMERGENCY DOOR			1
21	7186972	LEVER			2
22	7168836	SHAFT			2
23	7168837	HINGE, DOOR			2
24	7168839	SPACER			2
25	7168841	SEAL			1
26	38C616	SCREW			6
27	7169291	DECAL			1
28	59D4	NUT 5			2
29	7170360	DECAL, SPRING REMOVAL			1
30	17C428	BOLT			2
31	18EM1224	WASHER			1
32	35C516	BOLT 10	Was 17C516 [B]		4
33	1CM640	SCREW			2
34	10C816	BOLT			1
35	97D5	NUT			6
36	59D5	NUT 5			4
37	59D5	NUT 5	Was 61D5 [B]		2
38	6665321	RIVET			1
39	6677192	SENSOR, MAGNETIC			1
40	6690688	TREE MOUNT			6

Page 3880 OSS# 6300322913 - All rights reserved by Bobcat Company - 08/04/2017 - 06:30:16 - Produced by Ken Cook Co. with mediaioff

CAB DOOR (Cont'd)
(Special Applications)

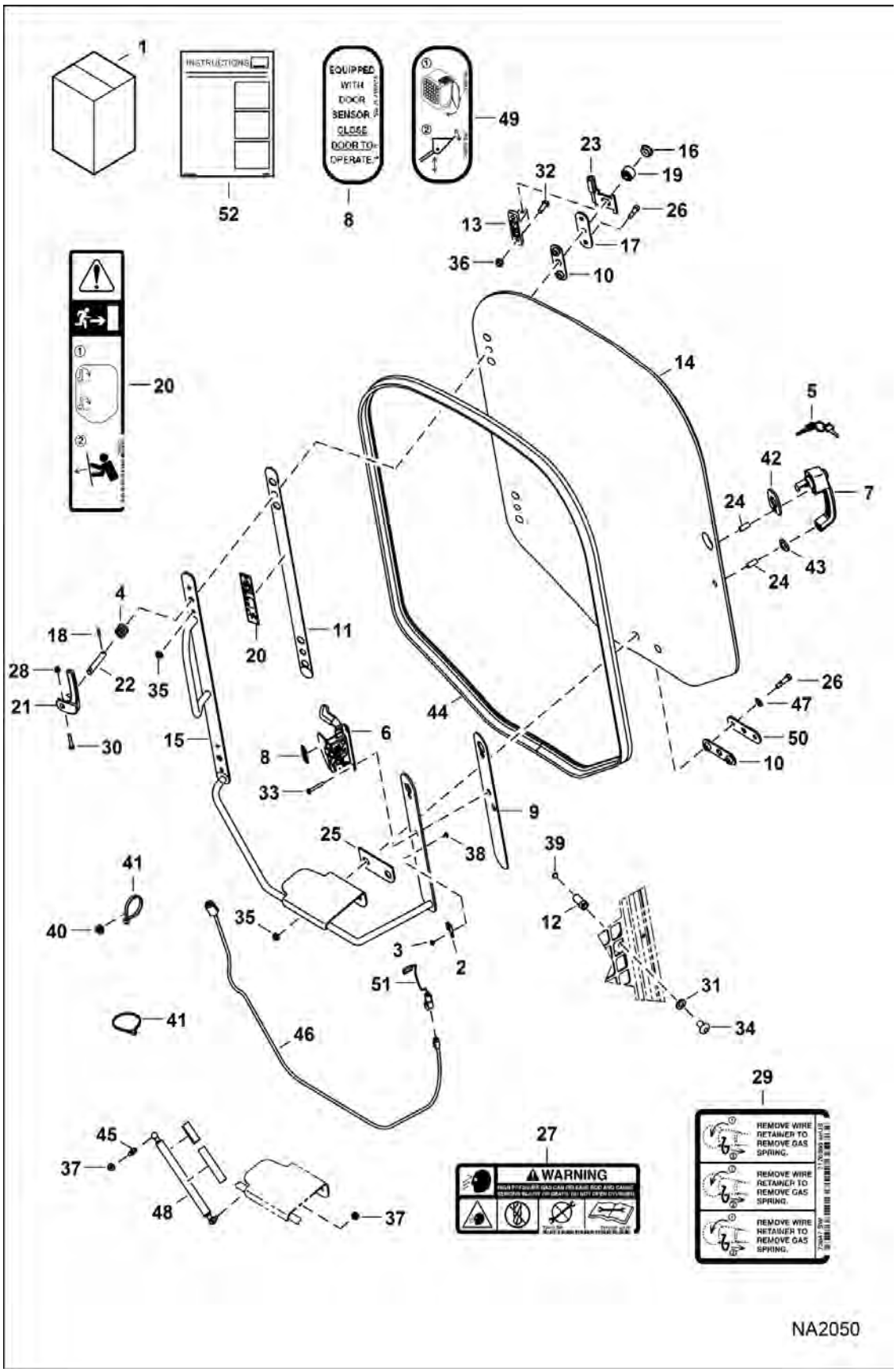

Page 539 - OSS# 6300322913 - All rights reserved by Bobcat Company - 08/04/2017 - 06:30:16 - Produced by Ken Cook Co. with mediaioff

CAB DOOR (Cont'd)
(Special Applications)

Ref No	Part Number	Description	Remarks	Serial Number	Qty
41	6690690	STRAP, TIE	203 mm (8") long - not in kit		10
41	6624289	STRAP, TIE	387,4 mm (15.25") long		5
42	7150745	SPACER	top		1
43	7150746	SPACER	bottom		1
44	7281063	SEAL, DOOR	Was 7222790 [A]		1
45	7169849	FITTING BALLSTUD			1
46	7170531	HARNESS, CAB			1
47	619021	WASHER, 5			2
48	7142371	SPRING GAS DOOR			1
49		DECAL, SAFETY	NLA - EMEA - no-text - Was 7168146 [A]		1
50	7183158	PLATE			1
51	6728459	SENSOR, DOOR	Also Order (2) 6677193 rivet		1
51	6677193	RIVET			2
52	6987232ENUS	INSTRUCTIONS	Was 6987232 [A]		1

Page Built OSS# 6300322913 - All rights reserved by Bobcat Company - 08/04/2017 - 06:30:16 - Produced by Ken Cook Co. with mediaioff

CAB ENCLOSURE
(Special Applications)

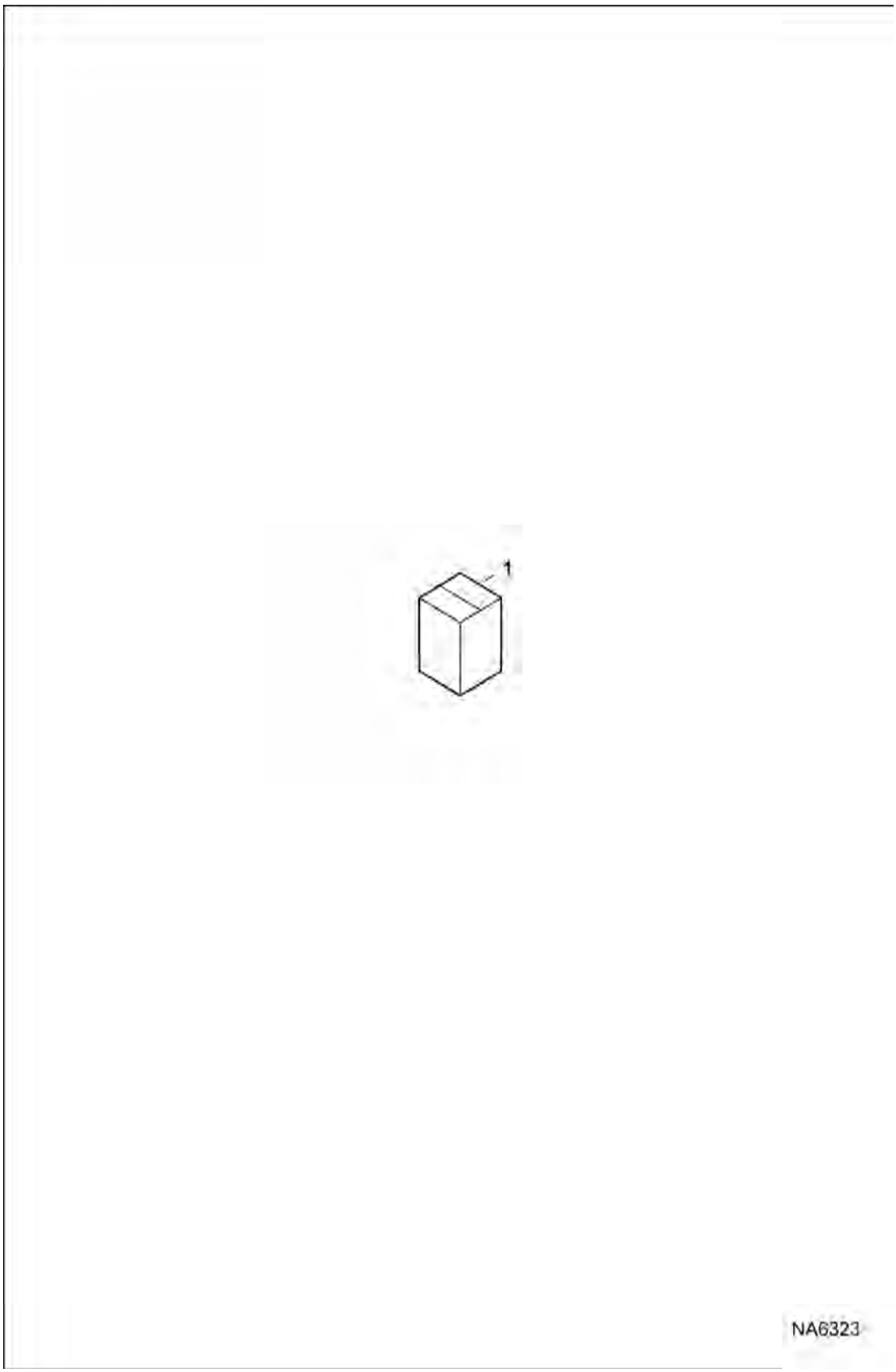

Page 541 - OSS# 6300322913 - All rights reserved by Bobcat Company - 08/04/2017 - 06:30:16 - Produced by Ken Cook Co. with mediaioff

CAB ENCLOSURE (Cont'd)
(Special Applications)

Ref No	Part Number	Description	Remarks	Serial Number	Qty
1		KIT, ENCL CAB SPCL	See Illustration CAB DOOR / NA2050 - NLA - Order 7128395 cab door kit & 7214673 rear window kit - 678 mm (26.7") x 390 mm (15.37") rear window opening - Was 7204789 [A], See Illustration CAB WINDOWS / NA2052 - NLA - Order 7128395 cab door kit & 7214673 rear window kit - 678 mm (26.7") x 390 mm (15.37") rear window opening - Was 7204789 [A]		1
1		KIT, ENCL CAB SPCL	See Illustration CAB DOOR / NA2050 - NLA - Order 7128395 cab door kit & 7214673 rear window kit - 666 mm (26.2") x 379 mm (14.92") rear window opening - Was 7225132 [A], See Illustration CAB WINDOWS / NA8179 - NLA - Order 7128395 cab door kit & 7214673 rear window kit - 666 mm (26.2") x 379 mm (14.92") rear window opening - Was 7225132 [A]		1

Page 4.12 OSS# 6300322913 - All rights reserved by Bobcat Company - 08/04/2017 - 06:30:16 - Produced by Ken Cook Co. with mediaioff

CAB SEAL KIT

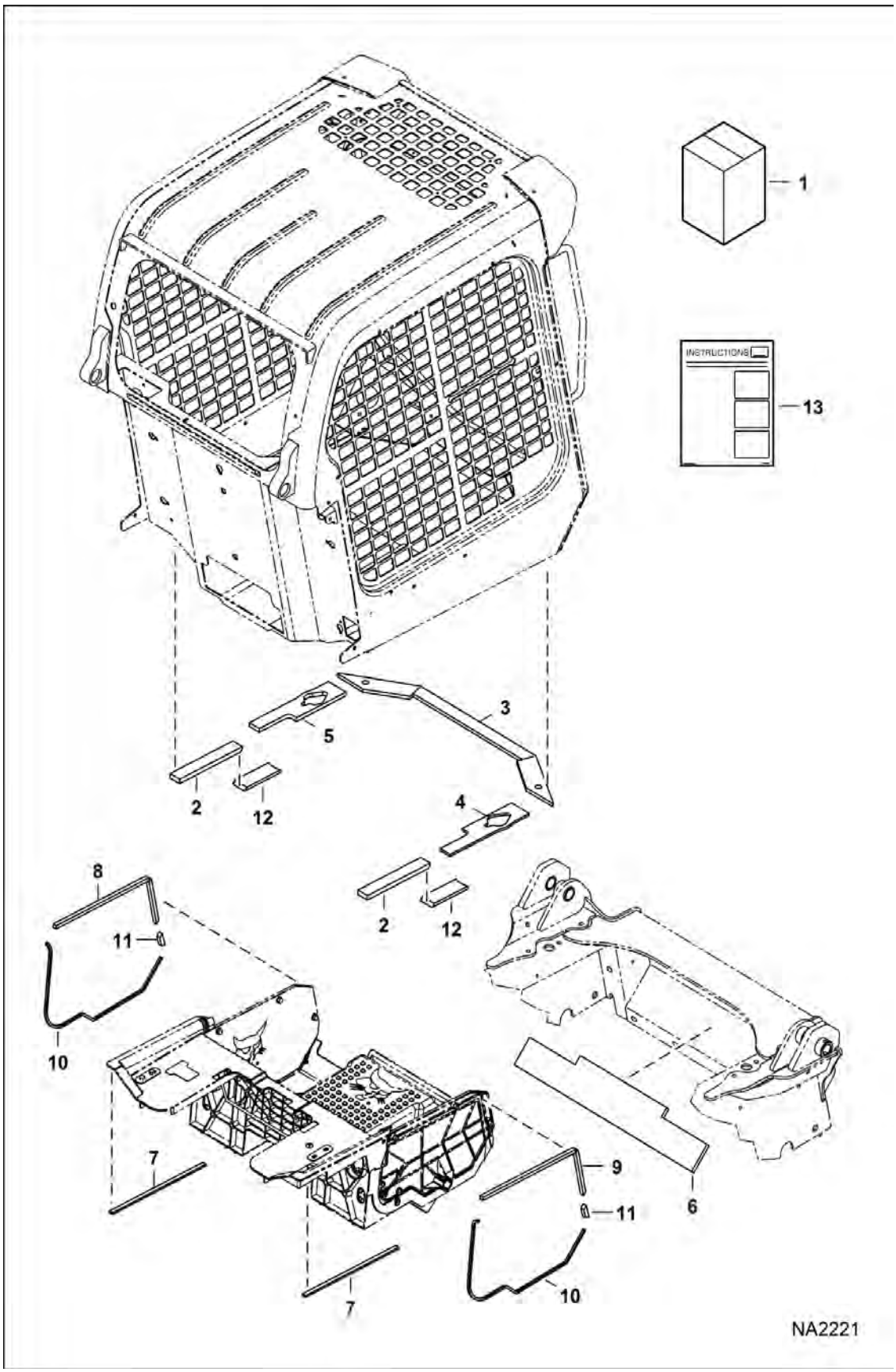

Page 543 - OSS# 6300322913 - All rights reserved by Bobcat Company - 08/04/2017 - 06:30:16 - Produced by Ken Cook Co. with mediaioff

CAB SEAL KIT (Cont'd)

Ref No	Part Number	Description	Remarks	Serial Number	Qty
1	7174903	KIT, SEAL CAB	Ref. 2-12		1
2	7179917	SEAL, CAB SIDE	Was 7245475 [A]		2
3	7182358	SEAL, CAB FRONT	Was 7245476 [A]		1
4	7179918	SEAL, LATCH	RH - Was 7156087 [A]		1
5	7179919	SEAL, LATCH	Was 7161789 [A]		1
6	7235751	FOAM, FRONT	Was 7163132 [A]		1
7	7166196	FOAM, PANEL			2
8	7166197	FOAM, PANEL	LH		1
9	7166198	FOAM, PANEL	RH		1
10	7166199	FOAM, EDGE			2
11	7166200	FOAM, PAN FLOOR			2
12	7267310	SEAL FOAM			2
13	6987388ENUS	INSTRUCTIONS	Was 6987388 [A]		1

Page 544 OSS# 6300322913 - All rights reserved by Bobcat Company - 08/04/2017 - 06:30:16 - Produced by Ken Cook Co. with mediaioff

CAB WINDOWS

(Rear) (Polycarbonate) (678 mm) (26.7") x (390 mm) (15.37") Cab Opening

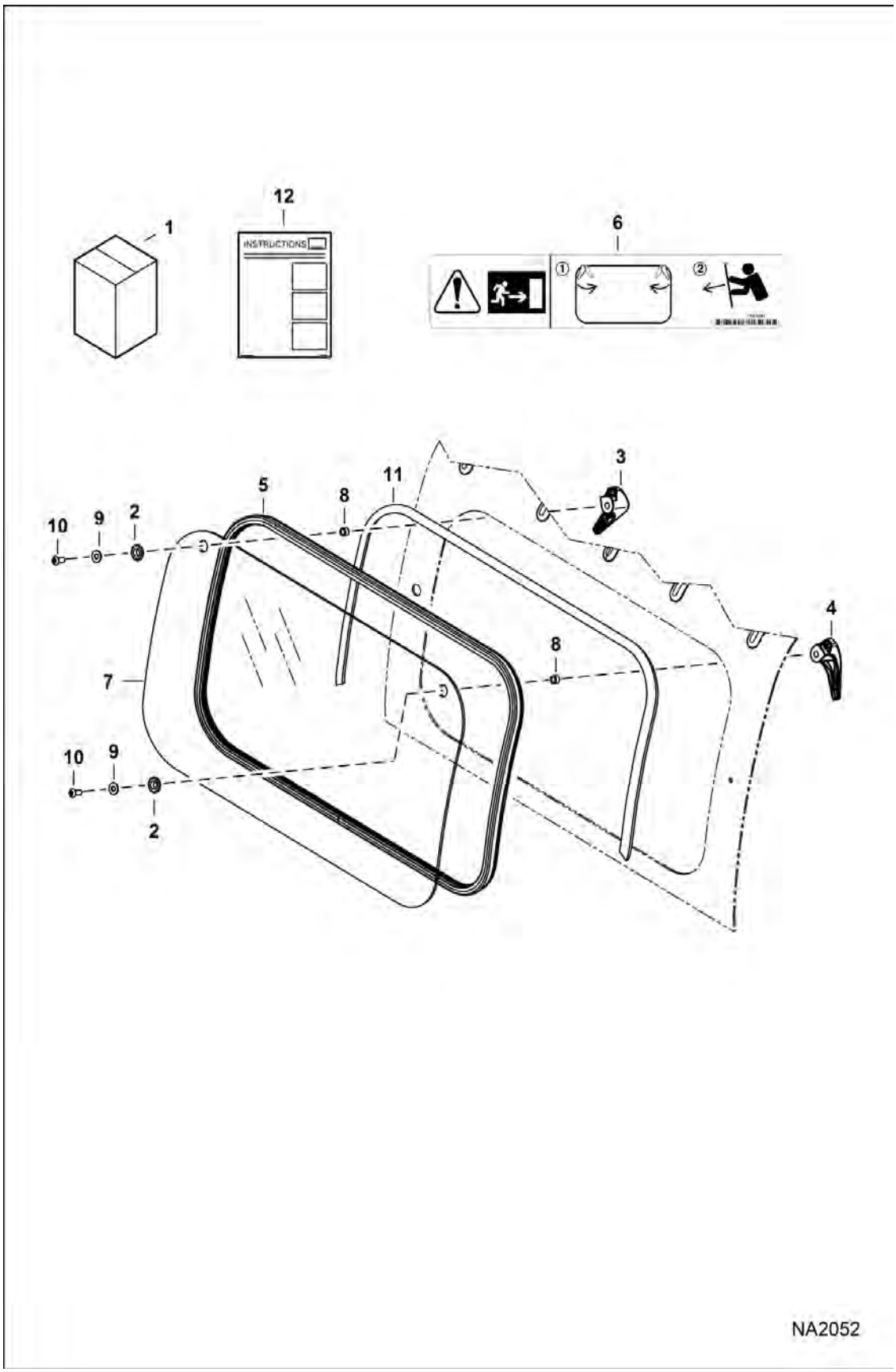

Page 545 - OSS# 6300322913 - All rights reserved by Bobcat Company - 08/04/2017 - 06:30:16 - Produced by Ken Cook Co. with mediaioff

CAB WINDOWS (Cont'd)

(Rear) (Polycarbonate) (678 mm) (26.7") x (390 mm) (15.37") Cab Opening

Ref No	Part Number	Description	Remarks	Serial Number	Qty
1		KIT, WINDOW REAR	See Illustration CAB WINDOWS / NA8179 - NLA - polycarbonate - Ref. 2-12 - Order 7214673 rear window kit - Was 7128389 [C]		1
2	7185137	SPACER			2
3	7121425	BUSHING			2
4		WINDOW, CAB REAR	See Illustration CAB WINDOWS / NA8179 - NLA - Order 7214138 - Was 7183022 [C]		1
5	7150151	LATCH, WINDOW LEFT			1
6	7150152	LATCH, WINDOW RIGHT			1
7	7163988	SEAL, WINDOW REAR			1
8	25E14	WSHR			2
9	53C516	BOLT			2
10	7167991	DECAL, EXIT REAR			1
11	6648416	SEAL BULK /FT	1371,6mm (54") - sold per foot		x
12	6987229	INSTRUCTIONS			1

Page Added OSS# 6300322913 - All rights reserved by Bobcat Company - 08/04/2017 - 06:30:16 - Produced by Ken Cook Co. with mediaioff

CAB WINDOWS

(Rear) (Polycarbonate) (666 mm) (26.2") x (379 mm) (14.92") Cab Opening

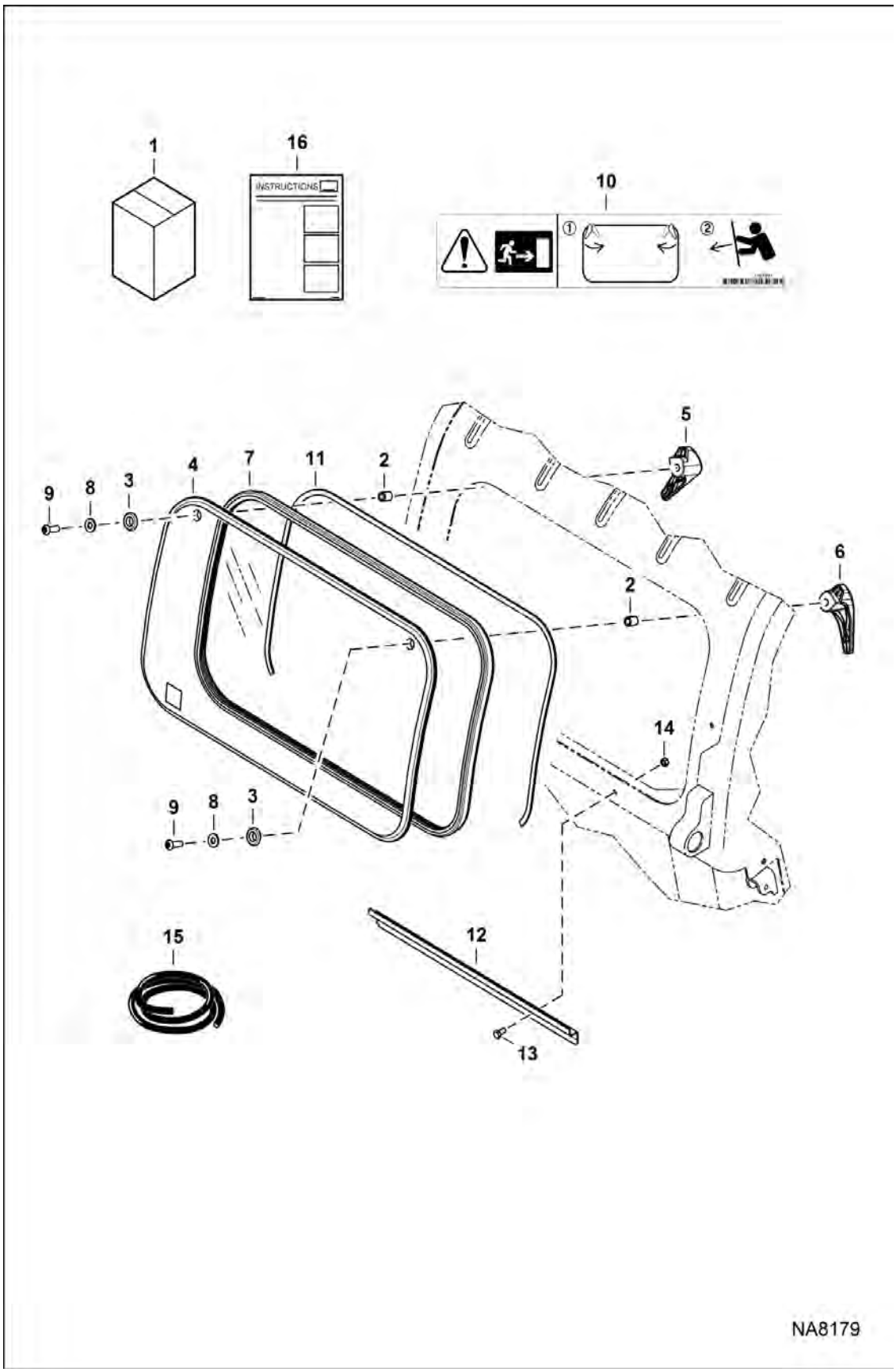

Page 547 - OSS# 6300322913 - All rights reserved by Bobcat Company - 08/04/2017 - 06:30:16 - Produced by Ken Cook Co. with mediaioff

CAB WINDOWS (Cont'd)

(Rear) (Polycarbonate) (666 mm) (26.2") x (379 mm) (14.92") Cab Opening

Ref No	Part Number	Description	Remarks	Serial Number	Qty
1	7214673	KIT, WINDOW REAR	polycarbonate - Ref. 2-16		1
2	7185137	SPACER			2
3	7121425	BUSHING			2
4	7214138	WINDOW, CAB REAR			1
5	7150151	LATCH, WINDOW LEFT			1
6	7150152	LATCH, WINDOW RIGHT			1
7	7163988	SEAL, WINDOW REAR			1
8	25E14	WSHR			2
9	53C516	BOLT			2
10	7167991	DECAL, EXIT REAR			1
11		SEAL, FOAM	NLA - 1372 mm (54") - Order Ref. 15 - Was 7201402 [A]		1
12	7224369	CHANNEL			1
13	17C510	BOLT			2
14	95D5	NUT			2
15	6648416	SEAL BULK /FT	sold per foot		x
16	6990916ENUS	INSTRUCTIONS	WAS 6990916 [A]		1

Page 3 of 3 OSS# 6300322913 - All rights reserved by Bobcat Company - 08/04/2017 - 06:30:16 - Produced by Ken Cook Co. with mediaioff

CAB WINDOWS
(Rear Window Removal Kit)

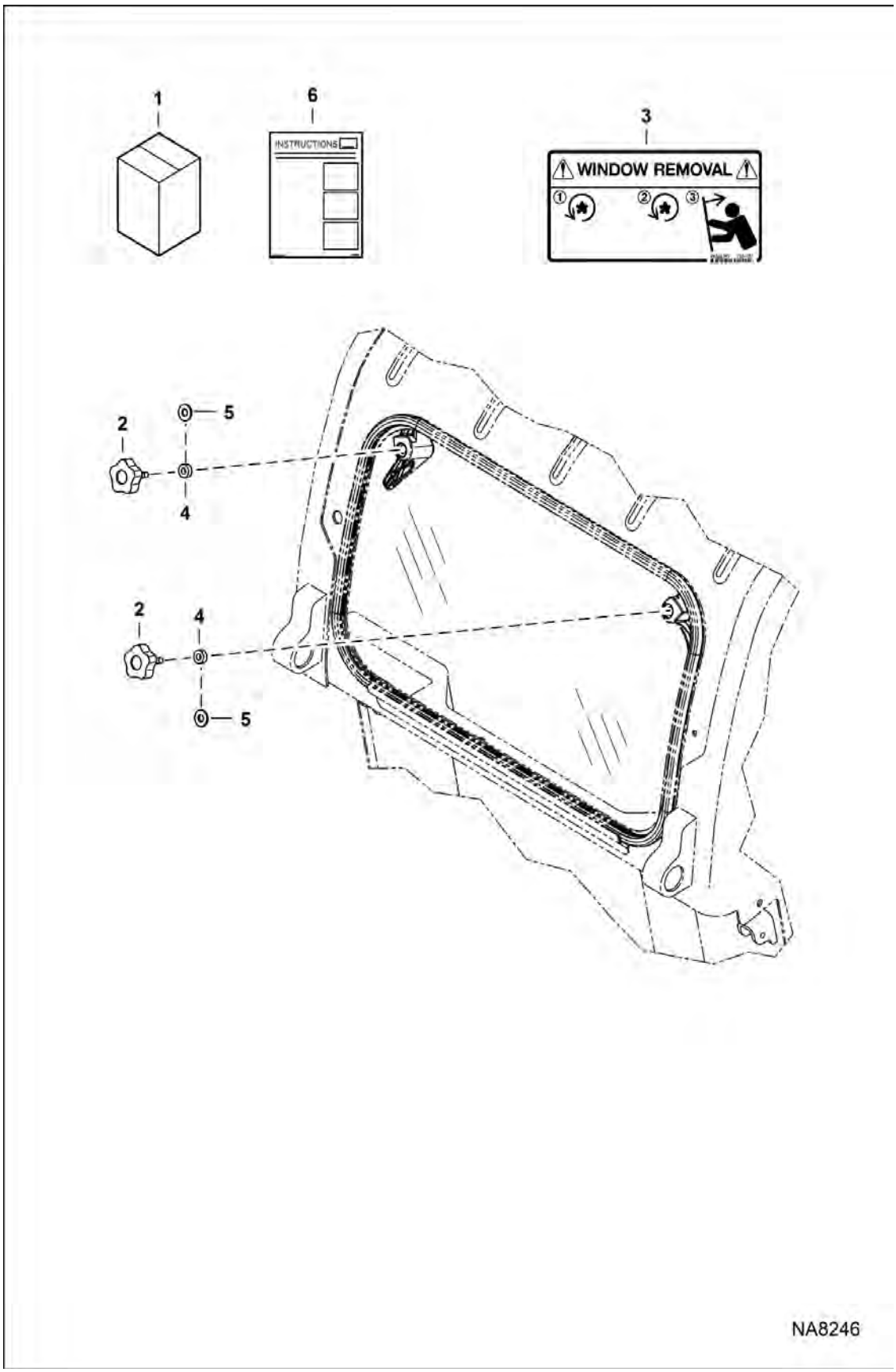

Page 549 - OSS# 6300322913 - All rights reserved by Bobcat Company - 08/04/2017 - 06:30:16 - Produced by Ken Cook Co. with mediaioff

CAB WINDOWS (Cont'd)
(Rear Window Removal Kit)

Ref No	Part Number	Description	Remarks	Serial Number	Qty
1	7234899	KIT, REMOVAL WINDOW	Ref. 2-4 & 6		1
2	7234926	KNOB			2
3	7234007	DECAL, REMOVAL WINDOW			1
4	7234943	SPACER			2
5	25E14	WSHR	not in kit - polycarbonate window only		2
6	6990802ENUS	INSTRUCTIONS	Was 6990802 [A]		1

Page 564 OSS# 6300322913 - All rights reserved by Bobcat Company - 08/04/2017 - 06:30:16 - Produced by Ken Cook Co. with mediaioff

CAB WINDOWS
(Side) (Glass)

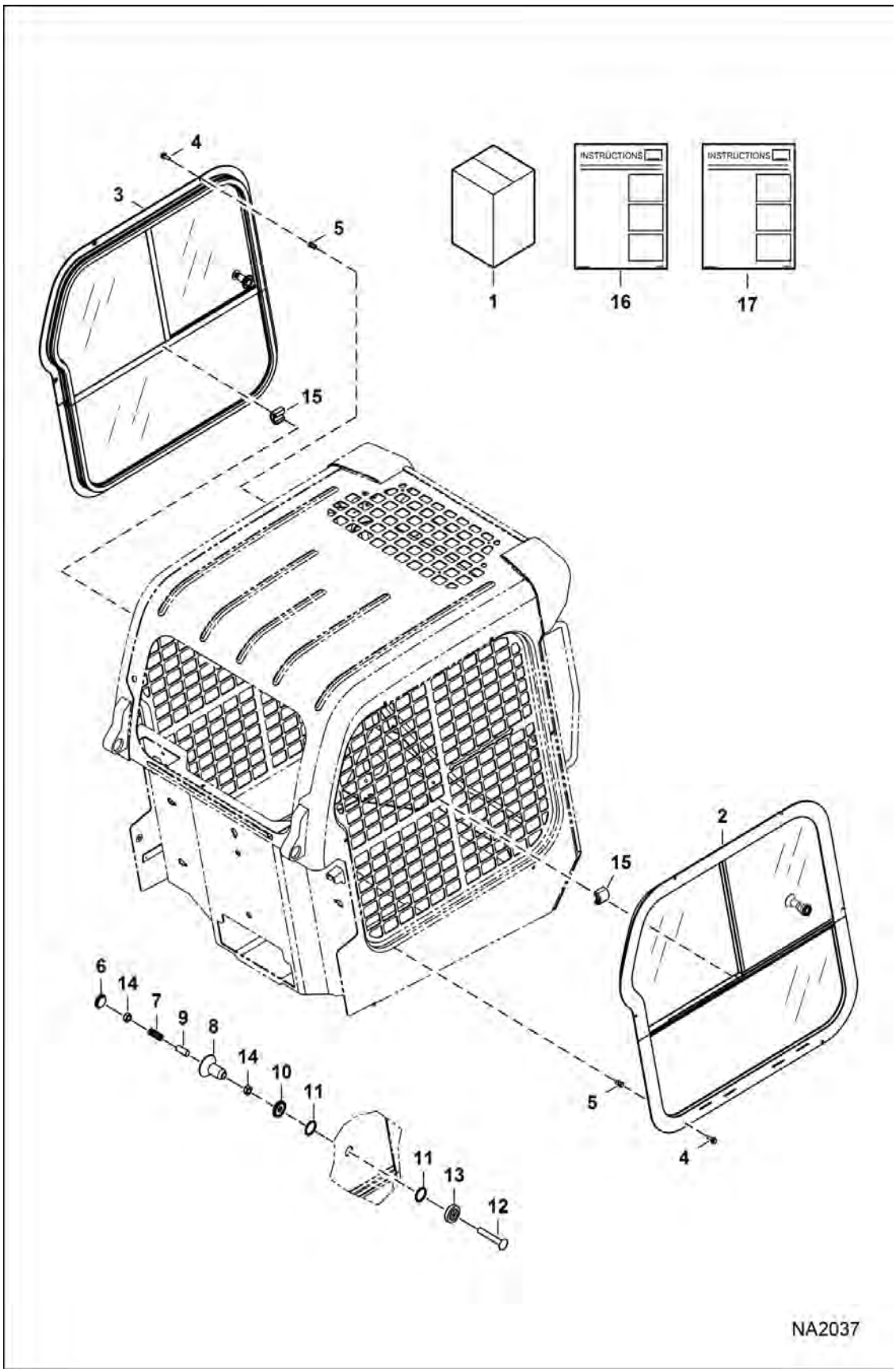

Page 551 - OSS# 6300322913 - All rights reserved by Bobcat Company - 08/04/2017 - 06:30:16 - Produced by Ken Cook Co. with mediaioff

CAB WINDOWS (Cont'd)
(Side) (Glass)

Ref No	Part Number	Description	Remarks	Serial Number	Qty
1	7128342	KIT, WINDOW SIDE	Ref. 2-16		1
2	7148068	WINDOW ASSY	RH - W/Ref. 10-13		1
2	7261608	GLASS, LOWER	W/Ref. 17		1
2	7261609	GLASS, REAR FIXED RH	W/vertical wiper seal - Also includes Ref. 17		1
2	7261610	GLASS, FORWARD SLIDING RH	W/channel - Also includes Ref. 17		1
2	7265522	LATCH, WINDOW CAB	Ref. 6-14		1
3	7148069	WINDOW ASSY	LH - W/Ref. 10-13		1
3	7261608	GLASS, LOWER	W/Ref. 17		1
3	7266739	GLASS, REAR FIXED LH	W/vertical wiper seal - Also includes Ref. 17		1
3	7266740	GLASS, FORWARD SLIDING LH	W/channel - Also includes Ref. 17		1
3	7265522	LATCH, WINDOW CAB	Ref. 6-14		1
4	35C412	BOLT			12
5	7154910	INSERT, THREADED			12
6	7010357	CAP, END			1
7	7010358	SPRING			1
8	7010359	KNOB			1
9	7010360	SLEEVE			1
10		BUSHING	NLA - inner - Order Ref. 2 or 3		1
11		SEAL	NLA - Order Ref. 2 or 3		2
12		BOLT	NLA - Order Ref. 2 or 3		1
13		BUSHING	outer - Order Ref. 2 or 3		1
14	7010365	NUT			2
15	7254421	BUMPER			2
16	6987228ENUS	INSTRUCTIONS	Was 6987228 [A]		1
17	7265242ENUS	INSTRUCTIONS			1

Page 5320 OSS# 6300322913 - All rights reserved by Bobcat Company - 08/04/2017 - 06:30:16 - Produced by Ken Cook Co. with mediaioff

CAB WINDOWS
(Side) (Polycarbonate)

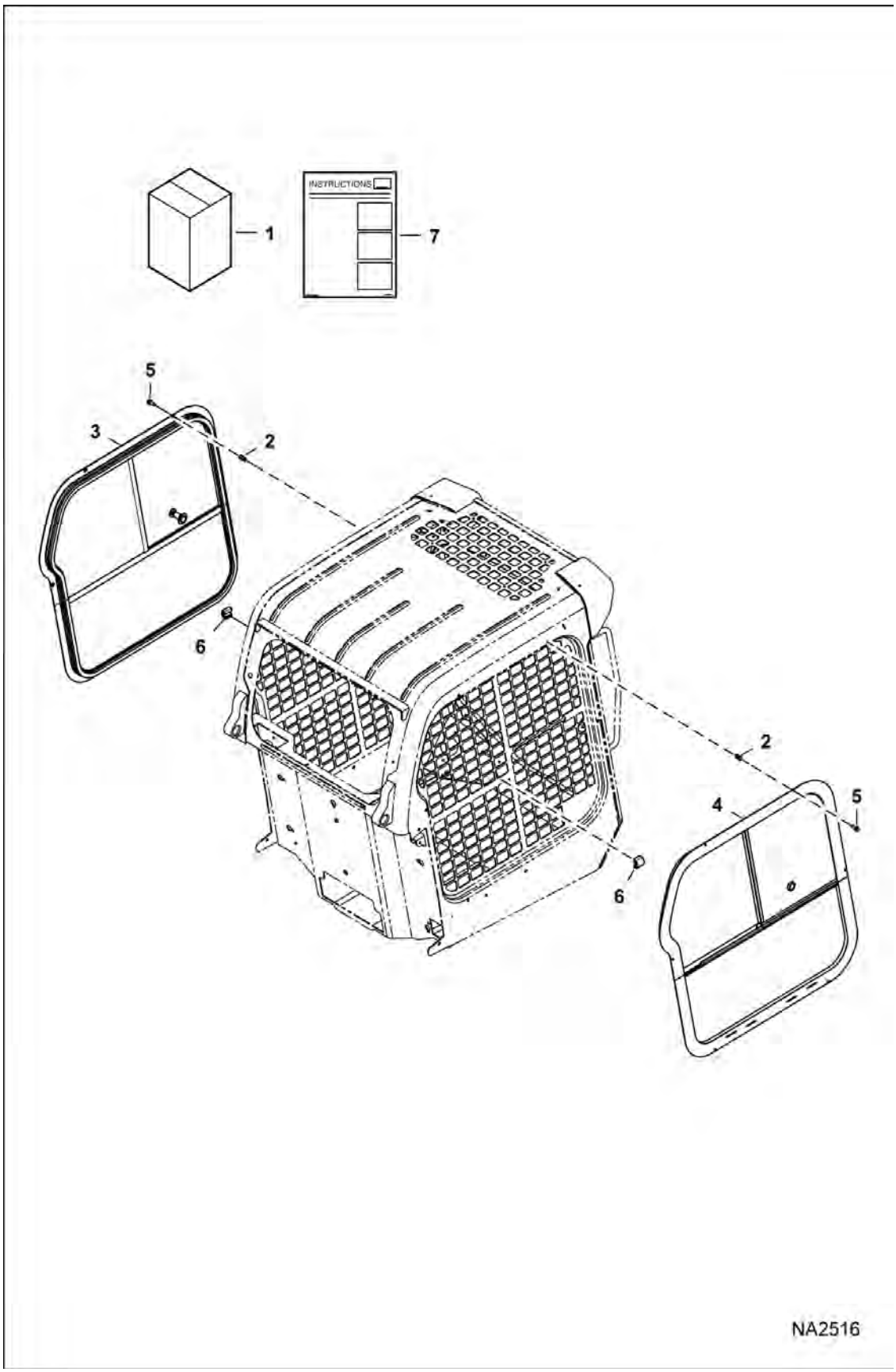

Page 553 - OSS# 6300322913 - All rights reserved by Bobcat Company - 08/04/2017 - 06:30:16 - Produced by Ken Cook Co. with mediaioff

CAB WINDOWS (Cont'd)
(Side) (Polycarbonate)

Ref No	Part Number	Description	Remarks	Serial Number	Qty
1	7182335	KIT, WINDOW SIDE	Ref. 2-6		1
2	7154910	INSERT, THREADED			10
3	7180126	WINDOW, CAB SLIDING	polycarbonate		1
4	7180127	WINDOW, CAB SLIDING	polycarbonate		1
5	31C412	BOLT	Was 35C412 [B,D]		12
6	7254421	BUMPER			2
7	6989418ENUS	INSTRUCTIONS	Was 6989418 [A]		1

Page 546 OSS# 6300322913 - All rights reserved by Bobcat Company - 08/04/2017 - 06:30:16 - Produced by Ken Cook Co. with mediaioff

CHROME PIN KIT

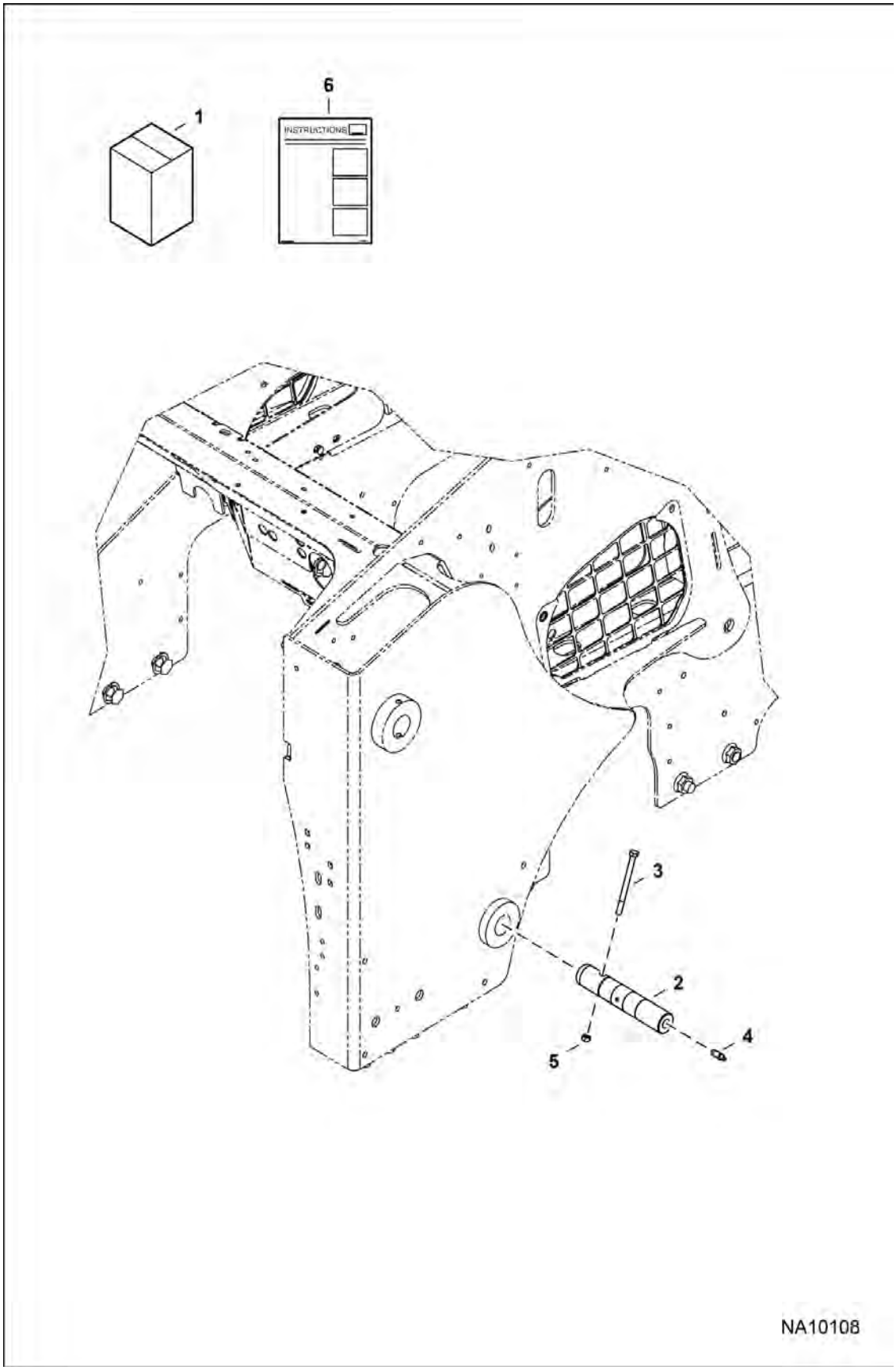

Page 555 - OSS# 6300322913 - All rights reserved by Bobcat Company - 08/04/2017 - 06:30:16 - Produced by Ken Cook Co. with mediaioff

CHROME PIN KIT (Cont'd)

Ref No	Part Number	Description	Remarks	Serial Number	Qty
1	7247395	KIT, PIN CHROME	Ref. 2-6		1
2	7238517	PIN, PIVOT			2
3	17C672	BOLT			2
4	45H25	FITTING, GREASE			2
5	85D6	NUT, 5			2
6	7247582ENUS	INSTRUCTIONS			1

Page 568 OSS# 6300322913 - All rights reserved by Bobcat Company - 08/04/2017 - 06:30:16 - Produced by Ken Cook Co. with mediaioff

COUNTERWEIGHT KIT

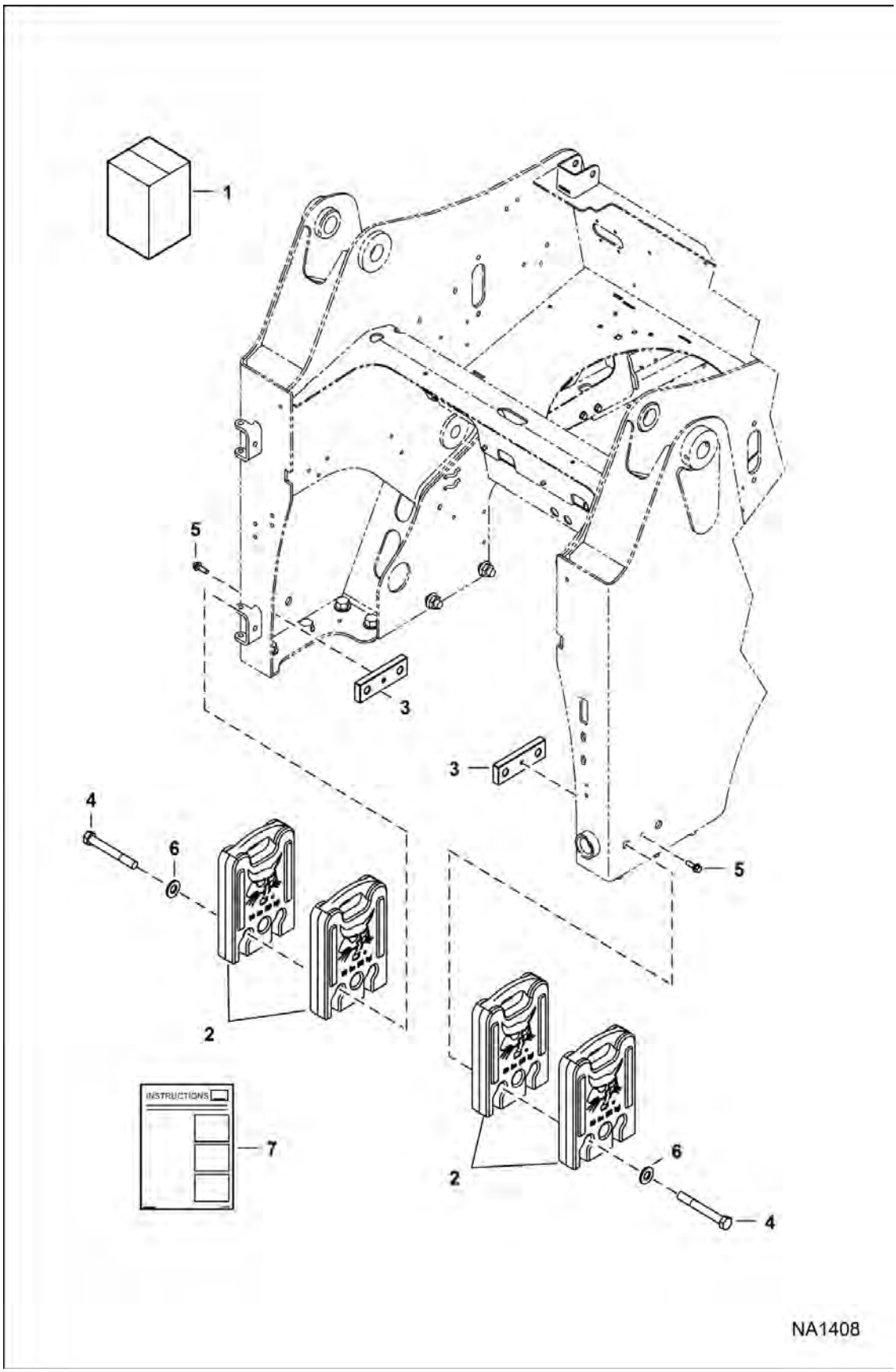

Page 557 - OSS# 6300322913 - All rights reserved by Bobcat Company - 08/04/2017 - 06:30:16 - Produced by Ken Cook Co. with mediaioff

COUNTERWEIGHT KIT (Cont'd)

Ref No	Part Number	Description	Remarks	Serial Number	Qty
1	7129250	KIT, COUNTERWEIGHT	Ref. 2-7 - 91 kg (200 lb)		1
2	7129173	COUNTERWEIGHT	23 kg (50 lb)		4
3	7155158	PLATE, THREADED			2
4	1C1296	BOLT			4
5	35C620	BOLT 5			2
6	27E12	WASHER			4
7	6987128ENUS	INSTRUCTIONS	Was 6987128 [A]		1

Page 568 OSS# 6300322913 - All rights reserved by Bobcat Company - 08/04/2017 - 06:30:16 - Produced by Ken Cook Co. with mediaioff

COUNTERWEIGHT KIT

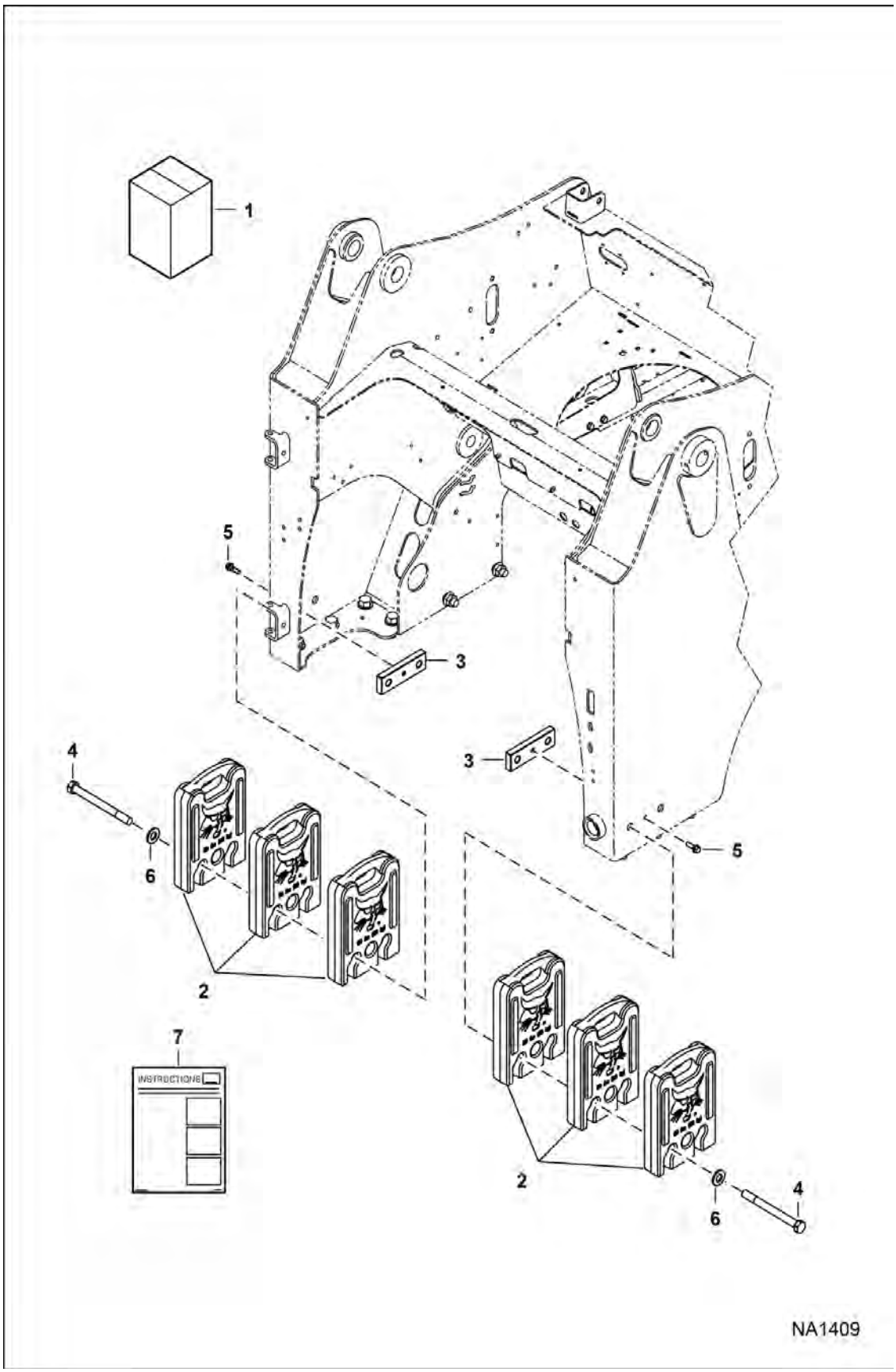

Page 559 - OSS# 6300322913 - All rights reserved by Bobcat Company - 08/04/2017 - 06:30:16 - Produced by Ken Cook Co. with mediaioff

COUNTERWEIGHT KIT (Cont'd)

Ref No	Part Number	Description	Remarks	Serial Number	Qty
1	7129251	KIT, COUNTERWEIGHT	Ref. 2-7 - 136 kg (300 lb)		1
2	7129173	COUNTERWEIGHT	23 kg (50 lb)		6
3	7155158	PLATE, THREADED			2
4	1C12136	BOLT			4
5	35C620	BOLT 5			2
6	27E12	WASHER			4
7	6987128ENUS	INSTRUCTIONS	Was 6987128 [A]		1

Page 560 OSS# 6300322913 - All rights reserved by Bobcat Company - 08/04/2017 - 06:30:16 - Produced by Ken Cook Co. with mediaioff

COUNTERWEIGHT KIT

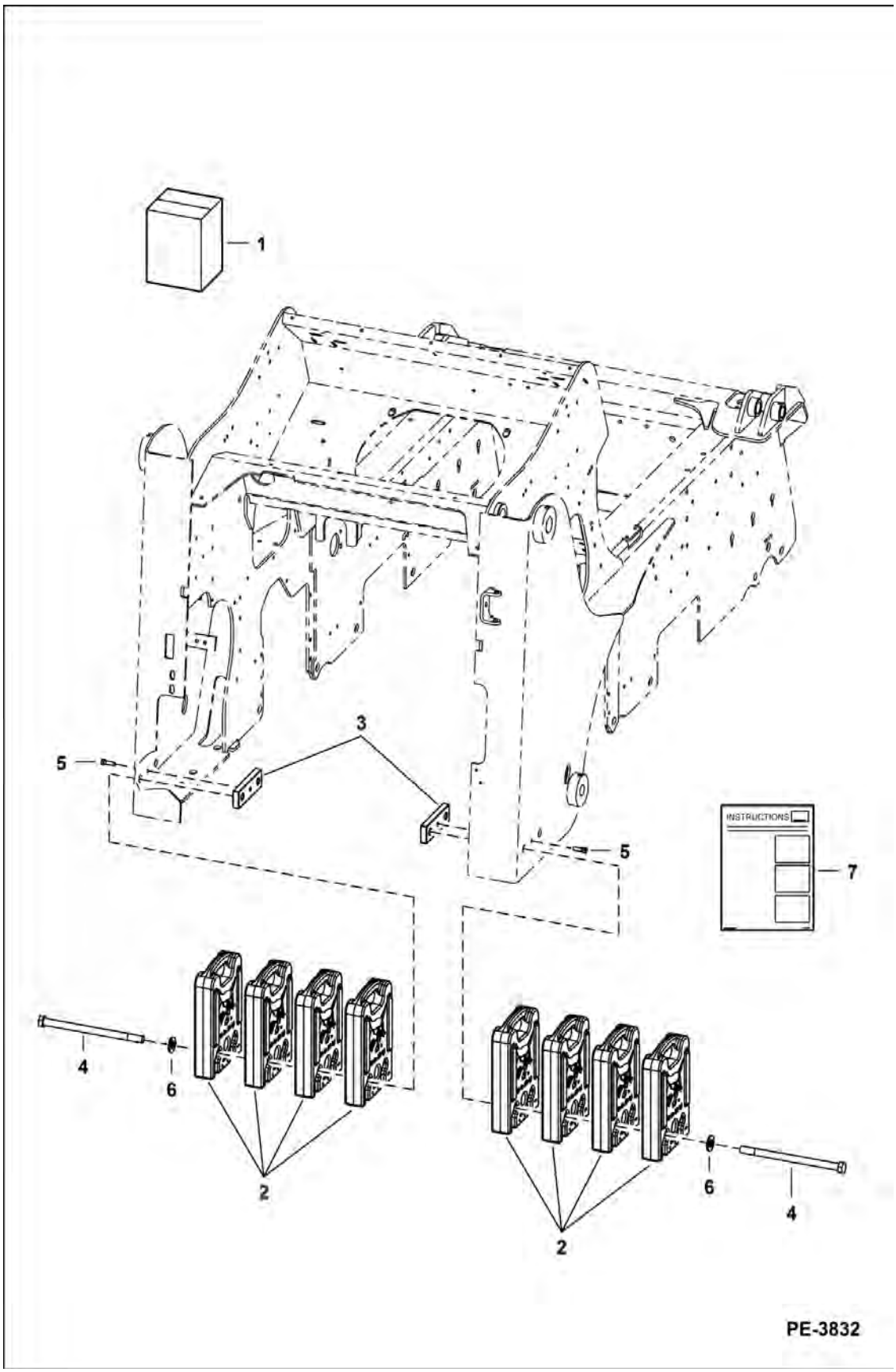

Page 561 - OSS# 6300322913 - All rights reserved by Bobcat Company - 08/04/2017 - 06:30:16 - Produced by Ken Cook Co. with mediaioff

COUNTERWEIGHT KIT (Cont'd)

Ref No	Part Number	Description	Remarks	Serial Number	Qty
1	7129252	KIT, COUNTERWEIGHT	Ref. 2-7 - 181 kg (400 lb)		1
2	7129173	COUNTERWEIGHT	23 kg (50 lb)		8
3	7155158	PLATE, THREADED			2
4	7242790	SCREW	Was 1C12168 [A]		4
5	35C620	BOLT 5			2
6	27E12	WASHER			4
7	6987128ENUS	INSTRUCTIONS	Was 6987128 [A]		1

Page 324 OSS# 6300322913 - All rights reserved by Bobcat Company - 08/04/2017 - 06:30:16 - Produced by Ken Cook Co. with mediaioff

COUPLER GUARD KIT

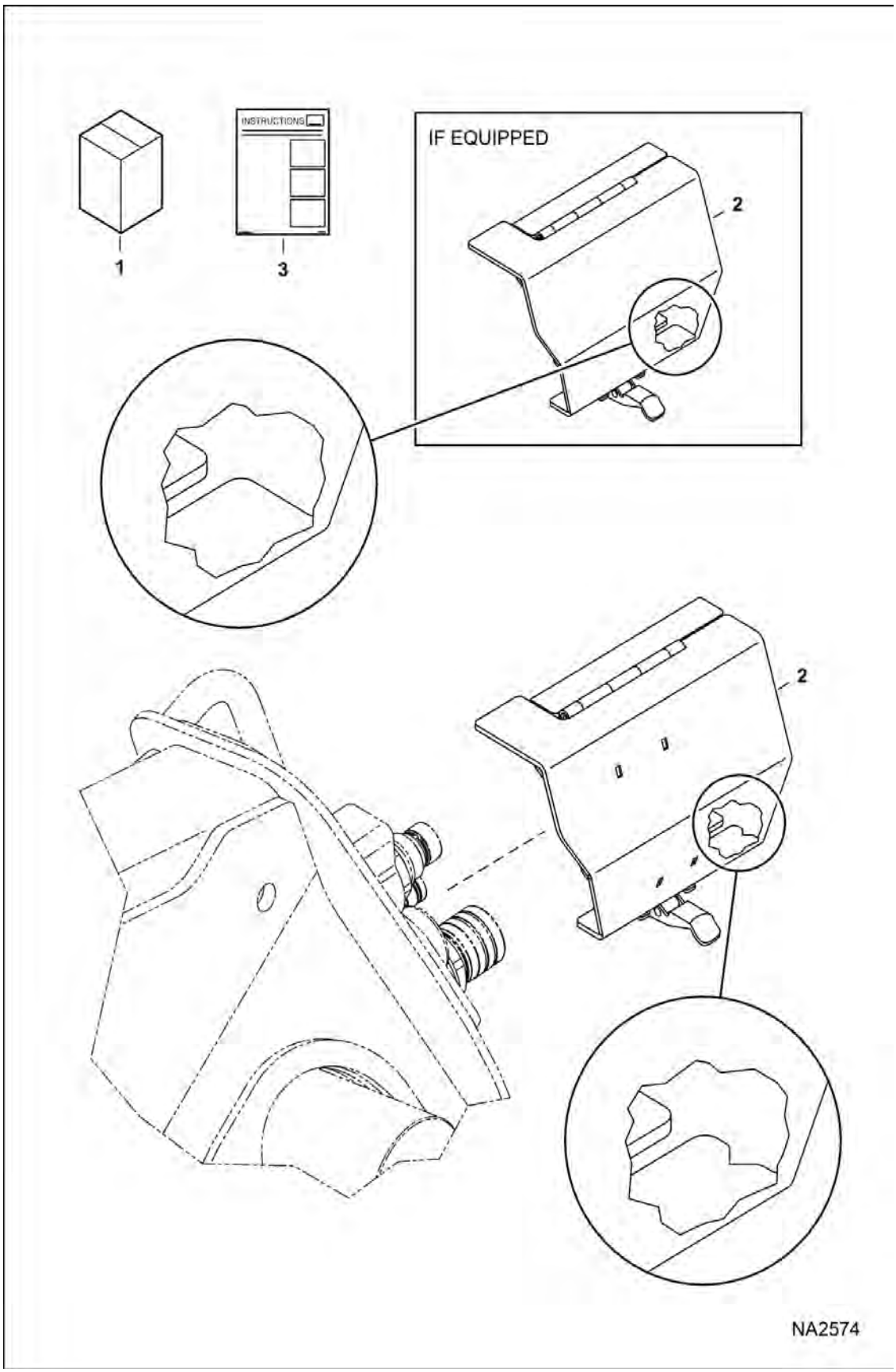

Page 563 - OSS# 6300322913 - All rights reserved by Bobcat Company - 08/04/2017 - 06:30:16 - Produced by Ken Cook Co. with mediaioff

COUPLER GUARD KIT (Cont'd)

Ref No	Part Number	Description	Remarks	Serial Number	Qty
1		KIT, GUARD COUPLER	NLA - Ref. 2 & 3 - 7250844 or 7174131 [A]		1
2	7250845	GUARD, COUPLER	Was 7173324 [A]		1
3	6987492ENUS	INSTRUCTIONS	Was 6987492 [A]		1

Page 564 OSS# 6300322913 - All rights reserved by Bobcat Company - 08/04/2017 - 06:30:16 - Produced by Ken Cook Co. with mediaioff

CUP HOLDER KIT

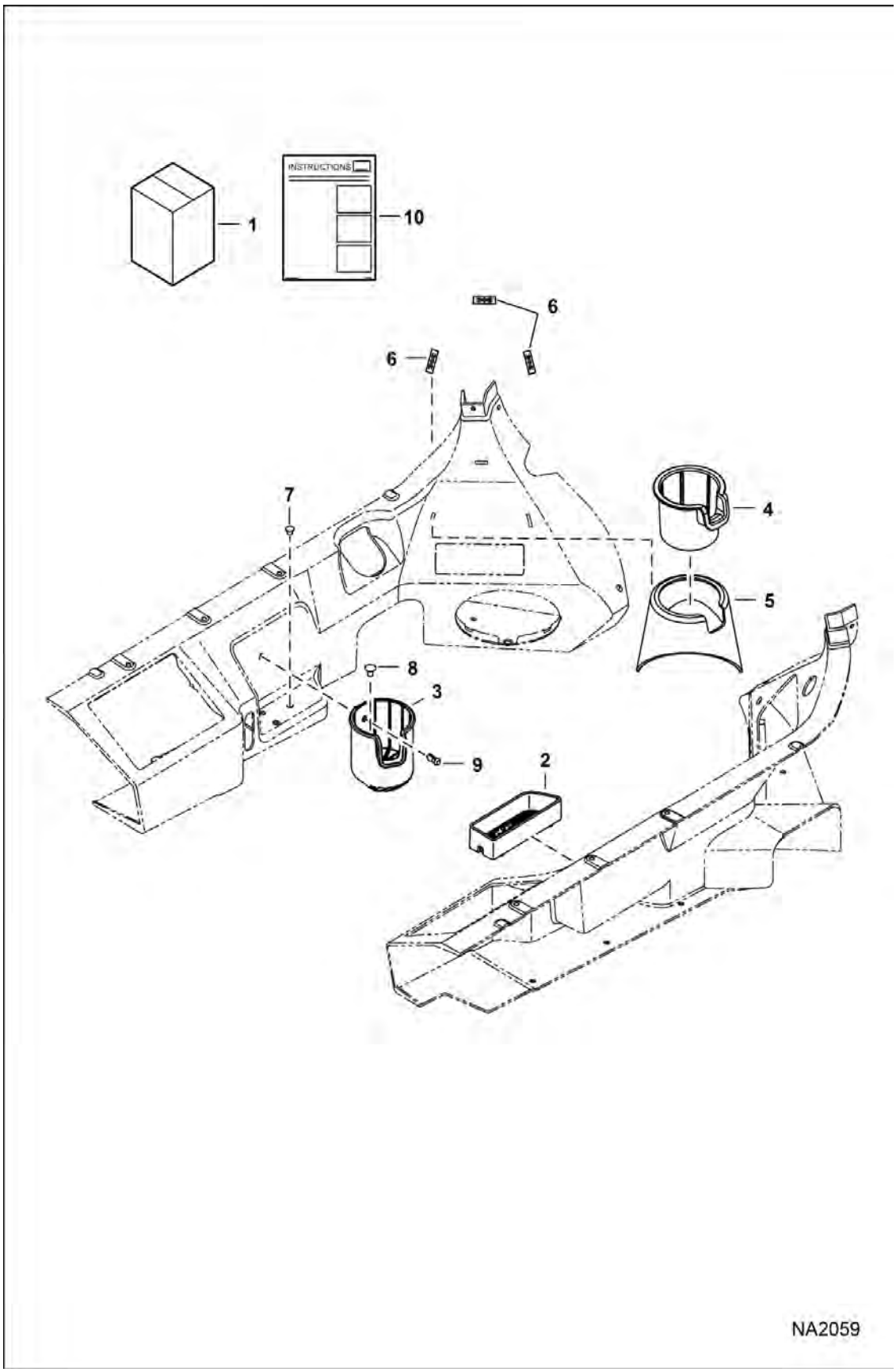

Page 565 - OSS# 6300322913 - All rights reserved by Bobcat Company - 08/04/2017 - 06:30:16 - Produced by Ken Cook Co. with mediaioff

CUP HOLDER KIT (Cont'd)

Ref No	Part Number	Description	Remarks	Serial Number	Qty
1	7167395	KIT, CUP HOLDER	Ref. 3-10		1
2	7154404	CONTAINER	not in kit		1
3	7140441	HOLDER, CUP			1
4	7155649	HOLDER, CUP			1
5	7160320	HOLDER, CUP			1
6	7167003	CLIP			3
7	7188745	PLUG			8
8	6674895	RETAINER			1
9	7160383	RIVET, BIRD CAGE			1
10	6987227ENUS	INSTRUCTIONS	Was 6987227 [A]		1

Page 558 OSS# 6300322913 - All rights reserved by Bobcat Company - 08/04/2017 - 06:30:16 - Produced by Ken Cook Co. with mediaioff

CYLINDER KIT
(Cushion) (82,6 mm) (3.25") Dia Bore

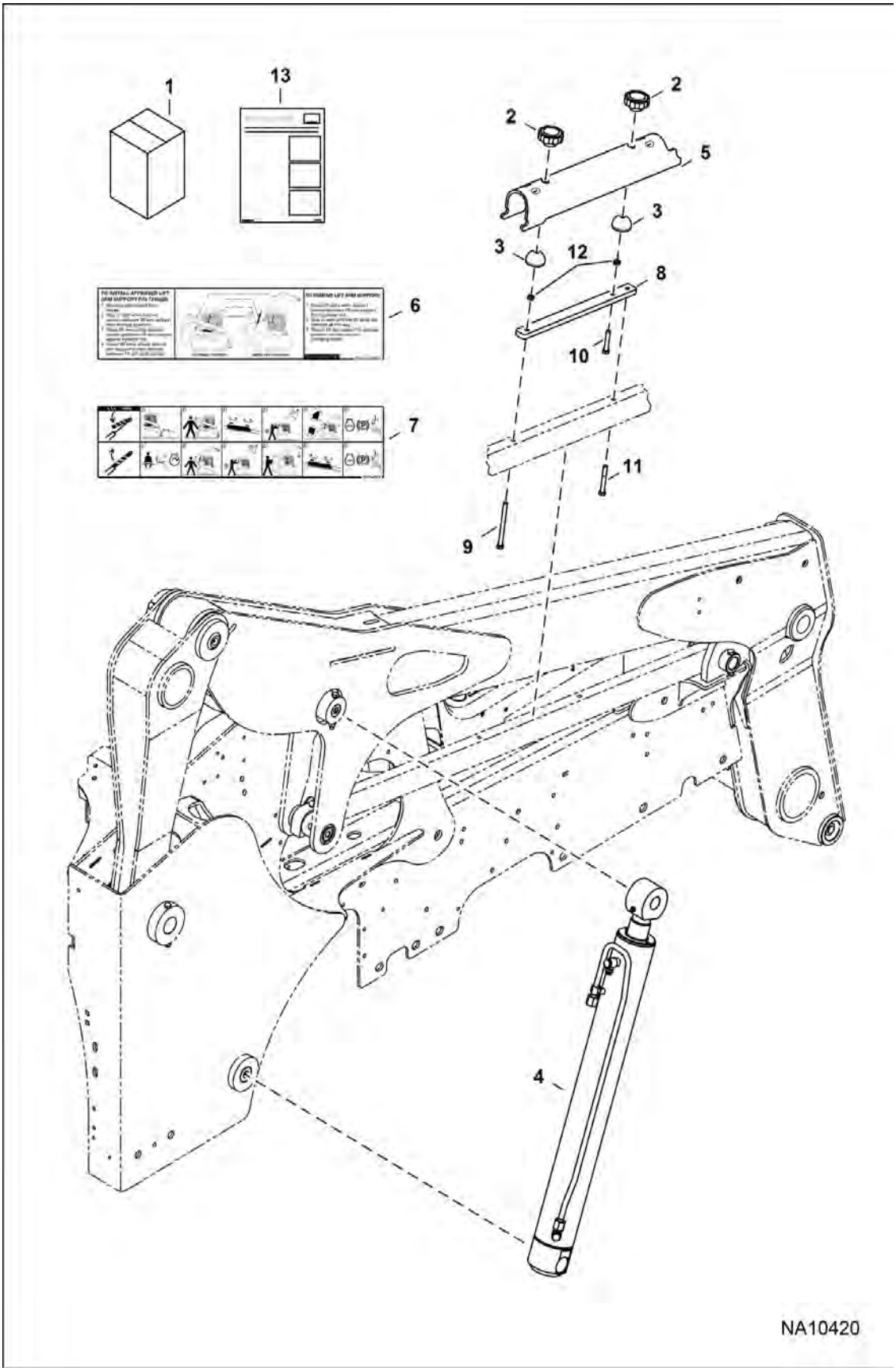

Page 567 - OSS# 6300322913 - All rights reserved by Bobcat Company - 08/04/2017 - 06:30:16 - Produced by Ken Cook Co. with mediaioff

CYLINDER KIT (Cont'd)

(Cushion) (82,6 mm) (3.25") Dia Bore

Ref No	Part Number	Description	Remarks	Serial Number	Qty
1	7252436	KIT, CYL LIFT CUSHION	Ref. 2-13		1
2	6684932	HANDLE, CLAMPING			2
3	7201355	DAMPER			2
4		CYLINDER, HYD	See Illustration LIFT CYLINDER / NA10254		1
5	7249525	SUPPORT, LIFT ARM			1
6	7251858	DECAL			1
7	7251859	DECAL			1
8	7253017	MOUNT			1
9	7253018	BOLT			1
10	7253019	BOLT			1
11	17C644	BOLT			1
12	7D6	NUT			2
13	7256160ENUS	INSTRUCTIONS			1

Page 560 OSS# 6300322913 - All rights reserved by Bobcat Company - 08/04/2017 - 06:30:16 - Produced by Ken Cook Co. with mediaioff

DEBRIS SHIELD KIT

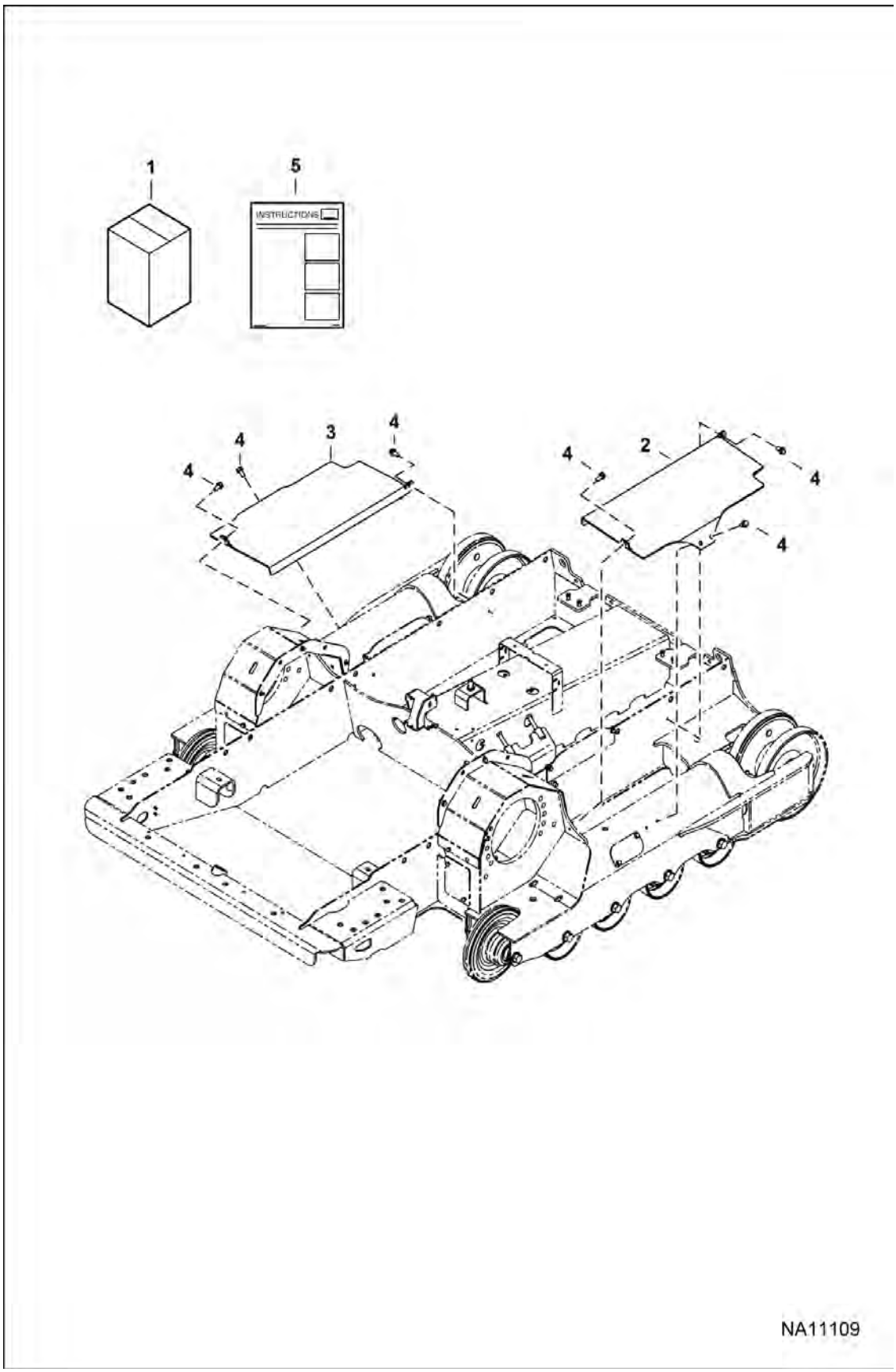

Page 569 - OSS# 6300322913 - All rights reserved by Bobcat Company - 08/04/2017 - 06:30:16 - Produced by Ken Cook Co. with mediaioff

DEBRIS SHIELD KIT (Cont'd)

Ref No	Part Number	Description	Remarks	Serial Number	Qty
1	7282701	KIT, DEBRIS SHIELD	W/Ref. 2-5		1
2	7243862	SHIELD, DEBRIS	RH		1
3	7243863	SHIELD, DEBRIS	LH		1
4	84G3712	BOLT 5			8
5	7283576ENUS	INSTRUCTIONS	Was 7283576 [A]		1

Page 3/3 OSS# 6300322913 - All rights reserved by Bobcat Company - 08/04/2017 - 06:30:16 - Produced by Ken Cook Co. with mediaioff

DECALS
(Inside)

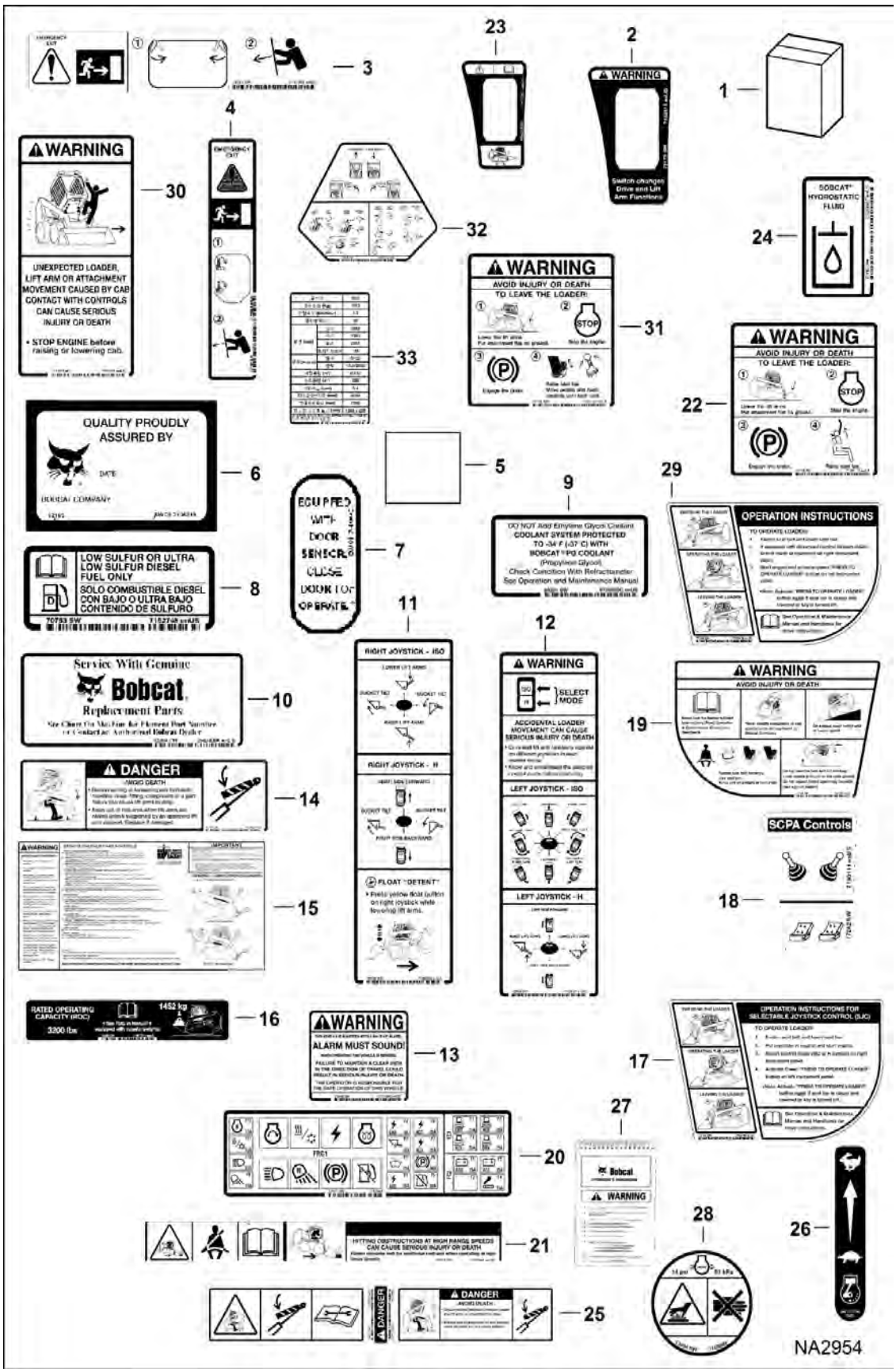

Page 571 - OSS# 6300322913 - All rights reserved by Bobcat Company - 08/04/2017 - 06:30:16 - Produced by Ken Cook Co. with mediaioff

Illustration NA2954

Model T770 MT3
6989477

DECALS (Cont'd)
(Inside)

Ref No	Part Number	Description	Remarks	Serial Number	Qty
1	6990151	KIT, DECAL	See Illustration DECALS / NA6474		1
1	7206563AR	KIT, DECAL TRANSLATION			1
1	7206563BR	KIT, DECAL TRANSLATION			1
1	7206563CA	KIT, DECAL TRANSLATION			1
2	7168114	DECAL, SWITCH			1
3	7167991	DECAL, EXIT REAR			1
4	7168025	DECAL EMERGENCY DOOR			1
5	7169747	TREAD, SAFETY			1
6	7106218	DECAL QUALITY APPRVL			1
7		DECAL, SAFETY	NLA - door sensor - Was 7110316 [A]		1
8	7152748	DECAL, FUEL DIESEL			1
9	6708929	DECAL, COOLANT	propylene glycol		1
10	6565200	DECAL, FILTER	not in kit		1
11	7168023	DECAL	RH - SJC		1
12	7168024	DECAL	LH - SJC		1
13	6737189	DECAL, WARNING	backup alarm		1
14	7167988	DECAL, DANGER			2
15	7242070	DECAL, SERVICE	Was 7205726 [A]		1
16	7200273	DECAL, ROC	1576 kg (3475 lb) - solid mount track frame - Was 7178340 [B,D]		1
16	7200275	DECAL, ROC	1361 kg (3000 lb) - solid mount track frame - steel track - Was 7200272 [B,D]		1
16	7200274	DECAL, ROC	1406 kg (3100 lb) - roller suspension track frame - Was 7183740 [B,D]		1
17	7168144	DECAL	SJC/SCPA		1
18	7190111	DECAL, CONTROL	manual control		1
19	7167994	DECAL, WARNING			1
20	7167945	DECAL, FUSE RELAY			1
21	7184346	DECAL WARNING	not in kit		1
22	7168142	DECAL, WARNING			1
23	7177707	DECAL	warning		1
24	6565990	DECAL, OIL HYD 5	hyd fill		1
25	7170355	DECAL, DANGER	hose and tube danger		1
26	7177742	DECAL	throttle		1
27	6987175ENUS	OHB, W/WIRE ROPE	not in kit - Was 6987175 [A]		1
27	6987175ESAR	OHB, W/WIRE ROPE	Was 6987175AR [A]		1

Page 1 of 2 OSS# 6300322913 - All rights reserved by Bobcat Company - 08/04/2017 - 06:30:16 - Produced by Ken Cook Co. with mediaioff

DECALS (Cont'd)
(Inside)

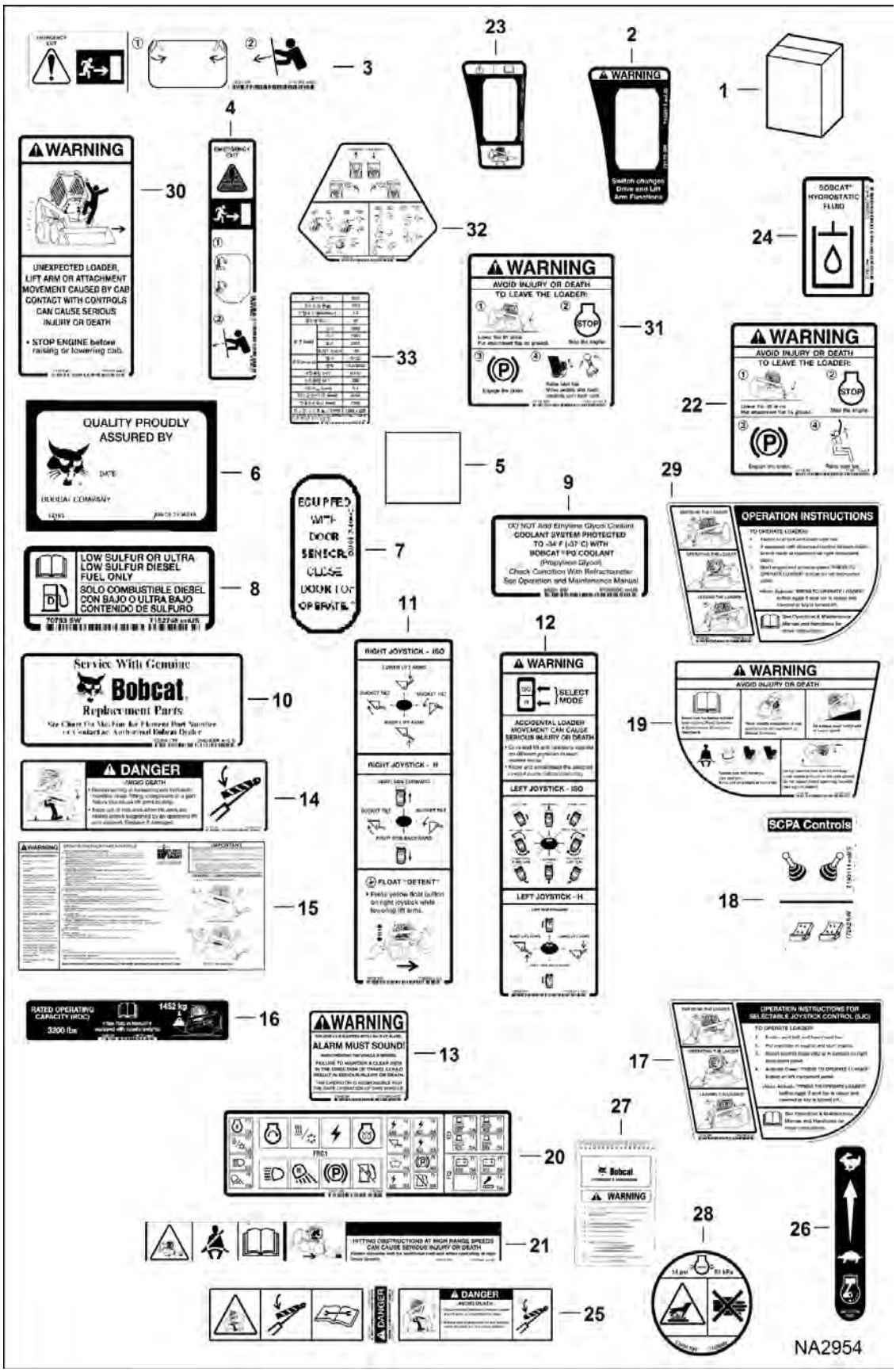

Page 573 - OSS# 6300322913 - All rights reserved by Bobcat Company - 08/04/2017 - 06:30:16 - Produced by Ken Cook Co. with mediaioff

Illustration NA2954

Model T770 MT3
6989477

DECALS (Cont'd)
(Inside)

Ref No	Part Number	Description	Remarks	Serial Number	Qty
27	6987175PTBR	OHB, W/WIRE ROPE	Was 6987175BR [A]		1
27	6987175FRCA	OHB, W/WIRE ROPE	Was 6987175CA [A]		1
27	6987175FRFR	OHB, W/WIRE ROPE			1
27	6987175KOKR	OHB, W/WIRE ROPE			1
28	7169699	DECAL	radiator cap - not in kit		1
29	7168136	DECAL			1
30	7168138	DECAL, WARNING			1
31	7168140	DECAL, WARNING			1
32	7168272	DECAL			1
33	7234278	DECAL, SPECS KOREAN	not in kit		1

Page 1 of 4 OSS# 6300322913 - All rights reserved by Bobcat Company - 08/04/2017 - 06:30:16 - Produced by Ken Cook Co. with mediaioff

DECALS
(Outside)

DECALS

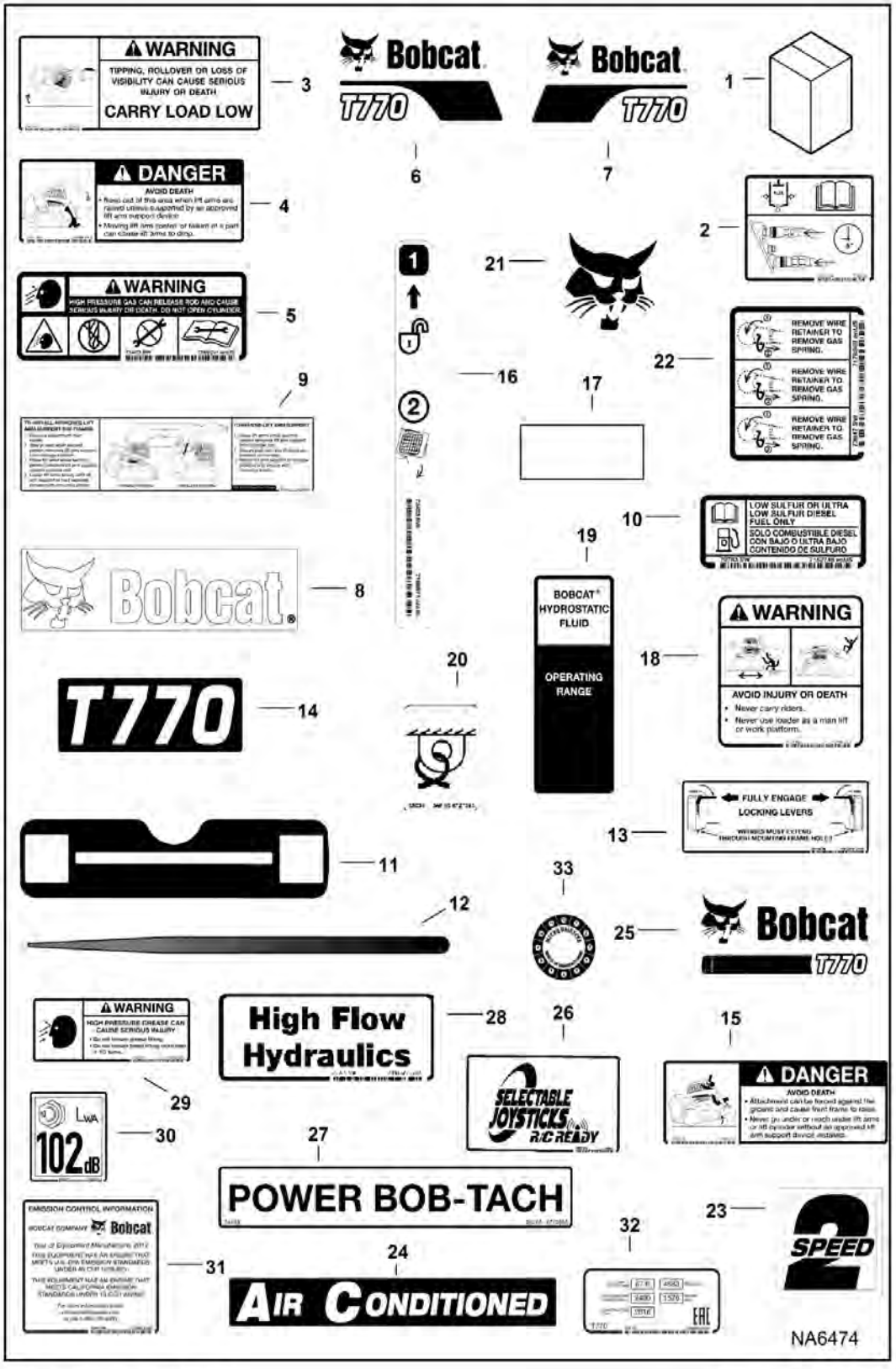

DRAWING SCALE: 1 OF .1

INSTALL NUMBER

Illustration NA6474

Page 575 - OSS# 6300322913 - All rights reserved by Bobcat Company - 08/04/2017 - 06:30:16 - Produced by Ken Cook Co. with mediaioff

DECALS (Cont'd)
(Outside)

Ref No	Part Number	Description	Remarks	Serial Number	Qty
1	6990151	KIT, DECAL	See Illustration DECALS / NA2954		1
1	7206563AR	KIT, DECAL TRANSLATION			1
1	7206563BR	KIT, DECAL TRANSLATION			1
1	7206563CA	KIT, DECAL TRANSLATION			1
2	7168031	DECAL	coupler		1
3	7167993	DECAL, WARNING	danger		1
4	7167989	DECAL, DANGER	danger		1
5	7169291	DECAL	warning		1
6	7303733	DECAL UPRIGHT LH			1
7	7303734	DECAL UPRIGHT RH			1
8	6735901	DECAL, LOGO BOBCAT HEAD	white		1
9	7169340	DECAL	lift arm support		1
9	7251858	DECAL	lift arm support		1
10	7152748	DECAL, FUEL DIESEL	low sulfer		1
11	7169965	DECAL, TAILGATE BASE			1
12	7169971	DECAL, LIFT ARM			2
13	6561383	DECAL, OPERATION 5	Bob-Tach locking levers		1
14	7211441	DECAL, MODEL	T770 - rear door - Was 7194600 [A]		1
15	7167990	DECAL, DANGER	danger		1
16	7169877	DECAL	gas spring		1
17	6555341	TREAD, SAFETY			1
18	7167996	DECAL, WARNING	warning		1
19	7169710	DECAL, SIGHT GAUGE			1
20	6727595	DECAL, TIE-DOWN	tie down		5
21	7116870	DECAL, LOGO BOBCAT HEAD			2
22	7170360	DECAL, SPRING REMOVAL			1
23	6729078	DECAL	2-speed		2
24	7166916	DECAL, A/C	not in kit		2
25	7194599	DECAL, MODEL	not in kit		2
26	7145528	DECAL	SJC - R/C ready - not in kit		1
26	6737626	DECAL SJC	non R/C ready - not in kit		1
27	6719888	DECAL	Power Bob-Tach - not in kit		1
28	7120693	DECAL	high flow - not in kit		1
29	7168039	DECAL, WARNING	See Illustration DECALS / NA6216 - Was 7167995 [A]		2
30	6733220	DECAL, DECIBEL	noise level - 102 db - European - not in kit		1

Page 1 of 1 OSS# 6300322913 - All rights reserved by Bobcat Company - 08/04/2017 - 06:30:16 - Produced by Ken Cook Co. with mediaoff

DECALS (Cont'd)
(Outside)

DECALS

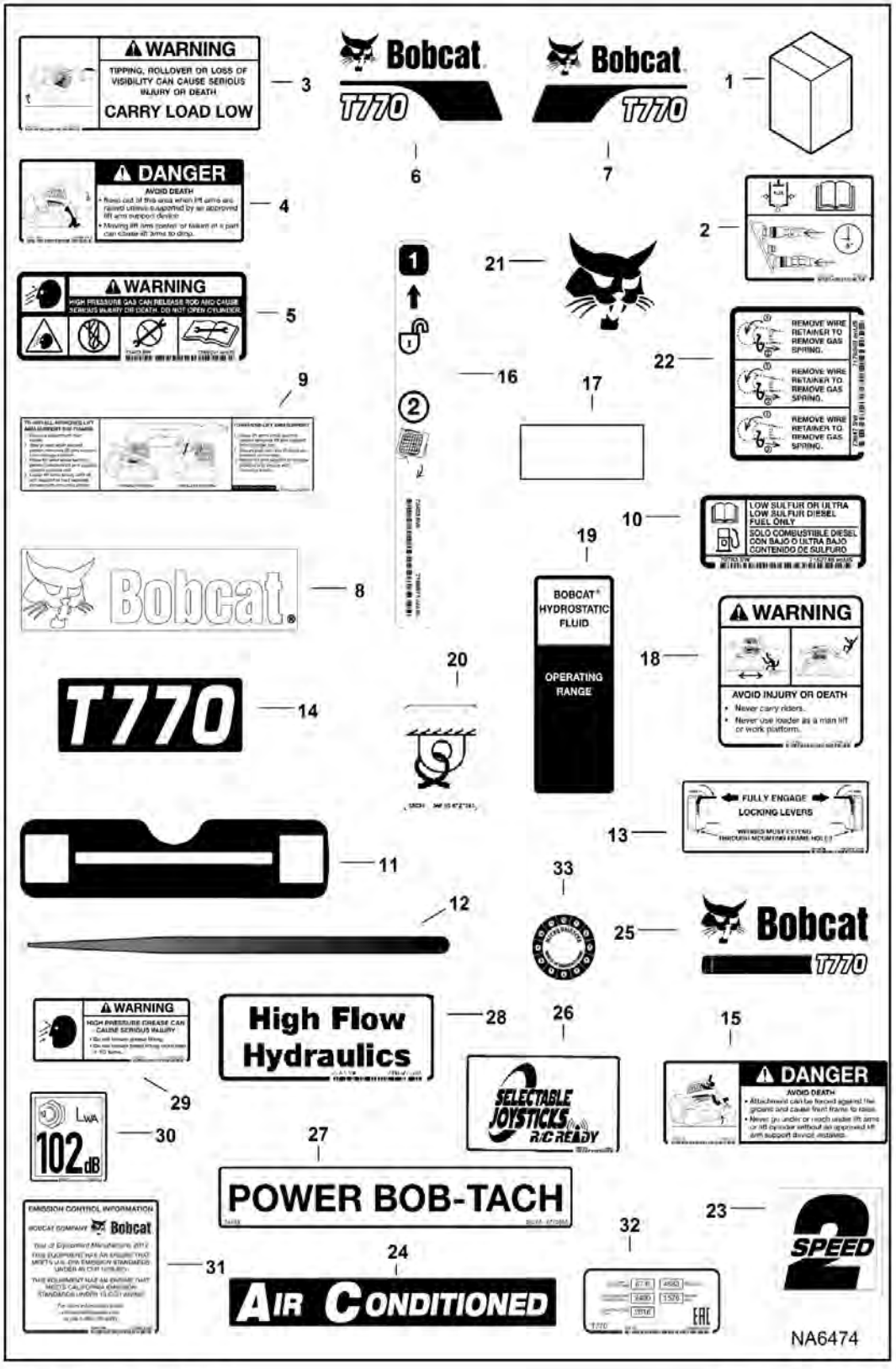

DRAWING SCALE: 1 OF .1

INSTALL NUMBER

Page 577 - OSS# 6300322913 - All rights reserved by Bobcat Company - 08/04/2017 - 06:30:16 - Produced by Ken Cook Co. with mediaioff

DECALS (Cont'd)
(Outside)

Ref No	Part Number	Description	Remarks	Serial Number	Qty
31		DECAL, EPA FLEX	NLA - Was 7215867 [D]		1
32	7308493	DECAL RUSSIAN	Russian - not in kit		1
33	7249237	DECAL	Russian - not in kit		1
34	7234279	DECAL, SPECS KOREAN	not in kit		1

Page 3 of 3 OSS# 6300322913 - All rights reserved by Bobcat Company - 08/04/2017 - 06:30:16 - Produced by Ken Cook Co. with mediaioff

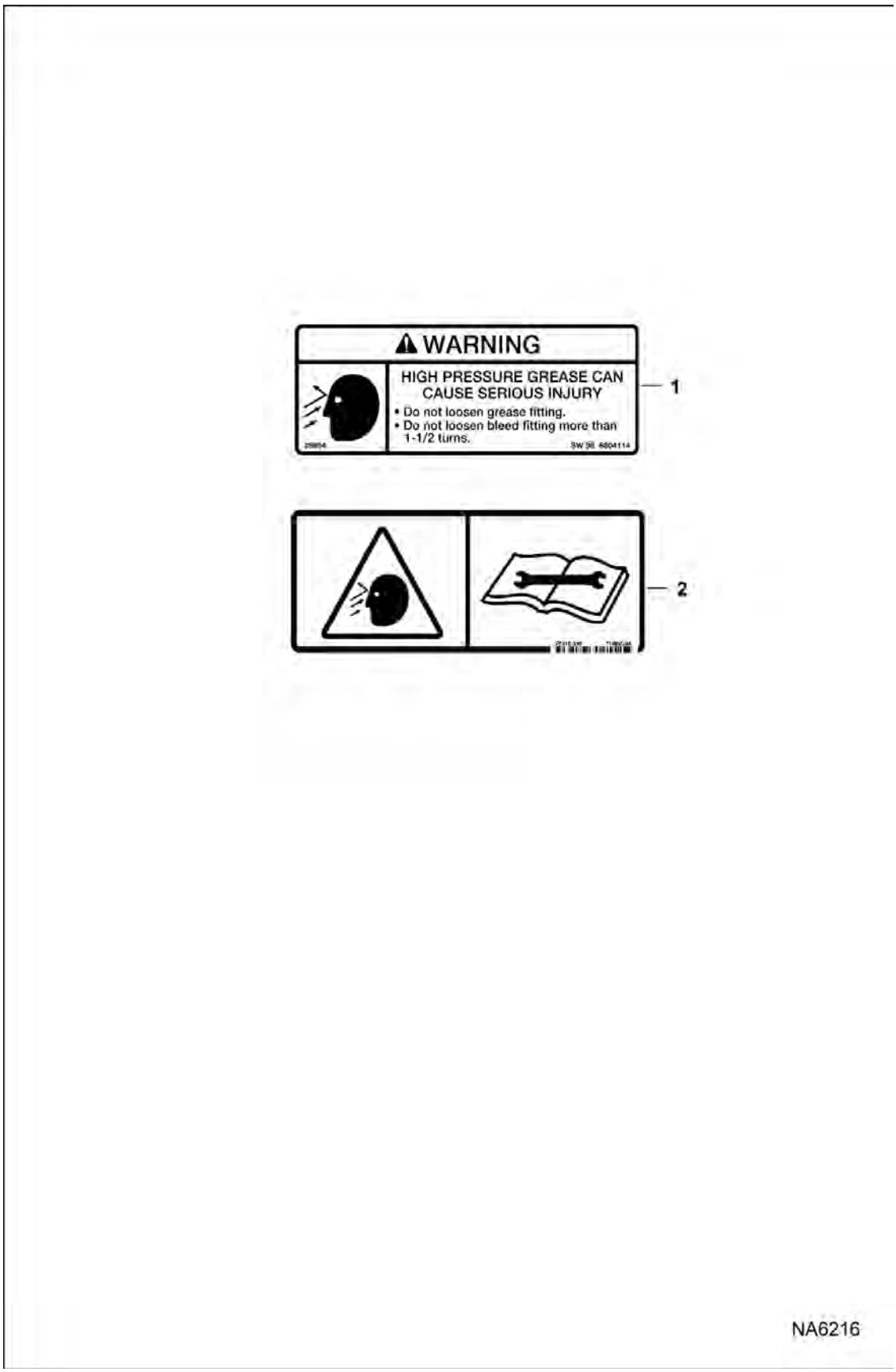

Page 579 - OSS# 6300322913 - All rights reserved by Bobcat Company - 08/04/2017 - 06:30:16 - Produced by Ken Cook Co. with mediaioff

DECALS (Cont'd)
(Outside)

Ref No	Part Number	Description	Remarks	Serial Number	Qty
1		DECAL, WARNING	NLA - high pressure grease - Order Ref. 2 - Was 6804114 [A]		1
2	7168039	DECAL, WARNING	high pressure grease		2

Page 3804 OSS# 6300322913 - All rights reserved by Bobcat Company - 08/04/2017 - 06:30:16 - Produced by Ken Cook Co. with mediaioff

DECALS
(EMEA)

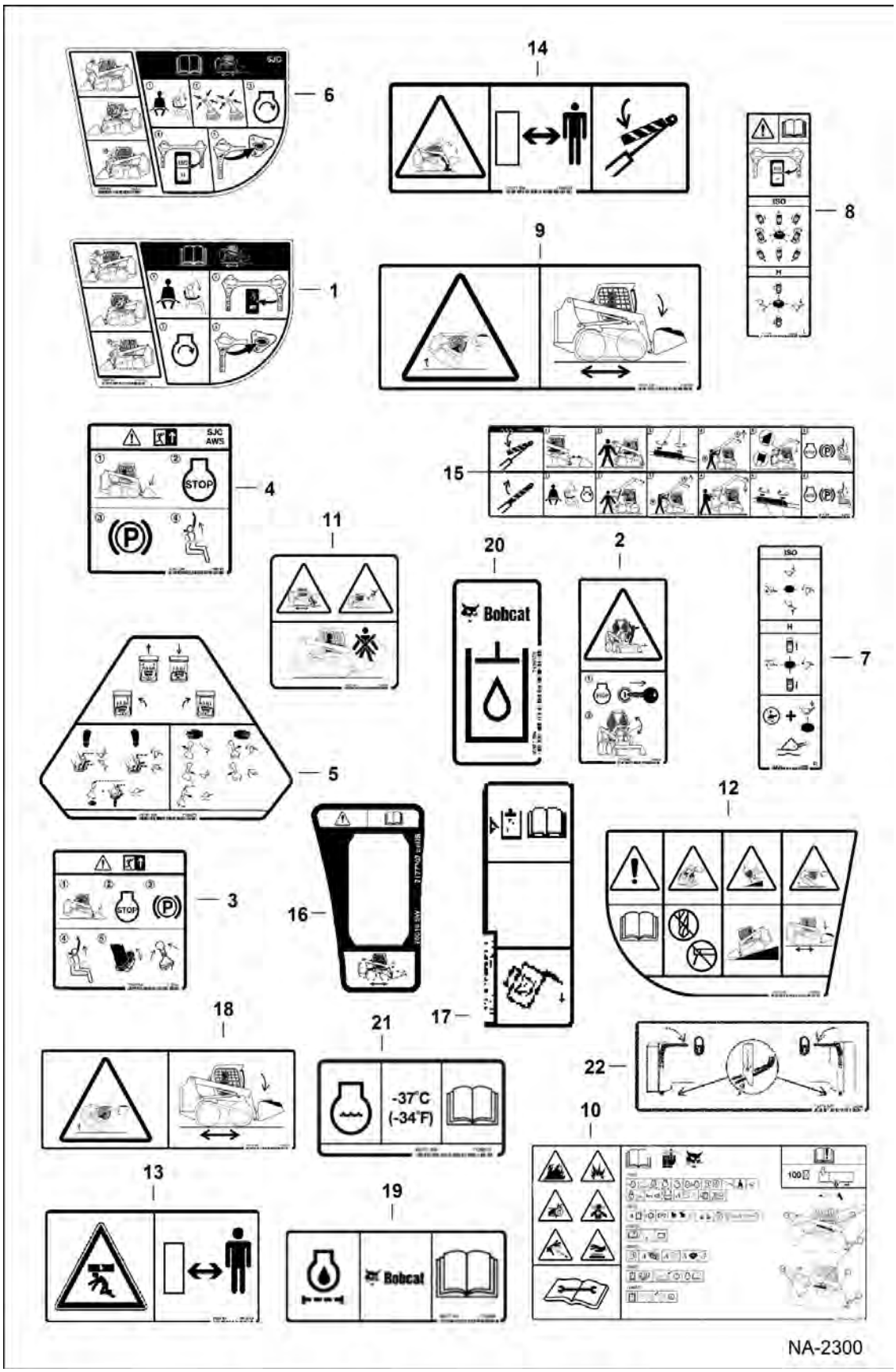

Page 581 - OSS# 6300322913 - All rights reserved by Bobcat Company - 08/04/2017 - 06:30:16 - Produced by Ken Cook Co. with mediaioff

DECALS (Cont'd)
(EMEA)

Ref No	Part Number	Description	Remarks	Serial Number	Qty
1	7168137	DECAL, OPERATION			1
2	7168139	DECAL, WARNING			1
3	7168141	DECAL, WARNING			1
4	7168143	DECAL, WARNING			1
5	7168273	DECAL, CONTROL			1
6	7168145	DECAL, WARNING	SJC		1
7	7168081	DECAL, OPERATION	SJC - RH		1
8	7168082	DECAL, OPERATION	SJC - LH		1
9	7168033	DECAL, DANGER			1
10	7205727	DECAL, SERVICE	Was 7168042 [A]		1
11	7168040	DECAL, WARNING			1
12	7168038	DECAL, WARNING			1
13	7168037	DECAL, WARNING			1
14	7168034	DECAL, DANGER			1
15	7169341	DECAL			1
15	7251859	DECAL			1
16	7177707	DECAL	SJC switch		1
17	7173294	DECAL	sight guage		1
18	6713507	DECAL	stay clear		2
19	7120569	DECAL, FILTER			1
20	7120570	DECAL	hyd oil		1
21	7120573	DECAL	eng coolant		1
22	7173403	DECAL, OPERATION	Bob-Tach		1

Page 3820 OSS# 6300322913 - All rights reserved by Bobcat Company - 08/04/2017 - 06:30:16 - Produced by Ken Cook Co. with mediaioff

DELUXE HEADLINER KIT

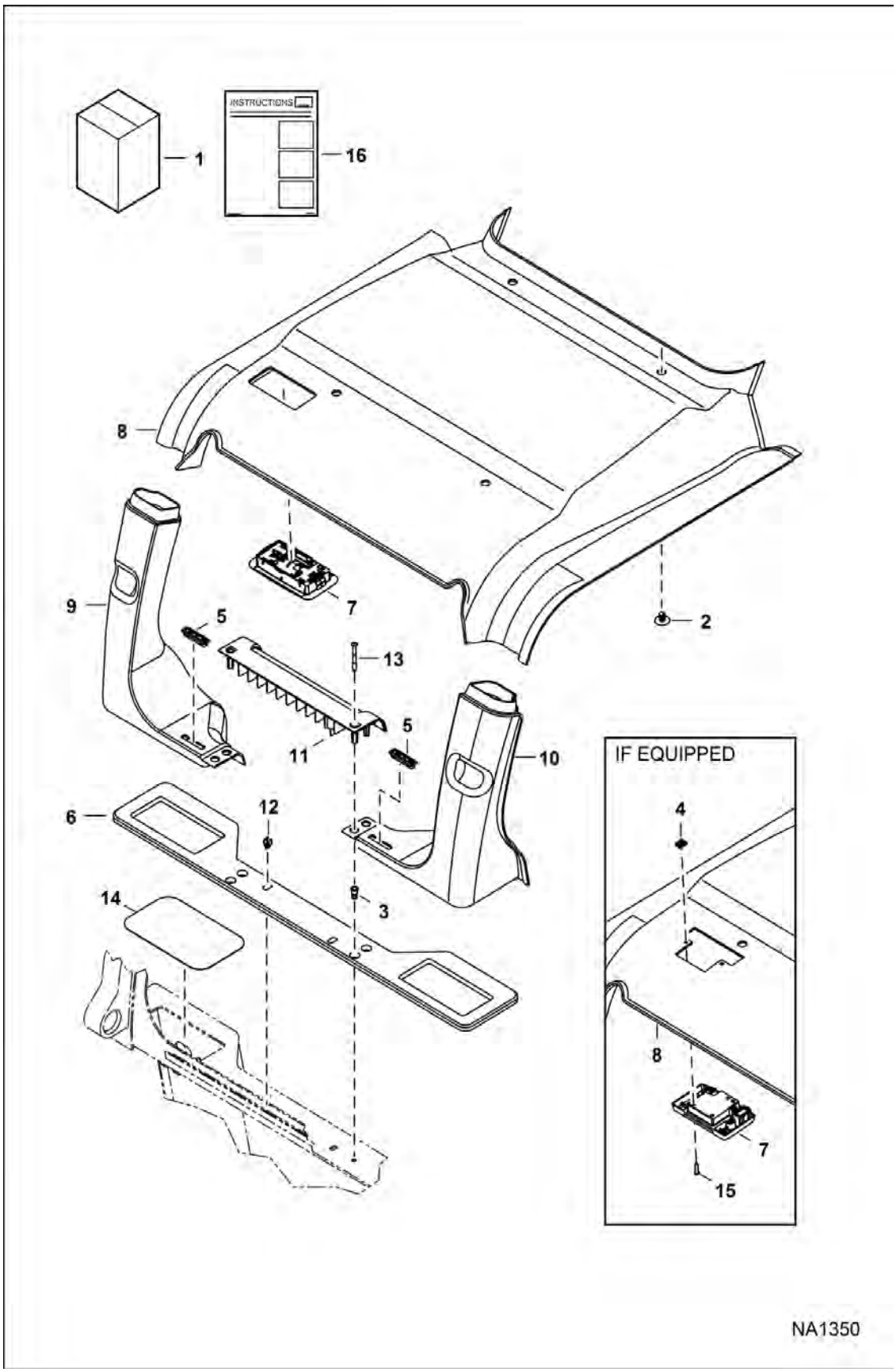

Page 583 - OSS# 6300322913 - All rights reserved by Bobcat Company - 08/04/2017 - 06:30:16 - Produced by Ken Cook Co. with mediaioff

DELUXE HEADLINER KIT (Cont'd)

Ref No	Part Number	Description	Remarks	Serial Number	Qty
1		KIT, HEADLINER DLX	NLA - LED - Ref. 2-16 - Order 7156253 - Was 7156353 [A]		1
1	7156253	KIT, HEADLINER DLX	Ref. 3-16, non-LED		1
2	6674895	RETAINER			4
3	6675033	INSERT, THREADED			2
4	7142762	CLIP			2
5	7145885	VENT, DEFROST			2
6	7153832	SEAL, SHELF REAR			1
7		LIGHT, CAB HEADLINER	NLA - 3-position switch - Order 7166629 light - Was 7155797 [A]		1
7		LIGHT, CAB HEADLINER	NLA – 2-position switch - Order cab headliner light 7229539 - also Order jumper harness 7244211 & headliner 7234061- Was 7166629 [A]		1
7	7229539	LIGHT, CAB HEADLINER			1
8		HEADLINER, DLX	NLA - LED - Order headliner 7234061 - also Order light 7229539 & harness 7244211 - Was 7155798 [A]		1
8	7234061	HEADLINER	Non-LED		1
9	100333SUB	DUCT, AIR	RH - W/Ref. 3 - Was 7165330		1
10	100334SUB	DUCT, AIR	LH - W/Ref. 3 - Was 7165331		1
11	7165332	SHELF, REAR			1
12	7165333	CLIP			2
13	7165799	SCREW			2
14	7168610	COVER			2
15	7170114	SCREW			2
16	6987355ENUS	INSTRUCTIONS	Was 6987355 [A]		1

Page 584 OSS# 6300322913 - All rights reserved by Bobcat Company - 08/04/2017 - 06:30:16 - Produced by Ken Cook Co. with mediaoff

DELUXE INTERIOR KIT
(1-Connector Harness)

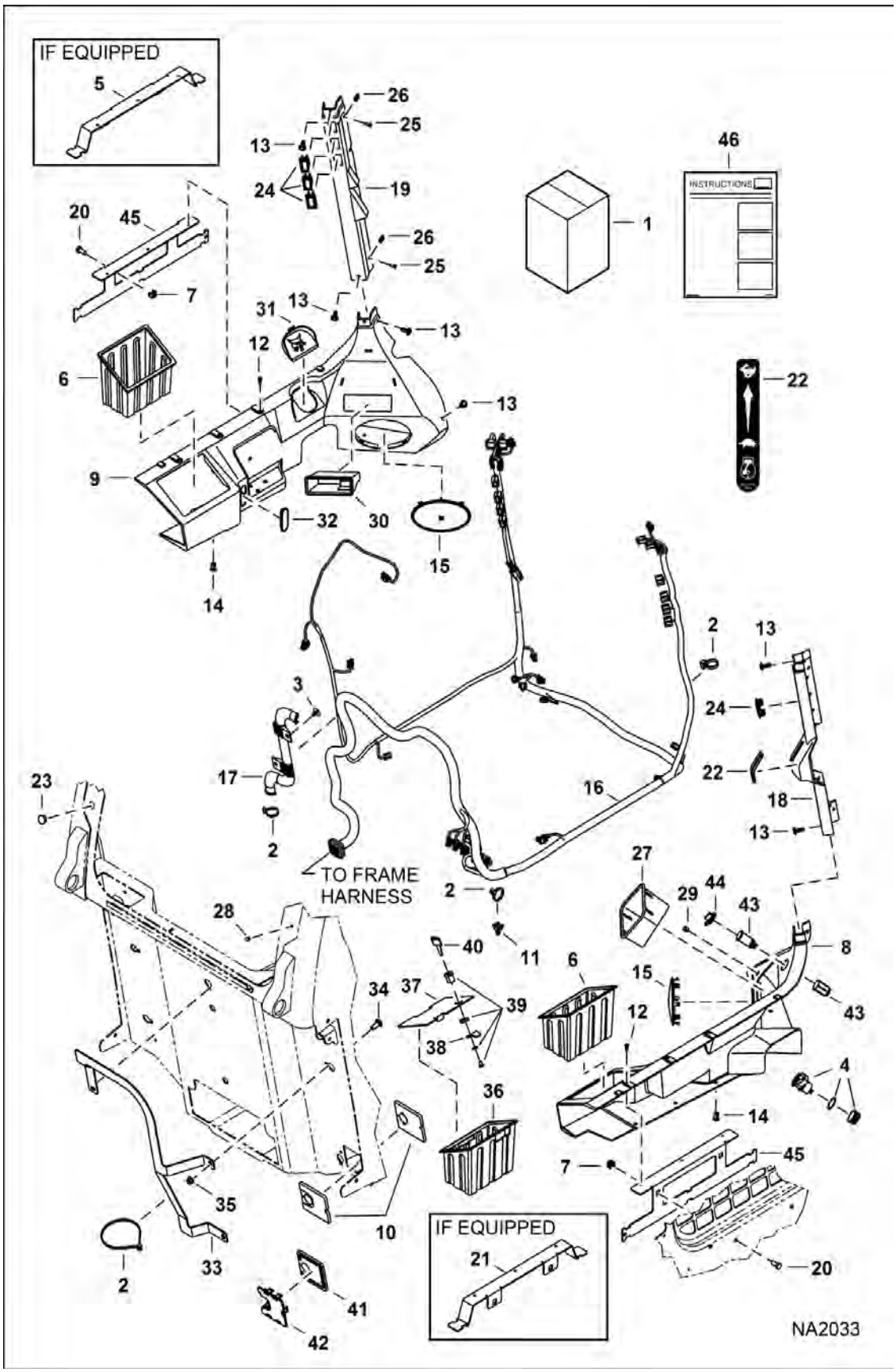

Page 595 - OSS# 6300322913 - All rights reserved by Bobcat Company - 08/04/2017 - 06:30:16 - Produced by Ken Cook Co. with mediaioff

DELUXE INTERIOR KIT (Cont'd)

(1-Connector Harness)

Ref No	Part Number	Description	Remarks	Serial Number	Qty
1	7129465	KIT, INTERIOR DLX	Ref. 2, 3, 6-35, & 43-46		1
2	6624289	STRAP, TIE			20
3	6674895	RETAINER			2
4	7001664	PLUG, POWER	W/hinged cover - not in kit		1
5	7116118	BRACKET			1
6	7145268	CONTAINER, STORAGE			2
7	7149204	NUT			4
8	7155642	FENDER, PANEL RH			1
9	7155643	FENDER, PANEL L.H.			1
10	7185150	PLUG, HARNESS CAB	replaces both Ref. 41 & 42		2
11	7010600	MOUNT TREE FIR			2
12	7160381	RIVET, BIRD CAGE			6
13	7160382	RIVET, BIRD CAGE			8
14	7160383	RIVET, BIRD CAGE			10
15	7161939	GRILL			2
16	7196753	HARNESS, CAB DLX			1
17	7164073	GUIDE			1
18	7164347	COLUMN, FRONT RIGHT			1
19	7164348	COLUMN, FRONT LEFT			1
20	17C616	BOLT 5	Was 17C612 [B]		4
21		BRACKET	NLA - Order Ref. 45 - Was 7127976 [A]		1
22	7177742	DECAL			1
23	6657719	PLUG	0.75" dia hole		2
24	6665314	PLUG			5
25	6669224	TAP SCREW			6
26	7142762	CLIP			6
27	7154285	BOX,RADIO DELETE			1
28	7188745	PLUG			1
29	7182942	PLUG			1
30	7165344	STORAGE			1
31	7165345	DOOR, COVER			1
32	7165346	DOOR, COVER			1
33	7166177	BRACKET			1
34	10C616	BOLT 10			3
35	97D6	NUT 10			3
36	7181555	TOOL BOX	EMEA - not in kit		1
37	7181556	COVER, TOOL BOX	EMEA - metal cover - not in kit		1
38	7181557	CAM	EMEA - not in kit		1
39	6670726	LOCK ONLY	EMEA - not in kit		1

Page 580 OSS# 6390322913 - All rights reserved by Bobcat Company - 08/04/2017 - 06:30:16 - Produced by Ken Cook Co. with mediaioff

DELUXE INTERIOR KIT (Cont'd)
(1-Connector Harness)

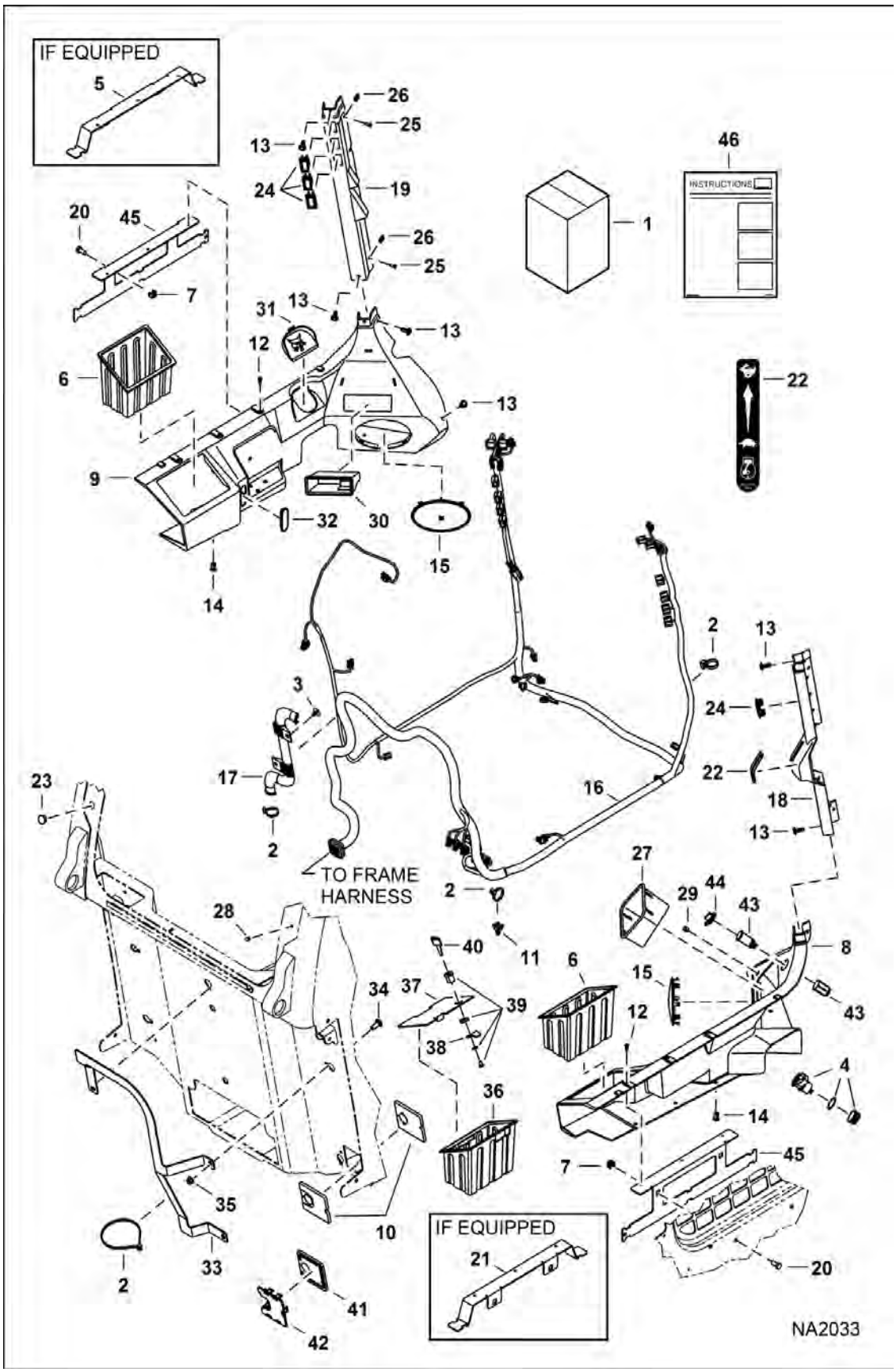

Page 587 - OSS# 6300322913 - All rights reserved by Bobcat Company - 08/04/2017 - 06:30:16 - Produced by Ken Cook Co. with mediaioff

DELUXE INTERIOR KIT (Cont'd)

(1-Connector Harness)

Ref No	Part Number	Description	Remarks	Serial Number	Qty
40	6693241	KEY (2)	EMEA - not in kit		1
41		PLUG, HARNESS CAB DLX	NLA - Order Ref. 10		1
42		FOAM	NLA - Order Ref. 10		1
43	6664223	OUTLET			1
44	6664224	CAP			1
45	7193021	BRACKET			2
46	6987234	INSTRUCTIONS			1

Page 584 OSS# 6300322913 - All rights reserved by Bobcat Company - 08/04/2017 - 06:30:16 - Produced by Ken Cook Co. with mediaioff

DELUXE INTERIOR KIT
(3-Connector Harness)

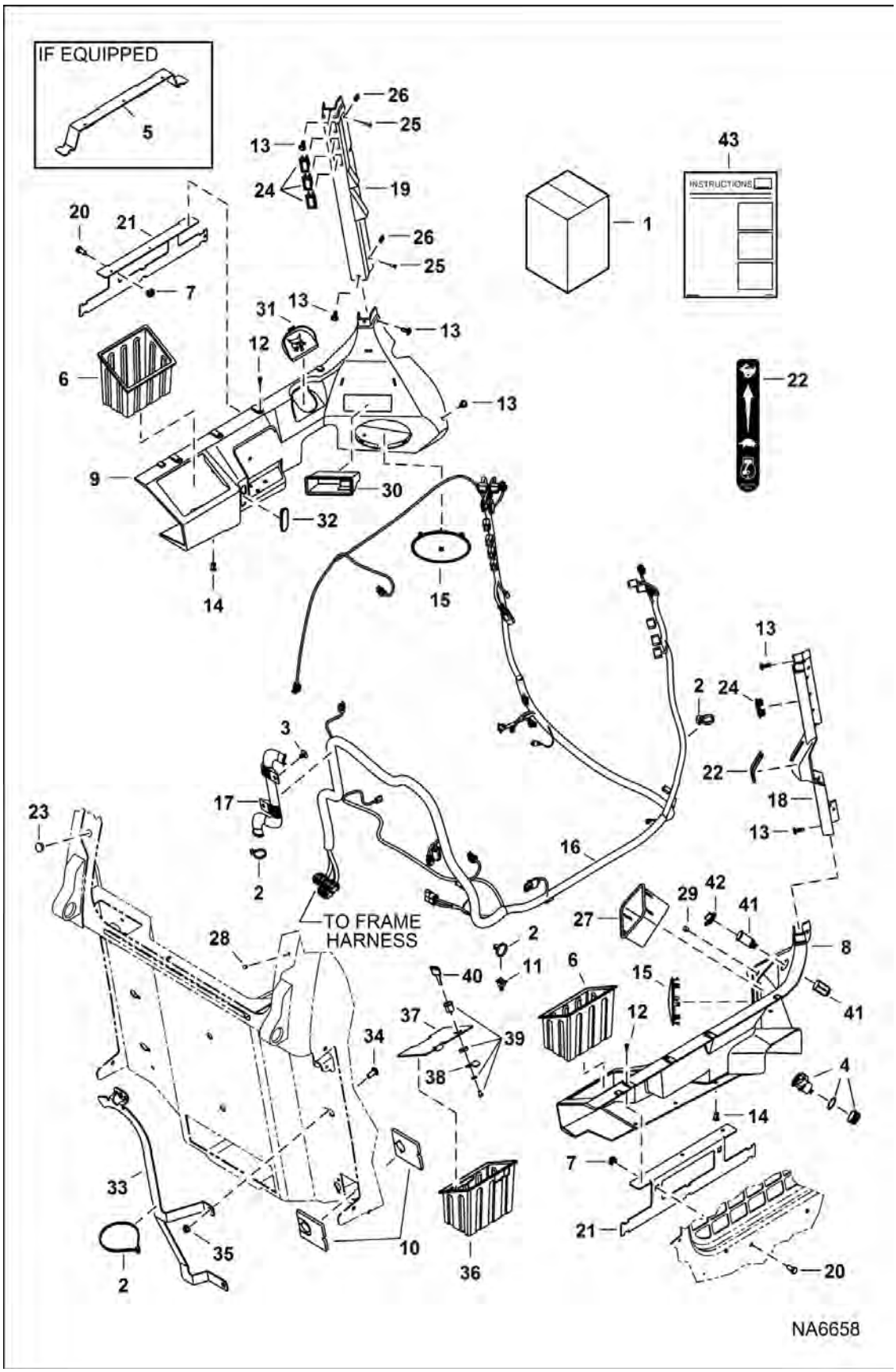

Page 589 - OSS# 6300322913 - All rights reserved by Bobcat Company - 08/04/2017 - 06:30:16 - Produced by Ken Cook Co. with mediaioff

DELUXE INTERIOR KIT (Cont'd)

(3-Connector Harness)

Ref No	Part Number	Description	Remarks	Serial Number	Qty
1		KIT, DLX HRNS/INTER	See Illustration DELUXE INTERIOR KIT / NA8651 - NLA - Ref. 2, 3, 6-35, & 41-43 - Was 7220758 [A]		1
2	6624289	STRAP, TIE			20
3	6674895	RETAINER			2
4	7001664	PLUG, POWER	W/hinged cover - not in kit		1
5	7116118	BRACKET			1
6	7145268	CONTAINER, STORAGE			2
7	7149204	NUT			4
8	7155642	FENDER, PANEL RH			1
9	7155643	FENDER, PANEL L.H.			1
10	7185150	PLUG, HARNESS CAB			2
11	7010600	MOUNT TREE FIR			2
12	7160381	RIVET, BIRD CAGE			6
13	7160382	RIVET, BIRD CAGE			8
14	7160383	RIVET, BIRD CAGE			10
15	7161939	GRILL			2
16	7231782	HARNESS, CAB DLX	one connector to dome light - Was 7210556 [A]		1
17	7164073	GUIDE			1
18	7164347	COLUMN, FRONT RIGHT			1
19	7164348	COLUMN, FRONT LEFT			1
20	17C616	BOLT 5			4
21	7193021	BRACKET			2
22	7177742	DECAL	throttle		1
23	6657719	PLUG	0.75" dia hole		2
24	6665314	PLUG			5
25	6669224	TAP SCREW			6
26	7142762	CLIP			6
27	7154285	BOX,RADIO DELETE			1
28	7188745	PLUG			1
29	7182942	PLUG			1
30	7165344	STORAGE			1
31	7165345	DOOR, COVER			1
32	7165346	DOOR, COVER			1
33	7199044	BRACKET			1
34	10C616	BOLT 10			3
35	97D6	NUT 10			3
36	7181555	TOOL BOX	EMEA - not in kit		1
37	7181556	COVER, TOOL BOX	EMEA - metal cover - not in kit		1
38	7181557	CAM	EMEA - not in kit		1
39	6670726	LOCK ONLY	EMEA - not in kit		1

Page 582 OSS# 6390322913 - All rights reserved by Bobcat Company - 08/04/2017 - 06:30:16 - Produced by Ken Cook Co. with mediaIoff

DELUXE INTERIOR KIT (Cont'd)
(3-Connector Harness)

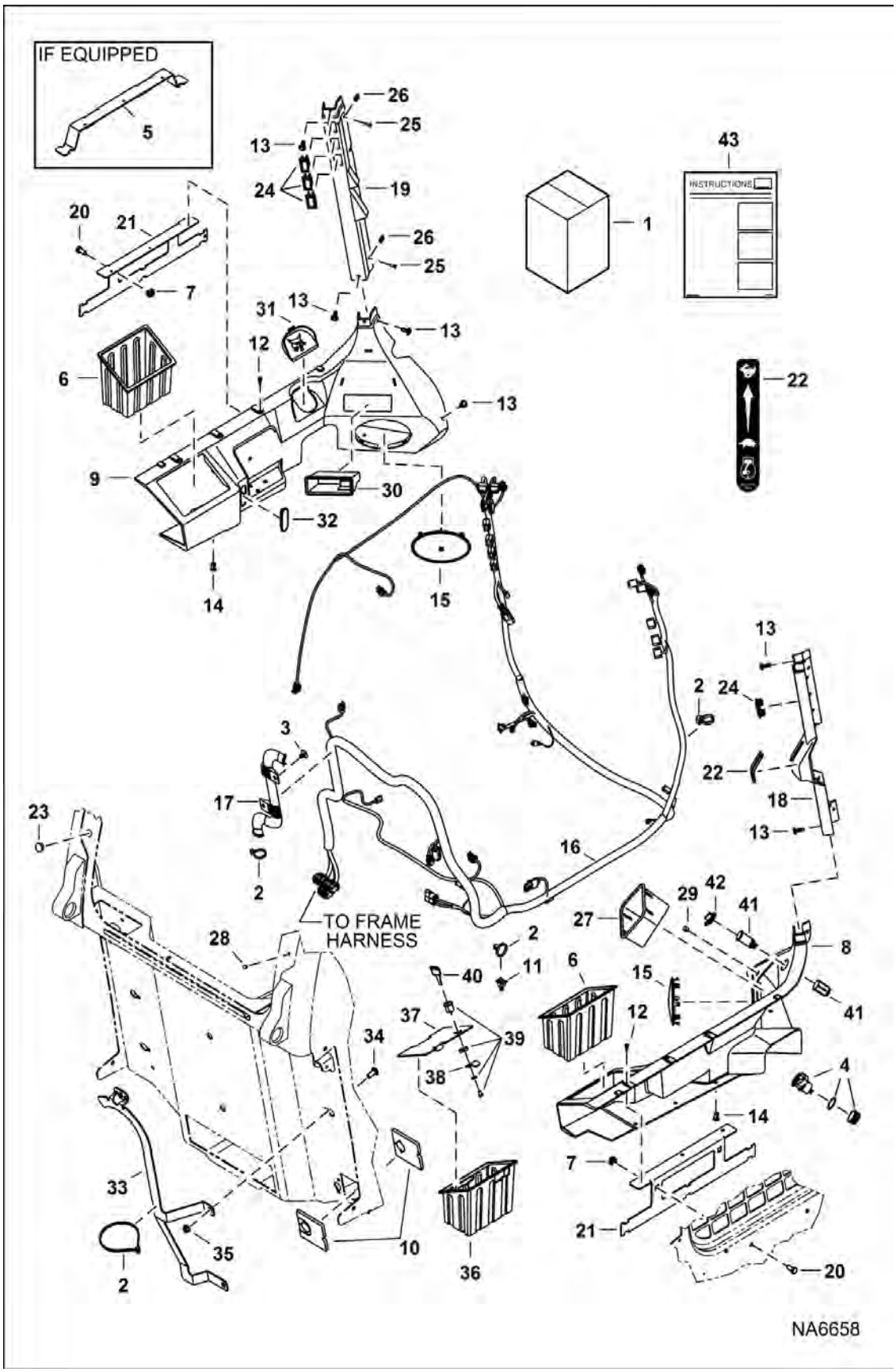

Illustration NA6658

Model T770 MT3
6989477

Page 591 - OSS# 6300322913 - All rights reserved by Bobcat Company - 08/04/2017 - 06:30:16 - Produced by Ken Cook Co. with mediaioff

DELUXE INTERIOR KIT (Cont'd)
(3-Connector Harness)

Ref No	Part Number	Description	Remarks	Serial Number	Qty
40	6693241	KEY (2)	EMEA - not in kit		1
41	6664223	OUTLET			1
42	6664224	CAP			1
43	6987234	INSTRUCTIONS			1

Page 324 OSS# 6300322913 - All rights reserved by Bobcat Company - 08/04/2017 - 06:30:16 - Produced by Ken Cook Co. with mediaioff

DELUXE INTERIOR KIT
(3-Connector Harness)

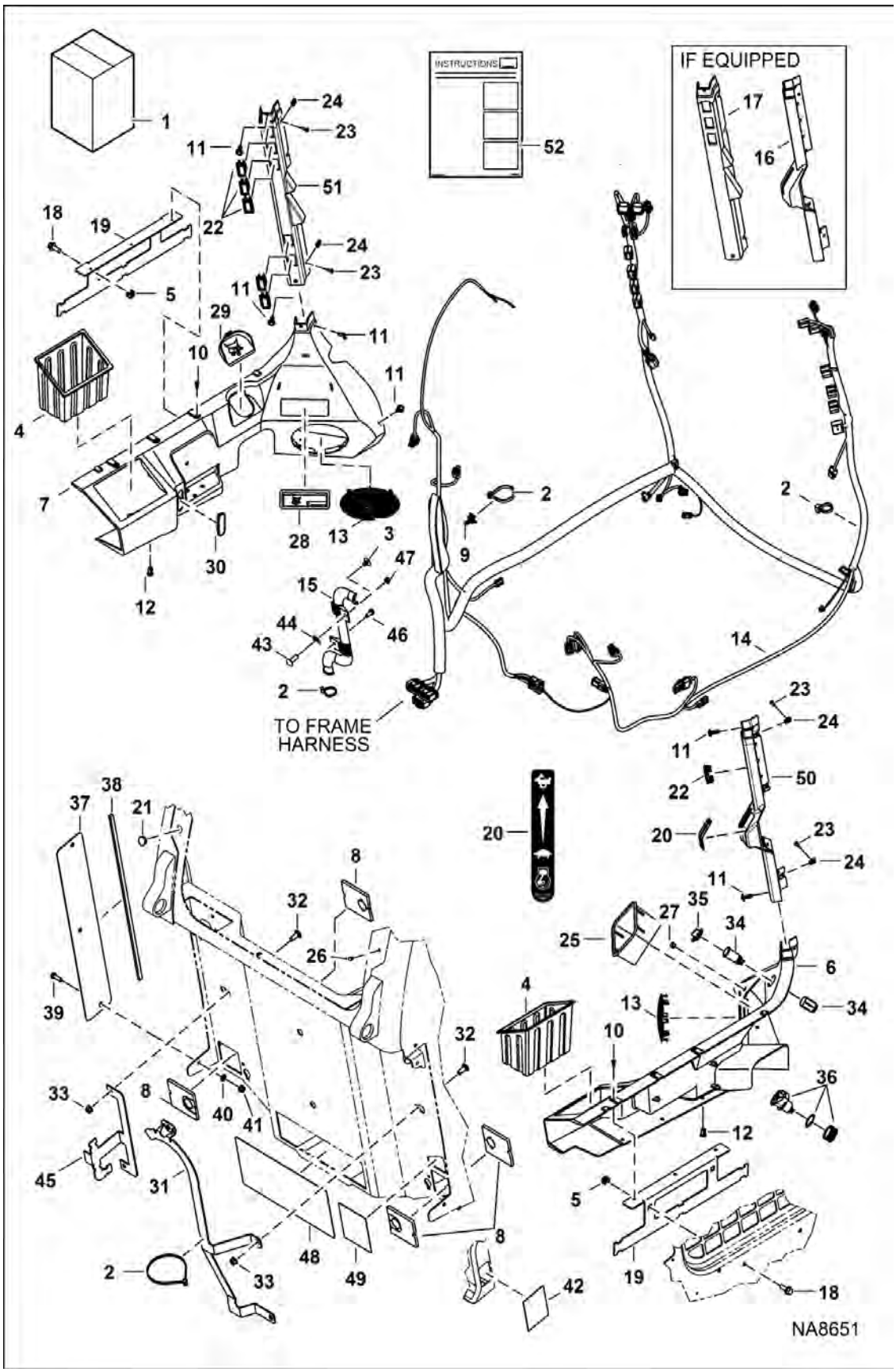

Page 593 - OSS# 6300322913 - All rights reserved by Bobcat Company - 08/04/2017 - 06:30:16 - Produced by Ken Cook Co. with mediaioff

DELUXE INTERIOR KIT (Cont'd)

(3-Connector Harness)

Ref No	Part Number	Description	Remarks	Serial Number	Qty
1	7241484	KIT, HEADLINER DLX	Ref. 2-7, 9-13, 15-35 & 37-50		1
2	6624289	STRAP, TIE			23
3	6674895	RETAINER	600, 700 & 800's		2
4	7145268	CONTAINER, STORAGE			2
5	7149204	NUT			4
6	7155642	FENDER, PANEL RH			1
7	7155643	FENDER, PANEL L.H.			1
8	7185150	PLUG, HARNESS CAB	not in kit		4
9	7015668	MOUNT, STRAP TIE			2
10	7160381	RIVET, BIRD CAGE			6
11	7160382	RIVET, BIRD CAGE			8
12	7160383	RIVET, BIRD CAGE			10
13	7161939	GRILL			2
14		HARNESS, CAB DLX	See Illustration CAB ELECTRICAL CIRCUITRY / NA1167 - not in kit		1
15	7164073	GUIDE			1
16		COLUMN, FRONT RIGHT	NLA - Order Ref 50 - Was 7164347 [A]		1
17		COLUMN, FRONT LEFT	NLA - Order Ref 51 - Was 7164348 [A]		1
18	35C616	BOLT 5			4
19	7193021	BRACKET			2
20	7177742	DECAL	throttle		1
21	6657719	PLUG	0.75" dia hole		2
22	6665314	PLUG	Use W/Ref 16, 17		5
22	6665314	PLUG	Use W/Ref 50, 51		8
23	6669224	TAP SCREW			6
24	7142762	CLIP			6
25	7154285	BOX,RADIO DELETE			1
26	7188745	PLUG			1
27	7182942	PLUG			1
28	7165344	STORAGE			1
29	7165345	DOOR, COVER			1
30	7165346	DOOR, COVER			1
31	7199044	BRACKET			1
32	10C616	BOLT 10			3
33	97D6	NUT 10			3
34	6664223	OUTLET			1
35	6664224	CAP			1
36	7001664	PLUG, POWER	not in kit		1
37	7166544	COVER, HVAC			2
38	7182796	SEAL, FOAM			2

Page 586 OSS# 6300322913 - All rights reserved by Bobcat Company - 08/04/2017 - 06:30:16 - Produced by Ken Cook Co. with mediaoff

DELUXE INTERIOR KIT (Cont'd)
(3-Connector Harness)

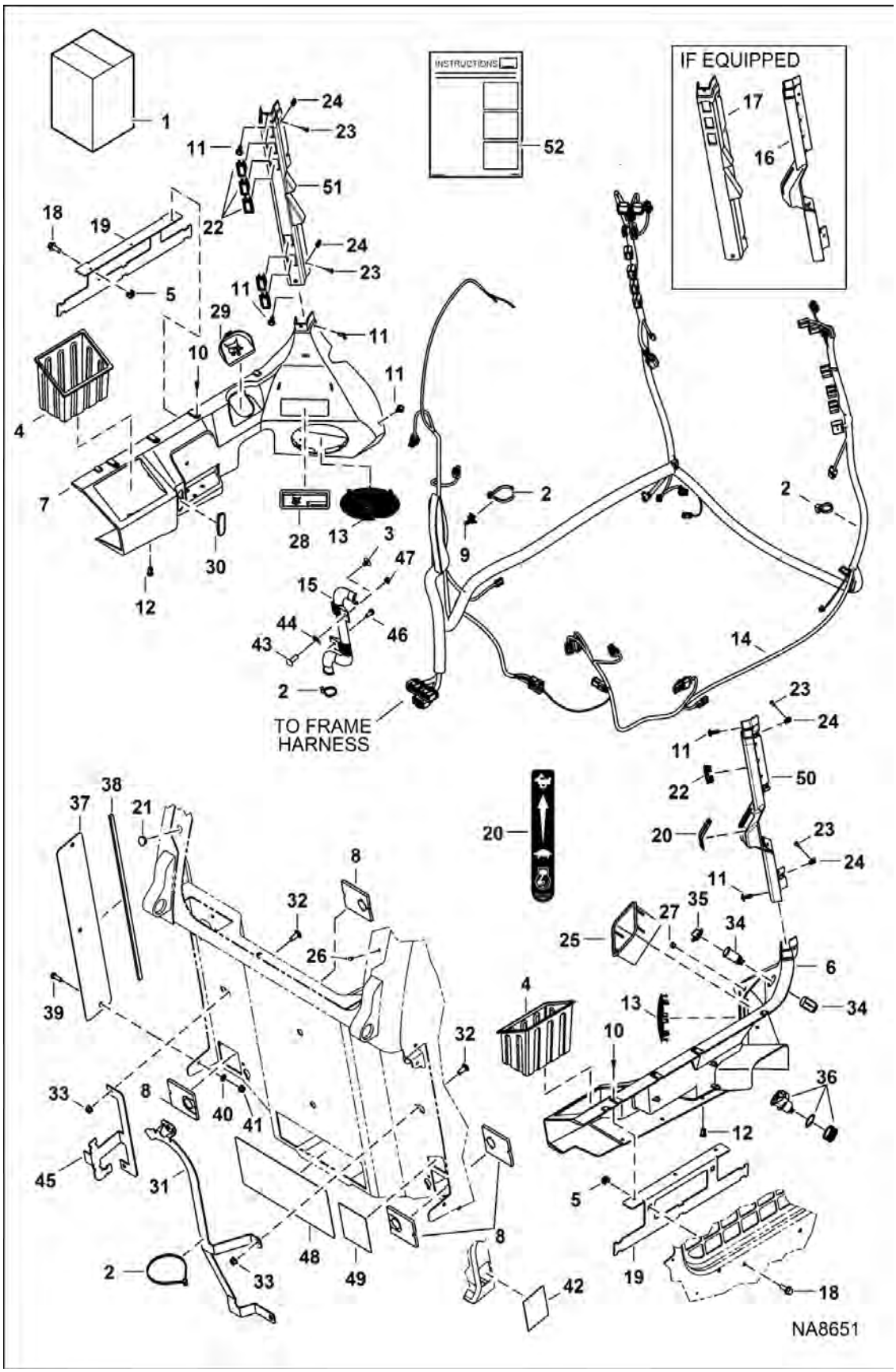

Page 595 - OSS# 6300322913 - All rights reserved by Bobcat Company - 08/04/2017 - 06:30:16 - Produced by Ken Cook Co. with mediaioff

DELUXE INTERIOR KIT (Cont'd)
(3-Connector Harness)

Ref No	Part Number	Description	Remarks	Serial Number	Qty
39	1CM825	BOLT			4
40	1EM80	WASHER			4
41	1DM8	NUT			4
42	7197973	COVER			1
43	10C612	BOLT	500's		1
44	6684033	NUT	500's		1
45	7226854	BRACKET			1
46	84G3712	BOLT 5	500's		1
47	57D6	NUT 5	500's		1
48	7178954	COVER, HVAC			1
49	7197972	COVER			1
50	7282966	COLUMN, FRONT RIGHT			1
51	7265545	COLUMN, FRONT LEFT			1
52	6990988ENUS	INSTRUCTIONS	Was 6990988 [A]		1

Page 588 OSS# 6300322913 - All rights reserved by Bobcat Company - 08/04/2017 - 06:30:16 - Produced by Ken Cook Co. with mediaioff

ELECTRICAL CONTROLS KIT
(7-Pin)

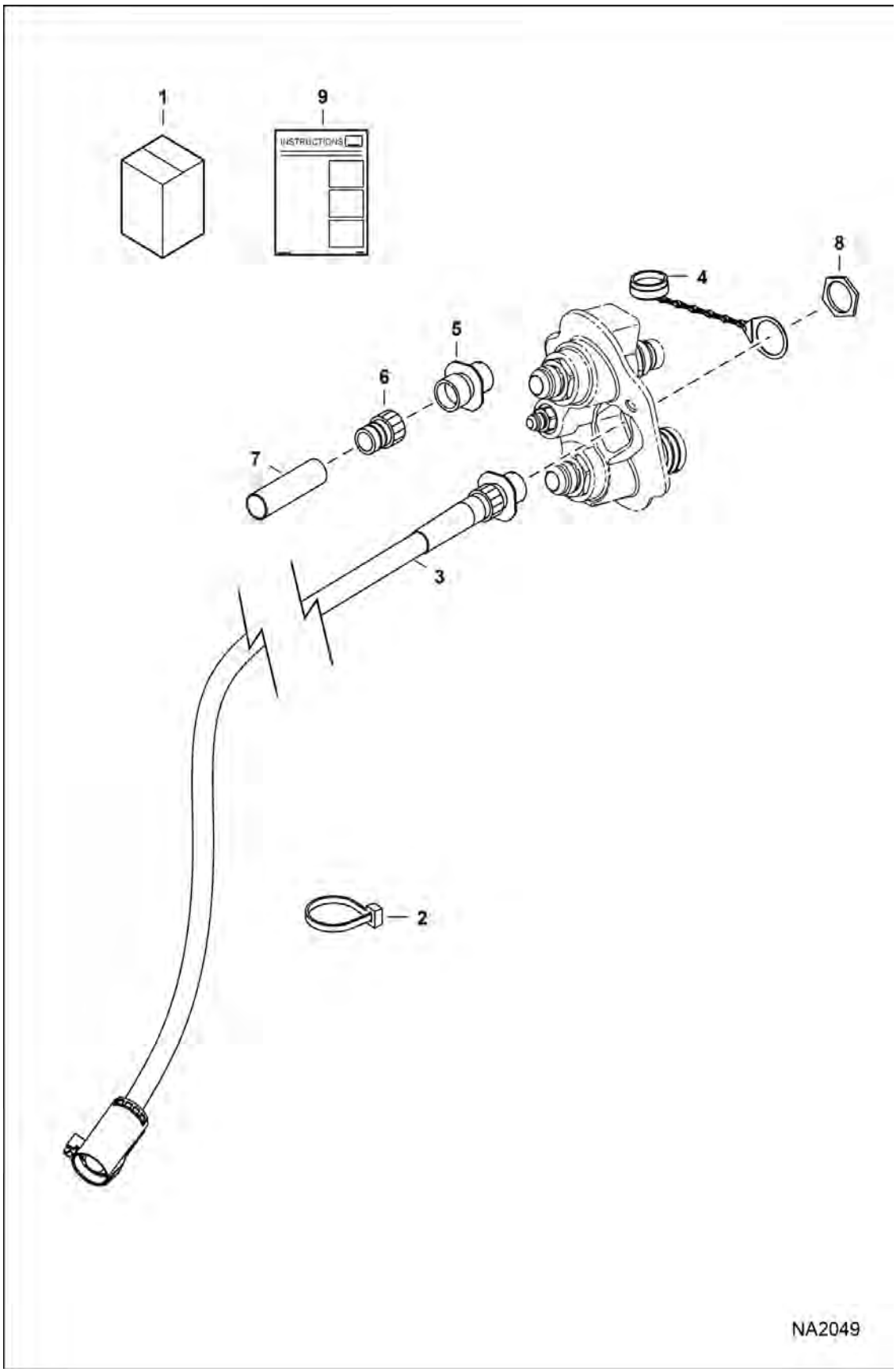

Page 597 - OSS# 6300322913 - All rights reserved by Bobcat Company - 08/04/2017 - 06:30:16 - Produced by Ken Cook Co. with mediaioff

ELECTRICAL CONTROLS KIT (Cont'd)

(7-Pin)

Ref No	Part Number	Description	Remarks	Serial Number	Qty
1	7128426	KIT, ACD 7-PIN	Ref. 2-9		1
2	6624289	STRAP, TIE			1
3	7175321	HARNESS, ACD INPUT	W/Ref. 4-8		1
4	6675026	CAP, CONNECTOR			1
5	6674802	CONNECTOR, 7-PIN			1
5	6669549	SOCKET	18 ga - not in kit		4
5	6677136	SOCKET	12 ga - not in kit		3
6	6674799	ADAPTER	heat shrink		1
7		HEAT SHRINK	NSS - purchase locally		1
8	6688338	NUT	jam		1
9	6987238ENUS	INSTRUCTIONS	Was 6987238 [A]		1

Page 590 OSS# 6300322913 - All rights reserved by Bobcat Company - 08/04/2017 - 06:30:16 - Produced by Ken Cook Co. with mediaioff

ELECTRICAL CONTROLS KIT
(14-Pin)

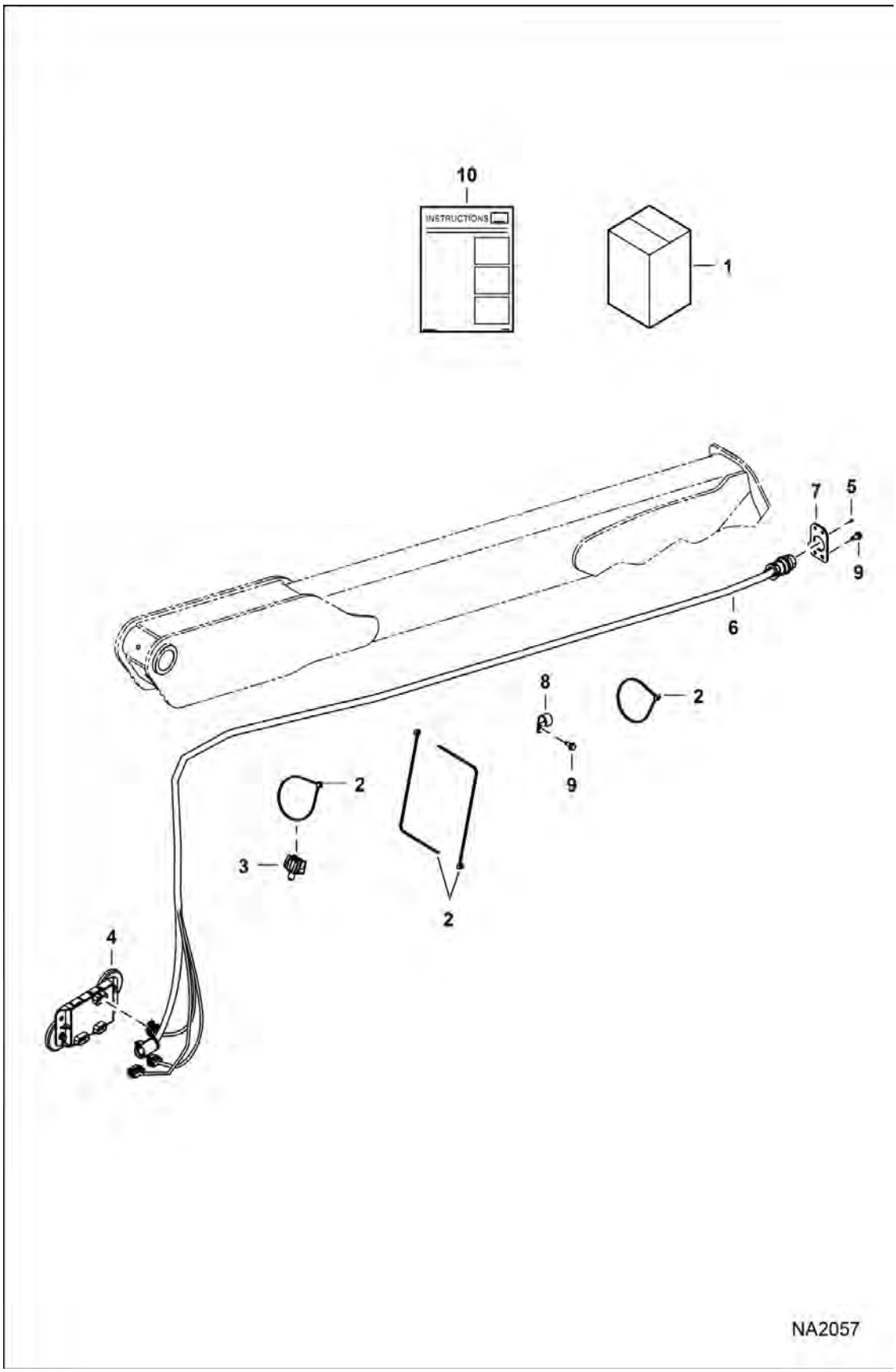

Page 599 - OSS# 6300322913 - All rights reserved by Bobcat Company - 08/04/2017 - 06:30:16 - Produced by Ken Cook Co. with mediaioff

ELECTRICAL CONTROLS KIT (Cont'd)
(14-Pin)

Ref No	Part Number	Description	Remarks	Serial Number	Qty
1	6733136	KIT, ATTACHMENT 14-PIN	Ref. 2-10		1
2	6624289	STRAP, TIE			9
3	6675281	MOUNT			1
4	6678675	CONTROLLER, ACD DLX	3 connector - W/O magnets		1
4	83D6	NUT 5			2
4	6719448	MAGNET, CONTROL ATTACH	45 kg (100 lb) force		2
4	25G612	SCREW			2
5	6704892	RIVET			1
6	6732730	HARNESS			1
7	6733144	MOUNT			1
8	30H50	CLAMP			6
9	84G3112	BOLT 5			8
10	6901872ENUS	INSTRUCTIONS			1

Page 1004 OSS# 6300322913 - All rights reserved by Bobcat Company - 08/04/2017 - 06:30:16 - Produced by Ken Cook Co. with mediaioff

ENGINE COMPARTMENT SEAL KIT
(S/N A3P811001 & Above)

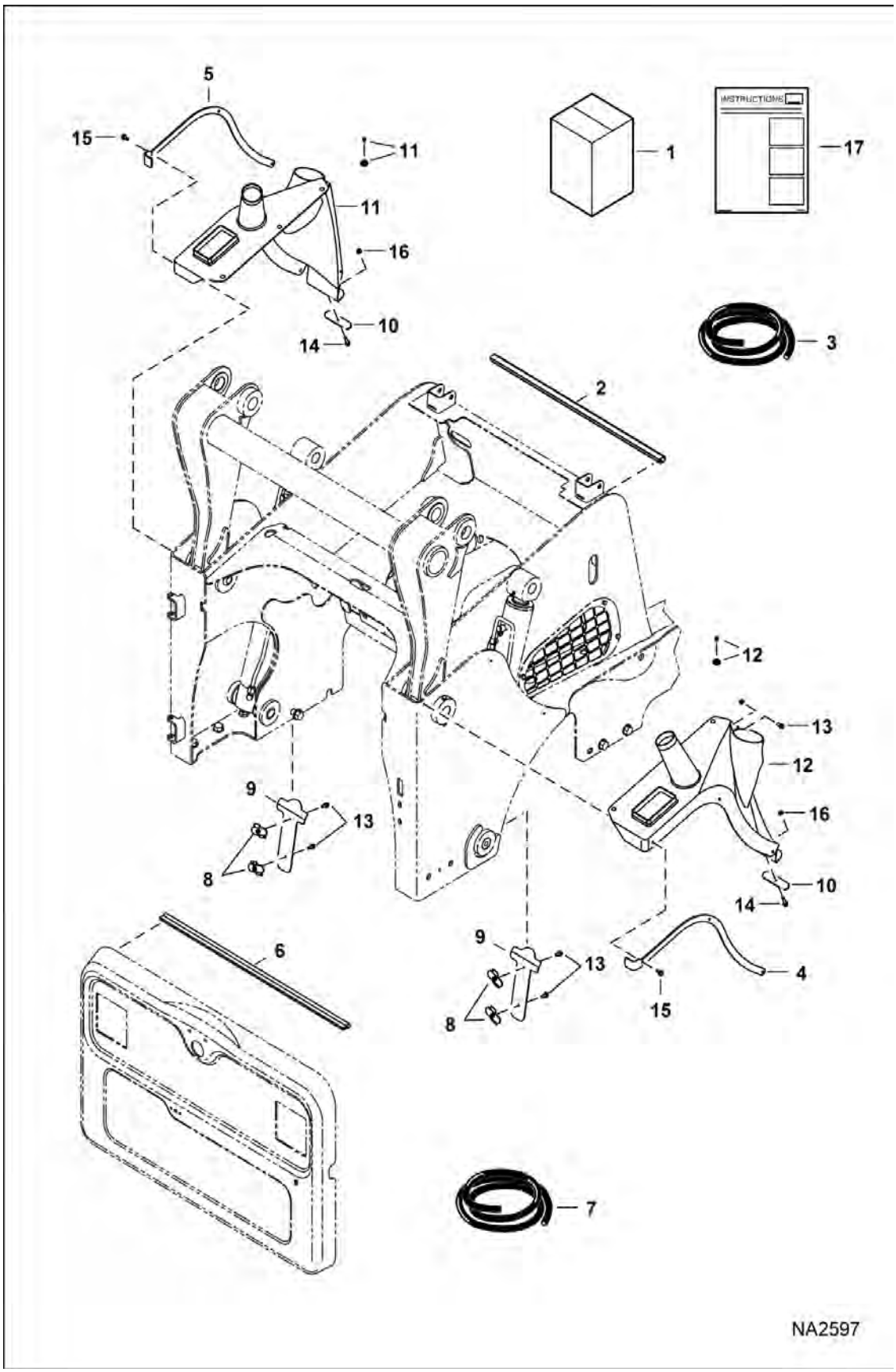

Page 601 - OSS# 6300322913 - All rights reserved by Bobcat Company - 08/04/2017 - 06:30:16 - Produced by Ken Cook Co. with mediaioff

ENGINE COMPARTMENT SEAL KIT (Cont'd)

(S/N A3P811001 & Above)

Ref No	Part Number	Description	Remarks	Serial Number	Qty
1	7190789	KIT, ENG COMP SEAL	Ref. 2-17 - Was SALES [A]	A3P811001 - A3P816056	1
				A3P911001 - A3P913054	1
2		SEAL, TAILGATE	NLA - 35" (889 mm) long - Order Ref. 3		1
3	6675410	SEAL, BULK	bulk - sold per foot		x
4	7182960	STRAP, HOLD DOWN	RH		1
5	7183077	STRAP, HOLD DOWN	LH		1
6		SEAL	NLA - 62" (1575 mm) long - Order Ref. 7		1
7	7188375	SEAL, BULK	sold per foot		x
8	7184329	CATCH, ASSY			4
9	7185936	COVER			2
10	7185937	BRACKET			2
11	7190707	BOOT, RUBBER	LH		1
12	7190708	BOOT, RUBBER	RH		1
13	31C512	BOLT			5
14	31C520	BOLT			2
15	84G3112	BOLT 5			7
16	97D5	NUT			2
17	6989488ENUS	INSTRUCTIONS	Was 6989488 [A]		1

Page 2020 OSS# 6300322913 - All rights reserved by Bobcat Company - 08/04/2017 - 06:30:16 - Produced by Ken Cook Co. with mediaioff

ENGINE COMPARTMENT SEAL KIT

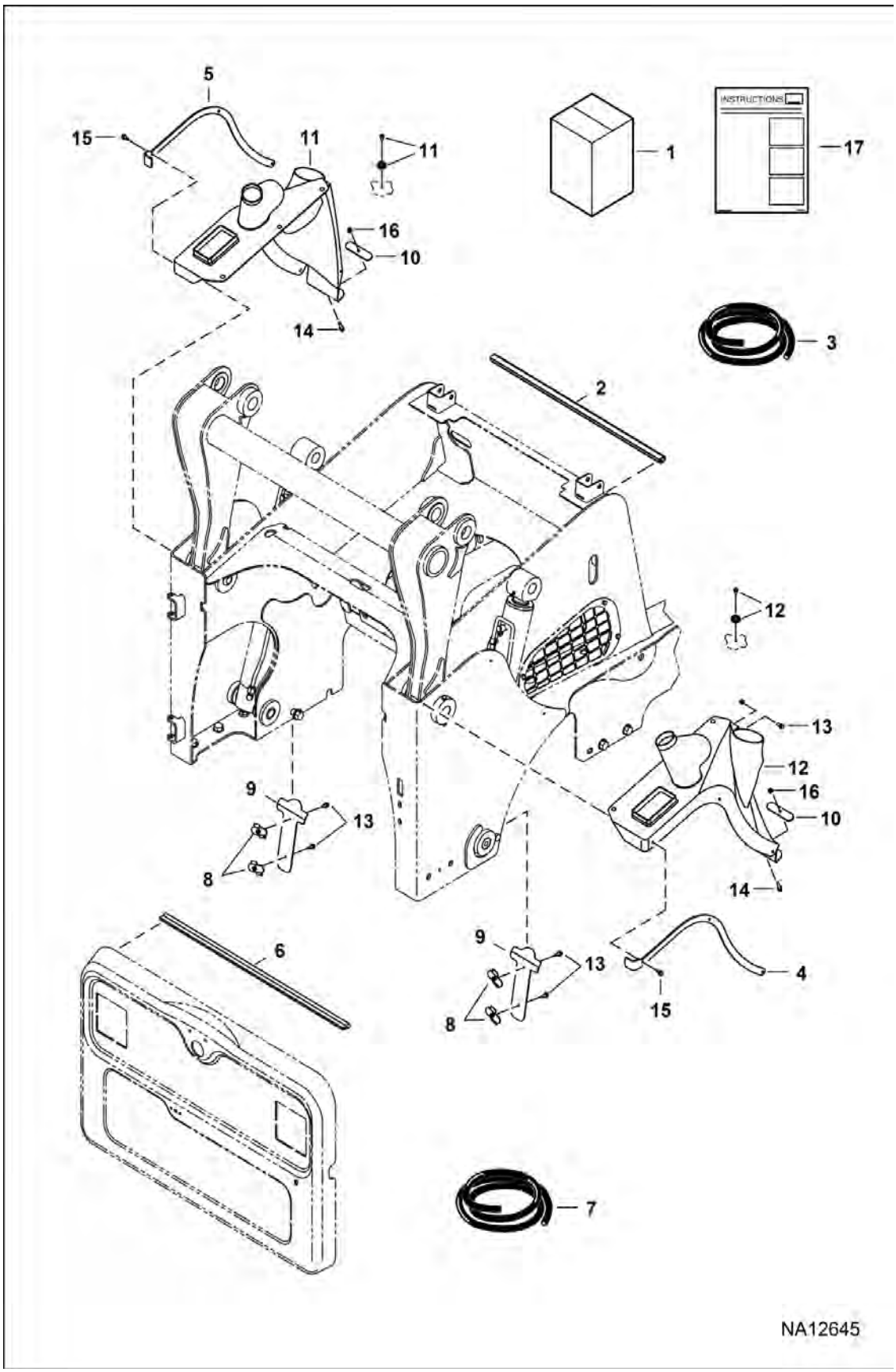

Page 693 - OSS# 6300322913 - All rights reserved by Bobcat Company - 08/04/2017 - 06:30:16 - Produced by Ken Cook Co. with mediaioff

ENGINE COMPARTMENT SEAL KIT (Cont'd)

Ref No	Part Number	Description	Remarks	Serial Number	Qty
1	7309976	KIT ENGINE COMP SEAL	Ref. 2-17 - Was 7190789	A3P816057 & Above	1
				A3P913055 & Above	1
2		SEAL TAILGATE	NLA - (889 mm) 35" long - Order Ref. 3		1
3	6675410	SEAL, BULK	bulk - sold per foot		x
4	7182960	STRAP, HOLD DOWN	RH		1
5	7183077	STRAP, HOLD DOWN	LH		1
6		SEAL	NLA - 62" (1575 mm) long - Order Ref. 7		1
7	7188375	SEAL, BULK	sold per foot		x
8	7184329	CATCH, ASSY			4
9	7185936	COVER			2
10	7185937	BRACKET			2
11	7309889	BOOT SEAL LH	LH		1
12	7309890	BOOT SEAL RH	RH		1
13	31C512	BOLT			5
14	31C520	BOLT			2
15	84G3112	BOLT 5			7
16	97D5	NUT			2
17	7311798ENUS	INSTRUCTIONS			1

Page 596 OSS# 6300322913 - All rights reserved by Bobcat Company - 08/04/2017 - 06:30:16 - Produced by Ken Cook Co. with mediaioff

EUROPEAN ACCESSORIES
(Road Kit)

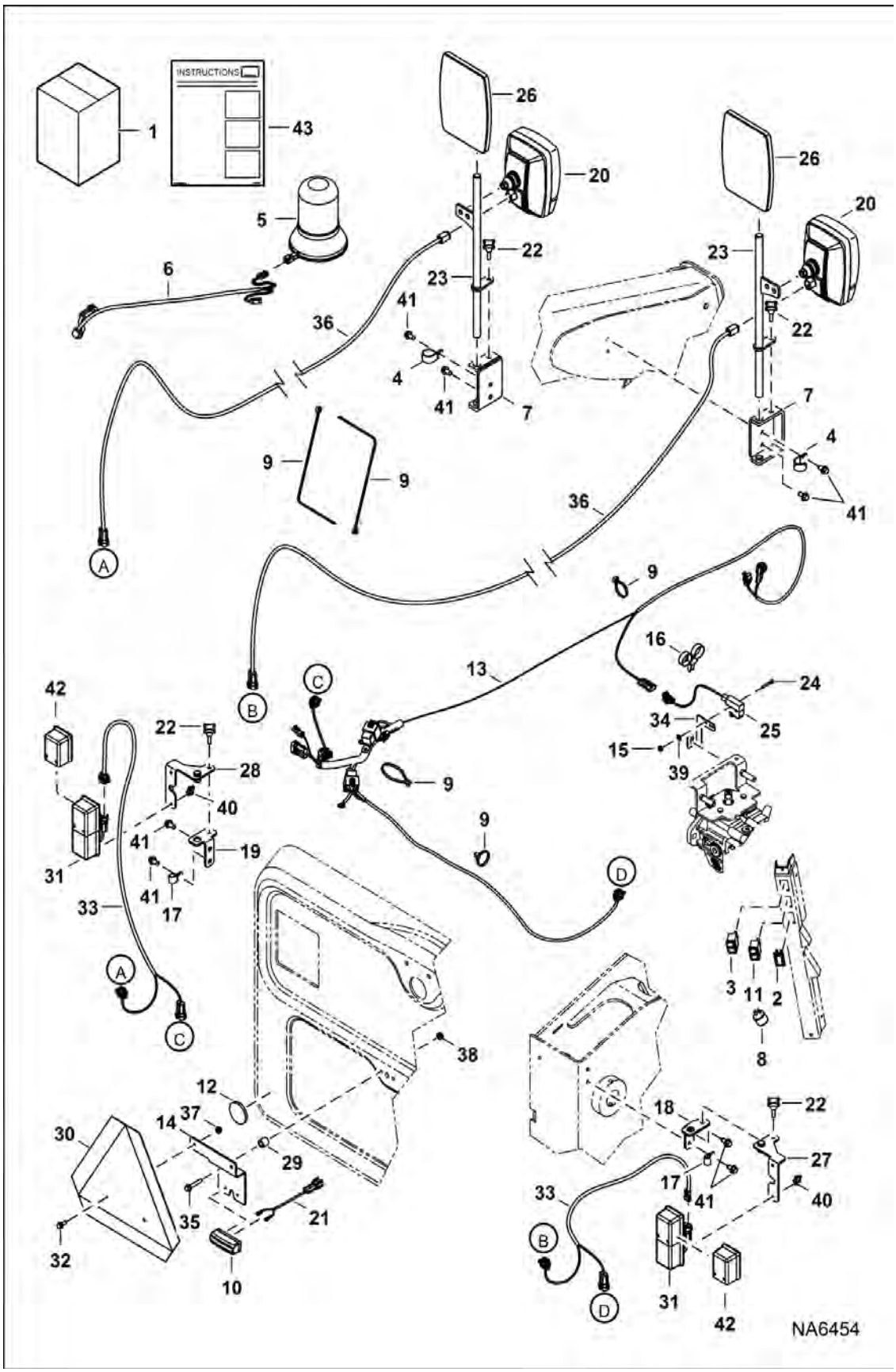

Page 605 - OSS# 6300322913 - All rights reserved by Bobcat Company - 08/04/2017 - 06:30:16 - Produced by Ken Cook Co. with mediaioff

EUROPEAN ACCESSORIES (Cont'd)
(Road Kit)

Ref No	Part Number	Description	Remarks	Serial Number	Qty
1	7175606	KIT, ROAD	manual controls		1
2	6665314	PLUG			2
3	6668816	SWITCH			1
4	30H73	CLAMP			2
5	6675523	LIGHT EC BEACON			1
6	6718872	HARNESS			1
7	7194092	BRACKET, RH			1
7	7194093	BRACKET, LH			1
8	6557904	FLASHER			1
9	6624289	STRAP, TIE			18
10	6665729	LIC LIGHT			1
11	6668815	SWITCH			1
12	7191035	LENS, REFLECTIVE			2
13	7175670	HARNESS ROAD KIT			1
14	7174476	BRACKET	fuse		1
15	12D6	NUT 10			2
16	6678668	STRAP			4
17	30H31	CLAMP 10			2
18	7194097	HOLDER, BASE RH			1
19	7194096	HOLDER, BASE LH			1
20	7153089	LIGHT, FRONT ASSY			2
21	7153090	HARNESS, LIGHT LICENSE			1
22	7191193	KNOB	RH		4
23	7153519	SHAFT, SPINDLE	RH		1
23	7153521	SHAFT, SPINDLE	LH		1
24	85G616	SCREW 10			2
25	6661150	SWITCH, ROLLER MICRO	manual controls		1
26	7153522	MIRROR, SIDE HEAD			2
27	7180993	HOLDER, RH			1
28	7180992	HOLDER, LH			1
29	7157740	SPACER			2
30	7157745	SLOW MOVING PLATE - 12			1
31		LIGHT, ASSY REAR	NLA - whole red/amber light assembly - Order RH or LH light assembly PN 7104670 or 7104671 - Was 7101384 [A]		2
32	29CM616	BOLT			2
33		HARNESS, DOOR REAR	NLA - Was 7152344 [A]		2
34	7155044	BRACKET	manual controls		1
34	7175580	BRACKET, SWITCH	SJC		1
35	29CM845	BOLT			2

Page Built: OSS# 6300322913 - All rights reserved by Bobcat Company - 08/04/2017 - 06:30:16 - Produced by Ken Cook Co. with mediaioff

EUROPEAN ACCESSORIES (Cont'd)
(Road Kit)

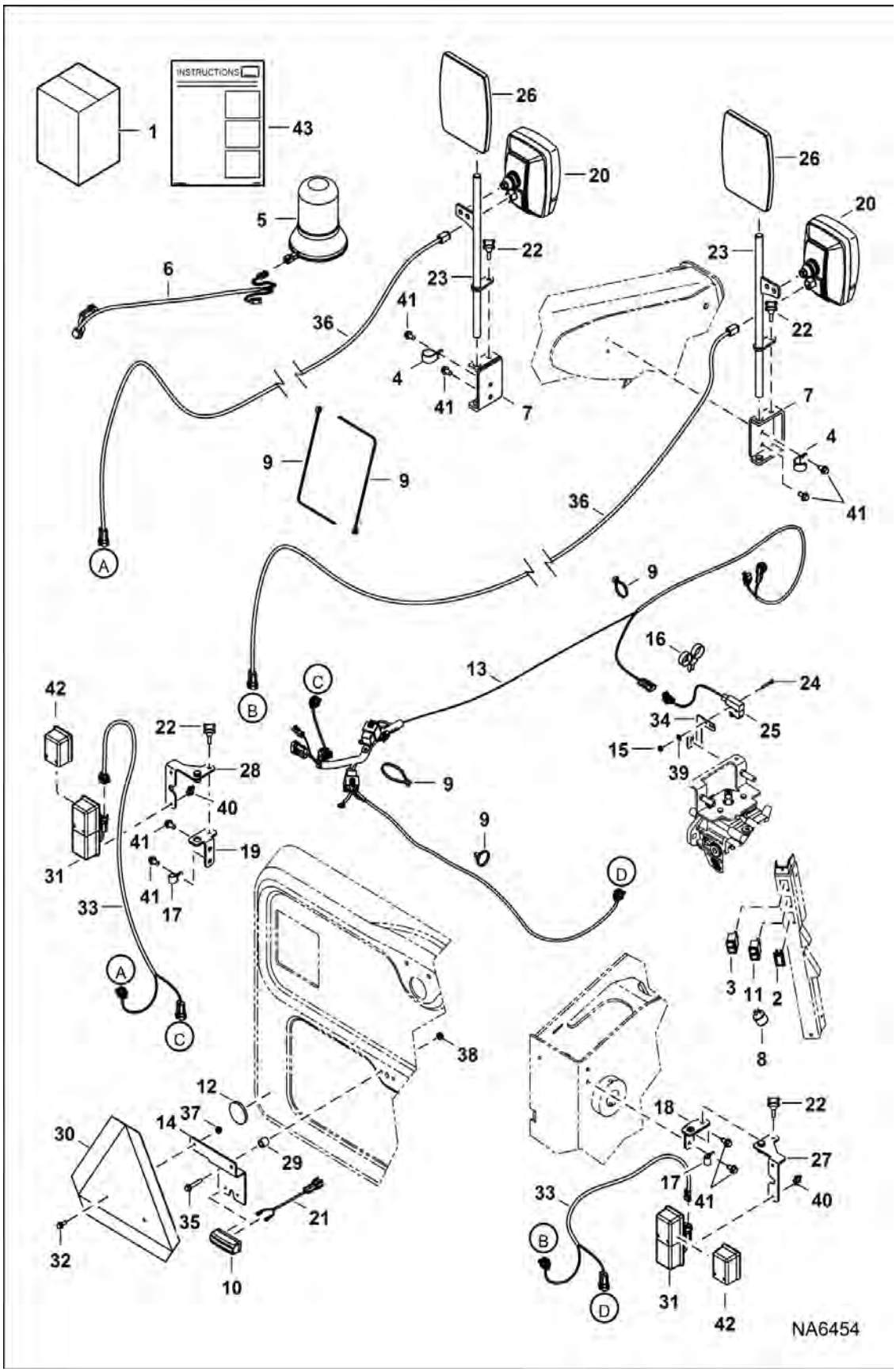

Page 607 - OSS# 6300322913 - All rights reserved by Bobcat Company - 08/04/2017 - 06:30:16 - Produced by Ken Cook Co. with mediaioff

EUROPEAN ACCESSORIES (Cont'd)
(Road Kit)

Ref No	Part Number	Description	Remarks	Serial Number	Qty
36	7241542	HARNESS, BOOM	Was 7152108 [A]		2
37	43DM6	NUT			2
38	43DM8	NUT			2
39	12E6	WASHER			2
40	6688637	MOUNT			2
41	26GM10020	BOLT			8
42	7266394	LENS, RED STOP			2
43		INSTRUCTIONS	NLA		1

Page 1 of 1 OSS# 6300322913 - All rights reserved by Bobcat Company - 08/04/2017 - 06:30:16 - Produced by Ken Cook Co. with mediaioff

EUROPEAN ACCESSORIES
(Road Kit)

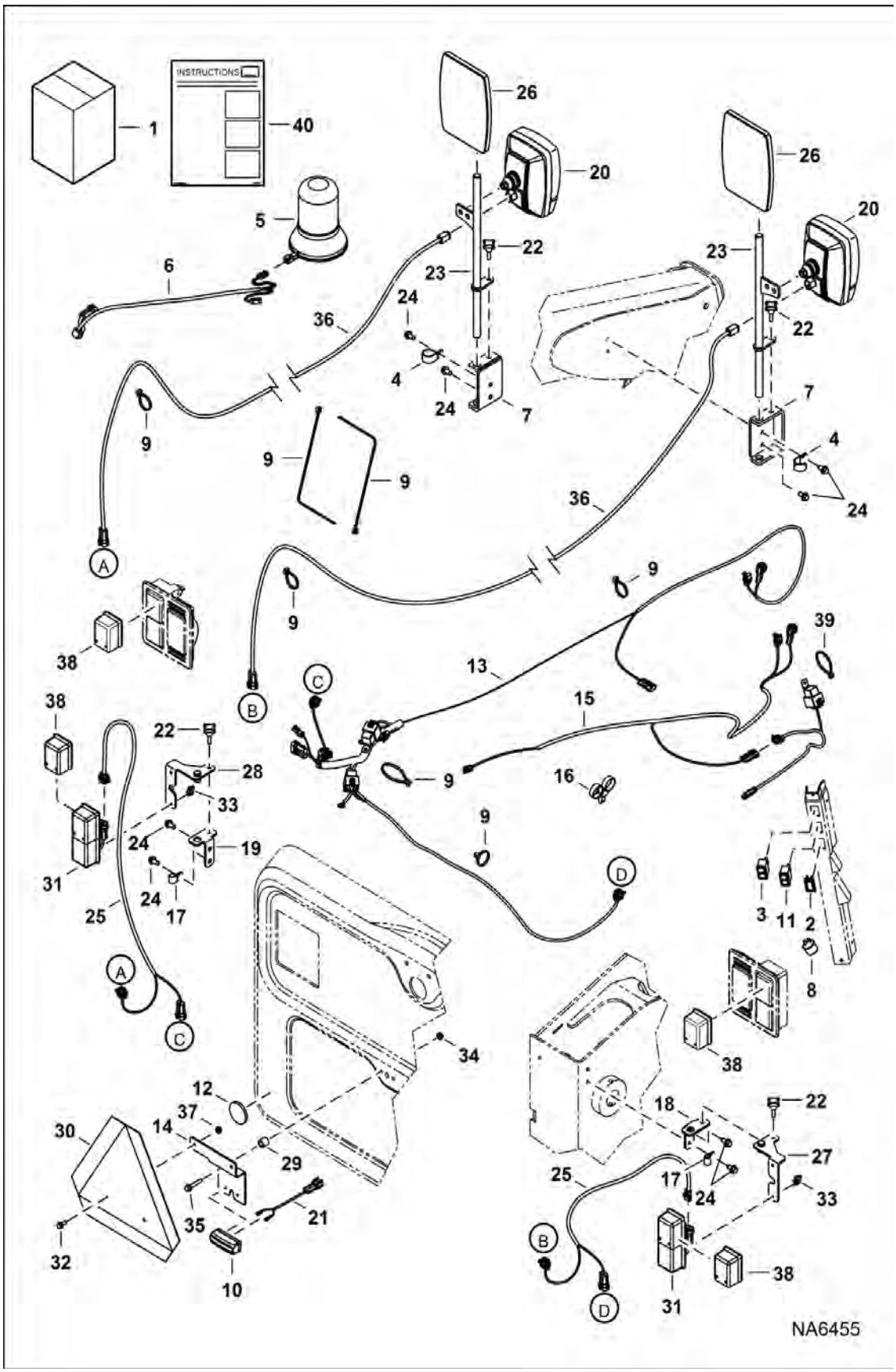

Page 609 - OSS# 6300322913 - All rights reserved by Bobcat Company - 08/04/2017 - 06:30:16 - Produced by Ken Cook Co. with mediaioff

EUROPEAN ACCESSORIES (Cont'd)
(Road Kit)

Ref No	Part Number	Description	Remarks	Serial Number	Qty
1		KIT, ROAD	SALES #7175669 - SJC		1
2	6665314	PLUG			2
3	6668816	SWITCH			1
4	30H73	CLAMP			2
5	6675523	LIGHT EC BEACON			1
6	6718872	HARNESS			1
7	7194092	BRACKET, RH			1
7	7194093	BRACKET, LH			1
8	6557904	FLASHER			1
9	6624289	STRAP, TIE			20
10	6665729	LIC LIGHT			1
11	6668815	SWITCH			1
12	7191035	LENS, REFLECTIVE			2
13	7175670	HARNESS ROAD KIT			1
14	7174476	BRACKET	fuse		1
15	7175581	HARNESS BRAKE SJC			1
16	6678668	STRAP			3
17	30H31	CLAMP 10			2
18	7194097	HOLDER, BASE RH			1
19	7194096	HOLDER, BASE LH			1
20	7153089	LIGHT, FRONT ASSY			2
21	7153090	HARNESS, LIGHT LICENSE			1
22	7191193	KNOB	RH		4
23	7153519	SHAFT, SPINDLE	RH		1
23	7153521	SHAFT, SPINDLE	LH		1
24	26GM10020	BOLT			8
25		HARNESS, DOOR REAR	NLA - Was 7152344 [A]		2
26	7153522	MIRROR, SIDE HEAD			2
27	7180993	HOLDER, RH			1
28	7180992	HOLDER, LH			1
29	7157740	SPACER			2
30	7157745	SLOW MOVING PLATE - 12			1
31		LIGHT, ASSY REAR	NLA - whole red/amber light assembly - Order RH or LH light assembly PN 7104670 or 7104671 - Was 7101384 [A]		2
32	29CM616	BOLT			2
33	6688637	MOUNT			2
34	43DM8	NUT			2
35	29CM845	BOLT			2
36	7241542	HARNESS, BOOM	Was 7152108 [A]		2
37	43DM6	NUT			2

Page Built: OSS# 6390322913 - All rights reserved by Bobcat Company - 08/04/2017 - 06:30:16 - Produced by Ken Cook Co. with mediaioff

EUROPEAN ACCESSORIES (Cont'd)
(Road Kit)

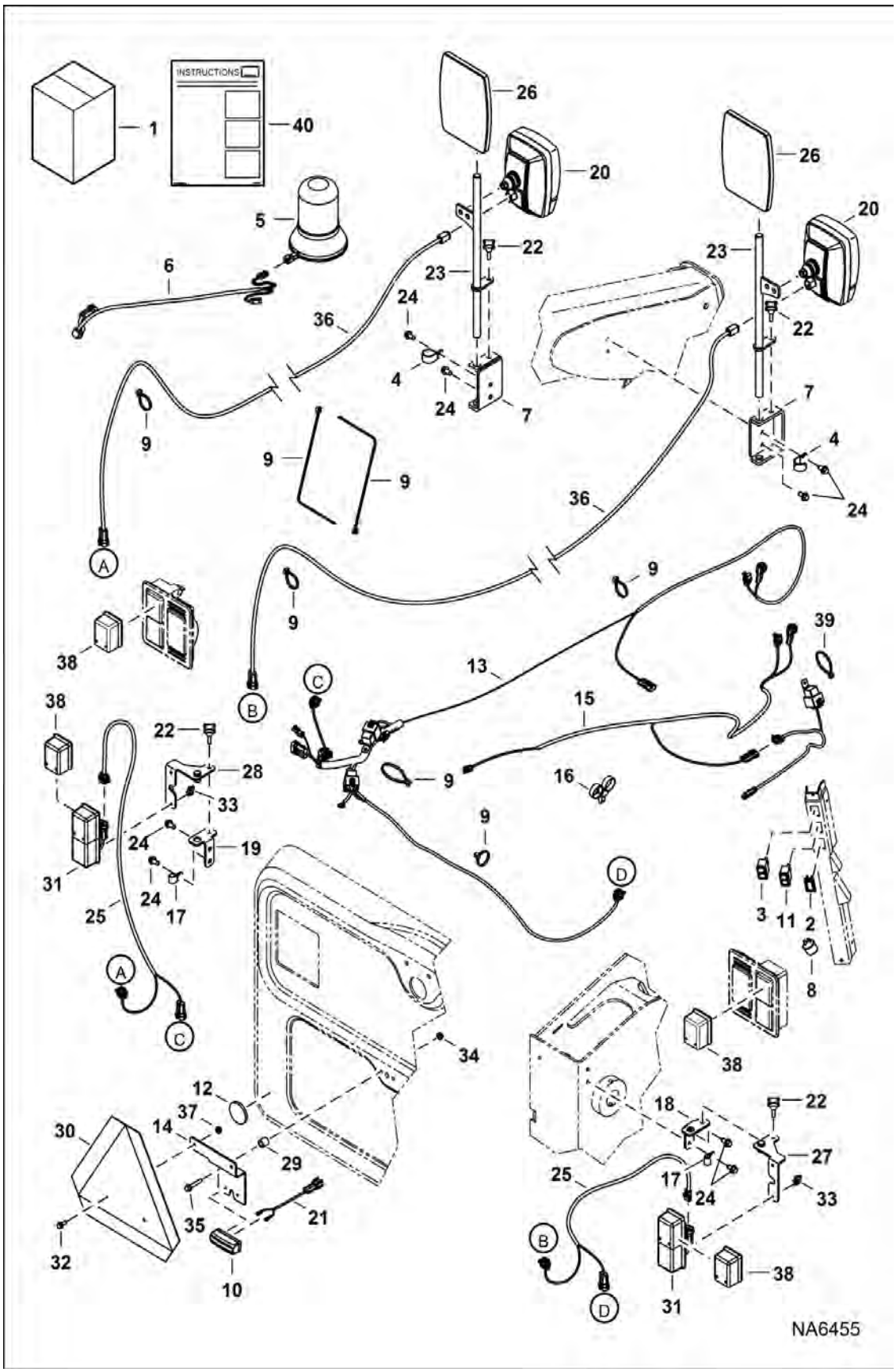

Page 611 - OSS# 6300322913 - All rights reserved by Bobcat Company - 08/04/2017 - 06:30:16 - Produced by Ken Cook Co. with mediaioff

EUROPEAN ACCESSORIES (Cont'd)
(Road Kit)

Ref No	Part Number	Description	Remarks	Serial Number	Qty
38	7266394	LENS, RED STOP			4
39	6690690	STRAP, TIE			1
40	6989727ENUS	INSTRUCTIONS	Was 6989727 [A]		1

Page 1.2 OSS# 6300322913 - All rights reserved by Bobcat Company - 08/04/2017 - 06:30:16 - Produced by Ken Cook Co. with mediaioff

EUROPEAN ACCESSORIES
(Exhaust Pipe Shield)

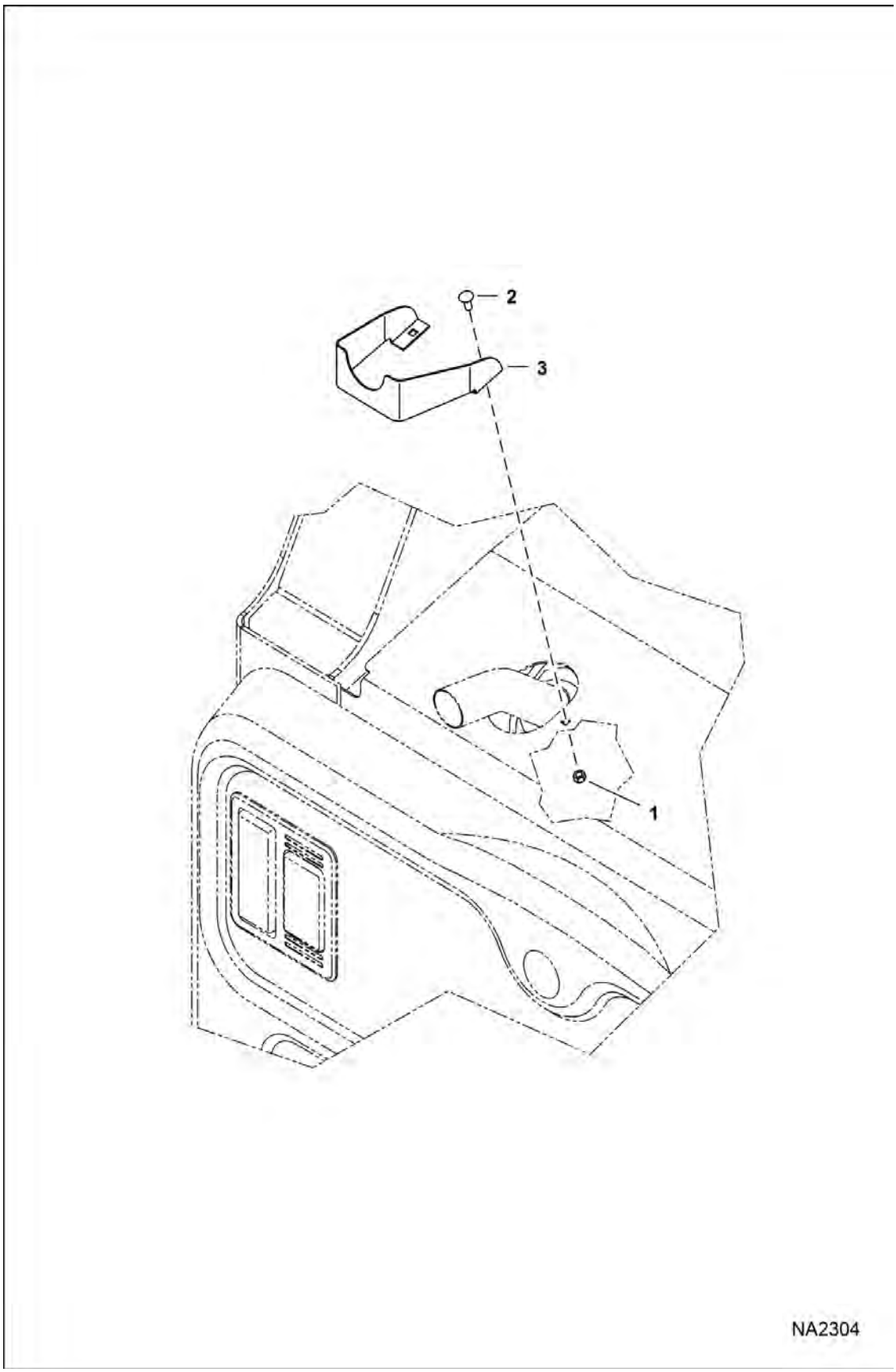

Page 613 - OSS# 6300322913 - All rights reserved by Bobcat Company - 08/04/2017 - 06:30:16 - Produced by Ken Cook Co. with mediaioff

EUROPEAN ACCESSORIES (Cont'd)

(Exhaust Pipe Shield)

Ref No	Part Number	Description	Remarks	Serial Number	Qty
1	61D5	NUT 10			2
2	10C512	BOLT	Was 37C512 [B]		2
3	7174811	SHIELD, ISOLATOR			1

Page 1 of 1 OSS# 6300322913 - All rights reserved by Bobcat Company - 08/04/2017 - 06:30:16 - Produced by Ken Cook Co. with mediaioff

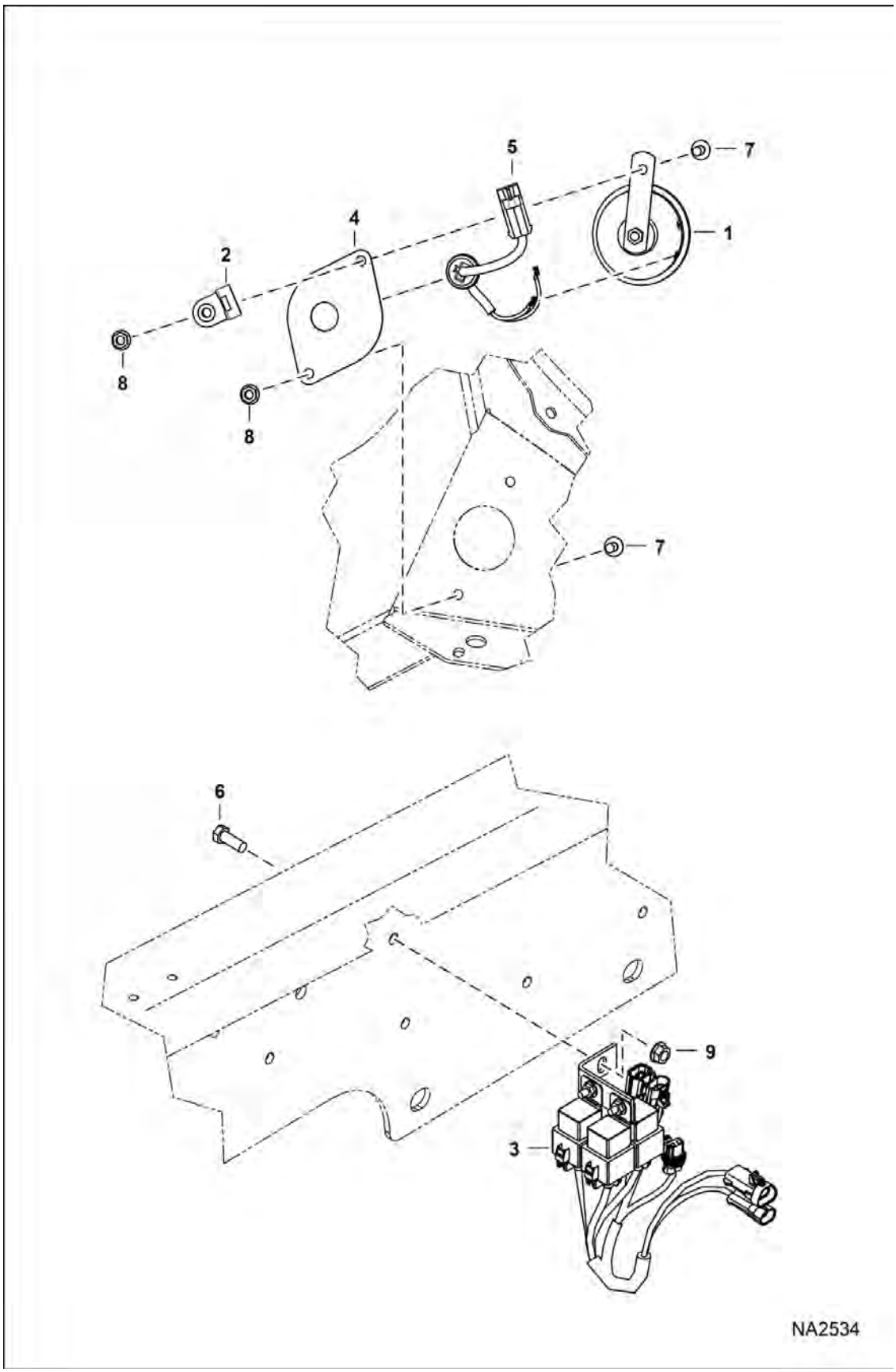

Page 615 - OSS# 6300322913 - All rights reserved by Bobcat Company - 08/04/2017 - 06:30:16 - Produced by Ken Cook Co. with mediaioff

EUROPEAN ACCESSORIES (Cont'd)

(Horn)

Ref No	Part Number	Description	Remarks	Serial Number	Qty
1	6671106	ALARM			1
2	6684641	MOUNT			1
3	7151940	HARNESS, HORN	SJC		1
4	7177690	MOUNT			1
5	7183295	HARNESS, HORN			1
6	17C616	BOLT 5			1
7	35C516	BOLT 10			2
8	55D5	NUT			2
9	97D6	NUT 10			1

Page Built: OSS# 6300322913 - All rights reserved by Bobcat Company - 08/04/2017 - 06:30:16 - Produced by Ken Cook Co. with mediaioff

EUROPEAN ACCESSORIES
(Light Extenders) (Wide Attachment)

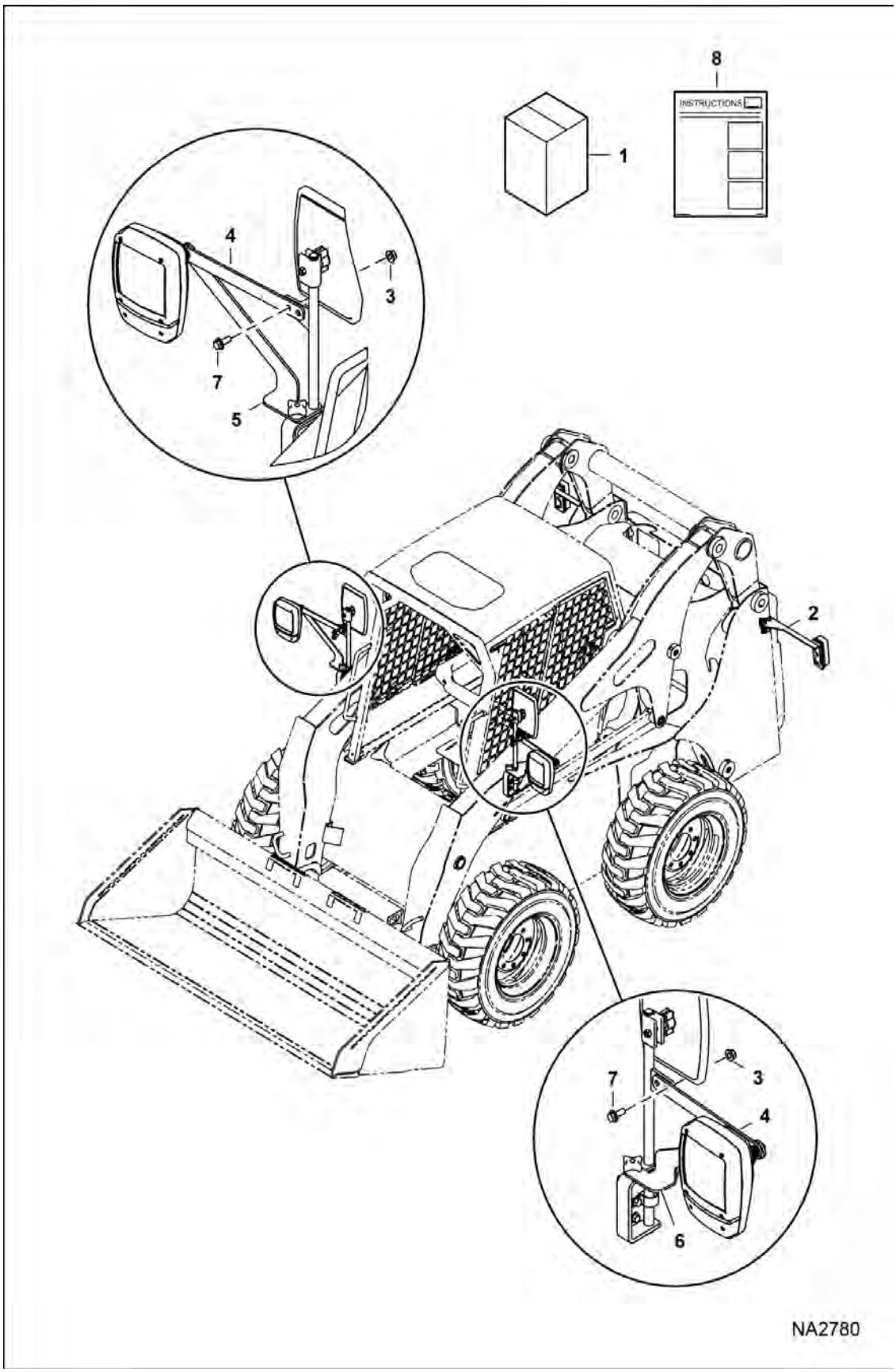

Page 617 - OSS# 6300322913 - All rights reserved by Bobcat Company - 08/04/2017 - 06:30:16 - Produced by Ken Cook Co. with mediaioff

EUROPEAN ACCESSORIES (Cont'd)

(Light Extenders) (Wide Attachment)

Ref No	Part Number	Description	Remarks	Serial Number	Qty
1	7188129	KIT, EXTENTION LIGHT	Ref. 2-8		1
2	7180997	HOLDER	LH		1
2	7180998	HOLDER	RH		1
3	43DM10	NUT			4
4	7188130	HOLDER			2
5	7188131	HOLDER	RH		1
6	7188132	HOLDER	LH		1
7	29CM1025	BOLT			4
8	6987366	INSTRUCTIONS			1

Page Built: OSS# 6300322913 - All rights reserved by Bobcat Company - 08/04/2017 - 06:30:16 - Produced by Ken Cook Co. with mediaioff

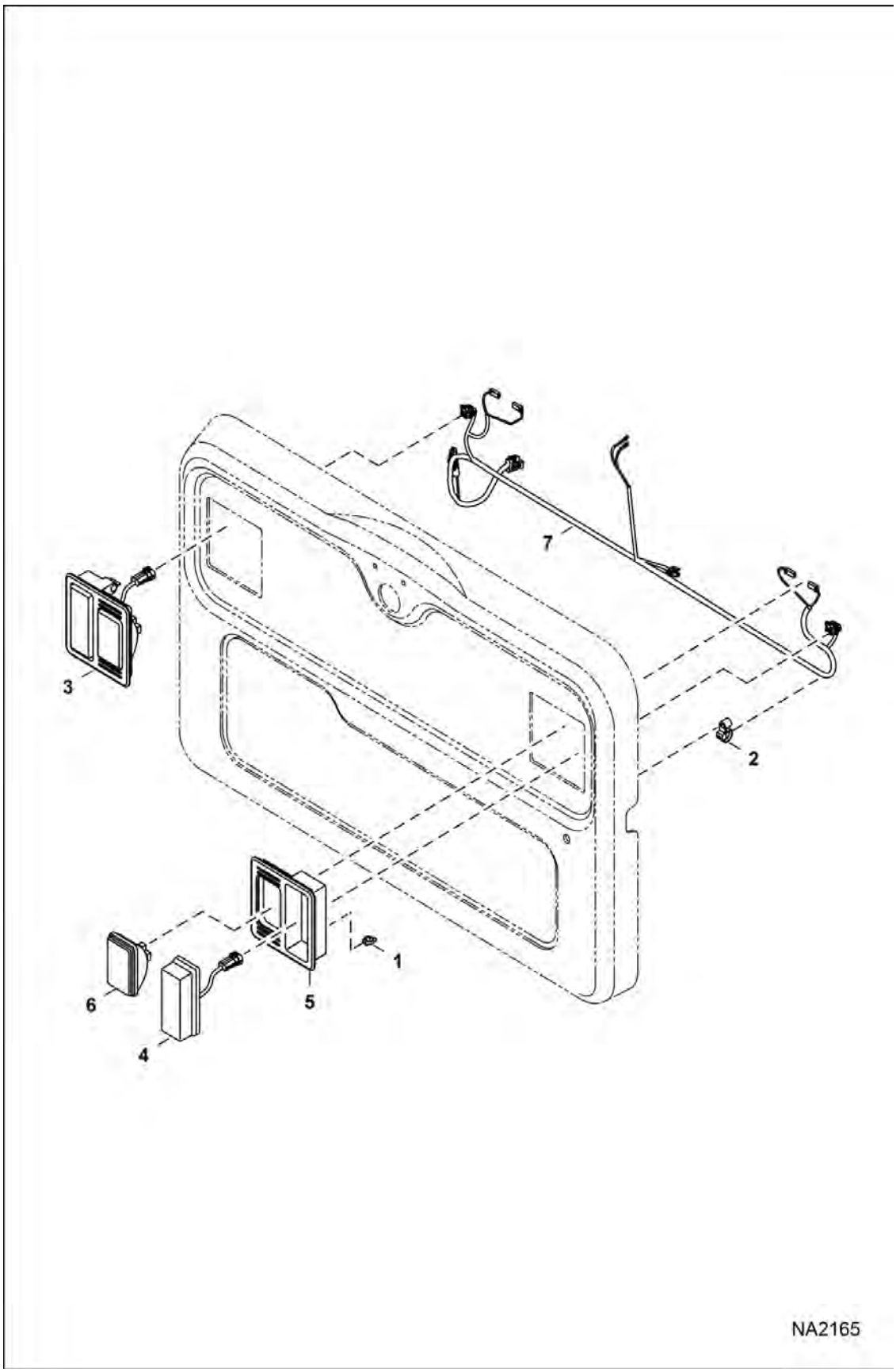

Page 619 - OSS# 6300322913 - All rights reserved by Bobcat Company - 08/04/2017 - 06:30:16 - Produced by Ken Cook Co. with mediaioff

EUROPEAN ACCESSORIES (Cont'd)

(Rear Door Lights)

Ref No	Part Number	Description	Remarks	Serial Number	Qty
1	6688637	MOUNT			2
2	7002988	TIE, STUD MOUNT			5
3	7308794	LIGHT ASSEMBLY EURO RH	assy RH - Ref. 4-6 - Was 7104670		1
3	7308795	LIGHT ASSEMBLY EURO LH	assy LH - Ref. 4-6 - Was 7104671 [A]		1
4		LIGHT, ASSY REAR	NLA - whole red/amber light assembly - Order RH or LH light assembly PN 7104670 or 7104671 - Was 7101384 [A]		2
4	6686096	LENS REAR TURN	turn - amber		1
4	6686097	LIGHT BULB TURN	turn - 21W		1
4	6686099	LENS REAR STOP	stop - red		1
4	6686098	LIGHT BULB STOP	stop - 21/5W		1
4	6686100	SCREW			2
5	6672279	MOUNT, LIGHT RUBBER			1
6	7308797	LIGHT WORK	- Was 6671027 [A]		2
7	7217483	HARNESS, REAR DOOR	Was 7175287		1

Page Built: OSS# 6300322913 - All rights reserved by Bobcat Company - 08/04/2017 - 06:30:16 - Produced by Ken Cook Co. with mediaoff

F.O.P.S KIT

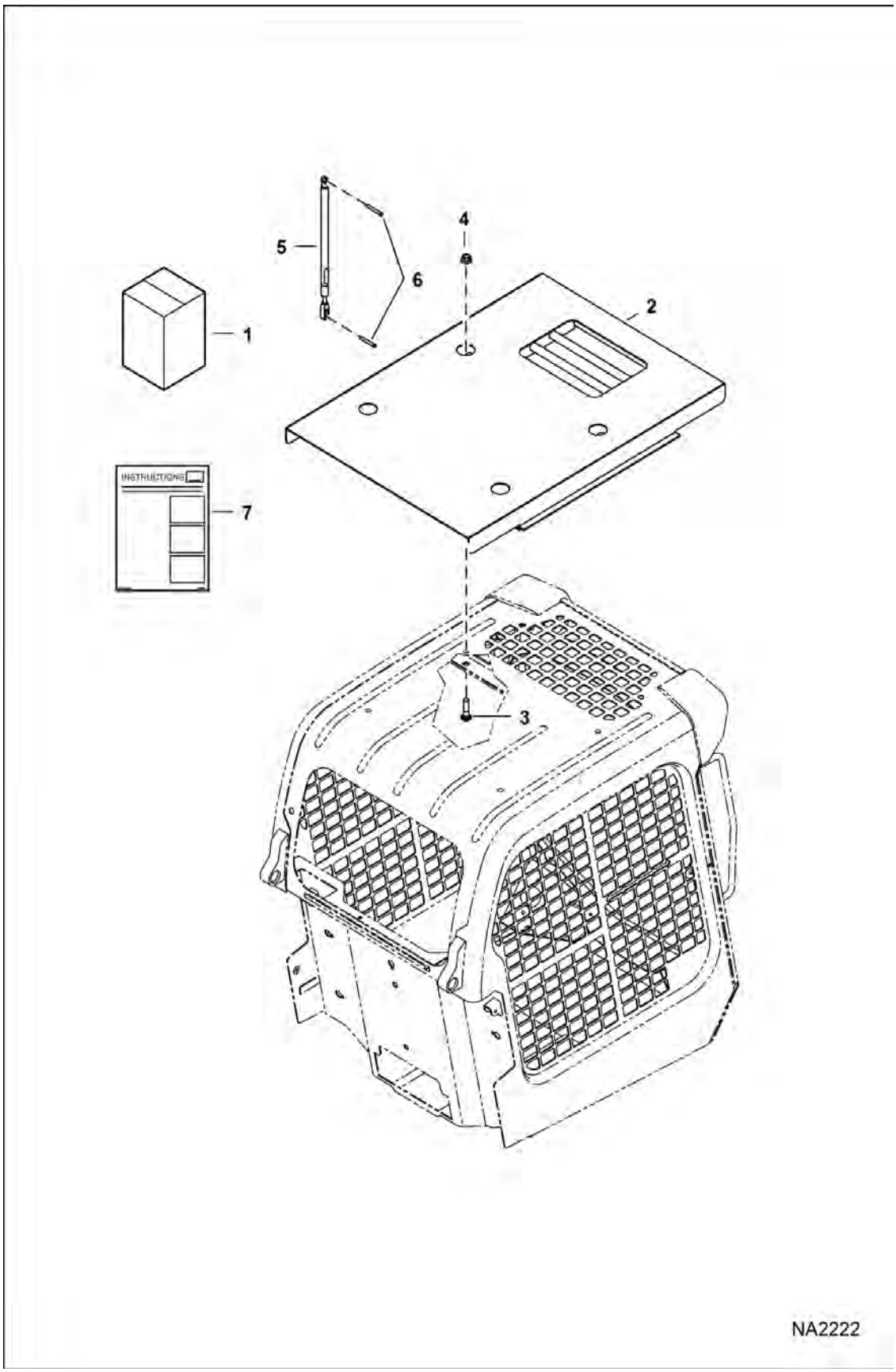

Page 621 - OSS# 6300322913 - All rights reserved by Bobcat Company - 08/04/2017 - 06:30:16 - Produced by Ken Cook Co. with mediaioff

F.O.P.S KIT (Cont'd)

Ref No	Part Number	Description	Remarks	Serial Number	Qty
1	7129293	KIT, FOPS TOP	Ref. 2-7		1
1		RESEALING PLUG KIT	See Illustration RESEALING KIT / NA2775		1
2	7167506	SHIELD, ASSY			1
3	7164686	BOLT, CARRIAGE			4
4	53D10	NUT			4
5	7167437	SPRING, GAS STD			1
6	7194471	PIN, CLEVIS			2
7	6987216ENUS	INSTRUCTIONS	Was 6987216 [A]		1

Page 224 OSS# 6300322913 - All rights reserved by Bobcat Company - 08/04/2017 - 06:30:16 - Produced by Ken Cook Co. with mediaioff

F.O.P.S WINDOW KIT

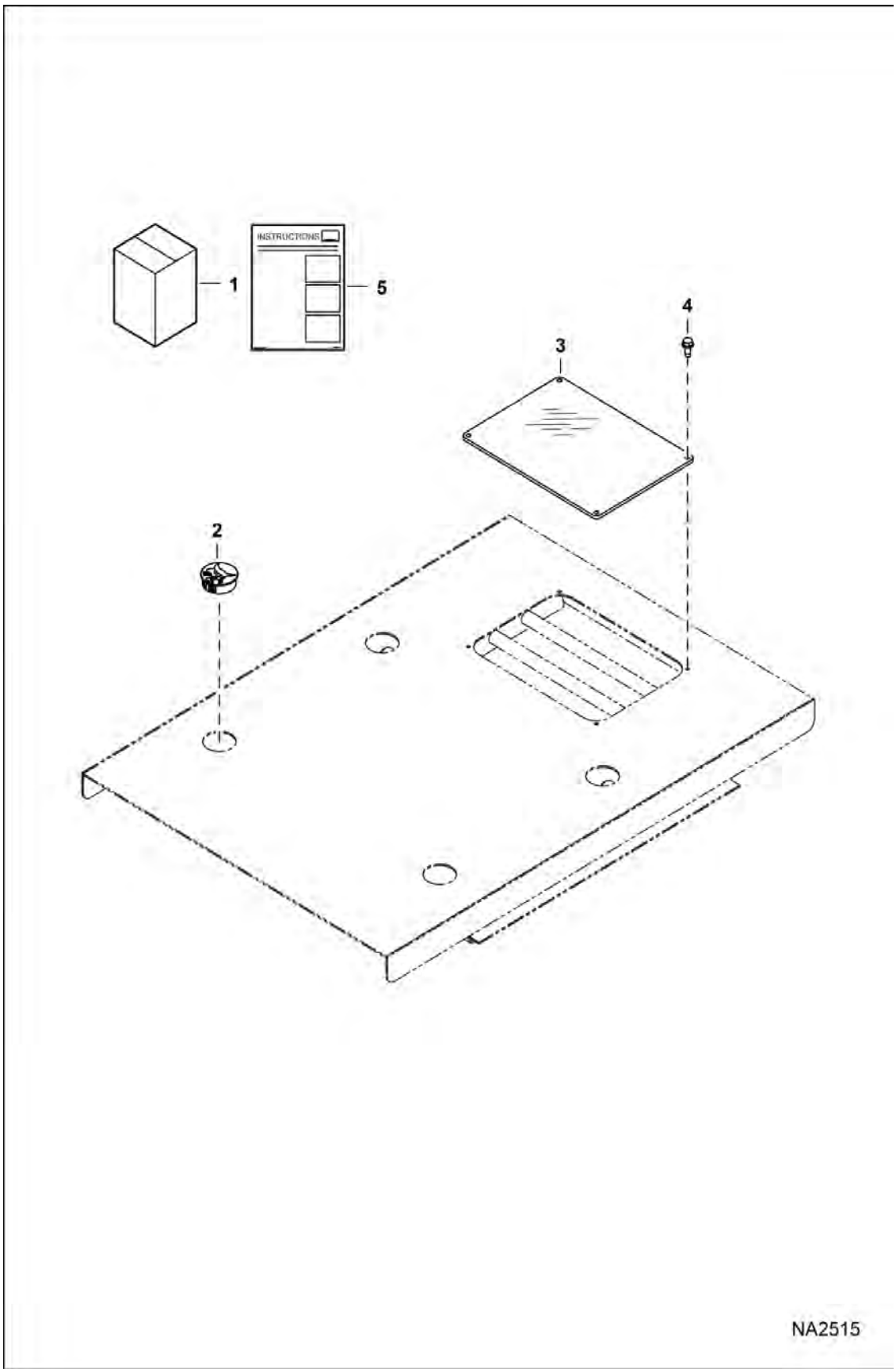

Page 623 - OSS# 6300322913 - All rights reserved by Bobcat Company - 08/04/2017 - 06:30:16 - Produced by Ken Cook Co. with mediaioff

F.O.P.S WINDOW KIT (Cont'd)

Ref No	Part Number	Description	Remarks	Serial Number	Qty
1	7186723	KIT, WINDOW FOPS	Ref. 2-5		1
2	6718796	PLUG			4
3	7186644	WINDOW, FOPS			1
4	84G3112	BOLT 5			4
5	6989520ENUS	INSTRUCTIONS	Was 6989520 [C]		1

Page 224 OSS# 6300322913 - All rights reserved by Bobcat Company - 08/04/2017 - 06:30:16 - Produced by Ken Cook Co. with mediaioff

FIRE EXTINGUISHER

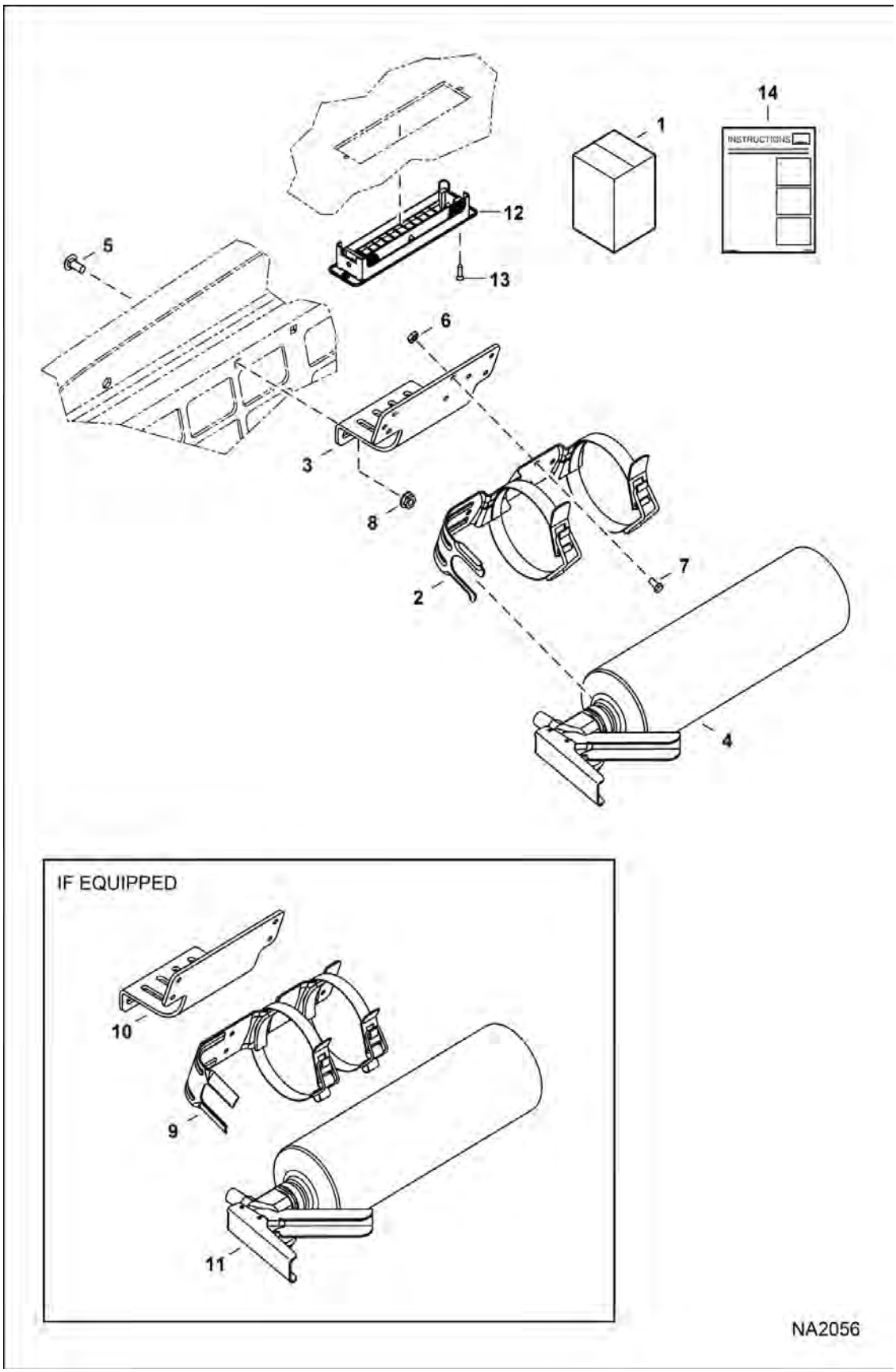

Page 625 - OSS# 6300322913 - All rights reserved by Bobcat Company - 08/04/2017 - 06:30:16 - Produced by Ken Cook Co. with mediaioff

FIRE EXTINGUISHER (Cont'd)

Ref No	Part Number	Description	Remarks	Serial Number	Qty
1		KIT, EXTINGUISHER FIRE	NLA - Ref. 5-11 & 14 - Was 7129307 [A]		1
1	7129307	KIT, EXTINGUISHER FIRE	Ref. 2-8 & 12-14		1
2	7224665	BRACKET, EXTINGUISHER FIRE	red - diamond hole pattern - Use W/Ref. 3		1
3	7223715	BRACKET, MOUNTING	Use W/Ref. 2 or 9		1
4	7224664	EXTINGUISHER, FIRE	W/Ref. 2 - Also see Ref. 11		1
5	10C410	BOLT			2
6	12D10	NUT			4
7	45G1006	BOLT			4
8	55D4	NUT			2
9		BRACKET	NLA - black - rectangle hole pattern - Order Ref. 2 & 3 - Was 6691173 [A]		1
10		BRACKET	NLA - rectangle hole pattern - Order Ref. 3 - Was 7166482 [C]		1
11		EXTINGUISHER,FIRE	NLA - Order Ref. 4 & reuse Ref. 9 or Also Order Ref. 3 - Was 7168164 [A]		1
12	7155796	LOUVER, RECTANGLE			1
13	7155799	SCREW			2
14	6987223ENUS	INSTRUCTIONS	Was 6987223 [A]		1

Page Built: OSS# 6300322913 - All rights reserved by Bobcat Company - 08/04/2017 - 06:30:16 - Produced by Ken Cook Co. with mediaoff

FLASHER LIGHTS
(4-Way)

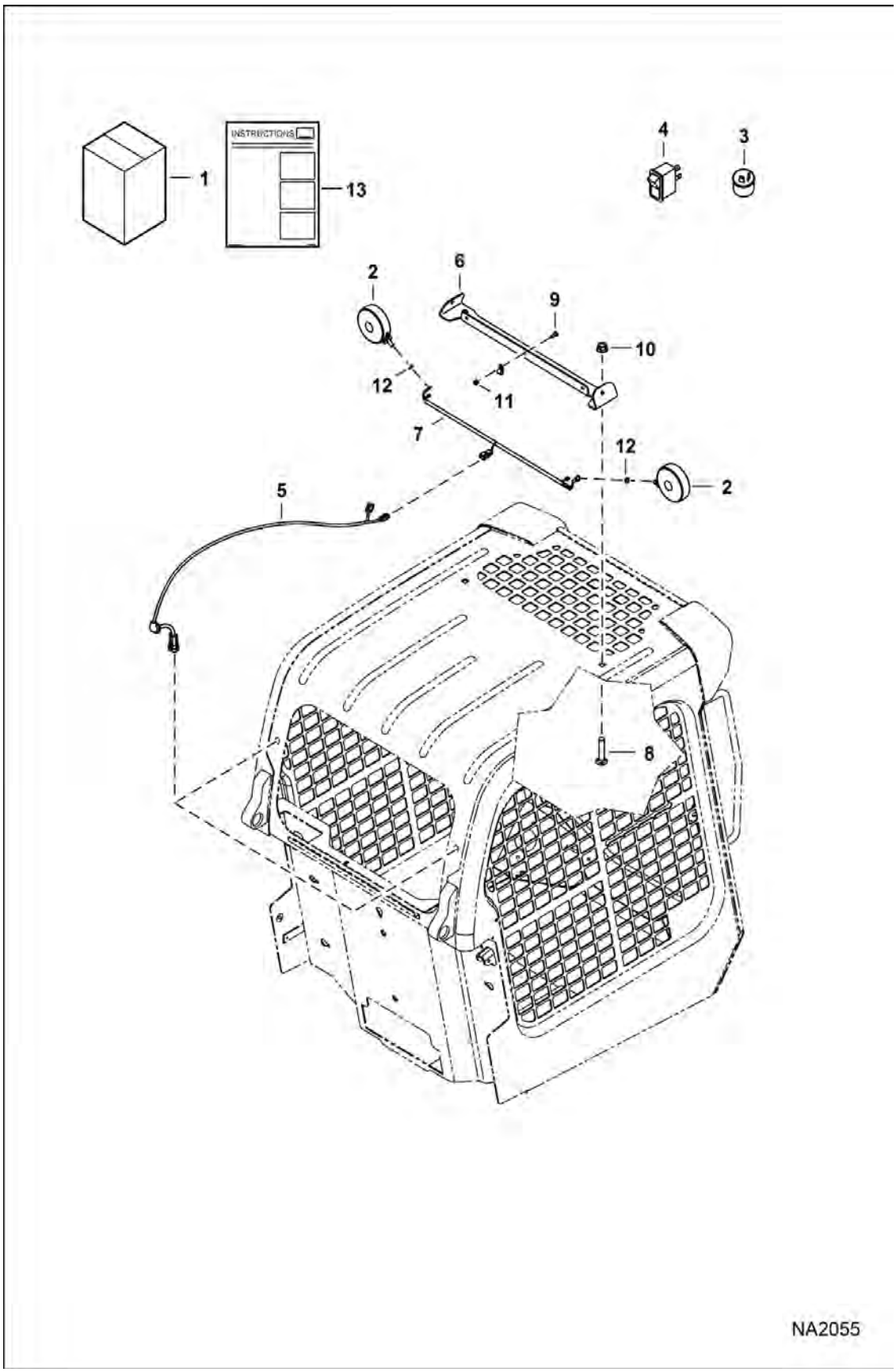

Page 627 - OSS# 6300322913 - All rights reserved by Bobcat Company - 08/04/2017 - 06:30:16 - Produced by Ken Cook Co. with mediaioff

FLASHER LIGHTS (Cont'd)
(4-Way)

Ref No	Part Number	Description	Remarks	Serial Number	Qty
1	7128338	KIT, FLASHER 4-WAY	Ref. 2-13		1
1		RESEALING PLUG KIT	See Illustration RESEALING KIT / NA2775		1
2	6517516	LGHT ASY			2
3	6557904	FLASHER			1
4	6668815	SWITCH	See Ref. 13 for proper placement		1
5	6718872	HARNESS			1
6	7166832	MOUNT			1
7	7169753	HARNESS, FLASHER 4-WAY			1
8	37C1032	BOLT			2
9	37C412	BOLT			3
10	55D10	NUT			2
11	59D4	NUT 5			3
12	6E5	WASHER			2
13	6987224ENUS	INSTRUCTIONS	Was 6987224 [A]		1

Page 1284 OSS# 6300322913 - All rights reserved by Bobcat Company - 08/04/2017 - 06:30:16 - Produced by Ken Cook Co. with mediaioff

FUEL SEDIMENT BOWL KIT

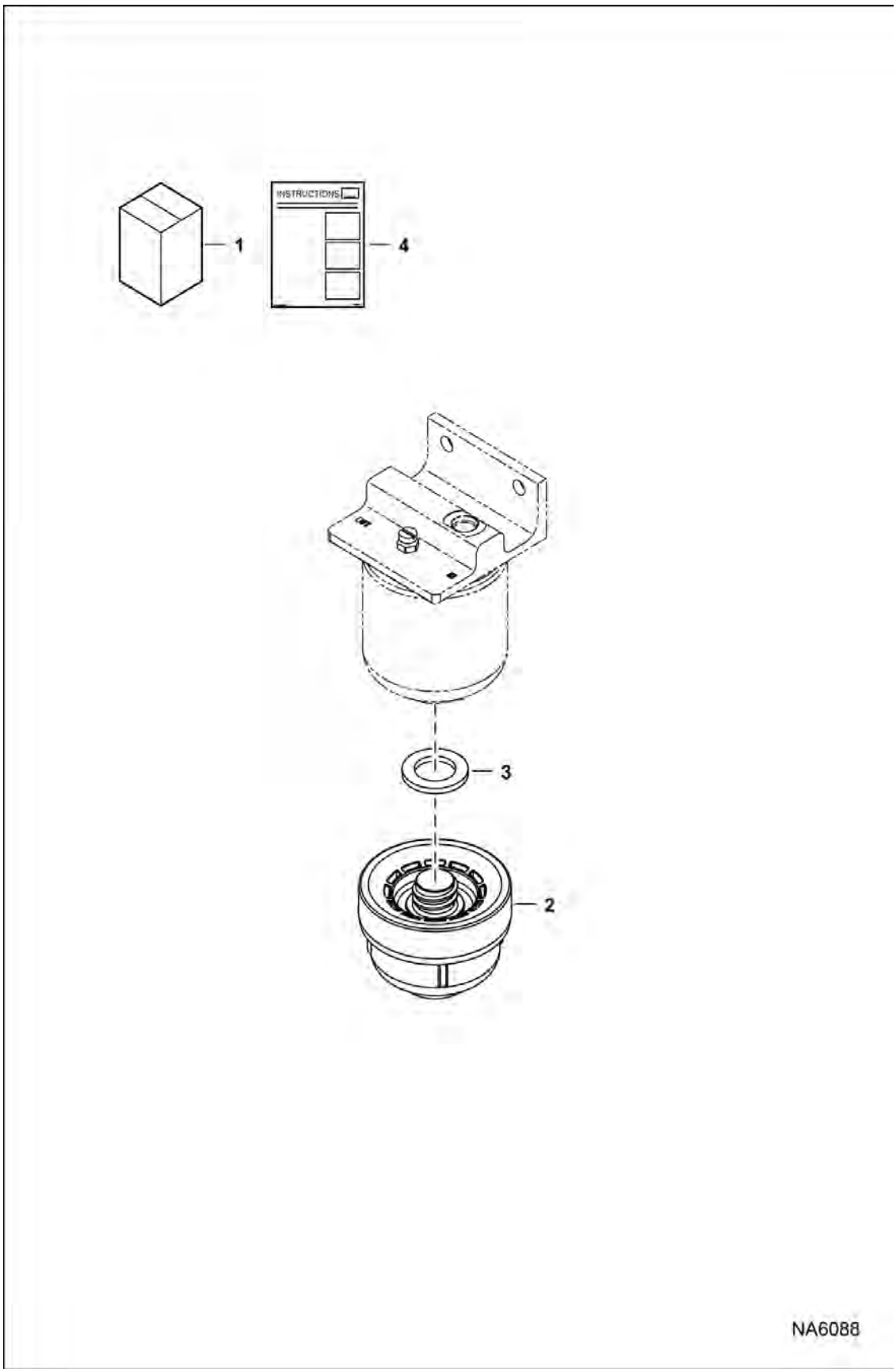

Page 629 - OSS# 6300322913 - All rights reserved by Bobcat Company - 08/04/2017 - 06:30:16 - Produced by Ken Cook Co. with mediaioff

FUEL SEDIMENT BOWL KIT (Cont'd)

Ref No	Part Number	Description	Remarks	Serial Number	Qty
1		KIT, BOWL FUEL	NLA - Order components - Was 7177215 [A]		1
2	7167163	BOWL, FUEL	W/Ref. 3		1
3	7177212	GASKET			1
4	6987336ENUS	INSTRUCTIONS	Was 6987336 [A]		1

Page 1804 OSS# 6300322913 - All rights reserved by Bobcat Company - 08/04/2017 - 06:30:16 - Produced by Ken Cook Co. with mediaioff

GAS SPRING KIT

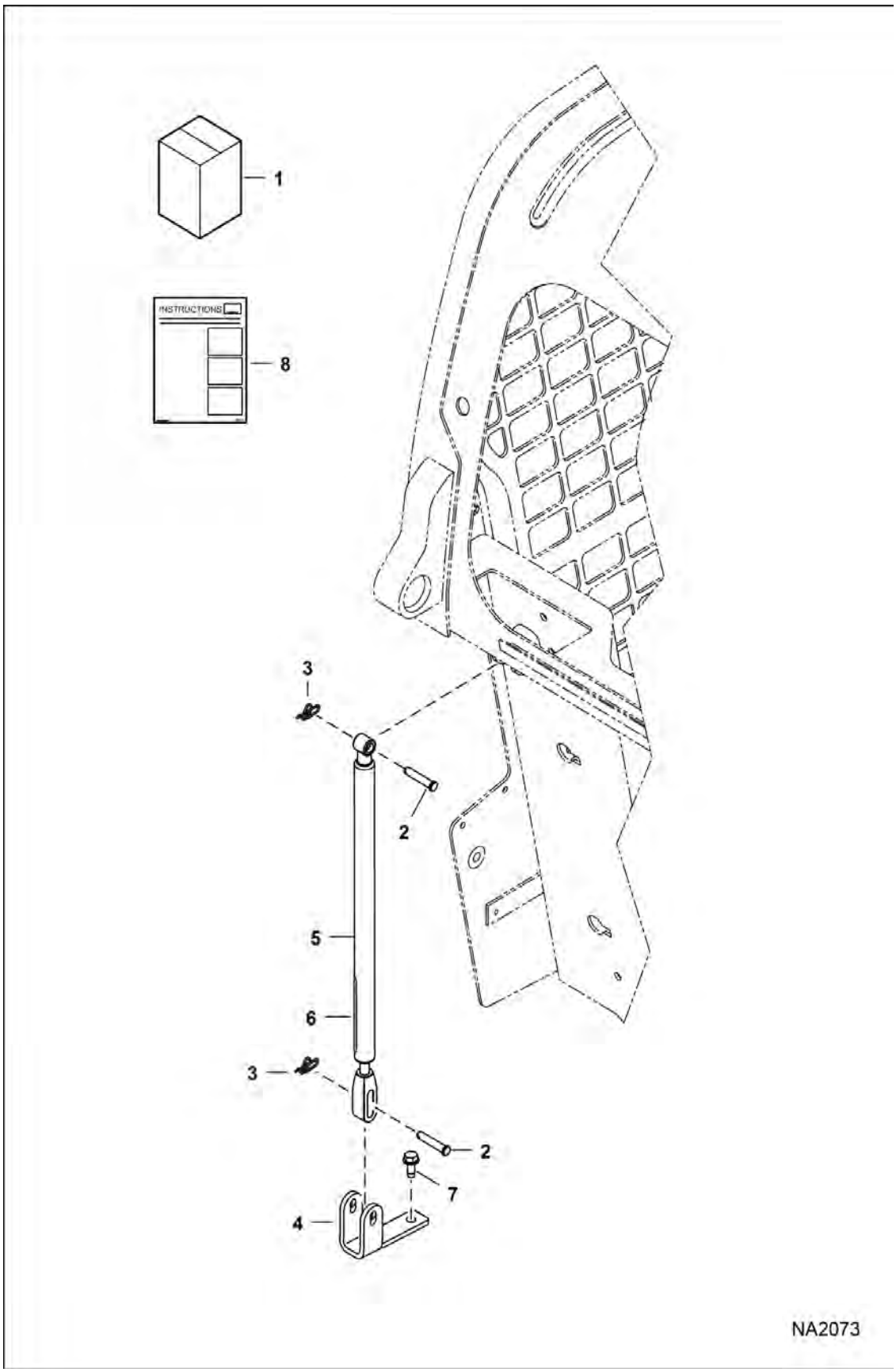

Page 631 - OSS# 6300322913 - All rights reserved by Bobcat Company - 08/04/2017 - 06:30:16 - Produced by Ken Cook Co. with mediaioff

GAS SPRING KIT (Cont'd)

Ref No	Part Number	Description	Remarks	Serial Number	Qty
1	7170782	KIT, GAS SPRING DLX	Ref. 2-8		1
2	6567743	PIN			2
3	6631418	RING, RETAINING			2
4	7144859	MOUNT, GAS SPRING			1
5	7167438	GAS SPRING	Deluxe Gas Spring - Also Order Ref. 6		1
6	7169291	DECAL			1
7	84G3712	BOLT 5			2
8	6987279ENUS	INSTRUCTIONS	Was 6987279 [A]		1

Page 624 OSS# 6300322913 - All rights reserved by Bobcat Company - 08/04/2017 - 06:30:16 - Produced by Ken Cook Co. with mediaioff

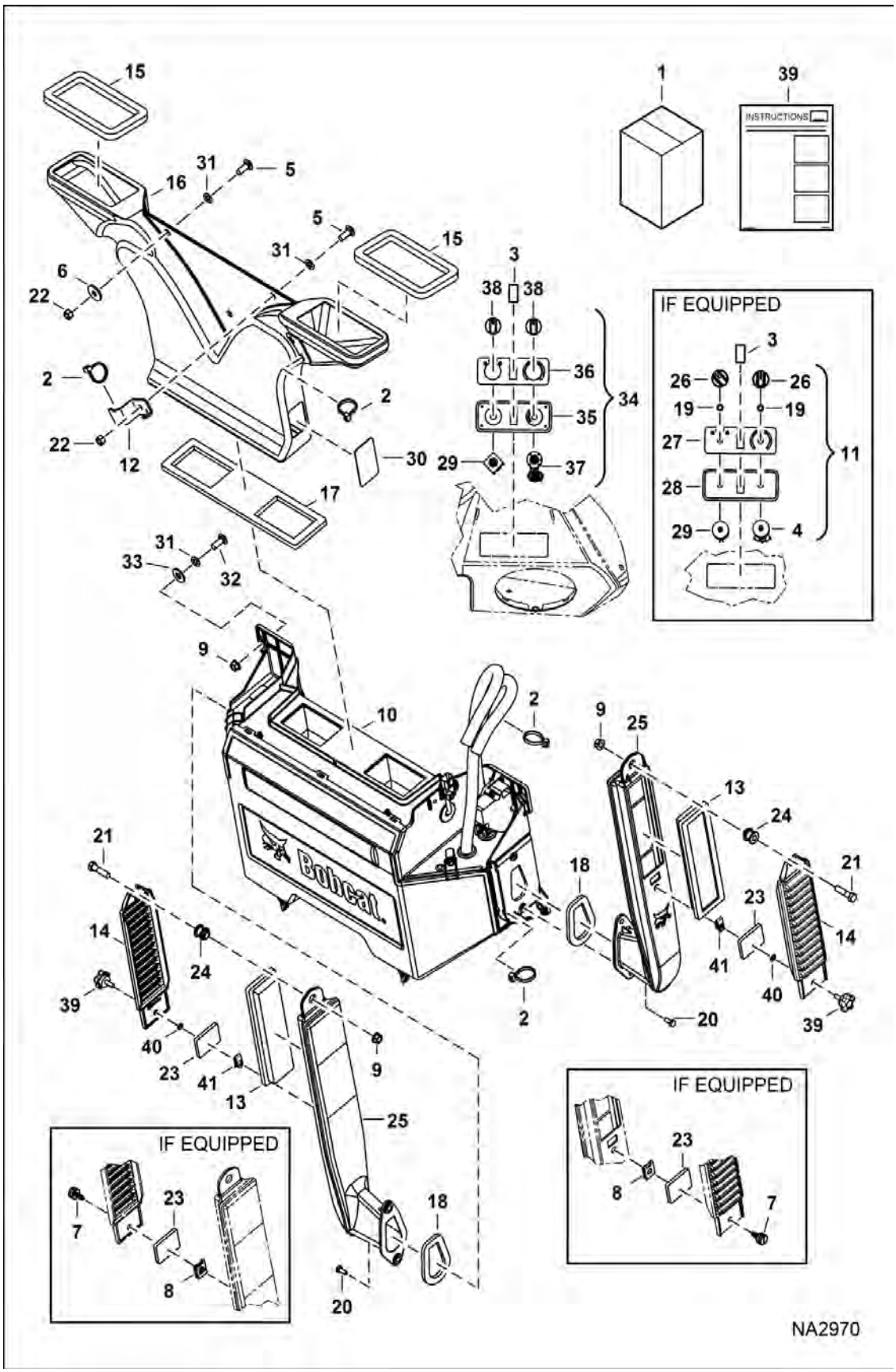

Page 633 - OSS# 6300322913 - All rights reserved by Bobcat Company - 08/04/2017 - 06:30:16 - Produced by Ken Cook Co. with mediaioff

HEATER & A/C (Cont'd)
(Heater Kit)

Ref No	Part Number	Description	Remarks	Serial Number	Qty
1	7128484	KIT, HEATER	Ref, 2, 5-10, 13-18, 21-25 & 29-39		1
2	6624289	STRAP, TIE			6
3	6675181	PLUG SWITCH HOLE	not in kit		1
4	7168604	RESISTOR	temp control - W/Ref. 19 - not in kit		1
5	10C616	BOLT 10			2
6	619021	WASHER, 5			2
7	7000983	SCREW	W/Ref. 8		2
8	7000984	CLIP			2
9	97D6	NUT 10			6
10		HEATER, CAB	See Illustration HEATER & A/C / NA2969		1
11	7240823	PANEL, CONTROL	W/Ref. 4 & 26-29 - Was 7176309 [A]		1
12	7192569	BRACKET	not in kit		1
13	7176099	FILTER, AIR FRESH 10			2
14	7176100	COVER			2
15	7165673	SEAL, CAB DUCT			2
16	7257309	DUCT	Was 7197262 [A]		1
17	7257310	SEAL, DUCT CENTER	Was 7167405 [A]		1
18	7176579	SEAL, FOAM			2
19		NUT	NSS - not in kit		2
20	6702642	BOLT 5	Was 7166190 [B]		4
21	17C624	BOLT 5			2
22	95D6	NUT			2
23	7176943	SEAL, COVER			2
24	7176942	SPACER			2
25	7176101	DUCT, AIR			2
26	6675177	KNOB	not in kit		2
27	7011061	DECAL	not in kit		1
28	7011062	PANEL, CONTROL	not in kit		1
29	6675176	SWITCH	blower motor		1
30	7197973	COVER			1
31	6674894	NUT, LOCK			6
32	10C620	BOLT			4
33	25E18	WASHER			4
34	7240823	PANEL, CONTROL	W/Ref. 35-38 & 29		1
35	7254992	PANEL, CONTROL			1
36	7254993	DECAL			1
37	7244206	POTENTIOMETER, HVAC			1
38	7244207	KNOB			2
39	7301022	SCREW KNOB	W/Ref. 40 & 41		2
40	6675212	RETAINER, BOLT			2
41	7160765	NUT			2
42	6990847ENUS	INSTRUCTIONS	Was 6990847 [A]		1

Page 84 OSS# 6300322913 - All rights reserved by Bobcat Company - 08/04/2017 - 06:30:16 - Produced by Ken Cook Co. with mediaioff

HEATER & A/C
(Heater Assembly)

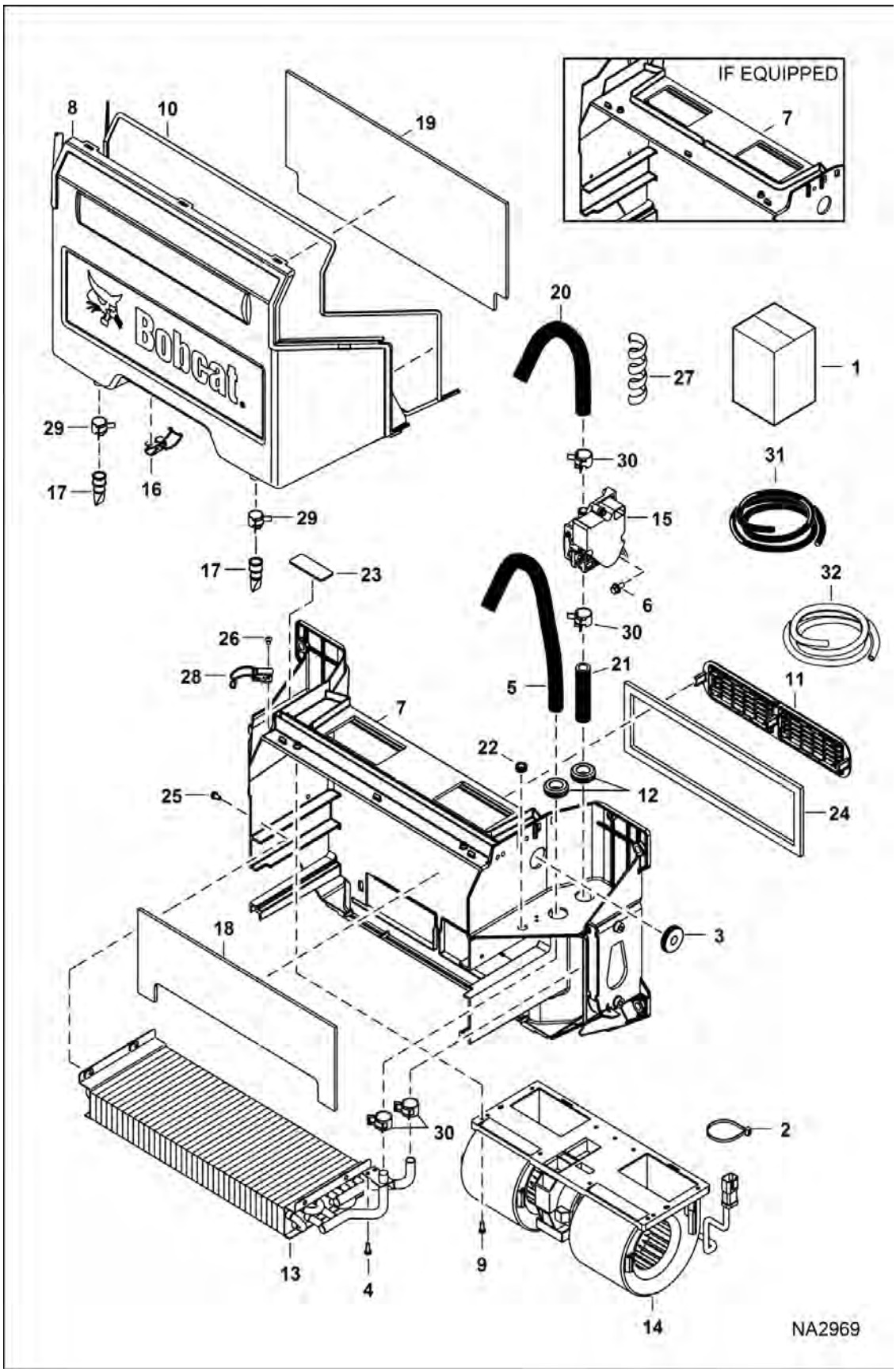

Page 635 - OSS# 6300322913 - All rights reserved by Bobcat Company - 08/04/2017 - 06:30:16 - Produced by Ken Cook Co. with mediaioff

HEATER & A/C (Cont'd)

(Heater Assembly)

Ref No	Part Number	Description	Remarks	Serial Number	Qty
1		ASSY, HEATER	Contact your Local Dealer for Bobcat Technical Information BTI437 - NLA - Ref. 2-32		1
2	6624289	STRAP, TIE			1
3	6682697	GROMMET			1
4	7162770	SCREW			2
5		HOSE, HEATER	NLA - 521 mm (20.5") long - Order Ref. 28		1
6	7166190	SCREW THREAD ROLLING			2
7		HOUSING	Contact your Local Dealer for Bobcat Technical Information BTI437 - NLA		1
8	7185848	COVER			1
9	7192287	BOLT			2
10	7192408	SEAL			1
11	7193354	FILTER, AIR RECIRCULATING			1
12	7193532	GROMMET			2
13	7193534	COIL, HEATER			1
14		BLOWER	NLA - W/O Drain Holes - Was 7193536 [A]		1
14	7282145	FAN, HVAC 3 SPD	W/ Drain Holes - Includes RESISTOR - Was 7249527 [A]		1
15	7003456	VALVE, MOTORIZED ASSY	Was 7193537 [B]		1
16	7193540	LATCH			2
17	7193541	DRAIN, WATER SEAT			2
18	7193542	SEAL			1
19	7193543	SEAL			1
20		HOSE, WATER	NLA - 610 mm (24") long - Order Ref. 31		1
21		HOSE, HEATER	NLA - 85 mm (3.35") long - Order Ref. 31		1
22	7010397	PLUG, FILL	Was 7193778 [A]		1
23	7193782	COVER			1
24	7193783	SEAL, FOAM			1
25	7193784	BOLT			4
26	7193786	RIVET, POP			4
27		WRAPAROUND	NLA - 457 mm (18") long - Order Ref. 32		2
28	7196889	LATCH			2
29	5HM18	CLAMP			2
30	5HM20	CLAMP			4
31	6565977	HOSE, BULK	sold per foot		x
32	7194262	WRAPAROUND	bulk - sold per foot		x

Page 1 of 1 OSS# 6300322913 - All rights reserved by Bobcat Company - 08/04/2017 - 06:30:16 - Produced by Ken Cook Co. with mediaioff

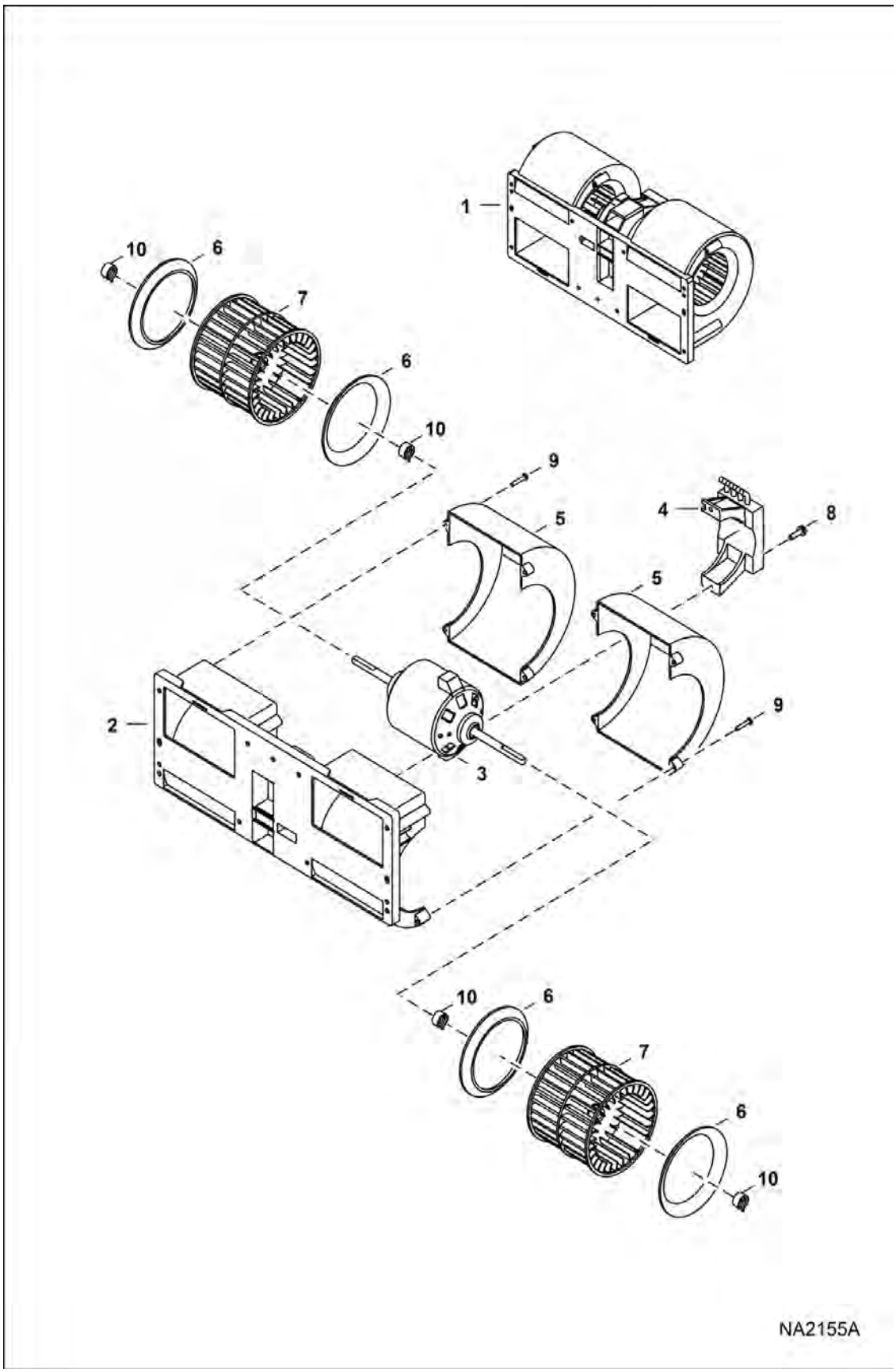

Page 637 - OSS# 6300322913 - All rights reserved by Bobcat Company - 08/04/2017 - 06:30:16 - Produced by Ken Cook Co. with mediaioff

HEATER & A/C (Cont'd)
(Blower Assembly)

Ref No	Part Number	Description	Remarks	Serial Number	Qty
1		BLOWER	NLA - Ref. 2-10 - W/O Drain Holes - Was 7193536 [A]		1
1	7282145	FAN, HVAC 3 SPD	Ref. 2-10 - W/ Drain Holes - Includes RESISTOR - Was 7249527 [A]		1
2	7010162	HOUSING, BLOWER			1
3	7010163	MOTOR, FAN			1
4		RESISTOR	NLA - Was 7021380 [A]		1
5	7010165	COVER			2
6	7010166	RING, INNER			4
7	7010167	BLOWER, WHEEL			2
8	7003471	SCREW			2
9	7010168	SCREW			8
10	7010169	CLAMP, HOSE			4

Page 7884 OSS# 6300322913 - All rights reserved by Bobcat Company - 08/04/2017 - 06:30:16 - Produced by Ken Cook Co. with mediaioff

HEATER & A/C

(Heater Plumbing Kit)

(S/N A3P811001 - A3P814202, A3P911001 - A3P912727)

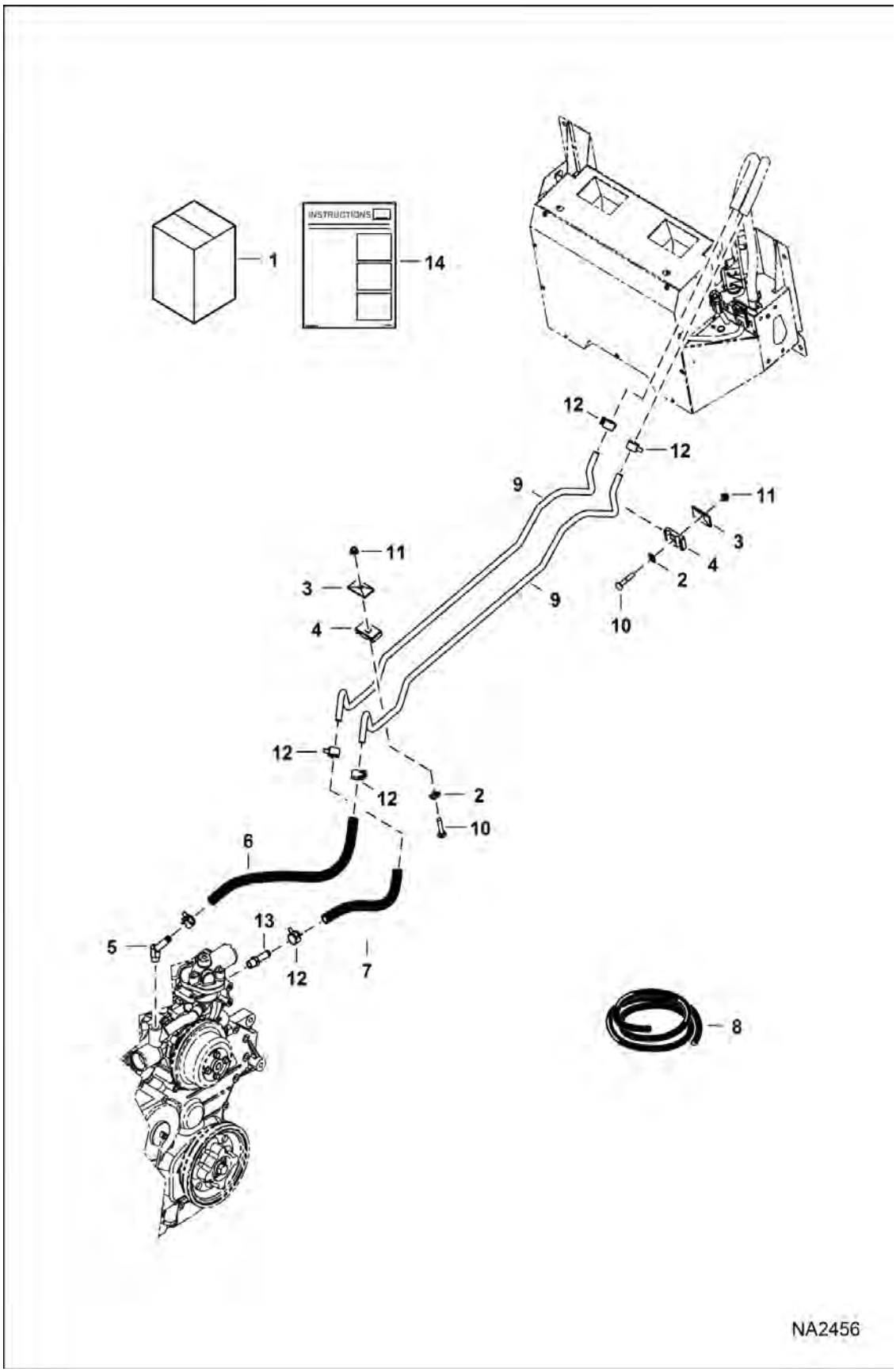

Page 639 - OSS# 6300322913 - All rights reserved by Bobcat Company - 08/04/2017 - 06:30:16 - Produced by Ken Cook Co. with mediaioff

HEATER & A/C (Cont'd)

(Heater Plumbing Kit)

(S/N A3P811001 - A3P814202, A3P911001 - A3P912727)

Ref No	Part Number	Description	Remarks	Serial Number	Qty
1	7128488	KIT, PLUMBING HEATER	Ref. 2-14		1
2	774220	NUT			2
3	6652521	PLATE			2
4	6701892	CLAMP			2
5	6731085	ELBOW	not in kit		2
5	6731085	ELBOW			1
6		HOSE	NLA - 457 mm (18") long - Order Ref. 8		1
7		HOSE	NLA - 229 mm (9") long - Order Ref. 8		1
8	6565977	HOSE, BULK	sold per foot		x
9	7191297	TUBELINE, HEATER			2
10	37C528	BOLT			2
11	55D5	NUT			2
12	5HM20	CLAMP			6
13	6731084	CONNECTOR			1
14	6987231ENUS	INSTRUCTIONS	Was 6987231 [A]		1

Page Added OSS# 6300322913 - All rights reserved by Bobcat Company - 08/04/2017 - 06:30:16 - Produced by Ken Cook Co. with mediaioff

HEATER & A/C

(Heater Plumbing Kit)
(S/N A3P814203 & Above, A3P912728 & Above)

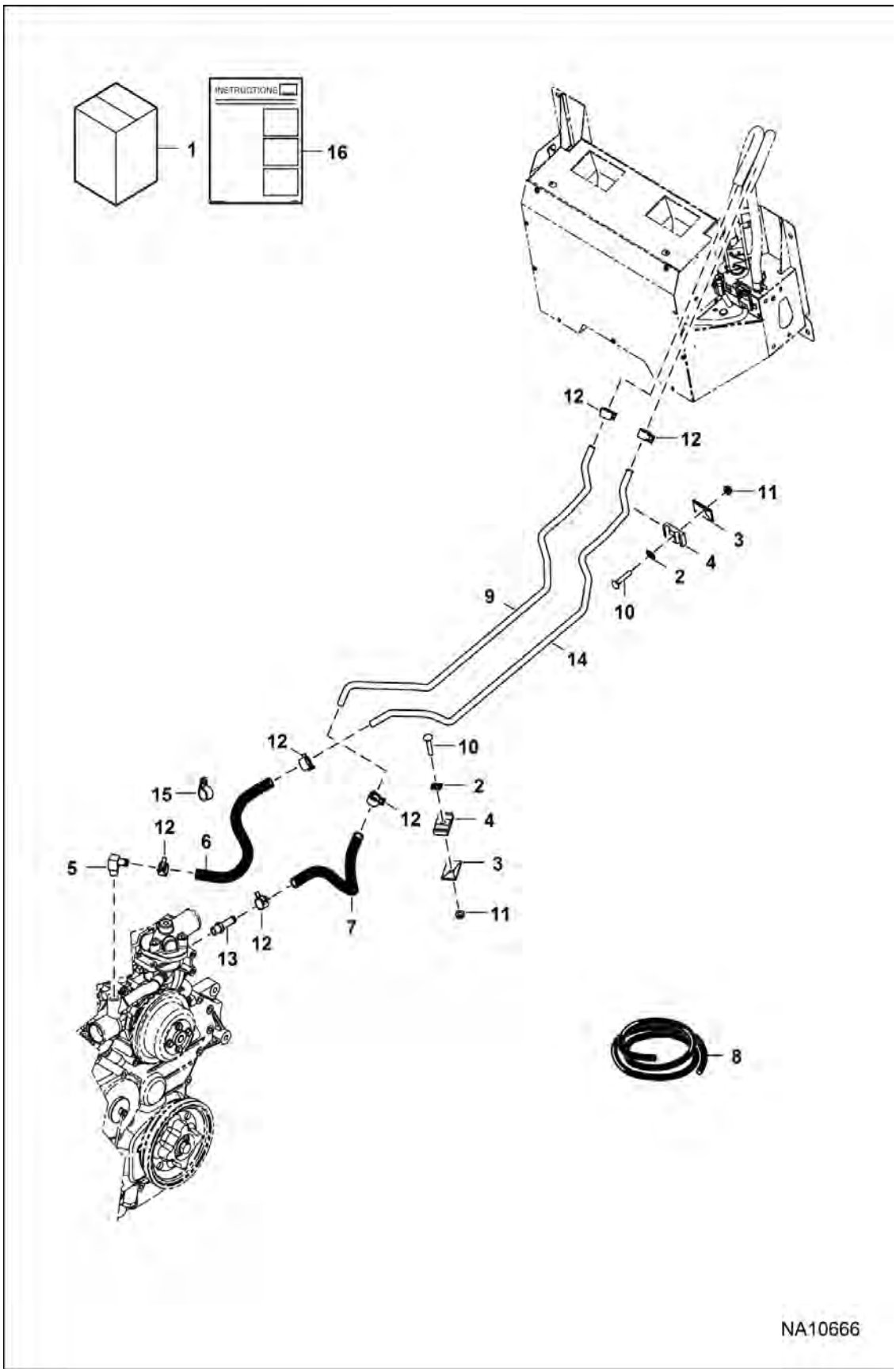

Page 641 - OSS# 6300322913 - All rights reserved by Bobcat Company - 08/04/2017 - 06:30:16 - Produced by Ken Cook Co. with mediaioff

HEATER & A/C (Cont'd)

(Heater Plumbing Kit)

(S/N A3P814203 & Above, A3P912728 & Above)

Ref No	Part Number	Description	Remarks	Serial Number	Qty
1	7240733	KIT, PLUMBING HEATER	Ref. 2-16		1
2	774220	NUT			2
3	6652521	PLATE			2
4	6701892	CLAMP			2
5	7198554	FITTING, ELBOW			1
6		HOSE	NLA - 572 mm (22.5") long - Order Ref. 8		1
7		HOSE	NLA - 394 mm (15.5") long - Order Ref. 8		1
8	6565977	HOSE, BULK	sold per foot		x
9	7274773	TUBELINE	NLA - Was 7243405 [A]		1
10	37C528	BOLT			2
11	55D5	NUT			2
12	5HM20	CLAMP			6
13	6731084	CONNECTOR			1
14	7274772	TUBELINE	NLA - Was 7243404 [A]		1
15	30H45	CLIP			1
16	7255983ENUS	INSTRUCTIONS	Was 7255983		1

Page 1 of 2 OSS# 6300322913 - All rights reserved by Bobcat Company - 08/04/2017 - 06:30:16 - Produced by Ken Cook Co. with mediaioff

HEATER & A/C

(A/C Kit)

(S/N A3P811001 - A3P812129)

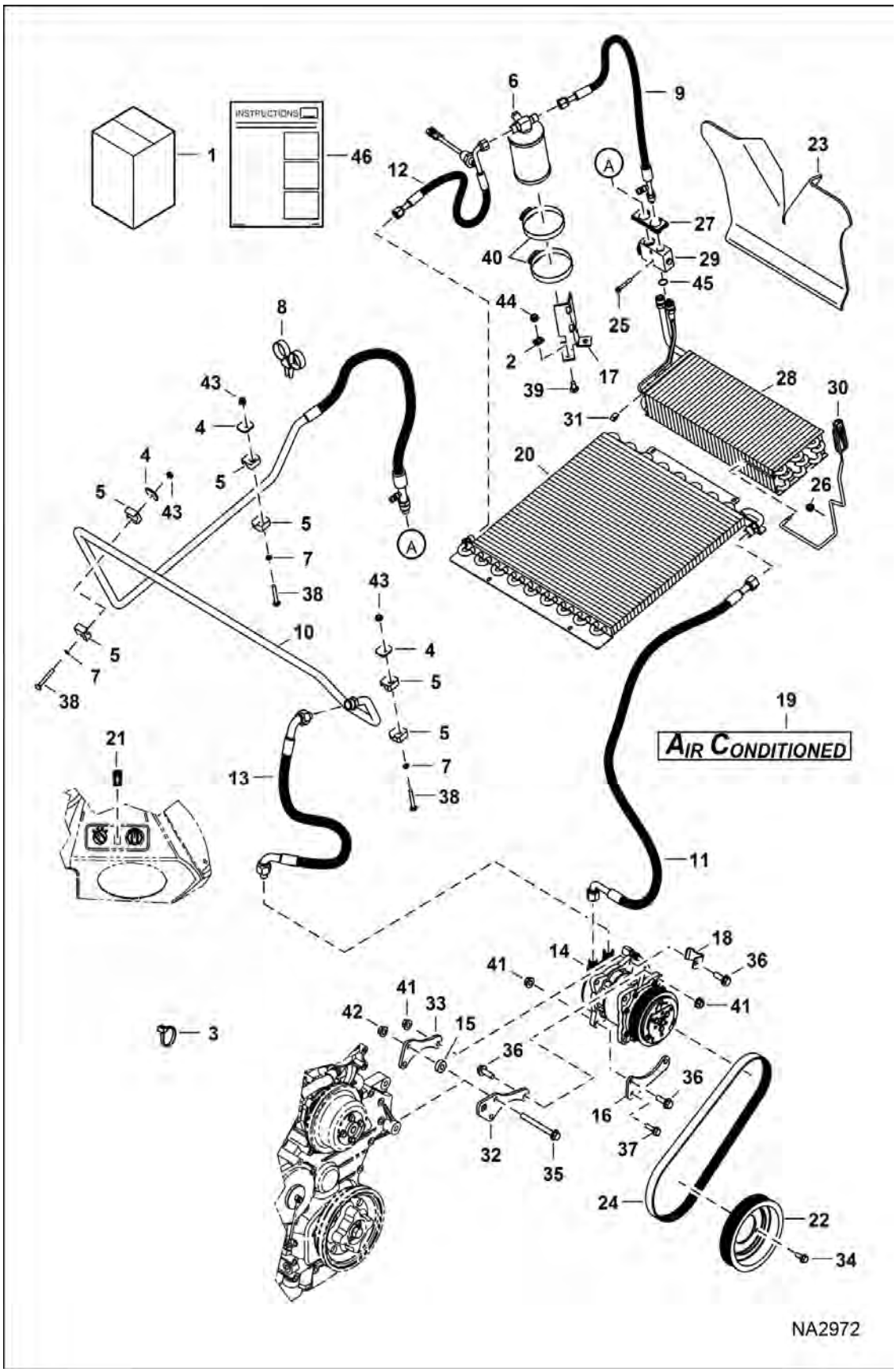

Page 643 - OSS# 6300322913 - All rights reserved by Bobcat Company - 08/04/2017 - 06:30:16 - Produced by Ken Cook Co. with mediaioff

HEATER & A/C (Cont'd)

(A/C Kit)

(S/N A3P811001 - A3P812129)

Ref No	Part Number	Description	Remarks	Serial Number	Qty
1	7198713	KIT, A/C	Ref. 2-46		1
2	774220	NUT			2
3	6624289	STRAP, TIE			5
4	6665102	COVER			3
5	6666920	CLAMP, HALF			6
6	6674235	RECEIVER, DRIER A/C			1
7	6675212	RETAINER, BOLT			3
8	6678668	STRAP			1
9	6697915	HOSE			1
9	7009976	O-RING	#6		x
10	6698285	HOSE, A/C ASSY			1
10	7009978	O-RING	#10		x
11	6698288	HOSE, A/C ASSY			1
11	7009977	O-RING	#8		x
12	6698289	HOSE, A/C ASSY			1
12	6675779	SWITCH, PRESS			1
12	7009976	O-RING	#6		x
13	6698290	HOSE, A/C ASSY			1
13	7009978	O-RING	#10		x
14	7279628	COMPRESSOR, A/C	Was 7023580 [A]		1
15	7140611	SPACER			1
16	7141594	BRACKET, COMPRESSOR A/C			1
17	7228298	BRACKET	Was 7151848 [A]		1
18	7164564	BRACKET, A/C			1
19	7166916	DECAL, A/C	not in kit		2
20	7024834	CONDENSER, A/C	Was 7167588 [A]		1
21	7169112	SWITCH, ROCKER A/C			1
22	7169128	PULLEY A/C	Was 7134551 [A]		1
22	7197904	PULLEY	102 mm (4") mounting bolt circle		1
23	7173651	INSULATION, HEATER			1
24	7174707	BELT, COMPRESSOR A/C			1
25	7192371	BOLT			2
26	7193531	GROMMET			1
27	7193533	GROMMET			1
28	7193535	EVAPORATOR			1
29	6675534	BLOCK, VALVE A/C	Was 7193538 [D]		1
30	7193539	THERMOSTAT			1
31	6676539	CLIP PANEL	Was 7193785 [A]		2
32	7195527	MOUNT, COMPRESSOR A/C			1

Page 344 OSS# 6300322913 - All rights reserved by Bobcat Company - 08/04/2017 - 06:30:16 - Produced by Ken Cook Co. with mediaoff

HEATER & A/C (Cont'd)
(A/C Kit)
(S/N A3P811001 - A3P812129)

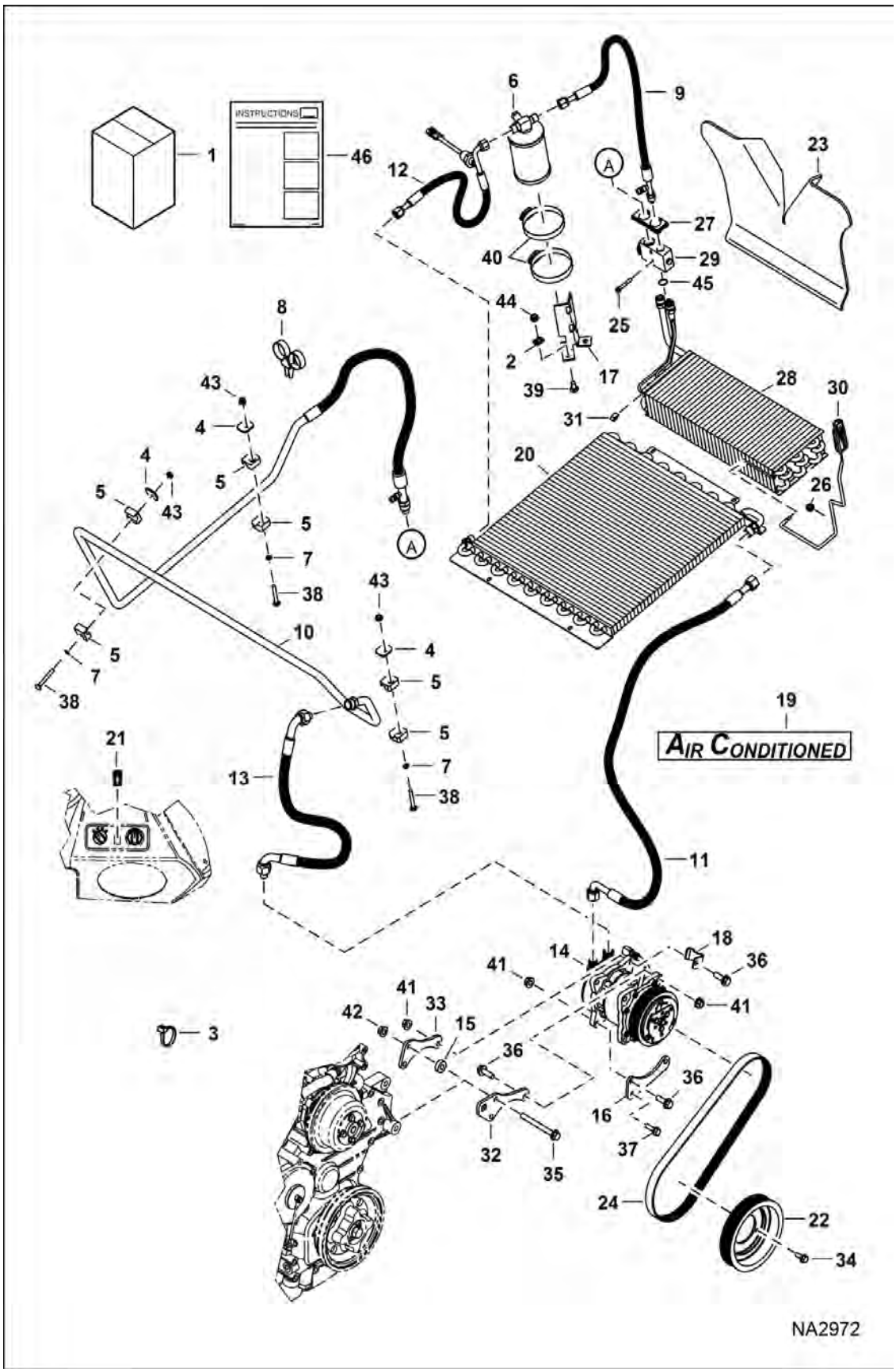

Illustration NA2972

Model T770 MT3
6989477

Page 645 - OSS# 6300322913 - All rights reserved by Bobcat Company - 08/04/2017 - 06:30:16 - Produced by Ken Cook Co. with mediaioff

HEATER & A/C (Cont'd)

(A/C Kit)

(S/N A3P811001 - A3P812129)

Ref No	Part Number	Description	Remarks	Serial Number	Qty
33	7196605	MOUNT			1
34	59CM816	BOLT	Was 7197533 [A]		3
35	1CM10100	SCREW			1
36	29CM1030	SCREW FLGD HEX CAP			6
37	29CM830	CAPSCREW			1
38	37C432	SCREW			3
39	37C512	BOLT			2
40	44H48	CLAMP			2
41	51DM10	NUT			6
42	53DM10	NUT			1
43	55D4	NUT			3
44	55D5	NUT			2
45	7009977	O-RING	#8		2
46	6990077ENUS	INSTRUCTIONS	Was 6990077 [A]		1

Page Added OSS# 6300322913 - All rights reserved by Bobcat Company - 08/04/2017 - 06:30:16 - Produced by Ken Cook Co. with mediaioff

HEATER & A/C

(A/C Kit)

(S/N A3P812130 - A3P814204, A3P911321 - A3P912726)

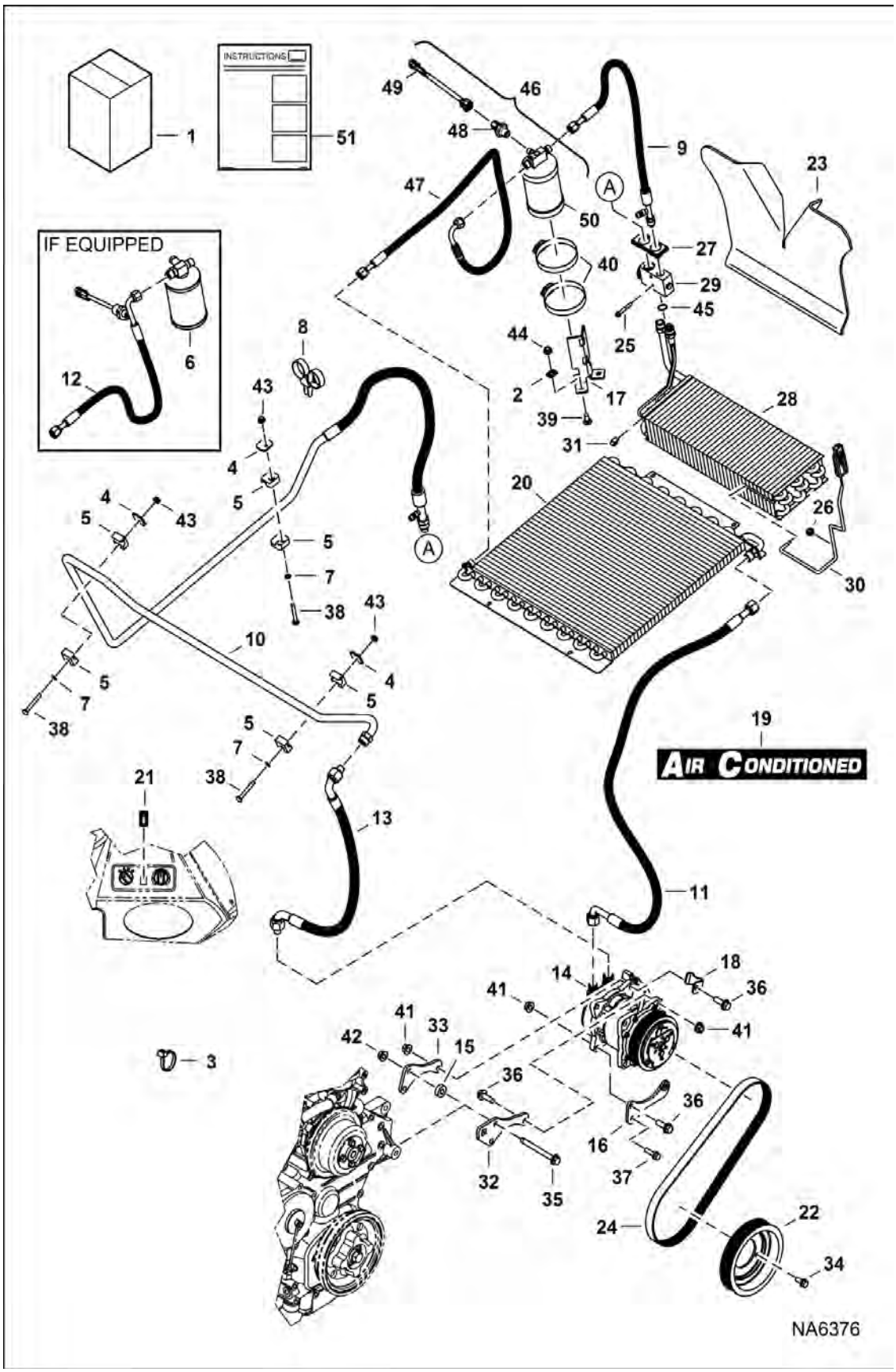

Page 647 - OSS# 6300322913 - All rights reserved by Bobcat Company - 08/04/2017 - 06:30:16 - Produced by Ken Cook Co. with mediaioff

HEATER & A/C (Cont'd)

(A/C Kit)

(S/N A3P812130 - A3P814204, A3P911321 - A3P912726)

Ref No	Part Number	Description	Remarks	Serial Number	Qty
1	7203684	KIT, A/C	Ref. 2-18 & 20-47 & 51		1
2	774220	NUT			2
3	6624289	STRAP, TIE			5
4	6665102	COVER			3
5	6666920	CLAMP, HALF			6
6	6674235	RECEIVER, DRIER A/C			1
7	6675212	RETAINER, BOLT			3
8	6678668	STRAP			1
9	6697915	HOSE			1
9	7009976	O-RING	#6		x
10	7196314	TUBELINE, HOSE AC ASSY			1
11	6698288	HOSE, A/C ASSY			1
11	7009977	O-RING	#8		x
12	7023524	HOSE, A/C ASSY			1
12	6675779	SWITCH, PRESS			1
12	7009976	O-RING	#6		2
13	7193843	HOSE, A/C ASSY			1
13	7009978	O-RING	#10		x
14	7279628	COMPRESSOR, A/C	Was 7023580 [A]		1
15	7140611	SPACER			1
16	7141594	BRACKET, COMPRESSOR A/C			1
17	7228298	BRACKET	Was 7151848 [A]		1
18	7164564	BRACKET, A/C			1
19	7166916	DECAL, A/C	not in kit		2
20	7024834	CONDENSER, A/C	Was 7167588 [A]		1
21	7169112	SWITCH, ROCKER A/C			1
22	7197904	PULLEY			1
23	7173651	INSULATION, HEATER			1
24	7174707	BELT, COMPRESSOR A/C			1
25	7192371	BOLT			2
26	7193531	GROMMET			1
27	7193533	GROMMET			1
28	7193535	EVAPORATOR			1
29	6675534	BLOCK, VALVE A/C			1
30	7193539	THERMOSTAT			1
31	6676539	CLIP PANEL	Was 7193785 [A]		2
32	7195527	MOUNT, COMPRESSOR A/C			1
33	7196605	MOUNT			1

Page 4 of 4 OSS# 6300322913 - All rights reserved by Bobcat Company - 08/04/2017 - 06:30:16 - Produced by Ken Cook Co. with mediaioff

HEATER & A/C (Cont'd)

(A/C Kit)

(S/N A3P812130 - A3P814204, A3P911321 - A3P912726)

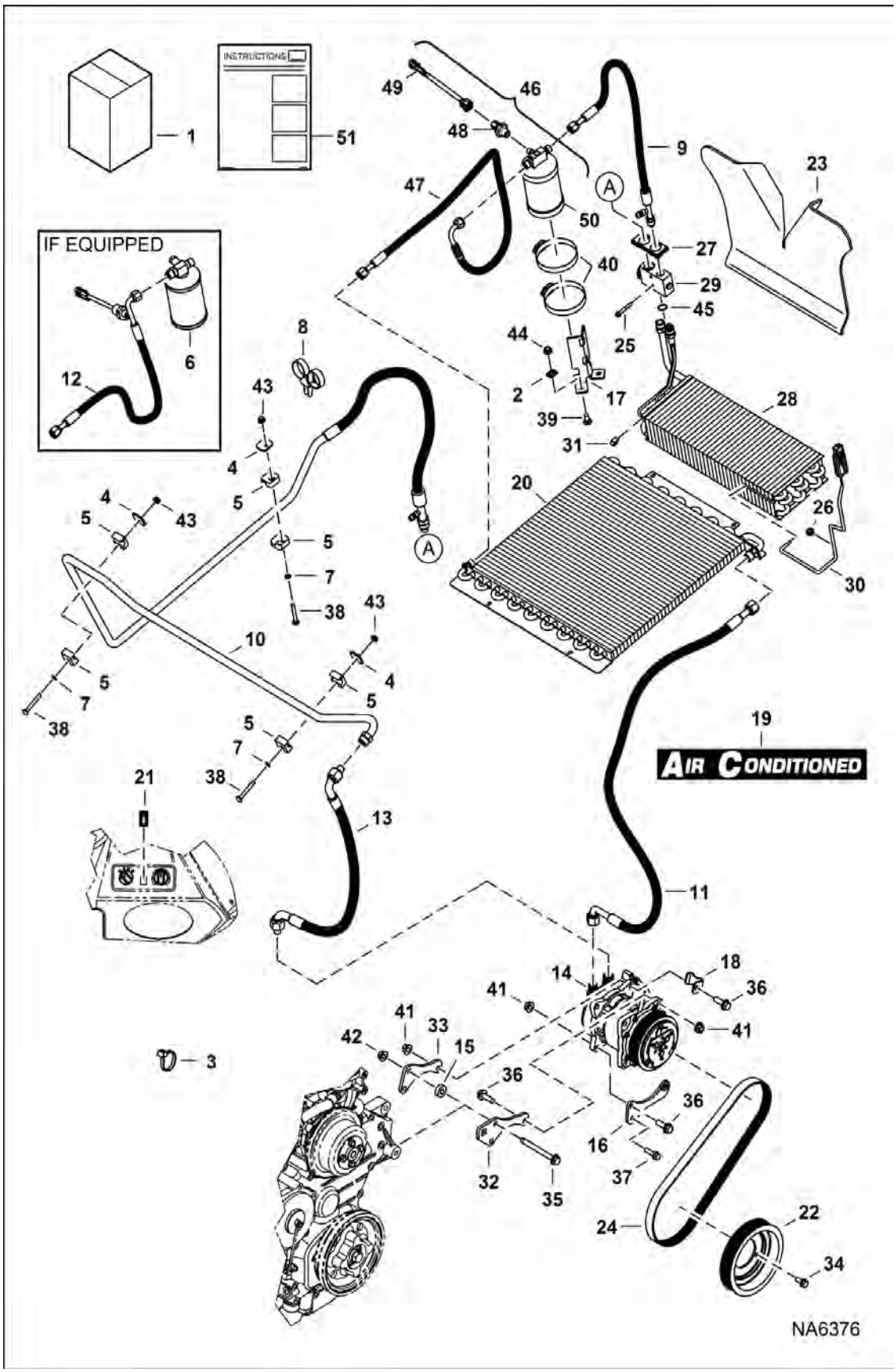

Page 649 - OSS# 6300322913 - All rights reserved by Bobcat Company - 08/04/2017 - 06:30:16 - Produced by Ken Cook Co. with mediaioff

HEATER & A/C (Cont'd)

(A/C Kit)

(S/N A3P812130 - A3P814204, A3P911321 - A3P912726)

Ref No	Part Number	Description	Remarks	Serial Number	Qty
34	59CM816	BOLT			3
35	1CM10100	SCREW			1
36	29CM1030	SCREW FLGD HEX CAP			6
37	29CM830	CAPSCREW			1
38	37C432	SCREW			3
39	37C512	BOLT			2
40	44H48	CLAMP			2
41	51DM10	NUT			6
42	53DM10	NUT			1
43	55D4	NUT			3
44	55D5	NUT			2
45	7009977	O-RING	#8		2
46	7286433	RECEIVER, DRIER A/C	W/Ref. 48-50 - Was 7286432		1
47	7214029	HOSE, A/C ASSY			1
48	7286436	SWITCH, PRESS			1
49	7286435	HARNESS, A/C	Was 7286434		1
50		DRIER	NSS - Order 7286433		1
51	6990077ENUS	INSTRUCTIONS	Was 6990077 [A]		1

Page 1660 OSS# 6300322913 - All rights reserved by Bobcat Company - 08/04/2017 - 06:30:16 - Produced by Ken Cook Co. with mediaioff

HEATER & A/C

(A/C Kit)

(S/N A3P814205 & Above, A3P912727 & Above)

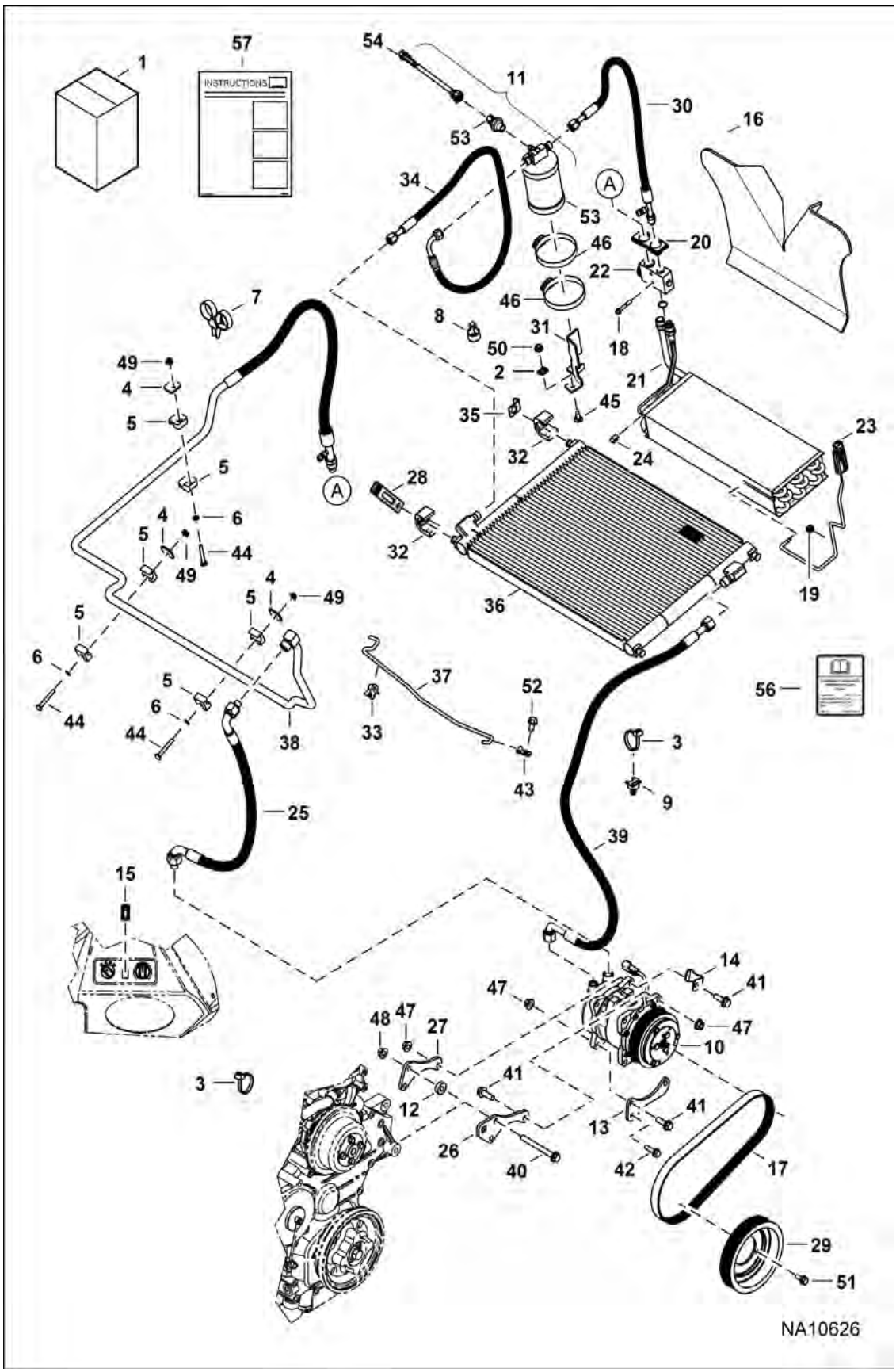

Page 651 - OSS# 6300322913 - All rights reserved by Bobcat Company - 08/04/2017 - 06:30:16 - Produced by Ken Cook Co. with mediaioff

HEATER & A/C (Cont'd)

(A/C Kit)

(S/N A3P814205 & Above, A3P912727 & Above)

Ref No	Part Number	Description	Remarks	Serial Number	Qty
1	7240735	KIT, A/C	Ref. 2-52, 56 & 57		1
2	774220	NUT			2
3	6624289	STRAP, TIE			6
4	6665102	COVER			3
5	6666920	CLAMP, HALF			6
6	6675212	RETAINER, BOLT			3
7	6678668	STRAP			1
8	6678669	STRAP			1
9	7015668	MOUNT, STRAP TIE			1
10	7279628	COMPRESSOR, A/C	Was 7023580 [A]		1
11	7286433	RECEIVER, DRIER A/C	W/Ref. 53-55 - Was 7286432		1
12	7140611	SPACER			1
13	7141594	BRACKET, COMPRESSOR A/C			1
14	7164564	BRACKET, A/C			1
15	7169112	SWITCH, ROCKER A/C			1
16	7173651	INSULATION, HEATER			1
17	7174707	BELT, COMPRESSOR A/C			1
18	7192371	BOLT			2
19	7193531	GROMMET			1
20	7193533	GROMMET			1
21	7193535	EVAPORATOR			1
22	6675534	BLOCK, VALVE A/C	Was 7193538 [A]		1
23	7193539	THERMOSTAT			1
24	6676539	CLIP PANEL	Was 7193785 [A]		2
25	7193843	HOSE, A/C ASSY			1
26	7195527	MOUNT, COMPRESSOR A/C			1
27	7196605	MOUNT			1
28	7197614	STRAP, HOLD DOWN			2
29	7197904	PULLEY			1
30	7311134	HOSE AC ASSY	Was 7256578 [A]		1
31	7228298	BRACKET			1
32	7233371	MOUNT, CONDENSER			4
33	7241791	GROMMET			1
34	7229414	HOSE, A/C ASSY			1
35	7243982	RETAINER, HOLDER			2
36	7261010	CONDENSER			1

Page 632 OSS# 6390322913 - All rights reserved by Bobcat Company - 08/04/2017 - 06:30:16 - Produced by Ken Cook Co. with mediaoff

HEATER & A/C (Cont'd)

(A/C Kit)

(S/N A3P814205 & Above, A3P912727 & Above)

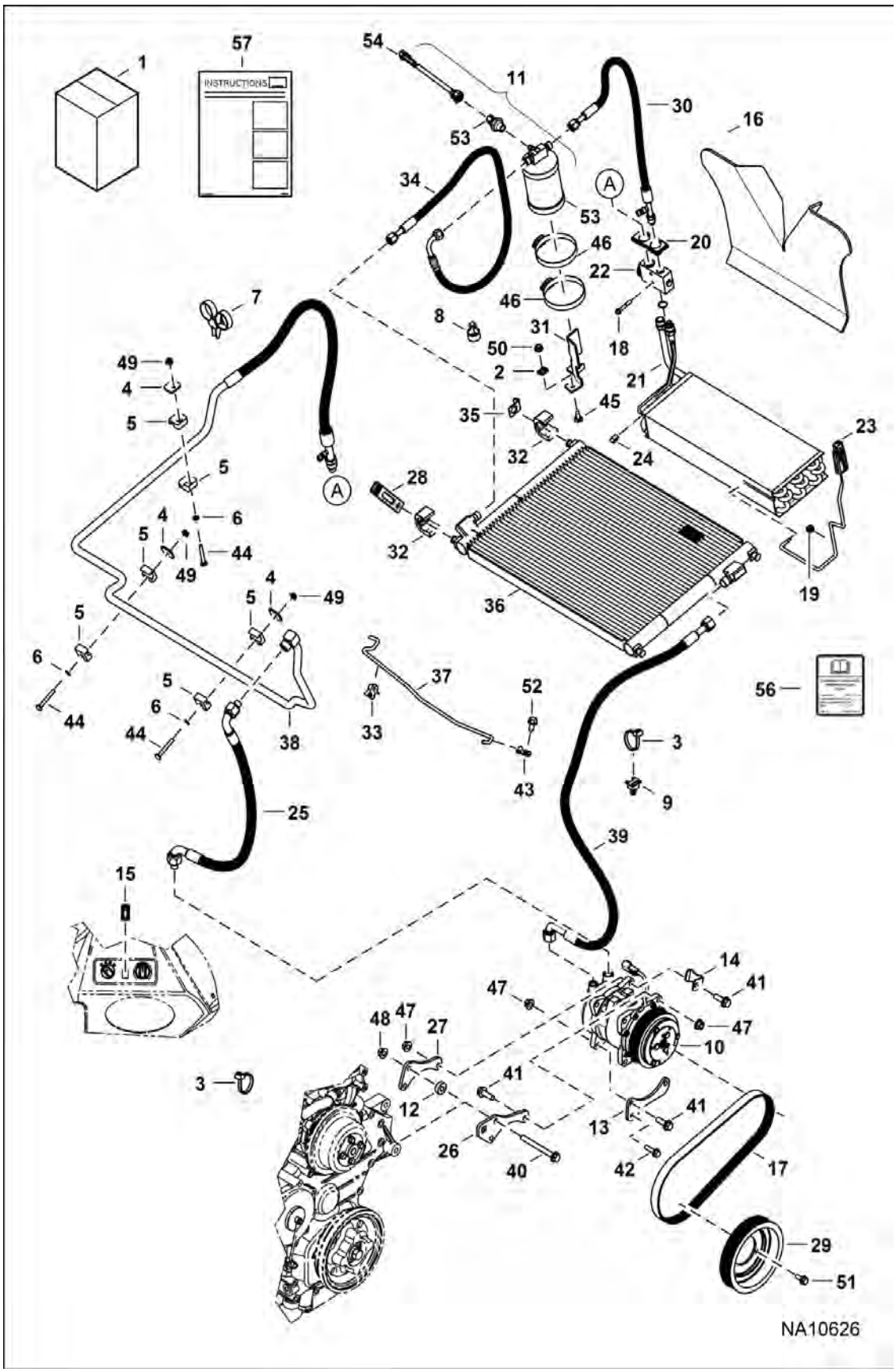

Illustration NA10626

Model T770 MT3
6989477

Page 653 - OSS# 6300322913 - All rights reserved by Bobcat Company - 08/04/2017 - 06:30:16 - Produced by Ken Cook Co. with mediaioff

HEATER & A/C (Cont'd)

(A/C Kit)

(S/N A3P814205 & Above, A3P912727 & Above)

Ref No	Part Number	Description	Remarks	Serial Number	Qty
37	7261605	ROD	Was 7245955 [A]		1
38	7311137	HOSE AC TUBELINE ASSY	Was 7275043 [A]		1
39	7275149	HOSE, A/C ASSY	NLA - Was 7266324 [A]		1
40	1CM10100	SCREW			1
41	29CM1030	SCREW FLGD HEX CAP			6
42	29CM830	CAPSCREW			1
43	30H12	CLIP			1
44	37C432	SCREW			3
45	37C512	BOLT			2
46	44H48	CLAMP			2
47	51DM10	NUT			6
48	53DM10	NUT			1
49	55D4	NUT			3
50	55D5	NUT			2
51	59CM816	BOLT			3
52	84G3712	BOLT 5			1
53	7286436	SWITCH, PRESS			1
54	7286435	HARNESS, A/C	Was 7286434		1
55		DRIER	NSS - Order 7286433		1
56	7318895	DECAL HVAC			1
57	7255984ENUS	INSTRUCTIONS	Was 7255984 [A]		1

Page 164 OSS# 6300322913 - All rights reserved by Bobcat Company - 08/04/2017 - 06:30:16 - Produced by Ken Cook Co. with mediaoff

HEATER & A/C
(HVAC Assembly)

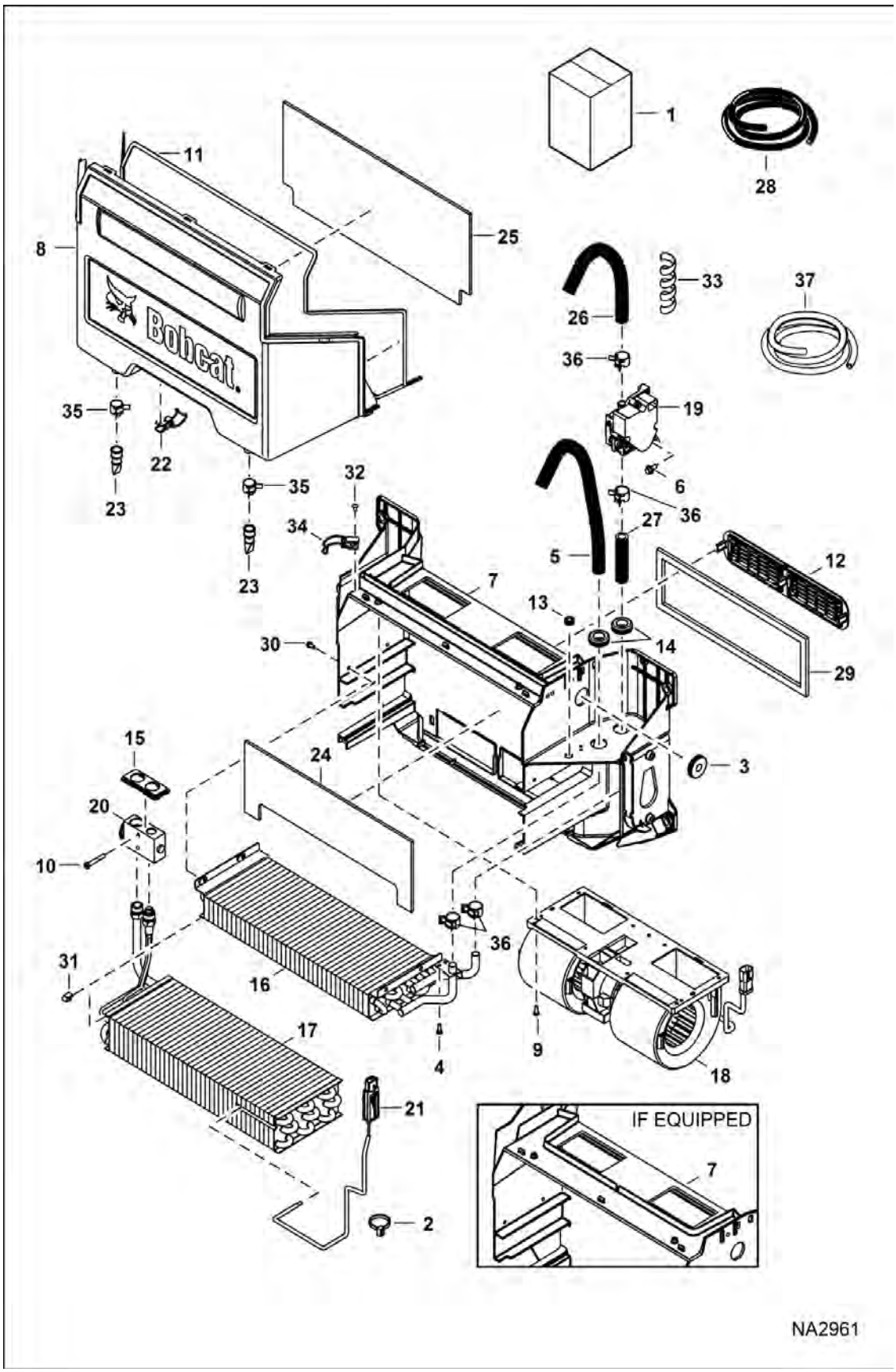

Page 655 - OSS# 6300322913 - All rights reserved by Bobcat Company - 08/04/2017 - 06:30:16 - Produced by Ken Cook Co. with mediaioff

HEATER & A/C (Cont'd)
(HVAC Assembly)

Ref No	Part Number	Description	Remarks	Serial Number	Qty
1		HVAC ASSY	Contact your Local Dealer for Bobcat Technical Information BTI437 - NLA - Ref. 2-37		1
2	6624289	STRAP, TIE			2
3	6682697	GROMMET			1
4	7162770	SCREW			2
5		HOSE, HEATER	NLA - 520,7 mm (20.5") long - Order Ref. 28		1
6	7166190	SCREW THREAD ROLLING			2
7		HOUSING	Contact your Local Dealer for Bobcat Technical Information BTI437 - NLA		1
8	7185848	COVER			1
9	7192287	BOLT			2
10	7192371	BOLT			2
11	7192408	SEAL			1
12	7193354	FILTER, AIR RECIRCULATING			1
13	7193531	GROMMET			1
14	7193532	GROMMET			2
15	7193533	GROMMET			1
16	7193534	COIL, HEATER			1
17	7193535	EVAPORATOR			1
18		BLOWER	NLA - W/O Drain Holes - Was 7193536 [A]		1
18	7282145	FAN, HVAC 3 SPD	W/ Drain Holes - Includes RESISTOR - Was 7249527 [A]		1
19	7003456	VALVE, MOTORIZED ASSY	Was 7193537 [B]		1
20	6675534	BLOCK, VALVE A/C	Was 7193538 [D]		1
21	7193539	THERMOSTAT			1
22	7193540	LATCH			2
23	7193541	DRAIN, WATER SEAT			2
24	7193542	SEAL			1
25	7193543	SEAL			1
26		HOSE, HEATER	NLA - 609,6 mm (24") long - Order Ref. 28		1
27		HOSE, HEATER	NLA - 85 mm (3.35") long - Order Ref. 28		1
28	6565977	HOSE, BULK	sold per foot		x
29	7193783	SEAL, FOAM			1
30	7193784	BOLT			4
31	6676539	CLIP PANEL	Was 7193785 [A]		2
32	7193786	RIVET, POP			4
33		WRAPAROUND	NLA - 457 mm (18") long - Order Ref. 37		2
34	7196889	LATCH			2
35	5HM18	CLAMP			2
36	5HM20	CLAMP			4
37	7194262	WRAPAROUND	bulk - sold per foot		x

Page 648 OSS# 6300322913 - All rights reserved by Bobcat Company - 08/04/2017 - 06:30:16 - Produced by Ken Cook Co. with mediaioff

HEATER & A/C
(Lower Duct Kit)

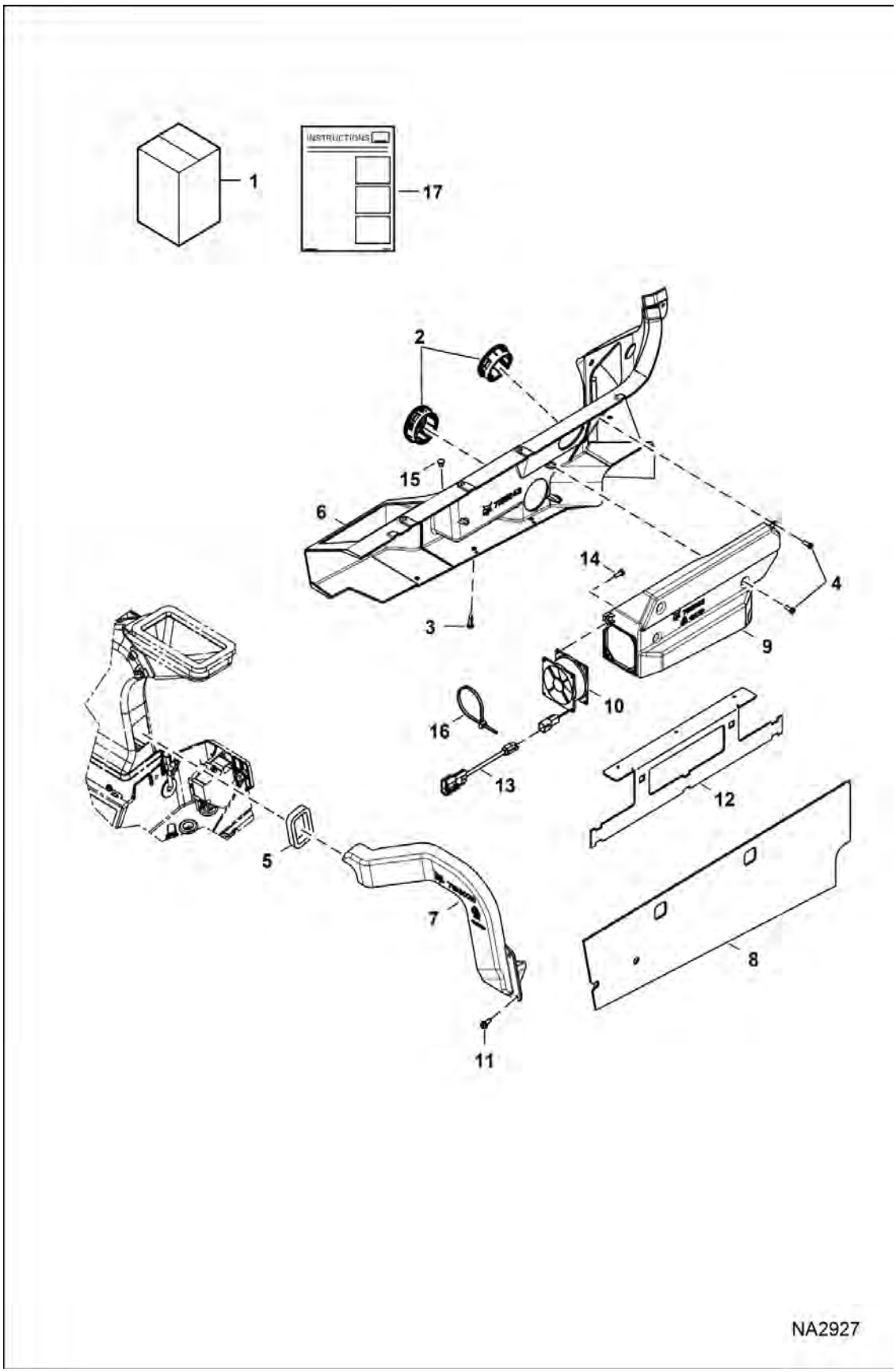

Page 657 - OSS# 6300322913 - All rights reserved by Bobcat Company - 08/04/2017 - 06:30:16 - Produced by Ken Cook Co. with mediaioff

HEATER & A/C (Cont'd)
(Lower Duct Kit)

Ref No	Part Number	Description	Remarks	Serial Number	Qty
1	7200657	KIT, DUCT	Ref. 2-11, 14 & 15 - Also Order Ref. 12 & 13	A3P911001 - 11002	1
1	7200657	KIT, DUCT	Ref. 2-11, 14 & 15	A3P911003 & Above	1
2	7155794	LOUVER, ROUND			2
3	7160381	RIVET, BIRD CAGE			2
4	7318495	SCREW	Was 7162770 [B]		6
5	7193018	SEAL			1
6	7193019	PANEL, DUCT			1
7	7193020	DUCT, AIR			1
8	7193022	INSULATION			1
9	7193023	DUCT, AIR			1
10	7197733	FAN			1
11	26GM6016	BOLT			3
12	7193021	BRACKET	not in kit		1
13	7200883	HARNESS, JUMPER FAN	not in kit		1
14	7192287	BOLT			4
15	7188745	PLUG			4
16	6624289	STRAP, TIE			1
17	6990079ENUS	INSTRUCTIONS	WAS 6990079 [A]		1

Page 650 OSS# 6300322913 - All rights reserved by Bobcat Company - 08/04/2017 - 06:30:16 - Produced by Ken Cook Co. with mediaioff

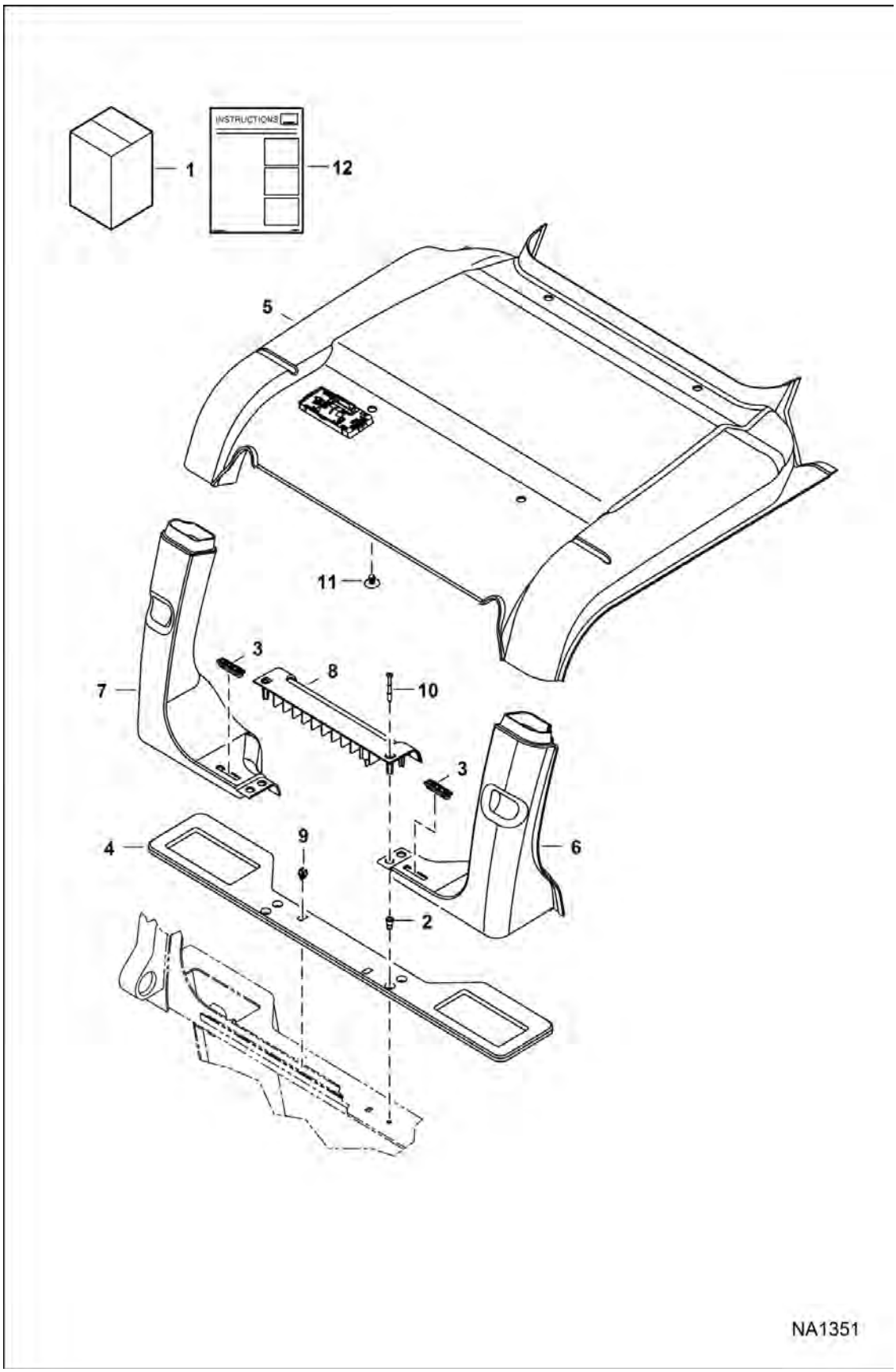

Page 659 - OSS# 6300322913 - All rights reserved by Bobcat Company - 08/04/2017 - 06:30:16 - Produced by Ken Cook Co. with mediaioff

HEATER & A/C (Cont'd)
(HVAC Headliner Kit)

Ref No	Part Number	Description	Remarks	Serial Number	Qty
1	7174171	KIT, HEADLINER HVAC			1
2	6675033	INSERT, THREADED			2
3	7145885	VENT, DEFROST			2
4	7153832	SEAL, SHELF REAR			1
5	7155785	HEADLINER, HVAC			1
6	100333SUB	DUCT, AIR	RH - W/Ref. 3		1
7	100334SUB	DUCT, AIR	LH - W/Ref. 3		1
8	7165332	SHELF, REAR			1
9	7165333	CLIP			2
10	7165799	SCREW			2
11	6674895	RETAINER			4
12	6987356ENUS	INSTRUCTIONS	Was 6987356 [A]		1

Page 652 OSS# 6300322913 - All rights reserved by Bobcat Company - 08/04/2017 - 06:30:16 - Produced by Ken Cook Co. with mediaioff

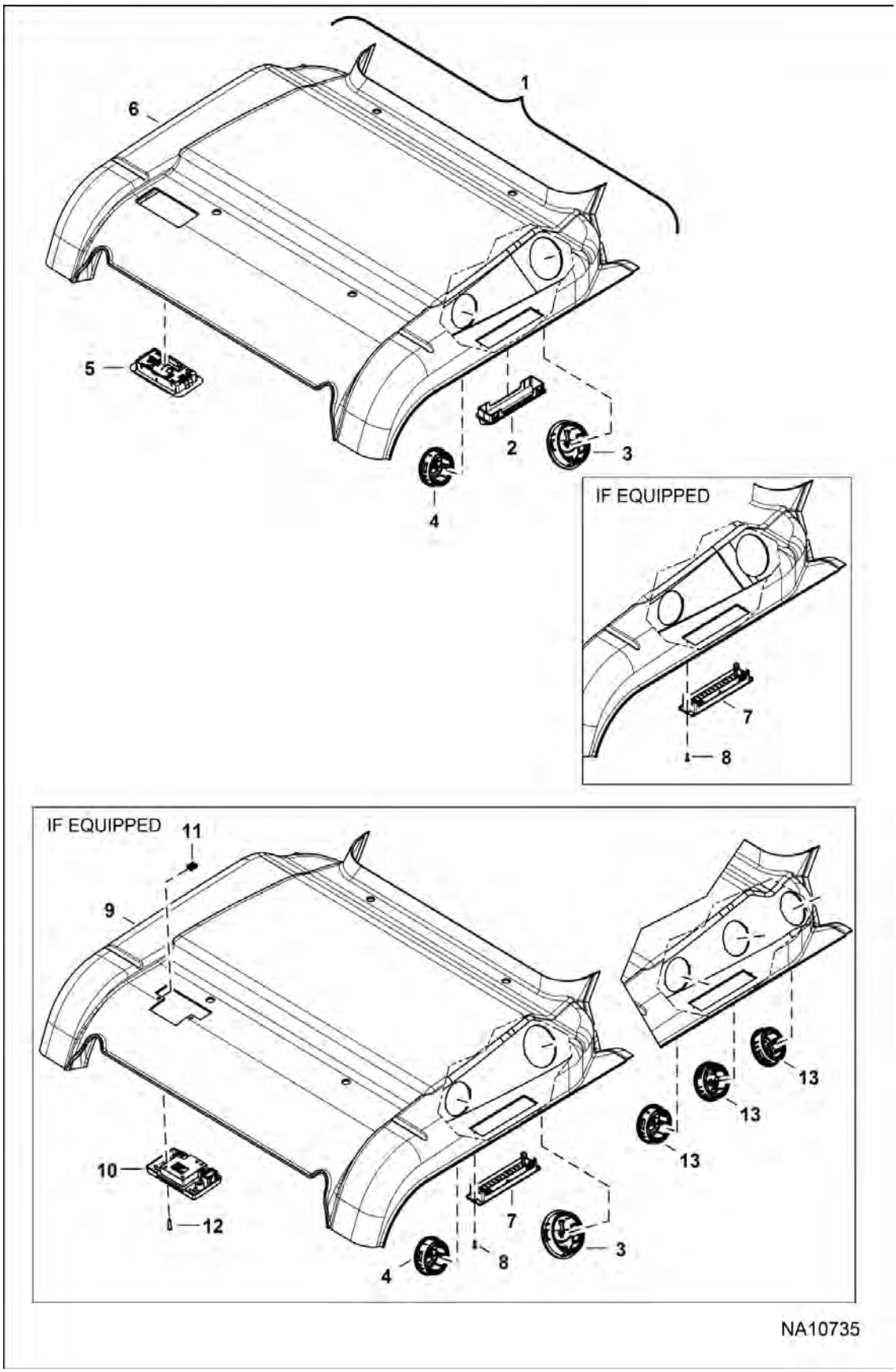

Page 661 - OSS# 6300322913 - All rights reserved by Bobcat Company - 08/04/2017 - 06:30:16 - Produced by Ken Cook Co. with mediaioff

HEATER & A/C (Cont'd)
(HVAC Headliner Kit)

Ref No	Part Number	Description	Remarks	Serial Number	Qty
1	7155785	HEADLINER, HVAC	W/Ref. 2-6		1
2	7261903	LOUVER			2
3	7155794	LOUVER, ROUND	700 mm (2.75") dia		2
4	7222397	LOUVER, ROUND	85 mm (3.35") dia		2
5	7229539	LIGHT, CAB HEADLINER			1
6	7234064	HEADLINER, DLX			1
7	7155796	LOUVER, RECTANGLE			2
8	7155799	SCREW			4
9	7155787	HEADLINER, DLX			1
10	7166629	LIGHT, CAB HEADLINER	Was 7155797 [A]		1
11	7142762	CLIP			2
12	7170114	SCREW			2
13	7155794	LOUVER, ROUND	700 mm (2.75") dia		6

Page 624 OSS# 6300322913 - All rights reserved by Bobcat Company - 08/04/2017 - 06:30:16 - Produced by Ken Cook Co. with mediaioff

HEPA FILTER KIT

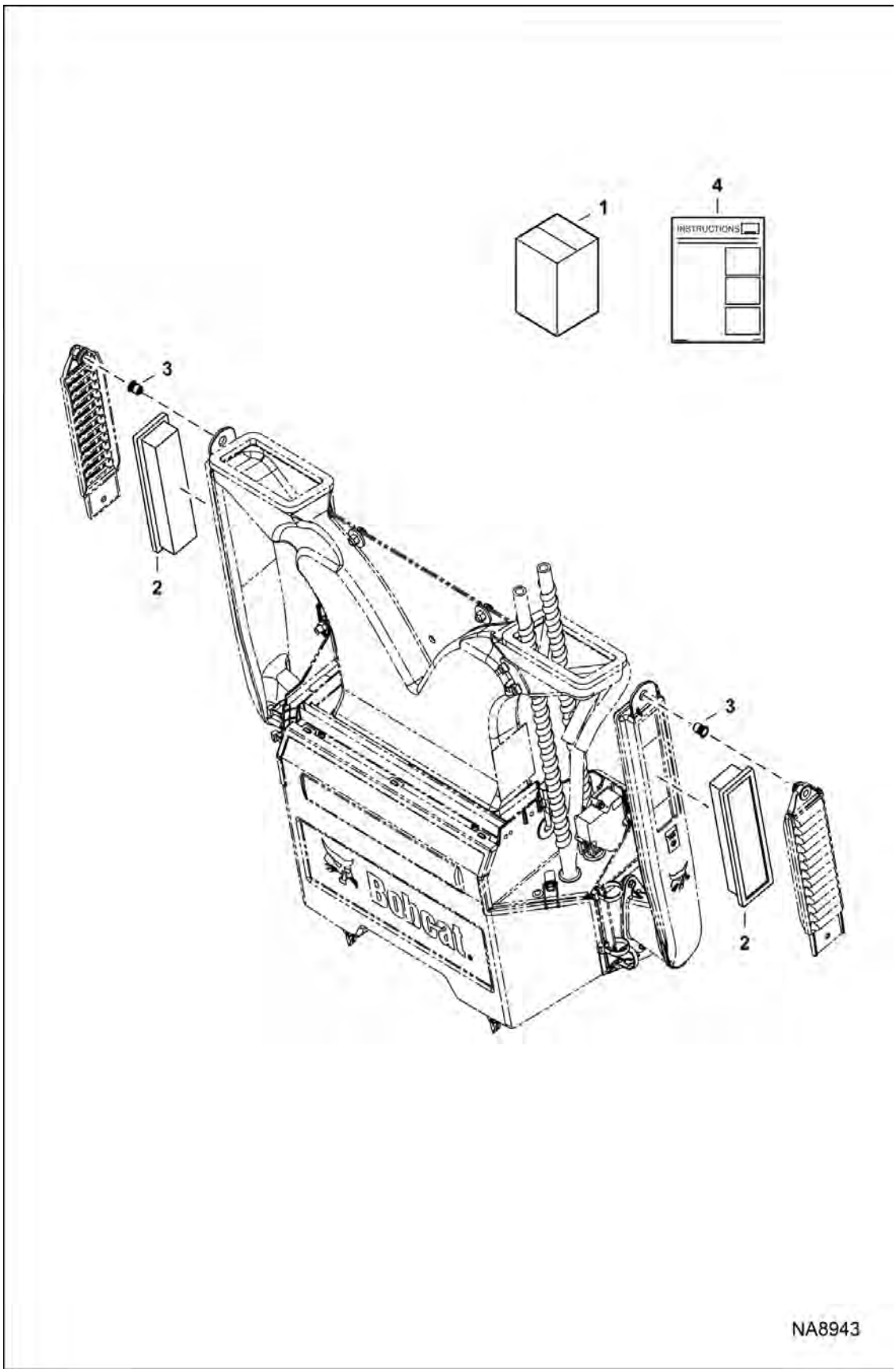

Page 663 - OSS# 6300322913 - All rights reserved by Bobcat Company - 08/04/2017 - 06:30:16 - Produced by Ken Cook Co. with mediaioff

HEPA FILTER KIT (Cont'd)

Ref No	Part Number	Description	Remarks	Serial Number	Qty
1		KIT, HEPA FILTER	NLA - Order components - Was 7238900 [A]		1
2	7231496	FILTER, AIR HEATER CAB			2
3	7246559	INSERT, THREADED			2
4	7255728ENUS	INSTRUCTIONS			1

Page 654 OSS# 6300322913 - All rights reserved by Bobcat Company - 08/04/2017 - 06:30:16 - Produced by Ken Cook Co. with mediaioff

HORN KIT
(Manual Controls, AHC & ACS)

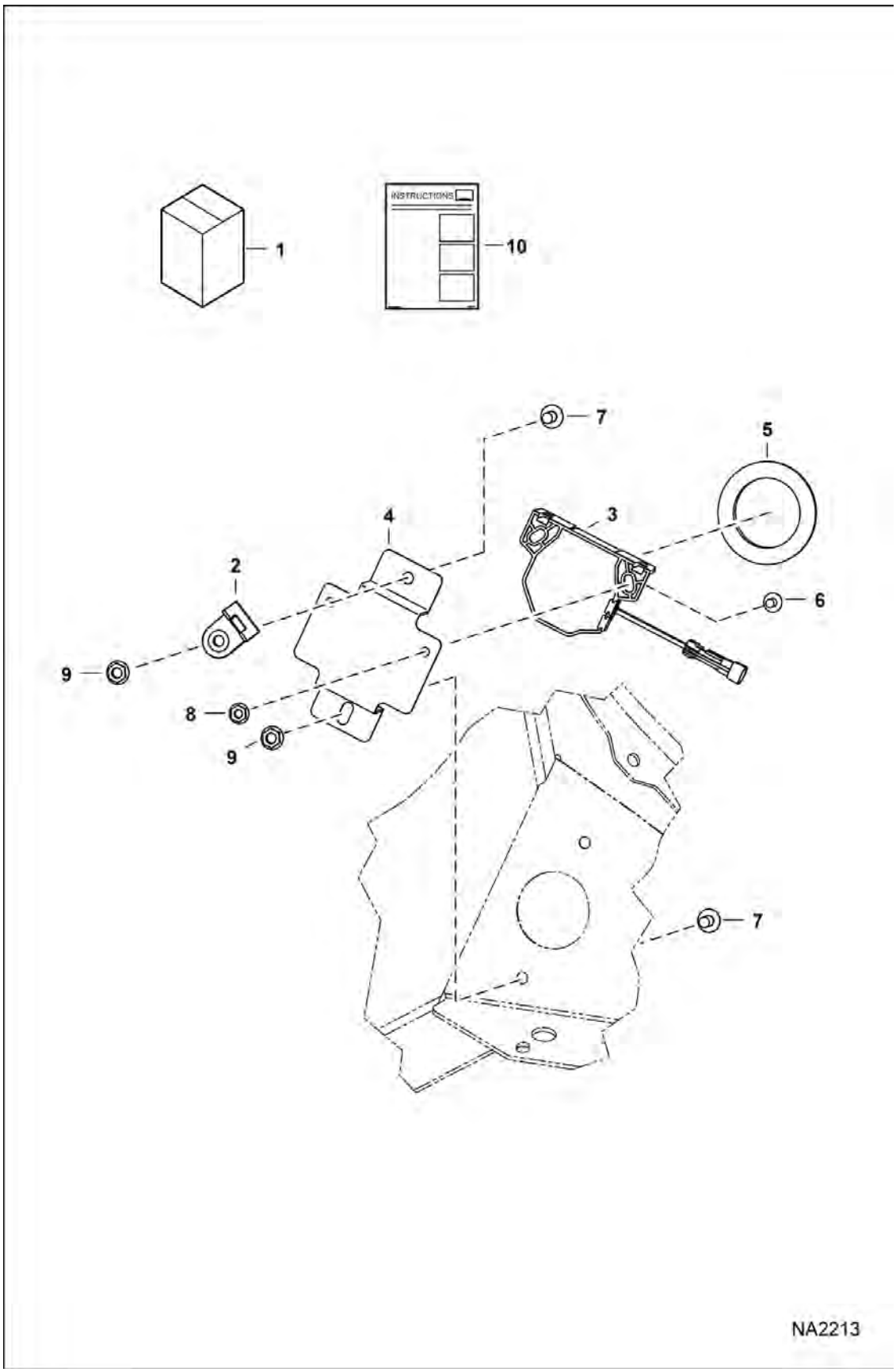

Page 665 - OSS# 6300322913 - All rights reserved by Bobcat Company - 08/04/2017 - 06:30:16 - Produced by Ken Cook Co. with mediaioff

HORN KIT (Cont'd)
(Manual Controls, AHC & ACS)

Ref No	Part Number	Description	Remarks	Serial Number	Qty
1		KIT, HORN	See Illustration HORN KIT / NA8403 - NLA - Was 7173594 [A]		1
2	6684641	MOUNT			1
3	7001044	HORN, ALARM			1
4	7171081	BRACKET, HORN			1
5	7171088	GROMMET			1
6	35C410	BOLT 5			2
7	35C516	BOLT 10			2
8	55D4	NUT			2
9	55D5	NUT			2
10	6987237	INSTRUCTIONS			1

Page 658 OSS# 6300322913 - All rights reserved by Bobcat Company - 08/04/2017 - 06:30:16 - Produced by Ken Cook Co. with mediaioff

HORN KIT
(Manual Controls, AHC & ACS)

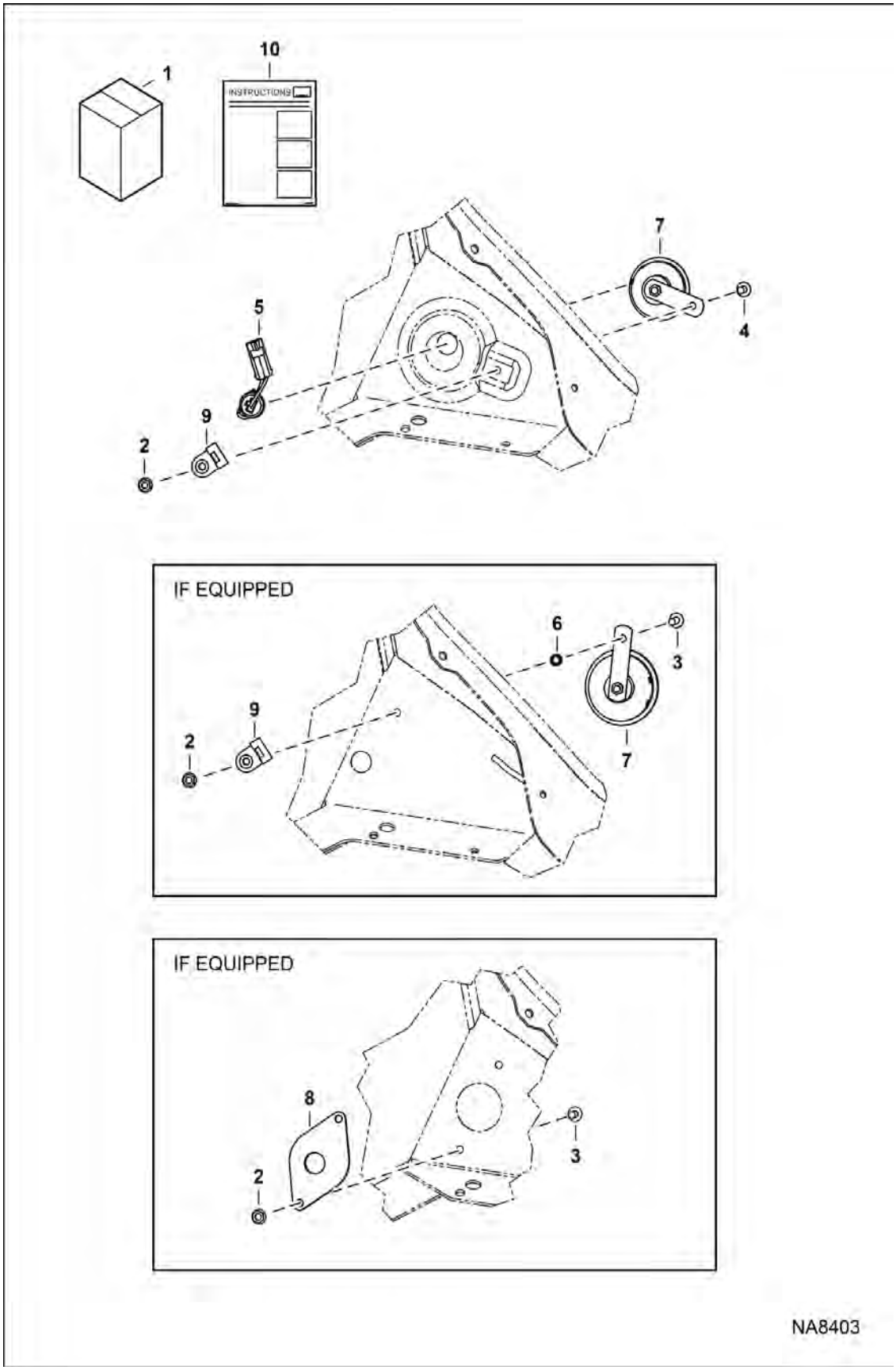

Page 667 - OSS# 6300322913 - All rights reserved by Bobcat Company - 08/04/2017 - 06:30:16 - Produced by Ken Cook Co. with mediaioff

Illustration NA8403

HORN KIT (Cont'd)
(Manual Controls, AHC & ACS)

Ref No	Part Number	Description	Remarks	Serial Number	Qty
1	7223271	KIT, HORN	W/Ref. 2-10		1
2	55D5	NUT			1
2	55D5	NUT	not in kit		2
3	35C524	BOLT			1
3	35C524	BOLT	not in kit		2
4	35C516	BOLT 10			1
5	7225718	HARNESS, HORN	180 mm (7") long		1
5	7183295	HARNESS, HORN	225 mm (9") long - not in kit		1
6	7222767	SPACER			1
7	7221530	HORN, ALARM			1
8	7177690	MOUNT			1
9	6684641	MOUNT			1
10	6990338ENUS	INSTRUCTIONS	WAS 6990338 [A]		1

Page 6684 OSS# 6300322913 - All rights reserved by Bobcat Company - 08/04/2017 - 06:30:16 - Produced by Ken Cook Co. with mediaioff

HORN KIT
(Selectable Joystick Controls)

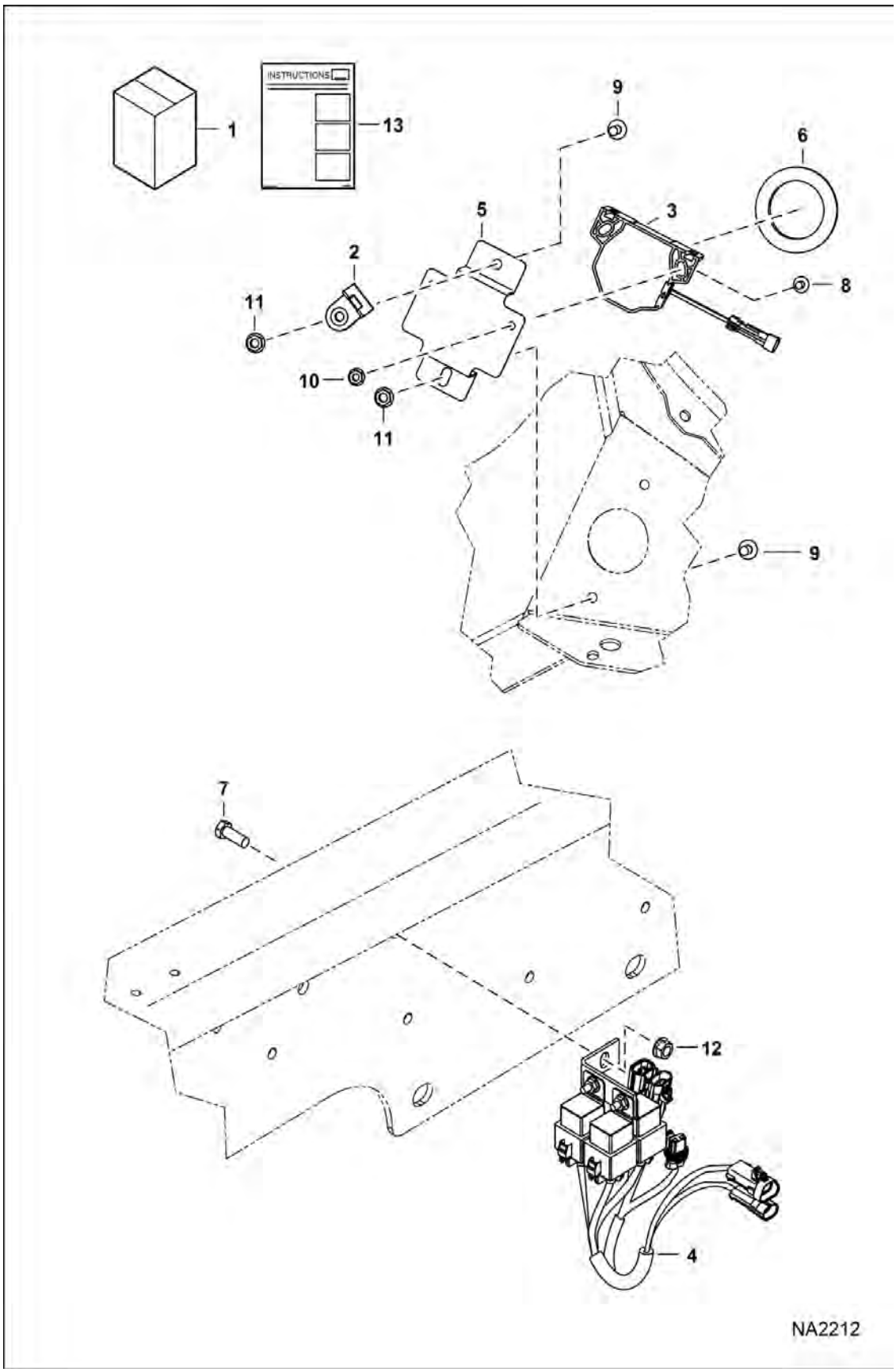

Page 669 - OSS# 6300322913 - All rights reserved by Bobcat Company - 08/04/2017 - 06:30:16 - Produced by Ken Cook Co. with mediaioff

HORN KIT (Cont'd)
(Selectable Joystick Controls)

Ref No	Part Number	Description	Remarks	Serial Number	Qty
1		KIT, HORN W/JOYSTICK	See Illustration HORN KIT / NA8402 - NLA - Was 7173595 [A]		1
2	6684641	MOUNT			1
3	7001044	HORN, ALARM			1
4	7151940	HARNESS, HORN			1
5	7171081	BRACKET, HORN			1
6	7171088	GROMMET			1
7	17C616	BOLT 5			1
8	35C410	BOLT 5			2
9	35C516	BOLT 10			2
10	55D4	NUT			2
11	55D5	NUT			2
12	97D6	NUT 10			1
13	6987237	INSTRUCTIONS			1

Page 7/8 OSS# 6300322913 - All rights reserved by Bobcat Company - 08/04/2017 - 06:30:16 - Produced by Ken Cook Co. with mediaioff

HORN KIT
(Selectable Joystick Controls)

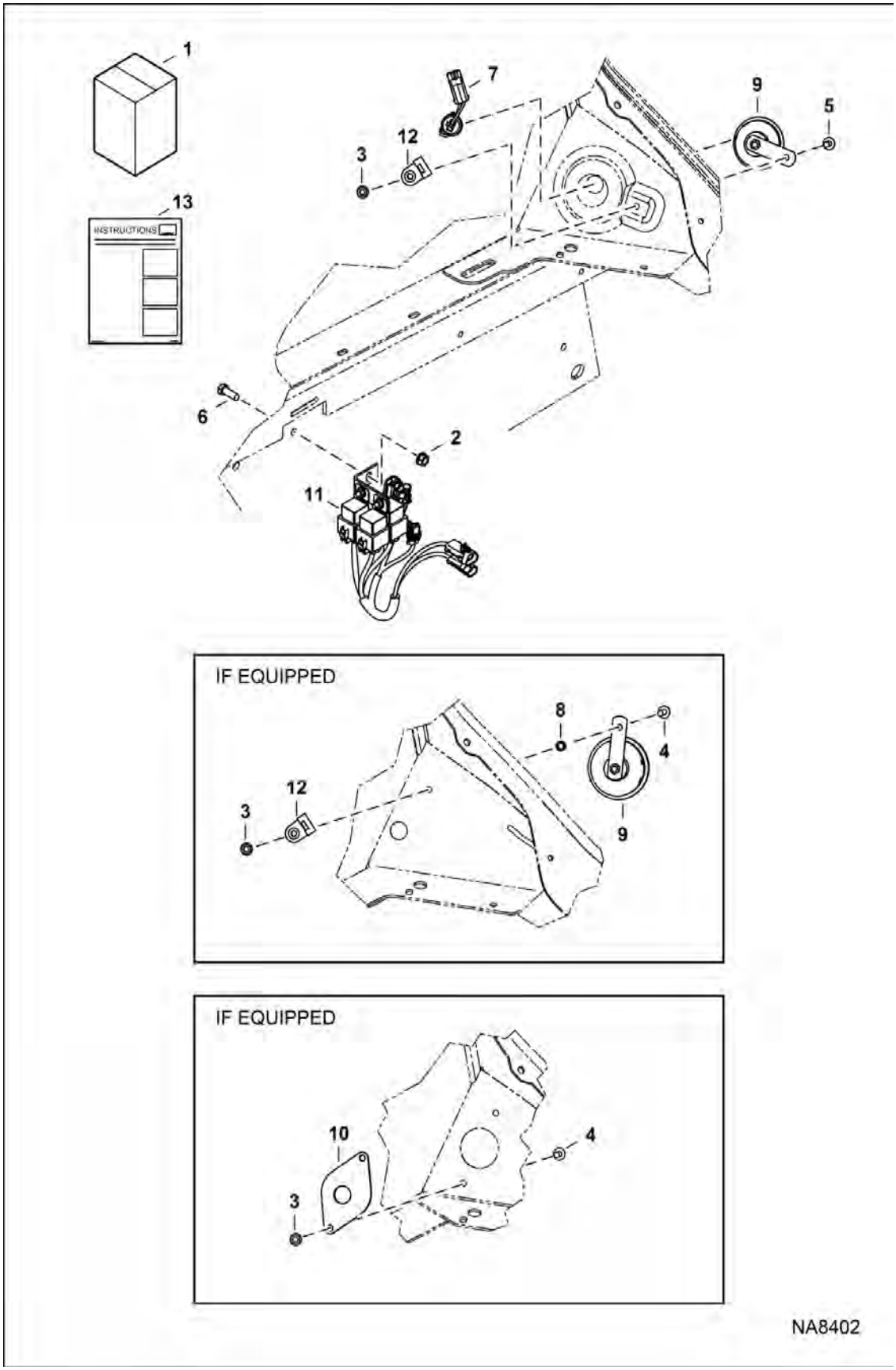

Page 671 - OSS# 6300322913 - All rights reserved by Bobcat Company - 08/04/2017 - 06:30:16 - Produced by Ken Cook Co. with mediaioff

HORN KIT (Cont'd)
(Selectable Joystick Controls)

Ref No	Part Number	Description	Remarks	Serial Number	Qty
1	7223272	KIT, HORN W/JOYSTICK	W/Ref. 2-13		1
2	97D6	NUT 10			1
3	55D5	NUT			1
3	55D5	NUT	not in kit		2
4	35C524	BOLT			1
4	35C524	BOLT	not in kit		2
5	35C516	BOLT 10			1
6	17C616	BOLT 5			1
7	7225718	HARNESS, HORN	180 mm (7") long		1
7	7183295	HARNESS, HORN	225 mm (9") long - not in kit		1
8	7222767	SPACER			1
9	7221530	HORN, ALARM			1
10	7177690	MOUNT			1
11	7151940	HARNESS, HORN			1
12	6684641	MOUNT			1
13	6990338ENUS	INSTRUCTIONS	WAS 6990338 [A]		1

Page 7/7 OSS# 6300322913 - All rights reserved by Bobcat Company - 08/04/2017 - 06:30:16 - Produced by Ken Cook Co. with mediaioff

HOSE GUIDE ASSY

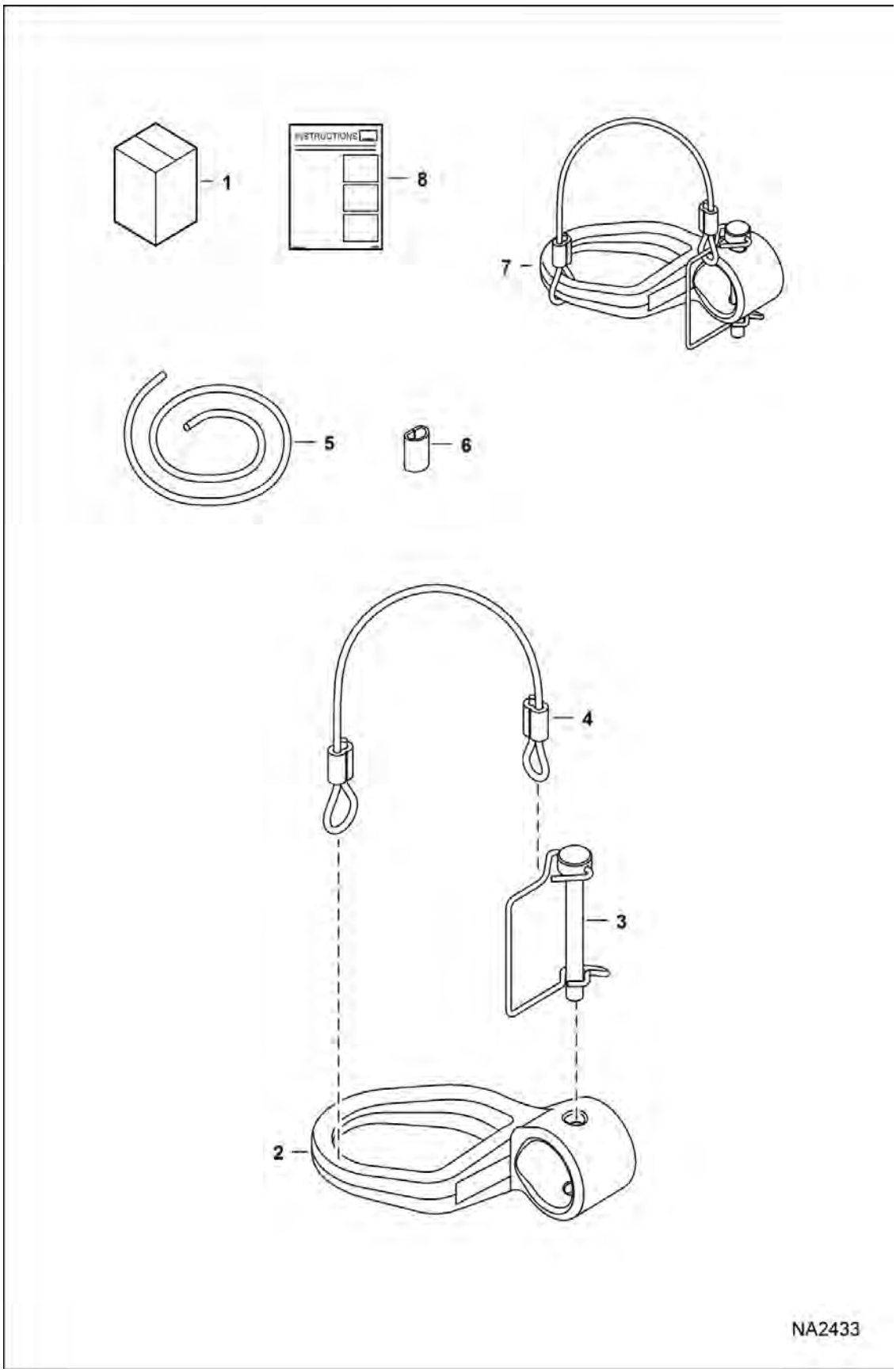

Page 673 - OSS# 6300322913 - All rights reserved by Bobcat Company - 08/04/2017 - 06:30:16 - Produced by Ken Cook Co. with mediaioff

HOSE GUIDE ASSY (Cont'd)

Ref No	Part Number	Description	Remarks	Serial Number	Qty
1	7187118	KIT, GUIDE HOSE	Ref. 7 & 8		1
2		GUIDE	NSS - Order Ref. 7		1
3	7161559	PIN, SNAPPER			1
4		CABLE ASSY	NSS - 304,8 mm (12") long - Order Ref. 5 & 6		1
5	6558309	CABLE BULK/FT	bulk - sold per foot		x
6	6558310	SLEEVE			2
7	7161953	GUIDE, HOSE ASSY	Ref. 2-4		1
8	6989526ENUS	INSTRUCTIONS	Was 6989526 [A]		1

Page 74 OSS# 6300322913 - All rights reserved by Bobcat Company - 08/04/2017 - 06:30:16 - Produced by Ken Cook Co. with mediaioff

HOSE GUIDE POST KIT

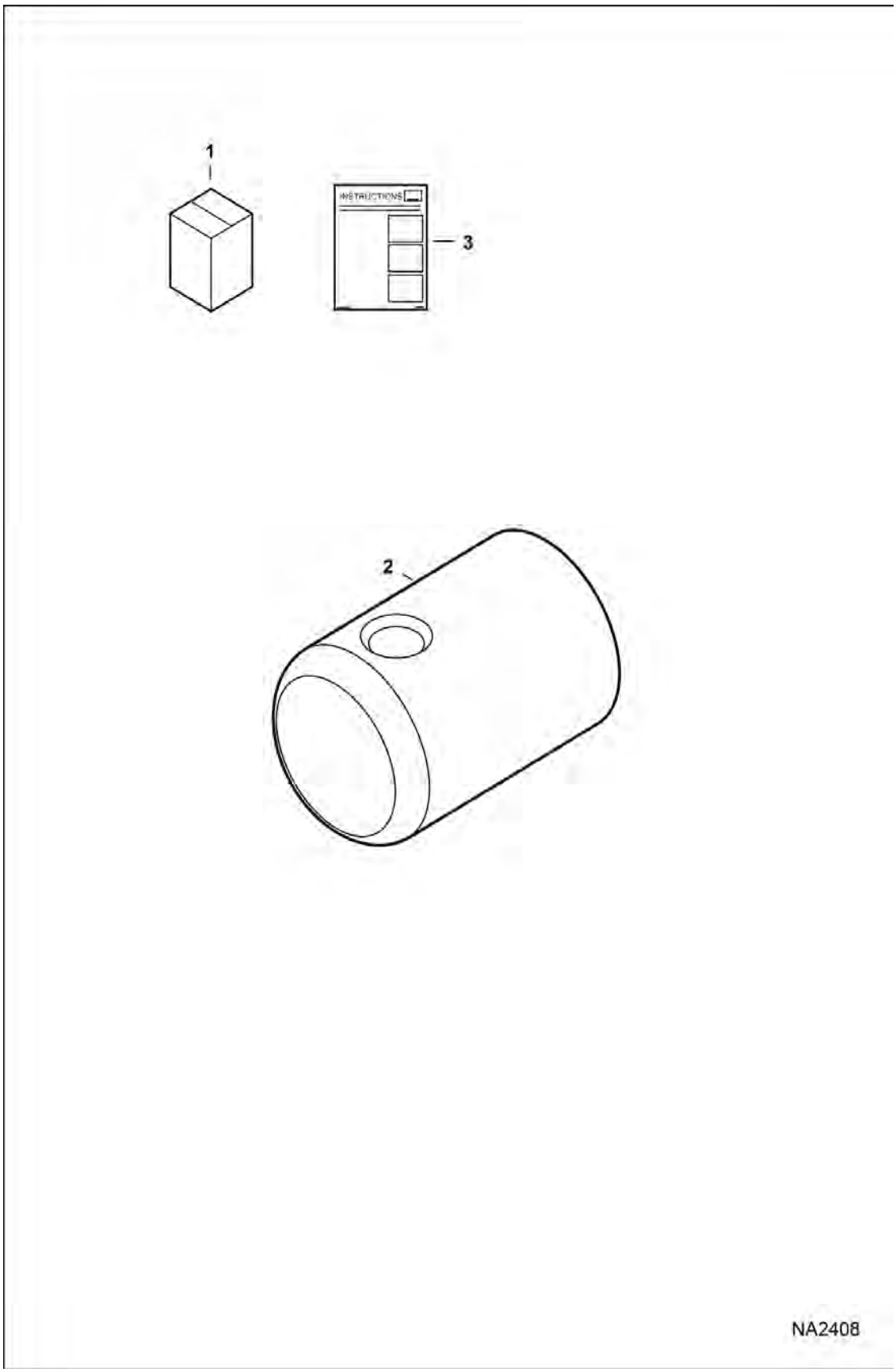

Page 675 - OSS# 6300322913 - All rights reserved by Bobcat Company - 08/04/2017 - 06:30:16 - Produced by Ken Cook Co. with mediaioff

HOSE GUIDE POST KIT (Cont'd)

Ref No	Part Number	Description	Remarks	Serial Number	Qty
1		KIT, POST GUIDE HOSE	NLA - Ref. 2 & 3 - Order components - Was 7177863 [A]		1
2	7170300	PIN, PIVOT			1
3	6987421ENUS	INSTRUCTIONS	Was 6987421 [A]		1

Page 7/8 OSS# 6300322913 - All rights reserved by Bobcat Company - 08/04/2017 - 06:30:16 - Produced by Ken Cook Co. with mediaioff

INTERMITTENT WIPER KIT
(Cab Door)

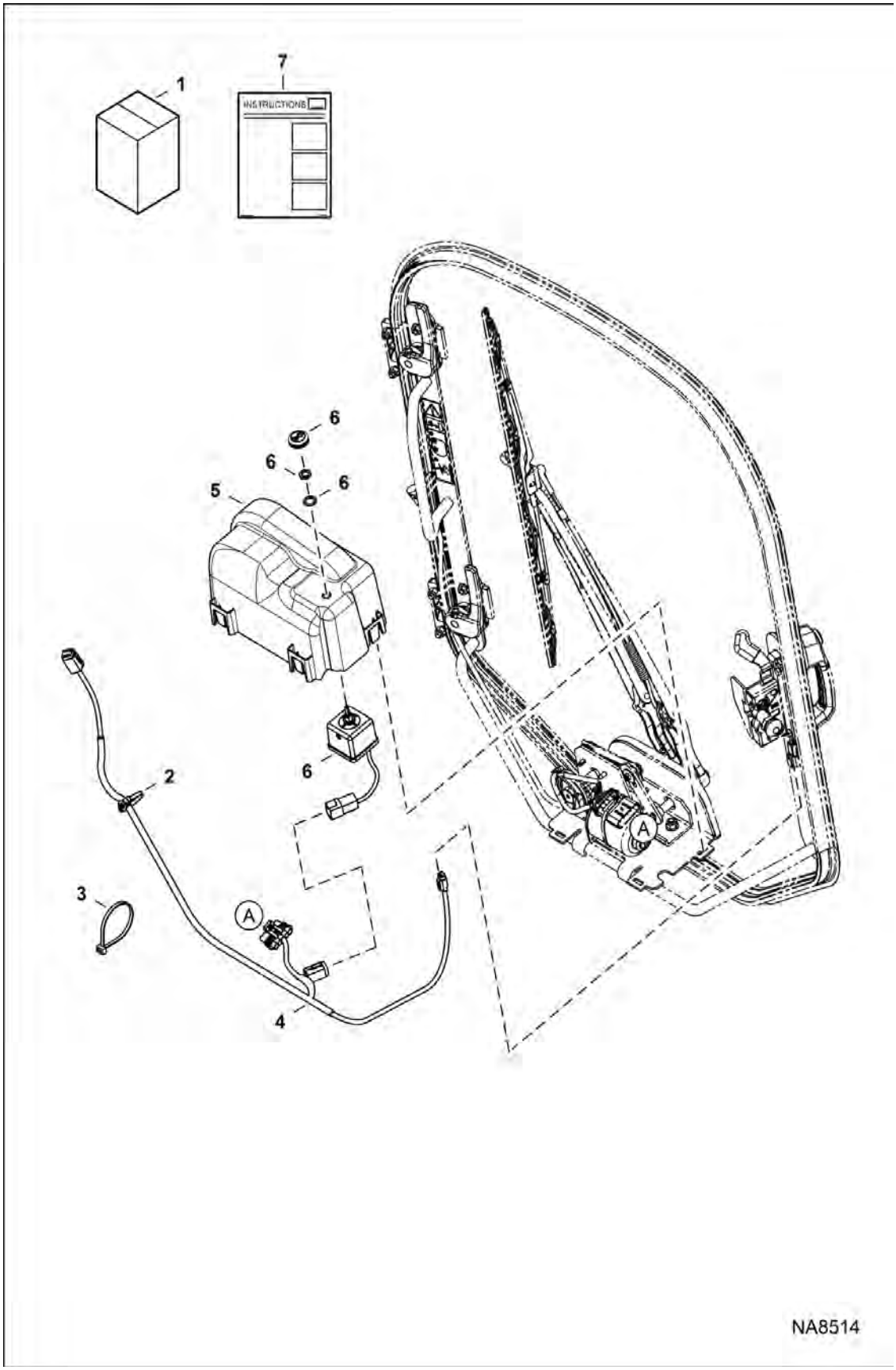

Page 677 - OSS# 6300322913 - All rights reserved by Bobcat Company - 08/04/2017 - 06:30:16 - Produced by Ken Cook Co. with mediaioff

INTERMITTENT WIPER KIT (Cont'd)
(Cab Door)

Ref No	Part Number	Description	Remarks	Serial Number	Qty
1	7240148	KIT, WIPER INTERMITTENT	W/Ref. 2-7		1
2	6610510	STRAP, TIE 10			3
3	6624289	STRAP, TIE			5
4	7231771	HARNESS, WIPER			1
5	7232529	COVER, WIPER			1
6	7237096	CONTROL, WIPER			1
7	6990939ENUS	INSTRUCTIONS	Was 6990939 [A]		1

Page 7/8 OSS# 6300322913 - All rights reserved by Bobcat Company - 08/04/2017 - 06:30:16 - Produced by Ken Cook Co. with mediaioff

ISOLATOR MOUNT KIT
(Fabricated Mounts)

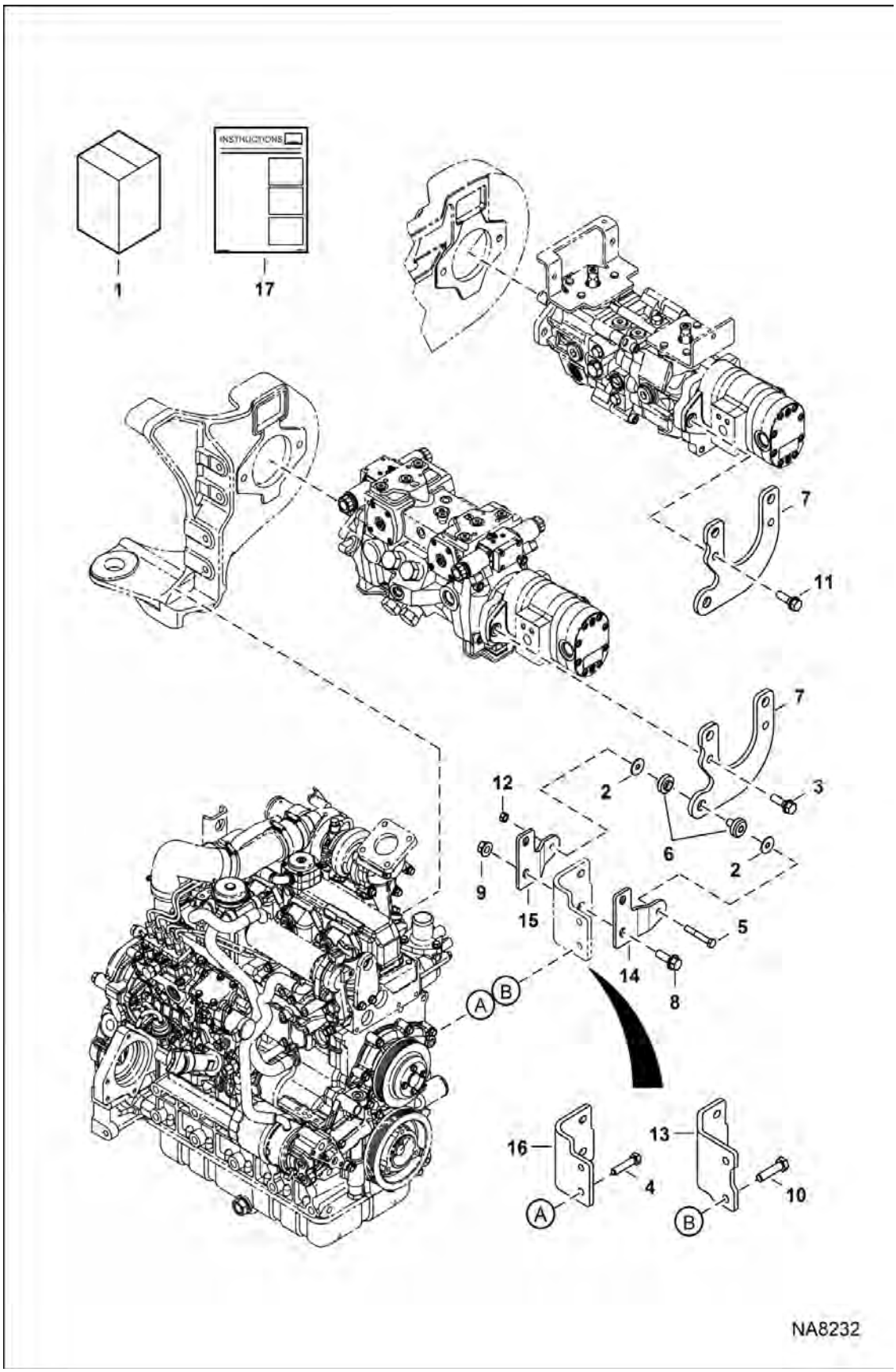

Page 679 - OSS# 6300322913 - All rights reserved by Bobcat Company - 08/04/2017 - 06:30:16 - Produced by Ken Cook Co. with mediaioff

ISOLATOR MOUNT KIT (Cont'd)

(Fabricated Mounts)

Ref No	Part Number	Description	Remarks	Serial Number	Qty
1	7239976	KIT, MOUNT ISOLATOR	Ref. 2-17		1
2	6737388	WASHER			2
3	7131273	SCREW			2
4	7227033	BOLT	V3307 ENGINE ONLY		2
5	17C640	BOLT	Was 1C640 [D]		1
6	7223184	MOUNT, LOAD ISOLATOR			1
7	7193687	BRACKET, MOUNTING			1
8	31C824	BOLT 10			2
9	83D8	NUT 5			2
10	7213595	BOLT	V3800 ENGINE ONLY		2
11	45C828	BOLT			2
12	53D6	NUT			1
13	7222083	MOUNT, BRACKET	V3800 ENGINE ONLY		1
14	7222080	BRACKET, MOUNTING			1
15	7222081	BRACKET, MOUNTING			1
16	7222082	MOUNT, BRACKET	V3307 ENGINE ONLY		1
17	6990931ENUS	INSTRUCTIONS	Was 6990931		1

Page 1 of 1 OSS# 6300322913 - All rights reserved by Bobcat Company - 08/04/2017 - 06:30:16 - Produced by Ken Cook Co. with mediaioff

KEYLESS PANEL KIT
(Push Button Switch)

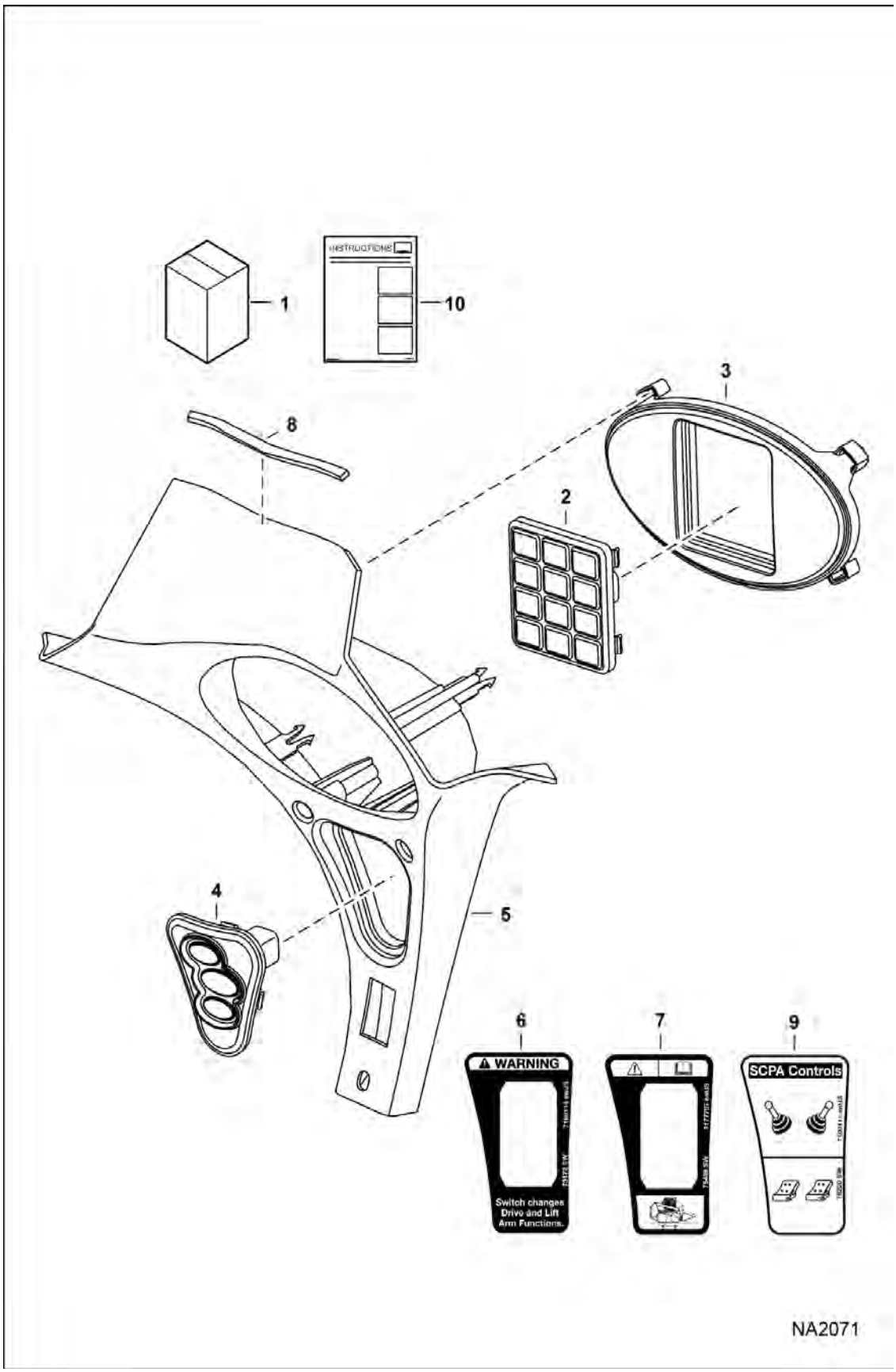

Page 681 - OSS# 6300322913 - All rights reserved by Bobcat Company - 08/04/2017 - 06:30:16 - Produced by Ken Cook Co. with mediaioff

KEYLESS PANEL KIT (Cont'd)
(Push Button Switch)

Ref No	Part Number	Description	Remarks	Serial Number	Qty
1		KIT, START KEYLESS	See Illustration KEYLESS PANEL SWITCH / NA6348 - NLA - Was 7129289 [A]		1
2	6693712	KEYPAD, PANEL			1
3	7003027	INSERT, KEYPAD			1
4		SWITCH, IGN	NLA - Was 7003033 [A]		1
5	7155791	PANEL, RH			1
6	7168114	DECAL, SWITCH			1
7	7177707	DECAL			1
8	7187104	SEAL			1
9	7190111	DECAL, CONTROL	control		1
10	6987281	INSTRUCTIONS			1

Page 824 OSS# 6300322913 - All rights reserved by Bobcat Company - 08/04/2017 - 06:30:16 - Produced by Ken Cook Co. with mediaioff

KEYLESS PANEL KIT
(Deluxe) (Push Button Switch)

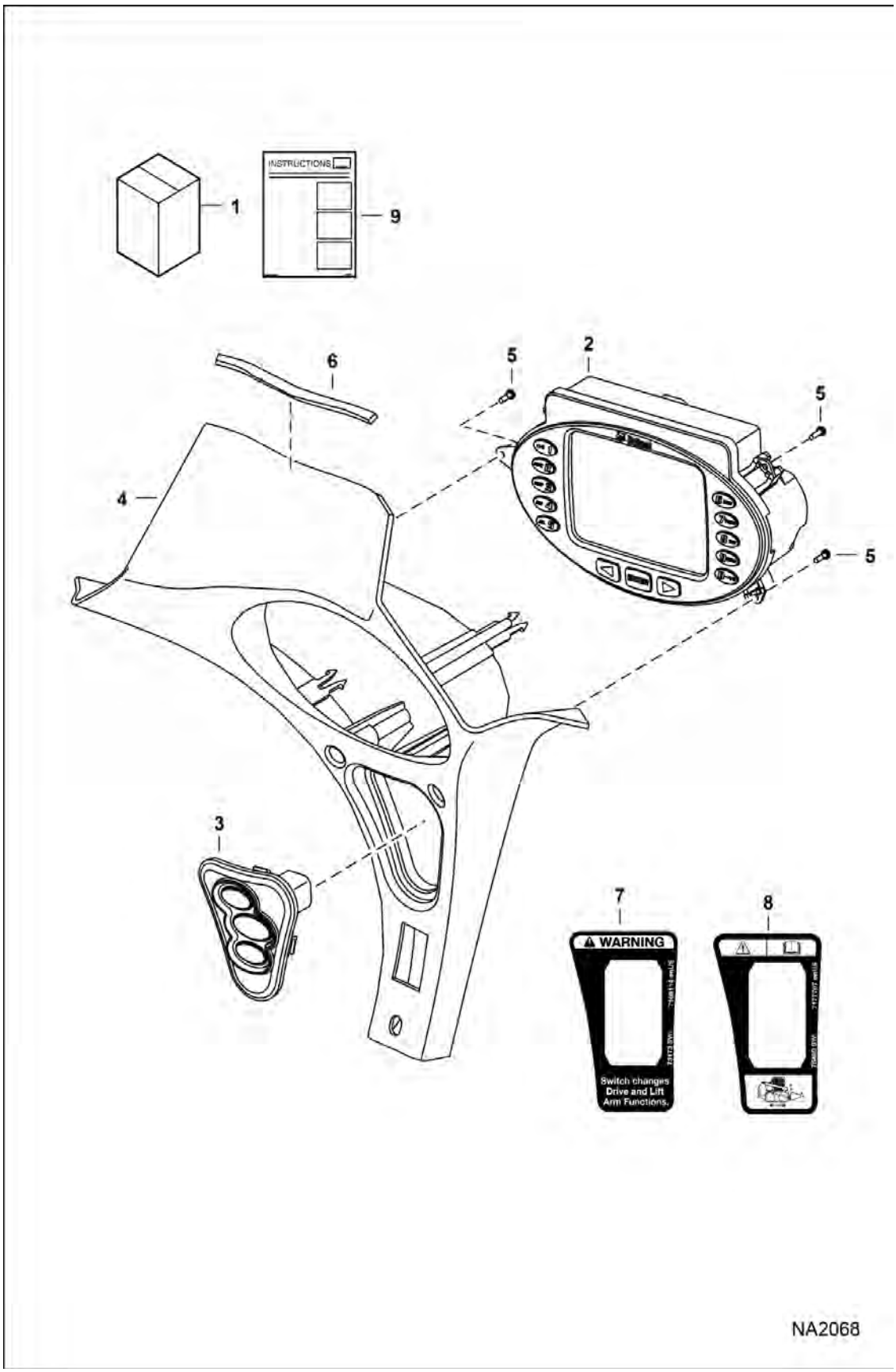

Page 693 - OSS# 6300322913 - All rights reserved by Bobcat Company - 08/04/2017 - 06:30:16 - Produced by Ken Cook Co. with mediaioff

KEYLESS PANEL KIT (Cont'd)

(Deluxe) (Push Button Switch)

Ref No	Part Number	Description	Remarks	Serial Number	Qty
1		KIT, PANEL DLX	See Illustration KEYLESS PANEL KIT / NA6347 - NLA - Was 7128344 [A]		1
2	6693413	DISPLAY, DLX			1
3		SWITCH, IGN	NLA - Was 7003033 [A]		1
4	7155791	PANEL, RH			1
5	7179008	SCREW, PLASTIC			3
6	7187104	SEAL			1
7	7168114	DECAL, SWITCH			1
8	7177707	DECAL	switch - EMEA no-text		1
9	6987280	INSTRUCTIONS			1

Page 684 OSS# 6300322913 - All rights reserved by Bobcat Company - 08/04/2017 - 06:30:16 - Produced by Ken Cook Co. with mediaioff

KEYLESS PANEL KIT
(Deluxe) (Rotary Switch)

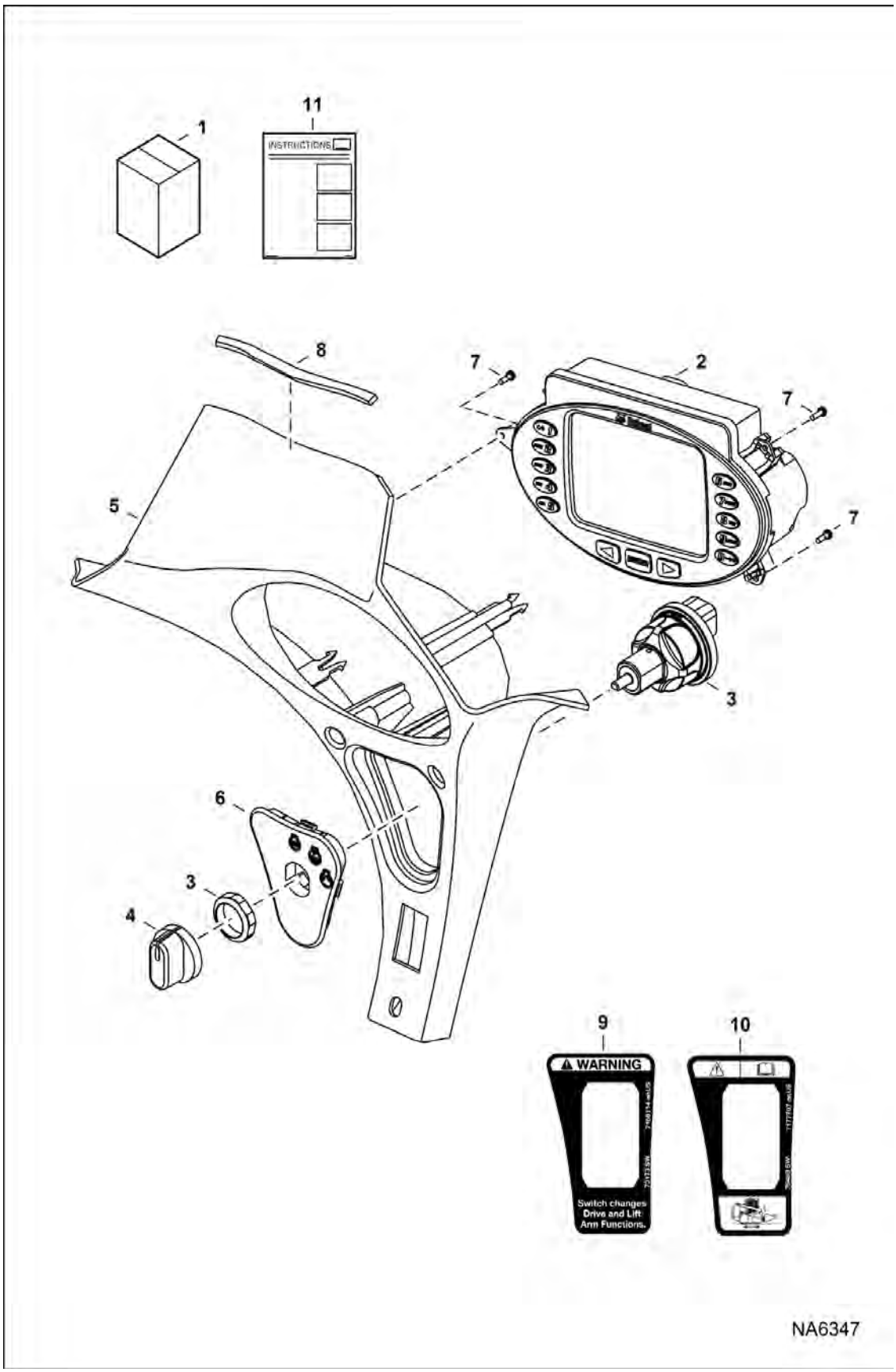

Page 695 - OSS# 6300322913 - All rights reserved by Bobcat Company - 08/04/2017 - 06:30:16 - Produced by Ken Cook Co. with mediaioff

KEYLESS PANEL KIT (Cont'd)

(Deluxe) (Rotary Switch)

Ref No	Part Number	Description	Remarks	Serial Number	Qty
1	7213928	KIT, PANEL DLX	Ref. 2-8, & 11		1
2	6693413	DISPLAY, DLX			1
3	7023022	SWITCH ROTARY			1
4	7023588	KNOB			1
5	7155791	PANEL, RH			1
6	7163589	INSERT, SWITCH			1
7	7179008	SCREW, PLASTIC			3
8	7187104	SEAL			1
9	7168114	DECAL, SWITCH	not in kit		1
10	7177707	DECAL	not in kit - EMEA no-text		1
11	6990343ENUS	INSTRUCTIONS	WAS 6990343 [A]		1

Page 1 of 1 OSS# 6300322913 - All rights reserved by Bobcat Company - 08/04/2017 - 06:30:16 - Produced by Ken Cook Co. with mediaioff

KEYLESS PANEL SWITCH
(Rotary Switch)

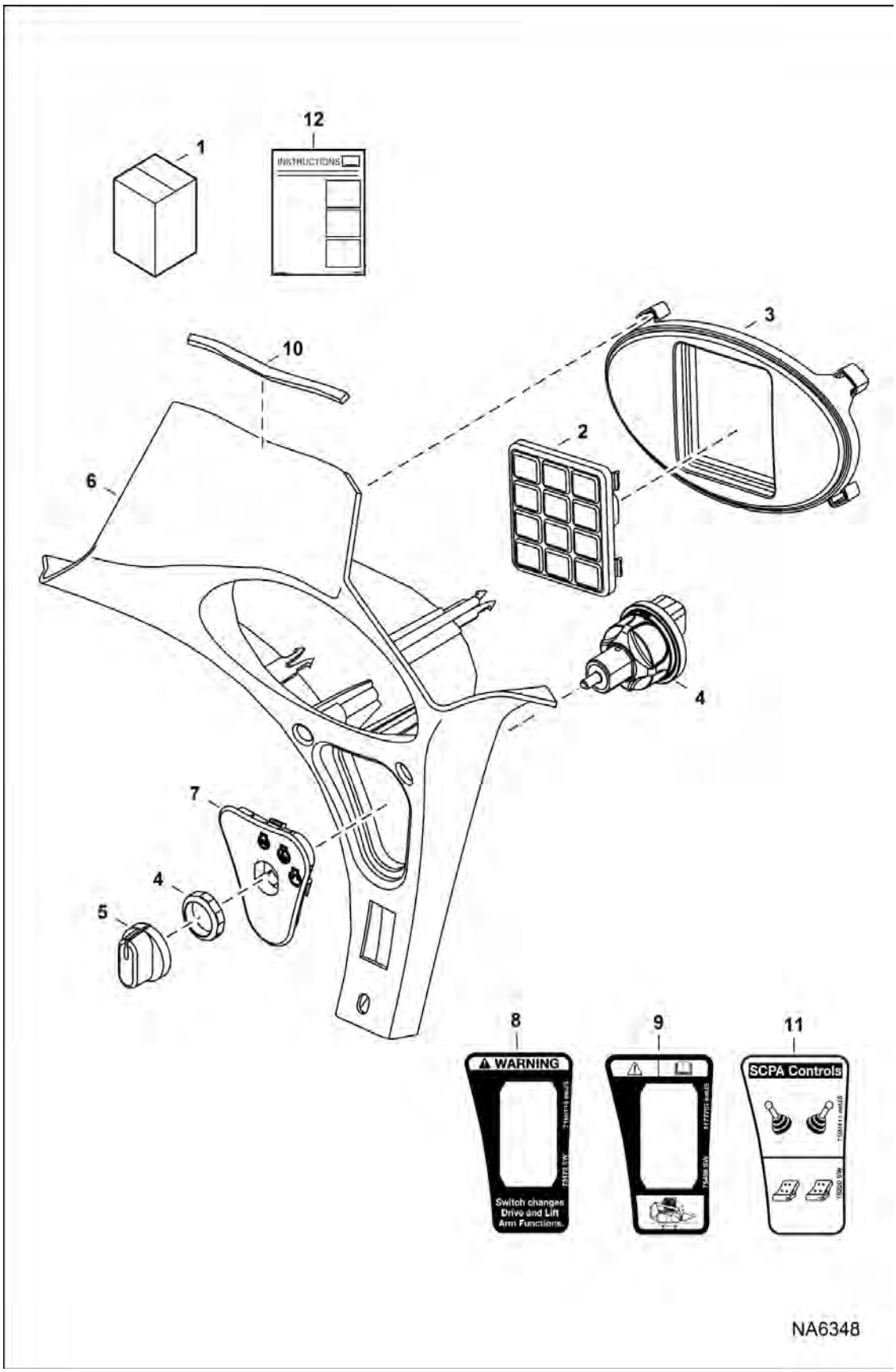

Illustration NA6348

Page 687 - OSS# 6300322913 - All rights reserved by Bobcat Company - 08/04/2017 - 06:30:16 - Produced by Ken Cook Co. with mediaioff

KEYLESS PANEL SWITCH (Cont'd)

(Rotary Switch)

Ref No	Part Number	Description	Remarks	Serial Number	Qty
1	7213929	KIT, PANEL KEYLESS	Ref. 2-12		1
2	6693712	KEYPAD, PANEL			1
3	7003027	INSERT, KEYPAD			1
4	7023022	SWITCH ROTARY			1
5	7023588	KNOB			1
6	7155791	PANEL, RH			1
7	7163589	INSERT, SWITCH			1
8	7168114	DECAL, SWITCH			1
9	7177707	DECAL			1
10	7187104	SEAL			1
11	7190111	DECAL, CONTROL			1
12	6990344ENUS	INSTRUCTIONS	WAS 6990344 [A]		1

Page 680 OSS# 6300322913 - All rights reserved by Bobcat Company - 08/04/2017 - 06:30:16 - Produced by Ken Cook Co. with mediaioff

LIFT CYLINDER CUSHION
(Piston) (63,5 mm) (2.5") long

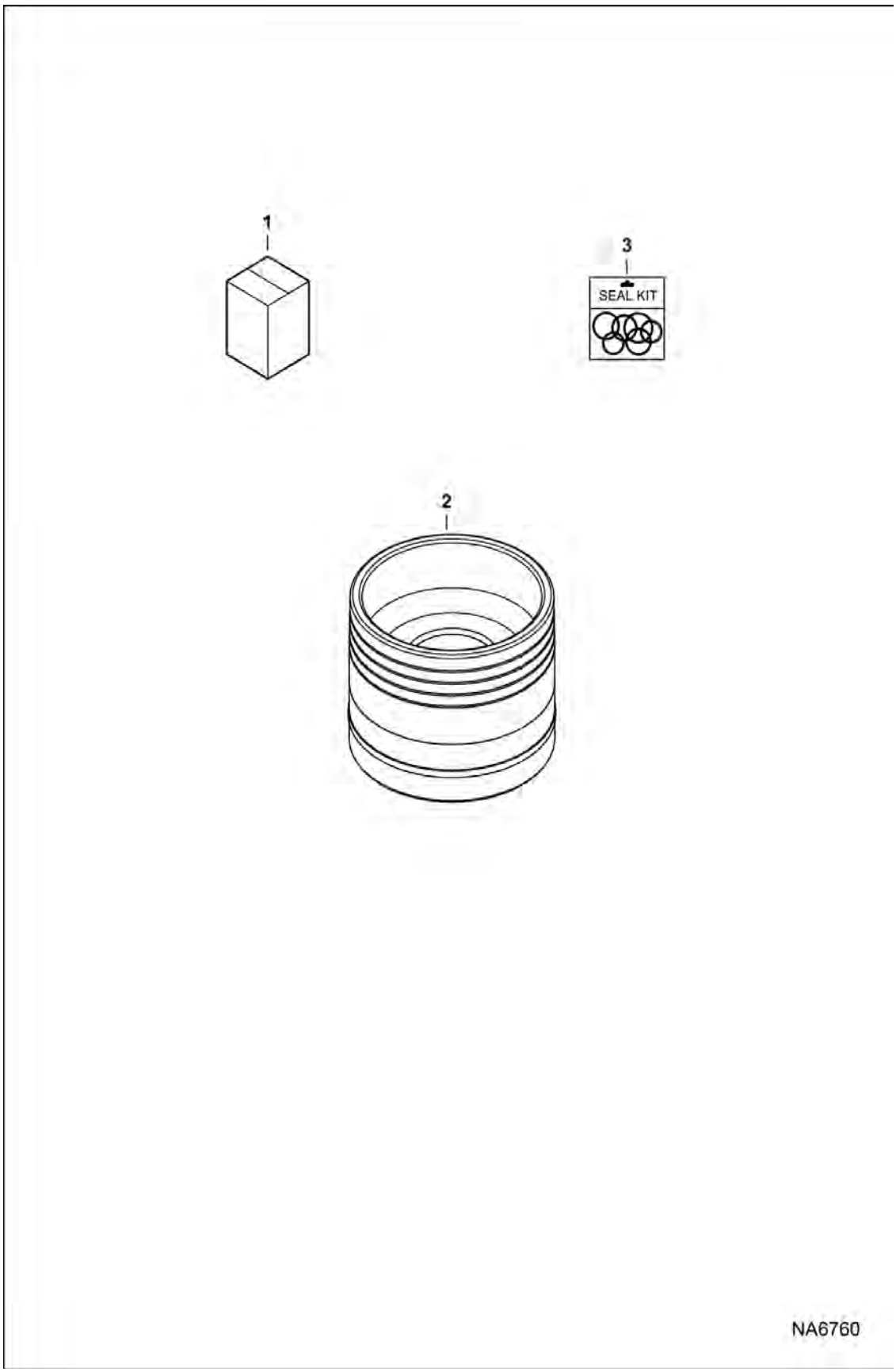

Page 689 - OSS# 6300322913 - All rights reserved by Bobcat Company - 08/04/2017 - 06:30:16 - Produced by Ken Cook Co. with mediaioff

LIFT CYLINDER CUSHION (Cont'd)

(Piston) (63,5 mm) (2.5") long

Ref No	Part Number	Description	Remarks	Serial Number	Qty
1		KIT, CUSHION CYL	NLA - Order (2) each of Ref. 2 & 3 - 63,5 mm (2.5") long - LH and RH lift cylinders must be serviced with same size pistons - Was 7223909 [A]		1
2	7207408	PISTON, CYL LIFT	63,5 mm (2.5") long - LH and RH lift cylinders must be serviced with same size pistons		2
3	7225639	KIT, SEAL	See Illustration LIFT CYLINDER / NA6139 complete cylinder		2

Page 1004 OSS# 6300322913 - All rights reserved by Bobcat Company - 08/04/2017 - 06:30:16 - Produced by Ken Cook Co. with mediaioff

LIFT KIT
(Four Point)

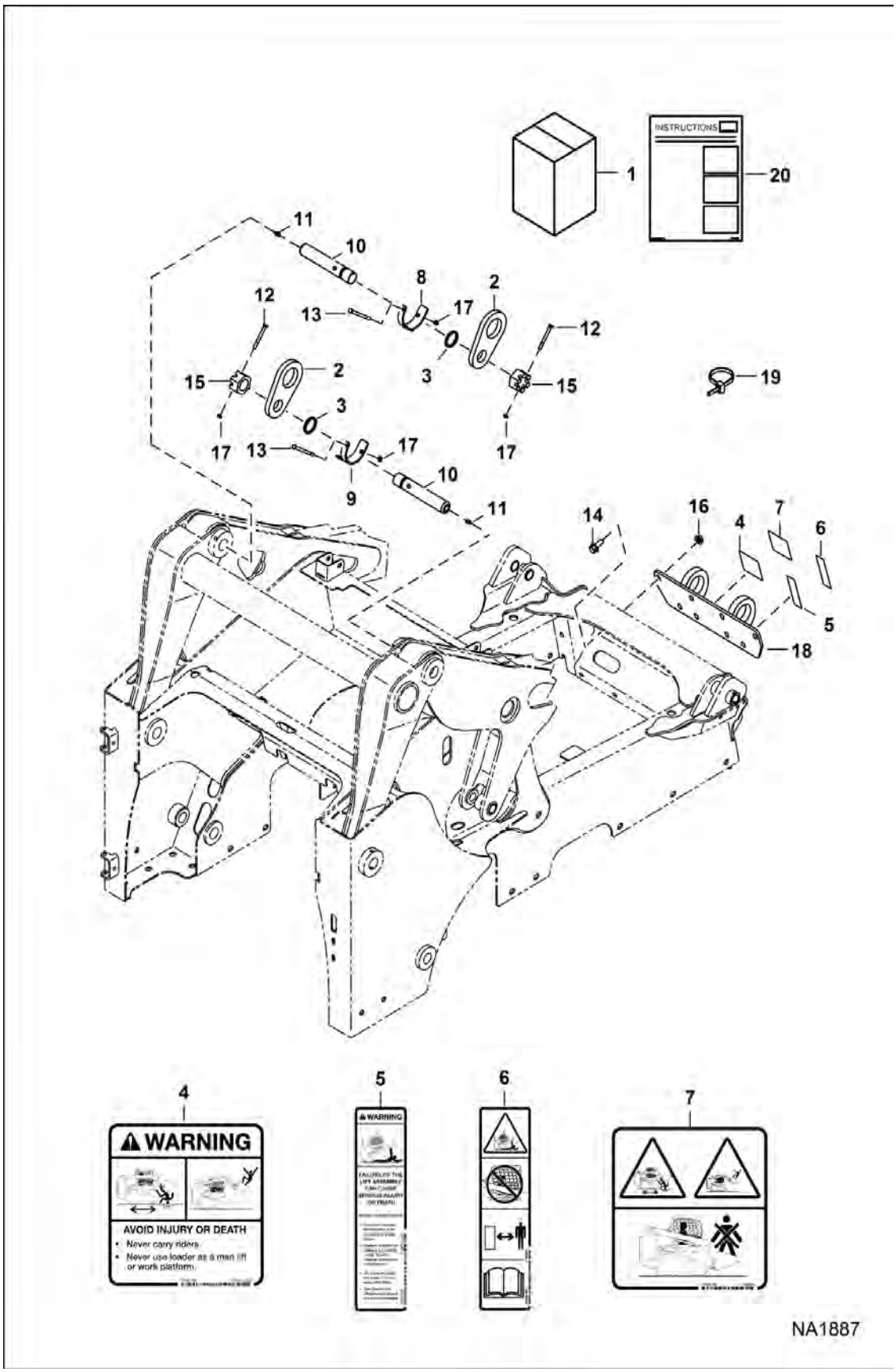

Page 691 - OSS# 6300322913 - All rights reserved by Bobcat Company - 08/04/2017 - 06:30:16 - Produced by Ken Cook Co. with mediaioff

LIFT KIT (Cont'd)
(Four Point)

Ref No	Part Number	Description	Remarks	Serial Number	Qty
1	7156605	KIT, LIFT	Ref. 2-20		1
1		RESEALING PLUG KIT	See Illustration RESEALING KIT / NA2775		1
2	7162933	LIFT EYE			2
3	7163507	WASHER, SPRING			2
4	7167996	DECAL, WARNING			1
5	7168019	DECAL, WARNING			1
6	7168020	DECAL, WARNING	no text		1
7	7168040	DECAL, WARNING			1
8	7185837	BRACKET			1
9	7185838	BRACKET			1
10	7188343	PIN			2
11	10H25	FITTING, GREASE 5			2
12	17C656	BOLT			2
13	17C680	BOLT			2
14	31C1024	BOLT			8
15	4D28	NUT			2
16	53D10	NUT			8
17	85D6	NUT, 5			4
18	7156606	BRACKET, ASSY			1
19	6624289	STRAP, TIE			4
20	6987219ENUS	INSTRUCTIONS	Was 6987219 [A]		1

Page 1224 OSS# 6300322913 - All rights reserved by Bobcat Company - 08/04/2017 - 06:30:16 - Produced by Ken Cook Co. with mediaoff

LIFT KIT
(Single Point)
(S/N A3P811001 - A3P813485, A3P911001 - A3P912191)

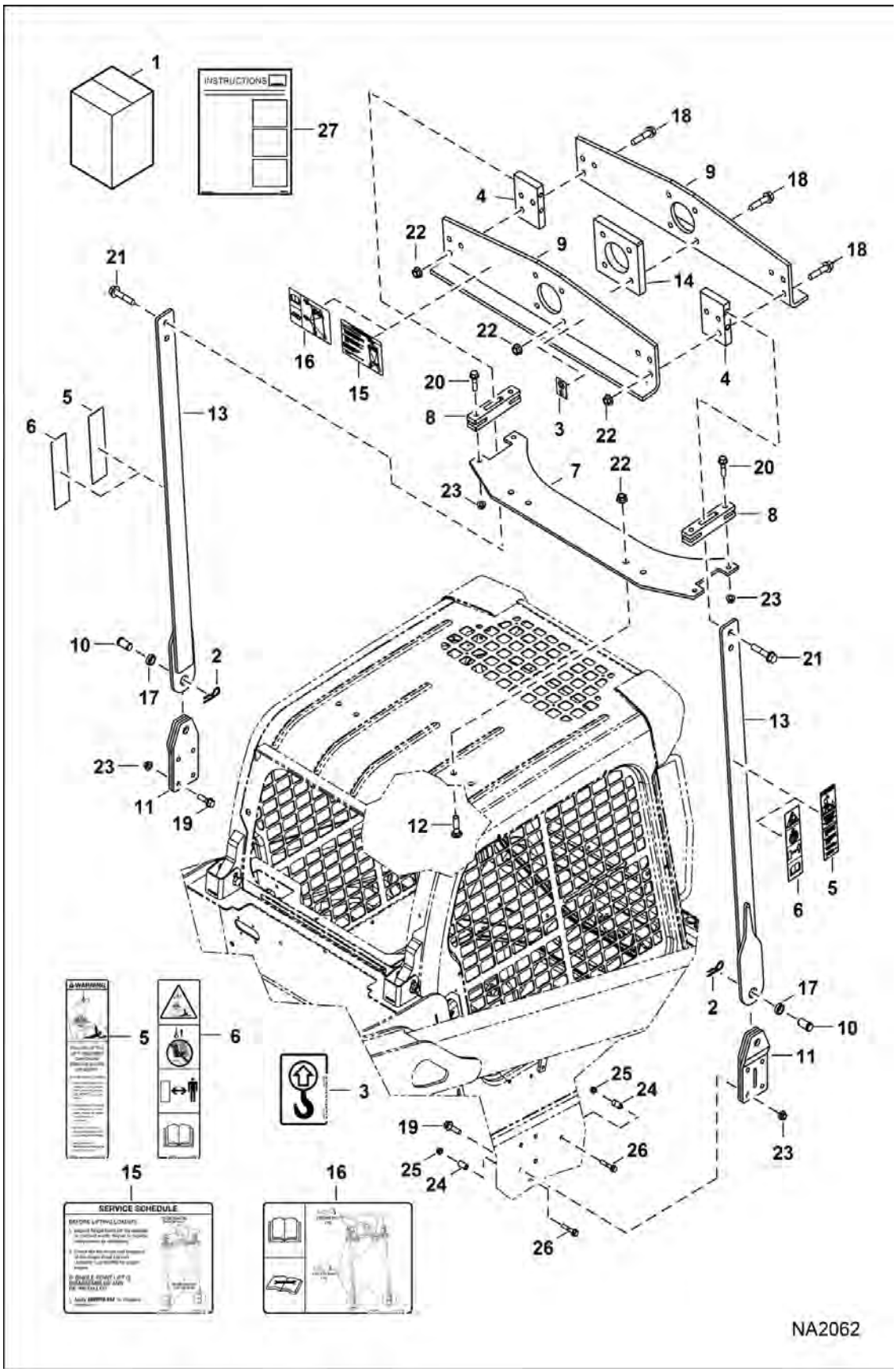

Illustration NA2062

Model T770 MT3
6989477

Page 693 - OSS# 6300322913 - All rights reserved by Bobcat Company - 08/04/2017 - 06:30:16 - Produced by Ken Cook Co. with mediaioff

LIFT KIT (Cont'd)
(Single Point)
(S/N A3P811001 - A3P813485, A3P911001 - A3P912191)

Ref No	Part Number	Description	Remarks	Serial Number	Qty
1	7193579	KIT, LIFT SINGLE POINT	Ref. 2-27 - Was 7129295 [A]		1
1		RESEALING PLUG KIT	See Illustration RESEALING KIT / NA2775		1
2	1320075	PIN, COTTER			2
3	6533898	DECAL			2
4	7126682	BLOCK, SINGLE POINT LIFT			2
5	7142141	DECAL			2
6	7142142	DECAL			2
7	7193584	MOUNT, LIFT KIT	Was 7159102		1
8	7160760	MOUNT			2
9	7160779	PLATE			2
10	7161536	PIN, CLEVIS			2
11	7163748	MOUNT			2
12	7164686	BOLT, CARRIAGE			4
13	7166334	ARM LIFT			2
14	7166831	BLOCK			1
15	7168021	DECAL			2
16	7168022	DECAL			2
17	7168159	BUSHING			2
18	31C1044	BOLT			10
19	31C828	BOLT			8
20	31C832	BOLT			4
21	49C1048	BOLT			4
22	53D10	NUT			14
23	53D8	NUT			12
24	7199872	SPACER, TUBE			2
25	97D6	NUT 10			2
26	31C632	BOLT			2
27	6990240ENUS	INSTRUCTIONS	Was 6987217 - Was 6990240 [A]		1

Page 1 of 1 OSS# 6300322913 - All rights reserved by Bobcat Company - 08/04/2017 - 06:30:16 - Produced by Ken Cook Co. with mediaioff

LIFT KIT
(Single Point)
(S/N A3P813486 & Above, A3P912192 & Above)

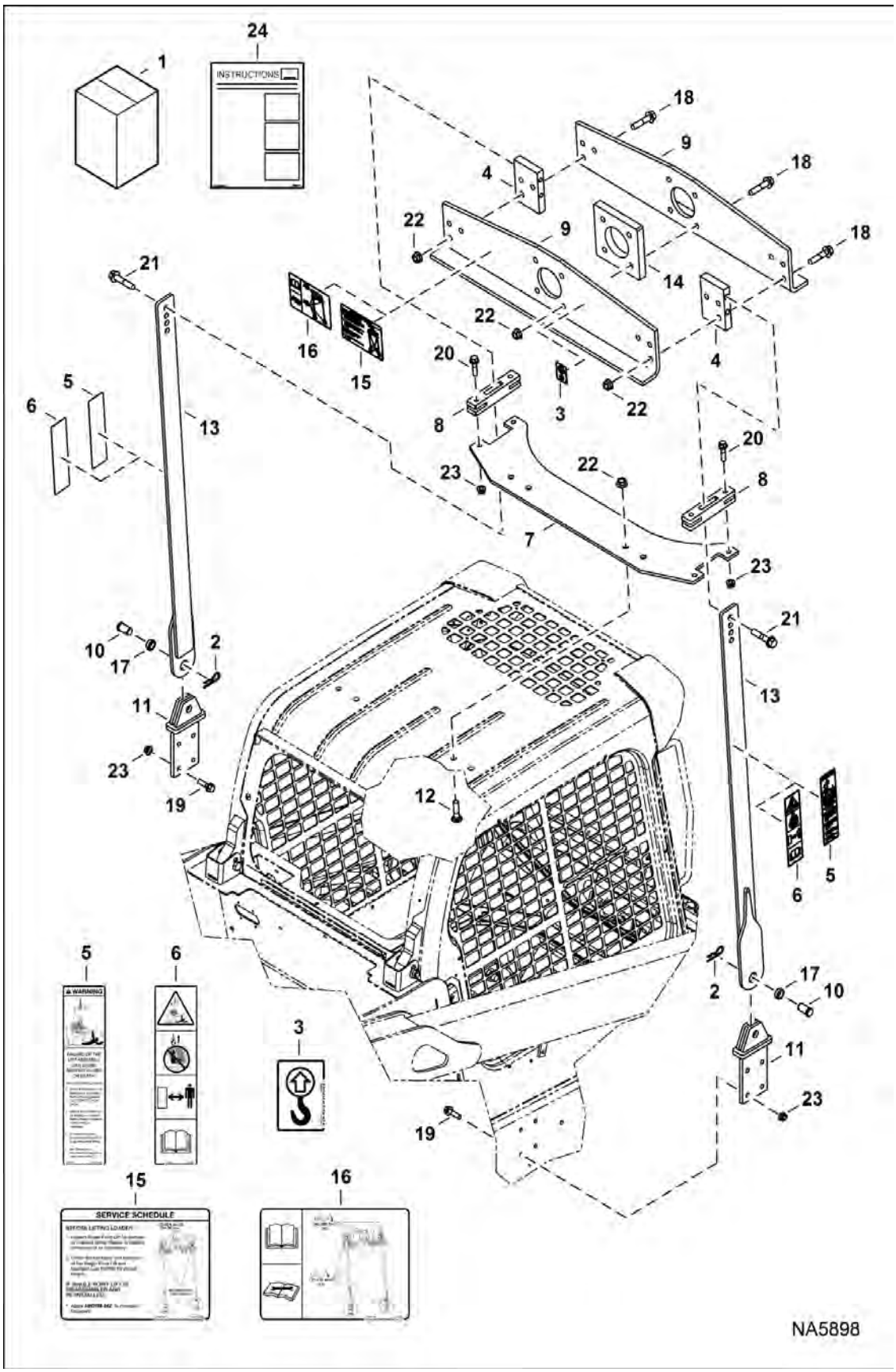

Illustration NA5898

Model T770 MT3
6989477

Page 695 - OSS# 6300322913 - All rights reserved by Bobcat Company - 08/04/2017 - 06:30:16 - Produced by Ken Cook Co. with mediaioff

LIFT KIT (Cont'd)
(Single Point)
(S/N A3P813486 & Above, A3P912192 & Above)

Ref No	Part Number	Description	Remarks	Serial Number	Qty
1	7226713	KIT, LIFT SINGLE POINT	Ref. 2-24		1
1		RESEALING PLUG KIT	See Illustration RESEALING KIT / NA2775		1
2	1320075	PIN, COTTER			2
3	6533898	DECAL			2
4	7126682	BLOCK, SINGLE POINT LIFT			2
5	7142141	DECAL			2
6	7142142	DECAL			2
7	7193584	MOUNT, LIFT KIT	Was 7159102 [B,D]		1
8	7160760	MOUNT			2
9	7160779	PLATE			2
10	7161536	PIN, CLEVIS			2
11	7229198	MOUNT, LIFT KIT			2
12	7164686	BOLT, CARRIAGE			4
13	7166334	ARM LIFT			2
14	7166831	BLOCK			1
15	7168021	DECAL			2
16	7168022	DECAL			2
17	7168159	BUSHING			2
18	31C1044	BOLT			10
19	31C828	BOLT			8
20	31C832	BOLT			4
21	49C1048	BOLT			4
22	53D10	NUT			14
23	53D8	NUT			12
24	6990240ENUS	INSTRUCTIONS	Was 6990240 [A]		1

Page 688 OSS# 6300322913 - All rights reserved by Bobcat Company - 08/04/2017 - 06:30:16 - Produced by Ken Cook Co. with mediaioff

LIGHT GUARD KIT
(Front)

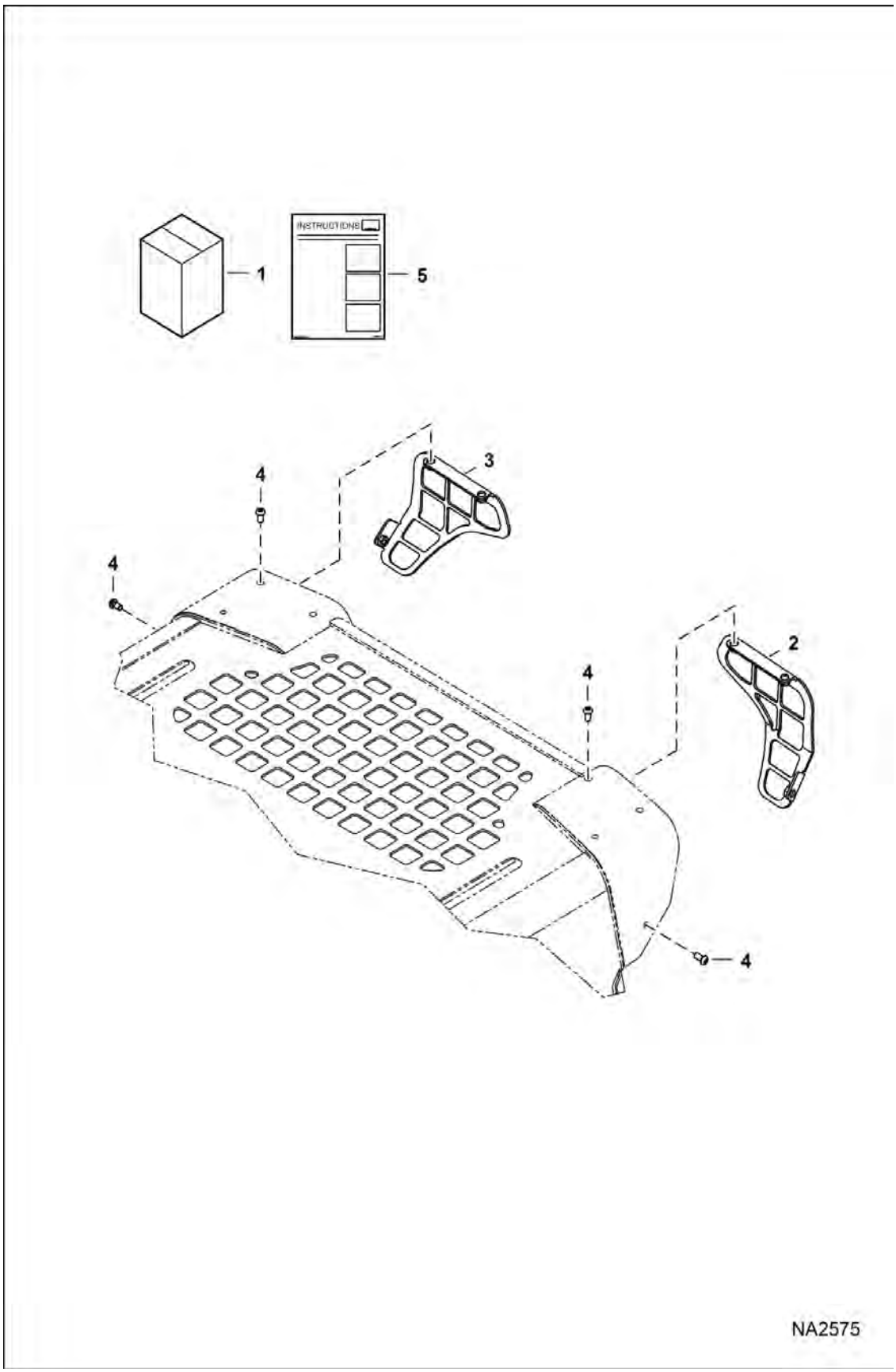

Page 697 - OSS# 6300322913 - All rights reserved by Bobcat Company - 08/04/2017 - 06:30:16 - Produced by Ken Cook Co. with mediaioff

LIGHT GUARD KIT (Cont'd)
(Front)

Ref No	Part Number	Description	Remarks	Serial Number	Qty
1	7174129	KIT, GUARD LIGHT	Ref. 2-5		1
2	7183869	GUARD, LIGHT	RH		1
3	7183870	GUARD, LIGHT	LH		1
4	25G510	BOLT			6
5	6989487ENUS	INSTRUCTIONS	Was 6989487 [A]		1

Page Built: OSS# 6300322913 - All rights reserved by Bobcat Company - 08/04/2017 - 06:30:16 - Produced by Ken Cook Co. with mediaioff

LIGHT GUARD KIT
(Rear)

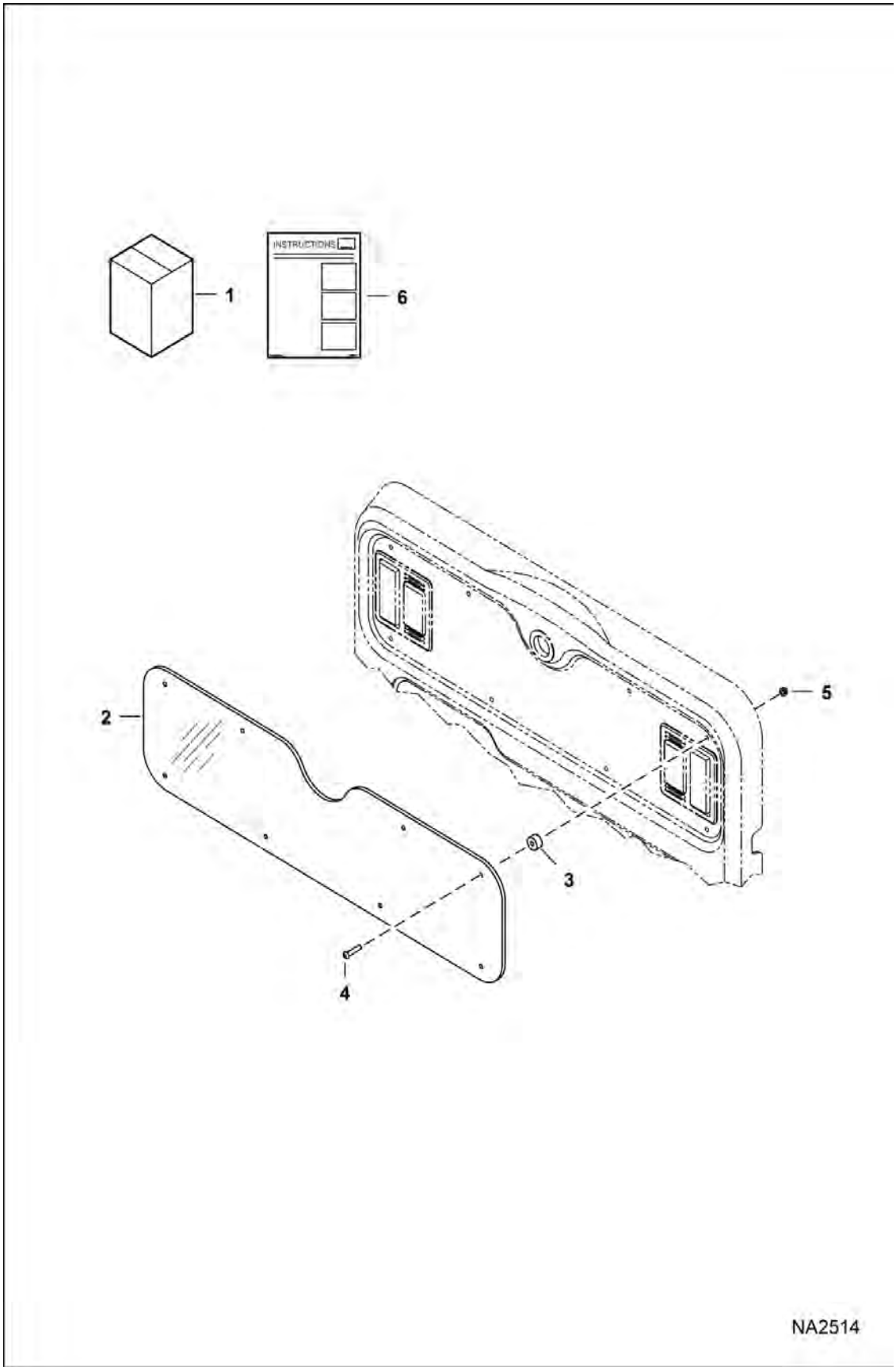

Page 699 - OSS# 6300322913 - All rights reserved by Bobcat Company - 08/04/2017 - 06:30:16 - Produced by Ken Cook Co. with mediaioff

LIGHT GUARD KIT (Cont'd)
(Rear)

Ref No	Part Number	Description	Remarks	Serial Number	Qty
1	7174128	KIT, GUARD LIGHT	Ref. 2-6		1
2	7173309	GUARD, LIGHT			2
3	7173310	SPACER			8
4	25G628	SCREW			8
5	97D6	NUT 10			8
6	6987490ENUS	INSTRUCTIONS	Was 6987490 [A]		1

Page 1004 OSS# 6300322913 - All rights reserved by Bobcat Company - 08/04/2017 - 06:30:16 - Produced by Ken Cook Co. with mediaioff

LOADER LED LIGHT KIT

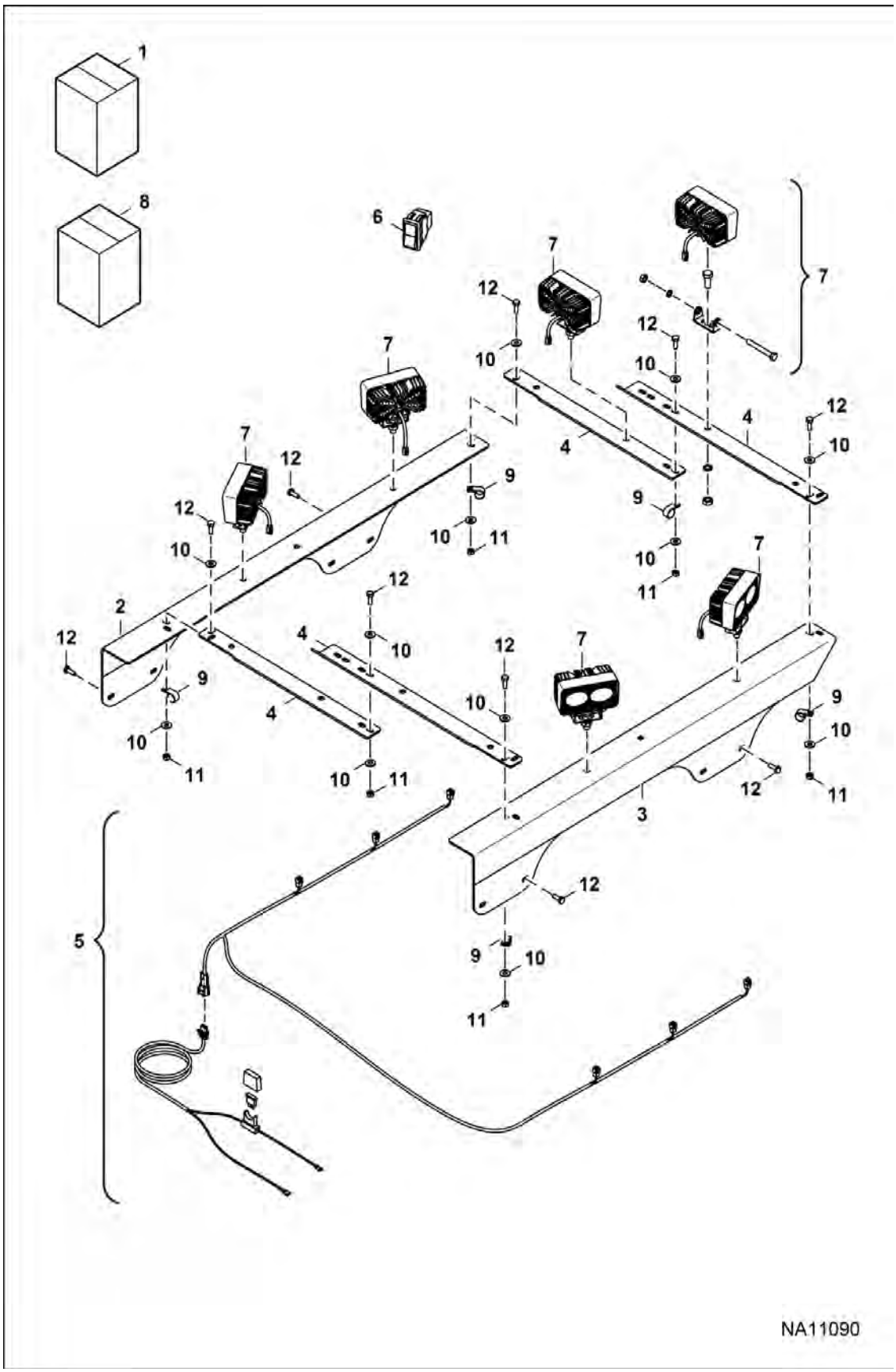

Page 701 - OSS# 6300322913 - All rights reserved by Bobcat Company - 08/04/2017 - 06:30:16 - Produced by Ken Cook Co. with mediaioff

LOADER LED LIGHT KIT (Cont'd)

Ref No	Part Number	Description	Remarks	Serial Number	Qty
1	7275379	KIT, LIGHT LED	Ref. 2-8		1
2	7275528	RAIL, LIGHT MOUNTING LH			1
3	7275529	RAIL, LIGHT MOUNTING RH			1
4	7275530	RAIL, FRONT CROSS MEMBER			2
5	7275531	HARNESS, LED LIGHT			1
6	7265583	SWITCH, ROCKER LIGHT			1
7	7275532	LIGHT, LED FLOOD			6
8	7275533	KIT, HARDWARE	Ref. 8-12		1
9		CLAMP	NSS		X
10		WASHER	NSS		X
11		NUT	NSS		X
12		BOLT	NSS		X

Page 124 OSS# 6300322913 - All rights reserved by Bobcat Company - 08/04/2017 - 06:30:16 - Produced by Ken Cook Co. with mediaioff

MAINTENANCE PLATFORM KIT

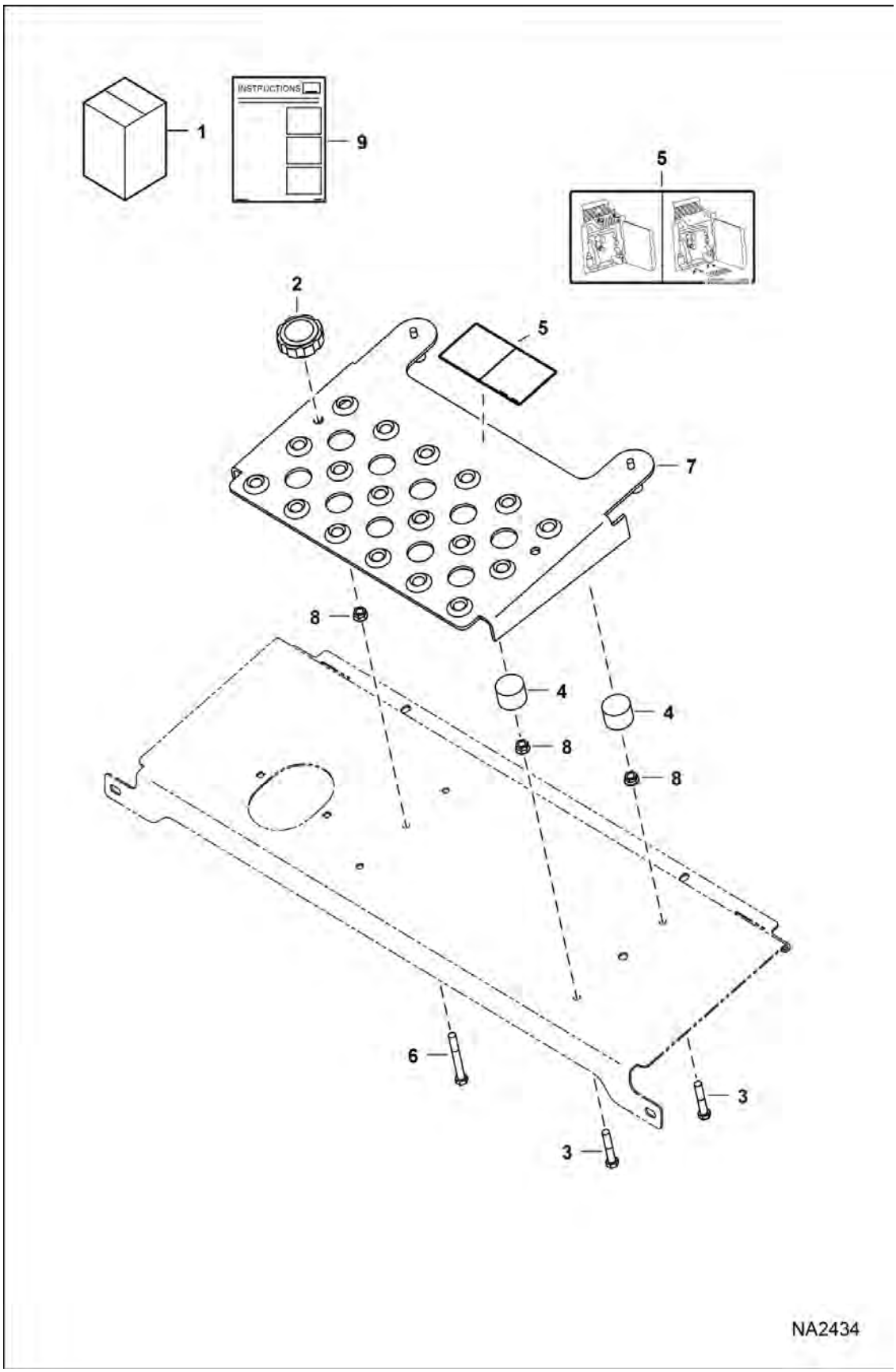

Page 709 - OSS# 6300322913 - All rights reserved by Bobcat Company - 08/04/2017 - 06:30:16 - Produced by Ken Cook Co. with mediaioff

MAINTENANCE PLATFORM KIT (Cont'd)

Ref No	Part Number	Description	Remarks	Serial Number	Qty
1	7178420	KIT, PLATFORM MAINTENANCE	Ref. 2-9		1
2	6684932	HANDLE, CLAMPING			2
3	7186768	BOLT			4
4	7156809	BUMPER			4
5	7188542	DECAL, INSTRUCTIONS			1
6	7186769	BOLT			2
7	7173943	PLATFORM			1
8	55D6	NUT			6
9	6989484ENUS	INSTRUCTIONS	WAS 6989484 [A]		1

Page 696 OSS# 6300322913 - All rights reserved by Bobcat Company - 08/04/2017 - 06:30:16 - Produced by Ken Cook Co. with mediaioff

MUFFLER GUARD KIT

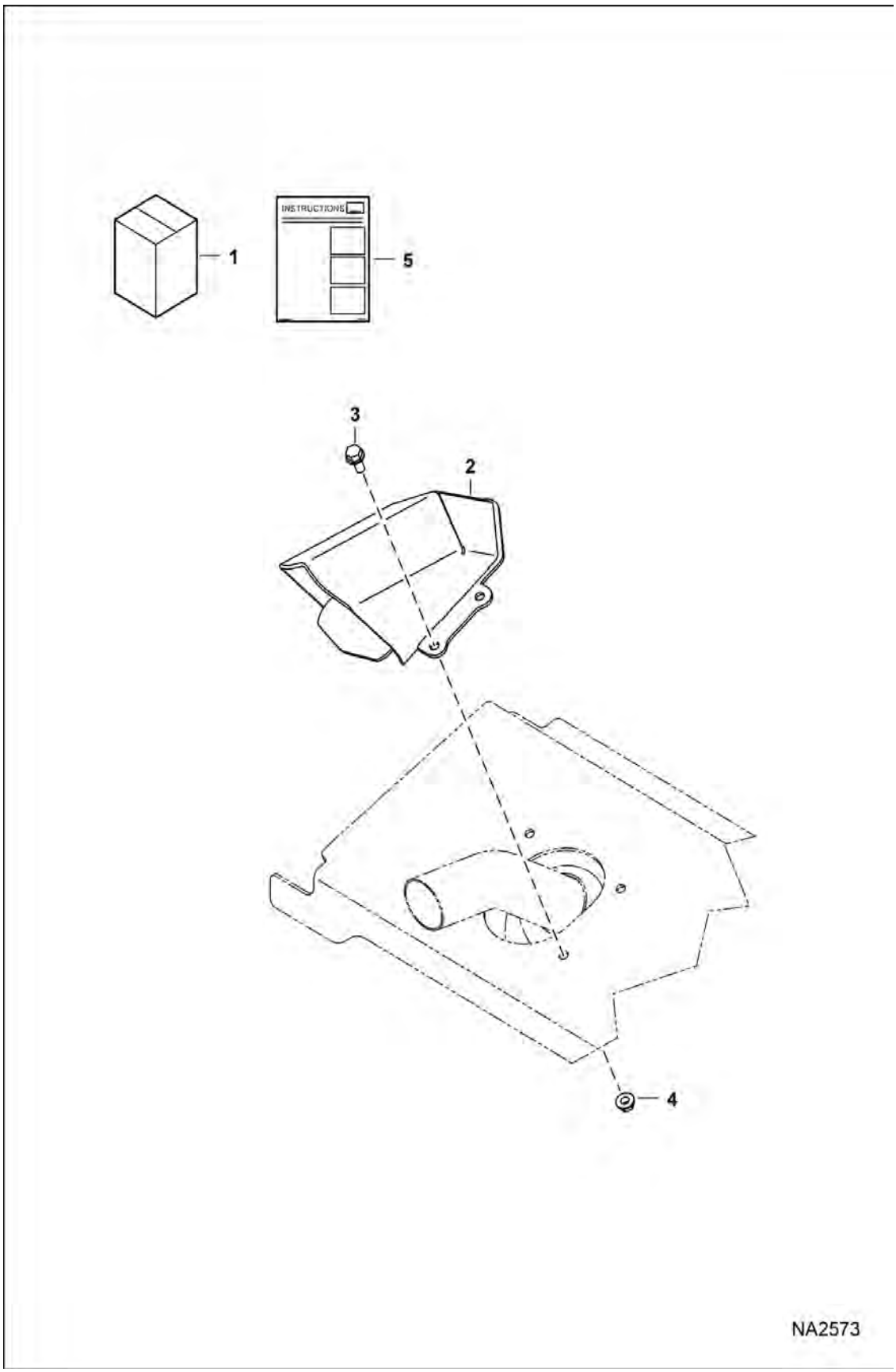

Page 705 - OSS# 6300322913 - All rights reserved by Bobcat Company - 08/04/2017 - 06:30:16 - Produced by Ken Cook Co. with mediaioff

MUFFLER GUARD KIT (Cont'd)

Ref No	Part Number	Description	Remarks	Serial Number	Qty
1	7244920	KIT, GUARD MUFFLER	Ref. 2-5 - Was 7174130		1
2	7237149	GUARD, MUFFLER	Was 7193671		1
3	31C512	BOLT			4
4	97D5	NUT			4
5	6987491ENUS	INSTRUCTIONS	Was 6987491 [A]		1

Page 698 OSS# 6300322913 - All rights reserved by Bobcat Company - 08/04/2017 - 06:30:16 - Produced by Ken Cook Co. with mediaioff

MUFFLER/PURIFIER

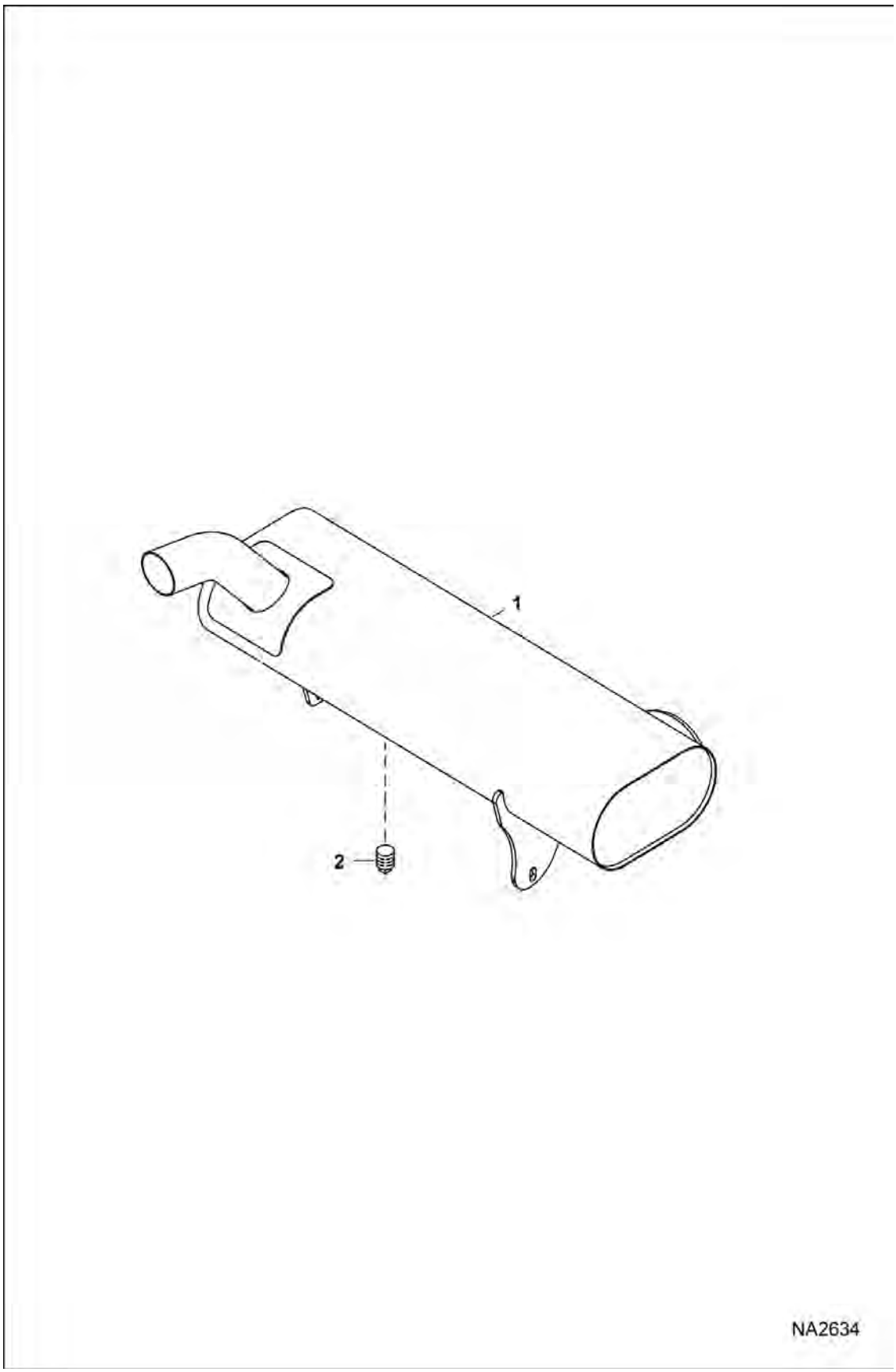

Page 707 - OSS# 6300322913 - All rights reserved by Bobcat Company - 08/04/2017 - 06:30:16 - Produced by Ken Cook Co. with mediaioff

MUFFLER/PURIFIER (Cont'd)

Ref No	Part Number	Description	Remarks	Serial Number	Qty
1	7177966	MUFFLER, PURIFIER			1
2	6661062	PLUG, PIPE	brass - 0.38"		1

Page 1 of 1 OSS# 6300322913 - All rights reserved by Bobcat Company - 08/04/2017 - 06:30:16 - Produced by Ken Cook Co. with mediaioff

NEUTRAL LIGHTING

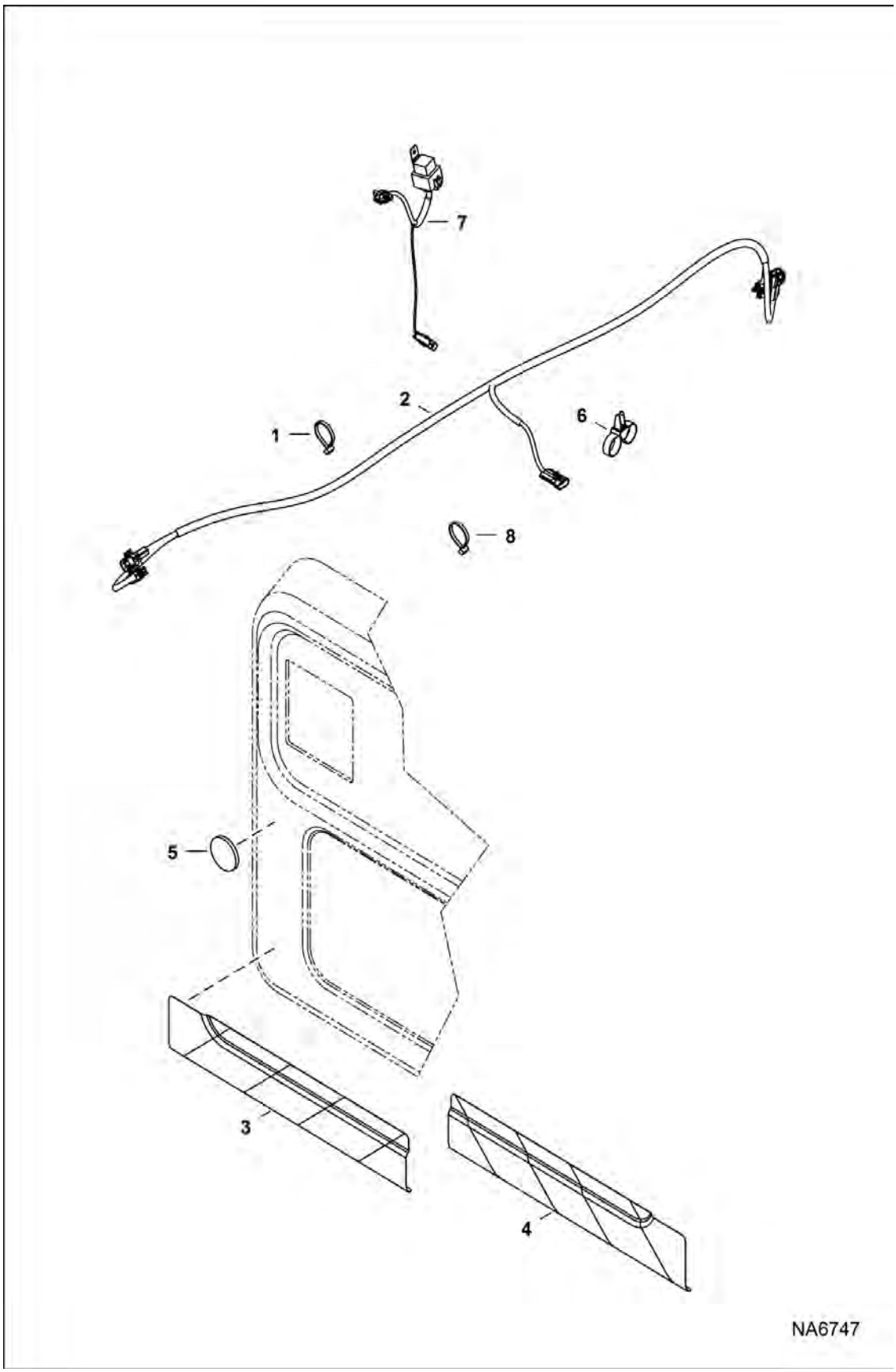

Page 709 - OSS# 6300322913 - All rights reserved by Bobcat Company - 08/04/2017 - 06:30:16 - Produced by Ken Cook Co. with mediaioff

NEUTRAL LIGHTING (Cont'd)

Ref No	Part Number	Description	Remarks	Serial Number	Qty
1	6624289	STRAP, TIE			9
2	7219294	HARNESS, SWITCH NEUTRAL			1
3	7220344	DECAL, REFLECTIVE			1
4	7220348	DECAL, REFLECTIVE			1
5	7191035	LENS, REFLECTIVE			2
6	6678668	STRAP			2
7	7175581	HARNESS BRAKE SJC			1
8	6690690	STRAP, TIE			1

Page 1 of 1 OSS# 6300322913 - All rights reserved by Bobcat Company - 08/04/2017 - 06:30:16 - Produced by Ken Cook Co. with mediaioff

NEUTRAL LIGHTING OPTION

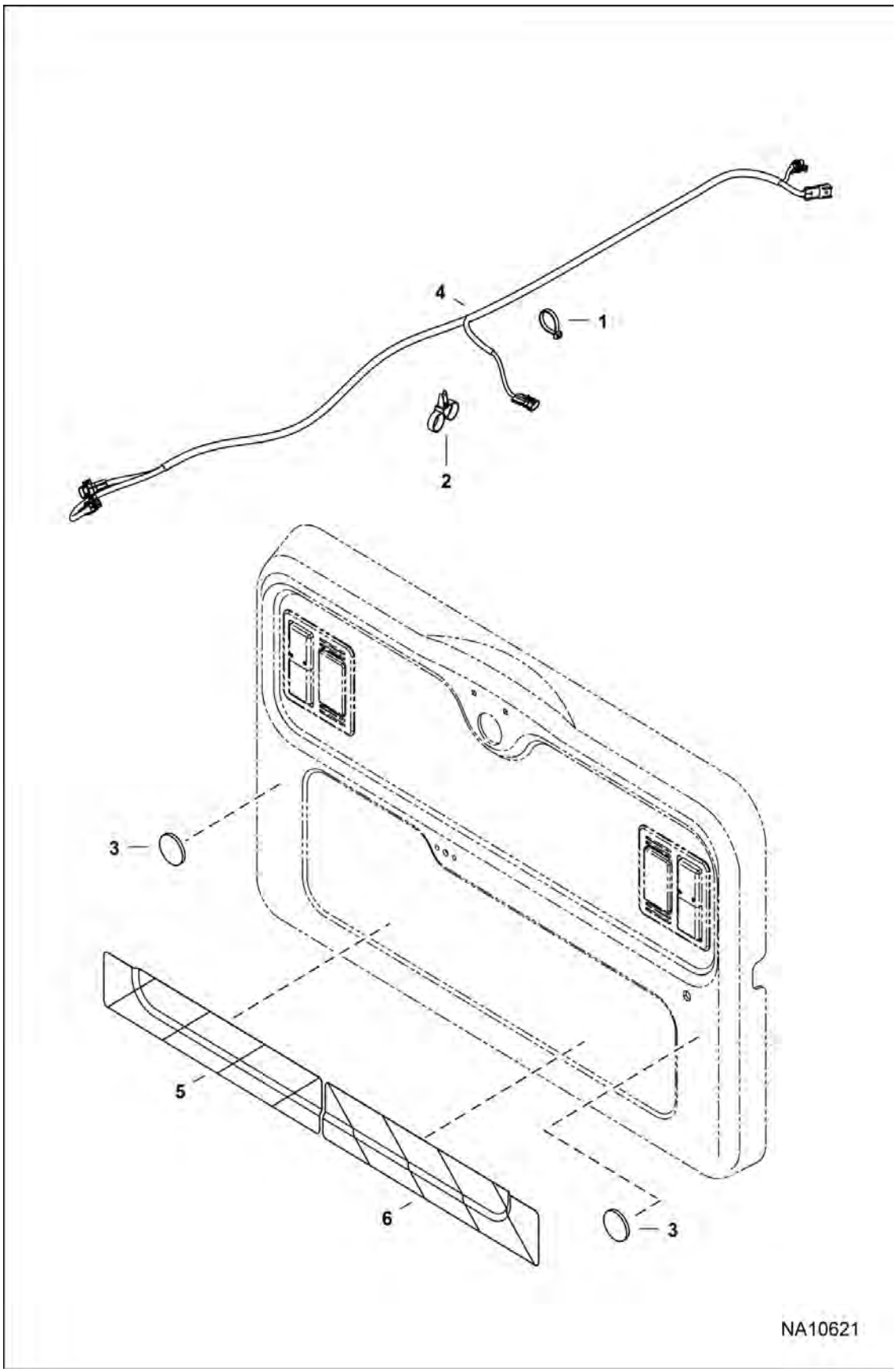

Page 711 - OSS# 6300322913 - All rights reserved by Bobcat Company - 08/04/2017 - 06:30:16 - Produced by Ken Cook Co. with mediaioff

NEUTRAL LIGHTING OPTION (Cont'd)

Ref No	Part Number	Description	Remarks	Serial Number	Qty
1	6624289	STRAP, TIE			7
2	6678668	STRAP			1
3	7191035	LENS, REFLECTIVE			2
4	7219294	HARNESS, SWITCH NEUTRAL			1
5	7220344	DECAL, REFLECTIVE			1
6	7220348	DECAL, REFLECTIVE			1

Page 1.2 OSS# 6300322913 - All rights reserved by Bobcat Company - 08/04/2017 - 06:30:16 - Produced by Ken Cook Co. with mediaioff

PEDAL EXTENDERS

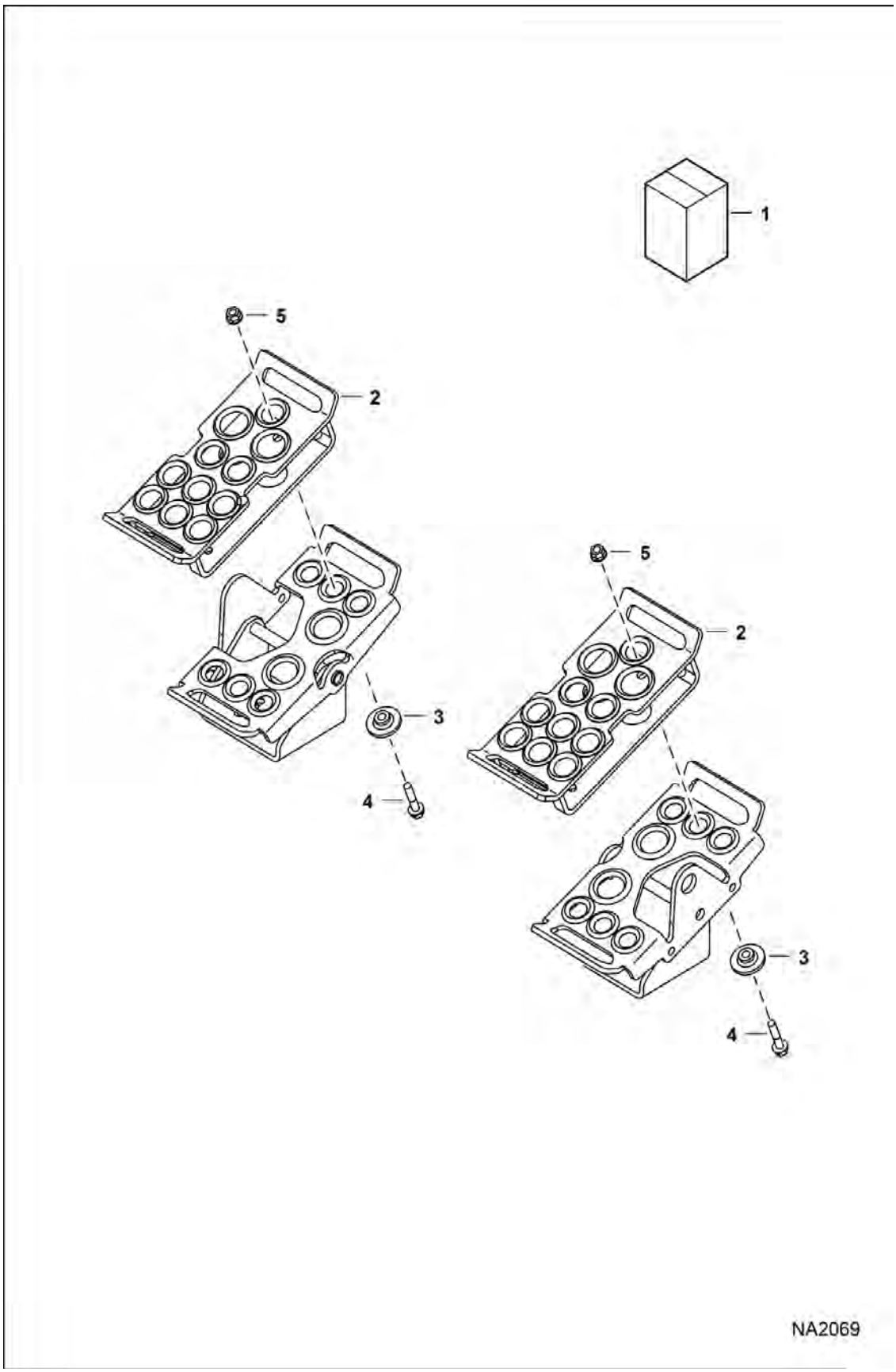

Page 713 - OSS# 6300322913 - All rights reserved by Bobcat Company - 08/04/2017 - 06:30:16 - Produced by Ken Cook Co. with mediaioff

PEDAL EXTENDERS (Cont'd)

Ref No	Part Number	Description	Remarks	Serial Number	Qty
1		KIT, PEDAL EXTENDER	NLA - Order components - Was 7131229 [A]		1
2	7131233	PEDAL			2
3	7131236	BUSHING			6
4	35C524	BOLT			6
5	89D5	NUT			6

Page 144 OSS# 6300322913 - All rights reserved by Bobcat Company - 08/04/2017 - 06:30:16 - Produced by Ken Cook Co. with mediaioff

POWER BOB-TACH

(Kit) (Round Base End Cylinder) (Bottom Mounted Cylinder Ports)
(Two Female Connector Valve Coils)

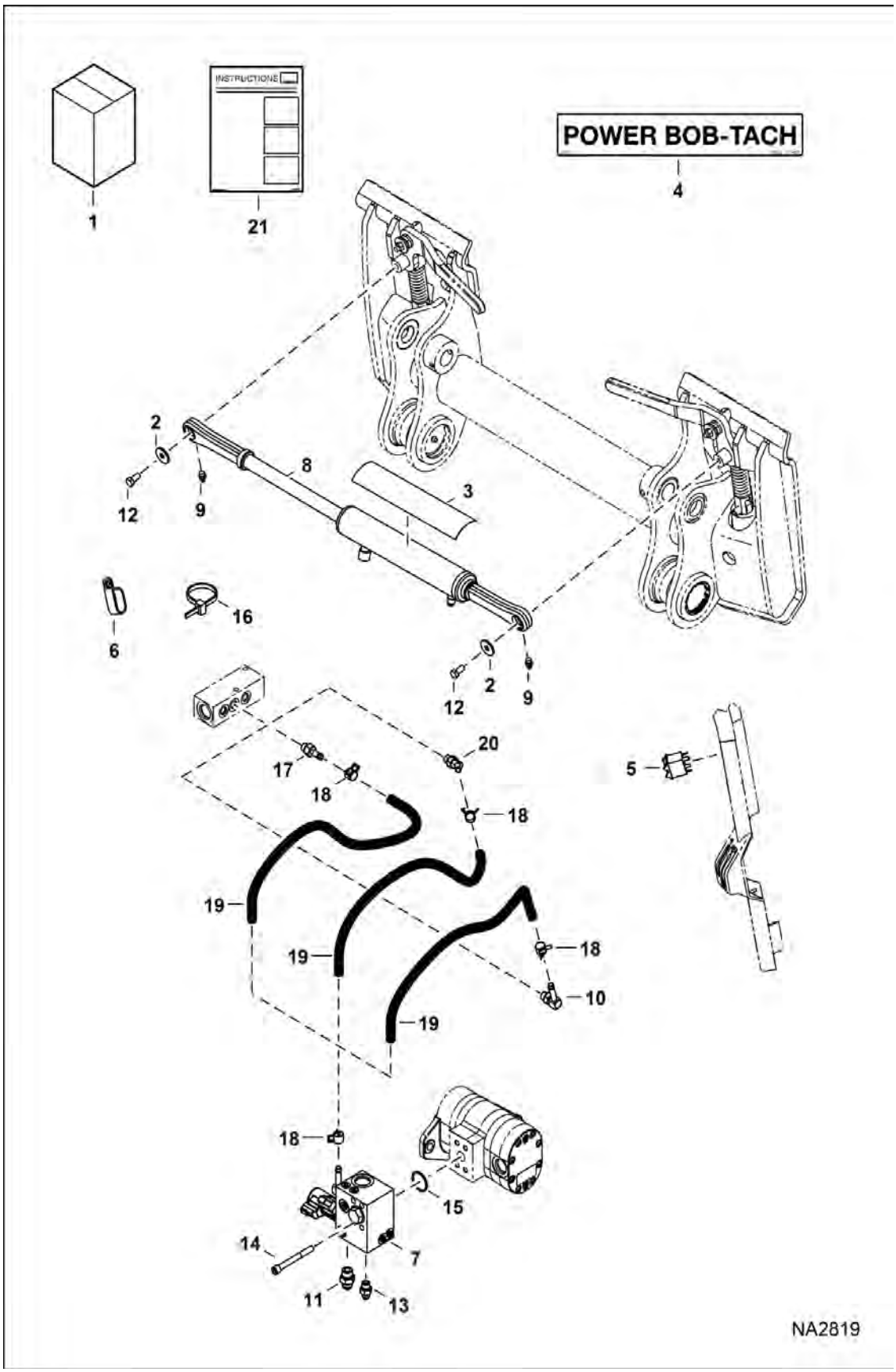

Page 715 - OSS# 6300322913 - All rights reserved by Bobcat Company - 08/04/2017 - 06:30:16 - Produced by Ken Cook Co. with mediaioff

POWER BOB-TACH (Cont'd)

(Kit) (Round Base End Cylinder) (Bottom Mounted Cylinder Ports)
(Two Female Connector Valve Coils)

Ref No	Part Number	Description	Remarks	Serial Number	Qty
1		KIT, POWER BOB-TACH	See Illustration POWER BOB-TACH / NA2928 - NLA - Ref. 2, 3, 5, 7-14, 17 & 20 - Also Order 7192262 plumbing kit - Was 7192250 [A], See Illustration POWER BOB-TACH / NA10366 - NLA - Ref. 2, 3, 5, 7-14, 17 & 20 - Also Order 7192262 plumbing kit - Was 7192250 [A]		1
2	619021	WASHER, 5			2
3	6555341	TREAD, SAFETY			1
4	6719888	DECAL	not in kit		1
5	7001712	SWITCH			1
6	31H42	CLIP	not in kit		1
7		VALVE, POWER BOBTACH	See Illustration POWER BOB-TACH / NA2823		1
8		CYLINDER, POWER BOB-TACH	See Illustration POWER BOB-TACH / NA2603		1
9	10H35	FITTING, GREASE 10			2
10	6727313	FITTING, ELBOW			1
11	15KB0808	FITTING, HYD CONNECTOR			1
12	17C612	BOLT 5			2
13	15KB0606	FITTING, HYD CONNECTOR			1
14	17C652	BOLT			4
15	55K214	O-RING	not in kit		1
16	6624289	STRAP, TIE	not in kit		4
17	7158632	CONNECTOR			1
18		CLAMP	See Illustration POWER BOB-TACH / NA2928 not in kit		2
19		HOSE	See Illustration POWER BOB-TACH / NA2928 not in kit		1
20	7256234	FITTING, HYD ELBOW 90	Was 7249850 [A]		1
21	6989741ENUS	INSTRUCTIONS	Was 6989741 [A]		1

Page Created OSS# 6300322913 - All rights reserved by Bobcat Company - 08/04/2017 - 06:30:16 - Produced by Ken Cook Co. with mediaoff

POWER BOB-TACH

(Kit) (Bottom & Side Mounted Cyl Ports) (54 mm) (2.125") OD Cyl (44,45 mm) (1.75") Dia Cyl Bore

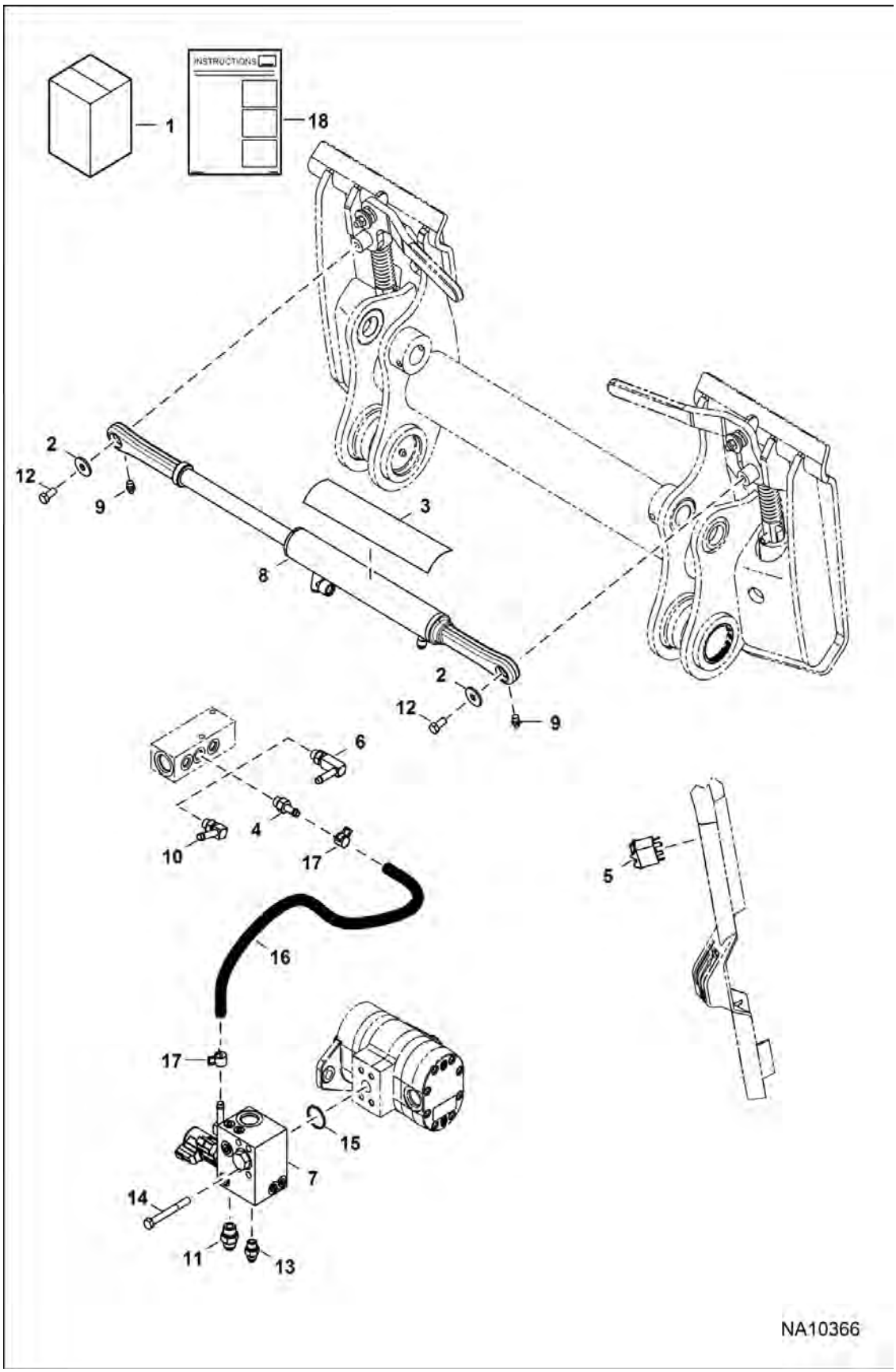

Page 717 - OSS# 6300322913 - All rights reserved by Bobcat Company - 08/04/2017 - 06:30:16 - Produced by Ken Cook Co. with mediaioff

POWER BOB-TACH (Cont'd)

(Kit) (Bottom & Side Mounted Cyl Ports) (54 mm) (2.125") OD Cyl (44,45 mm) (1.75") Dia Cyl Bore

Ref No	Part Number	Description	Remarks	Serial Number	Qty
1	7261311	KIT, POWER BOB-TACH	- Also Order 7261305 plumbing kit - Ref. 2-14 & 18 - if loader is equipped W/deluxe cab harness, Also Order 7240781 fuel harness		1
2	619021	WASHER, 5			2
3	6555341	TREAD, SAFETY			1
4	7158632	CONNECTOR	500 series		1
5	7001712	SWITCH			1
6	7256234	FITTING, HYD ELBOW 90	600 series		1
6	79K6	O RING 10			1
7	7010992	VALVE, POWER BOB-TACH	See Illustration POWER BOB-TACH / NA2823		1
8	7227463	CYLINDER, POWER BOB-TACH	See Illustration POWER BOB-TACH / NA10368		1
9	10H35	FITTING, GREASE 10			2
10	6727313	FITTING, ELBOW	700 800 series		1
10	79K6	O RING 10			1
11	15KB0808	FITTING, HYD CONNECTOR			1
11	79K8	O RING 10			x
12	17C612	BOLT 5			2
13	15KB0606	FITTING, HYD CONNECTOR			1
13	79K6	O RING 10			x
14	17C652	BOLT			4
15	55K214	O-RING	not in kit		1
16		HOSE	not in kit		1
17		CLAMP	not in kit		2
18	7270051ENUS	INSTRUCTIONS	- Was 7261451 [D]		1

Page Built: OSS# 6300322913 - All rights reserved by Bobcat Company - 08/04/2017 - 06:30:16 - Produced by Ken Cook Co. with mediaioff

POWER BOB-TACH

(Kit) (Bottom & Side Mounted Cyl Ports) (47,6 mm) (1.875") OD Cyl (38,1 mm) (1.5") Dia Cyl Bore

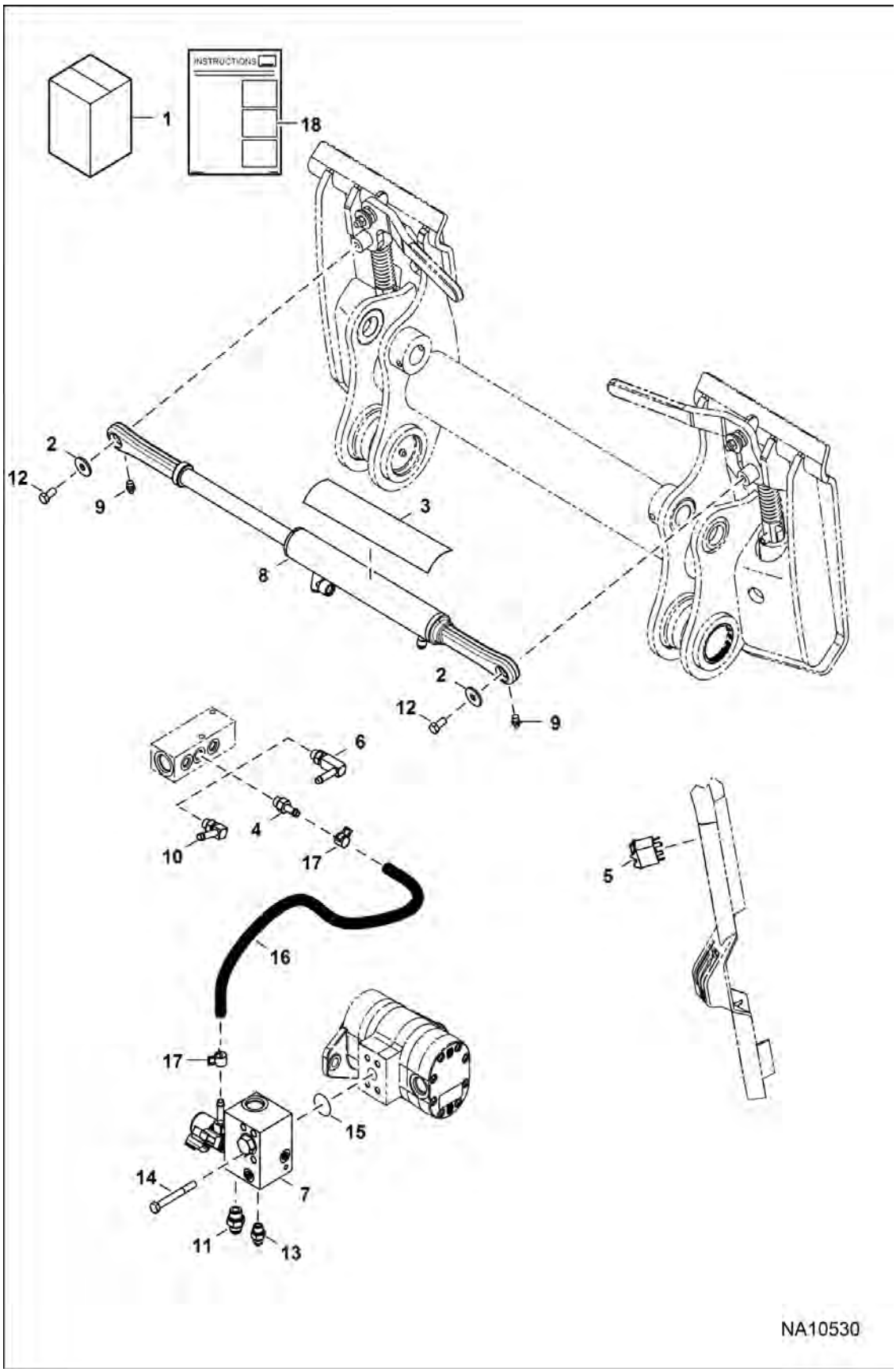

Page 719 - OSS# 6300322913 - All rights reserved by Bobcat Company - 08/04/2017 - 06:30:16 - Produced by Ken Cook Co. with mediaioff

POWER BOB-TACH (Cont'd)

(Kit) (Bottom & Side Mounted Cyl Ports) (47,6 mm) (1.875") OD Cyl (38,1 mm) (1.5") Dia Cyl Bore

Ref No	Part Number	Description	Remarks	Serial Number	Qty
1	7269942	KIT, POWER BOB-TACH	See Illustration POWER BOB-TACH / NA10371 - Also Order 7261305 plumbing kit - Ref. 2-14 & 18 - loader must be equipped W/deluxe cab harness & deluxe fuel harness		1
1		HARNESS, CAB DLX	See Illustration CAB ELECTRICAL CIRCUITRY / NA1167 - Also Order deluxe cab harness - not in kit		1
1		HARNESS, FUEL DLX	See Illustration ENGINE ELECTRICAL CIRCUITRY / NA10682 - Also Order deluxe fuel harness - not in kit		1
2	619021	WASHER, 5			2
3	6555341	TREAD, SAFETY			1
4	7158632	CONNECTOR	500 series		1
5	7001712	SWITCH			1
6	7256234	FITTING, HYD ELBOW 90	600 series		1
7	7273570	VALVE, POWER BOB-TACH	See Illustration POWER BOB-TACH / NA10383 - Was 7231548 [A]		1
8		CYLINDER, POWER BOB-TACH	See Illustration POWER BOB-TACH / NA10373 W/Ref. 9 - Was 7227570 [A]		1
8	7307224	CYLINDER HYDRAULIC	See Illustration POWER BOB-TACH / NA12512 - W/Ref. 9 - Was 7227570		1
9	10H35	FITTING, GREASE 10	not in kit		2
10	6727313	FITTING, ELBOW	700 800 series		1
11	15KB0808	FITTING, HYD CONNECTOR			1
11	79K8	O RING 10			x
12	17C612	BOLT 5			2
13	15KB0606	FITTING, HYD CONNECTOR			1
13	79K6	O RING 10			x
14	17C652	BOLT			4
15	55K214	O-RING	not in kit		1
16		HOSE	See Illustration POWER BOB-TACH / NA10371 - not in kit		1
17		CLAMP	See Illustration POWER BOB-TACH / NA10371 - not in kit		2
18	7270051ENUS	INSTRUCTIONS	Was 7270051 [A]		1

Page 1 of 1 OSS# 6300322913 - All rights reserved by Bobcat Company - 08/04/2017 - 06:30:16 - Produced by Ken Cook Co. with mediaoff

POWER BOB-TACH

(Kit) (Bottom & Side Mounted Cyl Ports) (47,6 mm) (1.875") OD Cyl (38,1 mm) (1.5") Dia Cyl Bore (Cylinder Guard)

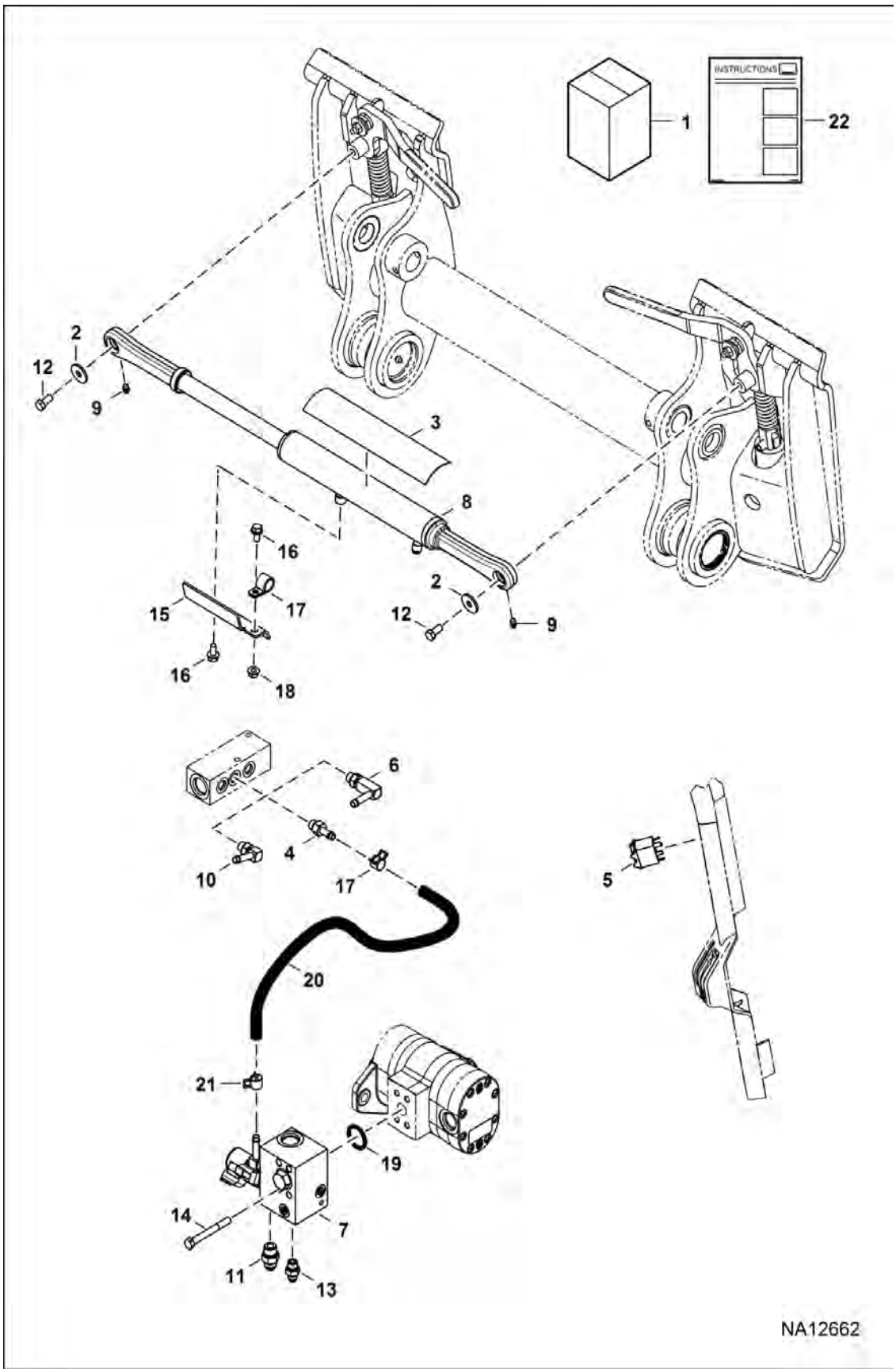

Page 721 - OSS# 6300322913 - All rights reserved by Bobcat Company - 08/04/2017 - 06:30:16 - Produced by Ken Cook Co. with mediaioff

POWER BOB-TACH (Cont'd)

(Kit) (Bottom & Side Mounted Cyl Ports) (47,6 mm) (1.875") OD Cyl (38,1 mm) (1.5") Dia Cyl Bore (Cylinder Guard)

Ref No	Part Number	Description	Remarks	Serial Number	Qty
1	7310665	KIT POWER BOB-TACH	- Also Order 7310805 plumbing kit - Ref. 2-18 & 22 - loader must be equipped W/deluxe cab harness & deluxe fuel harness		1
1		HARNESS, CAB DLX	See Illustration CAB ELECTRICAL CIRCUITRY / NA1167 - Also Order deluxe cab harness - not in kit		1
1		HARNESS, FUEL DLX	- Also Order deluxe fuel harness - not in kit		1
2	619021	WASHER, 5			2
3	6555341	TREAD, SAFETY			1
4	7158632	CONNECTOR	500 series		1
5	7001712	SWITCH			1
6	7256234	FITTING, HYD ELBOW 90	600 series		1
7	7273570	VALVE, POWER BOB-TACH	See Illustration POWER BOB-TACH / NA10383		1
8	7307224	CYLINDER HYDRAULIC	See Illustration POWER BOB-TACH / NA12512 - W/Ref. 9		1
9	10H35	FITTING, GREASE 10	not in kit		2
10	6727313	FITTING, ELBOW	700 800 series		1
11	15KB0808	FITTING, HYD CONNECTOR			1
11	79K8	O RING 10			x
12	17C612	BOLT 5			2
13	15KB0606	FITTING, HYD CONNECTOR			1
13	79K6	O RING 10			x
14	17C652	BOLT			4
15	7303206	GUARD POWER BOB-TACH			1
16	29CM816	SCREW			2
17	30H45	CLIP	Was 30H41 [B]		1
18	51DM8	NUT			1
19	55K214	O-RING	not in kit		1
20		HOSE	- not in kit		1
21		CLAMP	- not in kit		2
22	7270051ENUS	INSTRUCTIONS			1

Page 224 OSS# 6300322913 - All rights reserved by Bobcat Company - 08/04/2017 - 06:30:16 - Produced by Ken Cook Co. with mediaoff

POWER BOB-TACH
(Plumbing Kit) (Bottom Mounted Cylinder Ports)

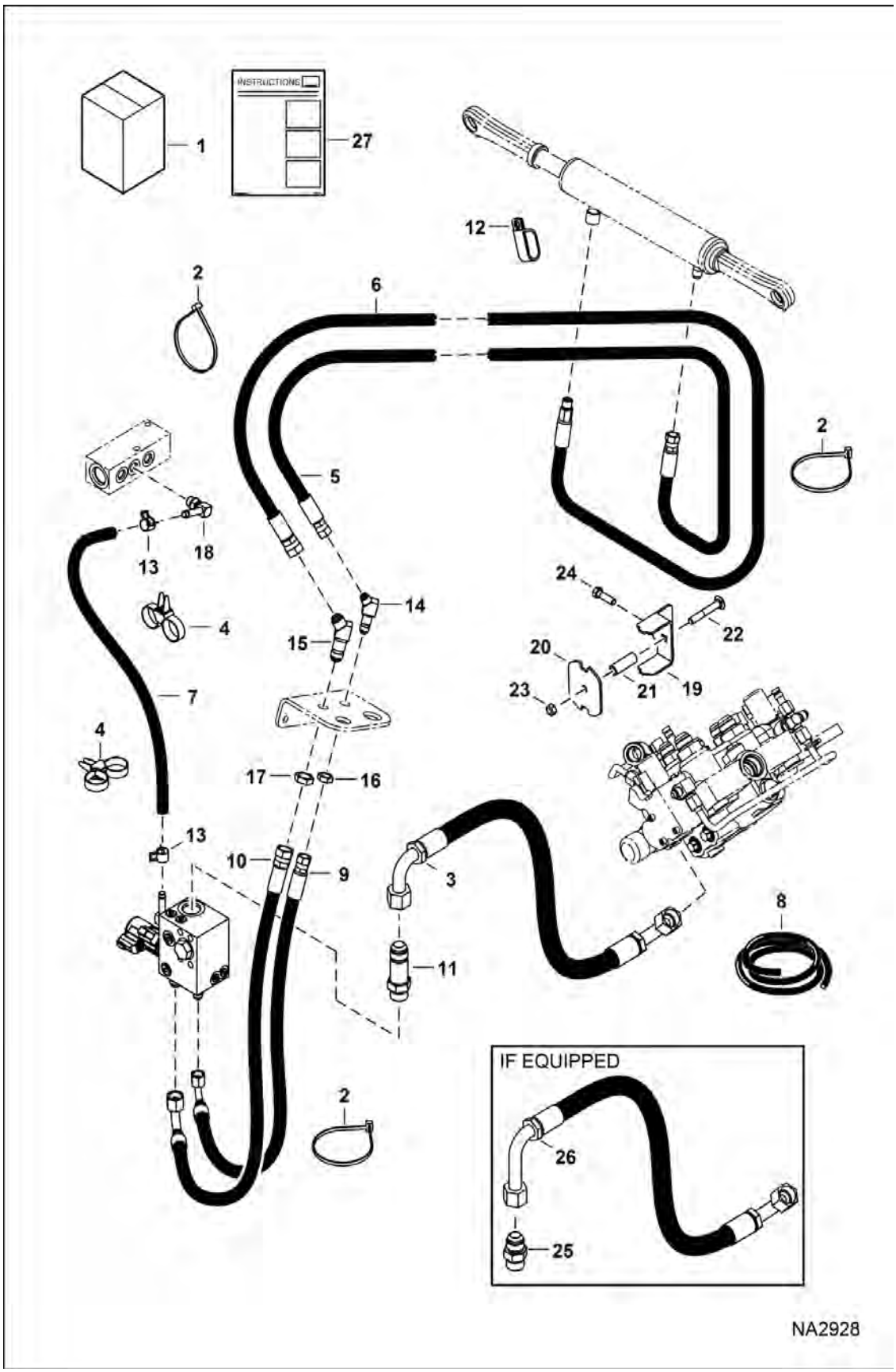

Page 723 - OSS# 6300322913 - All rights reserved by Bobcat Company - 08/04/2017 - 06:30:16 - Produced by Ken Cook Co. with mediaioff

POWER BOB-TACH (Cont'd)

(Plumbing Kit) (Bottom Mounted Cylinder Ports)

Ref No	Part Number	Description	Remarks	Serial Number	Qty
1	7192262	KIT, PLUMBING POWER BOB-TACH	Ref. 2-17 & 19-24		1
2	6624289	STRAP, TIE			3
3	7219833	HOSE, HYD	[A]		1
4	6678668	STRAP			2
5	7235464	HOSE, HYD	Was 7172169 [A]		1
5	79K6	O RING 10			x
6	7172170	HOSE, HYD			1
7		HOSE	NLA - 749 mm (29.5") long - Order Ref. 8		1
7		HOSE	NLA - 787 mm (31") lomg - Order Ref. 8		1
8	6586251	HOSE, BULK	sold per foot		1
9	7184970	HOSE, HYD			1
10	7184969	HOSE, HYD			1
11	16KB1212	FITTING, HYD CONNECTOR			1
11	79K12	O RING 10			x
12	31H42	CLIP			1
13	5HM15	CLAMP			2
14	46K5	ELBOW			1
15	46K6	ELBOW			1
16	86F5	NUT			1
17	86F6	NUT			1
18		FITTING	See Illustration POWER BOB-TACH / NA2819 not in kit		1
19	7238615	BRACKET			1
20	7238616	CLAMP, HOSE			1
21	7238617	SPACER			1
22	10C640	BOLT			1
23	85D6	NUT, 5			1
24	1C620	BOLT			1
25	15KB1212	FITTING, HYD CONNECTOR	not in kit		1
25	79K12	O RING 10	not in kit		x
26	7219834	HOSE, HYD	not in kit		1
27	6989741ENUS	INSTRUCTIONS	not in kit - part of Power Bob-Tach kit - Was 6989741 [A]		1

Page 2 OSS# 6300322913 - All rights reserved by Bobcat Company - 08/04/2017 - 06:30:16 - Produced by Ken Cook Co. with mediaoff

POWER BOB-TACH
(Plumbing Kit) (Bottom & Side Mounted Cylinder Ports)

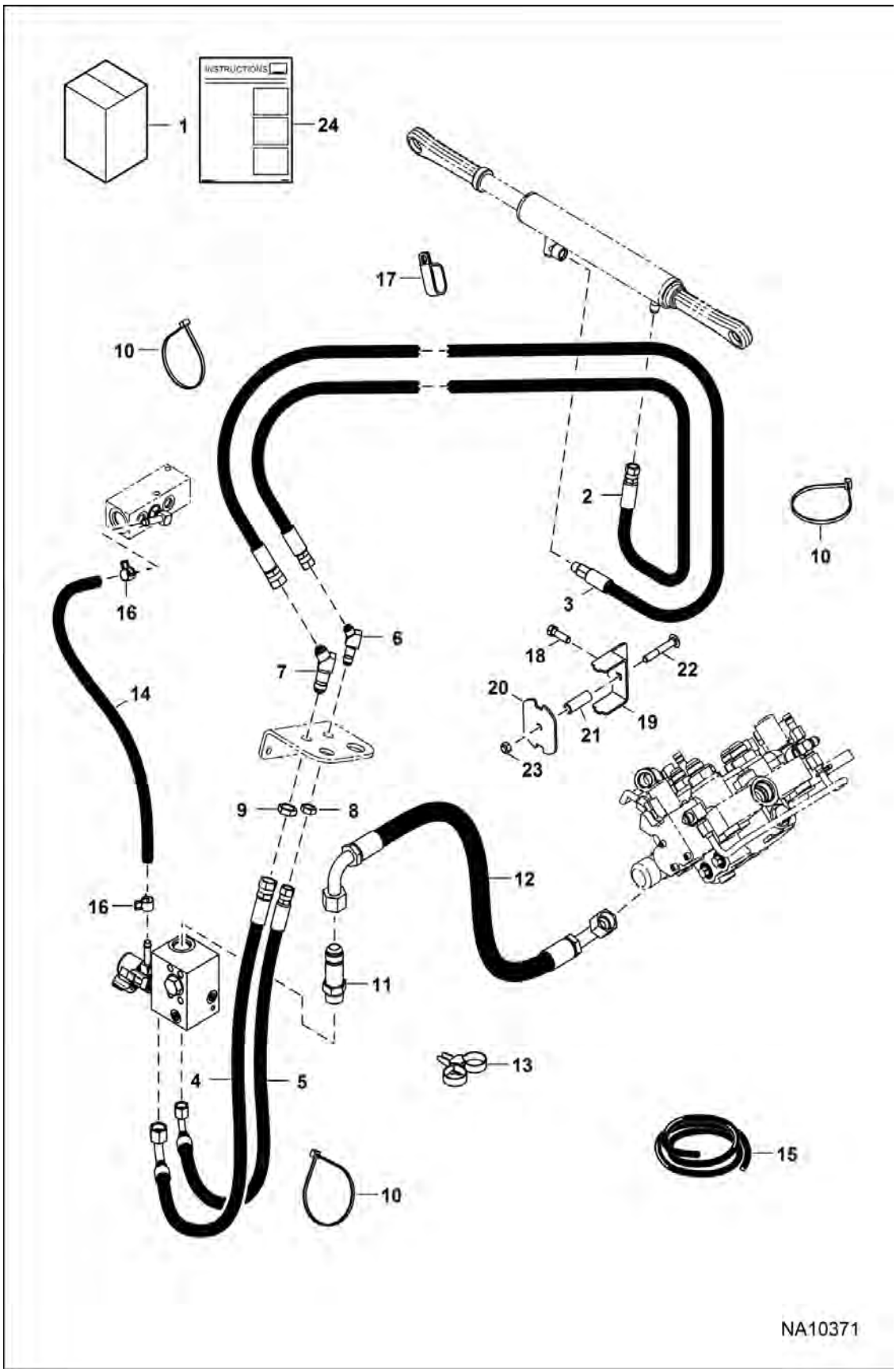

Page 725 - OSS# 6300322913 - All rights reserved by Bobcat Company - 08/04/2017 - 06:30:16 - Produced by Ken Cook Co. with mediaioff

POWER BOB-TACH (Cont'd)

(Plumbing Kit) (Bottom & Side Mounted Cylinder Ports)

Ref No	Part Number	Description	Remarks	Serial Number	Qty
1	7261305	KIT, PLUMBING POWER BOB-TACH	Ref. 2-23		1
2	7235464	HOSE, HYD			1
3	7253527	HOSE, HYD ASSY			1
4	7184969	HOSE, HYD			1
5	7184970	HOSE, HYD			1
6	46K5	ELBOW			1
7	46K6	ELBOW			1
8	86F5	NUT			1
9	86F6	NUT			1
10	6624289	STRAP, TIE			3
11	16KB1212	FITTING, HYD CONNECTOR			1
12	7219833	HOSE, HYD			1
13	6678668	STRAP			2
14		HOSE	NLA - 839 mm (33") long - Order Ref. 15		1
15	6586251	HOSE, BULK	sold per foot		x
16	5HM15	CLAMP			2
17	31H42	CLIP			1
18	1C620	BOLT			1
19	7238615	BRACKET			1
20	7238616	CLAMP, HOSE			1
21	7238617	SPACER			1
22	10C640	BOLT			1
23	85D6	NUT, 5			1
24	7270051ENUS	INSTRUCTIONS	- Was 7261451 [D]		1

Page Text OSS# 6300322913 - All rights reserved by Bobcat Company - 08/04/2017 - 06:30:16 - Produced by Ken Cook Co. with mediaoff

POWER BOB-TACH

(Plumbing Kit) (Bottom & Side Mounted Cylinder Ports)
(Split Cylinder Hoses)

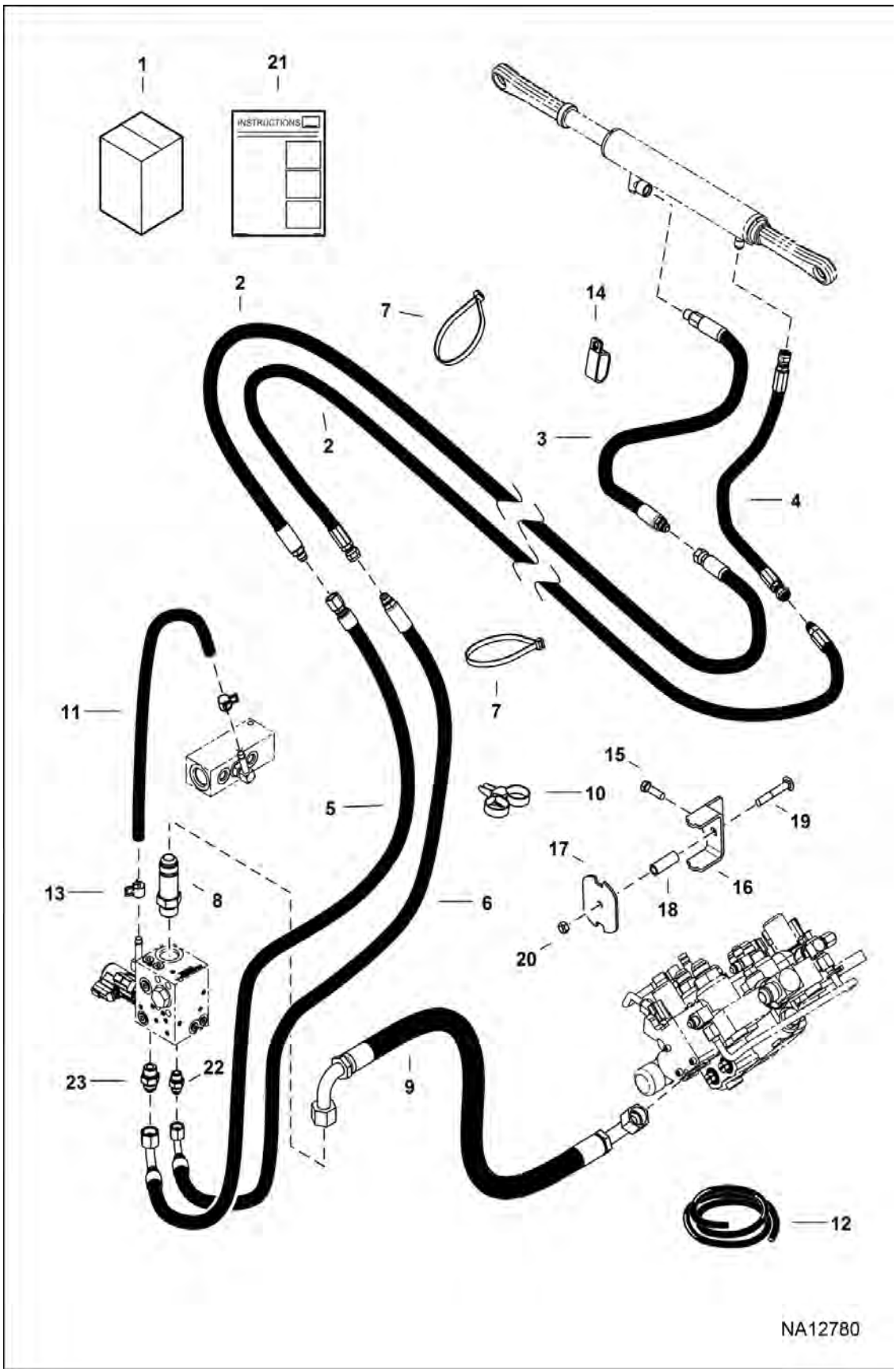

Page 727 - OSS# 6300322913 - All rights reserved by Bobcat Company - 08/04/2017 - 06:30:16 - Produced by Ken Cook Co. with mediaioff

POWER BOB-TACH (Cont'd)

(Plumbing Kit) (Bottom & Side Mounted Cylinder Ports)
(Split Cylinder Hoses)

Ref No	Part Number	Description	Remarks	Serial Number	Qty
1	7310805	KIT PLUMBING POWER BOB-TACH			1
2	7308865	HOSE HYDRAULIC ASSY			2
3	7308860	HOSE HYDRAULIC ASSY			1
4	7308861	HOSE HYDRAULIC ASSY			1
5	7184971	HOSE, HYD			1
6	7184972	HOSE, HYD			1
7	6624289	STRAP, TIE			6
8	16KB1212	FITTING, HYD CONNECTOR			1
9	7219833	HOSE, HYD			1
10	6678668	STRAP			1
11		HOSE	NLA - 839 mm (33") long - Order Ref. 12		1
12	6586251	HOSE, BULK	sold per foot		1
13	5HM15	CLAMP			2
14	31H42	CLIP			1
15	1C620	BOLT			1
16	7238615	BRACKET			1
17	7238616	CLAMP, HOSE			1
18	7238617	SPACER			1
19	10C640	BOLT			1
20	85D6	NUT, 5			1
21	7319591ENUS	INSTRUCTIONS	Was 7319591		1
22	15KB0606	FITTING, HYD CONNECTOR	not in kit		1
23	15KB0808	FITTING, HYD CONNECTOR	not in kit		1

Page Base OSS# 6300322913 - All rights reserved by Bobcat Company - 08/04/2017 - 06:30:16 - Produced by Ken Cook Co. with mediaoff

POWER BOB-TACH
(Cylinder) (Bottom Mounted Ports)

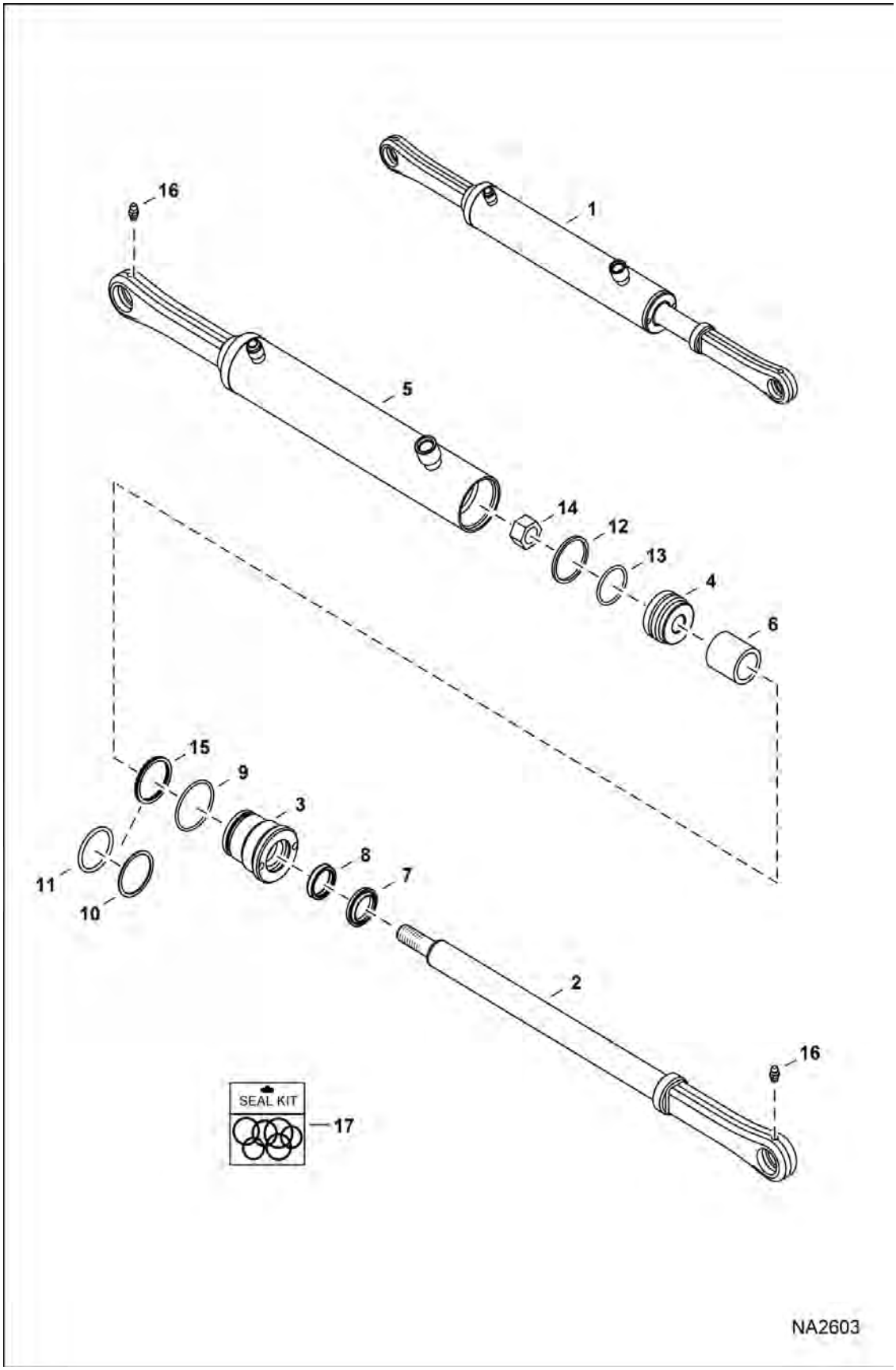

Page 729 - OSS# 6300322913 - All rights reserved by Bobcat Company - 08/04/2017 - 06:30:16 - Produced by Ken Cook Co. with mediaioff

POWER BOB-TACH (Cont'd)
(Cylinder) (Bottom Mounted Ports)

Ref No	Part Number	Description	Remarks	Serial Number	Qty
1		CYLINDER, POWER BOB-TACH	See Illustration POWER BOB-TACH / NA10368 - NLA - Ref. 2-14 & 16 - Order 7227463 cylinder & 7253527 hose - Was 7183318 [A], See Illustration POWER BOB-TACH / NA10371 - NLA - Ref. 2-14 & 16 - Order 7227463 cylinder & 7253527 hose - Was 7183318 [A]		1
1	7183318REM	CYLINDER, POWER BOB-TACH			1
2	7227462	SHAFT, W/A	524 mm (20.66") to bushing center		1
2		SHAFT, W/A	512 mm (20.16") to bushing center - NLA - Order 7227462 - Was 7183319		1
3	6586542	HEAD			1
4	6586543	PISTON			1
5		CASE	See Illustration POWER BOB-TACH / NA10371 - NLA - Order 7227465 case & 7253527 hose - Was 7183521 [A], See Illustration POWER BOB-TACH / NA10368 - NLA - Order 7227465 case & 7253527 hose - Was 7183521 [A]		1
6	6810356	SPACER			1
7	6666542	WIPER, ROD CYL			1
8	6667323	SEAL			1
9	82K132	O-RING HYDRAULIC			1
10	73K222	RING			1
11	58K222	O RING 10			1
12	25K30110	O RING 10			1
13	6532453	RING SEAL			1
14	92D10	NUT			1
15	7008782	SEAL, QUAD			1
16	10H35	FITTING, GREASE 10			2
17	7138014	SEAL KIT	Ref. 7-9, & 12-15		1

Page 1 of 1 OSS# 6300322913 - All rights reserved by Bobcat Company - 08/04/2017 - 06:30:16 - Produced by Ken Cook Co. with mediaoff

POWER BOB-TACH

(Cylinder) (Bottom & Side Mounted Ports) (54 mm) (2.125") OD Cyl
(44,45 mm) (1.75") Dia Bore

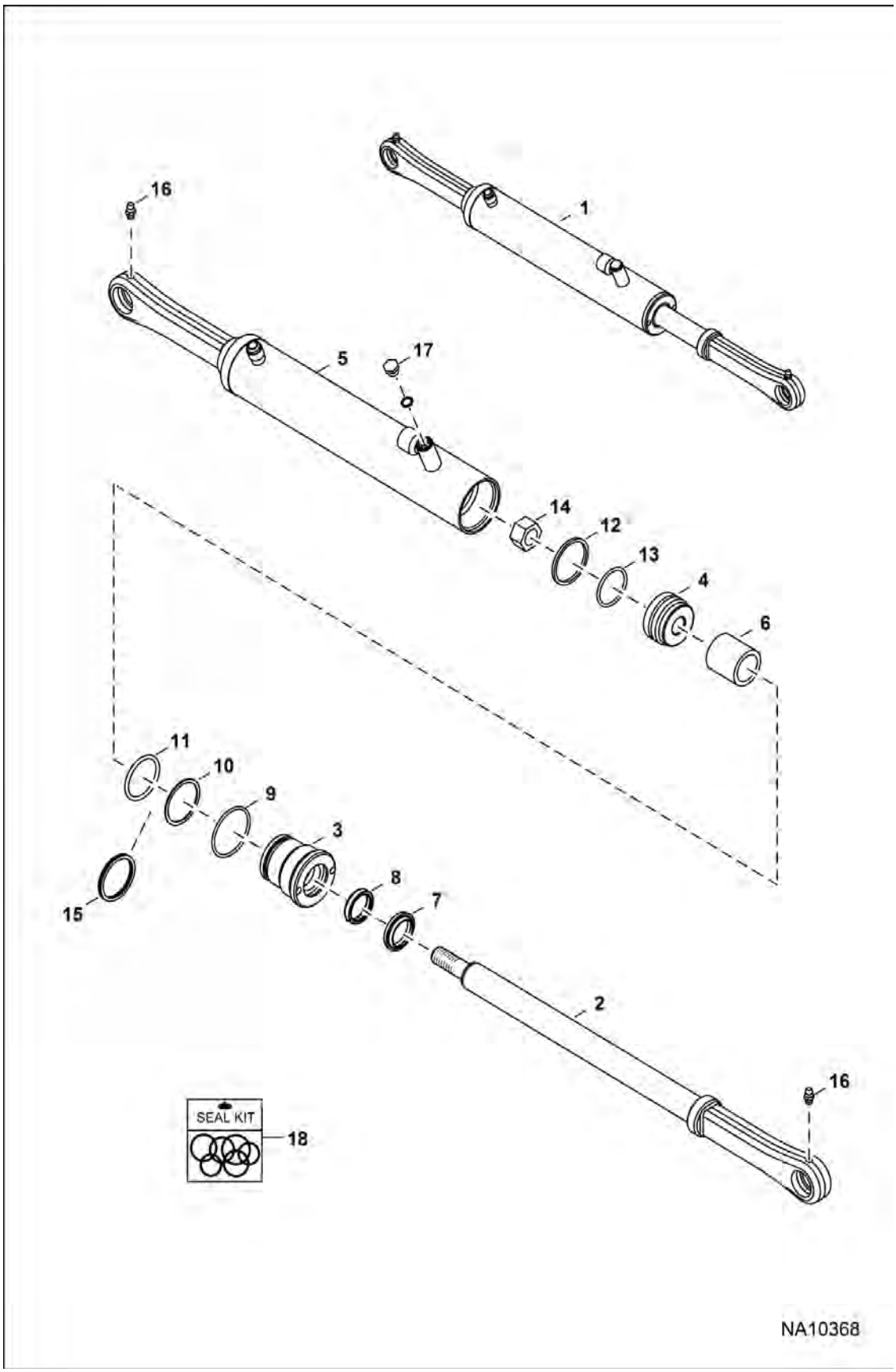

Page 731 - OSS# 6300322913 - All rights reserved by Bobcat Company - 08/04/2017 - 06:30:16 - Produced by Ken Cook Co. with mediaioff

POWER BOB-TACH (Cont'd)

(Cylinder) (Bottom & Side Mounted Ports) (54 mm) (2.125") OD Cyl (44,45 mm) (1.75") Dia Bore

Ref No	Part Number	Description	Remarks	Serial Number	Qty
1	7227463	CYLINDER, POWER BOB-TACH	Ref. 2-14 & 16-18		1
2	7227462	SHAFT, W/A			1
3	6586542	HEAD			1
4	6586543	PISTON			1
5	7227465	TUBE, CASE CYL POWER BOB-TACH			1
6	6810356	SPACER			1
7	6666542	WIPER, ROD CYL			1
8	6667323	SEAL			1
9	82K132	O-RING HYDRAULIC			1
10	73K222	RING			1
11	54K40116	O-RING			1
12	25K30110	O RING 10			1
13	6532453	RING SEAL			1
14	92D10	NUT			1
15	7008782	SEAL, QUAD			1
16	10H35	FITTING, GREASE 10			2
17	6812170	PLUG			2
18	7138014	SEAL KIT	Ref. 7-9, & 12-15		1

Page 124 OSS# 6300322913 - All rights reserved by Bobcat Company - 08/04/2017 - 06:30:16 - Produced by Ken Cook Co. with mediaoff

POWER BOB-TACH

(Cylinder) (Bottom & Side Mounted Ports) (47,6 mm) (1.875") OD Cyl (38,1 mm) (1.5") Dia Bore

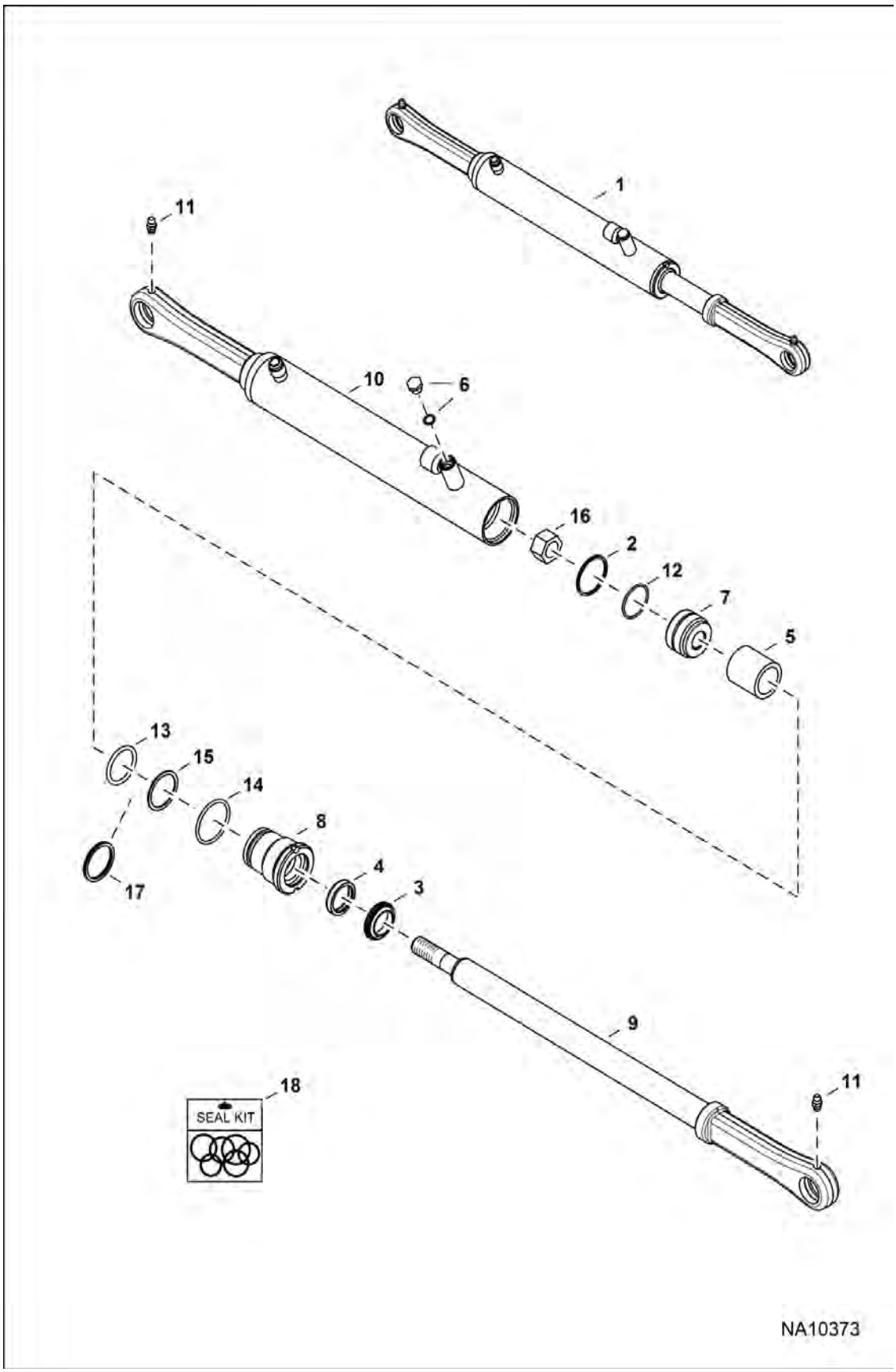

Page 733 - OSS# 6300322913 - All rights reserved by Bobcat Company - 08/04/2017 - 06:30:16 - Produced by Ken Cook Co. with mediaioff

POWER BOB-TACH (Cont'd)

(Cylinder) (Bottom & Side Mounted Ports) (47,6 mm) (1.875") OD Cyl (38,1 mm) (1.5") Dia Bore

Ref No	Part Number	Description	Remarks	Serial Number	Qty
1		CYLINDER HYDRAULIC	See Illustration POWER BOB-TACH / NA12512 NLA - Ref. 2-16 - Was 7227570 [A]		1
2	6649690	SEAL			1
3	6666542	WIPER, ROD CYL			1
4	6667323	SEAL			1
5	6810356	SPACER			1
6	6812170	PLUG			1
7	7153107	PISTON			1
8	7153108	HEAD			1
9	7227462	SHAFT, W/A			1
10	7227571	TUBE, CASE CYL POWER BOB-TACH			1
11	10H35	FITTING, GREASE 10			2
12	54K20106	ORING			1
13	54K40108	ORING			1
14	58K128	ORING			1
15	73K218	RING BKUP			1
16	92D10	NUT			1
17	7207335	SEAL, QUAD			1
18	7155417	KIT, SEAL	Ref. 2-4, 12, 14, 16 &17		1

Page 1 of 1 OSS# 6300322913 - All rights reserved by Bobcat Company - 08/04/2017 - 06:30:16 - Produced by Ken Cook Co. with mediaioff

POWER BOB-TACH
(Cylinder) (Guard Stud)

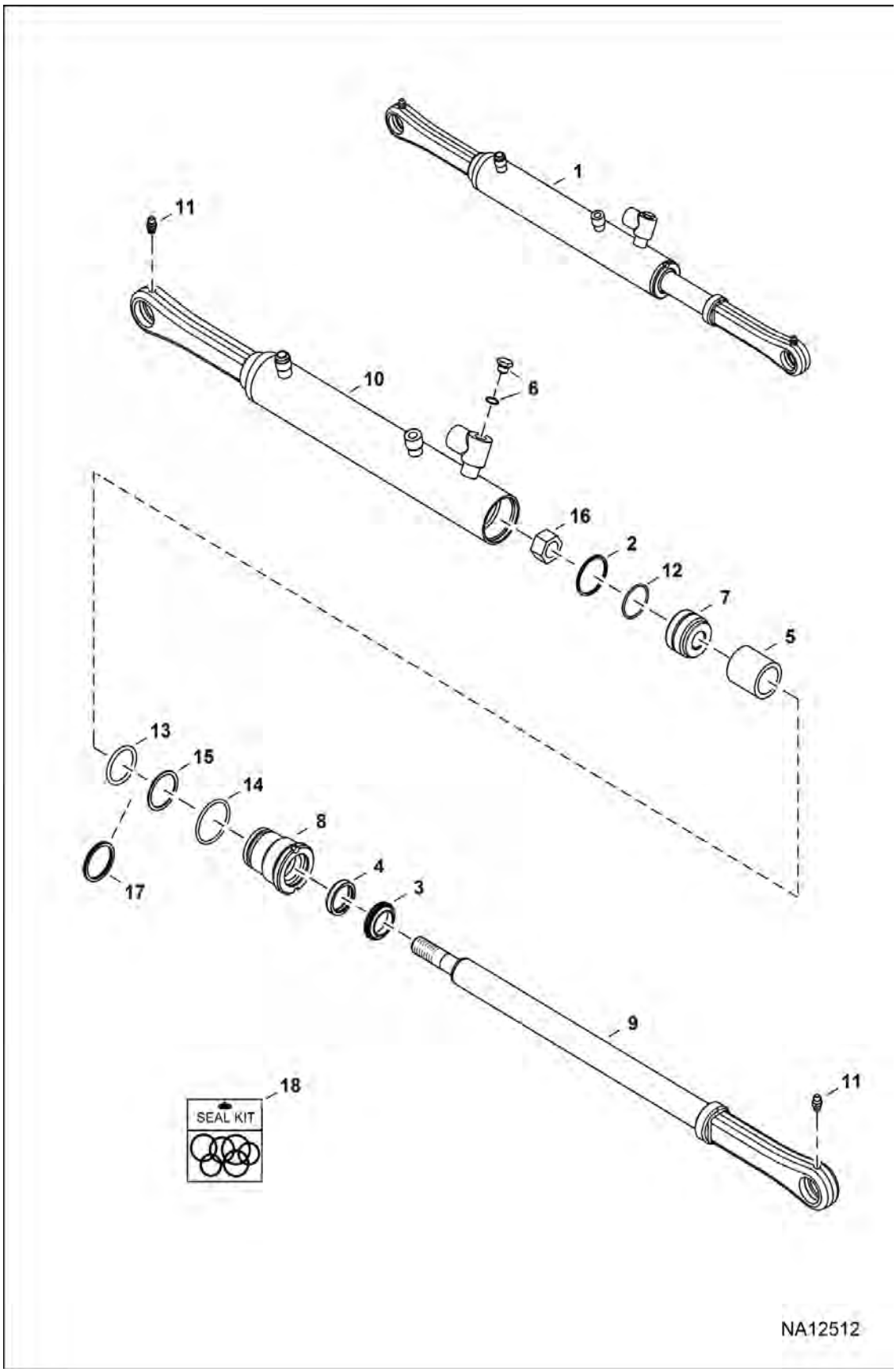

Page 735 - OSS# 6300322913 - All rights reserved by Bobcat Company - 08/04/2017 - 06:30:16 - Produced by Ken Cook Co. with media1off

POWER BOB-TACH (Cont'd)
(Cylinder) (Guard Stud)

Ref No	Part Number	Description	Remarks	Serial Number	Qty
1	7307224	CYLINDER HYDRAULIC	Ref. 2-16		1
2	6649690	SEAL			1
3	6666542	WIPER, ROD CYL			1
4	6667323	SEAL			1
5	6810356	SPACER			1
6	6812170	PLUG			1
7	7153107	PISTON			1
8	7153108	HEAD			1
9	7227462	SHAFT, W/A			1
10		TUBE CASE CYLINDER	NLA - Was 7307555		1
11	10H35	FITTING, GREASE 10			2
12	54K20106	ORING			1
13	54K40108	ORING			1
14	58K128	ORING			1
15	73K218	RING BKUP			1
16	92D10	NUT			1
17	7207335	SEAL, QUAD			1
18	7155417	KIT, SEAL	Ref. 2-4, 12, 14, 16 &17		1

Page 728 OSS# 6300322913 - All rights reserved by Bobcat Company - 08/04/2017 - 06:30:16 - Produced by Ken Cook Co. with mediaioff

POWER BOB-TACH
(Valve) (Two Female Connector Coils) (JEM)

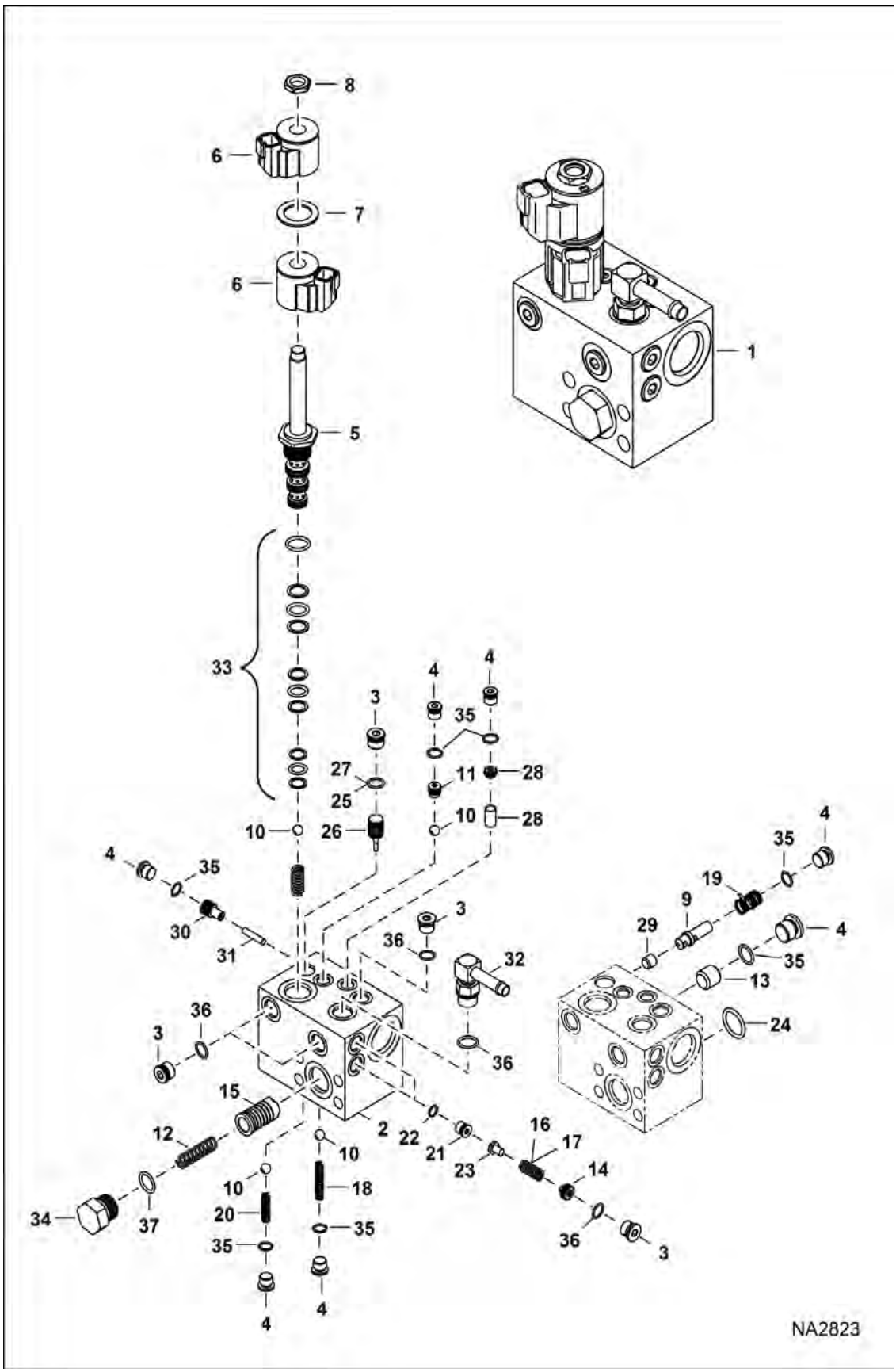

Page 737 - OSS# 6300322913 - All rights reserved by Bobcat Company - 08/04/2017 - 06:30:16 - Produced by Ken Cook Co. with mediaioff

POWER BOB-TACH (Cont'd)
(Valve) (Two Female Connector Coils) (JEM)

Ref No	Part Number	Description	Remarks	Serial Number	Qty
1	7010992	VALVE, POWER BOB-TACH	Ref. 2-37 - Was 7022766 [B,D]		1
2		BLOCK	NLA - Order Ref. 1		1
3	6669620	PLUG	W/Ref. 36		5
4	6665719	PLUG	W/Ref. 35		7
5	6673986	SPOOL, VALVE			1
6	7010006	COIL			2
7	6689389	SPACER			1
8	7020647	NUT			1
9	7020648	SPOOL			1
10	6678705	BALL			4
11	7008561	SEAT, SHUTTLE			1
12	7020649	SPRING			1
13	6669615	ORIFICE	0.020 dia. - Was 6664029 [A]		1
14	7020604	PLUG			2
15	7020650	SPOOL			1
16	7020651	SPRING			1
17	7020607	SPRING			1
18	7020652	SPRING			1
19	7020653	SPRING			1
20	7020654	SPRING			1
21	7020606	PLUG			2
22	7020655	O-RING			2
23	7020605	POPPET			2
24	6690299	O-RING			1
25	7020656	RING, BACK-UP			2
26	7020657	PISTON			1
27	6678837	O-RING			1
28	7020658	FILTER CARTRIDGE			1
29	7020659	ORIFICE			1
30	7020660	GUIDE			1
31	7020661	SHAFT			1
32	6727313	FITTING, ELBOW			1
33	6672756	KIT, SEAL	Was 6673835 [A]		1
34	7008556	PLUG			1
35		O RING 10	NSS - Order Ref. 4 - Was 79K3 [B,D]		x
36		O RING 10	NSS - Order Ref. 3 - Was 79K6 [B,D]		x
37	79K10	O RING 10			x

Page 730 OSS# 6300322913 - All rights reserved by Bobcat Company - 08/04/2017 - 06:30:16 - Produced by Ken Cook Co. with mediaioff

POWER BOB-TACH
(Valve) (Two Female Connector Coils)

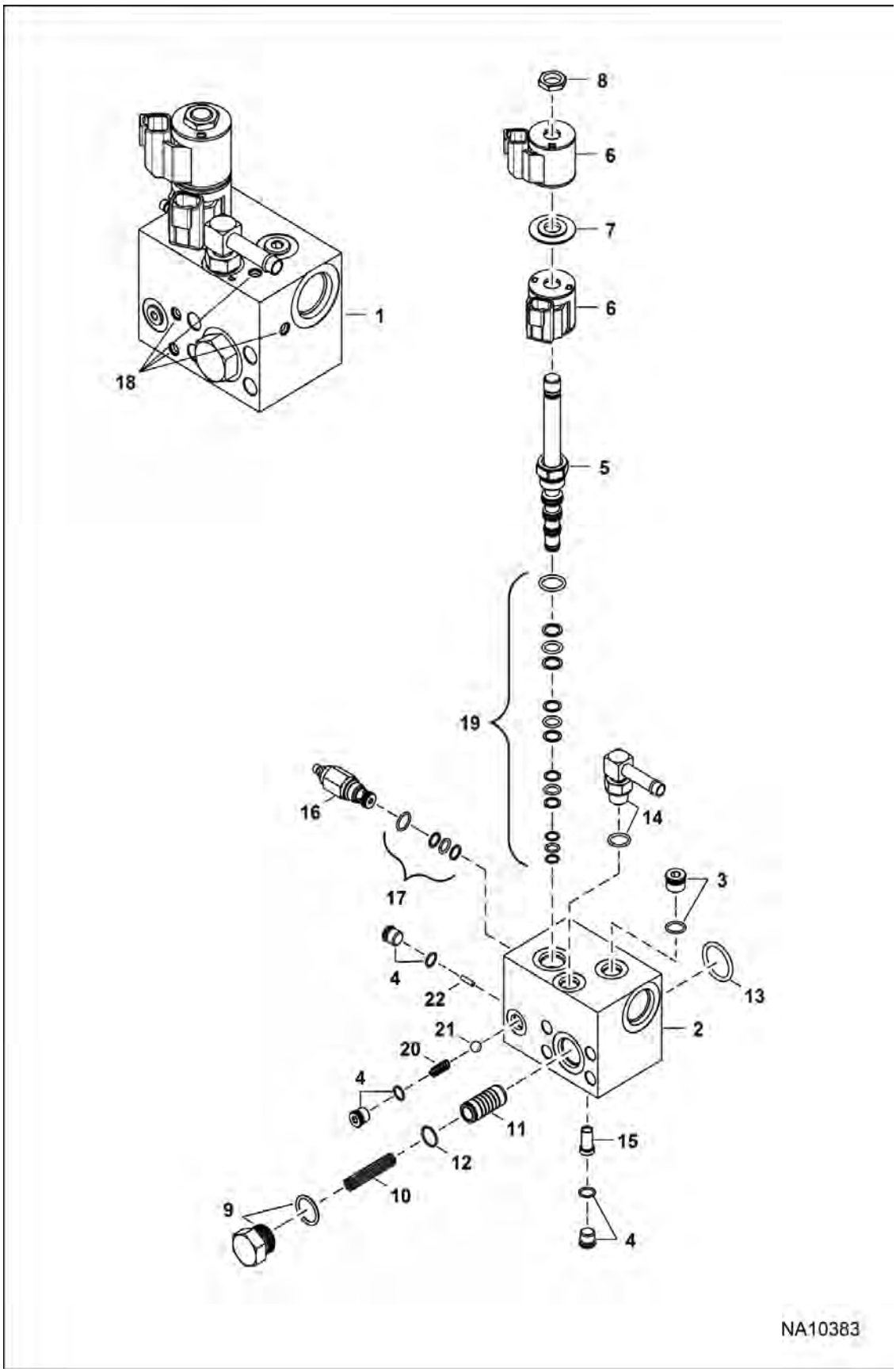

Page 739 - OSS# 6300322913 - All rights reserved by Bobcat Company - 08/04/2017 - 06:30:16 - Produced by Ken Cook Co. with mediaioff

Illustration NA10383

POWER BOB-TACH (Cont'd)
(Valve) (Two Female Connector Coils)

Ref No	Part Number	Description	Remarks	Serial Number	Qty
1	7273570	VALVE, POWER BOB-TACH	Ref. 2-21 - Was 7231548 [A]		1
2		BLOCK	NSS - Order Ref. 7 & 8		1
3	7235665	PLUG, SOCKET			1
3	79K6	O RING 10			1
4	7235664	PLUG			3
4	79K4	O RING 10			3
5	7232742	VALVE, SOLENOID			1
6	7010006	COIL			2
7	6689389	SPACER			1
8	7020647	NUT			1
9	7267121	PLUG			1
9	79K10	O RING 10			1
10	7224039	SPRING, COMPRESSION			1
11	7225214	SPOOL			1
12	7214312	RING, RETAINING			1
13	25K40100	O RING 10			1
14	6727313	FITTING, ELBOW			1
14	79K6	O RING 10			1
15	7226770	ORIFICE			1
16	7232751	VALVE, RELIEF			1
17	7282204	KIT, SEAL	FS062-N - Was 7031574 [A]		1
18	7232870	PLUG			11
19	6672756	KIT, SEAL			1
20	7247745	SPRING, COMPRESSION			1
21	10J10	BALL			1
22	7240464	ORIFICE			1

Page Added OSS# 6300322913 - All rights reserved by Bobcat Company - 08/04/2017 - 06:30:16 - Produced by Ken Cook Co. with mediaoff

POWER BOB-TACH GUARD KIT

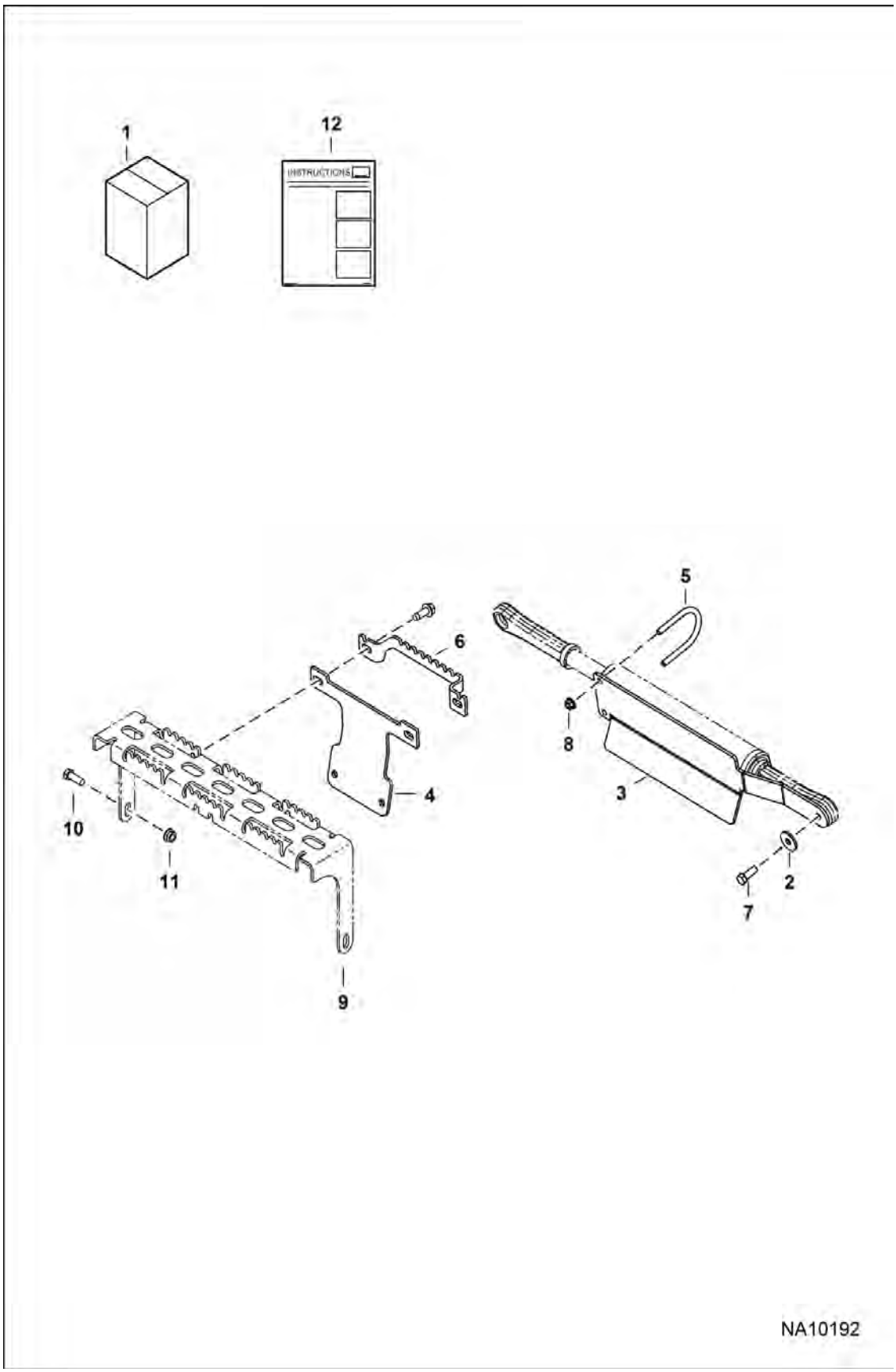

Page 741 - OSS# 6300322913 - All rights reserved by Bobcat Company - 08/04/2017 - 06:30:16 - Produced by Ken Cook Co. with mediaioff

POWER BOB-TACH GUARD KIT (Cont'd)

Ref No	Part Number	Description	Remarks	Serial Number	Qty
1	7249240	KIT, POWER BOB-TACH	Ref. 2-8 & 12		1
2	619021	WASHER, 5			1
3	7244714	GUARD, POWER BOB-TACH			1
4	7246260	STEP			1
5	7250415	U-BOLT			1
6	7256352	STEP			1
7	17C616	BOLT 5			1
8	97D5	NUT			2
9	7233244	STEP, LIFT ARM	not in kit		1
10	17C616	BOLT 5	not in kit		1
11	53D6	NUT	not in kit		1
12	7255118ENUS	INSTRUCTIONS	Was 7255118 [A]		1

Page 1 of 2 OSS# 6300322913 - All rights reserved by Bobcat Company - 08/04/2017 - 06:30:16 - Produced by Ken Cook Co. with mediaioff

RADIO KIT

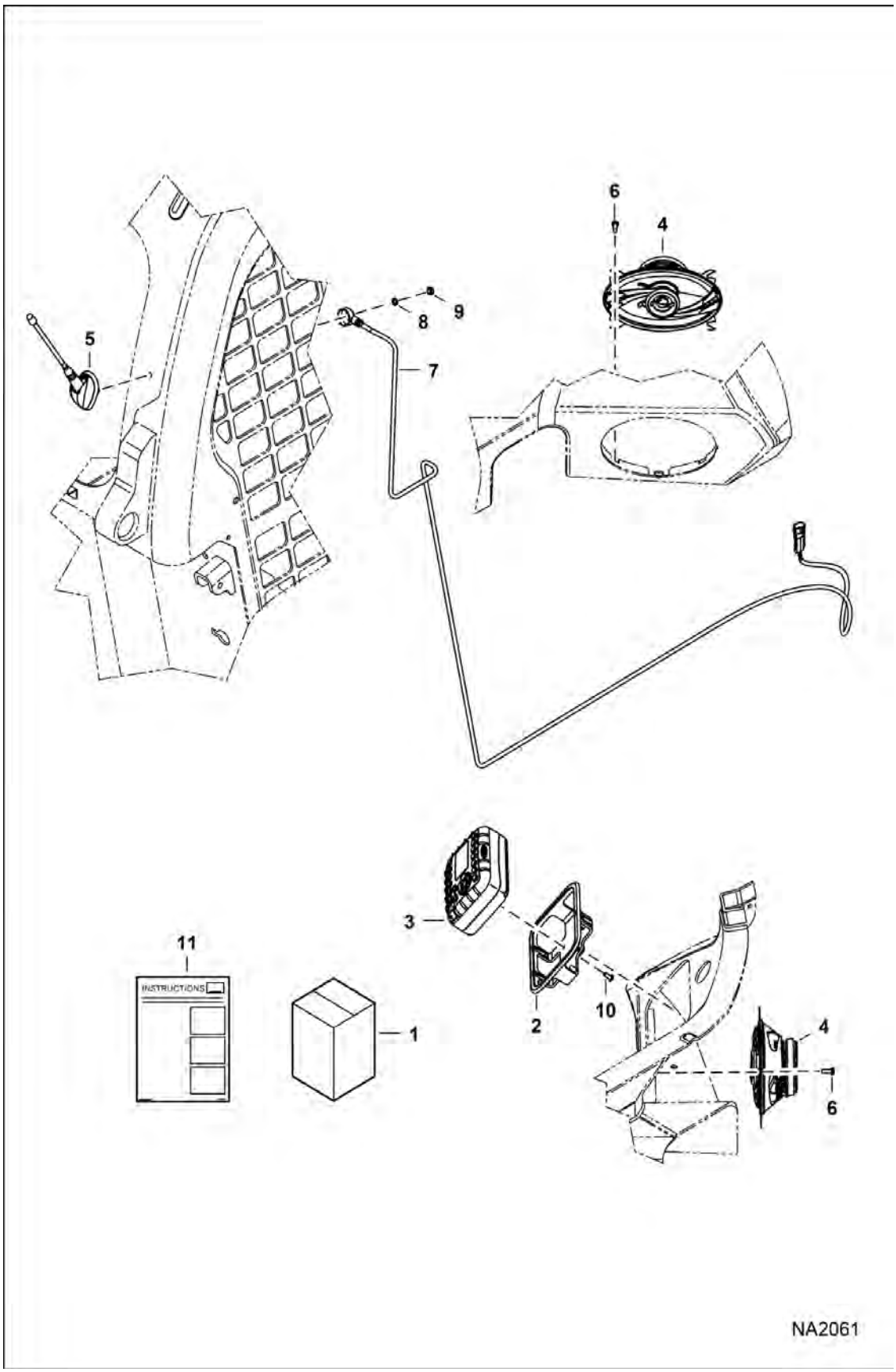

Page 743 - OSS# 6300322913 - All rights reserved by Bobcat Company - 08/04/2017 - 06:30:16 - Produced by Ken Cook Co. with mediaioff

RADIO KIT (Cont'd)

Ref No	Part Number	Description	Remarks	Serial Number	Qty
1	6988435	KIT, RADIO M-SERIES LOADERS	Ref. 2-11 - deluxe cab only		1
2	7145333	BRACKET, RADIO			1
3	6988336	RADIO, BOBCAT HEAVY-DUTY MINI	W/Ref. 10		1
4	6988660	SPEAKER, 4 X 6 RETAIL JXA462			2
5		ANTENNA, 94 INCH MOTOROLA MALE PLUG	NLA - W/Ref. 7-9 - Was 6988661 [B]		1
5	6988661	ANTENNA, 88 INCH MOTOROLA MALE PLUG	W/Ref. 7-9 - Was 7159877 [A]		1
6	7162770	SCREW			8
7		CABLE	NSS - Order Ref. 5		1
8		WASHER	NSS - Order Ref. 5		1
9		NUT	NSS - Order Ref. 5		1
10		SCREW	NSS - Order Ref. 3		4
11	6987139ENUS	INSTRUCTIONS	Was 6987139 [A]		1

Page 444 OSS# 6300322913 - All rights reserved by Bobcat Company - 08/04/2017 - 06:30:16 - Produced by Ken Cook Co. with mediaioff

REAR AUXILIARY KIT

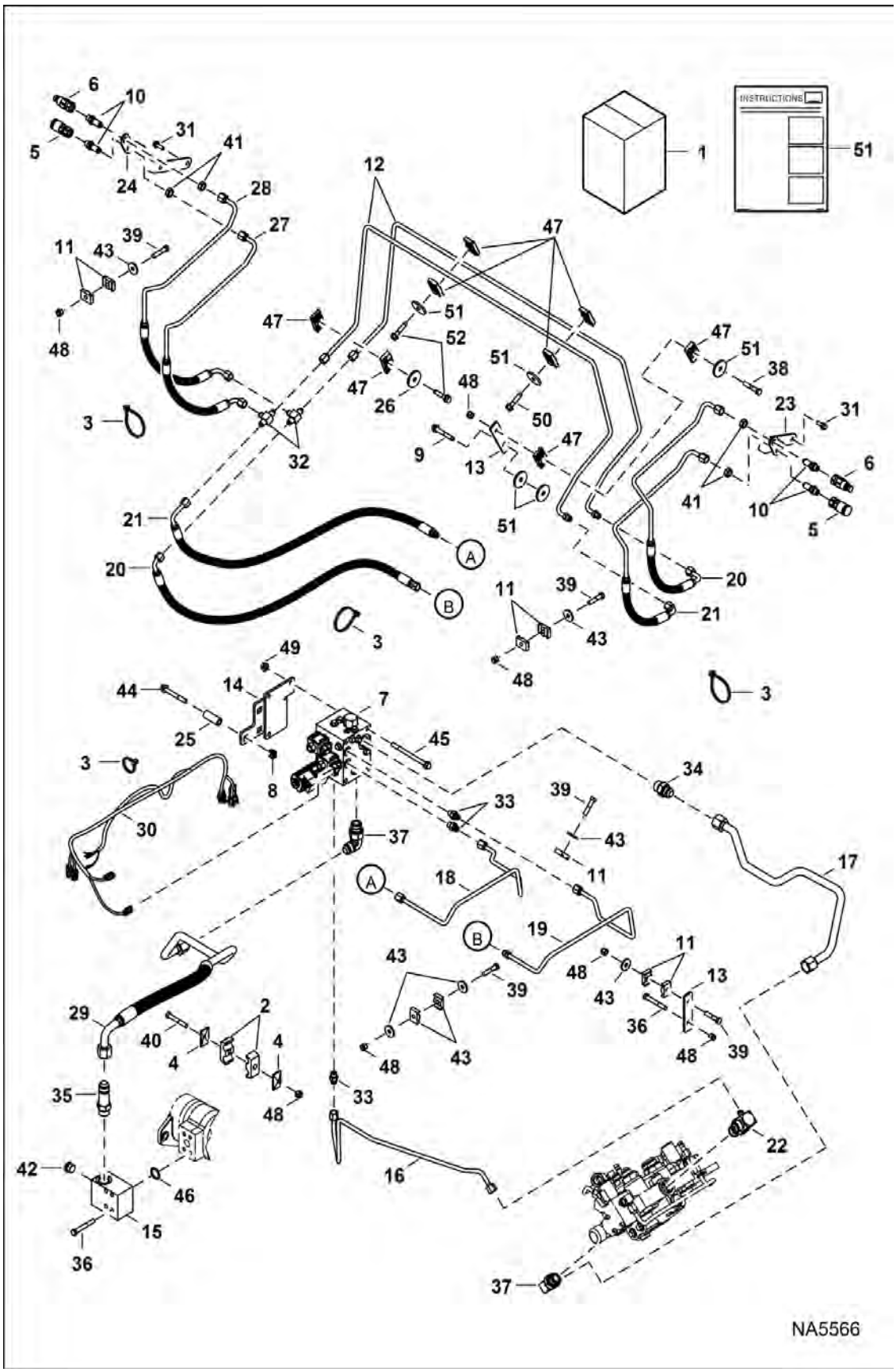

Page 745 - OSS# 6300322913 - All rights reserved by Bobcat Company - 08/04/2017 - 06:30:16 - Produced by Ken Cook Co. with mediaioff

REAR AUXILIARY KIT (Cont'd)

Ref No	Part Number	Description	Remarks	Serial Number	Qty
1		KIT, AUX REAR	See Illustration REAR AUXILIARY KIT / NA6639 - NLA - Ref. 2-51 - Was 7201029 [A]		1
2	6592506	CLAMP			2
3	6624289	STRAP, TIE			9
4	6652521	PLATE			2
5	7246786	COUPLER, FF FEMALE	Contact your Local Dealer for Bobcat Technical Information BTI433ldr - Was 6667803 [A]		2
6	7246787	COUPLER, FF MALE	Contact your Local Dealer for Bobcat Technical Information BTI433ldr - Was 6667804 [A]		2
7	6685624	VALVE, AUX REAR	See Illustration REAR AUXILIARY VALVE / MS2255		1
8	6685663	NUT, RETAINING			3
9	84G3740	BOLT			1
10	6716089	CONNECTOR			4
10	79K6	O RING 10			1
11	7115645	CLAMP	Was 6726277 [A]		10
12	7201025	TUBELINE, HYD			2
13	7203897	CLAMP, ADAPTER			2
14	7201028	MOUNT, VALVE			1
15	7226207	MANIFOLD, OUTLET PUMP	Was 7029565 [A]		1
16	7201023	TUBELINE, HYD			1
17	7201022	TUBELINE, HYD			1
18	7201024	TUBELINE, HYD			1
19	7201026	TUBELINE, HYD			1
20	7177104	HOSE, HYD			1
21	7177105	HOSE, HYD			1
22	7178841	TEE			1
22	79K16	O RING 10			1
23	7186827	MOUNT, BULKHEAD			1
24	7186828	MOUNT, BULKHEAD			1
25	7204384	SPACER			1
26	872229	WASHER			6
27	7202689	HOSE, HYD			1
28	7202688	HOSE, HYD			1
29	7201027	HOSE, HYD			1
30	7201414	HARNESS, AUX REAR			1
31	84G3716	SCREW 5			4
32	10K5	TEE			2
33	15KB0606	FITTING, HYD CONNECTOR			3
33	79K6	O RING 10			1
34	15KB1212	FITTING, HYD CONNECTOR			1
34	79K12	O RING 10			1
35	16KB1212	FITTING, HYD CONNECTOR			1
35	79K12	O RING 10			1

Page Made OSS# 6300322913 - All rights reserved by Bobcat Company - 08/04/2017 - 06:30:16 - Produced by Ken Cook Co. with mediaioff

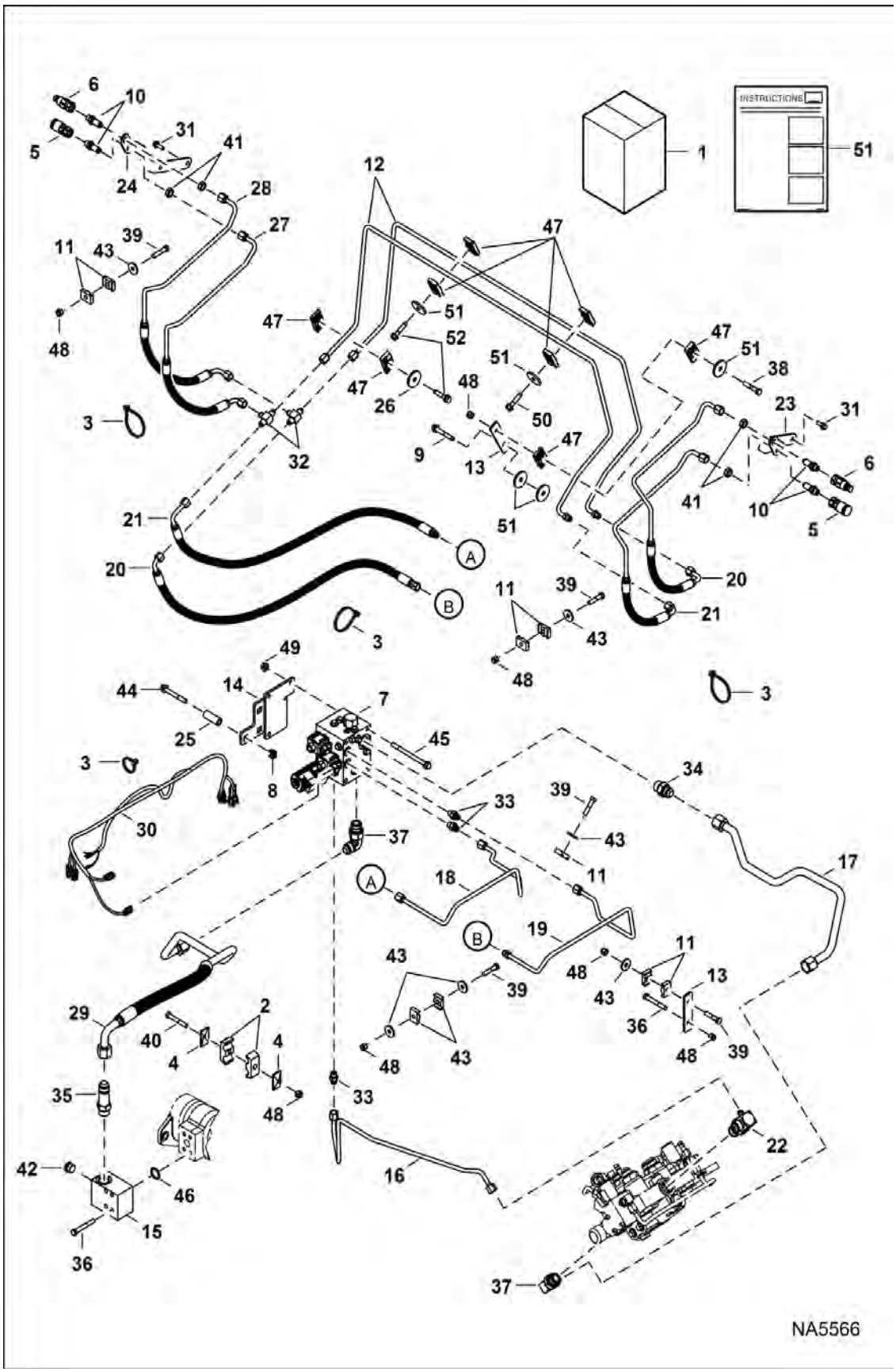

Page 747 - OSS# 6300322913 - All rights reserved by Bobcat Company - 08/04/2017 - 06:30:16 - Produced by Ken Cook Co. with mediaioff

REAR AUXILIARY KIT (Cont'd)

Ref No	Part Number	Description	Remarks	Serial Number	Qty
36	17C644	BOLT			4
37	7101797	ELBOW			2
37	79K12	O RING 10			1
38	17C424	BOLT			1
39	17C428	BOLT			5
40	17C640	BOLT			1
41	86F5	NUT			4
42	24K6	FITTING	Was 47K7 [B]		1
42	79K10	O RING 10			1
43	619021	WASHER, 5			7
44	35C648	BOLT			3
45	31C680	BOLT			3
46	55K214	O-RING			1
47	7196075	CLAMP, TUBELINE			8
48	59D6	NUT			8
49	83D6	NUT 5			3
50	84G3728	BOLT			3
51	6990141	INSTRUCTIONS			1

Page 743 OSS# 6300322913 - All rights reserved by Bobcat Company - 08/04/2017 - 06:30:16 - Produced by Ken Cook Co. with mediaioff

REAR AUXILIARY KIT
(A3P812130 & Above)

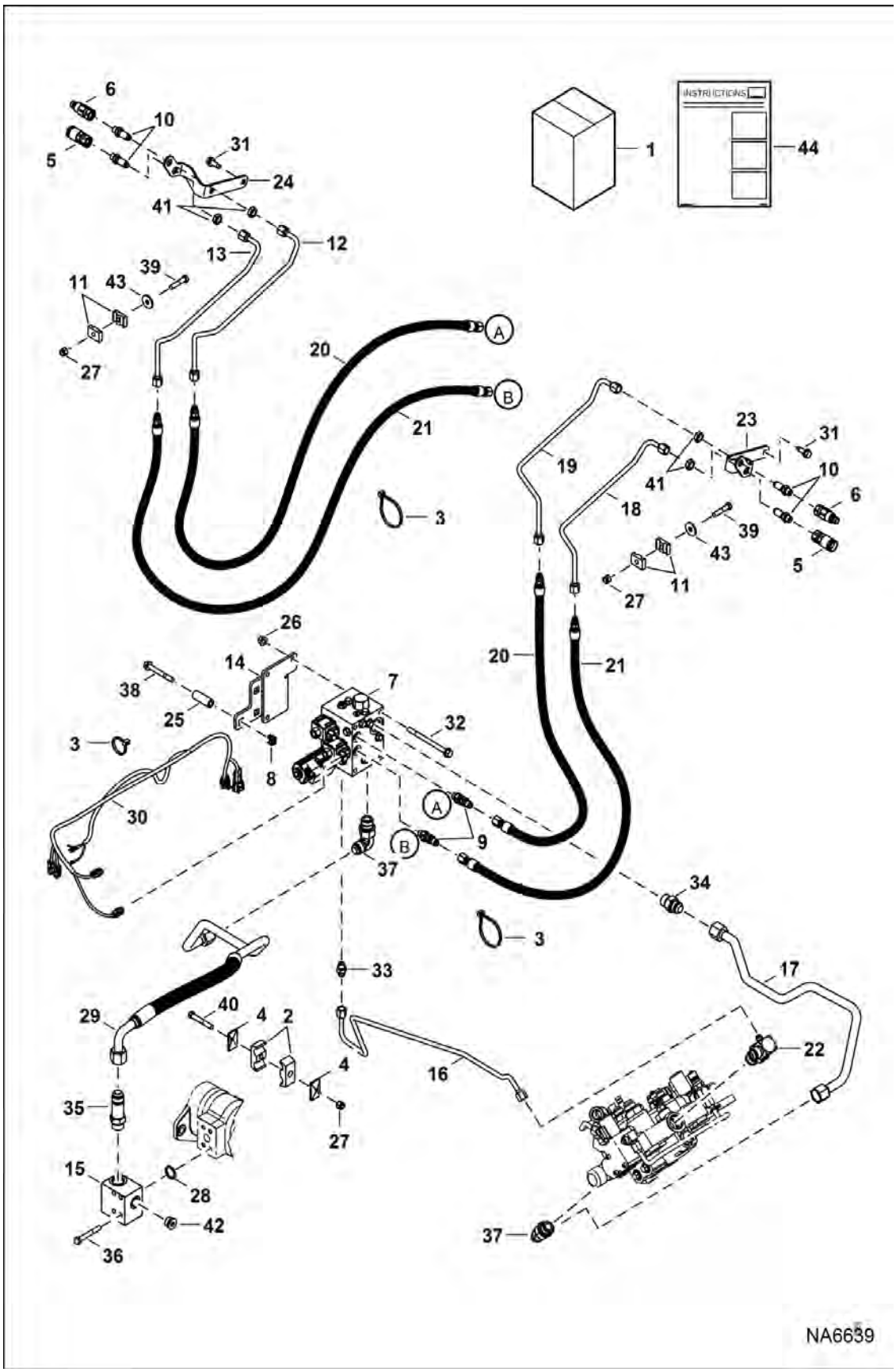

Page 749 - OSS# 6300322913 - All rights reserved by Bobcat Company - 08/04/2017 - 06:30:16 - Produced by Ken Cook Co. with mediaioff

REAR AUXILIARY KIT (Cont'd)

(A3P812130 & Above)

Ref No	Part Number	Description	Remarks	Serial Number	Qty
1	7220912	KIT, AUX REAR	Ref. 2-44		1
2	6592506	CLAMP			2
3	6624289	STRAP, TIE			13
4	6652521	PLATE			2
5	7246786	COUPLER, FF FEMALE	Contact your Local Dealer for Bobcat Technical Information BTI433ldr - Was 6667803 [A]		2
6	7246787	COUPLER, FF MALE	Contact your Local Dealer for Bobcat Technical Information BTI433ldr - Was 6667804 [A]		2
7	6685624	VALVE, AUX REAR	See Illustration REAR AUXILIARY VALVE / MS2255		1
8	6685663	NUT, RETAINING			3
9	21KB0606	FITTING, HYD TEE			2
9	79K6	O RING 10			2
10	6716089	CONNECTOR			4
10	79K6	O RING 10			4
11	7115645	CLAMP	Was 6726277 [A]		4
12	7217363	TUBELINE, HYD			1
13	7217364	TUBELINE, HYD			1
14	7201028	MOUNT, VALVE			1
15	7226207	MANIFOLD, OUTLET PUMP	Was 7029565 [A]		1
16	7222582	TUBELINE, HYD			1
17	7201022	TUBELINE, HYD			1
18	7217365	TUBELINE, HYD			1
19	7217366	TUBELINE, HYD			1
20	7250782	HOSE, HYD ASSY	Was 7217367 [A]		2
21	7250783	HOSE, HYD ASSY	Was 7217368 [A]		2
22	7178841	TEE			1
22	79K16	O RING 10			1
23	7186827	MOUNT, BULKHEAD			1
24	7186828	MOUNT, BULKHEAD			1
25	7204384	SPACER	50,8 mm (2") long		3
25	7228562	SPACER	63,5 mm (2.5") long		3
26	83D6	NUT 5			3
27	59D6	NUT			3
28	55K214	O-RING			1
29	7201027	HOSE, HYD			1
30	7201414	HARNESS, AUX REAR			1
31	84G3716	SCREW 5			4
32	31C680	BOLT			3
33	15KB0606	FITTING, HYD CONNECTOR			1
33	79K6	O RING 10			1
34	15KB1212	FITTING, HYD CONNECTOR			1
34	79K12	O RING 10			1

Page 1 of 1 OSS# 6300322913 - All rights reserved by Bobcat Company - 08/04/2017 - 06:30:16 - Produced by Ken Cook Co. with mediaioff

REAR AUXILIARY KIT (Cont'd)
(A3P812130 & Above)

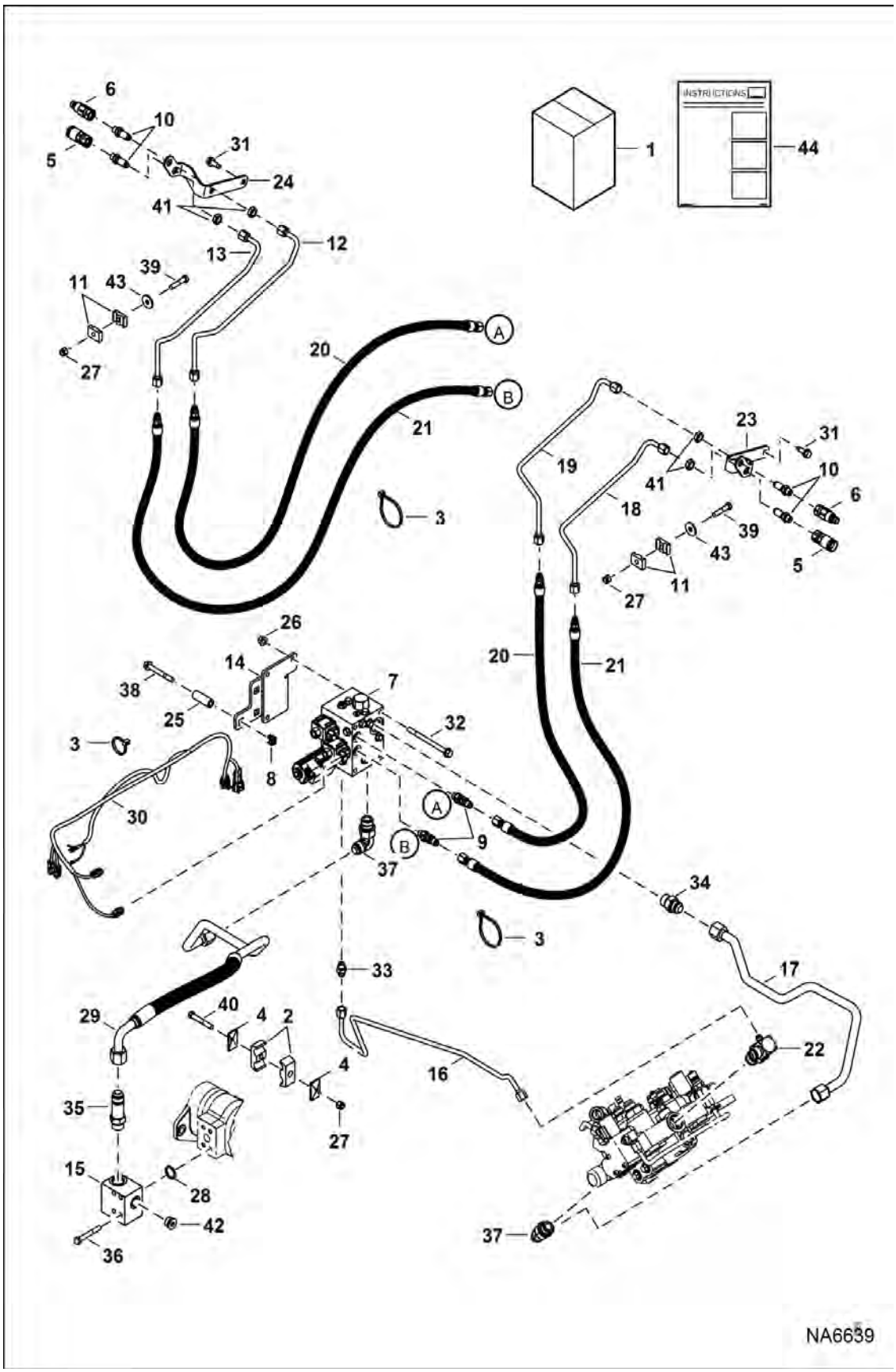

Page 751 - OSS# 6300322913 - All rights reserved by Bobcat Company - 08/04/2017 - 06:30:16 - Produced by Ken Cook Co. with mediaioff

REAR AUXILIARY KIT (Cont'd)
(A3P812130 & Above)

Ref No	Part Number	Description	Remarks	Serial Number	Qty
35	16KB1212	FITTING, HYD CONNECTOR			1
35	79K12	O RING 10			1
36	17C644	BOLT			4
37	7101797	ELBOW			2
37	79K12	O RING 10			1
38	35C648	BOLT	Use W/Ref. 25 (7204384 spacer)		3
38	31C656	BOLT	Use W/Ref. 25 (7228562 spacer) - Was 35C656 [A]		3
39	17C428	BOLT			2
40	17C640	BOLT			1
41	86F5	NUT			4
42	24K6	FITTING	Was 47K7 [B]		1
42	79K10	O RING 10			1
43	619021	WASHER, 5			2
44	6990454ENUS	INSTRUCTIONS	Was 6990454 [A]		1

Page 2 OSS# 6300322913 - All rights reserved by Bobcat Company - 08/04/2017 - 06:30:16 - Produced by Ken Cook Co. with mediaioff

REAR AUXILIARY KIT

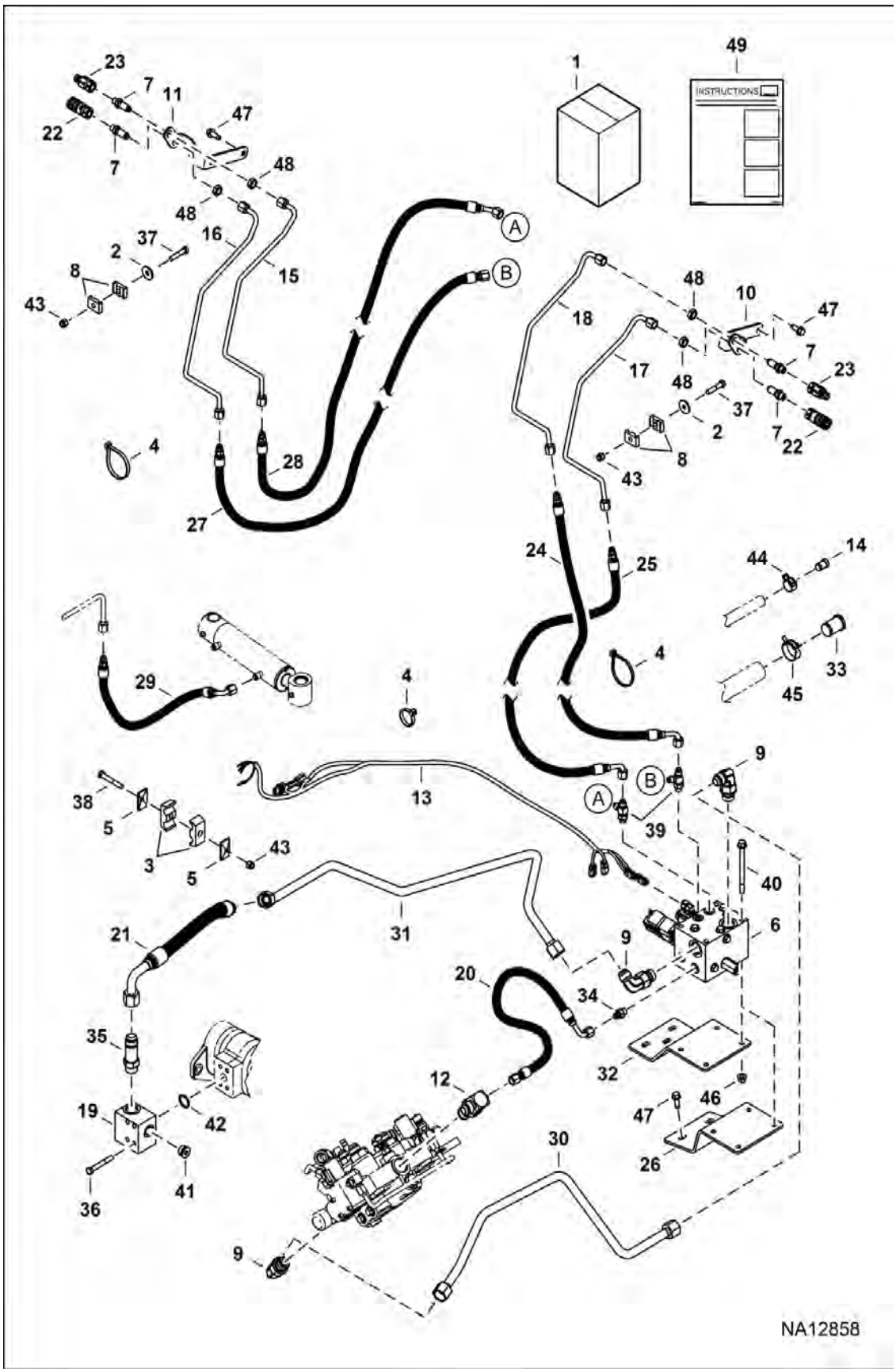

Page 753 - OSS# 6300322913 - All rights reserved by Bobcat Company - 08/04/2017 - 06:30:16 - Produced by Ken Cook Co. with mediaioff

REAR AUXILIARY KIT (Cont'd)

Ref No	Part Number	Description	Remarks	Serial Number	Qty
1	7311880	KIT REAR AUX			1
2	619021	WASHER, 5			2
3	6592506	CLAMP			2
4	6624289	STRAP, TIE			18
5	6652521	PLATE			2
6	6685624	VALVE, AUX REAR			1
7	6716089	CONNECTOR			4
8	7115645	CLAMP			4
9	7101797	ELBOW			3
10	7186827	MOUNT, BULKHEAD			1
11	7186828	MOUNT, BULKHEAD			1
12	7195615	FITTING, HYD TEE			1
13	7201414	HARNESS, AUX REAR			1
14	7203382	PLUG, STEEL			1
15	7310258	TUBELINE HYDRAULIC			1
16	7310259	TUBELINE HYDRAULIC			1
17	7310257	TUBELINE HYDRAULIC			1
18	7310256	TUBELINE HYDRAULIC			1
19	7226207	MANIFOLD, OUTLET PUMP			1
20	7242381	HOSE, HYD ASSY			1
21	7242382	HOSE, HYD ASSY			1
22	7246786	COUPLER, FF FEMALE			2
23	7246787	COUPLER, FF MALE			2
24	7310253	HOSE HYDRAULIC ASSY			1
25	7310250	HOSE HYDRAULIC ASSY			1
26	7266913	BRACKET			1
27	7310255	HOSE HYDRAULIC ASSY			1
28	7310254	HOSE HYDRAULIC ASSY			1
29	7268430	HOSE, HYD ASSY			1
30	7270042	TUBELINE, HYD			1
31	7270043	TUBELINE, HYD			1
32	7270121	BRACKET			1
33	7273679	PLUG			1

Page 1 of 1 OSS# 6300322913 - All rights reserved by Bobcat Company - 08/04/2017 - 06:30:16 - Produced by Ken Cook Co. with mediaioff

REAR AUXILIARY KIT (Cont'd)

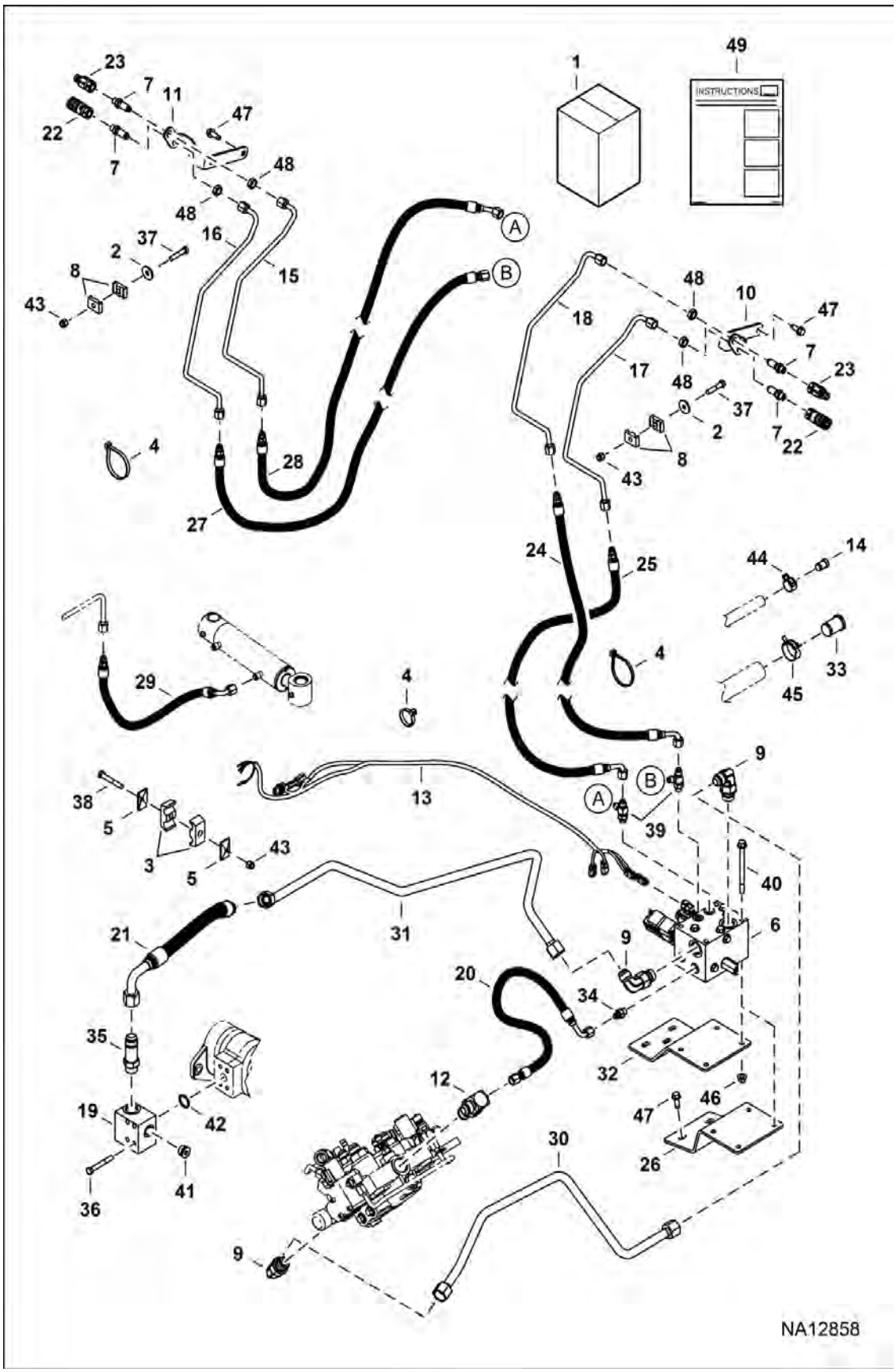

Page 755 - OSS# 6300322913 - All rights reserved by Bobcat Company - 08/04/2017 - 06:30:16 - Produced by Ken Cook Co. with mediaioff

REAR AUXILIARY KIT (Cont'd)

Ref No	Part Number	Description	Remarks	Serial Number	Qty
34	15KB0606	FITTING, HYD CONNECTOR			1
35	16KB1212	FITTING, HYD CONNECTOR			1
36	17C644	BOLT			4
37	1C628	BOLT			2
38	17C640	BOLT			1
39	21KB0606	FITTING, HYD TEE			2
40	35C680	SCREW			4
41	24K6	FITTING			1
42	55K214	O-RING			1
43	59D6	NUT			3
44	5HM24	CLAMP			1
45	5HM38	CLAMP, HOSE			1
46	83D6	NUT 5			4
47	84G3716	SCREW 5			7
48	86F5	NUT			4
49	7280212ENUS	INSTRUCTIONS			1

Page 1 of 1 OSS# 6300322913 - All rights reserved by Bobcat Company - 08/04/2017 - 06:30:16 - Produced by Ken Cook Co. with mediaioff

REAR AUXILIARY VALVE

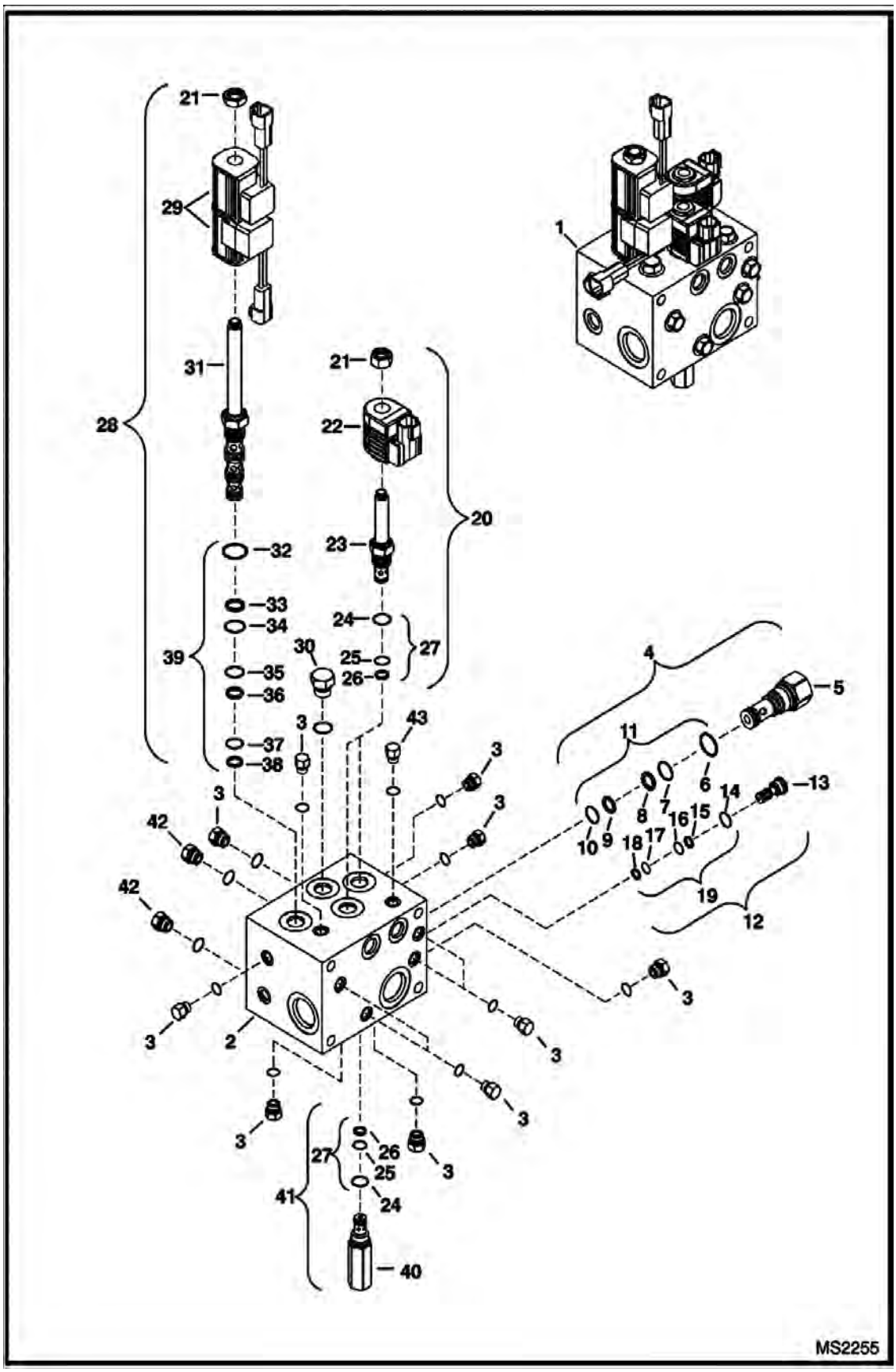

Page 757 - OSS# 6300322913 - All rights reserved by Bobcat Company - 08/04/2017 - 06:30:16 - Produced by Ken Cook Co. with mediaioff

REAR AUXILIARY VALVE (Cont'd)

Ref No	Part Number	Description	Remarks	Serial Number	Qty
1	6685624	VALVE, AUX REAR			1
2		BLOCK	NSS		1
3		PLUG	NSS - #4 SAE W/ O-ring		11
4	6684044	VALVE	differential sensing - Ref. 5-10		1
5		VALVE	NSS - Order Ref. 4		1
6	6684046	O-RING			1
7	6684048	O-RING			1
8	6684047	BACK-UP RING			1
9	6684050	BACK-UP RING			1
10		O-RING	NLA - Order Ref. 11 [A]		1
11	6684045	SEAL KIT	Ref. 6-10		1
12	6684061	VALVE	shuttle - Ref. 13-18		1
13		VALVE	NSS - Order Ref. 12		1
14	6684063	O-RING			1
15	6684064	BACK-UP RING			1
16	6684065	O-RING			1
17	6684066	O-RING			1
18		BACK-UP RING	NLA - Was 6684067 [A]		1
19	6684062	SEAL KIT	Ref. 14-18		1
20		VALVE	NLA - Ref. 21-26 - .5" dia x 45 mm (1.78") long stem - Order 7021365 solenoid valve - Was 6685061 [A]		2
20	7021365	VALVE, SOLENOID	Ref. 21-26 - 13 mm dia x 38 mm (1.53") long stem		2
21	6684060	NUT	0.5" thread - Use W/Ref. 22 (6684073 coil)		2
21	7021367	NUT	13 mm thread - Use W/Ref. 22 (7021366 coil)		2
22	6684073	COIL	12 volt - Use W/ 0.5" dia x 45 mm (1.78") long stem		2
22	7021366	COIL, SOLENOID	12 volt - Use W/ 13 mm dia x 38 mm (1.53") long stem		2
23		STEM	NSS - Order Ref. 20		2
24	6684070	O-RING			3
25	6684071	O-RING			3
26	6684072	BACK-UP RING			3
27	6684069	SEAL KIT	Ref. 24-26		3
28	6688933	VALVE ASSY	solenoid W/coils - Ref. 21, 29 & 31-38		1
29	6688934	COIL			2
30		PLUG	NSS - #8 SAE W/ O-ring		1
31		VALVE	NSS - Order Ref. 28		1
32		O-RING	NLA - Order Ref. 39		1
33	6684053	BACK-UP RING			1
34	6684054	O-RING			1
35	6684056	RING,O			1
36		BACK-UP RING	NLA - Was 6684055 [A]		1
37		O-RING	NLA - Order Ref. 39		1
38		BACK-UP RING	NLA - Was 6684057 [A]		1
39	6684052	SEAL KIT	Ref. 32-38		1
40		VALVE	NSS - Order Ref. 41		x
41	6685328	RELIEF VALVE	W/Ref. 24-26		1
42		PLUG	NSS - #6 SAE W/ O-ring		4
43		PLUG	NSS - metric		1

Page 7-68 OSS# 6300322913 - All rights reserved by Bobcat Company - 08/04/2017 - 06:30:16 - Produced by Ken Cook Co. with mediaoff

REAR WIPER KIT

(678 mm) (26.7") x (390 mm) (15.37") Cab Opening

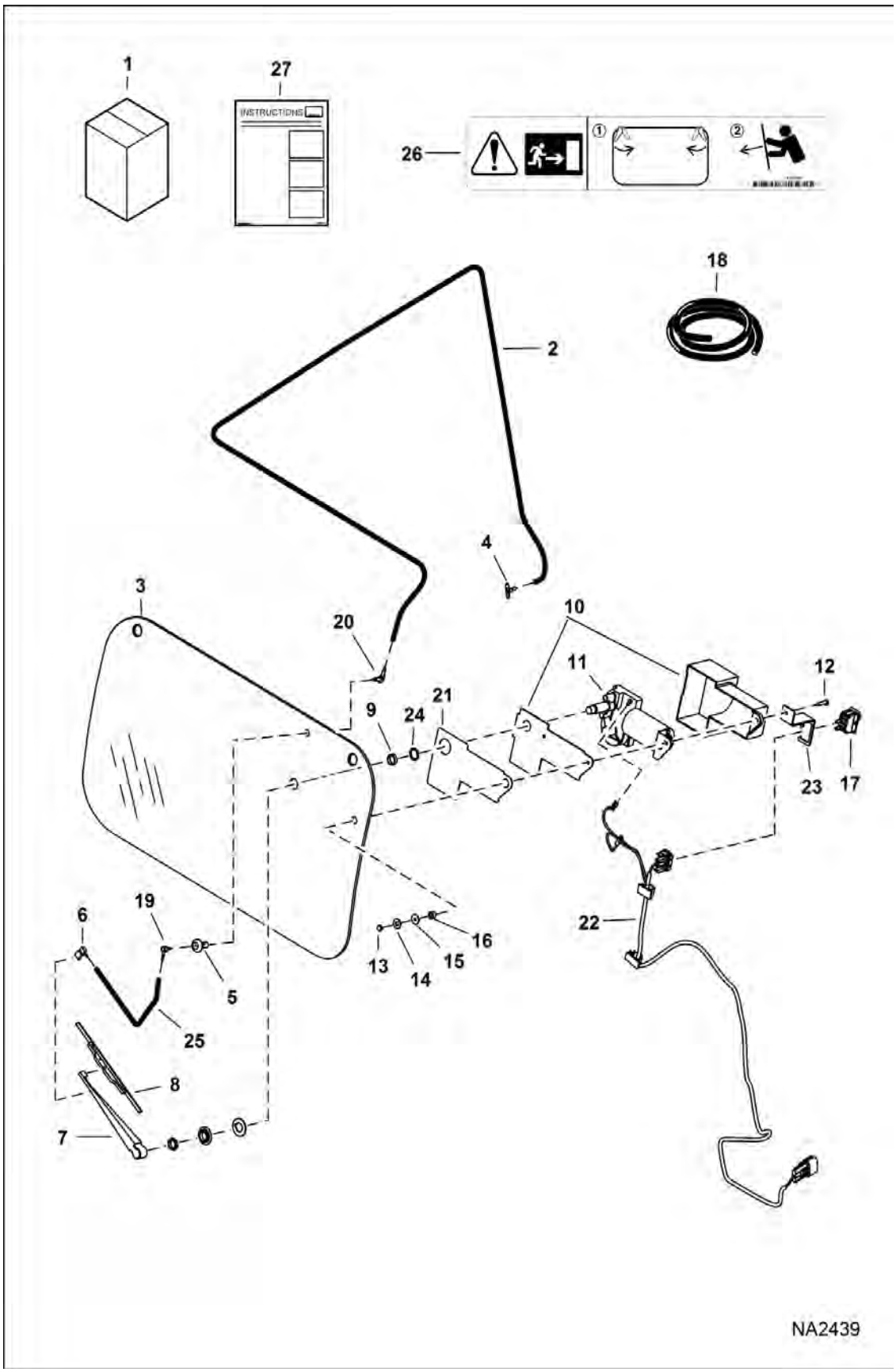

Page 759 - OSS# 6300322913 - All rights reserved by Bobcat Company - 08/04/2017 - 06:30:16 - Produced by Ken Cook Co. with mediaioff

REAR WIPER KIT (Cont'd)

(678 mm) (26.7") x (390 mm) (15.37") Cab Opening

Ref No	Part Number	Description	Remarks	Serial Number	Qty
1		KIT, WIPER REAR	See Illustration REAR WIPER KIT / NA8213 - NLA - Ref. 2-27 - Order 7225133 rear wiper kit - Was 7163571 [C]		1
2		HOSE	NLA - 2133,6 mm (84") long - Order Ref. 18		1
3		WINDOW, CAB REAR	See Illustration REAR WIPER KIT / NA8213 - NLA - Order 7225133 rear wiper kit - Was 7172247 [C]		1
4	6676000	TEE			1
5	7167177	GROMMET WIPER			1
6	6676028	NOZZLE			1
7	6676001	ARM, WIPER			1
8	6676002	BLADE, WIPER			1
9	6667201	SPACER			1
10	6664097	COVER			1
11	6665602	MOTOR			1
12	87G1014	SCREW, MACHINE			1
13	6664103	NUT			1
14	6664065	WASHER	nylon		1
15	6801059	WASHER	neoprene		1
16	6664085	BUSHING	nylon		1
17	6675999	SWITCH			1
18	6676003	HOSE, BULK/FT	black - 0.109" ID - sold per foot		x
19	6676500	ELBOW	exterior		1
20	6676917	ELBOW	interior		1
21	7172119	SEAL, FOAM			1
22	7180207	HARNESS, WIPER			1
23	7172708	BRACKET, SWITCH			1
24	7172121	WASHER			1
25		HOSE	305 mm (12") long - Order Ref. 18		1
26	7167991	DECAL, EXIT REAR			1
27	6987282	INSTRUCTIONS			1

Page Built: 08/04/2017 - 06:30:16 - Produced by Ken Cook Co. with mediaoff
OSS# 6300322913 - All rights reserved by Bobcat Company - 08/04/2017 - 06:30:16 - Produced by Ken Cook Co. with mediaoff

REAR WIPER KIT

(666 mm) (26.2") x (379 mm) (14.92") Cab Opening

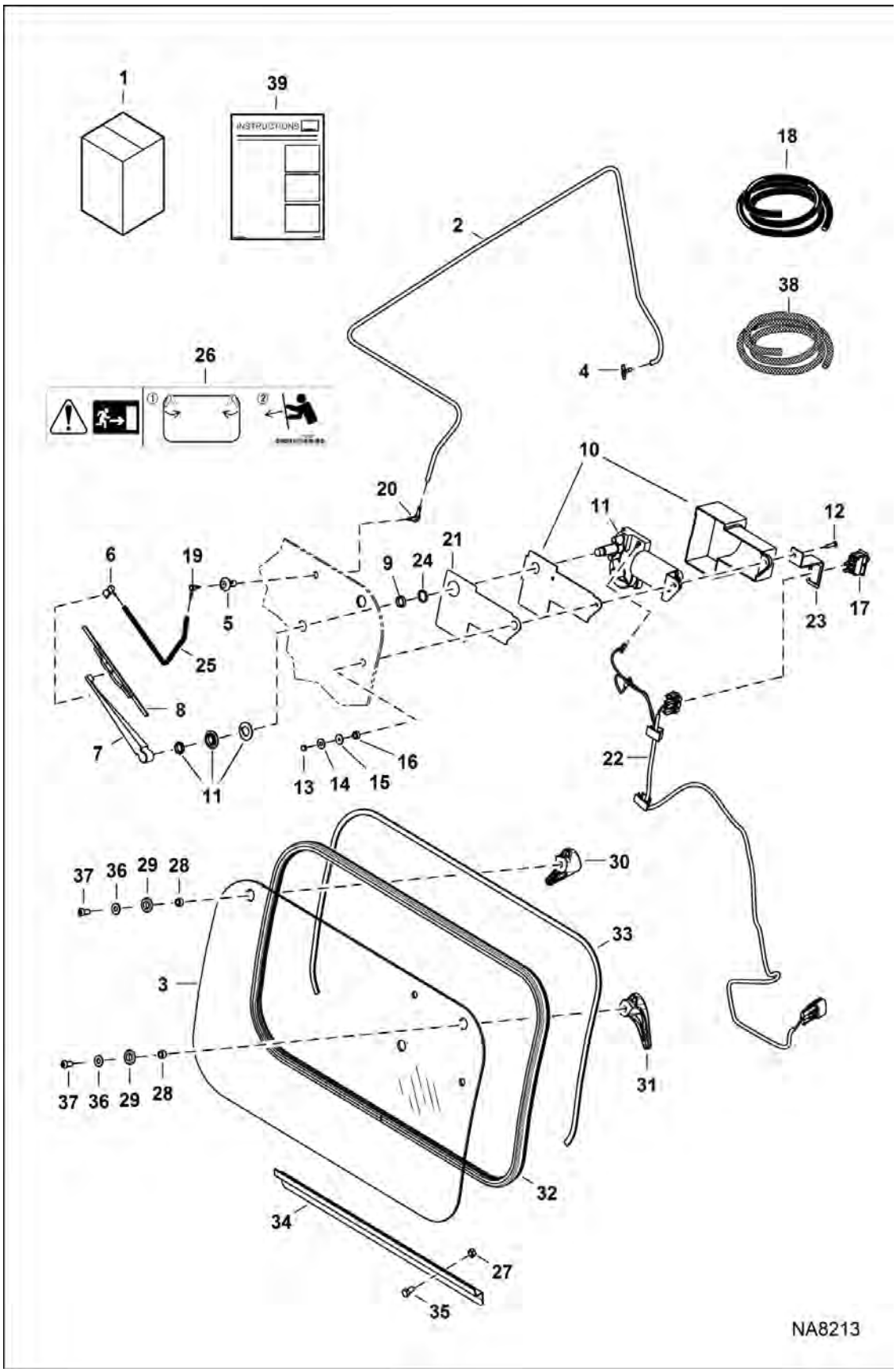

Page 761 - OSS# 6300322913 - All rights reserved by Bobcat Company - 08/04/2017 - 06:30:16 - Produced by Ken Cook Co. with mediaioff

REAR WIPER KIT (Cont'd)

(666 mm) (26.2") x (379 mm) (14.92") Cab Opening

Ref No	Part Number	Description	Remarks	Serial Number	Qty
1	7225133	KIT, WIPER REAR	Ref. 2-39		1
2		HOSE	NLA - 2438 mm (96") long - Order Ref. 18		1
3	7225145	WINDOW, CAB REAR			1
4	6676000	TEE			1
5	7167177	GROMMET WIPER			1
6	6676028	NOZZLE			1
7	6676001	ARM, WIPER			1
8	6676002	BLADE, WIPER			1
9	6667201	SPACER			1
10	6664097	COVER			1
11	6665602	MOTOR			1
12	87G1014	SCREW, MACHINE			1
13	6664103	NUT			1
14	6664065	WASHER	nylon		1
15	6801059	WASHER	neoprene		1
16	6664085	BUSHING	nylon		1
17	6675999	SWITCH			1
18	6676003	HOSE, BULK/FT	black - 0.109" ID - sold per foot		x
19	6676500	ELBOW	exterior		1
20	6676917	ELBOW	interior		1
21	7172119	SEAL, FOAM			1
22	7180207	HARNESS, WIPER			1
23	7172708	BRACKET, SWITCH			1
24	7172121	WASHER			1
25		HOSE	305 mm (12") long - Order Ref. 18		1
26	7167991	DECAL, EXIT REAR			1
27	95D5	NUT			2
28	6802539	SPACER			2
29	7121425	BUSHING			2
30	7150151	LATCH, WINDOW LEFT			1
31	7150152	LATCH, WINDOW RIGHT			1
32	7163988	SEAL, WINDOW REAR			1
33		FOAM SEAL	1372 mm (54") long - Order Ref. 38		1
34	7224369	CHANNEL			1
35	17C510	BOLT			2
36	25E14	WSHR			2
37	53C512	SCREW			2
38	6648416	SEAL BULK /FT	sold per foot		x
39	6990917ENUS	INSTRUCTIONS	Was 6990917 [A]		1

Page 2 OSS# 6300322913 - All rights reserved by Bobcat Company - 08/04/2017 - 06:30:16 - Produced by Ken Cook Co. with mediaoff

REMOTE CONTROL KIT
(Selectable Joystick Controls)

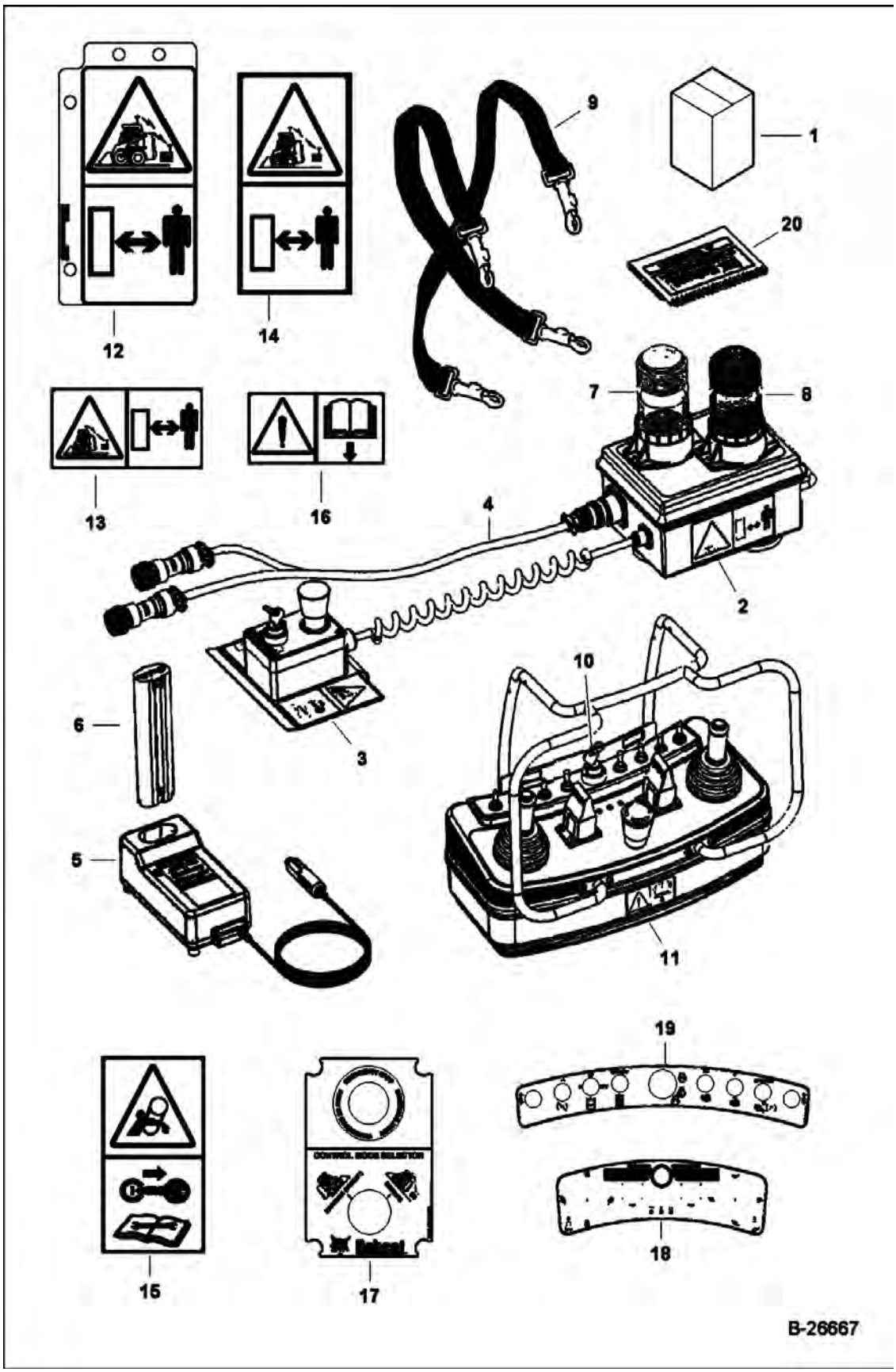

Page 763 - OSS# 6300322913 - All rights reserved by Bobcat Company - 08/04/2017 - 06:30:16 - Produced by Ken Cook Co. with mediaioff

REMOTE CONTROL KIT (Cont'd)

(Selectable Joystick Controls)

Ref No	Part Number	Description	Remarks	Serial Number	Qty
1	7185234	KIT, REMOTE CONTROL	radio remote control		1
2		RECEIVER, 2.4GHZ	Contact your Local Dealer for Bobcat Technical Information BTI392 - Was 6692756 [B]		1
3	7011071	CONTROL, MODE SELECTOR	- mode selector/E-stop box - W/Ref. 17		1
4	7011070	HARNESS, RECEIVER			1
5	6692769	CHARGER, MAKITA DC1422, 12-24VDC			1
6	6692770	BATTERY, NiCd, 9.6V, 1.3Ah, MAKITA 9000			1
7	6693411	LENS, STROBE AMBER	green		1
7	6693409	BULB, STROBE			1
8	6693410	LENS, STROBE AMBER	amber		1
8	6693409	BULB, STROBE			1
9	6692771	SHOULER HARNESS			1
10	6692762	KEYS, SET OF 2	set of (2)		x
11		2.4GHZ TRANSMITTER	Contact your Local Dealer for Bobcat Technical Information BTI392 - transmitter - W/Ref. 18 & 19		1
12	7135569	DECAL	remote ready identification tag		1
13	6692757	DECAL, "REMOTE CONTROL OPERATION", LARGE			1
14	6692768	DECAL, "REMOTE CONTROL OPERATION", SMALL			1
15	6692767	DECAL, "ROTATING PARTS"			1
16	6692763	DECAL WARNING, "READ THE MANUAL"	operating instructions		1
17		DECAL	NLA - Order Ref. 3		1
18		DECAL	NLA - Order Ref. 11		1
19		DECAL	NLA - Order Ref. 11		1
20	6904709	OHB, W/WIRE ROPE	operation, maintenance and parts		1
20	6904709AR	OM RADIO REMOTE CONTROL SPANISH			1

Page 6 of 6 OSS# 6300322913 - All rights reserved by Bobcat Company - 08/04/2017 - 06:30:16 - Produced by Ken Cook Co. with mediaioff

RESEALING KIT
(Sealing Open Cab Holes)

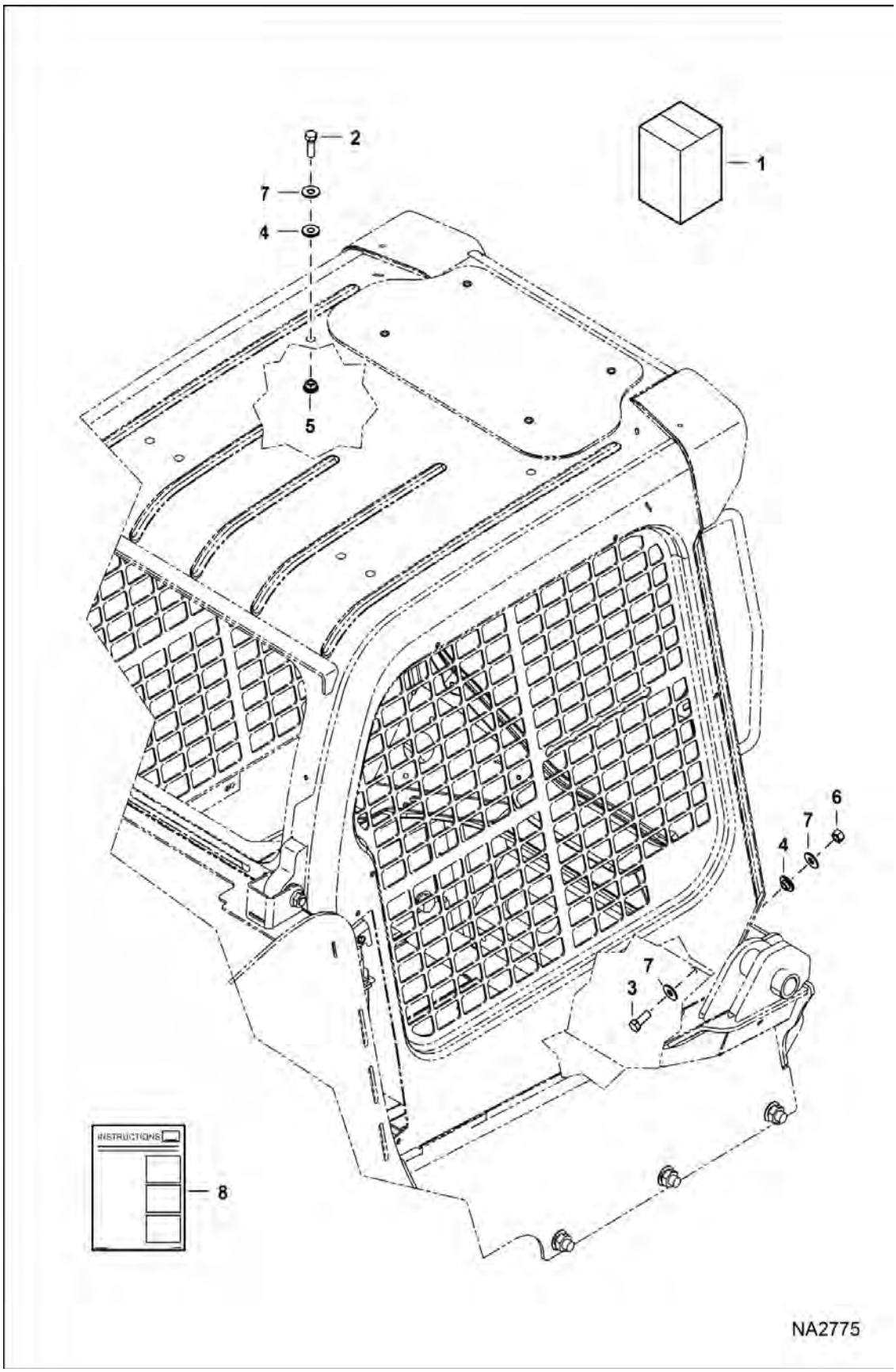

Page 765 - OSS# 6300322913 - All rights reserved by Bobcat Company - 08/04/2017 - 06:30:16 - Produced by Ken Cook Co. with mediaioff

RESEALING KIT (Cont'd)
(Sealing Open Cab Holes)

Ref No	Part Number	Description	Remarks	Serial Number	Qty
1	7172897	KIT, RESEAL PLUGS	Ref. 2-8		1
2	17C824	BOLT 5			6
3	17C820	BOLT 5			8
4	7173453	PLUG			14
5	7192823	NUT			6
6	61D8	NUT 5			8
7	25E20	WASHER			22
8	6987335ENUS	INSTRUCTIONS	WAS 6987335 [A]		1

Page 758 OSS# 6300322913 - All rights reserved by Bobcat Company - 08/04/2017 - 06:30:16 - Produced by Ken Cook Co. with mediaioff

REVERSING FAN KIT
(S/N A3P816156 - A3P816165)

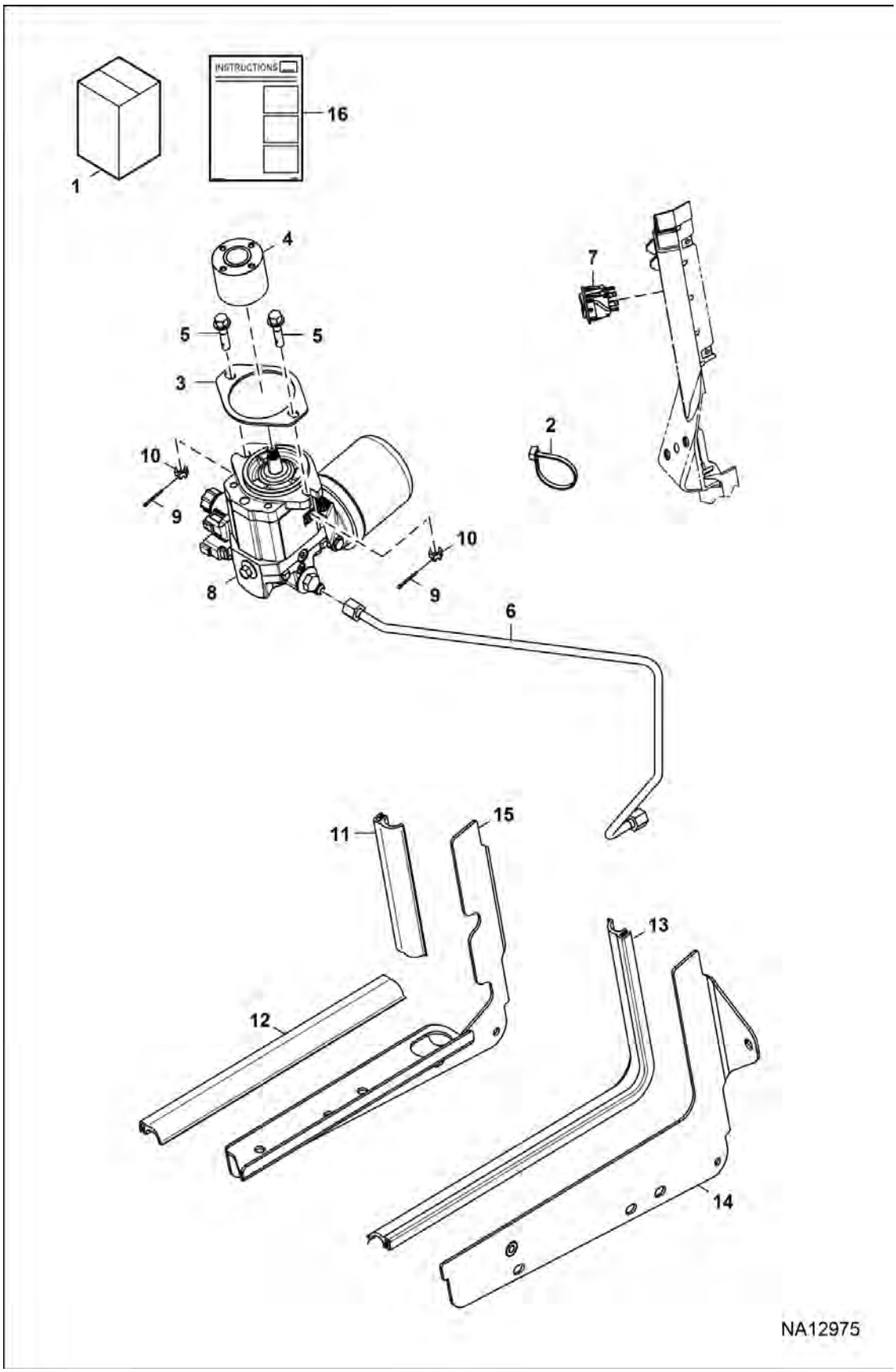

Page 767 - OSS# 6300322913 - All rights reserved by Bobcat Company - 08/04/2017 - 06:30:16 - Produced by Ken Cook Co. with mediaioff

REVERSING FAN KIT (Cont'd)

(S/N A3P816156 - A3P816165)

Ref No	Part Number	Description	Remarks	Serial Number	Qty
1	7307658	KIT REVERSING FAN	W/Ref. 2-10 & 16		1
2	6624289	STRAP, TIE			1
3	7242068	GASKET			1
4	7249438	HUB			1
5	7249974	BOLT			2
6	7280471	TUBELINE, HYD			1
7	7285934	SWITCH MOMENTARY REV FAN			1
8	7280087	MOTOR			1
9	1F316	PIN			2
10	3D6	NUT			2
11	7313334	SEAL DUCT	See Illustration COOLING SYSTEM / NA10671 - not in kit		1
12	7313335	SEAL DUCT	See Illustration COOLING SYSTEM / NA10671 - not in kit		1
13	7313333	SEAL DUCT	See Illustration COOLING SYSTEM / NA10671 - not in kit		1
14	7242275	DUCT	See Illustration MAIN FRAME / NA10900 - not in kit		1
15	7251359	PANEL, DUCT LH	See Illustration MAIN FRAME / NA10900 - not in kit		1
16	7307662ENUS	INSTRUCTIONS	Was 7307662 [A]		1

Page 760 OSS# 6300322913 - All rights reserved by Bobcat Company - 08/04/2017 - 06:30:16 - Produced by Ken Cook Co. with mediaioff

REVERSING FAN KIT
(S/N A3P816166 & Above, A3P913090 & Above)

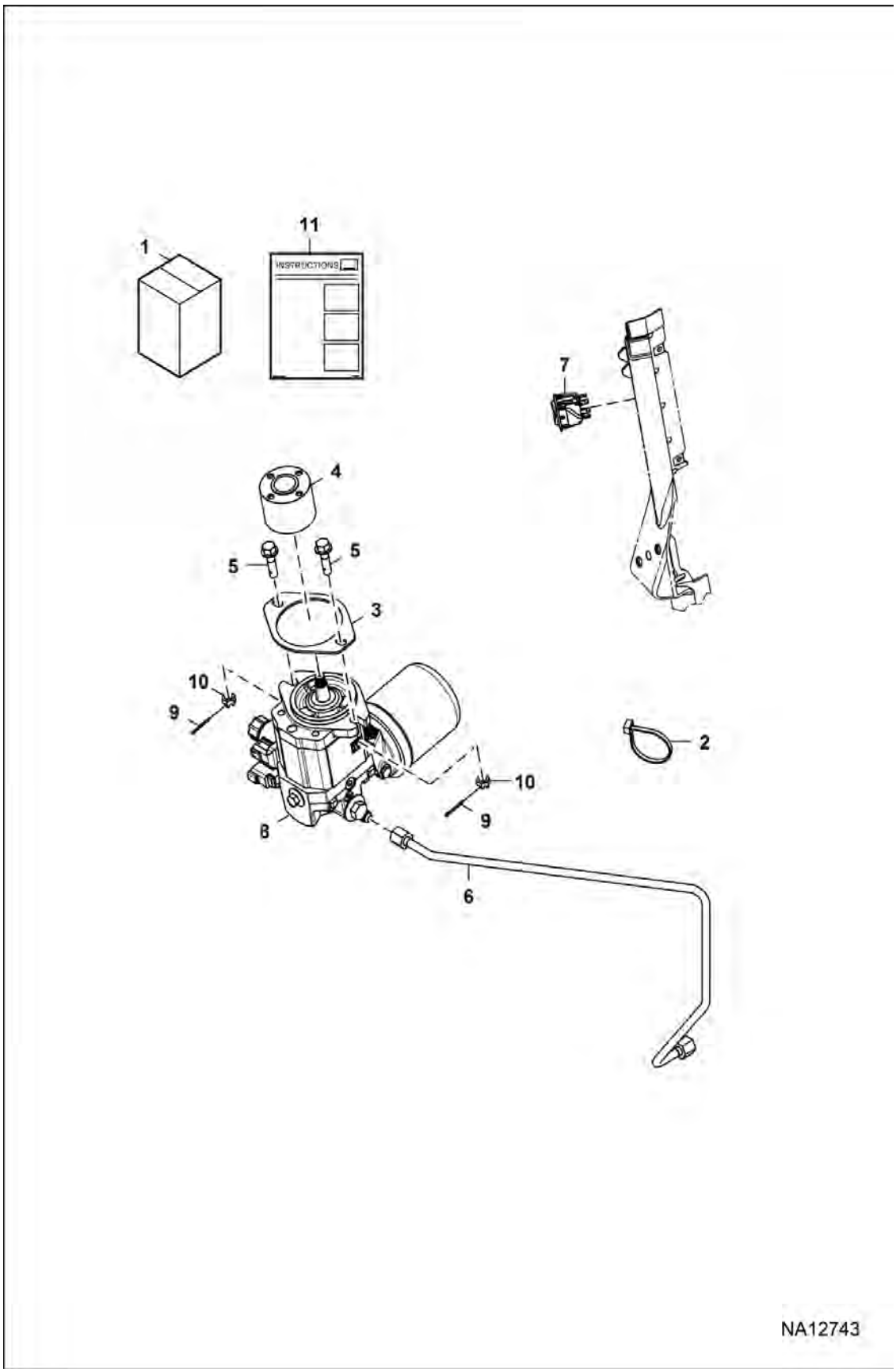

Page 769 - OSS# 6300322913 - All rights reserved by Bobcat Company - 08/04/2017 - 06:30:16 - Produced by Ken Cook Co. with mediaioff

REVERSING FAN KIT (Cont'd)

(S/N A3P816166 & Above, A3P913090 & Above)

Ref No	Part Number	Description	Remarks	Serial Number	Qty
1	7307658	KIT REVERSING FAN	W/Ref. 2-11		1
2	6624289	STRAP, TIE			1
3	7242068	GASKET			1
4	7249438	HUB			1
5	7249974	BOLT			2
6	7280471	TUBELINE, HYD	See Illustration HYDROSTATIC CIRCUITRY / NA10681		1
7	7285934	SWITCH MOMENTARY REV FAN			1
8		MOTOR	See Illustration COOLING FAN MOTOR / NA12818		1
9	1F316	PIN			2
10	3D6	NUT			2
11	7307662ENUS	INSTRUCTIONS	Was 7307662 [A]		1

Page 762 OSS# 6300322913 - All rights reserved by Bobcat Company - 08/04/2017 - 06:30:16 - Produced by Ken Cook Co. with mediaioff

RIDE CONTROL KIT
(S/N A3P811001 - A3P816155, A3P911001 - A3P913075)

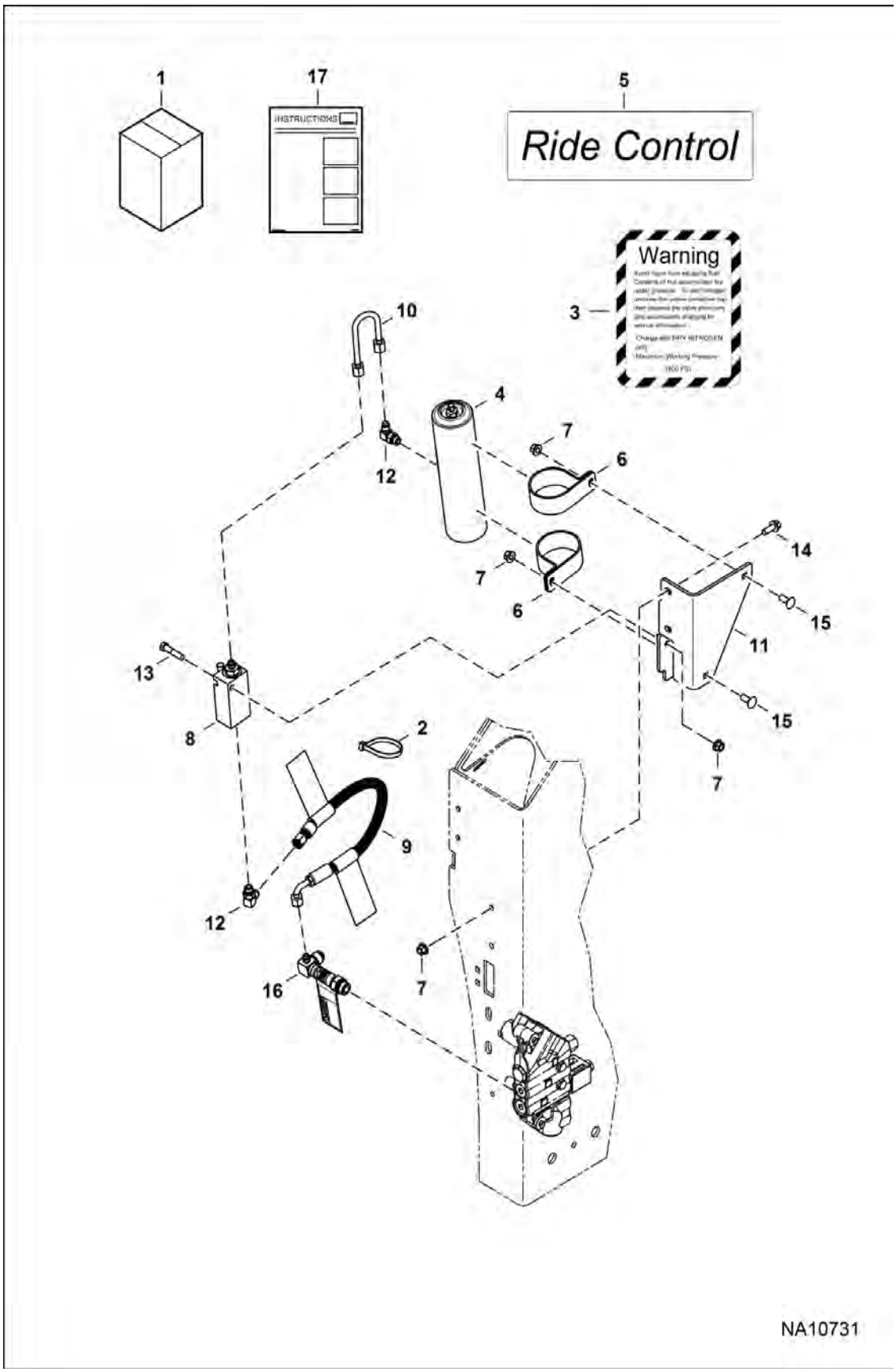

Page 771 - OSS# 6300322913 - All rights reserved by Bobcat Company - 08/04/2017 - 06:30:16 - Produced by Ken Cook Co. with mediaioff

RIDE CONTROL KIT (Cont'd)

(S/N A3P811001 - A3P816155, A3P911001 - A3P913075)

Ref No	Part Number	Description	Remarks	Serial Number	Qty
1	7300393	KIT, RIDE CONTROL	Ref. 2-17		1
2	6624289	STRAP, TIE			1
3	6684688	DECAL, WARNING			1
4	6684703	ASSY, ACCUMULATOR			1
5	6690272	DECAL			2
6	7188110	CLAMP			2
7	83D6	NUT 5			5
8	7259789	VALVE, RIDE CONTROL	See Illustration RIDE CONTROL KIT / NA10733		1
9	7259917	HOSE, HYD	available only as an assembly W/two danger decals installed		1
10	7259791	TUBELINE, HYD			1
11	7240280	BRACKET, CONTROL			1
12	17KB0606	FITTING			2
12	79K6	O RING 10			1
13	1C628	BOLT			1
14	31C616	SCREW			2
15	37C616	BOLT			2
16	7212964	KIT FITTING W/DECAL			1
17	6990527ENUS	INSTRUCTIONS	Was 6990527 [A]		1

Page 1 of 2 OSS# 6300322913 - All rights reserved by Bobcat Company - 08/04/2017 - 06:30:16 - Produced by Ken Cook Co. with mediaoff

RIDE CONTROL KIT
(S/N A3P816156 & Above, A3P913076 & Above)

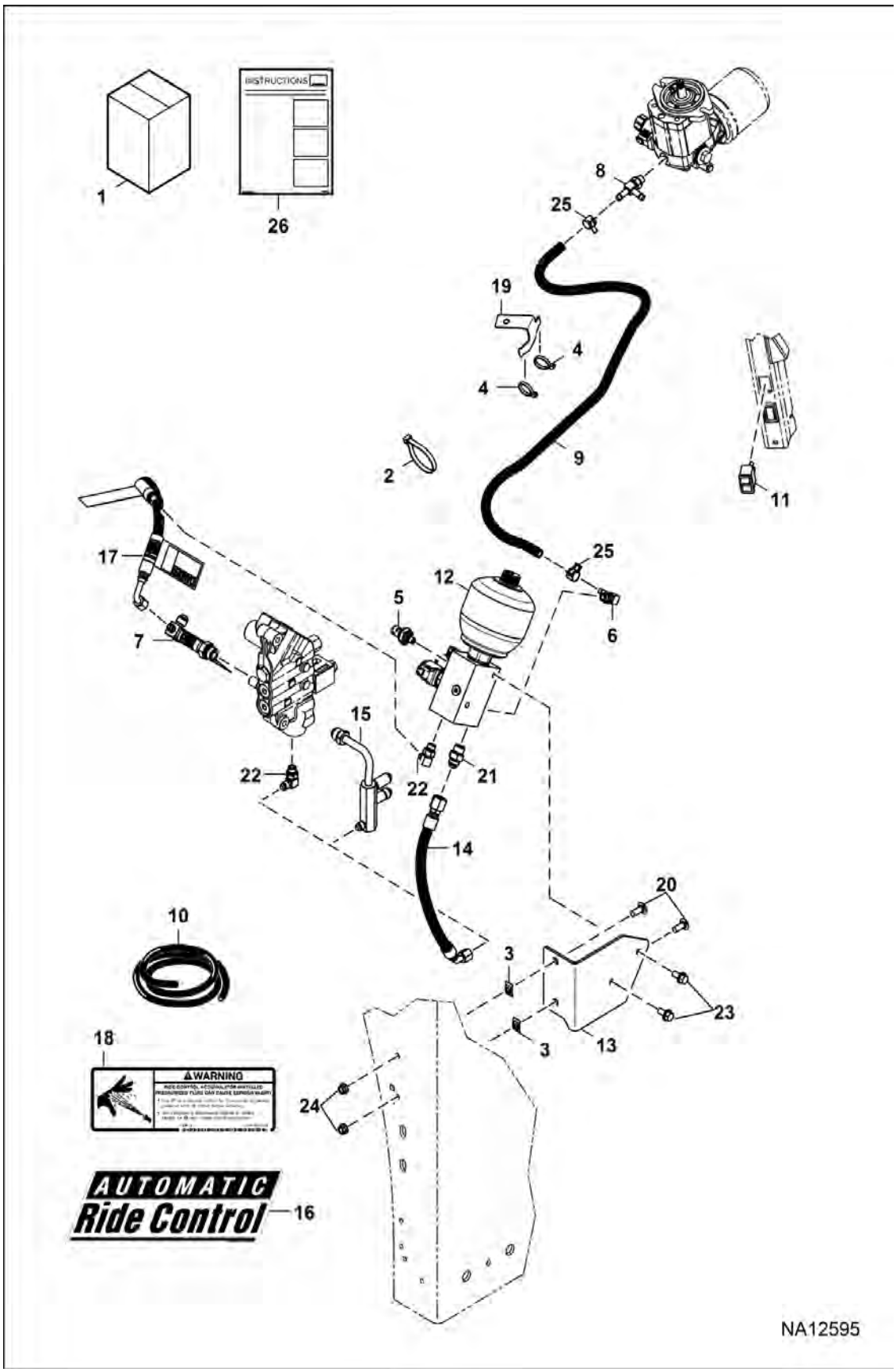

Page 773 - OSS# 6300322913 - All rights reserved by Bobcat Company - 08/04/2017 - 06:30:16 - Produced by Ken Cook Co. with mediaioff

RIDE CONTROL KIT (Cont'd)

(S/N A3P816156 & Above, A3P913076 & Above)

Ref No	Part Number	Description	Remarks	Serial Number	Qty
1	7306402	KIT RIDE CONTROL	W/Ref. 2-26		1
2	6624289	STRAP, TIE			1
3	6684033	NUT			2
4	6690690	STRAP, TIE			2
5	7320663	SENSOR PRESS	Was 7025582 [A]		1
6	7174807	ELBOW			1
7	7212964	KIT FITTING W/DECAL			1
8	7246193	FITTING, HYD TEE			1
9		HOSE	NLA - 1168,4 mm (46") long - Order Ref. 10		1
10	6586251	HOSE, BULK	sold per foot		x
11	7294390	SWITCH, ROCKER			1
12	7301823	MANIFOLD			1
13	7306230	BRACKET SUPPORT			1
14	7306272	HOSE HYDRAULIC ASSY			1
15	7306706	TUBELINE HYDRAULIC ASSY			1
16	7308285	DECAL CONTROL			1
17	7308286	HOSE HYDRAULIC ASSY			1
18	7308738	DECAL SAFETY			2
19	7309870	BRACKET TANK			1
20	10C616	BOLT 10			2
21	15KB0808	FITTING, HYD CONNECTOR			1
22	17KB0606	FITTING			2
23	35C612	BOLT 5			2
24	97D6	NUT 10	Was 55D6 [B]		2
25	5HM16	CLAMP			2
26	7309389ENUS	INSTRUCTIONS	Was 7309389		1

Page 4 of 4 OSS# 6300322913 - All rights reserved by Bobcat Company - 08/04/2017 - 06:30:16 - Produced by Ken Cook Co. with mediaoff

RIDE CONTROL KIT
(Valve Assembly)

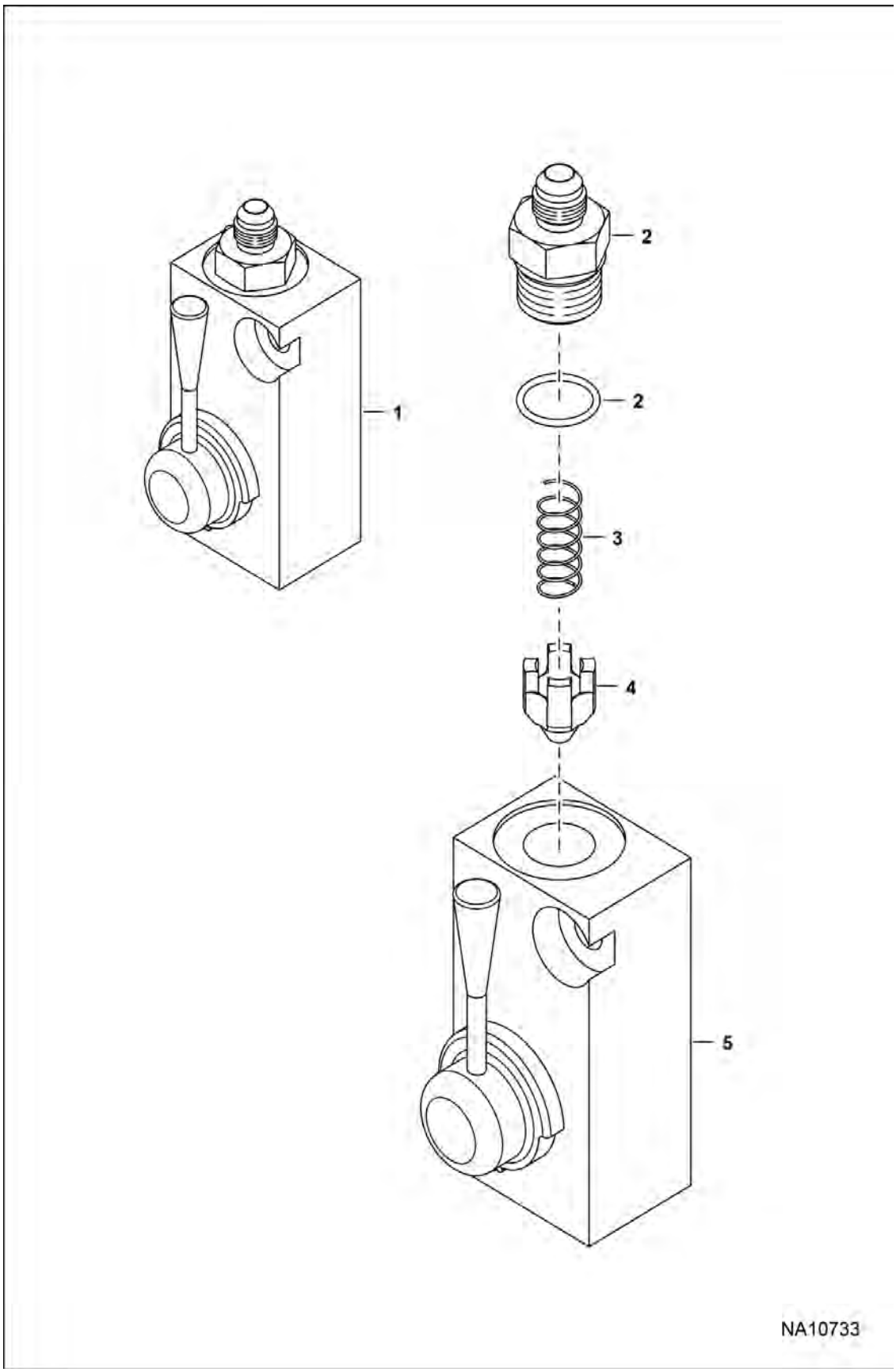

Page 775 - OSS# 6300322913 - All rights reserved by Bobcat Company - 08/04/2017 - 06:30:16 - Produced by Ken Cook Co. with mediaioff

RIDE CONTROL KIT (Cont'd)
(Valve Assembly)

Ref No	Part Number	Description	Remarks	Serial Number	Qty
1	7259789	VALVE, RIDE CONTROL	Ref. 2-5 - Was 7240257 [B,D]		1
2	7259790	ADAPTER			1
2	79K10	O RING 10			1
3	7186599	VALVE CHECK SPRING			1
4	7186598	VALVE, CHECK			1
5		BLOCK	NSS - Order Ref. 1		1

Page 768 OSS# 6300322913 - All rights reserved by Bobcat Company - 08/04/2017 - 06:30:16 - Produced by Ken Cook Co. with mediaioff

SEAT
(Suspension) (Air)

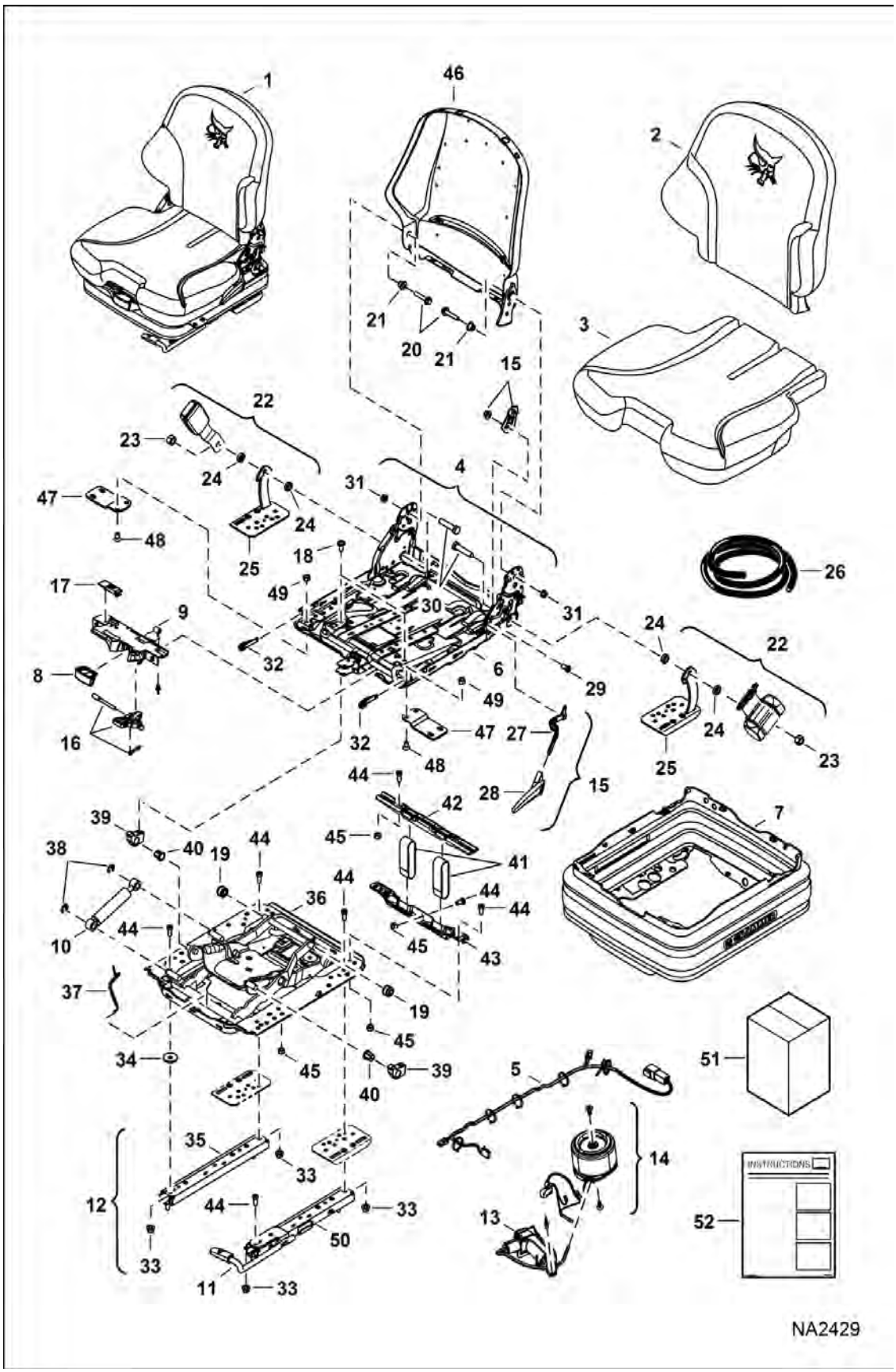

Page 777 - OSS# 6300322913 - All rights reserved by Bobcat Company - 08/04/2017 - 06:30:16 - Produced by Ken Cook Co. with mediaioff

SEAT (Cont'd)
(Suspension) (Air)

Ref No	Part Number	Description	Remarks	Serial Number	Qty
1		SEAT, OPERATOR SUSPENSION AIR	NLA - Ref. 2-49 - Order 7167603 seat - Also Order Ref. 46 or reuse from existing seat - Was 7182356 [A]		1
1	7167603	SEAT, OPERATOR SUSPENSION AIR	See Illustration SEAT COVERS / NA10388 Ref. 2-22 & 26-45		1
2	7010335	KIT, CUSHION SEAT VINYL	backrest		1
3	7010336	KIT, CUSHION SEAT VINYL			1
4	7010338	KIT, BACKREST SEAT	Ref. 20, 21 & 31		1
5	7011175	KIT, SWITCH SEAT			1
6		FRAME	NSS		1
7	7011176	BELLOWS, SEAT CPL			1
8	6921092	HANDLE	Was 7011177 - Was 7011177 [A]		1
9	7011178	HOUSING			1
9		SWITCH, COMPRESSOR	NSS - Order Ref. 9		x
9		VALVE, BLEED OFF	NSS - Order Ref. 9		x
10	7010342	KIT, ABSORBER SHOCK SEAT	W/Ref. 38		1
11	7010343	KIT, LEVER ADJUSTING	assy		1
12	7011179	KIT, RAIL SLIDE SEAT	Ref. 33, 35 & 50 - handle not included		1
13	7011180	COMPRESSOR, AIR SEAT			1
13		HOSE	NSS - Order Ref. 13		x
14	7011181	KIT, SPRING AIR			1
15	7010346	KIT, BACKREST SEAT	Ref. 27, 28 & 29		1
16	7011182	KIT, LEVER			1
17		COVER	NSS - Order Ref. 9		1
18		BOLT	NSS		2
19		BUSHING	NSS - white plastic - Order Ref. 51		2
20		BOLT	NSS		2
21		BUSHING	NSS		2
22	7010345	KIT, TETHER SEAT BELT	Ref. 23-25 - not included		1
23		NUT	NSS - Order Ref. 22		2
24		BUSHING	NSS - Order Ref. 22		4
25		PLATE, TETHER	NSS - Order Ref. 22		2
26		SEAL	NSS		1
27		LEVER	NSS - Order Ref. 15		1
28		HANDLE	NSS - grey - Order Ref. 15		1
29		BOLT	NSS - Order Ref. 15		2
30		BOLT	NSS - Order Ref. 4		2
31		NUT	NSS - Order Ref. 4		2

Page 1 of 1 OSS# 6300322913 - All rights reserved by Bobcat Company - 08/04/2017 - 06:30:16 - Produced by Ken Cook Co. with mediaoff

SEAT (Cont'd)
(Suspension) (Air)

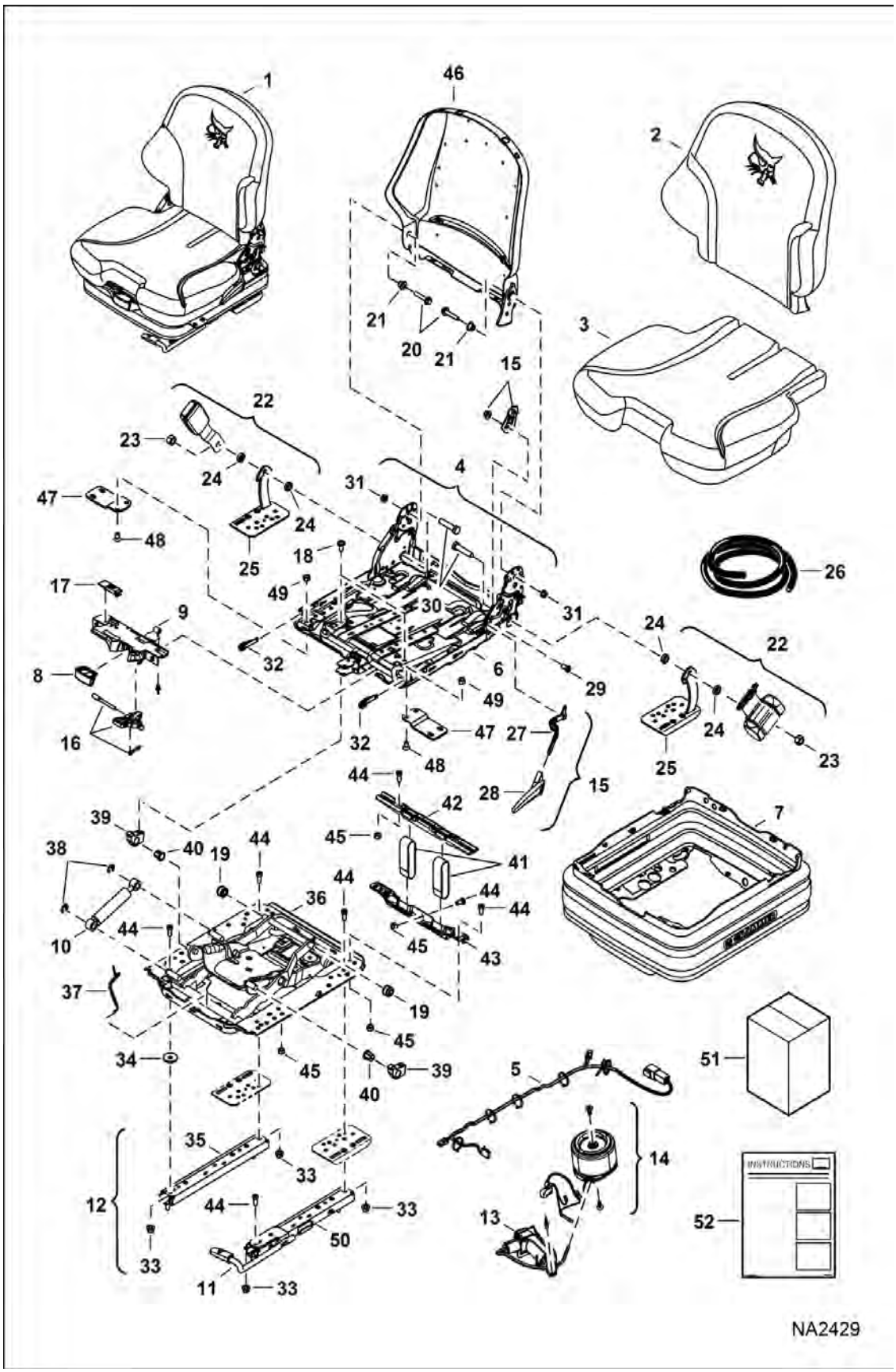

Page 779 - OSS# 6300322913 - All rights reserved by Bobcat Company - 08/04/2017 - 06:30:16 - Produced by Ken Cook Co. with mediaioff

SEAT (Cont'd)
(Suspension) (Air)

Ref No	Part Number	Description	Remarks	Serial Number	Qty
32		CLIP	NSS - plastic		2
33		NUT	NSS		4
34		WASHER	NSS		4
35		RAIL, SLIDE	NSS - Order Ref. 12		1
36		FRAME, SUSPENSION	NSS - Order Ref. 1		1
37		LEVER, GAUGE	NSS - white plastic - Order Ref. 51		1
38		CLIP	NSS - Order Ref. 10		2
39		BLOCK, STOP	NSS - Order Ref. 51		2
40		BUSHING	NSS - Order Ref. 51		2
41		STRAP, TETHER	NSS - white		2
42		MOUNT	NSS		1
43		MOUNT	NSS		1
44		BOLT	NSS		9
45		NUT	NSS		5
46		MOLDING, SEAT	NSS		1
47	7011183	KIT, BRACKET SEAT	W/Ref. 48 & 49		2
48		BOLT	NSS - Order Ref. 47		4
49		NUT	NSS - Order Ref. 47		4
50		RAIL, SLIDE	NSS - Order Ref. 12		1
51	7025560	KIT, REPAIR	Ref. 18 (2), 19, 37, 39 (2) & 40 (2)		x
52	6987249ENUS	INSTRUCTIONS	Was 6987249 [A]		1

Page 1800 OSS# 6300322913 - All rights reserved by Bobcat Company - 08/04/2017 - 06:30:16 - Produced by Ken Cook Co. with mediaioff

SEAT - 80 mm
(Suspension)

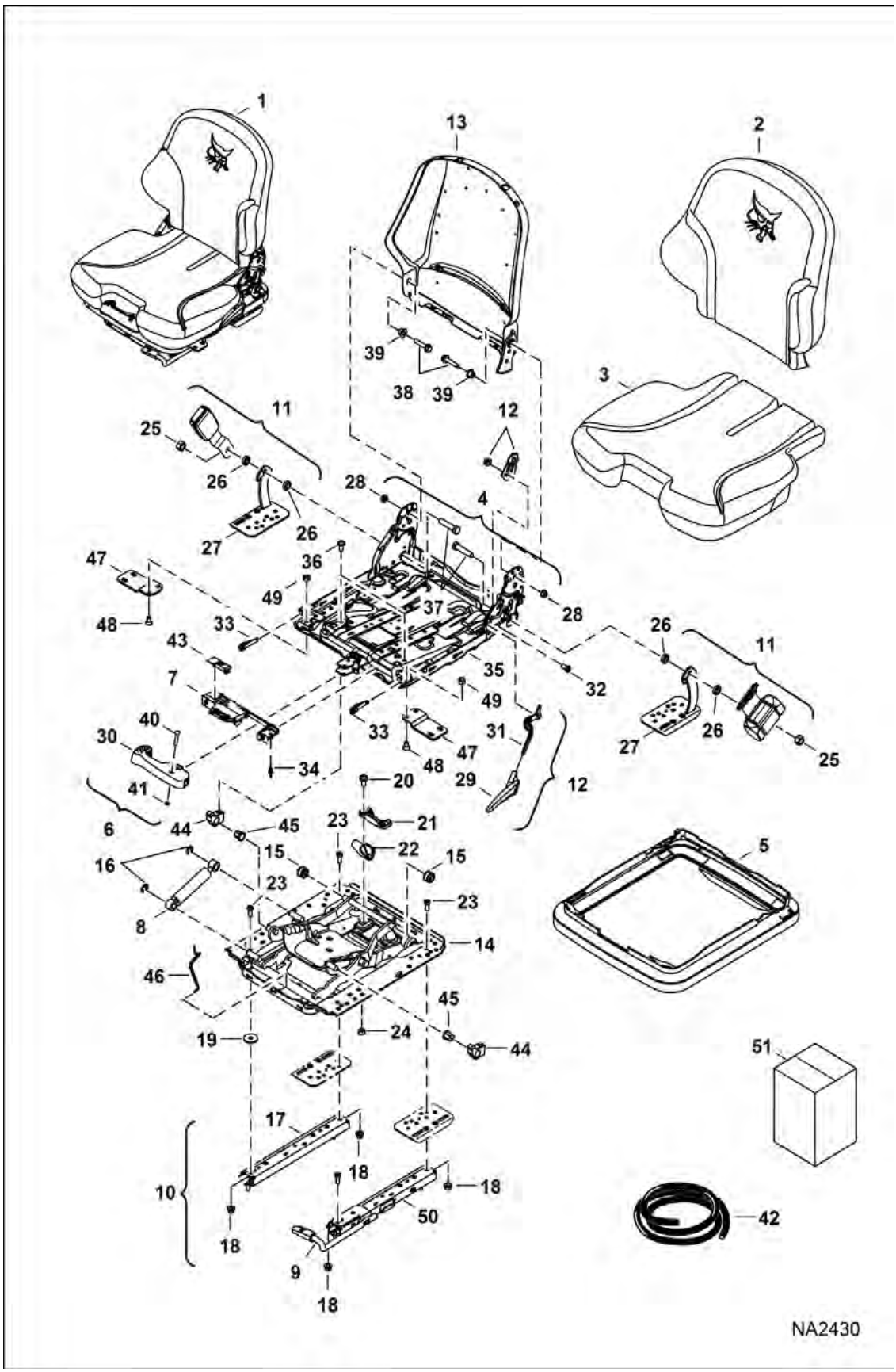

Page 781 - OSS# 6300322913 - All rights reserved by Bobcat Company - 08/04/2017 - 06:30:16 - Produced by Ken Cook Co. with mediaioff

SEAT - 80 mm (Cont'd)
(Suspension)

Ref No	Part Number	Description	Remarks	Serial Number	Qty
1		SEAT, SUSPENSION	NLA - W/SJC - Ref. 2-49 - Order 7149786 seat - Also Order Ref. 47 or reuse from existing seat - Was 7182357 [A]		1
1	7149786	SEAT, SUSPENSION	See Illustration SEAT COVERS / NA10388 W/manual controls - Ref. 2-10, 12-24 & 28-46		1
2	7010335	KIT, CUSHION SEAT VINYL	backrest		1
3	7010336	KIT, CUSHION SEAT VINYL			1
4	7010338	KIT, BACKREST SEAT	Ref. 28, 38 & 39 - parts for backrest		1
5	7010339	BELLOW			1
6	7010340	KIT, ADJUSTER SEAT	Ref. 30, 40 & 41		1
7	7010341	KIT, HOUSING SEAT	W/Ref. 34 & 43		1
8	7010342	KIT, ABSORBER SHOCK SEAT			1
9	7010343	KIT, LEVER ADJUSTING	assy.		1
10	7010344	KIT, RAIL SLIDE SEAT	Ref. 17, 18 & 50 - handle assy not included		1
11	7010345	KIT, TETHER SEAT BELT	Ref. 25-27 - not included		1
12	7010346	KIT, BACKREST SEAT	Ref. 29 & 31		1
13		BACKREST, SEAT	NSS		1
14		FRAME, SUSPENSION	NSS		1
15		BUSHING	NSS - white plastic - Order Ref. 51		2
16		CLIP	NSS		2
17		WASHER	NSS - Order Ref. 12		2
17		RAIL, SLIDE	NSS		1
18		NUT	NSS		4
19		WASHER	NSS		4
20		SCREW	NSS - Order Ref. 51		2
21		STOP, TETHER	NSS - Order Ref. 51		1
22		TETHER, BELT	NSS - Order Ref. 51		1
23		BOLT	NSS		4
24		NUT	NSS - Order Ref. 51		4
25	86D7	NUT			2
26		SPACER	NSS - Order Ref. 11		4
27		PLATE, TETHER	NSS - Order Ref. 11		2
28		NUT	NSS - Order Ref. 4		2
29		HANDLE, ADJUSTMENT	NSS - grey - Order Ref. 12		1
30		HANDLE, ADJUSTMENT	NSS - Order Ref. 6		1
31		LEVER	NSS - Order Ref. 12		1
32		SCREW	NSS - Order Ref. 12		1
33		CLIP	NSS - plastic		2

Page 1 of 2 OSS# 6300322913 - All rights reserved by Bobcat Company - 08/04/2017 - 06:30:16 - Produced by Ken Cook Co. with mediaioff

SEAT - 80 mm (Cont'd)
(Suspension)

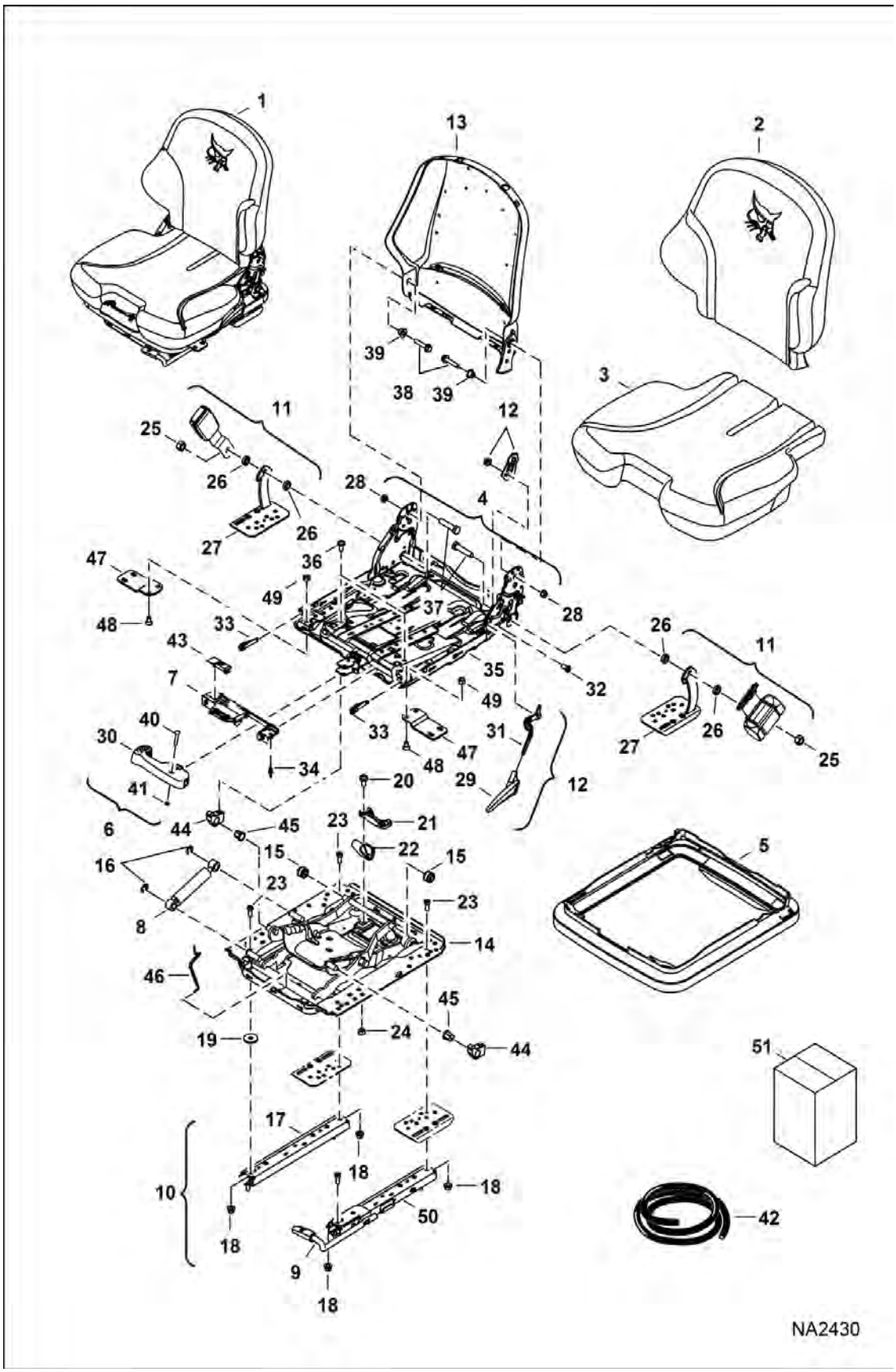

Page 783 - OSS# 6300322913 - All rights reserved by Bobcat Company - 08/04/2017 - 06:30:16 - Produced by Ken Cook Co. with mediaioff

SEAT - 80 mm (Cont'd)
(Suspension)

Ref No	Part Number	Description	Remarks	Serial Number	Qty
34		RIVOT	NSS - Order Ref. 7		2
35		FRAME	NSS - Order Ref. 1		2
36		BOLT	NSS		1
37		BOLT	NSS - Order Ref. 4		2
38		BOLT	NSS		2
39		BUSHINGS	NSS		2
40		BOLT	NSS - Order Ref. 6		1
41		CLIP	NSS - Order Ref. 6		1
42		SEAL	NSS		1
43		COVER	NSS - Order Ref. 7		1
44		BUSHING	NSS - Order Ref. 51		2
45		BLOCK, STOP	NSS - silver - Order Ref. 51		2
46		LEVER, GAUGE	NSS - white plastic - Order Ref. 51		1
47	7011183	KIT, BRACKET SEAT	W/Ref. 48 & 49		2
48		BOLT	NSS - Order Ref. 47		4
49		NUT	NSS - Order Ref. 47		4
50		RAIL, SLIDE	NSS - Order Ref. 10		1
51	7022791	KIT, REPAIR	Ref. 15 (2), 20 (2), 21, 22, 24 (2), 44 (2), 45 (2) & 46		x

Page 1 OSS# 6300322913 - All rights reserved by Bobcat Company - 08/04/2017 - 06:30:16 - Produced by Ken Cook Co. with mediaioff

SEAT BELT - 2"
(Retractable)

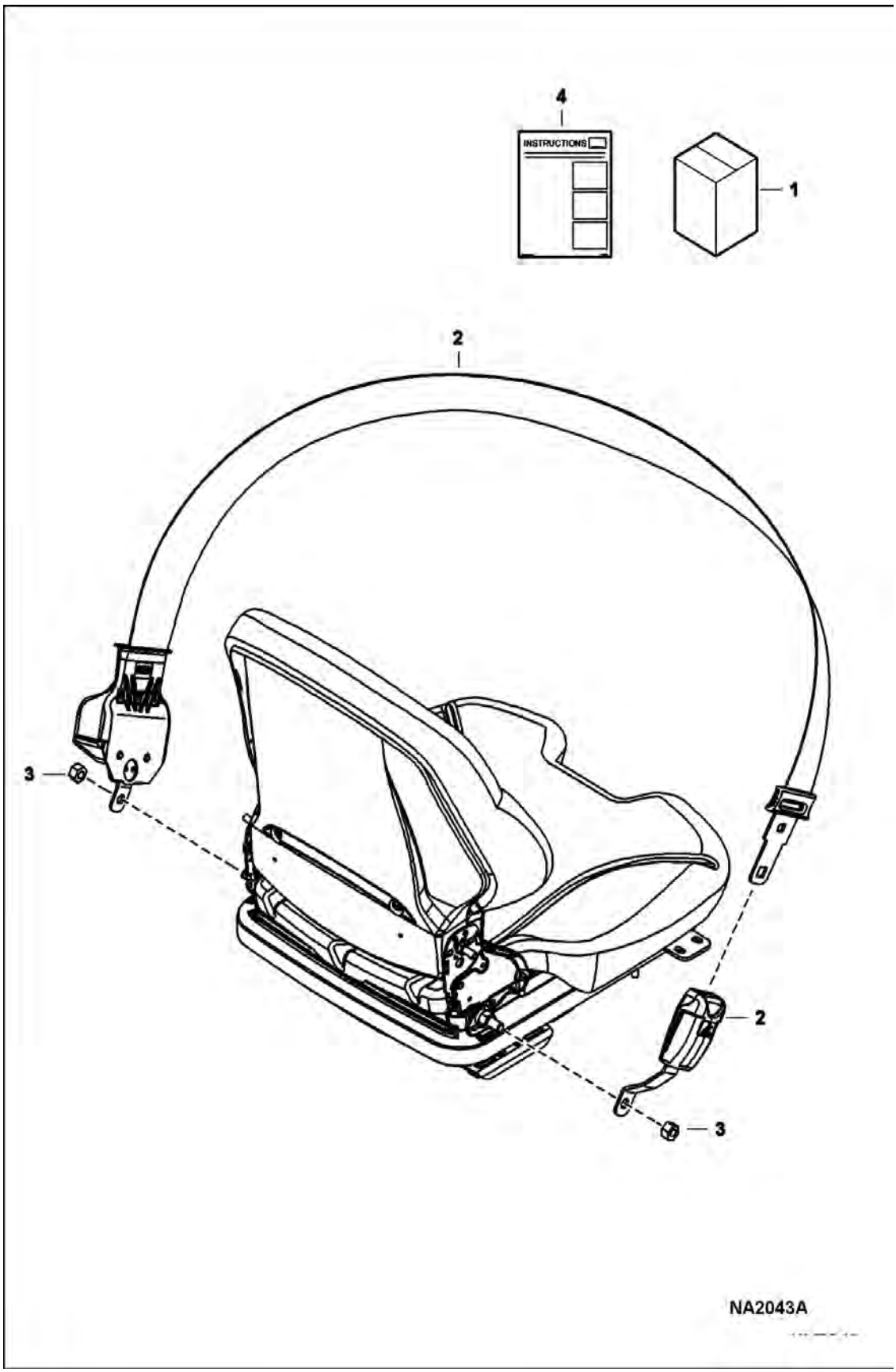

Page 795 - OSS# 6300322913 - All rights reserved by Bobcat Company - 08/04/2017 - 06:30:16 - Produced by Ken Cook Co. with mediaioff

Illustration NA2043A

SEAT BELT - 2" (Cont'd)
(Retractable)

Ref No	Part Number	Description	Remarks	Serial Number	Qty
1		KIT, BELT SEAT	NLA		1
2	7159542	BELT, SEAT RETRACTOR			1
3	86D7	NUT	not in kit		2
4		INSTRUCTIONS	NLA		1

Page 1 of 1 OSS# 6300322913 - All rights reserved by Bobcat Company - 08/04/2017 - 06:30:16 - Produced by Ken Cook Co. with mediaioff

SEAT BELT - 2"
(Three Point Retractable)

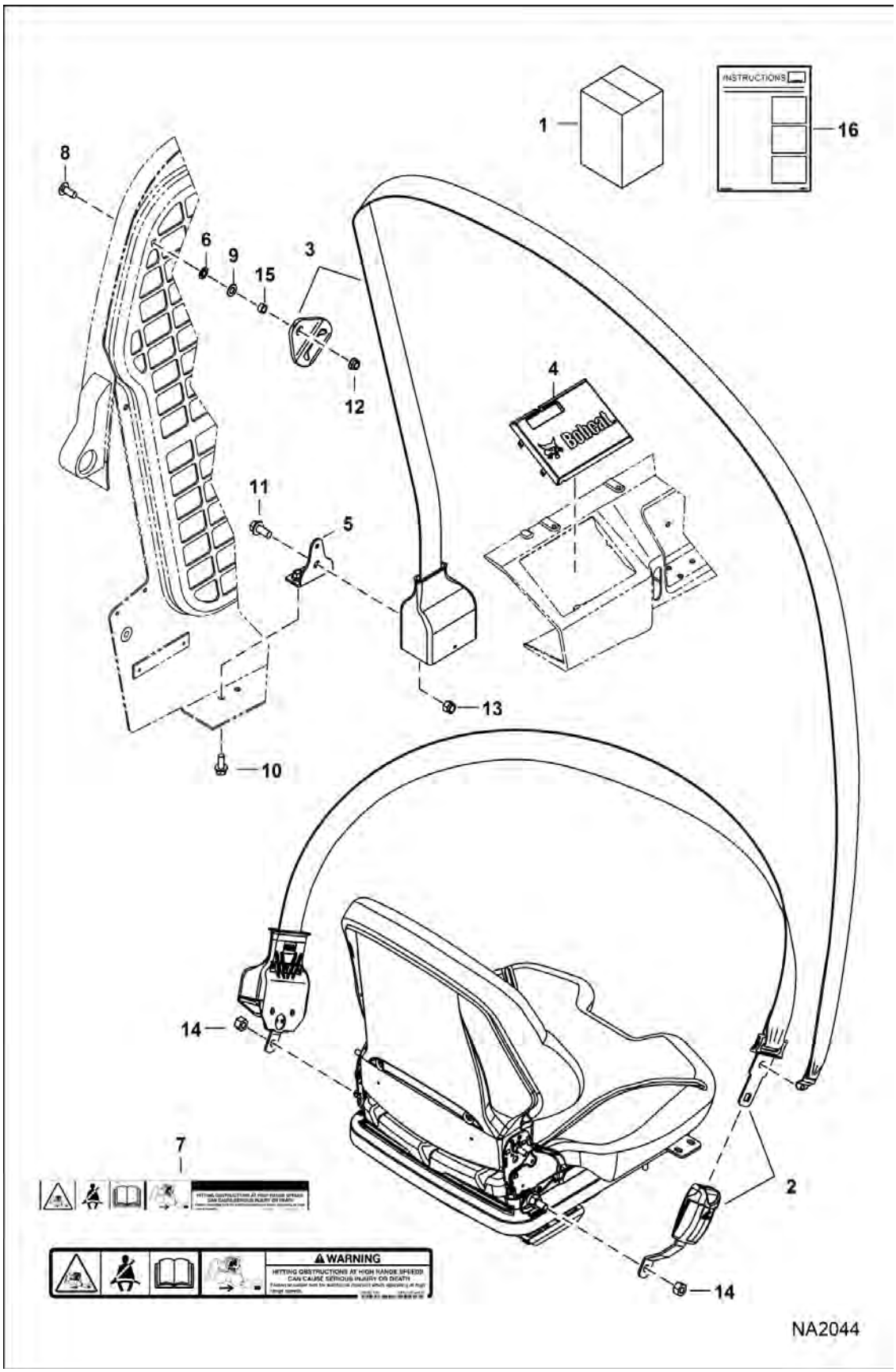

Page 787 - OSS# 6300322913 - All rights reserved by Bobcat Company - 08/04/2017 - 06:30:16 - Produced by Ken Cook Co. with mediaioff

SEAT BELT - 2" (Cont'd)
(Three Point Retractable)

Ref No	Part Number	Description	Remarks	Serial Number	Qty
1	7128405	KIT, BELT SEAT 2"	Ref. 2-13, 15 & 16		1
2	7152319	BELT, RETRACTOR			1
3	7152322	BELT, SEAT 2"			1
4	7152323	COVER, RETRACTOR			1
5	7152324	BRACKET, SEAT BELT			1
6	6674264	RETAINER NUT			1
7	7184346	DECAL WARNING			1
8	10C616	BOLT 10			1
9	29E6	WASHER			1
10	43C612	BOLT			2
11	31C716	SCREW			1
12	53D6	NUT			1
13	59D7	NUT			1
14	86D7	NUT	not in kit		2
15	7184341	BUSHING			1
16	6987248ENUS	INSTRUCTIONS	Was 6987248 [A]		1

Page 780 OSS# 6300322913 - All rights reserved by Bobcat Company - 08/04/2017 - 06:30:16 - Produced by Ken Cook Co. with mediaioff

SEAT BELT - 3"
(Retractable)

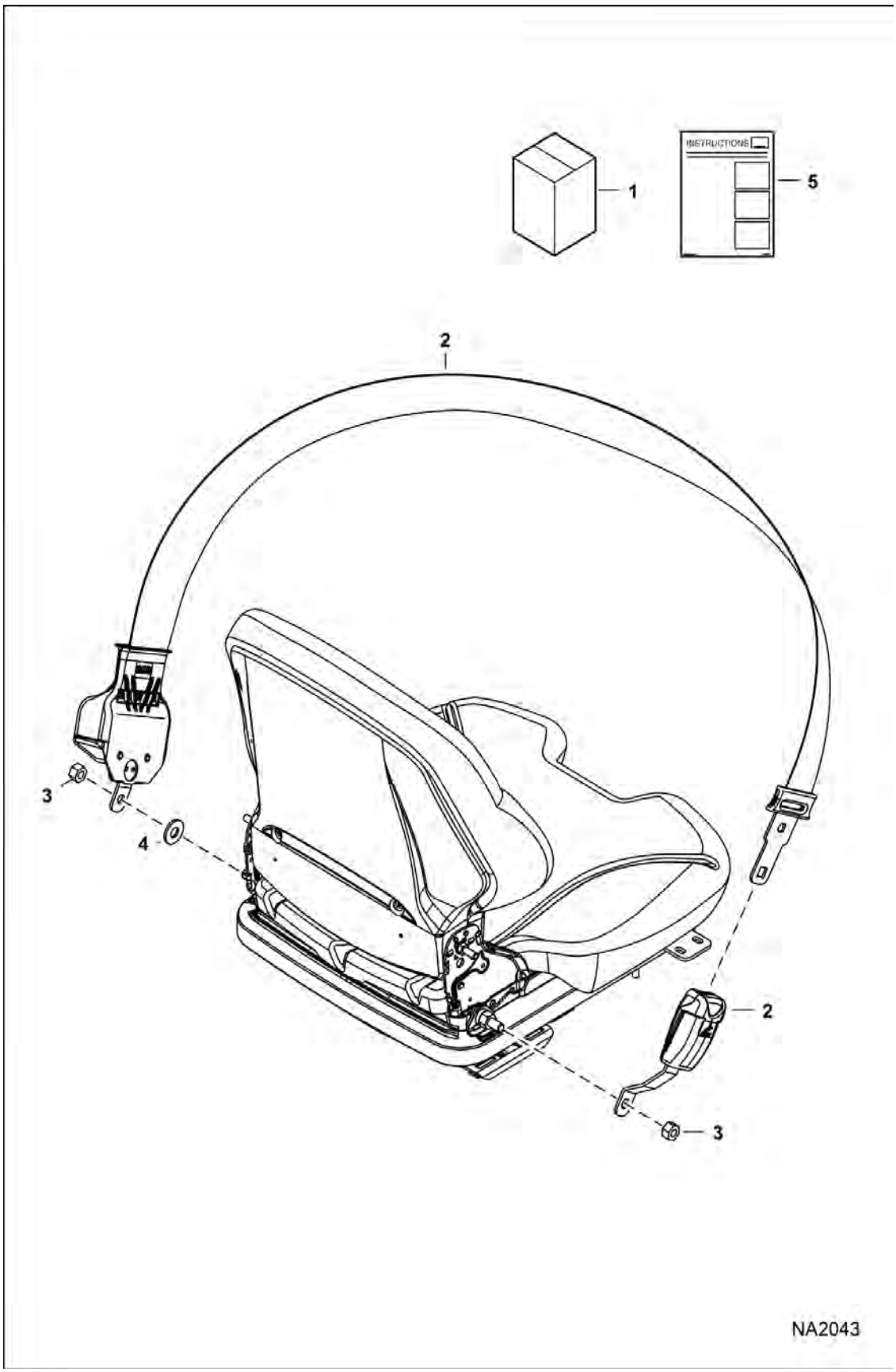

Page 789 - OSS# 6300322913 - All rights reserved by Bobcat Company - 08/04/2017 - 06:30:16 - Produced by Ken Cook Co. with mediaioff

SEAT BELT - 3" (Cont'd)
(Retractable)

Ref No	Part Number	Description	Remarks	Serial Number	Qty
1	7129303	KIT, BELT SEAT 3"	Ref. 2-4		1
2	7168171	BELT, SEAT 3"			1
3	86D7	NUT	not in kit		2
4	25E18	WASHER			1
5	6987253ENUS	INSTRUCTIONS	Was 6987253 [A]		1

Page 1004 OSS# 6300322913 - All rights reserved by Bobcat Company - 08/04/2017 - 06:30:16 - Produced by Ken Cook Co. with mediaioff

SEAT BELT - 3"
(Three Point Retractable)

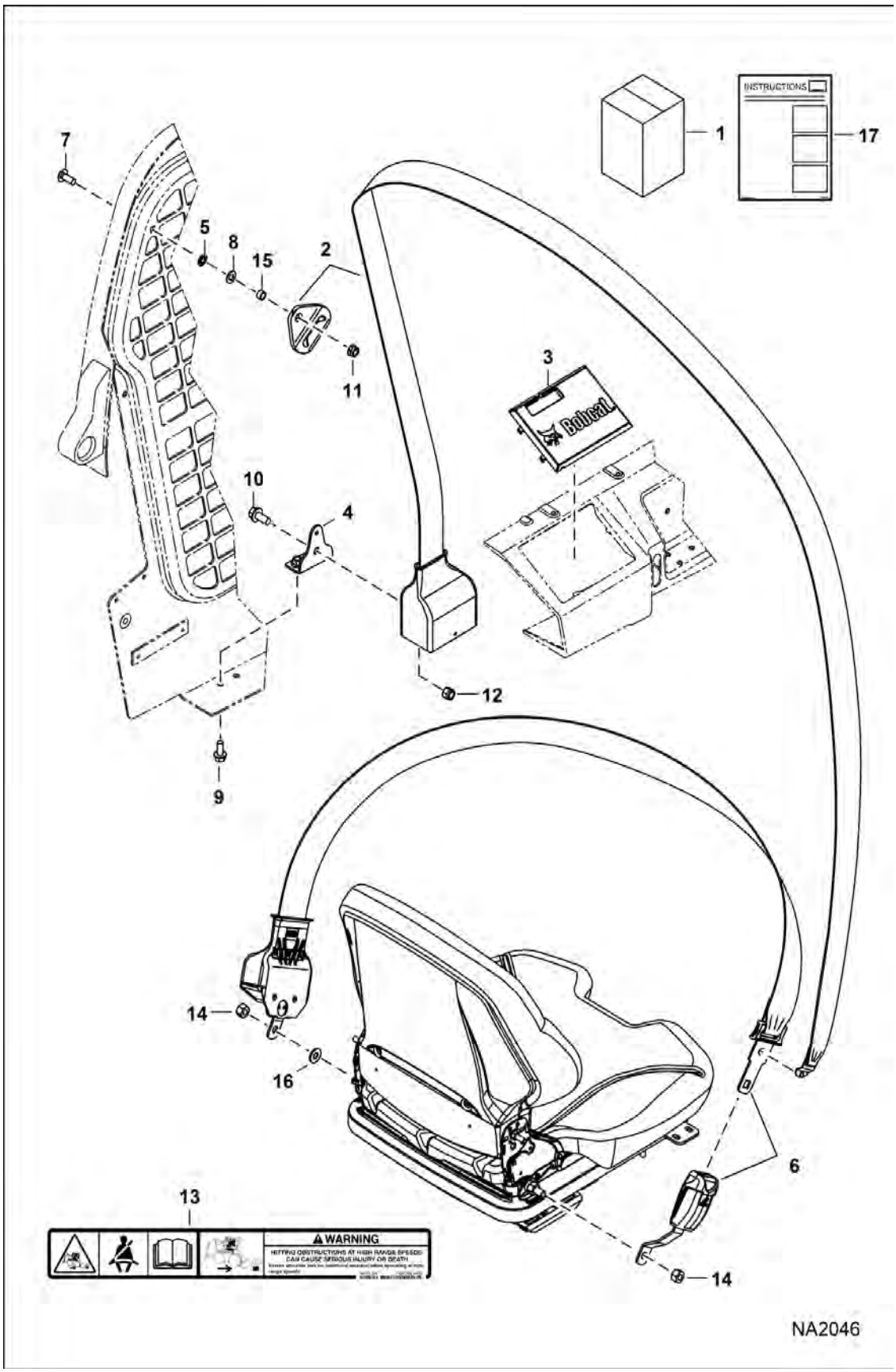

Page 791 - OSS# 6300322913 - All rights reserved by Bobcat Company - 08/04/2017 - 06:30:16 - Produced by Ken Cook Co. with mediaioff

SEAT BELT - 3" (Cont'd)
(Three Point Retractable)

Ref No	Part Number	Description	Remarks	Serial Number	Qty
1	7169480	KIT, BELT SEAT 3"	Ref. 2-17		1
2	7152322	BELT, SEAT 2"			1
3	7152323	COVER, RETRACTOR			1
4	7152324	BRACKET, SEAT BELT			1
5	6674264	RETAINER NUT			1
6	7168172	BELT, SEAT 3"			1
7	10C616	BOLT 10			1
8	29E6	WASHER			1
9	43C612	BOLT			2
10	31C716	SCREW			1
11	53D6	NUT			1
12	59D7	NUT			1
13	7184346	DECAL WARNING			1
14	86D7	NUT	not in kit		2
15	7184341	BUSHING			1
16	25E18	WASHER			1
17	6987248ENUS	INSTRUCTIONS	Was 6987248 [A]		1

Page 122 OSS# 6300322913 - All rights reserved by Bobcat Company - 08/04/2017 - 06:30:16 - Produced by Ken Cook Co. with mediaioff

SEAT COVERS
(Suspension Seat)

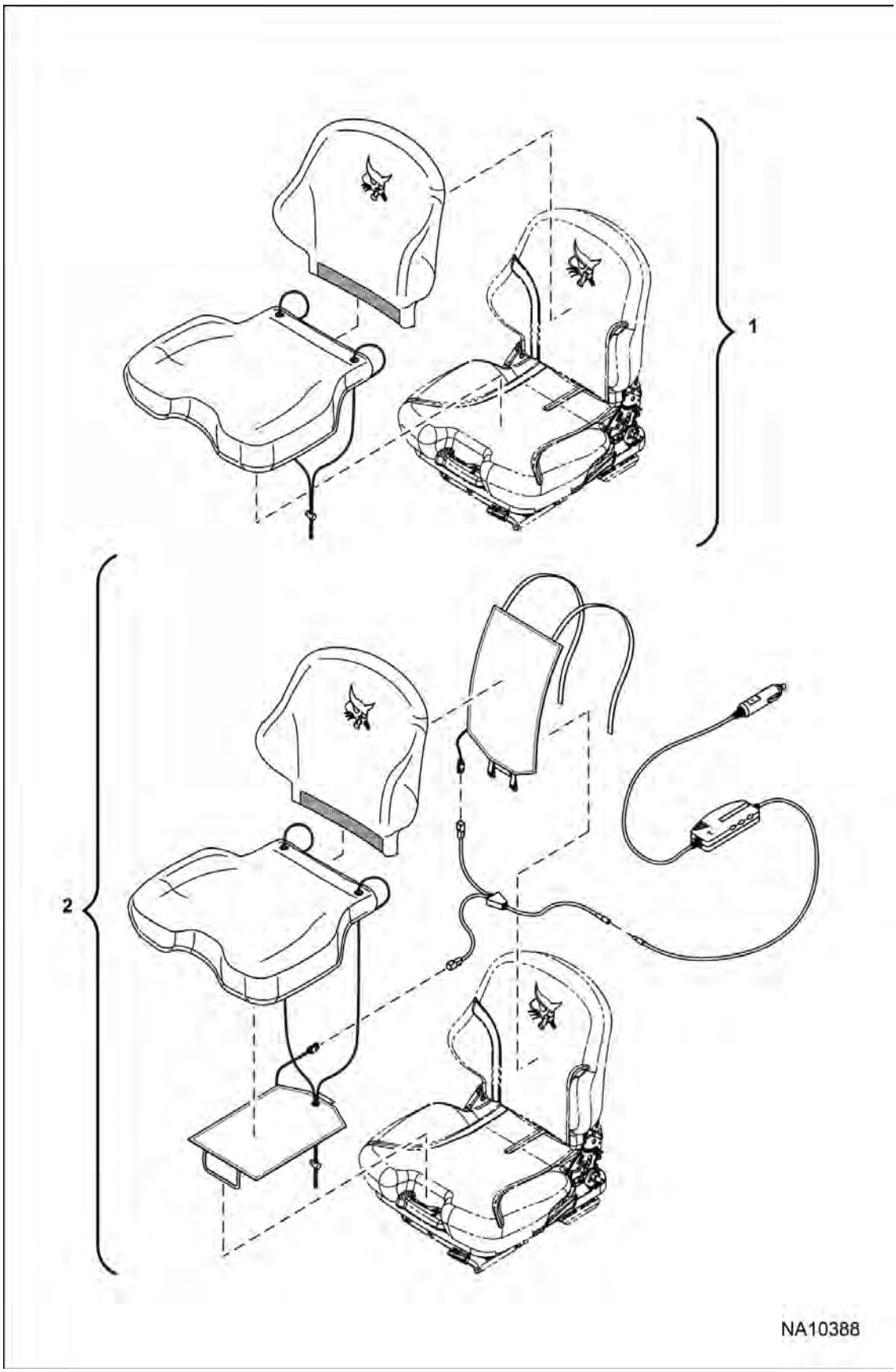

Page 793 - OSS# 6300322913 - All rights reserved by Bobcat Company - 08/04/2017 - 06:30:16 - Produced by Ken Cook Co. with mediaioff

SEAT COVERS (Cont'd)
(Suspension Seat)

Ref No	Part Number	Description	Remarks	Serial Number	Qty
1	7261288	COVER, SEAT	See Illustration SEAT - 80 mm / NA2430 - Use W/ 7149786 seat & 7167603 seat , See Illustration SEAT / NA2429 - Use W/ 7149786 seat & 7167603 seat		1
2	7261289	COVER, SEAT HEATED	See Illustration SEAT - 80 mm / NA2430 - Use W/ 7149786 seat & 7167603 seat , See Illustration SEAT / NA2429 - Use W/ 7149786 seat & 7167603 seat		1

Page 1 of 1 OSS# 6300322913 - All rights reserved by Bobcat Company - 08/04/2017 - 06:30:16 - Produced by Ken Cook Co. with mediaioff

SEAT KIT - 80 mm
(Suspension)

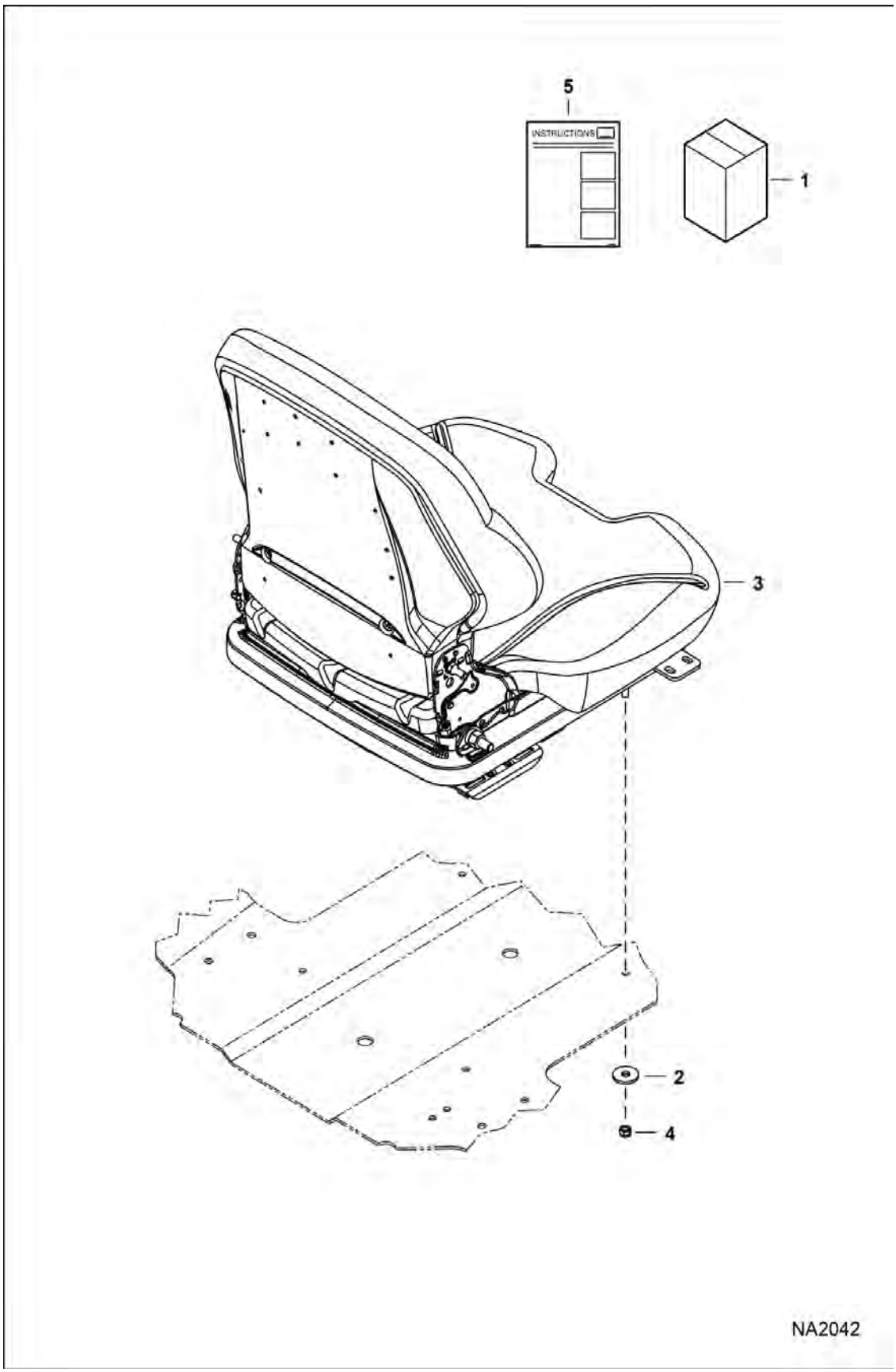

Page 795 - OSS# 6300322913 - All rights reserved by Bobcat Company - 08/04/2017 - 06:30:16 - Produced by Ken Cook Co. with mediaioff

SEAT KIT - 80 mm (Cont'd)
(Suspension)

Ref No	Part Number	Description	Remarks	Serial Number	Qty
1	7128524	KIT, SEAT 80MM SUSPENSION	Ref. 2-5		1
2	619021	WASHER, 5			4
3	7149786	SEAT, SUSPENSION	See Illustration SEAT COVERS / NA10388		1
4	59D5	NUT 5			4
5	6987249ENUS	INSTRUCTIONS	Was 6987249 [A]		1

Page 788 OSS# 6300322913 - All rights reserved by Bobcat Company - 08/04/2017 - 06:30:16 - Produced by Ken Cook Co. with mediaioff

SEAT KIT - 80 mm
(Suspension) (Air)

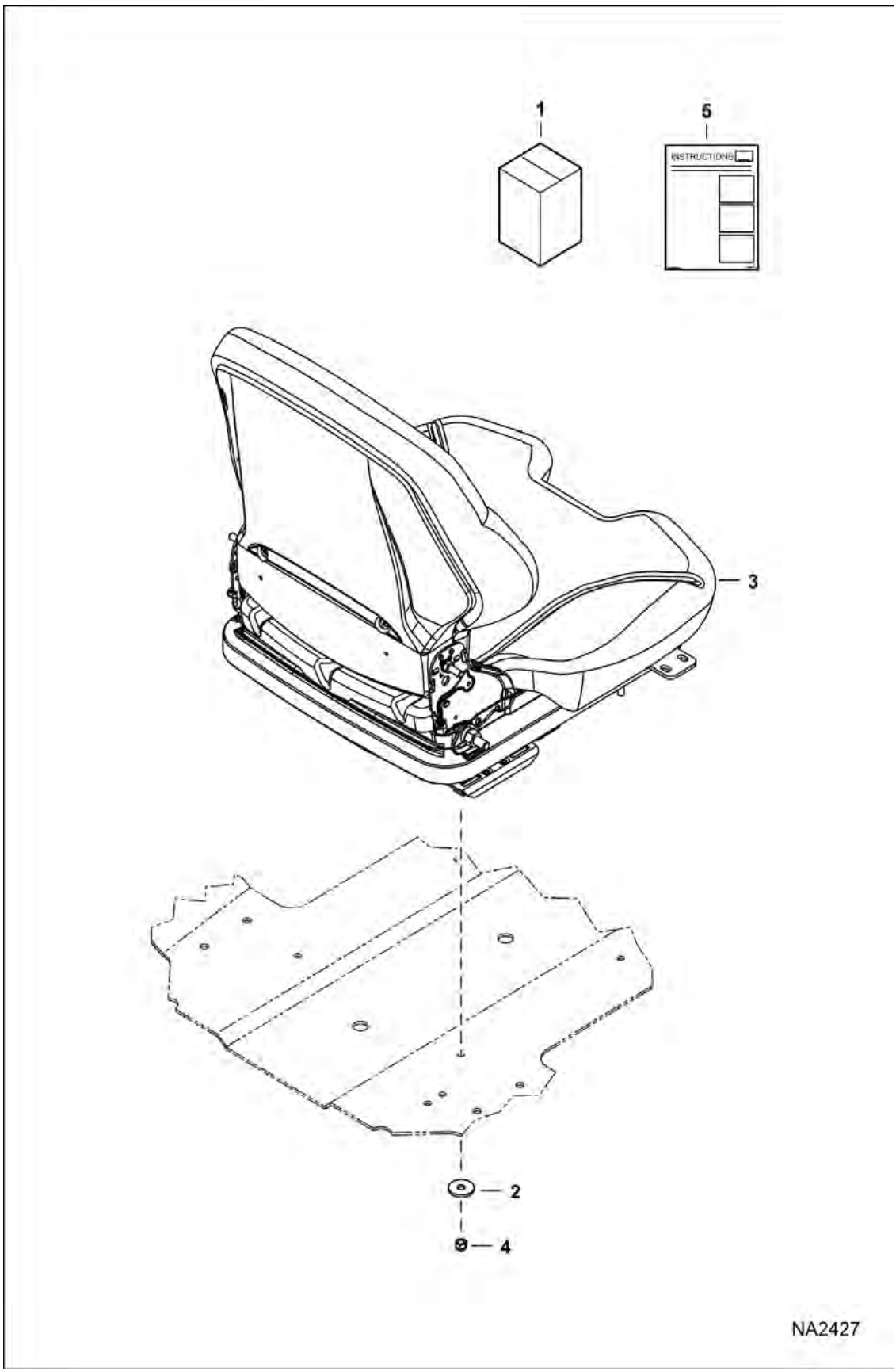

Page 797 - OSS# 6300322913 - All rights reserved by Bobcat Company - 08/04/2017 - 06:30:16 - Produced by Ken Cook Co. with mediaioff

SEAT KIT - 80 mm (Cont'd)
(Suspension) (Air)

Ref No	Part Number	Description	Remarks	Serial Number	Qty
1	7183366	KIT, SEAT OPERATOR SUSPENSION AIR	Ref. 2-5 - loader must be equipped with deluxe cab harness		1
2	619021	WASHER, 5			4
3	7167603	SEAT, OPERATOR SUSPENSION AIR	See Illustration SEAT COVERS / NA10388		1
4	59D5	NUT 5			4
5	6987249ENUS	INSTRUCTIONS	Was 6987249 [A]		1

Page 1 of 1 OSS# 6300322913 - All rights reserved by Bobcat Company - 08/04/2017 - 06:30:16 - Produced by Ken Cook Co. with mediaioff

SECURITY LOCKS

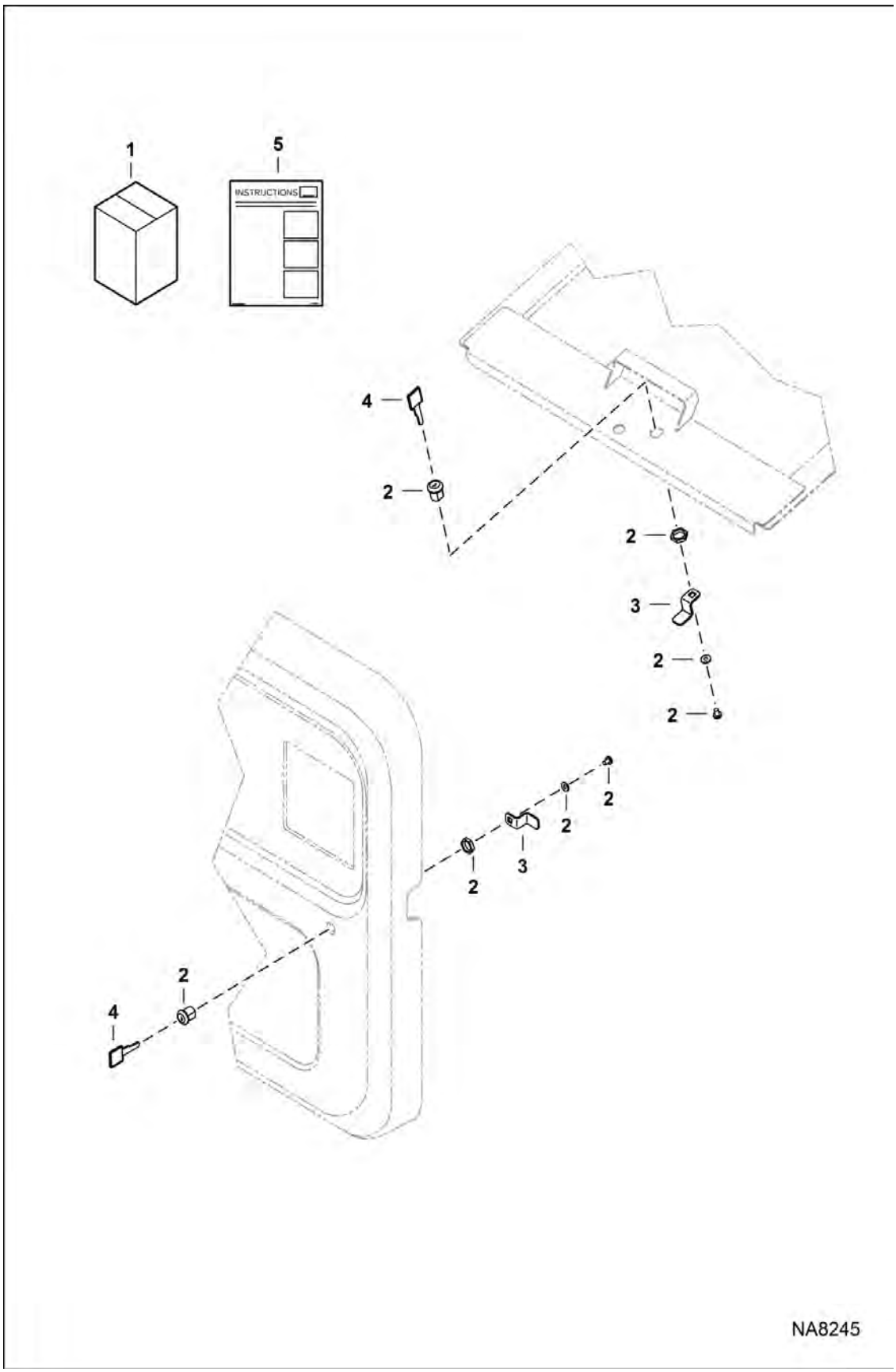

Page 799 - OSS# 6300322913 - All rights reserved by Bobcat Company - 08/04/2017 - 06:30:16 - Produced by Ken Cook Co. with mediaioff

SECURITY LOCKS (Cont'd)

Ref No	Part Number	Description	Remarks	Serial Number	Qty
1	7128403	KIT, LOCK SECURITY	Ref. 2-5		1
2	6670726	LOCK ONLY			1
3	7149056	LATCH, CAM			1
4	6693241	KEY (2)	ignition - single key W/O ring		1
5	6987239ENUS	INSTRUCTIONS	Was 6987239 [A]		1

Page 3804 OSS# 6300322913 - All rights reserved by Bobcat Company - 08/04/2017 - 06:30:16 - Produced by Ken Cook Co. with mediaioff

SHIELD KIT
(Radiator Screen)

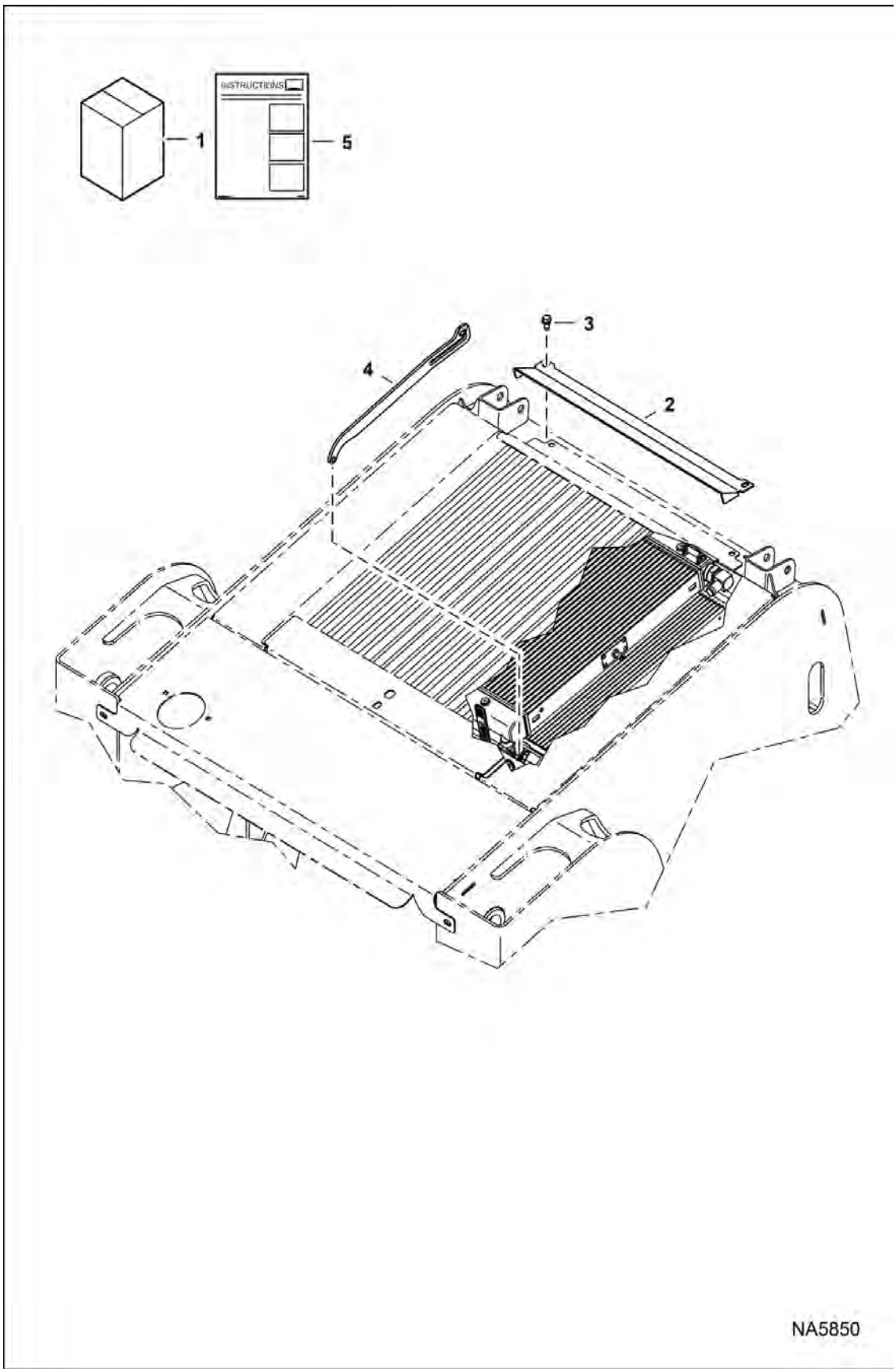

Page 801 - OSS# 6300322913 - All rights reserved by Bobcat Company - 08/04/2017 - 06:30:16 - Produced by Ken Cook Co. with mediaioff

SHIELD KIT (Cont'd)
(Radiator Screen)

Ref No	Part Number	Description	Remarks	Serial Number	Qty
1		KIT, HOOD SHIELD	NLA - Order components - Was 7225460 [D]		1
2	7221437	SHIELD, HOOD			1
3	84G3712	BOLT 5			2
4	7025104	ROD, PROP UP			1
5	6990560	INSTRUCTIONS			1

Page 1324 OSS# 6300322913 - All rights reserved by Bobcat Company - 08/04/2017 - 06:30:16 - Produced by Ken Cook Co. with mediaioff

SHIELD KIT
(Tilt Cylinder)

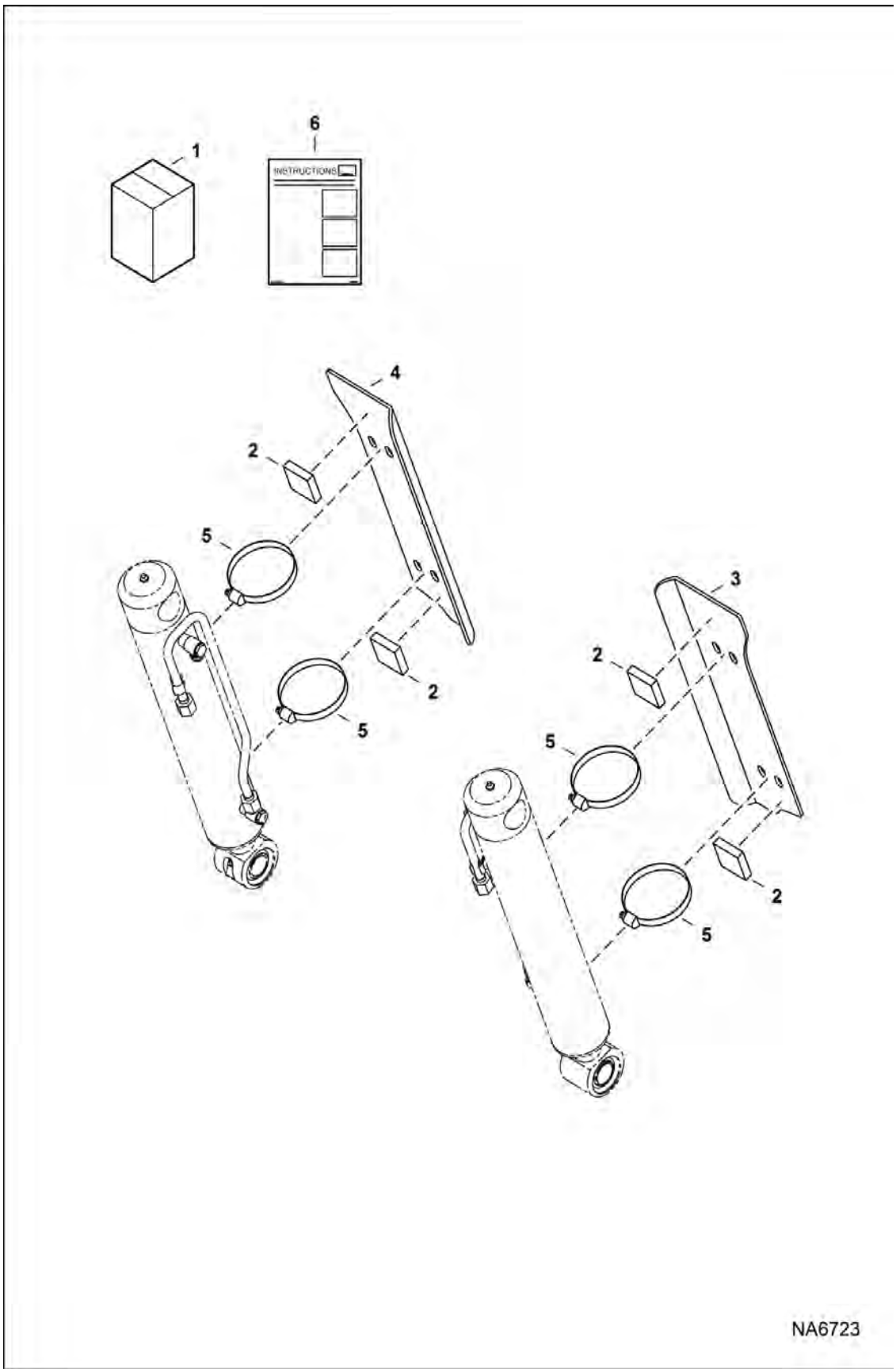

Page 803 - OSS# 6300322913 - All rights reserved by Bobcat Company - 08/04/2017 - 06:30:16 - Produced by Ken Cook Co. with mediaioff

SHIELD KIT (Cont'd)
(Tilt Cylinder)

Ref No	Part Number	Description	Remarks	Serial Number	Qty
1	7187059	KIT, SHIELD CYL	Ref. 2-6		1
2	6704436	RUBBERPAD			4
3	7187061	SHIELD, CYL	RH		1
4	7187062	SHIELD, CYL	LH		1
5	42H56	CLAMP			4
6	6990468ENUS	INSTRUCTIONS	WAS 6990468 [A]		1

Page 796 OSS# 6300322913 - All rights reserved by Bobcat Company - 08/04/2017 - 06:30:16 - Produced by Ken Cook Co. with mediaioff

SIDE LIGHT KIT
(S/N A3P816153 & Above, A3P913076 & Above)

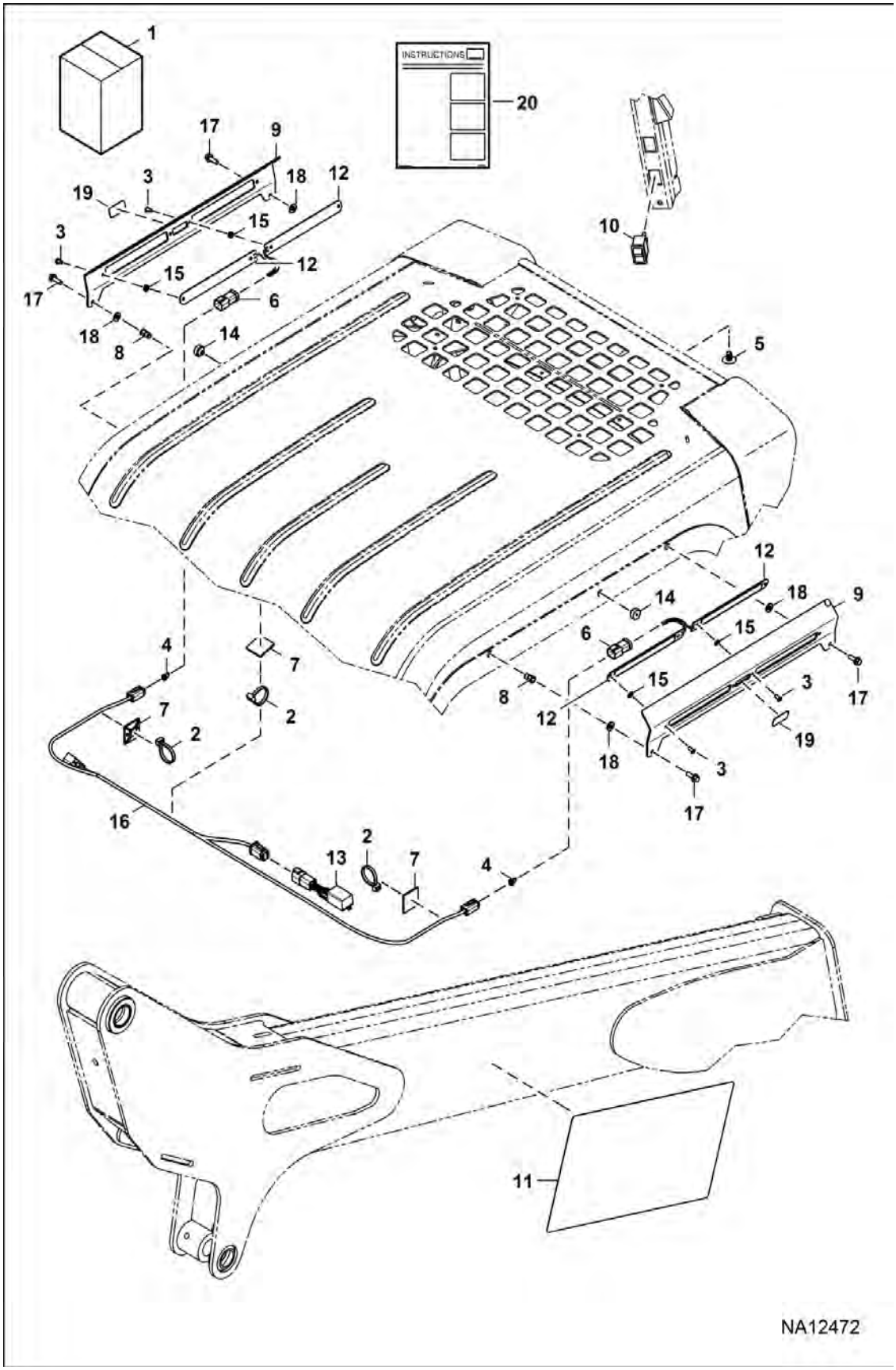

Page 805 - OSS# 6300322913 - All rights reserved by Bobcat Company - 08/04/2017 - 06:30:16 - Produced by Ken Cook Co. with mediaioff

SIDE LIGHT KIT (Cont'd)

(S/N A3P816153 & Above, A3P913076 & Above)

Ref No	Part Number	Description	Remarks	Serial Number	Qty
1	7256348	KIT, SIDE LIGHT	Ref. 2-20		1
2	6624289	STRAP, TIE			4
3	6630207	RIVET 5			8
4	6662251	WEDGE LOCK			2
5	6674895	RETAINER			4
6	6691419	CONNECTOR, ELECTRICAL			2
7	6693924	MOUNT			4
8	7154910	INSERT, THREADED			2
9	7254249	BRACKET			2
10	7265583	SWITCH, ROCKER LIGHT			1
11	7265824	DECAL			2
12	7277427	LIGHT, LED			4
13	7277428	LIGHT DRIVER			1
14	7284704	GROMMET			2
15	7286210	WASHER			8
16	7287115	HARNESS, LIGHT SIDE			1
17	35C412	BOLT			4
18	25E13	WASHER 5			4
19	7330027	COVER HOLE			2
20	7307574ENUS	INSTRUCTIONS	Was 7307574 [A]		1

Page 798 OSS# 6300322913 - All rights reserved by Bobcat Company - 08/04/2017 - 06:30:16 - Produced by Ken Cook Co. with mediaioff

SOUND/NOISE REDUCTION
(Bystander)
(S/N A3P913090 & Above)

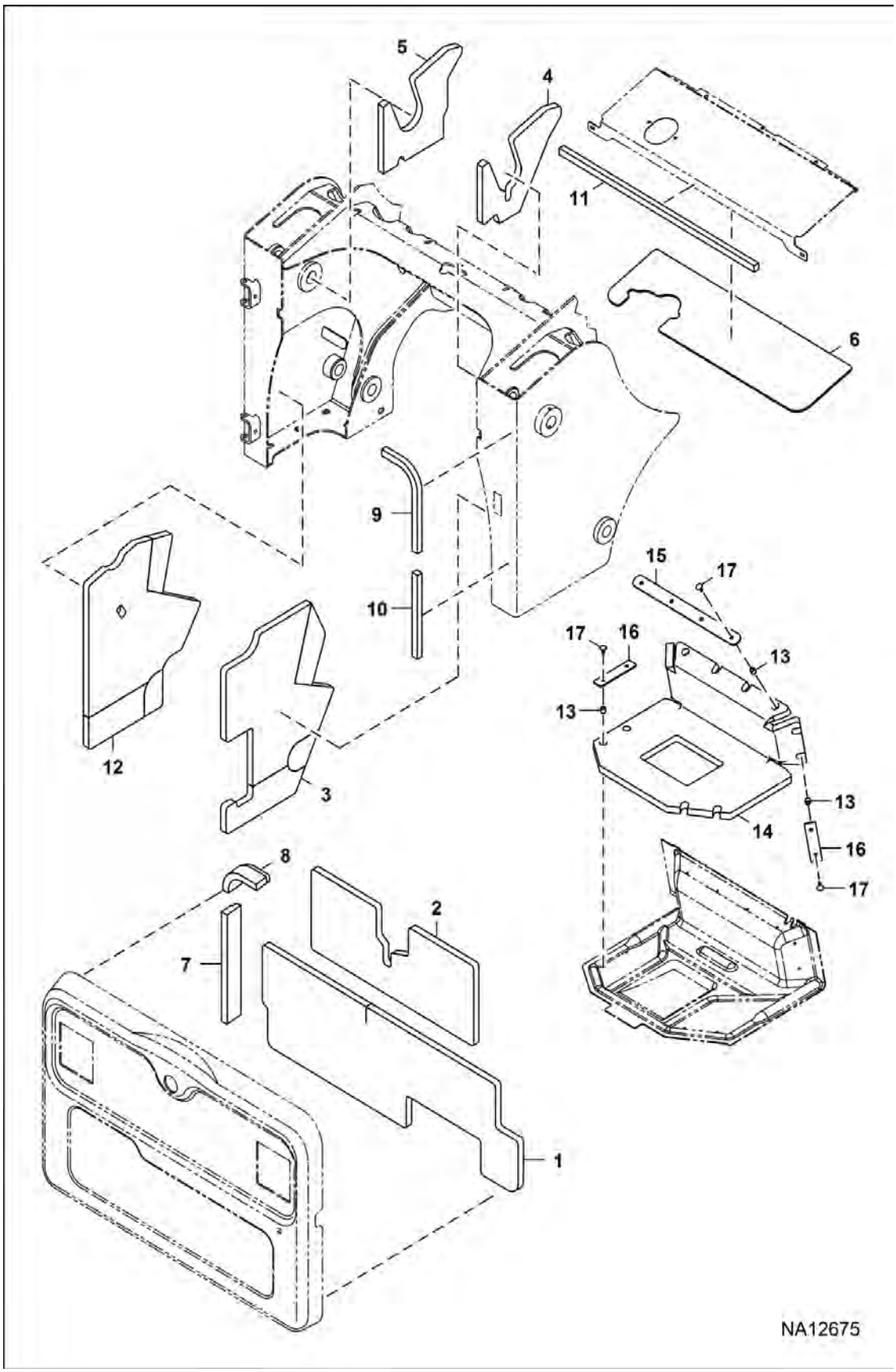

Page 807 - OSS# 6300322913 - All rights reserved by Bobcat Company - 08/04/2017 - 06:30:16 - Produced by Ken Cook Co. with mediaioff

SOUND/NOISE REDUCTION (Cont'd)

(Bystander)
(S/N A3P913090 & Above)

Ref No	Part Number	Description	Remarks	Serial Number	Qty
1	7171192	INSULATION, DOOR REAR			1
2	7171194	INSULATION, DOOR REAR			1
3	7171215	INSULATION, UPRIGHT	RH		1
4	7196757	INSULATION	RH		1
5	7196758	INSULATION	LH		1
6	7196760	INSULATION, ENG			1
7	7198932	INSULATION	LH		1
8	7198933	INSULATION	LH		1
9	7199009	INSULATION	RH		1
10	7199010	INSULATION	RH		1
11	7199011	INSULATION			1
12	7221233	INSULATION, UPRIGHT	LH		1
13	7249838	SPACER			12
14	7313836	DUCT FAN INSULATED			1
15	7313840	EDGE RUBBER			1
16	7313841	EDGE RUBBER			4
17	7314439	RETAINER SNAP IN			12

Page 800 OSS# 6300322913 - All rights reserved by Bobcat Company - 08/04/2017 - 06:30:16 - Produced by Ken Cook Co. with mediaoff

SOUND/NOISE REDUCTION KIT
(Manual Controls)

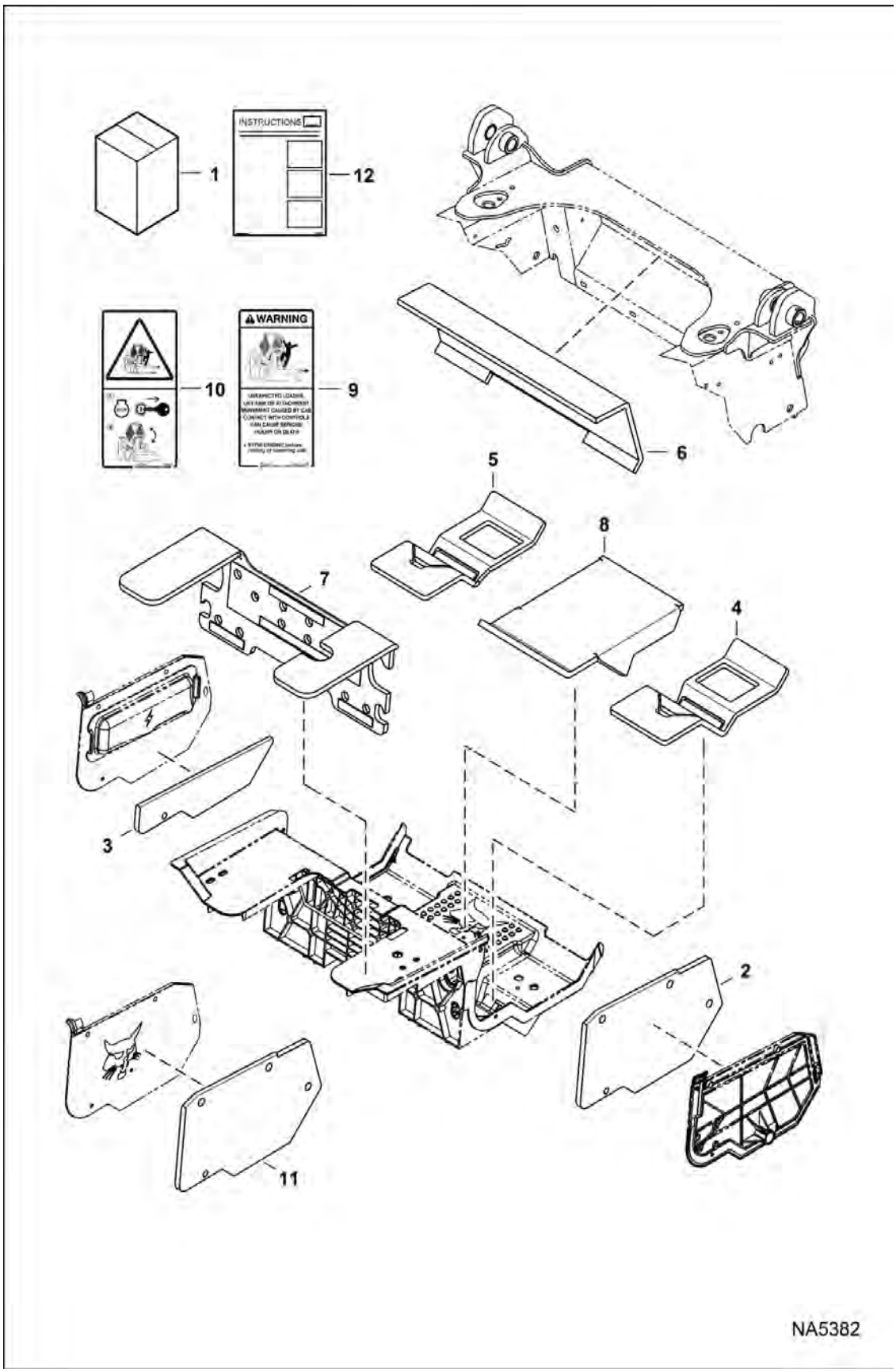

Page 809 - OSS# 6300322913 - All rights reserved by Bobcat Company - 08/04/2017 - 06:30:16 - Produced by Ken Cook Co. with mediaioff

SOUND/NOISE REDUCTION KIT (Cont'd)
(Manual Controls)

Ref No	Part Number	Description	Remarks	Serial Number	Qty
1	7192149	KIT, SOUND/NOISE REDUCTION	Ref. 2-12 [A]		1
2	7192066	INSULATION	panel RH		1
3	7198494	INSULATION, PANEL LH			1
4	7257256	INSULATION, FLOOR	RH - Was 7251972 [B]		1
5	7257257	INSULATION, FLOOR	LH - Was 7251973 [B]		1
6	7192071	INSULATION, CROSSMEMBER			1
7	7192154	INSULATION	compact track models		1
8	7258937	INSULATION, TRANS	compact track models - Was 7192156 [A]		1
9	7168138	DECAL, WARNING			1
10	7168139	DECAL, WARNING	no-text		1
11	7192067	INSULATION, PANEL LH			1
12	6989699ENUS	INSTRUCTIONS	Was 6989699 [A]		1

Page 1 of 1 OSS# 6300322913 - All rights reserved by Bobcat Company - 08/04/2017 - 06:30:16 - Produced by Ken Cook Co. with mediaioff

SOUND/NOISE REDUCTION KIT
(Selectable Joystick Controls)

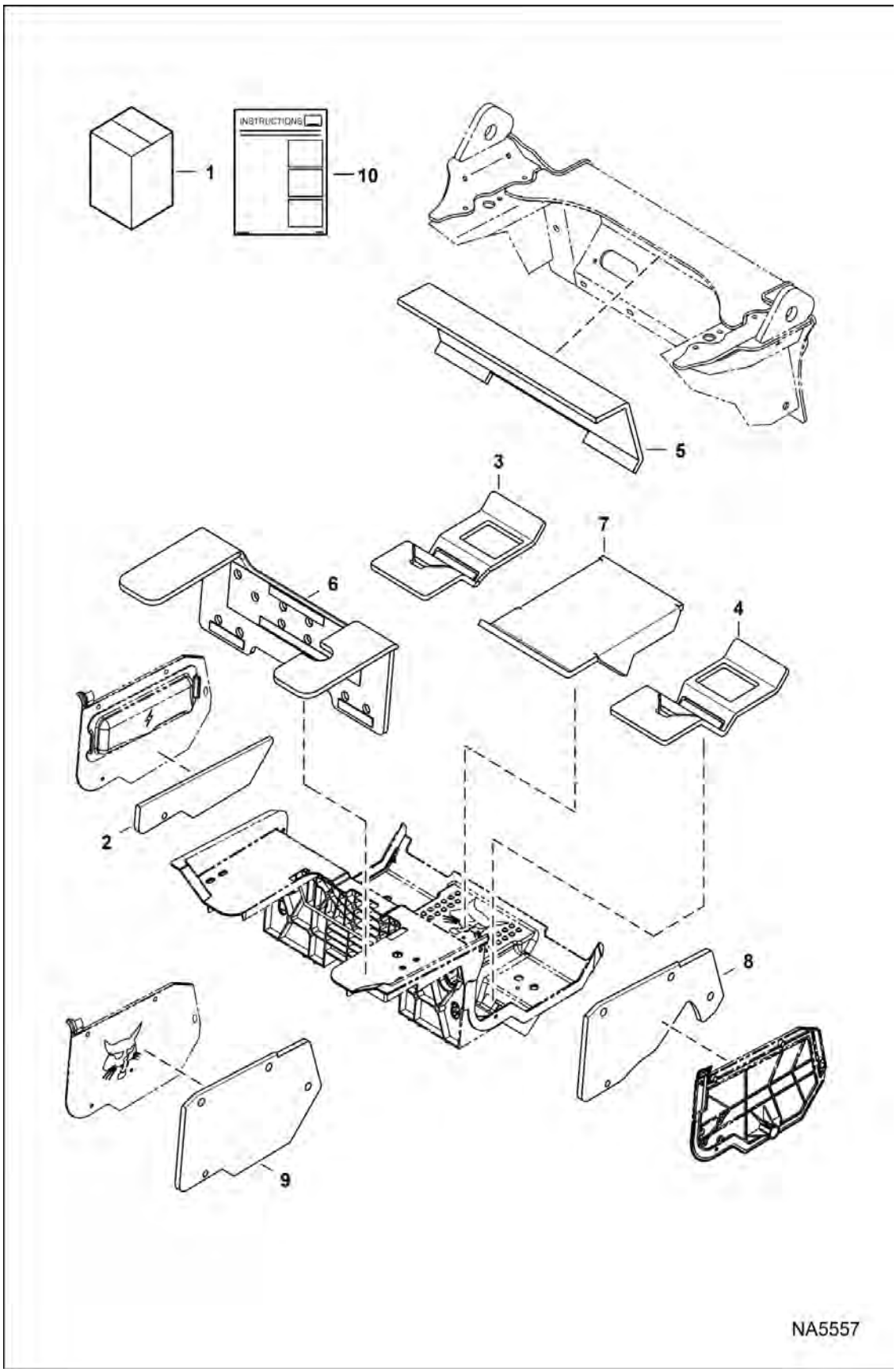

Page 811 - OSS# 6300322913 - All rights reserved by Bobcat Company - 08/04/2017 - 06:30:16 - Produced by Ken Cook Co. with mediaioff

SOUND/NOISE REDUCTION KIT (Cont'd)

(Selectable Joystick Controls)

Ref No	Part Number	Description	Remarks	Serial Number	Qty
1	7192150	KIT, SOUND/NOISE REDUCTION	Ref. 2-10		1
2	7198494	INSULATION, PANEL LH			1
3	7257256	INSULATION, FLOOR	RH - Was 7251972 [B]		1
4	7257257	INSULATION, FLOOR	LH - Was 7251973 [B]		1
5	7192071	INSULATION, CROSSMEMBER			1
6	7192155	INSULATION	compact track models		1
7	7258937	INSULATION, TRANS	compact track models - Was 7192156 [A]		1
8	7192184	INSULATION	panel RH		1
9	7192067	INSULATION, PANEL LH			1
10	6989699ENUS	INSTRUCTIONS	Was 6989699 [A]		1

Page 1.2 OSS# 6300322913 - All rights reserved by Bobcat Company - 08/04/2017 - 06:30:16 - Produced by Ken Cook Co. with mediaioff

SOUND/NOISE REDUCTION KIT

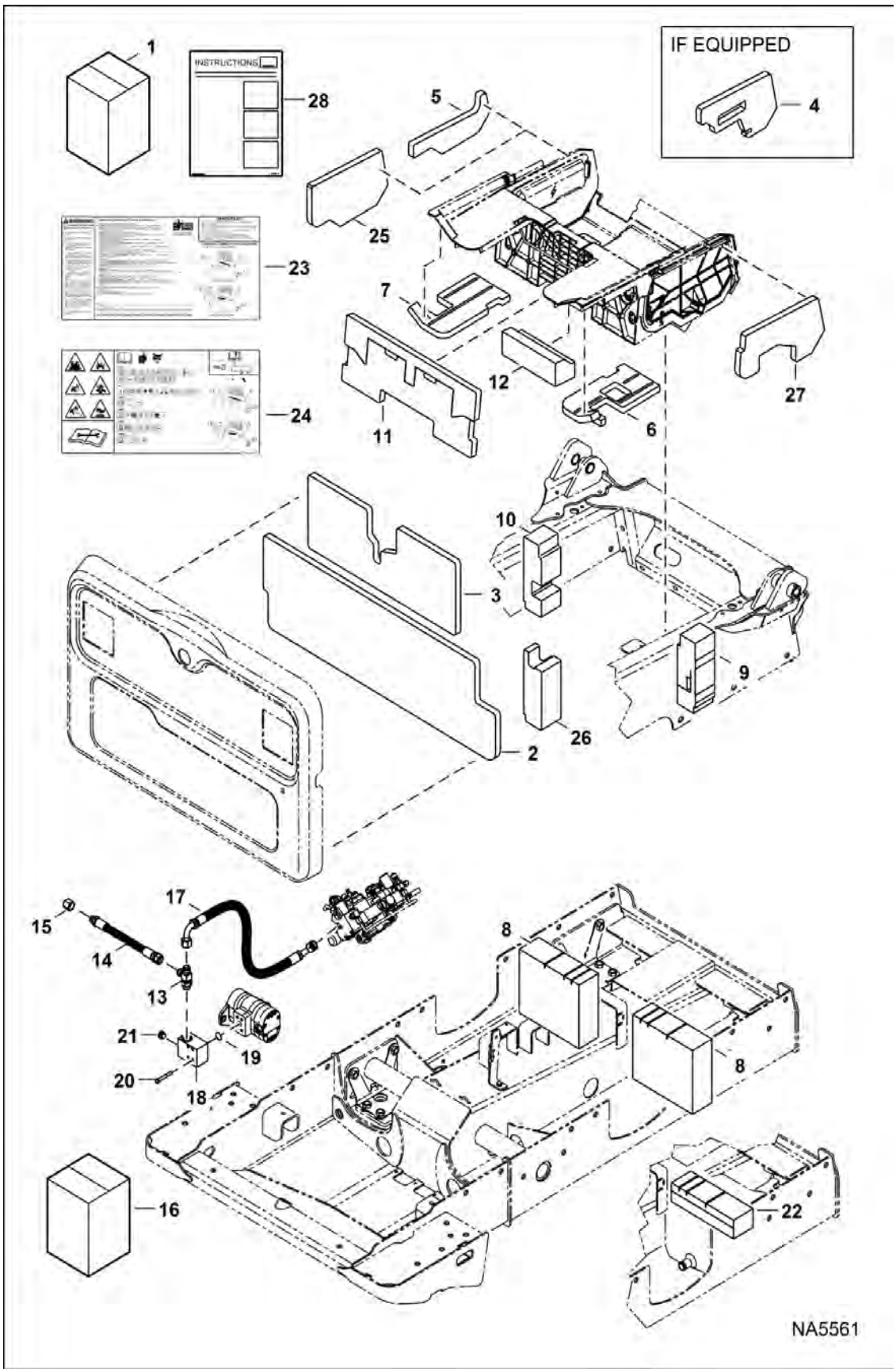

Page 813 - OSS# 6300322913 - All rights reserved by Bobcat Company - 08/04/2017 - 06:30:16 - Produced by Ken Cook Co. with mediaioff

SOUND/NOISE REDUCTION KIT (Cont'd)

Ref No	Part Number	Description	Remarks	Serial Number	Qty
1		KIT, SOUND/NOISE REDUCTION	NLA - Ref. 2-15 & 17-26 & 28 - for loaders W/O Ref. 18 manifold and not equipped with Power Bob-Tach, Also Order Ref. 16 - Was 7172902 [A]		1
2	7171192	INSULATION, DOOR REAR			1
3	7171194	INSULATION, DOOR REAR			1
4	7196358	INSULATION	RH		1
5	7198481	INSULATION, PANEL LH			1
6	7171219	INSULATION, PANEL RH			1
7	7171220	INSULATION, PANEL LH			1
8	7230944	INSULATION	Was 7174849 [A]		2
9	7230941	INSULATION	Was 7196318 [B]		1
10	7172023	INSULATION, FENDER			1
11	7173982	INSULATION, CROSSMEMBER			1
12	7174850	INSULATION,TRANSMISSION			1
13	21KB1212	FITTING, HYD TEE			1
14	7185232	HOSE, HYD	muffler		1
15	36K8	CAP			1
16		KIT, MANIFOLD	NLA - not in kit - Order Ref. 17-21		1
17	7219833	HOSE, HYD	Was 7172235 [A]		1
18	7226207	MANIFOLD, OUTLET PUMP	Was 7029565 [A]		1
19	55K214	O-RING			1
20	17C644	BOLT			4
21	24K6	FITTING	Was 47K7 [B]		1
22	7180052	INSULATION, TRANS			1
23	7242070	DECAL, SERVICE	Was 7205726 [A]		1
24	7205727	DECAL, SERVICE	no text - EMEA - Was 7168042 [A]		1
25	7171218	INSULATION, PANEL LH			1
26	7230942	INSULATION	Was 7202003 [B]		1
27	6987338ENUS	INSTRUCTIONS	Was 6987338 [A]		1

Page 1 of 1 OSS# 6300322913 - All rights reserved by Bobcat Company - 08/04/2017 - 06:30:16 - Produced by Ken Cook Co. with mediaoff

SOUND/NOISE REDUCTION OPTION
(Operator Ear)

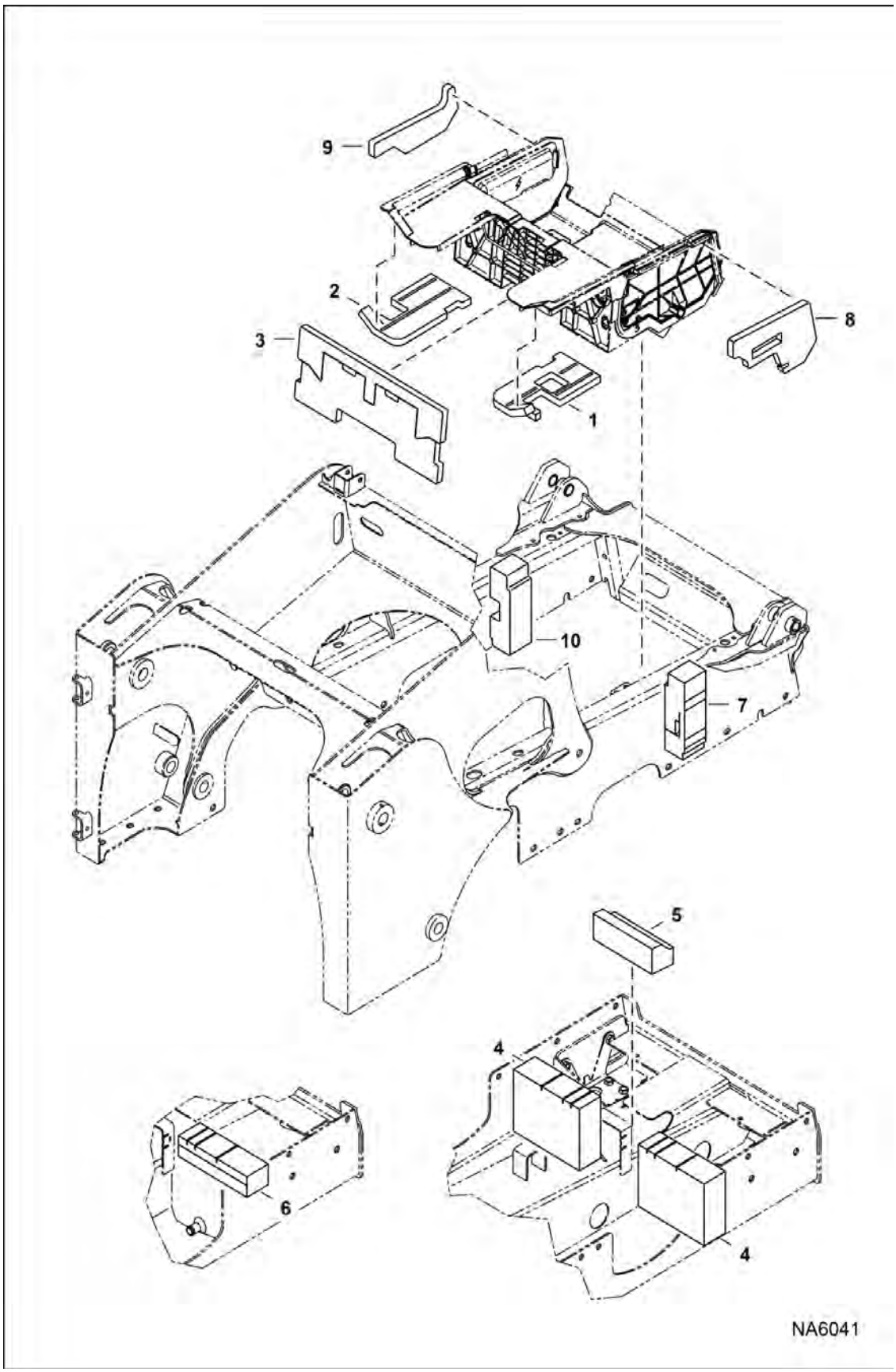

Page 815 - OSS# 6300322913 - All rights reserved by Bobcat Company - 08/04/2017 - 06:30:16 - Produced by Ken Cook Co. with mediaioff

SOUND/NOISE REDUCTION OPTION (Cont'd)

(Operator Ear)

Ref No	Part Number	Description	Remarks	Serial Number	Qty
1	7171219	INSULATION, PANEL RH			1
2	7171220	INSULATION, PANEL LH			1
3	7173982	INSULATION, CROSSMEMBER			1
4	7230944	INSULATION	Was 7174849 [A]		2
5	7174850	INSULATION,TRANSMISSION			1
6	7180052	INSULATION, TRANS			1
7	7230941	INSULATION	Was 7196318 [B]		1
8	7196358	INSULATION	RH		1
9	7198481	INSULATION, PANEL LH	LH		1
10	7230942	INSULATION	Was 7202003 [B]		1

Page 1 of 1 OSS# 6300322913 - All rights reserved by Bobcat Company - 08/04/2017 - 06:30:16 - Produced by Ken Cook Co. with mediaioff

SOUND/NOISE REDUCTION OPTION

(Bystander)

(S/N A3P811001 & Above, A3P911001 - A3P913089)

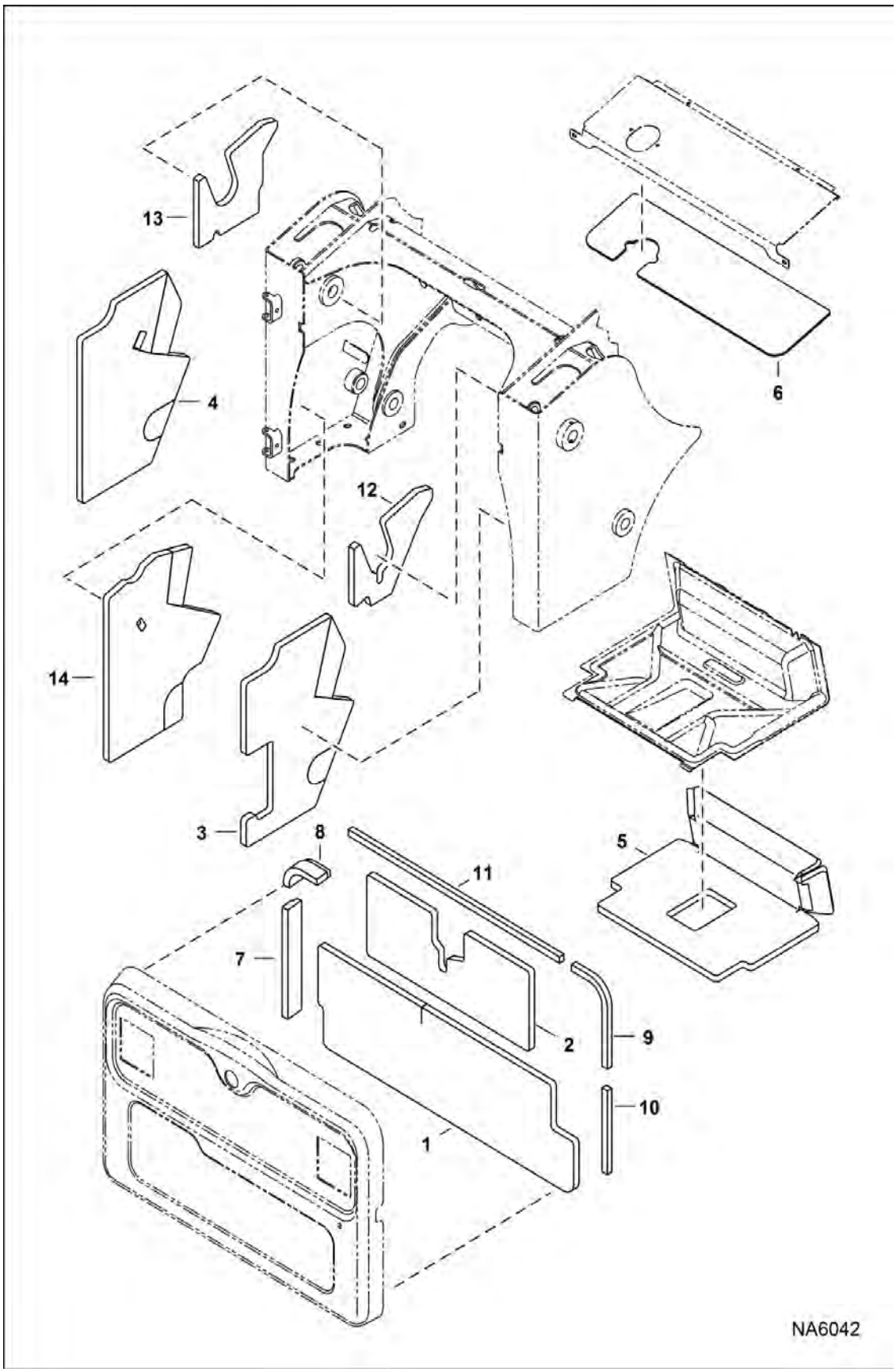

Page 817 - OSS# 6300322913 - All rights reserved by Bobcat Company - 08/04/2017 - 06:30:16 - Produced by Ken Cook Co. with mediaioff

SOUND/NOISE REDUCTION OPTION (Cont'd)

(Bystander)

(S/N A3P811001 & Above, A3P911001 - A3P913089)

Ref No	Part Number	Description	Remarks	Serial Number	Qty
1	7171192	INSULATION, DOOR REAR			1
2	7171194	INSULATION, DOOR REAR			1
3	7171215	INSULATION, UPRIGHT	RH		1
4	7204041	INSULATION, UPRIGHT	LH	A3P811001 -	1
5	7196759	INSULATION			1
5	7240044	INSULATION, SHROUD FAN		A3P8 & Above	1
				A3P9 & Above	1
6	7196760	INSULATION, ENG			1
7	7198932	INSULATION	LH		1
8	7198933	INSULATION	LH		1
9	7199009	INSULATION	RH		1
10	7199010	INSULATION	RH		1
11	7279886	INSULATION, TAILGATE	Was 7199011 [A]		1
12	7196757	INSULATION	RH		1
13	7196758	INSULATION	LH		1
14	7221233	INSULATION, UPRIGHT		A3P8 & Above	1

Page 1 of 1 OSS# 6300322913 - All rights reserved by Bobcat Company - 08/04/2017 - 06:30:16 - Produced by Ken Cook Co. with mediaioff

STEERING DAMPENER KIT
(Dual)

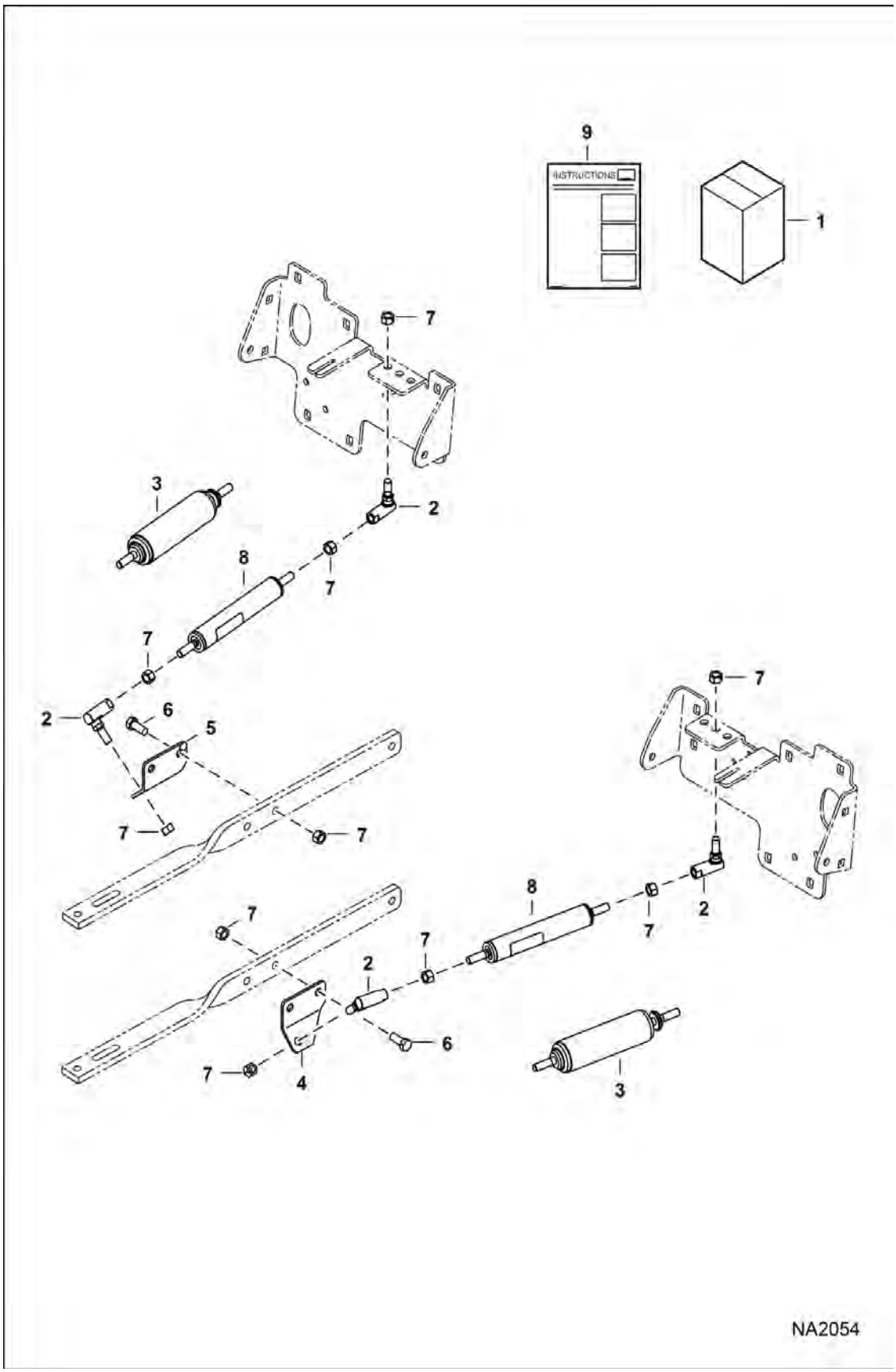

Page 819 - OSS# 6300322913 - All rights reserved by Bobcat Company - 08/04/2017 - 06:30:16 - Produced by Ken Cook Co. with mediaioff

STEERING DAMPENER KIT (Cont'd)
(Dual)

Ref No	Part Number	Description	Remarks	Serial Number	Qty
1	7169070	KIT, DAMPER STEERING	Ref. 2-8		1
2	6599744	BALL, JOINT			4
3		GAS SPRING	NLA - Japan Option - Order Ref. 8 - Was 6649551 [A]		2
4	7153075	BRACKET, DAMPER			1
5	7153076	BRACKET, DAMPER			1
6	2C614	SCREW			2
7	62D6	NUT 5			10
8	7188108	GAS SPRING			2
9	6987251ENUS	INSTRUCTIONS	Was 6987251 [A]		1

Page 1004 OSS# 6300322913 - All rights reserved by Bobcat Company - 08/04/2017 - 06:30:16 - Produced by Ken Cook Co. with mediaioff

STEERING LINKAGE SUPPORT KIT

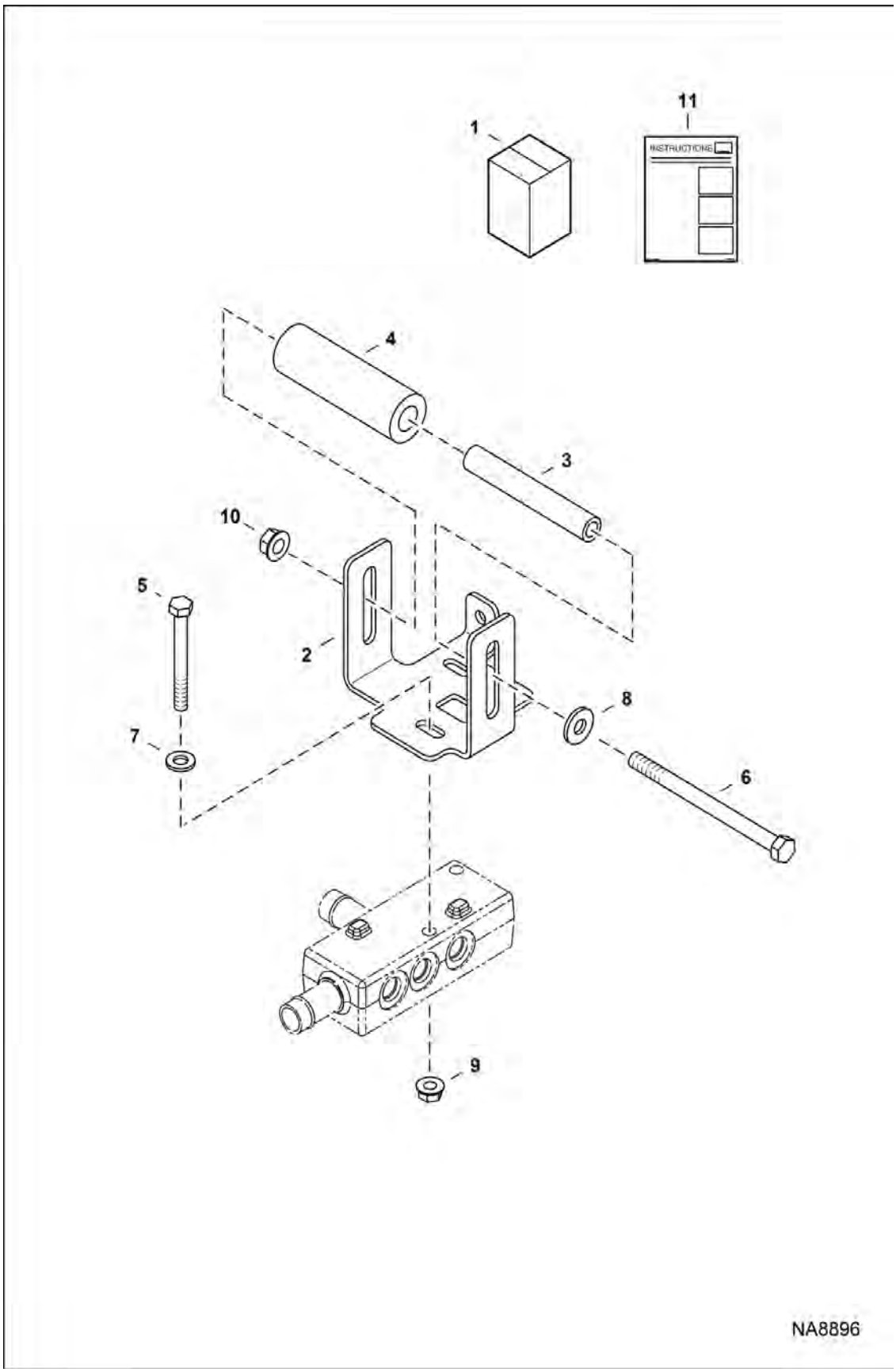

Page 821 - OSS# 6300322913 - All rights reserved by Bobcat Company - 08/04/2017 - 06:30:16 - Produced by Ken Cook Co. with mediaioff

STEERING LINKAGE SUPPORT KIT (Cont'd)

Ref No	Part Number	Description	Remarks	Serial Number	Qty
1	7238026	KIT, STRG LINKAGE SUPPORT	Ref. 2-11		1
2	7237993	BRACKET			1
3	7237994	BUSHING			1
4	7237995	ROLLER			1
5	17C544	BOLT			2
6	1C680	SCREW			1
7	25E15	WASHER 5			2
8	25E16	WSHR			1
9	97D5	NUT			2
10	97D6	NUT 10			1
11	7247388ENUS	INSTRUCTIONS	Was 7247388 [A]		1

Page 224 OSS# 6300322913 - All rights reserved by Bobcat Company - 08/04/2017 - 06:30:16 - Produced by Ken Cook Co. with mediaioff

STEERING PATTERN CONTROL KIT
(THL)

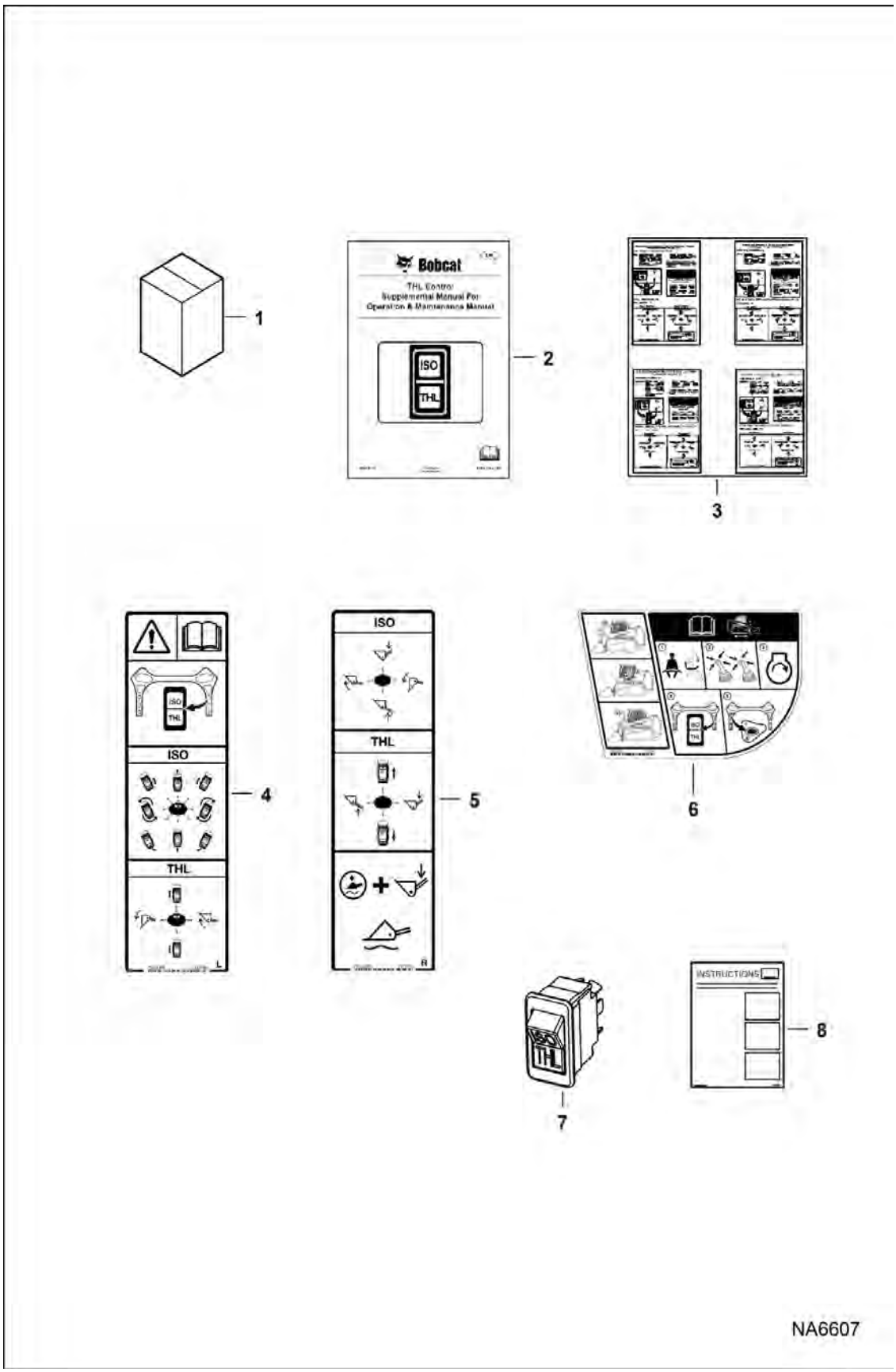

Page 823 - OSS# 6300322913 - All rights reserved by Bobcat Company - 08/04/2017 - 06:30:16 - Produced by Ken Cook Co. with mediaioff

STEERING PATTERN CONTROL KIT (Cont'd)
(THL)

Ref No	Part Number	Description	Remarks	Serial Number	Qty
1	7177725	KIT, PATTERN THL	Ref. 2-8		1
2	6987441	MANUAL, SUPPLEMENTAL			1
3	7180291	DECAL THL OHB			1
4	7177706	DECAL	switch NT		1
5	7177705	DECAL	LH THL NT		1
6	7177730	DECAL	RH THL NT		1
7	7218932	SWITCH, ROCKER	Was 7177348 [B]		1
8	6987474ENUS	INSTRUCTIONS	Was 6987474 [A]		1

Page 224 OSS# 6300322913 - All rights reserved by Bobcat Company - 08/04/2017 - 06:30:16 - Produced by Ken Cook Co. with mediaioff

STROBE LIGHT

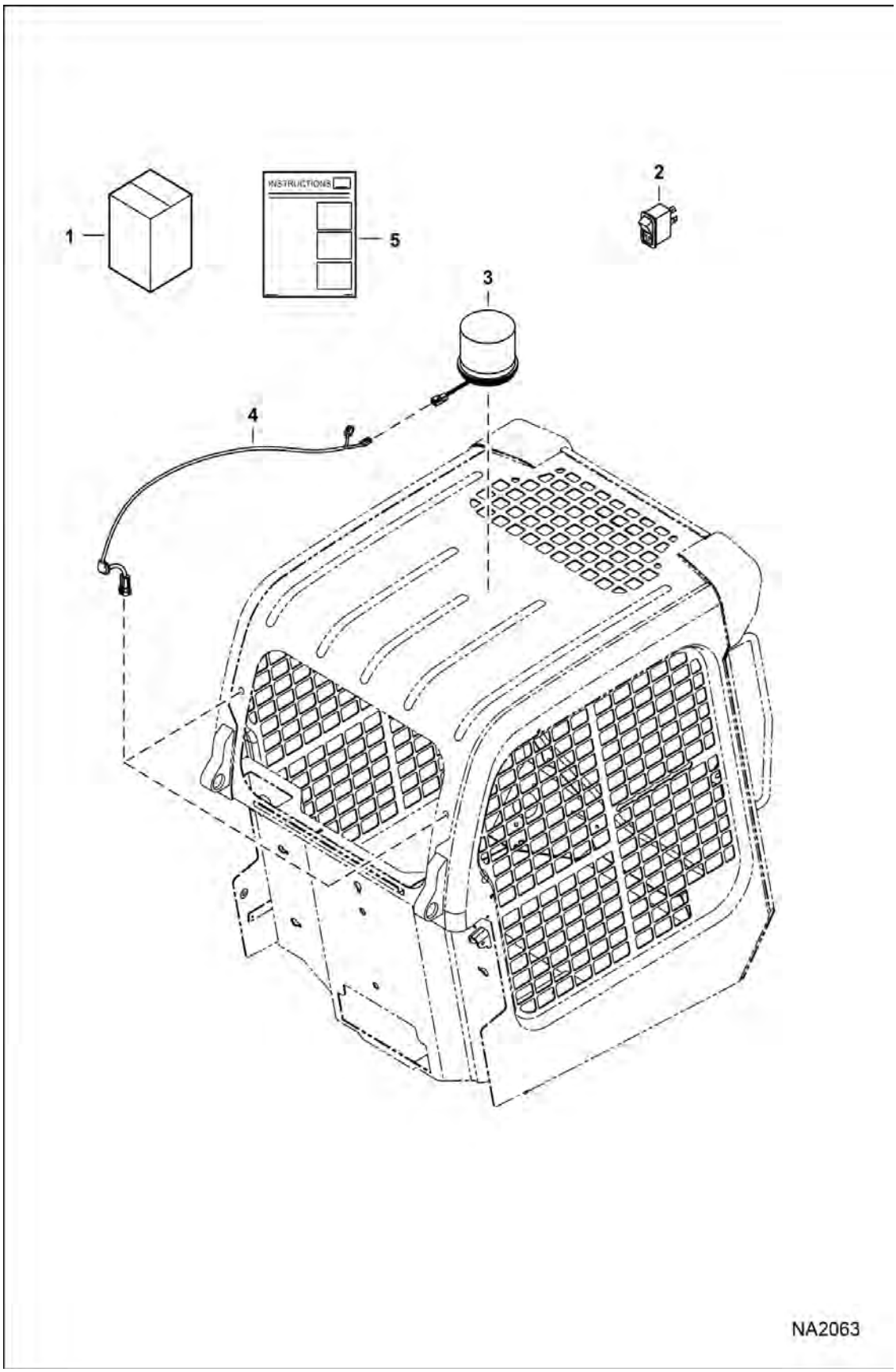

Page 825 - OSS# 6300322913 - All rights reserved by Bobcat Company - 08/04/2017 - 06:30:16 - Produced by Ken Cook Co. with mediaioff

STROBE LIGHT (Cont'd)

Ref No	Part Number	Description	Remarks	Serial Number	Qty
1	7129301	KIT, STROBE LIGHT	Ref. 2-5		1
2	6668816	SWITCH			1
3	7241140	LIGHT, STROBE	Was 7219903 [A]		1
3	7256347	LENS, REFLECTIVE	Was 6697797 [A]		1
4	6718872	HARNESS			1
5	6987225ENUS	INSTRUCTIONS	WAS 6987225 [A]		1

Page Created OSS# 6300322913 - All rights reserved by Bobcat Company - 08/04/2017 - 06:30:16 - Produced by Ken Cook Co. with mediaioff

TRACKS
(Rubber)

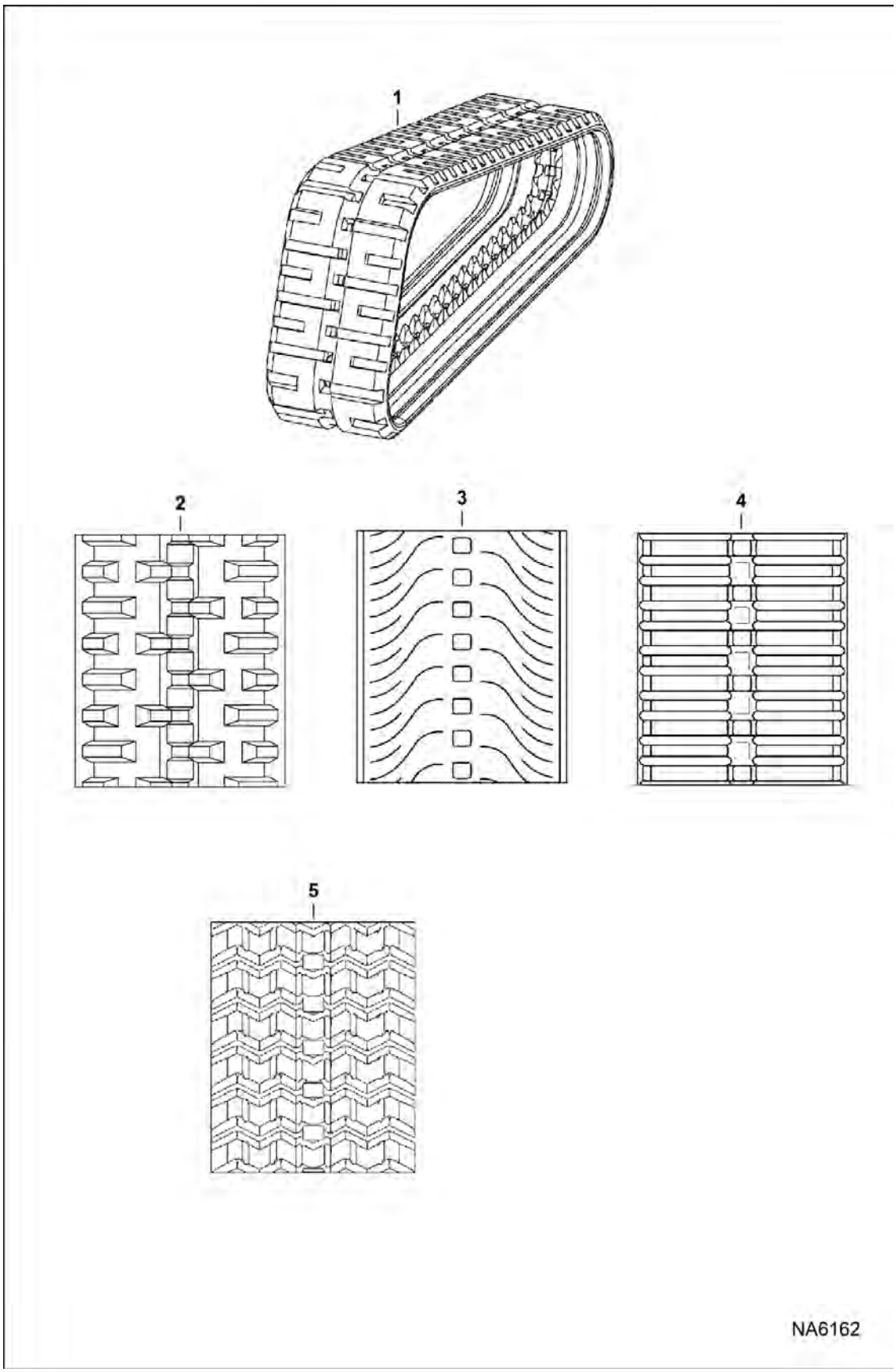

Page 827 - OSS# 6300322913 - All rights reserved by Bobcat Company - 08/04/2017 - 06:30:16 - Produced by Ken Cook Co. with mediaioff

TRACKS (Cont'd)
(Rubber)

Ref No	Part Number	Description	Remarks	Serial Number	Qty
1	6678748	TRACK, RBR (320X86X55) 12" C-PTRN BOBCAT	factory option		2
1	6678749	TRACK, RBR (450X86X55) 18" C-PTRN BCT	factory option		2
2		TRACK, RUBBER (450X84X56) 18" H-PATTERN EF	NLA - Was 6988834 [A]		2
2	7028228EF	TRACK,RBR(450 X84X56) 18IN H-PATTERN EF	Was 7028228 [A]		2
3	6989139	TRACK,RBR(450 X84X56)TURF-NO N-MARKING BCT			2
4	6988316	TRACK, RBR (450X84X56) MBL BCT			2
4	6989157	TRACK, RBR(450X84X56) MBL-NON-MARKI NG BCT			2
5	7305724EF	TRACK RBR (450X86X55) CB-PATTERN	zig zag		2

Page 1 of 1 OSS# 6300322913 - All rights reserved by Bobcat Company - 08/04/2017 - 06:30:16 - Produced by Ken Cook Co. with mediaioff

TRACKS
(Steel)

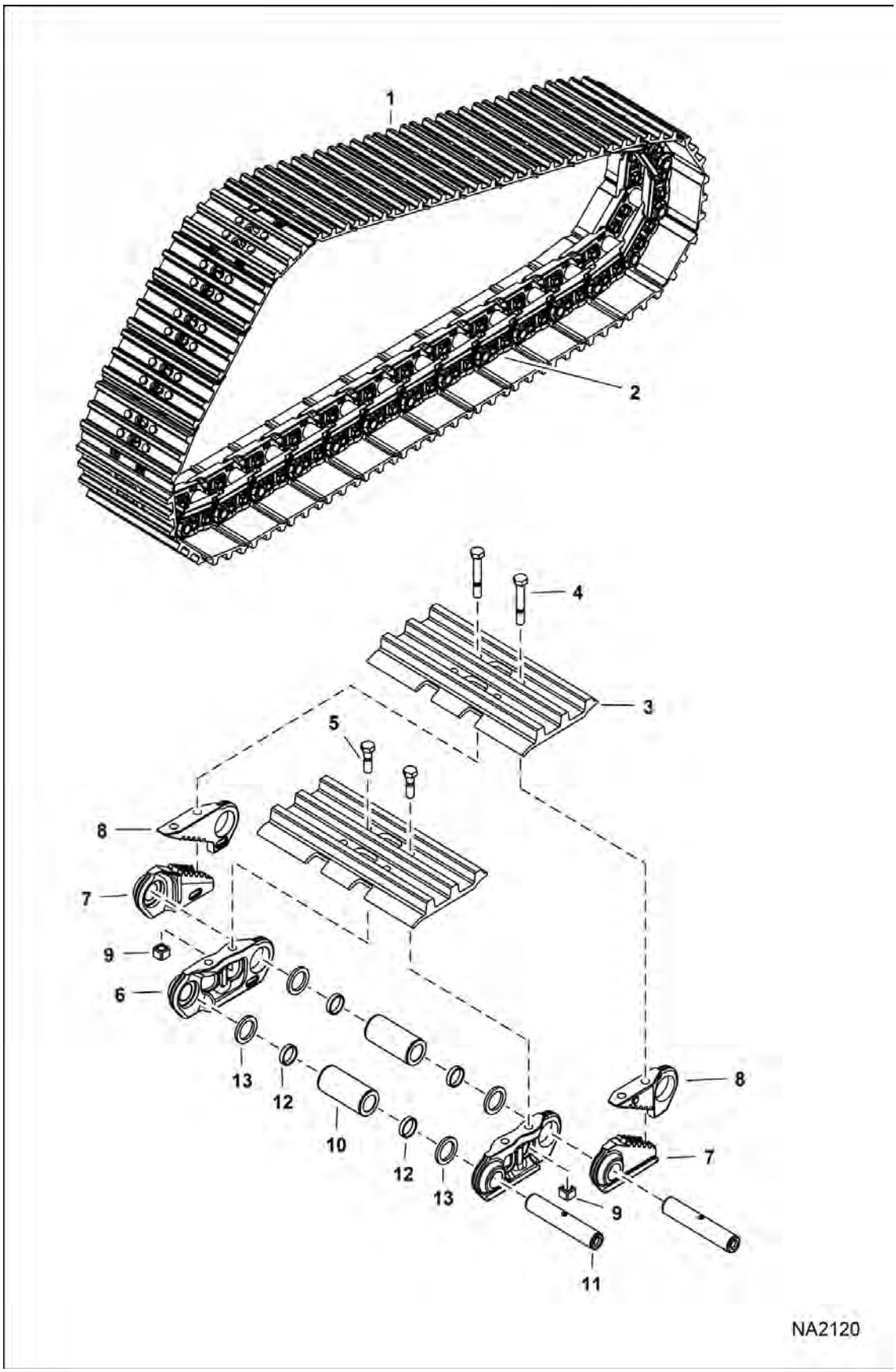

Page 829 - OSS# 6300322913 - All rights reserved by Bobcat Company - 08/04/2017 - 06:30:16 - Produced by Ken Cook Co. with mediaioff

TRACKS (Cont'd)
(Steel)

Ref No	Part Number	Description	Remarks	Serial Number	Qty
1	7166087	TRACK, STEEL	See Illustration DRIVE TRAIN / NA2827 - requires steel track factory option		1
2	7009339	CHAIN, TRACK			1
3	7009237	SHOE, TRACK			32
4	7009794	BOLT	master track bolt		4
5	7009793	BOLT			124
6	7009334	LINK TRACK, LH			31
6	7009335	LINK TRACK, RH			31
7	7009336	LINK, TRACK MASTER LH	pin end		1
7	7009337	LINK, TRACK MASTER RH	pin end		1
8	7009338	LINK, TRACK MASTER LH	bushing end		1
8	7009342	LINK, TRACK MASTER RH	bushing end		1
9	7009792	NUT			128
10	7009332	BUSHING			32
11	7009333	PIN			32
11	7010677	PLUG			32
11	7010678	PLUG			32
12	7009341	SPACER			64
13	7009340	SEAL			64

Page 822 OSS# 6300322913 - All rights reserved by Bobcat Company - 08/04/2017 - 06:30:16 - Produced by Ken Cook Co. with mediaioff

VINYL CAB KIT

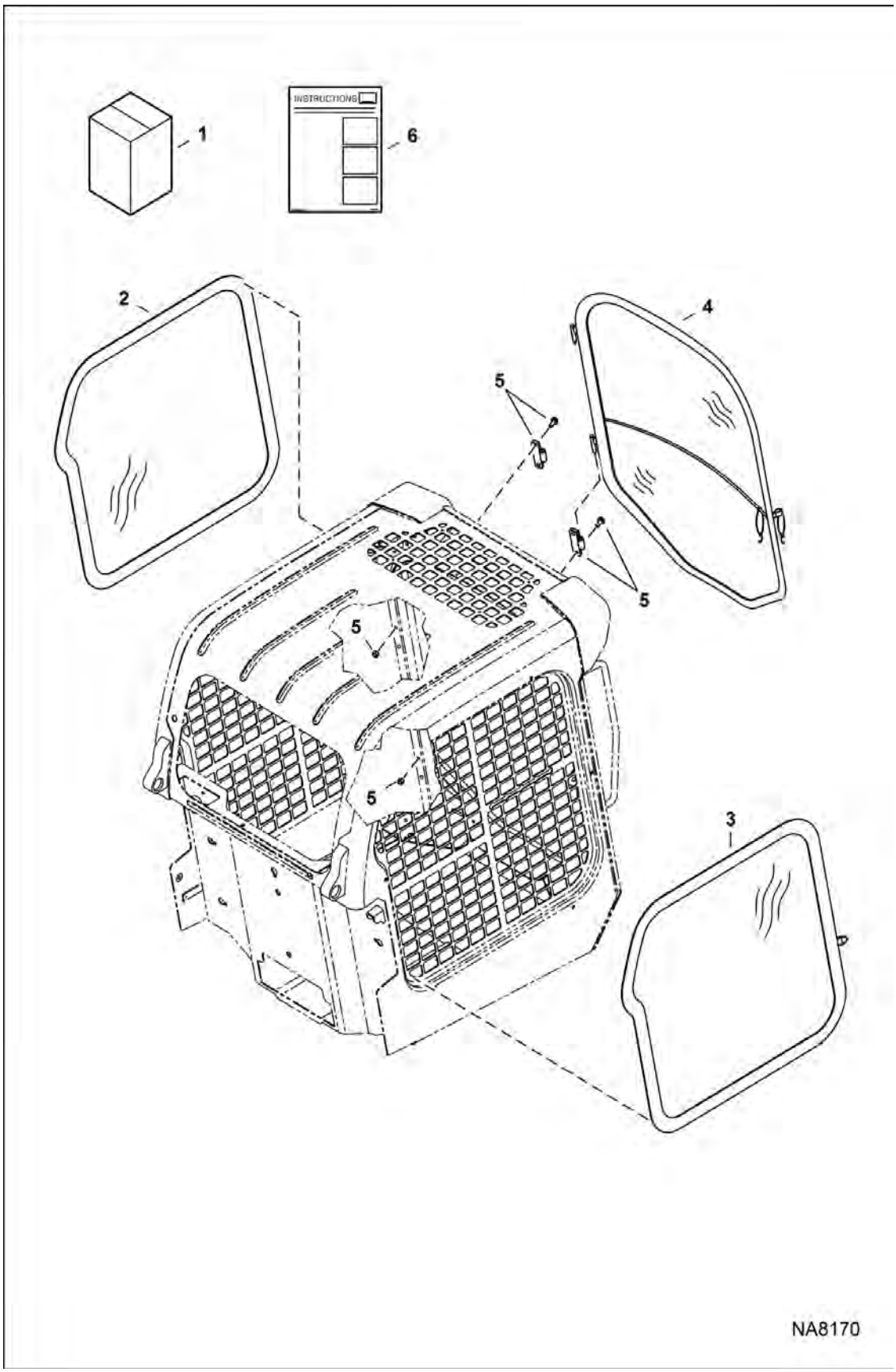

Page 831 - OSS# 6300322913 - All rights reserved by Bobcat Company - 08/04/2017 - 06:30:16 - Produced by Ken Cook Co. with mediaioff

VINYL CAB KIT (Cont'd)

Ref No	Part Number	Description	Remarks	Serial Number	Qty
1	6989239	ENCLOSURE, CAB VINYL			1
2	7030083	WINDOW, CAB VINYL LH			1
3	7030084	WINDOW, CAB VINYL RH			1
4	7030085	DOOR, VINYL			1
5	7030086	KIT, HINGE			1
6	6990376	INSTRUCTIONS			1

Page 824 OSS# 6300322913 - All rights reserved by Bobcat Company - 08/04/2017 - 06:30:16 - Produced by Ken Cook Co. with mediaioff

WHITE DECAL KIT

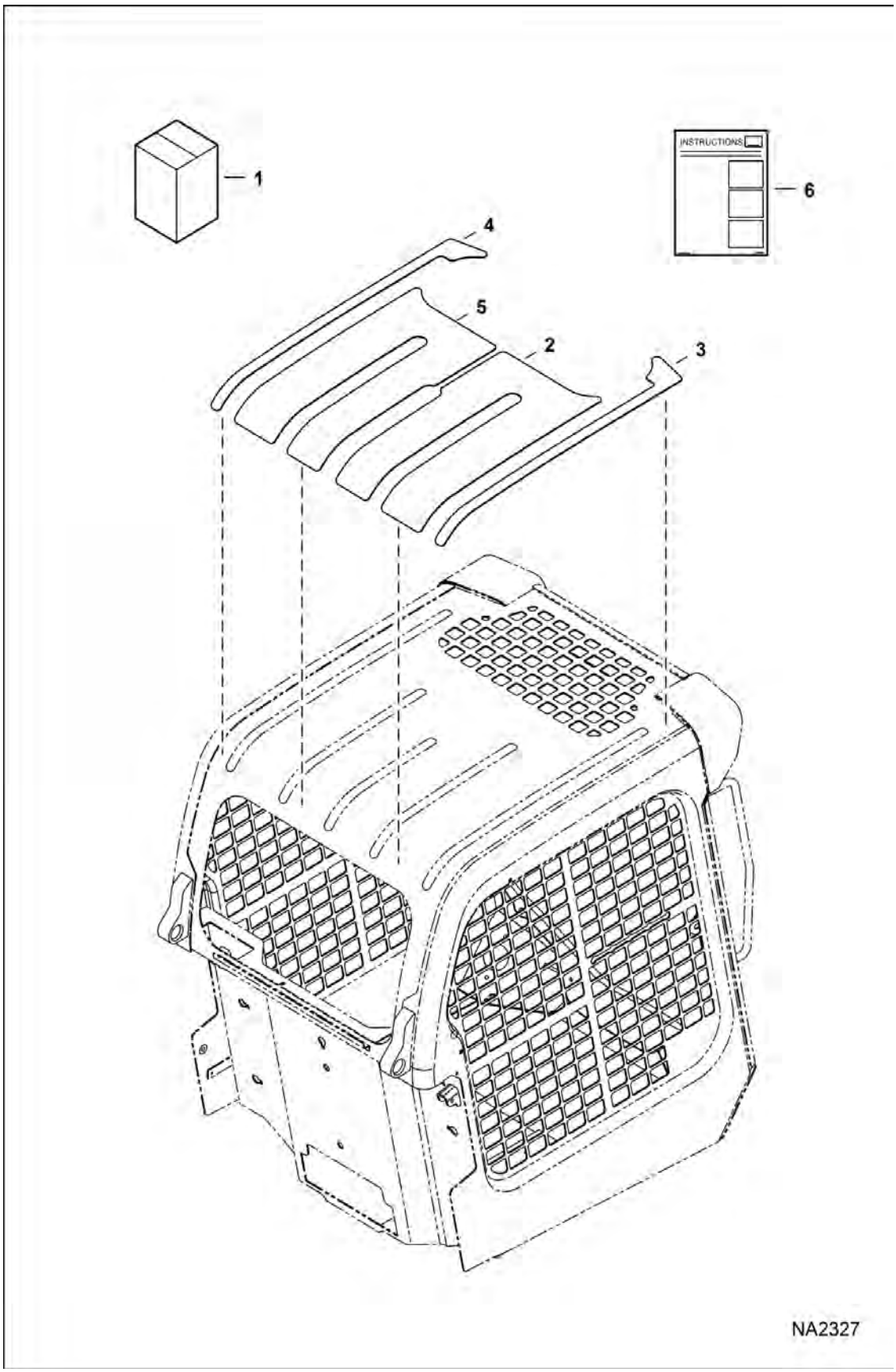

Page 833 - OSS# 6300322913 - All rights reserved by Bobcat Company - 08/04/2017 - 06:30:16 - Produced by Ken Cook Co. with mediaioff

WHITE DECAL KIT (Cont'd)

Ref No	Part Number	Description	Remarks	Serial Number	Qty
1	7172903	KIT, DECAL WHITE	Ref. 2-6		1
2	7140927	DECAL			1
3	7141375	DECAL			1
4	7174328	DECAL			1
5	7174537	DECAL			1
6	6987349ENUS	INSTRUCTIONS	Was 6987349 [A]		1

Page 826 OSS# 6300322913 - All rights reserved by Bobcat Company - 08/04/2017 - 06:30:16 - Produced by Ken Cook Co. with mediaioff

NUMERICAL INDEX

Part Number	Description	Was	Code	Page
100333SUB	DUCT, AIR			43, 575, 651
100334SUB	DUCT, AIR			43, 575, 651
100644SUB	ASSY DOOR			517, 523
10C410	BOLT			439, 617
10C512	BOLT			197, 365, 369, 605
10C520	BOLT			369
10C524	BOLT			365
10C612	BOLT			433, 585
10C616	BOLT 10			45, 117, 121, 333, 339, 345, 389, 577, 581, 585, 625, 765, 779, 783
10C620	BOLT			625
10C624	BOLT			47
10C640	BOLT			715, 717, 719
10C696	BOLT			385, 387
10C816	BOLT			511, 517, 523, 529
10H25	FITTING, GREASE 5			57, 63, 129, 131, 133, 135, 137, 139, 141, 143, 145, 147, 683
10H35	FITTING, GREASE 10			63, 707, 709, 711, 713, 721, 723, 725, 727
10J10	BALL			731
10K10	FITTING			491
10K5	TEE			737
10K8	TEE			185
11H15	FITTING10			57
12D10	NUT			617
12D6	NUT 10			597
12E6	WASHER			597
12H15	FITTING, GREASE 5			57
1306637	CLIP			149, 151
1320075	PIN, COTTER			685, 687
14D10	NUT			433, 435, 439
14J0715	PIN			317
15G628	SCREW			235, 239
15HB1010	ADAPTER, COUPLER			203, 205
15KB0404	FITTING, HYD CONNECTOR			219
15KB0606	FITTING, HYD CONNECTOR			97, 101, 105, 111, 117, 119, 121, 125, 153, 171, 203, 207, 211, 215, 219, 223, 225, 707, 709, 711, 713, 719, 737, 741, 745
15KB0608	FITTING, HYD CONNECTOR			207, 211, 215, 223, 225, 505
15KB0808	FITTING, HYD CONNECTOR			101, 111, 117, 409, 505, 507, 707, 709, 711, 713, 719, 765
15KB0810	FITTING, HYD CONNECTOR			505
15KB1008	FITTING, HYD CONNECTOR			185
15KB1010	FITTING, HYD CONNECTOR			97, 101, 105, 111, 505, 507
15KB1012	FITTING, HYD CONNECTOR			185, 203, 205

Page 835 - OSS# 6300322913 - All rights reserved by Bobcat Company - 08/04/2017 - 06:30:16 - Produced by Ken Cook Co. with mediaioff

Code for disposition of old part number
A -- Use up
B -- Use on other application (See PNI)
C -- File PDR Report with Bobcat Parts Sales
D -- Part Number Error

NUMERICAL INDEX (Cont'd)

Part Number	Description	Was	Code	Page
15KB1210	FITTING, HYD CONNECTOR			101, 111, 505
15KB1212	FITTING, HYD CONNECTOR			189, 207, 211, 215, 219, 223, 225, 715, 737, 741
15KB1216	FITTING, HYD CONNECTOR			121, 125
15KB1616	FITTING, HYD CONNECTOR			491
16F2	PLUG			459
16KB0606	FITTING, HYD CONNECTOR			207, 215, 219
16KB1212	FITTING, HYD CONNECTOR			715, 717, 719, 737, 741, 745
17C10136	BOLT			57
17C1056	BOLT			31
17C12112	BOLT			57
17C408	BOLT			439
17C424	BOLT			737
17C428	BOLT			119, 207, 211, 215, 511, 517, 523, 529, 737, 741
17C432	BOLT			211
17C510	BOLT			435, 439, 539, 753
17C536	BOLT	17C540	B	119, 201
17C540	BOLT			197, 207, 211, 215
17C544	BOLT			813
17C612	BOLT 5	31C612	B	31, 41, 235, 239, 487, 707, 709, 711, 713
17C616	BOLT 5			57, 65, 67, 75, 77, 149, 151, 235, 239, 359, 363, 577, 581, 607, 661, 663, 733
17C620	BOLT			149, 151, 189, 207, 211, 215, 219, 223, 225, 435, 439
17C624	BOLT 5			149, 151, 409, 435, 439, 487, 625
17C628	BOLT			235, 239
17C632	BOLT 5			97, 101, 105, 111
17C636	BOLT			235, 239
17C640	BOLT			45, 47, 57, 121, 125, 671, 737, 741, 745
17C644	BOLT			57, 121, 193, 559, 737, 741, 745, 805
17C648	BOLT 5			57
17C652	BOLT			57, 63, 707, 709, 711, 713
17C656	BOLT			57, 683
17C672	BOLT			57, 547
17C680	BOLT			235, 239, 405, 683
17C820	BOLT 5			55, 757
17C824	BOLT 5			757
17C844	BOLT			119
17KB0606	FITTING			153, 171, 207, 211, 215, 219, 223, 225, 763, 765
17KB0608	FITTING, HYD ELBOW			225
17KB1008	FITTING, HYD ELBOW			203, 205
17KB1010	FITTING, HYD ELBOW			203, 205
17KB1212	FITTING, HYD ELBOW			189, 193, 199
17KB608	FITTING, HYD ELBOW			219, 223
18EM1224	WASHER			511, 517, 523, 529

Code for disposition of old part number
A -- Use up
B -- Use on other application (See PNI)
C -- File PDR Report with Bobcat Parts Sales
D -- Part Number Error

Page 828 OSS# 6300322913 - All rights reserved by Bobcat Company - 08/04/2017 - 06:30:16 - Produced by Ken Cook Co. with mediaoff

NUMERICAL INDEX (Cont'd)

Part Number	Description	Was	Code	Page
19F12	BUSHING			499
19J12	CLAMP			189
19KB0606	FITTING, HYD TEE			211
1C1056	BOLT			35
1C12136	BOLT			551
1C1296	BOLT			549
1C416	BOLT	53C416	A	31, 35
1C556	SCREW HEX CAP			219
1C612	BOLT			361
1C616	BOLT			361
1C620	BOLT			715, 717, 719
1C624	BOLT			361
1C628	BOLT			745, 763
1C644	CANOPY BOLT 4			491
1C680	SCREW			813
1CM10100	SCREW			635, 639, 643
1CM620	BOLT	4CM620	A	475
1CM640	SCREW			511, 517, 523, 529
1CM8110	CAP,HEX			409
1CM825	BOLT			585
1CM830	SCREW			365, 369
1DM6	NUT			479
1DM8	NUT			585
1EM80	WASHER			585
1F316	PIN			315, 385, 387, 389, 759, 761
1K127	O-RING 10			153, 171
20J12	FLANGE			207, 211, 215, 219, 223, 225
21JM510	PIN			317, 319
21JM814	PIN			461
21KB0606	FITTING, HYD TEE			197, 201, 207, 211, 215, 741, 745
21KB1212	FITTING, HYD TEE			193, 805
23JM0820	PIN			401, 405
24K4	PLUG			233
24K5	PLUG			119, 189
24K6	FITTING	47K7	B	737, 741, 745, 805
24K7	PLUG			153, 159, 165, 171, 175, 179
25E11	WASHER			433, 435, 439
25E13	WASHER 5			31, 35, 377, 487, 797
25E14	WSHR			31, 537, 539, 541, 753
25E15	WASHER 5			351, 409, 813
25E16	WSHR			219, 813
25E17	WASHER 5			389
25E18	WASHER			51, 53, 239, 365, 369, 625, 781, 783
25E20	WASHER			757
25E24	WASHER			235, 239
25E25	WASHER 10			365
25G410	CAPSCREW			333, 339, 345
25G510	BOLT			433, 435, 439, 689
25G514	BOLT			395

Code for disposition of old part number

A -- Use up
B -- Use on other application (See PNI)
C -- File PDR Report with Bobcat Parts Sales
D -- Part Number Error

Page 837 - 0SS# 6300322913 - All rights reserved by Bobcat Company - 08/04/2017 08:30:16 - Produced by Ken Cook Co with mediaforf

NUMERICAL INDEX (Cont'd)

Part Number	Description	Was	Code	Page
25G612	SCREW			591
25G628	SCREW			691
25GM8010	SCREW			457
25GT410	SCREW			373, 377
25K20016	O RING 10			153, 159, 165, 171, 175, 179, 359
25K30110	O RING 10			721, 723
25K30118	O RING 10			93, 95
25K30210	RING,O			63
25K30218	O RING 10			145
25K30226	O RING 10			147
25K40100	O RING 10			731
25K40224	RING,O	54K40224	A	129, 135, 137, 143
25K40300	O RING 10	54K40300	A	147
26DM12	NUT			385
26GM10020	BOLT			597, 601
26GM6016	BOLT			649
27E10	WASHER			57
27E12	WASHER			57, 549, 551, 553
27E6	WASHER 5			405
28E14	WASHER			75, 77
29CM10110	BOLT			317, 319
29CM1025	BOLT			609
29CM1030	SCREW FLGD HEX CAP			635, 639, 643
29CM612	BOLT, FLANGED			451, 453
29CM616	BOLT			597, 601
29CM816	SCREW			713
29CM820	SCREW			351
29CM830	CAPSCREW	29CM825	B	399, 635, 639, 643
29CM845	BOLT			597, 601
29E6	WASHER			779, 783
29G416	BOLT			153, 171, 359, 361, 363, 365, 369
29G444	BOLT	6814022	A	153, 159, 165, 171, 175, 179
2C614	SCREW			811
2DM10	NUT			511, 517, 523
2DM8	NUT			457
30H12	CLIP			643
30H20	CLIP			325, 433, 435, 439
30H31	CLAMP 10			97, 105, 425, 597, 601
30H45	CLIP			633, 713
30H50	CLAMP			333, 339, 345, 425, 429, 591
30H60	CLIP			339, 345
30H65	CLIP			197
30H73	CLAMP			597, 601
30H82	CLAMP INSULATED			397, 399
31C1024	BOLT			683
31C1032	BOLT			65, 67, 75, 77
31C1044	BOLT			685, 687
31C1224	BOLT			65, 67

Code for disposition of old part number
A -- Use up
B -- Use on other application (See PNI)
C -- File PDR Report with Bobcat Parts Sales
D -- Part Number Error

Page 830 OSS# 6300322913 - All rights reserved by Bobcat Company - 08/04/2017 - 06:30:16 - Produced by Ken Cook Co. with mediaoff

NUMERICAL INDEX (Cont'd)

Part Number	Description	Was	Code	Page
31C1228	BOLT			13, 17, 19, 21, 25, 69, 79
31C1236	BOLT			19, 65, 67, 71, 75, 77
31C1252	BOLT	49C1252	B	79
31C412	BOLT	35C412	B,D	545
31C420	BOLT 5			325, 329
31C512	BOLT			593, 595, 697
31C520	BOLT			593, 595
31C612	BOLT			325, 425, 429, 435, 439, 511, 517, 523
31C616	SCREW			763
31C632	BOLT			685
31C656	BOLT	35C656	A	741
31C680	BOLT			737, 741
31C716	SCREW			779, 783
31C820	BOLT			13, 17, 19, 21, 25
31C824	BOLT 10			119, 671
31C828	BOLT			685, 687
31C832	BOLT	31C824	B	119, 401, 405, 685, 687
31C864	BOLT	31C860	B	409
31C880	SCREW			409
31H31	CLIP			413, 417, 421, 429
31H42	CLIP			707, 715, 717, 719
35C410	BOLT 5			325, 329, 353, 493, 495, 657, 661
35C412	BOLT			45, 47, 51, 53, 543, 797
35C512	BOLT			193
35C514	BOLT			21, 25, 413, 425
35C516	BOLT 10			31, 511, 517, 523, 529, 607, 657, 659, 661, 663
35C524	BOLT			659, 663, 705
35C612	BOLT 5			25, 65, 67, 71, 75, 77, 117, 339, 345, 351, 765
35C616	BOLT 5	84G3716	B	97, 101, 105, 111, 119, 121, 125, 189, 193, 397, 399, 585
35C620	BOLT 5			397, 399, 413, 425, 549, 551, 553
35C628	BOLT			397
35C648	BOLT			737, 741
35C680	SCREW			745
36K5	CAP			153, 171, 175, 179, 197, 317, 319
36K6	CAP			409
36K8	CAP			805
37C1032	BOLT			619
37C412	BOLT			619
37C432	SCREW			635, 639, 643
37C512	BOLT			635, 639, 643
37C516	BOLT			353, 493, 495
37C528	BOLT			631, 633
37C616	BOLT			763
37C620	BOLT			51, 53, 97, 105, 149, 151, 333, 487
37C624	BOLT			433, 435, 439
37C644	BOLT			101, 111, 505, 507
38C610	BOLT			517
38C612	BOLT	38C610	B	511, 517, 523

Code for disposition of old part number

A -- Use up
B -- Use on other application (See PNI)
C -- File PDR Report with Bobcat Parts Sales
D -- Part Number Error

Page 839 - 0SS# 6300322913 - All rights reserved by Bobcat Company - 08/04/2017 - 06:30:16 - Produced by Ken Cook Co. with mediaroff

NUMERICAL INDEX (Cont'd)

Part Number	Description	Was	Code	Page
38C616	SCREW			529
38C810	BOLT			435
38C820	SCREW			55
38C824	SCREW			55
38C840	BOLT			55
3974037	PIN			461
3974056	CAP			461
3974095	GASKET, METAL			447, 475, 479
3974143	BAND,PIPE			451
3974226	KEY			461
3974260	SCREW			471
3974389	PLUG			461
3974390	PLUG			461
3974394	PIN			475
3974409	PLUG			449
3974432	PLUG			455, 457
3974433	PLUG			455, 457
3974524	WASHER			477
3974920	SCREW			457
3974972	GASKET			447, 449, 479
3D6	NUT			315, 385, 387, 389, 759, 761
42H56	CLAMP			795
42HC325	CLAMP			397, 399
42HC425	CLAMP, HOSE			397, 399
42HS04	CLAMP, HOSE			413, 417, 421, 425, 429
43C612	BOLT			67, 69, 79, 779, 783
43C616	BOLT			359
43DM10	NUT			401, 409, 609
43DM6	NUT			597, 601
43DM8	NUT			351, 409, 413, 417, 421, 425, 429, 597, 601
44H48	CLAMP			635, 639, 643
45C512	BOLT			231, 233, 393
45C516	SCREW			413, 417, 421, 425, 429
45C620	BOLT			351, 401, 405
45C828	BOLT	45C824	B	265, 401, 405, 671
45G1006	BOLT			617
45G1212	BOLT			333, 339, 345
45H25	FITTING, GREASE			57, 547
46K5	ELBOW			121, 125, 715, 717
46K6	ELBOW			715, 717
46K7	ELBOW			97, 101, 105, 111
46K8	ELBOW			97, 101, 105, 111, 121, 125
47C620	BOLT			235, 239
47K10	PLUG			189, 193
47K8	PLUG			189, 267, 271, 275, 279
49C1048	BOLT			685, 687
49C412	BOLT			231, 233, 315, 385, 387, 389
49C616	BOLT			385, 387
49C624	SCREW			235, 239

Code for disposition of old part number
A -- Use up
B -- Use on other application (See PNI)
C -- File PDR Report with Bobcat Parts Sales
D -- Part Number Error

Page 1400 OSS# 6300322913 - All rights reserved by Bobcat Company - 08/04/2017 - 06:30:16 - Produced by Ken Cook Co. with mediaoff

NUMERICAL INDEX (Cont'd)

Part Number	Description	Was	Code	Page
49C628	BOLT			149, 151
49C636	BOLT			401, 405
4D28	NUT			683
4DM8	NUT			383
4F6106	PIN			45, 47
50D12	NUT			333, 339, 345
51DM10	NUT			635, 639, 643
51DM6	NUT			511
51DM8	NUT			351, 365, 369, 713
5289686	PLUG			51, 361, 487
53C512	SCREW			31, 753
53C516	BOLT			189, 393, 537, 539
53D10	NUT			31, 35, 57, 65, 67, 75, 77, 613, 683, 685, 687
53D12	NUT			13, 17, 19, 21, 25, 57
53D6	NUT			45, 47, 57, 97, 101, 105, 111, 121, 125, 149, 151, 235, 239, 671, 733, 779, 783
53D8	NUT			119, 685, 687
53DM10	NUT			635, 639, 643
53DM12	NUT			401, 405
54K20028	O RING 10			153, 159, 171, 175
54K20106	ORING			725, 727
54K30218	0-RING			129, 137
54K40108	ORING			725, 727
54K40116	O-RING			723
54K40300	O-RING	58K234	B	129, 131, 133, 135, 137, 139, 141, 143, 145
55CM12120	BOLT			401, 405
55CM1235	BOLT			401, 405
55D10	NUT			619
55D4	NUT			31, 35, 617, 635, 639, 643, 657, 661
55D5	NUT			21, 31, 197, 433, 435, 439, 607, 631, 633, 635, 639, 643, 657, 659, 661, 663
55D6	NUT			197, 695
55K204	O RING 10			153, 159, 165, 171, 175, 179
55K214	O-RING			189, 193, 207, 211, 215, 219, 223, 225, 707, 709, 711, 713, 737, 741, 745, 805
56G412	STUD			55
57D5	NUT			189, 193, 353, 435
57D6	NUT 5			51, 53, 121, 149, 151, 225, 325, 333, 339, 345, 435, 487, 585
58K004	O-RING			153, 171
58K013	O-RING 10			153, 159, 165, 171, 175, 179
58K014	O-RING 10			159, 175
58K016	O-RING 10			153, 159, 165, 171, 175, 179
58K017	O-RING 10			153, 159, 165, 171, 175, 179
58K022	O-RING 10			189, 193
58K120	O-RING			359, 363
58K128	ORING			725, 727
58K222	O RING 10			721
59CM1040	SCREW HX FLNG W/T8.8			409

Code for disposition of old part number
A -- Use up
B -- Use on other application (See PNI)
C -- File PDR Report with Bobcat Parts Sales
D -- Part Number Error

Page 841 - OSS# 6300322913 - All rights reserved by Bobcat Company - 08/04/2017 - 08:30:16 - Produced by Ken Cook Co with mehtaloff

NUMERICAL INDEX (Cont'd)

Part Number	Description	Was	Code	Page
59CM1060	SCREW			401
59CM816	BOLT			401, 405, 409, 413, 417, 421, 425, 429, 469, 635, 639, 643
59CM820	SCREW HX FLNG W/T 8.8			409, 417
59CM830	SCREW			417
59D4	NUT 5			333, 339, 345, 511, 517, 523, 529, 619
59D5	NUT 5			49, 351, 511, 517, 523, 529, 787, 789
59D6	NUT			55, 119, 121, 125, 433, 737, 741, 745
59D7	NUT			779, 783
59D8	NUT 5			31, 35
5CM1035	BOLT			397, 399
5HM13	CLAMP			413, 417, 421, 425, 429
5HM14	CLAMP			393, 395, 413, 417, 421, 425, 429
5HM15	CLAMP			417, 421, 429, 715, 717, 719
5HM16	CLAMP			117, 189, 193, 315, 765
5HM18	CLAMP			627, 647
5HM20	CLAMP			627, 631, 633, 647
5HM23	CLAMP			393
5HM24	CLAMP			395, 413, 417, 421, 425, 429, 745
5HM27	CLAMP			185, 189, 193, 197, 199, 201
5HM35	HOSECLAMP			197, 201
5HM38	CLAMP, HOSE			425, 429, 745
5HM42	HOSECLAMP			189, 193, 395
5HM47	CLAMP			189, 193
5HM55	CLAMP			393, 395
5HM58	CLAMP			413, 417, 421, 425, 429
619021	WASHER, 5			49, 63, 97, 101, 105, 111, 529, 625, 707, 709, 711, 713, 733, 737, 741, 745, 787, 789
61D4	NUT 5			439
61D5	NUT 10			55, 493, 495, 605
61D6	NUT 5			31, 389
61D8	NUT 5			757
62D4	NUT			433, 435, 439
62D6	NUT 5			235, 239, 811
63D6	NUT			149, 151
6505813	ADAPTER			339, 345
6511855	TAPE BULK/FT 25'			385, 387, 389
6512026	BUSHING			149, 151
6513466	PISTON RG			147
6513495	PIN 5			149, 151, 361, 487
6515817	WASHER			31, 35, 409
6517516	LGHT ASY			619
6519178	BUMPER			45, 47
6531270	SLEEVE, DETENT			153
6532347	BUSHING, SPACER			57
6532453	RING SEAL			721, 723
6533898	DECAL			685, 687
6534668	SNAP RING			435, 439
6553709	WASHER			31, 35

Code for disposition of old part number
A -- Use up
B -- Use on other application (See PNI)
C -- File PDR Report with Bobcat Parts Sales
D -- Part Number Error

Page 1432 OSS# 6300322913 - All rights reserved by Bobcat Company - 08/04/2017 - 06:30:16 - Produced by Ken Cook Co. with mediaoff

NUMERICAL INDEX (Cont'd)

Part Number	Description	Was	Code	Page
6554149	CORD, BULK/FT			31, 35
6555341	TREAD, SAFETY			567, 707, 709, 711, 713
6557720	HOSE, BULK			339, 345
6557831	WASHER			149, 151, 315, 385, 387
6557904	FLASHER			597, 601, 619
6558309	CABLE BULK/FT			665
6558310	SLEEVE			665
6560633	DAMPER, VIBRATION			31
6561383	DECAL, OPERATION 5			567
6562602	BUSHING			31
6563452	ADAPTER			339, 345
6563914	WASHER			149, 151, 235, 239, 361, 487
6564452	LEVERGRIP			55
6564654	PIN, CLEVIS			149, 151, 361, 487
6565200	DECAL, FILTER			563
6565977	HOSE, BULK			627, 631, 633, 647
6565990	DECAL, OIL HYD 5			563
6567743	PIN			31, 35, 623
6569203	CLAMP			351
6569752	HOSE BULK/FT			421
6576033	WASHER 5			401, 405
6576280	BOLT			351
6577058	PIN, HAND CONTROL			235, 239
6577545	GROMMET			353, 493, 495
6577821	HOSE, BULK			413, 417, 421, 425, 429
6577822	HOSE, BULK			393, 395, 413, 417, 421, 425, 429
6577954	PIN, PIVOT			57
6578169	HOSE, BULK/FT			413, 417, 421, 425, 429
6578172	HOSE, BULK			413, 417, 421, 425, 429
6578253	SPRING, COMPRESSION			63
6579613	STOP			31
658128	RING, SNAP			267, 275
6586251	HOSE, BULK			117, 189, 193, 315, 715, 717, 719, 765
6586542	HEAD			721, 723
6586543	PISTON			721, 723
6586918	SCREW, DETENT			153, 159, 165
6587575	ADAPTER			153
6587580	SPRING			153, 159, 165, 171, 175, 179
6587763	BOOT			153, 159, 165
6589226	COVER, END			153
6592098	WASHER			153
6592100	COLLAR			153, 159, 165, 171, 175, 179
6592105	BALL 5			153, 159, 165, 317, 319
6592107	SPRING, DETENT 5			153, 159, 165
6592109	ADAPTER			153, 159, 165, 171, 175, 179
6592506	CLAMP			121, 125, 737, 741, 745
6592766	U-BOLT			435
6595663	BUSHING			153, 171

Code for disposition of old part number

A -- Use up
B -- Use on other application (See PNI)
C -- File PDR Report with Bobcat Parts Sales
D -- Part Number Error

All rights reserved by Bobcat Company - 08/04/2017 06:38:16 - Produced by Ken Cook Co. with medialoft

NUMERICAL INDEX (Cont'd)

Part Number	Description	Was	Code	Page
6596807	PLUG			153
6598156	STUD			475
6598702	SPRING			477
6598908	ELBOW			413, 417, 425
6599085	NUT			479
6599360	SEALANT, ELEC .3 OZ			1
6599744	BALL, JOINT			235, 239, 811
6610510	STRAP, TIE 10			511, 517, 523, 669
6624289	STRAP, TIE			71, 97, 101, 105, 111, 117, 121, 125, 207, 211, 215, 219, 223, 225, 315, 325, 329, 333, 339, 345, 351, 357, 359, 361, 363, 413, 417, 421, 425, 429, 501, 505, 507, 511, 517, 523, 529, 577, 581, 585, 589, 591, 597, 601, 625, 627, 635, 639, 643, 647, 649, 669, 683, 701, 703, 707, 715, 717, 719, 737, 741, 745, 759, 761, 763, 765, 797
6625575	FUSE, 20A			333, 339, 345
6630038	WASHER			433, 435, 439
6630168	COUPLER, DIAGNOSTIC			153, 171
6630188	POLISH			1
6630189	POLISH			1
6630207	RIVET 5			797
6631046	GASKET			459
6631418	RING, RETAINING			31, 35, 45, 47, 623
6632279	KIT, SEAL			153, 171
6633583	SEALANT, POLYURETHANE 300 ML			1
6640690	PIN			357, 373, 377
6640692	CONNECTOR			357, 373, 377
6640694	LOCK			357, 373, 377
6640699	CONECTR 5			373, 377
6640700	LOCK 5			373, 377
6641176	SEAL			357, 373, 377
6641179	CONECTR 5			357, 373, 377
6641180	LOCK 5			357, 373, 377
6644965	BALL JOINT			433, 435, 439
6645081	O-RING			267, 271
6645086	PLUG			267, 271, 275, 279
6645812	SCREW,BLD			93
6646582	PLUG			373, 377
6646781	SWITCH, ALARM BACK-UP			353, 493
6647783	LOADCHECK			503
6647784	PLUG			503
6647785	SPRING			503
6648294	SPRING			503
6648416	SEAL BULK /FT			31, 537, 539, 753
6649481	LIGHT, WEDGE BASE			353
6649690	SEAL			725, 727

Code for disposition of old part number
A -- Use up
B -- Use on other application (See PNI)
C -- File PDR Report with Bobcat Parts Sales
D -- Part Number Error

Page 844 OSS# 6300322913 - All rights reserved by Bobcat Company - 08/04/2017 - 06:30:16 - Produced by Ken Cook Co. with mediaoff

NUMERICAL INDEX (Cont'd)

Part Number	Description	Was	Code	Page
6650083	PAINT, SPRAY BLUE CAN			1
6650107	SEAL			333, 339, 345
6650388	SEALANT			1
6650407	ADHESIVE			1
6650627	PLATE THR			267, 271, 275, 279
6650629	PIN			267, 271, 275, 279
6650630	RETAINER			267, 271, 275, 279
6650634	GASKET			267, 271, 275, 279
6650635	BEARING			267, 271, 275, 279
6650636	PIN			267, 271, 275, 279
6650637	BOLT			267, 271, 275, 279
6650646	O-RING			267, 271
6650647	O-RING			267, 271
6650648	PLUG			267, 271
6650652	CH.RELIEF			267, 271
6650668	BOLT			267, 271, 275, 279
6650675	COUPLER			267, 271
6651512	ALARM, BACK-UP			353, 493, 495
6652018	BOLT			275
6652521	PLATE			631, 633, 737, 741, 745
6652574	PLUG			455
6652592	PIN			477
6652656	NUT			473
6652670	STUD 5			449, 455, 459
6652679	KEY			465
6652688	CLAMP			471
6652689	CLAMP			471
6652712	BOLT			479
6652751	GASKET			447
6653827	STUD			449
6653993	CLAMP			451
6654718	CLAMP 5			453, 471
6654806	FUSE, 15A			333, 339, 345
6655515	FITTING, BANJO			475
6655752	FITTING, GREASE			93
6657028	O-RING			267, 271, 275, 279
6657067	COVER			267, 271, 275, 279
6657068	COVER			267, 271, 275, 279
6657446	SCREW			449
6657459	NUT			479
6657470	NUT			479
6657719	PLUG			31, 35, 577, 581, 585
6657734	PUMP, PRIMER HAND			413, 425
6658180	PLUG, BLEED			413, 417, 425, 429
6659369	HEATER, BLOCK ENG PLUG SOFT			499
6660016	RING, SPLIT	6691210	D	243, 249, 253, 257, 261
6660017	BEARING	6689117	A	243, 249, 253, 257, 261

Code for disposition of old part number
A -- Use up
B -- Use on other application (See PNI)
C -- File PDR Report with Bobcat Parts Sales
D -- Part Number Error

Page 845 - 0SS# 6300322913 - All rights reserved by Bobcat Company - 08/04/2017 06:38:16 - Produced by Keri Cook Co. with mediaLoft

NUMERICAL INDEX (Cont'd)

Part Number	Description	Was	Code	Page
6660018	BEARING, MOTOR DRIVE			243, 249, 253, 257, 261
6660032	STOP PIN	6691220	D	245, 249, 253, 257, 261
6660033	SPRING	6691221	A	245, 249, 253, 257, 261
6660034	SEAL	6691222	D	245, 249
6660037	SEAL	6691223		245, 249
6660644	CAP			153
6660775	SPRING			503
6660814	RING, QUAD			267, 271, 275, 279
6661062	PLUG, PIPE			699
6661150	SWITCH, ROLLER MICRO			501, 597
6661353	LIGHT, HOUSING ASSY			353
6661481	O-RING			267, 271
6662126	BRACKET			265
6662251	WEDGE LOCK			797
6662848	CAP			171
6663289	FUSE, 5A			333, 339, 345
6664065	WASHER			751, 753
6664085	BUSHING			751, 753
6664097	COVER			751, 753
6664103	NUT			751, 753
6664223	OUTLET			41, 577, 581, 585
6664224	CAP			41, 577, 581, 585
6664554	PUMP, WIPER WASHER			511, 517, 523
6665000	CLIP			373, 377, 511, 517, 523, 529
6665102	COVER			635, 639, 643
6665222	GEAR, RING STARTER			401, 405
6665314	PLUG			39, 41, 577, 581, 585, 597, 601
6665321	RIVET			373, 377, 511, 517, 523, 529
6665322	RIVET			373, 377, 511, 517, 523, 529
6665356	FUSEBLOCK			333, 339, 345
6665357	2ND LOCK			333, 339, 345
6665358	COVER , FUSE			333, 339, 345
6665370	PLUG			359
6665371	SWITCH, VACUUM			333, 339, 345
6665411	WEDGE			333, 339, 345
6665569	RING, BACK-UP			153, 159, 165, 171, 175, 179
6665570	CLYD RING			153, 159, 165, 171, 175, 179
6665602	MOTOR			751, 753
6665701	BUSHING, PRESS FIT			149, 151, 487
6665719	PLUG			729
6665729	LIC LIGHT			597, 601
6665909	MOUNT, FUSE			333, 339, 345
6666338	WASHER			267, 271, 275, 279
6666542	WIPER, ROD CYL			721, 723, 725, 727
6666766	GROMMET			511, 517, 523
6666920	CLAMP, HALF			635, 639, 643

Code for disposition of old part number
A -- Use up
B -- Use on other application (See PNI)
C -- File PDR Report with Bobcat Parts Sales
D -- Part Number Error

Page Added - OSS# 6300322913 - All rights reserved by Bobcat Company - 08/04/2017 - 06:30:16 - Produced by Ken Cook Co. with mediaioff

NUMERICAL INDEX (Cont'd)

Part Number	Description	Was	Code	Page
6667144	CONNECTOR			357, 373, 377
6667145	LOCK			357, 373
6667176	PLUG			503
6667201	SPACER			751, 753
6667323	SEAL			721, 723, 725, 727
6667326	SEAL			133, 135, 141, 143
6667327	SEAL,ROD			145
6667328	SEAL			147
6667352	FILTER, FUEL W/SEPARATOR 12			1, 11, 413, 417, 421, 425, 429
6667353	FILTER, FUEL ASSY			413, 417, 421, 425, 429
6667461	SPRNG PIN			457
6667676	COVER			503
6667680	SNAP RING			503
6667687	VALVE, STEM SOLENOID			153, 159, 171, 175
6668742	SWITCH			41
6668815	SWITCH			597, 601, 619
6668816	SWITCH			497, 597, 601, 817
6668820	NUT	6691022	B,D	153, 159, 171, 175, 229
6669087	SEAL KIT			183
6669224	TAP SCREW			39, 41, 577, 581, 585
6669267	SEAL			129, 131, 137, 139
6669402	HOUSING			267, 271
6669405	CAP, END			275, 279
6669410	KIT, SHIM			267, 271
6669411	BEARING			267, 271, 275, 279
6669549	SOCKET			589
6669615	ORIFICE	6664029	A	729
6669620	PLUG			729
6669676	VALVE, CHECK			207, 215
6669732	KIT, SEAL			153, 159, 165, 171, 175, 179
6670284	LIGHT, REAR ASSY			353
6670347	GASKET			447
6670426	NUT, CAP			479
6670427	CAP			479
6670533	NUT			473
6670634	SEAL KIT	7024825	A	159, 165, 175, 179, 503
6670706	CONNECTOR			373, 377
6670707	CONNECTOR			373, 377
6670710	PLUG			373, 377
6670711	LOCK			373, 377
6670714	PIN TERMINAL			373
6670715	SOCKET			373, 377
6670726	LOCK ONLY			387, 389, 577, 581, 791
6670769	O-RING			445, 471
6671106	ALARM			607
6671516	KIT, SEAL	7296604	A	267, 271, 275, 279
6671518	BOLT			267, 271, 275, 279

Code for disposition of old part number
A -- Use up
B -- Use on other application (See PNI)
C -- File PDR Report with Bobcat Parts Sales
D -- Part Number Error

Page 847 - 0SS# 6390322913 - All rights reserved by Bobcat Company - 08/04/2017 - 05:30:16 - Produced by Ken Cook Co. with medialoft

NUMERICAL INDEX (Cont'd)

Part Number	Description	Was	Code	Page
6671520	O-RING			265, 275, 283
6671527	NUT			503
6671528	CONN SEAL			333, 339, 345
6671725	BOLT	6687996	A	293, 307
6671741	SNAP RING	6688042	A	285, 287, 299, 301
6671760	COVER			289, 291
6672272	WASHER			353
6672273	SCREW			353
6672274	SCREW			353
6672275	GASKET			353
6672276	LENS, LIGHT RED			353
6672277	BRACKET			353
6672279	MOUNT, LIGHT RUBBER			353, 611
6672338	O-RING			93, 95
6672354	PLUG			461
6672384	CAP			479
6672436	SEAL			445, 457
6672471	VALVE, SOLENOID			153, 159, 171, 175
6672515	KIT, SEAL			321
6672756	KIT, SEAL			321, 729, 731
6672762	PLUG			321
6672863	VALVE, SOLENOID			503
6673188	SEAL KIT			229
6673200	FUSE BLOCK			333, 339, 345
6673789	BEARING, ROLLER			235, 239
6673882	SPRING			267
6673986	SPOOL, VALVE			729
6674054	SHAFT	7020900	A	253, 257, 261
6674056	SEAL	6691212	A	243, 253, 257, 261
6674099	BREAKER, 25A			333, 339, 345
6674235	RECEIVER, DRIER A/C			635, 639
6674264	RETAINER NUT			13, 17, 19, 21, 25, 779, 783
6674316	SWITCH, PRESS OIL HYD			313, 315, 333, 339, 345
6674343	SHIM	6690044	D	245, 249, 253, 257, 261
6674344	SPRING	6690046	D	245, 249, 253, 257, 261
6674345	PLUG	6690047	D	245, 249, 253, 257, 261
6674706	STUD			71, 243, 249
6674708	WASHER	6691239	D	245, 249, 253, 257, 261
6674713	BRAKE, DISC	6691234	A	245, 249, 253, 257, 261
6674714	BRAKE, DISC	6691233	A	245, 249, 253, 257, 261
6674720	GASKET, MOTOR HYD	6691232	D	245, 249, 253, 257, 261
6674722	SHIM	6691235	A	245, 249, 253, 257, 261
6674724	NUT			65, 67, 75, 77, 243, 249
6674728	SEAL, RING	6691237	A	245, 253, 257
6674734	BUSHING	6691243	D	245, 249, 253, 257, 261
6674799	ADAPTER			589
6674802	CONNECTOR, 7-PIN			589

Code for disposition of old part number
A -- Use up
B -- Use on other application (See PNI)
C -- File PDR Report with Bobcat Parts Sales
D -- Part Number Error

Page 840 OSS# 6300322913 - All rights reserved by Bobcat Company - 08/04/2017 - 06:30:16 - Produced by Ken Cook Co. with mediaioff

NUMERICAL INDEX (Cont'd)

Part Number	Description	Was	Code	Page
6674841	SPRING	6690042	D	245, 249, 253, 257, 261
6674853	POPPET	6691226	A	245, 249
6674894	NUT, LOCK			45, 47, 389, 433, 625
6674895	RETAINER			39, 43, 329, 557, 575, 577, 581, 585, 651, 797
6674907	NUT	6687925	A	289, 291, 303, 305
6675026	CAP, CONNECTOR			589
6675033	INSERT, THREADED			39, 41, 43, 575, 651
6675154	HOLDER			333, 339, 345
6675155	FUSE, 100A			333, 339, 345
6675176	SWITCH			625
6675177	KNOB			625
6675181	PLUG SWITCH HOLE			625
6675212	RETAINER, BOLT			439, 625, 635, 639, 643
6675281	MOUNT			591
6675298	COUPLER, BODY			511, 517, 523
6675336	LIGHT, BULB 50W			325, 329
6675341	GROUP, ROTARY			267, 271, 275, 279
6675342	PIN			267, 271, 275, 279
6675380	ADHESIVE, SPRAY 10.5 oz			1
6675410	SEAL, BULK			593, 595
6675523	LIGHT EC BEACON			497, 597, 601
6675524	CLIP			39, 43
6675534	BLOCK, VALVE A/C	7193538	D	635, 639, 643, 647
6675545	GROMMET			31, 35
6675559	COIL			153, 159, 171, 175, 333, 339
6675618	CLAMP			453, 459, 469
6675731	COIL			229
6675734	TIE STRAP			325, 433
6675779	SWITCH, PRESS			635, 639
6675780	Cartridge			503
6675781	Coil			503
6675866	SPOOL	6690041	A	245, 249, 253, 257, 261
6675867	WASHER	6690043	D	245, 249, 253, 257, 261
6675868	POPPET	6690045	A	253, 257, 261
6675999	SWITCH			751, 753
6676000	TEE			751, 753
6676001	ARM, WIPER			751, 753
6676002	BLADE, WIPER			751, 753
6676003	HOSE, BULK/FT			511, 517, 523, 751, 753
6676028	NOZZLE			751, 753
6676029	SOLENOID, LOCK SPOOL			153, 159, 165, 377, 487
6676038	O-RING	6689132	D	245, 249, 253, 257, 261
6676147	PLATE, VALVE			267
6676148	PLATE, VALVE			275
6676169	NUT			483
6676246	NUT			321
6676500	ELBOW			511, 517, 523, 751, 753

Code for disposition of old part number

A -- Use up
B -- Use on other application (See PNI)
C -- File PDR Report with Bobcat Parts Sales
D -- Part Number Error

Page 849 - 0SS# 6390322913 - All rights reserved by Bobcat Company - 08/04/2017 - 06:38:16 - Produced by Keri Cook Co. with mediaLoft

NUMERICAL INDEX (Cont'd)

Part Number	Description	Was	Code	Page
6676539	CLIP PANEL	7193785	A	635, 639, 643, 647
6676543	PLUG			503
6676597	O-RING	6691216	D	243, 245, 253, 257, 261
6676640	PLUG,SEAL			373
6676870	CONNECTOR			373
6676909	DISTRIBUTOR	6691219	D	245, 249
6676910	SEAL	6691248	D	245, 249
6676917	ELBOW			511, 517, 523, 751, 753
6677136	SOCKET			589
6677177	PLUG			321
6677192	SENSOR, MAGNETIC			511, 517, 523, 529
6677193	RIVET			511, 517, 523, 529
6677487	COVER			381
6677488	RECTIFIRE ASSY			381
6677490	BRACKETREAR			381
6677491	BRACKETFRT			381
6677492	ASSY, ROTOR			381
6677493	STATOR			381
6677495	SPACER			381
6677497	NUT	6677497	A	381
6678138	O-RING	7026585		249, 261
6678226	SEAL, OIL			267, 271, 275, 279
6678233	FILTER, OIL ENG 12			1, 11, 459
6678668	STRAP			351, 359, 501, 597, 601, 635, 639, 643, 701, 703, 715, 717, 719
6678669	STRAP			643
6678675	CONTROLLER, ACD DLX			591
6678705	BALL			729
6678748	TRACK, RBR (320X86X55) 12" C-PTRN BOBCAT			819
6678749	TRACK, RBR (450X86X55) 18" C-PTRN BCT			819
6678765	NUT			21, 25, 231, 393, 395
6678780	WASHER	6691241	D	245, 249, 253, 257, 261
6678785	NUT, SELF RETAINING			315, 385, 387
6678837	O-RING			729
6679025	CLAMP 2			491
6679034	MOUNT			225, 333, 339, 345, 351
6679103	VALVE, BRAKE			229
6679485	CONTROLLER, DRIVE			359
6679820	SWITCH, RELAY MAGNETIC			333, 339, 345
6680019	PLUG	6691209	D	243, 249, 253, 257, 261
6680264	STUD			473
6680272	NUT			479
6680355	CAP			383
6680356	BOLT			383

Code for disposition of old part number
A -- Use up
B -- Use on other application (See PNI)
C -- File PDR Report with Bobcat Parts Sales
D -- Part Number Error

Page 842 OSS# 6300322913 - All rights reserved by Bobcat Company - 08/04/2017 - 06:30:16 - Produced by Ken Cook Co. with mediaioff

NUMERICAL INDEX (Cont'd)

Part Number	Description	Was	Code	Page
6680357	HOLDER			383
6680358	RING RUBBER			383
6680359	RING STOP			383
6680360	STOP			383
6680361	SPRING			383
6680362	BALL			383
6680363	WASHER			383
6680364	LEVER			383
6680365	SHAFT			383
6680366	GEAR			383
6680367	GEAR			383
6680368	RING STOP			383
6680369	SEAL			383
6680370	PLATE			383
6680371	LEVER			383
6680372	BRACKET			383
6680373	YOKE			383
6680374	ARMATURE			383
6680375	SHAFT ORC ASSY			383
6680376	SWITCH			383
6680377	HOLDER			383
6680378	WASHER			383
6680379	SEAL			383
6680380	SEAL			383
6680381	SPRING			383
6680382	SPRING			383
6680383	BOLT			383
6680384	BOLT			383
6680388	BRACKET			383
6680389	BRACKET			383
6680390	GEAR			383
6680403	VALVE			229
6680410	CONTROLLER, ACS			359, 361, 363
6680417	HANDLE, AHC			373, 377
6680418	ASSY, HANDLE			357
6680419	HANDLE			357
6680441	BUSHING			45, 47
6680443	BUSHING, MAGNET			45, 47
6680447	DECAL			357
6680462	HANDLE, ACS RH			373, 377
6680468	STRAP			377, 487
6680469	SPACER			373, 377, 487
6680470	SPRING			377, 487
6680471	BOOT			373, 377
6680477	STRAP			377, 487
6680568	BOLT			473
6680570	GASKET			445
6680636	PLUG			461
6680640	PLUG			461

Code for disposition of old part number

A -- Use up
B -- Use on other application (See PNI)
C -- File PDR Report with Bobcat Parts Sales
D -- Part Number Error

Page 851 - 0SS# 6300322913 - All rights reserved by Bobcat Company - 08/04/2017 - 06:30:16 - Produced by ken look Co. with mediaroff

NUMERICAL INDEX (Cont'd)

Part Number	Description	Was	Code	Page
6680645	BOLT			461
6680646	ADAPTER			459, 469
6680649	TUBE			461
6680654	BOLT			459, 473
6680656	OIL PAN ASSY			459
6680657	PLUG			459
6680658	BOLT			455, 473
6680659	BOLT			459
6680660	FILTER, OIL			459
6680661	RING,O			447, 459
6680662	BOLT			455, 459, 465, 475
6680667	PLUG			455, 461
6680668	BOLT			455
6680673	SPRING			467
6680675	PLUG			467
6680676	ROTOR			467
6680677	COVER			467
6680678	SCREW			467
6680679	PLUG			467
6680680	SEAL			447, 467
6680681	RING,O			447, 467
6680682	RING,O			447, 467
6680685	BOLT			465
6680688	HEAD COVER			455
6680689	ADAPTER			455, 467, 469
6680690	GASKET			445, 455
6680691	RING,O			445, 455
6680693	SCREW			455
6680694	CAP			455
6680695	SEAL			445, 455
6680696	BOLT			455
6680698	CLAMP			455
6680699	CLAMP			455
6680700	WASHER			455
6680702	TUBE, DIPSTICK			459
6680704	COVER			467
6680705	REAR SEAL			447, 467
6680706	BOLT			453, 467, 469, 473
6680708	PUSH ROD			465
6680712	FLANGE			465
6680714	SHAFT			465
6680715	PIN			465
6680716	COLLAR			465
6680717	COLLAR			465
6680720	BUSHING			465
6680725	PIN			461
6680726	SNAP RING			461
6680728	BUSHING			461
6680730	ROD BEARING			461

Code for disposition of old part number
A -- Use up
B -- Use on other application (See PNI)
C -- File PDR Report with Bobcat Parts Sales
D -- Part Number Error

Page 844 - OSS# 6300322913 - All rights reserved by Bobcat Company - 08/04/2017 - 06:30:16 - Produced by Ken Cook Co. with mediaoff

NUMERICAL INDEX (Cont'd)

Part Number	Description	Was	Code	Page
6680731	BEARING, ROD CONNECTING			461
6680732	ROD BEARING			461
6680733	ROD BEARING			461
6680735	SLEEVE			461
6680736	GEAR			461
6680737	GEAR			461
6680738	BEARING MAIN			461
6680739	BEARING MAIN			461
6680740	BEARING MAIN			461
6680741	THRUST WASHER			461
6680742	THRUST WASHER			461
6680743	THRUST WASHER			461
6680744	THRUST WASHER			461
6680745	THRUST WASHER			461
6680746	THRUST WASHER			461
6680747	BOLT, FLYWHEEL			461
6680750	BOLT			477
6680752	SCREW			475
6680755	BOLT			469, 475
6680756	SCREW			475
6680757	COVER			477
6680759	NUT			477
6680761	SLEEVE			477
6680762	HOUSING			477
6680763	LEVER			477
6680765	SNAP RING			477
6680769	PIN			477
6680770	LEVER			477
6680772	LEVER			477
6680775	PIN			477
6680778	RING,O			445, 471
6680787	FUEL LINE			471
6680788	BOLT			471
6680790	JOINT			471
6680796	VALVE, CHECK			471
6680797	TEE			471
6680801	BOLT			449, 453
6680808	PLUG			475
6680809	PIN			475
6680813	KEY			475
6680820	WASHER			479
6680821	SNAP RING			479
6680822	SNAP RING			479
6680823	SNAP RING			479
6680827	SPRING			479
6680828	STUD			477, 479
6680829	GASKET			447, 475, 479
6680830	BOLT			477, 479

Code for disposition of old part number

A -- Use up
B -- Use on other application (See PNI)
C -- File PDR Report with Bobcat Parts Sales
D -- Part Number Error

Page 853 - 08/04/2017 06:38:16 - Produced by Kent Coon Co. with mediaWorks - All rights reserved by Bobcat Company - OSS# 6300322913

NUMERICAL INDEX (Cont'd)

Part Number	Description	Was	Code	Page
6680833	BOLT			479
6680842	HOSE			469
6680849	GASKET			445, 469
6680850	THERMOSTAT			469
6680851	BOLT			449, 469
6680852	PUMP, WATER			469
6680853	GASKET			447, 469
6680855	RING,O			447
6680856	BOLT			469, 473
6680859	GUIDE			457
6680861	INTAKE VALVE			457
6680862	VALVE, EXHAUST			457
6680863	SPRING, VALVE			457
6680866	VALVE SHAFT			457
6680867	STUD			471
6680868	SHAFT			457
6680870	WASHER			457
6680871	SNAP RING			457
6680872	SPRING			457
6680873	ROCKER ARM			457
6680875	ROCKER ARM			457
6680878	BOLT			457
6680884	GASKET			445, 449
6680885	BOLT			449
6680887	GASKET			445, 449
6680888	HEATER			449
6680891	GASKET			445, 449
6680894	HOSE			451
6680899	TUBE			451
6680900	BOLT			451, 477
6680903	CLAMP			451
6680952	FITTING 90 DEG BARB			393
6681622	SHAFT BRAKE	6691229	A	245, 249
6681638	PISTON	6691230	A	245, 249, 253, 257, 261
6681857	ALTERNATOR			381
6681905	NUT			511
6682260	FRONT SHAFT			267, 271
6682261	KEY			267, 271
6682262	HOUSING	6693867	A	275, 279
6682264	SHAFT REAR			275, 279
6682697	GROMMET			627, 647
6682875	PLUG	6688016	A	283
6682929	O-RING	6688000	A	309
6682930	RING, BACK-UP	6688041	A	309
6682936	O-RING			295
6682949	O-RING			265, 297
6682968	SCREW	6687995	A	289, 291, 303, 305
6683023	O-RING			447, 477
6683167	CYLINDER BLOCK			267, 271, 275, 279

Code for disposition of old part number
A -- Use up
B -- Use on other application (See PNI)
C -- File PDR Report with Bobcat Parts Sales
D -- Part Number Error

Page 846 OSS# 6300322913 - All rights reserved by Bobcat Company - 08/04/2017 - 06:30:16 - Produced by Ken Cook Co. with mediaoff

NUMERICAL INDEX (Cont'd)

Part Number	Description	Was	Code	Page
6683168	PISTON ASSEMBLY			267, 271, 275, 279
6683206	SEAL KIT			187
6683274	SEAL, SPOOL 10			153, 171
6684033	NUT			51, 53, 117, 149, 151, 385, 387, 389, 487, 585, 765
6684044	VALVE			749
6684045	SEAL KIT			749
6684046	O-RING			749
6684047	BACK-UP RING			749
6684048	O-RING			749
6684050	BACK-UP RING			749
6684052	SEAL KIT			749
6684053	BACK-UP RING			749
6684054	O-RING			749
6684056	RING,O			749
6684060	NUT			749
6684061	VALVE			749
6684062	SEAL KIT			749
6684063	O-RING			749
6684064	BACK-UP RING			749
6684065	O-RING			749
6684066	O-RING			749
6684069	SEAL KIT			749
6684070	O-RING			749
6684071	O-RING			749
6684072	BACK-UP RING			749
6684073	COIL			749
6684125	COUPLER			97, 101, 105, 111, 153, 159, 165, 171, 175, 179
6684397	BOLT	6677494	B	381
6684565	VALVE, RELIEF			267, 271, 275, 279
6684641	MOUNT			31, 607, 657, 659, 661, 663
6684646	VALVE, ANTI-CAV			153, 159, 165, 171, 175, 179
6684650	REGULATOR ASSY			381
6684651	BEARING,FRONT			381
6684652	BEARING,REAR	6684652	A	381
6684653	PULLEY			381
6684688	DECAL, WARNING			763
6684703	ASSY, ACCUMULATOR			763
6684782	O-RING			447, 459
6684857	PLUG			467, 469
6684910	SENSOR, ELEC AHC			373, 377
6684932	HANDLE, CLAMPING			57, 389, 559, 695
6685060	BUSHING, TORSION			149, 151, 235, 239
6685109	BOLT FLANGE			453
6685154	RING, BACK-UP			93, 95
6685190	STARTER			383
6685190REM	STARTER			383
6685328	RELIEF VALVE			749

Code for disposition of old part number

A -- Use up
B -- Use on other application (See PNI)
C -- File PDR Report with Bobcat Parts Sales
D -- Part Number Error

Page 855 - 0SS# 6300322913 - All rights reserved by Bobcat Company - 08/04/2017 - 06:30:16 - Produced by Ken Cook Co. with mediaroff

NUMERICAL INDEX (Cont'd)

Part Number	Description	Was	Code	Page
6685372	SEALANT, GASKET LIQUID 10.1 OZ			1
6685390	SCREW			283
6685433	SPRING PIN	7024974	A	257
6685498	GASKET			445, 447, 471, 473
6685624	VALVE, AUX REAR			737, 741, 745, 749
6685663	NUT, RETAINING			235, 239, 737, 741
6685918	PIN			461
6685922	OIL FILL FLANGE			459
6685923	GASKET			447, 459
6685924	OIL FILL CAP			459
6685925	OIL PAN BOLT			459
6685929	RELIEF VALVE			467
6685930	HOSE			455
6685939	LEVER			477
6685944	TUBE			471
6685945	TUBE			471
6685948	GASKET			447, 473
6685952	NUT			479
6685954	COVER			469
6685955	GASKET			445, 469
6685958	GUIDE			457
6685959	RETAINER			457
6685963	TUBE			451
6685965	HOSE			451
6685969	HOSE			459
6685971	O-RING			447, 459
6686096	LENS REAR TURN			611
6686097	LIGHT BULB TURN			611
6686098	LIGHT BULB STOP			611
6686099	LENS REAR STOP			611
6686100	SCREW			611
6686402	SEAL			459
6686926	FILTER, OIL HYD			1, 317, 319
6686934	PIN			283
6686968	SEAL, WIPER ROD			93, 95
6686985	BOLT			479
6686998	WIPER, ROD CYL			147
6686999	WIPER, ROD CYL			145
6687000	WIPER ROD			129, 131, 137, 139
6687866	KIT, SEAL			311
6687884	GREASE, HD SUPREME 10			1
6687885	GREASE, HP EXTREME 10			1
6687913	SEAL			235, 239
6687921	COLLAR			309
6687922	NUT			309
6687930	WIRE			285, 287
6687931	BUSHING			307

Code for disposition of old part number
A -- Use up
B -- Use on other application (See PNI)
C -- File PDR Report with Bobcat Parts Sales
D -- Part Number Error

Page 848 - OSS# 6300322913 - All rights reserved by Bobcat Company - 08/04/2017 - 06:30:16 - Produced by Ken Cook Co. with mediaioff

NUMERICAL INDEX (Cont'd)

Part Number	Description	Was	Code	Page
6687932	PIN			283
6687938	VALVE			295, 297
6687940	PLATE			285, 287, 299, 301
6687941	COUPLER			283
6687943	SHAFT			287, 301
6687956	2 HALF BEARINGS			285, 287, 299, 301
6687962	PISTON			289, 291
6687967	SPRING			293, 307
6687976	PLATE			285
6687986	KIT			289, 291
6687987	2 HALF BEARINGS			287
6687992	SCREW			283
6687997	SCREW			293, 307
6687999	RING, SNAP			285, 287, 299, 301
6688003	SCREW			283, 297, 401
6688005	SEAL			289, 291
6688006	SEAL			289, 291
6688008	SCREW			283, 297
6688009	SEAL			283, 297
6688010	PIN			293, 307
6688011	PIN			283
6688014	PIN			283
6688015	SCREW			283
6688017	SHIM			295
6688018	BEARING			285, 287
6688034	SCREW			309
6688040	BEARING			283, 297
6688321	SEAL KIT			187
6688338	NUT			589
6688637	MOUNT			597, 601, 611
6688655	BREATHER COVER			455
6688716	COVER			245, 253, 257
6688717	GASKET			245, 253, 257
6688718	BOLT			245
6688833	CONNECTOR			355
6688834	CONNECTOR			355
6688836	FLANGE			355
6688839	WEAR RING			93, 95
6688845	VALVE			153, 171
6688933	VALVE ASSY			749
6688934	COIL			749
6688980	BOLT			333
6689021	SEAL KIT			283
6689034	SOLENOID, SHUTOFF FUEL			477
6689112	SEAL			57, 97, 101, 105, 111
6689121	O-RING			249, 257, 261
6689124	ROTATING GROUP	6691213	D	243
6689126	PISTON			249

Code for disposition of old part number

A -- Use up
B -- Use on other application (See PNI)
C -- File PDR Report with Bobcat Parts Sales
D -- Part Number Error

All rights reserved by Bobcat Company - 08/04/2017 - 06:30:16 - Produced by ken look cd with medialoft

NUMERICAL INDEX (Cont'd)

Part Number	Description	Was	Code	Page
6689128	BOLT	6691240	D	245, 249, 253, 257, 261
6689129	PLUG			245, 253, 257, 261
6689133	RING,O			245, 249, 253, 257, 261
6689316	SPRING, START			479
6689318	SHAFT			479
6689331	GASKET			447, 451
6689371	ROLLER, TRACK 2			89
6689389	SPACER			729, 731
6689739	VALVE			153, 171
6689756	KIT, GASKET ENG UPPER			445
6689922	HANDLE			365, 369
6689923	HANDLE			365, 369
6689927	BOLT			365, 369
6690022	ROLLER			249
6690104	NUT			187
6690272	DECAL			763
6690299	O-RING			729
6690431	KIT, SEAL	6669734	A	153, 171
6690564	SPRING, COMPRESSION			239
6690688	TREE MOUNT			359, 511, 517, 523, 529
6690690	STRAP, TIE			117, 359, 429, 511, 517, 523, 529, 601, 701, 765
6690707	WIPER, ROD CYL			133, 135, 141, 143
6690911	CLAMP			129, 131, 133, 135, 137, 139, 141, 143, 145, 147
6690947	SWITCH, BPV			505, 507
6690948	SWITCH PARK BRAKE			325, 329
6691022	NUT			333, 339
6691098	COVER	6691231	D	245, 249, 253, 257, 261
6691208	WASHER, KIT	6692444	D	243, 249, 253, 257, 261
6691211	SEAL			243, 249, 253, 257, 261
6691215	NUT			71
6691217	SCREW			245, 249
6691224	SEAL			245
6691225	PLUG			245
6691227	PLUG			245, 249, 253, 257, 261
6691228	HOUSING			245, 249
6691236	SHIM			245, 249, 253, 257, 261
6691238	BOLT			245, 249, 253, 257, 261
6691244	PIN			245, 249, 253, 257, 261
6691245	O-RING			245, 249, 253, 257, 261
6691246	SNAP RING			245, 249, 253, 257, 261
6691247	SEAL			245, 249, 253, 257, 261
6691249	KIT, SEAL			243, 245, 249
6691260	BRAKE ASSY			245, 249
6691294	PLUG			467
6691295	GASKET			467
6691419	CONNECTOR, ELECTRICAL			359, 797
6691588	GASKET			445, 451

Code for disposition of old part number
A -- Use up
B -- Use on other application (See PNI)
C -- File PDR Report with Bobcat Parts Sales
D -- Part Number Error

Page 850 OSS# 6300322913 - All rights reserved by Bobcat Company - 08/04/2017 - 06:30:16 - Produced by Ken Cook Co. with mediaoff

NUMERICAL INDEX (Cont'd)

Part Number	Description	Was	Code	Page
6691714	SENSOR, SEATBAR BICS			45, 47
6692325	SEAL, PISTON			131, 133, 135, 141, 143
6692337	FILTER, HYD CARTRIDGE			1, 11, 313
6692364	PISTON RING			461
6692366	ROD			461
6692489	ALARM, BUZZER			325, 329
6692757	DECAL, "REMOTE CONTROL OPERATION", LARGE			755
6692762	KEYS, SET OF 2			755
6692763	DECAL WARNING, "READ THE MANUAL"			755
6692767	DECAL, "ROTATING PARTS"			755
6692768	DECAL, "REMOTE CONTROL OPERATION", SMALL			755
6692769	CHARGER, MAKITA DC1422, 12-24VDC			755
6692770	BATTERY, NiCd, 9.6V, 1.3Ah, MAKITA 9000			755
6692771	SHOULER HARNESS			755
6692834	ENG, V3800DIT 92 HP EPA T3 / EU STG IIIA			405, 443
6692834REM	ENG, V3800DIT 92 HP EPA T3 / EU STG IIIA			405, 443
6693237	IDLER, FRONT 2			81
6693238	IDLER, REAR 2			85
6693239	ROLLER ASSY			89
6693241	KEY (2)			325, 385, 387, 389, 413, 417, 421, 425, 429, 511, 517, 523, 529, 577, 581, 791
6693245	SWITCH, IGN			325
6693409	BULB, STROBE			755
6693410	LENS, STROBE AMBER			755
6693411	LENS, STROBE AMBER			755
6693413	DISPLAY, DLX			329, 675, 677
6693483	BOLT			453, 467
6693484	BOLT			467
6693485	BOLT			467
6693488	SPRING			477
6693712	KEYPAD, PANEL			325, 329, 673, 679
6693868	BEARING			271
6693869	GROUP, ROTARY			285
6693874	GROUP, ROTARY			287
6693876	SEAL, SHAFT			285, 299
6693921	SENSOR, RPM			351
6693924	MOUNT			797
6697863	PISTON, ASSY			145

Code for disposition of old part number

A -- Use up
B -- Use on other application (See PNI)
C -- File PDR Report with Bobcat Parts Sales
D -- Part Number Error

Page 859 - 0SS# 6390322913 - All rights reserved by Bobcat Company - 08/04/2017 - 08:30:16 - Produced by Ken Cook Co. with mediaoff

NUMERICAL INDEX (Cont'd)

Part Number	Description	Was	Code	Page
6697915	HOSE			635, 639
6697920	SENSOR, PRESS OIL ENG			351
6697933	IDLER REAR			85
6697938	BASE, JOYSTICK			365, 369
6697939	BASE, JOYSTICK			365, 369
6697942	PLUG, NYLON			31, 35, 121, 125
6697960	SOLENOID			293, 307
6697971	VALVE, 2 SPEED			321
6698062	GASKET, MOTOR			313
6698065	COIL, CPP012H			313, 317, 319
6698066	HOUSING, FILTER CARTRIDGE			313
6698120	GASKET			475
6698285	HOSE, A/C ASSY			635
6698288	HOSE, A/C ASSY			635, 639
6698289	HOSE, A/C ASSY			635
6698290	HOSE, A/C ASSY			635
6698328REM	MOTOR, DRIVE HYD			243, 245
6698434	VALVE, PROPORTIONAL			153, 159, 165, 171, 175, 179
6698519	CIRCLIP	7017210	B,D	473, 475
6698521	BRACKET, TIEDOWN			449
6698522	VALVE, DRAIN			461
6698523	EXCHANGER, OIL COOLER			459
6698524	ARM, VALVE BRIDGE			457
6698525	FLANGE, MUFFLER			451
6698526	HOOK, LIFT ENG			455
6698527	BLOCK ENGINE LOWER	6685921	A	459
6698528	WASHER, SEALING			445, 471
6698529	CAMSHAFT, FUEL			475
6698531	SPACER, PUMP INJ			475
6698532	BEARING, BALL			475
6698534	GASKET, EXHAUST			445, 453
6698535	PISTON, ENG			461
6698536	PISTON, ENG OS			461
6698537	HOUSING, PUMP INJ			473, 475
6698538	PUMP, FUEL INJ			475
6698539	GASKET, PUMP INJ			447, 473
6698540	NUT			473
6698541	WASHER, SPRING			473
6698542	INJECTOR, FUEL ASSY			471
6698544	BLOCK ENGINE			461
6698545	HOOK, LIFT ENG			455
6698546	HOUSING, GEAR ASSY			467
6698547	FLANGE, INTAKE			449

Code for disposition of old part number
A -- Use up
B -- Use on other application (See PNI)
C -- File PDR Report with Bobcat Parts Sales
D -- Part Number Error

Page 852 OSS# 6300322913 - All rights reserved by Bobcat Company - 08/04/2017 - 06:30:16 - Produced by Ken Cook Co. with mediaoff

NUMERICAL INDEX (Cont'd)

Part Number	Description	Was	Code	Page
6698548	PIPE, INTAKE			451
6698549	HOSE, AIR FORMED			451
6698550	MANIFOLD, INTAKE			449
6698551	MANIFOLD, EXHAUST			449
6698552	FLANGE, EGR			453
6698553	PIPE, TUBE EXHAUST			453
6698554	SHIELD, HEAT			453
6698555	CRANKSHAFT, ENGINE			461
6698556	PIPE, OIL			473
6698557	PIPE, OIL			477
6698558	PIPE, OIL			459
6698559	HOSE, RUBBER			459
6698560	GEAR, MECHANICAL TIMER			473
6698561	BRACKET, PUMP INJ			473
6698562	COVER, PUMP INJ			473
6698563	SPACER			473
6698564	GASKET, PUMP INJ			473
6698565	PIPE, INJECTION			471
6698566	PIPE, INJECTION			471
6698567	PIPE, INJECTION			471
6698568	PIPE, INJECTION			471
6698570	EXCHANGER, EGR			453
6698571	BRACKET, EXCHANGER			453
6698572	HOSE, WATER FORMED			453
6698573	PIPE, WATER EGR			453
6698574	HOSE, WATER FORMED			453
6698575	HOSE, WATER FORMED			453
6698576	HOSE, VACUUM			453
6698577	HOSE, VACUUM			453
6698578	STUD			461
6698579	KIT, GASKET ENG LOWER			447
6698580	VALVE, LEAD			453
6698581	GASKET, EGR VALVE			445, 453
6698582	GASKET, EGR PIPE			445, 453
6698583	GASKET, EGR FLANGE	6698583		445
6698585	VALVE, THERMOSTATIC			453
6698589	GASKET, HEAD CYL			455
6698591	KIT, SEAL			313, 317, 319
6698597	GASKET, HEAD CYL			455
6698598	GASKET, HEAD CYL			455
6698599	BOLT			461
6698600	WEIGHT, GOVERNOR			477

Code for disposition of old part number

A -- Use up
B -- Use on other application (See PNI)
C -- File PDR Report with Bobcat Parts Sales
D -- Part Number Error

Page 861 - 08/04/2017 - 06:30:16 - Produced by Ken Cook Co. with medialoft
All rights reserved by Bobcat Company - OSS# 6300322913

NUMERICAL INDEX (Cont'd)

Part Number	Description	Was	Code	Page
6698601	LEVER, STOP			477
669863	RING, SNAP			267, 271, 275, 279
6700631	GASKET CAP TANK HYDR			189, 193
6701097	WASHER			385, 387
6701174	WASHER			365
6701449	FLR.TUBE			413, 417, 421, 425, 429
6701535	SPRING, CENTERING			45, 47, 235, 239
6701892	CLAMP			97, 101, 105, 111, 117, 631, 633
6702444	FUSE 25A 5			333, 339, 345
6702593	SPACER			353, 493, 501
6702621	GRIP			357, 373
6702642	BOLT 5	7166190	B	625
6702716	BLOCK, WEAR			235, 239
6702903	LEVER, BOB-TACH LH			63
6702904	LEVER, BOB-TACH RH			63
6702958	BUSHING, WELD-ON			63
6702971	BOLT ASSY			31
6702990	BUSHING			373, 377
6704436	RUBBERPAD			795
6704453	SPRING 5			511, 517, 523, 529
6704892	RIVET			591
6706098	GUIDE, PRESS FIT			235, 239
6706104	NUT, RETAINING			67, 69, 79
6706485	BRACKET			67, 69, 77, 79
6707101	SEAL			119, 183
6707620	FUSE, 10A MINI 5			333, 339, 345
6707621	FUSE, 15A MINI 5			333, 339, 345
6707623	FUSE, 25A MINI 5			333, 339, 345
6708009	LINK			149, 151
6708043	FLANGE			149, 151
6708310	HOSE, BULK/FT 100			511, 517, 523
6708437	SPRG CLIP			333, 339, 345
6708929	DECAL, COOLANT			563
6708987	HINGE, WELD-ON			13, 17, 19, 21, 25
6710659	BUSHING			45, 47
6711643	CAM, WEAR			235, 239
6713043	SPACER			373, 377
6713507	DECAL			573
6713589	CLEVIS			45, 47
6713887	BOLT			45, 47
6715163	BUSHING, PRESS FIT			235, 239
6715164	SLEEVE, SPRING			235, 239
6715183	ELBOW			413, 417, 421, 425, 429
6715864	BUSHING			45, 47
6715865	BUSHING			45, 47
6715866	BUSHING			45, 47
6716089	CONNECTOR			737, 741, 745
6716621	COVER, FUSE			333, 339, 345

Code for disposition of old part number
A -- Use up
B -- Use on other application (See PNI)
C -- File PDR Report with Bobcat Parts Sales
D -- Part Number Error

Page 854 - OSS# 6300322913 - All rights reserved by Bobcat Company - 08/04/2017 - 06:30:16 - Produced by Ken Cook Co. with mediaioff

NUMERICAL INDEX (Cont'd)

Part Number	Description	Was	Code	Page
6717278	BUSHING, WELD-ON			13, 17, 19, 21, 25
6717402	BUSHING			413, 417, 421, 425, 429
6717579	GASKET			333, 339, 345, 417
6717885	ELBOW			185
6718034	FUSE, 30A			333, 339, 345
6718414	SENDER, TEMP ENG			351
6718796	PLUG			615
6718872	HARNESS			497, 597, 601, 619, 817
6718942	NUT			57
6719448	MAGNET, CONTROL ATTACH			591
6719766	STOP			55
6719825	BOLT			393, 399
6719828	BOLT			401, 405
6719829	BOLT			409
6719834	SPACER			373, 377, 487
6719835	SLEEVE			373, 377, 487
6719888	DECAL			567, 707
6720038ENUS	INSTRUCTIONS	6720038	C	499
6720808	KIT, HEATER ENG BLOCK			499
6725182	TEE	7166338	A	153, 159, 165, 171, 175, 179
6725301	COVER,OM			39, 43
6725303	PAN, OM			39
6727065	SCREW			373, 377, 487
6727313	FITTING, ELBOW			189, 193, 203, 205, 315, 707, 709, 711, 713, 729, 731
6727475	CAP, OIL HYD			11, 189, 193
6727525	BUSHING, WELD-ON			57
6727595	DECAL, TIE-DOWN			567
6727832	BUSHING, WELD-ON			57
6727869	SENDER,HYD TEMP			333, 339, 345
6728459	SENSOR, DOOR			511, 517, 523, 529
6728473	BOLT, SHOULDER			63
6728971	PIN, PIVOT TAPERED			57
6729078	DECAL			219, 223, 225, 567
6729594	HANDLE			373, 377
6729595	HANDLE			373, 377
6730894	BOLT			401, 405
6730995	BUSHING, WEAR			57
6731084	CONNECTOR			631, 633
6731085	ELBOW			631
6731152	MOUNT			413, 417, 421, 425, 429
6731160	WASHER			57
6731275	INSULATION			333, 339, 345
6731478	TAG EXIT			31, 35
6731646	BOLT			57
6732032	GASKET			397, 399
6732083	HOSE			125
6732730	HARNESS			591

Code for disposition of old part number

A -- Use up
B -- Use on other application (See PNI)
C -- File PDR Report with Bobcat Parts Sales
D -- Part Number Error

Page 863 - 0SS+ 6390322913 - All rights reserved by Bobcat Company - 08/04/2017 - 08:30:16 - Produced by Ken Cook Co. With mediaIoff

NUMERICAL INDEX (Cont'd)

Part Number	Description	Was	Code	Page
6733136	KIT, ATTACHMENT 14-PIN			591
6733144	MOUNT			591
6733220	DECAL, DECIBEL			567
6733370	HARNESS			351
6733429	CAP			393, 395
6733575	HINGE, REAR DOOR			55
6733616	BUMPER			55
6734090	ADAPTER			393
6734298	BRACKET			235, 239
6735249	HOSE, FUEL			413, 425
6735511	ADAPTER			207, 211, 215, 219, 223, 225
6735696	GROMMET			413
6735901	DECAL, LOGO BOBCAT HEAD			567
6736644	PAINT, ORANGE .5 OZ			1
6737088	COVER, ACCESS			65, 71, 75
6737189	DECAL, WARNING			353, 493, 495, 563
6737191	WEDGE, BOB-TACH			63
6737388	WASHER			149, 151, 235, 239, 389, 405, 671
6737524	KNOB			119, 183
6737626	DECAL SJC			567
6737692	BEARING ROLLER			435
6737693	SPACER			435
6801059	WASHER			751, 753
6801167	SPOOLPLUG			171
6802539	SPACER			31, 753
6803092	BONNET			171
6803202	SCREW			365, 369
6804114	DECAL, WARNING			71
6805550	WASHER			401, 405
6809726	ROLLER			55
6809845	BOLT			55
6810132	SPRING			55
6810141	SPRING			55
6810356	SPACER			721, 723, 725, 727
6810539	NUT			129, 131, 133, 137, 139, 141
6810540	NUT			135, 143, 145, 147
6812170	PLUG			317, 319, 723, 725, 727
6812171	PLUG			129, 131, 133, 135, 137, 139, 141, 143, 145, 147
6812865	FITTING			189, 193, 197
6813153	PLATE			153, 159, 165
6814531	ELBOW			105, 111
6814694	RETAINER			153, 159, 165, 171, 175, 179
6815152	SPOOL, TILT			153, 159, 165
6815223	FITTING			207, 211, 219, 223, 225
6816549	PLUG ASSY PORT RLF			153, 159, 165, 171, 175, 179
6817562	HEAD			145
6901872ENUS	INSTRUCTIONS			591

Code for disposition of old part number
A -- Use up
B -- Use on other application (See PNI)
C -- File PDR Report with Bobcat Parts Sales
D -- Part Number Error

Page 856 - OSS# 6300322913 - All rights reserved by Bobcat Company - 08/04/2017 - 06:30:16 - Produced by Ken Cook Co. with mediaoff

NUMERICAL INDEX (Cont'd)

Part Number	Description	Was	Code	Page
6902177	GREASE, METALUBE			1
6902228	PAINT, ORANGE SPRAY CAN 6			1
6902233	PAINT, ORANGE QT 6			1
6903117	FLUID, OIL HYD 2.5 GAL 2			1
6903118	FLUID, OIL HYD 5 GAL			1
6903119	FLUID, OIL HYD 55 GAL DRUM			1
6903122	GREASE, MULTI PURPOSE			1
6904026	FLUID, OIL HYD 1 GAL			1
6904027	FLUID, OIL HYD 265 GAL TOTE			1
6904709	OHB, W/WIRE ROPE			755
6904709AR	OM RADIO REMOTE CONTROL SPANISH			755
6921092	HANDLE	7011177	A	769
6921584	BEARING	654299	B,D	267, 275
6921585	RING RETAINING			271, 279
6967523	SPINDLE	6687920	A	309
6967525	SPRING	6688043	A	309
6967526	SPRING	6688021	A	309
6967527	PIN	6687923	A	309
6967534	PISTON			295
6967535	COLLAR			295
6967536	SPRING			295
6967539	SHIM	7008766	A	295
6969819	NUT, FLANGE			449, 455, 459, 471, 473, 475
6969824	GASKET, NOZZLE INJ			445, 471
6983127	ANTIFREEZE/COOLANT, PG CONCEN 55 GAL			1
6983128	ANTIFREEZE/COOLANT PG 53/47 PREMIX GAL			1
6983129	ANTIFREEZE/COOLANT, PG CONCENTRATE GAL			1
6983130	ANTIFREEZE/COOLANT PG 53/47 PRMX 55GAL			1
6987128ENUS	INSTRUCTIONS	6987128	A	549, 551, 553
6987139ENUS	INSTRUCTIONS	6987139	A	735
6987175ENGB	OHB, W/WIRE ROPE			7
6987175ENUS	OHB, W/WIRE ROPE	6987175	A	7, 563
6987175ESAR	OHB, W/WIRE ROPE	6987175AR	A	7, 563
6987175FRCA	OHB, W/WIRE ROPE	6987175CA	A	7, 563
6987175FRFR	OHB, W/WIRE ROPE			7, 563
6987175KOKR	OHB, W/WIRE ROPE			7, 563
6987175PTBR	OHB, W/WIRE ROPE	6987175BR	A	7, 563
6987216ENUS	INSTRUCTIONS	6987216	A	613
6987219ENUS	INSTRUCTIONS	6987219	A	683
6987223ENUS	INSTRUCTIONS	6987223	A	617

Code for disposition of old part number

A -- Use up
B -- Use on other application (See PNI)
C -- File PDR Report with Bobcat Parts Sales
D -- Part Number Error

Page 865 - 0SS# 6300322913 - All rights reserved by Bobcat Company - 08/04/2017 - 06:30:16 - Produced by Ken Cook Co with media10ff

NUMERICAL INDEX (Cont'd)

Part Number	Description	Was	Code	Page
6987224ENUS	INSTRUCTIONS	6987224	A	619
6987225ENUS	INSTRUCTIONS	6987225	A	497, 817
6987227ENUS	INSTRUCTIONS	6987227	A	557
6987228ENUS	INSTRUCTIONS	6987228	A	543
6987229	INSTRUCTIONS			537
6987230ENUS	INSTRUCTIONS	7278971ENUS	B,D	511, 517
6987231ENUS	INSTRUCTIONS	6987231	A	631
6987232ENUS	INSTRUCTIONS	6987232	A	529
6987234	INSTRUCTIONS			577, 581
6987235ENUS	INSTRUCTIONS	6987235	A	493, 495
6987236ENUS	INSTRUCTIONS	6987236	A	487
6987237	INSTRUCTIONS			657, 661
6987238ENUS	INSTRUCTIONS	6987238	A	589
6987239ENUS	INSTRUCTIONS	6987239	A	791
6987248ENUS	INSTRUCTIONS	6987248	A	779, 783
6987249ENUS	INSTRUCTIONS	6987249	A	49, 769, 787, 789
6987250ENUS	INSTRUCTIONS	6987250	A	505, 507
6987251ENUS	INSTRUCTIONS	6987251	A	811
6987252ENUS	INSTRUCTIONS	6987252	A	485
6987253ENUS	INSTRUCTIONS	6987253	A	781
6987279ENUS	INSTRUCTIONS	6987279	A	623
6987280	INSTRUCTIONS			675
6987281	INSTRUCTIONS			673
6987282	INSTRUCTIONS			751
6987335ENUS	INSTRUCTIONS	6987335	A	757
6987336ENUS	INSTRUCTIONS	6987336	A	621
6987338ENUS	INSTRUCTIONS	6987338	A	805
6987349ENUS	INSTRUCTIONS	6987349	A	825
6987355ENUS	INSTRUCTIONS	6987355	A	575
6987356ENUS	INSTRUCTIONS	6987356	A	651
6987366	INSTRUCTIONS			609
6987388ENUS	INSTRUCTIONS	6987388	A	535
6987421ENUS	INSTRUCTIONS	6987421	A	667
6987441	MANUAL, SUPPLEMENTAL			815
6987474ENUS	INSTRUCTIONS	6987474	A	815
6987490ENUS	INSTRUCTIONS	6987490	A	691
6987491ENUS	INSTRUCTIONS	6987491	A	697
6987492ENUS	INSTRUCTIONS	6987492	A	555
6988096	ANTIFREEZE/COOLANT, EG PREMIX GAL 6			1
6988097	ANTIFREEZE/COOLANT EG CONCENTRATE GAL			1
6988316	TRACK, RBR (450X84X56) MBL BCT			819
6988336	RADIO, BOBCAT HEAVY-DUTY MINI			735
6988435	KIT, RADIO M-SERIES LOADERS			735

Code for disposition of old part number
A -- Use up
B -- Use on other application (See PNI)
C -- File PDR Report with Bobcat Parts Sales
D -- Part Number Error

Page 858 OSS# 6300322913 - All rights reserved by Bobcat Company - 08/04/2017 - 06:30:16 - Produced by Ken Cook Co. with mediaoff

NUMERICAL INDEX (Cont'd)

Part Number	Description	Was	Code	Page
6988437	FLUID, OIL HYD BIO 55 GAL DRUM			1
6988439	FLUID, OIL HYD SYNTHETIC 55 GAL DRUM			1
6988660	SPEAKER, 4 X 6 RETAIL JXA462			735
6988661	ANTENNA, 88 INCH MOTOROLA MALE PLUG	7159877	A	735
6988777	FLUID, OIL HYD BIO GAL			1
6988778	FLUID, OIL HYD SYNTHETIC GAL			1
6988779	FLUID, OIL HYD SYNTHETIC 2.5 GAL			1
6989139	TRACK,RBR(450X84X56)TURF-NON-MARKING BCT			819
6989147	OIL, SYNTHETIC 5W40 QT			1
6989148	OIL, SYNTHETIC 5W40 GAL			1
6989157	TRACK, RBR(450X84X56)MBL-NON-MARKING BCT			819
6989239	ENCLOSURE, CAB VINYL			823
6989418ENUS	INSTRUCTIONS	6989418	A	545
6989475ENGB	OM, T770 LDR			7
6989475ENUS	OM, T770 LDR	6989475	A	7
6989475ENUSCD	OM, T770 LDR CD	6989475-CD	A	7
6989475ESAR	OM T770 LDR SPANISH			7
6989475ESARCD	OM T770 LDR SPANISH CD			7
6989475PTBR	OM T770 LDR PORTUGUESE	6989475BR	A	7
6989475PTBRCD	OM T770 LDR PORTUGUESE CD	6989475BR-CD	A	7
6989476ENUS	SM, T770 LDR	6989476		7
6989476ENUSCD	SM, T770 LDR CD	6989476-CD		7
6989477	PM, T770 LDR			7
6989477-CD	PM, T770 LDR CD			7
6989484ENUS	INSTRUCTIONS	6989484	A	695
6989487ENUS	INSTRUCTIONS	6989487	A	689
6989488ENUS	INSTRUCTIONS	6989488	A	593
6989520ENUS	INSTRUCTIONS	6989520	C	615
6989526ENUS	INSTRUCTIONS	6989526	A	665
6989699ENUS	INSTRUCTIONS	6989699	A	801, 803
6989727ENUS	INSTRUCTIONS	6989727	A	601
6989741ENUS	INSTRUCTIONS	6989741	A	707, 715
6990060ENGB	OM, T770 LDR			7
6990077ENUS	INSTRUCTIONS	6990077	A	635, 639

Code for disposition of old part number

A -- Use up
B -- Use on other application (See PNI)
C -- File PDR Report with Bobcat Parts Sales
D -- Part Number Error

Page 867 - 0SS# 6390322913 - All rights reserved by Bobcat Company - 08/04/2017 - 06:30:16 - Produced by Ker Cook Co - with medialoft

NUMERICAL INDEX (Cont'd)

Part Number	Description	Was	Code	Page
6990079ENUS	INSTRUCTIONS	6990079	A	649
6990126ENUS	INSTRUCTIONS	6990126	A	509
6990141	INSTRUCTIONS			737
6990151	KIT, DECAL			563, 567
6990240ENUS	INSTRUCTIONS	6987217	A	685, 687
6990338ENUS	INSTRUCTIONS	6990338	A	659, 663
6990343ENUS	INSTRUCTIONS	6990343	A	677
6990344ENUS	INSTRUCTIONS	6990344	A	679
6990376	INSTRUCTIONS			823
6990454ENUS	INSTRUCTIONS	6990454	A	741
6990468ENUS	INSTRUCTIONS	6990468	A	795
6990527ENUS	INSTRUCTIONS	6990527	A	763
6990560	INSTRUCTIONS			793
6990802ENUS	INSTRUCTIONS	6990802	A	541
6990847ENUS	INSTRUCTIONS	6990847	A	625
6990881ENGB	OM, T770 LDR			7
6990916ENUS	INSTRUCTIONS	6990916	A	539
6990917ENUS	INSTRUCTIONS	6990917	A	753
6990931ENUS	INSTRUCTIONS	6990931		671
6990939ENUS	INSTRUCTIONS	6990939	A	669
6990988ENUS	INSTRUCTIONS	6990988	A	585
69G436	BOLT			171, 359, 361, 363
6CM1220	BOLT			409
6E5	WASHER			619
6E6	WASHER			57
6EM80	WASHER, SPRING			383
7000488	DAMPER			409
7000489	DAMPER			409
7000642	WASHER, SEALING COPPER			445, 447, 451, 473, 477
7000665	PAD, WEAR	6680882	A	457
7000771	RING, WEAR			145
7000772	RING, WEAR			147
7000973	PLUG, MOTOR			313
7000974	PLUG, MOTOR			313
7000983	SCREW			625
7000984	CLIP			625
7001044	HORN, ALARM			657, 661
7001120	SHAFT, DRIVE			285, 299
7001421	GUAGE, SIGHT			189, 193
7001664	PLUG, POWER			41, 577, 581, 585
7001709	SWITCH FRONT WIPER			511, 517, 523
7001710	SWITCH, ISO			359
7001712	SWITCH			707, 709, 711, 713
7001713	SWITCH			361, 487
7001896	PUMP, HYD			267, 275
7002716	SCREW			153, 159, 165, 171, 175, 179
7002736	LATCH, DRAW			385

Code for disposition of old part number
A -- Use up
B -- Use on other application (See PNI)
C -- File PDR Report with Bobcat Parts Sales
D -- Part Number Error

Page 860 OSS# 6300322913 - All rights reserved by Bobcat Company - 08/04/2017 - 06:30:16 - Produced by Ken Cook Co. with mediaoff

NUMERICAL INDEX (Cont'd)

Part Number	Description	Was	Code	Page
7002737	LATCH, PAWL			385
7002739	GROMMET			203, 205
7002740	GROMMET			189, 193, 199, 203
7002980	SWITCH, PRESSURE			333, 339, 345
7002985	INSERT, BLANK			39, 325
7002988	TIE, STUD MOUNT			353, 493, 495, 611
7003027	INSERT, KEYPAD			325, 329, 673, 679
7003032	SWITCH, OVERRIDE TRACTION			325, 329
7003456	VALVE, MOTORIZED ASSY	7193537	B	627, 647
7003471	SCREW			629
7003487	SCREEN			189, 193
7003494	LEVER, RH			377
7003495	LEVER, LH			377
7003496	SENSOR			361, 487
7003628	JOYSTICK, LH			365, 369
7003629	JOYSTICK, RH			365, 369
7003698	BOOT, RUBBER			365, 369
7008041	CASE, FRONT ASSEMBLY			243
7008042	CASE, FRONT			243, 249
7008106	GROUP ROTATING RH			287
7008107	CONTROL			289
7008108	CONTROL			291
7008109	MODULE, CONTROL			283, 293, 307
7008110	HOUSING			283
7008111	FLANGE, LH			283, 297
7008112	FLANGE, RH			283, 297
7008114	SCREW			283, 297
7008115	SENSOR			283, 297
7008116	FILTER			283
7008117	SWASHPLATE			285, 287, 299, 301
7008118	BEARING			285, 299, 301
7008119	RING			289, 291
7008120	HOUSING			293, 307
7008122	COVER			293, 307
7008123	GASKET			293, 307
7008318	LEVER, AHC			373
7008319	LEVER, AHC			373
7008355	SEAL, QUAD			129, 131, 133, 135, 137, 139, 141, 143, 145
7008389	RETAINER, VALVE SPRING			457
7008514	GASKET, TURBO			445, 451
7008516	GASKET			451
7008556	PLUG			729
7008561	SEAT, SHUTTLE			729
7008573	FLANGE, WATER			469
7008575	SPRING, GOVERNOR			479
7008576	LEVER			479

Code for disposition of old part number

A -- Use up
B -- Use on other application (See PNI)
C -- File PDR Report with Bobcat Parts Sales
D -- Part Number Error

Page 869 - OSS# 6300322918 - All rights reserved by Bobcat Company - 08/04/2017 - 08:30:16 - Produced by Ken Cook Co. with mediaTOff

NUMERICAL INDEX (Cont'd)

Part Number	Description	Was	Code	Page
7008627	BOLT, ADJUSTING			479
7008644	CLAMP, INJECTION			471
7008700	PLUG			243, 249, 253, 257, 261
7008767	SHIM			295
7008771	KIT, SEAL			153, 159, 165, 171, 175, 179, 321
7008782	SEAL, QUAD			721, 723
7008802	WIRE			297
7008806	GASKET	7008121	A	293, 307
7008807	GROUP, ROTATING			285
7008810	VALVE, SOLENOID			313, 317
7008814	BULB, 37.5W	7276034		325, 329
7008823	SPRING			271
7008829	COIL			187
7008830	VALVE, SOLENOID			187
7008831	VALVE, RELIEF	7008831	A	187
7008832	VALVE, SOLENOID			187
7009081	NUT			325, 329
7009219	IDLER, ASSY			71
7009220	WASHER			71
7009221	BOLT			71
7009222	TENSIONER, TRACK ASSY			71
7009225	SUPPORT			71
7009226	ROLLER, UPPER			71
7009227	BOLT			71
7009228	BOLT			71
7009229	WASHER			71
7009230	NUT			71
7009231	SPROCKET, MOTOR DRIVE TRACK	7020401	A	71
7009232	WASHER, LOCK			71
7009233	BOLT			71
7009234	NUT			71
7009237	SHOE, TRACK			821
7009256	BOLT, FLANGE			231, 233
7009258	RING, RETAINER			231, 233
7009259	PIN			231
7009260	PIN			231
7009261	RING, RETAINER			231, 233
7009263	BRACKET, HINGE FORMED	7012610	A	231, 233
7009332	BUSHING			821
7009333	PIN			821
7009334	LINK TRACK, LH			821
7009335	LINK TRACK, RH			821
7009336	LINK, TRACK MASTER LH			821
7009337	LINK, TRACK MASTER RH			821

Code for disposition of old part number
A -- Use up
B -- Use on other application (See PNI)
C -- File PDR Report with Bobcat Parts Sales
D -- Part Number Error

Page 862 - OSS# 6300322913 - All rights reserved by Bobcat Company - 08/04/2017 - 06:30:16 - Produced by Ken Cook Co. with mediaoff

NUMERICAL INDEX (Cont'd)

Part Number	Description	Was	Code	Page
7009338	LINK, TRACK MASTER LH			821
7009339	CHAIN, TRACK			821
7009340	SEAL			821
7009341	SPACER			821
7009342	LINK, TRACK MASTER RH			821
7009545	CAM			243, 249
7009792	NUT			821
7009793	BOLT			821
7009794	BOLT			821
7009976	O-RING			635, 639
7009977	O-RING			635, 639
7009978	O-RING			635, 639
7010003	VALVE, CHECK			321
7010004	CARTRIDGE			321
7010005	CARTRIDGE			321
7010006	COIL			321, 729, 731
7010007	CARTRIDGE			321
7010008	BOLT			321
7010009	BOLT			321
7010010	BLOCK, PORT			321
7010031	FILTER, AIR SECONDARY			1, 11, 481, 483
7010126	BOLT			231, 233
7010133	GASKET, PUMP FUEL			447, 473
7010134	STUD			451
7010135	NUT			451
7010136	STUD			451
7010137	STUD			451
7010138	BOLT, FLANGE			451
7010144	BOLT, EYE JOINT			473
7010145	BEARING			475
7010162	HOUSING, BLOWER			629
7010163	MOTOR, FAN			629
7010165	COVER			629
7010166	RING, INNER			629
7010167	BLOWER, WHEEL			629
7010168	SCREW			629
7010169	CLAMP, HOSE			629
7010171	PUMP, GEAR TRIPLE			187
7010172	PUMP, GEAR DOUBLE			311
7010190	BOLT, ADJUSTMENT			479
7010227	COVER			283, 297
7010242	VALVE, CHECK			185
7010243	COVER, ACCESS			71
7010244	SCREW			71
7010257REM	MOTOR, DRIVE HYD 2-SPD			253
7010283	VALVE, REGULATOR			503

Code for disposition of old part number
A -- Use up
B -- Use on other application (See PNI)
C -- File PDR Report with Bobcat Parts Sales
D -- Part Number Error

Page 871 - 6989477 - 08/30/2017 - 08:30:16 - Produced by Ken Cook Co. - With mediaoff
All rights reserved by Bobcat Company - 08/04/2017 - 08:30:16 - Produced by Ken Cook Co. - With mediaoff
OSS# 6300322918

NUMERICAL INDEX (Cont'd)

Part Number	Description	Was	Code	Page
7010335	KIT, CUSHION SEAT VINYL			769, 773
7010336	KIT, CUSHION SEAT VINYL			769, 773
7010338	KIT, BACKREST SEAT			769, 773
7010339	BELLOW			773
7010340	KIT, ADJUSTER SEAT			773
7010341	KIT, HOUSING SEAT			773
7010342	KIT, ABSORBER SHOCK SEAT			769, 773
7010343	KIT, LEVER ADJUSTING			769, 773
7010344	KIT, RAIL SLIDE SEAT			773
7010345	KIT, TETHER SEAT BELT			769, 773
7010346	KIT, BACKREST SEAT			769, 773
7010357	CAP, END			543
7010358	SPRING			543
7010359	KNOB			543
7010360	SLEEVE			543
7010365	NUT			543
7010368	COVER	7194123	A	283, 401
7010397	PLUG, FILL	7193778	A	627
7010566	WASHER			71
7010567	BOLT			71
7010600	MOUNT TREE FIR			577, 581
7010677	PLUG			821
7010678	PLUG			821
7010749	KIT, SEAL			187
7010992	VALVE, POWER BOB-TACH			709, 729
7011040	VALVE, BPV	7011060	D	503, 505
7011061	DECAL			625
7011062	PANEL, CONTROL			625
7011070	HARNESS, RECEIVER			755
7011071	CONTROL, MODE SELECTOR			755
7011072	ROLLER, TRACK			71
7011081	HOSE, HYD			207, 211, 219, 223, 225
7011082	HOSE, HYD			207, 211, 219, 223, 225
7011083	HOSE, HYD			219, 223
7011084	HOSE, HYD			219, 223, 225
7011175	KIT, SWITCH SEAT			769
7011176	BELLOWS, SEAT CPL			769
7011178	HOUSING			769
7011179	KIT, RAIL SLIDE SEAT			769
7011180	COMPRESSOR, AIR SEAT			769
7011181	KIT, SPRING AIR			769
7011182	KIT, LEVER			769

Code for disposition of old part number
A -- Use up
B -- Use on other application (See PNI)
C -- File PDR Report with Bobcat Parts Sales
D -- Part Number Error

Page 1 of 2 OSS# 6300322913 - All rights reserved by Bobcat Company - 03/04/2017 - 06:30:16 - Produced by Ken Cook Co. with mediaoff

NUMERICAL INDEX (Cont'd)

Part Number	Description	Was	Code	Page
7011183	KIT, BRACKET SEAT			769, 773
7011982	PUMP, FUEL			473
7012202	ADAPTER			459
7012203	GASKET			467
7012295	VALVE, EGR			453
7012312	FILTER, OIL HYD TANK ASSY			189
7012314	FILTER, OIL HYD ASSY			1, 11, 189
7012315	CAP, FILTER			189
7012611	STRAP, HOLD DOWN			231, 233
7012612	ROD, PROP UP			231, 233
7012613	BUMPER, RUBBER			231, 233
7012614	EXCHANGER, OIL COOLER			233
7013201	PLUG			503
7013203	KIT, SEAL			503
7015269	TAPPET			465
7015308	SEAL			11, 189
7015518	VALVE, CHECK			197, 201
7015668	MOUNT, STRAP TIE			325, 333, 339, 345, 585, 643
7017197	GEAR, CAMSHAFT			465
7017198	PIN, STRAIGHT			461
7017199	PIN, STRAIGHT			459
7017200	GEAR, IDLER			465
7017201	BRACKET, ROCKER ARM			457
7017202	TURBOCHARGER			451
7017202EF	TURBOCHARGER			451
7017202REM	TURBOCHARGER			451
7017203	CAMSHAFT, VALVE			465
7017204	TUBE, WATER ELBOW			461
7017205	ADAPTER, PIPE			453
7017208	PULLEY, DRIVE			467
7017209	PUMP, FUEL INJ UNIT			475
7017210	CIRCLIP	6698519	B,D	473
7018011	CHANNEL			373, 377
7018012	CHANNEL			373, 377
7019303	SPACER			449
7020398	FRAME, TRACK			71
7020399	FRAME, TRACK			71
7020400	TENSIONER, TRACK ASSY			71
7020604	PLUG			729
7020605	POPPET			729
7020606	PLUG			729
7020607	SPRING			729
7020647	NUT			165, 179, 345, 729, 731
7020648	SPOOL			729
7020649	SPRING			729

Code for disposition of old part number

A -- Use up
B -- Use on other application (See PNI)
C -- File PDR Report with Bobcat Parts Sales
D -- Part Number Error

Page 873 - 0SS# 6300322913 - All rights reserved by Bobcat Company - 08/04/2017 - 06:30:15 - Produced by Ken Cook Co. with mediaroff

NUMERICAL INDEX (Cont'd)

Part Number	Description	Was	Code	Page
7020650	SPOOL			729
7020651	SPRING			729
7020652	SPRING			729
7020653	SPRING			729
7020654	SPRING			729
7020655	O-RING			729
7020656	RING, BACK-UP			729
7020657	PISTON			729
7020658	FILTER CARTRIDGE			729
7020659	ORIFICE			729
7020660	GUIDE			729
7020661	SHAFT			729
7020889	CAM			253, 257
7020890	BOLT			253, 257, 261
7020891	BOLT			253, 257
7020892	BOLT			253, 257, 261
7020893	CASE, FRONT ASSY			253, 257, 261
7020895	HOUSING, ASSY			253
7020896	BRAKE, ASSY			249, 253, 257, 261
7020897	HOUSING			253
7020898	HOUSING			253, 257, 261
7020899	SHAFT			253, 257, 261
7020901	HOUSING			253, 257, 261
7020902	STUD			253, 257, 261
7020903	NUT			65, 67, 75, 77, 253, 257, 261
7020904	ROLLER			253, 257, 261
7020905	DISTRIBUTOR			253, 257, 261
7020906	SEAL	7020706	B,D	253, 257, 261
7020907	SEAL			253, 257, 261
7020908	SEAL			253, 257, 261
7020909	SEAL			253, 257, 261
7020910	SEAL			253, 257, 261
7020911	SEAL			253, 257, 261
7020912	SPRING			253
7020913	PLUG			253, 257, 261
7020914	SPOOL			253
7020915	CLIP			253
7020916	SEAL			249, 253, 257, 261
7020950	HEAD, CYL ENG			455, 457
7020951	DIPSTICK, OIL ENG	6690692	B	459
7020953	RETAINER			475
7020954	RETAINER			475
7020991	BOLT	7000748		467
7021365	VALVE, SOLENOID			749
7021366	COIL, SOLENOID			749
7021367	NUT			749
7021782	RING, SNAP			249, 257, 261
7021791	CORD, HEATER BLOCK ENG			499

Code for disposition of old part number
A -- Use up
B -- Use on other application (See PNI)
C -- File PDR Report with Bobcat Parts Sales
D -- Part Number Error

Page 4 of 4 OSS# 6300322913 - All rights reserved by Bobcat Company - 08/04/2017 - 06:30:16 - Produced by Ken Cook Co. with mediaoff

NUMERICAL INDEX (Cont'd)

Part Number	Description	Was	Code	Page
7021795	BEARING			279
7022346	PULLEY, DRIVE			467
7022347	FLANGE, WATER			469
7022348	HOSE, WATER FORMED			469
7022765	BOLT, EYE	7022765	A	451, 471
7022791	KIT, REPAIR			773
7023022	SWITCH ROTARY			325, 329, 677, 679
7023076	OIL, 10W30 QT 12			1
7023077	OIL, 10W30 GAL 6			1
7023078	OIL, 10W30 2.5 GAL 2			1
7023079	OIL, 10W30 55 GAL DRUM			1
7023080	OIL, 15W40 QT 12			1
7023081	OIL, 15W40 GAL 6			1
7023082	OIL, 15W40 2.5 GAL 2			1
7023083	OIL, 15W40 55 GAL DRUM			1
7023084	OIL, 15W40 265 GAL TOTE			1
7023149	JOYSTICK, RH ASSY			365
7023150	JOYSTICK, LH ASSY			365
7023151	BASE, JOYSTICK RH			365
7023152	BASE, JOYSTICK LH			365
7023153	BOOT, RUBBER RH			365
7023154	BOOT, RUBBER LH			365
7023162	CAP, END	6669406	A	267, 271
7023524	HOSE, A/C ASSY			639
7023550	CAP, DIESEL LOCKING			413, 417, 421, 425, 429
7023588	KNOB			325, 329, 677, 679
7023598	CLIP, NYLON			339, 345
7023793	PUMP, HYD TANDEM W/O GEAR PUMP			297
7024038	FILTER, OIL HYD CANISTER COVER			193
7024103	PIN			233
7024104	PIN			233
7024107	BUMPER			233
7024160	GASKET, COVER FILTER			481, 483
7024329	RING, PISTON	6692365	A	461
7024834	CONDENSER, A/C	7167588	A	635, 639
7024845	GASKET			483
7024846	GASKET			481
7024884	WASHER	6669409	A	267, 271
7024885	BOLT			279
7024888	SEAL			279
7024902	SOLENOID			323
7024903	KIT, SEAL			323

All rights reserved by Bobcat Company - 08/04/2017 - 08:30:16 - Prpduced by Ken Cook Co. with mediaioff

OSS# 6300322913

Code for disposition of old part number

A -- Use up
B -- Use on other application (See PNI)
C -- File PDR Report with Bobcat Parts Sales
D -- Part Number Error

NUMERICAL INDEX (Cont'd)

Part Number	Description	Was	Code	Page
7024904	BOLT			323
7024928	GASKET, EGR FLANGE	6698583	A	453
7024970	KIT, SEAL			253, 257, 261
7024972	PISTON, MOTOR			257, 261
7024973	RING, RETAINING			249, 257, 261
7024981	OIL, SYNTHETIC DRIVE MOTOR 4			1
7025092	SOLENOID, LOCK BRAKE			323
7025093	KIT, SEAL			323
7025094	COIL, SOLENOID			323
7025103	EXCHANGER, WATER RADIATOR			233
7025104	ROD, PROP UP			233, 793
7025147	DISC, MOTOR HYD	7024975	D	257
7025310	PLUG, NYLON			389
7025320	DISPLAY, DLX	7022670		325, 329
7025560	KIT, REPAIR			769
7025564	VALVE, RELIEF	7024940	A	159, 165, 175, 179
7025588	BRACKET, HINGE FORMED			231, 233
7026578	CASE, FRONT ASSY			249
7026579	GROUP, ROTATING			249
7026580	CASE, REAR ASSY			249
7026581	SEAL, SHAFT			249
7026582	O-RING			249
7026583	GROUP, ROTARY			249
7026584	CASE, REAR			249
7026586	GROUP, ROTATING			261
7026587	CASE, REAR ASSY			261
7026588	CASE, REAR		A	261
7026589	SPOOL, MOTOR			261
7028228EF	TRACK,RBR(450X84X56 18IN H-PATTERN EF	7028228	A	819
7030083	WINDOW, CAB VINYL LH			823
7030084	WINDOW, CAB VINYL RH			823
7030085	DOOR, VINYL			823
7030086	KIT, HINGE			823
7031367	SEAL, SPOOL	6683274	B	159, 165, 175, 179
7100462	CLAMP			197
7100699	WASHER			235, 239
7101291	ELBOW			413, 417, 421, 425, 429
7101345	BONNET, DETENT HYD VALVE			171
7101371	ELBOW			189, 193
7101672	ACTUATOR			359, 361, 363
7101797	ELBOW			193, 737, 741, 745
7101893	SPACER			339, 345, 351

Code for disposition of old part number
A -- Use up
B -- Use on other application (See PNI)
C -- File PDR Report with Bobcat Parts Sales
D -- Part Number Error

Page 868 OSS# 6300322913 - All rights reserved by Bobcat Company - 08/04/2017 - 06:30:16 - Produced by Ken Cook Co. with mediaoff

NUMERICAL INDEX (Cont'd)

Part Number	Description	Was	Code	Page
7102184	SCREW			71
7102451	FITTING			351
7102652	SCREW			153, 159, 165, 171, 175, 179
7102747	GASKET			397, 399
7103217	WASHER			235, 239
7103708	BRACKET			235, 239
7103711	BOLT			235, 239
7105223	SPACER			235, 239
7106218	DECAL QUALITY APPRVL			563
7106279	SCREW			413, 417, 421, 425, 429
7108236	PIN			359, 361, 363
7108242	SPOOL, TILT			171, 175, 179
7109623	ELBOW			97, 101, 105, 111
7109661	LATCH, DOOR W/SENSOR			511, 517, 523, 529
7109662	HANDLE, LATCH DOOR			511, 517, 523, 529
7109904	BRACKET			275, 279
7109905	BRACKET			267, 271
7110310	SCREW			339, 345, 351
7110365	ARM, PINTLE			235, 239
7112383	AUX SPOOL			153, 159, 165, 171, 175, 179
7113340	CAP, DIESEL 3 PSI			413, 417, 421, 425, 429
7113631	ELBOW			197, 201
7115645	CLAMP	6726277	A	737, 741, 745
7116118	BRACKET			41, 577, 581
7116851	CUP			409
7116870	DECAL, LOGO BOBCAT HEAD			567
7120084	BRACKET			351
7120401	GLASS, DOOR			511, 517, 523
7120401PK	GLASS DOOR (25)			511, 517, 523
7120402	FRAME, DOOR CAB			511, 517, 523
7120411	WINDOW, CAB TOP			31, 35
7120569	DECAL, FILTER			573
7120570	DECAL			573
7120573	DECAL			573
7120693	DECAL			185, 567
7120881	SCREEN, FILLER			413, 417, 421, 425, 429
7121223	CAP, DIESEL LOCKING			413, 417, 425
7121399	SPRING			153, 159, 165, 171, 175, 179
7121425	BUSHING			31, 537, 539, 753
7122359	BRACKET			359
7123964	KIT, SEAL			153, 171
7123965	KIT, SEAL			159, 165, 175, 179
7125723	HOSE			223
7125948	PLATE			385, 387, 389

Code for disposition of old part number
A -- Use up
B -- Use on other application (See PNI)
C -- File PDR Report with Bobcat Parts Sales
D -- Part Number Error

Page 877 - 0SS# 6300322913 - All rights reserved by Bobcat Company - 08/04/2017 - 06:30:15 - Produced by Ken Cook Co. with mediaLoft

NUMERICAL INDEX (Cont'd)

Part Number	Description	Was	Code	Page
7126682	BLOCK, SINGLE POINT LIFT			685, 687
7127305	WASHER			409
7128338	KIT, FLASHER 4-WAY			619
7128342	KIT, WINDOW SIDE			543
7128395	KIT, DOOR CAB SPECIAL APPS			529
7128403	KIT, LOCK SECURITY			791
7128405	KIT, BELT SEAT 2"			779
7128426	KIT, ACD 7-PIN			589
7128442	KIT, BPV			505
7128484	KIT, HEATER			625
7128488	KIT, PLUMBING HEATER			631
7128524	KIT, SEAT 80MM SUSPENSION			787
7128962	BOB-TACH			63
7129173	COUNTERWEIGHT			549, 551, 553
7129250	KIT, COUNTERWEIGHT			549
7129251	KIT, COUNTERWEIGHT			551
7129252	KIT, COUNTERWEIGHT			553
7129293	KIT, FOPS TOP			613
7129299	KIT, BEACON LIGHT			497
7129301	KIT, STROBE LIGHT			817
7129303	KIT, BELT SEAT 3"			781
7129307	KIT, EXTINGUISHER FIRE			617
7129371	KIT, ACS			487
7129465	KIT, INTERIOR DLX			577
7130652	TANK, FUEL			413
7130834	HUB, FAN			385, 387
7130982	BRACKET			425, 429
7131211	MOUNT			401, 405
7131233	PEDAL			705
7131236	BUSHING			705
7131254	BRACKET, MOLDED SKI			333
7131273	SCREW	59CM1240	B	265, 401, 405, 433, 435, 439, 671
7131652	SPRING, SUSPENSION			75, 77
7131653	SPRING, SUSPENSION			75, 77
7132937	BUSHING, WELD-ON			57
7134445	BRACKET, TIE-DOWN			65, 71, 75
7134520	PLUG			153, 159, 165, 171, 175, 179
7134522	PLUG			153, 159, 165, 171, 175, 179
7134822	BOLT			401
7134830	BUSHING, WELD-ON			19, 21, 25
7134831	BUSHING, WELD-ON			13, 17, 19, 21, 25
7135124	SCREW			401, 405, 409

Code for disposition of old part number
A -- Use up
B -- Use on other application (See PNI)
C -- File PDR Report with Bobcat Parts Sales
D -- Part Number Error

Page 4 of 4 OSS# 6300322913 - All rights reserved by Bobcat Company - 08/04/2017 - 06:30:16 - Produced by Ken Cook Co. with mediaioff

NUMERICAL INDEX (Cont'd)

Part Number	Description	Was	Code	Page
7135356	SHAFT, CHROME			95
7135539	PULLEY			469
7135569	DECAL			755
7135715	SHROUD, FAN			397, 399
7135745	DUCT, AIR			385, 387
7136111	HOSE, DRAIN OIL			409
7136113	BUSHING			385, 387
7136376	MOUNT, MOTOR ASSY			385, 387
7136464	BUSHING, WELD-ON			63
7136465	BUSHING, WELD-ON			63
7136973	COVER			13, 17
7137132	COVER			65, 67, 75, 77
7137747	TANK, EXPANSION			393, 395
7137939	KIT, SEAL			129, 137
7138014	SEAL KIT			721, 723
7138376	BUSHING			153, 159, 165, 171, 175, 179
7138973	WINDOW, REAR			31
7139655	PULLEY, PUMP HYD			401, 405
7139763	SCREW			75, 77
7139798	DRIVECASE			65, 71, 75
7140441	HOLDER, CUP			557
7140611	SPACER			635, 639, 643
7140797	MOUNT, ENG			409
7140925	FLYWHEEL, ENG ASSY			401, 405
7140927	DECAL			825
7141037	MOUNT, ENG/PUMP			401, 409
7141342	FILTER, AIR CLEANER ASSY			481
7141349	BOLT			75, 77
7141375	DECAL			825
7141383	MOUNT, ENG			409
7141405	BUSHING	7146236	B,D	409
7141420	BRACKET, ALT			409
7141475	MOUNT, PUMP			401
7141594	BRACKET, COMPRESSOR A/C			635, 639, 643
7141600	MOUNT			401
7141674	BUSHING, WELD-ON			13, 17
7141675	BUSHING, WELD-ON			13, 17, 19, 21, 25
7141726	TUBE, EXHAUST			397, 399
7141909	PULLEY, PUMP HYD			401, 405
7142141	DECAL			685, 687
7142142	DECAL			685, 687
7142223	MOUNT, EXCHANGER OIL			231
7142371	SPRING GAS DOOR			511, 517, 523, 529
7142762	CLIP			39, 41, 43, 575, 577, 581, 585, 653
7143234	PIN, PIVOT			57
7143236	BUSHING, WELD-ON			57

Code for disposition of old part number

A -- Use up
B -- Use on other application (See PNI)
C -- File PDR Report with Bobcat Parts Sales
D -- Part Number Error

Page 879 - 08/07/2017 - 06:30:16 - Produced by Ken Cook Co. with nehlaroff
All rights reserved by Bobcat Company - OSS# 6300322918

NUMERICAL INDEX (Cont'd)

Part Number	Description	Was	Code	Page
7143238	BUSHING, WELD-ON			57
7143239	BUSHING, WELD-ON			57
7143444	COVER, SENSOR SPEED			359
7143880	HOSE, WATER FORMED			393
7143881	HOSE, WATER FORMED			393
7143955	BOLT			75, 77
7143971	SEATBAR			45
7144158	REAR DOOR			55
7144198	PIN, PIVOT			57
7144265	MOUNT, TANK			393, 395
7144859	MOUNT, GAS SPRING			31, 35, 623
7145147	LEVER, STEERING			235, 239
7145149	SHAFT, STEERING			239
7145268	CONTAINER, STORAGE			41, 577, 581, 585
7145287	LIFT ARM			57
7145320	LINK, ASSY			57
7145333	BRACKET, RADIO			735
7145347	COVER			65, 71, 75
7145358	SPRING			401, 405
7145436	BUSHING, WELD-ON			57
7145528	DECAL			567
7145872	BUSHING, WELD-ON			13, 17
7145885	VENT, DEFROST			43, 575, 651
7146178	DECAL			75, 77
7146264	COVER, RH SJC			365, 369
7146265	COVER, LH SJC			365, 369
7146294	MAIN FRAME			13
7146538	PIVOT BOB-TACH			63
7147350	SPACER, TUBE			405
7147804	PIN			57
7147806	PIN, PIVOT			57
7147815	BOOT			51, 361, 363, 373, 377
7147826	BOLT, CROSS DRILLED			385, 387
7148068	WINDOW ASSY			543
7148069	WINDOW ASSY			543
7148287	SEAL DOOR HANDLE			511, 517, 523, 529
7148289	SEAL DOOR HINGE			511, 517, 523, 529
7149056	LATCH, CAM			387, 389, 791
7149091	TUBE			31, 35
7149093	SPRING			31, 35
7149166	MOUNT, BOOM DOWN			119
7149204	NUT			41, 577, 581, 585
7149219	HARNESS, FUEL			333, 339, 345
7149357	MOUNT, LOAD ISOLATOR			405

Code for disposition of old part number
A -- Use up
B -- Use on other application (See PNI)
C -- File PDR Report with Bobcat Parts Sales
D -- Part Number Error

Page 868 OSS# 6300322913 - All rights reserved by Bobcat Company - 08/04/2017 - 06:30:16 - Produced by Ken Cook Co. with mediaoff

NUMERICAL INDEX (Cont'd)

Part Number	Description	Was	Code	Page
7149473	HOSE, WATER FORMED			393
7149786	SEAT, SUSPENSION			773, 787
7149827	COVER, WIPER			511, 517, 523
7150151	LATCH, WINDOW LEFT			31, 537, 539, 753
7150152	LATCH, WINDOW RIGHT			31, 537, 539, 753
7150182	BUSHING			129, 131, 133, 135, 137, 139, 141, 143
7150467	TUBELINE, HYD			129, 131, 133, 135
7150486	GROMMET			425, 429
7150719	SEAL DOOR FRAME			511, 517, 523, 529
7150745	SPACER			529
7150746	SPACER			529
7150823	SHAFT, ROD CYL LIFT			145
7151466	BRACKET			75
7151520	TUBELINE, HYD			145
7151868	PEDAL ASSEMBLY CONTROL LH			51, 149, 151, 487
7151871	PEDAL ASSEMBLY CONTROL RH			51, 149, 151, 487
7151889	BELLCRANK			235, 239
7151940	HARNESS, HORN			607, 661, 663
7152003	HOSE, HYD			97, 101, 105, 111
7152004	HOSE, HYD			97, 101, 105, 111
7152005	HOSE, HYD			97, 101, 105, 111
7152037	NUT, RETAINING			409
7152319	BELT, RETRACTOR			779
7152322	BELT, SEAT 2"			779, 783
7152323	COVER, RETRACTOR			779, 783
7152324	BRACKET, SEAT BELT			779, 783
7152605	SLEEVE			401, 405
7152658	WASHER			401, 405
7152748	DECAL, FUEL DIESEL			563, 567
7153006	HOSE, HYD			97, 101, 105, 111
7153008	HOSE, HYD			97, 101, 105, 111
7153075	BRACKET, DAMPER			811
7153076	BRACKET, DAMPER			811
7153089	LIGHT, FRONT ASSY			597, 601
7153090	HARNESS, LIGHT LICENSE			597, 601
7153107	PISTON			725, 727
7153108	HEAD			725, 727
7153379	LEVER, STEERING			235, 239
7153500	MOUNT, FILTER FUEL			413, 417, 425
7153503	BOOT			51, 149, 151, 361, 487
7153519	SHAFT, SPINDLE			597, 601
7153521	SHAFT, SPINDLE			597, 601
7153522	MIRROR, SIDE HEAD			597, 601

Page 881 - 08/04/2017 - 08:30:16 - Produced by Ken Cook Co. with mediaroff
All rights reserved by Bobcat Company - OSS# 6300322913

Code for disposition of old part number
A -- Use up
B -- Use on other application (See PNI)
C -- File PDR Report with Bobcat Parts Sales
D -- Part Number Error

NUMERICAL INDEX (Cont'd)

Part Number	Description	Was	Code	Page
7153832	SEAL, SHELF REAR			43, 575, 651
7154005	TUBE, COOLING			393, 397, 399
7154163	TUBELINE, HYD			137, 139, 141, 143
7154197	HOSE, AIR INTAKE			397
7154198	HOSE, AIR FORMED			397, 399
7154208	FRAME, TRACK			75
7154209	FRAME, TRACK			75
7154285	BOX,RADIO DELETE			41, 577, 581, 585
7154404	CONTAINER			557
7154522	TUBELINE			121, 125
7154523	TUBELINE			121, 125
7154903	LINK			361, 487
7154910	INSERT, THREADED			325, 329, 543, 545, 797
7155024	HARNESS DOOR			511, 517, 523
7155044	BRACKET			597
7155158	PLATE, THREADED			549, 551, 553
7155238	BOLT			401, 405
7155308	WINDOW			529
7155359	FRAME, DOOR CAB			529
7155390	HOUSING, FUSE RELAY			333, 339, 345
7155417	KIT, SEAL			725, 727
7155642	FENDER, PANEL RH			41, 577, 581, 585
7155643	FENDER, PANEL L.H.			41, 577, 581, 585
7155649	HOLDER, CUP			557
7155660	FITTING			185
7155661	HOSE			185
7155692	GUIDE			13, 17, 19, 21, 25
7155693	GUIDE			13, 17, 19, 21, 25
7155785	HEADLINER, HVAC			651, 653
7155786	HEADLINER,STD			39
7155787	HEADLINER, DLX			653
7155791	PANEL, RH			39, 41, 325, 329, 673, 675, 677, 679
7155792	PANEL, LH			39, 41, 325, 329
7155794	LOUVER, ROUND			649, 653
7155796	LOUVER, RECTANGLE			617, 653
7155798	HEADLINER, DLX			43
7155799	SCREW			617, 653
7155829	HOSE, HYD			97, 101, 105, 111
7155830	HOSE, HYD			97, 101, 105, 111
7156246	MOUNT			65
7156252	MOUNT			65, 67, 71, 77
7156253	KIT, HEADLINER DLX			575
7156319	HOSE, HYD			97, 101, 105, 111
7156362	MOUNT, BLKHD			97, 101, 105, 111
7156363	MOUNT, BLKHD			121, 125
7156605	KIT, LIFT			683
7156606	BRACKET, ASSY			683
7156761	PLATE			235, 239

Code for disposition of old part number
A -- Use up
B -- Use on other application (See PNI)
C -- File PDR Report with Bobcat Parts Sales
D -- Part Number Error

Page 1826 OSS# 6300322913 - All rights reserved by Bobcat Company - 08/04/2017 - 06:30:16 - Produced by Ken Cook Co. with mediaoff

NUMERICAL INDEX (Cont'd)

Part Number	Description	Was	Code	Page
7156809	BUMPER			695
7157286	BODY			153, 159, 165
7157289	BLOCK			153, 171
7157290	TUBELINE			153, 171
7157291	TUBELINE			153, 159, 165, 171, 175, 179
7157293	BODY			171, 175, 179
7157358	CLAMP			97, 101, 105, 111
7157611	MOUNT			149, 151, 487
7157671	COVER ARMREST, RH			365, 369
7157704	COVER ARMREST LH			365, 369
7157719	BRACKET			45, 47
7157740	SPACER			597, 601
7157745	SLOW MOVING PLATE - 12			597, 601
7157958	WASHER			31, 35
7158128	BUSHING, WEAR			57
7158459	SUPPORT, LIFT ARM			57
7158632	CONNECTOR			189, 707, 709, 711, 713
7158703	COVER, ACCESS			65, 69, 71, 75, 79
7158921	FITTING			189, 193, 197, 201
7159094	COVER, DRAIN			65, 71, 75
7159352	PAN, BATTERY			351
7159386	WASHER			433, 435, 439
7159532	COVER, ACCESS			13
7159542	BELT, SEAT RETRACTOR			777
7159624	BUSHING			235, 239, 435, 439
7159730	HOSE, HYD			207, 215
7159731	HOSE, HYD			207, 211, 215
7159732	HOSE, HYD			207, 215
7159733	HOSE, HYD			207, 211, 215
7159993	CABLE, THROTTLE			433
7160320	HOLDER, CUP			557
7160381	RIVET, BIRD CAGE			41, 577, 581, 585, 649
7160382	RIVET, BIRD CAGE			39, 41, 577, 581, 585
7160383	RIVET, BIRD CAGE			41, 557, 577, 581, 585
7160701	LATCH			55
7160703	HANDLE			55
7160704	STOP			55
7160705	CHANNEL			55
7160760	MOUNT			685, 687
7160765	NUT			51, 53, 625
7160779	PLATE			685, 687
7160841	SEAL HANDLE DOOR			511, 517, 523
7161098	BRACKET			333, 339, 345
7161130	COVER			51, 53
7161131	COVER, LEVER			53
7161423	SCREEN, RADIATOR			385
7161424	COVER, HOOD			385

All rights reserved by Bobcat Company - 08/04/2017 - 05:30:16 - Produced by Ken Cook Co. with mediaroff

Code for disposition of old part number

A -- Use up
B -- Use on other application (See PNI)
C -- File PDR Report with Bobcat Parts Sales
D -- Part Number Error

NUMERICAL INDEX (Cont'd)

Part Number	Description	Was	Code	Page
7161429	PLUG			511, 517, 523, 529
7161536	PIN, CLEVIS			685, 687
7161559	PIN, SNAPPER			665
7161903	KIT, SEAL			147
7161939	GRILL			41, 577, 581, 585
7161953	GUIDE, HOSE ASSY			665
7162141	BUSHING, WELD-ON			13, 17, 19, 21, 25
7162176	SPACER			365, 369
7162770	SCREW			627, 647, 735
7162864	HOSE, HYD ASSY			121, 125
7162868	HOSE, HYD ASSY			97, 101, 105, 111
7162933	LIFT EYE			683
7162967	CABLE, POSITIVE			351
7163132	FOAM, FRONT			51, 53
7163216	BRACKET			235, 239
7163219	KIT, SEAL			93, 95
7163263	CAP WASHER BOTTLE			511, 517, 523
7163507	WASHER, SPRING			683
7163589	INSERT, SWITCH			325, 329, 677, 679
7163706	HARNESS, JOYSTICK			359
7163748	MOUNT			685
7163768	BRACKET, FUEL			413, 425
7163769	BRACKET, FUEL			413, 417, 421, 425, 429
7163770	HOSE, FUEL			413, 417, 421, 425, 429
7163988	SEAL, WINDOW REAR			31, 537, 539, 753
7164073	GUIDE			329, 577, 581, 585
7164144	HARNESS			361, 363
7164294	PEDAL, FOOT THROTTLE			435, 439
7164345	COVER, PAN FLOOR			51, 53
7164347	COLUMN, FRONT RIGHT			577, 581
7164348	COLUMN, FRONT LEFT			577, 581
7164564	BRACKET, A/C			635, 639, 643
7164686	BOLT, CARRIAGE			613, 685, 687
7165037	CAP, INST PANEL RH			39
7165038	CAP, INST PANEL LH			39
7165061	HARNESS, ADAPTER BRAKE			207, 215
7165109	SPROCKET, MOTOR DRIVE TRACK			65, 67, 69, 75, 77, 79
7165332	SHELF, REAR			43, 575, 651
7165333	CLIP			43, 51, 53, 575, 651
7165344	STORAGE			41, 577, 581, 585
7165345	DOOR, COVER			41, 577, 581, 585
7165346	DOOR, COVER			41, 577, 581, 585
7165634	WASHER, PLASTIC			365, 369
7165635	SPACER, SJC			369

Code for disposition of old part number
A -- Use up
B -- Use on other application (See PNI)
C -- File PDR Report with Bobcat Parts Sales
D -- Part Number Error

Page 884 OSS# 6300322913 - All rights reserved by Bobcat Company - 08/04/2017 - 06:30:16 - Produced by Ken Cook Co. with mediaoff

NUMERICAL INDEX (Cont'd)

Part Number	Description	Was	Code	Page
7165673	SEAL, CAB DUCT			625
7165799	SCREW			39, 41, 43, 575, 651
7165806	BRACKET			189
7165972	COUPLER INSERT			511, 517, 523
7165991	HARNESS, CAB STD			325
7166047	SEAT, CHECK VALVE			153, 159, 165, 171, 175, 179
7166087	TRACK, STEEL			821
7166171	BRACKET			433, 435, 439
7166172	HANDLE			433, 435, 439
7166173	HANDLE			433, 435, 439
7166174	BLOCK			433, 435, 439
7166177	BRACKET			577
7166190	SCREW THREAD ROLLING			511, 517, 523, 627, 647
7166195	PAD, PAN FLOOR			51, 53
7166196	FOAM, PANEL			51, 53, 535
7166197	FOAM, PANEL			51, 53, 535
7166198	FOAM, PANEL			51, 53, 535
7166199	FOAM, EDGE			51, 53, 535
7166200	FOAM, PAN FLOOR			51, 53, 535
7166205	SPACER HANDLE			511, 517, 523
7166269	WASHER			433, 435, 439
7166315	PLUG			51, 361, 487
7166334	ARM LIFT			685, 687
7166339	SPRING, LOAD CHECK	7239824	C	153, 159, 165, 171, 175, 179
7166445	BRACKET, BLOCK DILL			333, 339, 345
7166489	BRACKET, CAB			333
7166544	COVER, HVAC			31, 585
7166629	LIGHT, CAB HEADLINER			43, 653
7166712	COVER			71
7166831	BLOCK			685, 687
7166832	MOUNT			619
7166916	DECAL, A/C			567, 635, 639
7167003	CLIP			557
7167163	BOWL, FUEL			621
7167165	TENSIONER WHEEL			401, 405
7167177	GROMMET WIPER			511, 517, 523, 751, 753
7167241	SEAL, BULK	6646705	B,D	409
7167395	KIT, CUP HOLDER			557
7167437	SPRING, GAS STD			31, 35, 613
7167438	GAS SPRING			35, 623
7167506	SHIELD, ASSY			613
7167603	SEAT, OPERATOR SUSPENSION AIR			769, 789
7167651	SHIELD, BELT			401, 405
7167844	SHAFT			511, 517, 523
7167845	PIN			511, 517, 523, 529

Code for disposition of old part number

A -- Use up
B -- Use on other application (See PNI)
C -- File PDR Report with Bobcat Parts Sales
D -- Part Number Error

Page 885 - 0SS# 6300322913 - All rights reserved by Bobcat Company - 08/04/2017 - 06:30:15 - Produced by Ken Cook Co. with mediaTOff

NUMERICAL INDEX (Cont'd)

Part Number	Description	Was	Code	Page
7167846	WASHER CAST			511, 517, 523, 529
7167945	DECAL, FUSE RELAY			333, 339, 345, 563
7167988	DECAL, DANGER			563
7167989	DECAL, DANGER			567
7167990	DECAL, DANGER			567
7167991	DECAL, EXIT REAR			537, 539, 563, 751, 753
7167993	DECAL, WARNING			567
7167994	DECAL, WARNING			563
7167996	DECAL, WARNING			567, 683
7168019	DECAL, WARNING			683
7168020	DECAL, WARNING			683
7168021	DECAL			685, 687
7168022	DECAL			685, 687
7168023	DECAL			563
7168024	DECAL			563
7168025	DECAL EMERGENCY DOOR			511, 517, 523, 529, 563
7168031	DECAL			567
7168033	DECAL, DANGER			573
7168034	DECAL, DANGER			573
7168037	DECAL, WARNING			573
7168038	DECAL, WARNING			573
7168039	DECAL, WARNING	7167995	A	567, 571
7168040	DECAL, WARNING			573, 683
7168081	DECAL, OPERATION			573
7168082	DECAL, OPERATION			573
7168114	DECAL, SWITCH			359, 563, 673, 675, 677, 679
7168136	DECAL			563
7168137	DECAL, OPERATION			573
7168138	DECAL, WARNING			563, 801
7168139	DECAL, WARNING			573, 801
7168140	DECAL, WARNING			563
7168141	DECAL, WARNING			573
7168142	DECAL, WARNING			563
7168143	DECAL, WARNING			573
7168144	DECAL			563
7168145	DECAL, WARNING			573
7168159	BUSHING			685, 687
7168171	BELT, SEAT 3"			781
7168172	BELT, SEAT 3"			783
7168173	BRACKET, COVER			333, 339, 345
7168272	DECAL			563
7168273	DECAL, CONTROL			573
7168336	HOSE, HYD			97, 101, 105, 111
7168429	BOLT, CONTROLLER			333, 339, 345
7168604	RESISTOR			625
7168610	COVER			39, 43, 575
7168836	SHAFT			529
7168837	HINGE, DOOR			529

Code for disposition of old part number
A -- Use up
B -- Use on other application (See PNI)
C -- File PDR Report with Bobcat Parts Sales
D -- Part Number Error

Page 880 OSS# 6300322913 - All rights reserved by Bobcat Company - 08/04/2017 - 06:30:16 - Produced by Ken Cook Co. with mediaoff

NUMERICAL INDEX (Cont'd)

Part Number	Description	Was	Code	Page
7168839	SPACER			529
7168841	SEAL			529
7168862	MOUNT, ARMREST			369
7168863	MOUNT, ARMREST			369
7168952	WIPER MOTOR			511
7168953	ARM WIPER ASSY			511
7168954	BLADE WIPER ASSY			511
7168955	GASKET			511
7168956	PLATE ADAPTOR			511
7168957	PLATE STUD ADAPTOR			511
7169070	KIT, DAMPER STEERING			811
7169112	SWITCH, ROCKER A/C			635, 639, 643
7169118	GUARD, CONDENSER			231, 233
7169128	PULLEY A/C	7134551	A	635
7169130	HARNESS ACCESSORY			485
7169291	DECAL			511, 517, 523, 529, 567, 623
7169340	DECAL			567
7169341	DECAL			573
7169480	KIT, BELT SEAT 3"			783
7169606	CONNECTOR, SLOTTED			31, 35
7169699	DECAL			563
7169710	DECAL, SIGHT GAUGE			567
7169747	TREAD, SAFETY			31, 35, 563
7169753	HARNESS, FLASHER 4-WAY			619
7169778	SEAL, BULK/FT			385, 387
7169849	FITTING BALLSTUD			511, 517, 523, 529
7169877	DECAL			31, 35, 567
7169911	DECAL PLATE			439
7169932	MOUNT			235, 239
7169965	DECAL, TAILGATE BASE			567
7169971	DECAL, LIFT ARM			567
7170114	SCREW			43, 575, 653
7170300	PIN, PIVOT			667
7170355	DECAL, DANGER			97, 101, 105, 111, 119, 563
7170360	DECAL, SPRING REMOVAL			511, 517, 523, 529, 567
7170486	TANK, FUEL			425
7170531	HARNESS, CAB			529
7170588	HOSE, WATER FORMED			393
7170608	BUSHING, WELD-ON			57
7170609	PIN, PIVOT TAPERED			57
7170611	SEAL			63
7170613	PLUG			63

Code for disposition of old part number
A -- Use up
B -- Use on other application (See PNI)
C -- File PDR Report with Bobcat Parts Sales
D -- Part Number Error

Page 887 - OSS# 6300322913 - All rights reserved by Bobcat Company - 08/04/2017 08:30:16 - Produced by Ken Cook Co. with medialoft

NUMERICAL INDEX (Cont'd)

Part Number	Description	Was	Code	Page
7170614	SNAP RING			63
7170615	BUSHING, WEAR			63
7170635	INSULATION, TANK FUEL			413, 425
7170674	FAN, ENG COOLANT			385, 387
7170765	NUT			365, 369
7170782	KIT, GAS SPRING DLX			623
7170798	CABLE, NEGATIVE			351
7171081	BRACKET, HORN			657, 661
7171088	GROMMET			657, 661
7171188	BRACKET			333, 339, 345
7171192	INSULATION, DOOR REAR			799, 805, 809
7171194	INSULATION, DOOR REAR			799, 805, 809
7171215	INSULATION, UPRIGHT			799, 809
7171218	INSULATION, PANEL LH			805
7171219	INSULATION, PANEL RH			805, 807
7171220	INSULATION, PANEL LH			805, 807
7171394	HOSE			193
7171962	TANK, FUEL AUX			425, 429
7172023	INSULATION, FENDER			805
7172119	SEAL, FOAM			751, 753
7172121	WASHER			751, 753
7172170	HOSE, HYD			715
7172412	FRAME, TRACK			65
7172413	FRAME, TRACK			65
7172708	BRACKET, SWITCH			751, 753
7172897	KIT, RESEAL PLUGS			757
7172903	KIT, DECAL WHITE			825
7173008	HOSE, HYD			219, 223
7173009	HOSE, HYD			219
7173010	HOSE, HYD			219
7173012	HOSE, HYD			219
7173013	HOSE, HYD			219
7173294	DECAL			573
7173309	GUARD, LIGHT			691
7173310	SPACER			691
7173403	DECAL, OPERATION			573
7173453	PLUG			757
7173576	COVER			31
7173592	KIT, ALARM BACK-UP			493
7173593	KIT, ALARM BACK-UP			495
7173651	INSULATION, HEATER			635, 639, 643
7173943	PLATFORM			695

Code for disposition of old part number
A -- Use up
B -- Use on other application (See PNI)
C -- File PDR Report with Bobcat Parts Sales
D -- Part Number Error

Page 880 OSS# 6300322913 - All rights reserved by Bobcat Company - 08/04/2017 - 06:30:16 - Produced by Ken Cook Co. with mediaioff

NUMERICAL INDEX (Cont'd)

Part Number	Description	Was	Code	Page
7173982	INSULATION, CROSSMEMBER			805, 807
7174044	LINK, PEDAL			149, 151
7174045	LINK, PEDAL			149
7174046	LINK, BELLCRANK			149
7174128	KIT, GUARD LIGHT			691
7174129	KIT, GUARD LIGHT			689
7174171	KIT, HEADLINER HVAC			651
7174328	DECAL			825
7174476	BRACKET			597, 601
7174537	DECAL			825
7174706	BELT, ALT			409
7174707	BELT, COMPRESSOR A/C			635, 639, 643
7174787	INSULATION, PAN SEAT			31, 35
7174807	ELBOW			117, 765
7174811	SHIELD, ISOLATOR			605
7174837	GASKET, WIPER			511, 517, 523
7174838	SPACER			511, 517, 523
7174839	SPACER			511, 517, 523
7174841	SPACER, HANDLE			511, 517, 523
7174850	INSULATION,TRANSMIS			805, 807
7174903	KIT, SEAL CAB			535
7175017	HARNESS, ALARM BACK-UP			353, 493
7175098	MUFFLER, EXHAUST			397, 399
7175151	STRIKER, DOOR			511, 517, 523, 529
7175270	PIN, PIVOT			57
7175321	HARNESS, ACD INPUT			589
7175559	HOSE, HYD			121
7175580	BRACKET, SWITCH			597
7175581	HARNESS BRAKE SJC			601, 701
7175606	KIT, ROAD			597
7175670	HARNESS ROAD KIT			597, 601
7176099	FILTER, AIR FRESH 10			625
7176100	COVER			625
7176101	DUCT, AIR			625
7176117	MOUNT			51, 239
7176118	MOUNT			51, 239
7176133	PANEL, CAB INTERIOR			43
7176134	PANEL, CAB INTERIOR			39
7176579	SEAL, FOAM			625
7176603	INSULATION, PANEL SEAT			31, 35
7176942	SPACER			625
7176943	SEAL, COVER			625

Code for disposition of old part number
A -- Use up
B -- Use on other application (See PNI)
C -- File PDR Report with Bobcat Parts Sales
D -- Part Number Error

All rights reserved by Bobcat Company - 08/04/2017 - 08:30:16 - Produced by Ken Cook Co. with mediaioff

Page 889 - 0SS# 6300322913 -

NUMERICAL INDEX (Cont'd)

Part Number	Description	Was	Code	Page
7177104	HOSE, HYD			737
7177105	HOSE, HYD			737
7177110	TANK, OIL HYD			189
7177132	BRACKET, TANK FUEL			417
7177133	BRACKET, TANK FUEL			417, 429
7177196	SHELL, ARMREST RH			365, 369
7177197	SHELL, ARMREST LH			365, 369
7177212	GASKET			621
7177235	BRACKET, HARNESS			333, 339, 345
7177326	HOSE, HYD			189
7177417	MOUNT, CONTROLS LH	7153506	A	369
7177418	MOUNT, CONTROLS RH	7156842	A	369
7177690	MOUNT			607, 659, 663
7177692	HARNESS, 2-SPD			219
7177705	DECAL			815
7177706	DECAL			815
7177707	DECAL			563, 573, 673, 675, 677, 679
7177725	KIT, PATTERN THL			815
7177730	DECAL			815
7177742	DECAL			563, 577, 581, 585
7177966	MUFFLER, PURIFIER			699
7178137	TUBELINE, HYD			119
7178139	HOSE, HYD			119
7178141	MOUNT, HOSE			121
7178213	CONNECTOR, FILTER			399, 481
7178214	GROMMET			397, 399, 481
7178418	HOSE, HYD ASSY			121
7178419	HOSE, HYD ASSY			121
7178420	KIT, PLATFORM MAINTENANCE			695
7178450	SHIELD, W/A			13, 17
7178451	COVER, SIDE			13, 17, 19, 21
7178573	HOSE, HYD			197, 201
7178574	HOSE, HYD			197, 201
7178623	COVER, HOSE			413, 421, 425
7178810	HOSE, HYD			425
7178841	TEE			737, 741
7178842	SHIELD, W/A			13, 17
7178954	COVER, HVAC			39, 585
7179008	SCREW, PLASTIC			325, 329, 675, 677
7179136	PLUG, HARNESS CAB STD			325
7179137	FOAM			325
7179917	SEAL, CAB SIDE	7245475	A	535
7179918	SEAL, LATCH	7156087	A	535
7179919	SEAL, LATCH	7161789	A	535

Code for disposition of old part number
A -- Use up
B -- Use on other application (See PNI)
C -- File PDR Report with Bobcat Parts Sales
D -- Part Number Error

Page 882 OSS# 6300322913 - All rights reserved by Bobcat Company - 08/04/2017 - 06:30:16 - Produced by Ken Cook Co. with mediaioff

NUMERICAL INDEX (Cont'd)

Part Number	Description	Was	Code	Page
7180052	INSULATION, TRANS			805, 807
7180087	DECAL, WARNING			493, 495
7180126	WINDOW, CAB SLIDING			545
7180127	WINDOW, CAB SLIDING			545
7180207	HARNESS, WIPER			751, 753
7180291	DECAL THL OHB			815
7180325	TUBE, TENSIONER			93
7180679	TANK, FUEL			417
7180680	TANK, FUEL			429
7180964	HOSE, HYD			193
7180987	FITTING, CROSS			153, 159, 165, 171, 175, 207, 215
7180992	HOLDER, LH			597, 601
7180993	HOLDER, RH			597, 601
7180997	HOLDER			609
7180998	HOLDER			609
7181050	HOSE, HYD			185
7181085	BRACKET			67, 71, 75, 77
7181309	PAD, WEAR			189
7181555	TOOL BOX			577, 581
7181556	COVER, TOOL BOX			577, 581
7181557	CAM			577, 581
7182044	HOSE, HYD			315
7182087	TUBELINE, HYD			207, 215
7182088	TUBE DRAIN			207, 215
7182335	KIT, WINDOW SIDE			545
7182358	SEAL, CAB FRONT	7245476	A	535
7182796	SEAL, FOAM			31, 585
7182882	TUBELINE, HYD			97, 101, 105, 111
7182942	PLUG			41, 577, 581, 585
7182960	STRAP, HOLD DOWN			593, 595
7183046	COVER, BELT			409
7183048	SPACER			433, 435, 439
7183077	STRAP, HOLD DOWN			593, 595
7183158	PLATE			529
7183185	FRAME, TRACK			71
7183186	FRAME, TRACK			71
7183295	HARNESS, HORN			607, 659, 663
7183298	CLAMP			97, 101, 105, 111
7183318REM	CYLINDER, POWER BOB-TACH			721
7183366	KIT, SEAT OPERATOR SUSPENSION AIR			789
7183605	KIT, FITTING W/DECAL			97, 101, 105, 111, 505
7183869	GUARD, LIGHT			689
7183870	GUARD, LIGHT			689
7184329	CATCH, ASSY			593, 595
7184341	BUSHING			779, 783
7184346	DECAL WARNING			563, 779, 783

Code for disposition of old part number

A -- Use up
B -- Use on other application (See PNI)
C -- File PDR Report with Bobcat Parts Sales
D -- Part Number Error

Page 891 - 05/30/2017 - Produced by Ken Cook Co. with mediaJoff - OSS+ 6300322918 - All rights reserved by Bobcat Company

NUMERICAL INDEX (Cont'd)

Part Number	Description	Was	Code	Page
7184677	BUSHING			55
7184969	HOSE, HYD			715, 717
7184970	HOSE, HYD			715, 717
7184971	HOSE, HYD			719
7184972	HOSE, HYD			719
7185137	SPACER			537, 539
7185150	PLUG, HARNESS CAB			325, 329, 577, 581, 585
7185169	PANEL, STEERING	7180037	A	51, 53
7185170	COVER			51, 53
7185232	HOSE, HYD			805
7185234	KIT, REMOTE CONTROL			755
7185837	BRACKET			683
7185838	BRACKET			683
7185848	COVER			627, 647
7185936	COVER			593, 595
7185937	BRACKET			593, 595
7186009	LOUVER, PLASTIC			13, 17, 19, 21, 25
7186010	LOUVER, PLASTIC			13, 17, 19, 21, 25
7186598	VALVE, CHECK			767
7186599	VALVE CHECK SPRING			767
7186644	WINDOW, FOPS			615
7186723	KIT, WINDOW FOPS			615
7186768	BOLT			695
7186769	BOLT			695
7186827	MOUNT, BULKHEAD			737, 741, 745
7186828	MOUNT, BULKHEAD			737, 741, 745
7186874	HOSE, HYD FORMED			197
7186972	LEVER			511, 517, 523, 529
7187059	KIT, SHIELD CYL			795
7187061	SHIELD, CYL			795
7187062	SHIELD, CYL			795
7187104	SEAL			39, 673, 675, 677, 679
7187118	KIT, GUIDE HOSE			665
7187124	LINK, LIFT ARM H ASSY			57
7188097	SEAL			511, 517, 523
7188108	GAS SPRING			235, 239, 811
7188110	CLAMP			763
7188129	KIT, EXTENTION LIGHT			609
7188130	HOLDER			609
7188131	HOLDER			609
7188132	HOLDER			609
7188343	PIN			683
7188375	SEAL, BULK			593, 595
7188448	HARNESS, PUMP			359
7188542	DECAL, INSTRUCTIONS			695

Code for disposition of old part number
A -- Use up
B -- Use on other application (See PNI)
C -- File PDR Report with Bobcat Parts Sales
D -- Part Number Error

Page 1324 OSS# 6300322913 - All rights reserved by Bobcat Company - 08/04/2017 - 06:30:16 - Produced by Ken Cook Co. with mediaioff

NUMERICAL INDEX (Cont'd)

Part Number	Description	Was	Code	Page
7188701	HOSE, HYD FORMED			189
7188745	PLUG	7174012	A	31, 35, 557, 577, 581, 585, 649
7188780	HOSE, HYD FORMED			189
7188781	HOSE, HYD FORMED			189
7189077	MOUNT			353, 493, 495
7189371	HOSE, HYD FORMED			189, 193
7189826	COVER			359
7189892	MOUNT, BELLCRANK			235
7189893	SHAFT, STEERING			235
7190111	DECAL, CONTROL			563, 673, 679
7190648	TUBELINE, HYD			197
7190707	BOOT, RUBBER			593
7190708	BOOT, RUBBER			593
7190754	COVER, DRAIN			67, 77
7190789	KIT, ENG COMP SEAL	SALES	A	593
7191035	LENS, REFLECTIVE			501, 597, 601, 701, 703
7191193	KNOB			597, 601
7191297	TUBELINE, HEATER			631
7191332	YOKE, FLANGE			151, 153
7191333	PIN, CLEVIS			149, 151
7191334	PIN, CLEVIS			149, 151
7191385	SHIELD, ALARM			353, 493, 495
7191672	ELBOW			333, 339, 345
7192066	INSULATION			801
7192067	INSULATION, PANEL LH			801, 803
7192071	INSULATION, CROSSMEMBER			801, 803
7192149	KIT, SOUND/NOISE REDUCTION		A	801
7192150	KIT, SOUND/NOISE REDUCTION			803
7192154	INSULATION			801
7192155	INSULATION			803
7192184	INSULATION			803
7192262	KIT, PLUMBING POWER BOB-TACH			715
7192287	BOLT			627, 647, 649
7192371	BOLT			635, 639, 643, 647
7192408	SEAL			627, 647
7192569	BRACKET			625
7192823	NUT			757
7193018	SEAL			649
7193019	PANEL, DUCT			649
7193020	DUCT, AIR			649
7193021	BRACKET			41, 577, 581, 585, 649
7193022	INSULATION			649
7193023	DUCT, AIR			649
7193354	FILTER, AIR RECIRCULATING			627, 647

Code for disposition of old part number
A -- Use up
B -- Use on other application (See PNI)
C -- File PDR Report with Bobcat Parts Sales
D -- Part Number Error

Page 893 - OSS# 6300322913 - All rights reserved by Bobcat Company - 08/04/2017 - 06:30:15 - Produced by Ken Cook Co. with mediaroff

NUMERICAL INDEX (Cont'd)

Part Number	Description	Was	Code	Page
7193370	MAIN FRAME			17
7193531	GROMMET			635, 639, 643, 647
7193532	GROMMET			627, 647
7193533	GROMMET			635, 639, 643, 647
7193534	COIL, HEATER			627, 647
7193535	EVAPORATOR			635, 639, 643, 647
7193539	THERMOSTAT			635, 639, 643, 647
7193540	LATCH			627, 647
7193541	DRAIN, WATER SEAT			627, 647
7193542	SEAL			627, 647
7193543	SEAL			627, 647
7193579	KIT, LIFT SINGLE POINT	7129295	A	685
7193584	MOUNT, LIFT KIT	7159102		685, 687
7193687	BRACKET, MOUNTING			405, 671
7193725	HINGE, DOOR CAB			511, 517, 523
7193758	FITTING, HYD ELBOW			97, 105
7193782	COVER			627
7193783	SEAL, FOAM			627, 647
7193784	BOLT			627, 647
7193786	RIVET, POP			627, 647
7193843	HOSE, A/C ASSY			639, 643
7194092	BRACKET, RH			597, 601
7194093	BRACKET, LH			597, 601
7194096	HOLDER, BASE LH			597, 601
7194097	HOLDER, BASE RH			597, 601
7194160	BUMPER, RUBBER 'M' SERIES			509
7194262	WRAPAROUND			627, 647
7194433	SHIELD, ALT	7162022	A	409
7194471	PIN, CLEVIS			613
7194599	DECAL, MODEL			567
7194975	GAUGE, SIGHT			13, 17, 19, 21, 25
7195109	HOSE, HYD			219
7195110	HOSE, HYD			219
7195527	MOUNT, COMPRESSOR A/C			635, 639, 643
7195615	FITTING, HYD TEE			745
7196015	BUSHING, PLASTIC			511, 517, 523
7196017	DISK, PLASTIC			511, 517, 523
7196075	CLAMP, TUBELINE			737
7196287	COVER, BELT			409, 435, 439
7196314	TUBELINE, HOSE AC ASSY			639
7196358	INSULATION			805, 807
7196359	HOSE, HYD			219
7196360	HOSE, HYD			219
7196558	MOUNT, PUMP			405
7196605	MOUNT			635, 639, 643
7196671	PANEL, LH			51, 53

Code for disposition of old part number
A -- Use up
B -- Use on other application (See PNI)
C -- File PDR Report with Bobcat Parts Sales
D -- Part Number Error

Page 886 - OSS# 6300322913 - All rights reserved by Bobcat Company - 08/04/2017 - 06:30:16 - Produced by Ken Cook Co. with mediaioff

NUMERICAL INDEX (Cont'd)

Part Number	Description	Was	Code	Page
7196673	BRACKET			333, 339, 345
7196753	HARNESS, CAB DLX			329, 577
7196757	INSULATION			799, 809
7196758	INSULATION			799, 809
7196759	INSULATION			809
7196760	INSULATION, ENG			799, 809
7196807	SPROCKET, MOTOR DRIVE TRACK			65, 67, 69, 75, 77, 79
7196823	HARNESS, MFR			333
7196824	HARNESS, MFR			333
7196889	LATCH			627, 647
7197082	COVER			51, 53
7197120	BOLT			57
7197614	STRAP, HOLD DOWN			643
7197733	FAN			649
7197894	BELT, DRIVE			401, 405
7197904	PULLEY			635, 639, 643
7197915	SPRING, COMPRESSION			365
7197916	SPACER			365
7197921	MOUNT, CONTROLS RH			365
7197922	MOUNT, CONTROLS LH			365
7197972	COVER			29, 585
7197973	COVER			585, 625
7198225	TUBELINE, HYD			97, 101
7198226	TUBELINE, HYD			97, 101
7198280	HOSE, HYD			97, 101
7198281	HOSE, HYD			97, 101
7198481	INSULATION, PANEL LH			805, 807
7198494	INSULATION, PANEL LH			801, 803
7198554	FITTING, ELBOW			633
7198713	KIT, A/C			635
7198932	INSULATION			799, 809
7198933	INSULATION			799, 809
7199009	INSULATION			799, 809
7199010	INSULATION			799, 809
7199011	INSULATION			799
7199044	BRACKET			581, 585
7199265	HOSE, HYD			215
7199266	HOSE, HYD			215
7199814	CLAMP, HOSE			97, 101, 105, 111, 121, 125
7199815	CLAMP, HOSE			97, 101, 105, 111, 121, 125
7199853	SPRING, TORSION			365, 369
7199872	SPACER, TUBE			97, 101, 105, 111, 121, 125, 685
7199946	BOLT			97, 101, 105, 111, 121, 125, 197
7200099	DUCT, AIR	7147264	D	13, 17, 19

Code for disposition of old part number

A -- Use up
B -- Use on other application (See PNI)
C -- File PDR Report with Bobcat Parts Sales
D -- Part Number Error

Page 895 - OSS# 6300322913 - All rights reserved by Bobcat Company - 08/04/2017 - 06:30:16 - Produced by Ken Cook Co. with mediaforff

NUMERICAL INDEX (Cont'd)

Part Number	Description	Was	Code	Page
7200100	DUCT, AIR	7200098	D	13, 17, 19
7200273	DECAL, ROC	7178340	B,D	563
7200274	DECAL, ROC	7183740	B,D	563
7200275	DECAL, ROC	7200272	B,D	563
7200551	HOSE, HYD ASSY STC			203
7200552	HOSE, HYD ASSY STC			203, 205
7200657	KIT, DUCT			649
7200883	HARNESS, JUMPER FAN			649
7200887	SLIDE			365, 369
7200888	SLIDE			365, 369
7201022	TUBELINE, HYD			737, 741
7201023	TUBELINE, HYD			737
7201024	TUBELINE, HYD			737
7201025	TUBELINE, HYD			737
7201026	TUBELINE, HYD			737
7201027	HOSE, HYD			737, 741
7201028	MOUNT, VALVE			737, 741
7201263	HOSE, HYD	7126166	B	223
7201355	DAMPER			57, 559
7201414	HARNESS, AUX REAR			737, 741, 745
7201515	RETAINING PLATE, RUBBER BUMPER			509
7201981	MANIFOLD, DRAIN CASE			119, 121, 125, 197, 201, 207, 211, 215, 223, 225
7202038	BUSHING, ALIGNMENT	6805102	A	153, 171
7202296	MOUNT, ENG			409
7202298	MOUNT, ENG			409
7202325	TUBELINE, HYD VALVE CONTROL			159, 165, 175, 179
7202329	FITTING, HYD CONNECTOR W/SCREEN			159, 165, 175, 179
7202343	HOSE, HYD			219
7202518	KIT, SEAL		A	131, 139
7202688	HOSE, HYD			737
7202689	HOSE, HYD			737
7202799	BRACKET, SUPPORT			13, 17, 19, 21, 25
7202800	BRACKET, SUPPORT			13, 17, 19, 21, 25
7202956	SEAL, BULK			325, 329
7203382	PLUG, STEEL	6717404	A	413, 417, 425, 745
7203389	SEAT BAR	7153408	A	47
7203490	FITTING, HYD CONNECTOR			97, 105
7203492	SPACER			145
7203494	CYLINDER, LIFT			145
7203497	TUBE, CASE CYL			145
7203643	SPRING, VALVE			159, 165, 175, 179
7203665	KIT, BUMPER			509

Code for disposition of old part number
A -- Use up
B -- Use on other application (See PNI)
C -- File PDR Report with Bobcat Parts Sales
D -- Part Number Error

Page 888 - OSS# 6300322913 - All rights reserved by Bobcat Company - 03/04/2017 - 06:30:16 - Produced by Ken Cook Co. with mediaioff

NUMERICAL INDEX (Cont'd)

Part Number	Description	Was	Code	Page
7203684	KIT, A/C			639
7203897	CLAMP, ADAPTER			737
7204041	INSULATION, UPRIGHT			809
7204291	MOUNT, ENG/PUMP			405, 409
7204384	SPACER			737, 741
7204727	HOSE, HYD			97, 101
7205329	SEAL, COVER			51, 53
7205727	DECAL, SERVICE	7168042	A	573, 805
7206563AR	KIT, DECAL TRANSLATION			563, 567
7206563BR	KIT, DECAL TRANSLATION			563, 567
7206563CA	KIT, DECAL TRANSLATION			563, 567
7207335	SEAL, QUAD			725, 727
7207408	PISTON, CYL LIFT			681
7207437	MOUNT, RADIATOR			233
7208181	BUSHING			233, 393
7208227	SEAT, RELIEF PORT			159, 165, 175, 179
7209911	EXTENSION, FITTING GREASE			63
7210504	HARNESS, SJC			359
7210557	HARNESS, CAB			325
7210758	COVER, PLATE			19, 21, 25
7210768	HARNESS, MFR			339
7210769	HARNESS, MFR			339
7210851	BRACKET			13, 17, 19
7211393	RETAINER, SEAL			159, 165, 175, 179
7211394	ADAPTER, DETENT			159, 165
7211397	WASHER, SPRING	6587523	A	153, 159, 165, 171, 175, 179
7211400	SLEEVE, DETENT			159, 165
7211441	DECAL, MODEL	7194600	A	567
7211446	KIT, FITTING W/DECAL			105, 111, 505, 507
7211820	TUBELINE, HYD			105, 111
7211821	TUBELINE, HYD			105, 111
7211829	HOSE, HYD			125
7211830	HOSE, HYD			125
7211868	MAIN FRAME			19
7211897	BUSHING, WELD-ON			19, 21, 25
7212037	HOSE, HYD			105, 111
7212038	HOSE, HYD			105, 111
7212684	HOSE, HYD FORMED	7186873	A	197
7212767	HOSE, HYD			225
7212770	HOSE, HYD			225
7212792	HOSE, HYD			223, 225
7212793	HOSE, HYD			223
7212964	KIT FITTING W/DECAL			763, 765
7212967	BRACKET, HARNESS			339, 345
7213028	FITTING, ELBOW			429

Code for disposition of old part number
A -- Use up
B -- Use on other application (See PNI)
C -- File PDR Report with Bobcat Parts Sales
D -- Part Number Error

Page 897 - 0SS+ 6300322913 - All rights reserved by Bobcat Company - 08/04/2017 - 08:30:16 - Produced by Ken Cook Co. with MediaTroff

NUMERICAL INDEX (Cont'd)

Part Number	Description	Was	Code	Page
7213030	TUBE, FUEL	7178507	A	425, 429
7213188	SCREW			389
7213215	HOSE HYDRAULIC ASSY	7162866	A	121, 125
7213394	PANEL, RH			439
7213396	CLAMP, CABLE			439
7213407	BRACKET, THROTTLE			439
7213411	SPRING, TORSION			439
7213412	LEVER			439
7213415	LEVER			439
7213429	CABLE, THROTTLE			439
7213435	CABLE, THROTTLE			439
7213595	BOLT			671
7213928	KIT, PANEL DLX			677
7213929	KIT, PANEL KEYLESS			679
7214029	HOSE, A/C ASSY			639
7214138	WINDOW, CAB REAR	7183022	A	31, 539
7214312	RING, RETAINING			159, 165, 175, 179, 731
7214512	FITTING, HYD TEE			153, 159, 165, 171, 175, 179
7214591	HOSE, AIR FORMED			399
7214626	HARNESS, 2-SPD			223
7214673	KIT, WINDOW REAR			539
7214856	RING, RETAINING			159, 165
7214874	BRACKET, SWITCH			501
7214875	BRACKET, CENTERING			501
7214959	BLOCK, VALVE CONTROL HYD			159, 165
7215374	BUSHING, NYLON			31, 35
7215408	BUSHING, WELD-ON	7170610	A	63
7215602	COVER, FILTER PARTICULATE			17, 19
7215769	BUSHING, WELD-ON	7139883		57
7217054	MOUNT, VALVE			119
7217075	SPOOL, BICS			159, 165, 175, 179
7217298	DRIVECASE			67, 77
7217363	TUBELINE, HYD			741
7217364	TUBELINE, HYD			741
7217365	TUBELINE, HYD			741
7217366	TUBELINE, HYD			741
7217483	HARNESS, REAR DOOR	7175287		611
7217484	HARNESS, REAR DOOR	7175271		353
7218276	PLATE, LATCH	7213527	D	55
7218747	WASHER, FLAT			57
7218781	CROSSMEMBER			13, 17, 19
7218782	GUIDE, HOSE			13, 17, 19
7218908	TUBELINE, HYD			207, 215
7218923	KIT, SEAL COMPLETE			159, 165, 175, 179

Code for disposition of old part number
A -- Use up
B -- Use on other application (See PNI)
C -- File PDR Report with Bobcat Parts Sales
D -- Part Number Error

Page 890 - OSS# 6300322913 - All rights reserved by Bobcat Company - 08/04/2017 - 06:30:16 - Produced by Ken Cook Co. with mediaoff

NUMERICAL INDEX (Cont'd)

Part Number	Description	Was	Code	Page
7218924	KIT, SEAL			159, 165, 175, 179
7218932	SWITCH, ROCKER	7177348	B	815
7219080	O-RING			159, 165, 175, 179
7219294	HARNESS, SWITCH NEUTRAL			501, 701, 703
7219324	VALVE, RELIEF	6686360	A	153, 159, 165, 171, 175, 179
7219416	GROMMET			205
7219703	PLUG, BICS			159, 165, 175, 179
7219755	PUMP, PRIMER HAND			417, 421, 429
7219833	HOSE, HYD		A	715, 717, 719, 805
7219834	HOSE, HYD			715
7219972	SEAL, WINDOW REAR			31, 35
7219974	WINDOW, CAB REAR			31, 35
7220344	DECAL, REFLECTIVE			501, 701, 703
7220348	DECAL, REFLECTIVE			501, 701, 703
7220859	MOUNT, VALVE			119
7220912	KIT, AUX REAR			741
7221105	SHIELD, RH			19, 21
7221106	SHIELD, LH			19, 21
7221233	INSULATION, UPRIGHT			799, 809
7221255	SPRING			63
7221425	COVER, ENG	7161417	A	385, 387, 389
7221433	SEAL, FOAM			385, 387
7221437	SHIELD, HOOD			385, 387, 793
7221530	HORN, ALARM			659, 663
7222080	BRACKET, MOUNTING			671
7222081	BRACKET, MOUNTING			671
7222082	MOUNT, BRACKET			671
7222083	MOUNT, BRACKET			671
7222389	BUSHING, WELD-ON			57
7222390	BUSHING, WELD-ON			57
7222397	LOUVER, ROUND			653
7222562	BLOCK, VALVE CONTROL HYD	7214959	A	175, 179
7222582	TUBELINE, HYD			741
7222644	HEAD, CYL TILT	7202036	B,D	133, 135, 141, 143
7222703	TUBE, CASE CYL TILT	7202033	B,D	139, 141, 143
7222705	TUBE, CASE CYL TILT	7202033	B,D	131, 133, 135
7222767	SPACER			659, 663
7223183	COVER, DRAIN			67, 69, 77, 79
7223184	MOUNT, LOAD ISOLATOR			671
7223271	KIT, HORN			659
7223272	KIT, HORN W/JOYSTICK			663
7223412	PANEL, DASH	7155788	A	39, 41
7223715	BRACKET, MOUNTING			617
7224039	SPRING, COMPRESSION			731

Code for disposition of old part number

A -- Use up
B -- Use on other application (See PNI)
C -- File PDR Report with Bobcat Parts Sales
D -- Part Number Error

Page 899 - 0SS# 6300322913 - All rights reserved by Bobcat Company - 08/04/2017 - 08:30:16 - Produced by Ken Cook Co. with mediaJoff

NUMERICAL INDEX (Cont'd)

Part Number	Description	Was	Code	Page
7224369	CHANNEL			539, 753
7224427	INSULATION, TANK FUEL			413
7224664	EXTINGUISHER, FIRE			617
7224665	BRACKET, EXTINGUISHER FIRE			617
7225133	KIT, WIPER REAR			753
7225145	WINDOW, CAB REAR			753
7225214	SPOOL			731
7225491	KIT, SEAL	7202518	B,D	133, 135, 141, 143
7225569	HOSE, HYD			125
7225570	HOSE, HYD			125
7225639	KIT, SEAL	7137945	B	145, 681
7225718	HARNESS, HORN			659, 663
7225738	MAIN FRAME			21, 25
7226148	FUEL, TUBE	7226147	A	429
7226149	FUEL, TUBE	7226147	A	417, 421, 429
7226207	MANIFOLD, OUTLET PUMP			193, 737, 741, 745, 805
7226475	HOSE, WATER FORMED			395
7226713	KIT, LIFT SINGLE POINT			687
7226770	ORIFICE			731
7226843	FRAME, TRACK			67
7226844	FRAME, TRACK			67
7226847	FRAME, TRACK			77
7226848	FRAME, TRACK			77
7226854	BRACKET			585
7227033	BOLT			671
7227043	SHIELD, RH			19, 21
7227044	SHIELD, LH			19, 21
7227053	LINK, BELLCRANK			151
7227083	COVER, SIDE			19, 21
7227149	SCREEN, EXCHANGER	7153365	B,D	387, 389
7227360	TANK, FUEL			421
7227414	SPRING SUSPENSION			79
7227462	SHAFT, W/A			721, 723, 725, 727
7227463	CYLINDER, POWER BOB-TACH			709, 723
7227465	TUBE, CASE CYL POWER BOB-TACH			723
7227571	TUBE, CASE CYL POWER BOB-TACH			725
7227895	TENSIONER, TRACK ASSY	7180674	A	93
7227906	SHAFT, CHROME			93
7227907	DUCT, AIR			389
7228241	INSULATION, TANK FUEL			417, 429

Code for disposition of old part number
A -- Use up
B -- Use on other application (See PNI)
C -- File PDR Report with Bobcat Parts Sales
D -- Part Number Error

Page 892 OSS# 6300322913 - All rights reserved by Bobcat Company - 08/04/2017 - 06:30:16 - Produced by Ken Cook Co. with mediaoff

NUMERICAL INDEX (Cont'd)

Part Number	Description	Was	Code	Page
7228298	BRACKET	7151848	A	635, 639, 643
7228545	HOSE, HYD FORMED			199
7228554	LINK, PEDAL			151
7228562	SPACER			741
7228629	ROLLER, TRACK			91
7228740	VALVE			119
7229198	MOUNT, LIFT KIT			687
7229391	ARMREST RH	7220855	A	365, 369
7229392	ARMREST LH	7220856	A	365, 369
7229411	HANDLE, LATCH DOOR	7213524	D	55
7229414	HOSE, A/C ASSY			643
7229539	LIGHT, CAB HEADLINER			575, 653
7230495	VALVE, LIFT MANUAL	6667844	A	183
7230514	FITTING			193
7230899	SHAFT, ROD CYL TILT			135, 143
7230901	COLLAR			135, 143
7230902	PISTON, CYL TILT			135, 143
7230941	INSULATION	7196318	B	805, 807
7230942	INSULATION	7202003	B	805, 807
7230944	INSULATION	7174849	A	805, 807
7231377	VALVE, 2-SPEED			323
7231496	FILTER, AIR HEATER CAB			655
7231591	LINK, STEERING			235, 239
7231771	HARNESS, WIPER			669
7231782	HARNESS, CAB DLX	7210556	A	329, 581
7232515	FITTING, HYD TEE			179
7232529	COVER, WIPER			669
7232654	ELBOW			339, 345
7232658	TANK, WASHER	7163259	A	511, 517, 523
7232742	VALVE, SOLENOID			731
7232751	VALVE, RELIEF			731
7232870	PLUG			731
7232934	BRACKET, JUNCTION	7203491	C	97, 105
7233244	STEP, LIFT ARM	7232056	A	57, 733
7233245	BRACKET	7232057	A	57
7233371	MOUNT, CONDENSER			643
7233439	SEALANT, GASKET LIQUID	7215541	A	31, 35
7233452	COVER ACCESS	7143346	A	65, 67, 75, 77
7233630	IDLER, REAR			87
7233891	HUB			315
7234007	DECAL, REMOVAL WINDOW			541
7234061	HEADLINER			575
7234064	HEADLINER, DLX			653
7234109	HOSE, DRAIN			409
7234174	MOTOR, WIPER			517, 523

Code for disposition of old part number
A -- Use up
B -- Use on other application (See PNI)
C -- File PDR Report with Bobcat Parts Sales
D -- Part Number Error

Page 901 - 08/04/2017 - 08:30:16 - Produced by Ken Cook Co. with mediaLoff - All rights reserved by Bobcat Company - OSS+ 6300322913

NUMERICAL INDEX (Cont'd)

Part Number	Description	Was	Code	Page
7234278	DECAL, SPECS KOREAN			563
7234279	DECAL, SPECS KOREAN			567
7234468	GAS SPRING	7144862	A	31, 35
7234561	BRACKET, FUEL			413, 417, 425, 429
7234737	HARNESS, CAB DLX			329
7234899	KIT, REMOVAL WINDOW			541
7234926	KNOB			541
7234943	SPACER			541
7234968	HARNESS, BRAKE ADAPTER			211
7235325	MOUNT			399
7235457	HOSE, HYD	6727045	A	223, 225
7235459	HOSE, HYD	7159735	A	197, 201
7235464	HOSE, HYD	7172169	A	715, 717
7235469	HOSE, HYD	7183112	A	203
7235664	PLUG			731
7235665	PLUG, SOCKET			731
7235736	CYLINDER, TILT			143
7235738	CYLINDER, TILT			135
7235751	FOAM, FRONT			51, 53, 535
7235925	VALVE, CHECK			317, 319
7236735	FITTING, HYD ELBOW			205, 317, 319
7237096	CONTROL, WIPER			669
7237149	GUARD, MUFFLER	7193671		697
7237993	BRACKET			813
7237994	BUSHING			813
7237995	ROLLER			813
7238026	KIT, STRG LINKAGE SUPPORT			813
7238517	PIN, PIVOT			547
7238615	BRACKET			715, 717, 719
7238616	CLAMP, HOSE			715, 717, 719
7238617	SPACER			715, 717, 719
7238662	SENSOR, FUEL			421
7239168	SPRING			317, 319
7239227	MOUNT, VALVE			211
7239272	TUBELINE, HYD			211
7239273	TUBELINE, HYD			211
7239276	HOSE, HYD ASSY			211
7239976	KIT, MOUNT ISOLATOR			671
7240006	IDLER, ASSY			83
7240044	INSULATION, SHROUD FAN			809
7240148	KIT, WIPER INTERMITTENT			669
7240280	BRACKET, CONTROL			763

Code for disposition of old part number
A -- Use up
B -- Use on other application (See PNI)
C -- File PDR Report with Bobcat Parts Sales
D -- Part Number Error

Page 1020 OSS# 6300322913 - All rights reserved by Bobcat Company - 08/04/2017 - 06:30:16 - Produced by Ken Cook Co. with mediaioff

NUMERICAL INDEX (Cont'd)

Part Number	Description	Was	Code	Page
7240464	ORIFICE			731
7240733	KIT, PLUMBING HEATER			633
7240735	KIT, A/C			643
7240780	COVER, ACCESS	6716010	A	13, 65, 67, 69, 71, 75, 77, 79
7240823	PANEL, CONTROL	7176309	A	625
7240968	NUT			315, 389
7241140	LIGHT, STROBE	7219903	A	817
7241484	KIT, HEADLINER DLX			585
7241542	HARNESS, BOOM	7152108	A	597, 601
7241637	GUIDE			69, 79
7241791	GROMMET			643
7241882	UNDERCARRIAGE			69
7241884	UNDERCARRIAGE			79
7241991	HOSE, HYD	7159044	A	189
7242068	GASKET			315, 389, 759, 761
7242070	DECAL, SERVICE	7205726	A	563, 805
7242275	DUCT			21, 25, 759
7242381	HOSE, HYD ASSY			745
7242382	HOSE, HYD ASSY			745
7242790	SCREW	1C12168	A	553
7242905	SLIDE			365, 369
7242906	SLIDE			365, 369
7243104	TUBE, COOLING			395
7243138	SHROUD, FAN			389
7243352	HOSE, WATER FORMED			395
7243409	HARNESS, 2 SPEED TRACK			225
7243576	ROLLER, TRACK			91
7243733	HOSE, HYD FORMED			193
7243862	SHIELD, DEBRIS			561
7243863	SHIELD, DEBRIS			561
7243938	SEAL, BULK			389
7243982	RETAINER, HOLDER			643
7244116	CROSSMEMBER			21
7244117	CROSSMEMBER			21
7244125	COVER, HOOD ASSY			389
7244196	MOUNT			389
7244206	POTENTIOMETER, HVAC			625
7244207	KNOB			625
7244210	MOUNT, ISOLATOR			389
7244219	HEAD			147
7244573	HOSE, WATER FORMED			395
7244574	HOSE, WATER FORMED			395
7244714	GUARD, POWER BOB-TACH			733

Code for disposition of old part number
A -- Use up
B -- Use on other application (See PNI)
C -- File PDR Report with Bobcat Parts Sales
D -- Part Number Error

Page 903 - 0SS# 6300322913 - All rights reserved by Bobcat Company - 08/04/2017 - 08:30:16 - Produced by Ken Cook Co. with mediaioff

NUMERICAL INDEX (Cont'd)

Part Number	Description	Was	Code	Page
7244920	KIT, GUARD MUFFLER	7174130		697
7244998	HOSE, HYD	7247640	B,D	205
7245374	CYLINDER, HYD			147
7245375	SHAFT			147
7245954	HOSE, HYD FORMED			193
7246193	FITTING, HYD TEE			117, 193, 765
7246260	STEP			733
7246559	INSERT, THREADED			655
7246605	TUBE CYL W/A			95
7246786	COUPLER, FF FEMALE	6667803	A	737, 741, 745
7246787	COUPLER, FF MALE	6667804	A	737, 741, 745
7246880	COVER, ACCESS			69, 79
7247290	RETAINER, BOLT			235, 239
7247388ENUS	INSTRUCTIONS	7247388	A	813
7247395	KIT, PIN CHROME			547
7247445	NUT BAR ASSY			55
7247582ENUS	INSTRUCTIONS			547
7247745	SPRING, COMPRESSION			731
7247755	LOUVER, RH			489
7247756	LOUVER, LH			489
7248580	BRACKET, FUEL			421
7248835	SHIELD, HOOD			389
7248868	TANK, HYD ASSY			193
7248871	FILTER, OIL HYD ASSY			193, 199
7248873	CAP			193
7248874	FILTER, OIL HYD			1, 193
7248942	HOSE, HYD FORMED			193, 199
7249151	HOSE, HYD ASSY	7162867	A	97, 101, 105, 111
7249237	DECAL			567
7249240	KIT, POWER BOB-TACH			733
7249242	PISTON, CYL LIFT			147
7249264	TUBELINE, HYD			97, 105
7249438	HUB			389, 759, 761
7249525	SUPPORT, LIFT ARM			57, 559
7249838	SPACER			799
7249974	BOLT			315, 389, 759, 761
7250289	KIT, SEAL			317, 319
7250339	PEDAL ASSY LH	7158574	A	51, 53
7250340	PEDAL ASSY RH	7157725	A	53, 435, 439
7250415	U-BOLT			733
7250782	HOSE, HYD ASSY	7217367	A	741
7250783	HOSE, HYD ASSY	7217368	A	741
7250831	FAN, COOLING			389
7250845	GUARD, COUPLER	7173324	A	555
7250870	GROMMET			523
7251003	TUBELINE, HYD			147

Code for disposition of old part number
A -- Use up
B -- Use on other application (See PNI)
C -- File PDR Report with Bobcat Parts Sales
D -- Part Number Error

Page 896 - OSS# 6300322913 - All rights reserved by Bobcat Company - 08/04/2017 - 06:30:16 - Produced by Ken Cook Co. with mediaoff

NUMERICAL INDEX (Cont'd)

Part Number	Description	Was	Code	Page
7251263	ASSY, WIPER ARM			517, 523
7251264	BLADE, WIPER			517, 523
7251265	GASKET			517, 523
7251266	PLATE, ADAPTER			517, 523
7251267	STUD			517, 523
7251278	NUT			517, 523
7251279	NUT			517, 523
7251340	ASSY, LIGHT HEAD RH	7138040	C	325, 329
7251341	ASSY, LIGHT HEAD LH	7138041	A	325, 329
7251359	PANEL, DUCT LH			21, 25, 759
7251689	PAINT, ORANGE QT 6			1
7251690	PAINT, ORANGE SPRAY CAN 6			1
7251691	PAINT, ORANGE .5 OZ			1
7251692	PAINT, CHARCOAL QT 6	6902234	A	1
7251693	PAINT, CHARCOAL SPRAY CAN 6	6902229	A	1
7251694	PAINT, CHARCOAL .5 OZ	6736641	A	1
7251695	PAINT, WHITE QT 6	6902235	A	1
7251701	PAINT, WHITE SPRAY CAN 6	6902230	A	1
7251702	PAINT, WHITE .5 OZ	6736642	A	1
7251704	PAINT, RED .5 OZ	6736645	A	1
7251705	PRIMER, QT 6	6902236	A	1
7251706	PRIMER, SPRAY CAN 6	6902232	A	1
7251858	DECAL			559, 567
7251859	DECAL			559, 573
7251862	SCREW			69, 79
7251863	NUT			69, 79
7252433	ASSY, LINK			57
7252436	KIT, CYL LIFT CUSHION			559
7252627	BRACKET			421
7252989	PIVOT, WEDGE	6704248	A	63
7253017	MOUNT			559
7253018	BOLT			559
7253019	BOLT			559
7253043	NOZZLE, SPRAY			523
7253378	HARNESS, JUMPER			329, 517, 523
7253527	HOSE, HYD ASSY			717
7254248	BUSHING			517, 523
7254249	BRACKET			797
7254421	BUMPER			543, 545
7254810	GROUP, ROTATING			299
7254811	GROUP, ROTATING			301
7254812	CONTROL			303

Code for disposition of old part number

A -- Use up
B -- Use on other application (See PNI)
C -- File PDR Report with Bobcat Parts Sales
D -- Part Number Error

Page 905 - 0SS# 6300322913 - All rights reserved by Bobcat Company - 09/04/2017 - 06:30:16 - Produced by Ken Cook Co. with mediaoff

NUMERICAL INDEX (Cont'd)

Part Number	Description	Was	Code	Page
7254813	CONTROL			305
7254817	KIT, SEAL			297
7254822	GROUP, ROTATING			299
7254825	GROUP, ROTATING			301
7254827	BEARING			299, 301
7254829	BUSHING			299, 301
7254831	PLATE, CONTROL			299
7254832	PLATE, CONTROL			301
7254835	COUPLER			297
7254836	FILTER			297
7254837	PIN			297
7254838	SHAFT	7008113		283, 297
7254992	PANEL, CONTROL			625
7254993	DECAL			625
7254999	HOSE, HYD FORMED			429
7255118ENUS	INSTRUCTIONS	7255118	A	733
7255136	SCREW, SOCKET HEAD			63
7255609	BOLT			389
7255728ENUS	INSTRUCTIONS			655
7255983ENUS	INSTRUCTIONS	7255983		633
7255984ENUS	INSTRUCTIONS	7255984	A	643
7256098	TEE	7203385	A	413, 417, 421, 425, 429
7256099	ELBOW BARB 90 DEGREE	7203383	A	413, 417, 421, 425, 429
7256100	ELBOW	7203384	A	421
7256160ENUS	INSTRUCTIONS			559
7256234	FITTING, HYD ELBOW 90	7249850	A	707, 709, 711, 713
7256291	TUBE			147
7256347	LENS, REFLECTIVE	6697797	A	817
7256348	KIT, SIDE LIGHT			797
7256350	TUBELINE			205
7256352	STEP			733
7256412	SUPPORT, TANK			429
7256422ENUS	INSTRUCTIONS			489
7257256	INSULATION, FLOOR	7251972	B	801, 803
7257257	INSULATION, FLOOR	7251973	B	801, 803
7257309	DUCT	7197262	A	625
7257310	SEAL, DUCT CENTER	7167405	A	625
7257435	FUEL, TUBE			421
7258389	PLUG			523
7258937	INSULATION, TRANS	7192156	A	801, 803
7259181	RING, COMPRESSION			421
7259282	FITTING, ELBOW			395
7259751	NUT, SELF THREADING			39
7259789	VALVE, RIDE CONTROL			763, 767
7259790	ADAPTER			767

Code for disposition of old part number
A -- Use up
B -- Use on other application (See PNI)
C -- File PDR Report with Bobcat Parts Sales
D -- Part Number Error

Page 898 OSS# 6300322913 - All rights reserved by Bobcat Company - 08/04/2017 - 06:30:16 - Produced by Ken Cook Co. with mediaoff

NUMERICAL INDEX (Cont'd)

Part Number	Description	Was	Code	Page
7259791	TUBELINE, HYD			763
7259917	HOSE, HYD			763
7260909	BRACKET			193
7260936	CONTROLLER, GATEWAY	6693353	A	333, 339, 345
7260937	CONTROLLER, AUX CONTROL	6691288	A	333, 339
7261010	CONDENSER			643
7261162	BOOT			399
7261288	COVER, SEAT			785
7261289	COVER, SEAT HEATED			785
7261305	KIT, PLUMBING POWER BOB-TACH			717
7261311	KIT, POWER BOB-TACH			709
7261605	ROD	7245955	A	643
7261608	GLASS, LOWER			543
7261609	GLASS, REAR FIXED RH			543
7261610	GLASS, FORWARD SLIDING RH			543
7261903	LOUVER			653
7265204	ELBOW BARBED			421
7265242ENUS	INSTRUCTIONS			543
7265451	EXCHANGER, OIL WATER AIR			389
7265453	EXCHANGER, OIL WATER			199, 395
7265522	LATCH, WINDOW CAB			543
7265545	COLUMN, FRONT LEFT			41, 585
7265577	MOTOR, FAN DRIVE			315, 317
7265583	SWITCH, ROCKER LIGHT			693, 797
7265824	DECAL			797
7266067	GROMMET			413, 417, 421, 425, 429
7266394	LENS, RED STOP			597, 601
7266398	BRACKET			21
7266399	RETAINER			21, 25
7266558	SPOOL, LIFT LOCK	7209460	A	153, 159, 165
7266560	SPOOL, LIFT	7209496	A	171, 175, 179
7266739	GLASS, REAR FIXED LH			543
7266740	GLASS, FORWARD SLIDING LH			543
7266821	PAN, FLOOR	7255133	A	51, 53
7266824	HARNESS, FUEL DLX	7240781	A	333, 339, 345
7266825	JOYSTICK, LH ASSY			369
7266826	JOYSTICK, RH ASSY			369
7266827	BASE, JOYSTICK LH			369

All rights reserved by Bobcat Company - 08/04/2017 - 06:30:16 - Produced by Ken Cook Co. with mediaroff

Code for disposition of old part number

A -- Use up
B -- Use on other application (See PNI)
C -- File PDR Report with Bobcat Parts Sales
D -- Part Number Error

NUMERICAL INDEX (Cont'd)

Part Number	Description	Was	Code	Page
7266828	BASE, JOYSTICK RH			369
7266913	BRACKET			745
7267114	KIT, MOTOR FAN			315
7267121	PLUG			731
7267310	SEAL FOAM			535
7267884ENUS	INSTRUCTIONS	7267884	A	315
7268430	HOSE, HYD ASSY			745
7268914	HOSE, HYD FORMED	7178518	A	197, 201
7269057	ASSY, IDLER	7141788	A	401, 405
7269058	ARM, IDLER	7174407	A	401, 405
7269857	BATTERY WET 1000 CCA			1, 351
7269863	CROSSMEMBER			25
7269864	BRACKET, RH			25
7269942	KIT, POWER BOB-TACH			711
7270042	TUBELINE, HYD			745
7270043	TUBELINE, HYD			745
7270051ENUS	INSTRUCTIONS	7261451	D	709, 711, 713, 717
7270080	PANEL, MOUNTING			53
7270121	BRACKET			745
7270255	GUIDE, CHANNEL			25
7270873	ASSY, VALVE			317
7271023	CYLINDER, GREASE			95
7272731	VALVE, SOLENOID			165, 179
7272732	ASSY, COIL SOLENOID			165, 179, 333, 339
7273399	HOSE, AIR FORMED	7243351	A	399
7273570	VALVE, POWER BOB-TACH	7231548	A	711, 713, 731
7273676	ROTOR, ASSY	7024971	A	253, 257, 261
7273679	PLUG			745
7274493	COIL, SOLENOID			319
7274762	NUT, HEX			517, 523
7274763	SCREW			517, 523
7274772	TUBELINE	7243404	A	633
7274773	TUBELINE	7243405	A	633
7274780	ARM, TENSIONER	7167164	A	401, 405
7274808	BRACKET			69, 79
7275149	HOSE, A/C ASSY	7266324	A	643
7275322	PUMP			271, 279
7275379	KIT, LIGHT LED			693
7275459	GUIDE, CHANNEL			25
7275528	RAIL, LIGHT MOUNTING LH			693
7275529	RAIL, LIGHT MOUNTING RH			693
7275530	RAIL, FRONT CROSS MEMBER			693
7275531	HARNESS, LED LIGHT			693

Code for disposition of old part number
A -- Use up
B -- Use on other application (See PNI)
C -- File PDR Report with Bobcat Parts Sales
D -- Part Number Error

Page 900 OSS# 6300322913 - All rights reserved by Bobcat Company - 08/04/2017 - 06:30:16 - Produced by Ken Cook Co. with mediaoff

NUMERICAL INDEX (Cont'd)

Part Number	Description	Was	Code	Page
7275532	LIGHT, LED FLOOD			693
7275533	KIT, HARDWARE			693
7276050	HOSE HYDRAULIC ASSY	7276143	A	225
7276051	HOSE HYDRAULIC ASSY	7276144	A	225
7277313ENUS	OM, T770 LDR			7
7277313ENUSCD	OM, T770 LDR CD			7
7277313ESAR	OM T770 LDR SPANISH			7
7277313ESARCD	OM T770 LDR SPANISH CD			7
7277313FRCA	OM T770 LDR FRENCH-CANADA			7
7277313FRCACD	OM T770 LDR FRENCH-CANADA CD			7
7277313KOKR	OM T770 LDR KOREAN			7
7277313KOKRCD	OM T770 LDR KOREAN CD			7
7277313PTBR	OM T770 LDR PORTUGUESE			7
7277313PTBRCD	OM T770 LDR PORTUGUESE CD			7
7277315ENGB	OM, T770 LDR			7
7277316ENGB	OM, T770 LDR			7
7277317ENGB	OM, T770 LDR			7
7277427	LIGHT, LED			797
7277428	LIGHT DRIVER			797
7277566	BLOCK			319
7277777	PIN	14J5032	B	63
7277987	CONTROLLER, AUX CONTROL			339, 345
7278971ENUS	INSTRUCTIONS	7278971	A	523
7279628	COMPRESSOR, A/C	7023580	A	635, 639, 643
7279636	KIT, DOOR CAB			523
7279886	INSULATION, TAILGATE	7199011	A	809
7280087	MOTOR			319, 759
7280134	PIN, STRAIGHT			319
7280212ENUS	INSTRUCTIONS			745
7280317	SOLENOID			319
7280443	COVER, MOTOR	7280334	A	25
7280471	TUBELINE, HYD			205, 759, 761
7280495	COVER, MOTOR	7241885	A	25
7280497	COVER, MOTOR	7241886	A	25
7280683	TUBELINE, HYD	7247350	A	105, 111
7280684	TUBELINE, HYD	7247351	A	105, 111
7280706	HOSE, HYD ASSY			105, 111
7280785	VALVE, POPPET	7214722	A	159, 165, 175, 179
7280922	LINK, BELLCRANK			151

- All rights reserved by Bobcat Company - 08/04/2017 08:30:16 - Produced by Ken Cook Co. with mediaroff

Code for disposition of old part number

A -- Use up
B -- Use on other application (See PNI)
C -- File PDR Report with Bobcat Parts Sales
D -- Part Number Error

NUMERICAL INDEX (Cont'd)

Part Number	Description	Was	Code	Page
7280923	LINK, PEDAL			151
7281063	SEAL, DOOR	7222790	A	511, 517, 523, 529
7282145	FAN, HVAC 3 SPD	7249527	A	627, 629, 647
7282204	KIT, SEAL	7031574	A	731
7282701	KIT, DEBRIS SHIELD			561
7282966	COLUMN, FRONT RIGHT			41, 585
7283467	VALVE, RELIEF	7008124		283
7283468	VALVE, RELIEF	6692332	A	309
7283576ENUS	INSTRUCTIONS	7283576	A	561
7283637	PLATE, DOOR	7164590	A	511, 517, 523, 529
7284704	GROMMET			797
7284937	SWASHPLATE	6685344	A	267, 271, 275, 279
7285000	SPRING, EXTENSION	7188749	A	435
7285001	PANEL, RH	7180032	A	51, 53, 435
7285934	SWITCH MOMENTARY REV FAN			759, 761
7286210	WASHER			797
7286433	RECEIVER, DRIER A/C	7286432		639, 643
7286435	HARNESS, A/C	7286434		639, 643
7286436	SWITCH, PRESS			639, 643
7286464	SENSOR, FUEL	7179839	A	333, 339, 345, 413, 417, 425, 429
7286484	BRACKET			117
7286537	LINK, CENTERING	7183821	B	235, 239
7286601	ISOLATOR VIBRATION			31, 35
7286606	ISOLATOR VIBRATION			35
7286607	ISOLATOR VIBRATION			35
7286651	FILTER, AIR	7197235	A	399, 483
7286652	FILTER, AIR OUTER	7010030	A	1, 11, 481, 483
7287115	HARNESS, LIGHT SIDE			797
7294390	SWITCH, ROCKER			117, 765
7295487	KIT, MAINTENANCE 250 HR	7295617	A	11
7295596	KIT, MAINTENANCE 50 HR	7295616	A	11
7295603	KIT, MAINTENANCE 500 HR	7295618	A	11
7296603	SEAL, SHAFT	6687191	A	267, 271
7297072	VALVE, CONTROL			165
7297080	VALVE			179
7299300	MOTOR, DRIVE			249
7299301	MOTOR, DRIVE			261
7300393	KIT, RIDE CONTROL			763
7301022	SCREW KNOB			625
7301672	COIL SOLENOID			165, 179, 345
7301823	MANIFOLD			117, 765
7302003	HOSE, HYD ASSY			117
7302293	KIT PIVOT BOB-TACH			63

Code for disposition of old part number
A -- Use up
B -- Use on other application (See PNI)
C -- File PDR Report with Bobcat Parts Sales
D -- Part Number Error

Page 902 - OSS# 6300322913 - All rights reserved by Bobcat Company - 08/04/2017 - 06:30:16 - Produced by Ken Cook Co. with mediaoff

NUMERICAL INDEX (Cont'd)

Part Number	Description	Was	Code	Page
7302297	KIT BOB-TACH UPPER (M SERIES)			63
7302676	HOSE, HYD ASSY			117
7302973	MOTOR, FAN	7231471	A	317, 319
7303206	GUARD POWER BOB-TACH			713
7303649	SPACER TUBE			35
7303703	ASSY CAB			29
7303733	DECAL UPRIGHT LH			567
7303734	DECAL UPRIGHT RH			567
7304511	HARNESS CAB DLX	7253409	A	329
7304592	ASSY CAB	7215840	A	29
7304712	HARNESS MFR LF CONTROL			345
7304757	HARNESS MFR LF MANUAL			345
7304852	VALVE, CARTRIDGE			165, 179
7305580	HINGE	7176593	A	511, 517, 523, 529
7305587	KIT, BOLT PUMP GEAR			187
7305588	KIT, BOLT PUMP GEAR			311
7305724EF	TRACK RBR (450X86X55) CB-PATTERN			819
7305843	PAINT ORANGE .5 OZ			1
7305844	PAINT ORANGE SPRAY CAN 6			1
7305845	PAINT ORANGE QT 6			1
7305889	TUBELINE HYD ASSY	-	B	117
7305890	TUBELINE HYD ASSY	-	B	117
7306106	FRAME MAIN			21, 25
7306230	BRACKET SUPPORT			765
7306272	HOSE HYDRAULIC ASSY			765
7306402	KIT RIDE CONTROL			765
7306706	TUBELINE HYDRAULIC ASSY			765
7307224	CYLINDER HYDRAULIC	7227570		711, 713, 727
7307574ENUS	INSTRUCTIONS	7307574	A	797
7307658	KIT REVERSING FAN			759, 761
7307662ENUS	INSTRUCTIONS	7307662	A	759, 761
7308285	DECAL CONTROL			117, 765
7308286	HOSE HYDRAULIC ASSY			765
7308493	DECAL RUSSIAN			567
7308657	VALVE PROPORTIONAL			319
7308659	VALVE PROPORTIONAL			319
7308738	DECAL SAFETY			117, 765

Code for disposition of old part number
A -- Use up
B -- Use on other application (See PNI)
C -- File PDR Report with Bobcat Parts Sales
D -- Part Number Error

Page 911 - OSS# 6300322913 - All rights reserved by Bobcat Company - 08/04/2017 - 06:30:18 - Produced by Ken Cook Co. with MediaTroff

NUMERICAL INDEX (Cont'd)

Part Number	Description	Was	Code	Page
7308794	LIGHT ASSEMBLY EURO RH	7104670		611
7308795	LIGHT ASSEMBLY EURO LH	7104671	A	611
7308797	LIGHT WORK	6671027	A	611
7308860	HOSE HYDRAULIC ASSY			719
7308861	HOSE HYDRAULIC ASSY			719
7308865	HOSE HYDRAULIC ASSY			719
7309389ENUS	INSTRUCTIONS	7309389		765
7309469	KIT SEAL			193
7309470	KIT SEAL			193
7309709	TUBELINE HYDRAULIC			507
7309710	TUBELINE HYDRAULIC			507
7309870	BRACKET TANK			117, 765
7309889	BOOT SEAL LH			595
7309890	BOOT SEAL RH			595
7309976	KIT ENGINE COMP SEAL	7190789		595
7310240	KIT BUCKET POSITION			507
7310250	HOSE HYDRAULIC ASSY			745
7310253	HOSE HYDRAULIC ASSY			745
7310254	HOSE HYDRAULIC ASSY			745
7310255	HOSE HYDRAULIC ASSY			745
7310256	TUBELINE HYDRAULIC			745
7310257	TUBELINE HYDRAULIC			745
7310258	TUBELINE HYDRAULIC			745
7310259	TUBELINE HYDRAULIC			745
7310665	KIT POWER BOB-TACH			713
7310805	KIT PLUMBING POWER BOB-TACH			719
7310945	WASHER DIVERTER	7305994		353
7311134	HOSE AC ASSY	7256578	A	643
7311137	HOSE AC TUBELINE ASSY	7275043	A	643
7311798ENUS	INSTRUCTIONS			595
7311865	FITTING GREASE	7234675	A	95
7311880	KIT REAR AUX			745

Code for disposition of old part number
A -- Use up
B -- Use on other application (See PNI)
C -- File PDR Report with Bobcat Parts Sales
D -- Part Number Error

Page 1,2,3 OSS# 6300322913 - All rights reserved by Bobcat Company - 08/04/2017 - 06:30:16 - Produced by Ken Cook Co. with mediaoff

NUMERICAL INDEX (Cont'd)

Part Number	Description	Was	Code	Page
7312185	HOSE HYDRAULIC ASSY			211, 225
7312186	HOSE HYDRAULIC ASSY			225
7312553	BATTERY 700 CCA DRY	6665427	A	1, 351
7313253	CASE FRONT			261
7313256	CAM ROTOR			261
7313333	SEAL DUCT	bulk	A	389, 759
7313334	SEAL DUCT	bulk	A	389, 759
7313335	SEAL DUCT	bulk	A	389, 759
7313341	DUCT AIR			389
7313463	CAM ROTOR			249
7313732	PLATE VALVE			271
7313733	PLATE VALVE			279
7313836	DUCT FAN INSULATED			799
7313840	EDGE RUBBER			799
7313841	EDGE RUBBER			799
7314079	VALVE CARTRIDGE			165, 179
7314341	ASSY BOLT W/WASHER			35
7314404	BLOCK FILTER	7231189	A	317
7314439	RETAINER SNAP IN			799
7316228	KIT MAINTENANCE 1000/2000 HR	7295619	A	11
7316249	SPACER STEERING	7189894	A	235
7316774	STRAP, RUBBER	7141906	A	385, 387, 389
7318495	SCREW	7162770	B	649
7318633	TUBELINE HYDRAULIC			491
7318675	MOUNT TUBELINE			491
7318895	DECAL HVAC			643
7319273	BRACKET TUBE			491
7319274	BRACKET MANIFOLD HYDRAULIC			491
7319591ENUS	INSTRUCTIONS	7319591		719
7319634	SADDLE WIPER			517, 523
7320663	SENSOR PRESS	7025582	A	117, 765
7327341	TUBELINE HYDRAULIC			491
7327342	TUBELINE HYDRAULIC			491
7327343	TUBELINE AUX			491
7327344	TUBELINE AUX			491
7330027	COVER HOLE			797
7330595	KIT FLOW AUX			491
7330600	INSTRUCTIONS INSTALL			491
73G624	BOLT			235, 239
73G824	BOLT			69, 79

Code for disposition of old part number

A -- Use up
B -- Use on other application (See PNI)
C -- File PDR Report with Bobcat Parts Sales
D -- Part Number Error

Page 913 - 0SS# 6300322913 - All rights reserved by Bobcat Company - 08/04/2017 - 08:30:16 - Produced by Ken Cook Co with nehialoff

NUMERICAL INDEX (Cont'd)

Part Number	Description	Was	Code	Page
73K013	RING, BACK-UP			153, 159, 165, 171, 175, 179
73K014	RING, BACK-UP 5			159, 175
73K016	RING, BACK-UP			153, 159, 165, 171, 175, 179
73K218	RING BKUP			725, 727
73K222	RING			721, 723
73K232	RING, BACK-UP			129, 135, 137, 143
73K234	RING, BACK-UP			147
75K3	RING,O			317, 319
75K5	O-RING			71
75K6	O-RING			145, 147
774220	NUT			353, 433, 435, 439, 493, 495, 631, 633, 635, 639, 643
77F8	ELBOW			121, 125
78K10	O RING			189, 193, 203, 205
78K8	O RING			189
799119	RING			153
79K10	O RING 10			97, 101, 105, 111, 153, 159, 165, 171, 175, 179, 185, 203, 205, 267, 271, 503, 505, 729, 731, 737, 741, 767
79K12	O RING 10			101, 111, 185, 189, 193, 197, 199, 201, 203, 205, 207, 211, 215, 219, 223, 225, 267, 271, 275, 279, 317, 319, 715, 737, 741
79K16	O RING 10			121, 125, 189, 193, 197, 737, 741
79K4	O RING 10			189, 193, 219, 731
79K6	O RING 10			97, 101, 105, 111, 119, 121, 125, 153, 159, 165, 171, 175, 179, 189, 193, 197, 201, 203, 207, 211, 215, 219, 223, 225, 709, 711, 713, 715, 731, 737, 741, 763
79K8	O RING 10			101, 111, 153, 159, 165, 171, 175, 179, 185, 203, 205, 207, 211, 215, 219, 223, 225, 267, 271, 275, 279, 393, 505, 709, 711, 713
7CM12100	BOLT			401, 405
7D4	NUT			119, 183
7D6	NUT			57, 559
80F10	ADAPTER HYDRAULIC			491
82K019	O-RING			153, 171
82K132	O-RING HYDRAULIC			721, 723
82K236	RING,O			147
83D4	NUT 10			45, 47, 119, 207, 211, 215
83D5	NUT 5			119, 197, 201, 207, 211, 215
83D6	NUT 5			97, 101, 105, 111, 235, 239, 405, 505, 507, 591, 737, 741, 745, 763
83D8	NUT 5			13, 17, 19, 21, 25, 401, 405, 409, 671
84G1320	BOLT			353, 493, 501
84G3112	BOLT 5			591, 593, 595, 615
84G3708	SCREW			17, 19
84G3710	SCREW			79
84G3712	BOLT 5			13, 17, 19, 21, 25, 31, 35, 65, 67, 69, 71, 75, 77, 79, 121, 125, 211, 235, 239, 333, 339, 345, 359, 385, 387, 389, 395, 397, 399, 413, 417, 421, 425, 429, 433, 435, 439, 561, 585, 623, 643, 793

Code for disposition of old part number
A -- Use up
B -- Use on other application (See PNI)
C -- File PDR Report with Bobcat Parts Sales
D -- Part Number Error

Page 906 OSS# 6300322913 - All rights reserved by Bobcat Company - 08/04/2017 - 06:30:16 - Produced by Ken Cook Co. with mediaoff

NUMERICAL INDEX (Cont'd)

Part Number	Description	Was	Code	Page
84G3716	SCREW 5			51, 53, 57, 65, 71, 75, 97, 101, 105, 111, 351, 435, 439, 491, 509, 737, 741, 745
84G3720	BOLT			51, 53, 71, 75
84G3724	BOLT			51, 53, 235, 239
84G3728	BOLT			97, 101, 105, 111, 117, 737
84G3732	BOLT		B	97, 101, 121, 125
84G3736	BOLT			197
84G3740	BOLT			97, 101, 105, 111, 121, 125, 333, 339, 345, 737
84G3744	BOLT			223, 225, 491
84G3748	BOLT			491
85D6	NUT, 5			55, 57, 63, 97, 101, 105, 111, 547, 683, 715, 717, 719
85D8	NUT, 5			31
85G616	SCREW 10			597
86D7	NUT			49, 365, 369, 773, 777, 779, 781, 783
86F5	NUT			121, 125, 715, 717, 737, 741, 745
86F6	NUT			97, 105, 715, 717
86F7	NUT 5			97, 101, 105, 111
86F8	NUT 5			97, 101, 105, 111, 121, 125
872229	WASHER			97, 101, 105, 111, 117, 121, 125, 491, 737
87G1014	SCREW, MACHINE			751, 753
88F7	ELBOW			97, 105
898731	1156 BULB			353
89D5	NUT			413, 417, 425, 705
89D6	NUT			25, 389, 397, 399, 413, 425
91K6	TEE			97, 101, 105, 111
91K7	FITTING			97, 101, 105, 111
92D10	NUT			721, 723, 725, 727
947088	RING, BACK-UP			129, 137, 139, 145
95D4	NUT			433, 435, 439
95D5	NUT			539, 753
95D6	NUT			149, 151, 235, 239, 361, 363, 409, 435, 439, 487, 625
96D12	NUT			401, 405
96D16	NUT			401, 405
96D8	NUT			385, 387
97D4	NUT			353, 493, 495
97D5	NUT			365, 369, 511, 517, 523, 529, 593, 595, 697, 733, 813
97D6	NUT 10			45, 117, 333, 359, 361, 385, 387, 491, 511, 517, 523, 577, 581, 585, 607, 625, 661, 663, 685, 691, 765, 813
98D6	NUT			235, 239, 435
99K9	ADAPTER HYDRAULIC			491

Page 915 - 0SS# 6300322913 - All rights reserved by Bobcat Company - 08/04/2017 - 08:30:16 - Produced by Ken Cook Co. with medialoft

Code for disposition of old part number
A -- Use up
B -- Use on other application (See PNI)
C -- File PDR Report with Bobcat Parts Sales
D -- Part Number Error