RUTHZIL TRATOR COMERCIAL DE PEÇAS LTDA 11 97083-6812 ROLANDO

1968

KOEHRING **Bantam**

MODEL TK-450
TELEKRANE

Everything possible has been done in the design and construction of your Bantam equipment to give dependable service and safe operation of the machine. To obtain best reliability, replace all parts with only genuine Bantam duplicates, obtained through your authorized Bantam distributor. When replacing wire rope, use only the types and sizes recommended in this manual. Lubricate the machine only as directed on the "Lubrication Chart" and within the frequencies specified.

SERIAL NO. _____

Printed in U.S.A.

Catalog No. 450-62

GENERAL INDEX

SECTION A — BASIC MACHINE, MODEL T-450

SECTION D — TELEKRANE ATTACHMENT & ACCESSORIES

SECTION A

INDEX

TO

GROUPS

1 THRU 12

BASIC MACHINE

&

T-450

MAIN FRAME, GUARDS, COUNTER-WEIGHT, FUEL TANK, SEATS	1
ENGINE, ENGINE CONTROLS, ELECTRICAL, GEAR REDUCTION UNIT	2
CHAIN CASE	3
SWING SHAFT, SWING CLUTCH CONTROLS, HOUSE BRAKE	6
VERTICAL SWING SHAFT	7
TURNTABLE BASE, CONE ROLLERS	8
BOOM SUPPORT	10
CAB	11
HYDRAULIC SYSTEM	12

SECTION A

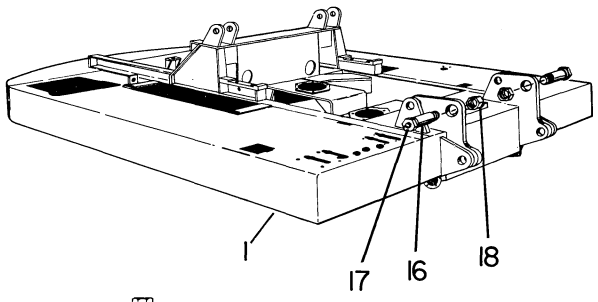

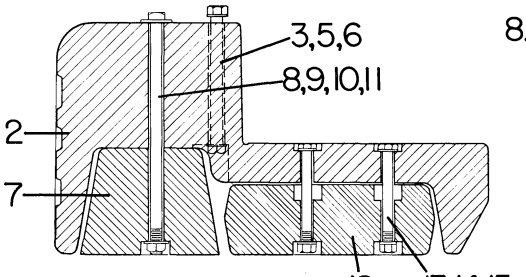

TYPE A

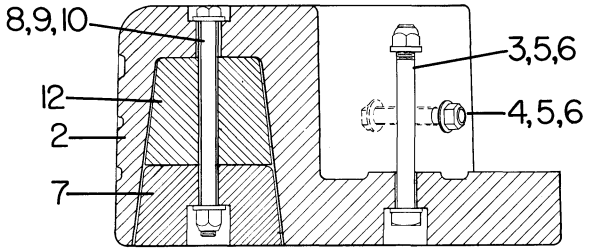

TYPE B

Ref. No.	Part Number	Part Number	Quan. Req'd.	Name and Description
	TYPE A	TYPE B		
1	35446		1	MAINFRAME, PRIOR TO SER. #527
1		35621	1	MAINFRAME, BEGIN. W/SER. #527
	NO LONGER AVAILABLE-USE A35950	A35950	1	COUNTERWEIGHT ASSEMBLY, 4000 LB., INCL. ITEMS 2 THRU 6
2		B35620	1	COUNTERWEIGHT, 4000 LB. - ONLY
3	1235-354		2	MACHINE BOLT, 1 1/4 UNC x 13 LG., SQ. HD.
3		1235-369	2	MACHINE BOLT, 1 1/4 UNC x 14 LG., SQ. HD.
4		1235-367	2	MACHINE BOLT, 1 1/4 UNC x 6 LG., HEX HD.
5	10049	10049	AR	WASHER
6	1205-133	1205-133	AR	NUT, 1 1/4 UNC SELF-LOCKING
	A15112	A35631	1	COUNTERWEIGHT ASSEMBLY, 1000 LB., INCLUDES ITEMS 7 THRU 11 - TO MAKE 5000 LBS.
7	B15102	B35628	2	COUNTERWEIGHT, 500 LB. - ONLY
8	1201-125	18764	2	BOLT
9	1205-176	1205-160	2	NUT
10	1209-40	18766	AR	WASHER
11	10049		2	WASHER
	A18530	A35632		COUNTERWEIGHT ASSEMBLY, 500 LB.(LH ONLY) INCLUDES ITEMS 13 THRU 15 IF APPLICABLE - TO MAKE 5500 LBS.
12	B15103	B35627	1	COUNTERWEIGHT, 500 LB. - ONLY
		A35633		COUNTERWEIGHT ASSEMBLY, 1000 LB. - INCLUDES TWO B35627 COUNTERWEIGHTS TO MAKE 6000 LBS.
13	18529		2	BOLT
14	1205-176		2	NUT
15	1209-40		2	WASHER
16	35447	35447	2	PIN, BOOM CYLINDER
	1217-188	1217-188	2	SELF-ALIGNING BUSHING, FOR ABOVE PIN
17	1213-1	1213-1	2	GREASE FITTING
18	1204-25	1204-25	2	NUT, ELASTIC STOP

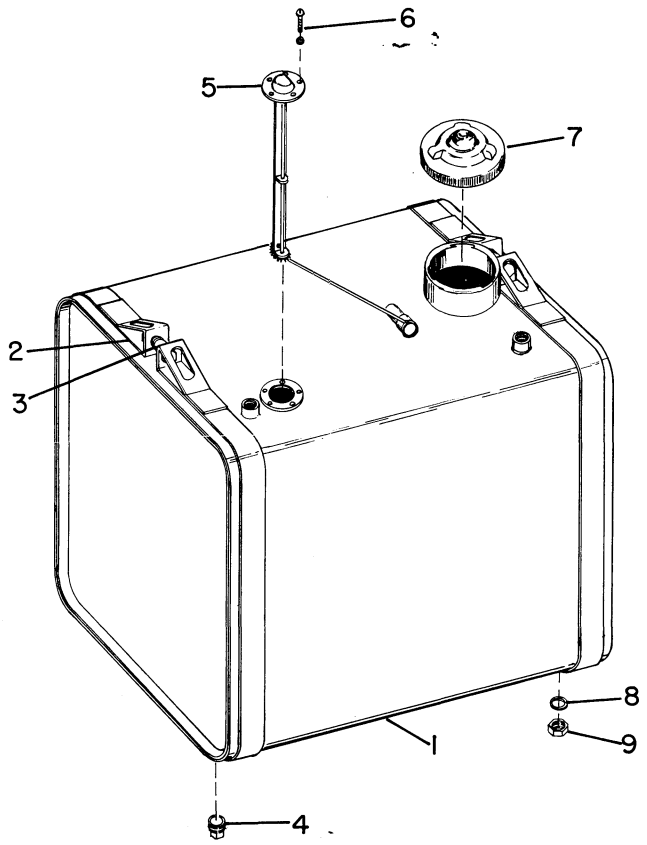

Ref. No.	Part Number	Part Number	Quan. Req'd.	Name and Description
	GM, AC, CHRYSLER	CUMMINS		
	A24234			FUEL TANK KIT, INCLUDES STEWART-WARNER GAUGE AND SENDER - FOR TANK REPLACEMENT ON MACHINES EQUIPPED WITH A.C. GAUGES
1	A35221	39857	1	FUEL TANK W/STRAPS AND FASTENERS, FOR MACHINES W/S-W GAUGES
	35617	24439	1	FUEL TANK ONLY, FOR MACHINES W/S-W GAUGES
2	35618	35618	2	STRAP WITH WEBBING
3	1202-18	1202-18	2	STOVE BOLT, 1/4 UNC x 4 LG.
	1205-21	1205-21	2	NUT, 1/4 UNC SELF-LOCKING
4	1219-279	1219-279	1	DRAIN PLUG, 3/8 NPT STD.
5	1245-40		1	SENDER W/GASKET - FOR A.C. GAUGE ONLY
5	1245-73	1245-73	1	SENDER W/GASKET - FOR STEWART-WARNER GAUGE ONLY
6	1233-5	1233-5	5	MACHINE SCREW, #8-32 x 3/8 LG., RD SL HEAD
7	35222	35222	1	FILLER CAP
8	1210-26	1210-26	4	LOCKWASHER, 1/2 MED.
9	1205-58	1205-58	4	NUT, 1/2 UNC

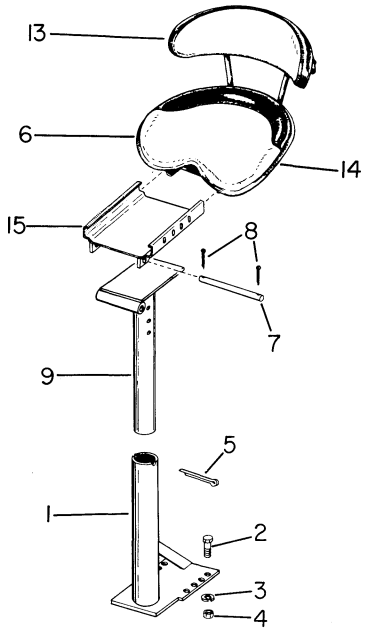

A

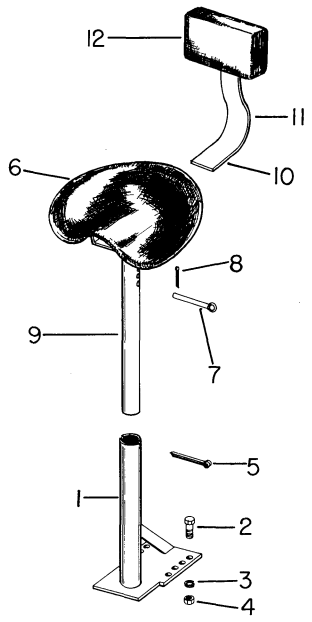

B

Ref. No.	Part Number "A"	Part Number "B"	Quan. Req'd.	Name and Description	
	A15915	A4725	OPT	SEAT ASSEMBLY, COMPLETE AS SHOWN	
1	A2581	A2581	1	SEAT STAND BASE	
2	1200-101	1200-101	2	CAPSCREW, 1/2 UNF x 1 1/2 LG.	
3	1210-26	1210-26	2	LOCKWASHER, 1/2 MED.	
4	1205-59	1205-59	2	NUT, 1/2 UNF	
5	1207-81	1207-81	1	COTTER PIN, 1/2 x 3 1/2 LG.	
6	A13489		1	SEAT ASSEMBLY, INCLUDES ITEMS 6 THRU 9,13 THRU	15
6	15916	A4724	1	SEAT, ONLY, INCLUDES ITEMS 13 & 14	
7	15912	1222-10	1	SEAT HINGE PIN	
8	1207-11	1207-11	2	COTTER PIN, 1/8 x 3/4 LG.	
9	15914	A4726	1	SEAT POST	
10		A8347	OPT	BAR SPRING SEAT BACK REST, INCLUDES ITEMS 11 &	12
11		4727	1	BAR SPRING, BACK REST	
12		4728	1	BACK REST	
13	13492		1	BACK, SEAT	
14	13491		1	CUSHION	
15	15913		1	BRACKET, ADJUSTABLE SEAT	

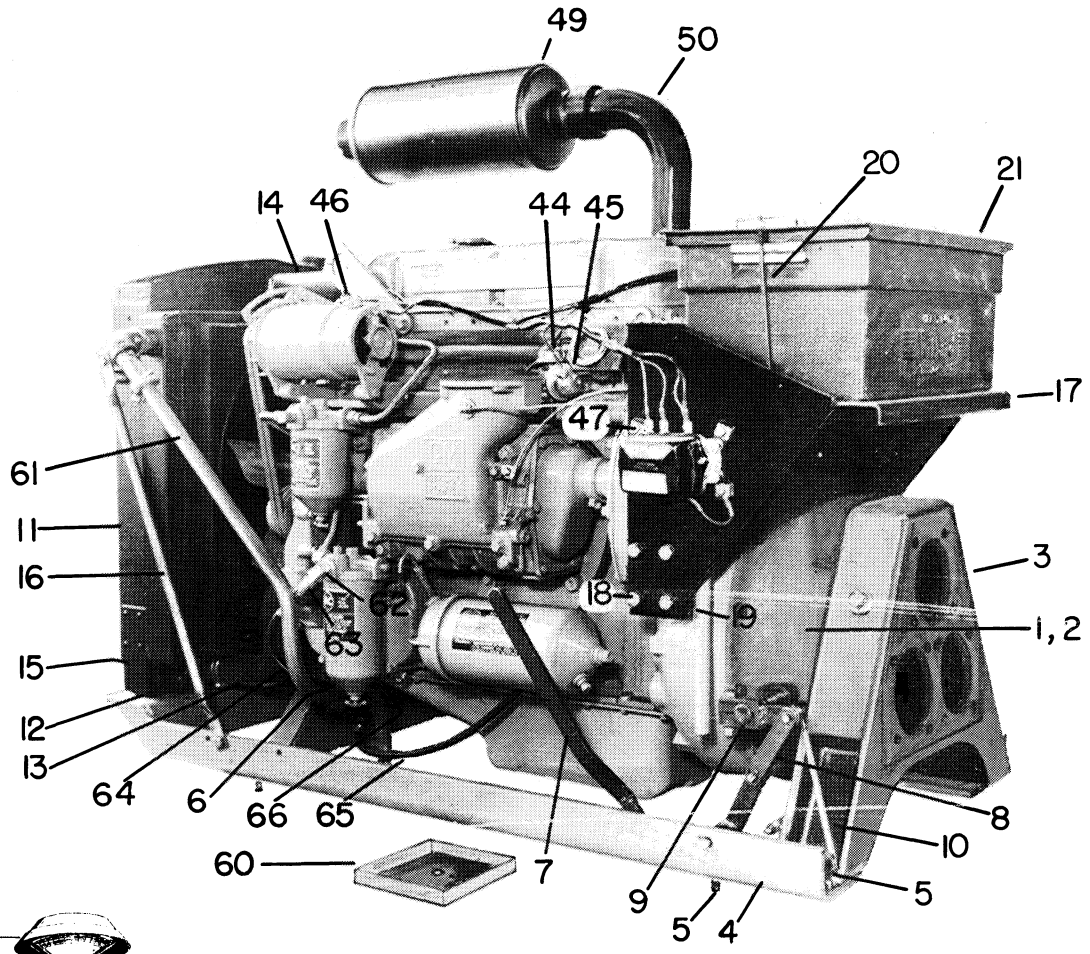
49
50
20
21
14
46
44
45
17
47
61
11
16
3
62
18
9
1, 2
63
15
12
13
64
6
66
65
8
10
60
7
9
5
5
4

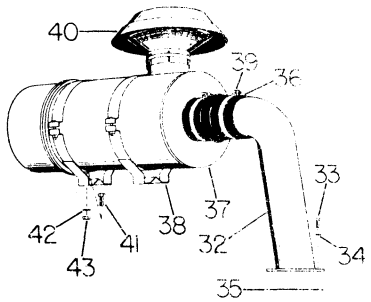
40
39
36
33
37
38
42
41
32
34
43
35

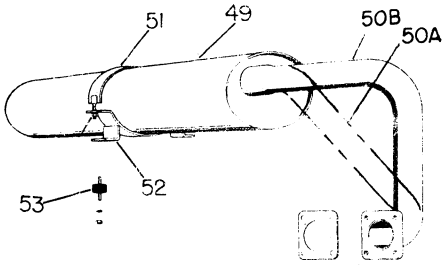
51
49
50B
50A
53
52

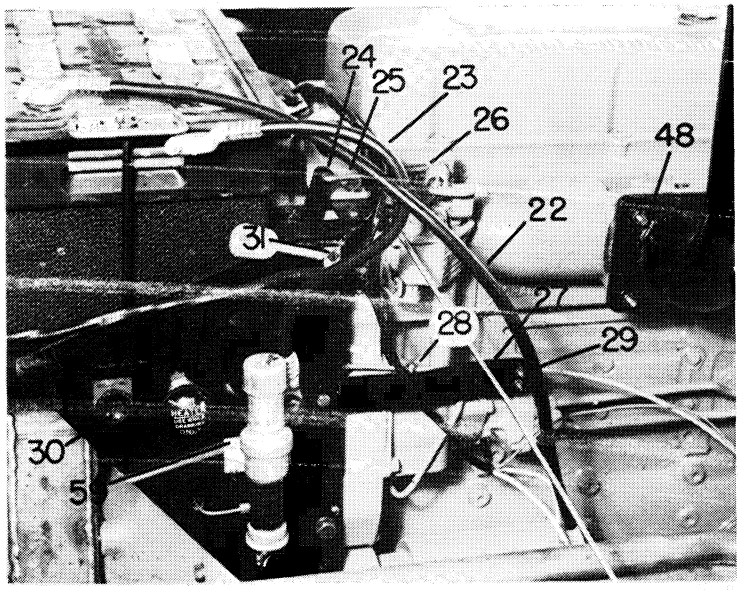
24
25
23
26
48
22
31
27
28
29
30
5

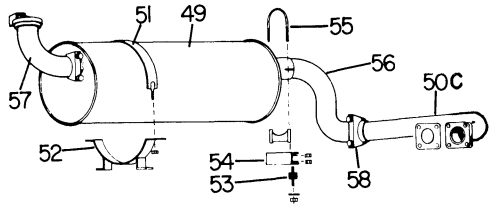
51
49
55
56
57
50C
52
54
53
58

Ref. No.	Part Number	Part Number	Quan. Req'd.	Name and Description
	GM 4-53	GM 3-71		
	A35213	A39924	1	ENGINE - GM Detroit Diesel, Less Items Below
		39893	1	FLYWHEEL, GM 3-71
1	A35214	A35214	1	BELL HOUSING ASS'Y - See Page 2.9
	32167	32167	12	CAPSCREW - Bell Housing to Flywheel Housing
	1210-23	1210-23	12	LOCKWASHER, 7/16 med.
2	A35218		1	CLUTCH ASS'Y - See Page 2.20
2		A39876	1	CLUTCH ASS'Y
		39877	1	COVER ASS'Y - For Above
		39878	1	DRIVEN PLATE ASS'Y - For Above
	1203-99	1203-99	8	CAPSCREW - Clutch to Flywheel
	1210-20	1210-20	8	LOCKWASHER, 3/8 med.
	1217-183	1217-75	1	PILOT BEARING
3	A35055	A35055	1	GEAR REDUCTION UNIT - See Page 2.21
4	35216	F39926	1	SKID
5	1200-149	1200-149	6	CAPSCREW, 5/8 UNF x 2 lg.
	1205-91	1205-91	6	NUT, 5/8 UNF Elastic w/Nylon Insert
6	1200-312	1200-149	2	CAPSCREW
	1205-79	1205-91	2	NUT
7	35242		1	CLUTCH LEVER - See Page 2.33
	35244		1	PIN, For Above
	1207-2		2	COTTER PIN
8	35236		2	LINK
	18397		2	PIN, For Above
	1207-2		2	COTTER PIN
9	35243		1	BLOCK
	1232-3		1	WOODRUFF KEY
	35207		1	CAPSCREW, 3/8 UNC x 3 lg.
	1210-20		1	LOCKWASHER, 3/8 med.
	1205-36		1	NUT, 3/8 UNC
10	6808		1	SPRING
	1207-31		1	COTTER PIN
11	A35575	39940	1	RADIATOR & OIL COOLER - See Page 2.27A Also
	41819	-	1	RADIATOR only (Replaces 25123)
	41820	41820	1	OIL COOLER only (Replaces 23987)
	35577	F39941	1	FAN SHROUD
	35224	-	1	RADIATOR CAP
	12283-24		1	OVERFLOW EXTENSION HOSE

- FILTERS -
26790 Fuel, Primary
26789 Fuel, Secondary
13414 Oil

Ref. No.	Part Number	Part Number	Quan. Req'd.	Name and Description	
	GM 4-53	GM 3-71			
11		39968	1	TOP TANK Cap - Stolper #2302J008	
		F39865	2	STRAP	
12	4059		2	PAD	
	1210-26		2	LOCKWASHER, 1/2 MED.	
	1205-58		2	NUT, 1/2 UNC	
13	1244-104		1	HOSE, LOWER	
	1222-119		2	CLAMP, FOR ABOVE	
14	1244-103		1	HOSE, UPPER	
	1240-25		2	CLAMP, FOR ABOVE	
		1244-134	2	HOSE, 1 3/4 ID - 2 ID, ENGINE TO RADIATOR	
		1244-137	1	HOSE, 1 3/4 ID, RADIATOR TO TOP TANK	
		1222-119	2	CLAMP, 2 3/8 ID	
		1240-25	4	CLAMP, 2 1/8 ID	
15	1219-384		1	DRAIN COCK	
	F41065	39958	1	DRAIN PAN	
16	35233	39847	1	BRACE	
	1200-61	1200-61	4	CAPSCREW, 3/8 UNC x 1 1/4 LG.	
	1210-20	1210-20	4	LOCKWASHER, 3/8 MED.	
	1205-36	1205-36	4	NUT, 3/8 UNC	
17	32093	F39961	1	BATTERY SUPPORT BRACKET	
		39846	2	BRACE, FOR ABOVE	
	1200-59		2	CAPSCREW, 3/8 UNC x 1 LG.	
	1200-57	1200-57	AR	CAPSCREW, 3/8 UNC x 3/4 LG.	
	1210-20	1210-20	4	LOCKWASHER, 3/8 MED.	
18	1200-100	1200-102	AR	CAPSCREW	
	1200-104		4	CAPSCREW, 1/2 UNC x 2 LG.	
	1210-26	1210-26	8	LOCKWASHER, 1/2 MED.	
19	32094	39845	1	PAD, LEFT SIDE ONLY	
20	32089	32089	2	BATTERY HOLD DOWN BOLT	
21	18288	F39943	1	TIE DOWN BRACKET	
	1210-17	1210-17	2	LOCKWASHER, 5/16 MED.	
	1205-25	1205-25	2	NUT, 5/16 UNC	
22	1223-534	1223-534	1	BATTERY CABLE	(Replaces 1223-263)
		1223-147	1	BATTERY CABLE, STARTER GROUND	
23	1223-339	1223-339	1	BATTERY CABLE, GROUND	(Replaces 1223-279)

Ref. No.	Part Number	Part Number	Quan. Req'd.	Name and Description
	GM 4-53	GM 3-71		
	1200-59	1200-59	1	CAPSCREW, 3/8 UNC x 1 LG., FOR BATTERY CABLE
	1210-20	1210-20	1	LOCKWASHER, 3/8 MED.
	1205-36	1205-36	2	NUT, 3/8 UNC
24	15608		1	BELLCRANK
	1208-1		1	MACHINERY BUSHING
	1207-11		1	COTTER PIN, 1/8 x 3/4 LG.
				SEE PAGES 2.18 AND 2.19 FOR HAND AND FOOT THROTTLE CONTROLS
25	15609		1	ROD
	1209-1		1	PLAINWASHER, 3/16
	1207-1		1	COTTER PIN, 1/16 x 1/2 LG.
26	1222-122		1	BALL END
	1210-14		1	LOCKWASHER, 1/4 MED.
	1205-14		1	NUT, 1/4 UNF
	1205-26		2	NUT, 5/16 UNF
27	35723		1	BRACKET, SINGLE CABLE
	35724		1	BRACKET, DUAL CABLE - FOR FOOT ACCELERATOR
28	5699		3	STOP
	1206-27		3	SETSCREW, #10 UNC x 3/4 LG., SOCKET CUP PT.
29	2929		2	"U" BOLT
	1210-8		4	LOCKWASHER, #10 MED.
	1205-5		4	NUT, #10 UNC
30	15552		1	CABLE, EMERGENCY STOP
	1200-57		1	CAPSCREW, 3/8 UNC x 3/4 LG.
	1205-36		1	NUT, 3/8 UNC
31	1240-43		2	CLIP, CABLE
	1200-2		2	CAPSCREW, 1/4 UNF x 3/4 LG.
	1205-14		2	NUT, 1/4 UNF
32	35739	1243-30	1	AIR INLET TUBE ADAPTER
33	1200-29	1200-61	4	CAPSCREW, FOR ABOVE
34	1210-17	1210-20	4	LOCKWASHER
35	35254	1239-8	1	GASKET
36	1244-121		1	RUBBER HUMP HOSE

Ref. No.	Part Number	Part Number	Quan. Req'd.	Name and Description
	GM 4-53	GM 3-71		
37	1243-24	1243-24	1	AIR CLEANER
	1243-35	1243-35	1	ELEMENT, FOR ABOVE
	23622	23622	1	DUST CAP
	23623	23623	1	BAFFLE ASSEMBLY
	23624	23624	1	CLAMP
	23625	23625	1	GASKET
38	1243-21	1243-21	2	MOUNTING BRACKET
39	1240-48	1240-48	2	CLAMP
40	1243-25	1243-25	1	STACK CAP
		F39947	1	TUBE
41	1200-59	1200-59	4	CAPSCREW, 3/8 UNC x 1 LG.
42	1210-20	1210-20	4	LOCKWASHER, 3/8 MED.
43	1205-36	1205-36	4	NUT, 3/8 UNC
44	1223-16	1223-16	1	PRESSURE SWITCH
	1219-93	1219-93	2	COUPLING, FOR ABOVE AND OIL SENDER
45			1	OIL PRESSURE SENDER) - SEE PAGE 2.7
46			1	TEMPERATURE GAUGE SENDER)
47	1200-34	1200-34	4	CAPSCREW, 5/16 UNF x 1 1/4 LG.
	1210-17	1210-17	4	LOCKWASHER, 5/16 MED.
	1205-26	1205-26	4	NUT. 5/16 UNF

Ref. No.	Part Number	Part Number	Part Number	Quan. Req'd.	Name and Description
	PRIOR TO SER. #257	SER. #257 TO #733	BEGIN. W/ SER. #733		
48	18409	18409	18409	4	STUD — SEE ITEMS 69 THRU 75 FOR GM 3-71
49	15563	1256-20	1256-22	1	EXHAUST MUFFLER
50	35223			1	EXHAUST PIPE
50A		35738		1	EXHAUST PIPE, TELEKRANE
50B		35078		1	EXHAUST PIPE, T & C-450
50C			F35894	1	EXHAUST PIPE
	35225	35225	35225	1	GASKET, FOR ABOVE PIPES
51		35382	F37518	1	STRAP
		1205-14	1205-14	2	NUT, 1/4 UNF, FOR ABOVE
52		35381	F36782	1	CRADLE
53	A27231	A27231	A27231	4	MOUNT KIT - REPLACES 1221-34, 1219-171
54	35256		35864	1	SUPPORT
55	15557	1240-66	1240-8	1	CLAMP
			15558	1	SPACER, FOR ABOVE
56			1256-29	1	EXHAUST PIPE
57			1256-23	1	PIPE
			1222-185	1	RAIN CAP, FOR ABOVE PIPE
58			1240-67	2	CLAMP

Ref. No.	Part Number GM 4-53	Part Number GM 3-71	Quan. Req'd.	Name and Description
59	18715	18715	1	STARTING AID KIT
	1291-5	1291-5	1	CONTROL CABLE, FOR ABOVE
	1200-1	1200-1	4	CAPSCREW, 1/4 UNC x 3/4 LG.
	1210-14	1210-14	4	LOCKWASHER, 1/4 MED.
	1205-13	1205-13	4	NUT, 1/4 UNC
60	F41065	39958	1	OIL DRAIN PAN
61			1	OIL COOLER AND FILTER CIRCUIT - SEE HYDRAULIC SYSTEM, SECTION 12
62	1219-29		1	ELBOW
63	1219-181		1	FUEL CHECK VALVE
64	1219-540		1	HOSE, FUEL SUPPLY
	1219-175	1219-175	AR	ELBOW, ABOVE HOSE TO TANK
65	1219-539		1	HOSE, FUEL RETURN
	1219-163		1	ELBOW, ABOVE HOSE TO TANK
66	1240-38		1	CLAMP, 3/8
	1240-60		1	CLAMP, 9/16
		12306-92	4	HOSE
		1219-835	1	FITTING, 5/8
		1219-519	3	FITTING, 3/8
67		1256-22	1	EXHAUST MUFFLER
68		F36782	1	CRADLE
69		1221-34	2	RUBBER MOUNT
70		F39964	1	EXHAUST PIPE
71		18409	4	STUD
		1210-20	4	LOCKWASHER, 3/8 MED.
		1205-170	4	NUT, 3/8 UNC BRASS
72		F36785	1	STRAP
73		1240-8	1	CLAMP, 3" ID
74		1240-67	2	CLAMP, 3-1/2" ID
75		1256-23	1	PIPE, 90°
		1222-185	1	RAIN CAP

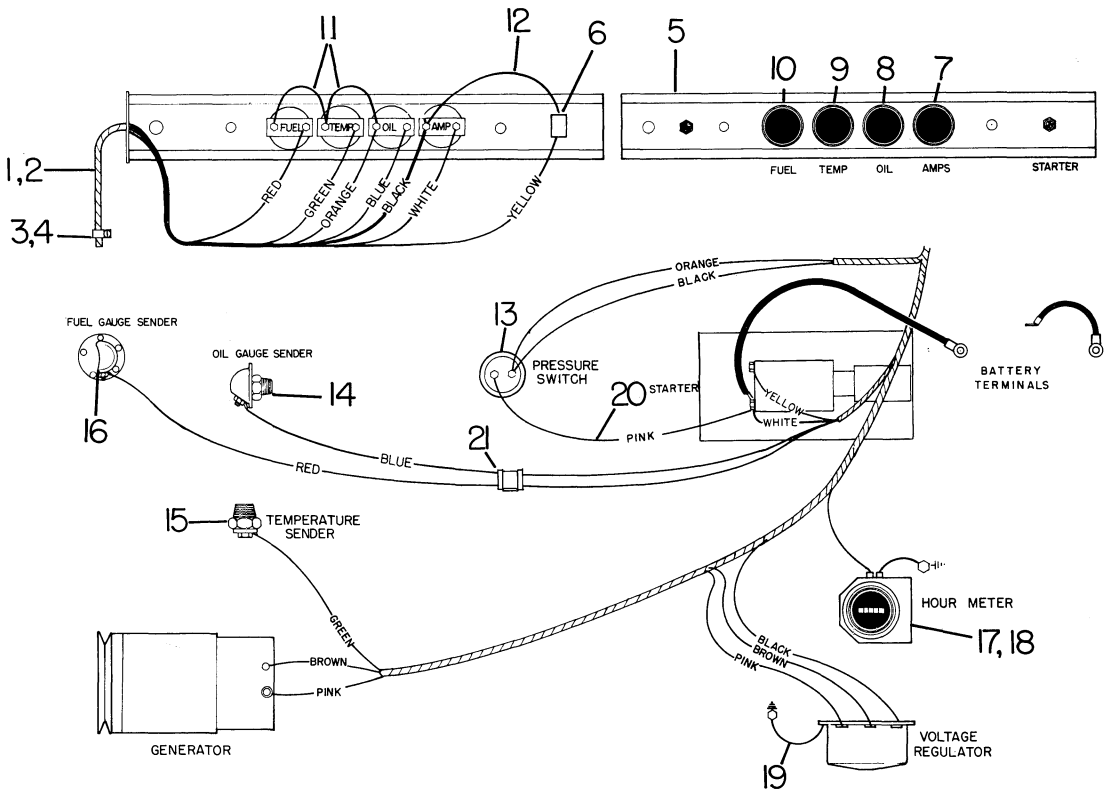

Ref. No.	Part Number	Quan. Req'd.	Name and Description
1	35390	1	WIRE HARNESS
2	1286-24	1	LOOM
	15542	1	BRACKET, HARNESS
3	1240-10	1	JIFFY CLIP
4	1211-7	1	SELF-TAPPING SCREW
5	10911	1	INSTRUMENT PANEL
6	1223-338	1	STARTER SWITCH
7	1245-13	1	AMMETER - A.C.
7	1245-68	1	AMMETER - STEWART-WARNER
8	1245-24	1	OIL PRESSURE GAUGE - A.C.
8	1245-71	1	OIL PRESSURE GAUGE - STEWART-WARNER
9	1245-36	1	TEMPERATURE GAUGE - A.C.
9	1245-41	1	TEMPERATURE GAUGE - STEWART-WARNER
10	1245-27	1	FUEL GAUGE - A.C.
10	1245-72	1	FUEL GAUGE - STEWART-WARNER

NOTE: STEWART-WARNER GAUGES MUST BE USED WITH S-W SENDERS: LIKEWISE WITH A.C. GAUGES & SENDERS.

Ref. No.	Part Number	Quan. Req'd.	Name and Description
11	10324	2	WIRE UNIT
12	10323	1	WIRE UNIT
13	1223-16	1	PRESSURE SWITCH
14	1245-14	1	SENDER, OIL PRESSURE - A.C.
	1245-38	1	SENDER, OIL PRESSURE - STEWART-WARNER
15	1245-25	1	SENDER, TEMPERATURE - A.C.
	1245-69	1	SENDER, TEMPERATURE - STEWART-WARNER
16	1245-40	1	SENDER, FUEL GAUGE W/GASKET - A.C.
	1245-73	1	SENDER, FUEL GAUGE W/GASKET - STEWART-WARNER
17	1245-59	1	HOUR METER
18	35372	1	BRACKET, HOUR METER
	1221-27	1	MOUNTING RUBBER, FOR ABOVE
	1223-6	1	TERMINAL
	1223-7	1	TERMINAL
19	15539	1	WIRE UNIT, GROUND
20	35389	1	WIRE UNIT, GROUND
21	1240-60	1	HOSE CLAMP

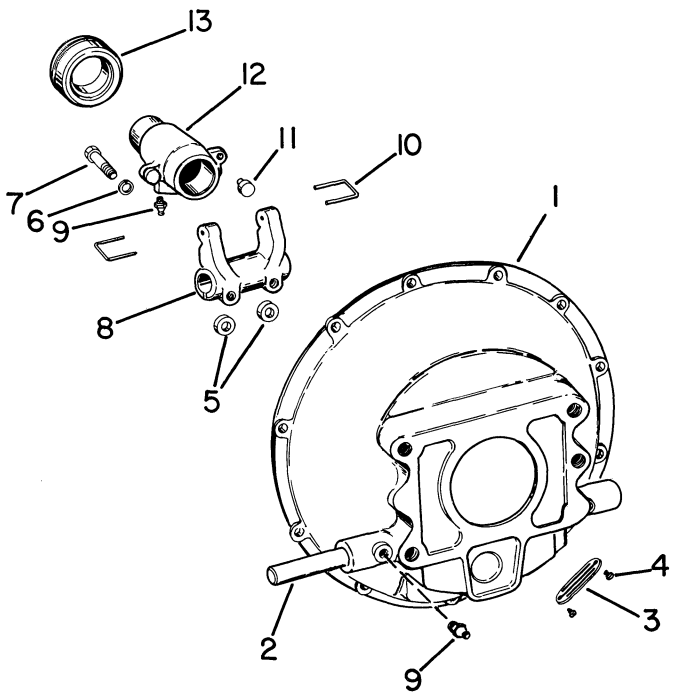

Ref. No.	Part Number	Quan. Req'd.	Name and Description
	A35214	1	BELL HOUSING ASSEMBLY, INCLUDES ITEMS 1 THRU 13. SEE PAGE 2.20 FOR CLUTCH BREAKDOWN. FOR GM 4-53, AC-2900, AND CUMMINS ENGINES.
1	22180	1	BELL HOUSING, MATED TO GEAR CASE W/DOWEL #35363
2	35206	1	SHAFT
3	22182	1	COVER, ACCESS
4	22183	2	SCREW AND LOCKWASHER SET
5	22184	2	WASHER KEY
6	22185	2	LOCKWASHER
7	22186	2	BOLT
8	22187	1	YOKE
9	1213-1	3	GREASE FITTING, 1/8 NPT
10	22188	2	PULL BACK SPRING
11	22189	2	PAD, CLUTCH YOKE
12	22190	1	SLEEVE
13	22191	1	BEARING

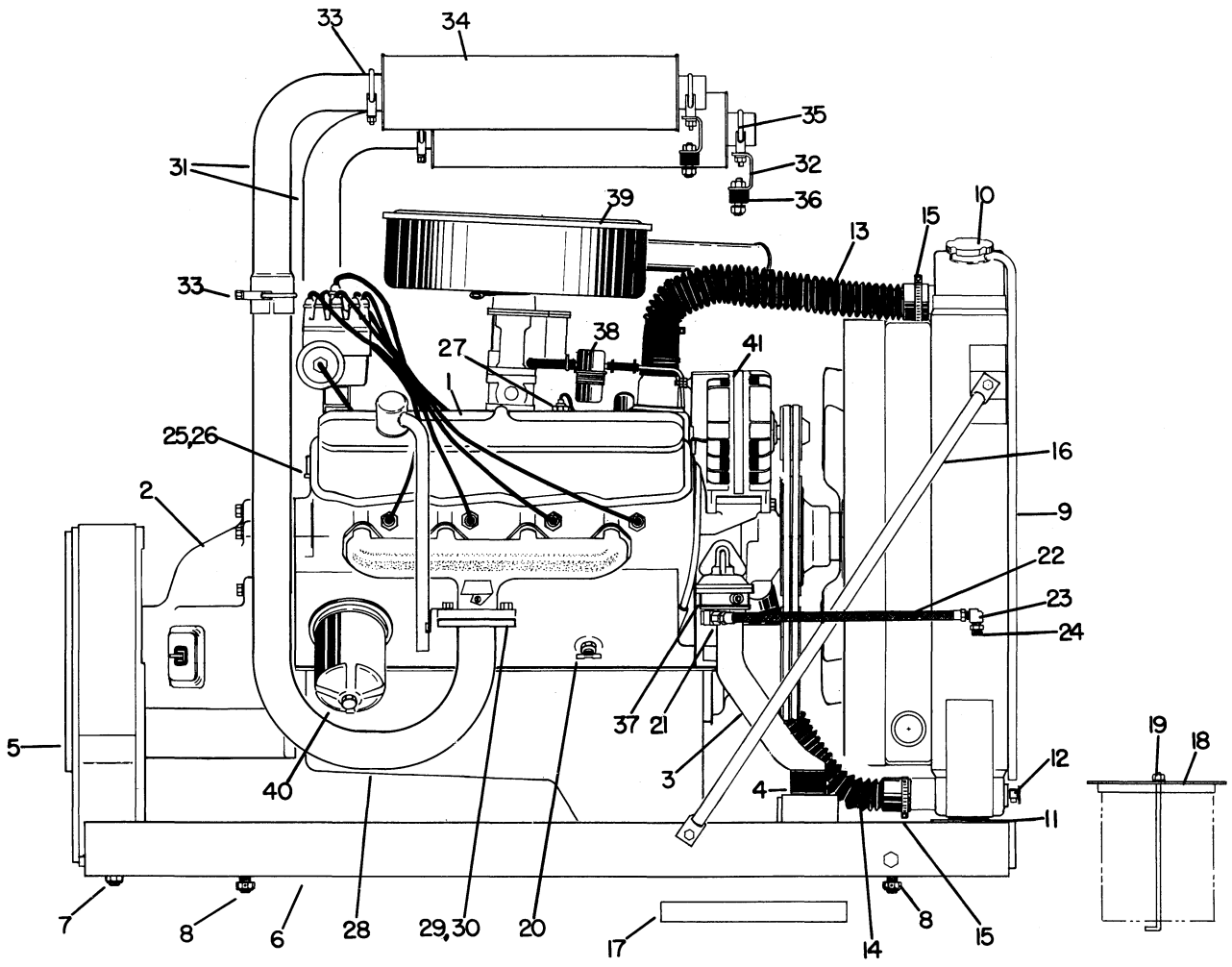

THE CHRYSLER HB-318 AND LH-318 ENGINES ARE STANDARD CHRYSLER PRODUCTION ENGINES.

FOR HB-318 ENGINES, USE BASE PARTS LIST 81-790-0238 AND PARTS SUPPLEMENT FOR HB-318-377 ENGINE.

FOR LH-318 ENGINES, USE BASE PARTS LIST 81-790-0364 AND PARTS SUPPLEMENT FOR LH-318-537 ENGINE.

REFER TO ANY AUTHORIZED CHRYSLER PARTS SUPPLIER IN YOUR LOCAL AREA FOR PARTS AND SERVICE.

Ref. No.	Part Number	Quan. Req'd.	Name and Description
1	35191	1	ENGINE ONLY, CHRYSLER HB-318
1	A35961	1	ENGINE ONLY, CHRYSLER LH-318
2		1	CLUTCH HOUSING & THROWOUT BEARING, SEE CHRYSLER PARTS LIS
3	20749	1	FRONT MOUNT, ENGINE
4	20750	1	INSULATOR, FRONT
	1205-37	2	NUT, 3/8 UNF
	1210-20	2	LOCKWASHER, 3/8 MED.
5	A35040	1	GEAR REDUCTION UNIT, SEE PAGE 2.21 FOR PARTS BREAKDOWN
6	35197	1	SKID
7	1200-149	2	CAPSCREW, 5/8 UNF x 2 LG.
8	1200-153	4	CAPSCREW, 5/8 UNF x 2 1/2 LG.
	1205-91	6	NUT, 5/8 UNF ELASTIC
	2397	4	WASHER
9	A35575	1	RADIATOR & OIL COOLER
	41819	1	RADIATOR ONLY
	41820	1	OIL COOLER ONLY
	1200-29	6	CAPSCREW, 5/16 UNC x 3/4 LG.
	1210-26	6	LOCKWASHER, 5/16 MED.
	35577	1	RADIATOR SHROUD
	1205-58	2	NUT, 1/2 UNC
	1210-26	2	LOCKWASHER, 1/2 MED.
10	35224	1	RADIATOR CAP
11	4059	2	PAD
12	1219-384	1	DRAIN COCK, 1/4 NPT
13	1244-105	1	UPPER HOSE, 1 3/4 ID
14	1244-106	1	LOWER HOSE, 1 1/2 - 1 3/4 ID
15	1240-2	4	CLAMP
16	35233	2	BRACE
	1200-61	4	CAPSCREW, 3/8 UNC x 1 1/4 LG.
	1210-20	4	LOCKWASHER, 3/8 MED.
	1205-36	4	NUT, 3/8 UNC

Ref. No.	Part Number	Quan. Req'd.	Name and Description
17	F41065	1	DRAIN PAN (Replaces 35232)
	1200-2	1	CAPSCREW, 1/4 UNF x 3/4 lg.
	1210-14	1	LOCKWASHER, 1/4 med.
	1209-2	1	PLAINWASHER, 1/4 reg.
18	15272	1	BRACKET, battery hold down
19	32089	2	HOLD DOWN BOLT
	1210-17	2	LOCKWASHER, 5/16 med.
	1205-25	2	NUT, 5/16 UNC
20	9478	2	DRAIN COCK
21	1219-14	1	ELBOW
22	1219-498	1	HOSE
23	1219-4	1	STREET ELBOW
24	1219-43	1	BUSHING
25	1245-14	1	OIL PRESSURE SENDER, A.C.
	1245-38	1	OIL PRESSURE SENDER, Stewart-Warner
26	1223-16	1	PRESSURE SWITCH
	1219-55	1	TEE
	1219-4	1	STREET ELBOW
27	1245-31	1	TEMPERATURE SENDER, HB-318
	1245-70	1	TEMPERATURE SENDER, LH-318
28	35192	1	EXHAUST PIPE, RH - HB-318
	35193	1	EXHAUST PIPE, LH - HB-318
28	1256-33	1	EXHAUST PIPE, RH - LH-318) See Inset
	1256-32	1	EXHAUST PIPE, LH - LH-318
28	35850	2	EXHAUST PIPE, Begin. W/Ser. #773 & 699, 740
29	32043	2	GASKET
30	1203-29	4	CAPSCREW, 7/16 UNF x 1 1/4 lg.
	1210-23	4	LOCKWASHER, 7/16 med.
	1205-172	4	NUT, 7/16 UNF, brass
31	35194	2	EXHAUST EXTENSION
31	35849	2	EXHAUST EXTENSION, Begin. W/Ser. #773 & 699, 740
32	35195	2	BRACKET, muffler
32	35864	2	BRACKET, muffler, Begin. W/Ser. #773 & 699, 740
	35865	2	"U" BOLT, for above bracket
33	1240-34	4	CLAMP, 2" ID

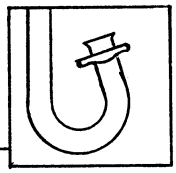

Ref. No.	Part Number	Quan. Req'd.	Name and Description
34	1256-7	2	MUFFLER
35	1240-20	2	CLAMP, 1 3/4" ID
36	A27231	4	RUBBER MOUNT KIT - Replaces 1219-171
			Refer to Chrysler Parts Lists for items below
37		1	FUEL PUMP, w/gasket
38		1	FUEL FILTER ELEMENT, w/gasket
39		1	FILTER, AIR CLEANER
40		1	ELEMENT, OIL FILTER, w/GASKET
41		1	ALTERNATOR w/PULLEY
	1200-86	1	CAPSCREW, 3/8 UNF x 4 1/4 LG., ALTERNATOR MOUNTING
	1210-20	1	LOCKWASHER, 3/8 MED.
	1205-37	1	NUT, 3/8 UNF
		1	ALTERNATOR PULLEY
		1	FAN BLADE
	1200-39	4	CAPSCREW, 5/16 UNC x 2 LG., FAN BLADE MOUNTING
	1210-17	4	LOCKWASHER, 5/16 MED.
		2	FAN BELT, MATCHED PAIR
		1	CLUTCH HOUSING
		1	THROWOUT BEARING
		1	SLEEVE

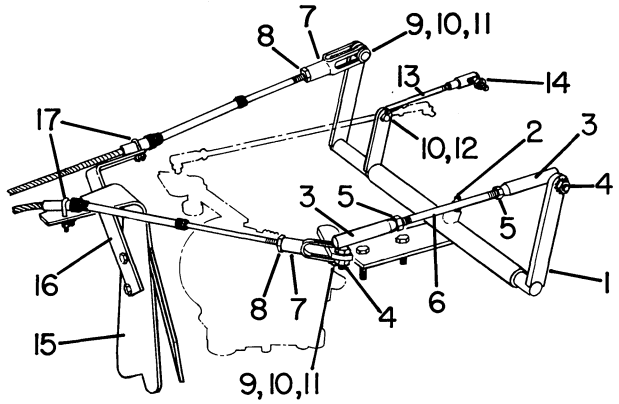

FIGURE 1

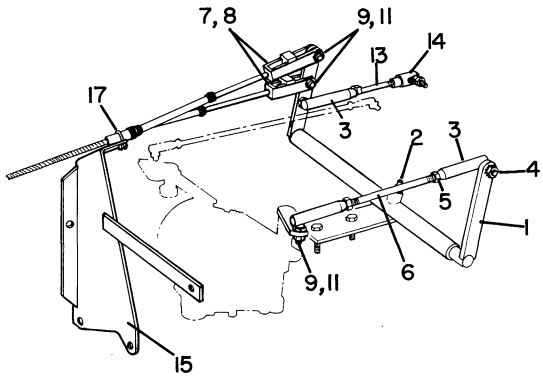

FIGURE 2

Ref. No.	Part Number	Part Number	Quan. Req'd.	Name and Description
	FIGURE 1	FIGURE 2		
1	35228	35771	1	BELLCRANK, GOVERNOR - HB-318
		F38145	1	BELLCRANK, GOVERNOR - LH-318
2	1213-1	1213-1	1	GREASE FITTING, 1/8 NPT
3	1222-122	1222-122	AR	BALL END, 1/4 UNF
4	1230-8	1230-8	AR	KEPS, 1/4 UNF
5	1205-18	1205-18	AR	NUT, 1/4 UNF JAM
6	35226	35226	1	LINK, GOVERNOR
7	18293	35773	AR	ADJUSTABLE YOKE
		35774	AR	SLIDING NUT, FOR ABOVE
8	1205-6	1205-6	AR	NUT, #10 UNF
9	18294	2234	AR	PIN
10	1209-2		AR	PLAINWASHER, 1/4 REG.
11	1207-2	1207-2	AR	COTTER PIN, 1/16 x 3/4 LG.
12	1207-1		AR	COTTER PIN, 1/16 x 1/2 LG.
13	35201	35763	1	ROD
14	1222-163	1222-163	1	BALL END
15	35199	35772	1	BRACKET
16	35466		1	SUPPORT
17	2929	2929	AR	"U" BOLT
	2938	2938	AR	SPACER
	1210-8	1210-8		LOCKWASHER, #10 MED.
	1205-5	1205-5		NUT, #10 UNC
		1240-43		CLIP, FOR REF. 15

WHEN ORDERING, SPECIFY BANTAM SERIAL NUMBER, PART NUMBER AND NAME OF PART REQUIRED

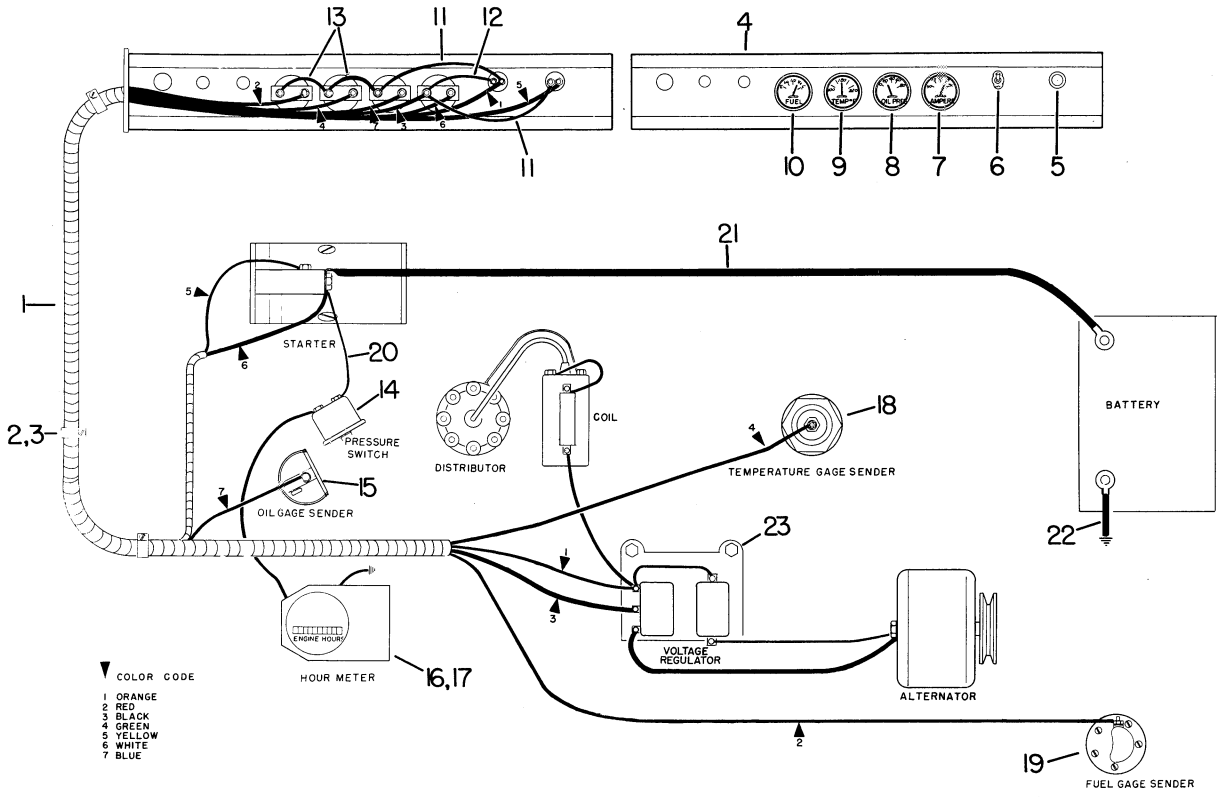

Ref. No.	Part Number	Quan. Req'd.	Name and Description	
1	35202	1	WIRING HARNESS	
2	1240-17	4	JIFFY CLIP	
3	1211-7	4	SELF-TAPPING SCREW, #14 x 1/2 LG.	
4	10911	1	INSTRUMENT PANEL	
5	1223-338	1	STARTER SWITCH	
6	1223-2	1	IGNITION SWITCH	
7	1245-13	1	AMMETER - A.C.	NOTE: STEWART-WARNER
	1245-68	1	AMMETER - STEWART-WARNER	GAUGES MUST BE USED
8	1245-24	1	OIL PRESSURE GAUGE - A.C.	WITH S-W SENDERS;
	1245-71	1	OIL PRESSURE GAUGE - STEWART-WARNER	LIKEWISE WITH A.C.
9	1245-41	1	TEMPERATURE GAUGE	GAUGES & SENDERS.
10	1245-27	1	FUEL GAUGE - A.C.	
	1245-72	1	FUEL GAUGE - STEWART-WARNER	
11	10323	2	WIRE WITH TERMINALS	

Ref. No.	Part Number	Quan. Req'd.	Name and Description
12	10321	1	WIRE WITH TERMINALS
13	10324	2	WIRE WITH TERMINALS
14	1223-16	1	PRESSURE SWITCH
15	1245-14	1	SENDER, OIL PRESSURE, A.C.
	1245-38	1	SENDER, OIL PRESSURE, STEWART-WARNER
16	1245-59	1	HOUR METER
17	35372	1	BRACKET, HOUR METER
	1221-27	1	RUBBER MOUNT
	1203-44	1	CAPSCREW, 3/8 UNC x 1/2 LG.
	1209-4	1	PLAINWASHER, 3/8 REG.
18	1245-31	1	SENDER, TEMPERATURE - CHRYSLER HB-318
	1245-70	1	SENDER, TEMPERATURE - CHRYSLER LH-318
19	1245-40	1	SENDER, FUEL GAUGE, W/GASKET, A.C.
	1245-73	1	SENDER, FUEL GAUGE, W/GASKET, STEWART-WARNER
20	35203	1	WIRE WITH TERMINALS
21	1223-370	1	BATTERY CABLE
22	1223-280	1	BATTERY CABLE, GROUND
23	35198	1	BRACKET, VOLTAGE REGULATOR
	1211-16	4	SELF-TAPPING SCREW
	1209-1	4	WASHER
	38146	1	GUARD BRACKET, CUT-OUT RELAY

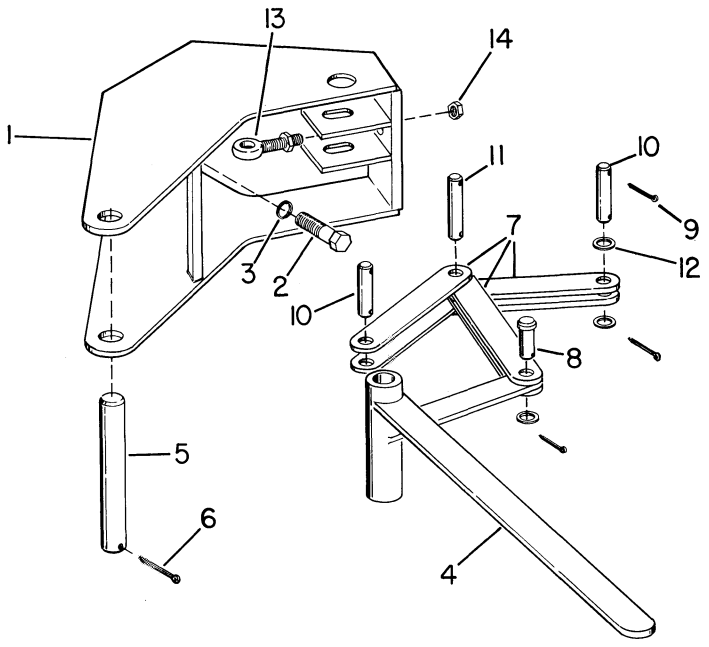

Ref. No.	Part Number	Quan. Req'd.	Name and Description	
1	35234	1	BRACKET	
2	1200-311	1	CAPSCREW, 7/16 UNC x 1 LG.	
3	1210-23	1	LOCKWASHER, 7/16 MED.	
4	35235	1	HANDLE, CLUTCH	
5	35239	1	PIN	
6	1207-22	1	COTTER PIN, 5/32 x 1 1/4 LG.	
7	35236	6	LINK	
8	3119	1	PIN	
9	1207-4	7	COTTER PIN, 3/32 x 3/4 LG.	
10	35238	2	PIN	
11	35237	1	PIN	
12	1209-4	6	PLAINWASHER, 3/8 REG.	
13	2228	1	EYE BOLT	
14	1205-39	2	NUT, 3/8 UNC	

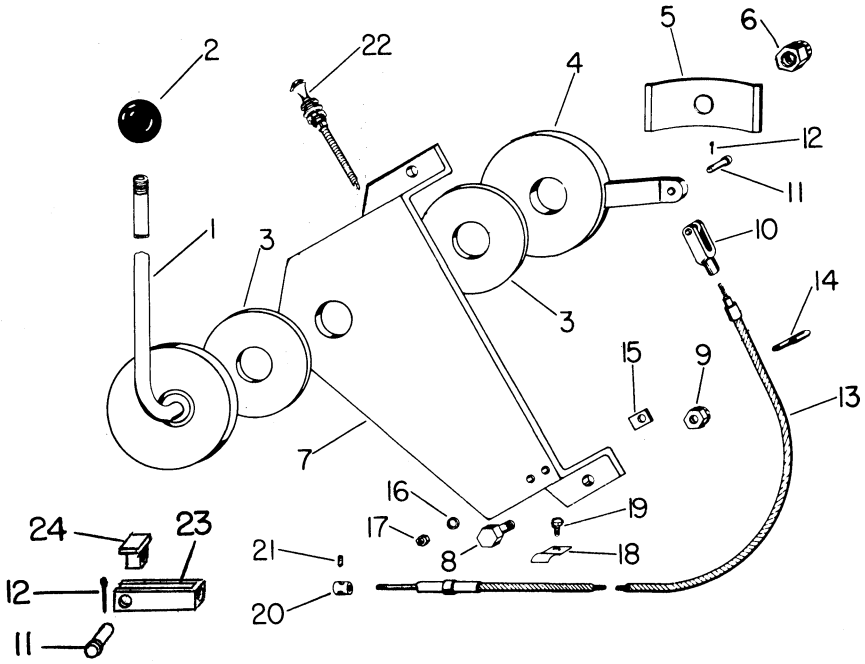

Ref. No.	Part Number	Part Number	Quan. Req'd.	Name and Description
	PRIOR TO SER.#1280	BEGIN. W/ SER.#1280		
1	A13041	A13041	1	CONTROL HANDLE & KNOB
2	1222-90	1222-90	1	KNOB
3	2928	2928	2	FRICTION DISC
4	10145	F19748	1	FRICTION PLATE
5	2927	2927	1	LEAF SPRING
6	1205-65	1205-65	1	NUT, 1/2 UNC SELF-LOCKING
7	10143	10143	1	BRACKET
8	1200-29	1200-29	2	CAPSCREW, 5/16 UNC x 3/4 LG.
9	1205-32	1205-32	2	NUT, 5/16 UNC SELF-LOCKING
10	2930	2597	2	ADJUSTABLE YOKE
11	2931	2234	2	PIN
12	1207-1	1207-2	2	COTTER PIN
		1205-18	2	JAM NUT
13	1222-4		1	CONTROL CABLE - NOT AVAILABLE - ORDER KIT BELOW
13	A24600		1	CONTROL CABLE KIT, INCLUDES 1291-25 CABLE, & ITEMS 10, 11, 12 - FOR GM 4-53 & A.C. 2900
13	A24602		1	CONTROL CABLE KIT, INCLUDES 1291-25 CABLE, & ITEMS 10, 11, 12, 23, 24 - FOR CHRYSLER & CUMMINS
13		1291-25	1	CONTROL CABLE
14	2929	2929	2	"U" BOLT
15	2938	2938	2	SPACER
16	1210-7	1210-7	4	LOCKWASHER, #10 LT.
17	1205-5	1205-5	4	NUT, #10 UNC
18	1240-9		3	JIFFY CLIP
19	1210-16		3	SELF-TAPPING SCREW, 3/16 x 1/2 LG.
20	5699		1	STOP
21	1206-27		1	SETSCREW, #10 UNC x 3/8 LG.
22	1222-102		1	CONTROL CABLE, CHOKE
23		19757	1	YOKE
24		F19758	1	NUT

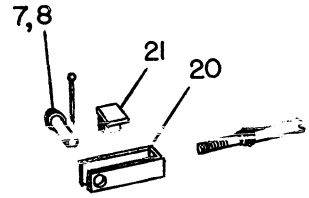

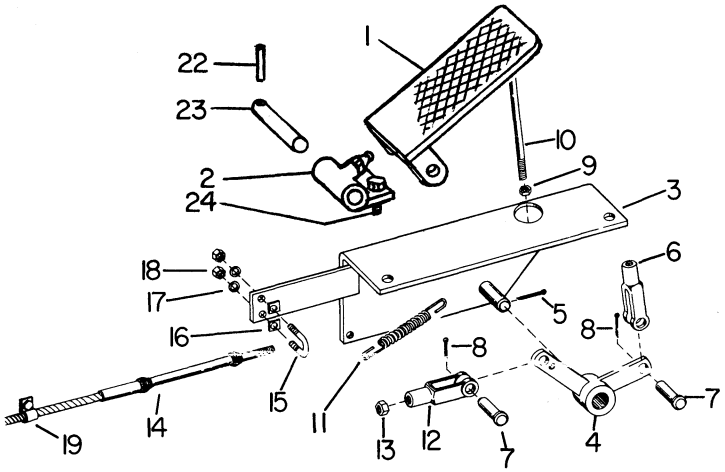

Ref. No.	Part Number Prior To Ser.#1280	Part Number Begin. W/ Ser.#1280	Quan. Req'd.	Name and Description	
1	44549	44549	1	PEDAL - Replaces 40094	
2	F44542	F44542	1	BRACKET, for above pedal	
	1213-6	1213-6	1	GREASE FITTING, for above	
3	35468	35468	1	BRACKET	
4	35469	35469	1	ARM	
5	1207-14	1207-14	1	COTTER PIN, 1/8 x 1/2 lg.	
6	2597	2597	1	ADJUSTABLE YOKE	
7	2234	2234	1/3	PIN	
8	1207-2	1207-2	1/3	COTTER PIN, 1/16 x 3/4 lg.	
9	1205-14	1205-18	1	NUT	
10	19922	19922	1	ROD - Replaces 35467 rod for 40094 pedal	
11	2235	2235	1	SPRING	
12	7758	2597	1	ADJUSTABLE YOKE END	
13	1205-6	1205-18	1	NUT	
14	1222-4		1	CABLE - Not available - Order Kit below	
14	A24601		1	CABLE KIT - For GM & AC Diesels	Incl. 1291-25 cable, 2597 yoke, 19757 yoke and nut as reqd
14	A24602		1	CABLE KIT - for Chrysler, Cummins	
14		1291-25	1	CABLE	
15	2929	2929	2	"U" BOLT	
16	2938	2938	2	SPACER	
17	1210-7	1210-7	4	LOCKWASHER, #10 lt.	
18	1205-5	1205-5	4	NUT, #10 UNC	
19	1240-49	1240-38	2	CLAMP	
20		19757	2	YOKE	
21		F19758	2	NUT	
22	1227-116	1227-116	1	ROLL PIN	
23	19921	19921	1	PIN, for 44549 pedal	
24	1200-30	1200-30	2	CAPSCREW, 5/16 UNF x 3/4 lg.	
	1210-17	1210-17	2	LOCKWASHER, 5/16 med.	
	1205-26	1205-26	2	NUT, 5/16 UNF	

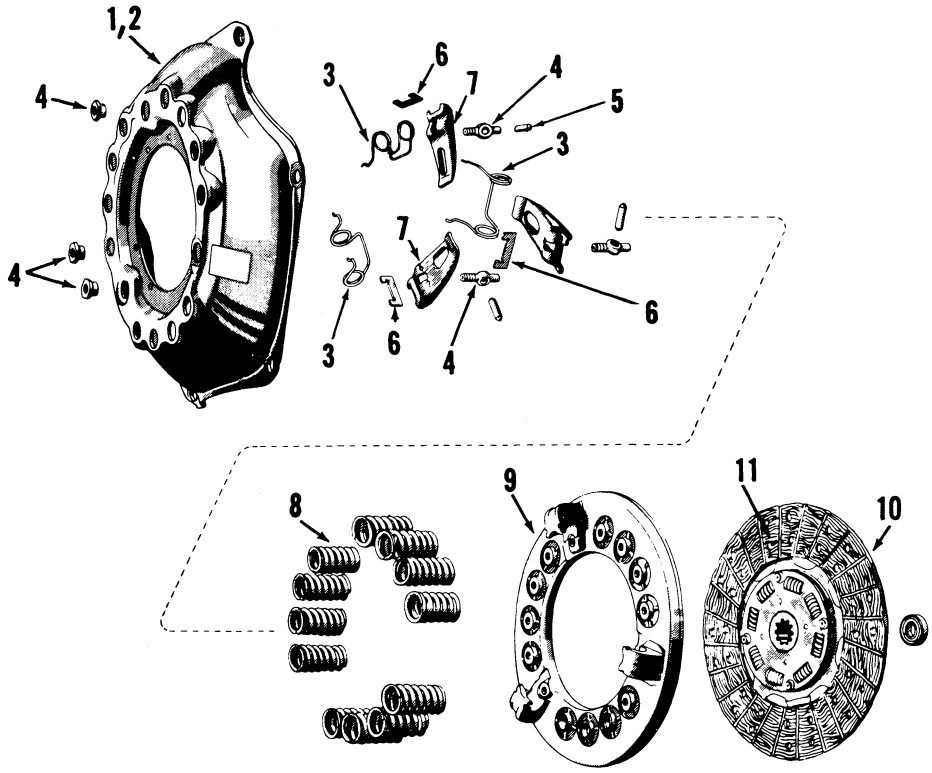

Ref. No.	Part Number	Quan. Req'd.	Name and Description
	A35218	1	CLUTCH ASSEMBLY, INCLUDES ITEMS 1 THRU 11
1	22192	1	COVER ASSEMBLY, INCLUDES ITEMS 2 THRU 9
2	22193	1	COVER & STRAP ASSEMBLY
	22194	4	SCREW, STRAP
	22195	4	FERRULE, STRAP
3	22196	4	ANTI-RATTLE SPRING
4	22197	4	EYE BOLT & NUT
5	22198	4	EYE BOLT PIN
6	22199	4	RELEASE LEVER STRUT
7	22200	4	RELEASE LEVER
8	22201	8	SPRING
8	22202	8	SPRING
9	22203	1	PRESSURE PLATE
10	22204	1	DRIVEN PLATE ASSEMBLY (FACING ATTACHED)
11	22205	1	FACING KIT, INCLUDES 2 PIECES OF FACING AND 60 RIVETS

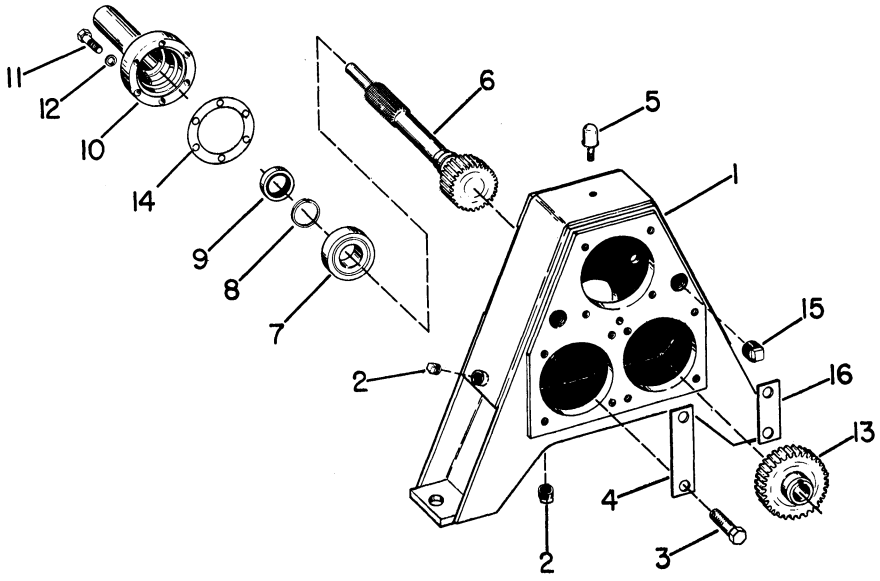

Ref. No.	Part Number GM, AC, CUMMINS	Part Number CHRYSLER	Quan. Req'd.	Name and Description
	A35055	A35040		GEAR REDUCTION UNIT, INCLUDES ITEMS 1 THRU 16
1	35045	35045	1	GEAR CASE, MATED TO BELL HOUSING W/DOWEL #35363
2	1219-112	1219-112	2	PIPE PLUG, 3/4 NPT STD.
3	1203-96	1203-96	4	CAPSCREW, 9/16 UNC x 1 1/2 LG., NYLOK INSERT
4	35038	35038	1	LOCKPLATE
	1209-27	1209-27	4	PLAINWASHER, COPPER
5	1213-30	1213-30	1	BREATHER
6	35047	35041	1	PINION, PRIOR TO..... (SERIAL NO. 644 - AC & GM)
6	35691	35689	1	PINION, HELICAL, BEGIN. W/.... (SERIAL NO. 663 - CHRYSLER)
7	1217-135	1217-135	1	BEARING
8	1220-46	1220-46	1	SNAP RING
9	1218-60	1218-60	1	SEAL
10	35048	35044	1	RETAINER
11	1203-132	1203-132	6	CAPSCREW, 5/16 UNC x 1 1/2 LG., NYLOK INSERT
12	1210-17	1210-17	6	LOCKWASHER, 5/16 MED.
13	35042	35042	3	GEAR, PRIOR TO..... (SERIAL NO. 644 - AC & GM)
13	35692	35692	3	GEAR, HELICAL, BEGIN. W/.... (SERIAL NO. 663 - CHRYSLER)
	1208-27	1208-27	3	MACHINERY BUSHING, 1 1/4 ID x 1 7/8 OD x 14 GA.
	1204-27	1204-27	3	LOCKNUT, ELASTIC
14	35046	35046	AR	SHIM, GEAR CASE
15	1219-20	1219-20	4	PIPE PLUG, 1 NPT STD.
16	35037	35037	1	LOCKPLATE

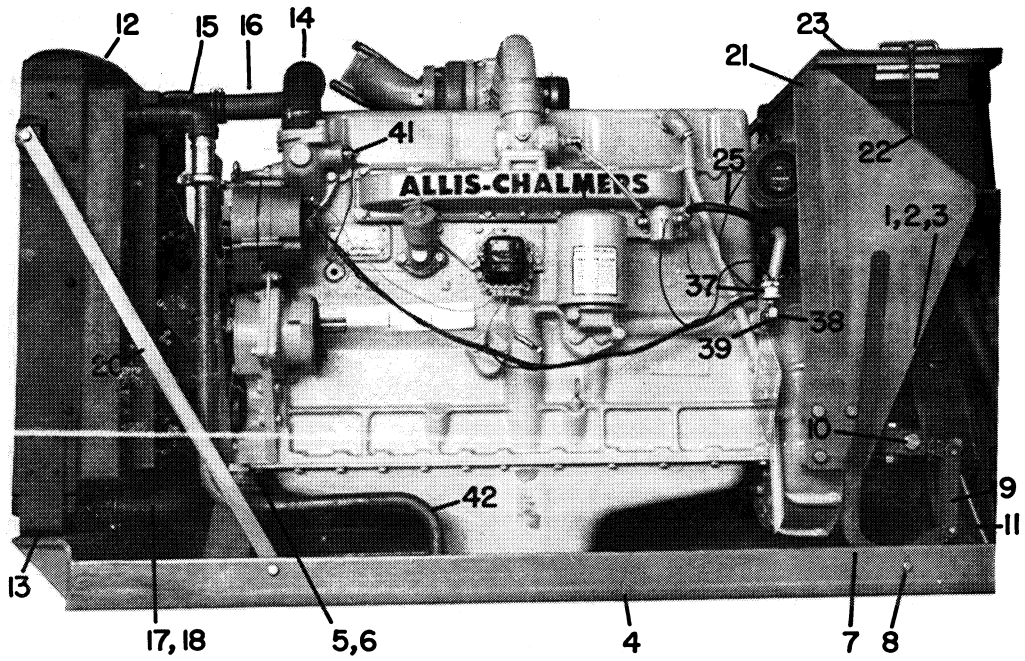
12
15
16
14
23
21
41
22
25
ALLIS-CHALMERS
1,2,3
37
38
39
20
10
42
9
11
13
17,18
5,6
4
7
8

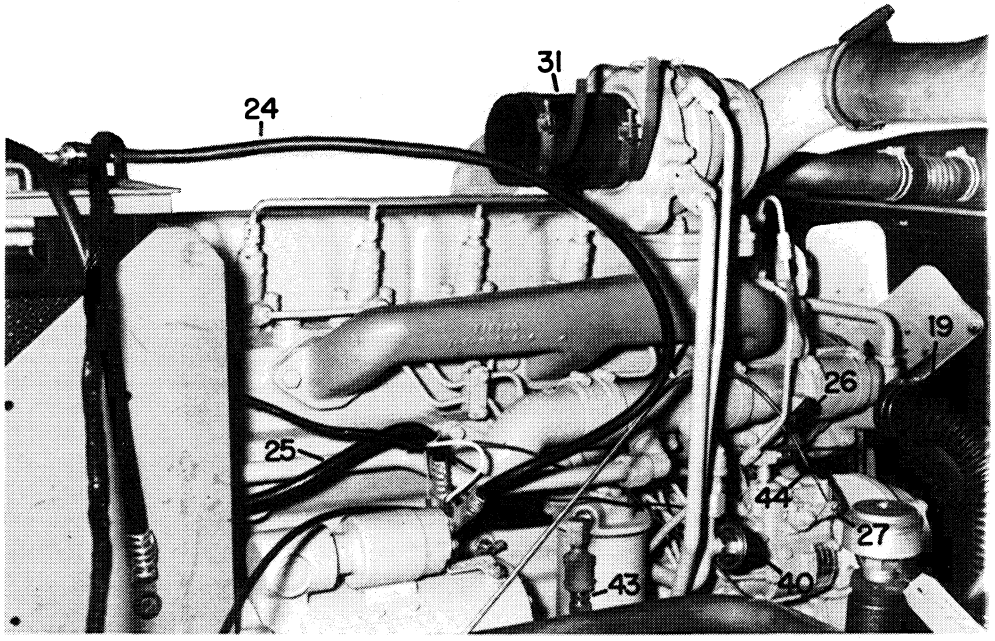
31
24
19
26
25
44
27
43
40

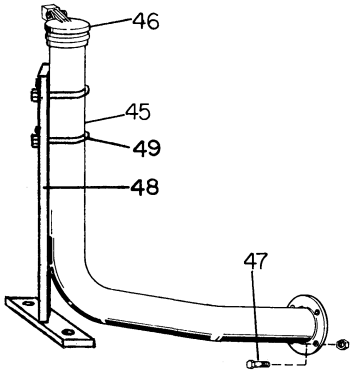
46
45
49
48
47

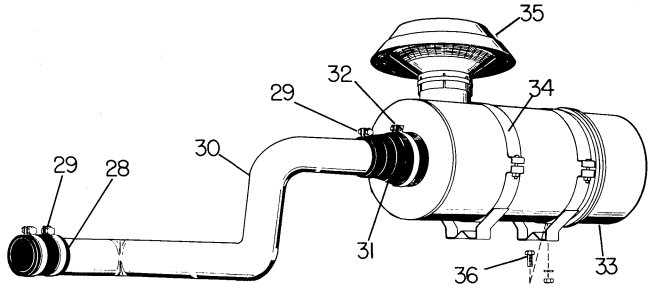
35
32
34
29
30
29
28
31
36
33

Ref. No.	Part Number	Quan. Req'd.	Name and Description
	35569	1	A-C 2900 DIESEL ENGINE, ONLY, LESS THE ITEMS LISTED BELOW
1	A35214	1	BELL HOUSING ASSEMBLY, SEE PAGE 2.9 FOR PARTS BREAKDOWN
	32167	12	CAPSCREW, BELL HOUSING TO FLYWHEEL HOUSING
	1210-23	12	LOCKWASHER, 7/16 MED.
2	A35218	1	CLUTCH ASSEMBLY, SEE PAGE 2.20 FOR PARTS BREAKDOWN
	1203-99	8	CAPSCREW, CLUTCH TO FLYWHEEL
	1210-20	8	LOCKWASHER, 3/8 MED.
	1217-183	1	PILOT BEARING
3	A35055	1	GEAR REDUCTION UNIT, SEE PAGE 2.21 FOR PARTS BREAKDOWN
4	35571	1	SKID
5	38568	2	MOUNT, BEGIN. W/SER. #1348
5	1221-28	2	RUBBER MOUNT, FRONT, PRIOR TO SER. #1348
6	38569	2	WASHER, BEGIN. W/SER. #1348
6	35572	2	PLATE, PRIOR TO SER. #1348
	1229-75	2	CAPSCREW, 5/8 UNF x 2 LG. H.T.
	1229-77	8	CAPSCREW, 5/8 UNF x 2 1/2 LG. H.T.
	1205-91	10	NUT, 5/8 UNF, ELASTIC W/NYLON INSERT
	1229-62	2	CAPSCREW, 1/2 UNF x 3 LG. H.T.
	1205-66	2	NUT, 1/2 UNF SELF-LOCKING
7	35242	1	CLUTCH LEVER
8	35244	1	PIN, FOR ABOVE LEVER
	1207-2	2	COTTER PIN, 1/16 x 3/4 LG.
9	35236	2	LINK
	18397	2	PIN, FOR ABOVE LINK
	1207-2	4	COTTER PIN, 1/16 x 3/4 LG.
10	35243	1	BLOCK
	1232-3	1	WOODRUFF KEY, FOR ABOVE BLOCK
	35207	1	CAPSCREW, 3/8 UNC x 3 LG.
	1210-20	1	LOCKWASHER, 3/8 MED.
	1205-36	1	NUT, 3/8 UNC
11	6808	1	SPRING

Ref. No.	Part Number	Quan. Req'd.	Name and Description	
12	A35575	1	RADIATOR & OIL COOLER	SEE PAGE 11.6 FOR SHROUDS.
	41819	1	RADIATOR ONLY (REPLACES 25123)	
	41820	1	OIL COOLER ONLY (REPLACES 23987)	SEE PAGE 2.27A FOR SURGE TANK.
	35576	1	RADIATOR SHROUD	
	35224	1	RADIATOR CAP	
13	4059	2	PAD	
	1210-26	2	LOCKWASHER, 1/2 MED.	
	1204-23	2	NUT, 1/2 UNF LOCK	
14	1244-136	1	HOSE, ENGINE OUTLET	
15	1244-132	1	HOSE	
16	35579	1	TUBE	
17	1244-133	1	HOSE	
18	35578	1	TUBE	
	1240-25	4	CLAMP, FOR ABOVE	
	1319-384	1	DRAIN COCK, RADIATOR	
19	1244-134	1	HOSE	
	1244-135	1	SPRING INSERT, FOR ABOVE HOSE	
	1222-119	4	CLAMP, FOR ABOVE HOSE	
20	35580	1	BRACE	
	1200-61	4	CAPSCREW, 3/8 UNC x 1 1/4 LG.	
	1210-20	4	LOCKWASHER, 3/8 MED.	
	1205-36	4	NUT, 3/8 UNC	
	35581	1	BRACKET, LOWER TUBE, ITEM 18, TO SKID	
	1200-35	1	CAPSCREW, 5/16 UNC x 1 1/2 LG.	
	1210-17	1	LOCKWASHER, 5/16 MED.	
	1205-25	1	NUT, 5/16 UNC	
	1240-2	1	CLAMP	
21	35573	1	BATTERY SUPPORT BRACKET	
	1200-102	8	CAPSCREW, 1/2 UNC x 1 3/4 LG., FOR ABOVE BRACKET	
	1210-26	8	LOCKWASHER, 1/2 MED.	
22	32089	2	BATTERY HOLD DOWN BOLT	
23	A18288-1	1	TIE DOWN BRACKET	
	1205-25	2	NUT, 5/16 UNC	
	1210-17	2	LOCKWASHER, 5/16 MED.	

Ref. No.	Part Number	Quan. Req'd.	Name and Description
24	1223-263	1	BATTERY CABLE
	1223-279	1	BATTERY CABLE, GROUND
25	1223-410	1	BATTERY CABLE, STARTER SOLENOID TO AIR HEATER SOLENOID
	1209-33	2	WASHER, FOR ABOVE
26	35574	1	THROTTLE BRACKET
	1240-43	1	CLIP, CHOKE WIRE TO ABOVE
	1233-5	1	MACHINE SCREW #8 x 3/8 LG.
	1200-315	1	CAPSCREW, 3/8 UNC x 5/8 LG.
	1210-20	1	LOCKWASHER, 3/8 MED.
27	18438	1	STOP
	2929	1	"U" BOLT
	2938	1	SPACER
	1210-8	2	LOCKWASHER, #10
	1205-5	2	NUT, #10 UNC
28	1244-139	1	HOSE
29	1240-13	3	CLAMP
30	35585	1	TUBE
31	1244-138	1	HOSE
32	1240-48	1	CLAMP
33	1243-24	1	AIR CLEANER
	1243-35	1	ELEMENT, FOR ABOVE
	23622	1	DUST CAP
	23623	1	BAFFLE
	23624	1	CLAMP
	23625	1	GASKET
34	1243-21	2	MOUNTING BRACKET
35	1243-25	1	STACK CAP
36	1200-59	4	CAPSCREW, 3/8 UNC x 1 LG.
	1210-20	4	LOCKWASHER, 3/8 MED.
	1205-36	4	NUT, 3/8 UNC
37	1223-16	1	PRESSURE SWITCH
38	1219-4	1	ELBOW, 90° STREET
39	1219-116	1	BUSHING
40		1	OIL PRESSURE GAUGE SENDER } - SEE PAGE 2.27
41		1	TEMPERATURE GAUGE SENDER }

Ref. No.	Part Number	Quan. Req'd.	Name and Description
42			OIL COOLER CIRCUIT - SEE PAGES 2.27A AND 12.9A
43	1219-176	1	HOSE, FUEL SUPPLY
	1219-175	2	ELBOW, ABOVE HOSE TO TANK
	1219-425	1	BUSHING, FOR ABOVE ELBOW
44	1219-177	1	HOSE, FUEL RETURN
	1219-163	1	ELBOW, ABOVE HOSE TO TANK
	1219-181	1	CHECK VALVE
45	35626	1	EXHAUST PIPE
46	1222-185	1	RAINCAP
47	1200-61	4	CAPSCREW, 3/8 UNC x 1 1/4 LG.
	1205-43	4	NUT, 3/8 UNC SELF-LOCKING
48	F38565	1	SUPPORT - BEGIN. W/SER. #1348
49	1240-8	2	CLAMP
50	F41553	1	OIL DRAIN PAN
	A41818	1	DRAIN HOSE
	1203-65	1	CAPSCREW, 1/4 UNC x 1/2 LG., DRAIN PAN

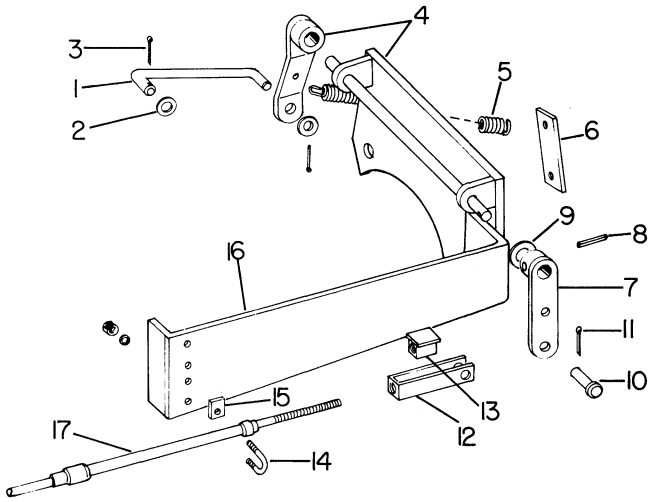

1	35709	1	ROD
2	1209-2	2	MACHINERY BUSHING
3	1207-2	2	COTTER PIN
4	A35708-1	1	LEVER ASSEMBLY
5	2235	1	SPRING
6	37942	1	PLATE
7	A35707-1	1	ARM
8	1227-116	1	ROLL PIN, 1/8 x 1 LG.
9	1209-4	AR	PLAINWASHER, 3/8 REG.
10	2234	1	PIN
11	1207-2	1	COTTER PIN
12	19757	1	YOKE
13	F19758	1	NUT
14	2929	1	"U" BOLT
	1210-7	2	LOCKWASHER
	1205-5	2	NUT
15	2938	1	SPACER
16	A35706-1	1	MOUNT
17			CABLE - SEE PAGES 2.18 & 2.19

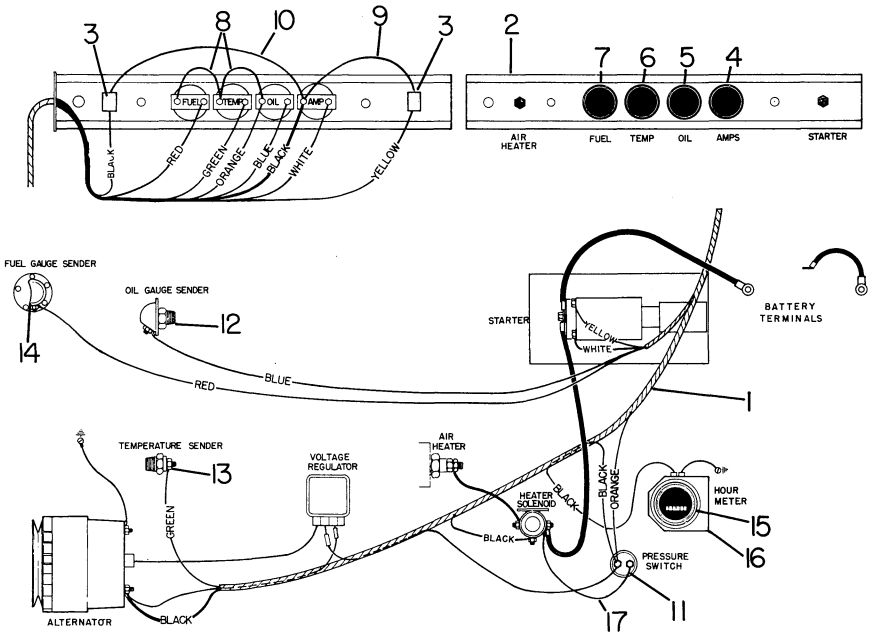

Ref. No.	Part Number	Quan. Req'd.	Name and Description
1	35587	1	WIRE HARNESS
	1286-24	1	LOOM, FOR ABOVE
	15542	1	BRACKET, HARNESS
2	10911	1	INSTRUMENT PANEL
3	1223-338	2	PUSH-BUTTON SWITCH
4	1245-13	1	AMMETER - A.C.
	1245-68	1	AMMETER - STEWART-WARNER
5	1245-24	1	OIL PRESSURE GAUGE - A.C.
	1245-71	1	OIL PRESSURE GAUGE - STEWART-WARNER
6	1245-36	1	TEMPERATURE GAUGE - A.C.
	1245-41	1	TEMPERATURE GAUGE - STEWART-WARNER
7	1245-27	1	FUEL GAUGE - A.C.
	1245-72	1	FUEL GAUGE - STEWART-WARNER
8	10324	2	WIRE UNIT
9	10323	1	WIRE UNIT
10	18478	1	WIRE UNIT
11	1223-16	1	PRESSURE SWITCH
12	1245-14	1	OIL PRESSURE SENDER - A.C.
	1245-38	1	OIL PRESSURE SENDER - S-W
13	1245-25	1	TEMPERATURE SENDER - A.C.
	1245-69	1	TEMPERATURE SENDER - S-W
14	1245-40	1	FUEL GAUGE SENDER w/GASKET - A.C.
	1245-73	1	FUEL GAUGE SENDER w/GASKET - S-W
15	1245-59	1	HOUR METER
16	35372	1	BRACKET, HOUR METER
	1221-27	1	RUBBER MOUNTING, HOUR METER
17	35588	1	WIRE UNIT

NOTE: STEWART-WARNER GAUGES MUST BE USED WITH S-W SENDERS; LIKEWISE FOR A.C. GAUGES & SENDERS.

AC-2900: Begin. W/Ser. #1713
GM 4-53: Begin. W/Ser. #1763

Early Baffles
Shown Page 11.6

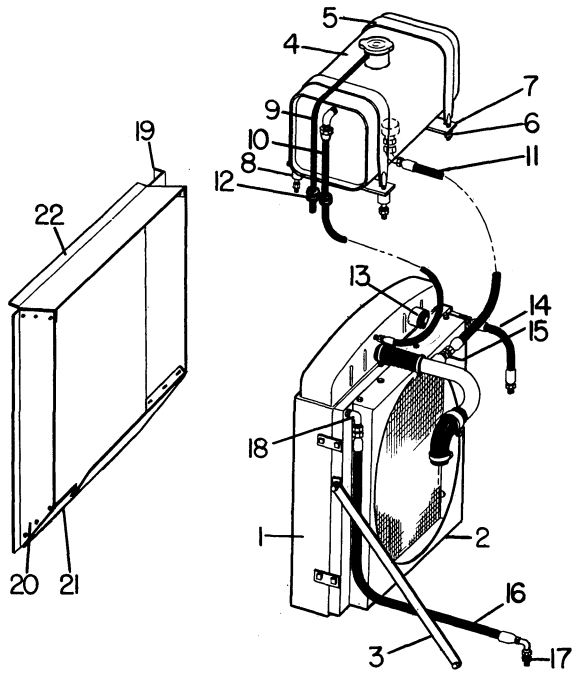

Ref. No.	Part Number	Quan. Req'd.	Name and Description
1	19902	1	RADIATOR & OIL COOLER
2	19904	1	SHROUD
	1211-3	22	SELF-TAPPING SCREW
3	41768	2	BRACE
4	19903	1	SURGE TANK
5	A35382-1	2	STRAP (Replaces F41749)
6	1210-17	4	LOCKWASHER
	1205-25	4	NUT
7	19901	2	STRIP
8	19900	2	SPACER
9	12283-60	1	HOSE

Ref. No.	Part Number	Quan. Req'd.	Name and Description
10	A19899	1	HOSE ASSEMBLY
11	A19898	1	HOSE ASSEMBLY
12	1223-44	1	GROMMET
13	1221-47	1	EXPANDER PLUG
14	A41771	1	HOSE ASSEMBLY
15	1219-582	2	ADAPTER
16	A41770	1	HOSE ASSEMBLY
17	1219-387	2	ADAPTER
18	1219-588	1	ELBOW
19	41763	1	PLATE, AC
	41754	1	PLATE, GM
20	41764	1	PLATE, AC
	41755	1	PLATE, GM
21	41765	1	PLATE, AC
	41757	1	PLATE, GM
22	41766	1	PLATE, AC
	41756	1	PLATE, GM
23	41758	1	PANEL, Cab (Not Shown)

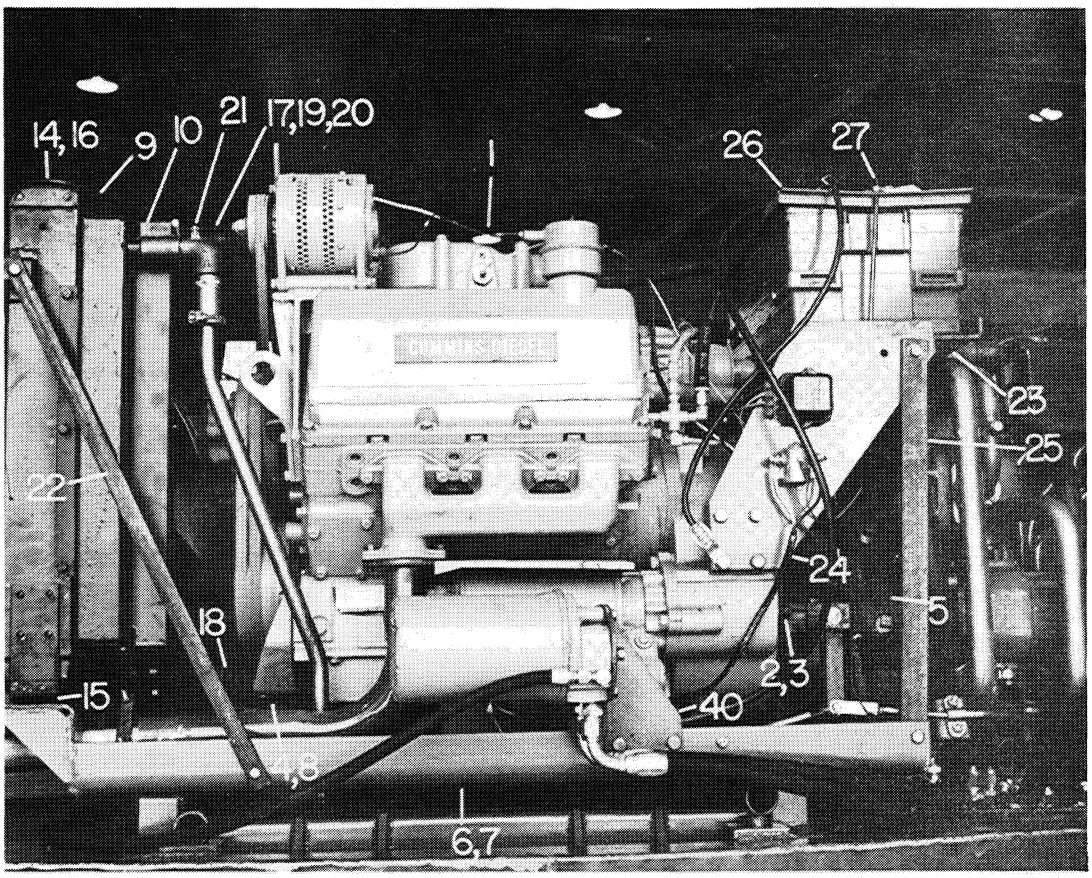
14,16
9
10
21
17,19,20
26
27
23
25
22
24
18
5
2,3
15
40
4,8
6,7

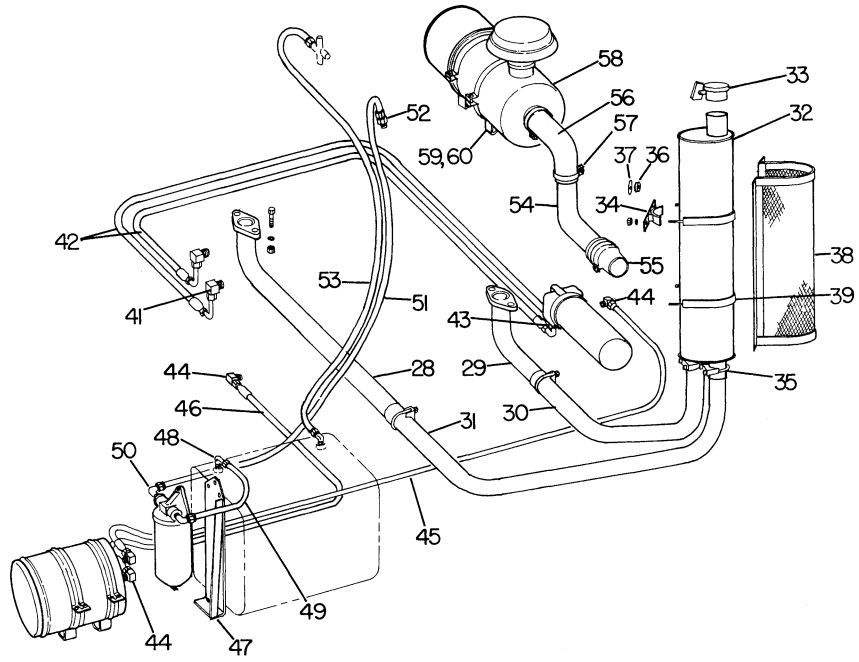
58
33
56
52
32
57
59,60
37
36
54
34
42
38
55
53
51
44
39
41
43
44
28
29
35
46
30
31
48
50
45
49
44
47

Ref. No.	Part Number	Quan. Req'd.	Name and Description
1	A37699	1	CUMMINS V-6 140 DIESEL ENGINE ONLY
2	A35214	1	BELL HOUSING, SEE PAGE 2.9 FOR PARTS BREAKDOWN
3	32167	12	CAPSCREW
	1210-23	12	LOCKWASHER
	A39822	1	CLUTCH, COMPLETE
	39823	1	COVER ASSEMBLY, CLUTCH
	39824	1	DRIVEN PLATE ASSEMBLY
4	1221-29	1	BUSHING
	10328	1	WASHER
	10329	1	WASHER
5	A35055	1	GEAR REDUCTION UNIT, SEE PAGE 2.21 FOR PARTS BREAKDOWN
6	F39839	1	SKID
7	1200-149	6	CAPSCREW, 5/8 UNF x 2 LG., SKID TO MAINFRAME
8	1200-163	1	CAPSCREW, 5/8 UNF x 3 3/4 LG., ENGINE TO FRONT MOUNT
	1205-91	7	NUT, 5/8 UNF ELASTIC
9	39817	1	RADIATOR & OIL COOLER
10	39818	1	SHROUD
11	39953	1	SHROUD, RH
12	39954	1	SHROUD, LH
13	39955	1	SHROUD, BOTTOM
	1205-58	2	NUT, 1/2 UNC, RADIATOR
	1210-26	2	LOCKWASHER, 1/2 MED.
14	12308-56	1	OVERFLOW EXTENSION HOSE
15	4059	2	MOUNTING PAD, RADIATOR
16	1219-384	1	DRAIN COCK, 1/4 NPT
17	1244-149	1	UPPER HOSE
18	1244-148	1	LOWER HOSE
19	39820	1	HOSE
20	39819	1	TUBE
21	1240-25	6	CLAMP, 2 1/8 ID
22	39847	2	BRACE
23	F39843	1	BATTERY BRACKET

Ref. No.	Part Number	Quan. Req'd.	Name and Description
24	39845	2	BLOCK
25	39846	2	BRACE
26	18288	1	BRACKET, HOLD DOWN
27	32089	2	HOLD DOWN BOLT
28	F39805	1	EXHAUST PIPE, RH
29	F39802	1	EXHAUST PIPE, LH
30	39807	1	MUFFLER PIPE, LH
31	39808	1	MUFFLER PIPE, RH
32	1256-40	1	MUFFLER
33	1222-189	1	RAIN CAP
34	F39809	2	CRADLE
35	1240-80	4	CLAMP, 2 3/4 ID
36	39813	2	SPACER
37	39814	6	WASHER
38	F37810	1	GUARD
39	F39815	2	MUFFLER STRAP
	1205-25	4	NUT, 5/16 UNC, MUFFLER GUARD
40	39852	1	BRACKET, OIL FILTER
41	1219-287	2	ADAPTER
42	A39826	2	HOSE ASSEMBLY
43	1219-480	2	ADAPTER
44	1219-799	4	ADAPTER
45	A39828	1	HOSE ASSEMBLY
46	A39829	1	HOSE ASSEMBLY
47	F39853	1	BRACKET
48	1219-827	1	ADAPTER
49	A39830	1	HOSE
50	1219-346	2	ADAPTER

Ref. No.	Part Number	Quan. Req'd.	Name and Description
51	A39831	1	HOSE ASSEMBLY
52	1219-464	1	ADAPTER
53	A39832	1	HOSE ASSEMBLY
54	39825	1	TUBE
55	1244-146	1	HUMP HOSE, 3 1/2" - 4"
56	1244-147	1	HOSE, 90°, 4" ID
57	1240-48	1	CLAMP
58	1243-24	1	AIR CLEANER
	1243-35	1	ELEMENT, FOR ABOVE
59	1243-21	2	MOUNTING BRACKET
60	1200-59	4	CAPSCREW, 3/8 UNC x 1 LG.
	1210-20	4	LOCKWASHER, 3/8 MED.
	1205-36	4	NUT, 3/8 UNC
61	39861	1	STARTING AID KIT
	1291-5	1	CABLE
	1200-1	1	CAPSCREW, 1/4 UNC x 3/4 LG.
	1205-13	1	NUT, 1/4 UNC
	1210-14	1	LOCKWASHER, 1/4 MED.

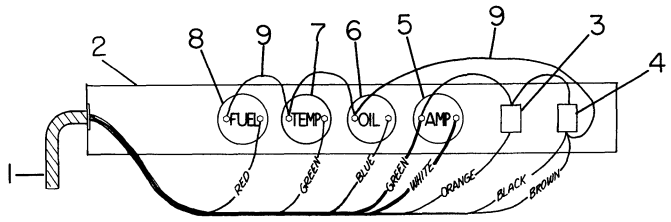

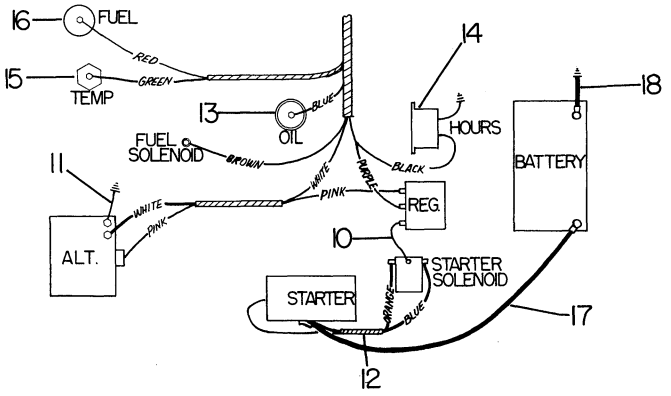

Ref. No.	Part Number	Quan. Req'd.	Name and Description
1	39821	1	WIRING HARNESS
	1286-24	1	LOOM, FOR ABOVE
	1286-8	1	LOOM, FOR ABOVE
2	10911	1	INSTRUMENT PANEL
3	1223-338	1	STARTER SWITCH
4	1223-468	1	TOGGLE SWITCH
5	1245-68	1	AMMETER
6	1245-71	1	OIL PRESSURE GAUGE
7	1245-41	1	TEMPERATURE GAUGE
8	1245-72	1	FUEL GAUGE
9	10323	3	WIRE WITH TERMINALS
10	39858	1	WIRE WITH TERMINALS
11	39860	1	WIRE WITH TERMINALS
12	39859	1	WIRE WITH TERMINALS
13	1245-38	1	OIL PRESSURE SENDER
14	1245-59	1	HOUR METER
	35372	1	BRACKET, FOR ABOVE
	1221-27	1	RUBBER MOUNT, HOUR METER
15	1245-69	1	TEMPERATURE SENDER
16	1245-73	1	FUEL GAUGE SENDER W/GASKET
17	1223-370	1	BATTERY CABLE
18	1223-280	1	BATTERY CABLE, GROUND

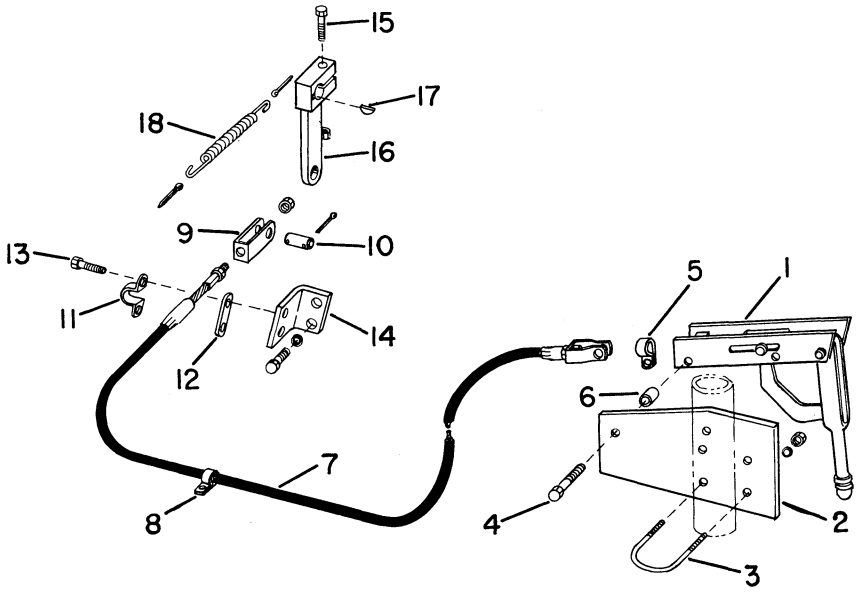

Ref. No.	Part Number	Quan. Req'd.	Name and Description
1	1291-17	1	LEVER
2	35896	1	BRACKET
3	35897	2	"U" BOLT
	1210-14	4	LOCKWASHER, 1/4 MED.
	1205-13	4	NUT, 1/4 UNC
4	1200-41	2	CAPSCREW, 5/16 UNC x 2 1/4 LG.
	1210-17	2	LOCKWASHER, 5/16 MED.
	1205-25	2	NUT, 5/16 UNC
5	1291-20	1	CLAMP
	1291-19	1	SPACER
	1291-18	1	SPACER
6	37702	2	SPACER
7	1291-22	1	CABLE, CHRYSLER
	1291-21	1	CABLE, GM, AC, CUMMINS
8	1240-38	1	CLAMP
9	1291-16	1	CLEVIS, CHRYSLER
	1291-13	1	CLEVIS, GM, AC, CUMMINS
	1205-40	2	JAM NUT, 3/8 UNF
10	37298	1	PIN, CHRYSLER
	36865	1	PIN, GM, AC, CUMMINS
	1207-5	2	COTTER PIN

Ref. No.	Part Number	Quan. Req'd.	Name and Description
11	32475	1	CLAMP
12	32476	1	SPACER
13	1200-63	2	CAPSCREW, 3/8 UNC x 1 1/2 LG.
	1210-20	2	LOCKWASHER, 3/8 MED.
	1205-36	2	NUT, 3/8 UNC
14	F35900	1	BRACKET, CHRYSLER
	36866	1	BRACKET, GM, AC, CUMMINS
15	1200-100	2	CAPSCREW, 1/2 UNC x 1 1/2 LG.
	1210-26	2	LOCKWASHER, 1/2 MED.
	1205-58	2	NUT, 1/2 UNC
16	F35931	1	BLOCK, GM, AC, CUMMINS
17	1232-3	1	WOODRUFF KEY, FOR ABOVE BLOCK
18	6808	1	SPRING, GM, AC, CUMMINS
	1207-14	1	COTTER PIN, FOR ABOVE

CHRYSLER INDUSTRIAL 8 CYLINDER ENGINE

MODEL
IND. HA273 AND LH318

BASE ENGINE PARTS LIST

ALWAYS CONSULT THE PARTS BOOK SUPPLEMENT BEFORE ORDERING PARTS. IF ALL PARTS DESIRED ARE NOT LISTED IN THE SUPPLEMENT, REFER TO BASE ENGINE PARTS CATALOG.

IMPORTANT - Complete information as to engine type and serial number is stamped on a plate located on the manifold side of the engine, and should be mentioned in all parts orders or in any communications pertaining thereto. The number stamped on left front end of cylinder block is a manufacturing code, and should not be used for the purpose of identifications.

INDUSTRIAL PRODUCTS DIVISION
CHRYSLER CORPORATION
MARYSVILLE, MICHIGAN, U.S.A.

MAY, 1967
Printed in U.S.A.

81-790-0364

PART TYPE CODE	PART NAME AND DESCRIPTION	PER ENG. HA273	PER ENG. LH318	PART NO.
	GROUP 9 - ENGINE			
	ENGINE GASKET SETS			
9-01-5	GASKET SET, Engine	-	1	2808 480
	Consists of:			
	1 - 2129 012 Gasket, Chain Case Cover			
	2 - 2806 984 Gasket, Cylinder Head			
	2 - 2463 290 Gasket, Cylinder Head Cover			
	1 - 50 082 Gasket, Cylinder Water Outlet			
	1 - 1400 185 Gasket, Fuel Pump Flange			
	1 - 1326 836 Gasket, Ignition Distributor			
	2 - ---- --- Gasket, Intake Manifold			
	1 - ---- --- Gasket, Intake Manifold, Front			
	1 - ---- --- Gasket, Intake Manifold, Rear			
	2 - ---- --- Gasket, Oil Pan			
	2 - ---- --- Gasket, Oil Pan, End			
	1 - ---- --- Gasket, Water Pump Body			
	1 - 2536 694 Seal, Chain Case Cover Oil			
	2 - ---- --- Seal, Crankshaft Bearing Oil			
	1 - ---- --- Seal, Crankshaft Bearing Cap #5 Oil, Right			
	1 - ---- --- Seal, Crankshaft Bearing Cap #5 Oil, Left			
	16 - ---- --- Shield, Valve Stem Oil			
	CYLINDER BLOCK ASSEMBLY			
9-02-5	BLOCK, w/PISTON and RINGS, Assembly	1	-	2600 430
	BLOCK, w/PISTON and RINGS, Assembly	-	1	2600 434
9-02-7	DOWEL, Cylinder Block to Clutch Housing	2	2	1122 532
	DOWEL, Cylinder Block to Clutch Housing Adjusting (.007) . .	2	2	1736 347
	DOWEL, Cylinder Block to Clutch Housing Adjusting (.014) . .	2	2	1736 348
	DOWEL, Cylinder Block to Clutch Housing Adjusting (.021) . .	2	2	1736 353
	DOWEL, Cylinder Block to Intake Manifold Locating	2	2	9414 469
9-02-16	PLUG, Block Core Hole, Small	1	1	2406 387
	PLUG, Block Core Hole, Large	9	9	2406 356
	PLUG, Block Core Hole, Large Oversize	*	*	2406 575
9-02-17	PLUG, Block Oil Line	1	1	1324 464
	CYLINDER HEAD			
9-03-4	HEAD, Assembly (Up To "B" Series 1966)	2	-	2532 080
	HEAD, Assembly ("B" Series 1966)	2	-	2536 176
	HEAD, Assembly ("C" Series 1967)	2	2	2806 213
9-03-5	GASKET, Head	2	2	2463 338
9-03-10	SCREW, Head (1/2" x 1 7/8")	10	10	2463 258
	SCREW, Head (1/2" x 3 5/8")	8	8	2463 259
	SCREW, Head (1/2" x 4 5/8")	2	2	2463 260

* Indicates - use as required.

Prices and specifications subject to change without notice.

Printed in U.S.A.

PART TYPE CODE	PART NAME AND DESCRIPTION	PER ENG. HA273	PER ENG. LH318	PART NO.
	CYLINDER HEAD - Cont'd			
9-03-18	PLUG, Head Core Hole	4	4	2406 387
9-03-28	COVER, Head, Assembly, Right (Up To "C" Series 1967)	1	-	2465 543
	COVER, Head, Assembly, Right ("C" Series 1967)	1	1	2806 072
	COVER, Head, Assembly, Left	1	1	2465 383
9-03-29	GASKET, Head Cover	2	2	2463 290
	CRANKSHAFT			
9-07-5	CRANKSHAFT, Assembly	1	1	2268 119
9-07-12	BUSHING, Pilot	1	1	53 298
9-07-17	SLINGER, Oil.	1	1	1618 686
	CRANKSHAFT GEAR OR SPROCKET			
9-08-5	SPROCKET	1	1	2463 385
	KEY	1	1	152 191
	CRANKSHAFT BEARINGS			
9-09-2	BEARING PACKAGE, Nos. 1-2-4 (std.)	3	3	2084 005
	BEARING PACKAGE, Nos. 1-2-4 (.001 undersize)	3	3	2084 006
	BEARING PACKAGE, Nos. 1-2-4 (.002 undersize)	3	3	2084 007
	BEARING PACKAGE, Nos. 1-2-4 (.003 undersize)	3	3	2275 387
	BEARING PACKAGE, Nos. 1-2-4 (.010 undersize)	3	3	2084 008
	BEARING PACKAGE, Nos. 1-2-4 (.012 undersize)	3	3	2275 388
	BEARING PACKAGE, No. 3 (std.)	1	1	1879 627
	BEARING PACKAGE, No. 3 (.001 undersize)	1	1	1879 628
	BEARING PACKAGE, No. 3 (.002 undersize)	1	1	1879 629
	BEARING PACKAGE, No. 3 (.003 undersize)	1	1	2275 389
	BEARING PACKAGE, No. 3 (.010 undersize)	1	1	1879 630
	BEARING PACKAGE, No. 3 (.012 undersize)	1	1	2275 390
	BEARING PACKAGE, No. 5 (std.)	1	1	1643 151
	BEARING PACKAGE, No. 5 (.001 undersize)	1	1	1643 152
	BEARING PACKAGE, No. 5 (.002 undersize)	1	1	1643 153
	BEARING PACKAGE, No. 5 (.003 undersize)	1	1	1643 154
	BEARING PACKAGE, No. 5 (.010 undersize)	1	1	1643 155
	BEARING PACKAGE, No. 5 (.012 undersize)	1	1	1643 156
	CRANKSHAFT BEARING CAPS, STUDS AND PARTS			
9-10-2	SEAL PACKAGE, Bearing Cap No. 5 Consists of: 1 - ---- --- Oil Seal, Right 1 - ---- --- Oil Seal, Left	1	1	1326 091

* Indicates - use as required.

Prices and specifications subject to change without notice.

Printed in U.S.A.

PART TYPE CODE	PART NAME AND DESCRIPTION	PER ENG. HA273	PER ENG. LH318	PART NO.
	CRANKSHAFT BEARING CAPS, STUDS AND PARTS - Cont'd			
9-10-5	CAP, Bearing Nos. 1-2-4	3	3	1632 519
	CAP, Bearing No. 3	1	1	2463 582
	CAP PACKAGE, Bearing No. 5	1	1	2275 446
	Consists of:			
	1 - ---- --- Cap, Bearing No. 5			
	1 - ---- --- Oil Seal, Right			
	1 - ---- --- Oil Seal, Left			
9-10-19	SCREW, Bearing Cap	10	10	1618 695
	CRANKSHAFT BEARING OIL SEAL			
9-11-1	SEAL PACKAGE, Rear Bearing Oil	1	1	1326 093
	Consists of:			
	2 - ---- --- Oil Seal, Rear Bearing			
	1 - ---- --- Oil Seal, Bearing Cap No. 5, Right			
	1 - ---- --- Oil Seal, Bearing Cap No. 5, Left			
	CAMSHAFT			
9-15-1	CAMSHAFT	1	-	2463 360
	CAMSHAFT	-	1	2658 362
9-15-2	ECCENTRIC	1	1	1618 718
9-15-6	PLATE, Sprocket Thrust	1	1	1946 992
9-15-10	WASHER, Sprocket Retaining Screw	1	1	1618 732
	CAMSHAFT BEARINGS			
9-16-6	BEARING, No. 1	1	1	1632 522
	BEARING, No. 2	1	1	1632 523
	BEARING, No. 3	1	1	1632 524
	BEARING, No. 4	1	1	1632 525
	BEARING, No. 5	1	1	1632 526
9-16-17	PLUG, Rear Bearing	1	1	1821 722
	CAMSHAFT GEAR OR SPROCKET			
9-17-5	SPROCKET	1	1	2463 386
	KEY	1	1	106 751
	TIMING CHAIN			
9-20-1	CHAIN	1	1	2463 384
	CHAIN CASE COVER			
9-23-5	COVER, Assembly	1	1	1944 773

* Indicates - use as required.

PART TYPE CODE	PART NAME AND DESCRIPTION	PER ENG. HA273	PER ENG. LH318	PART NO.
	CHAIN CASE COVER - Cont'd			
9-23-17	GASKET, Cover	1	1	2129 012
9-23-18	OIL SEAL, Cover, Assembly	1	1	2536 694
9-23-40	INDICATOR, Timing (Up To "B" Series 1966)	1	-	1947 236
	CONNECTING RODS			
9-31-4	ROD, Assembly	8	8	2406 785
9-31-5	BOLT, Cap	16	16	1944 865
9-31-7	NUT, Cap Bolt	16	16	1737 695
9-31-10	BUSHING, Rod	8	8	1618 701
	CONNECTING ROD BEARINGS			
9-32-2	BEARING PACKAGE (std.)	8	-	1879 617
	BEARING PACKAGE (std.)	-	8	2421 305
	BEARING PACKAGE (.001 undersize)	8	-	1879 618
	BEARING PACKAGE (.001 undersize)	-	8	2421 306
	BEARING PACKAGE (.002 undersize)	8	-	1879 619
	BEARING PACKAGE (.002 undersize)	-	8	2421 307
	BEARING PACKAGE (.003 undersize)	8	-	1879 620
	BEARING PACKAGE (.003 undersize)	-	8	2421 308
	BEARING PACKAGE (.010 undersize)	8	-	1879 621
	BEARING PACKAGE (.010 undersize)	-	8	2421 309
	BEARING PACKAGE (.012 undersize)	8	-	1879 622
	BEARING PACKAGE (.012 undersize)	-	8	2421 310
	PISTONS			
9-34-5	PISTON, w/PIN and Lock RINGS, Assembly (std.)	8	-	2495 072
	PISTON, w/PIN and Lock RINGS, Assembly (std.)	-	8	2808 519
	PISTON, w/PIN and Lock RINGS, Assembly (.005 oversize)	8	-	2495 073
	PISTON, w/PIN and Lock RINGS, Assembly (.005 oversize)	-	8	2808 520
	PISTON, w/PIN and Lock RINGS, Assembly (.020 oversize)	8	-	2495 074
	PISTON, w/PIN and Lock RINGS, Assembly (.020 oversize)	-	8	2808 521
	PISTON, w/PIN and Lock RINGS, Assembly (.040 oversize)	8	-	2495 075
	PISTON, w/PIN and Lock RINGS, Assembly (.040 oversize)	-	8	2808 522
	PISTON RINGS			
9-35-1	RING SET, Piston (std. to .009 oversize) Consists of: 8 - ---- --- Expander, Second Compression Ring 16 - ---- --- Rail, Lower Ring 8 - ---- --- Ring, Top Compression 8 - ---- --- Ring, Second Compression 8 - ---- --- Spacer, Lower Ring	1	-	2525 407

* Indicates - use as required.

Prices and specifications subject to change without notice.

PART TYPE CODE	PART NAME AND DESCRIPTION	PER ENG. HA273	PER ENG. LH318	PART NO.
	PISTON RINGS - Cont'd			
9-35-1	RING SET, Piston (std. to .009 oversize)	-	1	2808 553
	Consists of:			
	16 - ---- --- Rail, Lower Ring			
	8 - ---- --- Ring, Intermediate			
	8 - ---- --- Ring, Upper			
	8 - ---- --- Spacer, Lower Ring			
	RING SET, Piston (.020 to .029 oversize).	1	-	2525 408
	Consists of:			
	8 - ---- --- Expander, Second Compression Ring			
	16 - ---- --- Rail, Lower Ring			
	8 - ---- --- Ring, Top Compression			
	8 - ---- --- Ring, Second Compression			
	8 - ---- --- Spacer, Lower Ring			
	RING SET, Piston (.020 to .029 oversize)	-	1	2808 554
	Consists of:			
	16 - ---- --- Rail, Lower Ring			
	8 - ---- --- Ring, Intermediate			
	8 - ---- --- Ring, Upper			
	8 - ---- --- Spacer, Lower Ring			
	RING SET, Piston (.040 to .049 oversize)	1	-	2525 409
	Consists of:			
	8 - ---- --- Expander, Second Compression Ring			
	16 - ---- --- Rail, Lower Ring			
	8 - ---- --- Ring, Top Compression			
	8 - ---- --- Ring, Second Compression			
	8 - ---- --- Spacer, Lower Ring			
	RING SET, Piston (.040 to .049 oversize)	-	1	2808 555
	Consists of:			
	16 - ---- --- Rail, Lower Ring			
	8 - ---- --- Ring, Intermediate			
	8 - ---- --- Ring, Upper			
	8 - ---- --- Spacer, Lower Ring			
	PISTON PINS			
9-36-5	PIN (std.)	8	-	2463 268
	PIN (std.)	-	8	2658 878
	PIN (.003 oversize)	8	-	2463 269
	PIN (.003 oversize)	-	8	2658 879
	PIN (.008 oversize)	8	-	2463 270
	PIN (.008 oversize)	-	8	2658 880
9-36-7	RING, Pin Retaining	16	16	1324 470

* Indicates - use as required.

Prices and specifications subject to change without notice.

PART TYPE CODE	PART NAME AND DESCRIPTION	PER ENG. HA273	PER ENG. LH318	PART NO.
	VALVES			
9-39-1	GASKET PACKAGE, Valve Grind	-	1	2808 481
	Consists of:			
	2 - 2806 984 Gasket, Cylinder Head			
	2 - 2463 290 Gasket, Cylinder Head Cover			
	2 - ---- --- Gasket, Intake Manifold			
	1 - ---- --- Gasket, Intake Manifold, Front			
	1 - ---- --- Gasket, Intake Manifold, Rear			
	16 - 2205 958 Shield, Valve Stem Oil			
9-39-5	VALVE, Intake (std.)	8	8	2465 335
	VALVE, Intake (.005 oversize)	8	8	2465 336
	VALVE, Intake (.015 oversize)	8	8	2465 337
	VALVE, Intake (.030 oversize)	8	8	2465 338
9-39-6	VALVE, Exhaust (std.)	8	8	2465 339
	VALVE, Exhaust (.005 oversize)	8	8	2465 340
	VALVE, Exhaust (.015 oversize)	8	8	2465 341
	VALVE, Exhaust (.030 oversize)	8	8	2465 342
9-39-14	SHIELD, Intake and Exhaust Valve Stem Oil	16	16	2205 958
9-39-15	SPRING, Intake and Exhaust Valve	16	16	1739 534
9-39-16	RETAINER, Intake and Exhaust Valve Spring	16	16	2402 045
9-39-17	LOCK, Intake Valve Spring Retainer	16	16	381 875
	LOCK, Exhaust Valve Spring Retainer	16	16	1614 666
9-39-21	SPACER, Valve Spring	16	16	1639 947
	VALVE TAPPET			
9-41-4	TAPPET, Assembly (std.)	16	-	2469 501
	TAPPET, Assembly (std.)	-	16	2808 385
	TAPPET, Assembly (.001 oversize)	16	-	2469 502
	TAPPET, Assembly (.001 oversize)	-	16	2808 386
	TAPPET, Assembly (.008 oversize)	16	-	2469 503
	TAPPET, Assembly (.008 oversize)	-	16	2808 387
	TAPPET, Assembly (.030 oversize)	16	-	2469 504
	TAPPET, Assembly (.030 oversize)	-	16	2808 388
	VALVE PUSH ROD			
9-42-1	ROD, Assembly	16	-	2465 343
	ROD, Assembly	-	16	2532 152
	VALVE ROCKERS			
9-43-1	ROCKER, Assembly	16	-	2806 988
	ROCKER, Right	-	8	2536 146
	ROCKER, Left	-	8	2536 145

PART TYPE CODE	PART NAME AND DESCRIPTION	PER ENG. HA273	PER ENG. LH318	PART NO.
	VALVE ROCKERS - Cont'd			
9-43-3	SCREW, Rocker Adjusting	16	-	1855 238
9-43-5	SPACER, Rocker	8	-	2463 324
9-43-9	SHAFT, Rocker, Assembly	2	-	2536 526
	SHAFT, Rocker, Assembly	-	2	2532 149
9-43-11	RETAINER, Rocker Shaft, Ends and Center	6	6	2463 322
	RETAINER, Rocker Shaft, Intermediate	4	4	2463 323
9-43-19	PLUG, Rocker Shaft	4	4	1324 268

GROUP 10 - ENGINE OILING

	OIL LEVEL INDICATOR			
10-03-4	INDICATOR, Assembly	1	-	2402 839
	INDICATOR, Assembly	-	1	2463 571
10-03-7	TUBE, Indicator	1	1	1859 788
	OIL PUMP			
10-07-6	PUMP, Assembly (Up To "C" Series 1967)	1	-	2402 474
	PUMP, Assembly ("C" Series 1967 and After)	1	1	2843 251
10-07-7	COVER, Pump	1	1	2206 095
10-07-8	GASKET, Pump Cover	1	1	2268 921
	OIL PUMP SHAFT AND GEAR			
10-09-1	SHAFT, Pump Drive, Assembly	1	1	2121 530
10-09-5	SHAFT, Pump and Distributor Drive, w/GEAR, Assembly	1	1	2121 535
10-09-7	BUSHING, Pump and Distributor Drive Shaft	1	1	1737 725
	OIL PUMP ROTOR			
10-14-18	ROTOR, Outer	1	1	2121 531
	OIL PRESSURE RELIEF VALVE			
10-22-6	BODY, Cylinder Block Relief Valve (Up To "C" Series 1967)	1	-	1537 741
10-22-8	DISC, Cylinder Block Relief Valve (Up To "C" Series 1967)	1	-	1536 359
10-22-11	PLUNGER, Oil Pump Relief Valve (Up To "C" Series 1967)	1	-	2463 541
	PLUNGER, Oil Pump Relief Valve ("C" Series 1967 and After)	1	1	2843 208

* Indicates - use as required.

PART TYPE CODE	PART NAME AND DESCRIPTION	PER ENG. HA273	PER ENG. LH318	PART NO.
	OIL PRESSURE RELIEF VALVE - Cont'd			
10-22-12	SLEEVE, Cylinder Block Check Valve (Up To "C" Series 1967)	1	-	E6134M
10-22-15	SPRING, Cylinder Block Relief Valve (Up To "C" Series 1967)	1	-	1536 357
	SPRING, Oil Pump Relief Valve	1	1	2264 587
10-22-17	RETAINER, Cylinder Block Relief Valve Spring (Up To "C" Series 1967)	1	-	1537 742
10-22-40	CAP, Oil Pump Relief Valve (Up To "C" Series 1967)	1	-	2264 586
	CAP, Oil Pump Relief Valve ("C" Series 1967 and After)	1	1	2806 273
10-22-42	BODY, Cylinder Block Check Valve (Used in 1630 938 Assembly) (Up To "C" Series 1967)	1	-	1630 939
	BODY, Cylinder Block Check Valve (Used in 1538 518 Assembly) (Up To "C" Series 1967)	1	-	1535 905
10-22-43	SEAL, Cylinder Block Check Valve Body (Up To "C" Series 1967)	1	-	2229 666
	OIL STRAINER			
10-23-7	STRAINER, w/Suction PIPE, Assembly	1	-	2468 849
	STRAINER, w/Suction PIPE, Assembly	-	1	2206 200
	OIL PAN			
10-24-1	GASKET PACKAGE, Oil Pan Consists of: 2 - ---- --- Gasket, Oil Pan 2 - ---- --- Gasket, Oil Pan End	1	1	1879 520
10-24-4	PAN, Assembly (Up To "C" Series 1967)	1	-	2463 517
	PAN, Assembly ("C" Series 1967 and After)	1	-	2806 393
	PAN, Assembly	-	1	2268 361
10-24-23	SCREW, Pan Attaching, w/WASHER, Assembly	16	16	1947 953
	SCREW, Pan to Chain Case Cover, w/WASHER, Assembly	2	2	6025 926
10-24-37	PLUG, Drain	1	1	2125 890
10-24-38	GASKET, Drain Plug	1	1	2268 513

* Indicates - use as required.

Prices and specifications subject to change without notice.

CHRYSLER INDUSTRIAL 8 CYLINDER ENGINE

MODEL
IND. LH318-537

Prepared Especially for
Schield Bantam

THIS SUPPLEMENT PERTAINS TO PARTS PECULIAR TO THE ABOVE MODEL ONLY AND IS TO BE USED IN CONJUNCTION WITH BASE ENGINE PARTS LIST, 81-790-0364.

ALWAYS CONSULT THE PARTS BOOK SUPPLEMENT BEFORE ORDERING PARTS. IF ALL PARTS DESIRED ARE NOT LISTED IN THE SUPPLEMENT, REFER TO BASE ENGINE PARTS LIST.

IMPORTANT - Complete information as to engine type and serial number is stamped on a plate located on the manifold side of the engine, and should be mentioned in all parts orders or in any communications pertaining thereto. The number stamped on left front end of cylinder block is a manufacturing code, and should not be used for the purpose of identifications.

PARTS BOOK SUPPLEMENT

INDUSTRIAL PRODUCTS DIVISION
CHRYSLER CORPORATION
MARYSVILLE, MICHIGAN, U.S.A.

August 1968
Printed in U.S.A.

81-790-0383

PART TYPE CODE	LH318-537 PART NAME AND DESCRIPTION	PART NO.	PER ENG.

GROUP 6 - CLUTCH

	CLUTCH		
6-09-1	HOUSING	2826 823	1
	CLUTCH HOUSING PAN		
6-10-2	PAN	1938 248	1
	CLUTCH DISC		
6-13-1	DISC, Clutch Driving	1669 584	1
	CLUTCH COVER AND PRESSURE PLATE		
6-14-1	COVER, w/Pressure PLATE, Clutch	1785 876	1
6-14-10	SCREW, Clutch Cover to Flywheel	314 926	6
	CLUTCH PRESSURE SPRING		
6-16-1	SPRING, Clutch Pressure	855 521 1406 504	3 6
	CLUTCH RELEASE BEARING		
6-19-2	BEARING, w/SLEEVE, Clutch Release	1799 378	1
6-19-3	BEARING, Clutch Release	1664 510	1
	CLUTCH RELEASE BEARING SLEEVE		
6-20-14	SPRING, Clutch Release Bearing Sleeve Retainer	1923 333	2
	CLUTCH RELEASE FORK		
6-22-1	FORK, w/SPRING, Clutch Release	1927 343	1
6-22-4	SEAL, Clutch Release Fork	1927 348	1
6-22-15	PIVOT, Clutch Release Fork	633 238	1
6-22-19	SPRING, Clutch Release Fork	1923 332	1
	CLUTCH RELEASE FORK ROD		
6-24-1	END, Clutch Release Fork Rod	1927 345	1
6-24-3	NUT, Clutch Release Fork Rod Adjusting	1407 347	1
6-24-4	PIN, Clutch Release Fork Rod	1324 090	1

PART TYPE CODE	LH318-537 PART NAME AND DESCRIPTION	PART NO.	PER ENG.
	CLUTCH RELEASE FORK ROD - Cont'd		
6-24-5	BRACKET, Clutch Release Fork Rod Spring	1938 449	1
6-24-6	SPRING, Clutch Release Fork Rod	1634 508	1
	CLUTCH RELEASE FORK LEVER		
6-27-5	SPRING, Clutch Release Fork Return	1938 450	1

GROUP 7 - COOLING

	FAN		
7-02-1	FAN	2659 176	1
7-02-16	SPACER, Fan	1859 532	1
	FAN BELTS		
7-03-1	BELT		
	Fan and Alternator	2846 942	2
	Fan and Alternator, Matched Set	2846 941	1
	FAN PULLEY HUB		
7-05-1	HUB, Water Pump Pulley	2129 265	1
	FAN PULLEY		
7-06-1	PULLEY		
	Fan Drive	2513 934	1
	Auxiliary Drive	1075 624	1
7-06-5	SPACER, Auxiliary Drive Pulley	2125 876	1
7-06-14	PULLEY, Fan	2202 519	1
	RADIATOR HOSE AND TUBE		
7-14-9	HOSE, Water Pump By-Pass	2465 085	1
	THERMOSTAT		
7-41-4	THERMOSTAT, 180° F.	2808 631	1

PART TYPE CODE	PART NAME AND DESCRIPTION	PART NO.	PER ENG.
	WATER PUMP		
7-42-1	PUMP PACKAGE, Water	2448 315	1
	Consists of:		
	1 - ---- --- Bushing, Pipe Reducing		
	1 - ---- --- Gasket, Body		
	1 - ---- --- Pump		
7-42-4	REPAIR PACKAGE, Water Pump	2421 376	1
	Consists of:		
	1 - ---- --- Gasket, Body		
	1 - ---- --- Impeller		
	1 - ---- --- Seal		
	1 - ---- --- Shaft, w/BEARING		
	WATER PUMP BODY COVER PLATE		
7-44-3	GASKET, Water Pump Body	2129 013	1
	WATER PUMP SHAFT AND IMPELLER		
7-45-31	IMPELLER, Water Pump	2402 795	1
	WATER PUMP SEAL		
7-46-1	SEAL, Water Pump	2120 955	1
	WATER PUMP ELBOW		
7-48-22	NIPPLE, Water Pump By-Pass	1618 668	2

GROUP 8 - ELECTRICAL

	CHASSIS OR BODY WIRING CABLE AND CONNECTIONS		
8-16-6	INSULATOR, Alternator Battery Terminal	2291 093	1
	DISTRIBUTOR		
8-27-1	DISTRIBUTOR	2875 534	1
8-27-4	GASKET, Mounting	1326 836	1
8-27-26	CLAMP		
	Ignition Distributor	1947 612	1
	Ignition Distributor Adapter	2407 177	1
8-27-71	CAP	2444 507	1
8-27-76	SPRING, Cap Attaching	1838 508	2
8-27-100	OILER, Shaft	953 717	1

AR - Indicates use as required.
Printed in U. S. A.

Prices and specifications subject to change without notice.

PART TYPE CODE	LH318-537 PART NAME AND DESCRIPTION	PART NO.	PER ENG.
	DISTRIBUTOR - Cont'd		
8-27-122	ADAPTER, Ignition Distributor	2846 985	1
8-27-123	SEAL, Governor Shaft Oil	2421 312	1
	NOTE: Send orders for Governor Throttle Body and Lever Assembly to Pierce Governor Co., Inc., 1605 Ohio Avenue, Anderson, Indiana.		
8-27-133	BEARING PACKAGE, Drive Shaft	2275 229	1
	Consists of: 1 - ---- --- Bearing, Lower 1 - ---- --- Bearing, Upper 1 - ---- --- Collar 1 - ---- --- Pin 1 - ---- --- Washer, Thrust, Lower 1 - ---- --- Washer, Thrust, Upper		
8-27-138	PLATE, Breaker	2095 922	1
8-27-158	CONTACT, Breaker	2098 244	1
8-27-190	CONDENSER	2098 058	1
8-27-205	LEAD, Primary	2444 282	1
8-27-250	SHAFT, Governor and Cam Drive	2642 767	1
8-27-259	SPACER, Cam	2642 988	1
8-27-278	WEIGHT PACKAGE, Governor	1881 945	1
	Consists of: 2 - ---- --- Weight		
8-27-279	SPRING SET, Governor Weight	2809 075	1
	Consists of: 1 - ---- --- Spring, Strong 1 - ---- --- Spring, Weak		
8-27-292	PLATE, Cam and Stop	2444 264	1
8-27-297	DISC and SNAP RING PACKAGE, Cam Sleeve	1879 607	1
	Consists of: 1 - ---- --- Disc, Felt 1 - ---- --- Snap Ring		
8-27-300	ROTOR	1838 516	1
8-27-308	CONTROL, Vacuum	2444 456	1
8-27-320	HOSE, Carburetor to Distributor Vacuum Control	2264 998	1

PART TYPE CODE	PART NAME AND DESCRIPTION	PART NO.	PER ENG.
	DISTRIBUTOR - Cont'd		
8-27-352	GEAR and PIN PACKAGE, Drive Consists of: 1 - ---- --- Gear 1 - ---- --- Pin 1 - ---- --- Washer, Thrust	2448 815	1
	ALTERNATOR		
8-28-3	ALTERNATOR, w/PULLEY	2642 537	1
8-28-15	STRAP, Alternator Adjusting	2946 799	1
8-28-36	BRACKET, Alternator Mounting	2806 260	1
8-28-38	SPACER, Alternator Mounting Bracket	2129 856	1
8-28-54	SHIELD, Alternator Heat	2846 457	1
8-28-74	REGULATOR, Alternator Voltage	2098 300	1
8-28-297	PULLEY, Alternator	2098 272	1
	ALTERNATOR COMPONENT PARTS		
8-29-17	BRUSH PACKAGE, Alternator Consists of: 2 - ---- --- Brush 1 - ---- --- Terminal, Field 1 - ---- --- Washer, Insulating	2084 673	1
8-29-42	HOLDER, Brush	2095 038	1
8-29-97	ROTOR	2642 650	1
8-29-98	STATOR	2642 633	1
8-29-99	SLIP RING PACKAGE, Rotor Consists of: 1 - ---- --- Capacitor, w/Bolt 1 - ---- --- Insulator, Bolt 1 - ---- --- Insulator, Heat Sink 2 - ---- --- Lockwasher 2 - ---- --- Nut, Hex 1 - ---- --- Washer, Plain	2586 512	1
8-29-131	RECTIFIER — Positive Negative	2098 288 2098 287	3 3
8-29-132	SHIELD, Rectifier End	2098 646	1
8-29-133	BEARING, Rectifier End Shield	2098 512	1

PART TYPE CODE	PART NAME AND DESCRIPTION	PART NO.	PER ENG.
	ALTERNATOR COMPONENT PARTS - Cont'd		
8-29-134	INSERT, Alternator Mounting	2095 052	1
8-29-135	SINK, Rectifier Heat	2095 925	1
8-29-143	CEMENT, Lead Wire	2299 314	AR
8-29-145	SPACER PACKAGE, Rectifier Heat Sink Consists of: 2 - ---- --- Spacer	2421 138	1
8-29-153	SHIELD, Drive End	2095 945	1
8-29-154	BEARING, Drive End Shield	2098 478	1
8-29-155	PLATE, Drive End Bearing Retainer	2095 012	1
8-29-208	SCREW, Frame Through	2098 633	3
	IGNITION COIL AND SWITCH		
8-35-4	COIL, w/Mounting BRACKET, Ignition	2495 531	1
8-35-22	RESISTOR PACKAGE, Coil Primary Consists of: 2 - ---- --- Lockwire 2 - ---- --- Nut 1 - ---- --- Resistor 2 - ---- --- Screw	2275 590	1
8-35-41	BRACKET, Coil Mounting	2642 670	1
	IGNITION WIRING AND SPARK PLUGS		
8-36-1	CABLE PACKAGE, Ignition Consists of: 1 - ---- --- Cable 1 - ---- --- Nipple 1 - ---- --- Terminal	2421 835	8
8-36-14	SEPARATOR, Ignition Cable	2642 395	4
8-36-49	CABLE PACKAGE, Coil Secondary or Spark Plug Consists of: 1 - ---- --- Cable 1 - ---- --- Cover, Spark Plug 1 - ---- --- Nipple, Coil Terminal 1 - ---- --- Nipple, Distributor Terminal 2 - ---- --- Terminal, Distributor 1 - ---- --- Terminal, Spark Plug	2421 136	AR
8-36-114	PLUG, w/GASKET, Spark	2444 894	8

PART TYPE CODE	PART NAME AND DESCRIPTION	PART NO.	PER ENG.
	INSTRUMENT PANEL INSTRUMENTS		
8-37-155	UNIT, Temperature Gauge Sending	1770 732	1
	STARTING MOTOR		
8-52-4	STARTER	1889 100	1
8-52-41	CLUTCH	2642 506	1
8-52-49	FORK and PIN PACKAGE, Shifting Consists of: 1 - ---- --- Fork, Shifting 1 - ---- --- Pin	2084 093	1
8-52-76	HOUSING, Pinion	1889 066	1
8-52-80	BEARING, Pinion Housing	2098 986	1
8-52-82	STOP, SNAP RING AND STOP WASHER PACKAGE Consists of: 1 - ---- --- Snap Ring, Pinion Stop 1 - ---- --- Stop, Pinion 1 - ---- --- Washer, Pinion Stop	2448 804	1
8-52-88	BOOT, Shifting Fork	1889 147	1
8-52-120	ARMATURE	1889 079	1
8-52-135	BRUSH PACKAGE Consists of: 1 - ---- --- Brush 1 - ---- --- Brush, Field Shunt Coil 1 - ---- --- Screw, w/WASHER	2525 529	1
8-52-140	SPRING PACKAGE, Brush Consists of: 4 - ---- --- Spring	2084 666	1
8-52-150	HOLDER, Brush	1889 044	1
8-52-176	HEAD, Commutator End	1889 363	1
8-52-180	THRUST WASHER PACKAGE, Commutator End Consists of: 2 - ---- --- Washer (1/32") 2 - ---- --- Washer (3/64") 2 - ---- --- Washer (.080) 2 - ---- --- Washer (1/16") 2 - ---- --- Washer (.020)	2240 529	1

PART TYPE CODE	PART NAME AND DESCRIPTION	PART NO.	PER ENG.
	STARTING MOTOR - Cont'd		
8-52-214	COIL PACKAGE, Field Series and Shunt Consists of: 1 - ---- --- Coil, Field Series 1 - ---- --- Coil, Field Shunt	2084 088	1
8-52-241	BOLT, Frame Through	1889 080	2
8-52-341	CONTACT and COVER GASKET PACKAGE, Solenoid Consists of: 1 - ---- --- Contact, Solenoid 1 - ---- --- Gasket, Cover 1 - ---- --- Spring, Return 1 - ---- --- Spring, Solenoid Switch, Outer	2084 091	1
8-52-344	GASKET and COVER PACKAGE, Solenoid Consists of: 1 - ---- --- Cover 1 - ---- --- Gasket, Cover	2084 090	1
8-52-345	SOLENOID	2642 961	1
8-52-354	STUD PACKAGE, Solenoid Terminal Relay Consists of: 1 - ---- --- Insulator, Relay Stud 1 - ---- --- Nut, Hex 1 - ---- --- Stud, Solenoid Terminal Relay 1 - ---- --- Washer, Plain 1 - ---- --- Washer, Relay Stud Spacing	2084 094	1
8-52-375	CORE, Solenoid Moving	1889 151	1
	SWITCHES		
8-53-327	SWITCH, Low Oil Pressure	3004 106	1

GROUP 9 - ENGINE

	CYLINDER HEAD WATER OUTLET ELBOW OR CONNECTION		
9-05-5	CONNECTOR, Cylinder Water Outlet	2780 970	1
9-05-6	GASKET, Cylinder Water Outlet Connector	50 082	1
	CRANKSHAFT		
9-07-8	SCREW, Crankshaft	1821 414	1
9-07-22	WASHER, Crankshaft Screw	1855 561	1

PART TYPE CODE	PART NAME AND DESCRIPTION	PART NO.	PER ENG.
	CRANKSHAFT VIBRATION DAMPER		
9-13-5	DAMPER, Vibration	2658 458	1
	VALVE		
9-39-6	VALVE, Exhaust . . . Std.	2659 907	8
	.005 O/S	2659 908	8
	.015 O/S	2659 909	8
	.030 O/S	2659 910	8
9-39-14	SHIELD, Exhaust Valve Stem Oil	2205 958	8
9-39-15	SPRING, Exhaust Valve	2126 016	8
9-39-16	RETAINER, Exhaust Valve Spring	1551 002	8
9-39-17	LOCK, Exhaust Valve Spring Retainer	2402 312	16
	FLYWHEEL		
9-45-1	FLYWHEEL, w/Ring GEAR	2126 134	1
9-45-2	GEAR, Flywheel Ring	2863 494	1
	INTAKE AND EXHAUST MANIFOLD		
9-48-6	MANIFOLD, Exhaust	2468 170	2
9-48-7	MANIFOLD, Intake	2468 959	1
9-48-9	PLUG, Intake Manifold Heater Hole	1859 127	1
9-48-14	WASHER, Exhaust Manifold	2121 223	8
9-48-56	SHIELD, Intake Manifold Heat	2806 037	1
	MANIFOLD GASKETS		
9-50-1	GASKET PACKAGE, Intake Manifold Consists of: 2 - ---- --- Gasket, Intake Manifold 1 - ---- --- Gasket, Manifold, Front 1 - ---- --- Gasket, Manifold, Rear	2808 350	1

AR - Indicates use as required.
Printed in U. S. A.

Prices and specifications subject to change without notice.

PART TYPE CODE	PART NAME AND DESCRIPTION	PART NO.	PER ENG.

GROUP 10 - ENGINE OILING

CRANKCASE OIL FILLER OR BREATHER

10-01-21	AIR CLEANER, Cylinder Head Cover Breather Pipe	2402 013	1

CRANKCASE VENTILATOR

10-02-53	HOSE, Crankcase Vent Valve	883 031	AR
10-02-61	GROMMET, Vent Valve	2536 926	1
10-02-62	VALVE, Crankcase Vent	2808 622	1

OIL FILTER

10-26-8	CARTRIDGE, Oil Filter	2129 023	1
10-26-14	SHELL, Oil Filter	2448 371	1
10-26-27	GASKET, Oil Filter Shell	1557 575	1
10-26-35	GASKET, Oil Filter Tube Cap	1557 581	1
10-26-37	GASKET, Oil Filter Spring Retainer	1557 584	1

GROUP 14 - FUEL

AIR CLEANER

14-29-2	AIR CLEANER	2264 356	1
14-29-5	GASKET, Air Cleaner to Carburetor	1326 847	1
14-29-6	FILTER, Air Cleaner	1946 923	1

CARBURETOR

14-30-1	CARBURETOR	2899 883	1
14-30-2	GASKET, Carburetor Flange	1851 871	1

PART TYPE CODE	LH318-537 PART NAME AND DESCRIPTION	PART NO.	PER ENG.
	CARBURETOR - Cont'd		
14-30-4	REPAIR PACKAGE, Carburetor Minor	2299 270	1
	Consists of:		
	1 - ---- --- Gasket, Air Horn		
	1 - ---- --- Gasket, Body		
	1 - ---- --- Gasket, Flange		
	2 - ---- --- Gasket, Flange		
	2 - ---- --- Gasket, Main Metering Jet Plug		
	1 - ---- --- Gasket, Power By-Pass Jet		
	1 - ---- --- Gasket, Pump Discharge Nozzle		
	1 - ---- --- Float, Gauge		
	1 - ---- --- Needle and Seat		
	1 - ---- --- Pump		
	REPAIR PACKAGE, Carburetor	2299 268	1
	Consists of:		
	1 - ---- --- Gasket, Air Horn		
	1 - ---- --- Gasket, Flange		
	1 - ---- --- Gasket, Main Body		
	2 - ---- --- Gasket, Metering Jet Plug		
	1 - ---- --- Gasket, Power By-Pass Jet		
	1 - ---- --- Gasket, Pump Discharge Nozzle		
	2 - ---- --- Jet, Main Metering (std.)		
	1 - ---- --- Jet, Power By-Pass		
	1 - ---- --- Needle and Seat		
	1 - ---- --- Pump		
	1 - ---- --- Spring, Pump		
14-30-7	GASKET PACKAGE, Carburetor	2299 269	1
	Consists of:		
	1 - ---- --- Gasket, Air Horn		
	1 - ---- --- Gasket, Flange		
	2 - ---- --- Gasket, Flange		
	1 - ---- --- Gasket, Main Body		
	2 - ---- --- Gasket, Metering Jet Plug		
	1 - ---- --- Gasket, Needle and Seat		
	1 - ---- --- Gasket, Power By-Pass Jet		
	1 - ---- --- Gasket, Pump Discharge Nozzle		
14-30-8	NEEDLE and SEAT	2240 436	1
	CARBURETOR ATTACHING PARTS		
14-31-9	SPACER, Crankcase Vent	2125 648	1
14-31-12	GASKET, Crankcase Vent Spacer	2125 649	1
	CARBURETOR JETS		
14-35-1	JET, Main Metering . . . . . Std.	1631 448	2
14-35-6	JET, Power By-Pass	869 577	1

PART TYPE CODE	LH318-537 PART NAME AND DESCRIPTION	PART NO.	PER ENG.
	CARBURETOR JETS - Cont'd		
14-35-8	JET, Main Discharge	1676 821	2
	CARBURETOR PUMP		
14-41-3	PUMP	1631 656	1
	FUEL FILTER		
14-67-1	FILTER, Fuel	2525 254	1
14-67-2	HOSE, Fuel Filter	1739 230	2
	GOVERNOR		
14-68-4	TUBE, Governor to Carburetor Vacuum Control	2264 998	1
14-68-5	CONNECTOR, Governor to Carburetor Vacuum Control Tube	2206 146	1
14-68-11	ROD, Governor to Carburetor	1612 804	1
14-68-18	BALL JOINT, Governor to Carburetor Rod	1111 691	2
	VARIABLE SPEED GOVERNOR		
	GOVERNOR	2846 993	
14-71-3	GASKET, Governor Throttle Body to Intake Manifold	1486 008	1
	FUEL PUMP		
14-73-1	PUMP PACKAGE, Fuel, Airtex Consists of: 1 - ---- --- Gasket, Flange 1 - ---- --- Pump	2932 797	1
	PUMP PACKAGE, Fuel, Carter Consists of: 1 - ---- --- Gasket, Flange 1 - ---- --- Pump	2495 527	1
	FUEL PUMP MOUNTING		
14-74-1	GASKET, Flange	2843 770	1

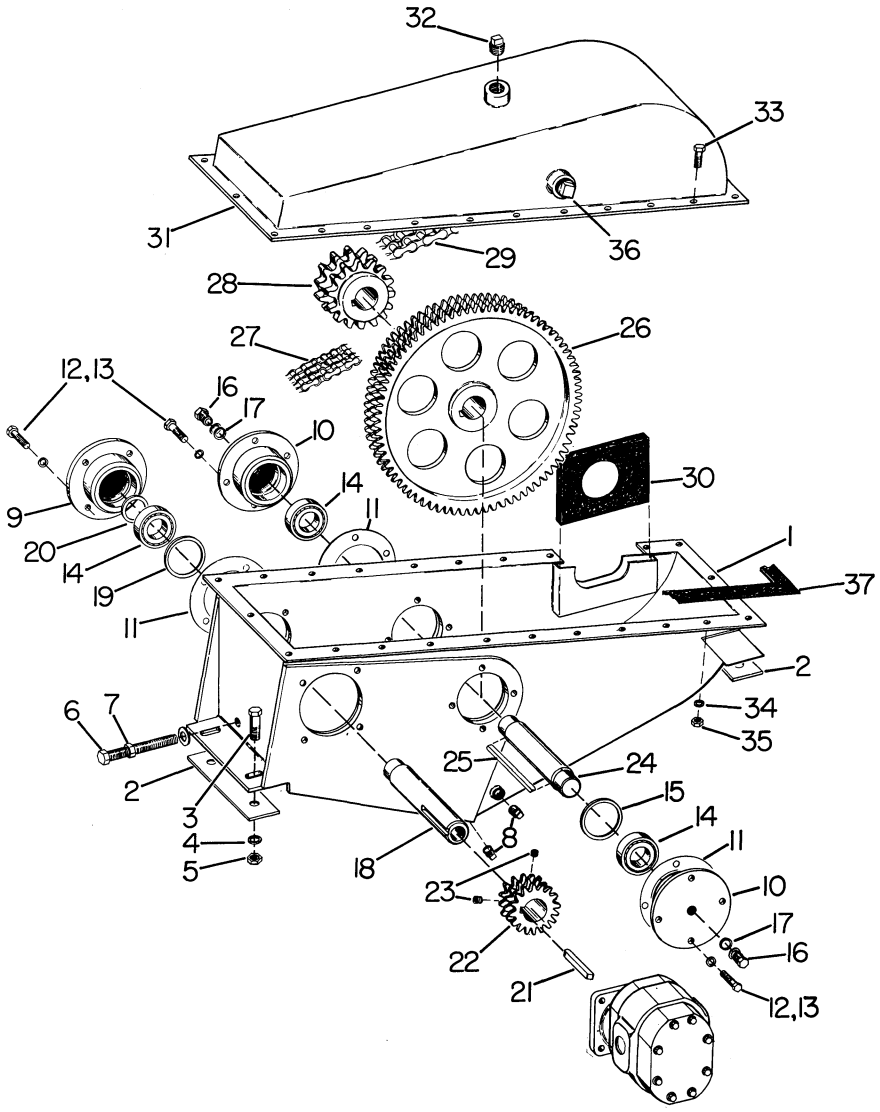

Ref. No.	Part Number	Quan. Req'd.	Name and Description
	A35150	1	CHAIN CASE ASSEMBLY, INCLUDES ITEMS 1 THRU 36
1	35151	1	CHAIN CASE
2	35164	AR	SPACER
3	1200-103	4	CAPSCREW, 1/2 UNF x 1 3/4 LG.
4	1210-26	4	LOCKWASHER, 1/2 MED.
5	1205-59	4	NUT, 1/2 UNF
6	35149	1	CAPSCREW, TENSION ADJUST
	2397	1	WASHER, FOR ABOVE CAPSCREW
7	1205-81	1	NUT, 5/8 UNF

Ref. No.	Part Number	Quan. Req'd.	Name and Description
8	1219-9	2	PIPE PLUG, 1/2 NPT
9	35154	1	CAP
10	35156	2	CAP
11	35145	AR	SHIM, .010
11	35146	AR	SHIM, .030
12	1200-59	12	CAPSCREW, 3/8 UNC x 1 LG.
13	1210-20	12	LOCKWASHER, 3/8 MED.
14	1217-54	3	BALL BEARING
15	35162	1	SPACER
16	1200-93	2	CAPSCREW, 1/2 UNC x 3/4 LG.
17	35163	2	GASKET, COPPER
18	35157	1	SHAFT, MOTOR
19	1220-48	1	RETAINING RING
20	1220-47	1	RETAINING RING
21	35166	1	KEY
22	35158	1	SPROCKET, MOTOR
23	1206-8	2	SETSCREW, 3/8 UNC x 3/8 LG., HEX SOCKET, CUP PT.
24	35161	1	JACKSHAFT
25	35165	1	KEY, JACKSHAFT
26	2625	1	SPROCKET
27	35168	1	CHAIN, WITH CONNECTING LINK
	1225-1	1	CONNECTING LINK, FOR ABOVE CHAIN
28	35159	1	SPROCKET
29	35169	1	CHAIN, WITH CONNECTING LINK
	1225-8	1	CONNECTING LINK, FOR ABOVE CHAIN
30	35017	1	OIL SEAL, FELT
31	35152	1	HOOD, CHAIN CASE
32	1219-20	1	PIPE PLUG, 1 NPT
33	1200-60	23	CAPSCREW, 3/8 UNF x 1 LG.
34	1210-20	23	LOCKWASHER, 3/8 MED.
35	1205-37	23	NUT, 3/8 UNF
36	1219-6	1	PIPE PLUG
37	35148	1	GASKET

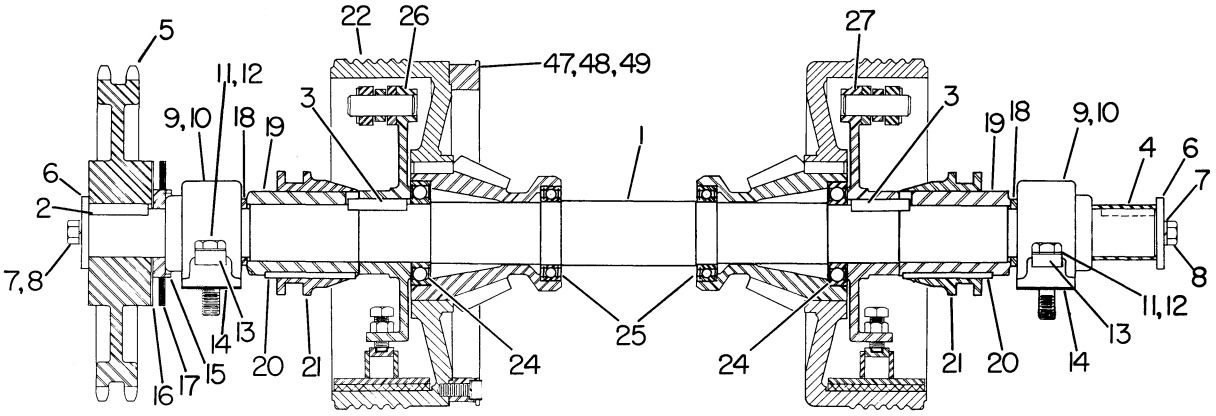
5
22
26
27
47,48,49
11,12
9,10
18
19
3
1
6
2
7,8
4
7
8
14
13
15
16
17
20
21
24
25

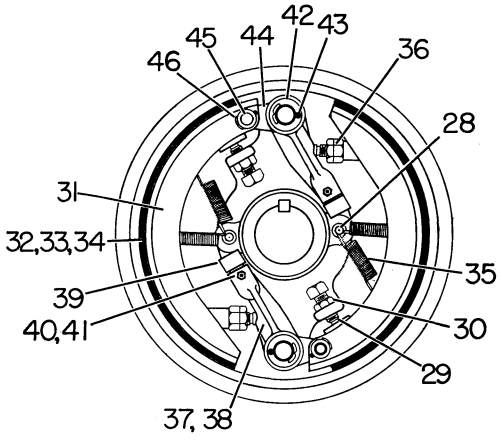
42
43
45
44
46
36
28
31
32,33,34
35
39
40,41
30
29
37,38

Ref. No.	Part Number	Quan. Req'd.	Name and Description
	A35010 (Repl. A13573)	1	SHAFT ASSEMBLY, COMPLETE, INCLUDES ITEMS 1 THRU 49
1	A13038	1	SHAFT, WITH KEYS & SLEEVE ITEMS 2 THRU 4
2	2371	1	KEY
3	10022	2	KEY
4	13001	1	SLEEVE, SHAFT GUARD
5	35014	1	SPROCKET, DOUBLE ROW
6	1414	2	CAP
7	1200-96	2	CAPSCREW, 1/2 UNF x 1 LG.
8	1210-26	2	LOCKWASHER, 1/2 MED.
9	1217-10	2	PILLOW BLOCK
10	1213-3	2	GREASE FITTING
11	1200-157	4	CAPSCREW, 5/8 UNF x 3 LG.
12	1208-3	4	MACHINERY BUSHING, 5/8 ID x 1 1/8 OD x 14 GA.
13	18261	2	LOCKPLATE
14	3906	AR	SHIM
15	35015	1	SPACER
16	35016	1	PLATE
17	35017	1	OIL SEAL
18	10024	2	SPACER
19	10029	2	SLEEVE
20	10023	2	KEY
21	10035	2	CONE
22	35011	2	BEVEL PINION & CLUTCH DRUM
	23063	1	DRUM, ONLY, FOR ABOVE
	23064	1	PINION, ONLY, FOR ABOVE
24	1217-2	2	BALL BEARING
25	1217-37	2	BALL BEARING
26	10034	1	BACK PLATE, RH

Ref. No.	Part Number	Quan. Req'd.	Name and Description
27	10033	1	BACK PLATE, LH
28	6463	4	SPRING PIN
29	1206-25	4	SETSCREW, 1/2 UNC x 1 1/2 LG., SQ. HD., FULL DOG PT.
30	1205-61	4	NUT, 1/2 UNC, JAM
31	A35115	4	CLUTCH SHOE ASSEMBLY, COMPLETE WITH 1/4" LINING (USE A35712 BELOW IF FOUR ARE REQUIRED)
31	A35712	4	CLUTCH SHOE ASSEMBLY, COMPLETE WITH 3/8" LINING (REPLACES A35115 ABOVE IF FOUR ARE REQUIRED)
32	A13574	1	LINING SET, INCLUDES 4 (1/4") LINING SEGMENTS AND RIVETS FOR TWO CLUTCHES (FOR A35115 CLUTCH SHOE ASSY.)
32	A23195	1	LINING SET, INCLUDES 4 (3/8") LINING SEGMENTS AND RIVETS FOR TWO CLUTCHES (FOR A35712 CLUTCH SHOE ASSY.)
35	6474	8	SPRING
36	A6465	4	ADJUSTMENT ASSEMBLY
37	A2670	2	OPERATING ARM ASSEMBLY, LH (SHOWN) COMPLETE WITH ITEMS 39 THRU 41
38	A2671	2	OPERATING ARM ASSEMBLY, RH (NOT SHOWN) COMPLETE WITH ITEMS 39 THRU 41
39	1217-49	4	CAM FOLLOWER
40	1206-4	4	SETSCREW, 1/4 UNC x 1/2 LG., HEX SOCKET CUP PT.
41	1205-17	4	NUT, 1/4 UNC, JAM
42	1208-12	4	MACHINERY BUSHING, 7/8 ID x 1 3/8 OD x 14 GA.
43	1207-30	4	COTTER PIN, 3/16 x 1 1/4 LG.
44	6476	4	LINK
45	6466	4	PIN
46	1207-12	4	COTTER PIN, 1/8 x 1 LG.
47	35123	1	BRAKE RING (Solid)
	A23621	1	BRAKE RING KIT (Split) - Incl. 48,49 — See Bulletin #225 Prior to Ser.#838
48	1203-94	6	CAPSCREW, 3/8 UNC x 1 1/2 LG., HEX SOCKET HEAD
49	1210-20	6	LOCKWASHER, 3/8 MED.

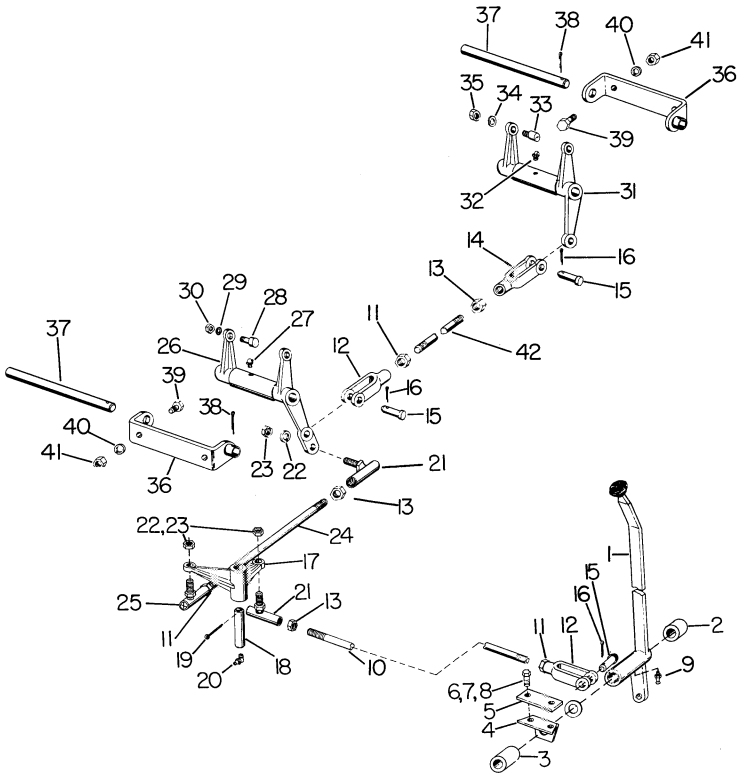

Ref. No.	Part Number	Quan. Req'd.	Name and Description
1	35098	1	LEVER WITH BUSHING, PRIOR TO SER. #527
1	35624	1	LEVER WITH BUSHING, BEGINNING WITH SER. #527
	1216-4	2	BUSHING, FOR ABOVE LEVERS
	1222-94	1	KNOB
2	35472	1	SPACER
3	10309	1	SPACER
4	35031	1	BRACKET
5	35032	AR	SHIM
6	1200-62	2	CAPSCREW, 3/8 UNF x 1 1/4 LG.
7	1210-20	2	LOCKWASHER, 3/8 MED.
8	1205-37	2	NUT, 3/8 UNF
9	1213-1	1	GREASE FITTING
10	10172	1	CONTROL LINK
11	1205-81	3	NUT, 5/8 UNF, RH
12	3796	2	ADJUSTABLE YOKE, RH

Ref. No.	Part Number	Quan. Req'd.	Name and Description
13	1205-82	3	NUT, 5/8 UNF, LH
14	3797	1	ADJUSTABLE YOKE, LH
15	1474	3	PIN
16	1207-12	3	COTTER PIN, 1/8 x 1 LG.
17	10153	1	BELLCRANK
18	1644	1	PIN
19	1207-44	1	COTTER PIN, 1/4 x 2 1/2 LG.
20	1213-6	1	GREASE FITTING
21	1222-104	22	BALL JOINT, LH
22	1210-32	3	LOCKWASHER, 5/8 MED.
23	1205-85	3	NUT, 5/8 UNF JAM
24	10187	1	CONTROL LINK
25	1222-103	1	BALL JOINT, RH
26	A13027	1	BELLCRANK, RH, COMPLETE WITH ITEMS 27 THRU 30
27	1213-3	1	GREASE FITTING
28	1217-50	2	CAM FOLLOWER
29	1210-20	2	LOCKWASHER, 3/8 MED.
30	1205-40	2	NUT, 3/8 UNF JAM
31	A13028	1	BELLCRANK, LH, COMPLETE WITH ITEMS 32 THRU 35
32	1213-3	1	GREASE FITTING
33	1217-50	2	CAM FOLLOWER
34	1210-20	2	LOCKWASHER, 3/8 MED.
35	1205-40	2	NUT, 3/8 UNF JAM
36	10146	2	BRACKET, BELLCRANK
	35760	AR	SHIM, 16 GA.
	35761	AR	SHIM, 1/8"
37	10147	2	PIN
38	1207-42	2	COTTER PIN, 1/4 x 2 LG.
39	1200-62	4	CAPSCREW, 3/8 UNF x 1 1/4 LG.
40	1210-20	4	LOCKWASHER, 3/8 MED.
41	1205-37	4	NUT, 3/8 UNF
42	10170	1	CONTROL LINK

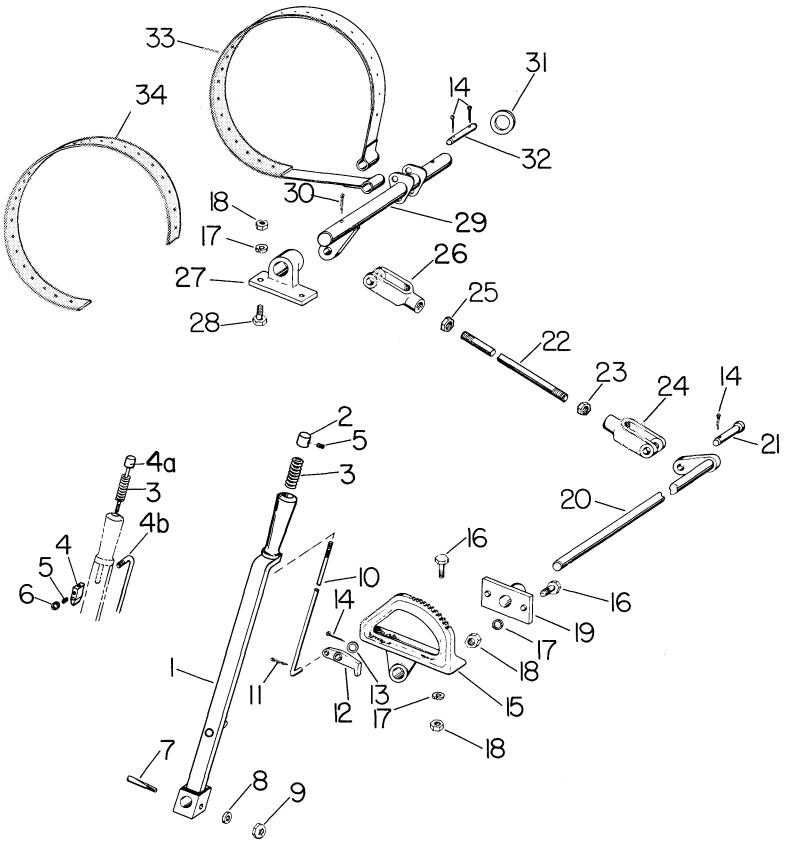

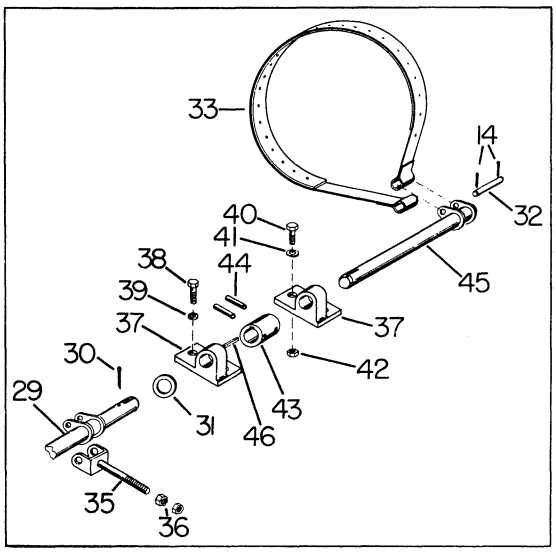

DOUBLE HOUSE BRAKE (OPTIONAL)

Ref. No.	Part Number	Quan. Req'd.	Name and Description
1	F19896	1	LEVER - REPLACES 10216 WITH ITEMS 2 AND 10
2	19893	1	PUSH BUTTON
3	2424	1	SPRING
4	10204	1	GUIDE BLOCK
4A	10206	1	PUSH BUTTON
4B	10205	1	ROD
5	1206-33	1	SETSCREW, #10-32 UNF x 3/16 LG.
6	1209-1	2	PLAINWASHER, 3/16 REG.
7	10208	1	DRAW KEY
8	1208-3	1	PLAINWASHER
9	1205-66	1	NUT, 1/2 UNF, SELF-LOCKING
10	19894	1	ROD
11	1207-1	AR	COTTER PIN, 1/16 x 1/2 LG.
12	10212	1	PAWL

Ref. No.	Part Number	Quan. Req'd.	Name and Description
13	1208-3	1	MACHINERY BUSHING
14	1207-12	7	COTTER PIN, 1/8 x 1 LG.
15	10219	1	RATCHET
	15616	AR	SHIM, FOR ABOVE
16	1200-62	4	CAPSCREW, 3/8 UNF x 1 1/4 LG.
17	1210-20	6	LOCKWASHER, 3/8 MED.
18	1205-37	4	NUT, 3/8 UNF
19	A10207-1	1	BRACKET
20	F35796	1	SHAFT - REPLACES 10215
21	1474	2	PIN
22	10172	1	CONTROL LINK
23	1205-81	1	NUT, 5/8 UNF, RH
24	3796	1	ADJUSTABLE YOKE, RH
25	1205-82	1	NUT, 5/8 UNF, LH
26	3797	1	ADJUSTABLE YOKE, LH

Ref. No.	Part Number	Part Number	Quan. Req'd.	Name and Description
	SINGLE	DOUBLE		
27	10214		1	PILLOW BLOCK (T-450 ONLY)
28	1200-61		2	CAPSCREW, 3/8 UNF x 1 1/4 LG.
29	35121	18963	1	SHAFT
30	1207-40	1207-40	2	COTTER PIN, 1/2 x 1 1/2 LG.
31	1208-27	1208-27	2	MACHINERY BUSHING
32	17525	17525	2	PIN
33	A10203-1	A10203-1	AR	BAND ASSEMBLY, WITH LINING
34	A13029	A13029	AR	LINING, WITH RIVETS FOR A10203-1 BAND
35		A18960-1	1	DEAD-END BOLT
36		1205-66	2	NUT, 1/2 UNF SELF-LOCKING
37	A18353-1	A18353-1	AR	BRACKET (T-450 ONLY)

Ref. No.	Part Number	Part Number	Quan. Req'd.	Name and Description
	SINGLE	DOUBLE		
38	1200-98	1200-98	2	CAPSCREW, 1/2 UNC x 1 1/4 LG.
39	1210-26	1210-26	2	LOCKWASHER, 1/2 MED.
40		1200-105	2	CAPSCREW, 1/2 UNF x 2 LG.
41		1210-26	2	LOCKWASHER, 1/2 MED.
42		1205-59	2	NUT, 1/2 UNF
43		18282	1	SLEEVE
44		1227-294	2	ROLL PIN
45		A18965-1	1	EXTENSION SHAFT
		F19728	1	EAR, FOR ABOVE (WELDED TO FRAME)
46		1997	1	KEY
		F19726	1	BRACKET (REPLACES 35778, TURN CONTROLS, C-450 ONLY)

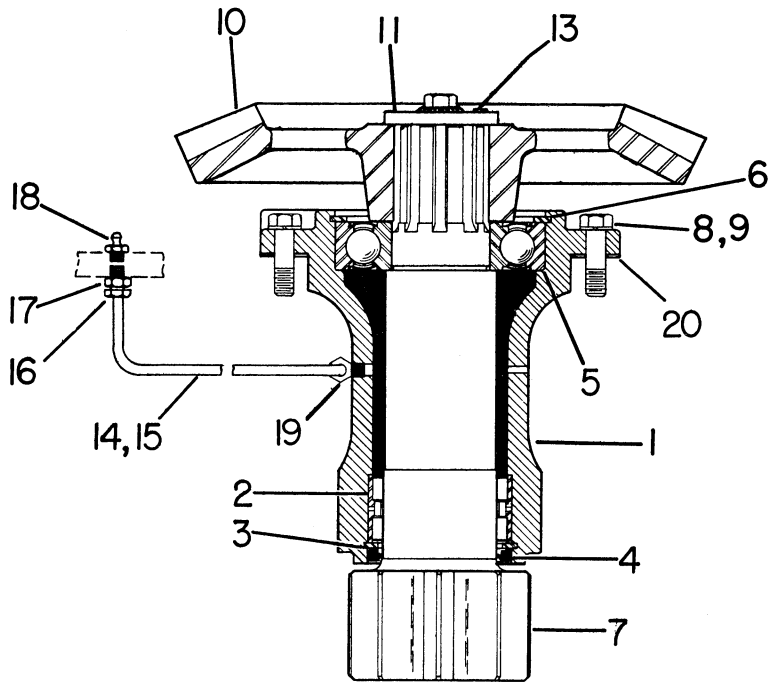

Ref. No.	Part Number	Part Number	Quan. Req'd.	Name and Description
	CONE ROLLER TURNTABLE	ROTEK TURNTABLE		
	A35020	A35600	1	VERTICAL SWING SHAFT, COMPLETE WITH ITEMS 1 THRU 20
	A13030	A13687	1	VERTICAL SWING SHAFT, LESS BEVEL GEAR COMPLETE WITH ITEMS 1 THRU 7
1	10014	35603	1	HOUSING, VERTICAL SWING SHAFT
2	1217-35	1217-35	1	BEARING
3	1220-1	1220-1	1	SNAP RING
4	1218-12	1218-12	1	SEAL
5	1217-36	1217-36	1	BALL BEARING
6	1220-14	1220-14	1	RETAINING RING
7	10016	35605	1	SHAFT, WITH GEAR
8	1242-55		6	CAPSCREW, 1/2 UNC x 1 3/4 LG. H.T.
8		1242-22	6	CAPSCREW, 5/8 UNC x 1 3/4 LG. H.T.
9	1210-26	1210-32	6	LOCKWASHER
10	35021	35021	1	GEAR, BEVEL
11	F19958	F19958	1	CAP & BOLT - BEGIN. W/SER. #1904 - REPLACES 1414

Ref. No.	Part Number	Quan. Req'd.	Name and Description
13	1206-4	1	SETSCREW
14	A13143	1	TUBE ASSEMBLY, INCLUDES ITEMS 15 THRU 17
15	1264-11	1	TUBE, GREASE
16	1219-33	2	NUT, DOUBLE COMPRESSION
17	1219-34	1	CONNECTOR, DOUBLE COMPRESSION, MALE
18	1213-1	1	GREASE FITTING
19	1219-35	1	ELBOW
20	15095	AR	SHIM

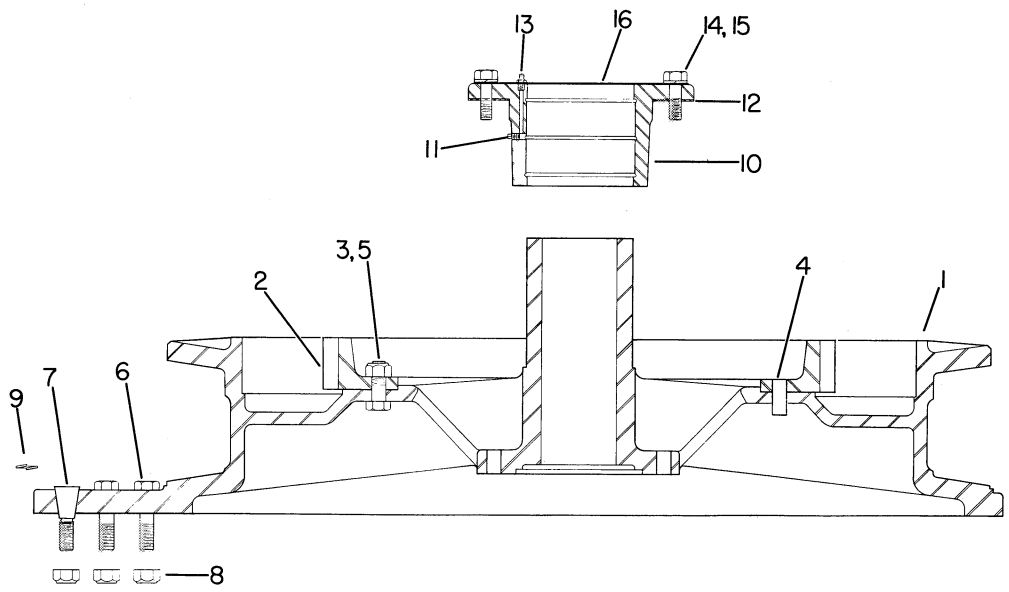

Ref. No.	Part Number	Part Number	Quan. Req'd.	Name and Description
	T-450	C-450		
1	35036	10257	1	TURNTABLE BASE
2	18292	18292	1	BULL GEAR
3	1229-95	1229-95	9	CAPSCREW, 3/4 UNF x 2 3/4 LG., HEAT TREATED
4	1222-17	1222-17	1	DOWEL PIN
5	1205-103	1205-103	9	NUT, 3/4 UNF SELF-LOCKING
6	1229-96		16	CAPSCREW, 3/4 UNF x 3 LG., HEAT TREATED
6	1229-94		8	CAPSCREW, 3/4 UNF x 2 1/2 LG., HEAT TREATED
	18543		AR	SHIM, .020", FOR ABOVE CAPSCREW
	18544		AR	SHIM, .010", FOR ABOVE CAPSCREW
	18546		AR	SHIM, 16 GA., FOR ABOVE CAPSCREW
6		1229-98	12	CAPSCREW, 3/4 UNF x 3 1/2 LG., HEAT TREATED
6		1229-101	2	CAPSCREW, 3/4 UNF x 4 1/4 LG., HEAT TREATED
7		35025	2	TAPER PIN
8		1205-103	16	NUT, 3/4 UNF SELF-LOCKING
9	1210-38		24	LOCKWASHER, 3/4 MED.
10	A13037	10252	1	BEARING, CENTER PIN
11	1219-63		1	PIPE PLUG, INCLUDED IN A13037
12		15096	1	SHIM, BEARING
13	1213-1	*	1	GREASE FITTING, 1/8 NPT STRAIGHT * (SEE PAGE 16.1, SECTION B FOR ADDITIONAL LUBRICATION ITEMS)
14	1242-33	1242-33	6	CAPSCREW, 5/8 UNC x 2 1/4 LG., HEAT TREATED
15	1210-32	1210-32	6	LOCKWASHER, 5/8 MED.
16	10242		1	COVER

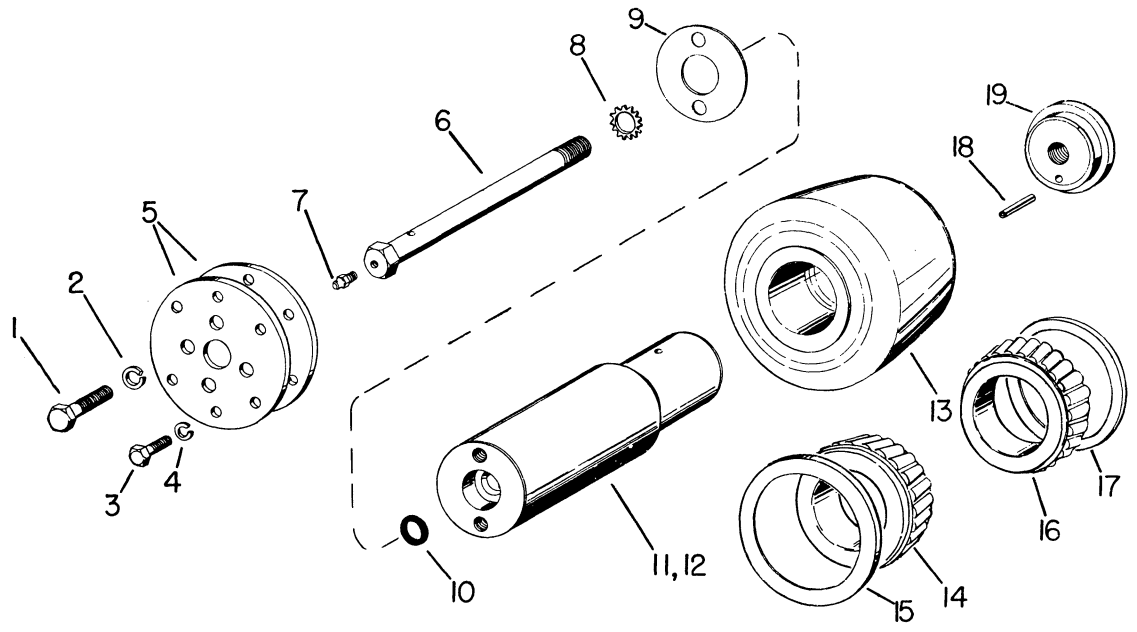

Ref. No.	Part Number	Quan. Req'd.	Name and Description
			QUANTITIES SHOWN FOR ONE MACHINE
1	1200-102	5	CAPSCREW, 1/2 UNC x 1 3/4 LG.
2	1210-26	5	LOCKWASHER, 1/2 MED.
3	1200-61	32	CAPSCREW, 3/8 UNC x 1 1/4 LG.
4	1210-20	32	LOCKWASHER, 3/8 MED.
5	10248	12	CAP
6	10243	5	CAPSCREW, SPECIAL
7	1213-7	5	GREASE FITTING
8	1210-95	5	LOCKWASHER, 11/16 EXTERNAL TOOTH
9	10249	AR	SHIM
9	15278	AR	SHIM
10	10244	5	SEAL
11	35126	4	PIN
12	35127	2	PIN, ECCENTRIC (REQUIRED FOR ADJUSTMENT, LOCATED AT BOTH FRONT OUTER ROLLER POSITIONS.
13	A35125	5	CONE ROLLER, COMPLETE WITH BEARINGS, ITEMS 14 THRU 17
14	1217-185	1	CONE
15	1217-187	1	SHIELD
16	1217-184	1	CONE
17	1217-186	1	SHIELD
18	1227-176	4	ROLL PIN
19	35128	4	CAP, ROLLER

BEGIN. W/SER. #527

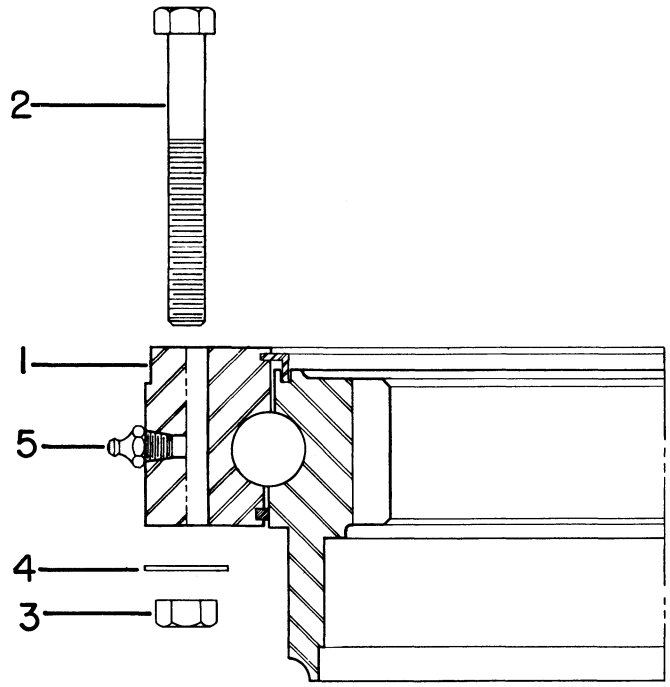

Ref. No.	Part Number	Quan. Req'd.	Name and Description
1	36370	1	ROTEK TURNTABLE BASE (REPLACES 35641)
	200998	1	UPPER SEAL FOR ABOVE
	200999	1	LOWER SEAL FOR ABOVE
2	1200-252	13	CAPSCREW, 7/8 UNC x 6 LG., GRADE 5
	1200-256	4	CAPSCREW, 7/8 UNC x 7 LG., GRADE 5
	1200-248	5	CAPSCREW, 7/8 UNC x 5 LG., GRADE 5
3	1205-111	17	NUT, 7/8 UNC SELF-LOCKING
4	1209-49	4	BEVELED WASHER, 7/8 ID
5	1213-14	2	GREASE FITTING, 1/8 PTF STRAIGHT

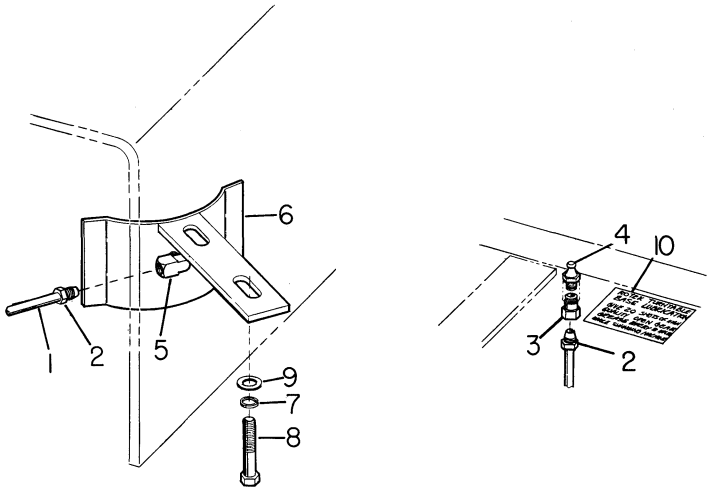

Ref. No.	Part Number	Quan. Req'd.	Name and Description	
	A38410		ROTEK LUBRICATOR ASSEMBLY, INCLUDES ITEMS 1 THRU 10	
1	1264-45	1	TUBE	
2	1219-33	2	NUT, DOUBLE COMPRESSION	
3	1219-34	1	CONNECTOR, DOUBLE COMPRESSION	
4	1213-1	1	GREASE FITTING	
5	1219-35	1	ELBOW, DOUBLE COMPRESSION	
6	F38413	1	FRAME	
7	1210-20	2	LOCKWASHER, 3/8 MED.	
8	1200-67	2	CAPSCREW, 3/8 UNC x 2 LG.,	
9	1209-4	2	WASHER, 3/8 STD.	
10	12260-47	1	DECAL	

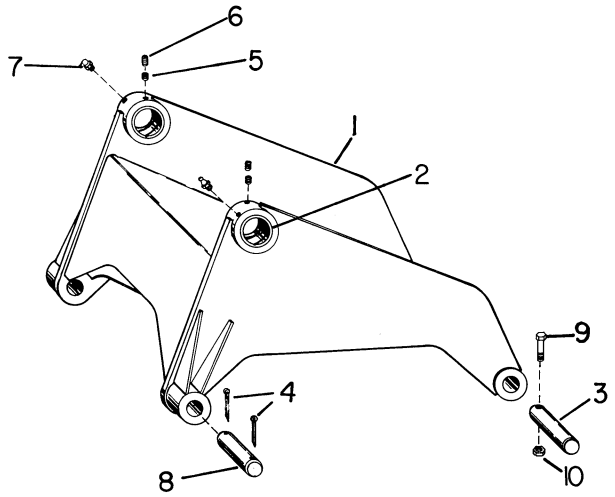

Ref. No.	Part Number	Quan. Req'd.	Name and Description
1	35421	1	BOOM SUPPORT
2	12014-1	2	BUSHING, FOR ABOVE SUPPORT
3	35422	2	PIN
4	1207-59	4	COTTER PIN, 5/16 x 3 LG.
5	1206-16	2	SETSCREW, 1/2 UNC x 1/2 LG., HEX SOCKET, CUP PT.
6	1206-39	2	SETSCREW, 1/2 UNC x 1/2 LG., HEX SOCKET, OVAL PT.
7	1213-6	2	GREASE FITTING, 1/8 NPT, 90°
8	35423	2	PIN
9	1200-116	2	CAPSCREW, 1/2 UNC x 3 1/2 LG.
10	1205-65	2	NUT, 1/2 UNC SELF-LOCKING

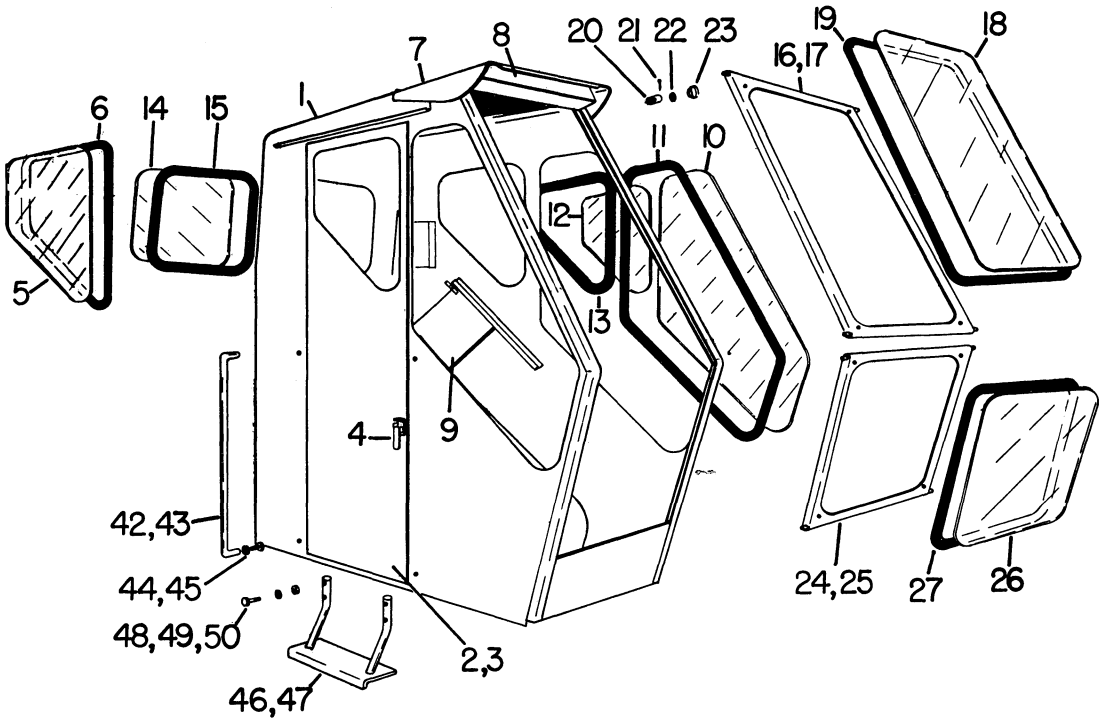
1
2,3
4
5
6
7
8
9
10
11
12
13
14
15
16,17
18
19
20
21
22
23
24,25
26
27
42,43
44,45
46,47
48,49,50

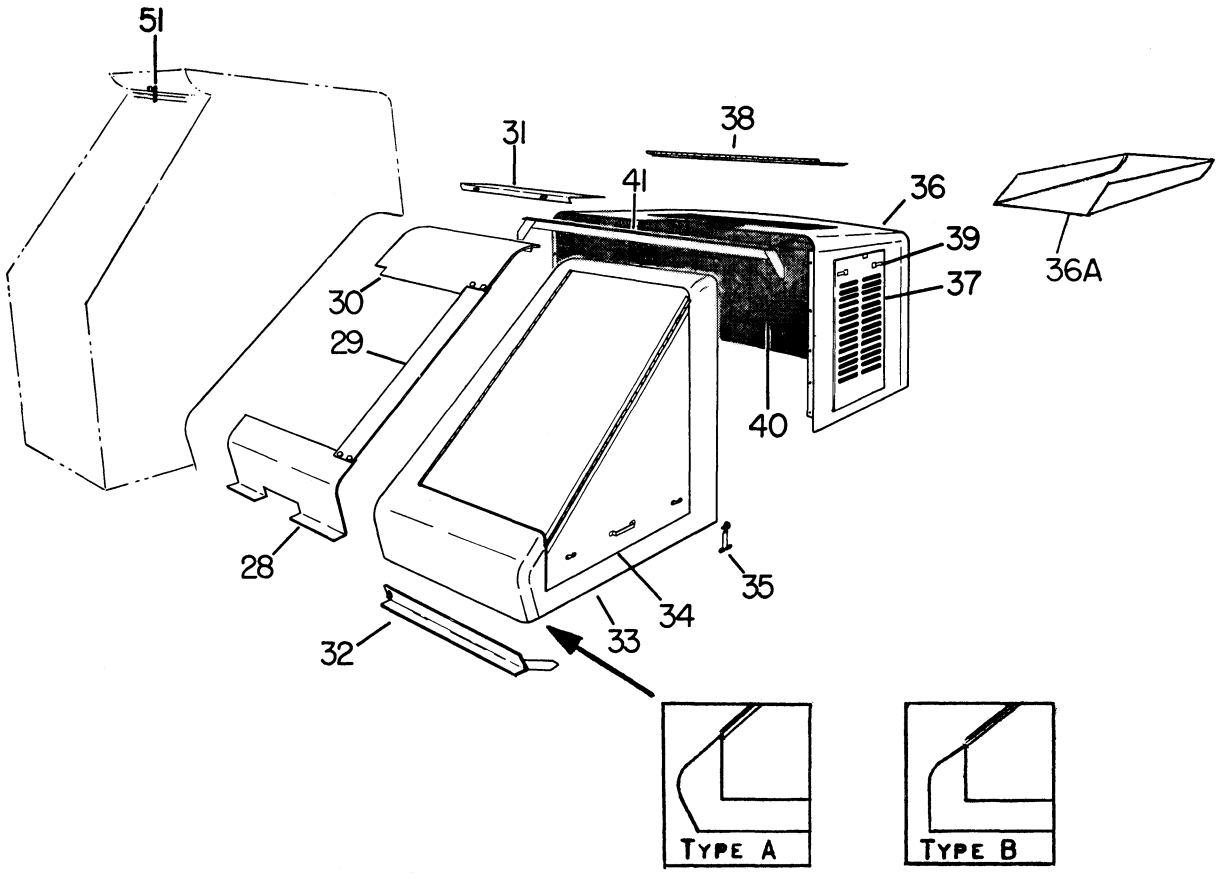
28
29
30
31
32
33
34
35
36
36A
37
38
39
40
41
51
TYPE A
TYPE B

Ref. No.	Part Number	Part Number	Quan. Req'd.	Name and Description
	TYPE A	TYPE B		SEE PAGE 11.1
		A35480	1	CAB, ALL VISION, INCLUDES ITEMS 1 THRU 41, 51, AND CAB DIVIDER, PAGE 11.5
1	A13588	A13689	1	OPERATOR'S CAB, INCLUDES ITEMS 1 THRU 27
1	35185	35798	1	OPERATOR'S CAB ONLY, INCLUDES ITEMS 3,4,7,8 & 9
2	A13589	A13589	1	DOOR ASSEMBLY, INCLUDES ITEMS 3 THRU 6
3	13581	13581	1	DOOR, ONLY W/HINGE AND HANDLE
	1233-30	1233-30	8	MACHINE SCREW,5/16 UNC x 3/4 LG.,FLAT SLOTTED HD.
	1209-3	1209-3	8	PLAINWASHER, 5/16 REG.
	1210-17	1210-17	8	LOCKWASHER, 5/16 MED.
	1205-25	1205-25	8	NUT, 5/16 UNC
4	13206	13206	1	HANDLE SET
5	35184	35184	1	WINDOW GLASS, DOOR
6	1270-82	1270-82	1	WEATHER STRIP
7	13193	13193	1	HINGED TOP DOOR
8	13194	13194	1	INSTRUMENT BOX
9	13195	13195	1	SLIDING DOOR
	13582	13582	1	SPRING CLIP, FOR ABOVE DOOR
10	10899	10899	2	WINDOW GLASS, SIDE, FRONT
11	1270-114	1270-114	2	WEATHER STRIP
12	10901	10901	1	WINDOW GLASS, SIDE, LEFT REAR
13	1270-89	1270-89	1	WEATHER STRIP
14	10898	10898	1	WINDOW GLASS, REAR
15	1270-80	1270-80	1	WEATHER STRIP
16	A13182	A13182	1	CAB WINDOW, FRONT UPPER COMPLETE, INCLUDES ITEMS 17 THRU 23
17	10908	10908	1	WINDOW FRAME, ONLY, FRONT UPPER
18	10904	10904	1	WINDOW GLASS, FRONT UPPER
19	1270-122	1270-122	1	WEATHER STRIP

Ref. No.	Part Number	Part Number	Quan. Req'd.	Name and Description
	TYPE A	TYPE B		SEE PAGE 11.1
20	15061	15061	4	LATCH, RIGHT HAND, FRONT WINDOWS
20	15062	15062	4	LATCH, LEFT HAND, FRONT WINDOWS
21	1207-4	1207-4	8	COTTER PIN, 3/32 x 3/4 LG.
22	1209-4	1209-4	12	PLAINWASHER, 3/8 REG.
23	3364	3364	8	SPRING
24	A13183	A13183	1	CAB WINDOW, FRONT LOWER, INCLUDES ITEMS 25, 26, 27, AND 20 THRU 23
25	10909	10909	1	WINDOW FRAME ONLY, FRONT LOWER
26	10906	10906	1	WINDOW GLASS, FRONT LOWER
27	1270-90	1270-90	1	WEATHER STRIP
28	35546		1	PANEL, LOWER, INCLUDES ITEM 29
29	35545	35545	1	SIDE PANEL
30	35544	35544	1	UPPER PANEL
31	35188	35188	1	COVER
32	35189	35189	1	ANGLE
33	35177	35797	1	MACHINERY HOUSING, LH, INCLUDES ITEMS 34 & 35
34	13587	13587	1	HINGED DOOR, MACHINERY HOUSING
35	1222-80	1222-80	2	HOOD LATCH
36	35178	35178	1	REAR HOUSING, INCLUDES ITEMS 37 THRU 40
		41578	1	REAR HOUSING, AS ABOVE - FOR BANTAM WINCH
36A		41573	1	PAN - FOR BANTAM WINCH
37	13584	13584	OPT.	REMOVABLE SIDE PANEL, LOUVERED
		F35985	OPT.	REMOVABLE SIDE PANEL, AC 2900 ENGINE
	1203-81	1203-81	AR	CAPSCREW, 5/16 UNC x 3/4 LG., CADMIUM PLATED
	1209-3	1209-3	AR	PLAINWASHER, 5/16 REG.
	1210-17	1210-17	AR	LOCKWASHER, 5/16 MED.
	1205-25	1205-25	AR	NUT, 5/16 UNC

Ref. No.	Part Number	Part Number	Quan. Req'd.	Name and Description
	TYPE A	TYPE B		SEE PAGE 11.1
37	13585	13585	OPT.	REMOVABLE SIDE PANEL, PLAIN
38	13586	13586	1	TOP HINGED DOOR
39	13201	13201	1	LATCH, FOR ITEMS 37 AND 38
40	13583	13583	2	REAR SLIDING PANEL, RH & LH
41	35179	35179	1	CHANNEL
42	A10986	A10986	2	HANDRAIL ASSEMBLY, INCLUDES ITEMS 43 THRU 45
43	10978	10978	2	HANDRAIL
44	1210-20	1210-20	4	LOCKWASHER, 3/8 MED.
	1209-4	1209-4	4	PLAINWASHER, 3/8 STD.
45	1200-60	1200-60	4	CAPSCREW, 3/8 UNF x 1 LG.
46	A10985	A10985	OPT.	STEP ASSEMBLY, INCLUDES ITEMS 47 THRU 50
47	9522	9522	1	STEP
48	1200-64	1200-64	4	CAPSCREW, 3/8 UNF x 1-1/2 LG.
49	1210-20	1210-20	4	LOCKWASHER, 3/8 MED.
50	1205-37	1205-37	4	NUT, 3/8 UNF
51	15442	15442	1	LATCH
	1200-5	1200-5	1	CAPSCREW, 1/4 UNC x 1-1/4 LG.
	10569	10569	1	SPRING
	1205-21	1205-21	1	NUT, 1/4 UNC, SELF-LOCKING
	15449	15449	1	STOP
	1221-6	1221-6	3	RUBBER BUMPER
	18524	18524	1	STOP
	1242-36	1252-36	14	CAPSCREW, 3/8 UNC x 1, H.T. (CAB TO FRAME)
	1205-43	1205-43	14	NUT, 3/8 UNF, SELF-LOCKING

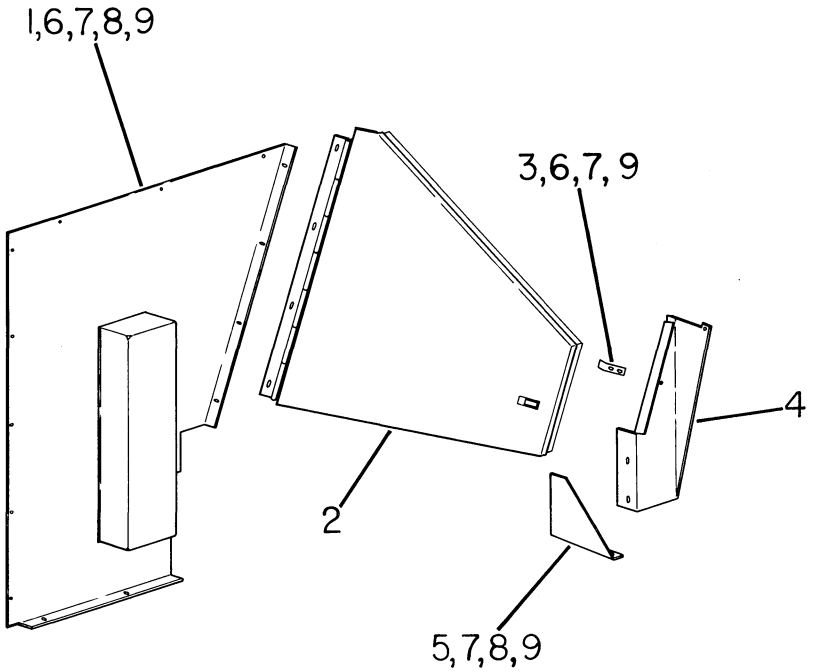

Ref. No.	Part Number	Quan. Req'd.	Name and Description
	A35540	1	CAB DIVIDER ASSEMBLY, INCLUDES ITEMS 1 THRU 9
1	35539	1	PANEL, REAR
2	35541	1	DOOR
3	35542	1	ANGLE
4	35543	1	PANEL, FRONT
5	35529	1	BRACKET
6	1203-81	11	CAPSCREW, 5/16 UNC x 3/4 LG., CADMIUM PLATED
7	1210-17	13	LOCKWASHER, 5/16 MED.
8	1209-3	8	PLAINWASHER, 5/16 REG. STD.
9	1205-25	10	NUT, 5/16 UNC

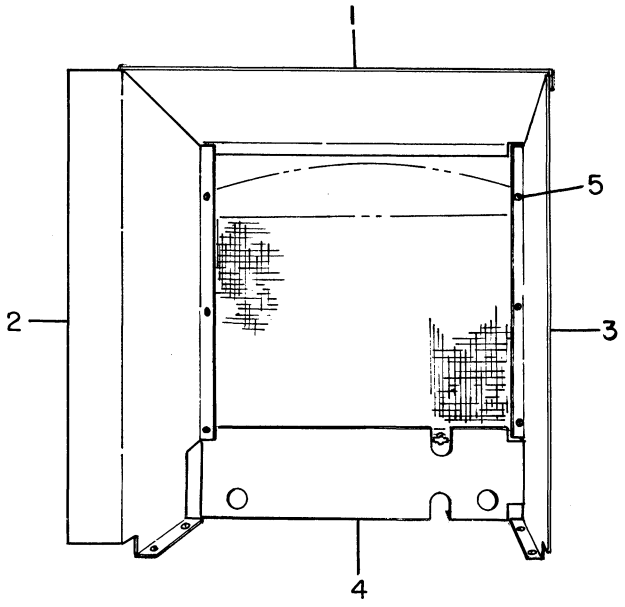

Ref. No.	Part Number	Part Number	Part Number	Quan. Req'd.	Name and Description	
	CHRYSLER	A.C. 2900	CUMMINS			
1	38548	38119		1	TOP SHROUD	
2	38549	38120	39953	1	SHROUD	
3	38547	38120	39954	1	SHROUD	
4	38546	38118	39955	1	SHROUD, BOTTOM	
5	1211-3	1211-3	1211-3	AR	SHEET METAL SCREW	



1



2

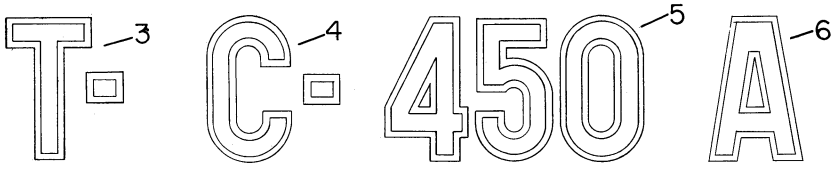

3 4 5 6

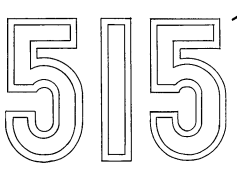

7



8

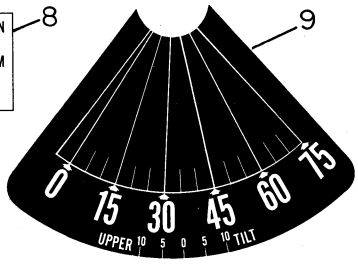

9

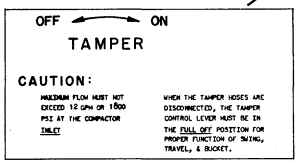

10

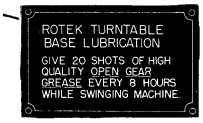

11



12

Ref. No.	Part Number	Quan. Req'd.	Name and Description
1	1222-95	2	EMBLEM
2	1222-39	2	"BANTAM" DECAL
3	15762	2	"T-" DECAL
4	15761	2	"C-" DECAL
5	35113	2	"450" DECAL
6	12260-31	2	"A" DECAL
7	12260-32	2	"515" DECAL
8	12260-34	1	TELEKRANE CONTROL DECAL
9	12260-30	1	TELEKRANE BOOM ANGLE INDICATOR
10	12260-48	1	HYDRAULIC TAMPER INSTRUCTION DECAL
11	12260-47	1	ROTEK LUBRICATION DECAL
12	35550	2	"TELEKRANE" DECAL
	1222-43	1	SERIAL NO. PLATE

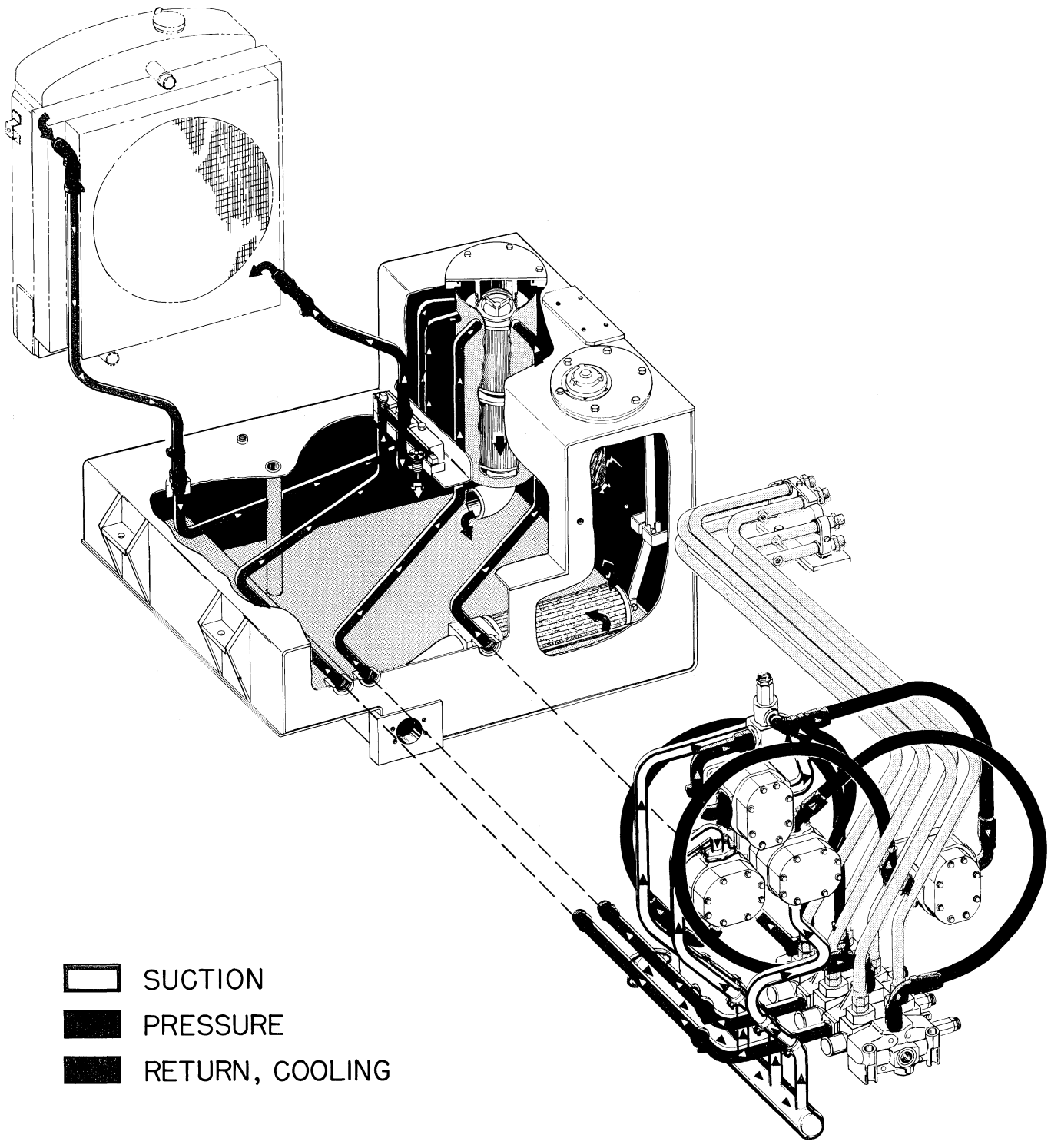
SUCTION
PRESSURE
RETURN, COOLING

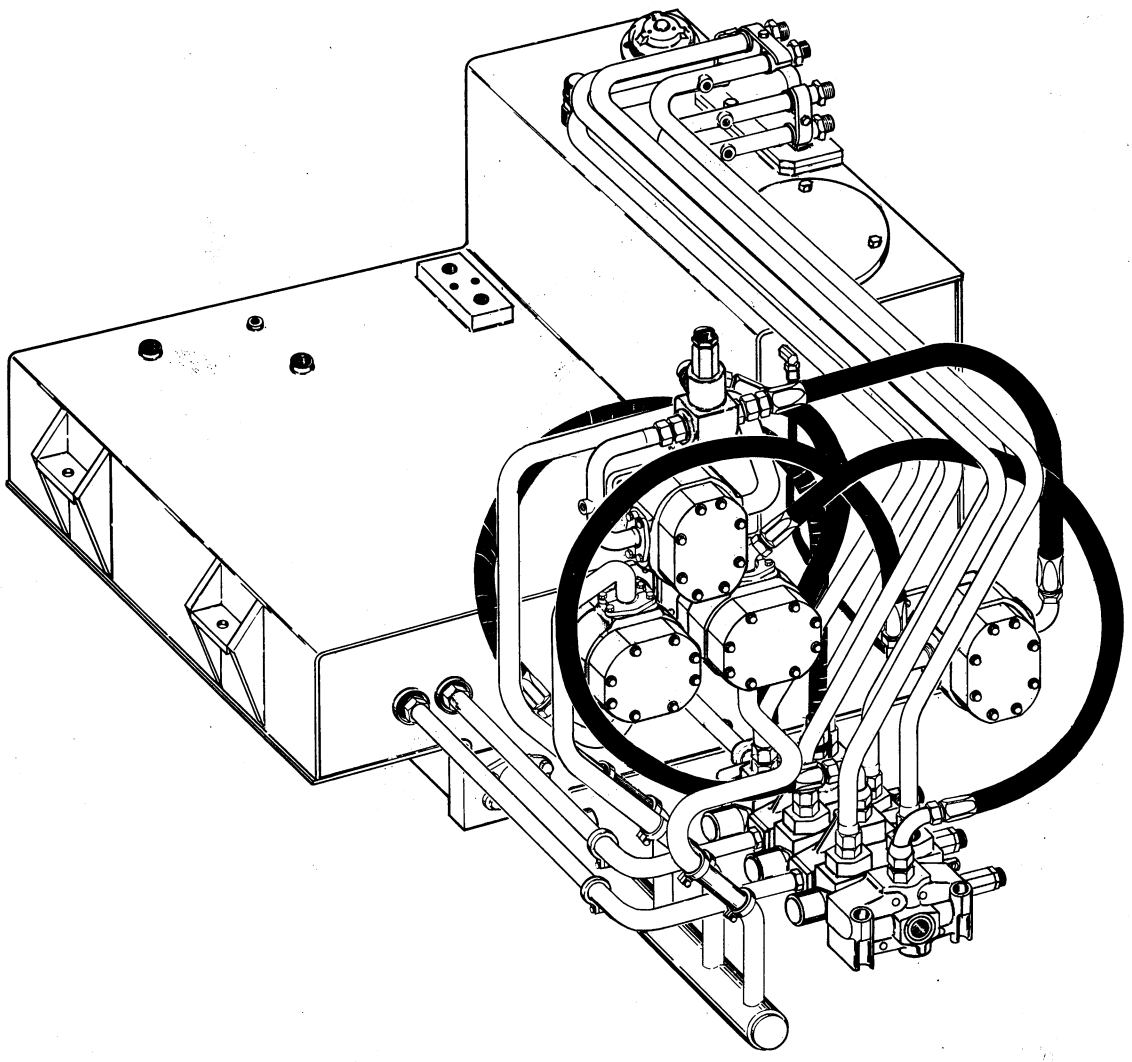

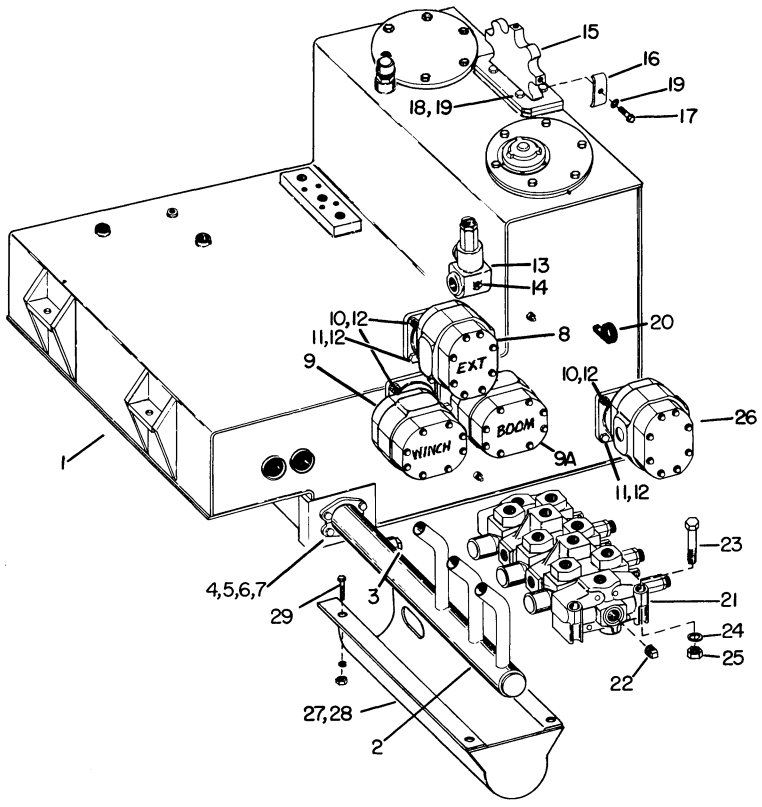

Ref. No.	Part Number	Part Number	Quan. Req'd.	Name and Description
	CHRYSLER, CUMMINS	GM & AC DIESELS		
1			1	RESERVOIR, SEE PAGE 12.10 FOR PARTS BREAKDOWN
2	35285	35285	1	MANIFOLD
3	1219-298	1219-298	1	PIPE PLUG, 1 1/4" STD.
4	1219-393	1219-393	2	SPLIT FLANGE CLAMP
5	1218-61	1218-61	1	"O" RING
6	1203-100	1203-100	4	CAPSCREW, 9/16 UNC x 1 3/4 LG., SAE GD. 5 - HT
7	1210-29	1210-29	4	LOCKWASHER, 5/8 MED.
8	A35266	A35267	1	HYDRAULIC PUMP
9	A35427	A35266	1	HYDRAULIC PUMP, PRIOR TO SER.#502 EXCEPT 449, 482, 493
9	A35288	A35711	1	HYDRAULIC PUMP, BEGIN. W/SER.#502 AND 449, 482, 493
9A	A35266	A35267	1	HYDRAULIC PUMP, PRIOR TO SER.#502 EXCEPT 449, 482, 493
9A	A35427	A35266	1	HYDRAULIC PUMP, BEGIN. W/SER.#502 AND 449, 482, 493
				SEE PAGE 12.12 FOR COMPLETE PUMP BREAKDOWN

Ref. No.	Part Number	Quan. Req'd.	Name and Description
10	35049	6	STUD, PUMPS
	35767	2	STUD, MOTOR
11	1203-97	8	CAPSCREW, SPECIAL
	1210-29	16	LOCKWASHER, 9/16 MED.
12	1205-70	6	NUT, 9/16 UNF
13	A35287	1	RELIEF VALVE, SEE PAGE 12.14 FOR COMPLETE PARTS BREAKDOWN
14	1219-120	1	PIPE PLUG, 1/4 NPT, HEX SOCKET HEAD
15	35315	1	BRACKET, TUBE
16	35323	3	CLAMP
17	1200-62	3	CAPSCREW, 3/8 UNF x 1 1/4 LG.
18	1200-59	4	CAPSCREW, 3/8 UNC x 1 LG.
19	1210-20	7	LOCKWASHER, 3/8 MED.
20	1240-50	3	HOSE CLAMP
21		1	VALVE BANK, SEE PAGE 12.14 FOR ASSEMBLIES AND COMPLETE PARTS BREAKDOWN
22	1219-112	1	PIPE PLUG, 3/4 NPT STD.
23	1200-124	3	CAPSCREW, 1/2 UNC x 4 1/2 LG.
24	1210-26	3	LOCKWASHER, 1/2 MED.
25	1205-58	3	NUT, 1/2 UNC
26	A35268	1	MOTOR, SEE PAGE 12.12 FOR COMPLETE PARTS BREAKDOWN
27	A37976	1	MANIFOLD GUARD ASSEMBLY, INCLUDES ITEMS 28 & 29
28	F37977	1	MANIFOLD GUARD
29	1200-98	4	CAPSCREW, 1/2 UNC x 1 1/4 LG.
	1210-26	4	LOCKWASHER, 1/2 MED.
	1205-58	4	NUT, 1/2 UNC

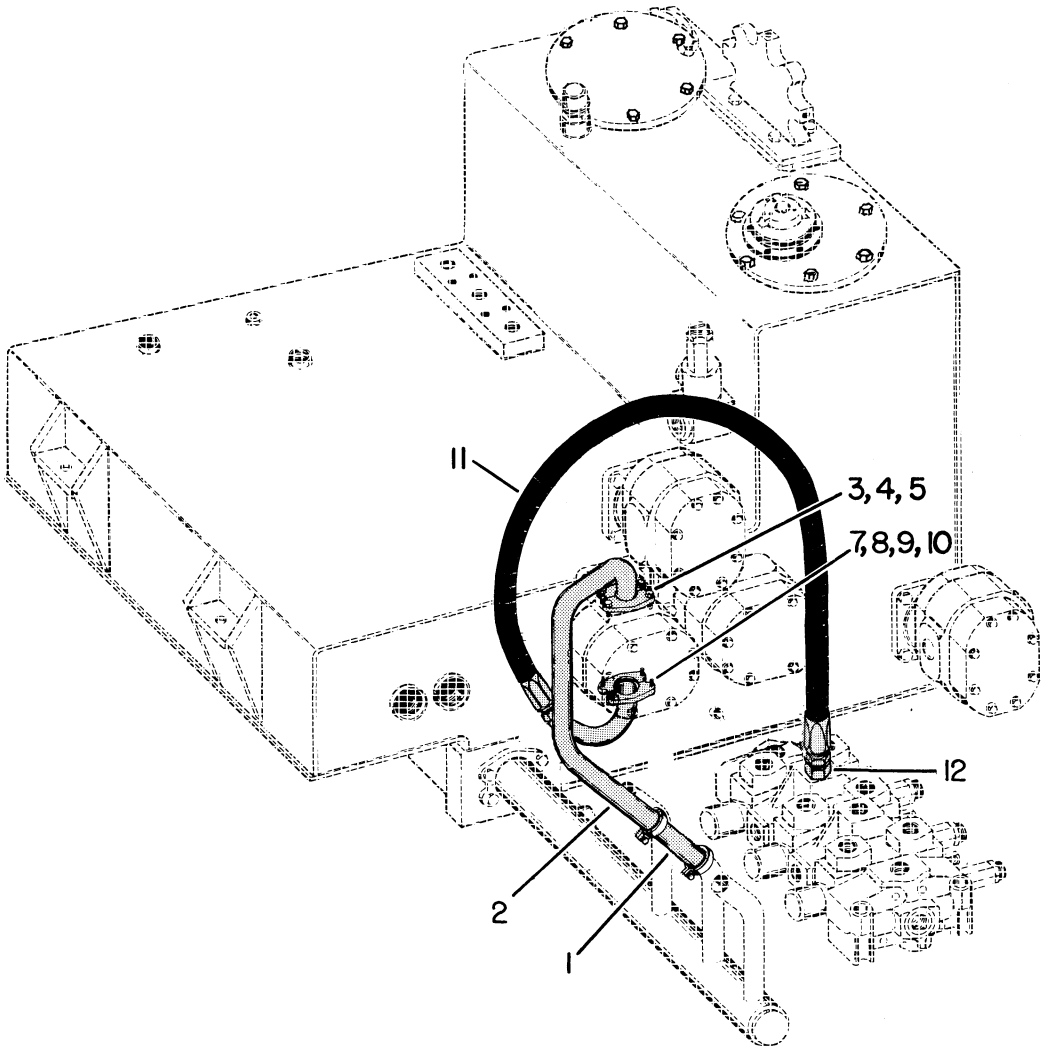

Ref. No.	Part Number CHRYSLER, CUMMINS	Part Number GM & AC DIESELS	Quan. Req'd.	Name and Description
1	1219-394	1219-394	1	FLEXMASTER JOINT
2	35426	35282	1	TUBE, PRIOR TO SER.#502 EXC 449, 482, 493
2	35282	35282	1	TUBE, BEGIN. W/SER.#502 AND 449, 482, 493
3	1219-390	1219-390	2	SPLIT FLANGE CLAMP W/"O" RING
	1218-72	1218-72	1	"O" RING FOR ABOVE CLAMP
4	1203-101	1203-101	4	CAPSCREW, 1/2 UNC X 1 1/2 LG., SAE GD.5-HT
5	1210-26	1210-26	4	LOCKWASHER, 1/2 MED.
7	1219-391	1219-391	2	SPLIT FLANGE CLAMP
8	1218-63	1218-63	1	"O" RING FOR ABOVE CLAMP
9	1203-102	1203-102	4	CAPSCREW, 7/16 UNC X 1 1/2 LG., SAE GD. 5-HT
10	1210-23	1210-23	4	LOCKWASHER, 7/16 MED.
11	A35325	A32325	1	HOSE ASSEMBLY, PRIOR TO SER.#502 EXC 449, 482, 493
11	A35325	A35729	1	HOSE ASSEMBLY, BEGIN. W/SER.#502 AND 449, 482, 493
	1258-54	1258-54	1	HOSE, 1" ID (SAE 100R2 TYPE B)
	1219-400	1219-400	1	FITTING, JIC SWIVEL
	1219-529	1219-626	1	FITTING
	1255-50	1255-50	1	COIL SLEEVE
12	1219-282	1219-282	1	ADAPTER
	1218-65	1218-65	1	"O" RING, FOR ABOVE ADAPTER

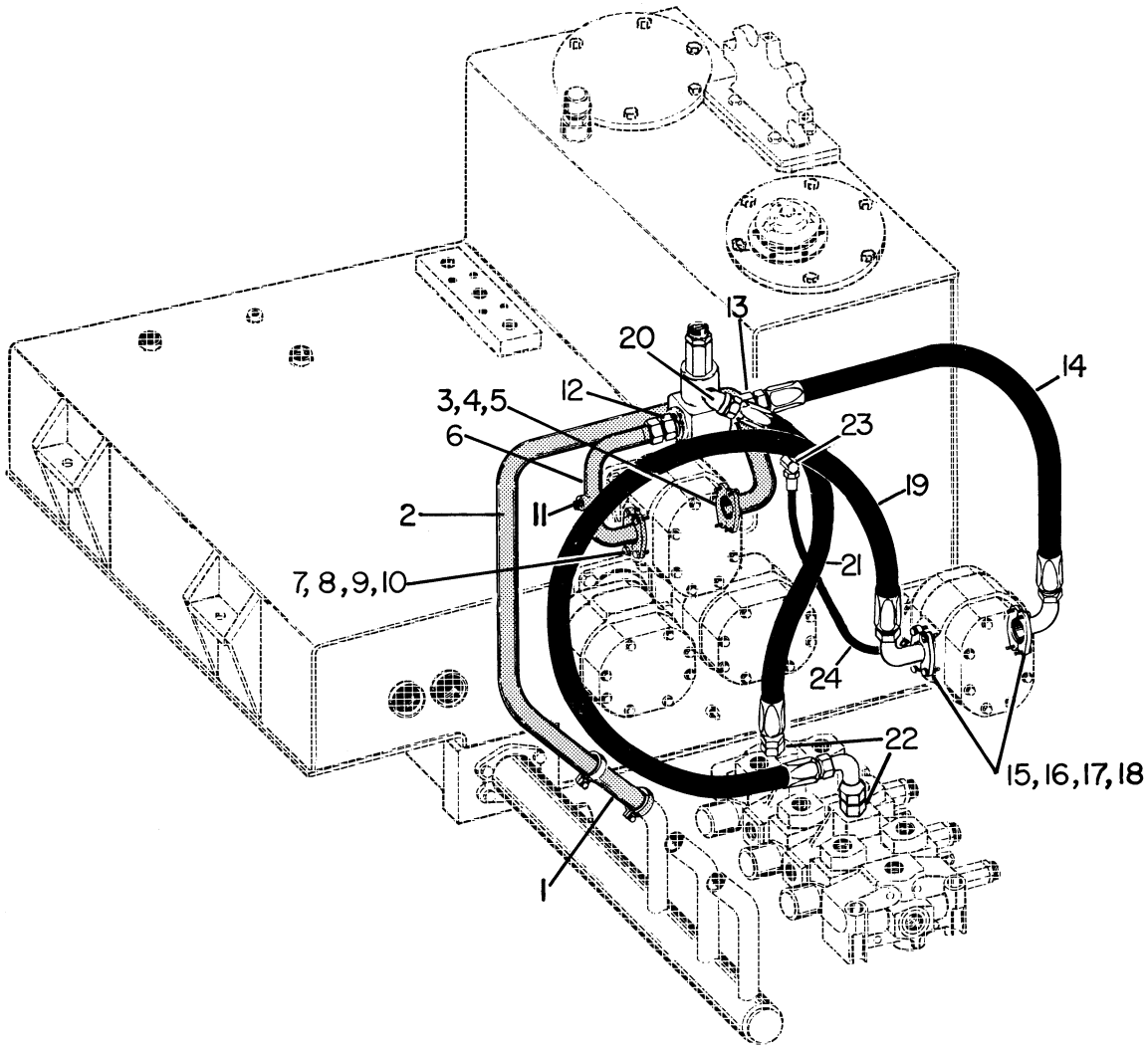

Ref. No.	Part Number	Quan. Req'd.	Name and Description
1	1219-394	1	FLEXMASTER JOINT
2	35283	1	TUBE
3	1219-390	2	SPLIT FLANGE CLAMP, w/"O" RING
	1218-72	1	"O" RING, FOR ABOVE CLAMP
4	1203-101	4	CAPSCREW, 1/2 UNF x 1 1/2 LG., SAE GRADE 5, HT. TREATED
5	1210-26	4	LOCKWASHER, 1/2 MED.
	35346	1	BRACKET, RELIEF VALVE
	35347	1	PAD
	35348	1	SHIM
	35349	1	"U" BOLT

Ref. No.	Part Number	Quan. Req'd.	Name and Description
6	35269	1	TUBE
7	1219-391	2	SPLIT FLANGE CLAMP
8	1218-63	1	"O" RING
9	1203-102	4	CAPSCREW, 7/16 UNC x 1 1/2 LG., SAE GRADE 5, HT. TREATED
10	1210-23	4	LOCKWASHER, 7/16 MED.
11	1219-409	1	PIPE PLUG
12	1219-388	1	ADAPTER
13	1219-387	1	ADAPTER
14	A35327	1	HOSE ASSEMBLY, COMPLETE WITH FITTINGS
	1258-34	1	HOSE, ONLY, 1" ID (SAE 100R2 TYPE B)
	1219-400	1	FITTING, JIC SWIVEL
	1219-403	1	FITTING, 90° SPLIT FLANGE
15	1219-392	4	SPLIT FLANGE CLAMP
16	1218-63	2	"O" RING
17	1203-102	8	CAPSCREW, 7/16 UNC x 1 1/2 LG., SAE GRADE 5, HT. TREATED
18	1210-23	8	LOCKWASHER, 7/16 MED.
19	A35328	1	HOSE ASSEMBLY, COMPLETE WITH FITTINGS
	1258-57	1	HOSE, ONLY, 1" ID (SAE 100R2 TYPE B)
	1219-403	1	FITTING, 90° SPLIT FLANGE
	1219-407	1	FITTING, 90° ELBOW
20	1219-297	1	STREET ELBOW
21	A35326	1	HOSE ASSEMBLY, COMPLETE WITH FITTINGS
	1299-34	1	HOSE, ONLY, 7/8" ID (SAE 100R5)
	1219-397	1	FITTING, JIC SWIVEL
	1219-398	1	FITTING, MALE PIPE
22	1219-282	2	ADAPTER
	1218-65	1	"O" RING, FOR ABOVE ADAPTER
23	1219-443	1	ELBOW, 90°
24	A35257	1	HOSE ASSEMBLY, COMPLETE WITH FITTINGS
	12300-20	1	HOSE, ONLY, 1/4" ID (SAE 100R6)
	1219-444	2	FITTING, MALE PIPE

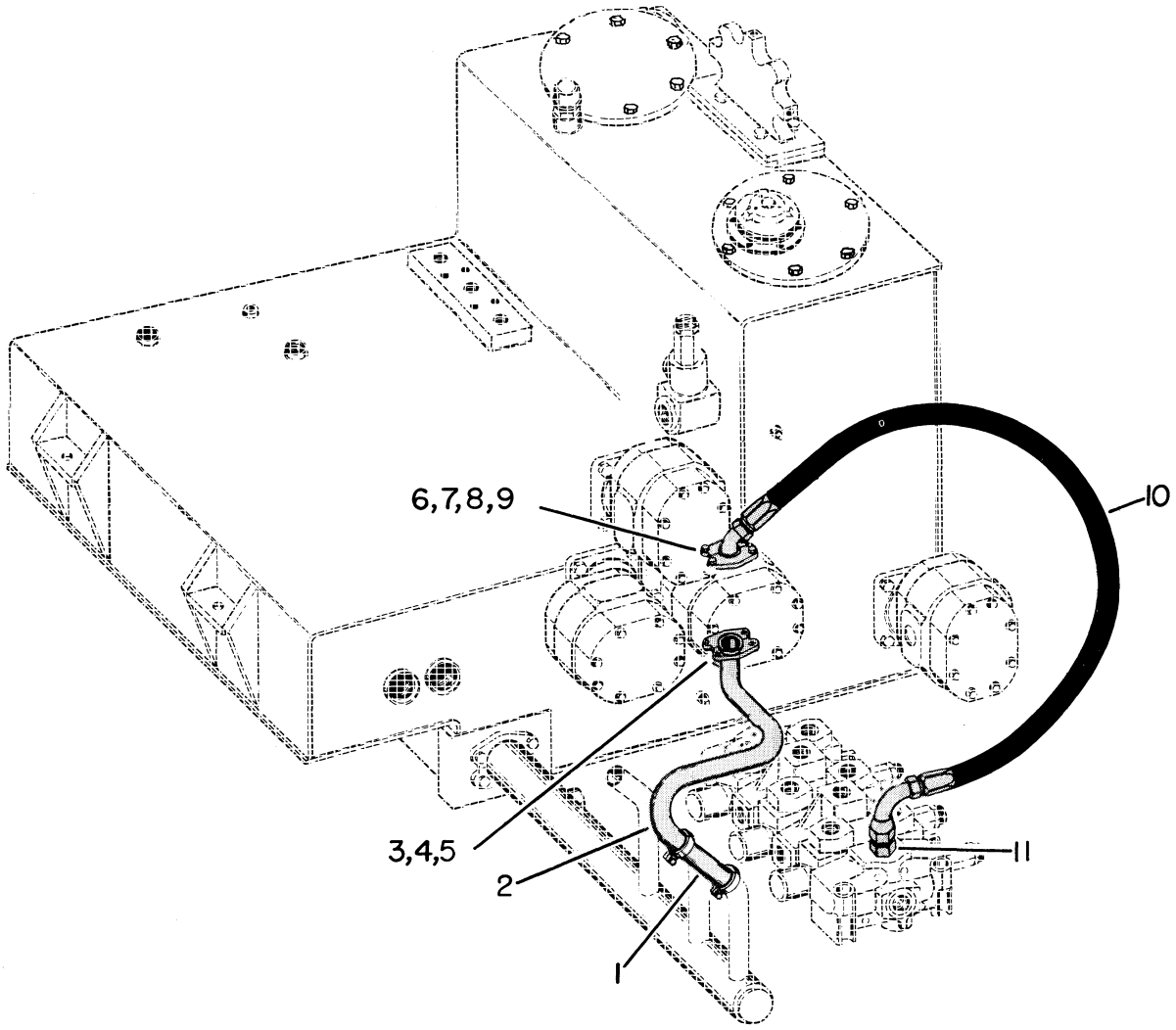

Ref. No.	Part Number	Part Number	Quan. Req'd.	Name and Description
	CHRYSLER, CUMMINS	GM & AC DIESELS		
1	1219-394	1219-394	1	FLEXMASTER JOINT
2	35284	35284	1	TUBE, PRIOR TO SER. #502 EXC 449, 482, 493
2	35728	35284	1	TUBE, BEGIN. W/SER. #502 AND 449, 482, 493
3	1219-390	1219-390	2	SPLIT FLANGE CLAMP W/"O" RING
	1218-72	1218-72	1	"O" RING FOR ABOVE CLAMP
4	1203-101	1203-101	4	CAPSCREW, 1/2 UNC x 1 1/2 LG., SAE GD. 5-HT
5	1210-26	1210-26	4	LOCKWASHER, 1/2 MED.
6	1219-392	1219-392	2	SPLIT FLANGE CLAMP
7	1218-63	1218-63	1	"O" RING
8	1203-102	1203-102	4	CAPSCREW, 7/16 UNC x 1 1/2 LG., SAE GD. 5-HT
9	1210-23	1210-23	4	LOCKWASHER, 7/16 MED.
10	A35329	A35329	1	HOSE ASSEMBLY, COMPLETE WITH FITTINGS BELOW
	1258-42	1258-42	1	HOSE, 1" ID (SAE 100R2 TYPE B)
	1219-528	1219-528	1	FITTING, 60° SPLIT FLANGE
	1219-407	1219-407	1	FITTING, 90° ELBOW
11	1219-282	1219-282	1	ADAPTER
	1218-65	1218-65	1	"O" RING, FOR ABOVE ADAPTER

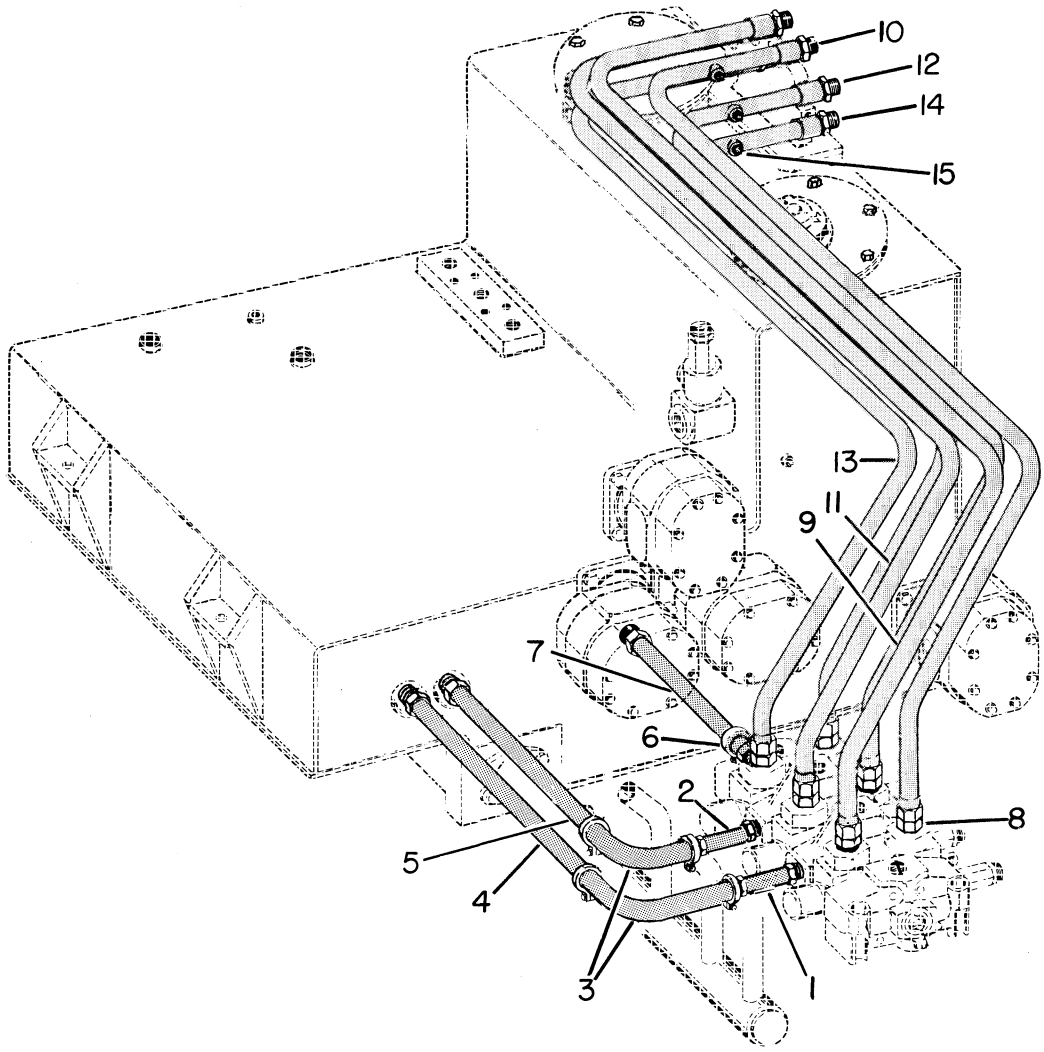

Ref. No.	Part Number	Quan. Req'd.	Name and Description
1	35318	1	TUBE, RETURN
2	35316	1	TUBE, RETURN
	1218-65	1	"O" RING, FOR ABOVE TUBES
3	1219-395	2	FLEXMASTER JOINT, 90°
4	35319	1	TUBE, RETURN
5	35247	1	TUBE, RETURN
	1218-73	1	"O" RING, FOR ABOVE TUBES
	1219-396	1	FLEXMASTER JOINT, STRAIGHT
7	35321	1	TUBE, RETURN
	1218-73	1	"O" RING, FOR ABOVE TUBE
8	1219-386	6	ADAPTER
	1218-65	6	"O" RING, FOR ABOVE
9	35271	1	TUBE) - BOOM LIFT CYLINDER
10	35272	1	TUBE)
11	35273	1	TUBE) - BOOM EXTEND CYLINDER
12	35274	1	TUBE)
13	35275	1	TUBE) - WINCH
14	35276	1	TUBE)
	1219-377	AR	SLEEVE, FEMALE, FOR TUBES, REF. #9 THRU #14
	1219-372	AR	SPUD, MALE, FOR TUBES, REF. #9 THRU #14
	1221-31	6	GROMMET, TUBE CLAMP
15	1219-137	3	PIPE PLUG, 1/4 NPT STD.

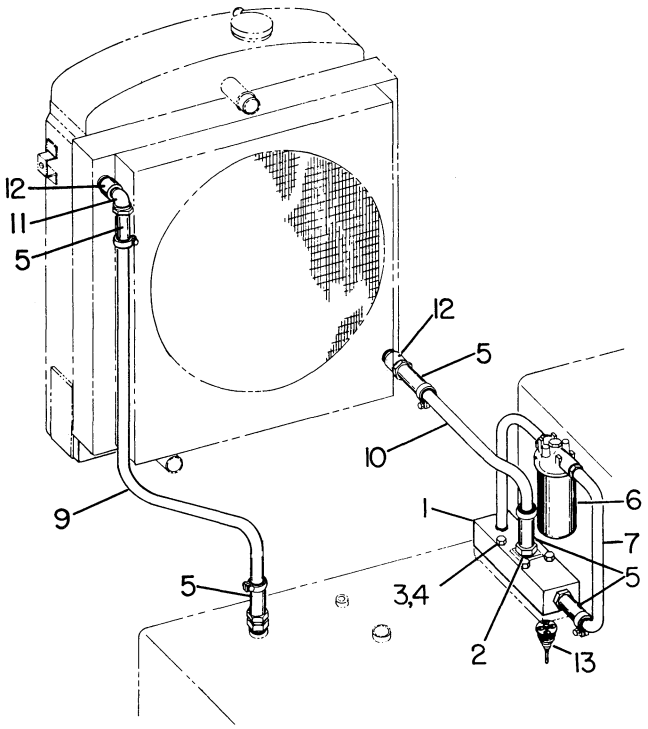

PRIOR TO SER. #390

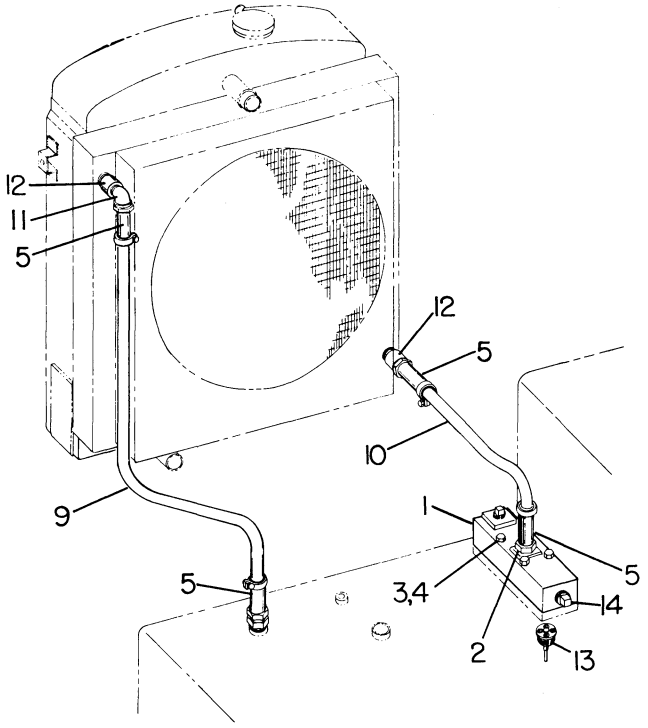

BEGINNING W/SER. #390

Ref. No.	Part Number	Part Number	Part Number	Quan. Req'd.	Name and Description
	PRIOR TO SER.#390	BEGIN. W/ SER.#390	BEGIN. W/ SER.#1008		
1	35291	35538		1	BLOCK, FLOW DIVIDER
	1218-72	1218-72		3	"O" RING, FOR ABOVE
2	35339	35339		1	RESTRICTOR PLATE
3	1200-71			4	CAPSCREW, 3/8 UNC x 2 1/2 LG.
3		1200-75		4	CAPSCREW, 3/8 UNC x 3 LG.
4	1210-20	1210-20		4	LOCKWASHER, 3/8 MED.
5	1219-429	1219-429	1219-429	AR	FLEXMASTER JOINT
6	A35342			1	FILTER W/CARTRIDGE
	23059			1	CARTRIDGE, FOR ABOVE
7	35246			1	TUBE
9	35368	35368	35368	1	TUBE, RETURN, GM DIESEL
9	35366	35366	35366	1	TUBE, RETURN, CHRYSLER
9	35591	35591	35591	1	TUBE, RETURN, AC DIESEL
9	39851	39851	39851	1	TUBE, RETURN, CUMMINS DIESEL
10	35369	35369	35369	1	TUBE, SUPPLY, GM DIESEL
10	35367	35367	35367	1	TUBE, SUPPLY, CHRYSLER
10	35589	35589	35589	1	TUBE, SUPPLY, AC DIESEL
10	39849	39849	39849	1	TUBE, SUPPLY, CUMMINS DIESEL
11	1219-297	1219-297	1219-297	1	ELBOW, 1 NPT
12	1219-19	1219-19	1219-19	2	COUPLING, 1 NPT STD.
13	1219-567	1219-567	1219-567	1	BY-PASS VALVE
14		1219-20	35933	AR	PLUG

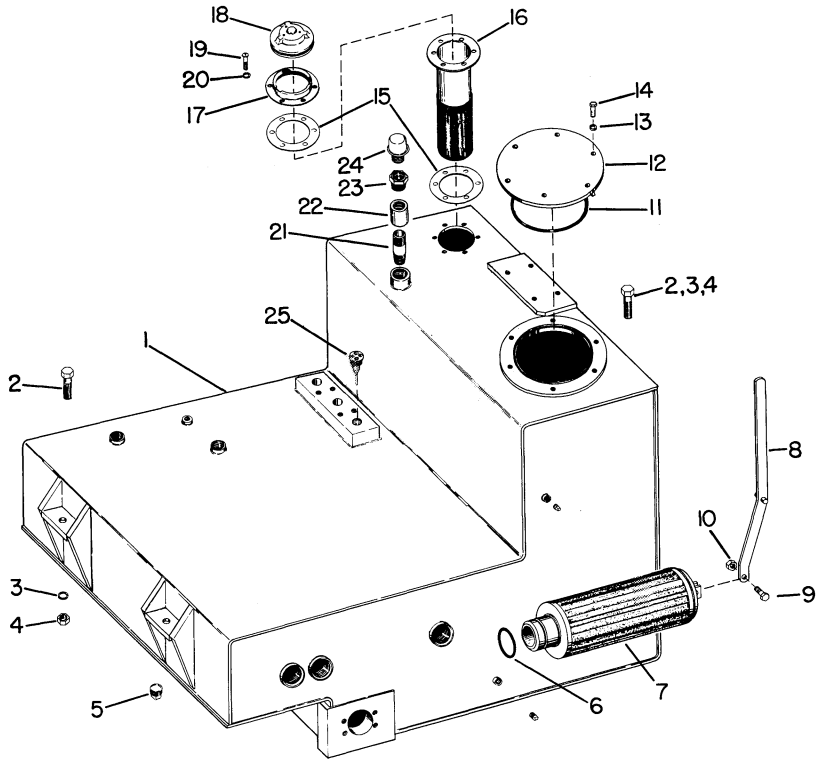

Ref. No.	Part Number	Quan. Req'd.	Name and Description
1	35436	1	RESERVOIR
2	1200-193	4	CAPSCREW, 3/4 UNF x 2 1/2 LG.
3	1210-38	4	LOCKWASHER, 3/4 MED.
4	1205-93	4	NUT, 3/4 UNF
5	1219-20	1	PIPE PLUG, 1 NPT STD.
6	1218-66	1	"O" RING
7	1252-5	1	FILTER
8	35438	1	LEVER
9	1200-102	1	CAPSCREW, 1/2 UNC x 1 3/4 LG.
10	1205-65	1	NUT, 1/2 UNC SELF-LOCKING
11	1218-89	1	"O" RING

Ref. No.	Part Number	Quan. Req'd.	Name and Description
12	35437	1	COVER
13	1210-20	6	LOCKWASHER, 3/8 MED.
14	1200-57	6	CAPSCREW, 3/8 UNC x 3/4 LG.
15	35330	2	GASKET
16	35313	1	STRAINER
17	35331	1	FILLER NECK
18	35332	1	FILLER CAP
19	1233-37	6	CAPSCREW, #8-32 x 1/2 LG., RD. SL. HEAD, CADMIUM PLATED
20	1210-5	6	LOCKWASHER, #8 MED.
21	1219-142	1	NIPPLE
22	1219-51	1	COUPLING
23	1219-300	1	BUSHING
24	1222-161	1	BREATHER
	22334	1	ELEMENT, FOR ABOVE BREATHER
25	1219-567	1	BY-PASS VALVE

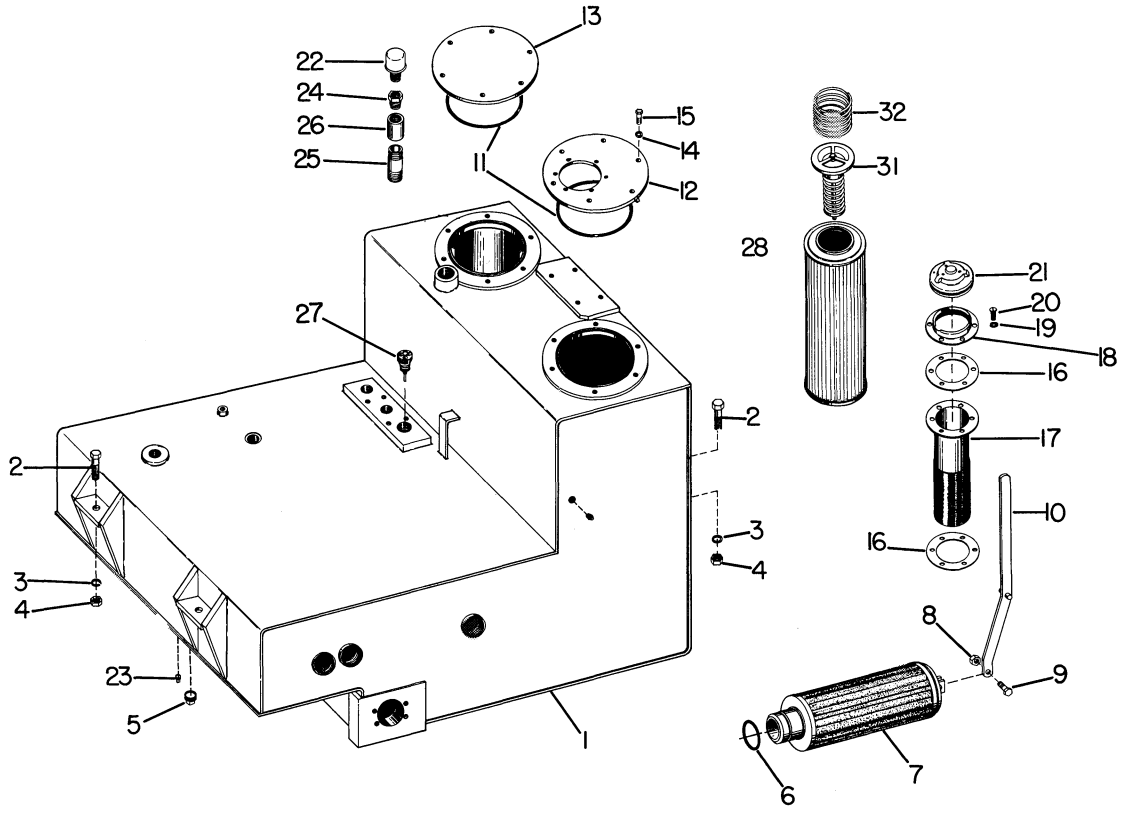

Ref. No.	Part Number	Quan. Req'd.	Name and Description
	BEGINNING W/SER.#390		
1	35531	1	RESERVOIR
2	1200-193	4	CAPSCREW, 3/4 UNF x 2 1/2 LG.
3	1210-38	4	LOCKWASHER, 3/4 MED.
4	1205-93	4	NUT, 3/4 UNF
5	1219-20	2	PIPE PLUG, 1 NPT STD.
6	1218-66	1	"O" RING
7	1252-5	1	FILTER
8	1205-65	1	NUT, 1/2 UNC SELF-LOCKING
9	1200-102	1	CAPSCREW, 1/2 UNC x 1 3/4 LG.
10	35438	1	LEVER
11	1218-89	2	"O" RING

Ref. No.	Part Number	Quan. Req'd.	Name and Description
12	35532	1	COVER
13	35533	1	COVER
14	1210-20	12	LOCKWASHER, 3/8 MED.
15	1200-57	12	CAPSCREW, 3/8 UNC x 3/4 LG.
16	35330	2	GASKET
17	35313	1	FILLER STRAINER
18	35331	1	FILLER NECK
19	1210-5	6	LOCKWASHER, #8 MED.
20	1233-37	6	CAPSCREW, #8-32 x 1/2 LG., RD. SL. HEAD., CAD. PLATED
21	35332	1	FILLER CAP
22	1222-161	1	BREATHER
	22334	1	ELEMENT, FOR ABOVE
23	1219-120	3	PIPE PLUG, 1/4 NPT HEX SOCKET HEAD
24	1219-300	1	BUSHING
25	1219-142	1	NIPPLE
26	1219-51	1	COUPLING
27	1219-567	1	BY-PASS VALVE
28	41181	1	FILTER, SINGLE - REQUIRED FOR TK-450 WITH BANTAM WINCH (REPLACES 22917 DOUBLE ELEMENTS & 22918 SLEEVE)
31	22919	1	BY-PASS VALVE
32	22920	1	HOLD-DOWN SPRING

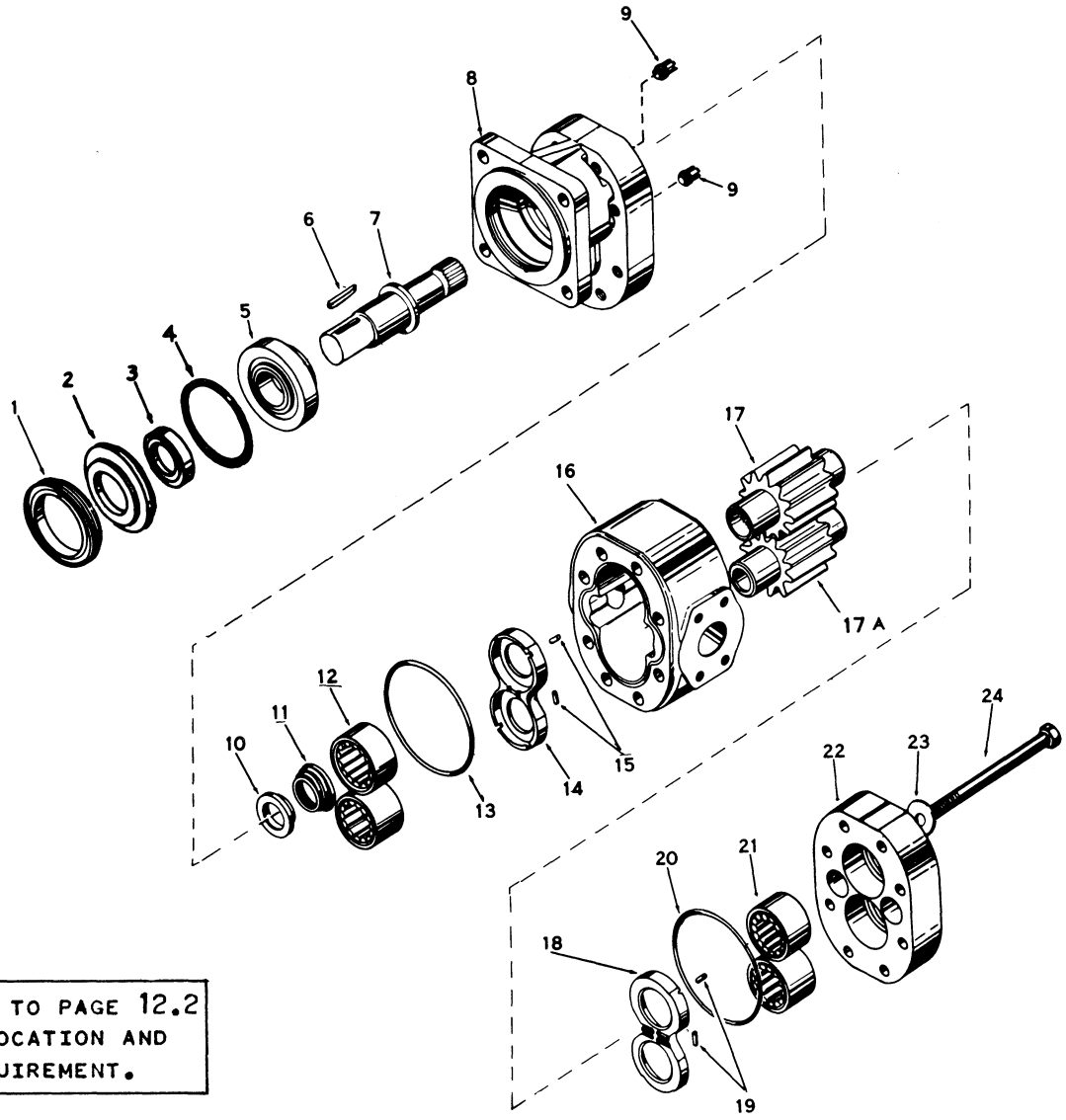

REFER BACK TO PAGE 12.2 FOR PUMP LOCATION AND ENGINE REQUIREMENT.

Ref. No.	Part Number						Quan. Req'd.	Name and Description
	A35288	A35267	A35266	A35427	A35711	A35268		PUMP MOTOR | INCLUDES ITEMS 1 THRU 24
	A22087	A22087	A22087	A22087	A22087	A22088	1	SHAFT END COVER ASSEMBLY, INCLUDES ITEMS 1 THRU 5 & 8 THRU 12
	A22084	A22089	A22090	A22993	A23188	A22085	1	GEAR HOUSING ASSEMBLY, INCLUDES ITEMS 13 THRU 16 & 18 THRU 20
	A22086	A22086	A22086	A22086	A22086	A22086	1	PORT END COVER ASSEMBLY, INCLUDES ITEMS 21 & 22
						A22080	1	SHAFT & GEAR ASSEMBLY, INCLUDES ITEMS 7 & 17
	A22081	A22082	A22083	A22994	A23189		1	SHAFT & GEAR ASSEMBLY, INCLUDES ITEMS 6, 7, & 17

Ref. No.	Part Number						Quan. Req'd.	Name and Description
	A35288	A35267	A35266	A35427	A35711	A35268		PUMP MOTOR
1	22048	22048	22048	22048	22048	22049	1	RETAINER RING
2	22050	22050	22050	22050	22050		1	SEAL-RETAINER
2						22051	1	SEAL, HIGH PRESSURE
3	22052	22052	22052	22052	22052		1	DOUBLE LIP SEAL
4	22053	22053	22053	22053	22053	22053	1	"O" RING
5	22054	22054	22054	22054	22054	22054	1	TAPERED ROLLER BEARING
6	22055	22055	22055	22055	22055		1	KEY
7	22056	22056	22056	22056	22056	22057	1	DRIVE SHAFT
						23661	1	NUT
						23662	1	COTTER PIN
8	22058	22058	22058	22058	22058	22059	1	SHAFT END COVER
9	22060	22060	22060	22060	22060		1	SETSCREW
9						22061	1	CHECK ASSEMBLY
10	22062	22062	22062	22062	22062	22062	1	SHAFT BUSHING, BRONZE
11	22063	22063	22063	22063	22063	22063	1	CONICAL SPRING
12	22064	22064	22064	22064	22064	22064	2	BEARING
13	22065	22065	22065	22065	22065	22065	1	"O" RING GASKET
14	22066	22066	22066	22066	22066	22066	1	THRUST PLATE
15	22067	22067	22067	22067	22067	22067	6	POCKET SEAL
16	22068	22069	22070	22984	23191	22071	1	GEAR HOUSING
17	22072	22073	22074	22985	23192	22073	1	DRIVE & DRIVEN(17A) GEAR SET
18	22066	22066	22066	22066	22066	22066	1	THRUST PLATE
19	22067	22067	22067	22067	22067	22067	6	POCKET SEAL
20	22065	22065	22065	22065	22065	22065	1	"O" RING GASKET
21	22064	22064	22064	22064	22064	22064	2	BEARING
22	22075	22075	22075	22075	22075	22075	1	PORT END COVER
23	22076	22076	22076	22076	22076	22076	8	WASHER
24	22077	22078	22079	22986	23193	22078	8	CAPSCREW
			A22991					PUMP SEAL KIT, INCLUDES ALL SEALS AND GASKETS
						A22992		MOTOR SEAL KIT, INCLUDES ALL SEALS AND GASKETS

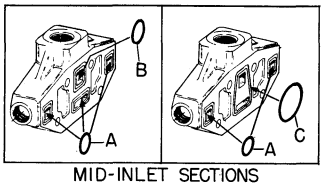

MID-INLET SECTIONS

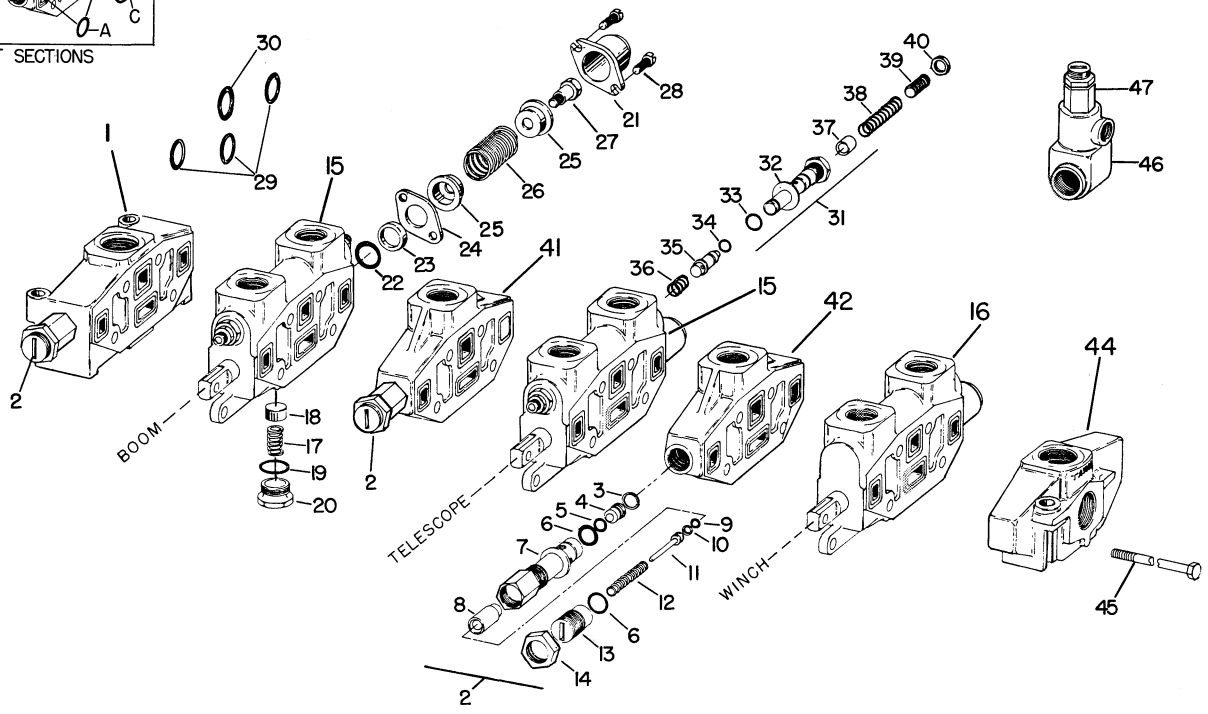

Ref. No.	Part Number	Quan. Req'd.	Name and Description
	A35428	1	VALVE BANK ASSEMBLY COMPLETE, INCLUDES ITEMS 1 THRU 45
A	22148	AR	"O" RING, 3 REQ'D BETWEEN EACH SECTION (2 REQ'D FOR MID-INLET SECTIONS USING LARGE CENTER "O" RING BELOW.
B	22149	AR	"O" RING, 1 REQ'D BETWEEN EACH SECTION (NOT REQ'D FOR MID-INLET SECTIONS USING LARGE CENTER "O" RING BELOW.
C	24437	AR	"O" RING, LARGE CENTER - MID-INLET SECTIONS ONLY
1	22130	1	INLET SECTION COMPLETE WITH RELIEF VALVE CARTRIDGE AND FOUR "O" RINGS LISTED ABOVE
2	22131	1	MAIN RELIEF VALVE CARTRIDGE, FOR ABOVE SECTION, INCLUDES ITEMS 3 THRU 14
3	22156	1	SNAP RING
4	22157	1	POPPET
5	22158	1	"O" RING
6	22159	2	"O" RING
7	22160	1	GASKET
8	22161	1	FLOATING SEAT
	25545	1	SNUBBER, FOR ABOVE
9	22162	1	"O" RING
10	22163	1	BACK-UP RING
11	22164	1	PLUNGER
12	24438	1	SPRING
13	22166	1	ADJUSTING SCREW
14	22167	1	LOCK NUT

Ref. No.	Part Number	Quan. Req'd.	Name and Description
15	A22132	2	VALVE SECTION ASSEMBLY, INCLUDES ITEMS 17 THRU 31
	22133	1	HOUSING, W/SPOOL ONLY, FOR ABOVE SECTION
16	A22995	1	VALVE SECTION ASSEMBLY, INCLUDES ITEMS 19 THRU 30
	22996	1	HOUSING, W/SPOOL ONLY, FOR ABOVE SECTION
17	22139	1	SPRING
18	22137	1	CHECK POPPET
19	22140	1	"O" RING
20	22138	1	CHECK VALVE CAP
21	22136	1	VALVE CAP
22	22141	2	"O" RING
23	22142	1	BACK-UP RING
24	22143	1	RETAINING PLATE
25	22144	2	SPRING GUIDE
26	22145	1	SPRING
27	22146	1	HEX HEAD STRIPPER BOLT
28	22147	2	FILLISTER HEAD SCREW
29	22148	3	"O" RING
30	22149	1	"O" RING
31	22150	2	RELIEF VALVE CARTRIDGE, INCLUDES ITEMS 32 THRU 40
32	22168	1	GASKET, WASHER
33	22169	1	"O" RING
34	22170	1	"O" RING
35	22171	1	POPPET
36	22172	1	SPRING
37	22173	1	SEAT, FLOATING
38	22174	1	SPRING
39	22175	1	SETSCREW
40	22176	1	LOCKNUT
41	22997	1	MID-INLET SECTION, COMPLETE W/RELIEF CARTRIDGE & "O" RINGS
42	22151	1	MID-INLET SECTION, COMPLETE W/RELIEF CARTRIDGE & "O" RINGS
	22131	1	RELIEF VALVE CARTRIDGE, FOR ABOVE, INCL. ITEMS 3 THRU 14
44	22153	1	OUTLET SECTION, LESS "O" RINGS
45	22154	4	STUD, FOR A35428 VALVE ASSEMBLY
46	A35287	1	RELIEF VALVE ASSEMBLY, COMPLETE WITH RELIEF CARTRIDGE
47	22155	1	RELIEF VALVE CARTRIDGE, FOR ABOVE

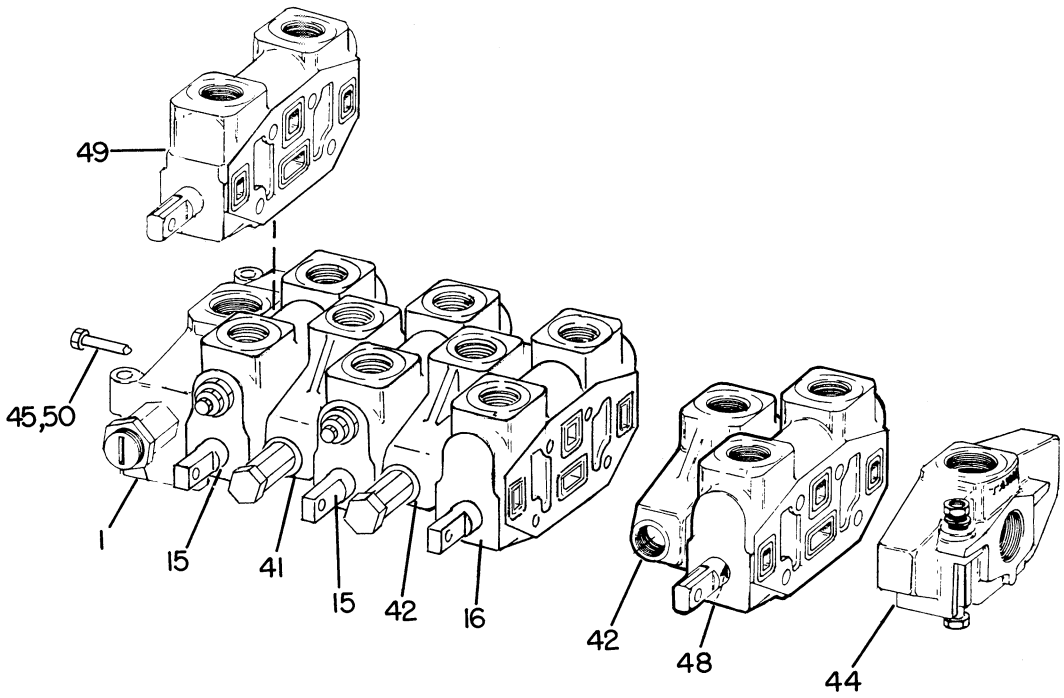

Ref. No.	Part Number	Quan. Req'd.	Name and Description
	A38580	1	VALVE BANK ASSEMBLY, FOR TWO-SPEED WINCH, INCLUDES ITEMS 1 THRU 48 BELOW.
			*SEE PAGE 12.14 & 12.15 FOR VALVE SECTION BREAKDOWN
1	22130	1	INLET SECTION COMPLETE W/RELIEF VALVE AND "O" RINGS, INCLUDES ITEMS 2 THRU 14*
15	A22132	2	VALVE SECTION ASSEMBLY, INCLUDES ITEMS 17 THRU 31*
16	A22995	1	VALVE SECTION ASSEMBLY, INCLUDES ITEMS 19 THRU 30*
41	22997	1	MID-INLET SECTION ASSEMBLY, COMPLETE WITH RELIEF VALVE & "O" RINGS
42	22151	2	MID-INLET SECTION ASSEMBLY, COMPLETE WITH RELIEF VALVE & "O" RINGS
44	22153	1	OUTLET SECTION, LESS "O" RINGS
45	24737	4	STUD, VALVE BANK ASSEMBLY
48	A24736	1	VALVE SECTION ASSEMBLY, INCLUDES ITEMS 19 THRU 30*
49	A35298	1	VALVE SECTION ASSEMBLY, FOR ADDITION TO A38580 VALVE BANK FOR AUXILIARY WINCH
50	38573	4	STUD, FOR ADDING ABOVE SECTION TO VALVE BANK

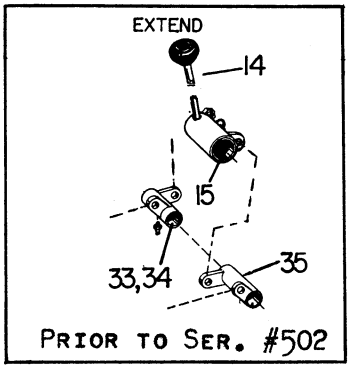

PRIOR TO SER. #502

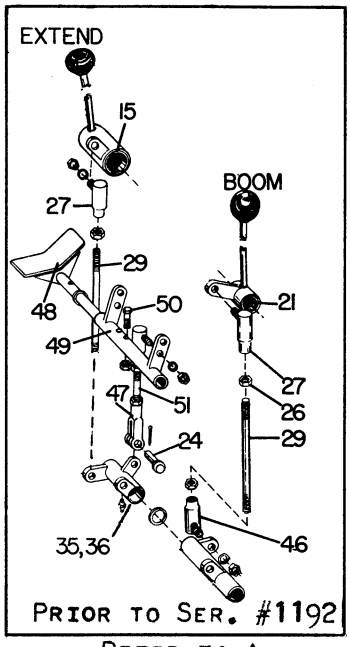

PRIOR TO SER. #1192

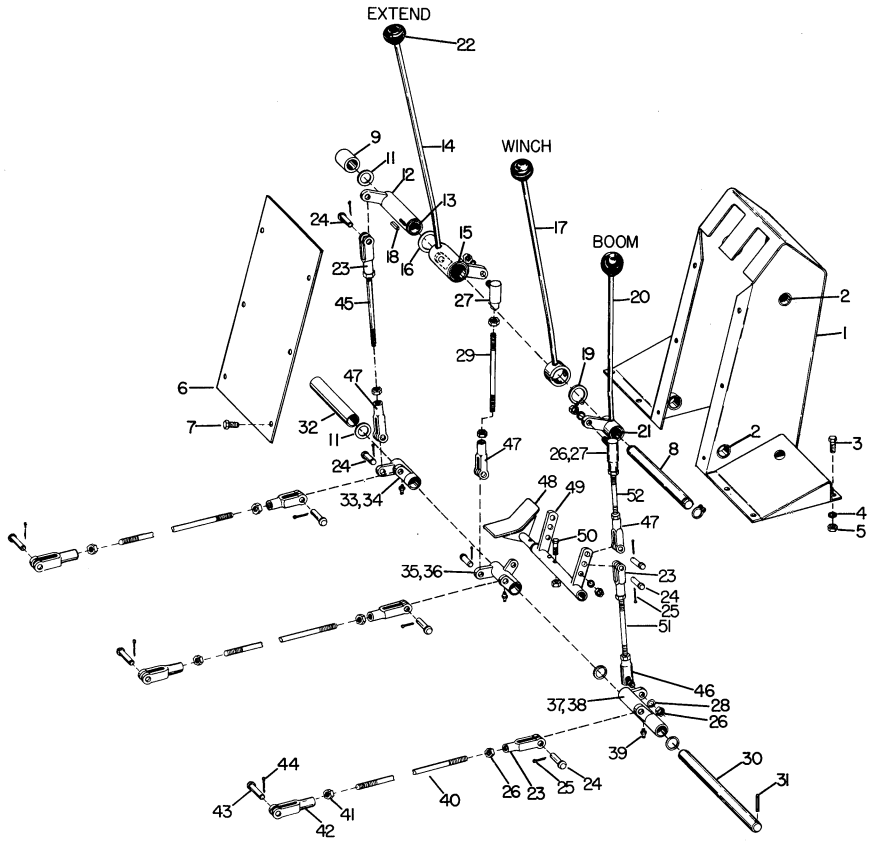

REFER TO ATTACHMENT SECTION FOR OPTIONAL CONTROLS

Ref. No.	Part Number	Quan. Req'd.	Name and Description
1	A 35452-1	1	HOUSING
2	1214-65	4	BUSHING, FOR ABOVE
3	1200-59	8	CAPSCREW, 3/8 UNC x 1 LG.
4	1210-20	8	LOCKWASHER, 3/8 MED.
5	1205-36	8	NUT, 3/8 UNC
6	35451	1	COVER
7	1211-10	6	THREAD CUTTING SCREW, 5/16 x 1/2 LG.
8	35762	1	SHAFT (REQUIRES SNAP RING BELOW)
	1220-19	2	SNAP RING
9	35457	1	SPACER
10	1227-186	1	ROLL PIN, 3/16 x 1 1/2 LG. (PRIOR TO SER. #502)

Ref. No.	Part Number	Quan. Req'd.	Name and Description
11	1208-8	AR	MACHINERY BUSHING, 3/4 x 1 1/4 x 18 GA.
12	A35459-1	1	BELLCRANK
13	1214-62	2	BUSHING, FOR ABOVE
14	A35456-1	1	LEVER, PRIOR TO SER.#502, BEGIN. W/SER. #1192
14	35737	1	LEVER, SER. #502 TO SER. #1192
15	1214-44	2	BUSHING, FOR ABOVE LEVER
16	1208-28	AR	MACHINERY BUSHING, 1 1/4 x 1 7/8 x 18 GA.
17	A35454-1	1	LEVER, WINCH
18	35455	1	KEY, FOR ABOVE LEVER
19	1220-63	1	RETAINING RING
20	A35453-1	1	LEVER, BOOM
21	1214-62	2	BUSHING
22	1222-94	3	KNOB
23	3118	5	ADJUSTABLE YOKE END
24	3119	8	PIN
25	1207-5	8	COTTER PIN, 3/32 x 1 LG.
26	1205-37	12	NUT, 3/8 UNF
	1205-162	4	NUT, 3/8 UNF LH
27	1222-139	2	BALL JOINT
28	1210-20	5	LOCKWASHER, 3/8 MED.
29	35460	1	CONTROL ROD
30	35084	1	SHAFT
31	1227-186	1	ROLL PIN, 3/16 x 1 1/2 LG.
32	35464	1	SPACER
33	A35463-1	1	BELLCRANK, HOIST (PRIOR TO SER.#502)
33	A35736-1	1	BELLCRANK, HOIST (BEGIN. W/SER.#502)
34	1216-2	2	BUSHING, FOR ABOVE LEVER
35	A35462-1	1	BELLCRANK, EXTEND-RETRACT

Ref. No.	Part Number	Quan. Req'd.	Name and Description
36	1216-2	2	BUSHING, FOR ABOVE LEVER
37	A35461-1	1	BELLCRANK, BOOM
38	1216-2	2	BUSHING, FOR ABOVE LEVER
39	1213-1	3	GREASE FITTING
40	A35172-1	3	CONTROL ROD
41	1205-148	3	NUT, 1/2 UNF, LH
42	2465	3	ADJUSTABLE YOKE END
43	1689	3	PIN
44	1207-13	3	COTTER PIN, 1/8 x 1/4 LG.
45	35560	1	ROD
46	1222-182	1	BALL JOINT
47	35559	3	YOKE
48	A35757-1	1	PEDAL
49	A35756-1	1	BELLCRANK
	1208-7	2	MACHINERY BUSHING, 3/4 x 1 1/4 x 14 GA.
50	1200-66	1	CAPSCREW, 3/8 UNF x 1 3/4 LG.
51	35758	1	ROD
52	35766	1	ROD

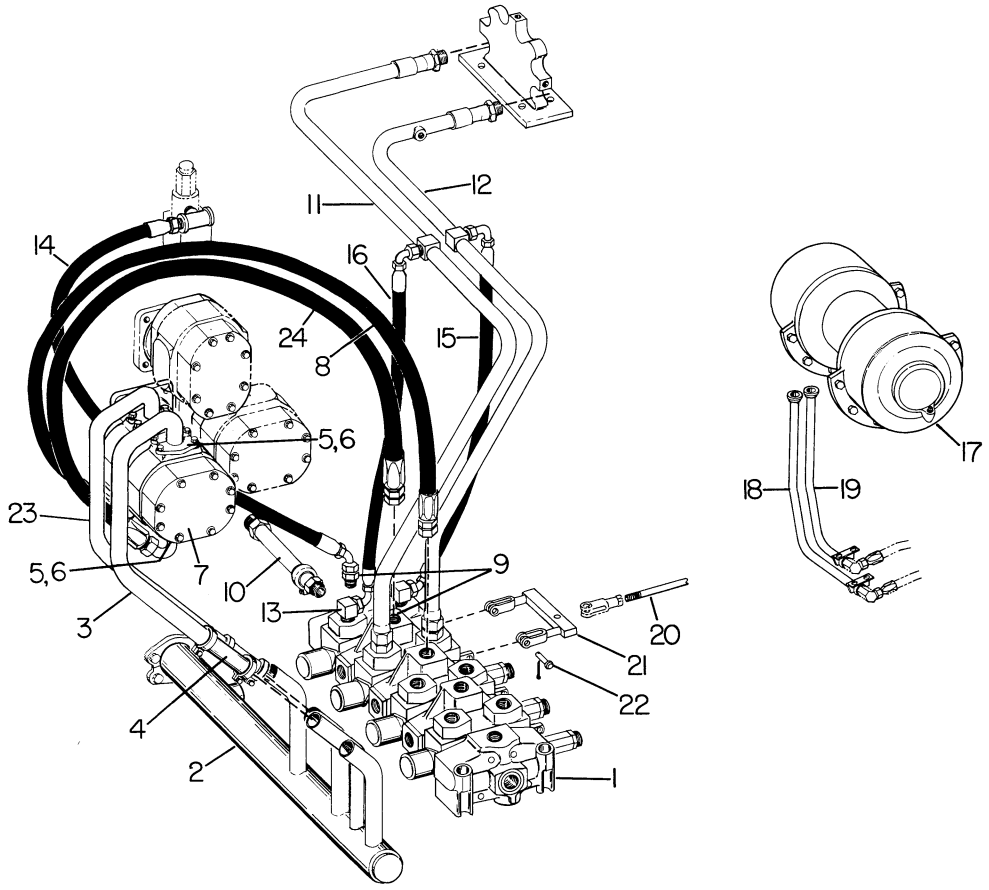

Ref. No.	Part Number	Quan. Req'd.	Name and Description
			THE FOLLOWING ITEMS ARE PECULIAR TO THE TWO-SPEED WINCH INSTALLATION. FOR ANY ITEMS NOT LISTED HERE, REFER TO PAGES 12.2 THRU 12.8.
1	A38580	1	VALVE ASSEMBLY, SEE PAGE 12.15A
	38573	4	VALVE ASSEMBLY BOLT, REQUIRED TO ADD AUXILIARY WINCH SECTIONS TO VALVE ABOVE.
2	38583	1	MANIFOLD (REPLACES ITEM 2, PAGE 12.2)
3	38595	1	SUCTION TUBE
4	1219-394	1	FLEXMASTER JOINT
5	1219-665	4	SPLIT FLANGE CLAMP
	1218-103	2	"O" RING, FOR ABOVE

Ref. No.	Part Number	Quan. Req'd.	Name and Description	
6	1203-137	8	CAPSCREW, 3/8 UNC x 1 1/4 LG., H.T.	
	1210-20	8	LOCKWASHER, 3/8 MED.	
7	A38581	1	HYDRAULIC TANDEM PUMP, CHRYSLER ENGINE	REPLACES ITEM 9, PAGE 12.2 — SEE PAGE 12.21
7	A38582	1	HYDRAULIC TANDEM PUMP, DIESEL ENGINES	
8	A35325	1	HOSE ASSEMBLY (REPLACES A35729, ITEM 11, PAGE 12.4, DIESEL)	
8	A38780	1	HOSE ASSEMBLY (REPLACES A35325, ITEM 11, PAGE 12.4, CHRYSLER)	
9	1219-282	2	ADAPTER	
10	38584	1	RETURN TUBE (REPLACES ITEM 7, PAGE 12.8)	
11	38596	1	TUBE (REPLACES ITEM 13, PAGE 12.8)	
12	38597	1	TUBE (REPLACES ITEM 14, PAGE 12.8)	
13	1219-680	2	ADAPTER, 90°	
	1218-65	2	"O" RING, FOR ABOVE	
14	A38598	1	HOSE ASSEMBLY	
15	A38599	1	HOSE ASSEMBLY	
16	A38600	1	HOSE ASSEMBLY	
17	A38515	1	HYDRAULIC WINCH, MODEL 22E (REPLACES A35834)	
18	F38585	1	TUBE (REPLACES ITEM 46, PAGE 35.9)	
19	F38587	1	TUBE (REPLACES ITEM 45, PAGE 35.9)	
20	F38589	1	ROD (REPLACES ITEM 40, PAGE 12.16)	
21	F38591	1	BRACKET	
22	1689	2	PIN	
	1207-13	2	COTTER PIN, 1/8 x 1/4 LG.	
23	38779	1	TUBE, CHRYSLER (REPLACES 35282, ITEM 2, PAGE 12.4)	
23	35426	1	TUBE, DIESELS (REPLACES 35282, ITEM 2, PAGE 12.4)	
24	A38780	1	HOSE	
	F38578	1	BELLCRANK (NOT SHOWN) (REPLACES ITEM 27, PAGE 35.20 - AUXILIARY WINCH CONTROL)	

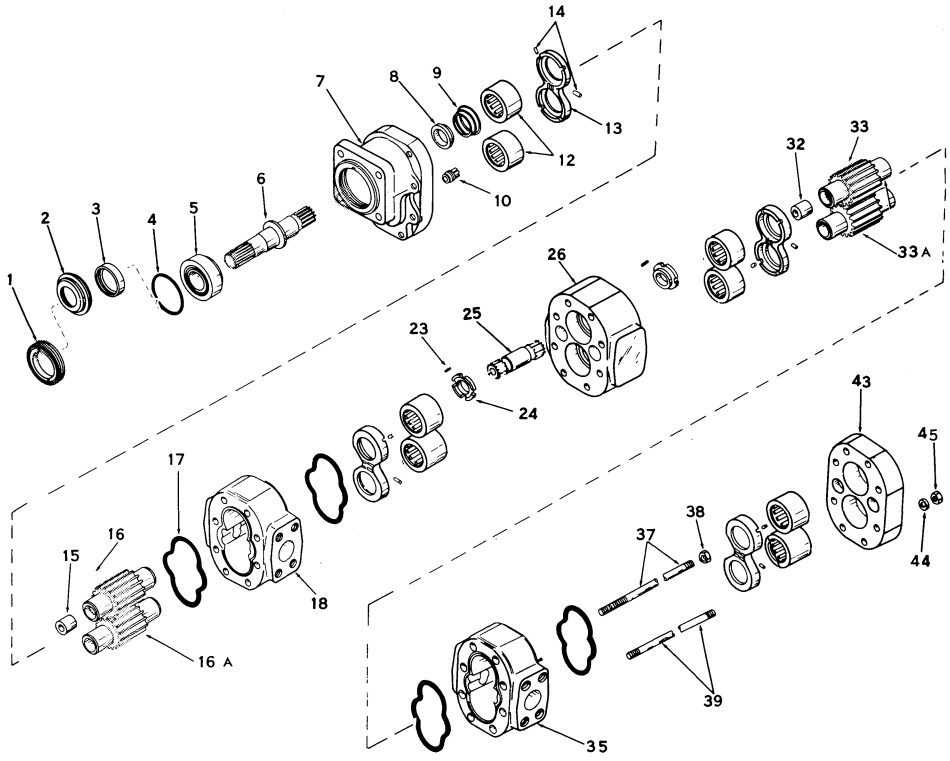

Ref. No.	Part Number	Part Number	Quan. Req'd.	Name and Description
	A38581 CHRYSLER	A38582 DIESELS		TANDEM PUMP COMPLETE
	A22991	A22991	1	PUMP SEAL KIT, BASIC
	24981	24981	1	TANDEM SECTION SEAL KIT, FOR USE WITH THE ABOVE
1	22048	22048	1	RETAINER RING
2	22050	22050	1	SEAL-RETAINER
3	22052	22052	1	DOUBLE LIP SEAL
4	22053	22053	1	"O" RING
5	22054	22054	1	TAPERED ROLLER BEARING
6	22056	22056	1	DRIVE SHAFT
	23661	23661	1	SLOTTED NUT, FOR ABOVE SHAFT (NOT SHOWN)
	23662	23662	1	COTTER PIN, FOR ABOVE
7	22058	22058	1	SHAFT END COVER
	24674	24674	1	PLUG, FOR ABOVE

Ref. No.	Part Number	Part Number	Quan. Req'd.	Name and Description
	A38581 CHRYSLER	A38582 DIESELS		
8	22062	22062	1	SHAFT BUSHING, BRONZE
9	22063	22063	1	CONICAL SPRING
10	24674	24674	1	PLUG
12	22064	22064	2	BEARING
13	22066	22066	1	THRUST PLATE
14	22067	22067	6	POCKET SEAL
15			1	SPACER
16	22985	22074	1	DRIVE & DRIVEN (16A) GEAR SET
17	24675	24675	1	"O" RING GASKET
18	24977	24978	1	GEAR HOUSING
23	23658	23658	2	ROLL PIN
24	24677	24677	2	BUSHING
25	24680	24680	1	SHAFT
26	24676	24676	1	BEARING CARRIER
32			1	SPACER
33	24979	24980	1	DRIVE & DRIVEN (33A) GEAR SET
35			1	GEAR HOUSING
37			1	CONNECTING BOLT
38			1	NUT, 3/8"
39	24570	24570	8	STUD
43			1	PORT END COVER
44	24730	24730	8	WASHER
45	24731	24731	8	NUT

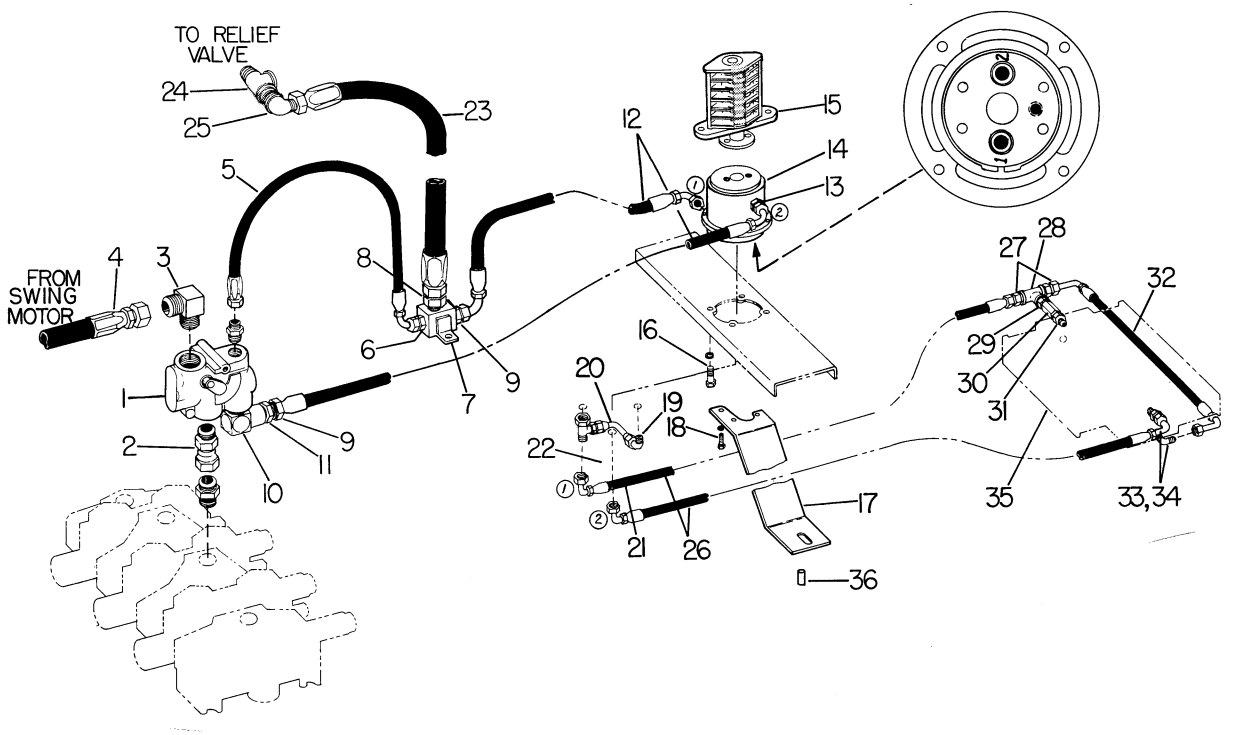

Ref. No.	Part Number	Quan. Req'd.	Name and Description
1	35651	1	FLOW DIVIDER
2	35891	1	SWIVEL ADAPTER
3	1219-680	1	ADAPTER
4	A35657	1	HOSE ASSEMBLY
5	A38177	1	HOSE ASSEMBLY
6	1219-440	1	ADAPTER
7	F38178	1	JUNCTION BLOCK
8	1219-387	1	ADAPTER
9	1219-283	2	ADAPTER
10	1219-789	1	ADAPTER, 90°
11	1219-254	1	REDUCING BUSHING

Ref. No.	Part Number	Quan. Req'd.	Name and Description
12	A38173	2	HOSE ASSEMBLY
13	1219-347	2	ADAPTER
14	A39083	1	ROTARY JOINT
15	A38200	1	COLLECTOR RING ASSEMBLY
16	1200-61	4	CAPSCREW, 3/8 UNC x 1 1/4 LG.
	1210-20	4	LOCKWASHER, 3/8 MED.
17	39085	1	ARM
18	1200-57	5	CAPSCREW, 3/8 UNC x 3/4 LG.
	1210-20	5	LOCKWASHER, 3/8 MED.
19	1219-122	1	ADAPTER, 90°
20	A39084	1	TUBE UNIT
21	1219-840	1	REDUCER
22	1219-695	1	TEE
23	A35326	1	HOSE ASSEMBLY
24	1219-679	1	TEE
25	1219-297	1	STREET ELBOW
			THE FOLLOWING ITEMS PROVIDE THE OIL SUPPLY TO THE CARRIER VALVE BANK. SEE GROUP 1A IN CARRIER MANUAL FOR REMAINDER OF OUTRIGGER SYSTEM.
26	A38174	2	HOSE ASSEMBLY
27	1219-283	2	ADAPTER
28	1219-7	1	TEE
29	1219-97	1	REDUCING BUSHING
30	1219-858	1	CHECK VALVE
31	1219-859	1	ADAPTER
32	A38176	1	HOSE ASSEMBLY
33	1219-571	2	ADAPTER, 90°
34	1219-446	2	ADAPTER
35	A40185	1	VALVE BANK
36	10597	1	DOWEL

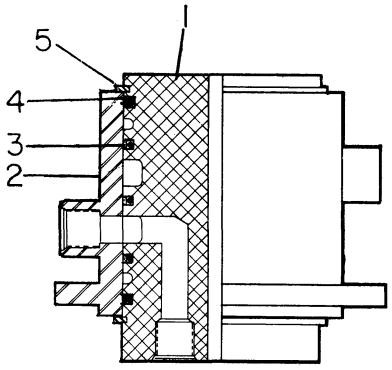

Ref. No.	Part Number	Quan. Req'd.	Name and Description
	39083		ROTARY MANIFOLD Complete
1	23975	1	SPOOL
2	23976	1	CASE
3	21488	5	TEFLON SEAL w/ "O" Ring (Also 24427)
4	25502	2	BACK-UP WASHER (Top & Bottom Seals)
5	23978	2	SNAP RING

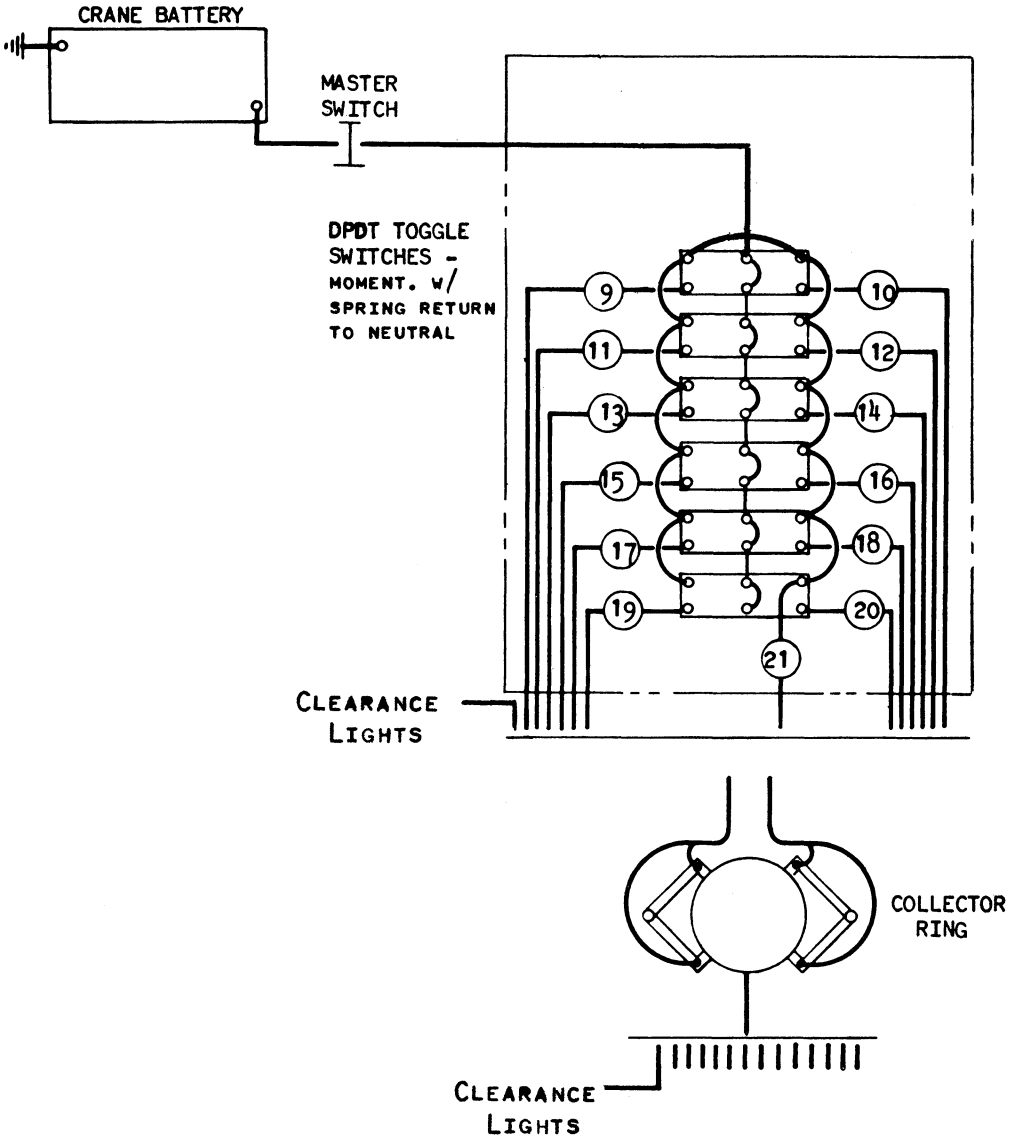

8	WHITE	CLEARANCE LIGHTS
9	BLACK	LF - UP
10	RED	LF - DOWN
11	YELLOW	LR - UP
12	GREEN	LR - DOWN
13	BLUE	L SIDE - IN
14	BROWN	L SIDE - OUT
15	WHITE	R SIDE - IN
16	BLACK	R SIDE - OUT
17	RED	RF - UP
18	YELLOW	RF - DOWN
19	GREEN	RR - UP
20	BLUE	RR - DOWN
21	BROWN	DIVERSION VALVE

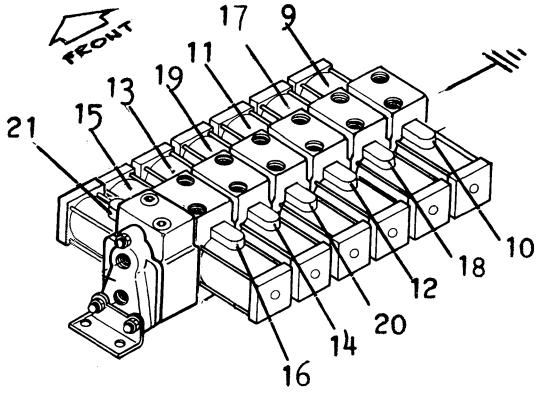

SECTION D

INDEX

TO

ATTACHMENTS

&

ACCESSORIES

HYDRAULIC CRANE	35
JIB	36
CLAMSHELL	45
KITS AND ACCESSORIES	46

SECTION D

INDEX

LOWER BOOM 35.2
CENTER BOOM. 35.4
UPPER BOOM 35.6
BOOM TIP 35.8
BOOM HYDRAULICS. 35.9
WINCH COOLING. 35.13
WINCH PRESSURE INDICATOR 35.13A
CYLINDERS. 35.14
HOIST BLOCK. 35.18
AUXILIARY WINCH. 35.19
WINCHES. 35.22
PROPORTIONATORS. 35.32
WINCH INDICATOR. 35.33
BOOM ANGLE INDICATOR 35.34

JIBS . . . . . SEE GROUP 36
CLAM . . . . . SEE GROUP 45

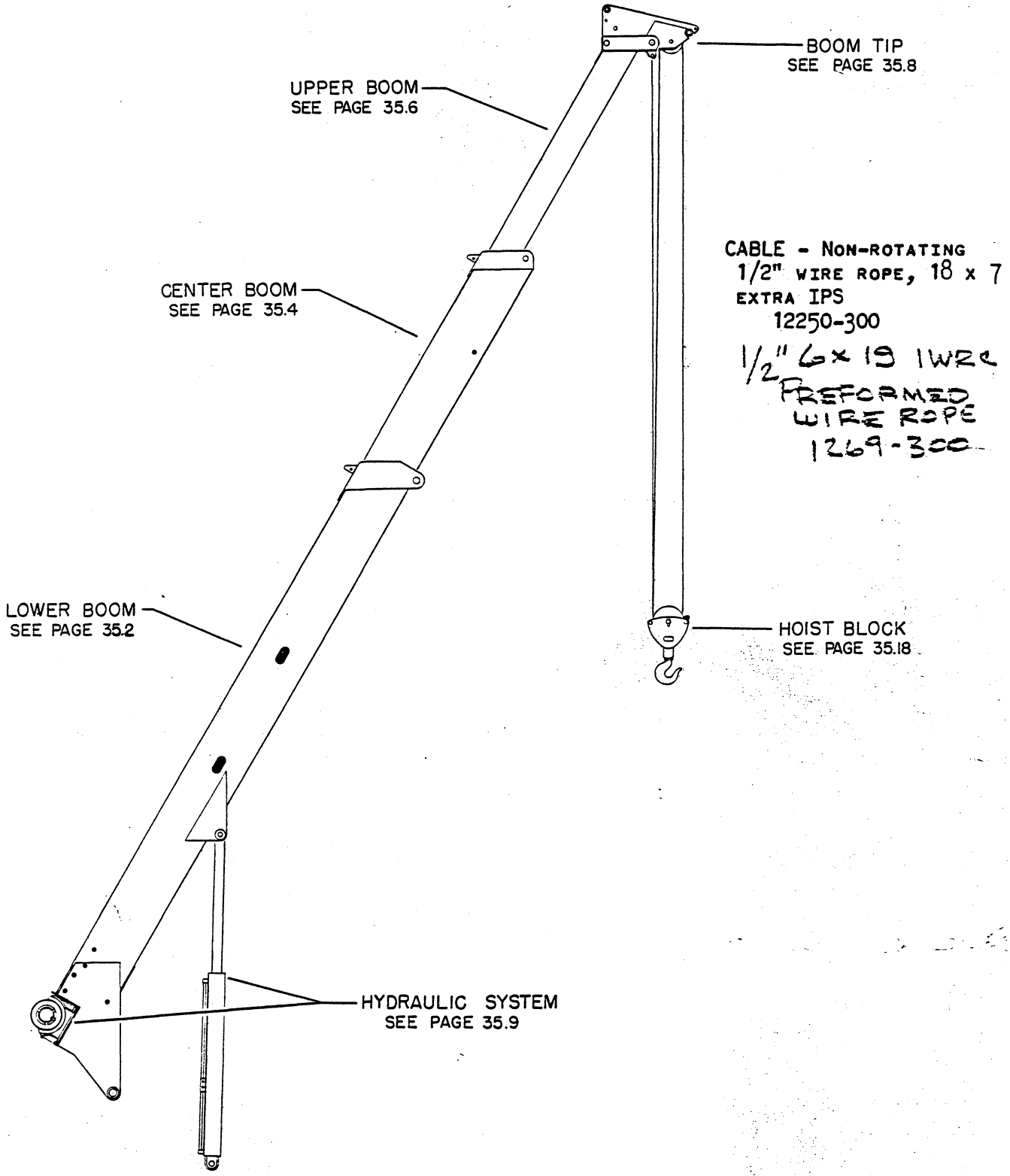

CABLE - NON-ROTATING
1/2" WIRE ROPE, 18 x 7
EXTRA IPS
12250-300
1/2" 6 x 19 IWRC
PREFORMED
WIRE ROPE
1269-300

A4536 ATTACHMENT. (BANTAM WINCH)

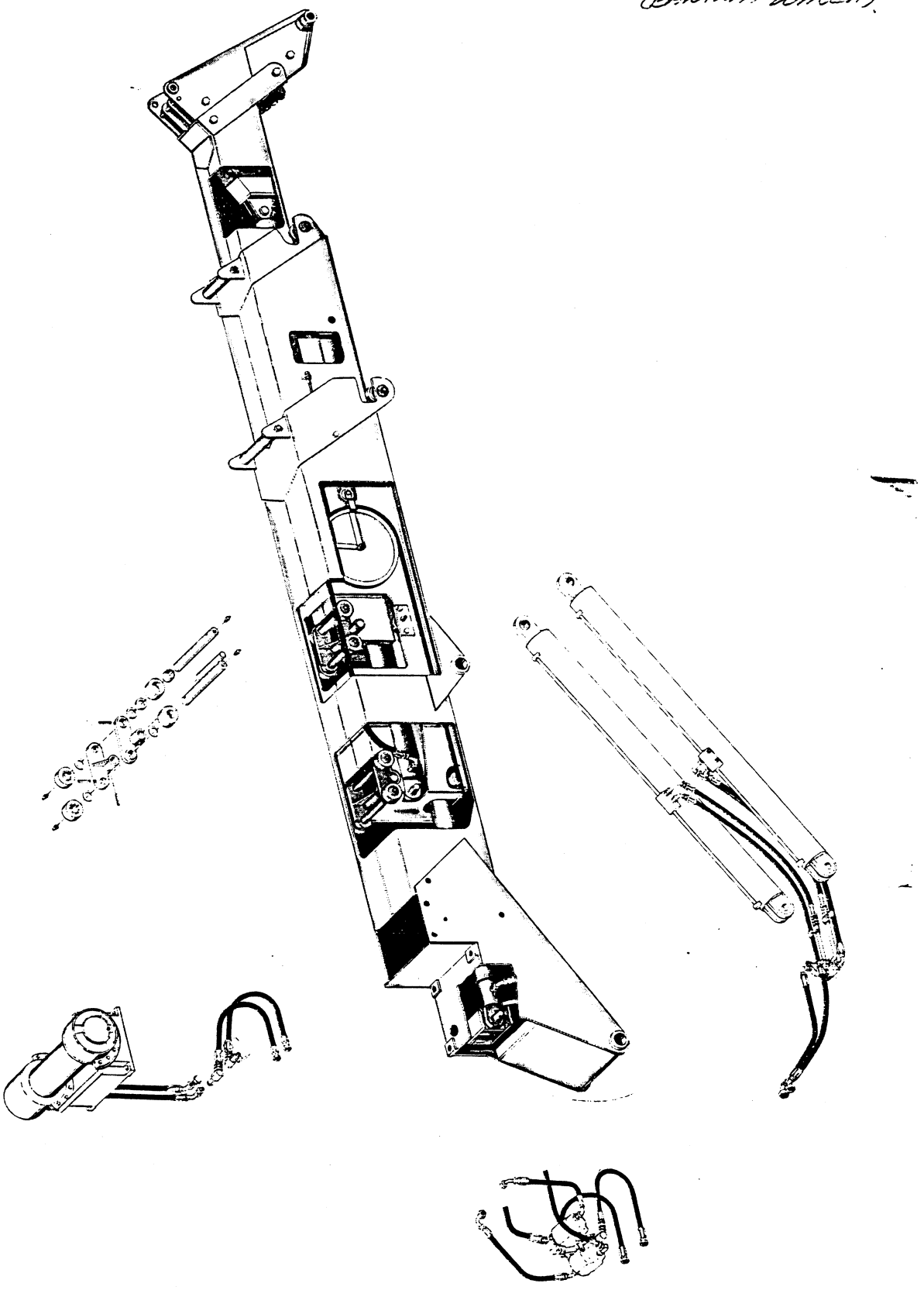

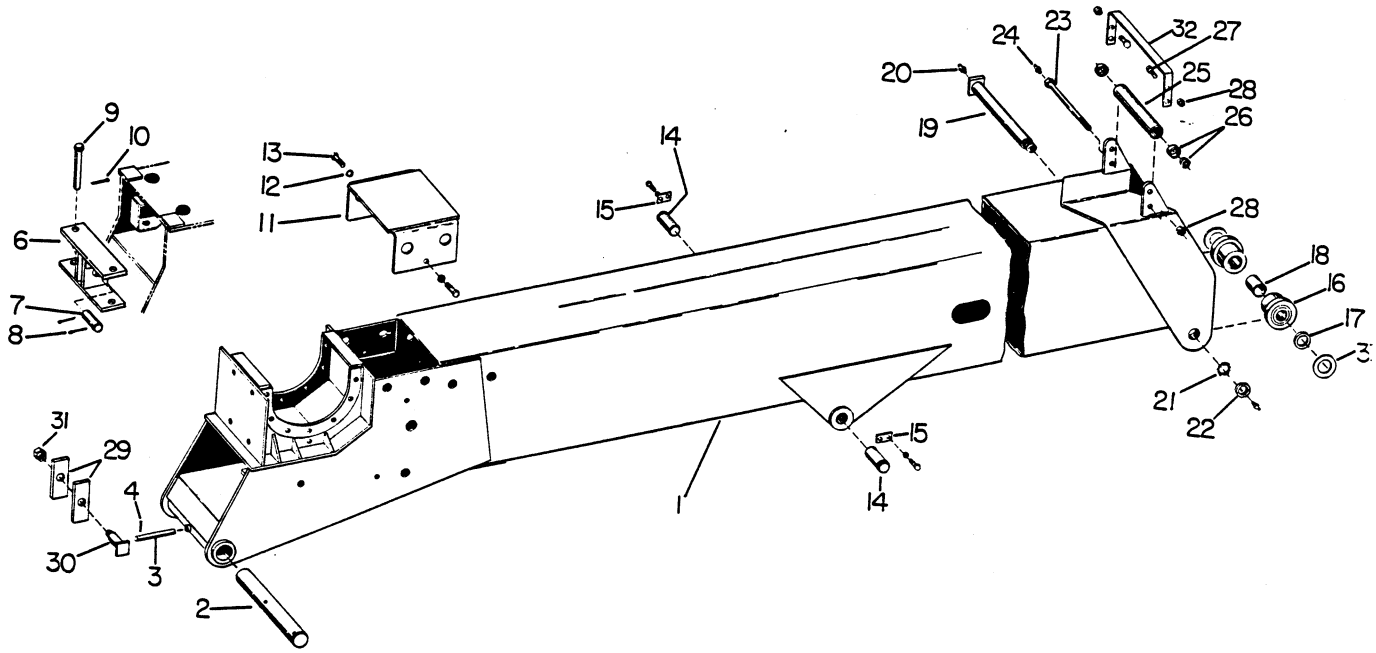

Ref. No.	Part Number	Part Number	Quan. Req'd.	Name and Description
1	F39900		1	LOWER BOOM - PRIOR #502)- EXC. 449,482,493
	35473		1	LOWER BOOM - #503 TO #773)- EXC. 699,740
	35842		1	LOWER BOOM - #773 TO #1752)- EXC. 1757
	F41522 BANTAM WINCH	F49270 (REPLACES F41522 W/ COVER, #11)	1	LOWER BOOM - BEGIN. #1752
2		35424	1	PIN
		35817	AR	SHIM FOR ABOVE
3		35877	1	PIN
		1200-212	1	CAPSCREW - PRIOR TO #773 EXC. 699, 740
4		1262-247	1	DRIV-LOK PIN, 1/4"
6		35475	1	BRACKET
7		35477	1	PIN
8		1207-58	2	COTTER PIN, 5/16 x 2 3/4 LG.
9		35476	2	PIN
10		1207-55	2	COTTER PIN, 5/16 x 2 LG.
11	A35478-1	F49259	1	COVER
12	1210-38	1210-32	2	LOCKWASHER
13	1200-182	1200-144	2	CAPSCREW

Model TK-450 TELEKRANE
Date REV. 1 FEB. 1971

BOOM

Group No. 35
Page 35.3

Ref. No.	Part Number	Quan. Req'd.	Name and Description
14	35645	2	PIN (REQUIRES ITEMS 15 AND FASTENERS)
15	18051	2	PLATE
	1200-59	4	CAPSCREW, 3/8 UNC x 1 LG.
	1210-20	4	LOCKWASHER, 3/8 MED.
16	A35479-1	2	ROLLER W/BUSHINGS, ITEMS 17 & 18
17	10723	1	THRUST BUSHING
18	1214-91	1	BUSHING
19	A35481-1	1	PIN
20	1213-1	2	GREASE FITTING, 1/8 NPT STRAIGHT
21	1228-8	1	LOCKWASHER
22	1228-9	1	LOCKNUT
23	35444	1	SHAFT, 16-1/2" LG.
	38404	1	SHAFT, 17-1/2" LG.
24	1213-10	1	GREASE FITTING, 1/4 UNF STRAIGHT
25	35443	1	ROLLER
26	1217-66	2	ROLLER BEARING W/CUP & CONE
27	1200-145	4	CAPSCREW, 5/8 UNF x 1 1/2 LG.
28	1205-91	4	NUT, ELASTIC 5/8 UNF
29	35716	2	BLOCK - GEARMATIC WINCH
	41529	2	BLOCK - BANTAM WINCH
30	A35717-1	1	PIN
31	1204-25	1	NUT, ELASTIC
32	35646	1	STRAP
33	1208-73	AR	MACHINERY BUSHING, 2 1/2 x 3 7/8 x 14 GA.
	35550	2	"TELEKRANE" DECAL
	35449	1	TRAVEL RACK, CONE ROLLER TURNTABLE) WELDED TO CARRIER
	35843	1	TRAVEL RACK, ROTEK TURNTABLE) WELDED TO CARRIER

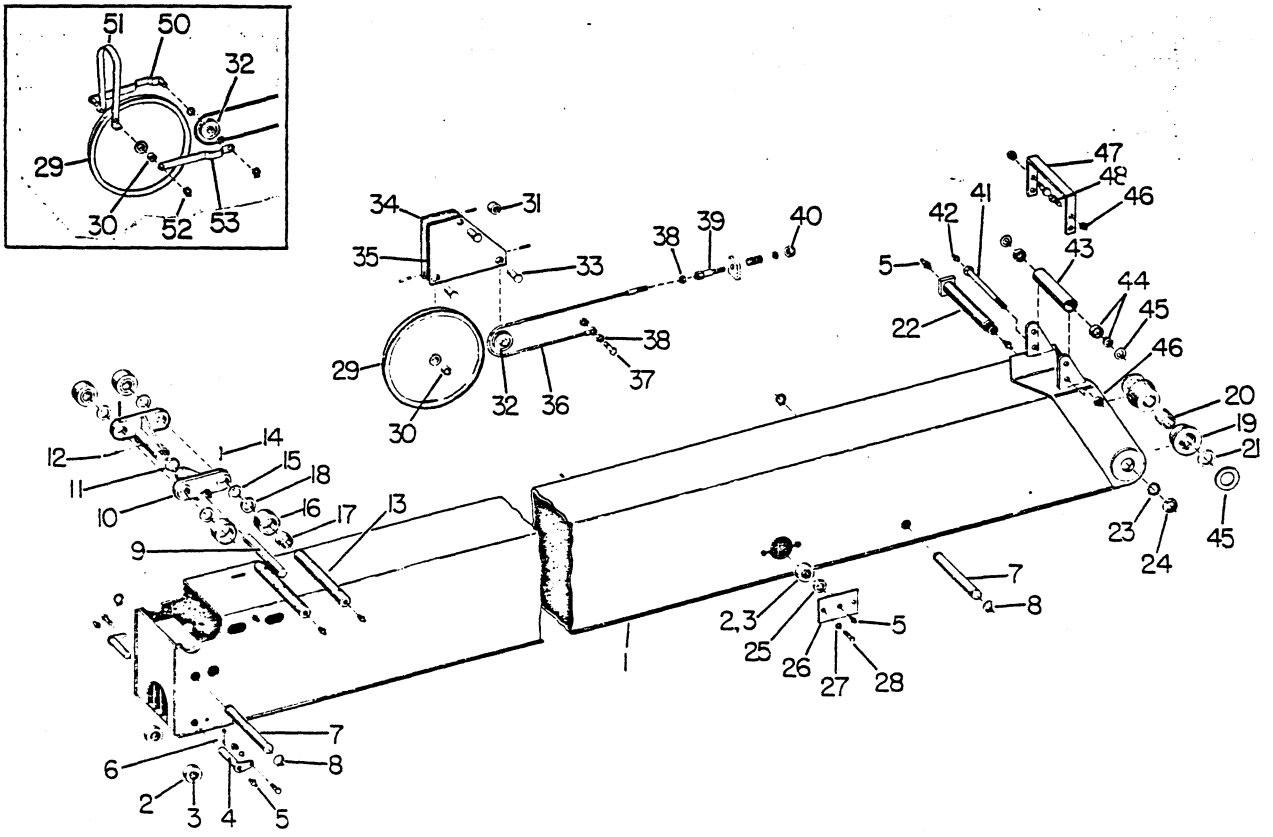

Ref. No.	Part Number	Quan. Req'd.	Name and Description
1	35486	1	CENTER BOOM SECTION
2	A35487-1	4	ROLLER W/BUSHING, ITEM 3
3	1214-5	1	BUSHING
4	A5950	2	PIN
5	1213-1	10	GREASE FITTING, 1/8 NPT
6	1207-57	2	COTTER PIN, 5/16 x 2 1/2 LG.
7	35488	2	PIN
8	1220-45	4	SNAP RING
9	35491	1	PIN
10	35492	2	BRACKET
11	1208-57	AR	MACHINERY BUSHING, 2 x 3 x 14 GA.
12	1227-297	1	ROLL PIN, 5/16 x 2 3/4 LG.
13	35489	2	PIN

Model T-450 TELEKRANE
Date REV. 1 FEB. 1970

BOOM

Ref. No.	Part Number	Quan. Req'd.	Name and Description
14	1227-302	2	ROLL PIN, 5/16 x 4 LG.
15	1208-72	AR	MACHINERY BUSHING, 2 1/2 x 3 1/2 x 14 GA.
16	A35493-1	4	ROLLER W/BUSHINGS, ITEMS 17 & 18
17	1214-94	1	BUSHING
18	10726	1	THRUST BUSHING
19	A35495-1	2	ROLLER W/BUSHINGS, ITEMS 20 & 21
20	1214-92	1	BUSHING
21	10723	1	THRUST BUSHING
22	35494	1	PIN
23	1228-8	1	LOCKWASHER
24	1228-9	1	LOCK NUT
25	35496	2	COLLAR
26	35497	2	SUPPORT
27	1210-38	4	LOCKWASHER, 3/4 MED.
28	1200-182	4	CAPSCREW, 3/4 UNC x 7/8 LG.
	A38760	2	WHEEL BRACKET ASSEMBLY, INCLUDES ITEMS 29 THRU 35- REPLACES ITEMS 50 THRU 53 SHOWN IN INSET.
29	A35498-1	2	SHEAVE W/BUSHING, ITEM 30
30	1214-63	1	BUSHING
31	38761	1	SPACER
32	A35503-1	2	SHEAVE W/BUSHING
	1214-63	1	BUSHING, FOR ABOVE
	1208-8	1	MACHINERY BUSHING, 3/4 x 1 1/4 x 18 GA.
33	F38768	3	PIN
	1227-188	3	ROLL PIN, FOR ABOVE
34	F38762	1	SUPPORT, LH
35	F38765	1	SUPPORT, RH
36	35504	2	CABLE
37	1200-106	2	CAPSCREW, 1/2 UNC x 2 1/4 LG.
	1210-26	2	LOCKWASHER, 1/2 MED.
38	1205-61	4	NUT, 1/2 UNC JAM
	1205-65	2	NUT, 1/2 UNC SELF-LOCKING

Ref. No.	Part Number	Quan. Req'd.	Name and Description
39	35556	2	SPINDLE
	16351	2	SPRING
	35557	2	EAR (WELDED TO BOOM)
	1208-3	2	MACHINERY BUSHING, 5/8 x 1 1/8 x 14 GA.
40	1205-90	2	NUT, 5/8 UNC ELASTIC
41	10957	1	SHAFT
42	1213-10	1	GREASE FITTING, 1/4 UNF STRAIGHT
43	10956	1	ROLLER
44	1217-66	2	ROLLER BEARING w/CUP & CONE
45	1208-73	2	MACHINERY BUSHING, 2 1/2 x 3 7/8 x 14 GA.
46	1205-91	1	NUT, 5/8 UNF ELASTIC
47	35647	1	STRAP
48	1200-145	2	CAPSCREW, 5/8 UNF x 1 1/2 LG.
49	1205-91	2	NUT, 5/8 UNF ELASTIC
50	35501	2	SUPPORT — NO LONGER AVAILABLE. REPLACE WITH ITEMS 31, 33, 34, 35
51	35558	2	GUARD — NO LONGER AVAILABLE. REPLACE WITH ITEMS 31, 33, 34, 35
52	1220-19	4	SNAP RING
53	35499	2	STRAP — NO LONGER AVAILABLE. REPLACE WITH ITEMS 31, 33, 34, 35

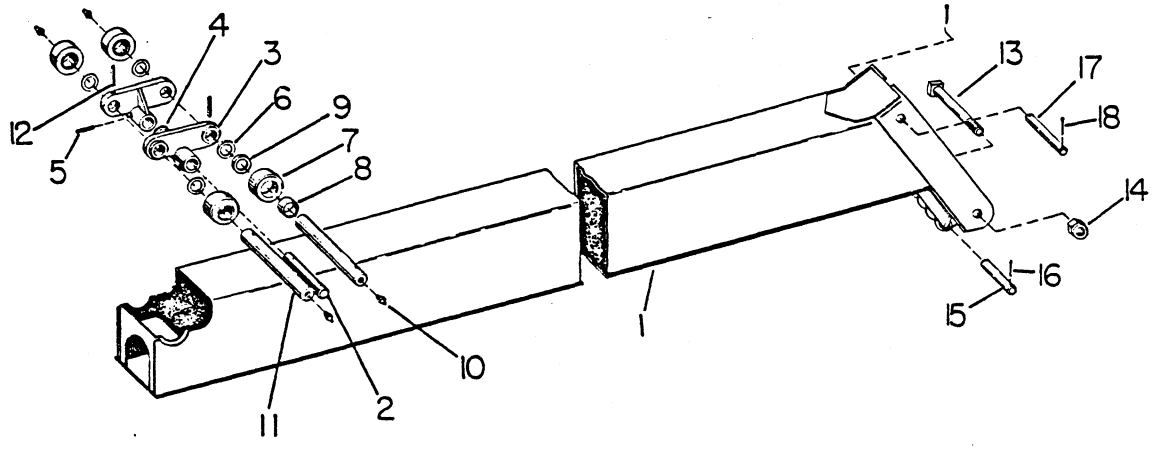

Ref. No.	Part Number	Quan. Req'd.	Name and Description
1	35505	1	BOOM SECTION, UPPER
2	35506	1	PIN
3	35507	2	BRACKET
4	1208-57	AR	MACHINERY BUSHING, 2 x 3 x 14 GA.
5	1227-297	1	ROLL PIN, 5/16 x 2 3/4 LG.
6	1208-72	AR	MACHINERY BUSHING, 2 1/2 x 3 1/2 x 14 GA.
7	A3593-1	4	ROLLER W/BUSHINGS, ITEMS 8 & 9
8	1214-94 ~~99~~	1	BUSHING
9	10726	1	THRUST BUSHING
10	1213-1	4	GREASE FITTING, 1/8 NPT STRAIGHT
11	35508	2	PIN
12	1227-302	2	ROLL PIN, 3/8 x 4 LG.
13	1235-354	1	MACHINE BOLT, 1 1/4 UNC x 13 LG.
14	1205-133	1	NUT, 1 1/4 UNC ELASTIC
15	38998 3696	1 1	PIN, 8 1/4" LG. PIN, 8 1/2" LG.
16	1207-42	1	COTTER PIN, 1/4 x 2 LG.
17	38199 35670	1 1	PIN, 13 1/2" LG. PIN, 12 3/4" LG.
18	1207-55	2	COTTER PIN, 5/16 x 2 LG.

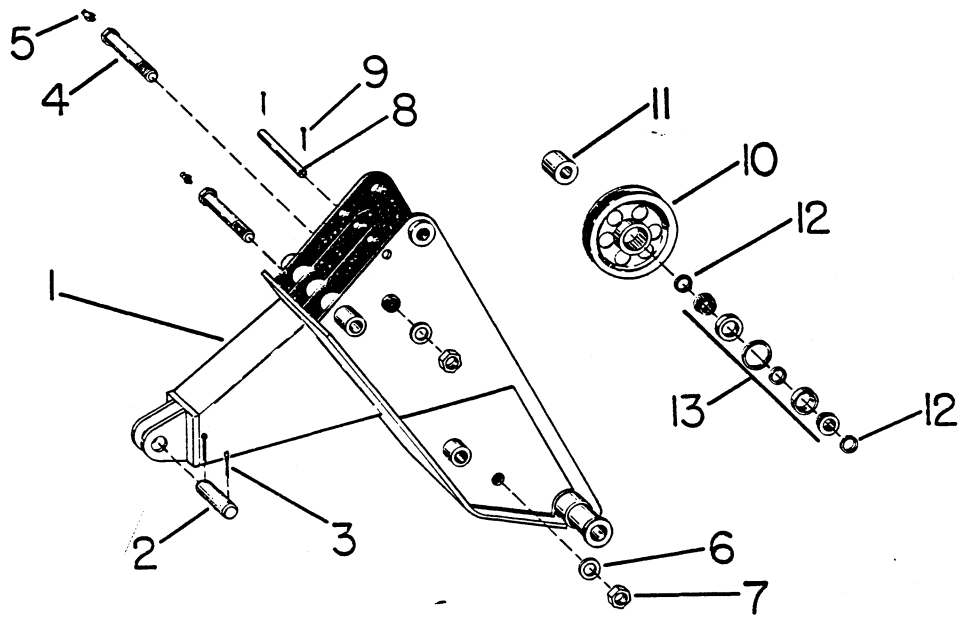

Ref. No.	Part Number	Quan. Req'd.	Name and Description
	A35404-1	1	BOOM TIP ASSEMBLY , INCLUDES ITEMS 1 THRU 13
1	[illegible]	1	BOOM TIP
2	35477	1	PIN
3	1207-58	2	COTTER PIN, 5/16 x 2 3/4 LG.
4	35516	2	PIN
5	1213-38	2	GREASE FITTING, 1/8 NPT LUBRIGARD
6	1209-28	2	WASHER, 1 3/8 x 2 3/4 x 9 GA.
7	1204-25	2	STOP NUT
8	35520	1	PIN
9	1207-22	2	COTTER PIN, 5/32 x 1 1/4 LG.
10	35517	5	SHEAVE
11	35518	1	SPACER
12	35515	AR	SPACER
	1208-31	AR	MACHINERY BUSHING, 1 3/8 x 2 1/8 x 10 GA.
	1208-32	AR	MACHINERY BUSHING, 1 3/8 x 2 1/8 x 14 GA.
	1208-33	AR	MACHINERY BUSHING, 1 3/8 x 2 1/8 x 18 GA.
13	35519	5	BEARING ASSEMBLY

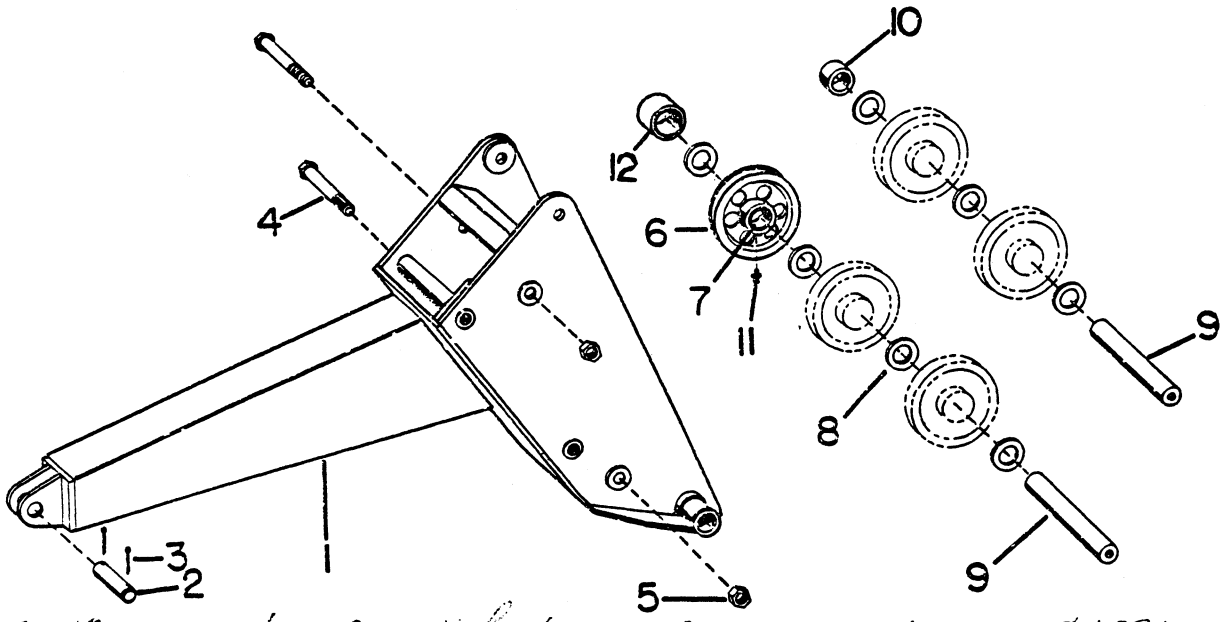

SER #1647 1ST CONSTRUCTION CLEARANCE - BEGIN SER# 1691

Ref. No.	Part Number	Part Number	Part Number	Quan. Req'd.	Name and Description
	A38980 3-SHEAVE	A38872 3-SHEAVE	A41260 4-SHEAVE		BOOM TIP ASSEMBLY, INCLUDES ITEMS 1 THRU 12
	10 1/2"	13 1/2"	13 1/2"		SHEAVE SIZE
1	F38981	F38873	F38873	1	BOOM TIP
2	35477	35477	35477	1	PIN
3	1207-58	1207-58	1207-58	2	COTTER PIN, 5/16 x 2 3/4 LG.
4	F38984	F38876	F38876	2	CAPSCREW
5	1205-179	1205-179	1205-179	2	ELASTIC NUT, 1 3/8 UNF
		1209-28	1209-28	2	WASHER, 1 3/8 SAE, FOR ABOVE
6	A38699			5	SHEAVE W/BEARING - 10 1/2"
6		A38933		5	SHEAVE W/BEARING - 13 1/2"
6			A38933	6	SHEAVE W/BEARING - 13 1/2"
7	1217-236	1217-236		5	BEARING, FOR ABOVE
7			1217-236	6	BEARING, FOR ABOVE
8	1209-53	1209-52		7	NYLON SPACER
8			1209-52	8	NYLON SPACER
9	38983			2	RACE - 5 7/8" LG.
9		38874	38874	1	UPPER RACE - 4 3/16" LG.
9		38875	38875	1	LOWER RACE - 8 1/8" LG.
10	38705	38879	38879	1	SPACER
11	1213-16	1213-16	1213-16	AR	GREASE FITTING, 30°
		1213-1	1213-1	3	GREASE FITTING, STRAIGHT
12		41259	-	1	SPACER

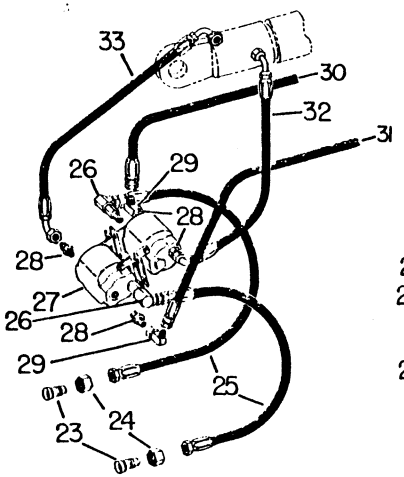

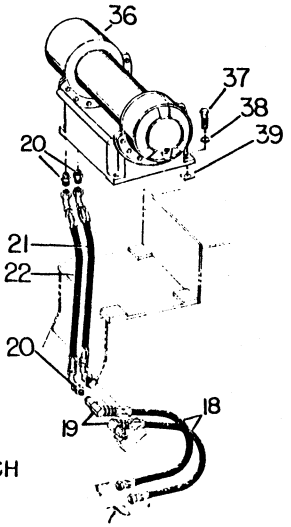

MODEL 11 WINCH

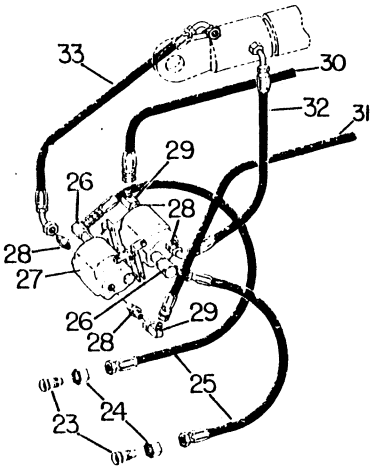

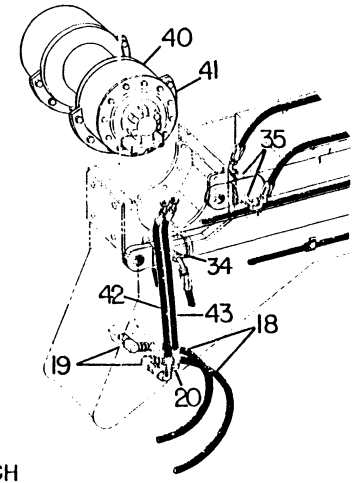

MODEL 22 WINCH

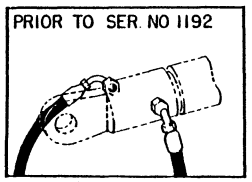

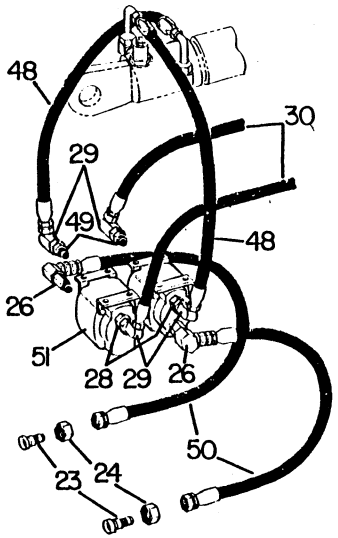

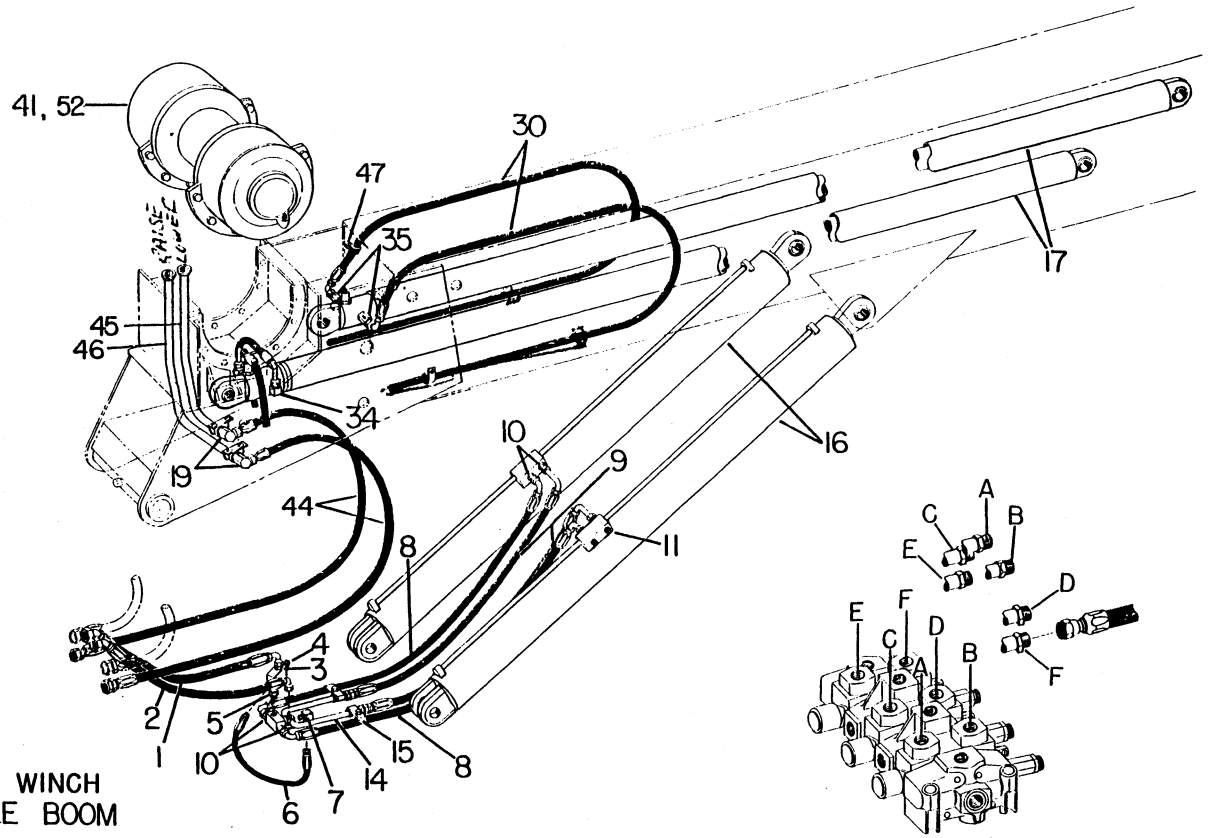

MODEL 22 WINCH
LOW-PROFILE BOOM

WHEN ORDERING SPECIFY BANTAM SERIAL NUMBER PART NUMBER AND NAME OF PART REQUIRED

Model T-450 TELEKRANE
Date REV. 1 MAY 1967

HYDRAULIC SYSTEM A38402

Ref. No.	Part Number	Quan. Req'd.	Name and Description
1	A35432	1	HOSE ASSEMBLY, COMPLETE
	1258-44	1	HOSE
	1219-408	1	FITTING, 45° ELBOW
	1219-407	1	FITTING, 90° ELBOW
2	A35386	1	HOSE ASSEMBLY, COMPLETE
	1258-45	1	HOSE
	1219-408	2	FITTING 45° ELBOW
3	1219-387	1	ADAPTER
4	1219-587	1	HOLDING VALVE
5	1219-589	1	ADAPTER
6	A35448	1	HOSE ASSEMBLY, COMPLETE
	12317-12	1	HOSE
	1219-584	2	FITTING
7	1219-588	2	ADAPTER, 90°
8	A35431	2	HOSE ASSEMBLY, COMPLETE
	1257-58	1	HOSE
	1219-406	2	FITTING, 90° ELBOW
9	A35309	2	HOSE ASSEMBLY, COMPLETE
	1257-47	1	HOSE
	1219-399	1	FITTING, JIC SWIVEL
	1219-405	1	FITTING, 90° ELBOW, LONG
10	1219-389	6	ADAPTER W/"O" RING
	1218-64	6	"O" RING, FOR ABOVE ADAPTER
11	1219-485	4	BOSS PLUG
14	A35429-1	1	MANIFOLD
	1200-95	1	CAPSCREW, 1/2 UNC x 1 LG.
	1210-26	1	LOCKWASHER, 1/2 MED.
15	35324	2	CLAMP
	1200-64	2	CAPSCREW, 3/8 UNF x 1 1/2 LG.
	1210-20	2	LOCKWASHER, 3/8 MED.
	1221-31	2	RUBBER GROMMET, FOR ITEM 14
16		2	HYDRAULIC CYLINDER, BOOM LIFT, SEE PAGE 35.16 FOR COMPLETE PARTS BREAKDOWN
17		2	HYDRAULIC CYLINDER, BOOM EXTENSION, SEE PAGE 35.14 FOR COMPLETE PARTS BREAKDOWN
18	A35408	2	HOSE ASSEMBLY, COMPLETE, PRIOR TO SER. #773 EXC. 699, 740
	1258-58	1	HOSE
	1219-400	2	FITTING, JIC SWIVEL
19	1219-580	2	SWIVEL, 90° W/"O" RING
	1218-65	2	"O" RING, FOR ABOVE SWIVEL

A35847 assy
A23128 system "O" ring
A23129 " "

23951 Repair kit, Imp Exit

Ref. No.	Part Number	Quan. Req'd.	Name and Description
20	1219-385	AR	ADAPTER W/"O" RING
	1218-65	AR	"O" RING, FOR ABOVE ADAPTER
21	A35409	1	HOSE ASSEMBLY, COMPLETE, PRIOR TO SER.#502 EXC. 449, 482, 493
	1258-26	1	HOSE
	1219-408	1	FITTING, 45° ELBOW
	1219-407	1	FITTING, 90° ELBOW
22	A35413	1	HOSE ASSEMBLY, COMPLETE, PRIOR TO SER.#502 EXC. 449, 482, 493
	1258-31	1	HOSE
	1219-408	1	FITTING, 45° ELBOW
	1219-407	1	FITTING, 90° ELBOW
23	1219-585	2	REDUCER
24	1219-565	2	NUT
25	A35521	2	HOSE ASSEMBLY, COMPLETE, PRIOR TO SER. #773 EXC. 699, 740
	1257-56	1	HOSE
	1219-399	2	FITTING, JIC SWIVEL
26	~~1219-581~~	2	SWIVEL 23950 REPAIR KIT. (IMP)
27	A35414	2	PROPORTIONATOR, PRIOR TO SER. #773 EXC. 699, 740 SERV. LETTE 15
	1200-59	8	CAPSCREW, 3/8 UNC x 1 LG., FOR ABOVE
	1210-20	8	LOCKWASHER, 3/8 MED.
	1205-36	8	NUT, 3/8 UNC
28	1219-480	4	ADAPTER, 3/4 NPT
28	1219-611	4	ADAPTER, 1/2 NPT
29	1219-583	4	SWIVEL ADAPTER
30	~~A35416~~	AR	HOSE ASSEMBLY, COMPLETE
	1257-306	1	HOSE
	1219-406	1	FITTING, 90° ELBOW
	1219-399	1	FITTING, JIC SWIVEL
31	A35418	1	HOSE ASSEMBLY, COMPLETE
	1257-313	1	HOSE
	1219-406	1	FITTING, 90° ELBOW
	1219-399	1	FITTING, JIC SWIVEL
32	A35417	1	HOSE ASSEMBLY, COMPLETE, PRIOR TO SER. #773, EXC. 699, 740
	1257-16	1	HOSE
	1219-406	2	FITTING, 90° ELBOW
33	A35419	1	HOSE ASSEMBLY, COMPLETE, PRIOR TO SER. #773, EXC. 669, 740
	1257-24	1	HOSE
	1219-406	2	FITTING, 90° ELBOW
34	1219-389	2	ADAPTER W/"O" RING, PRIOR TO SER. #1192
34	~~1219-802~~	2	ADAPTER W/"O" RING, BEGIN. W/SER. #1192
	1218-64	2	"O" RING, FOR ABOVE ADAPTER

NOT AVAIL.
REP. BY 35873
SEE PAGE 35.32
MOUNT BRACKETS OPPOSITE ON REPLACE. PART.

Ref. No.	Part Number	Quan. Req'd.	Name and Description
35	1219-586	2	ADAPTER W/"O" RING, PRIOR TO SER. #1192
	1218-64	2	"O" RING, FOR ABOVE
35	~~1219-852~~	2	ADAPTER W/"O" RING, BEGIN. W/SER. #1192
	1218-64	2	"O" RING, FOR ABOVE
36	35411	1	HYDRAULIC WINCH, MODEL 11, PRIOR TO SER. #502 EXC. 449, 482, 493
37	1200-230	4	CAPSCREW, 7/8 UNC x 2 1/4 LG.
38	1210-44	4	LOCKWASHER, 7/8 MED.
39	35412	AR	SHIM
40	35733	1	HYDRAULIC WINCH, MODEL 22, PRIOR TO SER. #773 EXC. 699, 740
41	35704	14	DOWEL BOLT
	1210-32	14	LOCKWASHER, 5/8 MED.
	1205-81	14	NUT, 5/8 UNF
42	A35746	1	HOSE ASSEMBLY, PRIOR TO SER. #773 EXC. 699, 740
	1258-38	1	HOSE
	1219-407	1	FITTING, 90°
	1219-528	1	FITTING, 60° FLANGE
	1218-63	1	"O" RING, FOR ABOVE 60° FITTING
43	A35747	1	HOSE ASSEMBLY, PRIOR TO SER. #773 EXC. 699, 740
	1258-31	1	HOSE
	1219-407	1	FITTING, 90°
	1219-528	1	FITTING, 60° FLANGE
	1218-63	1	"O" RING, FOR ABOVE 60° FITTING
44	A35869	2	HOSE ASSEMBLY, COMPLETE
	1258-78	1	HOSE
	1219-400	2	FITTING, JIC SWIVEL
45	F35878	1	TUBE, GEARMATIC MODEL 22 WINCH
	F38587	1	TUBE, GEARMATIC MODEL 22E WINCH
	F41602	1	TUBE, BANTAM WINCH
46	F35879	1	TUBE, GEARMATIC MODEL 22 WINCH
	F38585	1	TUBE, GEARMATIC MODEL 22E WINCH
	F41603	1	TUBE, BANTAM WINCH
	1218-63	2	"O" RING, FOR ITEMS 45 & 46
	35884	AR	SHIM, FOR ITEMS 45 & 46
	1200-63	4	CAPSCREW, 3/8 UNC x 1 1/2 LG., FOR ITEMS 45 & 46
	1210-20	4	LOCKWASHER, 3/8 MED.
	1209-4	4	PLAINWASHER, 3/8 REG.
47	1240-29	4	CLAMP
48	A35867	2	HOSE ASSEMBLY, COMPLETE, PRIOR TO SER. #1192
	1257-11	1	HOSE
	1219-405	1	FITTING, 90°
	1219-399	1	FITTING, JIC SWIVEL

Ref. No.	Part Number	Quan. Req'd.	Name and Description
48	A38403	2	HOSE ASSEMBLY COMPLETE - BEGIN. W/SER. #1192
	1257-27	1	HOSE
	1219-405	1	FITTING, 90°
	1219-399	1	FITTING, JIC SWIVEL
49	1219-646	2	ADAPTER
50	A35870	2	HOSE ASSEMBLY COMPLETE
	1257-66	1	HOSE
	1219-399	2	FITTING, JIC SWIVEL
51	A35873	2	PROPORTIONATOR - BEGIN. W/SER. #773 AND 699, 740
	1200-59	8	CAPSCREW, 3/8 UNC x 1 LG.
	1210-20	8	LOCKWASHER, 3/8 MED.
52		1	HYDRAULIC WINCH - SEE GEARMATIC WINCH, PAGE 35.22 AND BANTAM WINCH, PAGE 35.35

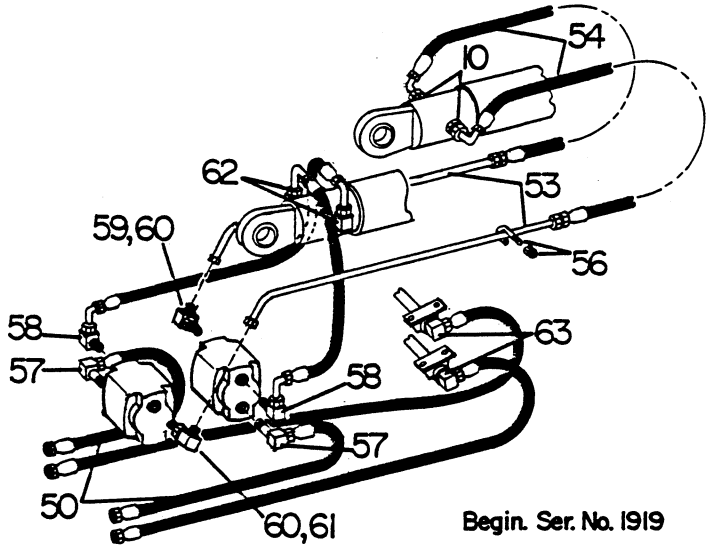

Begin. Ser. No. 1919

Ref. No.	Part Number	Quan. Req'd.	Name and Description
53	49016	2	TUBE
54	A38669	2	HOSE ASSEMBLY
55	A49017	2	HOSE ASSEMBLY
56	38937	2	J BOLT
	1205-22	2	NUT
57	12019-176	2	90° ADAPTER, LONG
58	1219-651	2	90° ADAPTER
59	1219-286	1	ADAPTER
60	1219-780	2	ADAPTER
61	1219-864	1	ADAPTER
62	1219-691	2	ADAPTER W/"O" RING
	1218-64	2	"O" RING
63	1219-680	2	ADAPTER W/"O" RING
	1218-65	2	"O" RING

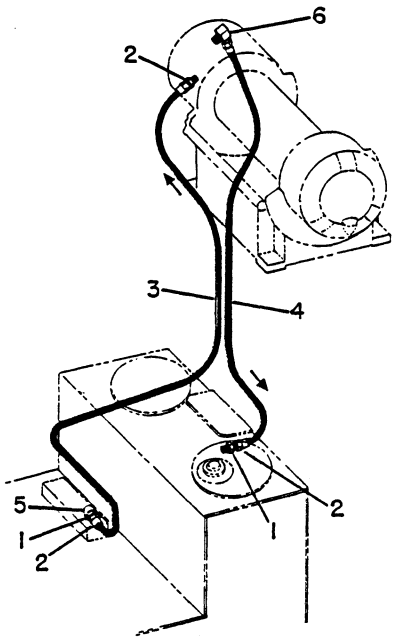

MODEL 11 WINCH

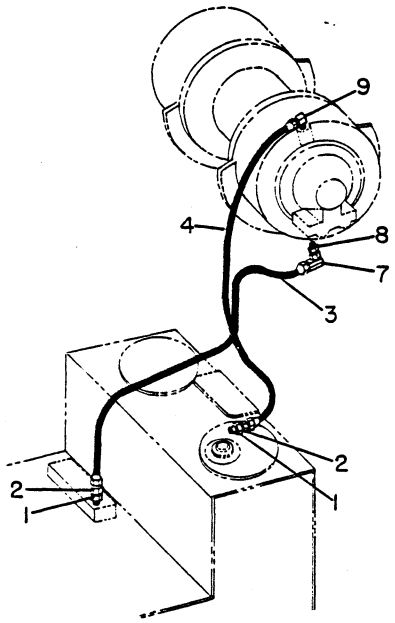

MODEL 22 WINCH

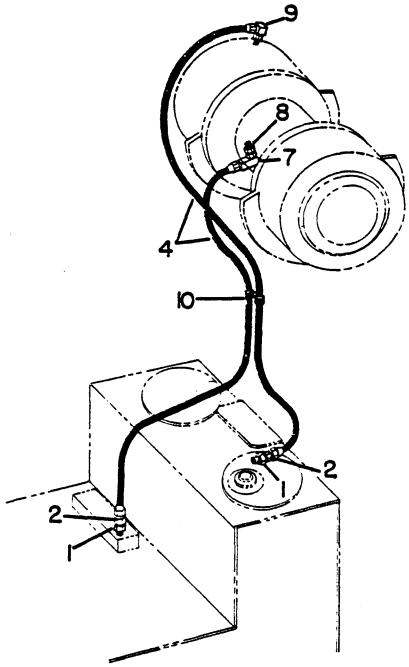

MODEL 22 WINCH
LOW-PROFILE BOOM

Ref. No.	Part Number	Quan. Req'd.	Name and Description
1	1219-254	AR	REDUCING BUSHING
2	1219-283	AR	ADAPTER
3	A35524	AR	HOSE ASSEMBLY, COMPLETE
	12308-122	1	HOSE
	1219-590	2	FITTING
4	A35523	AR	HOSE ASSEMBLY, COMPLETE
	12308-112	1	HOSE
	1219-590	2	FITTING
5	35522	1	ADAPTER, 90°
6	1219-464	1	ADAPTER, 90°
7	1219-241	1	ELBOW, 90°
8	1219-281	1	ADAPTER
9	1219-285	1	ADAPTER, 90°
10	1240-53	2	CLAMP

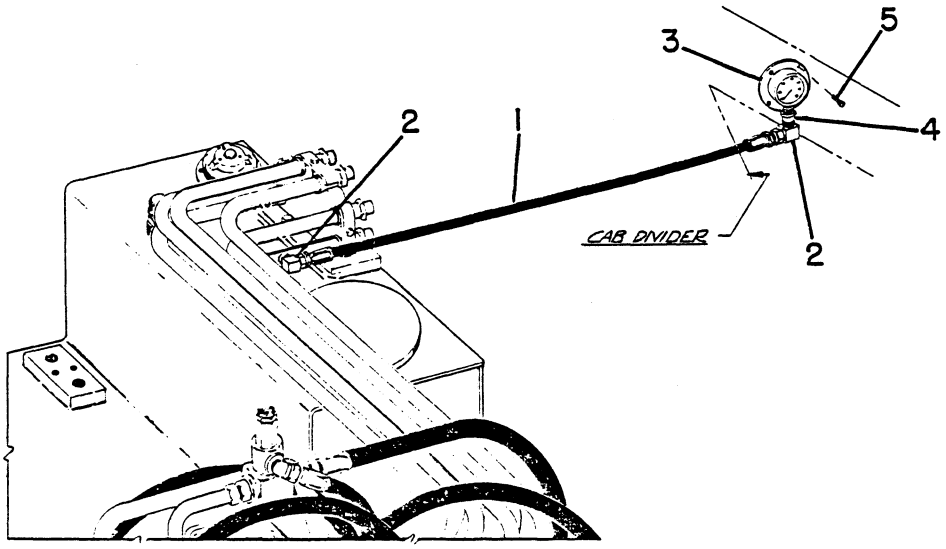

Ref. No.	Part Number	Quan. Req'd.	Name and Description
	A35680	1	WINCH PRESSURE INDICATOR ASSEMBLY, OPTIONAL
1	A35681	1	HOSE ASSEMBLY
	12317-53	1	HOSE
	1219-584	2	FITTING
2	1219-588	1	ADAPTER, 90°
3	1245-~~84~~ 75	1	PRESSURE GAUGE
4	1219-135	1	COUPLING
5	1211-~~8~~ 14	~~8~~ 2	DRIVE SCREW

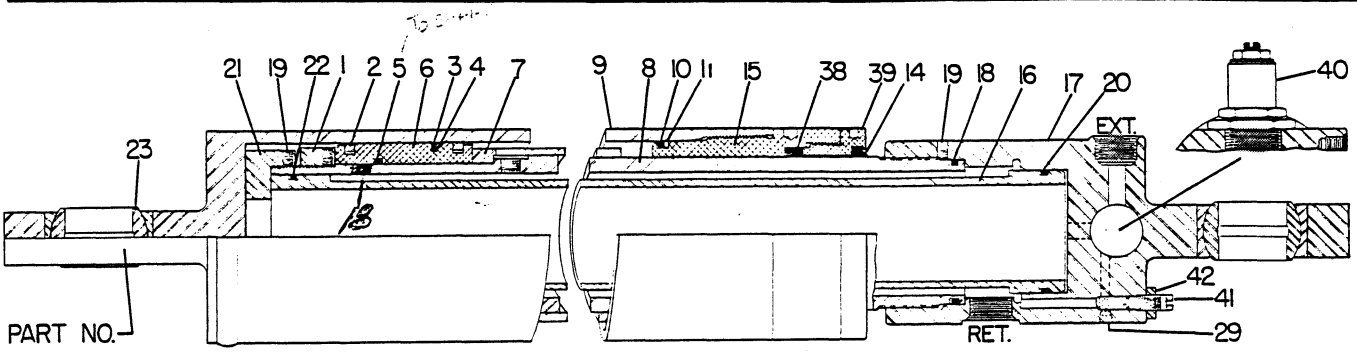

A38342

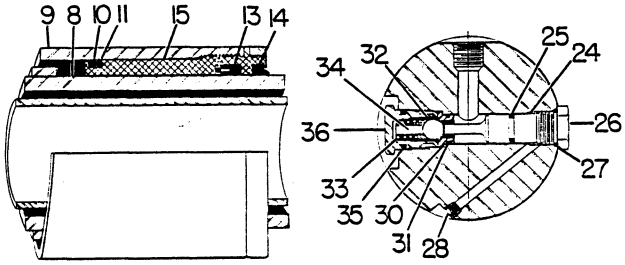

A35407

Ref. No.	Part Number	Part Number	Part Number	Quan. Req'd.	Name and Description
	35407	35690	38342	2	HYDRAULIC CYLINDER, INCLUDES ITEMS 1 THRU 42 AS APPLICABLE - IDENTIFY BY ILLUSTRATIONS & PART NO. STAMPED ON CYLINDER.
	~~A23126~~ A23127	A23127	A23127	1	SEAL KIT, INCL. PIST. RINGS, SEALS, "O" RINGS, BACK-UPS - SEE VALVE KIT, REF. 40
1	22879	22879	22879	1	BUTTRESS RING NUT
2	22218	22218	22218	2	PISTON RING
3	22217	22217	22217	1	TEFLON SEAL W/"O" RING
4				1	"O" RING, FOR ABOVE
5	22880	~~22880~~	22880	1	STATIC "O" RING
		24453	24453	2	BACK-UP WASHER, FOR ABOVE
6	22881	22881	22881	1	PISTON
7	22882	23083	23083	1	SPACER
8	22883	22883	22883	1	SHAFT
9	22884	23084	23084	1	CASE
10	22223	22223	22223	1	STATIC "O" RING
11	22224	22224	22224	1	BACK-UP WASHER
13	~~25389~~ 20063			1	"U" CUP SEAL (REPLACES 22885)
14	22886	22886	22886	1	WIPER SEAL

Model T-450 TELEKRANE
Date REV. 1 JUNE 1970

BOOM EXTENSION CYLINDER

Group No. 35
Page 35.15

Ref. No.	Part Number	Part Number	Part Number	Quan. Req'd.	Name and Description
	A35407	A35690	A38342		
15	22887	23081	23081	1	HEAD GLAND
16	22888	22888	22888	1	PORT TUBE ASSEMBLY
17	22889	22889	24457	1	ROD EYE UNIT ONLY
		24465		1	ROD EYE CONVERSION KIT, LESS BUSHING
18	22890	~~22890~~ 1218-65	~~22890~~	1 #2	STATIC "O" RING
		24454	24454	#3	BACK-UP WASHER, FOR ABOVE
19	22915	22915	22915	3	NYLOK SETSCREW, 1/4 UNC x 3/8 LG., ALLEN
20	22891	22891	22891	1	STATIC "O" RING
		24455	24455	2	BACK-UP WASHER, FOR ABOVE
21	22892	22892	22892	1	CAP NUT
22	22893	~~22893~~ 1218	~~22893~~	1	STATIC "O" RING
		24452	24452	2	BACK-UP WASHER, FOR ABOVE
23	22894	22894	22894	2	RBC BEARING
24	22895	22895		1	SHUTTLE STRIKER SPOOL
25	22848	1218-167 ~~22848~~		1	"O" RING
26	22896	22896		1	PLUG
27	22897	1218-226 ~~22897~~		1	"O" RING
28	1219-120	1219-38		1	PIPE PLUG
29	1219-38	1219-38	1219-38	1	PIPE PLUG, 1/8 NPT ALLEN
30	22898	22898		1	VALVE SEAT
31	22899	22899		1	"O" RING
32	22900	22900		1	STEEL BALL
33	22901	22901		1	SPRING
34	22849	22849		1	SPRING STOP
35	22846	1218-27 ~~22846~~		1	"O" RING
36	22902	22902		1	END CAP PLUG
38		~~25389~~ 22831	~~25389~~	1	ROD SEAL W/RETAINER (REPLACES 22886,22045)
39		23082	23082	1	PACK NUT
40			24458	1	HOLDING VALVE
			A25038	1	"O" RING KIT, FOR ABOVE
41			24459	1	NEEDLE VALVE
			24485	1	"O" RING, FOR ABOVE
42			24486	1	JAM NUT, 7/16 UNF

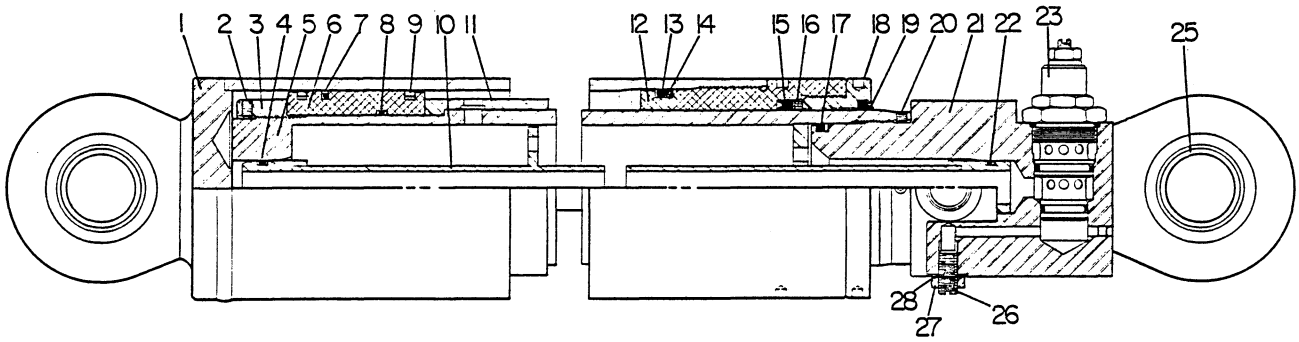

Ref. No.	Part Number	Quan. Req'd.	Name and Description
	39991	2	HYDRAULIC CYLINDER COMPLETE
	25955	2	SEAL KIT, INCLUDES SEALS, "O" RINGS, BACK-UP WASHERS FOR CYLINDER ONLY - SEE REF. 23
1	25954	1	CASE
2	1206-41	1	SETSCREW, 1/4 UNC x 3/8 LG., SOCKET HD, CUP PT.
3	25949	1	BUTTRESS PISTON NUT
4	1218-156	1	"O" RING
	25942	1	BACK-UP RING
5	25953	1	SHAFT
6	25952	1	PISTON
7	23432	1	SEAL
	1218-146	1	"O" RING, FOR ABOVE
8	24481	1	STATIC "O" RING
	25945	2	BACK-UP WASHER
9	23433	2	PISTON RING
10	25947	1	PORT TUBE
11	25948	1	SPACER

Model T-450 TELEKRANE
Date 1 JUNE 1970

BOOM EXTENSION CYLINDER

Group No. 35
Page 35-158

Ref. No.	Part Number	Quan. Req'd.	Name and Description
12	25951	1	HEAD GLAND
13	23985	1	"O" RING
14	25357	1	BACK-UP WASHER
15	25478	1	"U" CUP SEAL
16	25050	1	BACK-UP RING
17	1218-157	1	"O" RING
	25944	1	BACK-UP RING, FOR ABOVE
18	25950	1	THREAD RING
19	25049	1	WIPER SEAL
20	1206-41	1	SETSCREW, 1/4 UNC x 3/8 LG. SOCKET HD, CUP PT.
21	25946	1	ROD EYE UNIT ONLY
22	1218-156	1	"O" RING
	25942	1	BACK-UP WASHER
23	24458	1	HOLD VALVE
	A25038	1	SEAL KIT, FOR ABOVE
25	1217-182	2	SELF-ALIGNING BEARING
26	25956	1	NEEDLE VALVE
27	1205-39	1	LOCK NUT, 3/8 UNC
28	25943	1	"O" RING

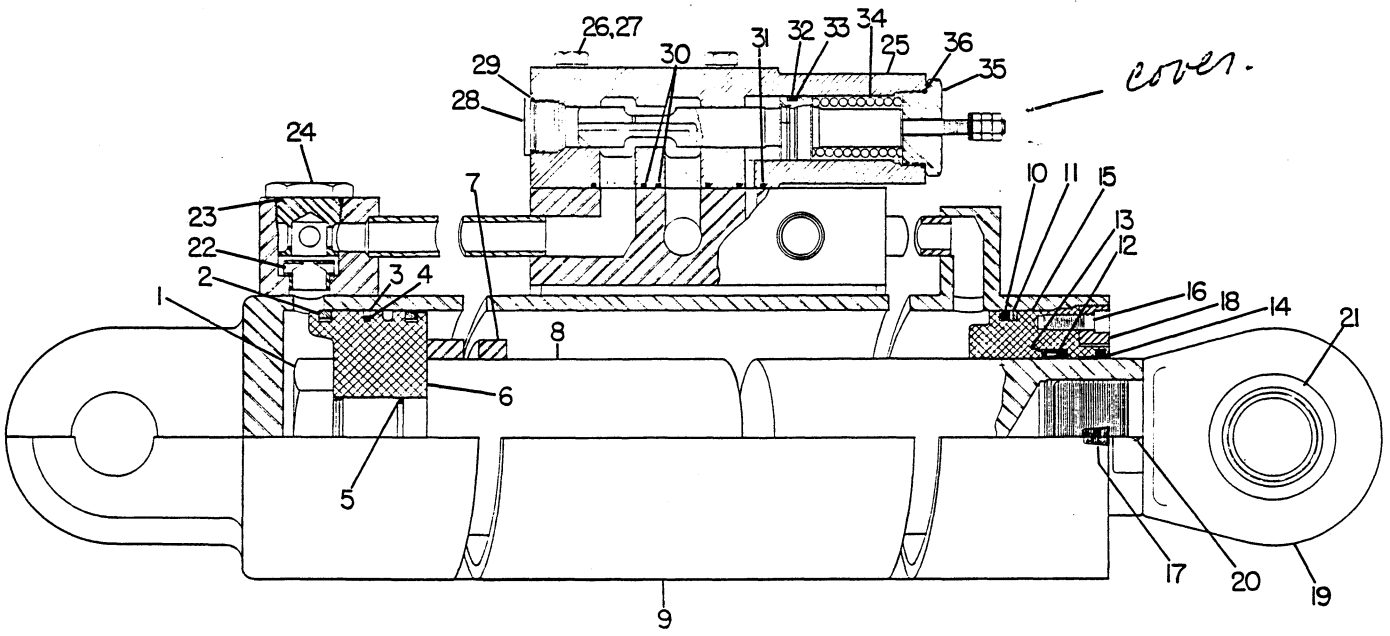

49097 UNITED HYD - AUG '72 4191-10H001

Ref. No.	Part Number	Quan. Req'd.	Name and Description
	A35406		BOOM HOIST CYLINDER, COMPLETE, INCLUDES ITEMS 1 THRU 31
	A23125	1	SEAL REPAIR KIT, INCLUDES ITEMS 2,3,5,10,11,12,14,30,31 990-9CC0 391C 99C-9CCC 39C9 w/c REF 2
1	22010	1	BUTTRESS LOCK NUT
2	22903	2	PISTON RING A23358 COVER KIT
3	22904	1	TEFLON SEAL w/"O" RING (SENSING VALVE
4		1	"O" RING, FOR ABOVE (NC-257) 35874 Cap.
5	22007	1	STATIC "O" RING (90 DUROMETER)
6	22905	1	PISTON
7	22906	1	SPACER
8	22907	1	SHAFT
9	22908	1	CASE
10	22909	1	STATIC "O" RING
11	22910	1	BACK-UP WASHER
12	22885	1	"U" CUP SEAL w/"O" RING
13		1	SPLIT "O" RING, FOR ABOVE SEAL
14	22886	1	WIPER SEAL
15	22911	1	HEAD GLAND

Ref. No.	Part Number	Quan. Req'd.	Name and Description
16	22912	2	CAPSCREW, 3/8 x 1 1/4 UNF ALLEN
17	1219-120	1	EXPANDER PIPE PLUG, 1/4 NPT COUNTERSUNK HEAD
18	22913	1	BUTTRESS DRAW RING
19	22914	1	ROD EYE
20	22915	1	NYLOK SETSCREW, 1/4 UNC x 3/8 LG., ALLEN HEAD
21	22916	1	BEARING, SELF-ALIGNING
22	22976	1	RESTRICTOR, ONE-WAY
23	22977	1	"O" RING
24	22978	1	CAP
25	A23102	1	SAFETY VALVE INCLUDES ITEMS 32 THRU 36 PRIOR TO 12/69 940-B1326727 BEGIN W/ 12/69
26	1200-119	4	CAPSCREW, 1/2 UNF x 3 3/4 LG.
27	1210-26	4	LOCKWASHER, 1/2 MED.
28	22980	1	PLUG
29	22981	1	"O" RING
30	22982	2	"O" RING
31	22983	1	"O" RING
32	23196	1	"O" RING
33	23197	2	BACK-UP WASHER
34	23198	1	SPRING
35	23199	1	CAP
36	23200	1	"O" RING
	1213-1	2	GF 1/8 NPT
			LOCKWASHER 3/8 LW-1220
			COVER 1214661
			BACK-UP WASHER 020-90000985. REF 23

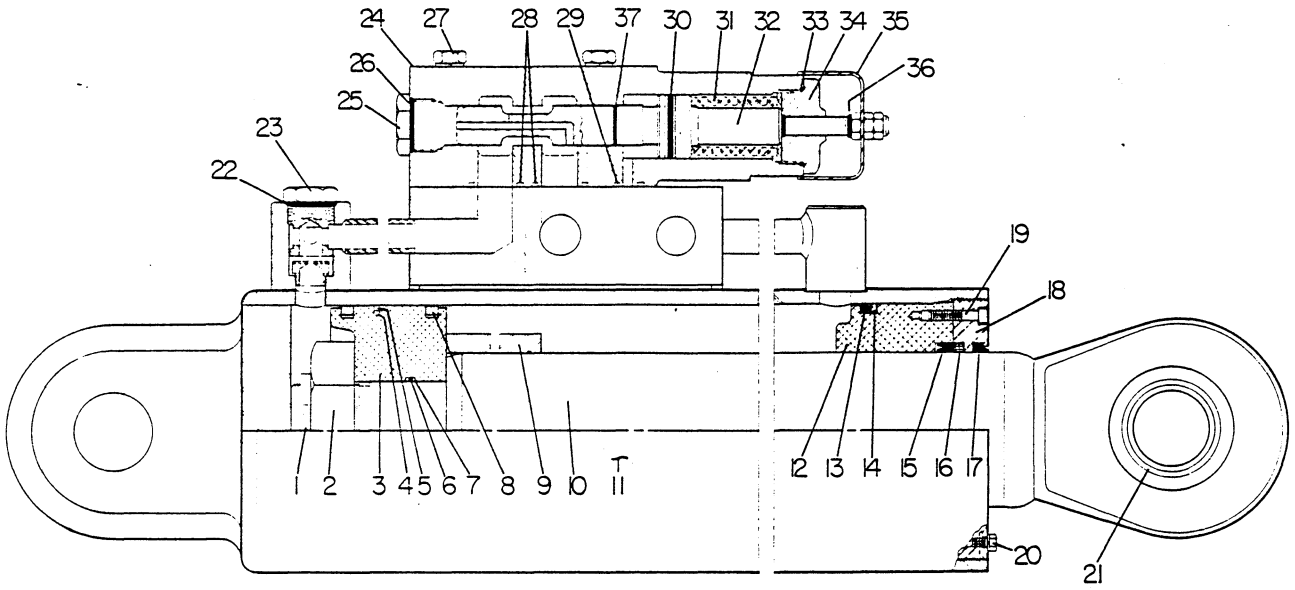

Ref. No.	Part Number	Quan. Req'd.	Name and Description
	49097	1	HYDRAULIC CYLINDER COMPLETE WITH HOLD VALVE - INCLUDES ITEMS 1 THRU 36
	27260	1	SEAL KIT - FOR CYLINDER ONLY - INCLUDES PISTON RINGS, SEALS, "O" RINGS
	27369	1	SEAL KIT - FOR HOLD VALVE ONLY, REF. 24
1		1	COTTER PIN, 5/32 x 3 1/2 LG.
2	25047	1	NUT
3	27263	1	PISTON
4	24587	1	SIRVON SEAL
5	1218-100	1	"O" RING
6	23747	1	"O" RING
7	25053	2	BACK-UP RING, LEATHER
8	24588	2	PISTON RING
9	27266	1	SPACER
10	27262	1	SHAFT
11	27261	1	CASE
12	27264	1	HEAD GLAND
13	22909	1	"O" RING

Model TK-450
Date 1 JUNE 1973

BOOM LIFT CYLINDER

Group No. 35
Page 35.17B

Ref. No.	Part Number	Quan. Req'd.	Name and Description
14	24586	1	LEATHER BACK-UP WASHER
15	25478	1	"U" CUP SEAL
16	25050	1	PHENOLIC BACK-UP RING
17	25049	1	ROD WIPER
18	27265	1	THREAD RING
19	27343	2	CAPSCREW, 1/4 UNC x 1 1/4 LG., SOCKET HEAD
20	1203-73	1	CAPSCREW, 1/4 UNF x 3/4 LG.
	1210-14	1	LOCKWASHER, 1/4 MED.
21	1217-188	2	SELF-ALIGNING BUSHING
22	1218-140	1	"O" RING
23	27371	1	RESTRICTOR CAP
ECN21675	NO LONGER AVAIL. 9/88		USE A2C8669 KIT/208670 INSTRUCTIONS (709 5355 BLOCK)
24	27267	1	SAFETY HOLD VALVE - INCLUDES ITEMS 25 THRU 36
25	27361	1	PLUG NOW 3325-001019
26	26504	1	"O" RING
27	1200-119	4	CAPSCREW NOW 2612-008060
	1210-26	4	LOCKWASHER 1/2
28	22982	2	"O" RING
29	1218-172	1	"O" RING
30	27362	1	"O" RING
	27363	2	BACK-UP WASHER NOW 2566-022026
31	27364	1	SPRING
32	27365	1	PLUNGER
	1205-62	3	NUT, 1/2 UNF JAM
33	1218-132	1	"O" RING
34	27366	1	CAP
35	27367	1	CAP
36	27368	2	"O" RING
37	1218-88	1	"O" RING
	27370	2	BACK-UP RING

SEE HOIST BLOCKS SHOWN ON PAGE 35.18A

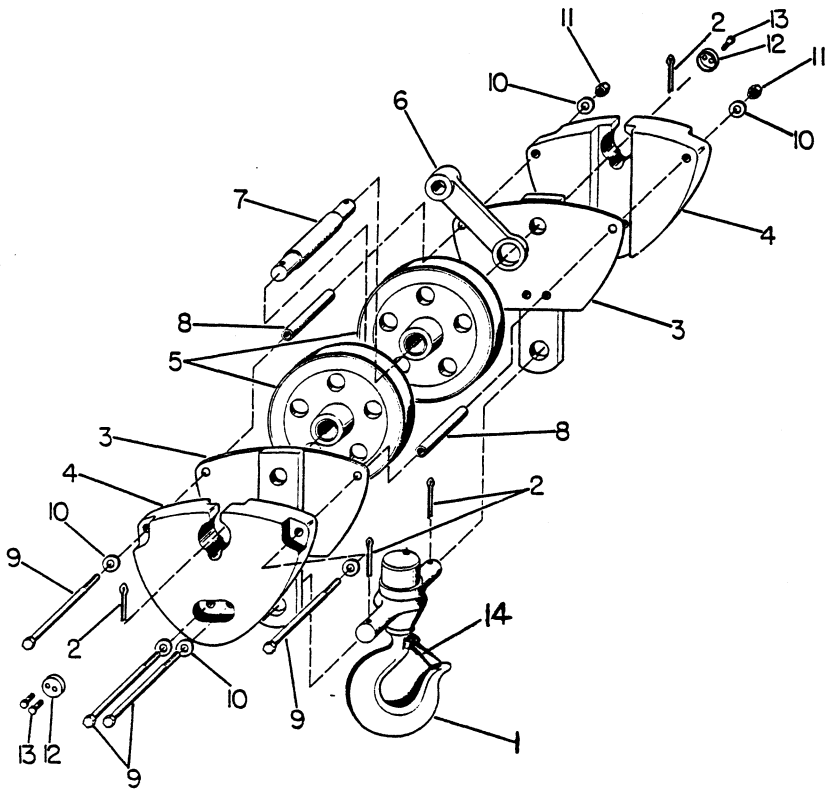

Ref. No.	Part Number	Part Number	Quan. Req'd.	Name and Description
	15 TON	20 TON		
	18540	35925	1	HOIST BLOCK COMPLETE WITH ITEMS 1 THRU 13
1	13616	24207	1	SWIVEL HOOK & TRUNNION
2	1207-79	1207-79	4/2	COTTER PIN, 1/2 x 3 LG.
3	13617	24210	2	SHELL & STRAP
4	13618	13618	2	CHEEK WEIGHT
5	13619	24211	2/3	SHEAVE ASSEMBLY W/BUSHING
	13676	25540	2/3	BUSHING, FOR ABOVE SHEAVE
6	13620	24212	1	BECKET
7	13621	24213	1	CENTER PIN
8	13622	24214	4	PIPE SPACER
9	1200-220		4	SPACER BOLT, 3/4 UNC x 8 LG.
9		24215	4	BOLT & NUT, 3/4 UNC x 9 1/2 LG.
10	1209-40	1209-40	8	WASHER, 3/4 SAE
11	1205-96	1205-96	4	NUT, 3/4 UNC JAM
12		24208	2	CAP
13		24209	4	CAPSCREW & WASHER
14	24935	24935	1	SAFETY LATCH KIT
	~~12250-300~~ 1269-300	~~12250-300~~ 1269-300	1	HOIST CABLE - ~~1/2" WIRE ROPE, 18 x 7 EXTRA IPS NON-ROTATING~~ 1/2" 6 x 19 IWRC PREFORMED WIRE ROPE
	B4070	B4070	1	CABLE SOCKET
	B17006	B17006	1	CABLE WEDGE
	7921	7921	1	PIN
	1207-40	1207-40	2	COTTER PIN

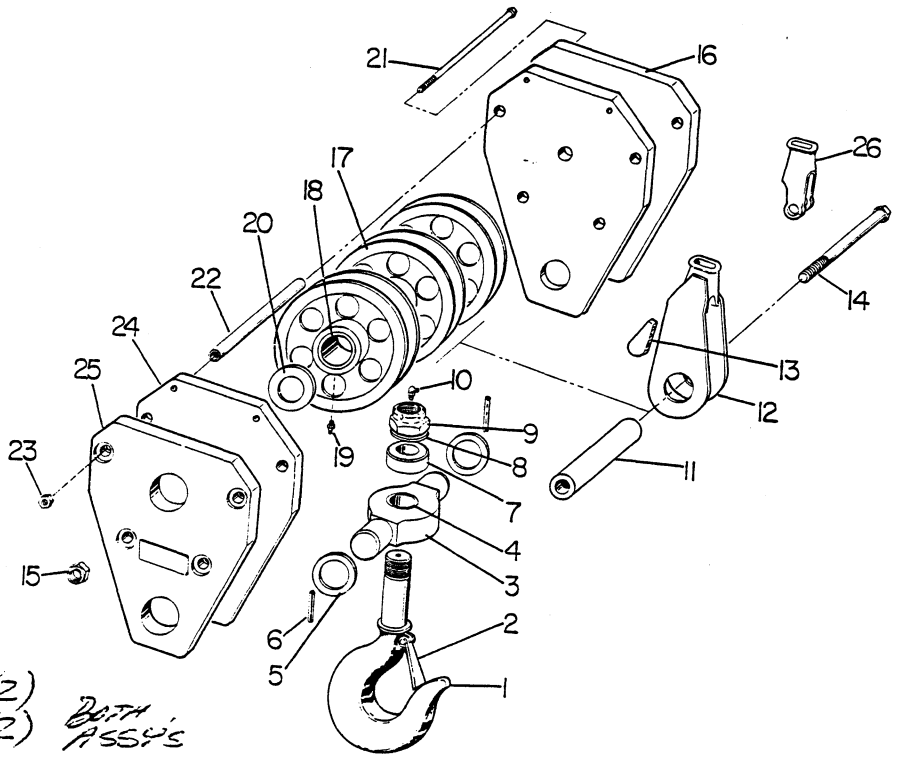

ADD 1200-98 (2)
1205-65 (2) BOTH ASSY'S

Ref. No.	Part Number	Part Number	Quan. Req'd.	Name and Description
	15 TON	17-1/2 TON		
	A41275	A41276	1	HOIST BLOCK COMPLETE
1	41287	41287	1	HOOK
2	1234-13	1234-13	1	SAFETY LATCH
3	A41297	A41298	1	TRUNNION W/BUSHING
4	1214-99	1214-99	1	BUSHING, FOR ABOVE
5	1208-70	1208-70	2	BUSHING
6	1227-399	1227-399	2	ROLL PIN
7	1217-282	1217-282	1	BEARING
8	1208-57	1208-57	1	BUSHING
9	1205-187	1205-187	1	NUT
10	1213-6	1213-6	1	GREASE FITTING
11	41281	41290	1	INNER RACE
12	F41282	F41282	1	CABLE SOCKET
13	B17006	B17006	1	WEDGE
14	F41279	F41288	1	CAPSCREW
15	1205-185	1205-185	1	NUT
16	41278	41278	2	PLATE
17	A38699	A38699	2/3	SHEAVE - 10-1/2" W/BEARING
18	1217-236	1217-236	2/3	BEARING, FOR ABOVE
19	1213-16	1213-16	2/3	GREASE FITTING, 30°
20	1209-53	1209-53	4/5	SPACER
21	1200-218	1235-289	4	CAPSCREW
22	41285	41291	4	TUBE
23	1205-100	1205-100	4	ESLOK NUT
24	41277	41277	2	PLATE
25	~~F41273~~	~~F41284~~	1	PLATE
26	B4070	B4070	1	CABLE SOCKET

For Auxiliary BANTAM Winch, See Page 35.41

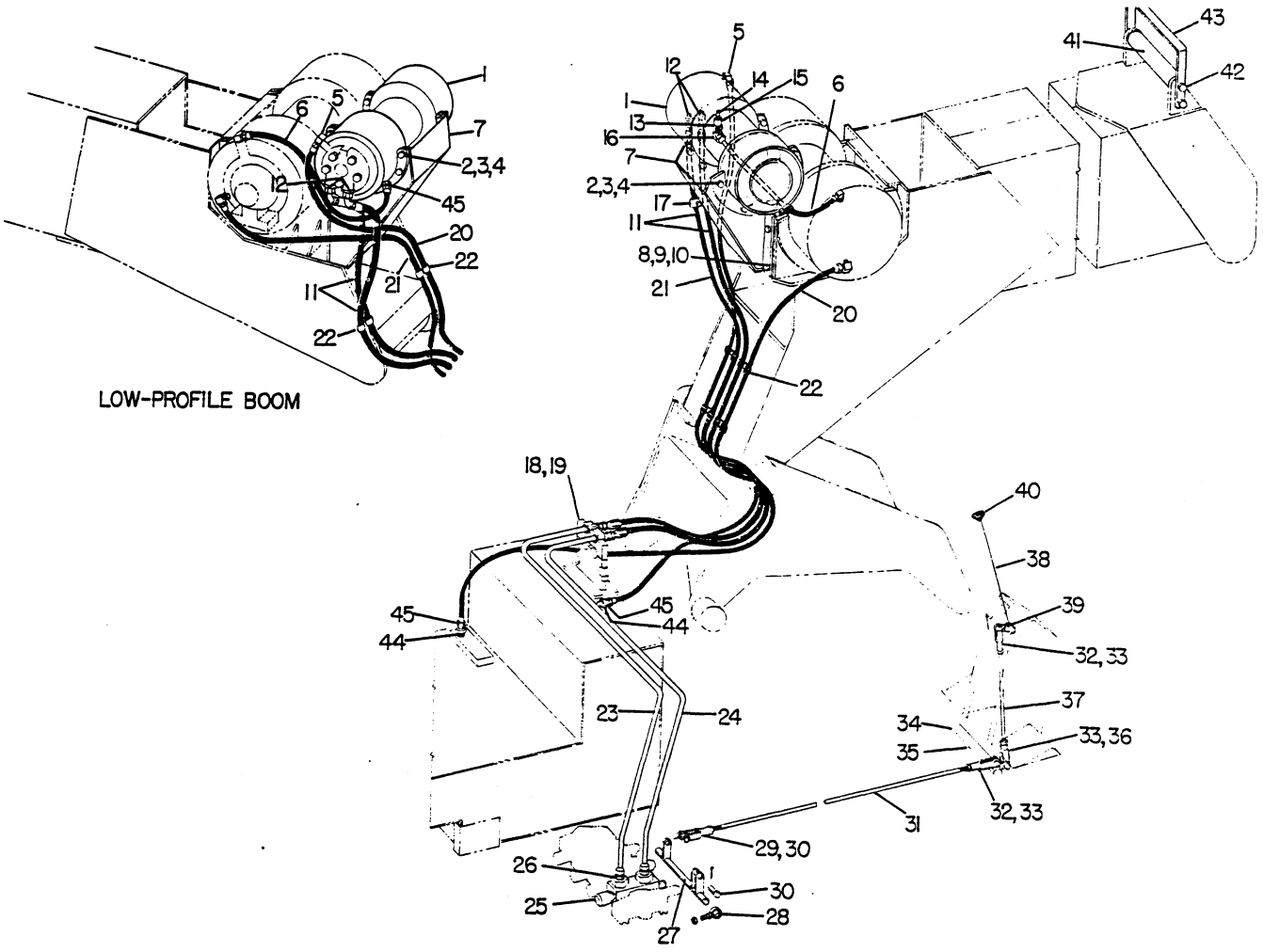

Ref. No.	Part Number	Part Number	Quan. Req'd.	Name and Description
	Prior To Ser. #773 exc.699,740	Begin. W/ Ser. #773 & 699,740		
1	A35702	A35835	1	HYDRAULIC WINCH, AUXILIARY, See page 35.30 for parts breakdown
2	35704	35704	12	DOWEL BOLT
3	1210-32	1210-32	12	LOCKWASHER, 5/8 med.
4	1205-81	1205-81	12	NUT, 5/8 UNF
5	1219-464	1219-464	1	ADAPTER, 90°
6	A35693	A35885	1	HOSE ASSEMBLY
7	35721	F35836	1	SUPPORT
8	1229-92	1229-92	4	CAPSCREW, 3/4 UNF x 2 lg.
9	1210-38	1210-38	4	LOCKWASHER, 3/4 med.
10	35412	35412	AR	SHIM
		1205-103	2	SELF-LOCKING NUT

Ref. No.	Part Number	Part Number	Quan. Req'd.	Name and Description
	PRIOR TO SER. #773 EXC. 699,740	BEGIN. W/ SER. #773 & 699,740		
11	A35694	A35694	2	HOSE ASSEMBLY
12	1219-555	1219-555	2	ADAPTER
13	1219-283		1	ADAPTER
14	1219-10		1	NIPPLE, 1/2 NPT
15	1219-18		1	COUPLING
16	1219-571		1	ADAPTER, 90°
17	35722		1	STRAP
	1240-29		2	CLAMP, FOR ABOVE STRAP
18	35701	35701	1	SUPPORT
19	1200-79	1200-79	2	CAPSCREW, 3/8 UNC x 3 1/2 LG.
	1210-20	1210-20	2	LOCKWASHER, 3/8 MED.
20	A35523	A35523	1	HOSE ASSEMBLY
21	A35524	A35523	1	HOSE ASSEMBLY
22	1240-29		4	CLAMP, FOR REF. 11
	1240-53	1240-53	5	CLAMP, FOR REF. 20 & 21 & 6
23	35727	35727	1	TUBE
24	35726	35726	1	TUBE
25	A35298	A35298	1	VALVE SECTION ASSEMBLY
	35643	35643	4	BOLT (REQUIRED TO INSTALL SECTION ABOVE)
26	1219-282	1219-282	2	ADAPTER
27	35744	35744	1	BELLCRANK
28	35743	35743	2	SUPPORT, BELLCRANK
	1216-2	1216-2	1	BUSHING, FOR ABOVE
	1205-37	1205-37	2	NUT, 3/8 UNF
29	2465	2465	1	ADJUSTABLE YOKE
	1205-148	1205-148	1	NUT, 1/2 UNF LH
30	1689	1689	2	PIN
	1207-13	1207-13	2	COTTER PIN, 1/8 x 1/4 LG.

Ref. No.	Part Number	Quan. Req'd.	Name and Description
31	#35172-/	1	CONTROL ROD
32	3118	2	ADJUSTABLE YOKE
	1205-37	2	NUT, 3/8 UNF
33	3119	3	PIN
	1207-5	3	COTTER PIN, 3/32 x 1 LG.
34	#35745-/	1	BELLCRANK
35	1213-1	1	GREASE FITTING
36	35559	1	YOKE
	1205-162	1	NUT, 3/8 UNF LH
37	35560	1	ROD
38	#35697-/	1	LEVER
39	1227-186	1	ROLL PIN
40	1222-94	1	KNOB
41	35443	1	ROLLER, BASE BOOM SECTION
	10956	1	ROLLER, CENTER BOOM SECTION
	1217-66	4	BEARING, FOR ABOVE ROLLERS
	1213-10	2	GREASE FITTING, FOR ABOVE
42	38404	1	SHAFT, BASE BOOM SECTION
	10957	1	SHAFT, CENTER BOOM SECTION
	1205-89	2	NUT, 5/8 UNF SELF-LOCKING
43	35649	1	STRAP, BASE BOOM SECTION
	35648	1	STRAP, CENTER BOOM SECTION
44	1219-254	2	REDUCING BUSHING
45	1219-283	2	ADAPTER

NOTE: WHEN ORDERING REPLACEMENT PARTS BE SURE TO STATE WINCH SERIAL NO.

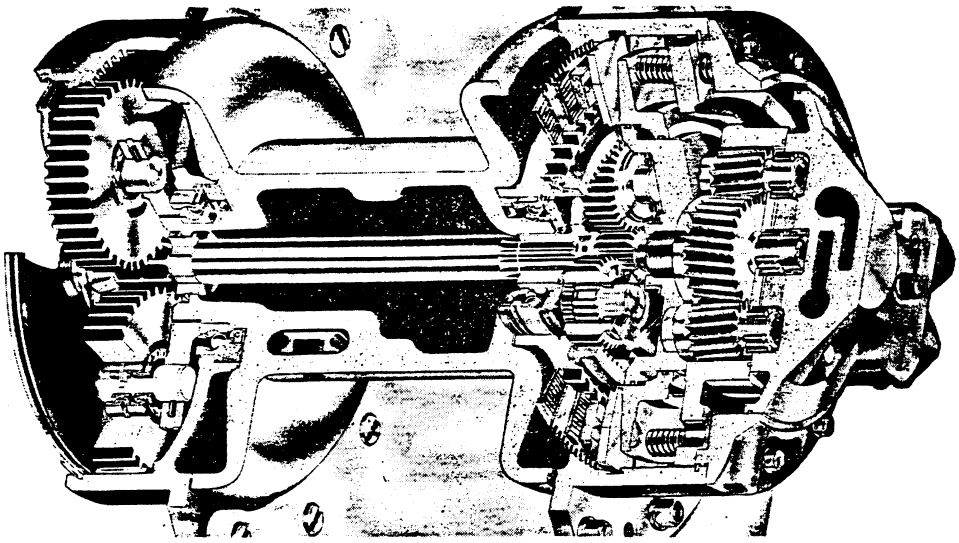

MODEL 22 MAIN WINCH - BEGINNING WITH SERIAL No. 502
(ALSO SERIAL NOS. 449, 482, 493)
SEE PAGES 35.23 THRU 35.26 FOR COMPLETE PARTS LISTING

MODEL 22E MAIN WINCH, BEGIN WITH SERIAL NO. ———
(EQUAL SPEED)

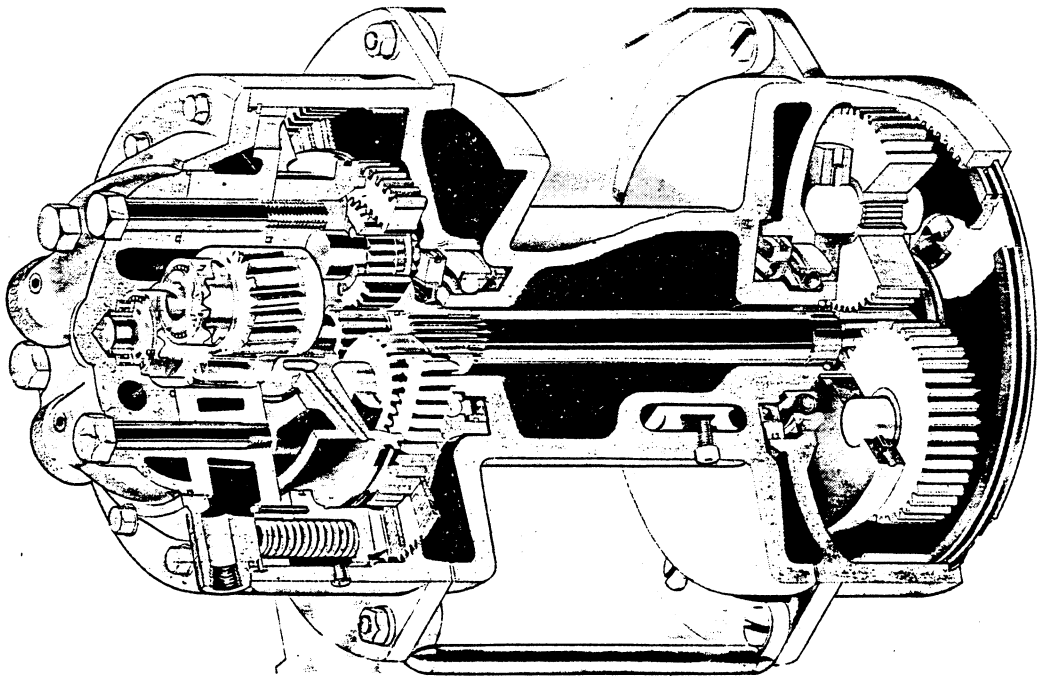

MODEL 11 MAIN WINCH - PRIOR TO SERIAL No. 502 EXCEPT NOS. 449, 482, 493

MODEL 11E AUXILIARY WINCH (EQUAL SPEED)

SEE PAGES 35.27 THRU 35.31 FOR COMPLETE PARTS LISTING

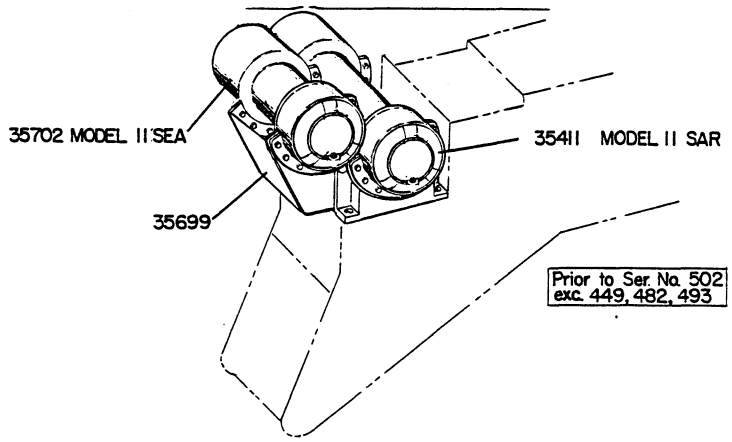

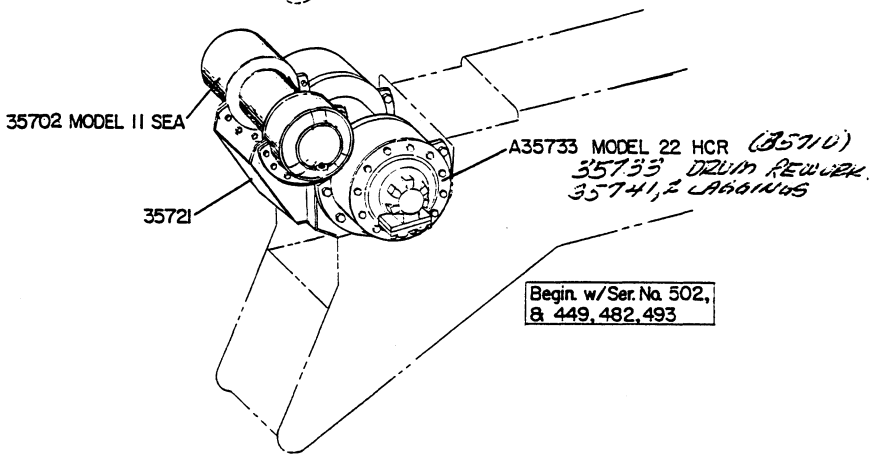

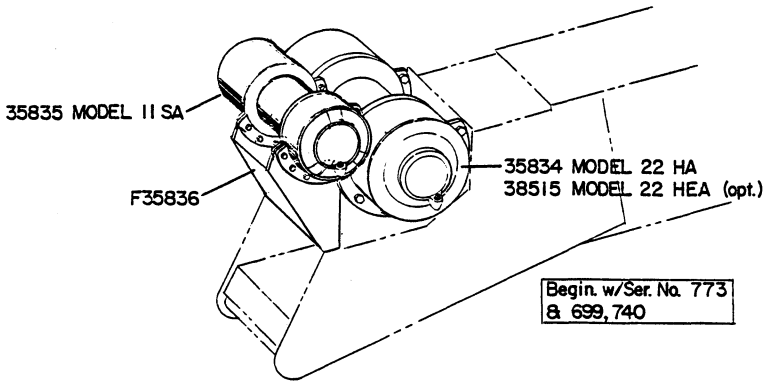

MODEL	PART NO.	A	B	C	FORWARD RPM	REVERSE RPM
11 SAR	35411	19"	9"	13.2"	40 @ 35 GPM	210 @ 35 GPM
11 SEA	35702	8"	9"	17.5"	40 @ 35 GPM	40 @ 35 GPM
11 SA	35835	13"	9"	13.2"	40 @ 35 GPM	224 @ 35 GPM
22 HCR	A35733	10"	10"	16.25"	44 @ 55 GPM	235 @ 55 GPM
22 HA	35834	10"	10"	16.25"	44 @ 55 GPM	235 @ 55 GPM
22 HEA	38515	10"	10"	16.25"	44 @ 55 GPM	44 @ 55 GPM

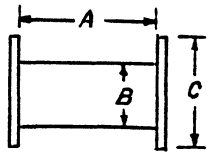

E - EQUAL SPEED
S - STANDARD FINAL DRIVE RATIO 8.75:1 (11) 8.25:1 (22)
H - HIGH SPEED FINAL DRIVE RATIO 4.44:1 (11) 4.22:1 (22)
A - ANTI CLOCKWISE ROTATION (VIEWED FROM FINAL DRIVE END) (HOIST)
C - CLOCKWISE ROTATION

BEGINNING WITH SERIAL NO. 502 (& 449, 482, 493)

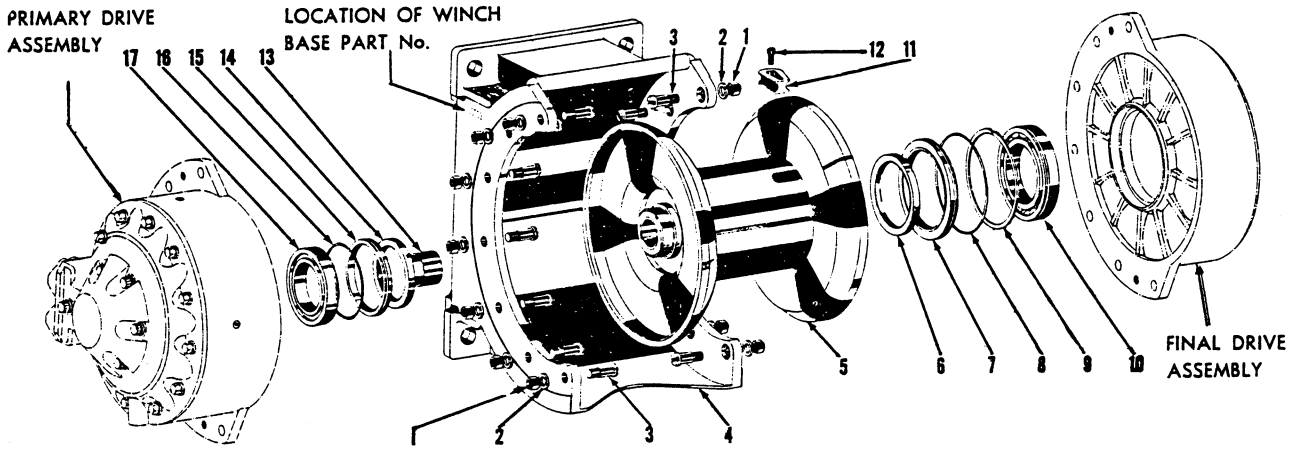

Ref. No.	Part Number	Quan. Req'd.	Name and Description
	A23222	1	DRUM SEAL KIT, INCLUDES ITEMS 7, 8, 9, 15, 16
1	24738	14	HEX NUT
2	24739	14	WASHER
3	24740	14	DOWEL BOLT
4			NOT APPLICABLE
5	23223	1	DRUM W/BUSHING, ITEM 13
6	23225	1	OIL SEAL
7	24827	1	LARGE SEAL RING
8	24828	1	"O" RING
9	24829	1	SNAP RING
10	23226	1	BALL BEARING W/ITEM 9
11	25899	1	HONDU was 23352 — Now Honda H22229 (SP 25879) replaces F11034? for Cable Serial 7/16 2-78.
12	24743	1	CAPSCREW
13	23224	1	DRUM BUSHING
14	23227	1	OIL SEAL
15	24830	1	SMALL SEAL RING — 23011 Honda used for 5/8 Cable
16	24831	1	"O"RING
17	23228	1	BALL BEARING

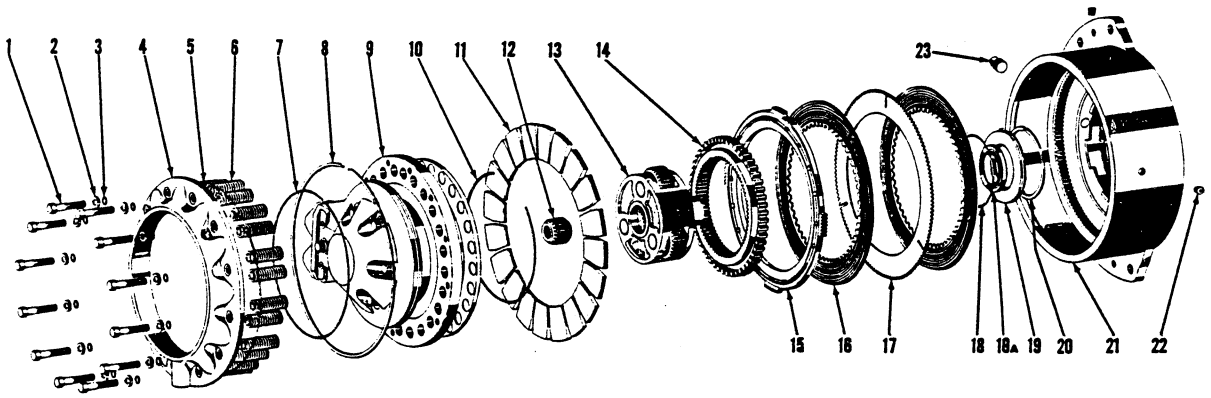

BEGINNING WITH SERIAL NO. 502 (& 449, 482, 493)

Ref. No.	Part Number	Part Number	Quan. Req'd.	Name and Description
	PRIOR TO SER. #773 EXC. 699,740 & MODEL 22	BEGIN. W/ SER. #773 699,740 MODEL 22		THESE SERIAL NUMBERS INDICATE CHANGE TO LOW-PROFILE BOOM; ALSO CHANGE FROM CLOCKWISE TO ANTI-CLOCKWISE WINCH (VIEWED FROM FINAL DRIVE END.) SEE PAGE 35.25 FOR MODEL 22E
	A23229	A23400		PRIMARY DRIVE ASSEMBLY, INCLUDES ITEMS 1 THRU 23
	A23230	A23230	1	PRIMARY DRIVE SEAL KIT, INCLUDES ITEMS 3, 5, 7, 8, 10, AND 18 THRU 20
1	24832	24832	12	CAPSCREW
2	24833	24833	12	SEAL WASHER
3	24834	24834	12	"O" RING
4	24835	24835	1	SPRING COVER
5	24836	24836	1	"O" RING
6	24750	24750	24	BRAKE SPRING
7	24837	24837	1	"O" RING
8	24838	24838	1	SNAP RING
9	A23231	A23401	1	MOTOR ASSEMBLY, SEE PAGE 35.27 FOR PARTS LIST
10	24839	24839	1	RETAINER
11	24840	24840	20	SEGMENT
12	23242	23242	1	SUN GEAR
→ 13	A23234	A23399	1	PRIMARY PLANET ASSEMBLY, SEE 35.26 FOR PARTS
14	24841	24841	1	RING GEAR
15	24842	24842	1	BACKING PLATE
16	24843	24843	1	BRAKE PLATE
17	24844	24844	1	DIVIDER PLATE
18	24831	24831	1	"O" RING
18A				4141 OIL SEAL 24856.
19	24845	24845	1	SEAL RING
20	24846	24846	1	SNAP RING
21	24847	24847	1	PRIMARY HOUSING
22	24761	24761	4	PIPE PLUG
23	24815	24815	1	PIPE PLUG

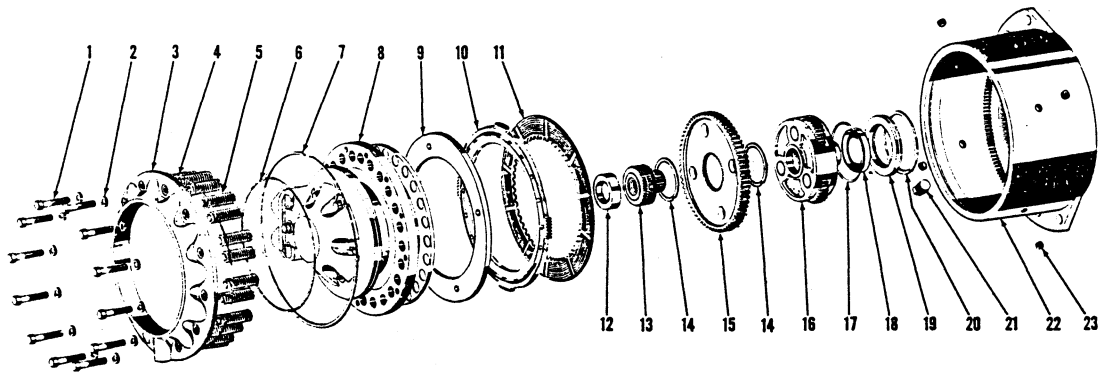

Ref. No.	Part Number	Part Number	Quan. Req'd.	Name and Description
	24855		1	PRIMARY DRIVE ASSEMBLY, MODEL 22E MAIN WINCH, PRIOR TO GEARMATIC SER. #22-4500
		24855	1	PRIMARY DRIVE ASSEMBLY, MODEL 22E MAIN WINCH, BEGIN. W/GEARMATIC SER. #22-4500
	25495	25495		SEAL KIT, INCLUDES ITEMS 2, 4, 6, 17, 18 & REF. 8, BOTTOM PAGE 35.26
1	24832	24832	12	CAPSCREW
2	24848	24848	12	SEAL WASHER
3	24835	24835	1	SPRING COVER
4	24836	24836	1	"O" RING
5	24750	24750	24	BRAKE SPRING
6	24837	24837	1	"O" RING
7	24838	24838	1	SNAP RING
8	23401		1	MOTOR ASSEMBLY
8		25903	1	MOTOR ASSEMBLY - REPLACES A23401 MOTOR IN 22E WINCHES PRIOR TO GEARMATIC SER. #22-4500 - WITH 25905 BRAKE PLATE; REF. 9 & 10 NOT REQ'D.
9	24849		1	PRESSURE PLATE
10	24842		1	BACKING PLATE
11	24850	25905	1	BRAKE PLATE
12	24851	24851	1	SPACER
13	24852	24852	1	BRAKE HUB ASSEMBLY - SEE PAGE 35.27
14	24853	24853	2	SNAP RING
15	24854	24854	1	BRAKE RING
→ 16	24859	24859	1	PRIMARY PLANET ASSEMBLY - SEE PAGE 35.26
17	24831	24831	1	"O" RING
18	24856	24856	1	OIL SEAL U 144
19	24857	24857	1	SEAL RING
20	24846	24846	1	SNAP RING
21	24815	24815	1	PIPE PLUG
22	24858	25904	1	PRIMARY DRIVE HOUSING
23	24761	24761	4	PIPE PLUG

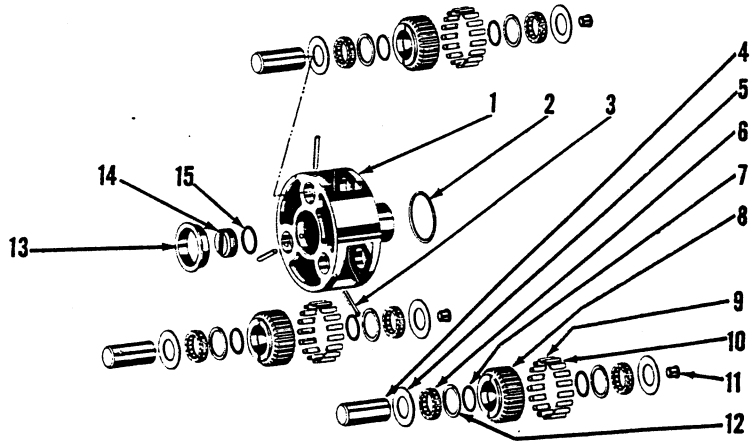

Ref. No.	Part Number	Quan. Req'd.	Name and Description
	A23234		PRIMARY PLANET ASSEMBLY, MODEL 22 MAIN WINCH, FOR CLOCKWISE ROTATION - PRIOR TO SER. #773 EXC. 699, 740, INCLUDES ITEMS 1 THRU 15 (SEE NOTE)
	A23399		PRIMARY PLANET ASSEMBLY, MODEL 22 MAIN WINCH, FOR ANTI-CLOCKWISE ROTATION - BEGIN. W/SER. #773 AND 699, 740, INCLUDES ITEMS 1 THRU 15 (SEE NOTE)
1	24867	1	PRIMARY PLANET HUB
2			NOT APPLICABLE
3	24868	3	PIN
4	24869	3	PRIMARY PLANET PIN
5	24870	6	GEAR SPACER
6	24871	6	ROLLER BEARING
7	24773	6	GARTER SPRING
8	24872	3	PRIMARY PLANET GEAR
9	24873	48	CAM LOCK
10	24874	3	CLEARANCE CAM LOCK
11	24769	3	THRUST PLUG
12	24786	6	SNAP RING
13	24875	1	BUSHING
14	24864	1	THRUST PAD
15	24865	1	"O" RING

NOTE: THE LOCATION OF ITEMS 9 & 10 IN ASSEMBLY DETERMINE CLOCKWISE OR ANTI-CLOCKWISE ROTATION.

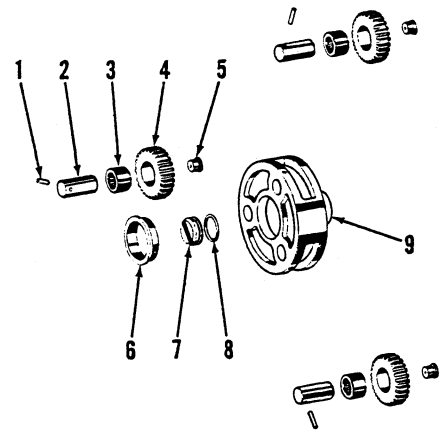

Ref. No.	Part Number	Quan. Req'd.	Name and Description
	A24859	1	PRIMARY PLANET ASSEMBLY, MODEL 22E MAIN WINCH, INCLUDES ITEMS 1 THRU 9
1	24783	3	PIN
2	24860	3	PRIMARY PLANET PIN
3	24861	3	NEEDLE BEARING
4	24862	3	PRIMARY PLANET GEAR
5	24769	3	THRUST PLUG
6	24863	1	BUSHING
7	24864	1	THRUST PAD
8	24865	1	"O" RING
9	24866	1	PRIMARY PLANET HUB

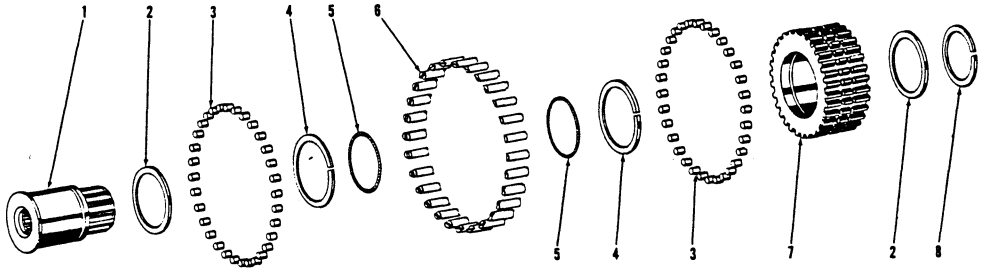

Ref. No.	Part Number	Quan. Req'd.	Name and Description
	A24852	1	BRAKE HUB ASSEMBLY, MODEL 22E MAIN WINCH, INCLUDES ITEMS 1 THRU 8
1	24877	1	PRIMARY SUN GEAR
2	24878	2	SPACER
3	24879	64	ROLLER
4	24880	2	SNAP RING
5	24876	2	GARTER SPRING
6	24881	28	CAM LOCK
7	24882	1	BRAKE HUB
8	24883	1	SNAP RING

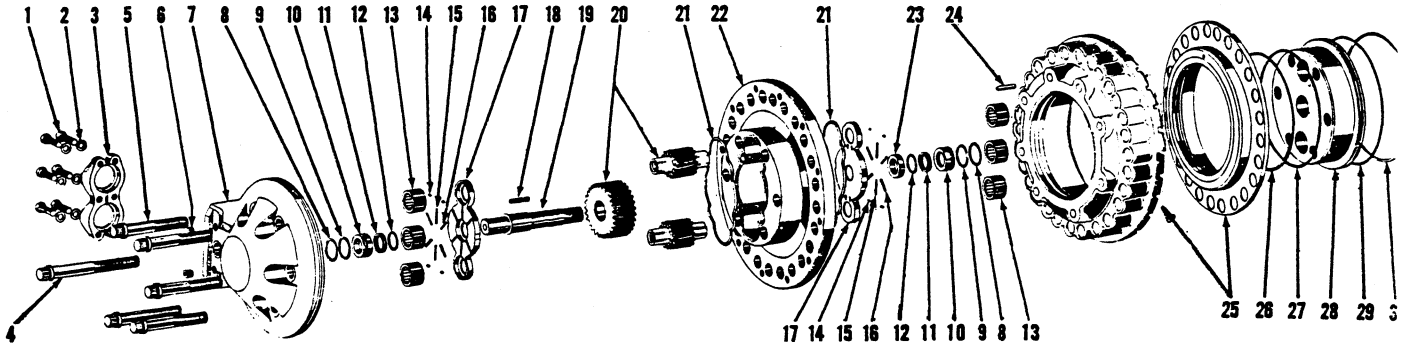

Ref. No.	Part Number	Part Number	Quan. Req'd.	Name and Description
	23231		1	CLOCKWISE MOTOR ASSEMBLY, FOR MODEL 22 MAIN WINCH - PRIOR TO SER. #773 EXC. 699, 740
	23401		1	ANTI-CLOCKWISE MOTOR ASSEMBLY, FOR MODEL 22 MAIN WINCH - BEGIN. W/SER. #773 & 699, 740 (ALSO MODEL 22E PRIOR TO G.MATIC #22-4500)
		25903	1	ANTI-CLOCKWISE MOTOR ASSEMBLY, FOR MODEL 22E MAIN WINCH (BEGIN. W/G.MATIC SER. #22-4500) REPLACES A23401 PER EXPLANATION, PAGE 35.25

Ref. No.	Part Number	Part Number	Quan. Req'd.	Name and Description
	23231			CLOCKWISE MOTOR
	23401			ANTI-CLOCKWISE MOTOR
		25903		ANTI-CLOCKWISE MOTOR- 22E BEGIN. W/G.MATIC SER. #22-4500
	A23241	A23241	1	MOTOR SEAL KIT, INCLUDES ITEMS 8, 9, 11, 12, 14, 15, 16, 21, 26, 27, 29, 30
	A23235	A23235	1	MOTOR GEAR KIT, INCLUDES ITEMS 10, 13, 17, 18, 20, 23,
1	24884	24884	6	CAPSCREW
2	24885	24885	6	WASHER
3	23243	23243	1	SPLIT FLANGE CLAMP SET
4	24886	24886	1	CAPSCREW
5	24887	24887	5	CAPSCREW
6	24761	24761	2	PIPE PLUG
7	24888	24888	1	PORT END COVER
8	24889	24889	2	BACK-UP WASHER
9	24865	24865	2	"O" RING
10	24891	24891	2	SEAL BUSHING
11	24790	24790	4	BACK-UP WASHER
12	24791	24791	2	"O" RING
13	24892	24892	6	NEEDLE BEARING
14	24893	24893	8	SMALL POCKET SEAL
15	24894	24894	4	MEDIUM POCKET SEAL
16	24895	24895	8	LARGE POCKET SEAL
17	24896	24896	2	THRUST PLATE
18	24897	24897	1	KEY
19	23236	23236	1	MOTOR SHAFT
20	24898	24898	1	MATCHED GEAR SET
21	24899	24899	2	"O" RING
22	24900	25907	1	GEAR HOUSING
23	24901	24901	1	SPACER
24	24806	25908	1	PIN
25	24902	25906	1	BRAKE PISTON
26	24808	24808	1	BACK-UP WASHER
27	24809	24809	1	"O" RING
28	24903		1	SHAFT END COVER, FOR CLOCKWISE ROTATION
28	24925	24925	1	SHAFT END COVER, FOR ANTI-CLOCKWISE ROTATION
29	24812	24812	1	"O" RING
30	24813	24813	1	BACK-UP WASHER

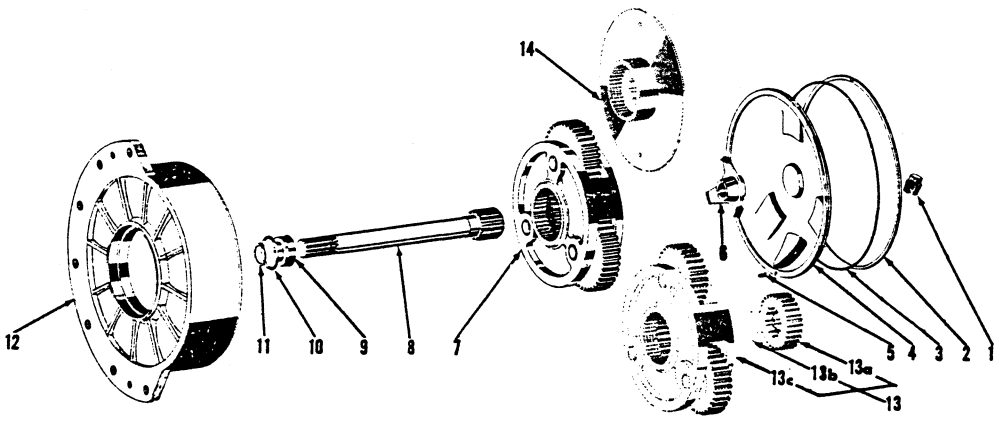

Ref. No.	Part Number	Quan. Req'd.	Name and Description
	A23237	1	FINAL DRIVE ASSEMBLY, MODEL 22 & 22E MAIN WINCHES, INCLUDES ITEMS 1 THRU 12
	A23238	1	FINAL DRIVE SEAL KIT, INCLUDES ITEMS 2, 3, 10, 11
1	24904	1	PIPE PLUG
2	24838	1	SNAP RING
3	24905	1	"O" RING
4	24906	1	END COVER
5	24907	1	PIN
6	24908	1	THRUST PLATE
7	A23239	1	FINAL PLANET ASSEMBLY, HIGH SPEED, SEE BELOW
8	23240	1	SUN GEAR SHAFT W/SEAL RING BELOW
9	24909	1	TAPER SEAL RING
10	24910	1	"O" RING
11	24911	1	SNAP RING
12	24912	1	FINAL HOUSING

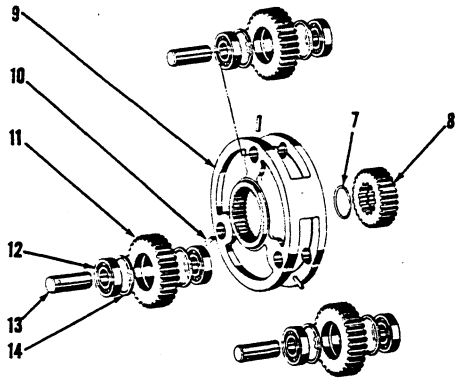

Ref. No.	Part Number	Quan. Req'd.	Name and Description
	A23239	1	FINAL PLANET ASSEMBLY, MODEL 22 & 22E MAIN WINCHES, INCLUDES ITEMS 9 THRU 14
7	24913	1	RETAINER RING
8	23242	1	SUN GEAR
9	24890	1	FINAL PLANET HUB
10	24823	3	PIN
11	24914	3	FINAL PLANET GEAR
12	24915	6	BALL BEARING
13	24916	3	FINAL PLANET PIN
14	24917	6	SNAP RING

MODEL 11 - STANDARD WINCH PRIOR TO SERIAL NO. 502 EXCEPT 449, 482, 493 AND AUXILIARY WINCH BEGINNING WITH SERIAL NO. 773 AND 699, 740

MODEL 11E - AUXILIARY WINCH PRIOR TO SERIAL NO. 773, EXCEPT 699, 740

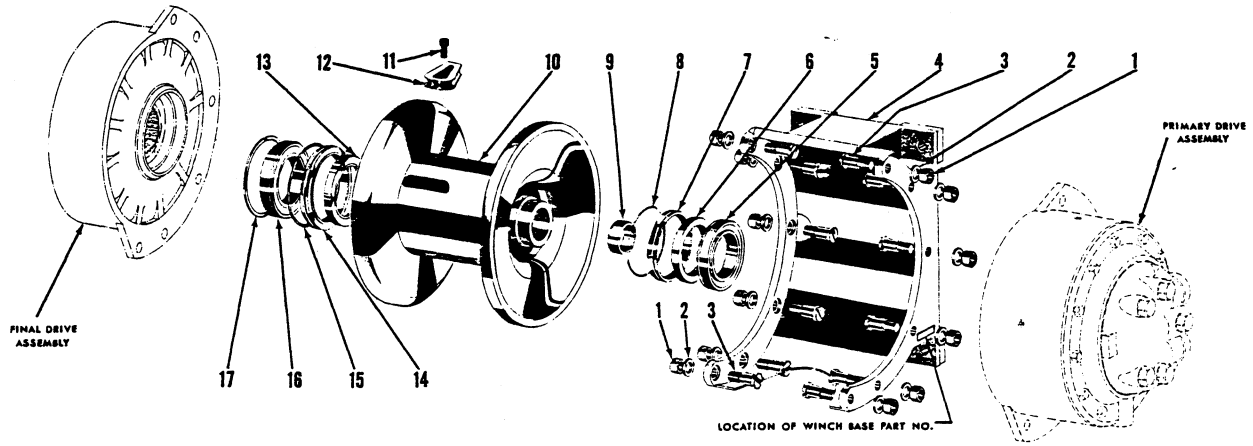

Ref. No.	Part Number	Quan. Req'd.	Name and Description
1	24738	12	NUT
2	24739	12	WASHER
3	24740	12	DOWEL BOLT
4	35623	1	WINCH BASE, MAIN WINCH PRIOR TO SERIAL #502 EXC. 449, 482, 493
5	23202	1	BALL BEARING
6	23203	1	OIL SEAL
7	24741	1	SMALL SEAL RING
8	24742	1	"O" RING
9	23204	1	DRUM BUSHING
10	23205	1	DRUM W/BUSHING - MAIN WINCH, MODEL 11
10	23402	1	DRUM W/BUSHING - AUXILIARY WINCH, MODEL 11
10	23244	1	DRUM W/BUSHING - AUXILIARY WINCH, MODEL 11E
11	24743	1	CAPSCREW
12	23332	1	HONDU
13	23206	1	OIL SEAL
14	24744	1	LARGE SEAL RING
15	24745	1	"O" RING
16	23207	1	BALL BEARING W/SNAP RING
17	24746	1	SNAP RING
	A23201		DRUM SEAL KIT, INCLUDES ITEMS 7, 8, 14, 15

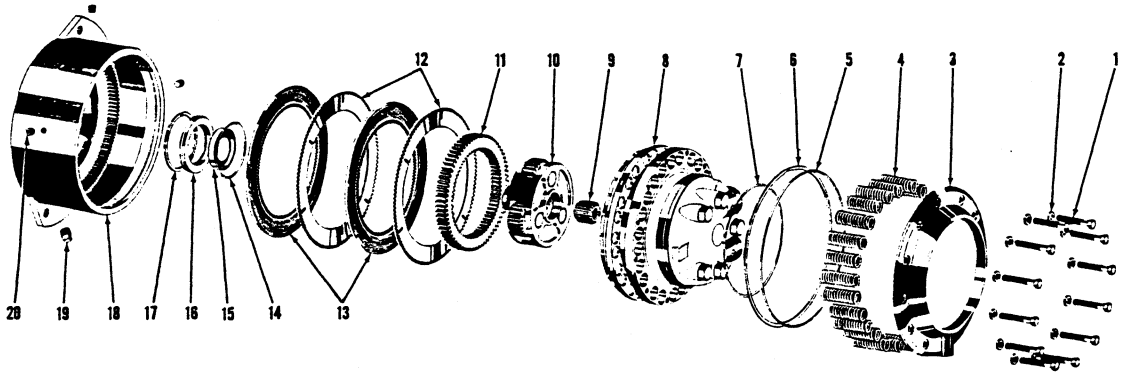

Ref. No.	Part Number	Quan. Req'd.	Name and Description
	A23208		PRIMARY DRIVE ASSEMBLY, MODEL 11 MAIN WINCH, INCLUDES ITEMS 1 THRU 20
1	24747	12	CAPSCREW
2	24748	12	SEAL WASHER
3	24749	1	SPRING COVER
4	24750	24	BRAKE SPRING
5	24751	1	"O" RING
6	24752	1	SNAP RING
7	24753	1	"O" RING
8	A23214	1	MOTOR ASSEMBLY, SEE PAGE 35.31B FOR COMPLETE BREAKDOWN
9	23210	1	SUN GEAR
10	A23213	1	PRIMARY PLANET ASSEMBLY, SEE PAGE 35.31A
11	23211	1	RING GEAR
12	24754	2	DIVIDER PLATE
13	24755	2	BRAKE PLATE
14	24742	1	"O" RING
15	24756	1	OIL SEAL
16	24757	1	SEAL RING
17	24758	1	SNAP RING
18	24759	1	PRIMARY HOUSING
19	24760	1	PIPE PLUG
20	24761	4	PIPE PLUG
	A23209		PRIMARY DRIVE SEAL KIT, INCLUDES ITEMS 5, 6, 7, 14 THRU 17

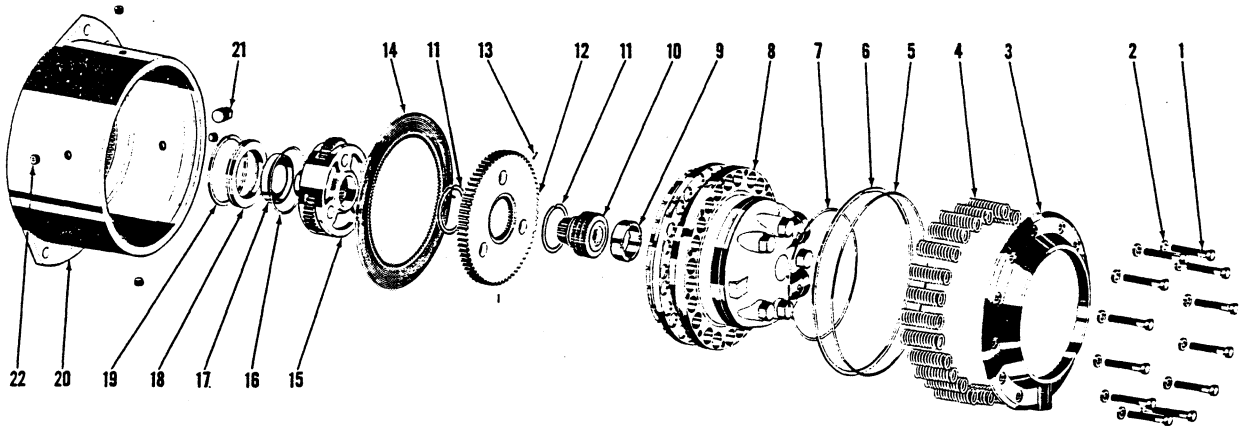

Ref. No.	Part Number	Quan. Req'd.	Name and Description
	A23245	1	PRIMARY DRIVE ASSEMBLY, MODEL 11E AUXILIARY WINCH, INCLUDES ITEMS 1 THRU 22
1	24747	12	CAPSCREW
2	24748	12	SEAL WASHER
3	24749	1	SPRING COVER
4	24750	12	BRAKE SPRING
5	24751	1	"O" RING
6	24752	1	SNAP RING
7	24753	1	"O" RING
8	A23214	1	MOTOR ASSEMBLY, SEE PAGE 35.31B FOR COMPLETE BREAKDOWN
9	24762	1	THRUST SPACER
10	A23246	1	BRAKE HUB ASSEMBLY, SEE PAGE 35.31B FOR PARTS BREAKDOWN

Ref. No.	Part Number	Quan. Req'd.	Name and Description
11	24763	2	SNAP RING
12	24764	1	BRAKE RING
13	24765	3	PIN
14	24755	1	BRAKE PLATE
15	A23247	1	PRIMARY PLANET ASSEMBLY
16	24742	1	"O" RING
17	24756	1	OIL SEAL
18	24757	1	SEAL RING
19	24758	1	SNAP RING
20	24766	1	PRIMARY HOUSING
21	24760	1	PIPE PLUG
22	24761	4	PIPE PLUG
	A23209	1	PRIMARY DRIVE SEAL KIT, INCLUDES ITEMS 5, 6, 7, 16 THRU 19

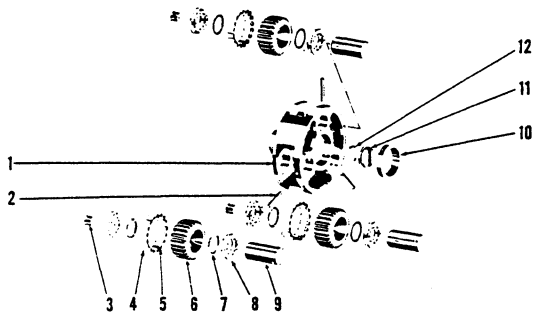

FIGURE 1 - MODEL 11

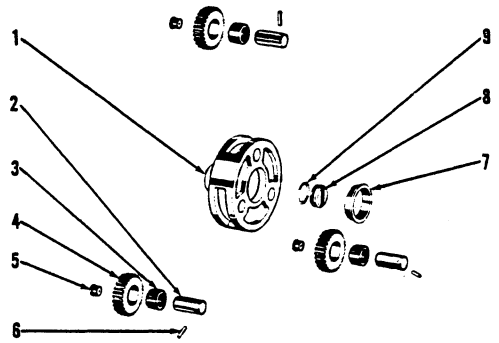

FIGURE 2 - MODEL 11E

	A23213	1	PRIMARY PLANET ASSEMBLY, MODEL 11 MAIN & AUXILIARY WINCHES, INCLUDES ITEMS 1 THRU 12
1	24767	1	PRIMARY PLANET HUB
2	24768	3	PIN
3	24769	3	THRUST PLUG
4	24770	48	CAM LOCK
5	24771	3	CLEARANCE CAM LOCK
6	24772	3	PRIMARY PLANET GEAR
7	24773	6	GARTER SPRING
8	24774	6	ROLLER BEARING
9	24775	3	PRIMARY PLANET PIN
10	24776	1	BUSHING
11	24777	1	THRUST PAD
12	24778	1	"O" RING
	A23247	1	PRIMARY PLANET ASSEMBLY, MODEL 11E AUXILIARY WINCH, INCLUDES ITEMS 1 THRU 9
1	24779	1	PRIMARY PLANET HUB
2	24780	3	PRIMARY PLANET PIN
3	24781	3	NEEDLE BEARING
4	24782	3	PRIMARY PLANET GEAR
5	24769	3	THRUST PLUG
6	24783	3	PIN
7	24776	1	BUSHING
8	24777	1	THRUST PAD
9	24778	1	"O" RING

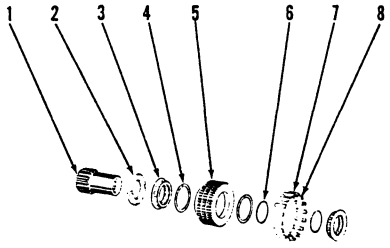

Ref. No.	Part Number	Quan. Req'd.	Name and Description
	A23246	1	BRAKE HUB ASSEMBLY, MODEL 11E AUXILIARY WINCH, INCLUDES ITEMS 1 THRU 8
1	24784	1	SUN GEAR
2	24785	1	GEAR SPACER
3	24774	2	ROLLER BEARING
4	24786	2	SNAP RING
5	24787	1	BRAKE HUB
6	24773	2	GARTER SPRING
7	24770	16	CAM LOCK
8	24771	1	CLEARANCE CAM LOCK, COPPER

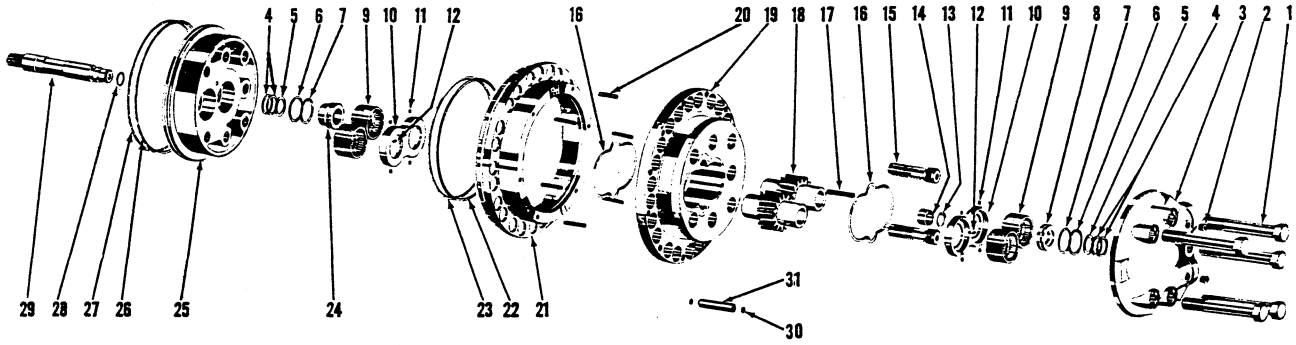

MODEL 11 & 11E

	A23214	1	MOTOR ASSEMBLY, INCLUDES ITEMS 1 THRU 29
	A23215	1	MOTOR SEAL KIT - INCLUDES ITEMS 4 THRU 7, 16, 22, 23, 26, 27, 28
1	24788	5	CAPSCREW
2	24761	2	PIPE PLUG
3	24789	1	PORT END COVER
4	24790	4	BACK-UP WASHER
5	24791	2	"O" RING
6	24792	2	BACK-UP WASHER
7	24793	2	"O" RING
8	24794	1	SHORT BUSHING
9	24795	4	NEEDLE BEARING

Ref. No.	Part Number	Quan. Req'd.	Name and Description
10	24796	2	THRUST PLATE
11	24797	8	LARGE POCKET SEAL
12	24798	2	SMALL POCKET SEAL
13	24799	1	SNAP RING
14	24800	1	SLEEVE
15	24801	2	CAPSCREW
16	24802	2	"O" RING
17	24803	1	KEY
18	24804	1	MATCHED GEAR SET
19	24805	1	GEAR HOUSING
20	24806	6	PIN
21	24807	1	BRAKE PISTON
22	24808	1	BACK-UP WASHER
23	24809	1	"O" RING
24	24810	1	LONG BUSHING
25	24811	1	SHAFT END COVER
26	24812	1	"O" RING
27	24813	1	BACK-UP WASHER
28	24814	1	"O" RING
29	23216	1	MOTOR SHAFT
	A23217	1	MOTOR GEAR KIT, INCLUDES ITEMS 8 THRU 15, 17, 18, 24

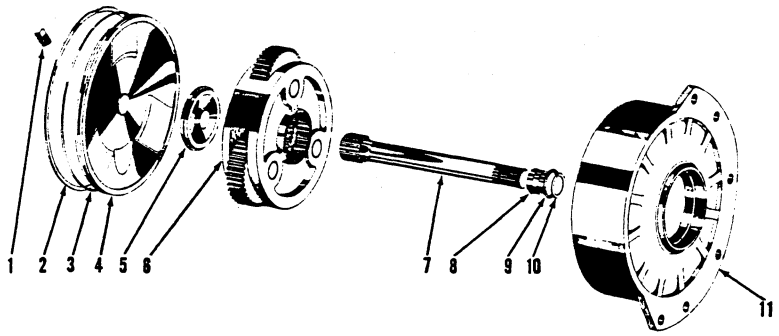

	A23218	1	FINAL DRIVE ASSEMBLY, MODEL 11 & 11E, INCLUDES ITEMS 1 THRU 11
1	24815	1	PIPE PLUG
2	24752	1	SNAP RING
3	24751	1	"O" RING
4	24816	1	END COVER
5	24817	1	THRUST PLATE
6	A23220	1	FINAL PLANET ASSEMBLY, SEE BREAKDOWN PAGE 35.31D
7	23221	1	SUN GEAR SHAFT W/SEAL RING, FOR DRUM 8" BETWEEN FLANGES
7	24926	1	SUN GEAR SHAFT W/SEAL RING, FOR DRUM 13" BETWEEN FLANGES
7	24927	1	SUN GEAR SHAFT W/SEAL RING, FOR DRUM 19" BETWEEN FLANGES
8	24818	1	TAPER SEAL RING
9	24819	1	"O" RING
10	24820	1	SNAP RING
11	24821	1	FINAL HOUSING
	A23219	1	FINAL DRIVE SEAL KIT, INCLUDES ITEMS 2, 3, 9, 10

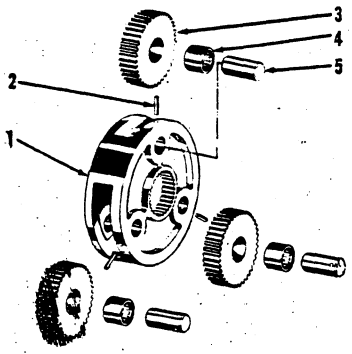

Ref. No.	Part Number	Quan. Req'd.	Name and Description
	A23220	1	FINAL PLANET ASSEMBLY, INCLUDES ITEMS 1 THRU 5
1	24822	1	FINAL PLANET HUB
2	24823	3	PIN
3	24824	3	FINAL PLANET GEAR
4	24825	3	NEEDLE BEARING
5	24826	3	FINAL PLANET PIN

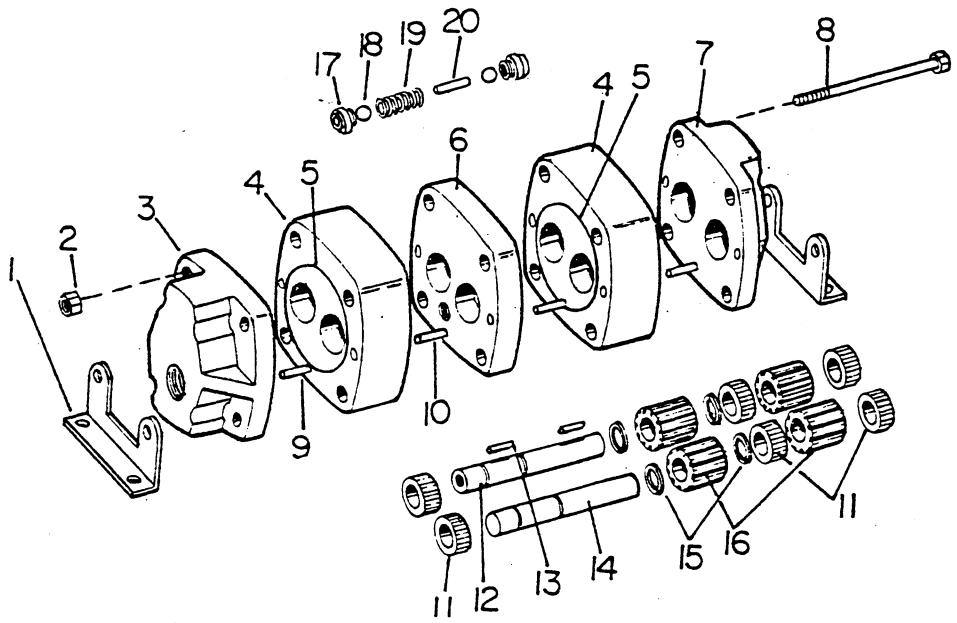

Ref. No.	Part Number	Quan. Req'd.	Name and Description	
	35873		DUAL PROPORTIONATOR	(Replaces 35414 Prior to Ser. #773 exc. 699, 740)
1	27817	2	MOUNTING BRACKET	(REES MOUNT BKT CHANGE DED SEQU. LETTER 15)
2	27820	4	NUT	
3	200529	1	END PLATE	
4	27810	2	CASE	
5	23250	4.	"O" RING	
6	27812	1	SPACER PLATE	
7	27811	1	END PLATE	
8	27818	2	CAPSCREW	
	200527	2	CAPSCREW, MOUNTING BRACKET	
9	200520	6	DOWEL PIN	
10	23251	2	DOWEL PIN	
11	23253	6	BEARING	
12	27813	1	IDLER SHAFT	
13	23252	2	DOWEL PIN	
14	23249	1	IDLER SHAFT	
15	23254	4	RETAINING RING	
16	23248	4	GEAR	
17	27814	2	VALVE HEAD	
18	27815	2	BALL	
19	27816	1	SPRING	
20	200530	1	DOWEL PIN	

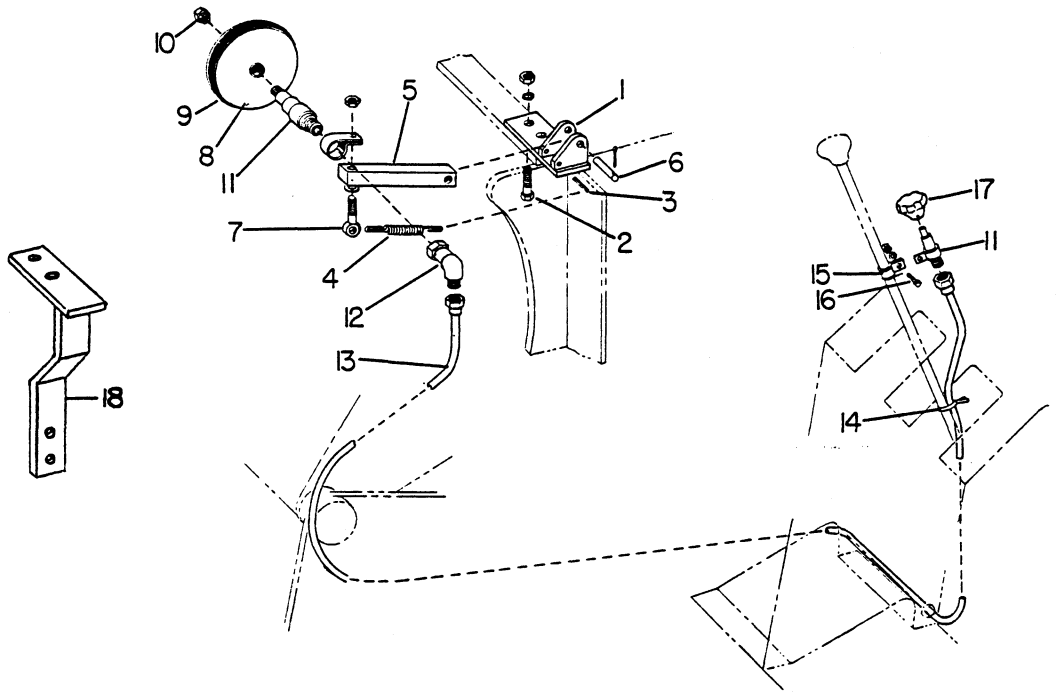

Ref. No.	Part Number	Quan. Req'd.	Name and Description
	A35990		INDICATOR ASS'Y - Gearmatic 22 - Low Profile Boom
	A35989		INDICATOR ASS'Y - Gearmatic 22 - High Profile Boom
	A38798		INDICATOR ASS'Y - Gearmatic 11 Auxiliary Winch
	A41821		INDICATOR ASS'Y - Bantam Main Winch
	A41822		INDICATOR ASS'Y - Bantam Auxiliary Winch
1	F35991	1	SUPPORT - Gearmatic Winch
	F41932	1	SUPPORT - Bantam Main Winch (Welded to boom)
	F41933	1	SUPPORT - Bantam Aux. Winch (Bolted to Winch)
2	1200-61	2	CAPSCREW, 3/8 UNC x 1-1/4 lg.
	1210-20	2	LOCKWASHER, 3/8 med.
	1205-36	2	NUT, 3/8 UNC
3	1227-186	1	ROLL PIN
4	35994	1	SPRING
5	35995	1	ARM
6	35996	1	PIN
	1207-4	2	COTTER PIN, 3/32 x 3/4 lg.
7	2228	1	EYE BOLT
	1209-4	2	PLAINWASHER, 3/8 reg.
	1210-20	1	LOCKWASHER, 3/8 med.
	1205-36	1	NUT, 3/8 UNC
8	35997	1	WHEEL
9	1218-66	1	"O" RING

Ref. No.	Part Number	Quan. Req'd.	Name and Description
10	1205-32	1	NUT, 5/16 UNC SELF-LOCKING
11	1253-13	2	DRIVE ASSEMBLY
12	1253-14	1	DRIVE JOINT
13	1253-12	1	FLEXIBLE SHAFT W/ NUTS - 12' LG. - LOW PROFILE MAIN WINCH
	1253-15	1	FLEXIBLE SHAFT W/ NUTS - 13' LG. - HI PROFILE, AUX. WINCH
14	1222-184	2	PLASTIC TIE
15	1240-72	1	CLAMP
16	1200-57	1	CAPSCREW, 3/8 UNC x 3/4 LG.
	1210-20	1	LOCKWASHER, 3/8 MED.
	1205-36	1	NUT, 3/8 UNC
17	1221-37	1	KNOB
18	F38561	1	BRACKET - AUX. WINCH ONLY

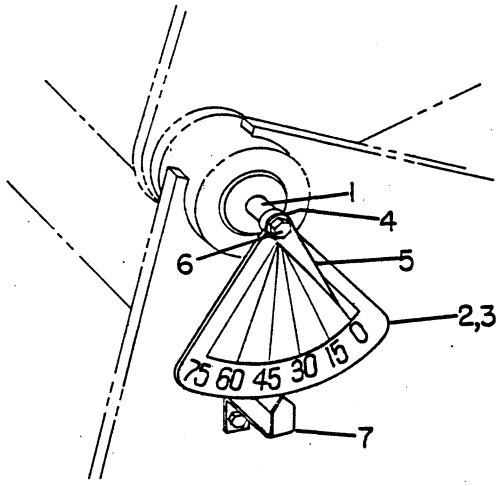

Ref. No.	Part Number	Quan. Req'd.	Name and Description
	A35607		BOOM ANGLE INDICATOR ASSEMBLY
1	35598	1	INDICATOR POST
	1210-20	1	LOCKWASHER
2	F35596	1	INDICATOR BRACKET
3	12260-30	1	INDICATOR PLATE
4	1217-24	1	BALL BEARING
5	35597	1	INDICATOR HAND
6	1205-14	1	NUT
	1210-14	1	LOCKWASHER
7	35599	1	LEVEL INDICATOR

SER# 201 1ST UNIT
TK450 #1702
#1752 ON (EXC 1757)

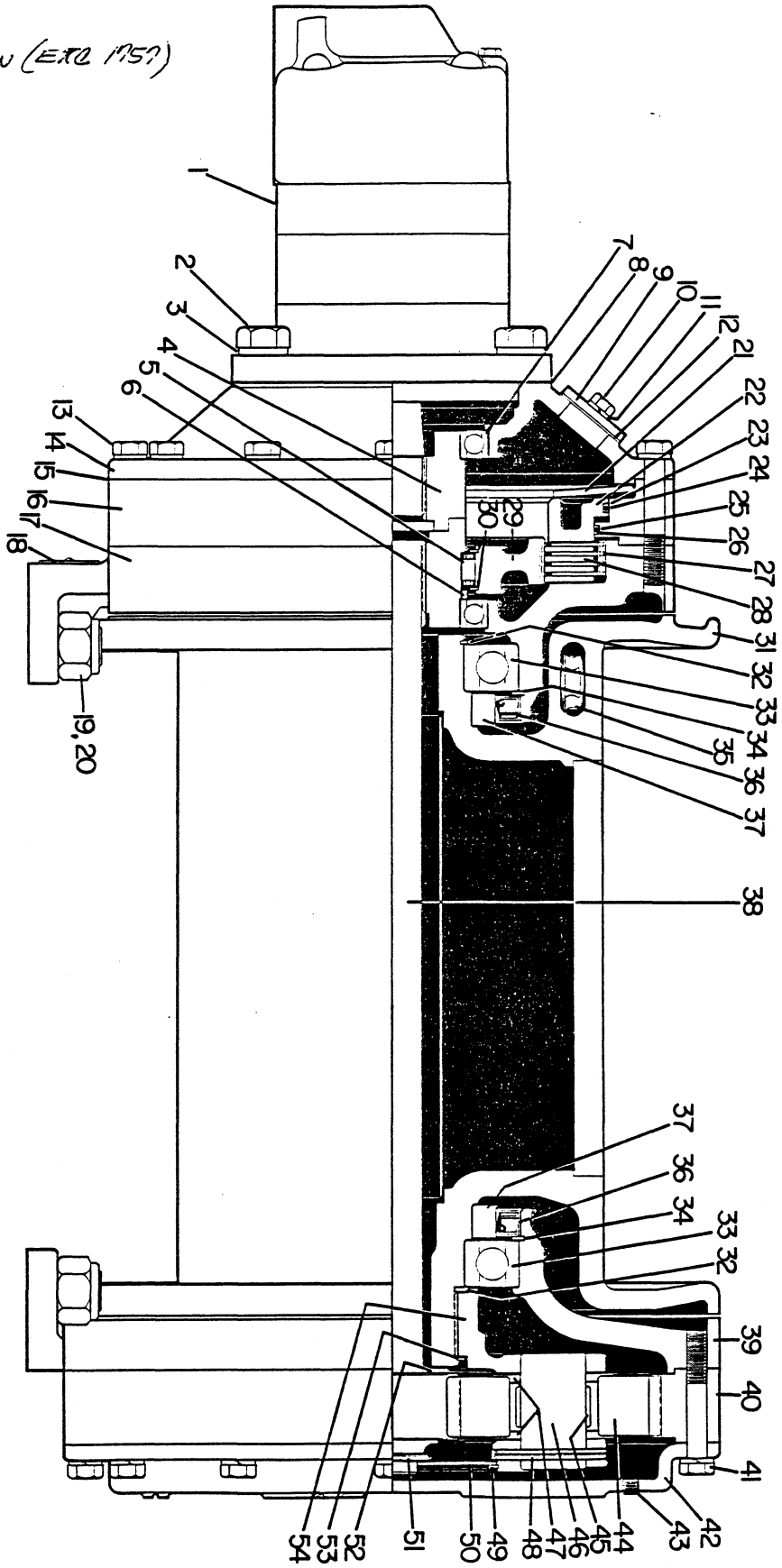

Ref. No.	Part Number Prior To Winch #601	Part Number Begin. W/ Winch #601	Quan. Req'd.	Name and Description
	A38750			WINCH COMPLETE - INCLUDES ITEMS 1 THRU 54 AND ITEMS 1 THRU 6, PAGE 6.23
	A26320		1	SEAL KIT - INCLUDES SHIMS, GASKETS, "O" RINGS, BACK-UP WASHERS, LIP SEALS *incl. 8, 12, 15, 23-24, 36*
1			1	MOTOR - SEE PAGE 35.40
2	1200-186		4	CAPSCREW, 5/8 UNC x 1 3/4 LG.
3	1209-9	1208-8	4	WASHER
4	41310	49355	1	HUB ASSEMBLY (49355 REPLACES 49134)
		49356	1	SPACER
5	41333		1	SPRAG CLUTCH
6	41330	49136	1	SPACER
7	1217-268	1217-312	2	BALL BEARING
8	41324		3	SHIM
9	41331		1	COVER
10	1200-59	1203-146	2	CAPSCREW
11	1209-4		2	LOCKWASHER
12	41575		1	GASKET
13	1200-114		12	CAPSCREW, 1/2 UNC x 3 1/4 LG.
	1210-26		12	LOCKWASHER, 1/2 MED.
14	41309	49133	1	END COVER
15	41321		3	SHIM
16	41317		1	PISTON HOUSING
	1219-38		1	PLUG, 1/8 NPT
17	41319	49132	1	MAIN DRIVE MOUNT
18	12260-160		1	IDENTIFICATION PLATE
	1211-22		2	DRIVE SCREW FOR ABOVE
19	1229-137		4	CAPSCREW, 1 UNF x 2 3/4 LG.
	49137		AR	SHIM FOR ABOVE
20	1205-123		4	LOCKNUT
21	38755		1	BELLEVILLE SPRING

Ref. No.	Part Number	Quan. Req'd.	Name and Description
22	41315	1	ANNULAR PISTON
23	1218-151	1	BACK-UP RING
24	1218-150	1	"O" RING
25	1218-152	1	"O" RING
26	1218-153	1	BACK-UP RING
27	38757	4	SEPARATOR DISC
28	38758	4	CLUTCH DISC
29	38744	1	OUTER RACE
30	1220-69	2	RETAINING RING
31	F49019	1	DRUM - BEGIN. W/SER. #488 (WINCH) - REPLACES F41320
	F49690	1	DRUM - BEGIN. W/SER. #1155 (WINCH)
32	1220-70	1	RETAINING RING
33	1217-267	2	BALL BEARING
34	1220-71	2	RETAINING RING
35	38753	1	WEDGE
36	1218-154	2	LIP SEAL
37	41325	2	SEAL RACE
38	38747	1	CENTER SHAFT - 22 3/4" LG.
39	41327	1	FINAL DRIVE MOUNT
40	36516	1	RING GEAR
41	1200-114	12	CAPSCREW, 1/2 UNC x 3 1/4 LG.
	1210-26	12	LOCKWASHER, 1/2 MED.
42	41329	1	COVER
43	1219-21	2	PLUG, 3/8 NPT
44	36519	3	PLANET GEAR
45	1217-251	3	ROLLER BEARING

Ref. No.	Part Number	Quan. Req'd.	Name and Description
46	36525	3	SHAFT
47	36526	6	BUSHING
48	1227-264	3	ROLL PIN
49	1220-73	1	RETAINING RING
50	38756	1	BUSHING HOLDER BOSS
51	36533	1	BUSHING
52	38754	1	BUSHING
53	1220-79	1	RETAINING RING
54	38759	1	PLANET CARRIER
	50448	2	CABLE GUARD (NOT SHOWN) - BEGIN. W/SER. #529 (WINCH)
	49688	2	CABLE GUARD (NOT SHOWN) - BEGIN. W/SER. #1155 (WINCH)

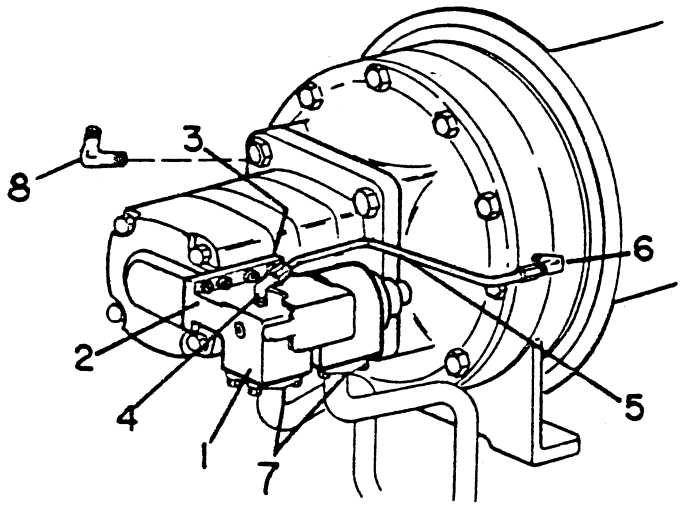

Ref. No.	Part Number	Quan. Req'd.	Name and Description
1	41980	1	HOLD VALVE - SEE PAGE 35.40A (Replaces 41521)
2	1218-115	2	"O" RING
3	1203-135	8	CAPSCREW, 3/8 UNC x 1 LG.
4	1219-351	2	ADAPTER
5	41577	1	TUBE
6	1219-776	1	ADAPTER
	1218-144	1	"O" RING, FOR ABOVE
7	1219-665	4	SPLIT FLANGE CLAMP
	1218-103	2	"O" RING
	1203-137	8	CAPSCREW, 3/8 UNC x 1 1/4 LG., H.T.
	1210-20	8	LOCKWASHER, 3/8 MED.
8	12019-124	1	ADAPTER

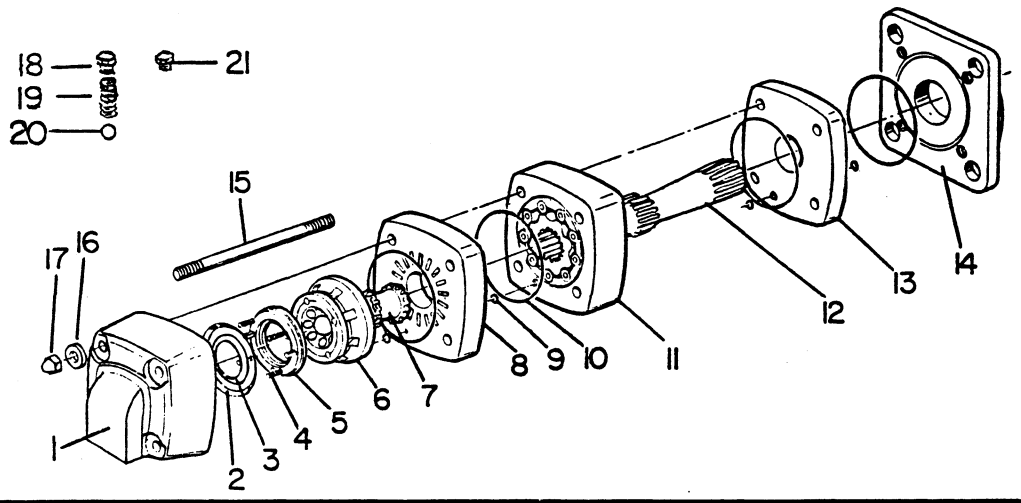

Ref. No.	Part Number	Part Number	Quan. Req'd.	Name and Description
	PRIOR TO SER.#775	BEGIN. W/ SER.#775		
	41332	49405	1	MOTOR COMPLETE
	26319	26319	1	SEAL KIT, INCLUDES ITEMS 2, 3, 9, 10
1	26321	27945	1	HOUSING
2	26322	26322	1	OUTER FACE SEAL
3	26323	26323	1	INNER FACE SEAL
4	26324	26324	4	SPRING
5	26325	26325	1	BALANCING PLATE ASSEMBLY
6	26326	27946	1	VALVE
7	26327	26327	1	VALVE DRIVE
8	26328	27947	1	VALVE PLATE
9	26329	26329	4	"O" RING
10	26330	26330	4	SEAL
11	27972	27974	1	GEROLER ASSEMBLY
12	27973	27973	1	OUTPUT SHAFT
13	26333	27949	1	WEAR PLATE
14	26334	27950	1	MOUNTING PLATE
15	26335	27951	4	STUD
	27955	27954	4	"O" RING, FOR ABOVE
16	26336	27952	4	WASHER
17	27956	27953	4	NUT
18	26416		2	CHECK VALVE PLUG ASS'Y
	22845		2	"O" RING only
19	26417		2	SPRING
20	26418		2	BALL
21	1219-860		1	PLUG w/"O" ring (Case Drain)
	1218-144		1	"O" RING

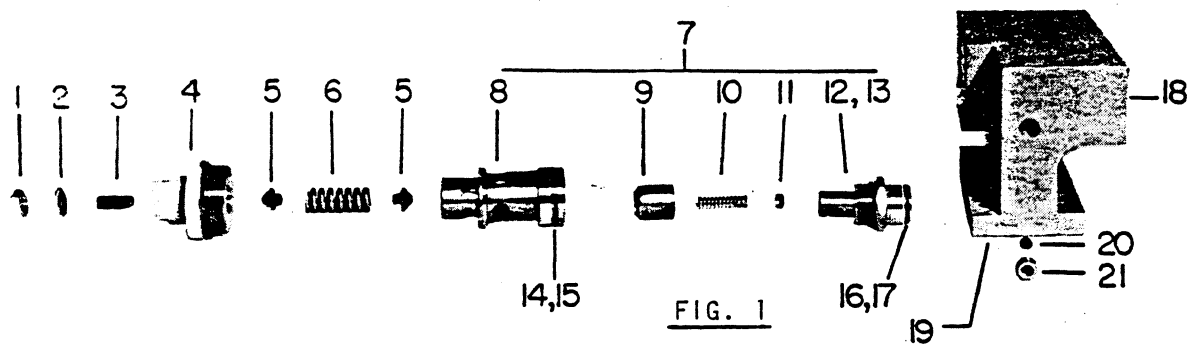

FIG. 1

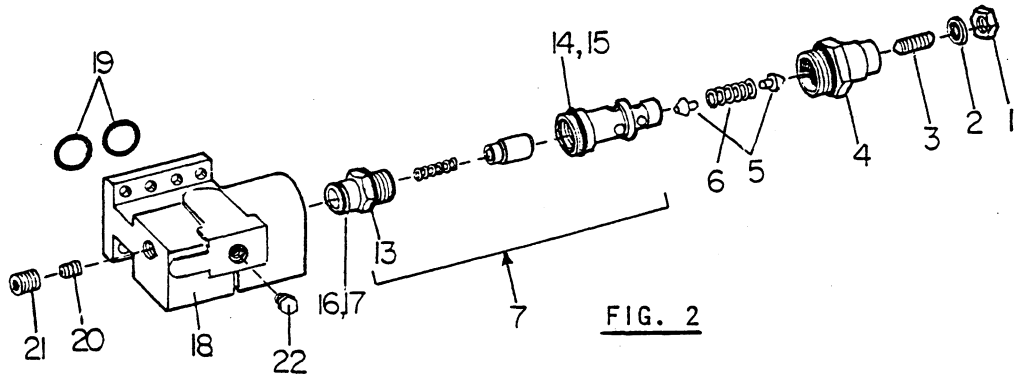

FIG. 2

Ref. No.	Part Number	Part Number	Quan. Req'd.	Name and Description
	Fig. 1	Fig. 2		
	41521	41980	1	HOLD VALVE Complete
	26560		1	REPAIR KIT - Includes Items 4, 7 thru 17, 19
1	26561	26561	1	NUT
2	26562	26562	1	THREAD SEAL
3	26563	26563	1	ADJUSTING SCREW
4	26564	26564	1	PLUG
	26565	202864	1	"O" RING, For above plug
5	26566	26566	2	SPRING END
6	26567	26567	1	SPRING
7	26568	202865	1	PISTON & POPPET ASS'Y - Incl. Items 8 thru 13
8	26569		1	POPPET
9	26570		1	POPPET
10	26571		1	SPRING
11	26572		1	SPRING SPACER
12	26573		1	PLUG & GUIDE
13	13552	1218-64	1	"O" RING
14	26391		1	SLIPPER SEAL
14		202866	1	BACK-UP RING
15	26393	1218-115	1	"O" RING
16	26574	26574	1	"O" RING
17	26575	26575	1	BACK-UP RING
18	26576	202867	1	BODY
19	1218-115	1218-115	2	"O" RING
20	26577	26577	1	ORIFICE PLUG (.030")
21	26578	202868	1	PLUG
22		1219-763	1	PLUG
		1218-155	1	"O" RING, For above plug

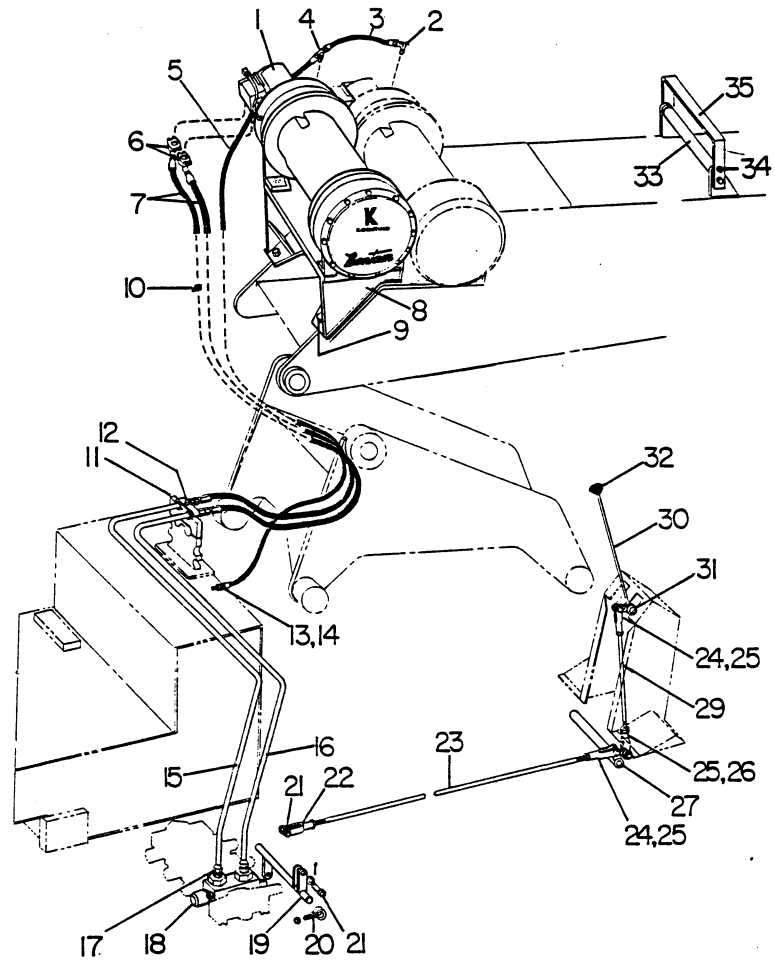

Ref. No.	Part Number	Quan. Req'd.	Name and Description
	A41572		AUXILIARY WINCH ASSEMBLY - OPTIONAL - INCLUDES ITEMS 1 THRU 35
1	A38750	1	HYDRAULIC WINCH ASSEMBLY - SEE PAGE 35.35 FOR BREAKDOWN
2	1219-464	1	ADAPTER
3	A35885	1	HOSE ASSEMBLY
4	1219-466	1	TEE
5	~~A35523~~ A49224	1	HOSE ASSEMBLY
6	1219-665	4	SPLIT FLANGE CLAMP
	1203-137	8	CAPSCREW, 3/8 UNC x 1 1/4 LG., H.T.
	1210-20	8	LOCKWASHER, 3/8 MED.
	1218-103	2	"O" RING
7	A41574	2	HOSE ASSEMBLY
8	F41538	1	BRACKET

Ref. No.	Part Number	Quan. Req'd.	Name and Description
9	1229-129	4	CAPSCREW, 1 UNF x 3 LG., H.T.
	1205-123	4	NUT, 1 UNF SELF-LOCKING
10	1240-29	3	CLAMP
11	35701	1	SUPPORT
12	1200-79	2	CAPSCREW, 3/8 UNC x 3 1/2 LG.
	1210-20	2	LOCKWASHER, 3/8 MED.
13	1219-254	1	REDUCER
14	1219-283	1	ADAPTER
15	35726	1	TUBE
16	35727	1	TUBE
17	1219-282	2	ADAPTER
18	35298	1	VALVE SECTION
	38573	4	BOLT (REQUIRED TO INSTALL SECTION)
19	F38578	1	BELLCRANK
20	A35743-1	1	SUPPORT
	1216-2	1	BUSHING, FOR ABOVE
	1210-20	2	LOCKWASHER
	1205-37	2	NUT, 3/8 UNF
21	1689	2	PIN
	1207-13	2	COTTER PIN, 1/8 x 1/4 LG.
	1209-6	1	PLAINWASHER, 1/2
22	2465	1	YOKE
	1205-148	1	NUT, 1/2 UNF, LH
23	A35172-1	1	ROD
24	3118	2	YOKE
	1205-37	2	NUT
25	3119	3	PIN
	1207-5	3	COTTER PIN, 3/32 x 1 LG.
26	35559	1	YOKE
	1205-162	1	NUT, 3/8 UNF, LH
27	A35745-1	1	BELLCRANK
	1213-1	1	GREASE FITTING
29	35560	1	ROD
30	A35697-1	1	LEVER

Model TK-450
Date 1 JUNE 1971

AUXILIARY BANTAM WINCH

Group No. 35
Page 35.4

Ref. No.	Part Number	Quan. Req'd.	Name and Description
31	1227-186	1	ROLL PIN, 3/16 x 1 1/2 LG.
32	1222-94	1	KNOB
33	A15025-2	1	ROLLER W/BEARING - CENTER BOOM SECTION
	A35401-2	1	ROLLER W/BEARING - BASE BOOM SECTION
	1217-66	4	BEARING, FOR ABOVE ROLLERS
	1213-10	2	GREASE FITTING
34	10957	1	SHAFT, CENTER BOOM SECTION
	38404	1	SHAFT, BASE BOOM SECTION
	1205-89	2	NUT, 5/8 UNF SELF-LOCKING
35	35648	1	STRAP, CENTER BOOM SECTION
	35649	1	STRAP, BASE BOOM SECTION

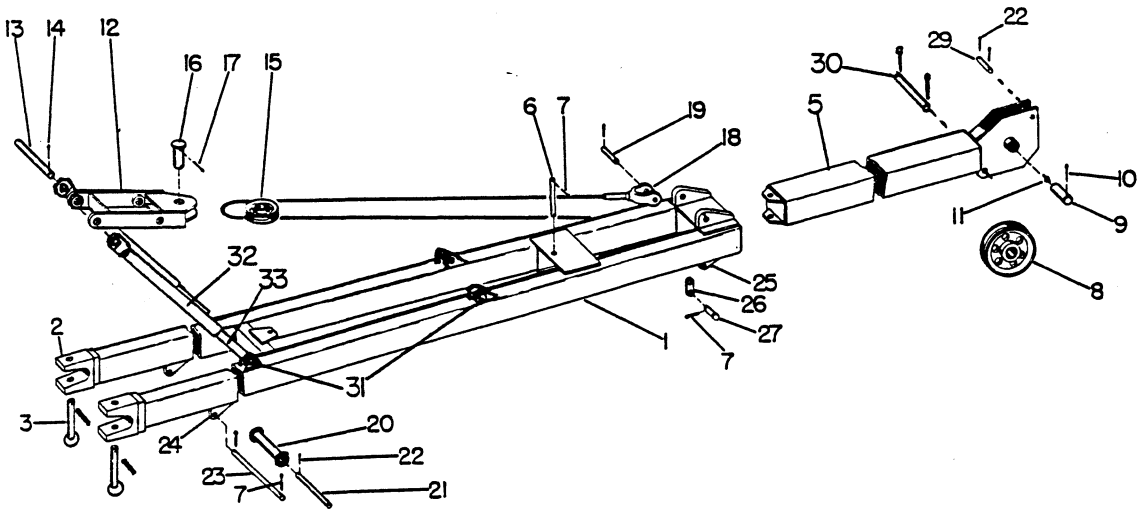

Ref. No.	Part Number	Part Number	Part Number	Quan. Req'd.	Name and Description
	A35415	A49305 *REPLACES A38997*	A49306 *REPLACES A38890*		JIB ATTACHMENT, COMPLETE, INCLUDES ITEMS 1 THRU 33
	10 1/2"	10 1/2"	13 1/2"		SHEAVE SIZE
	FOR A35404-1 BOOM HEAD				
1	35547	F38891	F38891	1	JIB BOOM ONLY
2	35886	35886	35886	2	BEARING BLOCK
	35553	35553	35553	AR	SHIM, FOR ABOVE
3	35887	35887	35887	2	PIN
	1227-335	1227-335	1227-335	2	ROLL PIN, FOR ABOVE
5	A35549-1	A35549-1	F38910	1	EXTENSION
6	17143	17143	17143	1	PIN
7	1207-40	1207-40	1207-40	6	COTTER PIN, 1/4 x 1 1/2 LG.
8	A18389-1	A18389-1		1	SHEAVE WITH BUSHING, 10 1/2"
	1214-8	1214-8		1	BUSHING, FOR ABOVE
8			A38934	1	SHEAVE WITH BUSHING, 13 1/2"
			1214-39	1	BUSHING, FOR ABOVE
9	4143	4143	38895	1	PIN
10	1207-71	1207-59	1207-71	1	COTTER PIN

Model T-450 TELEKRANE — Group No. 36
Date REV. 1 MARCH 1977 — 15'-20' JIB — Page 36.2

Ref. No.	Part Number	Part Number	Part Number	Quan. Req'd.	Name and Description
	A35415	A49305	A49306		
11	1213-1	1213-1	1213-1	1	GREASE FITTING
12	A35551-1	F38979	A35551-1	1	PENDANT BRACKET
13	35552	41257	38732	1	PIN
13		49314	49313	1	PIN - FOR JIB STOPS
14	1207-42	1207-55	1207-55	2	COTTER PIN
15	A18386-1	A18386-1	A18386-1	1	SHEAVE W/BUSHING
	1214-8	1214-8	1214-8	1	BUSHING, FOR ABOVE
16	A35568-1	A35568-1	A35568-1	1	PIN
17	1207-57	1207-57	1207-57	2	COTTER PIN, 5/16 x 2 1/2 LG.
18	35554	35554	35554	1	PENDANT W/PINS
19	10784	10784	10784	2	PIN
	1207-42	1207-42	1207-42	4	COTTER PIN, FOR ABOVE
20	35555	F38871	F38906	1	ROLLER
21	35520	38995	9855	1	PIN
22	1207-22	1207-30	1207-30	4	COTTER PIN
23	6035	41272	41272	1	PIN
24	35644	38495	38495	2	EAR (38495 REPL. 38908)
25	35565	35565	35565	2	EAR
	35566	35566	35566	2	EAR (FOR CRANE BOOM)
26	35567	35567	35567	1	LINK
27	1398	1398	1398	2	PIN
29		38490	38490	1	PIN
30		38909	38909	1	PIN
		1207-40	1207-40	2	COTTER PIN, FOR ABOVE
31		38768	38768	4	PIN
		1207-30	1207-30	4	COTTER PIN, FOR ABOVE
32		F49307	F49307	2	TUBE
33		F49310	F49310	2	TUBE
	35685	35685	35685	1	BALL & HOOK BLOCK
	1269-175	1269-175	1269-175	1	HOIST CABLE - 1/2" 6 x 19 IWRC PREFORMED WIRE ROPE.

JIB STOPS, ITEMS 31 THRU 33 BEGIN. W/ SER. #1992

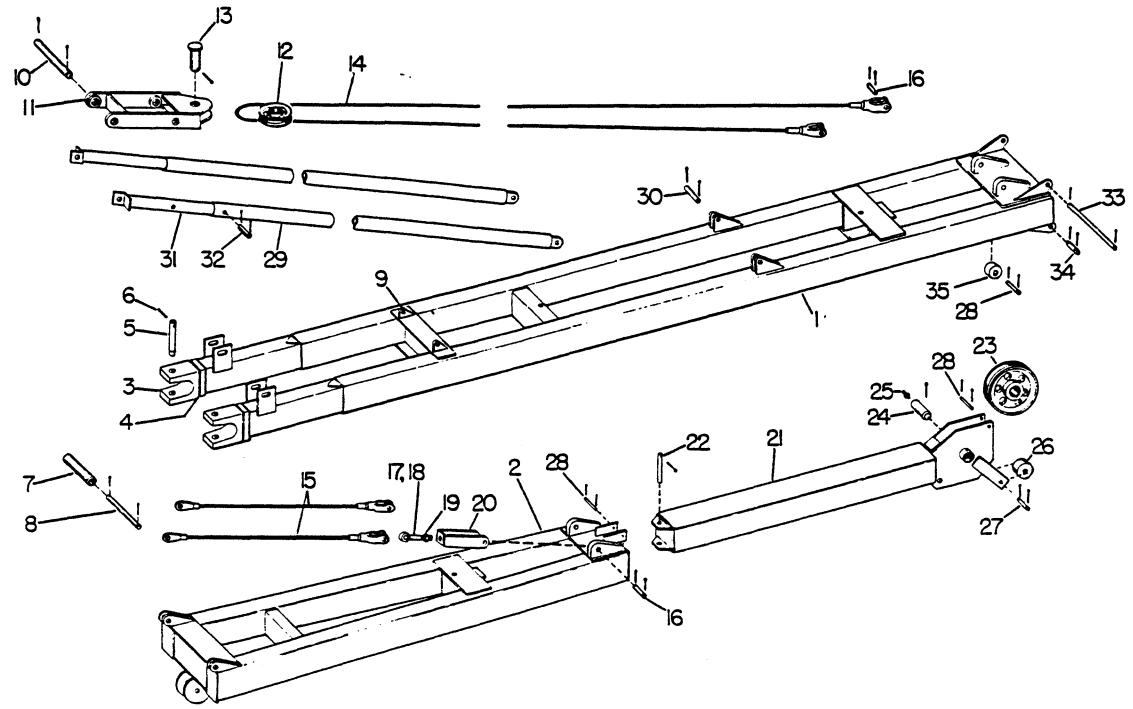

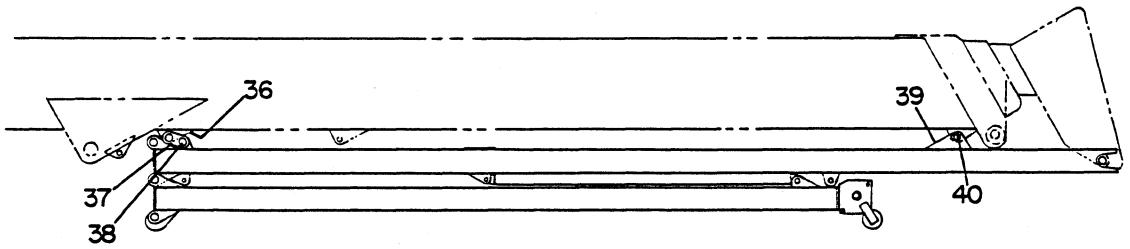

Ref. No.	Part Number	Part Number	Part Number	Quan. Req'd.	Name and Description
	A41235	A41270	A41258		32' JIB ASSEMBLY, INCLUDES ITEMS 1 THRU 40
	FOR A35404-1 BOOM HEAD	10 1/2" SHEAVES	13 1/2" SHEAVES		
1	F41236-			1	BOTTOM SECTION (REPLACES F38442)
1		F41271	F41271	1	BOTTOM SECTION
2	F38461-	F38461	F38461	1	TOP SECTION
3	35886	35886	35886	2	BEARING BLOCK - ASSEMBLE TO BOOM HEAD. USE SHIMS TO CENTER JIB WITH BOOM. WELD JIB & SHIMS TO BLOCKS
4	35553	35553	35553	AR	SHIM, FOR ABOVE BLOCKS

Model T-450 TELEKRANE
Date REV. 1 JUNE 1970

32' JIB

Group No. 36
Page 36.4

Ref. No.	Part Number	Part Number	Part Number	Quan. Req'd.	Name and Description
	A41235	A41270	A41258		
5	35887	35887	35887	2	PIN
6	1227-335	1227-335	1227-335	2	ROLL PIN
7	35555	F38871	F38906	1	ROLLER
8	35520	38995	9855	1	PIN
	1207-22	1207-22	1207-22	2	COTTER PIN
9	38473	38473	38473	2	EAR
10	38474	41237	38474	1	PIN
	1207-66	1207-66	1207-66	2	COTTER PIN
11	A35551-1	F38979	A35551-1	1	BRACKET
			1209-13	2	WASHER, FOR ABOVE
12	A18386-1	A18386-1	A18386-1	1	SHEAVE
	1214-8	1214-8	1214-8	1	BUSHING, FOR ABOVE
13	A35568-1	A35568-1	A35568-1	1	PIN
	1207-57	1207-57	1207-57	1	COTTER PIN
14	35554	35554	35554	1	PENDANT
15	10790	10790	10790	2	PENDANT - 10'
16	10784	10784	10784	5	PIN
	1207-42	1207-42	1207-42	10	COTTER PIN
17	F38475	F38475	F38475	1	BOLT, SHORT - FOR FULL JIB
18	F38476	F38476	F38476	1	BOLT, LONG - FOR SHORT JIB
19	1205-124	1205-124	1205-124	2	NUT, 1" UNC ELASTIC
20	F38480	F38480	F38480	1	LINK
21	F38522	F38522	F38921	1	EXTENSION
22	38491	38491	38491	1	PIN
	1207-41	1207-41	1207-41	2	COTTER PIN
23	A18389-1	A18389-1		1	SHEAVE - 10 1/2"
	1214-8	1214-8		1	BUSHING, FOR ABOVE
23			A38934	1	SHEAVE - 13 1/2"
			1214-39	1	BUSHING, FOR ABOVE
24	4143	4143	38895	1	PIN
	1207-59	1207-59	1207-71	1	COTTER PIN
25	1213-1	1213-1	1213-1	1	GREASE FITTING

Model T-450 TELEKRANE
Date REV. 1 JUNE 1970

32' JIB

Group No. 36
Page 36.

Ref. No.	Part Number	Part Number	Part Number	Quan. Req'd.	Name and Description
	A41235	A41270	A41258		
26	38493	38493	38493	1	ROLLER
27	38494	38494	38494	1	PIN
	1207-22	1207-22	1207-22	2	COTTER PIN
28	38490	38490	38490	3	PIN
	1207-22	1207-22	1207-22	6	COTTER PIN
29	F41233	F41233	F41233	2	OUTER TUBE
30	2335	2335	2335	2	PIN
	1207-22	1207-22	1207-22	2	COTTER PIN
31	F41234	F41234	F41234	2	INNER TUBE
32	5882	5882	5882	2	PIN
	1207-41	1207-41	1207-41	2	COTTER PIN
33	38487	38487	38487	1	PIN
	1207-41	1207-41	1207-41	2	COTTER PIN
34	38488	38488	38488	2	PIN
	1207-41	1207-41	1207-41	2	COTTER PIN
35	38489	38489	38489	1	ROLLER
36	35565	35565	35565	2	EAR - PIN TO LINK & JIB TO DETERMINE LOCATION ON BOOM BEFORE WELDING.
37	35567	35567	35567	1	LINK
38	1398	1398	1398	2	PIN
	1207-41	1207-41	1207-41	2	COTTER PIN
39	38495	38495	38495	2	EAR - MOUNT WITH PIN OVER OUTSIDE OF BOOM EARS, THE PIN BEARING ON FRONT EDGE OF SLOT. WELD EARS TO JIB.
40	6035	6035	6035	1	PIN
	1207-41	1207-41	1207-41	2	COTTER PIN

Ref. No.	Part Number	Quan. Req'd.	Name and Description
13	1219-758	2	ADAPTER
14	1219-773	3	QUICK DISCONNECT
15	1219-807	2	DUST CAP
16	A37905	2	HOSE ASSEMBLY
17	1240-29	10	CLAMP
18	1200-31	5	CAPSCREW, 5/16 UNC x 1 LG.
	1209-3	5	PLAINWASHER, 5/16 REG.
	1210-17	5	LOCKWASHER, 5/16 MED.
	1205-25	5	NUT, 5/16 UNC
19	1219-808	2	DUST PLUG
20	1219-779	2	ADAPTER
21	1219-780	2	ADAPTER
22	38303	1	BRACKET
23	F38306	2	BRACKET
	ADD.		
	1219-74?	—	HOSE VALVE.

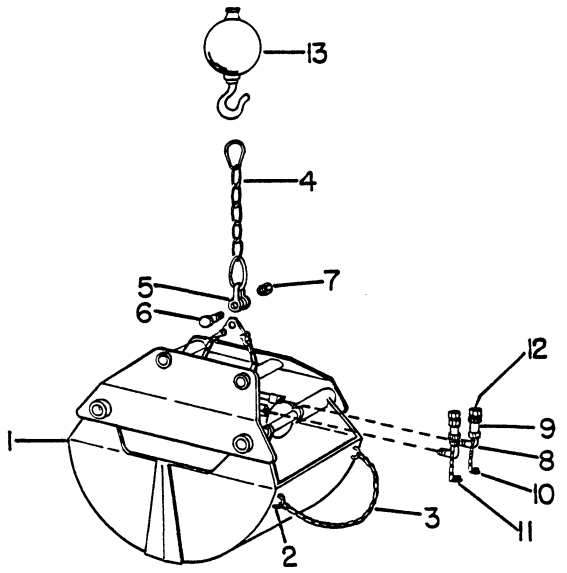

A39960 A37906

Ref. No.	Part Number	Part Number	Quan. Req'd.	Name and Description
	3/8 YD.	1/2 YD.		
1	39925	37904	1	HYDRAULIC CLAM
2	1222-29	1222-29	2	COLD SHUT
3	9513	9513	2	CHAIN
4	18534	18534	1	DRAG CHAIN
5	B10883	B10883	1	CLEVIS
6	18535	18535	1	PIN
7	18536	18536	1	NUT
8	1219-837	1219-772	2	ADAPTER
9	1219-622	1219-773	2	QUICK DISCONNECT
10	1219-743	1219-807	1	DUST CAP
11	1219-741	1219-808	1	DUST PLUG
12	1219-838		2	ADAPTER
13	A35685	A35685	1	BALL & HOOK ASSEMBLY
	24241	24241	1	WEDGE
	24242	24242	1	SOCKET
	24243	24243	1	SWIVEL HOOK

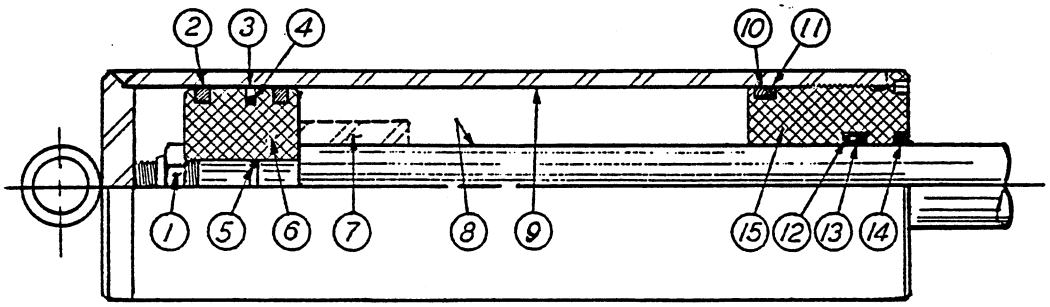

Ref. No.	Part Number	Quan. Req'd.	Name and Description
	A24705		HYDRAULIC CYLINDER, 5-1/2" BORE, INCLUDES ITEMS 1 THRU 15
1	22028	1	NUT
2	22828	2	PISTON RING
3	22829	1	TEFLON SEAL W/LOADING "O" RING
4		1	"O" RING, FOR ABOVE
5	22831	1	STATIC "O" RING
6	22832	1	PISTON
7		1	SPACER
8	24707	1	SHAFT
9		1	CASE
10	22834	1	STATIC "O" RING
11	22835	1	BACK-UP WASHER
12	22226	1	"U" CUP SEAL W/LOADING "O" RING
13		1	SEAL
14	22227	1	WIPER SEAL
15	24706	1	HEAD GLAND

SERIES G H J & K HOSE REEL

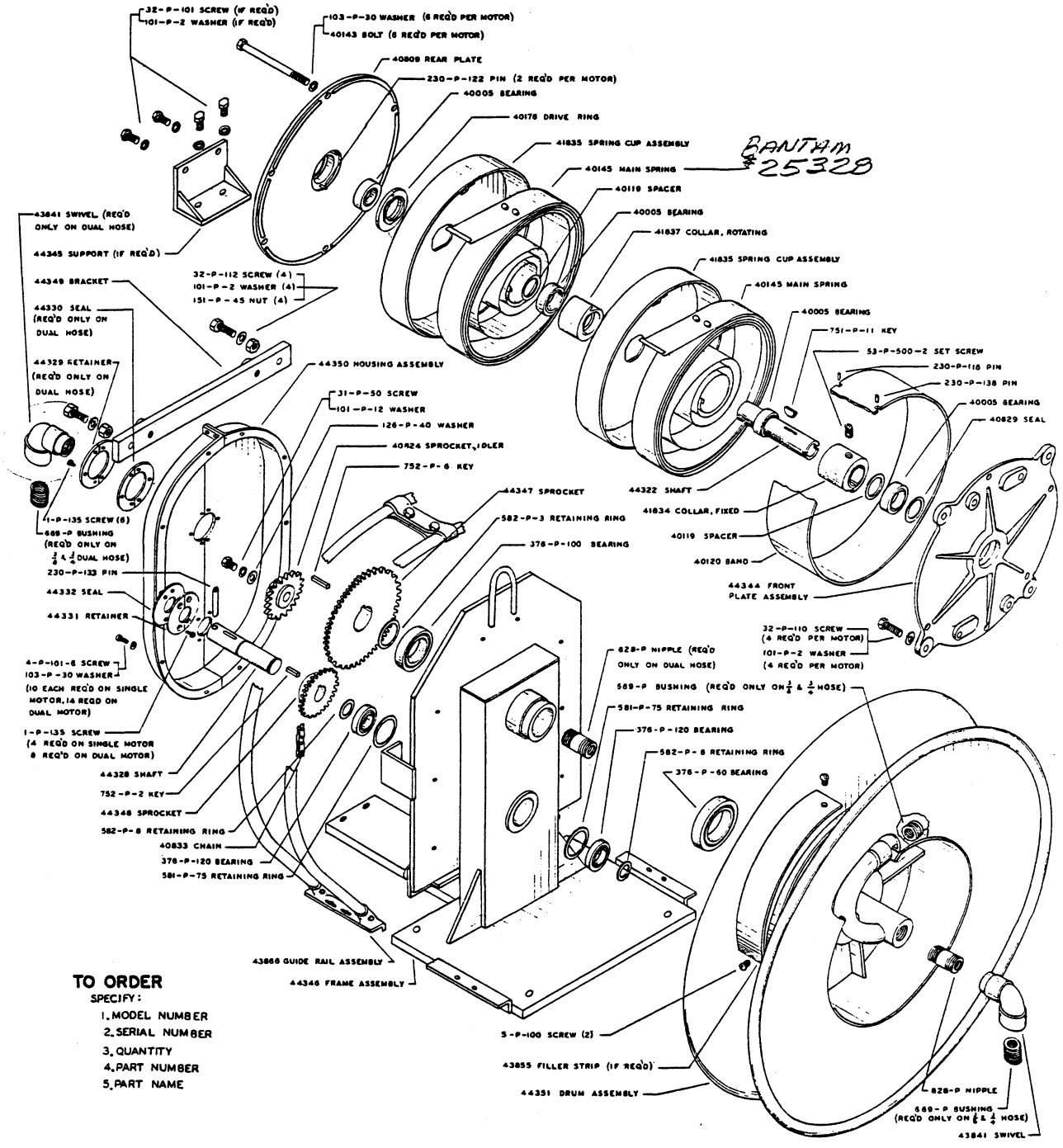

BANTAM #25328

TO ORDER

SPECIFY:

1. MODEL NUMBER
2. SERIAL NUMBER
3. QUANTITY
4. PART NUMBER
5. PART NAME

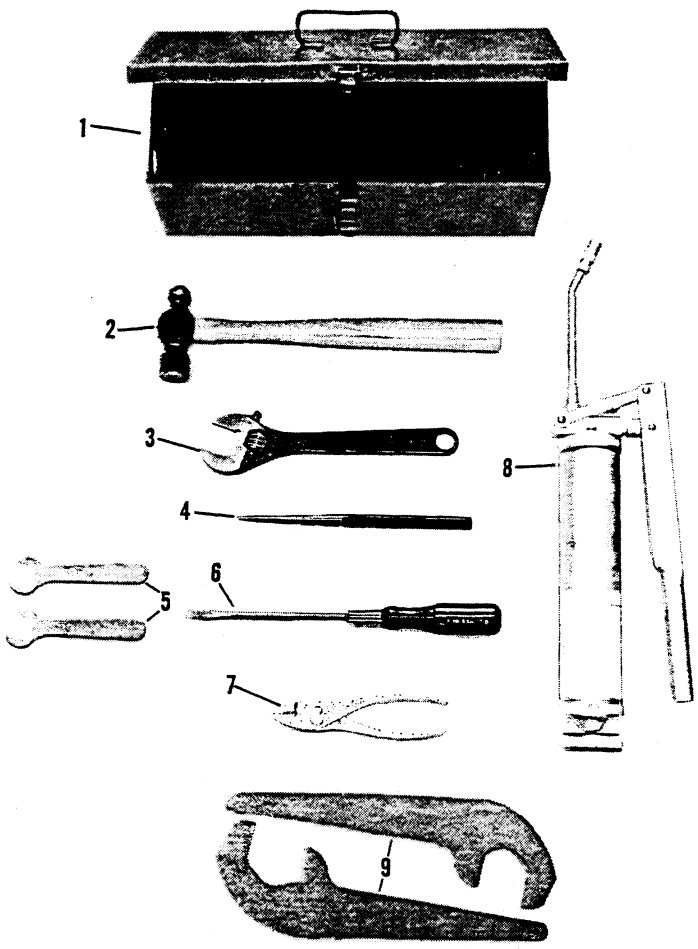

Ref. No.	Part Number	Part Number	Quan. Req'd.	Name and Description
	T-450	C-450		
	A38078	A38076		TOOL KIT, COMPLETE W/ITEMS INCLUDED IN THE RESPECTIVE COLUMN
1	17207	17207	1	TOOL BOX, ONLY
2	1226-1	1226-1	1	BALL PEIN HAMMER, 16 oz.
3	1226-6	1226-6	1	CRESCENT WRENCH, 10 INCH
4	1226-5	1226-5	1	LONG TAPER PUNCH, 3/16 INCH
5	1226-7	1226-7	2	CLUTCH ADJUSTING WRENCH
6	1226-4	1226-4	1	SCREW DRIVER, 6 INCH
7	1226-3	1226-3	1	PLIERS, 6 INCH
8	1226-2	1226-2	1	LEVER TYPE GREASE GUN
9		18453	2	WRENCH, TRACK TAKE-UP

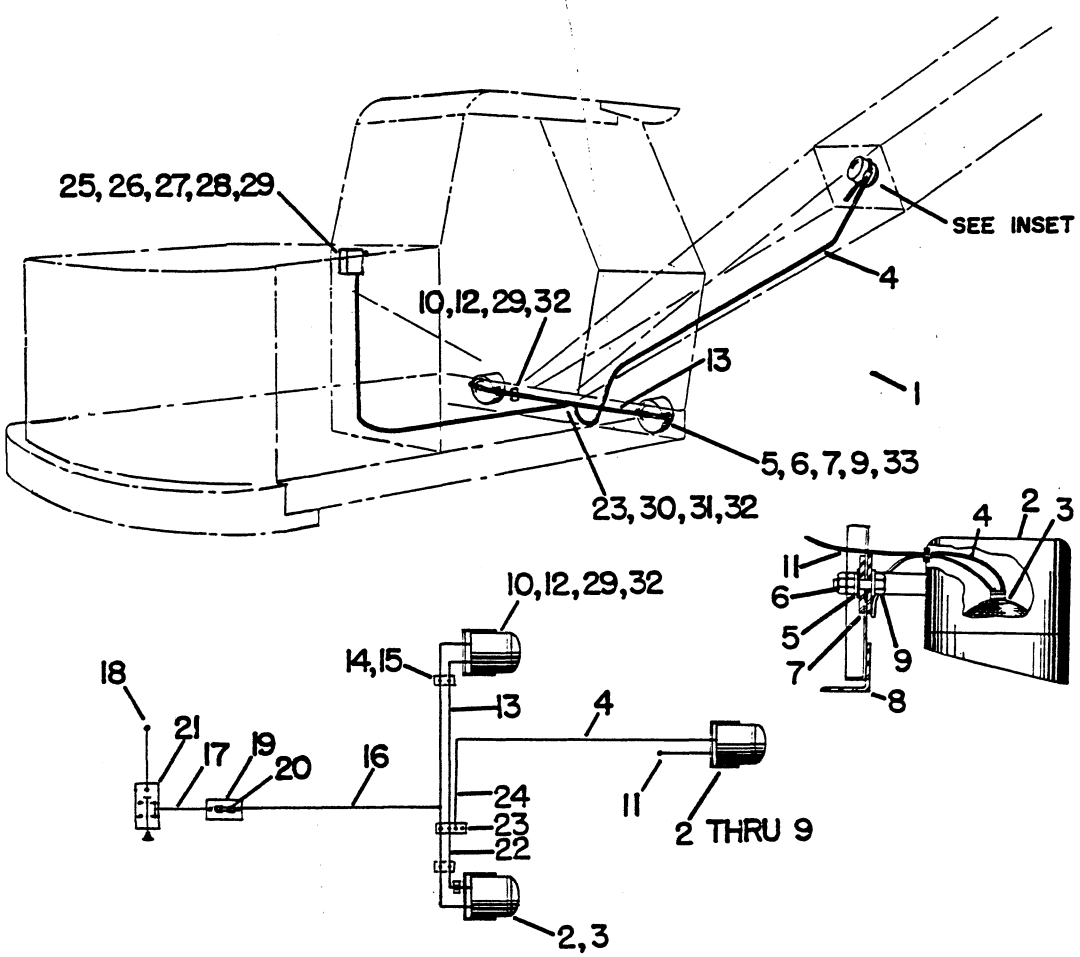

Ref. No.	Part Number	Quan. Req'd.	Name and Description
1	A15655	1	LIGHTING SYSTEM ASSEMBLY, 12 VOLT, INCLUDES ITEMS 2 THRU 33
2	1223-281	3	FLOOD LIGHT, LESS LAMP
3	13861	3	SEALED BEAM LAMP, ONLY, 12 VOLT
4	1277-300	1	PORTABLE CORD
5	1210-26	3	LOCKWASHER, 1/2 MED.
6	1205-58	6	NUT, 1/2 UNC
7	1209-6	6	WASHER, 1/2 REG.
8	15507	2	BRACKET
9	1200-106	1	CAPSCREW, 1/2 UNC x 2 1/4 LG.
10	1205-12	3	NUT, 3/16 UNC, SQ. HEAD
11	15521	1	WIRE UNIT, GROUND
12	1202-6	3	STOVE BOLT, 3/16 UNC x 3/4 LG., RD. SLOTTED HD.

Ref. No.	Part Number	Quan. Req'd.	Name and Description
13	1277-78	1	CORD
14	1219-187	3	CONNECTOR, MALE CAP
15	1219-188	3	CONNECTOR, FEMALE
16	15511	1	WIRE UNIT
17	15512	1	WIRE UNIT
18	15509	1	WIRE UNIT
19	1223-294	1	FUSE BLOCK, 12 VOLT
20	1223-295	1	FUSE, 12 VOLT
21	7103	1	SWITCH, HEADLIGHT
22	1277-16	1	CORD
23	6653	1	TERMINAL BLOCK
24	1277-10	1	CORD
25	1233-5	4	MACHINE SCREW, #8-32 x 3/8 RD. SLOTTED HD., CAD. PL.
26	1205-3	4	NUT, #8 UNC
27	1209-4	1	WASHER, 3/8 REG.
28	15508	1	BRACKET
29	1240-10	3	JIFFY CLIP
30	1233-2	2	MACHINE SCREW, #10-32 x 1 1/4 LG., RD. SLOTTED HD.
31	1205-6	3	NUT, #10 UNF
32	1210-7	5	LOCKWASHER, #10 LIGHT
	1240-23	8	PUSH-ON CLIP
	1240-31	12	CLAMP
	1223-41	1	GROMMET
33	1200-104	2	CAPSCREW, 1/2 UNC x 2 LG.

Model 450 | Group No. 46
Date 1 MAY 1964 | LIGHTING SYSTEM ASSEMBLY | Page 46.3

Ref. No.	Part Number	Quan. Req'd.	Name and Description
13	1277-78	1	CORD
14	1219-187	3	CONNECTOR, MALE CAP
15	1219-188	3	CONNECTOR, FEMALE
16	15511	1	WIRE UNIT
17	15512	1	WIRE UNIT
18	15509	1	WIRE UNIT
19	1223-294	1	FUSE BLOCK, 12 VOLT
20	1223-295	1	FUSE, 12 VOLT
21	7103	1	SWITCH, HEADLIGHT
22	1277-16	1	CORD
23	6653	1	TERMINAL BLOCK
24	1277-10	1	CORD
25	1233-5	4	MACHINE SCREW, #8-32 x 3/8 RD. SLOTTED HD., CAD. PL.
26	1205-3	4	NUT, #8 UNC
27	1209-4	1	WASHER, 3/8 REG.
28	15508	1	BRACKET
29	1240-10	3	JIFFY CLIP
30	1233-2	2	MACHINE SCREW, #10-32 x 1 1/4 LG., RD. SLOTTED HD.
31	1205-6	3	NUT, #10 UNF
32	1210-7	5	LOCKWASHER, #10 LIGHT
	1240-23	8	PUSH-ON CLIP
	1240-31	12	CLAMP
	1223-41	1	GROMMET
33	1200-104	2	CAPSCREW, 1/2 UNC x 2 LG.

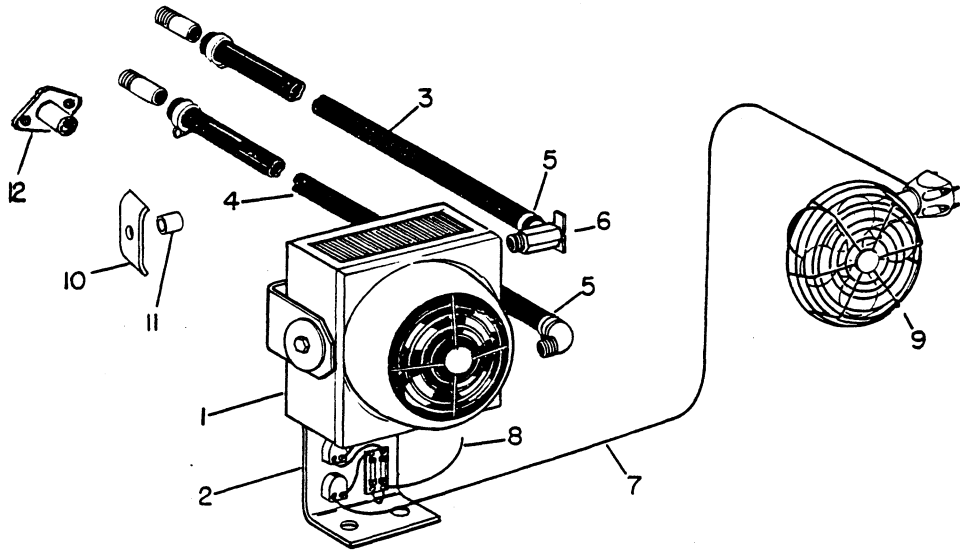

Ref. No.	Part Number	Quan. Req'd				Name and Description
		GM A38384	CHRYSLER A35848	AC A35890	CUMMINS A39952	HEATER & DEFROSTER ASSEMBLY
1	1223-329	1	1	1	1	HEATER
	13662	1	1	1	1	FAN BLADE, FOR ABOVE
	23958	1	1	1	1	MOTOR, FOR ABOVE
2	15528	1	1	1	1	BRACKET
3	1276-93	1				HOSE
3	1276-76		1			HOSE
3	1276-108			1		HOSE
3	1276-75				1	HOSE
4	1276-80	1				HOSE
4	1276-58		1			HOSE
4	1276-108			1		HOSE
4	1276-54				1	HOSE
5	1240-26	4	4	4	4	CLAMP
6	1219-190	1	1	1	1	SHUT-OFF COCK
7	16395	1	1	1	1	WIRE UNIT, SWITCH TO FAN
8	16398	1	1	1	1	WIRE UNIT, START. SOLEN. TO FUSE
	16396	2	2	2	2	WIRE UNIT, SWITCH TO FUSE BLOCK
	1223-264	1	1	1	1	CONNECTOR
	1223-294	1	1	1	1	FUSE BLOCK
	1223-282	2	2	2	2	FUSE, SFE-20
	15905	1	1	1	1	FAN BRACKET (REMOTE CONTROL ONLY)
	15336	1	1	1	1	NIPPLE, 3/8 x 1 1/2 LG.
9	1223-330	1	1	1	1	DEFROSTER FAN
	13663	1	1	1	1	FAN BLADE, FOR ABOVE
10	16331	1	1	1	1	CLAMP
11	16373	1	1	1	1	SPACER
12	F35949	1				HOSE ADAPTER

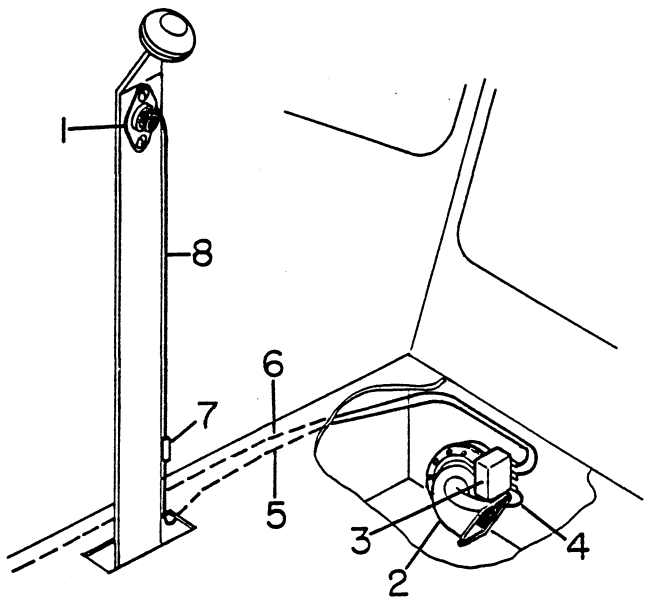

Ref. No.	Part Number	Quan. Req'd.	Name and Description	
	A35373	1	HORN ASSEMBLY, INCLUDES ITEMS 1 THRU 8	
1	1223-440	1	PUSH BUTTON SWITCH	
2	1223-387	1	HORN	
	1223-388	1	BRACKET	
	1223-389	1	NUT	
3	1223-270	1	RELAY, HORN	
4	15361	1	WIRE W/TERMINALS	
5	35561	1	WIRE W/TERMINALS	
6	35562	1	WIRE W/TERMINALS	
	1240-31	AR	CLAMP	
7	1223-264	1	CONNECTOR	
8	15722	1	WIRE W/TERMINALS	