TL90
ENGINE

NEW HOLLAND

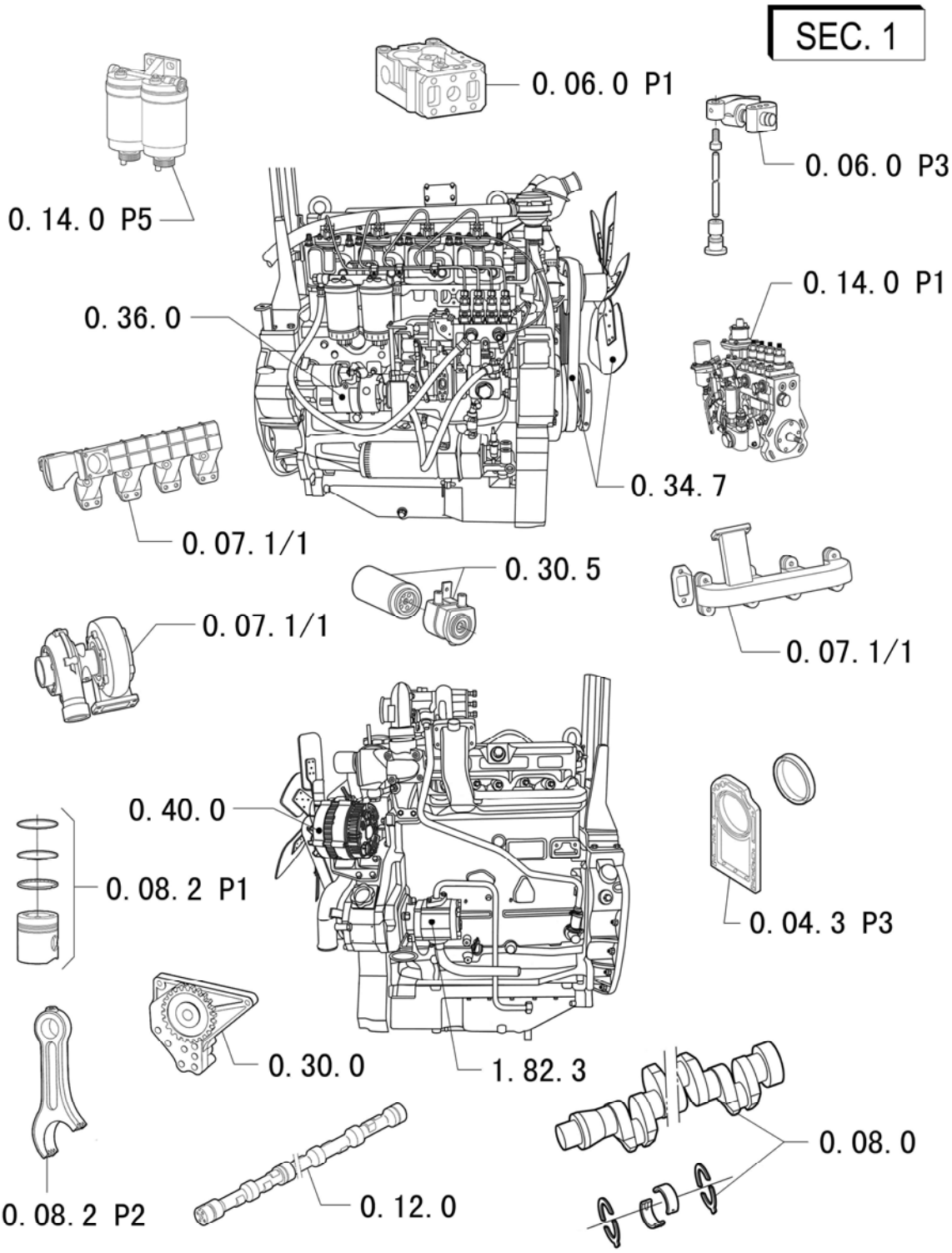

ENGINE EQUIPMENT

SEC. 2

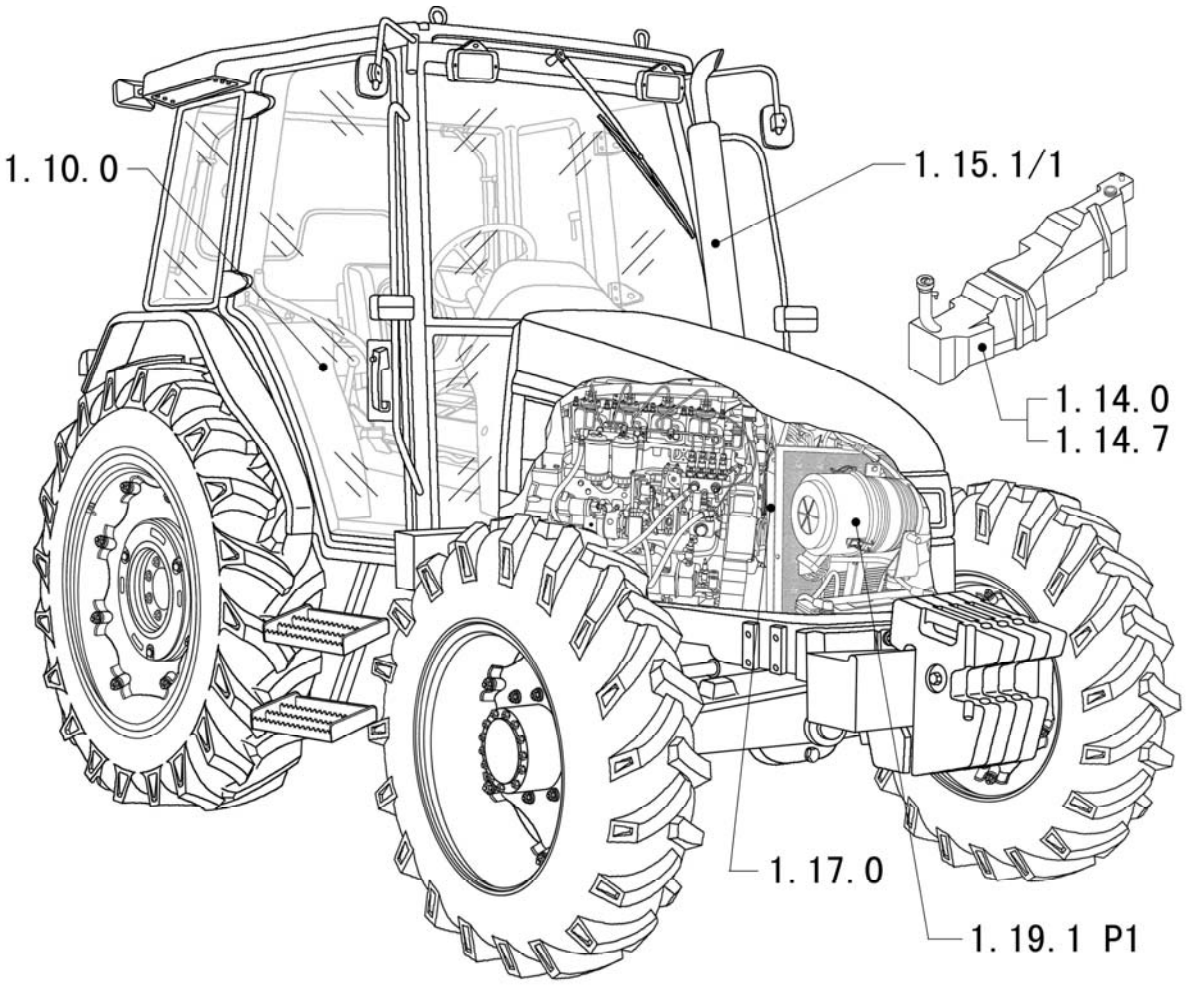

TRANSMISSION

SEC. 3

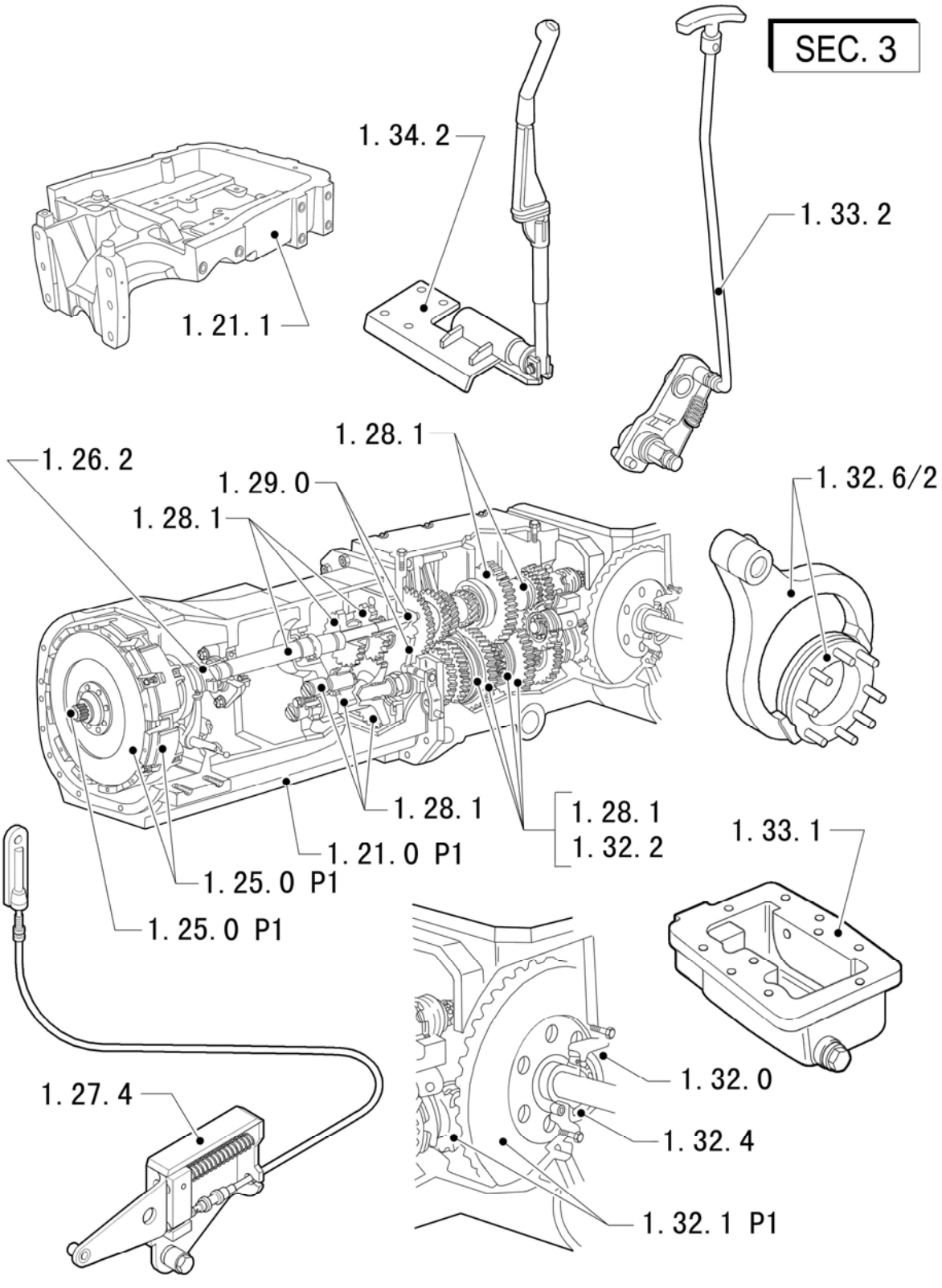

FRONT AXLE

SEC. 4

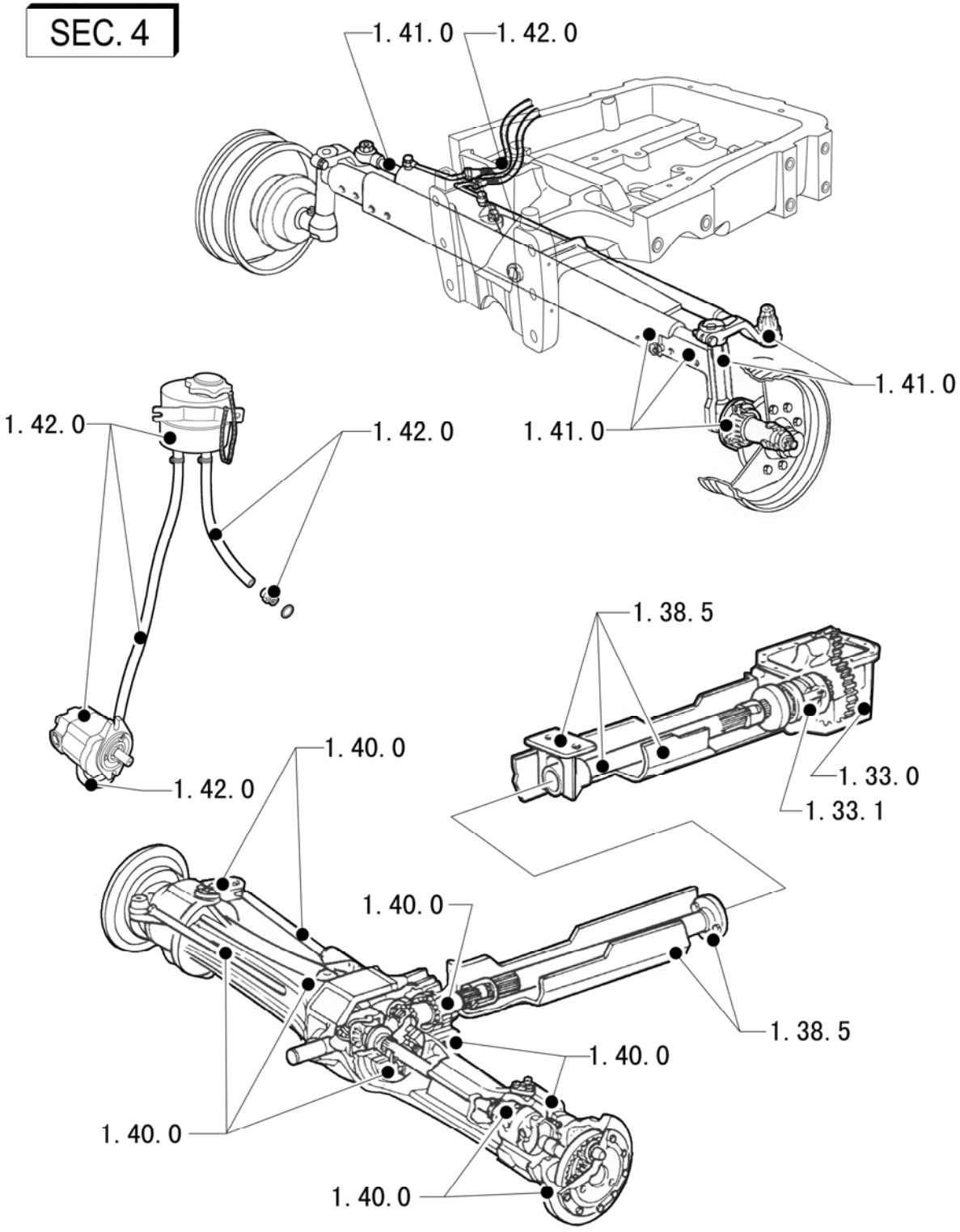

REAR AXLE

SEC. 5

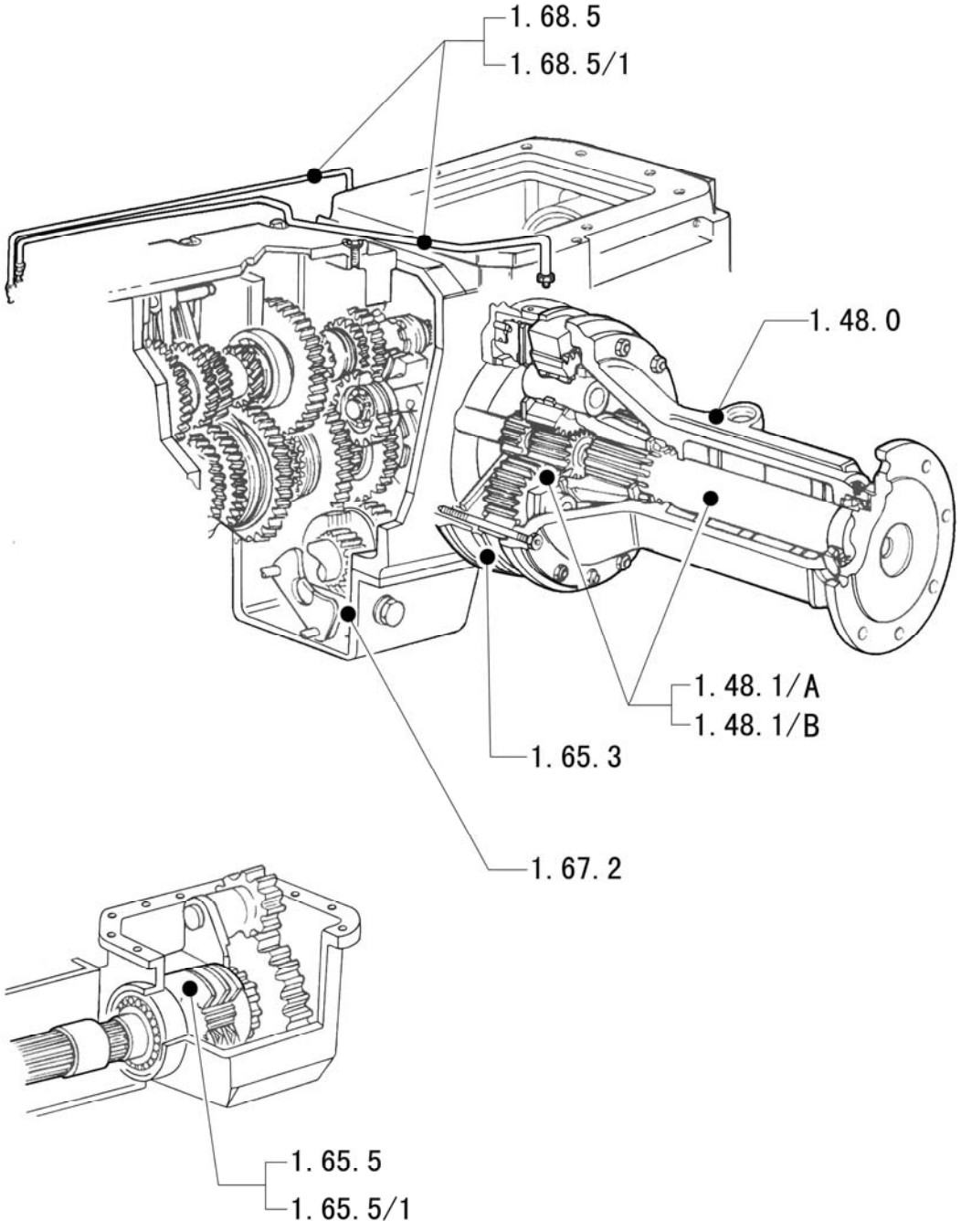

ELECTRICAL EQUIPMENT

SEC. 6

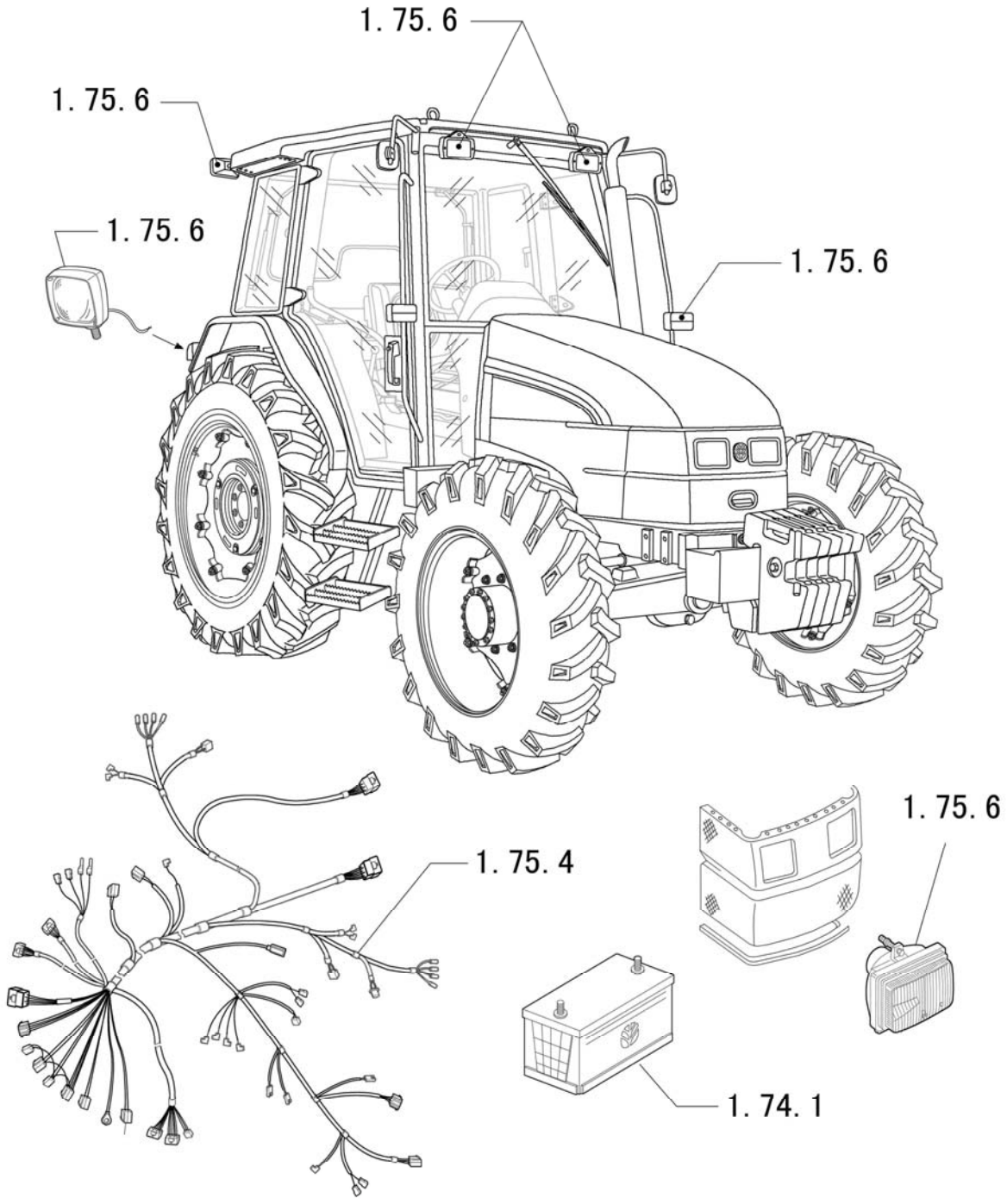

HYDRAULICS

SEC. 7

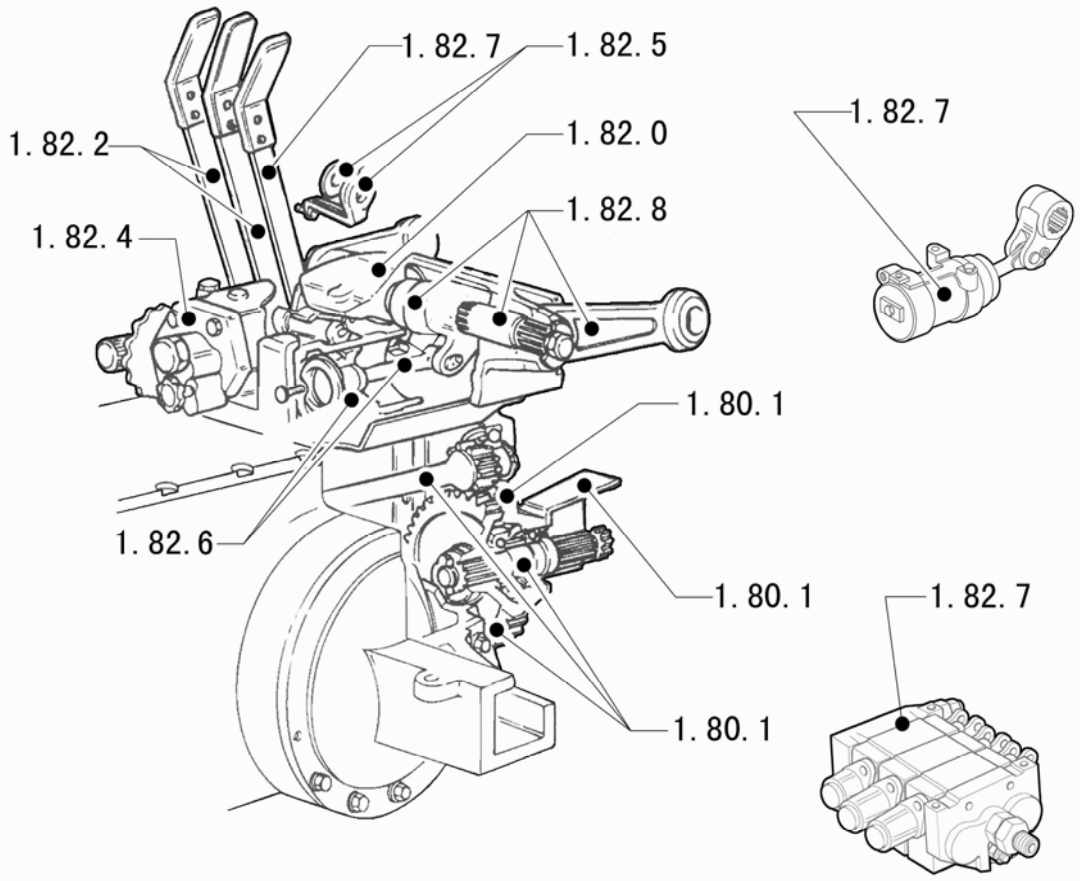

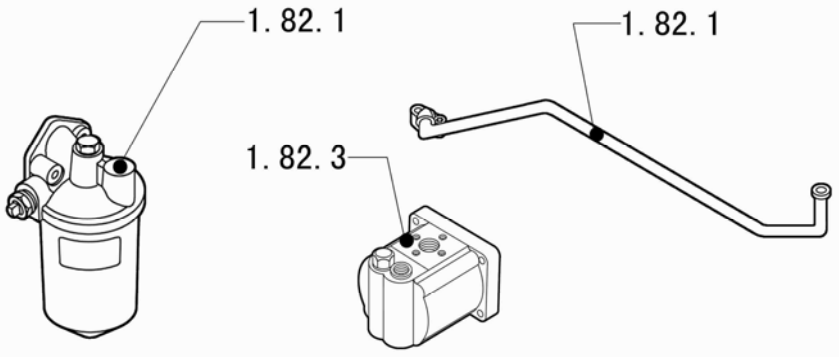

SHEET METAL

SEC. 8

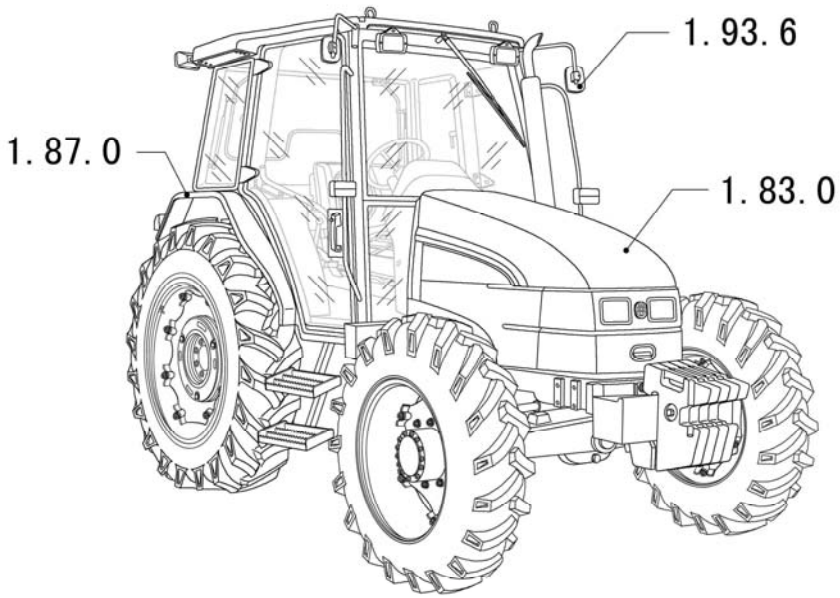

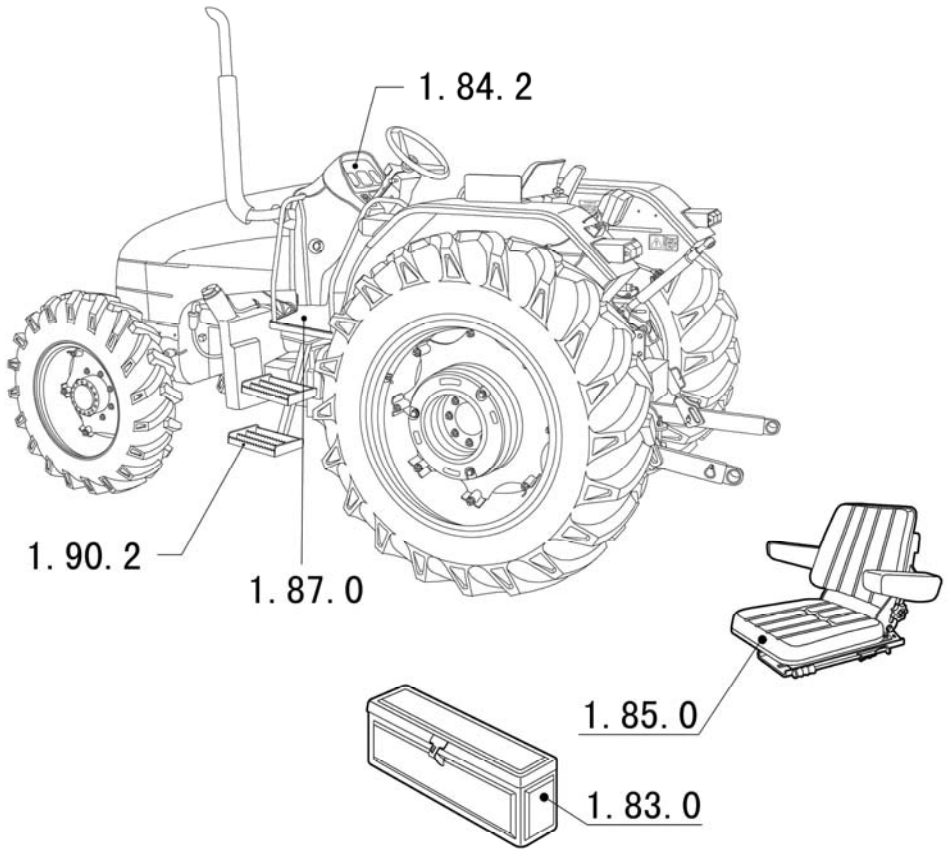

IMPLEMENT CARRIER

SEC. 9

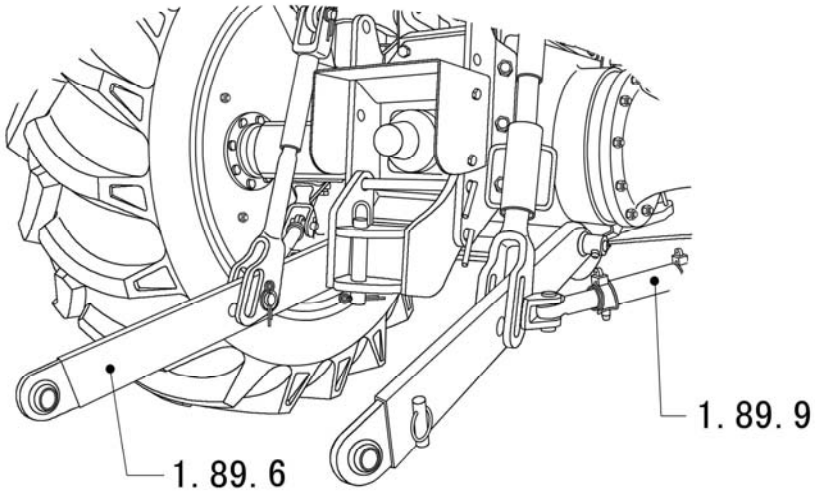

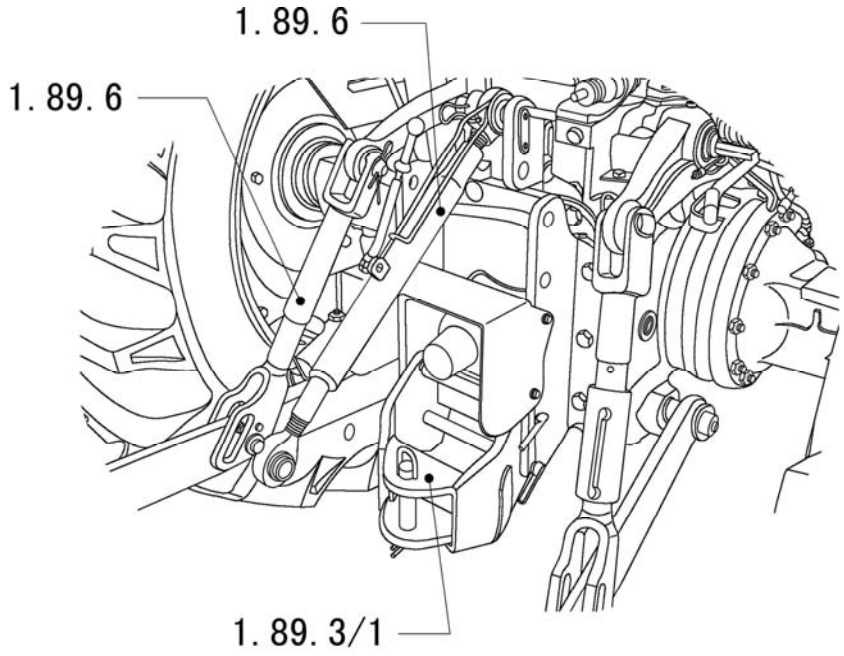

DRIVER'S POST

SEC. 10

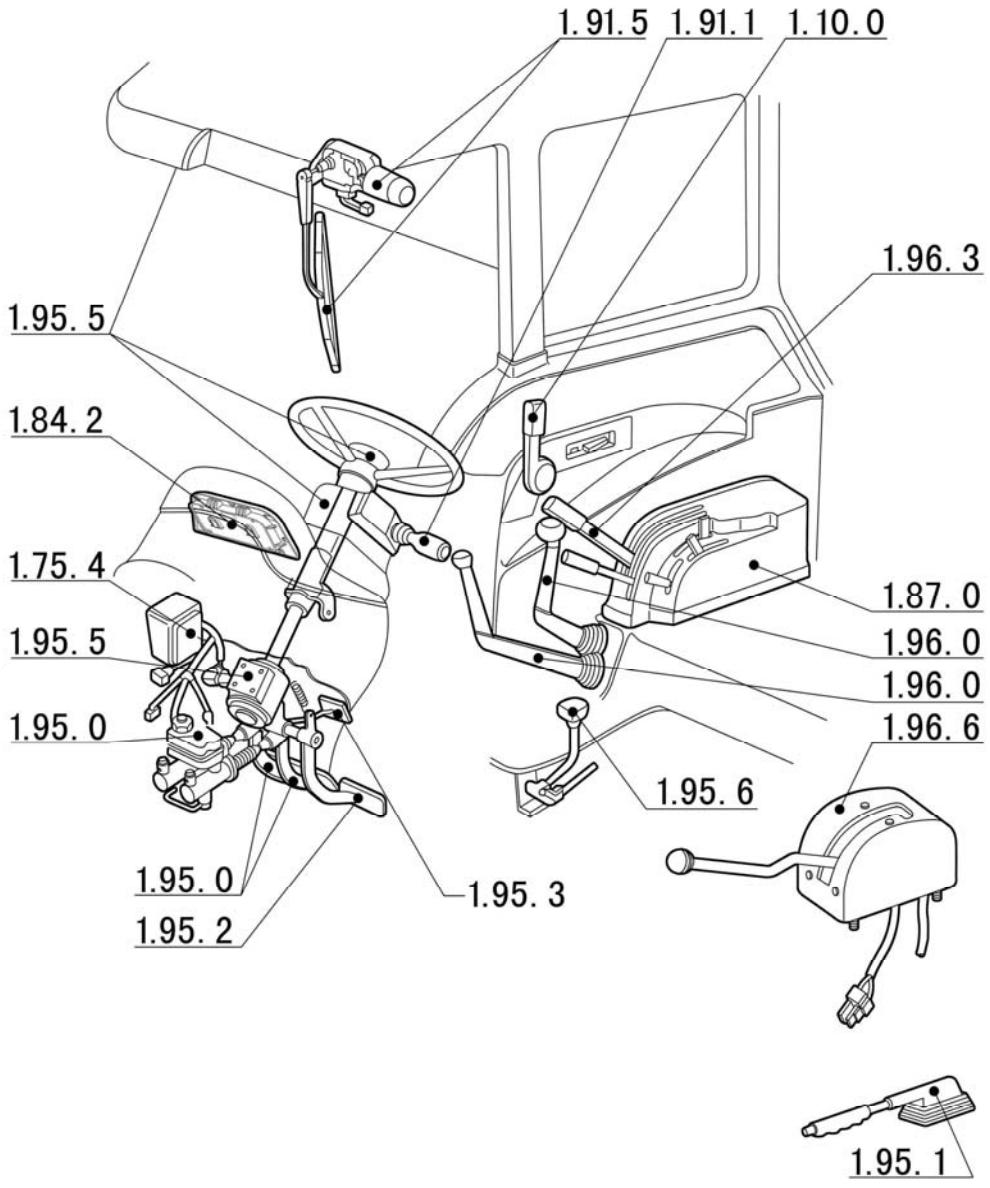

DRIVER'S POST

SEC.10

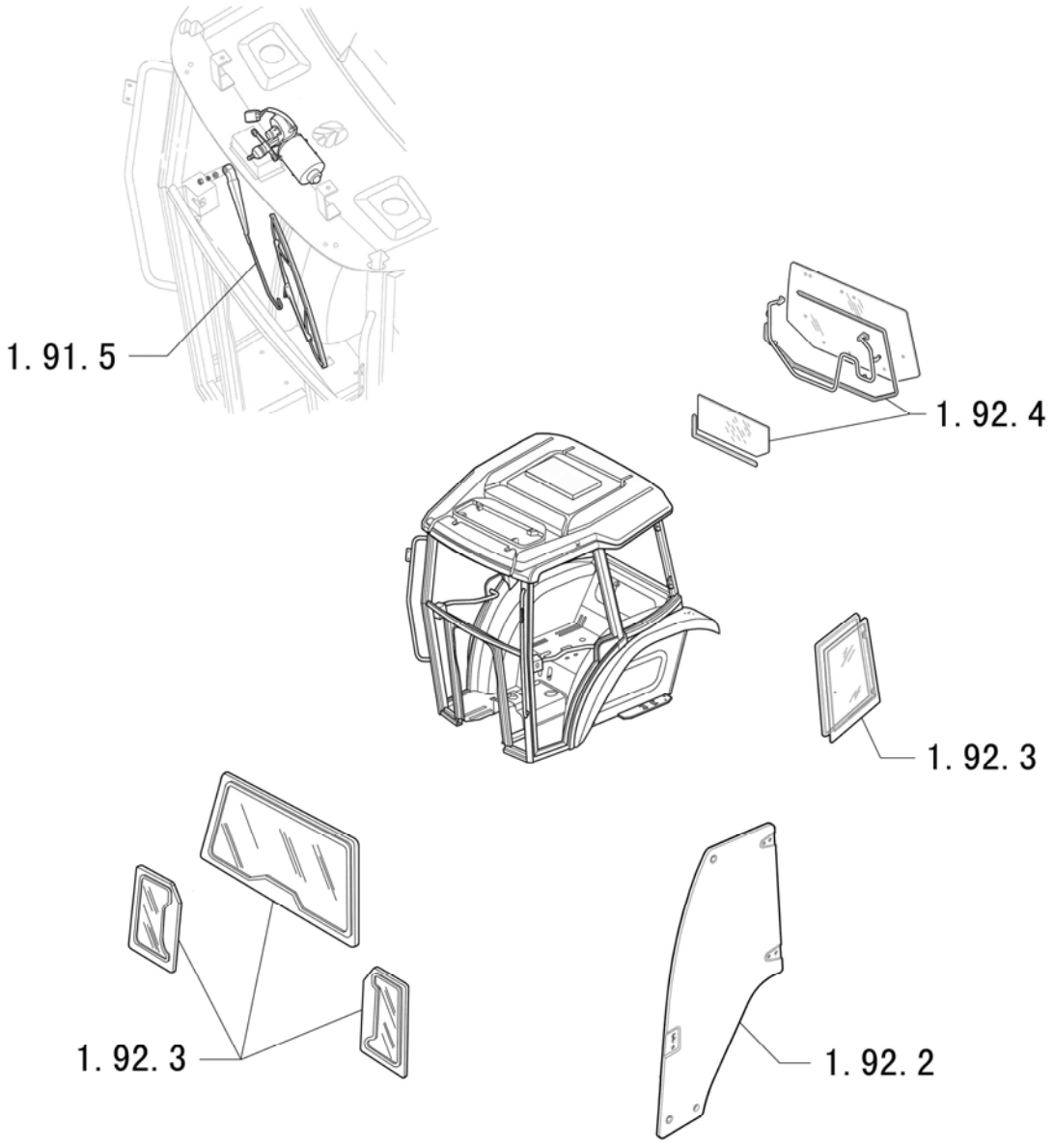

WHEELS

SEC.11

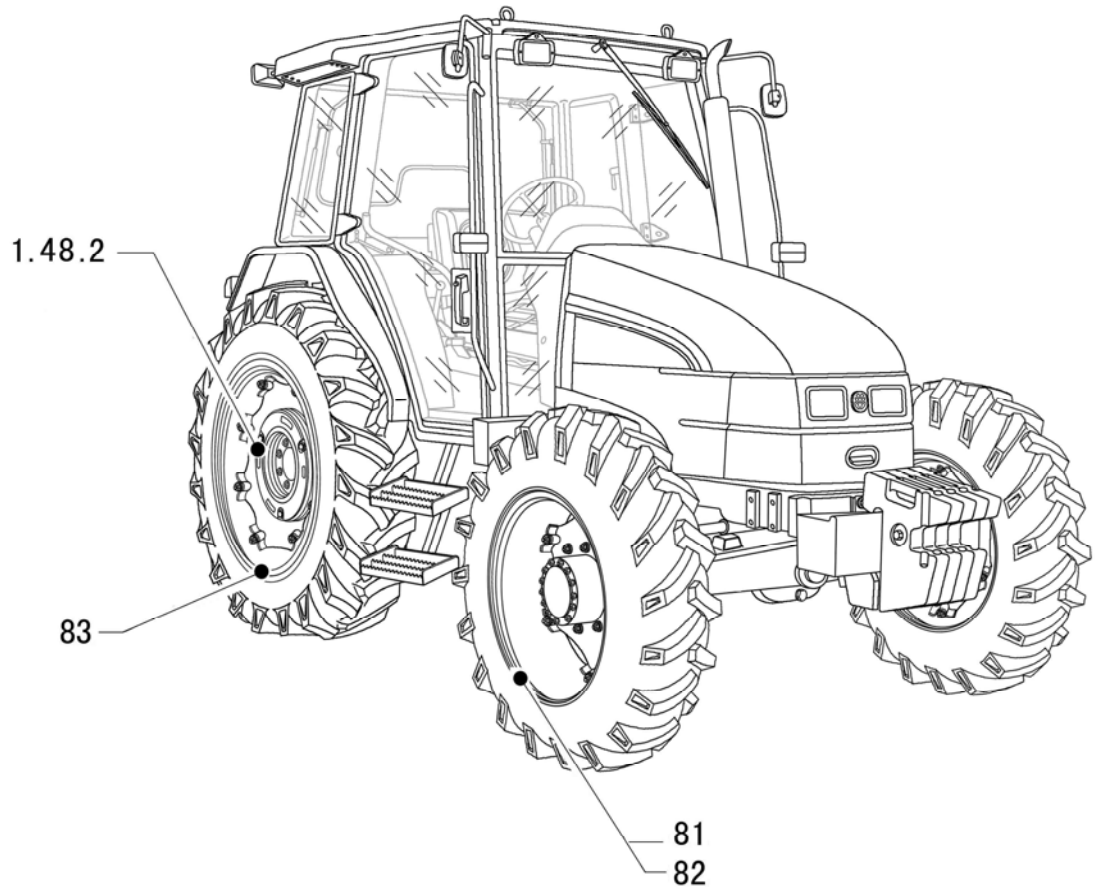

MAINTENANCE PARTS

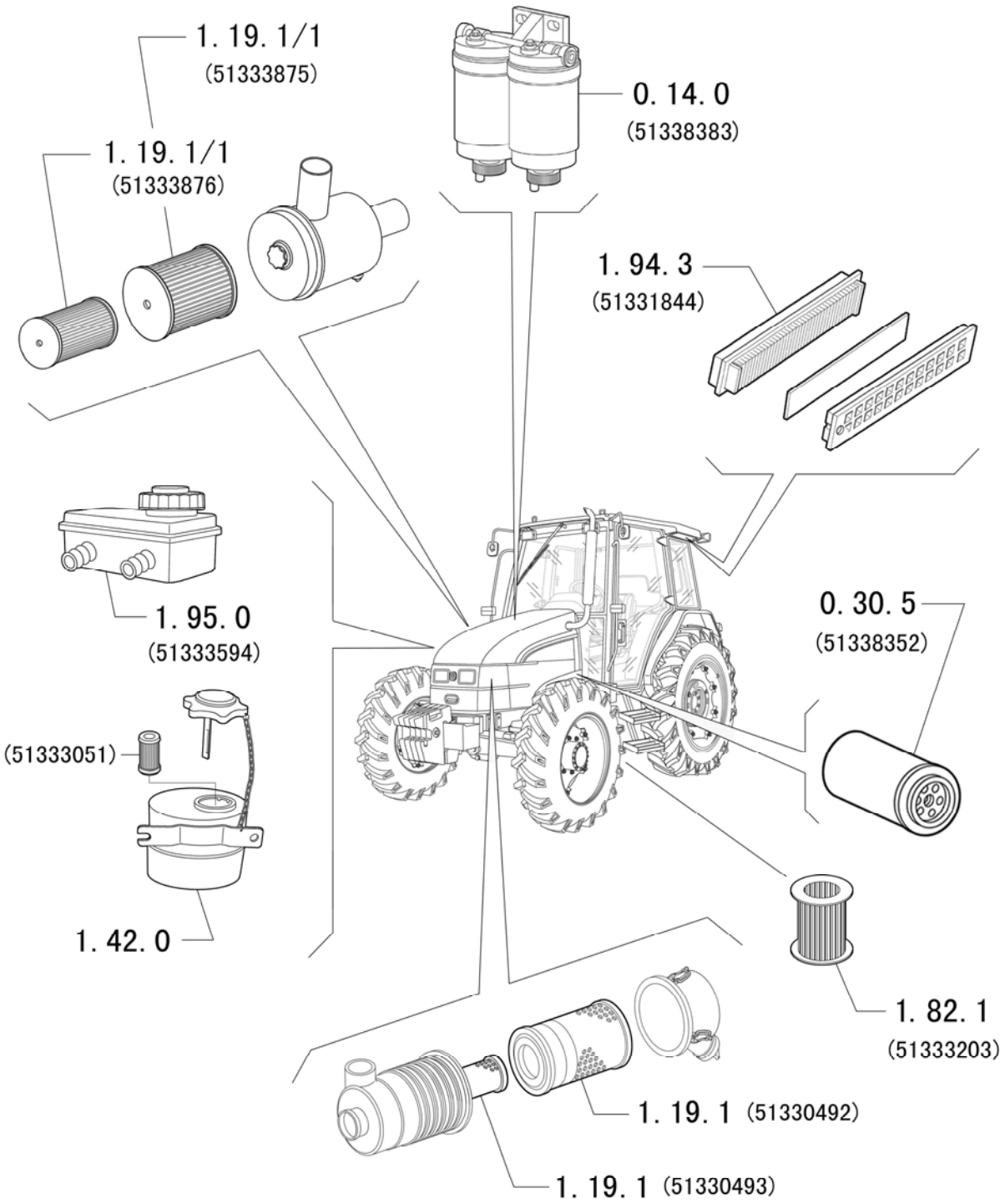

MAINTEANCE PARTS

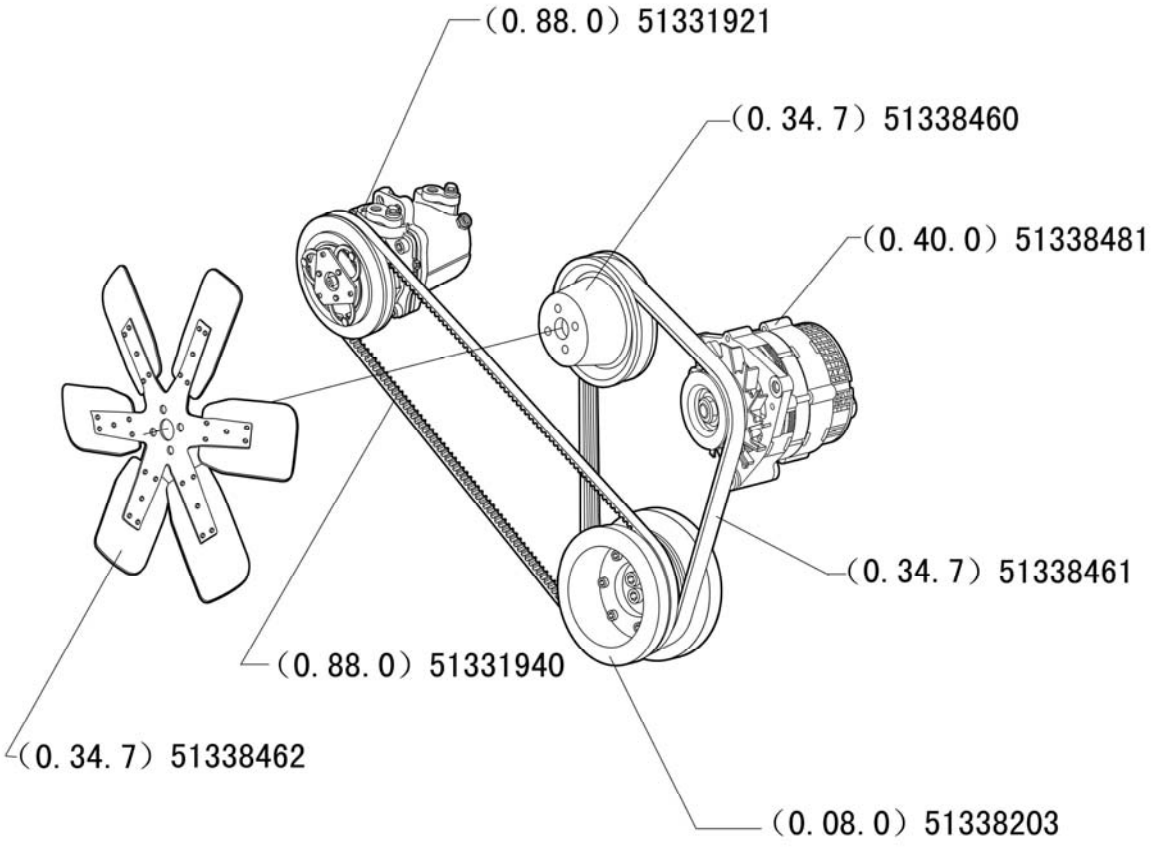

ENGINE

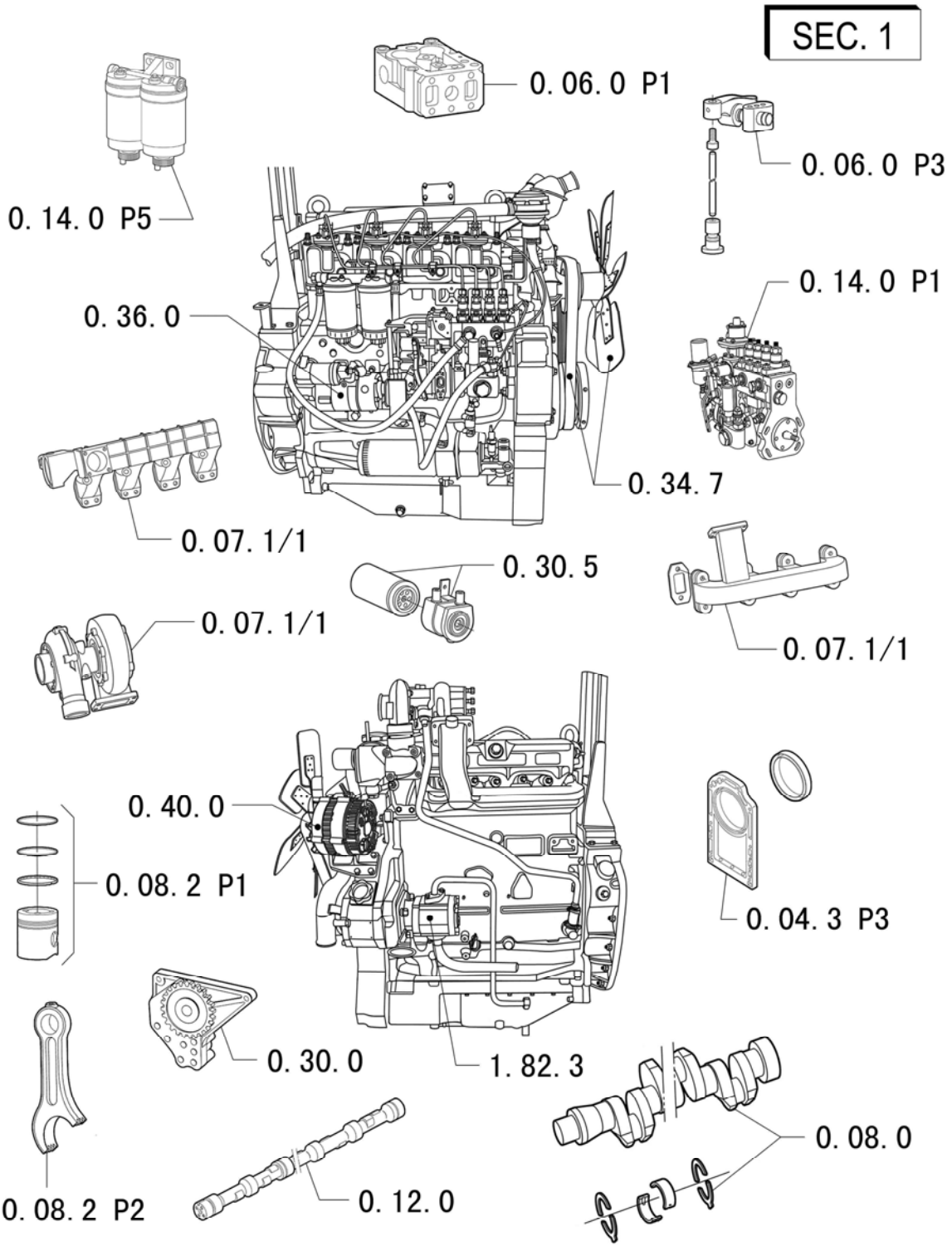
SEC. 1
0. 06. 0 P1
0. 06. 0 P3
0. 14. 0 P5
0. 14. 0 P1
0. 36. 0
0. 34. 7
0. 07. 1/1
0. 30. 5
0. 07. 1/1
0. 07. 1/1
0. 40. 0
0. 08. 2 P1
0. 04. 3 P3
0. 30. 0
1. 82. 3
0. 08. 0
0. 08. 2 P2
0. 12. 0

0.04.0	1/3	04/09

CRANKCASE AND CYLINDER

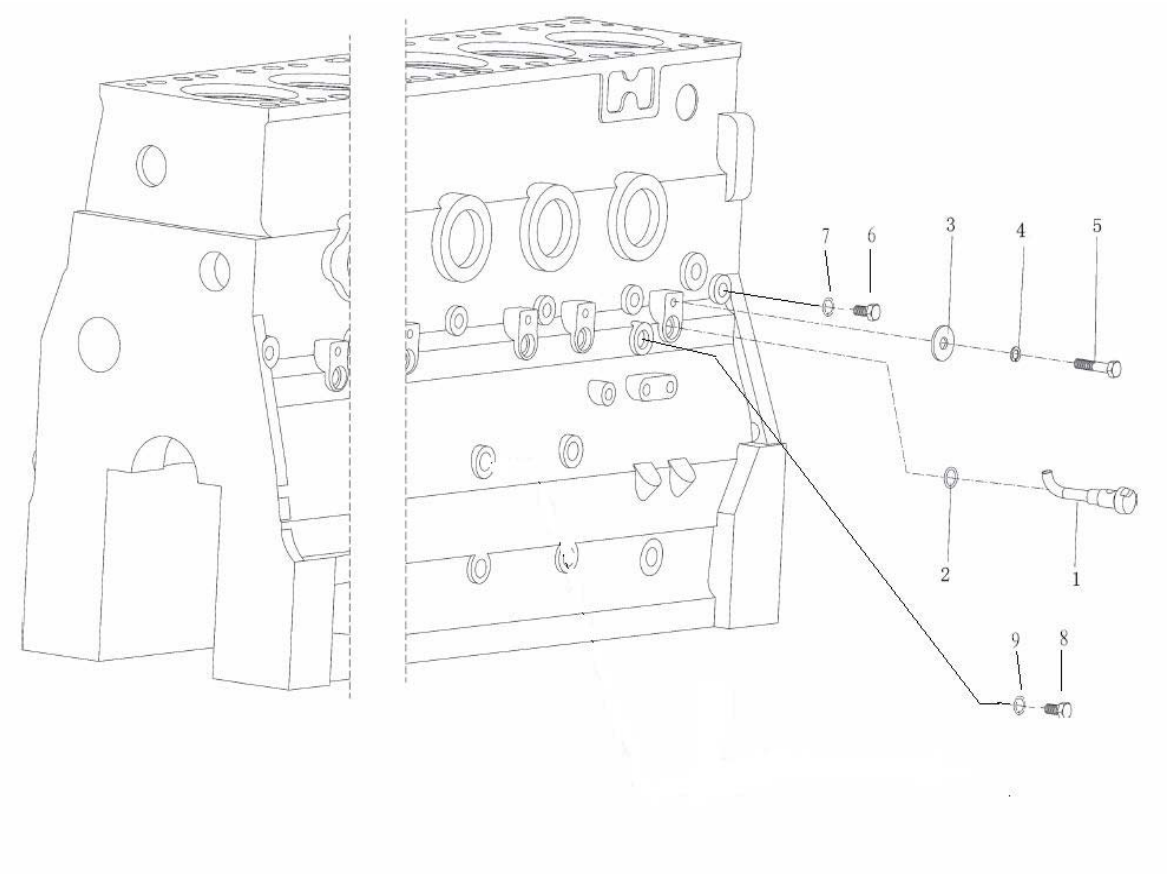

CRANKCASE AND CYLINDER

R	P.N.	DESCRIPTION	QTY
1	51338044	NOZZLE	4
2	51338045	O-SEAL	4
3	51338046	PLAIN WASHER	4
4	51338048	SPRING LOCK WASHER	4
5	51338047	HEXAGON BOLT	4
6	51338819	HEXAGON SCREW PLUG	1
7	51338359	GASKET	1
8	51338821	HEXAGON SCREW PLUG	1
9	51338582	GASKET	1

CRANKCASE AND CYLINDER

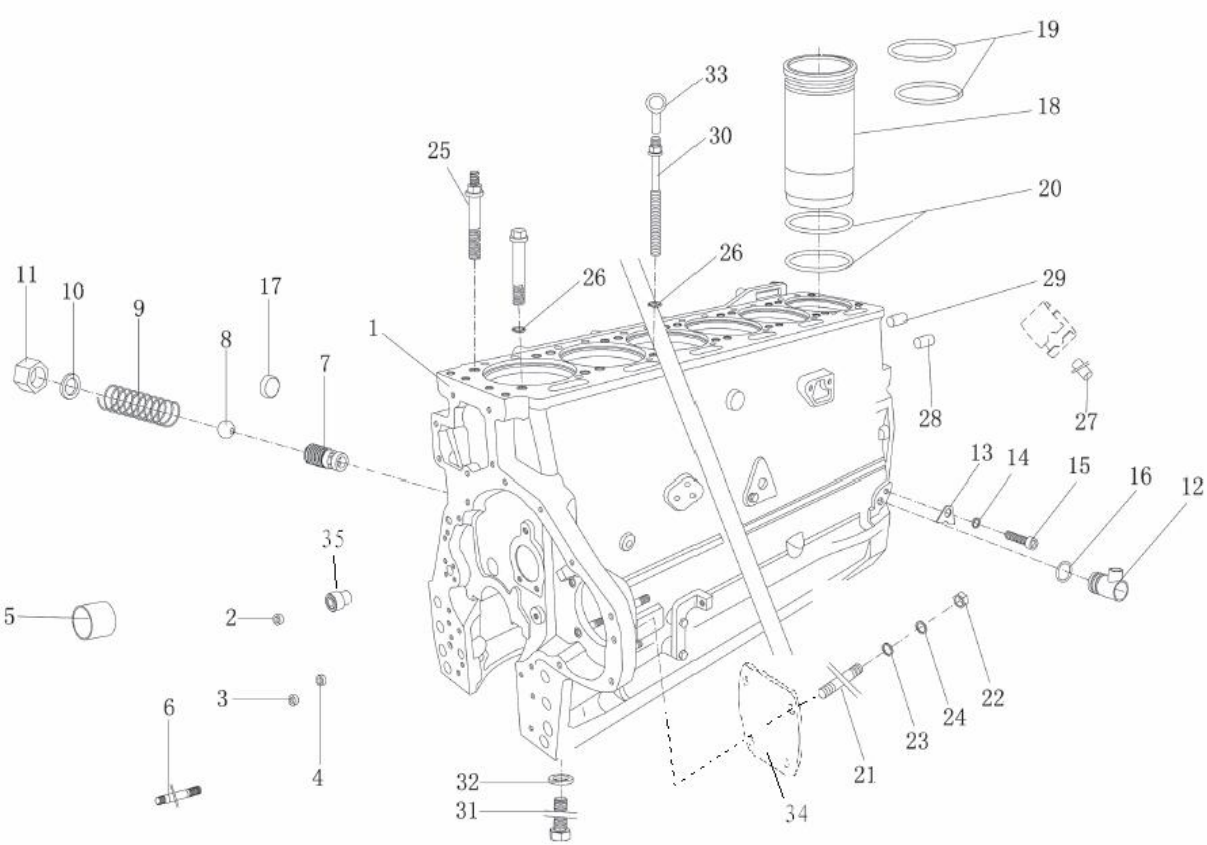

CRANKCASE AND CYLINDER

R	P.N.	DESCRIPTION	QTY
1	51338815	ENGINE BLOCK	1
2	51338025	PLUG	6
3	51338026	PLUG	2
4	51338027	PLUG	3
5	51338029	BEARING BUSH	1
6	51338017	STUD	1
7	51338033	SCREW FITTING	1
8	51338034	BALL	1
9	51338037	SPRING	1
10	51338035	SEALINE RING	1
11	51338036	ACORN NUT	1
12	51338529	MANIFOLD , TL90 TL100	1
13	51338531	RETAINING PLATE , TL90 TL100	1
14	51338048	SPRING LOCK WASHER , TL90 TL100	1
15	51338532	CHEESE HEAD SCREW , TL90 TL100	1
16	51338530	O-SEAL , TL90 TL100	1
17	51338030	COVER	3
18	51338022	CYLINDER LINER	4
19	51338023	O-SEAL	8
20	51338024	O-SEAL	8
21	51338083	STUD	4
22	51338012	HEXAGON BOLT	4
23	51338061	WASHER	4
24	51338062	WASHER	4
25	51338008	CYLINDER HEAD BOLT	14

CRANKCASE AND CYLINDER

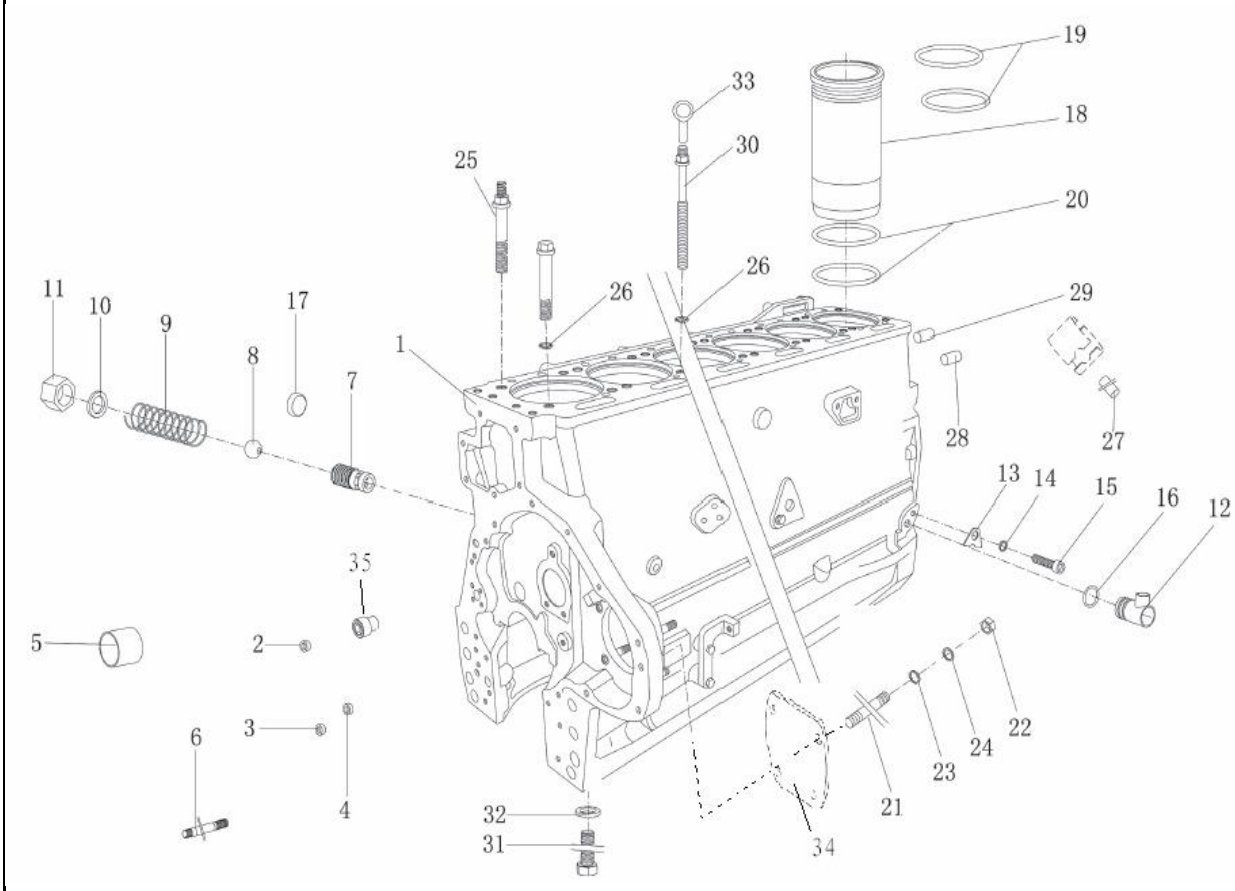

CRANKCASE AND CYLINDER

R	P.N.	DESCRIPTION	QTY
26	51338010	PLAIN WASHER	16
27	51338003	STRAIGHT PIN	5
28	51338004	PARALLEL PIN	3
29	51338005	PARALLEL PIN	2
30	51338009	CYLINDER HEAD BOLT	2
31	51338042	HEXAGON BOLT	10
32	51338066	GASKET	1
33	51338013	BOLT	2
34	51338816	COVER BOARD	1
35	51338817	SHAFT	1

0.04.2	1/2	04/09

OIL SUMP

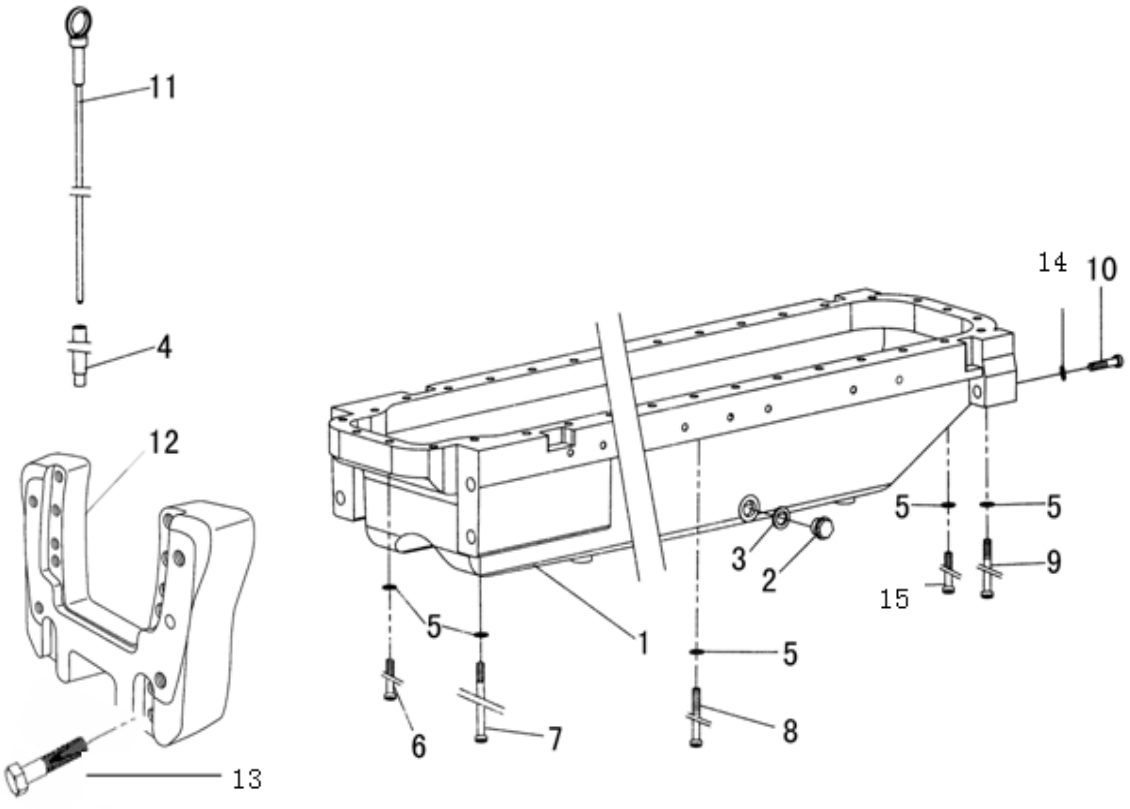

OIL SUMP

R	P.N.	DESCRIPTION	QTY
1	51338137	PAN, ENGINE OIL	1
2	51338674	SCREW PLUG	1
3	51338675	COMBINATION GASKET	2
4	51338140	TUBE	1
5	51338048	SPRING LOCK WASHER	25
6	51338141	CHEESE HEAD SCREW	4
7	51338676	CHEESE HEAD SCREW	6
8	51338142	CHEESE HEAD SCREW	10
9	51338143	CHEESE HEAD SCREW	6
10	51338146	CHEESE HEAD SCREW	2
11	51338138	DIPSTICK	1
12	51338848	BOARD	1
13	51338150	HEXAGON BOLT	10
14	51338120	SEALING RING	2
15	51338678	CHEESE HEAD SCREW	3

OIL SUMP，PIPE

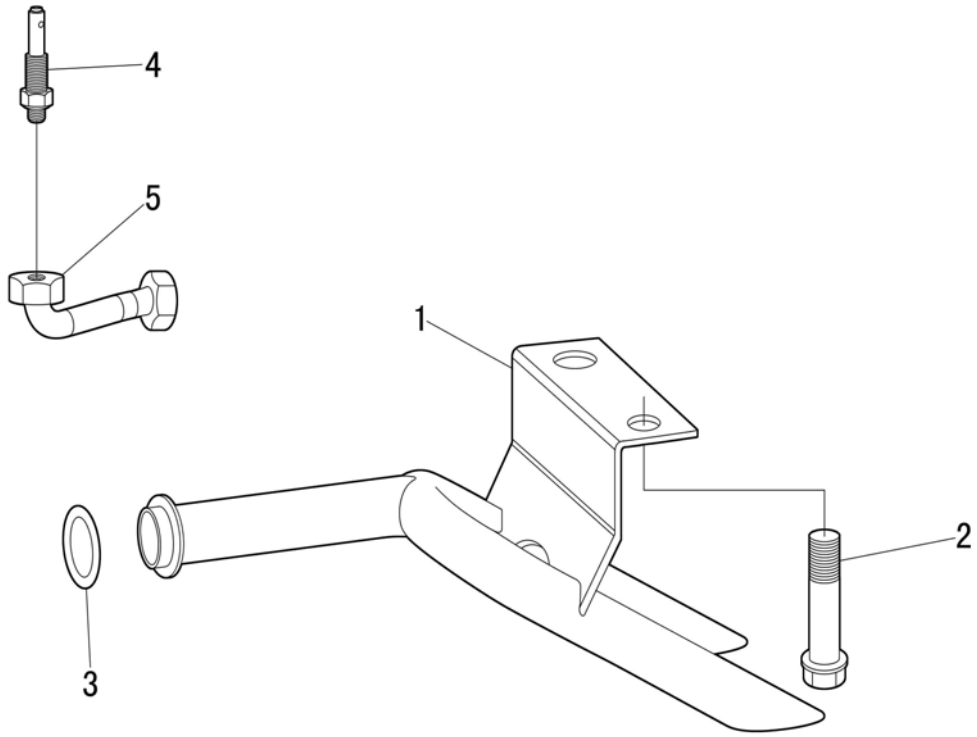

OIL SUMP，PIPE

R	P.N.	DESCRIPTION	QTY
1	51338307	LUBRICATION OIL LINE ASSEMBLY	1
2	51338278	LOCKING SCREW	1
3	51338313	O-RING	1
4	51338312	THREADED JOINT	1
5	51338311	LUBRICATION OIL SUCTION PIPE	1

HOUSING AND COVERS

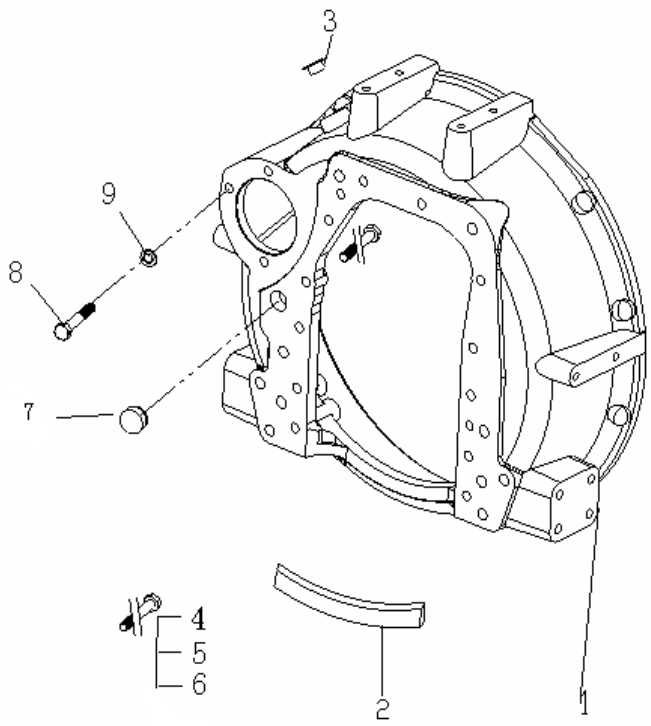

HOUSING AND COVERS

R	P.N.	DESCRIPTION	QTY
1	51338128	FLYWHEEL HOUSING	1
2	51338129	RUBBER STRIP	1
3	51338133	PLUG	1
4	51338130	HEXAGON BOLT	8
5	51338131	HEXAGON BOLT	2
6	51338132	HEXAGON BOLT	4
7	51338667	PLUG	1
8	51338483	HEXAGON BOLT	3
9	51338011	SPRING LOCK WASHER	3

HOUSING AND COVERS

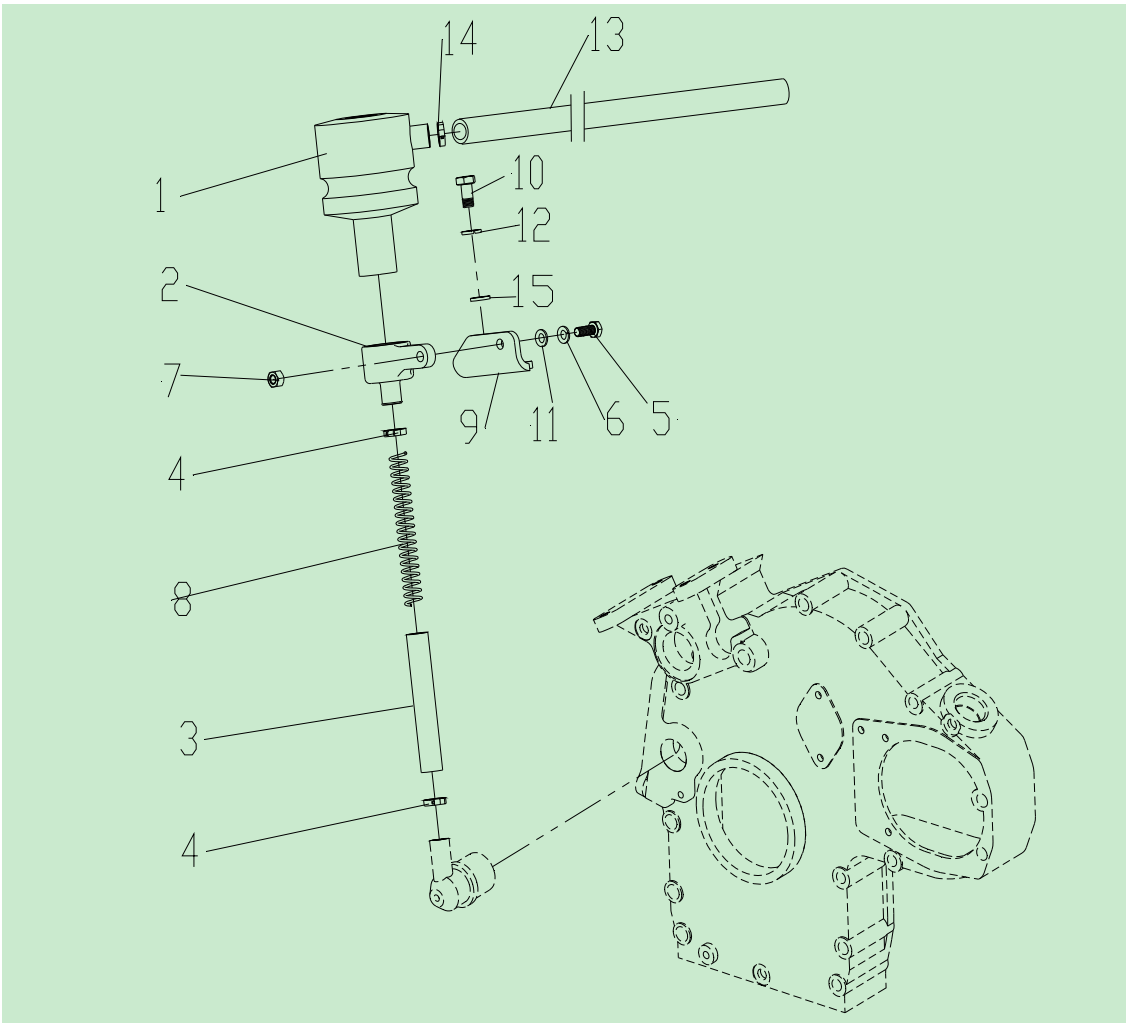

HOUSING AND COVERS

R	P.N.	DESCRIPTION	QTY
1	51338108	OIL SEPARATOR	1
3	51338672	HOSE	1
4	51338112	HOSE CLIP	2
5	51338114	HEXAGON BOLT	1
6	51338048	SPRING LOCK WASHER	1
7	51338069	HEXAGON NUT	1
8	51338111	COMPRESSION SPRING	1
9	51338118	BRACKET	1
10	51338119	HEXAGON BOLT	1
11	51338115	PLAIN WASHER	1
12	51338121	PLAIN WASHER	1
13	51338673	HOSE	1
14	51338117	HOSE CLIP	1
15	51338120	SPRING LOCK WASHER	1

HOUSING AND COVERS

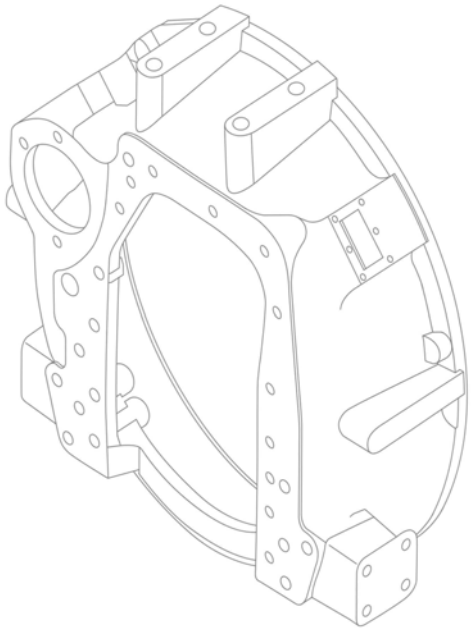

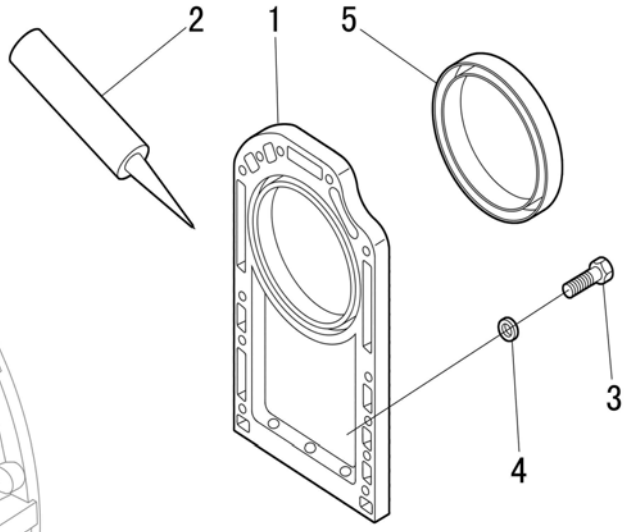

HOUSING AND COVERS

R	P.N.	DESCRIPTION	QTY
1	51338125	END COVER	1
2	51338053	GASKET SEALANT	AR
3	51338067	HEXAGON BOLT	10
4	51338124	SPRING WASHER	10
5	51338126	ROTARY SHAFT SEAL	1

HOUSING AND COVERS

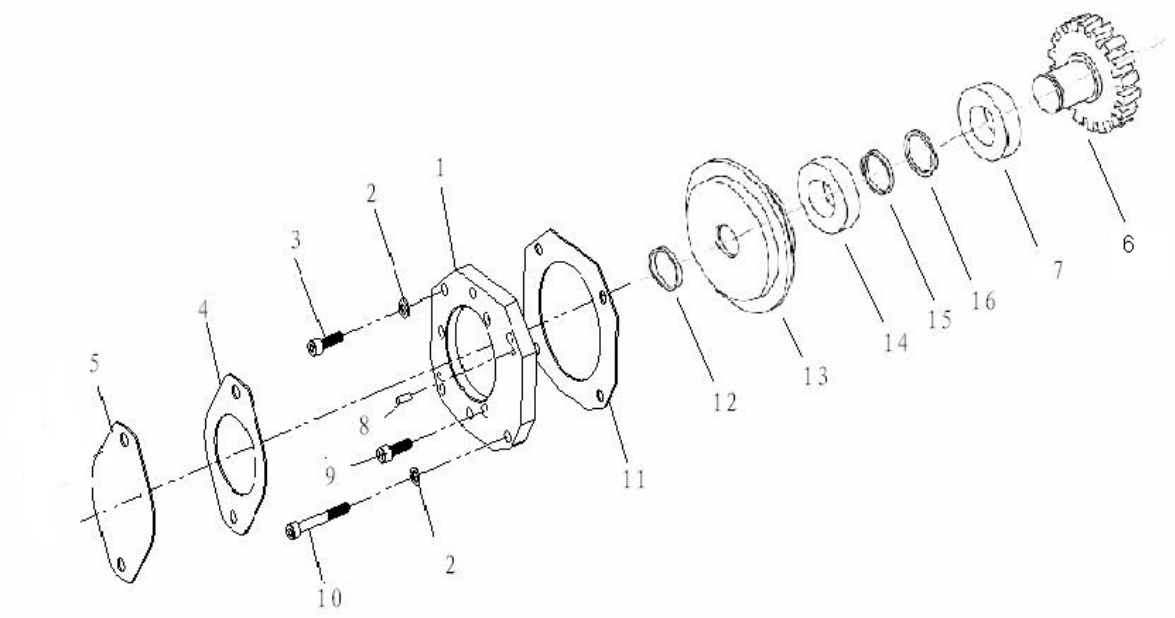

HOUSING AND COVERS

R	P.N.	DESCRIPTION	QTY
1	51338089	SUPPORT PLATE	1
2	51338048	SPRING LOCK WASHER	3
3	51338093	CHEESE HEAD SCREW	1
4	51338098	GASKET	1
5	51338818	COVER PLATE	1
6	51338088	HYDRAULIC PUMP GEAR UNITS	1
7	51338534	BEARING	1
8	51338096	PARALLEL PIN	2
9	51338091	CHEESE HEAD SCREW	2
10	51338095	CHEESE HEAD SCREW	3
11	51338090	GASKET	1
12	51338536	RING	1
13	51338102	BEARING SEAT	1
14	51338535	BEARING	1
15	51338101	BUSHING	1
16	51338537	CIRCLIP	1

HOUSING AND COVERS

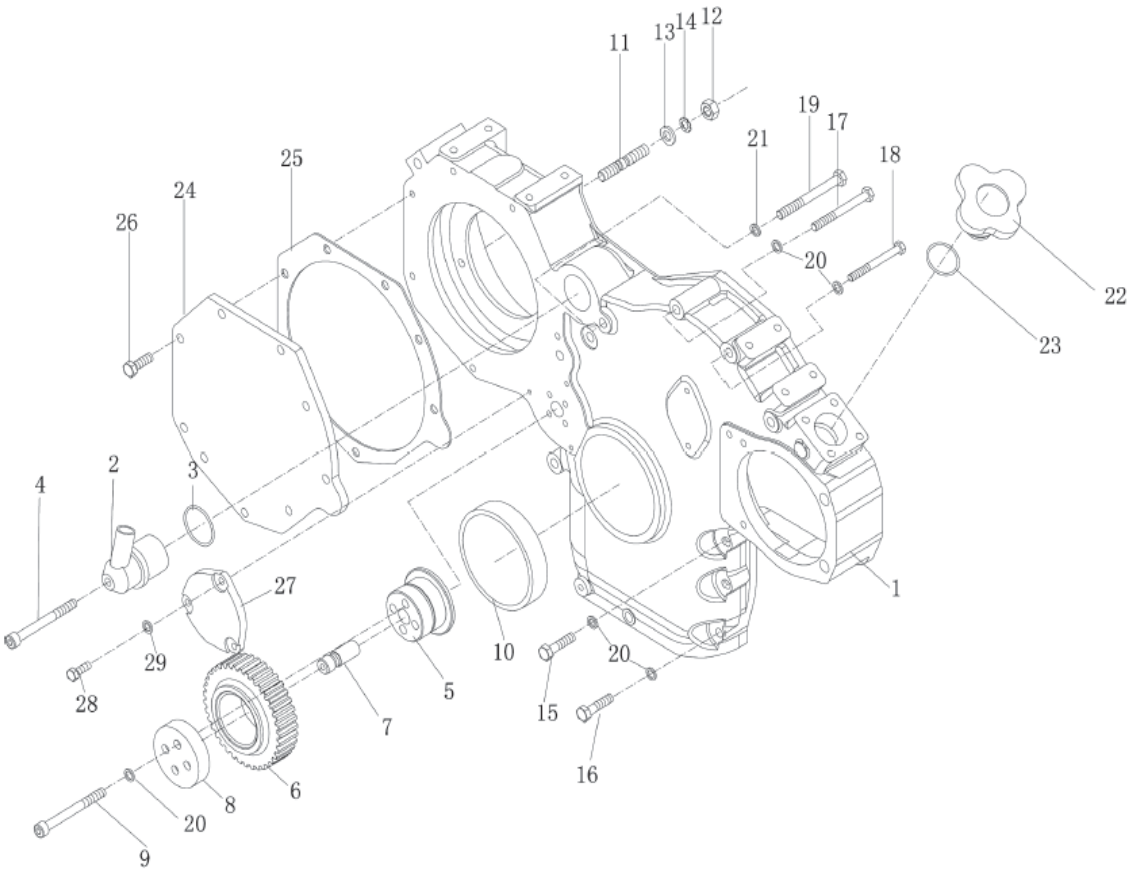

HOUSING AND COVERS

R	P.N.	DESCRIPTION	QTY
1	51338073	END COVER	1
2	51338795	HOUSING	1
3	51338080	O-SEAL	1
4	51338081	HEXAGON BOLT	1
5	51338074	FLANGED BUSH	1
6	51338075	SPUR GEAR	1
7	51338076	FLANGED BUSH	1
8	51338077	FLANGE	1
9	51338670	CHEESE HEAD SCREW	4
10	51338082	ROTARY SHAFT SEAL	1
11	51338083	STUD	4
12	51338060	HEXAGON NUT	4
13	51338061	PLAIN WASHER	4
14	51338062	TOOTH LOCK WASHER	4
15	51338054	HEXAGON BOLT	1
16	51338055	HEXAGON BOLT	5
17	51338056	HEXAGON BOLT	4
18	51338057	HEXAGON BOLT	2
19	51338058	HEXAGON BOLT TL80,TL90	2
20	51338048	SPRING LOCK WASHER TL100	1
21	51338059	SEALING RING	18
22	51338063	PLUG	1
23	51338064	O-SEAL	1
24	51338065	SHEILD	1
25	51338066	GASKET	1
			1

HOUSING AND COVERS

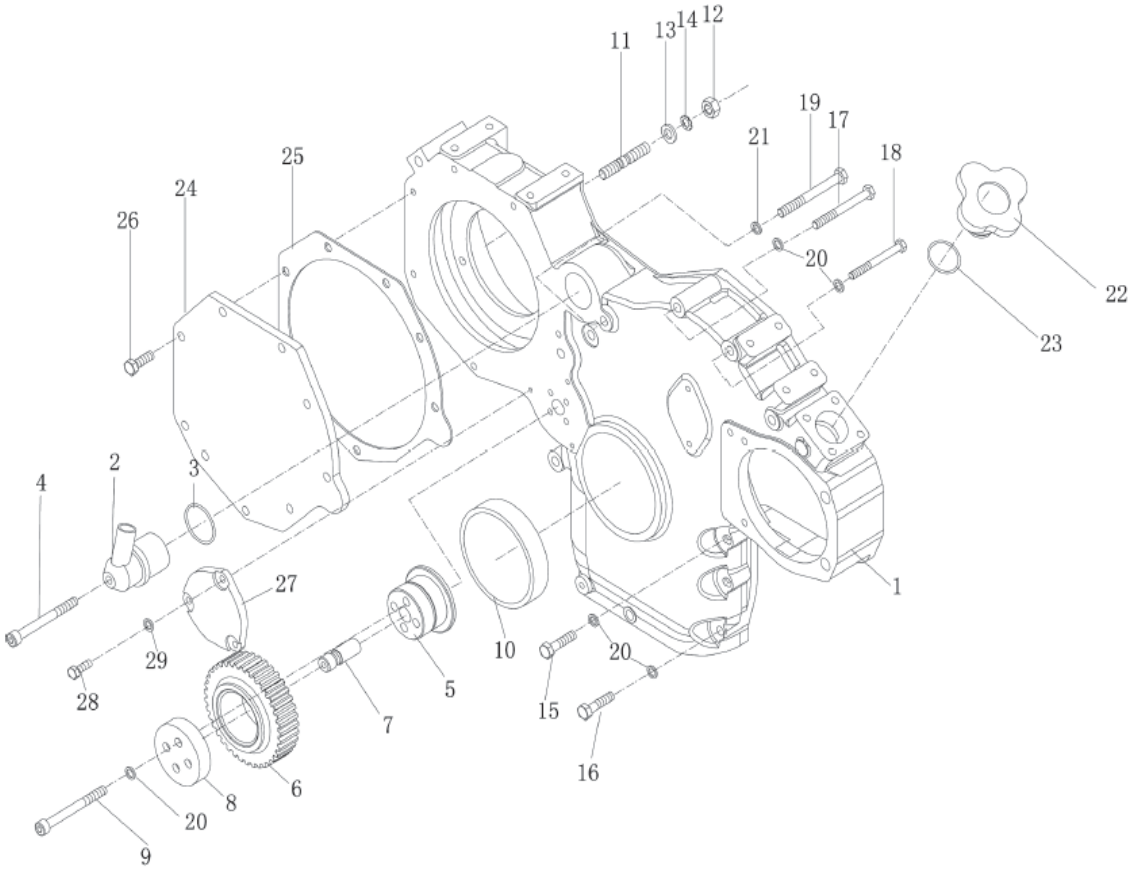

HOUSING AND COVERS

R	P.N.	DESCRIPTION	QTY
26	51338067	HEXAGON BOLT	9
27	51338070	SHEILD	1
28	51338071	HEXAGON BOLT	3
29	51338072	SEALING RING	3

0.06.0	1/4	04/09

HEAD CYLINDER

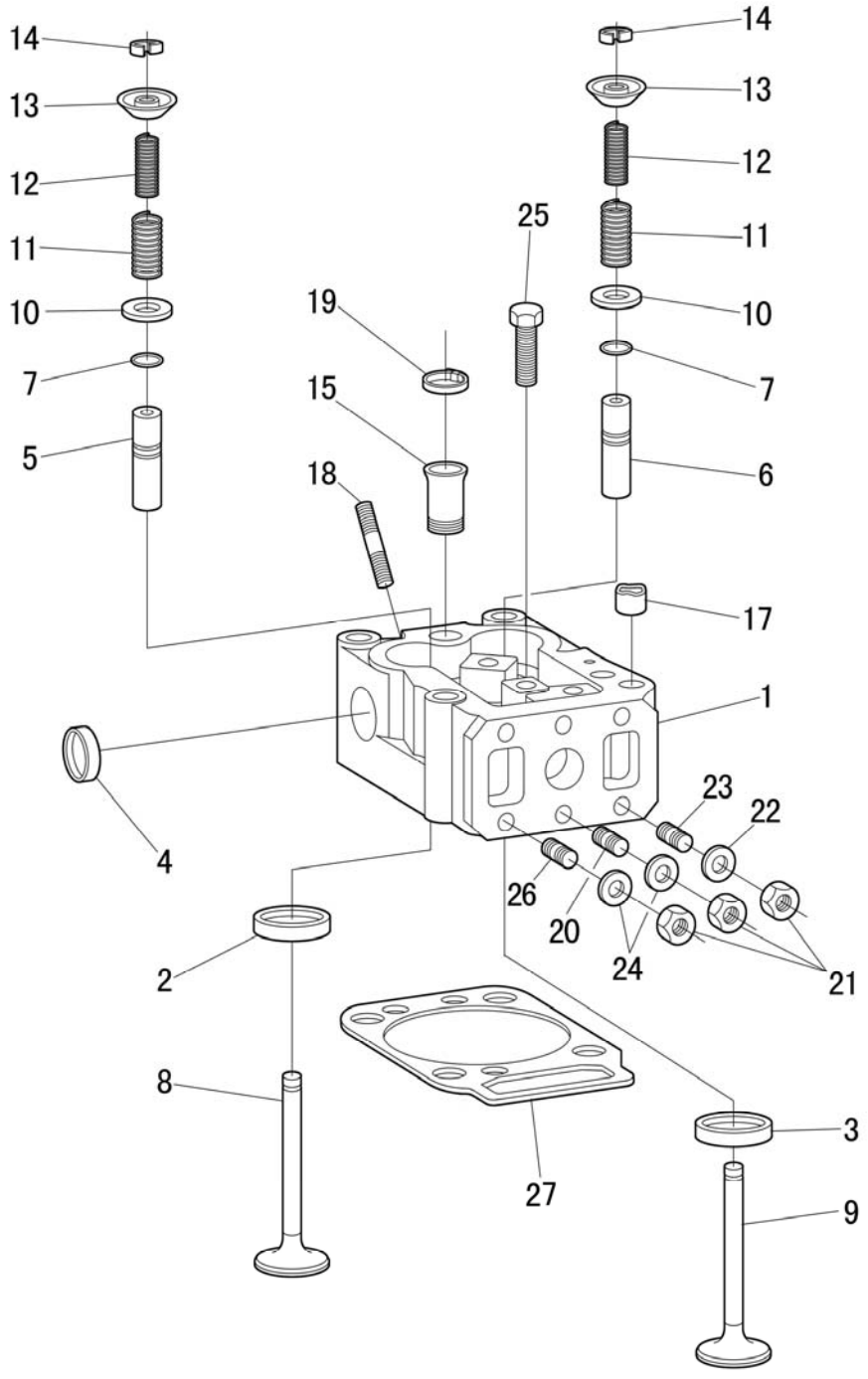

HEAD CYLINDER

R	P.N.	DESCRIPTION	QTY
1	51338697	CYLINDER HEAD TL80	4
1	51338790	CYLINDER HEAD TL90,TL100	4
2	51338704	VALVE SEAT EXHAUST	4
3	51338254	VALVE SEAT INTAKE	4
5	51338256	VALVE GUIDE(IN)	4
6	51338259	VALVE GUIDE(OUT)	4
7	51338257	AIRPROOF COVER	4
8	51338260	INLET VALVE	4
9	51338410	EXHAUST VALVE	4
10	51338262	SPRING CAP	8
11	51338263	VALVE SPRING	8
12	51338264	VALVE SPRING	8
13	51338265	SPRING CAP	8
14	51338266	VALVE COLLET	16
15	51338696	PIPE CONNECTION ASSY TL80	4
17	51338244	SCREW PLUG	4
18	51338236	STUD TL80	4
19	51338249	STUD TL80	4
20	51338007	STUD TL80	8
20	51338018	STUD TL90,TL100	8
21	51338239	NUT	16
22	51338238	PLAIN WASHER	8
23	51338827	STUD TL90,TL100	8

HEAD CYLINDER

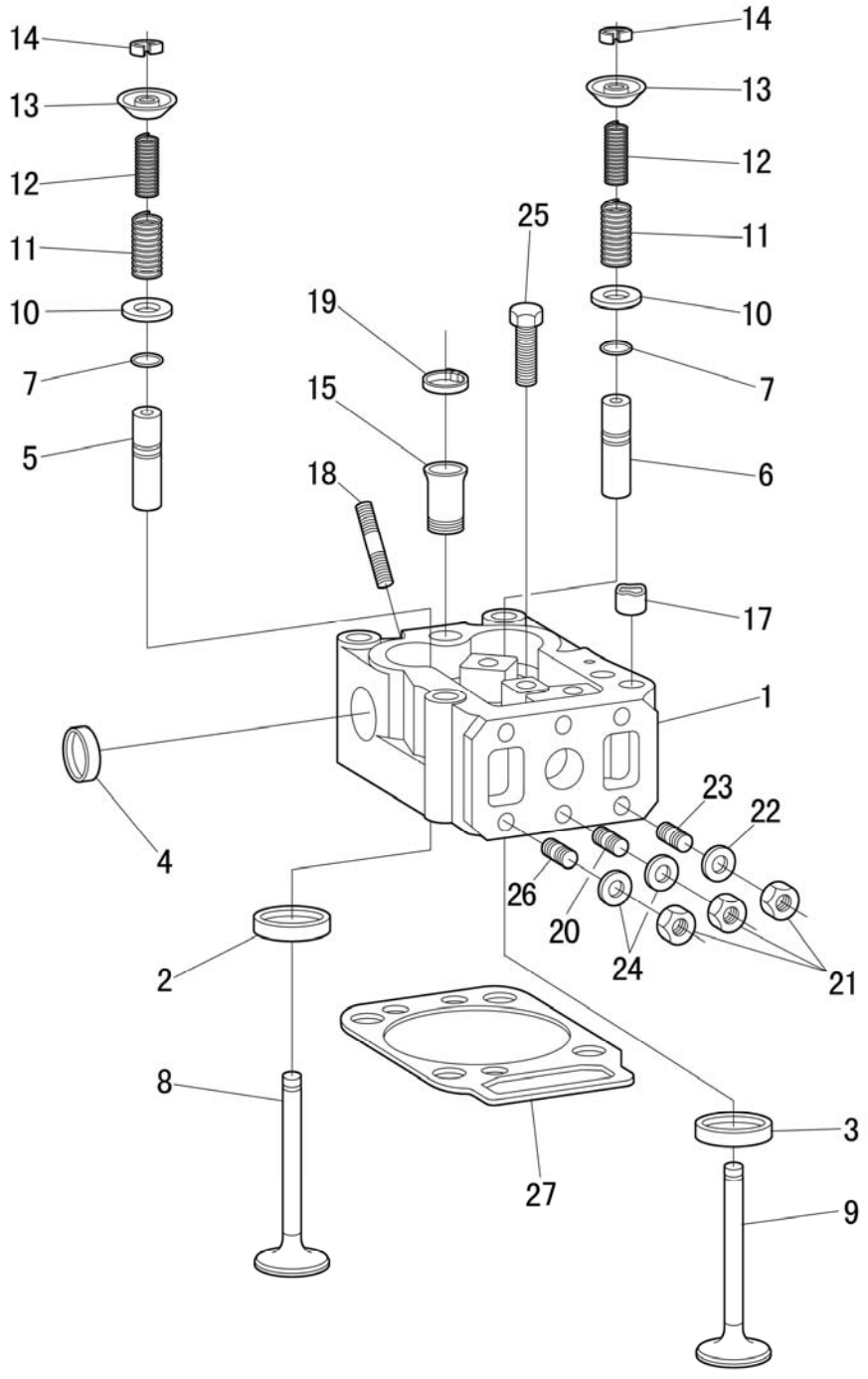

HEAD CYLINDER

R	P.N.	DESCRIPTION	QTY
24	51338237	PLAIN WASHER TL90,TL100	12
25	51338684	HEXAGON BOLT TL80	4
26	51338234	STUD TL90,TL100	4
27	51338683	GASKET	4

HEAD CYLINDER ROCKER ARM

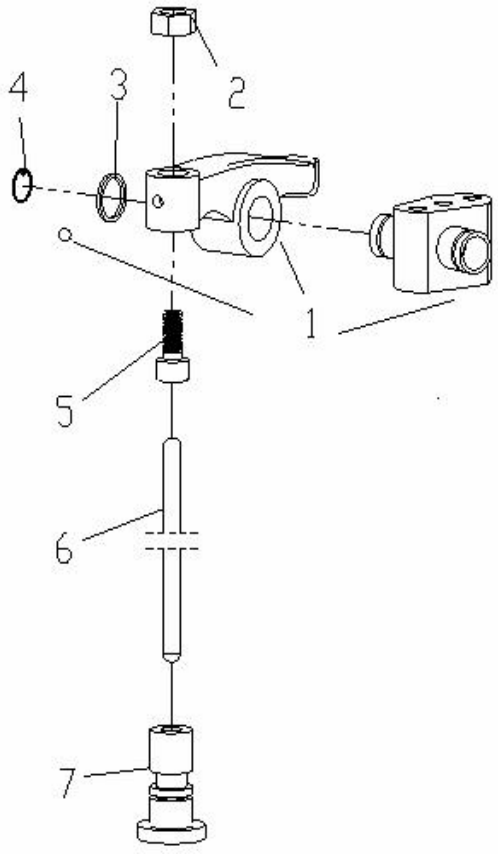

HEAD CYLINDER ROCKER ARM

R	P.N.	DESCRIPTION	QTY
1	51338789	ROCKER ARM ASSY	4
2	51338302	HEXAGON NUT	8
3	51338297	SPRIG LOCK WASHER	16
4	51338298	CIRCLIPS	8
5	51338301	ADJUSTING SCREW	8
6	51338290	PUSHROD	8
7	51338291	TAPPET	8

HEAD CYLINDER, COVER

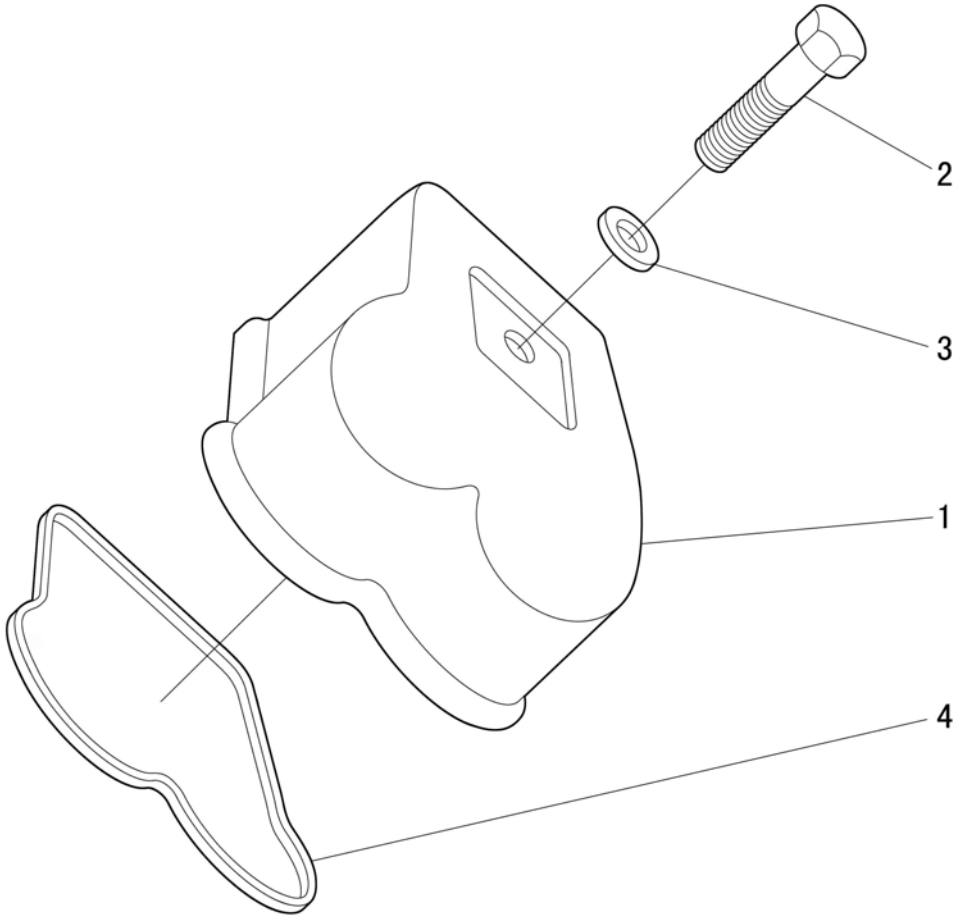

HEAD CYLINDER, COVER

R	P.N.	DESCRIPTION	QTY
1	51338267	CYLINGDER HEAD COVER	4
2	51338054	HEXAGON BOLT	4
3	51338094	SEALING RING	4
4	51338268	CYLIND HEAD COVER GASKET	4

INTAKE AND EXHAUST MANIFOLD

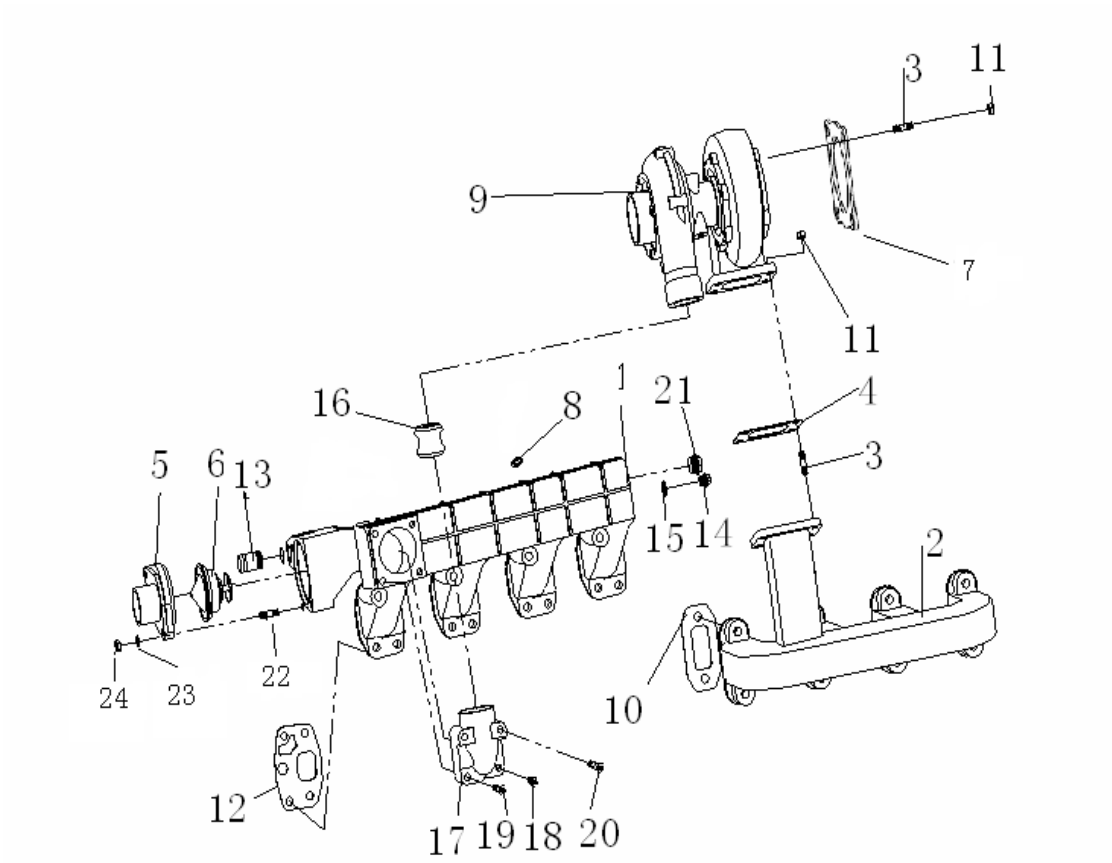

INTAKE AND EXHAUST MANIFOLD

R	P.N.	DESCRIPTION	QTY
1	51338832	AIR INLET PIPE TL90,TL100	1
1	51338403	AIR INLET PIPE TL80	1
2	51338472	EXHAUST PIPE	1
3	51338664	STUD TL80	4
3	51338470	STUD TL90,TL100	8
4	51338474	PLAN WASHER	1
5	51338415	THERMOSTAT COVER TL90,TL100	1
6	51338416	THERMOSTAT TL90,TL100	1
7	51338844	PLAN WASHER TL90,TL100	4
8	51338346	GASKET TL90,TL100	1
9	51338310	TURBOCHAGER TL90,TL100	1
9	51338665	TURBOCHAGER TL100	1
10	51338404	PLAN WASHER	4
11	51338471	HEXAGON NUT TL80	4
11	51338471	HEXAGON NUT TL90,TL100	8
12	51338611	PLAN WASHER TL90,TL100	4
13	51338834	PIPE-JOINT TL90,TL100	1
14	51338421	SCREW PLUG TL90,TL100	2
15	51338148	GASKET TL90,TL100	2
16	51338557	PIPE CONNECTION TL90,TL100	1
17	51338639	PIPE CONNECTION TL90	1
17	51338558	SYPHON TL90,TL100	1
18	51338559	CHESSE HEAD SCREW TL90,TL100	1
19	51338145	CHESSE HEAD SCREW TL90,TL100	1
20	51338560	CHESSE HEAD SCREW TL90,TL100	2

INTAKE AND EXHAUST MANIFOLD

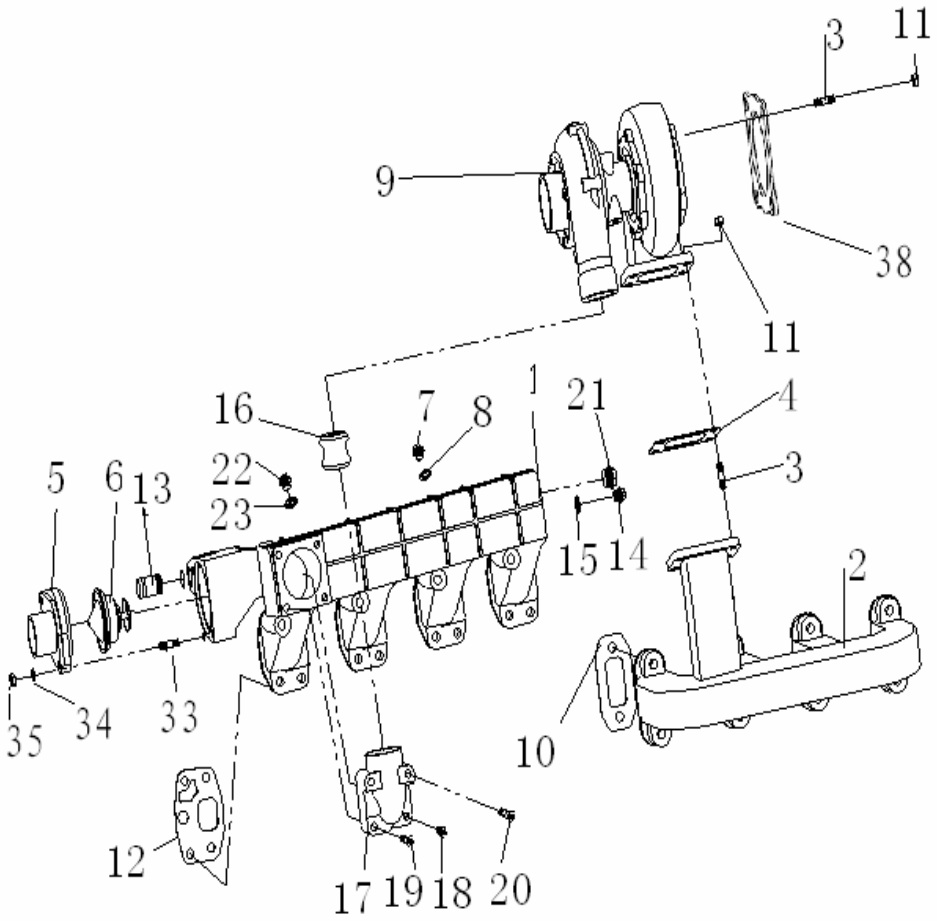

INTAKE AND EXHAUST MANIFOLD

Set.No	P.N.	DESCRIPTION	QTY
21	51338316	SCREWING, TL90/ 100	1
33	51338839	STUD, TL90/ 100, TL90 EURO II	2
34	51338048	SPRING LOCK WASHER, TL90/ 100, TL90 EURO II	2
35	51338069	HEXAGON NUT, TL90/ 100, TL90 EURO II	2
38	51338844	GASKET, TL90/ 100, TL90 EURO II	4

0.07.1/A	1/1	04/09

THERMOSTART

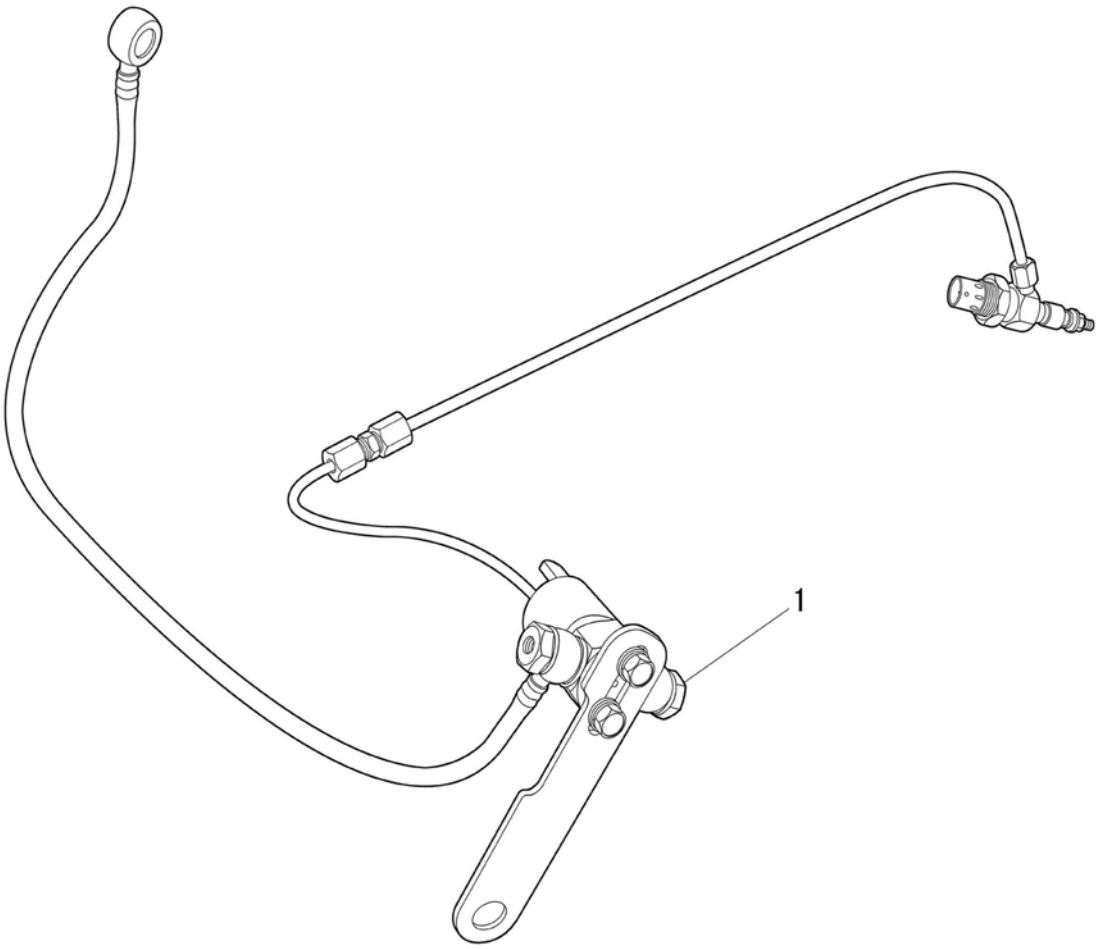

THERMOSTART

R	P.N.	DESCRIPTION	QTY
1	51338308	THERMOSTART ASSEMBLY	1

0.08.0	1/1	11/07

CRANKSHAFT

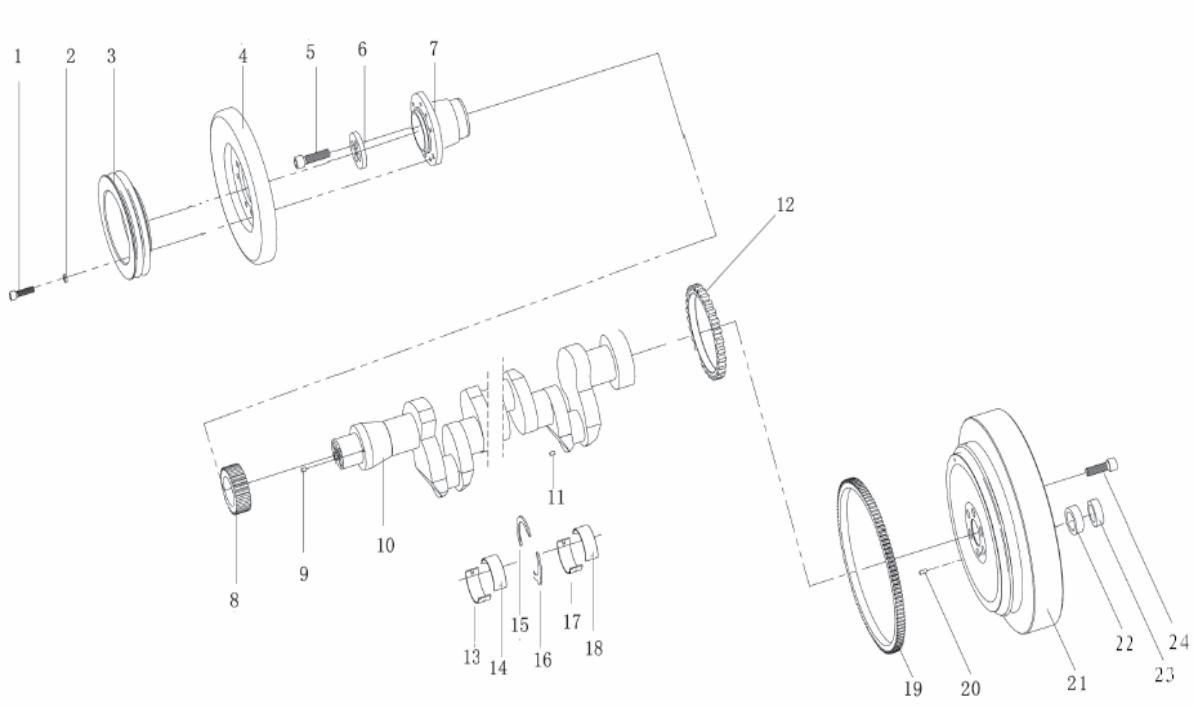

CRANKSHAFT

R	P.N.	DECRIPTION	QTY
1	51338204	CHEESE HEAD SCREW	6
2	51338011	SPRING LOCK WASHER	6
3	51338203	PULLEY	1
4	51338202	DAMPER	1
5	51338155	CHEESE HEAD SCREW	6
6	51338194	PLAIN WASHER	1
7	51338192	HUB	1
8	51338824	TIMING GEAR	1
9	51338171	STRAIGHT PIN	1
10	51338161	CRANKSHAFT	1
11	51338170	PLUG	4
12	51338168	RING GEAR	1
13	51338626	LOWER SHELL, MAIN	4
14	51338627	UPPER SHELL, MAIN	4
15	51338630	UPPER THRUST PIECE	2
16	51338628	LOWER THRUST PIECE	2
17	51338792	LOWER SHELL, MAIN, THRUST PIECE	1
18	51338793	UPPER SHELL, MAIN, THRUST PIECE	1
19	51338159	RING GEAR	1
20	51338156	STRAIGHT PIN	1
21	51338591	FLYWHEEL	1
22	51338566	SPACER	1
23	51338501	BALL BEARING	1
24	51338155	CHEESE HEAD SCREW	6

0.08.2	1/2	03/09

PISTON

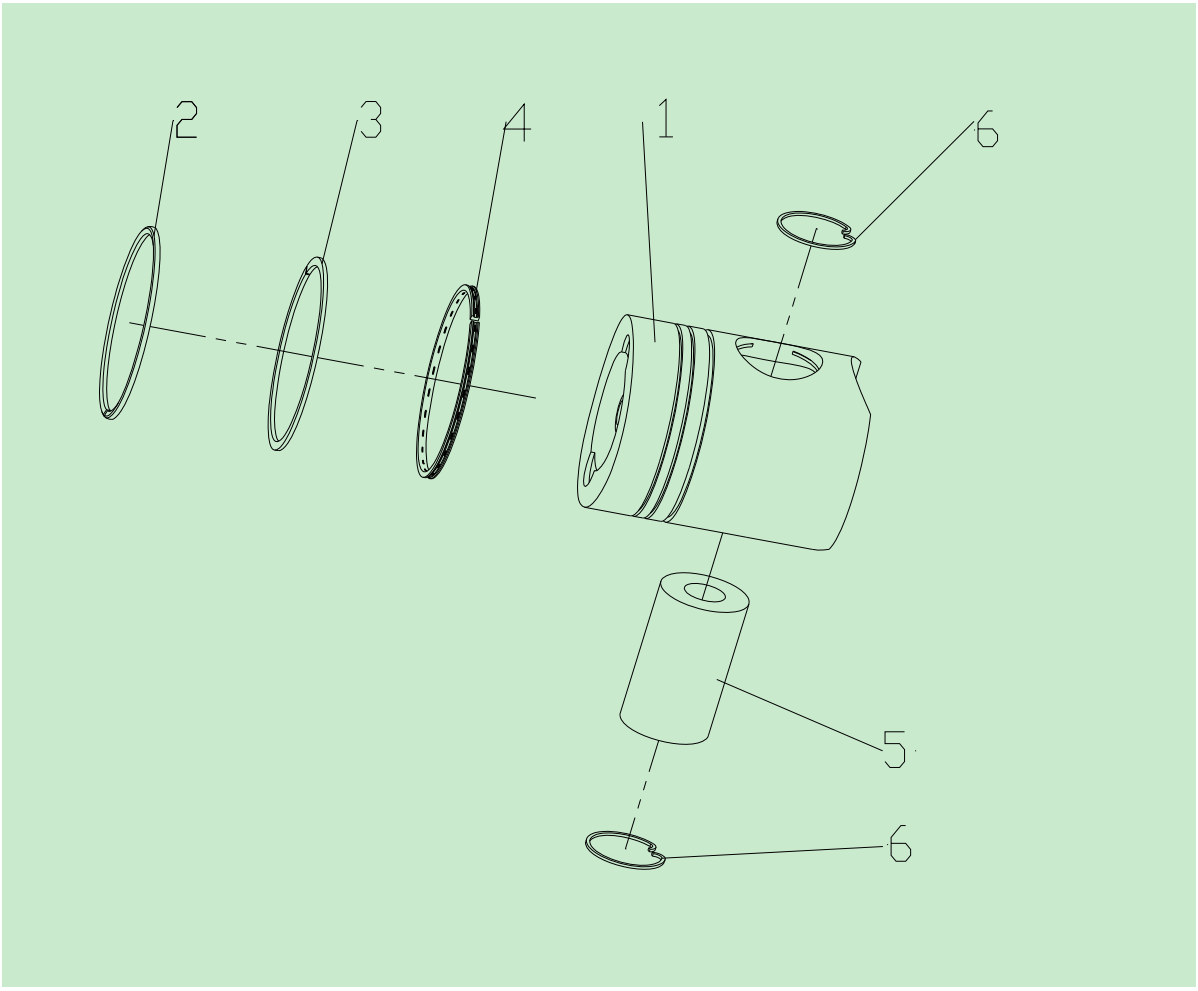

PISTON

R	P.N.	DESCRIPTION	QTY
1	51338572	PISTON TL80	4
1	51338213	PISTON TL90,TL100	4
2	51338592	RING TL90,TL100	4
2	51338214	RING TL80	4
3	51338593	CONICAL RING TL90,TL100	4
3	51338215	CONICAL RING TL80	4
4	51338594	RING TL90,TL100	4
4	51338216	RING TL80	4
5	51338217	PIN TL90,TL100	4
5	51338467	PIN TL80	4
6	51338218	CIRCLIP	8

0.08.2	2/2	03/09

CONNECTING ROD

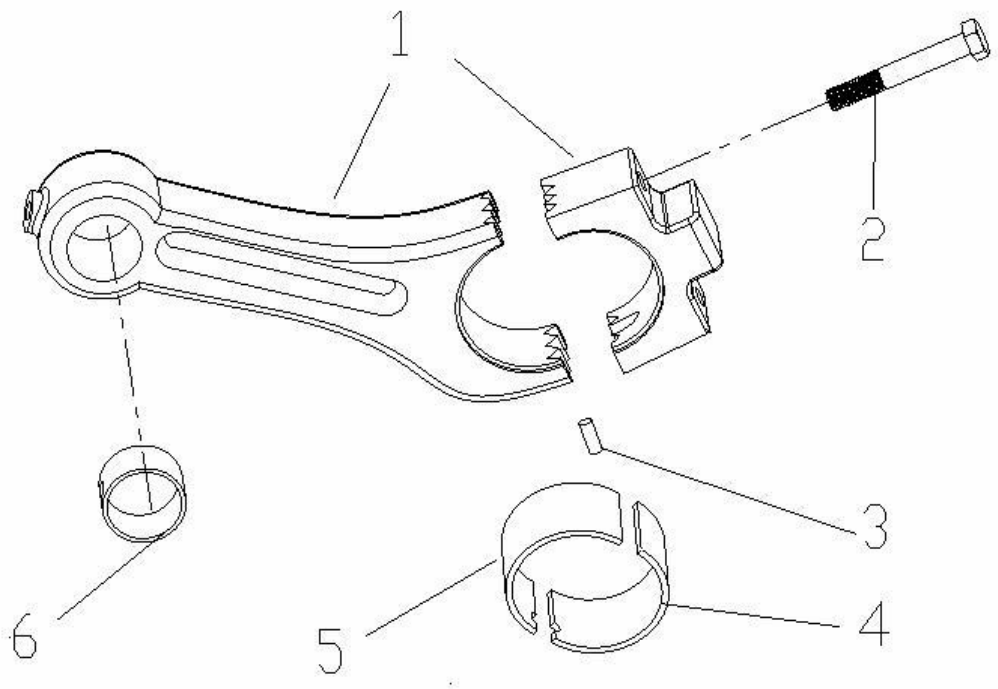

CONNECTING ROD

R	P.N.	DESCRIPTION	QTY
1	51338407	CONNECTING ROD	4
2	51338227	BIG END BOLT	8
3	51338228	STRAIGHT PIN	4
4	51338825	BIG END BEARING	4
5	51338826	BIG END BEARING	4
6	51338226	BIG END BUSH	4

0.08.4	1/1	04/09

BALANCER

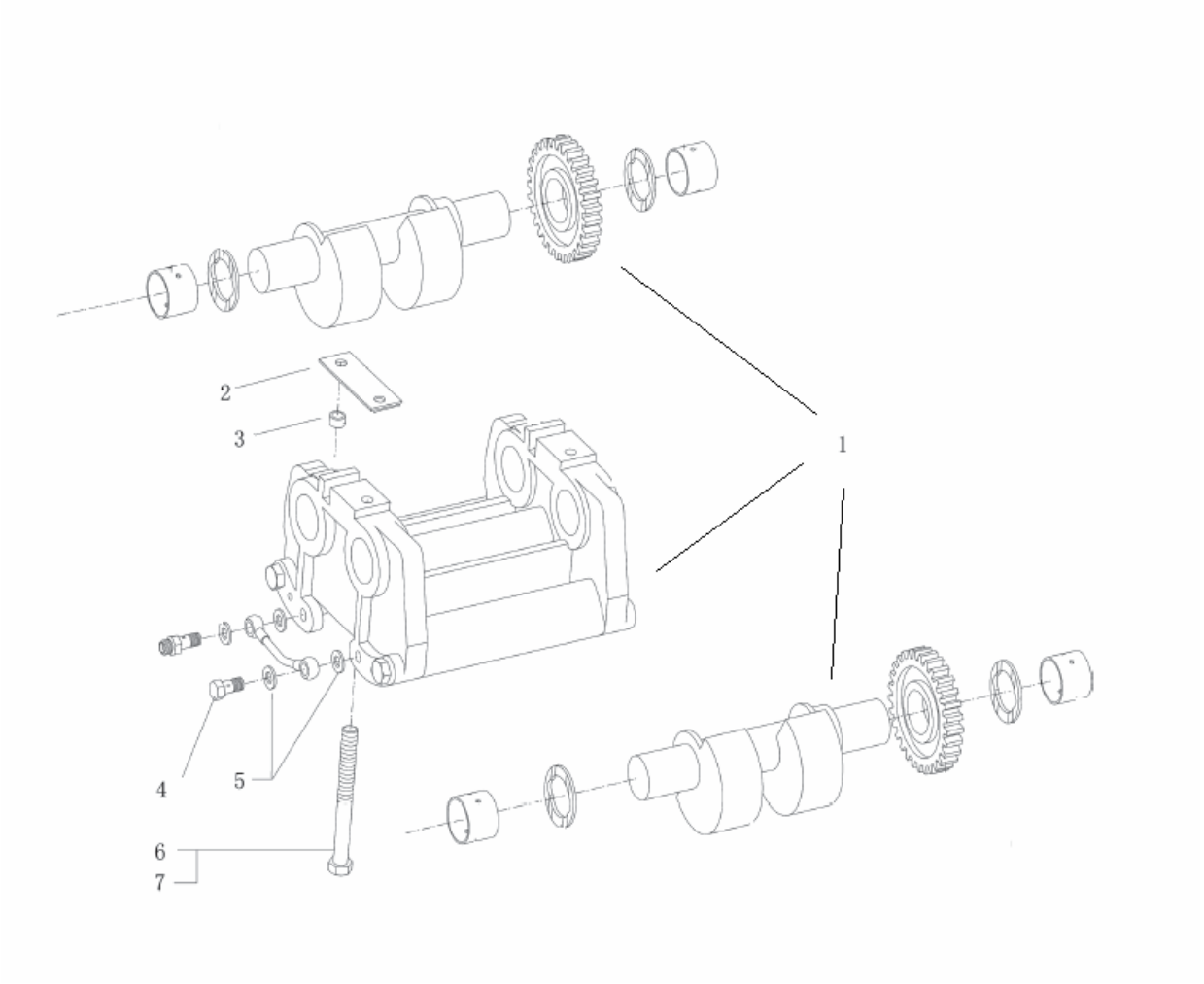

BALANCER

R	P.N.	DESCRIPTION	QTY
1	51338698	BALANCER ASSEMBLY	1
2	51338174	SHIM	6
3	51338175	RETAINER	2
4	51338189	HOLLOW SCREW	1
5	51338190	SEALING RING	4
6	51338176	HEXAGON BOLT	2
7	51338177	HEXAGON BOLT	2

0.12.0	1/1	03/09

DRIVE-GEARING TAPPETS AND PUSHRODS

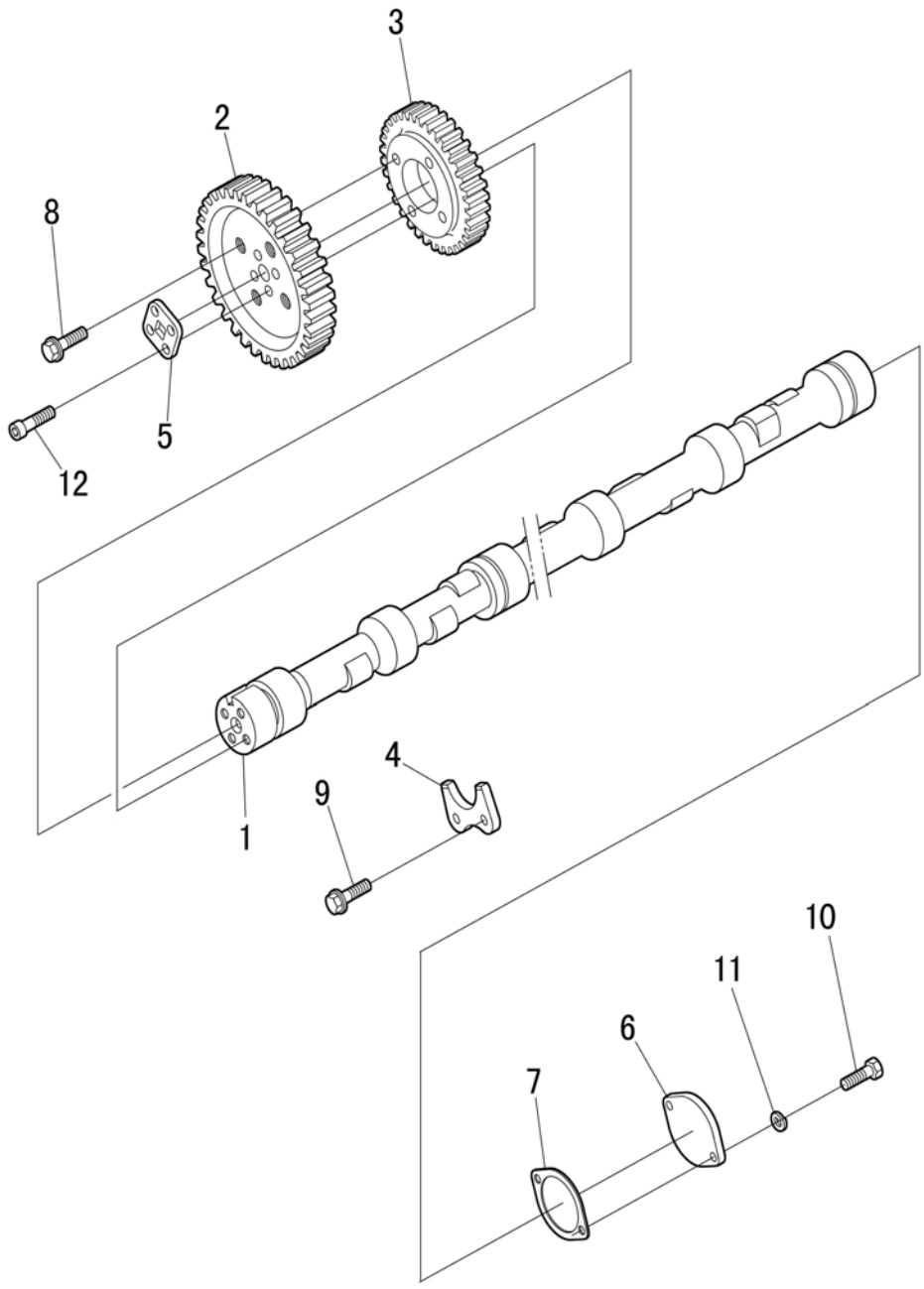

DRIVE-GEARING TAPPETS AND PUSHRODS

R	P.N.	DESCRIPTION	QTY
1	51338275	CAMSHAFT	1
2	51338280	CAMSHAFT GEAR	1
3	51338279	GEAR	1
4	51338277	QUADRANT PLATE	1
5	51338283	FLANGE	1
6	51338286	FLANGE	1
7	51338287	GASKET	1
8	51338285	LOCKING SCREW	4
9	51338278	LOCKING SCREW	2
10	51338288	HEXAGON BOLT	2
11	51338048	SPRING LOCK WASHER	2
12	51338284	CHEESE HEAD SCREW	4

FUEL SYSTEM INJECTION PUMP

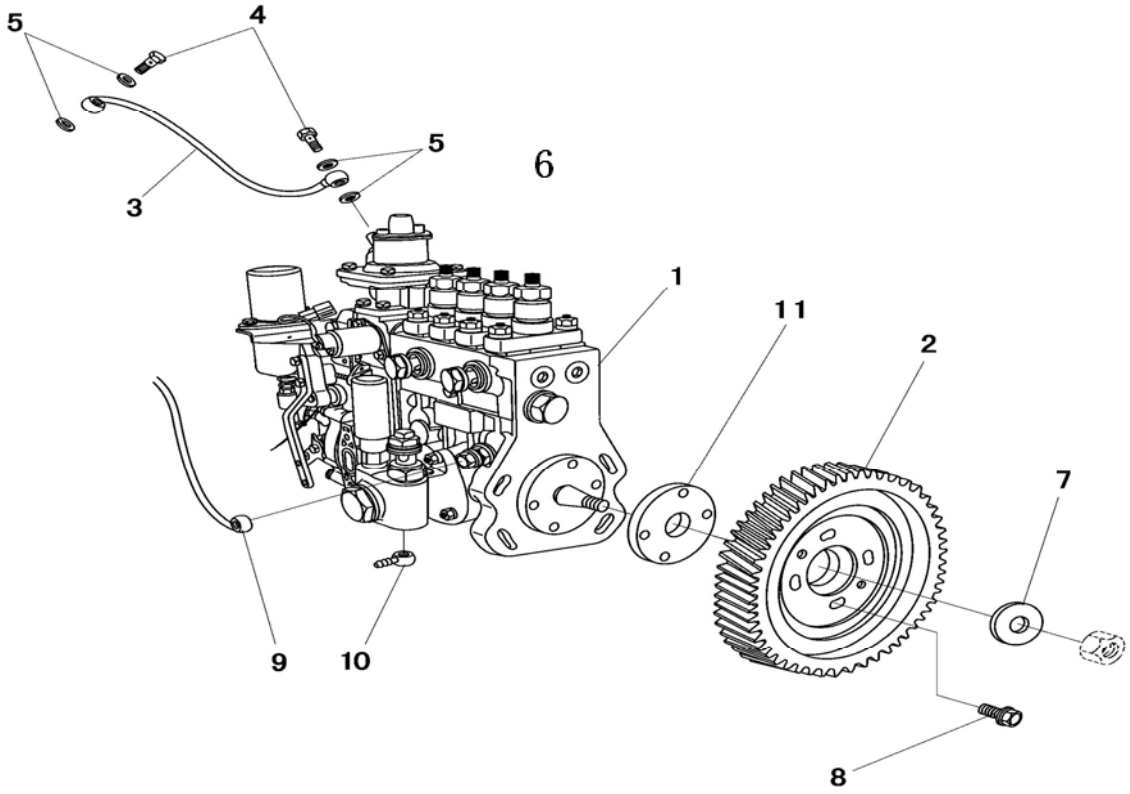

FUEL SYSTEM INJECTION PUMP

R	P.N.	DESCRIPTION	QTY
1	51338624	FUEL INJECTION PUMP TL90	1
1	51338625	FUEL INJECTION PUMP TL100	1
1	51338644	FUEL INJECTION PUMP TL90	1
1	51338610	FUEL INJECTION PUMP TL80	1
2	51338363	SPUR GEAR	1
3	51338685	HOLLOW PIPE TL90,TL100	1
4	51338552	HOLLOW SCREW TL90,TL100	1
5	51338442	SEALING RING TL90,TL100	2
6	51338365	HUB	1
7	51338366	PRESSURE CLIP	1
8	51338366	HEXAGON BOLT	4
9	51338368	LUBRICATION OIL LINE	1
10	51338370	CONNECTOR	1

FUEL SYSTEM INJECTION PUMP - PIPES

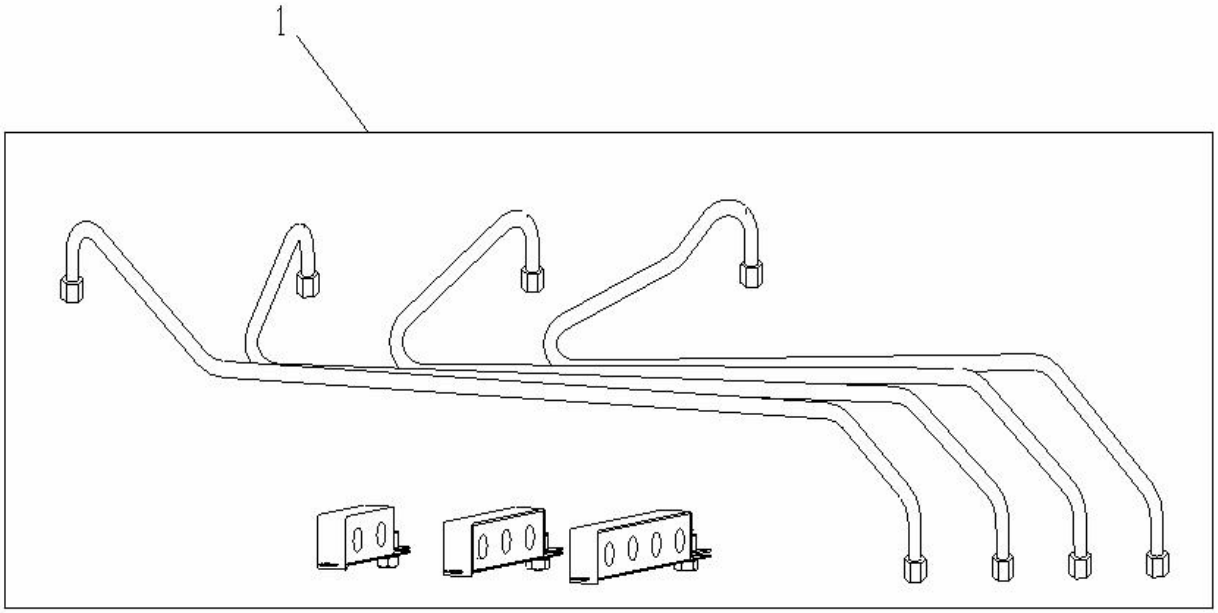

FUEL SYSTEM INJECTION PUMP - PIPES

R	P.N.	DESCRIPTION	QTY
1	51338372	HIGH PRESSURE PIPE ASSEMBLY TL80	1
1	51338612	HIGH PRESSURE PIPE ASSEMBLY TL90,TL100	1

FUEL SYSTEM INJECTION PUMP - PIPES

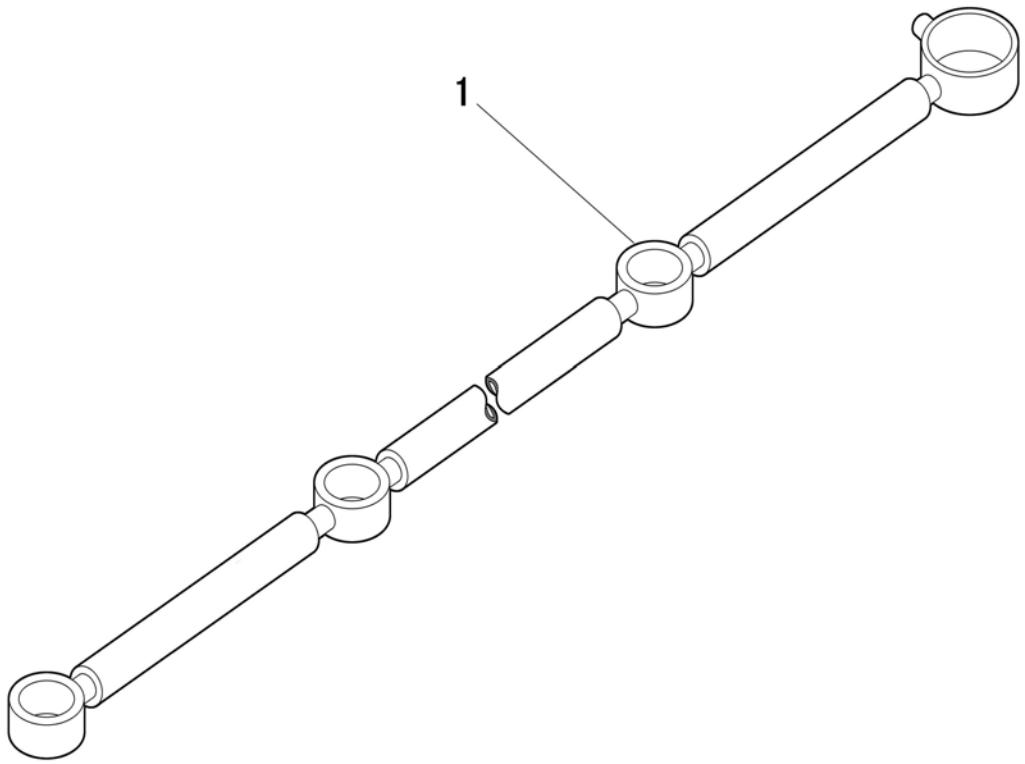

FUEL SYSTEM INJECTION PUMP - PIPES

R	P.N.	DESCRIPTION	QTY
1	51338393	LEAK OFF LINE	1

FUEL SYSTEM INJECTION PUMP - PIPES

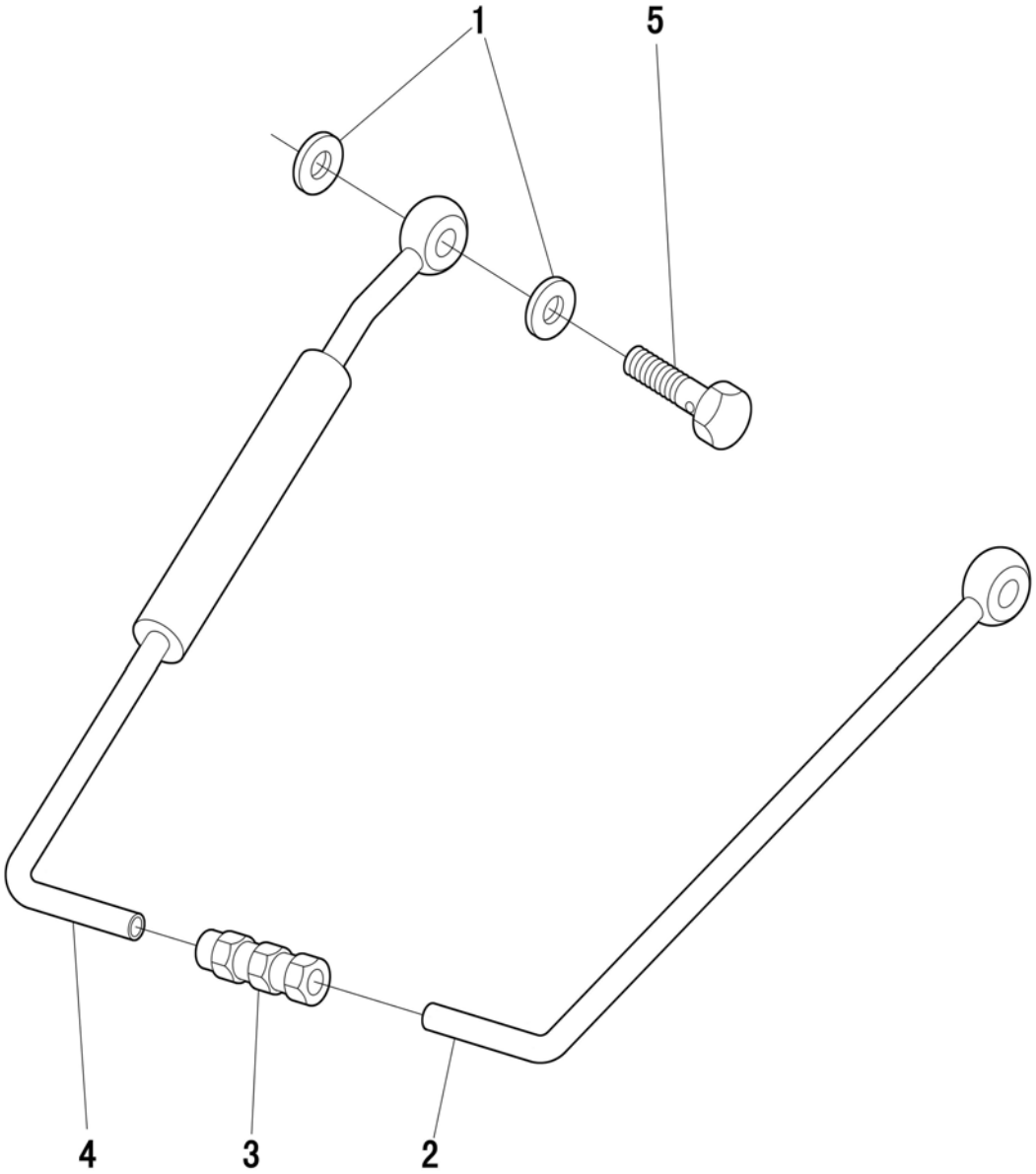

FUEL SYSTEM INJECTION PUMP - PIPES

R	P.N.	DESCRIPTION	QTY
1	51338359	SEALING RING	2
2	51338549	LUBRICATION OIL LINE	1
3	51338469	THREADED JOINT	1
4	51338570	LUBRICATION OIL LINE	1
5	51338189	HOLLOW SCREW	1

FUEL SYSTEM - FUEL FILTER

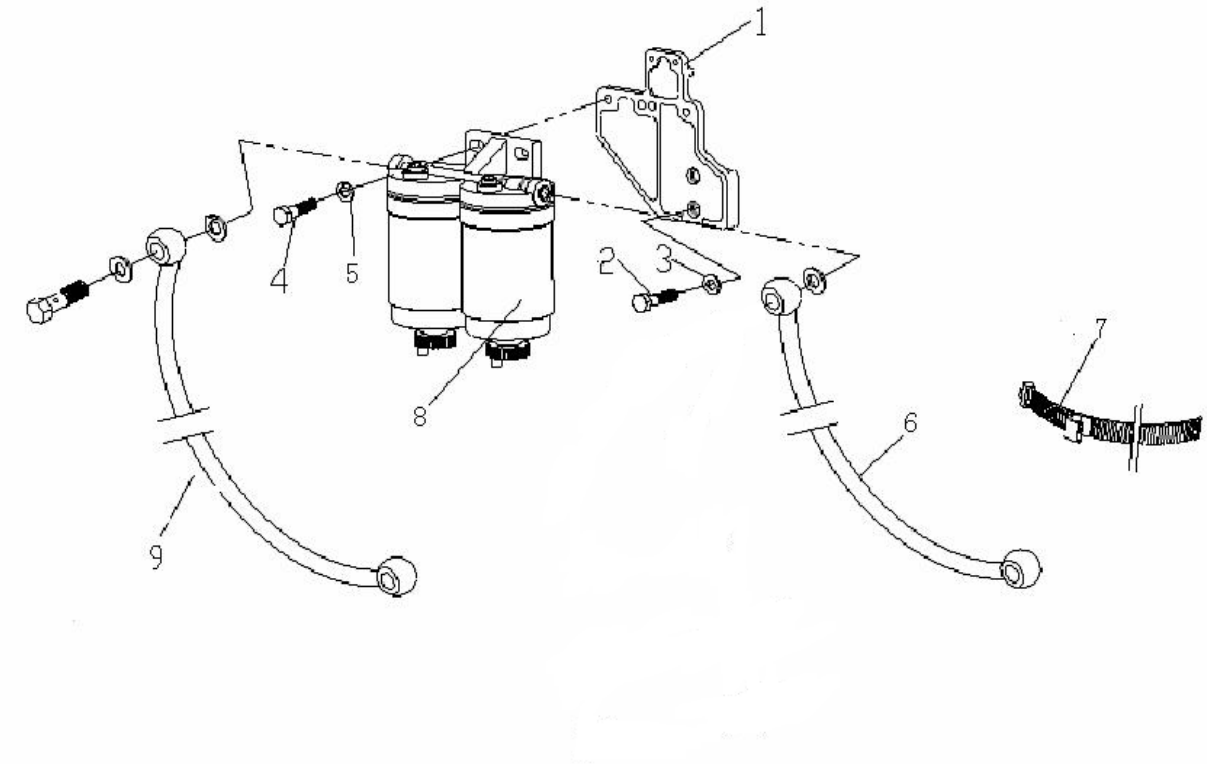

FUEL SYSTEM - FUEL FILTER

R	P.N.	DESCRIPTION	QTY
1	51338650	BRACKET TL80	1
1	51338381	BRACKET TL90,TL100	1
2	51338382	CHEESE HEAD SCREW TL80	2
2	51338067	HEXAGON BOLT TL90,TL100	2
3	51338048	SPRING LOCK WASHER	2
4	51338384	HEXAGON BOLT	2
5	51338061	PLAIN WASHER	2
6	51338633	FUEL PIPE	1
7	51338465	PLASTIC CLIP	2
8	51338383	FUEL FILTER	1
9	51338651	FUEL PIPE	1

0.14.0/B	1/1	04/09

FUEL SYSTEM - INJECTOR

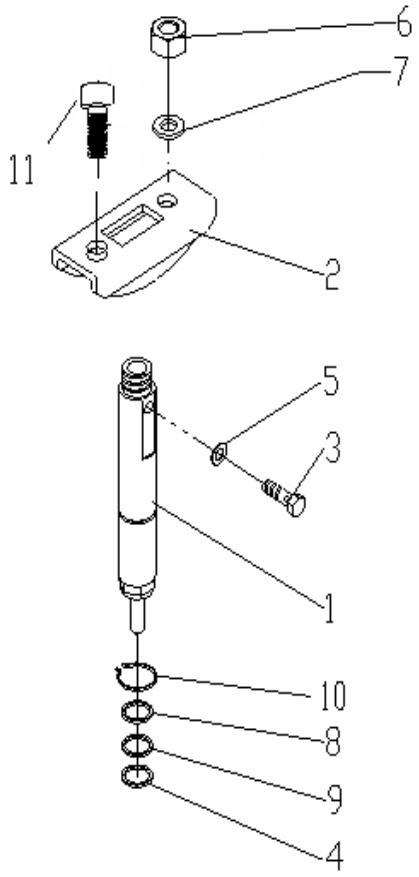

FUEL SYSTEM - INJECTOR

R	P.N.	DESCRIPTION	QTY
1	51338396	FUEL INJECTOR TL80	4
1	51338701	FUEL INJECTOR TL90,TL100	4
2	51338394	RETAINER TL80	4
2	51338645	BRIQUET TL90,TL100	4
3	51338395	HOLLOW SCREW	4
4	51338400	SEALING RING TL80	4
4	51338646	BALL WASHER TL90,TL100	4
5	51338072	SEALING RING	8
6	51338069	HEXAGON NUT TL80	8
7	51338115	PLAIN WASHER TL80	8
8	51338398	PLAIN WASHER TL80	4
8	51338647	PLAIN WASHER TL90,TL100	4
9	51338399	O-SEAL TL80	4
9	51338648	O-SEAL TL90,TL100	4
10	51338397	CIRCLIP TL80	4
10	51338649	CIRCLIP TL90,TL100	4

0.24.0	1/1	04/09

TURBOCHARGING PIPES

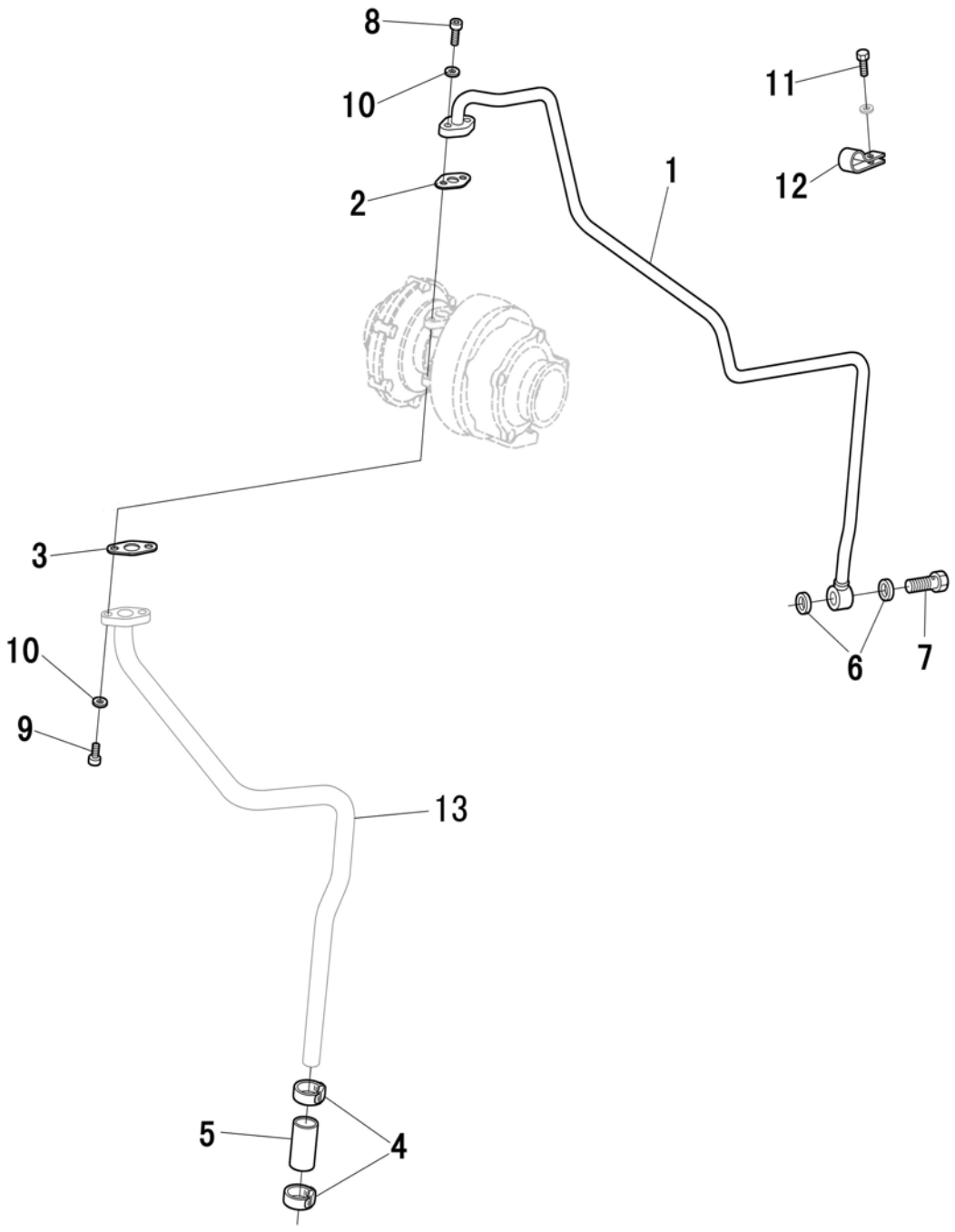

TURBOCHARGING PIPES , TL90 TL100

R	P.N.	DESCRIPTION	QTY
1	51338574	LUBRICATION OIL LINE	1
2	51338577	GASKET	1
3	51338578	GASKET	1
4	51338249	PIPE CLAMP	2
5	51338579	TUBE	1
6	51338582	SEALING RING	2
7	51338580	HOLLOW SCREW	1
8	51338382	CHESSE HEAD SCREW	2
9	51338559	CHESSE HEAD SCREW	2
10	51338048	SPRING LOCK WASHER	4
11	51338787	HEXAGON BOLT	1
12	51338828	PIPE CLAMP	1
13	51338576	PIPE	1

0.30.0	1/1	04/09	

OIL PUMP

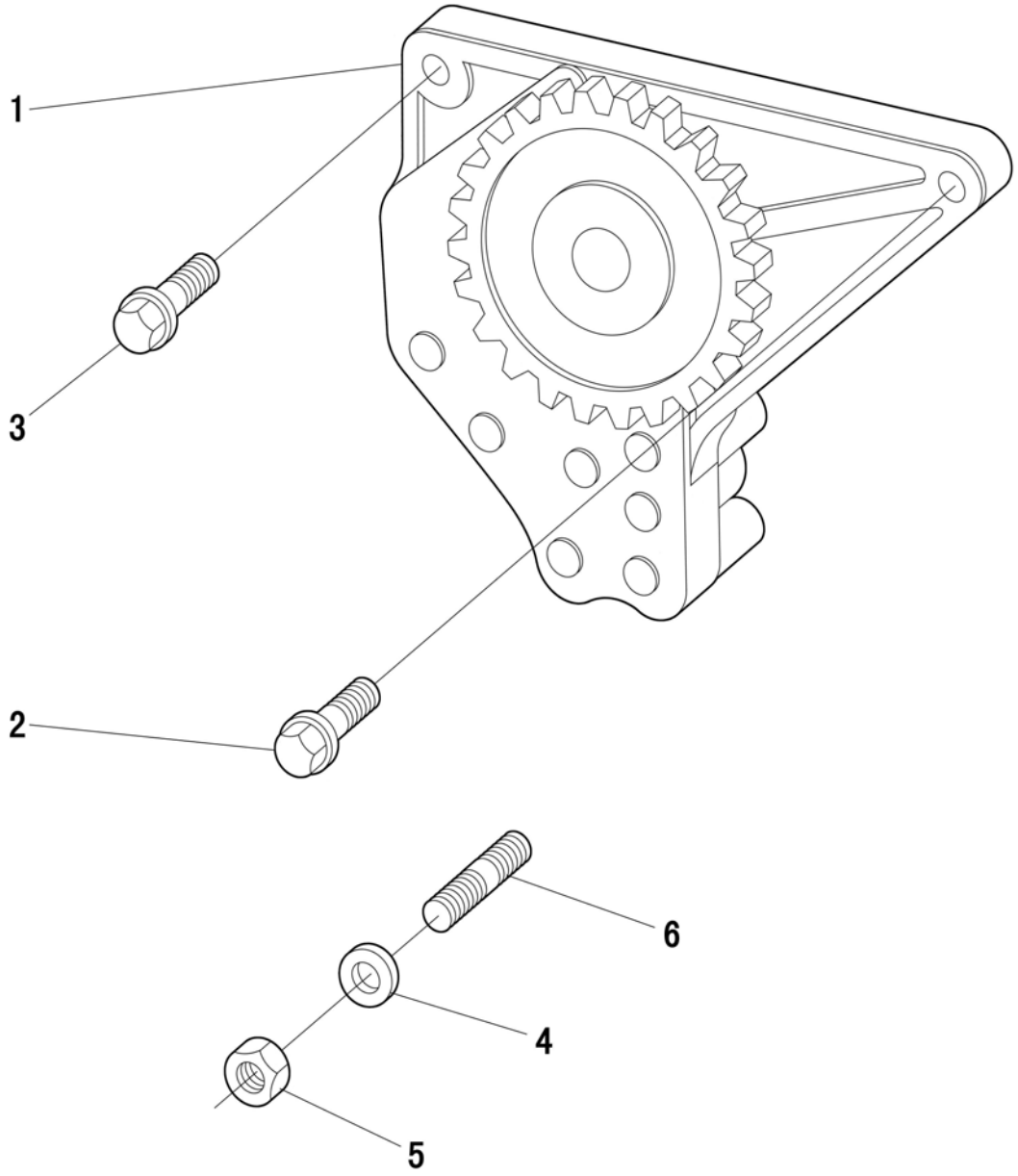

OIL PUMP

R	P.N.	DESCRIPTION	QTY
1	51338709	OIL PUMP ASSY	1
2	51338323	LOCKING SCREW	1
3	51338285	LOCKING SCREW	1
4	51338324	PLAIN WASHER	1
5	51338325	NUT	1
6	51338017	STUD	1

0.30.5	1/1	04/09

OIL LINES AND OIL COOLER

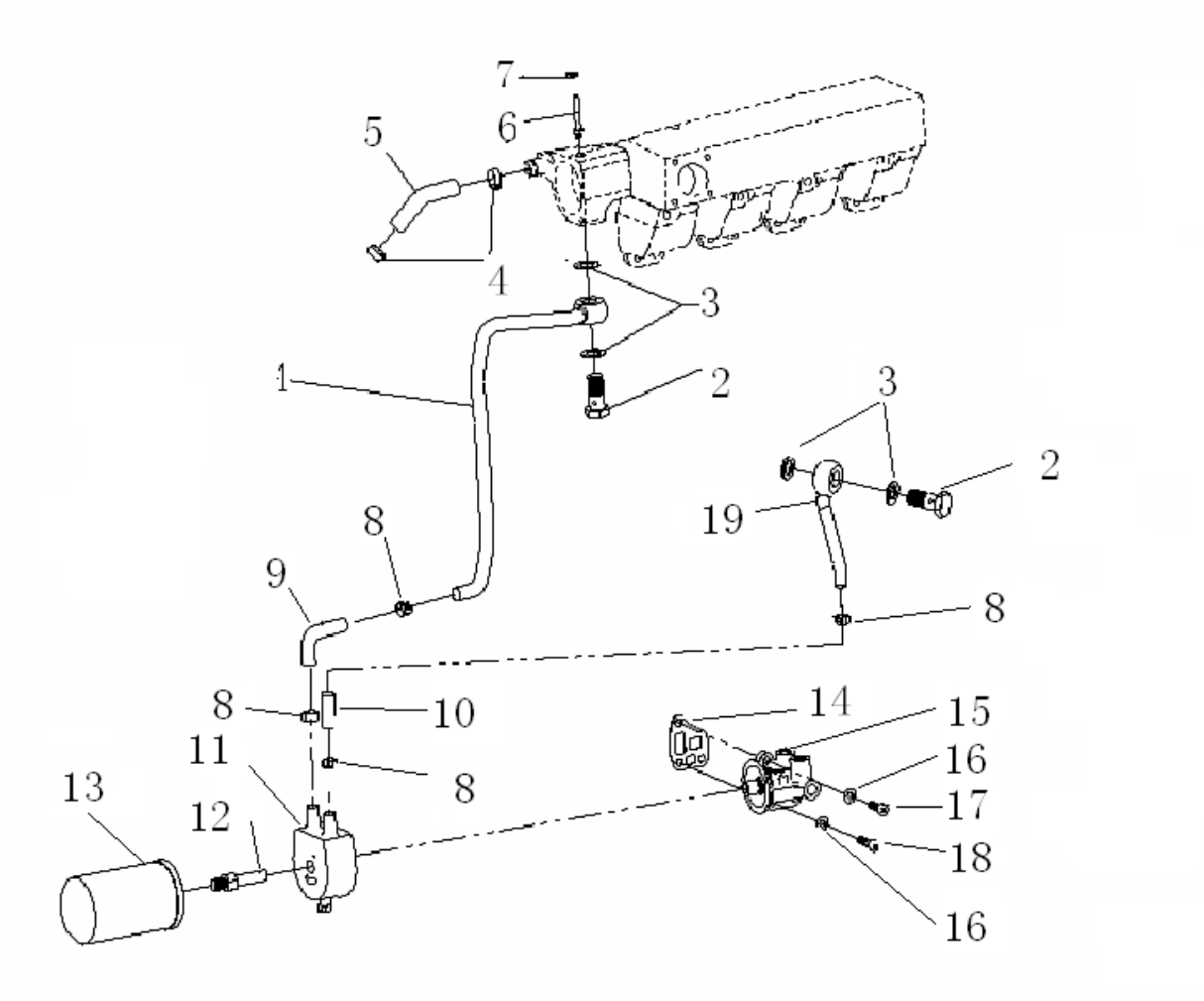

OIL LINES AND OIL COOLER

R	P.N.	DESCRIPTION	QTY
1	51338432	WATER RETURN PIPE TL90,TL100	1
2	51338430	HOLLOW SCREW TL90,TL100	2
3	51338148	SEALING RIING TL90,TL100	4
4	51338441	HOSE CLIP TL80	2
4	51338117	HOSE CLIP TL90,TL100	2
5	51338439	HOSE TL80	1
5	51338405	SYPHON TL90,TL100	1
6	51338417	CONNECTOR TL90,TL100	1
7	51338190	SEALING RING TL90,TL100	1
8	51338149	HOSE CLIP TL90,TL100	4
9	51338613	TUBE TL90,TL100	1
10	51338431	HOSE TL90,TL100	1
11	51338342	OIL COOLER TL90,TL100	1
12	51338344	CONNECTOR TL90,TL100	1
13	51338352	FILTER TL90,TL100	1
14	51338354	SEALING RING TL90,TL100	1
15	51338317	FILTER HEAD TL90,TL100	1
16	51338660	SPRING WASHER TL90,TL100	2
17	51338355	CHEESE HEAD SCREW TL90,TL100	1
18	51338204	CHEESE HEAD SCREW TL90,TL100	2
19	51338429	WATER INTAKE PIPE TL90,TL100	1

0.34.7	1/1	04/09

WATER PUMP - FAN

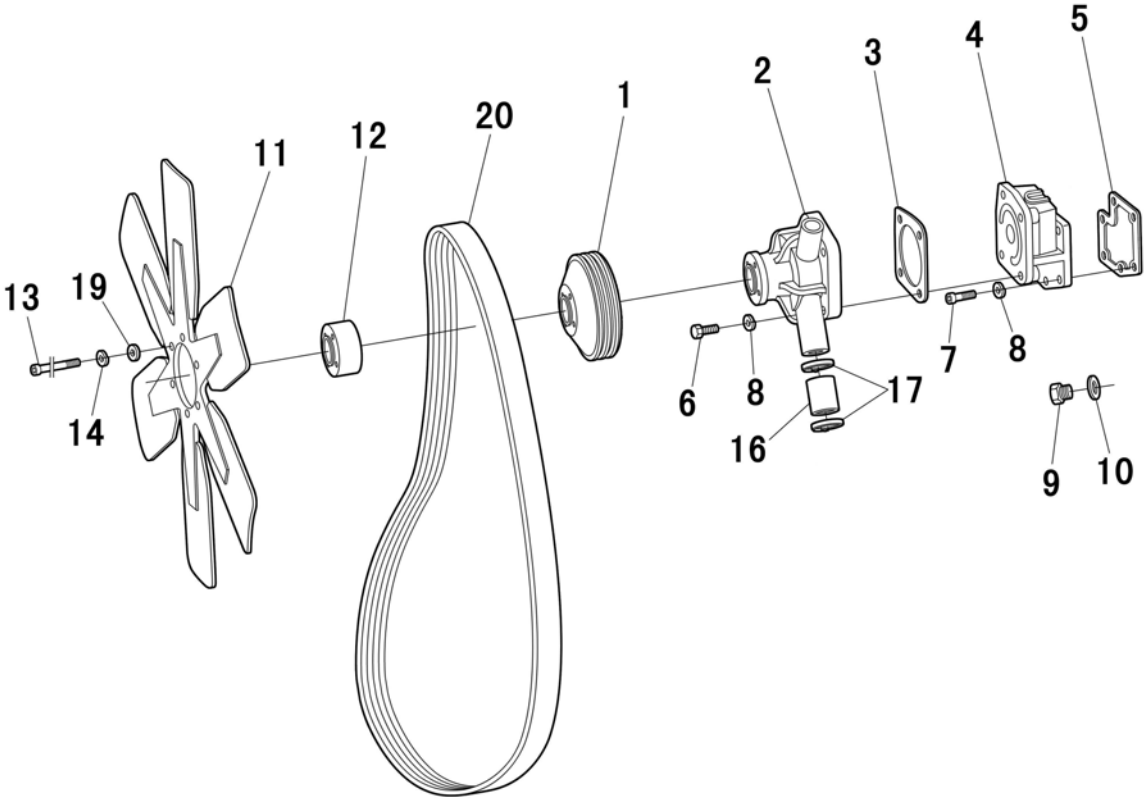

WATER PUMP - FAN

R	P.N.	DESCRIPTION	QTY
1	51338460	PULLEY	1
2	51338448	CENTRIFUGAL PUMP	1
3	51338446	PUMP GASKET	1
4	51338444	ADAPTER	1
5	51338445	PUMP GASKET	1
6	51338054	HEXAGON BOLT	4
7	51338067	HEXAGON BOLT	6
8	51338048	SPRING LOCK WASHER	10
9	51338447	SCREW PLUG	1
10	51338346	SEALING RING	1
11	51338462	FAN	1
12	51338463	FLANGE	1
13	51338464	CHEESE HEAD SCREW	4
14	51338048	SPRING LOCK WASHER	4
16	51338456	TUBE	1
17	51338457	PIPE CLAMP	2
18	51338412	SCREW PLUG	1
19	51338115	PLAIN WASHER	4
20	51338461	V-BELT	1
21	51338442	SEALING RING	1

0.36.0	1/1	04/09

STARTER MOTOR

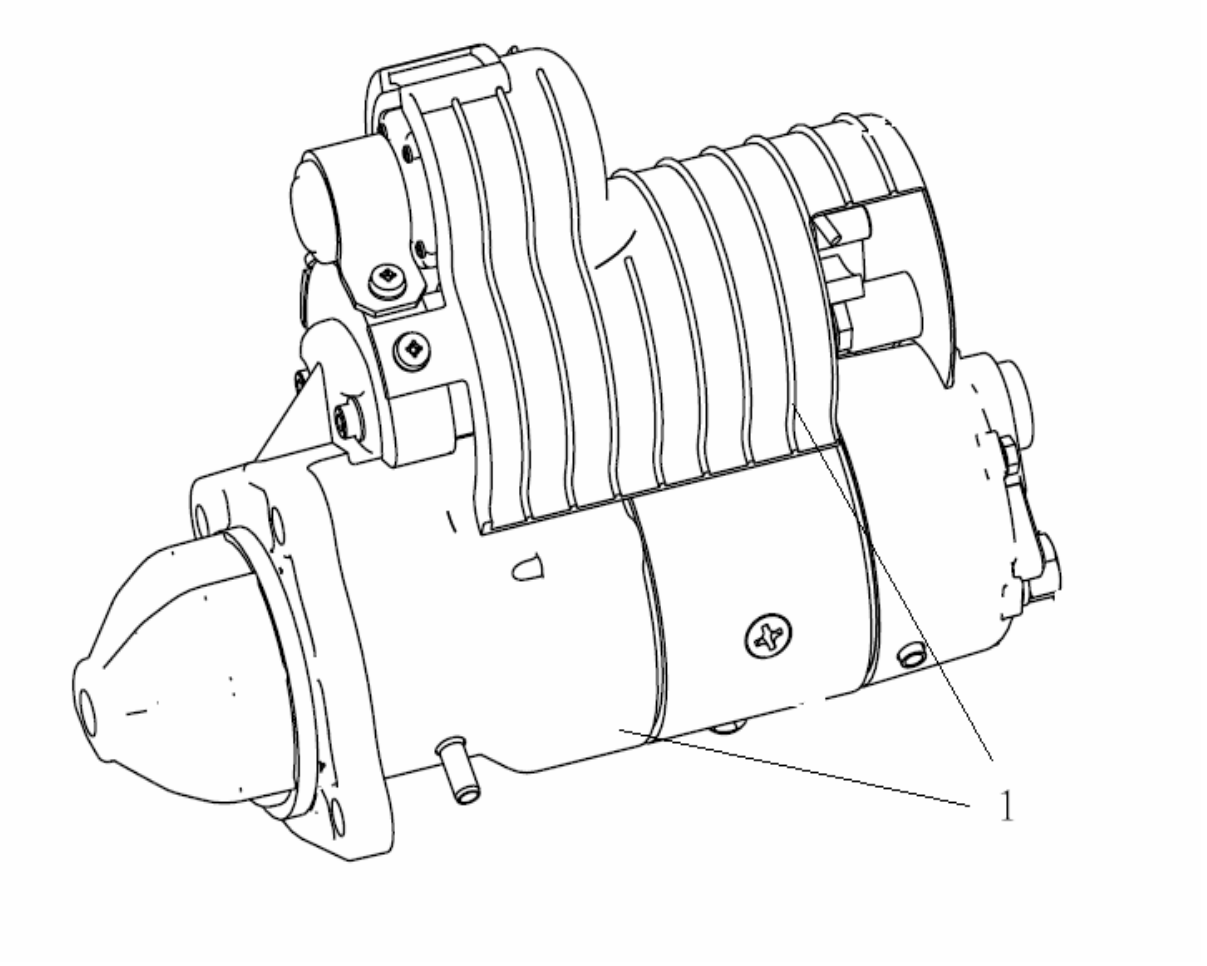

STARTER MOTOR

R	P.N.	DESCRIPTION	QTY
1	51338482	STARTER	1

0.40.0	1/1	04/09

ALTERNATOR

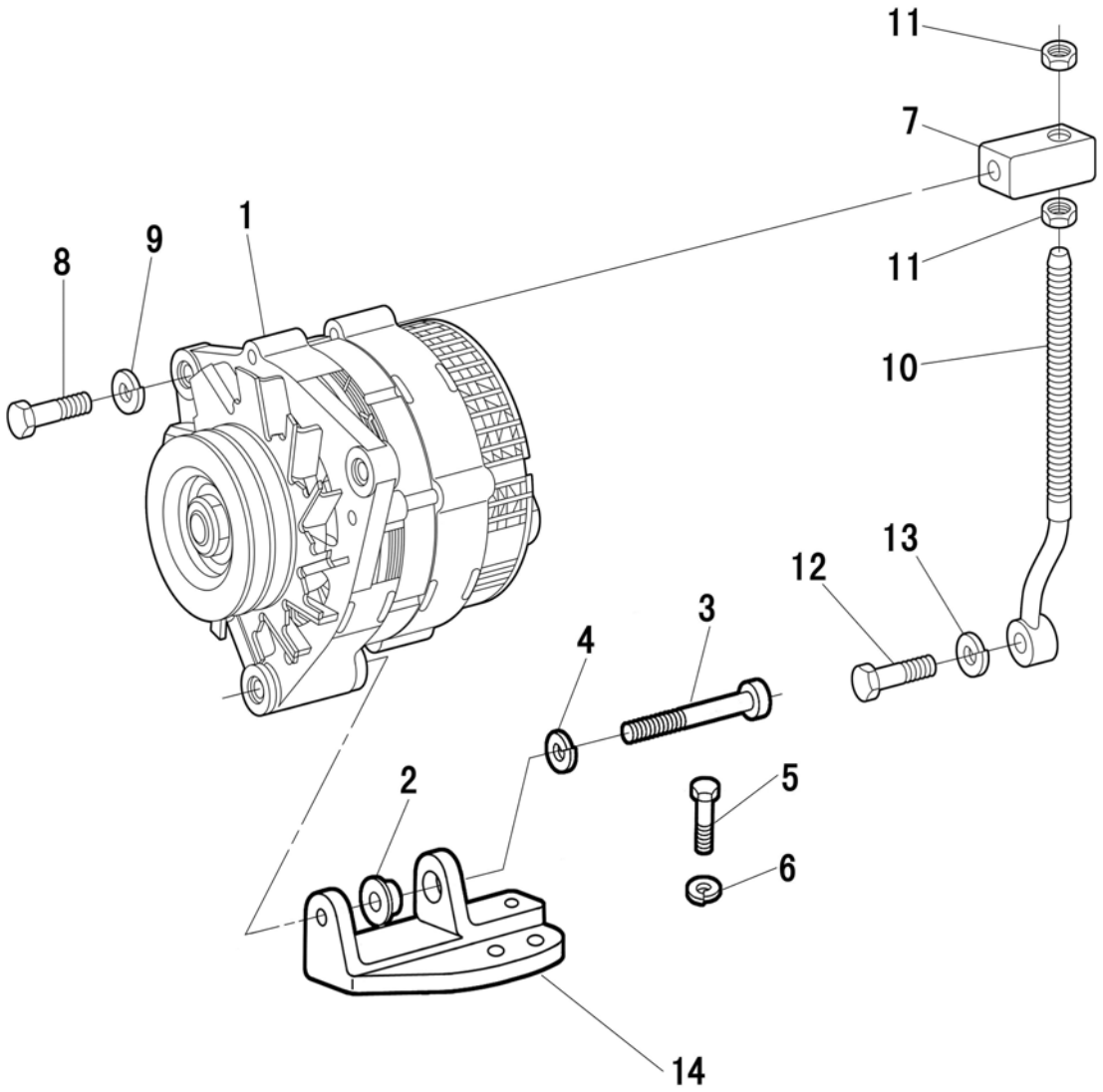

ALTERNATOR

R	P.N.	DESCRIPTION	QTY
1	51338481	ALTERNATOR ASSEMBLY	1
2	51338478	SLEEVE	1
3	51338309	CHEESE HEAD SCREW	1
4	51338011	SPRING LOCK WASHER	1
5	51338067	HEXAGON BOLT	3
6	51338048	SPRING LOCK WASHER	3
7	51338480	BRACKET	1
8	51338384	HEXAGON BOLT	1
9	51338061	PLAIN WASHER	1
10	51338479	STRAINER	1
11	51338012	HEXAGON NUT	2
12	51338384	HEXAGON BOLT	1
13	51338061	WASHER	1
14	51338477	BRACKET	1

AIR CONDITIONING - COMPRESSOR

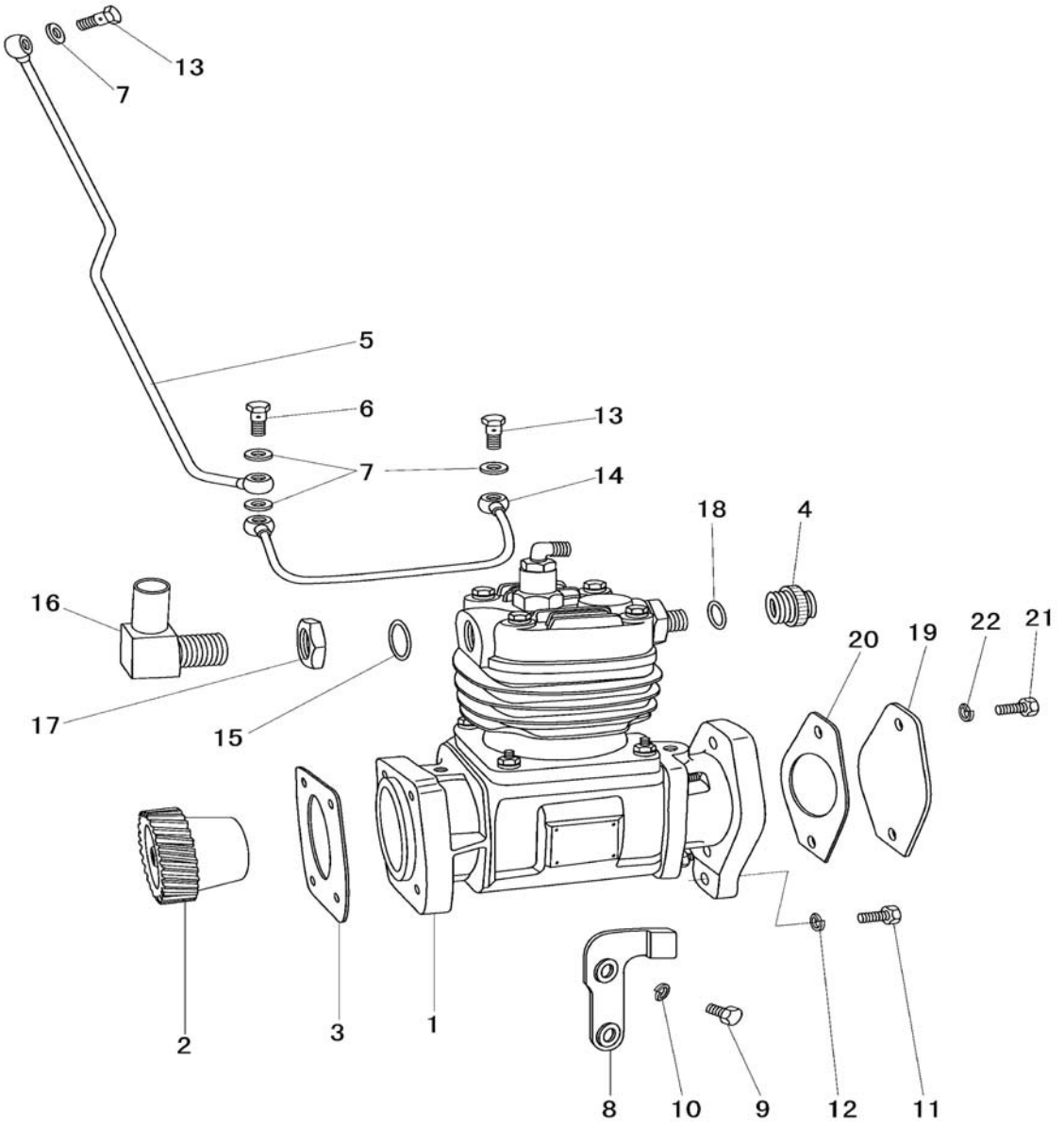

AIR CONDITIONING - COMPRESSOR

R	P.N.	DESCRIPTION	QTY
1	51338487	AIR COMPRESSOR	1
2	51338488	GEAR	1
3	51338489	BRACKET	1
4	51338497	EXHAUST JOINT	1
5	51338492	LUBRICATION OIL LINE	1
6	51338491	HOLLOW SCREW	1
7	51338359	SEALING RING	7
8	51338500	BRACKET	1
9	51338067	HEXAGON BOLT	2
10	51338048	SPRING LOCK WASHER	2
11	51338483	HEXAGON BOLT	1
12	51338011	SPRING LOCK WASHER	1
13	51338493	HOLLOW SCREW	2
14	51338490	LUBRICATION OIL LINE	1
15	51338423	SEALING RING	1
16	51338494	INLET JOINT	1
17	51338495	HEXAGON NUT	1
18	51338496	SEALING RING	1
19	51338498	COVER	1
20	51338499	SEALING RING	1
21	51338343	HEXAGON BOLT	2
22	51338011	SPRING LOCK WASHER	2

AIR CONDITIONING - BELTS & PULLEYS

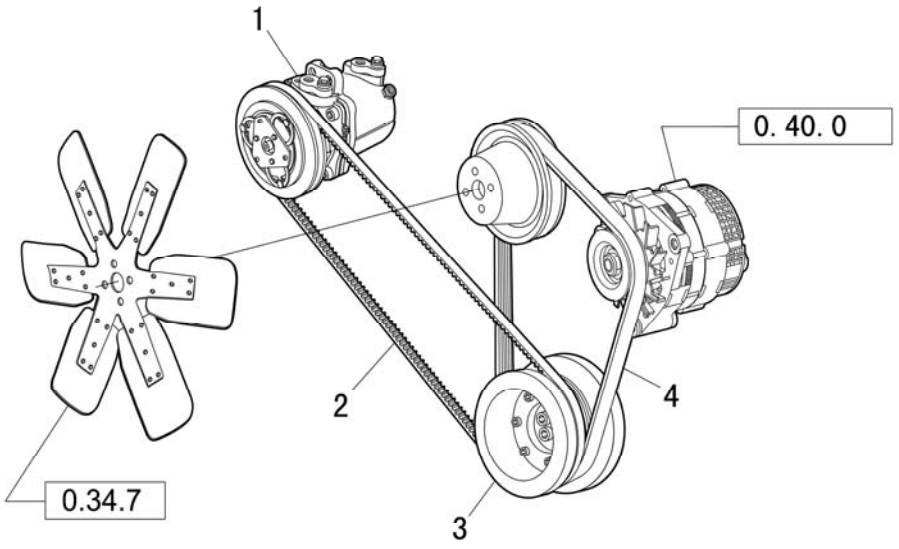

AIR CONDITIONING - BELTS & PULLEYS

Set.No	P.N.	DESCRIPTION	QTY
1	51331921	COMPRESSOR AND SUPPORT ASSY	1
2	51331940	COMPRESSOR BELT	1
3	51338203	PULLEY	1
4	51338460	BELT	1

ENGINE EQUIPMENT

SEC. 2

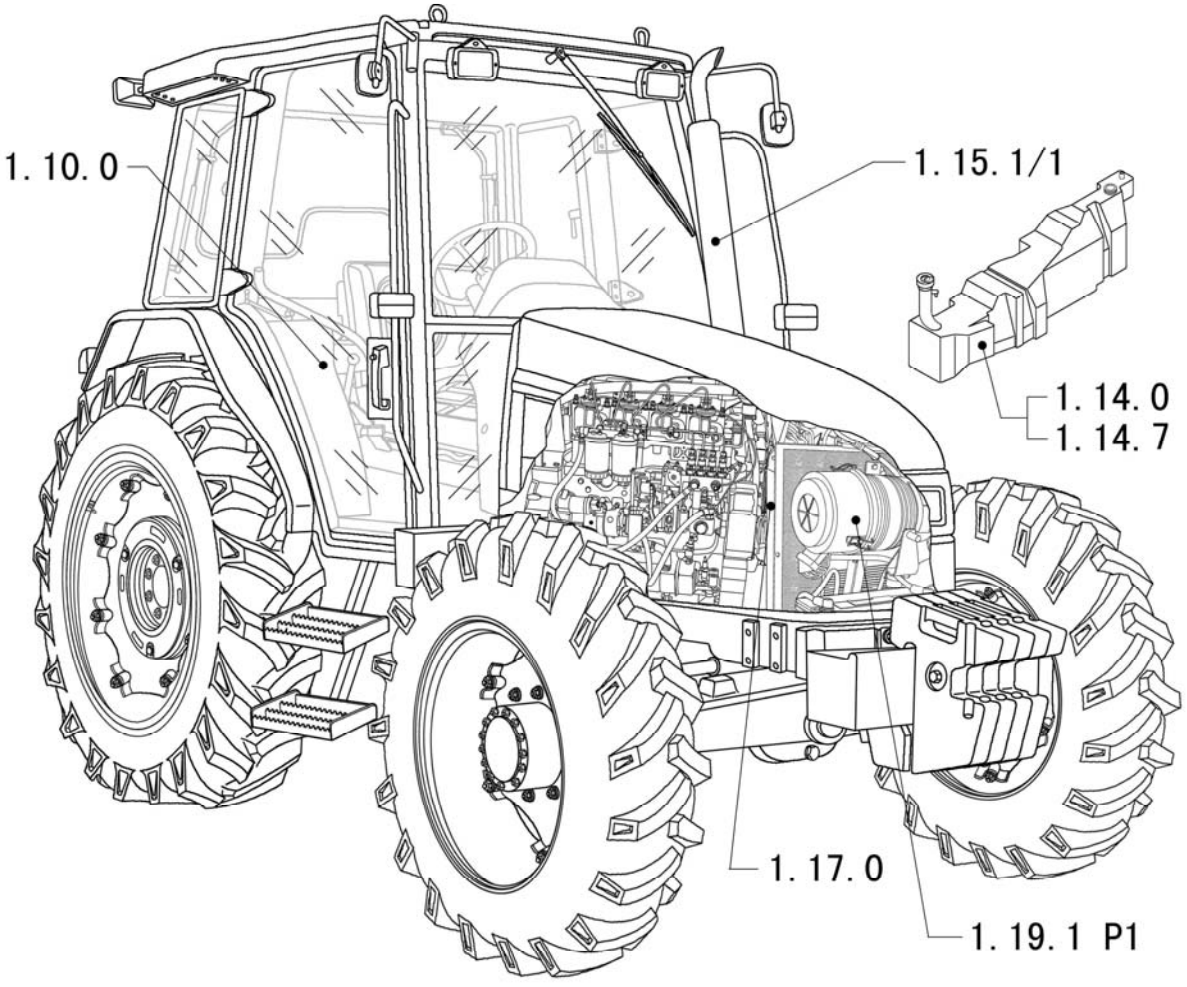

1.10.0	1/2	06/09

THROTTLE CONTROL LINKAGE

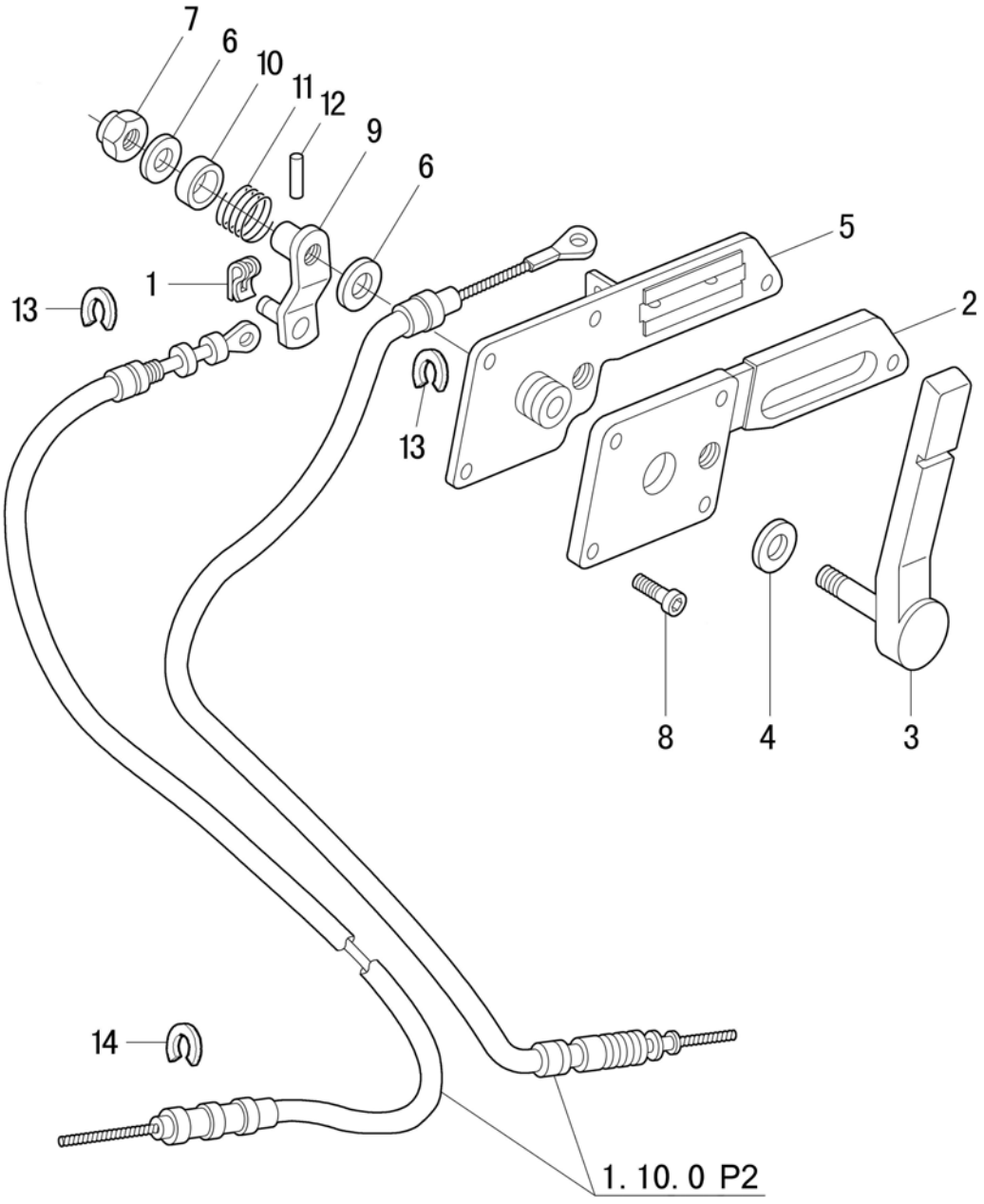

THROTTLE CONTROL LINKAGE

R	P.N.	DESCRIPTION	QTY
1	51331207	PIN	1
2	5140157	SUPPORT	1
3	5169712	THROTTLE LEVER	1
4	5153009	WASHER, HAND THROTTLE	2
5	5167190	SUPPORT	1
6	51332351	WASHER	2
7	51330669	HAND THROTTLE NUT	1
8	51332518	SCREW	5
9	5129632	LEVER ASSY	1
10	5133911	BUSHING	1
11	5105248	SPRING, HAND THROTTLE	1
12	81865251	PIN	1
13	51329577	SNAP RING	2
14	51331208	RING	1

1.10.0	2/2	06/09

QUICK LIFT CONTROL LINKAGE

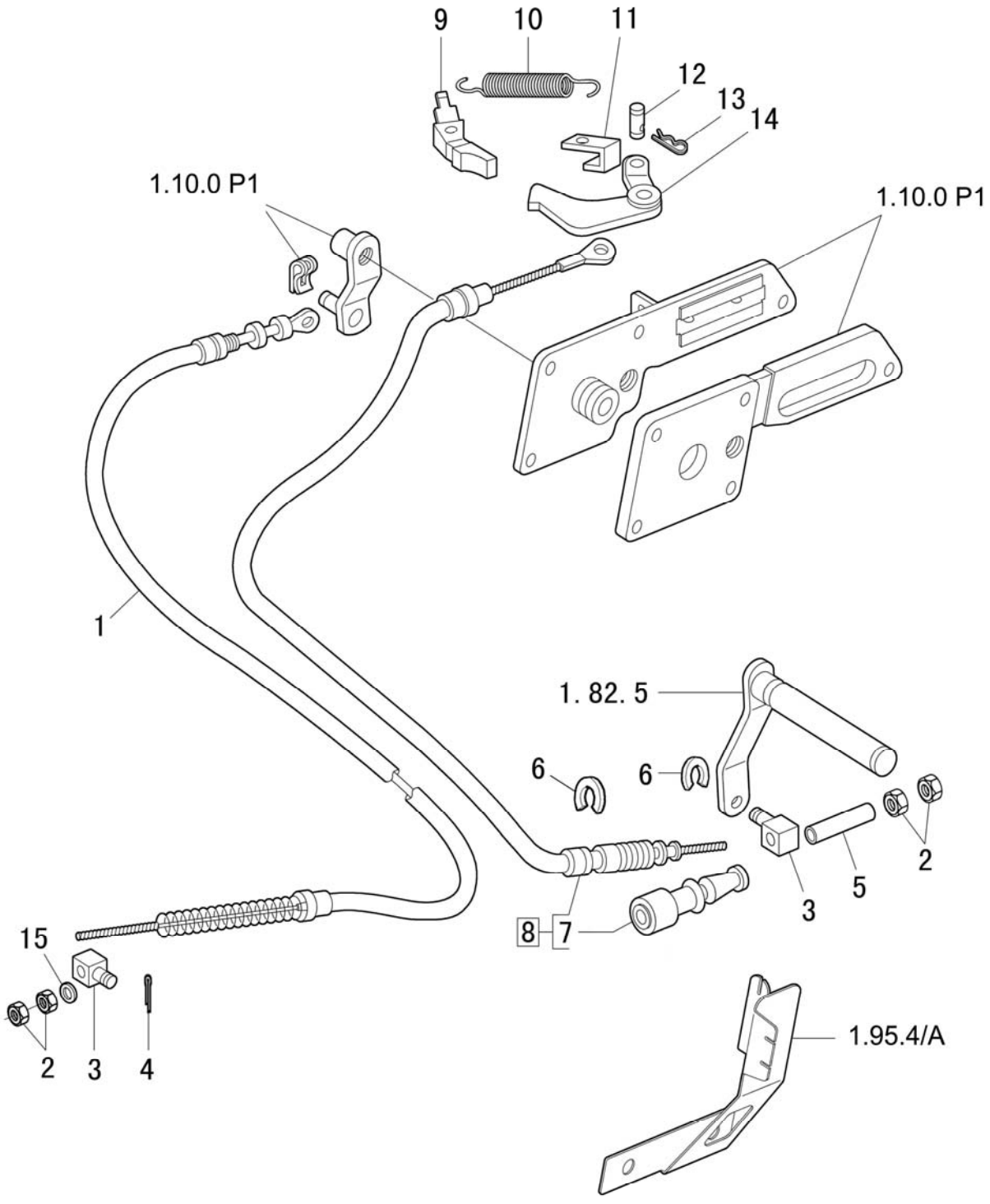

QUICK LIFT CONTROL LINKAGE

R	P.N.	DESCRIPTION	QTY
1	51333588	HAND THRTTLE CONTROL CABLE	1
1	51331127	HAND THRTTLE CONTROL CABLE, NON TURBO A PUMP	4
2	51323142	NUT	4
3	5138330	CABLE ADJUSTER PIN	1
4	51323353	PIN	2
5	51330841	BUSH	1
6	51331207	SNAP RING	3
7	5132050	BELLOWS FOR CABLE	1
8	51332293	COMPLETE CABLE	1
9	51322566	PUSH ASSY	1
10	5128638	SPRING	1
11	5112637	BRACKET	1
12	5178607	PIN	2
13	51323353	PIN	2
14	5128639	LEVER ASSY	1
15	51332351	WASHER	1

1.14.0	1/1	06/09

FUEL TANK

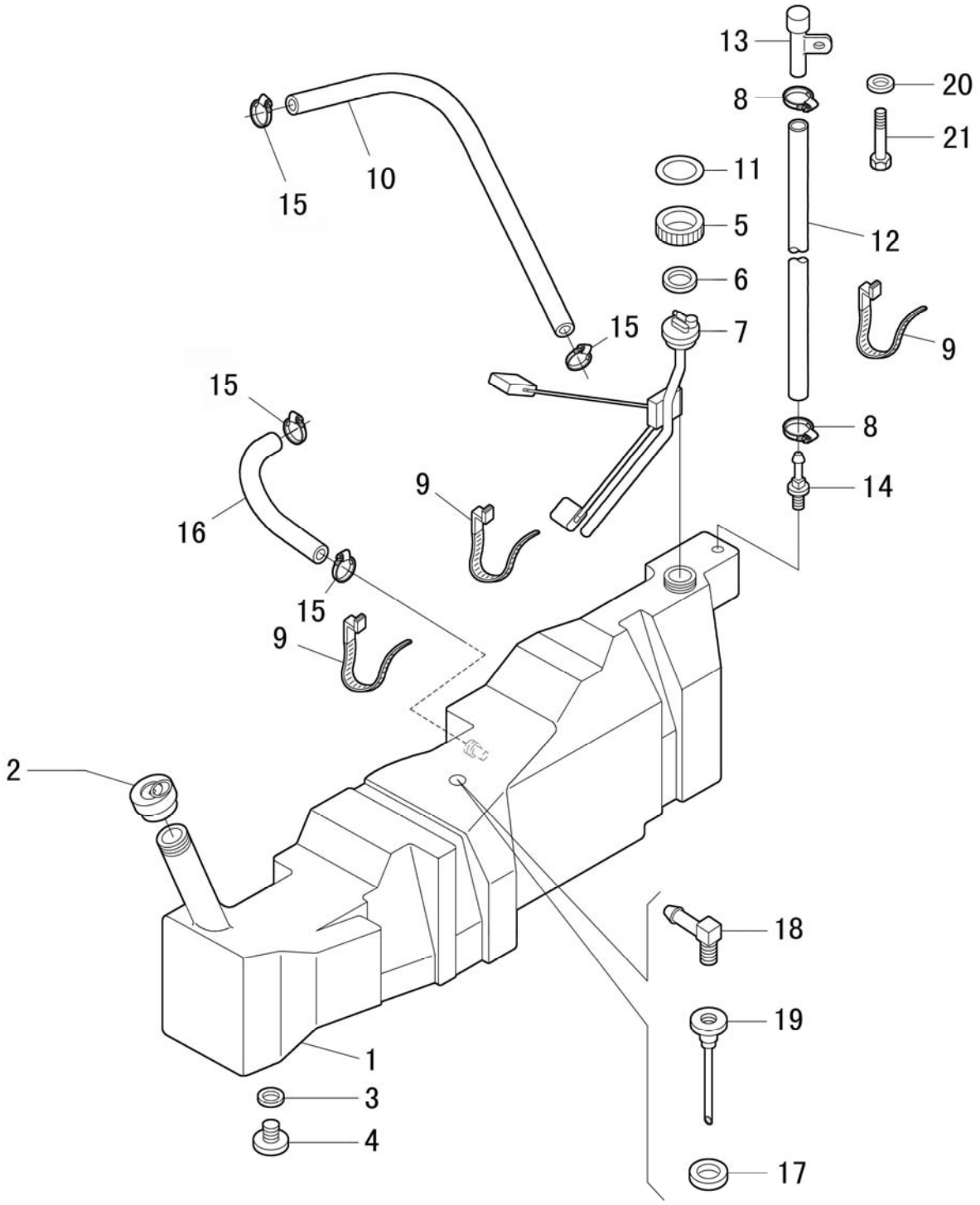

FUEL TANK

R	P.N.	DESCRIPTION	QTY
1	51332333	FUEL TANK & SENSOR ASSEMBLY	1
2	51336330	FUEL TANK CAP	1
3	14463889	O-RING SEAL	1
4	82019464	PLUG	1
5	82002171	RING	1
6	83998804	GASKET	1
7	5198889	SENSOR	1
8	51336372	CLIP	2
9	51332321	COLLAR	4
10	51330681	HOSE	1
11	47123293	CAP	1
12	51333906	HOSE	1
13	5153270	BREATHER ASSY	1
14	5179758	BREATHER CONNECTOR	1
15	51336371	HOOP	2
16	51330682	HOSE	1
17	14463189	O-RING SEAL	1
18	5182127	CONNECTOR	1
19	5191270	CONNECTOR	1
20	51323402	PLAIN WASHER 8	1
21	51325718	BOLT	1

1.14.7	1/1	06/09

FUEL TANK SUPPORT

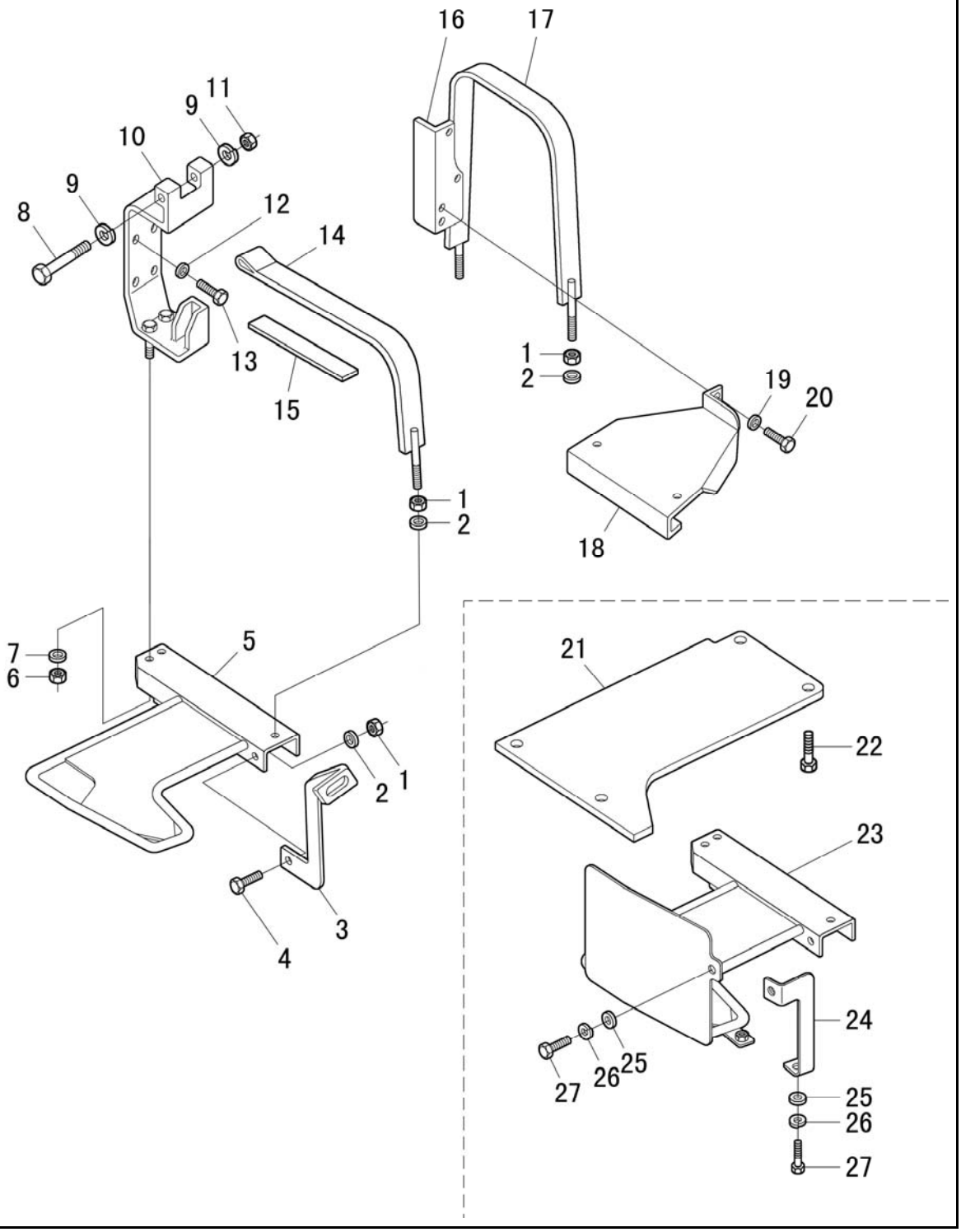

FUEL TANK SUPPORT

R	P.N.	DESCRIPTION	QTY
1	51323150	NUT	6
2	51323403	GASKET	6
3	51333248	BRACKET	1
4	51323103	BOLT	2
5	51333911	SUPPORT	1
6	51323160	NUT	2
7	10517074	LOCKWASHER	2
8	11107921	BOLT	1
9	10516874	LOCKWASHER	2
10	51333249	BRACKET	1
11	51330093	NUT	1
12	11194174	LOCKWASHER, TAPER	4
13	11255924	CAPSCREW	4
14	51333252	STRAP ASSY	1
15	51334916	SEAL	2
16	51333247	BRACKET	1
17	51333250	STRAP ASSY	1
18	51333254	BRACKET	1
19	10516874	LOCKWASHER	2
20	51323131	BOLT	2
21	5186468	SHIELD	1
22	51323095	BOLT	4
23	51333914	GUARD	1
24	51332278	BRACKET	1
25	51323403	WASHER	2
26	51323380	WASHER	2
27	51323129	BOLT	2

1.15.1/1	1/1	06/09

MUFFLER

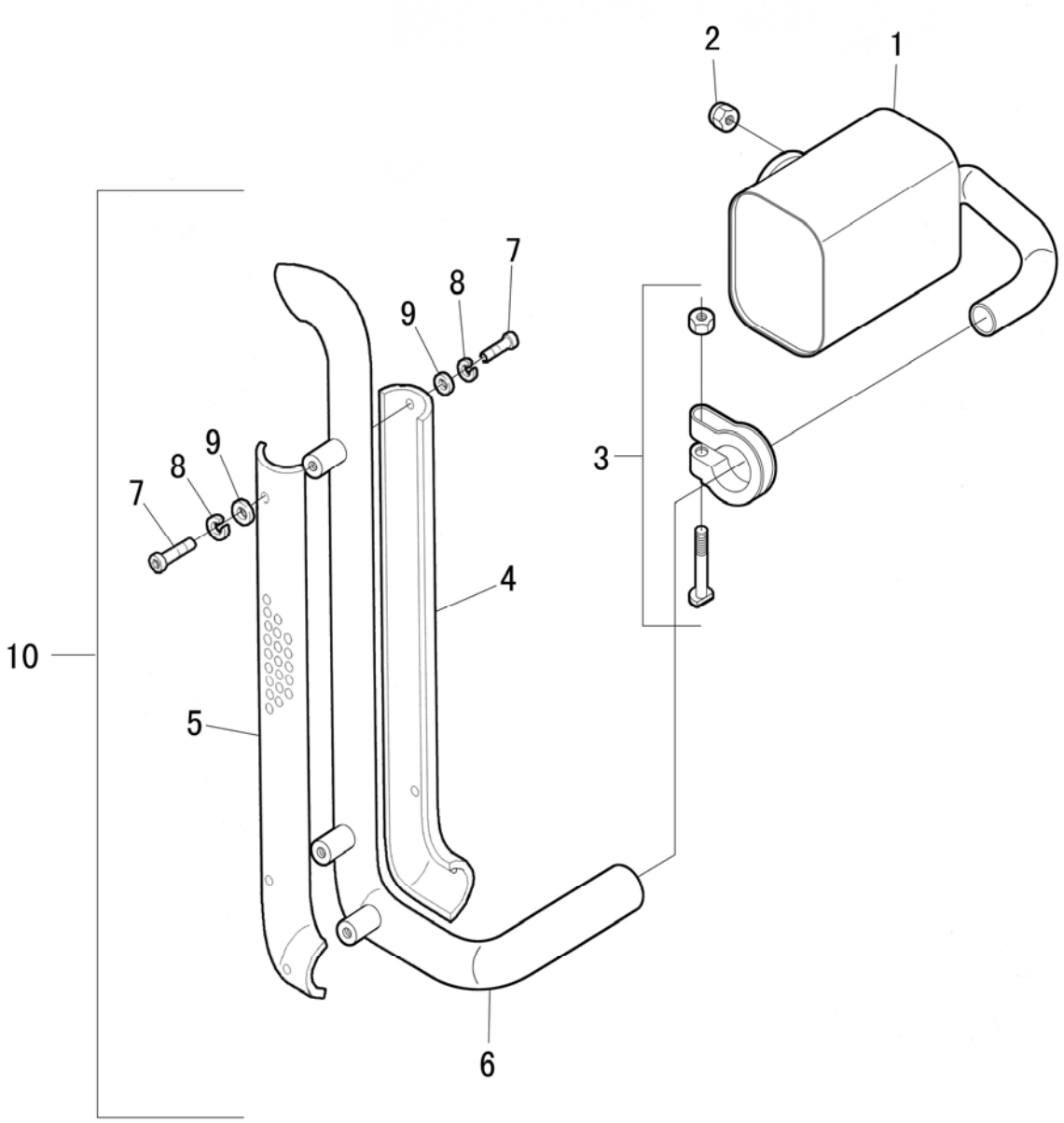

MUFFLER

R	P.N.	DESCRIPTION	QTY
1	51331499	MUFFLER ASSY TL80	1
2	51323143	NUT	4
3	51331176	CLAMP ASSY	1
4	51331170	SHIELD A (W/CAB)	1
4	51332793	SHIELD B (L/CAB)	1
5	51332799	SHIELD C (W/CAB)	1
5	51335186	SHIELD D (L/CAB)	1
6	51331178	PIPE (L/CAB)	1
6	51331171	PIPE (W/CAB)	1
7	51331175	BOLT	6
8	51323378	WASHER	6
9	51330665	WASHER	6
10	51331526	PIPE ASSY L/CAB TL80	1
10	51331500	PIPE ASSY W/CAB TL80	1

1.15.1/2	1/1	06/09

MUFFLER

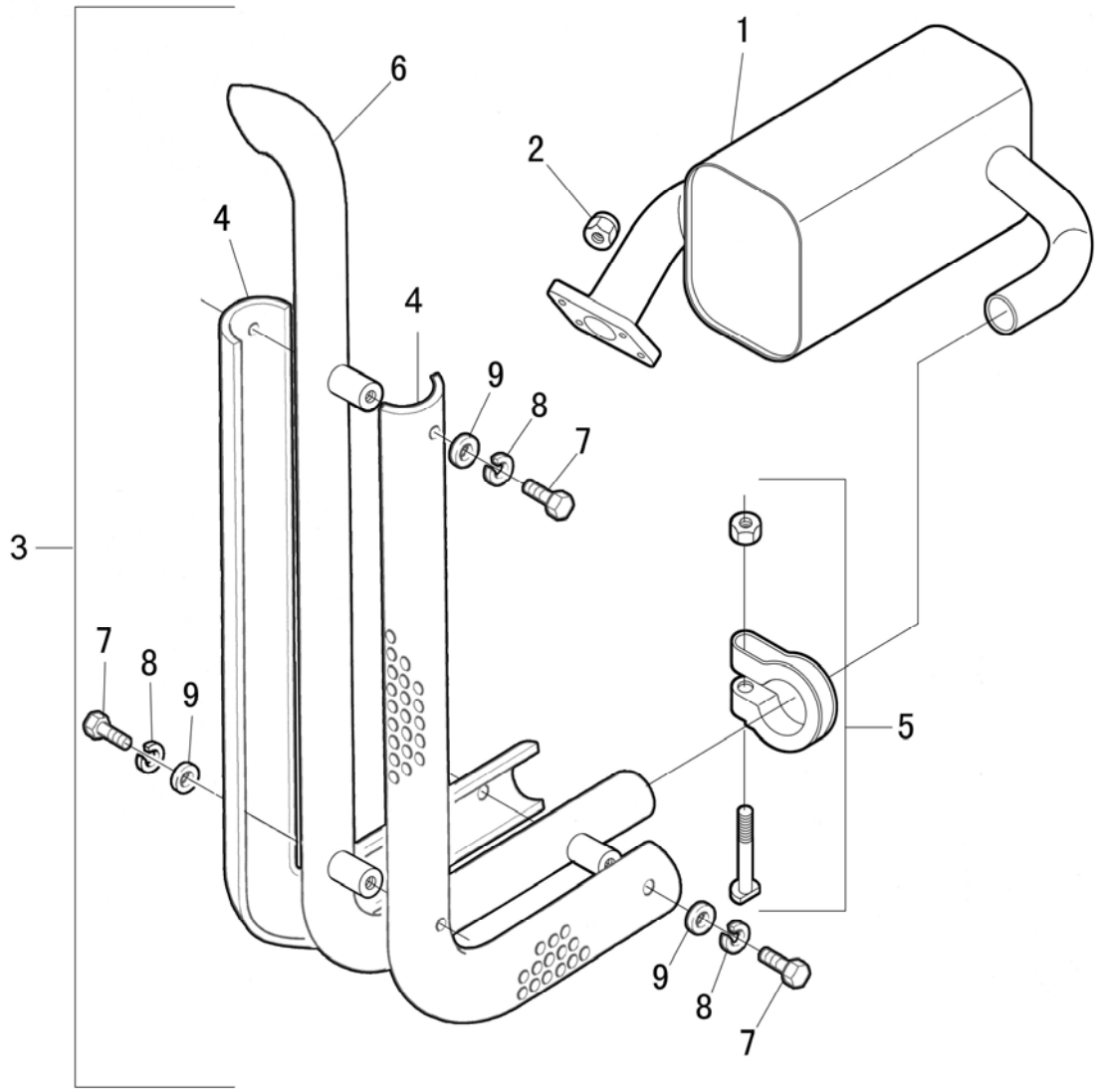

MUFFLER

R	P.N.	DESCRIPTION	QTY
1	51331513	MUFFLER ASSY, TL100	1
2	51323143	NUT	4
3	51331527	PIPE ASSY (W/CAB, TL100)	1
3	51331514	PIPE ASSY (LCAB, TL100)	1
4	51331170	SHIELD A (W/CAB)	1
4	51332799	SHIELD B (W/CAB)	1
4	51332793	SHIELD C (LCAB)	1
4	51335186	SHIELD D	1
5	51331176	CLAMP ASSY	1
6	51331163	NO. 2 EXHAUST PIPE (W/CAB)	1
6	51331494	NO. 2 EXHAUST PIPE (LCAB)	1
7	51331175	BOLT	6
8	51323378	WASHER	6
9	51330665	WASHER	6

1.17.0	1/2	06/09

RADIATOR

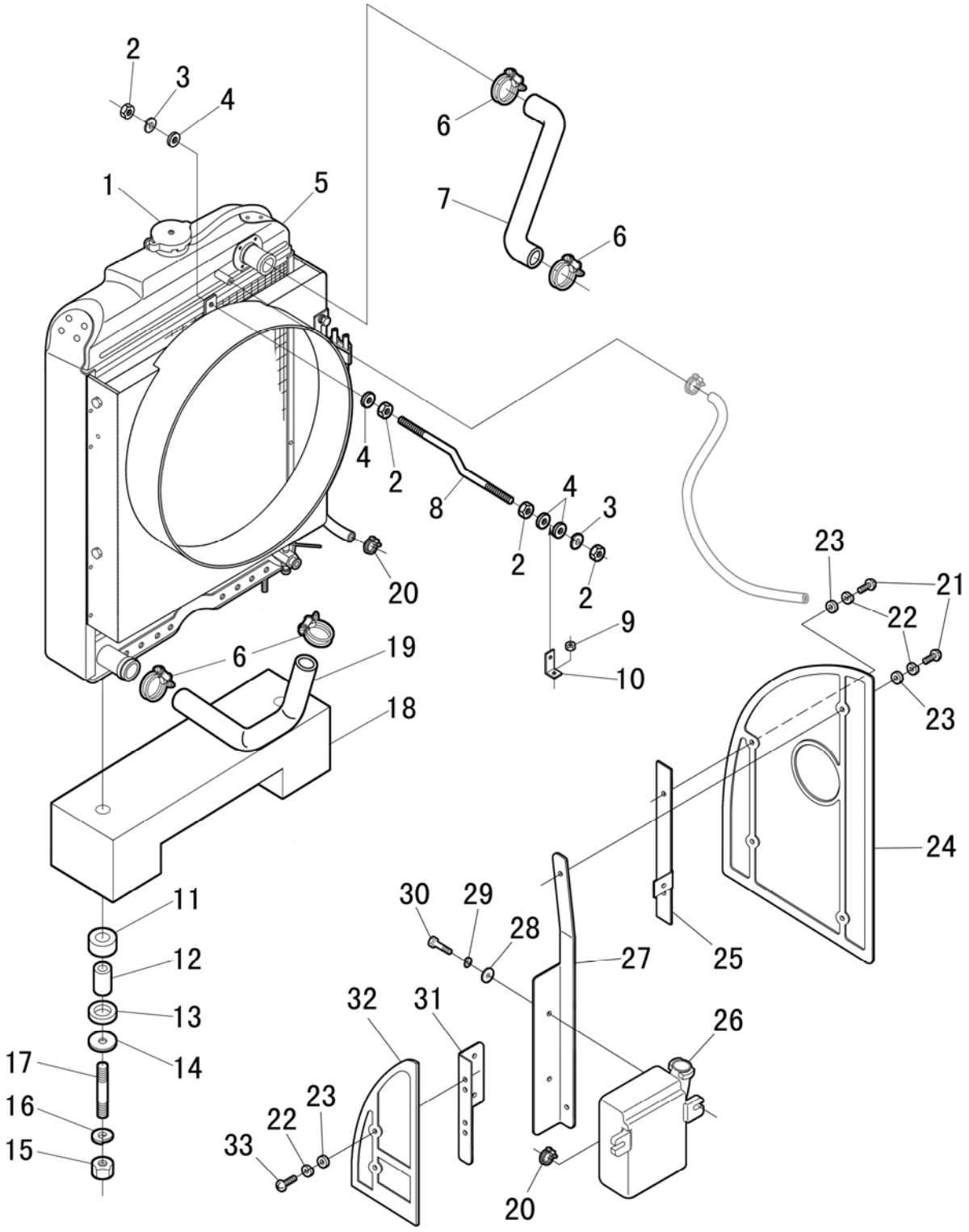

RADIATOR

R	P.N.	DESCRIPTION	QTY
1	51332827	CAP	1
2	51325739	NUT	4
3	51323379	SPRING WASHER 8	2
4	51323402	PLAIN WASHER 8	4
5	51330436	COWL ELEMENTS TL80	1
5	51330481	COWL ELEMENTS	1
6	51325592	CLAMP	4
7	51330439	INTAKE HOSE	1
8	51330446	ROD	1
9	51326859	NUT	1
10	51342916	BRACKET	1
11	51330440	GASKET	2
12	51330442	BUSHING	2
13	51330441	SHIM	2
14	51330443	WASHER	2
15	12164714	NUT	2
16	51323380	WASHER	2
17	51337625	STUD	2
18	51330445	SPONGE CUSHION	1
19	51330438	OUTLET HOSE TL90,TL100	1
19	51330437	OUTLET HOSE TL80	1
20	51328681	CLAMP	2

RADIATOR

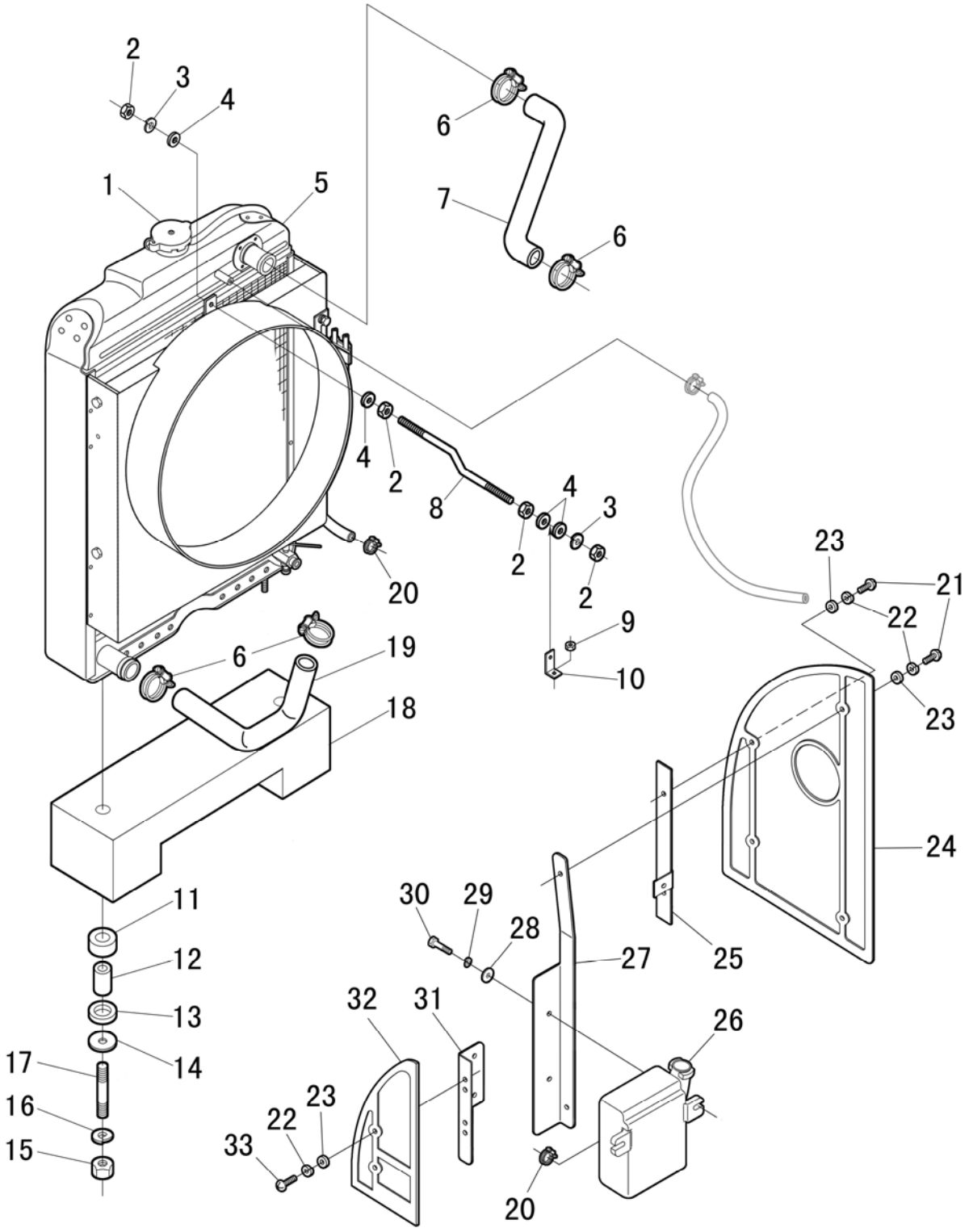
2
3
4
1
5
6
7
6
4
2
8
4
3
2
2
20
23
21
22
9
10
6
19
18
23
24
11
12
13
14
17
16
15
30
29
28
27
25
32
31
26
23
22
33
20

RADIATOR

R	P.N.	DESCRIPTION	QTY
21	51323091	BOLT	2
22	51323401	WASHER	4
23	51323378	WASHER	4
24	51337285	SHIELD RH	1
25	51337001	FRONT BRACKET RH	1
26	51337655	SUB-RADIATOR	1
27	51337004	REAR BRACKET RH	1
28	51323391	WASHER	2
29	51326156	WASHER	2
30	51330190	BOLT	2
31	51337277	FRONT BRACKET LH	1
32	51337281	SHIELD LH	1
33	51323197	BOLT	2

1.18.0	1/1	06/09

AIR INTERCOOLER & PIPES ASSEMBLY （90HP EURO II / 100HP EURO II）

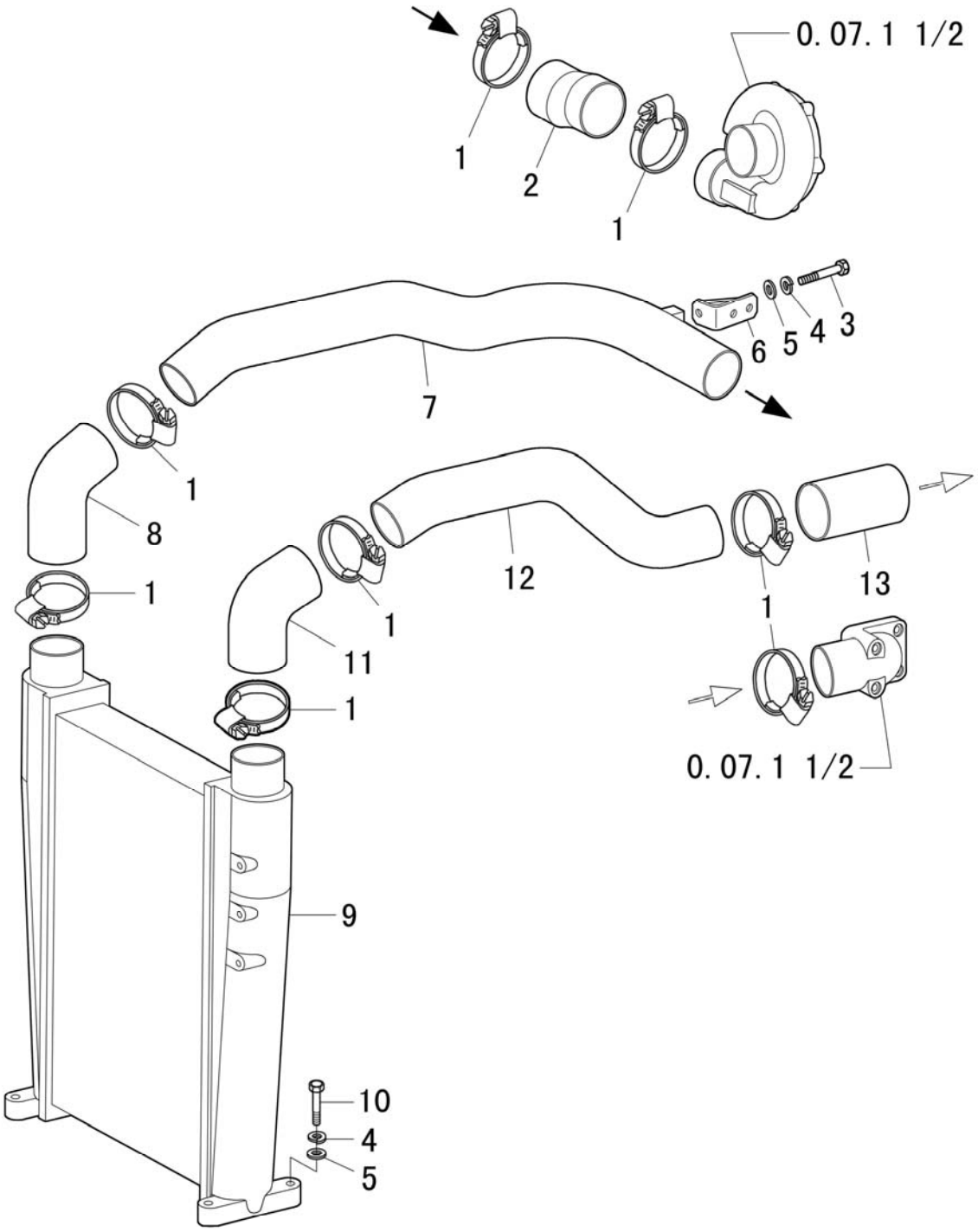

AIR INTERCOOLER & PIPES ASSEMBLY（90HP EURO II / 100HP EURO II）

R	P.N.	DESCRIPTION	QTY
1	51325596	HOOP	8
2	51336483	TURBOCHARGER OUTLET SILICON HOSE	1
3	51325717	BOLT	3
4	51326156	WASHER	7
5	51323402	PLAIN WASHER	7
6	51336489	INTERCOOLER INLET PIPE BRACKET	1
7	51336486	INTERCOOLER INLET PIPE	1
8	51336481	INTERCOOLER INLET PIPE BRACKET	1
9	51335569	AIR INTERCOOLER ASSEMBLY	1
10	51328652	BOLT	4
11	51336482	INTERCOOLER OUTLET SILICON HOSE	1
12	51336485	INTERCOOLER OUTLET PIPE	1
13	51342800	INLET MANIFOLD HOSE	1

1.19.1	1/2	06/09

DRY AIR CLEANER, TL80

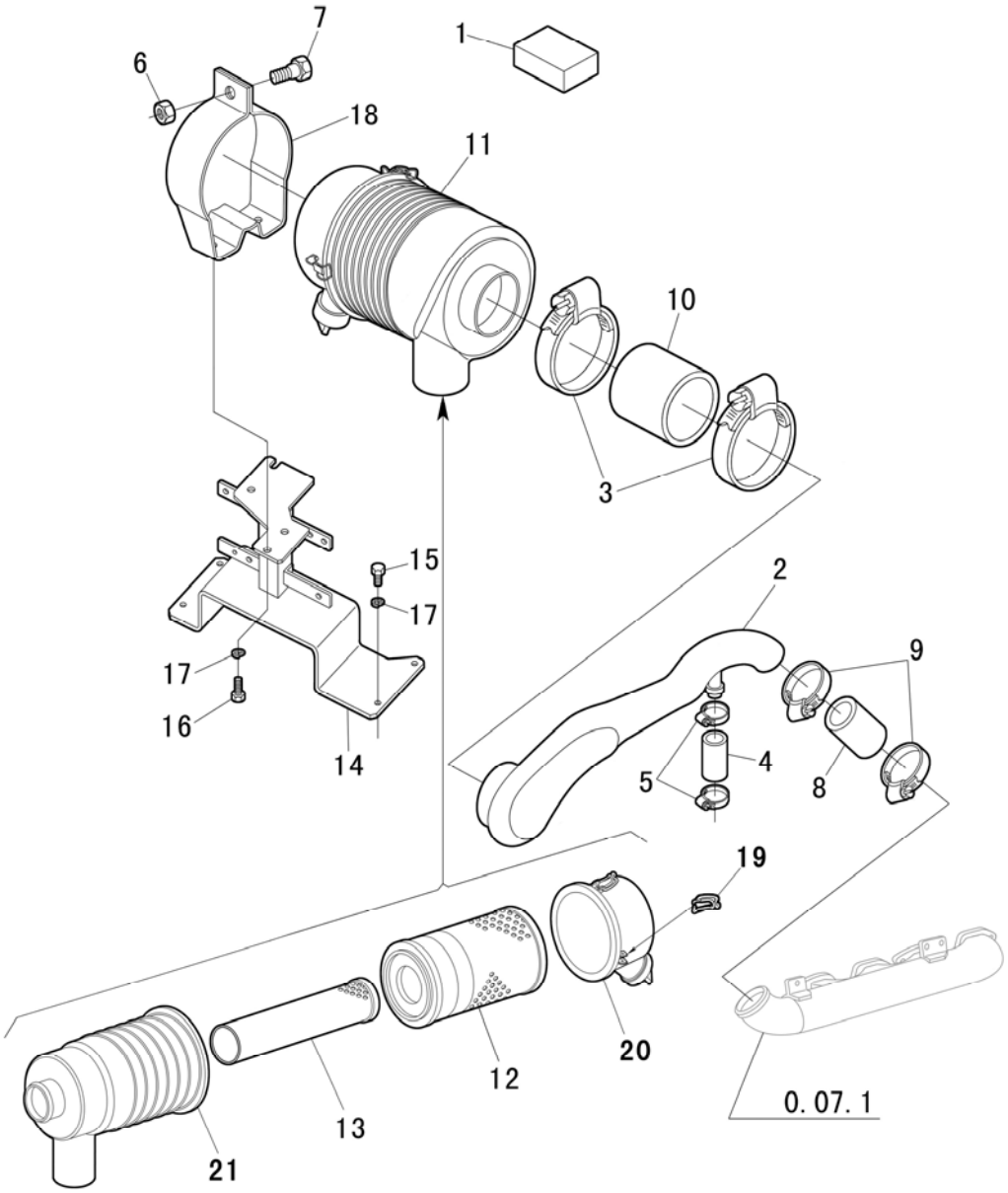

DRY AIR CLEANER, TL80

R	P.N.	DESCRIPTION	QTY
1	51331205	SPONGE CUSHION	1
2	51332977	INTAKE CONNECTOR	1
2	51330499	CONNECTOR (WITH AIR PUMP)	1
3	51331267	CLAMP	2
4	51331204	TUBE	1
5	51325589	CLAMP	2
6	51330857	NUT	1
7	51323095	BOLT	1
8	51331266	PIPE	1
9	51330510	CLAMP	2
10	51330507	PIPE	1
11	51330484	DRY AIR FILTER	1
12	51330492	MAIN ELEMENT ASSY	1
13	51330493	SAFETY ELEMENT ASSY	1
14	51330508	SUPPORT	1
15	51323130	BOLT	4
16	51323103	BOLT	2
17	51323380	WHASHER	6
18	51330504	BRACKET	1
19	51330495	CLIP	3
20	51330494	COVER ASSY	1
21	51330491	CASING	1

DRY AIR CLEANER, TL90 TL100

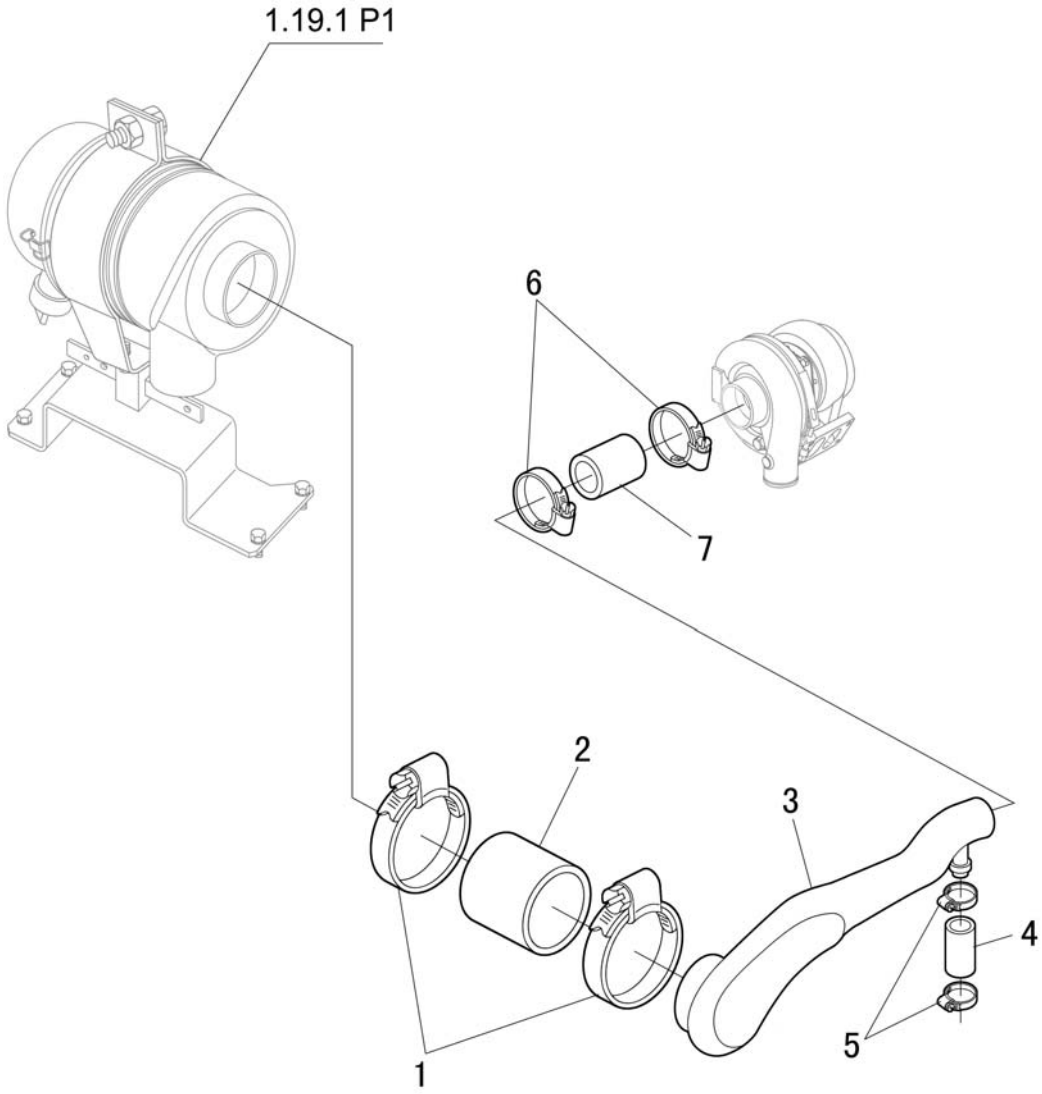

DRY AIR CLEANER, TL90 TL100

R	P.N.	DESCRIPTION	QTY
1	51331267	CLAMP	2
2	51330507	PIPE	1
3	51332978	CONNECTOR	1
3	51330505	CONNECTOR (WITH AIR PUMP)	1
4	51331206	TUBE	1
5	51325589	CLAMP (WITH AIR PUMP)	2
6	51323503	CLAMP	2
7	51330506	PIPE	1

1.19.1/1	1/2	06/09

EXTERNAL DRY AIR CLEANER（W/CAB） - FILTER & PIPES

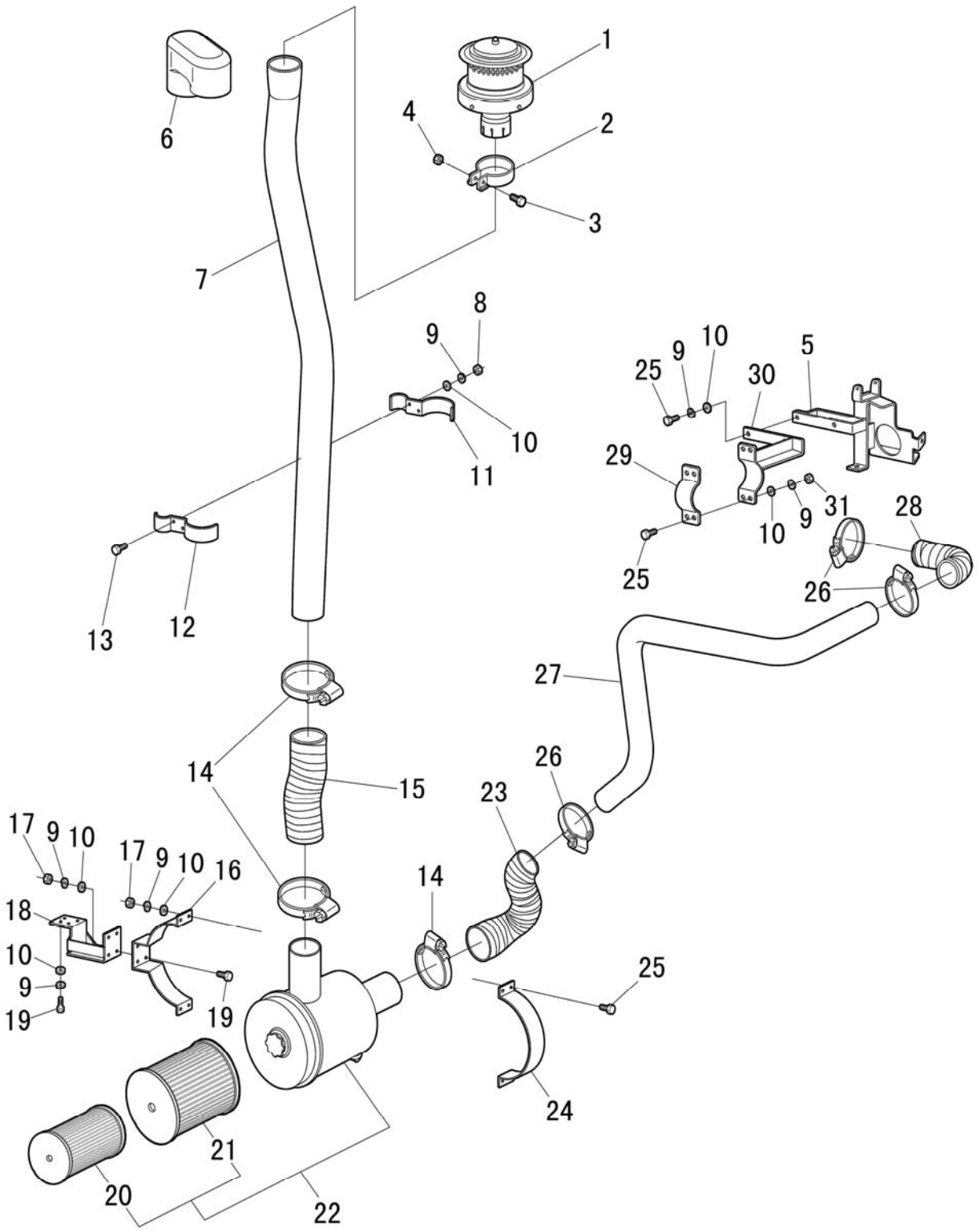

EXTERNAL DRY AIR CLEANER（W/CAB） - FILTER & PIPES

R	P.N.	DESCRIPTION	QTY
1	51343000	EXTERNAL DRY AIR CLEANER ASSY	1
2	51343103	RING	2
3	51343104	BOLT	1
4	51333893	NUT	1
5	51334011	LOWER SUPPORT, GAS SPRING	1
6	51343012	COVER, EXTERNAL DRY AIR CLEANER	1
7	51343040	FILTER HOSE ASSY	1
8	51330857	NUT	2
9	51326156	WASHER	19
10	51323402	PLAIN WASHER 8	19
11	51342820	CLAMP	1
12	51342818	CLAMP	1
13	51323096	BOLT	2
14	51333905	CLAMP	3
15	51337213	HOSE	1
16	51333894	BRACKET	1
17	51323142	NUT	8
18	51334342	BRACKET	1
19	51323095	BOLT	8
20	51343007	FILTER ELEMENT	1
21	51343006	FILTER, AIR	1
22	51342992	AIR CLEANER ASSY	1

1.19.1/1	2/2	06/09

EXTERNAL DRY AIR CLEANER（W/CAB） - FILTER & PIPES

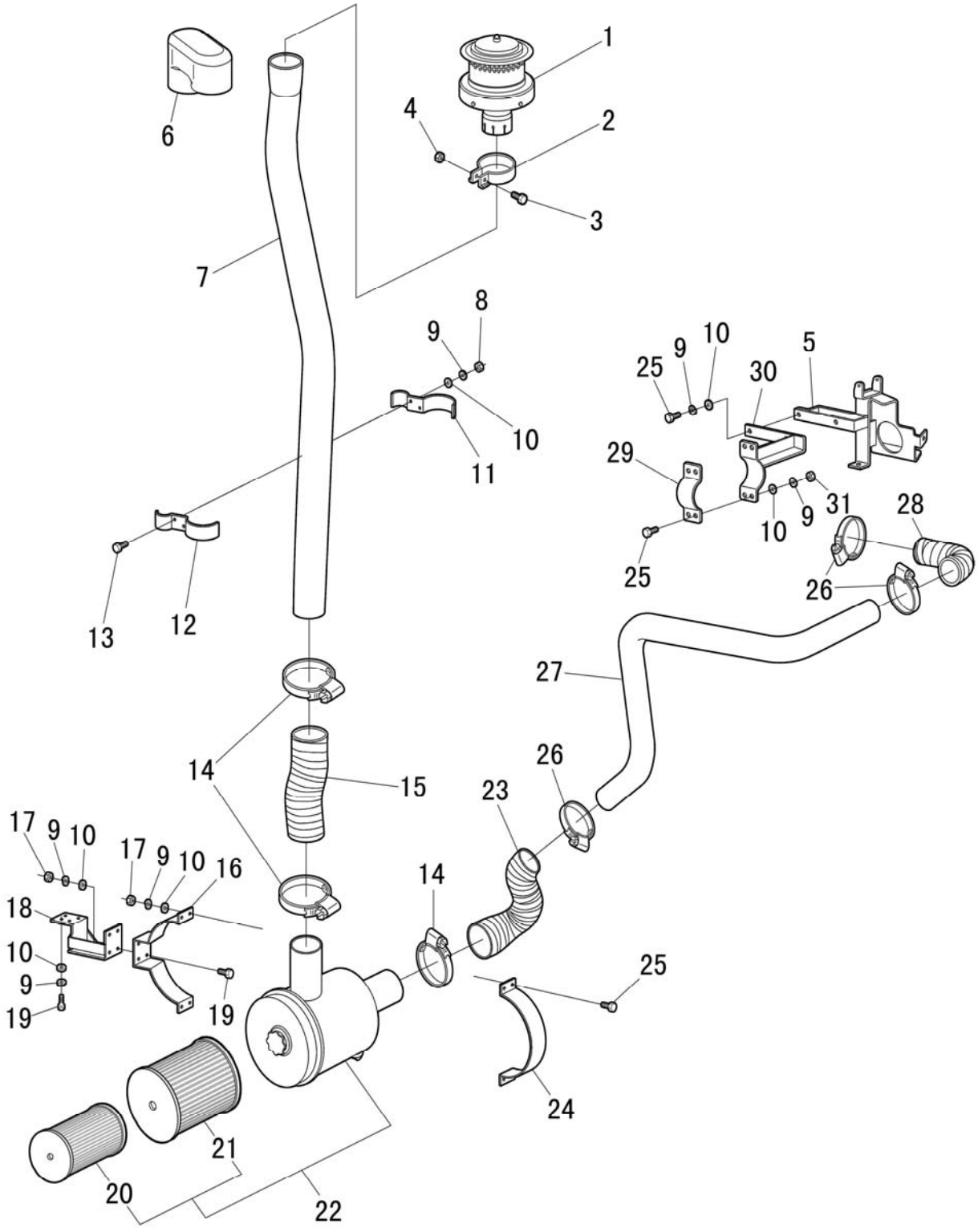

EXTERNAL DRY AIR CLEANER（W/CAB） - FILTER & PIPES

R	P.N.	DESCRIPTION	QTY
23	51337572	INTAKE HOSE	1
24	51334350	RIGHT BRACKET	1
25	51323098	BOLT	4
26	51323503	CLAMP	3
27	51337571	TUBE	1
28	51337212	HOSE	1
29	51334204	CLIP	1
30	51336494	BRACKET	1
31	51325740	NUT	4

1.19.1/2	1/2	06/09

EXTERNAL DRY AIR CLEANER（L/CAB） - FILTER & PIPES

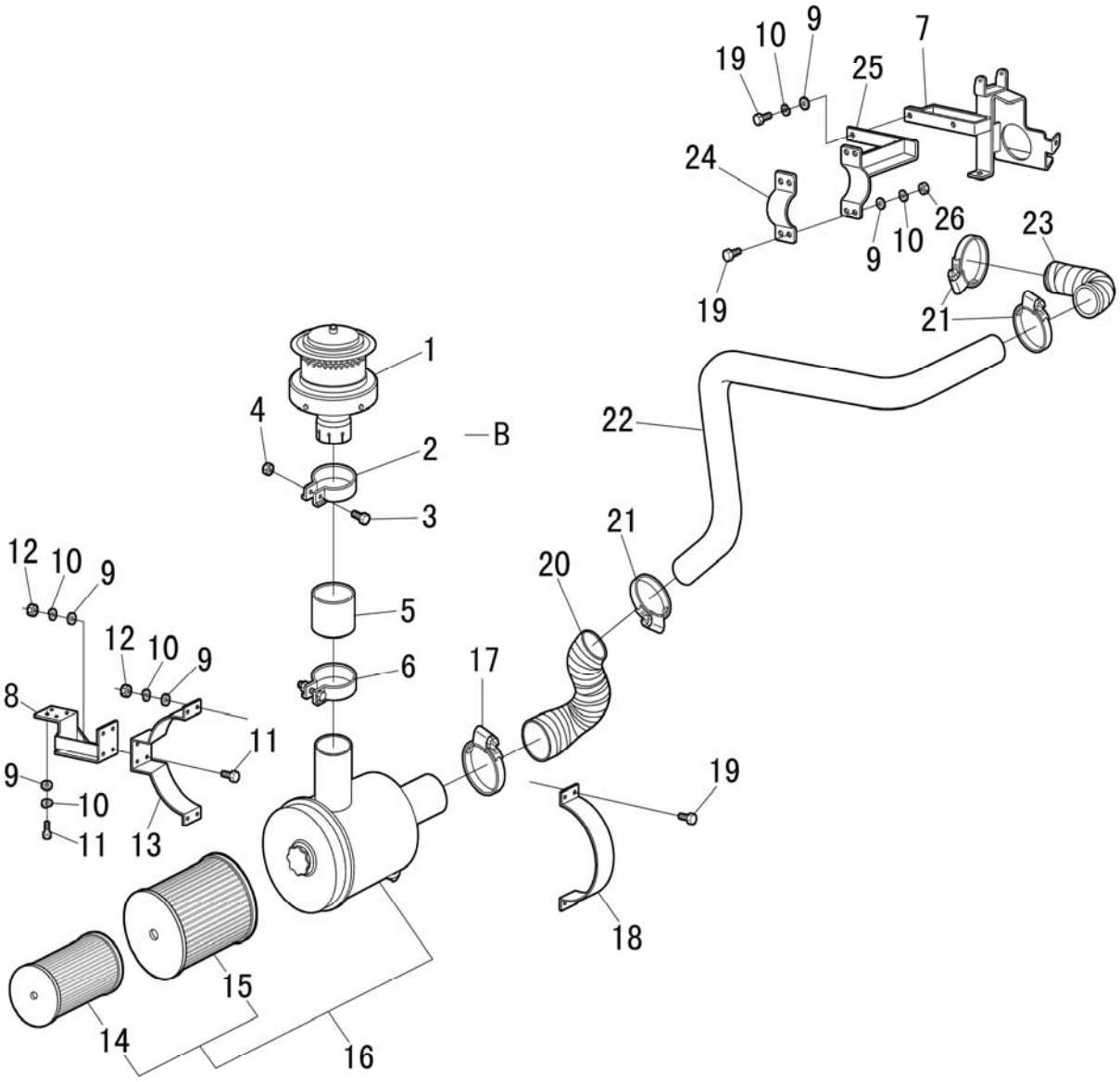

EXTERNAL DRY AIR CLEANER（L/CAB） - FILTER & PIPES

R	P.N.	DESCRIPTION	QTY
1	51343000	EXTERNAL DRY AIR CLEANER ASSY	1
2	51343103	RING	2
3	51343104	BOLT	2
4	51333893	NUT	2
5	51343096	TUBE	1
6	51337175	CLAMP	1
7	51334011	LOWER SUPPORT, GAS SPRING	1
8	51333894	BRACKET	1
9	51323402	PLAIN WASHER 8	17
10	51326156	WASHER	17
11	51323095	BOLT	8
12	51323142	NUT	8
13	51333889	SUPPORT	1
14	51343007	FILTER ELEMENT ASSY	1
15	51343006	MAIN ELEMENT	1
16	51333877	FILTER, AIR	1
17	51337213	HOSE	1
18	51334350	RIGHT BRACKET	1
19	51323098	BOLT	4
20	51337572	HOSE	1

EXTERNAL DRY AIR CLEANER（L/CAB） - FILTER & PIPES

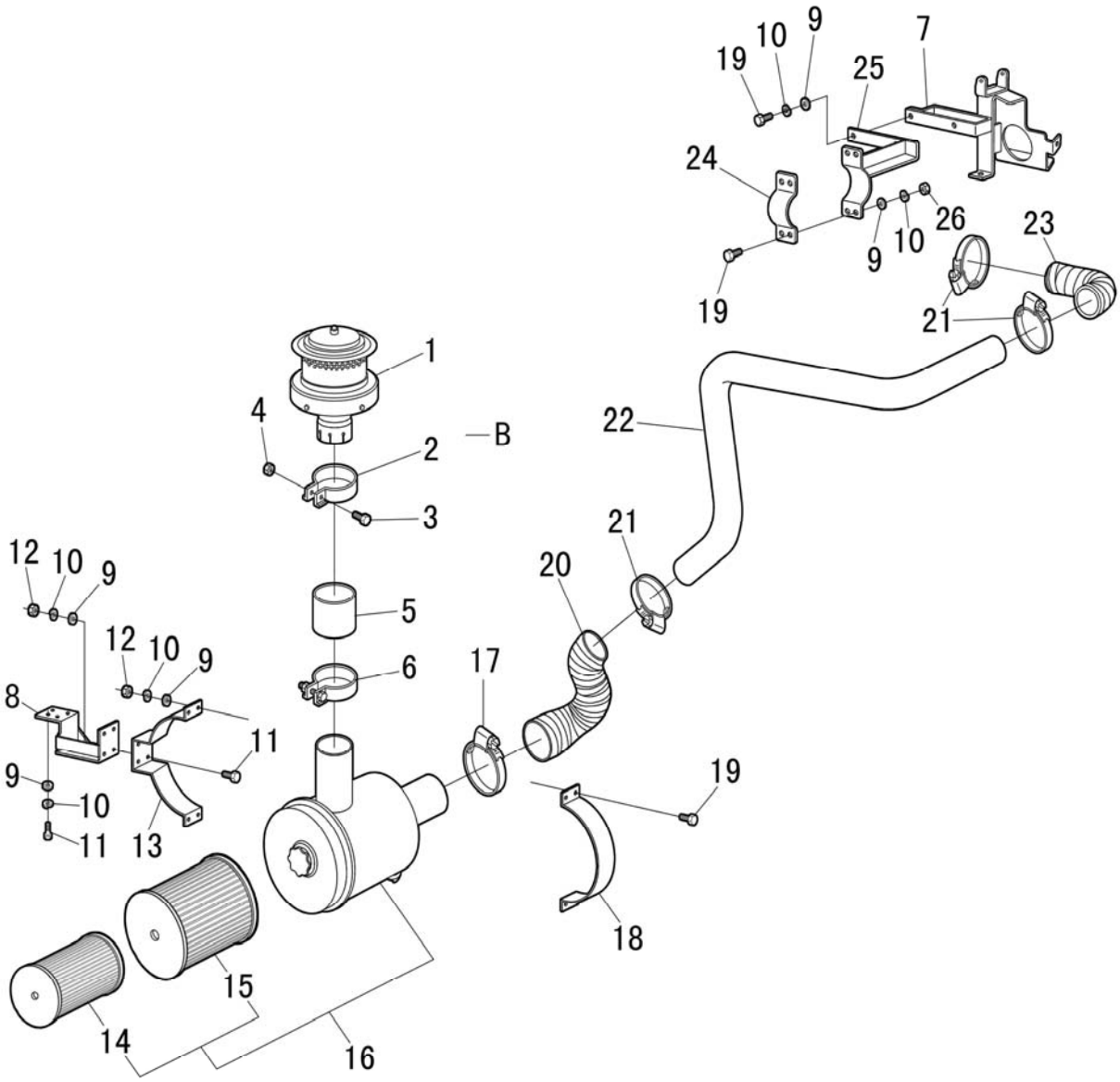

EXTERNAL DRY AIR CLEANER（L/CAB） - FILTER & PIPES

R	P.N.	DESCRIPTION	QTY
21	51323503	CLAMP	3
22	51337571	TUBE	1
23	51337212	HOSE	1
24	51334204	RING	1
25	51336494	BRACKET	1
26	51325740	NUT	4

TRANSMISSION

SEC. 3

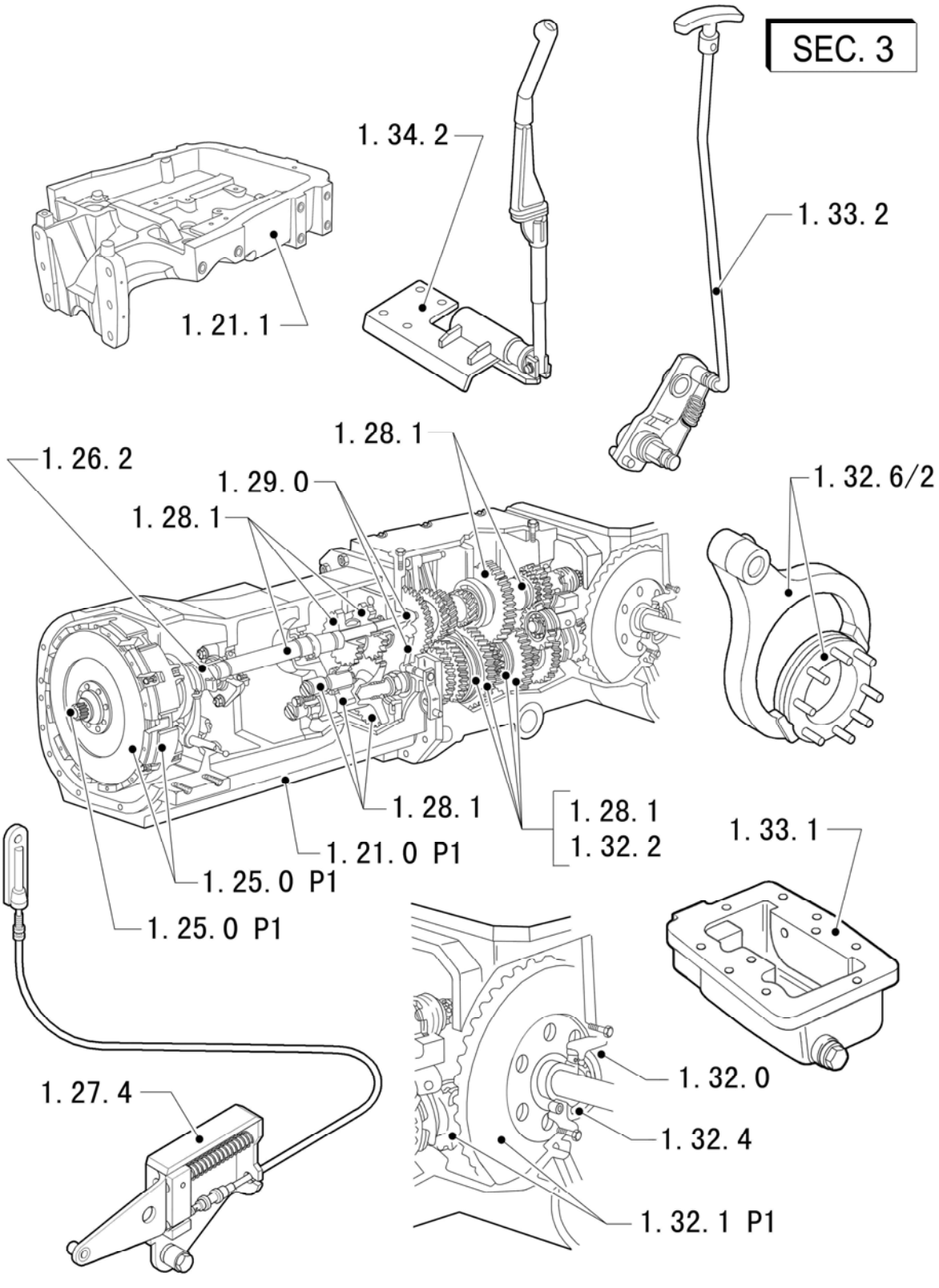

1.21.0	1/3	06/09

HOUSING

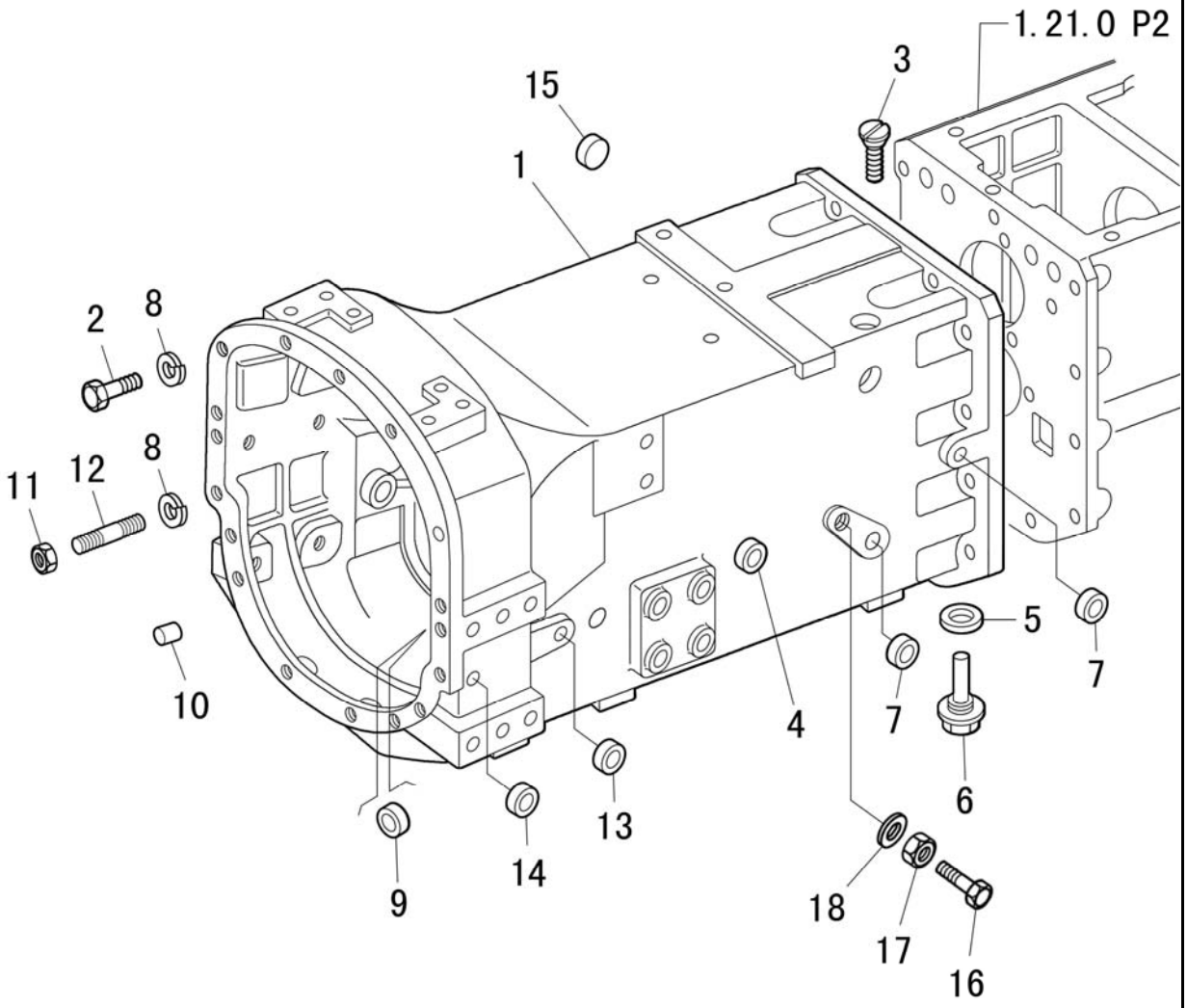

HOUSING

R	P.N.	DESCRIPTION	QTY
1	87368061	HOUSING	1
2	15540734	SCREW	4
3	13305311	CAPSCREW	1
4	5115534	BUSHING	4
5	10263460	WASHER	1
6	5118991	PLUG	2
7	14328701	PLUG (2 FOR 12x4 TRANSMISSION)	1
8	51323381	WASHER	11
9	14329801	PLUG	2
10	51322903	PIN	4
11	51330604	BOLT	7
12	51330603	STUD	2
13	5133142	BUSHING	4
14	5106488	PLUG	2
15	4998275	PLUG	2
16	51323113	BOLT	1
17	51323151	NUT	1
18	51323381	WASHER	1

HOUSING

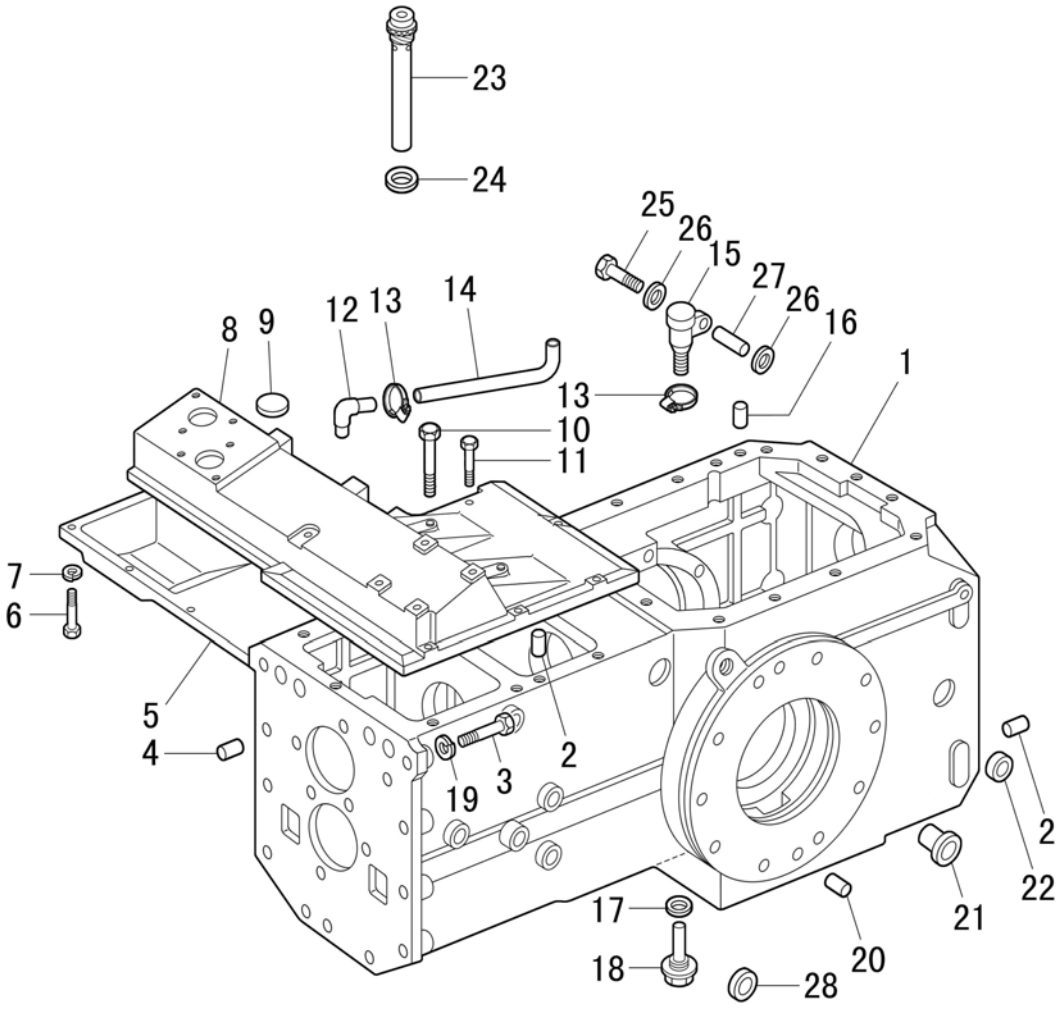
23
24
25
26
15
27
26
16
1
8
9
12
13
14
13
10
11
7
6
5
4
19
3
2
2
22
21
17
18
20
28

HOUSING

R	P.N.	DESCRIPTION	QTY
1	51332292	HOUSING	1
2	10839810	PIN	2
3	15540734	BOLT	12
4	10839910	PIN	2
5	5173638	GUARD	1
6	14305124	CAPSCREW	8
7	11197774	WASHER	8
8	47129841	COVER WITH DOWELS	1
9	10159004	PLUG	2
10	15888824	CAPSCREW	2
11	15970924	CAPSCREW	6
12	5157395	BREATHER ADAPTER	1
13	10186890	COLLAR	2
14	51337207	TUBE	1
15	5153270	COMPLETE BREATHER	1
16	5119529	DOWEL	2
17	10263460	SEAL RECTANGULAR	1
18	5118991	PLUG	2
19	11198674	TAPER LOCKWASHER	11

HOUSING

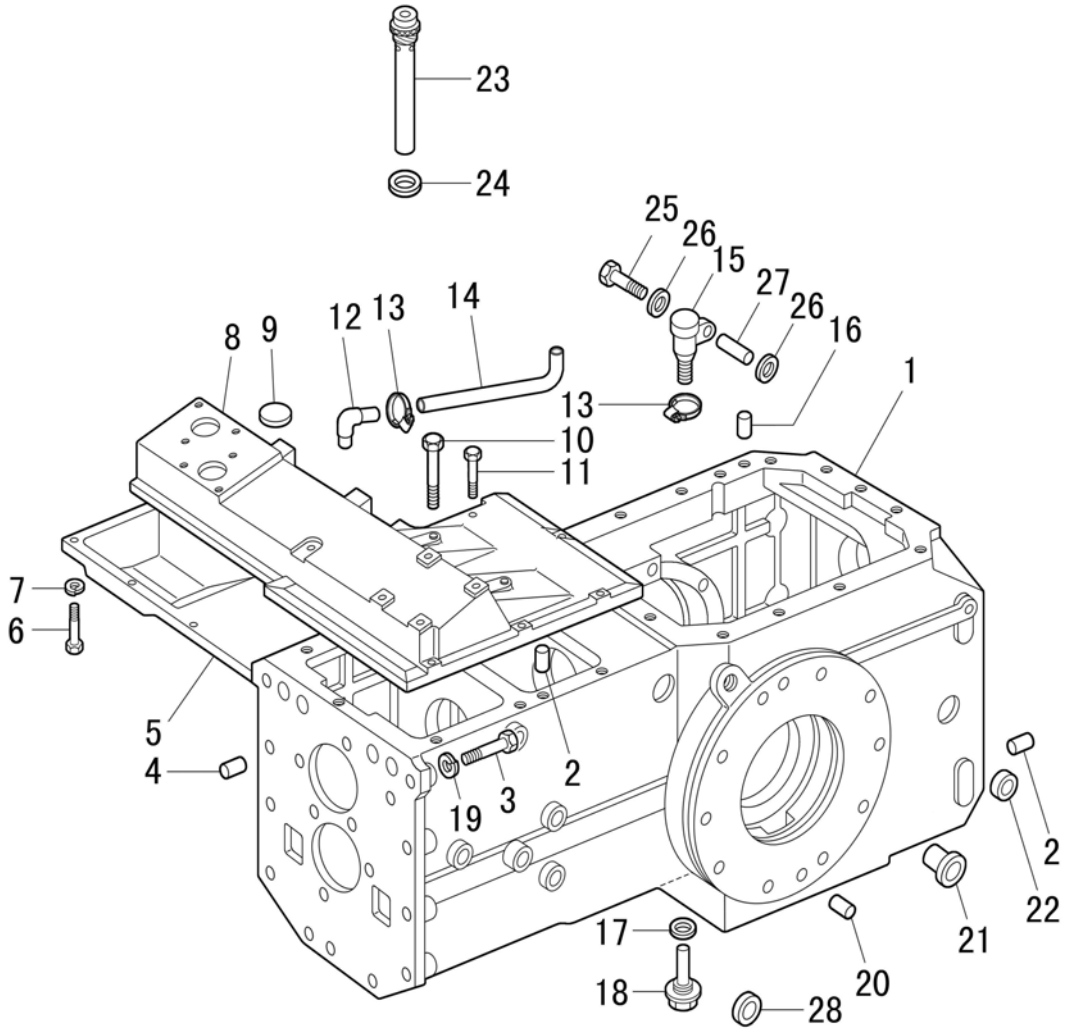
23
24
25
26
15
27
26
16
1
14
12
13
8
9
13
10
11
7
6
5
4
19
3
2
2
22
21
17
18
20
28

HOUSING

R	P.N.	DESCRIPTION	QTY
20	5110200	DOWEL	4
21	5160960	PLUG	2
22	14329101	PLUG	1
23	5176843	BREATHER COMPLETE	1
24	10262160	SEAL	1
25	51328652	BOLT	1
26	51323402	PLAIN WASHER 8	2
27	44906350	SPACER	1
28	14328501	PLUG (12+4)	1

1.21.1	1/1	06/09

BALLASTING SUPPORT

2WD

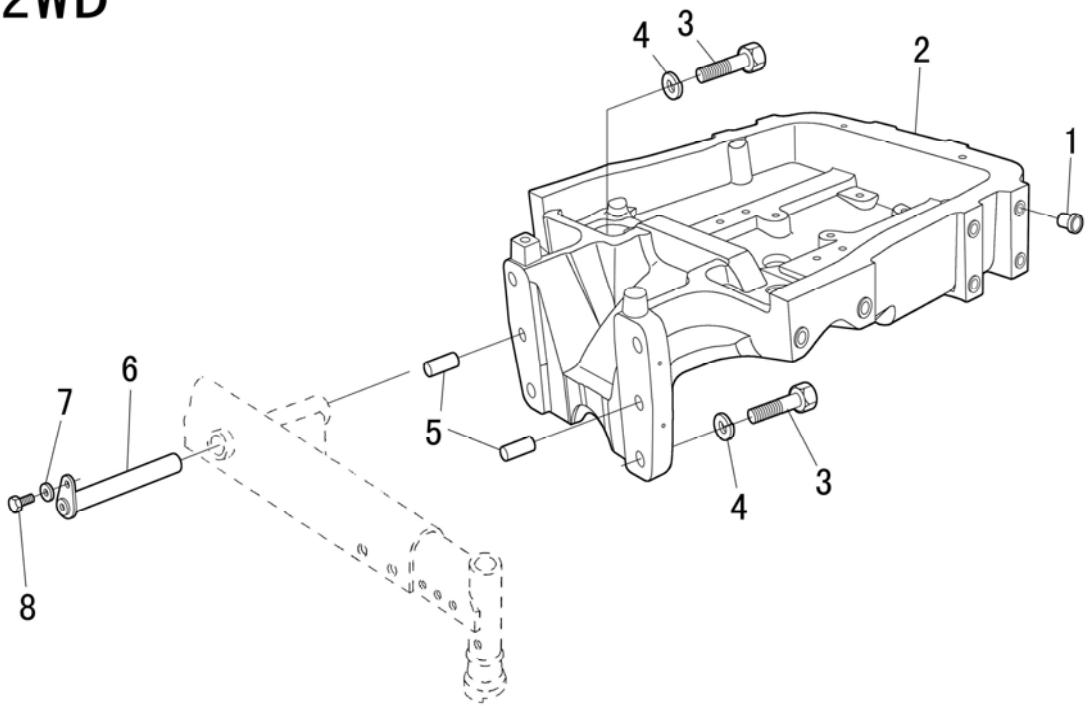

4WD

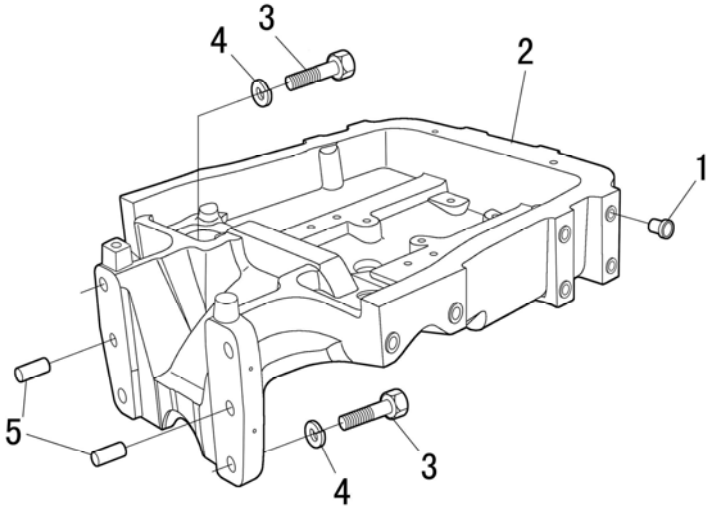

BALLASTING SUPPORT

R	P.N.	DESCRIPTION	QTY
1	5171790	PLUG	12
2	51331286	SUPPORT FRONT AXLE (2WD)	1
2	51333055	SUPPORT FRONT AXLE (2WD)	1
2	51331287	SUPPORT FRONT AXLE (4WD)	1
2	51333054	SUPPORT FRONT AXLE (4WD)	1
3	51342105	CAPSCREW	4
4	11191674	TAPER LOCKWASHER	4
5	4668595	DOWEL	2
6	5110400	PIVOT SHAFT ASSY (2WD)	1
7	11190574	TAPER LOCKWASHER (2WD)	1
8	15970524	CAPSCREW (2WD)	1

CLUTCH

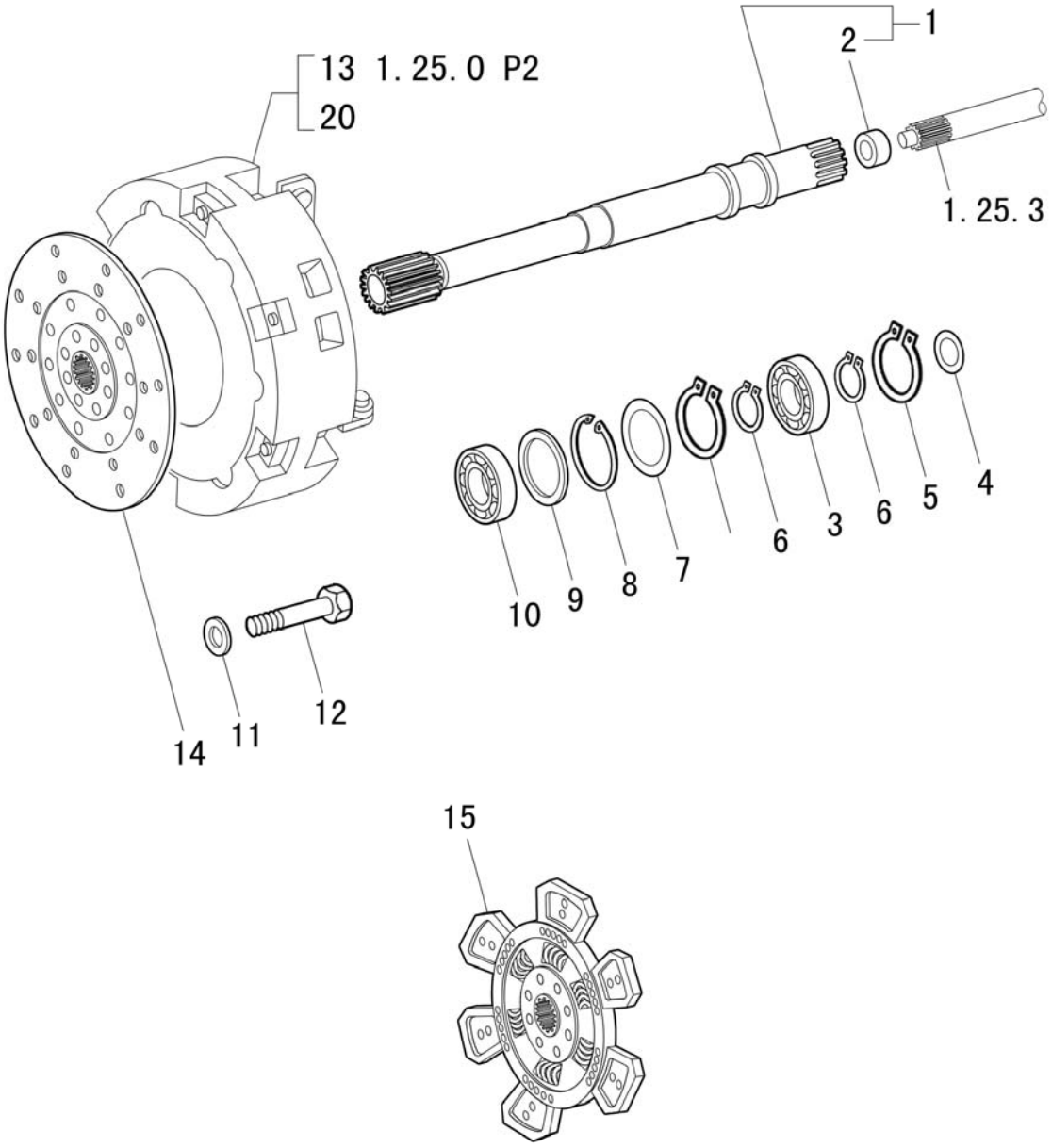

CLUTCH

R	P.N.	DESCRIPTION	QTY
1	51336621	SHAFT ASSY , TL80	1
2	51336393	BUSHING , TL80	1
3	51343076	BEARING	1
4	4985295	OIL SEAL	1
5	51323309	SNAP RING	2
6	51323319	SNAP RING	2
7	5164500	SEAL	1
8	51323308	SNAP RING	1
9	5164517	SNAP RING	1
10	24905130	BEARING	1
11	11190574	TAPER LOCKWASHER (TL80/ 90)	6
12	11234724	CAPSCREW (TL80/ 90)	6
13	5189826	CLUTCH ASSY (EXPORT) (TL80/ 90)	1
13	51335174	CLUTCH ASSY (TL80/ 90)	1
14	5167937	FRICTION DISC, P.T.O. (EXPORT) (TL80/ 90)	1
14	51335400	FRICTION DISC, P.T.O. (TL80/ 90)	1
15	5189825	DRIVEN PLATE (EXPORT) (TL80/ 90)	1
15	51335391	DRIVEN PLATE (TL80/ 90)	1
20	5189875	COVER (TL80/ 90)	1

CLUTCH

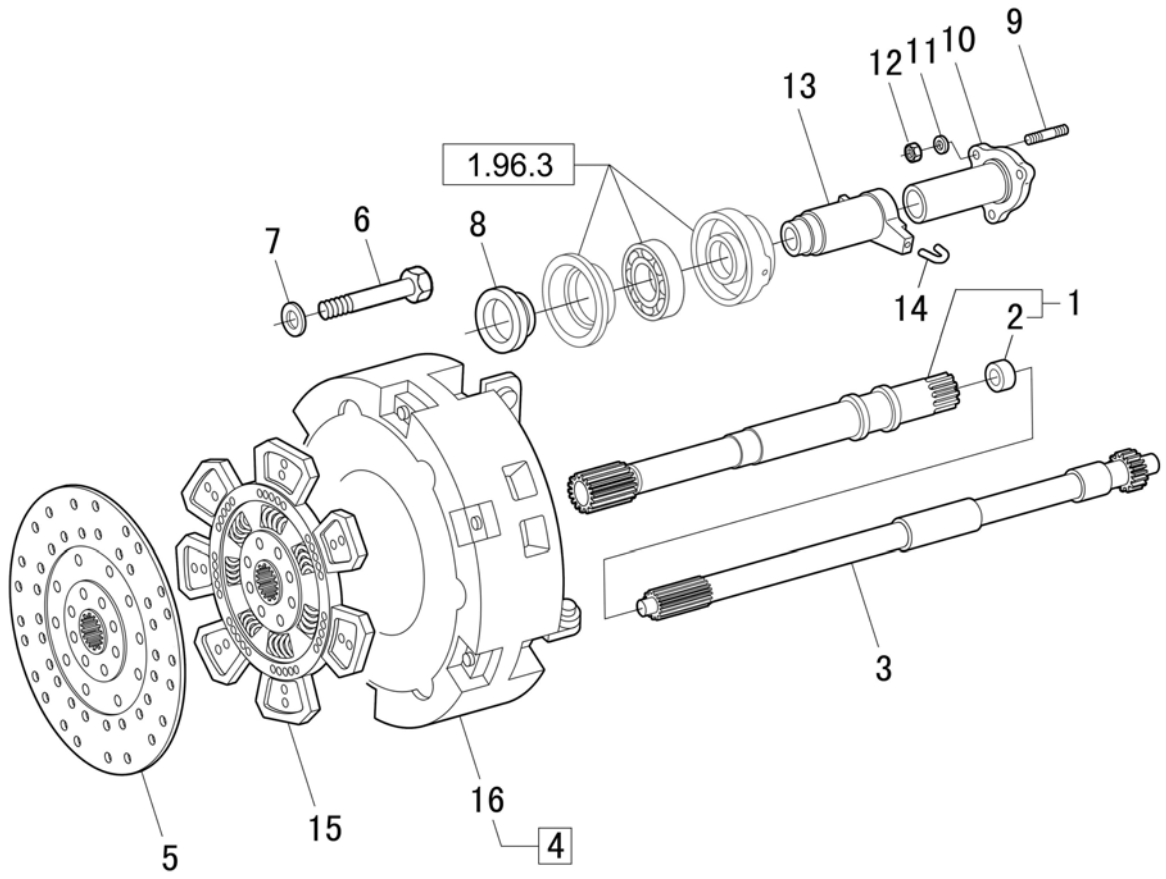

CLUTCH

R	P.N.	DESCRIPTION	QTY
1	51336622	SHAFT (TL80/ 90)	1
2	51336393	BUSHING (TL80/ 90)	1
3	5189504	P.T.O. SHAFT	1
4	47126704	CLUTCH ASSY (TL100)	1
5	5167937	DRIVEN PLATE P.T.O. (TL100)	1
6	11234724	CAPSCREW (TL100)	6
7	11190574	LOCKWASHER, TAPER (TL100)	6
8	51336186	THRUST BEARING, CLUTCH	1
8	87345759	THRUST BEARING, CLUTCH (FOR AREA OUTSIDE CHINA)	1
9	13517210	STUD	3
10	5167184	SUPPORT	1
11	51323379	SPRING WASHER 8	3
12	51323149	NUT	3
13	5167167	SLEEVE	1
14	44011615	SPRING	2
15	47126703	MASTER CLUTCH (TL100)	1
16	47126706	COVER (TL100)	1

1.25.0/1	1/1	06/09

CLUTCH , TL90 TL100

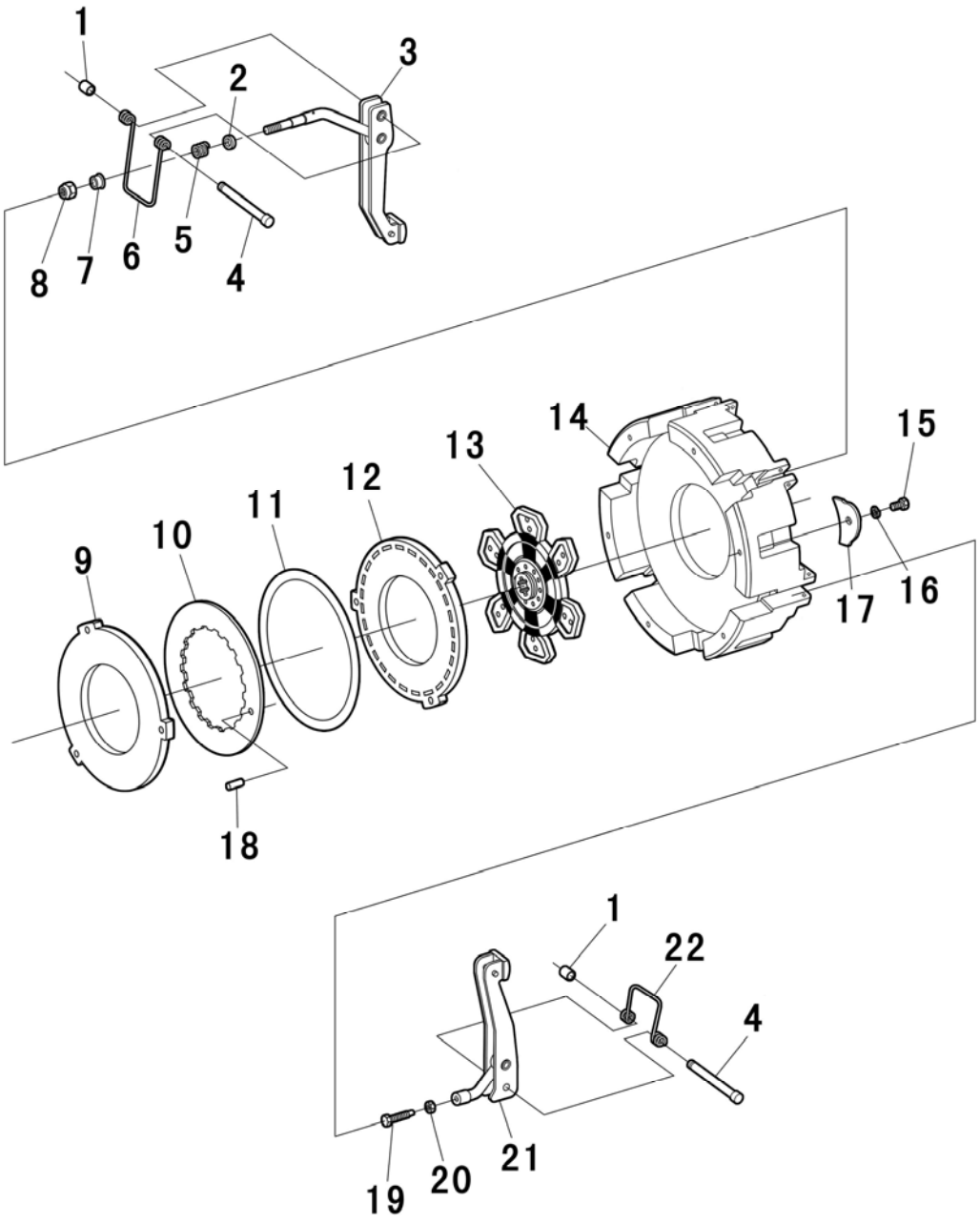

CLUTCH , TL90 TL100

R	P.N.	DESCRIPTION	QTY
1	51335444	LOCKING SLEEVE	6
2	51335435	GASKET	3
3	51335404	P.T.O.CLUTCH DISENGAGEMENT LEVER	3
4	51335446	PIN	6
5	51335436	P.T.O.CLUTCH DISK SPRING	3
6	51335449	P.T.O.CLUTCH DISENGAGEMENT LEVER SPRING	3
7	51335410	P.T.O.CLUTCH DISK SLEEVE	3
8	51335451	HEX LOCKING NUT	3
9	51335395	P.T.O.CLUTCH DISK	1
10	51335408	SPRING	1
11	51335407	SUPPORT RING	1
12	51335394	MAIN TRANSMISSION CLUTCH DISK	1
13	51335391	MAIN TRANSMISSION CLUTCH PLATE	1
14	51335393	CASING	1
15	11234724	CAPSCREW, HEX.M10	6
16	11190574	LOCKWASHER, TAPER	6
17	54115448	SPRING WASHER	6
18	51323275	PIN	1
19	51335442	ADJUSTING SCREW	3
20	51323182	NUT	3
21	51335405	MAIN DISENGAGEMENT LEVER ASSY	3
22	51335450	MAIN DISENGAGEMENT LEVER SPRING	3

1.26.2	1/1	06/09

CLUTCH CONTROL

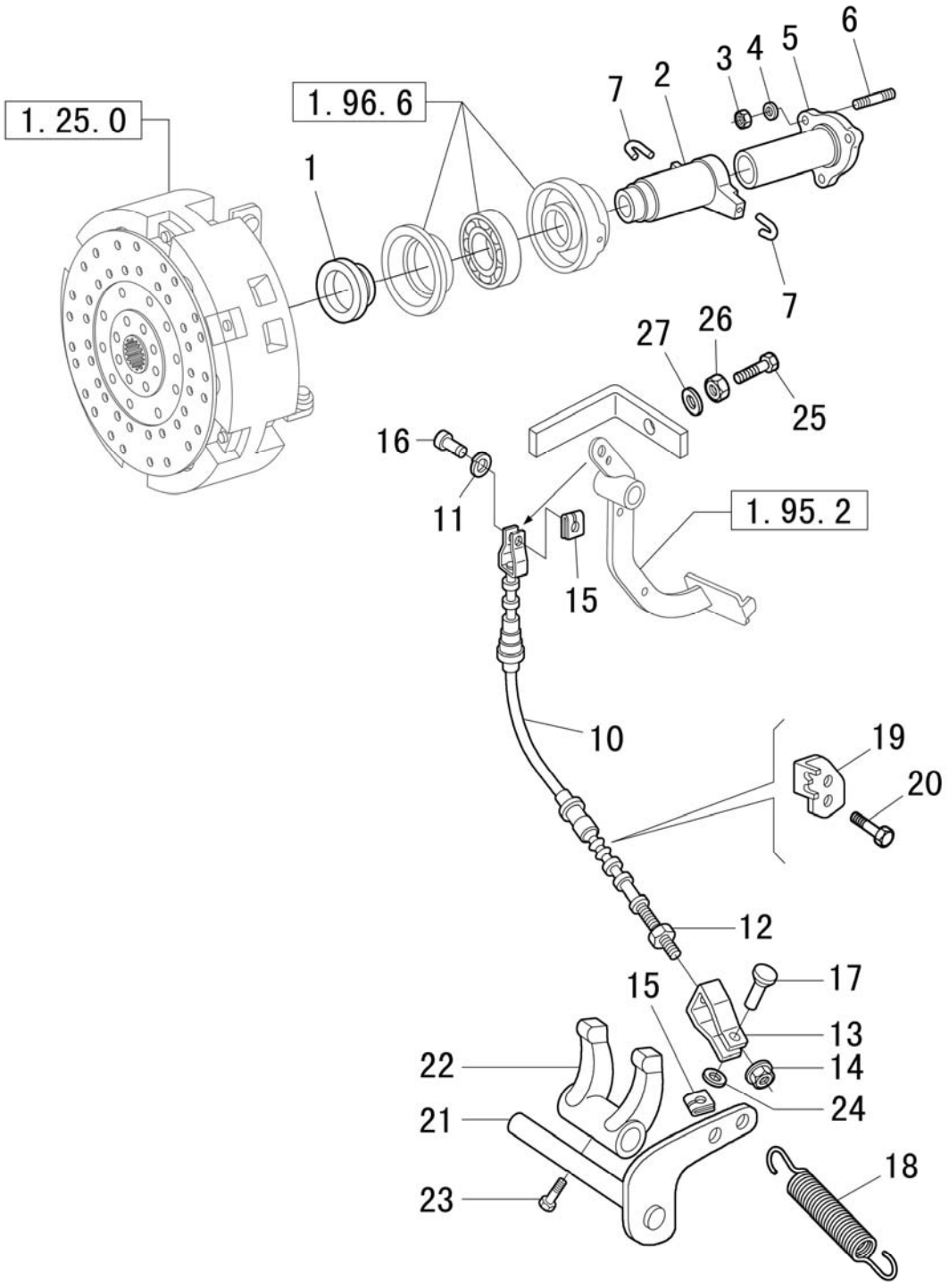

CLUTCH CONTROL

R	P.N.	DESCRIPTION	QTY
1	51336186	THRUST BEARING, CLUTCH	1
2	5167167	SLEEVE, MASTER CLUCH	1
3	51323149	NUT	3
4	51323379	LOCKWASHER	3
5	5167184	SUPPORT	1
6	13517210	STUD	3
7	44011615	SPRING, CLUTCH FORK	2
10	51337931	CABLE MASTER CLUTCH	1
11	12644404	WASHER, FLAT	1
15	11063976	FASTENER	2
16	5175716	PIN	1
17	4998010	PIN	2
18	51342975	SPRING	1
19	5175732	BRACKET	1
20	15970524	CAPSCREW	2
21	51342973	CONTROL LEVER ELEMENTS	1
22	5168938	FORK LEVER RELEASE CONTROL	1
23	4968813	SCREW	1
24	14496401	WASHER	1
25	51324776	BOLT	1
26	51331995	NUT	1
27	51323380	WASHER	1

NOTE: Part 10 includes parts 12, 13 and 14.

1.27.4	1/1	06/09

CLUTCH INTERLOCK CONTROL

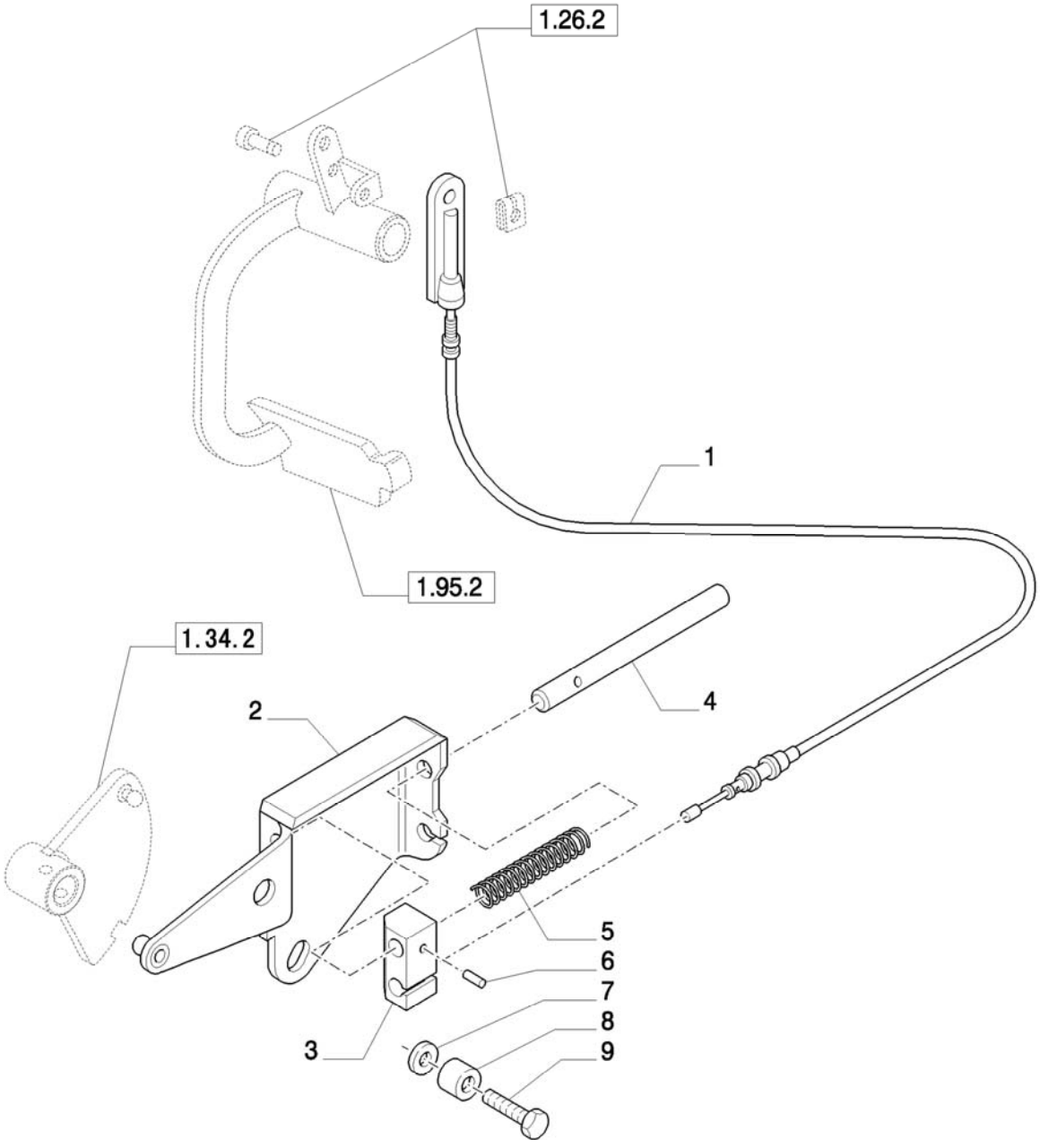

CLUTCH INTERLOCK CONTROL

R	P.N.	DESCRIPTION	QTY
1	87342322	INTERLOCK CABLE ASSY	1
2	87342315	REACTION PLATE ASSY	1
3	87342320	CABLE HUB JOINT	1
4	87342321	INTERLOCK PIN	1
5	87363968	SPRING	1
6	51323274	PIN	1
7	51323404	WASHER	1
8	87342317	SPACER	1
9	51323133	CAPSCREW	1

1.28.1	1/5	06/09

GEARBOX SHAFT, GEARINGS

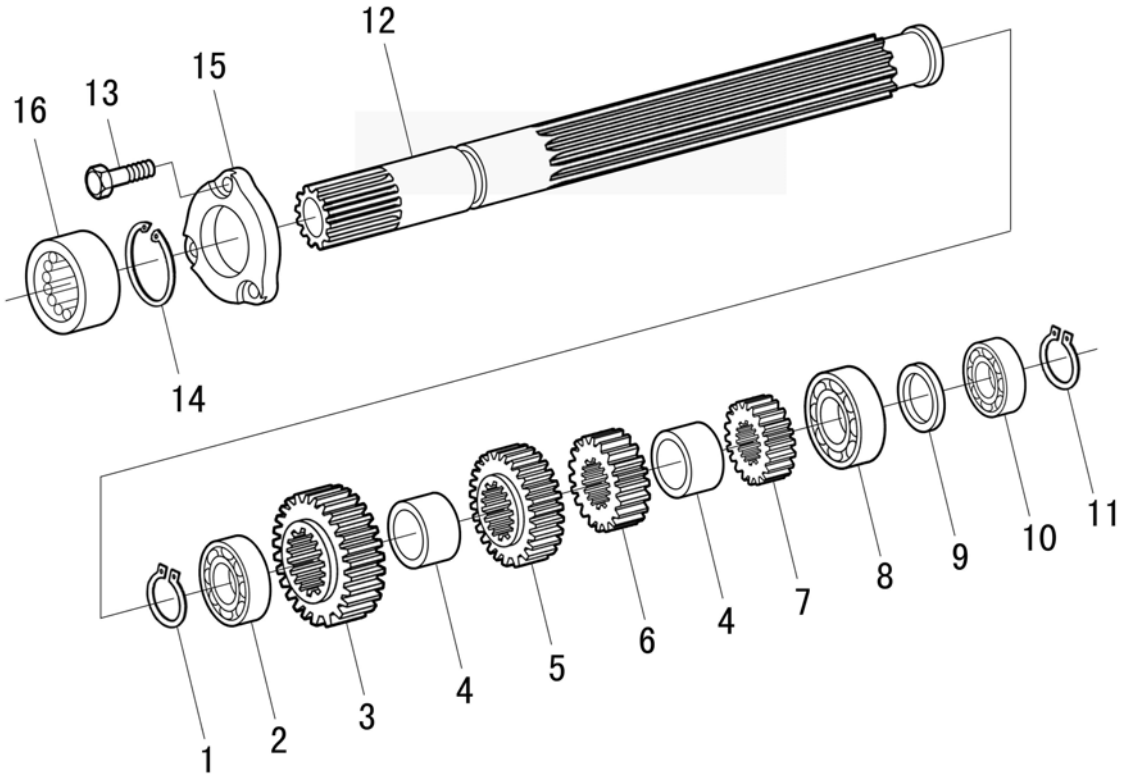

GEARBOX SHAFT, GEARINGS

R	P.N.	DESCRIPTION	QTY
1	11069076	SNAP RING	1
2	28996330	BEARING	1
3	5123982	DRIVE GEAR, 4TH SPEED	1
4	5111983	SPACER	2
5	5179672	DRIVEN GEAR, 3RD SPEED	1
6	5169606	DRIVEN GEAR, 2ND SPEED	1
7	5118912	DRIVE GEAR,1ST SPEED	1
8	5138660	BEARING	2
9	5109669	THRUST WASHER	AR
9	5118937	THRUST WASHER	AR
9	5118938	THRUST WASHER	AR
9	5118939	THRUST WASHER	AR
9	5118940	THRUST WASHER	AR
9	5086496	WASHER	1
10	51342933	BEARING (FOR CHINA)	1
10	5147070	BEARING (FOR AREA OUTSIDE CHINA)	1
11	11068876	RETAINING RING D=40	1
12	5125349	TRANSMISSION SHAFT , TL80	1
13	14302821	SCREW , TL80	3
14	11059976	SNAP RING , TL80	1
15	5162671	BEARING COVER , TL80	2
16	5123466	SLEEVE , TL80	1

TRANSMISSION GEARS, DRIVEN SHAFT

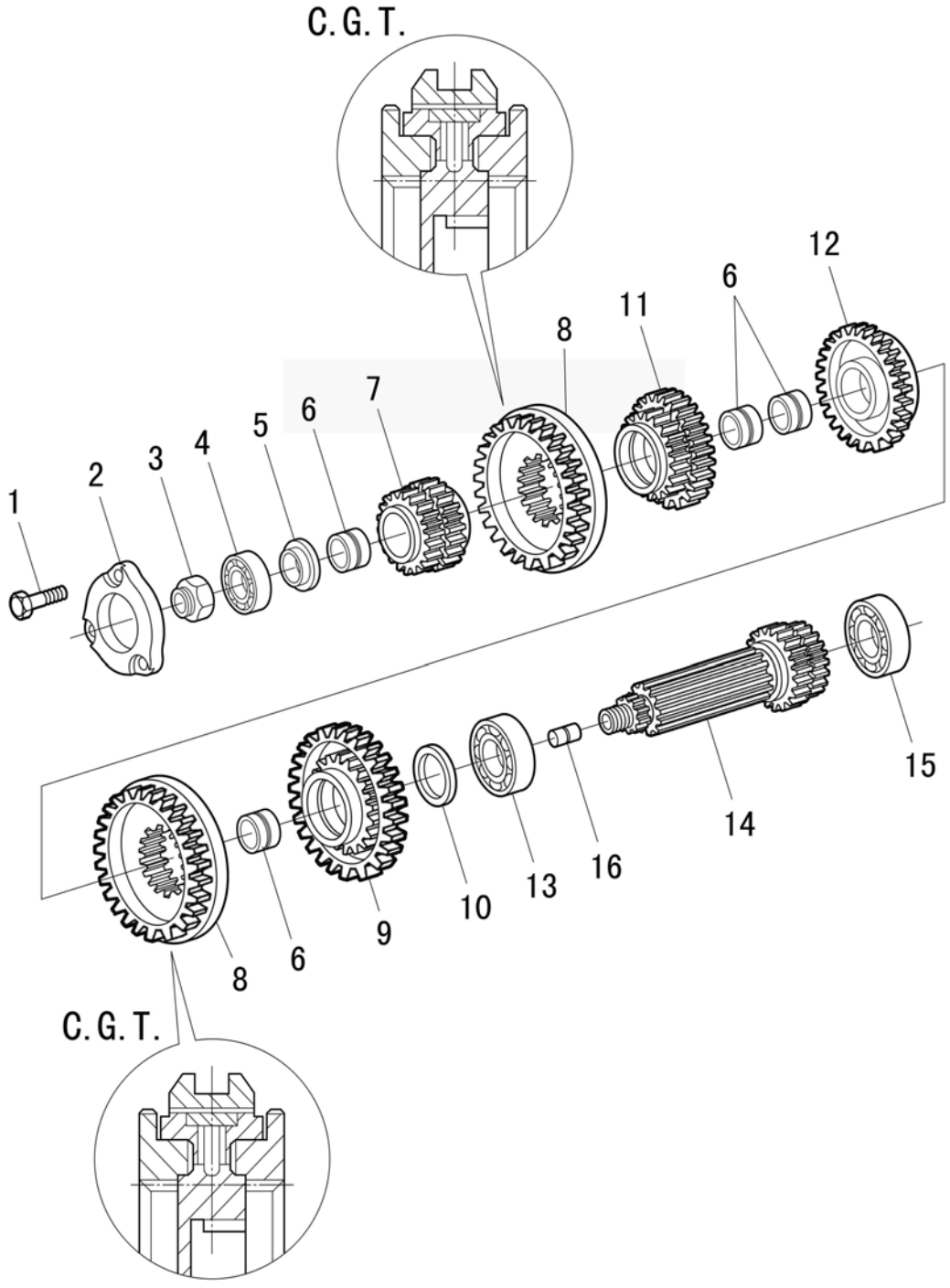

TRANSMISSION GEARS, DRIVEN SHAFT

R	P.N.	DESCRIPTION	QTY
1	5162671	BEARING COVER	1
2	14302821	CAPSCREW	3
3	5122985	RING NUT	1
4	28995880	BEARING	1
5	5122797	WASHER, THRUST, 4TH DRIVEN GEAR	1
6	5101537	DRIVE GEAR BUSHING	4
7	5172050	DRIVEN GEAR IV SPEED	1
8	5188093	SYNCHRONIZER	2
9	5172047	DRIVEN GEAR I SPEED	1
10	5109656	WASHER, THRUST, DRIVEN GEAR 1ST	1
11	5179673	DRIVEN GEAR III SPEED	1
12	5172048	DRIVEN GEAR II SPEED	1
13	5138660	BEARING	1
14	5131167	DRIVEN SHAFT , TL90 TL100	1
14	5127958	DRIVEN SHAFT , TL80	1
15	5126458	BEARING	1
16	5145131	SLEEVE	1

TRANSMISSION SHAFT, CLUTCH SHAFT

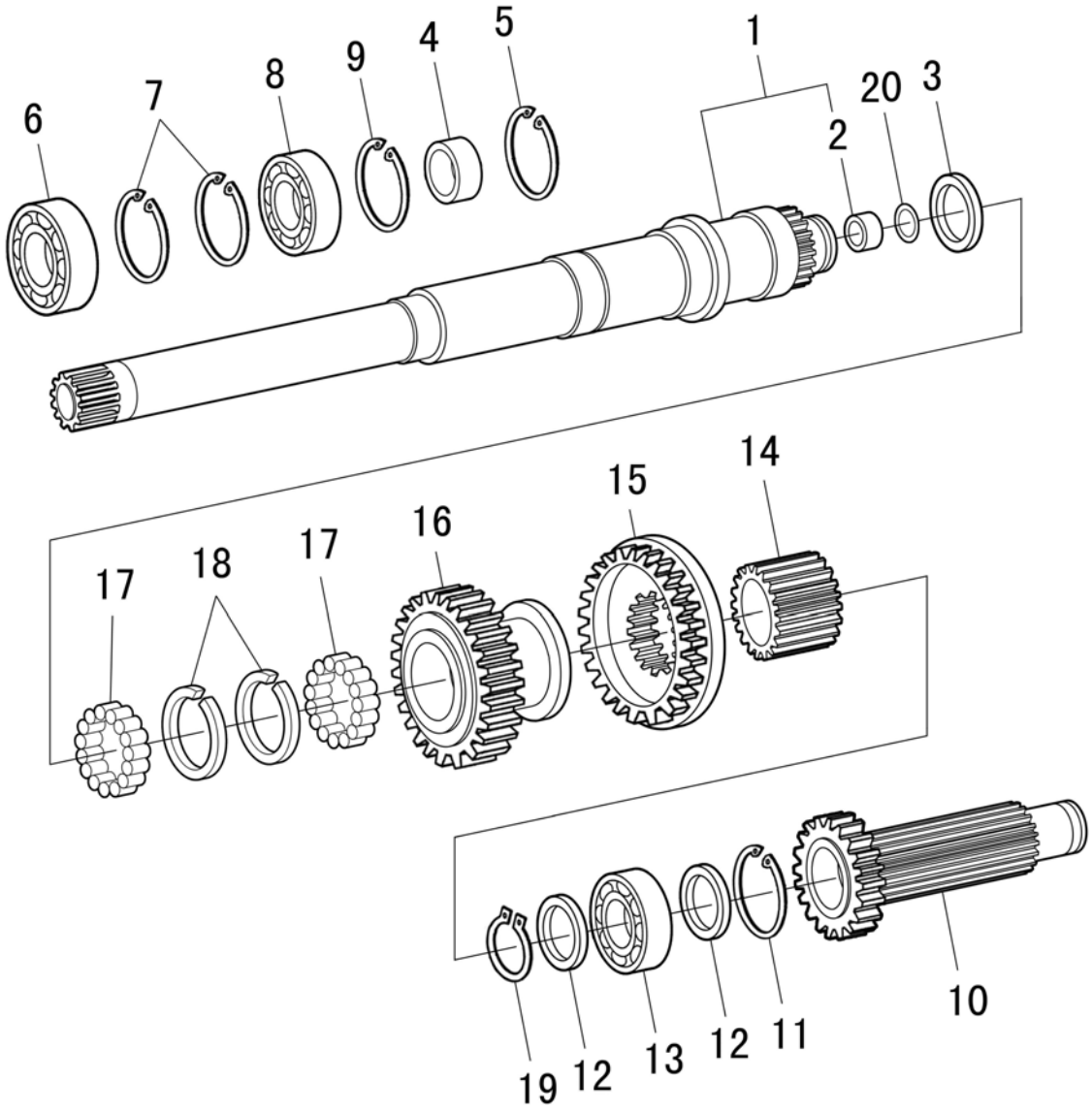

TRANSMISSION SHAFT, CLUTCH SHAFT

R	P.N.	DESCRIPTION	QTY
1	51336622	SHAFT, MASTER CLUTCH, REVERSE ASSY, TL90 TL100	1
2	51336393	BUSHING	1
3	5164517	SNAP RING, TL90 TL100	1
4	5164500	SEAL, TL90 TL100	1
5	11069376	RETAINING RING, TL90 TL100	1
6	24905130	BEARING, TL90 TL100	1
7	11062476	RETAINING RING, TL90 TL100	2
8	51343076	BEARING, TL90 TL100	1
9	11062176	RETAINING RING, TL90 TL100	1
10	5161817	SHAFT, TL90 TL100	1
11	11068876	RETAINING RING, TL90 TL100	1
12	5143461	WASHER, TL90 TL100	2
13	47134157	BEARING, TL90 TL100	1
14	5143460	SLEEVE, TL90 TL100	1
15	5186629	SYNCHRONIZER, TL90 TL100	1
16	5164583	REVERSE DRIVE GEAR, TL90 TL100	1
17	5137225	NEEDLE, TL90 TL100	2
18	5137224	THRUST WASHER, TL90 TL100	2
19	11070876	RETAINING RING, TL90 TL100	1
20	4985295	OIL SEAL, TL80	1

TRANSMISSION - GEARS

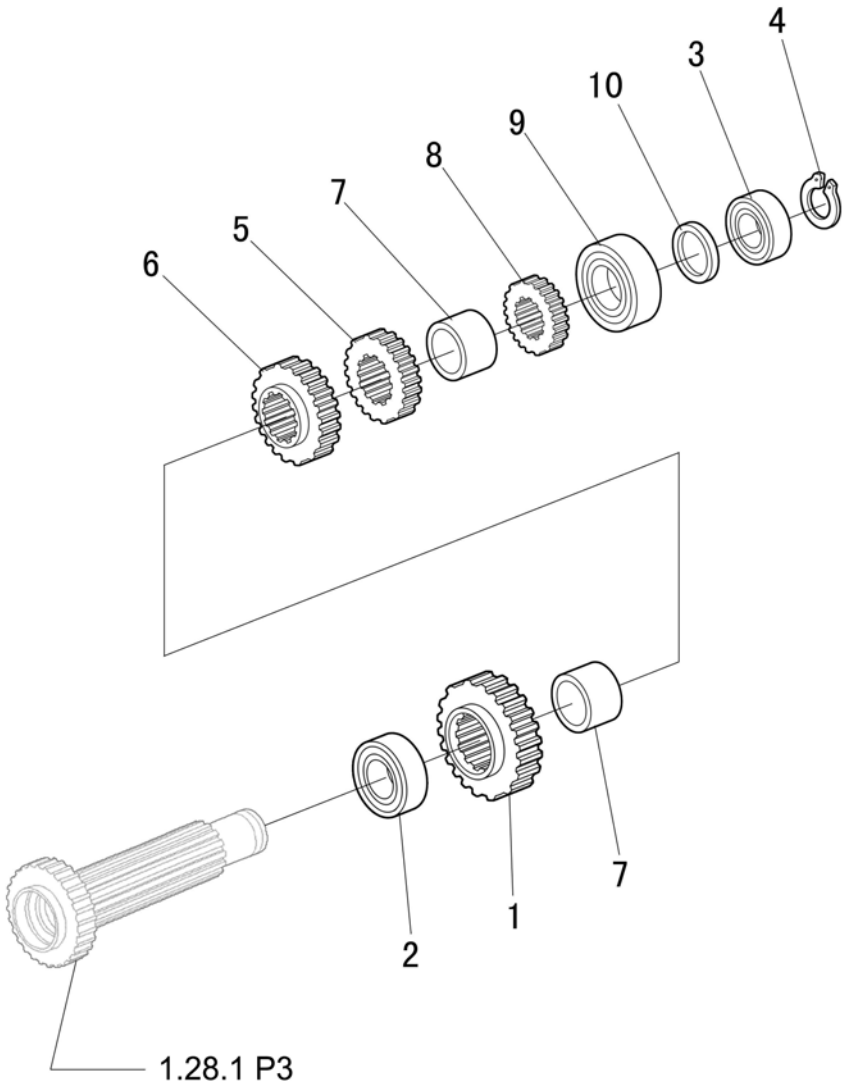

TRANSMISSION - GEARS

R	P.N.	DESCRIPTION	QTY
1	5123982	DRIVE GEAR, 4TH SPEED	1
2	28996330	BEARING	1
3	51342933	BEARING (FOR CHINA)	1
3	5147070	BEARING (FOR AREA OUTSIDE CHINA)	1
4	11068876	RETAINING RING	1
5	5169606	DRIVE GEAR 2ND SPEED	1
6	5179672	DRIVE GEAR 3RD SPEED	1
7	5111983	BUSHING	2
8	5118912	DRIVE GEAR, 1ST SPEED	1
9	5138660	BEARING	1
10	5109669	THRUST WASHER 3,00mm	AR
10	5118937	THRUST WASHER 3,25mm	AR
10	5118938	THRUST WASHER 3,50mm	AR
10	5118939	THRUST WASHER 3,75mm	AR
10	5118940	THRUST WASHER 4,00mm	AR

TRANSMISSION - REVERSE GEAR

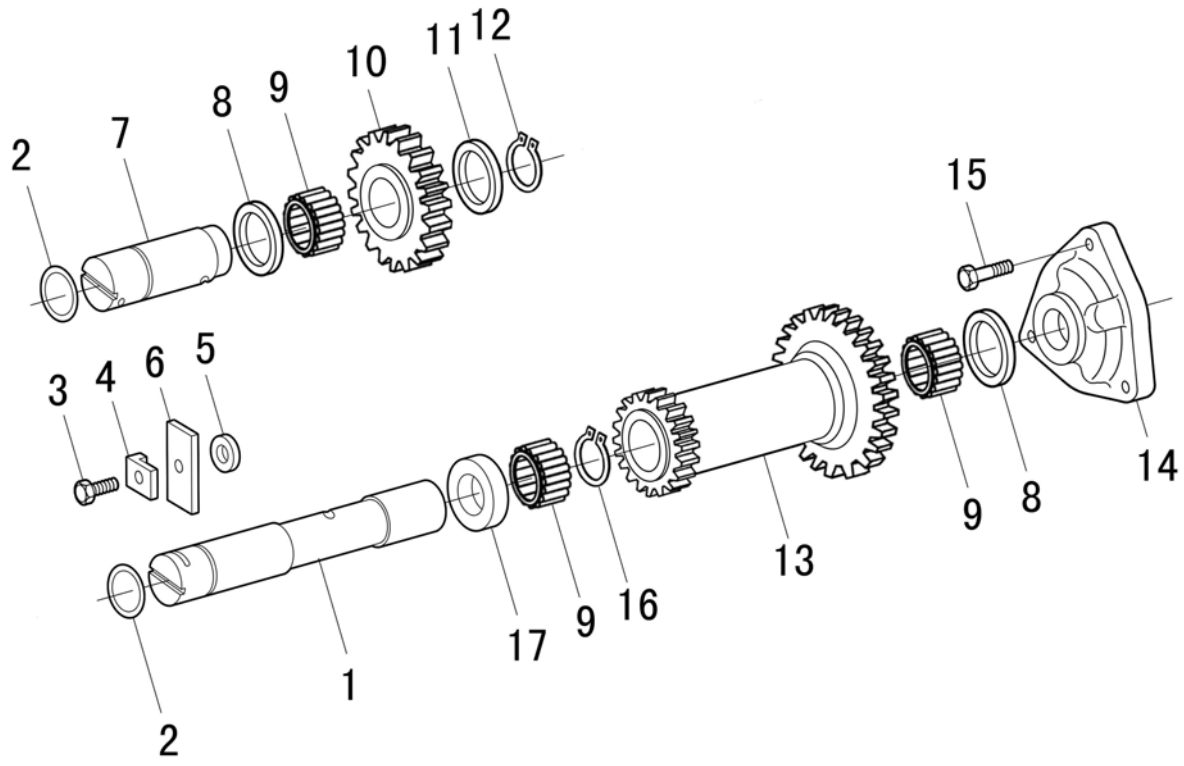

TRANSMISSION - REVERSE GEAR, TL90/ 100

R	P.N.	DESCRIPTION	QTY
1	5117557	DRIVEN GEAR SHAFT	1
2	14457980	O-RING SEAL	2
3	51323133	BOLT	1
4	14198901	LOCKPLATE	1
5	5117562	SPACER	1
6	5117561	THURST GASKET	1
7	5117567	SHAFT, IDLER	1
8	5117560	WASHER	2
9	5117559	NEEDLE	3
10	5160492	GEAR	1
11	5117570	WASHER	1
12	11068076	RETAINING RING	1
13	5160495	GEAR	1
14	5117552	COVER	1
15	14238124	CAPSCREW, SELF-LOCKING	3
16	5137228	RETAINING RING	2
17	5117563	THURST WASHER	1

1.29.0	1/1	06/09

TRANSMISSION, INTERNAL SHIFTING CONTROLS

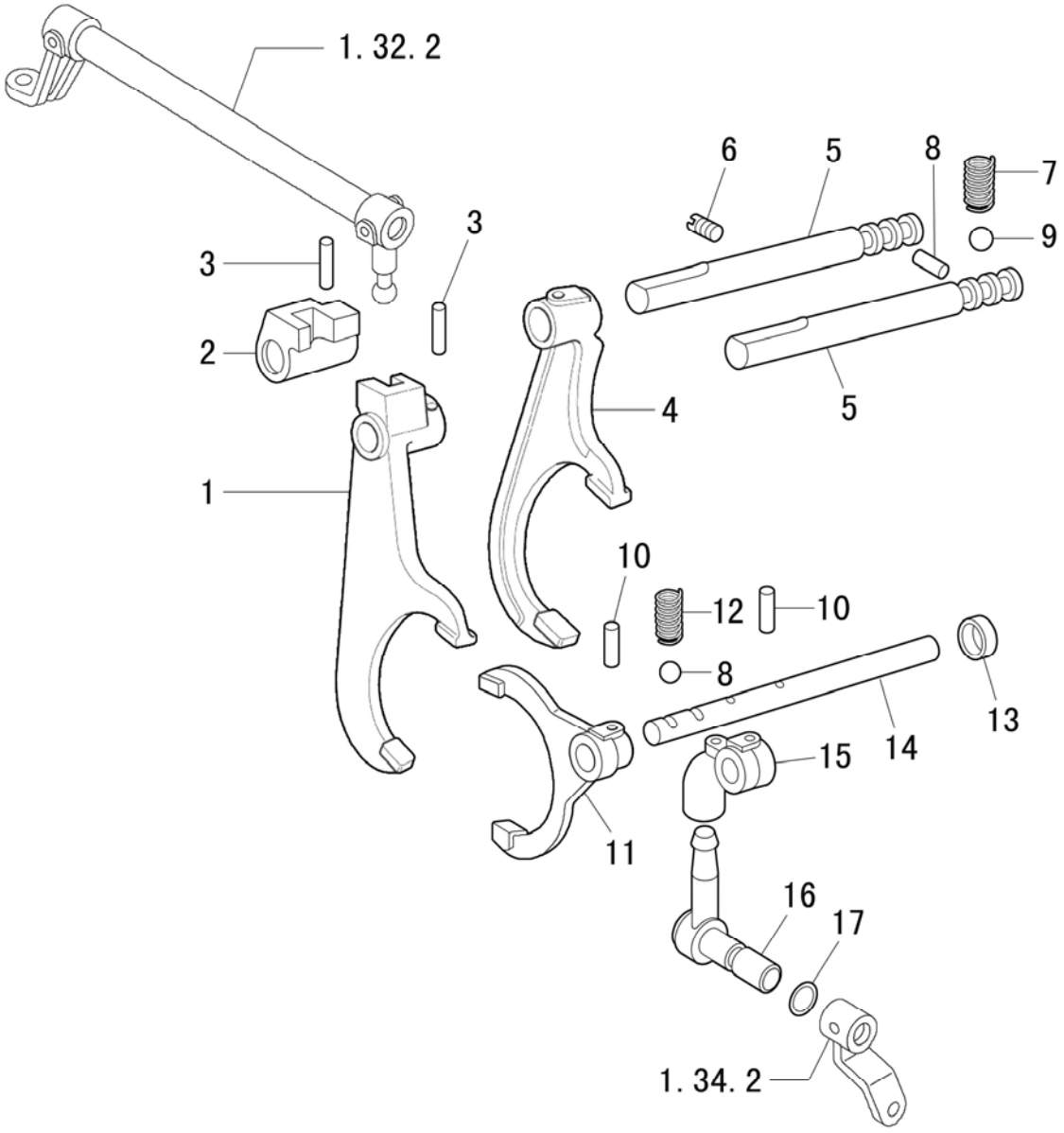

TRANSMISSION, INTERNAL SHIFTING CONTROLS

R	P.N.	DESCRIPTION	QTY
1	5174202	FORK	1
2	5174201	HUB	1
3	13907770	PIN	3
4	5127387	FORK 1ST-2ND SPEED	1
5	51333459	ROD I-II-III-IV SPEED	2
6	10152314	SLOTTED PLUG	1
7	4994342	SPRING	2
8	5110264	INTERLOCK PIN	1
9	20063390	BALL	2
10	13907670	PIN , TL90 TL100	2
11	5143463	FORK , TL90 TL100	1
12	4956546	SPRING , TL90 TL100	1
13	5161859	SPACER , TL90 TL100	1
14	51333462	LEVER , TL90 TL100	1
15	5162090	HUB , TL90 TL100	1
16	5149536	LEVER SHAFT , TL90 TL100	1
17	14457280	O-RING SEAL , TL90 TL100	1

1.32.0	1/1	06/09

TRANSMISSION, COVERS AND SUPPORTS

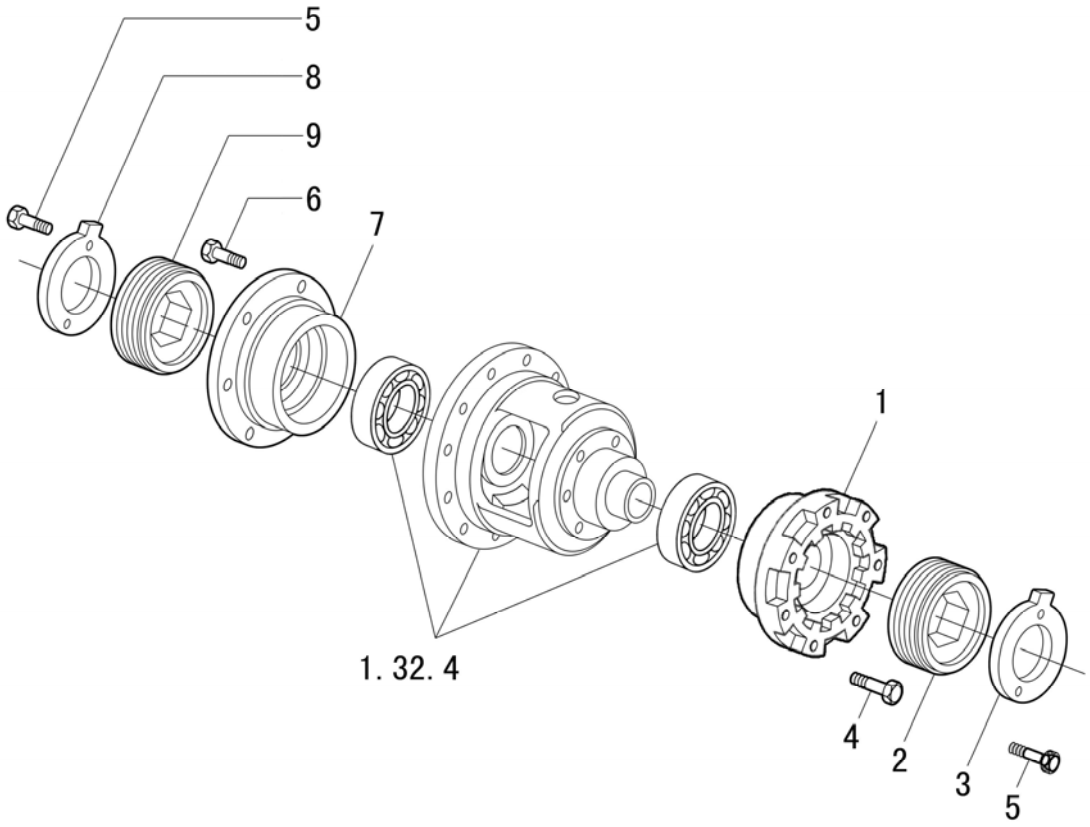

TRANSMISSION, COVERS AND SUPPORTS

R	P.N.	DESCRIPTION	QTY
1	5181269	LH SUPPORT FOR DIFF.HOUSING	1
2	5198104	LOCK NUT	1
3	5087672	LOCKWASHER	1
4	14233724	CAPSCREW, SELF-LOCKING	6
5	14238024	CAPSCREW, SELF-LOCKING	4
6	14234024	BOLT	6
7	5181270	RH SUPPORT FOR DIFF.HOUSING	1
8	5198101	LOCKING RING	1
9	5198105	LOCK NUT	1

CENTRAL REDUCTION GEARS, SLOW DRIVEN GEAR

80

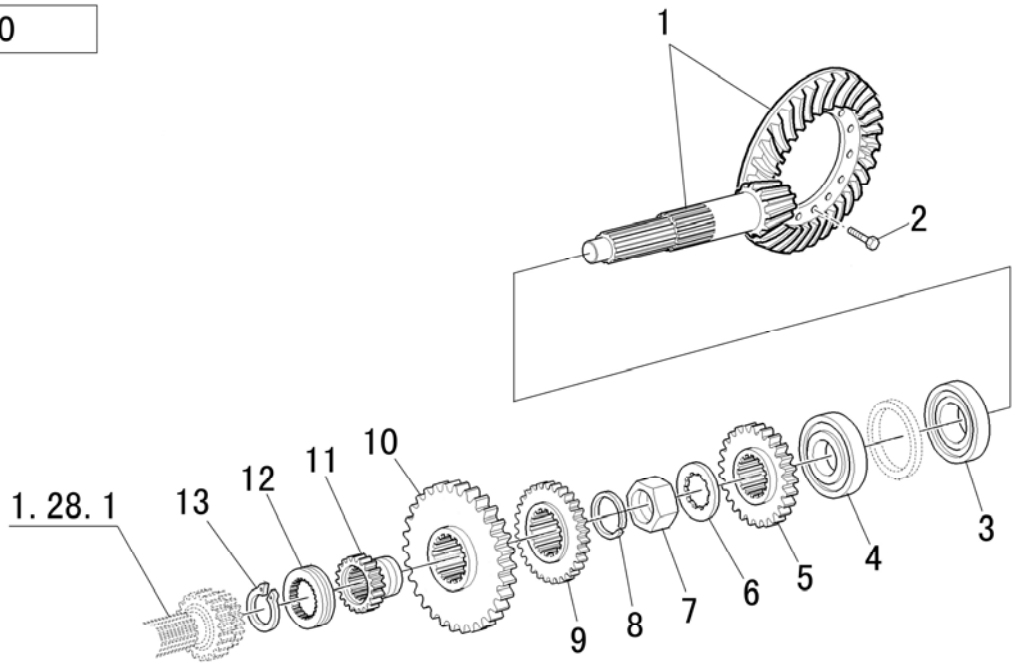

90~100

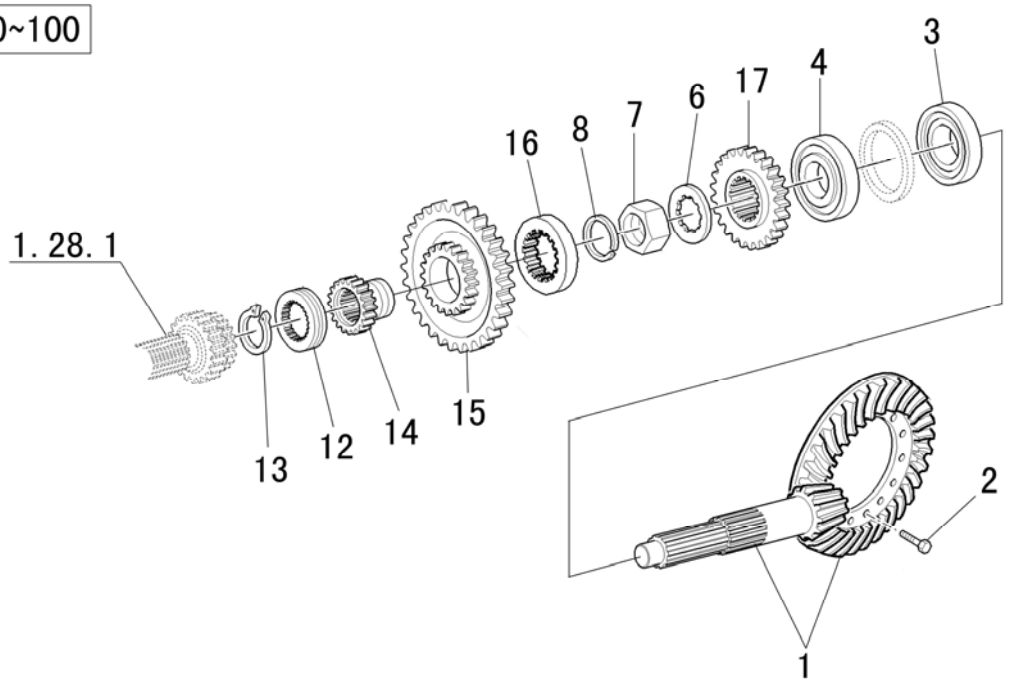

CENTRAL REDUCTION GEARS, SLOW DRIVEN GEAR

R	P.N.	DESCRIPTION	QTY
1	47135643	BEVEL PINION (TL100)	1
1	51331445	BEVEL PINION (TL80/ 90)	1
1	87385870	BEVEL PINION (EURO II)	1
2	14274734	CAPSCREW, SELF-LOCKING	12
3	51337420	BEARING	1
4	5126452	BEARING (TL80/ 90)	1
4	5130990	BEARING (TL100)	1
5	5125005	DRIVEN GEAR , TL80	1
6	5119261	LOCKWASHER	1
7	5117744	NUT	1
8	5127762	SNAP RING	1
9	5145165	GEAR REVERSE , TL80	1
10	5125007	DRIVEN GEAR , TL80	1
11	5125009	SLEEVE , TL80	1
12	5125010	SLIDING SLEEVE	1
13	11068976	RETAINING RING	1
14	5160749	SLIDING SLEEVE , TL90 TL100	1
15	5160747	DRIVEN GEAR TO LOW SPEED RANGE , TL90 TL100	1
16	5160748	SPACER , TL90 TL100	1
17	51343221	DRIVEN GEAR , TL90 TL100	1

CENTRAL REDUCTION GEARS, INTERMEDIATE GEAR

TL 80

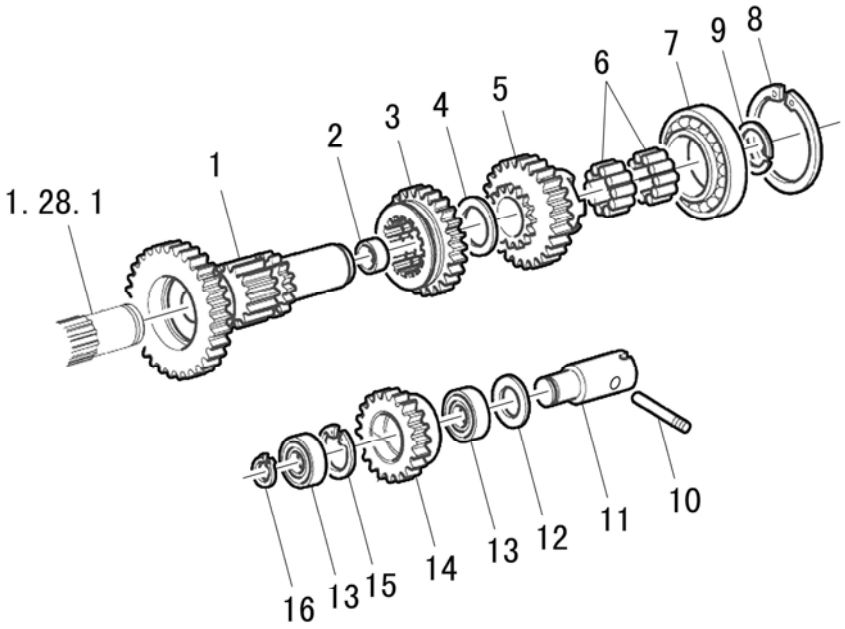

TL 90−100

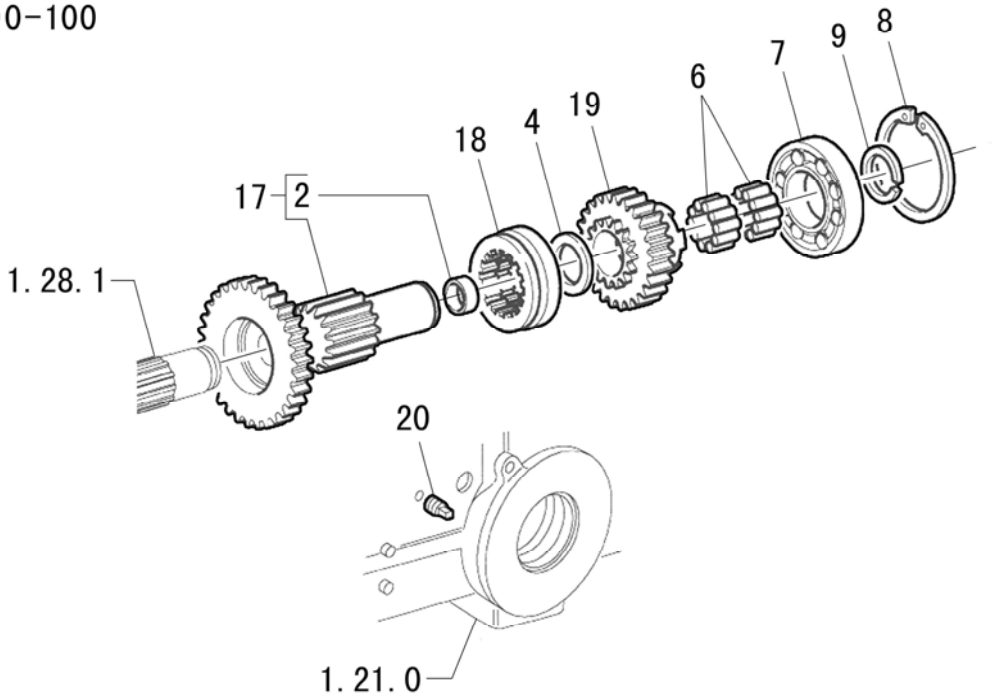

CENTRAL REDUCTION GEARS, INTERMEDIATE GEAR

R	P.N.	DESCRIPTION	QTY
1	5176776	RANGE DRIVE SHAFT ASSY	1
2	4950081	BUSHING	1
3	5145164	SLEEVE, REVERSE GEAR	1
4	5182075	WASHER, SYNCHRONIZER	1
5	5125013	DRIVE GEAR	1
6	5109747	BEARING, NEEDLE	2
7	51343077	BEARING	1
8	11075476	RETAINING RING	1
9	5117076	RETAINING RING	1
10	5152965	THREADED PIN	1
11	5153087	REVERSE PIN	1
12	5153088	WASHER THRUST	1
13	20715580	BEARING	2
14	5145166	INTERMEDIATE GEAR	1
15	11060576	RETAINING RING	1
16	5117075	RETAINING RING	1
17	5176751	RANGE DRIVE SHAFT ASSY	1
18	5125880	COUPLING SLEEVE, INTERMEDIATE GEAR	1
19	5131169	GEAR	1
20	14323914	THREADED PLUG, TAPER	2

CENTRAL REDUCTION GEARS, ADJUSTING SHIMS

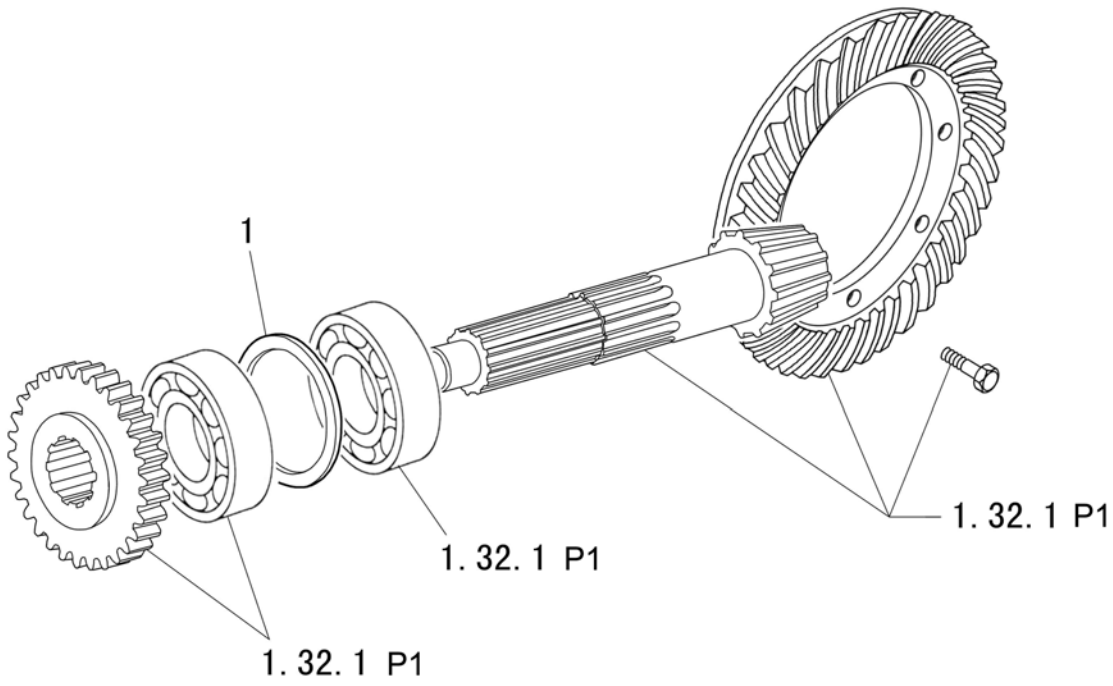

CENTRAL REDUCTION GEARS, ADJUSTING SHIMS

R	P.N.	Description	QTY
1	5111859	SHIM, BEVEL PINION, 1,90	1
1	5111860	SHIM, BEVEL PINION, 1,95	AR
1	5111861	SHIM, BEVEL PINION, 2,00	AR
1	5111862	SHIM, BEVEL PINION, 2,05	AR
1	5111863	SHIM, BEVEL PINION, 2,10	AR
1	5111864	SHIM, BEVEL PINION, 2,15	AR
1	5111865	SHIM, BEVEL PINION, 2,20	AR
1	5111866	SHIM, BEVEL PINION, 2,25	AR
1	5111867	SHIM, BEVEL PINION, 2,30	AR
1	5111868	SHIM, BEVEL PINION, 2,35	AR
1	5111869	SHIM, BEVEL PINION, 2,40	AR
1	5111870	SHIM, BEVEL PINION 2,45	AR
1	5111871	SHIM, BEVEL PINION, 2,50	AR
1	5125098	SHIM, BEVEL PINION, 1,85	AR
1	5125099	SHIM, BEVEL PINION, 2,55	AR
1	5125100	SHIM, BEVEL PINION, 2,60	AR
1	5125101	SHIM, BEVEL PINION, 2,65	AR
1	5125102	SHIM, BEVEL PINION, 2,70	AR
1	51332822	SHIM, BEVEL PINION, 2.75	AR
1	51332823	SHIM, BEVEL PINION, 2.80	AR
1	51332824	SHIM, BEVEL PINION, 2.85	AR
1	51332825	SHIM, BEVEL PINION, 2.90	AR
1	51332826	SHIM, BEVEL PINION, 2.95	AR
1	51332830	SHIM, BEVEL PINION, 3.00	AR

1.32.2	1/1	06/09

CENTRAL REDUCTION GEAR CONTROLS

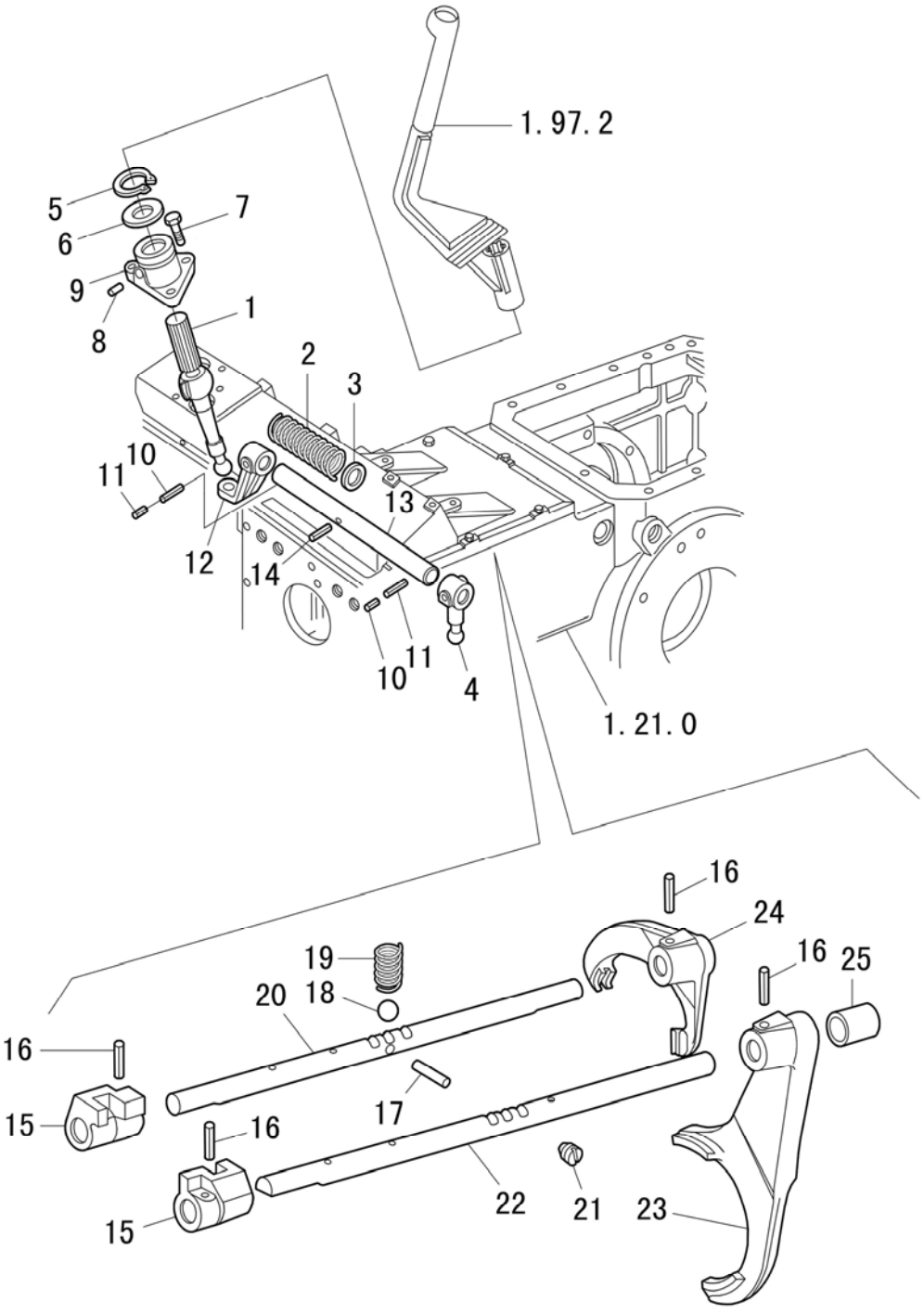

CENTRAL REDUCTION GEAR CONTROLS

R	P.N.	DESCRIPTION	QTY
1	47134074	TRANSMISSION CONTROL LEVER	1
2	5127962	SPRING	1
3	5132334	SPACER	1
4	5127965	LEVER, FORK CONTROL	1
5	11059976	RETAINING RING	1
6	4984223	OIL SEAL	1
7	16043524	CAPSCREW	3
8	5125535	DOWEL	2
9	5176076	TRANSMISSION LEVER SUPPORT	1
10	14607270	PIN	2
11	14601670	PIN	2
12	5175998	TRANSMISSION CONTROL OUTER LEVER	1
13	5172876	GEAR SHIFT SHAFT	1
14	13907670	PIN	1
15	5174201	SPEED RANGE DOG	2
16	13907770	PIN	4
17	5110264	INTERLOCK PIN	1
18	20063390	BALL	2
19	4994342	SPRING	2
20	51333460	SHIFT SHAFT , TL80	1
20	51333461	GEAR SHIFT SHAFT , TL90 TL100	1
21	10152314	PLUG	1
22	51333463	LOW AND HIGH RANGE GEAR SHIFT SHAFT , TL90 TL100	1
22	51333464	GEAR SHIFT SHAFT , TL80	1
23	5125823	FORK	1
24	5125822	FORK	1
25	13604211	SPACER	1

1.32.4	1/1	06/09

DIFERENTIAL GEARS

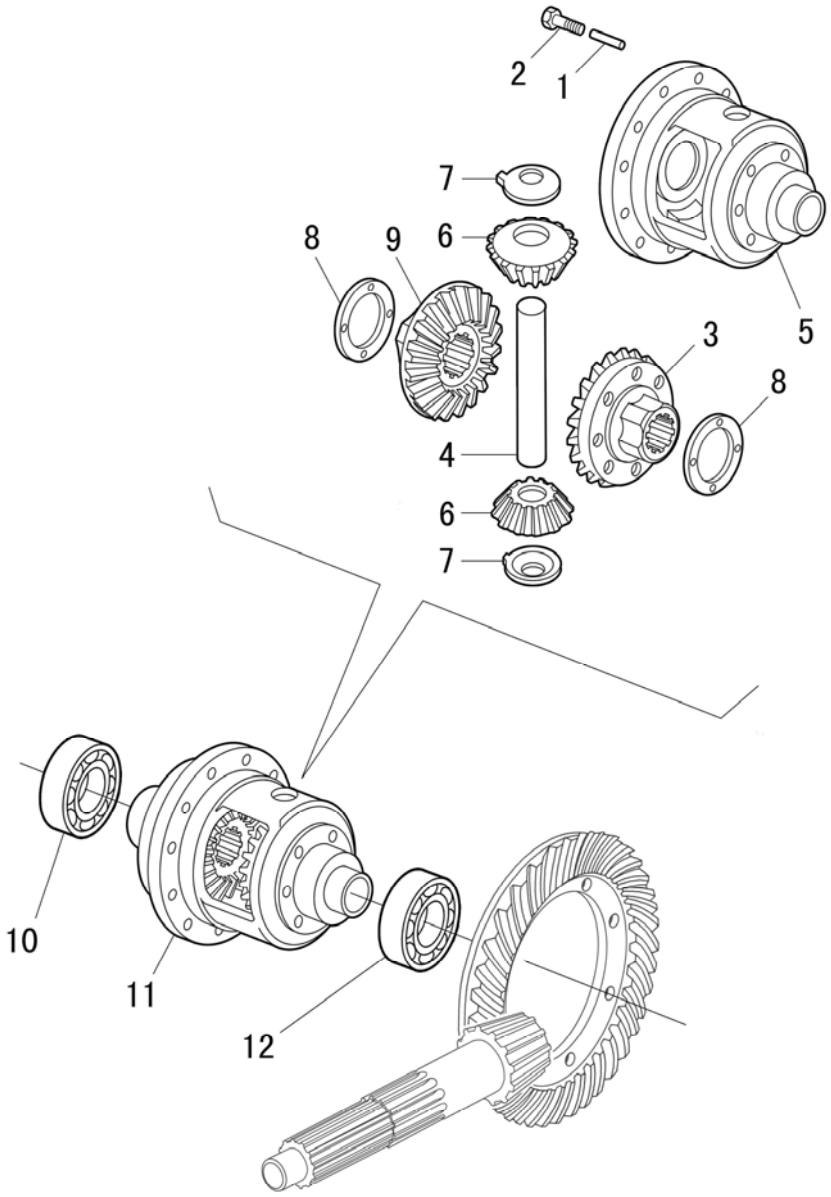

DIFERENTIAL GEARS

R	P.N.	DESCRIPTION	QTY
1	5173242	PIN	1
2	13807870	SCREW	1
3	4993576	GEAR L.H. DIFFERENTIAL	1
4	47135873	PINION SHAFT	1
5	5181266	DIFFERENTIAL CASING	1
6	4993578	PINION DIFFERENTIAL	2
7	4993654	THRUST WASHER PINION	2
8	4993653	THRUST WASHER 1,6	2
8	4993652	THRUST WASHER 1,5	0
8	5138269	THRUST WASHER 1,7	0
8	5144799	THRUST WASHER 1,4	0
8	5144800	THRUST WASHER 1,8	0
8	5168814	THRUST WASHER 1,9	0
8	5168815	THRUST WASHER 2,0	0
9	4993577	GEAR R.H.DIFFERENTIAL	1
10	24903480	BEARING	1
11	5181267	DIFFERENTIAL CASING ASSEMBLY	1
12	24903460	BEARING, ROLLER	1

1.32.6/2	1/1	06/09

FORK SHAFT & DIFFERENTIAL SLEEVE

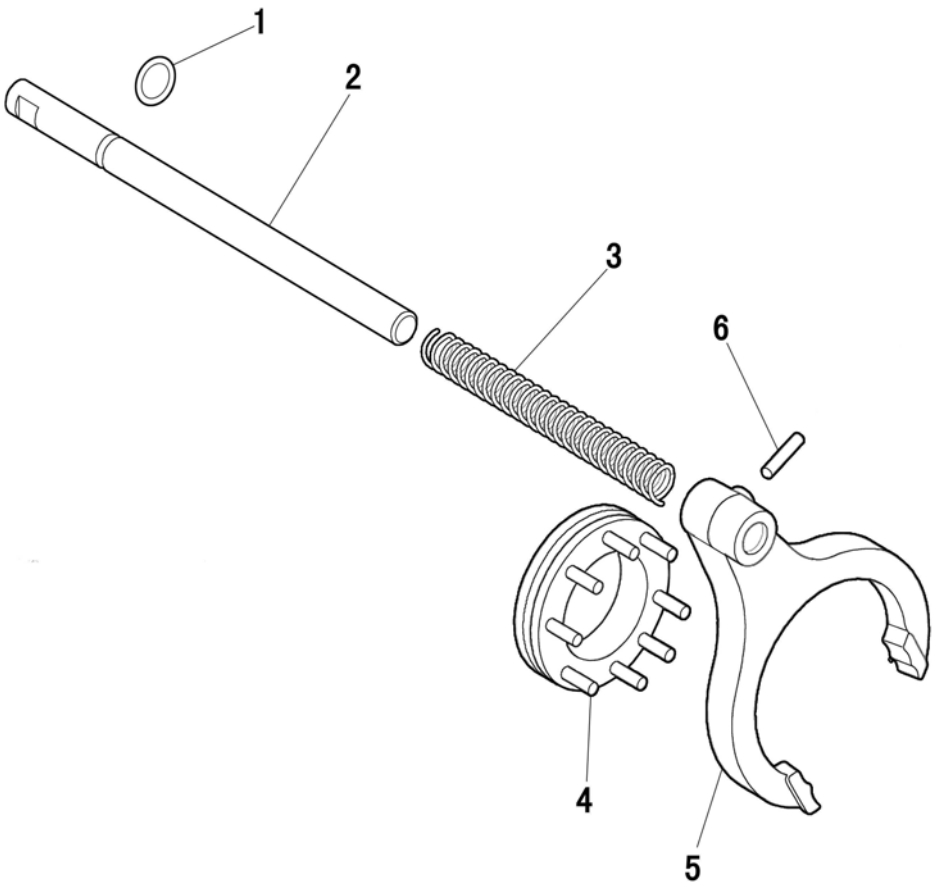

FORK SHAFT & DIFFERENTIAL SLEEVE

R	P.N.	DESCRIPTION	QTY
1	14457281	O-RING	1
2	5162895	DIFFERENTIAL SHAFT	1
3	5114581	SPRING	1
4	5181720	ACTUATING COLLAR ASSY	1
5	5181268	FORK, DIFFERENTIAL LOCK CONTROL	1
6	13910670	PIN, ROLL	1

1.33.0	1/1	06/09

CASING AND COVERS IDLER

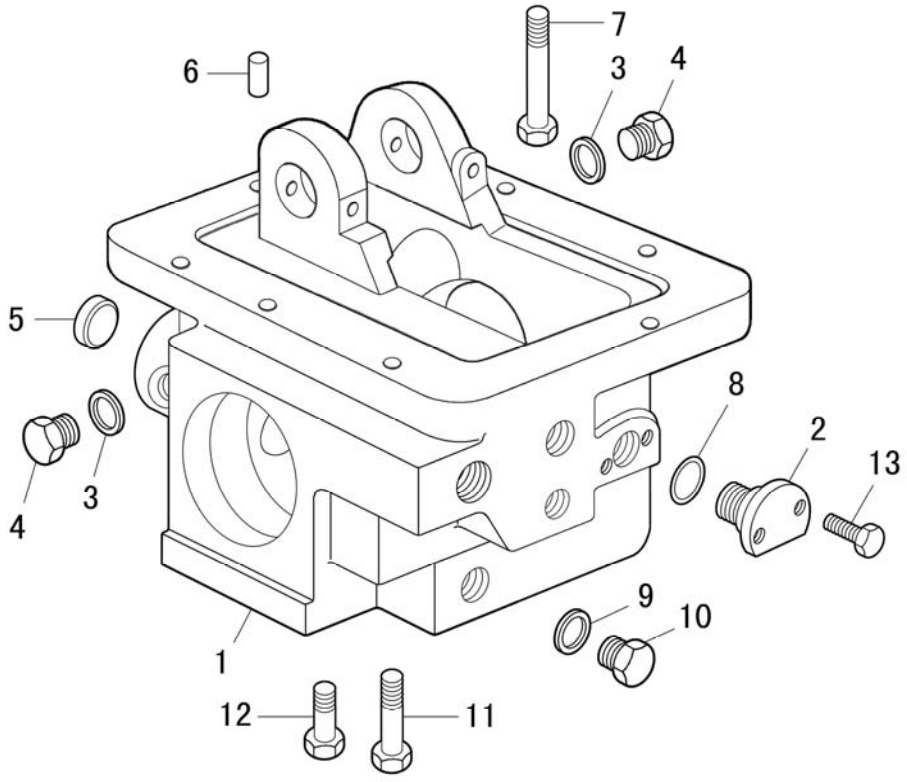

CASING AND COVERS IDLER

R	P.N.	DESCRIPTION	QTY
1	5091160	DROP BOX	1
2	5171837	PLUG	1
3	51323469	WASHER	3
6	10839810	PIN	2
7	15540921	BOLT	1
8	14453280	O-RING	1
9	51323473	WASHER	1
10	10305111	PLUG	1
11	15541721	BOLT	1
12	51323135	BOLT	4
13	51323086	BOLT	2

1.33.1	1/2	06/09

PARKING BRAKE

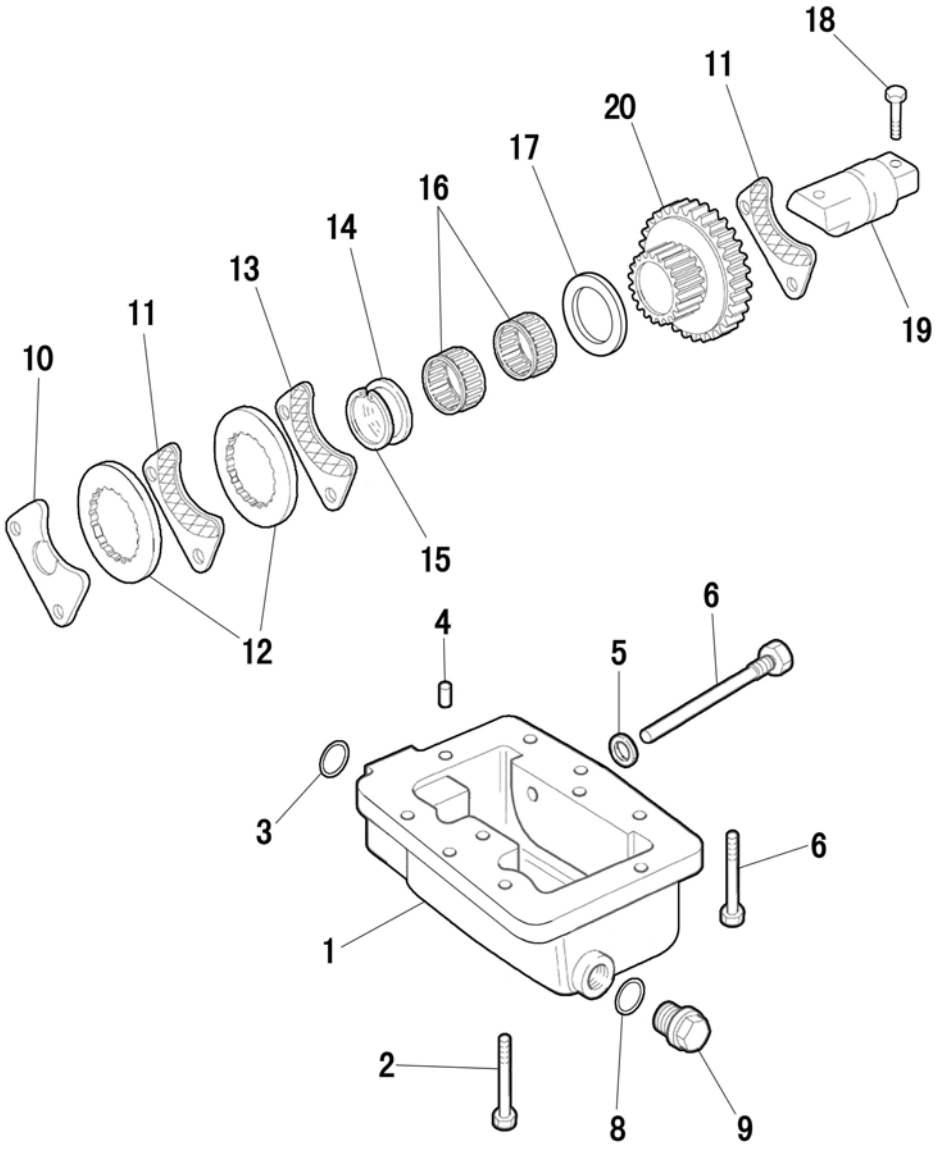

PARKING BRAKE

R	P.N.	DESCRIPTION	QTY
1	5128435	PARKING BRAKE SECTOR HOUSING	1
2	15541621	CAPSCREW	3
3	51332576	SNAP RING	1
4	10839810	PIN	2
5	10298460	SEAL	2
6	5123396	SCREW	2
7	15541121	CAPSCREW	1
7	15540521	CAPSCREW	2
8	10263460	RECTANGULAR SEAL	1
9	10305114	PLUG	1
10	5122153	PARKING BRAKE SHOE	1
11	5118095	PARKING BRAKE SECTOR	2
12	5118101	PARKING BRAKE DISC	3
13	5118100	PARKING BRAKE INNER SECTOR	3
14	11068076	RETAINING RING	1
15	5122915	SNAP RING	1
16	5122914	BEARING NEEDLE	2
17	5123395	NEEDLE SPACER	1
18	14233734	CAPSCREW, SELF-LOCKING	2
19	5128437	PARKING BRAKE DRIVEN GEAR SHAFT	1
20	51332208	4WD SHAFT DRIVEN GEAR	1

TRANSMISSION GEARS

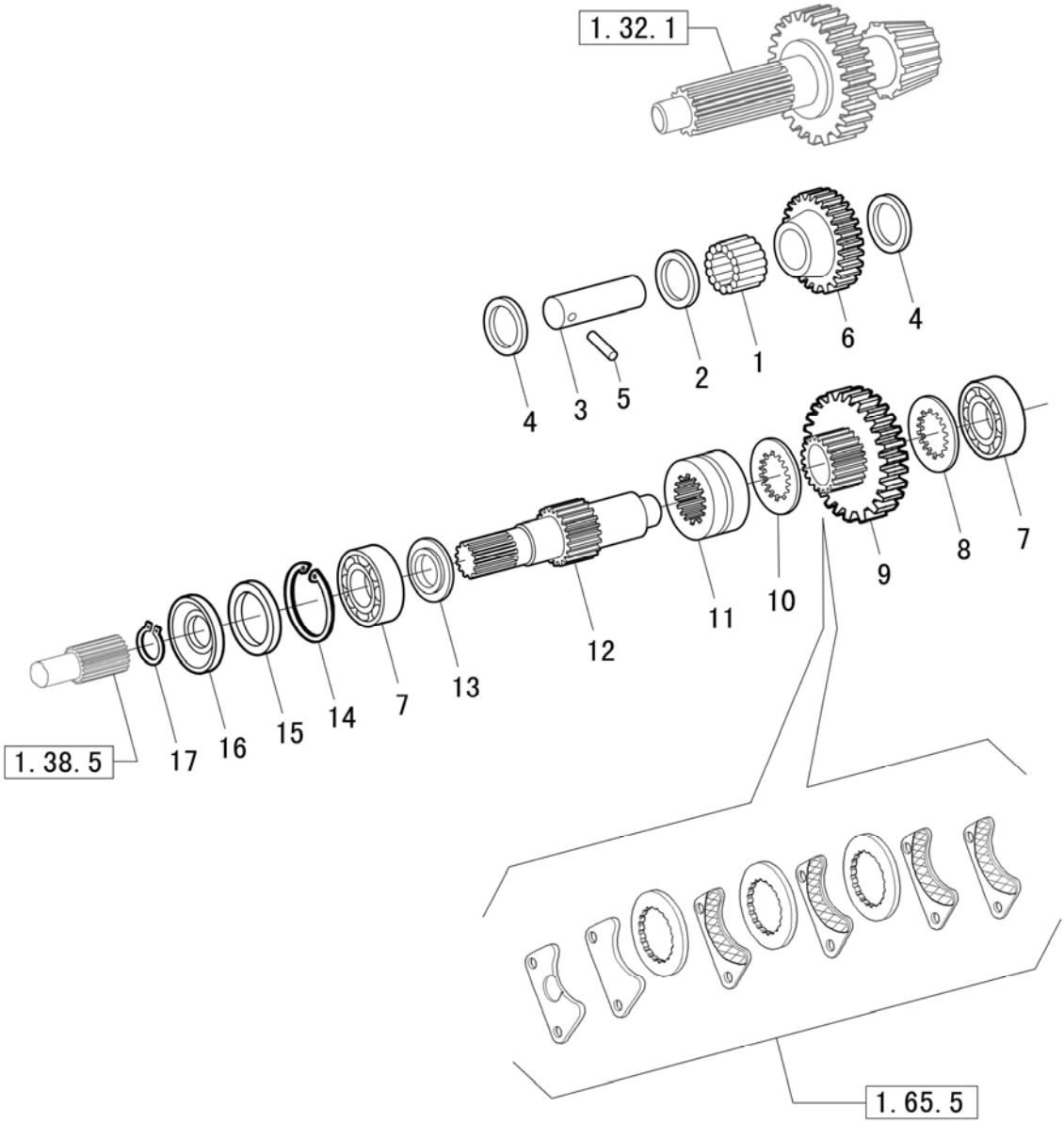

TRANSMISSION GEARS

R	P.N.	DESCRIPTION	QTY
1	5115937	BEARING ROLLER	15
2	5123389	SPACER, BEARING, P.T.O.RELAY GEAR	1
3	5123387	PIN, P.T.O.RELAY GEAR	1
4	51335406	WASHER THRUST, RELAY GEAR	2
5	13943070	ROLL PIN	1
6	5125011	RELAY GEAR, P.T.O.SHAFT	1
7	23111990	BEARING, BALL	2
8	5121807	WASHER, THRUST, PTO BEAR.DRIVEN SHAFT	1
9	51332208	4WD SHAFT DRIVEN GEAR	1
10	5124122	WASHER THRUST, DRIVEN GEAR, PTO SHAFT	1
11	5123388	SLIDING SLEEVE, P.T.O. ENGAGEMENT	1
12	5123391	P.T.O.CONTROL SHAFT	1
13	584132	SNAP RING, BEARING	1
14	11061576	RETAINING RIN	1
15	5119206	OIL SEAL	1
16	5109919	DISK	1
17	11067776	RETAINING RING	1

1.33.2	1/1	06/09

TRANSMISSSION GEARS, IDLER CONTROLS

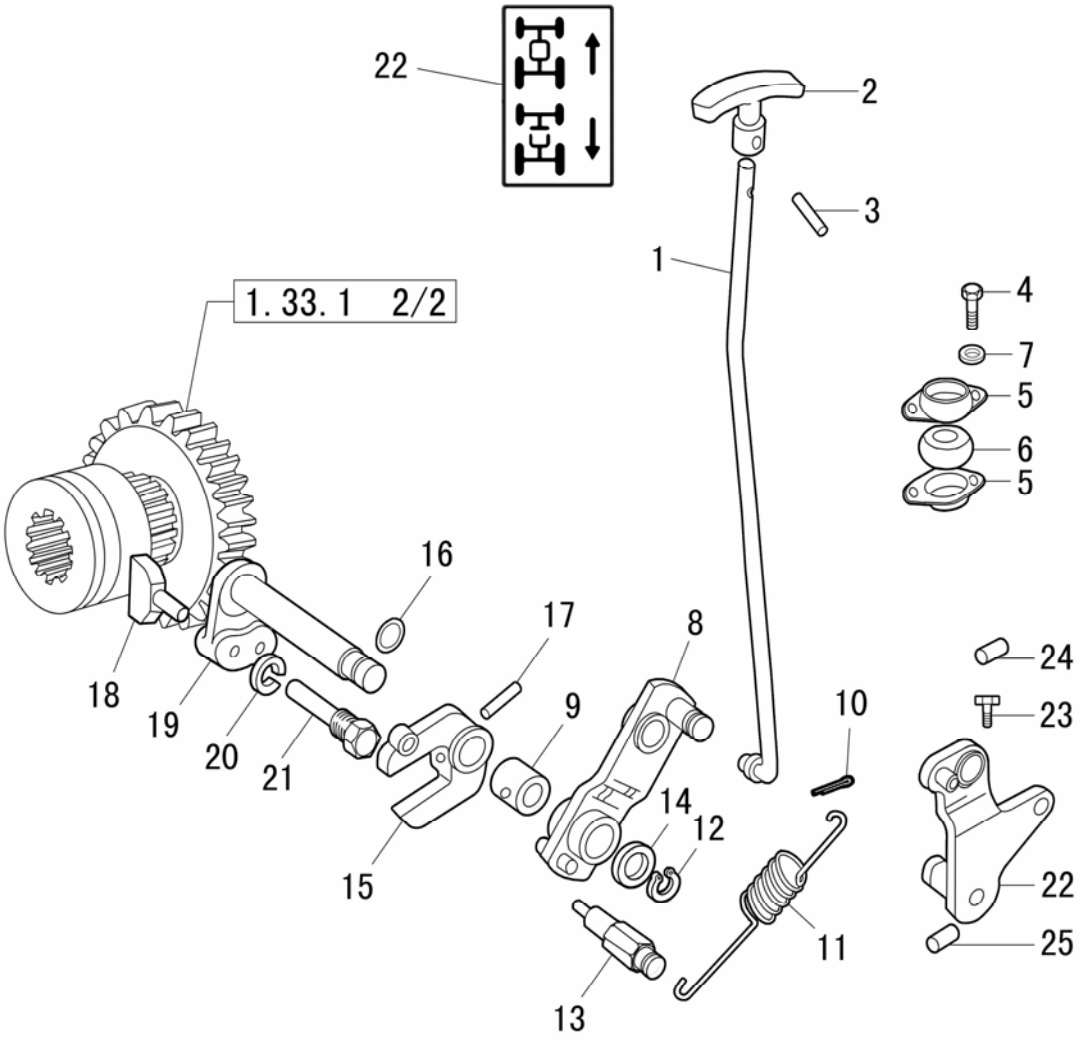

TRANSMISSSION GEARS, IDLER CONTROLS

R	P.N.	DESCRIPTION	QTY
1	51331793	DT LEVER COMPL.	1
2	5112229	HANDGRIP LEVER	1
3	51323276	PIN	1
4	13276114	CAPSCREW	2
5	5156494	SEAT,SPHERICAL BUSHING	2
6	5109058	BUSHING	1
7	51323378	WASHER	2
8	5129028	CONNECTING ROD	1
9	5129030	BUSHING,PIN,RELAY LEVER	1
10	10734401	PIN, COTTER	1
11	5129033	SPRING	1
12	51323314	SNAP RING	1
13	5129031	SCREW,SPRING	1
14	5129024	WASHER D=14X25X2	1
15	5129032	FORK,P.T.O.CONTROL	1
16	559983	SEAL O-RING	1
17	13940470	ROLL PIN	1
18	5095899	PAD, PTO CONTROL RELAY LEVER	1
19	5157597	INNER RELAY LEVER,P.T.O.CONTROL	1
20	10280060	SEAL,RECTANGULAR	1
21	5129023	SCREW STOP,RELAY LEVER	1
22	51333845	2WD / 4WD STICK	1

1.34.2	1/1	06/09

REVERSER CONTROL, LEVERS AND TIE-RODS

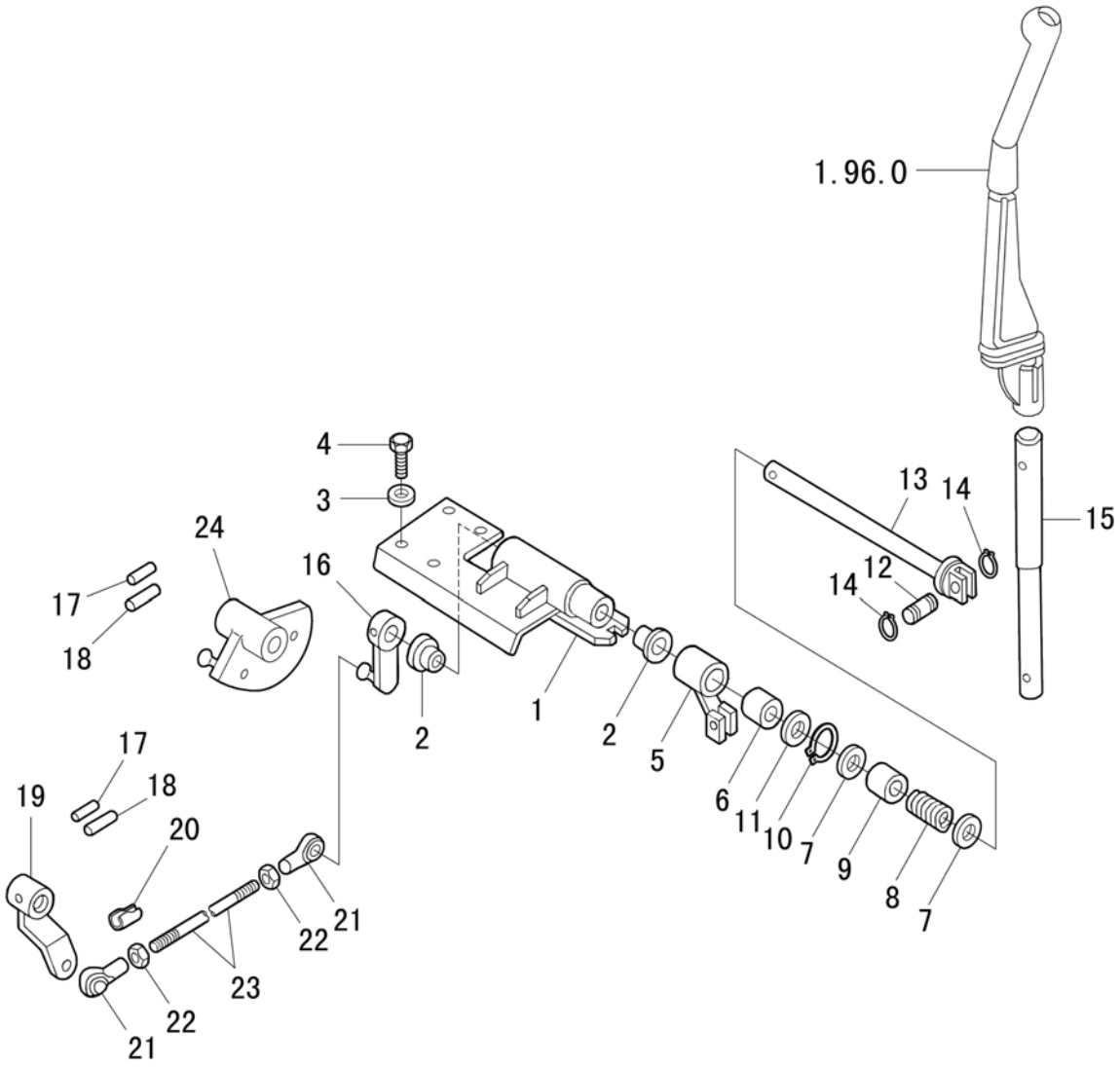

REVERSER CONTROL, LEVERS AND TIE-RODS

R	P.N.	DESCRIPTION	QTY
1	5173762	BUSHINGS	1
2	5188075	BUSHING PEDAL	2
3	51323379	SPRING WASHER 8	4
4	51323095	BOLT	4
5	5173579	COMPLETE SUPPORT	1
6	44907939	BUSHING	1
7	5171256	SPACER	2
8	585488	SPRING	1
9	5171257	SPACER FOR SPRING	1
10	51331994	SNAP RING	1
11	44907953	SPACER	1
12	5171255	PIN	2
13	5173727	SHAFT DRIVE GEAR	1
14	51323312	RETAINING RING	4
15	5173725	LEVER	1
16	5171309	LEVER CONTROL	1
17	51331993	ROLLER PIN	2
18	51331992	PIN	2
19	5174555	REVERSE CONTROL LEVER	1
20	10125674	CLAMP	2
21	10124611	HEAD,SPHERIC JOINT	2
22	51331995	NUT	2
23	5166698	PULL ROD	1
24	87342313	12X12 EXTERNAL LEVER ASSY	1

1.38.5	1/2	06/09

PROPELLER SHAFT - 4WD

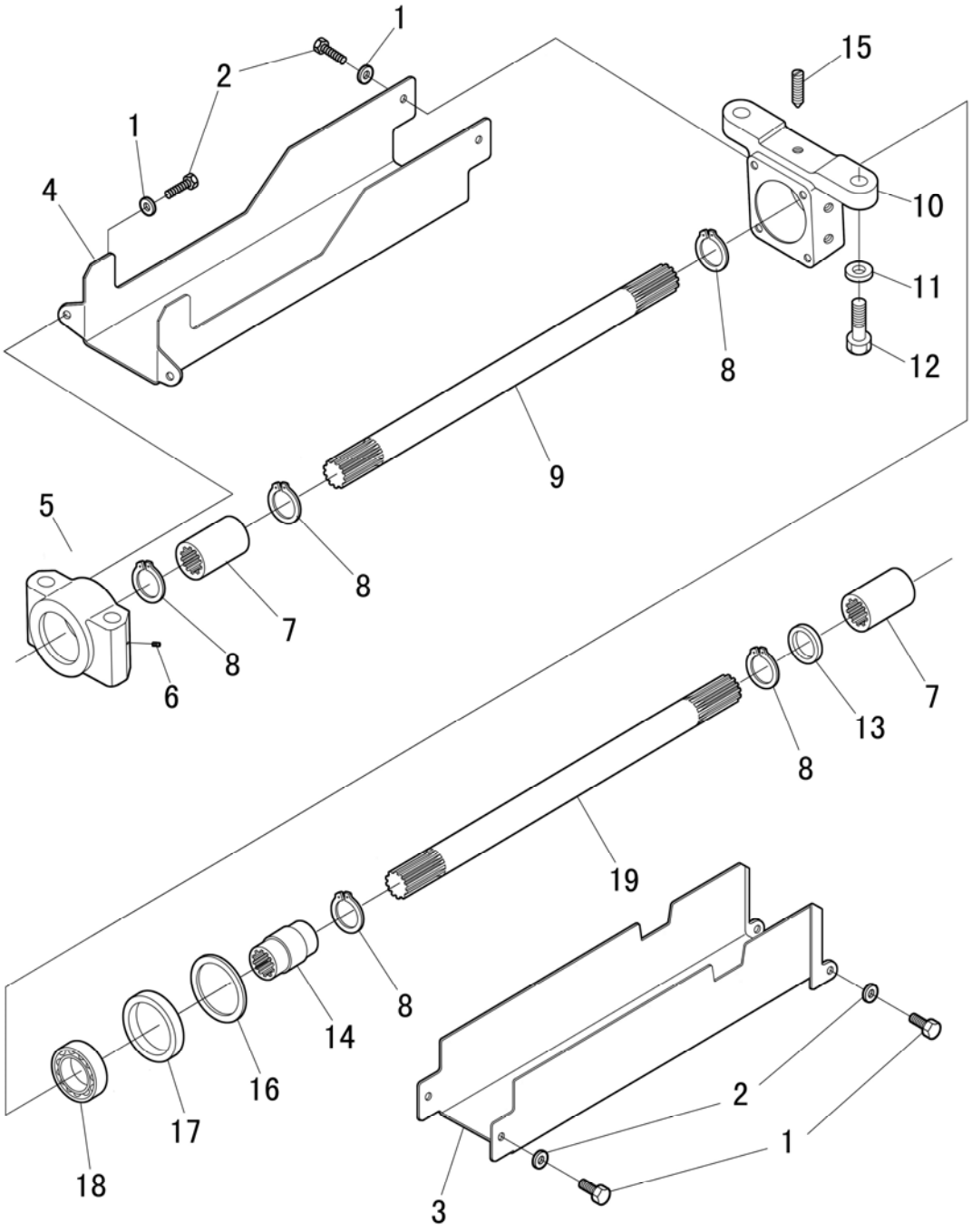

PROPELLER SHAFT - 4WD

R	P.N.	DESCRIPTION	QTY
1	11197874	LOCKWASHER	8
2	16043124	BOLT	8
3	51331435	REAR PROTECTION COVER	1
4	51331434	FRONT PROTECTION COVER	1
5	51332177	FRONT SUPPORT FRAME	1
6	51332175	NOZZLE	1
7	4997313	SLEEVE, TRANSMISSION SHAFT	2
8	11067776	RETAINING RING	5
9	51331303	FRONT TRANSMISSSION SHAFT	1
10	51331302	MIDDLE SUPPORT	1
11	11197974	CONICAL SPRING WASHER	2
12	15540524	CAPSCREW, HEX.	2
13	4997301	SHIM, 2,2	1
13	4997302	SHIM 2,5 MM	AR
13	4997303	SHIM 2,8 MM	AR
13	4997304	SHIM 3,0 MM	AR
13	4997305	SHIM 3,3 MM	AR
13	4997306	SHIM 3,7 MM	AR
13	4997307	SHIM 4,0 MM	AR
13	4997308	SHIM 4,3 MM	AR
13	5158051	SHIM 1,5 MM	AR
13	5158052	SHIM 1,9 MM	AR

PROPELLER SHAFT - 4WD

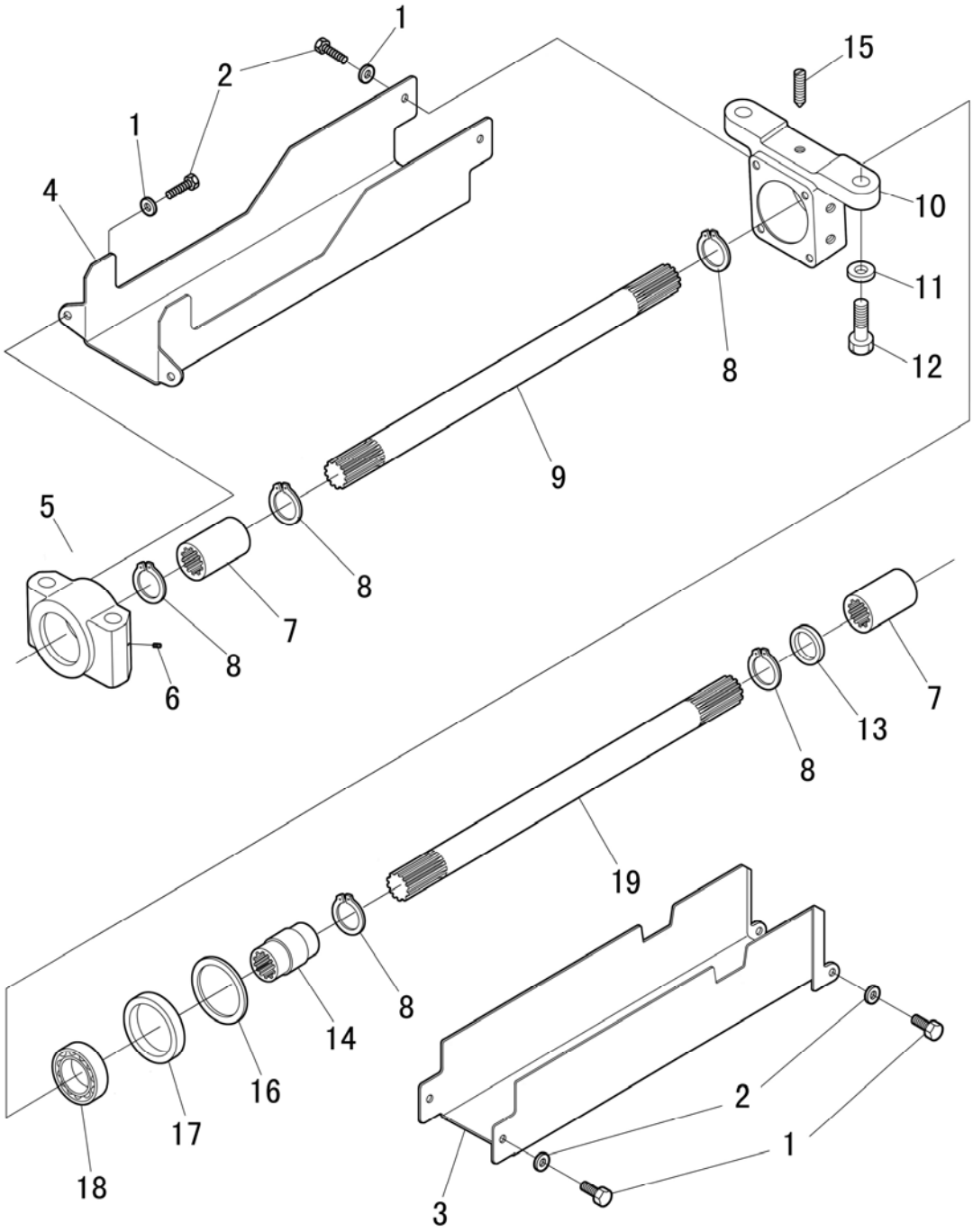

PROPELLER SHAFT - 4WD

R	P.N.	DESCRIPTION	QTY
14	51331301	CONNECTING SLEEVE	1
15	51337221	SCREW	1
16	51337206	SPACER	1
17	51322836	BEARING WASHER	1
18	51322978	BEARING	1
19	51331304	REAR TRANSMISSION SHAFT	1

1.38.5/1	1/2	06/09

PROPELLER SHAFT - 4WD

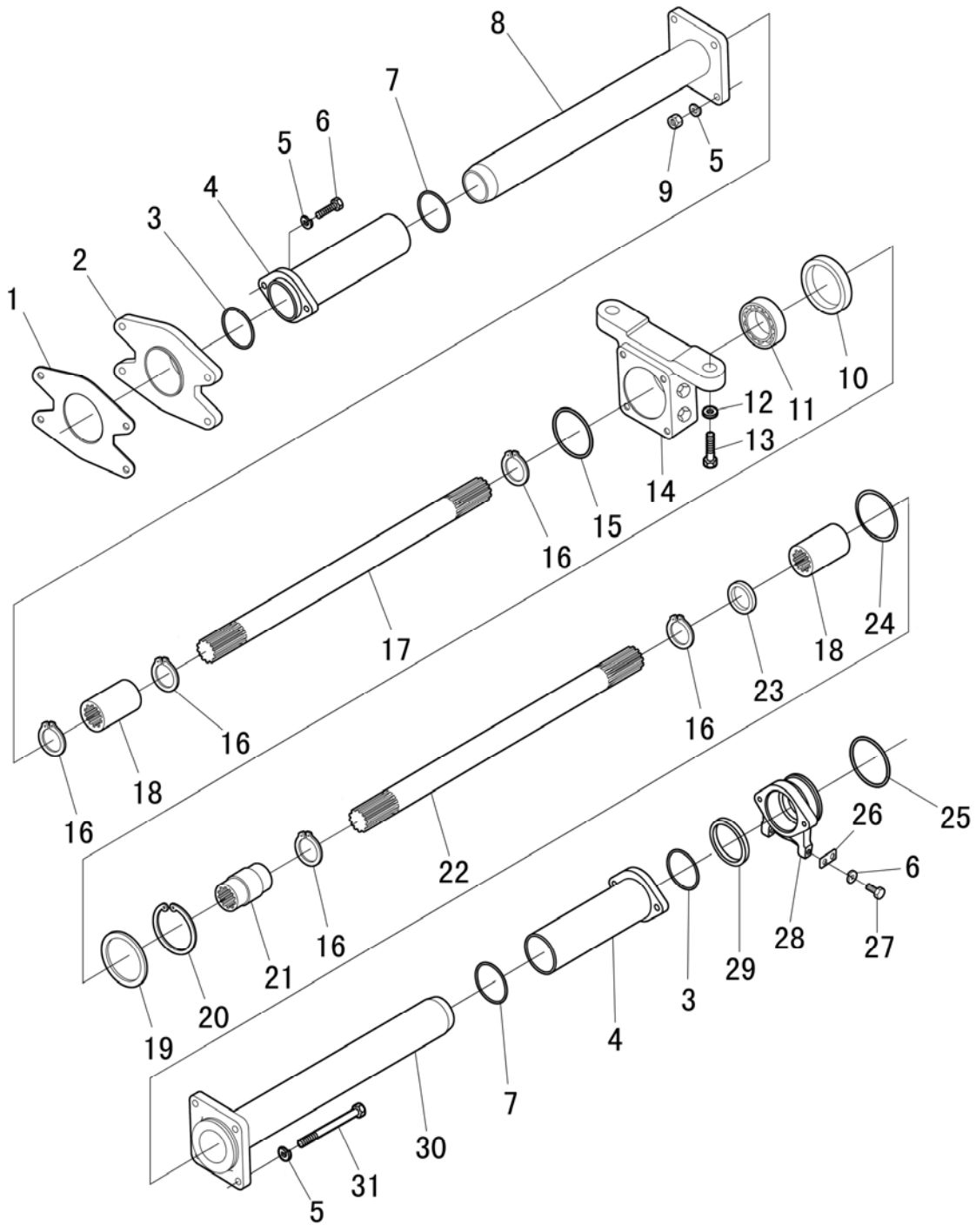

PROPELLER SHAFT - 4WD

R	P.N.	DESCRIPTION	QTY
1	51331777	REAR CAP GASKET	1
2	51331778	REAR CAP	1
3	51331839	O RING	2
4	51331779	EXTERNAL SHIELD ASSY	2
5	51323379	SPRING WASHER 8	16
6	51323096	BOLT	8
7	51322930	O-RING	2
8	51331484	INNER SHIELD ASSY (I)	1
9	51323143	NUT	4
10	51322836	BEARING SLEEVE	1
11	51322978	BEARING	1
12	11197974	CONICAL SPRING WASHER	2
13	15540524	CAPSCREW	2
14	51331483	MIDDLE SUPPORT	1
15	51322938	O-RING	1
16	11067776	RETAINING RING	4
17	51331303	FRONT TRANSMISSSION SHAFT	1
18	4997313	SLEEVE, TRANSMISSION SHAFT	2
19	51322837	SPACER	1
20	51323307	RETAINING RING	1
21	51331301	CONNECTING SLEEVE	1
22	51331304	REAR TRANSMISSION SHAFT	1

PROPELLER SHAFT - 4WD

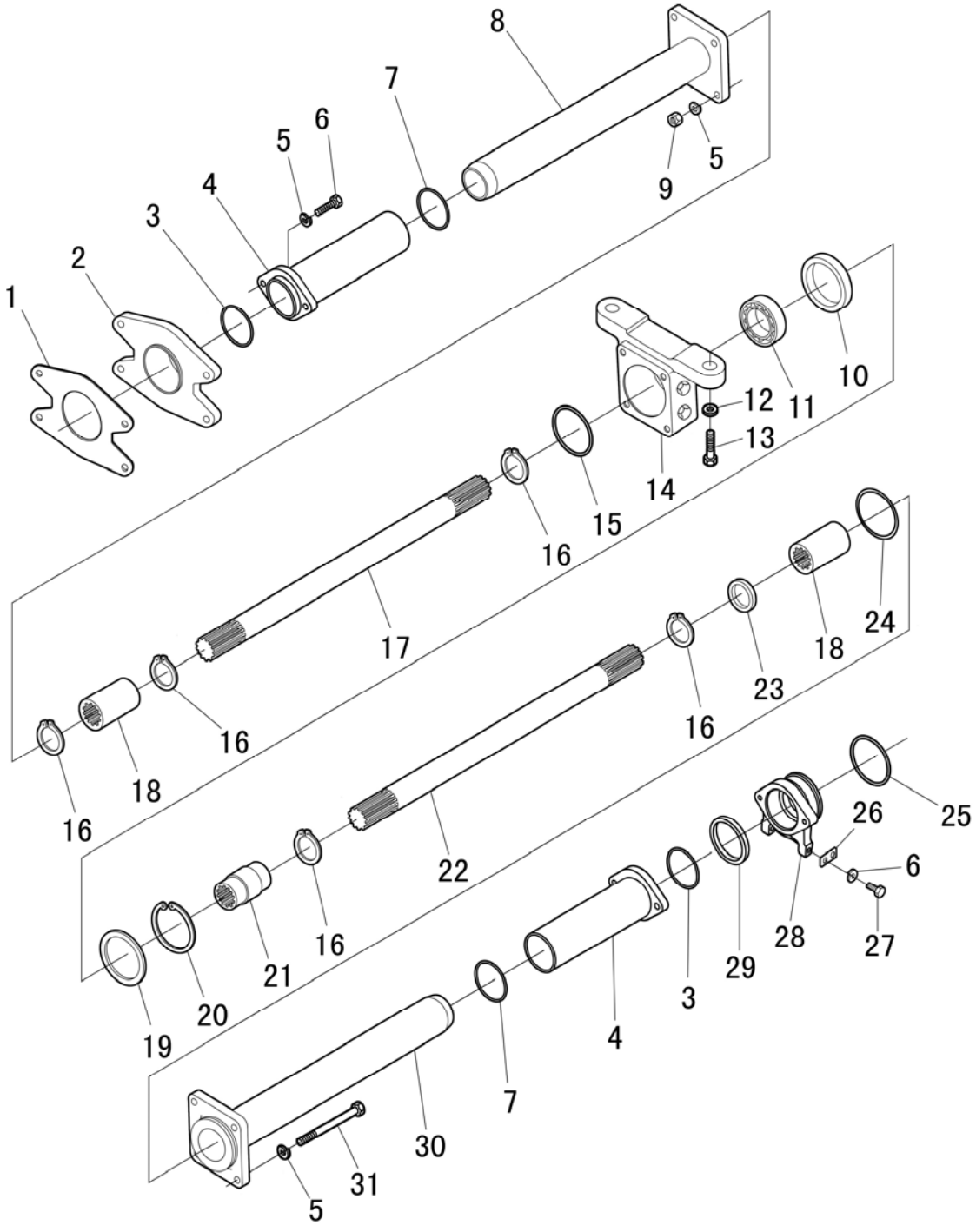

PROPELLER SHAFT - 4WD

R	P.N.	DESCRIPTION	QTY
23	4997301	SHIM, 2,2	1
23	4997302	SHIM 2,5 MM	0
23	4997303	SHIM 2,8 MM	0
23	4997304	SHIM 3,0 MM	0
23	4997305	SHIM 3,3 MM	0
23	4997306	SHIM 3,7 MM	0
23	4997307	SHIM 4,0 MM	0
23	4997308	SHIM 4,3 MM	0
23	5158051	SHIM 1,5 MM	0
23	5158052	SHIM 1,9 MM	0
24	51331840	O RING	1
25	51331841	O RING	1
26	51331776	CONNECTING PLATE	2
27	51323094	BOLT	2
28	51331775	SEAL SEAT	1
29	51331843	SEAL	1
30	51331485	INNER SHIELD ASSY (II)	1
31	51331842	BOLT	4

FRONT AXLE

SEC. 4

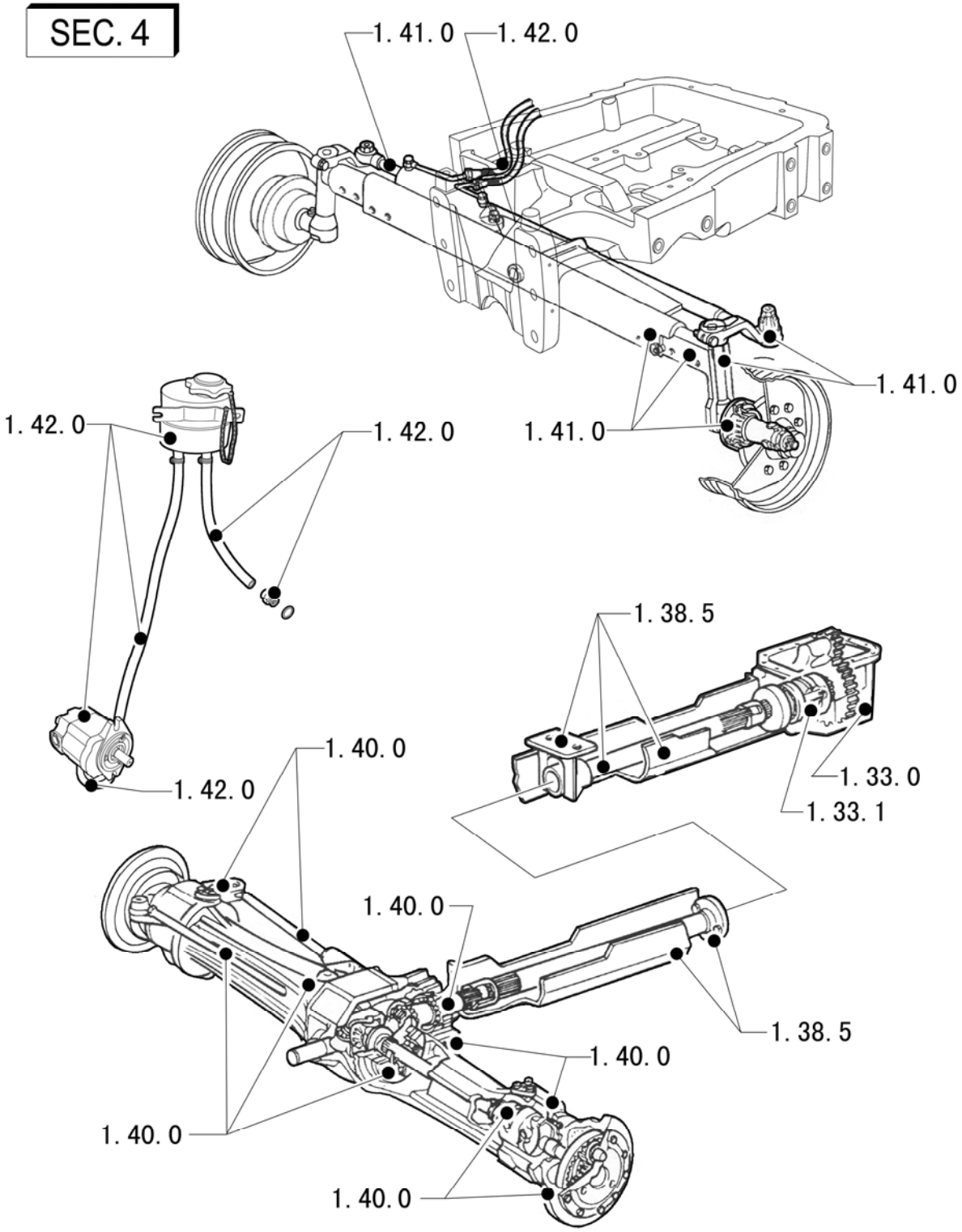

FRONT AXLE CASING - 4WD

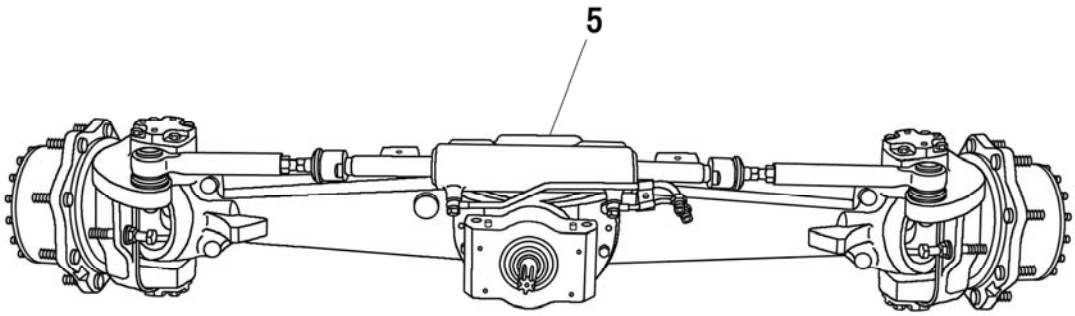

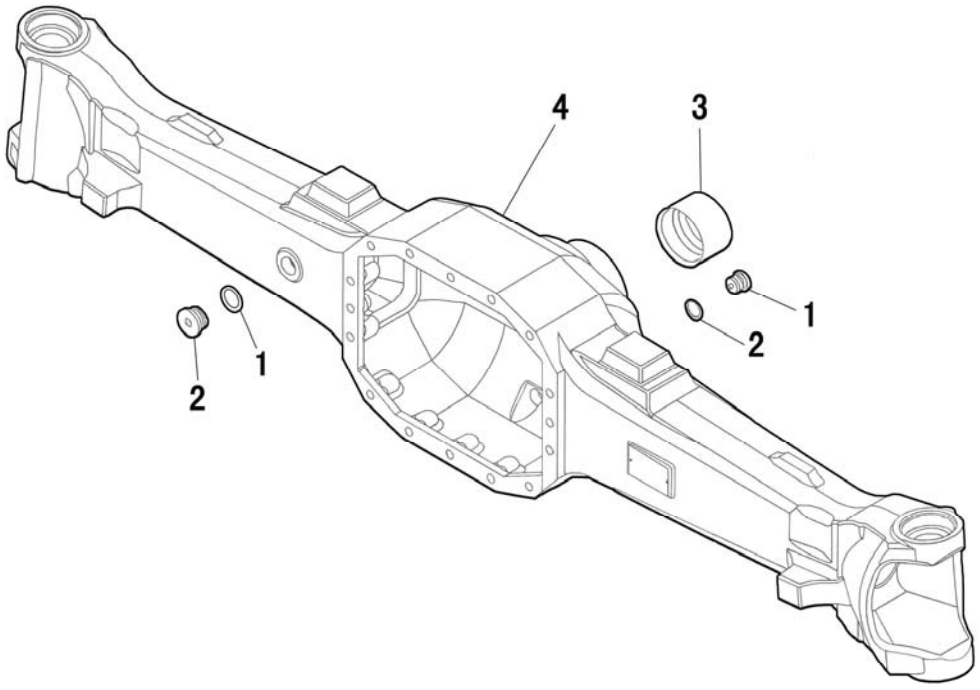

FRONT AXLE CASING - 4WD

R	P.N.	DESCRIPTION	QTY
1	51332067	PLUG SEAL RING	1
2	51332068	PLUG	1
3	51332069	BUSHING	1
4	51332070	STEERING AXLE HOUSING	1
5	51330557	FRONT AXLE ASSY.	1
5	51333527	SLIP-LIMITED FRONT AXLE ASSY.	1
5	51336380	FRONT AXLE ASSY	1

1.40.0/1	1/2	06/09

FRONT AXLE - BEVEL GEAR/ PINION SET - 4WD

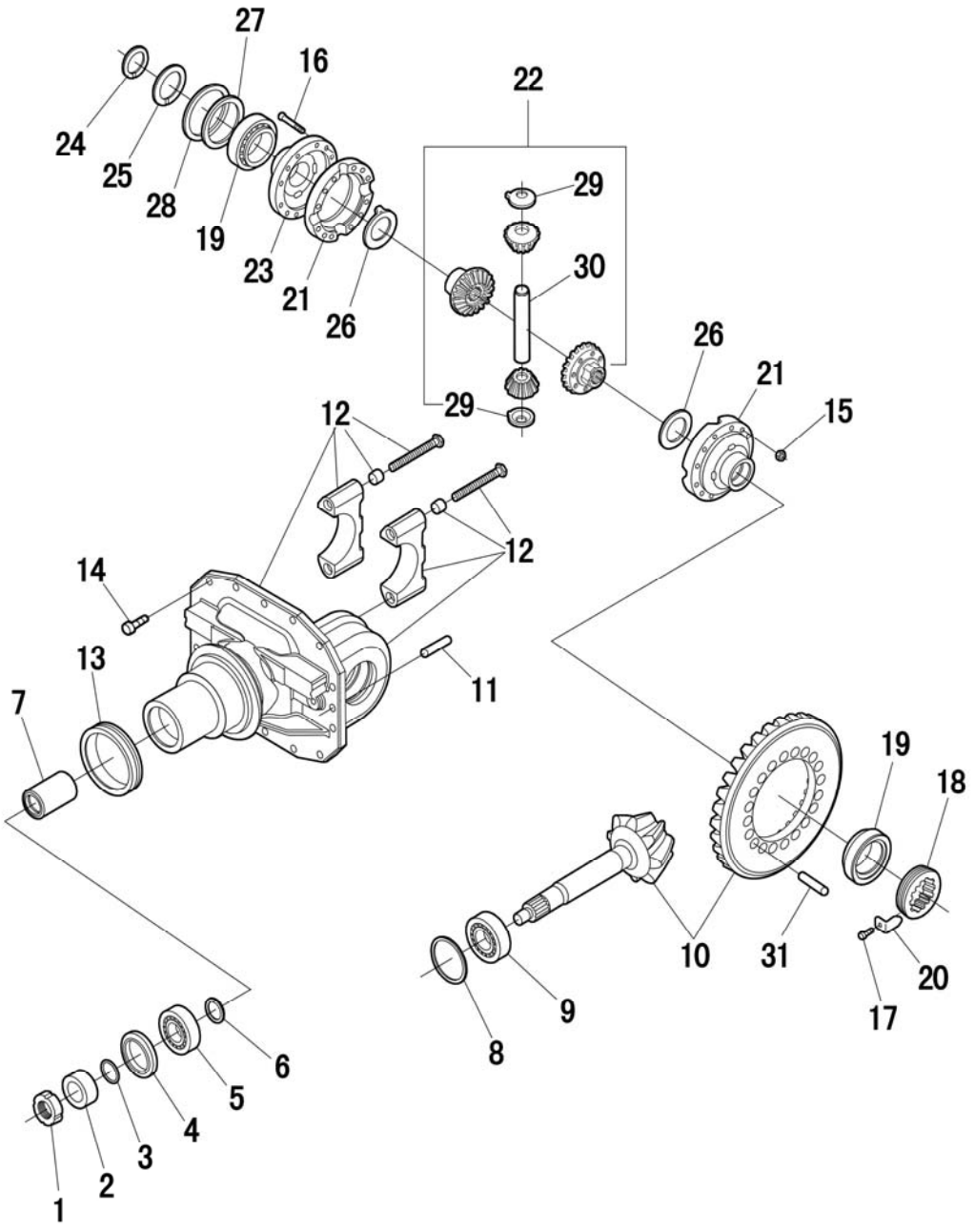

FRONT AXLE - BEVEL GEAR/ PINION SET - 4WD

R	P.N.	DESCRIPTION	QTY
1	51332071	NUT	1
2	51332072	SPACER	1
3	51332073	O-RING	1
4	51332074	SEAL	1
5	51332075	BEARING	1
6	51332076	SHIM	1
6	51332077	SHIM	AR
6	51332078	SHIM	AR
6	51332079	SHIM	AR
6	51332080	SHIM	AR
6	51332081	SHIM	AR
7	51332082	SHIM	AR
8	51332083	SHIM	AR
8	51332084	SHIM	AR
8	51332085	SHIM	AR
8	51332086	SHIM	AR
8	51332087	SHIM	AR
8	51332088	SHIM	AR
9	51332089	BEARING	1
10	51332090	BEVEL GEAR SET	1
11	51332091	DOWEL	2
12	51332092	SUPPORT	1
13	51332093	FLANGE	1
14	51332094	BOLT	12
15	51332095	NUT	12

FRONT AXLE - BEVEL GEAR/ PINION SET - 4WD

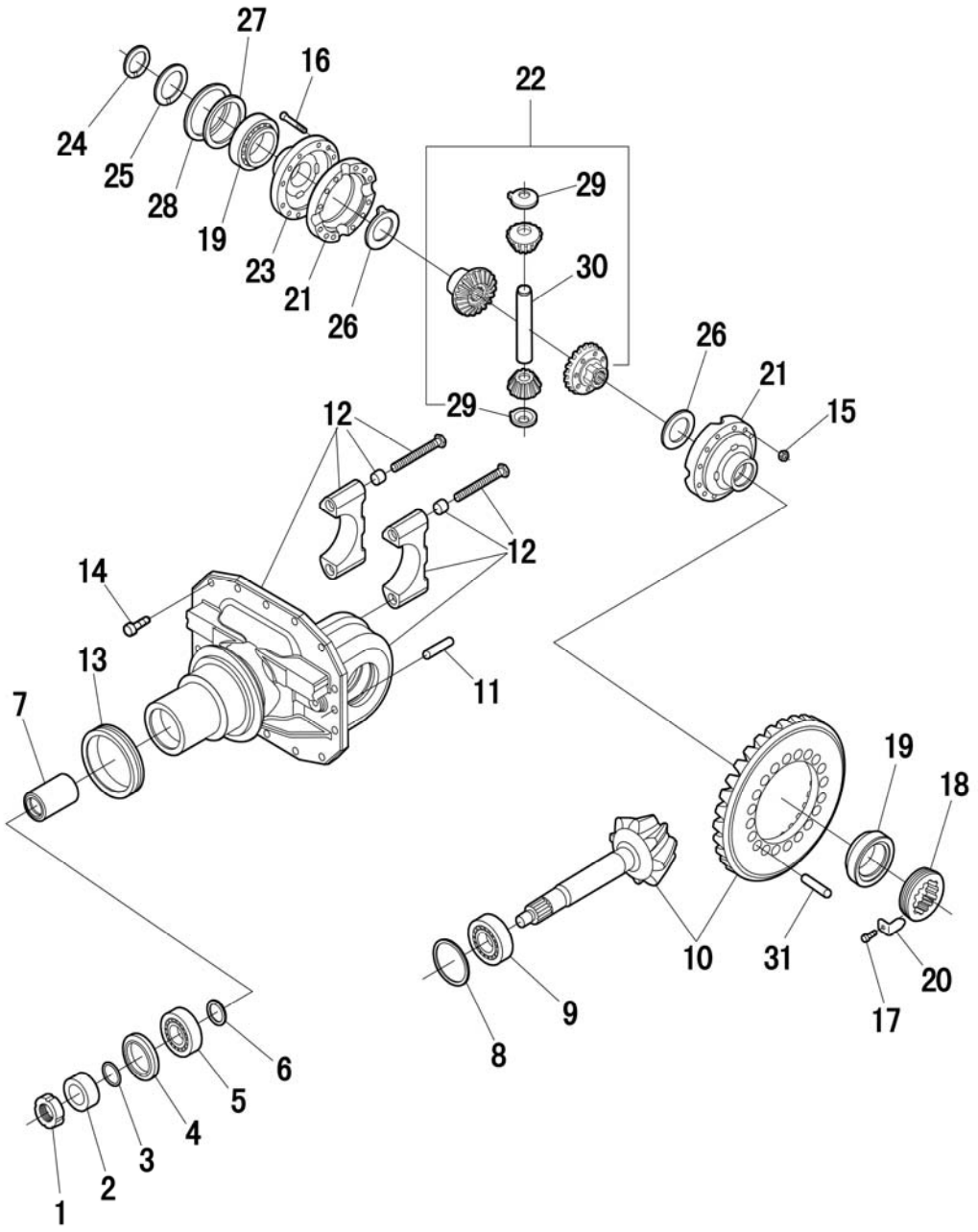

FRONT AXLE - BEVEL GEAR/ PINION SET - 4WD

R	P.N.	DESCRIPTION	QTY
16	51332096	NUT	12
17	51332097	BOLT	1
18	51332098	RING NUT	1
19	51332099	BEARING	2
20	51332100	SHEET	1
21	51332101	DIFFERENTIAL CARRIER	1
22	51332102	DIFFERENTIAL KIT	1
23	51332103	RIGHT-SIDE CASING	1
26	51332104	FRICTION WASHER	2
27	51332105	SHIM	1
27	51332106	SHIM	AR
27	51332107	SHIM	AR
27	51332108	SHIM	AR
27	51332109	SHIM	AR
27	51332110	SHIM	AR
28	51332111	SPACER	1
29	51332112	FRICTION WASHER	2
30	51332113	DIFFERENTIAL SHAFT	1
31	51332114	DOWEL	2

NOTE:Parts 24, 25 not applicable to the subject models.

1.40.0/5	1/1	06/09

FRONT AXLE - SUPPORT - 4WD

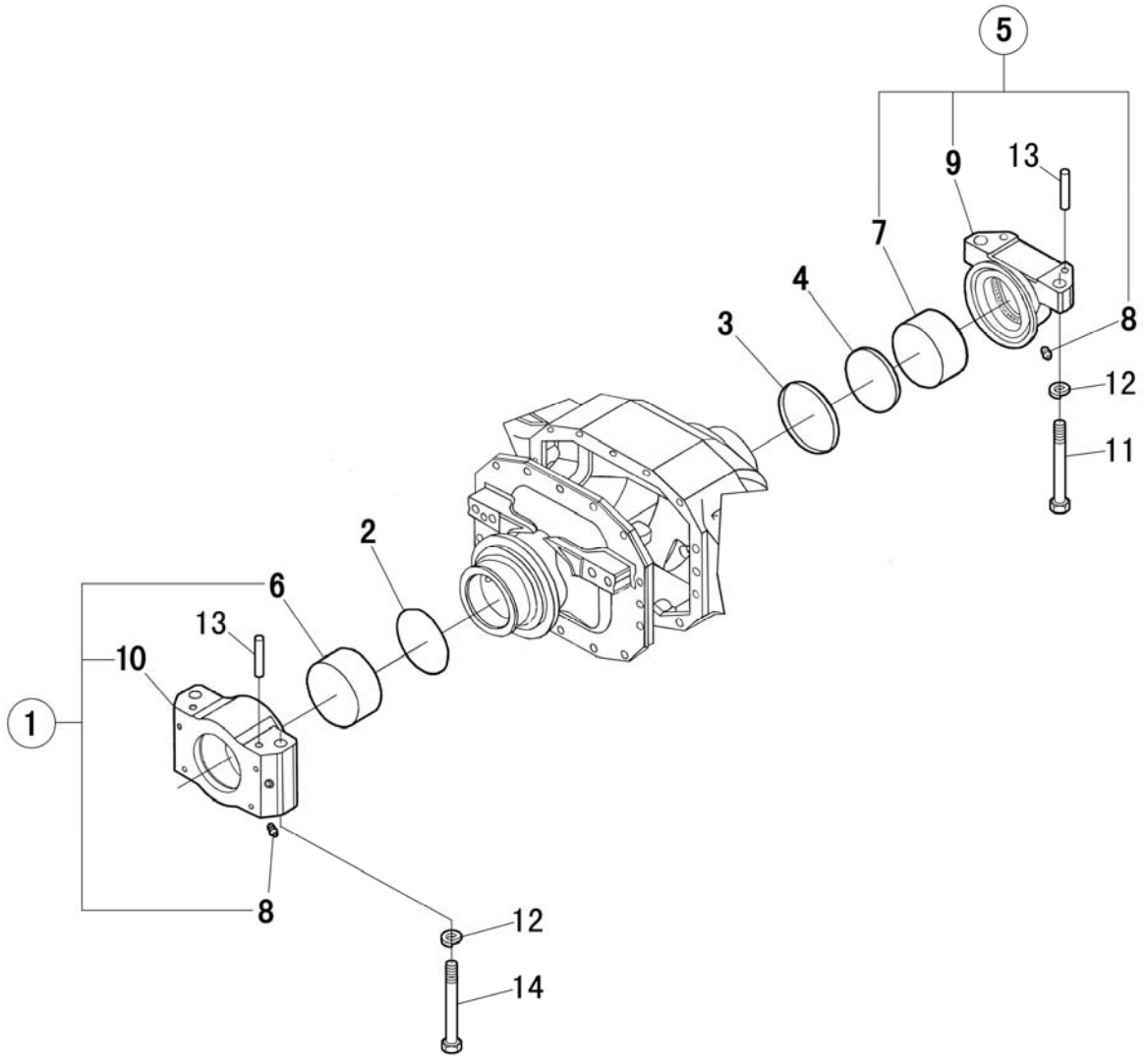

FRONT AXLE - SUPPORT - 4WD

R	P.N.	DESCRIPTION	QTY
*1	51332168	SUPPROT KIT	1
2	51332169	O-RING	1
3	51332170	V-RING	1
4	51332171	SEALING BUSHING	1
*5	51332172	SUPPROT KIT	1
6	51332173	THRUST BUSHING	1
7	51332174	THRUST BUSHING	1
8	51332175	GREASE FITTING	2
9	51332176	SUPPORT, REAR	1
10	51332177	SUPPORT, FRONT	1
11	14272034	SELF-LOCKING CAPSCREW	2
12	11191674	TAPER LOCKWASHER	4
13	10837710	PIN	4
14	14272934	BOLT	2

NOTE: Part 1 includes parts 6, 8 and 10. Part 5 includes parts 7, 8 and 9.

1.40.0/6A	1/2	06/09

FRONT AXLE - BEVEL GEAR/ PINION SET - 4WD

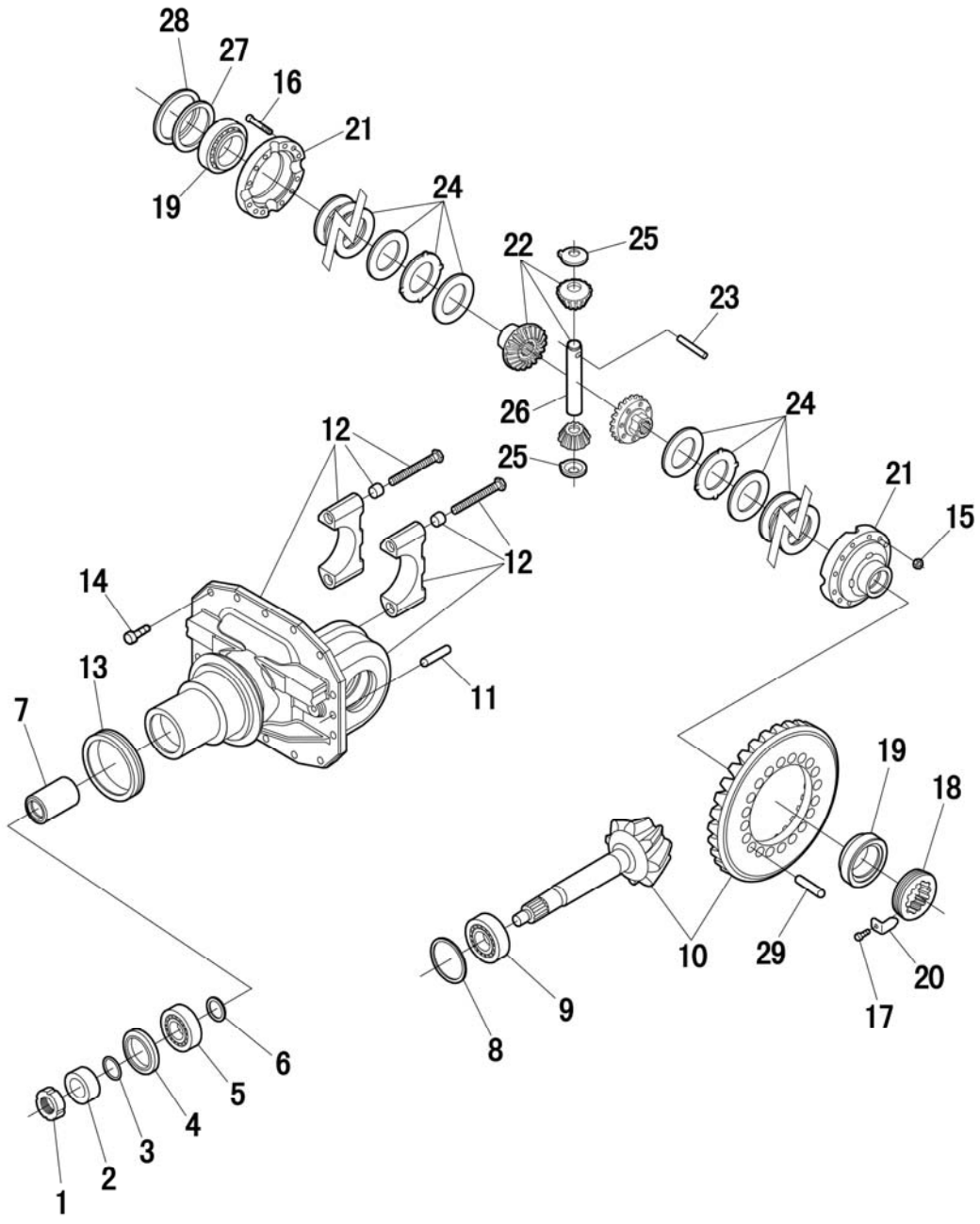

FRONT AXLE - BEVEL GEAR/ PINION SET - 4WD

R	P.N.	DESCRIPTION	QTY
1	51332071	NUT	1
2	51332072	SPACER	1
3	51332073	O-RING	1
4	51332074	SEAL	1
5	51332075	BEARING	1
6	51332076	SHIM	1
6	51332077	SHIM	AR
6	51332078	SHIM	AR
6	51332079	SHIM	AR
6	51332080	SHIM	AR
6	51332081	SHIM	AR
7	51332082	SPACER	AR
8	51332083	SHIM	AR
8	51332084	SHIM	AR
8	51332085	SHIM	AR
8	51332086	SHIM	AR
8	51332087	SHIM	AR
8	51332088	SHIM	AR
9	51332089	BEARING	1
10	51332090	BEVEL GEAR SET	1
11	51332091	DOWEL	2
12	51337036	SUPPORT	1
13	51332093	FLANGE	1
14	51332094	BOLT	12
15	51332095	NUT	12

SLIP-LIMITED FRONT AXLE - BEVEL GEAR/ PINION SET - 4WD

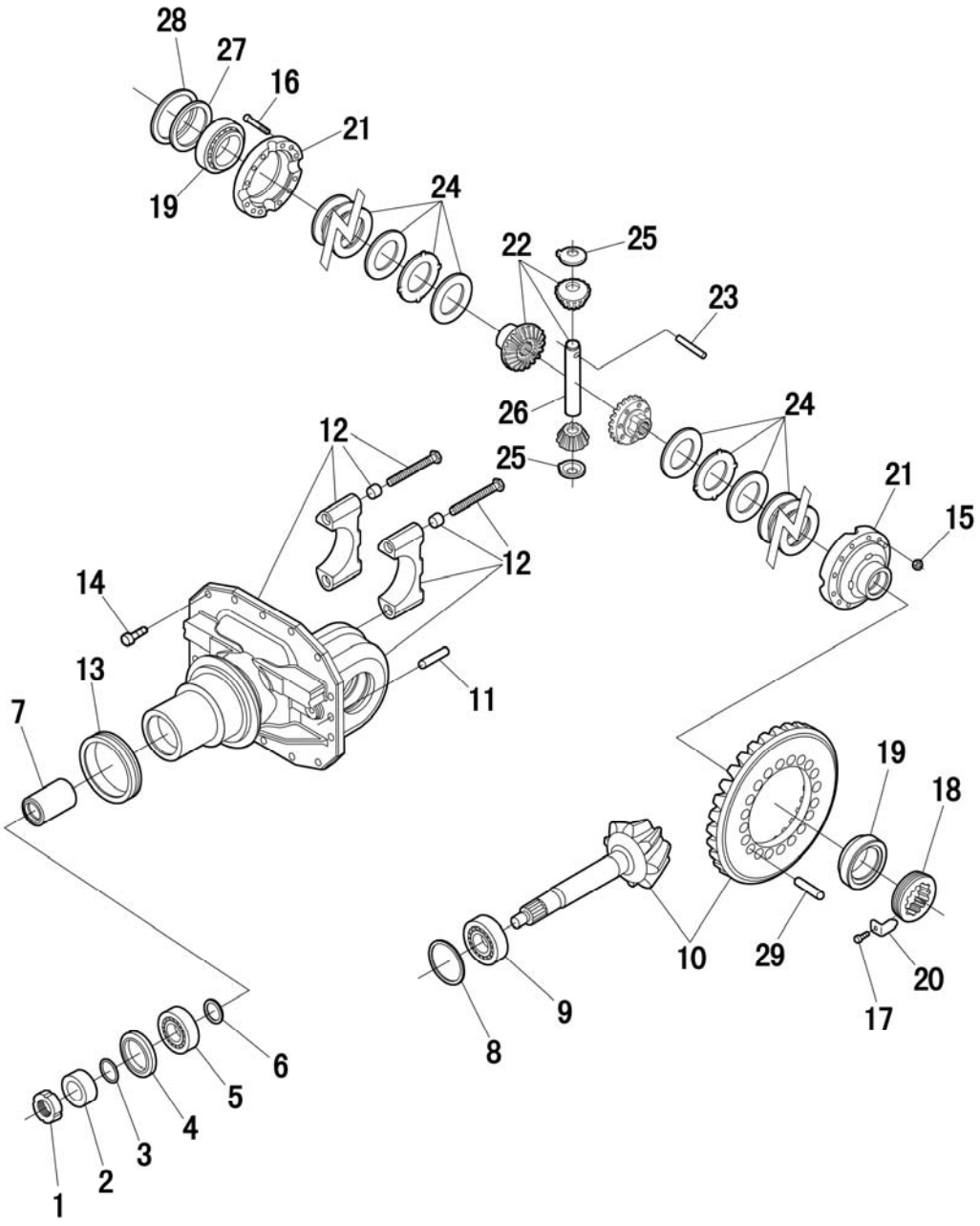

SLIP-LIMITED FRONT AXLE - BEVEL GEAR/ PINION SET - 4WD

R	P.N.	DESCRIPTION	QTY
16	51337037	NUT	12
17	51332097	BOLT	1
18	51332098	ADJUSTMENT NUT	1
19	51332099	BEARING	2
20	51332100	SHEET	1
21	51337038	DIFFERENTIAL CARRIER	1
22	51337039	DIFFERENTIAL KIT	1
23	51337040	PIN	1
24	51337041	SLIP LIMITED WASHER	2
25	51337042	FRICTION WASHER	2
26	51337043	PLANET GEAR SHAFT	1
27	51332105	SHIM	1
27	51332106	SHIM	AR
27	51332107	SHIM	AR
27	51332108	SHIM	AR
27	51332109	SHIM	AR
27	51332110	SHIM	AR
28	51332111	SPACER	1
29	51332114	DOWEL	2

FRONT AXLE - DIFFERENTIAL GEARS AND SHAFT

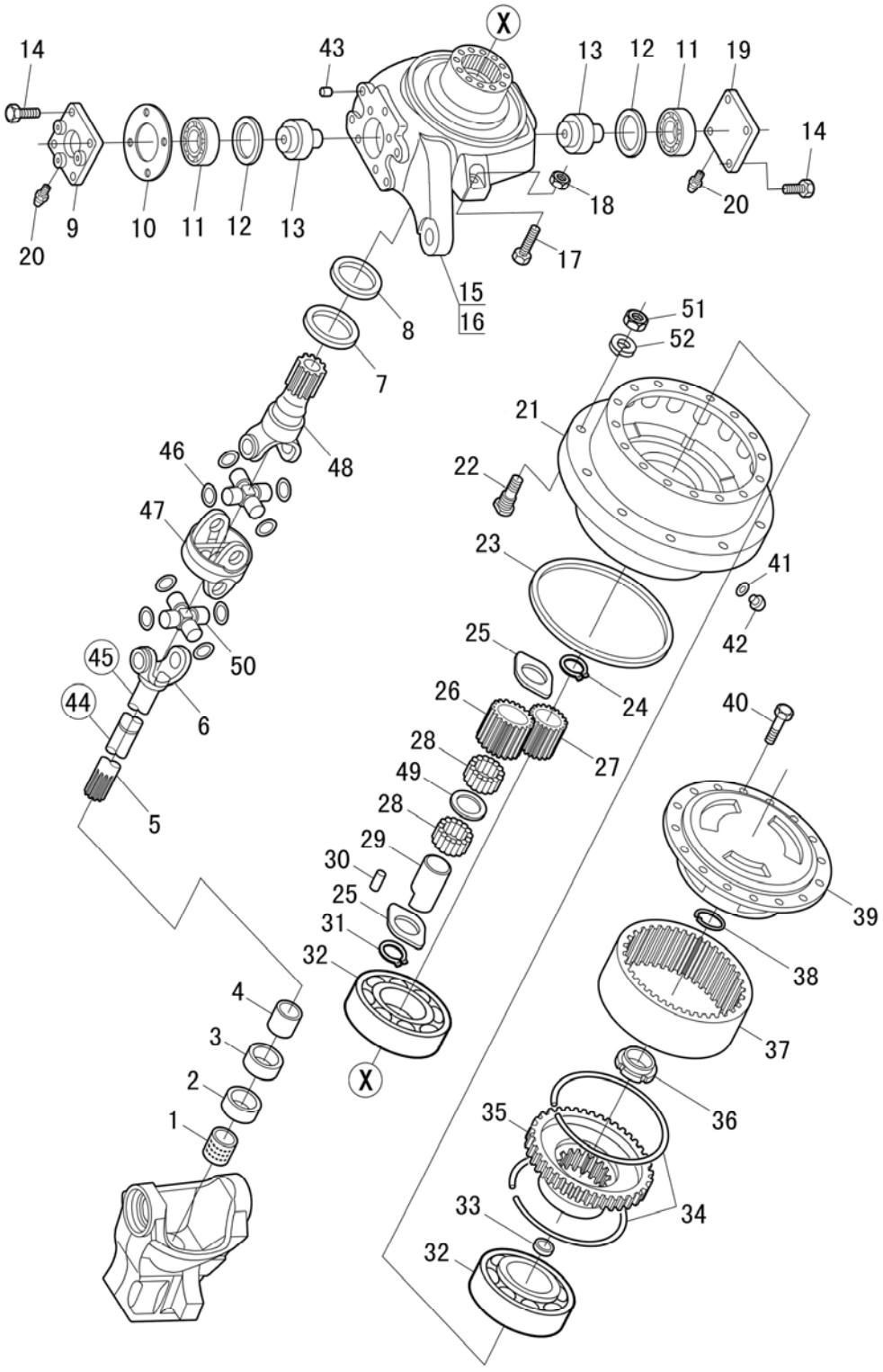

FRONT AXLE - DIFFERENTIAL GEARS AND SHAFT

R	P.N.	DESCRIPTION	QTY
1	51332115	BUSHING	2
2	51332116	SEAL	2
3	51332117	PROTECTION CAP	2
4	51332118	REDUCTION BUSHING	2
5	51342278	HALF SHAFT FORK	1
6	51342217	HALF SHAFT FORK	1
7	51332119	SEAL	2
8	51332120	SBEARING	2
9	51332121	COVER	2
10	51332122	SHIM	1
10	51332123	SHIM	AR
10	51332124	SHIM	AR
10	51332125	SHIM	AR
10	51332126	SHIM	AR
11	51332127	BEARING	4
12	51332129	SEAL	4
13	51332130	PIVOT PIN	4
14	51332094	BOLT	4
15	51332132	STEERING CASE	1
16	51332133	STEERING CASE	1
17	51332134	BOLT	2
18	51332135	NUT	2
19	51332136	COVER	2
20	51332137	GREASE FITTING	4

FRONT AXLE - DIFFERENTIAL GEARS AND SHAFT

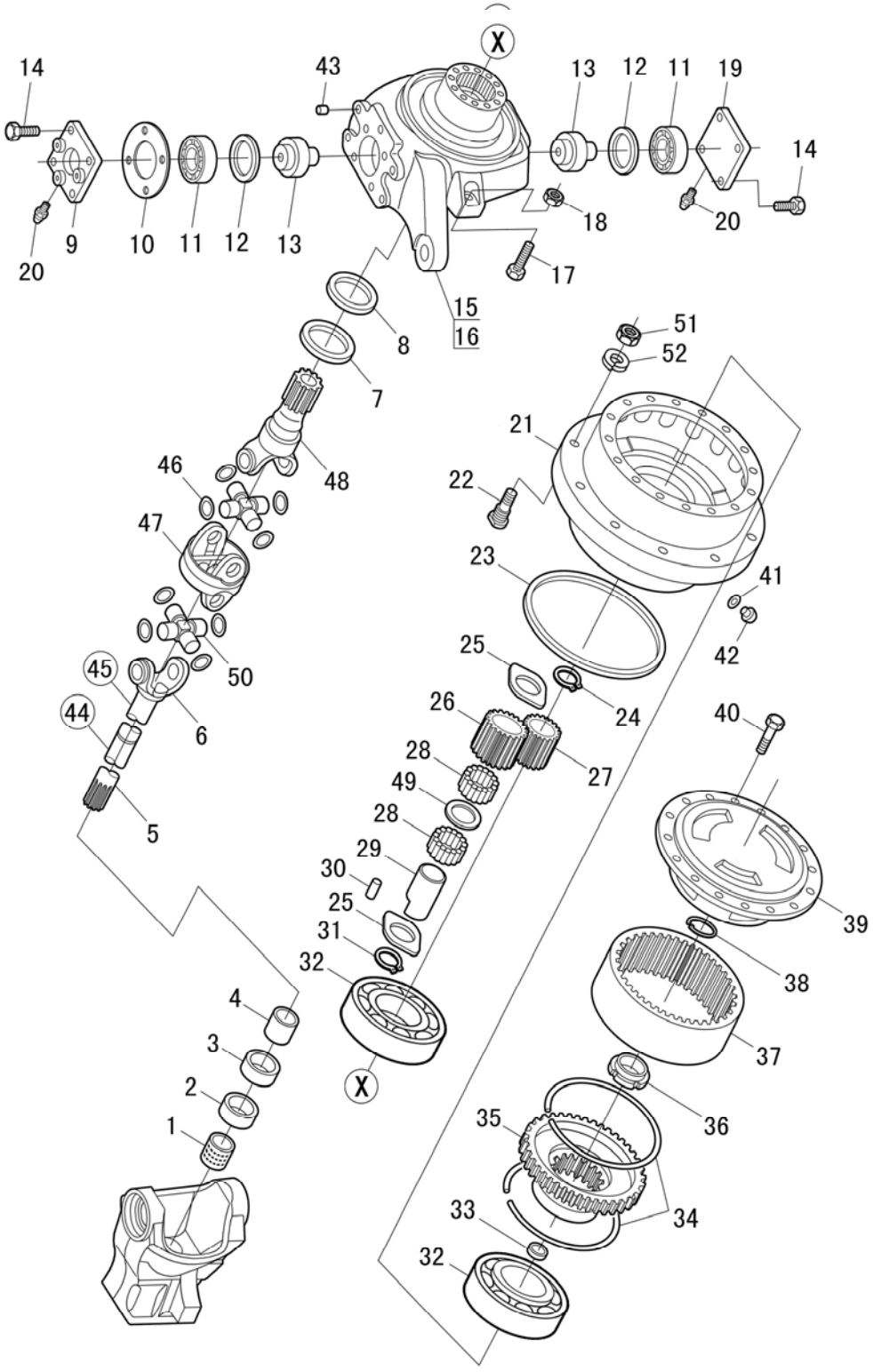

FRONT AXLE - DIFFERENTIAL GEARS AND SHAFT

R	P.N.	DESCRIPTION	QTY
21	51332138	HUB	2
22	51332139	STUD	16
23	51332140	SEAL	2
24	51332141	CIRCLIP	2
25	51332142	FRICTION WAHSER	12
26	51332143	PLANET GEAR	6
27	51332144	SUN GEAR	2
28	51332145	ROLLER	228
29	51332146	PIN	6
30	51332147	ROLLER	6
31	51332148	CIRCLIP	6
32	51332149	BEARING	4
33	51332150	SUN GEAR SNAP RING	2
34	51332151	CIRCLIP	4
35	51332152	GEAR CARRIER	2
36	51332153	LOCKING NUT	2
37	51332154	RING GEAR	2
38	51332155	SNAP RING	2
39	51332156	PLANET GEAR CARRIER	2
40	51332157	BOLT	32
41	51332158	SEAL WASHER	2
42	51332068	PLUG	2
43	51332160	PLUG	2
*44	51332161	RIGHT SIDE HALF SHAFT KIT （LONGER）	2
44	51337023	RIGHT SIDE HALF SHAFT KIT （ANTI-SLIP FRONT AXLE）	2

FRONT AXLE - DIFFERENTIAL GEARS AND SHAFT

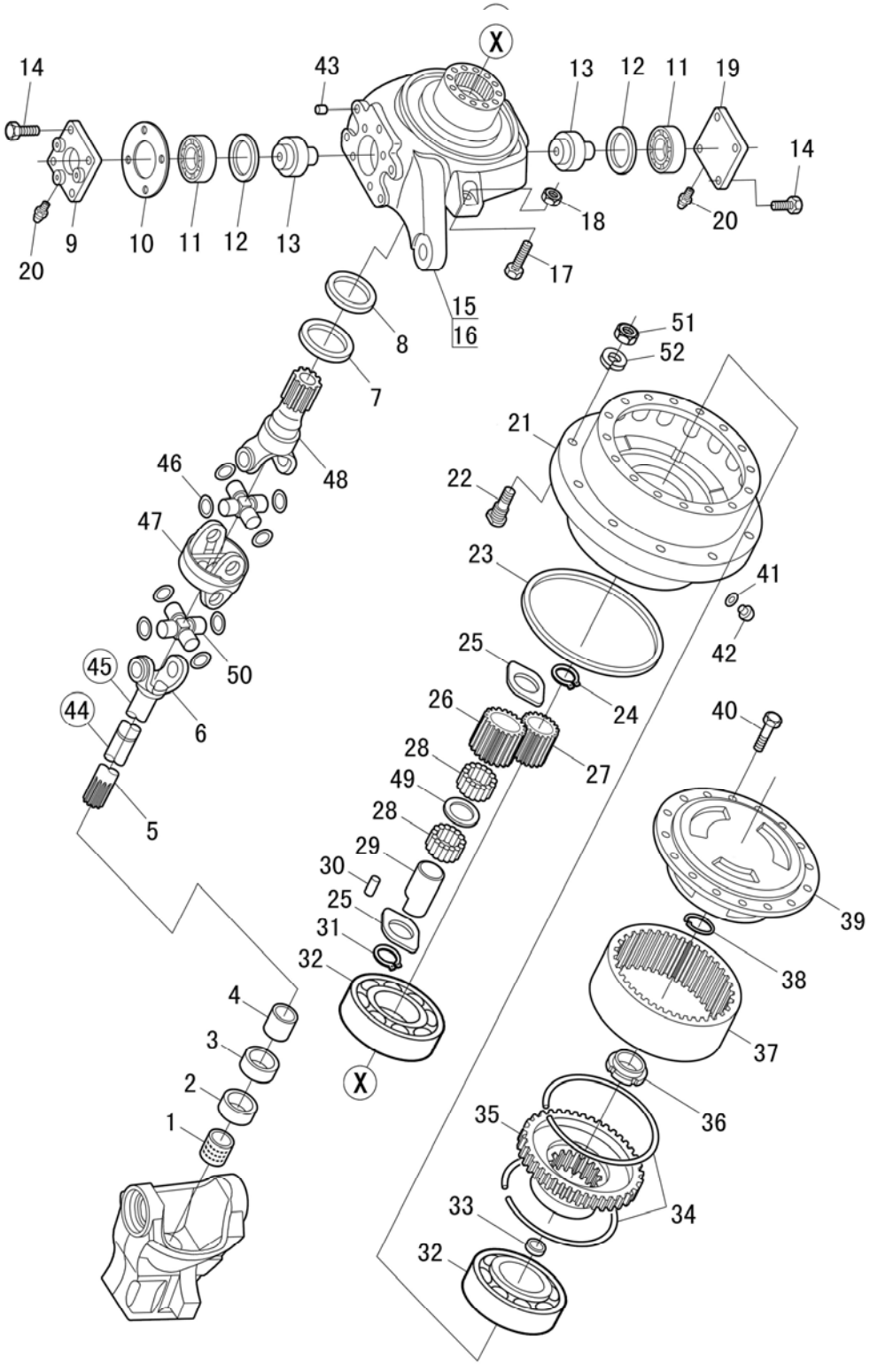

FRONT AXLE - DIFFERENTIAL GEARS AND SHAFT

R	P.N.	DESCRIPTION	QTY
*45	51332162	LEFT SIDE HALF SHAFT KIT （SHORTER）	4
46	51342215	CIRCLIP	8
47	51342216	INTERMEDIATE CONNECTOR	1
48	51342213	HALF SHAFT FORK	1
49	51332163	SPACER	6
50	51342214	CROSS AXES	2
51	12164224	NUT	16
52	44011091	WASHER	16

1.40.0/12	1/1	06/09

FRONT AXLE - HYDRAULIC DRIVE CYLINDER - 4WD

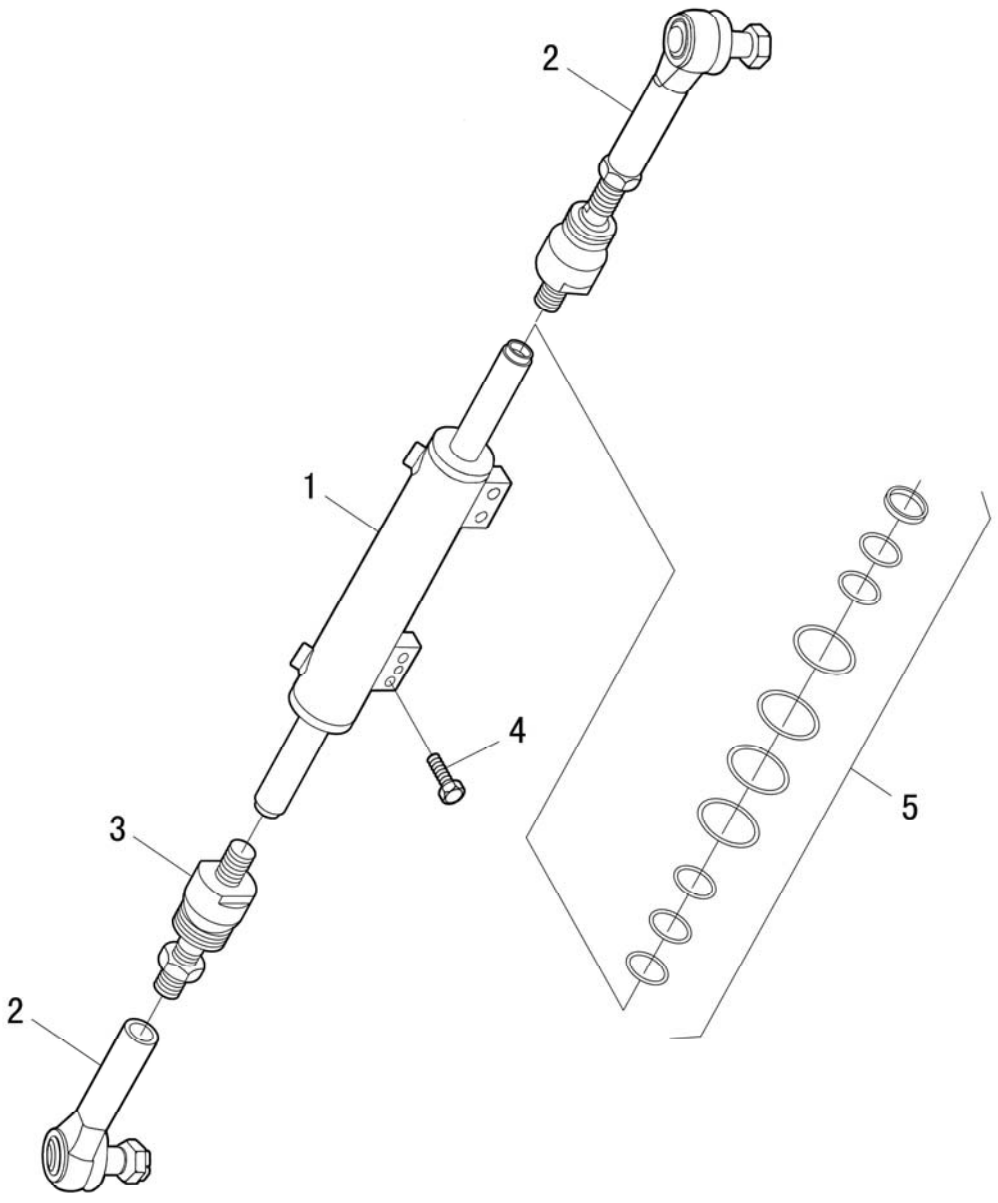

FRONT AXLE - HYDRAULIC DRIVE CYLINDER - 4WD

R	P.N.	DESCRIPTION	QTY
1	51332164	CYLINDER	1
2	51332165	TRACTION ROD	2
3	51332166	COUPLER	3
4	51332167	BOLT	4
5	51337681	SEAL COMPONENTS	1

1.41.0	1/2	06/09

FRONT AXLE 2WD - HUBS

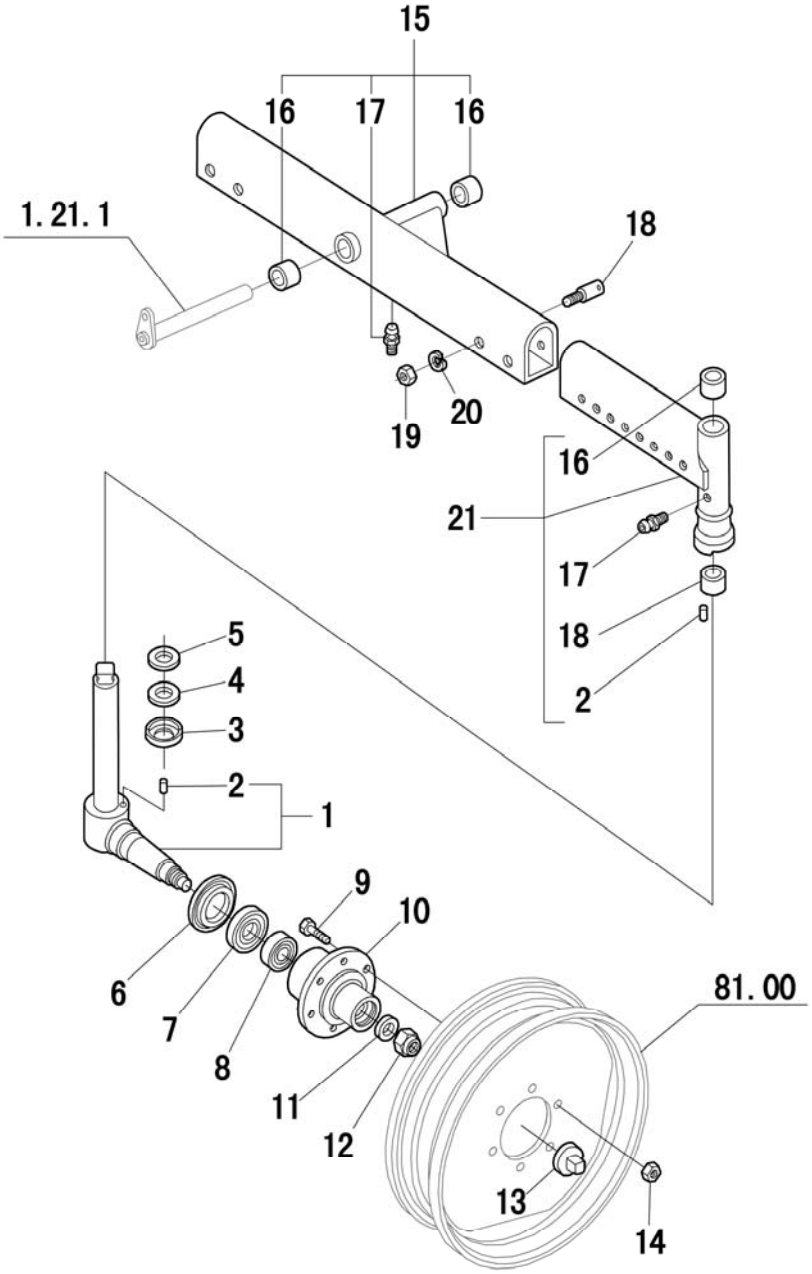

FRONT AXLE 2WD - HUBS

R	P.N.	DESCRIPTION	QTY
1	5166146	R.H.STEER. KUNCKLE W/DOWEL	1
1	5166148	L.H.STEER. KUNCKLE W/DOWEL	1
2	10839510	PIN	3
3	566125	CUP, THRUST WASHER, AXLE	2
4	5144475	THRUST WASHER	2
5	561953	THRUST WASHER	2
6	4951077	SEAL, INNER BEARING	2
7	5132342	BEARING	2
8	5132343	BEARING	2
9	51331470	FRONT WHEEL STUD	6
10	5166103	FRONT WHEEL HUB	1
11	559715	WASHER	2
12	14044274	NUT	2
13	4957312	COVER	2
14	51331412	FRONT WHEEL NUT	12
15	5166140	FRONT AXLE BODY ASSY.	1
16	5115656	BUSHING	6
17	13407211	NOZZLE	1
18	5168833	FIXING AXLE	4
19	10726721	NUT	4
20	11191779	CUP WASHER	4
21	5169672	FRONT AXLE BODY ASSY.	1

FRONT AXLE 2WD - STEERING ROD

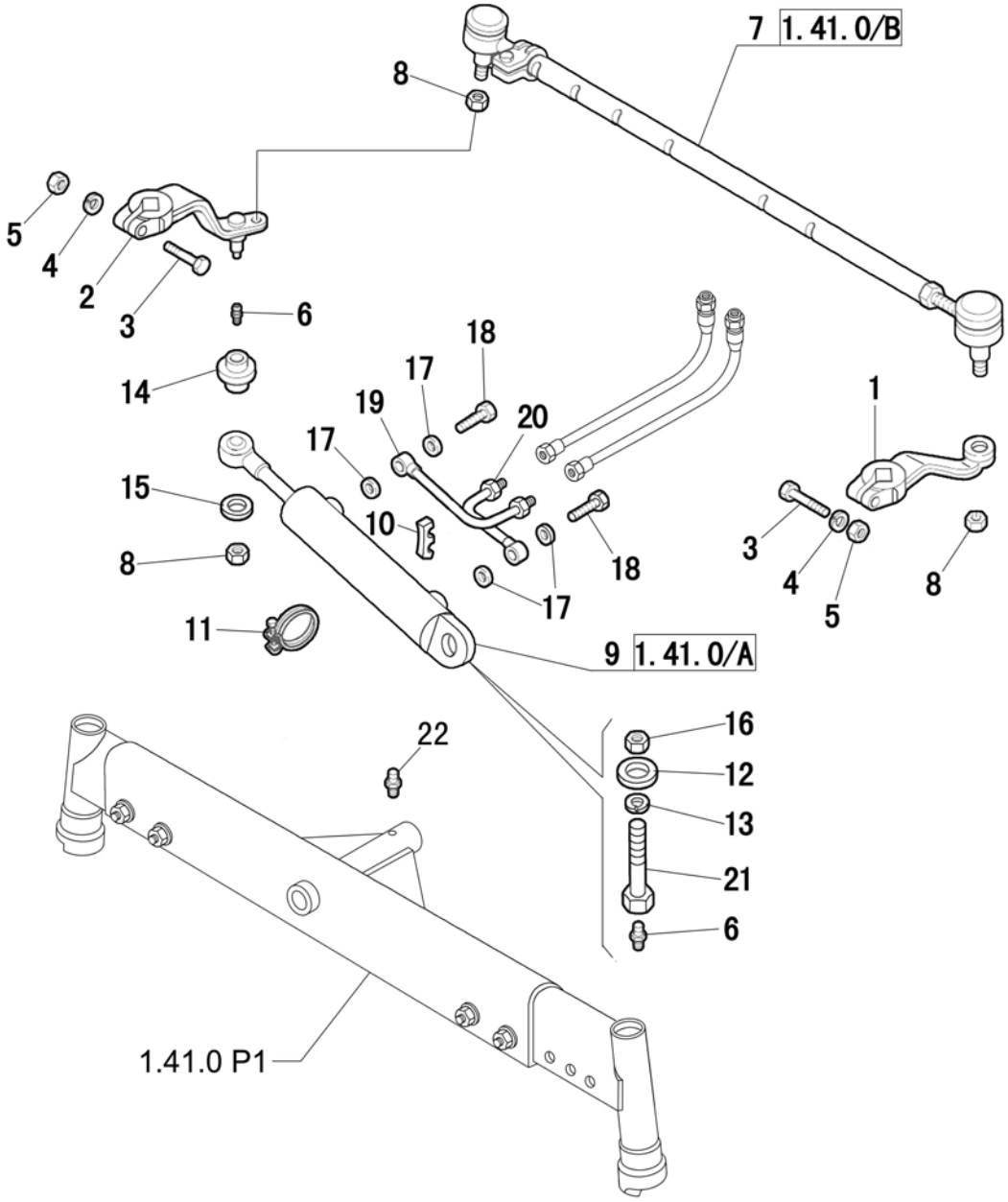

FRONT AXLE 2WD - STEERING ROD

R	P.N.	DESCRIPTION	QTY
1	5166080	L.H. LEVER ON STEERING LINK	1
2	5166081	R.H. LEVER ASSY	1
3	15862134	SCREW	1
4	11194174	LOCKWASHER, TAPER	1
5	12164024	NUT	2
6	13406911	NOZZLE	2
7	5178665	TRACK ROD ADJUSTABLE ASSY	1
8	12575911	NUT, SELF-LOCKING	2
9	51335070	CYLINDER	1
10	5121043	SPACER	1
11	13000990	COLLAR SLEEVE	1
12	5168900	WASHER	1
13	11191974	LOCKWASHER TAPER	2
14	5166084	BUSH CYLINDER PIVOT	1
15	5100730	WASHER, CYLINDER PIVOT	1
16	10724621	NUT	1
17	44906168	SEAL	4
18	10184314	UNION	2
19	51330601	R.H. STEERING PIPE ASSY	1
20	51330600	L.H.STEERING PIPE ASSY	1
21	51332368	PIN STEERING CONTROL CYLINDER	1
22	51322896	NOZZLE	1
23	10734901	PIN	1

1.41.0/A	1/1	06/09

POWER STEERING CYLINDER - 2WD

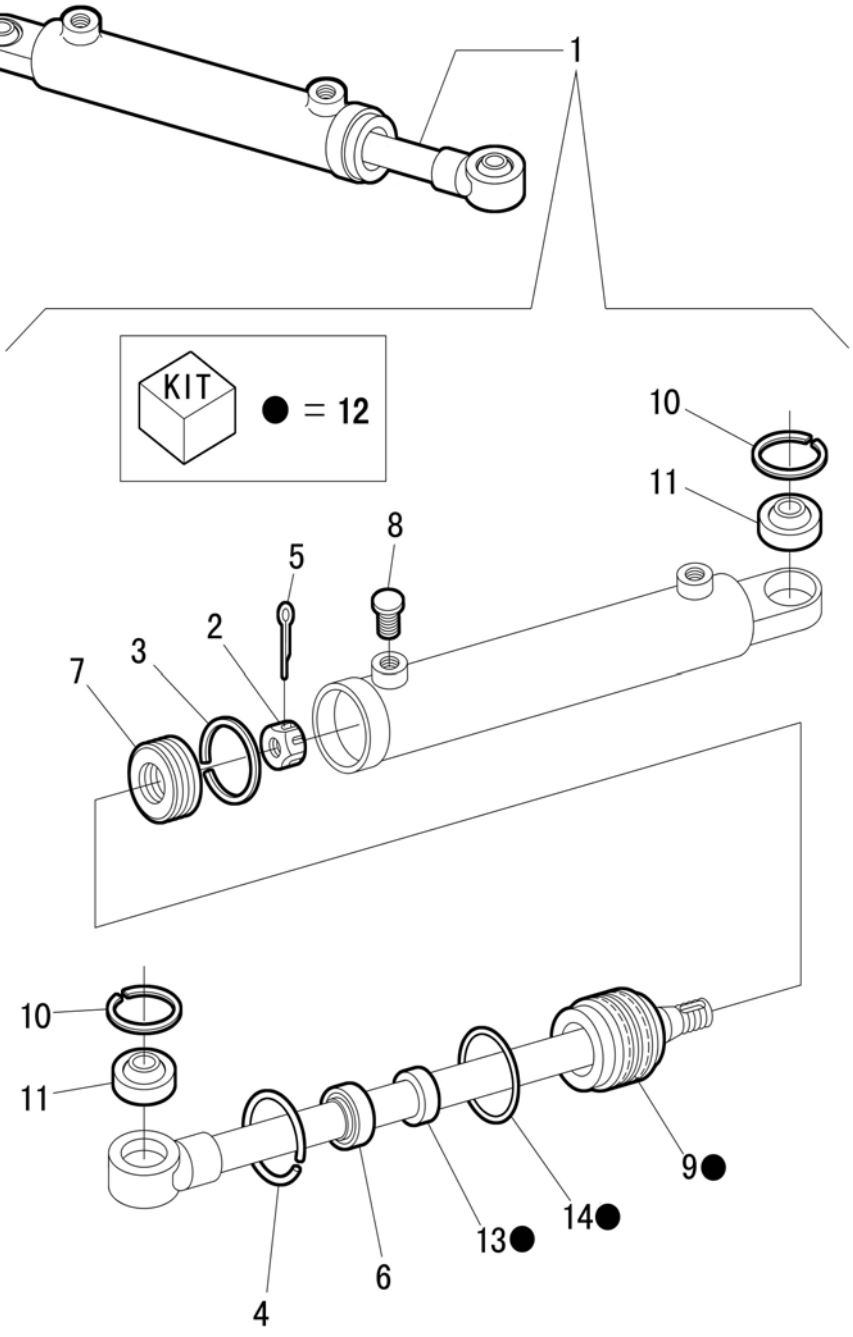

POWER STEERING CYLINDER - 2WD

R	P.N.	DESCRIPTION	QTY
1	51335070	STEERING CYLINDER	1
2	51335101	NUT	1
3	51335103	RING	2
4	51335107	LOCKING RING	1
5	51335102	PIN	1
6	51335105	GASKET	1
7	51335098	PISTON	1
8	51335100	PLUG	2
9	51335099	GUIDE COVER	1
10	51335108	LOCKING RING	2
11	51335109	BEARING	2
12	51335457	SEAL KIT	1
13	51335104	SEAL RING	1
14	51335106	O-RING	1

1.41.0/B	1/1	06/09

FRONT AXLE 2WD - TRANSVERSAL STEERING ROD

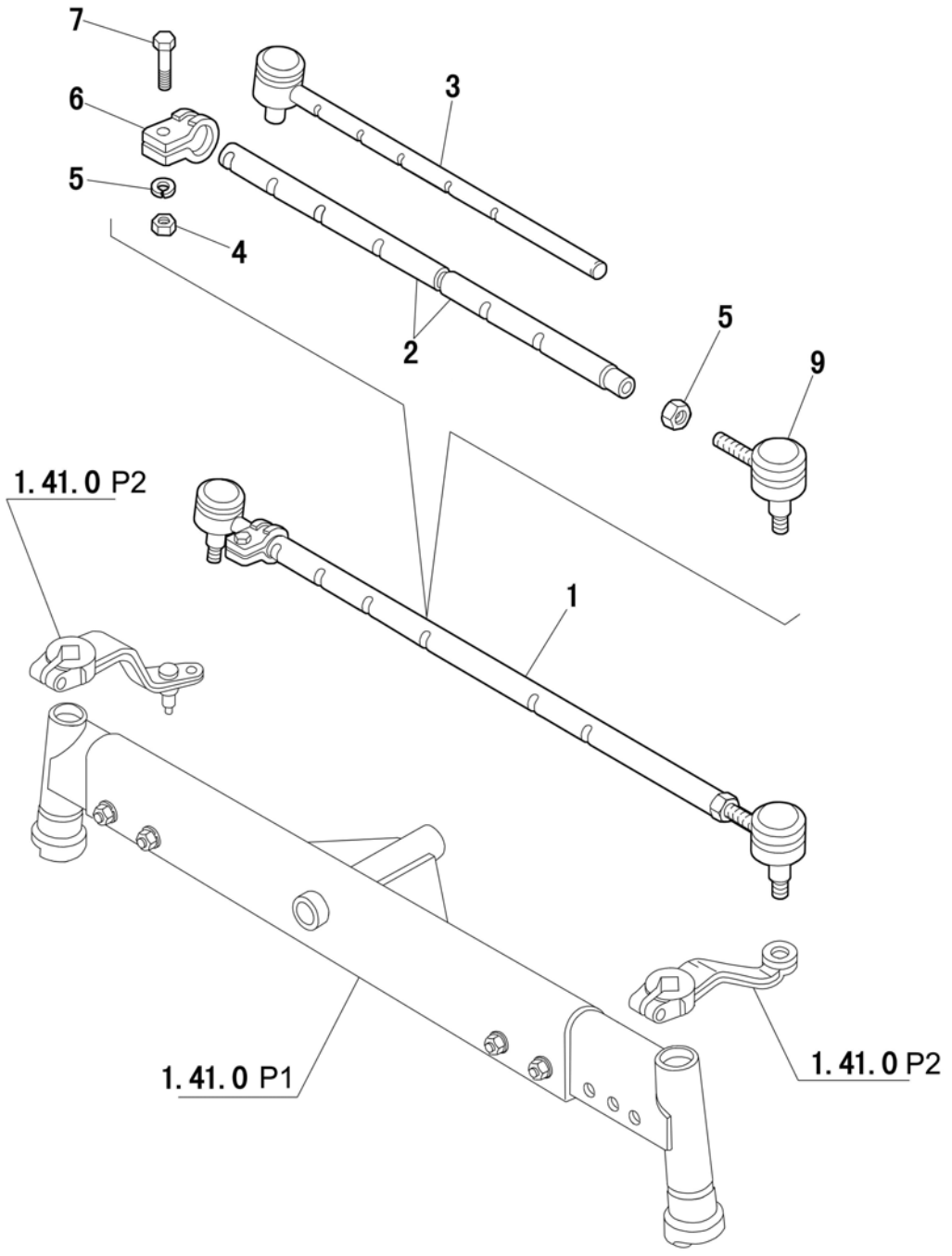

FRONT AXLE 2WD - TRANSVERSAL STEERING ROD

R	P.N.	DESCRIPTION	QTY
1	5178665	TRACK ROD ADJUSTABLE ASSY	1
2	5178376	TUBE TRACK ROD	1
3	5178379	TRACK ROD	1
4	51323160	NUT	1
5	11198674	LOCKWASHER, TAPER	1
6	5170020	CLAMP	1
7	15540824	51328172	1
8	5107113	NUT	1
9	5178390	BALL JOINT ASSY.	1

1.42.0	1/2	06/09

FRONT AXLE 2WD, HYDRAULIC STEERING CONTROL - PIPES & OIL TANK

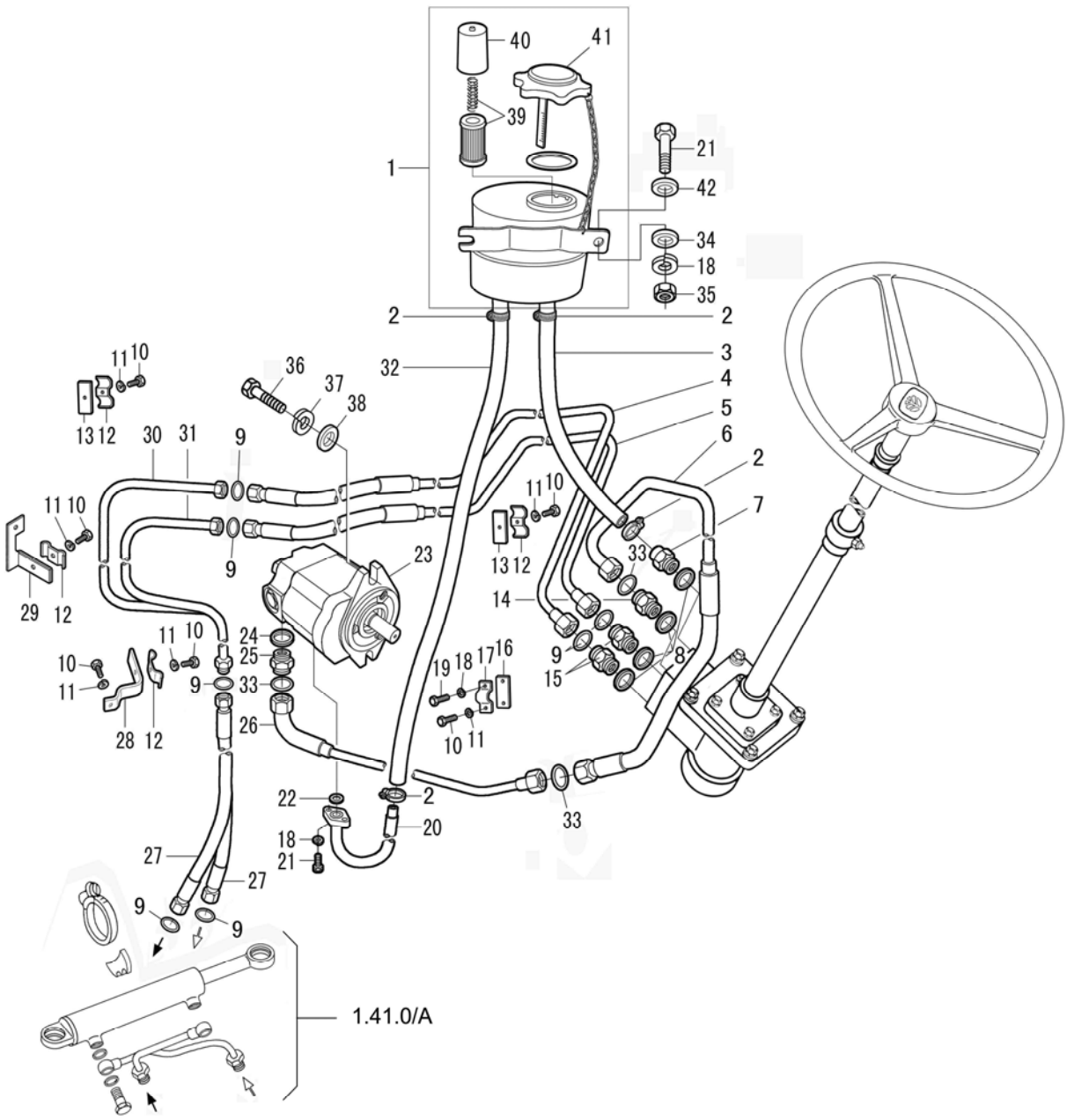

FRONT AXLE 2WD, HYDRAULIC STEERING CONTROL - PIPES & OIL TANK

R	P.N.	DESCRIPTION	QTY
1	51330635	OIL TANK	1
1	51333049	OIL TANK	1
2	51327172	CLAMP	4
3	51330534	OIL RETURN RUBBER PIPE	1
4	51335247	STEERING GEAR OUTLET PIPE（II）	1
4	51335248	STEERING GEAR OUTLET PIPE（II）	1
5	51331456	STEERING GEAR OUTLET PIPE（I）	1
5	51333047	STEERING GEAR OUTLET PIPE（I）	1
6	51331292	STEERING GEAR OUTLET PIPE	1
7	51330535	OIL RETURN JOINT	1
8	51323472	WASHER	4
9	51330653	O-RING SEAL	8
10	51323091	BOLT	6
11	51323378	WASHER	6
12	51322078	PIPE CLAMP	4
13	51322810	BOTTOM CLIP, OIL PIPE, CYLINDER	2
14	51330529	JOINT (II)	1
15	51330528	JOINT (I)	2
16	51331296	FIXED PLATE (V)	1
17	51331458	FIXED PLATE (III)	1
18	51323379	SPRING WASHER 8	5
19	51323095	BOLT	1
20	51333035	OIL SUCTION PIPE ASSY	1

1.42.0	2/2	06/09

FRONT AXLE 2WD, HYDRAULIC STEERING CONTROL - PIPES & OIL TANK

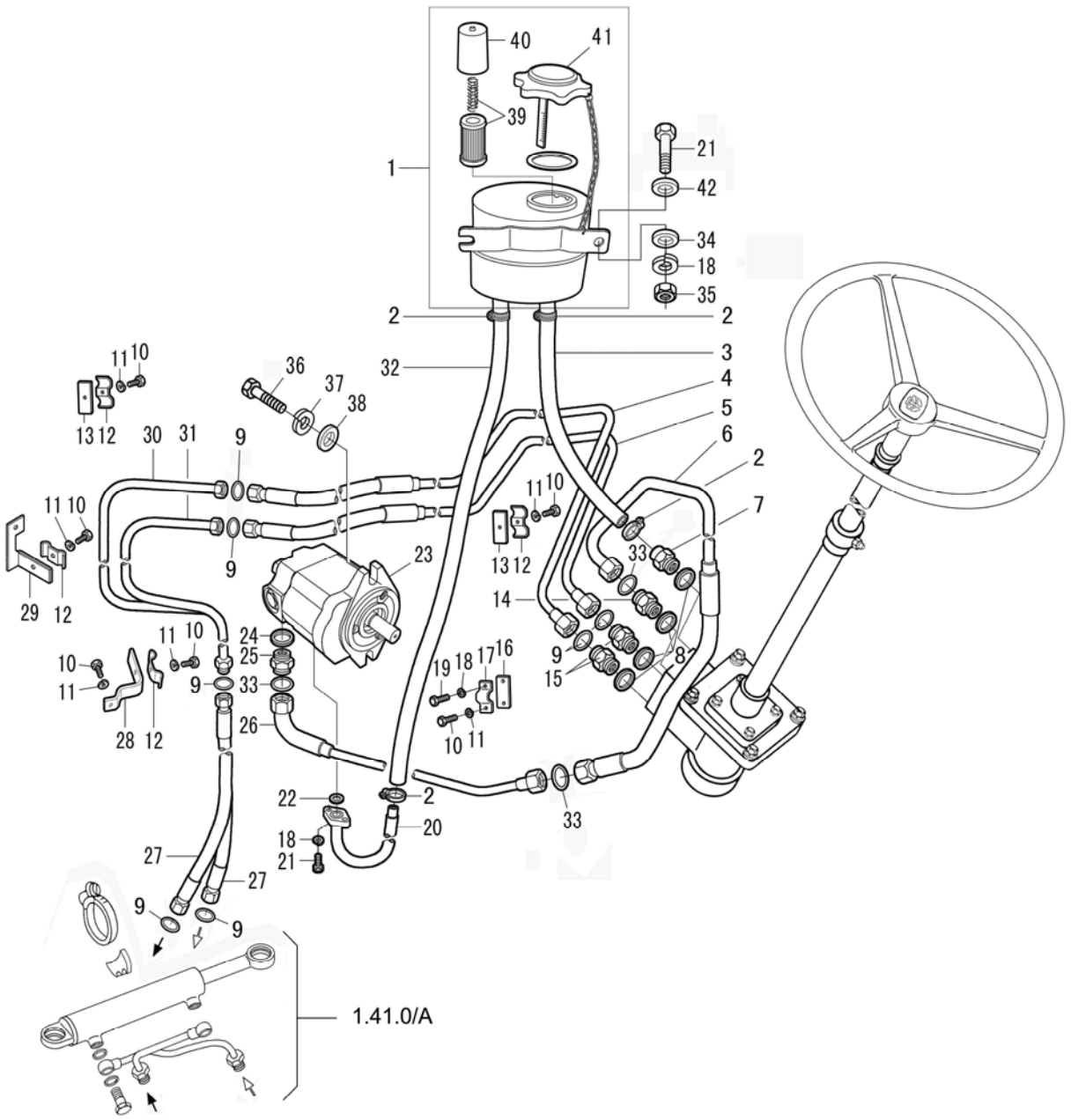

FRONT AXLE 2WD, HYDRAULIC STEERING CONTROL - PIPES & OIL TANK

R	P.N.	DESCRIPTION	QTY
21	51323096	BOLT	4
22	51322527	O-RING SEAL	1
23	51337264	HLCB- D14/14 CONSTANT FLOW PUMP	1
24	51323471	WASHER	1
25	51323495	CONNECTOR	1
26	51342752	INTAKE CONNECTING PIPE, STEERING MOTOR	1
27	51331454	CYLINDER HOSE	2
28	51331455	FIXING PLATE (II)	1
29	51331449	FIXING PLATE (I)	1
30	51331450	OIL PIPE ASSY (I)	1
31	51331452	OIL PIPE ASSY (II)	1
32	51330533	OIL SUCTION RUBBER PIPE	1
32	51333046	OIL SUCTION RUBBER PIPE (W/ EXTERNAL AIR CLEANER)	1
33	51322912	O-RING SEAL	3
34	51323402	PLAIN WASHER	2
35	51323149	NUT	2
36	51331209	SCREW	2
37	51323380	WASHER	2
38	51323403	WASHER	2
39	51333051	FILTER	1
40	51333053	COVER	1
41	51333052	STEERING OIL TANK CAP	1
42	51323396	WASHER	2

1.42.0/1	1/2	06/09

FRONT AXLE 4WD, HYDRAULIC STEERTING CONTROL - PIPES & OIL TANK

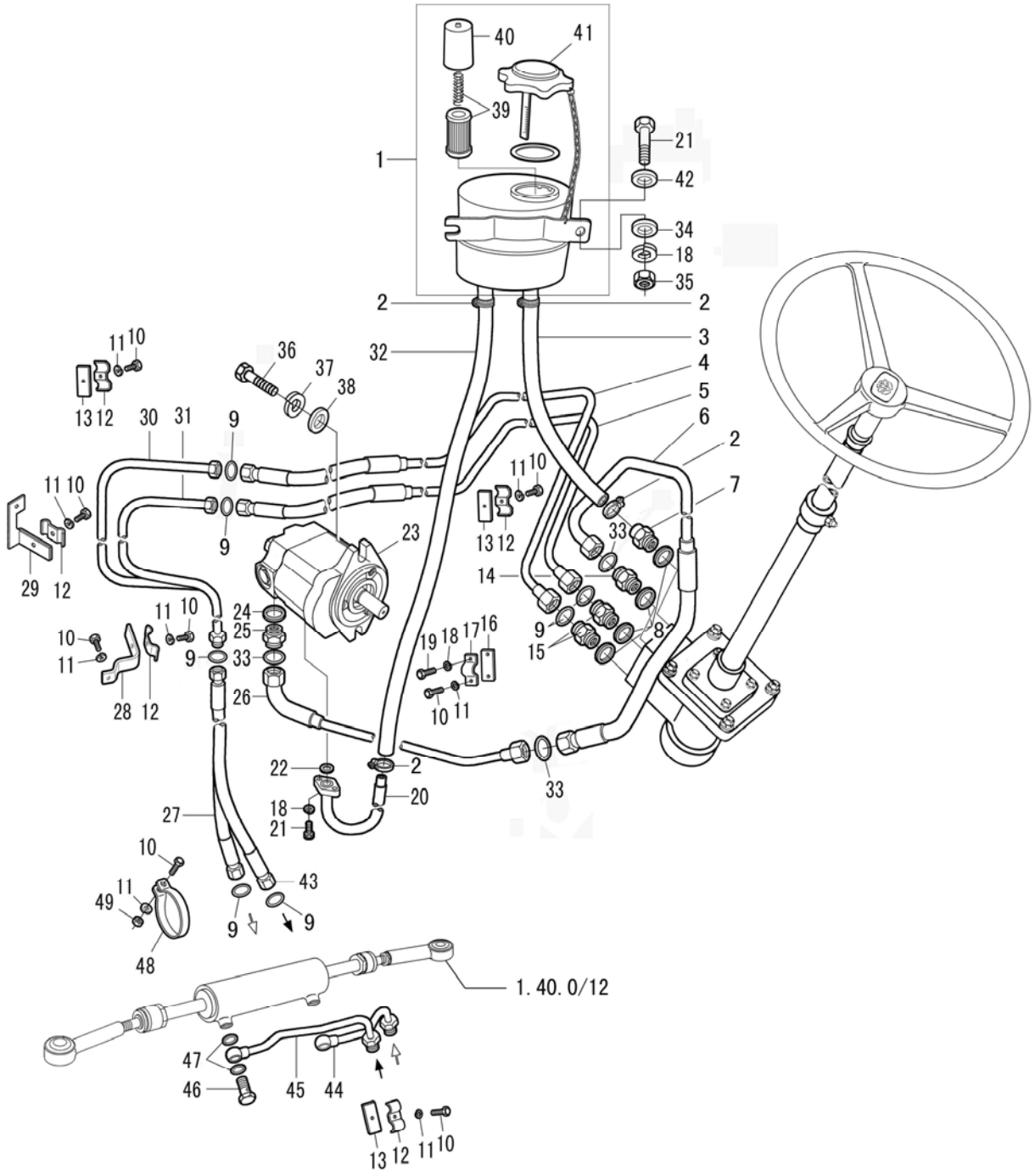

FRONT AXLE 4WD, HYDRAULIC STEERTING CONTROL - PIPES & OIL TANK

R	P.N.	DESCRIPTION	QTY
1	51330635	OIL TANK	1
1	51333049	OIL TANK	1
2	51327172	CLAMP	4
3	51330534	OIL RETURN RUBBER PIPE	1
4	51335247	STEERING GEAR OUTLET PIPE （II）	1
4	51335248	STEERING GEAR OUTLET PIPE （II）	1
5	51331456	STEERING GEAR OUTLET PIPE （I）	1
5	51333047	STEERING GEAR OUTLET PIPE （I）	1
6	51331292	STEERING GEAR OUTLET PIPE	1
7	51330535	OIL RETURN JOINT	1
8	51323472	WASHER	4
9	51330653	O-RING SEAL	8
10	51323091	BOLT	8
11	51323378	WASHER	8
12	51322078	PIPE CLAMP (II)	5
13	51322810	OIL PIPE BOTTOM PLATE CLIP OF OIL CYLINDER	2
14	51330529	JOINT(II)	1
15	51330528	JOINT(I)	2
16	51331296	FIXED PLATE(V)	1
17	51331458	FIXED PLATE(III)	1
18	51323379	SPRING WASHER 8	5
19	51323095	BOLT	1
20	51333035	OIL SUCTION PIPE ASSY.	1
21	51323096	BOLT	4
22	51322527	O-RING SEAL	1
23	51337264	HLCB- D14/14CONSTANT FLOW PUMP	1

1.42.0/1	2/2	06/09

FRONT AXLE 4WD, HYDRAULIC STEERTING CONTROL - PIPES & OIL TANK

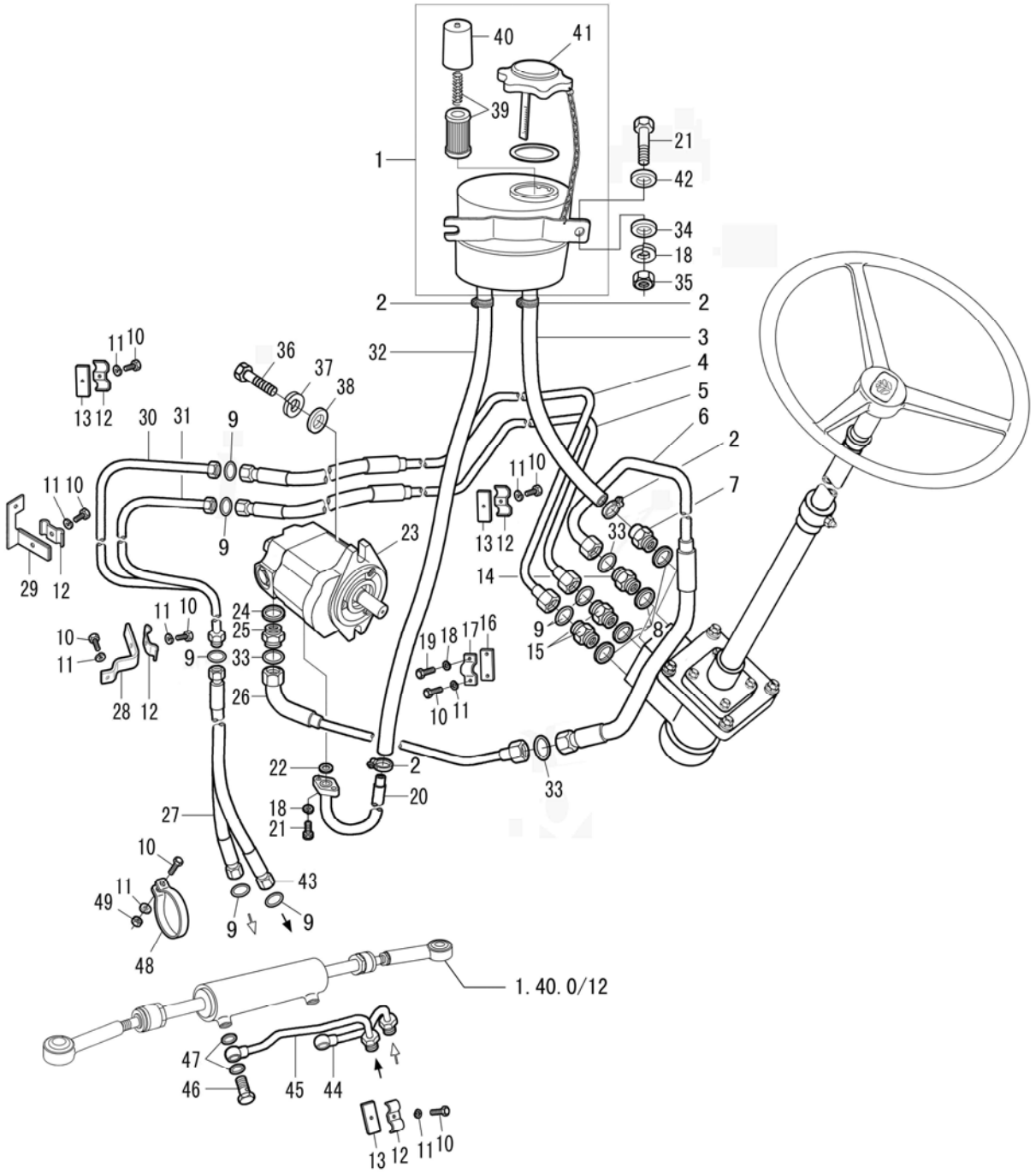

FRONT AXLE 4WD, HYDRAULIC STEERTING CONTROL - PIPES & OIL TANK

R	P.N.	DESCRIPTION	QTY
24	51323471	WASHER	1
25	51323495	CONNECTOR	1
26	51342752	INTAKE CONNECTION PIPE, STEERING MOTOR	1
27	51331454	CYLINDER HOSE	1
28	51331455	FIXING PLATE (II)	1
29	51331449	FIXING PLATE (I)	1
30	51331450	OIL PIPE ASSY (I)	1
31	51331452	OIL PIPE ASSY (II)	1
32	51330533	OIL SUCTION RUBBER PIPE	1
32	51333046	OIL SUCTION RUBBER PIPE (W/ EXTERNAL AIR CLEANER)	1
33	51322912	O-RING SEAL	3
34	51323402	PLAIN WASHER	2
35	51323149	NUT	2
36	51331209	SCREW	2
37	51323380	WASHER	2
38	51323403	WASHER	2
39	51333051	FILTER	1
40	51333053	COVER	1
41	51333052	STEERING OIL TANK CAP	1
42	51323396	WASHER	2
43	51335246	CYLINDER HOSE	1
44	51331290	CYLINDER TUBE ASSY (RIGHT)	1
45	51331294	CYLINDER TUBE ASSY (LEFT)	1
46	10184314	UNION	2
47	44906168	SEAL	4
48	51331192	CLIP	1
49	51323142	NUT	1

1.44.0	1/1	06/09

FRONT SUPPORT & BALLAST

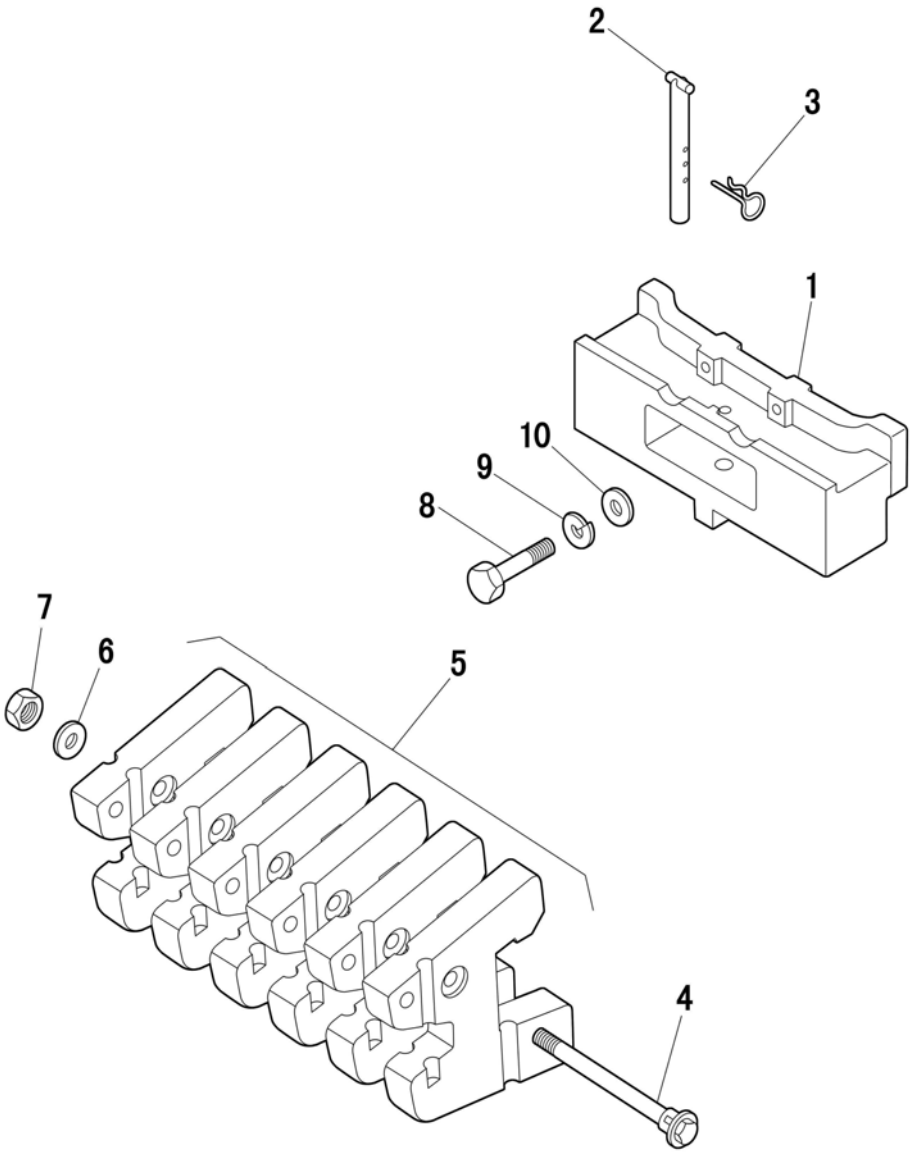

FRONT SUPPORT & BALLAST

R	P.N.	DESCRIPTION	QTY
1	51327685	FRONT BALLAST SUPPORT	1
2	51322303	PIN	1
3	51322299	PIN, SPRING	1
4	51330531	BOLT (10 BALLASTS)	1
4	51332318	BOLT (4 BALLASTS)	1
5	51327944	FRONT BALLAST	10
6	51323042	WASHER	1
7	51323162	NUT	1
8	51330667	BOLT	4
9	51323384	WASHER	4
10	51322302	WASHER	4

REAR AXLE

SEC. 5

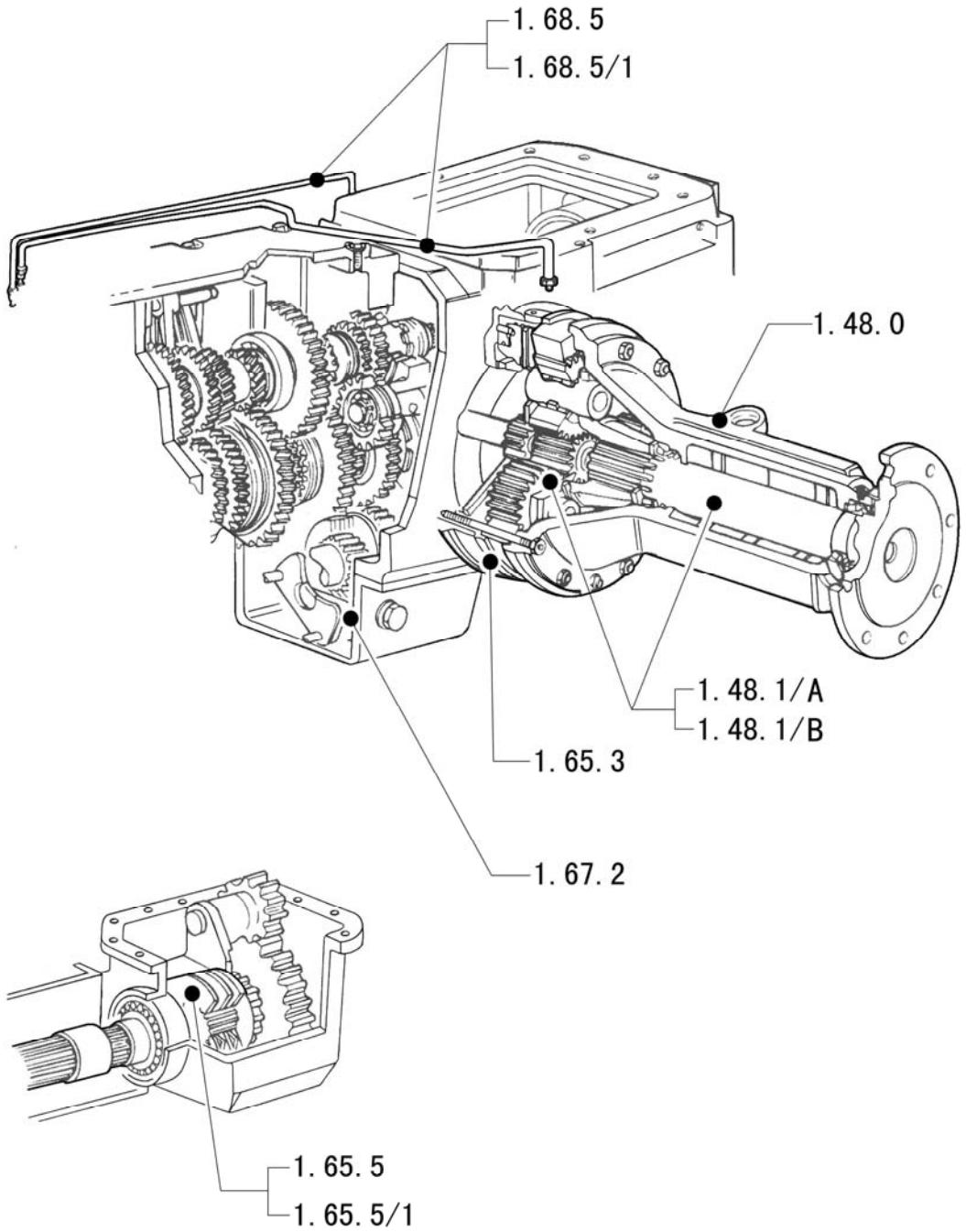

1.48.0	1/1	06/09

SIDE REDUCTION UNITS

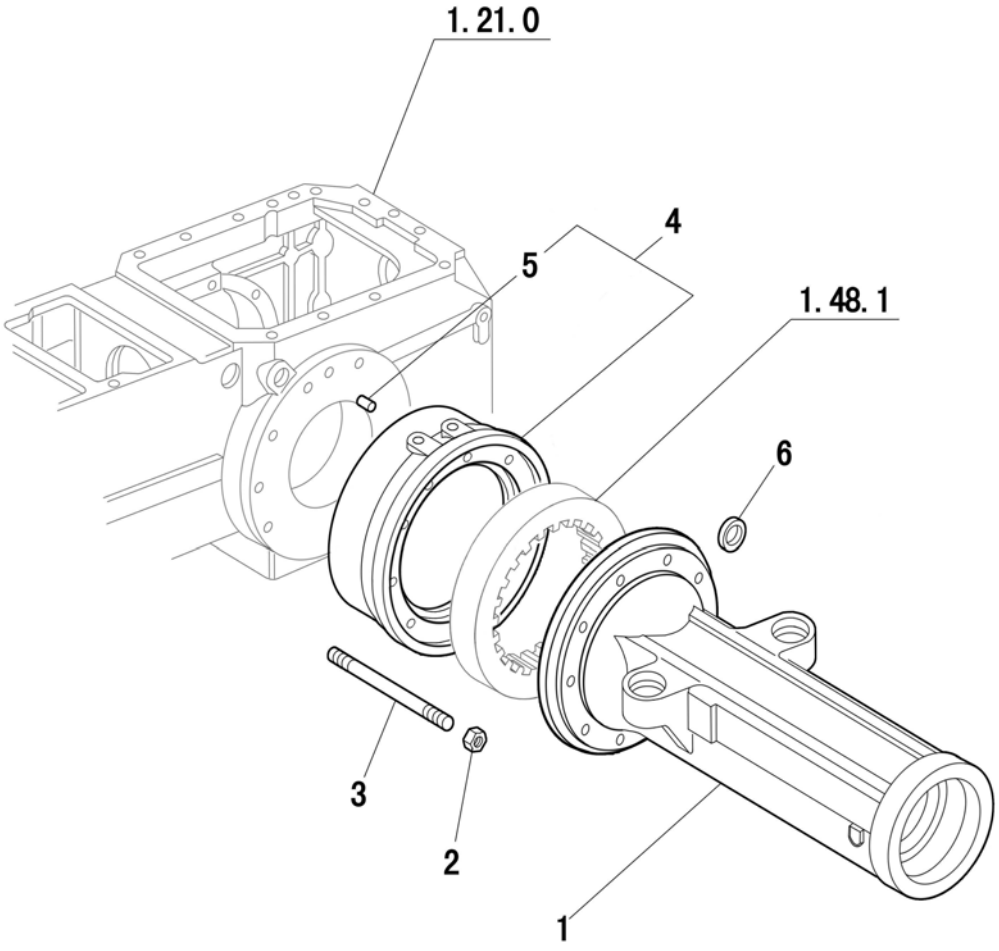

SIDE REDUCTION UNITS

R	P.N.	DESCRIPTION	QTY
1	5170103	HOUSING, FINAL DRIVE	2
2	12164024	NUT	20
3	13558130	STUD, M14 , TL90 TL100	16
3	13557930	STUD, M14 , TL80	4
3	5171503	STUD, M14 (W/ TWO ASSIST RAMS)	6
4	51342151	SPACER WITH LOCATING PINS	2
5	5110094	DOWEL	3

1.48.1	1/1	06/09

FINAL DRIVE, GEARS & SHAFTS

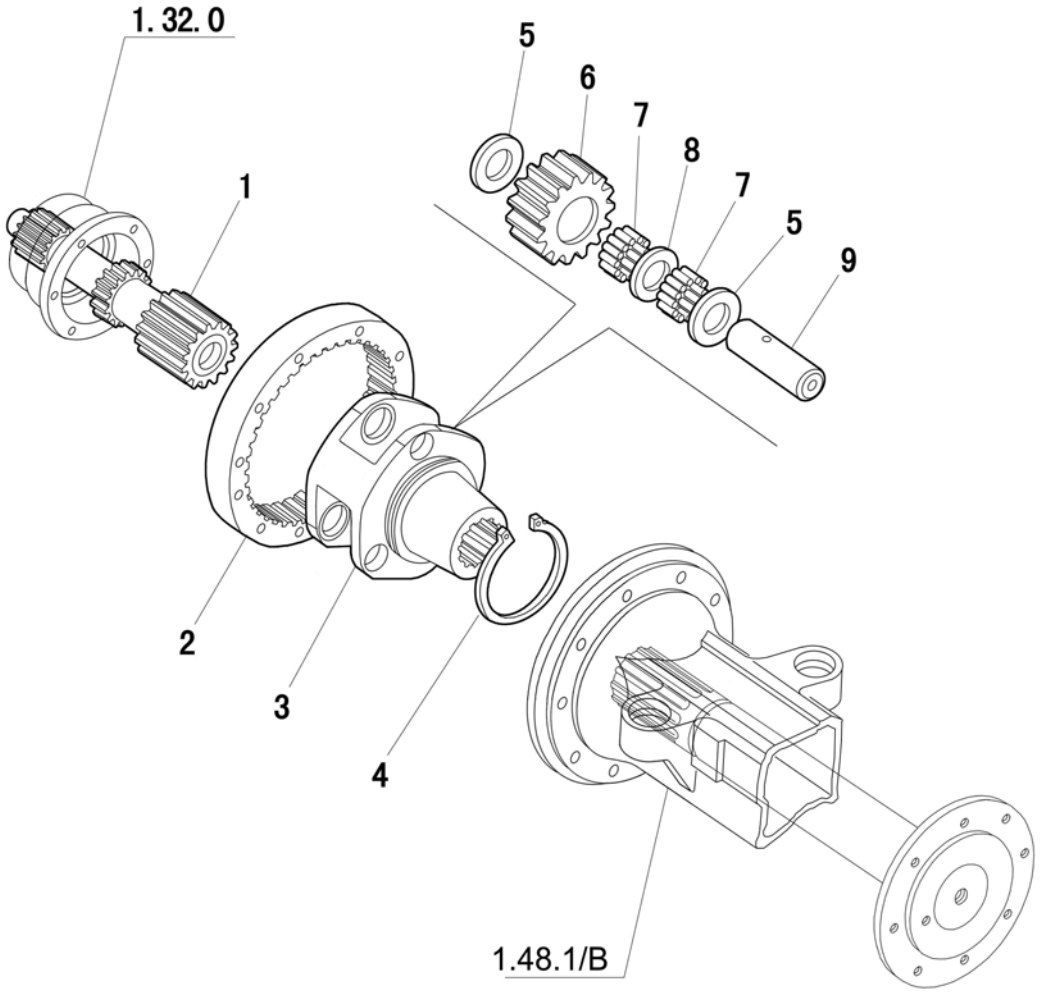

FINAL DRIVE, GEARS & SHAFTS

R	P.N.	DESCRIPTION	QTY
1	5181721	RH AXLE SHAFT	1
1	5181722	LH AXLE SHAFT	1
2	5170096	FINAL DRIVE GEAR	2
3	5170104	SUPPORT FOR REDUCER PLANET CASING	2
4	5157726	PANET PIN RETAINING RING	2
5	5157720	SNAP RING, REDUCER PLANETARY GEAR	12
6	51335144	FINAL DRIVE PLANET PINION	6
7	5157719	NEEDLE BEARING, REDUCER PLANET GEAR	6
8	5157718	SPACER, NEEDLE,S BEARING	6
9	5170095	SPINDLE	6

1.48.1/A	1/1	06/09

FINAL DRIVE, GEARS & SHAFTS

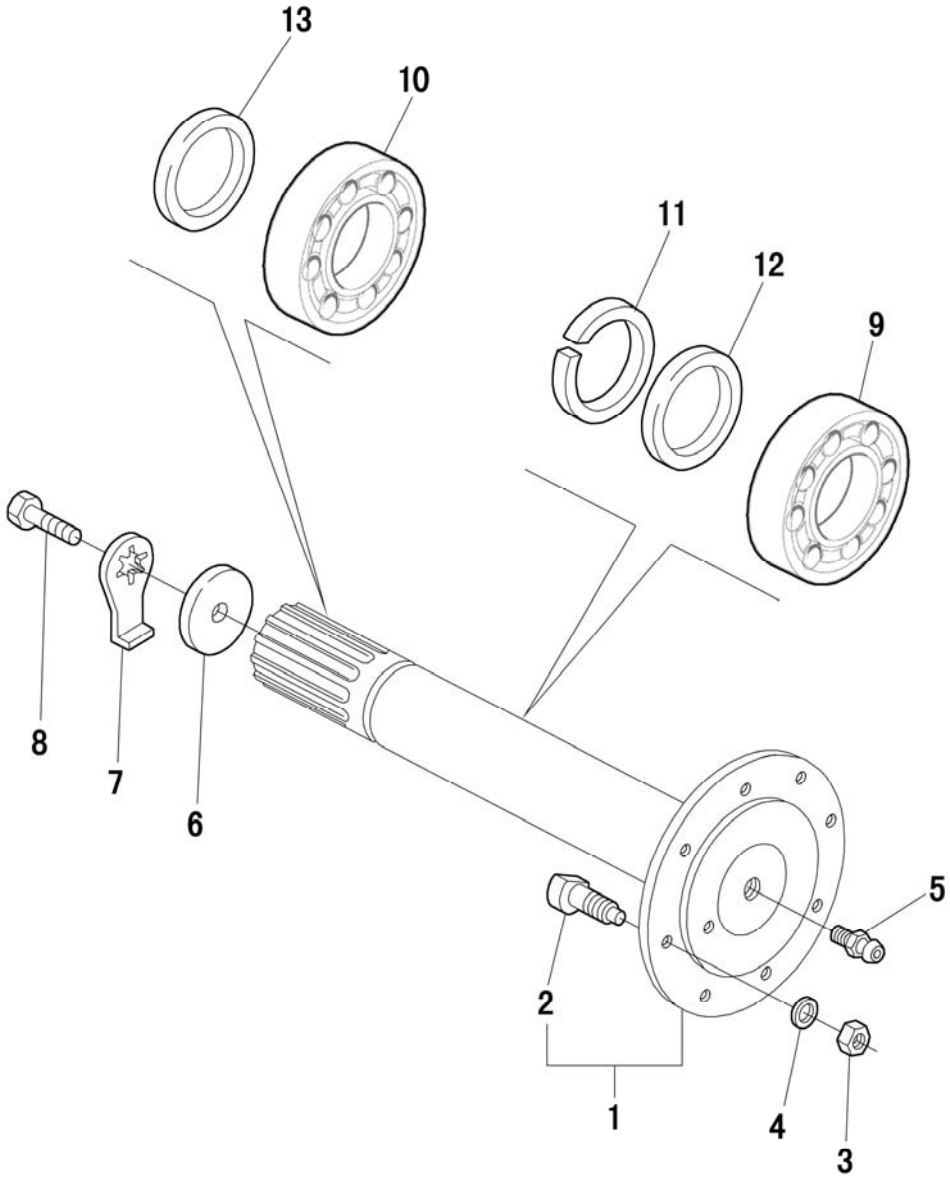

FINAL DRIVE, GEARS & SHAFTS

R	P.N.	DESCRIPTION	QTY
1	5170097	DRIVE WHEEL SHAFT WITH SCREW AND RING	2
2	44011089	SCREW	8
3	51323163	NUT	16
4	44011091	WASHER	16
5	13407211	NOZZLE	2
6	4997201	DISC DRIVE WHEEL SHAFT	2
7	5157668	PLATE DRIVE WHEEL SHAFT	2
8	14258031	CAPSCREW	2
9	20645490	BEARING, BALL	2
10	26794670	BEARING	2
11	5123054	EXTERNAL SPACER	2
12	51342556	SEAL	2
13	4996966	SHIM 4,5 mm	1
13	4996967	SHIM 4,6 mm	AR
13	4996968	SHIM 4,7 mm	AR
13	4996969	SHIM 4,8 mm	AR
13	4996970	SHIM 4,9 mm	AR
13	4996971	SHIM 5,0 mm	AR
13	4996972	SHIM 5,1 mm	AR
13	4996973	SHIM 5,2 mm	AR
13	4996974	SHIM 5,3 mm	AR
13	4996975	SHIM 5,4 mm	AR
13	4996976	SHIM 5,5 mm	AR
13	4996977	SHIM 5,6 mm	AR
13	4996978	SHIM 5,7 mm	AR
13	4996979	SHIM 5,8 mm	AR

1.48.2	1/1	06/09

REAR BALLAST

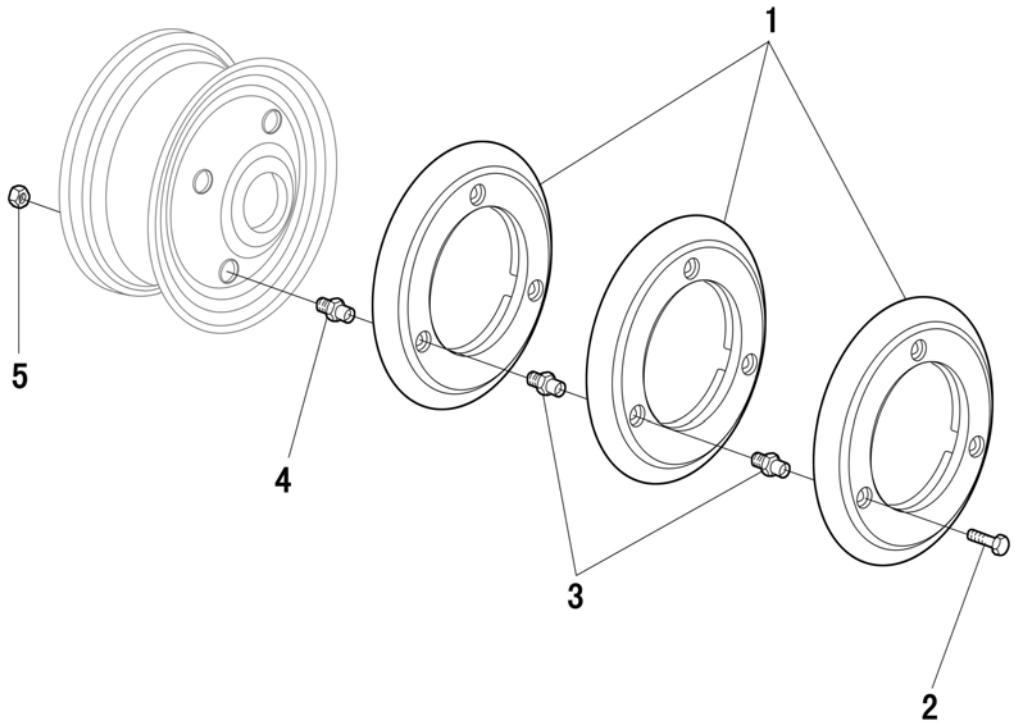

REAR BALLAST

R	P.N.	DESCRIPTION	QTY
1	51333004	REAR BALLAST	6
2	15980524	CAPSCREW, HEX.M16	6
3	51333050	SCREW FOR DISC	12
4	51332316	SCREW FOR DISC	6
*5	51331276	NUT	6
*6	11194274	LOCKWASHER, TAPER	6

NOTE: Part 5 includes part 6.

1.65.3	1/1	06/09

TRANSMISSION BRAKE

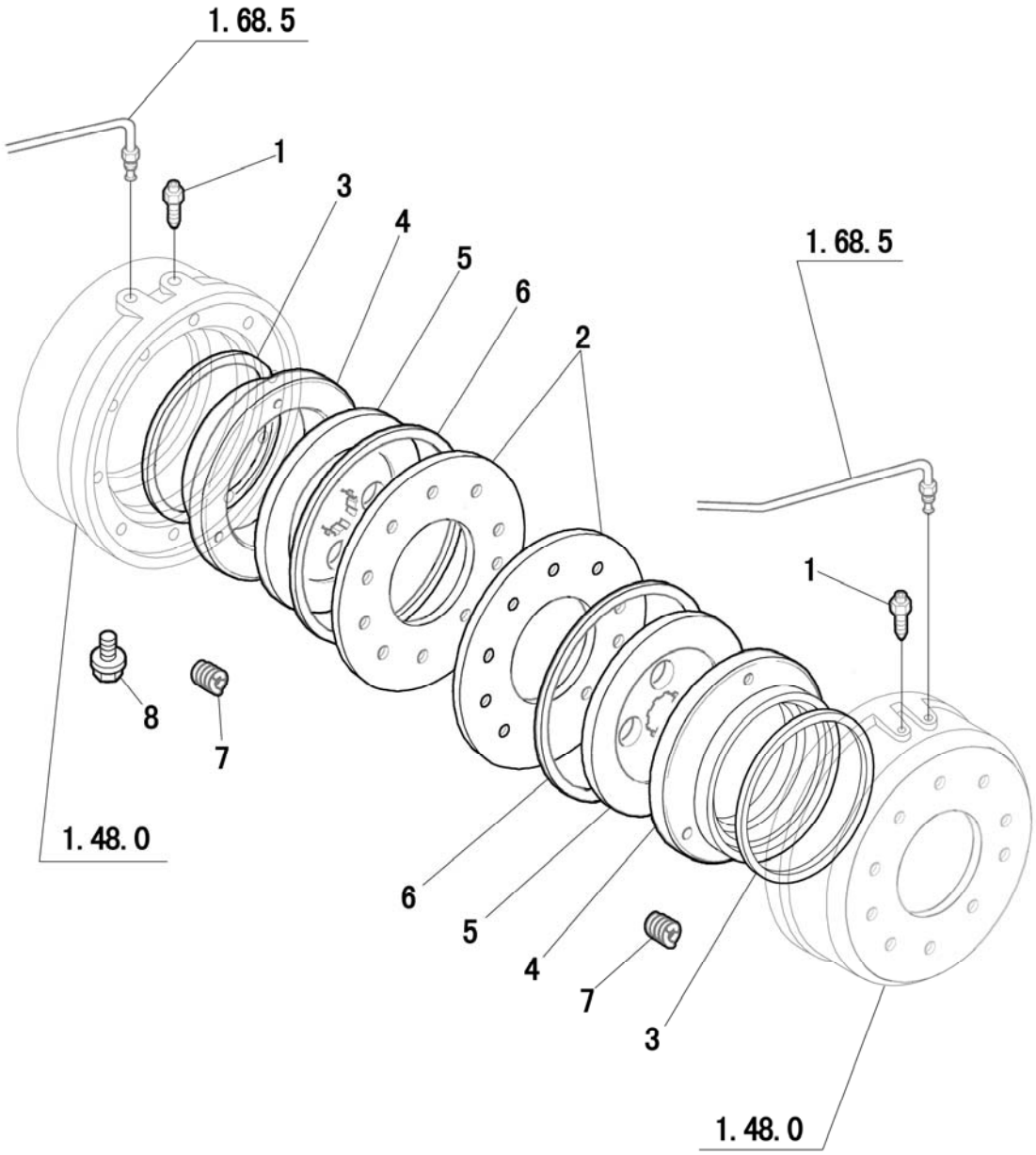

TRANSMISSION BRAKE

R	P.N.	DESCRIPTION	QTY
1	5106843	SCREW	2
2	5191349	DISC, BRAKE	2
3	5158115	SEAL, BRAKE PISTON	2
4	5191352	BRAKE PISTON	2
5	5184313	BRAKE DISC WITH PADS (IMPORTED)	2
5	51342141	BRAKE DISC WITH PADS (DOMESTIC)	2
6	5105536	SEAL, BRAKE PISTON	2
7	5120761	SPRING	6
8	5117615	PLUG	2

1.65.5	1/1	06/09

HANDBRAKE CONTROL

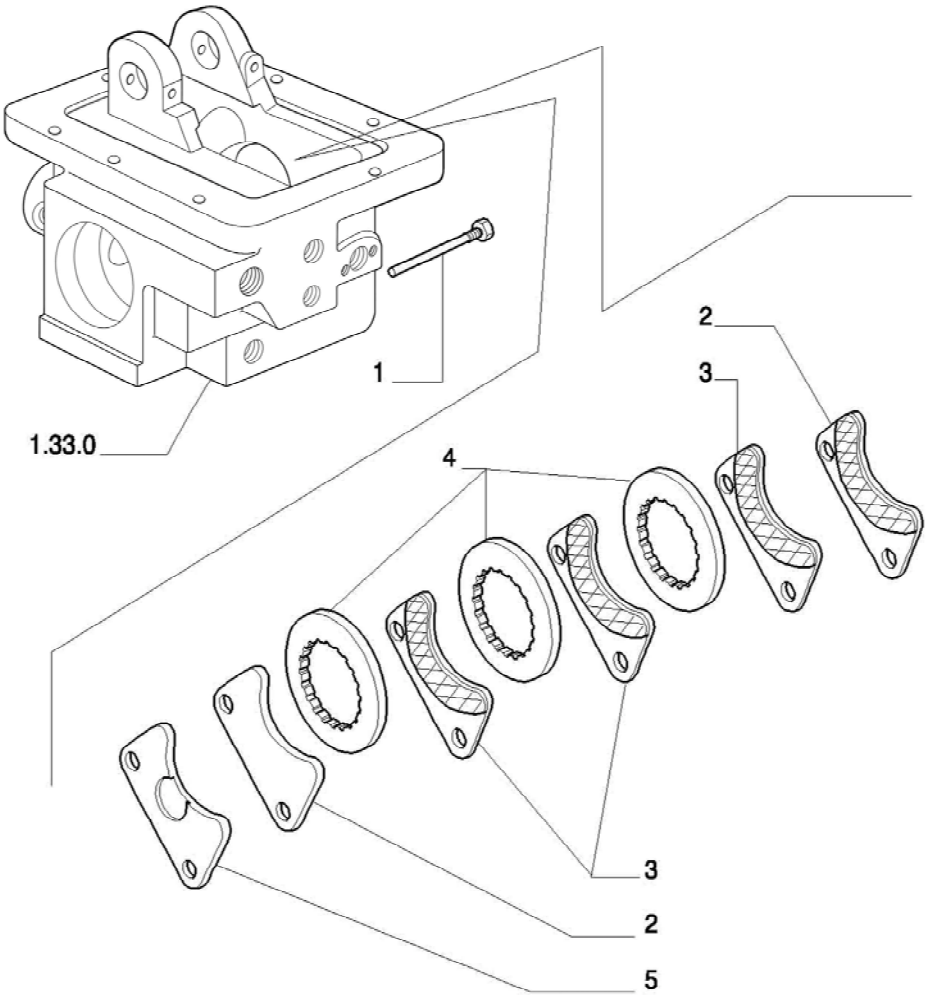

HANDBRAKE CONTROL

R	P.N.	DESCRIPTION	QTY
1	5123396	SCREW	2
2	5118095	PARKING BRAKE SECTOR	2
3	5118100	PARKING BRAKE INNER SECTOR	3
4	5118101	PARKING BRAKE DISC	3
5	5122153	PARKING BRAKE SHOE	1

1.67.2	1/1	06/09

HANDBRAKE CONTROL

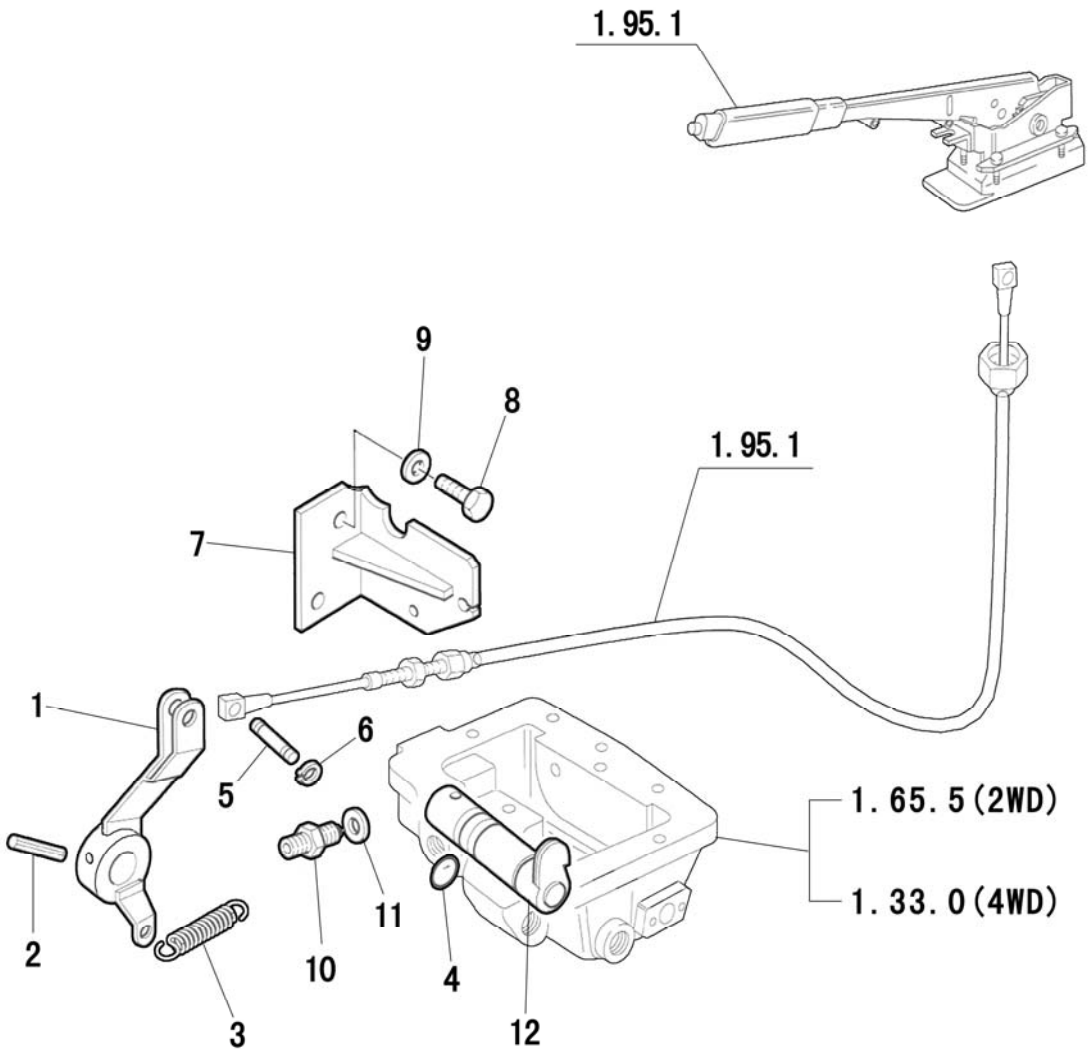

HANDBRAKE CONTROL

R	P.N.	DESCRIPTION	QTY
1	51337768	ROD (4WD)	1
1	51337767	ROD (2WD)	1
2	13917170	ROLLER PIN	1
3	5127295	SPRING	1
4	14457780	O-RING SEAL	1
5	5111831	PIN	1
6	51323312	RETAINING RING	2
7	5183157	BRACKET	1
8	51323133	CAPSCREW	2
9	11198674	LOCKWASHER, TAPER	2
10	5118107	SCREW	1
11	10298460	SEAL, RECTANGULAR (2WD)	1
12	5162774	PIN W/INNER LEVER CONTROL PARKINK BRAKE (4WD)	1
12	5123850	PIN W/INNER LEVER HAND BRAKE CONTR. (2WD)	1

1.68.5	1/1	06/09

BRAKE PIPE

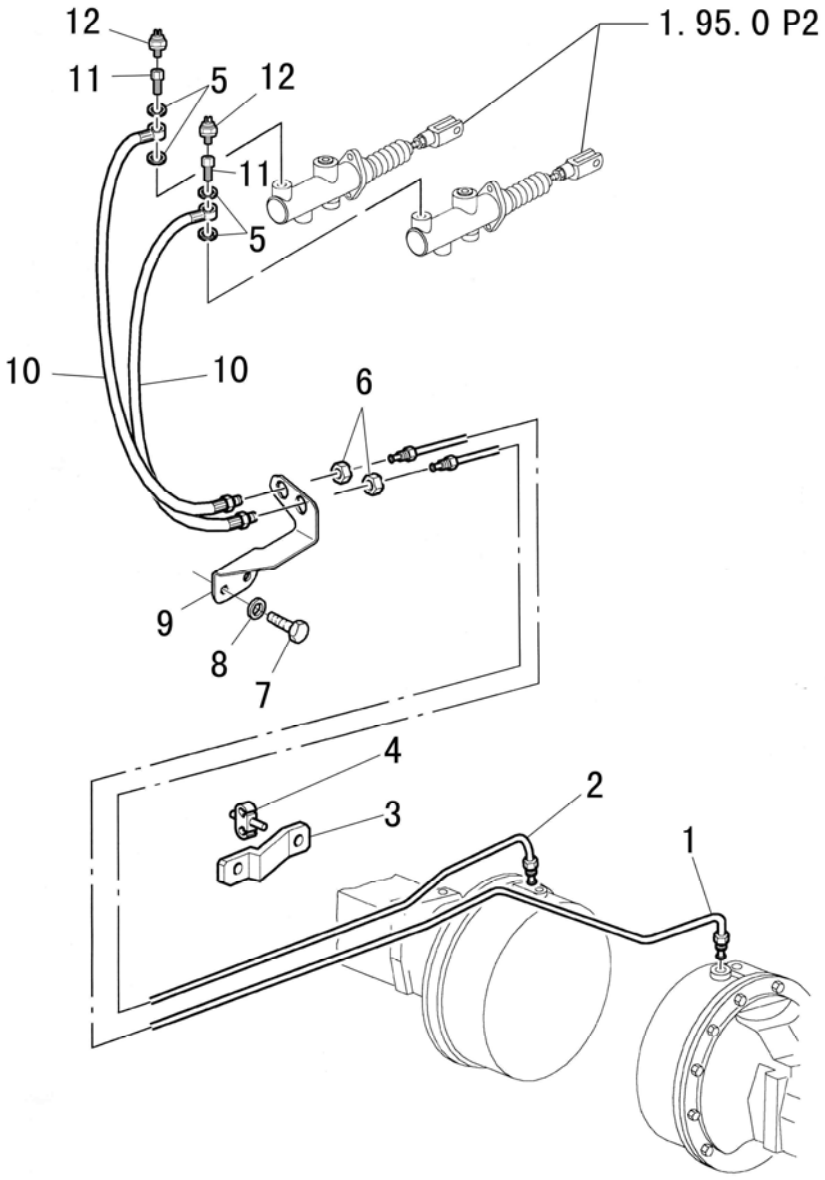

BRAKE PIPE

R	P.N.	DESCRIPTION	QTY
1	47132547	LH PIPE BRAKE ASSY	1
2	47132549	RH PIPE BRAKE ASSY	1
3	47132597	BRACKET	1
4	14575380	RETAINER	4
5	51332509	WASHER 12	4
6	10718114	LOCKNUT	2
7	15970621	CAPSCREW	1
8	51332509	WASHER 12	4
9	51331181	BRACKET BRAKE HOSE	1
10	47136663	HOSE BRAKE MASTER CYLINDER	2
11	5155704	JOINT	2
12	51335497	PRESSURE SWITCH 6A	2

ELECTRICAL EQUIPMENT

SEC. 6

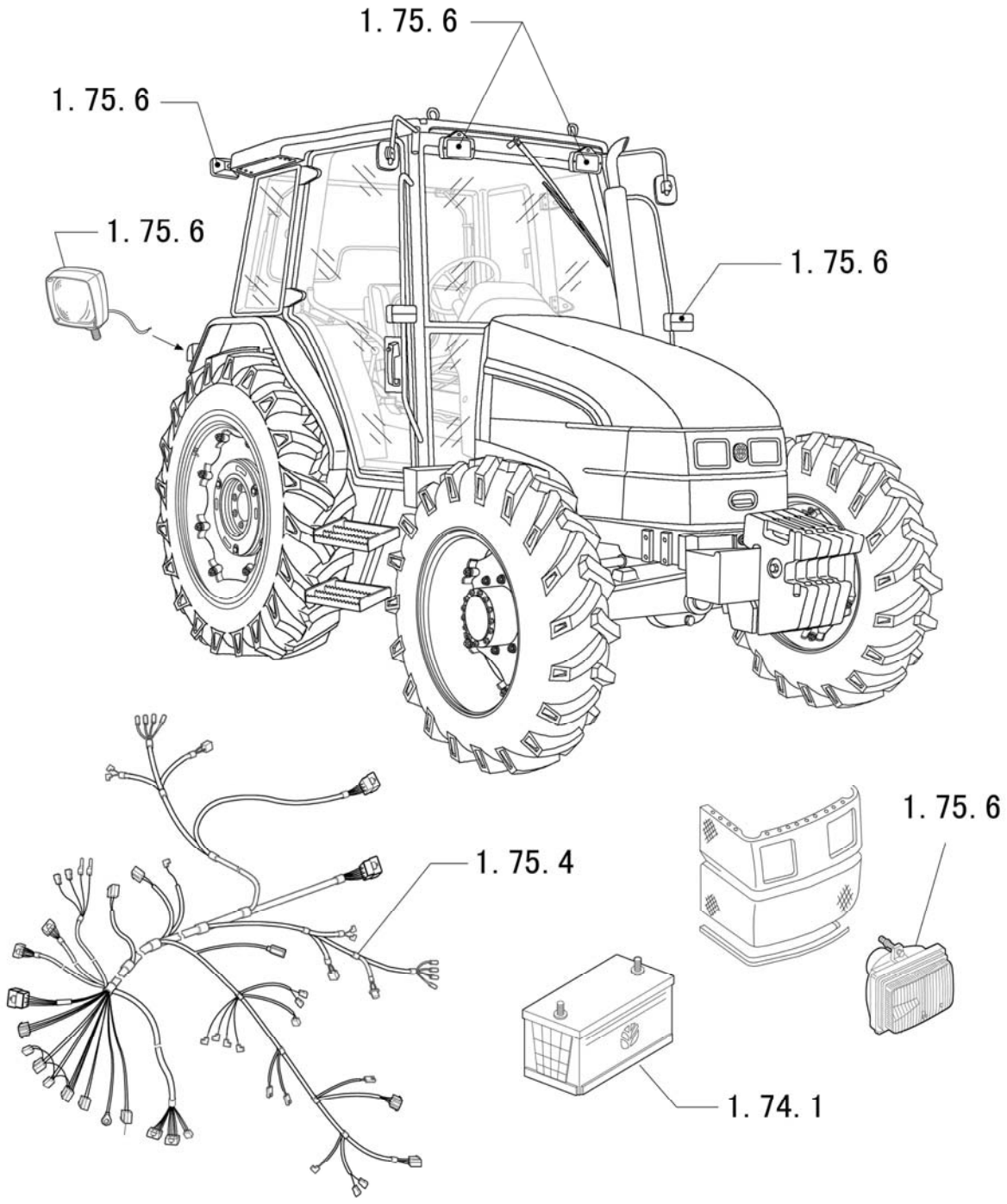

1.74.1	1/1	06/09

BATTERY MOUNTING, BATTERY & CABLE

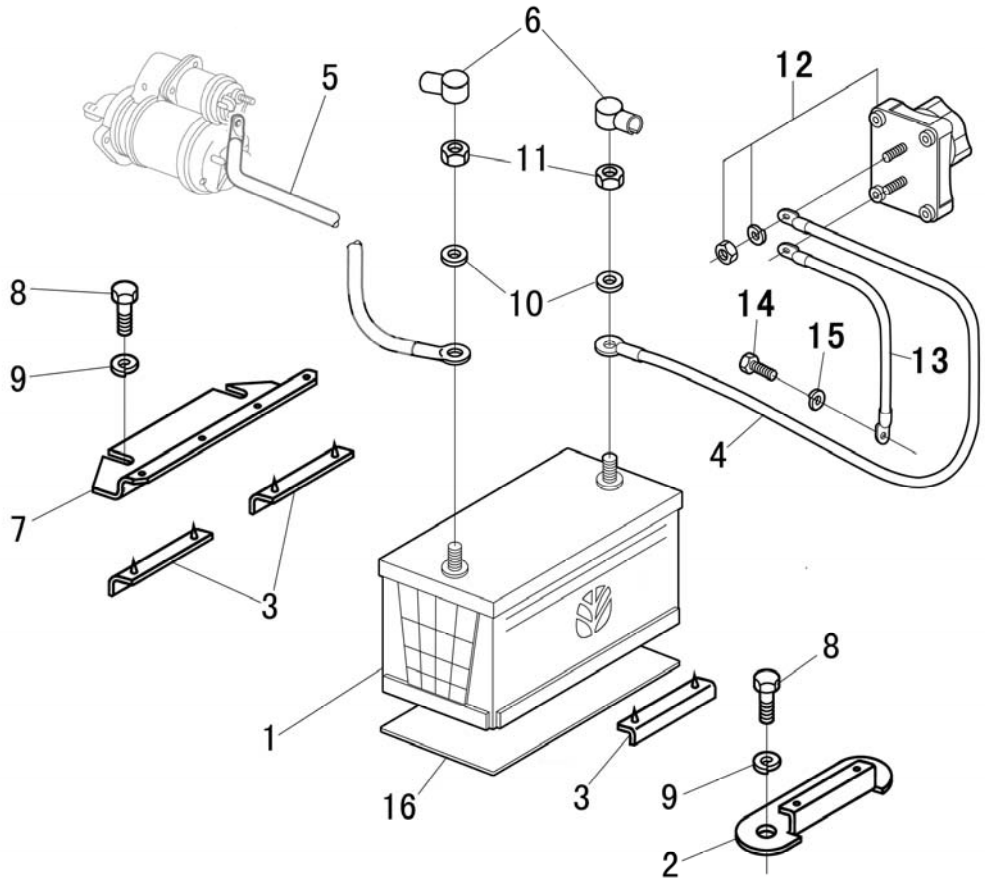

BATTERY MOUNTING, BATTERY & CABLE

R	P.N.	DESCRIPTION	QTY
1	51328988	BATTERY	1
2	51331316	BATTERY FIXING PLATE	1
3	5115754	CLAMP OF BATTERY	3
4	51337012	SHUT-OFF CABLE	1
5	51330725	STARTING CABLE	1
6	51328291	COVER	2
7	51330702	BATTERY FIXING PLATE	1
8	51323129	BOLT	4
9	51323380	WASHER	4
10	51323403	WASHER	2
11	51323713	NUT	2
12	51337014	ELECTRICAL POWER SWITCH	1
13	51337013	CABLE	1
14	51323095	BOLT	1
15	51323379	GASKET	1
16	51330703	SPACER	1

1.75.1	1/1	06/09

STEERING COLUMN COVER

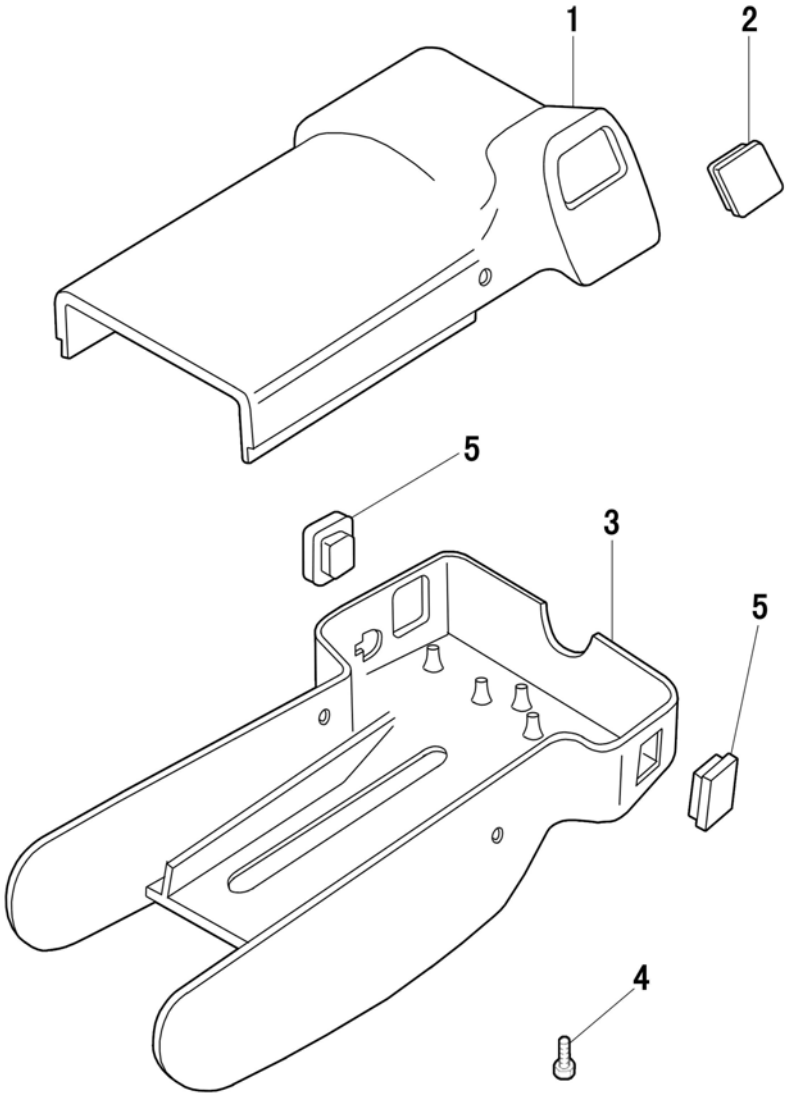

STEERING COLUMN COVER

R	P.N.	DESCRIPTION	QTY
1	82034647	FRONT COVER	1
2	51331317	PLUG	1
3	82007773	REAR COVER	1
4	51323235	SCREW	4
4	51330787	SCREW	2
5	82004989	PLUG	2

1.75.4	1/1	06/09

VARIOUS ELECTRIC CABLES & ELEMENTS

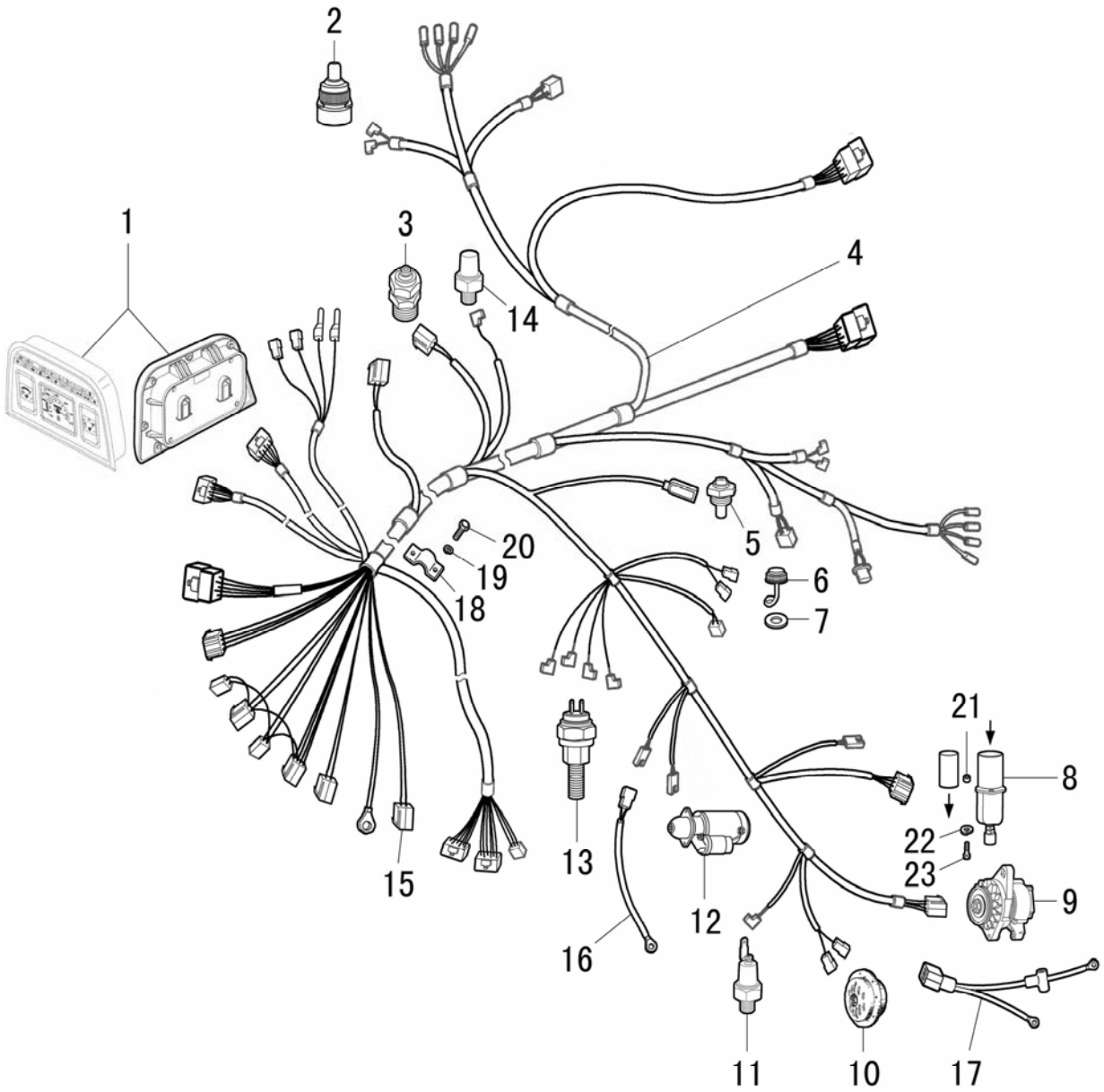

VARIOUS ELECTRIC CABLES & ELEMENTS

R	P.N.	DISCRIPTION	QTY
1	51336320	INSTURMENT CLUSTER (EURO I)	1
1	51336321	INSTURMENT CLUSTER (EURO II)	1
2	5131017	SWITCH FOR PARKING BRAKE SIGNALER	1
3	51330730	ENGINE STARTING SWITCH	1
4	51330734	MASTER WIRE	1
5	51335603	ROTATE SPEED SENSOR	1
6	51327516	WATER TEMPERATURE WASHER	1
7	87332142	WATER TEMPERATURE WASHER	1
8	51336679	FUEL CUT-OFF SOLENOID	1
9	51338481	ALTERNATOR	1
10	51330719	HORN	1
10	51335606	HORN (NEW STYLE)	1
11	51322235	OIL PRESSURE SWITCH	1
12	51338482	STARTER MOTOR	1
13	51335497	PRESSURE SWITCH	2
14	51327521	AIR PRESSURE SENSOR	1
15	51334057	PNEUMATIC BRAKE CABLE	1
16	51331337	STARTER MOTOR CABLE	1
17	51331339	ALTERNATOR CABLE	1
18	51333800	CLAMP	1
19	51326861	SCREW	2
20	51323401	GASKET	2
21	51320920	WASHER	2
22	51323378	WASHER	2
23	51327171	BOLT	2

1.75.6	1/2	06/09

HEADLAMP

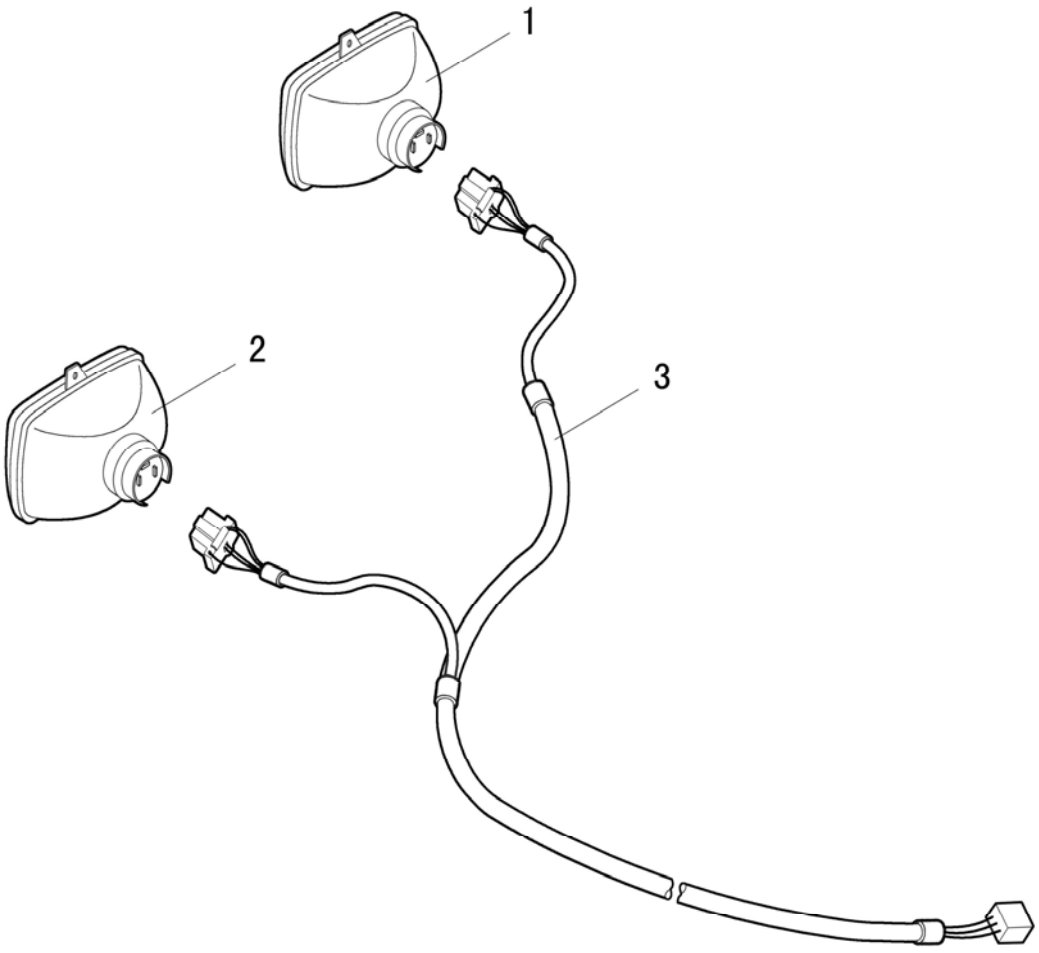

HEADLAMP

R	P.N.	DESCRIPTION	QTY
1	51330794	BULB ASSY RH	1
2	51330793	BULB ASSY LH	1
3	51330775	HARNESS ASSY, WIRING ASSY	1

STEERING LIGHTING COMPONENTS

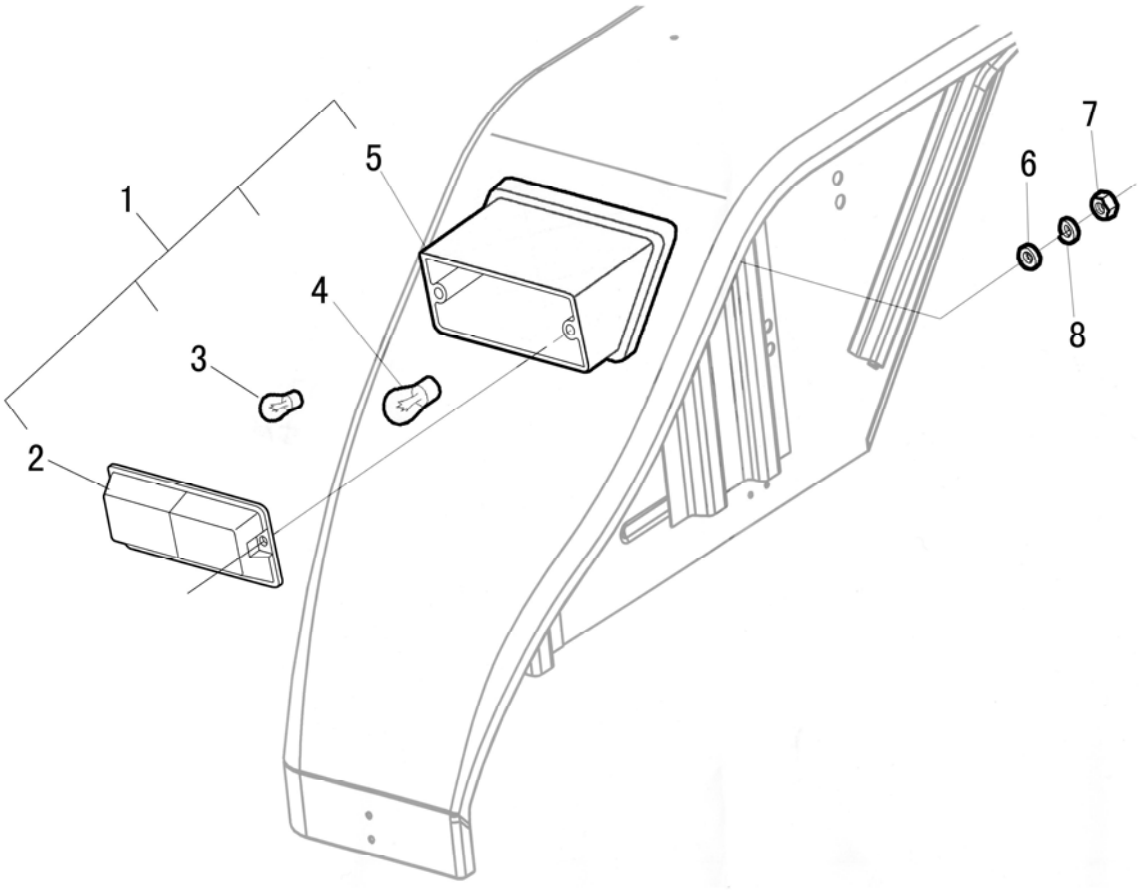

STEERING LIGHTING COMPONENTS

R	P.N.	DESCRIPTION	QTY
1	51330731	R.H. REAR SIGNAL LIGHT	1
1	51330795	L.H. REAR SIGNAL LIGHT	1
1	51330733	L.H FRONT TRACTOR LAMP	1
1	51330796	R.H FRONT TRACTOR LAMP	1
2	51331883	PE COVER	1
2	51331885	PE COVER	1
3	51331880	BULB P21-12V	1
4	51331882	BULB P21/5-12V	1
6	51323401	GASKET	4
7	51323300	NUT	4
8	51323378	WASHER	4

1.75.6/A	1/1	06/09

FRONT LIGHTING COMPONENTS

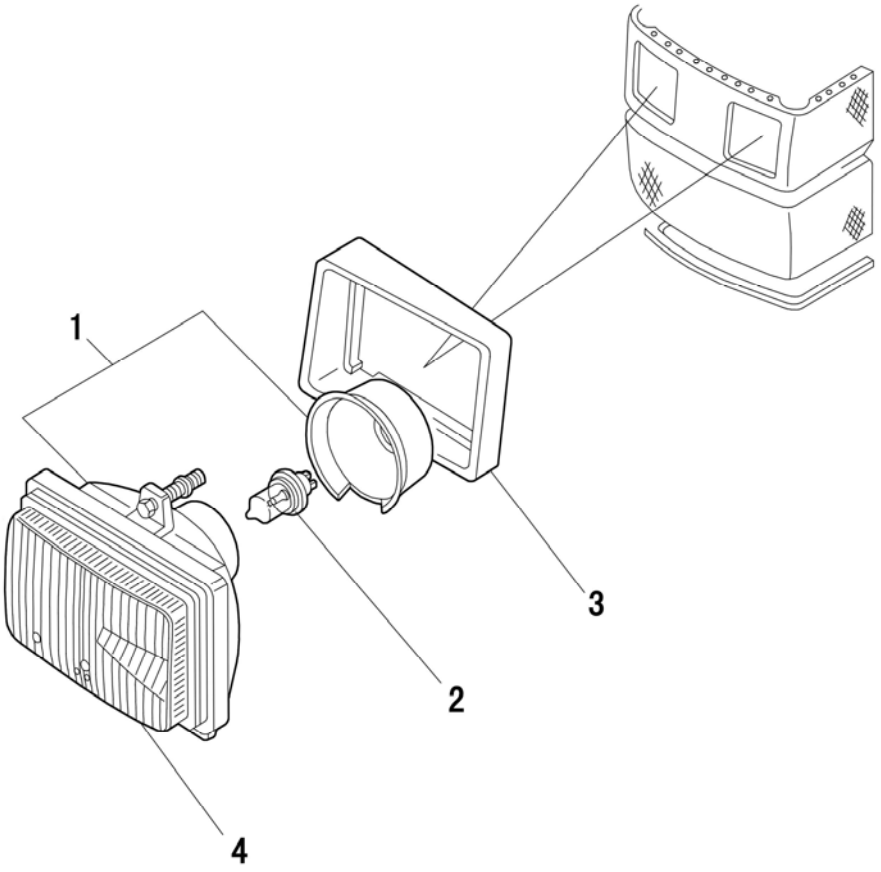

FRONT LIGHTING COMPONENTS

R	P.N.	DESCRIPTION	QTY
1	51330794	R.H. FRONT HEAD LIGHT ASSY.	1
1	51333929	R.H. FRONT HEAD LIGHT ASSY. (FOR EXPORT)	1
1	51330793	L.H. FRONT HEAD LIGHT ASSY.	1
1	51333930	L.H. FRONT HEAD LIGHT ASSY. (FOR EXPORT)	1
2	51331873	BULB (H4)	2
3	5169373	R.H. HEAD LAMP GASKET	1
3	5168895	L.H.HEAD LAMP GASKET	1
4	51331872	LENS	2
4	51334281	LENS	2

1.75.6/B	1/1	06/09

FRONT HEAD LIGHTING COMPONENTS

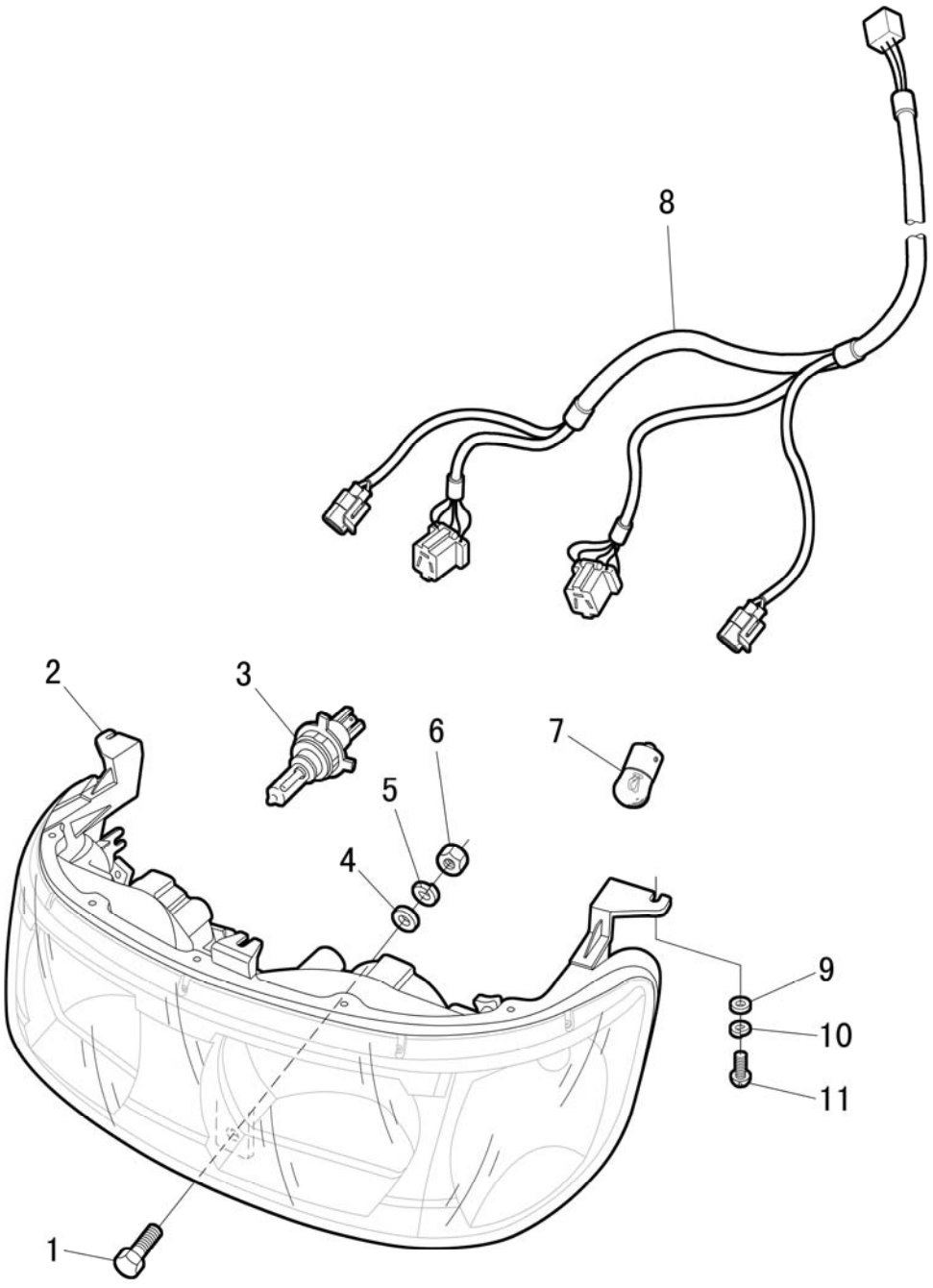

FRONT HEAD LIGHTING COMPONENTS

R	P.N.	DESCRIPTION	QTY
1	51323096	BOLT	3
2	51334252	FRONT HEAD LIGHT	1
2	51334263	FRONT HEAD LIGHT (FOR EXPORT)	1
3	51331873	BULB (H4)	2
4	51323402	PLAIN WASHER 8	3
5	51325801	WASHER	3
6	51323143	NUT	3
7	51335259	BULB	2
8	51335269	FRONT LIGHT CABLE (4-CYLINDER TRACTOR)	1
8	51335266	FRONT LIGHT CABLE (6-CYLINDER TRACTOR)	1
9	51323401	GASKET	5
10	51325799	GASKET	5
11	51323091	BOLT	5

1.75.6/C	1/1	06/09

REFLECTOR ASSEMBLY

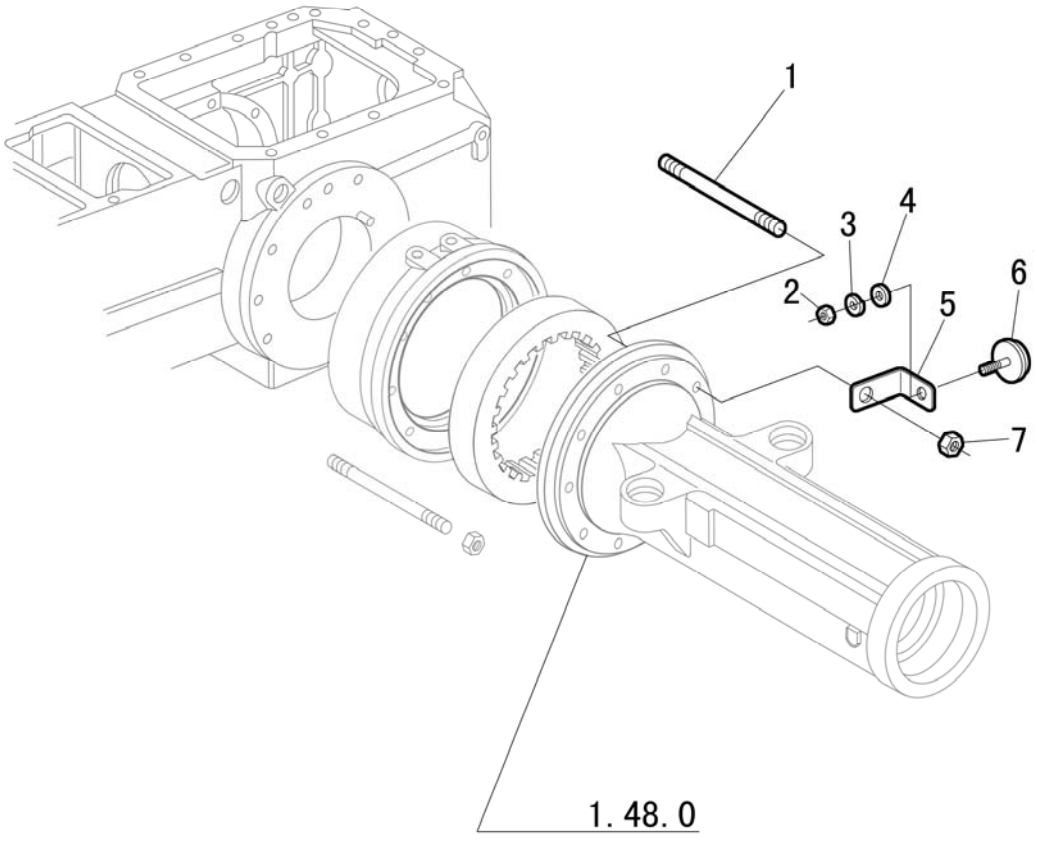

REFLECTOR ASSEMBLY

R	P.N.	DISCRIPTION	QTY
1	13558130	STUD, TL90, TL100	18
1	13557930	STUD, TL80	2
1	5171503	STUD (W/ TWO ASSIST RAMS)	6
2	51323142	NUT	2
3	51323378	WASHER	2
4	51323401	WASHER	2
5	51337916	RIVET	2
6	51337621	REFLECTER, LAMP	2
7	12164024	NUT	20

HYDRAULICS

SEC. 7

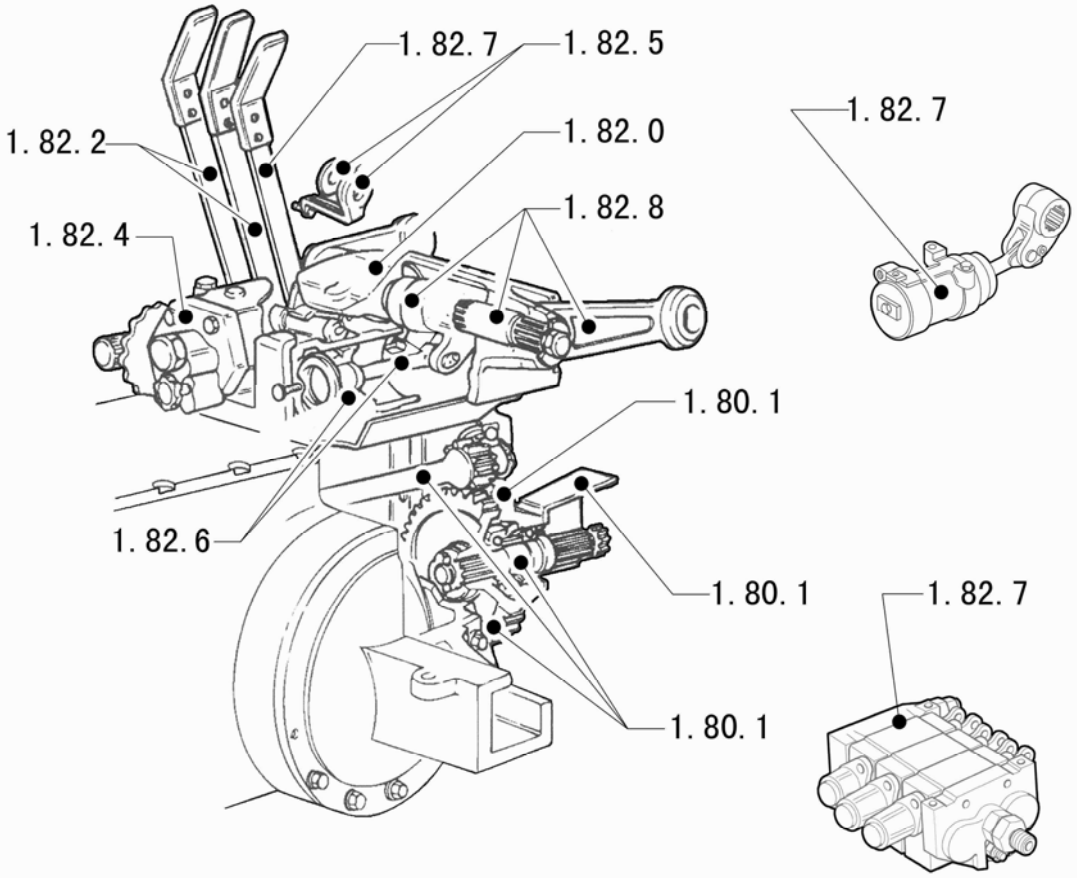

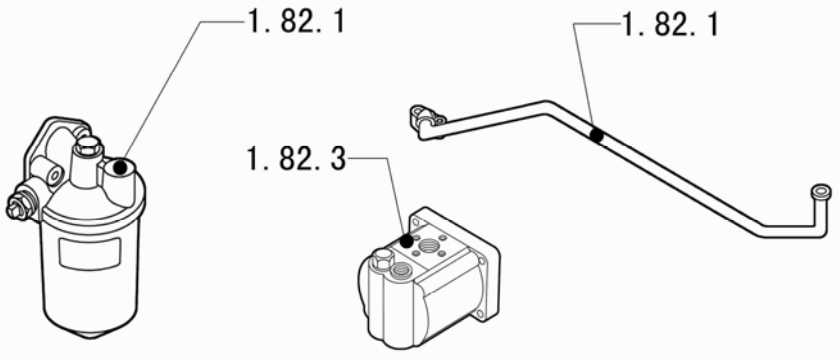

PTO - SHIELD

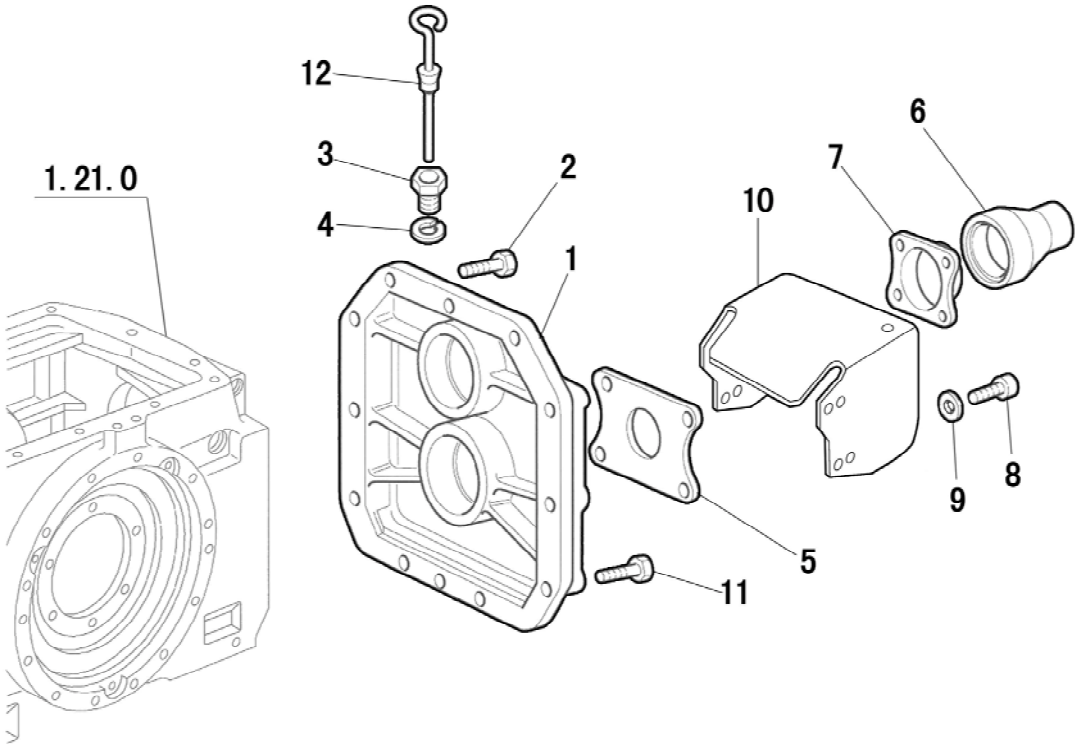

PTO - SHIELD

R	P.N.	DESCRIPTION	QTY
1	51337044	P.T.O. CASING	1
2	51327956	BOLT	4
3	5169718	PLUG FOR DIPSTICK	1
4	10263460	SEAL	1
5	5104039	GUARD REAR SEAL	1
6	47125899	PTO SAFETY COVER	1
7	5155332	SEAL PROTECTION	1
8	51323203	SCREW	4
9	51325849	WASHER	4
10	51333157	GUARD	1
11	15981521	BOLT	6
12	5169720	DIPSTICK	1
13	14452880	SEAL	2

P.T.O. - SHAFTS & GEARS

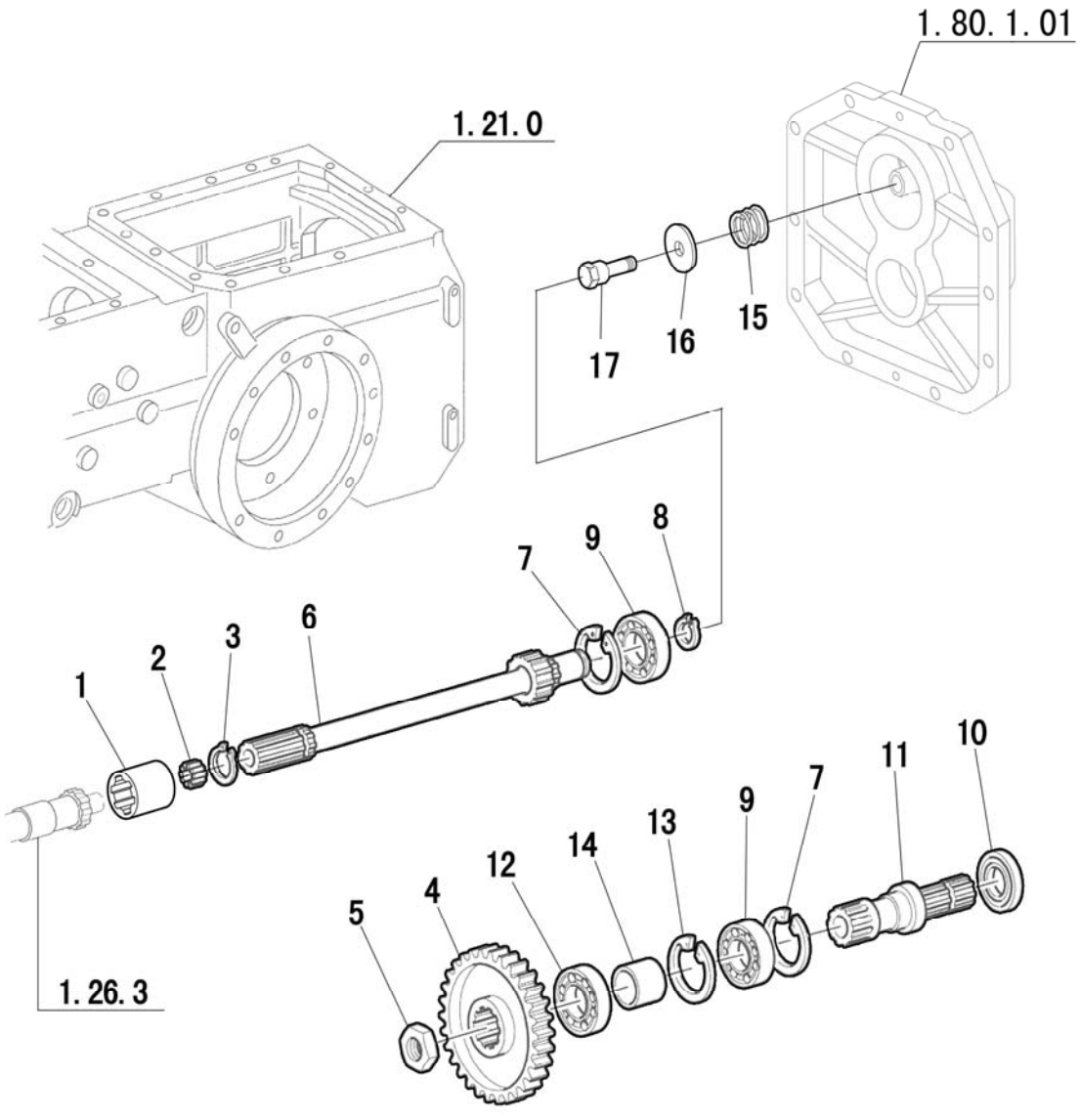

P.T.O. - SHAFTS & GEARS

R	P.N.	DESCRIPTION	QTY
1	51343098	P.T.O. COUPLING	1
2	5103238	BEARING ROLLER	1
3	11068376	RETAINING RING	1
4	51332330	P.T.O.DRIVEN GEAR, 540RPM	1
4	87368073	P.T.O.DRIVEN GEAR, 750RPM	1
5	5122985	RING NUT	1
6	51332922	P.T.O. DRIVE SHAFT, 540RPM	1
6	51332920	P.T.O. DRIVE SHAFT, 750RPM	1
7	11062476	RETAINING RING	2
8	81864128	RETAINING RING	1
9	20943310	BEARING	2
10	51337073	SEAL	1
11	51334298	PTO OUTPUT SHAFT, 540RPM, 6 SPLINES	1
11	51334296	PTO OUTPUT SHAFT, 750RPM, 8 SPLINES	1
12	5138660	BEARING	1
13	51337074	SNAP RING	1
14	51337072	P.T.O. SHAFT SLEEVE	1
15	47127604	SPRING PTO BRAKE	1
16	47131175	BRAKE DISC	1
17	47130774	PIN	1

1.80.1/5	1/2	06/09

DUAL SPEED 540-750-1000RPM - P.T.O. - CASING & SHAFT

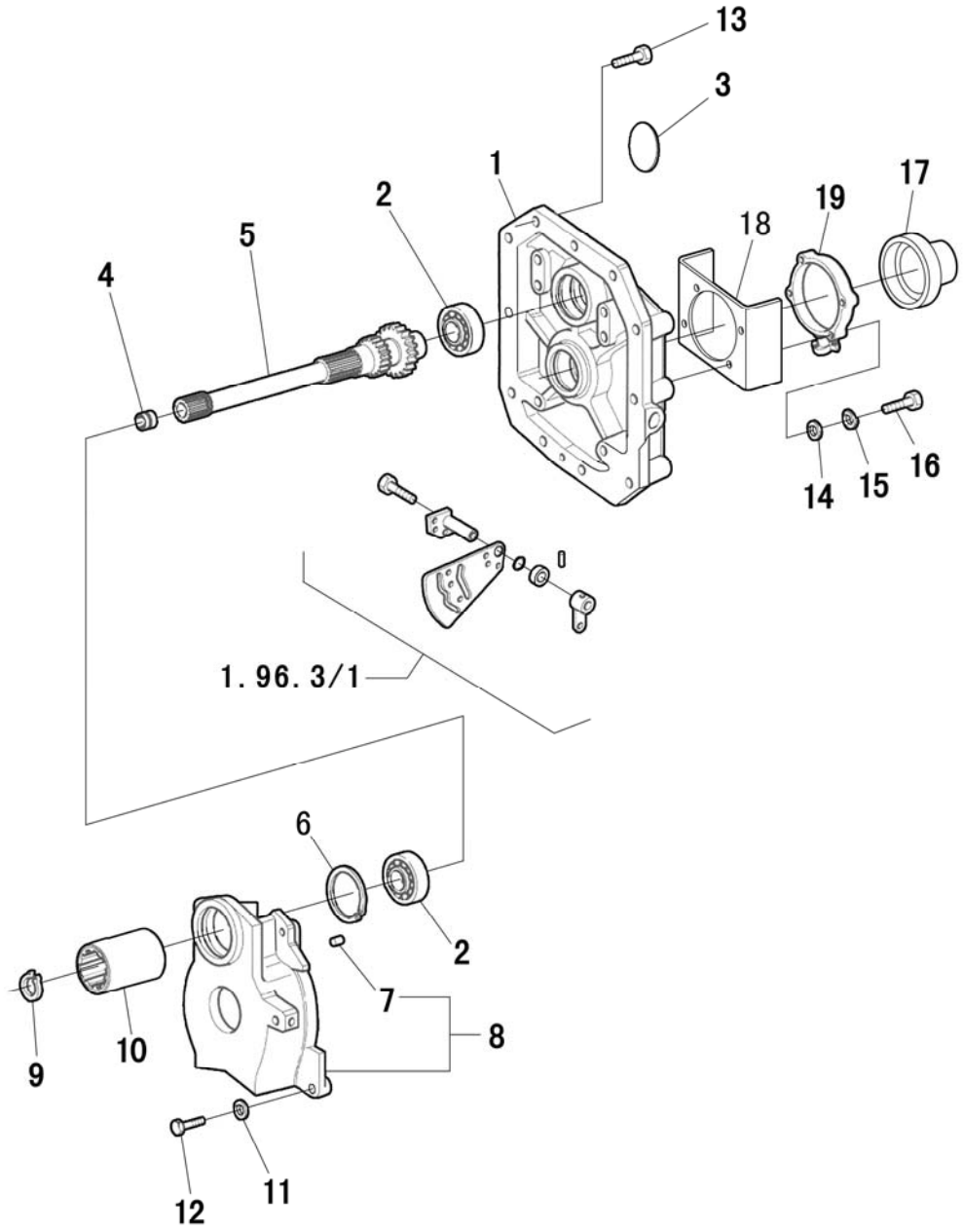

DUAL SPEED 540-750-1000RPM - P.T.O. - CASING & SHAFT

R	P.N.	DESCRIPTION	QTY
1	87346814	PTO CASING	1
2	20943310	BEARING	2
3	14328501	PLUG	1
4	5103238	BEARING ROLLER	1
5	51343246	PTO DRIVE SHAFT 540-1000RPM	1
5	51343099	PTO DRIVE SHAFT 540-750RPM	1
5	51343247	PTO DRIVE SHAFT 540/1000RPM (EURO II)	1
6	11062476	RETAINING RING	1
7	10839710	PIN	2
8	87307208	P.T.O. SUPPORT WITH DOWELS ASSEMBLY	1
9	81864128	RETAINING RING	1
10	51343098	P.T.O. COUPLING	1
11	11190779	LOCKWASHER	4
12	51327276	BOLT	4
13	51327956	BOLT	4
14	51323413	WASHER	4
15	51325849	WASHER	4
16	51323203	SCREW	4
17	47125899	PTO SAFETY COVER	1
18	51337906	GUARD PTO SHAFT	1
19	5155332	SEAL PROTECTION	1

1.80.1/5	2/2	06/09

DUAL SPEED P.T.O. SHAFT & CONNECTING SLEEVE

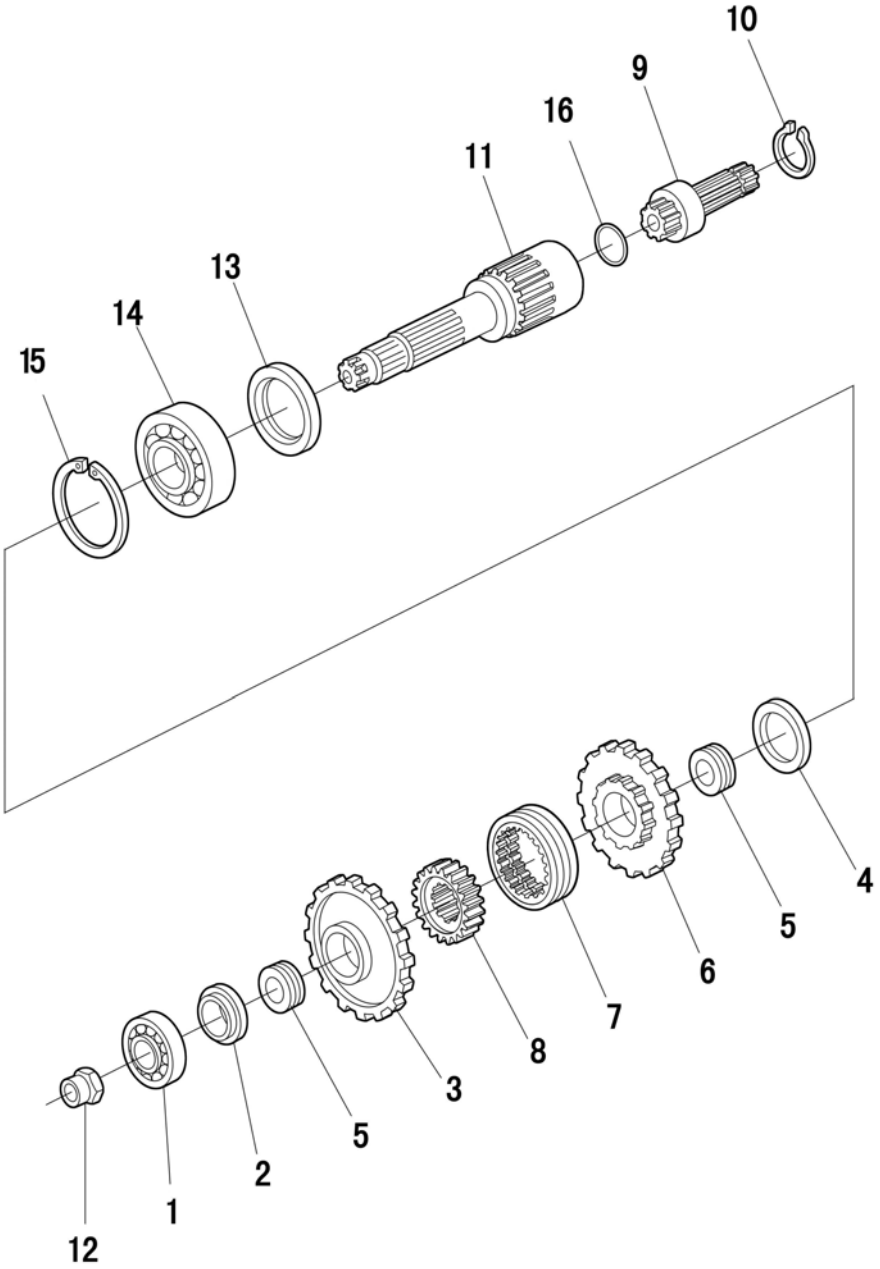

DUAL SPEED P.T.O. SHAFT & CONNECTING SLEEVE

R	P.N.	DESCRIPTION	QTY
1	20045200	BEARING	1
2	5162811	THRUST WASHER	1
3	5170028	P.T.O. DRIVEN GEAR (540/1000)	1
3	47124070	P.T.O. DRIVEN GEAR (540/750)	1
3	47124070	P.T.O. DRIVEN GEAR (540/1000, EURO II)	1
4	5109656	THRUST WASHER	1
5	5101537	DRIVEN GEAR BUSHING	2
6	5170030	P.T.O.1000 DRIVEN GEAR	1
6	47124071	P.T.O.750 DRIVEN GEAR	1
6	47124069	P.T.O.1000 DRIVEN GEAR (EURO II)	1
7	5129513	SLEEVE SLIDING P.T.O.CONTROL	1
8	5129512	SLEEVE FIXED P.T.O.CONTROL	1
9	51334297	P.T.O. SHAFT (540/750/1000, 6 SPLINES)	1
9	51333170	P.T.O.SHAFT (540/750/1000, 8 SPLINES)	1
9	47133076	P.T.O. SHAFT (540/750/1000, 21 SPLINES)	1
10	87347166	SNAP RING	1
11	5198353	P.T.O. SHAFT	1
12	5122985	LOCKING NUT	1
13	5165976	SEAL	1
14	20943310	BEARING	1
15	11062476	SNAP RING	1
16	14459881	O-RING	1

1.82.0	1/1	06/09

LIFTER HOUSING

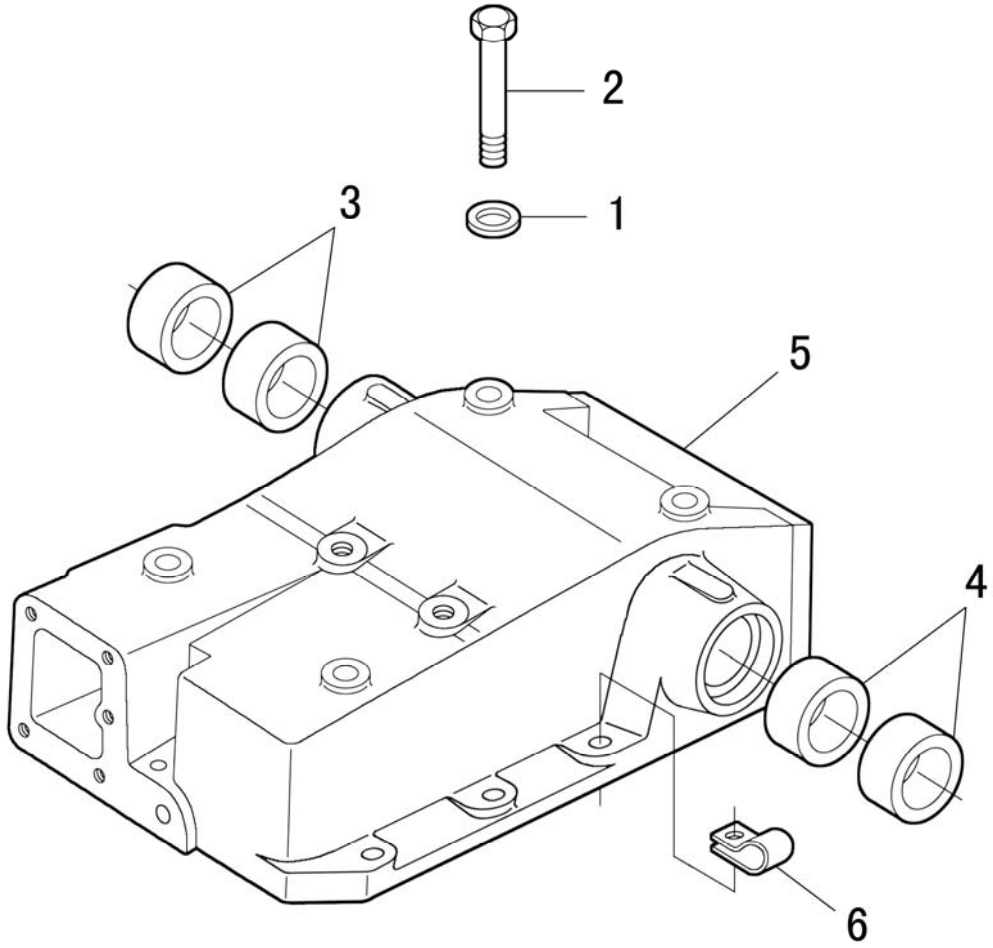

LIFTER HOUSING

R	P.N.	DESCRIPTION	QTY
1	51323381	WASHER	13
2	51323117	BOLT	7
2	51323118	BOLT	3
2	51323135	BOLT	1
2	51323110	BOLT	2
3	51342805	RIGHT BUSH, ROCKER SHAFT	2
4	51342804	LEFT BUSH, BOCKER SHAFT	2
5	51330850	LIFTER HOUSING	1
6	51327631	CLIP	1

1.82.1	1/5	06/09

LIFTER, LINES

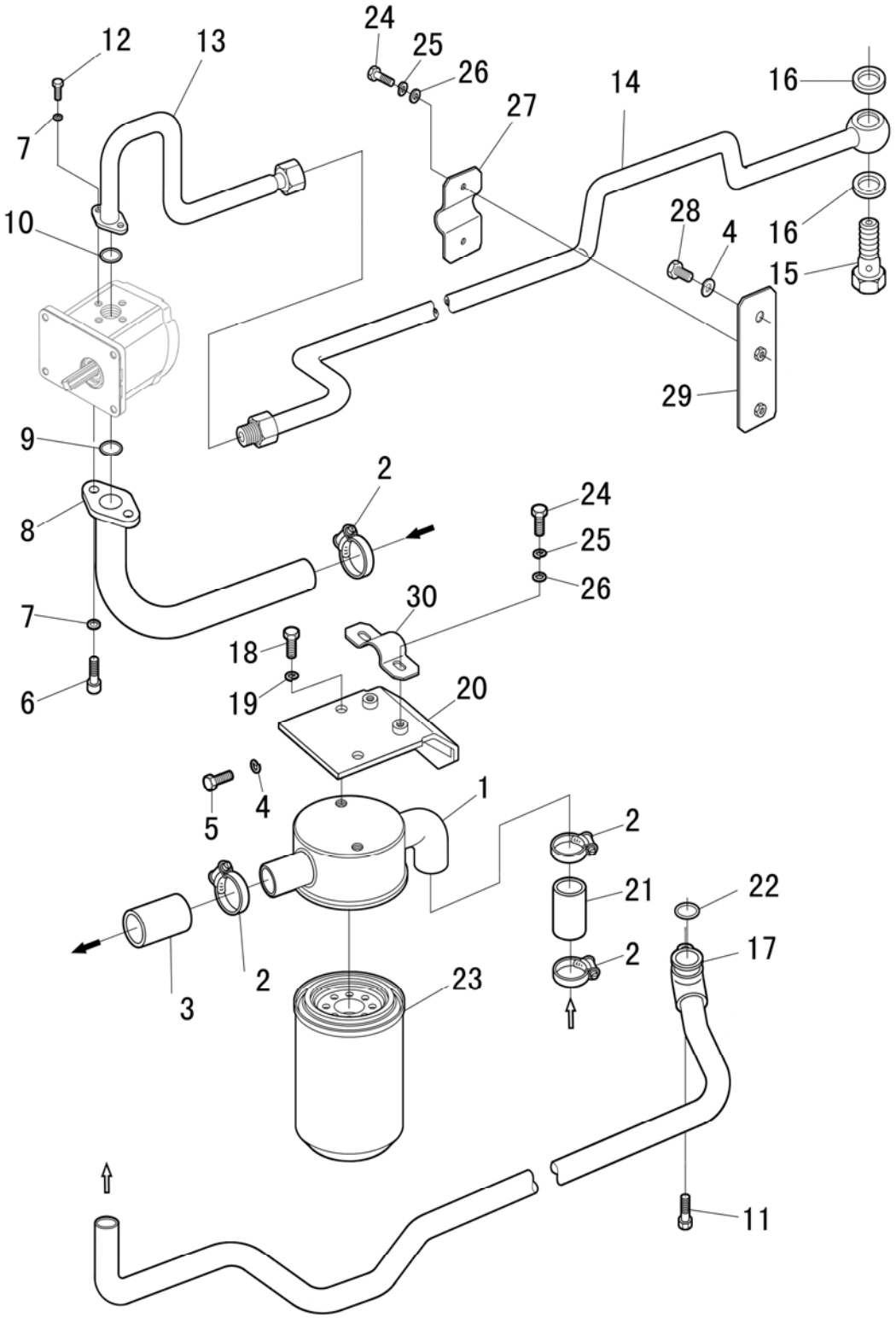

LIFTER, LINES

R	P.N.	DESCRIPTION	QTY
1	51337179	FILTER SEAT	1
2	51323501	HOSE CLIP	4
3	51331145	HOSE	1
4	51323382	WASHER	3
5	51330555	BOLT	2
6	51323204	SCREW	2
7	51323379	WASHER	4
8	51342623	INTAKE OIL PIPE	1
9	51330839	O-RING	1
10	51336833	O-RING	1
11	51330840	BOLT	1
12	51323098	BOLT, PIPE CONNECTOR	2
13	51342619	HIGH PRESSURE OUTLET PIPE	1
14	51342621	HIGH PRESSURE OIL PIPE	1
15	87322705	BOLT	1
16	87332142	SEALING WASHER	2
17	51342625	OIL SUCTION PIPE	1
18	51323103	BOLT	2
19	51323380	GASKET	2
20	51342548	FLITER SUPPORT PLATE	1

LIFTER, LINES

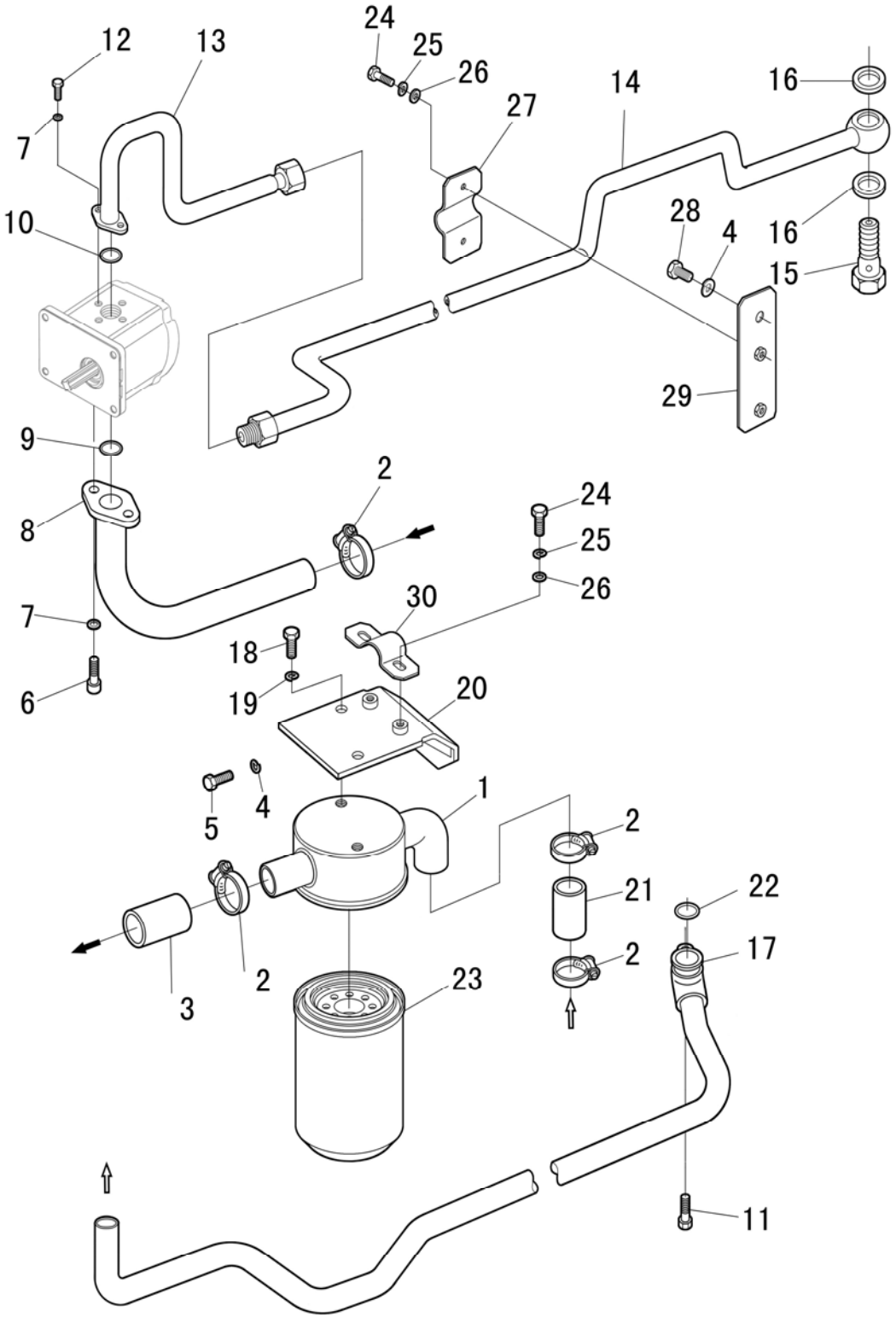

LIFTER, LINES

R	P.N.	DESCRIPTION	QTY
21	51330828	CONNECTING HOSE I	1
22	51330842	O-RING	1
23	51337035	FILTER CARTRIDGE	1
24	51323091	BOLT-HEX.M6	4
25	51323378	WASHER	4
26	51323401	GASKET	4
27	51336180	CLAMP II	1
28	51332294	BOLT	1
29	51336179	CLAMP I	1
30	51336254	CLAMP III	1

1.82.1	3/5	06/09

LIFTER, LINES - W/ PNEUMATIC PUMP

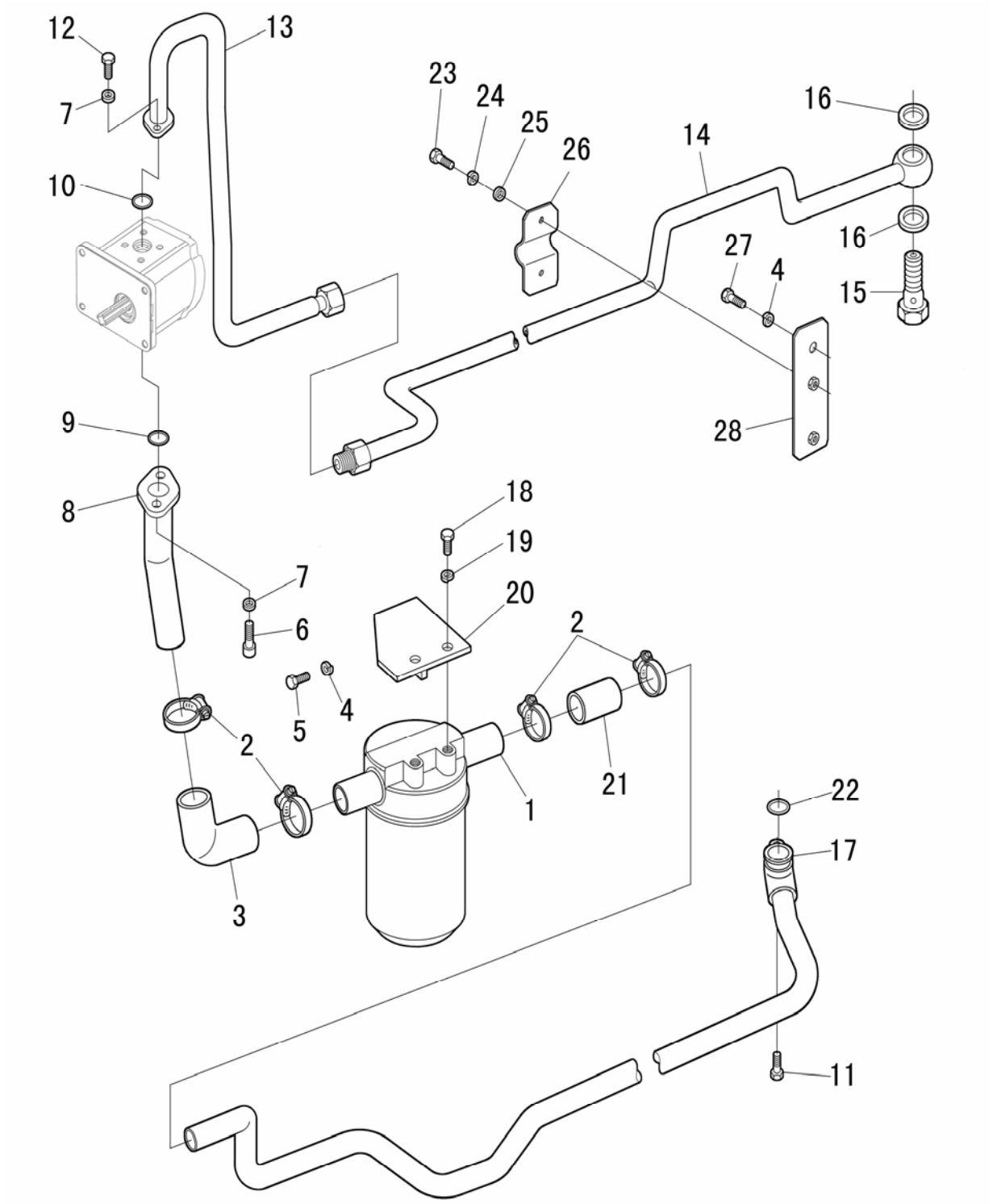

LIFTER, LINES - W/ PNEUMATIC PUMP

R	P.N.	DESCRIPTION	QTY
1	51331150	FILTER CARTRIDGE	1
2	51323501	CLAMP	4
3	51330829	HOSE	1
4	51323382	WASHER	3
5	51330555	BOLT	2
6	51323204	SCREW	2
7	51323379	WASHER	4
8	51330816	INTAKE OIL PIPE, FILTER	1
9	51330839	O-RING SEAL	1
10	51336833	O-RING SEAL	1
11	51330840	BOLT	1
12	51323098	BOLT, PIPE CONNECTOR	2
13	51330820	HIGH PRESSURE OUTLET PIPE	1
14	51330821	HIGH PRESSURE PIPE	1
15	51322705	BOLT	1
16	87332142	SEAL	2
17	51332359	OIL SUCTION PIPE	1
18	51323103	BOLT	2
19	51323380	WASHER	2
20	51330813	FILTER SUPPORT PLATE	1

1.82.1	4/5	06/09

LIFTER, LINES - W/ PNEUMATIC PUMP

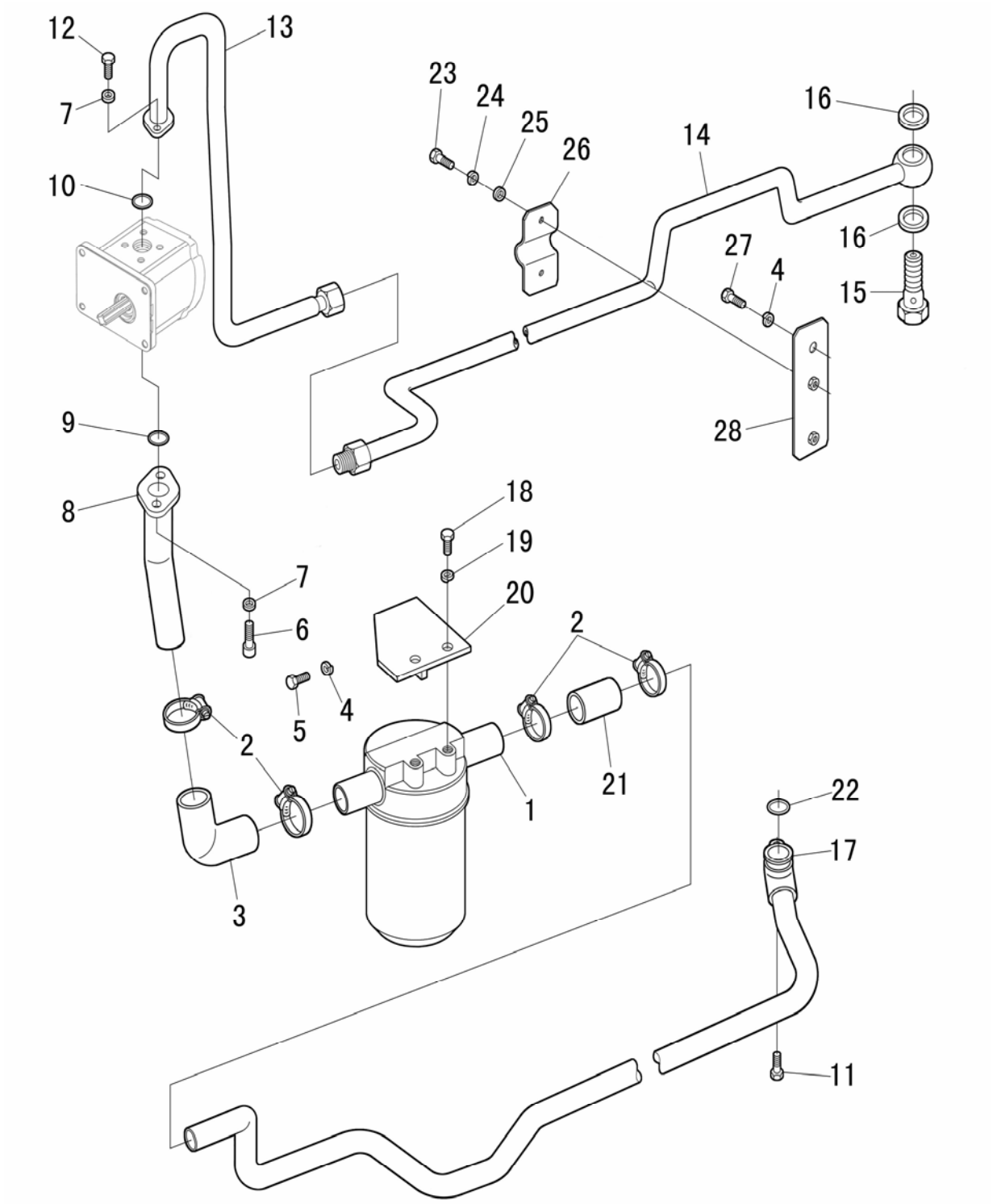

LIFTER, LINES - W/ PNEUMATIC PUMP

R	P.N.	DESCRIPTION	QTY
21	51330828	CONNECTING HOSE I	1
22	51330842	O-RING SEAL	1
23	51323091	BOLT	4
24	51323378	WASHER	4
25	51323401	GASKET	4
26	51336180	CLAMP II	1
27	51332294	BOLT	1
28	51336179	CLAMP I	1

LIFTER, LINES

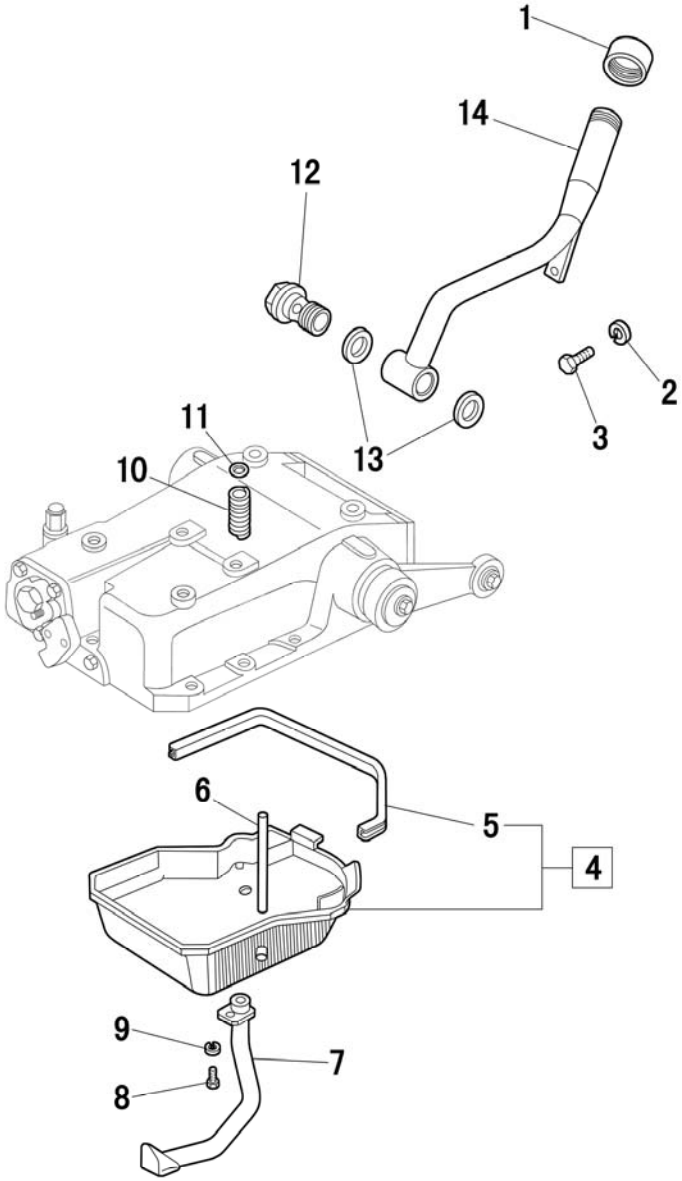

LIFTER, LINES

R	P.N.	DESCRIPTION	QTY
1	5180946	OIL FILLER CAP ASSY	1
2	51323402	PLAIN WASHER 8	1
3	51323095	BOLT	1
4	5165978	OIL PAN	1
5	5122962	SEALING RING, LIFTER	1
6	5122987	TUBE	1
7	47134528	OIL RETURN PIPE	1
8	51323094	BOLT	1
9	51323413	WASHER	1
10	559958	SPRING	1
11	51323404	WASHER	1
12	5171221	JOINT	1
13	5188035	SEALING WASHER M33	2
14	51331108	OIL FILLER PIPE	1

1.82.2	1/2	06/09

LIFTER EXTERNAL CONTROLS

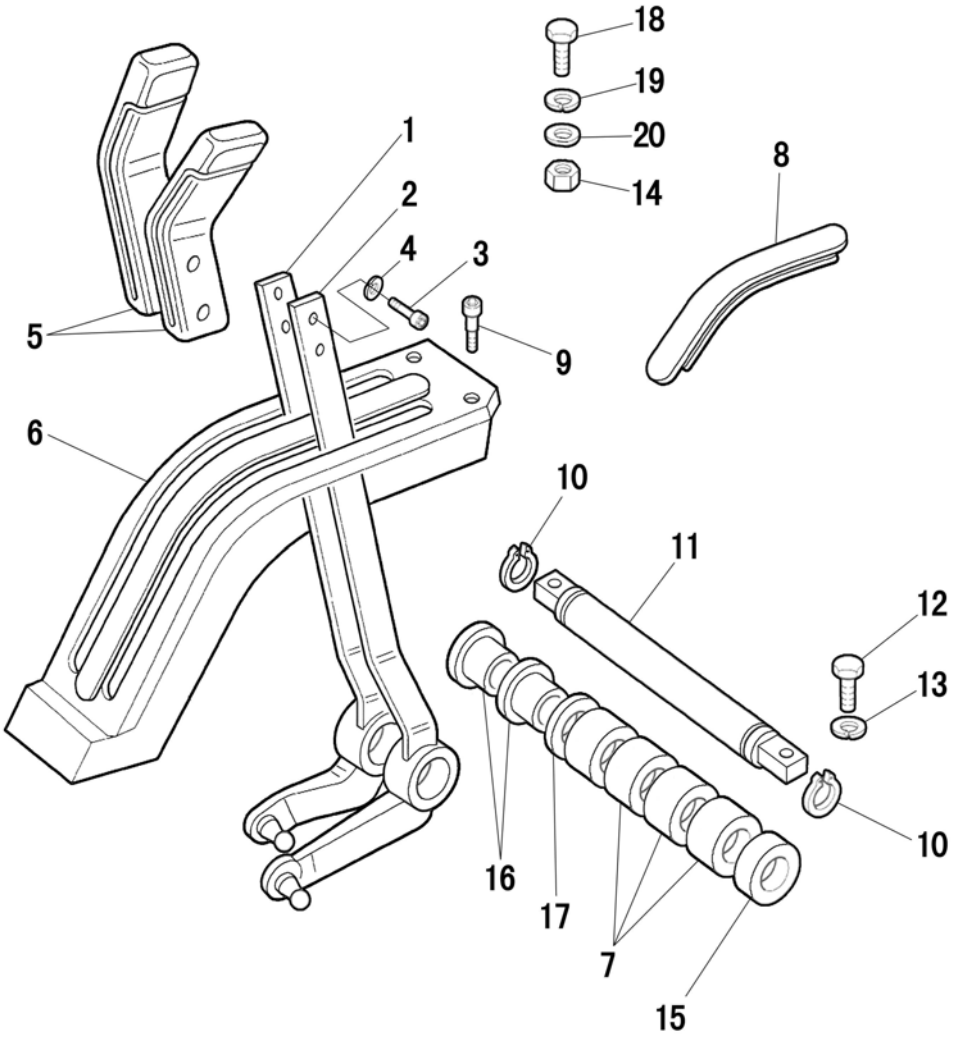

LIFTER EXTERNAL CONTROLS

R	P.N.	DESCRIPTION	QTY
1	5166335	POSITION CONTROL LEVER	1
2	5169219	DRAFT CONTROL LEVER	1
3	14302928	CAPSCREW	4
4	10569074	LOCKWASHER	4
5	5126318	KNOB	2
6	51332357	SECTOR	1
7	5154839	SPACER	3
8	5128710	SEALING STRIP	2
9	15958804	CAPSCREW	4
10	11066976	RING	2
11	5126024	SPINDLE	1
12	51323096	BOLT	2
13	51323379	SPRING WASHER 8	2
14	51332200	SEAT	2
15	5154841	SPACER	2
16	5154842	BUSHING	1
17	5154840	WASHER	1
18	47133460	KNOB W/PIN ASSY	2
19	11087776	RING	2
20	51332199	WASHER	2

LIFTER EXTERNAL CONTROLS - TIE-RODS

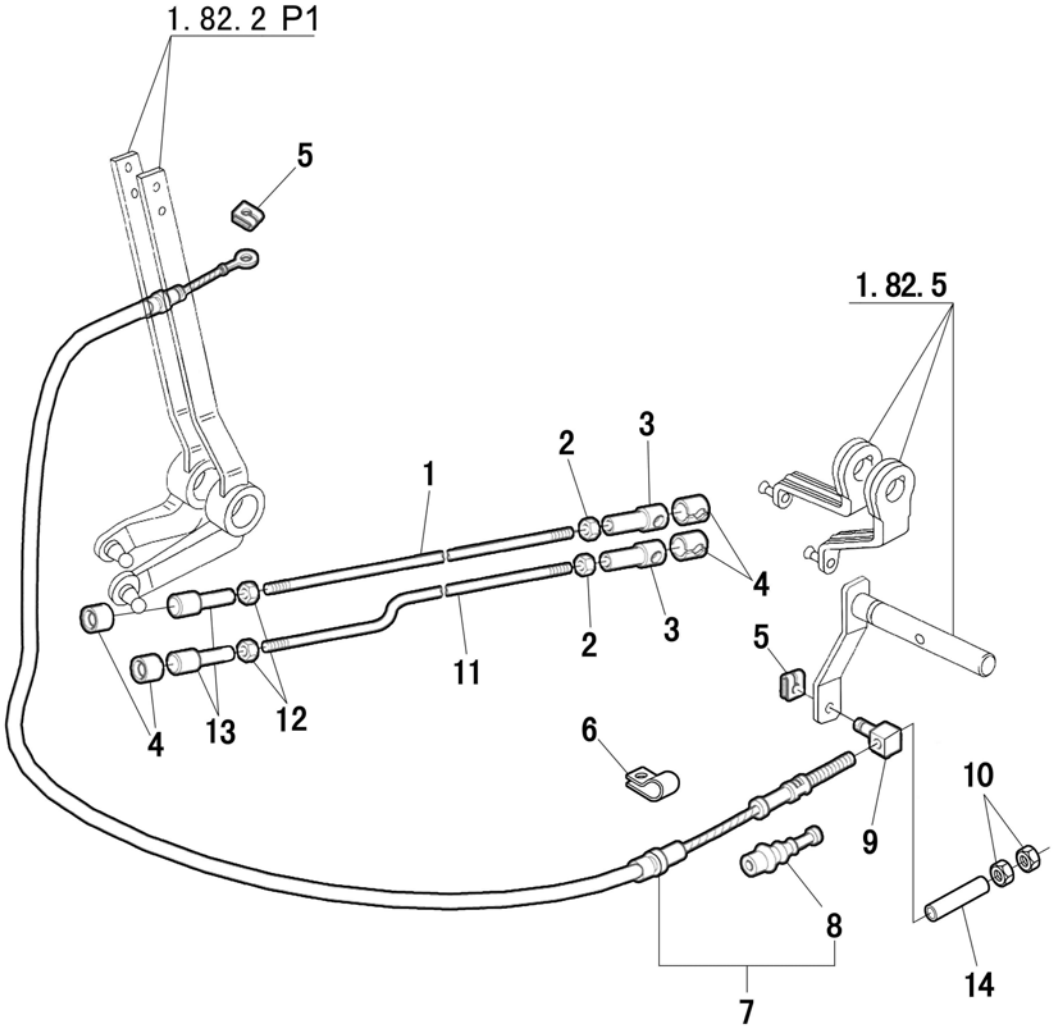

LIFTER EXTERNAL CONTROLS - TIE-RODS

R	P.N.	DESCRIPTION	QTY
1	51332852	LEVER	1
2	51323143	NUT	4
3	51327630	HEAD, SPHERIC JOINTS 13	4
4	51327629	SPRING	4
5	51331207	SNAP RING	2
6	51327631	CLIP	1
7	51332293	COMPLETE CABLE	1
8	5132050	BELLOWS FOR CABLE	1
9	5138330	CABLE ADJUSTER PIN	1
10	51323142	NUT	4
11	51332853	LEVER	1
12	51333641	NUT	2
13	51327636	HEAD, SPHERIC JOINTS 13 (L.H)	2
14	51330841	BUSH	1

1.82.3	1/1	06/09

HYDRAULIC PUMP

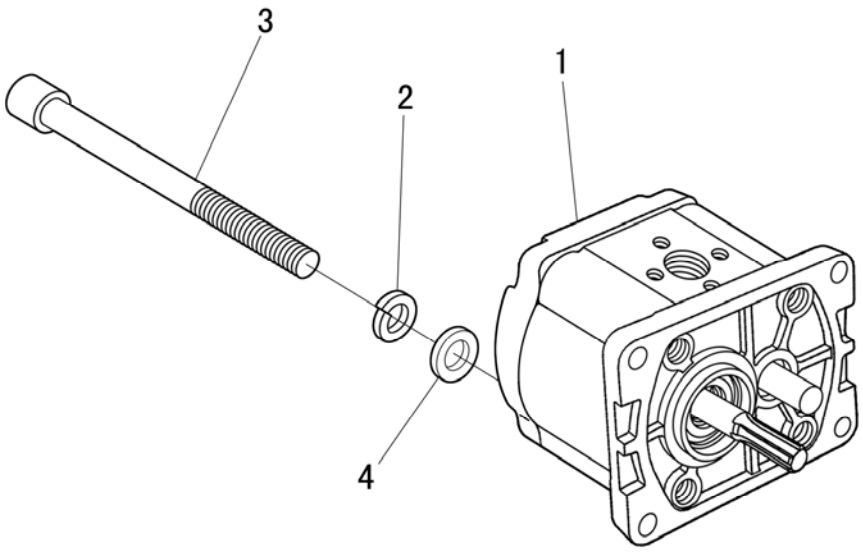

HYDRAULIC PUMP

R	P.N.	DESCRIPTION	QTY
1	51335507	GEAR PUMP (WITH AIR COMPRESSOR)	1
1	51336792	GEAR PUMP (WITHOUT AIR COMPRESSOR)	1
2	51323380	WASHER	AR
3	51331209	BOLT (WITH AIR COMPRESSOR)	2
4	51323403	WASHER (WITHOUT AIR COMPRESSOR)	4

1.82.4	1/4	06/09

LIFT CONTROL - VALVE

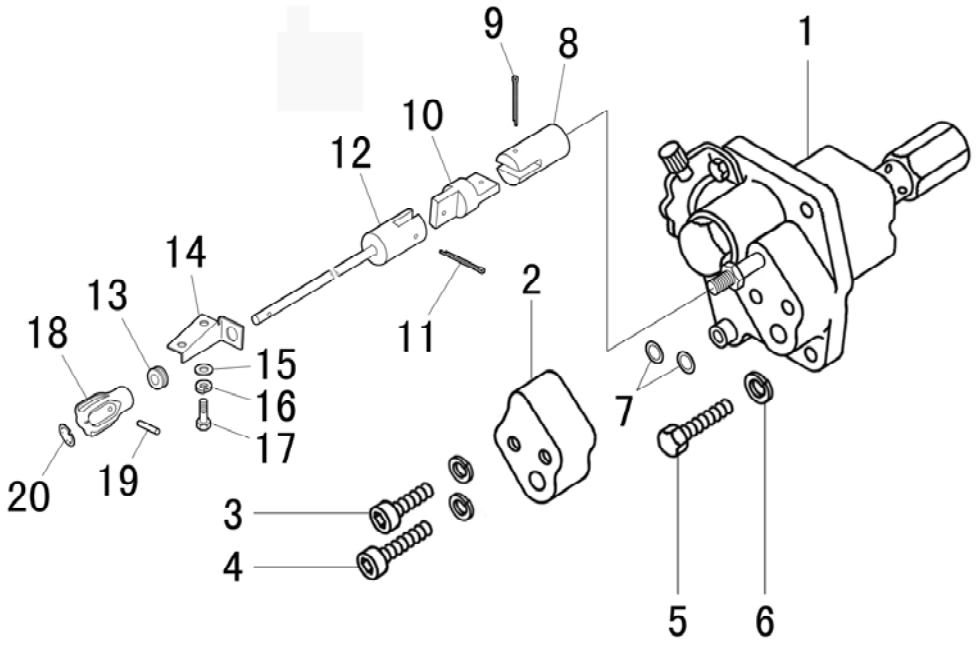

LIFT CONTROL - VALVE

R	P.N.	DESCRIPTION	QTY
1	51342462	DISTRIBUTOR ASSY	1
1	51336333	DISTRIBUTOR ASSY	1
2	51322643	OIL INLET JOINT	1
3	51323206	BOLT	1
4	51323207	BOLT	1
5	51323098	BOLT	4
6	51323379	WASHER	4
7	51335198	O-RING	2
8	51331409	UNIVERSAL JOINT I	1
9	51323273	PIN	1
10	51331410	UNIVERSAL JOINT II	1
11	51331448	PIN	1
12	51331422	LEVER	1
13	51332999	RING	1
14	51332998	SUPPORT	1
15	51323401	WASHER	2
16	51323378	WASHER	2
17	51323091	BOLT	2
18	51327620	VALVE ADJUSTMENT LEVER	1
19	51327236	PIN	1
20	51342089	HYDRAULIC ADJUSTER STICK	1

LIFT CONTROL - VALVE

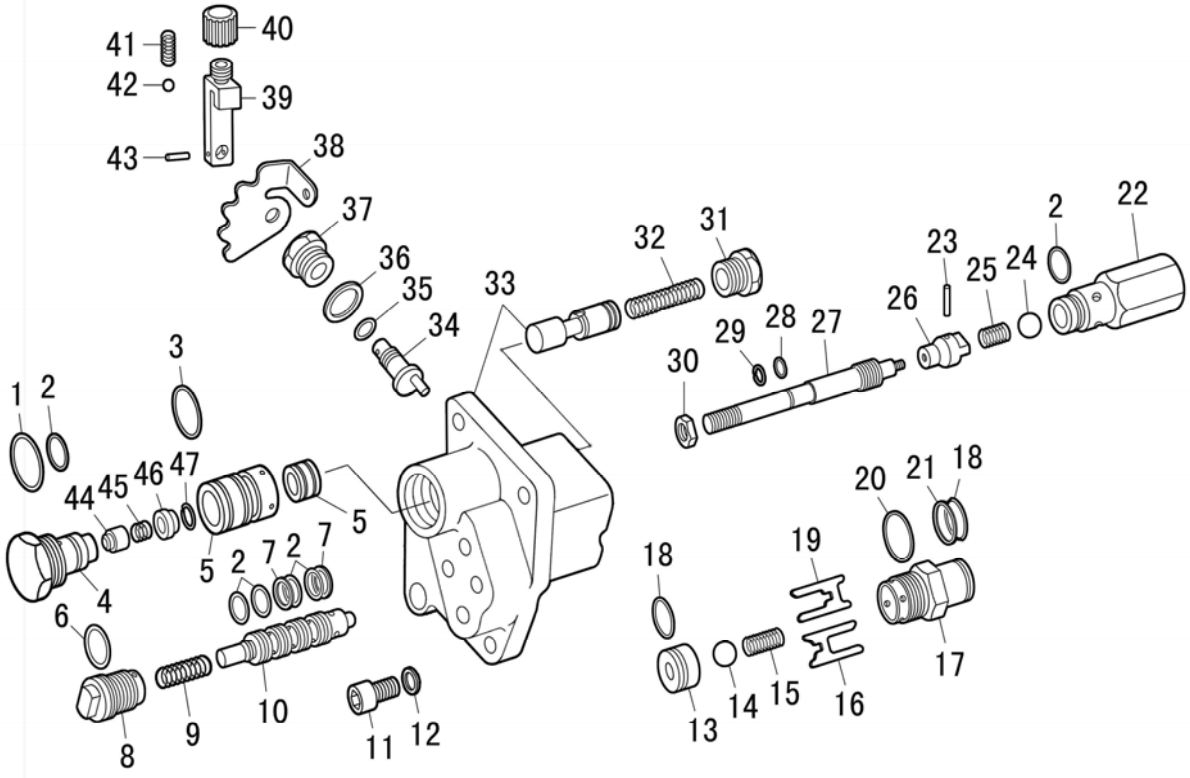

LIFT CONTROL - VALVE

R	P.N.	DESCRIPTION	QTY
1	51322499	O-RING 2.62X28.24	1
2	51322496	O-RING 2.62X17.12	6
3	51322503	O-RING 1.78X26.70	1
4	51322498	PLUG, CONTROL VALVE SEAT	1
5	51322478	COUPLING, CONTROL VALVE	1
6	51322528	O-RING 1.78X25.12	1
7	51322511	SNAP RING, CONTROL VALVE SEAT	2
8	51322509	MAIN CONTROL VALVE SEAT PLUG	1
9	51322510	MAIN CONRTOL VALVE SPRING	1
10	51322487	MAIN CONTROL VALVE COUPLING	1
11	51323208	SCREW	1
12	51323469	WASHER	1
13	51322521	CHECK VALVE SEAT	1
14	51323026	STEEL BALL	1
15	51322522	CHECK VALVE SPRING	1
16	51322526	CHECK VALVE LOWER SEAT PIECE	1
17	51322523	DISTRIBUTOR OUTPUT JOINT	1
18	51322497	O-RING	2
19	51322525	CHECK VALVE UPPER SEAT PIECE	1
20	51322527	O-RING	1
21	51322524	OUTPUT JOINT SNAP RING	1
22	51322490	CYLINDER SAFETY VALVE ASSY.	1
23	51323275	O-RING	1

LIFT CONTROL - VALVE

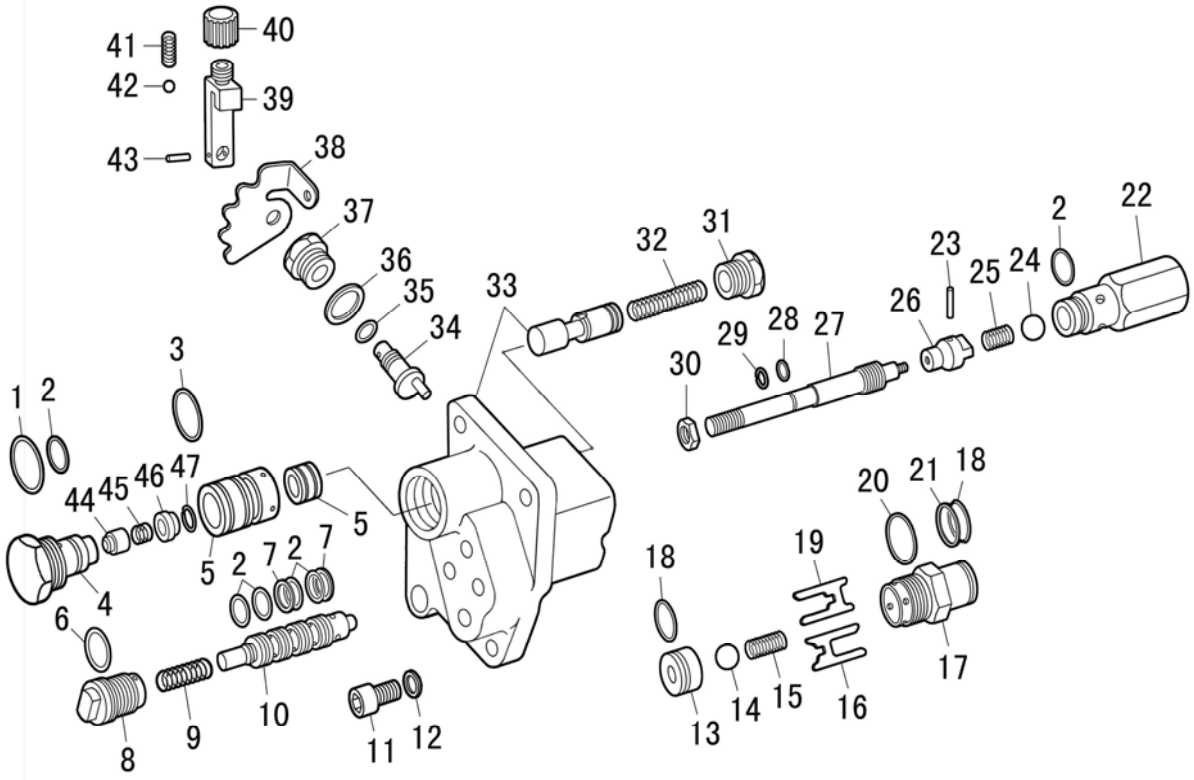

LIFT CONTROL - VALVE

R	P.N.	DESCRIPTION	QTY
24	51323017	STEEL BALL	1
25	51322513	DROP VALVE SPRING	1
26	51322512	DROP VALVE BODY	1
27	51322508	DROP VALVE ADJUSTING LEVER	1
28	51322507	DROP VALVE OIL SEAL	1
29	51322506	DROP VALVE ADJUSTING LEVER SNAP RING	1
30	51323177	NUT	1
31	51322505	CONTROL VALVE PLUG	1
32	51322504	CONTROL VALVE SPRING	1
33	51322481	DISTRIBUTOR HOUSING WITH LEVER	1
34	51322519	ADJUSTING PIN	1
35	51322520	ADJUSTING PIN SEAL RING	1
36	51323473	WASHER	1
37	51322518	ADUJSTING PLUG	1
38	51322517	QUADRANT ADJUSTING PLATE	1
39	51322516	ADJUSTING PIN OPERATING LEVER	1
40	51322515	ADJUSTING HANDLE	1
41	51322514	OUTER SPRING	1
42	51323019	STEEL BALL	1
43	51323272	PIN	1
44	51322500	CONTROL VALVE CORE	1
45	51322501	VALVE CORE ADJUSTING SPRING	1
46	51322502	SPRING WASHER	1
47	51323325	SNAP RING	1

HYDRAULIC - RELIEF VALVE

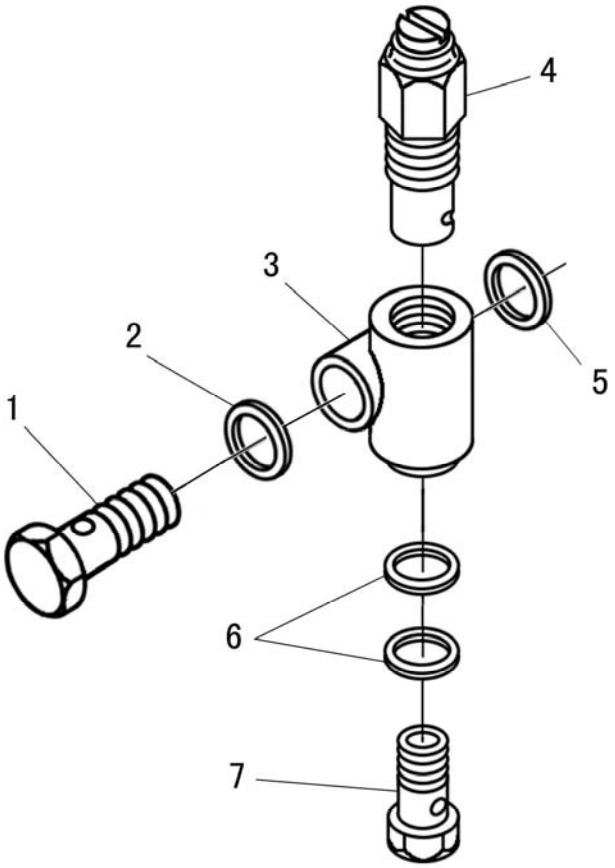

HYDRAULIC - RELIEF VALVE

R	P.N.	DESCRIPTION	QTY
1	51322647	PIPE CONNECTOR, RELIEF VALVE	1
2	51323474	WASHER	1
3	51322645	RELIEF VALVE BODY	1
4	51335509	RELIEF VALVE	1
5	51323473	WASHER	1
6	51323470	WASHER	2
7	51322646	BOLT, CONNECTOR	1

1.82.5	1/4	06/09

LIFTER, INSIDE LINKAGES

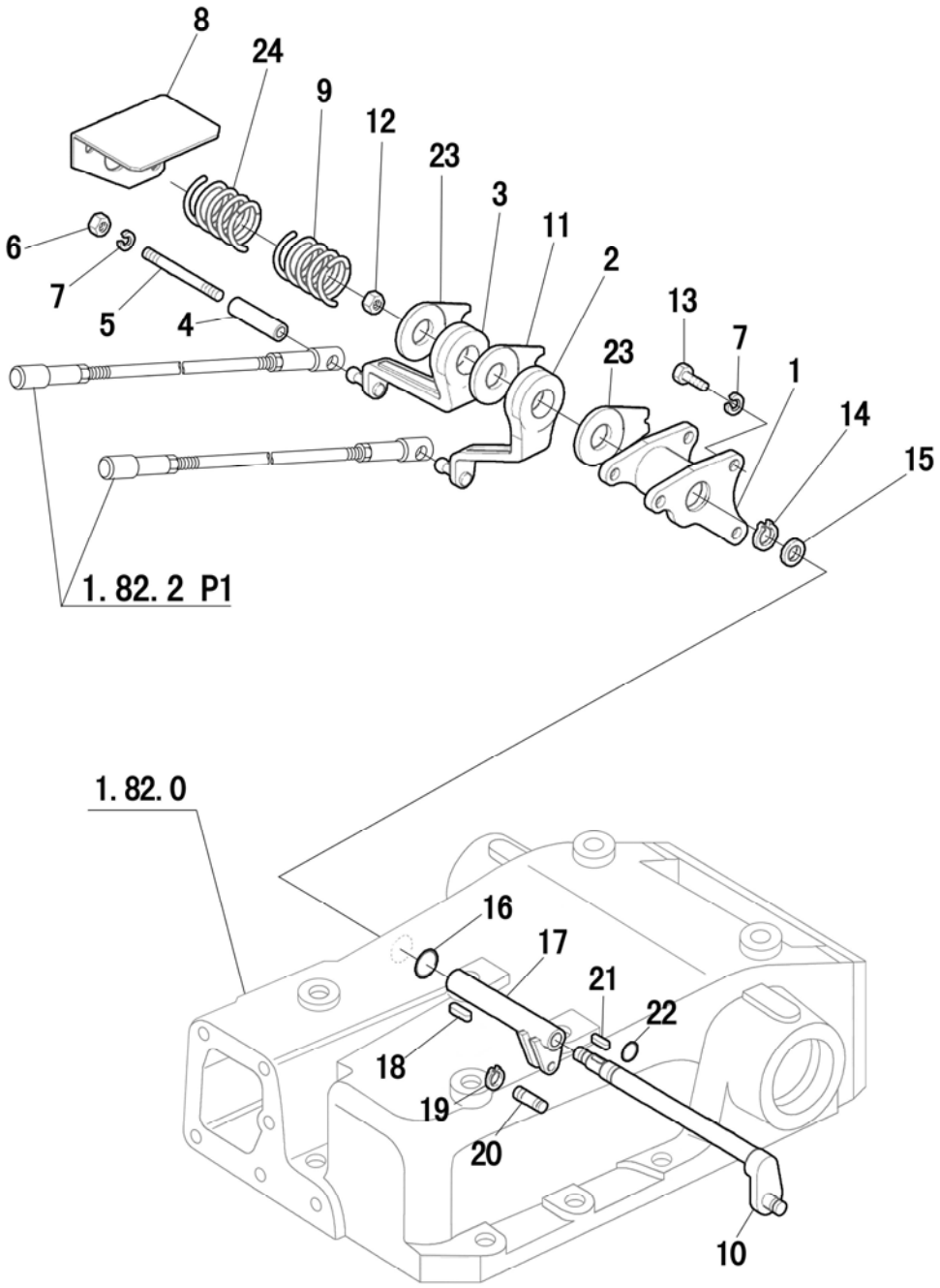

LIFTER, INSIDE LINKAGES

R	P.N.	DESCRIPTION	QTY
1	51327633	CONTROL LEVER SEAT	1
2	51330826	DRAFT CONTROL ARM	1
3	51330825	FOSITION CONTROL ARM	1
4	51327637	SPACER SLEEVE	3
5	51327238	STUD	3
6	51323143	NUT	3
7	51323379	SPRING WASHER 8	6
8	51327634	QUADRANT CONTROL PLATE	1
9	51322574	SPRING	1
10	51327635	TRANSFER SHAFT OF POSITION CONTROL	1
11	51322584	DRAFT CONTROL ARM	1
12	51323301	BOLT	1
13	51323096	BOLT	3
16	51322920	O-RING	1
17	51327611	DRAFT CONTROL TRANSFER SHAFT	1
18	51322889	KEY	1
19	51322463	ELASTIC CLIP	2
20	51322563	PINTLE	2
21	51322890	KEY	1
22	51322537	O-RING	1
23	51322602	DRAFT CONTROL ARM	2
24	51322575	SPRING	1

LIFTER, INSIDE LINKAGES

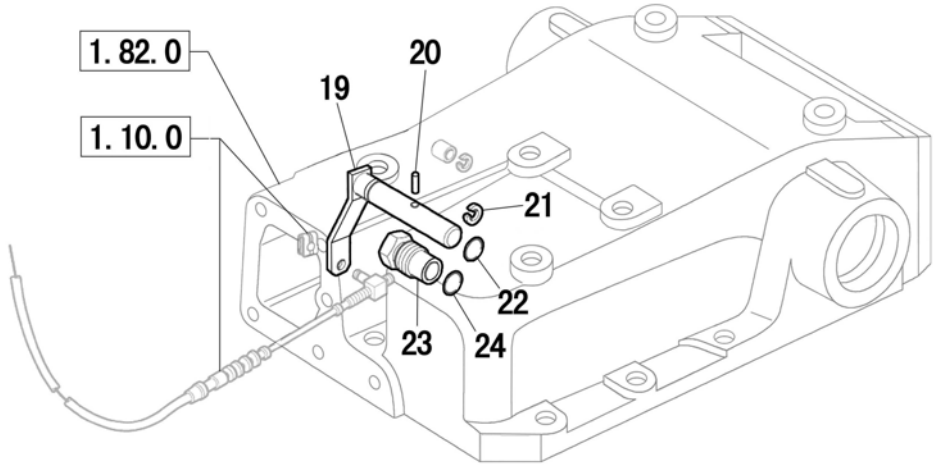

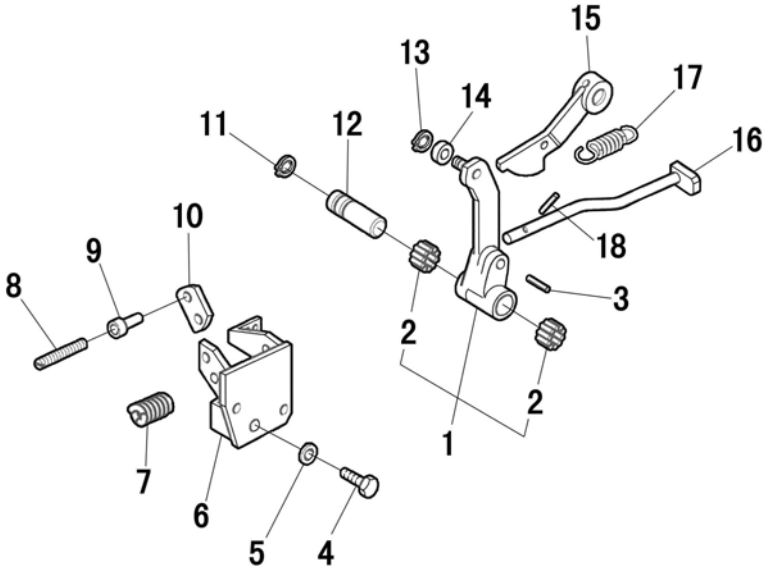

LIFTER, INSIDE LINKAGES

R	P.N.	DESCRIPTION	QTY
1	51322472	ARM	1
2	51322475	BUSH	1
3	51323274	PIN	1
4	51323095	BOLT	2
5	51323379	WASHER	2
6	51322547	SUPPORT	1
7	51322426	FILTER SPRING	1
8	51322428	ADJUSTING SCREW	1
9	51322427	ADJUSTING NUT	1
10	51322425	FRONT BLOCK	1
11	51323326	WASHER	1
12	51322535	VAVLE OPERATING ARM PINTLE	1
13	51323312	SNAP RING	3
14	51322424	ROLLER	3
15	51322577	CAM	1
16	51322432	POSITIONING LEVER ELEMENTS	1
17	51322562	SPRING	1
18	51323276	PIN	1
19	51327615	ARM	1
20	51323277	PIN	1
21	51323331	SNAP RING	1
22	51322537	O-RING	1
23	51322536	BOLT OF SLEEVE	1
24	87332142	WASHER	1

1.82.5	3/4	06/09

LIFTER, INSIDE LINKAGES

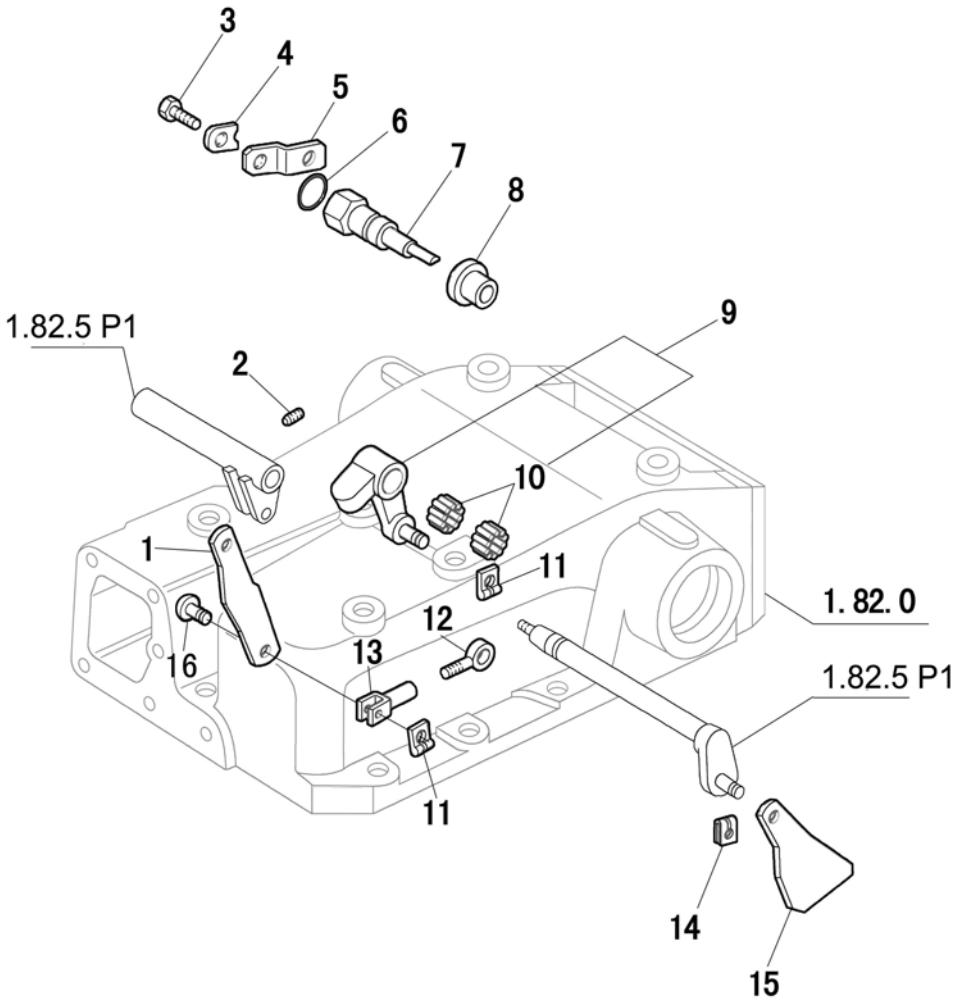

LIFTER, INSIDE LINKAGES

R	P.N.	DESCRIPTION	QTY
1	51322464	DRAFT CONTROL CAM	1
2	51323209	SCREW	1
3	51323129	BOLT	1
4	51323252	WASHER	1
5	5135220	FIXED PLATE	1
6	51322497	O-RING	1
7	5135221	LEVER PIN	1
8	51322534	BUSH OF DRAFT CONTROL LEVER	1
9	51332001	DRAFT REACTION LEVER ASSY.	1
10	5109160	NEEDLE BEARING	2
11	51322463	ELASTIC CLIP	2
12	51322461	DRAFT CONTROL SCREW	1
13	51322462	CONNECTING FORK OF DRAFT CONTROL SCREW	1
14	51322564	ELASTIC CLIP	1
15	51322565	POSITION CONTROL CAM	1
16	51322563	PINTLE	1

LIFTER, INSIDE LINKAGES

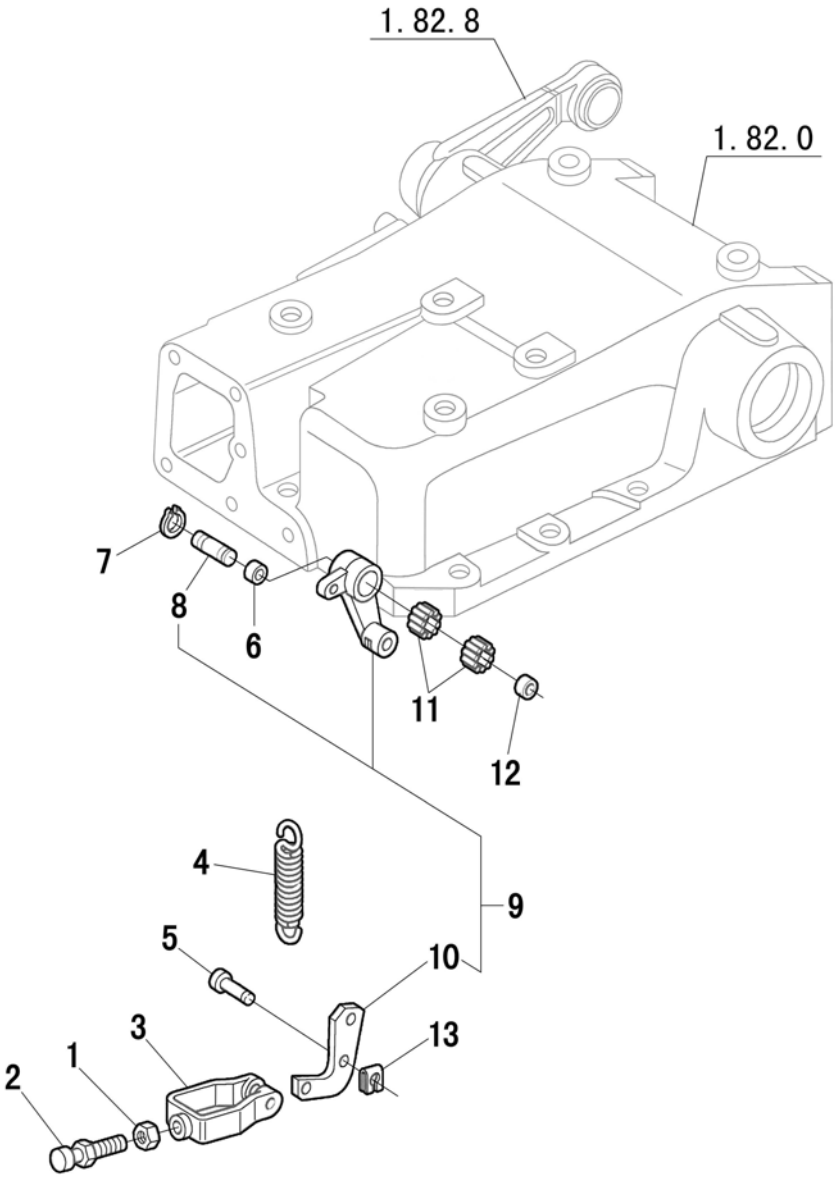

LIFTER, INSIDE LINKAGES

R	P.N.	DESCRIPTION	QTY
1	51323177	NUT	1
2	51322465	CONTROL SCREW OF VALVE OPERATING ARM	1
3	51322469	CONNECTING FORK OF CONTROL VALVE	1
4	51322540	CONTROL LEVER ARM SPRING	1
5	51322539	CONNECTING FORK PINTLE	1
6	51322424	ROLLER	1
7	51323312	SNAP RING	2
8	51322556	ROLLER SHAFT	1
9	51322559	CONTROL LEVER ARM	1
10	51322557	CONTROL LEVER	1
11	51320869	BUSH	2
12	51322538	SPACER	1
13	51322463	ELASTIC CLIP	1

1.82.6	1/1	06/09

HYDRAULIC LIFT CYLINDER

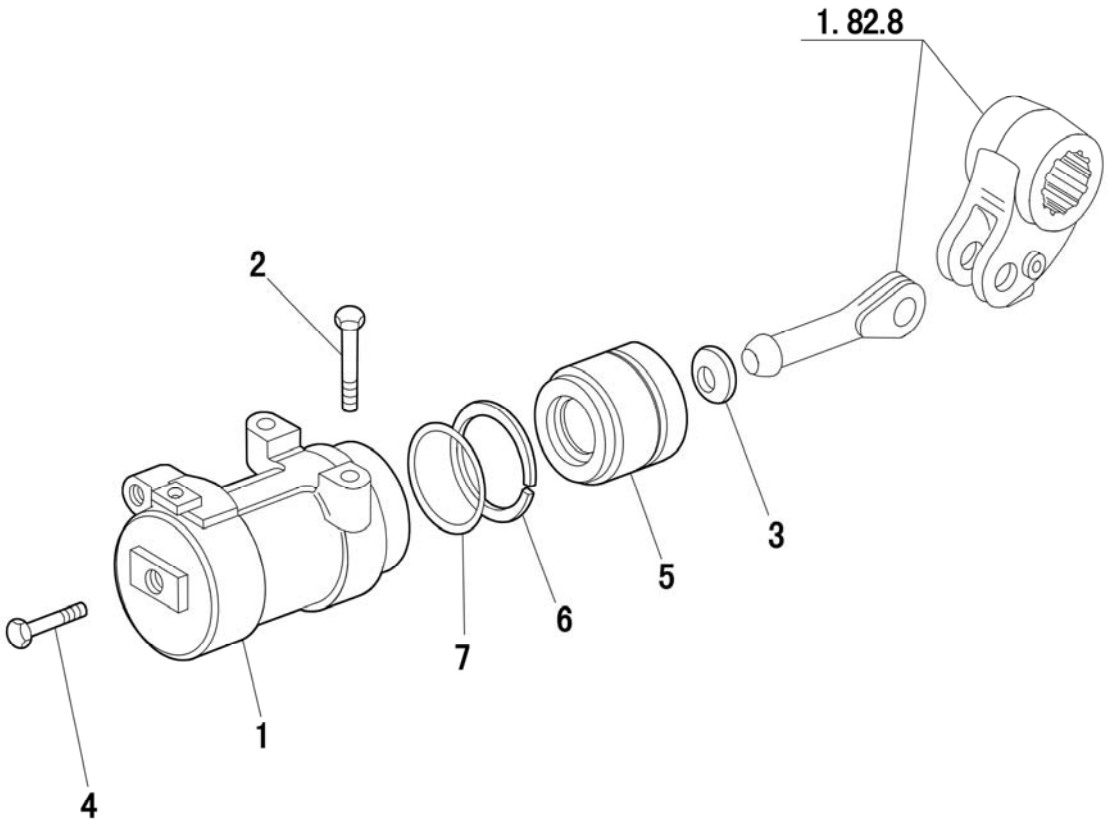

HYDRAULIC LIFT CYLINDER

R	P.N.	DESCRIPTION	QTY
1	51322449	LIFT CYLINDER	1
2	51333640	BOLT	2
3	51322468	CONNECTING ROD SEAT	1
4	51332930	BOLT	1
5	51322466	PISTON ELEMENTS	1
6	51332207	O-RING BLOCK	1
7	14465981	O-RING	1

1.82.7/1	1/2	06/09

REMOTE CONTROL VALVE

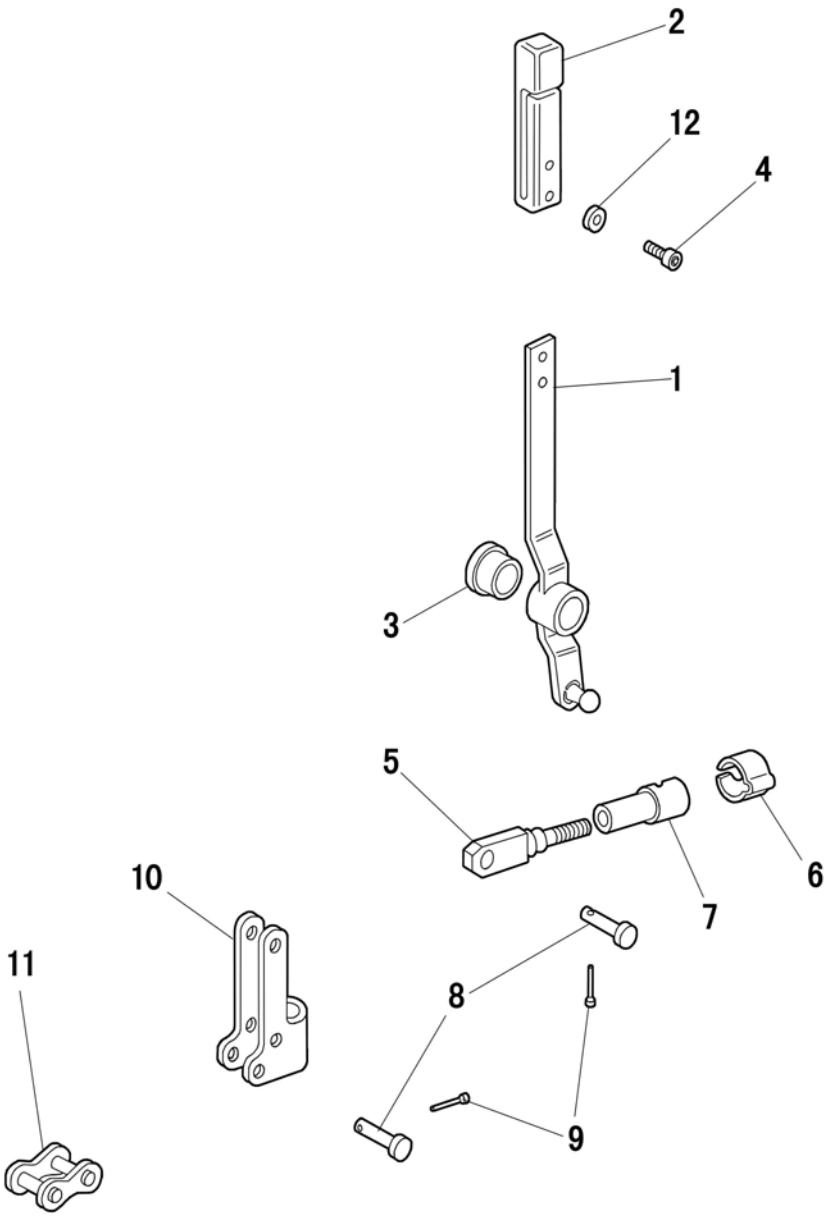

REMOTE CONTROL VALVE

R	P.N.	DESCRIPTON	QTY
1	5173935	CONTROL LEVER	1
2	5126318	KNOB	1
3	5154842	BUSHING	1
4	14302928	CAPSCREW	2
5	5169149	CONNECTING FORK	1
6	51327629	ELASTIC CLIP	1
7	51327630	COUPLER	1
8	5126824	PIN	1
9	10734304	PIN	1
10	5126027	FORK	1
11	5116896	CONNECTOR	1
12	10569074	WASHER	2

SINGLE ACTING REMOTE VALVE - PIPES

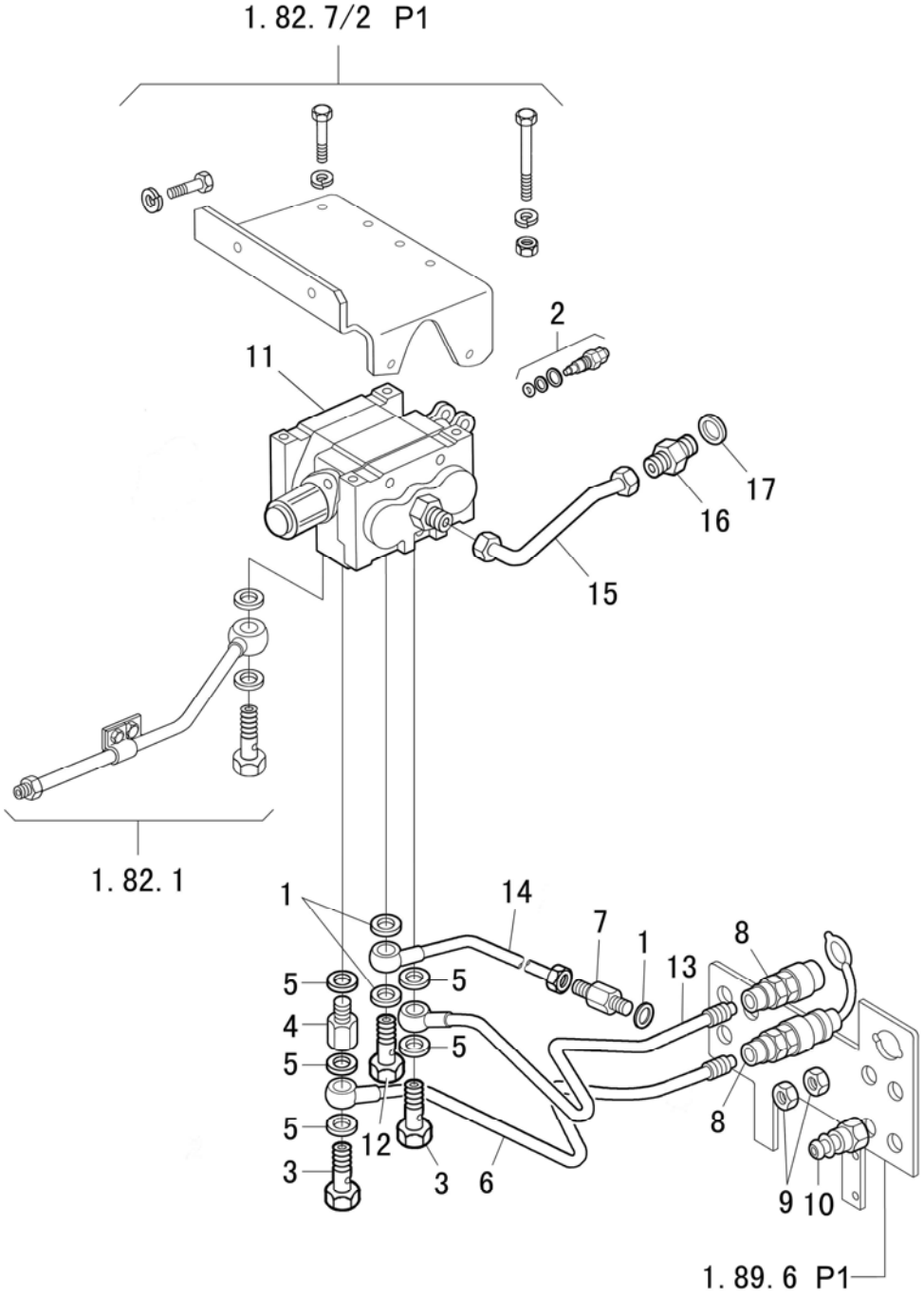

SINGLE ACTING REMOTE VALVE - PIPES

R	P.N.	DESCRIPTION	QTY
1	87332142	SEALING WASHER	3
2	51335508	RELIEF VALVE	1
3	5100984	UNION	2
4	5121789	SPACER	1
5	5186176	SEALING WASHER	5
6	51332985	LOWER PIPE ELEMENTS	1
7	5167516	CONNECTOR	1
8	51331140	QUICK COUPLER	2
9	5129168	HEXAGON NUT	4
10	51330771	12N WIRE	1
11	51330830	REMOTE VALVE ASSY.	1
12	51322705	BOLT, JOINT	1
13	51332987	UPPER PIPE ELEMENTS	1
14	5171297	DISCHARGE PIPE FROM REMOTE VALVE	1
15	5166874	DELIVERY PIPE TO DISTRIBUTOR	1
16	51330827	COUPLER	1
17	51323472	WASHER	1

S/D ACTING VALVES - CONTROL LEVERS

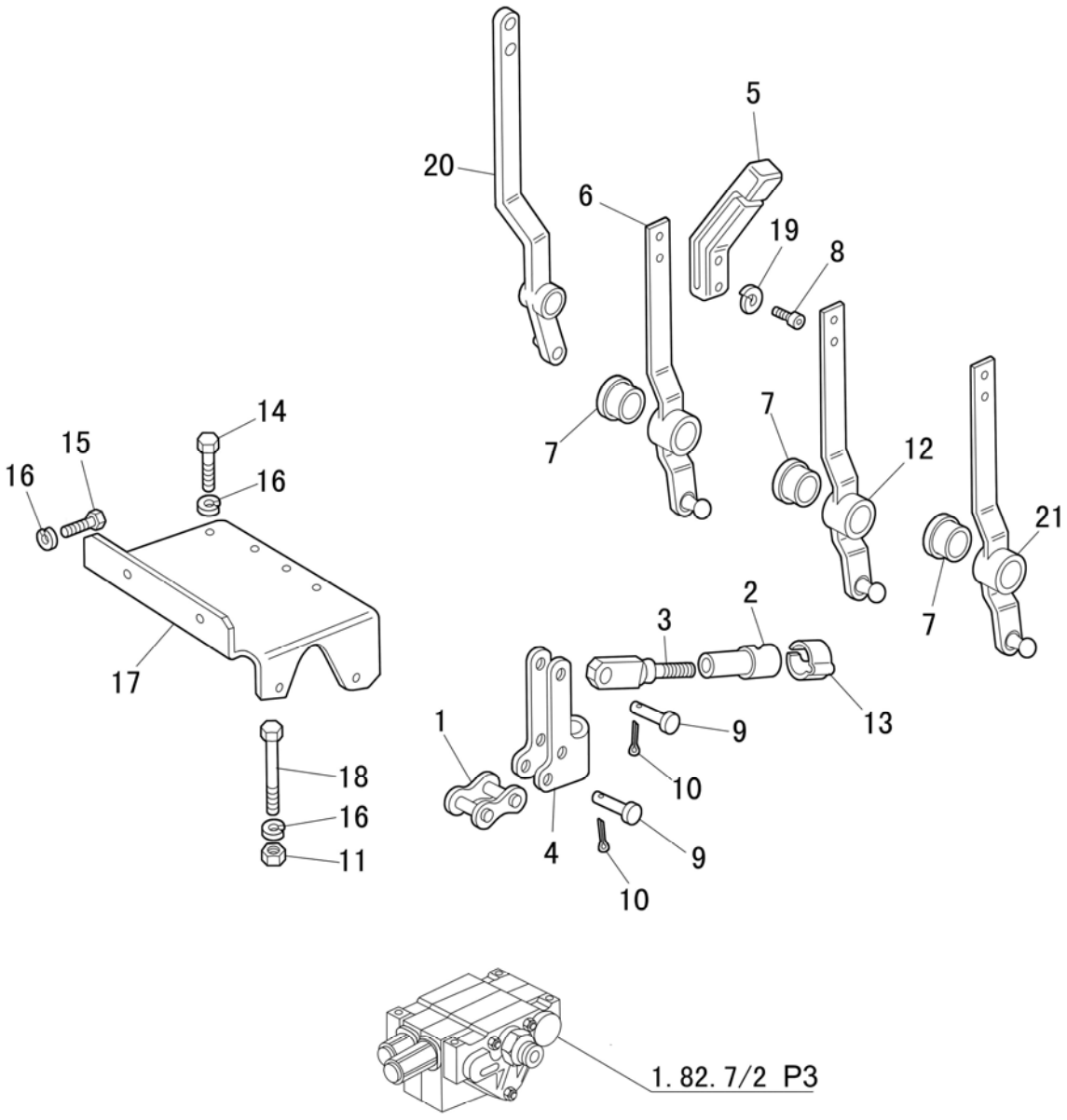

S/D ACTING VALVES - CONTROL LEVERS

R	P.N.	DESCRIPTION	QTY
1	5116896	COUPLER	3
2	51327630	SPHERIC JOINT	3
3	5169149	JOINT	3
4	5126027	REMOTE VALVE FORK	3
5	5126318	LEVER HARNESS	3
6	5173935	CONTROL LEVER (1ST REMOTE VALVE)	1
7	5154842	BUSHING	3
8	14302928	CAPSCREW	6
9	5126824	PINTLE	6
10	10734304	PIN	6
11	12164714	NUT	3
12	5125446	CONTROL LEVER (2ND REMOTE VALVE)	1
13	51327629	SPRING CLAMP	3
14	10979224	SCREW	4
15	51323129	SCREW	4
16	11190574	TAPER LOCKWASHER	8
17	5198044	SUPPORT	1
18	11343724	BOLT	3
19	10569074	GASKET	6
20	5169219	POSITION CONTROL LEVER	1
21	5192514	CONTROL LEVER (3RD REMOTE VALVE)	1

DOUBLE ACTING DISTRIBUTOR VALVES - PIPE

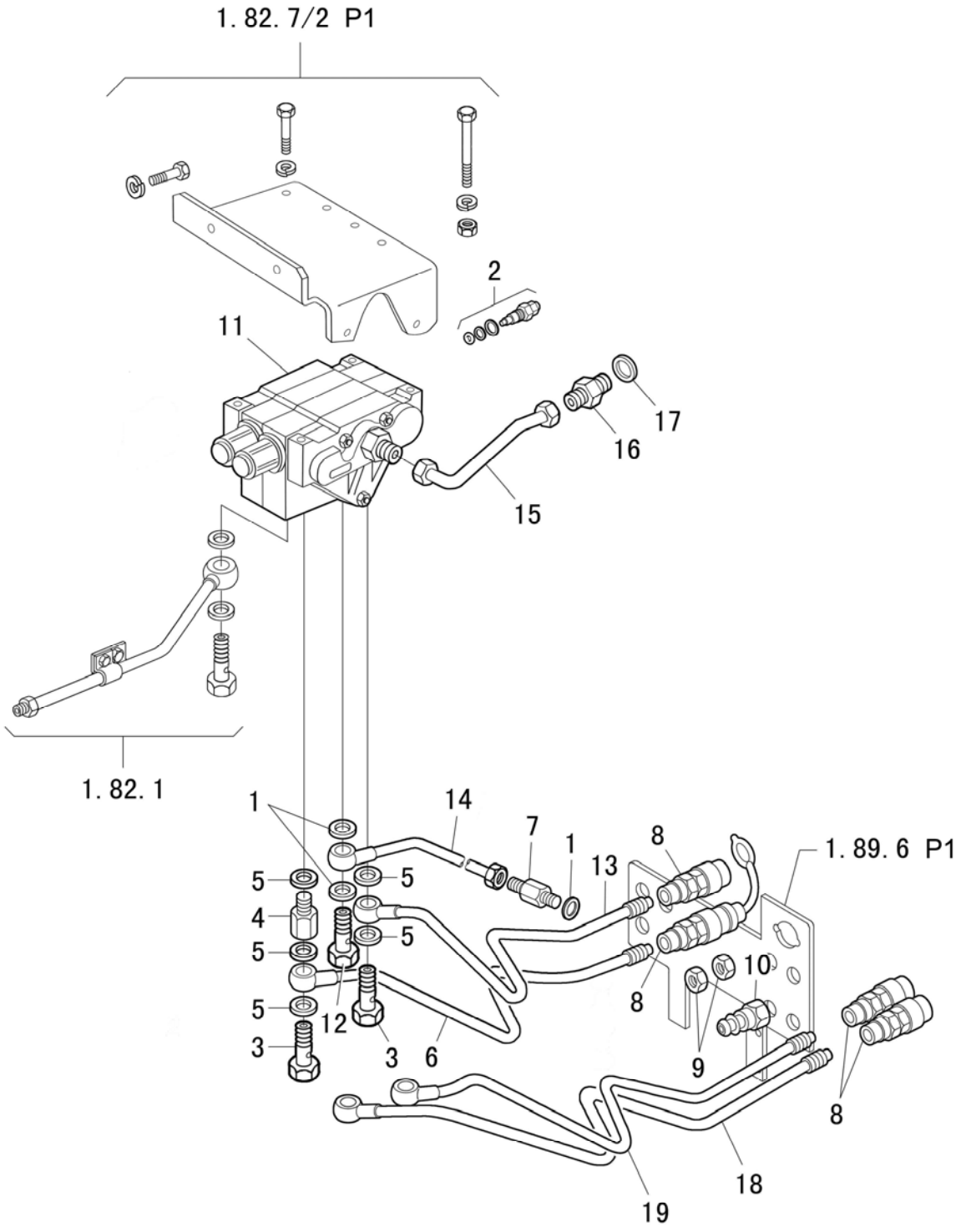

DOUBLE ACTING DISTRIBUTOR VALVES - PIPE

R	P.N.	DESCRIPTION	QTY
1	87332142	SEALING WASHER	3
2	51335508	RELIEF VALVE	1
3	5100984	UNION	2
4	5121789	SPACER	1
5	5186176	BONDED SEALING WASHER	5
6	51332985	1ST REMOTE VALVE LOWER PIPE	1
7	5167516	STRAIGHT CONNECTOR	1
8	51331140	QUICK COUPLER	2
9	5129168	HEX NUT	4
10	51330771	12N WIRE	1
11	51331516	2 REMOTE VALVES ASSY	1
12	51322705	BOLT, JOINT	1
13	51332987	1ST REMOTE VALVE UPPER PIPE	1
14	5171297	DISCHARGE PIPE FROM REMOTE VALVE	1
15	5166876	DISTRIBUTOR INTAKE PIPE	1
16	51330827	STRAIGHT CONNECTOR	1
17	51323472	WASHER	1
18	5129181	2ND REMOTE VALVE UPPER PIPE	1
19	5129179	2ND REMOTE VALVE LOWER PIPE	1

3 REMOTE VALVES - PIPES

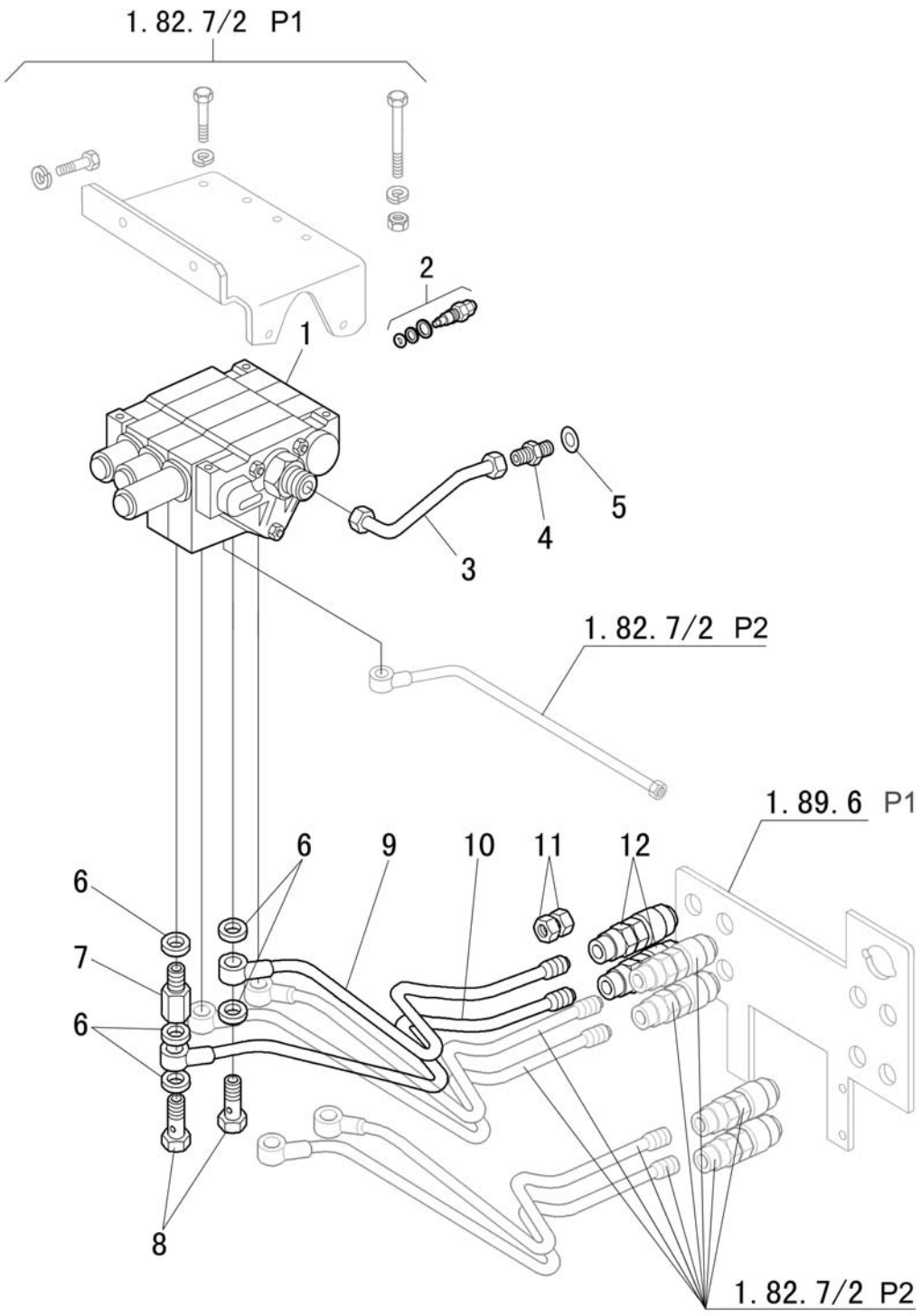

3 REMOTE VALVES - PIPES

R	P.N.	DESCRIPTION	QTY
1	51332211	3 REMOTE VALVES ASSY.	1
1	51333499	3 REMOTE VALVES ASSY. WITH 2 FLOAT VALVES	1
2	5131906	RELIEF VALVE	1
3	5166878	DISTRIBUTOR INTAKE PIPE	1
4	51330827	STRAIGHT CONNECTOR	1
5	51323472	WASHER	1
6	5186176	SEALING WASHER	5
7	5121789	SPACER	1
8	5100984	UNION	2
9	5129183	3RD REMOTE VALVE RIGHTSIDE PIPE	1
10	5171343	3RD REMOTE VALVE LEFTSIDE PIPE	1
11	5129168	HEXAGONAL NUT	4
12	51331140	QUICK COUPLER	2

1.82.8	1/1	06/09

LIFT ARMS & SUPPORT

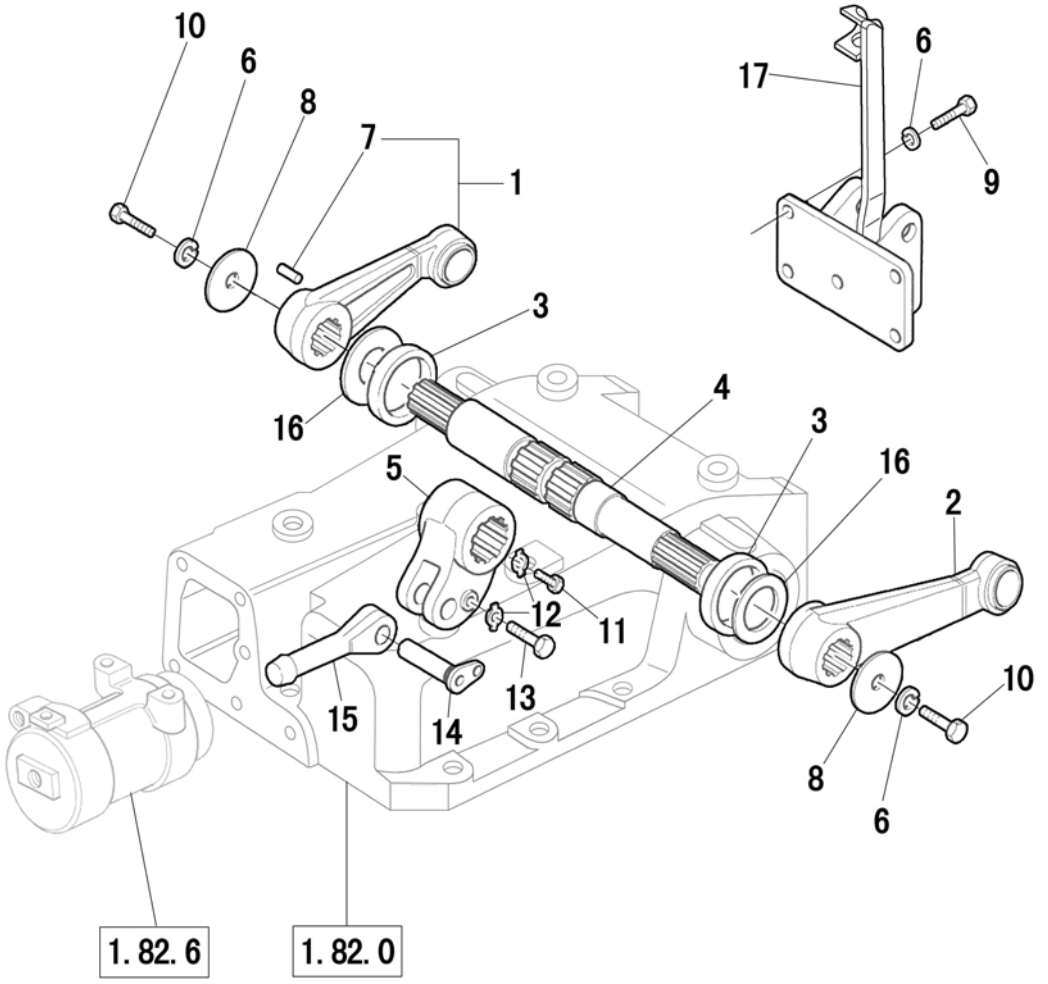

LIFT ARMS & SUPPORT

R	P.N.	DESCRIPTION	QTY
*1	51331101	RIGHT LIFT ARM	1
2	51331102	LEFT LIFT ARM	1
3	51322530	ROCKER SHAFT OIL SEAL	2
4	51337669	ROCKER SHAFT	1
5	51322442	INNER LIFT ARM	1
6	51323382	WASHER	6
8	51322532	ROCKER SHAFT PRESSURE PLATE	2
9	51331411	BOLT	4
10	51323136	BOLT	2
11	51322453	FIXING SCREW OF INNER LIFT ARM	1
12	51323252	WASHER	2
13	51323128	BOLT	1
14	51336502	PIN	1
15	51322450	PISTON ROD	1
16	51322531	ROCKER SHAFT SPACER	2
17	51331401	SUPPORT ASSY.	1

NOTE: Part 1 includes part 7.

SHEET METAL

SEC. 8

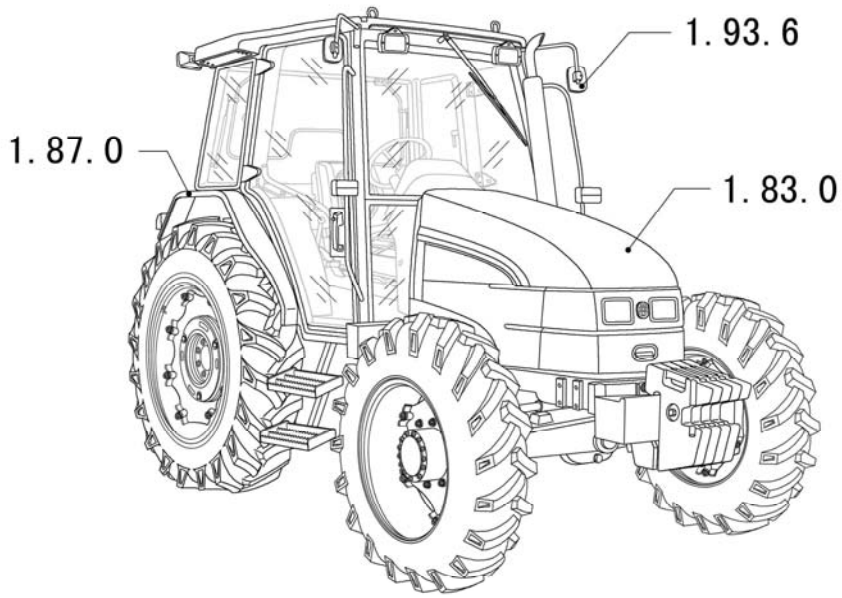

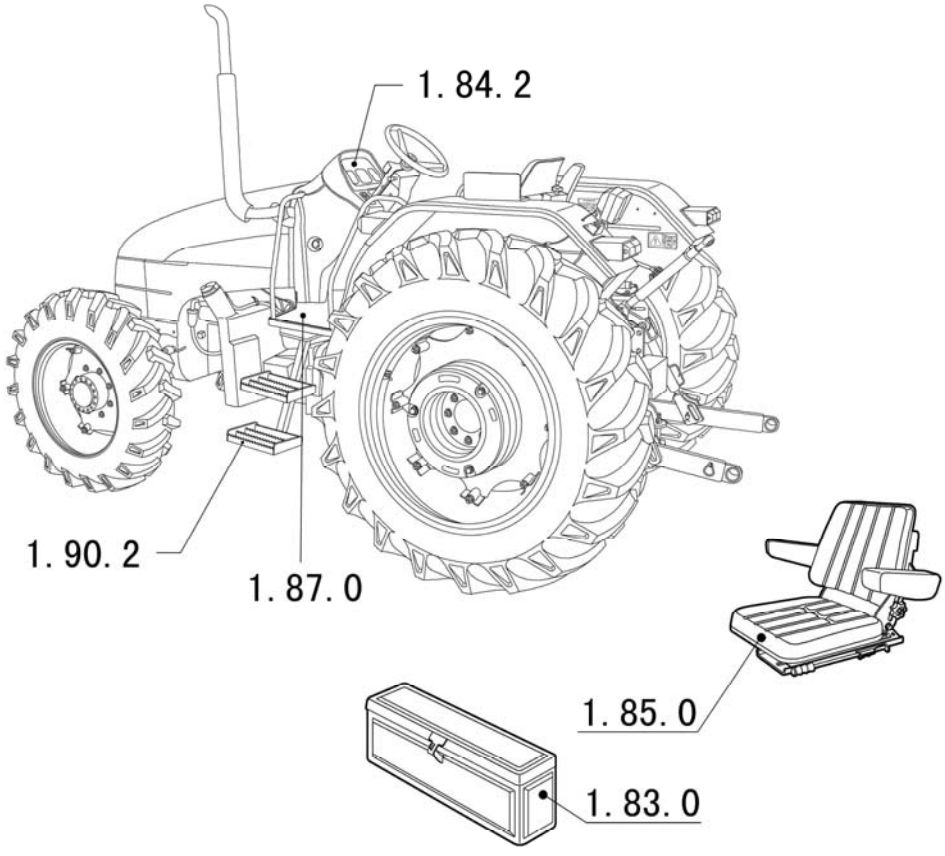

1.83.0	1/6	06/09

BODY, HOOD

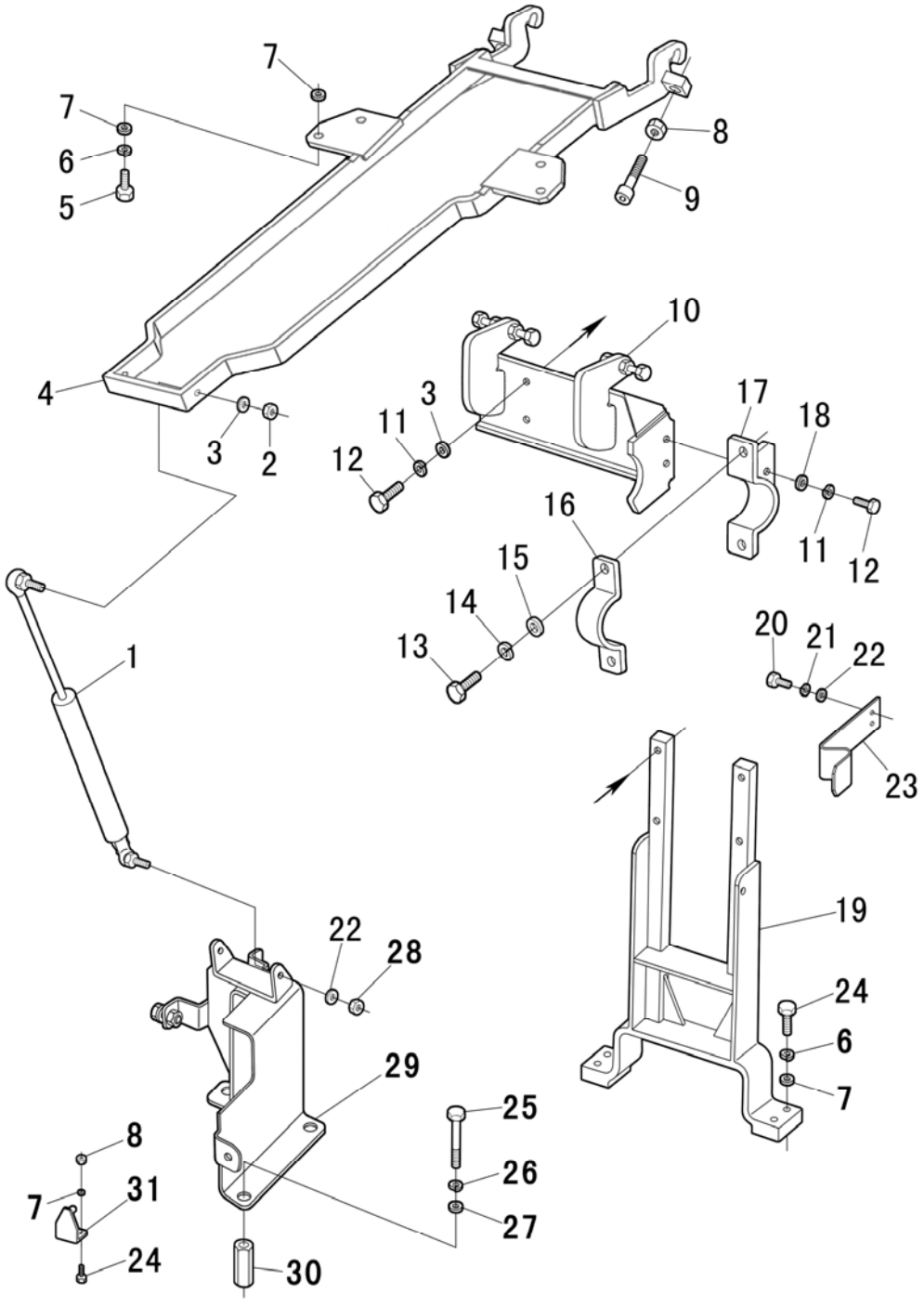

BODY, HOOD

R	P.N.	DESCRIPTION	QTY
1	5166403	HOOD SPRING	2
2	51327823	NUT	2
3	51323402	PLAIN WASHER 8	6
4	51333060	HOOD BAR	1
5	51323103	BOLT	4
6	51323380	WASHER	8
7	51323403	WASER	14
8	51323144	NUT	4
9	51333139	BOLT	2
10	51337704	SUPPORT	1
11	51323379	SPRING WASHER 8	6
12	51323096	BOLT	6
13	51323099	BOLT	2
14	51325801	WASHER	2
15	51325788	WASHER	2
16	51337702	PLATE	1
17	51337697	CLAMP	1
18	51337385	WASHER	2
19	51330448	COMPLETE SUPPORT	1
20	51323091	BOLT	4

BODY, HOOD

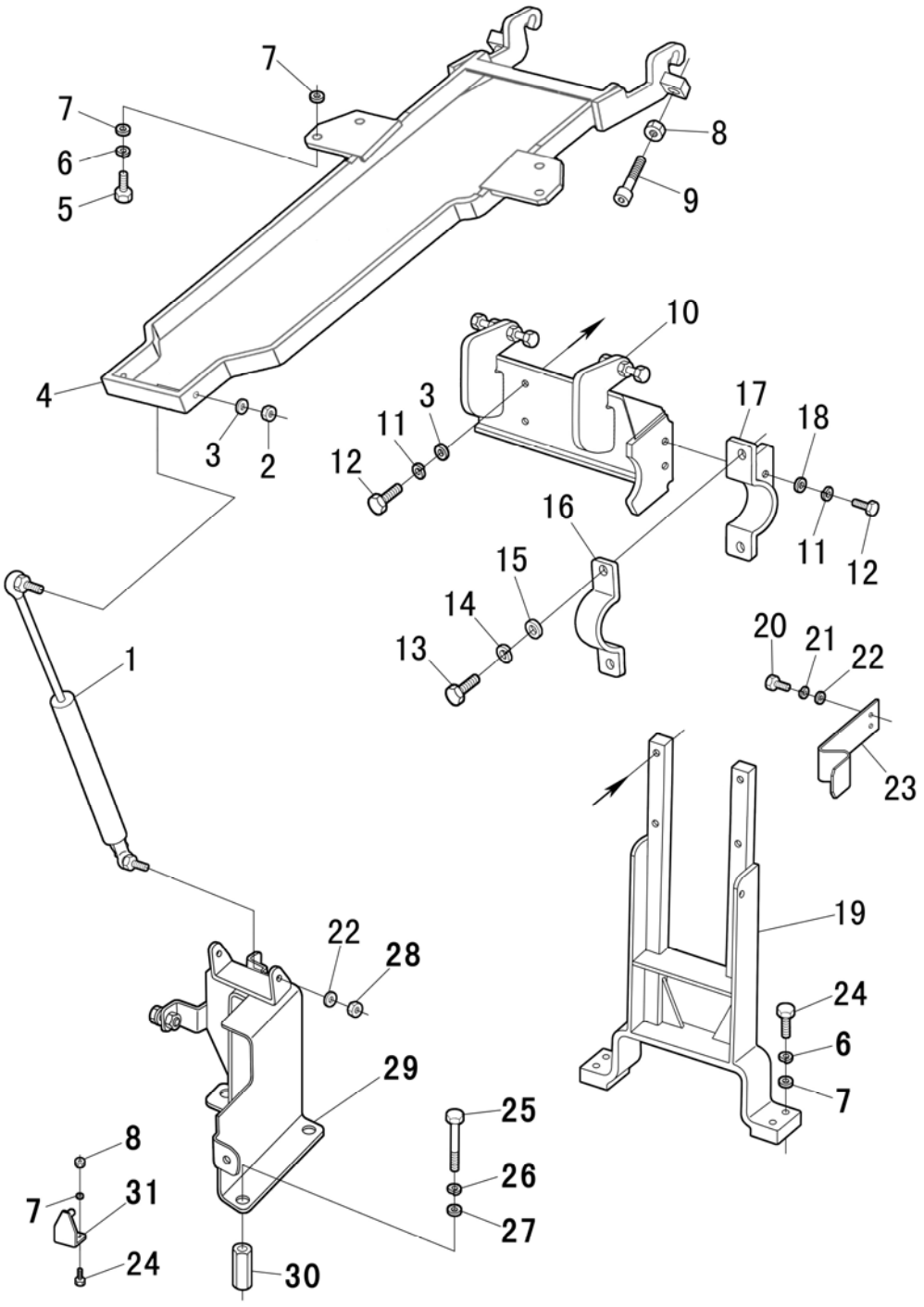
7
7
6
5
8
9
4
3
2
10
3
11
12
17
18
11
12
16
15
14
13
20
21
22
23
1
22
28
19
24
6
7
29
25
26
27
8
31
7
24
30

BODY, HOOD

R	P.N.	DESCRIPTION	QTY
21	51323378	WASHER	4
22	51325786	WASHER	6
23	51331364	PLATE	2
24	51323104	BOLT	6
25	51330555	BOLT	3
26	51323382	WASHER	3
27	51326732	WASHER	3
28	51326864	LOCKNUT	2
29	51330548	LOW SUPPORT GAS SPRING	1
30	51330547	SPACE	3
31	51331133	FRONT HOOD SUPPORT	1

1.83.0	3/6	06/09

BODY, HOOD

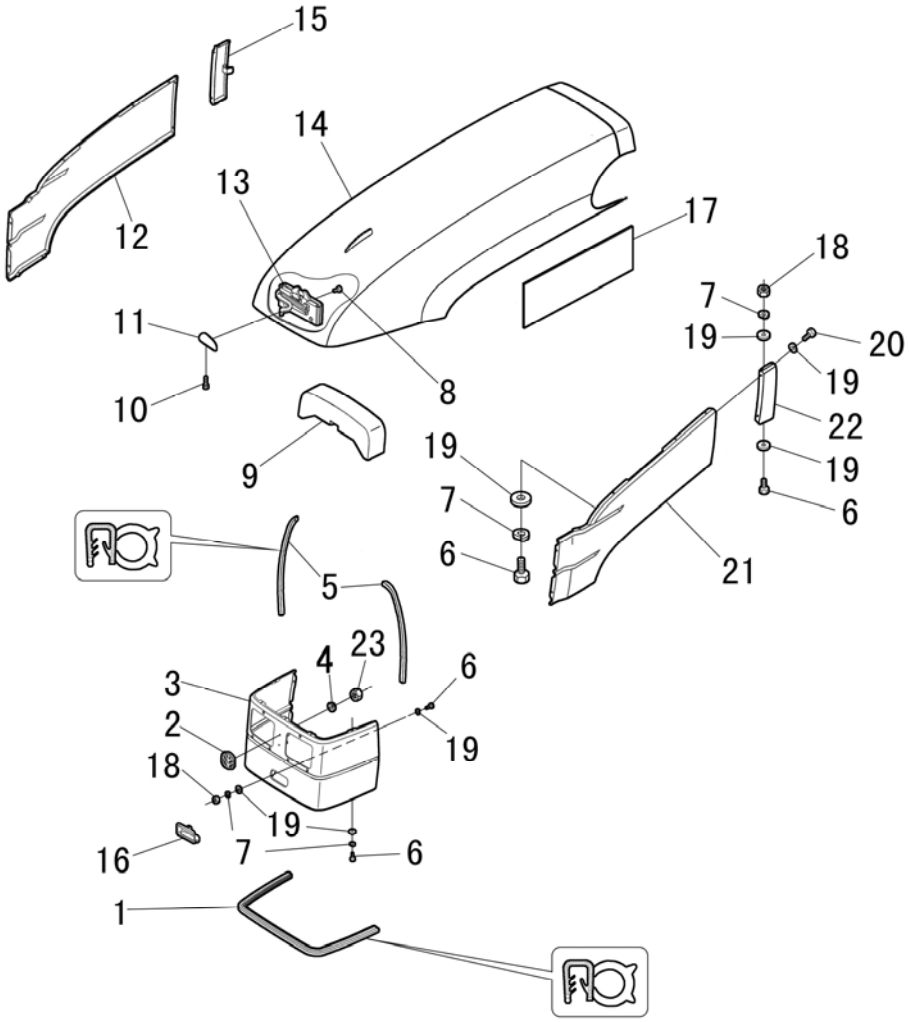

BODY, HOOD

R	P.N.	DESCRIPTION	QTY
1	47132990	LOWER SEAL	1
2	82005611	DECAL	1
3	51333196	FRONT GRILL W/KNOB	1
4	5138360	WASHER	2
5	51331417	SEAL	2
6	51323090	BOLT	21
7	51323378	WASHER	21
8	51327171	CAPSCREW	2
9	51331416	SPONGE	1
10	51330556	SCREW	1
11	5182805	HOOD LATCH KNOB	1
12	51333345	RIGHTSIDE HOOD PANEL ASSY.	1
13	5182793	HOOD LATCH	1
14	51332457	UPPER HOOD PANEL ASSY.	1
15	51331362	RIGHTSIDE LOWER JOINT BLOCK ASSY.	1
16	51333178	HANDLE	1
17	5186023	HEAT INSULATION GASKET	1
18	51323142	NUT	8
19	51325786	WASHER	33
20	51330554	BOLT	4
21	51333343	LEFTSIDE HOOD PANEL	1
22	51331359	LEFTSIDE LOWER JOINT BLOCK ASSY.	1
23	5135069	FIXING CLIP	1

BODY

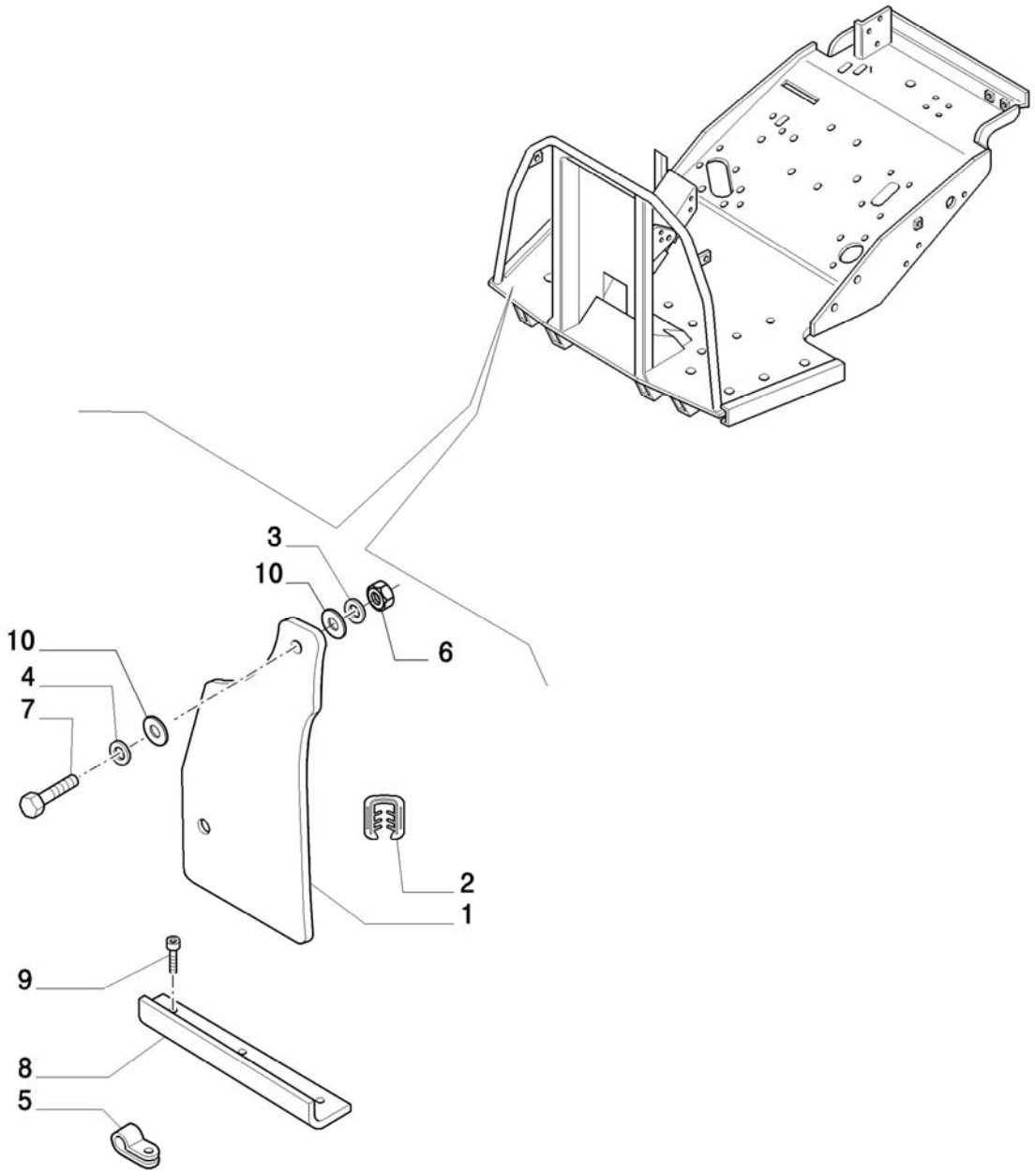

BODY

R	P.N.	DESCRIPTION	QTY
1	47131242	FRONT WINDSHIELD	2
2	47131244	GASKET	2
3	51323402	PLAIN WASHER 8	4
4	47130062	SPACE	4
5	47130065	CLIP	4
6	51329526	SIDE WINDOW HINGE PLASTIC NUT	4
7	51332512	CAPSCREW	4
8	47130256	BRACKET	2
9	51330017	SCREW	6
10	51329525	RUBBER WASHER	8

1.83.0	5/6	06/09

SUPPORT & TOOL BOX, W/ CAB

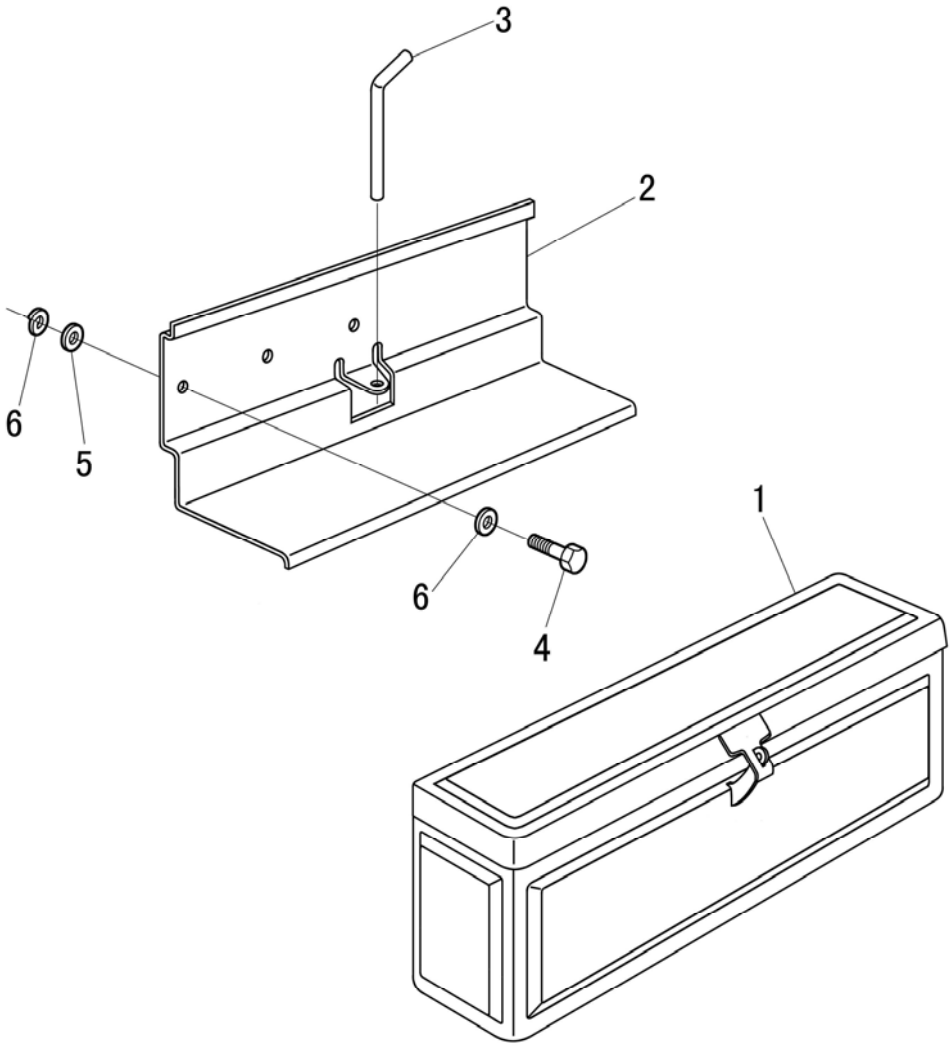

SUPPORT & TOOL BOX, W/ CAB

R	P.N.	DESCRIPTION	QTY
1	51330698	COMPLETE TOOL BOX	1
2	51331432	SUPPORT TOOL BOX	1
2	51334045	SUPPORT TOOL BOX	1
3	51330552	PIN	1
4	51323203	SCREW	2
5	51323402	PLAIN WASHER 8	2
6	51323379	SPRING WASHER 8	2

1.83.0	6/6	06/09

SUPPORT & TOOL BOX, L/ CAB

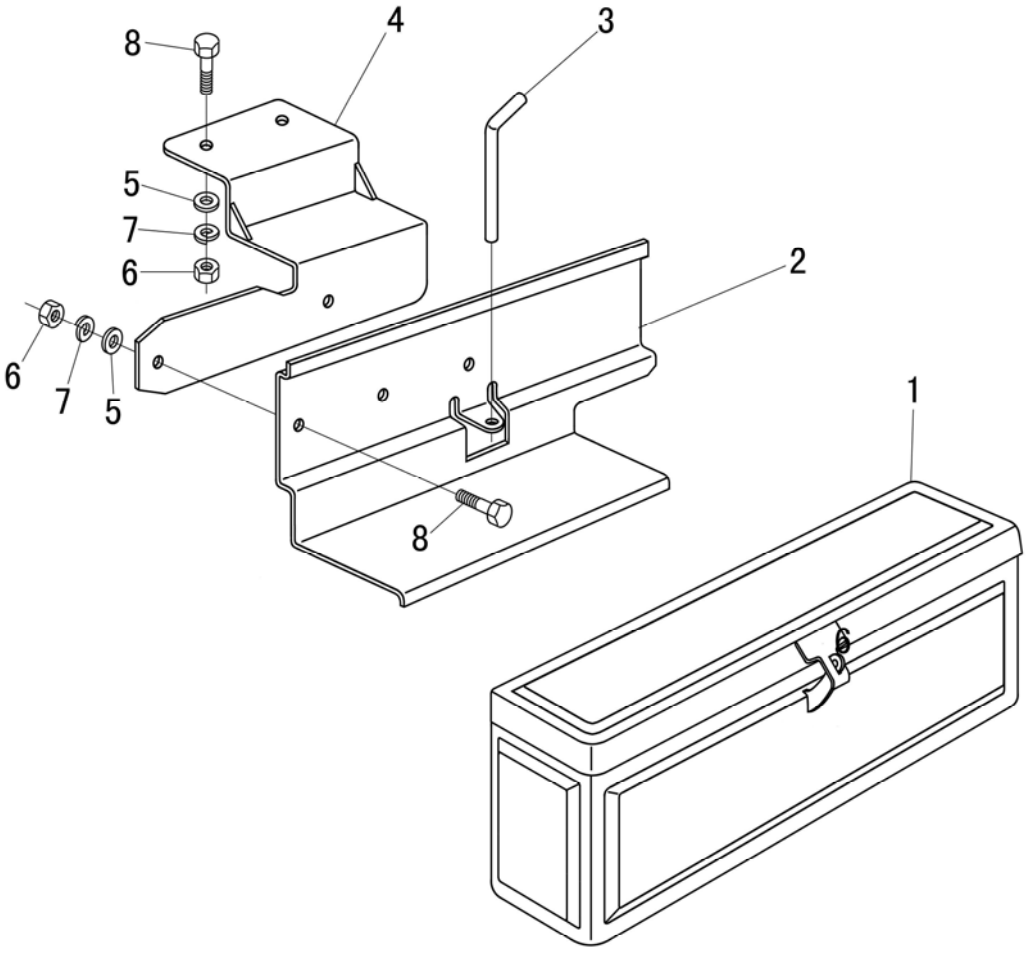

SUPPORT & TOOL BOX, L/ CAB

R	P.N.	DESCRIPTION	QTY
1	51330698	COMPLETE TOOL BOX	1
2	51331432	SUPPORT TOOL BOX	1
3	51330552	PIN	1
4	51332335	SUPPORT	1
5	51323402	PLAIN WASHER 8	4
6	51323149	NUT	4
7	51323379	SPRING WASHER 8	4
8	51323204	SCREW	4

1.83.0/1	1/3	06/09

BODY, HOOD

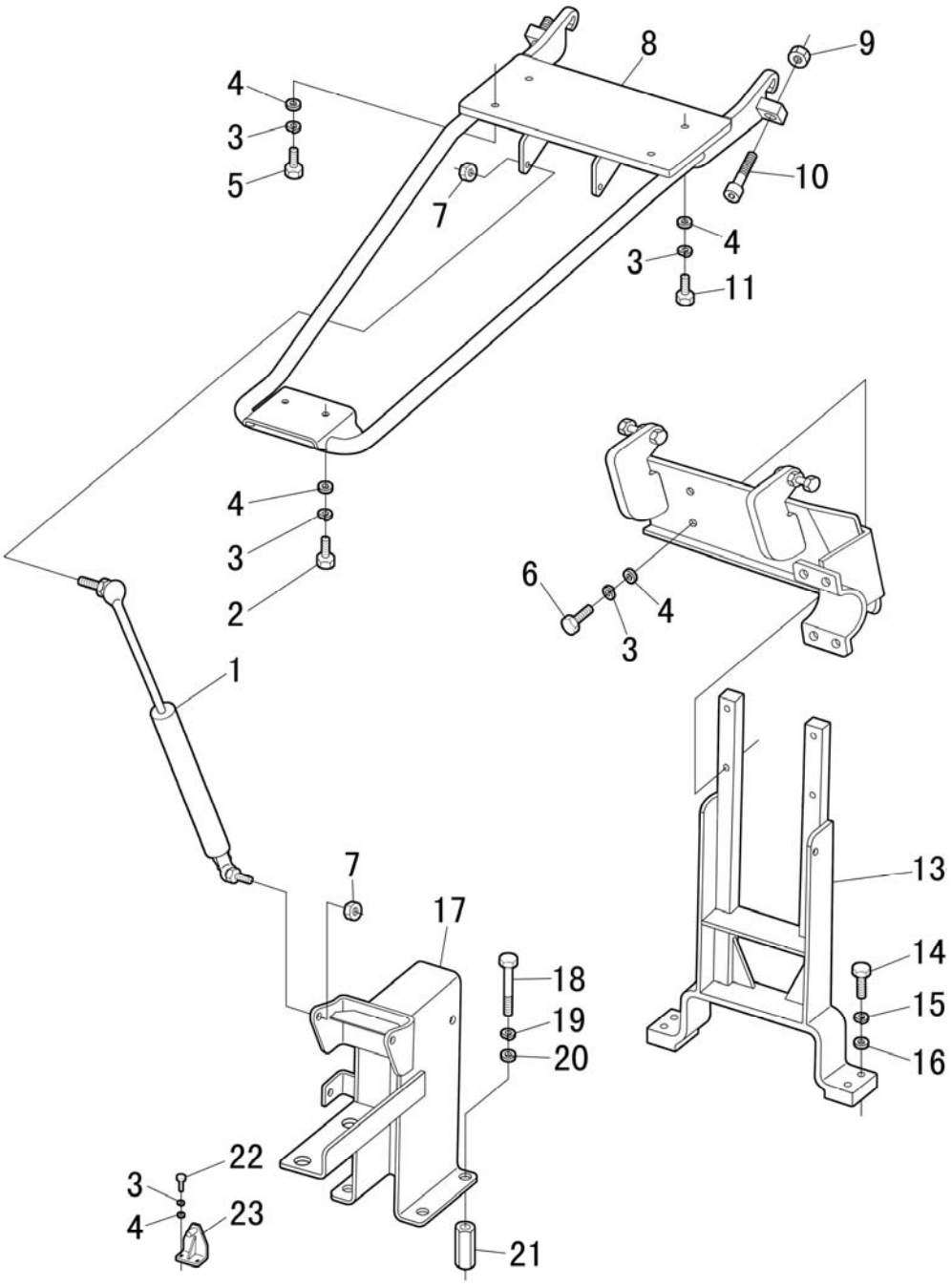

BODY, HOOD

R	P.N.	DESCRIPTION	QTY
1	51334212	GAS SPRING	2
2	51334420	BOLT	4
3	51323379	SPRING WASHER 8	12
4	51323402	PLAIN WASHER 8	12
5	51323126	BOLT	2
6	51323096	BOLT	4
7	51327823	NUT	4
8	51336266	HOOD FRAME	1
9	51323144	NUT	2
10	51333139	BOLT	2
11	51323127	BOLT	2
12	51337704	SUPPORT ASSY.	1
13	51330448	COMPLETE SUPPORT	1
14	51323104	BOLT	4
15	51323380	WASHER	4
16	51323403	WASHER	4
17	51335155	LOWER SUPPORT, GAS SPRING	1
18	51330555	BOLT	4
19	51323382	WASHER	4
20	51326732	WASHER	4
21	51330547	SPACER	4
22	51325717	BOLT	2
23	51334391	BRACKET	1

1.83.0/1	2/3	06/09

BODY, HOOD

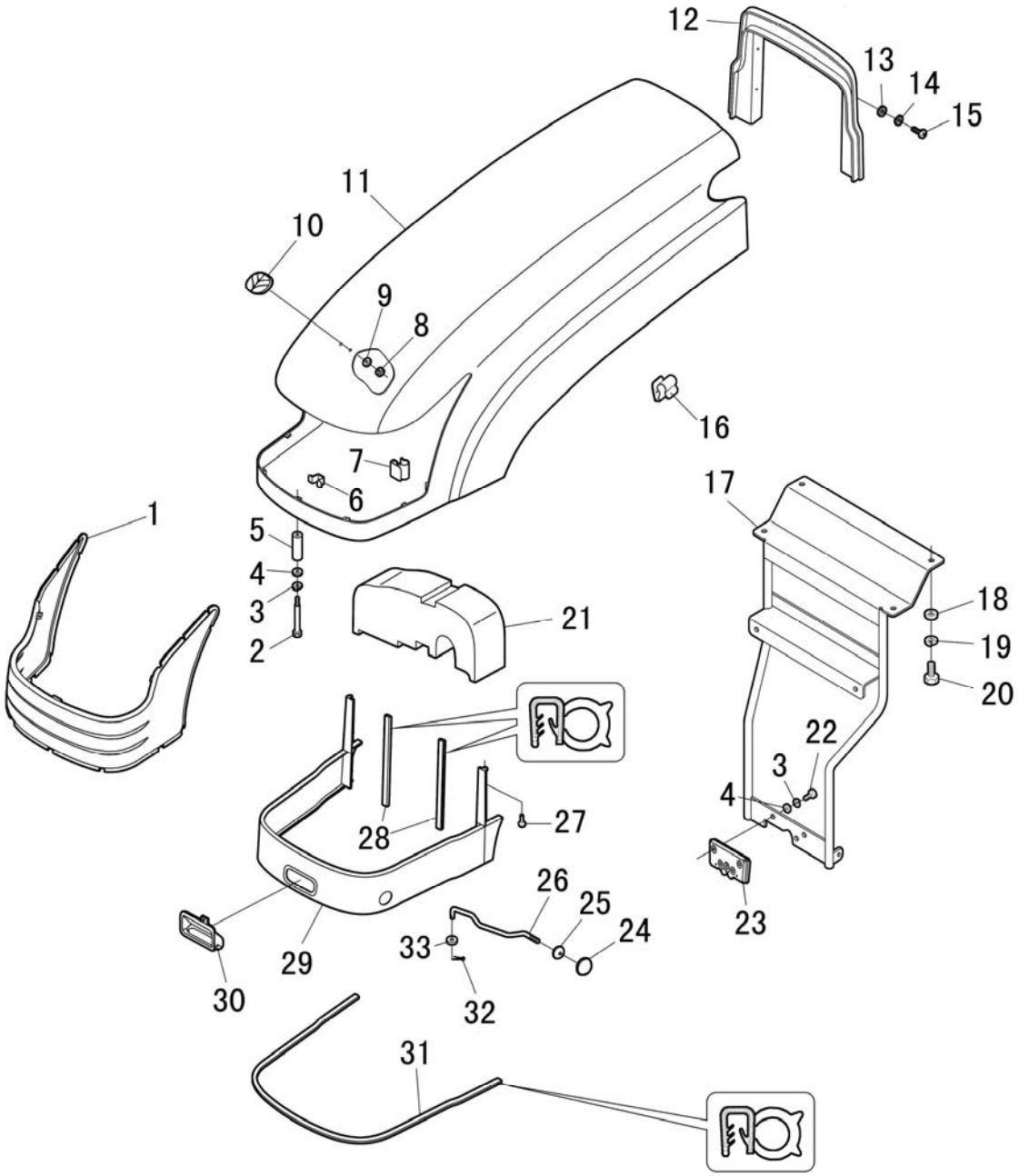

BODY, HOOD

R	P.N.	DESCRIPTION	QTY
1	51334808	COVER	1
2	51334956	BOLT	7
3	51323378	WASHER	7
4	51323401	WASHER	7
5	51334828	SPACER	7
6	51336807	SPRING FASTENER	5
7	51336816	SPRING FASTENER	8
8	14227876	SPRING NUT	3
9	5138360	RUBBER RING	3
10	47128460	LOGO	1
11	51334858	HOOD	1
12	51335160	HOOD SEAL	1
12	51335161	HOOD SEAL	1
13	51323300	NUT	2
14	51335250	WASHER	6
15	51332513	BOLT	4
16	51335466	SPRING FASTENER	7
17	51342107	LATCH SUPPORT	1
18	51323402	PLAIN WASHER 8	4
19	51323379	SPRING WASHER 8	4
20	51334420	BOLT	4

1.83.0/1	3/3	06/09

BODY, HOOD

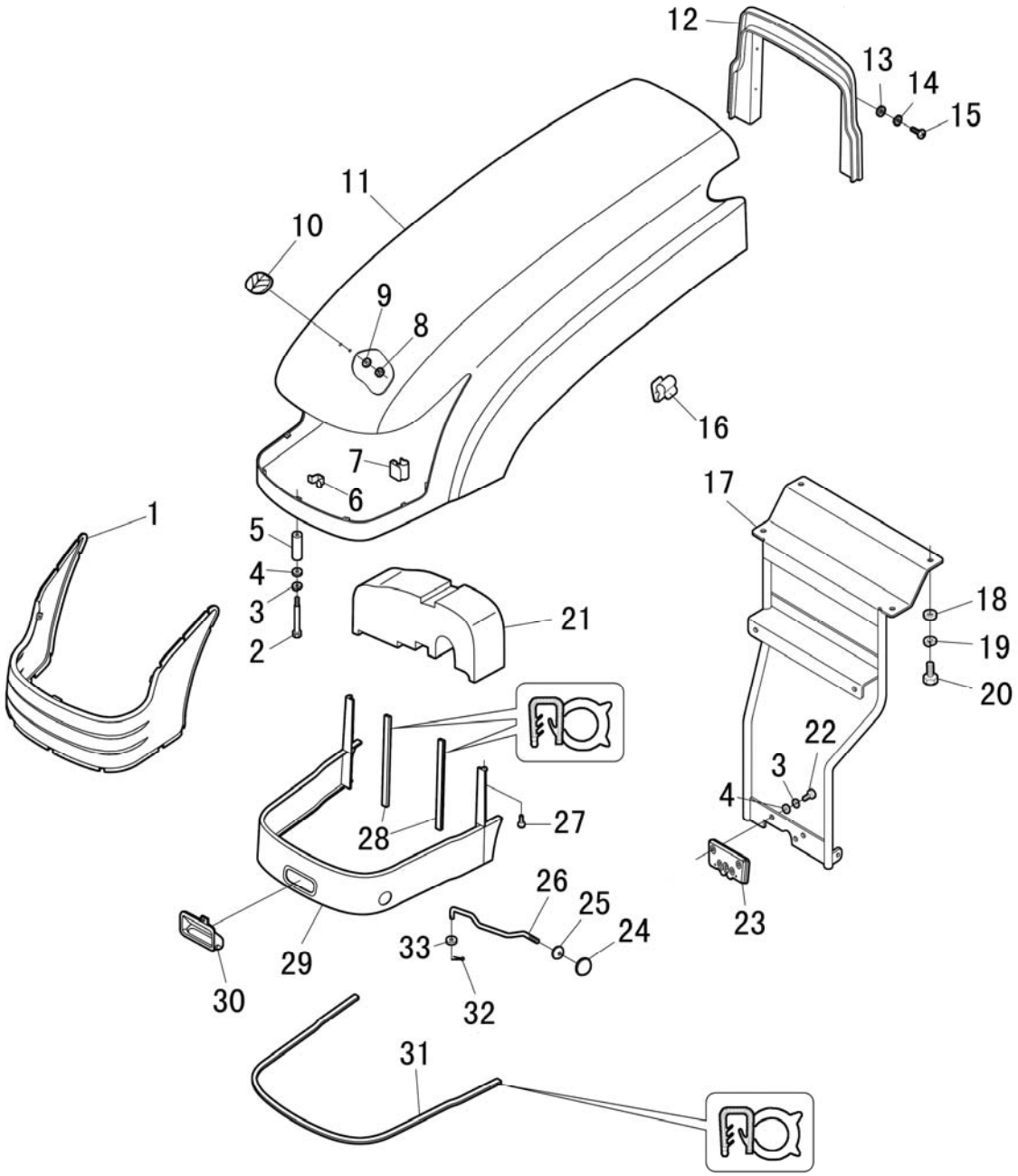

BODY, HOOD

R	P.N.	DESCRIPTION	QTY
21	51335162	FOAM	1
21	51336829	FOAM (EURO II)	1
22	51323092	BOLT	2
23	51334291	HOOD LATCH	1
24	51336947	PUSH BUTTON JOINT	1
25	51336944	PUSH BUTTON	1
26	51336943	LEVER	1
27	51336533	SCREW	2
28	51342909	SEAL	2
29	51334822	LOWER COVER	1
30	51333178	KNOB	1
31	51334847	LOWER SEAL	1
32	51323356	PIN	1
33	51325786	WASHER	1

1.84.2	1/1	06/09

INSTRUMENTAL PANEL

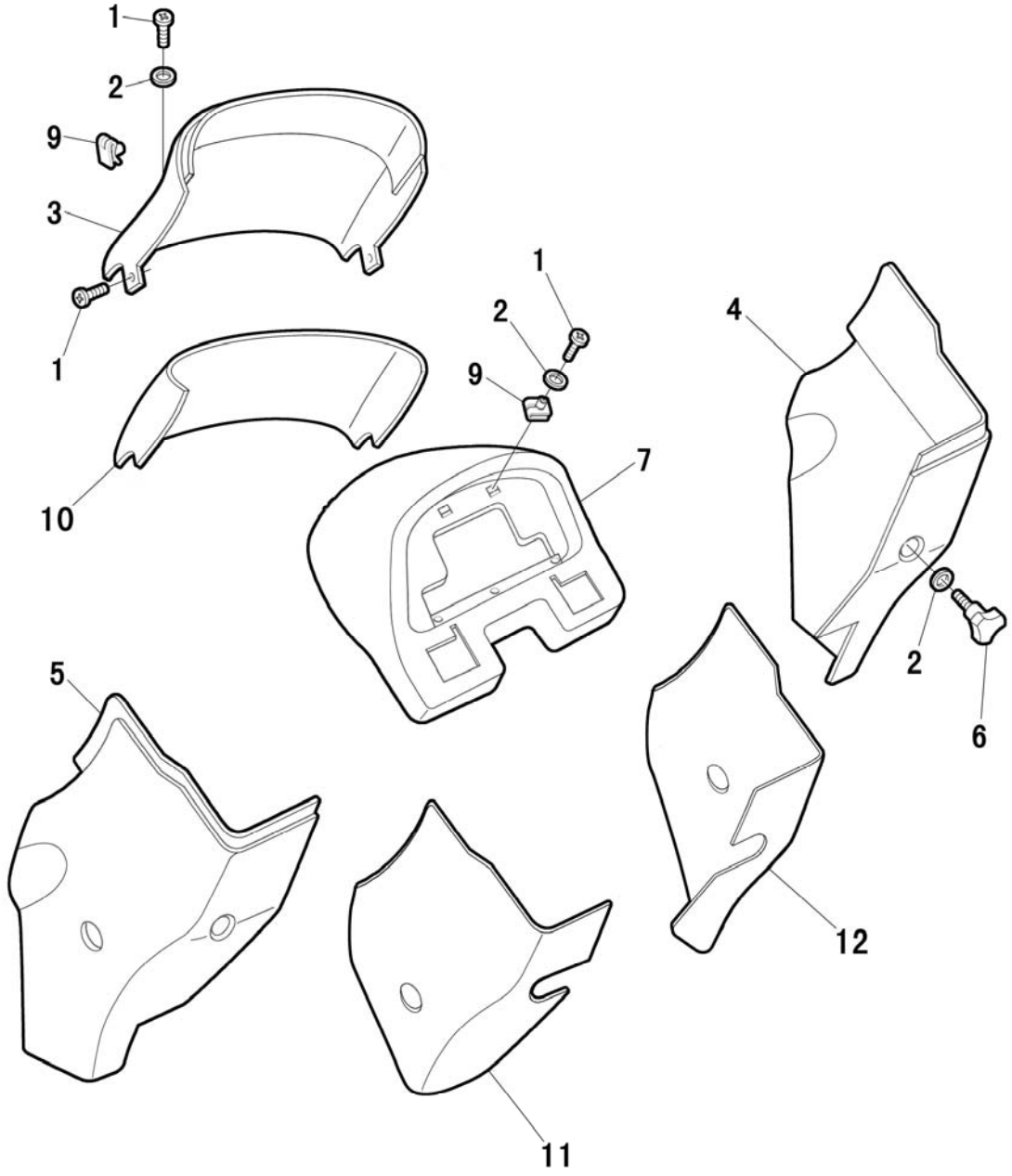

INSTRUMENTAL PANEL

R	P.N.	DESCRIPTION	QTY
1	14778914	SCREW	8
2	12647604	WASHER PLAIN	4
3	5175424	UPPER PANEL	1
4	47125854	RH LOWER PANEL	1
5	51334134	L.H. LOWER PANEL	1
6	5178910	KNOB	4
7	82004208	PANEL ASY-INSTRUMENT	1
8	47130056	NUT SPRING	6
9	82006114	NUT SPRING	2
10	82003323	PANEL INSTRUMENT UPPER	1
11	47125741	PANEL INSTRUMENT LOWER－RH	1
12	51342014	PANEL INSTRUMENT LOWER－LH	1

1.85.0	1/1	06/09

SEAT

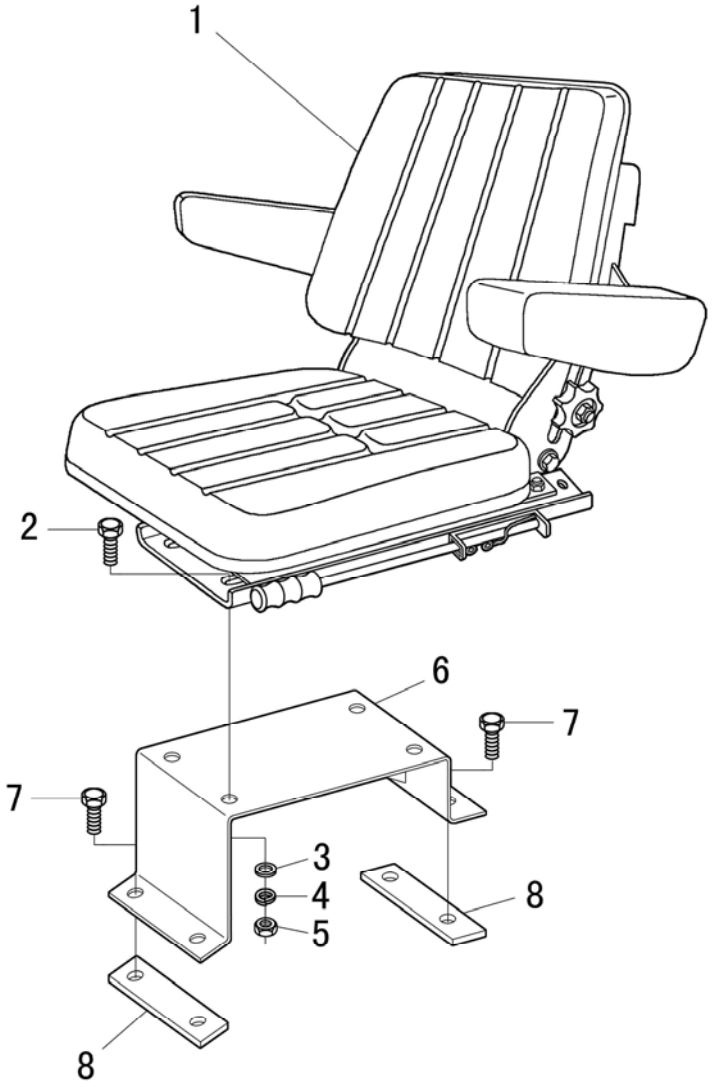

SEAT

R	P.N.	DESCRIPTION	QTY
1	51342011	SEAT (FOR AREA OUTSIDE CHINA)	1
1	51342756	SEAT (W/O ARMREST)	1
1	51333725	SEAT (WITH BELT)	1
2	51323096	BOLT	4
3	51323402	PLAIN WASHER	8
4	51323379	SPRING WASHER	8
5	51323149	NUT	4
6	51332353	SEAT SUPPORT	1
7	51333081	BOLT	4
8	51336409	STRIP	2
8	51333082	STRIP	2

1.87.0	1/3	11/07

PLATFORM & FENDERS - L/ CAB

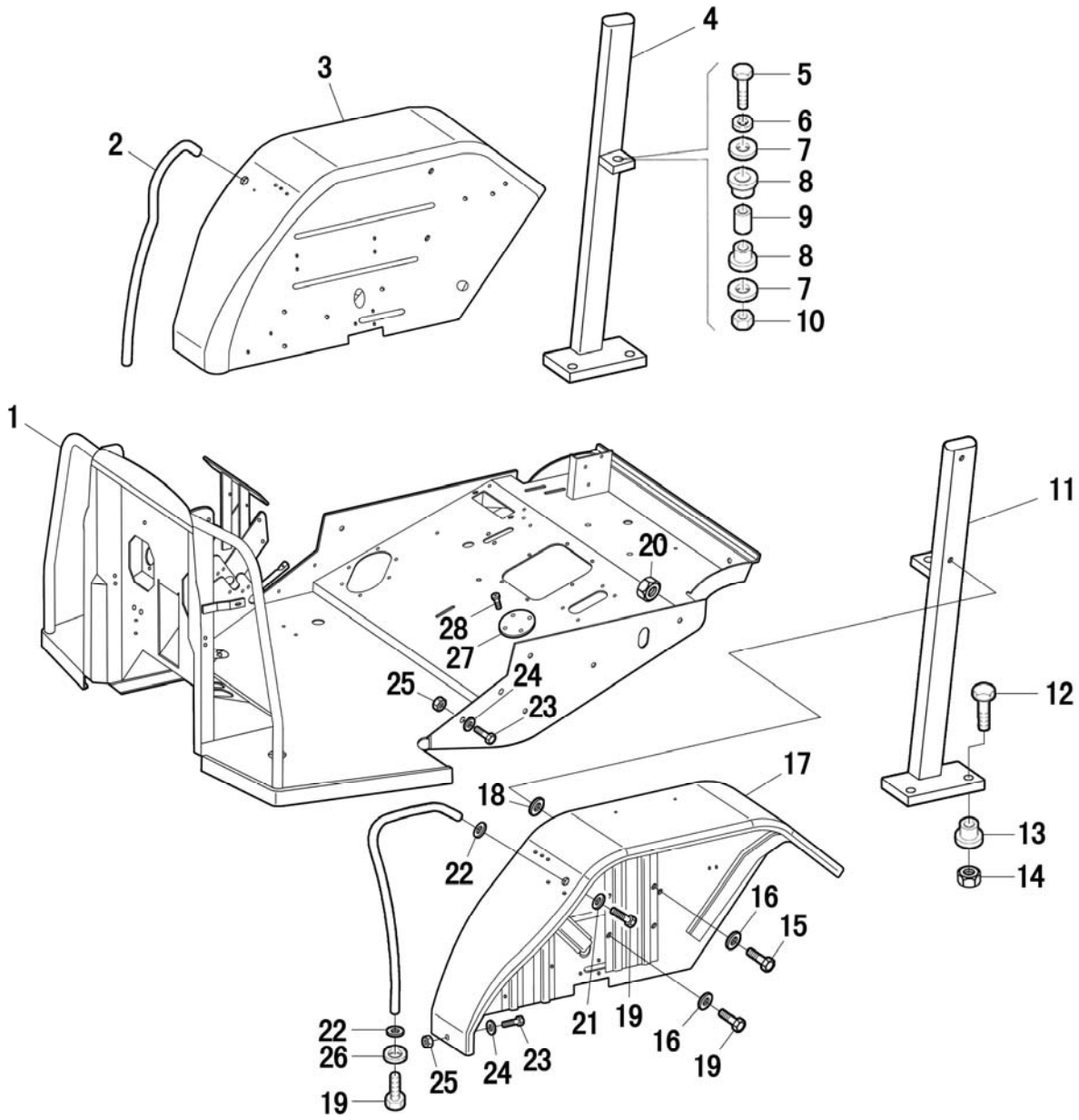

PLATFORM & FENDERS - L/ CAB

R	P.N.	DESCRIPTION	QTY
1	51344265	PLATFORM	1
2	51334304	R.H. HANDLE	1
3	51334385	FENDER RH	1
4	51334363	RH FRONT SUPPORT ASSY	1
5	15541224	CAPSCREW	2
6	12648524	FLAT WASHER	2
7	5167723	WASHER	4
8	5187531	RING CUSHION MOUNT	4
9	5167724	SPACER	2
10	51330487	NUT	2
11	51334366	LH FRONT SUPPORT ASSY	1
12	15985024	BOLT	4
13	5167746	SPACER	4
14	12575011	NUT SELF-LOCKING	4
15	51323105	CAPSCREW	4
16	12646824	WASHER	12
17	51334381	FENDER LH	1
18	51333849	GASKET	4
19	51323130	BOLT	12
20	12574514	NUT	4

PLATFORM & FENDERS - L/ CAB

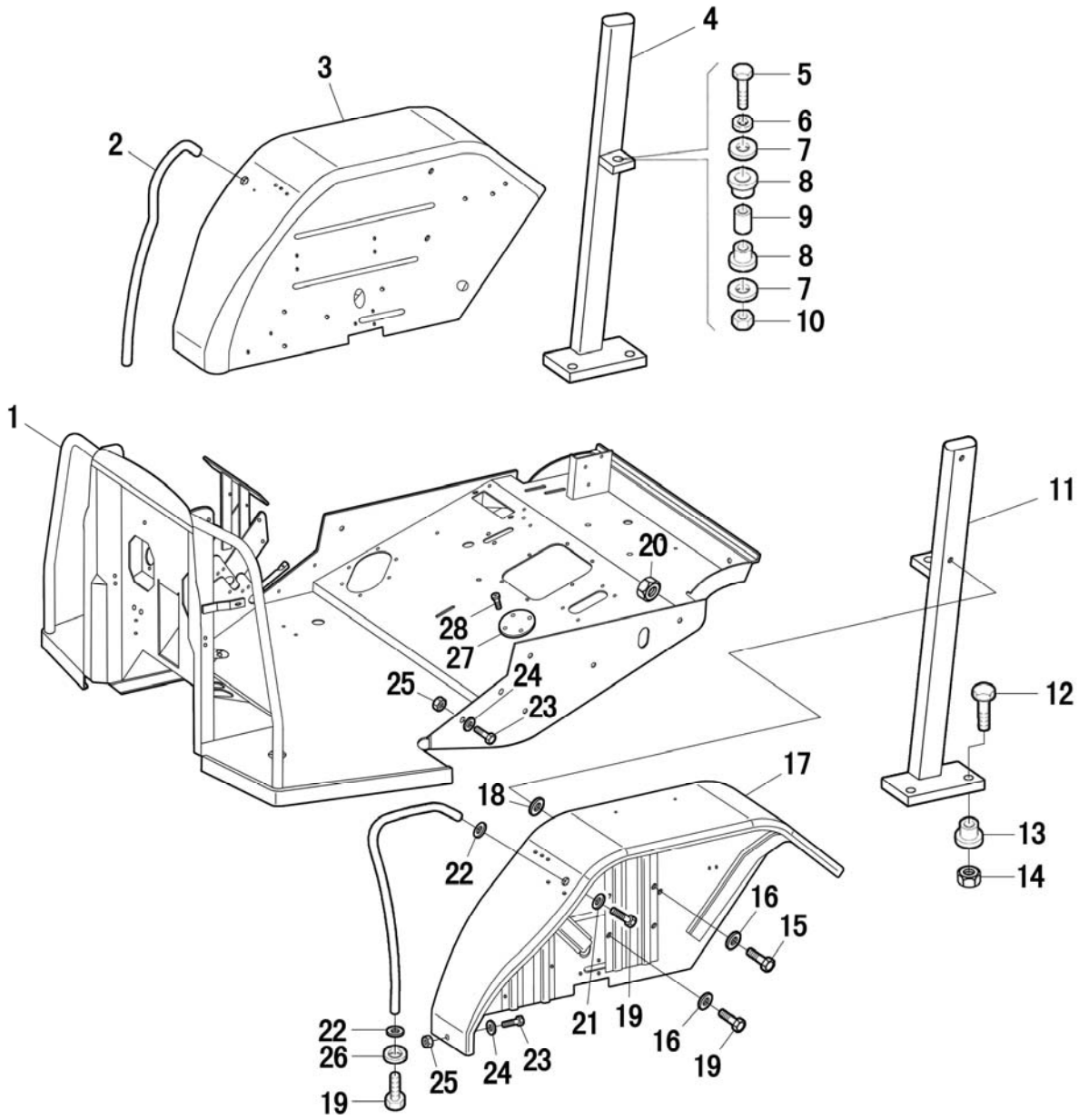

PLATFORM & FENDERS - L/ CAB

R	P.N.	DESCRIPTION	QTY
21	51329339	WASHER	2
22	51325454	WASHER	4
23	51323091	BOLT	6
24	51323395	WASHER 6	6
25	51326864	NUT	6
26	51323403	WASHER	2
27	5176213	COVER PLATFORM BLACK	1
28	15688507	CAPSCREW	4

PLATFORM - L/ CAB

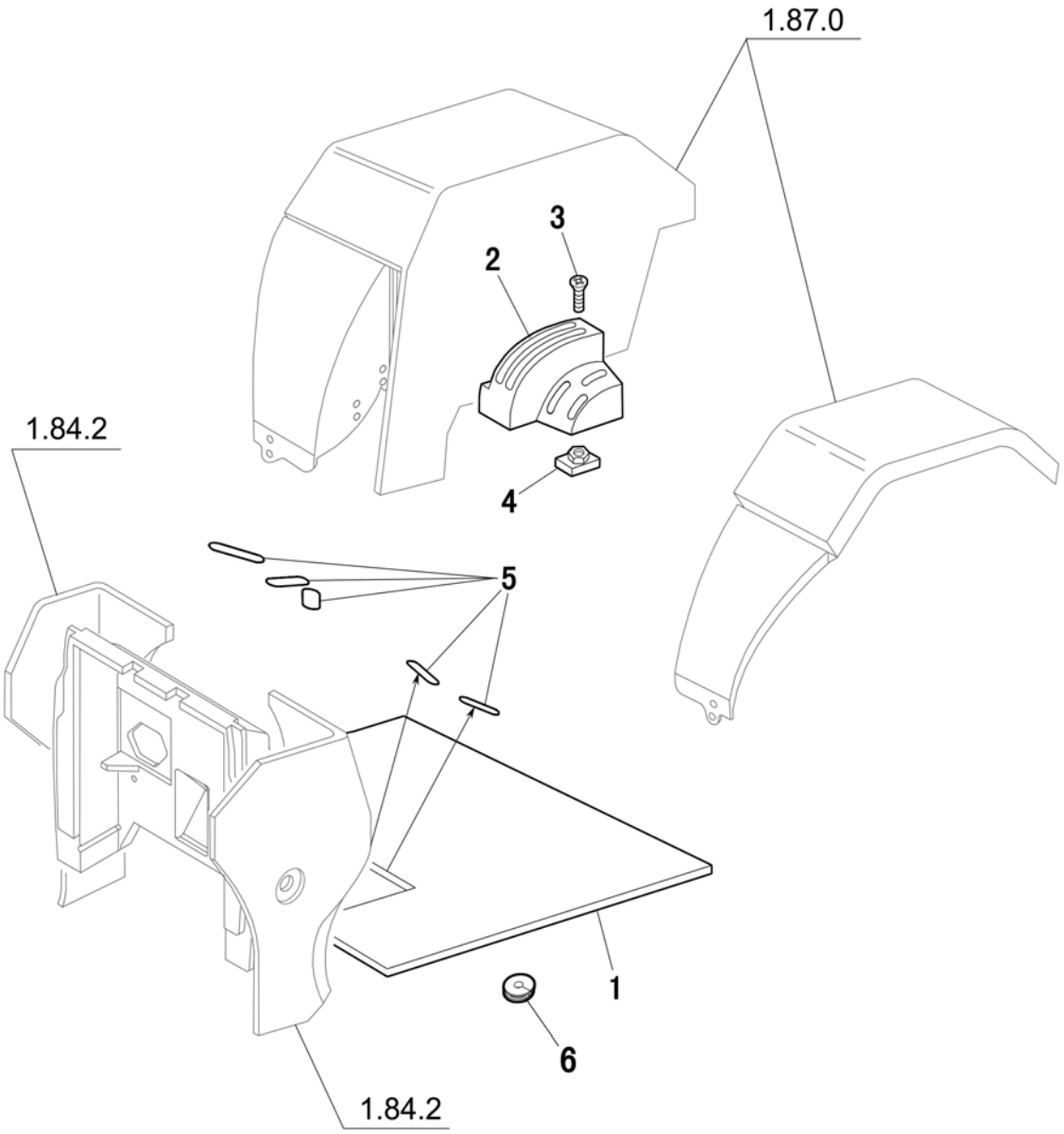

PLATFORM - L/ CAB

R	P.N.	DESCRIPTION	QTY
1	51331085	FRONT MAT FOR PLATFORM	1
2	5168810	R.H.SIDE LEVER COVER	1
3	15959504	SCREW	3
4	14115780	BLOCK	3
5	5173209	COVER	4
6	51337981	RUBBER COVER	1

1.89.3/1	1/1	06/09

TOW HOOK

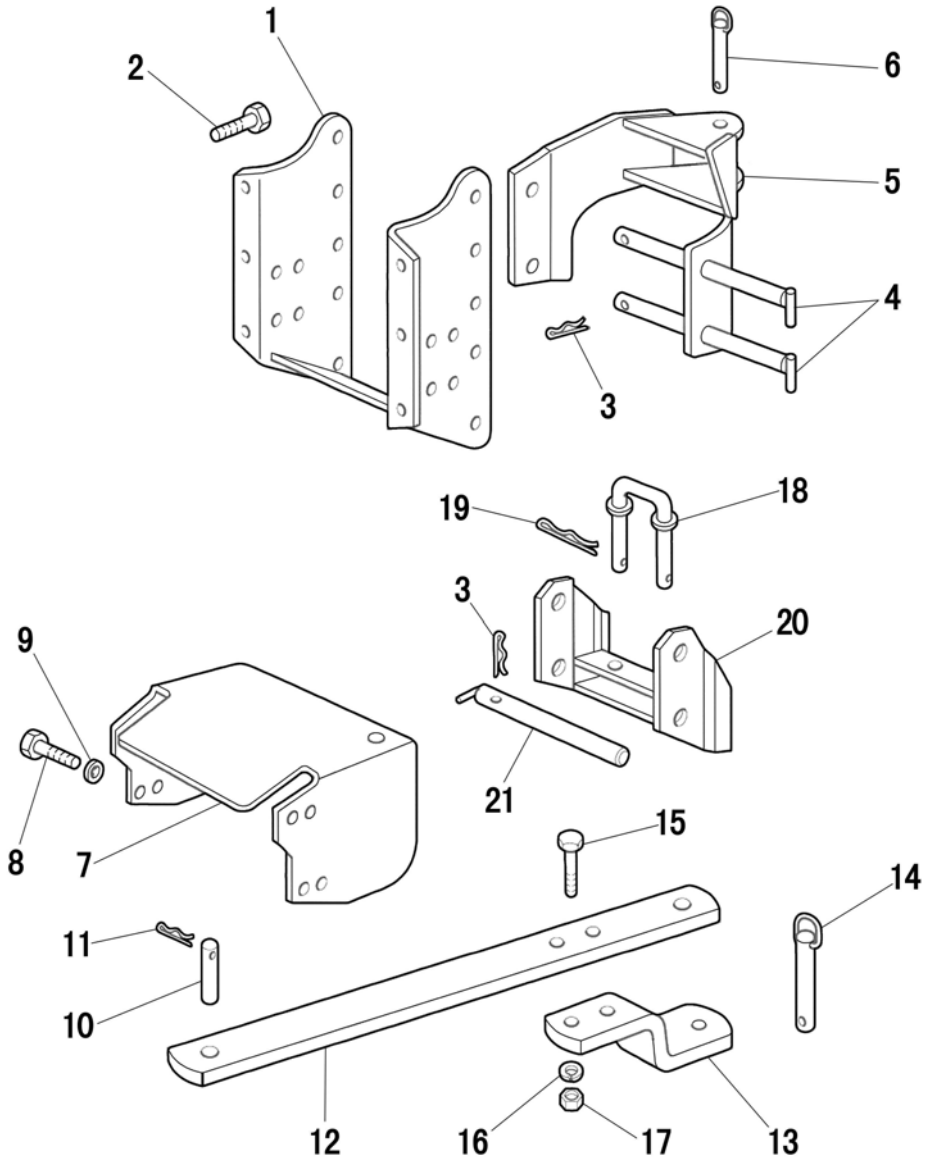

TOW HOOK

R	P.N.	DESCRIPTION	QTY
1	51333165	SUPPORT	1
2	15981521	BOLT M16X1.5X90	6
2	15981224	BOLT M16X1.5X65 (Use with no tow hook)	6
3	51322299	COTTER PIN	4
4	5124424	PIN	2
5	51333163	HITCH ASSY.	1
6	573185	TOWING BAR AND PIVOT	1
7	51333157	P.T.O. SHAFT GUARD	1
8	16043324	CAPSCREW	4
9	14499404	WASHER	4
10	5153813	PIN	1
11	578668	COTTER PIN	1
12	51333151	DRAWBAR	1
13	51333153	DRAWBAR REAR END	1
14	596060	TOWING BAR AND PIVOT	1
15	15985031	CAPSCREW	2
16	11191674	LOCKWASHER	2
17	10721021	NUT	2
18	5101047	PIN	1
19	5112606	COTTER PIN	3
20	51333136	SUPPORT, DRAWBAR	1
21	5117437	PIN	2

1.89.3/2	1/1	06/09

TRAILER HITCH（EC HOMOLOGATION）

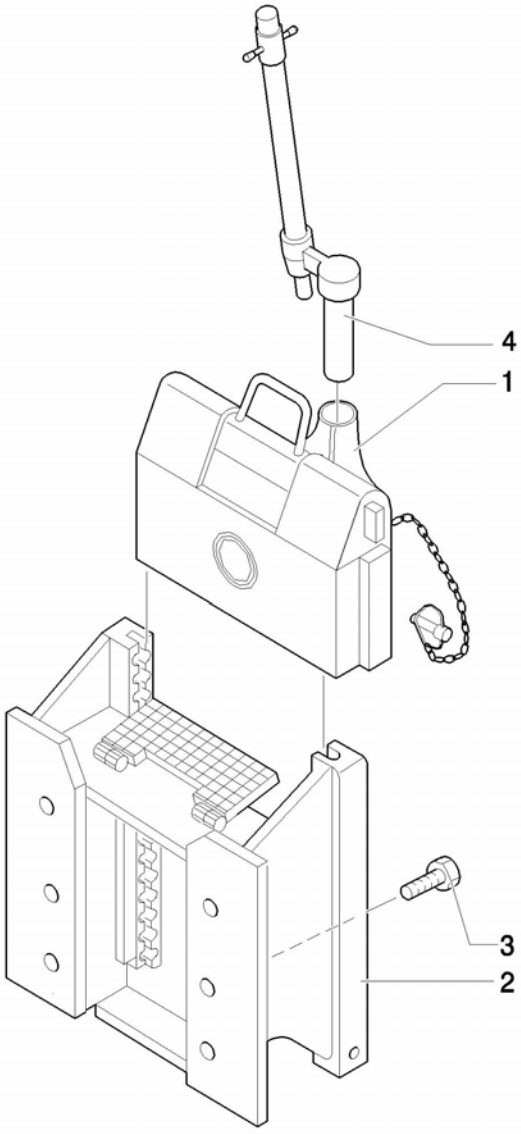

TRAILER HITCH（EC HOMOLOGATION）

R	P.N.	DESCRIPTION	QTY
1	5199447	COUPLING ASSY.	1
2	5199459	REAR TOWHOOK ASSY	1
3	15981521	BOLT	6
4	5199449	PIN ASSEMBLY	1

IMPLEMENT CARRIER

SEC. 9

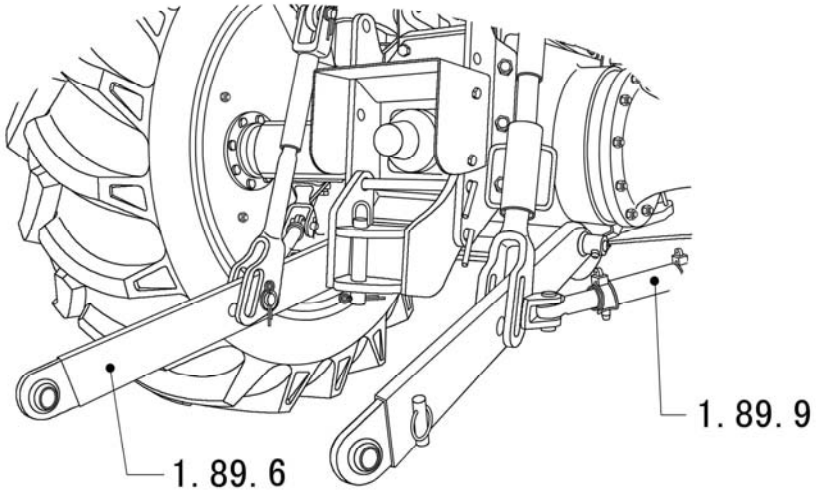

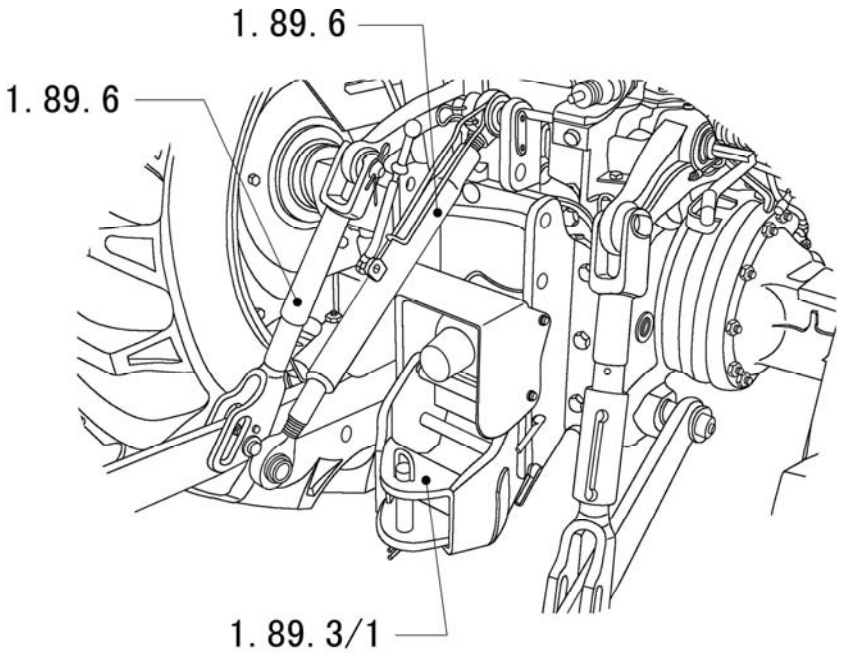

1.89.6	1/2	06/09

LINK ASSEMBLY

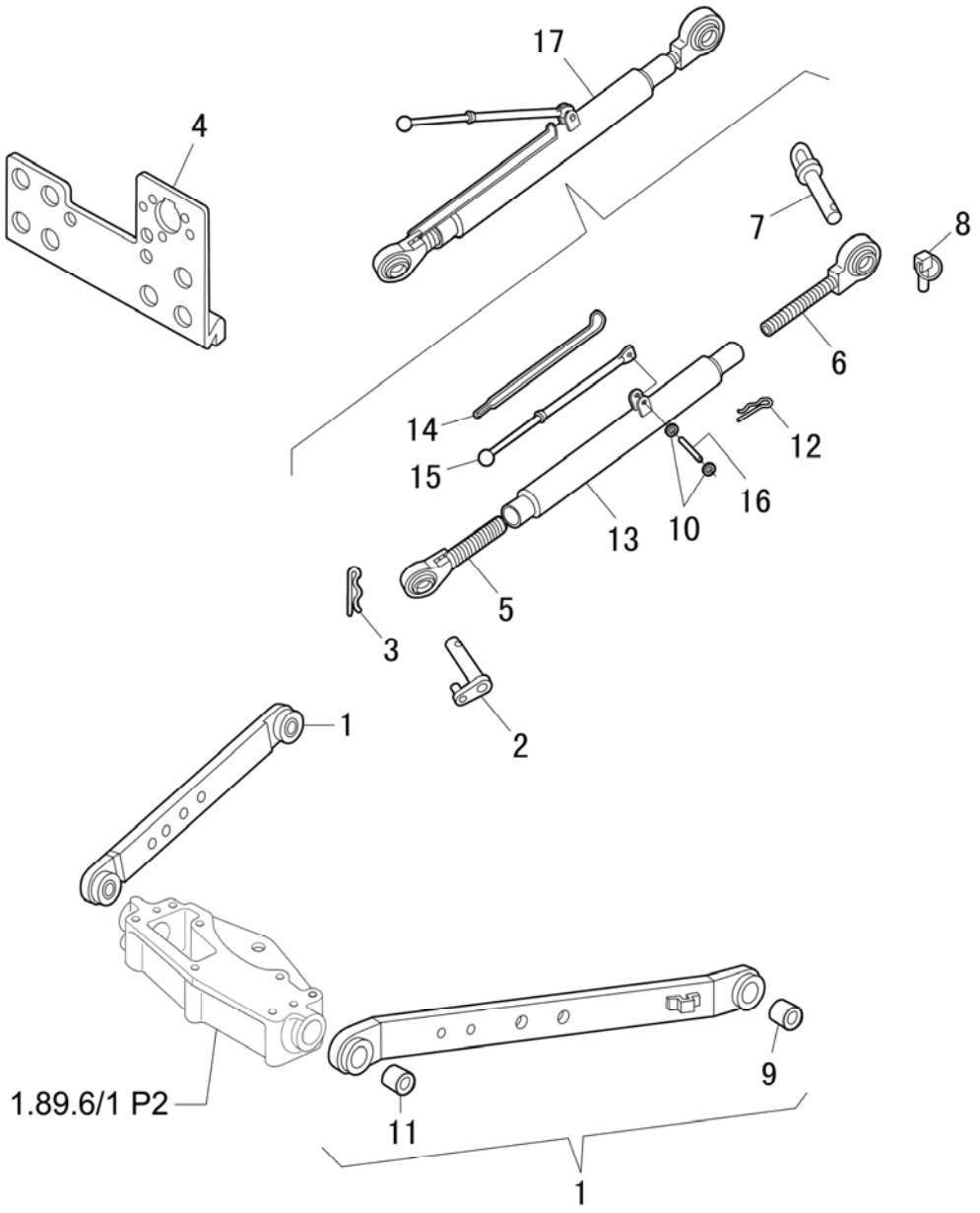

LINK ASSEMBLY

R	P.N.	DESCRIPTION	QTY
1	51332898	LOWER LINK ASSY.	1
2	51331394	CONNECTING PIN	1
3	5112606	COTTER	1
4	5199441	QUICK COUPLER SUPPORT	1
5	5143008	FRONT ROD	1
6	5143010	REAR ROD	1
7	822483	PIN, LINK SLEEVE	1
8	81810390	PIN	1
9	822441	BUSHING, SPHERICAL	1
10	51332492	WASHER	1
11	5102994	FRONT SPHERIC BUSH FOR ARMS	1
12	51330075	PIN	1
13	5133112	COUPLING LINK COMPLETE	1
14	5140619	SPRING	1
15	5172394	CRANK	1
16	51332493	PINTLE	1
17	51332334	UPPER LINK	1

LINK ASSEMBLY

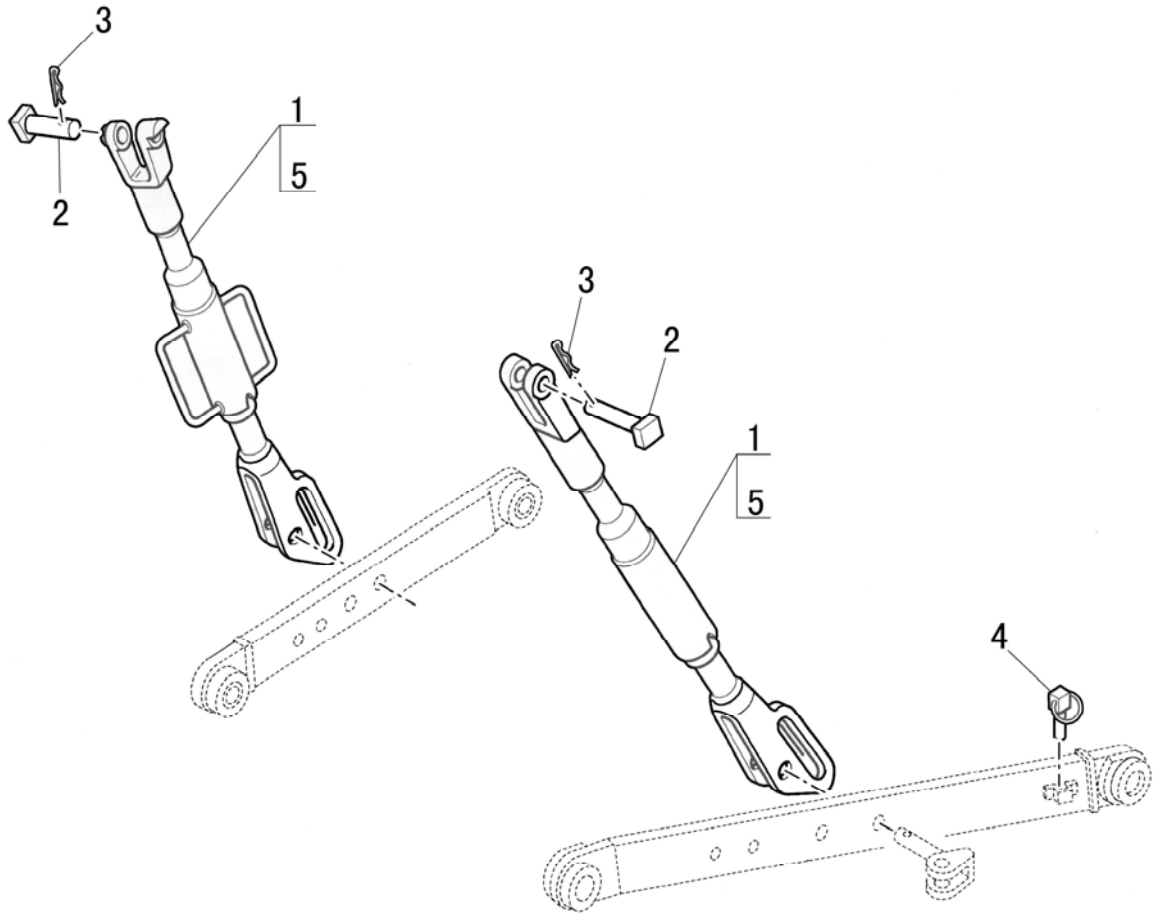

LINK ASSEMBLY

R	P.N.	DESCRIPTION	QTY
1	5186941	R.H. LINK ASSY	1
1	5123277	L.H. LINK ASSY.	1
2	47126271	LIFT LINK UPPER PIN	2
3	5112606	COTTER	2
4	81810390	CLIP	2
5	87352403	R.H. LIFT LINK ASSY.	1
5	87352401	L.H. LIFT LINK ASSY.	1

1.89.6/1	1/2	06/09

FLEXURE BAR

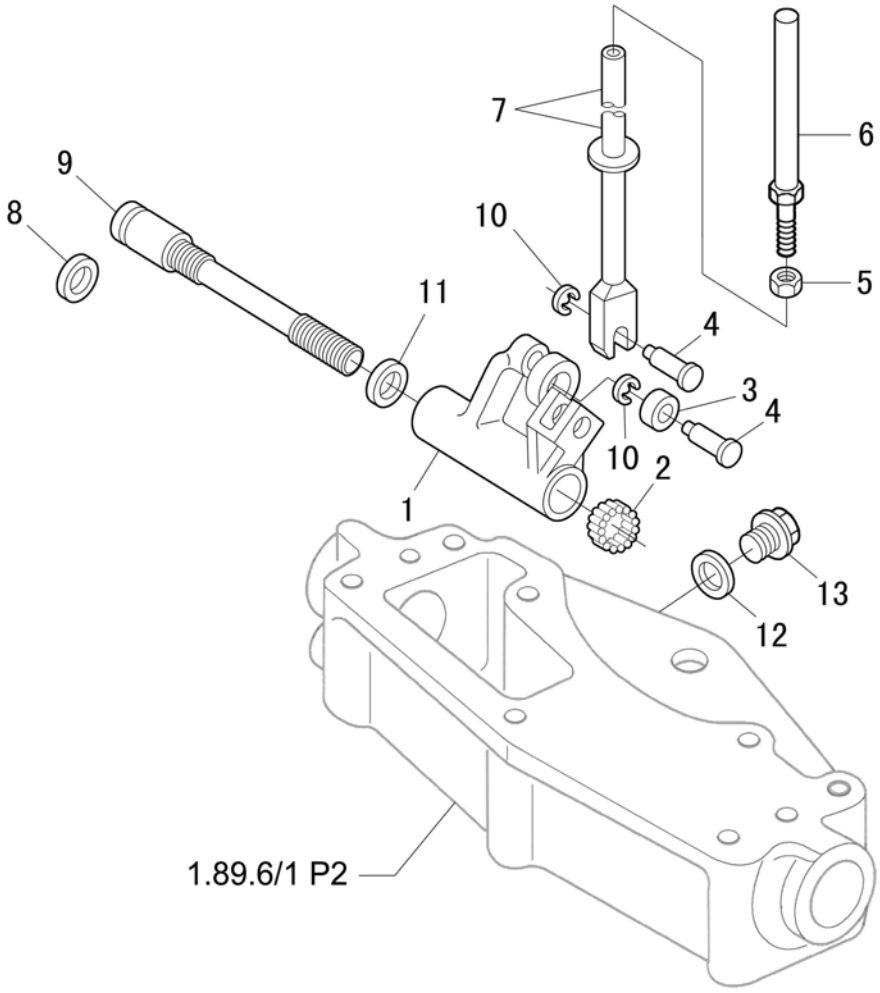

FLEXURE BAR

R	P.N.	DESCRIPTION	QTY
1	5171680	LEVER	1
2	5109160	ROLLER BEARING	2
3	5109156	ROLLER	1
4	5109172	PIN	2
5	10791014	NUT	1
6	5134791	UPPER PART, LINK WITH BALL	1
7	5171678	ROD, DRAFT CONTROL	1
8	5115996	O-RING SEAL	1
9	5171676	DRAFT CONTROL LEVER PIN	1
10	11065976	RETAINING RING	2
11	5117691	SPACER	1
12	10263460	RECTANGULAR SEAL	1
13	10305114	PLUG	1

FLEXURE BAR

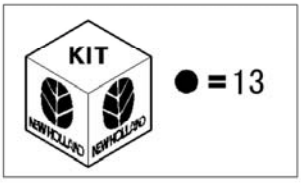

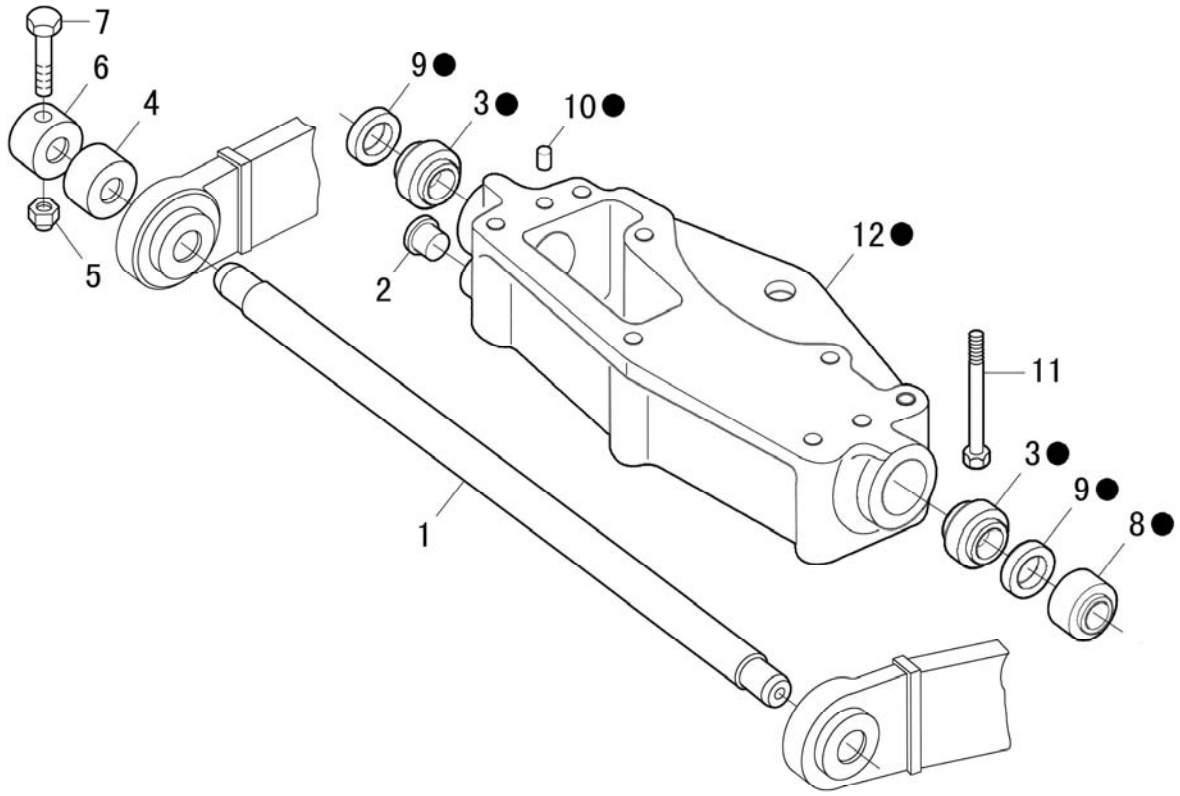

FLEXURE BAR

R	P.N.	DESCRIPTION	QTY
1	51334970	FLEXURE BAR	1
2	5171670	PLUG	1
3	5109977	BUSHING, SENSING BAR	2
4	5177788	WASHER	2
5	12574514	NUT	2
6	5116247	RING, LOWER LINK	2
7	15888724	CAPSCREW	2
8	5171675	SPACER	2
9	47129340	FLEX.BAR SEAL	1
10	5119529	DOWEL	2
11	15864224	CAPSCREW	7
12	5171671	SUPPORT SENSING BAR	1
13	5171673	COMPLETE BAR SUPPORT	1

1.89.6/2	1/1	06/09

SUPPLEMENTARY TOW DEVICE - CROSS - PIECE

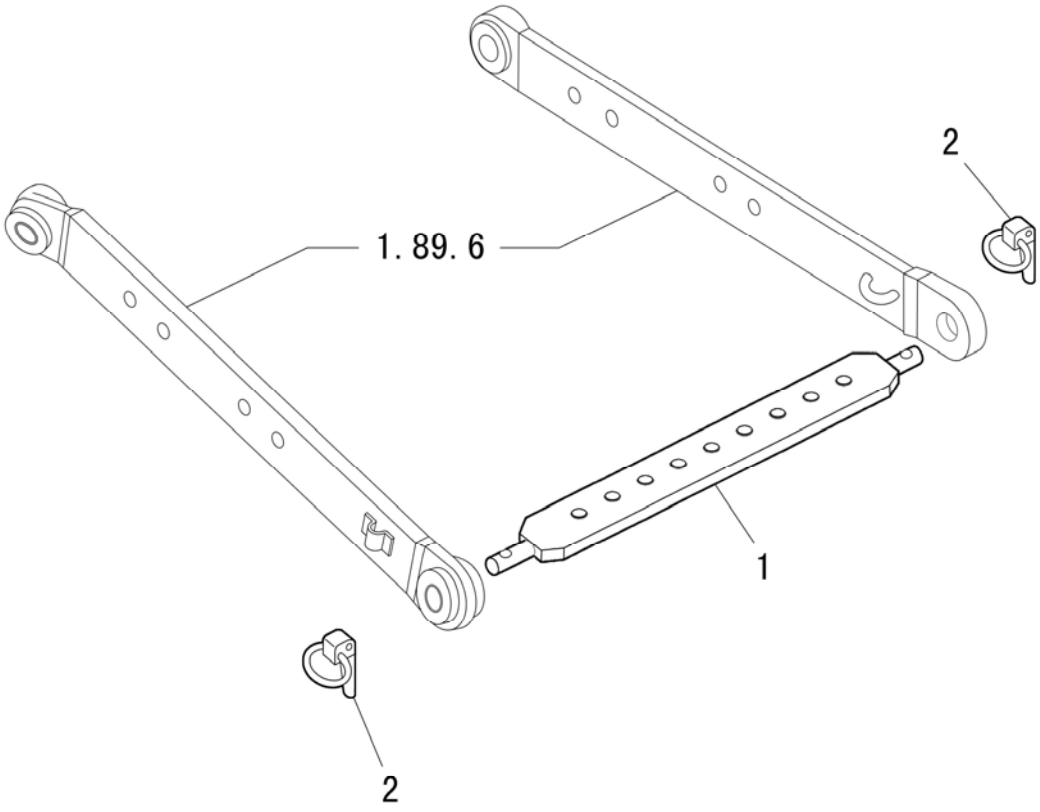

SUPPLEMENTARY TOW DEVICE - CROSS - PIECE

R	P.N.	DESCRIPTION	QTY
1	51333155	CROSSRAIL	1
2	81810390	LINCH PIN	2

1.89.6/3	1/2	06/09

LIFT ARMS

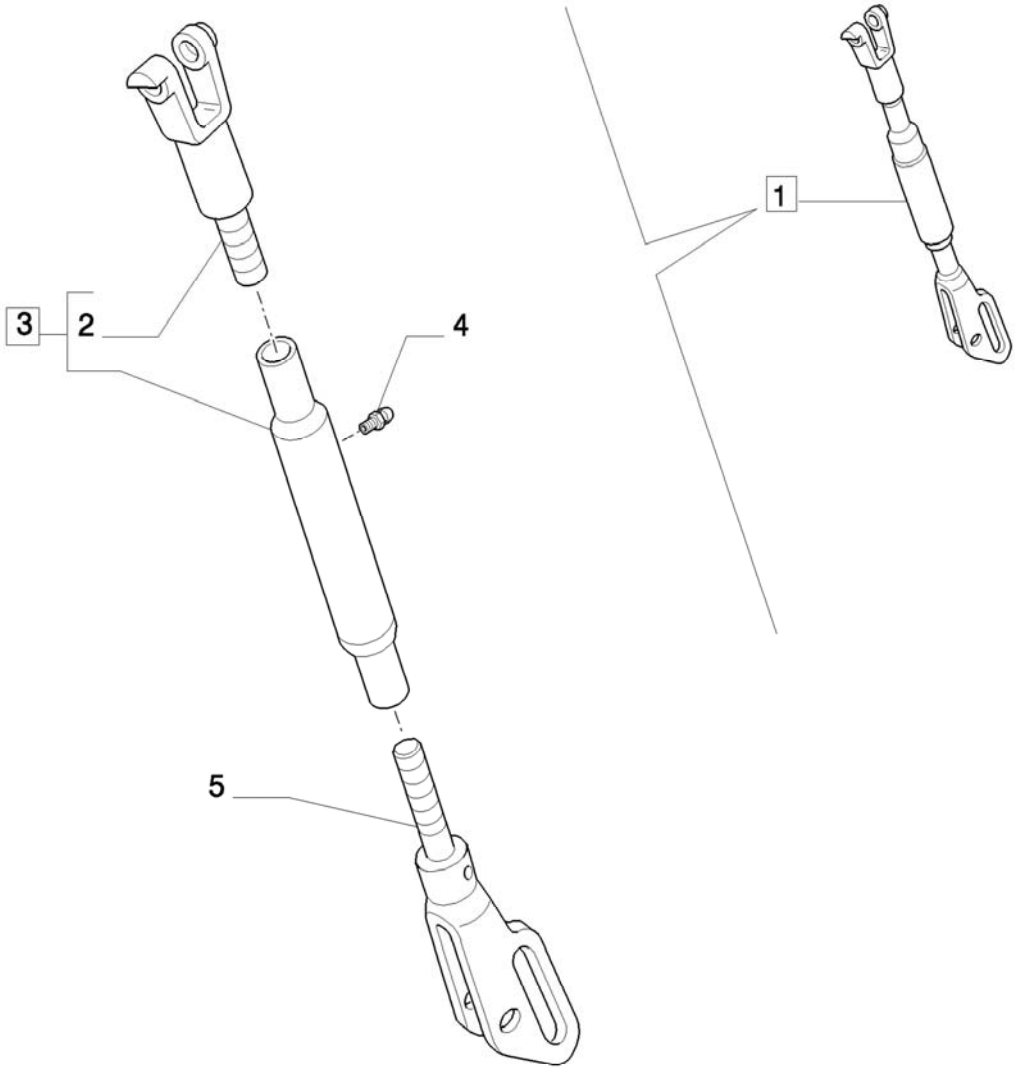

LIFT ARMS

R	P.N.	DESCRIPTION	QTY
1	87352401	L.H. LIFT LINK ASSY.	1
2	5132115	UPPER PART, L.H.TIE-ROD	1
3	5132084	UPPER PART, L.H.TIE-ROD COMPLETE	1
4	13406911	NOZZLE	1
5	5162012	TIE-ROD LOWER COMPLETE END	1

LIFT ARMS

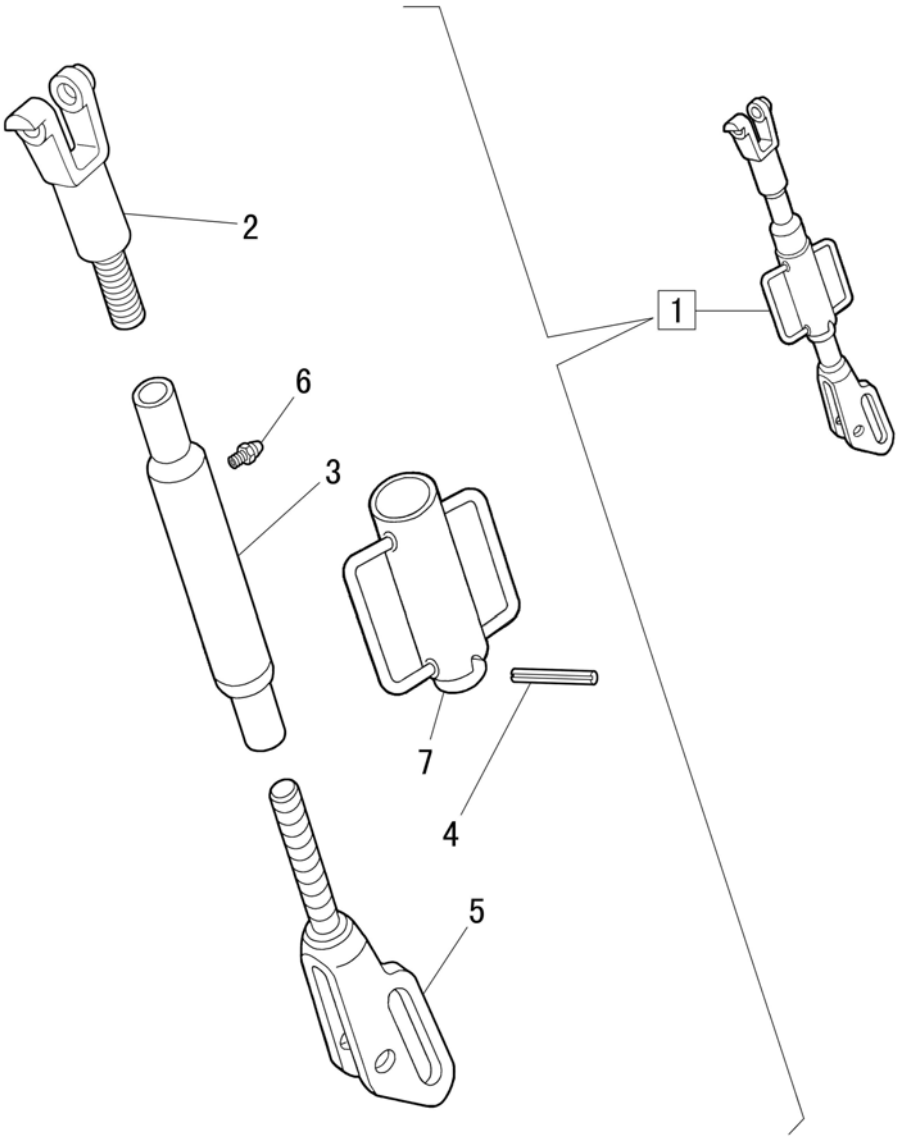

LIFT ARMS

R	P.N.	DESCRIPTION	QTY
1	5186941	LINK ROD ASSY	1
2	5191859	FORK ASSY UPPER	1
3	5191861	TUBE INNER	1
4	47133330	PIN	1
5	5191860	FORK ASSY LOWER	1
6	13407211	NOZZLE	1
7	5191862	TUBE ASSY OUTER	1

1.89.9	1/1	06/09

STABILIZER

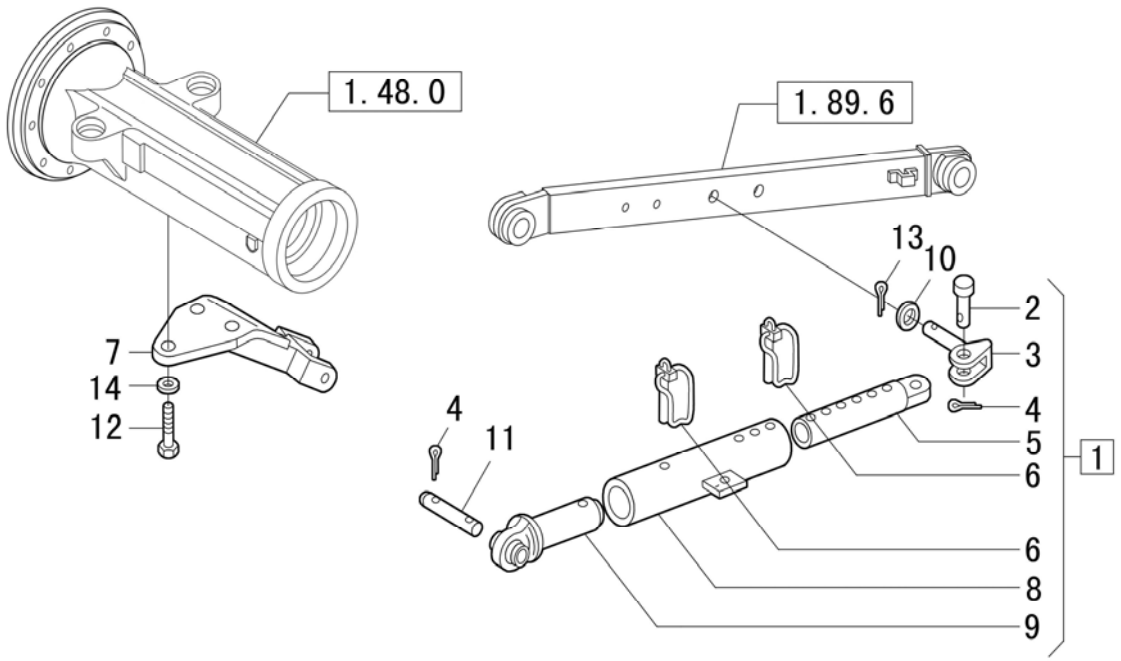

STABILIZER

R	P.N.	DESCRIPTION	QTY
1	51331408	L.H. STABILIZER	2
2	47133051	PIN	1
3	5123274	PIN	1
4	51332671	COTTER PIN	4
5	51331403	ADJUSTMENT ROD	1
6	51331404	CLIP	4
7	51331423	BRACKET, STABILIZER	2
8	51331407	END	1
9	5174917	ROD ASSY, FRONT END	1
10	562106	WASHER	2
11	5125861	PIN	2
12	51331471	BOLT	6
13	5112606	COTTER PIN	2
14	51323384	WASHER	6

DRIVER'S POST

SEC. 10

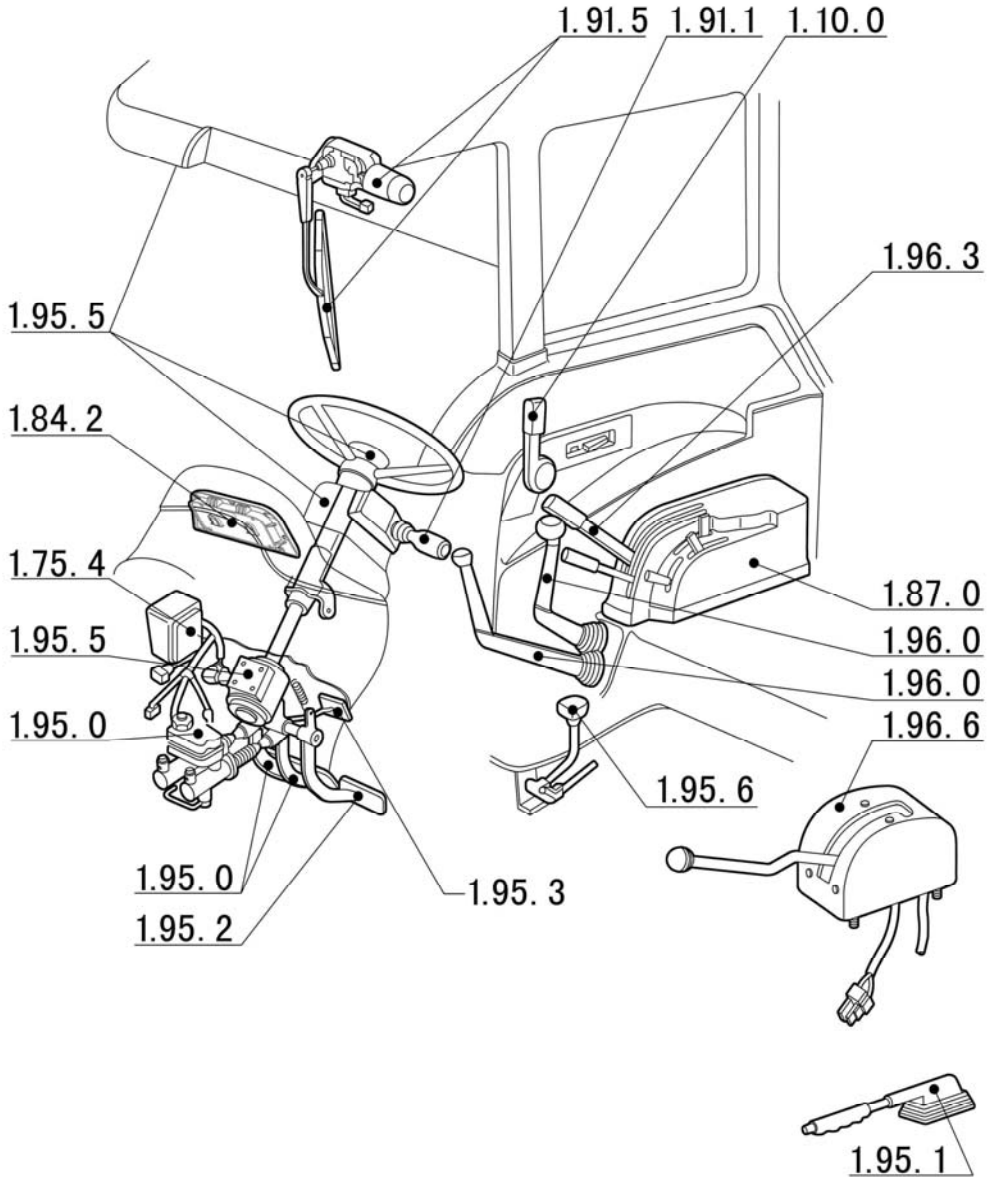

DRIVER'S POST

SEC.10

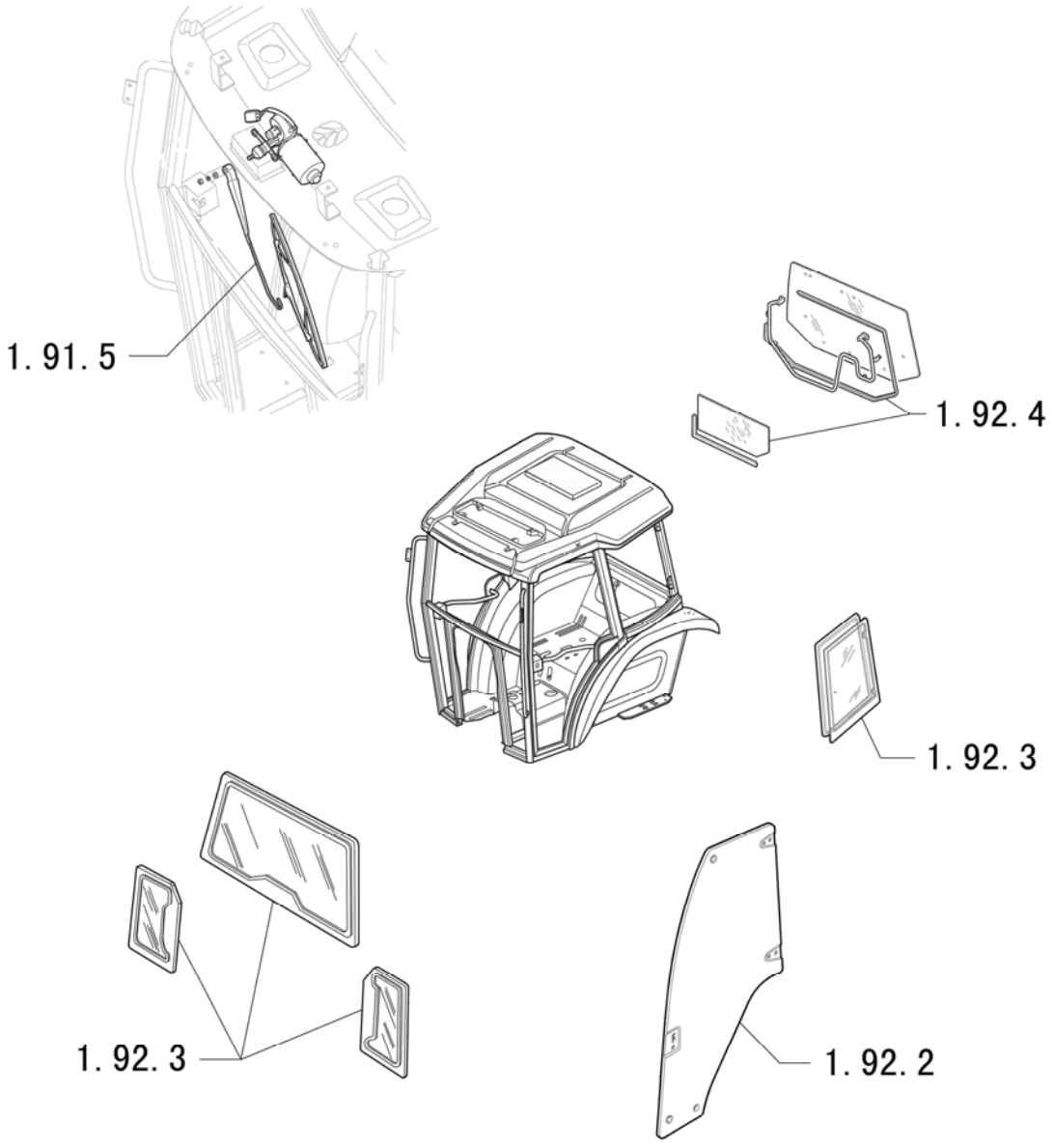

1.90.2	1/2	06/09

STEPS - W/ CAB

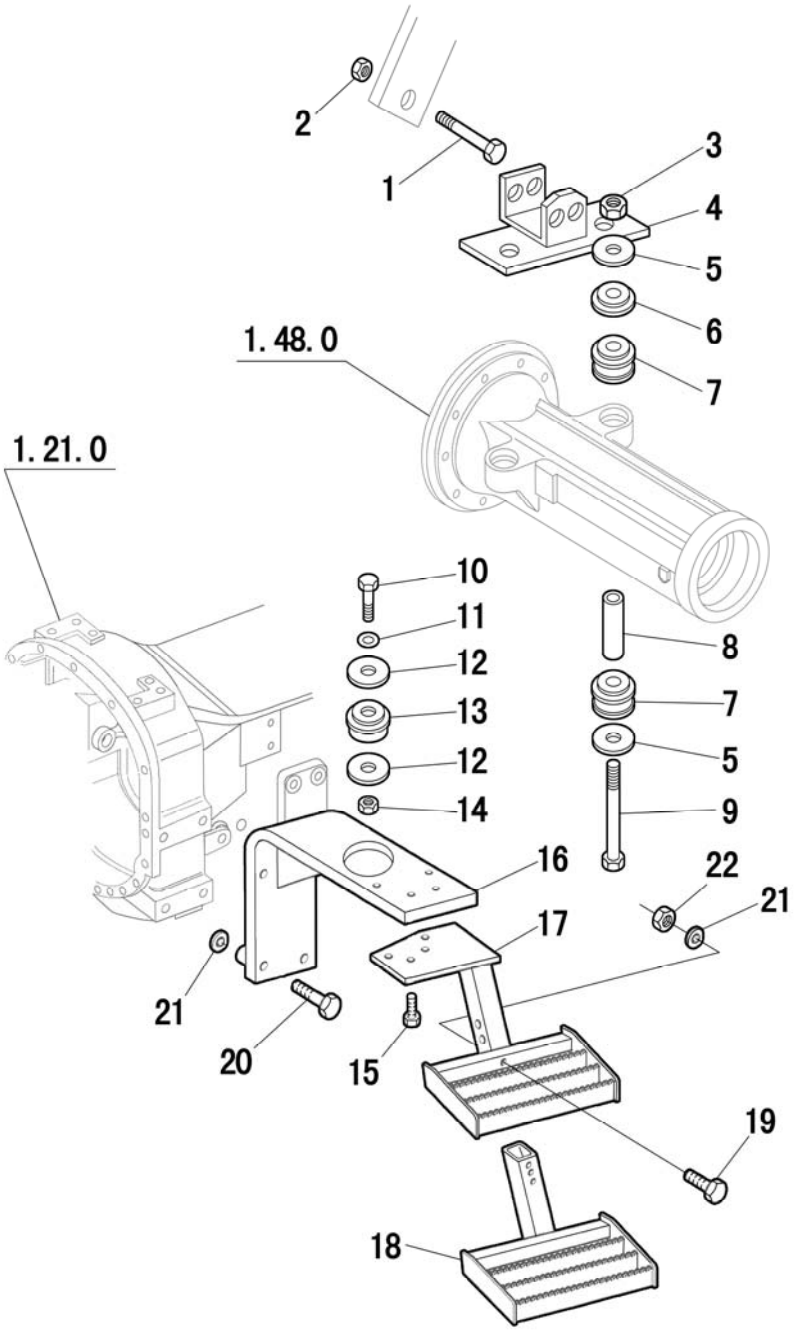

STEPS - W/ CAB

R	P.N.	DESCRIPTION	QTY
1	15989324	CAPSCREW	2
2	12575111	NUT	2
3	12574921	NUT SELF-LOCKING	4
4	51331096	REAR BRACKET	2
5	4997422	SPACER	12
6	4997421	UPPER CUSHION PAD	4
7	4997423	RING,CUSHION MOUNT	8
8	5169559	SPACER	4
9	15982121	BOLT	4
10	51330667	SCREW	2
11	51331097	SCREW	2
12	83957652	SPACER	4
13	83983548	DAMPER	2
14	12575011	NUT SELF-LOCKING	2
15	11234724	CAPSCREW	8
16	51331100	LEFT FRONT BRACKET	1
16	51331095	RIGHT FRONT BRACKET	1
17	5182170	STEP ASSY LH	1
17	5184803	STEP ASSY - RH	1
18	82007964	STEP ASSY	2
19	51323118	BOLT	2
20	11390524	CAPSCREW	8
21	51323404	WASHER	2
22	51330487	NUT	2

1.90.2	2/2	06/09

STEPS - L/ CAB

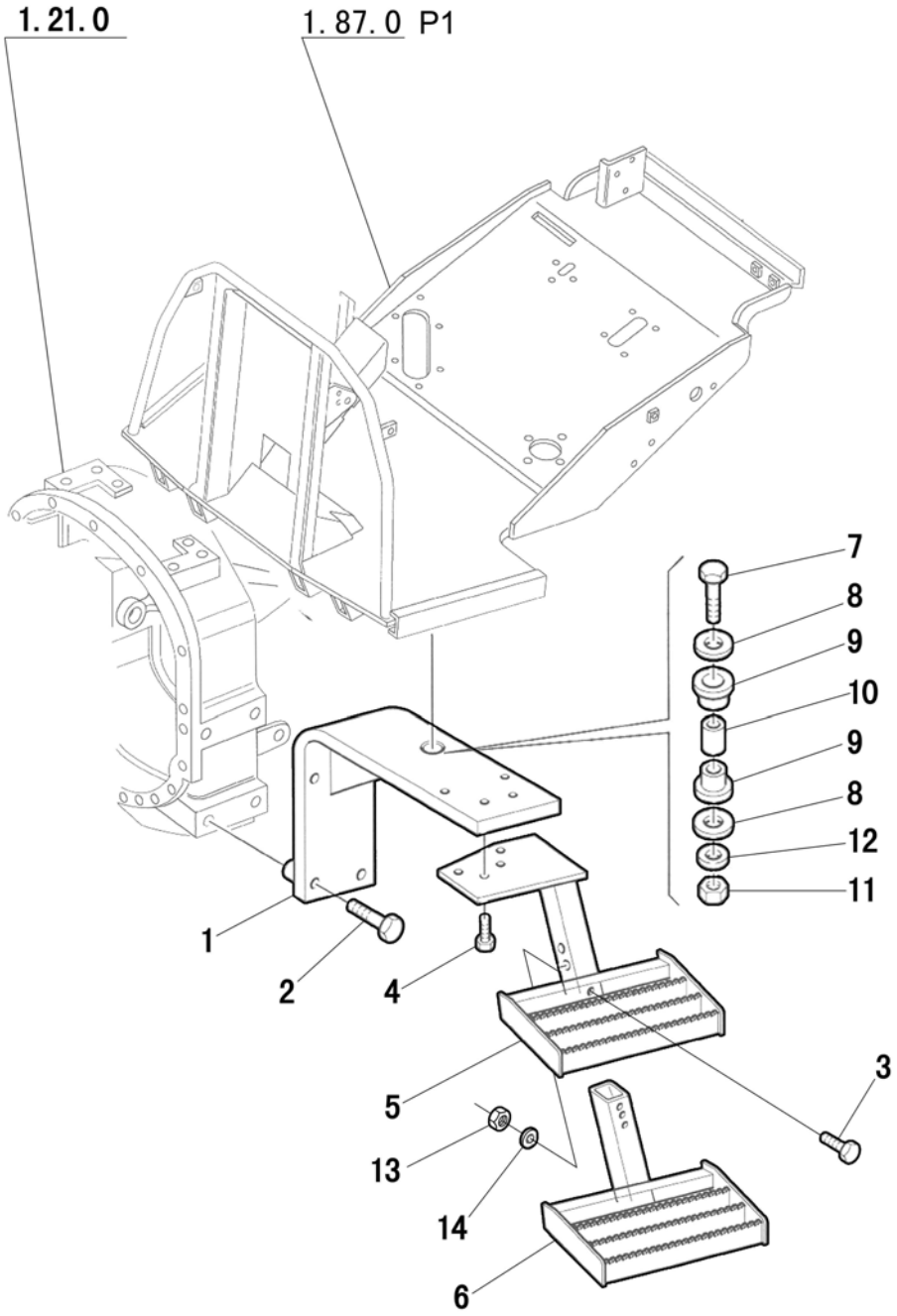

STEPS - L/ CAB

R	P.N.	DESCRIPTION	QTY
1	51330421	L.H. FRONT BRACKET	1
1	51330424	R.H. FRONT BRACKET	1
2	51333140	CAPSCREW	8
3	51323118	BOLT	2
4	11234724	CAPSCREW	8
5	5182170	L.H. STEP ASSY.	1
5	5184803	R.H. STEP ASSY.	1
6	82007964	STEP ASSY	2
7	15541524	BOLT	2
8	5167723	WASHER	8
9	5187531	RING CUSHION MOUNT	8
10	5167724	SPACER	4
11	51330487	NUT	4
12	12648524	FLAT WASHER	4
13	51330487	NUT	2
14	51323404	WASHER	2

SWITCH

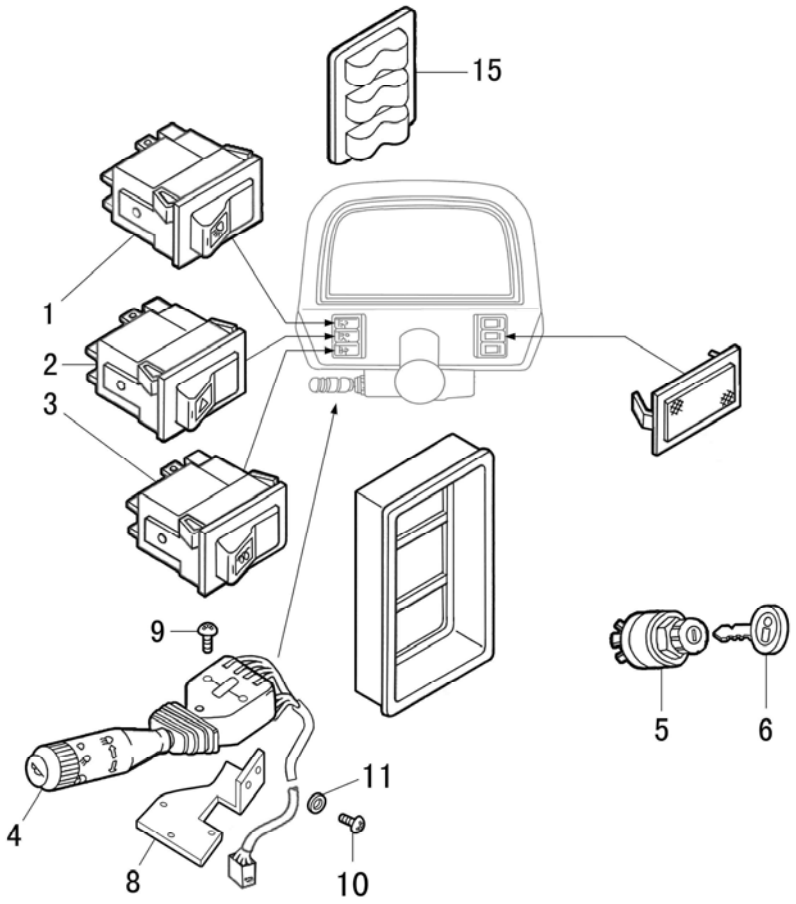

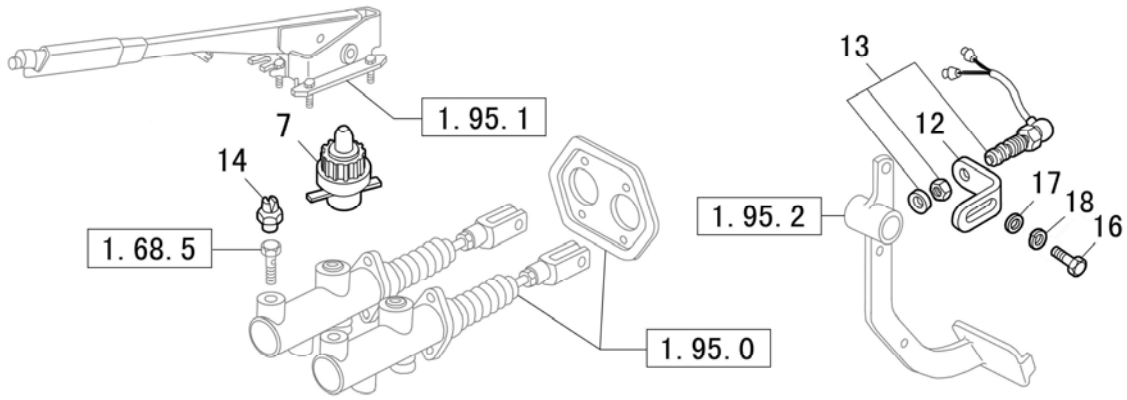

SWITCH

R	P.N.	DESCRIPTION	QTY
1	51331890	WORK LAMP SWITCH	1
2	51331889	HAZARD WARING LIGHT SWITCH	1
3	51331888	THERMOSTART SWITCH	1
4	5198383	LIGHTS CONTROL	1
5	47124203	POWER SWITCH 50A	1
6	51331861	KEY	2
7	5131017	PARKING BRAKE SWITCH	1
8	82012889	BRACKRT	1
9	51327267	SCREW	3
10	51323228	SCREW	2
11	51330721	WASHER	2
12	5175752	BRACKRT	1
13	51330730	ENGINE START SWITCH	1
14	51335497	PRESSURE SWITCH	2
15	51330720	ROCKER SWITCH	1
16	51330728	BOLT	2
17	51326862	WASHER	2
18	51323377	WASHER	2

SWITCH (W/ CAB)

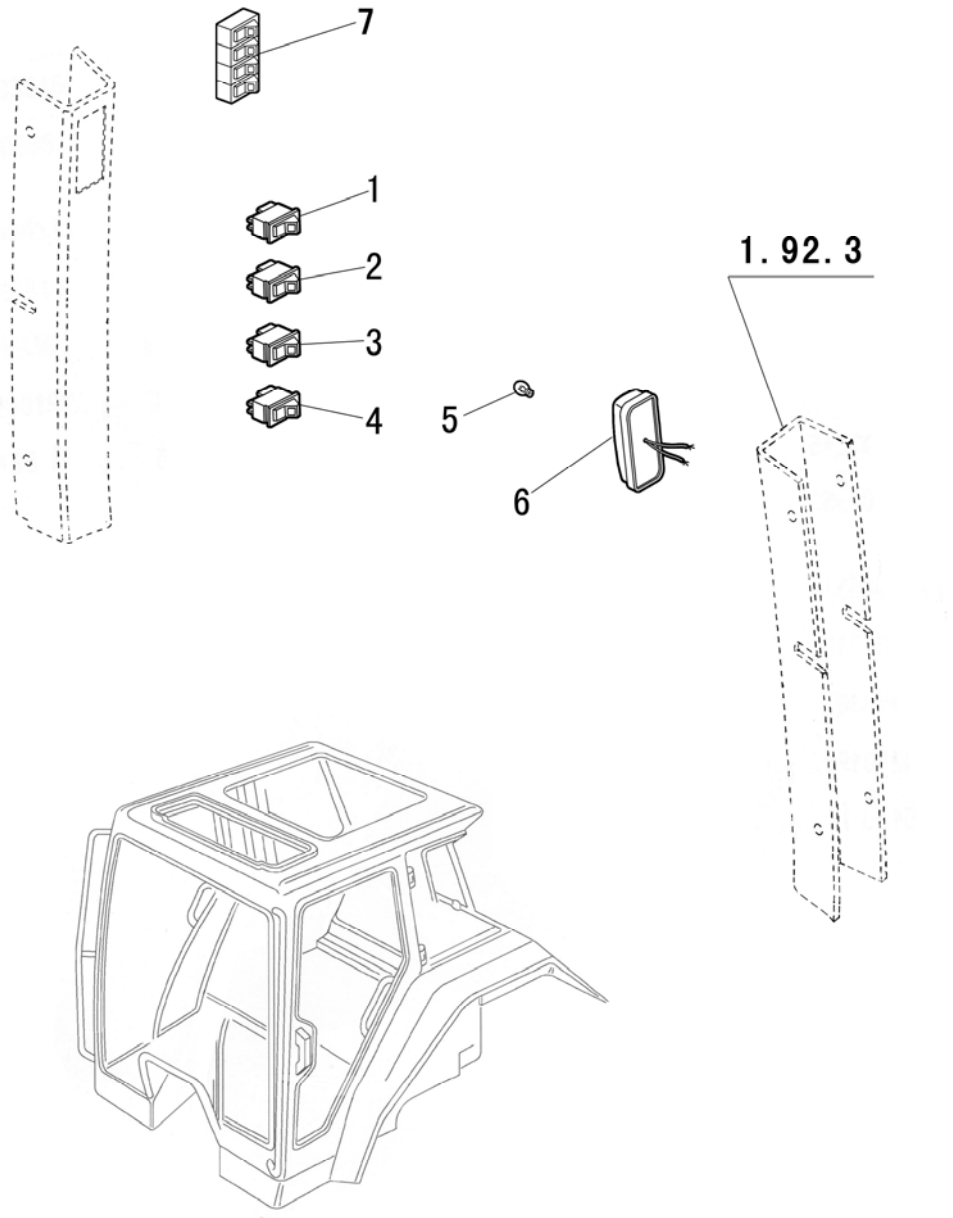

SWITCH (W/ CAB)

R	P.N.	DESCRIPTION	QTY
1	51331892	WORK LAMP SWITCH	1
2	51331893	HEAD LAMP	1
3	51331894	WIPER SWITCH	1
4	51331891	WASHING SWITCH	1
5	51331897	BULB	1
6	51331919	INTERIOR LIGHT	1
7	51331916	SWITCH	1

1.91.3	1/2	06/09

WORKLAMPS

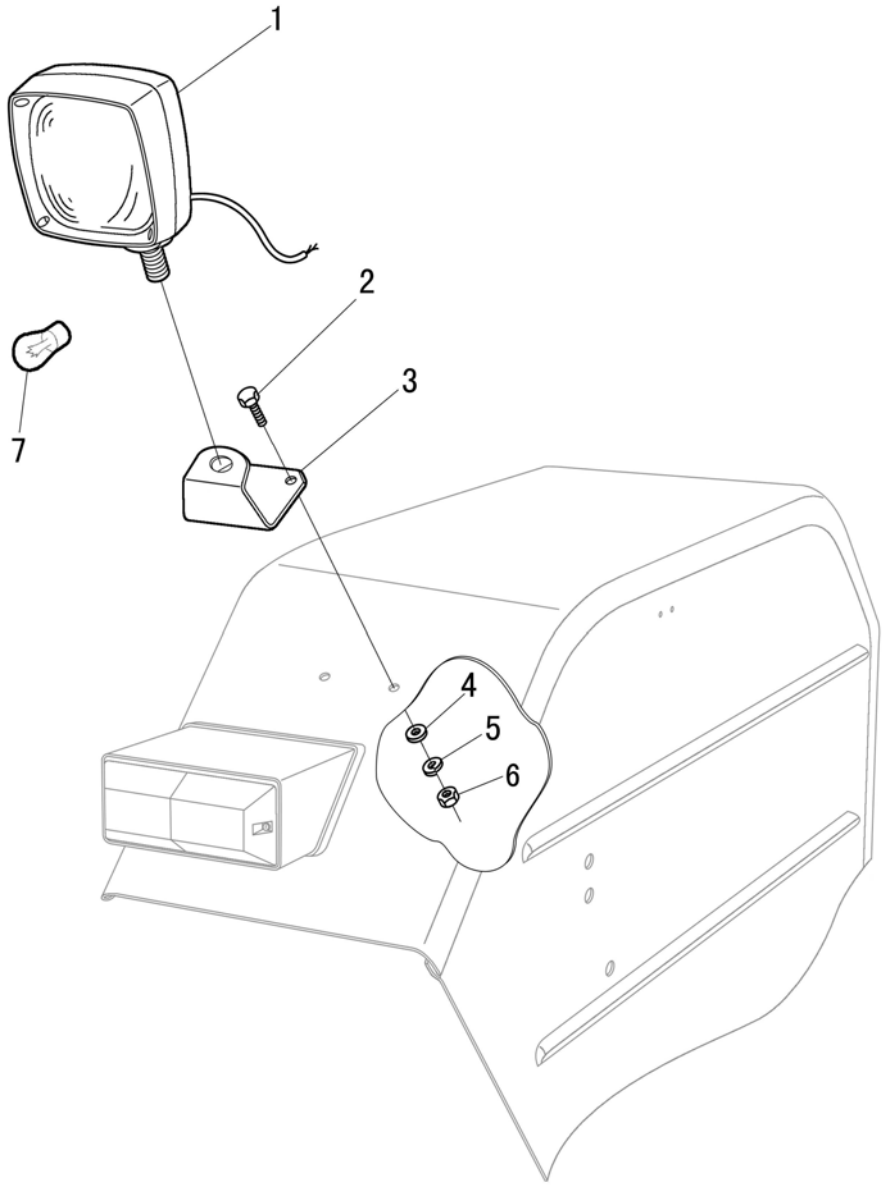

WORKLAMPS

R	P.N.	DESCRIPTION	QTY
1	51330732	REAR WORKLAMP	1
2	51323096	BOLT	3
3	51330676	GUIDE	1
4	51323402	WASHER	3
5	51323379	WASHER	3
6	51323149	NUT	3
7	51331886	BULB	1

1.91.3	2/2	06/09

CAB LIGHT

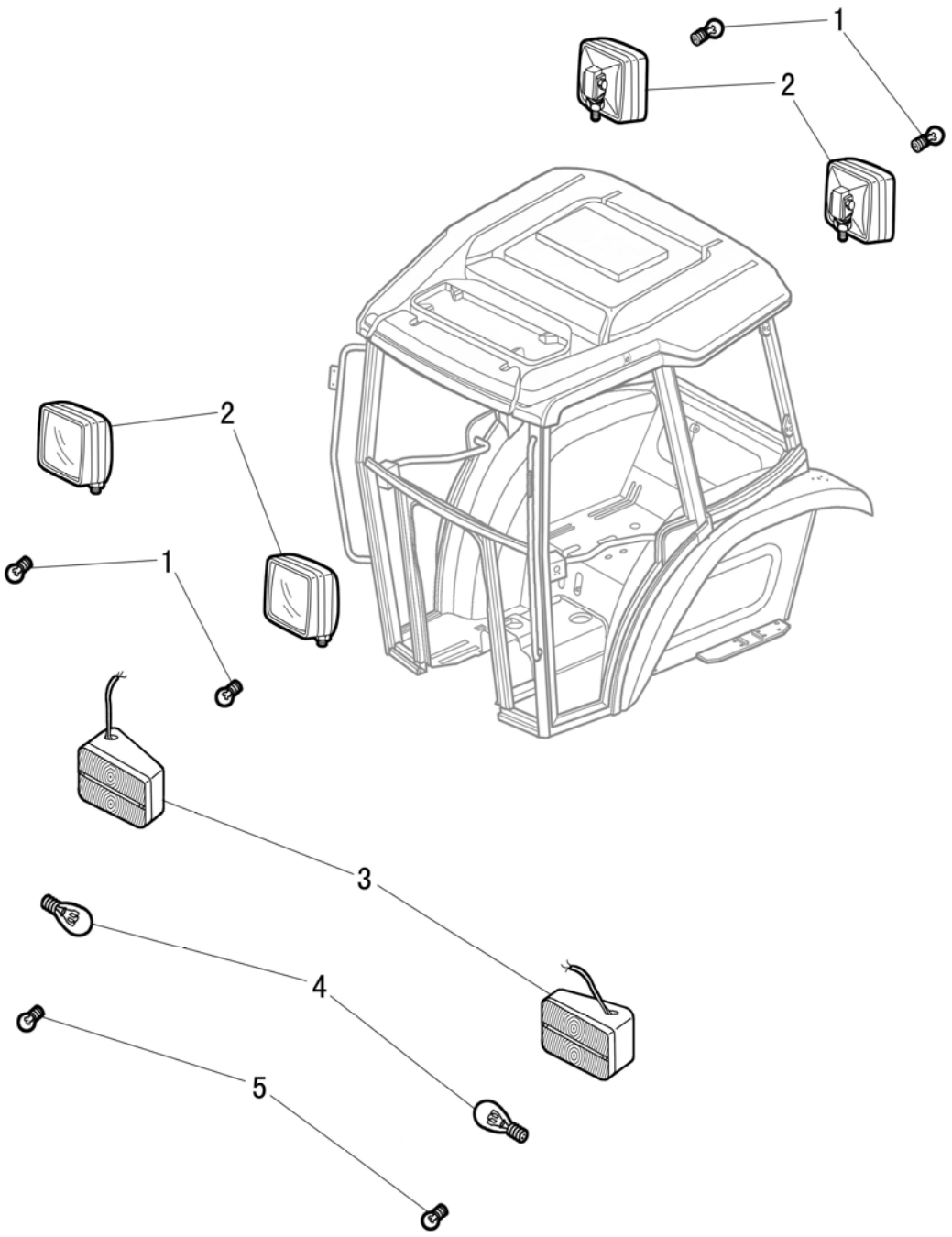

CAB LIGHT

R	P.N.	DESCRIPTION	QTY
1	51331896	BULB	4
2	51331934	HEAD LAMP	4
3	51331898	LAMP ASSY RH	1
4	51331880	BULB	2
5	51331884	BULB	2
6	51331900	LAMP ASSY LH	1

FUSE BOX

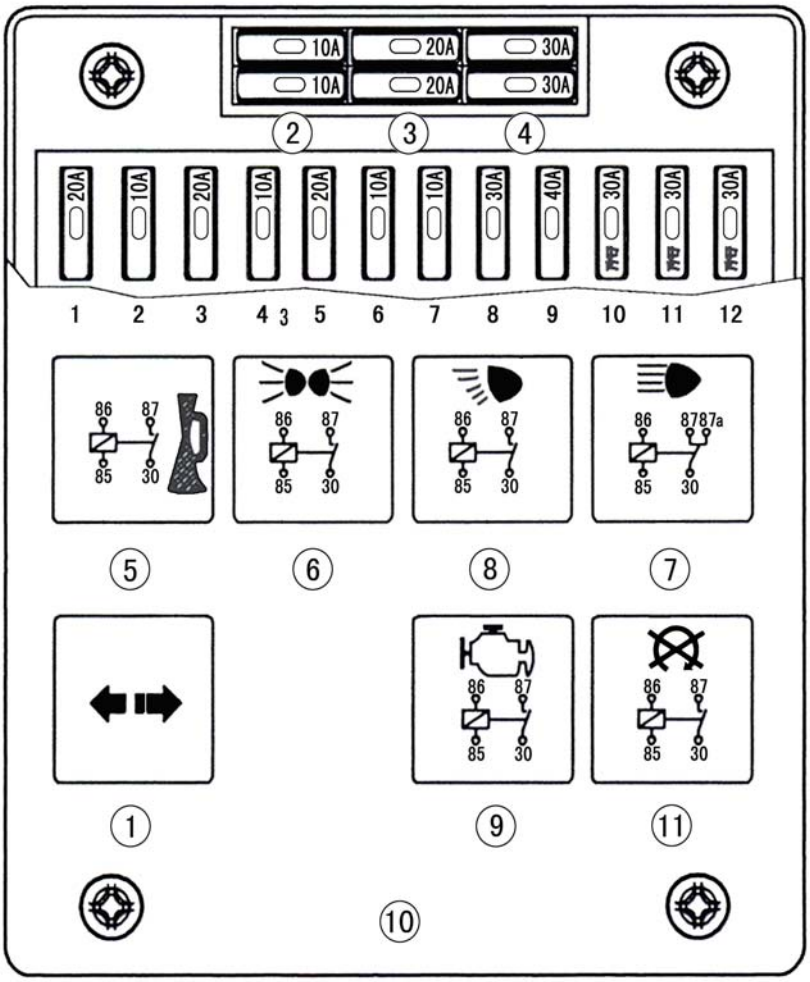
10A
10A
20A
20A
30A
30A
2
3
4
20A
10A
20A
10A
20A
10A
10A
30A
40A
30A
30A
30A
1 2 3 4 3 5 6 7 8 9 10 11 12
86 87 85 30
86 87 85 30
86 87 85 30
86 87 87a 85 30
5
6
8
7
86 87 85 30
86 87 85 30
1
9
11
10

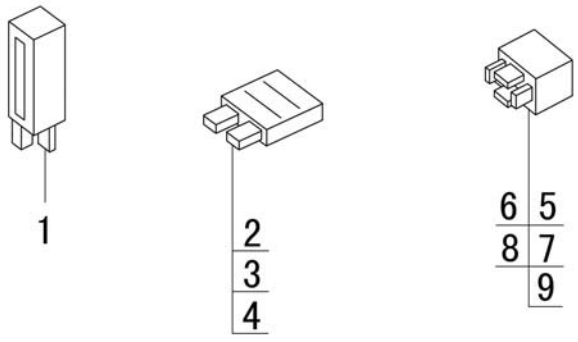
1
2
3
4
6 5
8 7
9

FUSE BOX

R	P.N.	DESCRIPTION	QTY
1	51330706	SMART RELAY	1
2	51330710	FUSE, 10A	4
3	51330709	FUSE, 20A	4
4	51342278	FUSE, 40A	3
5	51330705	HORN RELAY	1
6	51330707	WORKING LIGHT RELAY	1
7	51328511	FULL BEAM HEADLIGHT RELAY	1
8	51328510	DIPPED BEAM HEADLIGHT RELAY	1
9	51328508	STARTER RELAY	1
10	51335660	CONTROL BOX ASSEMBLY	1
11	51331860	FUEL SHUT-OFF SOLENOID RELAY	1

FUSE BOX

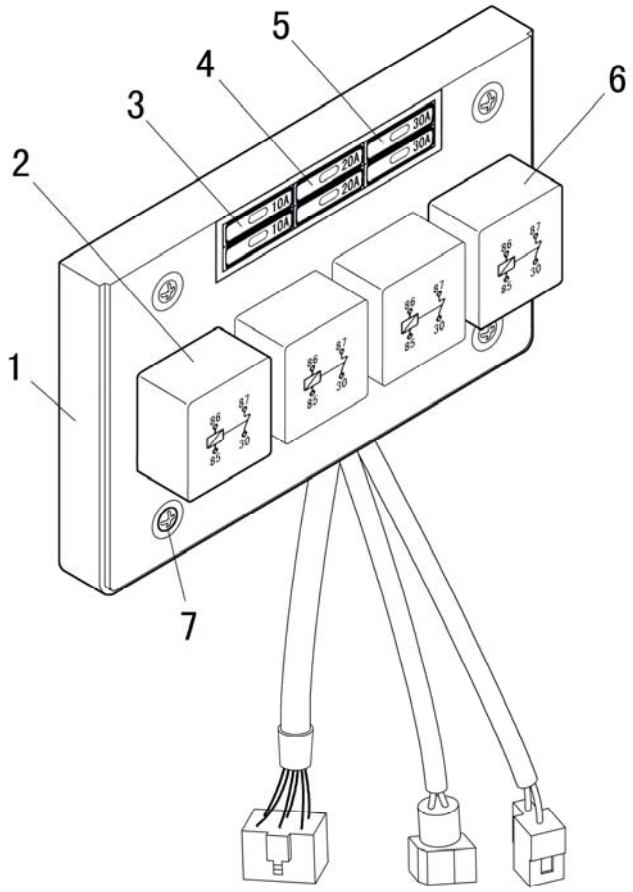

FUSE BOX

R	P.N.	DESCRIPTION	QTY
1	51334260	RELAY BOX ASSEMBLY	1
2	51328508	STARTER RELAY	1
3	51330710	FUSE, 10A	2
4	51330709	FUSE, 20A	2
5	51330708	FUSE, 30A	2
6	51330705	HORN RELAY	3
7	51330715	SCREW	4

FRONT WINDSCREEN WIPER

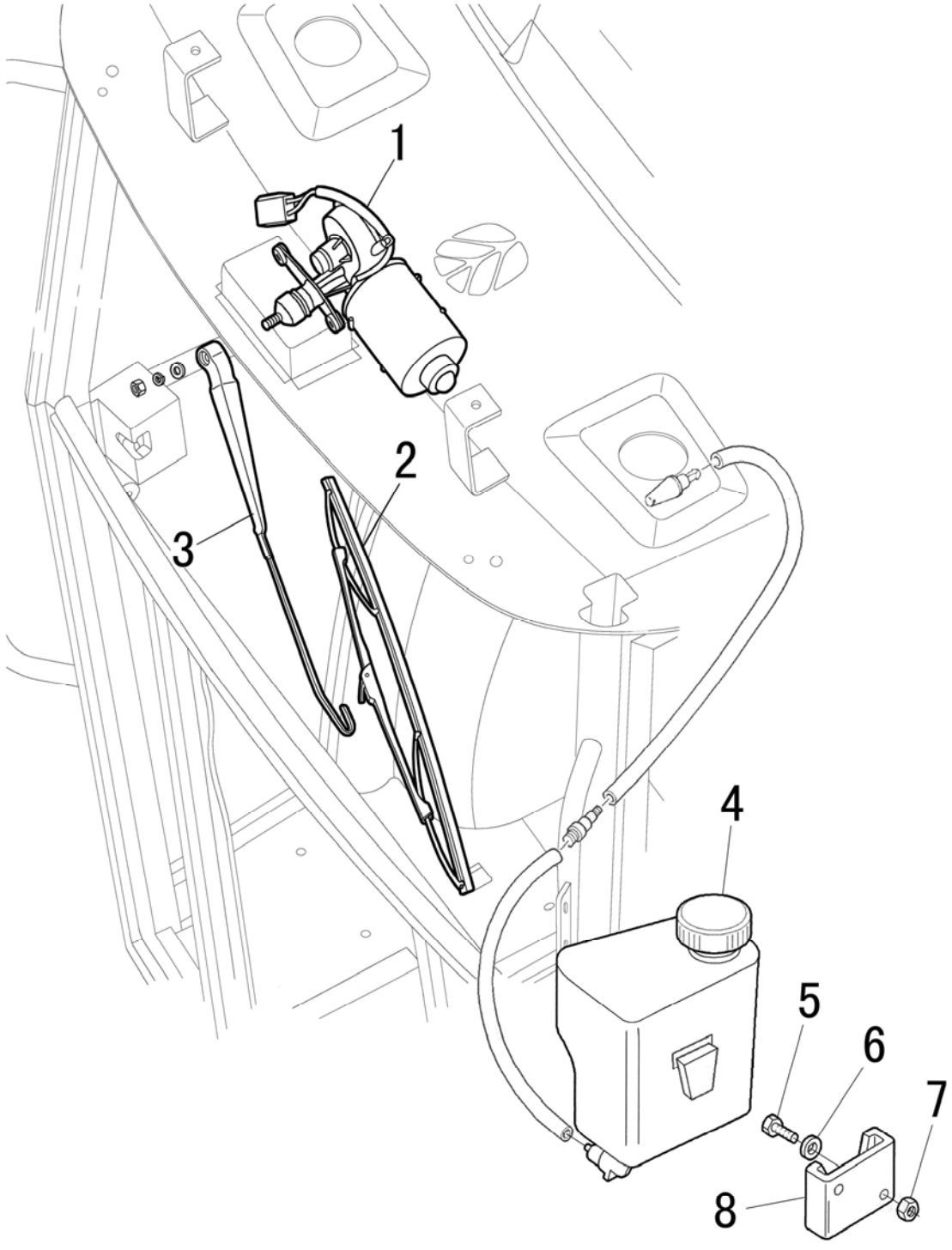

FRONT WINDSCREEN WIPER

R	P.N.	DESCRIPTION	QTY
1	51331917	FRONT WINDSHIED WIPER ASSY.	1
2	51331876	WIPER BLADE, WINDSHIELD	1
3	51331877	WIPER BLADE ASSY	1
4	51331918	RESERVOIR	1
5	51330015	BOLT	2
6	51323395	WASHER	2
7	51323142	NUT	2
8	51330892	SUPPORT	1

REAR WINDSHIELD WIPER

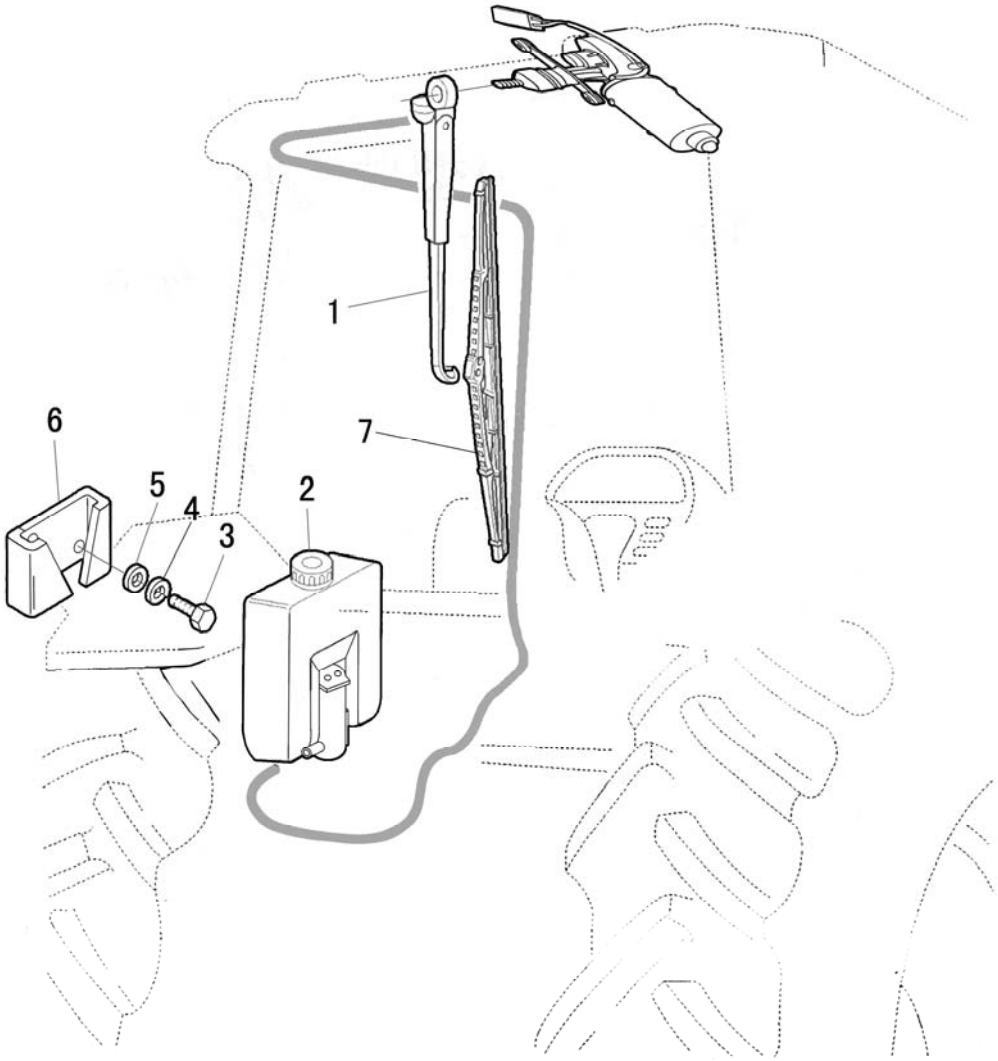

REAR WINDSHIELD WIPER

R	P.N.	DESCRIPTION	QTY
1	51331925	REAR WINDOW WIPER	1
2	51331935	RESERVOIR	1
3	51330015	BOLT	2
4	51323395	WASHER	2
5	51323142	NUT	2
6	51330892	BRACKET	1
7	51331875	REAR WIPER BLADE	1

1.92.1	1/1	06/09

FRAME

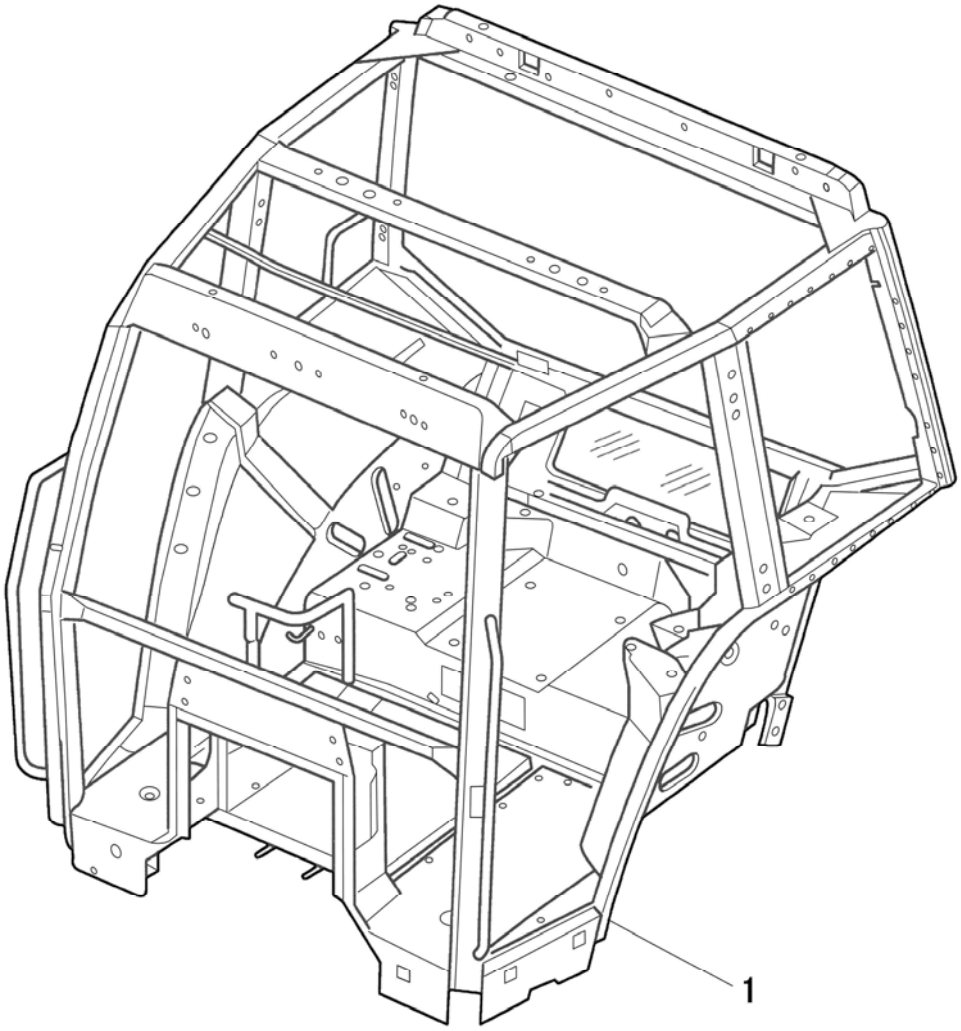

FRAME

R	P.N.	DESCRIPTION	QTY
1	51330861	CAB FRAME	1

DOORS

DOORS

R	P.N.	DESCRIPTION	QTY
1	51334756	R.H. DOOR GLASS	1
1	51334757	L.H. DOOR GLASS	1
2	51323096	BOLT	4
3	51331058	DOOR SEAL	2
4	51330901	SHOCK ABSORBER	2
5	51323379	WASHER	4
6	51323396	WASHER	4
7	51325739	MUT	4
8	51334773	DOOR HANDLE	1
8	51334775	DOOR HANDLE	1
9	51332512	CAPSCREW	8
10	51334792	LOCK PLATE	1
10	51334794	LOCK PLATE	1
11	82035977	HINGE SEAL	8
12	51323396	WASHER	8
13	51334781	B HINGE	2
13	51334779	A HINGE	2
14	51323312	RETAINING RING	8
15	51334763	PINTLE	4
16	51334787	HINGE	2
16	51334788	HINGE	2
17	51330857	NUT	8
18	51334769	PLATE	1
18	51334770	PLATE	1
19	87373884	PLATE	1

DOORS

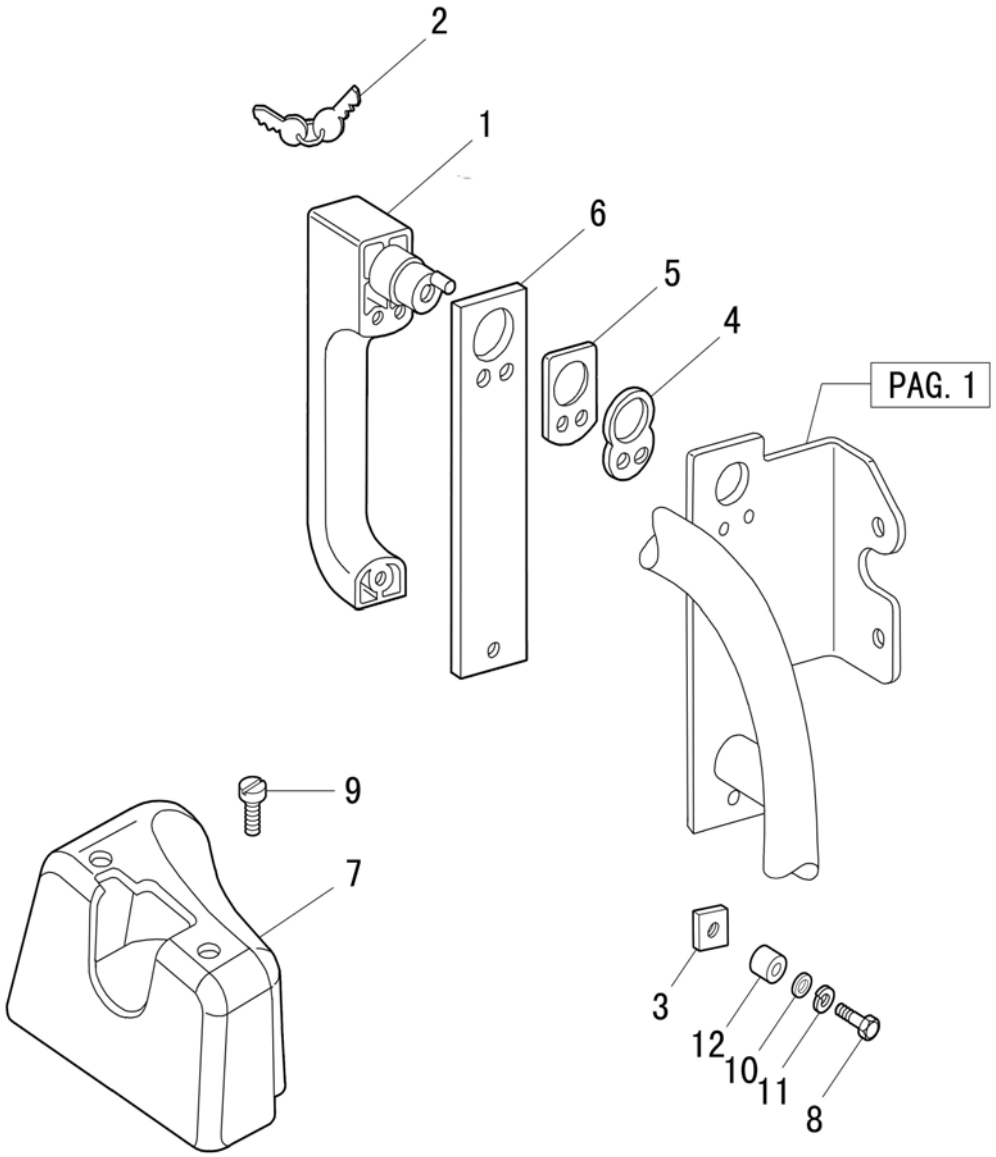

DOORS

R	P.N.	DESCRIPTION	QTY
1	51331005	LOCK ASSY.	2
*2		KEY	2
3	51330898	DOOR HANDLE GASKET	2
4	51334759	GASKET	2
5	51330907	GASKET	2
6	51334760	GASKET	2
7	51334786	R.H. LOCK BOX	1
7	51334785	L.H. LOCK BOX	1
8	51332513	BOLT	6
9	51332516	SCREW	2
10	51323401	WASHER	6
11	51323378	WASHER	6
12	51334758	DOOR HANDLE GASKET	2

NOTE: Keys are different on each tractor.

1.92.3	1/1	06/09

WINDSHIELD GLASS & SIDE WINDOWS

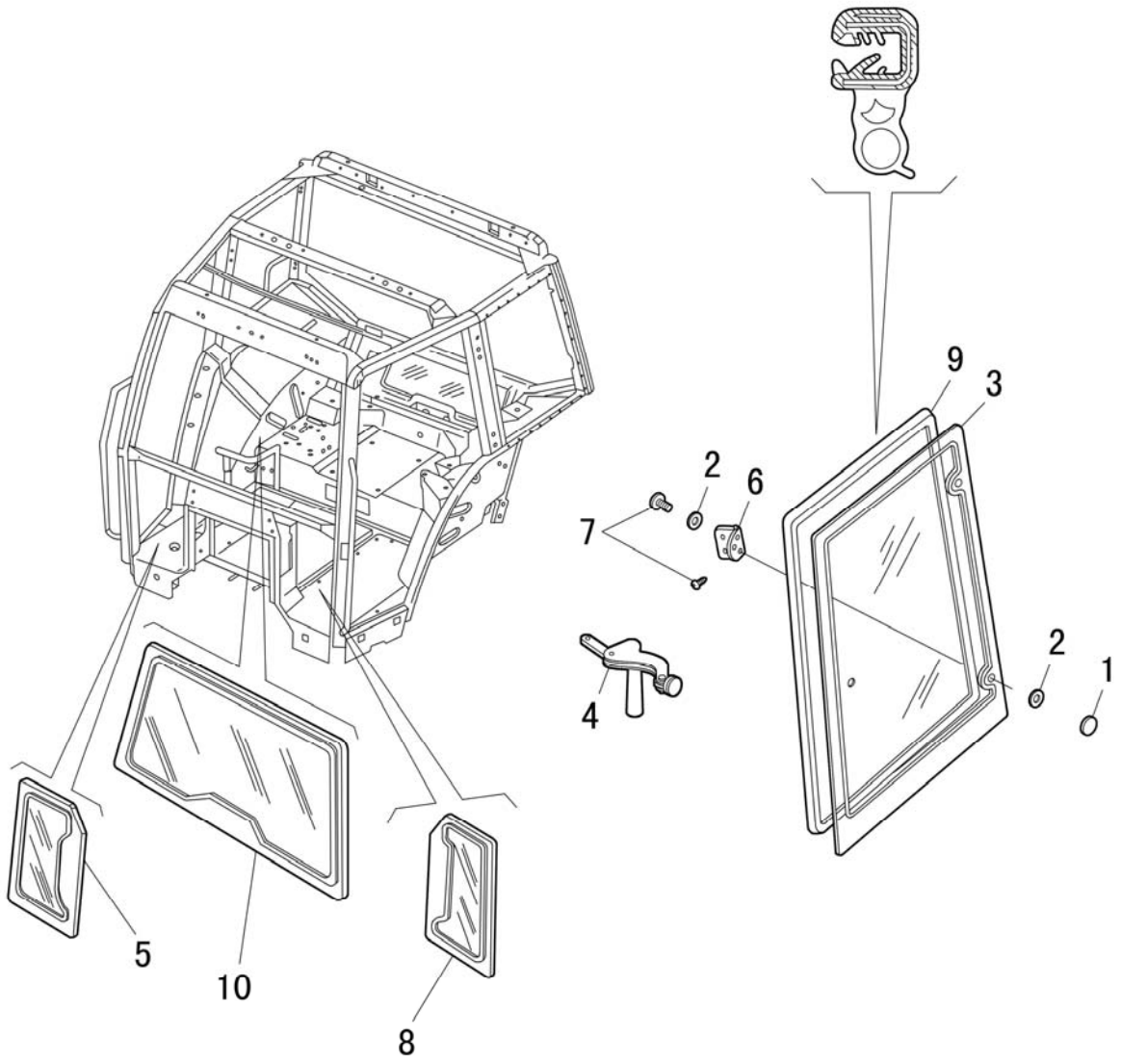

WINDSHIELD GLASS & SIDE WINDOWS

R	P.N.	DESCRIPTION	QTY
1	51329526	SIDE WINDOW HINGE PLASTIC NUT	4
2	5124800	RUBBER WASHER	12
3	51330867	L.H. REAR GLASS	1
3	51330865	R.H. REAR GLASS	1
4	51329527	LEFT SIDE WINDOW FORK UNIT	1
4	51329528	RIGHT SIDE WINDOW FORK UNIT	1
5	51330866	FRONT LOWER GLASS, CAB RH	1
6	51329523	SIDE WINDOW HINGE UNIT	4
7	51322801	PIN	4
8	51330868	FRONT LOWER GLASS, CAB LH	1
9	51331057	SIDE GLASS SEAL	2
10	51330864	FRONT WINDSHIELD	1

1.92.4	1/2	06/09

REAR WINDOW

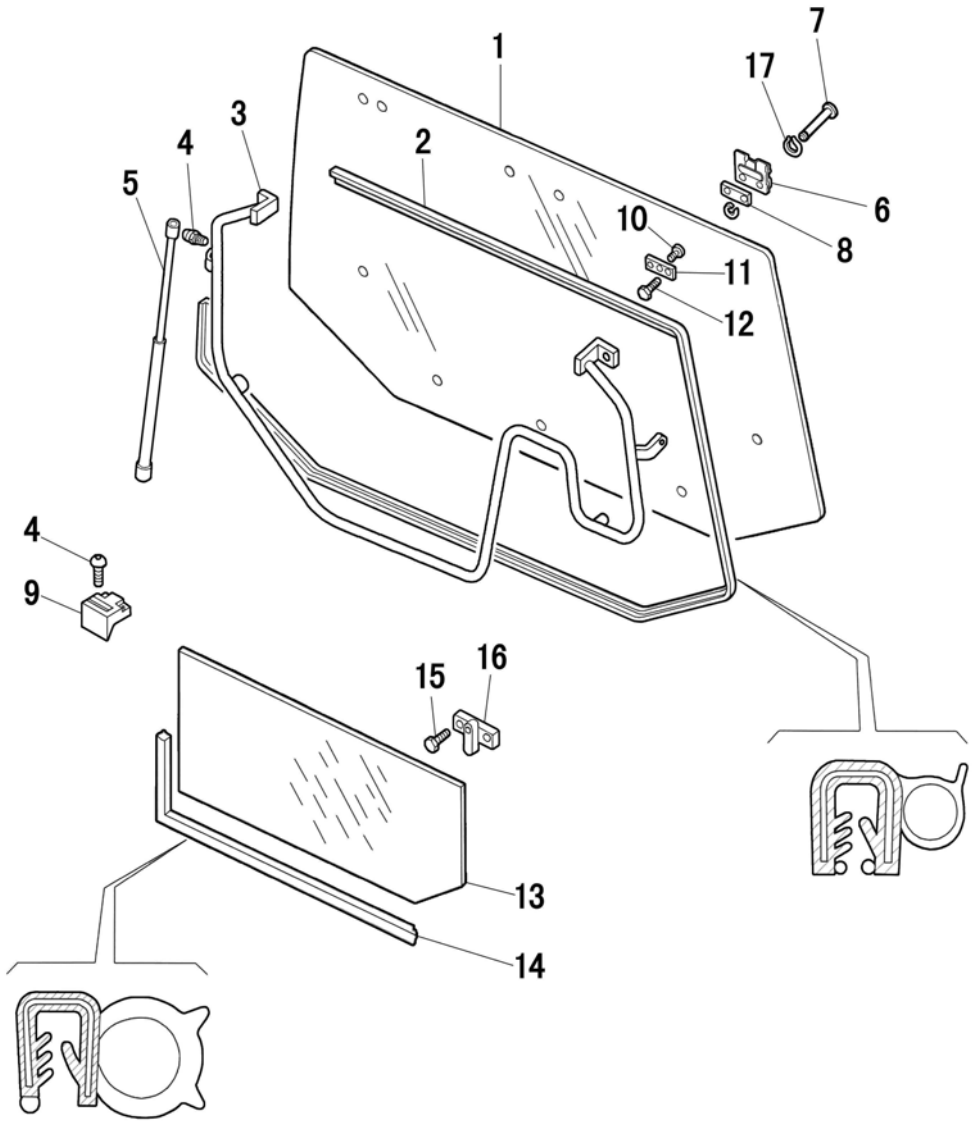

REAR WINDOW

R	P.N.	DESCRIPTION	QTY
1	51330862	REAR UPPER GLASS	1
2	51331056	GLASS SEAL	1
3	51330893	REAR HANDRAIL ASSY.	1
4	51327315	SCREW	2
5	47126775	REAR WINDOW SUPPORT GAS SPRING	2
6	51329513	REAR WINDOW HINGE BASE SEAT	2
7	51330909	REAR WINDOW SHAFT	2
8	51330979	RUBBER GASKET	2
9	51330976	FIXING GLASS	1
10	51332517	SCREW	4
11	51331088	PLATE	2
12	51323231	SCREW	4
13	51330863	REAR LOWER GLASS	1
14	51342190	REAR LOWER GLASS SEAL	1
15	51331054	SCREW	2
16	51330977	FIXING GLASS	1
17	51323312	RETAINGNING RING	1

1.92.4	2/2	06/09

REAR WINDOW

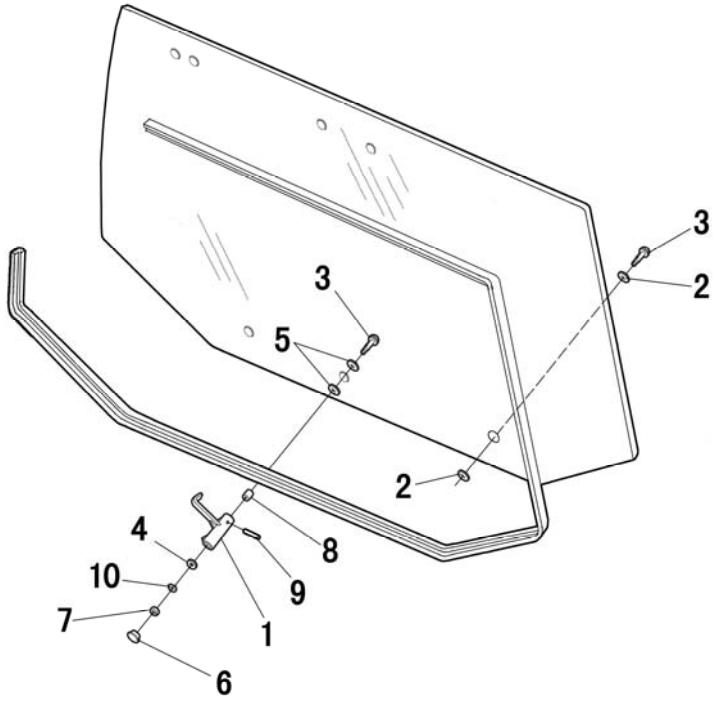

REAR WINDOW

R	P.N.	DESCRIPTION	QTY
1	51329507	LOCK BODY	1
2	5124800	PLASTIC BOLT WASHER	4
3	51329502	BOLT	3
4	51323404	WASHER	1
5	51330980	WASHER	2
6	51329508	REAR COVER	1
7	51323151	NUT	1
8	51330975	SLEEVE	1
9	51329506	REAR WINDOW LOCK PIN	1
10	51323381	WASHER	1

1.93.1	1/1	06/09

CAB TRIM

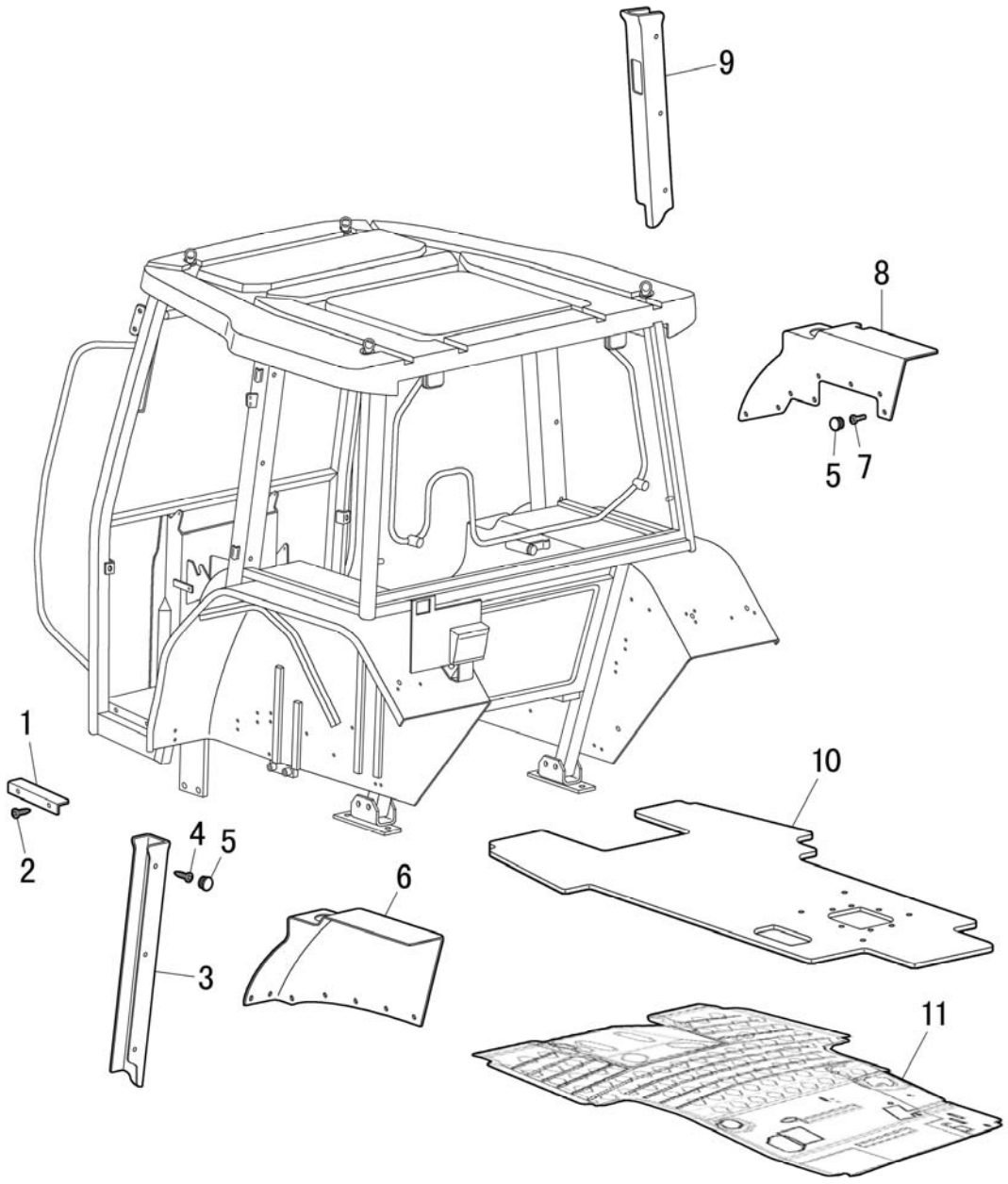

CAB TRIM

R	P.N.	DESCRIPTION	QTY
1	51336091	LH FIXING PLATE	1
1	51336092	RH FIXING PLATE	1
2	51327315	SCREW	4
3	51336158	L.H. COLUMN TRIM	1
4	51323244	SCREW	12
5	51331060	BUTTON	32
6	51336159	L.H. COVER TRIM	1
7	51332516	SCREW	20
8	51336160	R.H. COVER TRIM	1
9	51336110	R.H. COLUMN TRIM	1
10	51336093	MAT (W/ CAB)	1
11	51337613	DELUXE MAT (OPTION)	1

1.93.6	1/1	06/09

REAR-VIEW MIRROR

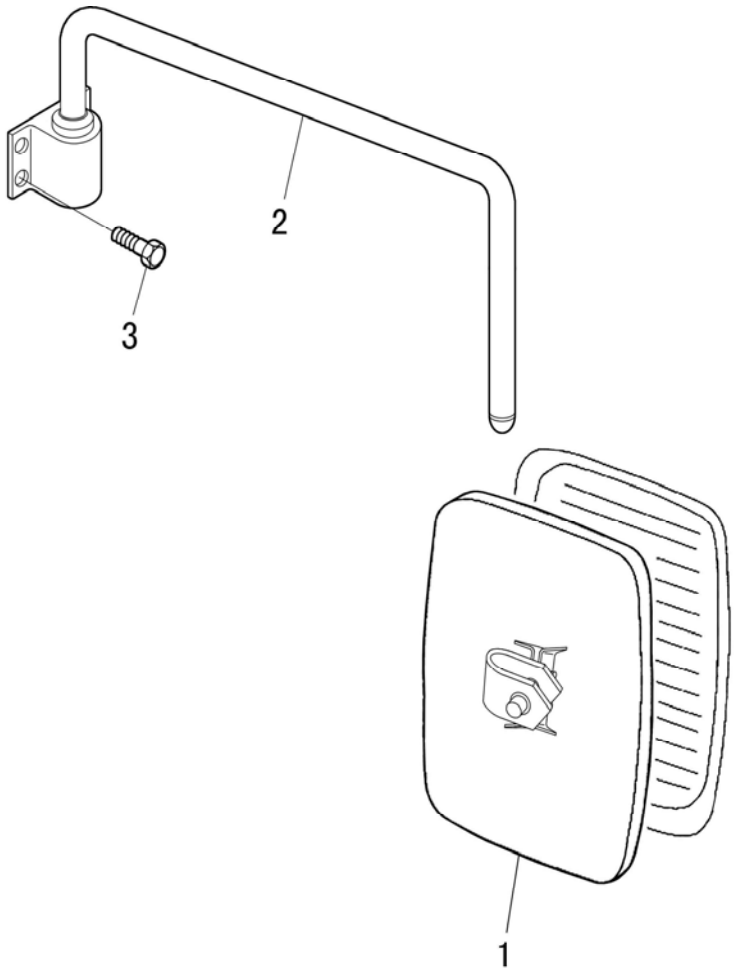

REAR-VIEW MIRROR

R	P.N.	DESCRIPTION	QTY
1	51336847	MIRROR	2
2	51336848	BRACKET, RH	1
2	51342957	BRACKET, LH	1
3	51343060	SCREW	8

1.94.0/3	1/1	06/09

CANOPY & SUPPORTS

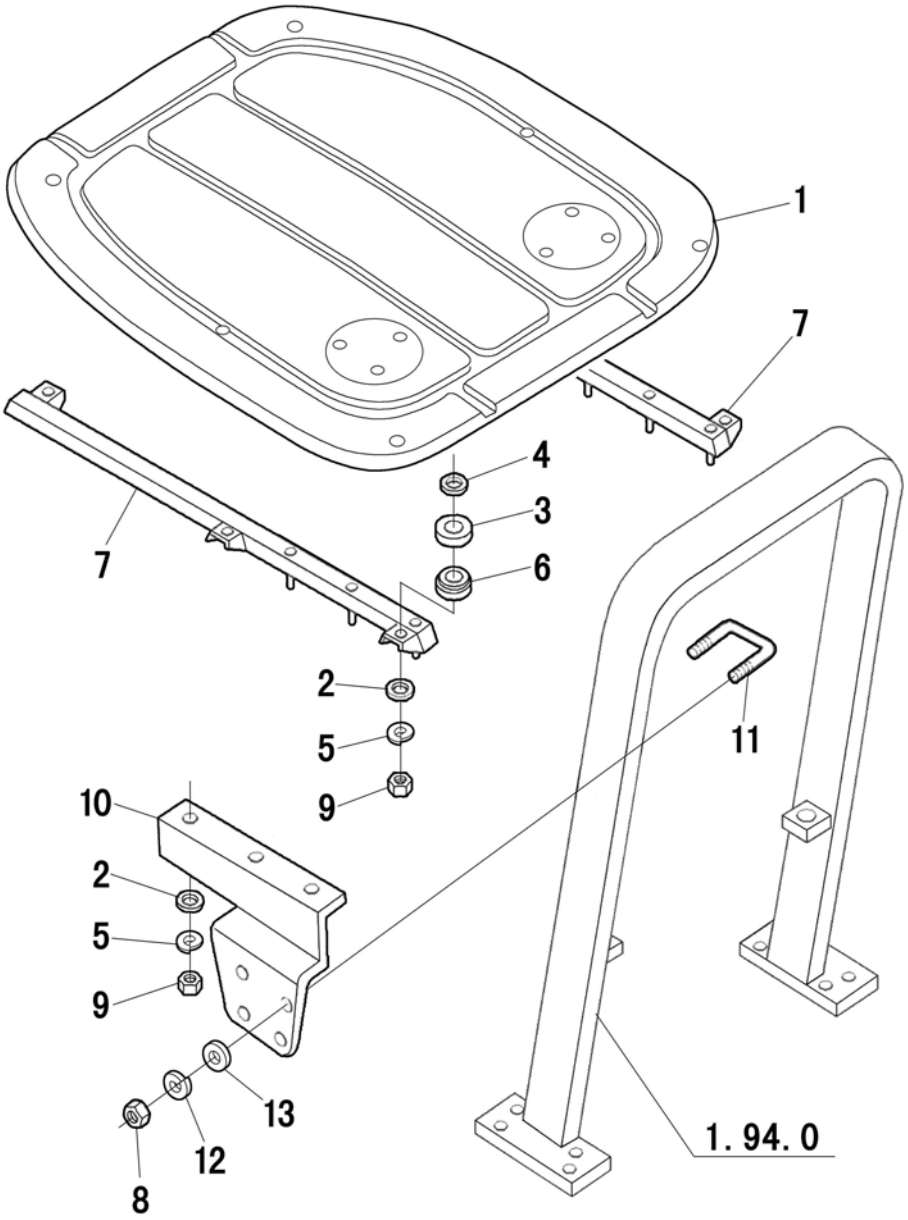

CANOPY & SUPPORTS

R	P.N.	DESCRIPTION	QTY
1	51333616	CANOPY ASSY	1
2	51323402	PLAIN WASHER 8	12
3	5181750	UPPER BUSH	6
4	51333599	WASHER	6
5	51323379	SPRING WASHER 8	12
6	5137570	LOWER BUSH	6
7	51333452	SUPPORT L.H.	1
7	51333451	SUPPORT R.H.	1
8	51323145	NUT	8
9	51323143	NUT	12
10	5185440	LH BRACKET	1
10	5185441	RH BRACKET	1
11	82016733	BAR	4
12	51323381	WASHER	8
13	51323404	WASHER	8

1.94.0/4	1/1	06/09

SAFETY FRAME

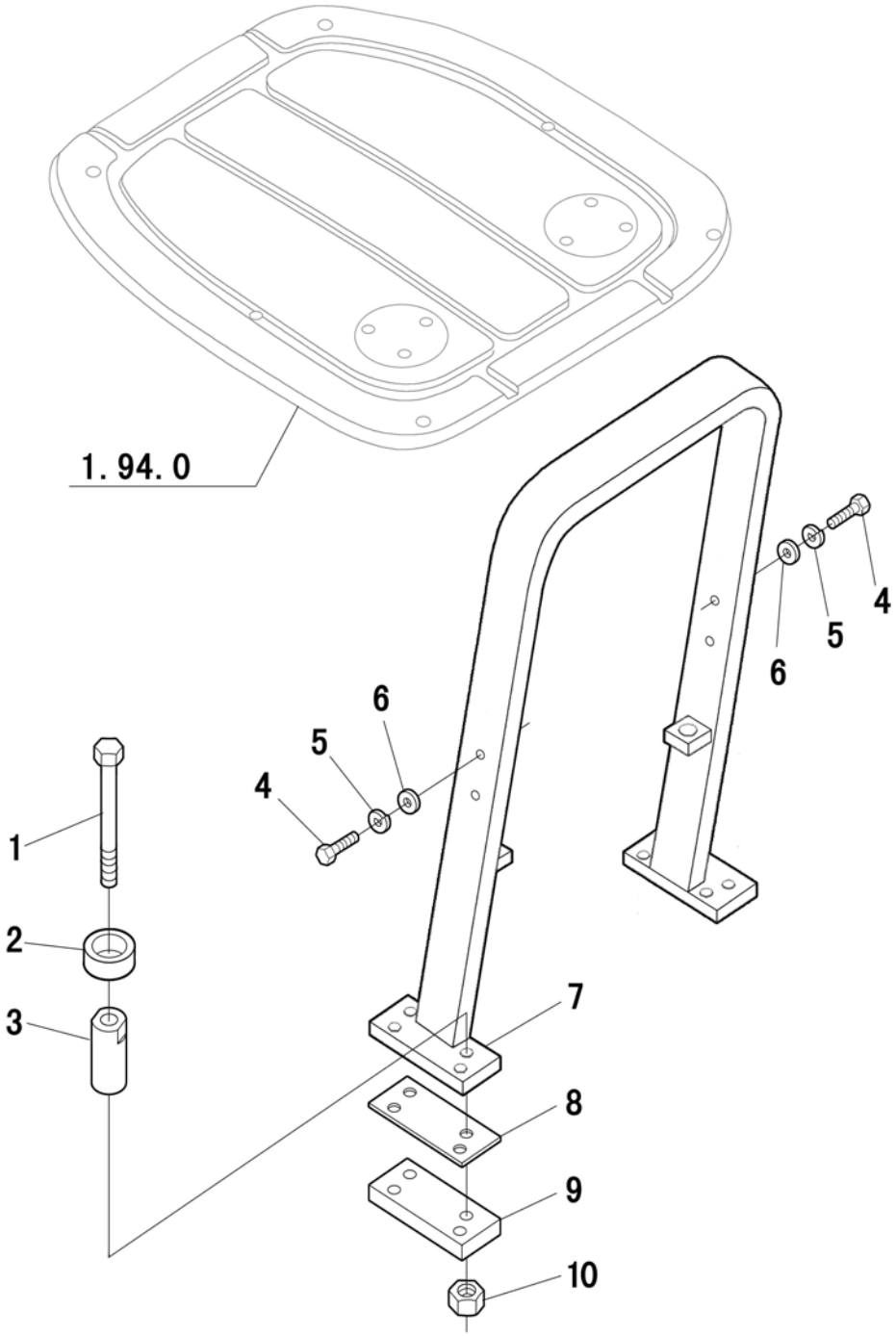

SAFETY FRAME

R	P.N.	DESCRIPTION	QTY
1	51334015	BOLT	8
2	51331041	RUBBER GASKET	4
3	51331042	SPACER	4
4	51333931	BOLT	4
5	51333849	GASKET	4
6	12646824	FLAT WASHER	4
7	51333489	ROPS	1
8	51333487	RING CUSHION MOUNT	2
9	51333456	FIXING ROPS PLATE	2
10	51332741	NUT	8

1.94.0/5	1/1	06/09

FOLDAWAY SAFETY FRAME

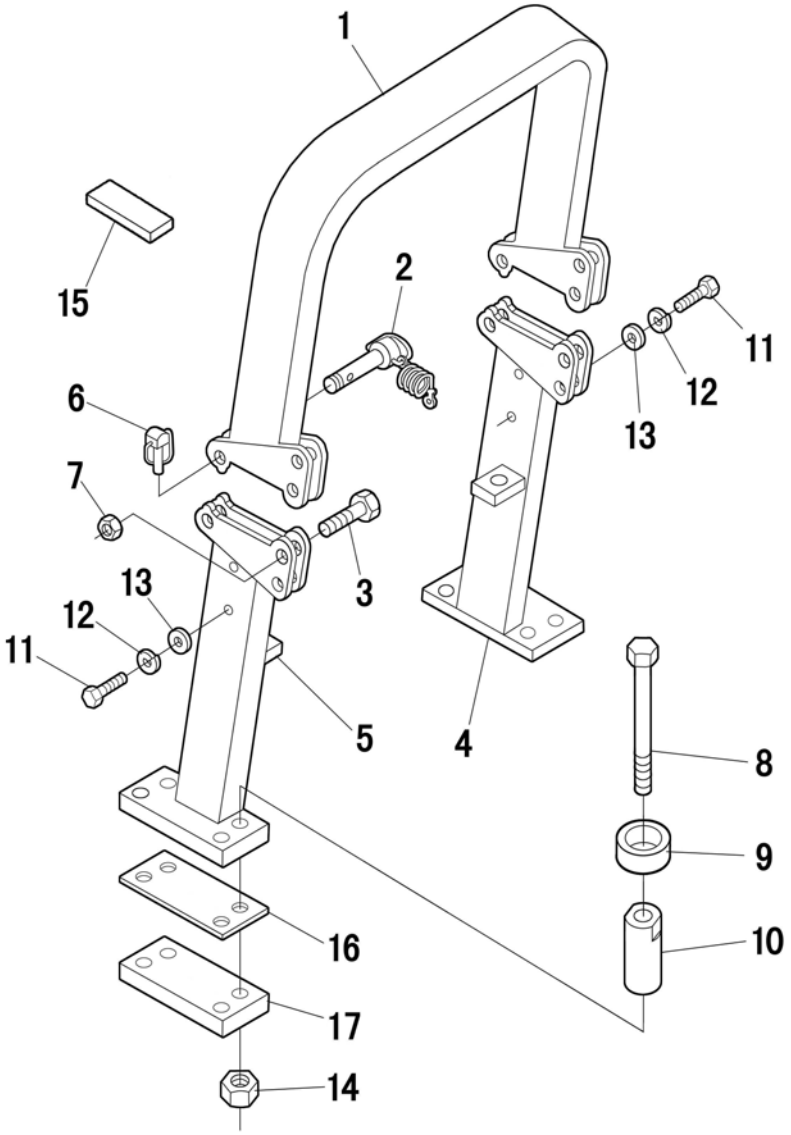

FOLDAWAY SAFETY FRAME

R	P.N.	DESCRIPTION	QTY
1	51337286	ARCH	1
2	82002843	PIN AND CABLE ASSY-ROLL BAR	2
3	51328307	BOLT	2
4	51333491	COLUMN RH	1
5	51333490	COLUMN LH	1
6	81810439	PIN AND RING ASSY	2
7	51332752	NUT	2
8	51334015	BOLT	8
9	51331041	RUBBER GASKET	4
10	51331042	SPACER	4
11	51333931	BOLT	4
12	51333849	GASKET	4
13	12646824	FLAT WASHER	4
14	51332741	NUT	8
15	81870231	CUSHION	2
16	51333487	RING CUSHION MOUNT	2
17	51333456	FIXING ROPS PLATE	2

HEATING SYSTEM, CONTROLS



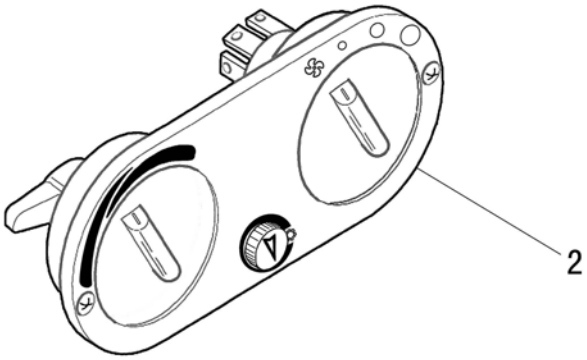

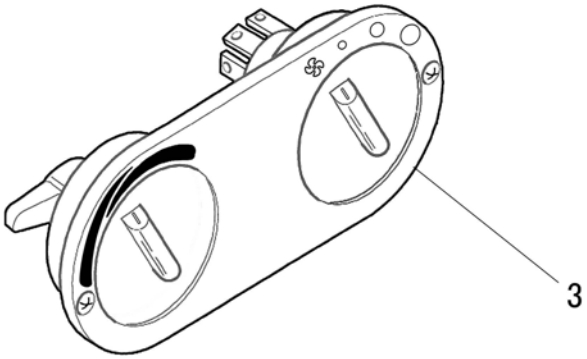

HEATING SYSTEM, CONTROLS

R	P.N.	DESCRIPTION	QTY
1	51331933	BASIC BLOWER CONTROL PANEL	1
2	51331922	AIR CONDITIONING CONTROL PANEL	1
3	51331923	HEATER CONTROL PANEL	1

HEATING SYSTEM

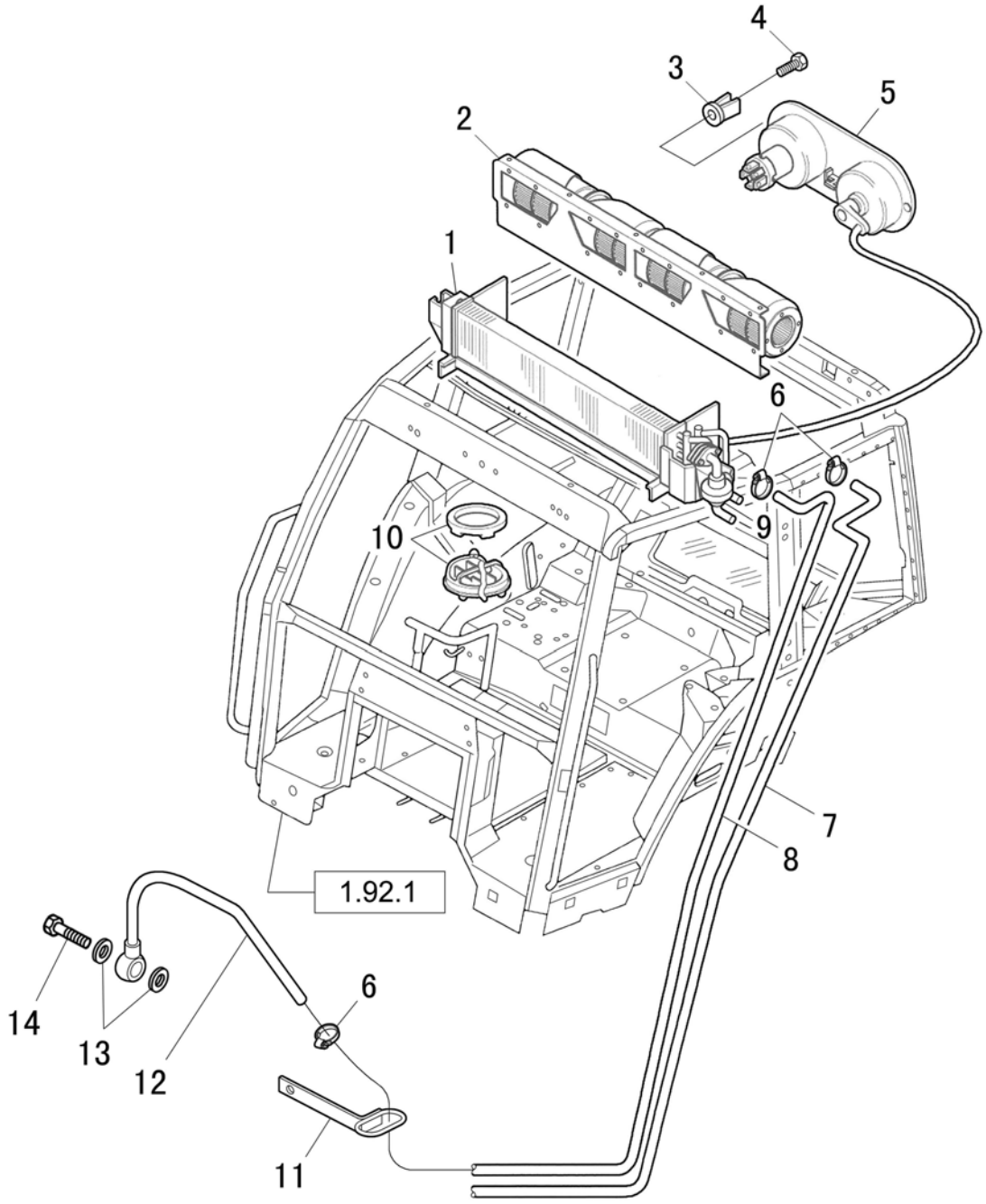

HEATING SYSTEM

R	P.N.	DESCRIPTION	QTY
1	51331924	HEATER ASSY	1
2	51331932	BLOWER	1
3	51327268	NUT	2
4	51328284	SCREW	2
5	51331923	CONTROL PANEL	1
6	51336322	CLAMP	4
7	51331937	OUTLET PIPE	1
8	51331936	INLET PIPE	1
9	51331938	VALVE	1
10	51336107	VENT	6
11	51331856	FIXING CLIP	1
12	51331855	THERMOSTART OUTLET PIPE	1
12	51342925	THERMOSTART OUTLET PIPE (EURO II)	1
13	51323473	WASHER	2
14	51322705	BOLT, JOINT	1

HEATING SYSTEM, FILTER

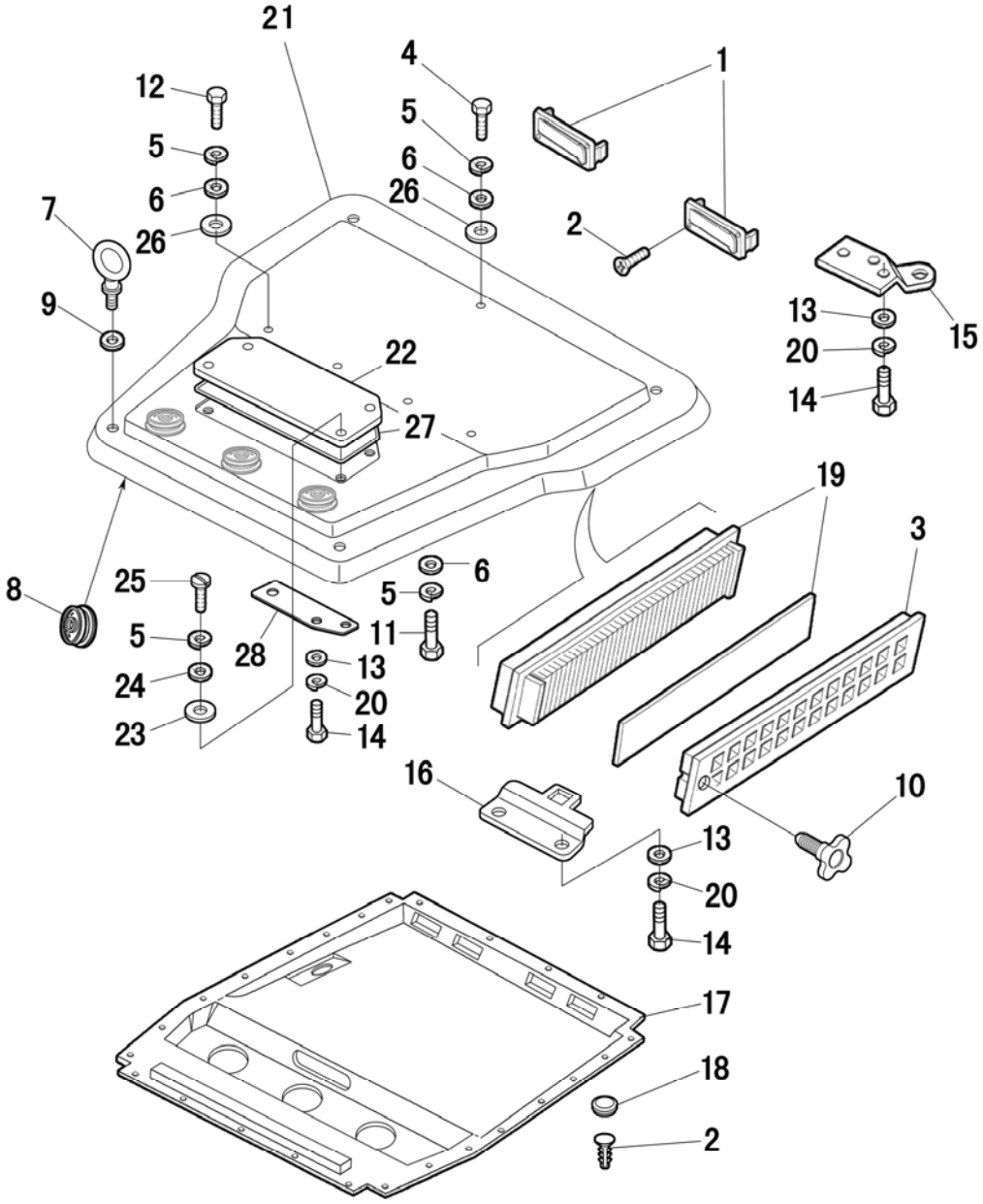

HEATING SYSTEM, FILTER

R	P.N.	DESCRIPTION	QTY
1	82007656	INLET	4
2	51323244	SCREW	AR
3	51331845	SUPPORT	2
4	51323059	BOLT	1
5	51326156	WASHER	9
6	51323396	WASHER	9
7	51332515	SCREW	4
8	51336107	INLET	6
9	51336096	RUBBER WASHER	4
10	51331854	KNOB	2
11	51323098	BOLT	4
12	51332514	BOLT	4
13	51323401	WASHER	14
14	51323229	SCREW	14
15	51336100	SUPPORT - L.H. REAR LAMP	1
15	51336101	SUPPORT -R.H. REAR LAMP	1
16	51336099	AIR FILTER SUPPORT	2
17	51336104	TRIM	1
18	51331060	BUTTON	AR
19	51331844	FILTER ASSY	2
20	51323378	WASHER	14

1.94.3	4/6	06/09

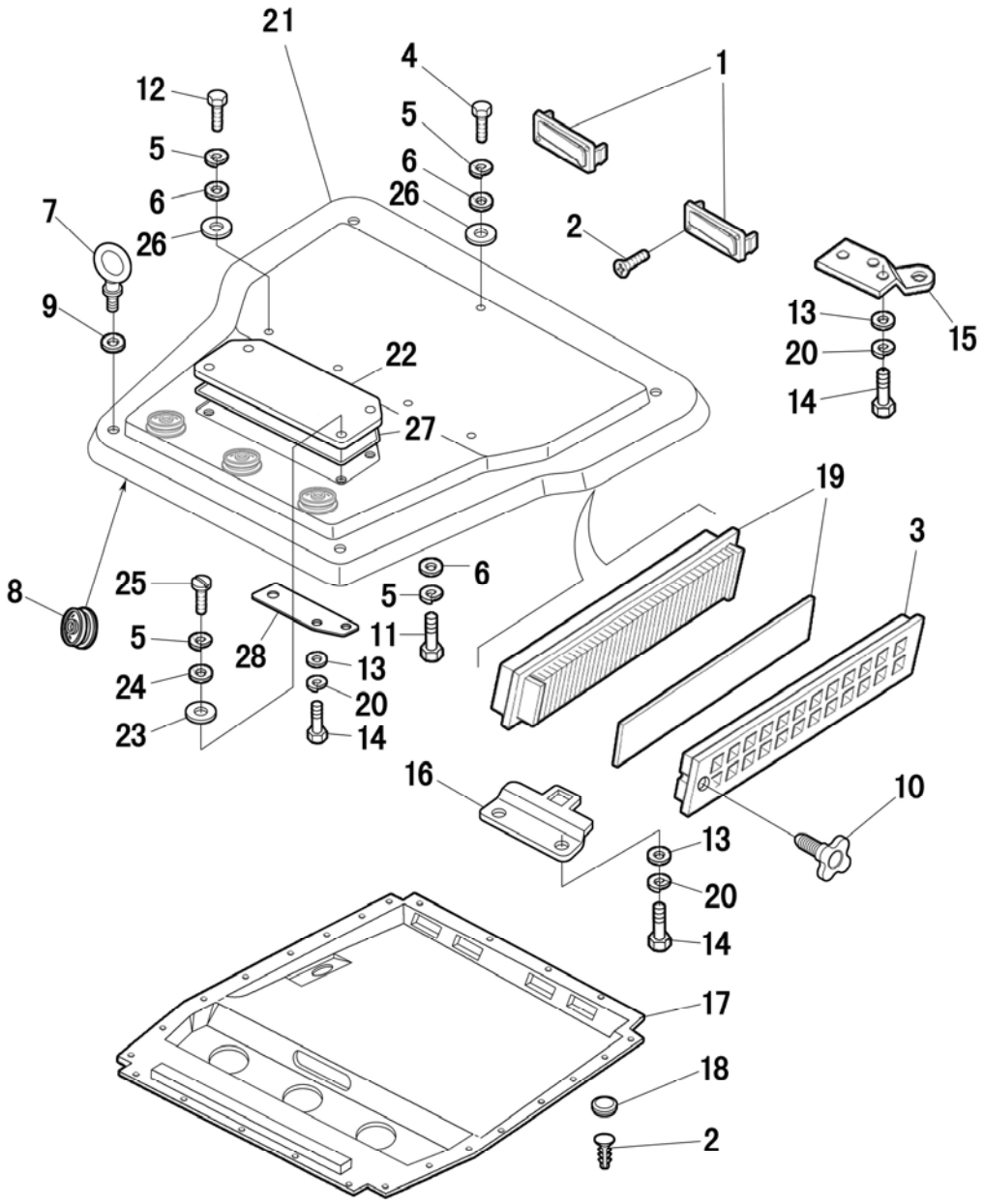
21
4
1
12
5
6
26
7
2
9
13
20
14
15
22
27
19
3
8
25
5
24
23
28
6
5
11
13
20
14
16
10
13
20
14
17
18
2

HEATING SYSTEM, FILTER

R	P.N.	DESCRIPTION	QTY
21	51336102	ROOF	1
22	47132596	COVER	1
23	51336094	RUBBER WASHER	4
24	51335250	WASHER	4
25	51323230	SCREW	4
26	51336097	RUBBER WASHER	4
27	5175456	SEAL	1
28	51336095	SUPPORT - FRONT LAMP	2

HEATING SYSTEM, CONDENSER

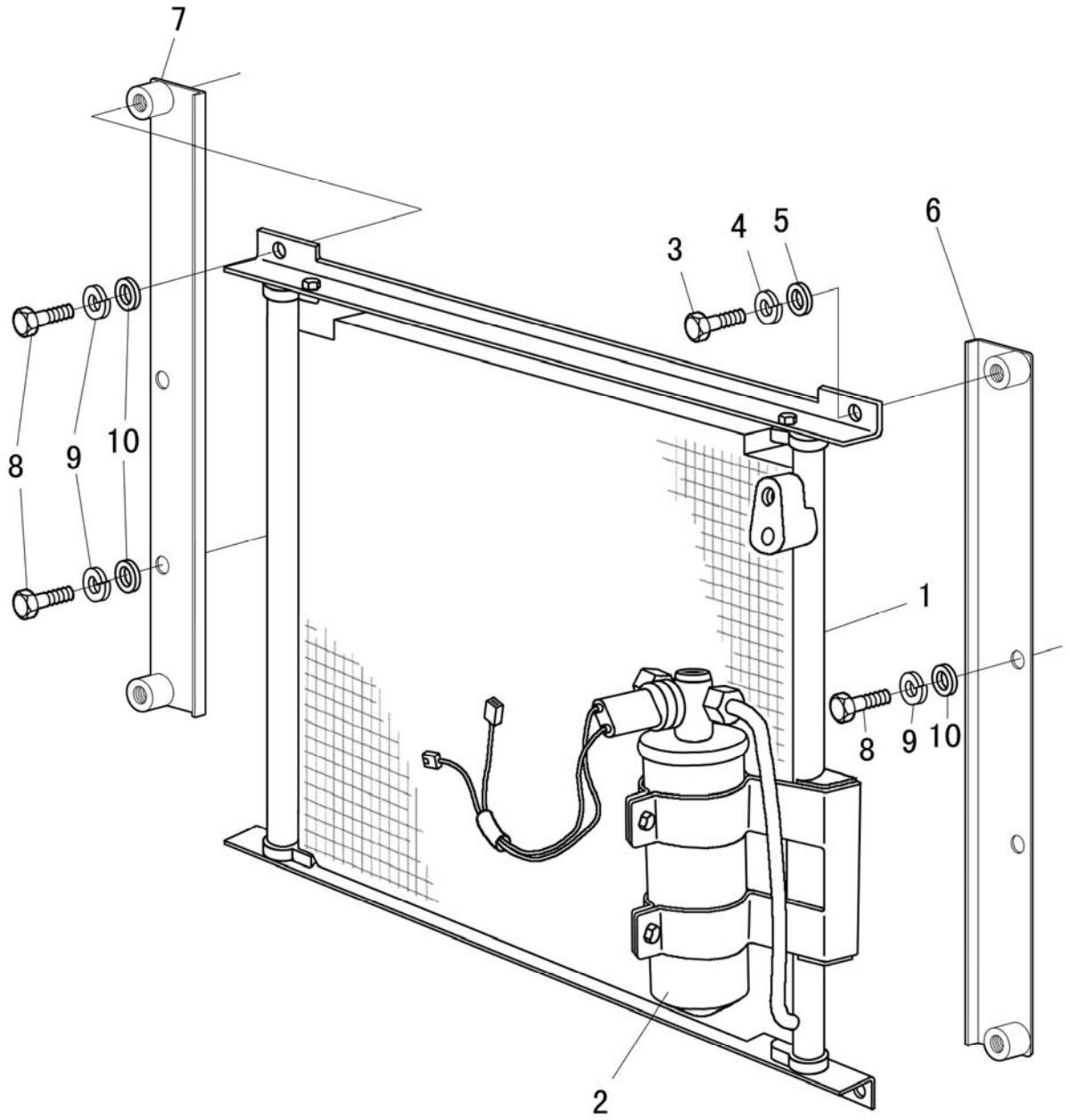

HEATING SYSTEM, CONDENSER

R	P.N.	DESCRIPTION	QTY
1	51342277	CONDENSER (EURO II, TL80)	1
1	51343580	CONDENSER (EURO II, TL90, TL100)	1
2	51331930	EVAPORATOR	1
3	51323203	BOLT	4
4	51323376	WASHER	4
5	51323402	WASHER	4
6	51343030	BRACKET, LEFT	1
7	51343029	BRACKET, RIGHT	1
8	51329641	BOLT	4
9	51323378	WASHER	4
10	51323401	WASHER	4

HEATING SYSTEM, PIPES

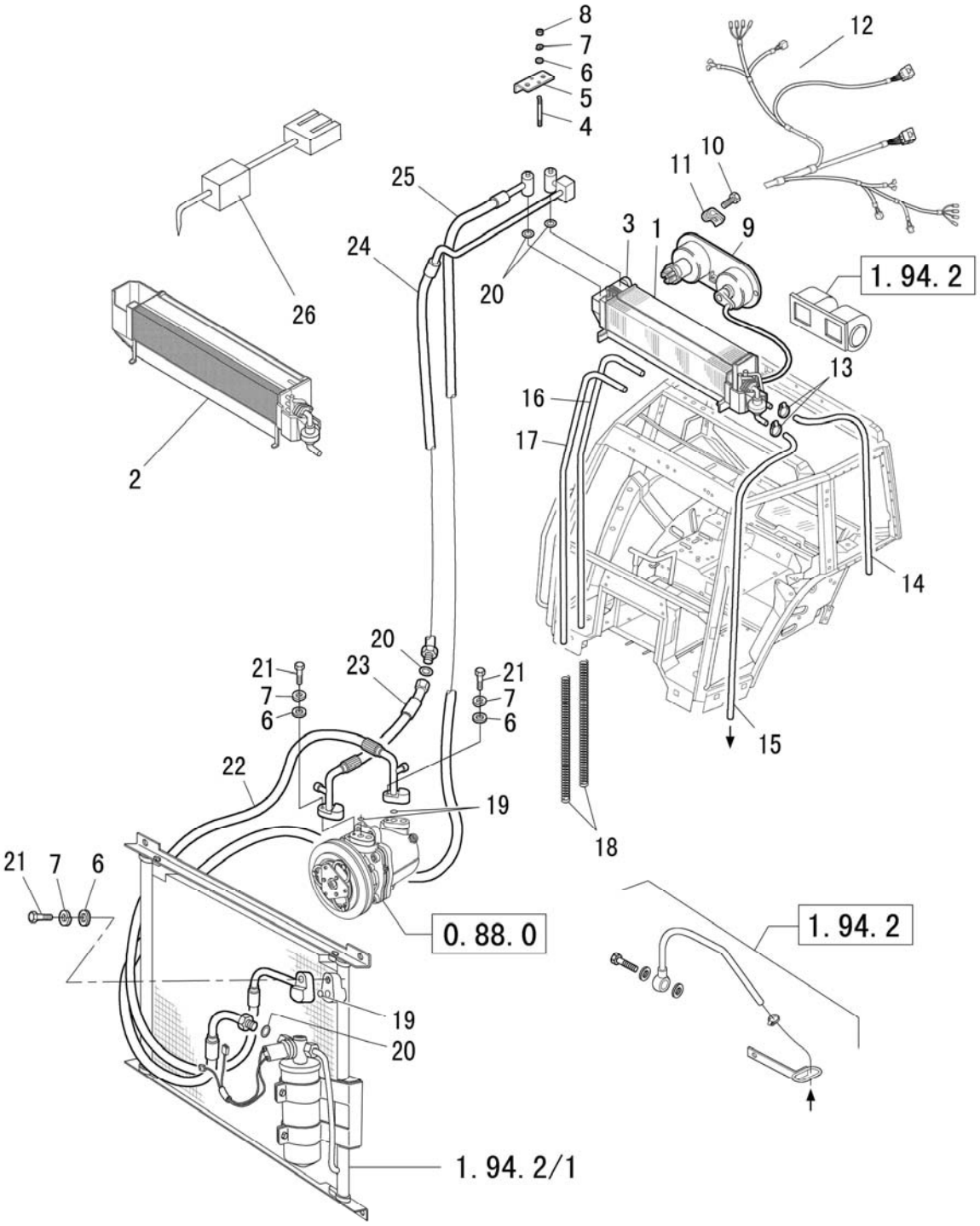

HEATING SYSTEM, PIPES

R	P.N.	DESCRIPTION	QTY
1	51331920	EVAPORATOR ASSY.	1
2	51335552	EVAPORATOR CASING	1
3	51331843	EXPANDING VALVE	1
4	51337913	BOLT	2
5	51337914	COVER PLATE	1
6	51323401	WASHER	5
7	51323378	WASHER	5
8	51323142	BOLT	2
9	51331922	CONTROL PANEL	1
10	51328284	SCERW	2
11	51327268	SPRING NUT	2
12	51331939	BLOWER WIRE	1
13	51336322	CLAMP	6
14	51331937	OUTLET PIPE	1
15	51331936	INLET PIPE	1
16	51335560	REAR WATER OUTLET PIPE	2
17	51335559	FRONT WATER OUTLET PIPE	2
18	51336319	SPRING	4
19	51331851	O-SEAL RING	3
20	51331849	O-SEAL RING	4
21	51323092	BOLT	3
22	51331928	COMPRESSOR OUTLET PIPE ASSY.	1
23	51331927	COMPRESSOR RETURN PIPE JOINT	1
24	51331926	COMPRESSOR RETURN PIPE ASSY.	1
25	51331929	INLET PIPE, AIR FILTER	1
26	51335551	TEMPERATURE CONTROL SENSOR	1

1.95.0	1/2	06/09

BRAKE PEDALS

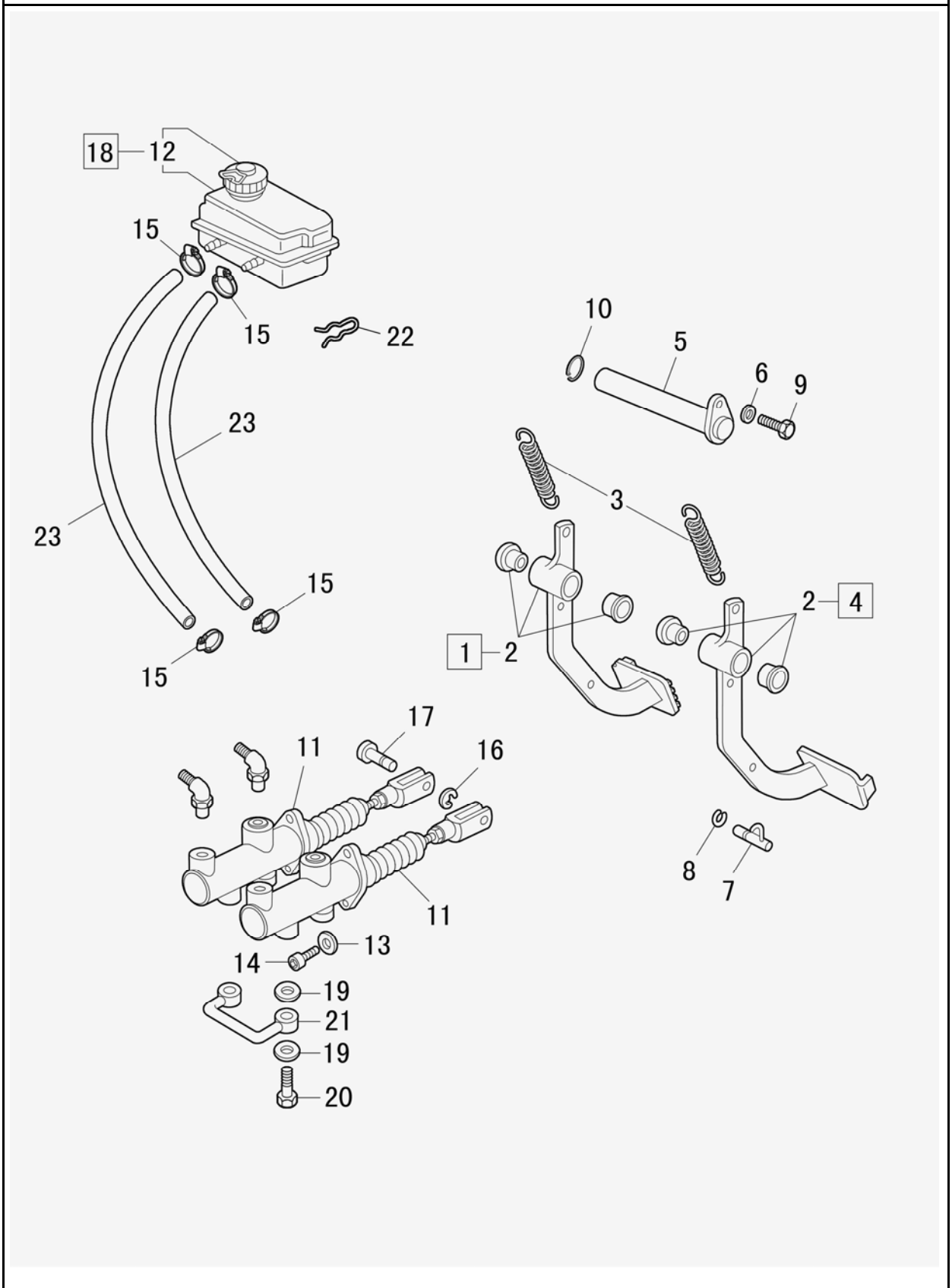

BRAKE PEDALS

R	P.N.	DESCRIPTION	QTY
1	47137542	BRAKE PEDAL AND BUSH ASSY.	1
2	5155548	BUSHING	2
3	5153180	SPRING	2
4	47137545	BRAKE PEDAL AND BUSH ASSY.	1
5	82030041	SHAFT ASSY-PEDAL SUPPORT	1
6	10615474	WASHER	1
7	5142152	LATCH ASSY-BRAKE PEDAL	1
8	11088180	SNAP RING	1
9	51323089	CAPSCREW	1
10	11067376	RETAINING RING	1
11	51332198	CYLINDER ASSY-BRAKE MASTER	2
12	87306500	OIL BRAKE RESERVOIR CUP	1
13	51323379	SPRING WASHER 8	4
14	14306424	SCREW	4
15	51328681	HOOP	4
16	51322564	FASTENER	2
17	5155381	PIN	2
18	51333594	OIL BRAKE RESERVOIR - ASSY	1
19	10298460	WASHER	4
20	5155703	UNION	2
21	5155701	TUBE ASSY-BRAKE MASTER CYLINDER	1
22	5141690	SPRING	2
23	51342332	FEEDING HOSE	2

BRAKE PEDALS, CYLINDER

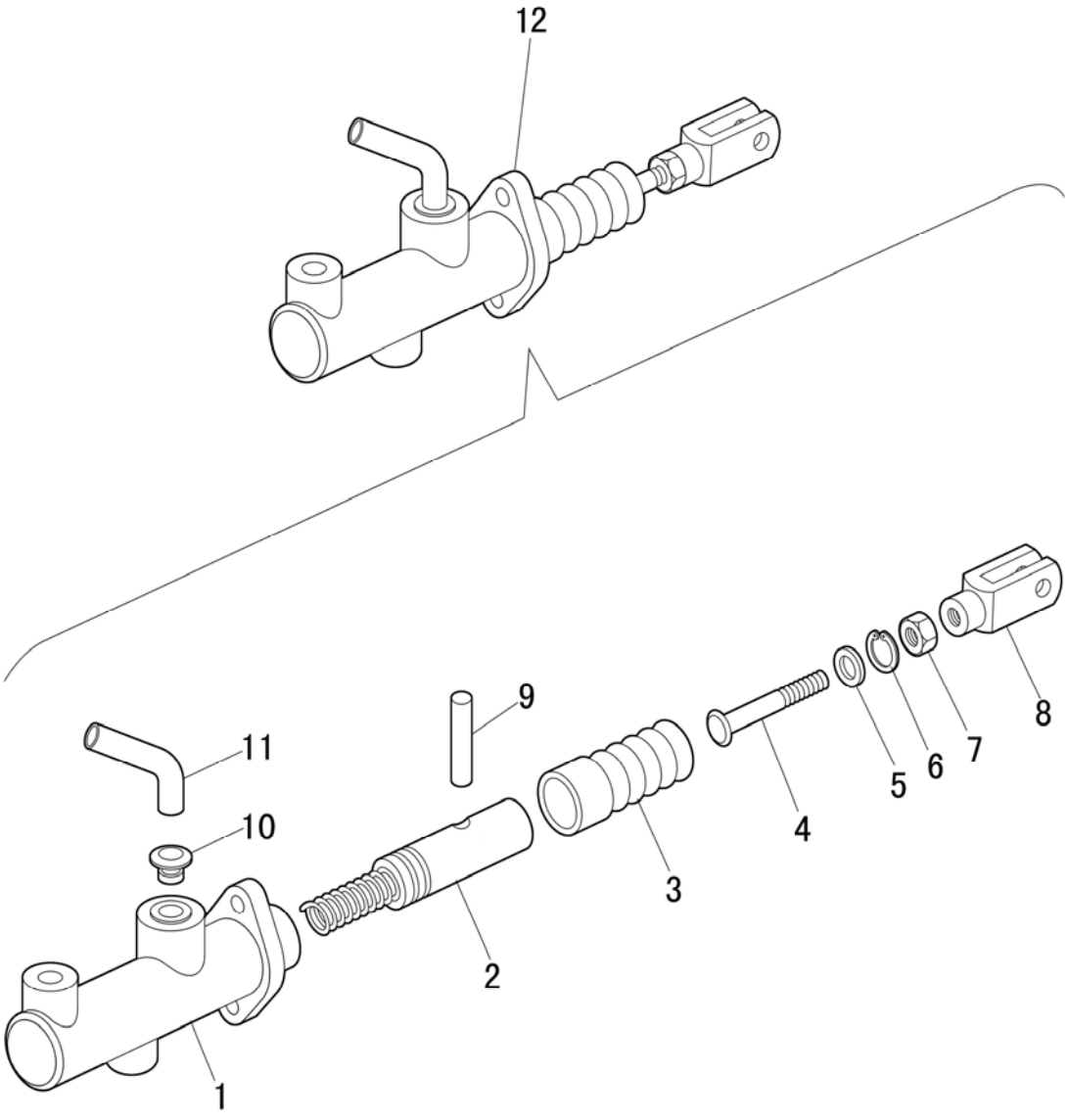

BRAKE PEDALS, CYLINDER

R	P.N.	DESCRIPTION	QTY
1	51335095	CYLINDER CASING	2
2	51335094	PISTON ASSY.	1
3	51335293	COVER	1
4	51333627	PUSH ROD	1
5	51333626	WASHER	1
6	51335093	SNAP RING	1
7	51323172	NUT	1
8	51333628	FORK	1
9	51333624	PINTLE	1
10	51333623	SEAL RING	1
11	51333622	CONNECTOR	1
12	51332198	BRAKE PUMP ASSY.	2

1.95.1	1/1	06/09

BRAKE, HAND CONTROL

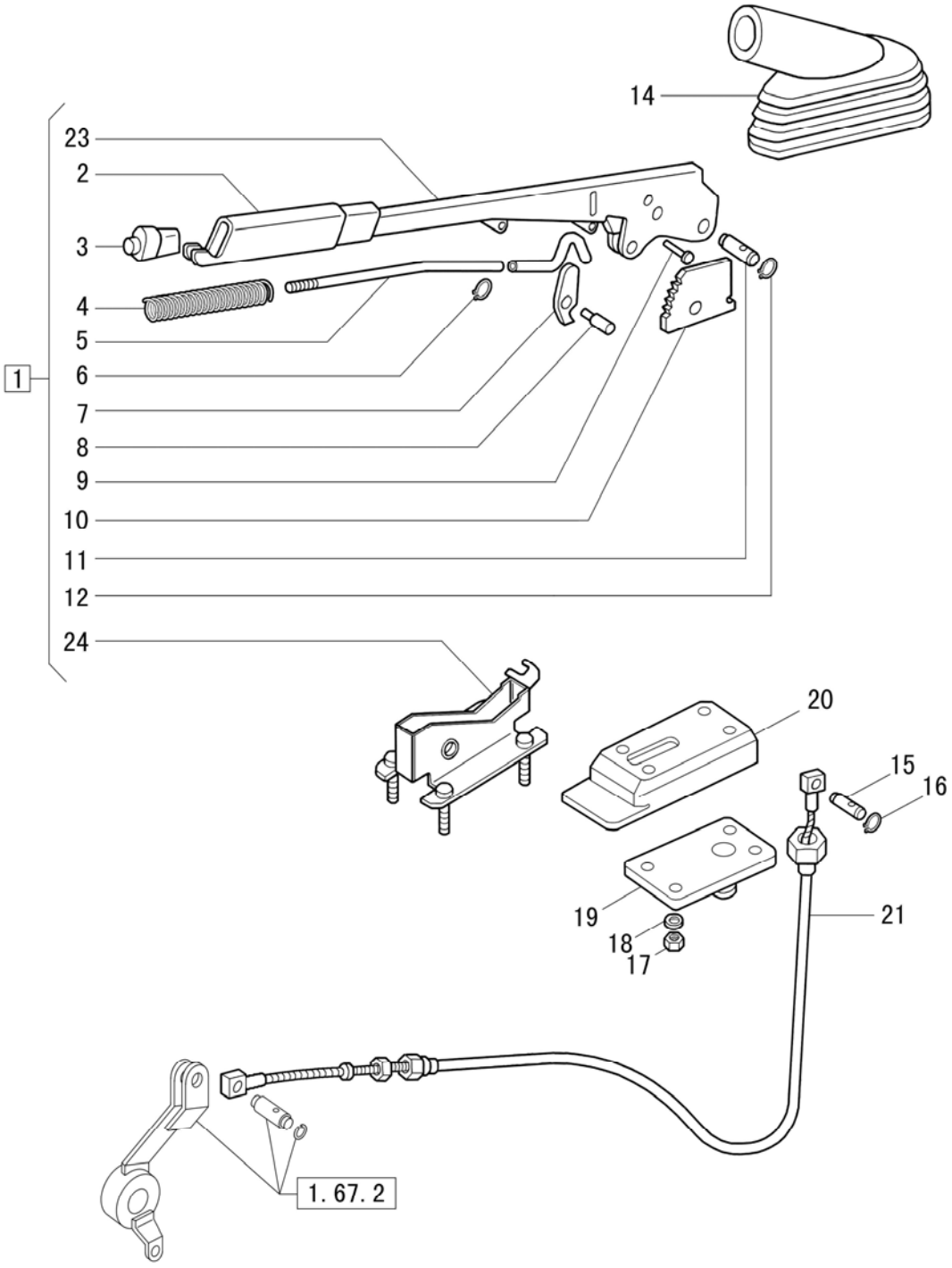

BRAKE, HAND CONTROL

R	P.N.	DESCRIPTION	QTY
1	47129269	HAND BRAKE LEVER	1
2	51342116	LEVER	1
3	5174275	HAND BRAKE LEVER BUTTON ASSY.	1
4	5105729	SPRING	1
5	5185690	TIE-ROD	1
6	11065476	RETAINING RING	1
7	5185679	PAWL	1
8	5131437	PIN, PAWL	1
9	4985127	RIVET, STOP DOG	1
10	5185678	HAND BRAKE STOP SECTOR	1
11	4988275	PIN	1
12	13400775	RETAINING RING	1
14	51337911	LEVER BELLOWS	1
15	5105280	PIN	1
16	11065676	RETAINING RING	2
17	51323379	SPRING WASHER	4
18	16100814	NUT	4
19	5185712	PLATE	1
20	51333161	SUPPORT	1
21	82016628	HAND BRAKE CABLE	1
23	51342117	LEVER	1
24	47129273	HAND BRAKE LEVER SUPPORT ASSY.	1

1.95.2	1/1	06/09

CLUTCH PEDAL

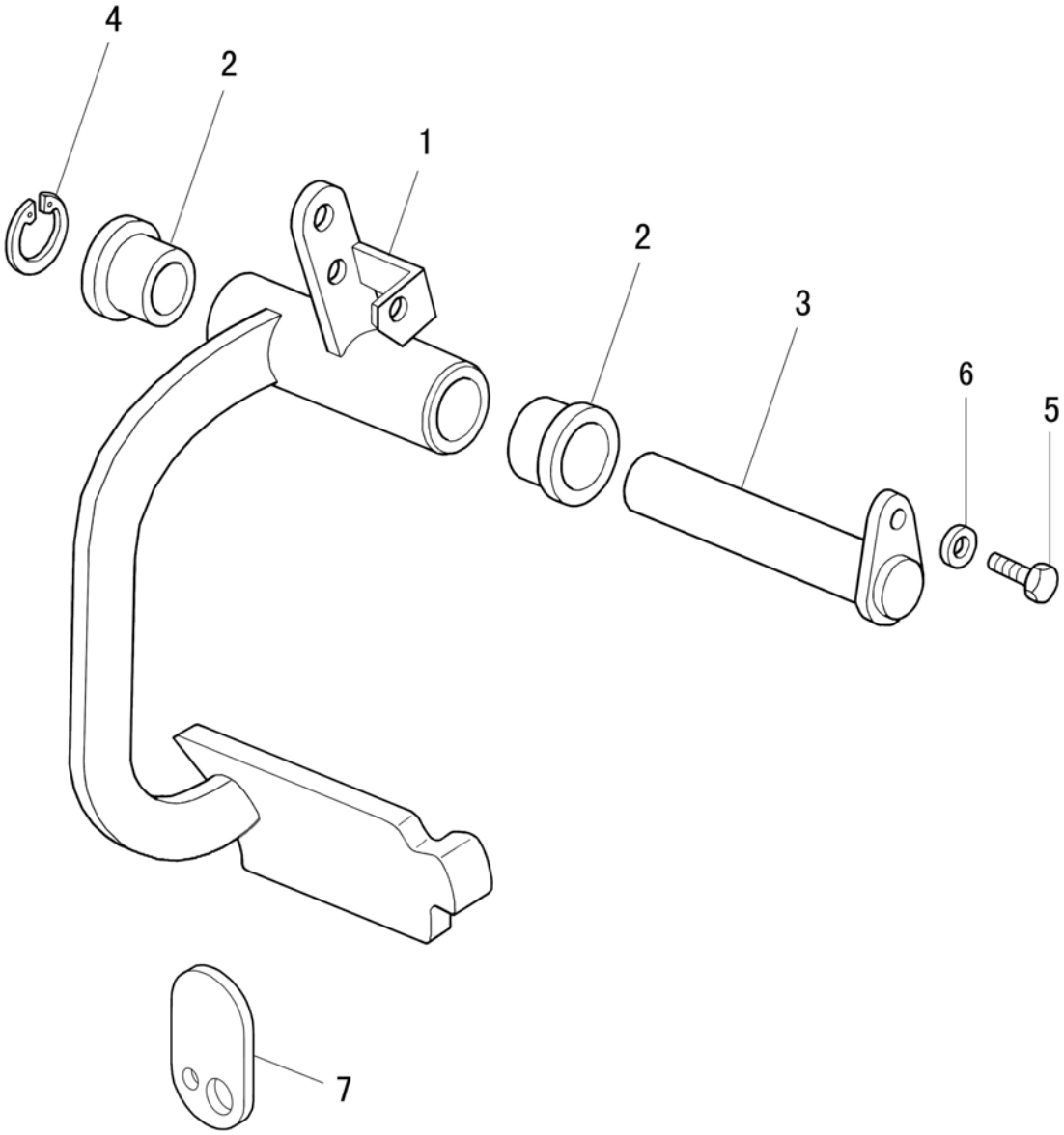

CLUTCH PEDAL

R	P.N.	DESCRIPTION	QTY
1	5175711	PEDAL ASSEMBLY WITH BUSH	1
2	5155548	BUSHING	2
3	51332382	SHAFT ASSY-PEDAL SUPPORT	1
4	11067376	RETAINING RING	1
5	51325707	CAPSCREW	1
6	51332383	WASHER	1
7	47125751	FRONT COVER	1
7	51335659	FRONT COVER (FOR AIR-CONDITIONER)	1

1.95.4	1/1	06/09

THROTTLE CONTROL LINKAGE

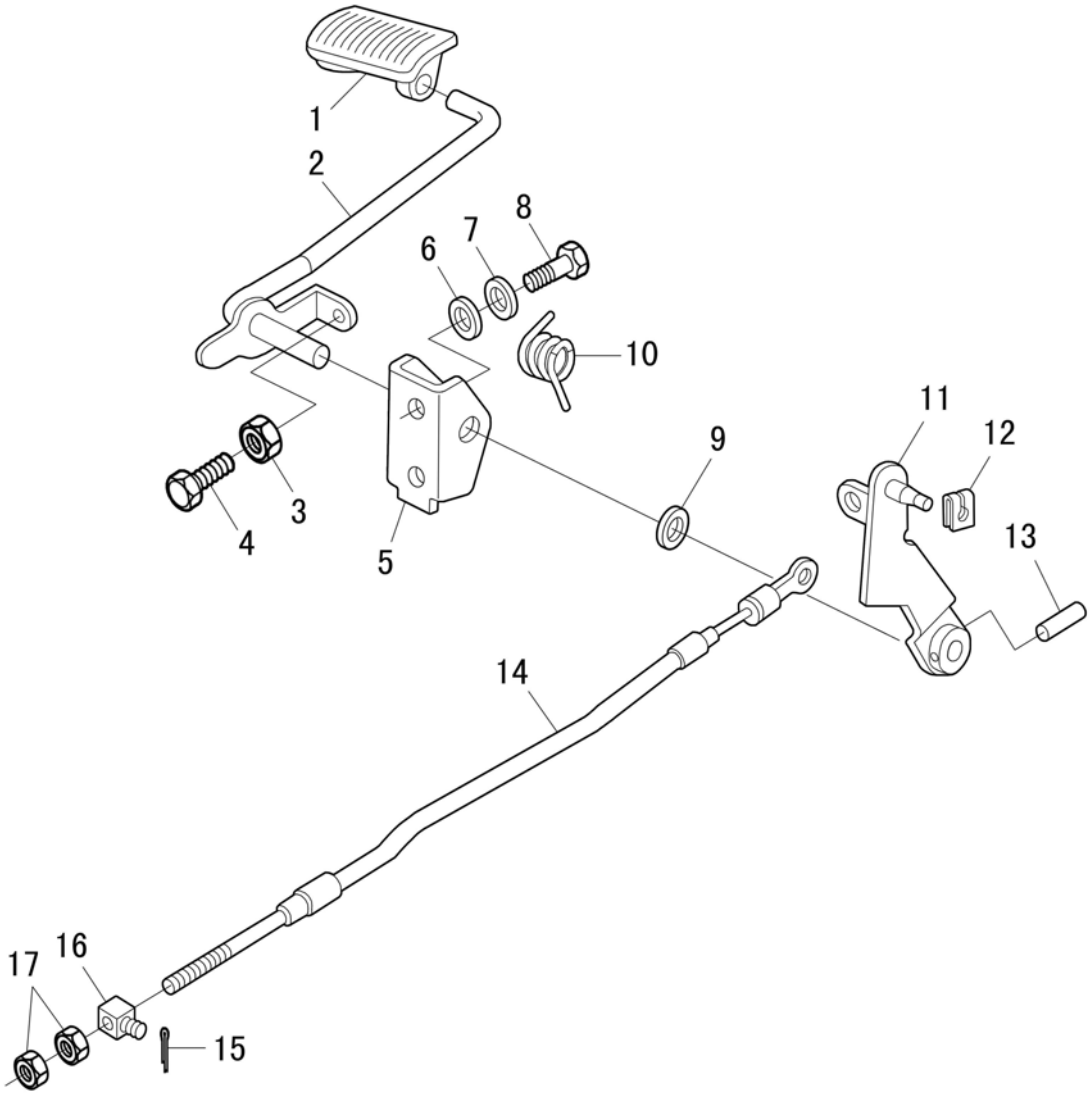

THROTTLE CONTROL LINKAGE

R	P.N.	DESCRIPTION	QTY
1	5167651	THROTTLE PEDAL	1
2	51333064	PEDAL ASSY-THROTTLE	1
3	15896214	NUT	1
4	51327171	BOLT	1
5	5157531	SUPPORT	1
6	51323402	PLAIN WASHER	2
7	51323379	SPRING WASHER	2
8	51323095	BOLT	2
9	5183850	SPACER	1
10	5148906	THROTTLE PEDAL RETURN SPRING	1
11	5183872	LEVER ASSY THROTTLE CONTROL	1
12	51331207	SNAP RING	1
13	5186261	SPIRAL PIN	1
14	51331126	THROTTLE CONTROL CABLE , TL80	1
14	51333587	THROTTLE CONTROL CABLE	1
15	51332351	WASHER	1
16	51331129	CABLE ADJUSTER PIN , TL80	2
16	51333496	CABLE ADJUSTER PIN	2
17	51323142	NUT	2

1.95.4/A	1/1	06/09

ENGINE SHUT-OFF CONTROL

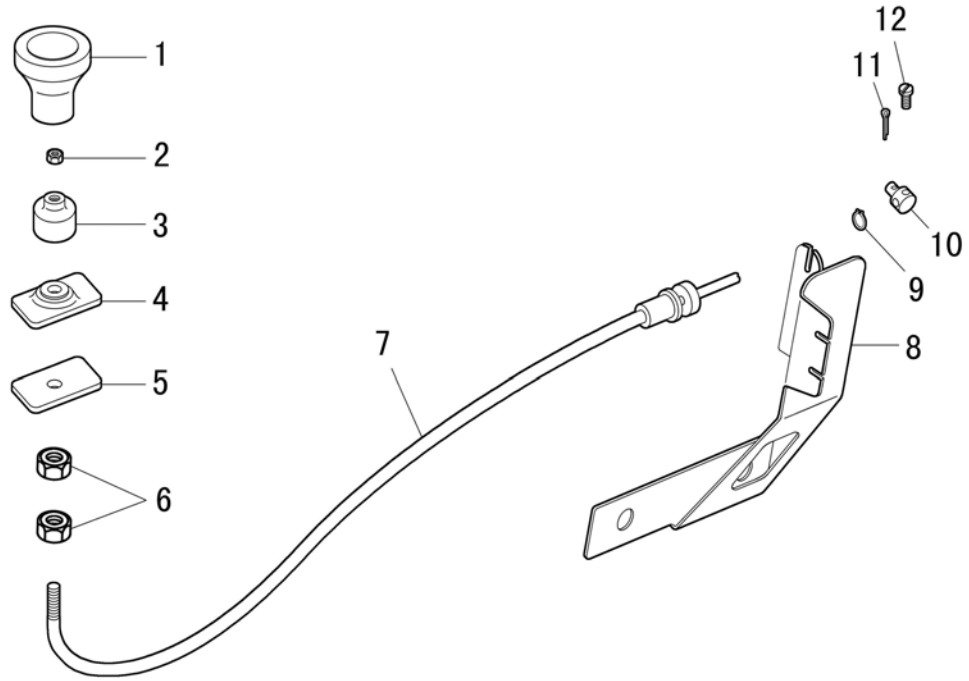

ENGINE SHUT-OFF CONTROL

R	P.N.	DESCRIPTION	QTY
1	51328146	SHUT-OFF HANDLE	1
2	51332503	NUT	1
3	51332869	SHIELD	1
4	51332285	COVER ASSEMBLY	1
5	51332286	PLATE	1
6	51332915	NUT	2
7	51332867	CABLE ASSEMBLY	1
8	51333492	SUPPORT ASSEMBLY	1
9	51329577	SNAP RING	1
10	51332866	ADJUSTER PIN , TL80	1
11	51323354	PIN , TL80	1
12	51330728	BOLT , TL80	1

1.95.5/A	1/2	06/09

HYDRAULIC STEERING

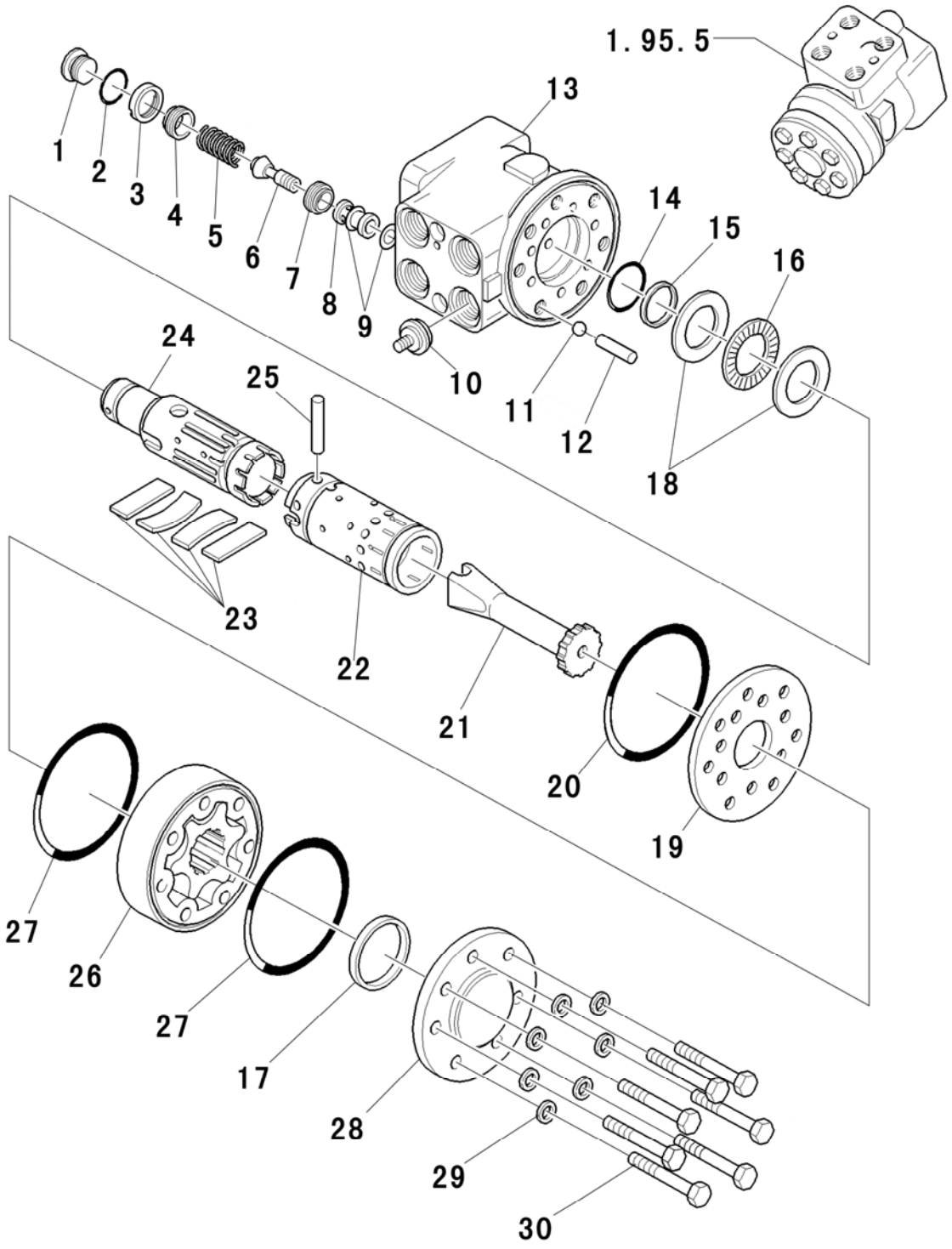

HYDRAULIC STEERING

R	P.N.	DESCRIPTION	QTY
1	51337481	RELIEF VALVE	1
2	51337480	SEALING RING	1
3	51337482	RETAINING BOLT	1
4	51337483	SPRING SEAT	1
5	51337479	RELIEVE SPRING	1
6	51337478	RELIEVE VALVE	1
7	51337477	STUD	1
8	51337476	RELIEVE VALVE SEAT	1
9	51329928	O-RING SEAL	2
10	51337484	CHECK VALVE COMPONENTS	1
11	51337485	STEEL BALL	1
12	51337488	PIN	1
13	51337475	VALVE BODY	1
14	51337473	SEALING RING	1
15	51337472	SEALING RING	1
16	51337471	NEEDLE BEARING	1
17	51337490	SPACER	1
18	51337470	RETAINING RING	2
19	51337494	RING	1
20	51337474	SEAL RING	1

HYDRAULIC STEERING

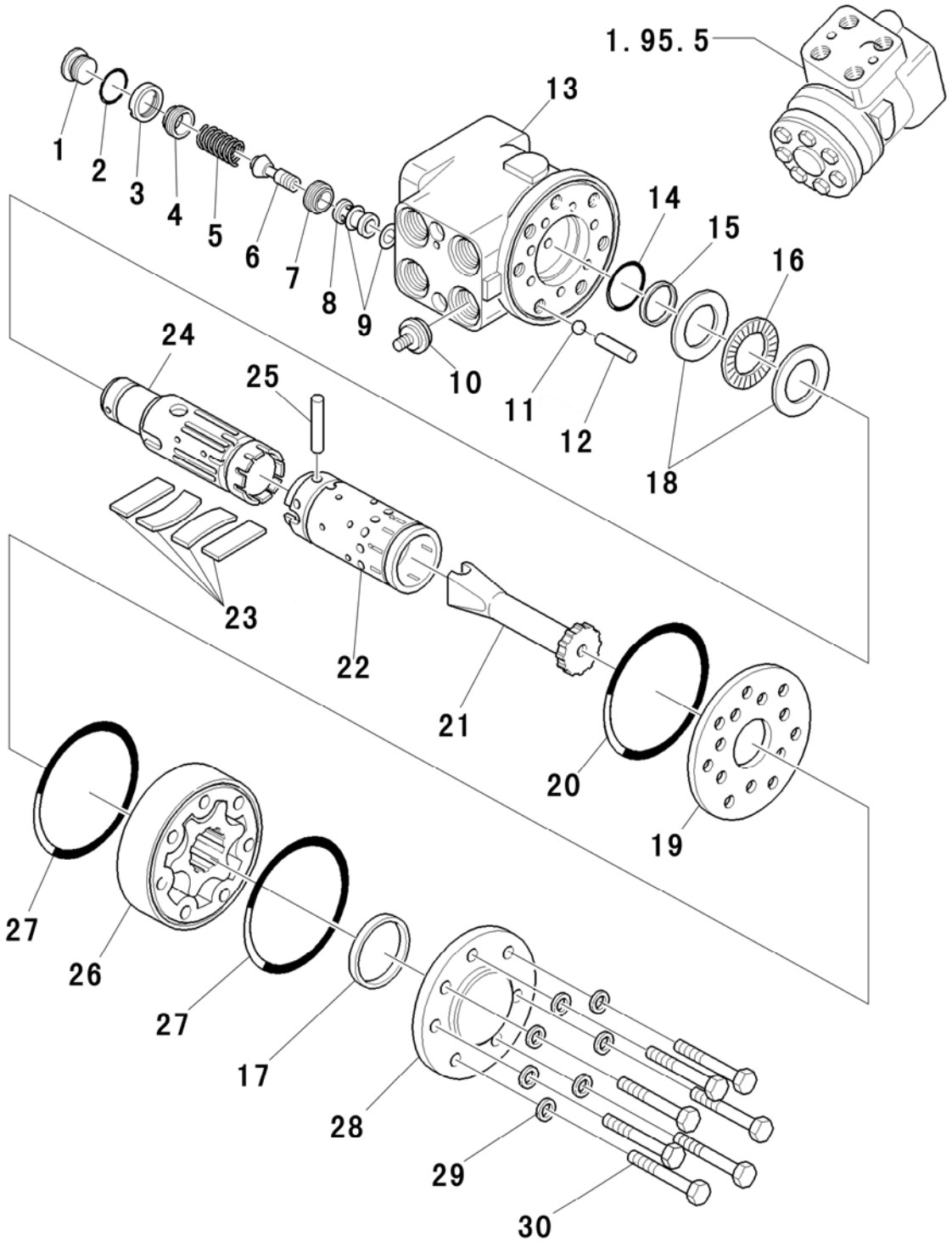

HYDRAULIC STEERING

R	P.N.	DESCRIPTION	QTY
21	51337493	DRIVEN SHAFT	1
22	51337469	VALVE SLEEVE	1
23	51337468	SHEET SPRING	6
24	51337467	VALVE	1
25	51337486	PIN	1
26	51337492	ROTOR (2WD)	1
26	51337496	ROTOR (4WD)	1
27	51337491	SEALING RING	2
28	51337489	REAR COVER	1
29	51337487	COMPLEX SEALING WASHER	7
30	51323116	SCREW (2WD)	7
30	51337495	SCREW (4WD)	7

1.95.5	1/1	06/09

STEERING COLUMN, STEERING WHEEL

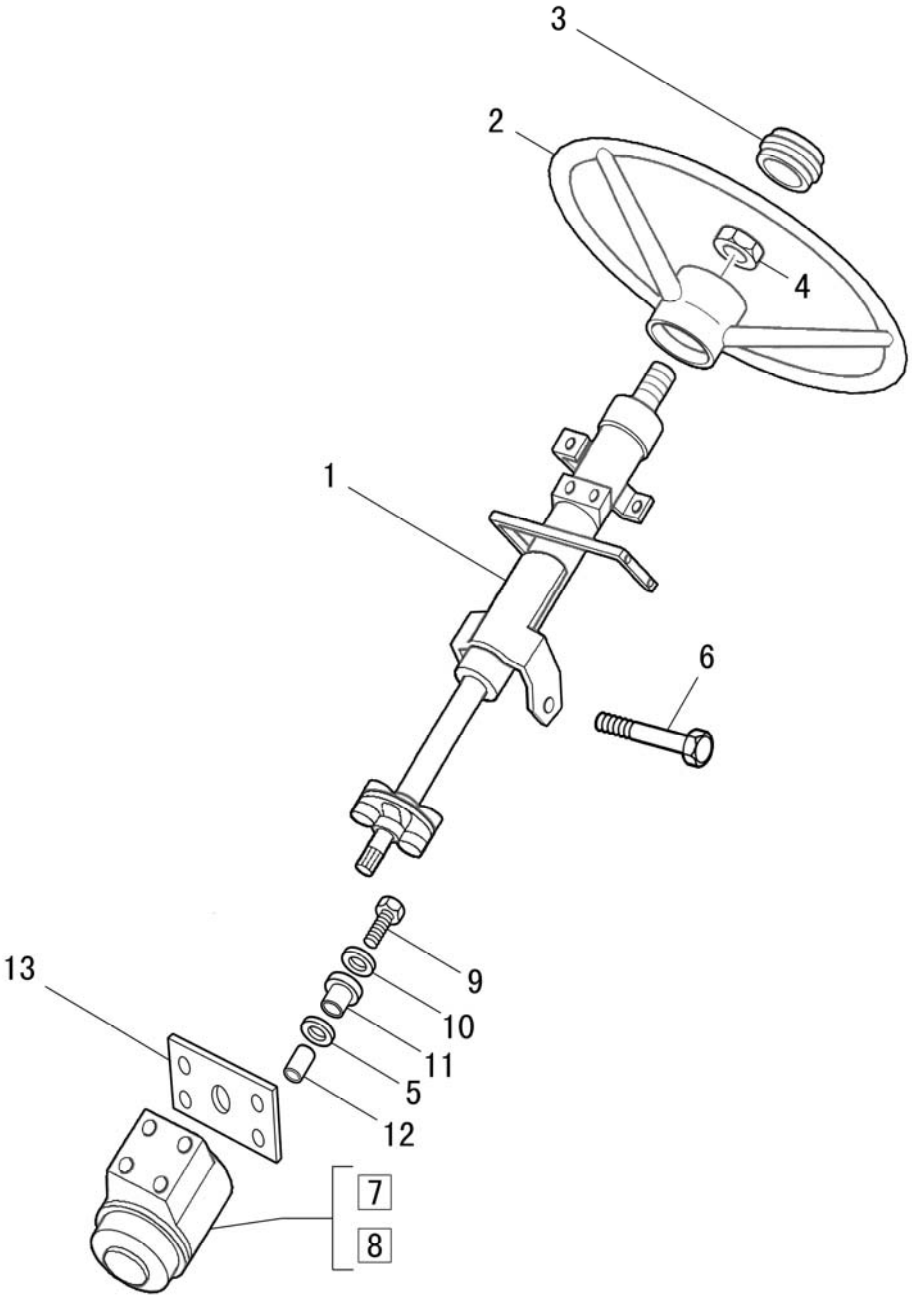

STEERING COLUMN, STEERING WHEEL

R	P.N.	DESCRIPTION	QTY
*1	51330516	STEERING COLUMN ASSY.	1
1	51333724	STEERING COLUMN ASSY. (FOR EXPORT)	1
2	5174446	STEERING WHEEL WITH COVERING	1
3	51330641	COMPLETE COVER	1
3	51333039	COMPLETE COVER	1
5	47123604	SPACER	4
6	51323095	BOLT	4
7	51330517	MOTOR ASSY-POWER STEERING (2WD)	1
8	51330518	MOTOR ASSY-POWER STEERING (4WD)	1
9	51323105	CAPSCREW	4
10	51323403	WASHER	4
11	5197926	BUSH	4
12	5197925	SPACER	4
13	5197927	SPACER	1

NOTE: Part 1 includes part 4.

1.95.6	1/2	06/09

DIFFERENTIAL LOCK CONTROL

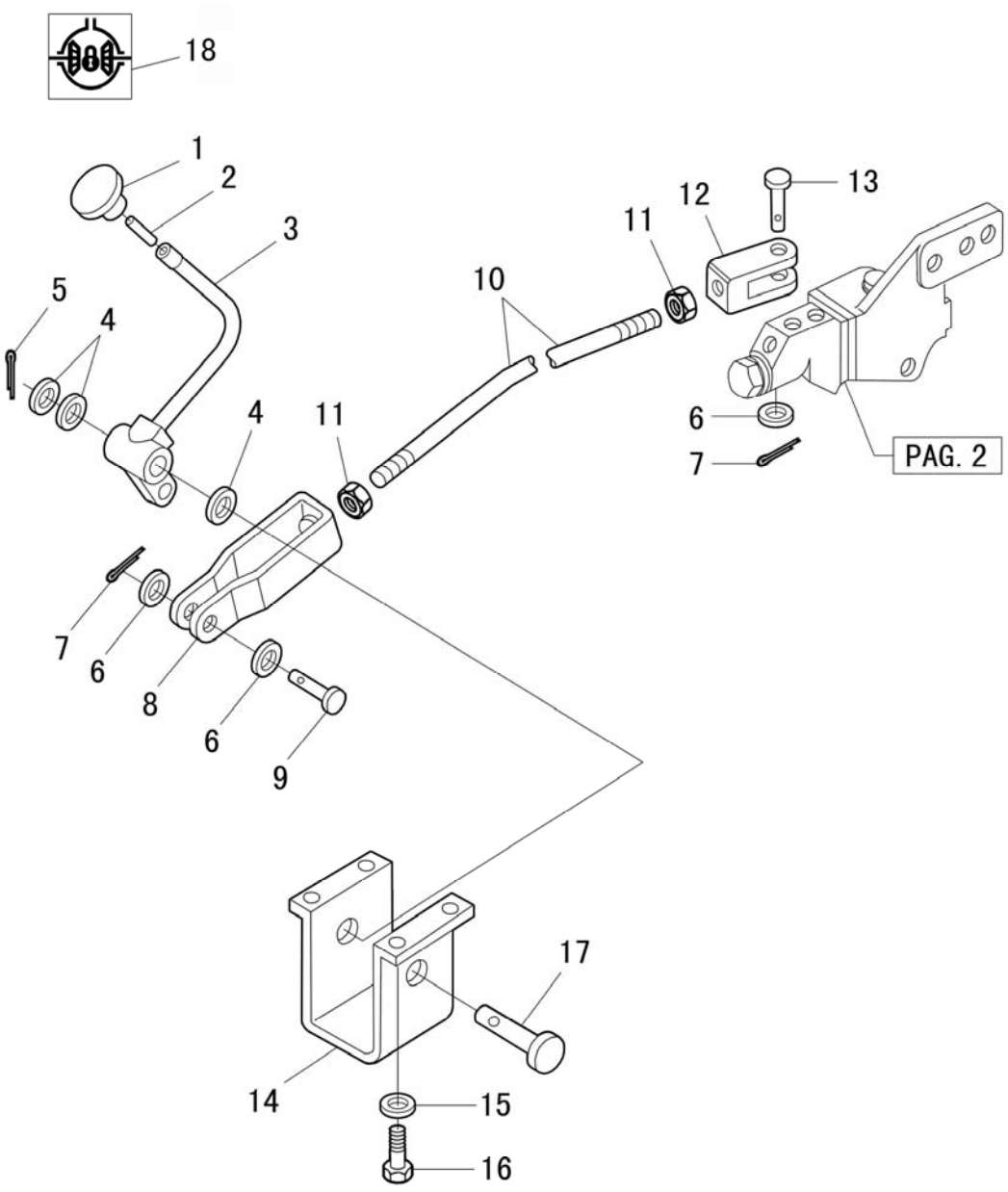

DIFFERENTIAL LOCK CONTROL

R	P.N.	DESCRIPTION	QTY
1	5111800	PEDAL DIFFERENTIAL LOCK	1
2	51323277	PIN	1
3	51332363	ARM, DIFFERENTIAL LOCK CONTROL	1
4	51323405	WASHER	3
5	10734704	COTTER	1
6	51323403	WASHER	4
7	10733604	COTTER	2
8	5172575	FORK LINK DIFF.LOCK	1
9	5110601	PIN, FRONT	1
10	51332210	LINK, DIFFERENT.LOK CONTROL	1
11	51323177	NUT	3
12	5112921	FORK	1
13	5110602	PIN	1
14	51332365	SUPP.LEVER REAR DIFF.LOCK CONTROL	1
15	11194774	WASHER	4
16	51323091	BOLT	4
17	5167422	PIN PEDAL DIFF.LOCK CONTROL	1
18	51337795	DIFFERENTIAL IDENTIFICATION	1

DIFFERENTIAL LOCK CONTROL

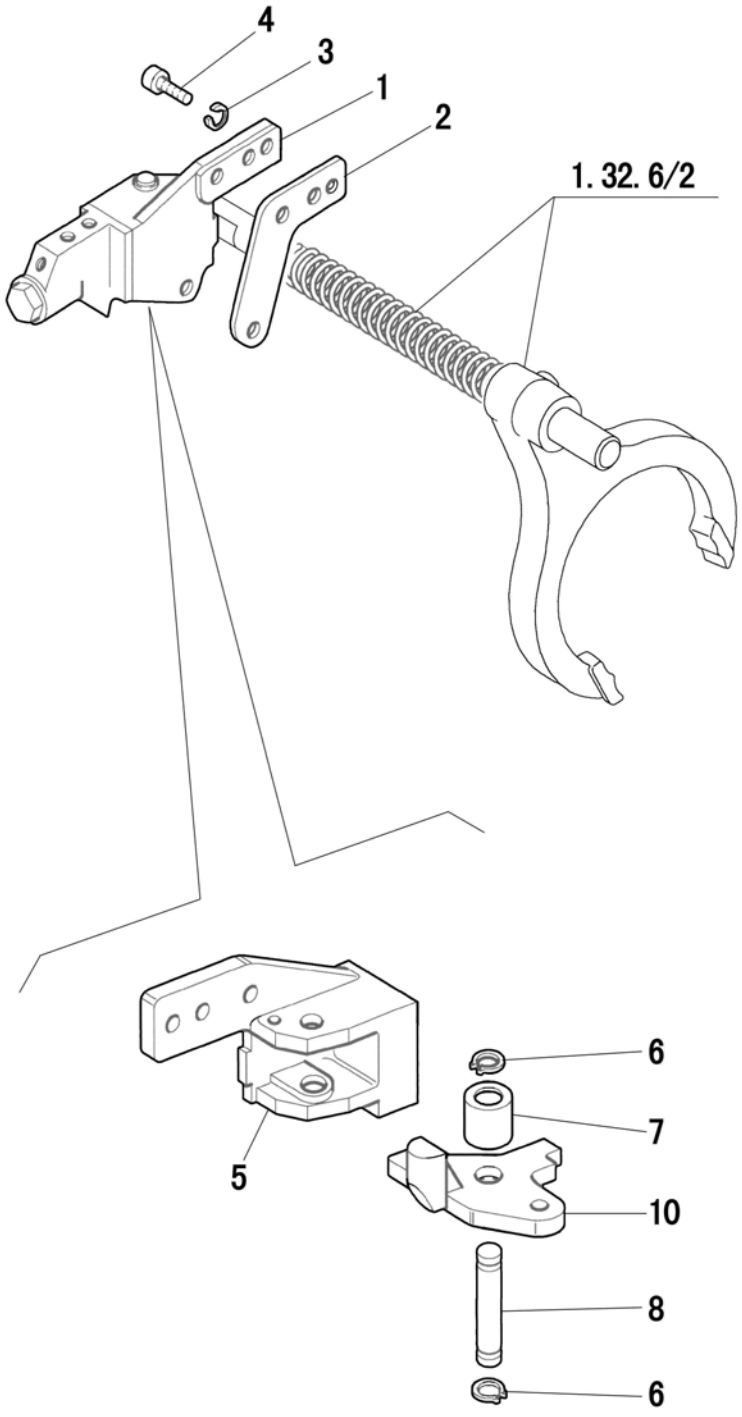

DIFFERENTIAL LOCK CONTROL

R	P.N.	DESCRIPTION	QTY
1	87369064	SUPPORT, DIFFER.LOCK CONTROL	1
2	5123691	SHIM, SUPPORT,DIFFERENTIAL LOCK	1
3	11190574	LOCKWASHER	3
4	14307524	CAPSCREW	3
5	87369064	SUPPORT, DIFFER.LOCK CONTROL	1
6	11066476	O-RING	2
8	87368070	PIN, DIFFERENTIAL LOCK CONTROL	1
10	5125123	LEVER, DIFFERENTIAL LOCK CONTROL	1

GEARBOX CONTROL

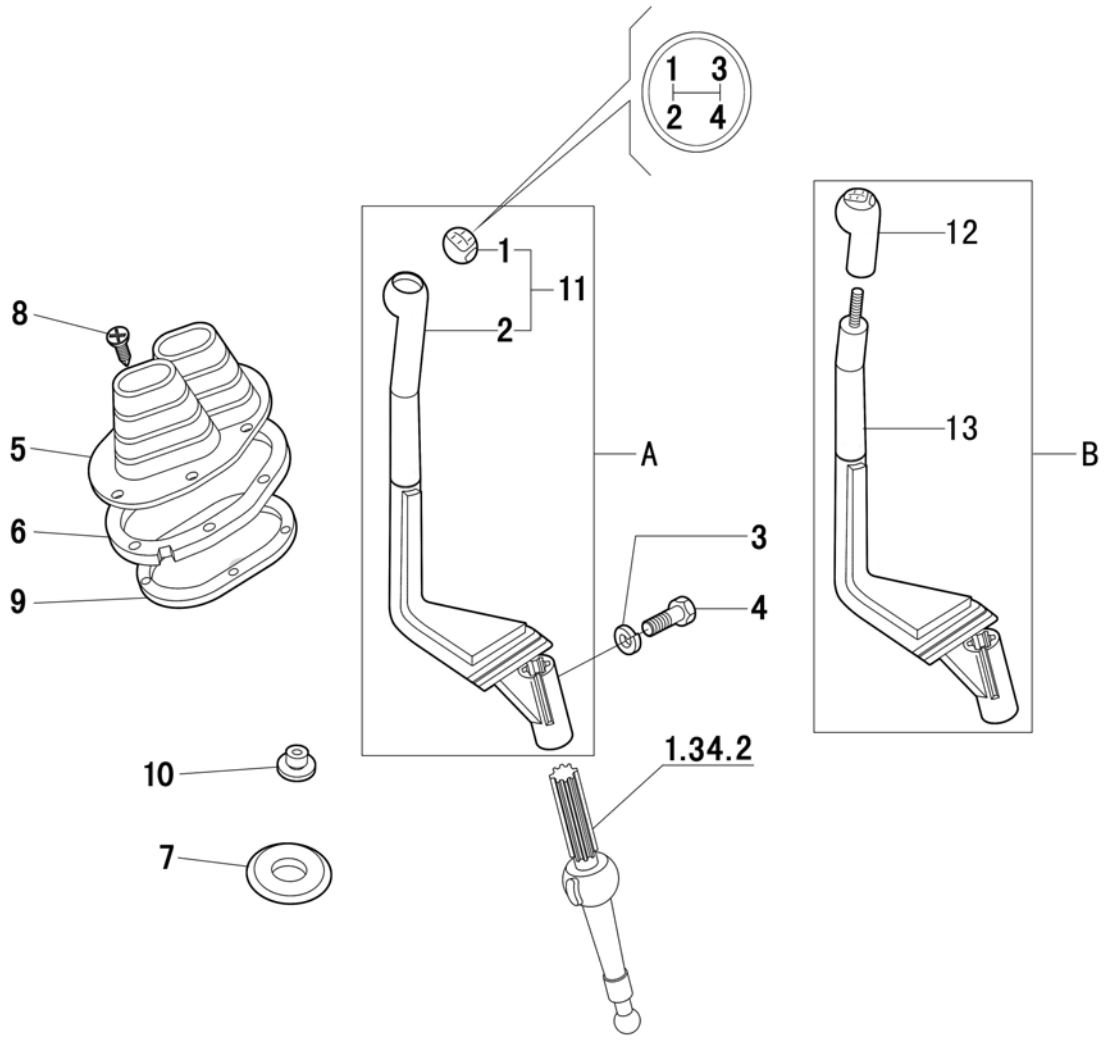

GEARBOX CONTROL

R	P.N.	DESCRIPTION	QTY
1	51333117	GEAR SHIFT LEVER UPPER COVER	1
2	51333119	GEAR SHIFT LEVER ASSY.	1
3	51323379	SPRING WASHER 8	1
4	51323055	CAPSCREW	1
5	5167165	UPPER BELLOWS FOR LEVER	1
6	51333159	RING	1
7	5129575	LOWER BELLOWS, SHIFT LEVER	2
8	15688507	CAPSCREW	6
9	47124217	GEARBOX LEVER BELLOWS SPACER	1
10	14115980	CLASPER	6
11	51333120	LEVER ASSY. (WITH KNOB)	1
12	51336865	KNOB (FOR EXPORT)	1
13	51337715	LEVER ASSY. (FOR EXPORT)	1

GEARBOX CONTROL

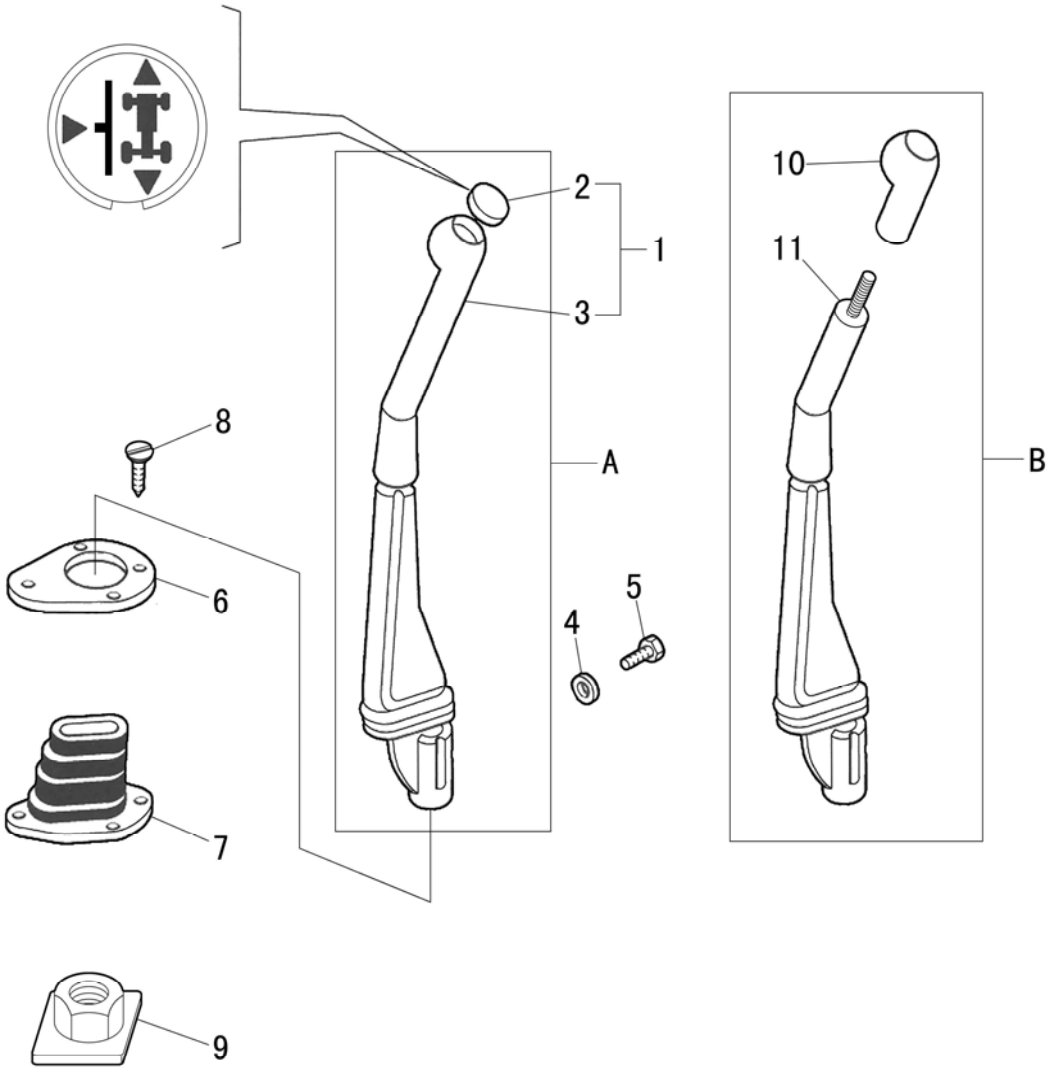

GEARBOX CONTROL

R	P.N.	DESCRIPTION	QTY
1	51333351	SHUTTLE LEVER ASSY.	1
2	51333354	SHUTTLE LEVER CAP	1
3	51333352	LEVER	1
4	10569374	LOCKWASHER	1
5	51323055	CAPSCREW	1
6	5176214	RING	1
7	5167408	UPPER BELLOWS	1
8	15688507	CAPSCREW	4
9	14115780	CLASPER	4
10	51336874	KNOB (FOR EXPORT)	1
11	51337719	SHUTTLE LEVER ASSY.(FOR EXPORT)	1

GEARBOX CONTROL

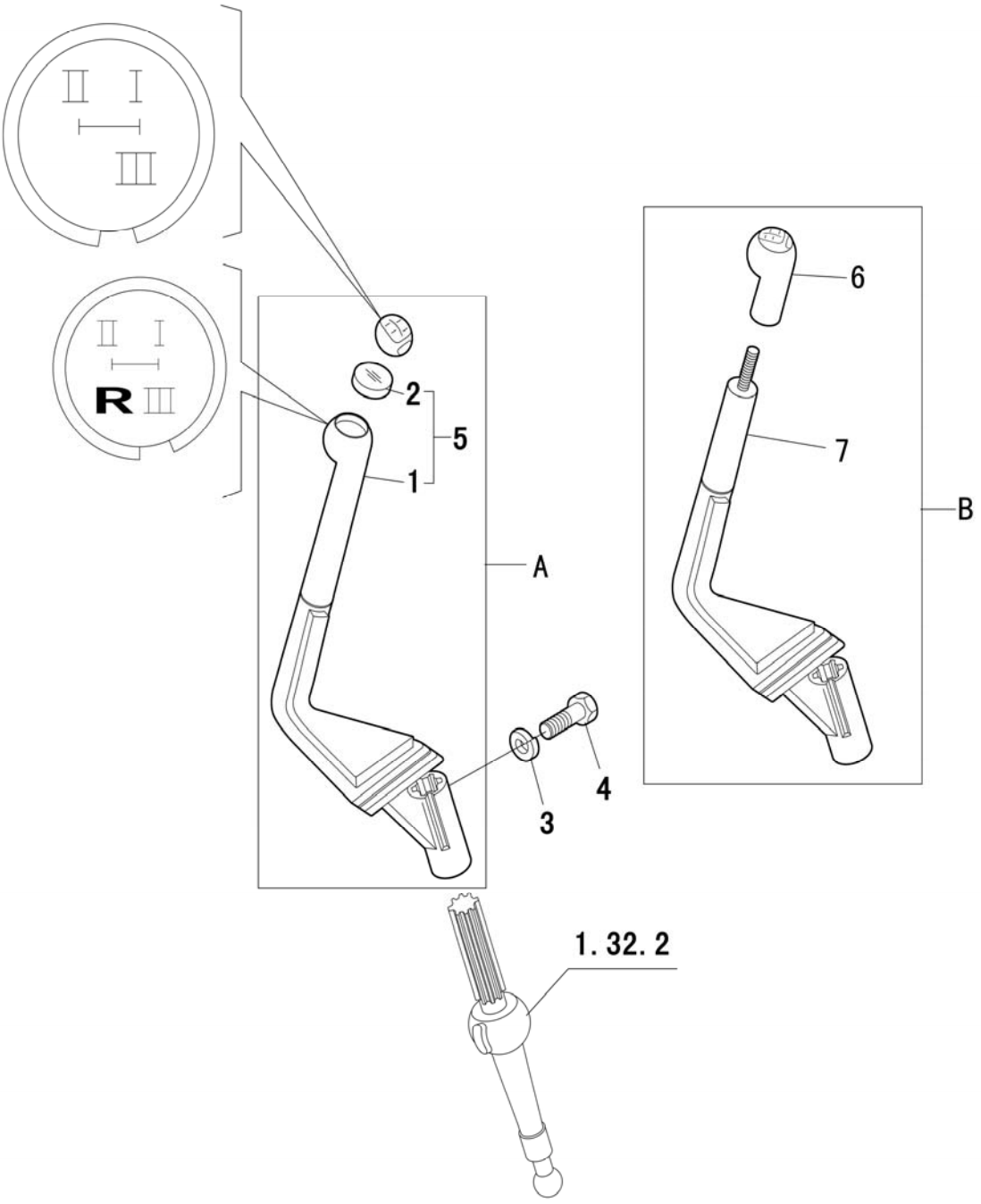

GEARBOX CONTROL

R	P.N.	DESCRIPTION	QTY
1	51333123	RANGE GEAR CONTROL LEVER	1
2	51333121	CAP (12＋4)	1
2	51333125	CAP (12＋12)	1
3	51323379	TAPER LOCKWASHER	1
4	51323055	BOLT	1
5	51333124	RANGE GEAR CONTROL LEVER (WITH SYMBOL CAP)(12＋4	1
5	51333126	RANGE GEAR CONTROL LEVER (WITH SYMBOL CAP) (12＋	1
6	51336868	KNOB (FOR EXPORT) (12＋4)	1
6	51336871	KNOB (FOR EXPORT) (12＋12)	1
7	51337717	RANGE GEAR CONTROL LEVER ASSY.(FOR EXPORT)	1

1.96.3	1/1	06/09

P.T.O. CONTROL

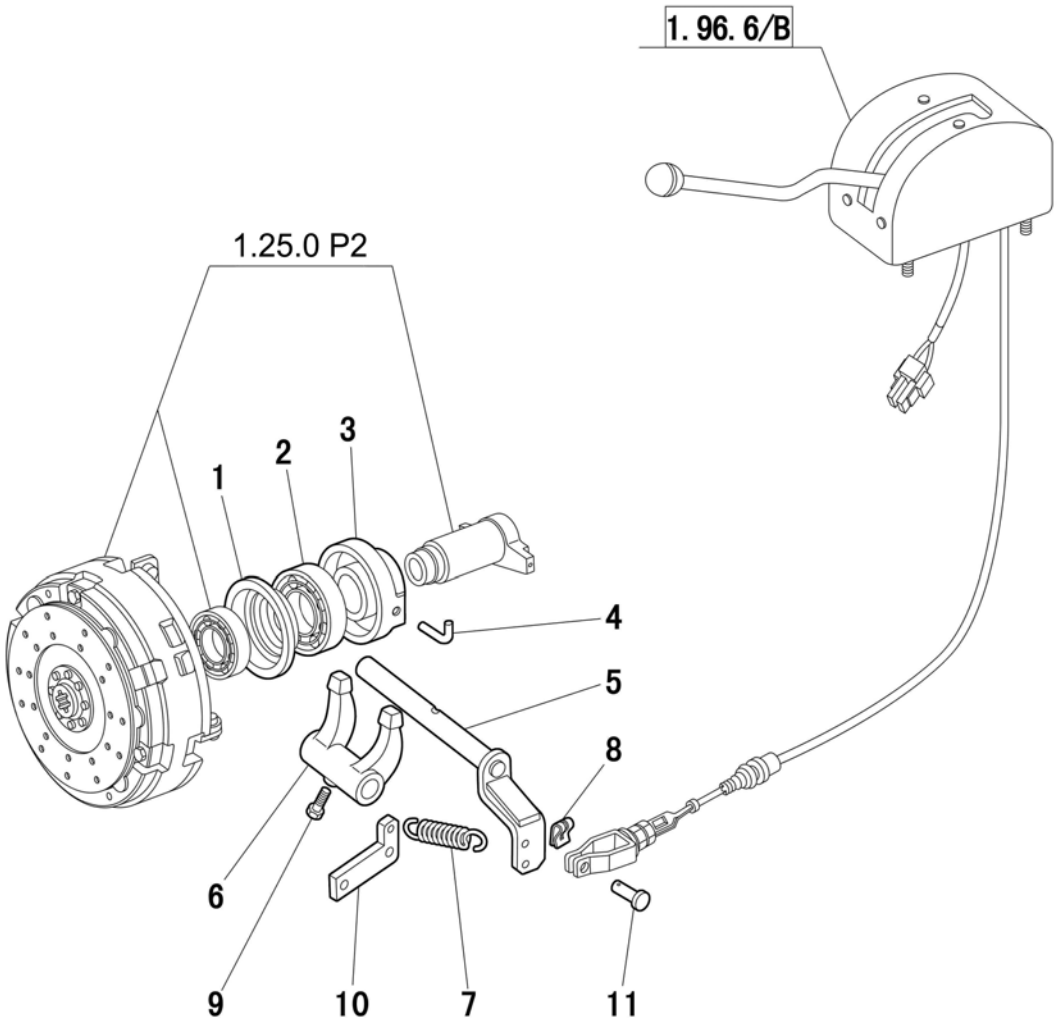

P.T.O. CONTROL

R	P.N.	DESCRIPTION	QTY
1	5167182	COLLAR, P.T.O.CLUTCH SLEEVE	1
2	51336185	BEARING SLEEVE	1
3	5167173	SLEEVE, P.T.O. CLUTCH	1
4	44011615	SPRING, CLUTCH FORK	2
5	87310439	COMPLETE SHAFT FOR ENGAGEMENT CONTROL LEVER P	1
6	5168938	FORK	1
7	5120395	SPRING	1
8	11063976	FASTENER	1
9	4968813	SCREW	1
10	51331794	PLATE	1
11	4998010	PIN	1

1.96.3/1	1/1	06/09

540-750-1000 RPM P.T.O. CONTROL

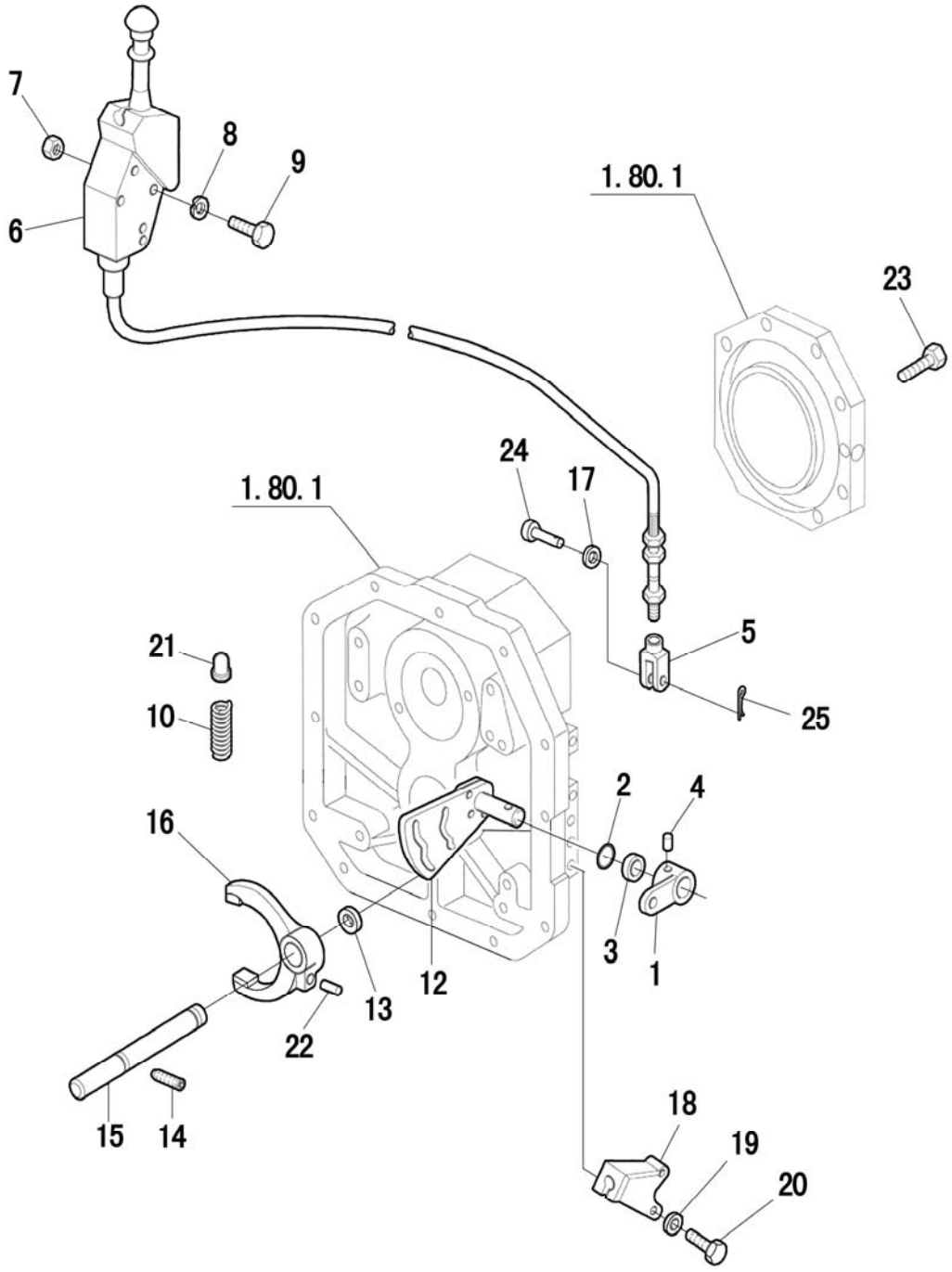

540-750-1000 RPM P.T.O. CONTROL

R	P.N.	DESCRIPTION	QTY
1	5180999	LEVER, P.T.O.	1
2	14457580	O-RING	1
3	594832	RETAINING RING	1
4	51331993	PIN	1
5	10001071	FORK	1
6	5185988	CONTROL ASSY P.T.O.	1
7	51323142	NUT	3
8	51323401	WASHER	6
9	51333322	CAPSCREW	3
10	5128251	SPRING	1
11	51333172	540/1000RPM DECAL FOR PTO CONTROL	1
12	5162792	PIN WITH QUADRANT	1
13	14457080	O-RING	1
14	51333389	SCREW	1
15	5162788	P.T.O. ROD	1
16	5162815	FORK WITH PINS ASSY.	1
17	51323401	WASHER	1
18	5180998	BRACKET	1
19	11198574	LOCKWASHER	2
20	51323130	BOLT	2
21	5150839	PAWL	1
22	5154545	PIN	1
23	51323204	SCREW	1
24	51333504	PINTLE	1
25	51323353	PIN	1

1.96.3/B	1/2	06/09

P.T.O. CONTROL

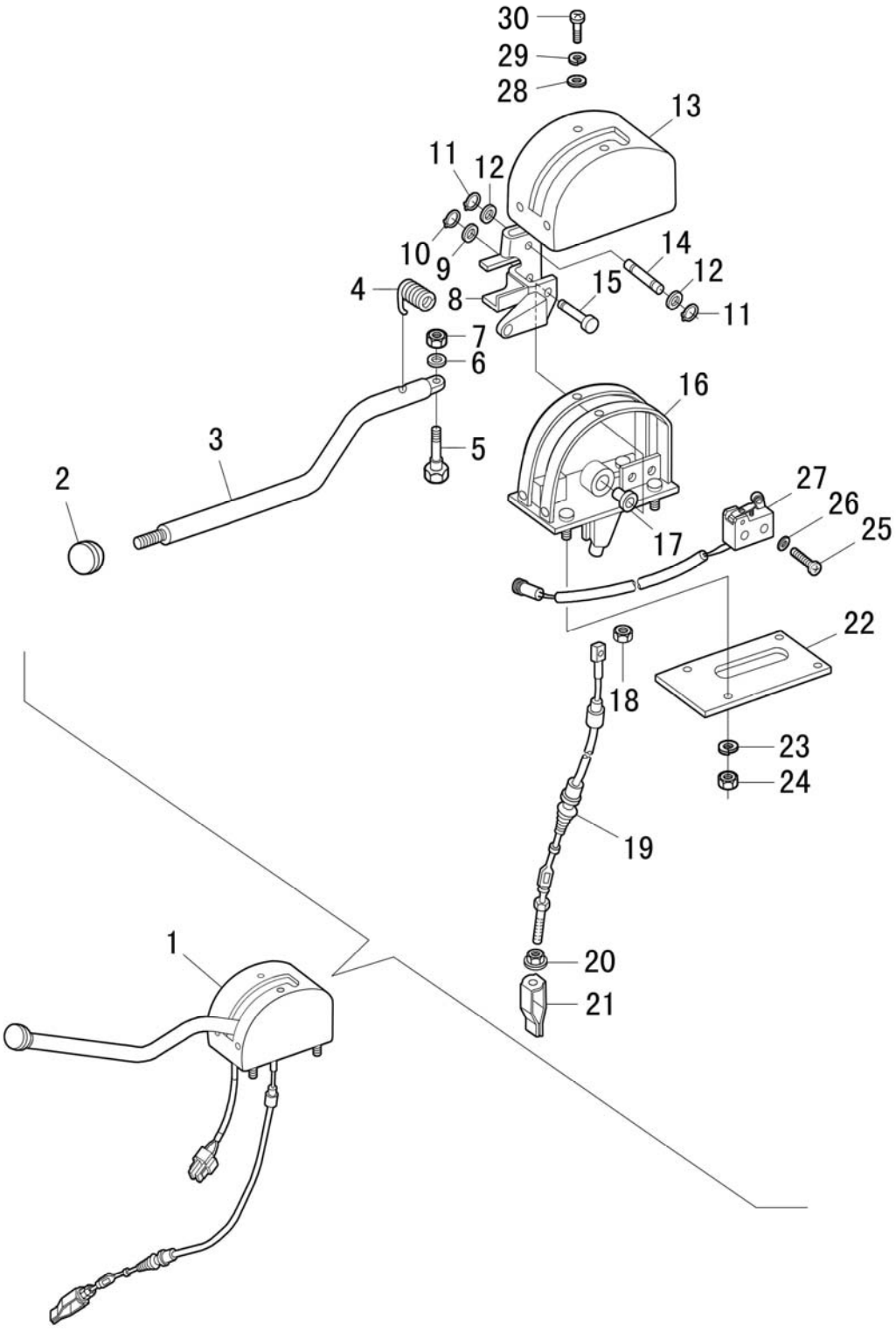

P.T.O. CONTROL

R	P.N.	DESCRIPTION	QTY
1	51334292	LEVER COMMAND PTO CLUTCH ASSY	1
2	5171717	KNOB	1
3	47131848	LEVER PTO CLUTCH	1
4	5171729	EXTENSION SPRING	1
5	5171743	LEVER PIN	1
6	14446621	FLAT WASHER	1
7	12574211	NUT	1
8	5189654	LEVER BODY ASSY	1
9	51323404	WASHER	1
10	11066071	SNAP RING	1
11	11087771	SNAP RING	2
12	14447021	FLAT WASHER	2
13	5171715	COVER	1
14	5171745	PIN	1
15	5171733	PIN	1
16	51334293	SUPPORT ASSEMBLY PTO CLUTCH	1
17	5171734	BUSH	2
18	5126325	NUT	1
19	5170966	CABLE P.T.O.CLUCHT	1
20	5104884	BALL, CABLE ADJUSTER	1
21	5116728	FORK, CABLE ADJUSTER SIDE	1
22	5171744	SEAL	1
23	51323379	SPRING WASHER	4
24	16100814	NUT	4

P.T.O. CONTROL

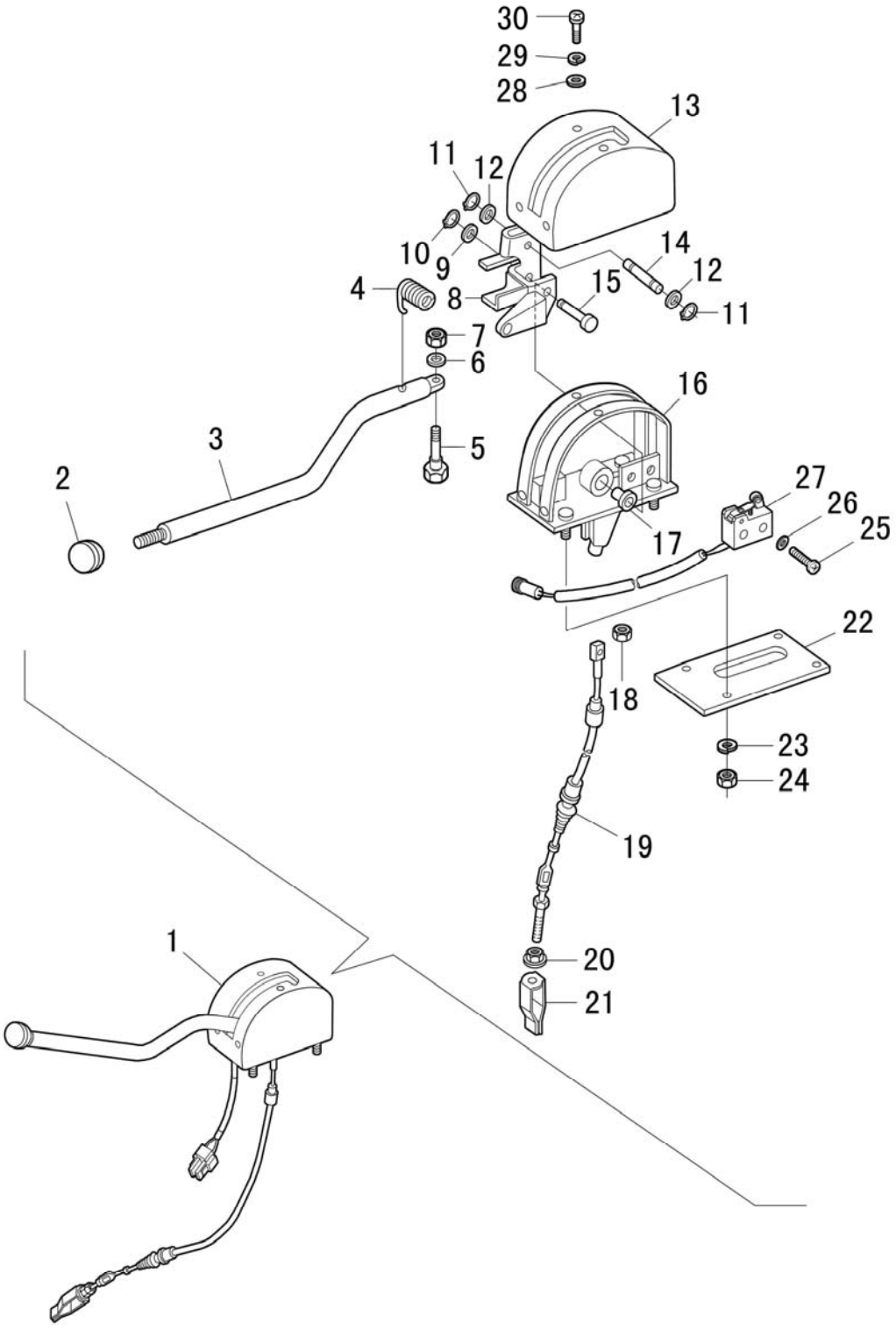
30
29
28
13
11
12
10
9
14
12
4
8
15
11
7
6
16
3
5
2
27
26
25
17
22
18
23
24
19
1
20
21

P.T.O. CONTROL

R	P.N.	DESCRIPTION	QTY
25	51334295	SCREW	2
26	51323376	WASHER	2
27	51334255	P.T.O. SWITCH	1
28	51323400	WASHER	4
29	51323377	WASHER	4
30	51328507	SCREW	4

WHEELS

SEC.11

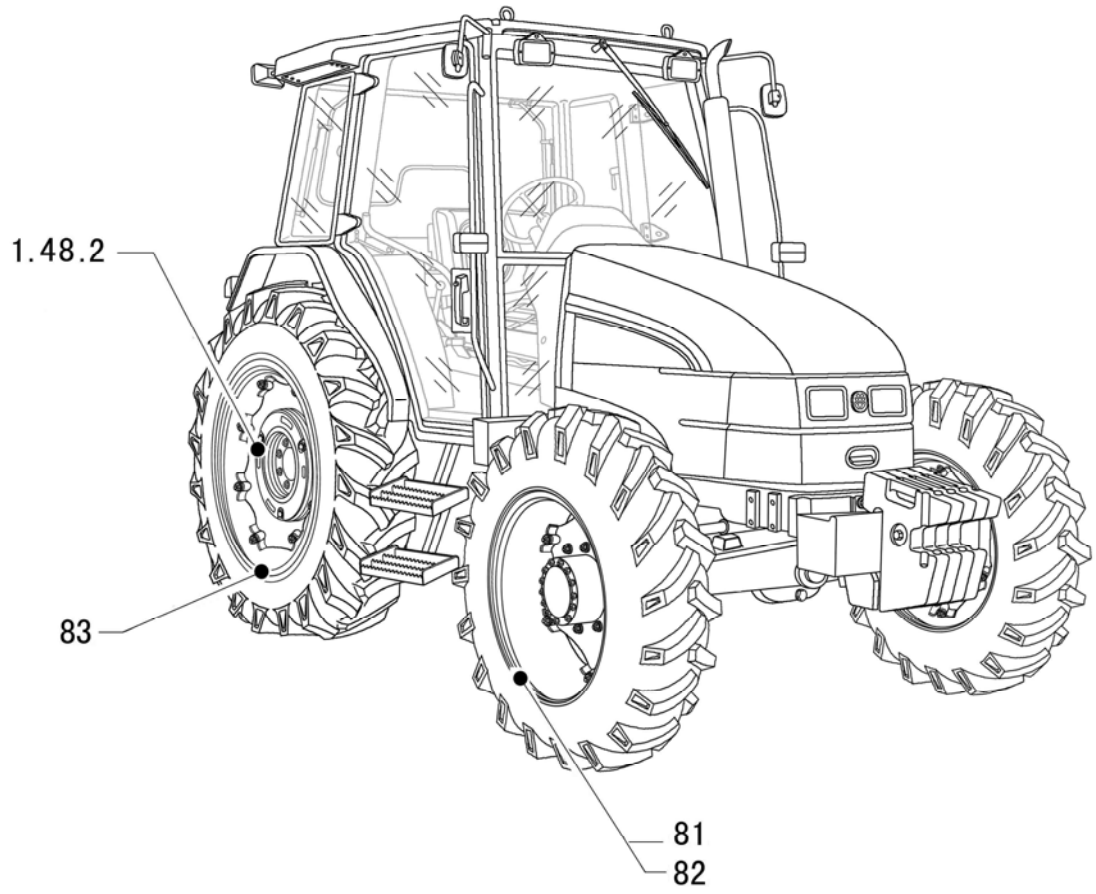

81	1/1	06/09

DIRECTION WHEELS

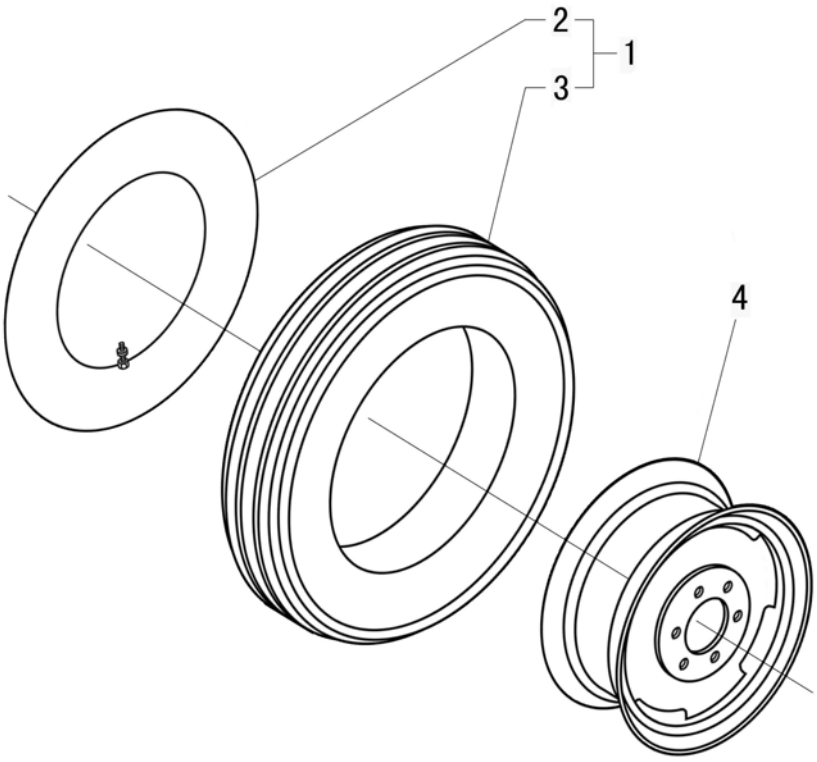

DIRECTION WHEELS

R	P.N.	DESCRIPTION	QTY
1	51330638	WHEEL ASSY (7.50-16)	2
1	51331197	WHEEL ASSY (10.00-16)	2
2	51333009	INNER TUBE(7.50-16)	2
2	51333011	INNER TUBE(10.00-16)	2
3	51333010	OUTER TUBE(7.50-16)	2
3	51333012	OUTER TUBE(10.00-16)	2
4	51330536	SPOKE (7.50-16)	2
4	51331194	SPOKE(10.00-16)	2

82	1/1	06/09

STEERING DRIVE WHEELS

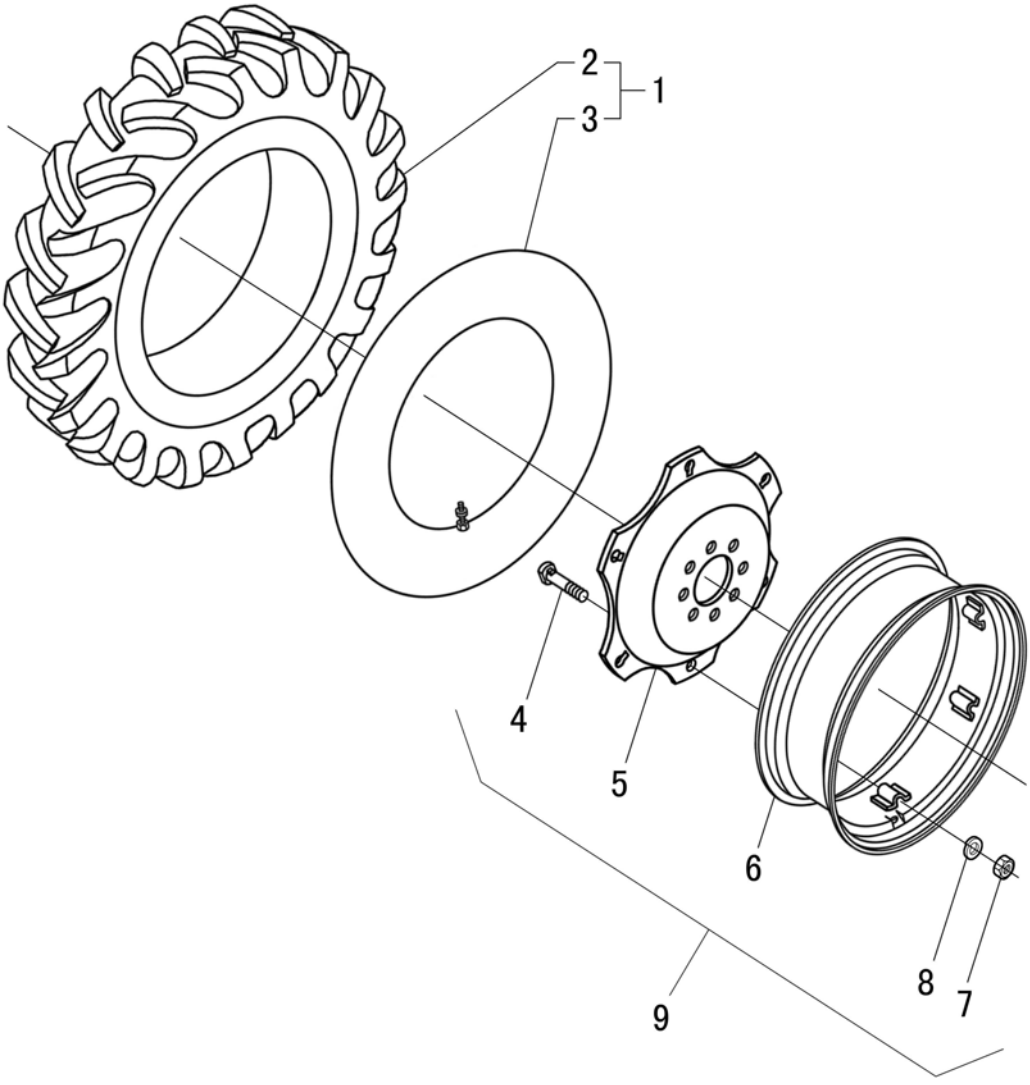

STEERING DRIVE WHEELS

R	P.N.	DESCRIPTION	QTY
1	51331537	WHEEL ASSY (13.6-24)	2
1	51331530	WHEEL ASSY (11.2-24)	2
1	51331538	WHEEL ASSY (12.4-24)	2
1	51331529	WHEEL ASSY (12.4-24 PADDY TYPE)	2
1	51335240	WHEEL ASSY PR1 (12.4-24)	2
1	51326772	WHEEL ASSY (14.9-24)	2
1	51343181	WHEEL ASSY ANTI-PIERCING (14.9-24)	2
2	51333024	OUTER TUBE (13.6-24)	2
2	51333034	OUTER TUBE (11.2-24)	2
2	51333014	OUTER TUBE (12.4-24)	2
2	51333030	OUTER TUBE (12.4-24 PADDY TYPE)	2
2	51335241	OUTER TUBE PR1 (12.4-24)	2
2	51333016	OUTER TUBE (14.9-24)	2
2	51343182	OUTER TUBE ANTI-PIERCING (14.9-24)	2
3	51333023	INNER TUBE (13.6-24)	2
3	51333033	INNER TUBE (11.2-24)	2
3	51333013	INNER TUBE (12.4-24)	2
3	51333029	INNER TUBE (12.4-24 PADDY TYPE)	2
3	51333015	INNER TUBE (14.9-24)	2
4	51331277	BOLT	12
5	51331200	SPOKE	2
6	51331199	24xW10 RIM WELDING PARTS (12.4-24/11.2-24)	2
6	51331283	24xW12 RIM WELDING PARTS (14.9-24/13.6-24)	2
7	51331276	NUT	12
8	51331278	WASHER	12
9	51331198	24xW10 RIM ASSY (12.4-24/11.2-24)	2
9	51331282	24xW12 RIM ASSY (14.9-24/13.6-24)	2

DRIVE WHEELS

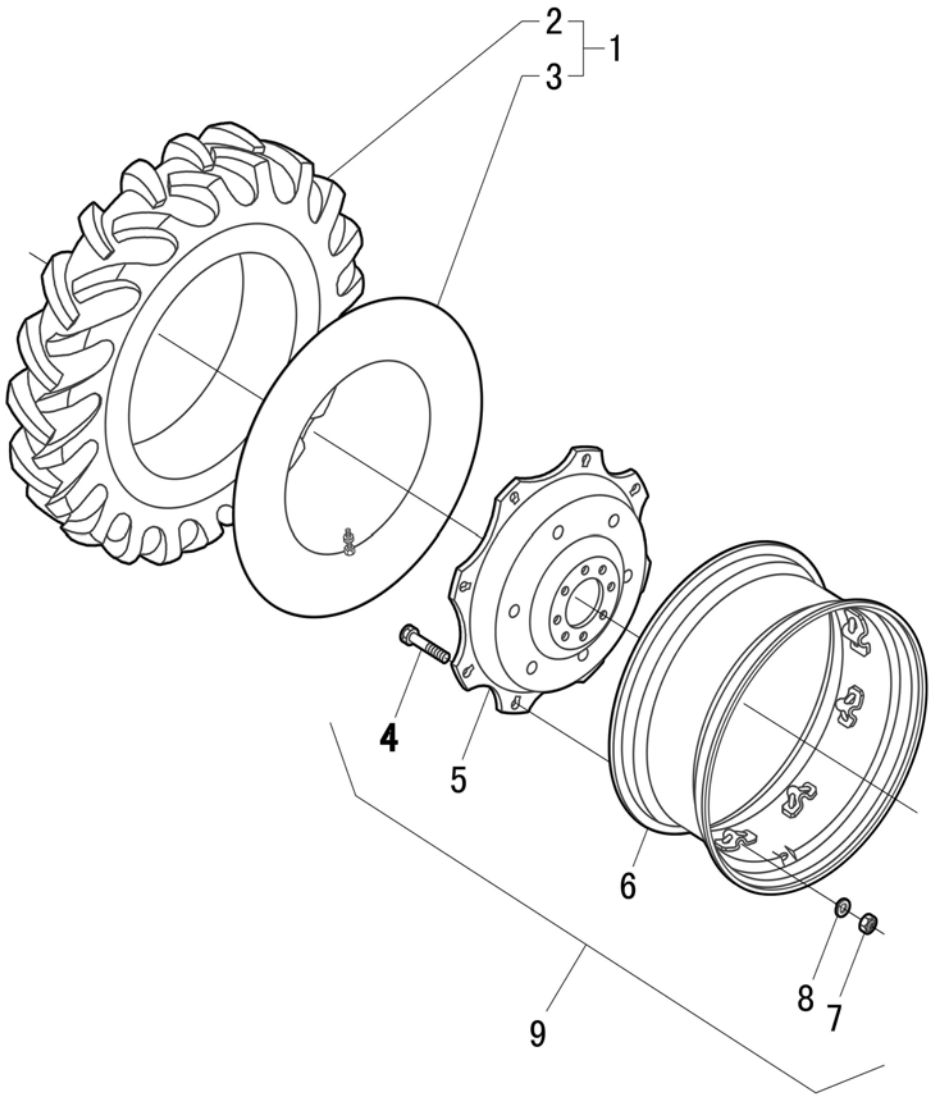

DRIVE WHEELS

R	P.N.	DESCRIPTION	QTY
1	51330527	WHEEL ASSY (16.9-34)	2
1	51331193	WHEEL ASSY (18.4-34)	2
1	51343183	WHEEL ASSY ANTI-PIERCING (18.4-34)	2
2	51333018	OUTER TUBE (16.9-34)	2
2	51333020	OUTER TUBE(18.4-34)	2
2	51343184	OUTER TUBE ANTI-PIERCING (18.4-34)	2
3	51333017	INNER TUBE (16.9-34)	2
3	51333019	INNER TUBE(18.4-34)	2
4	51330526	BOLT	16
5	51330525	SPOKE	2
6	51330522	34XW15L RIM WELDING PARTS	2
7	51331276	NUT	16
8	51323406	WASHER	16
9	51330521	34XW15L RIM ASSY (16.9-34 / 18.4-34)	2

DRIVE WHEELS

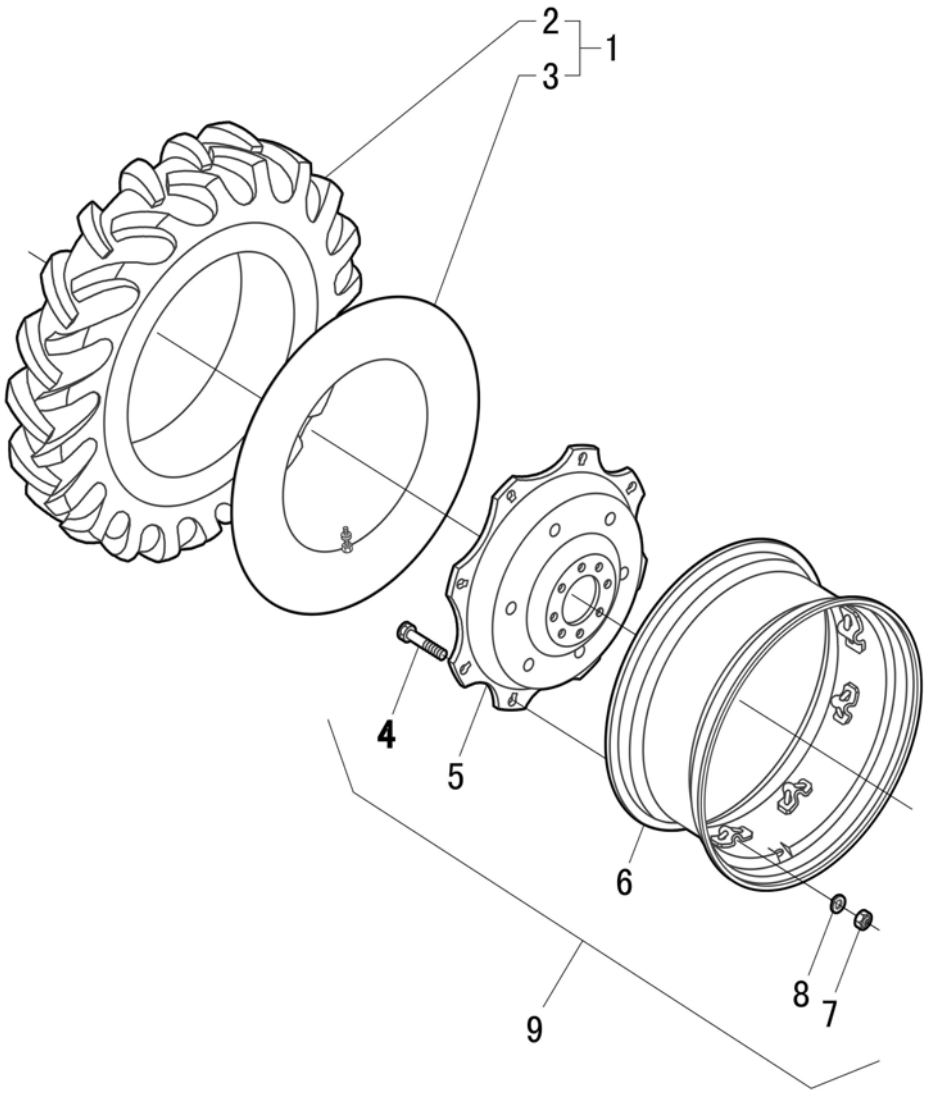

DRIVE WHEELS

R	P.N.	Description	QTY
1	51331465	WHEEL ASSY. (DRIVE WHEEL) (13.6-38)	2
1	51331531	WHEEL ASSY. (DRIVE WHEEL) (13.6-38)	2
1	51335242	WHEEL ASSY. (DRIVE WHEEL WITH PR1 PATTERN) (13.6-38	2
2	51333026	OUTER TUBE (FOR PADDY FIELD) (13.6-38)	2
2	51333028	OUTET TUBE (13.6-38)	2
2	51335243	OUTER TUBE (WITH PR1 PATTERN) (13.6-38)	2
3	51333025	INNER TUBE (FOR PADDY FIELD) (13.6-38)	2
3	51333027	INNER TUBE (FOR PADDY FIELD) (13.6-38)	2
4	5112385	BOLT	16
5	5125704	SPOKE	2
6	51331462	RIM	2
7	51331276	NUT	16
8	5122064	WASHER	16
9	51331461	38XDW12 RIM ASSY. (13.6-38)	2

DRIVE WHEELS

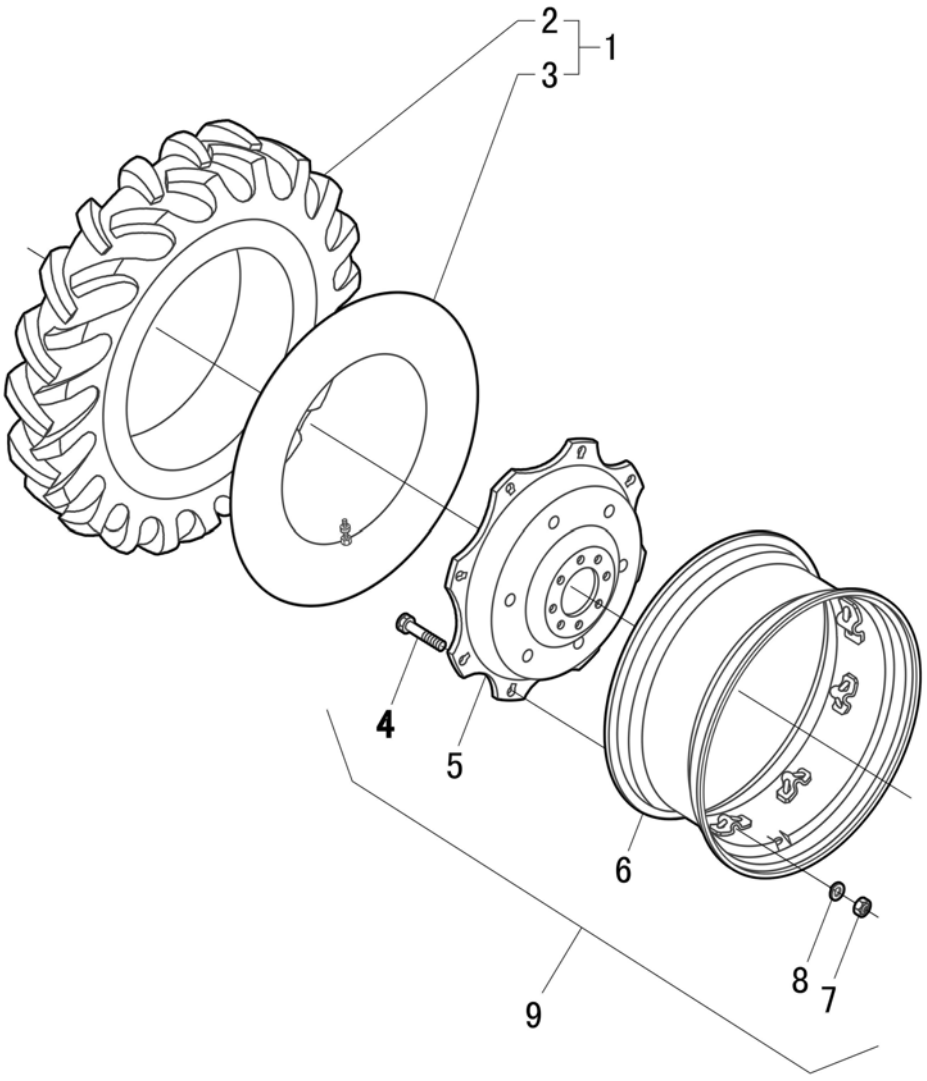

DRIVE WHEELS

R	P.N.	DESCRIPTION	QTY
1	51329269	WHEEL ASSY. (DRIVE WHEEL) (16.9-30)	2
1	51331536	WHEEL ASSY. (DRIVE WHEEL) (15.5-38)	2
1	51333043	WHEEL ASSY. (DRIVE WHEEL) (18.4-30)	2
2	51333032	OUTER TUBE (16.9-30)	2
2	51333022	OUTER TUBE (15.5-38)	2
2	51333045	OUTER TUBE (18.4-30)	2
3	51333031	INNER TUBE (16.9-30)	2
3	51333021	INNER TUBE (15.5-38)	2
3	51333044	INNER TUBE (18.4-30)	2
4	51330526	BOLT	16
5	5125719	SPOKE (16.9/18.4-30)	2
5	5125703	SPOKE (15.5-38)	2
6	51331467	38XDW12 RIM WELDING PARTS (16.9-30)	2
6	51331533	38XDW12 RIM WELDING PARTS (15.5-38)	2
6	51333041	38XDW12 RIM WELDING PARTS (18.4-30)	2
7	51331276	NUT M16X1.5	16
8	5122064	WASHER	16
9	51331466	38XDW12 RIM ASSY. (16.9-30)	2
9	51331532	38XDW12 RIM ASSY. (15.5-38)	2
9	51333040	38XDW12 RIM ASSY. (18.4-30)	2