RUTHZIL TRATOR COMERCIAL DE PEÇAS LTDA 11 97083-6812 ROLANDO CITRANGULO

MANITOU

HANDLING YOUR WORLD

Part No. 53101050

TLB 844 S

PARTS MANUAL

(ORIGINAL INSTRUCTIONS)

MANITOU

HANDLING YOUR WORLD

Part No. 53101050

TLB 844 S

PARTS MANUAL

(ORIGINAL INSTRUCTIONS)

Sl. NO.	DESCRIPTION	PAGE NO.
1	ENGINE	1-3
2	COOLING SYSTEM	5-7
3	FUEL, AIR AND EXHAUST	9-19
4	TRANSMISSION	23-71
5	REAR AXLE	75-93
6	BRAKES	97-101
7	FRONT AXLE, STEERING (2 WHEEL DRIVE)	105-117
8	FRONT AXLE, STEERING (4 WHEEL DRIVE)	121-139
9	CABIN	143-173
10	CHASSIS AND BODY WORK	177-189
11	ELECTRICS	193-203
12	HYDRAULICS	207-239
13	LOADER	243-275
14	BACKHOE	279-313
15	CONTROL CABLE	317-323
16	CYLINDERS	327-343
17	ATTACHMENT EXTENDABLE DIPPER	347-355
18	ATTACHMENT ROCK BREAKER	359-369
19	AIR CONDITIONER	373-385

ENGINE

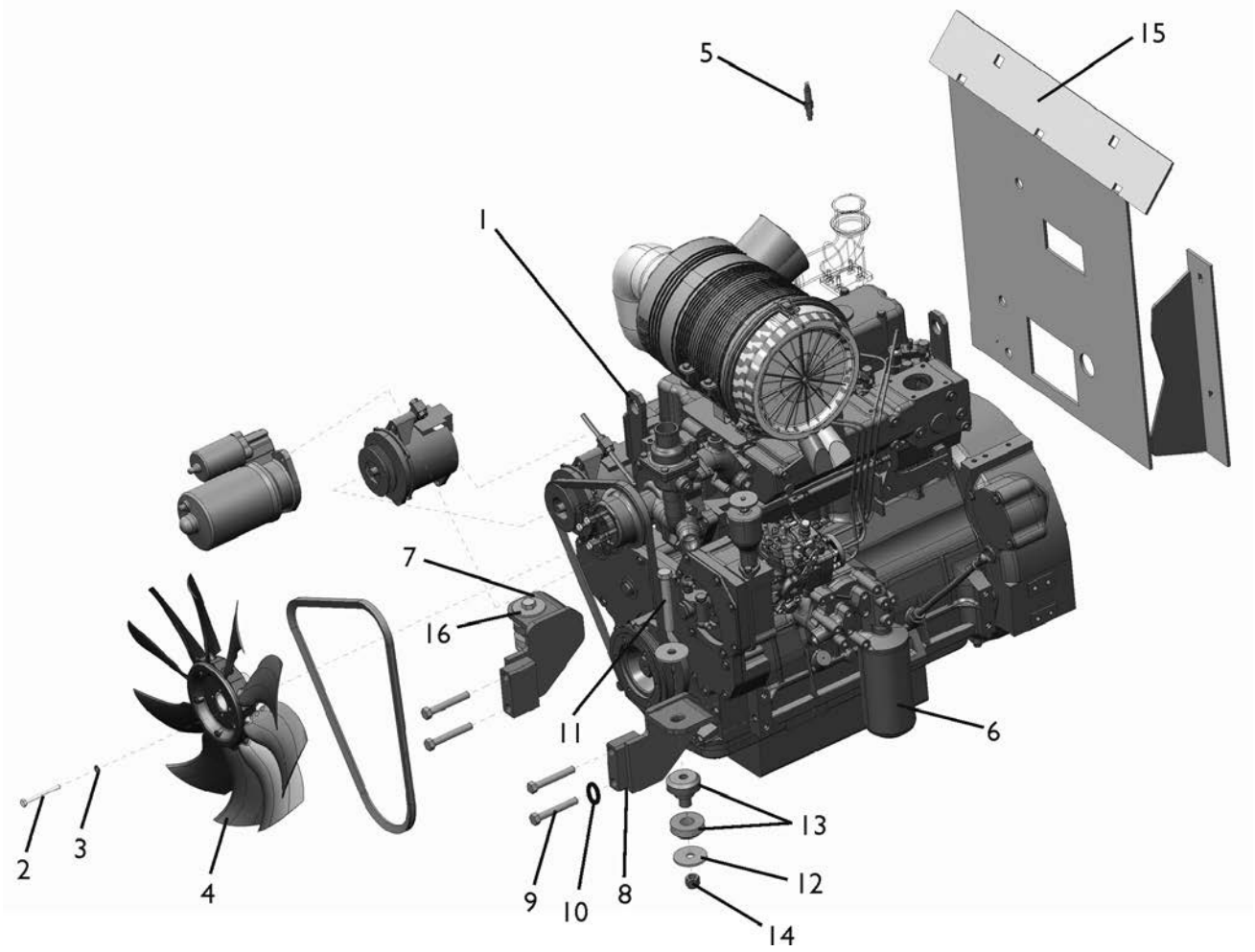
5
15
1
7
16
11
6
13
12
14
2
3
4
9
10
8

Ref.	Part No.	Description	Quantity	Applicable Machines	Remarks
1	1A0910	Engine	1		
2	339337X1	Bolt	4		
3	339374X1	Washer	4		
4	1A0909	Fan	1		
5	1D0061	Temperature Switch	1		
6	53100183	Engine Oil Filter	1		
7	1TA0014M1	Eng. Mtg. Plate RHS	1		
8	1TA0015M1	Eng. Mtg. Plate LHS	1		
9	1TA0038M1	Bolt M8	4		
10	1A0028	Spring Washer	4		
11	6007821M1	Bolt	2		
12	6106849M1	Washer	6		
13	6106848M91	Engine Mounting	2		
14	1442739M91	Engine Nut	2		
15	1J0255	Heat Deflector	1		

COOLING SYSTEM

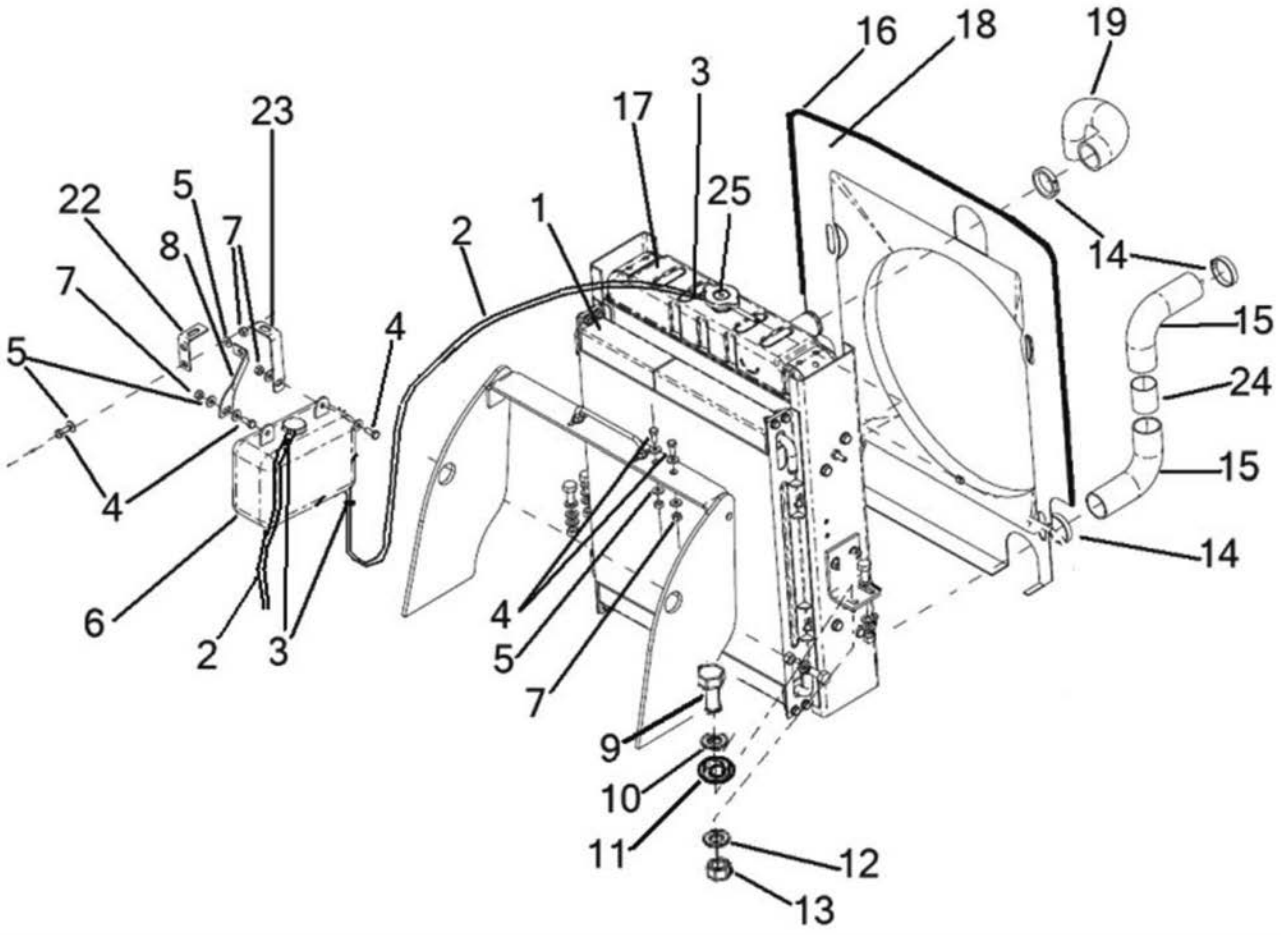
16
18
19
3
17
23
25
22
5
1
2
14
8
7
7
15
5
4
24
4
15
14
6
4
5
2
3
7
9
10
11
12
13

Ref.	Part No.	Description	Quantity	Applicable Machines	Remarks
1	1A0837	Oil Cooler			
2	1A0863	Hose	2		
3	6013103M1	Hose Clamp	3		
4	339761X1	Bolt	6		
5	391039X1	Washer	12		
6	1A0451	Expansion Bottle	1		
7	394367X1	Nut, Lock	6		
8	1A0134	Tie Strap	1		
9	3009497X1	Screw	4		
10	385362X1	Washer	4		
11	1A0450	Rubber Pad	2		
12	390597X1	Washer	8		
13	1440329X1	Nut, Lock	4		
14	3517413M1	Worm Drive Clip	6		
15	1A0469	Radiator Bottom Hose	1		
16	1A0172	Rubber Beeding	1		
17	1A0759	Radiator Assy.	1		
18	1A0699	Fan Cowl	1		
19	1A0468	Rad, Top Hose	1		
22	1A0474	Plate Expn Bottle	1		
23	1TA0029M1	Strap Expn Bottle	1		
24	1TA0031M1	Pipe	1		
25	10X0356	Radiator Cap	1		

FUEL, AIR AND EXHAUST

FUEL TANK

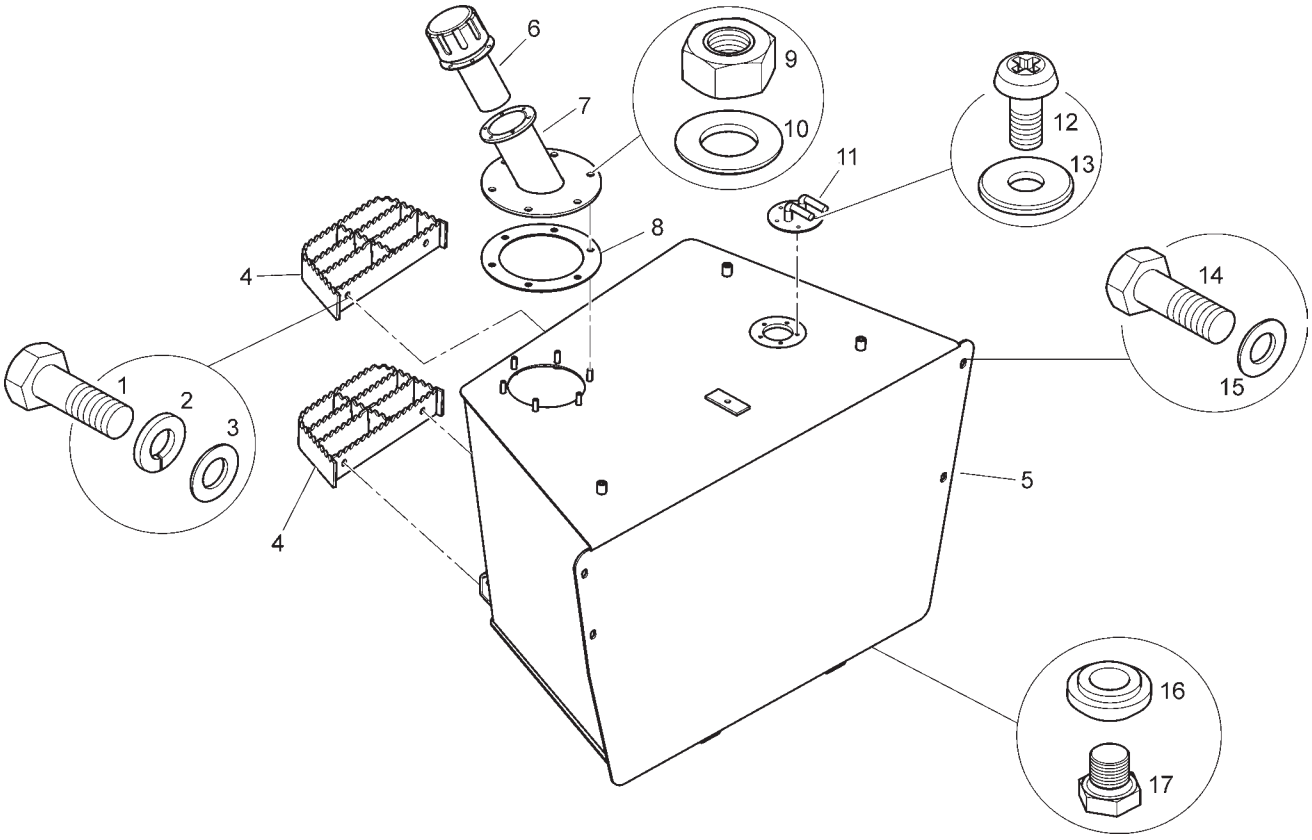

FUEL TANK

Ref.	Part No.	Description	Quantity	Applicable Machines	Remarks
1	3009492X1	Hex Bolt	4		
2	339376X1	Lock Washer	4		
3	390734X1	Washer	4		
4	1B0801	Top Step W/Assembly	14		
5	6113603M91	Fuel Tank W/Assembly	1		
6	1B0560	Tank Cap	1		
7	1B0501	Filler Neck W/Assembly	1		
8	1H0125	Rubber Gasket	1		
9	339169X1	Hex Nut	6		
10	390972X1	Washer	6		
11	1D0259	Fuel Level Sensor	1		
12	3007932X1	Screw	5		
13	3019560X1	Washer	5		
14	600779M1	Hex Bolt	4		
15	385363X1	Washer	1		
16	352024	Tapped Boss	1		
17	376501X1	Plug	1		

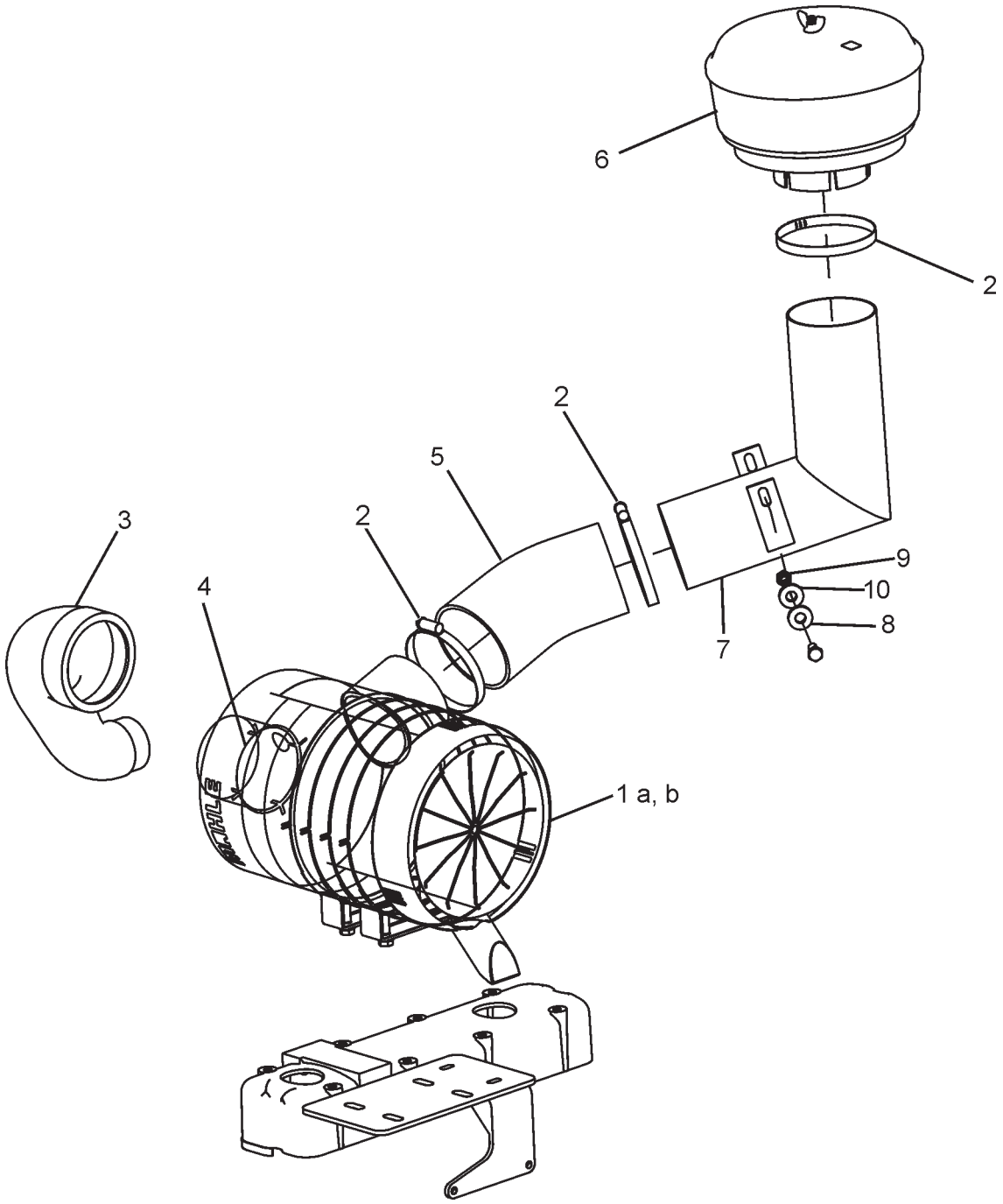
6
2
2
5
2
3
4
9
10
8
7
1 a, b

Ref.	Part No.	Description	Quantity	Applicable Machines	Remarks
1	53100297	Air Cleaner	1		
1a	53100298	Air Filter Inner	1		
1b	53100299	Air Filter Outer	1		
2	3517729M1	Worn Drive Clip	3		
3	53100305	Hose	1		
4	53100307	Clamp	1		
5	1A0904	Hose	1		
6	1A0055	Precleaner	1		
7	1A0905	Pipe	1		
8	3009492X1	Bolt	2		
9	1440329X1	Nut	2		
10	390597X1	Washer	4		

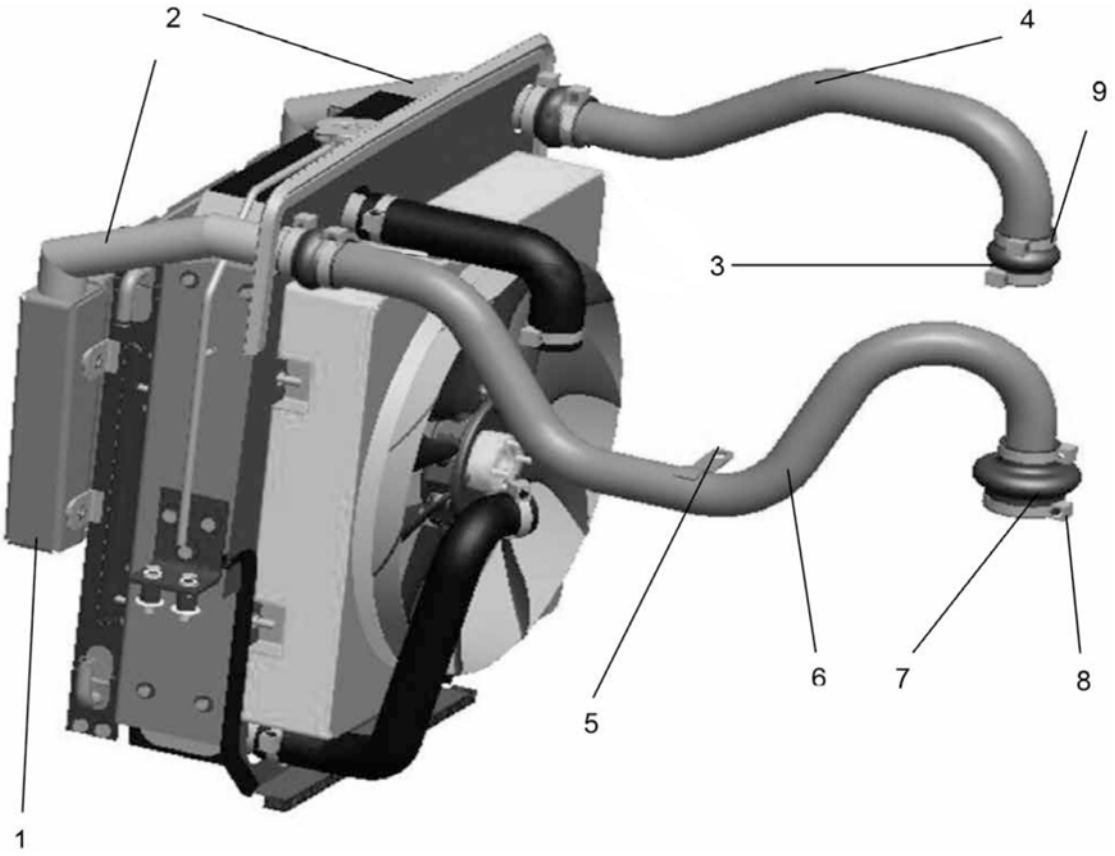
2
4
9
3
1
5
6
7
8

Ref.	Part No.	Description	Quantity	Applicable Machines	Remarks
1	1A0834	Charge Air Cooler	1		
2	1A0445	Hose	2		
3	1A0929	Rubber Hose	1		
4	1A0926	Pipe – Inlet	1		
5	1A0440	Clamp – Pipe	1		
6	1A0951	Pipe – Outlet	1		
7	1A0930	Rubber Hose	1		
8	3517416M1	Worm Drive Clip	1		
9	3517414M1	Worm Drive Clip	7		

EXHAUST SYSTEM (Kirloskar)

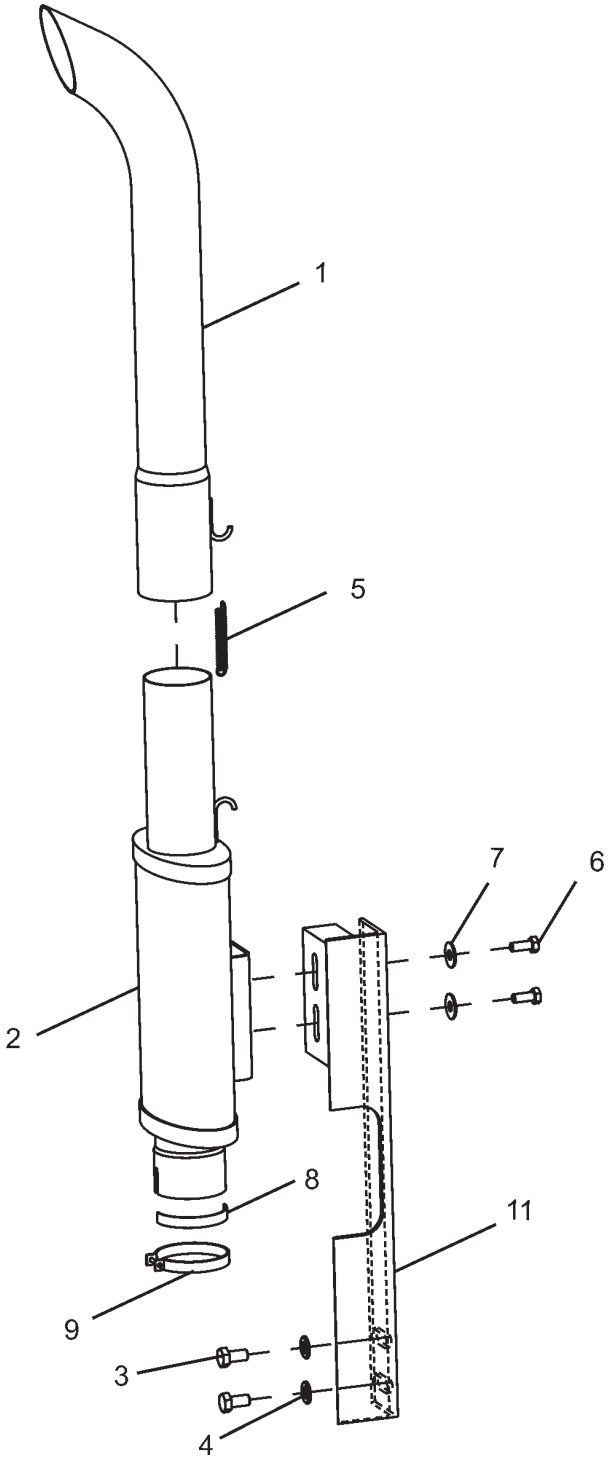

EXHAUST SYSTEM (Kirloskar)

Ref.	Part No.	Description	Quantity	Applicable Machines	Remarks
1	1A0198	Pipe	6		
2	1A0133	Exhaust Silencer	1		
3	339081X1	Bolt	2		
4	390734X1	Washer	2		
5	3522399M1	Extension Spring	1		
6	339123X1	Bolt	2		
7	391039X1	Washer	2		
8	1A0150	Gasket Fiber	1		
9	1A0151	Clamp	1		
11	6112813M1	Bracket	1		

FUEL SYSTEM (Kirloskar)

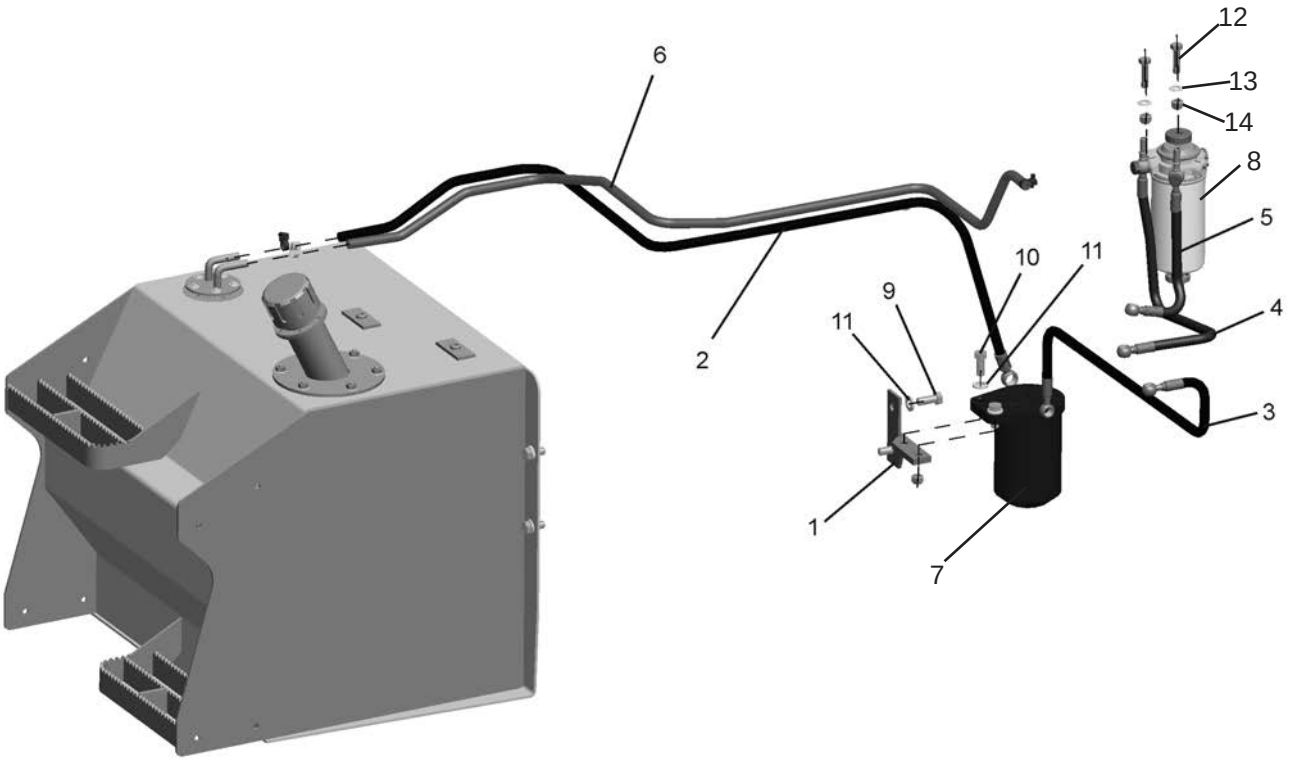

FUEL SYSTEM (Kirloskar)

Ref.	Part No.	Description	Quantity	Applicable Machines	Remarks
1	1A0326	Filter Mount Bracket	1		
2	1A0903	Hose	1		
3	6113814M91	Hose	1		
4	1A0972	Hose	1		
5	1A0974	Hose	1		
6	6113815M91	Hose	1		
7	53100311	Fule Filter Element Pre	1		
8	53100309	Fule Filter Cartridge	1		
9	3009506X1	Bolt	2		
10	3019851X1	Bolt	2		
11	390735X1	Washer	4		
12	3516013M1	Bolt	2		
13	390734X1	Washer	4		
14	1440329X1	Nut	2		

NOTES

NOTES

TRANSMISSION

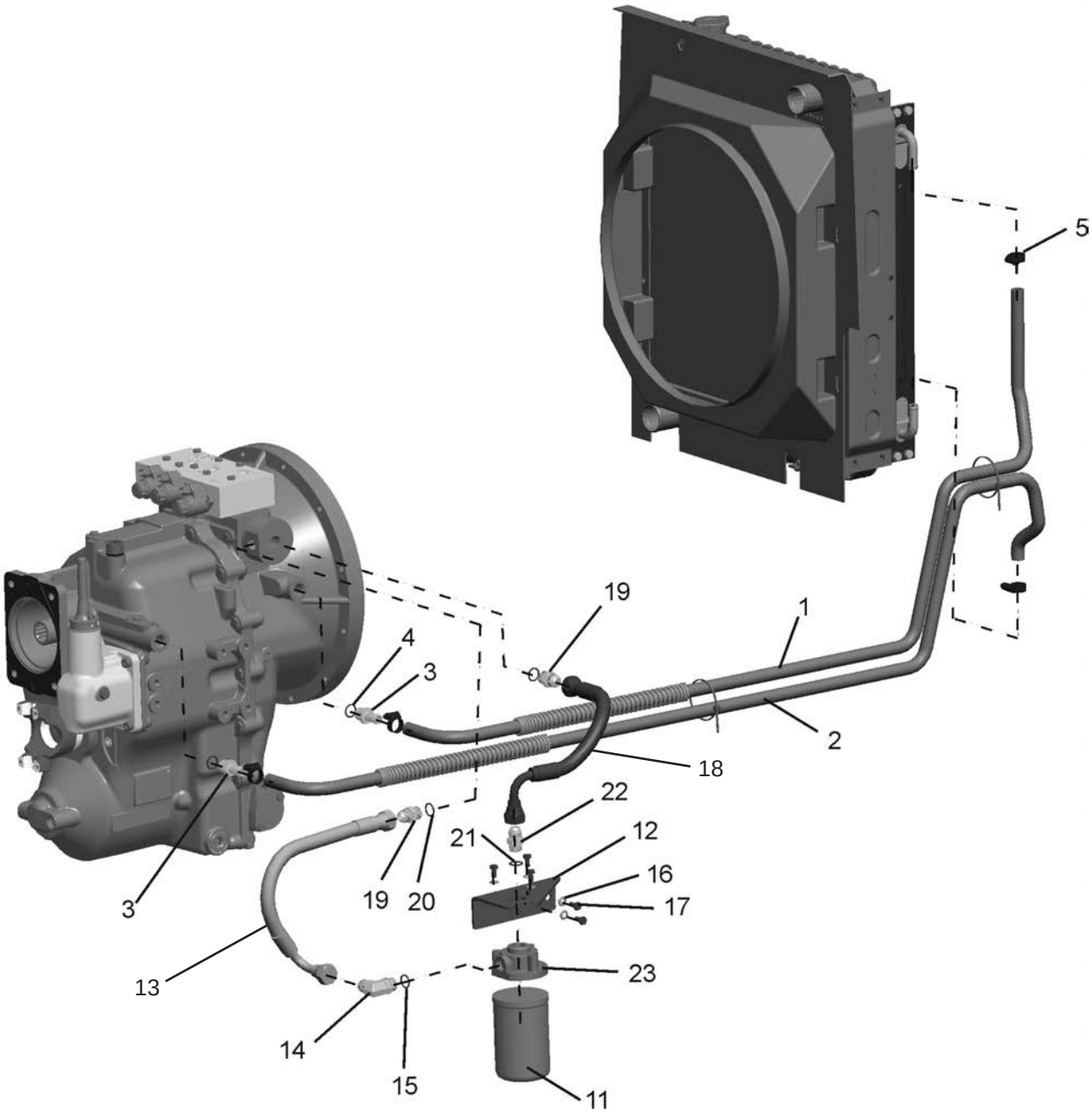
5
19
1
4
3
2
18
22
21
12
16
19
20
17
3
13
23
14
15
11

Ref.	Part No.	Description	Quantity	Applicable Machines	Remarks
1	1TA0033M1	Hose Assy	1		
2	1TA0034M1	Hose Assy	1		
3	6107562M92	Union	2		
4	835024M1	O-Ring	2		
5	3517410M1	Clip	4		
11	6112184M1	Filter Transmission	1		
12	6110580M1	Bracket, Filter Mntg.1			
13	6110581M91	Hose Assy	1		
14	835007M1	Elbow	1		
15	835024M1	O-Ring	1		
16	390972X1	Washer	5		
17	339123X1	Bolt	5		
18	6110582M91	Hose Assy	1		
19	358735X1	Union	2		
20	835024M1	O-Ring	2		
21	835024M1	O-Ring	1		
22	358735X1	Union	1		
23	6112185M1	Filter Head	1		
	10X3357	Speed Sensor	1		Not Shown in Drawing

TORQUE CONVERTER

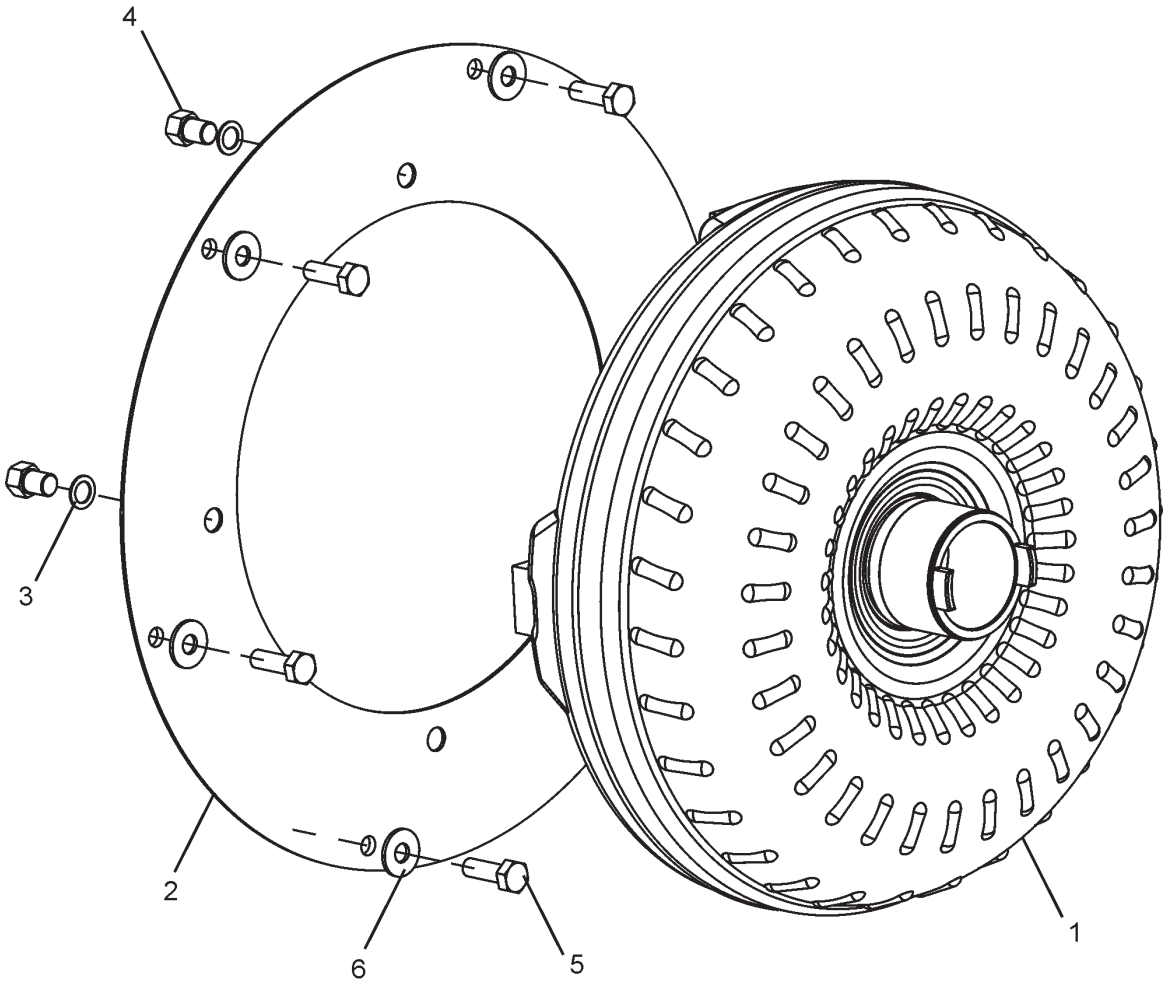

TORQUE CONVERTER

Ref.	Part No.	Description	Quantity	Applicable Machines	Remarks
1	1K0162	Converter	1		
2	1K0111	Drive Plate	1		
3	353756X1	Washer	4		
4	354228X1	Bolt	4		
5	3508576X1	Bolt	6		
6	2757286M1	Washer	6		

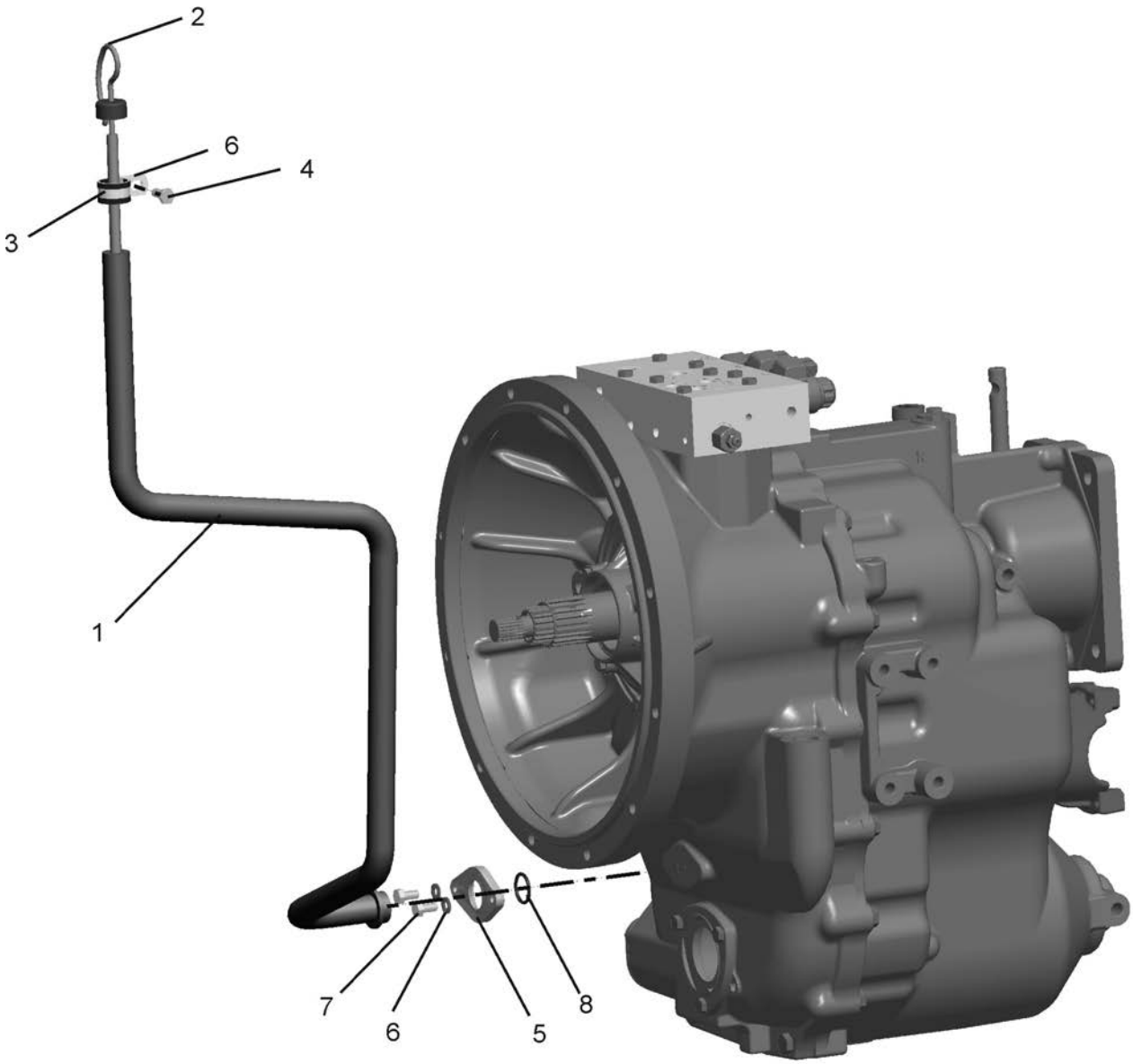
2
6
4
3
1
7
6
5
8

Ref.	Part No.	Description	Quantity	Applicable Machines	Remarks
1	6111930M1	Tube Assy	1		
2	1TA0037M91	Dip Stick	1		
3	360643X1	P Clip	1		
4	339123X1	Bolt	1		
5	6111931M1	Flange	1		
6	390972X1	Washer	3		
7	3391123X1	Bolt	2		
8	3007117X1	O-Ring	1		

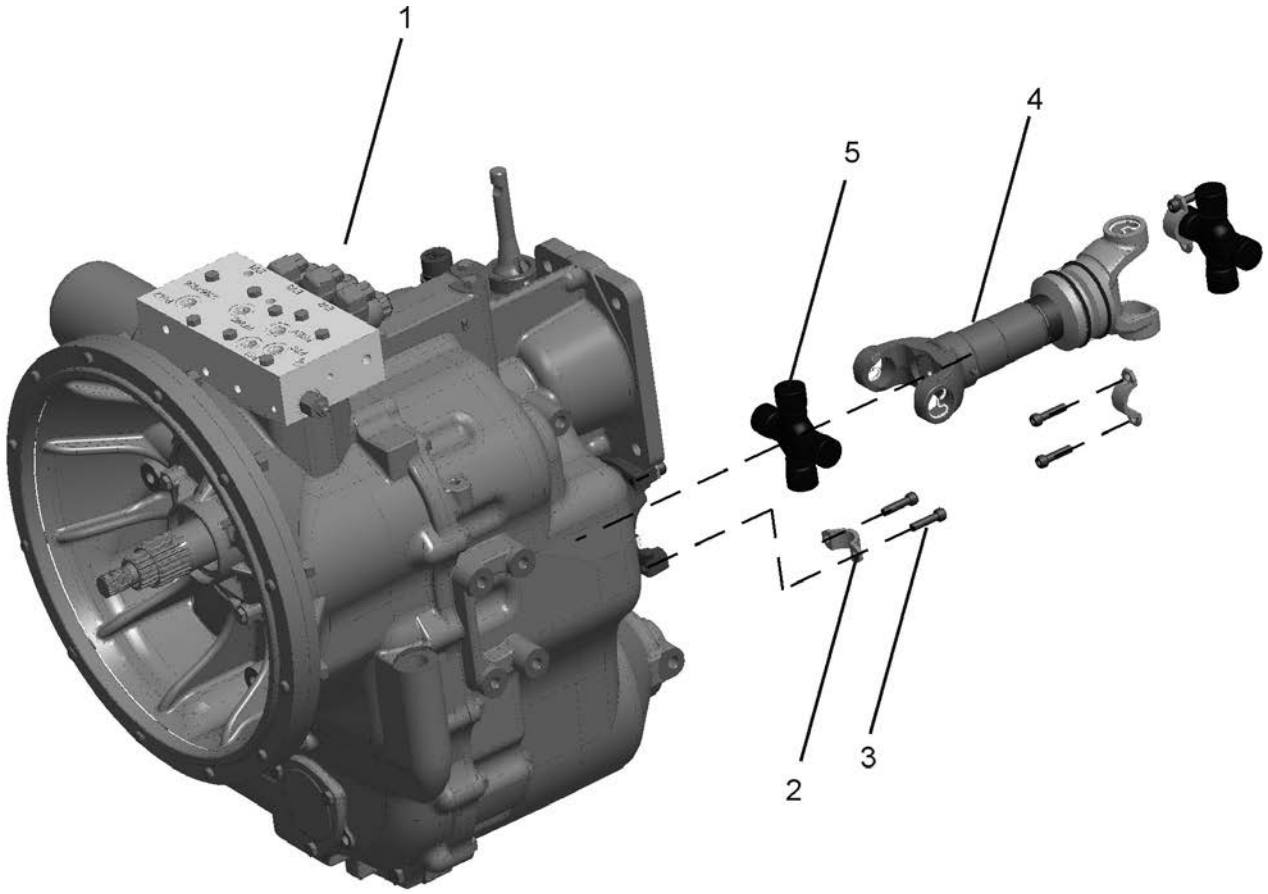
1
5
4
2
3

Ref.	Part No.	Description	Quantity	Applicable Machines	Remarks
1	1A0915	Gearbox	1		
2	3370901M1	Strap	4		
3	360880X1	Bolt	8		
4	6106483M92	Drive Shaft Assy	1		
5	10X0344	Spider	2		

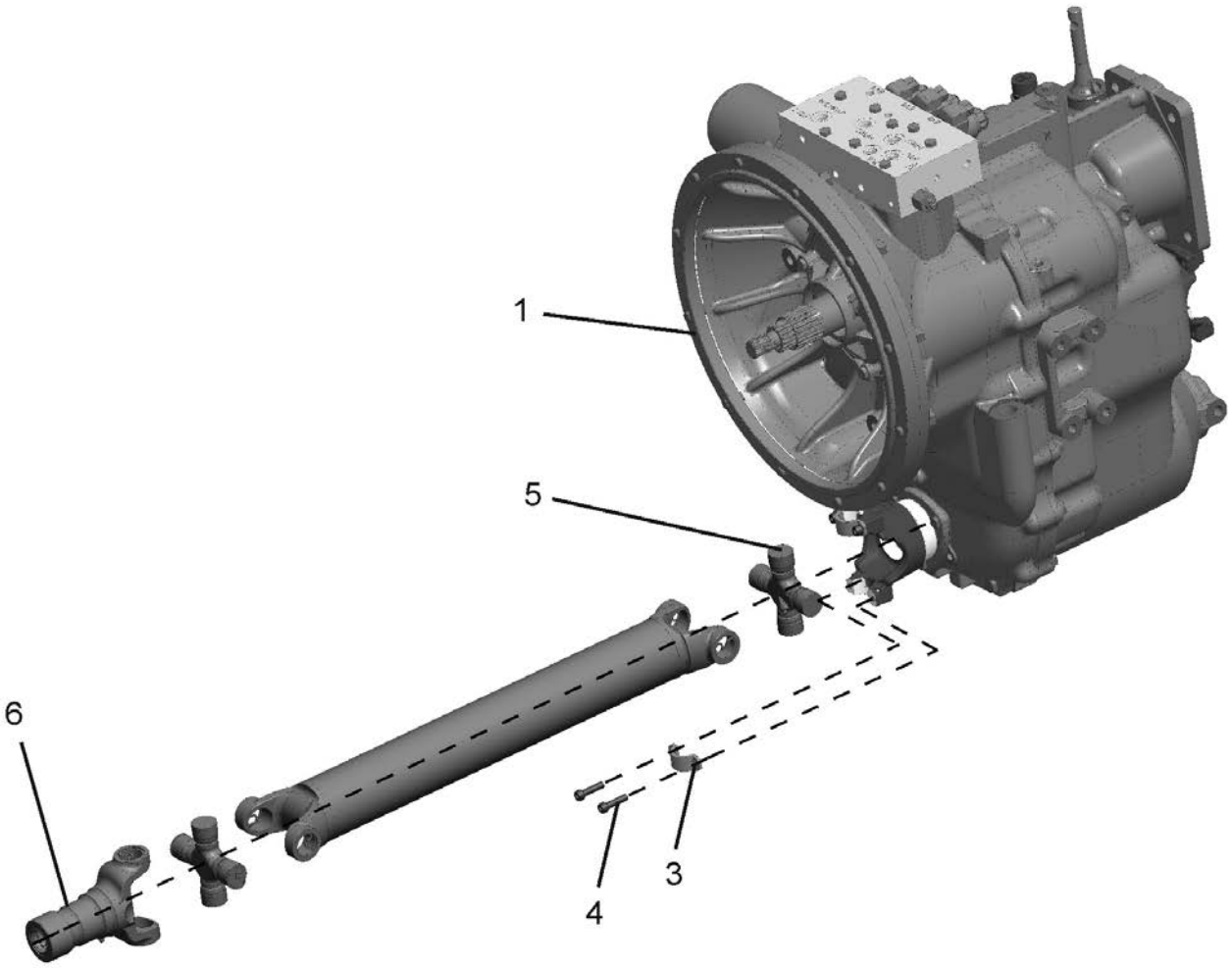
1
5
6
4
3

Ref.	Part No.	Description	Quantity	Applicable Machines	Remarks
1	1K0299	Transmission	1		
2	1K0201	Drive Shaft Assy	1		
3	3370901M1	Strap	4		
4	360880X1	Bolt	8		
5	10X0344	Spider	2		
6	6194417M1	Flange	1		

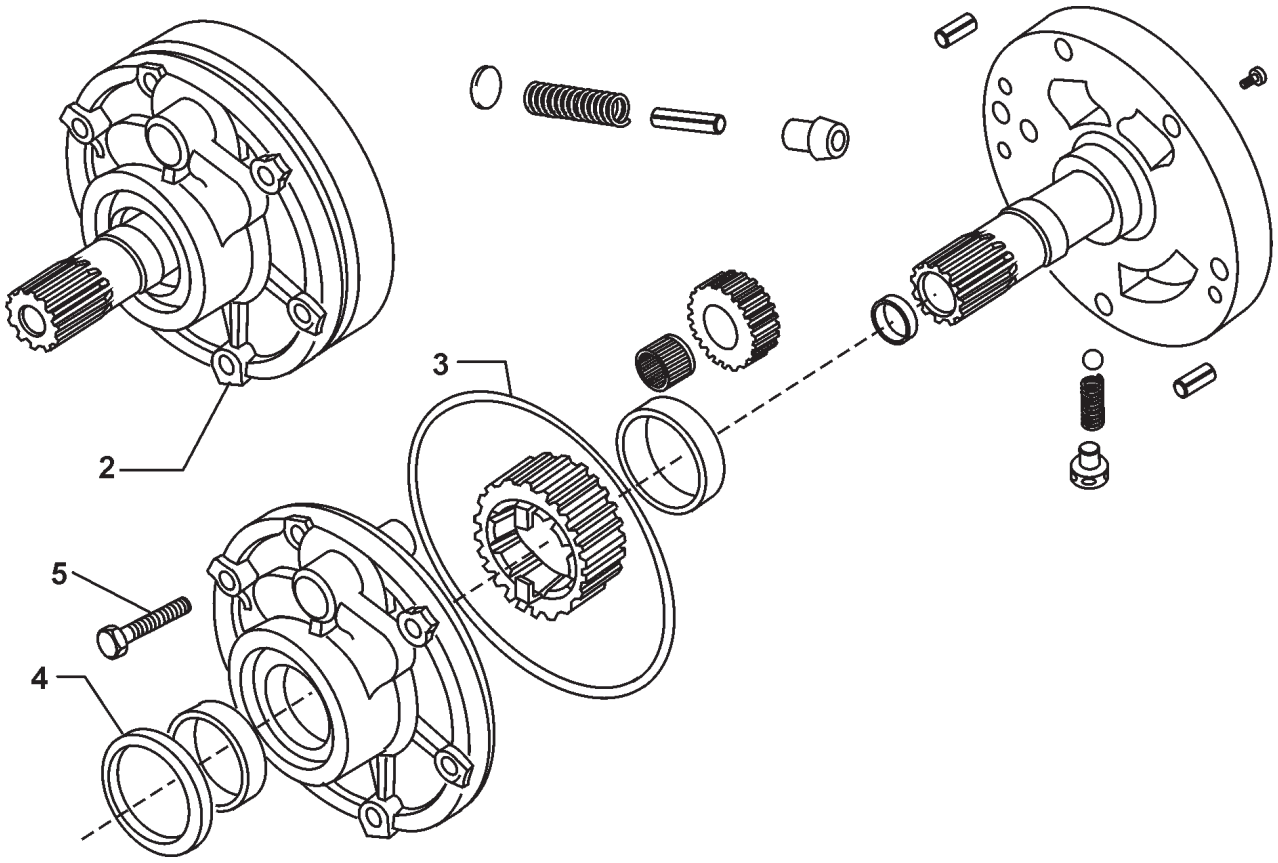
2
3
4
5

Ref.	Part No.	Description	Quantity	Applicable Machines	Remarks
2	6194309M91	Pump Assy	1		
3	6194310M1	O-Ring	1		
4	6194307M1	Seal, Oil	1		
5	6194308M1	Screw	6		

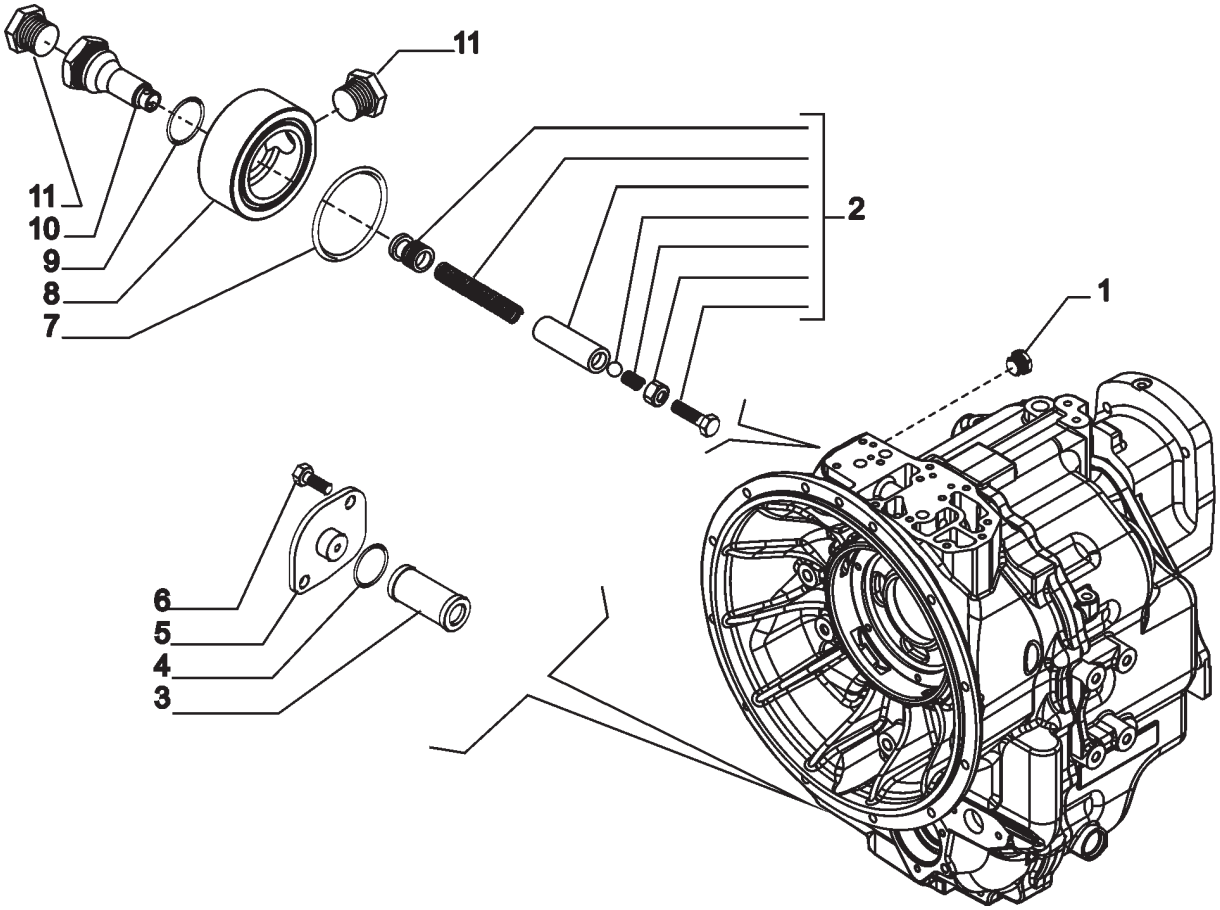
11
11
10
9
8
7
2
1
6
5
4
3

Ref.	Part No.	Description	Quantity	Applicable Machines	Remarks
1	6194311M1	Plug	1		
2	6194312M91	Valve Kit	1		
3	6194313M1	Oil Filter	1		
4	6194314M1	O-Ring	1		
5	6194315M1	Cover	1		
6	6194316M1	Bolt M8x18	2		
7	6194317M1	O-Ring	1		
8	6194318M1	Cover	1		
9	6194319M1	O-Ring	1		
10	6194320M1	Oil Filter Connections	1		
11	6194321M1	Plug	2		

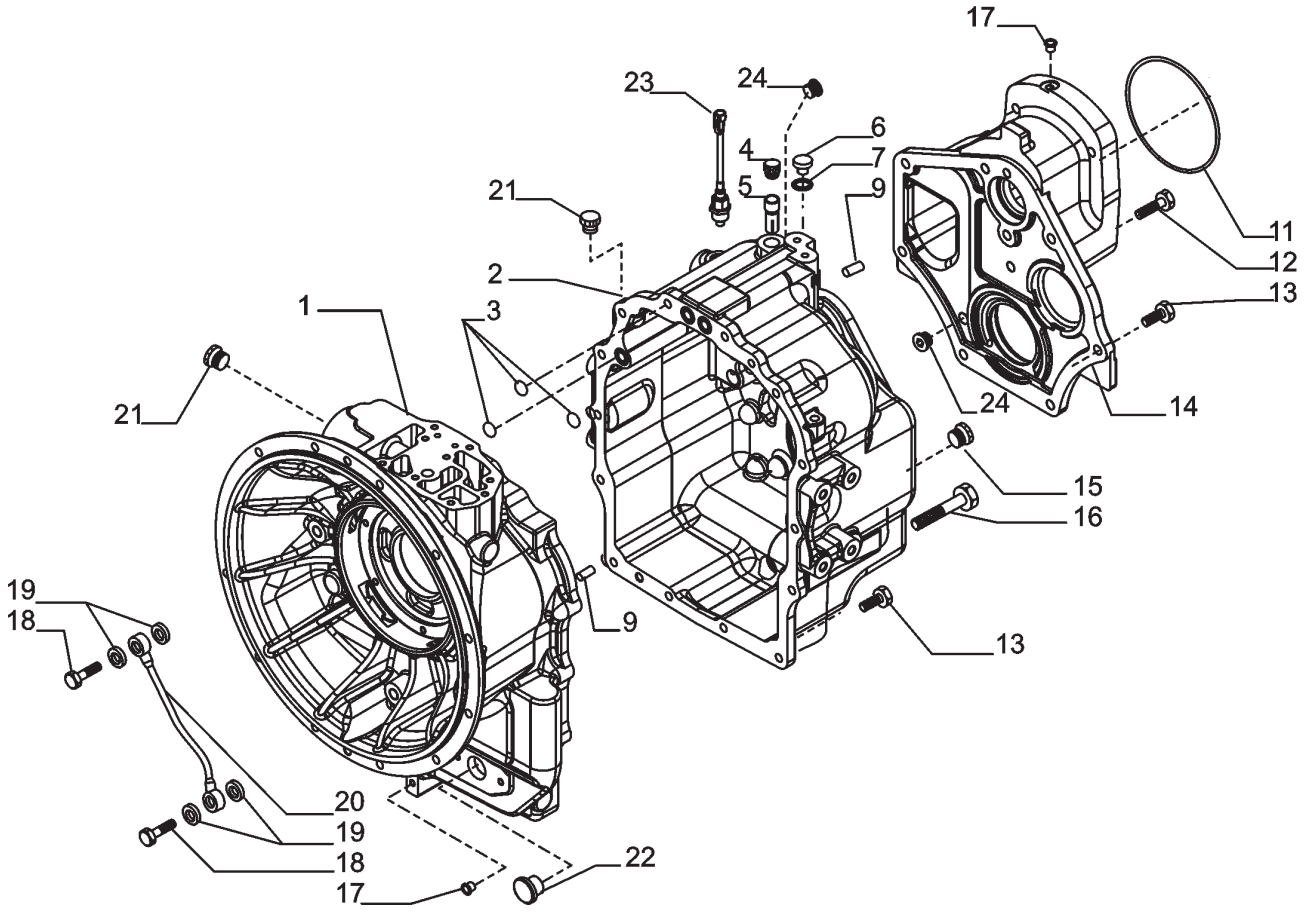
17
23
24
6
4
7
5
9
21
11
2
12
1
3
13
21
24
14
15
16
19
18
9
13
20
19
18
17
22

Ref.	Part No.	Description	Quantity	Applicable Machines	Remarks
1	6195102M1	Housing	1		
2	6195103M1	Housing	1		
3	6194325M1	O-Ring	3		
4	6194326M1	Breather	1		
5	6194327M1	Pipe	1		
6	6194328M1	Plug	2		
7	6194329M1	Washer Copper	2		
9	6194330M1	Pin	3		
11	6194332M1	O-Ring	1		
12	6194311M1	Bolt	1		
13	6194334M1	Bolt	19		
14	6194729M1	Cover, Rear	1		
15	3523632M1	Plug	1		
16	6194337M1	Bolt	4		
17	6194338M1	Bolt	2		
18	6194339M1	Washer Copper	4		
19	6194340M1	Pipe	1		
20	6194321M1	Plug	1		
21	6194341M1	Plug	1		
22	6194955M91	Sensor	1		

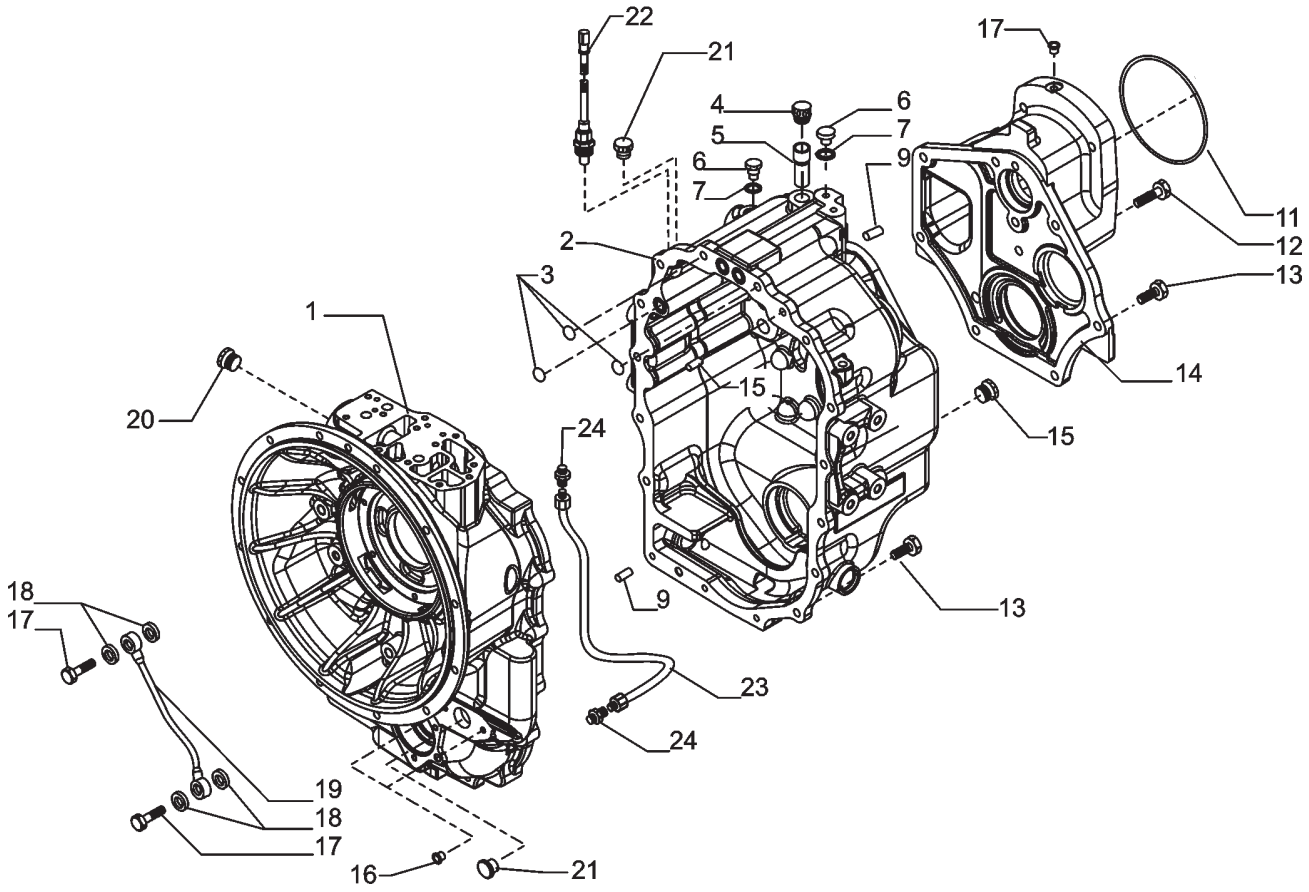
22
21
17
4
6
5
7
6
9
7
11
2
12
3
13
1
15
14
20
15
24
9
13
18
17
23
24
19
18
17
16
21

Ref.	Part No.	Description	Quantity	Applicable Machines	Remarks
1	6194728M1	Housing	1		
2	6194324M1	Housing	1		
3	6194325M1	O-Ring	3		
4	6194326M1	Breather	1		
5	6194327M1	Pipe	1		
6	6194328M1	Plug	2		
7	6194329M1	Washer, Copper	2		
9	6194330M1	Pin	1		
11	6194332M1	O-Ring	1		
12	6194333M1	Bolt	2		
13	6194334M1	Bolt	6		
14	6194729M1	Cover, Rear	1		
15	3523632M1	Plug	1		
16	6194337M1	Plug	2		
17	6194321M1	Plug	1		
18	6194326M1	Breather	1		
19	6194327M1	Pipe	1		
20	6194328M1	Plug	1		
21	6194329M1	Washer, Copper	1		
22	6194342M1	Sensor	1		
23	6194730M91	Pipe	1		
24	6194731M91	Union	2		

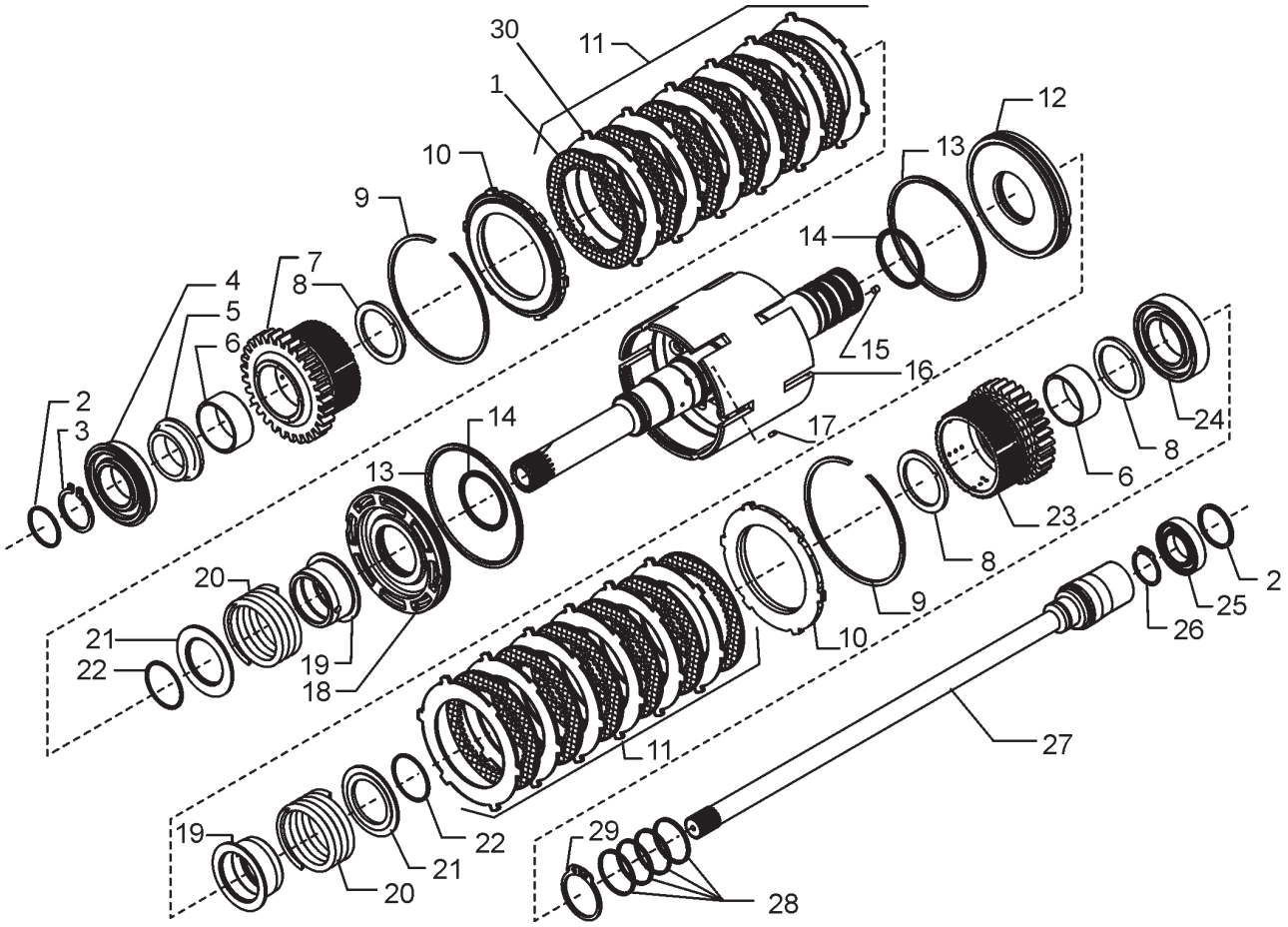
30
11
1
12
10
13
9
14
7
8
4
5
6
15
16
2
3
14
17
13
24
8
6
23
8
20
2
9
21
25
10
22
26
19
18
11
27
19
29
22
21
20
28

Ref.	Part No.	Description	Quantity	Applicable Machines	Remarks
1	6194353M1	Plate Friction	12		
2	6194343M1	Ring, Sealing	2		
3	6190292M1	Ring, Snap	1		
4	6194345M1	Bearing	1		
5	6194346M1	Spacer	1		
6	6194347M1	Bearing, Needle	2		
7	6194348M1	Gear	1		
8	6194351M1	Washer, Thrust	2		
9	6194349M1	Ring, Retaining	2		
10	6194350M1	Plate, Locking	2		
11	6194957M91	Clutch	2		
12	6194358M1	Piston	1		
13	6194359M1	Ring, Sealing	2		
14	6194360M1	Ring, Sealing	2		
15	6194496M91	Shaft Assy	1		
16	6194497M1	Rivet	4		
17	6194365M1	Pin Roll	2		
18	6194358M1	Piston	1		
19	6194357M1	Steeve	2		
20	6194354M1	Spring	2		
21	6194355M1	Cup, Spring	2		
22	6194495M1	Ring, Retaining	2		
23	6194362M1	Gear	1		
24	6194364M1	Bearing	1		
25	6194367M1	Bearing	1		
26	6194368M1	Ring, Snap	1		
27	6194732M1	Shaft	1		
28	6194363M1	Seal	4		
29	6194356M1	Ring, Retaining	1		
30	6194352M1	Plate Drive	12		

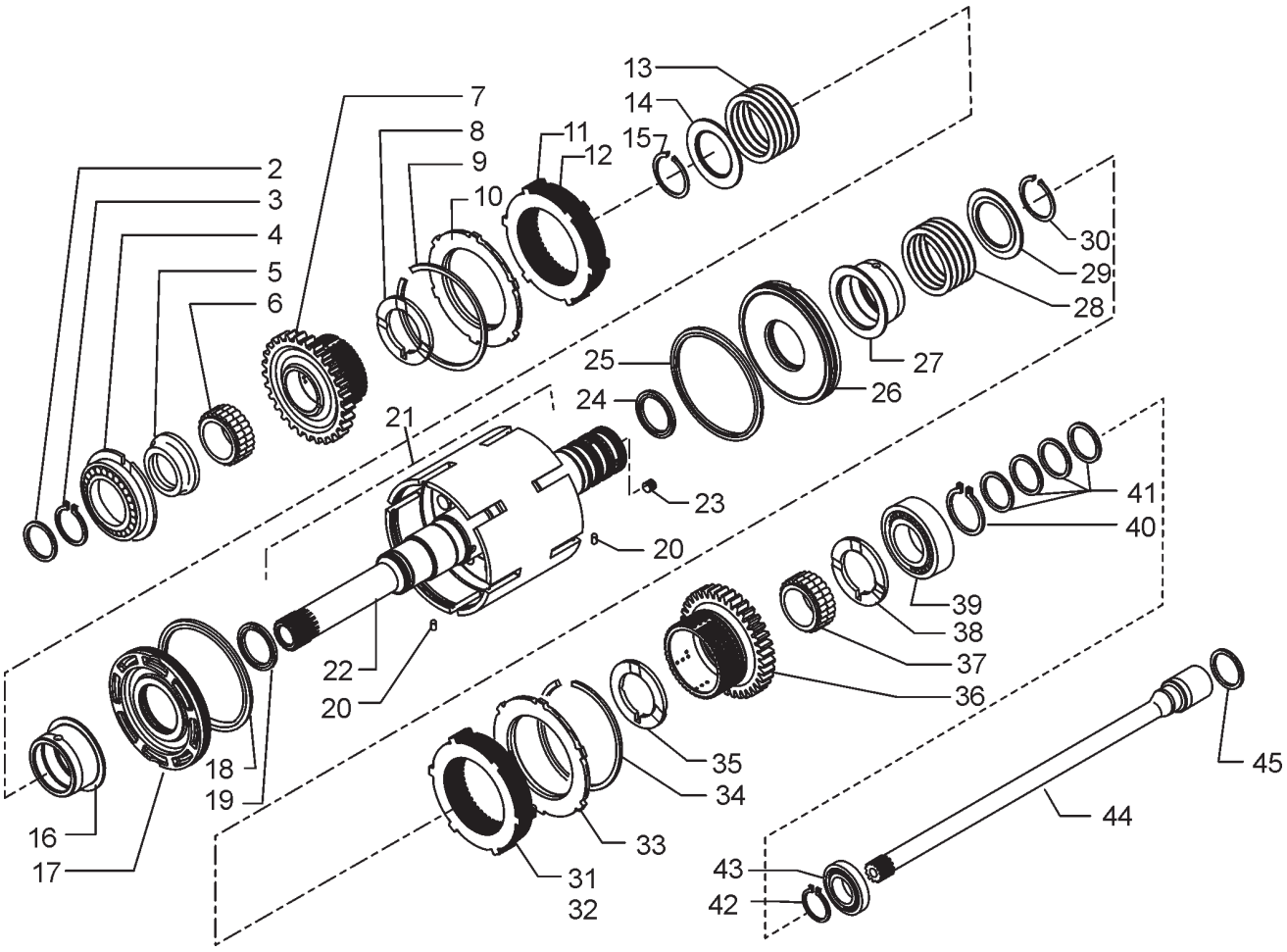
2
3
4
5
6
7
8
9
10
11
12
13
14
15
16
17
18
19
20
21
22
23
24
25
26
27
28
29
30
31
32
33
34
35
36
37
38
39
40
41
42
43
44
45

Ref.	Part No.	Description	Quantity	Applicable Machines	Remarks
1	6111347M91	Gearbox	1		
2	6194343M1	Ring, Sealing	1		
3	6190292M1	Ring, Snap	1		
4	6194345M1	Bearing	1		
5	6194346M1	Spacer	1		
6	6194347M1	Bearing, Needle	1		
7	6194348M1	Gear	1		
8	6194351M1	Washer, Thrust	1		
9	6194349M1	Ring, Retaining	1		
10	6194350M1	Plate, Locking	1		
11	6194352M1	Plate, Drive	12		
12	6194353M1	Plate, Friction	12		
13	6194495M1	Spring	1		
14	6194355M1	Cup, Spring	1		
15	6194354M1	Ring, Retaining	1		
16	6194357M1	Sleeve	1		
17	6194358M1	Piston	1		
18	6194359M1	Ring, Sealing	1		
19	6194360M1	Ring, Sealing	1		
20	6194365M1	Pin, Roll	2		
21	6194496M91	Shaft Assy	1		
23	6194497M1	Rivet	4		
24	6194360M1	Ring, Sealing	1		
25	6194359M1	Ring, Sealing	1		
26	6194358M1	Piston	1		
27	6194357M1	Sleeve	1		

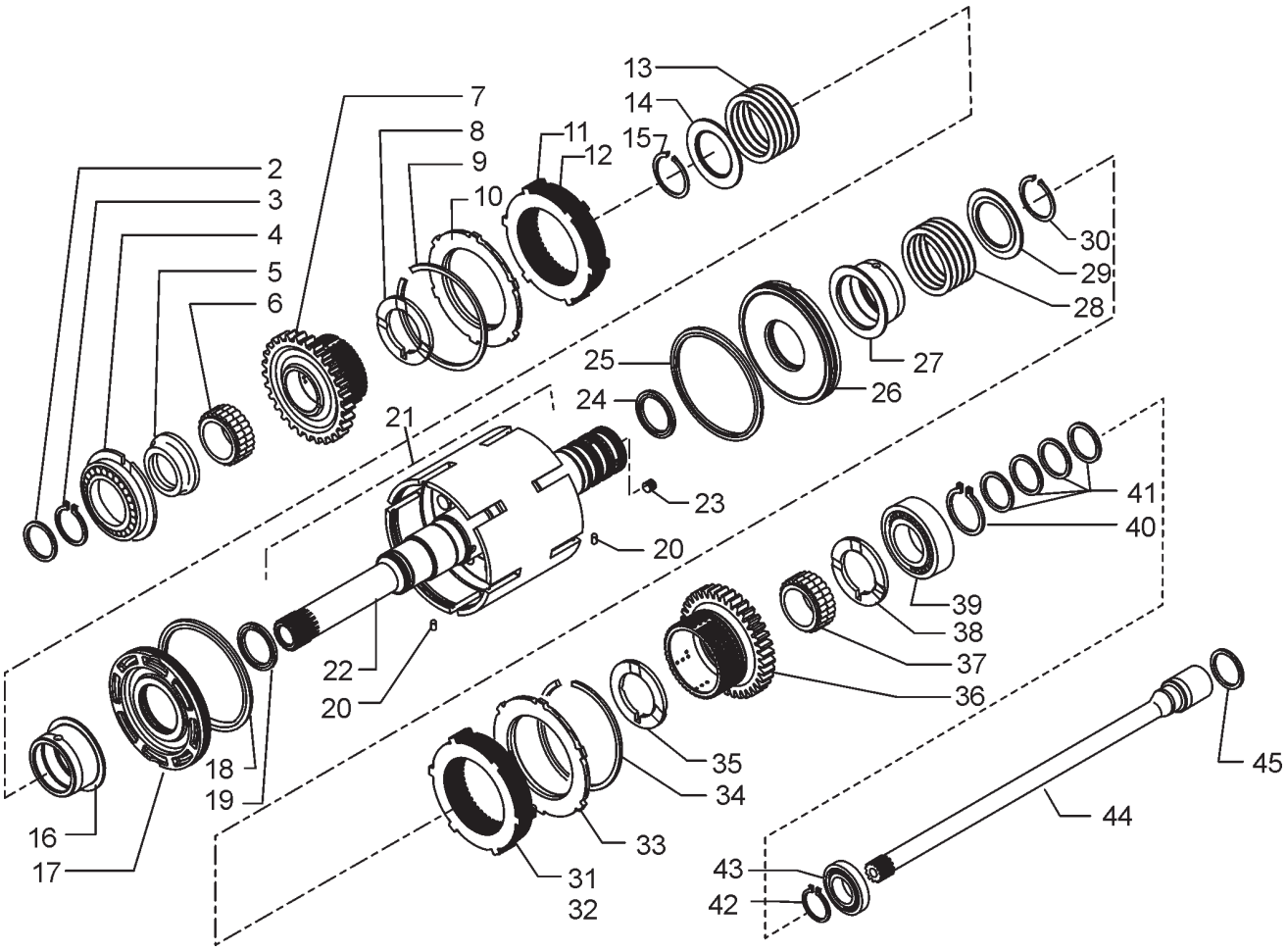
2
3
4
5
6
7
8
9
10
11
12
13
14
15
16
17
18
19
20
21
22
23
24
25
26
27
28
29
30
31
32
33
34
35
36
37
38
39
40
41
42
43
44
45

Ref.	Part No.	Description	Quantity	Applicable Machines	Remarks
28	6194354M1	Spring	1		
29	6194355M1	Cup, Spring	1		
30	6194495M1	Ring, Retaining	1		
31	6194353M1	Plate, Friction	12		
32	6194352M1	Plate, Drive	12		
33	6194350M1	Plate, Locking	1		
34	6194349M1	Ring, Retaining	1		
35	6194351M1	Washer, Thrust	1		
36	6194362M1	Gear	1		
37	6194347M1	Bearing, Needle	1		
38	6194351M1	Washer, Thrust	1		
39	6194364M1	Bearing	1		
40	6194356M1	Ring, Snap	1		
41	6194363M1	Seal	1		
42	6194368M1	Ring, Snap	1		
43	6194367M1	Bearing	1		
44	6194732M1	Shaft	1		
45	6194343M1	Ring, Sealing	1		
46	6194957M91	Clutch	2		

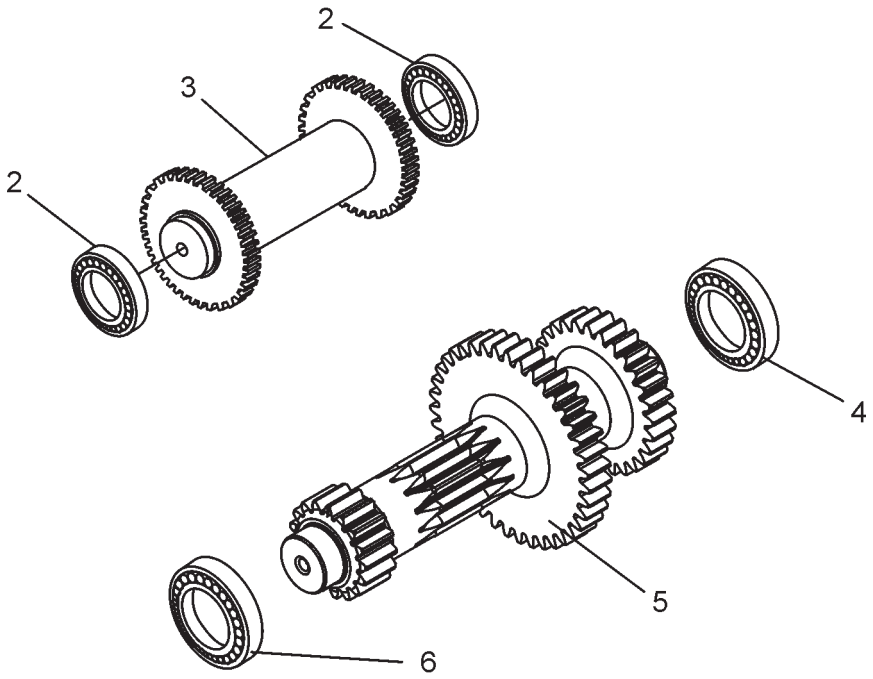
2
3
2
4
5
6

Ref.	Part No.	Description	Quantity	Applicable Machines	Remarks
2	6194369M1	Bearing	2		
3	6194370M1	Shaft	1		
4	6194371M1	Bearing	1		
5	6194372M1	Shaft	1		
6	6194373M1	Bearing	1		

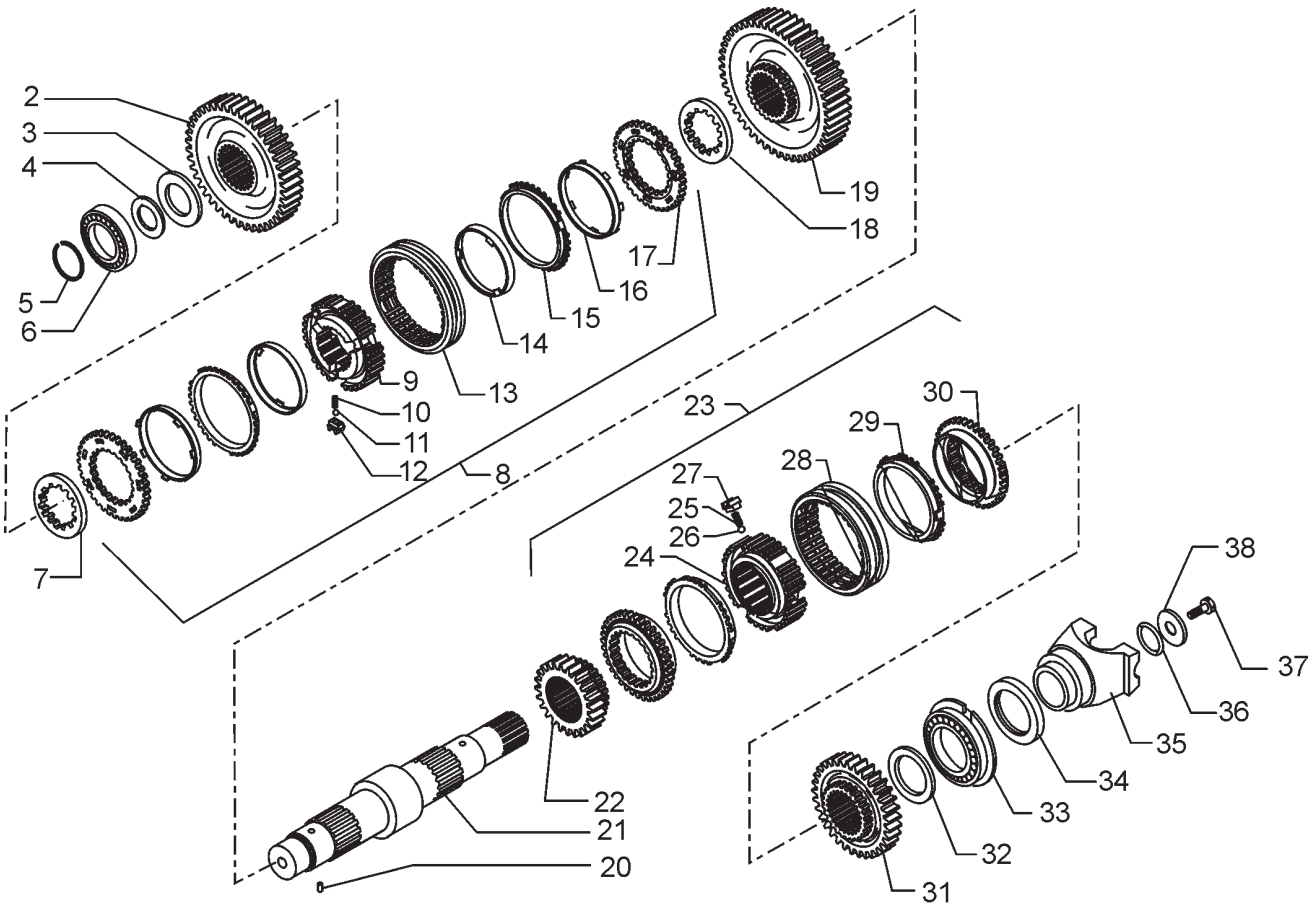
2
3
4
5
6
7
8
9
10
11
12
13
14
15
16
17
18
19
20
21
22
23
24
25
26
27
28
29
30
31
32
33
34
35
36
37
38

Ref.	Part No.	Description	Quantity	Applicable Machines	Remarks
1	6112170M91	Transmission Assy	1		
2	6194374M1	Gear	1		
3	6194375M1	Washer, Thrust	1		
4	6194376M1	Shim	UAR		
4	6194377M1	Shim	UAR		
4	6194378M1	Shim	UAR		
4	6194379M1	Shim	UAR		
5	6194380M1	Ring, Retaining	1		
6	6194373M1	Bearing	1		
7	6194381M1	Spacer	1		
8	6194391M91	Kit, Synchro	1		
9	6194385M1	Hub	1		
10	6194384M1	Spring	3		
11	6194389M1	Ball	3		
12	6194388M1	Plate	3		
13	6194390M1	Locking	1		
14	6194382M1	Sleeve	2		
15	6194386M1	Ring	2		
16	6194387M1	Ring	2		
17	6194383M1	Ring	2		
18	6194381M1	Spacer	1		
19	6194392M1	Gear	1		
20	6194365M1	Pin, Roll	1		
21	6195104M1	Shaft	1		
22	6194393M1	Gear	1		

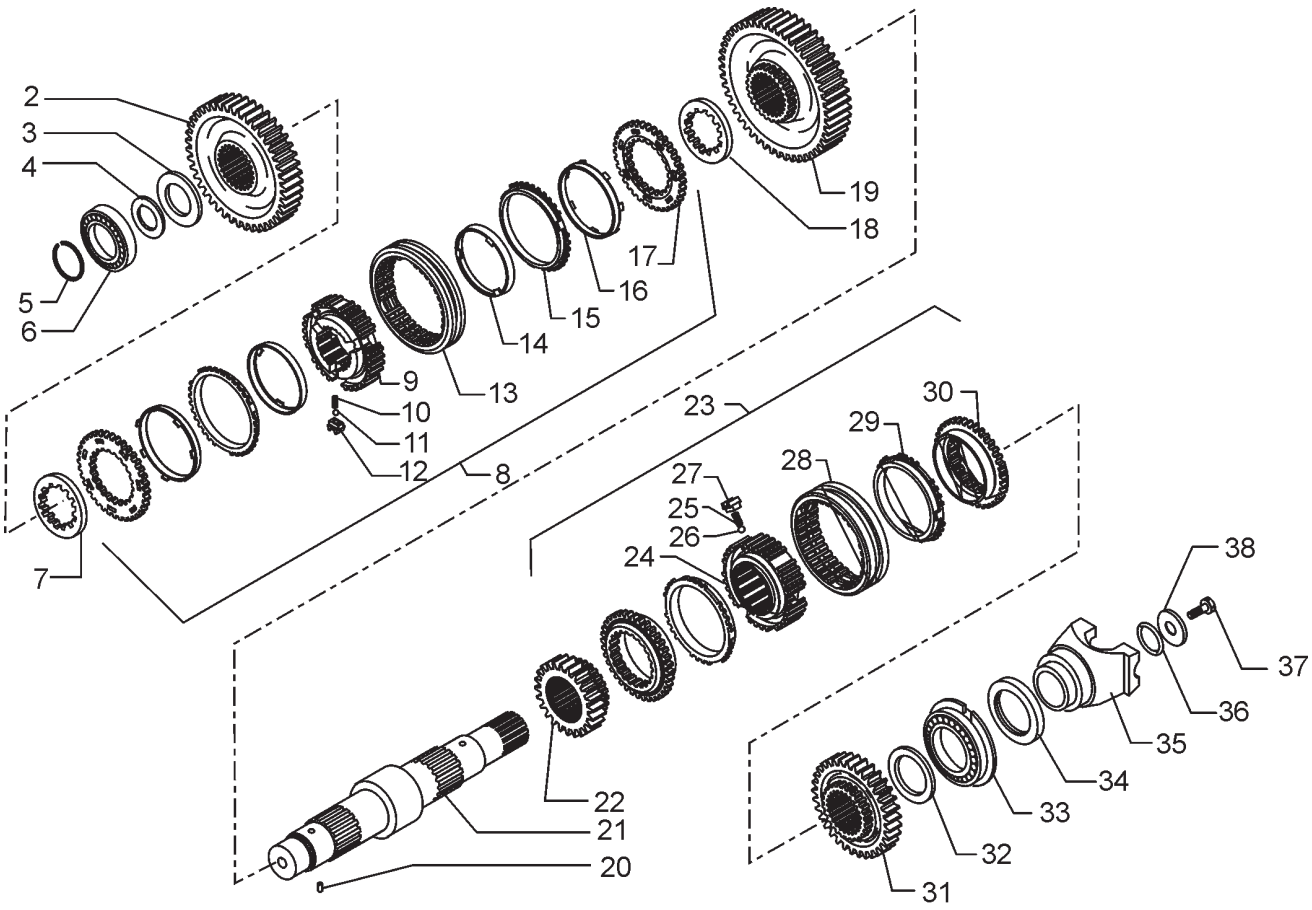
2
3
4
5
6
7
8
9
10
11
12
13
14
15
16
17
18
19
20
21
22
23
24
25
26
27
28
29
30
31
32
33
34
35
36
37
38

Ref.	Part No.	Description	Quantity	Applicable Machines	Remarks
23	6194402M91	Kit, Synchro	1		
24	6194396M1	Hub	1		
25	6194400M1	Spring	3		
26	6194399M1	Ball	3		
27	6194398M1	Plate, Locking	3		
28	6194401M1	Sleeve	1		
29	6194397M1	Ring, Special	2		
30	6194395M1	Ring	2		
31	6194410M1	Gear	1		
32	6194409M1	Washer, Thrust	1		
33	6194408M1	Bearing	1		
34	6194407M1	Seal, Oil	1		
35	6194406M1	Flange	1		
36	6194405M1	O-Ring	1		
37	6194404M1	Washer	1		
38	6194403M1	Bolt	1		

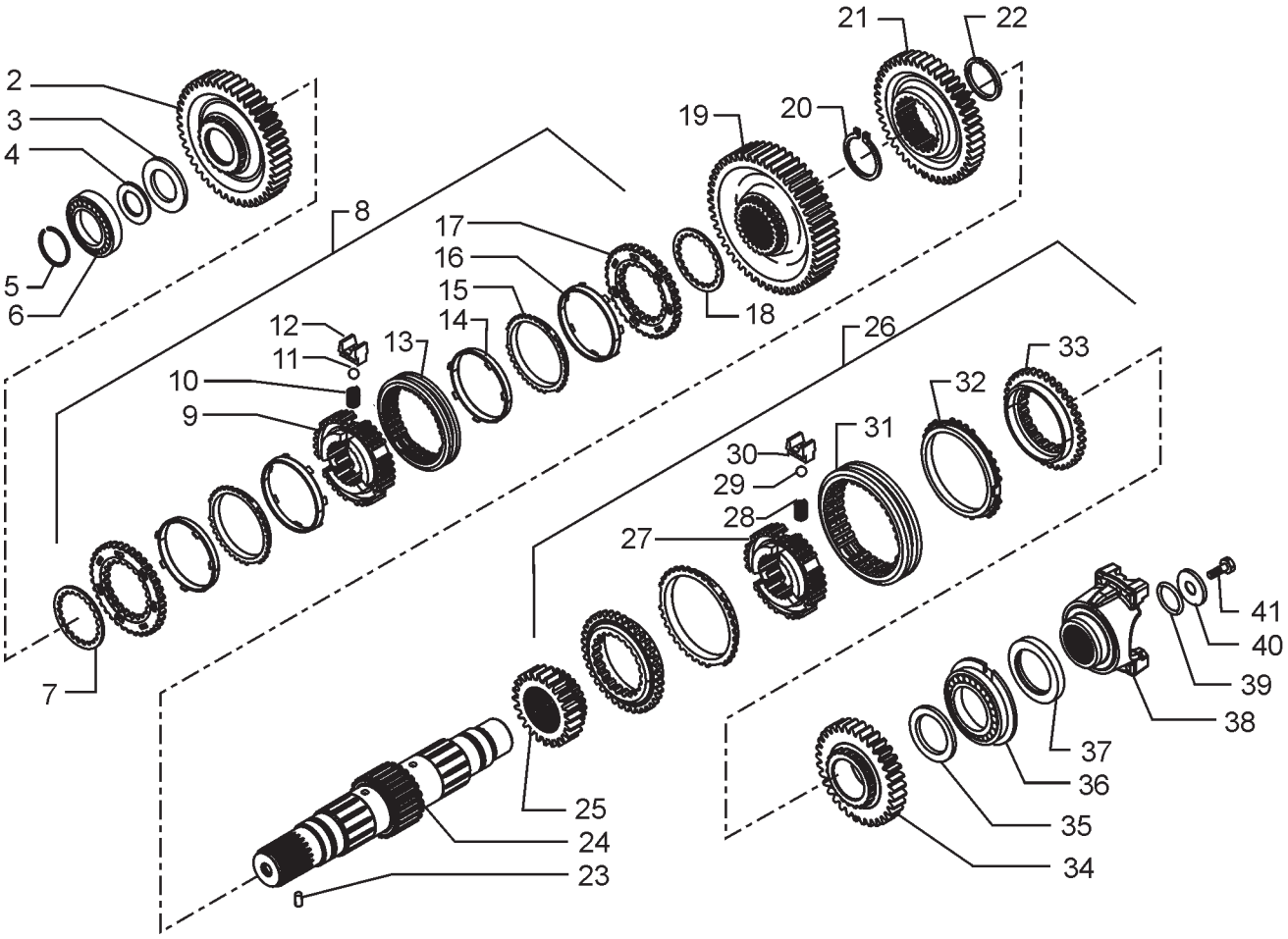
2
3
4
5
6
7
8
9
10
11
12
13
14
15
16
17
18
19
20
21
22
23
24
25
26
27
28
29
30
31
32
33
34
35
36
37
38
39
40
41

Ref.	Part No.	Description	Quantity	Applicable Machines	Remarks
1	6111347M91	Gearbox	1		
2	6194374M1	Gear	1		
3	6194375M1	Washer, Thrust	1		
4	6194376M1	Shim	UAR		
4	6194377M1	Shim	UAR		
4	6194378M1	Shim	UAR		
4	6194379M1	Shim	UAR		
5	6194380M1	Ring, Retaining	1		
6	6194373M1	Bearing	1		
7	6194381M1	Spacer	1		
8	6194391M91	Kit, Synchro	1		
9	6194385M1	Hub	1		
10	6194384M1	Spring	3		
11	6194389M1	Ball	3		
12	6194388M1	Plate, Locking	3		
13	6194390M1	Sleeve	1		
14	6194382M1	Ring	2		
15	6194386M1	Ring	2		
16	6194387M1	Ring	2		
17	6194383M1	Ring, Synchro	2		
18	6194381M1	Spacer	1		
19	6194392M1	Gear	1		
20	6194413M1	Ring, Retaining	1		
21	6194412M1	Gear	1		
22	6194411M1	Ring, Retaining	1		
23	6194365M1	Pin, Roll	1		
24	6194394M1	Shaft	1		
25	6194393M1	Gear	1		

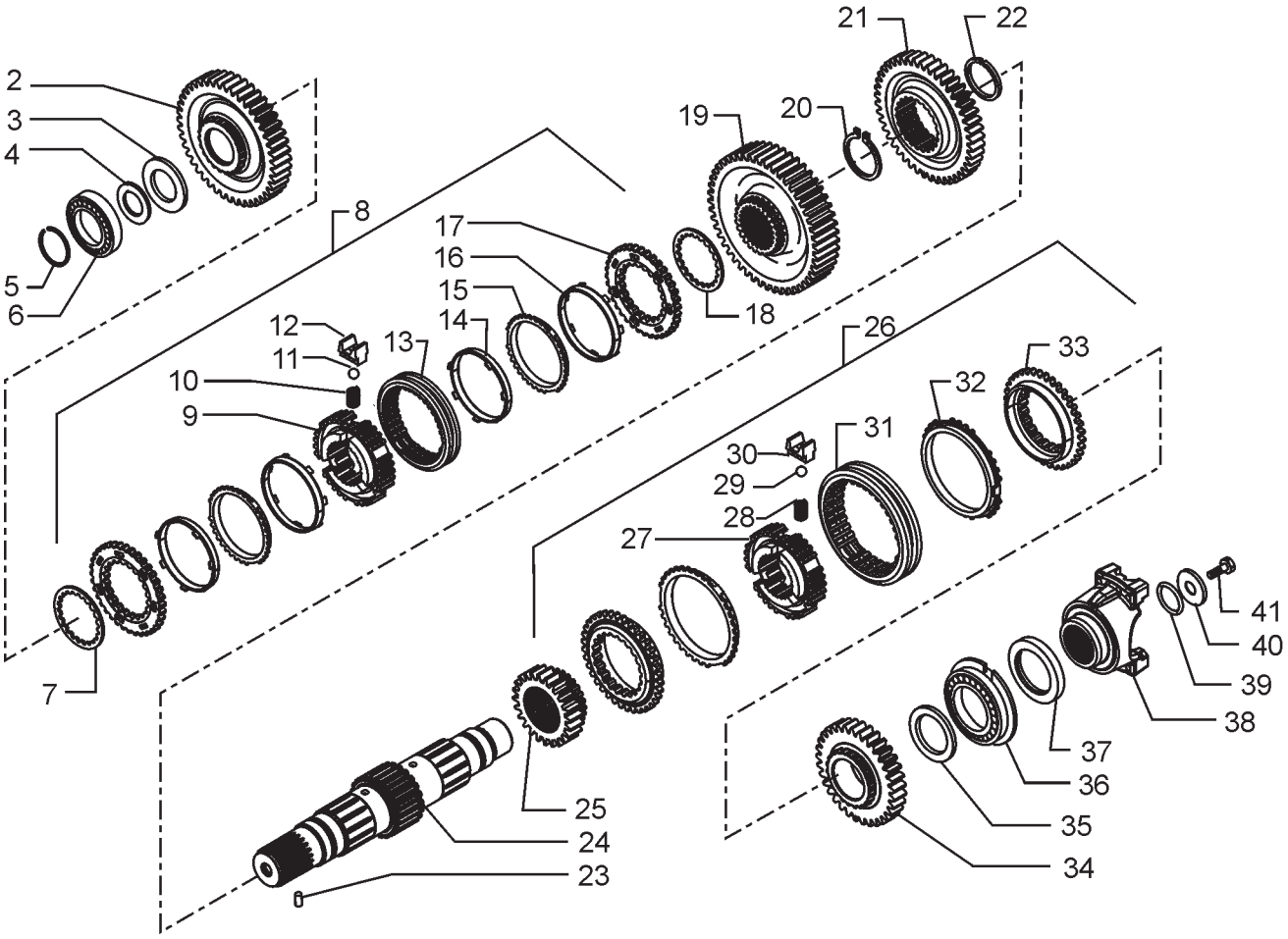
2
3
4
5
6
7
8
9
10
11
12
13
14
15
16
17
18
19
20
21
22
23
24
25
26
27
28
29
30
31
32
33
34
35
36
37
38
39
40
41

Ref.	Part No.	Description	Quantity	Applicable Machines	Remarks
26	6194402M91	Kit, Synchro	1		
27	6194396M1	Hub	1		
28	6194400M1	Spring	3		
29	6194399M1	Ball	3		
30	6194398M1	Plate, Locking	3		
31	6194401M1	Sleeve	1		
32	6194397M1	Ring, Special	2		
33	6194395M1	Ring	2		
34	6194410M1	Gear	1		
35	6194409M1	Washer, Thrust	1		
36	6194408M1	Bearing	1		
37	6194407M1	Seal, Oil	1		
38	6194406M1	Flange	1		
39	6194405M1	O-Ring	1		
40	6194404M1	Washer	1		
41	6194403M1	Bolt	1		

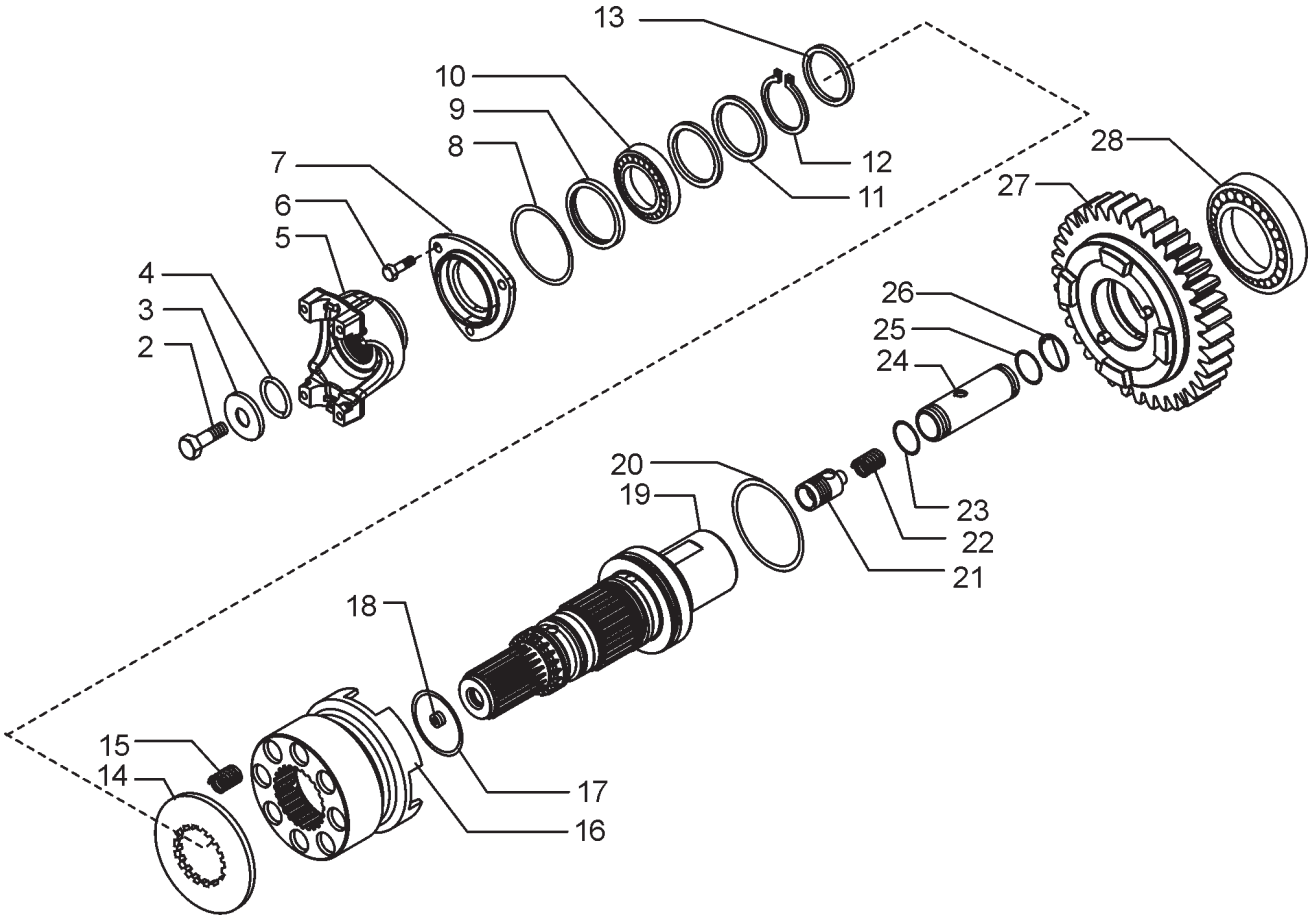
13
10
9
8
7
6
5
4
3
2
12
11
28
27
26
25
24
20
19
23
22
21
18
15
14
17
16

Ref.	Part No.	Description	Quantity	Applicable Machines	Remarks
1	1K0299	Gearbox	1		
2	6194403M1	Bolt	1		
3	6194414M1	Washer	1		
4	6193384M1	O-Ring	1		
5	6194417M1	Flange	1		
6	6194416M1	Bolt	3		
7	6194415M1	Cover	1		
8	6194419M1	O-Ring	1		
9	6194418M1	Ring, Sealing	2		
10	6194369M1	Bearing	2		
11	6194343M1	Ring, Sealing	1		
12	6193699M1	Ring, Snap	1		
13	6194420M1	Washer	1		
14	6194428M1	Spacer	8		
15	6194427M1	Spring	9		
16	6194426M1	Sleeve	2		
17	6194425M1	O-Ring	1		
18	3523998M1	Plug	1		
19	6194424M1	Shaft	1		
20	6194423M1	O-Ring	1		
21	6194722M91	Valve Assy	1		
22	6194427M1	Spring	1		
23	6194720M1	O-Ring	1		
24	6194721M1	Cylinder	1		
25	6194720M1	O-Ring	1		
26	6194719M1	Ring, Snap	1		
27	6194422M1	Gear	1		
28	6194421M1	Bearing	1		

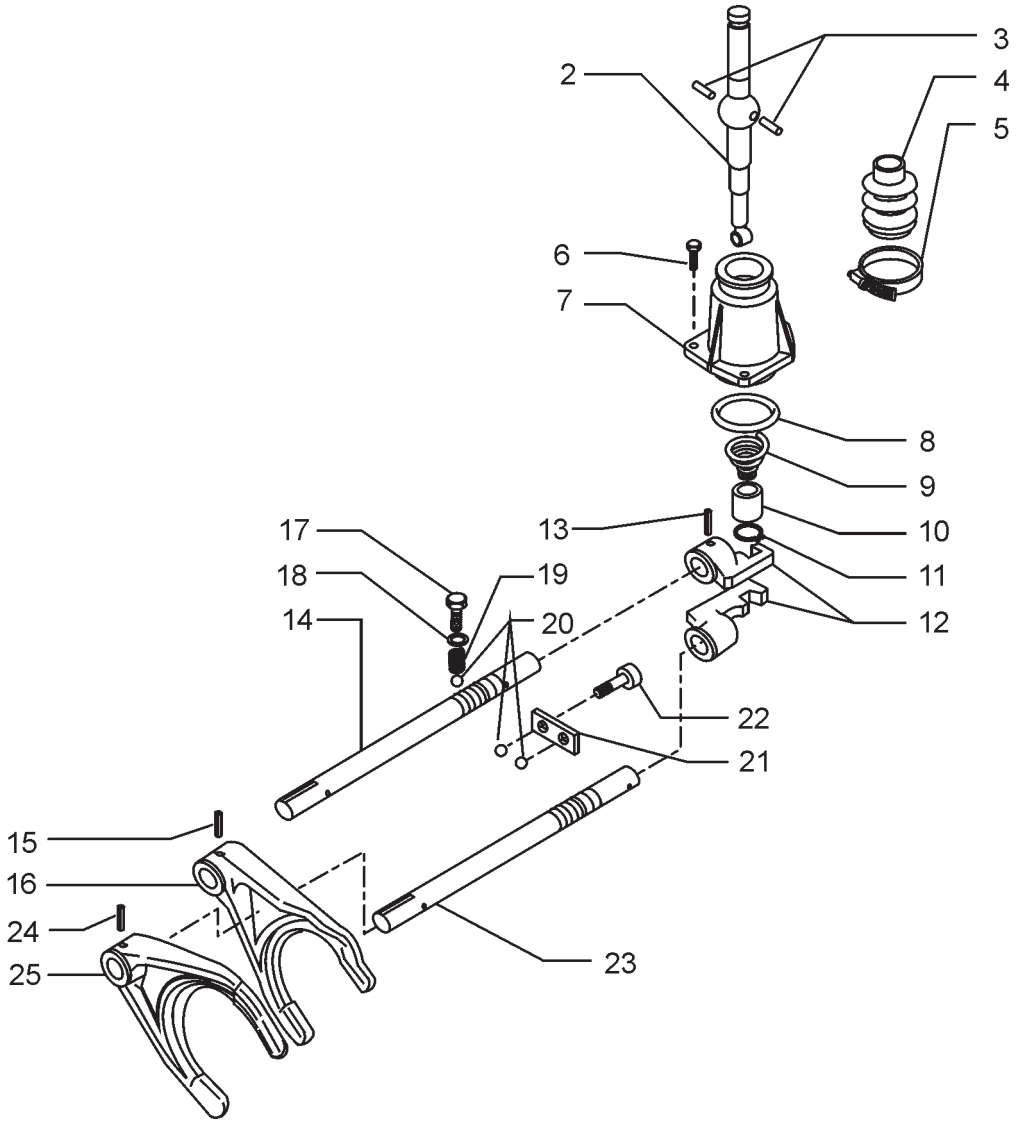
2
3
4
5
6
7
8
9
10
11
12
13
14
15
16
17
18
19
20
21
22
23
24
25

Ref.	Part No.	Description	Quantity	Applicable Machines	Remarks
1	1K0275	Transmission Assy	1		
2	6194436M1	Lever, Control	1		
3	6194437M1	Pin	2		
4	6194438M1	Boot	1		
5	6194439M1	Clamp	1		
6	6194434M1	Bolt	3		
7	6194435M1	Cover	1		
8	6194440M1	O-Ring	1		
9	6194441M1	Spring	1		
10	6194442M1	Bush	1		
11	6194443M1	Ring, Snap	1		
12	6194444M1	Selector	2		
13	6194446M1	Rail	2		
14	6194429M1	Rail	1		
15	6194447M1	Pin	1		
16	6194449M1	Fork, Shifter	1		
17	6194431M1	Bolt	2		
18	6194430M1	Washer	2		
19	6194432M1	Spring	2		
20	6194433M1	Ball	4		
21	6194450M1	Plate	1		
22	6194445M1	Bolt	2		
23	6194446M1	Rail	1		
24	6194447M1	Pin	1		
25	6194448M1	Fork, Shifter	1		

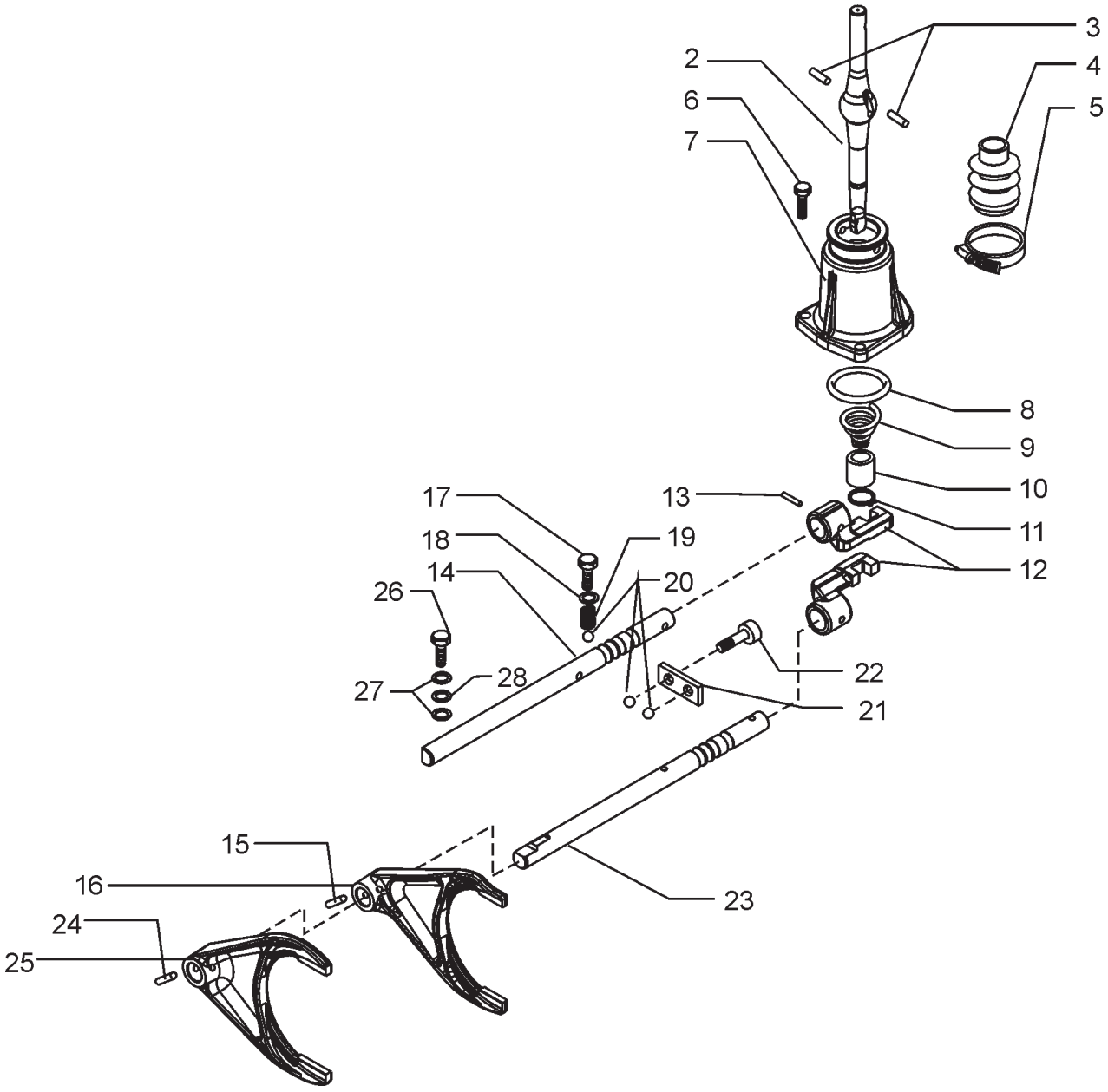
3
2
4
6
5
7
8
9
10
17
13
11
18
19
12
14
20
26
22
27
28
21
15
16
23
24
25

Ref.	Part No.	Description	Quantity	Applicable Machines	Remarks
1	1K0299	Gearbox	1		
2	6194436M1	Lever, Control	1		
3	6194437M1	Pin	2		
4	6194438M1	Boot	1		
5	6194439M1	Clamp	1		
6	6194434M1	Bolt	3		
7	6194435M1	Cover	1		
8	6194440M1	O-Ring	1		
9	6194441M1	Spring	1		
10	6194442M1	Bush	1		
11	6194443M1	Ring, Snap	1		
12	6194444M1	Selector	2		
13	6194447M1	Pin	2		
14	6194429M1	Rail	1		
15	6194447M1	Pin	1		
16	6194449M1	Fork, Shifter	1		
17	6194431M1	Bolt	2		
18	6194430M1	Washer	2		
19	6194432M1	Spring	2		
20	6194433M1	Ball	4		
21	6194450M1	Plate	1		
22	6194445M1	Bolt	2		
23	6194446M1	Rail	1		
24	6194447M1	Pin	1		
25	6194448M1	Fork, Shifter	1		
26	6194837M1	Screw	1		
27	6194838M1	Washer, Copper	2		
28	6194839M1	Washer	1		

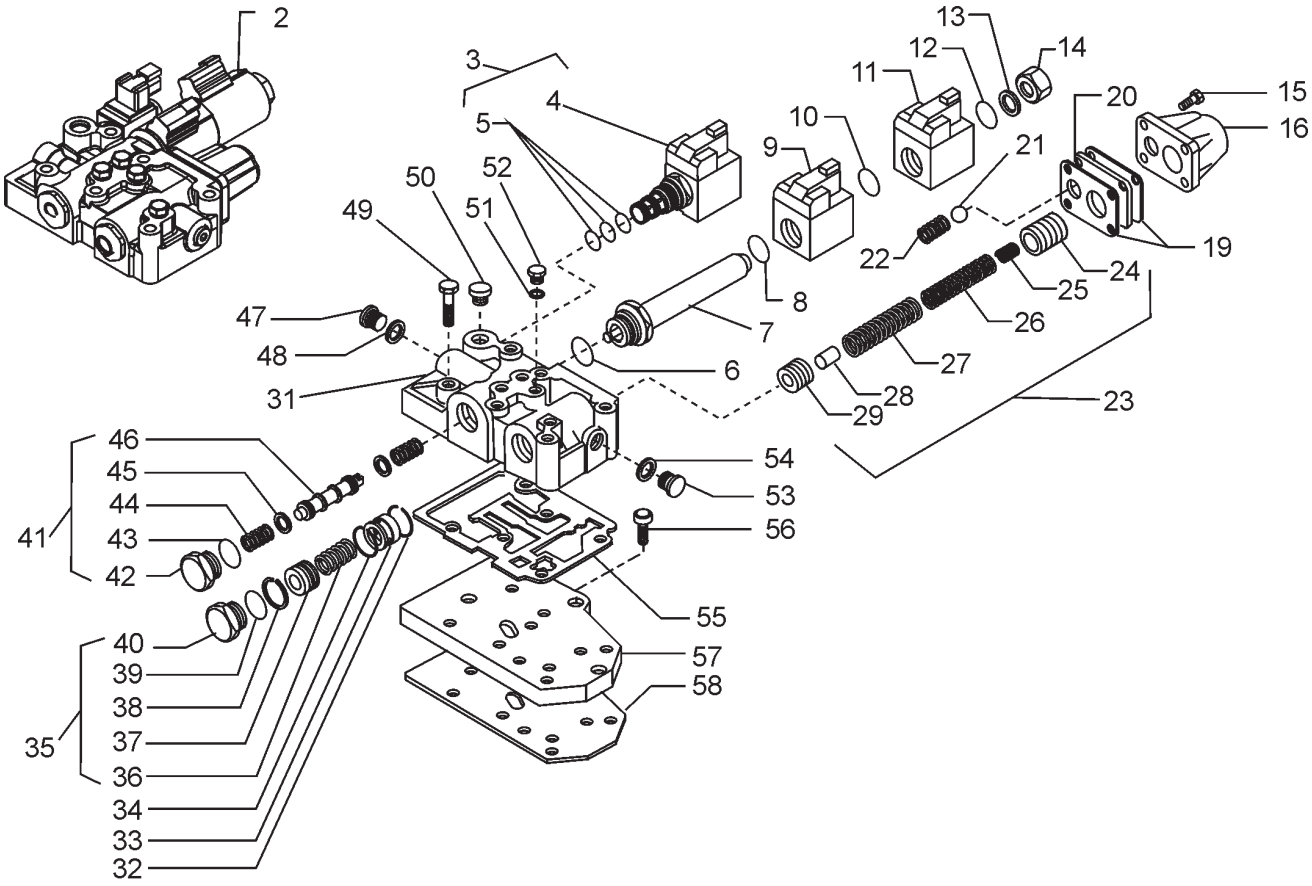
2
3
4
5
50
52
49
51
47
48
31
46
45
44
41
43
42
40
39
38
35
37
36
34
33
32
13
12
14
11
10
9
20
15
16
21
22
19
24
25
26
27
28
29
23
8
7
6
54
53
56
55
57
58

Ref.	Part No.	Description	Quantity	Applicable Machines	Remarks
1		Transmission Assy	1		
2	6194733M91	Valve Assy Control	1		
3	6194452M91	Valve, Solenoid	1		
4		Valve	1		
5	6194453M91	Kit, Seal	1		C
6		O-Ring	1		
7	6194486M1	Solenoid Tube	1		C
8		O-Ring	1		
9	6194483M1	Coil	1		
10		O-Ring	1		C
11	6194483M1	Coil	1		
12		O-Ring	1		C
13	6194481M1	Washer	1		
14	6194482M1	Plug	1		A
15		Bolt	4		
16	6194479M1	Cover, Valve	1		
17	6194742M91	Body Kit Valve Assy, Control	1		
18	6194740M91	Plate Kit, Parts	1		
19		Gasket	2		E Ref. 18
20		Plate	1		Ref. 18
21		Ball	1		Ref. 18
22		Spring	1		Ref. 18
23	6194739M91	Modulation Valve Assy	1		
24		Piston	1		Ref. 23
25		Spring	1		Ref. 23
26		Spring	1		Ref. 23
27		Spring	1		Ref. 23
28		Pin	1		Ref. 23
29		Piston	1		Ref. 23
31	6194741M91	Control Valve Body Assy.	1		NSS
*	10X0268	Pressure Test Adaptor	1		

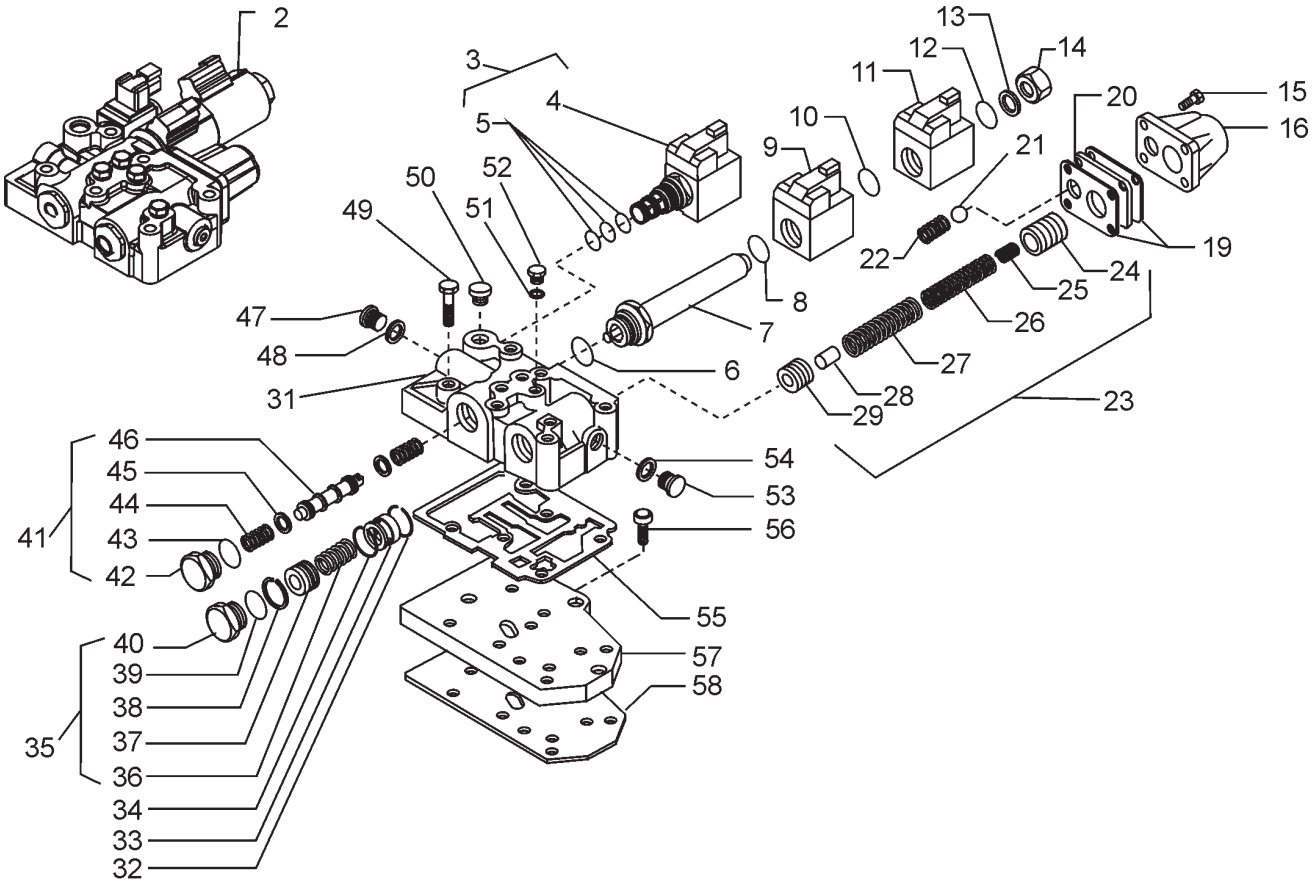
2
3
4
5
50
52
49
51
47
48
31
46
45
44
41
43
42
40
39
38
35
37
36
34
33
32
13
12
14
11
10
9
20
15
16
21
22
19
24
25
26
27
28
29
23
8
7
6
54
53
56
55
57
58

Ref.	Part No.	Description	Quantity	Applicable Machines	Remarks
32		Ring, Snap	1		
33		Bushing	1		
34		Ring, Snap	1		
35	6194735M91	Flow divider Piston Kit, Parts	1		
36		Spring	1		Ref. 35
37		Ring, Snap	1		Ref. 35
38		Ring, Snap	1		Ref. 35
39		O-Ring	1		C Ref. 35
40		Plug	1		Ref. 35
41	6194734M91	FWD/RVS Spool Assy	1		
42		Plug	1		Ref. 41
43		O-Ring	1		C Ref. 41
44		Spring	2		Ref. 41
45		Washer	2		Ref. 41
46		Spool	1		Ref. 41
47		Plug	1		A
48		Washer, Copper	1		A
49		Bolt	6		A
50		Plug	1		A
51		Plug	4		A
52		Washer, Copper	4		A
53		Plug	1		A
54		Washer, Copper	1		A
55		Gasket	1		E
56		Bolt	3		A
57	6194467M1	Plate	1		
58		Gasket	1		E
*	6194736M91	Bolts/Plugs Kit, Parts	X		B Contains A
*	6194737M91	Sealing Rings Kit, Parts	X		D Contains C
*	6194738M91	Gaskets Kit, Parts	X		F Contains E

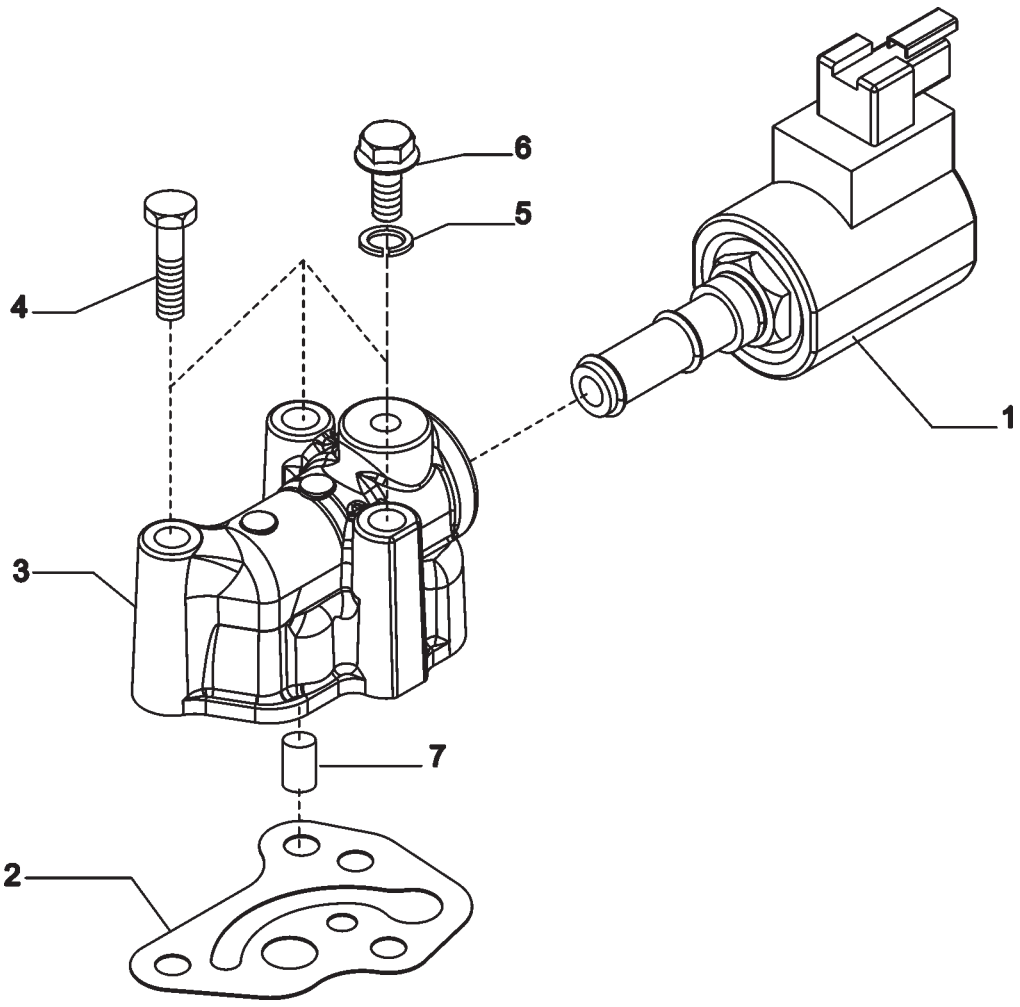
6
5
4
1
3
7
2

Ref.	Part No.	Description	Quantity	Applicable Machines	Remarks
	1K0299	Gearbox	1		
1	6194488M1	Valve, Solenoid	1		
2	6194489M1	Gasket	1		
3	6194490M1	Housing	1		
4	6194308M1	Screw	3		
5	6194329M1	Washer, Copper	1		
6	6194491M1	Plug	1		
7	6194328M1	Plug	1		

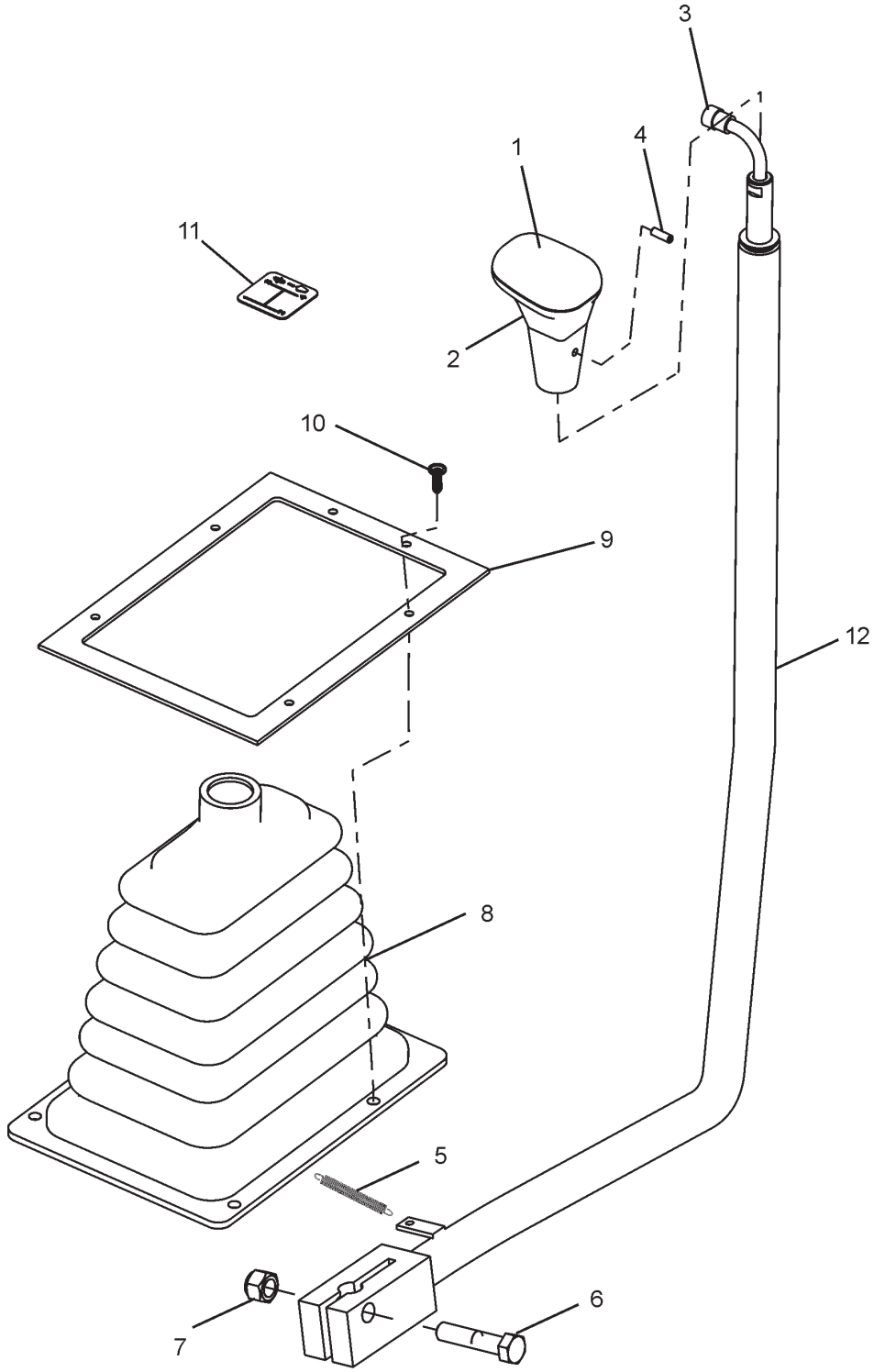
3
1
4
1
11
2
10
9
12
8
5
6
7

GEAR CHANGE

Control Lever

Ref.	Part No.	Description	Quantity	Applicable Machines	Remarks
1	1D0068	Gear Lever Knob	1		
2	1D0122	Knob Top	1		
3	1D0121	Micro Sw. Assy	1		
4	3009429X1	Screw	1		
5	1475805M1	Spring	1		
6	3009511X1	Bolt	1		
7	1440330X1	Nut	1		
8	6101248M2	Boot	1		
9	6101249M2	Retainer	1		
10	3521303M3	Fastener	6		
11	6101921M1	Decal Gear Change	1		
12	6112800M91	Gear Lever Weld Assy	1		

NOTES

NOTES

REAR AXLE

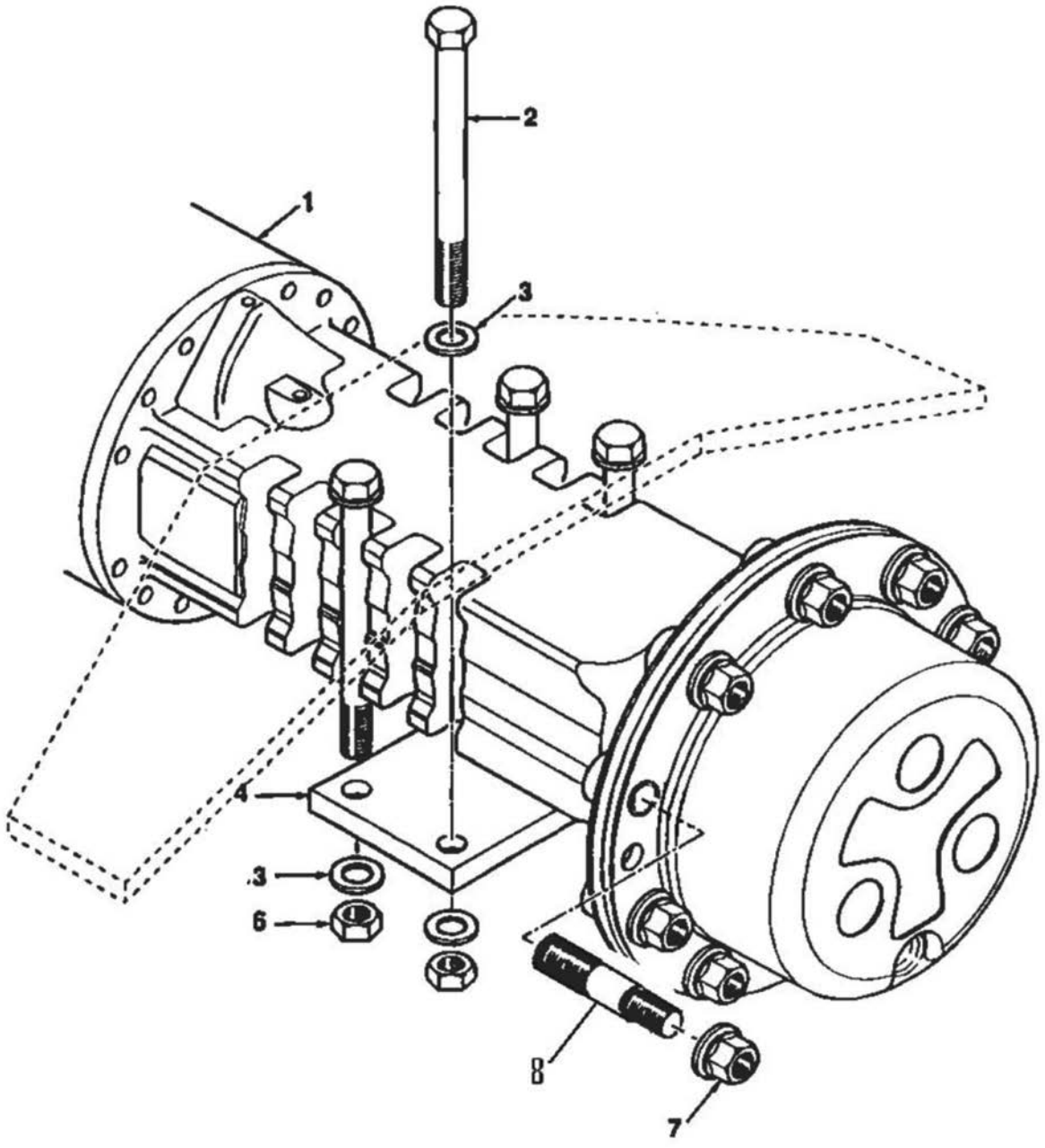
1
2
3
4
3
6
8
7

REAR AXLE

Ref.	Part No.	Description	Quantity	Applicable Machines	Remarks
1	1K0270	Axle Assy. Rear	1		
2	1K0177	Bolt	8		
3	385365X1	Washer	16		
4	6106096M1	Plate	2		
6	1K0163	Nut	8		
7	6106829M91	Nut	20		
8	1K0048	Stud	20		

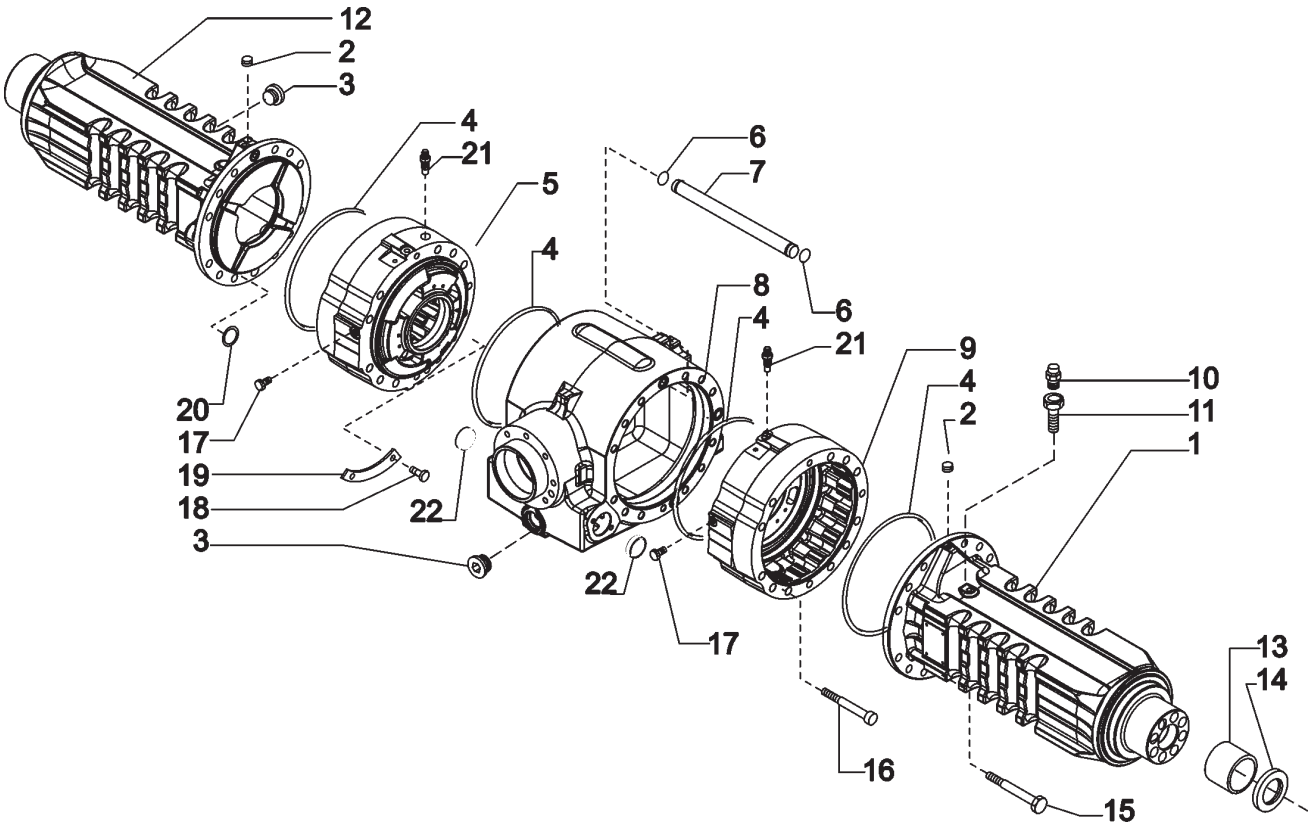
12
2
3
4
21
5
6
7
4
8
4
21
6
9
4
2
10
11
1
20
17
19
18
3
22
22
17
16
15
13
14

Ref.	Part No.	Description	Quantity	Applicable Machines	Remarks
1	6193332M1	Beam Trumpet RH	1		
2	3523998M1	Plug M10x1	2		
3	3523632M1	Plug M30x2	2		
4	3523632M1	O-Ring	4		
5	6193334M1	Brake Cylinder LH	1		
6	3523630M1	O-Ring	2		
7	6193335M1	Pipe	1		
8	6193404M1	Central Body	1		
9	6193337M1	Brake Cylinder RH	1		
10	6193409M1	Breather M10x1	1		
11	6193338M1	Breather Pipe	1		
12	6193339M1	Beam Trumpet LH	1		
13	6193340M1	Bush	2		
14	6193341M1	Seal Ring	2		
15	6193342M1	Bolt M14x140	22		
16	6193343M1	Bolt M12x130	2		
17	10X2037	Plug	2		
18	6193345M1	Rivet 4 8x6	4		
19	6193426M1	Plate	2		
20	6193347M1	O-Ring	8		
21	6193348M1	Breather M10x1	2		
22	10X3364	Plug	2		

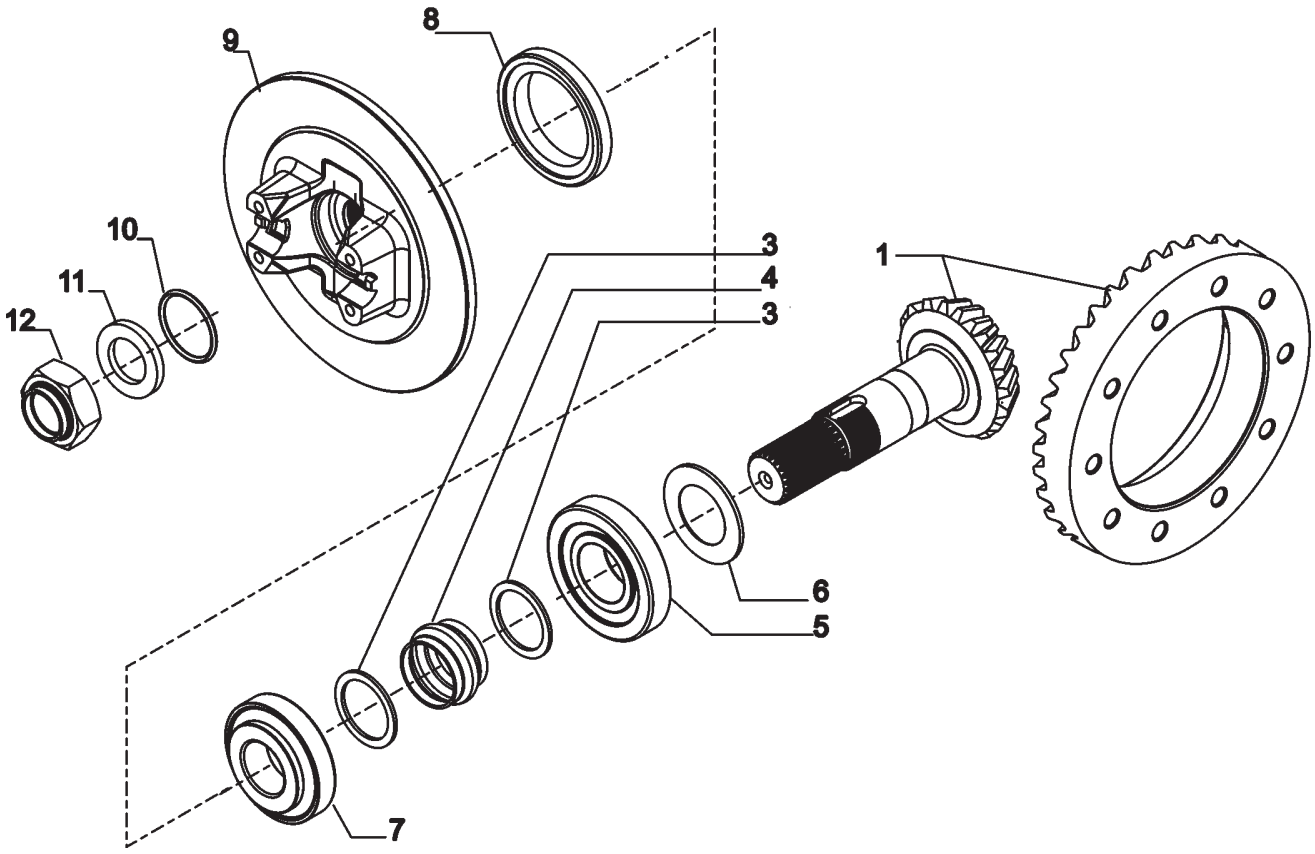
8
9
10
11
12
3
4
3
1
6
5
7

Ref.	Part No.	Description	Quantity	Applicable Machines	Remarks
1	10X3365	Bevelgear / Pinion Z=15/37	1		
3	3523082M1	Washer	2		
4	6193350M1	Collapsible Spacer	1		
5	6193361M1	Bearing	1		
6	6193351M1	Shim 2.50mm	UAR		
6	6193352M1	Shim 2.60mm	UAR		
6	6193353M1	Shim 2.70mm	UAR		
6	6193354M1	Shim 2.80mm	UAR		
6	6193355M1	Shim 2.90mm	UAR		
6	6193356M1	Shim 3.00mm	UAR		
6	6193357M1	Shim 3.20mm	UAR		
6	6193358M1	Shim 3.30mm	UAR		
6	6193376M1	Shim 3.30mm	UAR		
6	6193374M1	Shim 3.40mm	UAR		
7	3475567M1	Bearing	1		
8	6193363M1	Seal Ring	1		
9	10X3366	Flange	1		
10	10X3367	O-Ring	1		
11	10X3368	Washer	1		
12	10X3369	Nut M30X2	1		

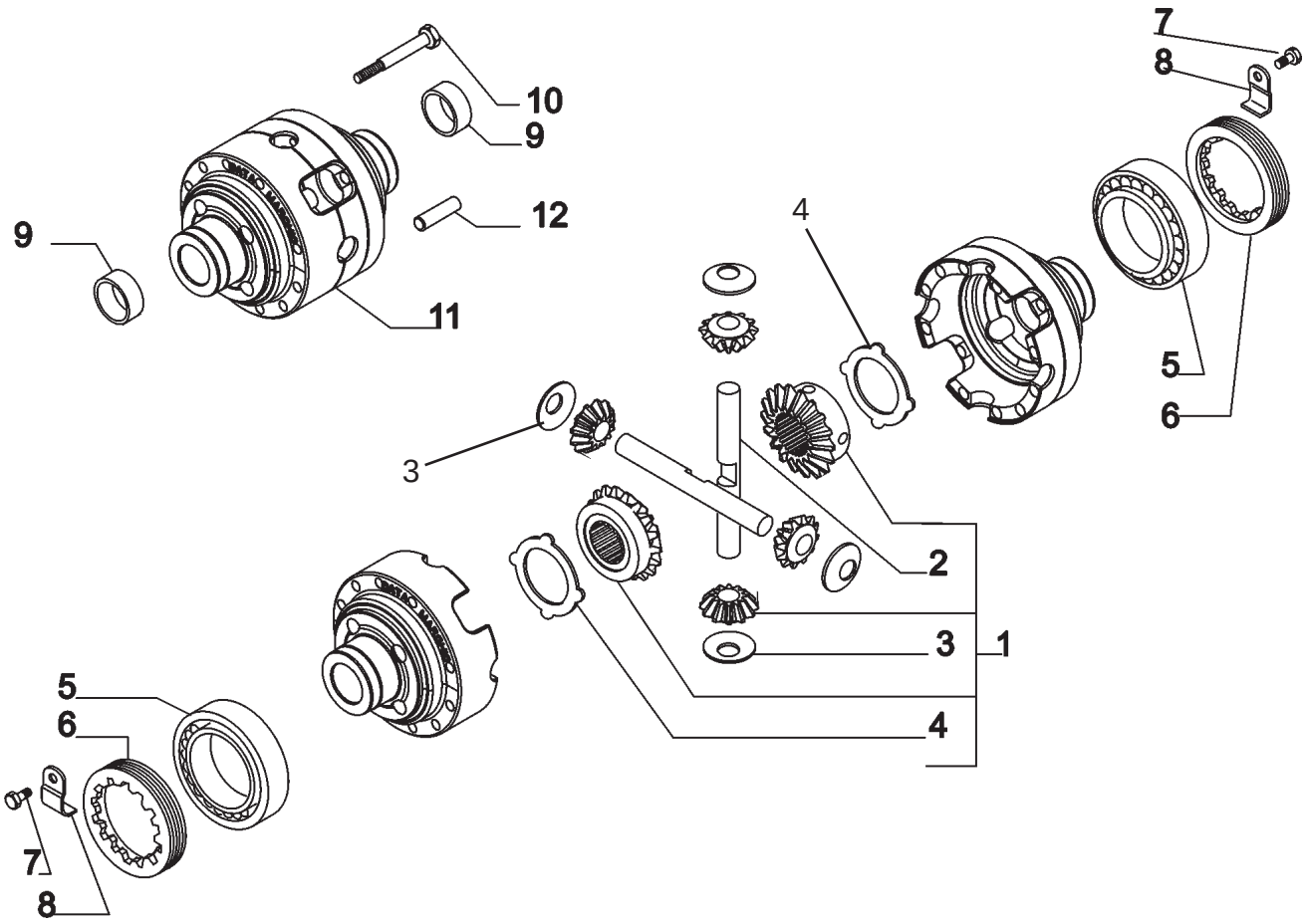
10
9
9
12
11
7
8
4
5
6
3
2
3
1
4
5
6
7
8

Ref.	Part No.	Description	Quantity	Applicable Machines	Remarks
1	10X3370	Differentia Kit	1		Include 2, 3 & 4
2	6193367M1	Shaft	2		
3	6193368M1	Thrust Washer	4		
4	6193369M1	Drive Plate	2		
5	6193375M1	Bearing	2		
6	6193374M1	Ring Nut	2		
7	3523583M1	Bolt M6X10	2		
8	6193373M1	Locking Plate	2		
9	6190302M1	Bushing	2		
10	6193379M1	Bolt M12X90	10		
11	10X1840	Differentia Housing	1		
12	6193377M1	Pin D12X40	2		

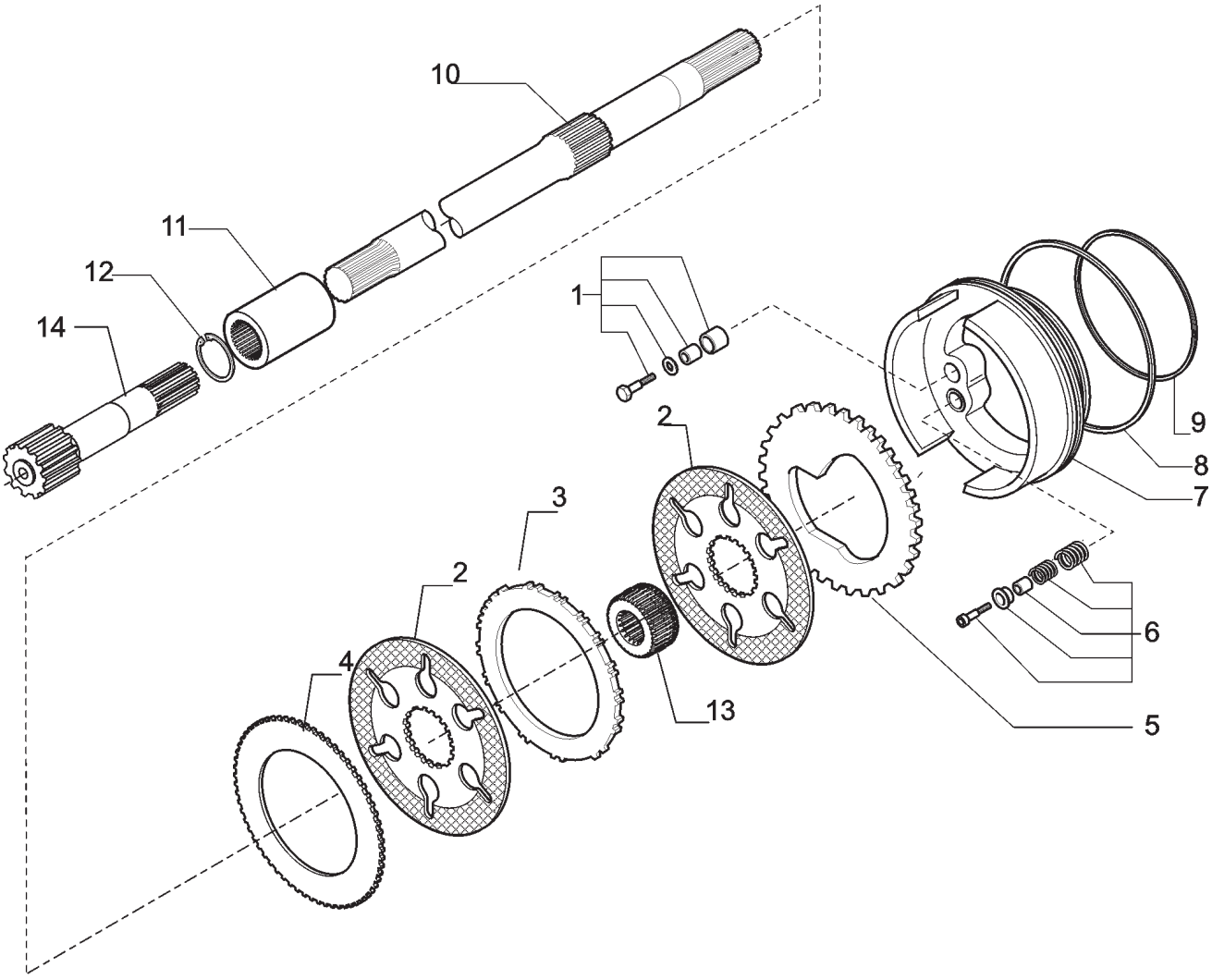
10
11
12
14
1
2
3
2
4
13
9
8
7
6
5

Ref.	Part No.	Description	Quantity	Applicable Machines	Remarks
1	6193394M91	Self-adjust Kit	2		
2	6193395M1	Brake Plate	4		
3	6193396M1	Brake Drive Plate	2		
4	6193397M1	Brake Drive Plate	2		
5	6193399M1	Brake Driver Plate	2		
6	10X3404	Self-adjust Kit	2		
7	6193398M1	Brake Piston (Pos.)	2		
8	6193402M1	O-Ring	2		
9	6193403M1	O-Ring	2		
10	6193401M1	Half-Shaft	2		
11	6193420M1	Bushing	2		
12	6193421M1	Snap Ring	2		
13	6194490M1	Sleeve	2		
14	6193422M1	Half-Shaft	2		

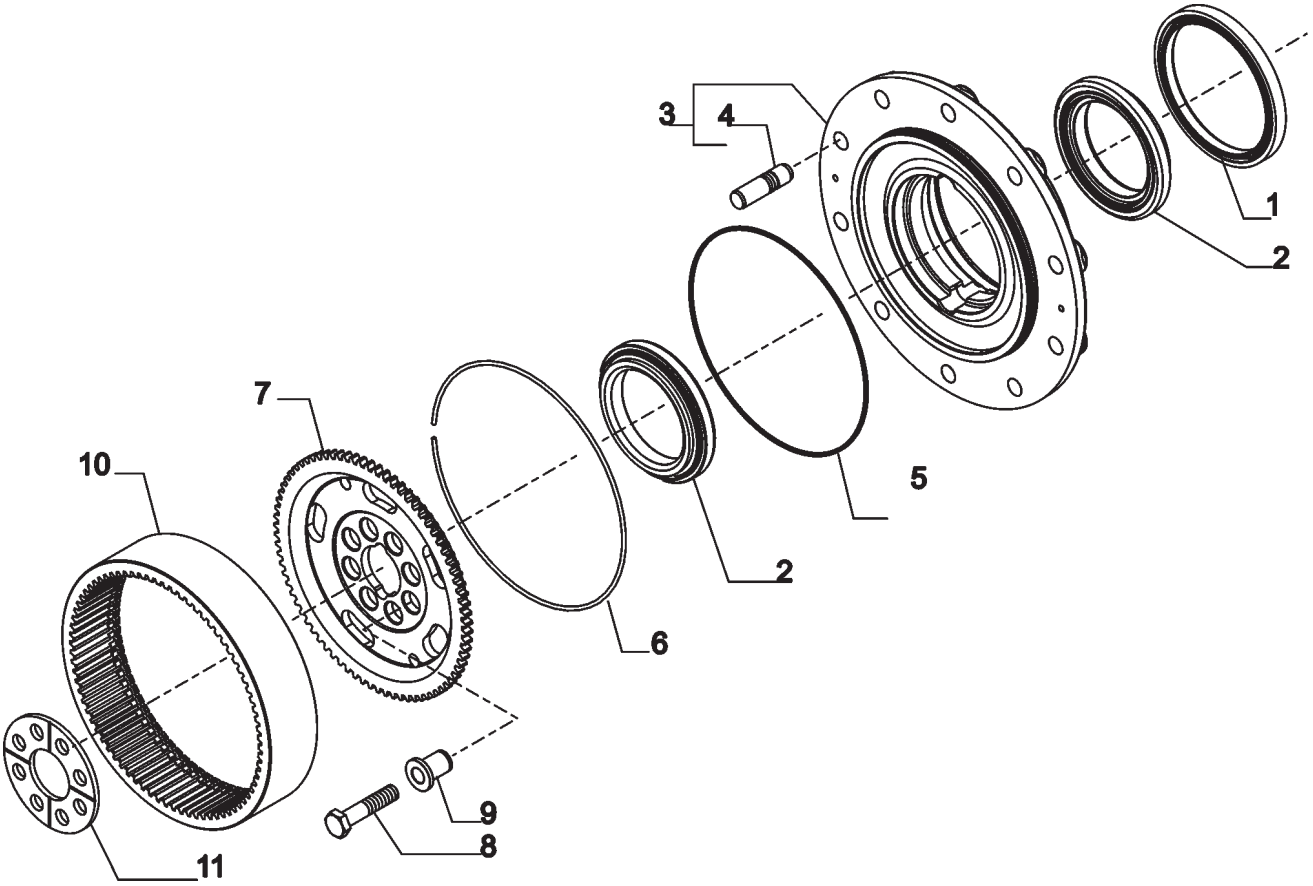
3
4
1
2
7
10
2
5
6
9
8
11

Ref.	Part No.	Description	Quantity	Applicable Machines	Remarks
1	6193408M1	Seal Ring	2		
2	3475599M1	Bearing	4		
3	6194284M91	Wheel Hub Kit	2		
4	1K0048	Stud	20		
5	6193346M1	O-Ring	2		
6	6190290M1	Ring	2		
7	6193411M1	Wheel Carrier	2		
8	3475604M1	Bolt	16		
9	10X1825	Centering Bush	2		
10	10X2056	Crown Gear	2		
11	6110605M91	Thrust Washer	2		

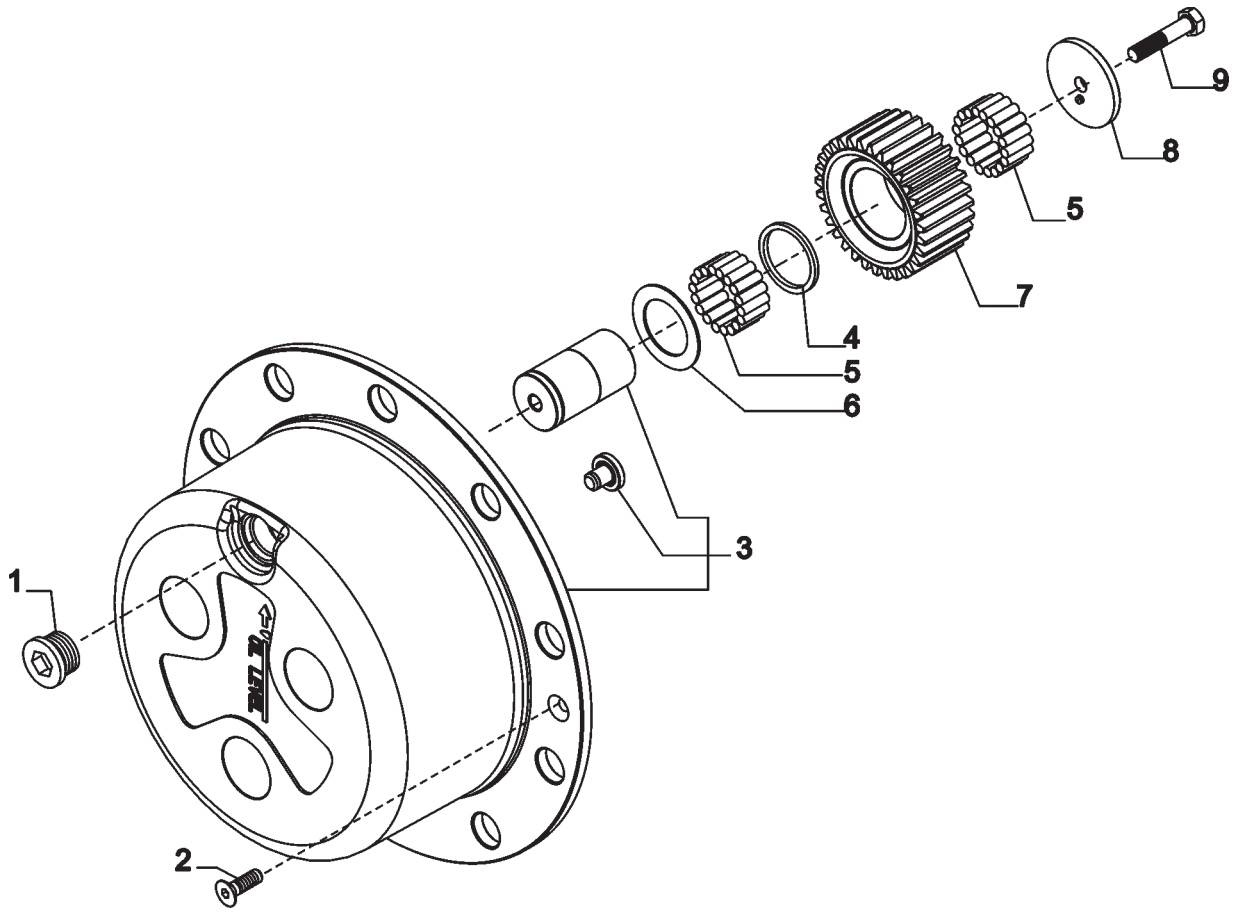
1
2
3
4
5
6
7
8
5
9

Ref.	Part No.	Description	Quantity	Applicable Machines	Remarks
1	3523632M1	Plug	2		
2	6190282M1	Bolt	4		
3	6193412M91	Planetary Carrier Assy.	2		
4	6193415M1	Washer	6		
5	6193414M1	Bearing Needles	372		
6	10X2081	Locking Thrust Washer	6		
7	6193419M1	Gear	6		
8	10X1817	Thrust Washer	6		
9	6190283M1	Bolt	6		

PARKING BRAKE

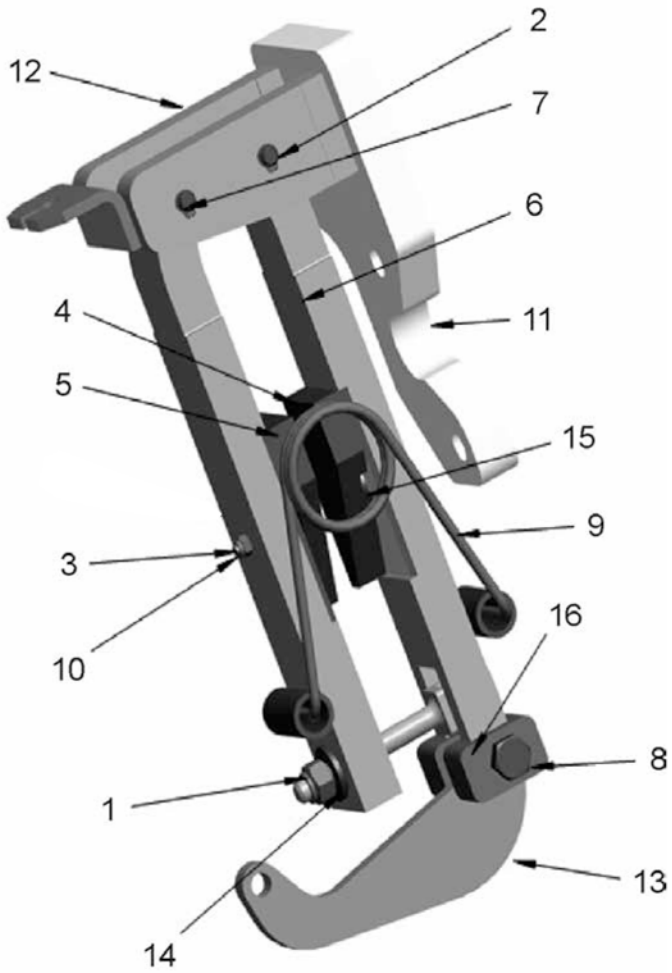

PARKING BRAKE

Ref.	Part No.	Description	Quantity	Applicable Machines	Remarks
	1K0237	Brake Caliper Assy.	1		
1	1440329X1	Nyloc Nut	1		
2	1440522X1	Retaining Ring Ext.	2		
3	1441494X1	Nyloc Nut	2		
4	1K0243	Brake Shoe LH	1		
5	1K0244	Brake Shoe RH	1		
6	1K0246	Brake Plate with Hing	1		
7	1K024	Hinge Pin (Plate)	2		
8	1K0250	Hinge Pin (Plate)	1		
9	1K0253	Spring	1		
10	1K0254	Bolt Brake Pad	1		
11	1K0255	Brake Mounting Assy.	1		
12	1K0256	Brake Plate RH Assy.	1		
13	1K0258	Lever Assy.	1		
14	1K0260	Spherical Washer	1		
15	1K0261	Bolt Brake Pad	1		
16	394367X1	Nyloc Nut	1		

REAR WHEELS

Heavy Duty Tyre

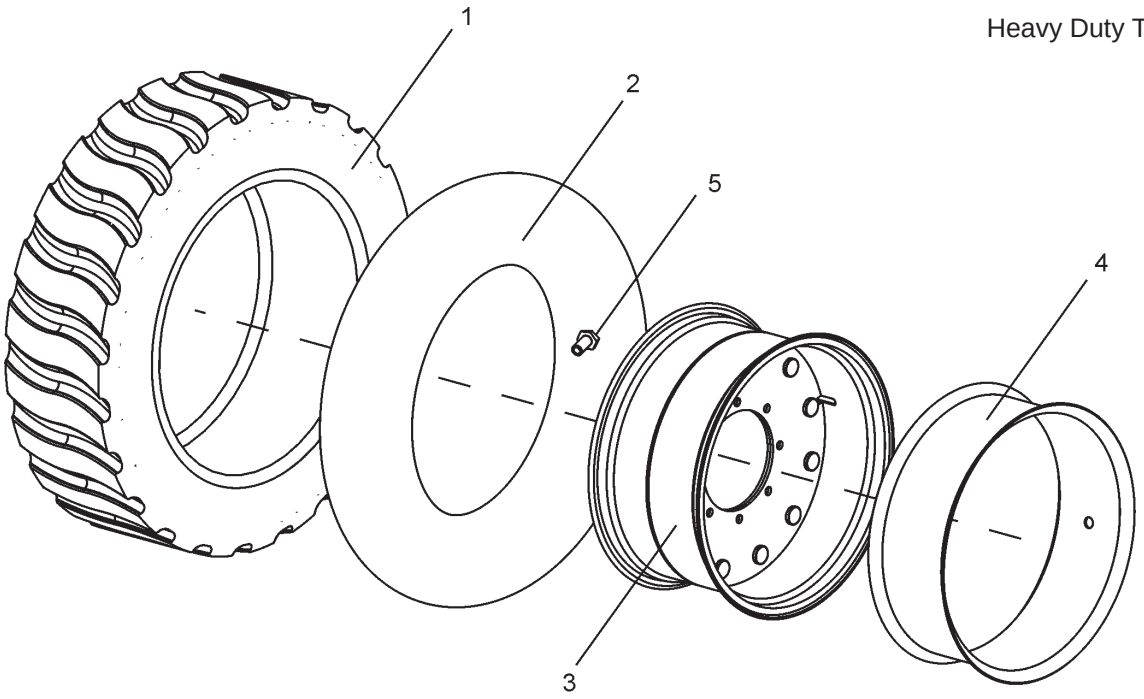

Standard tyre

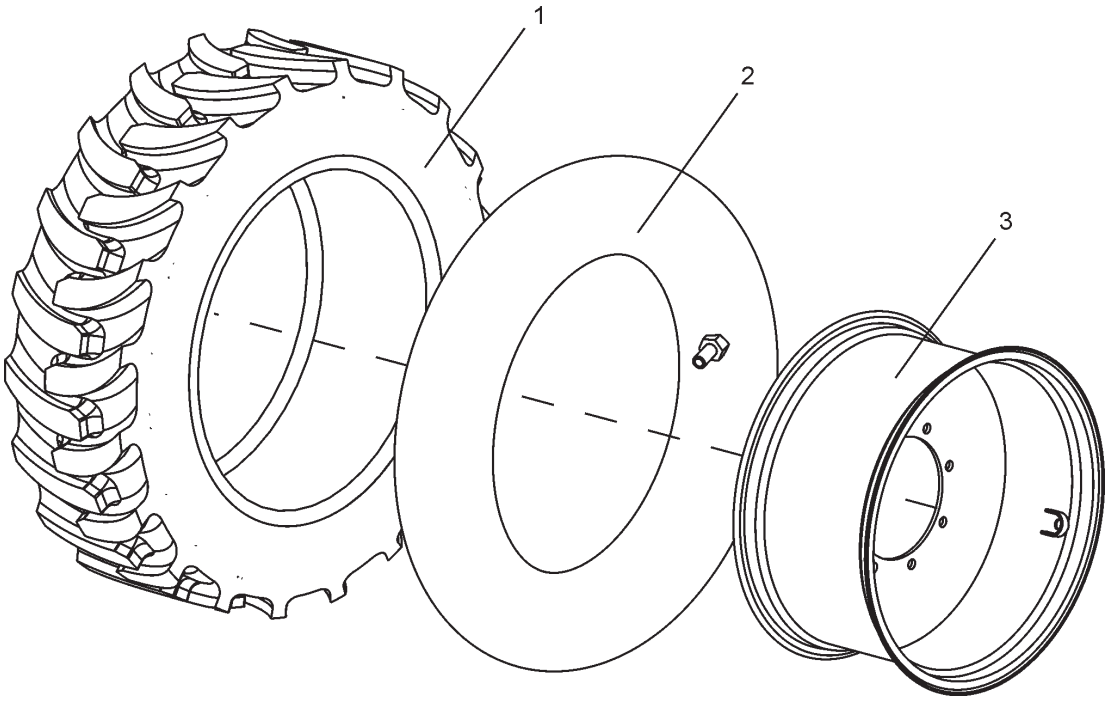

REAR WHEELS

Ref.	Part No.	Description	Quantity	Applicable Machines	Remarks
Standard tyre (16.9 x 28)					
1		Tube Less Tyre	2		
1	1F0005	Tyre	2		
2	1F0015	Tube	2		
3	1F0003	Rim	2		
4	1F0016	Flap	2		
Heavy Duty Tyre (14 x 25)					
1	1F0006	Tyre	2		
2	1F0017	Tube	2		
3	1F0021	Rim	2		
4	1F0018	Flap	2		
	1K0252	Valve Tubeless Type	2		

NOTES

NOTES

BRAKES

CONTROL BOX

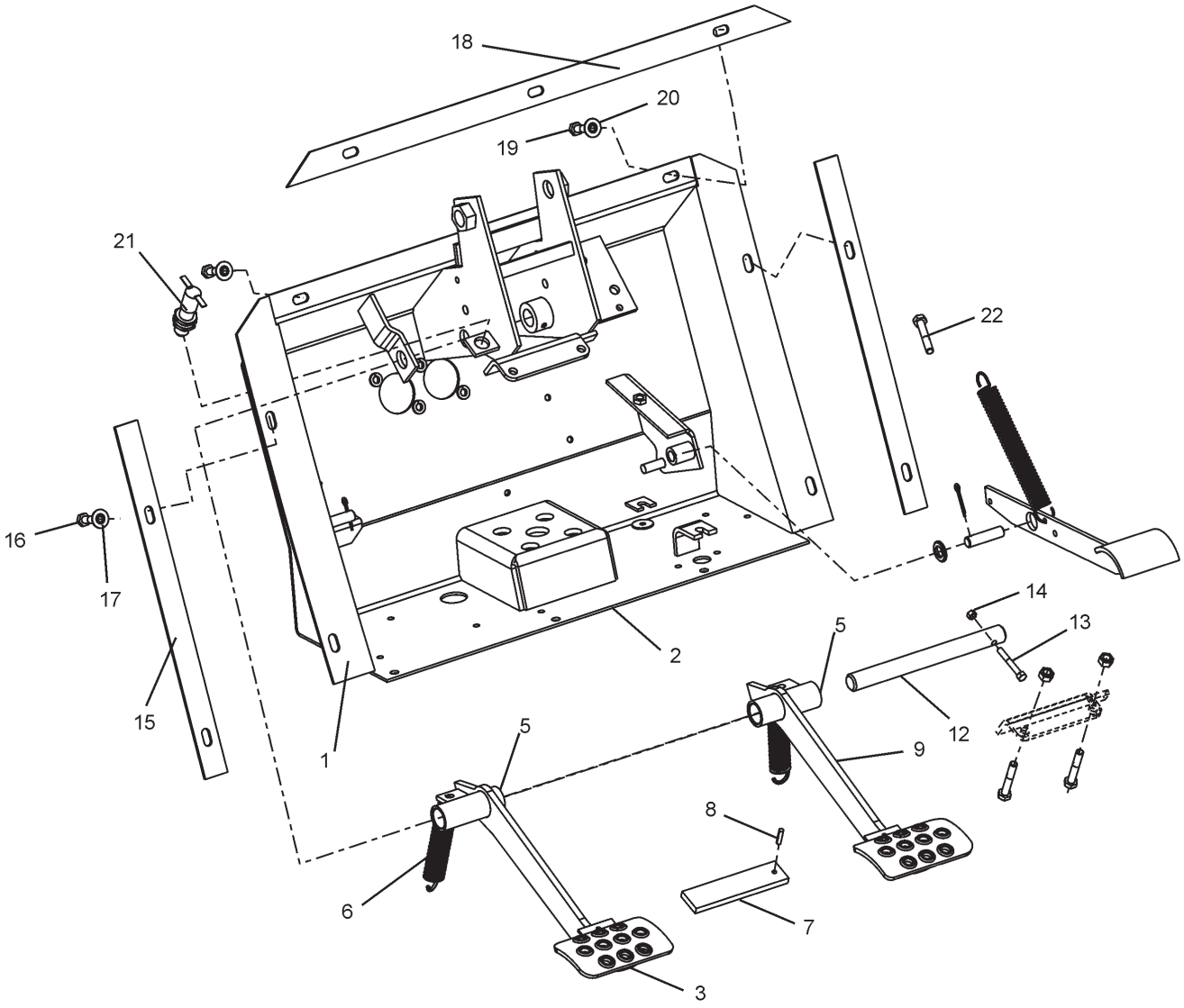

CONTROL BOX

Ref.	Part No.	Description	Quantity	Applicable Machines	Remarks
2	1J0698	Control Box W/A	1		
3	1J0695	Pedal Assy, LH	1		
5	1469497M1	Bushing	2		
6	1680157M2	Spring	2		
7	6108795M1	Latch	1		
8	195446M1	PIn	1		
9	1J0696	Pedal Assy., RH	1		
12	6106570M1	Shaft	1		
13	391244X1	Bolt	1		
14	1441500X1	Nut	1		
15	6100820M1	Gasket	2		
16	339011X1	Screw	4		
17	385361X1	Washer	4		
18	6100819M1	Gasket	1		
19	339761X1	Bolt	3		
20	385361X1	Washer	3		
21	1D0190	Switch Assy.	1		
22	390992X1	Bolt	4		

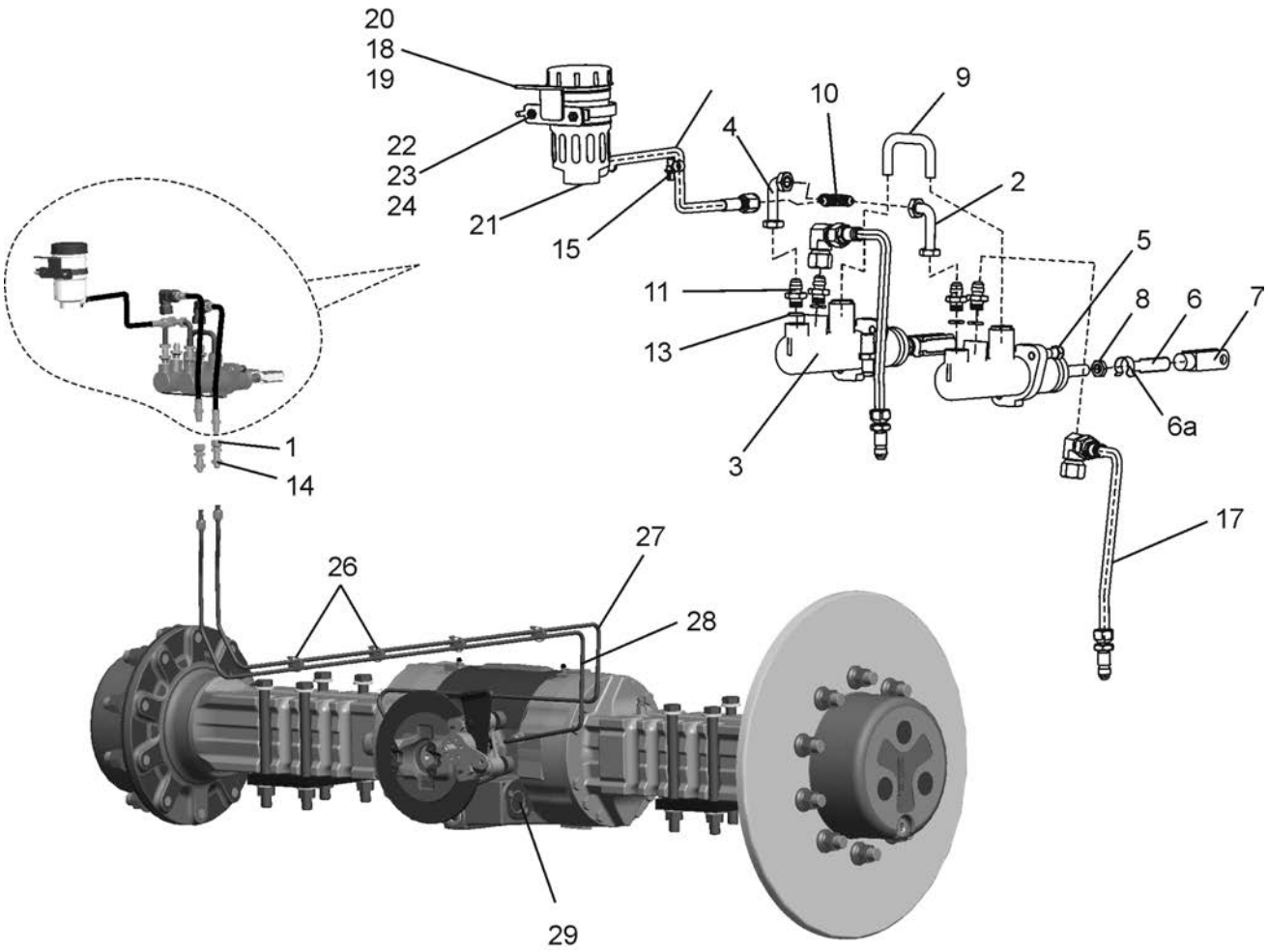
20
18
19
22
23
24
21
15
4
10
9
2
5
11
8
6
7
13
6a
3
1
14
17
27
26
28
29

Ref.	Part No.	Description	Quantity	Applicable Machines	Remarks
1	356265X1	Connector	2		
2	6106491M91	Tube Assy RH	1		
3	1H0301	Cylinder, Master	2		
4	6106517M91	Tube Assy LH	1		
5	394367X1	Nut, Lock	4		
6	1B0158	Pin, Clevis	2		
6A	3521461	Pin Lock	2		
7	3521833M1	Clevis	2		
8	3009694X1	Nut, Lock	2		
9	6108152M91	Tube Assy.	1		
10	356559X1	Tee	1		
11	3019692X91	Connector Assy.	4		
13	3019395X1	O-Ring	4		
14	356613X1	Nut	2		
15	3517409M1	Clamp	1		
16	1H0033	Hose Assy.	1		
17	6106506M91	Hose Assy.	2		
18	339123X1	Bolt	2		
19	390972X1	Washer	2		
20	1A0140	Bracket	1		
21	1H0329	Reservoir	1		
22	339721X1	Bolt	2		
23	301956X1	Washer	2		
24	1441494X1	Nut, Lock	2		
25	6106033M1	Bracket	1		
26	1H0308	Tube Clamp	4		
27	6112806M1	Tube Assy, RH	1		
28	6112805M1	Tube Assy, LH	1		
29	6106477M91	Connector Assy	2		

NOTES

NOTES

FRONT AXLE & STEERING
(2 Wheel Drive)

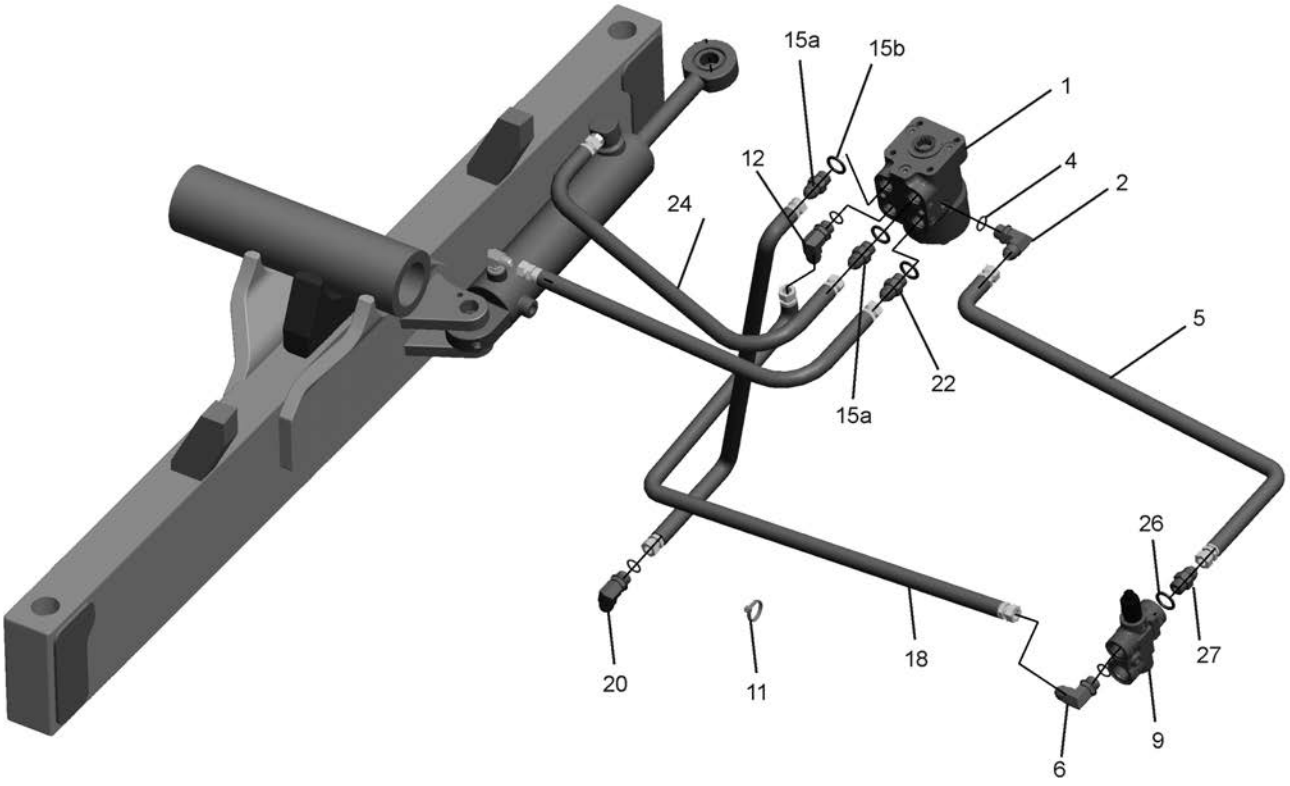
15a
15b
1
12
4
2
24
5
22
15a
26
27
20
11
18
9
6

Ref.	Part No.	Description	Quantity	Applicable Machines	Remarks
1	1H0447	Orbitrol Unit	1		
2	1H0100	Union	1		
4	1H0080	Dowty Seal	1		
5	1H0062	Hose Assy	1		
6	358762X91	Elbow Assy	1		
6a	831497M1	O-Ring	1		
9	1H0448	Priority Valve	1		
10	1H0099	Hose Assy	1		
11	1876229M1	Tie, Cable	UAR		
12	1H0078	Elbow Assy	1		
12a	831497M1	O-Ring	1		
15a	1H0075	Union	2		
15b	1H0076	Dowty Seal	2		
18	6107537M91	Hose	1		
20	365233X1	Elbow	1		
21	6107102M91	Hose	1		
22	1H0077	Connector	1		
24	1H0032	Hose Assy.	1		
26	835024M1	O-Ring	1		
27	3517854M1	Connector	1		

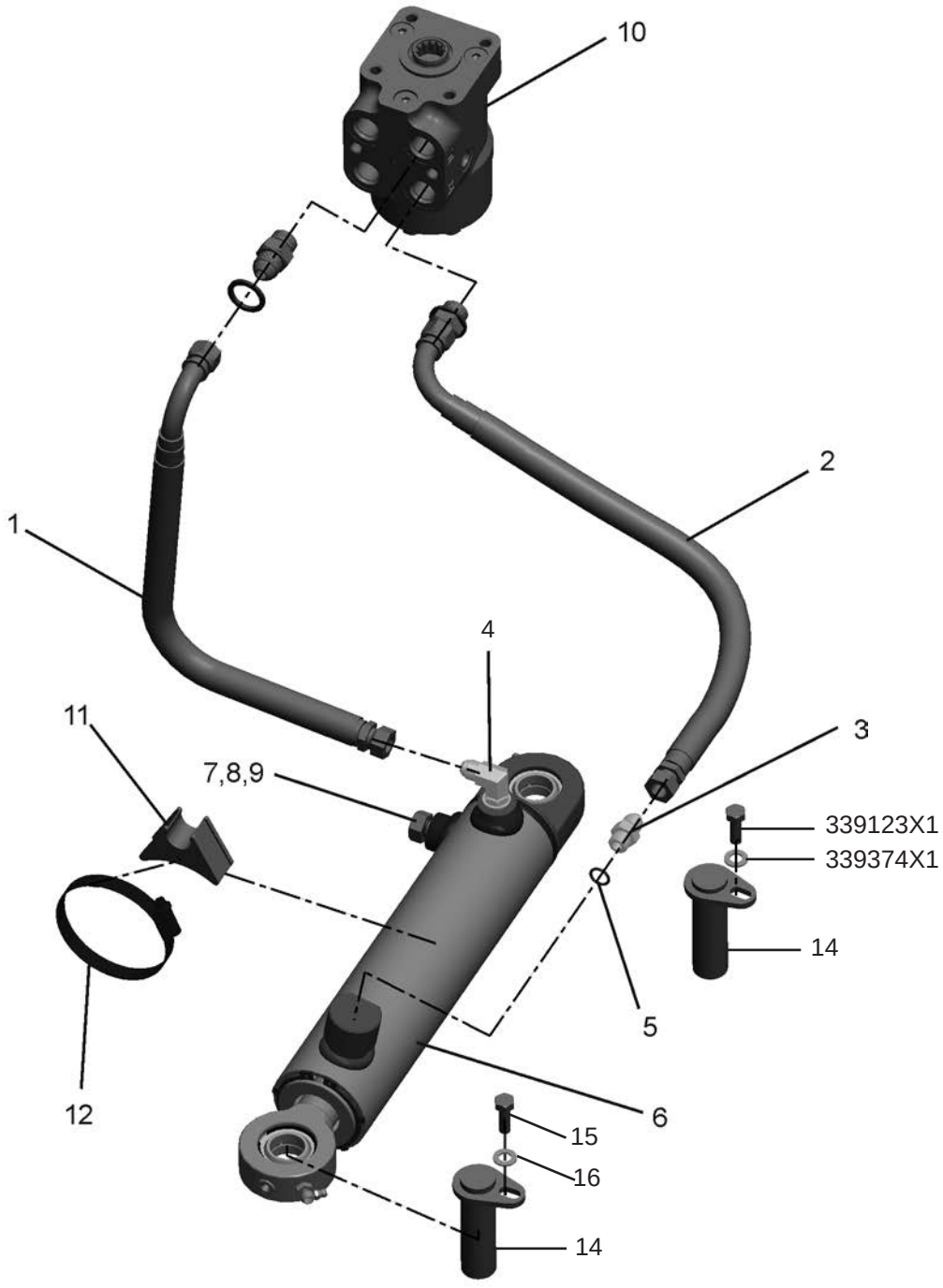
10
2
1
4
11
7,8,9
3
339123X1
339374X1
14
5
12
6
15
16
14

Ref.	Part No.	Description	Quantity	Applicable Machines	Remarks
1	6107102M91	Hose	1		
2	1H0032	Hose	1		
3	835091M91	Union	2		
4	357196X1	Connector	1		
5	831452M1	O-Ring	2		
6	1H0376	Steering Cyl.	1		
8	357194X1	Plug	1		
9	831452M1	O-Ring	1		
10	1H0447	Orbitrol Valve	1		
11	D142787	Mount Rubber	1		
12	3517728M1	Clip	1		
14	1K0115	Pivto Pin Steering Cyl.	2		
15	339123X1	Bolt	2		
16	339374X1	Washer	2		

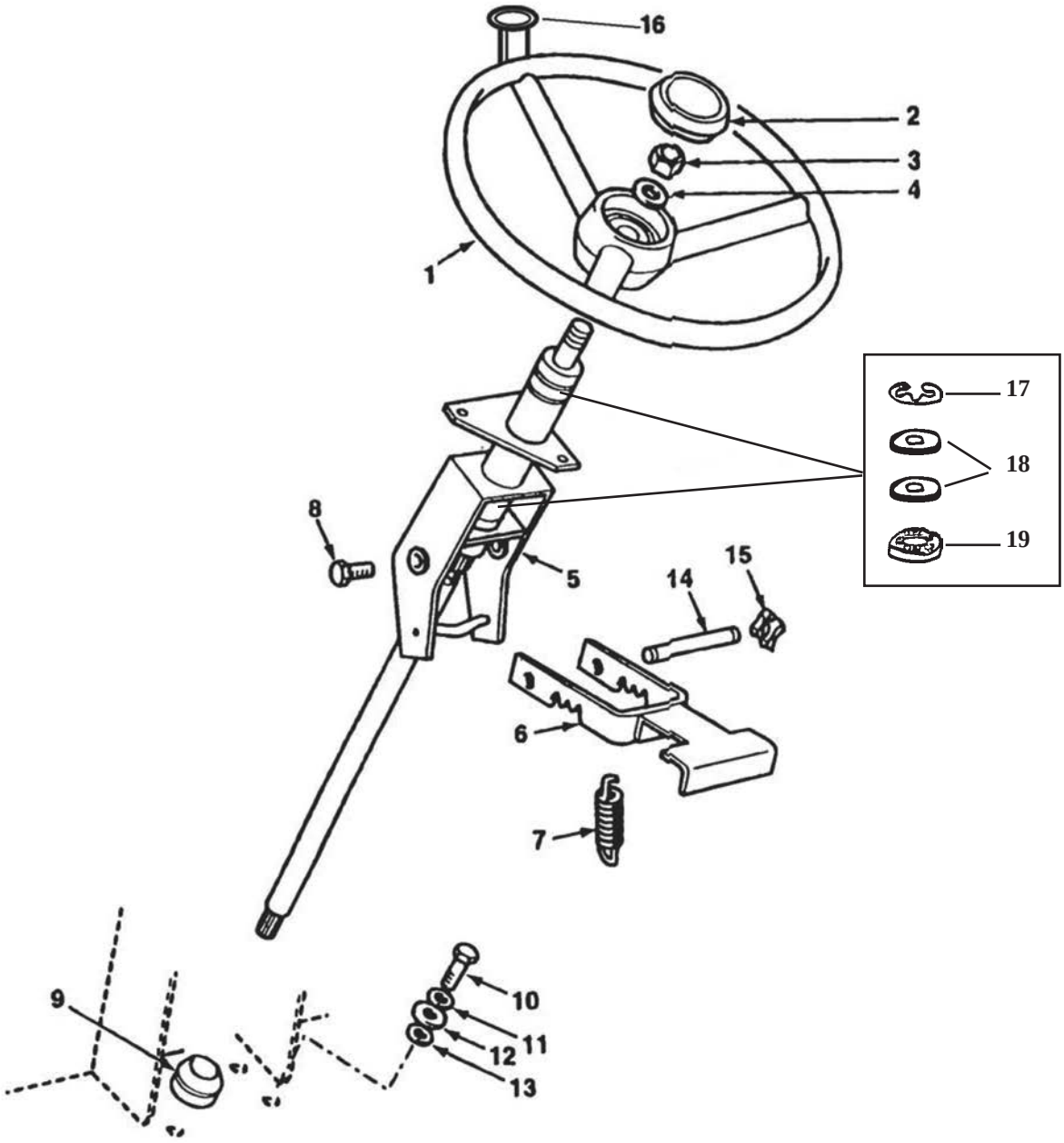
16
2
3
4
1
17
18
19
8
5
15
14
6
7
9
10
11
12
13

Ref.	Part No.	Description	Quantity	Applicable Machines	Remarks
1	J0205	Wheel, Steering	1		
2		Cap	1		NSP
3	1441246X1	Nut	1		
4	392913X1	Washer	1		
5	1J0008	Column, Steering	1		
6	1J0042	Bracket	1		
7	3522399M1	Spring	1		
8	1611049M1	Screw	2		
9	1471979M1	Ring, Sealing	1		
10	3009494X1	Screw	4		
11	339376X1	Washer, Lock	4		
12	390597X1	Washer	4		
13	3507736M1	Stanchion	4		
14	3521918M2	Pin	1		
15	3521461M1	Clip	2		
16	1J0003	Spinner Knob	1		
17	10X0424	Thrust Bearing	2		
18	10X1860	Shim	4		
19	10X1859	Lock	2		

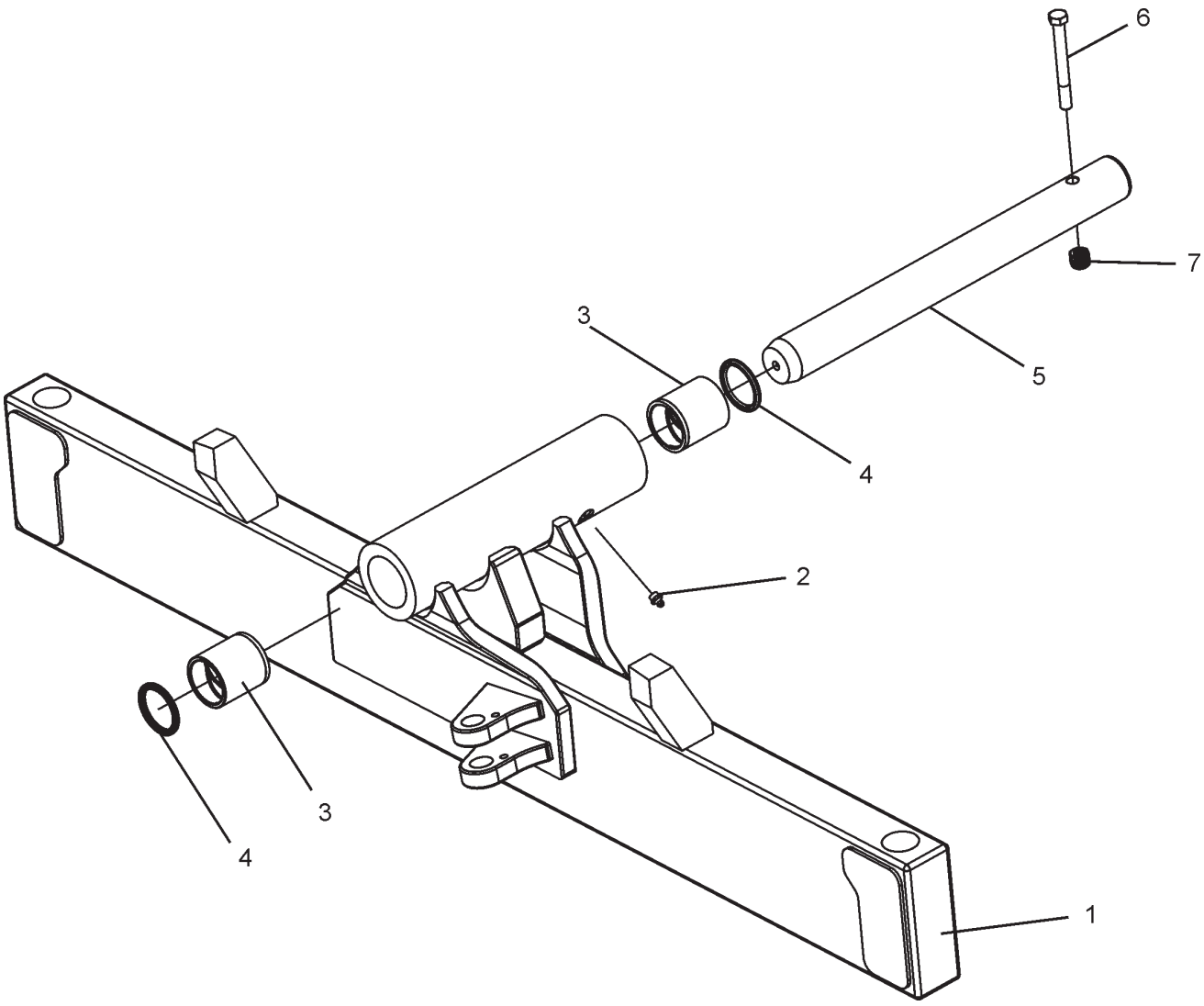
6
7
3
5
4
2
3
4
1

Ref.	Part No.	Description	Quantity	Applicable Machines	Remarks
1	1K0158	Front Axle W/A	1		
2	339608X1	Grease Nipple	1		
3	1TK0004M1	Bush	2		
4	1TK0005M1	Seal	2		
5	1B1094	Pin	1		
6	3009518X1	Bolt	1		
7	1440330X1	Nut	1		

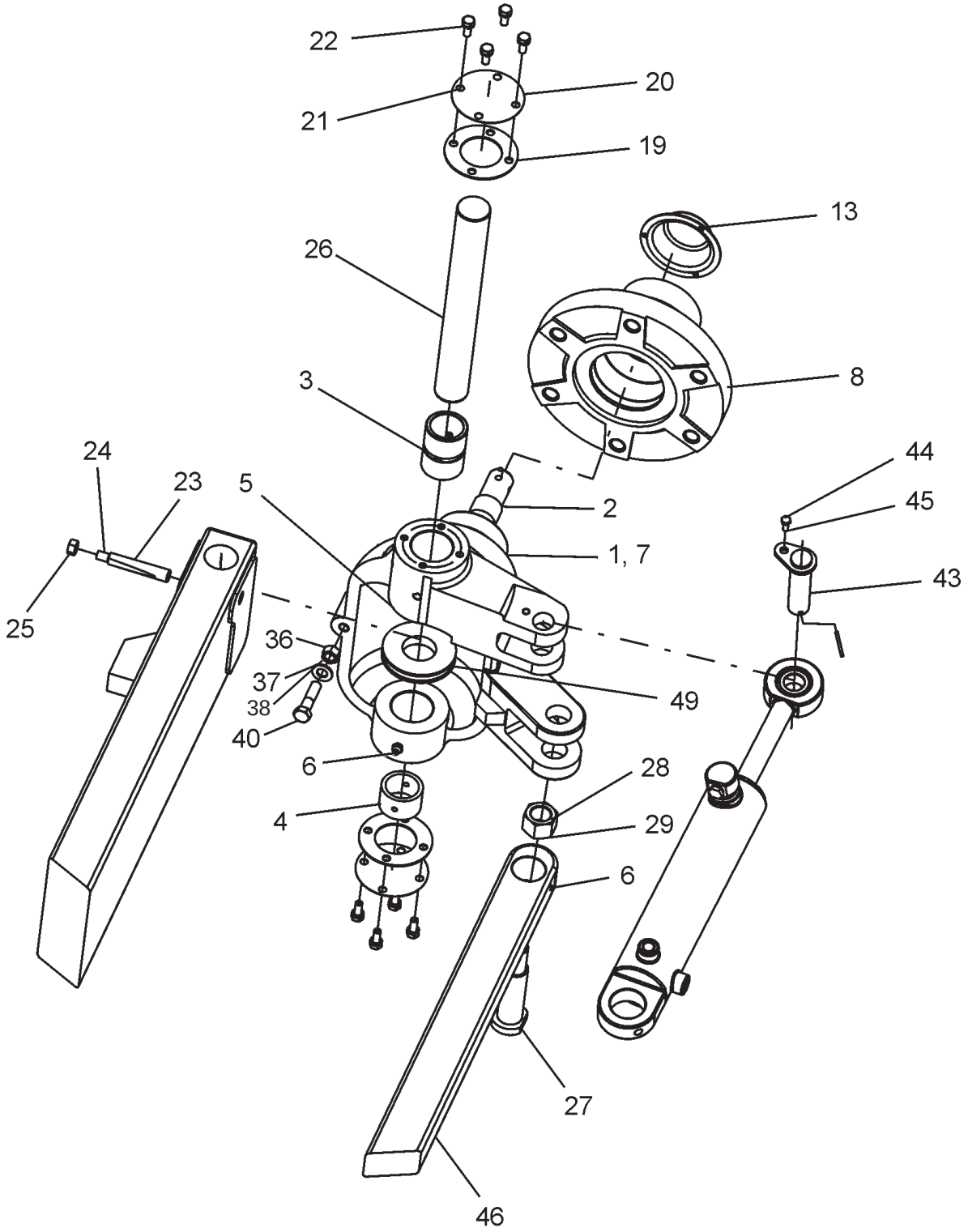
22
20
21
19
13
26
8
3
24
23
5
44
2
45
1, 7
43
25
36
37
38
40
49
6
28
4
29
6
27
46

Ref.	Part No.	Description	Quantity	Applicable Machines	Remarks
1	1K0290	Stub Axle Carrier LHS	1		
2	1K0284	Stub Axle	2		
3	1K0150	Bush Top	2		
4	1K0151	Bush Bottom	2		
5	3019957X1	Oil Seal	2		
6	1441858X1	Grease Nipple	6		
7	1K0127	Stub Axle Carrier RHS	1		
8	1K0019	Wheel Hub	2		
9	1K0283	Bearing	2		
10	1K0211	Bearing	2		
11	3019968X1	Oil Seal	2		
12	1K0020	Sleeve	2		
13	1K0288	Wheel Hub Cover	2		
14	339721X1	Screw Hex	6		
15	1440312X1	Spring Washer	6		
16	1K0074	Slotted Nut	2		
17	339037X1	Split Pin	2		
18	1K0286	Washer Hub	2		
19	1K0149	Gasket	4		
20	1K0130	Plate	4		
21	339374X1	Lock Washer	16		
22	339123X1	Bolt	16		
23	1K0089	Cotter Pin	2		

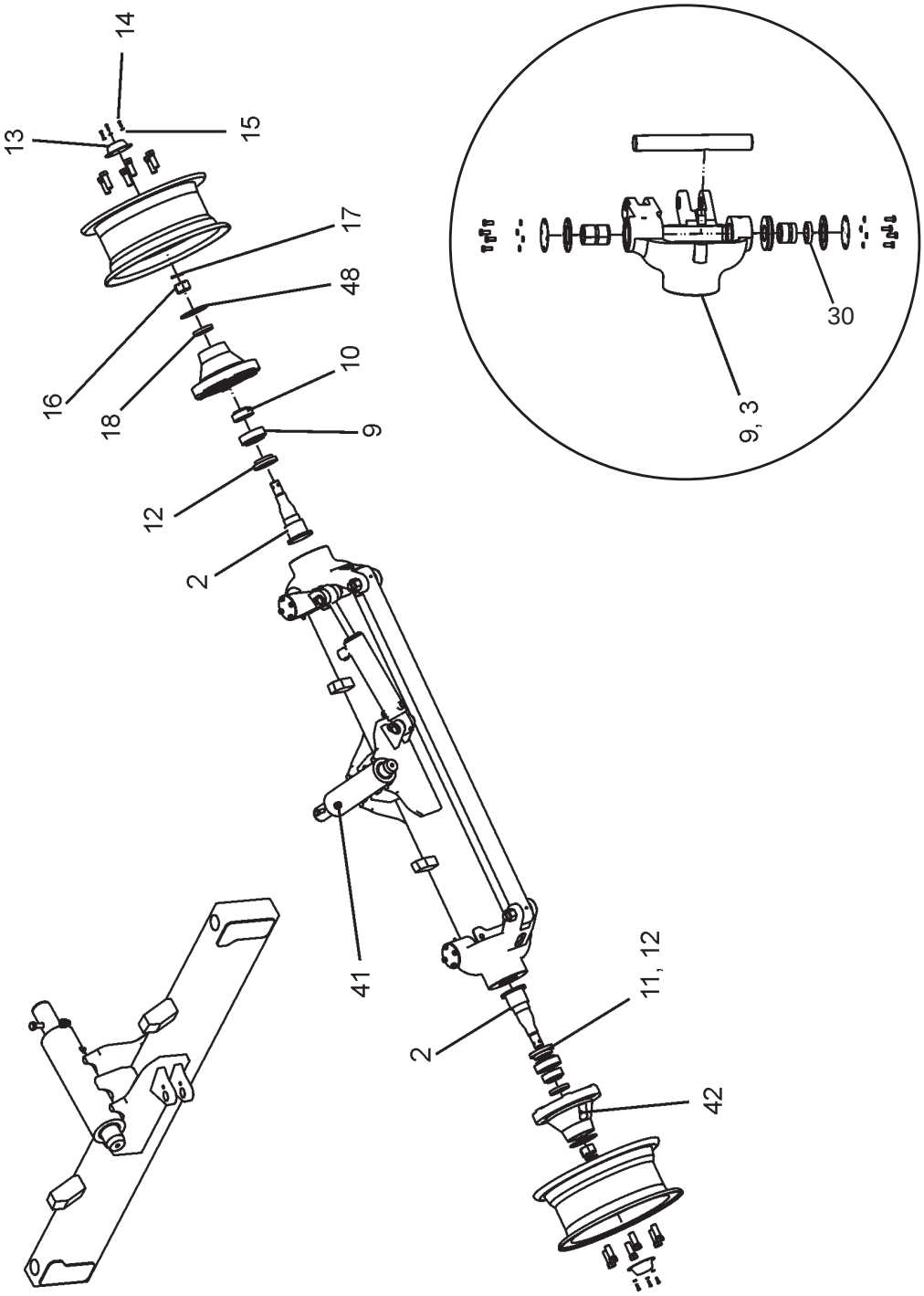
14
13
15
17
48
16
18
10
9
12
2
41
11, 12
2
42
30
9, 3

Ref.	Part No.	Description	Quantity	Applicable Machines	Remarks
24	390744X1	Washer	2		
25	390881X1	Nut	2		
26	1K0128	King Pin	2		
27	1K0014	Pin Track Rod	2		
28	1440867X1	Lock Nut	2		
29	339379X1	Spring Washer	2		
30	1K0041	Shim 0.5	UAR		
30	1K0042	Shim 0.6	UAR		
30	1K0043	Shim 0.7	UAR		
30	1K0044	Shim 0.8	UAR		
30	1K0045	Shim 0.9	UAR		
30	1K0046	Shim 1.0	UAR		
36	3019407X1	Hex Nut	2		
37	390735X1	Washer	4		
38	1K0065	Washer	UAR		
38A	1K0066	Washer	UAR		
40	390887X1	Screw	2		
41	1441858X1	Grease Fittings	4		
42	1441983X1	Grease Fittings	2		
43	1K0115	Pin	2		
44	339123X1	Bolt	2		
45	339374X1	Washer	2		
46	1K0012	Track Rod	1		
47	1K0152	Bush Track Rod	2		
48	1K0289	Gasket Wheel Hub	2		
49	1K0137	Thrust Bush	2		

NOTES

NOTES

FRONT AXLE & STEERING
(4 Wheel Drive)

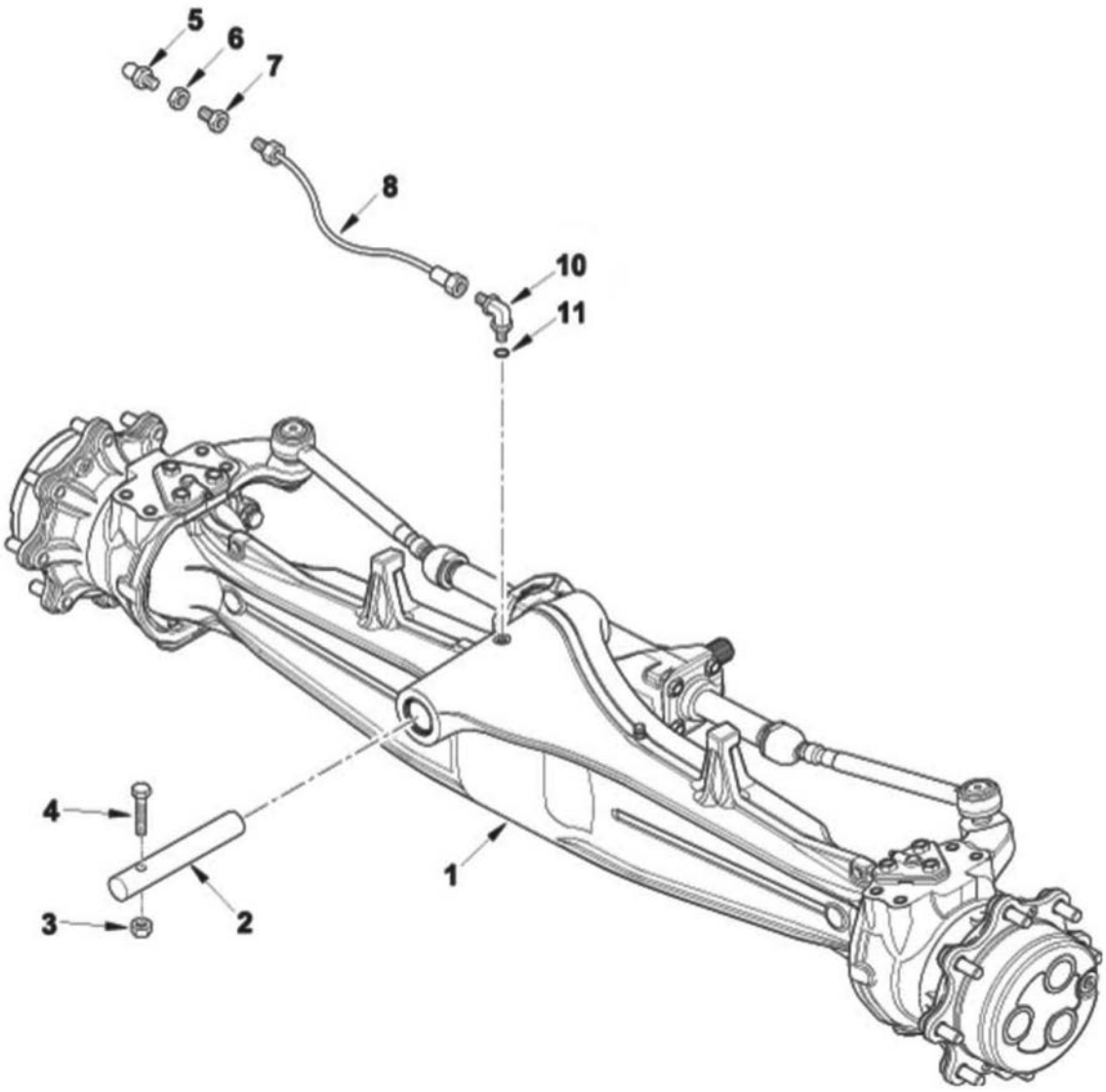
5
6
7
8
10
11
4
3
2
1

FRONT AXLE (4 WHEEL DRIVE)

Ref.	Part No.	Description	Quantity	Applicable Machines	Remarks
1	6111268M91	Axle Assy. Front	1		
2	1B1094	Pin	1		
3	1440330X1	Nut	1		
4	3009518X1	Bolt	1		
5	1441858X1	Fitting, Grease	1		
6	3009694X1	Nut, Lock	1		
7	3521240M1	Fitting	1		
8	6110197M1	Hose Assy	1		
10	358760X91	Elbow	1		
11	831495M1	O-Ring	1		

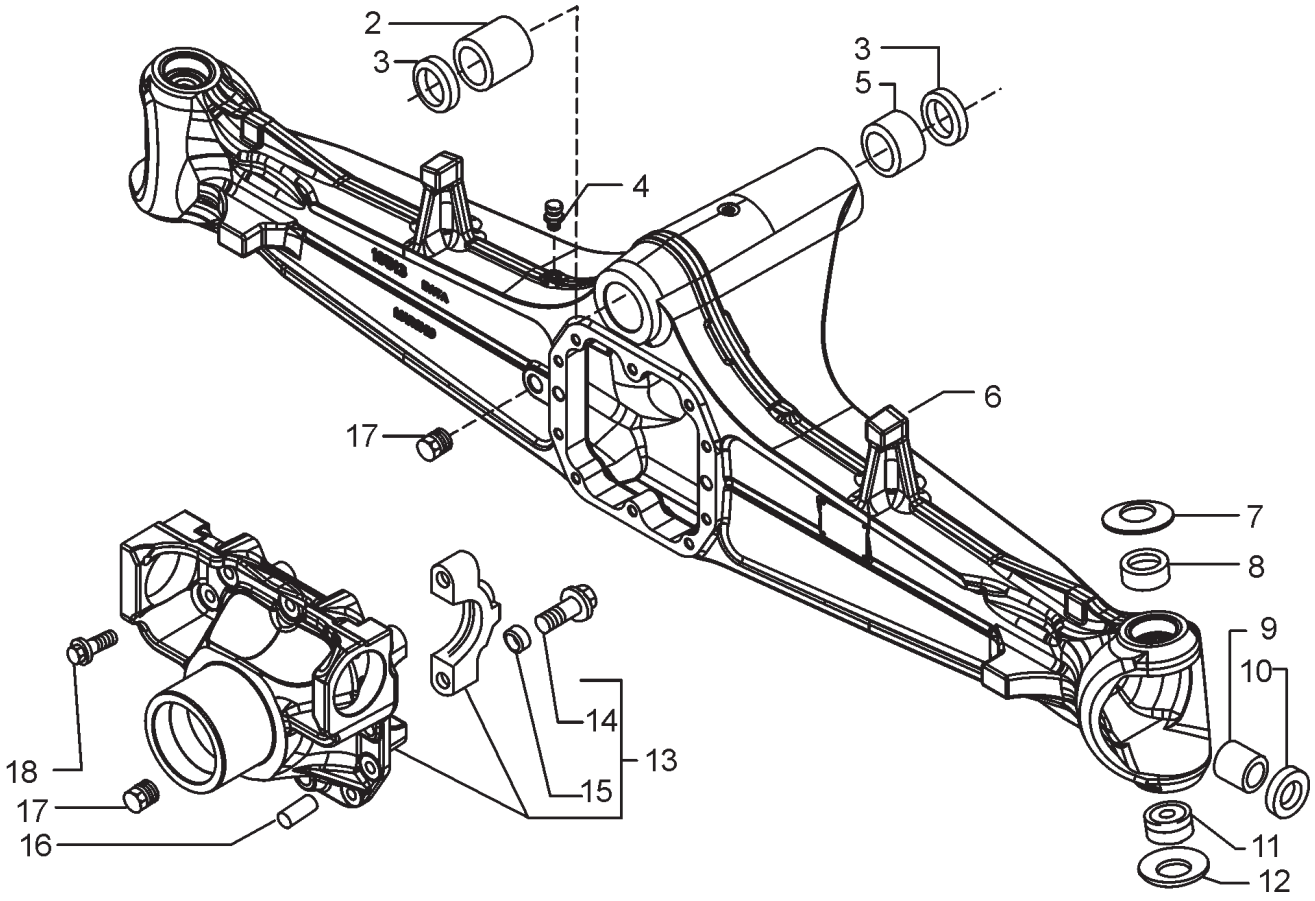
2
3
3
5
4
6
17
7
8
9
10
18
17
16
14
13
15
11
12

Ref.	Part No.	Description	Quantity	Applicable Machines	Remarks
1	6111268M91	Axle Assy, Front	1		
2	6194021M1	Bush	1		
3	6194017M1	Seal, Oil	2		
4	3475328M1	Breather	1		
5	6194022M1	Bush	1		
6	6194902M1	Housing, Axle	1		
7	3523545M1	Washer	2		
8	6194030M1	Bush	2		
9	3475535M1	Bushing	2		
10	6194903M1	Seal, Oil	2		
11	3523057M1	Bushing	2		
12	3523555M1	Washer	2		
13	6194018M91	Support Assy	2		
14	3523068M1	Screw	4		
15	3475335M1	Bushing	4		
16	3475341M1	Pin	4		
17	3475329M1	Plug	2		
18	3523067M1	Screw	10		

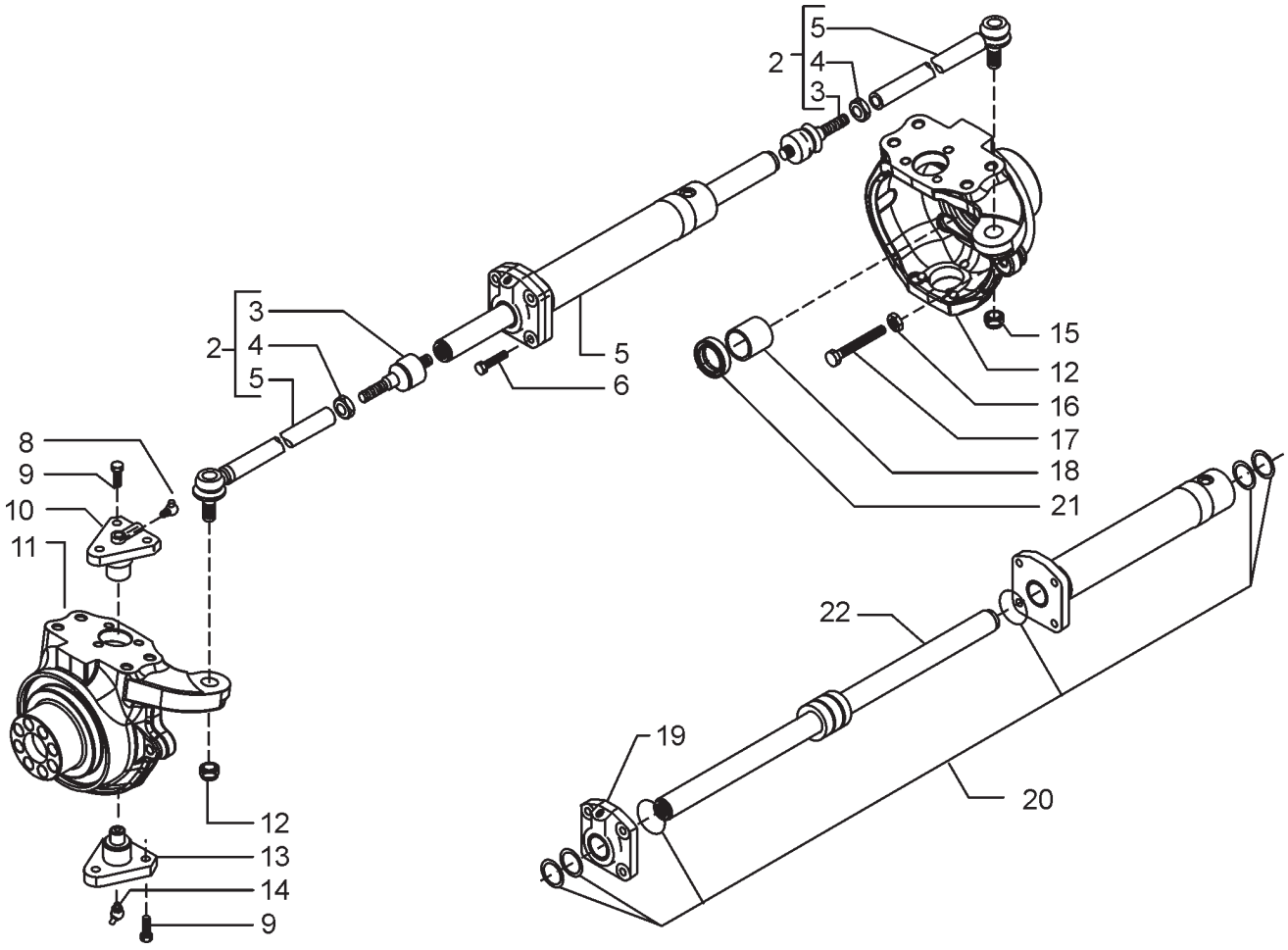
5
2
4
3
3
2
4
5
5
6
15
12
16
17
18
21
8
9
10
11
22
19
20
12
13
14
9

STEERING PIVOT (4 WHEEL DRIVE)

Ref.	Part No.	Description	Quantity	Applicable Machines	Remarks
2	6112445M91	Armassembly, Steering	2		
3	6194904M91	Ball Joint	2		
4	6193677M1	Nut	2		
5	6193678M1	Rod, Tie	2		
6	6112444M91	Cylinder, Steering	1		
7	6194024M1	Bolt	4		
8	6190567M1	Fitting, Grease	2		
9	3523548M1	Screw	12		
10	6190565M1	Pin	2		
11	6194905M91	Housing, Swivel	1		
12	6190221M1	Nut	2		
13	6190566M1	Pin	2		
14	6194111M1	Fitting, Grease	2		
15	6194906M91	Housing, Swivel	1		
16	6194005M1	Nut	2		
17	6194907M1	Bolt	2		
18	6194908M1	Bush	2		
19	6194909M1	Head, Cylinder	1		
20	6194910M91	Kit, Seal	1		
21	6194911M1	Seal, Oil	2		
22	6194912M91	Rod	1		

FRONT WHEELS

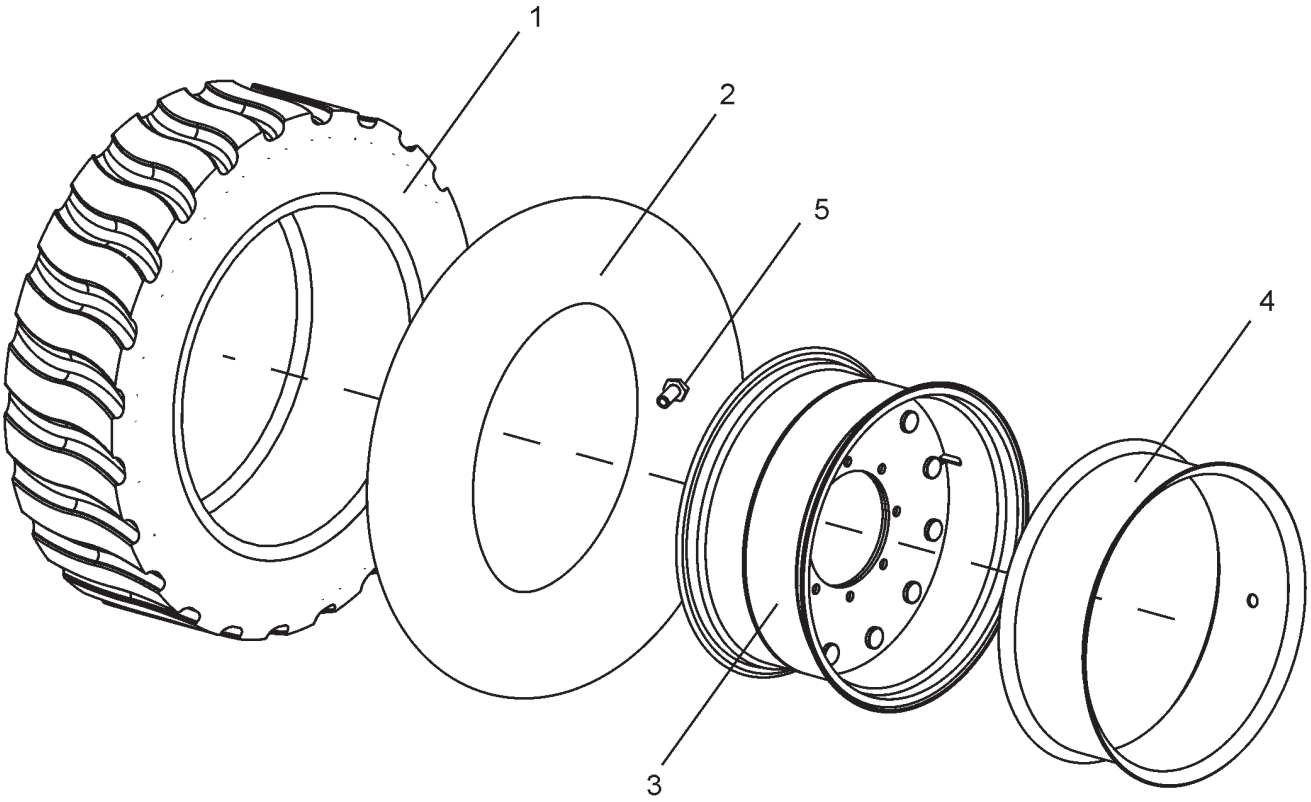

FRONT WHEELS

Ref.	Part No.	Description	Quantity	Applicable Machines	Remarks
TYRE FRONT					
Standard Tyre (12.5-18)					
1	1F0008 Tyre	Tyre	2		2WD/4WD
2	1F0013 Tube	Tube	2		2WD/4WD
3	1K0035 Rim	Rim	2		2WD
3	6112810M1 Rim	Rim	2		4WD
4	1F0012	Flap	2		2WD
	1K0252 Valve		2		For tubeless tyre
H.D.T. (9 x 16)					
1	1F0004	Tyre	2		2WD/4WD
2	1F0011	Tube	2		2WD/4WD
3	1K0061	Rim	2		2WD
4	1F0012	Flap	2		2WD

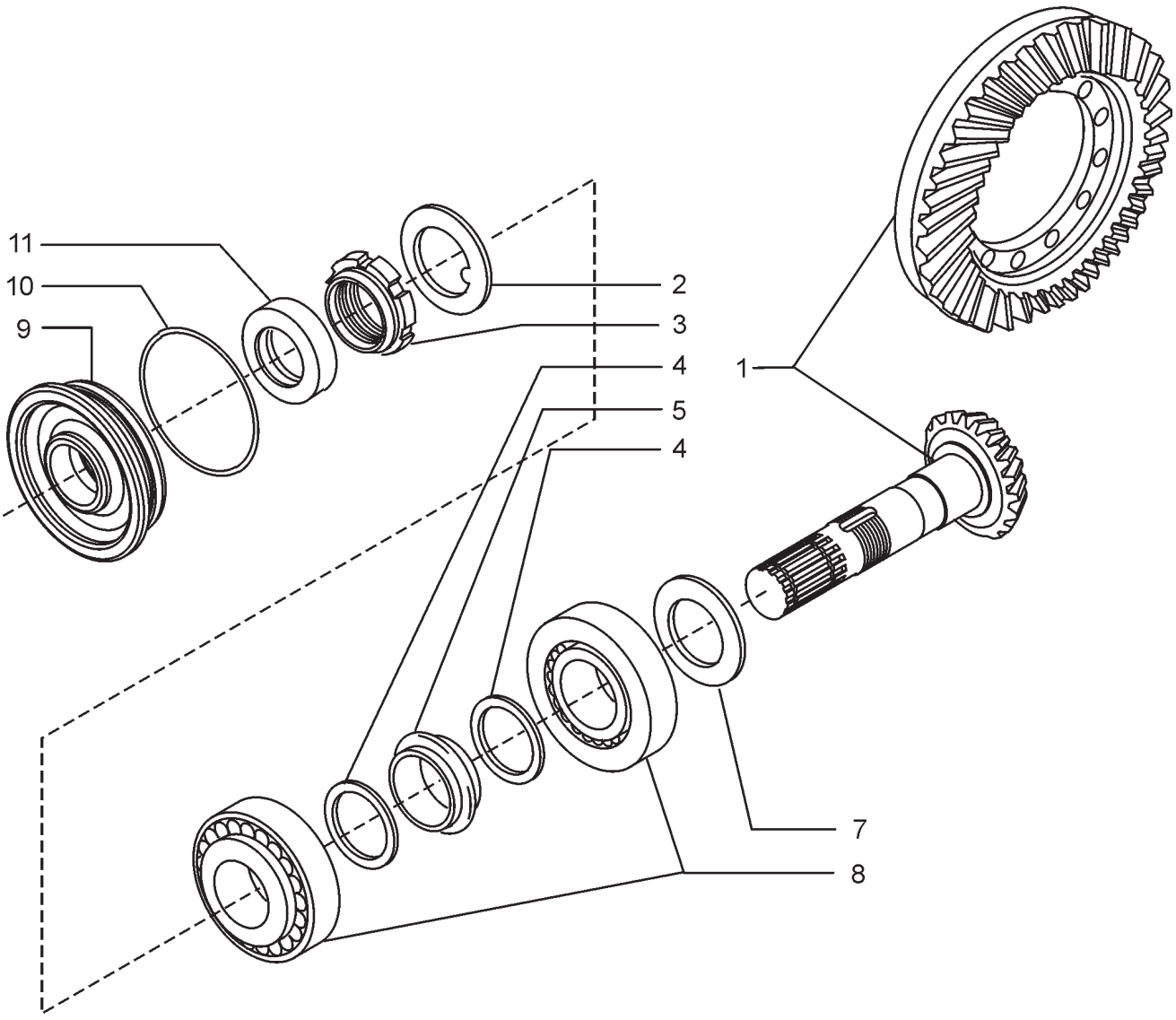
11
10
9
2
3
4
5
4
1
7
8

BEVEL GEAR (4 WHEEL DRIVE)

Ref.	Part No.	Description	Quantity	Applicable Machines	Remarks
TYR					
1	6194506M91	Kit, Crownwheel	1		
2	3475569M1	Washer, Lock	1		
3	3475570M1	Nut	1		
4	3523082M1	Washer	2		
5	3523083M1	Spacer	1		
7	6190197M1	Shim	1		2.5 mm
7	6190198M1	Shim	1		2.6 mm
7	6190199M1	Shim	1		2.7 mm
7	6190200M1	Shim	1		2.8 mm
7	6190201M1	Shim	1		2.9 mm
7	6190202M1	Shim	1		3.0 mm
7	6190203M1	Shim	1		3.1 mm
7	6190204M1	Shim	1		3.2 mm
7	6190205M1	Shim	1		3.3 mm
7	6190206M1	Shim	1		3.4 mm
8	3475567M1	Bearing, Ball	2		
9	6194025M1	Cover	1		
10	6194006M1	O-Ring	1		
11	6193433M1	Seal, Oil	1		

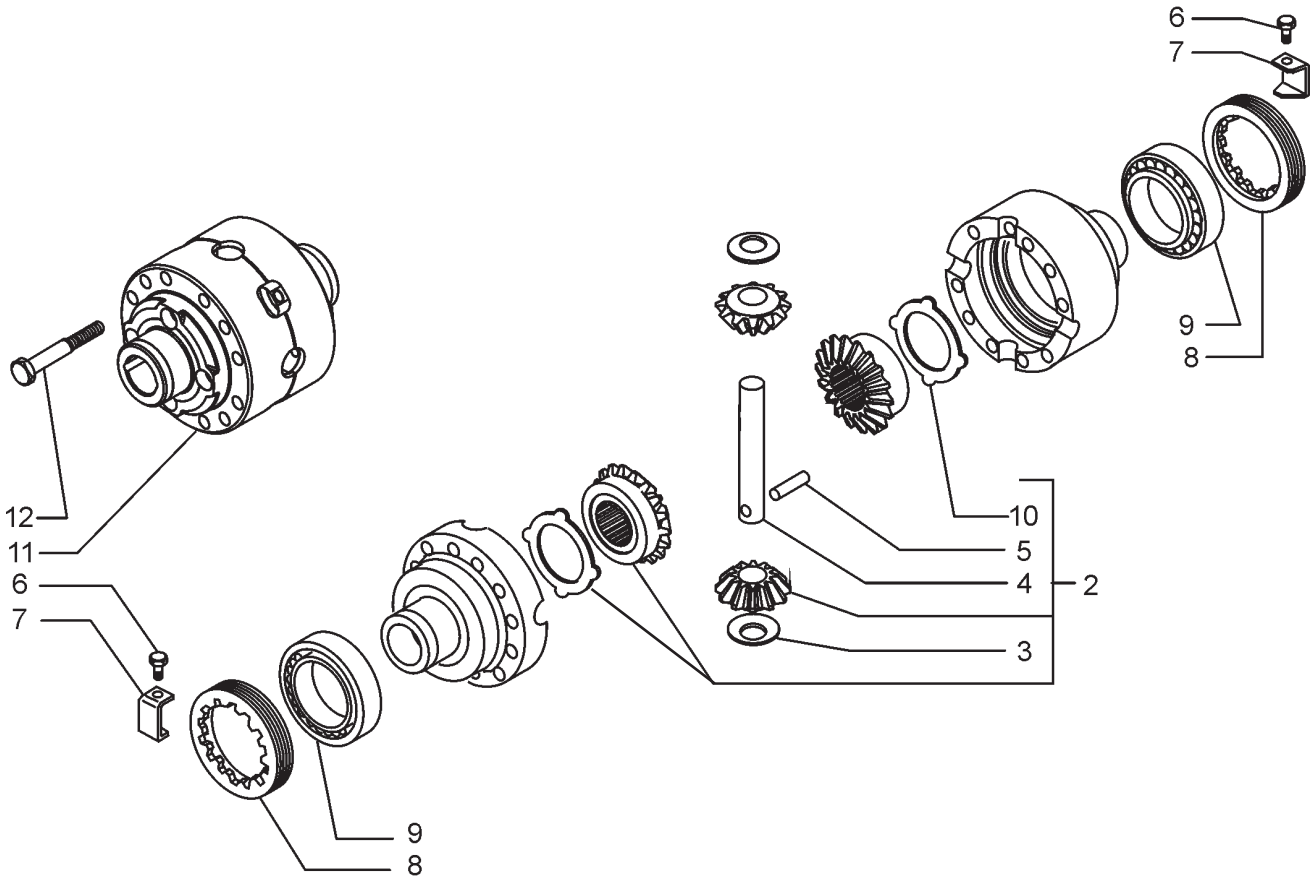
6
7
9
8
12
11
10
5
4
2
3
6
7
9
8

DIFFERENTIAL (4 WHEEL DRIVE)

Ref.	Part No.	Description	Quantity	Applicable Machines	Remarks
2	6190225M91	Kit, Differential	1		
3	3475579M1	Washer, Thrust	2		
4	3523085M1	Shaft	1		
5	3523088M1	Pin, Dowel	1		
6	3523583M1	Screw	2		
7	3475583M1	Plate	2		
8	3475584M1	Nut	2		
9	3475585M1	Bearing, Roller	2		
10	3475581M1	Washer, Thrust	2		
11	6190815M91	Housing Assy	1		
12	3523086M1	Screw	12		

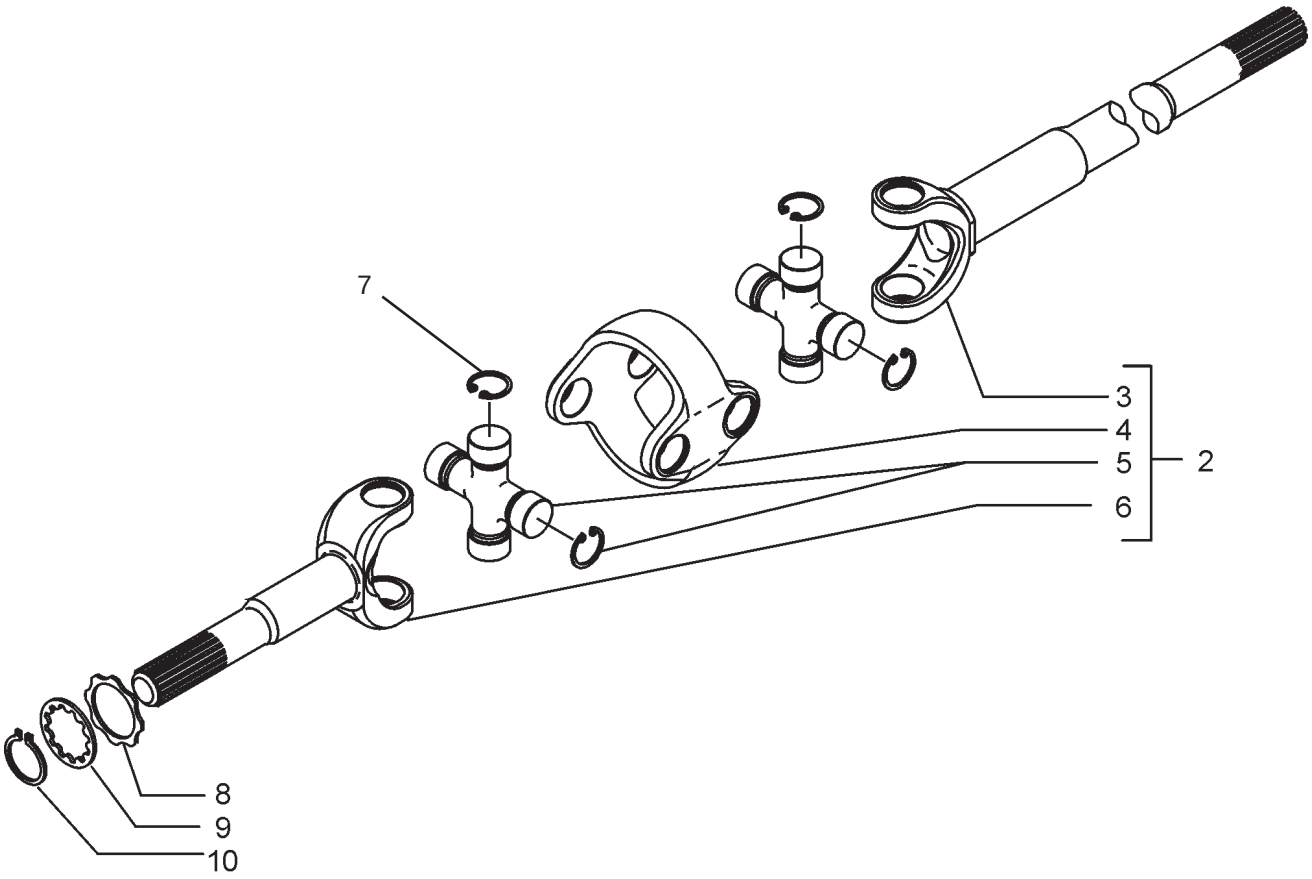
7
3
4
5
6
2
8
9
10

SHAFT AXLE (4 WHEEL DRIVE)

Ref.	Part No.	Description	Quantity	Applicable Machines	Remarks
2	6194913M91	Shaft, Axle	2		
3	6194914M1	Shaft	2		
4	6194915M1	Clevis	2		
5	6190253M91	Spider Assy	4		
6	6194916M1	Shaft	2		
7	6194917M1	Ring, Snap	16		
8	6194918M1	Washer	2		
9	6194919M1	Washer	2		
10	6193699M1	Ring, Snap	2		

WHEEL HUB FRONT (4 WHEEL DRIVE)

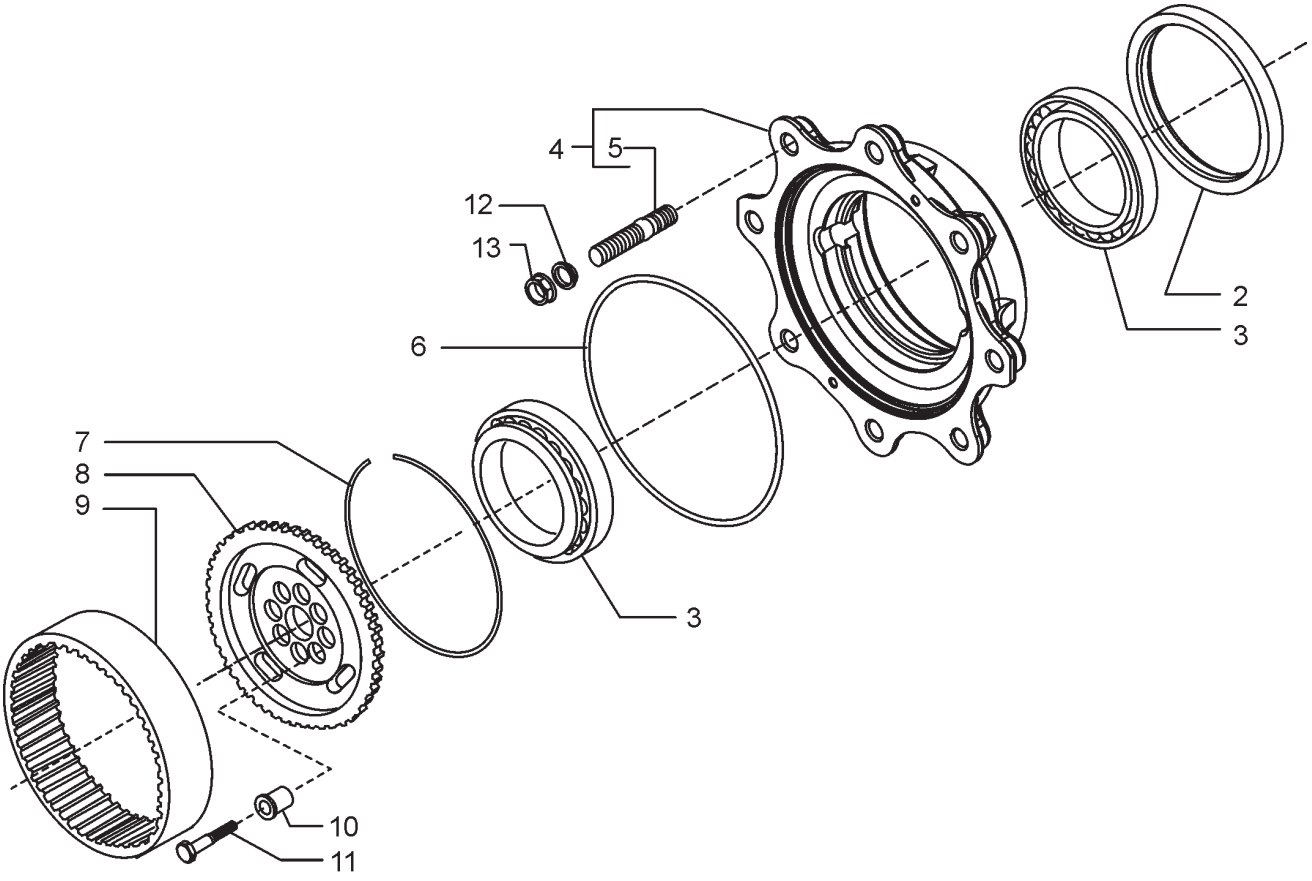

WHEEL HUB FRONT (4 WHEEL DRIVE)

Ref.	Part No.	Description	Quantity	Applicable Machines	Remarks
2	6193704M1	Seal, Ring	2		
3	3475599M1	Bearing, Ball	4		
4	6194920M91	Kit, Wheel Hub	2		
5	6194921M1	Stud	16		
6	6194922M1	O-Ring	2		
7	6194923M1	Ring	2		
8	6194924M1	Wheel Carrier	2		
9	6194925M1	Crown Gear	2		
10	6194926M1	Bush	16		
11	6194927M1	Screw	16		
12	3475615M1	Washer	16		
13	3475616M1	Nut	16		

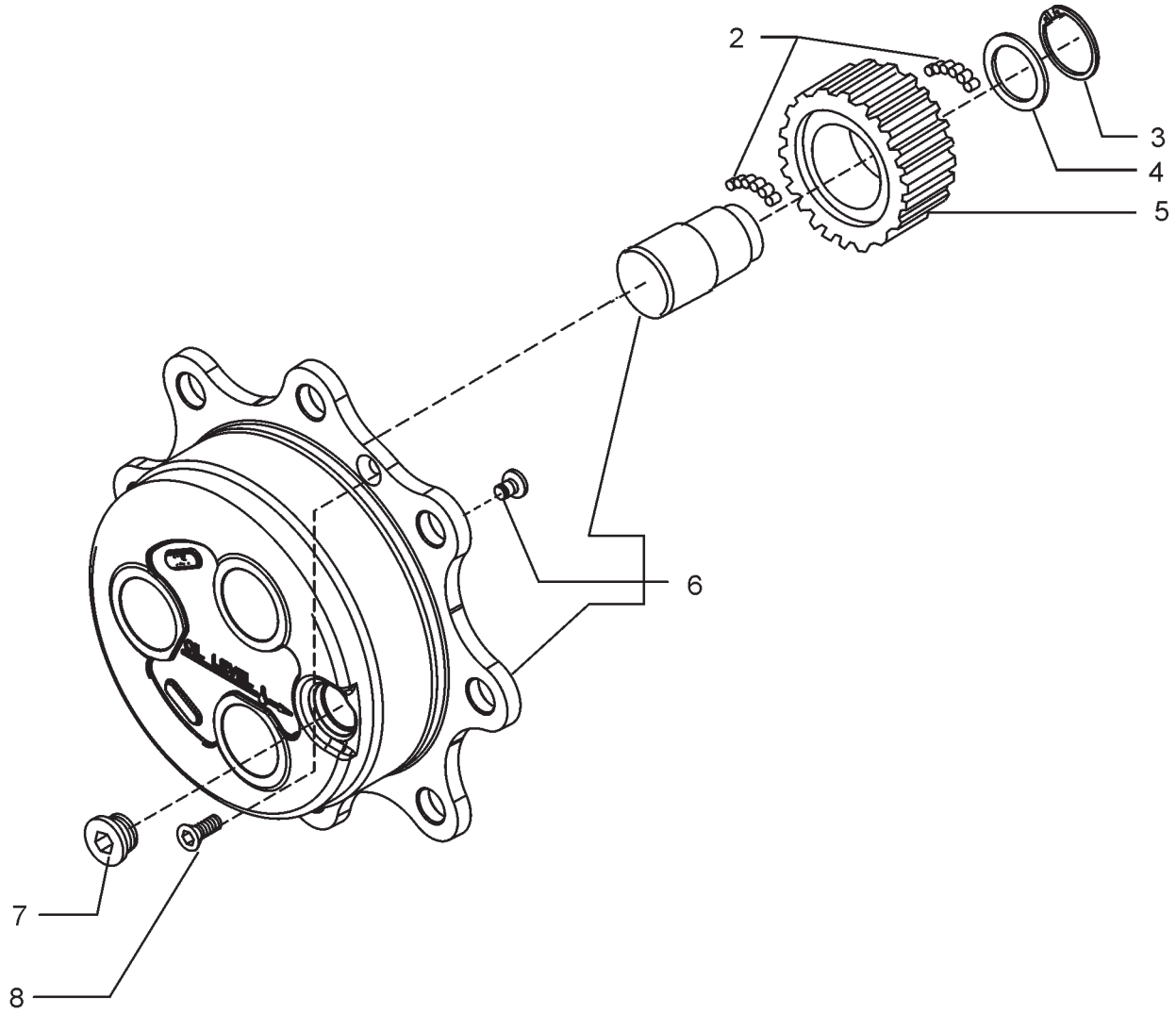
2
3
4
5
6
7
8

PLANETARY CARRIER (4 WHEEL DRIVE)

Ref.	Part No.	Description	Quantity	Applicable Machines	Remarks
2	6193417M1	Needle	336		56 Needles / Gear
3	6194928M1	Ring, Snap	6		
4	6194929M1	Washer	6		
5	6194930M1	Gear	6		
6	6194931M91	Kit, Planetary Carrier	2		
7	3523632M1	Plug	2		
8	6190282M1	Screw	2		

NOTES

NOTES

CABIN

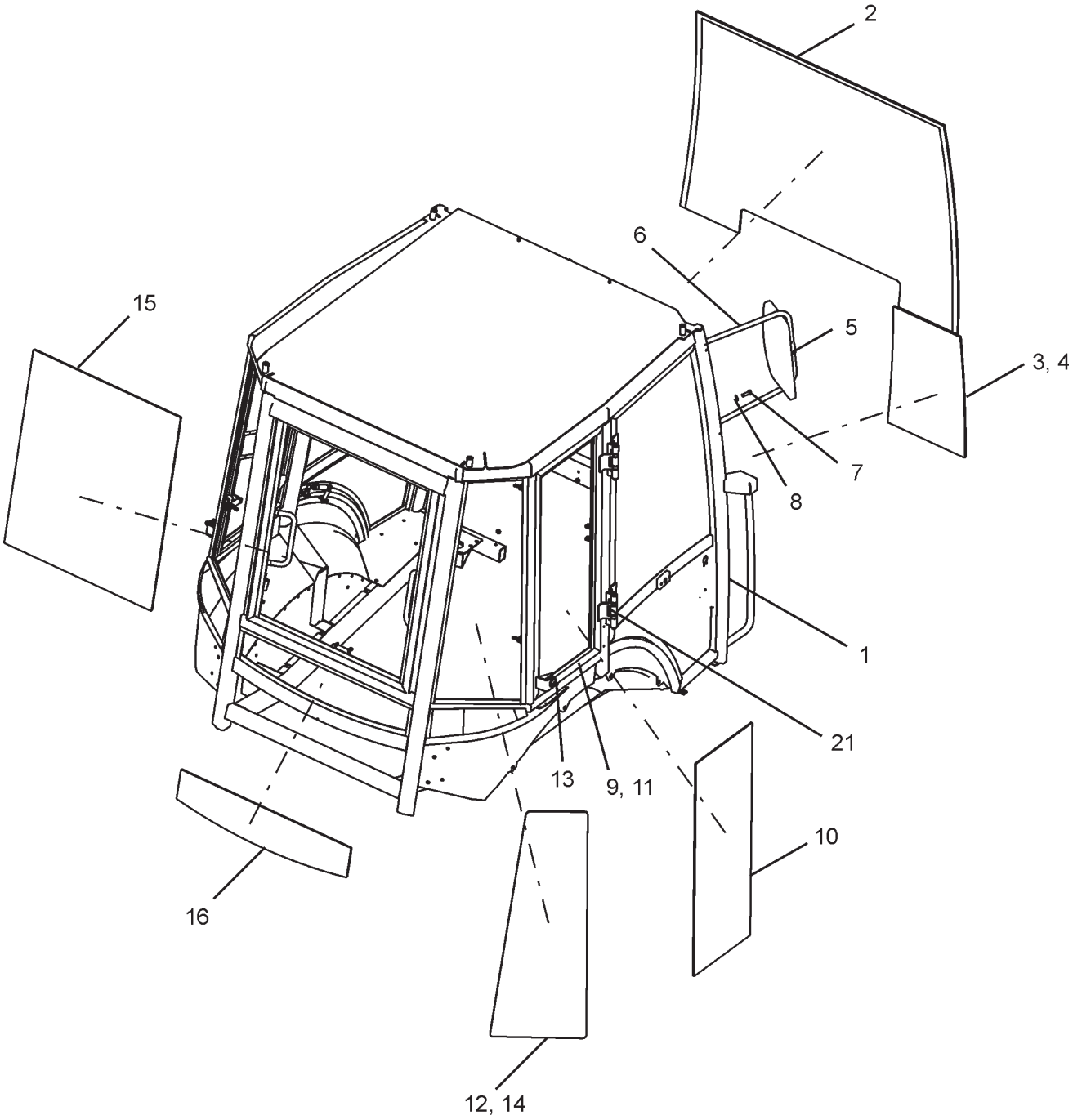
2
6
15
5
3, 4
7
8
1
21
13
9, 11
10
16
12, 14

Ref.	Part No.	Description	Quantity	Applicable Machines	Remarks
1	1TJ0025M91	Cab Assy	1		
2	1J0227	Windshield	1		
3	6099902M1	Front Glass - RH	1		
4	6099903M1	Front Glass - LH	1		
5	1D0029	Rear View Mirror	1		
6	6108734M91	Mirror Arm	1		
7	3512463M1	Bolt	4		
8	3512395M1	Washer	4		
9	1TJ0056M91	Window W/A - LH	1		
10	1TJ0002M1	Side Window Glass	1		
11	1TJ0058M91	Window W/A - RH	1		
12	1TJ0209M1	Side Quarter Glass - RH	1		
13	1TJ0177M1	Window Lock Male	2		
14	1TJ0004M1	Side Quarter Glass - LH	1		
15	1TJ0006M1	Rear Win Glass - Upper	1		
16	1TJ0005M1	Rear Win Glass - Lower	1		
17	1J0015	Tube Adhesive	3		
20	1TJ0079	Beading Rear Window	2		
21	1J0259	Strap	2		
22	339891X1	Bolt	4		
23	390972X1	Washer	8		
24	394367X1	Nut	4		

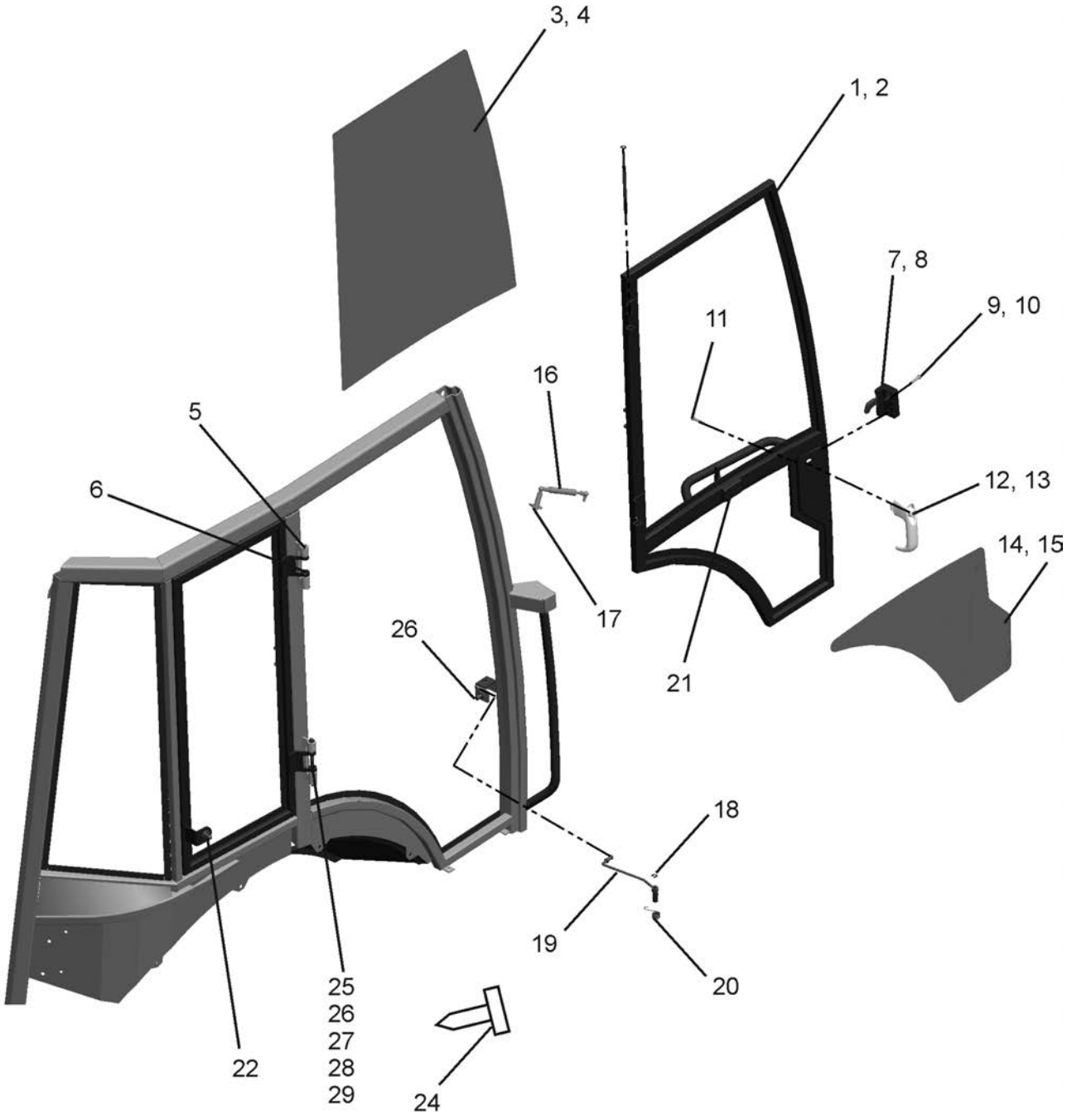
3, 4
1, 2
7, 8
9, 10
11
16
5
6
12, 13
14, 15
17
26
21
18
19
20
25
26
27
28
29
22
24

Ref.	Part No.	Description	Quantity	Applicable Machines	Remarks
1	1TJ0030M91	Door W/A LH	1		
2	1TJ0031M91	Door W/A RH	1		
3	1J0452	Door Glass LH	1		
4	1J0458	Door Glass RH	1		
5	391415X1	Spring Clip	8		
6	1J0317	Hinge Pin	4		
7	1J0013	Door Lock LH	1		
8	1J0014	Door lock RH	1		
9	3512498M1	Screw	2		
10	3007934X1	Screw	6		
11	3512448M1	Plug	2		
12	1J0011	Door Handle LH	1		
13	1J0012	Door Handle RH	1		
14	1J0453	Door Glass LH	1		
15	1J0459	Door Glass RH	1		
16	1J0224	Gas Strut	2		
17	391025X1	Washer Lock	2		
18	391415X1	Spring Clip	2		
19	1TJ0155M1	Lock Lever	2		
20	1TJ0154M1	Spring, Lever	2		
21	1TJ0176M1	Lock Female	2		
22	1TJ0177M1	Win Lock Male	2		
23	10X1675	Beading Cab Door	2		
24	1J0015	Tube Adhesive	2		
25	1TJ0210M1	Nylon Bush	12		
	*3512340M1	Pin Bolt - Door	1		

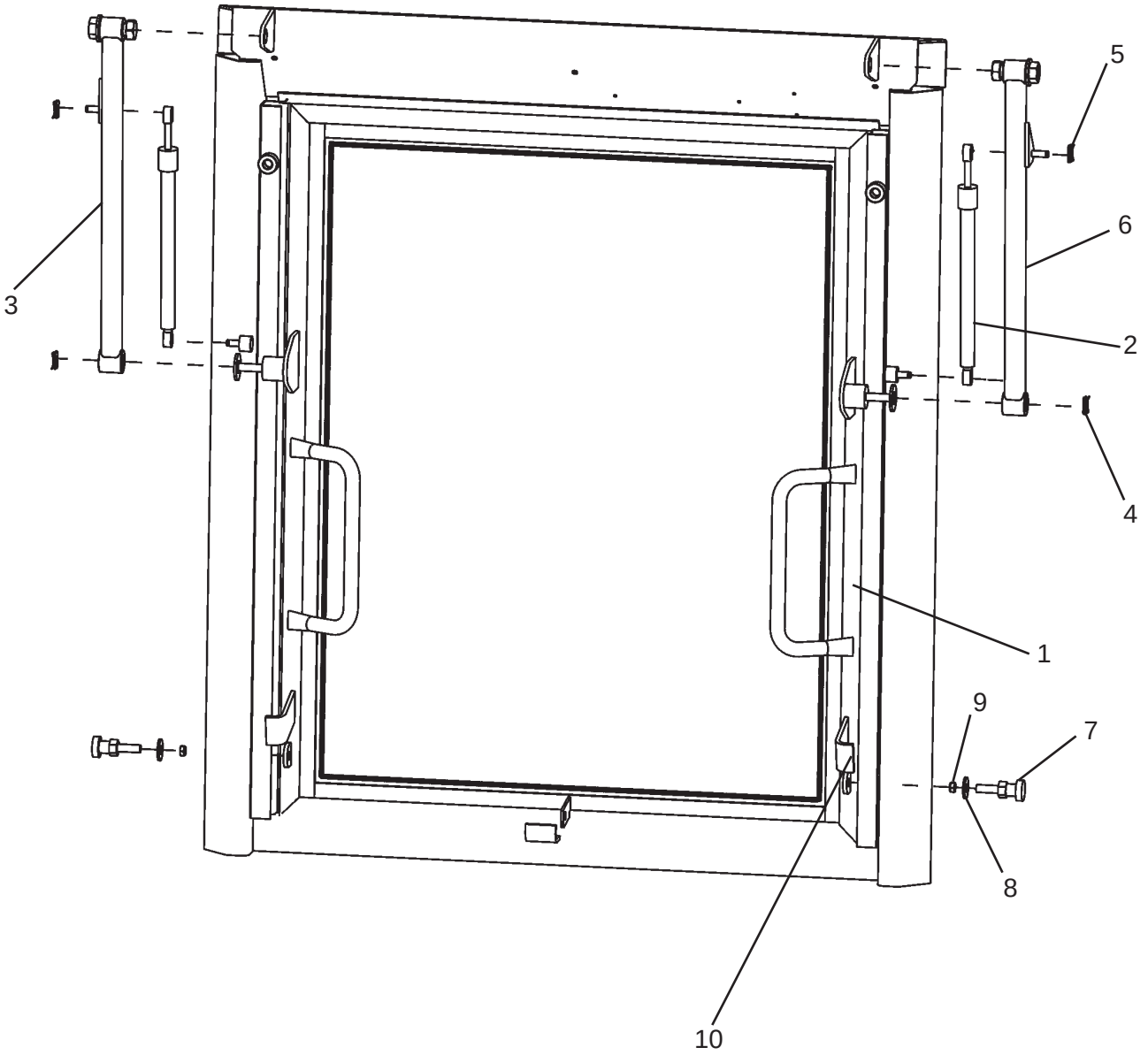
5
6
3
2
4
1
9
7
8
10

Ref.	Part No.	Description	Quantity	Applicable Machines	Remarks
1	1TJ0060M91	Rear Win Assy			
2	1J0223	Gas Strut	2		
3	1TJ0158M91	Slide Link Assy - RH	1		
4	3521461M1	Safety Fastener	4		
5	3516322M1	Safety Fastener	2		
6	1TJ0159M91	Slide Link Assy - LH	1		
7	1TJ0167M1	Bearing	2		
8	390597X1	Washer	4		
9	1440329X1	Nut	2		
10	1TJ0139	Lock	2		

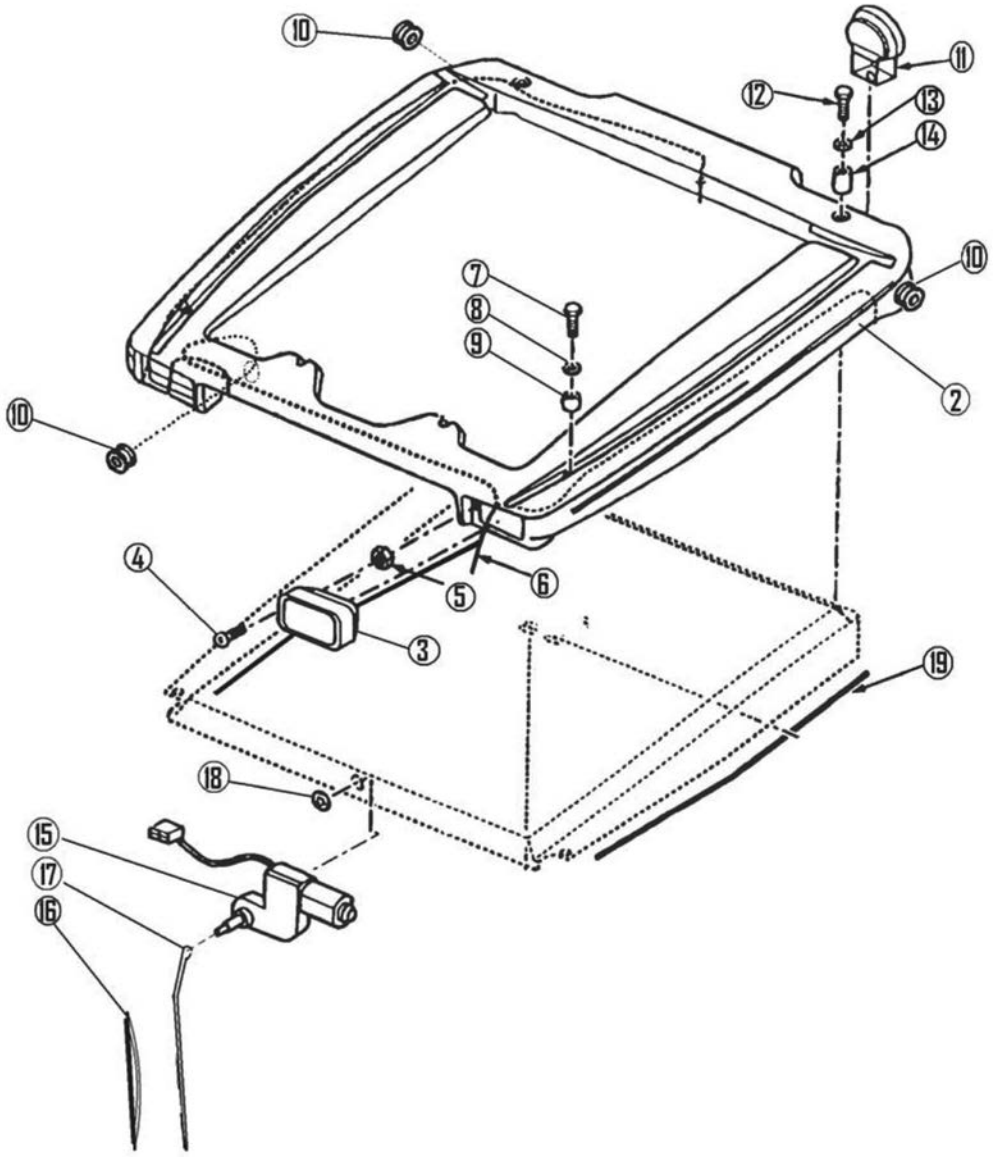
10
11
12
13
14
10
7
8
9
2
10
4
5
6
3
19
18
15
17
16

Ref.	Part No.	Description	Quantity	Applicable Machines	Remarks
1	1TJ0025M91	Cab Assy	1		
2	1J0389	Top Roof, fully covered	1		
3	1D0114	Lamp Assy, Work	2		
4	6099456M1	Screw	4		
5	6101590M1	Nut	4		
6	1TD0010M91	Harness Assy-Roof	1		
7	3009505X1	Bolt	2		
8	3512620M1	Washer	2		
9	1J0080	Spacer	2		
10	1J0016	Grommet	3		
11	1D0203	Lamp Assy, Work	2		
12	3009509X1	Bolt	2		
13	1J0080	Washer	2		
14	6099564M1	Spacer	2		
15	1D0362	Motor, Wiper	1		
16	1D0119	Blade, Wiper	1		
17	1D0120	Arm, Wiper	1		
18	3019881X1	Washer, Lock	4		
19	1J0208	Mouse Tape	4		
	* 1D0206	Reflector Amber	2		
	* 1D0296	Reflector Red	2		
	* 1D0207	Reflector White	2		

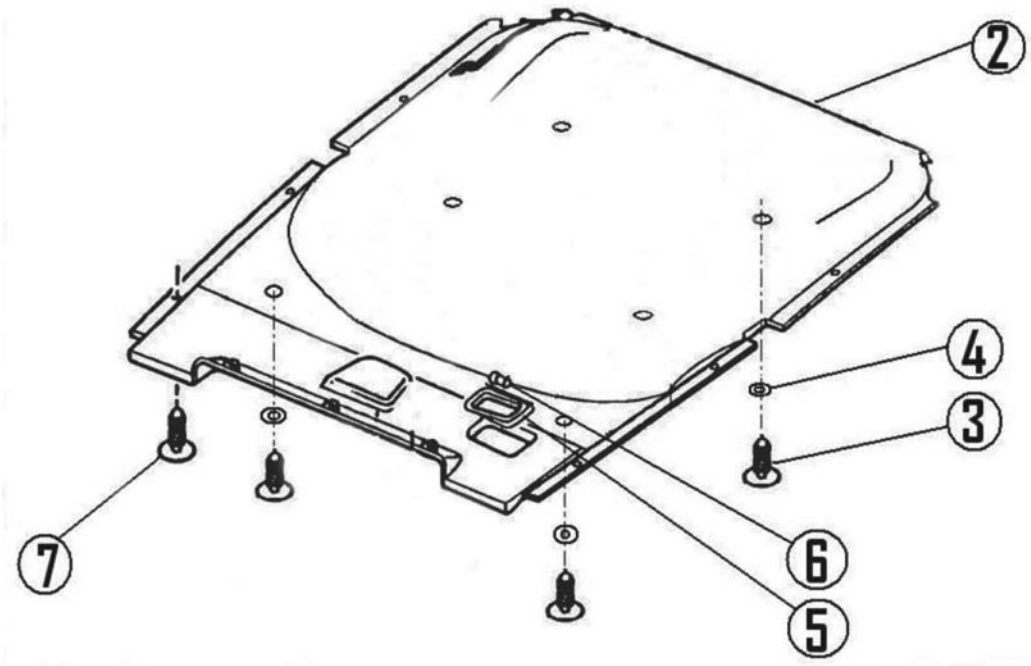
2
4
3
7
6
5

Ref.	Part No.	Description	Quantity	Applicable Machines	Remarks
1	1TJ0025M91	Cab Assy	1		
2	1J0390	Roof, Inner	1		
3	1J0077	Fastener, Roof	6		
4	1J0267	Washer Composite	6		
5	1D0209	Cabin Lamp Assy	1		
6	1D0140	Bulb	1		
7	6099456M1	Screw	14		
8	1D0302	FM Radio	1		
9	1D0306	Antena	1		
10	1D0303	Speaker	2		
11	6113898M1	Plate	1		



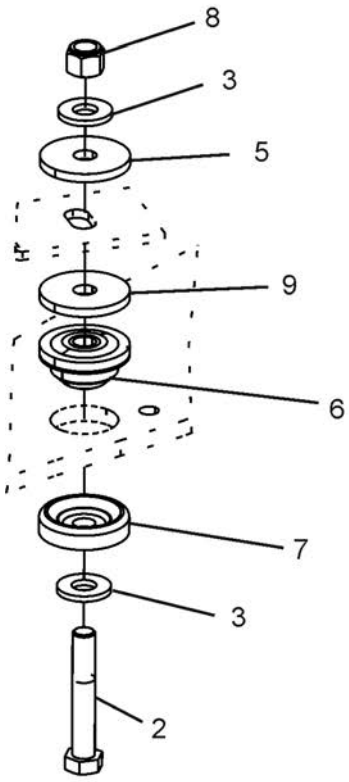
8
3
5
9
6
7
3
2

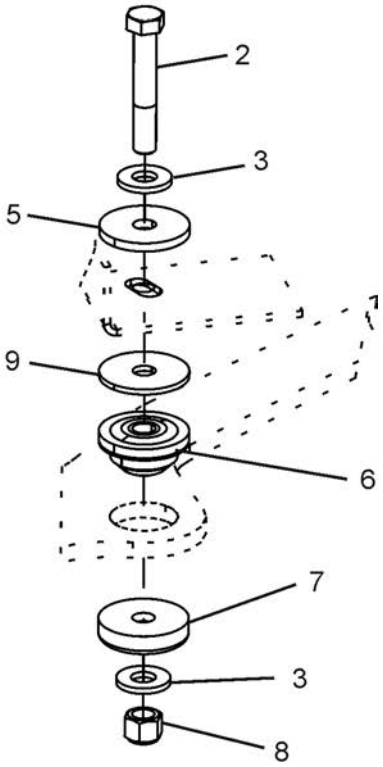
2
3
5
9
6
7
3
8

Ref.	Part No.	Description	Quantity	Applicable Machines	Remarks
1	1TJ0025M91	Cab Assy	1		
2	1442669X1	Screw	4		
3	385365X1	Washer	4		
4	3521648M3	Washer	2		
5	6101687M1	Washer	4		
6	1J0240	Insulator Block	4		
7	1J0241	Insulator Block	4		
8	339035X1	Nut	4		
9	1J0001	Washer	4		

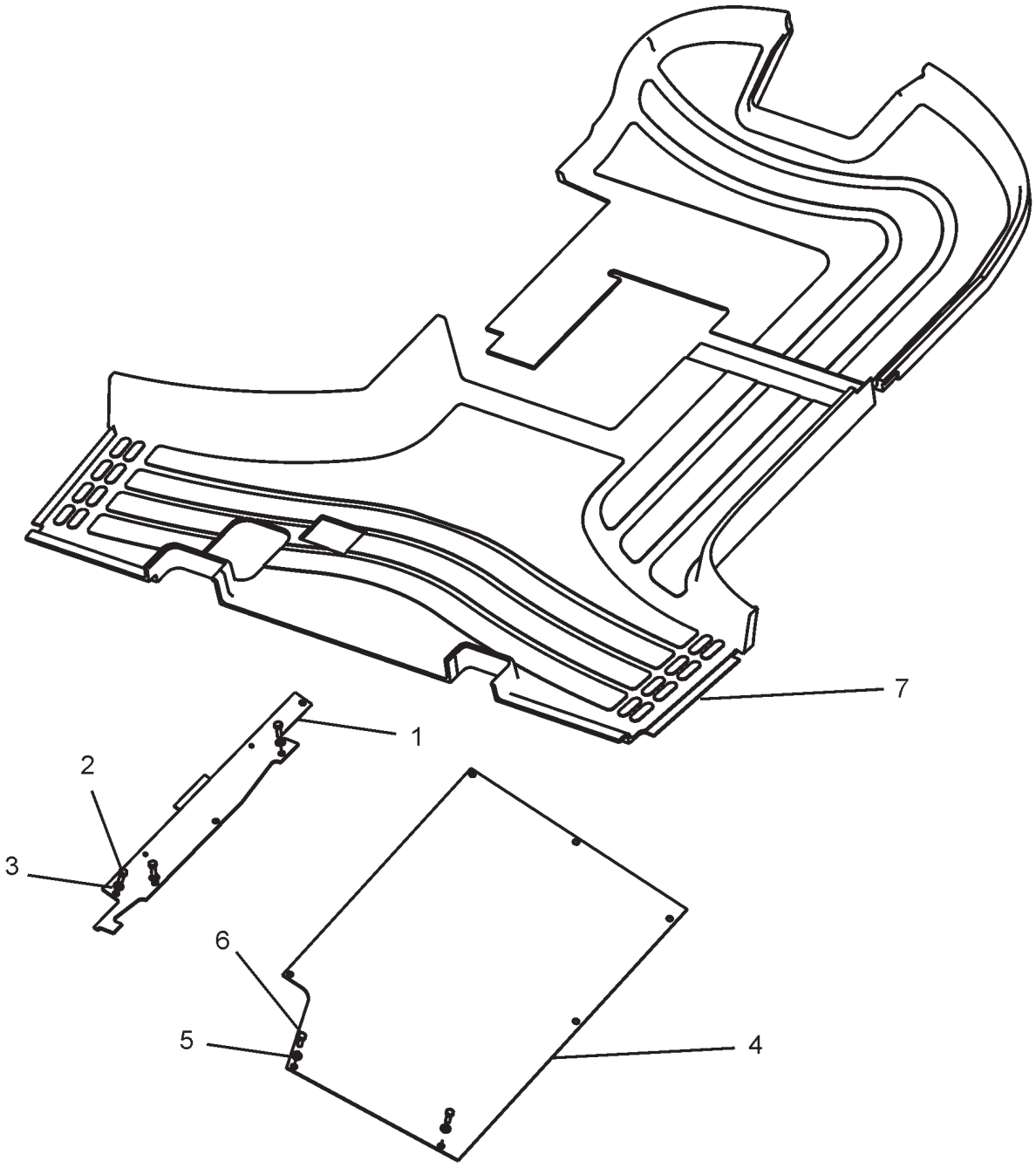
7
1
2
3
6
5
4

Ref.	Part No.	Description	Quantity	Applicable Machines	Remarks
1	1J0130	Plate	1		
2	390811X1	Screw	5		
3	390972X1	Washer	5		
4	6101043M2	Plate	1		
5	390811X1	Screw	7		
6	390972X1	Washer	7		
7	53101042	Floor Mat Cabin	1		

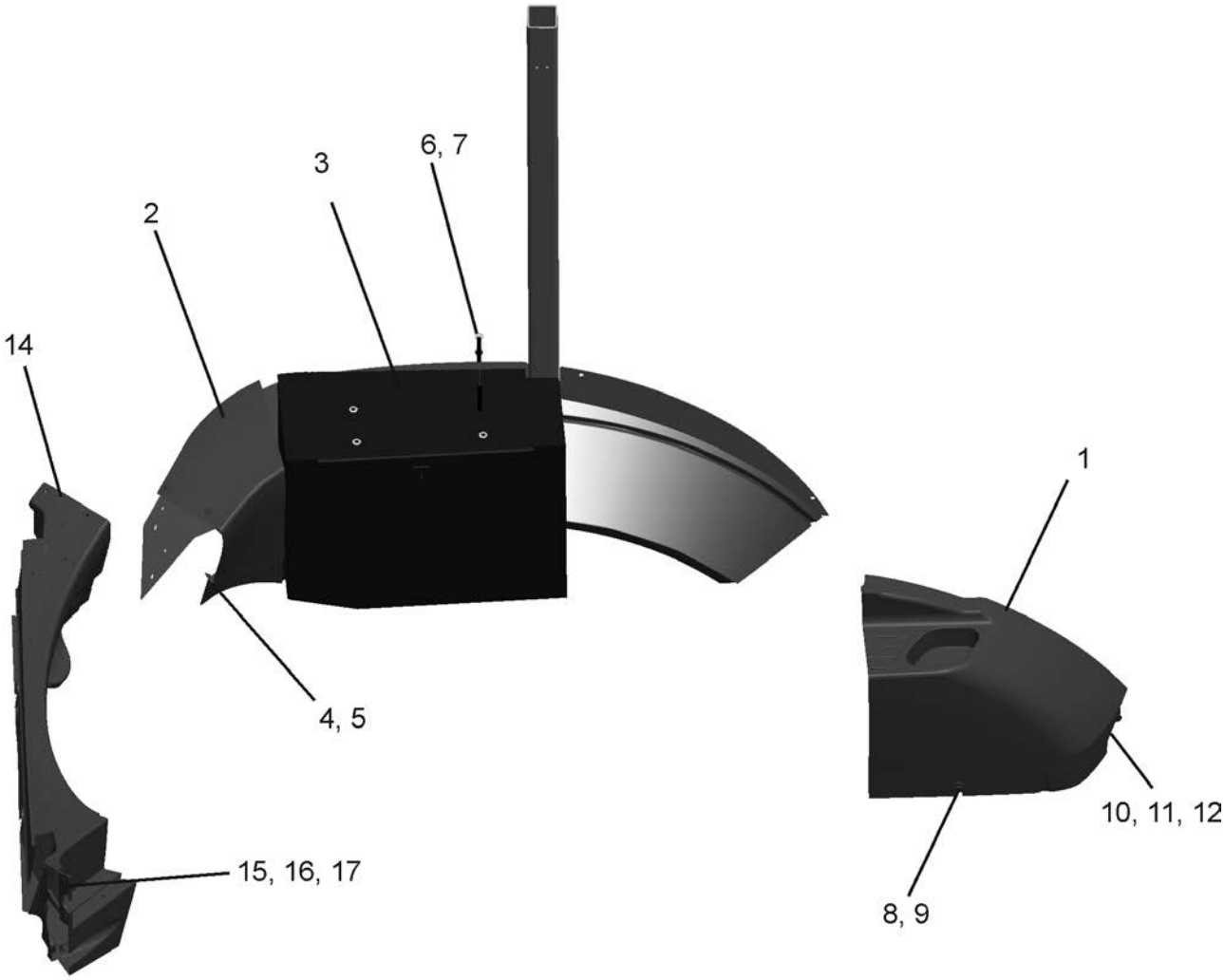
14
2
3
6, 7
4, 5
15, 16, 17
1
10, 11, 12
8, 9

Ref.	Part No.	Description	Quantity	Applicable Machines	Remarks
1	J0374	LHS Console (Front)	1		
2	1J0375	LHS Console (Rear)	1		
3	1J0193	Cushion tool box	1		
4	339761X1	Mtg Bolt (Rear Console)	1		
5	391039X1	Washer (Rear Console)	1		
6	339169X1	Nut (Cushion)	4		
7	339374X1	Washer (Cushion)	4		
8	339262X1	Bolt (LHS Front Console)	1		
9	3512435M1	Washer (LHS Front Console)	1		
10	1J0078	Bracket (LHS Front Console)	1		
11	339229X1	Bolt (LHS Front Console) 1			
12	339891X1	Bolt (LHS Front Console)	1		
13	391039X1	Washer (LHS Front Console)	1		
14	1J0376	Rear Cover Internal	1		
15	339804X1	Bolt	6		
16	3516109M1	Washer	6		
17	6101591M1	Rivets	8		

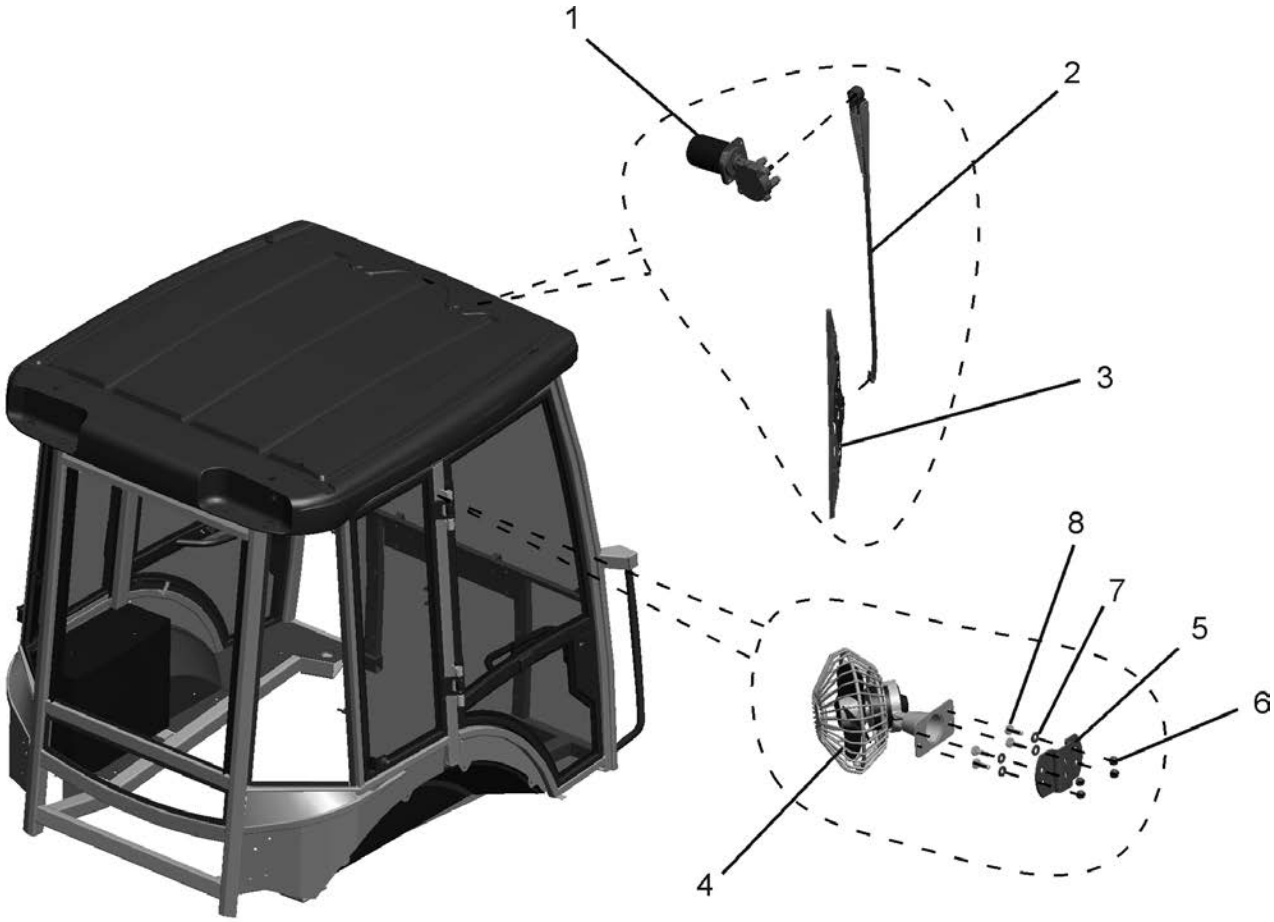
1
2
3
4
5
6
7
8

Ref.	Part No.	Description	Quantity	Applicable Machines	Remarks
1	1D0362	Motor, Wiper	1		
2	1D0120	Arm, Wiper	1		
3	1D0119	Blade, Wiper	1		
4	1D0358	Cabin Fan	1		
5	1D0038	Bracket Assy	1		
6	1441500X1	Nut	4		
7	390971X1	Washer	4		
8	359560X1	Bolt	4		

FRONT CONSOLE

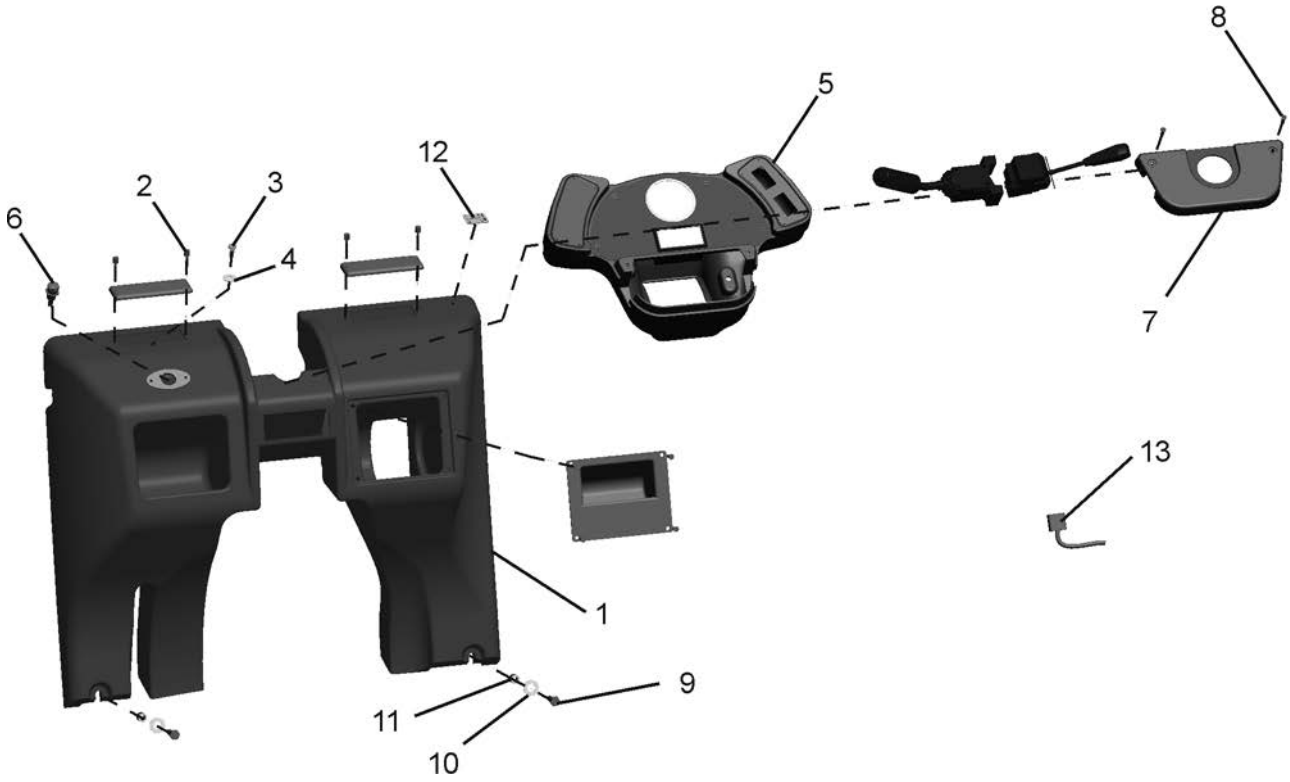

FRONT CONSOLE

Ref.	Part No.	Description	Quantity	Applicable Machines	Remarks
1	1J0373	Front Console	1		
2	3522735M4	Self Tap Screw	4		
3	391039X1	Washer	2		
4	339123X1	Bolt	2		
5	1J0583	Panel, Instrument	1		
6	6113723M1	Mobile Charging Unit	1		
7	1J0377	Cover Sheet	1		
8	6101591M1	Rivet	6		
9	339891X1	Bolt	2		
10	391039X1	Washer	2		
11	6101730M1	Spacer	2		
12	6101914M1	Decal	1		
13	1D0351	Harness, Front Console	1		

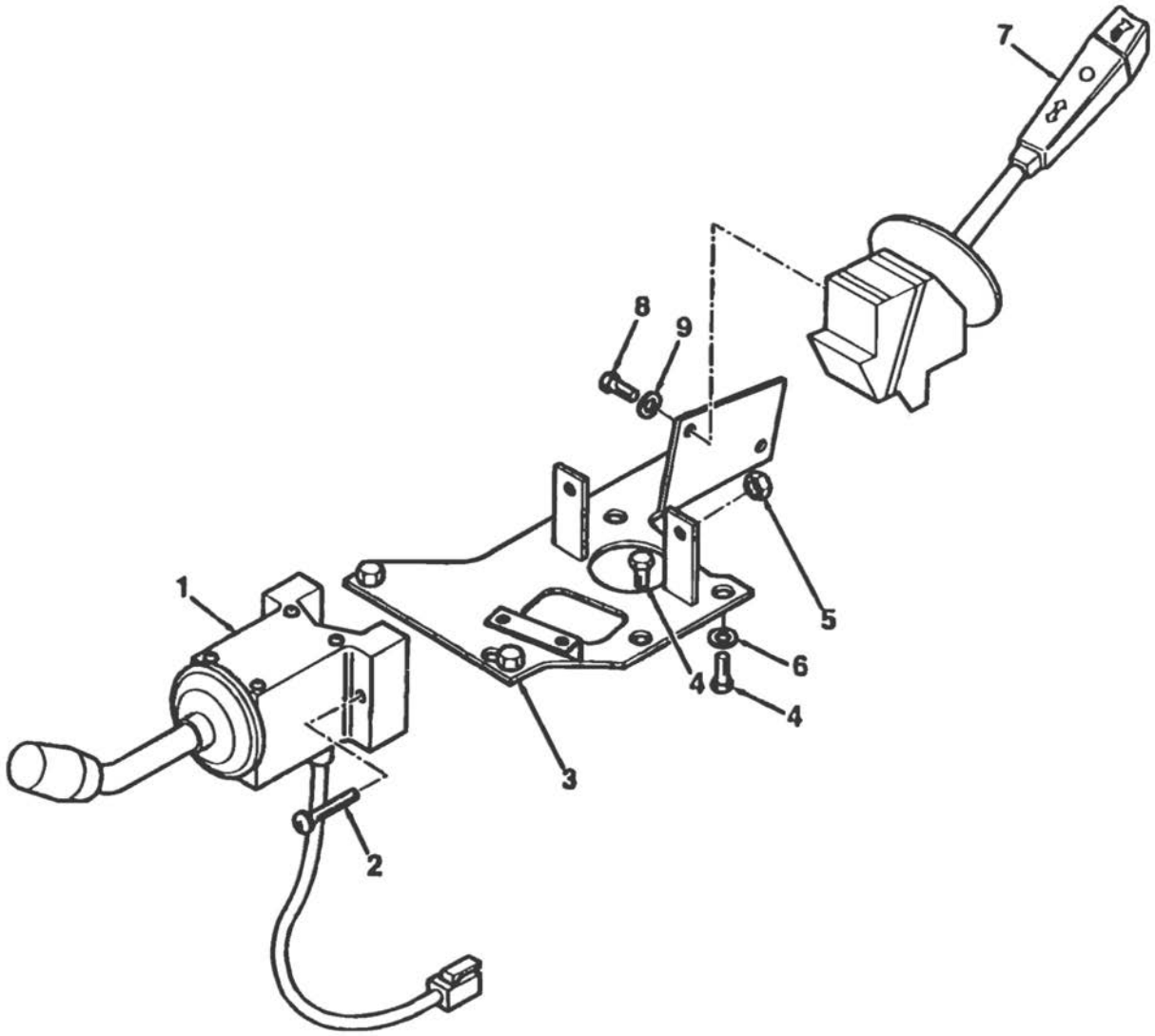
7
8
9
1
5
6
4
4
3
2

Ref.	Part No.	Description	Quantity	Applicable Machines	Remarks
1	1D0066	Switch, FWD /REV	1		
2	3009538X1	Screw	2		
3	6107120M91	Bracket Assy	1		
4	339124X1	Screw	3		
5	1441494X1	Nut, Lock	2		
6	390972X1	Washer	3		
7	3516095M1	Combination Switch	1		
8	3007932X1	Screw	2		
9	3019560X1	Washer	2		

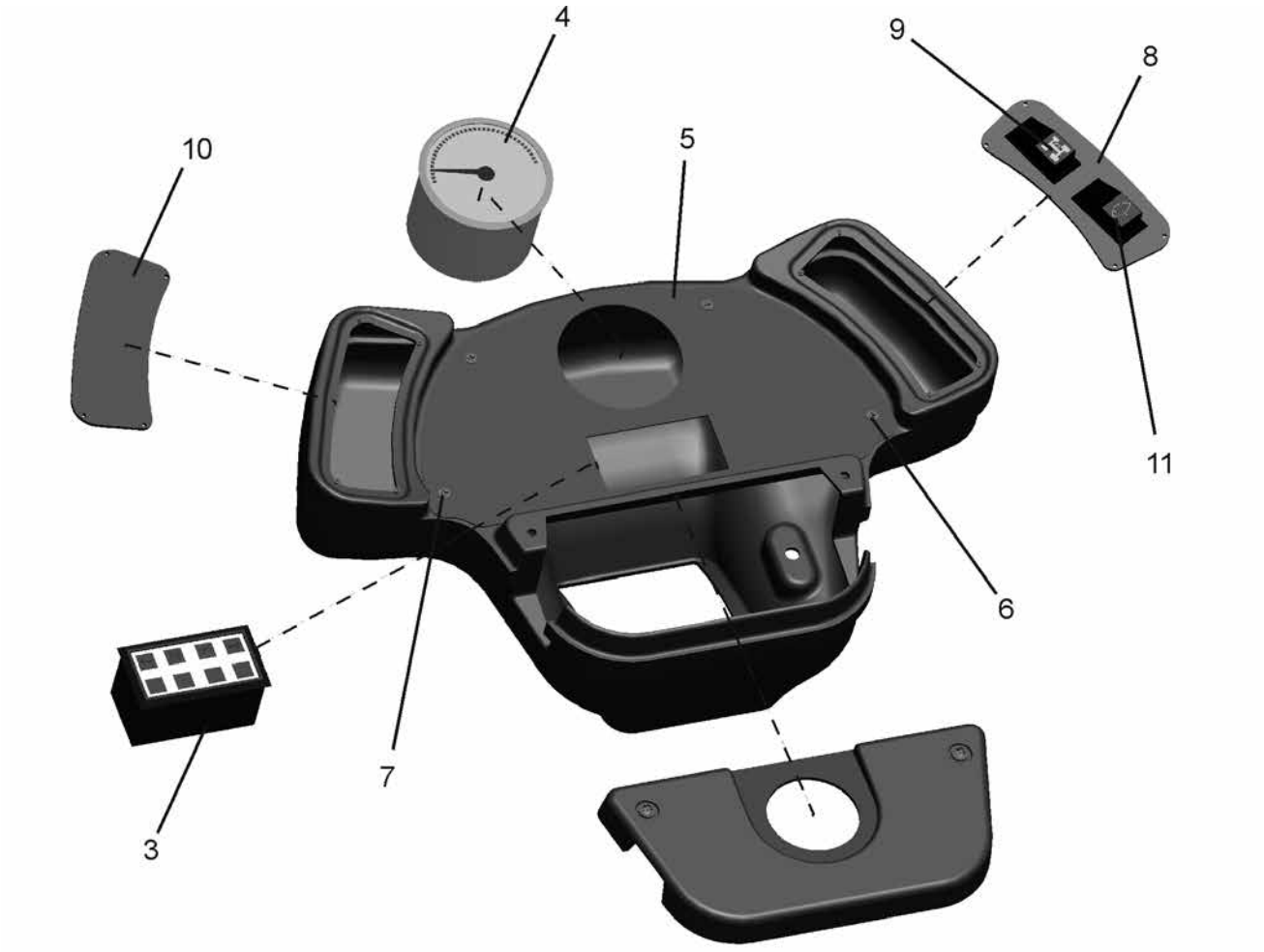
4
9
8
10
5
11
6
7
3

Ref.	Part No.	Description	Quantity	Applicable Machines	Remarks
1	1J0583	Instrument Panel	1		Includes all gauges and switches
2	1D0361	Switch Wiper	1		
3	6113894M1	Front Warning Cluster	1		
4	6113722M1	Speedometer	1		
5	1J0542	Plate Front Cluster	1		
6	1J0618	Screw	4		
7	1J0617	Screw	8		
8	1D0064	U-Plate	1		
9	1D0014	Switch, 4 Wheel Drive	1		
10	1D0065	U-Plate	1		

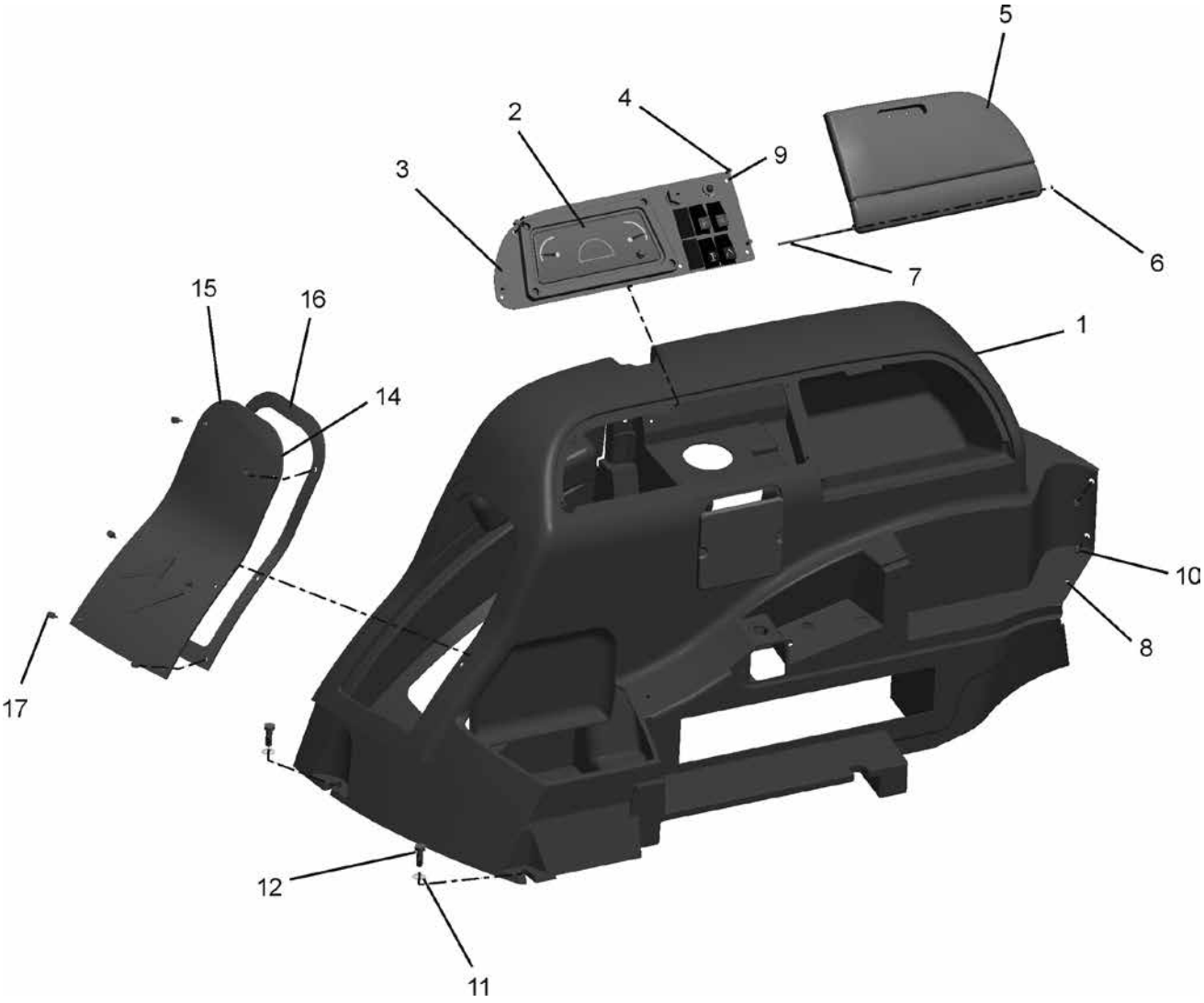
5
4
2
9
3
6
7
15
16
1
14
10
8
17
12
11

SIDE CONSOLE

Switch Pack

Ref.	Part No.	Description	Quantity	Applicable Machines	Remarks
1	1J0616	Side Console	1		
2	6113895M1	Instrument Pack	1		
3	1J0541	Plate Cluster	1		
4	365919X1	Screw	8		
5	1J0381	Cover	1		
6	3000115X1	Circlip	1		
7	6101630M1	Rod	1		
8	6101591M1	Rivet	13		
9	391038X1	Washer	1		
10	339560X1	Screw	1		
11	3516109M1	Washer	2		
12	339804X1	Screw	2		
13	1472524M2	Screw	6		
14	1D0110	Decal	1		
15	1J0382	Cover	1		
16	6102504M1	Gasket	1		

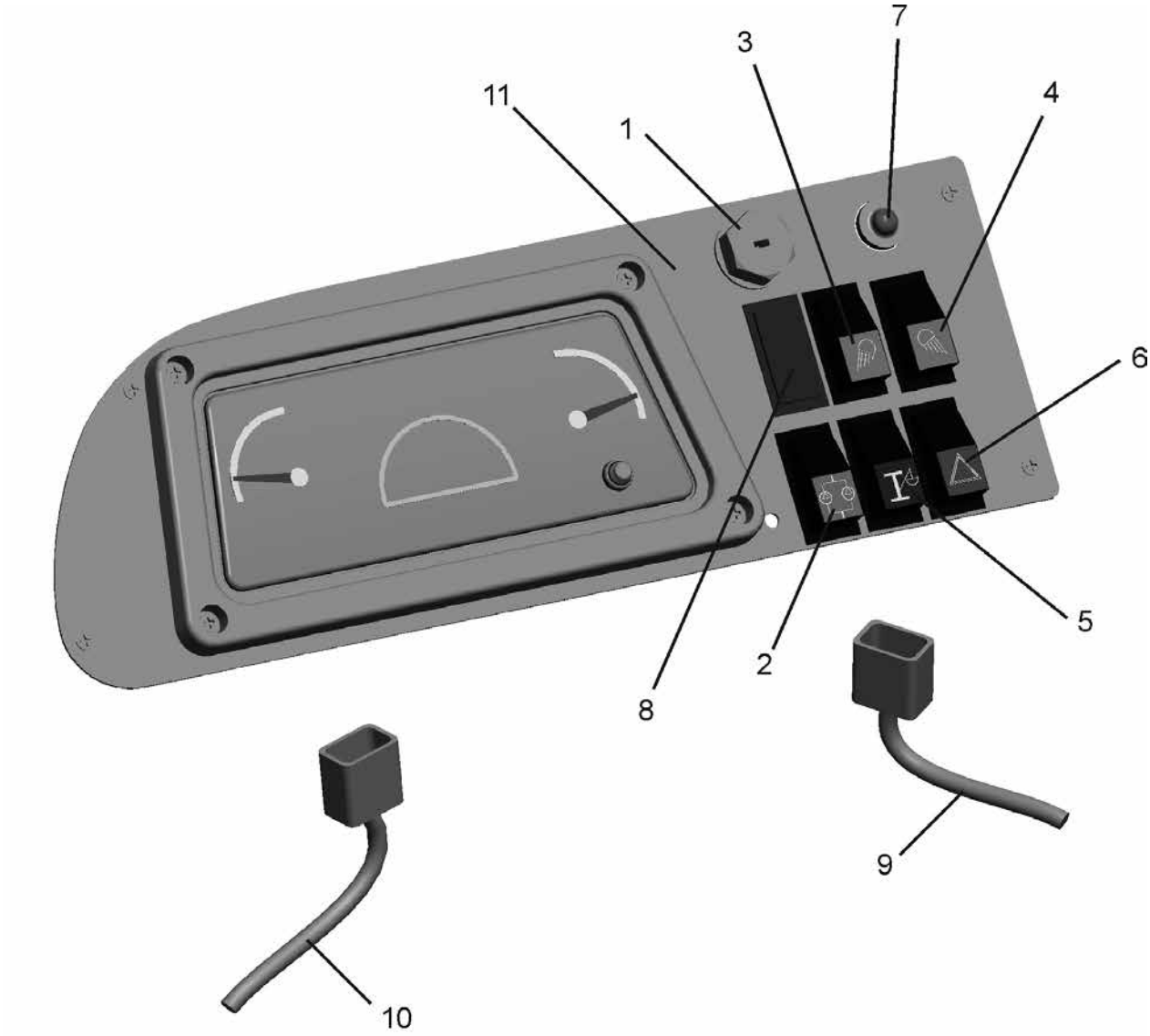
11
1
3
7
4
6
5
2
8
9
10

Ref.	Part No.	Description	Quantity	Applicable Machines	Remarks
1	1D0316	Switch, Ignition	1		
2	1D0012	Switch, Pump Dump	1		
3	1D0002	Switch, Front Work Lamp	1		
4	1D0004	Switch, Rear Work Lamp	1		
5	1D0007	Switch, Mast Control	1		
6	1D0006	Switch, Hazard	1		
7	1D0073	Switch, Horn	1		
8	1D0109	Blank Switch	4		
9	1D0363	Relay Harnes	1		
10	1TD0004M91	Harness Assy.	1		


1
2
3
4
5

Ref.	Part No.	Description	Quantity	Applicable Machines	Remarks
1	1J0329	Seat Assy.	1		
2	339124X1	Screw	4		
3	390972X1	Washer	4		
4	10X3502	Spring	2		
5	10X3577	Cushion	2		

NOTES

NOTES

CHASSIS AND BODY WORK

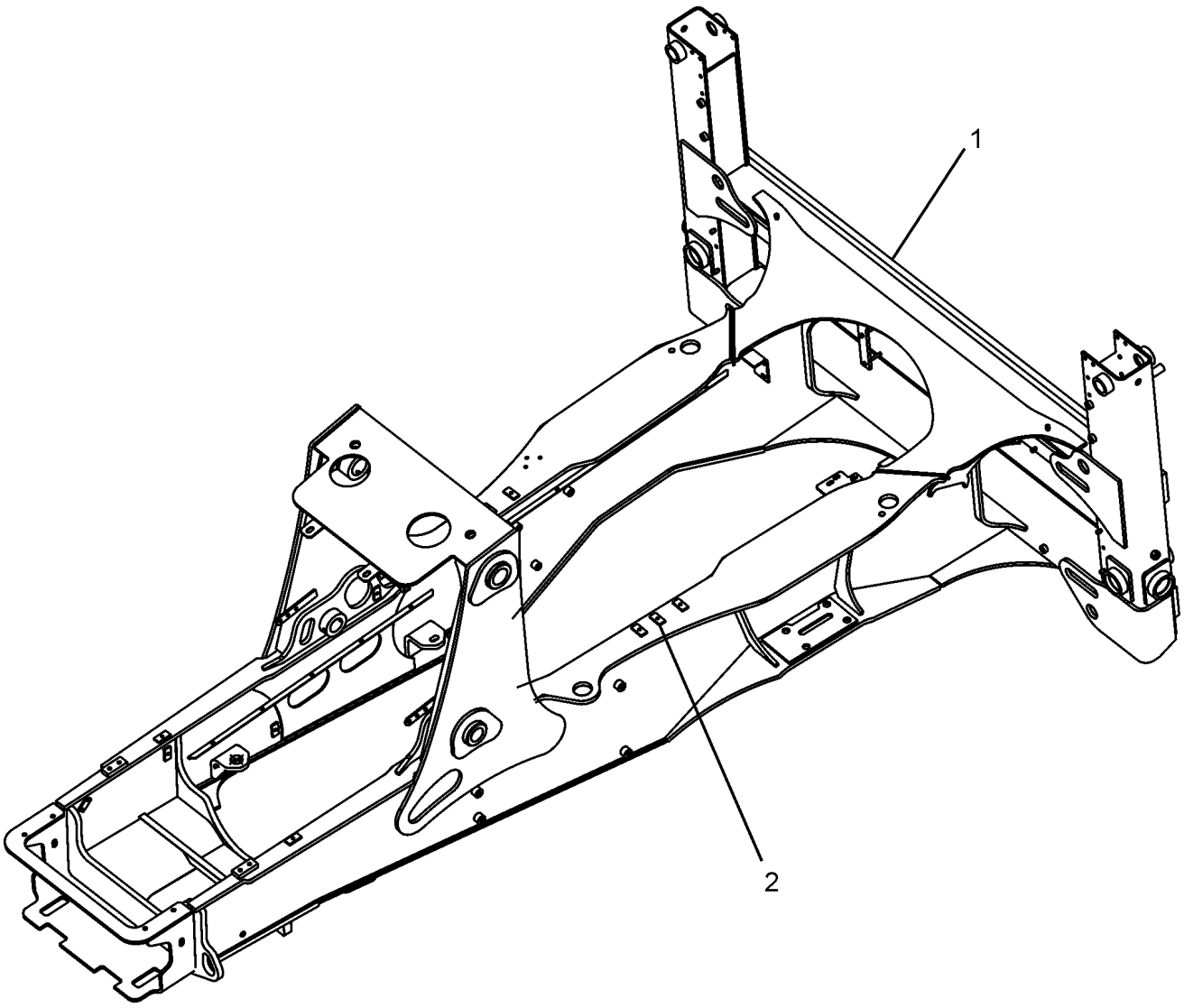
1
2

Ref.	Part No.	Description	Quantity	Applicable Machines	Remarks
1	1B1186	Chassis	1		
2	1470375M1	Mount	6		

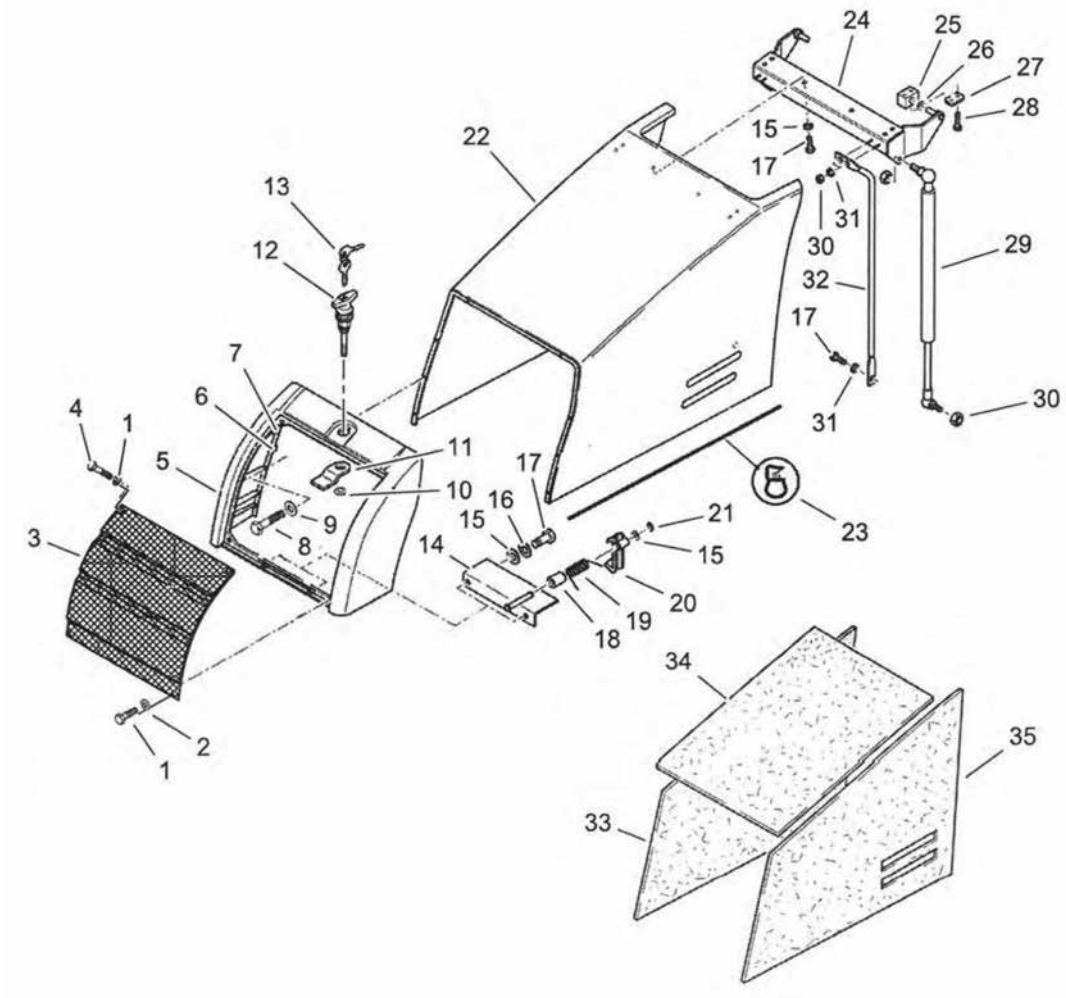
24
25
26
27
28
15
17
22
13
12
31
30
29
32
17
31
30
7
6
4
1
5
11
10
9
8
3
17
16
15
14
21
15
20
19
18
23
34
35
33
2
1

Ref.	Part No.	Description	Quantity	Applicable Machines	Remarks
1	339560X1	Bolt, Hex.	2		
2	391038X1	Washer	4		
3	6101133M91	Grill	1		
4	391884X1	Bolt	2		
5	6101058M92	Softnose Assy Bonnet	1		
6	6100813M1	Insert	10		
7	6101246M1	Jack Nut	4		
8	339804X1	Bolt, Hex.	8		
9	390971X1	Washer	8		
10	1440329X1	Nut, Hex	1		
11	6108647M1	Bolt - Bonnet Lock	1		
12	6108646M91	Lock Assy. Bonnet	1		
13	6107891M1	Key, Multipurpose	2		
14	6100960M92	Catch Assy. Bonnet	1		
15	390972X1	Washer	9		
16	339374X1	Washer	2		
17	339124X1	Bolt	11		
18	6101529M1	Spacer	1		
19	3521090M3	Spring Torsion	1		
20	6106050M91	Catch, Safety - Bonnet	1		
21	1440522X1	Circlip Ext	1		
22	1A0850	Bonnet Assy.	1		
23	6101241M1	Seal Bonnet	2		
24	6109810M91	Support Bracket	1		
25	6102086M1	Hinge-Block	2		
26	1441664X1	Washer	2		
27	1462583M1	Plate-Clamp	2		
28	339229X1	Bolt	2		

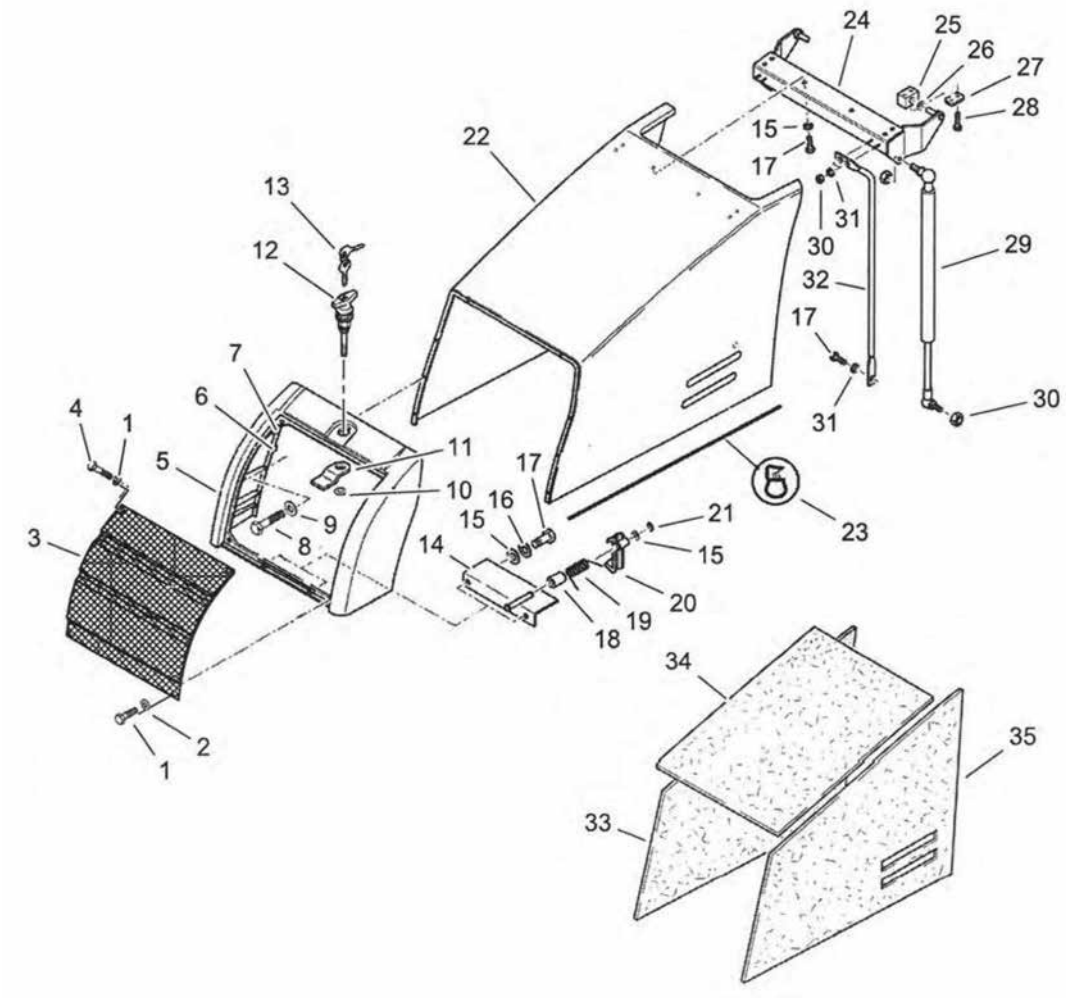
24
25
26
27
28
15
17
22
13
12
31
30
29
32
17
7
6
4
1
5
11
10
9
8
3
16
15
14
17
21
15
20
19
18
23
31
30
34
35
33
2
1

Ref.	Part No.	Description	Quantity	Applicable Machines	Remarks
29	6111404M91	Gas Strut - With Sleeve (Bonnet)	2		
30	394367X1	Nut, Hex. - Nyloc	4		
31	385361X1	Washer Hardened	6		
32	6102023M1	Support Tube	2		
33	6101176M1	Panel-Soundproofing-Side-LH	1		
34	6101175M2	Panel-Soundproofing-Top	1		
35	6101177M1	Panel-Soundproofing-Side-RH	1		

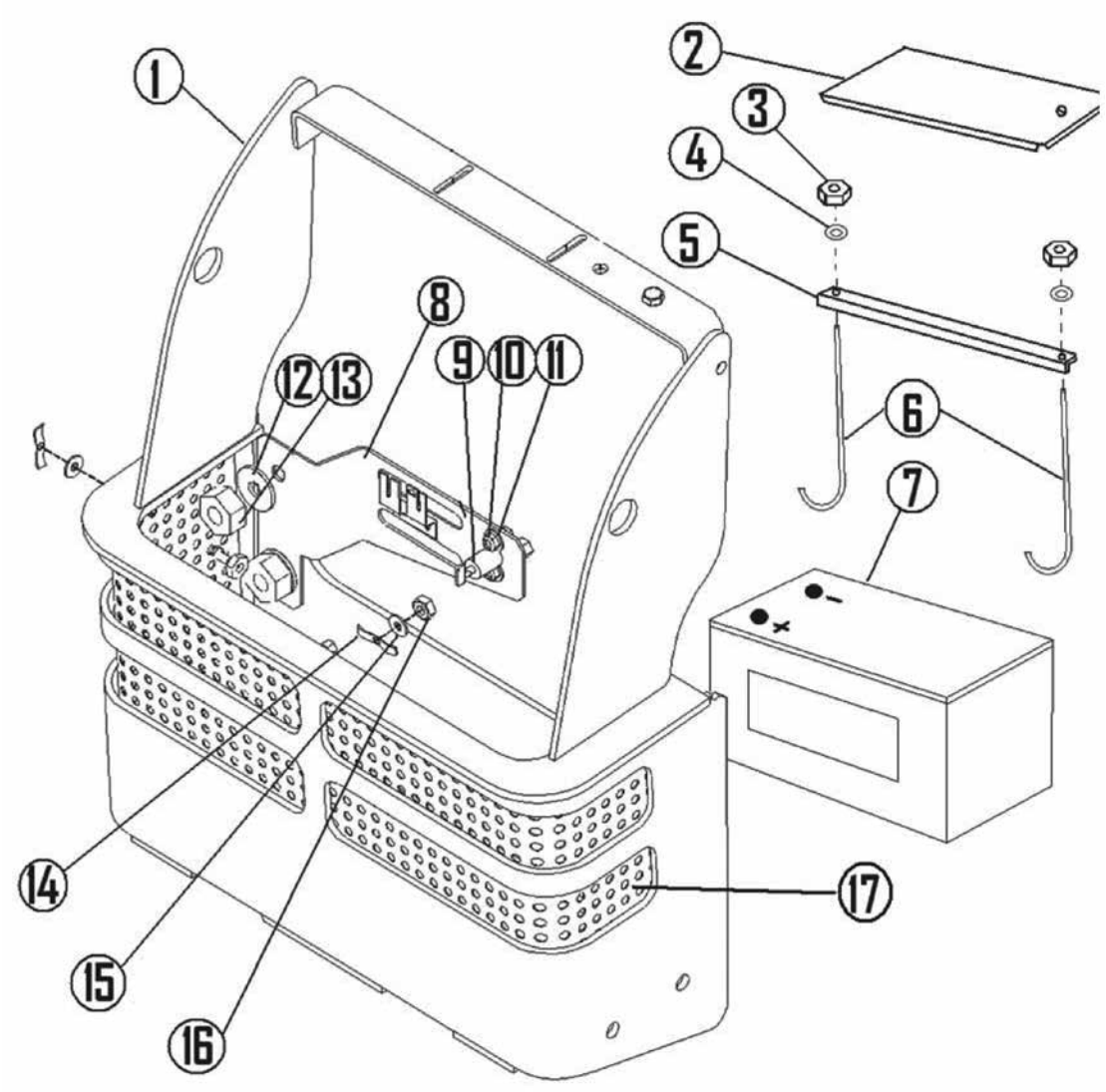
1
2
3
4
5
6
7
8
9
10
11
12
13
14
15
16
17

Ref.	Part No.	Description	Quantity	Applicable Machines	Remarks
1	1A0336	Battery Box	1		
2	6112847M2	Cover Plate	1		
3	1441500X1	Nut	2		
4	391038X1	Washer	2		
5	6112094M1	Bracket	1		
6	6112832M1	J-Bolt	2		
7	1D0001	Battery	1		
8	1A0338	Bracket	1		
9	1D0213	Isolator	1		
10	1441500X1	Nut	2		
11	390971X1	Washer	2		
12	3019575X1	Washer	4		
13	339034X1	Nut	4		
14	6100932M1	Clamp	4		
15	390972X1	Washer	4		
16	394367X1	Nut	4		
17	1A0174	Grille	2		

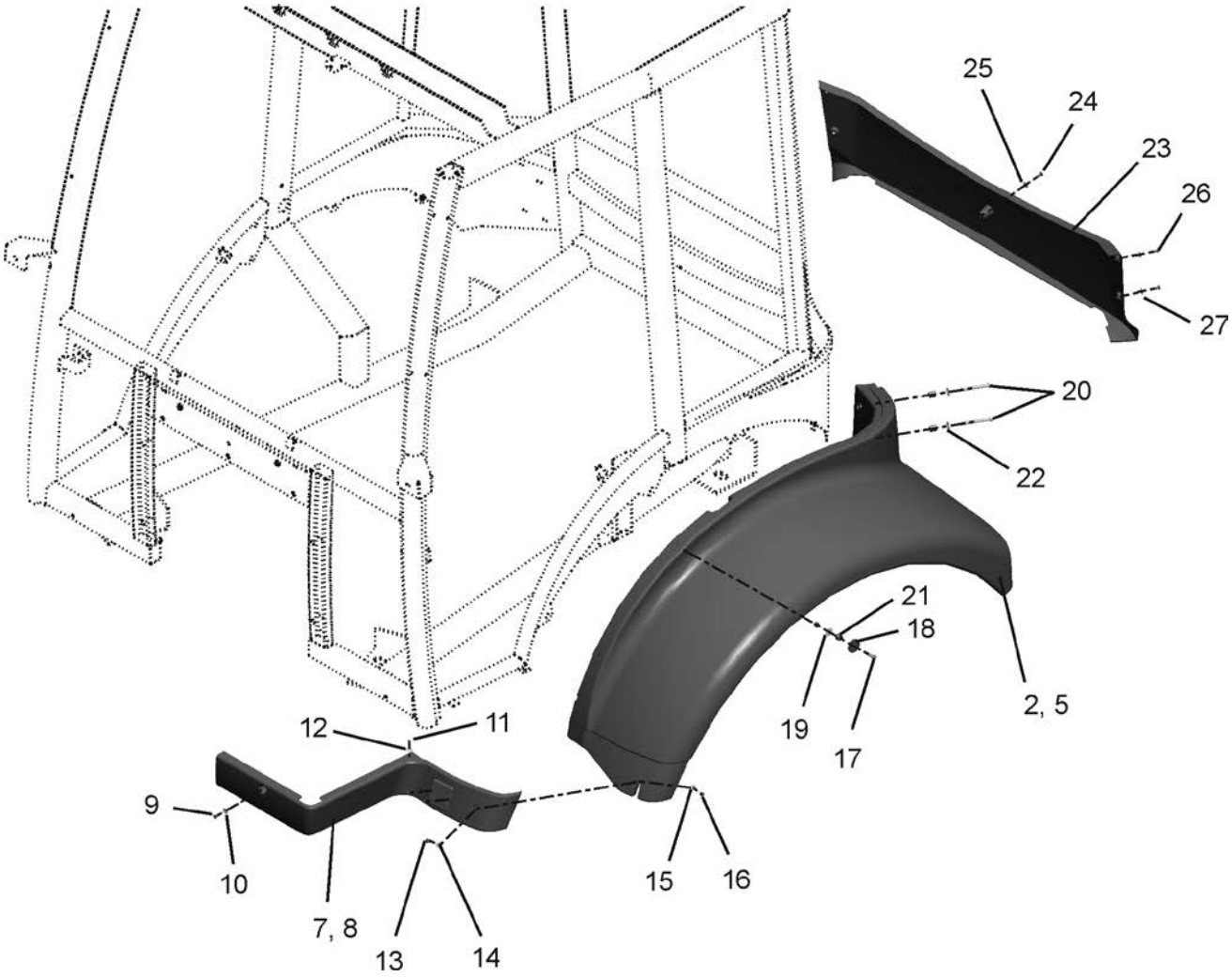
25
24
23
26
27
20
22
21
18
19
17
2, 5
12
11
9
10
7, 8
13
14
15
16

Ref.	Part No.	Description	Quantity	Applicable Machines	Remarks
2	1J0384	Fender LH	1		
3	6106468M1	Jack Nut	6		
5	1J0383	Fender RH	1		
7	1J0385	Sill LH	1		
8	1J0386	Sill RH	1		
9	8401620	Screw	2		
10	391038X1	Washer	2		
11	6108652M1	Screw	2		
12	391038X1	Washer	2		
13	8401620	Screw	2		
14	391038X1	Washer	2		
15	6102079M1	Washer	2		
16	1441500X1	Lock Nut	2		
17	339010X1	Screw	8		
18	1H0259	Washer	8		
19	6101730M1	Spacer	8		
20	339891X1	Screw	2		
21	391039X1	Washer	6		
22	6101732M2	Spacer	2		
23	1J0387	Pannel	1		
24	3009547X1	Screw	1		
25	390972X1	Washer	1		
26	8401620	Screw	4		
27	391038X1	Washer	4		

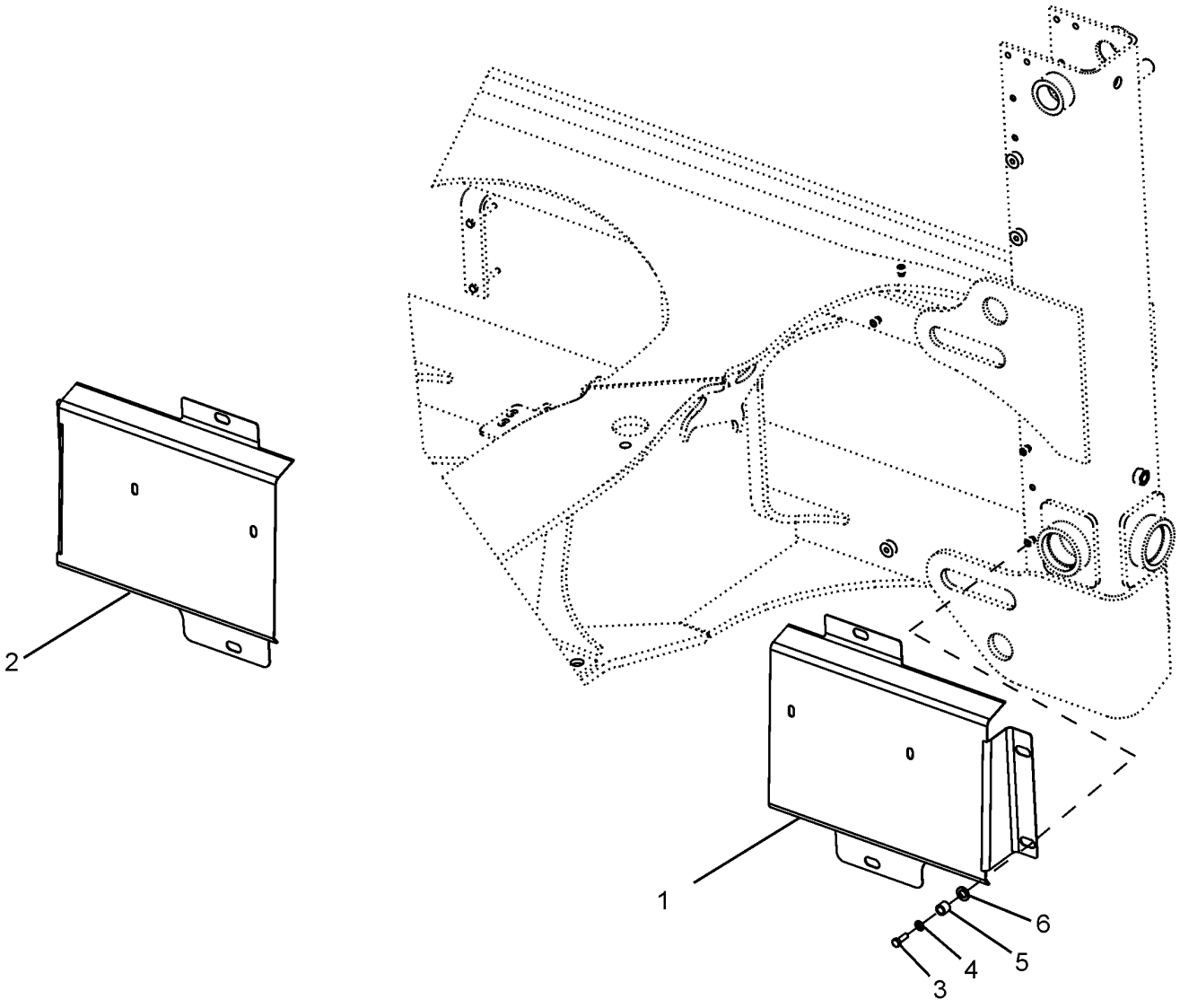
2
1
6
5
4
3

Ref.	Part No.	Description	Quantity	Applicable Machines	Remarks
1	1H0146	Deflecto, Mud - LH	1		
2	1H0145	Deflecto, Mud - RH	1		
3	339761X1	Screw	8		
4	390972X1	Washer	8		
5	6101892M1	Spacer	8		
6	390735X1	Washer	8		

NOTES

NOTES

ELECTRICS

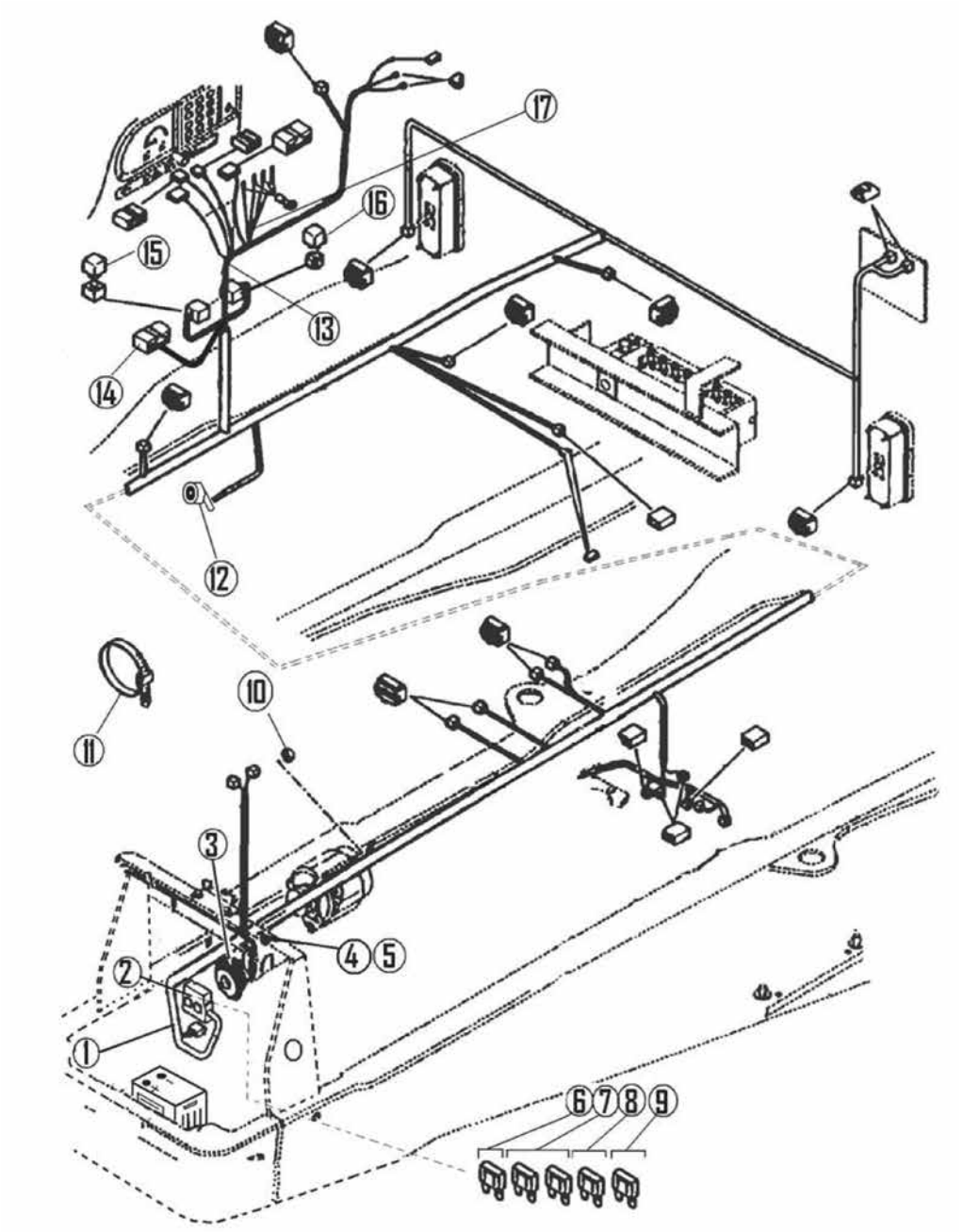
17
16
15
13
14
12
11
10
3
4
5
2
1
6
7
8
9

Ref.	Part No.	Description	Quantity	Applicable Machines	Remarks
1	1D0352	Harness Assy	1		
2	1D0054	Fuse Box	1		
3	6108843M1	Horn	1		
4	394367X1	Lock Nut	1		
5	339123X1	Screw	1		
6	1D0132	Fuse -100 A	1		
7	1D0131	Fuse - 60 A	2		
8	1D0130	Fuse - 40 A	1		
9	1D0129	Fuse - 30 A	1		
10	339030X1	Nut	1		
11	1664405M1	Tie Cable	UAR		
12	1D0040	Reverse Alarm	1		
13	1D0363	Panel Harness	1		
14	1D0113	Flasher Relay	1		
15	1D0112	Start Relay	1		
16	1D0107	Ignition Relay	1		
17	1TD0004M91	Switch Pack Harness	1		

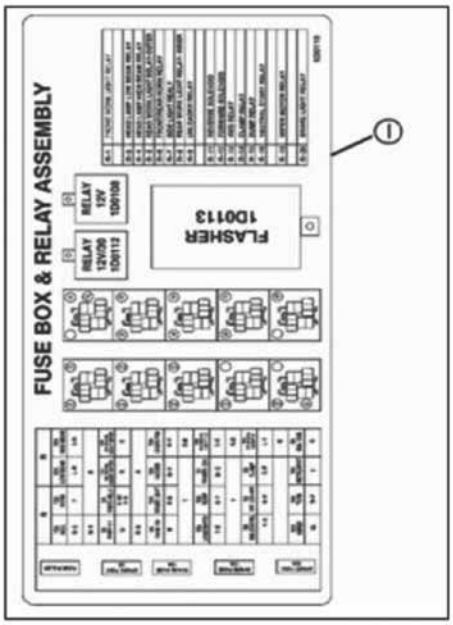
FUSE BOX & RELAY ASSEMBLY
FLASHER
1D0113
RELAY
12V
100108
RELAY
12V/30
100112
1

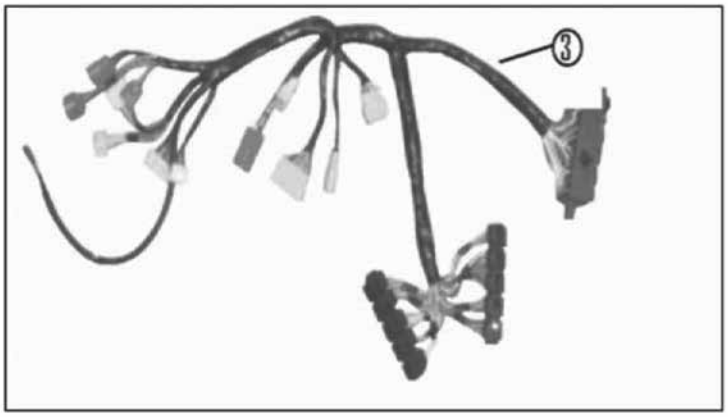
3

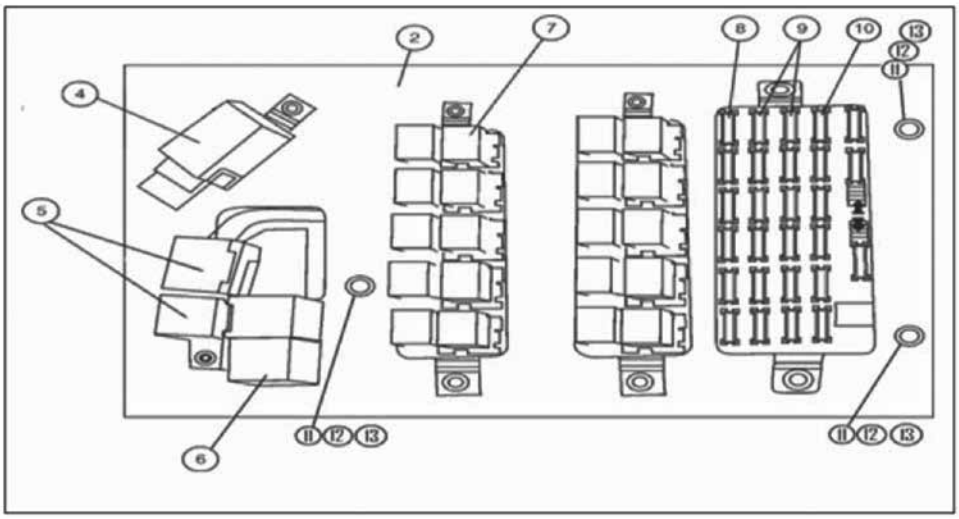
2
7
8
9
10
13
12
11
4
5
6
11
12
13
11
12
13

Ref.	Part No.	Description	Quantity	Applicable Machines	Remarks
1	1D0110	Decal, Fuse Box	1		
2	1D0053	Mtg. Plate	1		
4	1D0113	Relay, Flasher	1		
5	1D0108	Relay, Ignition	1		
6	1D0112	Relay, Start	1		
7	1D0107	Relay	16		
8	1D0126	Fuse - 5 A	6		
9	1D0127	Fuse - 10 A	9		
10	1D0128	Fuse - 15 A	9		
11	3507736M1	Mounting	3		
12	394367X1	Nut	3		
13	390992X1	Bolt	3		

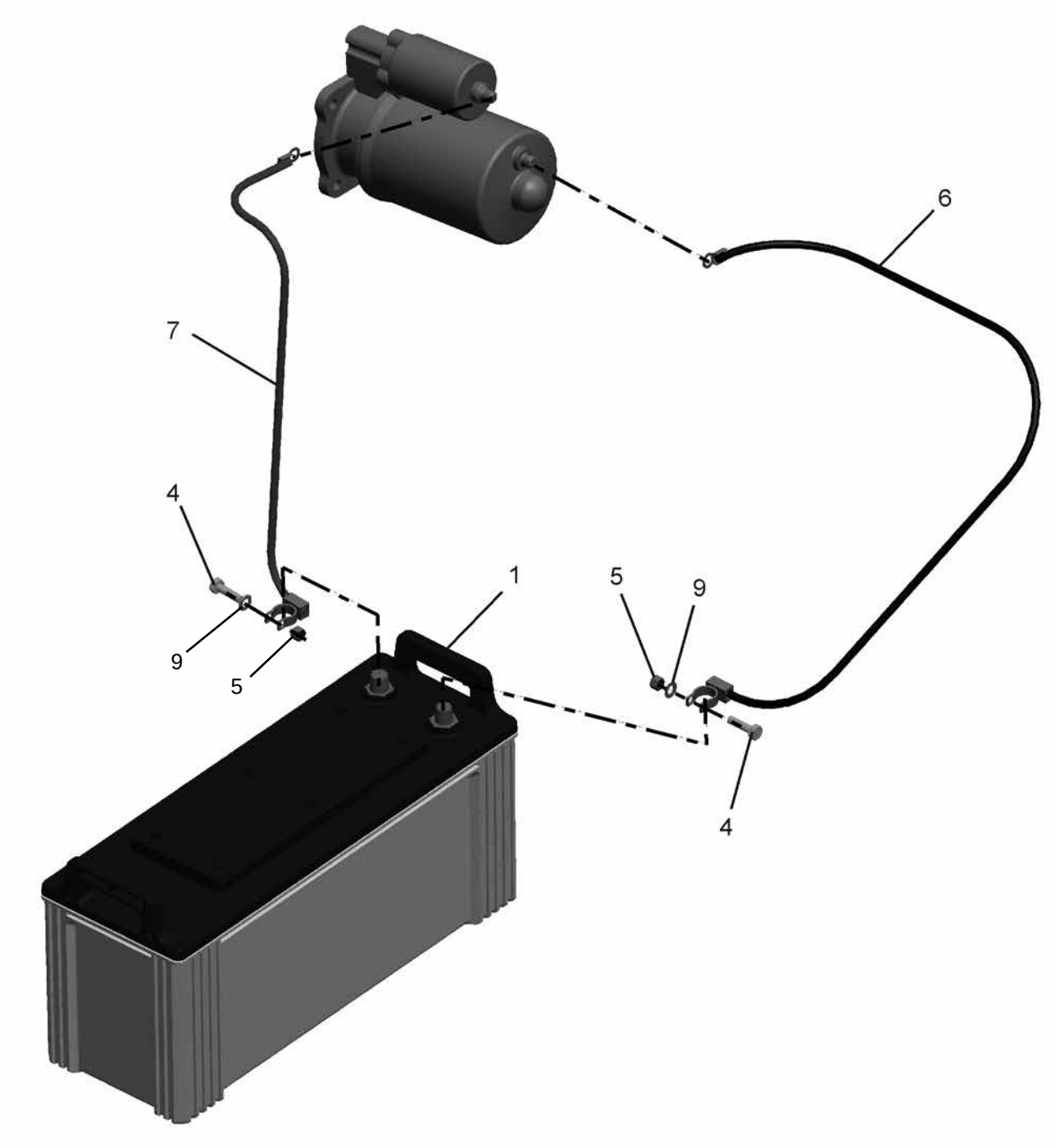
6
7
4
1
5
9
9
5
4

Ref.	Part No.	Description	Quantity	Applicable Machines	Remarks
1	1D0001	Battery	1		
4	339666X1	Screw	2		
5	1441500X1	Nut	2		
6	1TD0015M91	Cable Assy (–ve)	1		
7	1TD0014M91	Cable Assy (+ve)	1		
9	390972X1	Washer	4		

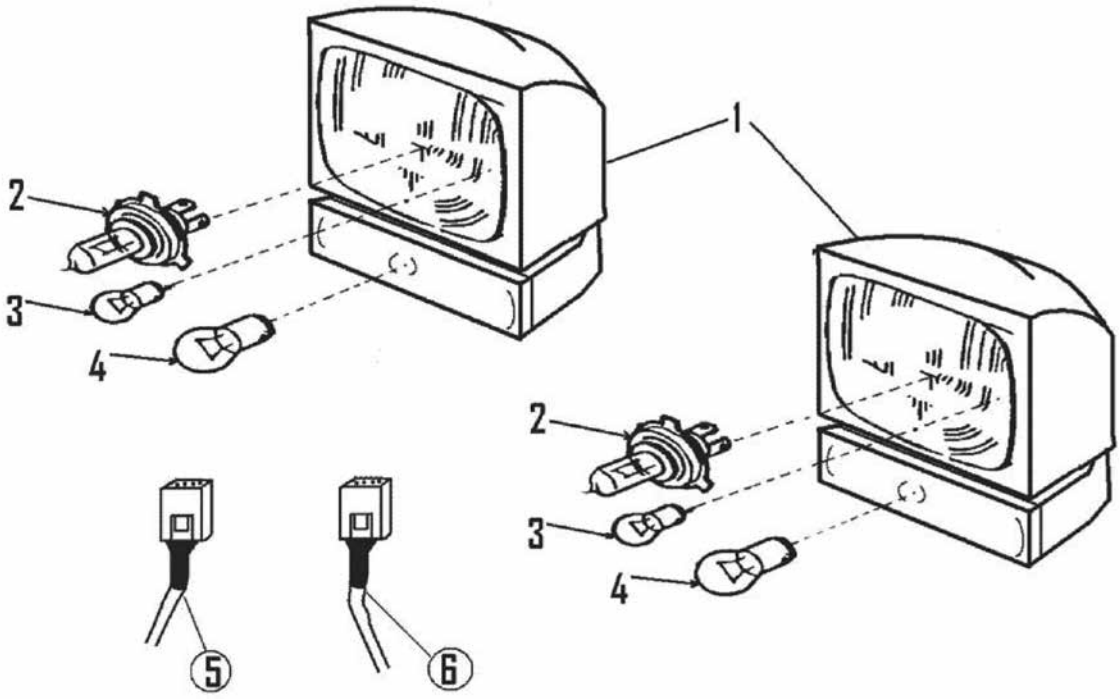
1
2
3
4
2
3
4
5
6

Ref.	Part No.	Description	Quantity	Applicable Machines	Remarks
1	1D0208	Head Light	2		
2	3523444M1	Bulb Head Light	2		
3	1D0135	Bulb Parking	2		
4	3523687M1	Bulb Indicator	2		
5	1D0085	Harness	1		
6	1D0086	Harness	1		

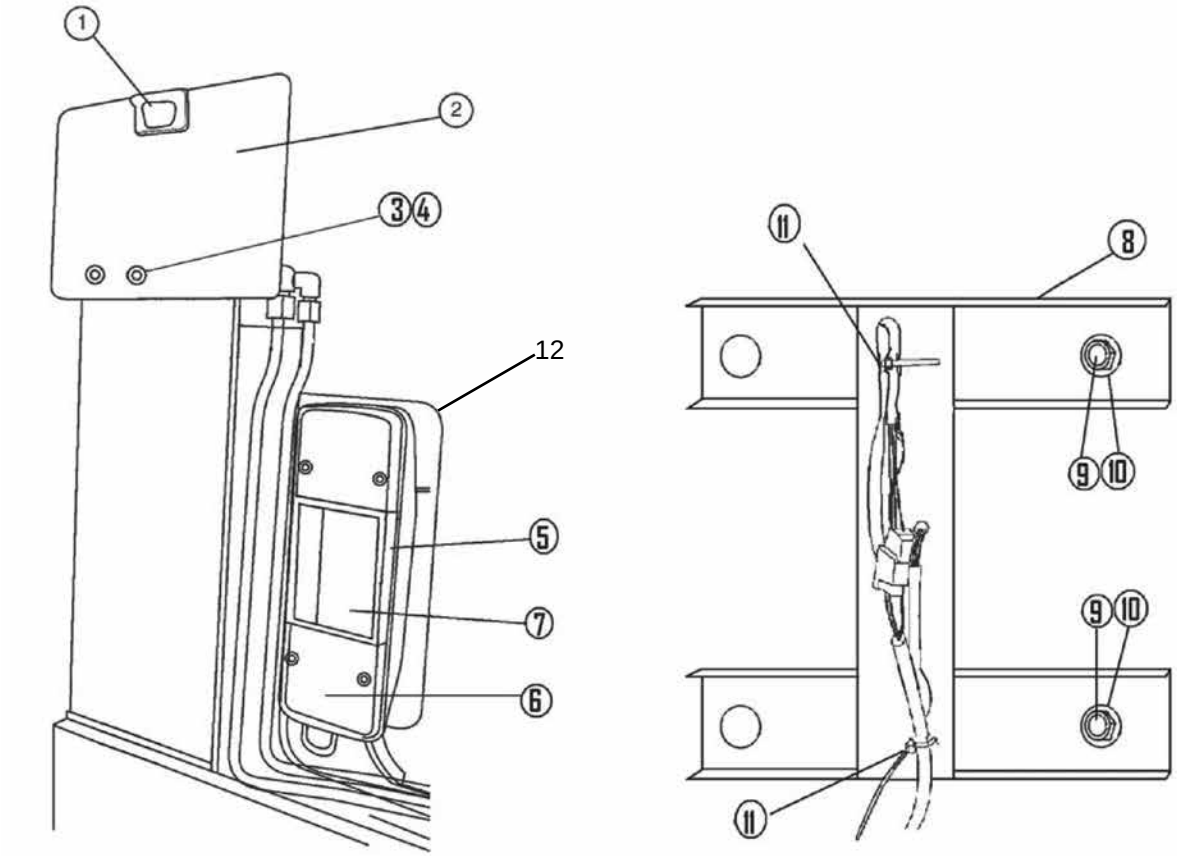
1
2
3 4
12
5
7
6
11
8
9 10
9 10
11

Ref.	Part No.	Description	Quantity	Applicable Machines	Remarks
1	1D0205	Lamp	1		
2	1D0181	Number Plate	1		
3	339124X1	Bolt	2		
4	390972X1	Washer	2		
5	1D0194	Tail Lamp Assy - RH	1		
5(a)	1D0233	Tail Lamp Assy - LH	1		
6	1D0141	Bulb (Brake)	2		
7	1D0137	Bulb Parking	2		
8	1B0655	Bracket	2		
9	339124X1	Bolt	2		
10	390972X1	Washer	2		
11	1A0134	Tie Cable	2		
12	1D0827	Tail Lamp Bracket	1		

NOTES

NOTES

HYDRAULICS

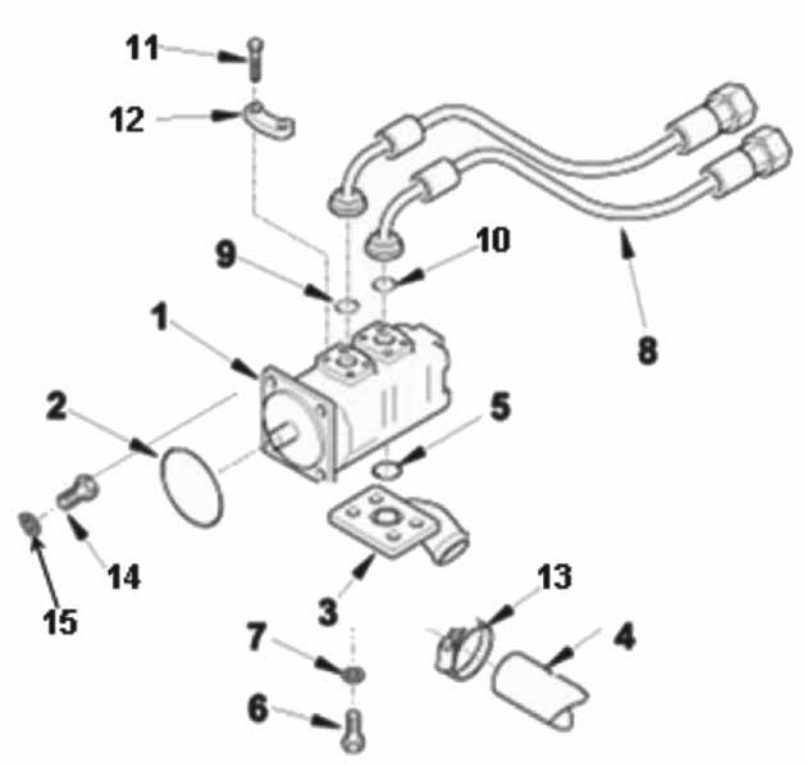
11
12
9
10
1
8
2
5
14
15
3
13
7
4
6

Ref.	Part No.	Description	Quantity	Applicable Machines	Remarks
1	1H0470	Hyd Pump Assy	1		
2	6194332M1	O-Ring	1		
3	6110434M1	Elbow Suction	1		
4	1H0496	Hose	1		
5	6110711M1	O-Ring	1		
6	1440356X1	Screw	4		
7	339369X1	Washer	4		
8	6112853M91	Hose Assy P2	1		
9	359300X1	O-Ring	1		
10	359300X1	O-Ring	1		
11	3009493X1	Bolt	8		
12	3521551M1	Bracket Clamp	4		
13	3517413M1	Clip	1		
14	3019978X1	Bolt	4		
15	385363X1	Washer	4		
16	1H0528	Hose P1 (Pump to LVB)	1		

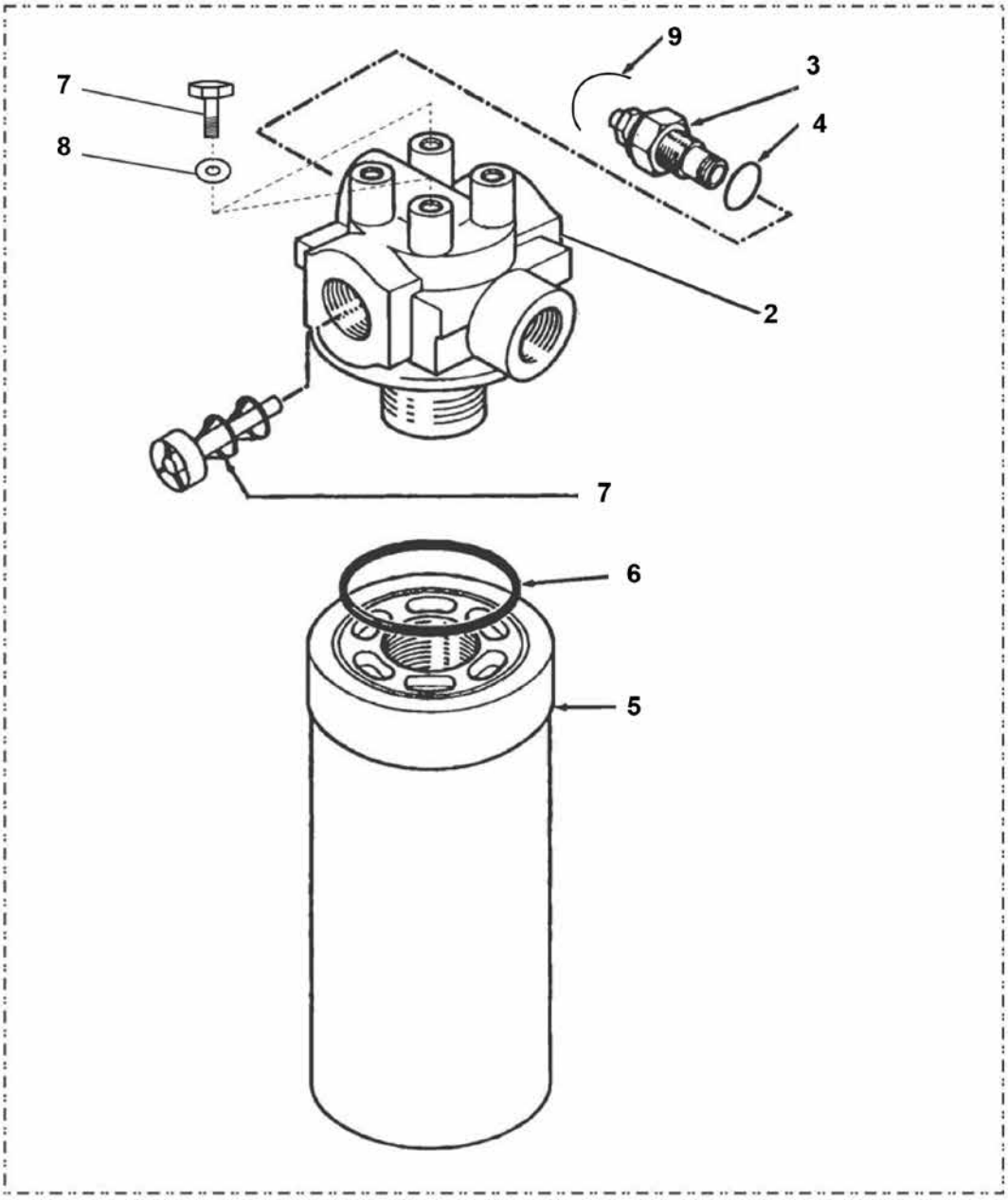
9
3
4
7
8
2
7
6
5

Ref.	Part No.	Description	Quantity	Applicable Machines	Remarks
2	1H0520	Head, Filter	1		
3	1H0522	Switch, Pressure	1		
4	3523725M1	O-Ring	1		
5	1H0519	Element Filter	1		
7	3009492X1	Screw	2		
8	385362X1	Washer	2		
9	1H0527	Rubber Boot	1		

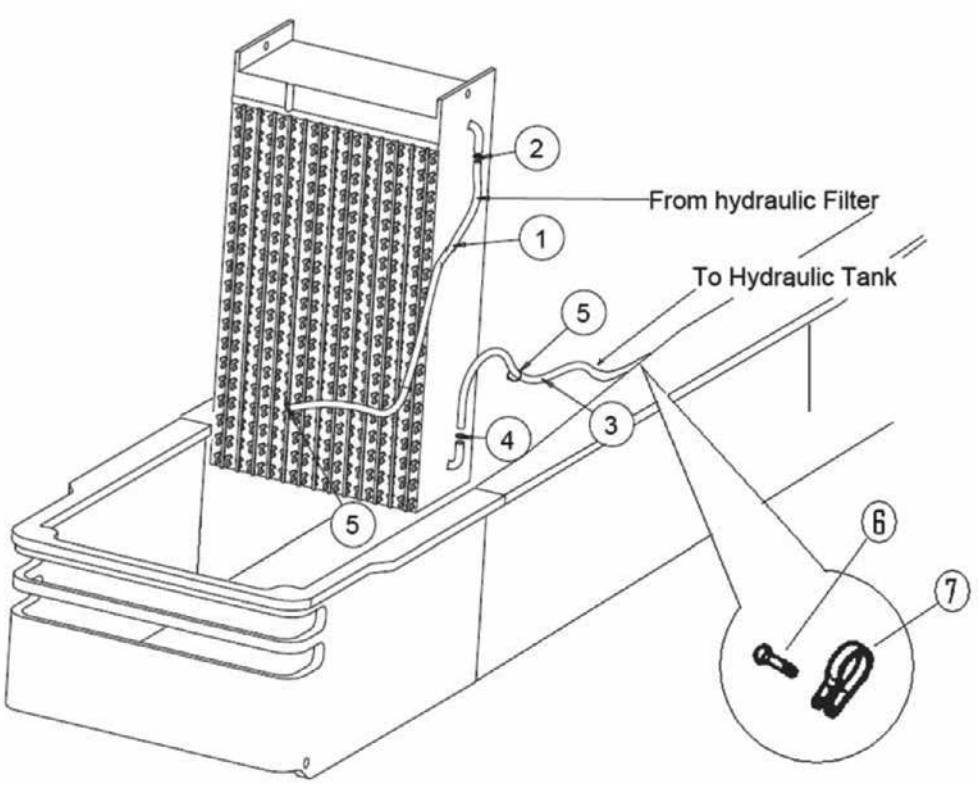
2
From hydraulic Filter
1
To Hydraulic Tank
5
3
4
5
6
7

Ref.	Part No.	Description	Quantity	Applicable Machines	Remarks
1	1H0030	Hose Assy	1		
2	3517410M1	Worm Drive Clip	1		
3	1TA0035M1	Hose Assy	1		
4	3517410M1	Worm Drive Clip	4		
5	1664405M1	Tie Cable	UAR		
6	339124X1	Bolt	1		
7	3517114M1	P Clip	1		

HYDRAULICS RESERVOIR

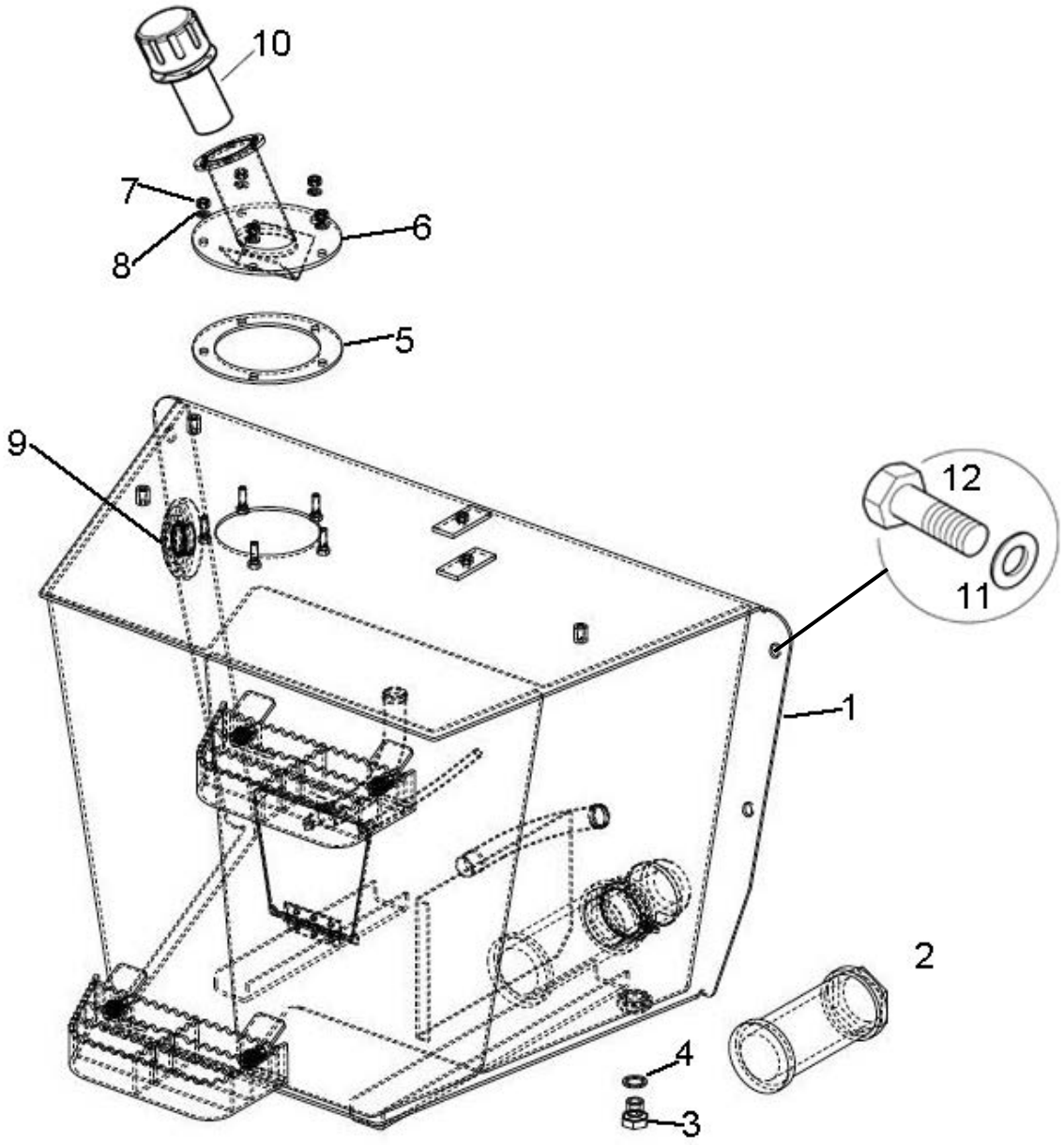

HYDRAULICS RESERVOIR

Ref.	Part No.	Description	Quantity	Applicable Machines	Remarks
1	6113580M91	Tank Hydraulic Assy.	1		
2	3515254M1	Element - Suction	1		
3	376501X1	Plug	1		
4	352024	Washer	1		
5	6100975M21	Gasket	1		
6	1B0489	Filler Neck W/Assy.	1		
7	339169X1	Hex Nut	5		
8	339374X1	Lock Washer	5		
9	1B0863	Level Gauge	1		
10	1B0560	Hydraulic Tank Cap	1		
11	385363X1	Tank Mounting Washer	4		
12	6007796M1	Tank Mounting Bolt	4		

WALVOIL VALVE BLOCK HYDRAULIC LAYOUT

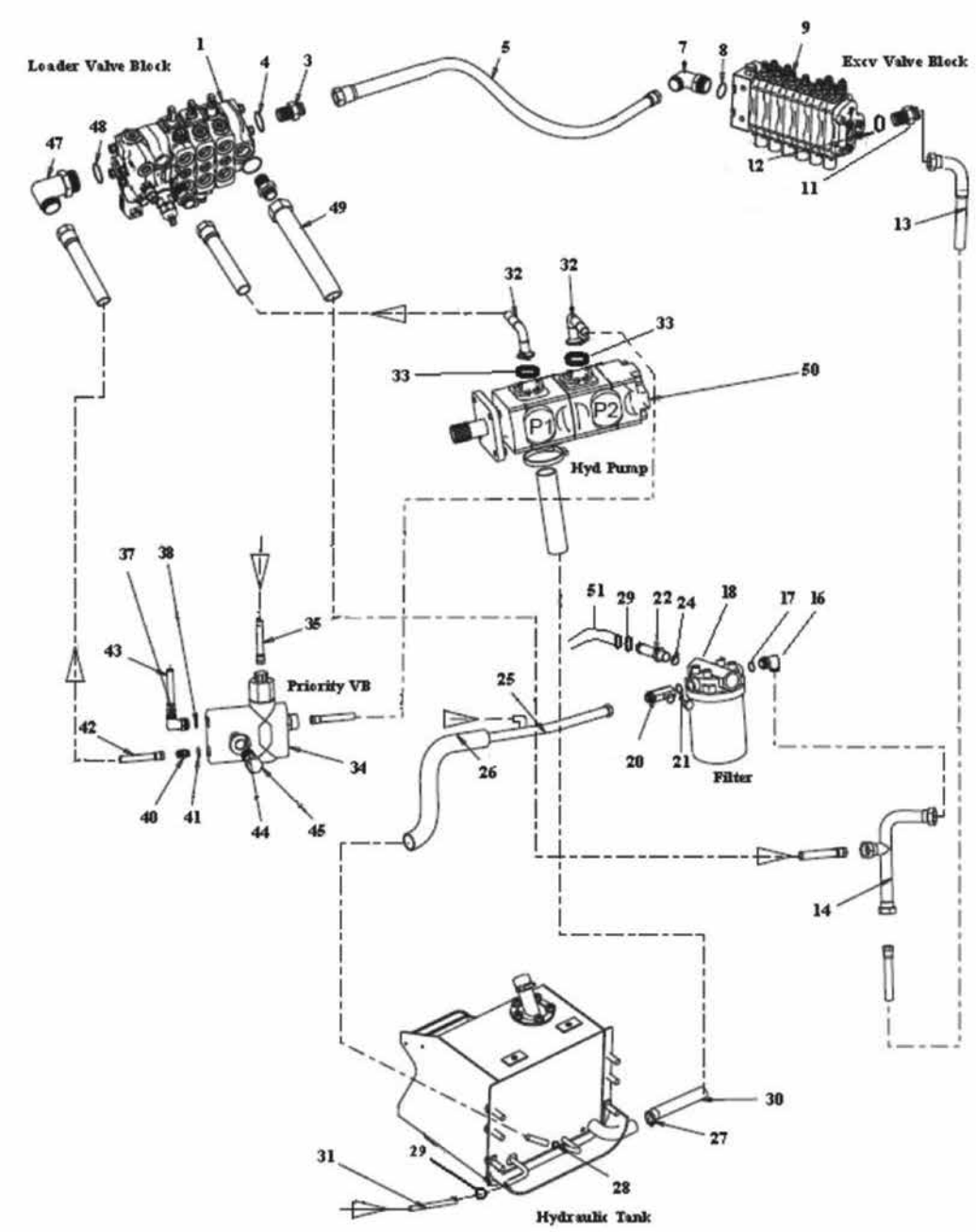

WALVOIL VALVE BLOCK HYDRAULIC LAYOUT

Ref.	Part No.	Description	Quantity	Applicable Machines	Remarks
1	1H0507	2 Spool Valve Block	1		
3	1H0208	Adaptor	1		
4	835026M1	O-Ring	1		
5	1H0246	Hose Assy Adaptor	1		
7	1H0310	Adaptor	1		
8	835026M1	O-Ring	1		
9	1H0508	6 Spool Valve Block	1		
11	358738X1	Adaptor	1		
12	835026M1	O-Ring	1		
13	1H0097	Hose Assy	1		
14	1H0215	Tube Assy	1		
16	358757X1	Adaptor	1		
17	835026M1	O-Ring	1		
18	1H0520	Hyd. Filter Head	1		
20	1H0247	Connector	1		
21	835026M1	O-Ring	1		
22	6107562M92	Adaptor Assy	1		
24	835024M1	O-Ring	1		
25	1H0107	Tube Assy	1		
26	6112871M1	Hose, Return	2		
27	3517413M1	Worm Drive Clip	2		

WALVOIL VALVE BLOCK HYDRAULIC LAYOUT

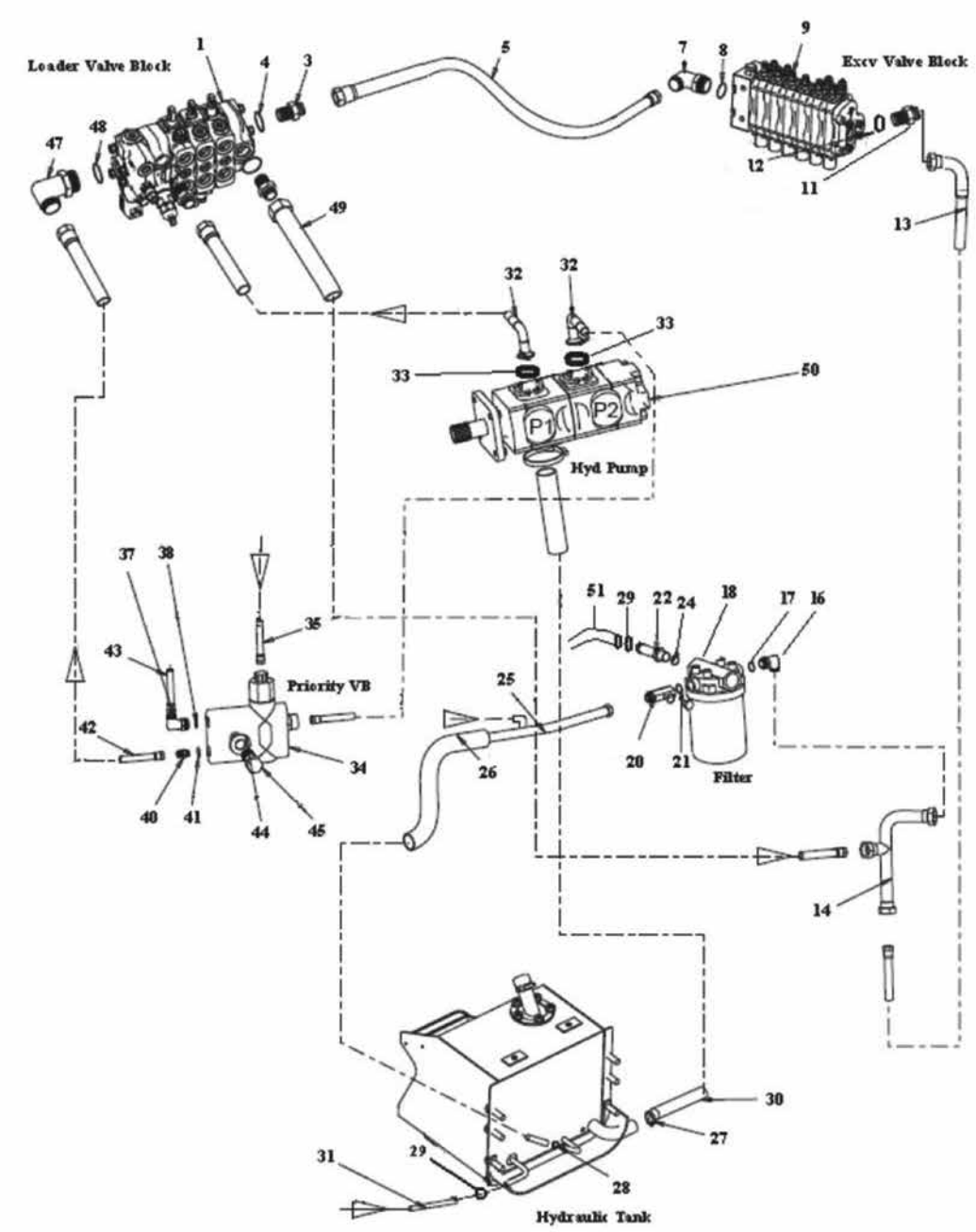

WALVOIL VALVE BLOCK HYDRAULIC LAYOUT

Ref.	Part No.	Description	Quantity	Applicable Machines	Remarks
28	3517738M1	Worm Drive Clip	2		
29	3517410M1	Worm Drive Clip	1		
30	1H0496	Hose Suction	1		
31	1TA0035M1	Hose Assy.	1		
32	6112853M91	Hose Assy.	2		
33	359300X1	O-Ring	2		
34	1H0448	Priority Valve	1		
35	1H0062	Hose Assy.	1		
37	358753X1	Elbow	1		
38	831497M1	O-Ring	1		
40	3517854M1	Connector	1		
41	835024M1	O-Ring	1		
42	1H0548	Hose Assy.	1		
43	1H0099	Hose Assy.	1		
44	339369X1	Washer, Lock	1		
45	339368X1	Bolt	1		
47	1H0266	Elbow	1		
48	835026M1	O-Ring	1		
49	1H0200	Hose Assy.	1		
51	1H0030	Hose Assy.	1		

WALVOIL 2 SPOOL

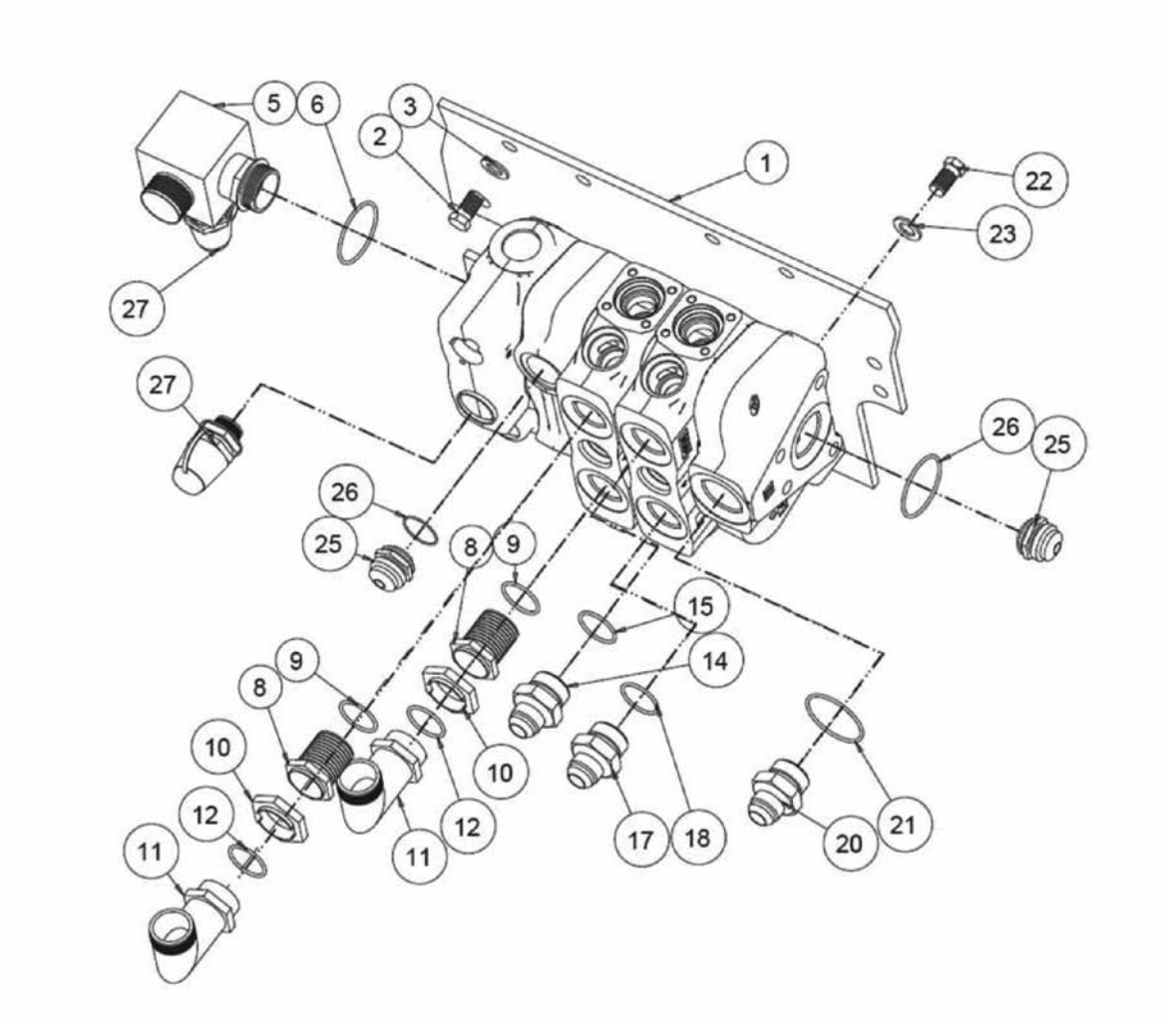

WALVOIL 2 SPOOL

Ref.	Part No.	Description	Quantity	Applicable Machines	Remarks
1	1B0163	Mtg. Plate	1		
2	3009492X1	Screw	3		
3	339123X1	Washer, Lock	3		
5	1H0266	Elbow	1		
6	835026M1	O-Ring	1		
8	1H0173	Adaptor	2		
9	835025X1	O-Ring	2		
10	1H0244	Sleeve	2		
11	835007M91	Elbow, 90	2		
12	835024X1	O-Ring	2		
14	358736X1	Adaptor	1		
15	835025M1	O-Ring	1		
17	1H0165	Adaptor	1		
18	835025M1	O-Ring	1		
20	358738X1	Adaptor	1		
21	835026M1	O-Ring	1		
22	3009492X1	Screw	4		
23	339376X1	Washer	4		
25	1H0208	Adaptor	2		
26	835026M1	O-Ring	2		
27	1H0240	Test Adaptor	2		

WALVOIL 3 SPOOL

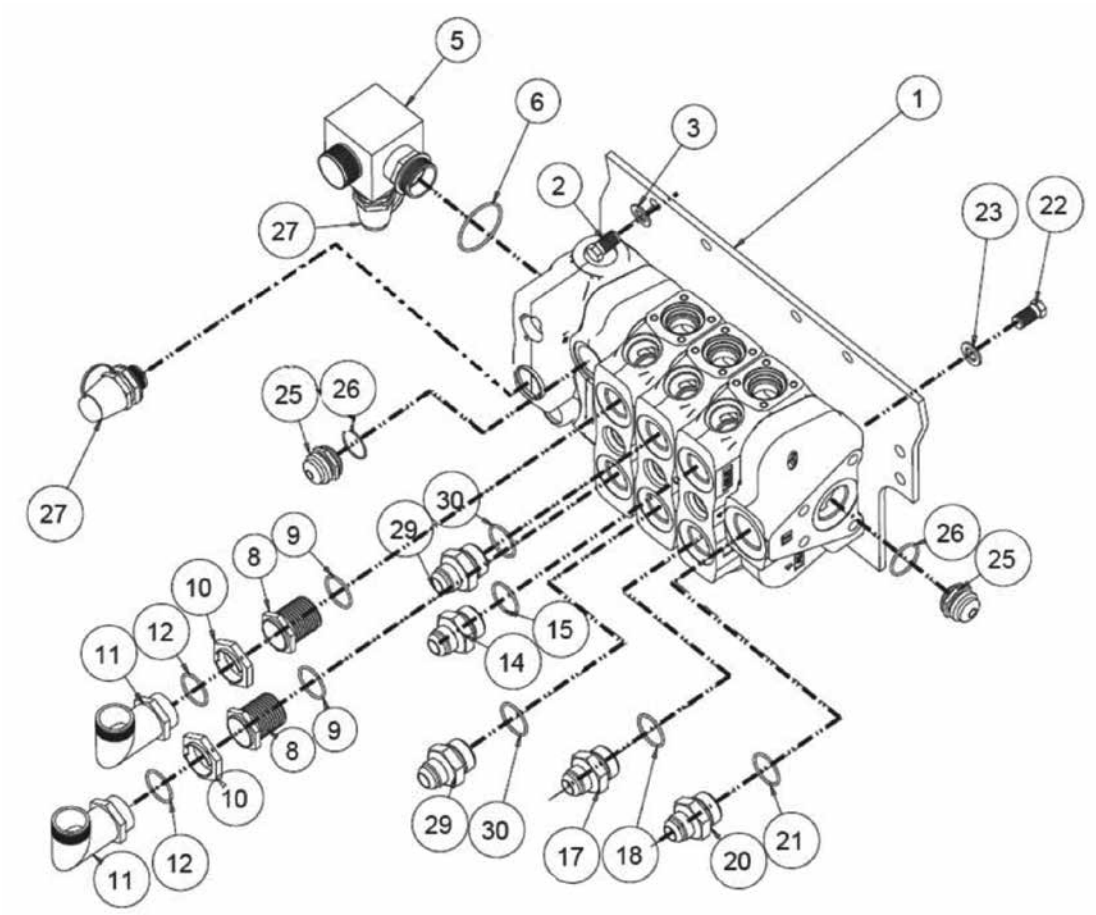

WALVOIL 3 SPOOL

Ref.	Part No.	Description	Quantity	Applicable Machines	Remarks
1	1B0163	Mtg. Plate	1		
2	3009492X1	Screw	3		
3	339123X1	Washer, Lock	3		
5	1H0266	Elbow	1		
6	835026M1	O-Ring	1		
8	1H0173	Adaptor	2		
9	835025X1	O-Ring	2		
10	1H0244	Sleeve	2		
11	835007M91	Elbow, 90	2		
12	835024X1	O-Ring	2		
14	358736X1	Adaptor	1		
15	835025M1	O-Ring	1		
17	1H0165	Adaptor	1		
18	835025M1	O-Ring	1		
20	358738X1	Adaptor	1		
21	835026M1	O-Ring	1		
22	3009492X1	Screw	4		
23	339376X1	Washer	4		
25	1H0208	Adaptor	2		
26	835026M1	O-Ring	2		
27	1H0240	Test Adaptor	2		
29	1H0165	Adaptor	2		
30	835025M1	O-Ring	2		

WALVOIL 6 SPOOL

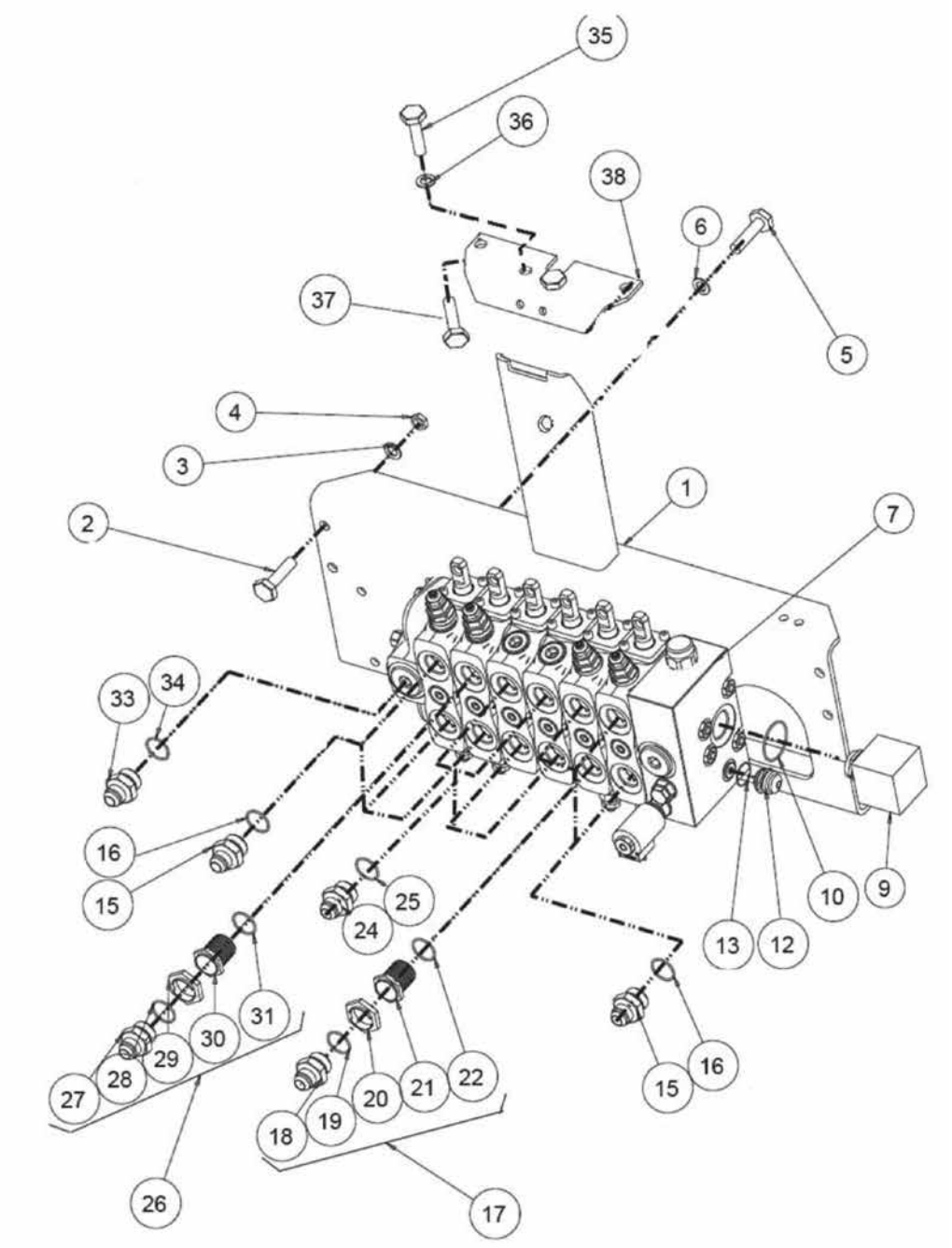

WALVOIL 6 SPOOL

Ref.	Part No.	Description	Quantity	Applicable Machines	Remarks
1	1B0167	Bkt. Digger Valve	1		
2	3009493X1	Bolt	4		
3	385362X1	Washer	4		
4	1440329X1	Nut	4		
5	3009492X1	Bolt, VB Mounting	4		
6	339376X1	Washer	4		
7	1H0194 6	Spool Valve	1		
9	1H0310	Elbow	1		
10	835026M1	O-Ring	1		
12	365107X1	Adaptor	1		
13	831452M1	O-Ring	1		
15	1H0165	Adaptor	6		
16	835025M1	O-Ring	6		
17	1H0254	Adaptor Assy	1		
18	1H0233	Adaptor	1		
19	835024M1	O-Ring	1		
20	1H0244	Sleeve	1		
21	1H0173	Adaptor	1		
22	835025M1	O-Ring	1		
24	1H0195	Adaptor	4		
25	835025M1	O-Ring	4		
26	1H0193	Adaptor Assy	1		
27	1H0233	Adaptor	1		
28	835024M1	O-Ring	1		
29	1H0232	Sleeve	1		
30	1H0173	Adaptor	1		

WALVOIL 6 SPOOL

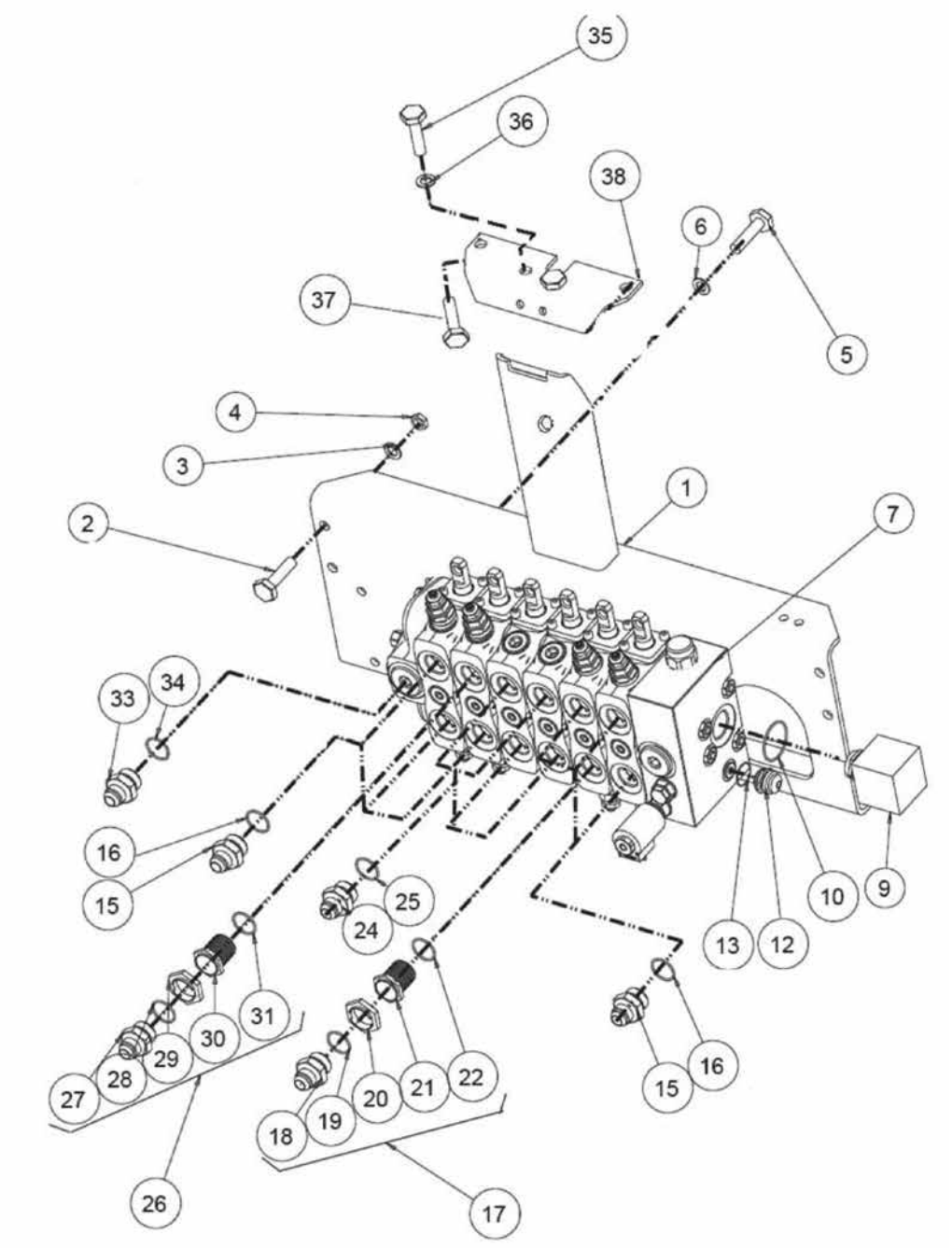

WALVOIL 6 SPOOL

Ref.	Part No.	Description	Quantity	Applicable Machines	Remarks
31	835025M1	O-Ring	1		
33	358738X1	Adaptor	1		
34	835026M1	O-Ring	1		
35	339124X1	Bolt	4		
36	339374X1	Washer	4		
37	354742X1	Bolt	2		
38	1B0414	Plate	1		

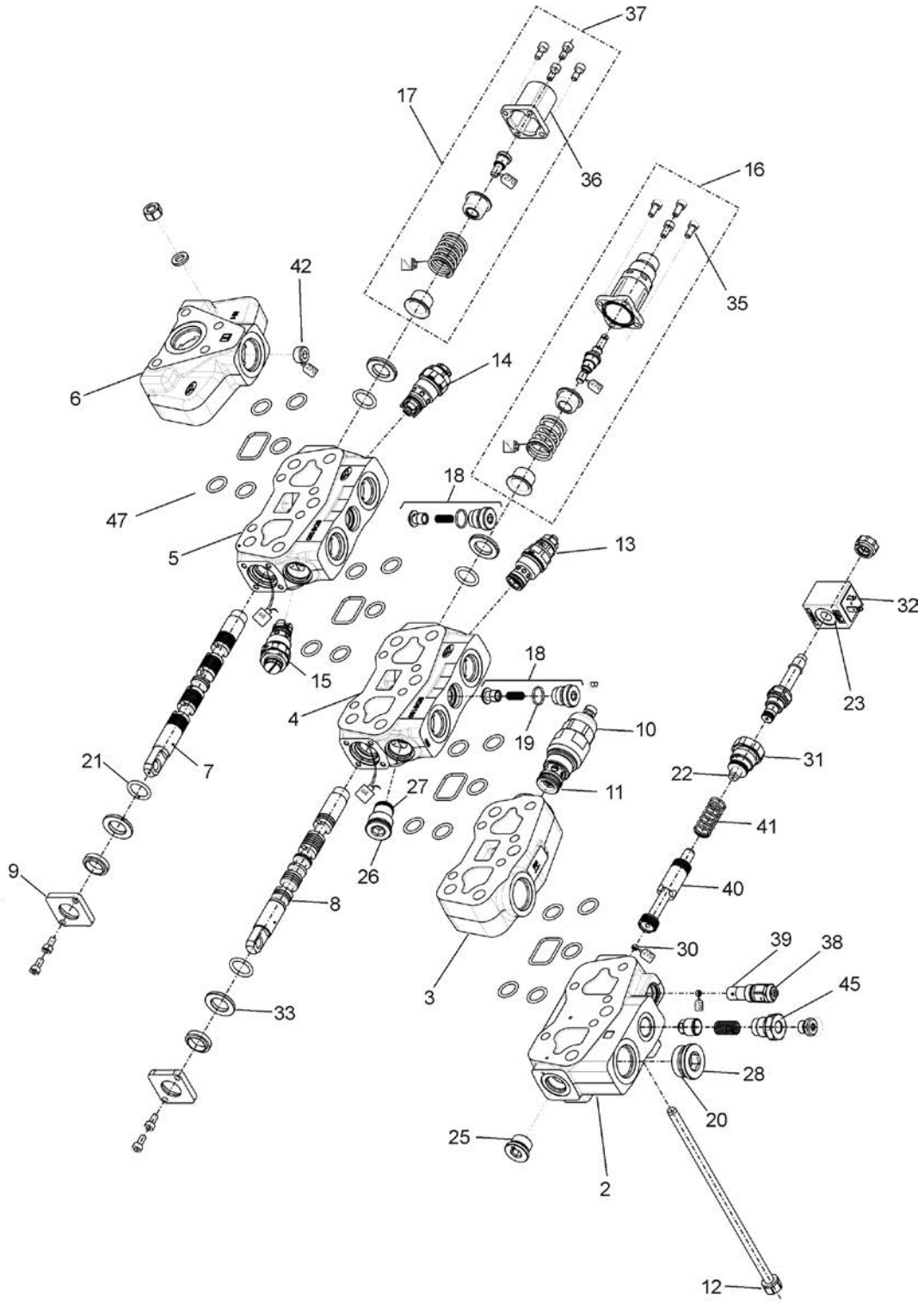
37
17
36
16
35
42
6
14
47
18
5
13
32
18
15
4
19
10
23
21
7
22
31
27
11
41
9
26
40
8
30
39
38
3
45
33
28
20
25
2
12

WALVOIL OPEN CENTER VALVE BLOCK 2 Spool

Ref.	Part No.	Description	Quantity	Applicable Machines	Remarks
1	1H0507	2 Spool Valve	1		
2	10X1355	Inlet Cover	1		
3	10X1356	Intermediate Section	1		
4	10X2885	Lift Section	1		
5	10X2884	Tilt Section	1		
6	10X1359	Outlet Cover	1		
7	10X1361	Tilt Spool	1		
8	10X1362	Lift Spool	1		
9	10X1365	Dust Cover, Spool	2		
10	10X1363	Main Relief Valve	1		
11	10X1420	Seal Kit, Relief Valve	1		
12	10X1367	Tie Rod Kit	4		
13	10X1403	ARV, 240 Bar	1		
14	10X2886	ARV, 310 Bar	1		
15	10X2887	ARV, 340 Bar	1		
16	10X1372	Detent Kit, Float	1		
17	10X1368	Tilt Control Kit	1		
18	10X1366	Load Hold Check Valve	2		
19	10X1433	Seal Kit, Load Hold Valve	1		
20	10X1434	O-Ring, Inlet Allen Plug	1		
21	10X1431	O-Ring, Spool	4		
22	10X1430	O-Ring Unloader Plug	1		
23	10X1373	Unloader Solenoid Valve	1		
24	10X1360	Complete Seal Kit	1		
25	10X1435	O-Ring, Inlet Unloader Plug	1		
26	10X2888	ARV, 240 Bar	1		

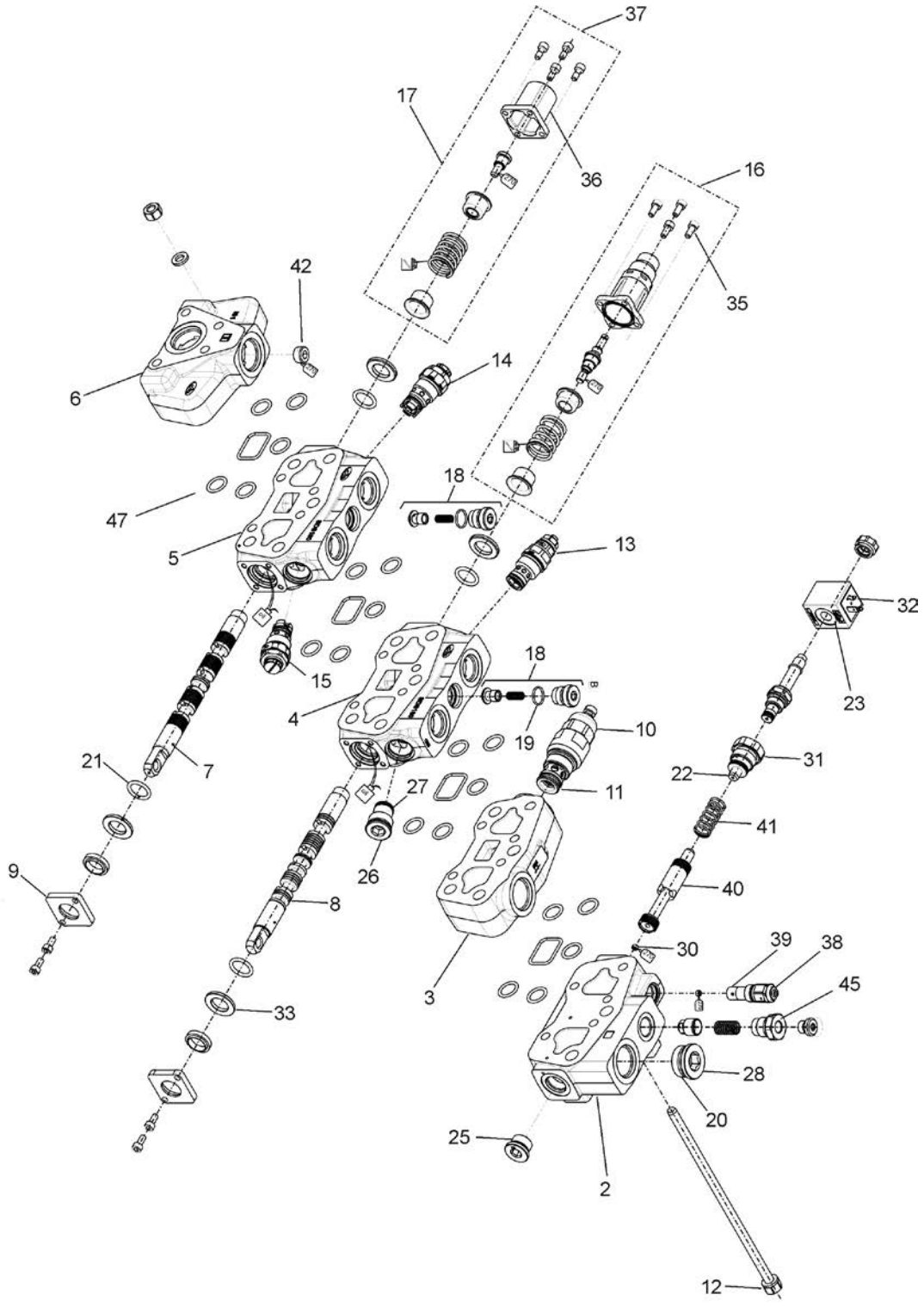
37
17
36
16
35
42
6
14
47
18
5
13
32
18
15
4
19
10
23
21
7
22
31
27
11
41
9
26
40
8
30
39
38
3
45
33
28
20
25
2
12

WALVOIL OPEN CENTER VALVE BLOCK 2 Spool

Ref.	Part No.	Description	Quantity	Applicable Machines	Remarks
27	10X2881	ARV O-Ring	1		
28	10X1456	Plug Assy	1		
30	10X1457	Orifice (Unloader)	1		
31	10X1458	Plug Assy	1		
32	10X1459	Solenoid Coil	1		
33	10X1460	Spool Seal	1		
34	10X1461	Spool Cap	1		
35	10X1462	Allen Cap Bolt	4		
36	10X1463	Cap	1		
37	10X1464	Allen Cap Bolt	4		
38	10X1439	Unloader Relief	1		
39	10X1432	O-Ring	1		
40	10X1468	Unloader Spool	1		
41	10X1467	Spring Unloader	1		
42	10X1469	Carry Over Plug	1		
43	10X1470	O-Ring Kit ARV	1		
45	10X1876	Check Valve	1		
47	10X1419	Seal Kit - Section	2		

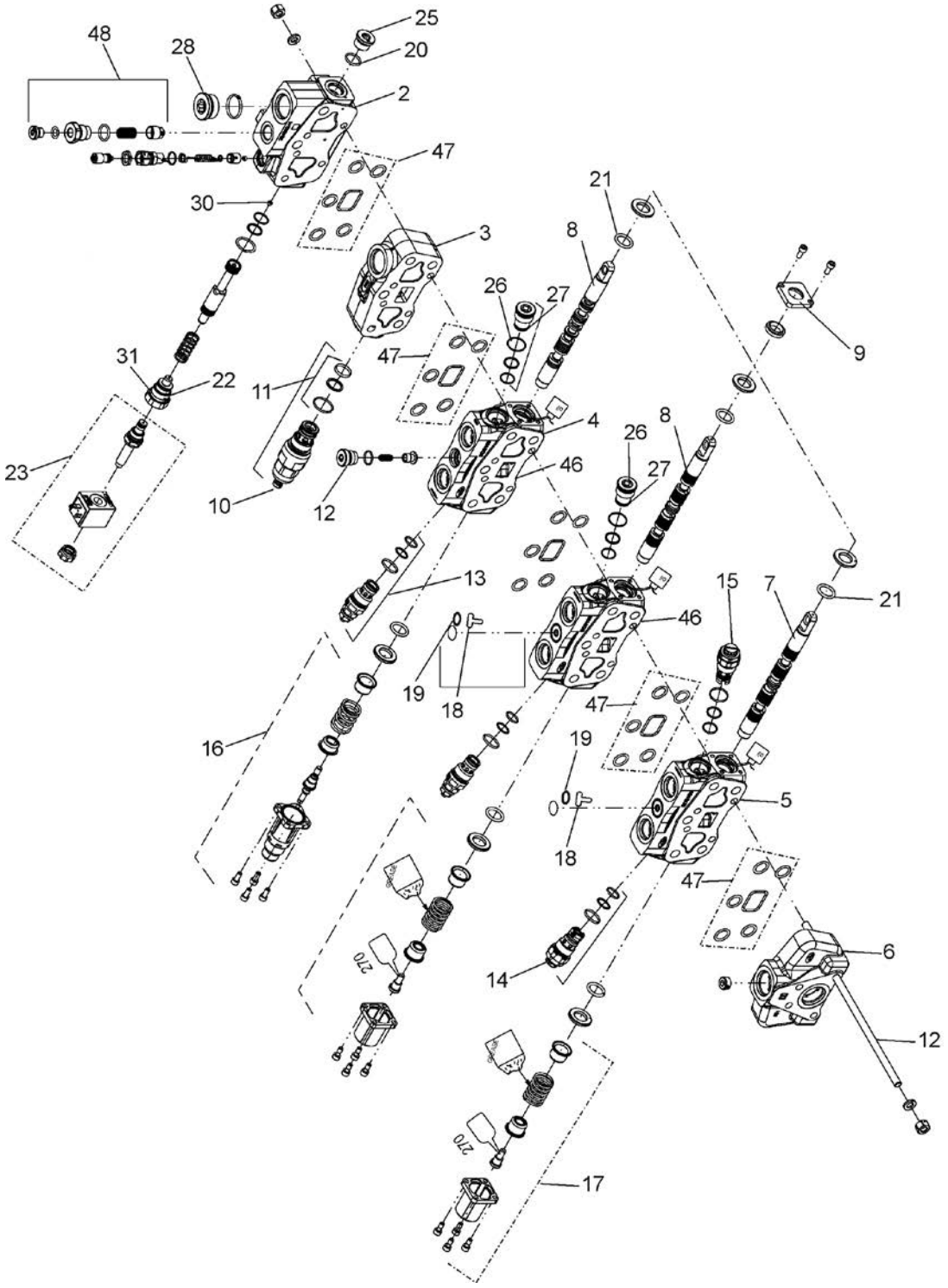
48
28
25
20
2
47
30
3
21
8
26
27
9
31
22
11
47
4
26
8
23
10
12
46
27
13
15
7
21
46
19
18
16
47
19
5
18
47
14
6
12
17

WALVOIL OPEN CENTER VALVE BLOCK 3 Spool

Ref.	Part No.	Description	Quantity	Applicable Machines	Remarks
1	1H0585	3 Spool Valve	1		
2	10X1355	Inlet Cover	1		
3	10X1356	Intermediate Section	1		
4	10X2885	Lift Section	1		
5	10X2884	Tilt Section	1		
6	10X1359	Outlet Cover	1		
7	10X1361	Tilt Spool	1		
8	10X1362	Lift Spool	1		
9	10X1365	Dust Cover, Spool	2		
10	10X1363	Main Relief Valve	1		
11	10X1420	Seal Kit, Relief Valve	1		
12	10X1367	Tie Rod Kit	4		
13	10X1403	ARV, 240 Bar	1		
14	10X2886	ARV, 310 Bar	1		
15	10X2887	ARV, 340 Bar	1		
16	10X1372	Detent Kit, Float	1		
17	10X1368	Tilt Control Kit	1		
18	10X1366	Load Hold Check Valve	2		
19	10X1433	Seal Kit, Load Hold Valve	1		
20	10X1434	O-Ring, Inlet Allien Plug	1		
21	10X1431	O-Ring, Spool	4		
22	10X1430	O-Ring Unloader Plug	1		
23	10X1373	Unloader Solenoid Valve	1		
25	10X1435	O-Ring, Inlet Uploader Plug	1		
26	10X2888	ARV, 240 Bar	1		

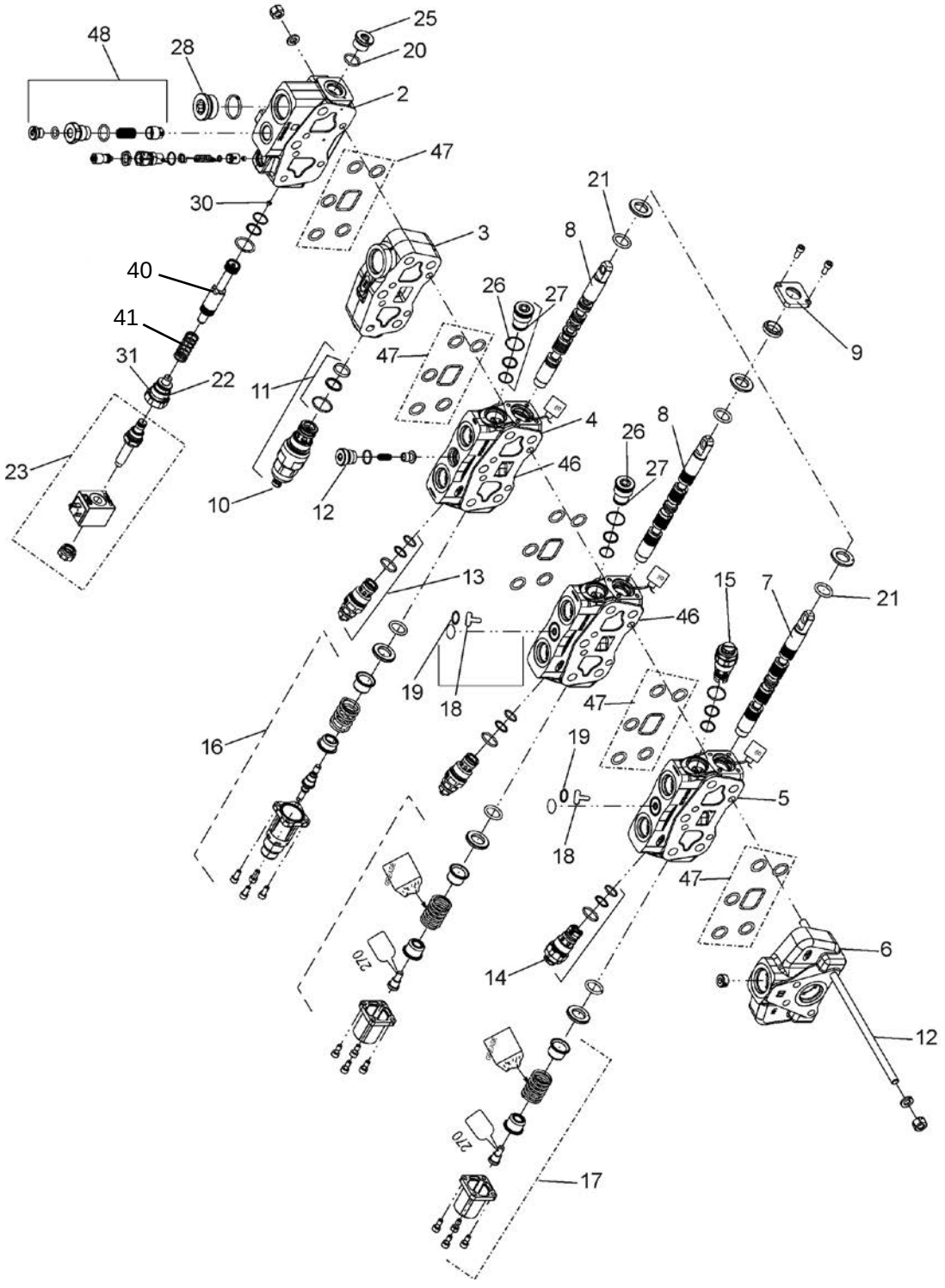
48
28
25
20
2
47
30
3
21
8
40
26
27
9
41
31
22
11
47
4
26
8
23
10
12
46
27
13
15
7
21
46
19
18
16
47
19
5
18
47
6
14
12
270
270
17

WALVOIL OPEN CENTER VALVE BLOCK 3 Spool

Ref.	Part No.	Description	Quantity	Applicable Machines	Remarks
27	10X2881	ARV O-Ring	1		
28	10X1456	Plug Assy	1		
30	10X1457	Orifice (Unloader)	1		
31	10X1458	Plug Assy	1		
32	10X1459	Solenoid Coil Spacer	1		
33	10X1460	Spool Seal	1		
34	10X1461	Spool Cap	1		
35	10X1462	Allen Cap Bolt	4		
36	10X1463	Spool Cap	1		
37	10X1464	Allen Cap Bolt	4		
38	10X1439	Unloader Relief	1		
39	10X1432	O-Ring	1		
40	10X1468	Unloader Spool	1		
41	10X1467	Spring Unloader	1		
42	10X1469	Plug Carry Over	1		
43	10X1470	O-Ring Kit ARV	1		
46	10X1472	Aux. Section	1		
47	10X1419	Seal Kit - Section	5		
48	10x1876	Check Valve	1		

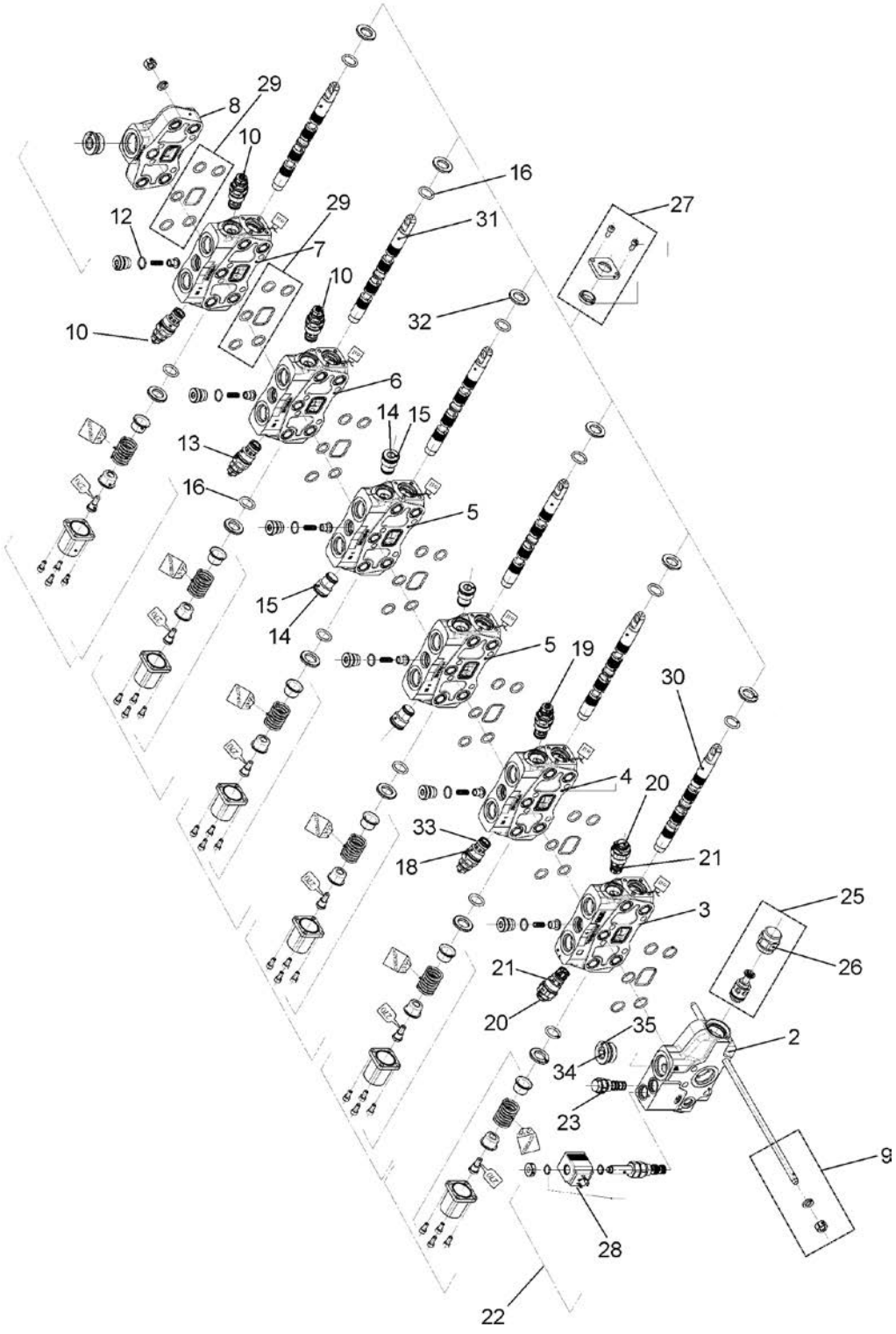
29
8
10
16
27
12
29
31
7
10
10
32
6
14
15
13
16
5
15
14
5
19
30
4
20
33
18
21
25
3
26
21
20
35
2
34
23
9
28
22

WALVOIL OPEN CENTER VALVE BLOCK 6 Spool

Ref.	Part No.	Description	Quantity	Applicable Machines	Remarks
1	1H0508	6 Spool Valve	1		
2	10X1384	Inlet Cover	1		
3	10X1465	Slew Section	1		
4	10X2889	Boom Section	1		
5	10X2890	Stabilizer Section	2		
6	10X2891	Dipper Section	1		
7	10X2892	Bucket Section	1		
8	10X1390	Outlet Cover	1		
9	10X1398	Tie Rod Kit	4		
10	10X2894	ARV, 280 Bar	3		
11	10X1366	Load Hold Check Valve	6		
12	10X1433	Seal Kit, Check Valve	6		
13	10X2893	ARV, 270 Bar	1		
14	10X1423	Plug	4		
15	10X1424	Seal Kit, Plug	4		

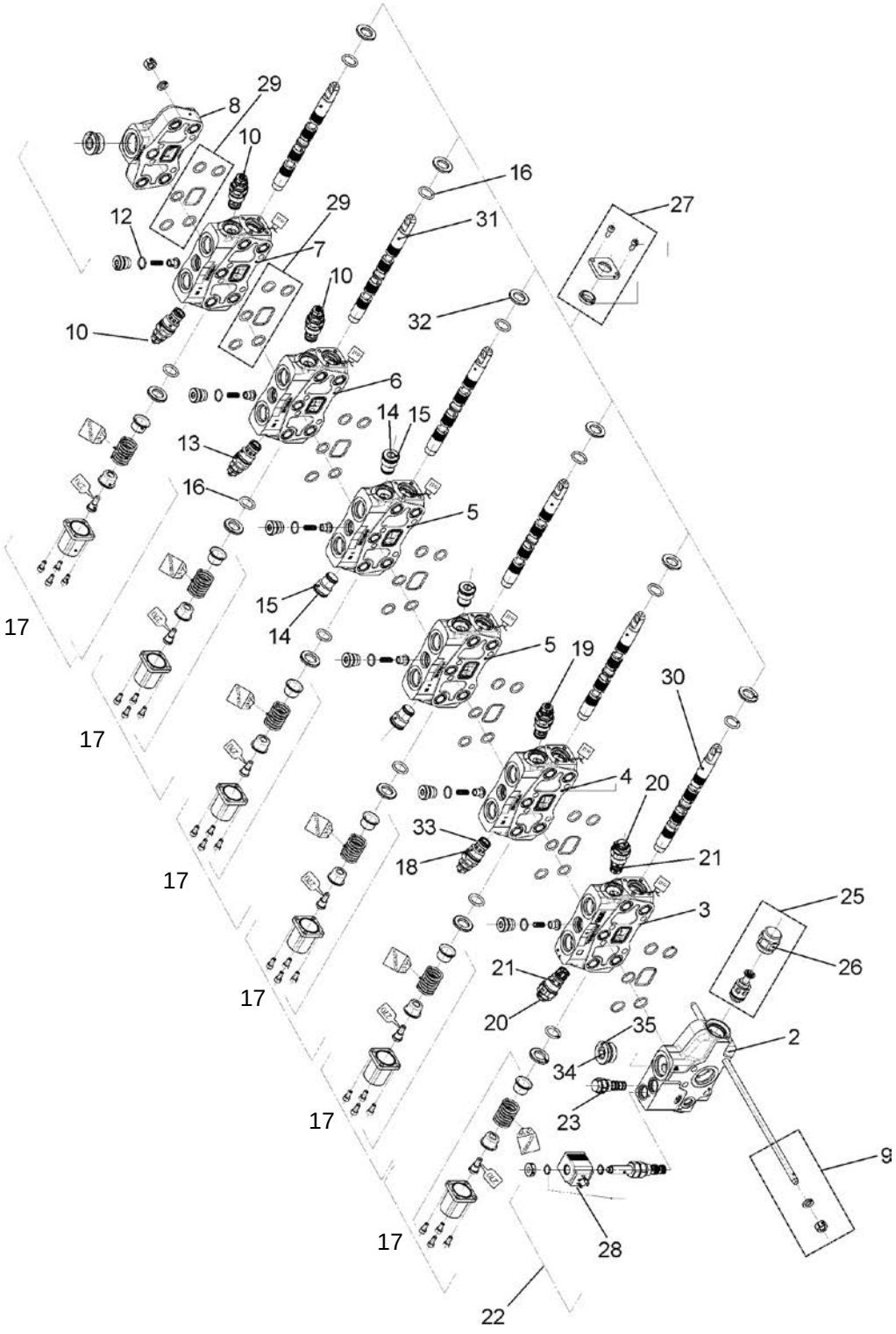
29
8
10
16
27
12
29
31
7
10
32
10
6
14
15
13
16
5
15
14
17
5
19
30
17
4
20
33
21
18
17
25
3
26
21
20
35
2
34
23
9
17
28
22

WALVOIL OPEN CENTER VALVE BLOCK 6 Spool

Ref.	Part No.	Description	Quantity	Applicable Machines	Remarks
16	10X1431	O-Ring, Spool	12		
17	10X1399	Spool Control Kit	6		
18	10X2886	ARV, 310 Bar	1		
19	10X2888	ARV, 240 Bar	1		
20	10X1611	ARV, 240 Bar			
21	10X1422	Seal Kit, ARV 240 Bar	1		
22	10X1393	Side Shift Solenoid Assy	1		
23	10X1492	Check Valve, Side Shift	1		
25	10X1394	Anti Cavitation Valve	1		
26	10X1425	O-Ring, Anti Cavitation Valve	1		
27	10X1365	Dust Cover, Spool	6		
28	10X1453	Solenoid Coil	1		
29	10X1419	Seal Kit - Section	7		
30	10X3429	Spool (Slew)	1		
31	10X1395	Spool	5		
32	10X1460	Spool Seal	6		
33	10X1470	O-Ring Kit ARV	1		
34	10X1682	Plug	1		
35	10X1683	O-Ring	1		

NOTES

NOTES

LOADER

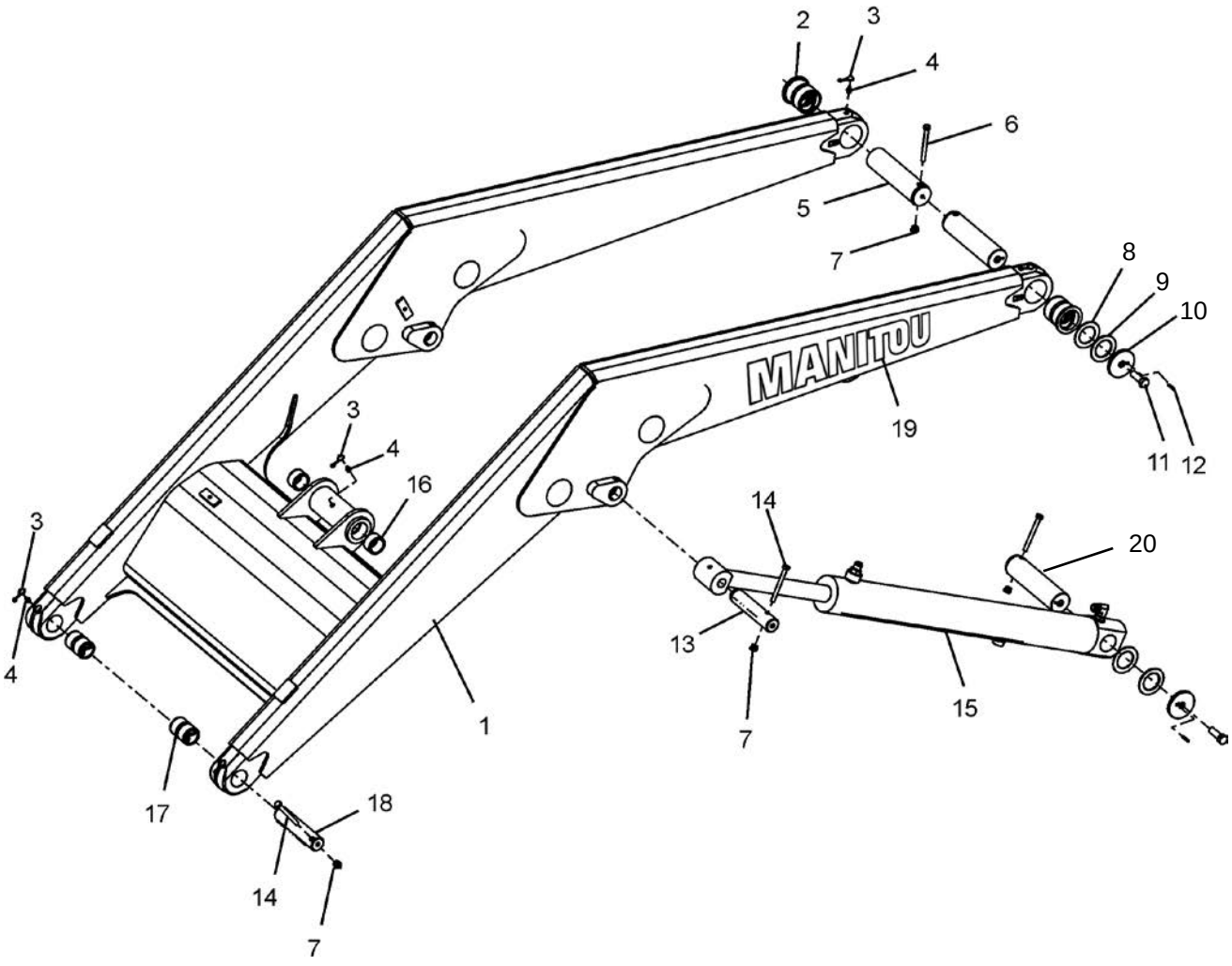
2
3
4
6
5
7
8
9
10
MANITOU
19
11
12
3
4
16
3
4
14
20
13
7
15
1
17
18
14
7

Ref.	Part No.	Description	Quantity	Applicable Machines	Remarks
1	1B1189	Loader Arm	1		
2	1B1136	Bushing	2		
3	3516180M2	Cap Grease Nipple	5		
4	339608X1	Fitting Grease	5		
5	1B1143	Pin	2		
6	3516015M1	Screw	4		
7	1440329X1	Nut, Lock	8		
8	1B1144	Washer Thrust	4		
9	1B1145	Washer Thrust	4		
10	3522717M3	Washer	4		
11	339613X1	Screw	3		
12	1441736X1	Pin, Spiroll	4		
13	1B1092	Pin LH	1		
13	1B1093	Pin RH	1		
14	3516014M1	Screw	4		
15	1H0445	Lift - Cylinder	2		
16	3520032M1	Bushing	2		
17	3522862M2	Bushing	2		
18	1B1070	Pin	2		
19	1L0059	Decal (MANITOU)	2		
20	1B1112	Pin	2		

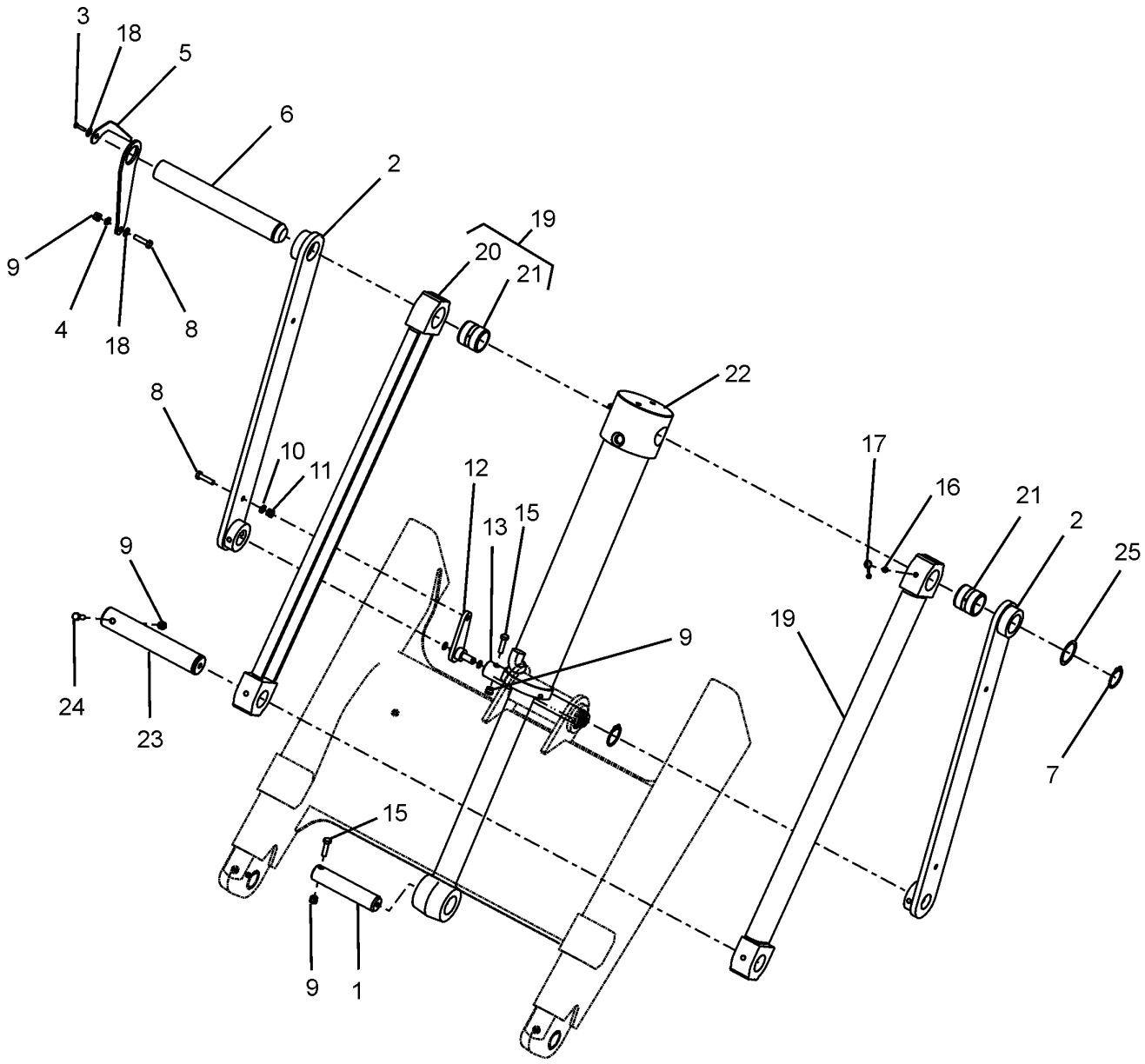
3
18
5
6
2
19
20
21
9
4
18
8
22
8
10
11
12
13
15
17
16
21
2
25
9
9
19
24
23
7
15
9
1

Ref.	Part No.	Description	Quantity	Applicable Machines	Remarks
1	1B1091	Pin	1		
2	3522361M93	Link	2		
3	339081X1	Screw	1		
4	339376X1	Washer, Lock	2		
5	3516352M1	Pointer, Bucket	1		
6	1B1079	Pin	1		
7	391129X1	Ring, Snap	2		
8	3516013M1	Screw	2		
9	1440329X1	Nut, Lock	5		
10	3516762M1	Circlip	1		
11	339300X1	Washer	1		
12	3521757M93	Pivot	1		
13	1B1073	Pin	1		
14	339820X1	Circlip	1		
15	3516014M1	Screw	2		
16	339608X1	Fitting, Grease	2		
17	3516180M2	Cover	2		
18	390734X1	Washer	2		
19	6101983M91	Link Assy.	2		
20	6101984M91	Link	2		
21	3521716M1	Bushing	2		
22	1H0147	Cylinder Tilt	1		
23	1B1077	Pin	1		
24	3501289M1	Screw	1		
25	1B0022	Washer	2		

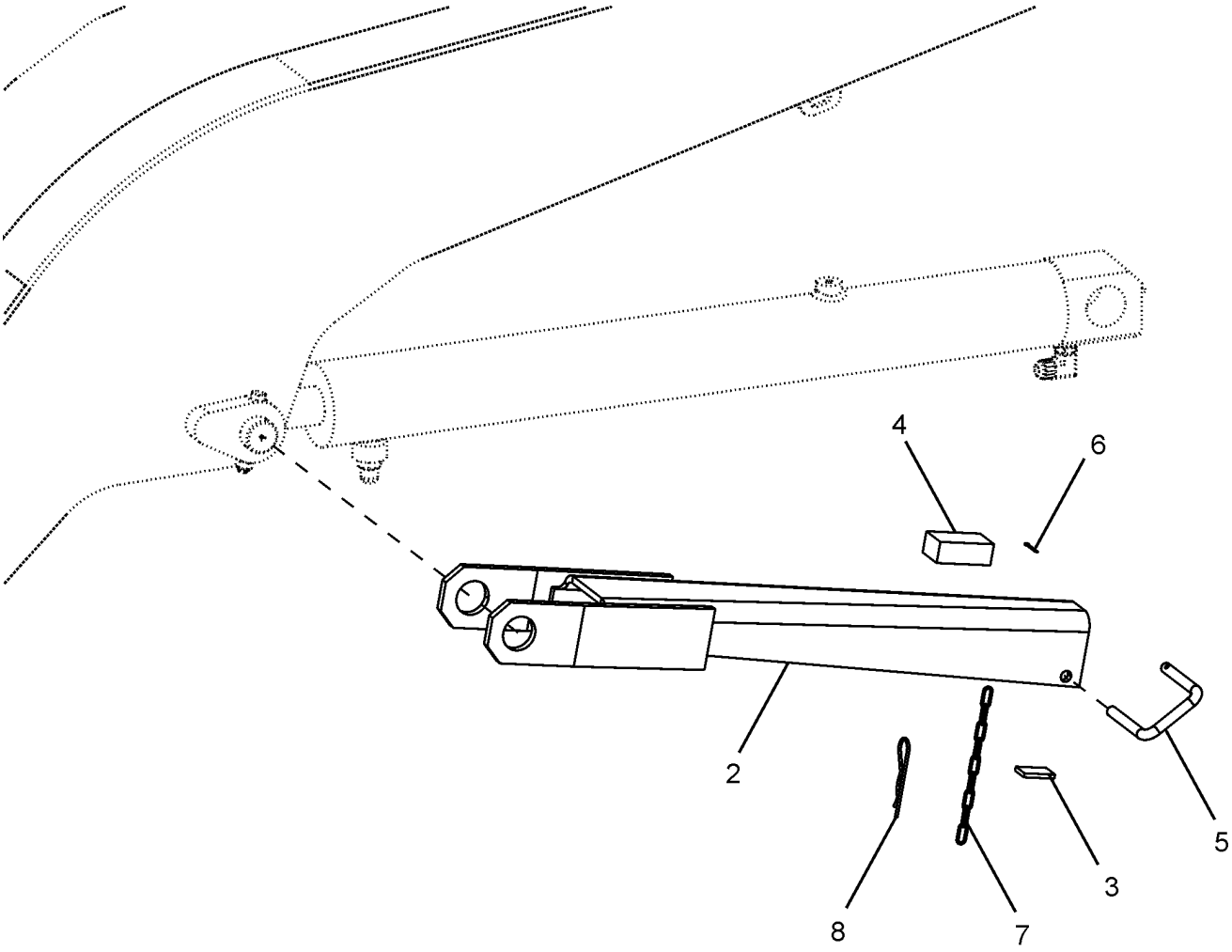
4
6
2
5
3
8
7

Ref.	Part No.	Description	Quantity	Applicable Machines	Remarks
2	6101162M92	Support	1		
3	1471300M1	Stop Pad	1		
4	1458633M3	Stop Pad	1		
5	3521910M2	Pin, Linch	1		
6	1442994X1	Pin, Split	1		
7	3517165M1	Chain	1		
8	377165X1	Pin, Linch	1		

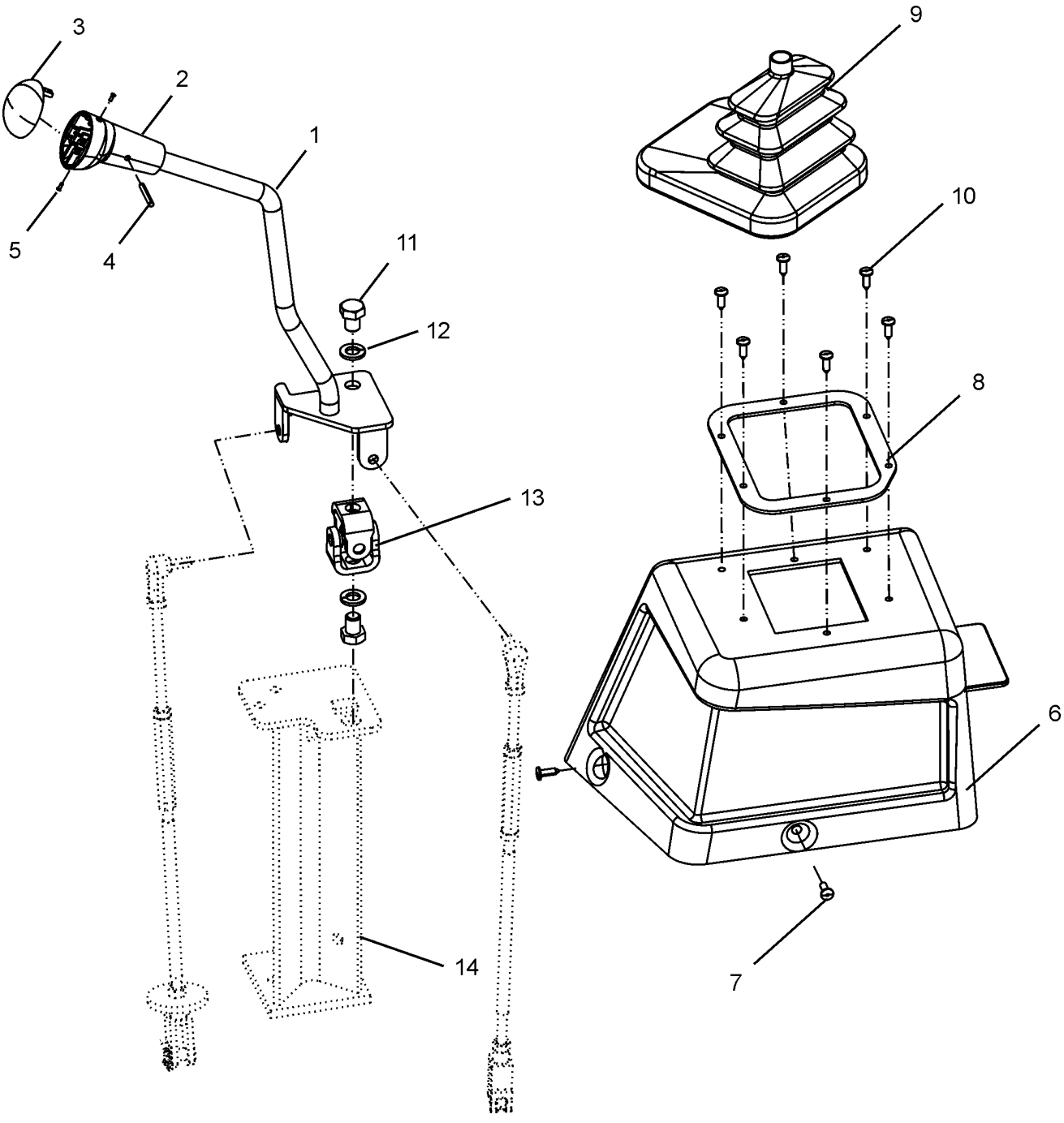
3
2
1
5
4
11
12
13
14
9
10
8
6
7

Ref.	Part No.	Description	Quantity	Applicable Machines	Remarks
1	1B0467	Loader Lever Assy	1		
2	3522621M5	Grip	1		
3	3522669M3	Knob	1		
4	3019531X1	Pin	2		
5	3516886M1	Screw	2		
6	1J0426	Console	1		
7	6101591M1	Rivet	3		
8	3516856M3	Plate	1		
9	3519697M1	Boot	1		
10	3521303M3	Fastener	6		
11	354742X1	Bolt	2		
12	359369X1	Washer	2		
13	3521075M91	Universal Joint Loader	1		
14	1B0291	Control Coloumn	1		

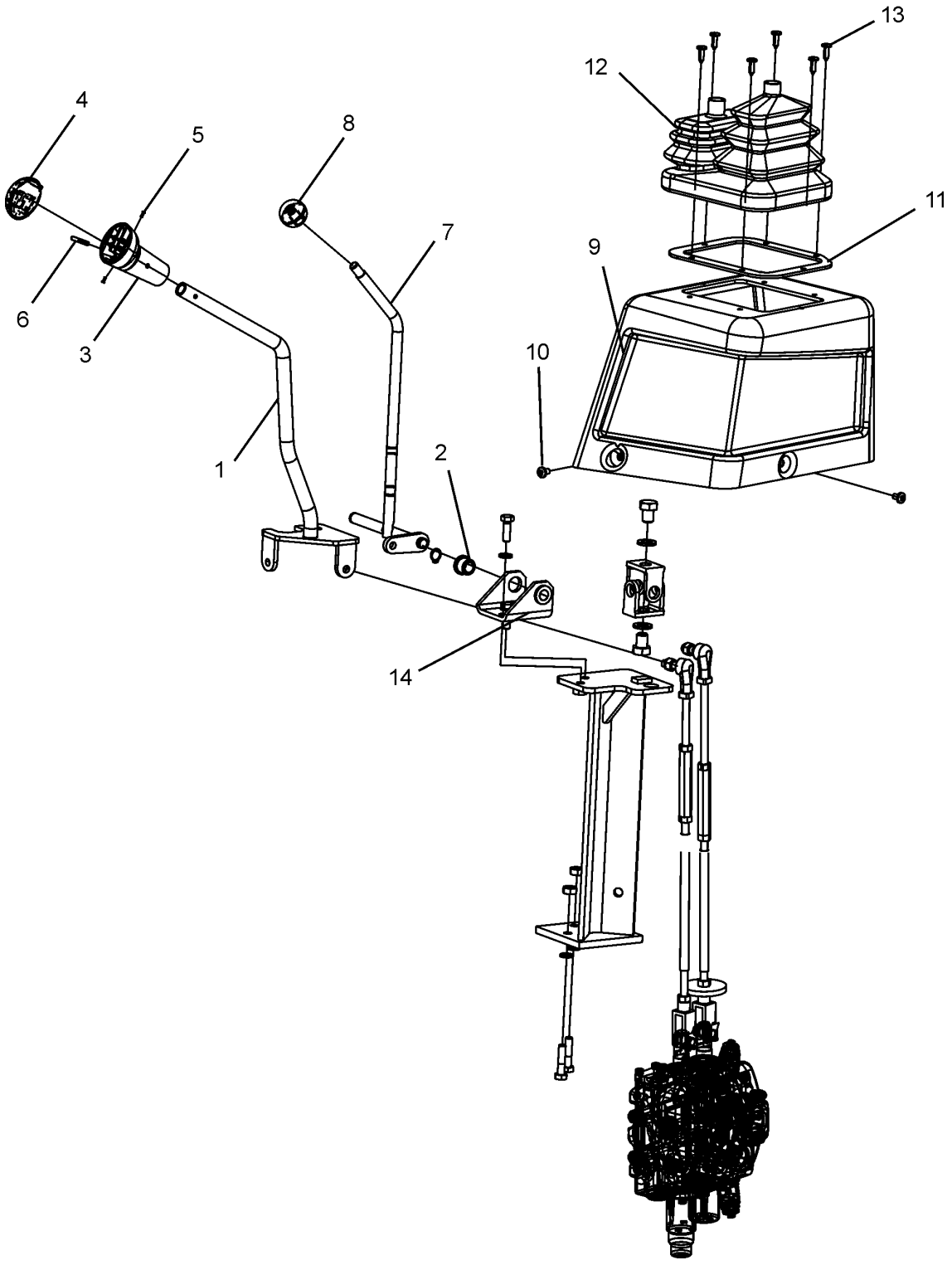
13
12
4
5
8
11
7
9
6
3
10
1
2
14

Ref.	Part No.	Description	Quantity	Applicable Machines	Remarks
1	1B0298	Loader Lever Assy	1		
2	6106560M1	Bushing	4		
3	3522621M5	Grip	1		
4	3522669	Knob	1		
5	3516886M1	Screw	2		
6	3019531X1	Pin, Roll	1		
7	1B0289	Lever Assy	1		
8	3517899M1	Knob	1		
9	1J0426	Console	1		
10	6101591M1	Rivet	3		
11	3516856M3	Plate	1		
12	3519696M1	Boot	1		
13	3521303M3	Fastener	6		
14	1B0292	Bracket	1		

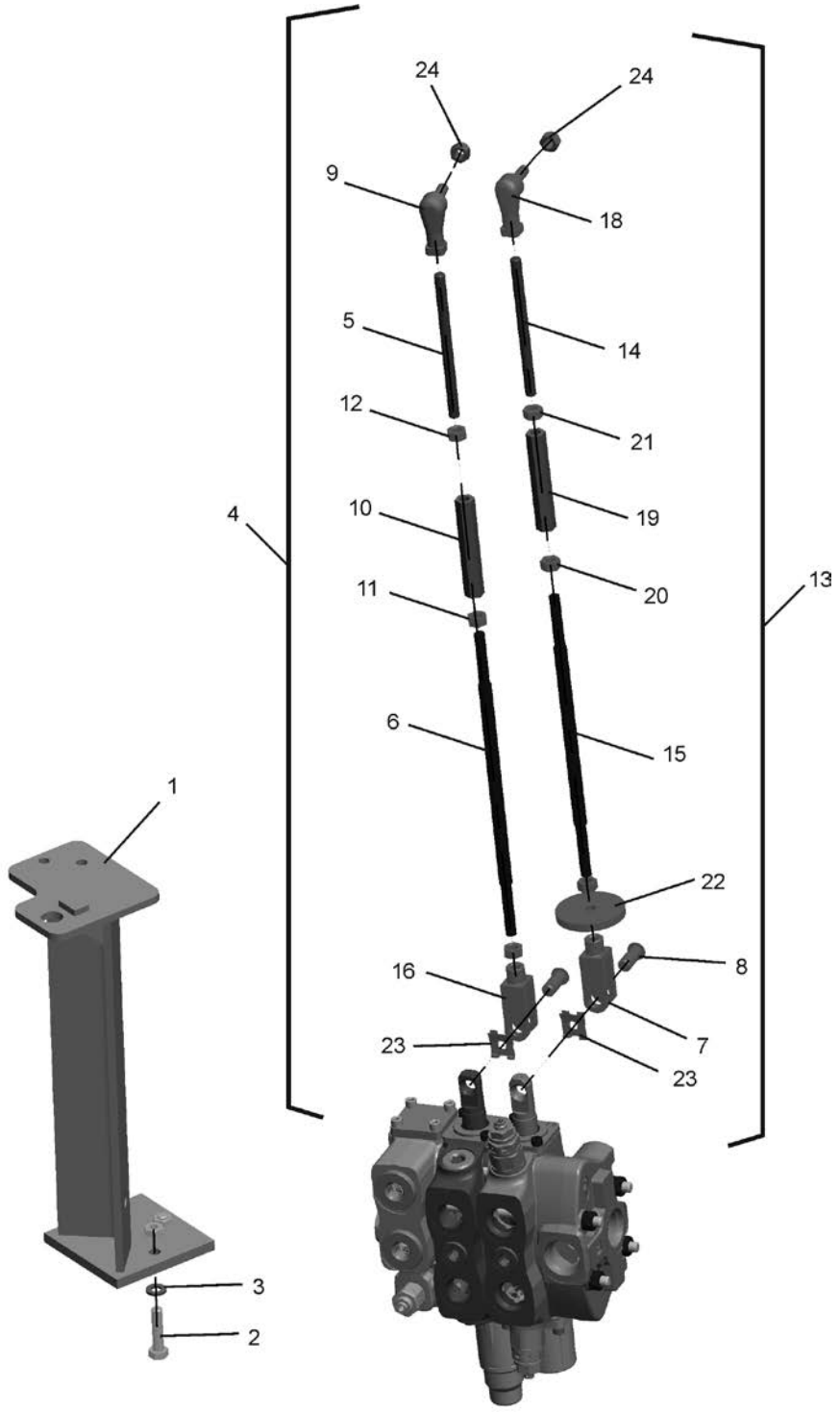
24
24
9
18
5
14
12
21
10
19
4
20
13
11
6
15
1
22
16
8
23
7
23
3
2

Ref.	Part No.	Description	Quantity	Applicable Machines	Remarks
1	1B0291	Support Assy	1		
2	339009X1	Screw	3		
3	359369X1	Washer, Lock	3		
4	1B0160	Rod Assy	1		
7	1B0139	Clevis	2		
8	1B0158	Pin, Clevis	2		
9	3517518M1	Ball Joint	2		
13	1B0159	Rod Assy	1		
22	3518878M3	Washer	1		
23	3521461M1	Clip	2		
24	394367X1	Nut, Lock	2		

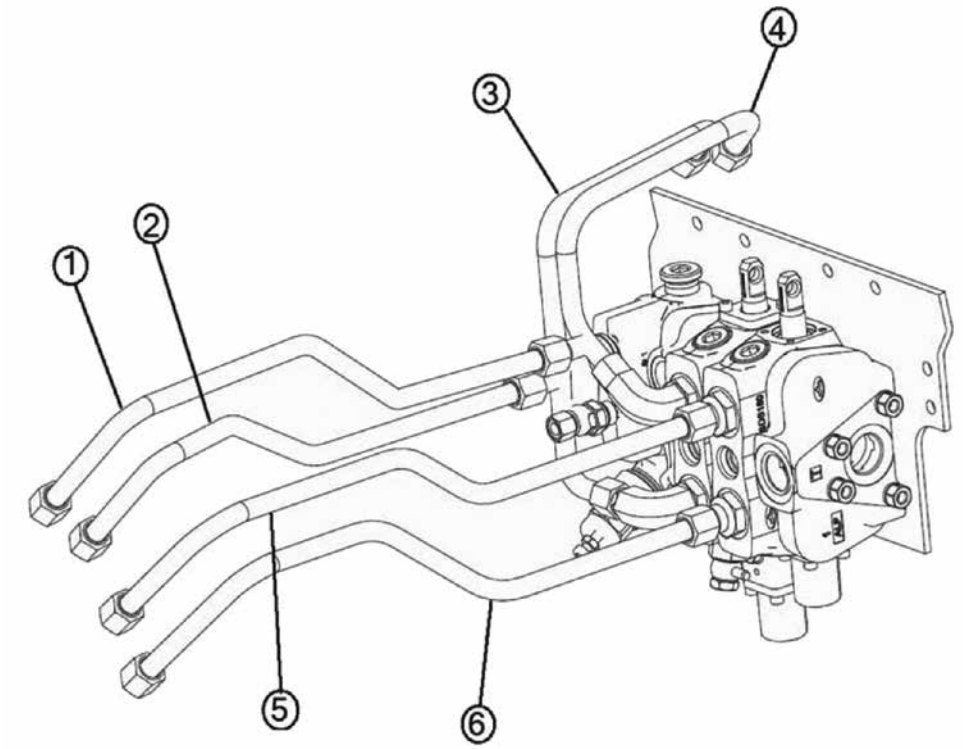
4
3
2
1
5
6

Ref.	Part No.	Description	Quantity	Applicable Machines	Remarks
1	1TH0026M1	Tube Assy, HE	1		
2	1TH0027M1	Tube Assy, RE	1		
3	1TH0022M1	Tube Assy, RE	1		
4	1TH0023M1	Tube Assy, HE	1		
5	1TH0029M1	Tube Assy, HE	1		
6	1TH0028M1	Tube Assy, RE	1		

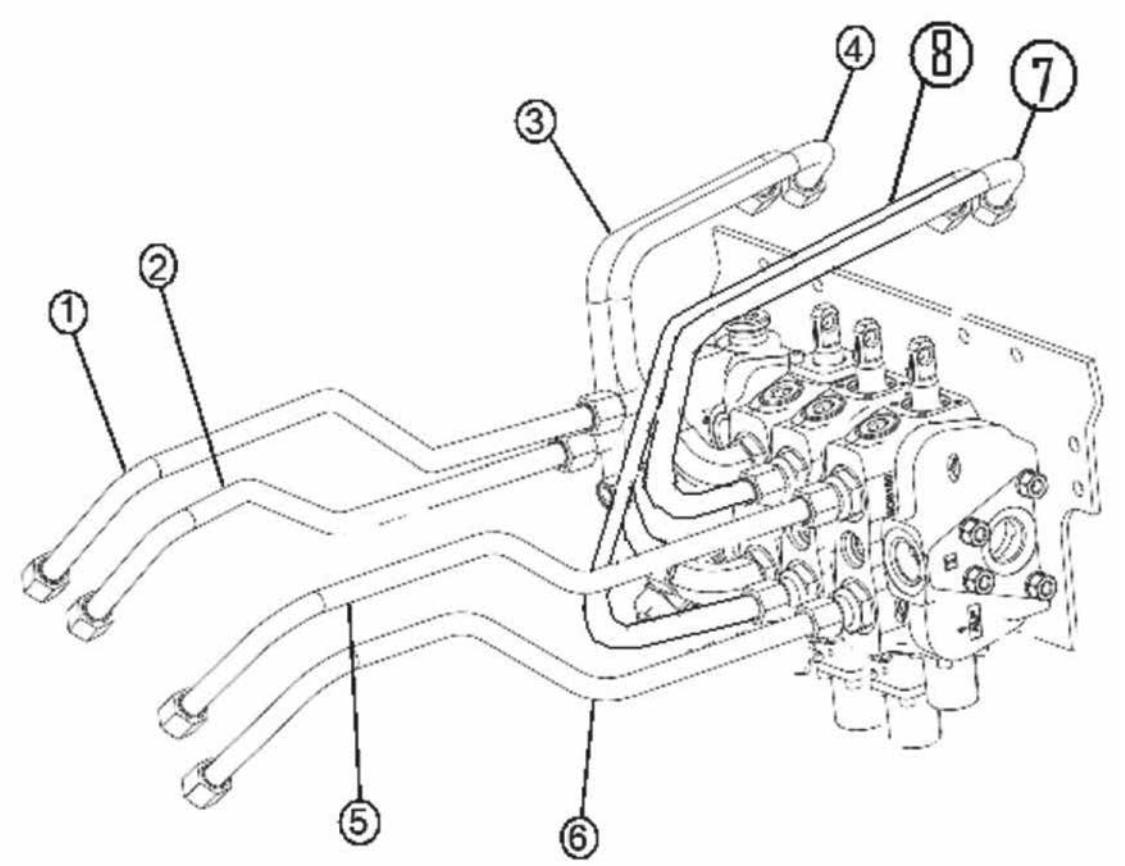
1
2
3
4
5
6
7
8

Ref.	Part No.	Description	Quantity	Applicable Machines	Remarks
1	1TH0026M1	Tube Assy, HE	1		
2	1TH0027M1	Tube Assy, RE	1		
3	1TH0022M1	Tube Assy, RE	1		
4	1TH0023M1	Tube Assy, HE	1		
5	1TH0029M1	Tube Assy, HE	1		
6	1TH0028M1	Tube Assy, RE	1		
7	1TH0025M1	Tube Assy, HE	1		
8	1TH0024M1	Tube Assy, RE	1		

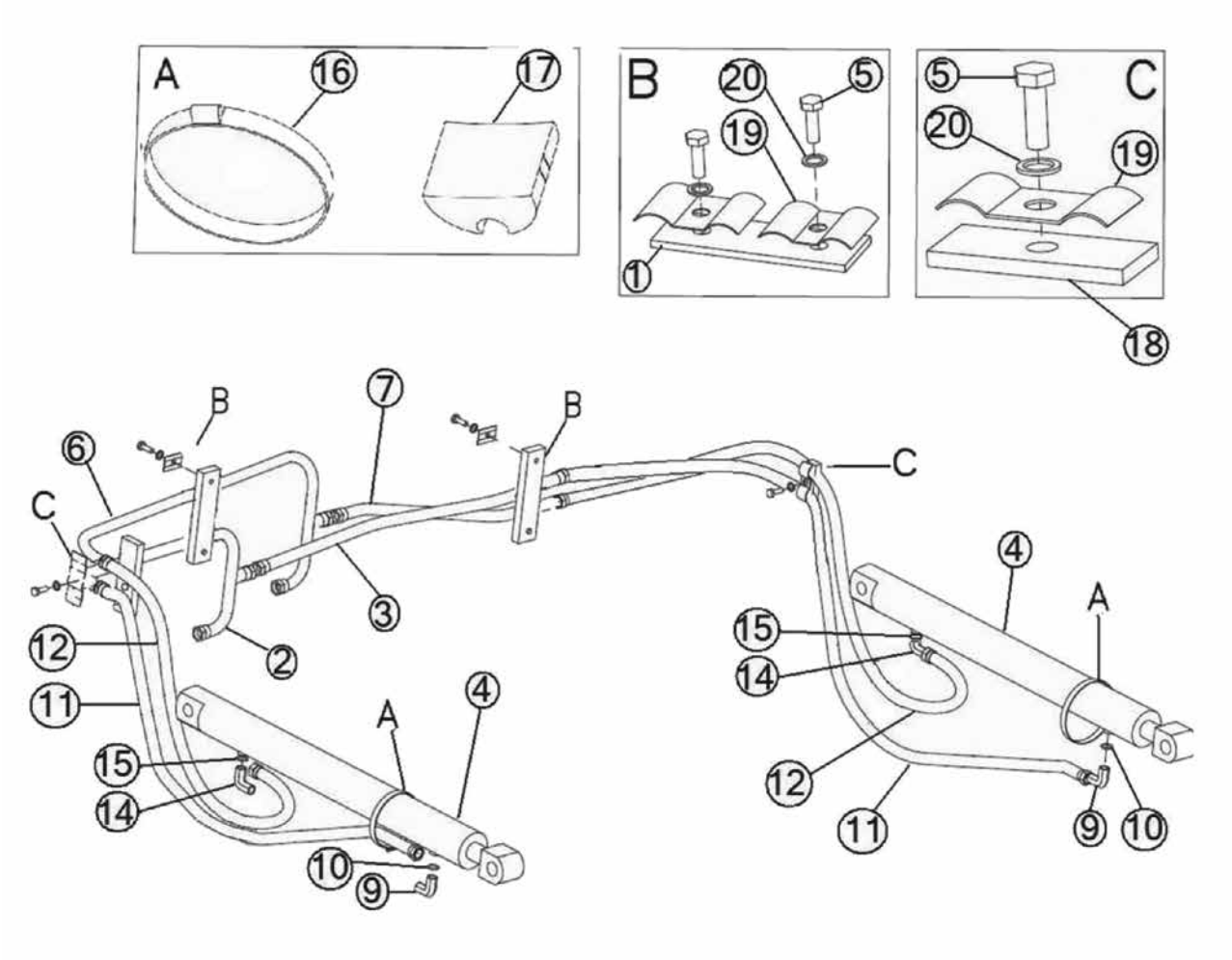
A
16
17
B
20
5
19
1
C
5
20
19
18
7
B
B
6
C
C
4
A
3
12
2
15
14
11
4
A
15
14
12
11
9
10
10
9

Ref.	Part No.	Description	Quantity	Applicable Machines	Remarks
1	6101897M1	Pad, Rubber	2		
2	1TH0022M1	Tube Assy	1		
3	1TH0027M1	Tube Assy	1		
4	1H0157	Cylinder	2		
5	339124X1	Screw	2		
6	1TH0023M1	Tube Assy	1		
7	1TH0026M1	Tube Assy	1		
9	835007M91	Elbow, 90°	2		
10	835025M1	O-Ring	1		
11	1TH0030M1	Hose Assy	2		
12	1TH0031M1	Hose Assy	2		
14	835007M91	Elbow, 90°	2		
15	835024M1	O-Ring	2		
16	3517731M1	Worm Drive Clip	2		
17	L79937	Grommet	2		
18	6106109M1	Pad Rubber	2		
19	6101228M1	Bracket Clamp	2		
20	339374X1	Washer, Lock	2		

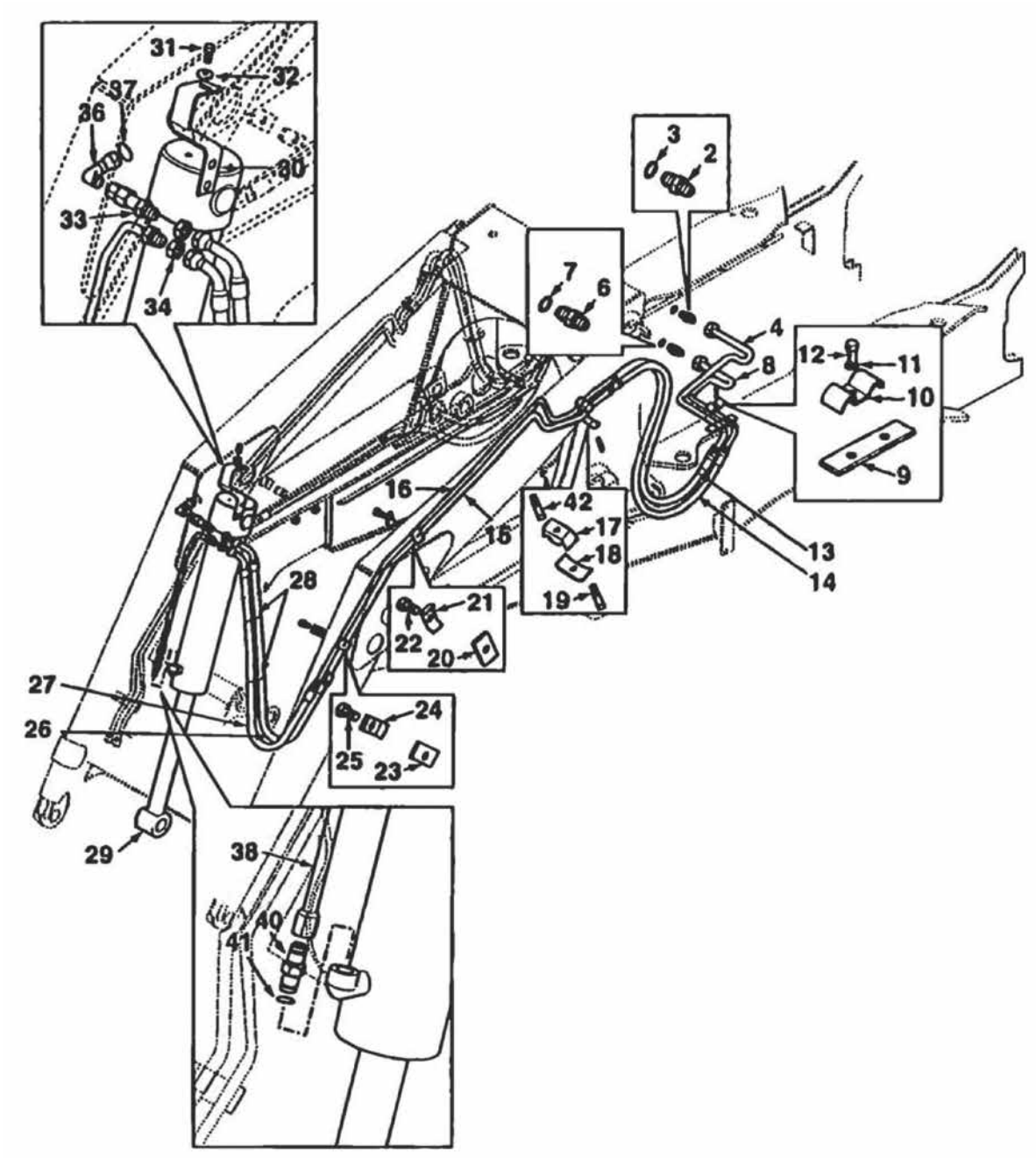
31
32
37
36
30
33
34
3
2
7
6
4
8
12
11
10
9
16
42
17
18
19
15
13
14
28
21
22
20
27
26
24
25
23
29
38
40
41

Ref.	Part No.	Description	Quantity	Applicable Machines	Remarks
2	358736X1	Adaptor	1		
3	835025M1	O-Ring	1		
4	1TH0029M1	Tube Assy	1		
6	1H0165	Adaptor	1		
7	835025M1	O-Ring	1		
8	1TH0028M1	Tube Assy	1		
9	6101897M1	Pad, Rubber	1		
10	6101228M1	Bracket, Clamp	1		
11	385361X1	Washer	1		
12	339124X1	Screw	1		
13	1TH0034M91	Hose Assy	1		
14	6112867M91	Hose Assy	1		
15	6102461M91	Tube Assy	1		
16	6102463M91	Tube Assy	1		
17	3520538M2	Clamp	1		
18	3520534M1	Bracket, Clamp	1		
19	339291X1	Screw	1		
20	6106109M1	Pad, Rubber	1		
21	3520534M1	Bracket, Clamp	1		
22	339337X1	Bolt	1		
23	6106109M1	Pad, Rubber	1		
24	3520534M1	Bracket, Clamp	1		
25	339337X1	Bolt	1		
26	6102384M91	Hose Assy	1		
27	6102383M91	Hose Assy	1		
28	1876229M1	Tie, Cable	UAR		
29	1H0147	Cylinder Assy	1		
30	6102378M91	Bracket	1		

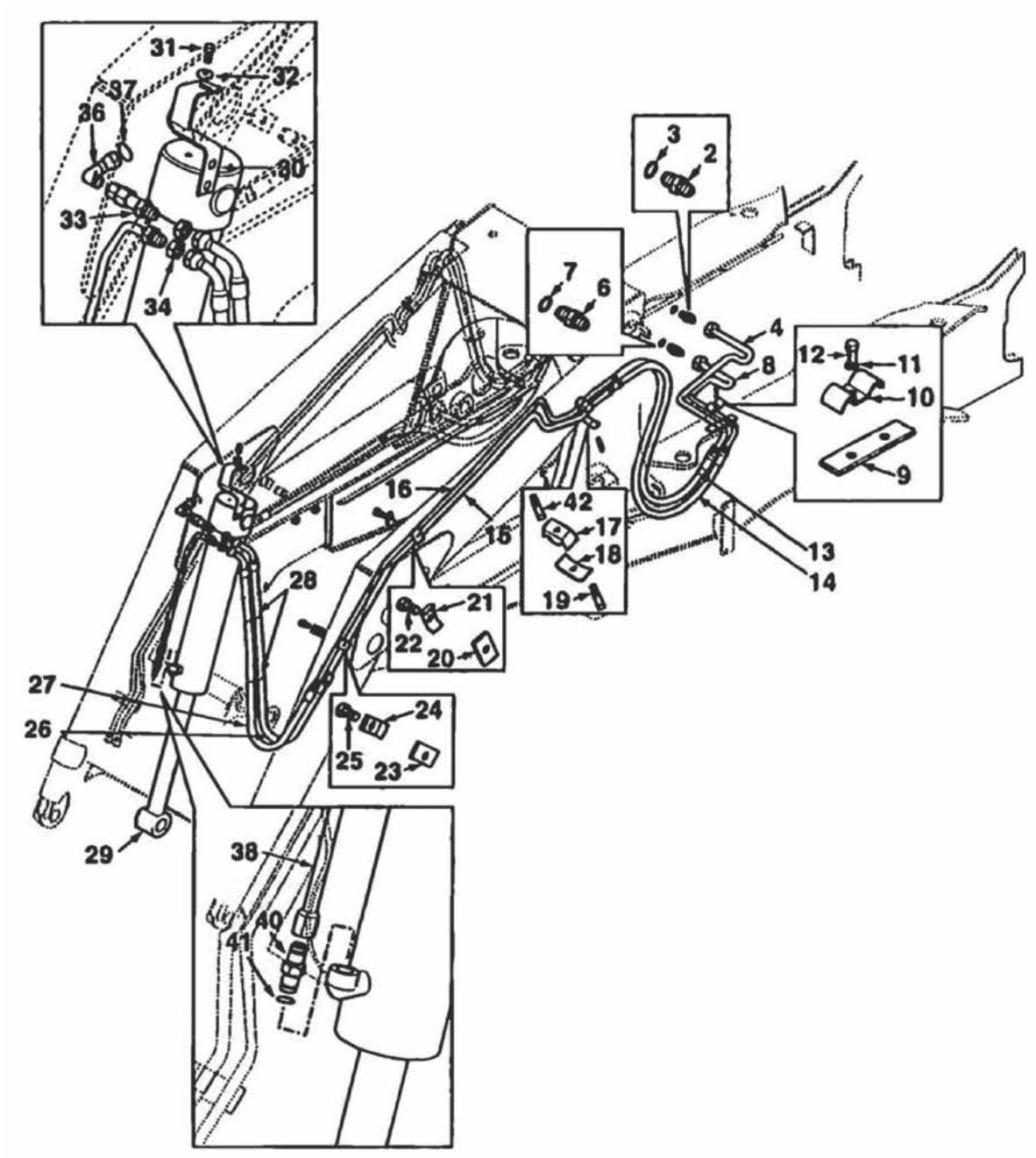
31
32
37
36
30
33
34
3
2
7
6
4
8
12
11
10
9
16
42
17
18
19
15
13
14
28
21
22
20
27
26
24
25
23
29
38
40
41

Ref.	Part No.	Description	Quantity	Applicable Machines	Remarks
31	3009505X1	Bolt	1		
32	385363X1	Washer	1		
33	6100591M91	Tube Assy	1		
34	355574X1	Nut	2		
36	835007M91	Elbow, 90°	1		
37	835025M1	O-Ring	1		
38	6102381M91	Tube Assy	1		
40	358735X1	Union	1		
41	835024M1	O-Ring	1		
42	6101690M1	Rivet Nut	1		

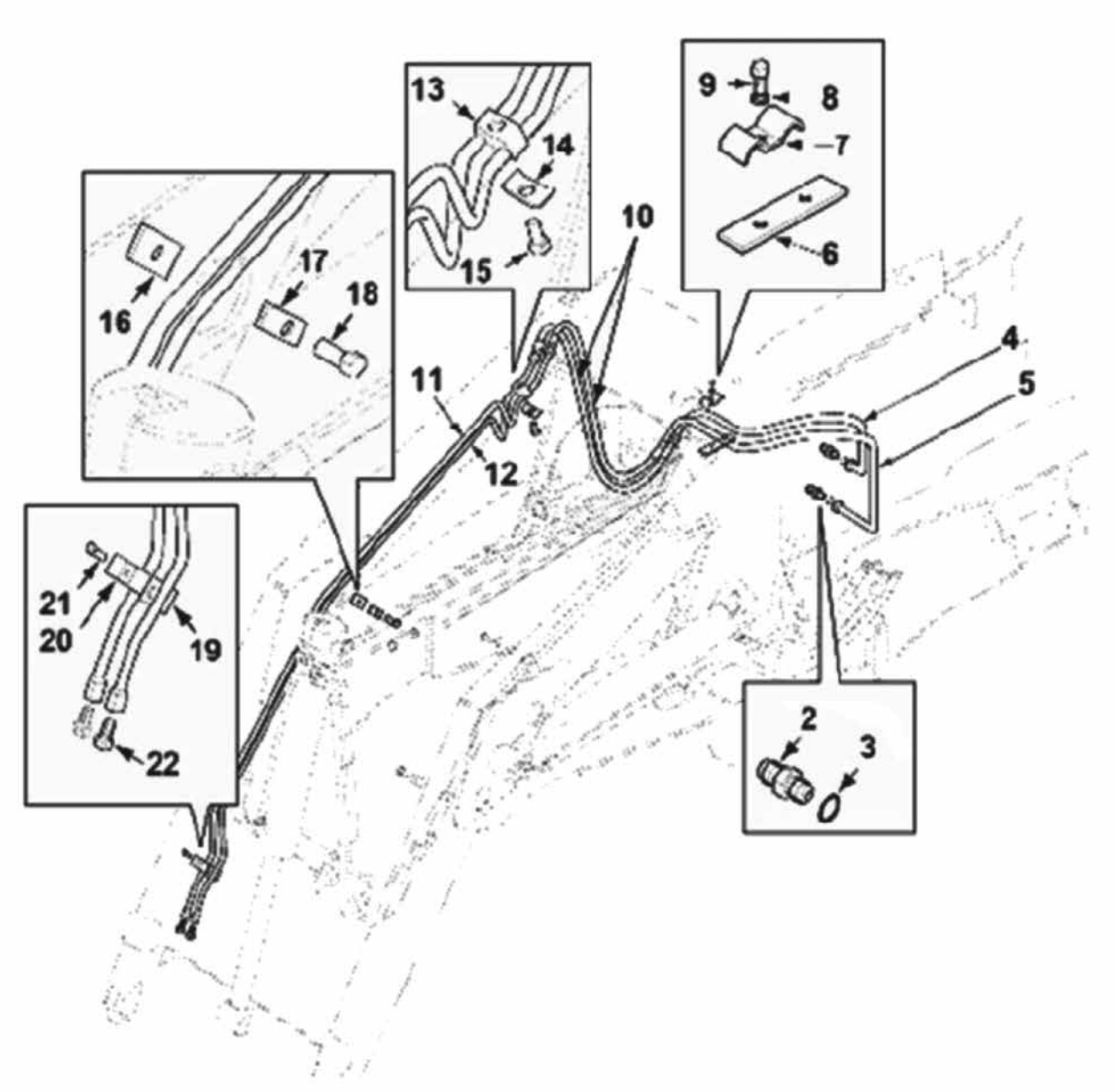
13
14
15
9
8
7
6
10
16
17
18
4
5
11
12
21
20
19
22
2
3

Ref.	Part No.	Description	Quantity	Applicable Machines	Remarks
2	1H0165	Adaptor	2		
3	835025M1	O-Ring	2		
4	1TH0025M1	Tube Assy	1		
5	1TH0024M1	Tube Assy	1		
6	6101897M1	Pad, Rubber	1		
7	6101228M1	Bracket, Clamp	1		
8	385361X1	Washer	1		
9	339124X1	Screw	1		
10	6112867M91	Hose Assy	2		
11	6101234M91	Tube Assy	1		
12	6101236M91	Tube Assy	1		
13	3520528M2	Clamp	1		
14	3520534M1	Bracket, Clamp	1		
15	339291X1	Screw	1		
16	6106109M1	Pad, Rubber	1		
17	3520534M1	Bracket, Clamp	1		
18	339337X1	Bolt	1		
19	6106109M1	Pad, Rubber	1		
20	6101228M1	Bracket, Clamp	1		
21	339009X1	Screw	1		
22	356447X1	Plug, Blank-Off	2		

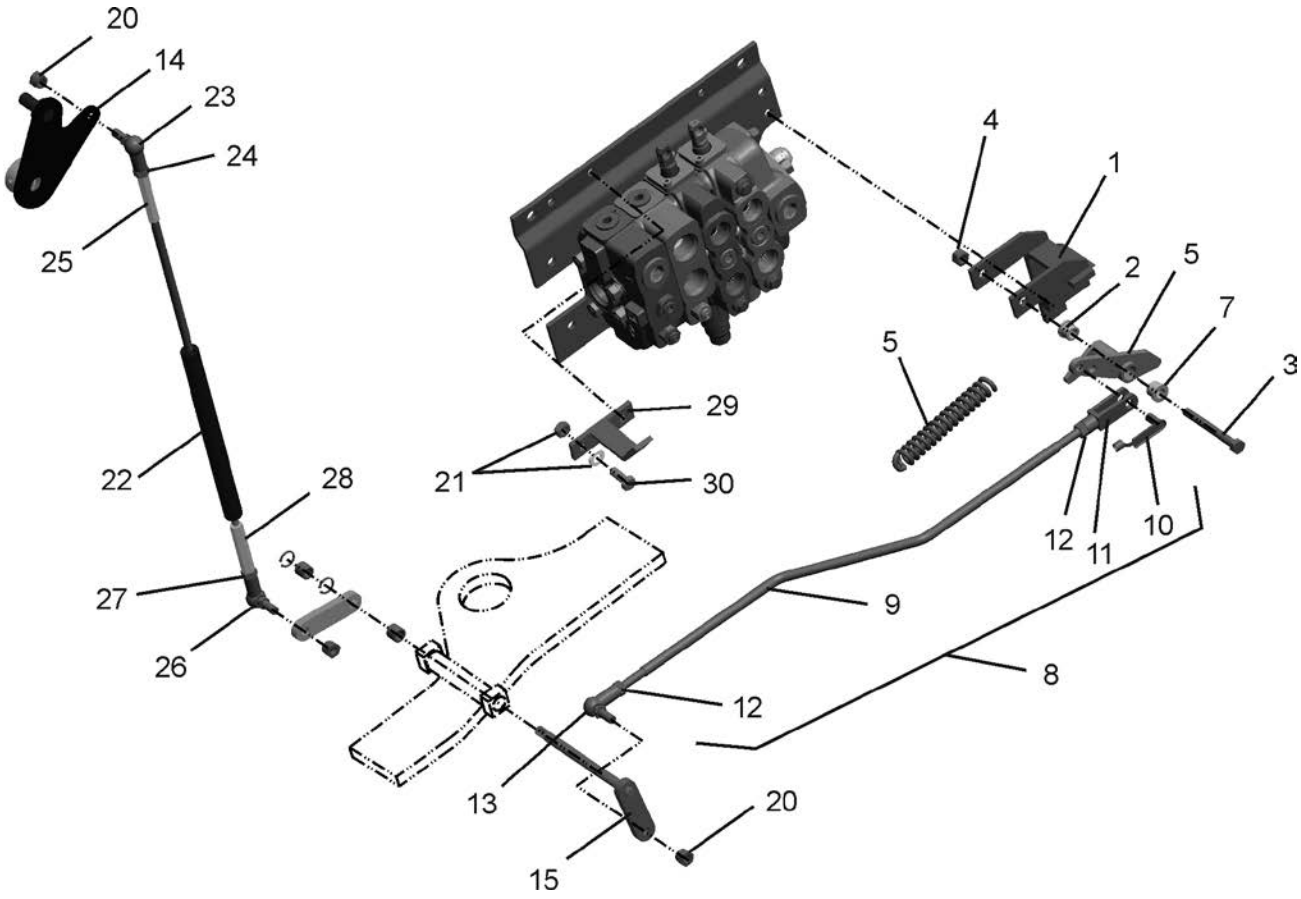
20
14
23
24
25
22
28
27
26
29
21
30
4
1
2
5
7
3
5
12
11
10
9
8
12
13
20
15

Ref.	Part No.	Description	Quantity	Applicable Machines	Remarks
1	1B0166	Mtg Bracket	1		
2	1440329X1	Nut, Lock	2		
3	3009517X1	Screw	1		
4	1440330X1	Nut	1		
5	6106694M91	Lever Assy	1		
6	3519680M2	Spring	1		
7	1B0260	Bushing	2		
8	6106691M92	Rod Assy	1		
9	6106692M2	Rod	1		
10	3521834M1	Pin, Clevis	1		
11	3521833M1	Clevis	1		
12	3009693X1	Nut	2		
13	3521794M91	Ball Joint	1		
14	6109072M91	Arm Assy	1		
15	3519123M92	Arm	1		
16	3518960M1	Lever	2		
17	3521514M5	Bushing	2		
18	339710X1	Ring, Snap	2		
19	3516765M91	Arm Assy	1		
20	1440329X1	Nut, Lock	2		
21	385362X1	Washer	2		
22	1J0222	Damper Assy	1		
23	3521889M91	Ball Joint	1		
24	6107340M1	Nut	1		
25	6106241M1	Turnbuckle	1		
26	3521794M91	Ball Joint	1		
27	3009693X1	Nut	1		
28	6106240M1	Turnbuckle	1		
29	1B0206	Bracket	1		
30	3009492X1	Screw	2		

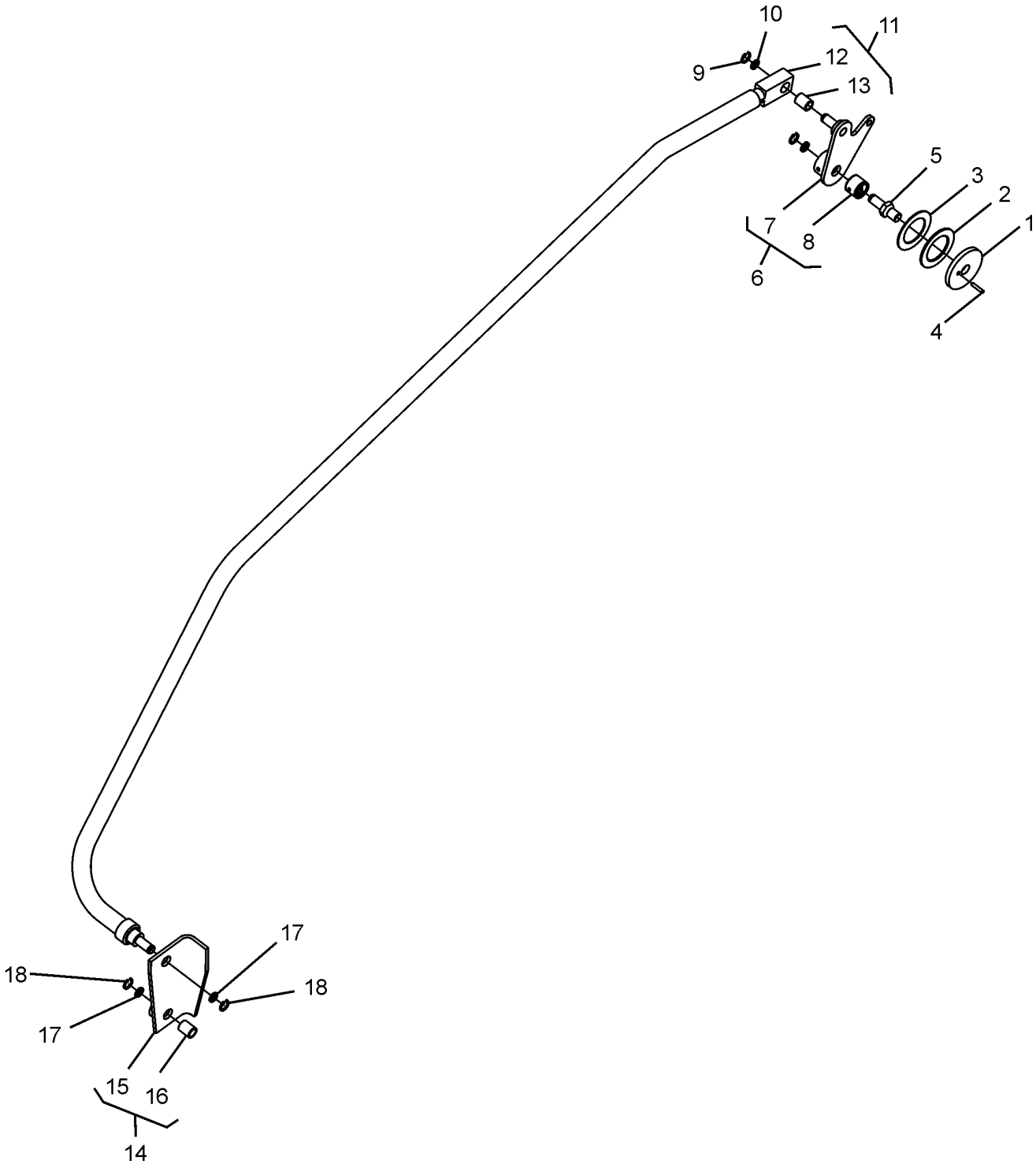
10
11
9
12
13
5
3
2
1
7
8
6
4
17
18
18
17
15
16
14

Ref.	Part No.	Description	Quantity	Applicable Machines	Remarks
1	3522963M1	Washer, Thrust	1		
2	3522962M1	Washer, Thrust	1		
3	3522717M3	Washer	1		
4	1441736X1	Pin. Roll	1		
5	3521799M5	Shaft	1		
6	3516765M91	Arm Assy.	1		
7	3521773M94	Arm	1		
8	3516761M1	Bushing	1		
9	339300X1	Washer	2		
10	3516762M1	Ring, Snap	2		
11	6107911M91	Link Assy.	1		
12	6107910M91	Link	1		
13	3516761M1	Bushing	1		
14	6100971M91	Mount	1		
15	6100972M1	Link	1		
16	3516761M1	Bushing	2		
17	339300X1	Washer	2		
18	3516762M1	Ring, Snap	2		

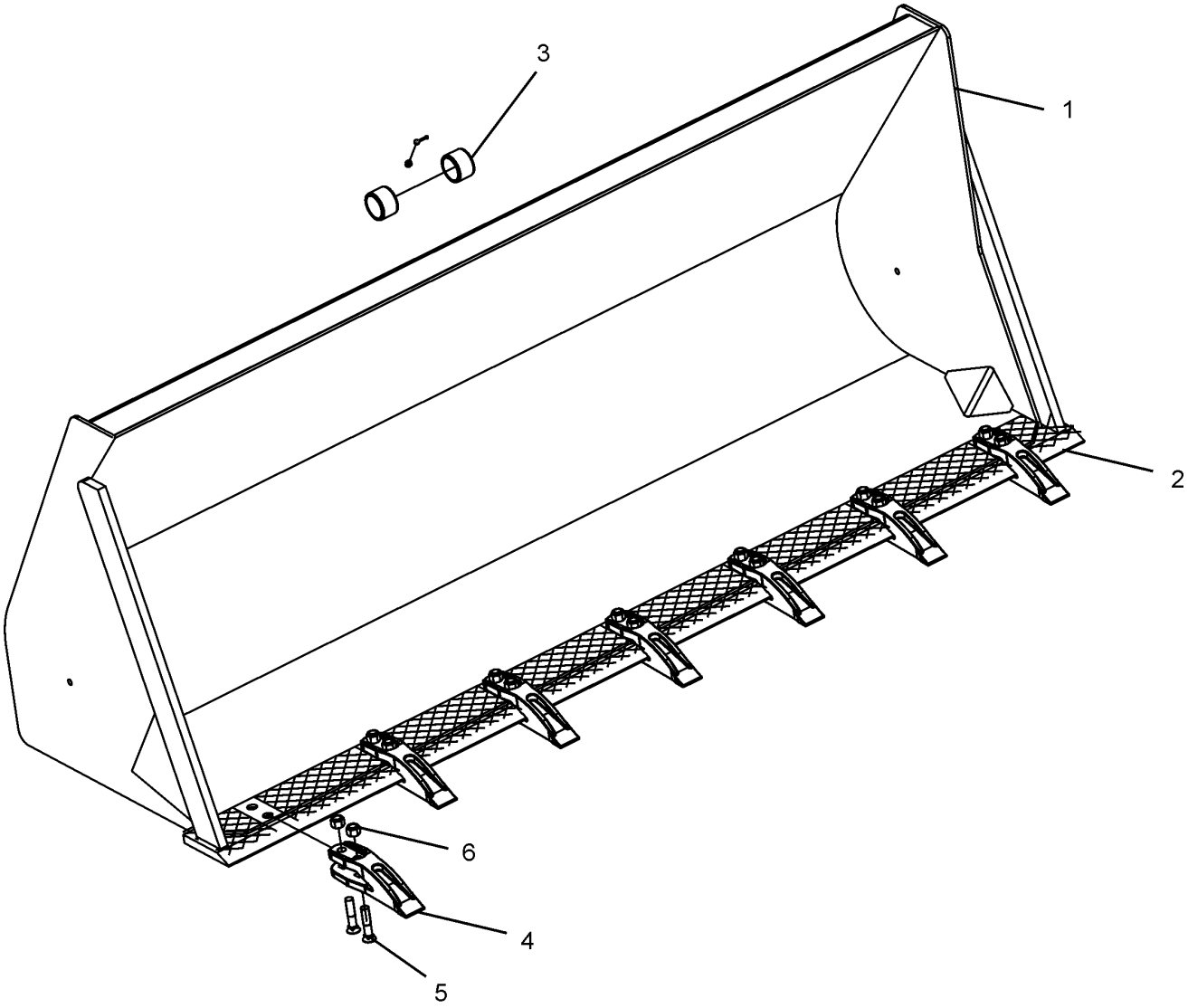
3
1
2
6
4
5

Ref.	Part No.	Description	Quantity	Applicable Machines	Remarks
1	1C0084	Bucket Assy.	1		
2	1C0081	Blade, Dozer	1		
3	3520033M1	Bushing	2		
4	1C0189	Tooth	7		
5	1C0135	Bolt	14		
6	1442739X1	Nut	14		
*	10X3624	Tooth Kit	1		

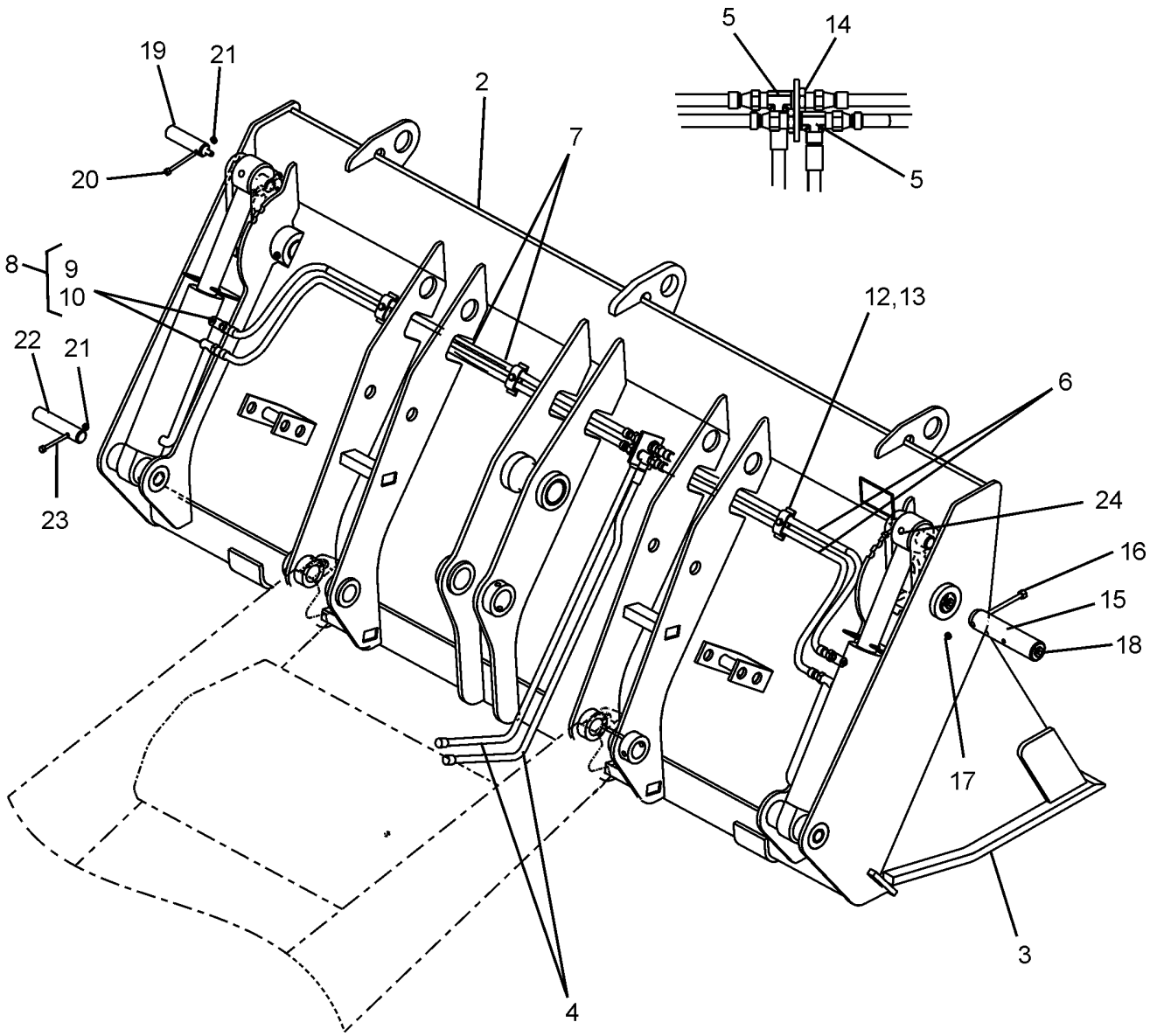
5
14
19
21
2
7
20
5
8
9
10
12,13
22
21
6
24
23
16
15
18
17
3
4

Ref.	Part No.	Description	Quantity	Applicable Machines	Remarks
1	1B0227	7 in1 Bucket	1		
2	6103622M92	Back Blade W/A	1		
3	6103648M92	Calm W/A	1		
4	6106214M91	Hose Assy.	2		
5	1H0253	Tee	2		
6	6106212M91	Hose Assy	2		
7	6106213M91	Hose Assy	2		
8	835091M91	Union Assy	4		
9	358733X1	Union	4		
10	831452M1	O-Ring	4		
11	1H0164	Cylinder Assy	2		
12	3522094M2	Bracket, Clamp	3		
13	339761X1	Screw	3		
14	356614X1	Nut, Lock	2		
15	3507539M1	Pin Main Pivot	2		
16	3009504X1	Bolt M10	2		
17	1440329X1	Nylock Nut	2		
18	365572X1	Nipple Grease	4		
19	6106215M1	Pin Cyl (Rod End)	2		
20	339891X1	Bolt	2		
21	394367X1	Nut Nylock	4		
22	3517159M1	Pin Cyl. (Head End)	2		
23	390246X1	Bolt	2		
24	365572X1	Grease Nipple	4		

NOTES

NOTES

BACKHOE

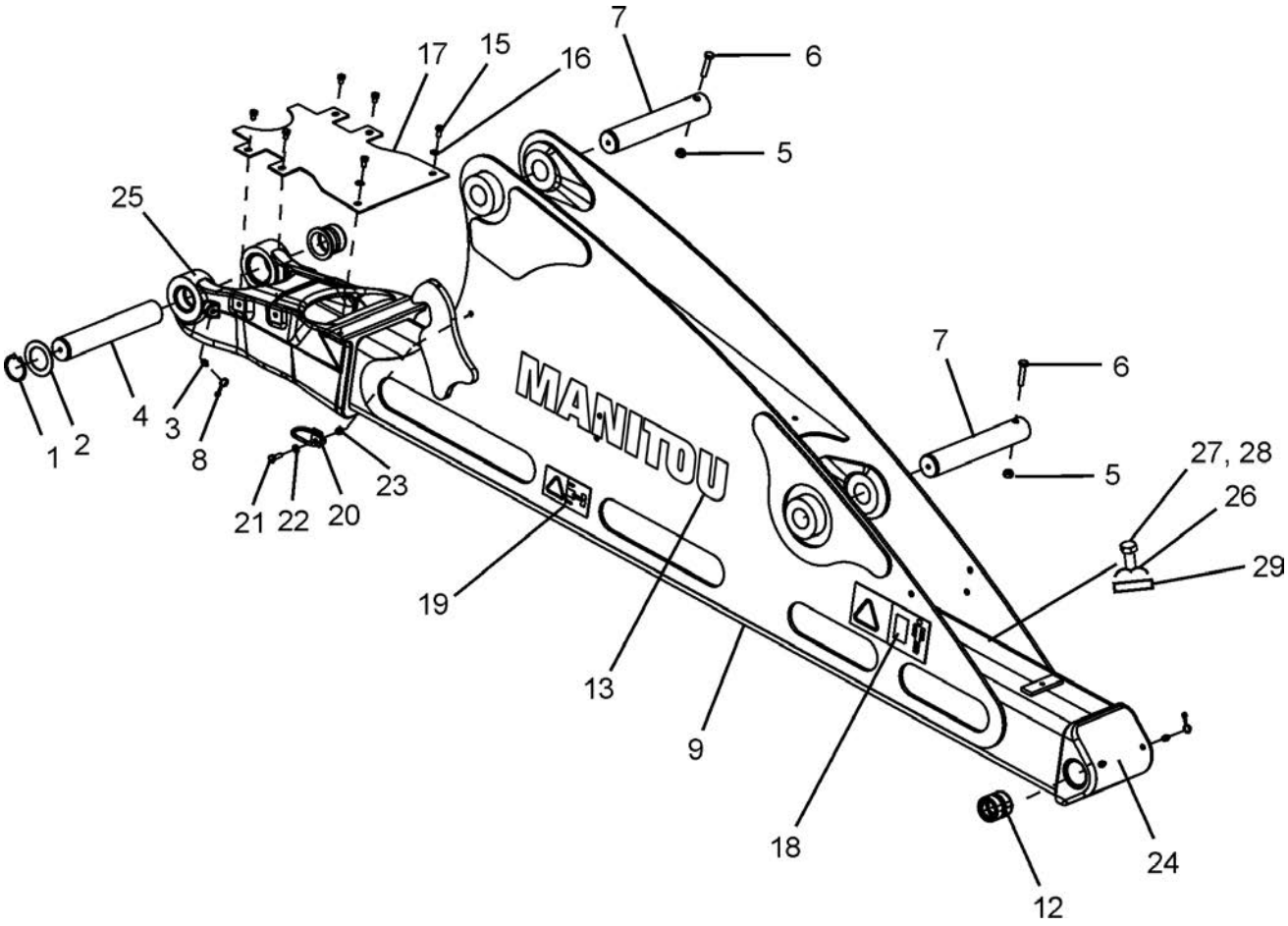
7
17
15
16
6
5
25
MANITOU
7
6
5
27, 28
26
29
1
2
4
3
8
21
22
20
23
19
13
9
18
24
12

BOOM

Ref.	Part No.	Description	Quantity	Applicable Machines	Remarks
1	391129X1	Ring, Snap	2		
2	3519378M1	Washer	2		
3	339608X1	Fitting, Grease	3		
4	1B1084	Pin	1		
5	1440329X1	Nut Lock	2		
6	3501289M1	Screw	2		
7	1B1090	Pin	2		
8	3516180M2	Cover	3		
9	1B0563	Boom Assy.	1		
11	3501015M2	Bushing	2		
12	1B0711	Bushing	2		
13	1L0063	Decal Manitou	2		
15	339228X1	Bolt	4		
16	391039X1	Washer	4		
17	1B0319	Mud Cover	1		
18	6101949M1	Decal (Safety)	2		
19	6102056M1	Decal (Crushing)	2		
20	6101491M91	Support Assy	4		
21	339761X1	Screw	4		
22	390972X1	Washer	4		
23	394367X1	Nut Lock 4			
24	1B0436	Dipper Pivot Casting	1		
25	1B0565	Boom Pivot Casting	1		
26	6101228M1	Clamp	1		
27	339761X1	Bolt	1		
28	339374X1	Washer	1		
29	6106109M1	Rubber Pad	1		

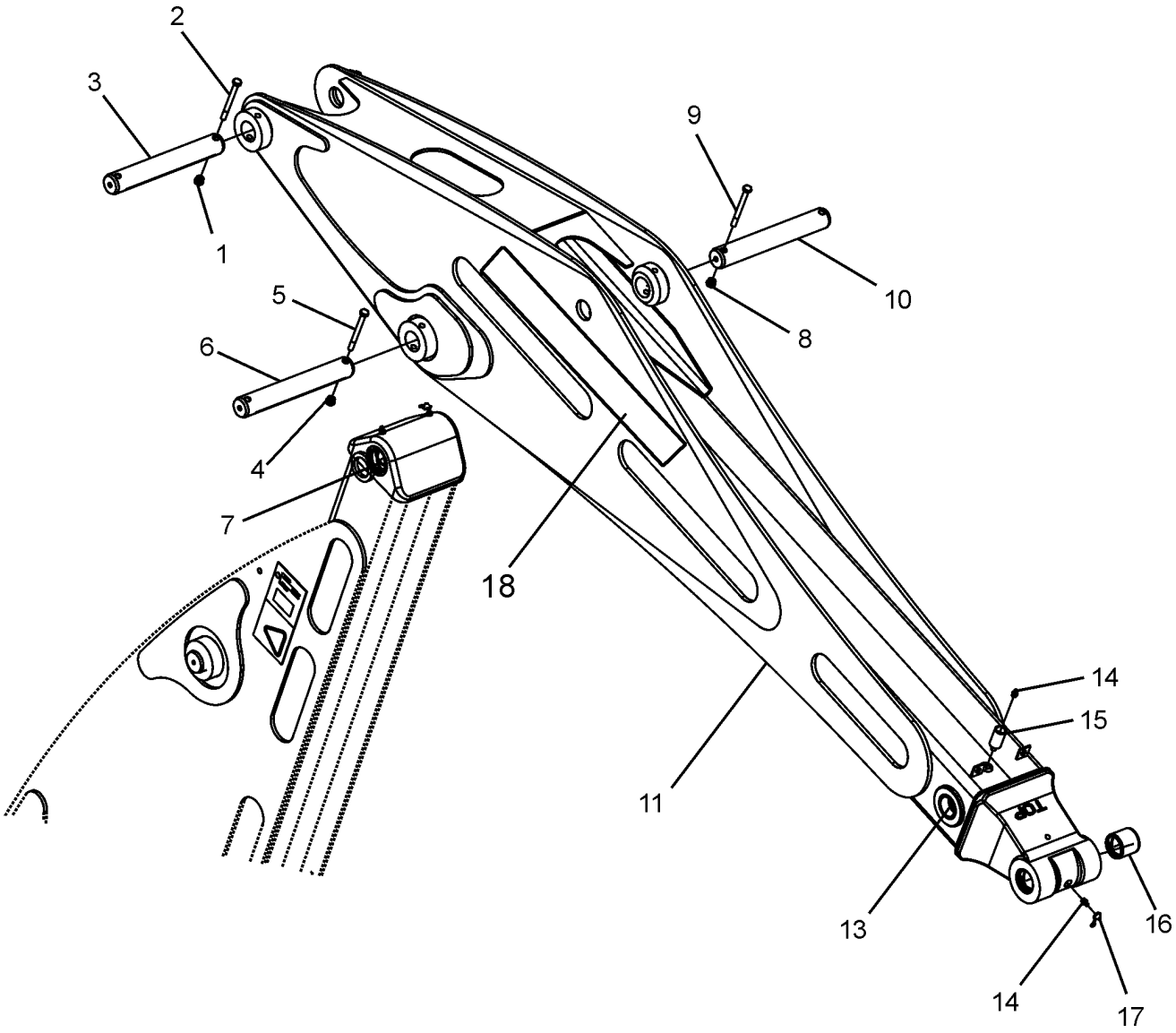
2
3
1
9
10
8
5
6
4
7
18
14
15
11
13
16
14
17

Ref.	Part No.	Description	Quantity	Applicable Machines	Remarks
1	1440329X1	Nut, Lock	2		
2	3501289M1	Screw	2		
3	1B1066	Pin	1		
4	1440329X1	Nut, Lock	2		
5	3501289M1	Screw	2		
6	1B1067	Pin	1		
7	3501027M1	Washer	2		
8	1440329X1	Nut, Lock	1		
9	3501289M1	Screw	1		
10	1B1081	Pin	1		
11	1B0576	Dipper stick	1		
13	1B0711	Bushing	2		
14	339608X1	Fitting, Grease	2		
15	3504012M1	Adaptor	1		
16	1B0711	Bushing	2		
17	3516180M2	Cover	2		
18	1L0064	Decal (TLB 844 S)	2		
22	1L0061	Decal New	2		
23	1L0062	Decal (With Smart UCH)	2		

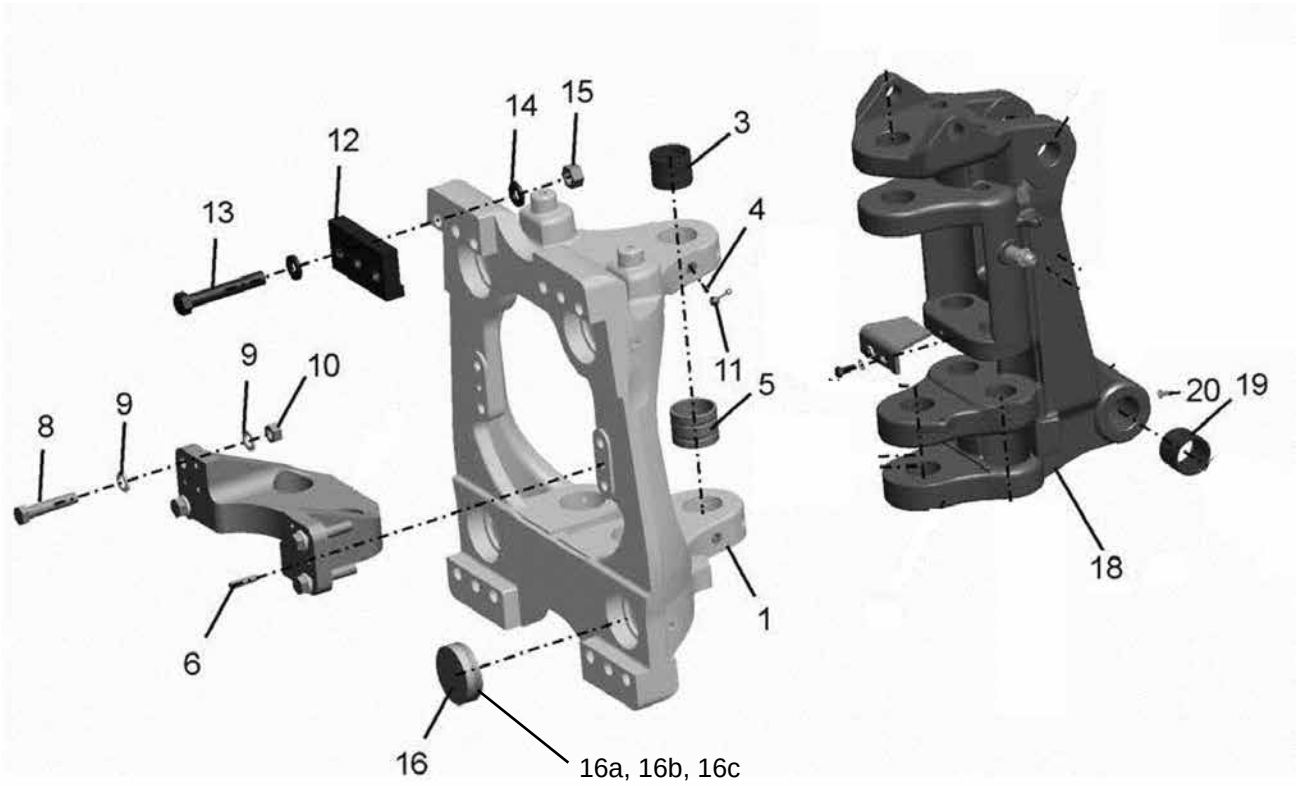
14
15
3
12
13
4
11
9
10
5
8
9
20
19
18
1
6
16
16a, 16b, 16c

DIGGER SWING PIVOT

Side Shift

Ref.	Part No.	Description	Quantity	Applicable Machines	Remarks
1	1B0391	Frame	1		
3	3500312M3	Bushing	2		
4	339608X1	Fitting, Grease	6		
5	3521388M5	Bushing	4		
6	3522954M1	Pin, Dowel	2		
8	3522187M2	Screw	4		
9	385365X1	Washer	8		
10	3522225M3	Nut	4		
11	3516180M2	Cover	7		
12	3521610M1	Plate	4		
13	1B0514	Screw	12		
14	3517388M1	Washer	24		
15	3522257M4	Nut	12		
16	6110790M91	Clamp Seal Assy	4		
16a	1H0666	Clamp Seal Piston	4		
16b	6110789M1	Seal	4		
16c	1H0667	O Ring	4		
18	1B0218	Pivot	1		
19	3500047M4	Bushing	2		
20	339608X1	Fitting, Grease	1		

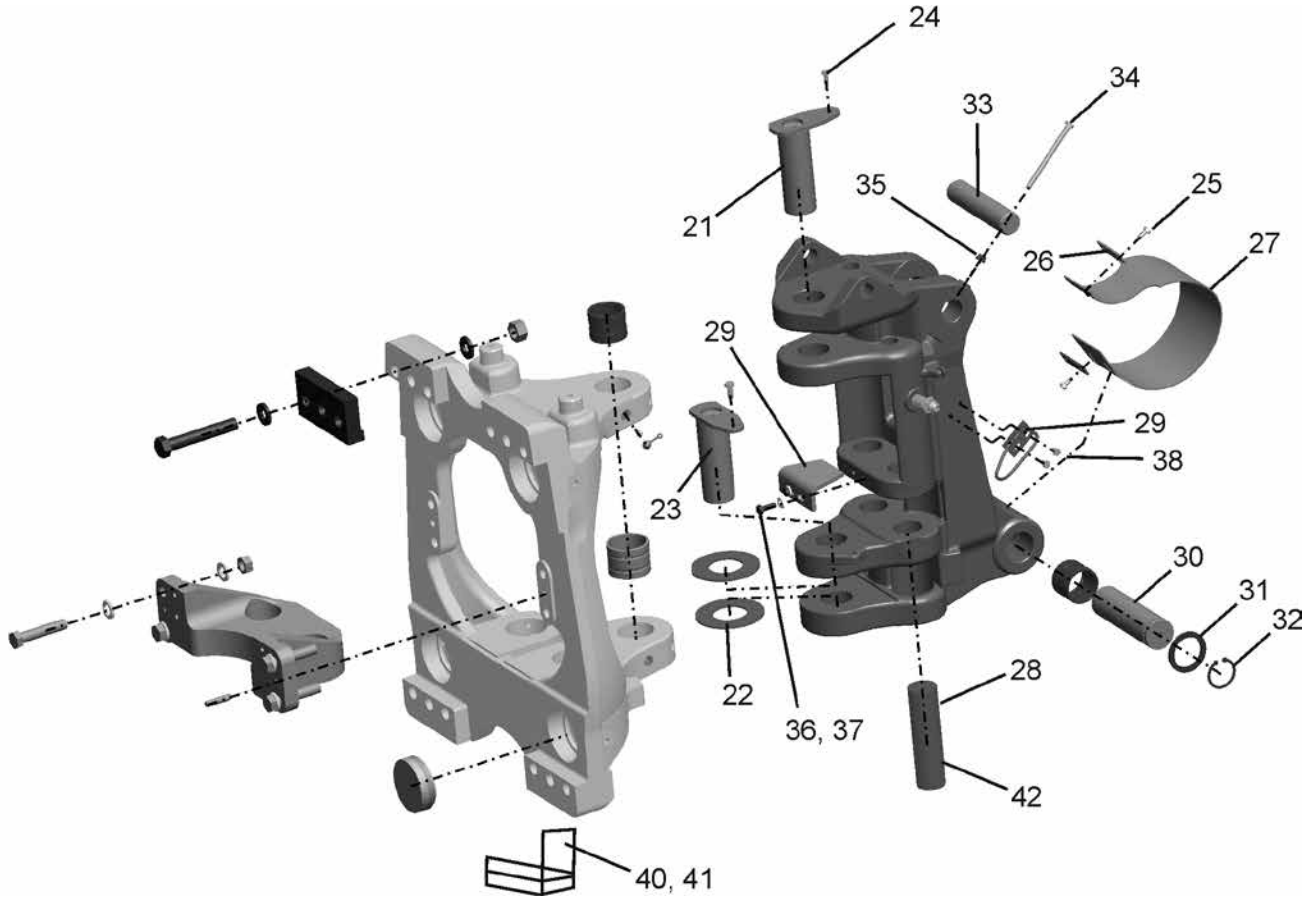
24
34
33
21
35
25
26
27
29
29
38
23
30
31
32
22
36, 37
28
42
40, 41

Ref.	Part No.	Description	Quantity	Applicable Machines	Remarks
21	1B0722	Pin	1		
22	3521389M1	Washer, Thrust	2		
23	1B0723	Pin	1		
24	3009492X1	Screw	4		
25	339123X1	Bolt	4		
26	6101936M1	Plate	2		
27	1C0054	Guard	1		
28	1B1089	Pin	2		
29	6102858M5	Retainer	1		
30	1B1084	Pin	1		
31	3519378M1	Washer	2		
32	391129X1	Ring, Snap	2		
33	1B1083	Pin	1		
34	339649X1	Screw	1		
35	1440329X1	Nut Lock	1		
36	6007776M1	Bolt	2		
37	385362X1	Washer	2		
38	339124X1	Bolt	4		
39	390972X1	Washer	4		
40	1B0413	Support Assy - RH	1		
41	1B0412	Support Assy - LH	1		

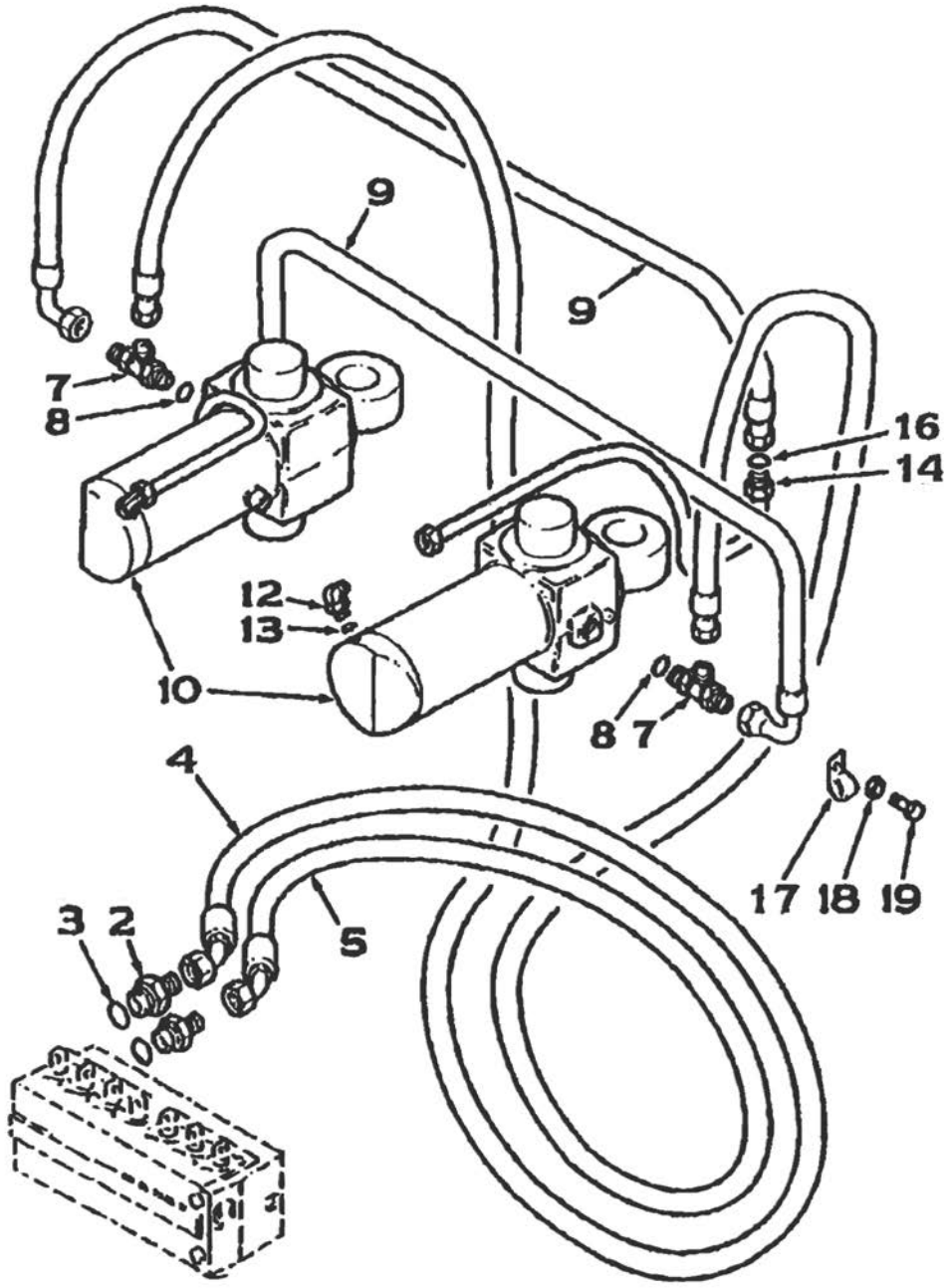
9
9
7
8
16
14
12
13
10
8
7
4
17
18
19
3
2
5

Ref.	Part No.	Description	Quantity	Applicable Machines	Remarks
2	358735X1	Union	2		
3	835024M1	O-Ring	2		
4	6107455M91	Hose Assy	1		
5	6107456M91	Hose Assy	1		
7	358809X1	Tee	2		
8	831497M1	O-Ring	2		
9	6100716M91	Hose Assy	2		
10	1H0559	Cylinder Assy (55 Dia)	2		
12	365065X91	Connector	2		
13	831452M1	O-Ring	1		
14	1H0561	Tube Assy. LH	1		
14	1H0562	Tube Assy. RH	1		
16	1850747M2	O-Ring	1		
17	3517114M1	Clip	2		
18	390972X1	Washer	2		
19	339228X1	Screw	2		

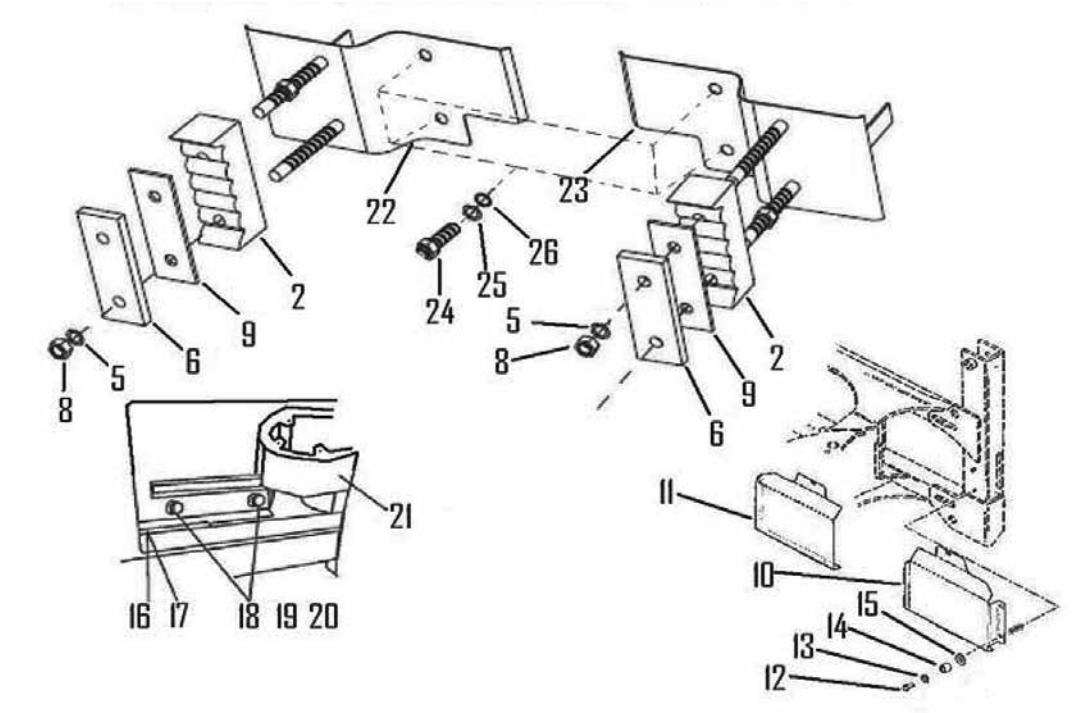
22
23
26
25
24
2
9
6
5
8
5
8
9
2
6
11
10
15
14
13
12
21
16
17
18
19
20

DIGGER HYDRAULICS

Ref.	Part No.	Description	Quantity	Applicable Machines	Remarks
2	6101859M1	Clamp RH	3		
3	6101216M1	Clamp LH	1		
5	390972X1	Washer	6		
6	6101215M1	Plate	4		
8	394367X1	Nut Lock	6		
9	6102197M1	Rubber Pad	4		
10	1H0145	Mud Guard RH	1		
11	1H0146	Mud Guard LH	1		
12	339761X1	Screw	6		
12A	339123X1	Screw	2		
13	390972X1	Washer	6		
13A	390597X1	Washer	2		
14	6101892M1	Spacer	8		
15	390735X1	Washer	8		
16	1H0250	Angle Plate LH	1		
17	1H0251	Angle Plate RH	1		
18	339376X1	Washer M10	8		
19	1440329X1	Hex Nut M10	4		
20	339081X1	Bolt M10-20	4		
21	1H0162	Hose Chain	2		
22	1H0474	Bracket Plate RH	1		
23	1H0475	Bracket Plate LH	1		
24	3009492X1	Screw	4		
25	339376X1	Washer	4		
26	390734X1	Lock Washer	4		

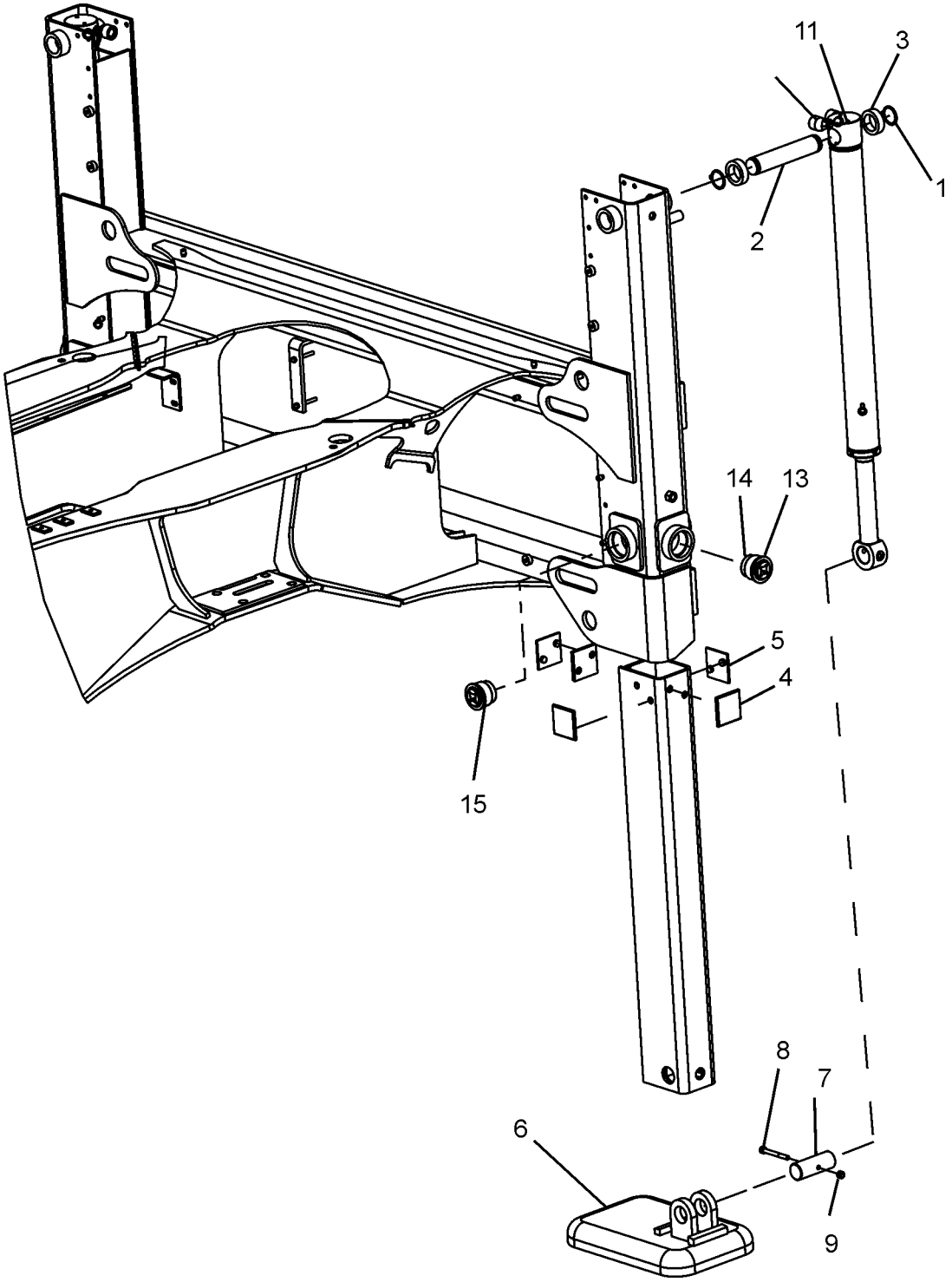
11
3
1
2
14
13
5
4
15
8
7
6
9

Ref.	Part No.	Description	Quantity	Applicable Machines	Remarks
1	1440478X1	Ring Snap	4		
2	1B1074	Pin	2		
3	3521279M2	Spacer	4		
4	6112163M91	Inner Leg	2		
5	3516684M2	Pad, Wear 4.5 mm	X		
5	3521199M3	Pad, Wear 5.0 mm	X		
5	3517077M1	Pad, Wear 5.5 mm	X		
5	3518965M1	Pad, Wear 6.0 mm	X		
5	3518936M1	Pad, Wear 6.5 mm	X		
5	6108416M1	Pad, Wear 4.00 mm	2		
5	6108417M1	Pad, Wear 3.6 mm	2		
6	1B0327	Foot	2		
7	1B1085	Pin	2		
8	1442169X1	Screw	2		
9	1440329X1	Nut, Lock	2		
10	3519712M1	Pad, Wear 4.5 mm	X		
10	3519713M1	Pad, Wear 5.0 mm	X		
10	3519714M1	Pad, Wear 5.5 mm	X		
10	3519715M1	Pad, Wear 6.0 mm	X		
10	3519716M1	Pad, Wear 6.5 mm	X		
10	6108418M1	Pad, Wear 4.0 mm	X		
10	6108419M1	Pad, Wear 3.6 mm	X		
11	1TH0041M91	Cylinder	2		
13	1B0731	Threaded Plug	6		
14	1B0732	Wear Pad	6		
15	61086852M1	Screw	12		

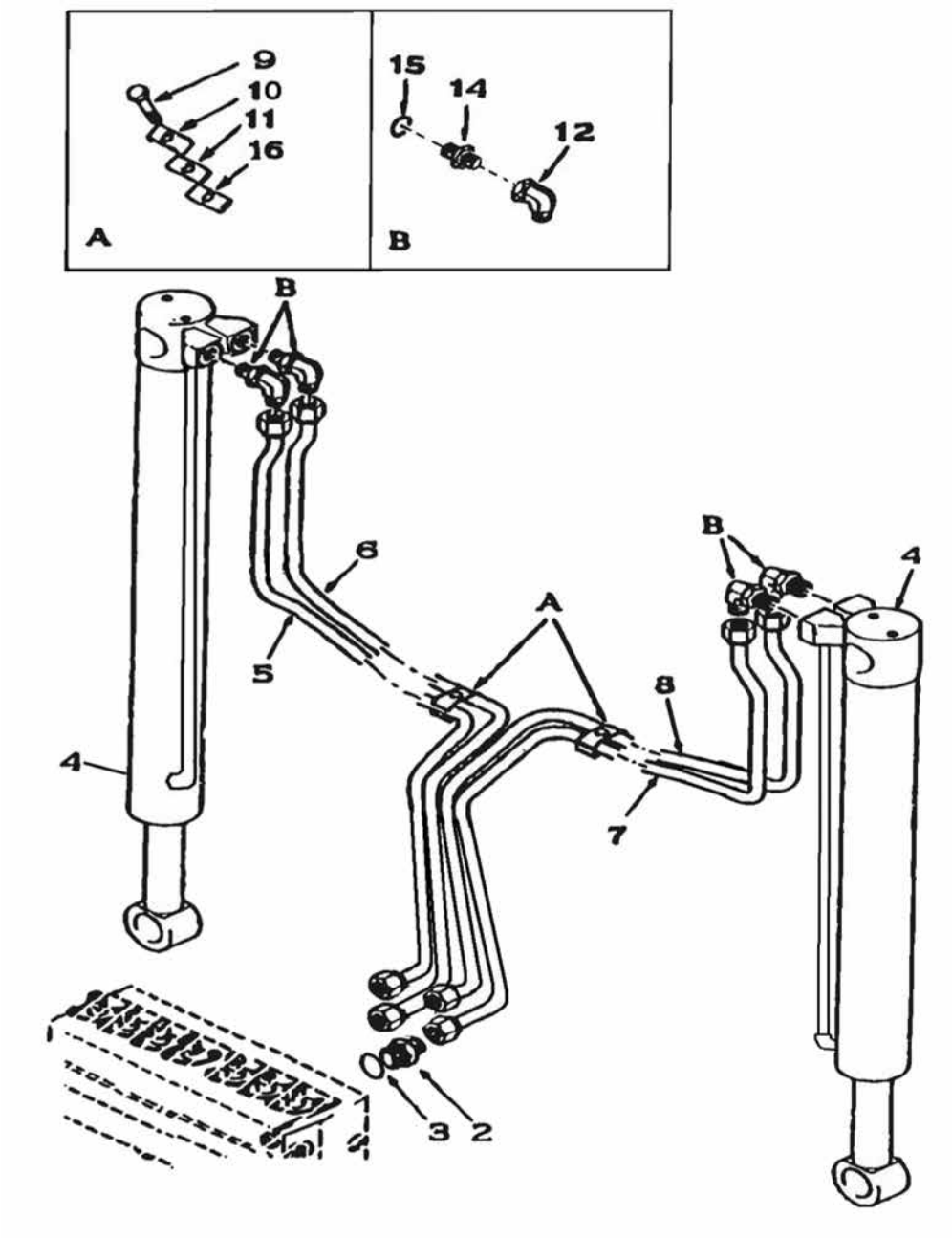
9
10
11
16
A
15
14
12
B
B
6
5
A
B
4
4
8
7
3
2

Ref.	Part No.	Description	Quantity	Applicable Machines	Remarks
2	1H0195	Union	4		
3	835025M1	O-Ring	4		
4	1H0020	Cylinder Assy	2		
5	6112877M91	Tube Assy RH	1		
6	6112879M91	Tube Assy RH	1		
7	6112876M91	Tube Assy LH	1		
8	6112878M91	Tube Assy LH	1		
9	339228X1	Bolt	2		
10	3518910M1	Bracket Clamp	2		
11	1458385M1	Pad, Rubber	2		
12	365233X1	Swivel Elbow	4		
14	832158M1	Adaptor	4		
15	835024M1	O-Ring	4		
16	390972X1	Washer	2		

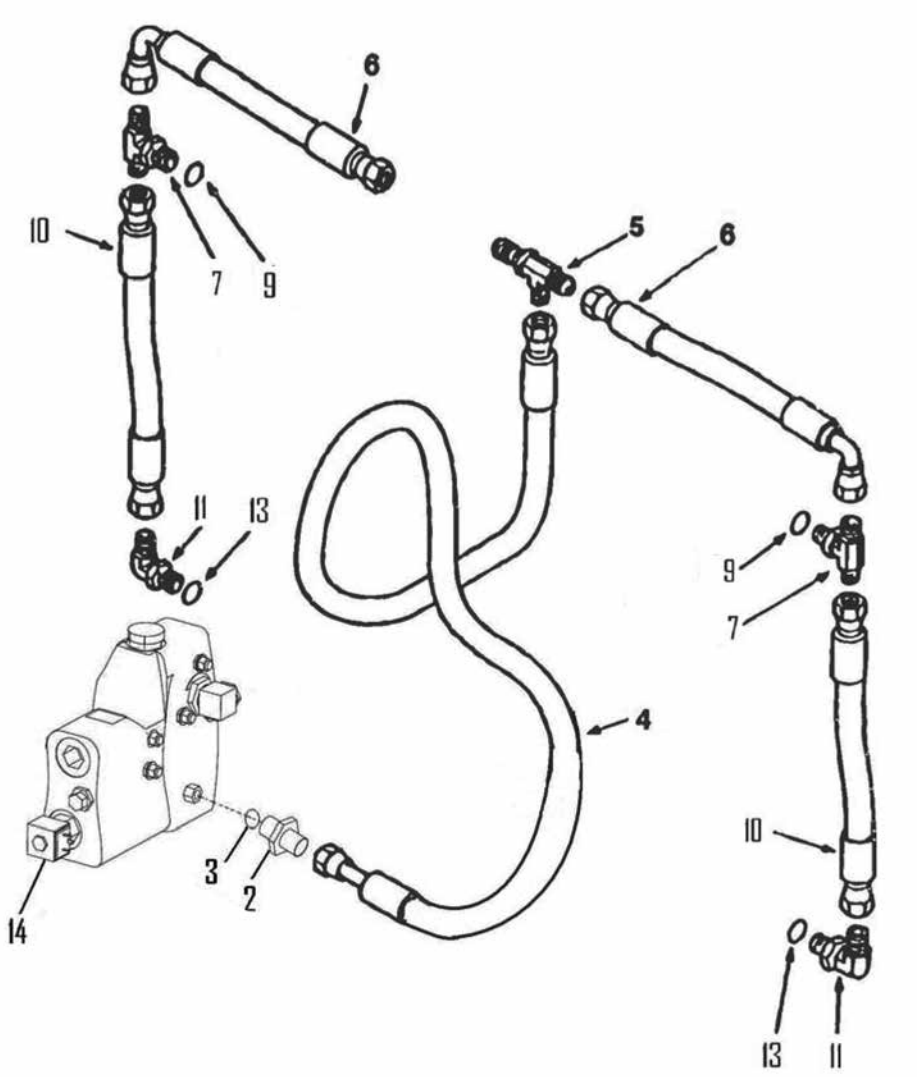
6
10
7
9
5
6
11
13
9
7
4
10
3
2
14
13
11

Ref.	Part No.	Description	Quantity	Applicable Machines	Remarks
2	365107X1	Union	1		
3	831452M1	O-Ring	1		
4	3519344M91	Hose Assy	1		
5	356558X1	Tee	1		
6	3521878M93	Hose Assy	2		
7	1H0658	Tee	2		
9	394923X1	O-Ring	2		
10	3521882M94	Hose Assy	2		
11	358761X91	Elbow, 90°	2		
13	394923X1	O-Ring	2		
14	10X1393	Solenoid Assy	1		

STABILIZER CONTROL

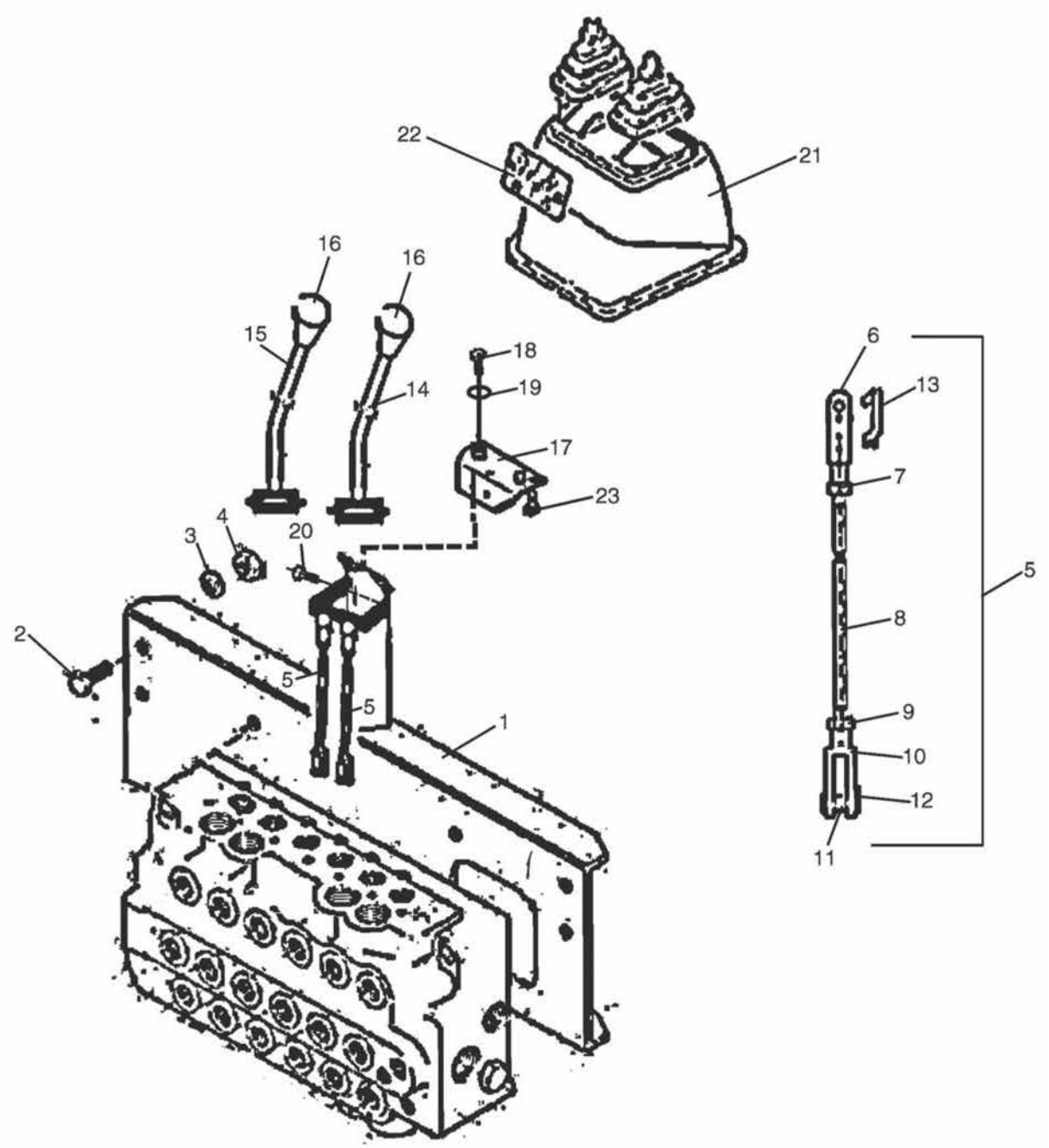

STABILIZER CONTROL

Ref.	Part No.	Description	Quantity	Applicable Machines	Remarks
1	1B0167	Digger Valve Bracket	1		
2	3009493X1	Bolt	4		
3	385362X1	Washer	4		
4	1440329X1	Nut	4		
5	1B0141	Rod Assy.	2		
6	1B0172	Clevis	2		
7	3519650M1	Nut M8 (LH Thread)	2		
8	1B0097	Rod	2		
9	351969X1	M8 Hex nut	2		
10	1B0139	Clevis	2		
11	1B0158	Clevis Pin	2		
12	3531461M1	Spring Clip	2		
13	3520666M1	Pin Clevis	2		
14	1B0173	Handle Assy, LH	1		
15	1B0174	Handle Assy, RH	1		
16	3517899M1	Knob	2		
17	1B0414	Bracket Assy.	1		
18	339123X1	Bolt	4		
19	390972X1	Lock Washer	4		
20	3009516X1	Bolt	2		
21	1J0388	Digger Box	1		
22	1B0157	Decal	1		
23	354742X1	Bolt	4		

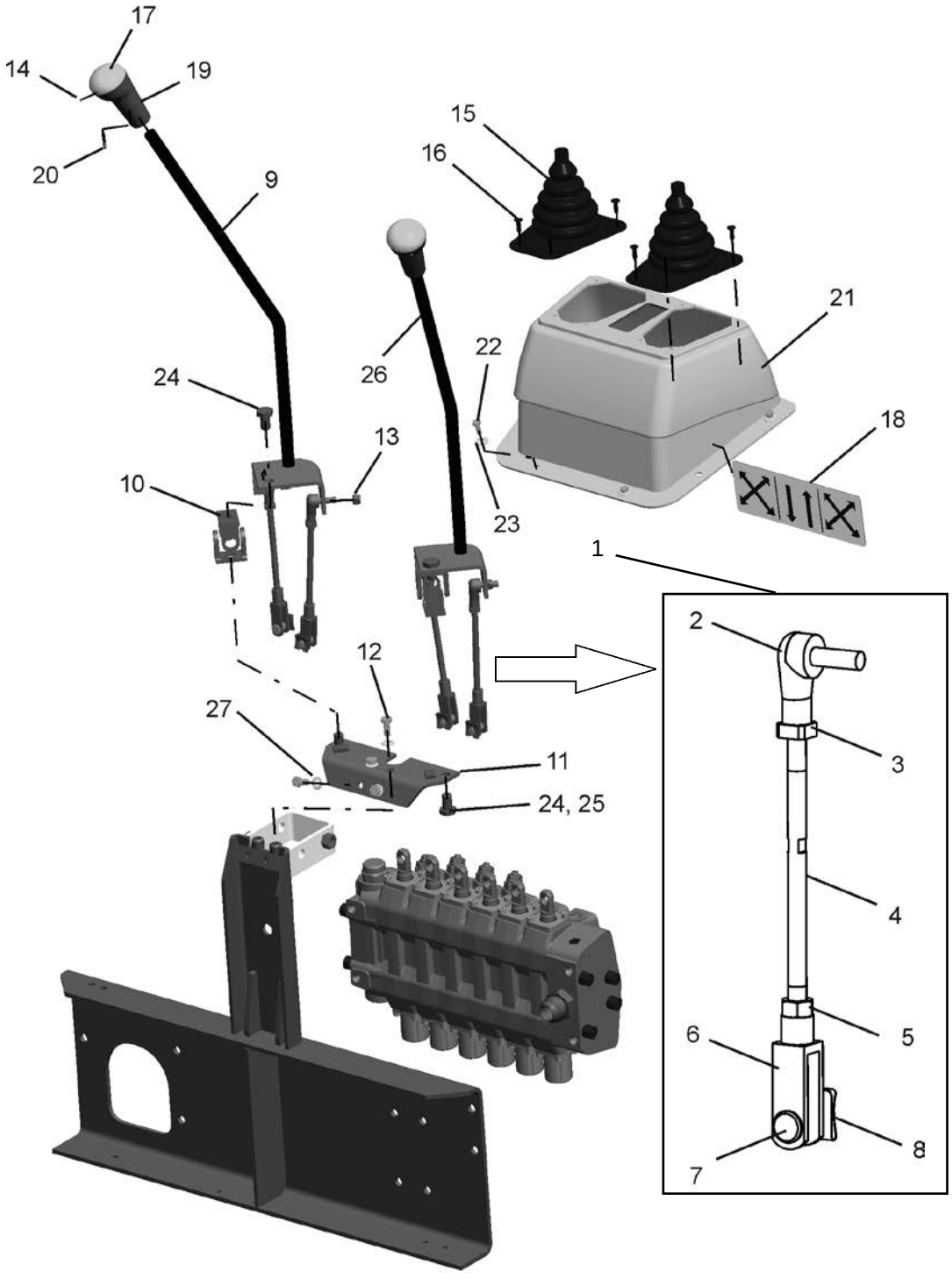
17
14
19
20
9
15
16
21
22
26
24
18
13
10
23
1
2
12
27
3
11
24, 25
4
6
5
8
7

DIGGER CONTROL

Cross Pattern

Ref.	Part No.	Description	Quantity	Applicable Machines	Remarks
1	1B0140	Rod Assy	4		
2	3517518M1	Ball Joint	4		
3	339169X1	Nut	4		
4	6106906M1	Rod	4		
5	3519650M1	Nut	4		
6	1B0139	Clevis	4		
7	1B0158	Clevis Pin	4		
8	3521461M1	Spring Clip	4		
9	6107173M91	Lever Assy	1		
10	3521075M91	Universal Joint	2		
11	1B0414	Bracket	1		
12	339123X1	Screw	4		
13	394367X1	Nut Lock	4		
14	3516886M1	Screw	4		
15	3522855M2	Boot	2		
16	3521303M3	Fastener	8		
17	3522669M3	Cap	2		
18	1B0157	Decal	1		
19	3522621M5	Grip	2		
20	3319531X1	Pin, Roll	2		
21	1J0388	Console	1		
22	339560X1	Screw	6		
23	391038X1	Washer	6		
24	354742X1	Bolt	4		
25	359369X1	Washer Lock	4		
26	6107172M91	Lever Assy	1		
27	390972X1	Washer	4		

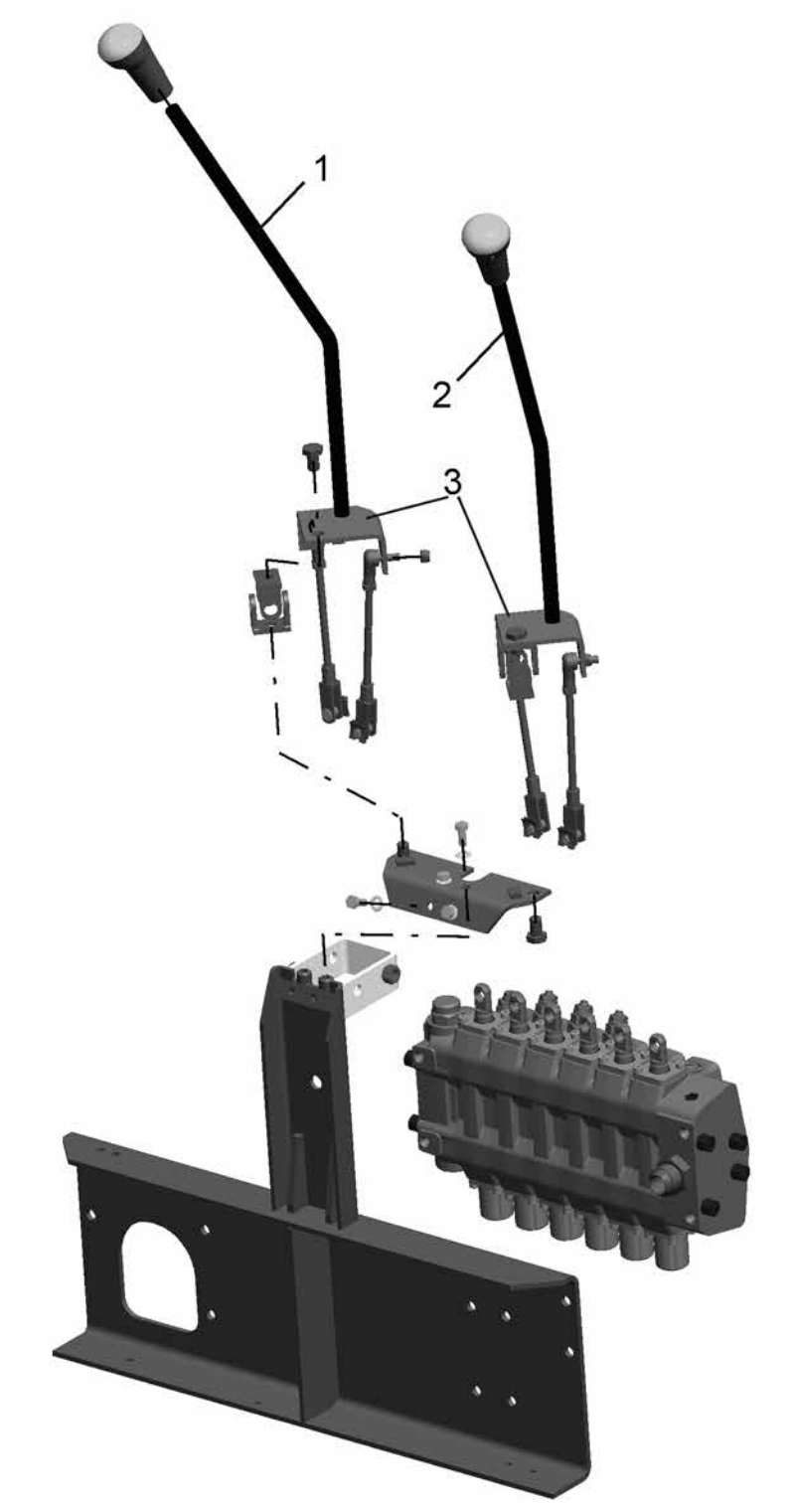
1
2
3

DIGGER CONTROL

Plus Pattern

Ref.	Part No.	Description	Quantity	Applicable Machines	Remarks
1	1B0972	Lever Assy. RH Control	1		
2	1B0973	Lever Assy. LH Control	1		
3	1B0979	Bracket	2		

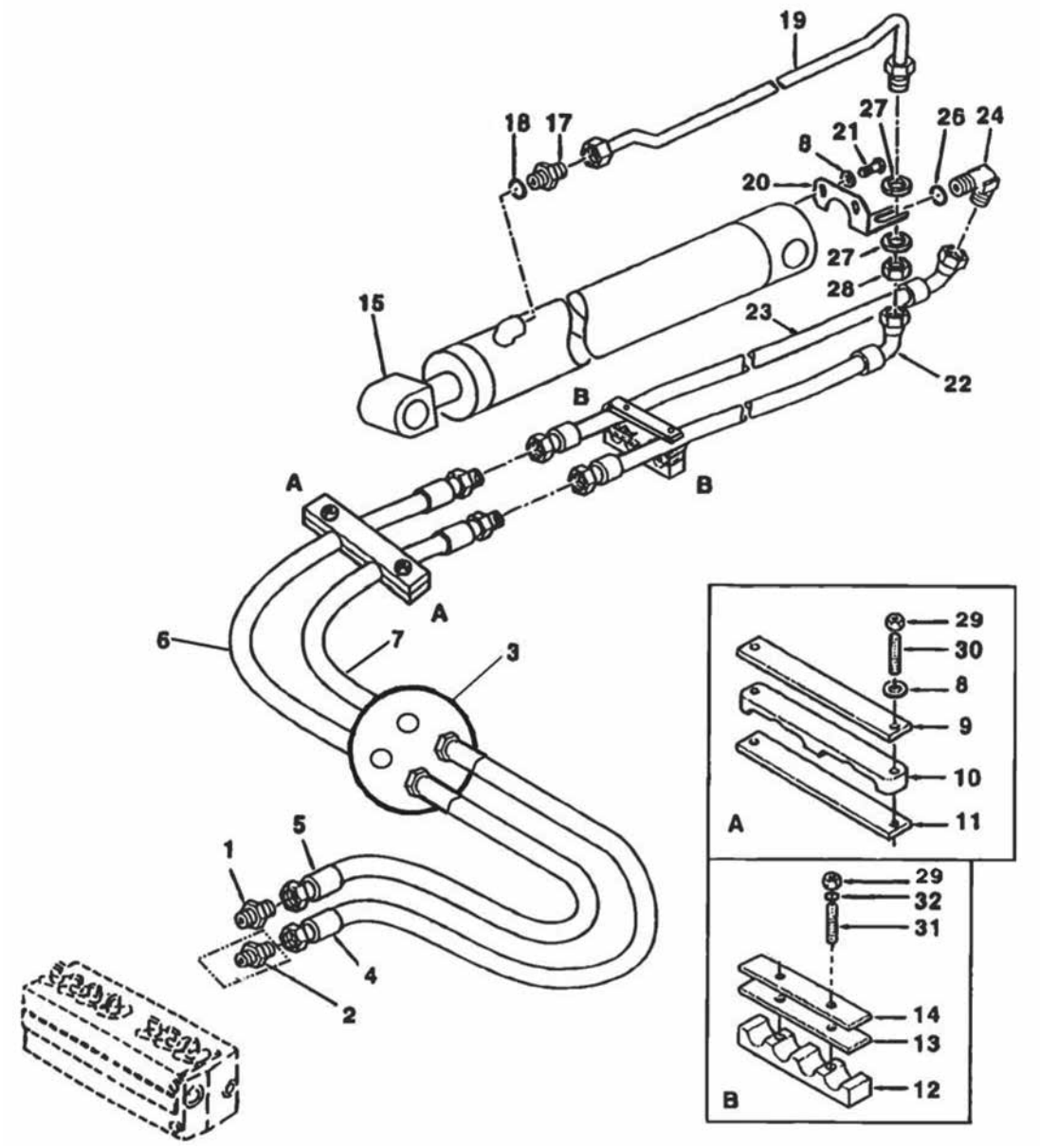
19
18
17
27
21
26
24
8
20
27
28
15
23
22
B
A
B
A
6
7
3
5
1
4
2
29
30
8
9
10
11
A
29
32
31
14
13
12
B

Ref.	Part No.	Description	Quantity	Applicable Machines	Remarks
1	1H0165	Adaptor Assy	1		
2	1H0254	Restrictor Assy	1		
3	1B0541	Split Plate	1		
4	1H0286	Hose Assy	1		
5	1H0284	Hose Assy	1		
6	1H0285	Hose Assy	1		
7	1H0287	Hose Assy	1		
8	390972X1	Washer	2		
9	6102130M1	Plate	1		
10	6102122M1	Bracket, Clamp	1		
11	6102128M1	Pad	1		
12	6102126M1	Bracket, Clamp	2		
13	6102145M1	Pad	2		
14	6102124M1	Plate	2		
15	1H0013	Cylnder Assy	1		
17	358735X1	Union	1		
18	835024M1	O-Ring	1		
19	6100855M91	Tube Assy	1		
20	6100883M1	Bracket	1		
21	339124X1	Screw	2		
22	6101735M92	Hose Assy	1		
23	6101736M92	Hose Assy	1		
24	835007M91	Elbow, 90°	1		
26	835024M1	O-Ring	1		
27	3519378X1	Washer	6		
28	355574X1	Nut	2		
29	394367X1	Nut Lock	4		
30	6108049M1	Stud	2		
31	1B0396	Stud	2		
32	390972X1	Washer	2		

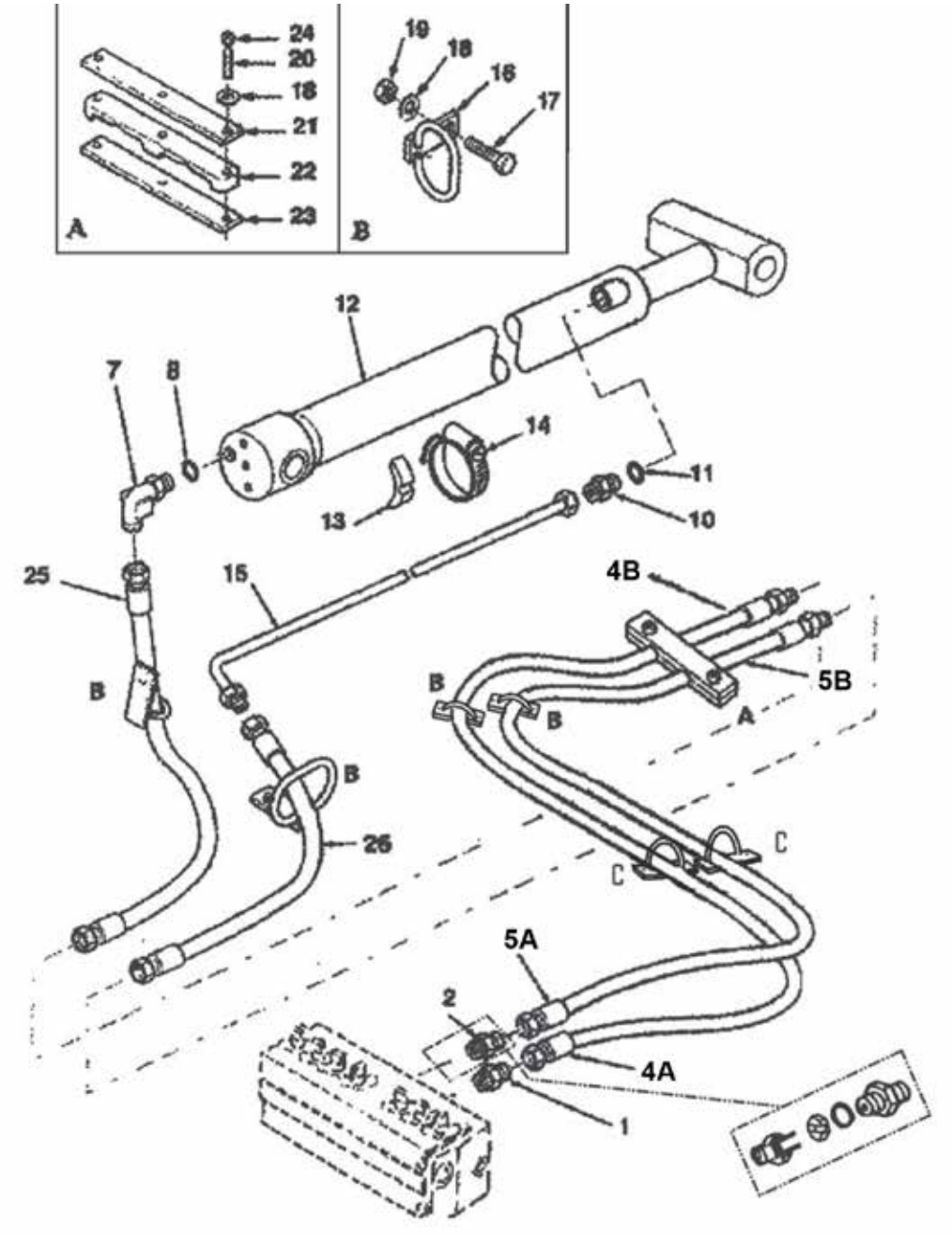
A
B
24
20
18
21
22
23
19
18
16
17
12
7
8
14
13
11
10
25
15
4B
5B
B
A
26
C
5A
2
4A
1

Ref.	Part No.	Description	Quantity	Applicable Machines	Remarks
1	1H0165	Connector Assy	1		
2	1H0193	Restrictor Assy	1		
4A	1H0450	Hose Assy	1		
4B	1H0430	Hose Assy	1		
5A	1H0451	Hose Assy	1		
5B	1H0431	Hose Assy	1		
8	835024M1	O-Ring	1		
10	358735X1	Connector	1		
11	835024M1	O-Ring	1		
12	1H0014	Cylinder Assy	1		
13	L79937	Spacer	1		
14	3517733M91	Clamp	1		
15	6100976M92	Tube Assy	1		
16	6101491M91	Support Assy	4		
17	339761X1	Screw	2		
18	390972X1	Washer	12		
19	394367X1	Nut Lock	2		
20	6108049M1	Stud	2		
21	6102130M1	Plate	1		
22	6102122M1	Bracket Clamp	1		
23	6102128M1	Pad	1		
24	394367X1	Nut Nylock	2		
25	6101738M91	Hose Assy	1		
26	6101737M91	Hose Assy	1		

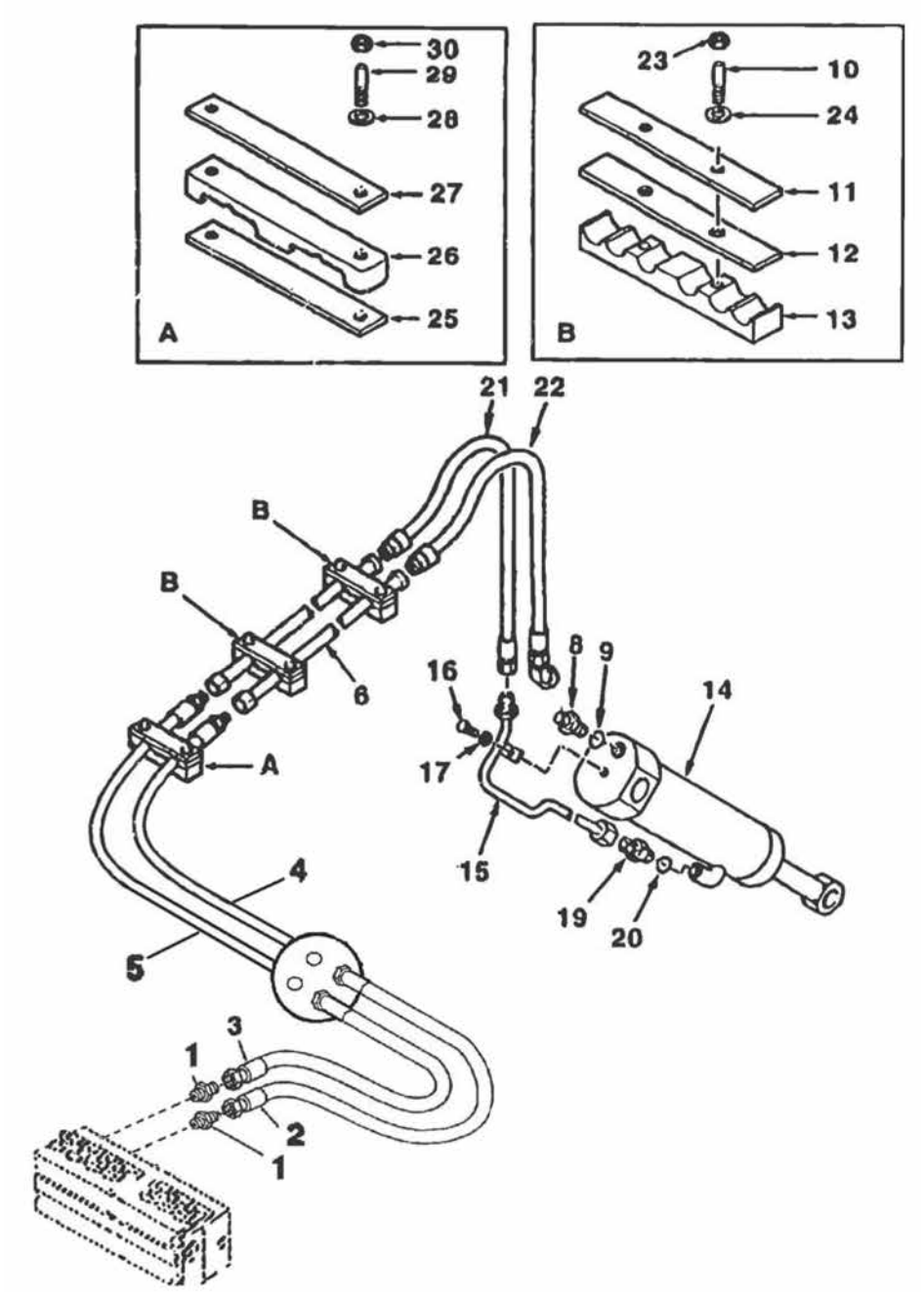
30
29
28
27
26
25
A
23
10
24
11
12
13
B
21
22
B
B
6
A
16
17
8
9
14
15
19
20
4
5
3
1
2
1

Ref.	Part No.	Description	Quantity	Applicable Machines	Remarks
1	1H0165	Connector Assy	2		
2	1H0288	Hose Assy	1		
3	1H0290	Hose Assy	1		
4	1H0289	Hose Assy	1		
5	1H0291	Hose Assy	1		
6	6101771M91	Tube Assy	2		
8	358735X1	Union	1		
9	835024M1	O-Ring	1		
10	6108049M1	Stud	4		
11	6102124M1	Plate	2		
12	6102145M1	Pad	2		
13	6102126M1	Bracket, Clamp	2		
14	1H0306	Cylinder Assy	1		
15	1H0302	Tube Assy	1		
16	339124X1	Bolt	1		
17	390972X1	Washer	1		
19	1H0395	Connector Long	1		
20	835024M1	O-Ring	1		
21	6102309M91	Hose Assy	1		
22	1H0305	Hose Assy	1		
23	394367X1	Nut, Lock	2		
24	390972X1	Washer	2		
25	6102128M1	Pad	1		
26	6102122M1	Bracket, Clamp	1		
27	6102130M1	Plate	1		
28	390972X1	Washer	2		
29	3516075M1	Stud	2		
30	394367X1	Nut, Lock	2		

DIGGER BUCKET LINKAGE

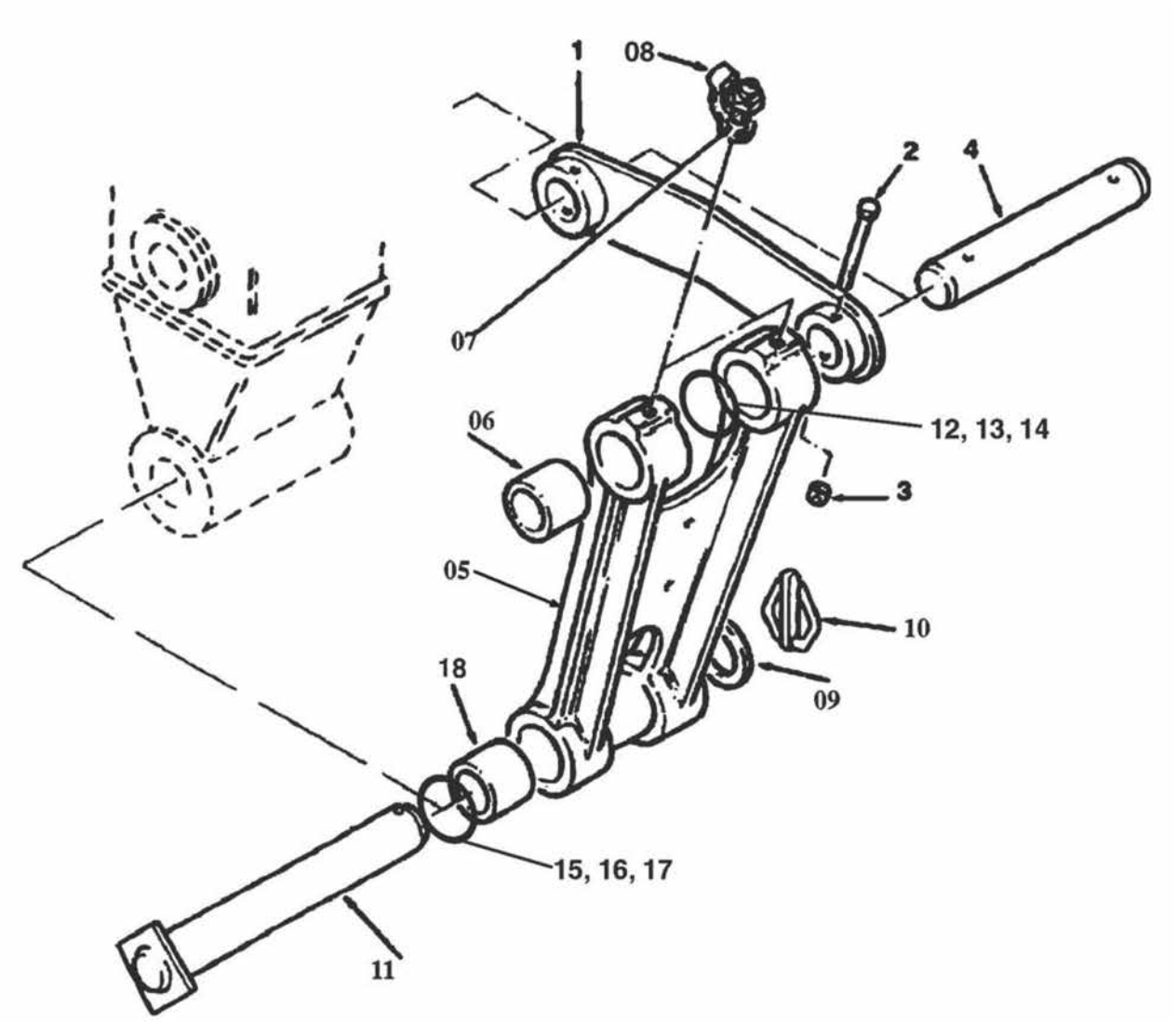

DIGGER BUCKET LINKAGE

Ref.	Part No.	Description	Quantity	Applicable Machines	Remarks
1	1B0449	Link Assy.	2		
2	1441106X1	Screw	4		
3	1440329X1	Nut, Lock	4		
4	1B1069	Pin	2		
5	3522380M2	Link Assy.	1		
6	1B0711	Bushing	2		
7	339608X1	Fitting, Grease	3		
8	3516180M2	Cover	3		
9	3501790M1	Washer	2		
10	3516522M91	Pin, Linch	2		
11	1B1071	Pin	2		
12	1B0019	Shim - 1mm	UAR		
13	1B0020	Shim - 2mm	UAR		
14	1B0021	Shim - 3mm	UAR		
15	1B0022	Shim - 1mm	UAR		
16	1B0023	Shim - 2mm	UAR		
17	1B0024	Shim - 3mm	UAR		
18	1B0711	Bushing	2		

DIGGER BUCKET STANDARD

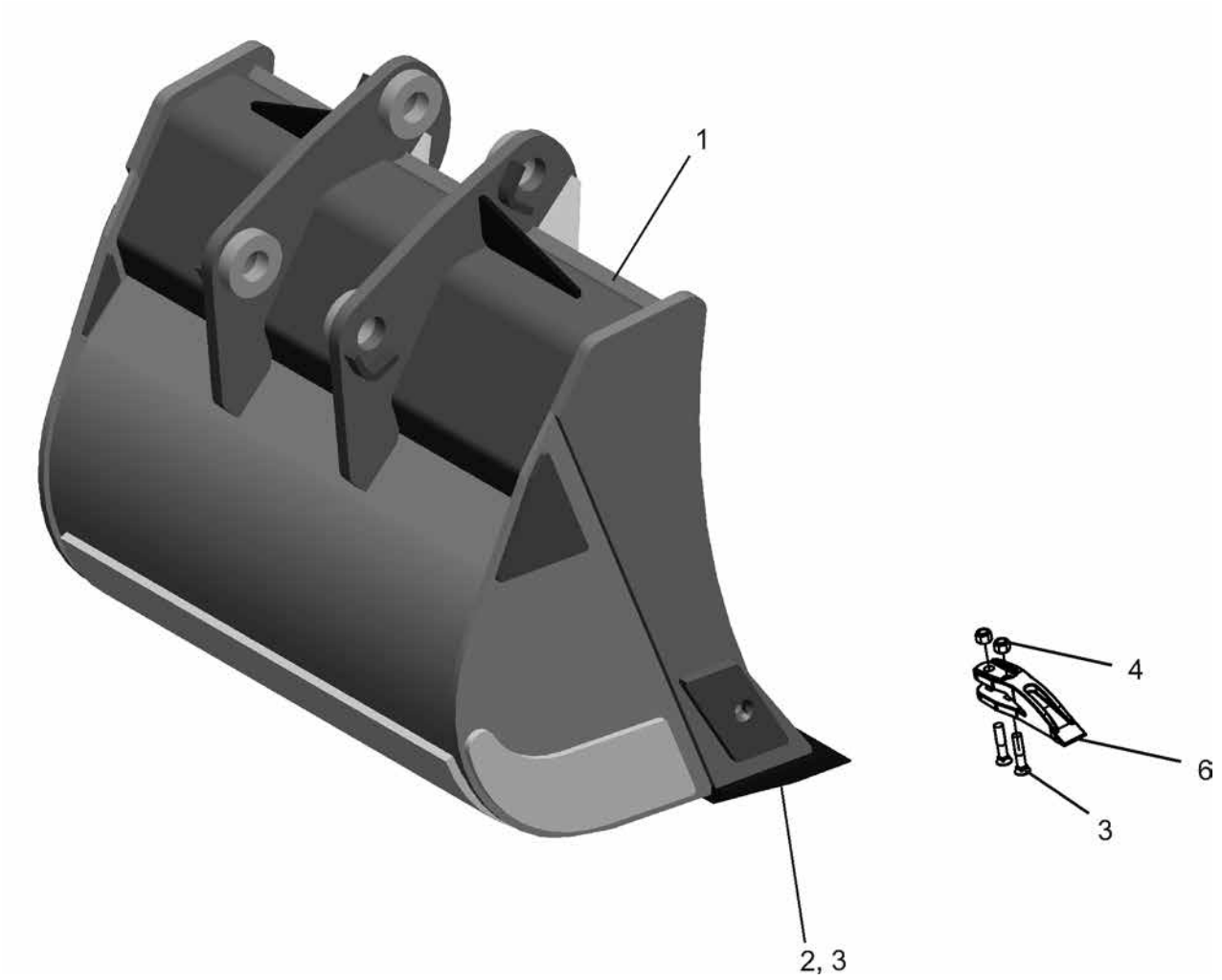

DIGGER BUCKET STANDARD

Ref.	Part No.	Description	Quantity	Applicable Machines	Remarks
1	1C0306	Bucket	1		0.12 Cum
1	1C0307	Bucket	1		0.18 Cum
1	1C0308	Bucket	1		0.24 Cum
1	1C0309	Bucket	1		0.27 Cum
1	1C0310	Bucket	1		0.31 Cum
2	1C0191	Side Cutter -LH	1		
2	1C0190	Side Cutter- RH	1		
3	1C0135	Bolt	10		
4	1442739X1	Nut	10		
6	1C0189	Tooth	3		
*	10X3560	Tooth Kit	1		

NOTES

NOTES

CONTROL CABLE

PARKING BRAKE CABLE

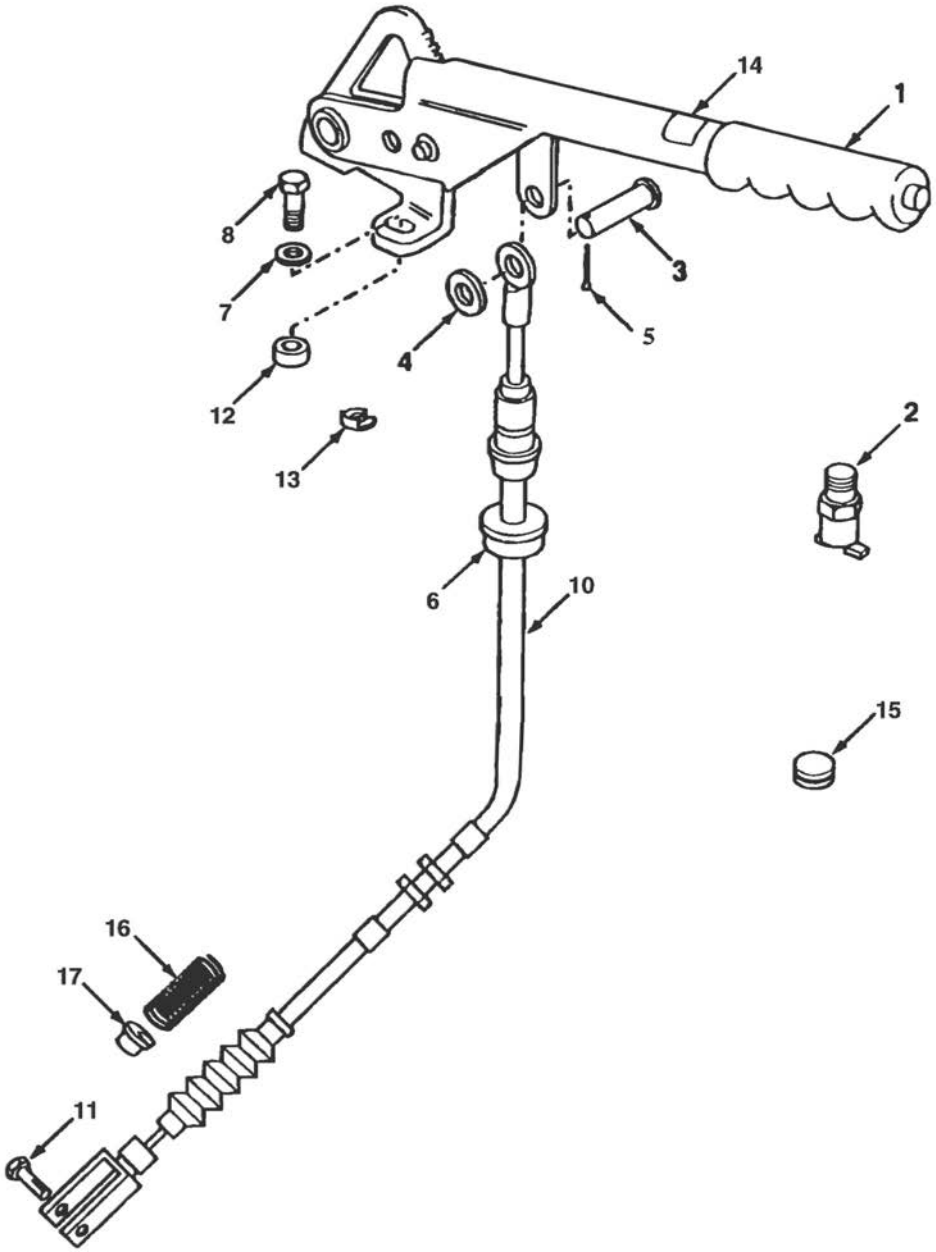

PARKING BRAKE CABLE

Ref.	Part No.	Description	Quantity	Applicable Machines	Remarks
1	1K0269	Lever, Brake	1		
2	1D0190	Switch Assy	1		
3	1K0271	Pin	1		
4	385361X1	Washer	1		
5	1442992X1	Pin, Split	1		
6	6102367M1	Grommet	1		
7	390734X1	Washer	2		
8	3009492X1	Screw	2		
10	1J0582	Cable Assy	1		
11	6107031M1	Pin	1		
12	3516293M1	Spacer	2		
13	1696650M1	Clip	1		
14	3516652M1	Decal	1		
15	3516323M1	Grommet	2		
16	3518052M2	Spring	1		
17	3518051M1	Spring Retainer	1		

BOOM LOCK CABLE

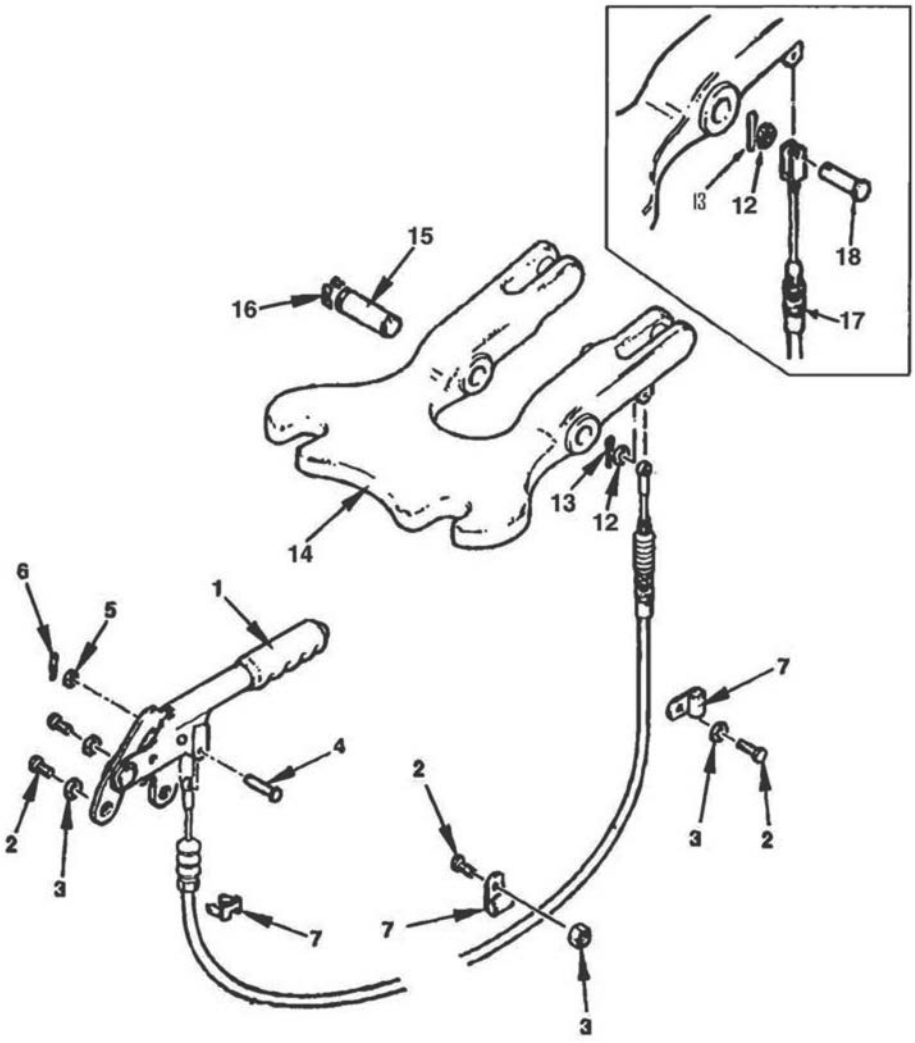

BOOM LOCK CABLE

Ref.	Part No.	Description	Quantity	Applicable Machines	Remarks
1	3522379M92	Lever, Control	1		
2	339124X1	Screw	4		
3	390972X1	Washer	4		
4	376401X1	Pin	1		
5	385361X1	Washer	1		
6	1442864X1	Pin, Split	1		
7	3517114M1	Clip	3		
12	385361X1	Washer	2		
13	1442864X1	Pin, Split	2		
14	3521747M6	Latching Device	1		
15	1B1078	Pin	2		
16	392758X1	Ring, Snap	4		
17	1J0040	Cable	1		
18	376401X1	Pin	1		

THROTTLE CABLE

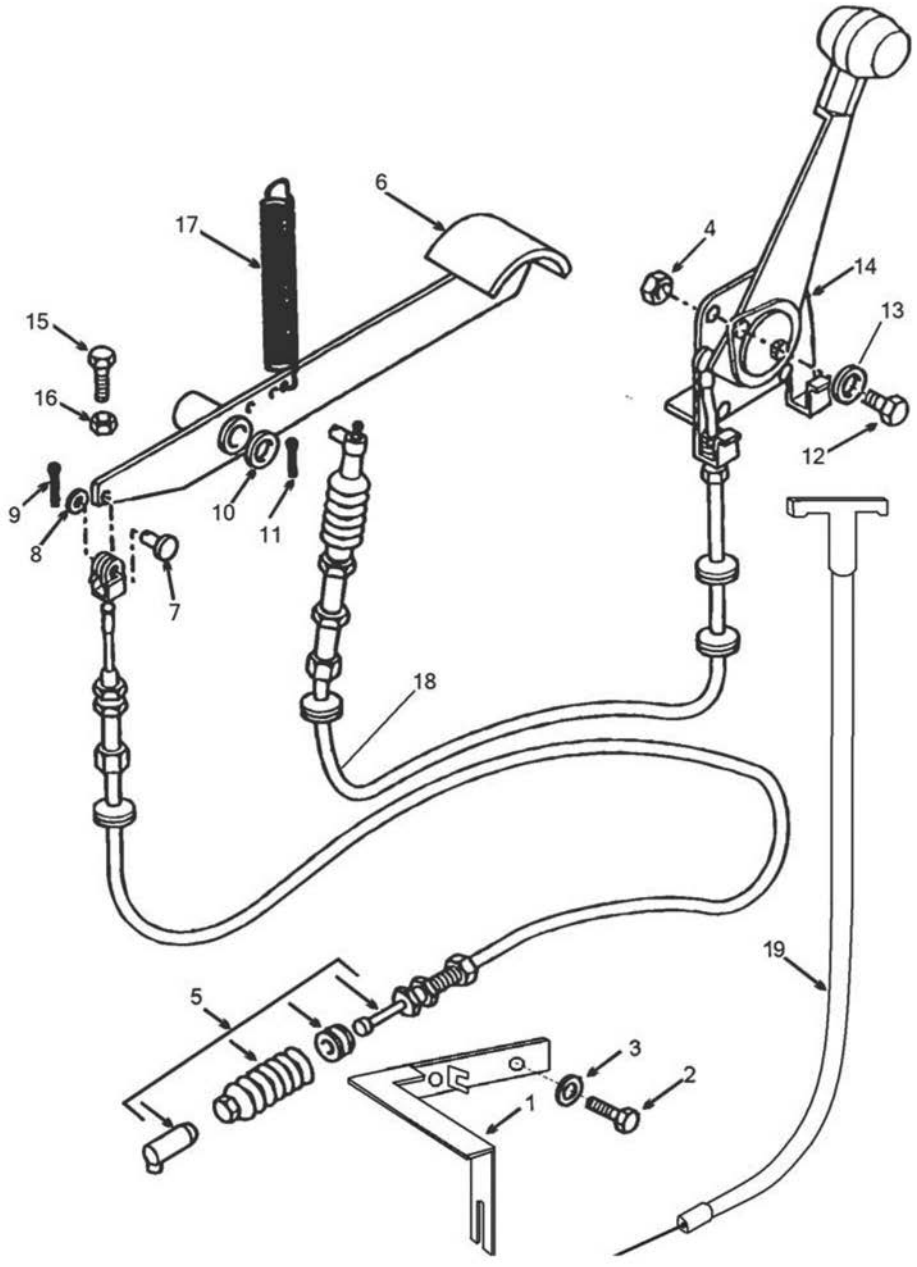

THROTTLE CABLE

Ref.	Part No.	Description	Quantity	Applicable Machines	Remarks
1	1A0094	Mount Bracket	1		
2	1440433X1	Screw	2		
3	390971X1	Washer	2		
4	339030X1	Lock Nut	4		
5	1A0901	Foot Throttle Cable	1		
6	1B0394	Pedal Assy	1		
7	195446M1	Pin	1		
8	353753X1	Washer	1		
9	354039X1	Pin, Split	1		
10	390735X1	Washer	1		
11	1442965X1	Pin Split	1		
12	339666X1	Screw	4		
13	339375X1	Lock Washer	4		
14	1Z0159	Hand Th. Assy.	1		
15	339337X1	Bolt M8-30 Z5F	1		
16	392309X1	Nut	1		
17	1470592M1	Spring	1		
18	1Z0155	Cable Assy	1		
19	1A0902	Stop Cable	1		

NOTES

NOTES

CYLINDERS

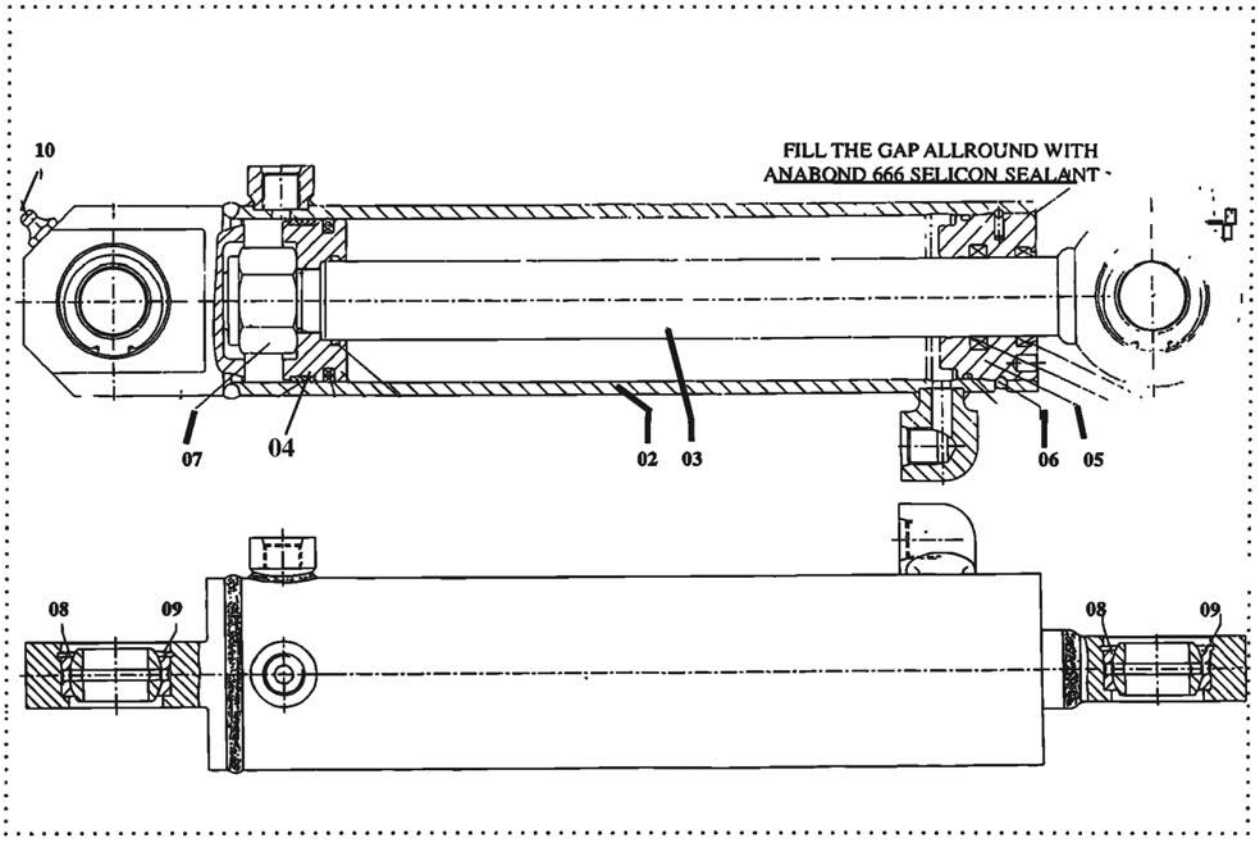
10
FILL THE GAP ALLROUND WITH
ANABOND 666 SELICON SEALANT
07
04
02
03
06
05
08
09
08
09

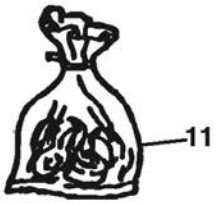
11

STEERING CYLINDER (2 WHEEL DRIVE)

Ref.	Part No.	Description	Quantity	Applicable Machines	Remarks
	1H0376	Steering Cylinder	1		
3	10X1771	Piston Rod Assy.	1		
4	10X1772	Piston	1		
5	10X1770	H.E. Cover	1		
6	10X1767	Retaining Ring	1		
7	10X1773	Piston Nut	1		
8	10X1768	Spherical Bearing	1		
9	10X1769	Circlip Lock	2		
10	10X1775	Grease Nipple	2		
11	10X1776	Seal Kit	1		
12	10X1774	Grease Nipple, 90°	1		

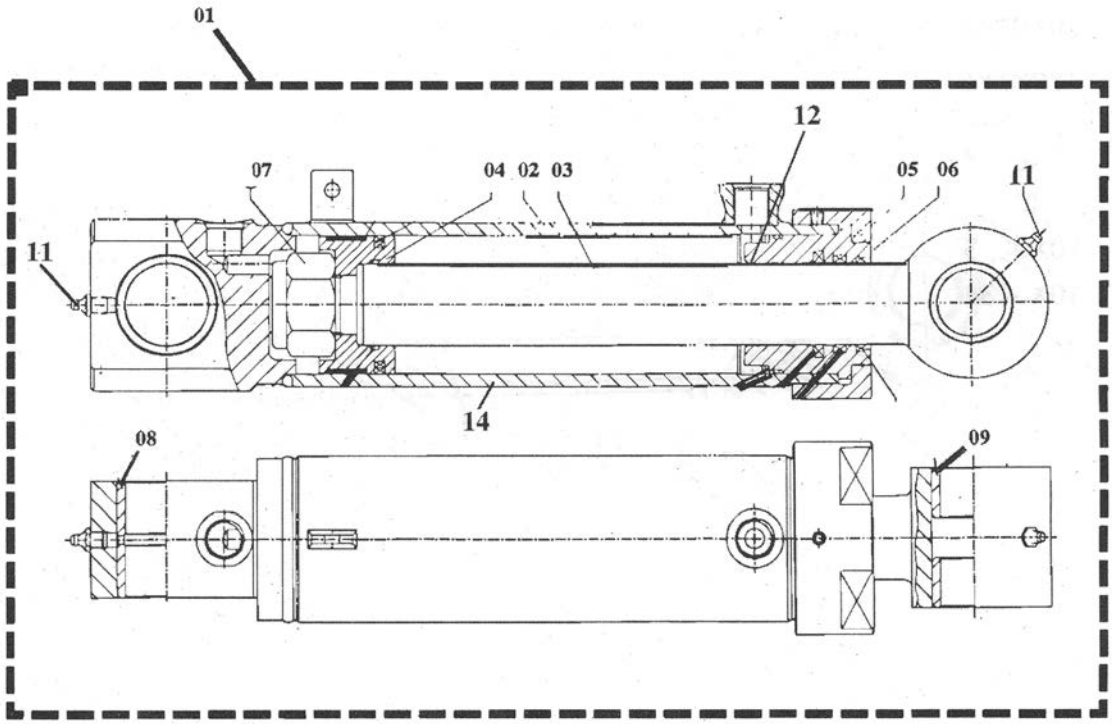
01
12
07
04
02
03
05
06
11
11
14
08
09


13

Ref.	Part No.	Description	Quantity	Applicable Machines	Remarks
1	1H0157	Cylinder Assy	2		
2	10X1438	Tube Assy	1		
3	10X0200	Piston Rod	1		
4	10X0201	Piston	1		
5	10X0202	Retainer	1		
6	10X1351	Head End Cover	1		
7	10X0204	Nyloc Nut	1		
8	10X0205	Bush Clevis	1		
9	10X0206	Bush, R.E.	1		
11	10X1352	Grease Nipple	2		
12	10X1353	Bi metalic Bush	1		
13	10X1354	Seal Kit	1		

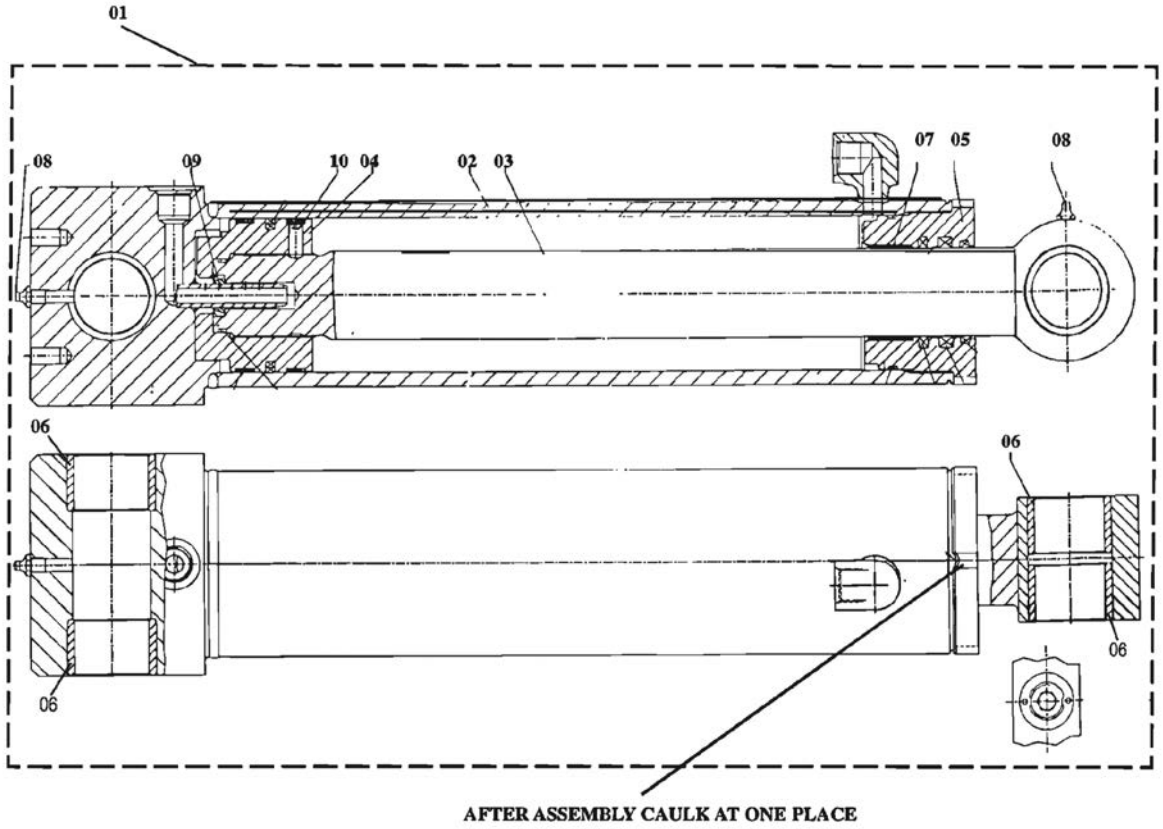
01
08
09
10
04
02
03
07
05
08
06
06
06
06
AFTER ASSEMBLY CAULK AT ONE PLACE


11

Ref.	Part No.	Description	Quantity	Applicable Machines	Remarks
1	1H0147	Cylinder	1		
2	10X0136	Tube S/A	1		
3	10X0137	Piston Rod S/A	1		
4	10X0138	Piston	1		
5	10X0139	H.E. Cover	1		
6	10X0140	Bush	4		
7	10X0162	Bimetal Bush	1		
8	10X0142	Grease Nipple	2		
9	10X0143	Cushion Ring	1		
10	10X0144	Hex, Soc., Set. Screw	1		
11	10X0155	Seal Kit	1		

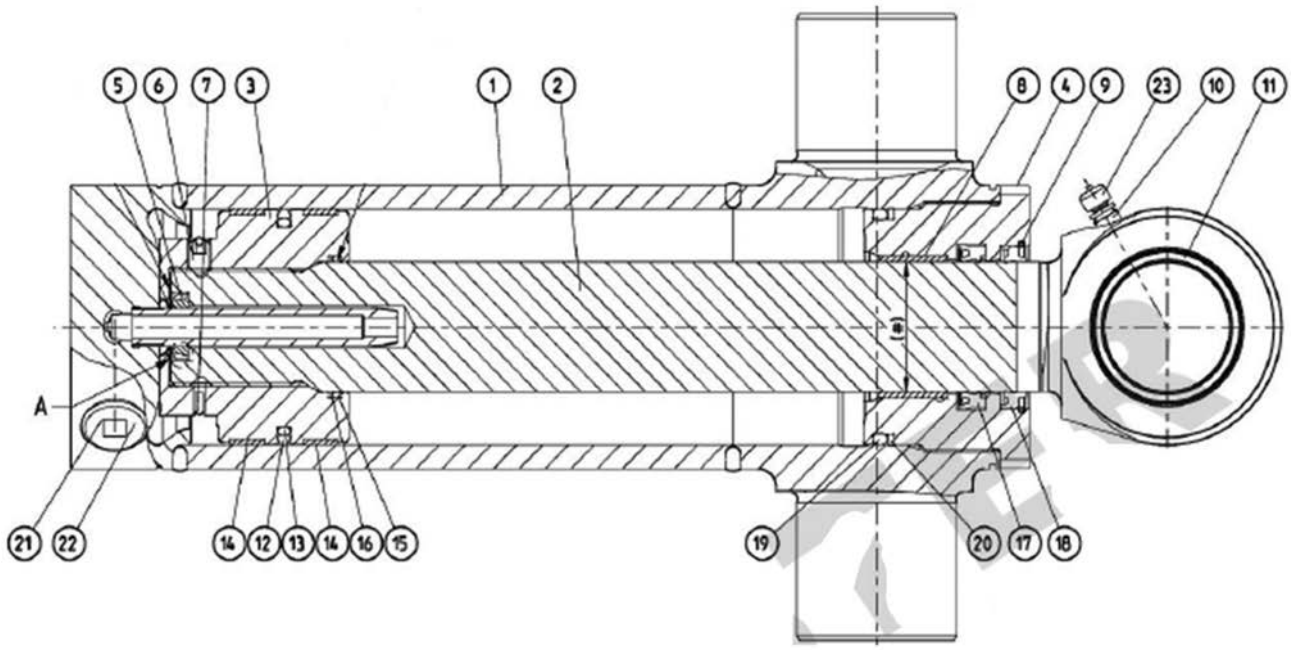
5
6
7
3
1
2
8
4
9
23
10
11
A
21
22
14
12
13
14
16
15
19
20
17
18

Ref.	Part No.	Description	Quantity	Applicable Machines	Remarks
	1H0559	Swing Cylinder	2		
1	10X3204	Tube S/A	1		
2	10X3205	Piston Rod S/A	1		
3	10X3206	Piston	1		
4	10X3207	HE Cover	1		
5	10X3037	Cushioning Ring	1		
6	10X3210	Set Screw	1		
7	10X1625	Snap Ring	1		
8	10X3208	Bimetal Bush	1		
9	10X3212	Snap Ring	1		
10	10X3044	Grease Nipple	1		
11	10X3209	Bush	1		
21	10X3213	Plug	3		
22	10X3214	O-Ring	3		
23	10X1628	Grease Nipple Cap	1		
*	10X3211	Seal Kit	1		

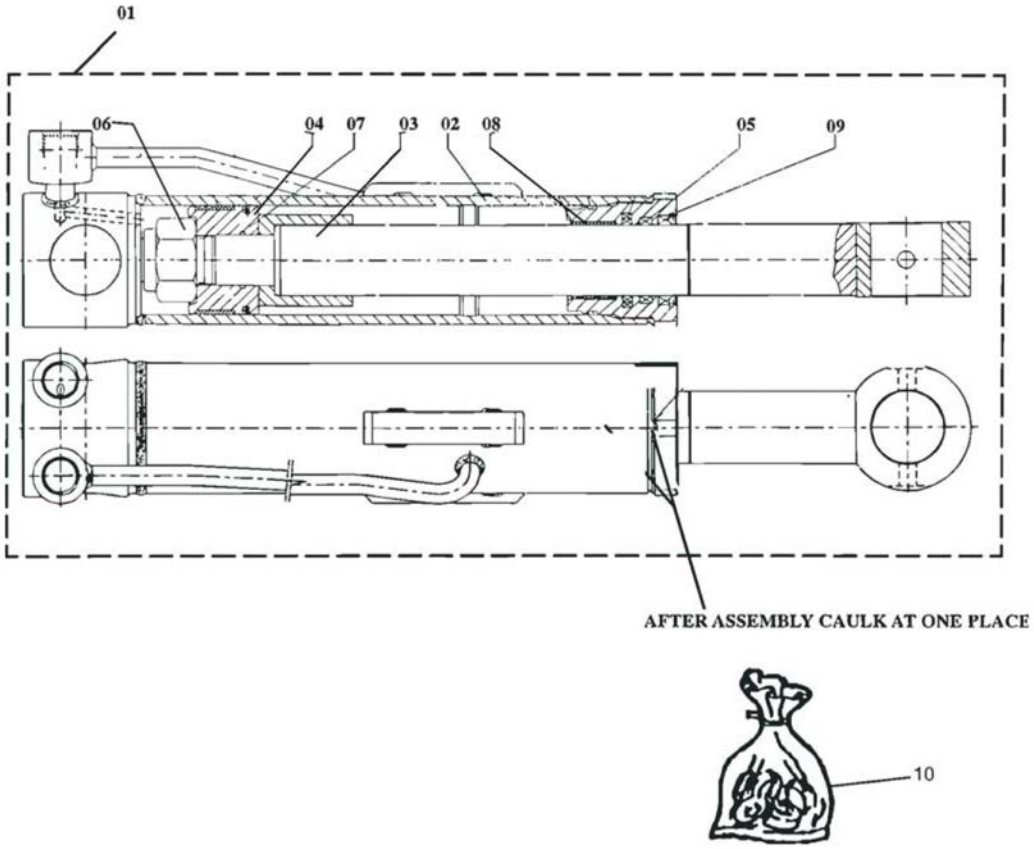
01
06
04
07
03
02
08
05
09
AFTER ASSEMBLY CAULK AT ONE PLACE
10

Ref.	Part No.	Description	Quantity	Applicable Machines	Remarks
1	1TH0041M91	Stabilizer Cylinder	2		
2	10X0051	Tube S/A	1		
3	10X0052	Piston Rod S/A	1		
4	10X0053	Piston	1		
5	10X1782	H.E. Cover	1		
6	10X0055	Nyloc Nut	1		
7	10X0056	Stop Tube	1		
8	10X0057	Bimetal Bush	1		
9	10X0058	Snap Ring	1		
10	10X1783	Seal Kit	1		

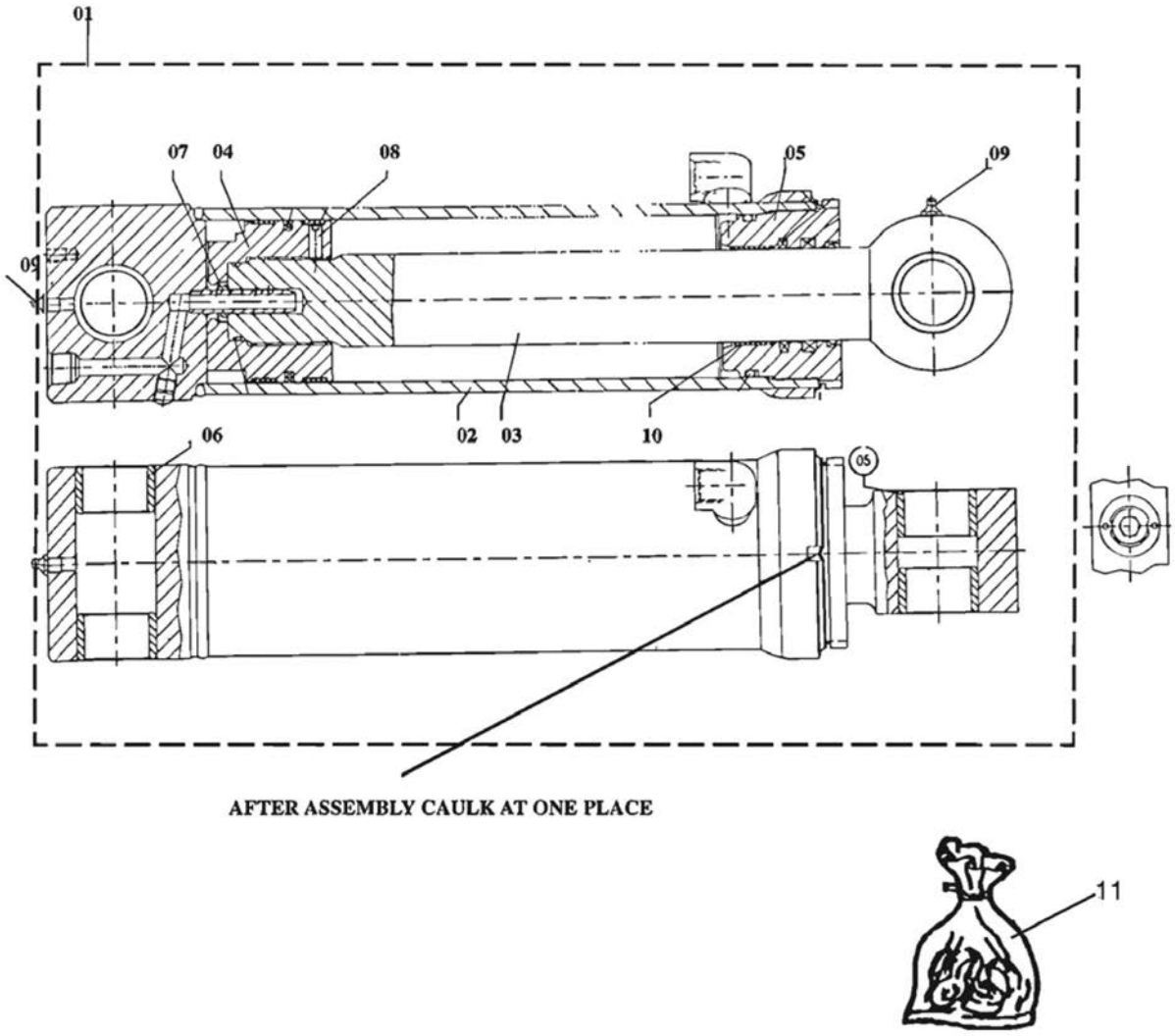
01
07
04
08
05
09
09
06
02
03
10
05
AFTER ASSEMBLY CAULK AT ONE PLACE
11

Ref.	Part No.	Description	Quantity	Applicable Machines	Remarks
1	H0013	Boom Cylinder	1		
2	10X0178	Tube S/A	1		
3	10X0179	Piston Rod S/A	1		
4	10X0180	Piston	1		
5	10X0181	H.E. Cover	1		
6	10X0160	Bush	4		
7	10X0183	Cushion Ring	1		
8	10X0184	Set Screw	1		
9	10X0185	Grease Nipple	1		
10	10X0230	Bimetal Bush	1		
11	10X0197	Seal Kit	1		

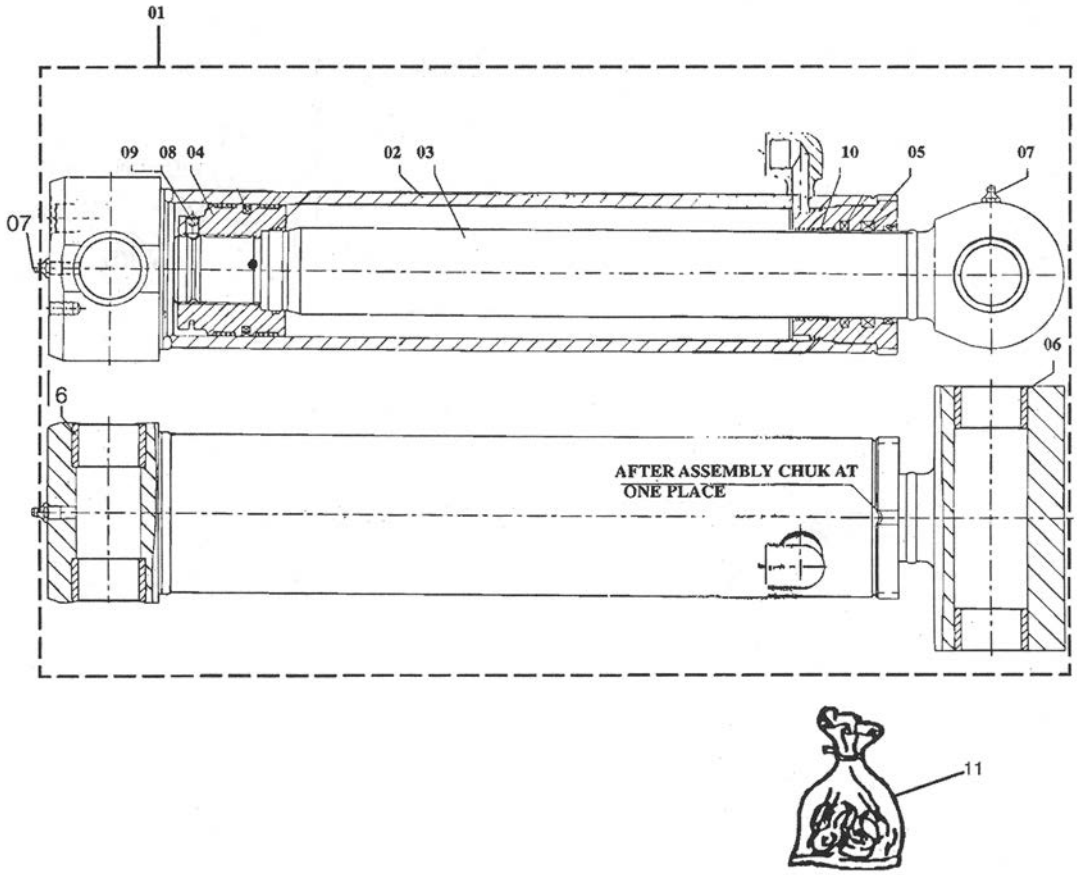
01
09
08
04
02
03
10
05
07
07
06
6
AFTER ASSEMBLY CHUK AT
ONE PLACE
11

Ref.	Part No.	Description	Quantity	Applicable Machines	Remarks
1	1H0014	Dipper Cylinder	1		
2	10X0222	Tube Assy	1		
3	10X0223	Piston Rod Assy.	1		
4	10X0224	Piston	1		
5	10X0225	H.E. Cover	1		
6	10X0160	Bush	4		
7	10X0227	Grease Nipple	2		
8	10X0228	Set Screw	1		
9	10X0229	Snap Ring	1		
10	10X0230	Bimetal Bush	1		
11	10X0241	Seal Kit	1		

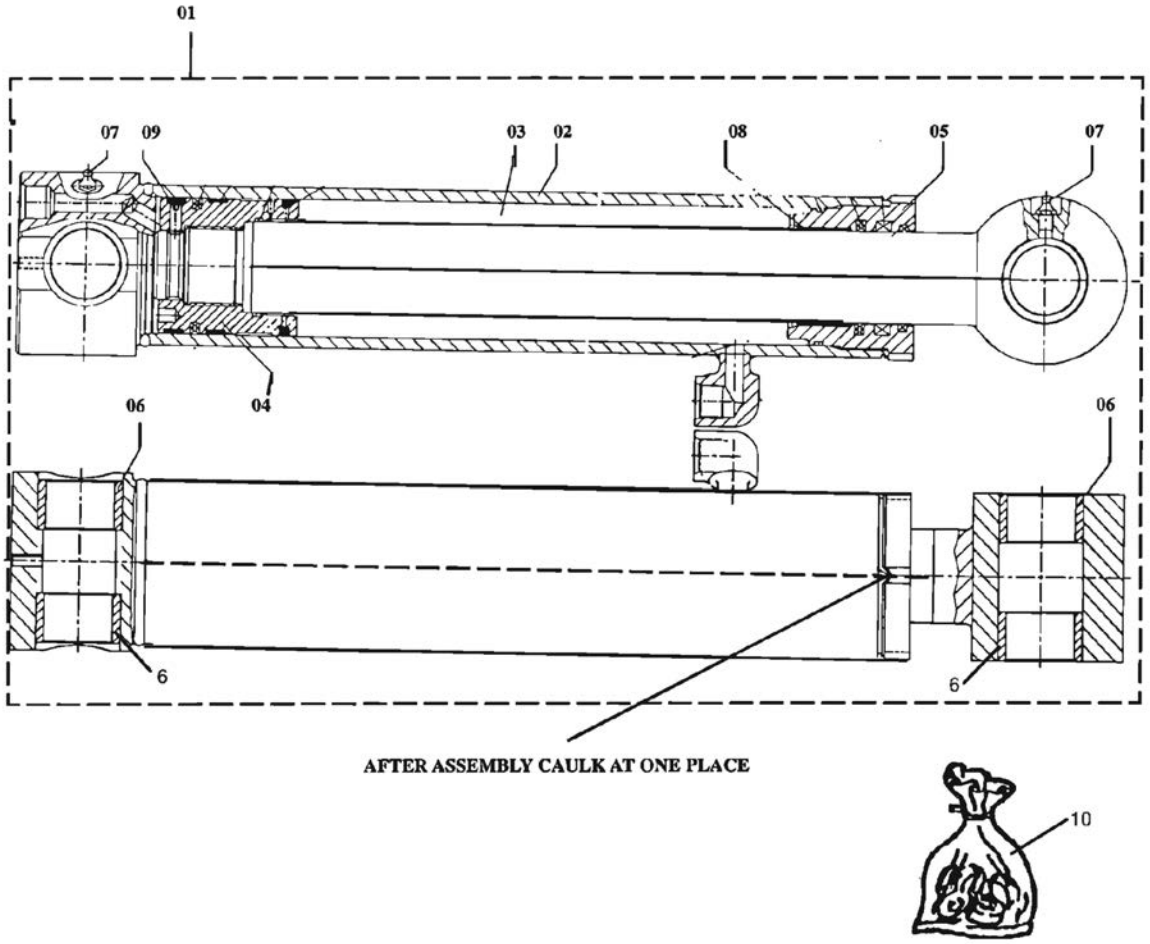
01
07
09
03
02
08
05
07
04
06
06
6
6
AFTER ASSEMBLY CAULK AT ONE PLACE
10

Ref.	Part No.	Description	Quantity	Applicable Machines	Remarks
1	1H0306	Bucket Cylinder	1		
2	10X1691	Tube S/A	1		
3	10X1692	Piston Rod S/A	1		
4	10X1693	Piston	1		
5	10X1694	H.E. Cover	1		
6	10X0160	Bush	4		
7	10X0161	Grease Nipple	1		
8	10X1697	Bimetal Bush	1		
9	10X1695	Set. Screw	1		
10	10X1700	Seal Kit	1		
11	10X1696	Snap Ring (at Piston)	1		

NOTES

NOTES

ATTACHMENT EXTENDABLE DIPPER

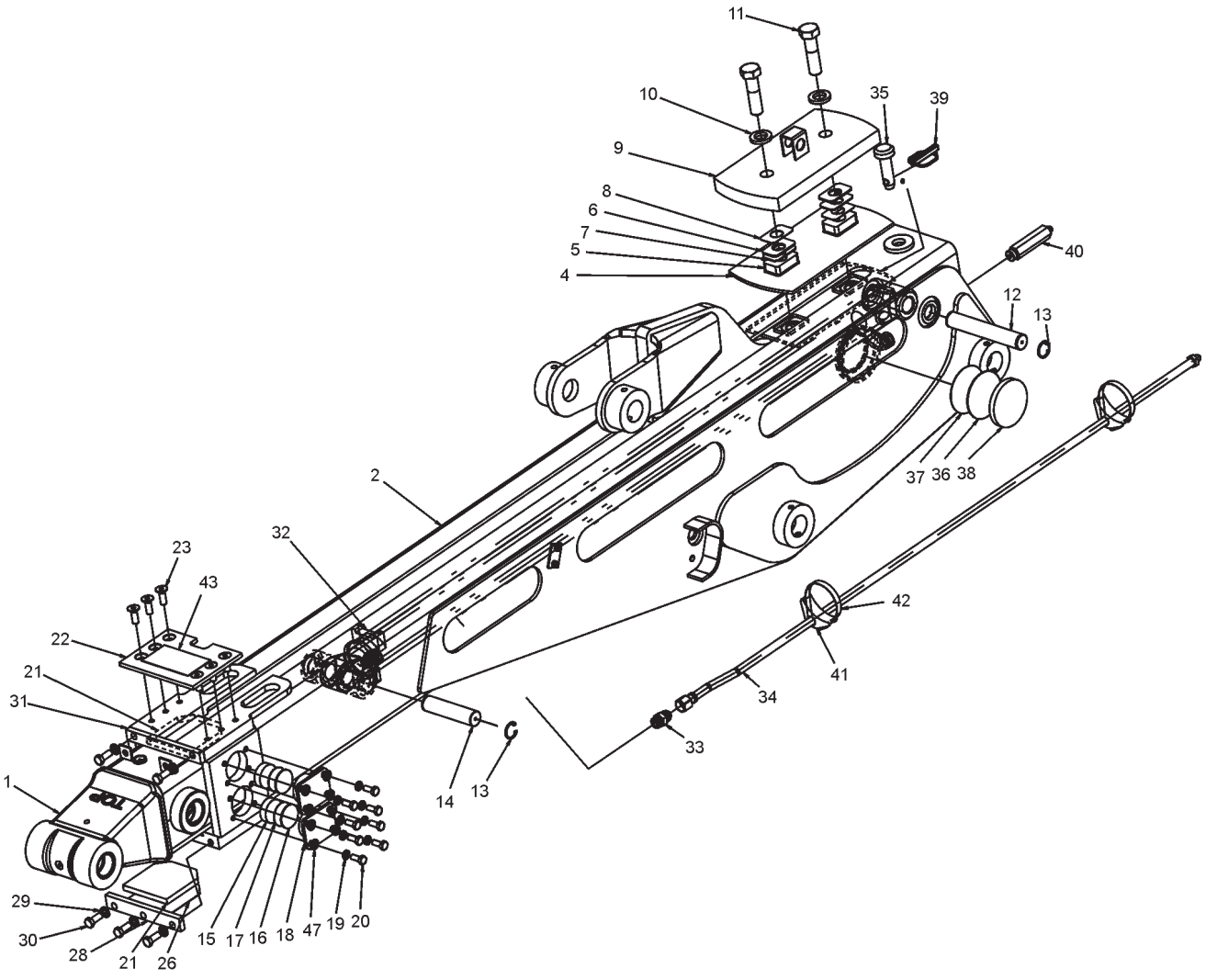
11
10
35
39
9
8
6
7
5
4
40
12
13
2
37 36 38
32
23
43
22
21
31
1
42
41
34
33
14
13
29
30
28
21
26
15
17
16
18
47
19
20

Ref.	Part No.	Description	Quantity	Applicable Machines	Remarks
1	3504158M98	Telescopic Extn. W/Assy	1		
2	6100743M96	4.75 Housing W/A	1		
4	6102518M1	Wear Pad	1		
5	3501655M2	Spacer, Pads	2		
6	3502976M2	Shim 3.0 Thk	2		
7	3502975M2	Shim 2.0 Thk	2		
8	3501975M2	Shim 1.0 Thk	2		
9	6102519M91	Cover Plate	1		
10	3517388M1	Washer	2		
11	3517491M1	Bolt	2		
12	3501624M1	Pin Cylinder (Head End)	1		
13	355973X1	Snap Ring	4		
14	3501625M1	Pin Cylinder (Rod End)	1		
15	3502475M2	Wear Pad	4		
16	3502476M1	Shim	4		
17	3510645M1	Shim	2		
18	6106121M2	Wear Pad Housing	4		
19	339376X1	Lock Washer	16		
20	3009492X1	Hex Bolt	16		
21	3501658M2	Wear Pad	2		
22	6111887M1	Collar Cover Plate	1		
23	3009464X1	Screw Socket Flat Hd	6		
26	3502938M1	Shim - 4.0 mm	UAR		
	3502939M1	Shim - 2.0 mm	UAR		
	3502940M1	Shim - 1.0 mm	UAR		
	3510862M1	Shim - 0.5 mm	UAR		

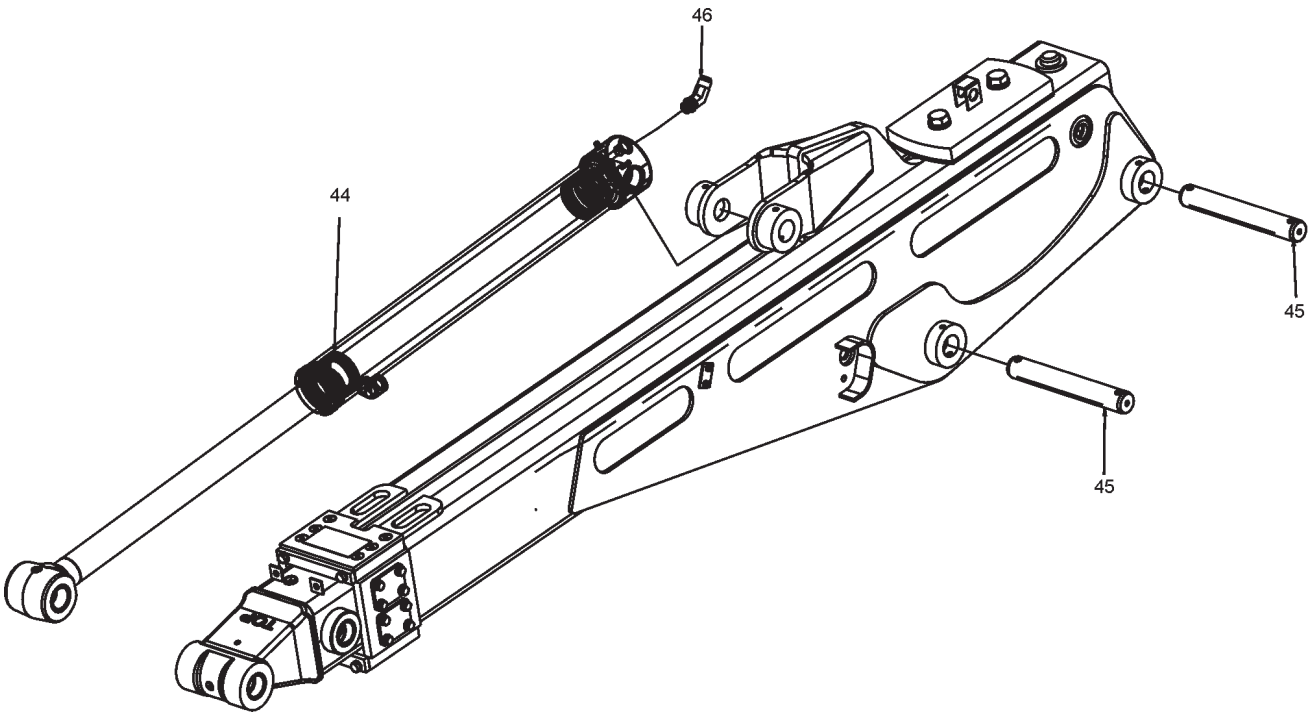
46
44
45
45

Ref.	Part No.	Description	Quantity	Applicable Machines	Remarks
28	6106164M1	Scraper Plate	1		
29	339369X1	Lock Washer	5		
30	6007797M1	Hex Bolt	5		
31	6102971M1	Top Wear Pad Retainer	1		
32	6111074M91	Cylinder Extender	1		
33	835013M91	Connector	1		
34	6100599M91	Tube Assy	1		
35	6108900M1	Pin-Transport	1		
36	3502477M1	Shim	2		
37	3510644M1	Shim	2		
38	3502473M2	Wear Pad Inner	2		
39	1B1263	Safety Linch	1		
40	6100603M91	Connector	1		
41	D142787	Saddle	2		
42	3517728M1	Hose Clamp	2		
43	6108692M1	Decal Oper Inst Book	1		
44	1H0651	Bucket Cylinder	1		
45	1B1262	Pin	2		
46	835010M91	Elbow	1		
47	390744X1	Plain Washer	16		

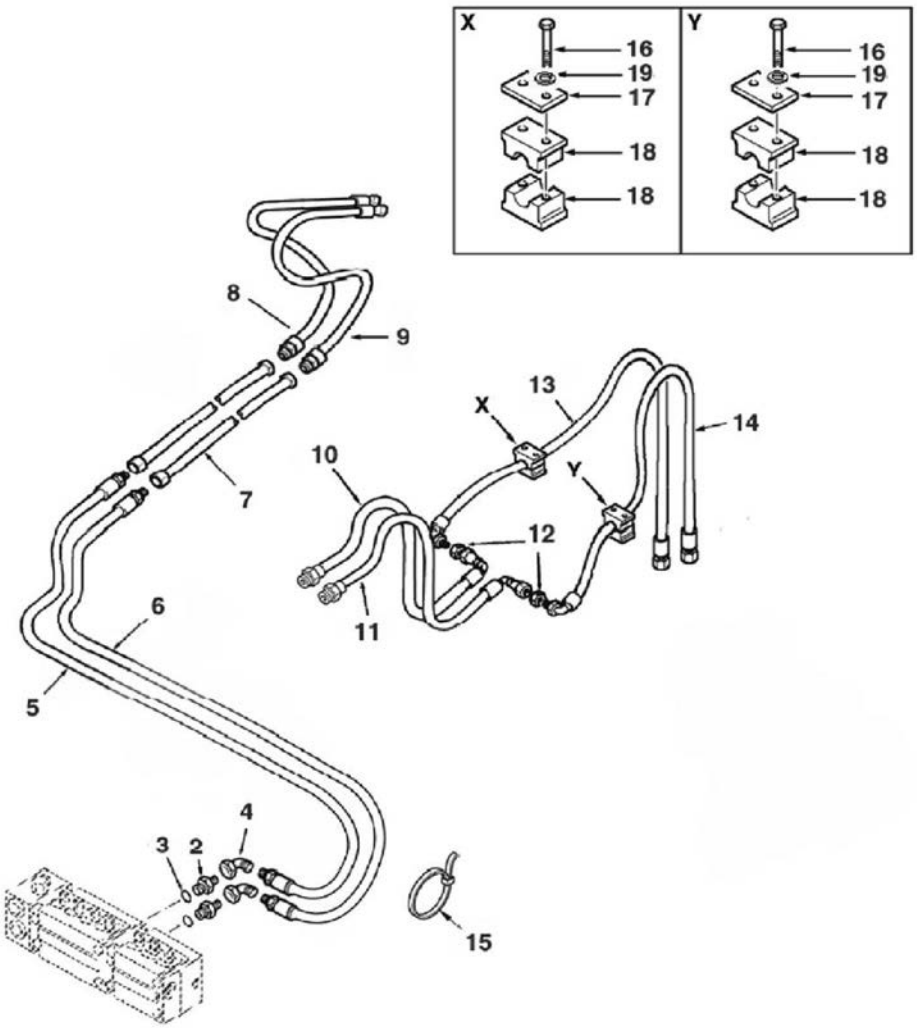
X
16
19
17
18
18
Y
16
19
17
18
18
8
9
7
10
X
13
14
Y
12
11
6
5
4
3
2
15

Ref.	Part No.	Description	Quantity	Applicable Machines	Remarks
2	365716X1	Connector	1		
3	835025M1	O Ring	1		
4	373784X1	Elbow 45 Deg	2		
5	6108764M91	Hose Assy Dark Green	1		
6	6108765M91	Hose Assy Black	1		
7	6101773M91	Tube-Ex'hoe 4.5 Boom	2		
8	6101741M91	Hose-Ex'hoe Head	1		
9	6101757M91	Hose-Ex'hoe Rod	1		
10	6101739M91	Hose-Bucket Rod	1		
11	6101740M91	Hose-Bucket Head	1		
12	355574X1	Lock Nut	2		
13	6101007M91	Hose-Cylinder-Bucket	1		
14	6101008M91	Hose-Cylinder-Bucket	1		
15	1664405M1	Tie mm T50S	2		
16	1440922X1	Bolt	4		
17	1462583M1	Plate-Clamp	2		
18	3520340M3	Tube Clamp	4		
19	390971X1	Washer	4		

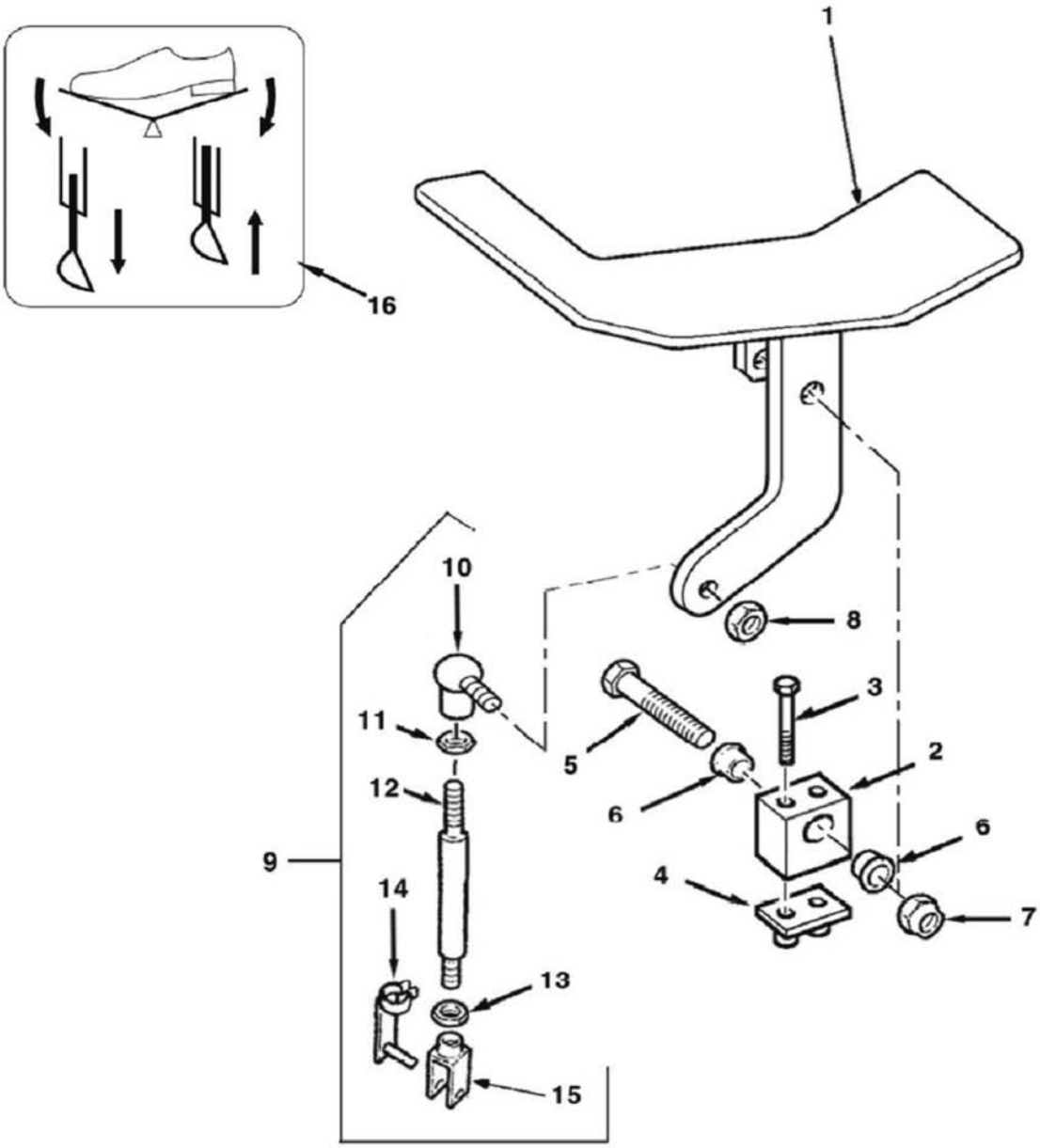
1
16
10
8
11
3
5
2
12
6
6
9
4
14
7
13
15

Ref.	Part No.	Description	Quantity	Applicable Machines	Remarks
1	6106874M91	Pedal-Ext. Hoe	1		
2	6106734M1	Block-Nylon Pivot	1		
3	3001758X1	Screw Hex	2		
4	3519538M1	Plate Base	1		
5	339679X1	Bolt	1		
6	6106866M1	Bush-Ext. Hoe	2		
7	1440329X1	Nut Lock	1		
8	394367X1	Nut	1		
9	6106724M92	Rod-Ext. Hoe	1		
10	3517518M1	Ball Joint Comp.	1		
11	339169X1	Nut	1		
12	6106725M1	Rod	1		
13	3519650M1	Hex Nut L.H.	1		
14	3521124M1	Spring Pin	1		
15	6108405M1	Clevis LH Thread	1		
16	6101865M2	Decal-Ext. Hoe	1		

NOTES

NOTES

ATTACHMENT ROCK BREAKER

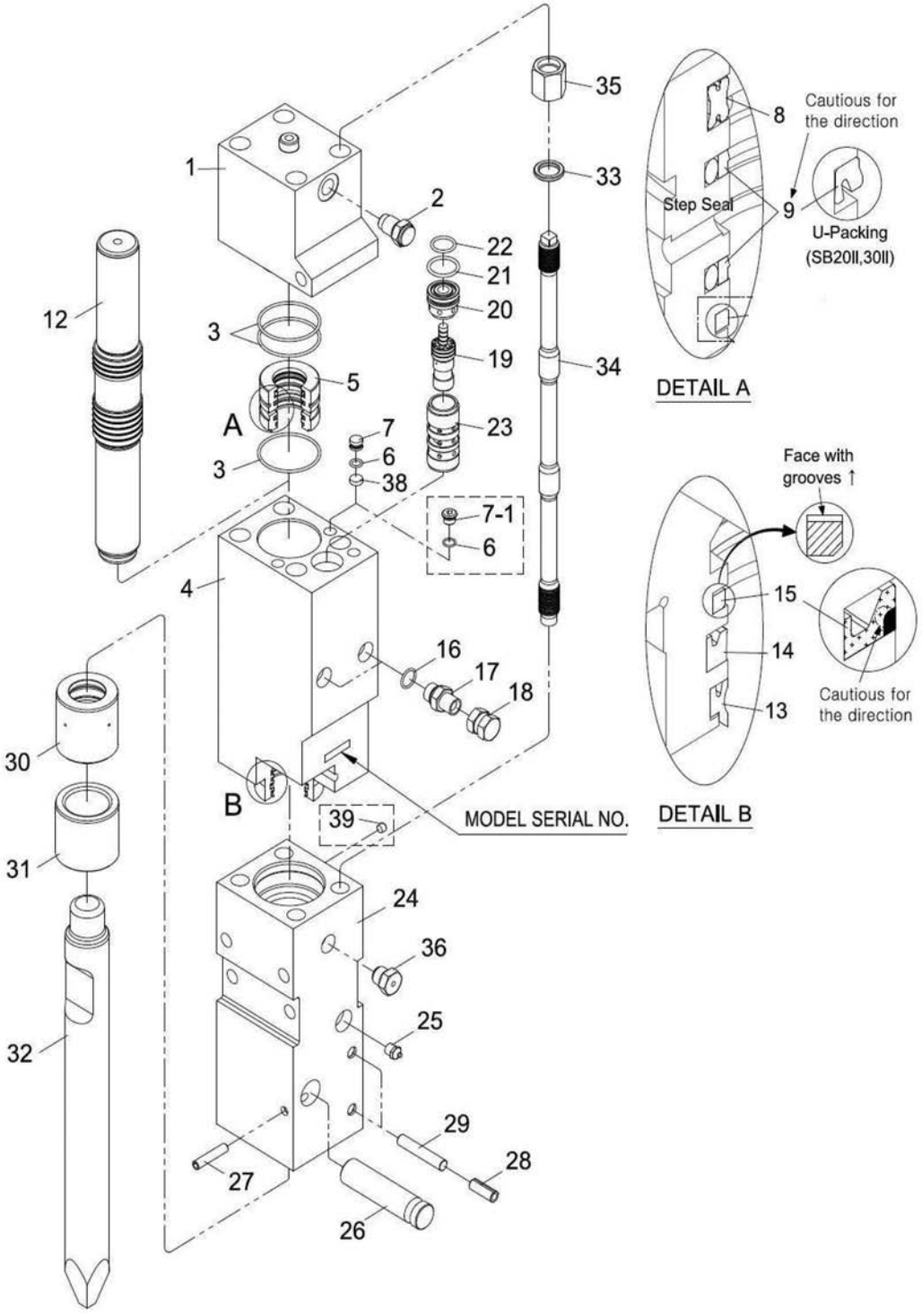
1
2
3
4
5
6
7
7-1
8
9
12
13
14
15
16
17
18
19
20
21
22
23
24
25
26
27
28
29
30
31
32
33
34
35
36
38
39
A
B
Step Seal
U-Packing
(SB20II,30II)
Cautious for
the direction
DETAIL A
Face with
grooves ↑
Cautious for
the direction
DETAIL B
MODEL SERIAL NO.

Ref.	Part No.	Description	Quantity	Applicable Machines	Remarks
1	10X2434	Back Head	1		
2	10X2435	Charging Valve	1		
3	10X2436	O-Ring	3		
4	10X2437	Cylinder	1		
5	10X2438	Seal Retainer	1		
6	10X2439	O-Ring	3		
7	10X2440	Plug	3		
8	10X2441	Gas Seal	1		
9	10X2442	Step Seal	2		
12	10X2443	Piston	1		
13	10X2444	Dust Seal	1		
14	10X2445	U-Packing	1		
15	10X2446	Buffer Seal	1		
16	10X2447	O-Ring	2		
17	10X2448	Adapter	2		
18	10X2449	Union Cap	2		
19	10X2450	Valve	1		
20	10X2451	Valve Plug	1		
21	10X2452	O-Ring	1		
22	10X2453	O-Ring	1		
23	10X2454	Valve Sleeve	1		
24	10X2455	Front Head	1		
25	10X2456	Grease Nipple	1		
26	10X2457	Rod Pin	1		
27	10X2458	Spring Pin	1		
28	10X2459	Spring Pin	4		

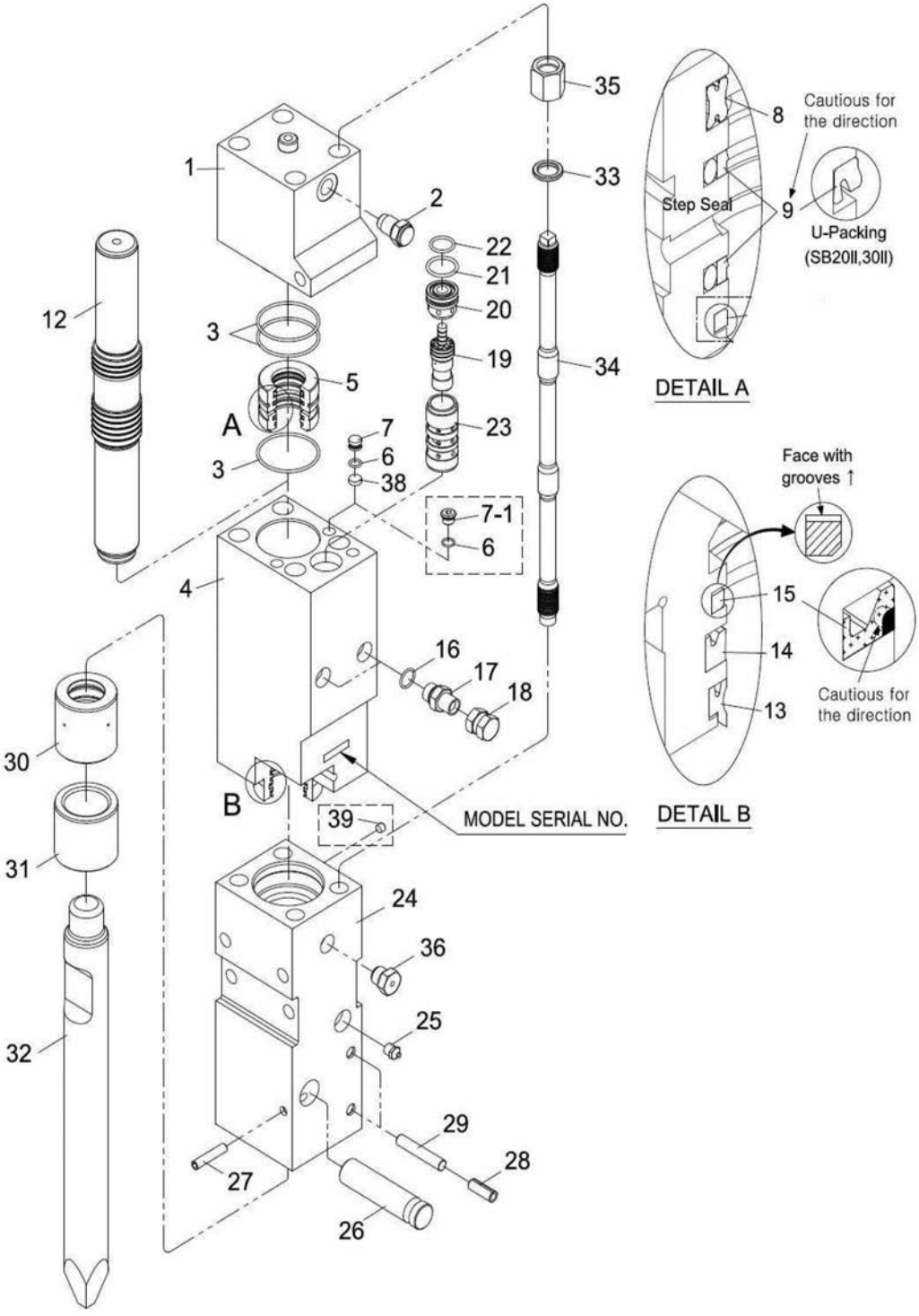
1
2
3
4
5
6
7
7-1
8
9
12
13
14
15
16
17
18
19
20
21
22
23
24
25
26
27
28
29
30
31
32
33
34
35
36
38
39
A
B
Step Seal
U-Packing
(SB20II,30II)
Cautious for
the direction
DETAIL A
Face with
grooves ↑
Cautious for
the direction
DETAIL B
MODEL SERIAL NO.

Ref.	Part No.	Description	Quantity	Applicable Machines	Remarks
29	10X2460	Stop Pin	2		
30	10X2461	Ring Bush	1		
31	10X2462	Thrust Bush	1		
32	10X2463	Rod (Moil Point)	1		
32	10X2523	Rod (Universal Type)	1		
32	10X2522	Rod (V-Wedge)	1		
32	10X2521	Rod (H-Wedge)	1		
32	10X2524	Rod (Flat)	1		
33	10X2464	Washer	4		
34	10X2465	Through Bolt	4		
35	10X2466	Hex Nut	4		
36	10X2467	Air Check Valve	1		
*	10x2469	Seal Kit	1		

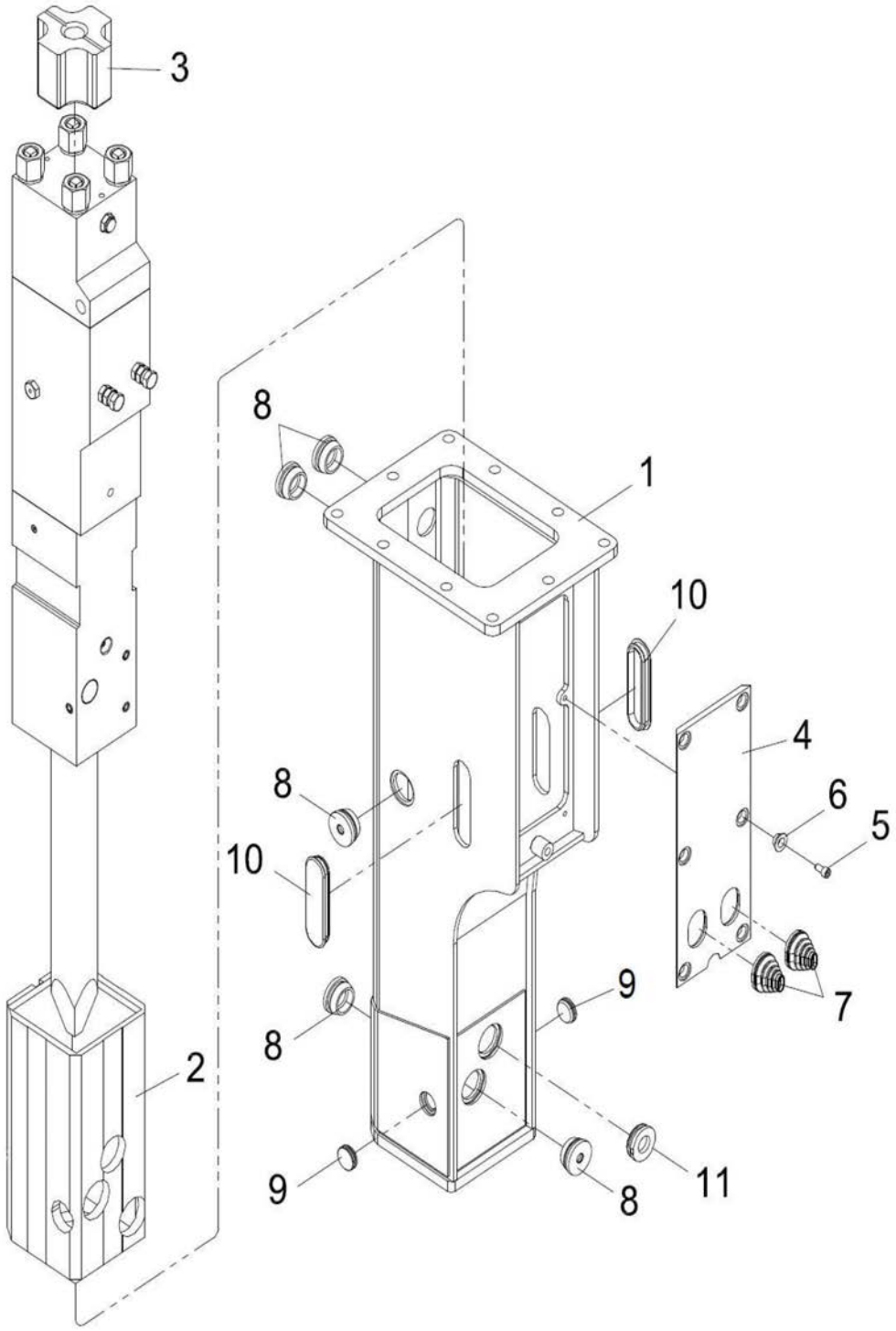
3
8
1
10
4
6
5
8
10
9
7
8
2
9
8
11

Ref.	Part No.	Description	Quantity	Applicable Machines	Remarks
1	10X2470	Frame	1		
2	10X2473	Down Cushion	1		
3	10X2471	Upper Cushion	1		
4	10X2472	Window Cover	1		
5	10X2474	Socket Bolt	6		
6	10X2475	Washer	6		
7	10X2476	Hose Cover	2		
8	10X2477	Sound Plug-1	5		
9	10X2478	Sound Plug-2	2		
10	10X2479	Sound Plug-3	2		
11	10X2480	Sound Plug-4	1		

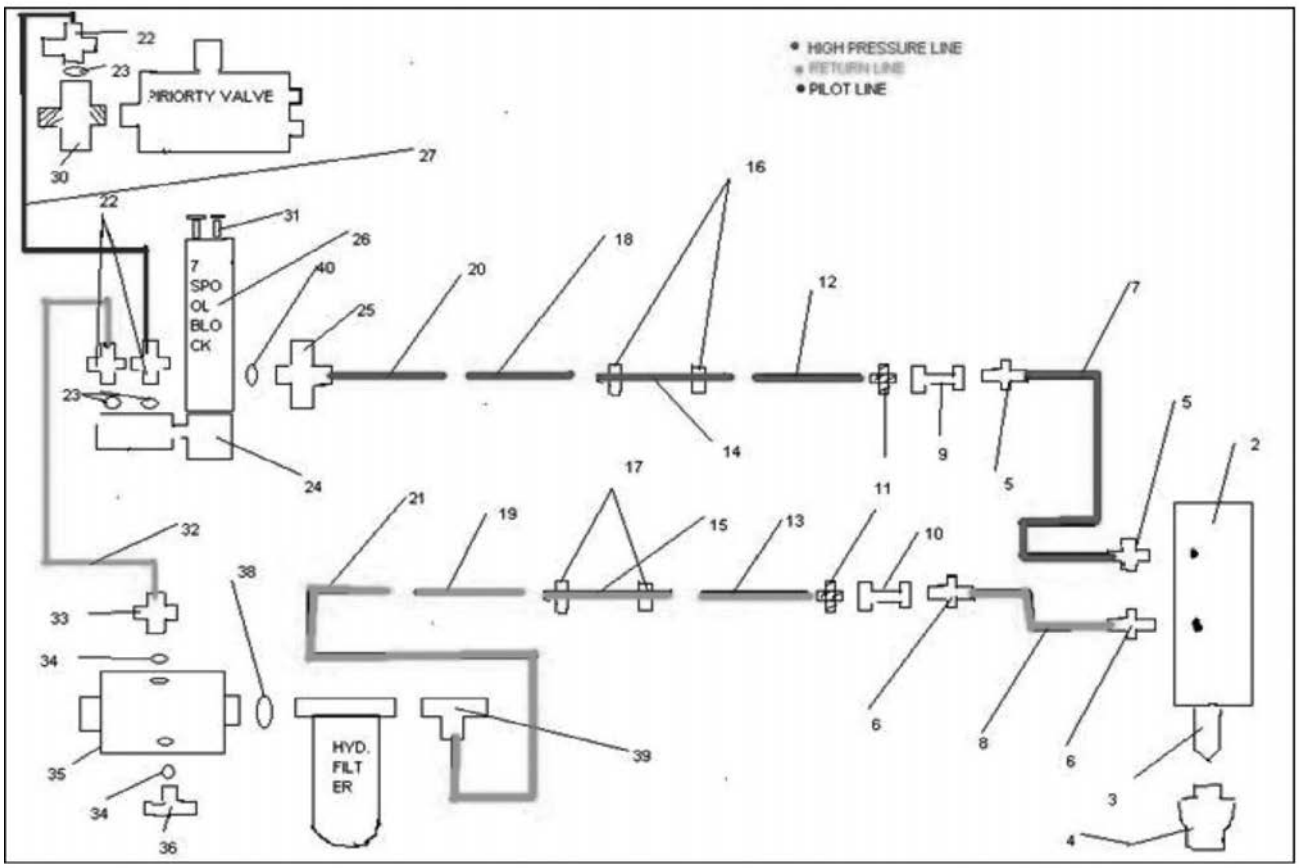
HIGH PRESSURE LINE
RETURN LINE
PILOT LINE
PRIORTY VALVE
7 SPOOL BLOCK
HYD. FILTER

Ref.	Part No.	Description	Quantity	Applicable Machines	Remarks
1	10X2585	(TXI-430-KS) Circuitary Kit	1		
5&6	10X1791	Connector -QRC	2		
7&8	10X2529	Hose Assy. (Inlet) TXI-430-KS	2		
9	3H0440	Quick Coupling Male	2		
10	3H0439	Quick Coupling Female	2		
11	10X1792	Connector - QRC	2		
12	10X1794	Hose Assy. (Pressure Line)	1		
13	10X1795	Hose Assy. (Return Line)	1		
14	10X1796	Tube Assy.(Pressure Line)	1		
15	10X1797	Tube Assy.(Return Line)	1		
16	10X1801	Tube Clamps	2		
17	10X1802	Tube Clamps	2		
18	10X1808	Hose Assy	1		
19	10X1809	Hose Assy	1		
20	10X1807	Hose Assy	1		
21	10X1810	Hose Assy	1		
22	365065X91	Connector	3		
24	10X1917	Solenoid (Rock Breaker)	1		
25	1H0183	Adaptor	1		
26	10X1780	Section Assy	1		
27	3519344M9	Hose Assy	1		
30	1H0241	Test Adaptor	1		
31	10X1781	7 Spool Tie Rod	1		
32	3519226M91	Hose Assembly	1		
33	358741X91	Connector	2		

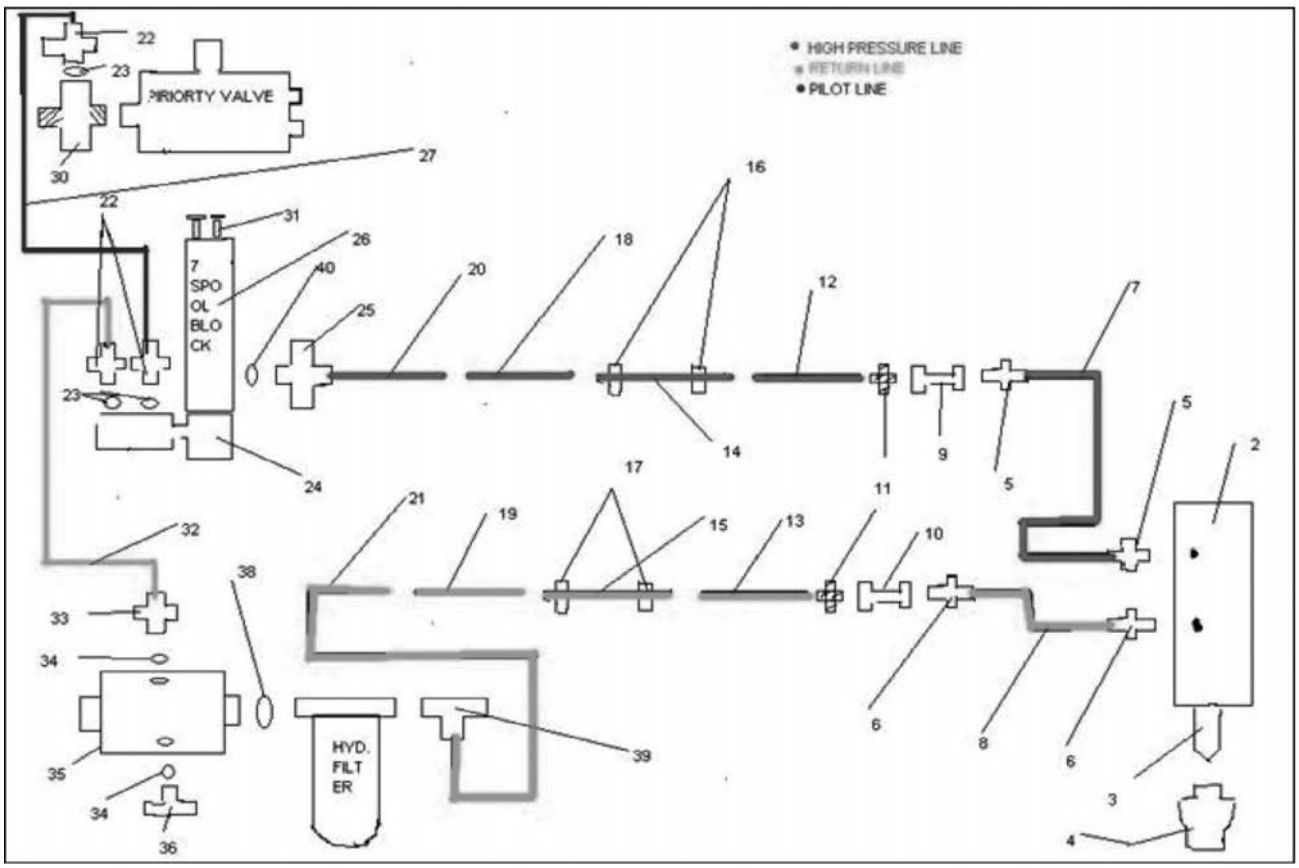
HIGH PRESSURE LINE
RETURN LINE
PILOT LINE
PRIORTY VALVE
7 SPOOL BLOCK
HYD. FILTER

Ref.	Part No.	Description	Quantity	Applicable Machines	Remarks
34	831495M1	O-Ring	1		
35	6108318M91	Connector	1		
36	358713X1	Fitting	1		
38	835026M1	O-Ring	1		
39	10X1800	T-Connector (Return Line)	1		
40	835025M1	O-Ring	1		
41	10X1918	Padel Rock Breaker	1		
42	1D0187	3 Pin Connector	1		
43	1D0107	Relay	1		

NOTES

NOTES

AIR CONDITIONER

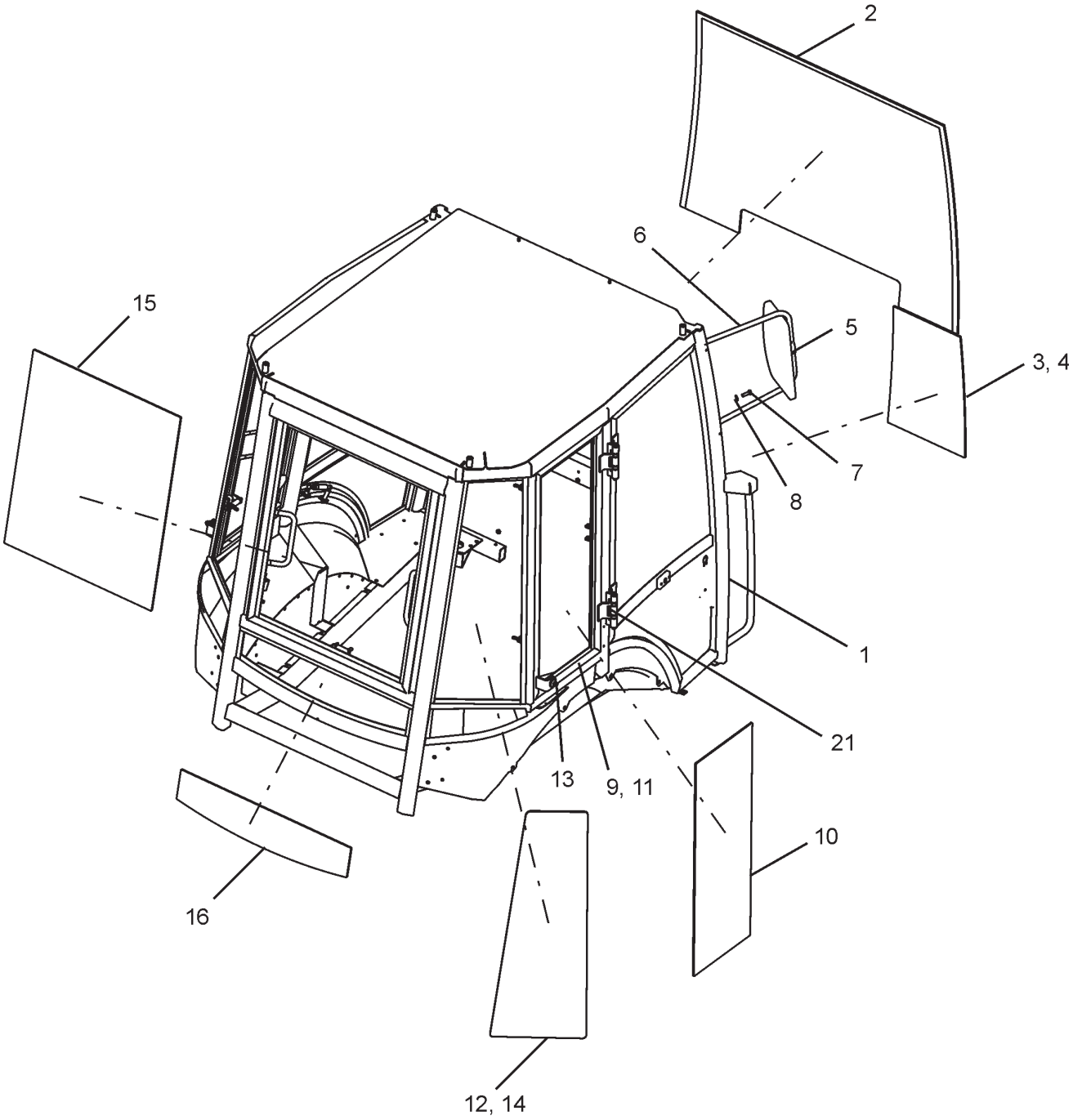
2
6
15
5
3, 4
7
8
1
21
13
9, 11
10
16
12, 14

Ref.	Part No.	Description	Quantity	Applicable Machines	Remarks
1	1TJ0025M91	Cab Assy	1		
2	1J0227	Windshield	1		
3	6099902M1	Front Glass - RH	1		
4	6099903M1	Front Glass - LH	1		
5	1D0029	Rear View Mirror	1		
6	6108734M91	Mirror Arm	1		
7	3512463M1	Bolt	4		
8	3512395M1	Washer	4		
9	1TJ0056M91	Window W/A - LH	1		
10	1J0454	Side Window Glass	1		
11	1TJ0058M91	Window W/A - RH	1		
12	1J0460	Side Quarter Glass - RH	1		
13	1TJ0177M1	Window Lock Male	2		
14	1J0450	Side Quarter Glass - LH	1		
15	1J0455	Rear Win Glass - Upper	1		
16	1J0451	Rear Win Glass - Lower	1		
17	1J0015	Tube Adhesive	3		
20	1TJ0079	Beading Rear Window	2		
21	1J0259	Strap	2		
22	339891X1	Bolt	4		
23	390972X1	Washer	8		
24	394367X1	Nut	4		


3
4
1
5
2
7
8
10
6
9

Ref.	Part No.	Description	Quantity	Applicable Machines	Remarks
1	1J0554	FRP Cover	1		
2	1J0625	Inner Roof-FRP	1		
3	1A0619	Aircon Unit	1		
4	1J0548	Cab Weldment	1		
5	1J0628	Bracket Assembly	1		
6	1J0594	Operator Seat	1		
7	1J0557	Slide Link Assy - RH	1		
8	1J0556	Slide Link Assy - LH	1		
9	1J0555	Rear Window	1		
10	1J0619	Grommet	2		

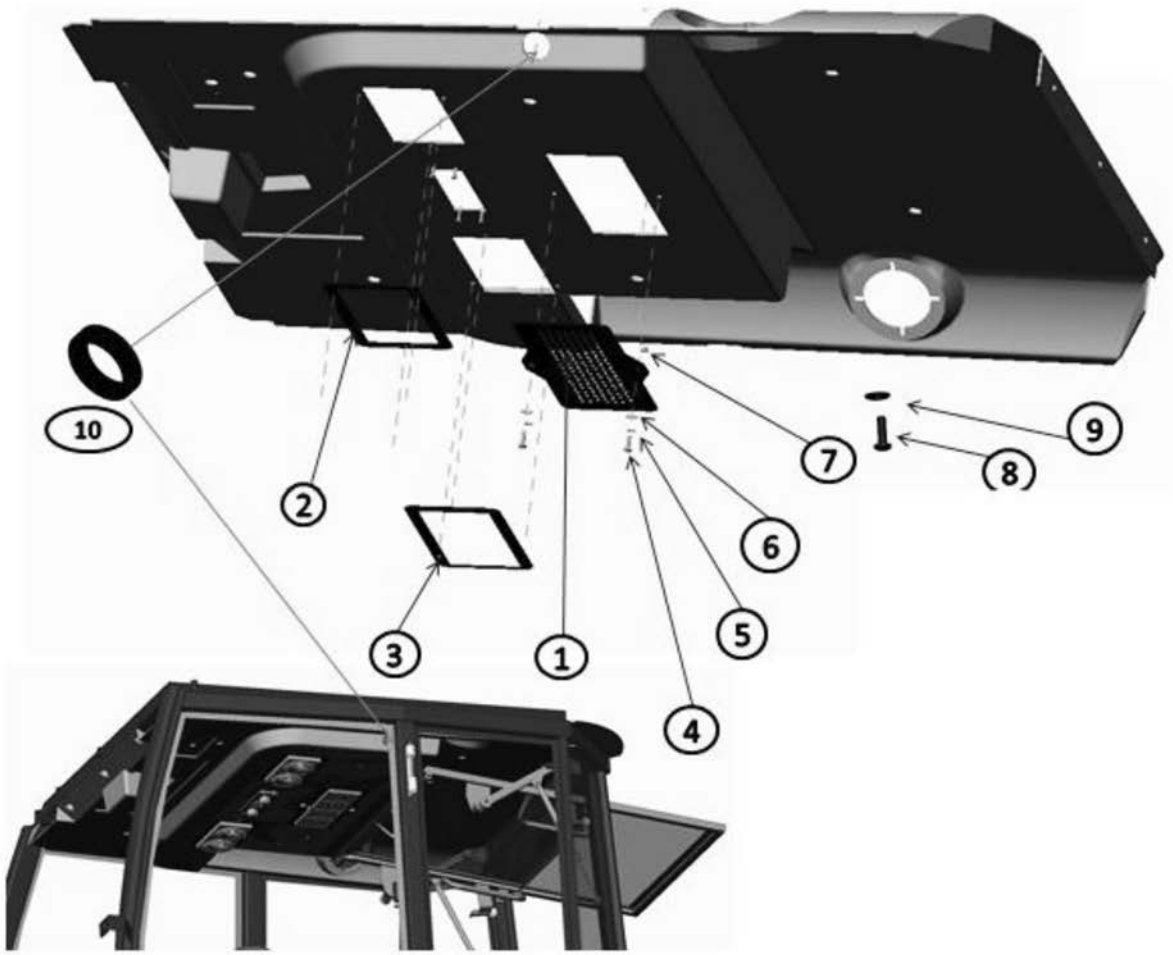
10
2
3
1
4
5
6
7
8
9

Ref.	Part No.	Description	Quantity	Applicable Machines	Remarks
1	1J0620	Plate Vent	1		
2	1J0621	Box Vent - LH	1		
3	1J0622	Box Vent - RH	1		
4	3008229X1	Screw	12		
5	3516109M1	Washer	12		
6	391038X1	Washer Large	12		
7	1441500X1	Lock Nut Nylon	12		
8	1J0629	Hex Screw	6		
9	1J0630	Washer	6		
10	1J0016	Grommet	2		

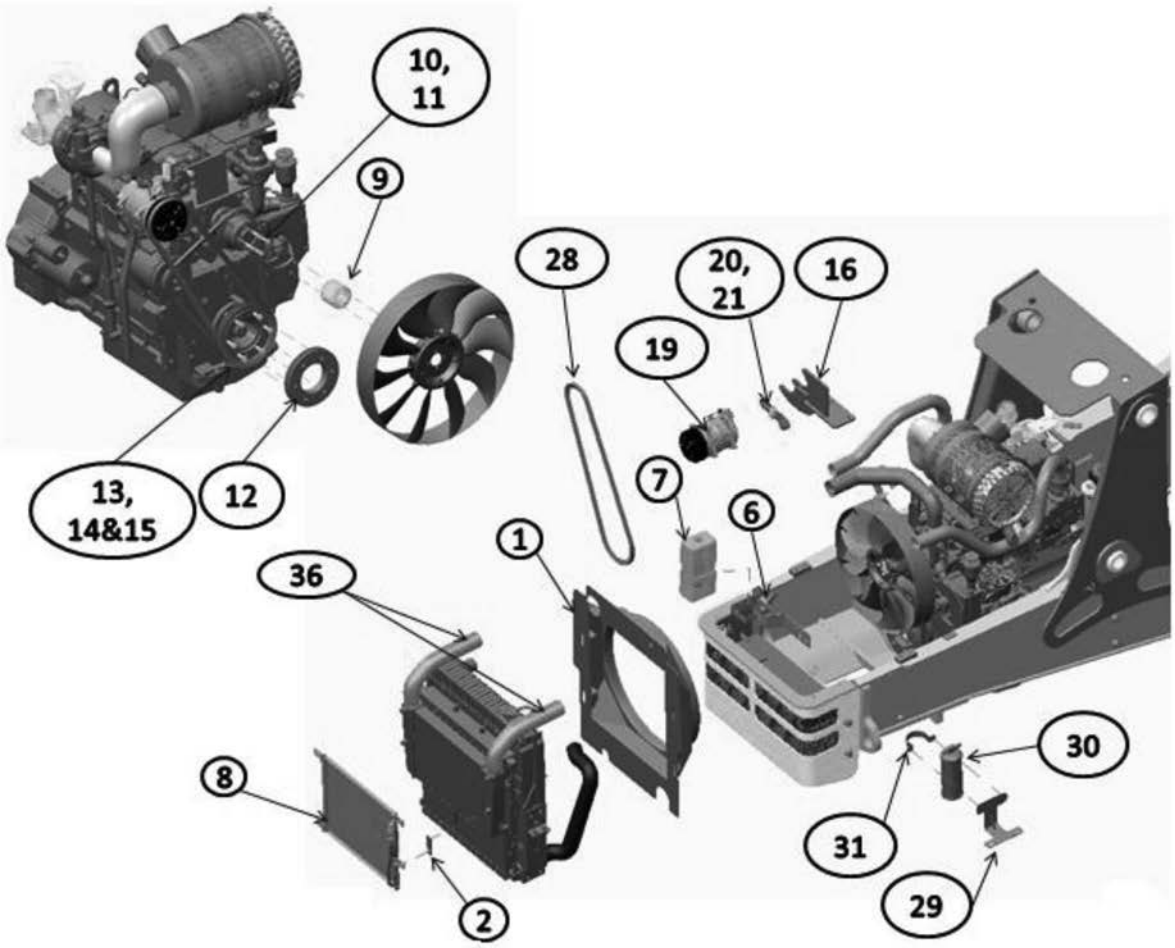
10,
11
9
28
20,
21
16
19
13,
14&15
12
7
6
1
36
8
2
30
31
29

Ref.	Part No.	Description	Quantity	Applicable Machines	Remarks
1	1A0803	Fan Cowl-Frp	1		
2	1A0851	Condensor Mtg Brkt	1		
	339666X1	Bolt	4		Cond. Mtg. Hardware
	390971X1	Washer	5		Cond. Mtg. Hardware
	1441500X1	Lock Nut	1		Cond. Mtg. Hardware
6	1A0861	Ext. Bottle Brkt	1		
7	1A0451	Expansion Bottle	1		
8	Mbsl	Condenser	1		
9	1A0760	Fan Spacer	1		
10	339374X1	Lock Washer	4		
11	1A0794	Bolt	4		
12	1A0784	Crank Pulley	1		
13	339376X1	Washer	6		
14	390972X1	Washer	6		
15	1A0795	Bolt	6		
16	1A0781	Compressor Bracket Assy	1		
	390734X1	Washer	3		Comp. Mtg. Hardware
	6007776M1	Bolt	3		Comp. Mtg. Hardware
19	10X3410	Compressor	1		
20	1E0060	Lever	1		
	1E0061	Block	1		Comp. Posn. Hardware
	390972X1	Washer	UAR		Comp. Posn. Hardware
	339376X1	Washer	1		Comp. Posn. Hardware
	339009X1	Screw	1		Comp. Posn. Hardware
	3516013M1	Bolt	1		Comp. Posn. Hardware
	390974X1	Washer	1		Comp. Posn. Hardware

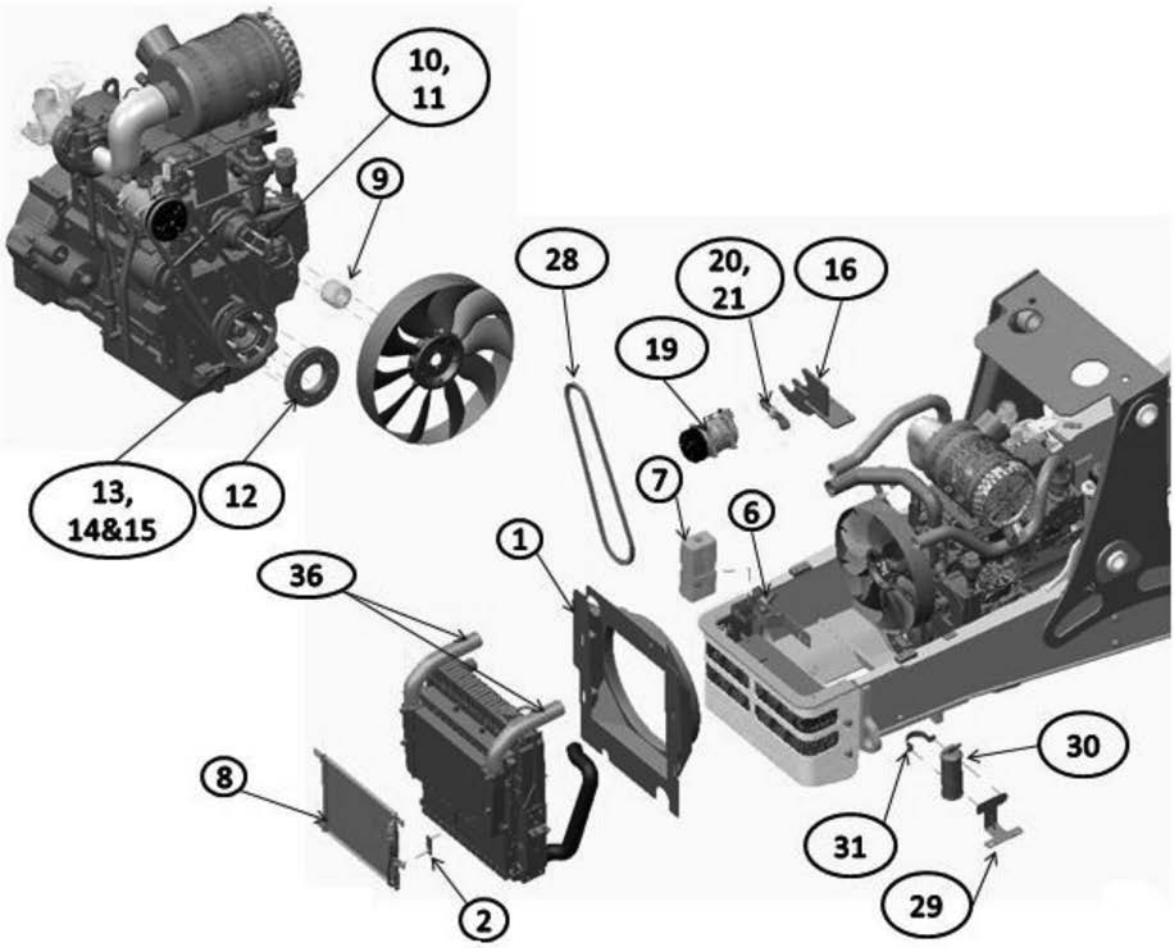
10,
11
9
28
20,
21
16
19
13,
14&15
12
7
6
1
36
8
2
30
31
29

Ref.	Part No.	Description	Quantity	Applicable Machines	Remarks
27	1440329X1	Nut Lock	1		
28	1A0796	V Belt (Engine to Compressor)	1		
29	1A0750	Bracket Receiver	1		
30	MBSL	RD Bottle	1		
31	1J0477	Clamp Receiver	1		
	3512395M1	Washer	2		RD bottle mounting hardware
	339375X1	Washer	2		RD bottle mounting hardware
	339666X1	Bolt	2		RD bottle mounting hardware
35	1D0355	Relay and Fuse Box W/H	1		
36	1A0445	CAC Hose	2		

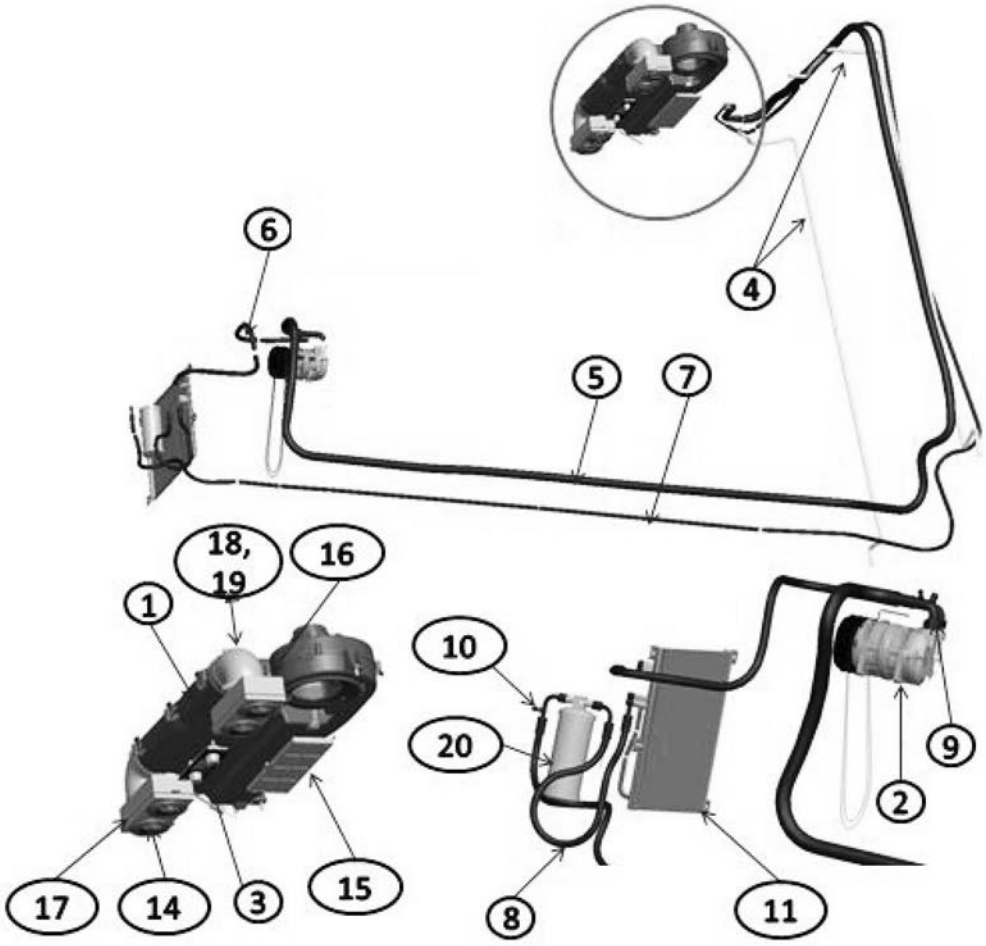
6
4
5
7
18, 19
16
1
10
20
9
2
17
14
3
15
8
11

Ref.	Part No.	Description	Quantity	Applicable Machines	Remarks
1	10X3409	AC Unit	1		
2	10X3410	Compressor	1		
3	10X3411	Control Panel	1		
4	10X3412	Drain Hose	2		
5	10X3413	Suction Hose	1		
6	1A0724	Discharge Hose	1		
7	10X3415	L Hose Assembly	1		
8	10X3416	L Hose Assembly Condensern	1		
9	10X3417	Pipe Assembly	1		
10	10X3418	Pipe Assembly with Binary Switch	1		
11	10X3419	Condenser Core	1		
12	10X3420	Main Wire Harness	1		
13	10X3421	Sub Wire Harness	1		
14	10X3422	Louvers for Ducting	4		
15	10X3423	Filter Assemble	1		
16	10x3424	Louver Housing - LH	1		
17	10X3425	Louver Housing- RH	1		
18	10X3426	Duct	2		
19	10X3427	Clamp (for Duct Holding)	4		
20	10X3428	Receiver Drier Bottle	1		

YOUR DEALER

MANITOU
HANDLING YOUR WORLD

MANITOU EQUIPMENT INDIA PVT. LTD.
Plot No. 22, Udyog Vihar, Greater Noida, P.O. Surajpur, Gautam Budh Nagar, U.P.-201306, INDIA
Email: mei.marketing@manitou-group.com • www.manitou-group.com