RUTHZIL TRATOR COMERCIAL DE PEÇAS LTDA 11 97083-6812 ROLANDO CITRANGULO

MULLER - GUINCHO FRANKLIN

28-010-1

TS22 - H42

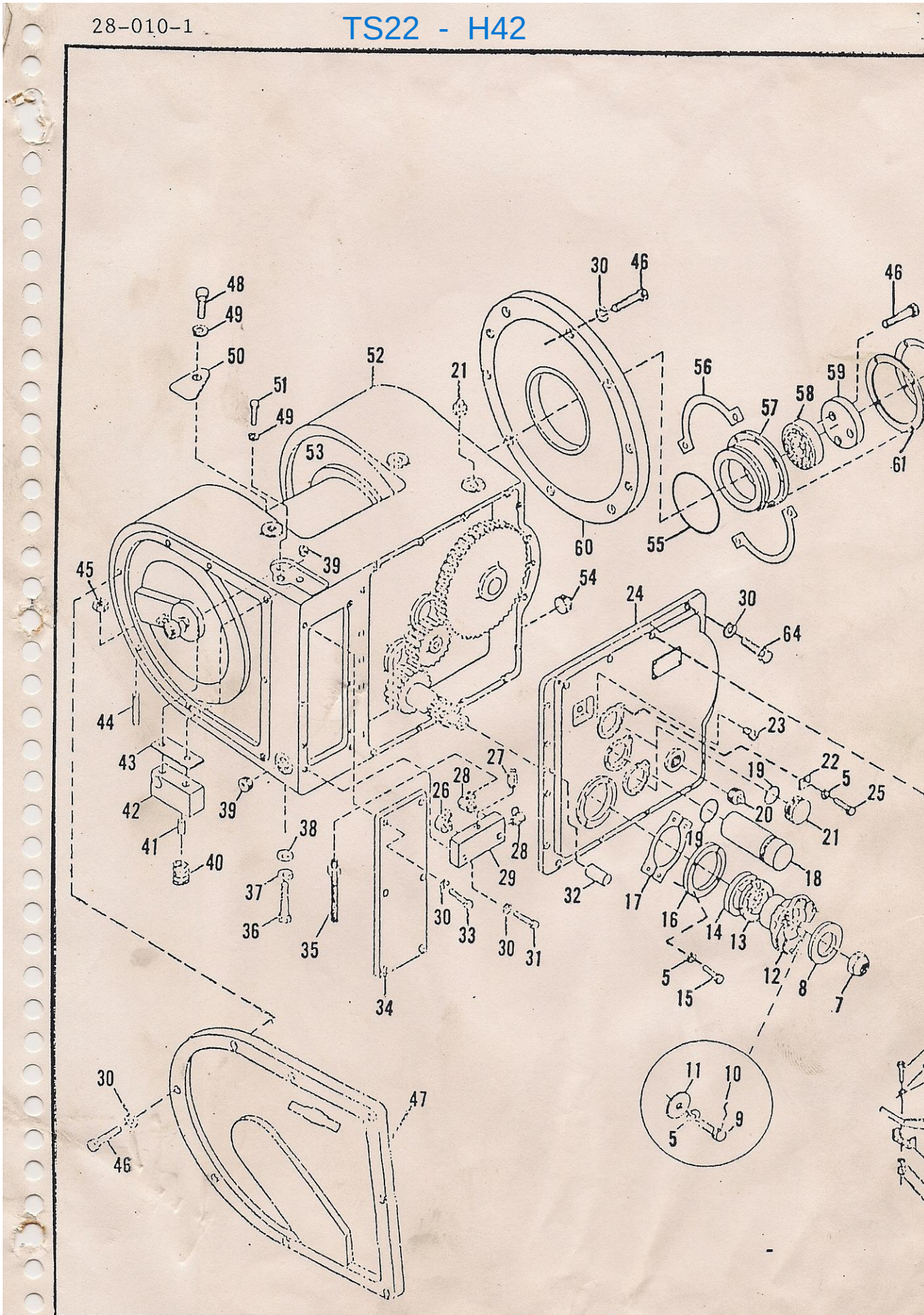

Revised 2/18/93

ATTACHMENTS
MODEL H-42 WINCH
MAIN CASE ASSEMBLY

REF NUMBER	PART NUMBER	DESCRIPTION	NUMBER REQ'D
1	1010003	COVER	1
2	1000412	CLAMP	1
3	180130	BOLT 3/8x2" NC	1
4	120388	WASHER, Flat 3/8"	1
5	120382	WASHER, Lock 3/8"	6
6	120377	NUT 3/8" NC	1
7	1505643	NUT (Eff Winch S/N 4360)	1
8	1502711	WASHER	1
9	1500611	BOLT, Dr Hd (Eff Thru Winch S/N 4359)	1
10	Com'l	WIRE, Lock	A/R
11	001-1134	WASHER	1
12	1028278	YOKE	1
13	1500515	SPACER	1
14	1502708	SEAL, Oil	1
15	180122	BOLT 3/8x1" NC	4
16	1004922	RETAINER, Brg	1
17	1006956	SHIM .005 (Blue)	A/R
17A	1006957	SHIM .007 (Clear)	A/R
17B	1006958	SHIM .020 (Yellow)	A/R
18	1004932	SHAFT, Idler	1
19	2001311	O RING	3
20	143982	PLUG 3/4" Sq Hd	2
21	1007298	PLUG	2
22	2001316	CLIP	3
23	1500355	BREATHER	1
24	1035594	COVER, Frt	1
25	180120	BOLT 3/8x3/4" NC	3
26	1500295	ELBOW	1
27	1504125	ELBOW	1
28	1500913	ELBOW	2
29	1013574	BLOCK, Check Valve	1
30	120383	WASHER, Lock 7/16"	31
31	180157	BOLT 7/16x2-1/2" NC	2
32	141287	PIN, Dowel 1/2x1-1/2"	6
33	1509546	BOLT 7/16x1" NC	6
34	1015760	COVER, Brake	1
35	1008983	HOSE ASM	1
36	271772	BOLT 3/4x2-1/4" NC	8
37	131046	WASHER, Lock 3/4"	8
38	131000	WASHER, Flat 3/4"	8
39	144014	PLUG 1/2" Sq Soc Hd	2
40	2001301	SPRING, Poppet	1
41	9416147	PIN, Spring 3/16x2"	1
42	1015759	ANCHOR, Brake, Top	1
43	1012311	SHIM .031	A/R
43A	1012312	SHIM .062	A/R
43B	1012313	SHIM .125	A/R

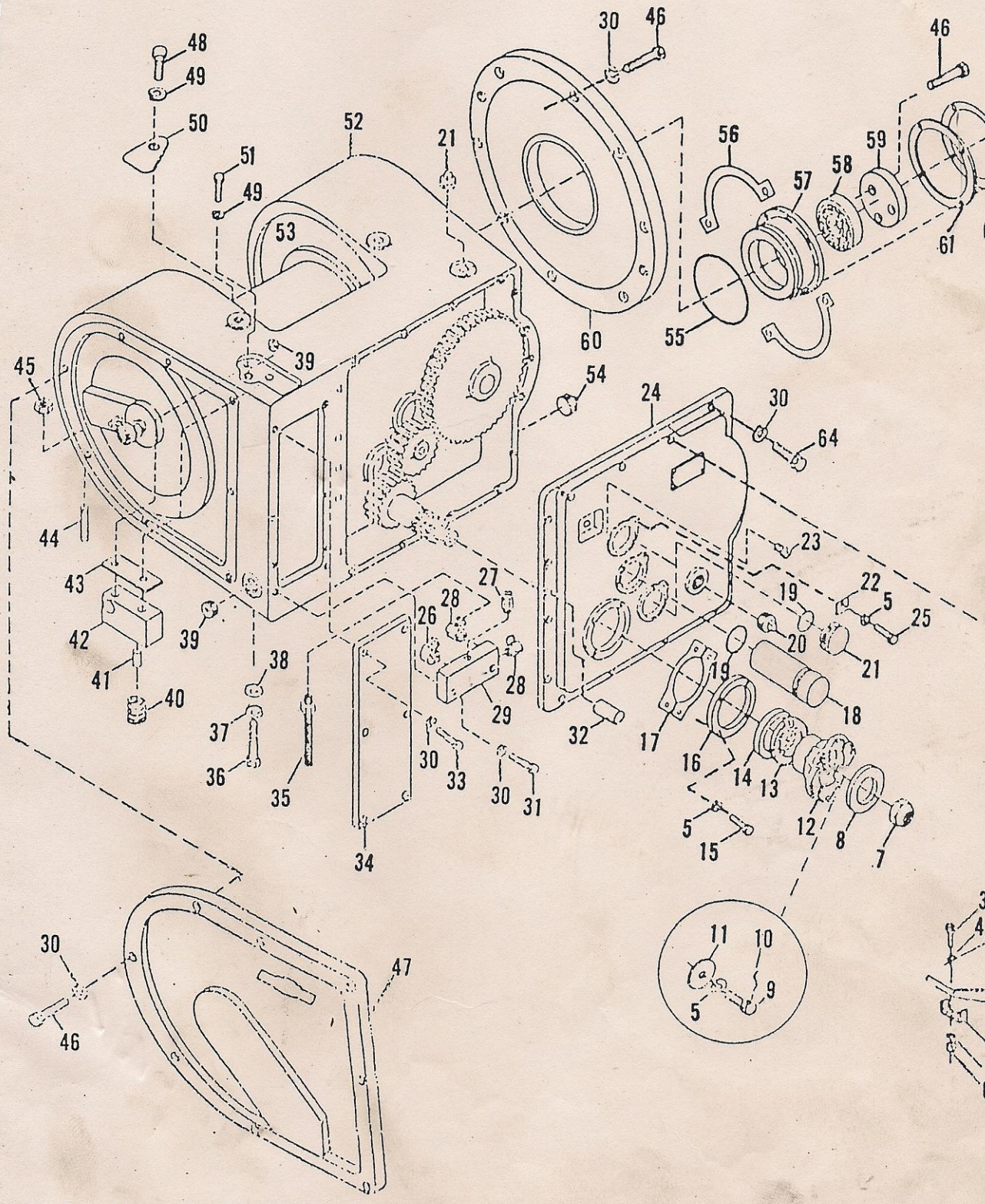
48
49
50
51
49
52
53
21
30
46
60
56
57
58
59
46
61
55
45
39
54
24
30
64
44
43
42
41
40
39
38
37
36
35
34
27
28
26
28
29
30
33
30
31
32
23
19
22
5
25
20
21
19
18
17
16
14
13
12
8
7
5
15
11
10
9
5
30
46
47

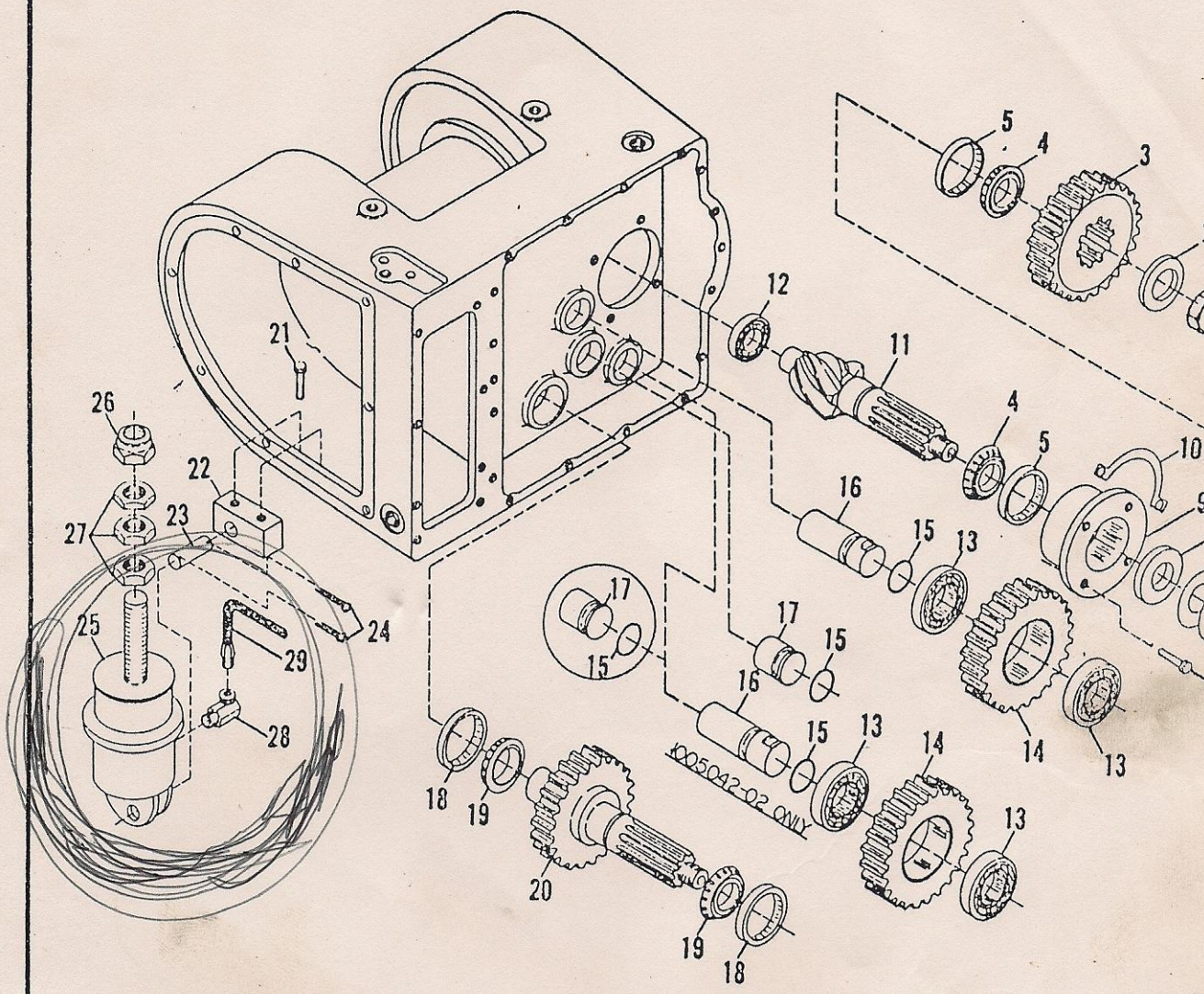
1005042-02 ONLY

ATTACHMENTS
MODEL H-42 WINCH
GEARING

REF NUMBER	PART NUMBER	DESCRIPTION	NUMBE REQ'
1	1504513	NUT, Lock (Part of Rngr & Pn Asm)	1
2	1500388	WASHER	1
3	1015757	GEAR, Drive, 44T	1
4	1500393	BEARING, Cone	2
5	1500395	BEARING, Cup	2
6	1007731	SHIM .005	A/
6A	1007732	SHIM .007	A/
6B	1007733	SHIM .020	A/
7	1007728	SPACER	1
8	180147	BOLT 7/16x1-1/4" NC	4
9	1007726	CARRIER, Brg	1
10	1006959	SHIM .005 (Blue)	A/
10A	1006960	SHIM .007 (Clear)	A/
10B	1006961	SHIM .020 (Yellow)	A/
11	1500412	GEAR, Pn	1
12	1500413	BEARING, Pn	1
13	1503611	BEARING, Ball (Use 4 w/1005042-02, -04)	2(
14	1004934	GEAR, Idler, 24T (Use 2 w/1005042-02, -04)	1(
15	2001311	O RING	3
16	1004932	SHAFT, Idler (Use 2 w/1005042-02, -04)	1(
17	1007298	PLUG, Idler Shaft (Use 1 w/1005042-02, 04)	2(
18	1503607	BEARING, Cup	2
19	1503606	BEARING, Cone	2
20	1006507	PINION & SHAFT	1
21	1504573	BOLT, Soc Hd	2
22	1008505	ANCHOR, Brake, Bottom	1
23	1008511	PIN	1
24	119120	PIN, Cotter	2
25	●1012818	CYLINDER, Power (Use w/B/M 1005042-01; -02)	1
25A	■1012808	CYLINDER, Power (Use w/B/M 1005042-03; -04; -09; -10)	1
26	1500597	NUT, Self-Aligning	1
27	124944	NUT, Jam 5/8" NF	3
28	1500913	ELBOW	1
29	1015761	HOSE ASM	1

For breakdown of power cylinder marked ● see page 28-010-4.

For breakdown of power cylinder marked ■ see page 28-010-5.

ATTACHMENTS
MODEL H-42 WINCH
GEARING

REF NUMBER	PART NUMBER	DESCRIPTION	NUMB REQ
1	1504513	NUT, Lock (Part of Rngr & Pn Asm)	1
2	1500388	WASHER	1
3	1015757	GEAR, Drive, 44T	1
4	1500393	BEARING, Cone	2
5	1500395	BEARING, Cup	2
6	1007731	SHIM .005	A
6A	1007732	SHIM .007	A
6B	1007733	SHIM .020	A
7	1007728	SPACER	1
8	180147	EOLT 7/16x1-1/4" NC	4
9	1007726	CARRIER, Brg	1
10	1006959	SHIM .005 (Blue)	A
10A	1006960	SHIM .007 (Clear)	A
10B	1006961	SHIM .020 (Yellow)	A
11	1500412	GEAR, Pn	1
12	1500413	BEARING, Pn	1
13	1503611	BEARING, Ball (Use 4 w/1005042-02, -04)	2
14	1004934	GEAR, Idler, 24T (Use 2 w/1005042-02, -04)	1
15	2001311	O RING	3
16	1004932	SHAFT, Idler (Use 2 w/1005042-02, -04)	1
17	1007298	PLUG, Idler Shaft (Use 1 w/1005042-02, 04)	2
18	1503607	BEARING, Cup	2
19	1503606	BEARING, Cone	2
20	1006507	PINION & SHAFT	1
21	1504573	BOLT, Soc Hd	2
22	1008505	ANCHOR, Brake, Bottom	1
23	1008511	PIN	1
24	119120	PIN, Cotter	2
25	●1012818	CYLINDER, Power (Use w/B/M 1005042-01; -02)	1
25A	■1012808	CYLINDER, Power (Use w/B/M 1005042-03; -04; -09; -10)	1
26	1500597	NUT, Self-Aligning	1
27	124944	NUT, Jam 5/8" NF	3
28	1500913	ELBOW	1
29	1015761	HOSE ASM	1

For breakdown of power cylinder marked ● see page 28-010-4.

For breakdown of power cylinder marked ■ see page 28-010-5.

28-010-3

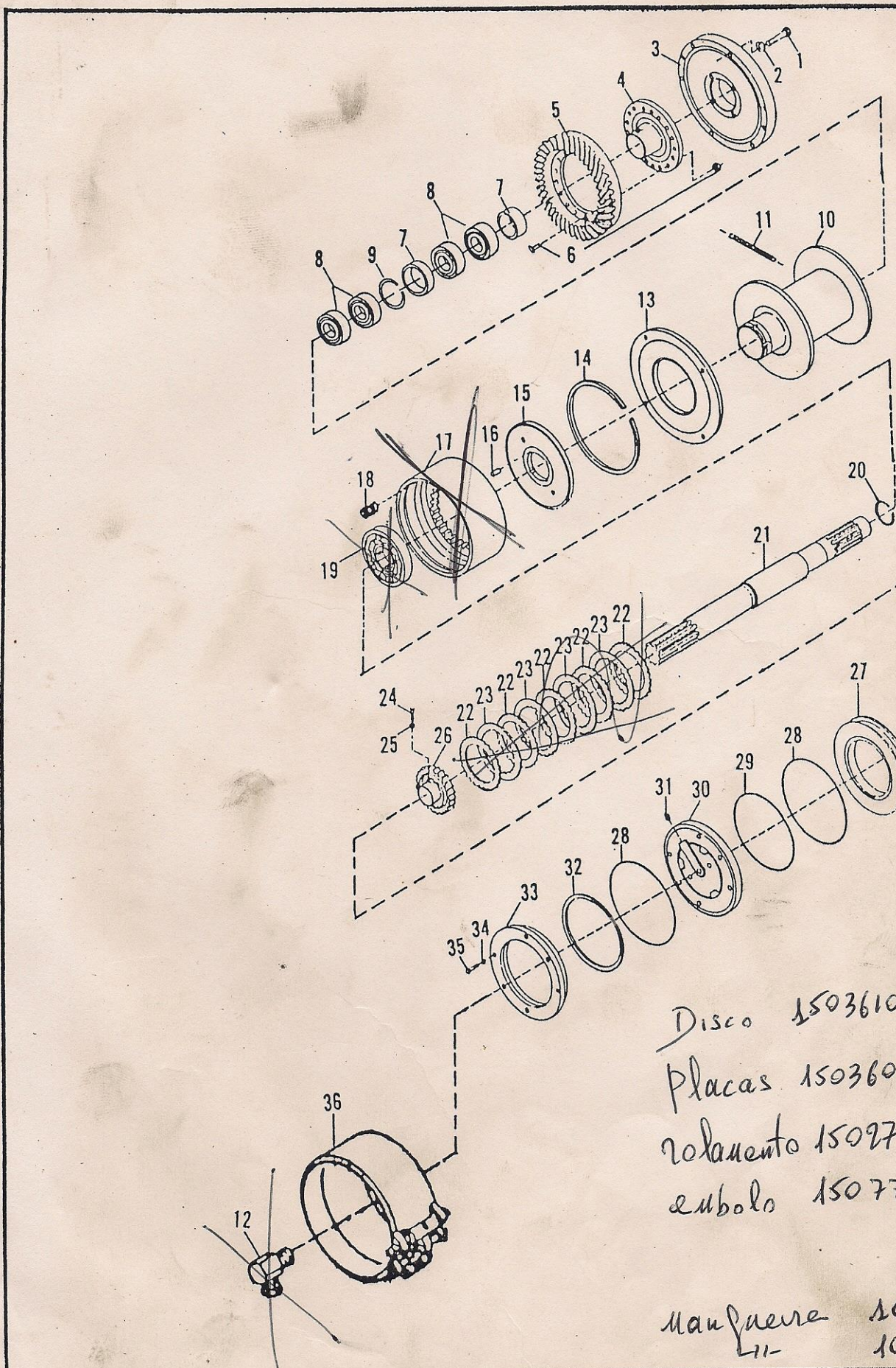

Disco 1503610

Placas 150360

rolamento 15027

embolo 1507

manqueira 1

-"- 1

GUINCHO FRANKLIN

ATTACHMENTS
MODEL H-42 WINCH
MAIN SHAFT ASSEMBLY

REF NUMBER	PART NUMBER	DESCRIPTION	
1	180147	BOLT 7/16x1-1/4" NC	
2	120383	WASHER, Lock 7/16"	
3	1015752	COVER, Bevel Gear	
4	1015756	HUB, Rngr	
5	1500412	RING GEAR & PINION	
6	1500426	KIT, Nut & Bolt	
7	1004938	SPACER	
8	2001408	BEARING, Ball	
9	2001406	RING, Snap	
10	1015755	SPOOL	
11	1505247	CABLE	
12	1507777	ELBOW	
12A	1508391	KIT, Service	
13	1015754	CARRIER, Brg, Spool	
14	1010363	RING, Snap	
15	1011293	DRUM, Spider	
16	141287	PIN, Dowel, 1/2x1-1/2"	
17	1009552	CLUTCH, Brake Drum	
18	1008518	SPRING	
19	1502716	BEARING, Ball	
20	2001392	RING, Snap	
21	1015758	SHAFT, Drum	
21A	1039404	SHAFT, Drum (-09 & -10 Only)	
22•	1503610	PLATE, Clutch, Friction	
23	1503609	PLATE, Clutch, Steel CAT 2B8955	
24	180124	BOLT 3/8x1-1/4" NC	
25	124829	NUT, Jam 3/8" NC	
26	1004927	HUB, Clutch, Inner	
27	1004572	PISTON, Clutch	
28	1504627	RING, Quad	
29	1504626	RING, Quad	
30	1004925	HUB, Clutch, Outer	
31	444688	PLUG 1/8" Hex Soc Hd	
32	1008598	RING, Snap	
33	1023563	RETAINER, Snap Ring	(Eff Winch S/N 4721)
34	120382	WASHER, Lock	
35	180121	BOLT 3/8"NCx7/8" Lg	
36	1010971	BAND, Brake Asm	

• igual ao disco embreagem de giro do D4

Revised 1/18/93

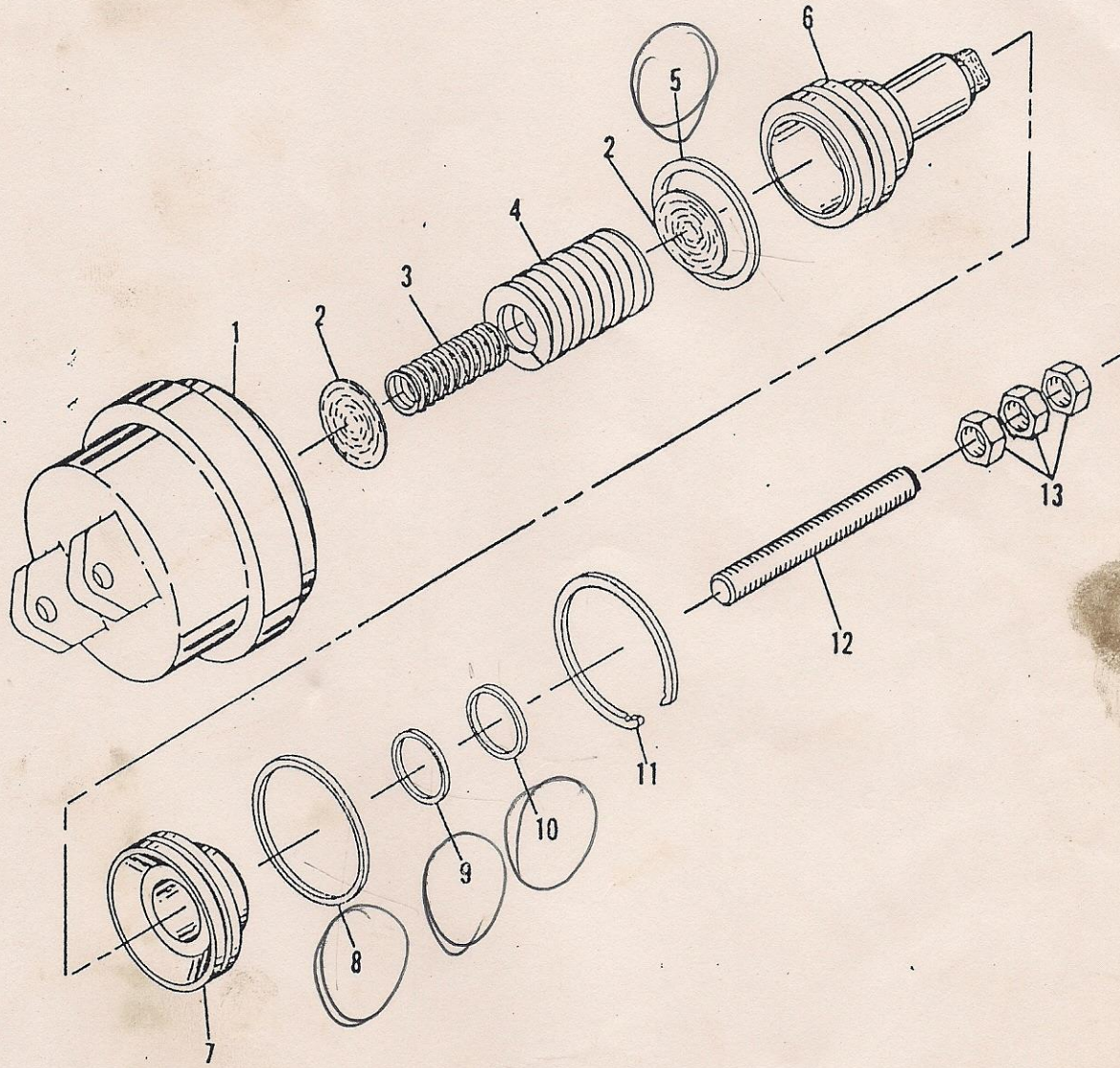
1
2
3
4
5
6
7
8
9
10
11
12
13

ATTACHMENTS
MODEL H-42 WINCH
(B/M: 1005042-03; -04; -09; -10)
POWER CYLINDER ASSEMBLY

REF NUMBER	PART NUMBER	DESCRIPTION	NUM RE
	1012808	POWER CYL ASM	
1	NSS	BODY, Cyl	
2	1012813	SPACER	
3	1504652	SPRING (Yellow)	
4	1008519	SPRING (Yellow)	
5	1504701	SEAL	
6	1012810	PISTON, Cyl	
7	1012811	CAP	
8	1504650	SEAL	
9	1504649	SEAL	
10	1504648	WIPER	
11	1501027	RING, Snap	
12	1012812	ROD, Threaded	
13	124944	NUT, Jam 5/8" NF	
14	1500597	NUT, Lock	