RUTHZIL TRATOR COMERCIAL DE PEÇAS LTDA 11 97083-6812 ROLANDO CITRANGULO

CASE CONSTRUCTION

:W20E 2012
PÁ CARREGADEIRA
Catálogo de Peças nº 84522121

GENERAL
GENERAL
GENERAL 1

ENGINE
MOTOR
MOTEUR 2

FUEL
COMBUSTIBLE
CARBURANT 3

ELECTRICAL SYSTEM
SISTEMA ELECTRICO
SYSTEME ELECTRIQUE 4

STEERING
DIRECCION
DIRECTION 5

TRANSMISSION
TRANSMISION
TRANSMISSION 6

BRAKES
FRENOS
FREINS 7

HYDRAULIC SYSTEM
SISTEMA HIDRAULICO
SYSTEME HIDRAULIQUE 8

CHASSIS
BASTIDOR
CHASSIS 9

NUMERICAL INDEX
INDICE NUMERICO
INDEX NUMERIQUE 10

W20E
WHEEL LOADER
Parts Catalog nº 84522121

GENERAL
GENERAL
GENERAL
1

W20E
PALA CARGADORA
Catálogo de Repuestos nº 84522121

W20E
PÁ CARREGADEIRA
Catálogo de Peças nº 84522121



Issued 06/2012 Edición 06/2012 Edição 06/2012

Todos os direitos são reservados à **CNH LATIN AMERICA LTDA.**.
Os dados contidos neste catálogo são fornecidos a título de indicação somente. A qualquer momento, a **CNH LATIN AMERICA LTDA.** poderá introduzir, por razões de ordem técnica ou comerciais, modificações nos produtos descritos neste catálogo. Para informações mais detalhadas e atualizadas, solicitamos ao usuário consultar o concessionário **CNH LATIN AMERICA LTDA.** mais próximo.
O sistema de numeração das peças utilizado neste catálogo não pode ser copiado ou utilizado sem autorização por escrito da **CNH LATIN AMERICA LTDA.**.

All rights reserved by Soc. **CNH LATIN AMERICA LTDA.**.
The information contained in this catalogue is intended to be of a general nature only. The **CNH LATIN AMERICA LTDA.** may at any time and from time to time, for technical or other necessary reasons, modify any of the details or specifications of the product described in this catalogue. To be sure of getting accurate, detailed and up-to-date information, an intending buyer should consult his nearest **CNH LATIN AMERICA LTDA.** dealer or distributor.
Single item numeration method used in this catalogue may not be used without written consent by Soc. **CNH LATIN AMERICA LTDA.**.

Reservados todos los derechos para Soc. **CNH LATIN AMERICA LTDA.**.
Los datos contenidos en este catálogo se facilitan a titulo indicativo. **CNH LATIN AMERICA LTDA.** podrá introducir, en cualquier momento, por razones de naturaleza tanto técnica como comercial, modificaciones en los modelos descritos en este catálogo. Para mayor información rogamos al cliente se dirija al Concesionario o Filiale **CNH LATIN AMERICA LTDA.** más próximo.
El sistema de numeración de las piezas reseñadas en el catálogo no puede ser objeto de imitación o copia en ningun caso sin autorización por escrito de Soc. **CNH LATIN AMERICA LTDA.**.

Tutti i diritti sono riservati alla Soc. **CNH LATIN AMERICA LTDA.**.
Il sistema di numerazione che individua is ingoli particolare elencati nel presente calatogo non può essere adottato in alcun caso senza autorizzazione scritta dalla Soc. **CNH LATIN AMERICA LTDA.**. I dati contenuti in questo catalogo sono forniti a titolo indicativo. La **CNH LATIN AMERICA LTDA.** potrà apportare in qualunque momento modifiche ai modelli descritti in questo catalogo, per ragioni di natura tecnica o commerciale.
Per ulteriore informazione, il cliente è pregato di rivolgersi al più vicino Concessionario o Sede **CNH LATIN AMERICA LTDA.**.

Alle in diesem Propekt anthaltenen Angaben sind Orientierungsdate. Es können jedoch von **CNH LATIN AMERICA LTDA.** sowohl aus technischen und Kaufmännischen Gründen als auch aus der Notwendigkeit, geänderte gesetzliche Erfordernisse der verschiedenen Lander zu berücksichtigen, Anderugen einge führt werden. Der Kunde ist gebeten, sich für weirtere information an Vertragshändler order.
CNH LATIN AMERICA LTDA.-Niederlassungen zu werden.
Alle Urheberrechte sind von der **CNH LATIN AMERICA LTDA.**-vorbehalten.
Die Benutzung des Numerierungssustems zur Kennzeichnung der im vorliegende Katalog aufgeführten Ersatzteile bedarf in jedem Falle der schriftlichen Genehmigung der **CNH LATIN AMERICA LTDA.**.

Tous droits réservés à la Soc. **CNH LATIN AMERICA LTDA.**.
Les données de cette brochure sont fournies à titre indicatif et pourraient se révéler caduques à la suite de modifications apportées par le constructeur, à n'import quel moment, pour de raisons techniques ou commerciales ainsi que pour satisfaire aux normes en vigueur dans le différents Pays. Pour toute information, nous prions le client de bien vouloir s'adresser au Concessionnaire ou à la Filiale **CNH LATIN AMERICA LTDA.** les plus proches.
Le système de numérotation des pièces en list dans ce catalogue ne peut être adopté en aucun cas, sans une autorisation écrite de la Soc. **CNH LATIN AMERICA LTDA.**

CNH LATIN AMERICA LTDA.
Av. General David Sarnoff, nº 2237 - Inconfidentes
CEP 32210-900 Contagem - MG - Brasil
CNPJ: 60.850.617/0009-85

CASE Customer Assistance Brasil: 0800 727 2273
CASE Customer Assistance Colombia: 018009448372
CASE Customer Assistance Peru: 080077270
http://www.casece.com
CaseCustomerAssistance.Brasil@casece.com

INSTRUÇÕES PARA O PEDIDO DE PEÇAS DE SERVIÇO

“Os números de peça indicados neste catálogo estão corretos até a data da publicação. A política da New Holland de contínuo melhoramento dos produtos durante toda a vida de produção do modelo, pode dar origem às últimas alterações nas figuras e nos números de peça. Quando encomendar peças de substituição, certifique-se de confirmar suas especificações no CD atual do sistema PAL ou com a microficha do catálogo de peças no seu concessionário.”

INSTRUCTIONS FOR ORDERING SPARE PARTS

“The part numbers shown in this catalogue are correct up to the date of publication. New Holland policy of continuously improving our products during the production lifetime of the Model may result in later changes to illustrations and to part numbers. When ordering replacement parts be sure to confirm your requirements against the current CD based PAL or microfiche parts catalogue at your dealership.”

INSTRUCCIONES PARA LOS PEDIDOS DE RECAMBIOS

“Los números de pieza indicados en este catálogo son los correctos en la fecha de la publicación. La política de New Holland es de constante mejora de sus productos durante todo el período de vida de la producción del Modelo, lo que puede hacer que se produzcan cambios en las ilustraciones y en los números de pieza. Al hacer pedidos de recambios debe asegurarse de que sean de acuerdo con sus necesidades comprobando el CD actualizado en sistema PAL o bien las microfichas de catálogos existentes en la agencia.”

ISTRUZIONI PER ORDINARE I RICAMBI

“ I numeri ricambio riportati in questo catalogo si intendono corretti fino alla data della pubblicazione. La New Holland persegue una politica di continuo miglioramento del prodotto durante tutto il periodo di produzione del modello per cui può accadere che ci siano modifiche successive alle illustrazioni e ai numeri ricambio. Al momento di ordinare un particolare di ricambio, verificare accuratamente i dati utilizzando il CD PAL o il catalogo ricambi su microfiche presente presso la Concessionaria.

ANLEITUNG ZUM BESTELLEN VON ERSATZTEILEN

“Die in diesem Katalog aufgeführten Teilnummern sind am Tag der Veröffentlichung korrekt. Die Firmenpolitik von New Holland sieht während der Produktionsdauer dieses Modells dessen kontinuierliche Verbesserung vor; dies kann zu späteren Änderungen an Abbildungen und Teilnummern führen. Stellen Sie vor der Bestellung von Ersatzteilen sicher, daß Sie bei Ihrem Händlerbetrieb die von Ihnen benötigten Teile mit dem aktuellen PAL auf der Grundlag e von CDs oder dem aktuellen Microfiche-Ersatzteilkatalog abgeglichen haben.”

INSTRUCTIONS POUR COMMANDE PIECES DETACHEES

Les références de pièces détachées notées dans ce catalogue sont correctes à la date de publication.La politique New Holland pour l’amélioration constante des produits durant la durée de vie des modèles peut changer les illustrations et les références des pièces détachées.Quand l’ordre de remplacement de pièces est confirmé, il est nécessaire de mettre à jour l’actuel CD base PAL ou microfiches de pièces détachées chez votre concessionnaire.

REGRAS PARA PEDIDO DE PEÇAS

Este catálogo está dividido em seções principais correspondendo a áreas específicas do produto. Cada seção está representada através de figuras detalhadas (desenhos) para auxiliar na localização e identificação de peças. As peças disponíveis para serviço estão indicadas ao lado da figura e, para a correta identificação das peças necessárias proceder da seguinte forma:

1) Consultar a figura da seção principal na página 16 para identificar a seção em questão.

2) Em seguida, consultar as páginas 17 a 36 para encontrar a figura à qual pertence o número de peça necessário.

3) Consultar o índice do número de peça na página 44. Este índice apresenta todos os números de peça que aparecem no catálogo.

ORDERING RULES

This catalogue is divided into main sections corresponding to specific areas of the product. Each section is represented by detailed figures (illustrations) to assist in locating and identifying parts. Parts released for service are indicated alongside the figure, hence, for the correct identification of parts required proceed as follows:

1) Consult the main section illustration on page 16 to identify the section in question.

2) Then consult pages 17 to 36 to find the figure to which the required part number belongs.

3) Refer to the part number index on page 44. This index lists all part numbers appearing in the catalogue.

NORMATIVA DE PEDIDOS

Este catálogo se divide en tres secciones principales correspondientes a áreas específicas del producto. Cada sección se representa con figuras detalladas (ilustraciones) para facilitar la localización e identificación de las piezas. Las piezas disponibles para el servicio se encuentran indicadas al lado de la figura, de aquí, que para la identificación correcta de las piezas necesarias, deba seguirse este orden:

1) Consultar la sección principal en la ilustración de la página 16 para identificar la sección en cuestión.

2) Seguidamente consultar las páginas 17 to 36 para localizar la figura a la que pertenece el número de pieza buscada.

3) Ver el índica de números de pieza en la página 44. Este índica contiene todos los números de pieza del catálogo.

NORME PER L'ORDINAZIONE

Questo catalogo è suddiviso in sezioni principali corrispondenti alle aree specifiche della macchina. Ogni sezione è composta da figure tecniche dettagliate che agevolano l'individuazione e l'identificazione dei particolari. I particolari disponibili per l'assistenza sono indicati unitamente alla figura, per cui per la corretta identificazione degli stess i è necessario procedere come segue:

1) Consultare l'illustrazione delle sezioni principali a pag. 16 per individuare la sezione che interessa.

2) Consultare poi le pagine da 17 a 36 per trovare la figura alla quale appartiene il numero del ricambio necessario.

3) Fare riferimento all'indice dei numeri ricambio a pag. 44, che elenca tutti i numeri ricambio che appaiono nel catalogo.

BESTELLREGELN

Dieser Katalog ist in Hauptabschnitte aufgeteilt, die speziellen Baugruppen des Produkts entsprechen. Jeder Abschnitt wird durch detaillierte Abbildungen veranschaulicht, die das Auffinden und Identifizieren von Teilen erleichtern. Für den Service freigegebene Teile sind neben der Abbildung aufgeführt; um erforderliche Teile richtig zuzuordnen, gehen Sie somit wie folgt vor:

1) Stellen Sie mit Hilfe der auf Seite 16 veranschaulichten Hauptabschnitte fest, zu welcher Baugruppe bzw. welchem Abschnitt das Teil gehört.

2) Suchen Sie dann auf den Seiten 17 bis 36 die Abbildung, zu der die Nu mmer des benötigten Teils gehört.

3) Suchen Sie die Nummer im Teilnummer-Verzeichnis auf Seite 44. In diesem Verzeichnis sind alle im Katalog enthaltenen Teilnummern zusammengefaßt.

REGLES DE COMMANDES

Ce catalogue est divisé en sections principales correspondant aux aires spécifiques de production. Chaques sections est représentées par des figures détaillées (illustrations) pour aider à la localisation et à l'identification des pièces détachées. Les pièces nécessaires pour le service sont indiquées sur le côté de la figure, pour l'identification correcte de la pièce requise procédez comme ci dessous

1) Consultez l'illustration de la section principale page 16 pour identifier la section en question

2) Consulter les pages de 17 à 36 pour trouver la figure qui contient la référence demandée

3) Se référer à l'index de la référence pièce à la page 44 .Cet index indique toutes les références pièces apparaissant dans le catalogue.

01.01	01	p6	02/03

CHASSI
MAIN FRAME
BASTIDOR
TELAIO
GESTELL
CHASSI

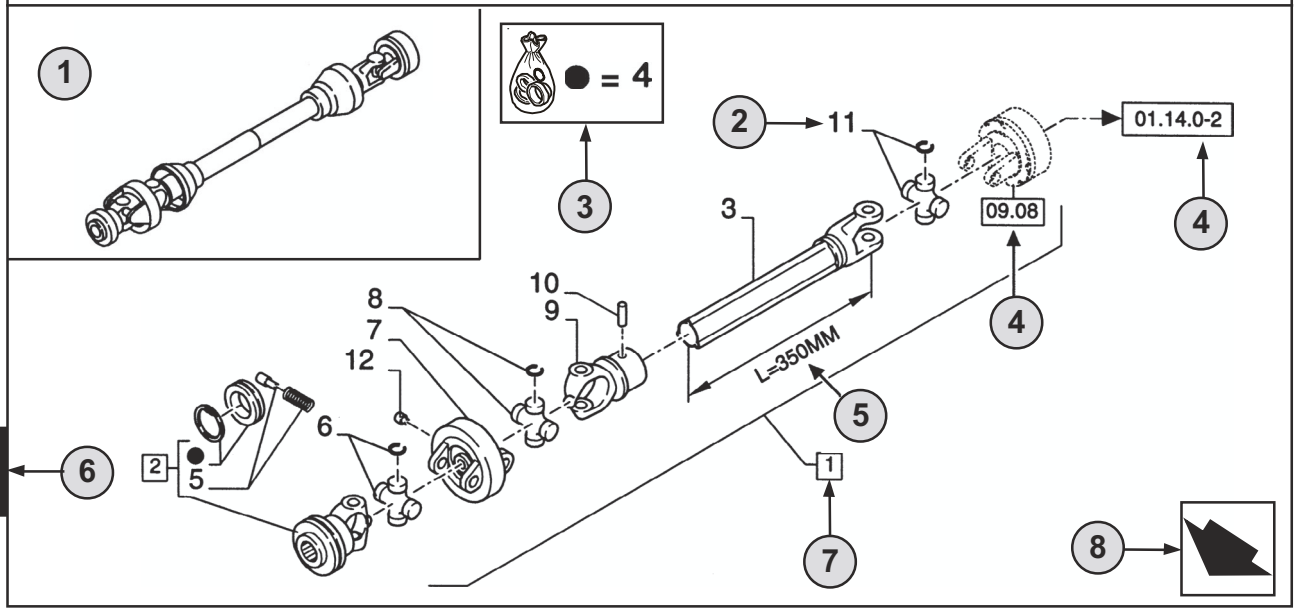

1

9 10

01.01	01	p6	02/03
11	12	13	14

CHASSI - D0200
MAIN FRAME
BASTIDOR
TELAIO
GESTELL
CHASSI

R	N	P.N.	MOD	Q	Descrição	Description	Descripción	L.C.
	A	**86529340**		1	TOMADA DE FORÇA **(2 AO 11)**	SHAFT, PTO	TOMA DE FUERZA	207P
2		**84014007**		1	GARFO **(4,5)**	YOKE	HORQUILLA	085F
3		**NSS**		1	EIXO, **L=350MM**	SHAFT	EJE	016A
4		**84004292**	C0204	1	KIT	KIT	EQUIPO	305C
		[84058743]	D0500	1	KIT	KIT	EQUIPO	305C

15 16 7 2 18 19 20 21 17 22 22 23

(A) SOMENTE BRASIL 24

1

STANDARD 25

26 **MODELOS**

PORTUGUÊS

1 **Posição** da “Figura” na máquina.

2 Referência - figura chamar pelo n° de peça.

3 Peças fornecidas nos kits de reparação por referência de símbolo.

4 01.14.0-2 Peça indicada na **Página** ou no **Figura**, ou chamadas para **Variações** ou **Detalhes**. Indicam componentes que se mostram em detalhe em um outro local do catálogo com o número da figura indicado.

5 Especificações técnicas relacionadas com a peça indicada.

6 Número da **Seção**.

7 2 Inclui os item(s) .....

8 Orientação (A seta indica a frente da máquina). 

9 Descrição da figura.

10 Informação geral da figura.

11 Código do **Conjunto**.

12 Código de **Seqüência** no conjunto.

13 Número da página no código de seqüência.

14 **Data** da impressão ou da atualização da página (mês-ano).

15 **Nota** - Em relação ao n°. de peça. Existe uma chave para os símbolos e abreviaturas na parte inferior da página.

16 Peças que não são disponibilizadas (ver a Página 42).

17 Descrição adicional da peça para auxiliar a confirmar a identificação.
Consultar a página 42 para explicação dos símbolos usados.

18 Não disponível como peça de serviço.

19 Número de Peça.

20 Modificação.
C 0201 = Peça válida **ATÉ 0201** mudar.
D 0300 = Peça válida **A PARTIR** de **0300** mudar.
F 0202 = Peça válida **A PARTIR do N°. de Série.... até ao N°. de Série....**

Implementação da mudança. N° de série a partir do qual a alteração tem início. Os números são indicados na plaqueta de identificação do modelo (ver a página 38).
Ex.: **D0300 N° de Série 2503001** significa que a peça foi montada **“A PARTIR”** do n°. de série **2503001.**
Como conseqüência, as peças marcadas por **C0201**, foram montadas **“ATÉ”** ao n°. de série **2501999.**
Ver a tabela de códigos na página 41.

21 **Quantidade** total de peças referenciadas na página. A quantidade pode ser substituída pelas seguintes indicações:
M = fornecido em metros. **AR** = Quantidade consoante ao pedido.

22 **Descrição** da peça.

23 **L.C. - Código Léxico** para a identificação dos nomes das peças (ver página 45).

24 Referências de rodapé.

25 Notas das figuras.

26 Número do modelo.

01.01	01	p8	02/03

CHASSI
MAIN FRAME
BASTIDOR
TELAIO
GESTELL
CHASSI

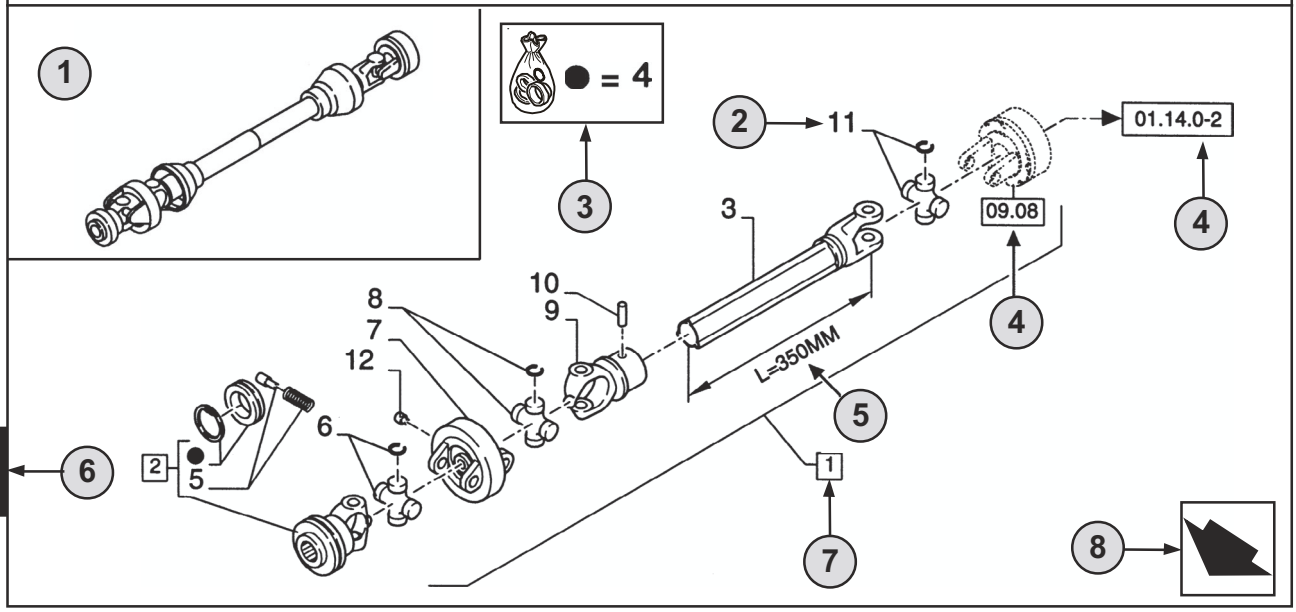

9 10

01.01	01	p8	02/03
11	12	13	14

CHASSI - D0200
MAIN FRAME
BASTIDOR
TELAIO
GESTELL
CHASSI

R	N	P.N.	MOD	Q	Descrição	Description	Descripción	L.C.
	A	**86529340**		1	TOMADA DE FORÇA **(2 AO 11)**	SHAFT, PTO	TOMA DE FUERZA	207P
2		**84014007**		1	GARFO **(4,5)**	YOKE	HORQUILLA	085F
3		**NSS**		1	EIXO, **L=350MM**	SHAFT	EJE	016A
4		**84004292**	C0204	1	KIT	KIT	EQUIPO	305C
		[84058743]	D0500	1	KIT	KIT	EQUIPO	305C

15 16 7 2 18 19 20 21 17 22 22 23

(A) SOMENTE BRASIL 24

STANDARD 25

26 **MODELOS**

1

ENGLISH

1 **Position** of the “Figure” on the machine.

2 Reference - Figure call-out of the partnumber.

3 Parts supplied in repair kits per symbol reference.

4 01.14.0-2 Part illustrated on the **Page** or in the **Figure** indicated, or calls for **Variations** or **Details**. Indicates components shown in detail elsewhere in the catalogue under the figure number shown.

5 Technical specifications relating to the Part indicated.

6 **Section** number.

7 2 Includes item(s) .....

8 Orientation. (Arrow indicates front of the machine). 

9 Figure description.

10 General information of the figure.

11 **Assembly** code.

12 **Sequence** code within the assembly.

13 Page number within the sequence code.

14 **Date** of printing or updating of page (month-year).

15 **Note** - Relating to the Part Number. There is a key to symbols and abbreviations at the bottom of the text page.

16 Non-serviced parts. (see page 42).

17 Further description of the part to help confirm identification. Refer to page 42 for explanation of symbols used.

18 Not available as service part.

19 Part Number.

20 Modification.
C 0201 = Part valid **UNTIL 0201** change.
D 0300 = Part valid **FROM 0300** change.
F 0202 = Part valid **FROM Serial N.... to Serial N....**

Implementation of change. Serial number from which the change starts.
The numbers are indicated on the identification plate of the model (see page 38).
E.g.: **D0300 Serial n° 2503001** means that the part has been installed **“FROM”** serial number **2503001**. Consequently, the parts marked by C0201, were installed **“UP TO”** serial number **2501999**.
See code table page 41.

21 Total **Quantity** of the Part referred to in the page.
The quantity can be replaced by the following indications:
M = supplied in metres. **AR** = quantity as requested.

22 Part **Description**.

23 **L.C. - Lexicon code** for the identification of Part names (see page 45).

24 Footnote references.

25 Figure notes.

26 Model number.

01.01	01	p10	02/03

CHASSI
MAIN FRAME
BASTIDOR
TELAIO
GESTELL
CHASSI

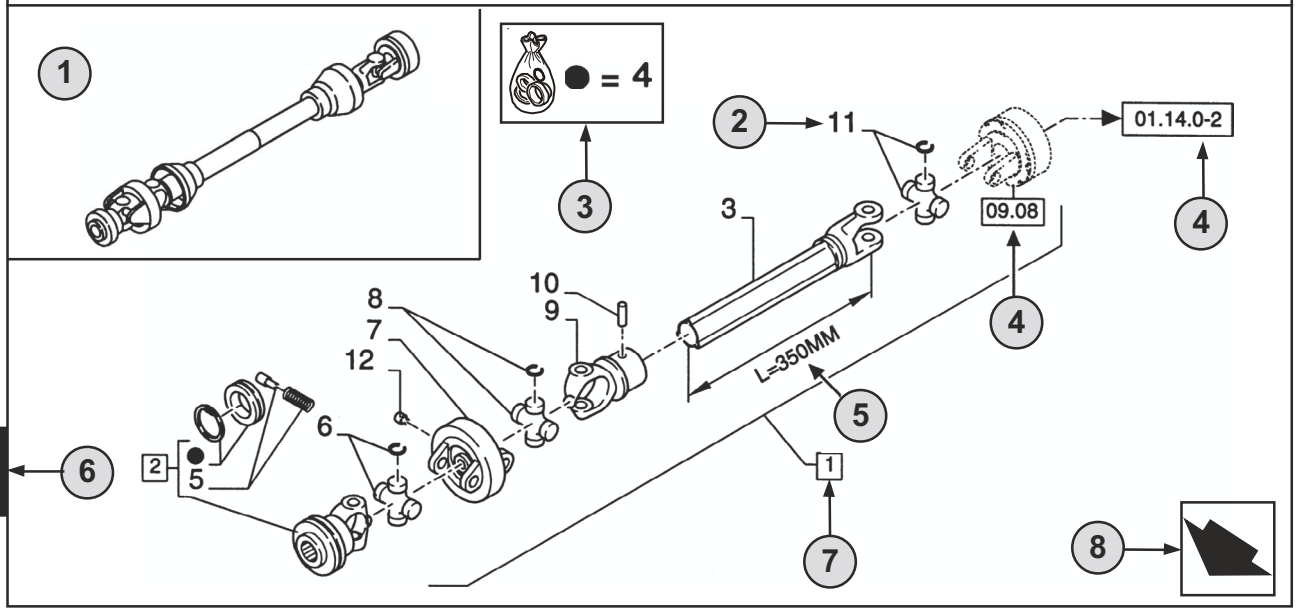

1

9 10

01.01	01	p10	02/03
11	12	13	14

CHASSI - D0200
MAIN FRAME
BASTIDOR
TELAIO
GESTELL
CHASSI

R	N	P.N.	MOD	Q	Descrição	Description	Descripción	L.C.
	A	**86529340**		1	TOMADA DE FORÇA **(2 AO 11)**	SHAFT, PTO	TOMA DE FUERZA	207P
2		**84014007**		1	GARFO **(4,5)**	YOKE	HORQUILLA	085F
3		**NSS**		1	EIXO, **L=350MM**	SHAFT	EJE	016A
4		**84004292**	C0204	1	KIT	KIT	EQUIPO	305C
		[84058743]	D0500	1	KIT	KIT	EQUIPO	305C

15 16 7 2 18 19 20 21 17 22 22 23

(A) SOMENTE BRASIL 24

1

STANDARD 25

26 **MODELOS**

ESPAÑOL

1 **Posición** de la “Figura” en la máquina.

2 Referencia - Figura correspondiente del número de pieza.

3 Piezas suministradas en juegos de reparación por símbolo de referencia.

4 01.14.0-2 Pieza ilustrada en la **Página** o en la **Figura** indicado, o indicaciones por **Variaciones** o **Detalles.** Señala componentes mostrados en detalle en algún lugar del catálogo bajo este número de figura.

5 Especificaciones técnicas relacionadas con la pieza indicada.

6 Número de **Sección**.

7 2 Incluye punto(s) .....

8 Orientación (La flecha indica la parte delantera de la máquina). 

9 Descripción de la figura.

10 Información general de la figura.

11 Código de **Conjunto.**

12 Código de **Secuencia dentro del conjunto.**

13 Número de pieza dentro del código de secuencia.

14 **Fecha** de impresión o puesta al día de la página (mes-año).

15 **Nota -** Relacionada con el Número de Pieza.Hay una clave de símbolos y abreviaciones al final de la página de texto.

16 Piezas que no se suministran en servicio (ver página 42).

17 Descripción ulterior de la pieza para facilitar su identificación. Ver la explicación de los símbolos utilizados en la página 42.

18 No disponible como pieza de servicio.

19 Número de pieza.

20 Modificación.
C 0201 = Pieza válida **HASTA** el cambio **0201**.
D 0300 = Pieza válida **DESDE** el cambio **0300**.
F 0202 = Pieza válida **DESDE el N° de Serie.... al N° de Serie....**

Implementación del cambio. Número de serie a partir del cual comienza el cambio. Los números se indican en la placa de identificación del modelo (ver página 38).
P.e.: **D0300 Serie n° 2503001** significa que las piezas se han instalado **“DESDE”** el número de serie **2503001**.
En consecuencia, las piezas marcadas con **C0201**, fueron montadas **“HASTA”** el número de serie **2501999**.
Ver tabla de códigos en la página 41.

21 **Cantidad** total de las piezas referenciadas en la página.
La cantidad puede ser sustituida por cualquiera de las siguientes indicaciones:
M = suministrada por metros. **AR** = cantidad según sea necesario.

22 **Descripción** de la pieza.

23 **L.C. - Código Léxico** para la identificación de los nombres de piezas (ver página 45).

24 Notas de pié de página.

25 Notas de figura.

26 Número de modelo.

01.01	01	p12	02/03

CHASSI
MAIN FRAME
BASTIDOR
TELAIO
GESTELL
CHASSI

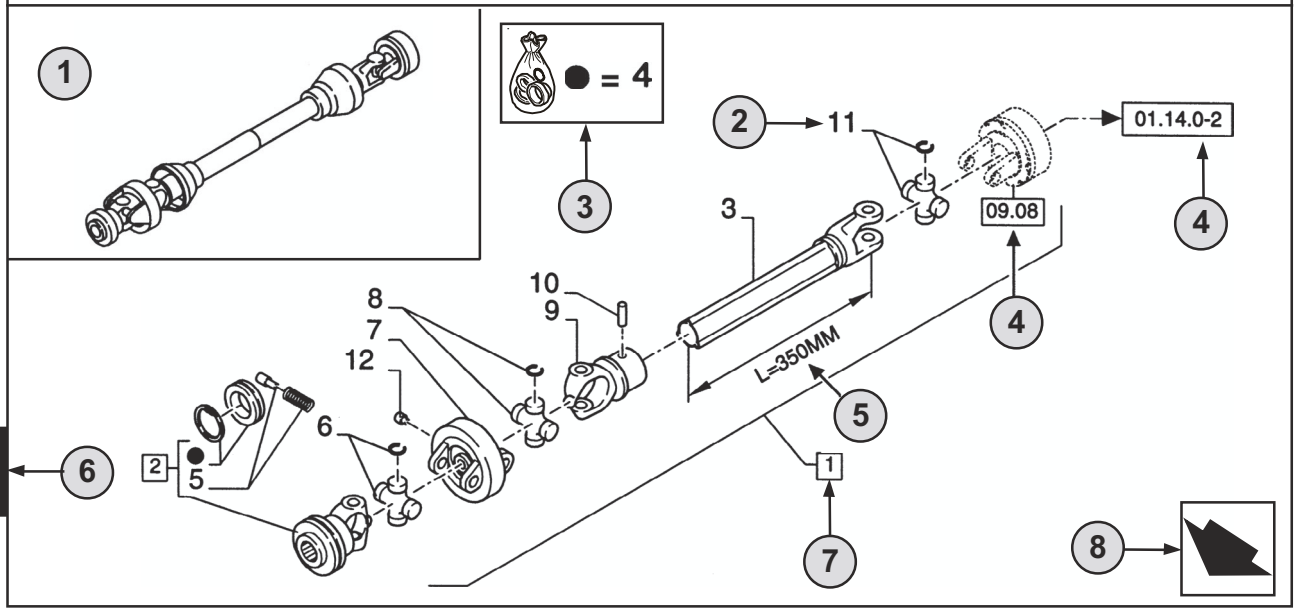

1

9 10

01.01	01	p12	02/03
11	12	13	14

CHASSI - D0200
MAIN FRAME
BASTIDOR
TELAIO
GESTELL
CHASSI

R	N	P.N.	MOD	Q	Descrição	Description	Descripción	L.C.
	A	**86529340**		1	TOMADA DE FORÇA **(2 AO 11)**	SHAFT, PTO	TOMA DE FUERZA	207P
2		**84014007**		1	GARFO **(4,5)**	YOKE	HORQUILLA	085F
3		**NSS**		1	EIXO, **L=350MM**	SHAFT	EJE	016A
4		**84004292**	C0204	1	KIT	KIT	EQUIPO	305C
		[84058743]	D0500	1	KIT	KIT	EQUIPO	305C

15 16 7 2 18 19 20 21 17 22 22 23

(A) SOMENTE BRASIL 24

1

STANDARD 25

26 **MODELOS**

1 **Posizione** della “Figura” sulla macchina.

2 Riferimento del Numero ricambio nella figura.

3 Particolari forniti nei corredi di riparazione per riferimento simbolico.

4 01.14.0-2 Particolare illustrato alla **Pagina** o nella **Figura** indicata, oppure richiamo per **Variazioni** o **Dettagli.** Indica i componenti illustrati in dettaglio in un’altra parte nel catalogo sotto il numero di figura riportato.

5 Dati tecnici relativi al particolare indicato.

6 Numero **Sezione**.

7 2 Comprende il/i pezzo/i .....

8 Orientamento (la freccia indica la parte anteriore della macchina). 

9 Descrizione figura.

10 Informazioni generali sulla figura.

11 Codice **complessivo**.

12 Codice **sequenza** nel complessivo.

13 Numero pagina nel codice sequenza.

14 **Data** di stampa o di aggiornamento della pagina (mese-anno).

15 **Nota** - Si riferisce al numero ricambio. In fondo alla pagina di testo è riportato la legenda dei simboli e delle abbreviazioni.

16 Particolari non soggetti a manutenzione (vedi pag.42).

17 Ulteriore descrizione del particolare per confermare definitivamente l’indentificazione.Fare riferimento a pag.42 per la spiegazione dei simboli utilizzati.

18 Non disponibile come particolare per l’assistenza.

19 Numero ricambio.

20 Modifica.
C 0201 = Particolare valido **FINO alla modifica 0201**.
D 0300 = Particolare valido **A PARTIRE dalla modifica 0300**.
F 0202 = Particolare valido **A PARTIRE dal telaio n. .... fino al telaio n. ....**

Introduzione della modifica. Numero telaio a partire dal quale la modifica è stata adottata.
I numeri sono indicati sulla targhetta di identificazione del modello (vedi pag. 38).
E.s.: **D0300 telaio n. 2503001** significa che il particolare è stato installato **“A PARTIRE DAL”** talaio n. **2503001**. Per cui, i particolari marcati **C0201**, sono stati installati **“FINO AL”** telaio n. **2501999**.
Vedere tabella codici a pag. 41.

21 **Quantità** totale del particolare indicato nella pagina.
La quantità può essere sostituita dalle indicazioni seguenti:
M = fornito a metri. **AR** = quantità come necessario (‘as required’).

22 **Descrizione particolare**.

23 **L.C. - Codice Lessico** per l’identificazione dei nomi dei particolari (vedi pag.45).

24 Riferimenti note a piè di pagina.

25 Note figura**.**

26 Numero modello.

01.01	01	p14	02/03

CHASSI
MAIN FRAME
BASTIDOR
TELAIO
GESTELL
CHASSI

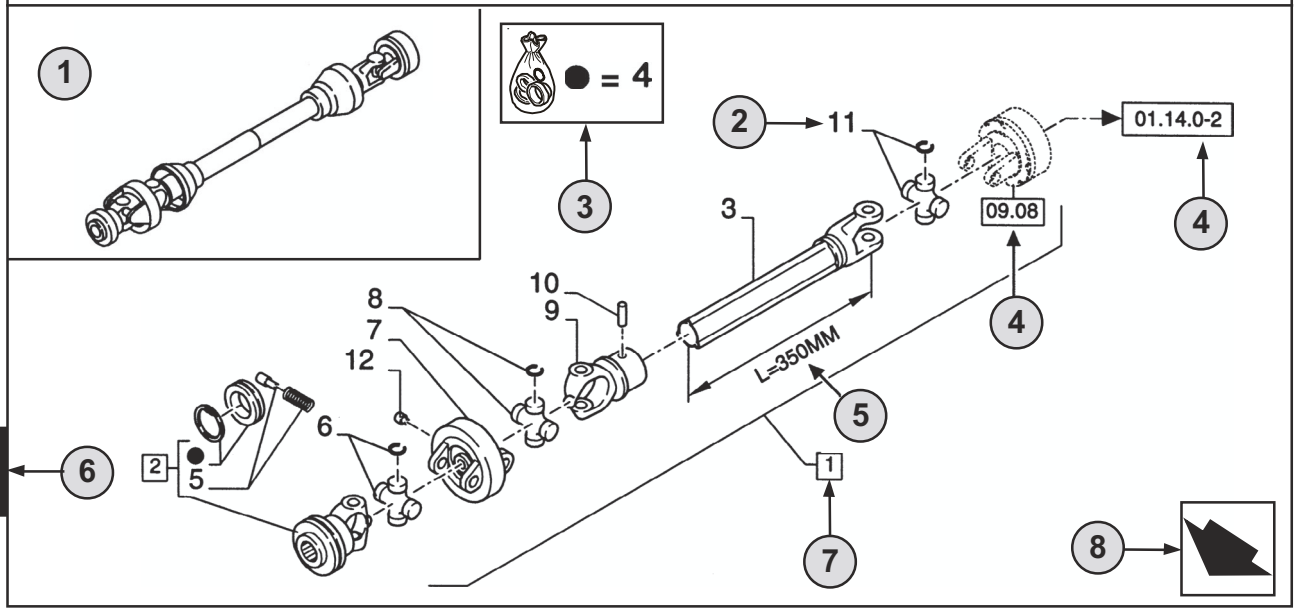

1

9 10

01.01	01	p14	02/03
11	12	13	14

CHASSI - D0200
MAIN FRAME
BASTIDOR
TELAIO
GESTELL
CHASSI

R	N	P.N.	MOD	Q	Descrição	Description	Descripción	L.C.
	A	**86529340**		1	TOMADA DE FORÇA **(2 AO 11)**	SHAFT, PTO	TOMA DE FUERZA	207P
2		**84014007**		1	GARFO **(4,5)**	YOKE	HORQUILLA	085F
3		**NSS**		1	EIXO, **L=350MM**	SHAFT	EJE	016A
4		**84004292**	C0204	1	KIT	KIT	EQUIPO	305C
		[84058743]	D0500	1	KIT	KIT	EQUIPO	305C

15 16 7 2 18 19 20 21 17 22 22 23

(A) SOMENTE BRASIL 24

1

STANDARD 25

26 **MODELOS**

DEUTSCH

1 **Position** der “Abbildung” an der Maschine.

2 Bezug - Abbilding, auf der die Teilnummer aufgeführt ist.

3 Teile, die gemäß der Bezeichnung durch das Symbol in Reparatursätzen geliefert werden.

4 01.14.0-2 Teil, das auf der angegebenen **Seite** oder **Abbildung** veranschaulicht ist, oder Verweis auf **Änderungen** oder **dataillierte Angaben**. Angabe von Teilen, die an anderer Stelle innerhalb des Katalogs unter der dargestellten Abbildungsnummer detailliert dargestellt sind.

5 Technische Daten zum angegebenen Teil.

6 **Abschnitts**nummer.

7 2 I Umfaßt Teil(e) .....

8 Orientierung (der Pfeil weist zur Vorderseite der Maschine). 

9 Beschreibung der Abbildung.

10 Allgemeine Information zur Abbildung.

11 **Montage**code.

12 **Folge**code innerhalb der Baugruppe.

13 Seitennummer innerhalb des Folgecodes.

14 **Datum** des Drucks oder der Aktualisierung der Seite (Monat-Jahr).

15 **Hinweis -** Bezieht sich auf die Teilnummer. Ein Schlüssel für die Symbole und Abkürzungen befindet sich unten auf der Textseite.

16 Kein gewartetes Teil. (Siehe Seite 42).

17 Weitere Beschreibung des Teils; dient als Hilfe bei der Identifizierung des Teils. Beachten Sie Seite 42 mit einer Erläuterung der verwendeten Symbole.

18 Nicht als Service-Teil erhältlich

19 Teilnummer.

20 Modifizierung.
C 0201 = Teil gültig **BIS** zur Änderung **0201**.
D 0300 = Teil gültig **AB** der Änderung **0300**.
F 0202 = Teil gültig **AB Serien-N.... bis Serien-N....**

Einführung der Änderung. Serienummer, von der an die Änderung erfolgte. Die Nummern sind auf dem Typenschild des Modells aufgeführt (siehe Seite 38).
Beispiel: **D0300 Serienummer 2503001** bedeutet, daß das Teil “**AB**” Serienummer **2503001** montiert wurde. Folglich wurden Teile, die mit **C0201** markiert sind, **“BIS”** Serienummer **2501999** montiert.Es sei auf die Code-Tabelle auf Seite 41 verwiesen.

21 **Gesamtzahl** des auf der Seite Aufgeführten Teils.Diese Zahl kann durch die folgenden Angaben ersetzt sein:
M = Lieferung in Meter. **AR** = Anzahl nach Bedarf.

22 **Beschreibung** von Teilen.

23 **L.C. - Lexikon-Code** zur Identifizierung von Bezeichnungen für Teile (siehe Seite 45).

24 Fußnotenverzeichnisse.

25 Hinweise zu Abbildungen.

26 Modellnummer.

01.01	01	p16	02/03

CHASSI
MAIN FRAME
BASTIDOR
TELAIO
GESTELL
CHASSI

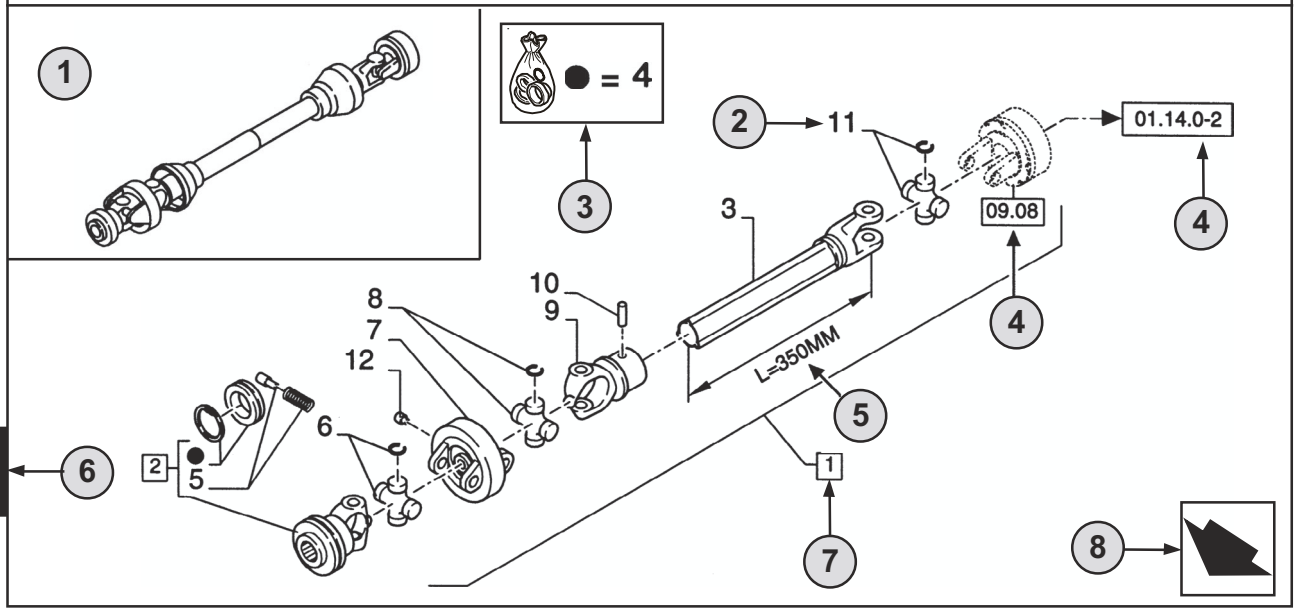

1

9 10

01.01	01	p16	02/03

11 12 13 14

CHASSI - D0200
MAIN FRAME
BASTIDOR
TELAIO
GESTELL
CHASSI

R	N	P.N.	MOD	Q	Descrição	Description	Descripción	L.C.
	A	**86529340**		1	TOMADA DE FORÇA **(2 AO 11)**	SHAFT, PTO	TOMA DE FUERZA	207P
2		**84014007**		1	GARFO **(4,5)**	YOKE	HORQUILLA	085F
3		**NSS**		1	EIXO, **L=350MM**	SHAFT	EJE	016A
4		**84004292**	C0204	1	KIT	KIT	EQUIPO	305C
		[84058743]	D0500	1	KIT	KIT	EQUIPO	305C

15 16 7

2 18 19 20 21 17 22 22 23

(A) SOMENTE BRASIL 24

1

STANDARD 25

26 **MODELOS**

1 Position du “Chiffre” sur la machine.

2 Référence-Chiffre de terminaison de la référence**.**

3 Pièces détachées approvisionnées en kit de réparation par symbole de référence.

4 01.14.0-2 Pièce illustrée dans la **page** ou sur la **figure** indiquée, pour des **variations** ou des **détails**. Montre les composants détaillés par ailleurs dans le catalogue sous le numéro de la figure.

5 Spécifications techniques relatif à la pièce indiquée.

6 Numérotation des sections.

7 2 ITEM inclus .....

8 Orientation (la Flèche indique l’avant de la machine). 

9 Description de la figure.

10 Information générale de la figure.

11 Code d’assemblage.

12 Code de séquence sans l’assemblage.

13 Numéro de page sans le code de séquence.

14 Date d’impression ou mise à jour de la page (mois-année).

15 Note-relatif à la référence. Ceci est la clé des symboles et abréviations en bas de la page suivante.

16 Pièces non servies (voir page 42).

17 Description supplémentaire de la pièces pour aider à la confirmation de l’identification.
Se reporter à la page 42 pour l’explication des symboles utilisés.

18 Ne concerne pas le service pièces détachées.

19 Référence.

20 Modification.
C 0201 = Pièce valable **JUSQU’A 0201** Changement.
D 0300 = Pièce valable **A PARTIR DE 0300** Changement.
F 0202 = Pièce valable **A PARTIR DU** N° de série **.... Jusqu’au** N° de série**....**

Mise en oeuvre de changement.Les numéro de série qui démarrent.Les numéros sont indiqués sur la plaque d’identification du modèles (voir page 38).
Ex.: **D0300** N° de série **2503001** indique que la pièce a été installée à partir du N° de série **2503001**.
En conséquence la pièce marquée **C0201** serait installée après le N° de série **2501999**.
Voir la table - codes page 41.

21 Total du nombre de pièces référencées dans la page.
La quantité peut être remplacée par l’indications suivante:
M = Vendu au mètres. **AR** = Quantité à la demande.

22 Description de la pièce.

23 L.C. - Code Lexique ou Glossaire pour l’identification du nom des pièces (voir page 45).

24 Référence en bas de page.

25 Annotation des chiffres.

26 Numéro du modèle.

TABLE OF CONTENTS

00-00		REFORMA DO MOTOR
02-02	01	MOTOR - FIXAÇÃO
02-04	01	VENTILADOR
02-04A	01	HÉLICE DO VENTILADOR DO MOTOR (PLÁSTICO)
02-06	01	RADIADOR E COMPONENTES
02-06A	01	RADIADOR E COMPONENTES
02-06A	02	RADIADOR E COMPONENTES
02-06B	01	SISTEMA DE ARREFECIMENTO - MANGUEIRAS E CONEXÕES
02-06B	02	SISTEMA DE ARREFECIMENTO - MANGUEIRAS E CONEXÕES
02-06C	01	SISTEMA DE ARREFECIMENTO - PROTEÇÕES
02-08	01	FILTRO DE AR E COMPONENTES
02-10	01	SILENCIOSO - MONTAGEM
02-12	01	BOMBA D'ÁGUA - CONJUNTO
02-14	01	TAMPA DE DISTRIBUIÇÃO
02-16	01	TURBOCOMPRESSOR E COLETORES DE ADMISSÃO & ESCAPE
02-18	01	TURBOCOMPRESSOR - MONTAGEM
02-20	01	FILTRO E RADIADOR DE ÓLEO
02-22	01	BOMBA E CARTER DE ÓLEO
02-24	01	TAMPA DO CABEÇOTE, JUNTAS E TERMOSTATO
02-26	01	CABEÇOTE E VÁLVULAS
02-28	01	EIXO COMANDO DE VÁLVULAS
02-30	01	BLOCO DE CILINDROS
02-32	01	ÁRVORE DE MANIVELAS
02-34	01	VOLANTE E CARCAÇA
02-34A	01	VOLANTE E CARCAÇA
02-36	01	PISTÕES E BIELAS
02-38	01	JOGOS DE JUNTAS
03-02	01	ACELERADOR E ARTICULAÇÕES
03-04	01	TANQUE DE COMBUSTÍVEL E COMPONENTES
03-06	01	SISTEMA DE INJEÇÃO DE COMBUSTÍVEL
03-08	01	BOMBA ALIMENTADORA
03-10	01	FILTRO DE COMBUSTÍVEL
03-12	01	BOMBA INJETORA
03-14	01	SOLENÓIDE DE CORTE DE COMBUSTÍVEL
03-16	01	BICO INJETOR
04-02	01	ALTERNADOR 65A - MONTAGEM (OPCIONAL PARA MÁQUINAS STANDARD)
04-02A	01	ALTERNADOR 65A - MONTAGEM COM FILTRO (STANDARD PARA MÁQUINAS VERSÃO FERTILIZANTE)
04-04	01	ALTERNADOR 65A - CONJUNTO (OPCIONAL)
04-06	01	ALTERNADOR 45A - MONTAGEM (OPCIONAL)
04-08	01	ALTERNADOR 45A - CONJUNTO (OPCIONAL)
04-08B	01	ALTERNADOR 50A - CONJUNTO E MONTAGEM (STANDARD)
04-10	01	PAINEL DE INSTRUMENTOS
04-14	01	SISTEMA ELÉTRICO - DIANTEIRO
04-16	01	SISTEMA ELÉTRICO - MOTOR
04-18	01	INDICADOR DE DIREÇÃO
04-20	01	MOTOR DE PARTIDA E BATERIA
04-22	01	MOTOR DE PARTIDA - CONJUNTO
04-22A	01	MOTOR DE PARTIDA - CONJUNTO
04-24	01	LANTERNA TRASEIRA (STD E OPCIONAL)
04-26	01	LANTERNA DE DIREÇÃO (OPCIONAL)
04-28	01	FAROL - ROPS (OPCIONAL)
04-30	01	FAROL DIANTEIRO E TRASEIRO
04-32	01	ALARME DE RÉ
05-02	01	BOMBA DE DIREÇÃO E VOLANTE

TABLE OF CONTENTS

05-04	01	BOMBA DE DIREÇÃO AOS CILINDROS
05-06	01	UNIDADE HIDROSTÁTICA DA DIREÇÃO
05-08	01	CILINDROS DE DIREÇÃO
05-08	02	CILINDROS DE DIREÇÃO
05-10	01	LINHAS DE PRESSÃO HIDRÁULICA DA DIREÇÃO
05-12	01	CIRCUITO HIDRÁULICO DA DIREÇÃO - RETORNO
06-02	01	TRANSMISSÃO - CONTROLES
06-04	01	MONTAGEM E CIRCUITO HIDRÁULICO DA TRANSMISSÃO
06-06	01	CONVERSOR DE TORQUE
06-10	01	CARCAÇA DO CONVERSOR DE TORQUE
06-12	01	CARCAÇA DA CAIXA DE MUDANÇAS
06-14	01	EIXO DE SAÍDA DA TRANSMISSÃO
06-16	01	PEÇAS DO EIXO DA EMBREAGEM RÉ E 3ª
06-18	01	PEÇAS DO EIXO DA EMBREAGEM - PARA FRENTE 2ª E 1ª
06-20	01	PEÇAS DO EIXO DA EMBREAGEM - 4ª
06-22	01	EMBREAGENS
06-24	01	FILTRO E BOMBA DA TRANSMISSÃO
06-26	01	FILTRO E BOMBA DA TRANSMISSÃO
06-26A	01	FILTRO E BOMBA DA TRANSMISSÃO
06-28	01	MONTAGEM DA VÁLVULA DE CONTROLE DA TRANSMISSÃO
06-30	01	VÁLVULA DE CONTROLE DA TRANSMISSÃO
06-32	01	FREIO DE ESTACIONAMENTO - TRANSMISSÃO
06-34	01	EIXO PROPULSOR DIANTEIRO
06-36	01	EIXO PROPULSOR CENTRAL
06-38	01	EIXO PROPULSOR TRASEIRO
06-38A	01	EIXO PROPULSOR TRASEIRO
06-40	01	EIXOS DIANTEIRO E TRASEIRO (DANA) - MONTAGEM
06-42	01	EIXO DIANTEIRO - CONJUNTO
06-44	01	EIXO DIANTEIRO - CARCAÇAS
06-46	01	EIXO DIANTEIRO - PRISIONEIROS DAS CARCAÇAS
06-48	01	EIXO DIANTEIRO - DIFERENCIAL
06-50	01	EIXO DIANTEIRO - CUBO DE RODA
06-52	01	EIXO DIANTEIRO - FREIOS
06-54	01	EIXO TRASEIRO - CONJUNTO
06-56	01	EIXO TRASEIRO (STD) - CARCAÇAS
06-56A	01	EIXO TRASEIRO (HD, HEAVY DUTY) (OPCIONAL) - CARCAÇAS
06-58	01	EIXO TRASEIRO (STD) - PRISIONEIROS DAS CARCAÇAS
06-58A	01	EIXO TRASEIRO (HD, HEAVY DUTY) (OPCIONAL) - PRISIONEIROS DAS CARCAÇAS
06-60	01	EIXO TRASEIRO (STD) - DIFERENCIAL
06-60A	01	EIXO TRASEIRO (HD, HEAVY DUTY) (OPCIONAL) - DIFERENCIAL
06-62	01	EIXO TRASEIRO (STD) - CUBO DE RODA
06-62A	01	EIXO TRASEIRO (HD, HEAVY DUTY) (OPCIONAL) - CUBO DE RODA
06-64	01	EIXO TRASEIRO (STD) - FREIOS
06-64A	01	EIXO TRASEIRO (HD, HEAVY DUTY) (OPCIONAL) - FREIOS
06-66	01	RODAS E PNEUS
07-02	01	CIRCUITO DO FREIO - PEDAL AO EIXO
07-04	01	CIRCUITO DO FREIO - PEDAL AOS ACUMULADORES
07-06	01	CIRCUITO DO FREIO - BOMBA E RESERVATÓRIO
07-08	01	PEDAL DE FREIO
07-14	01	VÁLVULA SOLENÓIDE REGULADORA DE PRESSÃO
07-16	01	FREIO DE ESTACIONAMENTO - MONTAGEM
07-18	01	FREIO DE ESTACIONAMENTO - ALAVANCA
08-02	01	SISTEMA HIDRÁULICO PRIMÁRIO - PÁ CARREGADEIRA E DIREÇÃO
08-04	01	CIRCUITO HIDRÁULICO - BOMBA À VÁLVULA
08-06	01	VÁLVULA DE CONTROLE AO RESERVATÓRIO HIDRÁULICO - RETORNO

TABLE OF CONTENTS

08-06A	01	VÁLVULA DE CONTROLE AO RESERVATÓRIO HIDRÁULICO COM VÁLVULA DE RETENÇÃO, MONTAGEM - RETORNO
08-08	01	RESERVATÓRIO HIDRÁULICO E PEÇAS COMPONENTES
08-10	01	PÁ CARREGADEIRA - CIRCUITO HIDRÁULICO DE LEVANTAMENTO
08-12	01	PÁ CARREGADEIRA - CIRCUITO HIDRÁULICO DE BASCULAMENTO
08-14	01	PÁ CARREGADEIRA - CIRCUITO HIDRÁULICO SEÇÃO OPCIONAL (PARKER)
08-14A	01	PÁ CARREGADEIRA - CIRCUITO HIDRÁULICO DO ACOPLAMENTO
08-14B	01	PÁ CARREGADEIRA - CIRCUITO HIDRÁULICO SEÇÃO OPCIONAL (REXROTH)
08-16	01	CILINDROS DE LEVANTAMENTO
08-18	01	CILINDROS DE INCLINAÇÃO
08-20	01	BOMBA HIDRÁULICA - CONJUNTO ULICA
08-22	01	CONTROLE DA CARREGADEIRA (2 CARRETÉIS & 1 ALAVANCA - PARKER)
08-22B	01	CONTROLE DA CARREGADEIRA (2 CARRETÉIS & 1 ALAVANCA - REXROTH)
08-24	01	CONTROLE DA CARREGADEIRA (2 CARRETÉIS & 2 ALAVANCAS - PARKER)
08-24B	01	CONTROLE DA CARREGADEIRA (2 CARRETÉIS & 2 ALAVANCAS - REXROTH)
08-26	01	CONTROLE DA CARREGADEIRA (3 CARRETÉIS & 2 ALAVANCAS - PARKER)
08-28	01	CONTROLE DA CARREGADEIRA (3 CARRETÉIS & 3 ALAVANCAS - PARKER)
08-28B	01	CONTROLE DA CARREGADEIRA (3 CARRETÉIS & 3 ALAVANCAS - REXROTH)
08-30	01	CONTROLES DE POSICIONAMENTO - RETORNO DA CAÇAMBA
08-32	01	CONTROLE DE ALTURA DA CAÇAMBA
08-34	01	VÁLVULA DE CONTROLE DA CARREGADEIRA (2 CARRETÉIS - PARKER)
08-36	01	VÁLVULA DE CONTROLE DA CARREGADEIRA (SEÇÃO DE ADMISSÃO E SAÍDA - PARKER)
08-38	01	VÁLVULA DE CONTROLE DA CARREGADEIRA (SEÇÃO DA CAÇAMBA - PARKER)
08-40	01	VÁLVULA DE CONTROLE DA CARREGADEIRA (SEÇÃO DE LEVANTAMENTO - PARKER)
08-42	01	VÁLVULA DE CONTROLE DA CARREGADEIRA (SEÇÃO DE FECHAMENTO - PARKER)
08-44	01	VÁLVULA DE ALÍVIO (PARKER)
08-46	01	VÁLVULA CONTRA PRESSÃO (PARKER)
08-48	01	VÁLVULA DE ALÍVIO (PARKER)
08-50	01	VÁLVULA ANTICAVITAÇÃO (PARKER)
08-52	01	VÁLVULA DE CONTROLE - POSICIONADOR (SEÇÃO DA CAÇAMBA - PARKER)
08-54	01	VÁLVULA ANTICAVITAÇÃO (PARKER)
08-56	01	VÁLVULA DE CONTROLE - POSICIONADOR (SEÇÃO LEVANTAMENTO - PARKER)
08-58	01	VÁLVULA ANTICAVITAÇÃO (PARKER)
08-60	01	VÁLVULA DE CONTROLE DA CARREGADEIRA (3 CARRETÉIS - PARKER)
08-62	01	VÁLVULA DE CONTROLE DA CARREGADEIRA (SEÇÃO AUXILIAR - PARKER)
08-64	01	VÁLVULA DE CONTROLE - POSICIONADOR (SEÇÃO AUXILIAR - PARKER)
08-66	01	VÁLVULA DE CONTROLE DA CARREGADEIRA (2 CARRETÉIS - REXROTH)
08-68	01	VÁLVULA DE CONTROLE DA CARREGADEIRA (3 CARRETÉIS - REXROTH)
08-70	01	VÁLVULA DE ALÍVIO (REXROTH)
08-72	01	VÁLVULA ANTICAVITAÇÃO (REXROTH)
08-74	01	VÁLVULA DE ALÍVIO E ANTI-CAVITAÇÃO (REXROTH)
09-02	01	ESTRUTURA DE LEVANTAMENTO DA CARREGADEIRA E COMPONENTES
09-04	01	CAÇAMBAS DA CARREGADEIRA
09-04A	01	CAÇAMBAS DA CARREGADEIRA 2.25 YD3 COM DENTES
09-06	01	CAÇAMBAS DA CARREGADEIRA 4 EM 1 (OPCIONAL)
09-08	01	CILINDROS DAS MADÍBULAS - CAÇAMBA 4 EM 1
09-10	01	CHASSI TRASEIRO, BALANCIM E CONTRAPESO
09-12	01	GRADE E MÁSCARA
09-14	01	CAPUZ DO MOTOR
09-16	01	PÁRA-LAMAS
09-18	01	CHASSI DIANTEIRO
09-20	01	COMPARTIMENTO DO OPERADOR

TABLE OF CONTENTS

09-22	01	PROTEÇÃO CONTRA CAPOTAMENTO (ROPS E CABINA)
09-24	01	PROTEÇÃO CONTRA CAPOTAMENTO E CABINA COM VIDROS (STANDARD)
09-24	02	PROTEÇÃO CONTRA CAPOTAMENTO - VIDROS (STANDARD)
09-24	03	CABINE - VIDROS (STANDARD)
09-24	04	PROTEÇÃO CONTRA CAPOTAMENTO - VEDAÇÃO (STANDARD)
09-24	05	PROTEÇÃO CONTRA CAPOTAMENTO
09-26	01	CABINA COM SISTEMA DE CLIMATIZAÇÃO - FIXAÇÃO (OPCIONAL)
09-26	02	CABINA COMPLETA
09-28	01	CABINA COM SISTEMA DE CLIMATIZAÇÃO - COMPONENTES (OPCIONAL)
09-28	02	CABINA COMPLETA - PORTA
09-28	03	CABINA COMPLETA - JANELA
09-28	04	CABINA COMPLETA - REVESTIMENTOS
09-28	05	CABINA COMPLETA - LIMPADOR E LAVADOR DE PARA-BRISA
09-28	06	CABINA COMPLETA - REVESTIMENTO DO FREIO DE ESTACIONAMENTO
09-28	07	CABINA COMPLETA - SISTEMA ELÉTRICO
09-30	01	SISTEMA DE AR CONDICIONADO
09-30	02	SISTEMA DE AR CONDICIONADO
09-30	03	SISTEMA DE AR CONDICIONADO
09-30	04	SISTEMA DE AR CONDICIONADO
09-30	05	SISTEMA DE AQUECIMENTO
09-30	06	CABINE - AR CONCIONADO E AQUECEDOR
09-30	07	CABINE - AQUECEDOR
09-30B	01	CLIMATIZADOR - TAMPAS E FILTROS
09-30D	01	CLIMATIZADOR - TAMPA E VENTILADOR
09-30F	01	CLIMATIZADOR - CONJUNTO
09-30H	01	CLIMATIZADOR - PAINEL
09-32	01	RETROVISOR EXTERNO - OPCIONAL
09-32	01	RETROVISOR EXTERNO - OPCIONAL
09-32	02	LUZ ROTATIVA
09-34	01	BANCO DO OPERADOR - SUPORTE
09-36	01	BANCO DO OPERADOR - CONJUNTO
09-40	01	DECALQUES
09-44	01	DECALQUES - REFLETIVOS

SECTION INDEX
Motor

00-00		REFORMA DO MOTOR
02-02	01	MOTOR - FIXAÇÃO
02-04	01	VENTILADOR
02-04A	01	HÉLICE DO VENTILADOR DO MOTOR (PLÁSTICO)
02-06	01	RADIADOR E COMPONENTES
02-06A	01	RADIADOR E COMPONENTES
02-06A	02	RADIADOR E COMPONENTES
02-06B	01	SISTEMA DE ARREFECIMENTO - MANGUEIRAS E CONEXÕES
02-06B	02	SISTEMA DE ARREFECIMENTO - MANGUEIRAS E CONEXÕES
02-06C	01	SISTEMA DE ARREFECIMENTO - PROTEÇÕES
02-08	01	FILTRO DE AR E COMPONENTES
02-10	01	SILENCIOSO - MONTAGEM
02-12	01	BOMBA D'ÁGUA - CONJUNTO
02-14	01	TAMPA DE DISTRIBUIÇÃO
02-16	01	TURBOCOMPRESSOR E COLETORES DE ADMISSÃO & ESCAPE
02-18	01	TURBOCOMPRESSOR - MONTAGEM
02-20	01	FILTRO E RADIADOR DE ÓLEO
02-22	01	BOMBA E CARTER DE ÓLEO
02-24	01	TAMPA DO CABEÇOTE, JUNTAS E TERMOSTATO
02-26	01	CABEÇOTE E VÁLVULAS
02-28	01	EIXO COMANDO DE VÁLVULAS
02-30	01	BLOCO DE CILINDROS
02-32	01	ÁRVORE DE MANIVELAS
02-34	01	VOLANTE E CARCAÇA
02-34A	01	VOLANTE E CARCAÇA
02-36	01	PISTÕES E BIELAS
02-38	01	JOGOS DE JUNTAS

00-00		p1	08/11

REFORMA DO MOTOR
ENGINE OVERHOULING
REFORMA DEL MOTOR
ENGINE OVERHOULING

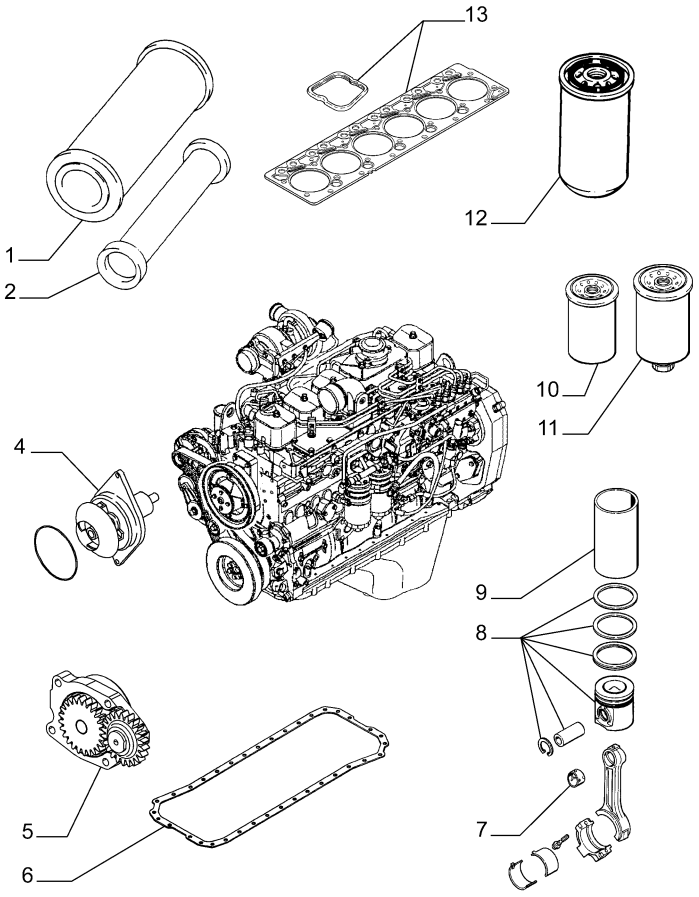

ENGINE OVERHOULING
ENGINE OVERHOULING
ENGINE OVERHOULING
ENGINE OVERHOULING

R	N	P.N.	MOD	Q	Denominação Bezeichnung	Description Description	Denominacion Beskrivelse	Descrizione Beschrijving	L.C.
		71104378		1	KIT DE REVISÃO DO MOTOR				
						ENGINE OVERHAUL KIT	KIT DE REVISIÓN DEL M	KIT REVISIONE MOTORE	002K
					MOTORÜBERHOLUNGSS	KIT DE REVISION MOTEI	MOTORREVISIONSSÆT	REVISIEKIT VOOR MOTO	
1		**149167A1**		1	ELEMENTO, Outer	ELEMENT	ELEMENTO	ELEMENTO	020E
					ELEMENT	ELEMENT	ELEMENT	ELEMENT	
2		**149166A1**		1	ELEMENTO, Inner	ELEMENT	ELEMENTO	ELEMENTO	020E
					ELEMENT	ELEMENT	ELEMENT	ELEMENT	
4		**J286278**		1	BOMBA DE AGUA	PUMP, WATER	BOMBA DE AGUA	POMPA, ACQUA	Z147
					WASSERPUMPE	POMPE A EAU	PUMP, WATER	PUMP, WATER	
5		**84374426**		1	BOMBA DE ÓLEO DO MOTOR				
						ENGINE OIL PUMP	BOMBA DE ACEITE DE M	POMPA OLIO MOTORE	153P
					MOTORÖLPUMPE	POMPE A HUILE MOTEU	MOTOROLIEPUMPE	MOTOROLIEPOMP	
5		**J937404**		1	BOMBA OLEO MOTOR	PUMP, ENGINE OIL	BOMBA ACEITE	POMPA, OLIO MOTORE	Z103
					OELPUMPE	POMPE A HUILE	PUMP, ENGINE OIL	PUMP, ENGINE OIL	
6		**75289105**		1	KIT GAXETA DE MOTOR, Lower				
						ENGINE GASKET KIT	KIT DE JUNTAS DEL MO	KIT GUARNIZIONI MOTO	317S
					MOTORDICHTUNGSSAT	JEU DE JOINTS MOTEUF	MOTORPAKNINGSSÆT	KIT MET MOTORPAKKIN	
7		**87403209**		6	BUCHA	BUSHING	CASQUILLO	BOCCOLA	095B
					BUCHSE	BAGUE	BØSNING	BUS	
8		**C5884230**		6	PISTÃO	PISTON	PISTÓN	PISTONE	235S
					KOLBEN	PISTON	STEMPEL	ZUIGER	
8		**A77730**		6	PISTAO	PISTON	PISTON	PISTONE	6270
					KOLBEN	PISTON	PISTON	PISTON	
9		**J904166**		6	CAMISA	SLEEVE	CAMISA	MANICOTTO	8000
					HUELSE	CHEMISE	SLEEVE	SLEEVE	
10		**J931063**		1	FILTRO DE COMBUSTÍVEL	FUEL FILTER	FILTRO DE COMBUSTIBI	FILTRO CARBURANTE	064F
					KRAFTSTOFFFILTER	FILTRE A CARBURANT	BRÆNDSTOFFILTER	BRANDSTOFFILTER	
11		**J930942**		1	SEPARADOR	SEPARATOR	SEPARADOR	SEPARATORE	P062
					ABSCHEIDER	SEPARATEUR	UDSKILLER	AFSCHEIDER	
12		**J937743**		1	FILTRO DE ÓLEO DO MOTOR, Single pkg qty. For multi pkg [qty.12] order J937743MP				
						ENGINE OIL FILTER	FILTRO DE ACEITE DE M	FILTRO OLIO MOTORE	067F
					MOTORÖLFILTER	FILTRE A HUILE MOTEU	MOTOROLIEFILTER	MOTOROLIEFILTER	
13		**75289104**		1	KIT DE REVISÃO DO MOTOR, Upper				
						ENGINE OVERHAUL KIT	KIT DE REVISIÓN DEL M	KIT REVISIONE MOTORE	002K
					MOTORÜBERHOLUNGSS	KIT DE REVISION MOTEI	MOTORREVISIONSSÆT	REVISIEKIT VOOR MOTO	

02-02	01	p1	04/12

MOTOR - FIXAÇÃO
ENGINE - MOUNTING
MOTOR - MONTAJE
ENGINE - MOUNTING

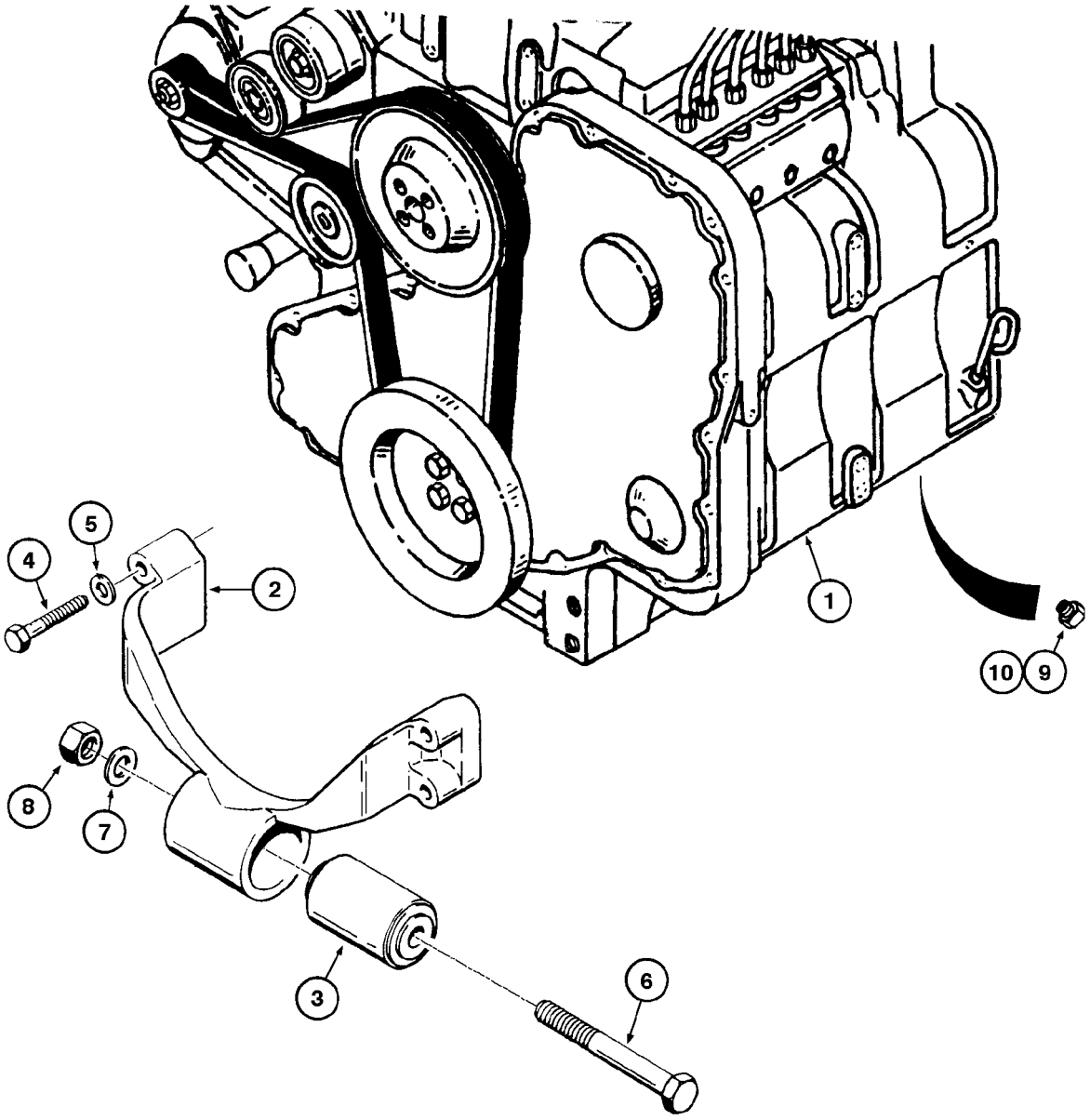

ENGINE - MOUNTING
ENGINE - MOUNTING
ENGINE - MOUNTING
ENGINE - MOUNTING

R	N	P.N.	MOD	Q	Denominação Bezeichnung	Description Description	Denominacion Beskrivelse	Descrizione Beschrijving	L.C.
1		75263179	a	1	MOTOR, Assy	ENGINE	MOTOR	MOTORE	130M
					MOTOR	MOTEUR	MOTOR	MOTOR	
1		87530003	b	1	MOTOR, Assy	ENGINE	MOTOR	MOTORE	130M
					MOTOR	MOTEUR	MOTOR	MOTOR	
		L127411		1	SUPORTE CONJUNTO, Includes items 2, 3				
						SUPPORT ASSY.	APOYADERO (CONJUNT	SUPPORTO, COMPLESS	P427
					STUETZE (KPLT.)	SUPPORT (ASSEMBLE)	SUPPORT ASSY.	SUPPORT ASSY.	
2		J916664		1	SUPORTE	SUPPORT	APOYADERO	SUPPORTO	8790
					STUETZE	SUPPORT	SUPPORT	SUPPORT	
3		L124020		1	AMORTECEDOR DE CHO	SHOCK ABSORBER	AMORTIGUADOR	AMMORTIZZATORE	P334
					STOSSDAEMPFER	SILENTBLOC	SHOCK ABSORBER	SHOCK ABSORBER	
4		814-12070		4	PARAFUSO, Hex, M12 x 70, 8.8				
						BOLT	PERNO	BULLONE	140B
					SCHRAUBE	VIS	BOLT	BOUT	
5		496-21053		4	ARRUELA PLANA, 17/32" x 1 1/16" x .134"				
						WASHER	ARANDELA	RONDELLA	131R
					UNTERLEGSCHEIBE	RONDELLE	FLADSKIVE	SLUITRING	
6		426-1296		1	PARAFUSO, Hex, 3/4"-10 x 6", G8				
						BOLT	PERNO	BULLONE	140B
					SCHRAUBE	VIS	BOLT	BOUT	
7		496-81000		1	ARRUELA PLANA, 25/32" x 1 3/8" x .134", HDN				
						WASHER	ARANDELA	RONDELLA	131R
					UNTERLEGSCHEIBE	RONDELLE	FLADSKIVE	SLUITRING	
8		231-14412		1	CONTRA PORCA, 3/4"-10, GB				
						LOCK NUT	TUERCA DE BLOQUEO	DADO DI BLOCCAGGIO	P263
					SICHERUNGSMUTTER	CONTRE-ECROU	LÅSEMØTRIK	BORGMOER	
9		CASL125989		1	COTOVELO	ELBOW	CODO	GOMITO	085G
					KNIESTÜCK	COUDE	VINKELRØR	KNIESTUK	
10		218-755		1	TAMPA, 37º, 3/4"-16	CAP	TAPÓN	TAPPO	052T
					KAPPE	CAPUCHON	TANKDÆKSEL	DOP	

(a) BSN N6AE00944
(b) ASN N6AE00945

02-04	01	p1	11/07

VENTILADOR
ENGINE FAN
VENTILADOR
ENGINE FAN

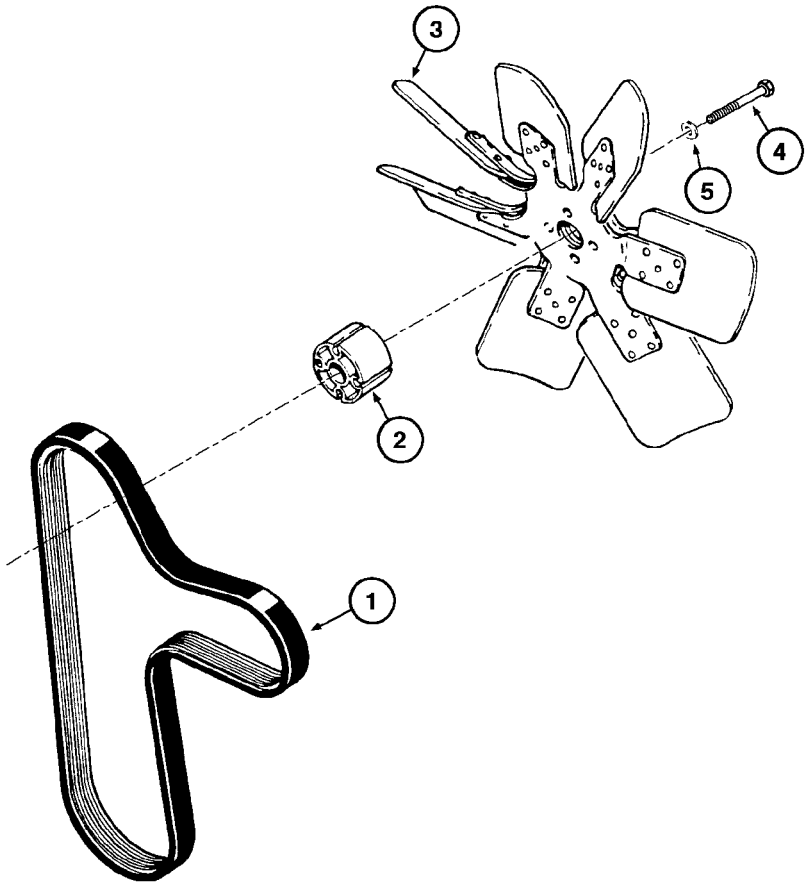

ENGINE FAN
ENGINE FAN
ENGINE FAN
ENGINE FAN

R	N	P.N.	MOD	Q	Denominação Bezeichnung	Description Description	Denominacion Beskrivelse	Descrizione Beschrijving	L.C.
1		J911566		1	CORREIA V, 3.56 mm W x 1612.90 mm L, 8 Ribs				
						V-BELT	CORREA TRAPEZOIDAL	CINGHIA, TRAPEZ	Z087
					KEILRIEMEN	COURROIE TRAPEZOID.	V-BELT	V-BELT	
2		A190656		1	ESPACADOR	SPACER	ESPACIADOR	DISTANZIALE	8090
					ABSTANDSSTUECK	ENTRETOISE	SPACER	SPACER	
3		A189402		1	HELICE	FAN	VENTILADOR	VENTILATORE	3140
					VENTILATOR/LUEFTER	HELICE	FAN	FAN	
4		814-10050		4	PARAFUSO, Hex, M10 x 50, 8.8				
						BOLT	PERNO	BULLONE	140B
					SCHRAUBE	VIS	BOLT	BOUT	
5		496-21041		4	ARRUELA PLANA, 13/32" x 13/16" x .089", HDN				
						WASHER	ARANDELA	RONDELLA	131R
					UNTERLEGSCHEIBE	RONDELLE	FLADSKIVE	SLUITRING	

02-04A	01	p1	05/09

HÉLICE DO VENTILADOR DO MOTOR (PLÁSTICO)
ENGINE FAN
VENTILADOR
ENGINE FAN

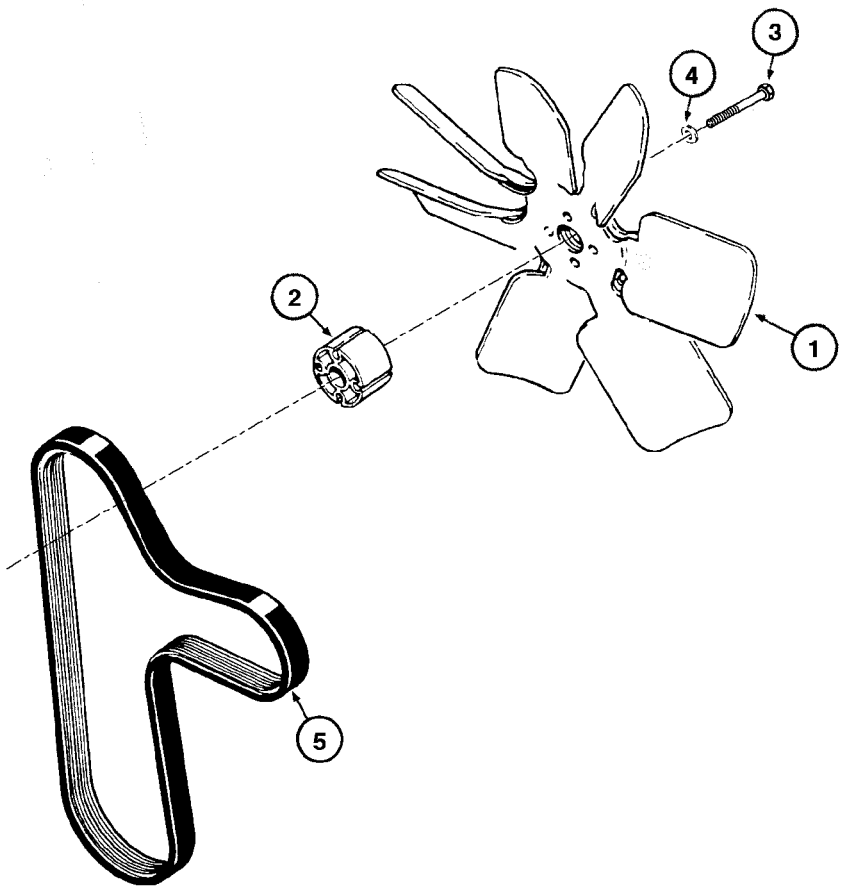

ENGINE FAN
ENGINE FAN
ENGINE FAN
ENGINE FAN

R	N	P.N.	MOD	Q	Denominação Bezeichnung	Description Description	Denominacion Beskrivelse	Descrizione Beschrijving	L.C.
1		84180843		1	VENTILADOR, Plastic GEBLÄSE	FAN VENTILATEUR	VENTILADOR VENTILATOR	VENTOLA VENTILATOR	030V
2		A184545		1	ESPACADOR ABSTANDSSTUECK	SPACER ENTRETOISE	ESPACIADOR SPACER	DISTANZIALE SPACER	8090
3		814-10070		4	PARAFUSO, Hex, M10 x 70, 8.8 SCHRAUBE	BOLT VIS	PERNO BOLT	BULLONE BOUT	140B
4		496-21041		4	ARRUELA PLANA, 13/32" x 13/16" x .089", HDN UNTERLEGSCHEIBE	WASHER RONDELLE	ARANDELA FLADSKIVE	RONDELLA SLUITRING	131R
5		J911566		1	CORREIA V, 3.56 mm W x 1612.90 mm L, 8 Ribs KEILRIEMEN	V-BELT COURROIE TRAPEZOID.	CORREA TRAPEZOIDAL V-BELT	CINGHIA, TRAPEZ V-BELT	Z087

02-06	01	p1	04/11

RADIADOR E COMPONENTES
RADIATOR AND RELATED PARTS
RADIADOR Y PIEZAS COMPONENTES
RADIATOR AND RELATED PARTS

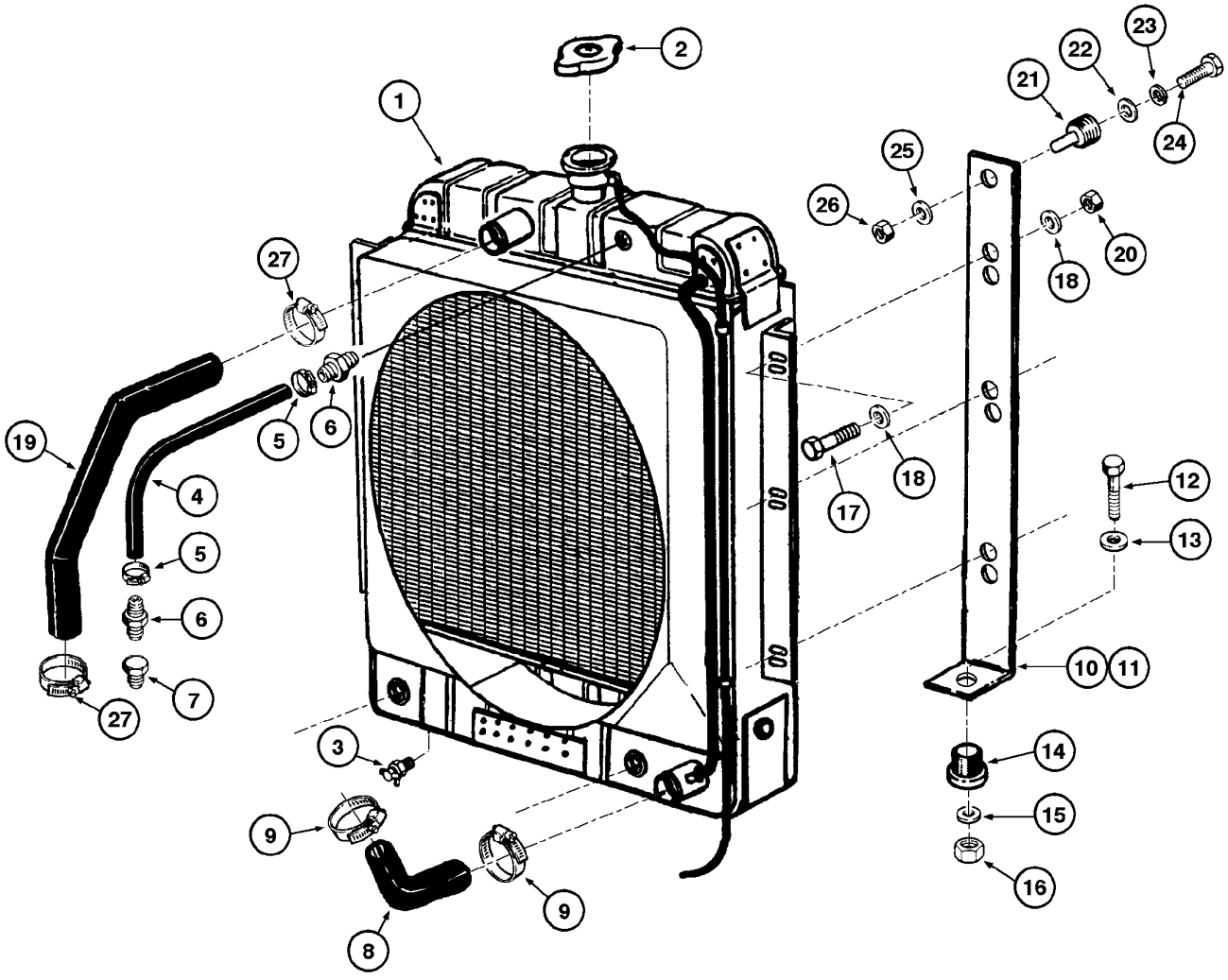

RADIATOR AND RELATED PARTS
RADIATOR AND RELATED PARTS
RADIATOR AND RELATED PARTS
RADIATOR AND RELATED PARTS

R	N	P.N.	MOD	Q	Denominação Bezeichnung	Description Description	Denominacion Beskrivelse	Descrizione Beschrijving	L.C.
1		147356A1		1	RADIADOR, water STD	RADIATOR	RADIADOR	RADIATORE	025R
					KÜHLER	RADIATEUR	KØLER	RADIATEUR	
1	1	148103A1		1	RADIADOR, water	RADIATOR	RADIADOR	RADIATORE	025R
					KÜHLER	RADIATEUR	KØLER	RADIATEUR	
1	2	148104A1		1	RADIADOR, water, Include items 2, 3				
						RADIATOR	RADIADOR	RADIATORE	025R
					KÜHLER	RADIATEUR	KØLER	RADIATEUR	
2		E60048		1	TAMPA DO RADIADOR	RADIATOR CAP	TAPÓN DE RADIADOR	TAPPO DEL RADIATORE	039T
					KÜHLERVERSCHLUSSK/	BOUCHON DU RADIATEI	KØLERDÆKSEL	RADIATEURDOP	
3		217-103		2	DRENO	COCK, DRAIN	LLAVE DE PASO	CRICCO	Z158
					ABLASSHAHN	ROBINET DE VIDANGE	COCK, DRAIN	COCK, DRAIN	
4		E159292		1	MANGUEIRA, 6.4 mm ID x 580.00 mm, SAE 20R1				
						HOSE	TUBO	TUBO FLESSIBILE	030M
					SCHLAUCH	FLEXIBLE	SLANGE	SLANG	
5		214-1704		2	BRAÇADEIRA MANGUEIRA, #4, 0.25/0.62 Type M Worm				
						HOSE CLAMP	ABRAZADERA DE MANG	FASCETTA STRINGITUB	P729
					SCHLAUCHSCHELLE	COLLIER POUR FLEXIBL	SLANGEKLEMME	SLANGKLEM	
6		217-150		2	CONEXÃO, 1/4" Hose X 1/8" NPTF Beaded				
						FITTING	ACOPLAMIENTO	RACCORDO	3300
					ARMATUR	RACCORD	FITTING	AANSLUITING	
7		221-1087		1	REDUTOR	REDUCER	REDUCTOR	RIDUTTORE	Z609
					ENDANTRIEB	REDUCTEUR	REDUCER	REDUCER	
8		147272A1		1	MANGUEIRA DO RADIADOR, 57.20 mm ID x 119.00 mm, SAE 20R4, Lower				
						RADIATOR HOSE	TUBO DE RADIADOR	TUBO FLESSIBILE RADI/	A060
					KÜHLERSCHLAUCH	FLEXIBLE DE RADIATEU	SLANGE, KØLER	RADIATEURSLANG	
9		214-1436		2	BRAÇADEIRA MANGUEIRA, #36, 1.81/2.75 Type F Worm				
						HOSE CLAMP	ABRAZADERA DE MANG	FASCETTA STRINGITUB	P729
					SCHLAUCHSCHELLE	COLLIER POUR FLEXIBL	SLANGEKLEMME	SLANGKLEM	
10		147354A1		1	SUPORTE, radiator RH	SUPPORT	SOPORTE	SUPPORTO	300S
					STÜTZE	SUPPORT	BESLAG	STEUN	
11		147355A1		1	SUPORTE, radiator LH	SUPPORT	SOPORTE	SUPPORTO	300S
					STÜTZE	SUPPORT	BESLAG	STEUN	
12		413-840		4	PARAFUSO, Hex, 1/2"-13 x 2 1/2", G5				
						BOLT	PERNO	BULLONE	140B
					SCHRAUBE	VIS	BOLT	BOUT	
13		495-31056		4	ARRUELA PLANA, 1/2" x 1 7/8" x .109"				
						WASHER	ARANDELA	RONDELLA	131R
					UNTERLEGSCHEIBE	RONDELLE	FLADSKIVE	SLUITRING	
14		L46821		2	AMORTECEDOR DE CHOQ, lower				
						SHOCK ABSORBER	AMORTIGUADOR	AMMORTIZZATORE	P334
					STOSSDAEMPFER	SILENTBLOC	SHOCK ABSORBER	SHOCK ABSORBER	
15		495-11053		4	ARRUELA PLANA, 1/2", SAE				
						WASHER	ARANDELA	RONDELLA	131R
					UNTERLEGSCHEIBE	RONDELLE	FLADSKIVE	SLUITRING	
16		231-1448		2	PORCA, 1/2"-13, GB	NUT	TUERCA	DADO	010D
					MUTTER	ECROU	MØTRIK	MOER	

(1) OPCIONAL para ambiente abrasivo
(2) OPCIONAL para "bagacinho"

Até o nº de série N6AE00937

W20E

02-06	01	p2	04/11

RADIADOR E COMPONENTES
RADIATOR AND RELATED PARTS
RADIADOR Y PIEZAS COMPONENTES
RADIATOR AND RELATED PARTS

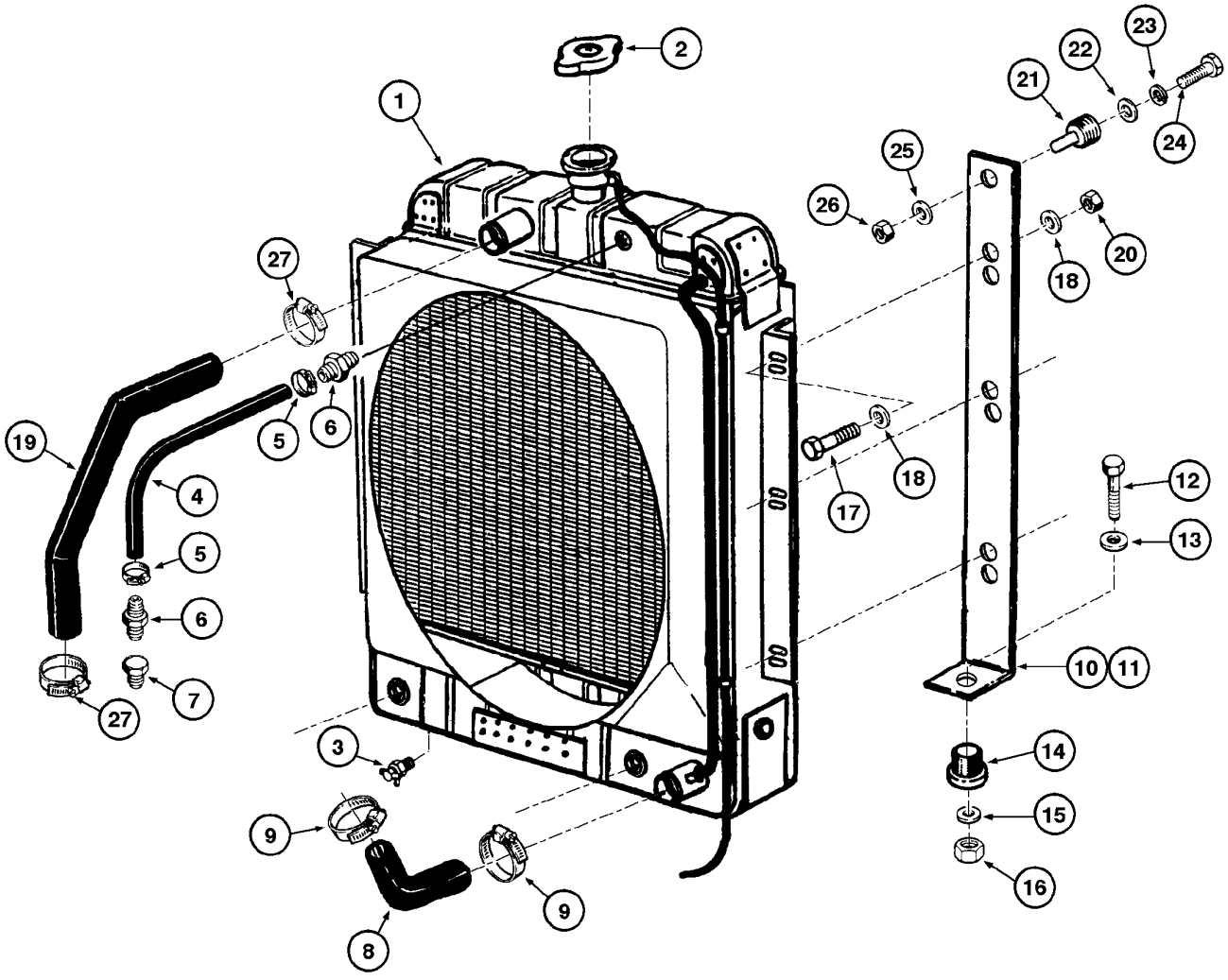

RADIATOR AND RELATED PARTS
RADIATOR AND RELATED PARTS
RADIATOR AND RELATED PARTS
RADIATOR AND RELATED PARTS

R	N	P.N.	MOD	Q	Denominação Bezeichnung	Description Description	Denominacion Beskrivelse	Descrizione Beschrijving	L.C.
17		413-620		6	PARAFUSO, Hex, 3/8"-16 x 1 1/4", G5, Full Thd				
						BOLT	PERNO	BULLONE	140B
					SCHRAUBE	VIS	BOLT	BOUT	
18		495-21044		1 2	ARRUELA PLANA, 3/8"	WASHER	ARANDELA	RONDELLA	131R
					UNTERLEGSCHEIBE	RONDELLE	FLADSKIVE	SLUITRING	
19		147271A1		1	MANGUEIRA DO RADIADOR, 44.50 mm x 355.0 mm, SAE 20R4, Upper				
						RADIATOR HOSE	TUBO DE RADIADOR	TUBO FLESSIBILE RADI/	A060
					KÜHLERSCHLAUCH	FLEXIBLE DE RADIATEU	SLANGE, KØLER	RADIATEURSLANG	
20		231-1446		6	CONTRA PORCA, 3/8"-16, GB				
						LOCK NUT	TUERCA DE BLOQUEO	DADO DI BLOCCAGGIO	P263
					SICHERUNGSMUTTER	CONTRE-ECROU	LÅSEMØTRIK	BORGMOER	
21		E159690		2	COXIM, Upper	CUSHION	COJÍN	CUSCINO	2460
					KISSEN	COUSSIN	PUDE	KUSSEN	
22		495-31056		2	ARRUELA PLANA, 1/2" x 1 7/8" x .109"				
						WASHER	ARANDELA	RONDELLA	131R
					UNTERLEGSCHEIBE	RONDELLE	FLADSKIVE	SLUITRING	
23		495-11053		2	ARRUELA PLANA, 1/2", SAE				
						WASHER	ARANDELA	RONDELLA	131R
					UNTERLEGSCHEIBE	RONDELLE	FLADSKIVE	SLUITRING	
24		413-840		2	PARAFUSO, Hex, 1/2"-13 x 2 1/2", G5				
						BOLT	PERNO	BULLONE	140B
					SCHRAUBE	VIS	BOLT	BOUT	
25		495-31056		2	ARRUELA PLANA, 1/2" x 1 7/8" x .109"				
						WASHER	ARANDELA	RONDELLA	131R
					UNTERLEGSCHEIBE	RONDELLE	FLADSKIVE	SLUITRING	
26		231-1448		2	PORCA, 1/2"-13, GB	NUT	TUERCA	DADO	010D
					MUTTER	ECROU	MØTRIK	MOER	
27		214-1428		2	BRAÇADEIRA MANGUEIRA, #28, 1.31/2.25 Type F Worm				
						HOSE CLAMP	ABRAZADERA DE MANG	FASCETTA STRINGITUB	P729
					SCHLAUCHSCHELLE	COLLIER POUR FLEXIBL	SLANGEKLEMME	SLANGKLEM	

Até o nº de série N6AE00937

W20E

02-06A	01	p1	06/11

RADIADOR E COMPONENTES
RADIATOR AND RELATED PARTS
RADIADOR Y PIEZAS COMPONENTES
RADIATOR AND RELATED PARTS

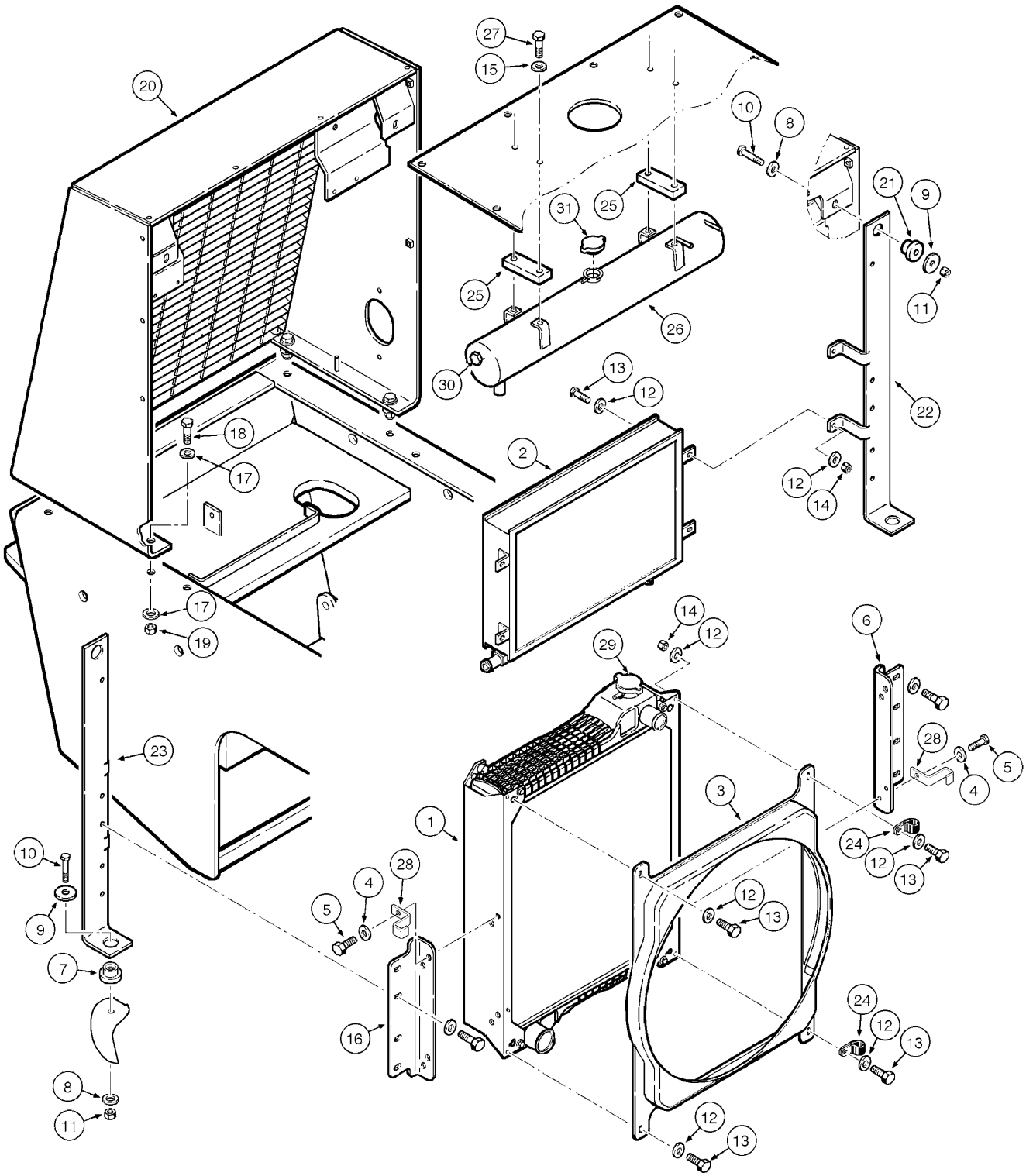

RADIATOR AND RELATED PARTS
RADIATOR AND RELATED PARTS
RADIATOR AND RELATED PARTS
RADIATOR AND RELATED PARTS

R	N	P.N.	MOD	Q	Denominação Bezeichnung	Description Description	Denominacion Beskrivelse	Descrizione Beschrijving	L.C.
1		347611A3		1	RADIADOR, engine WASSERKUEHLER	RADIATOR RADIATEUR	RADIATOR RADIATOR	RADIATORE RADIATOR	6755
2		401430A1		1	RADIADOR DE OLEO, transmission OELKUEHLER	COOLER, OIL RADIATEUR D'HUILE	REFRIGERADOR DE ACI COOLER, OIL	SCAMBIATORE CAL OLI(COOLER, OIL	Z229
3		87373373		1	COBERTURA, radiator VERKLEIDUNG	SHROUD PROTECTION	PROTECTOR DÆKKE	RIPARO MANTEL	7830
4		892-11008		8	TRAVA DA ARRUELA, M8 SICHERUNGSSCHEIBE	LOCK WASHER RONDELLE FREIN	ARANDELA DE BLOQUE(LÅSESKIVE	RONDELLA DI SICUREZ BORGRING	132R
5		627-8020		8	PARAFUSO, Hex, M8 x 20, 10.9 SCHRAUBE	BOLT VIS	PERNO BOLT	BULLONE BOUT	140B
6		87539346		1	SUPORTE, LH STÜTZE	SUPPORT SUPPORT	SOPORTE BESLAG	SUPPORTO STEUN	300S
7		L46821		2	AMORTECEDOR DE CHO(STOSSDAEMPFER	SHOCK ABSORBER SILENTBLOC	AMORTIGUADOR SHOCK ABSORBER	AMMORTIZZATORE SHOCK ABSORBER	P334
8		495-11053		4	ARRUELA PLANA, 1/2", SAE UNTERLEGSCHEIBE	WASHER RONDELLE	ARANDELA FLADSKIVE	RONDELLA SLUITRING	131R
9		495-31056		4	ARRUELA PLANA, 1/2" x 1 7/8" x .109" UNTERLEGSCHEIBE	WASHER RONDELLE	ARANDELA FLADSKIVE	RONDELLA SLUITRING	131R
10		413-840		4	PARAFUSO, Hex, 1/2"-13 x 2 1/2", G5 SCHRAUBE	BOLT VIS	PERNO BOLT	BULLONE BOUT	140B
11		231-1448		4	PORCA, 1/2"-13, GB MUTTER	NUT ECROU	TUERCA MØTRIK	DADO MOER	010D
12		895-15008		1 6	ARRUELA PLANA, M8 x 20 x 1.6 UNTERLEGSCHEIBE	WASHER RONDELLE	ARANDELA FLADSKIVE	RONDELLA SLUITRING	131R
13		627-8025		8	PARAFUSO, Hex, M8 x 25, 10.9 SCHRAUBE	BOLT VIS	PERNO BOLT	BULLONE BOUT	140B
14		832-10408		8	CONTRA PORCA, M8 x 1.25, Cl 8 SICHERUNGSMUTTER	LOCK NUT CONTRE-ECROU	TUERCA DE BLOQUEO LÅSEMØTRIK	DADO DI BLOCCAGGIO BORGMOER	P263
15		896-11010		1 2	ARRUELA PLANA, M10 x 21.5 x 2.5, HT UNTERLEGSCHEIBE	WASHER RONDELLE	ARANDELA FLADSKIVE	RONDELLA SLUITRING	131R
16		87539392		1	SUPORTE, radiator RH STÜTZE	SUPPORT SUPPORT	SOPORTE BESLAG	SUPPORTO STEUN	300S
17		496-21066		8	ARRUELA PLANA, 21/32" x 1 5/16" x .150" UNTERLEGSCHEIBE	WASHER RONDELLE	ARANDELA FLADSKIVE	RONDELLA SLUITRING	131R
18		413-1032		4	PARAFUSO, Hex, 5/8"-11 x 2", G5 SCHRAUBE	BOLT VIS	PERNO BOLT	BULLONE BOUT	140B
19		425-1010		4	PORCA, 5/8"-11, G5 MUTTER	NUT ECROU	TUERCA MØTRIK	DADO MOER	010D

A partir do nº de série N6AE00938

W20E

02-06A	01	p2	06/11

RADIADOR E COMPONENTES
RADIATOR AND RELATED PARTS
RADIADOR Y PIEZAS COMPONENTES
RADIATOR AND RELATED PARTS

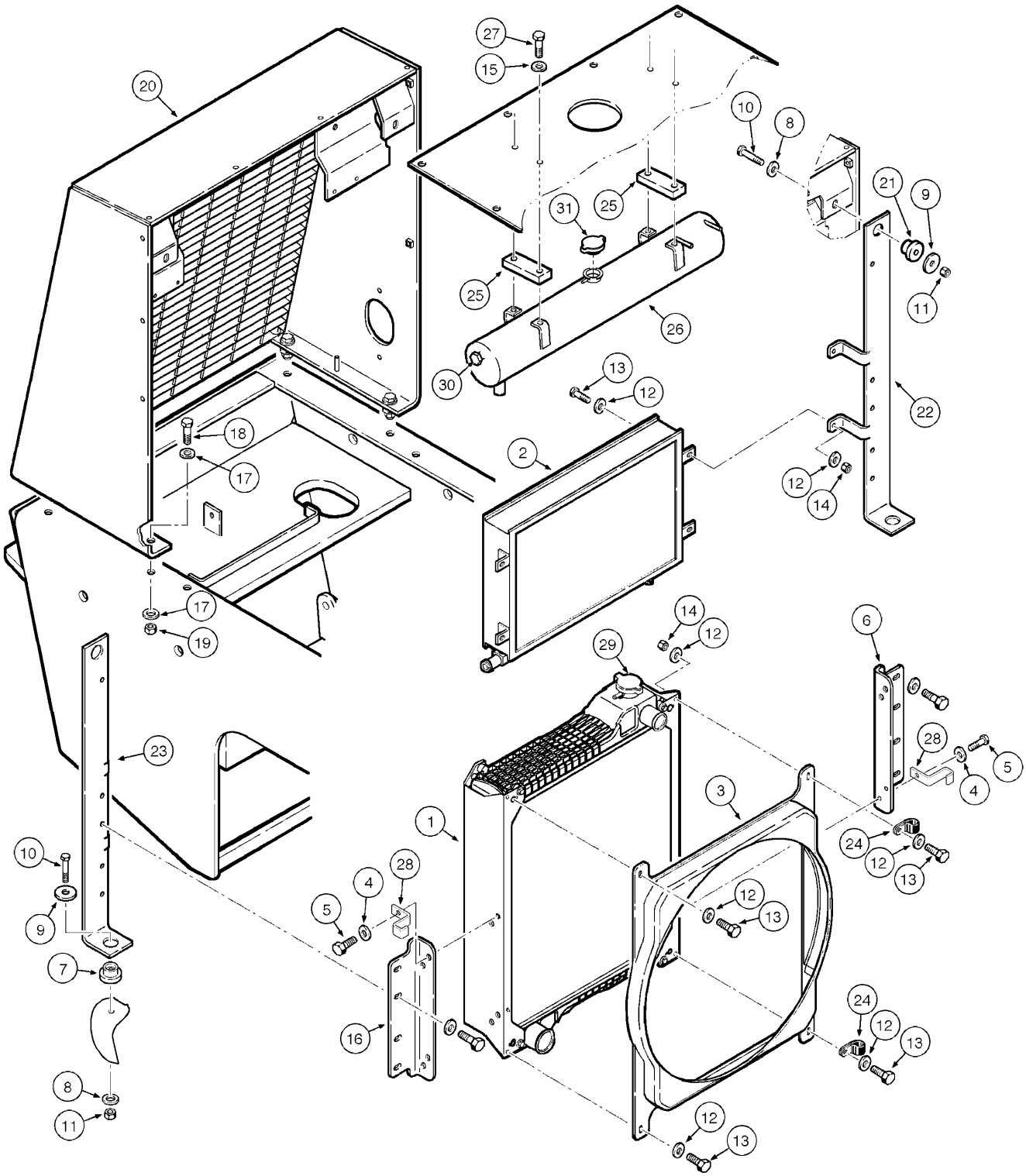

RADIATOR AND RELATED PARTS
RADIATOR AND RELATED PARTS
RADIATOR AND RELATED PARTS
RADIATOR AND RELATED PARTS

R	N	P.N.	MOD	Q	Denominação Bezeichnung	Description Description	Denominacion Beskrivelse	Descrizione Beschrijving	L.C.
20		**87519712**		1	PROTEÇÃO SCHUTZABDECKUNG	GUARD PROTECTION	DEFENSA BESKYTTELSESSKÆRM	PROTEZIONE AFSCHERMING	070R
21		**E159690**		2	COXIM KISSEN	CUSHION COUSSIN	COJÍN PUDE	CUSCINO KUSSEN	2460
22		**87667271**		1	SUPORTE DA BRAÇADEIRA, LH SCHELLENHALTERUNG	CLAMP BRACKET BRIDE DE FIXATION	SOPORTE DE ABRAZADI KLEMMEKONSOL	STAFFA DEL FERMO KLEMSTEUN	Z417
23		**87671721**		1	SUPORTE DA BRAÇADEIRA, RH SCHELLENHALTERUNG	CLAMP BRACKET BRIDE DE FIXATION	SOPORTE DE ABRAZADI KLEMMEKONSOL	STAFFA DEL FERMO KLEMSTEUN	Z417
24		**70639314**		2	ESPAÇADOR DISTANZSTÜCK	SPACER ENTRETOISE	SEPARADOR AFSTANDSSTYKKE	DISTANZIALE AFSTANDSSTUK	075D
25		**87521194**		2	BLOCO BLOCK	BLOCK BLOC	BLOQUE MOTORBLOK	BLOCCO BLOK	074B
26		**87365988**		1	RESERVATÓRIO, cooling BEHÄLTER	RESERVOIR RESERVOIR	DEPÓSITO BEHOLDER	SERBATOIO RESERVOIR	7050
27		**627-10040**		4	PARAFUSO, Hex, M10 x 40, 10.9, Full Thd SCHRAUBE	BOLT VIS	PERNO BOLT	BULLONE BOUT	140B
28		**87667376**		2	GRAMPO KLAMMER	CLIP COLLIER	ABRAZADERA KLIPS	FERMO KLEM	045F
29		**A170241**		1	TAMPA DO RADIADOR KÜHLERVERSCHLUSSK/	RADIATOR CAP BOUCHON DU RADIATE	TAPÓN DE RADIADOR KØLERDÆKSEL	TAPPO DEL RADIATORE RADIATEURDOP	039T
30		**75326369**		1	INDICADOR ANZEIGE	INDICATOR INDICATEUR	INDICADOR INDIKATOR	INDICATORE INDICATOR	087S
31		**75327024**		1	COBERTURA ABDECKUNG	COVER COUVERCLE	CUBIERTA DÆKSEL	COPERCHIO AFSCHERMING	265C

A partir do nº de série N6AE00938

W20E

02-06A	02	p1	06/11

RADIADOR E COMPONENTES
RADIATOR AND RELATED PARTS
RADIADOR Y PIEZAS COMPONENTES
RADIATOR AND RELATED PARTS

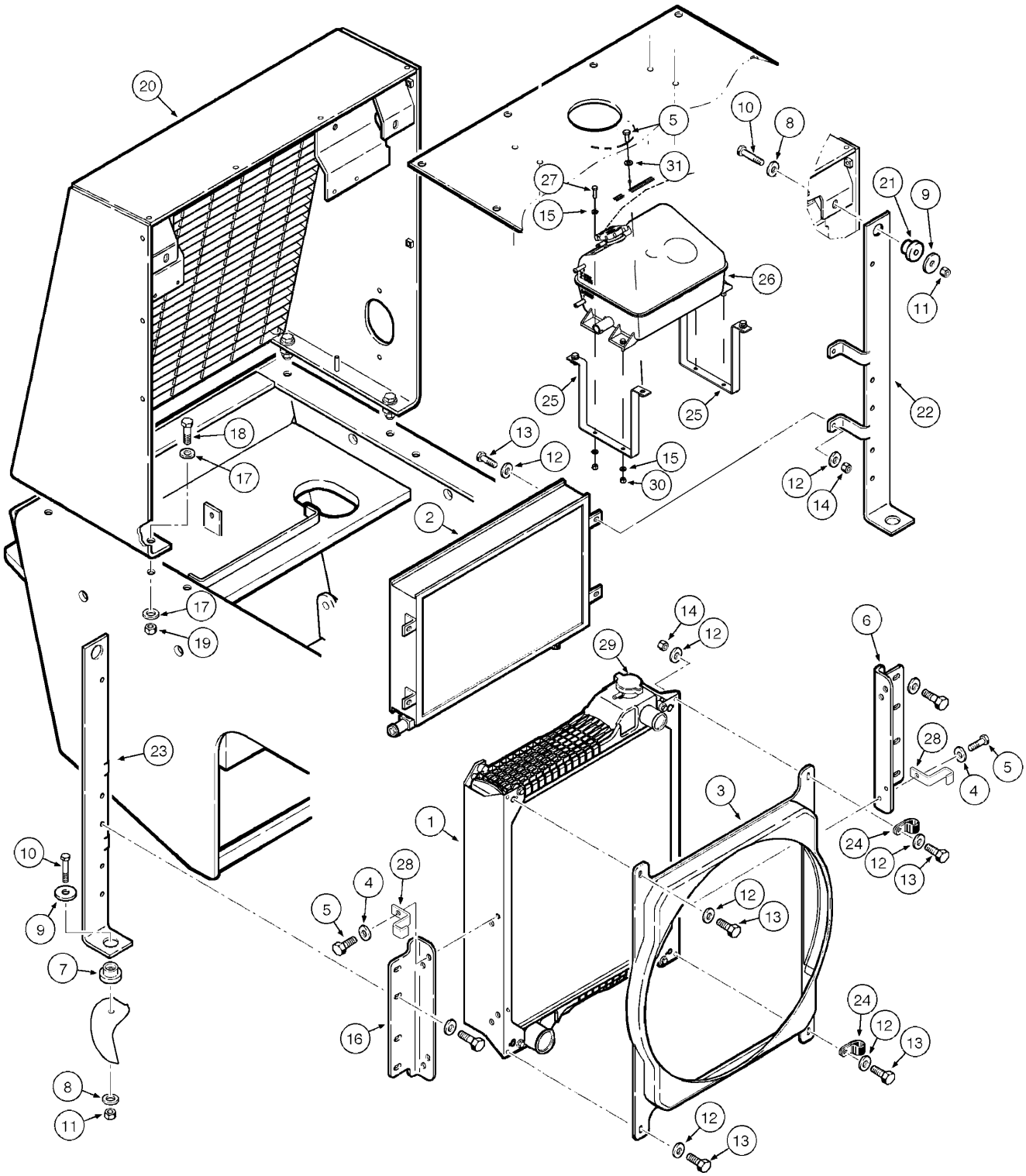

RADIATOR AND RELATED PARTS
RADIATOR AND RELATED PARTS
RADIATOR AND RELATED PARTS
RADIATOR AND RELATED PARTS

R	N	P.N.	MOD	Q	Denominação Bezeichnung	Description Description	Denominacion Beskrivelse	Descrizione Beschrijving	L.C.
1		347611A3		1	RADIADOR, engine WASSERKUEHLER	RADIATOR RADIATEUR	RADIATOR RADIATOR	RADIATORE RADIATOR	6755
2		401430A1		1	RADIADOR DE OLEO, transmission OELKUEHLER	COOLER, OIL RADIATEUR D'HUILE	REFRIGERADOR DE ACI COOLER, OIL	SCAMBIATORE CAL OLI(COOLER, OIL	Z229
3		87373373		1	COBERTURA, radiator VERKLEIDUNG	SHROUD PROTECTION	PROTECTOR DÆKKE	RIPARO MANTEL	7830
4		892-11008		8	TRAVA DA ARRUELA, M8 SICHERUNGSSCHEIBE	LOCK WASHER RONDELLE FREIN	ARANDELA DE BLOQUE(LÅSESKIVE	RONDELLA DI SICUREZ BORGRING	132R
5		627-8020		8	PARAFUSO, Hex, M8 x 20, 10.9 SCHRAUBE	BOLT VIS	PERNO BOLT	BULLONE BOUT	140B
6		87539346		1	SUPORTE, LH STÜTZE	SUPPORT SUPPORT	SOPORTE BESLAG	SUPPORTO STEUN	300S
7		L46821		2	AMORTECEDOR DE CHO(STOSSDAEMPFER	SHOCK ABSORBER SILENTBLOC	AMORTIGUADOR SHOCK ABSORBER	AMMORTIZZATORE SHOCK ABSORBER	P334
8		495-11053		4	ARRUELA PLANA, 1/2", SAE UNTERLEGSCHEIBE	WASHER RONDELLE	ARANDELA FLADSKIVE	RONDELLA SLUITRING	131R
9		495-31056		4	ARRUELA PLANA, 1/2" x 1 7/8" x .109" UNTERLEGSCHEIBE	WASHER RONDELLE	ARANDELA FLADSKIVE	RONDELLA SLUITRING	131R
10		413-840		4	PARAFUSO, Hex, 1/2"-13 x 2 1/2", G5 SCHRAUBE	BOLT VIS	PERNO BOLT	BULLONE BOUT	140B
11		231-1448		4	PORCA, 1/2"-13, GB MUTTER	NUT ECROU	TUERCA MØTRIK	DADO MOER	010D
12		895-15008		1 6	ARRUELA PLANA, M8 x 20 x 1.6 UNTERLEGSCHEIBE	WASHER RONDELLE	ARANDELA FLADSKIVE	RONDELLA SLUITRING	131R
13		627-8025		8	PARAFUSO, Hex, M8 x 25, 10.9 SCHRAUBE	BOLT VIS	PERNO BOLT	BULLONE BOUT	140B
14		832-10408		8	CONTRA PORCA, M8 x 1.25, Cl 8 SICHERUNGSMUTTER	LOCK NUT CONTRE-ECROU	TUERCA DE BLOQUEO LÅSEMØTRIK	DADO DI BLOCCAGGIO BORGMOER	P263
15		896-11006		1 2	ARRUELA PLANA, M6 x 13 x 2, HT UNTERLEGSCHEIBE	WASHER RONDELLE	ARANDELA FLADSKIVE	RONDELLA SLUITRING	131R
16		87539392		1	SUPORTE, radiator RH STÜTZE	SUPPORT SUPPORT	SOPORTE BESLAG	SUPPORTO STEUN	300S
17		496-21066		8	ARRUELA PLANA, 21/32" x 1 5/16" x .150" UNTERLEGSCHEIBE	WASHER RONDELLE	ARANDELA FLADSKIVE	RONDELLA SLUITRING	131R
18		413-1032		4	PARAFUSO, Hex, 5/8"-11 x 2", G5 SCHRAUBE	BOLT VIS	PERNO BOLT	BULLONE BOUT	140B
19		425-1010		4	PORCA, 5/8"-11, G5 MUTTER	NUT ECROU	TUERCA MØTRIK	DADO MOER	010D

A partir do nº de série NAAE15535

W20E

02-06A	02	p2	06/11

RADIADOR E COMPONENTES
RADIATOR AND RELATED PARTS
RADIADOR Y PIEZAS COMPONENTES
RADIATOR AND RELATED PARTS

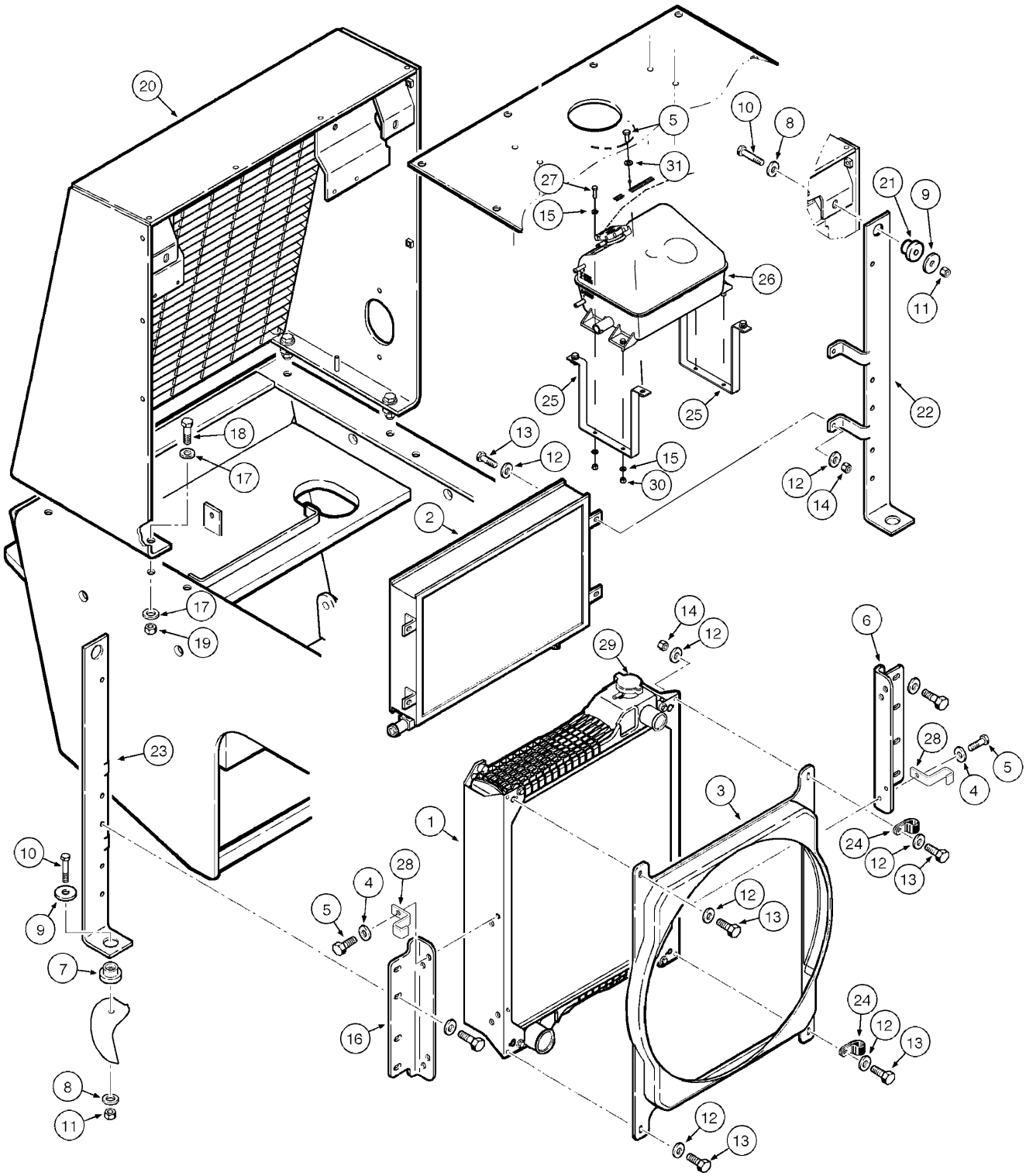

RADIATOR AND RELATED PARTS
RADIATOR AND RELATED PARTS
RADIATOR AND RELATED PARTS
RADIATOR AND RELATED PARTS

R	N	P.N.	MOD	Q	Denominação Bezeichnung	Description Description	Denominacion Beskrivelse	Descrizione Beschrijving	L.C.
20		87519712		1	PROTEÇÃO SCHUTZABDECKUNG	GUARD PROTECTION	DEFENSA BESKYTTELSESSKÆRM	PROTEZIONE AFSCHERMING	070R
21		E159690		2	COXIM KISSEN	CUSHION COUSSIN	COJÍN PUDE	CUSCINO KUSSEN	2460
22		87667271		1	SUPORTE DA BRAÇADEIRA, LH SCHELLENHALTERUNG	CLAMP BRACKET BRIDE DE FIXATION	SOPORTE DE ABRAZADI KLEMMEKONSOL	STAFFA DEL FERMO KLEMSTEUN	Z417
23		87671721		1	SUPORTE DA BRAÇADEIRA, RH SCHELLENHALTERUNG	CLAMP BRACKET BRIDE DE FIXATION	SOPORTE DE ABRAZADI KLEMMEKONSOL	STAFFA DEL FERMO KLEMSTEUN	Z417
24		70639314		2	ESPAÇADOR DISTANZSTÜCK	SPACER ENTRETOISE	SEPARADOR AFSTANDSSTYKKE	DISTANZIALE AFSTANDSSTUK	075D
25		84233974		2	SUPORTE STÜTZE	SUPPORT SUPPORT	SOPORTE BESLAG	SUPPORTO STEUN	300S
26		84227067		1	RESERVATÓRIO, cooling TANK	TANK RESERVOIR	DEPÓSITO TANK	SERBATOIO TANK	115S
27		627-6025		4	PARAFUSO, Hex, M6 x 25, 10.9 SCHRAUBE	BOLT VIS	PERNO BOLT	BULLONE BOUT	140B
28		87667376		2	GRAMPO KLAMMER	CLIP COLLIER	ABRAZADERA KLIPS	FERMO KLEM	045F
29		A170241		1	TAMPA DO RADIADOR KÜHLERVERSCHLUSSK/	RADIATOR CAP BOUCHON DU RADIATEI	TAPÓN DE RADIADOR KØLERDÆKSEL	TAPPO DEL RADIATORE RADIATEURDOP	039T
30		832-10406		4	PORCA, M6 x 1, Cl 8 MUTTER	NUT ECROU	TUERCA MØTRIK	DADO MOER	010D
31		896-11008		4	ARRUELA PLANA, M8 x 17.5 x 2, HT UNTERLEGSCHEIBE	WASHER RONDELLE	ARANDELA FLADSKIVE	RONDELLA SLUITRING	131R

A partir do nº de série NAAE15535

W20E

02-06B	01	p1	06/11

SISTEMA DE ARREFECIMENTO - MANGUEIRAS E CONEXÕES
COOLING SYSTEM - HOSES AND CONNECTIONS
SISTEMA DE ENFRIAMIENTO - MANGUERAS Y CONEXIONES
COOLING SYSTEM - HOSES AND CONNECTIONS

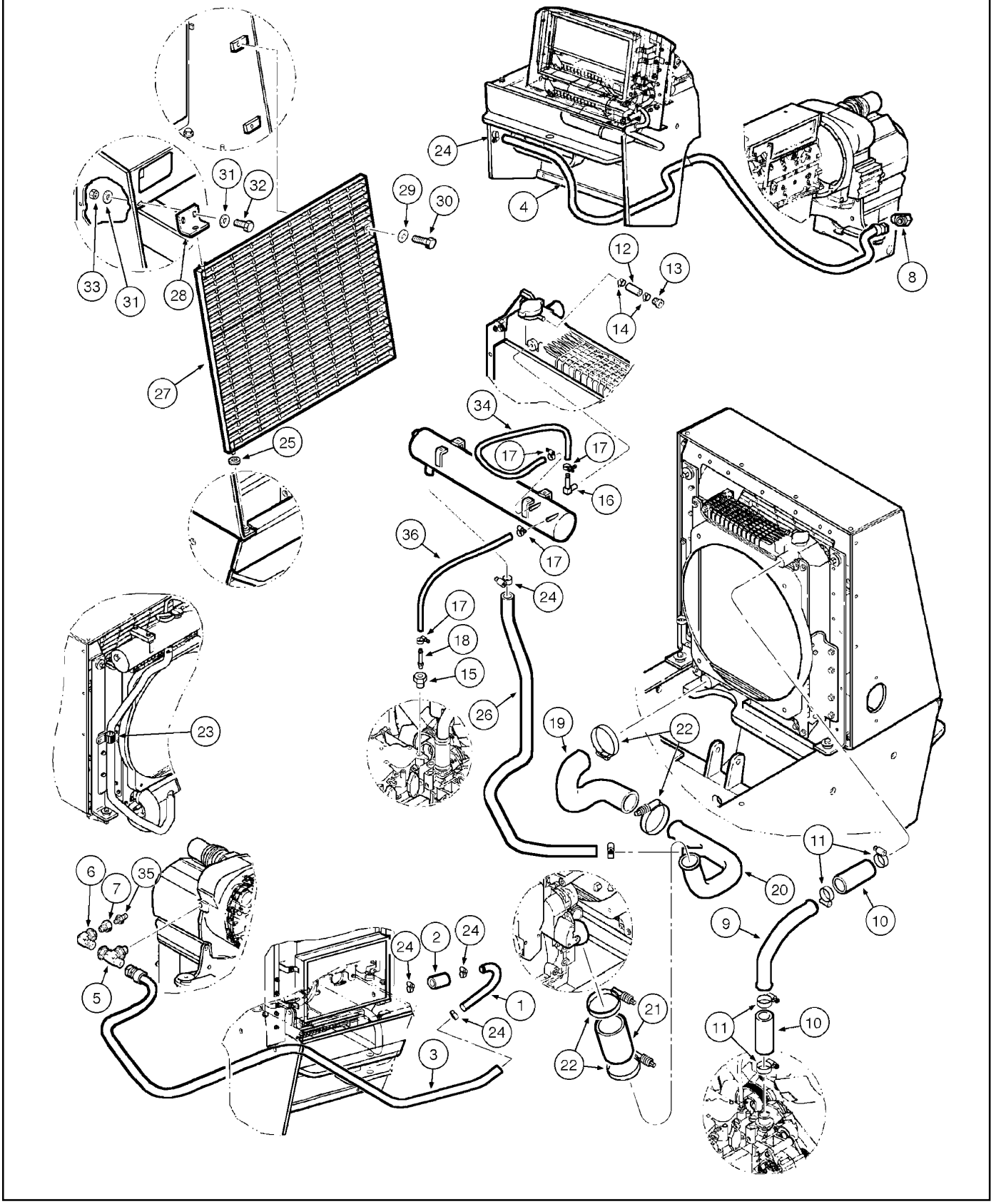

COOLING SYSTEM - HOSES AND CONNECTIONS
COOLING SYSTEM - HOSES AND CONNECTIONS
COOLING SYSTEM - HOSES AND CONNECTIONS
COOLING SYSTEM - HOSES AND CONNECTIONS

R	N	P.N.	MOD	Q	Denominação Bezeichnung	Description Description	Denominacion Beskrivelse	Descrizione Beschrijving	L.C.
1		87374055		1	TUBO, 19 mm ID x 25 mm OD x 165, 80 mm L				
						TUBE	TUBO	TUBO	195T
					ROHR	TUBE	RØR	LEIDING	
2		87374057		1	MANGUEIRA	HOSE	TUBO	TUBO FLESSIBILE	030M
					SCHLAUCH	FLEXIBLE	SLANGE	SLANG	
3		87374058		1	MANGUEIRA	HOSE	TUBO	TUBO FLESSIBILE	030M
					SCHLAUCH	FLEXIBLE	SLANGE	SLANG	
4		87374060		1	MANGUEIRA	HOSE	TUBO	TUBO FLESSIBILE	030M
					SCHLAUCH	FLEXIBLE	SLANGE	SLANG	
5		L73442		1	CONEXÃO	FITTING	ACOPLAMIENTO	RACCORDO	3300
					ARMATUR	RACCORD	FITTING	AANSLUITING	
6		217-1028		1	COTOVELO, 90º, 1/8"-27 Male x 1/4"-18 Female				
						ELBOW	CODO	GOMITO	085G
					KNIESTÜCK	COUDE	VINKELRØR	KNIESTUK	
7		79087360		1	VÁLVULA HIDRÁULICA	HYDRAULIC VALVE	VÁLVULA HIDRÁULICA	DISTRIBUTORE IDRAULI	010V
					HYDRAULIKVENTIL	SOUPAPE HYDRAULIQU	HYDRAULIKVENTIL	HYDRAULISCHE KLEP	
8		70924026		1	COTOVELO	ELBOW	CODO	GOMITO	085G
					KNIESTÜCK	COUDE	VINKELRØR	KNIESTUK	
9		87374063		1	TUBO, radiator	TUBE	TUBO	TUBO	195T
					ROHR	TUBE	RØR	LEIDING	
10		75238459		2	MANGUEIRA, 45.00 mm ID x 130.00 mm				
						HOSE	TUBO	TUBO FLESSIBILE	030M
					SCHLAUCH	FLEXIBLE	SLANGE	SLANG	
11		214-1428		4	BRAÇADEIRA MANGUEIRA, #28, 1.31/2.25 Type F Worm				
						HOSE CLAMP	ABRAZADERA DE MANG	FASCETTA STRINGITUB	P729
					SCHLAUCHSCHELLE	COLLIER POUR FLEXIBL	SLANGEKLEMME	SLANGKLEM	
12		86026037		1	MANGUEIRA, 7.90 mm ID x 43.00 mm, SAE 30R7, Cooling				
						HOSE	TUBO	TUBO FLESSIBILE	030M
					SCHLAUCH	FLEXIBLE	SLANGE	SLANG	
13		75327563		1	PINO	PIN	PASADOR	PERNO	080P
					PIN	BROCHE	STIFT	PEN	
14		A171099		2	BRAÇADEIRA MANGUEIR/	HOSE CLAMP	ABRAZADERA DE MANG	FASCETTA STRINGITUB	P729
					SCHLAUCHSCHELLE	COLLIER POUR FLEXIBL	SLANGEKLEMME	SLANGKLEM	
15		70904269		1	BUCHA	BUSHING	CASQUILLO	BOCCOLA	095B
					BUCHSE	BAGUE	BØSNING	BUS	
16		70931713		1	CONEXÃO	FITTING	ACOPLAMIENTO	RACCORDO	3300
					ARMATUR	RACCORD	FITTING	AANSLUITING	
17		12179490		4	GRAMPO DA MANGUEIRA	HOSE CLIP	ABRAZADERA DE MANG	FERMO DEL TUBO FLES	180C
					SCHLAUCHKLEMME	COLLIER POUR FLEXIBL	SLANGEKLEMME	SLANGKLEM	
18		70927605		1	CONECTOR HIDRÁUL	HYD CONNECTOR	CONECTOR HIDRÁULIC	CONNETTORE IDRAULIC	020R
					HYDR STECKVERBINDE	CONNECTEUR HYDRAU	HYDRAULIKSTIK	HYDRAULISCHE AANSLI	
19		87374097		1	MANGUEIRA, Radiator	HOSE	TUBO	TUBO FLESSIBILE	030M
					SCHLAUCH	FLEXIBLE	SLANGE	SLANG	
20		87374066		1	TUBO RÍGIDO	RIGID TUBE	TUBO RÍGIDO	TUBO RIGIDO	193T
					ROHR	TUYAU RIGIDE	STIFT RØR	VASTE LEIDING	
21		75238575		1	MANGUEIRA, 100.00 mm	HOSE	TUBO	TUBO FLESSIBILE	030M
					SCHLAUCH	FLEXIBLE	SLANGE	SLANG	
22		L115548		4	BRAÇADEIRA	CLAMP	ABRAZADERA	MORSETTO	120M
					KLEMME	COLLIER	SPÆNDEBÅND	KLEM	

A partir do nº de série N6AE00938

W20E

02-06B	01	p2	06/11

SISTEMA DE ARREFECIMENTO - MANGUEIRAS E CONEXÕES
COOLING SYSTEM - HOSES AND CONNECTIONS
SISTEMA DE ENFRIAMIENTO - MANGUERAS Y CONEXIONES
COOLING SYSTEM - HOSES AND CONNECTIONS

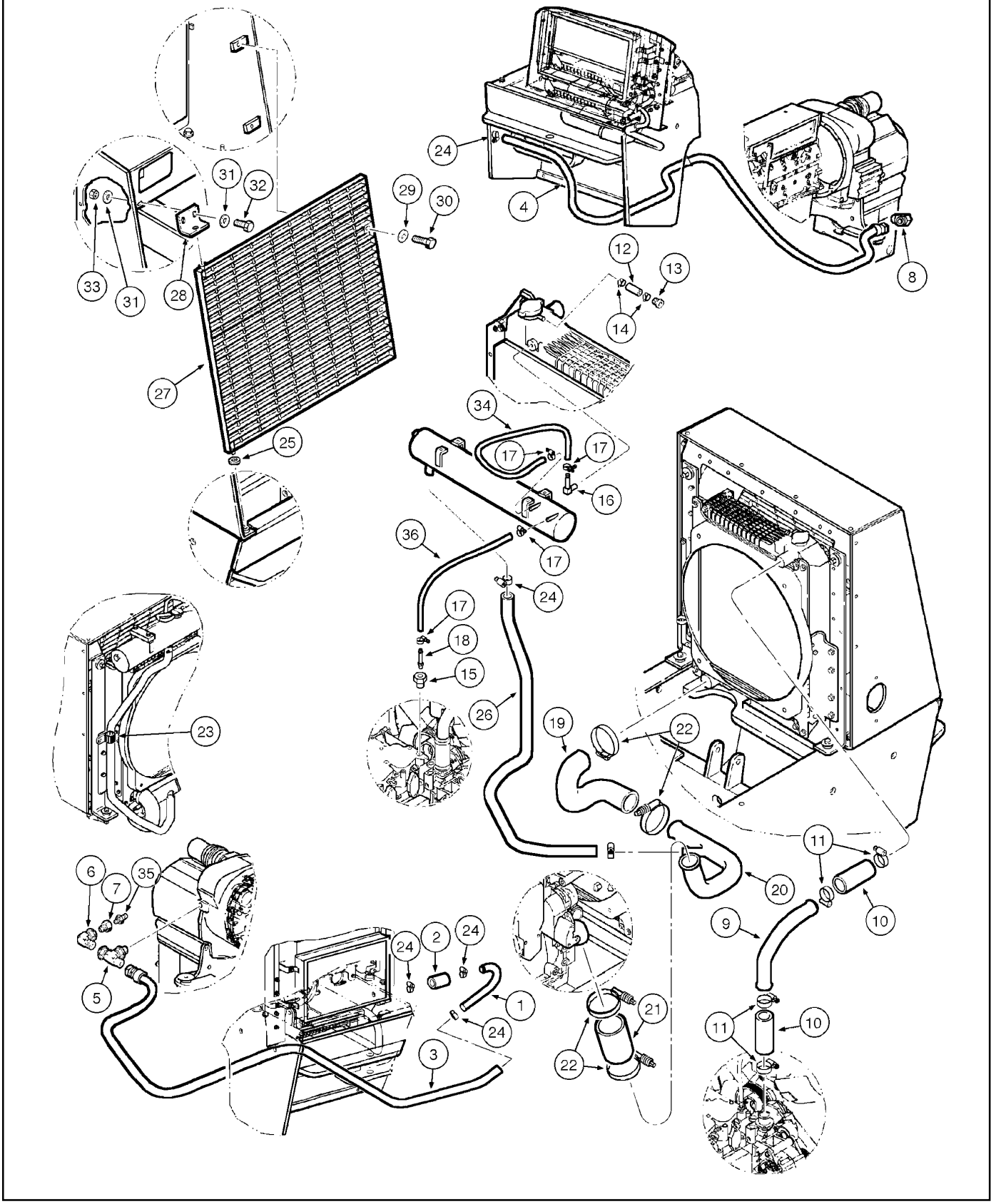

COOLING SYSTEM - HOSES AND CONNECTIONS
COOLING SYSTEM - HOSES AND CONNECTIONS
COOLING SYSTEM - HOSES AND CONNECTIONS
COOLING SYSTEM - HOSES AND CONNECTIONS

R	N	P.N.	MOD	Q	Denominação Bezeichnung	Description Description	Denominacion Beskrivelse	Descrizione Beschrijving	L.C.
23		70927312		1	COLAR	COLLAR	COLLAR	COLLARE	031F
					RINGE	COLLIER	SLANGEBÅND	KRAAG	
24		214-1416		6	BRAÇADEIRA MANGUEIRA, #16, 0.81/1.50 Type F Worm				
						HOSE CLAMP	ABRAZADERA DE MANG	FASCETTA STRINGITUB	P729
					SCHLAUCHSCHELLE	COLLIER POUR FLEXIBL	SLANGEKLEMME	SLANGKLEM	
25		495-11053		1	ARRUELA PLANA, 1/2", SAE				
						WASHER	ARANDELA	RONDELLA	131R
					UNTERLEGSCHEIBE	RONDELLE	FLADSKIVE	SLUITRING	
26		84234095		1	MANGUEIRA EM METRO	HOSE, METERS	METROS DE TUBO	FLESSIBLE AL METRO	Z303
					SCHLAUCH (METERWAF	FLEXIBLE AU METRE	SLANGE, MÅLERE	SLANG, METER	
27		147693A1		1	GRELHA, radiator	GRILLE	REJILLA	GRIGLIA	101G
					GRILL	CALANDRE	GITTER	GRILLE	
28		E159504		1	SUPORTE, grille	SUPPORT	SOPORTE	SUPPORTO	300S
					STÜTZE	SUPPORT	BESLAG	STEUN	
29		495-21044		2	ARRUELA PLANA, 3/8"	WASHER	ARANDELA	RONDELLA	131R
					UNTERLEGSCHEIBE	RONDELLE	FLADSKIVE	SLUITRING	
30		413-628		2	PARAFUSO, Hex, 3/8"-16 x 1 3/4", G5				
						BOLT	PERNO	BULLONE	140B
					SCHRAUBE	VIS	BOLT	BOUT	
31		495-21038		4	ARRUELA PLANA, 5/16"	WASHER	ARANDELA	RONDELLA	131R
					UNTERLEGSCHEIBE	RONDELLE	FLADSKIVE	SLUITRING	
32		413-516		2	PARAFUSO, Hex, 5/16"-18 x 1", G5, Full Thd				
						BOLT	PERNO	BULLONE	140B
					SCHRAUBE	VIS	BOLT	BOUT	
33		231-1445		2	CONTRA PORCA, 5/16"-18, GB				
						LOCK NUT	TUERCA DE BLOQUEO	DADO DI BLOCCAGGIO	P263
					SICHERUNGSMUTTER	CONTRE-ECROU	LÅSEMØTRIK	BORGMOER	
34		87374072		1	MANGUEIRA	HOSE	TUBO	TUBO FLESSIBILE	030M
					SCHLAUCH	FLEXIBLE	SLANGE	SLANG	
35		87524824		1	NIPLE	NIPPLE	BOQUILLA	NIPPLO	A065
					NIPPEL	GRAISSEUR	NIPPEL	NIPPEL	
36		84234092		1	MANGUEIRA	HOSE	TUBO	TUBO FLESSIBILE	030M
					SCHLAUCH	FLEXIBLE	SLANGE	SLANG	
37		307149A1		1	MANGUEIRA, 7.9 mm ID x 1676.40 mm				
						HOSE	TUBO	TUBO FLESSIBILE	030M
					SCHLAUCH	FLEXIBLE	SLANGE	SLANG	

A partir do nº de série N6AE00938

W20E

02-06B	02	p1	06/11

SISTEMA DE ARREFECIMENTO - MANGUEIRAS E CONEXÕES
COOLING SYSTEM - HOSES AND CONNECTIONS
SISTEMA DE ENFRIAMIENTO - MANGUERAS Y CONEXIONES
COOLING SYSTEM - HOSES AND CONNECTIONS

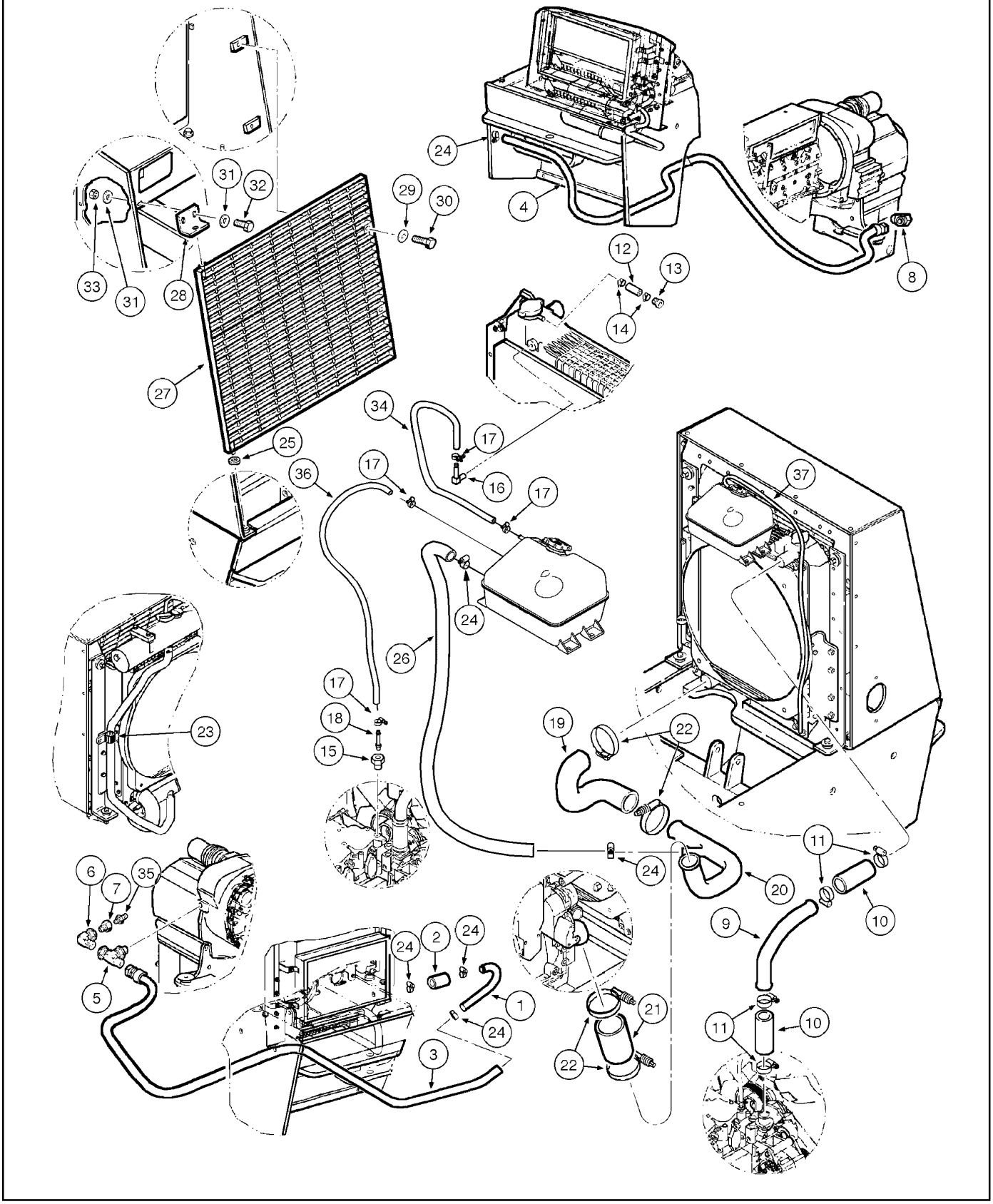

COOLING SYSTEM - HOSES AND CONNECTIONS
COOLING SYSTEM - HOSES AND CONNECTIONS
COOLING SYSTEM - HOSES AND CONNECTIONS
COOLING SYSTEM - HOSES AND CONNECTIONS

R	N	P.N.	MOD	Q	Denominação Bezeichnung	Description Description	Denominacion Beskrivelse	Descrizione Beschrijving	L.C.
1		87374055		1	TUBO, 19 mm ID x 25 mm OD x 165, 80 mm L				
						TUBE	TUBO	TUBO	195T
					ROHR	TUBE	RØR	LEIDING	
2		87374057		1	MANGUEIRA	HOSE	TUBO	TUBO FLESSIBILE	030M
					SCHLAUCH	FLEXIBLE	SLANGE	SLANG	
3		87374058		1	MANGUEIRA	HOSE	TUBO	TUBO FLESSIBILE	030M
					SCHLAUCH	FLEXIBLE	SLANGE	SLANG	
4		87374060		1	MANGUEIRA	HOSE	TUBO	TUBO FLESSIBILE	030M
					SCHLAUCH	FLEXIBLE	SLANGE	SLANG	
5		L73442		1	CONEXÃO	FITTING	ACOPLAMIENTO	RACCORDO	3300
					ARMATUR	RACCORD	FITTING	AANSLUITING	
6		217-1028		1	COTOVELO, 90º, 1/8"-27 Male x 1/4"-18 Female				
						ELBOW	CODO	GOMITO	085G
					KNIESTÜCK	COUDE	VINKELRØR	KNIESTUK	
7		79087360		1	VÁLVULA HIDRÁULICA	HYDRAULIC VALVE	VÁLVULA HIDRÁULICA	DISTRIBUTORE IDRAULI	010V
					HYDRAULIKVENTIL	SOUPAPE HYDRAULIQU	HYDRAULIKVENTIL	HYDRAULISCHE KLEP	
8		70924026		1	COTOVELO	ELBOW	CODO	GOMITO	085G
					KNIESTÜCK	COUDE	VINKELRØR	KNIESTUK	
9		87374063		1	TUBO, radiator	TUBE	TUBO	TUBO	195T
					ROHR	TUBE	RØR	LEIDING	
10		75238459		2	MANGUEIRA, 45.00 mm ID x 130.00 mm				
						HOSE	TUBO	TUBO FLESSIBILE	030M
					SCHLAUCH	FLEXIBLE	SLANGE	SLANG	
11		214-1428		4	BRAÇADEIRA MANGUEIRA, #28, 1.31/2.25 Type F Worm				
						HOSE CLAMP	ABRAZADERA DE MANG	FASCETTA STRINGITUB	P729
					SCHLAUCHSCHELLE	COLLIER POUR FLEXIBL	SLANGEKLEMME	SLANGKLEM	
12		86026037		1	MANGUEIRA, 7.90 mm ID x 43.00 mm, SAE 30R7, Cooling				
						HOSE	TUBO	TUBO FLESSIBILE	030M
					SCHLAUCH	FLEXIBLE	SLANGE	SLANG	
13		75327563		1	PINO	PIN	PASADOR	PERNO	080P
					PIN	BROCHE	STIFT	PEN	
14		A171099		2	BRAÇADEIRA MANGUEIR/	HOSE CLAMP	ABRAZADERA DE MANG	FASCETTA STRINGITUB	P729
					SCHLAUCHSCHELLE	COLLIER POUR FLEXIBL	SLANGEKLEMME	SLANGKLEM	
15		70904269		1	BUCHA	BUSHING	CASQUILLO	BOCCOLA	095B
					BUCHSE	BAGUE	BØSNING	BUS	
16		70931713		1	CONEXÃO	FITTING	ACOPLAMIENTO	RACCORDO	3300
					ARMATUR	RACCORD	FITTING	AANSLUITING	
17		12179490		4	GRAMPO DA MANGUEIRA	HOSE CLIP	ABRAZADERA DE MANG	FERMO DEL TUBO FLES	180C
					SCHLAUCHKLEMME	COLLIER POUR FLEXIBL	SLANGEKLEMME	SLANGKLEM	
18		70927605		1	CONECTOR HIDRÁUL	HYD CONNECTOR	CONECTOR HIDRÁULIC	CONNETTORE IDRAULIC	020R
					HYDR STECKVERBINDE	CONNECTEUR HYDRAU	HYDRAULIKSTIK	HYDRAULISCHE AANSLI	
19		87374097		1	MANGUEIRA, Radiator	HOSE	TUBO	TUBO FLESSIBILE	030M
					SCHLAUCH	FLEXIBLE	SLANGE	SLANG	
20		87374066		1	TUBO RÍGIDO	RIGID TUBE	TUBO RÍGIDO	TUBO RIGIDO	193T
					ROHR	TUYAU RIGIDE	STIFT RØR	VASTE LEIDING	
21		75238575		1	MANGUEIRA, 100.00 mm	HOSE	TUBO	TUBO FLESSIBILE	030M
					SCHLAUCH	FLEXIBLE	SLANGE	SLANG	
22		L115548		4	BRAÇADEIRA	CLAMP	ABRAZADERA	MORSETTO	120M
					KLEMME	COLLIER	SPÆNDEBÅND	KLEM	

A partir do nº de série NAAE15535

W20E

02-06B	02	p2	06/11

SISTEMA DE ARREFECIMENTO - MANGUEIRAS E CONEXÕES
COOLING SYSTEM - HOSES AND CONNECTIONS
SISTEMA DE ENFRIAMIENTO - MANGUERAS Y CONEXIONES
COOLING SYSTEM - HOSES AND CONNECTIONS

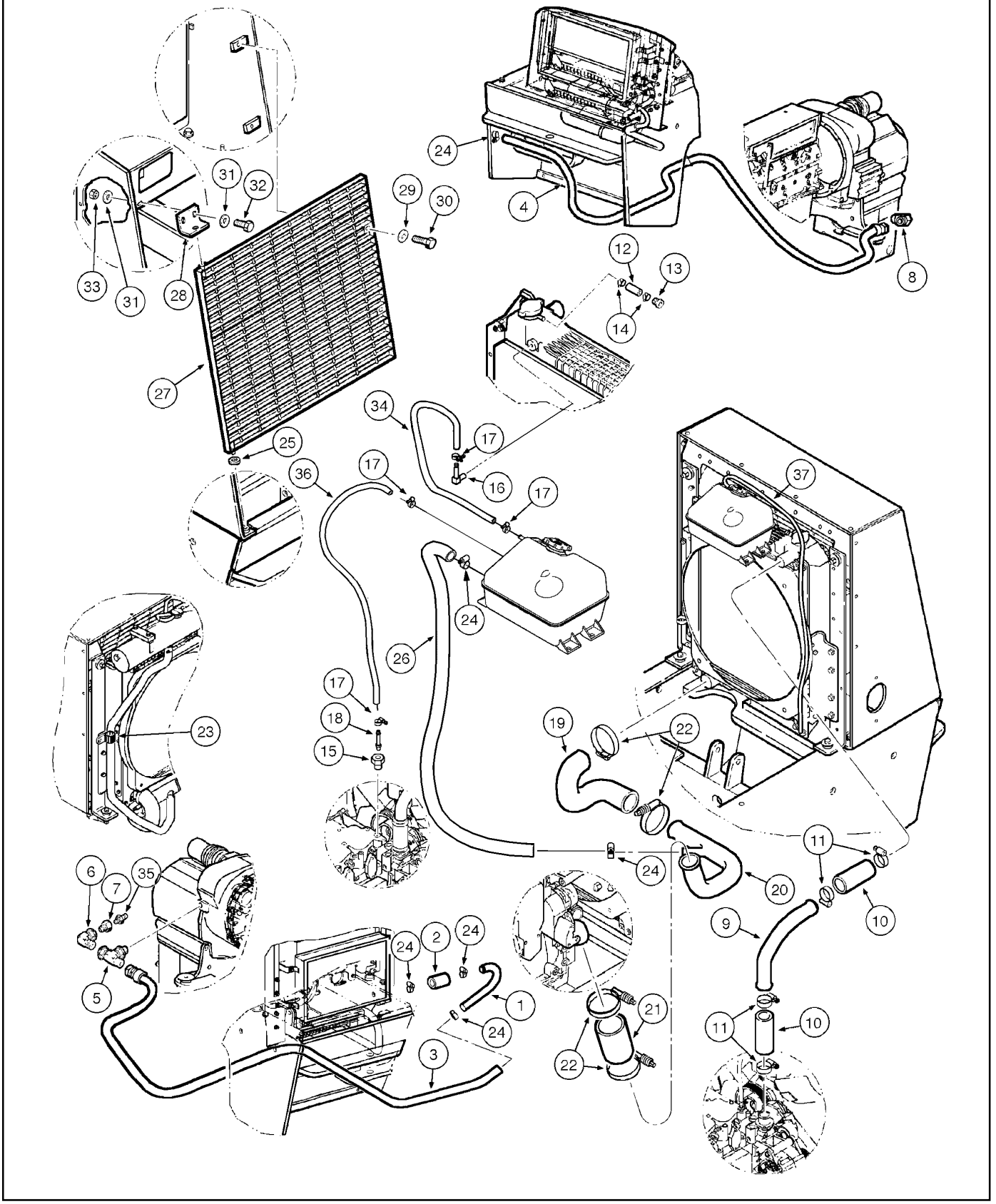

COOLING SYSTEM - HOSES AND CONNECTIONS
COOLING SYSTEM - HOSES AND CONNECTIONS
COOLING SYSTEM - HOSES AND CONNECTIONS
COOLING SYSTEM - HOSES AND CONNECTIONS

R	N	P.N.	MOD	Q	Denominação Bezeichnung	Description Description	Denominacion Beskrivelse	Descrizione Beschrijving	L.C.
23		70927312		1	COLAR	COLLAR	COLLAR	COLLARE	031F
					RINGE	COLLIER	SLANGEBÅND	KRAAG	
24		214-1416		6	BRAÇADEIRA MANGUEIRA, #16, 0.81/1.50 Type F Worm				
						HOSE CLAMP	ABRAZADERA DE MANG	FASCETTA STRINGITUB	P729
					SCHLAUCHSCHELLE	COLLIER POUR FLEXIBL	SLANGEKLEMME	SLANGKLEM	
25		495-11053		1	ARRUELA PLANA, 1/2", SAE				
						WASHER	ARANDELA	RONDELLA	131R
					UNTERLEGSCHEIBE	RONDELLE	FLADSKIVE	SLUITRING	
26		84234092		1	MANGUEIRA	HOSE	TUBO	TUBO FLESSIBILE	030M
					SCHLAUCH	FLEXIBLE	SLANGE	SLANG	
27		147693A1		1	GRELHA, radiator	GRILLE	REJILLA	GRIGLIA	101G
					GRILL	CALANDRE	GITTER	GRILLE	
28		E159504		1	SUPORTE, grille	SUPPORT	SOPORTE	SUPPORTO	300S
					STÜTZE	SUPPORT	BESLAG	STEUN	
29		495-21044		2	ARRUELA PLANA, 3/8"	WASHER	ARANDELA	RONDELLA	131R
					UNTERLEGSCHEIBE	RONDELLE	FLADSKIVE	SLUITRING	
30		413-628		2	PARAFUSO, Hex, 3/8"-16 x 1 3/4", G5				
						BOLT	PERNO	BULLONE	140B
					SCHRAUBE	VIS	BOLT	BOUT	
31		495-21038		4	ARRUELA PLANA, 5/16"	WASHER	ARANDELA	RONDELLA	131R
					UNTERLEGSCHEIBE	RONDELLE	FLADSKIVE	SLUITRING	
32		413-516		2	PARAFUSO, Hex, 5/16"-18 x 1", G5, Full Thd				
						BOLT	PERNO	BULLONE	140B
					SCHRAUBE	VIS	BOLT	BOUT	
33		231-1445		2	CONTRA PORCA, 5/16"-18, GB				
						LOCK NUT	TUERCA DE BLOQUEO	DADO DI BLOCCAGGIO	P263
					SICHERUNGSMUTTER	CONTRE-ECROU	LÅSEMØTRIK	BORGMOER	
34		87374072		1	MANGUEIRA	HOSE	TUBO	TUBO FLESSIBILE	030M
					SCHLAUCH	FLEXIBLE	SLANGE	SLANG	
35		87524824		1	NIPLE	NIPPLE	BOQUILLA	NIPPLO	A065
					NIPPEL	GRAISSEUR	NIPPEL	NIPPEL	
36		84234095		1	MANGUEIRA EM METRO	HOSE, METERS	METROS DE TUBO	FLESSIBLE AL METRO	Z303
					SCHLAUCH (METERWAF	FLEXIBLE AU METRE	SLANGE, MÅLERE	SLANG, METER	
37		307149A1		1	MANGUEIRA, 7.9 mm ID x 1676.40 mm				
						HOSE	TUBO	TUBO FLESSIBILE	030M
					SCHLAUCH	FLEXIBLE	SLANGE	SLANG	

A partir do nº de série NAAE15535

W20E

02-06C	01	p1	06/11

SISTEMA DE ARREFECIMENTO - PROTEÇÕES
COOLING SYSTEM - GUARDS
SISTEMA DE ENFRIAMIENTO - PROTECCIONES
COOLING SYSTEM - GUARDS

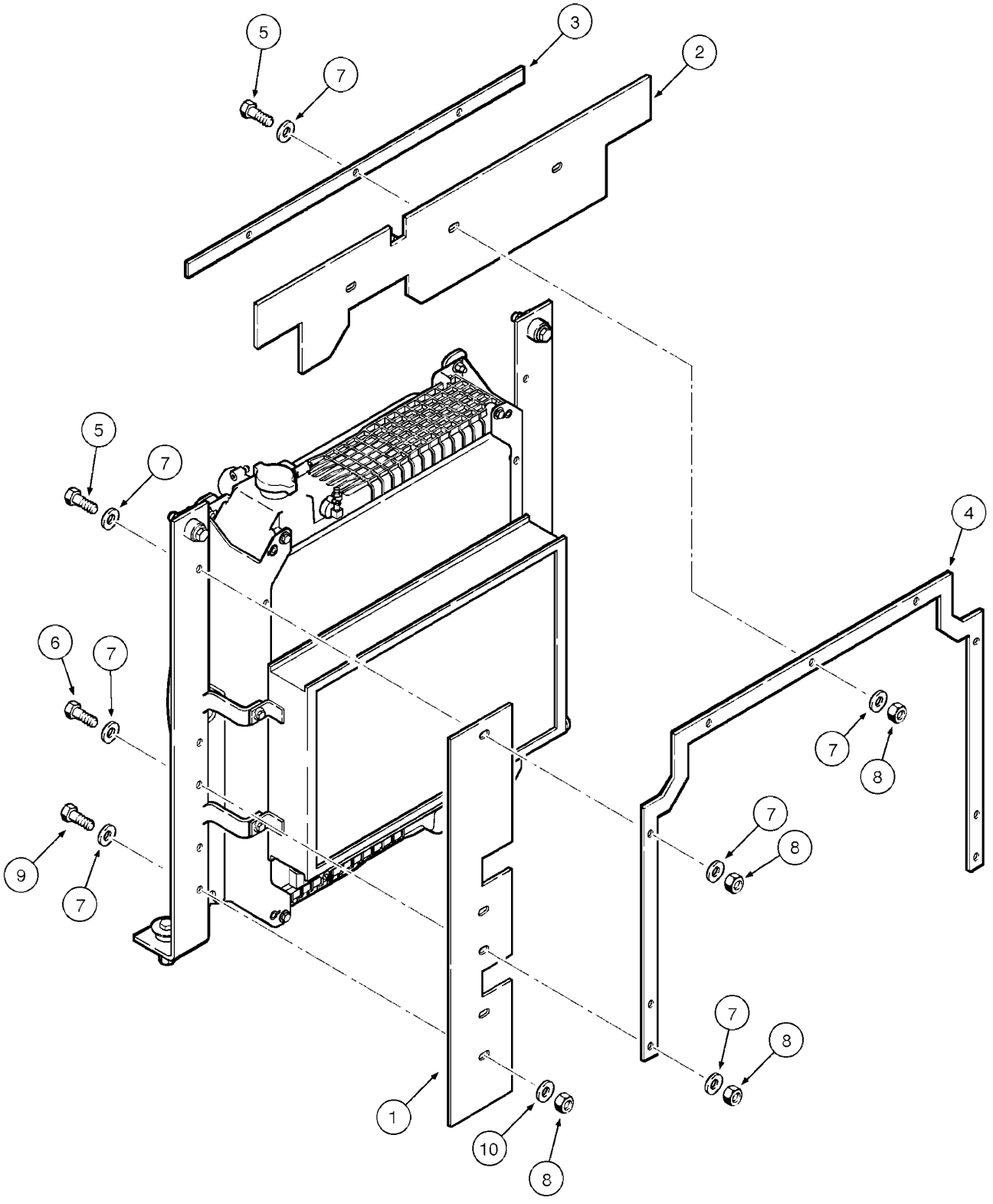

COOLING SYSTEM - GUARDS
COOLING SYSTEM - GUARDS
COOLING SYSTEM - GUARDS
COOLING SYSTEM - GUARDS

R	N	P.N.	MOD	Q	Denominação Bezeichnung	Description Description	Denominacion Beskrivelse	Descrizione Beschrijving	L.C.
1		87549269		2	PROTEÇÃO, radiator side	GUARD	DEFENSA	PROTEZIONE	070R
					SCHUTZABDECKUNG	PROTECTION	BESKYTTELSESSKÆRM	AFSCHERMING	
2		87549276		1	ISOLADOR, radiator top	ISOLATOR	AISLADOR	ISOLATORE	Z082
					ISOLATOR	ISOLANT	ISOLATOR	ISOLATIE	
3		87373400		1	PLACA, front	PLATE	PLACA	PIASTRA	105P
					PLATTE	PLAQUE	PLADE	PLAAT	
4		87549271		1	PLACA	PLATE	PLACA	PIASTRA	105P
					PLATTE	PLAQUE	PLADE	PLAAT	
5		627-10035		5	PARAFUSO, Hex, M10 x 35, 10.9, Full Thd				
						BOLT	PERNO	BULLONE	140B
					SCHRAUBE	VIS	BOLT	BOUT	
6		11107031		4	PARAFUSO, Hex, M10 x 45, 10.9				
						BOLT	PERNO	BULLONE	140B
					SCHRAUBE	VIS	BOLT	BOUT	
7		896-11010		22	ARRUELA PLANA, M10 x 21.5 x 2.5, HT				
						WASHER	ARANDELA	RONDELLA	131R
					UNTERLEGSCHEIBE	RONDELLE	FLADSKIVE	SLUITRING	
8		832-10410		13	CONTRA PORCA, M10 x 1.5, Cl 8				
						LOCK NUT	TUERCA DE BLOQUEO	DADO DI BLOCCAGGIO	P263
					SICHERUNGSMUTTER	CONTRE-ECROU	LÅSEMØTRIK	BORGMOER	
9		627-10040		4	PARAFUSO, Hex, M10 x 40, 10.9, Full Thd				
						BOLT	PERNO	BULLONE	140B
					SCHRAUBE	VIS	BOLT	BOUT	
10		39519		4	ARRUELA	WASHER	ARANDELA	RONDELLA	9720
					UNTERLEGSCHEIBE	RONDELLE	WASHER	WASHER	

A partir do nº de série N6AE00938

W20E

02-08	01	p1	03/09

FILTRO DE AR E COMPONENTES
AIR CLEANER AND RELATED PARTS
FILTRO DE AIRE Y COMPONENTES
AIR CLEANER AND RELATED PARTS

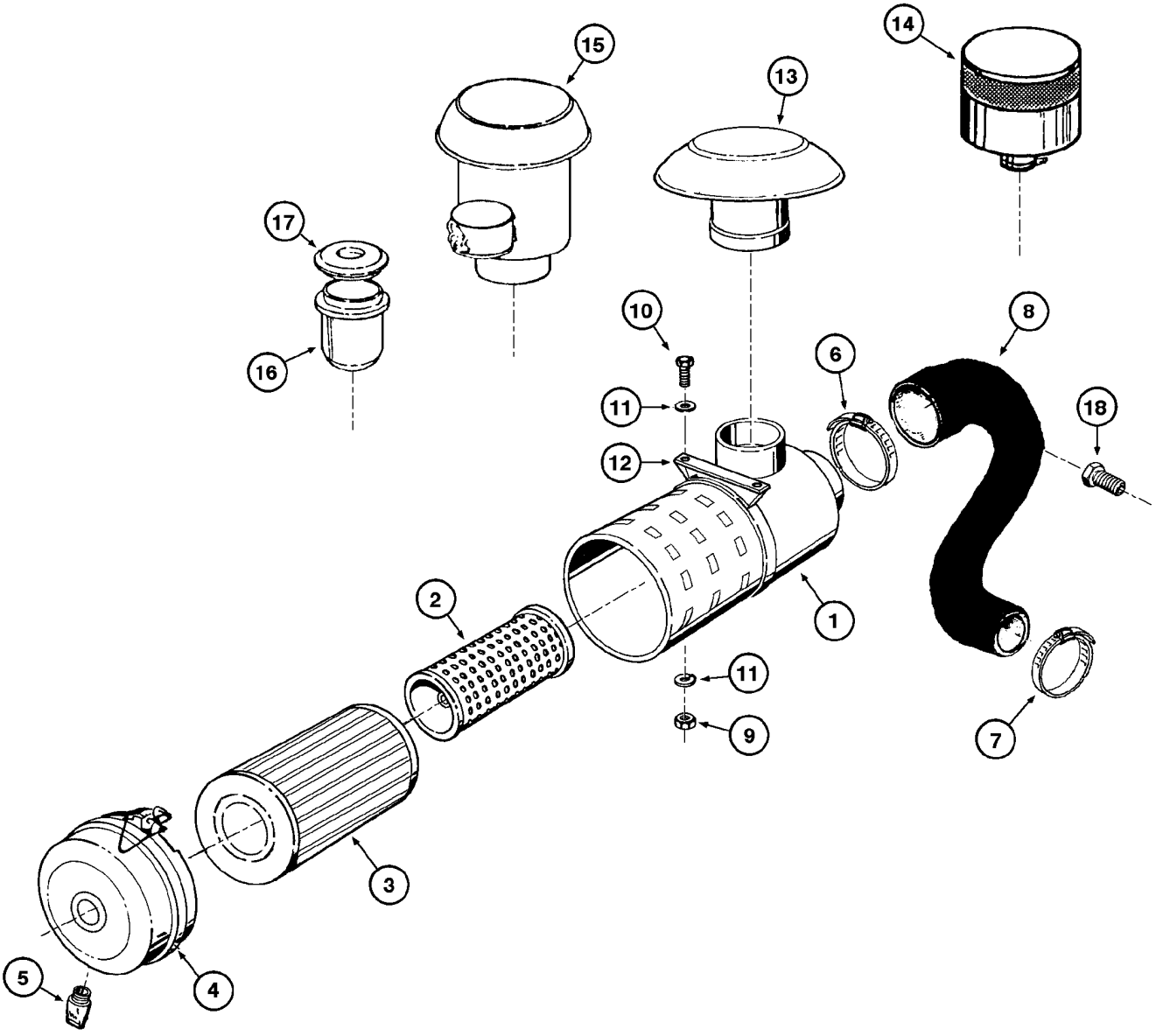

AIR CLEANER AND RELATED PARTS
AIR CLEANER AND RELATED PARTS
AIR CLEANER AND RELATED PARTS
AIR CLEANER AND RELATED PARTS

R	N	P.N.	MOD	Q	Denominação Bezeichnung	Description Description	Denominacion Beskrivelse	Descrizione Beschrijving	L.C.
		149056A1		1	FILTRO DE AR, Assy, Includes items 1 - 5				
						AIR FILTER	FILTRO DE AIRE	FILTRO ARIA	066F
					LUFTFILTER	FILTRE A AIR	LUFTFILTER	LUCHTFILTER	
1		**NSS**		1	SEM SERVIÇO EM SEPARADO, BODY				
						NOT SERVICED SEPARA	NO SE REPARA POR SE	NON FORNITO SEPARAT	064N
					NICHT A SEP ERS-T LIEF	NON FORUNI SEPAREM	SERVICERES IKKE SEPA	NIET LOS VERKRIJGBAA	
2		**149166A1**		1	ELEMENTO	ELEMENT	ELEMENTO	ELEMENTO	020E
					ELEMENT	ELEMENT	ELEMENT	ELEMENT	
3		**149167A1**		1	ELEMENTO	ELEMENT	ELEMENTO	ELEMENTO	020E
					ELEMENT	ELEMENT	ELEMENT	ELEMENT	
4		**149169A1**		1	COBERTURA	COVER	CUBIERTA	COPERCHIO	265C
					ABDECKUNG	COUVERCLE	DÆKSEL	AFSCHERMING	
5		**149168A1**		1	VÁLVULA	VALVE	VÁLVULA	VALVOLA	9620
					VENTIL	SOUPAPE	VENTIL	KLEP	
6		**214-21108**		1	BRAÇADEIRA, #108, 4.25"-4.56", T-Bolt				
						CLAMP	ABRAZADERA	MORSETTO	120M
					KLEMME	COLLIER	SPÆNDEBÅND	KLEM	
7		**L116820**		1	BRACADEIRA	CLAMP	COLLAR	MORSETTO	1640
					SCHELLE	COLLIER	CLAMP	CLAMP	
8		**149062A1**		1	MANGUEIRA ADMISSÃO DE AR, 460.00 mm, SAE J200				
						INTAKE AIR HOSE	TUBO DE ADMISIÓN DE	TUBO FLESS. ARIA ASPI	A059
					LUFTEINLASSSCHLAUCH	DURIT D'ADMISSION D'A	SLANGE, LUFTINDSUGN	INLAATLUCHTSLANG	
9		**829-1408**		2	PORCA, M8, Cl 10	NUT	TUERCA	DADO	010D
					MUTTER	ECROU	MØTRIK	MOER	
10		**814-8035**		2	PARAFUSO, Hex, M8 x 35, 8.8				
						BOLT	PERNO	BULLONE	140B
					SCHRAUBE	VIS	BOLT	BOUT	
11		**895-15008**		4	ARRUELA PLANA, M8 x 20 x 1.6				
						WASHER	ARANDELA	RONDELLA	131R
					UNTERLEGSCHEIBE	RONDELLE	FLADSKIVE	SLUITRING	
12		**149141A1**		1	SUPORTE, filter	SUPPORT	SOPORTE	SUPPORTO	300S
					STÜTZE	SUPPORT	BESLAG	STEUN	
13		**87462400**		1	PROTEÇÃO, weather	GUARD	DEFENSA	PROTEZIONE	070R
					SCHUTZABDECKUNG	PROTECTION	BESKYTTELSESSKÆRM	AFSCHERMING	
14		**149087A1**		1	FILTRO, HD Assy	FILTER	FILTRO	FILTRO	065F
					FILTER	FILTRE	FILTER	FILTER	
15		**149086A1**		1	ADAPTADOR, Assy, Include items 16, 17				
						ADAPTER	ADAPTADOR	ADATTATORE	001A
					ADAPTER	ADAPTATEUR	ADAPTER	ADAPTER	
16		**149171A1**		1	RECIPIENTE	CONTAINER	RECIPIENTE	CONTENITORE	254C
					BEHÄLTER	CONTENEUR	BEHOLDER	OPVANGBAK	
17		**149172A1**		1	FILTRO	FILTER	FILTRO	FILTRO	065F
					FILTER	FILTRE	FILTER	FILTER	
18		**149154A1**		1	CONEXÃO, sensor	FITTING	ACOPLAMIENTO	RACCORDO	3300
					ARMATUR	RACCORD	FITTING	AANSLUITING	

02-10	01	p1	10/08

SILENCIOSO - MONTAGEM
MUFFLER - ASSEMBLY
SILENCIADOR - MONTAJE
MUFFLER - ASSEMBLY

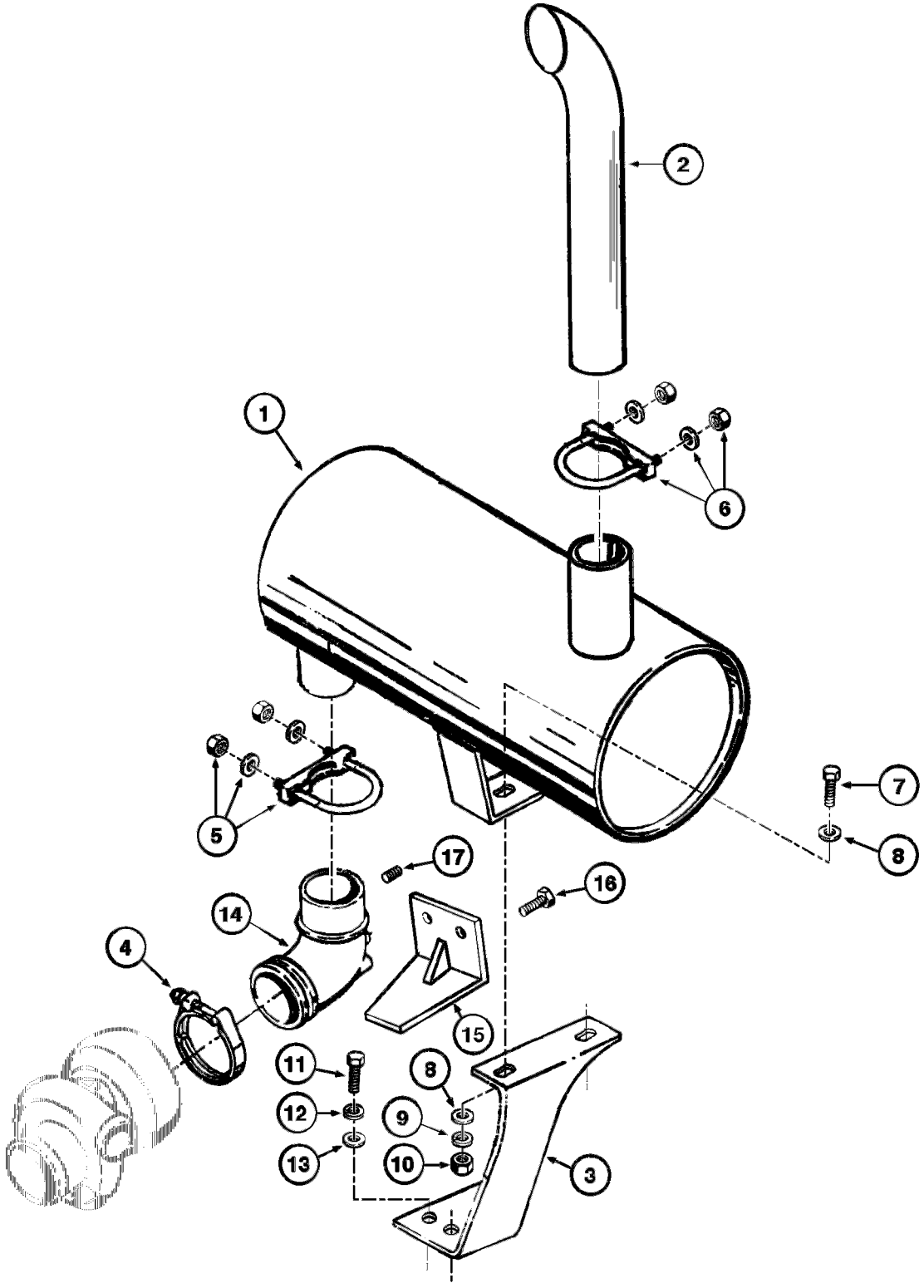

MUFFLER - ASSEMBLY
MUFFLER - ASSEMBLY
MUFFLER - ASSEMBLY
MUFFLER - ASSEMBLY

R	N	P.N.	MOD	Q	Denominação Bezeichnung	Description Description	Denominacion Beskrivelse	Descrizione Beschrijving	L.C.
1		75268191		1	SILENCIOSO	MUFFLER	SILENCIADOR	MARMITTA	160S
					SCHALLDÄMPFER	SILENCIEUX	LYDDÆMPER	UITLAATDEMPER	
2		E97671		1	TUBO, 88.9 mm ID x 90 mm OD x 700 mm L, exhaust				
						TUBE	TUBO	TUBO	195T
					ROHR	TUBE	RØR	LEIDING	
3		148547A1		1	SUPORTE	SUPPORT	SOPORTE	SUPPORTO	300S
					STÜTZE	SUPPORT	BESLAG	STEUN	
4		J903652		1	BRAÇADEIRA	CLAMP	ABRAZADERA	MORSETTO	120M
					KLEMME	COLLIER	SPÆNDEBÅND	KLEM	
5		E157331		1	BRACADEIRA	CLAMP	COLLAR	MORSETTO	1640
					SCHELLE	COLLIER	CLAMP	CLAMP	
6		E67923		1	BRACADEIRA	CLAMP	COLLAR	MORSETTO	1640
					SCHELLE	COLLIER	CLAMP	CLAMP	
7		413-620		2	PARAFUSO, Hex, 3/8"-16 x 1 1/4", G5, Full Thd				
						BOLT	PERNO	BULLONE	140B
					SCHRAUBE	VIS	BOLT	BOUT	
8		495-21044		4	ARRUELA PLANA, 3/8"	WASHER	ARANDELA	RONDELLA	131R
					UNTERLEGSCHEIBE	RONDELLE	FLADSKIVE	SLUITRING	
9		492-11038		2	TRAVA DA ARRUELA, 3/8"	LOCK WASHER	ARANDELA DE BLOQUE	RONDELLA DI SICUREZ	132R
					SICHERUNGSSCHEIBE	RONDELLE FREIN	LÅSESKIVE	BORGRING	
10		425-106		2	PORCA, 3/8"-16, G5	NUT	TUERCA	DADO	010D
					MUTTER	ECROU	MØTRIK	MOER	
11		614-10030		3	PARAFUSO, Hex, M10 x 30, 8.8				
						BOLT	PERNO	BULLONE	140B
					SCHRAUBE	VIS	BOLT	BOUT	
12		892-11010		3	TRAVA DA ARRUELA, M10	LOCK WASHER	ARANDELA DE BLOQUE	RONDELLA DI SICUREZ	132R
					SICHERUNGSSCHEIBE	RONDELLE FREIN	LÅSESKIVE	BORGRING	
13		895-11010		3	ARRUELA PLANA, M10 x 20 x 2				
						WASHER	ARANDELA	RONDELLA	131R
					UNTERLEGSCHEIBE	RONDELLE	FLADSKIVE	SLUITRING	
14		J910991		1	COTOVELO	ELBOW	CODO	GOMITO	2940
					KRUEMMER	COUDE	ELBOW	ELBOW	
15		J903761		1	SUPORTE	SUPPORT	APOYADERO	SUPPORTO	8790
					STUETZE	SUPPORT	SUPPORT	SUPPORT	
16		844-10025		4	PARAFUSO, Hex Flg, M10 x 25, 8.8, Full Thd				
						BOLT	PERNO	BULLONE	140B
					SCHRAUBE	VIS	BOLT	BOUT	
17		217-405		1	BUJÃO, Hex Hd, 1/4"-18 NPTF				
						PLUG	TAPÓN	TAPPO	050T
					STOPFEN	BOUCHON	PROP	PLUG	

02-12	01	p1	03/09

BOMBA D'ÁGUA - CONJUNTO
WATER PUMP - ASSEMBLY
BOMBA DE AGUA - CONJUNTO
WATER PUMP - ASSEMBLY

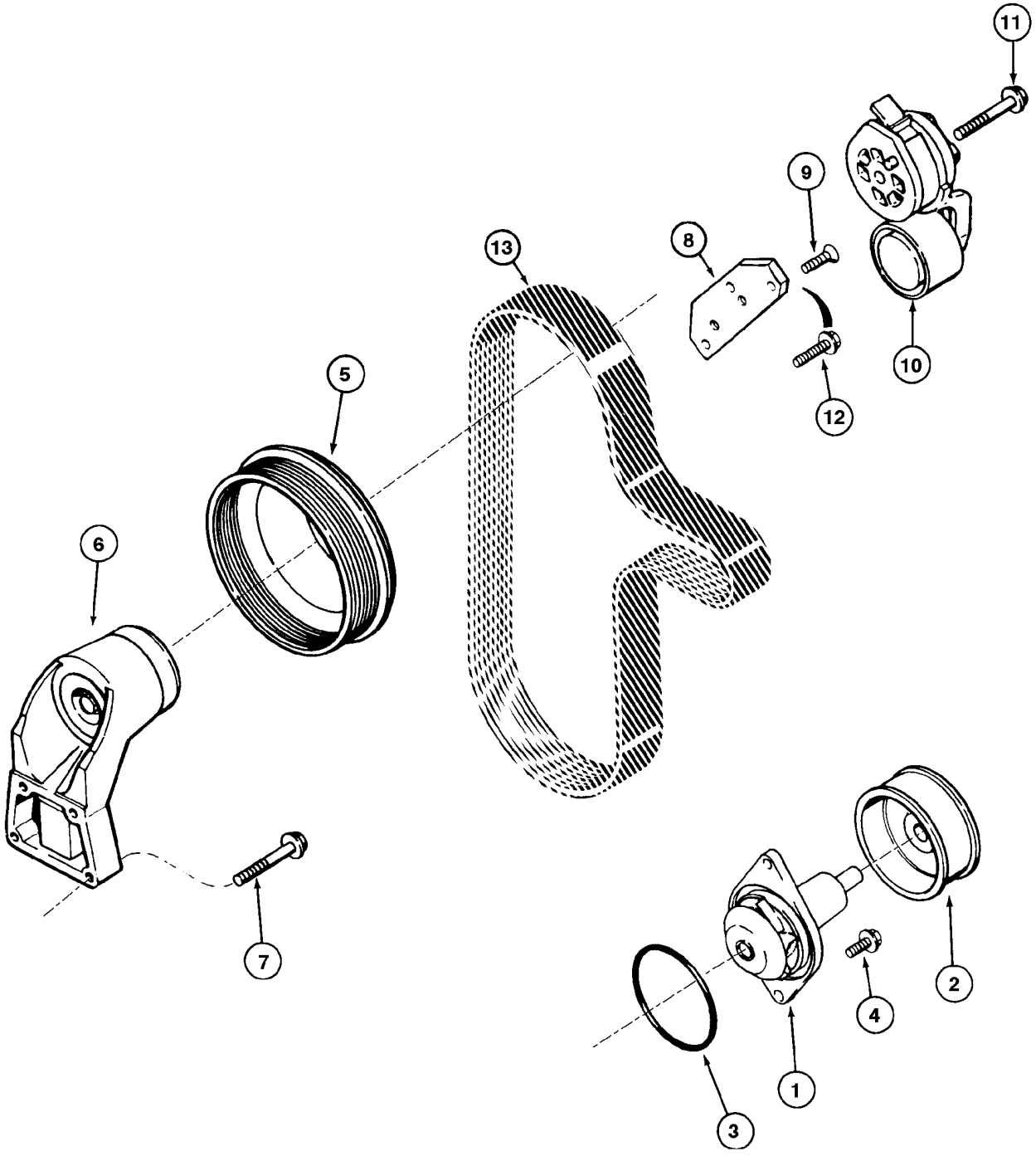

WATER PUMP - ASSEMBLY
WATER PUMP - ASSEMBLY
WATER PUMP - ASSEMBLY
WATER PUMP - ASSEMBLY

R	N	P.N.	MOD	Q	Denominação Bezeichnung	Description Description	Denominacion Beskrivelse	Descrizione Beschrijving	L.C.
		J286277		1	BOMBA DE AGUA, Assy, Includes items 1, 2, 3				
						PUMP, WATER	BOMBA DE AGUA	POMPA, ACQUA	Z147
					WASSERPUMPE	POMPE A EAU	PUMP, WATER	PUMP, WATER	
1		**NSS**		1	SEM SERVIÇO EM SEPARADO, PUMP				
						NOT SERVICED SEPARA	NO SE REPARA POR SE	NON FORNITO SEPARAT	064N
					NICHT A SEP ERS-T LIEI	NON FORUNI SEPAREM	SERVICERES IKKE SEPA	NIET LOS VERKRIJGBAA	
2		**NSS**		1	SEM SERVIÇO EM SEPARADO, PULLEY				
						NOT SERVICED SEPARA	NO SE REPARA POR SE	NON FORNITO SEPARAT	064N
					NICHT A SEP ERS-T LIEI	NON FORUNI SEPAREM	SERVICERES IKKE SEPA	NIET LOS VERKRIJGBAA	
3		**J906698**		1	VEDAÇÃO DE BORRACHA	RUBBER SEAL	JUNTA DE GOMA	GUARNIZIONE DI GOMM	122G
					GUMMIDICHTUNG	JOINT EN CAOUTCHOU(	GUMMITÆTNING	RUBBEREN AFDICHTINC	
4		**J941981**		2	PARAFUSO	SCREW	TORNILLO	VITE	7450
					SCHRAUBE	VIS	SCREW	SCREW	
5		**J914462**		1	POLIA	PULLEY	POLEA	PULEGGIA	230P
					RIEMENSCHEIBE	POULIE	REMSKIVE	RIEMSCHIJF	
6		**J911922**		1	SUPORTE CONJUNTO, far	SUPPORT ASSY.	APOYADERO (CONJUNT	SUPPORTO, COMPLESS	P427
					STUETZE (KPLT.)	SUPPORT (ASSEMBLE)	SUPPORT ASSY.	SUPPORT ASSY.	
	1	**J911923**		1	SUPORTE	SUPPORT	SOPORTE	SUPPORTO	300S
					STÜTZE	SUPPORT	BESLAG	STEUN	
	1	**J910739**		1	ROLAMENTO ESFÉRICO	BALL BEARING	RODAMIENTO DE BOLAS	CUSCINETTO A SFERE	343C
					KUGELLAGER	ROULEMENT A BILLES	KUGLELEJE	KOGELLAGER	
	1	**J911924**		1	CUBO	HUB	CUBO	MOZZO	135M
					NABE	MOYEU	NAV	NAAF	
	1	**J923044**		1	RETENTOR	RETAINER	RETENEDOR	FERMO	109R
					HALTERUNG	DISPOSITIF DE RETENU	HOLDER	HOUDER	
	1	**148570A1**		2	ANEL DE PRESSÃO	SNAP RING	ANILLO DE RESORTE	ANELLO ELASTICO	054A
					SPRENGRING	ANNEAU D'ARRET	LÅSERING	VEERRING	
	1	**J907769**		1	PARAFUSO	BOLT	PERNO	BULLONE	140B
					SCHRAUBE	VIS	BOLT	BOUT	
7		**845-8040**		4	PARAFUSO, Hex Flg, M8 x 40, 8.8				
						BOLT	PERNO	BULLONE	140B
					SCHRAUBE	VIS	BOLT	BOUT	
8		**J925207**		1	SUPORTE	SUPPORT	APOYADERO	SUPPORTO	8790
					STUETZE	SUPPORT	SUPPORT	SUPPORT	
9		**J925186**		1	PARAFUSO, Torx Soc, M8 x 1.25 x 25				
						SCREW	TORNILLO	VITE	040V
					SCHRAUBE	VIS	SKRUE	SCHROEF	
10		**J918944**	a	1	TENSOR DE CORREIA, Assy				
						BELT TENSIONER	TENSOR DE CORREA	TENDICINGHIA	087T
					GURTSTRAFFER	TENDEUR DE COURROI	REMSTRAMMER	RIEMSPANNER	
10		**J967188**	b	1	TENSOR DE CORREIA, Assy				
						BELT TENSIONER	TENSOR DE CORREA	TENDICINGHIA	087T
					GURTSTRAFFER	TENDEUR DE COURROI	REMSTRAMMER	RIEMSPANNER	
11		**844-10070**		1	PARAFUSO, Hex Flg, M10 x 70, 8.8				
						BOLT	PERNO	BULLONE	140B
					SCHRAUBE	VIS	BOLT	BOUT	

(1) Não ilustrado
(a) BSN N6AE00944
(b) ASN N6AE00945

02-12	01	p2	03/09

BOMBA D'ÁGUA - CONJUNTO
WATER PUMP - ASSEMBLY
BOMBA DE AGUA - CONJUNTO
WATER PUMP - ASSEMBLY

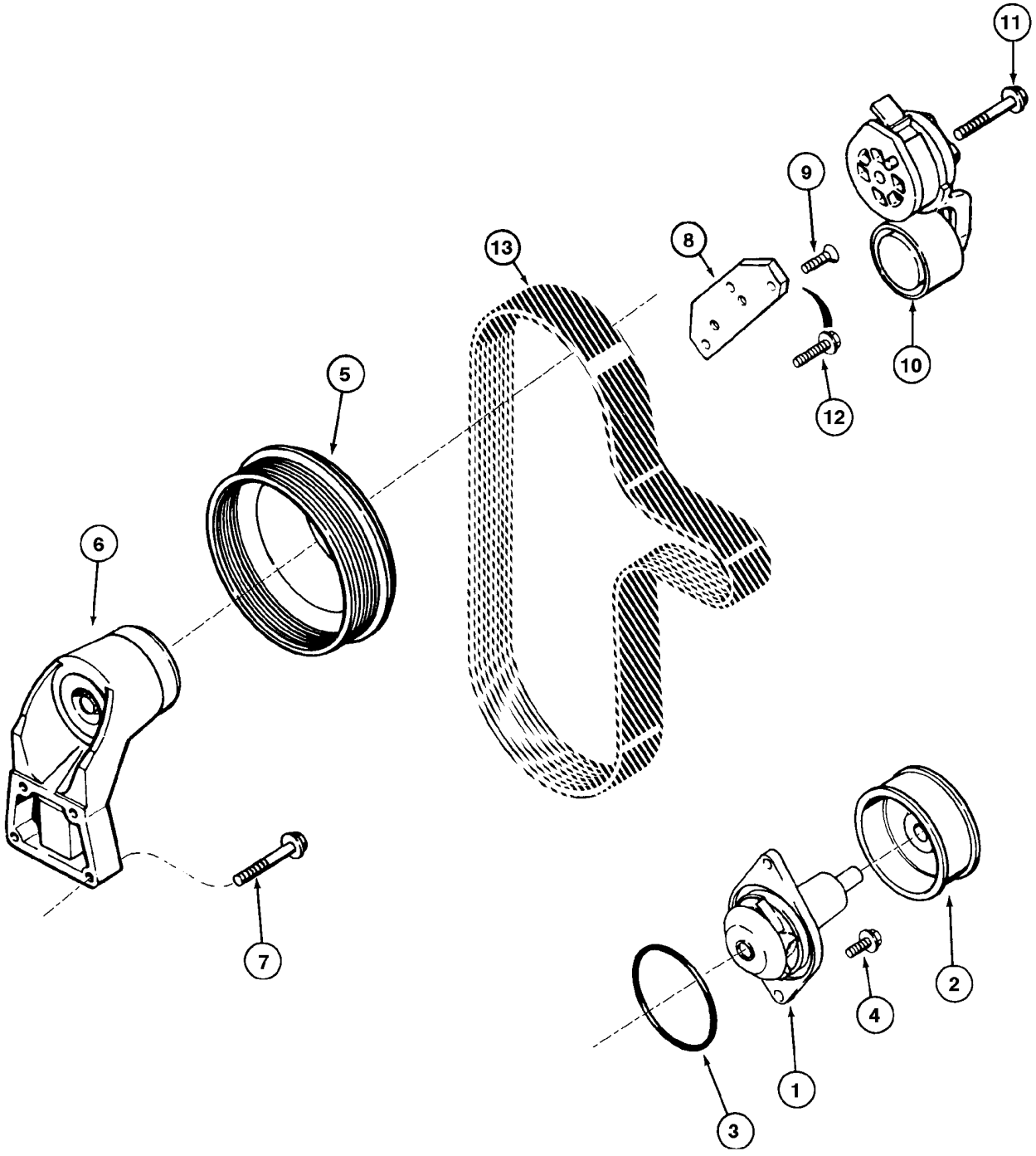

WATER PUMP - ASSEMBLY
WATER PUMP - ASSEMBLY
WATER PUMP - ASSEMBLY
WATER PUMP - ASSEMBLY

R	N	P.N.	MOD	Q	Denominação Bezeichnung	Description Description	Denominacion Beskrivelse	Descrizione Beschrijving	L.C.
12		**845-8025**		1	PARAFUSO, Hex Flg, M8 x 25, 8.8				
						BOLT	PERNO	BULLONE	140B
					SCHRAUBE	VIS	BOLT	BOUT	
13		**J911566**	a	1	CORREIA V, 3.56 mm W x 1612.90 mm L, 8 Ribs				
						V-BELT	CORREA TRAPEZOIDAL	CINGHIA, TRAPEZ	Z087
					KEILRIEMEN	COURROIE TRAPEZOID.	V-BELT	V-BELT	
13		**J911575**	b	1	CORREIA V, 3.56 mm W x 1602.00 mm L, 8 Ribs				
						V-BELT	CORREA TRAPEZOIDAL	CINGHIA, TRAPEZ	Z087
					KEILRIEMEN	COURROIE TRAPEZOID.	V-BELT	V-BELT	

(a) BSN N6AE00944
(b) ASN N6AE00945

02-14	01	p1	07/10

TAMPA DE DISTRIBUIÇÃO
FRONT GEAR COVER
TAPA DE DISTRIBUCIÓN
FRONT GEAR COVER

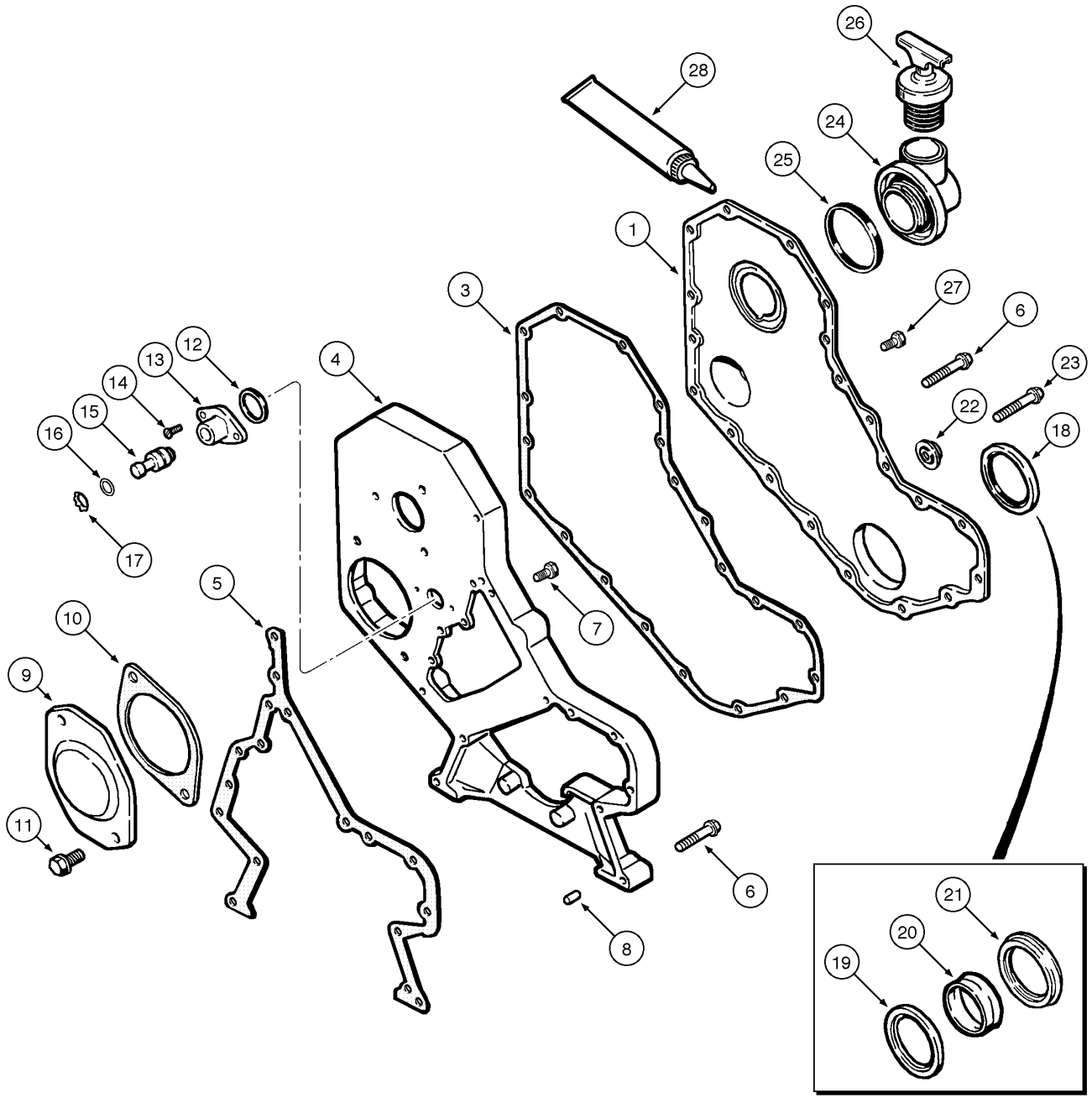

FRONT GEAR COVER
FRONT GEAR COVER
FRONT GEAR COVER
FRONT GEAR COVER

R	N	P.N.	MOD	Q	Denominação Bezeichnung	Description Description	Denominacion Beskrivelse	Descrizione Beschrijving	L.C.
1		J918674	a	1	COBERTURA, gear case ABDECKUNG	COVER COUVERCLE	CUBIERTA DÆKSEL	COPERCHIO AFSCHERMING	265C
1		J935581	b	1	TAMPA, gear case DECKEL	COVER COUVERCLE	TAPA COVER	COPERCHIO COVER	2250
3		J918673		1	JUNTA DICHTUNG	GASKET JOINT	JUNTA GASKET	GUARNIZIONE GASKET	3720
4		J932120	a	1	CARCACA, gear GEHAEUSE	HOUSING CARTER	CARCASA HOUSING	ALLOGGIAMENTO HOUSING	4540
4		J964422	b	1	COBERTURA, gear ABDECKUNG	COVER COUVERCLE	CUBIERTA DÆKSEL	COPERCHIO AFSCHERMING	265C
5		J916131	a	1	JUNTA DICHTUNG	GASKET JOINT	JUNTA GASKET	GUARNIZIONE GASKET	3720
5		J938156	b	1	JUNTA DICHTUNG	GASKET JOINT	JUNTA PAKNING	GUARNIZIONE PAKKING	123G
6		845-8050		10	PARAFUSO, Hex Flg, M8 x 50, 8.8 SCHRAUBE	BOLT VIS	PERNO BOLT	BULLONE BOUT	140B
6		J926863		8	PARAFUSO FLANGEADO FLANSCHSCHRAUBE	FLANGE BOLT VIS A EMBASE	PERNO DE CORONA FLANGEBOLT	BULLONE FLANGIATO FLENSBOUT	A027
7		845-8016	a	5	PARAFUSO, Hex Flg, M8 x 16, 8.8, Full Thd SCHRAUBE	BOLT VIS	PERNO BOLT	BULLONE BOUT	140B
7		J926846	b	5	PARAFUSO FLANGEADO FLANSCHSCHRAUBE	FLANGE BOLT VIS A EMBASE	PERNO DE CORONA FLANGEBOLT	BULLONE FLANGIATO FLENSBOUT	A027
8		J900257		2	PINO PIN	PIN BROCHE	PASADOR STIFT	PERNO PEN	080P
9		J914868		1	COBERTURA ABDECKUNG	COVER COUVERCLE	CUBIERTA DÆKSEL	COPERCHIO AFSCHERMING	265C
10		J919601		1	JUNTA DICHTUNG	GASKET JOINT	JUNTA GASKET	GUARNIZIONE GASKET	3720
11		854-12025		2	PARAFUSO, Hex Flg, M12 x 25, 10.9 SCHRAUBE	BOLT VIS	PERNO BOLT	BULLONE BOUT	140B
12		J915772		1	ANEL VEDADOR DICHTRING	SEALRING BAGUE D'ETANCHEITE	RETÉN PAKNINGSRING	ANELLO DI TENUTA KEERRING	Z125
13		J913995	a	1	CARCACA, pin GEHAEUSE	HOUSING CARTER	CARCASA HOUSING	ALLOGGIAMENTO HOUSING	4540
13		J919683	b	1	ALOJAMENTO, pin GEHÄUSE	HOUSING CARTER	ALOJAMIENTO HUS	ALLOGGIAMENTO HUIS	014V
14		J907998		2	PARAFUSO, Spc Rd Torx Hd, M5 x 17 SCHRAUBE	SCREW VIS	TORNILLO SKRUE	VITE SCHROEF	040V
15		J903924		1	PINO PIN	PIN BROCHE	PASADOR STIFT	PERNO PEN	080P
16		J913994		1	O-RING O-RING	O-RING JOINT TORIQUE	JUNTA TÓRICA O-RING	ANELLO TOROIDALE O-RING	055A

(a) BSN N6AE00944
(b) ASN N6AE00945

02-14	01	p2	07/10

TAMPA DE DISTRIBUIÇÃO
FRONT GEAR COVER
TAPA DE DISTRIBUCIÓN
FRONT GEAR COVER

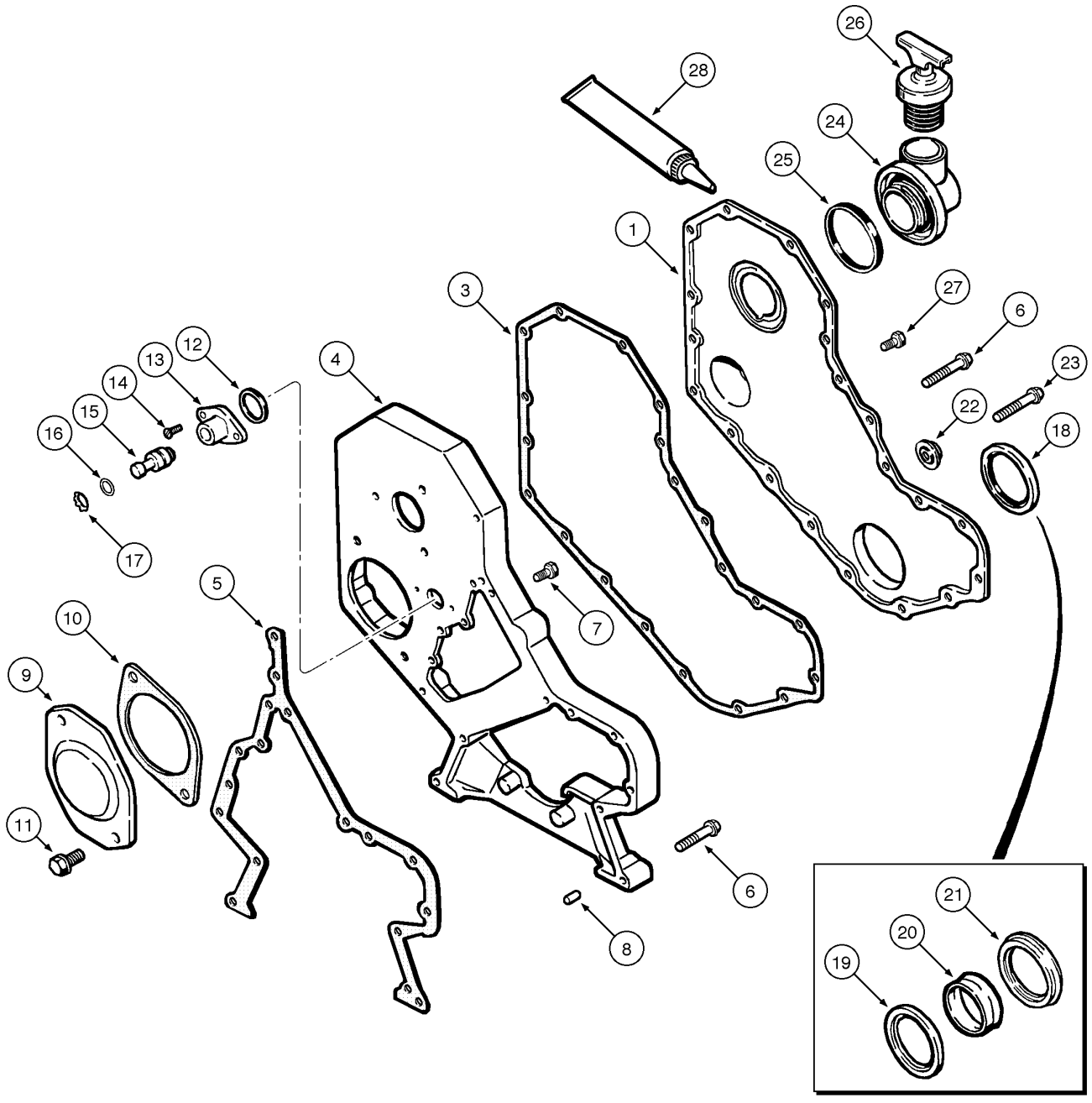

FRONT GEAR COVER
FRONT GEAR COVER
FRONT GEAR COVER
FRONT GEAR COVER

R	N	P.N.	MOD	Q	Denominação Bezeichnung	Description Description	Denominacion Beskrivelse	Descrizione Beschrijving	L.C.
17		J904849		1	ANEL DE PRESSÃO, 0.875", Int, #87				
						SNAP RING	ANILLO DE RESORTE	ANELLO ELASTICO	054A
					SPRENGRING	ANNEAU D'ARRET	LÅSERING	VEERRING	
18		J935959	a	1	JOGO, seal	SET	JUEGO	KIT	Z518
					SATZ	JEU	SÆT	SET	
18		J900709	b	1	KIT DE REVISÃO DO MOTOR, seal, Includes items 19, 20, 21				
						ENGINE OVERHAUL KIT	KIT DE REVISIÓN DEL M	KIT REVISIONE MOTORE	002K
					MOTORÜBERHOLUNGS	KIT DE REVISION MOTE	MOTORREVISIONSSÆT	REVISIEKIT VOOR MOTO	
19		NSS		1	SEM SERVIÇO EM SEPARADO				
						NOT SERVICED SEPARA	NO SE REPARA POR SE	NON FORNITO SEPARAT	064N
					NICHT A SEP ERS-T LIEF	NON FORUNI SEPAREM	SERVICERES IKKE SEPA	NIET LOS VERKRIJGBAA	
20		NSS		1	SEM SERVIÇO EM SEPARADO				
						NOT SERVICED SEPARA	NO SE REPARA POR SE	NON FORNITO SEPARAT	064N
					NICHT A SEP ERS-T LIEF	NON FORUNI SEPAREM	SERVICERES IKKE SEPA	NIET LOS VERKRIJGBAA	
21		NSS		1	SEM SERVIÇO EM SEPARADO				
						NOT SERVICED SEPARA	NO SE REPARA POR SE	NON FORNITO SEPARAT	064N
					NICHT A SEP ERS-T LIEF	NON FORUNI SEPAREM	SERVICERES IKKE SEPA	NIET LOS VERKRIJGBAA	
22		J912772		1	RETENTOR	RETAINER	TOPE	DISPOSITIVO TENUTA	7125
					HALTER	ARRETOIR	RETAINER	RETAINER	
23		845-8060	a	1	PARAFUSO, Hex Flg, M8 x 60, 8.8				
						BOLT	PERNO	BULLONE	140B
					SCHRAUBE	VIS	BOLT	BOUT	
23		J358097	b	1	PARAFUSO	SCREW	TORNILLO	VITE	040V
					SCHRAUBE	VIS	SKRUE	SCHROEF	
24		J924595		1	CONECTOR	CONNECTOR	CONECTOR	CONNETTORE	1950
					STECKVERBINDUNG	CONNECTEUR	CONNECTOR	CONNECTOR	
25		J903475		1	VEDAÇÃO	SEAL	ANILLO DE CIERRE	GUARNIZIONE; TENUTA	132A
					DICHTUNG	JOINT	PAKNING	AFDICHTING	
26		147490A1		1	COBERTURA, oil	COVER	CUBIERTA	COPERCHIO	265C
					ABDECKUNG	COUVERCLE	DÆKSEL	AFSCHERMING	
27		845-8016	a	11	PARAFUSO, Hex Flg, M8 x 16, 8.8, Full Thd				
						BOLT	PERNO	BULLONE	140B
					SCHRAUBE	VIS	BOLT	BOUT	
27		J924962	b	11	PARAFUSO FLANGEADO	FLANGE BOLT	PERNO DE CORONA	BULLONE FLANGIATO	A027
					FLANSCHSCHRAUBE	VIS A EMBASE	FLANGEBOLT	FLENSBOUT	
28		71100643	b	AR	JUNTA, liquid	GASKET	JUNTA	GUARNIZIONE	123G
					DICHTUNG	JOINT	PAKNING	PAKKING	

(a) BSN N6AE00944
(b) ASN N6AE00945

02-16	01	p1	03/09

TURBOCOMPRESSOR E COLETORES DE ADMISSÃO & ESCAPE
TURBOCHARGER SYSTEM AND INTAKE & EXHAUST MANIFOLDS
TURBOCOMPRESOR Y MULTIPLES DE ADMISIÓN & ESCAPE
TURBOCHARGER SYSTEM AND INTAKE & EXHAUST MANIFOLDS

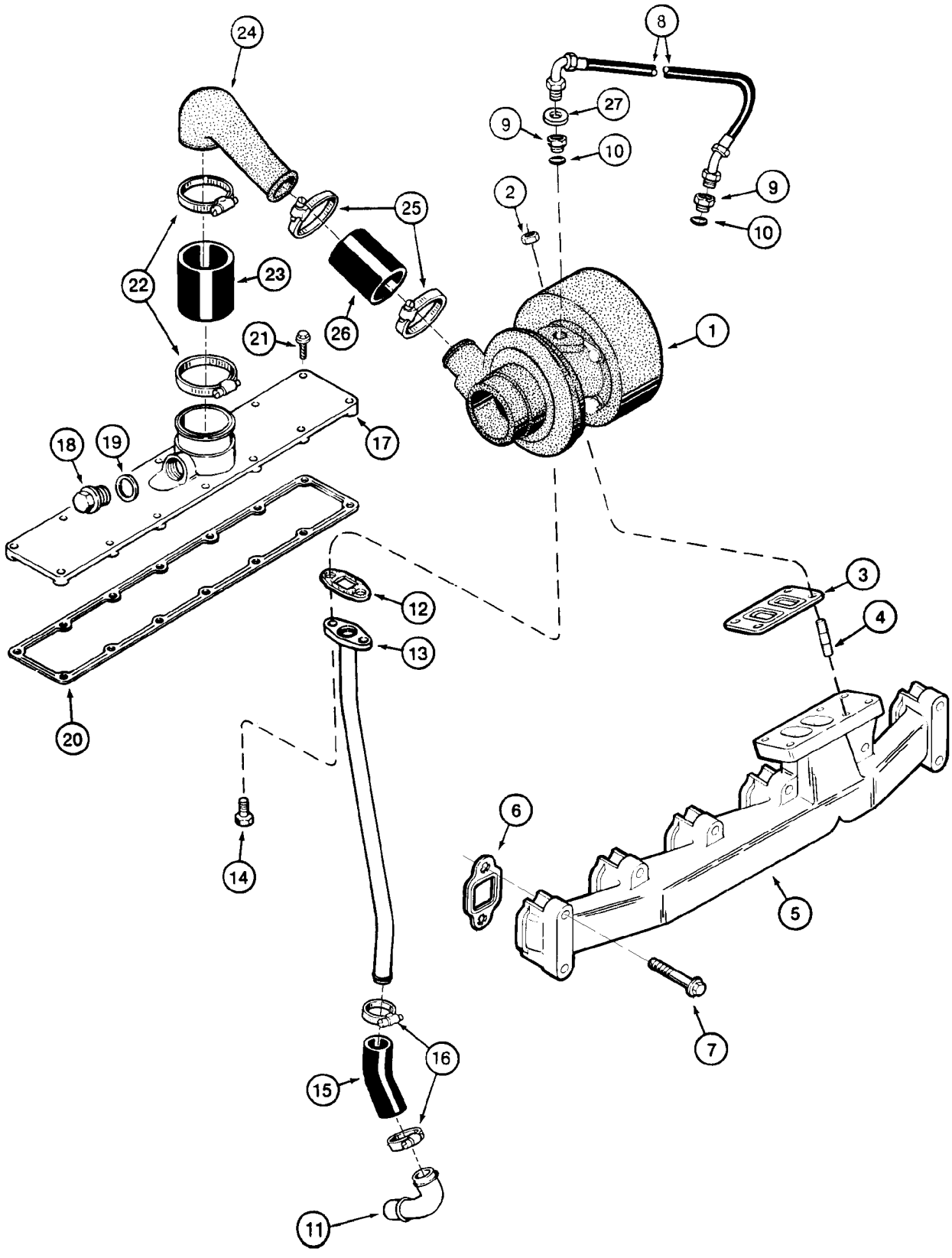

TURBOCHARGER SYSTEM AND INTAKE & EXHAUST MANIFOLDS
TURBOCHARGER SYSTEM AND INTAKE & EXHAUST MANIFOLDS
TURBOCHARGER SYSTEM AND INTAKE & EXHAUST MANIFOLDS
TURBOCHARGER SYSTEM AND INTAKE & EXHAUST MANIFOLDS

R	N	P.N.	MOD	Q	Denominação Bezeichnung	Description Description	Denominacion Beskrivelse	Descrizione Beschrijving	L.C.
1		71103143		1	TURBO-COMPRESSOR, Assy, (P.2-18)				
						TURBOCHARGER	TURBOCOMPRESOR	TURBOCOMPRESSORE	210T
					TURBOLADER	TURBOCOMPRESSEUR	TURBOLADER	TURBOCOMPRESSOR	
2		J818824		4	PORCA	NUT	TUERCA	DADO	010D
					MUTTER	ECROU	MØTRIK	MOER	
3		J901356	a	1	JUNTA	GASKET	JUNTA	GUARNIZIONE	3720
					DICHTUNG	JOINT	GASKET	GASKET	
3		J709861	b		JUNTA	GASKET	JUNTA	GUARNIZIONE	3720
					DICHTUNG	JOINT	GASKET	GASKET	
4		J818823		4	PRISIONEIRO	STUD	PRISIONERO	PRIGIONIERO	210P
					GEWINDEBOLZEN	GOUJON	STØTTEBOLT	TAPEIND	
5		J901683		1	COLECTOR	MANIFOLD	COLECTOR	COLLETTORE	5450
					ROEHRENWERK	COLLECTEUR	MANIFOLD	MANIFOLD	
6		J927154		6	JUNTA	GASKET	JUNTA	GUARNIZIONE	3720
					DICHTUNG	JOINT	GASKET	GASKET	
7		J930249		12	PARAFUSO FLANGEADO	FLANGE BOLT	PERNO DE CORONA	BULLONE FLANGIATO	A027
					FLANSCHSCHRAUBE	VIS A EMBASE	FLANGEBOLT	FLENSBOUT	
8		J918562		1	MANGUEIRA	HOSE	MANGUERA	TUBO FLESSIBILE	4480
					SCHLAUCH	FLEXIBLE	HOSE	HOSE	
9		J919687		2	CONECTOR ELÉTR, Includes item 10				
						ELEC CONNECTOR	CONECTOR ELÉCTRICC	CONNETTORE ELETTRI(	235C
					ELEKTR STECKVERBINI	CONNECTEUR ELECTRI	EL-STIK	CONNECTOR	
10		238-5013		2	O-RING, 0.426" ID x 0.566" OD x 0.07"				
						O-RING	JUNTA TÓRICA	ANELLO TOROIDALE	055A
					O-RING	JOINT TORIQUE	O-RING	O-RING	
11		J903744		1	BOCAL TUBO, 22.42 mm ID x 28 mm OD x 90.2, 64 mm L				
						PIPE FITTING	ACOPLAMIENTO DE TUE	RACCORDO TUBAZIONE	P190
					ROHRVERSCHRAUBUN(	RACCORD DE TUYAUTE	PASRØR	PIJPFITTING	
12		J914388	a	1	JUNTA	GASKET	JUNTA	GUARNIZIONE	3720
					DICHTUNG	JOINT	GASKET	GASKET	
12		J931350	b	1	JUNTA	GASKET	JUNTA	GUARNIZIONE	3720
					DICHTUNG	JOINT	GASKET	GASKET	
13		J918579		1	TUBO	TUBE	TUBO	TUBO	9400
					ROHR	TUBE	TUBE	TUBE	
14		845-8020		2	PARAFUSO, Hex Flg, M8 x 20, 8.8, Full Thd				
						BOLT	PERNO	BULLONE	140B
					SCHRAUBE	VIS	BOLT	BOUT	
15		J912183		1	MANGUEIRA	HOSE	TUBO	TUBO FLESSIBILE	030M
					SCHLAUCH	FLEXIBLE	SLANGE	SLANG	
16		214-1416		2	BRAÇADEIRA MANGUEIRA, #16, 0.81/1.50 Type F Worm				
						HOSE CLAMP	ABRAZADERA DE MANG	FASCETTA STRINGITUB	P729
					SCHLAUCHSCHELLE	COLLIER POUR FLEXIBL	SLANGEKLEMME	SLANGKLEM	
		J908086		1	COLETOR, Assy, Includes items 17, 18, 19				
						MANIFOLD	COLECTOR	COLLETTORE	198C
					VERTEILER	COLLECTEUR	MANIFOLD	VERDEELSTUK	

(a) BSN N6AE00944
(b) ASN N6AE00945

02-16	01	p2	03/09

TURBOCOMPRESSOR E COLETORES DE ADMISSÃO & ESCAPE
TURBOCHARGER SYSTEM AND INTAKE & EXHAUST MANIFOLDS
TURBOCOMPRESOR Y MULTIPLES DE ADMISIÓN & ESCAPE
TURBOCHARGER SYSTEM AND INTAKE & EXHAUST MANIFOLDS

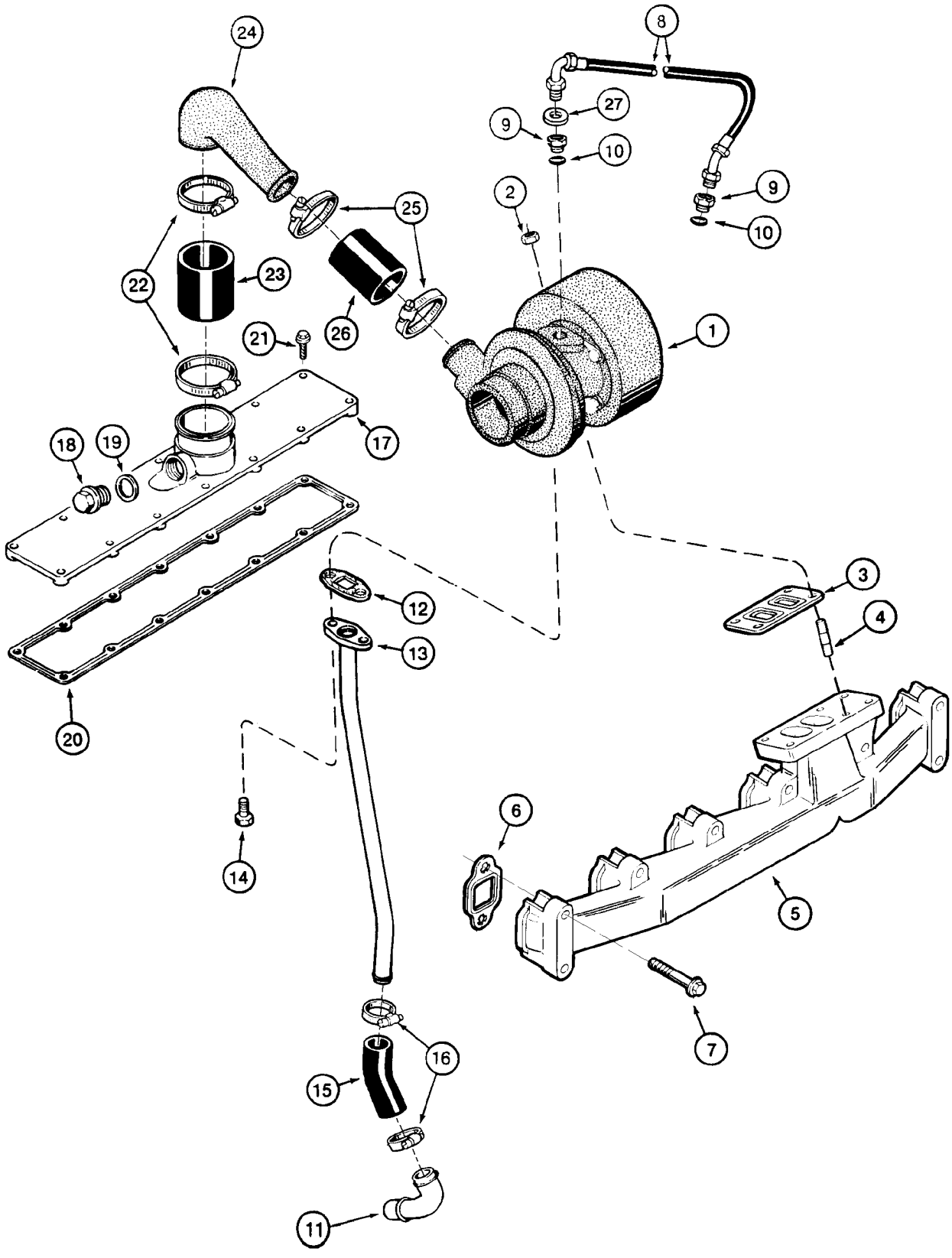

TURBOCHARGER SYSTEM AND INTAKE & EXHAUST MANIFOLDS
TURBOCHARGER SYSTEM AND INTAKE & EXHAUST MANIFOLDS
TURBOCHARGER SYSTEM AND INTAKE & EXHAUST MANIFOLDS
TURBOCHARGER SYSTEM AND INTAKE & EXHAUST MANIFOLDS

R	N	P.N.	MOD	Q	Denominação Bezeichnung	Description Description	Denominacion Beskrivelse	Descrizione Beschrijving	L.C.
17		NSS		1	SEM SERVIÇO EM SEPARADO, COVER				
						NOT SERVICED SEPARA	NO SE REPARA POR SE	NON FORNITO SEPARAT	064N
					NICHT A SEP ERS-T LIEI	NON FORUNI SEPAREM	SERVICERES IKKE SEPA	NIET LOS VERKRIJGBAA	
18		J907185		1	BUJAO	PLUG	TAPON	TAPPO	6400
					STOPFEN	BOUCHON	PLUG	PLUG	
19		J906773		1	ARRUELA	WASHER	ARANDELA	RONDELLA	9720
					UNTERLEGSCHEIBE	RONDELLE	WASHER	WASHER	
20		J931347		1	JUNTA	GASKET	JUNTA	GUARNIZIONE	3720
					DICHTUNG	JOINT	GASKET	GASKET	
21		J918109		16	PARAFUSO FLANGEADO, Hex Flg Hd, M8 x 1.25 x 25				
						FLANGE BOLT	PERNO DE CORONA	BULLONE FLANGIATO	A027
					FLANSCHSCHRAUBE	VIS A EMBASE	FLANGEBOLT	FLENSBOUT	
22		214-3240		2	BRAÇADEIRA MANGUEIRA, 1.75/2.625 HD Worm, W/liner				
						HOSE CLAMP	ABRAZADERA DE MANG	FASCETTA STRINGITUB	P729
					SCHLAUCHSCHELLE	COLLIER POUR FLEXIBL	SLANGEKLEMME	SLANGKLEM	
23		J916166		1	MANGUEIRA ADMISSÃO DE AR				
						INTAKE AIR HOSE	TUBO DE ADMISIÓN DE	TUBO FLESS. ARIA ASPI	A059
					LUFTEINLASSSCHLAUCI	DURIT D'ADMISSION D'A	SLANGE, LUFTINDSUGN	INLAATLUCHTSLANG	
24		J906973		1	TUBO DE ADMISSÃO DE AR, 42 - 54.7 mm ID x 50.8 - 63.5 mm OD				
						AIR INTAKE TUBE	TUBO DE ADMISIÓN DE	TUBO DI ASPIRAZIONE /	P089
					LUFTEINLASSROHR	TUBE D'ADMISSION D'AI	LUFTINDSUGNINGSSLAI	LUCHTINLAATLEIDING	
25		214-1540		2	BRAÇADEIRA MANGUEIRA, #40, 2.06/3.00 Type F Worm, W/liner				
						HOSE CLAMP	ABRAZADERA DE MANG	FASCETTA STRINGITUB	P729
					SCHLAUCHSCHELLE	COLLIER POUR FLEXIBL	SLANGEKLEMME	SLANGKLEM	
26		J916165		1	MANGUEIRA	HOSE	MANGUERA	TUBO FLESSIBILE	4480
					SCHLAUCH	FLEXIBLE	HOSE	HOSE	
27		J924389		2	VEDAÇÃO DA ARRUELA	SEALING WASHER	ARANDELA HERMÉTICA	ROSETTA DI TENUTA	133R
					DICHTSCHEIBE	RONDELLE D'ETANCHEI	TÆTNINGSSKIVE	AFDICHTRING	

02-18	01	p1	11/07

TURBOCOMPRESSOR - MONTAGEM
TURBOCHARGER - ASSEMBLY
TURBOCOMPRESOR - MONTAJE
TURBOCHARGER - ASSEMBLY

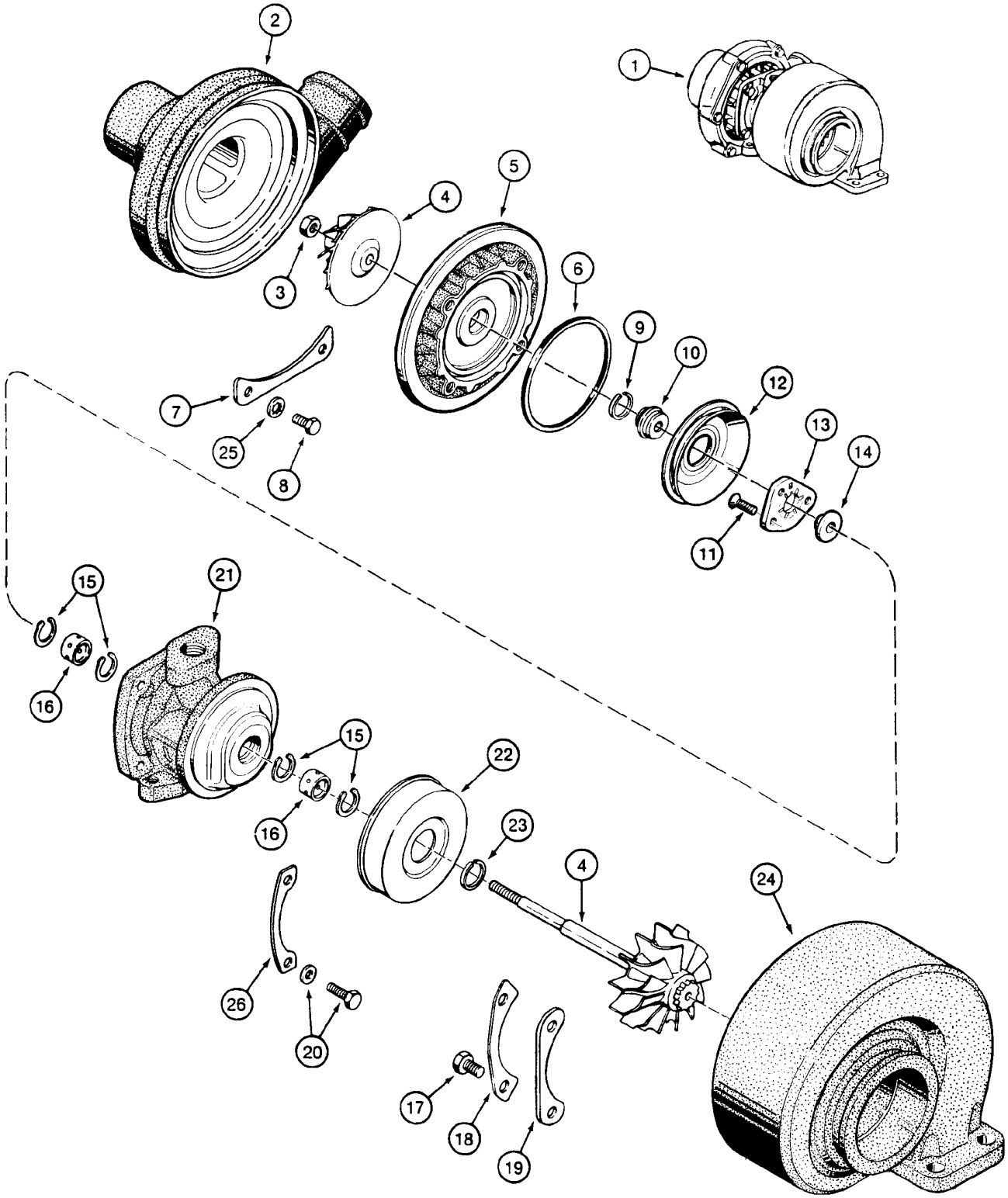

TURBOCHARGER - ASSEMBLY
TURBOCHARGER - ASSEMBLY
TURBOCHARGER - ASSEMBLY
TURBOCHARGER - ASSEMBLY

R	N	P.N.	MOD	Q	Denominação Bezeichnung	Description Description	Denominacion Beskrivelse	Descrizione Beschrijving	L.C.
1		148571A1		1	TURBO-COMPRESSOR, Assy				
					TURBOLADER	TURBOCHARGER TURBOCOMPRESSEUR	TURBOCOMPRESOR TURBOLADER	TURBOCOMPRESSORE TURBOCOMPRESSOR	210T
2		NSS		1	SEM SERVIÇO EM SEPARADO, HOUSING				
					NICHT A SEP ERS-T LIEI	NOT SERVICED SEPARA NON FORUNI SEPAREM	NO SE REPARA POR SE SERVICERES IKKE SEPA	NON FORNITO SEPARAT NIET LOS VERKRIJGBAA	064N
3		NSS		1	SEM SERVIÇO EM SEPARADO, NUT				
					NICHT A SEP ERS-T LIEI	NOT SERVICED SEPARA NON FORUNI SEPAREM	NO SE REPARA POR SE SERVICERES IKKE SEPA	NON FORNITO SEPARAT NIET LOS VERKRIJGBAA	064N
4		NSS		1	SEM SERVIÇO EM SEPARADO, ROTOR Assy				
					NICHT A SEP ERS-T LIEI	NOT SERVICED SEPARA NON FORUNI SEPAREM	NO SE REPARA POR SE SERVICERES IKKE SEPA	NON FORNITO SEPARAT NIET LOS VERKRIJGBAA	064N
5		NSS		1	SEM SERVIÇO EM SEPARADO, DIFFUSER				
					NICHT A SEP ERS-T LIEI	NOT SERVICED SEPARA NON FORUNI SEPAREM	NO SE REPARA POR SE SERVICERES IKKE SEPA	NON FORNITO SEPARAT NIET LOS VERKRIJGBAA	064N
6		NSS		1	SEM SERVIÇO EM SEPARADO, SEAL				
					NICHT A SEP ERS-T LIEI	NOT SERVICED SEPARA NON FORUNI SEPAREM	NO SE REPARA POR SE SERVICERES IKKE SEPA	NON FORNITO SEPARAT NIET LOS VERKRIJGBAA	064N
7		NSS		3	SEM SERVIÇO EM SEPARADO, PLATE				
					NICHT A SEP ERS-T LIEI	NOT SERVICED SEPARA NON FORUNI SEPAREM	NO SE REPARA POR SE SERVICERES IKKE SEPA	NON FORNITO SEPARAT NIET LOS VERKRIJGBAA	064N
8		NSS		6	SEM SERVIÇO EM SEPARADO, BOLT				
					NICHT A SEP ERS-T LIEI	NOT SERVICED SEPARA NON FORUNI SEPAREM	NO SE REPARA POR SE SERVICERES IKKE SEPA	NON FORNITO SEPARAT NIET LOS VERKRIJGBAA	064N
9		NSS		1	SEM SERVIÇO EM SEPARADO, SEAL				
					NICHT A SEP ERS-T LIEI	NOT SERVICED SEPARA NON FORUNI SEPAREM	NO SE REPARA POR SE SERVICERES IKKE SEPA	NON FORNITO SEPARAT NIET LOS VERKRIJGBAA	064N
10		NSS		1	SEM SERVIÇO EM SEPARADO, BAFFLE				
					NICHT A SEP ERS-T LIEI	NOT SERVICED SEPARA NON FORUNI SEPAREM	NO SE REPARA POR SE SERVICERES IKKE SEPA	NON FORNITO SEPARAT NIET LOS VERKRIJGBAA	064N
11		NSS		3	SEM SERVIÇO EM SEPARADO, BOLT				
					NICHT A SEP ERS-T LIEI	NOT SERVICED SEPARA NON FORUNI SEPAREM	NO SE REPARA POR SE SERVICERES IKKE SEPA	NON FORNITO SEPARAT NIET LOS VERKRIJGBAA	064N
12		NSS		1	SEM SERVIÇO EM SEPARADO, BAFFLE				
					NICHT A SEP ERS-T LIEI	NOT SERVICED SEPARA NON FORUNI SEPAREM	NO SE REPARA POR SE SERVICERES IKKE SEPA	NON FORNITO SEPARAT NIET LOS VERKRIJGBAA	064N
13		NSS		1	SEM SERVIÇO EM SEPARADO, BEARING				
					NICHT A SEP ERS-T LIEI	NOT SERVICED SEPARA NON FORUNI SEPAREM	NO SE REPARA POR SE SERVICERES IKKE SEPA	NON FORNITO SEPARAT NIET LOS VERKRIJGBAA	064N
14		NSS		1	SEM SERVIÇO EM SEPARADO, COLLAR				
					NICHT A SEP ERS-T LIEI	NOT SERVICED SEPARA NON FORUNI SEPAREM	NO SE REPARA POR SE SERVICERES IKKE SEPA	NON FORNITO SEPARAT NIET LOS VERKRIJGBAA	064N
15		NSS		4	SEM SERVIÇO EM SEPARADO, RING				
					NICHT A SEP ERS-T LIEI	NOT SERVICED SEPARA NON FORUNI SEPAREM	NO SE REPARA POR SE SERVICERES IKKE SEPA	NON FORNITO SEPARAT NIET LOS VERKRIJGBAA	064N
16		NSS		2	SEM SERVIÇO EM SEPARADO, BEARING				
					NICHT A SEP ERS-T LIEI	NOT SERVICED SEPARA NON FORUNI SEPAREM	NO SE REPARA POR SE SERVICERES IKKE SEPA	NON FORNITO SEPARAT NIET LOS VERKRIJGBAA	064N

02-18	01	p2	11/07

TURBOCOMPRESSOR - MONTAGEM
TURBOCHARGER - ASSEMBLY
TURBOCOMPRESOR - MONTAJE
TURBOCHARGER - ASSEMBLY

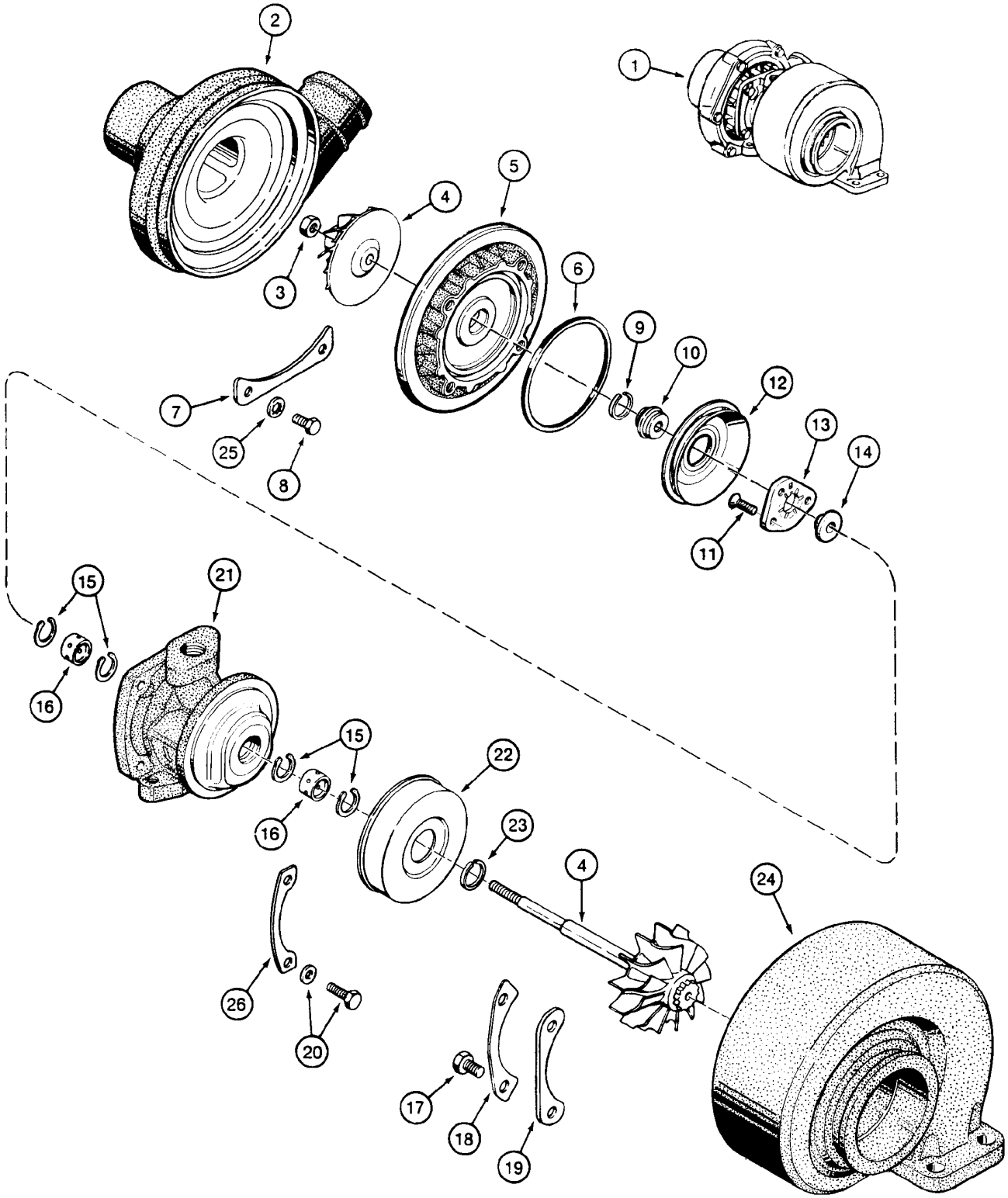

TURBOCHARGER - ASSEMBLY
TURBOCHARGER - ASSEMBLY
TURBOCHARGER - ASSEMBLY
TURBOCHARGER - ASSEMBLY

R	N	P.N.	MOD	Q	Denominação Bezeichnung	Description Description	Denominacion Beskrivelse	Descrizione Beschrijving	L.C.
17		**NSS**		4	SEM SERVIÇO EM SEPARADO, BOLT				
						NOT SERVICED SEPARA	NO SE REPARA POR SE	NON FORNITO SEPARAT	064N
					NICHT A SEP ERS-T LIEI	NON FORUNI SEPAREM	SERVICERES IKKE SEPA	NIET LOS VERKRIJGBAA	
18		**NSS**		2	SEM SERVIÇO EM SEPARADO, PLATE				
						NOT SERVICED SEPARA	NO SE REPARA POR SE	NON FORNITO SEPARAT	064N
					NICHT A SEP ERS-T LIEI	NON FORUNI SEPAREM	SERVICERES IKKE SEPA	NIET LOS VERKRIJGBAA	
19		**NSS**		2	SEM SERVIÇO EM SEPARADO, PLATE				
						NOT SERVICED SEPARA	NO SE REPARA POR SE	NON FORNITO SEPARAT	064N
					NICHT A SEP ERS-T LIEI	NON FORUNI SEPAREM	SERVICERES IKKE SEPA	NIET LOS VERKRIJGBAA	
20		**NSS**		1	SEM SERVIÇO EM SEPARADO, BOLT Assy				
						NOT SERVICED SEPARA	NO SE REPARA POR SE	NON FORNITO SEPARAT	064N
					NICHT A SEP ERS-T LIEI	NON FORUNI SEPAREM	SERVICERES IKKE SEPA	NIET LOS VERKRIJGBAA	
21		**NSS**		1	SEM SERVIÇO EM SEPARADO, HOUSING				
						NOT SERVICED SEPARA	NO SE REPARA POR SE	NON FORNITO SEPARAT	064N
					NICHT A SEP ERS-T LIEI	NON FORUNI SEPAREM	SERVICERES IKKE SEPA	NIET LOS VERKRIJGBAA	
22		**NSS**		1	SEM SERVIÇO EM SEPARADO, COVER				
						NOT SERVICED SEPARA	NO SE REPARA POR SE	NON FORNITO SEPARAT	064N
					NICHT A SEP ERS-T LIEI	NON FORUNI SEPAREM	SERVICERES IKKE SEPA	NIET LOS VERKRIJGBAA	
23		**NSS**		1	SEM SERVIÇO EM SEPARADO, SEAL				
						NOT SERVICED SEPARA	NO SE REPARA POR SE	NON FORNITO SEPARAT	064N
					NICHT A SEP ERS-T LIEI	NON FORUNI SEPAREM	SERVICERES IKKE SEPA	NIET LOS VERKRIJGBAA	
24		**NSS**		1	SEM SERVIÇO EM SEPARADO, HOUSING				
						NOT SERVICED SEPARA	NO SE REPARA POR SE	NON FORNITO SEPARAT	064N
					NICHT A SEP ERS-T LIEI	NON FORUNI SEPAREM	SERVICERES IKKE SEPA	NIET LOS VERKRIJGBAA	
25		**NSS**		6	SEM SERVIÇO EM SEPARADO, WASHER				
						NOT SERVICED SEPARA	NO SE REPARA POR SE	NON FORNITO SEPARAT	064N
					NICHT A SEP ERS-T LIEI	NON FORUNI SEPAREM	SERVICERES IKKE SEPA	NIET LOS VERKRIJGBAA	
26		**NSS**		2	SEM SERVIÇO EM SEPARADO, PLATE				
						NOT SERVICED SEPARA	NO SE REPARA POR SE	NON FORNITO SEPARAT	064N
					NICHT A SEP ERS-T LIEI	NON FORUNI SEPAREM	SERVICERES IKKE SEPA	NIET LOS VERKRIJGBAA	
	1	**J545652**		1	JOGO DE REPARO REPARATURPACKUNG	PACKAGE, REPAIR COLIS DE REPARATION	JEUGO REPARACION PACKAGE, REPAIR	CONFEZIONE, FRENI PACKAGE, REPAIR	P704

(1) Inclui 6, 8, 9, 11, 13, 15, 16, 17, 18, 20, 23, 25

02-20	01	p1	04/12

FILTRO E RADIADOR DE ÓLEO
OIL FILTER AND COOLER
FILTRO Y RADIADOR DE ACEITE
OIL FILTER AND COOLER

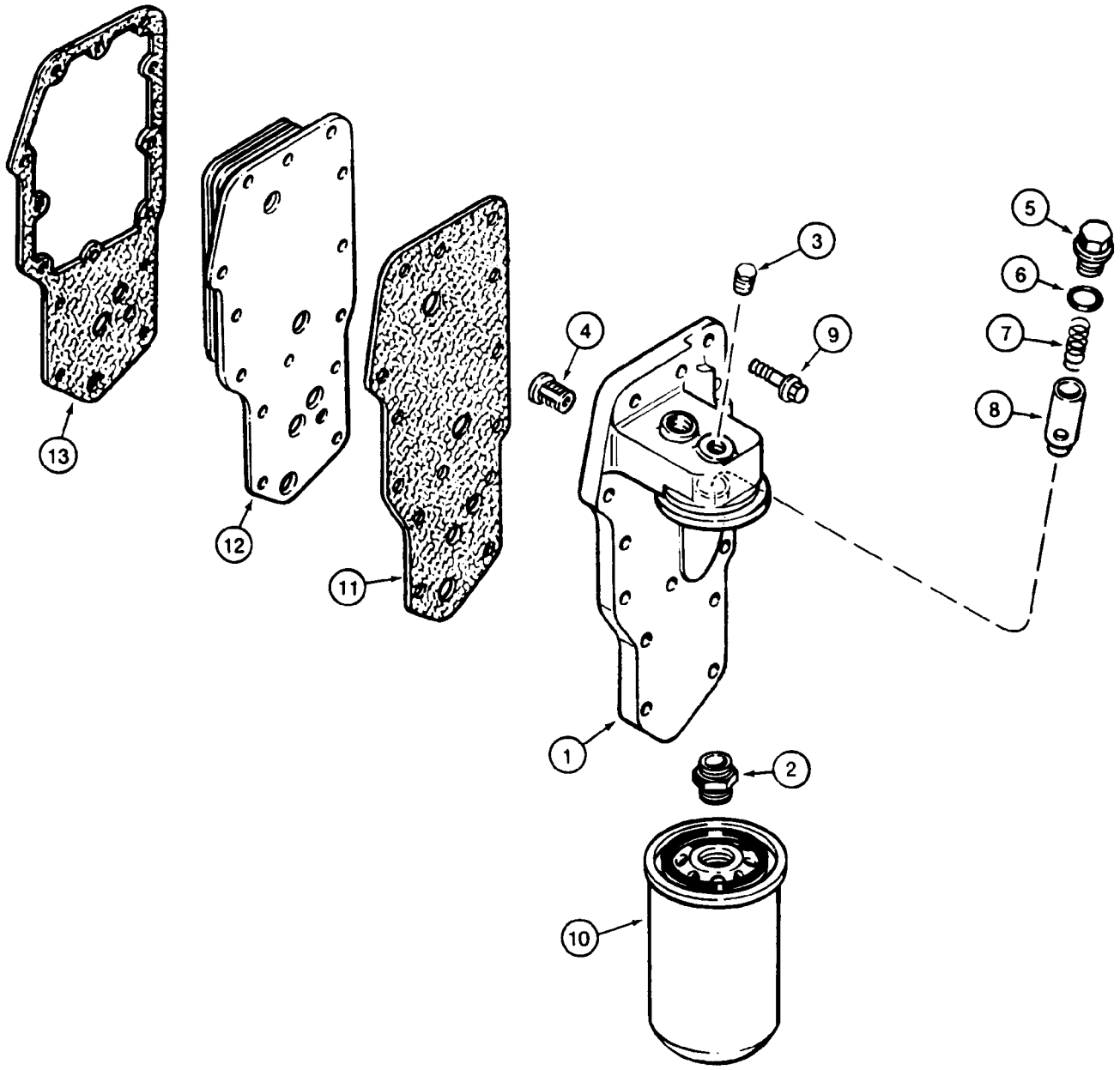

OIL FILTER AND COOLER
OIL FILTER AND COOLER
OIL FILTER AND COOLER
OIL FILTER AND COOLER

R	N	P.N.	MOD	Q	Denominação Bezeichnung	Description Description	Denominacion Beskrivelse	Descrizione Beschrijving	L.C.
		J918954		1	CABEÇA, Assy, Includes items 1, 2				
						HEAD	CULATA	TESTA	4180
					KOPF	TETE	HOVED	KOP	
1		**NSS**		1	SEM SERVIÇO EM SEPARADO, HEAD				
						NOT SERVICED SEPARA	NO SE REPARA POR SE	NON FORNITO SEPARAT	064N
					NICHT A SEP ERS-T LIEI	NON FORUNI SEPAREM	SERVICERES IKKE SEPA	NIET LOS VERKRIJGBAA	
2		**J909355**		1	ADAPTADOR	ADAPTER	ADAPTOR	ADATTATORE	0031
					ADAPTER	ADAPTEUR	ADAPTER	VERLOOPSTUK	
3		**J906619**		1	BUJÃO	PLUG	TAPÓN	TAPPO	050T
					STOPFEN	BOUCHON	PROP	PLUG	
4		**J933615**		1	VALVULA	VALVE	VALVULA	VALVOLA	P468
					VENTIL	VALVE	VALVE	VALVE	
5		**J915787**		1	BUJAO	PLUG	TAPON	TAPPO	6400
					STOPFEN	BOUCHON	PLUG	PLUG	
6		**J929457**		1	ANEL O	O-RING	ANILLO/ARO CAUCHO	ANELLO TOROIDALE	7176
					O-RING	JOINT TORIQUE	O-RING	O-RING	
7		**J925009**		1	MOLA	SPRING	MUELLE	MOLLA	8315
					FEDER	RESSORT	SPRING	SPRING	
8		**J918428**		1	EMBOLO	PLUNGER	EMBOLO	STANTUFFO	6420
					PUMPENKOLBEN	PLONGEUR, PISTON	PLUNGER	PLUNGER	
9		**845-8035**		14	PARAFUSO, Hex Flg, M8 x 35, 8.8				
						BOLT	PERNO	BULLONE	140B
					SCHRAUBE	VIS	BOLT	BOUT	
10		**J937743**		1	FILTRO DE ÓLEO DO MOTOR, Single pkg qty. For multi pkg [qty.12] order J937743MP				
						ENGINE OIL FILTER	FILTRO DE ACEITE DE M	FILTRO OLIO MOTORE	067F
					MOTORÖLFILTER	FILTRE A HUILE MOTEU	MOTOROLIEFILTER	MOTOROLIEFILTER	
11		**J942915**		1	JUNTA	GASKET	JUNTA	GUARNIZIONE	3720
					DICHTUNG	JOINT	GASKET	GASKET	
12		**J921558**		1	RADIADOR, oil	COOLER	REFRIGERADOR	RADIATORE	2130
					KÜHLER	REFROIDISSEUR	KØLER	KOELER	
13		**J942914**		1	JUNTA	GASKET	JUNTA	GUARNIZIONE	3720
					DICHTUNG	JOINT	GASKET	GASKET	

02-22	01	p1	03/09

BOMBA E CARTER DE ÓLEO
OIL PUMP AND PAN
BOMBA Y CARTER DE ACEITE
OIL PUMP AND PAN

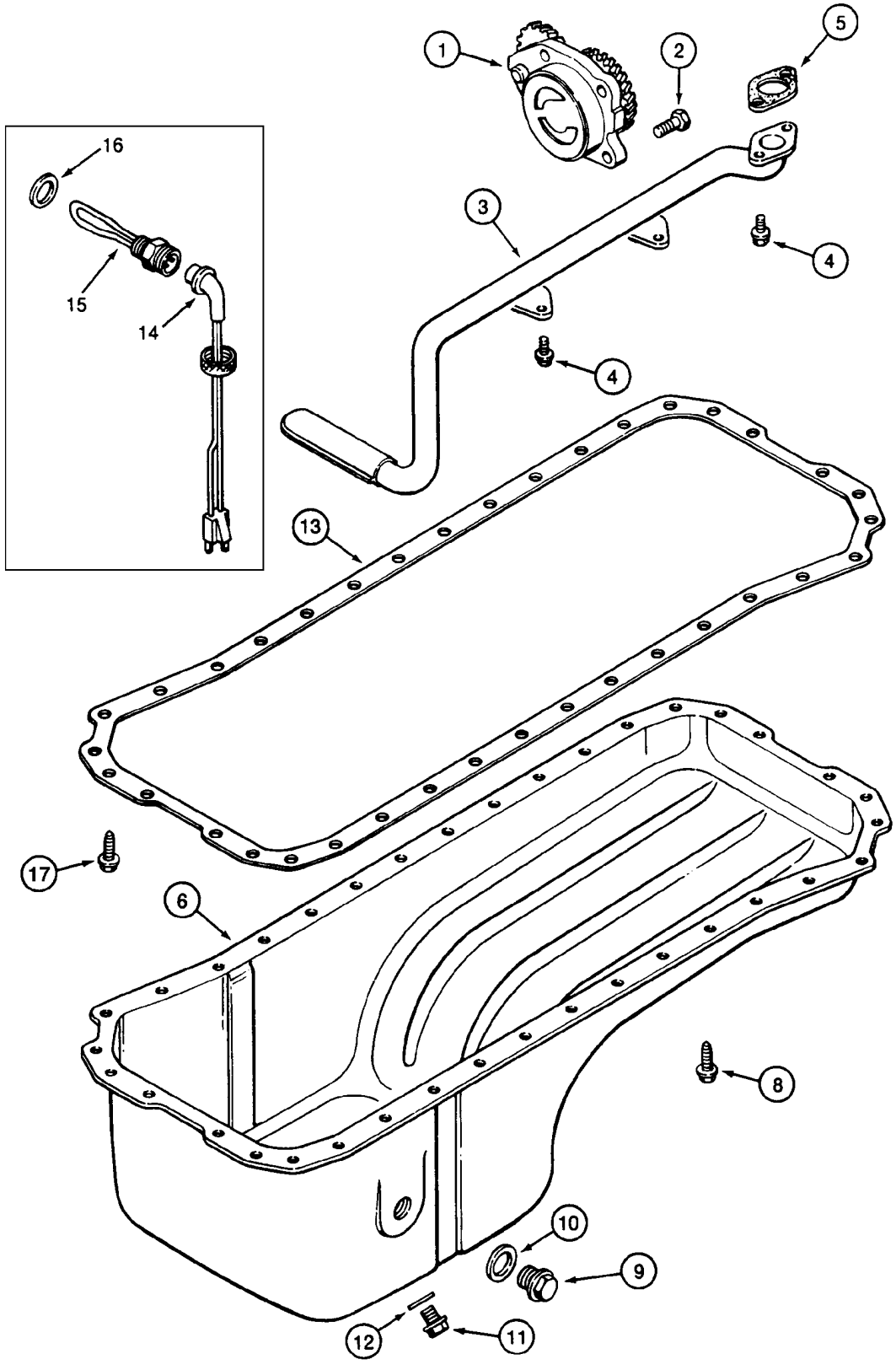

OIL PUMP AND PAN
OIL PUMP AND PAN
OIL PUMP AND PAN
OIL PUMP AND PAN

R	N	P.N.	MOD	Q	Denominação Bezeichnung	Description Description	Denominacion Beskrivelse	Descrizione Beschrijving	L.C.
1		**J937404**		1	BOMBA OLEO MOTOR, Assy				
						PUMP, ENGINE OIL	BOMBA ACEITE	POMPA, OLIO MOTORE	Z103
					OELPUMPE	POMPE A HUILE	PUMP, ENGINE OIL	PUMP, ENGINE OIL	
2		**J900677**		4	PARAFUSO	BOLT	PERNO	BULLONE	140B
					SCHRAUBE	VIS	BOLT	BOUT	
3		**J921992**		1	TUBO DE ASPIRAÇÃO, 25.4 mm OD x 359, 234 mm L				
						SUCTION PIPE	TUBO DE ASPIRACIÓN	TUBO DI ASPIRAZIONE	P629
					SAUGLEITUNG	TUYAU D'ASPIRATION	SUGERØR	AANZUIGLEIDING	
4		**J907860**		4	PARAFUSO FLANGEADO, Hex, Flg Hd, M8 x 25, Spcl				
						FLANGE BOLT	PERNO DE CORONA	BULLONE FLANGIATO	A027
					FLANSCHSCHRAUBE	VIS A EMBASE	FLANGEBOLT	FLENSBOUT	
5		**J931349**		1	JUNTA	GASKET	JUNTA	GUARNIZIONE	3720
					DICHTUNG	JOINT	GASKET	GASKET	
6		**J915703**		1	CARTER DE OLEO, Assy	PAN, OIL	CARCASA DE ACIETE	COPPA DELL'OLIO	Z105
					OELWANNE	CARTER A HUILE	PAN, OIL	PAN, OIL	
8		**J920400**		36	PARAFUSO FLANGEADO, Hex, Flg Hd, M8 x 21, Spcl				
						FLANGE BOLT	PERNO DE CORONA	BULLONE FLANGIATO	A027
					FLANSCHSCHRAUBE	VIS A EMBASE	FLANGEBOLT	FLENSBOUT	
9		**J924148**		1	BUJÃO	PLUG	TAPÓN	TAPPO	050T
					STOPFEN	BOUCHON	PROP	PLUG	
10		**J902425**		1	ARRUELA PLANA	WASHER	ARANDELA	RONDELLA	131R
					UNTERLEGSCHEIBE	RONDELLE	FLADSKIVE	SLUITRING	
11		**J924147**		1	BUJÃO, drain	PLUG	TAPÓN	TAPPO	050T
					STOPFEN	BOUCHON	PROP	PLUG	
12		**J920773**		1	VEDAÇÃO DA ARRUELA	SEALING WASHER	ARANDELA HERMÉTICA	ROSETTA DI TENUTA	133R
					DICHTSCHEIBE	RONDELLE D'ETANCHEI	TÆTNINGSSKIVE	AFDICHTRING	
13	1	**J931346**		1	JUNTA, seal	GASKET	JUNTA	GUARNIZIONE	3720
					DICHTUNG	JOINT	GASKET	GASKET	
		A77676		1	KIT DE GAXETAS, Assy	GASKET KIT	KIT DE JUNTAS	KIT GUARNIZIONI	3740
					DICHTUNGSSATZ	KIT DE JOINTS	PAKNINGSSÆT	KIT MET PAKKINGEN	
	2	**A77490**			JOGO, Includes items 14, 15				
						KIT	JEUGO	KIT	4830
					PACKUNG	POCHETTE	KIT	KIT	
14	2	**J905113**		1	CABO	CABLE	CABLE	CAVO	1240
					KABEL	CABLE	CABLE	CABLE	
15	2	**NSS**		1	SEM SERVIÇO EM SEPARADO				
						NOT SERVICED SEPARA	NO SE REPARA POR SE	NON FORNITO SEPARAT	064N
					NICHT A SEP ERS-T LIEI	NON FORUNI SEPAREM	SERVICERES IKKE SEPA	NIET LOS VERKRIJGBAA	
16	2	**J902425**		1	ARRUELA PLANA	WASHER	ARANDELA	RONDELLA	131R
					UNTERLEGSCHEIBE	RONDELLE	FLADSKIVE	SLUITRING	
17	2	**J900630**		2	PARAFUSO, Hex Flg, M8 x 20, 8.8, Full Thd				
						BOLT	PERNO	BULLONE	140B
					SCHRAUBE	VIS	BOLT	BOUT	

(1) Inclui 5, 12, 13
(2) AQUECEDOR ÓLEO (Opcional)

02-24	01	p1	03/09

TAMPA DO CABEÇOTE, JUNTAS E TERMOSTATO
CYLINDER HEAD COVERS, GASKETS, AND THERMOSTAT
TAPA DE LA CULATRA, JUNTAS Y TERMOSTATO
CYLINDER HEAD COVERS, GASKETS, AND THERMOSTAT

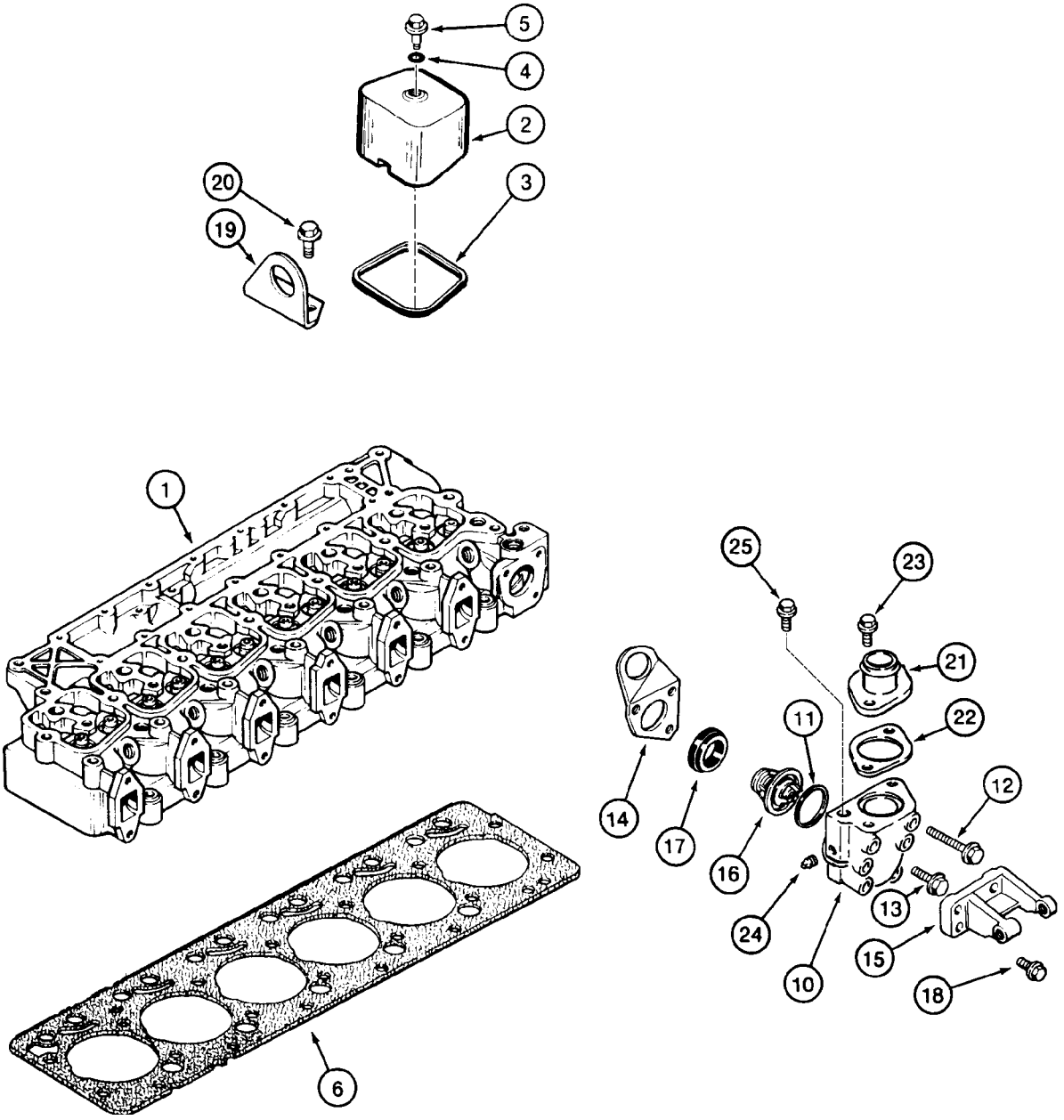

CYLINDER HEAD COVERS, GASKETS, AND THERMOSTAT
CYLINDER HEAD COVERS, GASKETS, AND THERMOSTAT
CYLINDER HEAD COVERS, GASKETS, AND THERMOSTAT
CYLINDER HEAD COVERS, GASKETS, AND THERMOSTAT

R	N	P.N.	MOD	Q	Denominação Bezeichnung	Description Description	Denominacion Beskrivelse	Descrizione Beschrijving	L.C.
1		REF		1	INSTRUÇÃO, HEAD (P.2-26)				
						INSTRUCTION	INSTRUCCIÓN	ISTRUZIONI	Z571
					ANLEITUNG	INSTRUCTION	INSTRUKTION	INSTRUCTIE	
2		J928404		6	TAMPA	COVER	TAPA	COPERCHIO	2250
					DECKEL	COUVERCLE	COVER	COVER	
3		J930906		6	JUNTA	GASKET	JUNTA	GUARNIZIONE	3720
					DICHTUNG	JOINT	GASKET	GASKET	
4		J928406		6	ISOLADOR	ISOLATOR	AISLADOR	ISOLATORE	Z082
					ISOLATOR	ISOLANT	ISOLATOR	ISOLATIE	
5		J907049		6	PARAFUSO	BOLT	TORNILLO	BULLONE	0810
					SCHRAUBE	BOULON	SKRUE	BOUT	
6		148599A1		1	JUNTA, STD	GASKET	JUNTA	GUARNIZIONE	123G
					DICHTUNG	JOINT	PAKNING	PAKKING	
6		148601A1		1	JOGO, .25mm	SET	JUEGO	KIT	Z518
					SATZ	JEU	SÆT	SET	
6		148602A1		1	JUNTA, .50mm	GASKET	JUNTA	GUARNIZIONE	123G
					DICHTUNG	JOINT	PAKNING	PAKKING	
10		J924473		1	CARCACA, thermostat	HOUSING	CARCASA	ALLOGGIAMENTO	4540
					GEHAEUSE	CARTER	HOUSING	HOUSING	
11		J906697		1	VEDADOR DE RETENCAO	SEAL	SELLO/RETEN	GUARNIZIONE TENUTA	7460
					DICHTRING	JOINT-D'ETANCHEITE	SEAL	SEAL	
12		845-8090		2	PARAFUSO, Hex Flg, M8 x 90, 8.8				
						BOLT	PERNO	BULLONE	140B
					SCHRAUBE	VIS	BOLT	BOUT	
13		845-8040		1	PARAFUSO, Hex Flg, M8 x 40, 8.8				
						BOLT	PERNO	BULLONE	140B
					SCHRAUBE	VIS	BOLT	BOUT	
14		J903757		1	SUPORTE	BRACKET	SOPORTE	STAFFA	1010
					HALTER	CONSOLE	BRACKET	BRACKET	
15		J910923		1	TENSOR	BRACE	TENSOR	MENARUOLA	0990
					STREBE	JAMBE-DE-FORCE	BRACE	BRACE	
		148600A1		1	TERMOSTATO, Assy, Includes items 16, 17				
						THERMOSTAT	TERMOSTATO	TERMOSTATO	096T
					THERMOSTAT	THERMOSTAT	TERMOSTAT	THERMOSTAAT	
16		NSS		1	SEM SERVIÇO EM SEPARADO, THERMOSTAT				
						NOT SERVICED SEPARA	NO SE REPARA POR SE	NON FORNITO SEPARAT	064N
					NICHT A SEP ERS-T LIEI	NON FORUNI SEPAREM	SERVICERES IKKE SEPA	NIET LOS VERKRIJGBAA	
17		J923331		1	JUNTA	GASKET	JUNTA	GUARNIZIONE	3720
					DICHTUNG	JOINT	GASKET	GASKET	
18		845-8025		3	PARAFUSO, Hex Flg, M8 x 25, 8.8				
						BOLT	PERNO	BULLONE	140B
					SCHRAUBE	VIS	BOLT	BOUT	
19		J908118		1	SUPORTE	BRACKET	SOPORTE	STAFFA	225S
					HALTERUNG	SUPPORT	BESLAG	STEUN	
20		844-12030		2	PARAFUSO, Hex Flg, M12 x 30, 8.8				
						BOLT	PERNO	BULLONE	140B
					SCHRAUBE	VIS	BOLT	BOUT	
21		J920123		1	CONECTOR	CONNECTION	TERMINAL	CONNETTORE	P154
					VERBINDUNG	CONNEXION	CONNECTION	CONNECTION	

TAMPA DO CABEÇOTE, JUNTAS E TERMOSTATO
CYLINDER HEAD COVERS, GASKETS, AND THERMOSTAT
TAPA DE LA CULATRA, JUNTAS Y TERMOSTATO
CYLINDER HEAD COVERS, GASKETS, AND THERMOSTAT

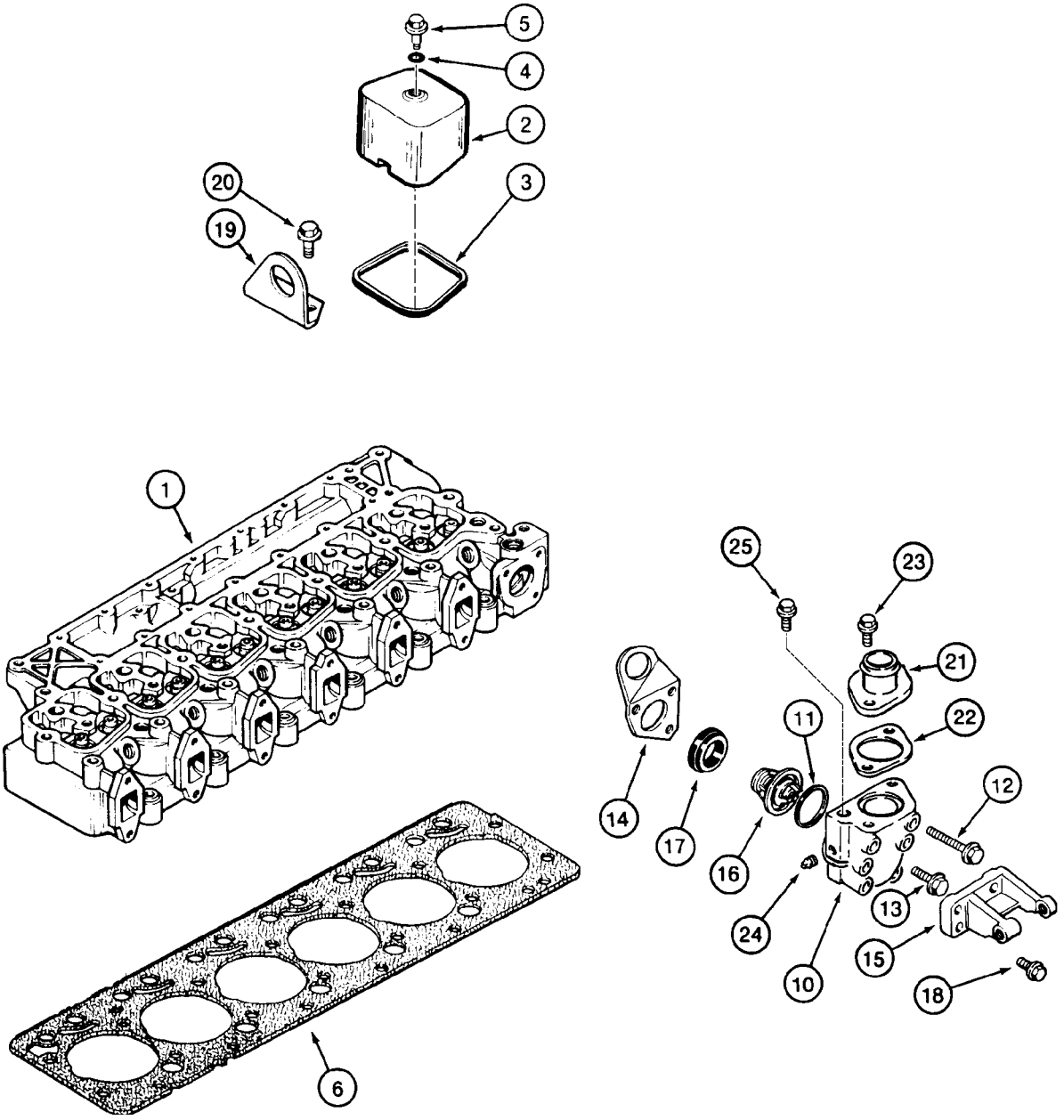

CYLINDER HEAD COVERS, GASKETS, AND THERMOSTAT
CYLINDER HEAD COVERS, GASKETS, AND THERMOSTAT
CYLINDER HEAD COVERS, GASKETS, AND THERMOSTAT
CYLINDER HEAD COVERS, GASKETS, AND THERMOSTAT

R	N	P.N.	MOD	Q	Denominação Bezeichnung	Description Description	Denominacion Beskrivelse	Descrizione Beschrijving	L.C.
22		**J912558**		1	JUNTA DICHTUNG	GASKET JOINT	JUNTA GASKET	GUARNIZIONE GASKET	3720
23		**845-8020**		2	PARAFUSO, Hex Flg, M8 x 20, 8.8, Full Thd SCHRAUBE	BOLT VIS	PERNO BOLT	BULLONE BOUT	140B
24		**221-446**		1	BUJÃO STOPFEN	PLUG BOUCHON	TAPÓN PROP	TAPPO PLUG	050T
25		**J900956**		1	BUJAO STOPFEN	PLUG BOUCHON	TAPON PLUG	TAPPO PLUG	6400

02-26	01	p1	04/12

CABEÇOTE E VÁLVULAS
CYLINDER HEAD AND VALVES
CULATA Y VALVULAS
CYLINDER HEAD AND VALVES

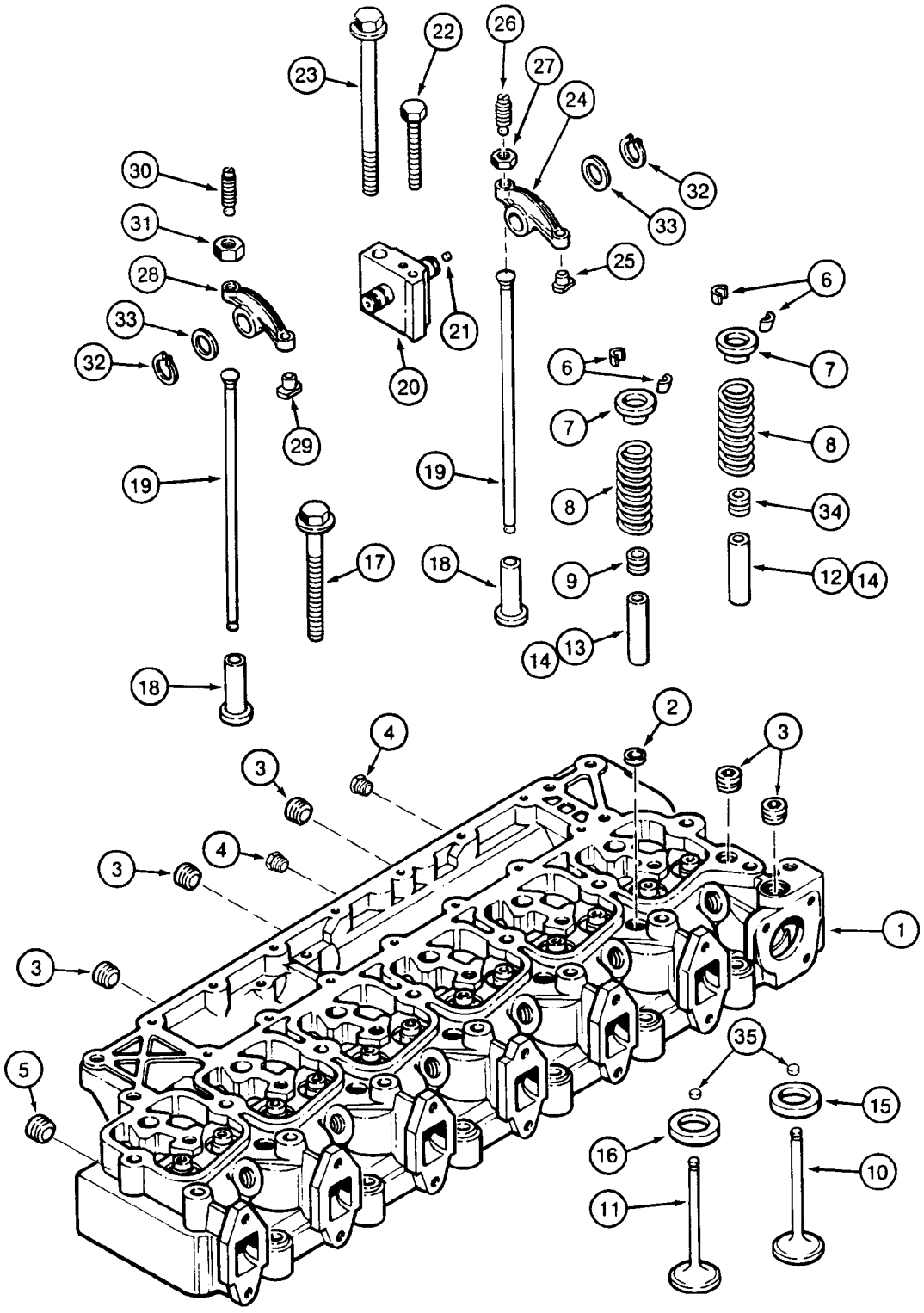

CYLINDER HEAD AND VALVES
CYLINDER HEAD AND VALVES
CYLINDER HEAD AND VALVES
CYLINDER HEAD AND VALVES

R	N	P.N.	MOD	Q	Denominação Bezeichnung	Description Description	Denominacion Beskrivelse	Descrizione Beschrijving	L.C.
		J927293		1	CABEÇOTE, Assy, Includes items 1 - 11				
						CYLINDER HEAD	CULATA	TESTATA	113T
					ZYLINDERKOPF	CULASSE	CYLINDERHOVED	CILINDERKOP	
1		**J929735**		1	CABECA CILINDRO, with valves				
						HEAD (CYLINDER)	CULATA	TESTA, CILINDRO	P208
					ZYLINDERKOPF	CULASSE	HEAD (CYLINDER)	HEAD (CYLINDER)	
2		**A77783**		5	BUJAO	PLUG	TAPON	TAPPO	6400
					STOPFEN	BOUCHON	PLUG	PLUG	
3		**A77429**		5	BUJÃO	PLUG	TAPÓN	TAPPO	050T
					STOPFEN	BOUCHON	PROP	PLUG	
4		**J906619**		2	BUJÃO	PLUG	TAPÓN	TAPPO	050T
					STOPFEN	BOUCHON	PROP	PLUG	
5		**A77505**		1	BUJÃO	PLUG	TAPÓN	TAPPO	050T
					STOPFEN	BOUCHON	PROP	PLUG	
6		**CASJ900250**		24	RETENTOR	RETAINER	RETENEDOR	FERMO	109R
					HALTERUNG	DISPOSITIF DE RETENU	HOLDER	HOUDER	
7		**J900299**		12	RETENTOR	RETAINER	TOPE	DISPOSITIVO TENUTA	7125
					HALTER	ARRETOIR	RETAINER	RETAINER	
8		**J926700**		12	MOLA VÁLVULA	VALVE SPRING	RESORTE DE VÁLVULA	MOLLA DELLA VALVOLA	P463
					VENTILFEDER	RESSORT DE SOUPAPE	VENTILFJEDER	KLEPVEER	
9		**J901097**		6	VEDADOR DE RETENCAO, intake				
						SEAL	SELLO/RETEN	GUARNIZIONE TENUTA	7460
					DICHTRING	JOINT-D'ETANCHEITE	SEAL	SEAL	
10		**J920867**		6	VÁLVULA, intake	VALVE	VÁLVULA	VALVOLA	9620
					VENTIL	SOUPAPE	VENTIL	KLEP	
11		**J920868**		6	VÁLVULA, exhaust	VALVE	VÁLVULA	VALVOLA	9620
					VENTIL	SOUPAPE	VENTIL	KLEP	
12	1	**J904408**		6	GUIA, intake Ø14	GUIDE	GUIA	GUIDA	4060
					FUEHRUNG	GUIDE	GUIDE	GUIDE	
13	1	**J904409**		6	GUIA, exhaust Ø14	GUIDE	GUIA	GUIDA	4060
					FUEHRUNG	GUIDE	GUIDE	GUIDE	
14	1	**J906206**		12	GUIA, int/exh Ø11	GUIDE	GUIA	GUIDA	4060
					FUEHRUNG	GUIDE	GUIDE	GUIDE	
15		**J906854**		6	ASSENTO VALVULA, intake	SEAT, VALVE	ASIENTO DE VALVULA	ALLOGGIAMENTO, VALV	P839
					VENTILSITZ	SIEGE DE SOUPAPE	SEAT, VALVE	SEAT, VALVE	
16		**J904105**		6	ASSENTO VALVULA, exhaust				
						SEAT, VALVE	ASIENTO DE VALVULA	ALLOGGIAMENTO, VALV	P839
					VENTILSITZ	SIEGE DE SOUPAPE	SEAT, VALVE	SEAT, VALVE	
17		**J920779**		6	PARAFUSO ESPECIAL, Cylinder head, 70 mm				
						SPECIAL BOLT	PERNO ESPECIAL	BULLONE SPECIALE	P698
					SPEZIALSCHRAUBE	VIS SPECIALE	SPECIALBOLT	SPECIALE BOUT	
17		**J920780**		14	PARAFUSO, Cylinder head, 120 mm				
						SCREW	TORNILLO	VITE	040V
					SCHRAUBE	VIS	SKRUE	SCHROEF	
18		**J931623**		12	PLATINADO, valve	TAPPET	LEVA	PUNTERIA	240P
					STÖSSEL	POUSSOIR DE SOUPAPE	VENTILLØFTER	KLEPSTOTER	

(1) Somente para serviço

02-26	01	p2	04/12

CABEÇOTE E VÁLVULAS
CYLINDER HEAD AND VALVES
CULATA Y VALVULAS
CYLINDER HEAD AND VALVES

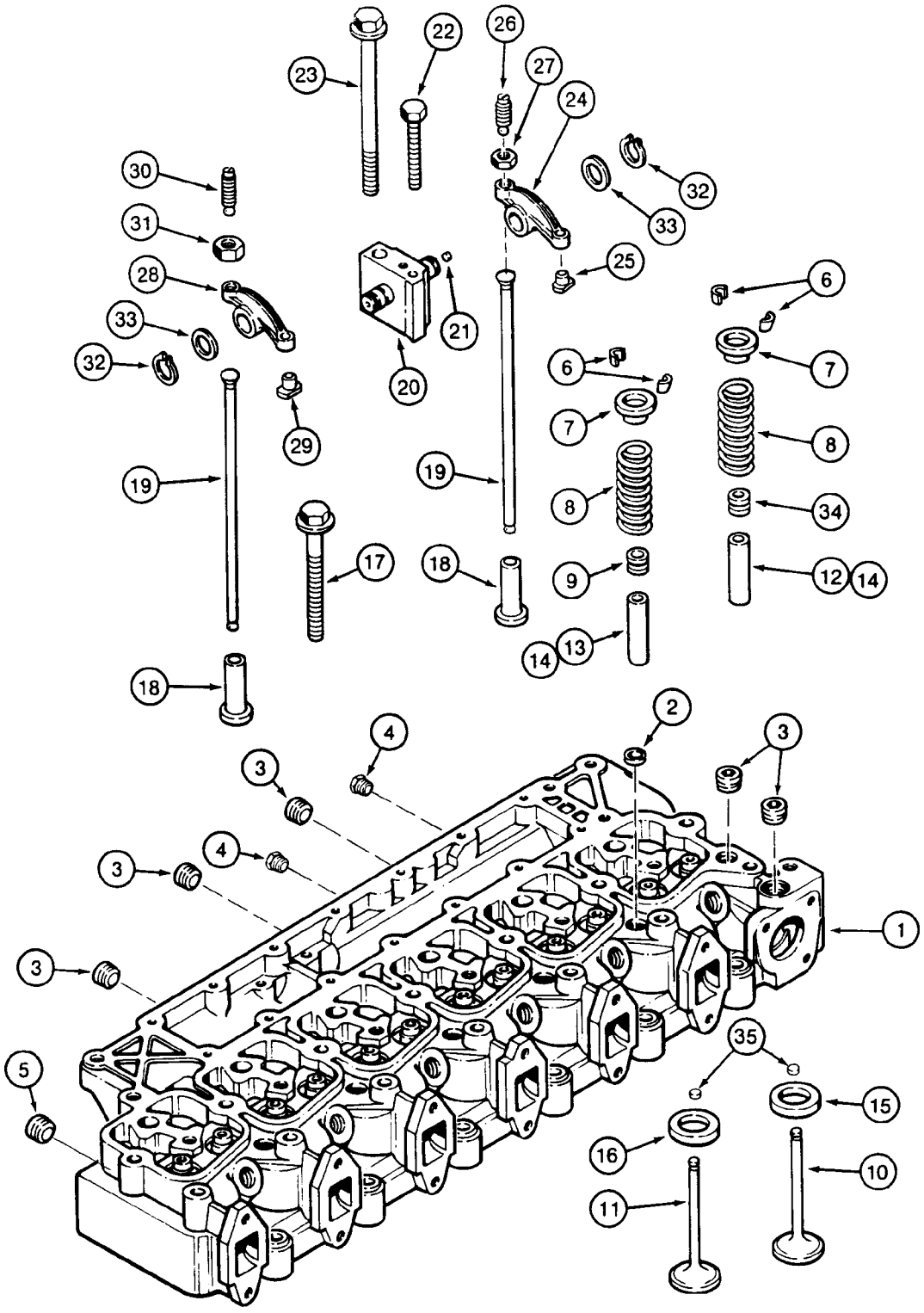

CYLINDER HEAD AND VALVES
CYLINDER HEAD AND VALVES
CYLINDER HEAD AND VALVES
CYLINDER HEAD AND VALVES

R	N	P.N.	MOD	Q	Denominação Bezeichnung	Description Description	Denominacion Beskrivelse	Descrizione Beschrijving	L.C.
19		**J923262**		12	HASTE DE IMPULSO, rocker arm				
						PUSH ROD	VÁSTAGO DE EMPUJE	ASTA DI SPINTA	P307
					STÖSSELSTANGE	TIGE DE POUSSEE	SKUBBESTANG	STOTERSTANG	
20		**J910815**		6	SUPORTE, & shaft Assy, Includes item 21				
						SUPPORT	SOPORTE	SUPPORTO	300S
					STÜTZE	SUPPORT	BESLAG	STEUN	
21		**J907555**		1	BUJÃO	PLUG	TAPÓN	TAPPO	050T
					STOPFEN	BOUCHON	PROP	PLUG	
22		**813-8075**		6	PARAFUSO, Hex, M8 x 75, 8.8				
						BOLT	PERNO	BULLONE	140B
					SCHRAUBE	VIS	BOLT	BOUT	
23		**J920781**		6	PARAFUSO ESPECIAL	SPECIAL BOLT	PERNO ESPECIAL	BULLONE SPECIALE	P698
					SPEZIALSCHRAUBE	VIS SPECIALE	SPECIALBOLT	SPECIALE BOUT	
24		**J910811**		6	BALANCIM, intake Assy, Includes items 25, 26, 27				
						ROCKER	BASCULADOR	BILANCIERE	P055
					SCHWINGE	CULBUTEUR	VIPPEARM	TUIMELAAR	
25		**NSS**		1	SEM SERVIÇO EM SEPARADO				
						NOT SERVICED SEPARA	NO SE REPARA POR SE	NON FORNITO SEPARAT	064N
					NICHT A SEP ERS-T LIEF	NON FORUNI SEPAREM	SERVICERES IKKE SEPA	NIET LOS VERKRIJGBAA	
26		**J900706**		1	PARAFUSO DE AJUSTE, Slotted, 3/8"-24 x 40mm, Adj, Ball Point				
						SET SCREW	TORNILLO DE AJUSTE	VITE DI FERMO	P327
					STELLSCHRAUBE	VIS DE REGLAGE	SÆTSKRUE	STELSCHROEF	
27		**425-116**		1	PORCA, 3/8"-24, G5	NUT	TUERCA	DADO	010D
					MUTTER	ECROU	MØTRIK	MOER	
28		**J910810**		6	BALANCIM, exhaust Assy, Includes items 29, 30, 31				
						ROCKER	BASCULADOR	BILANCIERE	P055
					SCHWINGE	CULBUTEUR	VIPPEARM	TUIMELAAR	
29		**NSS**		1	SEM SERVIÇO EM SEPARADO				
						NOT SERVICED SEPARA	NO SE REPARA POR SE	NON FORNITO SEPARAT	064N
					NICHT A SEP ERS-T LIEF	NON FORUNI SEPAREM	SERVICERES IKKE SEPA	NIET LOS VERKRIJGBAA	
30		**J900706**		1	PARAFUSO DE AJUSTE, Slotted, 3/8"-24 x 40mm, Adj, Ball Point				
						SET SCREW	TORNILLO DE AJUSTE	VITE DI FERMO	P327
					STELLSCHRAUBE	VIS DE REGLAGE	SÆTSKRUE	STELSCHROEF	
31		**425-116**		1	PORCA, 3/8"-24, G5	NUT	TUERCA	DADO	010D
					MUTTER	ECROU	MØTRIK	MOER	
32		**J900242**		12	ANEL DE PRESSÃO	SNAP RING	ANILLO DE RESORTE	ANELLO ELASTICO	054A
					SPRENGRING	ANNEAU D'ARRET	LÅSERING	VEERRING	
33		**J900245**		12	ARRUELA, Includes item 34	WASHER	ARANDELA	RONDELLA	9720
					UNTERLEGSCHEIBE	RONDELLE	WASHER	WASHER	
34		**J921640**		6	VEDADOR DE RETENCAO, exhaust				
						SEAL	SELLO/RETEN	GUARNIZIONE TENUTA	7460
					DICHTRING	JOINT-D'ETANCHEITE	SEAL	SEAL	
35		**J280911**		12	SUPORTE CONTRA DESGASTE				
						WEAR PAD	PASTILLA DE DESGASTE	PASTIGLIE DI USURA	P724
					VERSCHLEISSAUFLAGE	PATIN D'USURE	SLIDKLODS	SLIJTPLAAT	

02-28	01	p1	12/07

EIXO COMANDO DE VÁLVULAS
CAMSHAFT
ÁRBOL DE LEVAS
CAMSHAFT

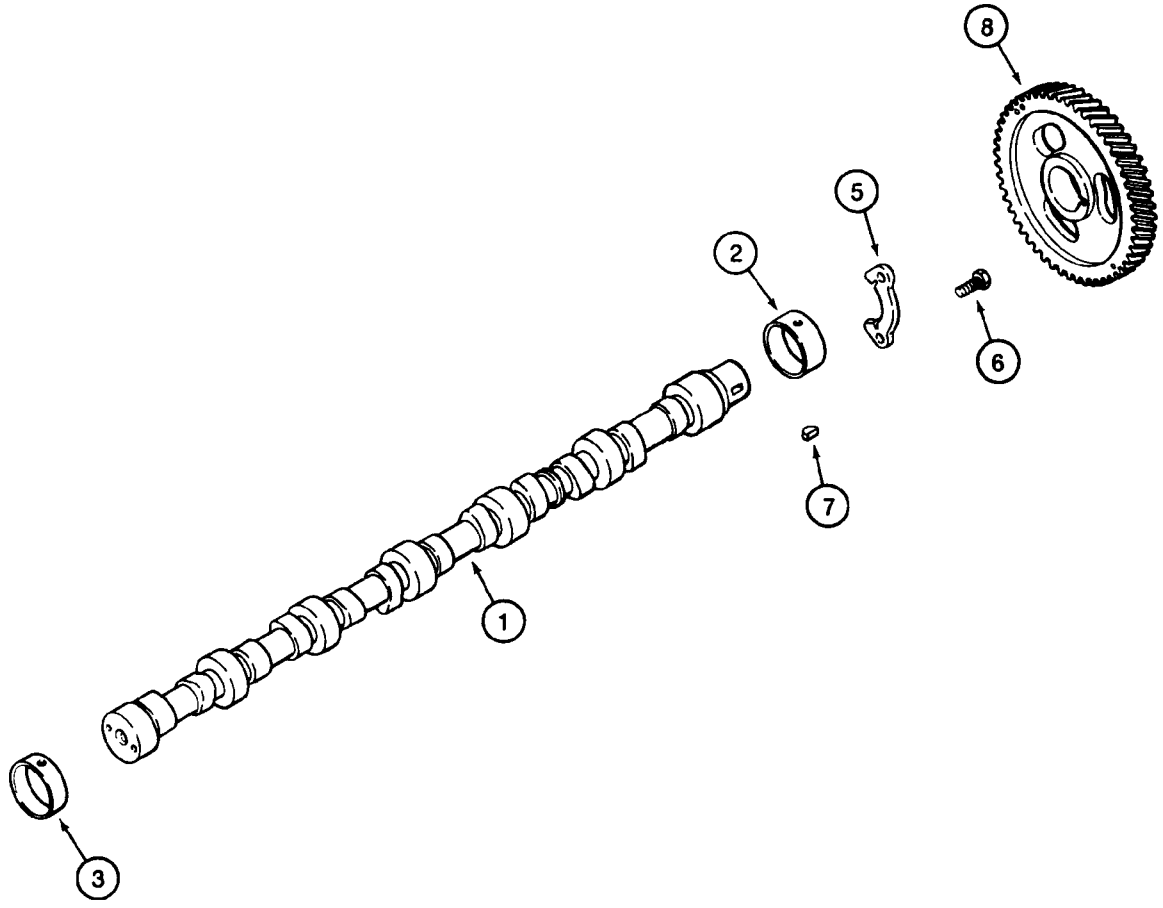

CAMSHAFT
CAMSHAFT
CAMSHAFT
CAMSHAFT

R	N	P.N.	MOD	Q	Denominação Bezeichnung	Description Description	Denominacion Beskrivelse	Descrizione Beschrijving	L.C.
1		**J929042**		1	EIXO COMANDO NOCKENWELLE	CAMSHAFT ARBRE A CAMES	ARBOL DE LEVAS CAMSHAFT	ALBERO A CAMME CAMSHAFT	1320
2	1	**J940059**		1	BUCHA, STD BUCHSE	BUSHING BAGUE	CASQUILLO BØSNING	BOCCOLA BUS	095B
2		**J904369**		1	BUCHA, Ø58mm BUECHSE	BUSHING DOUILLE	CASQUILLO BUSHING	BOCCOLA BUSHING	1140
3	1	**J903242**		6	BUCHA BUCHSE	BUSHING BAGUE	CASQUILLO BØSNING	BOCCOLA BUS	095B
5		**J927155**		1	SUPORTE STÜTZE	SUPPORT SUPPORT	SOPORTE BESLAG	SUPPORTO STEUN	300S
6		**J900227**		2	PARAFUSO, Hex, M8 x 1.25 x 22 SCHRAUBE	SCREW VIS	TORNILLO SKRUE	VITE SCHROEF	040V
7		**J902332**		1	CHAVETA KEIL	KEY CLAVETTE, CLE	CHAVETA KEY	CHIAVE KEY	4820
8	1	**J929028**		1	PINHÃO RITZEL	PINION PIGNON	PIÑÓN SPIDSHJUL	PIGNONE PIGNON	P045

(1) Somente para serviço

02-30	01	p1	10/10

BLOCO DE CILINDROS
CYLINDER BLOCK
BLOQUE DE CILINDROS
CYLINDER BLOCK

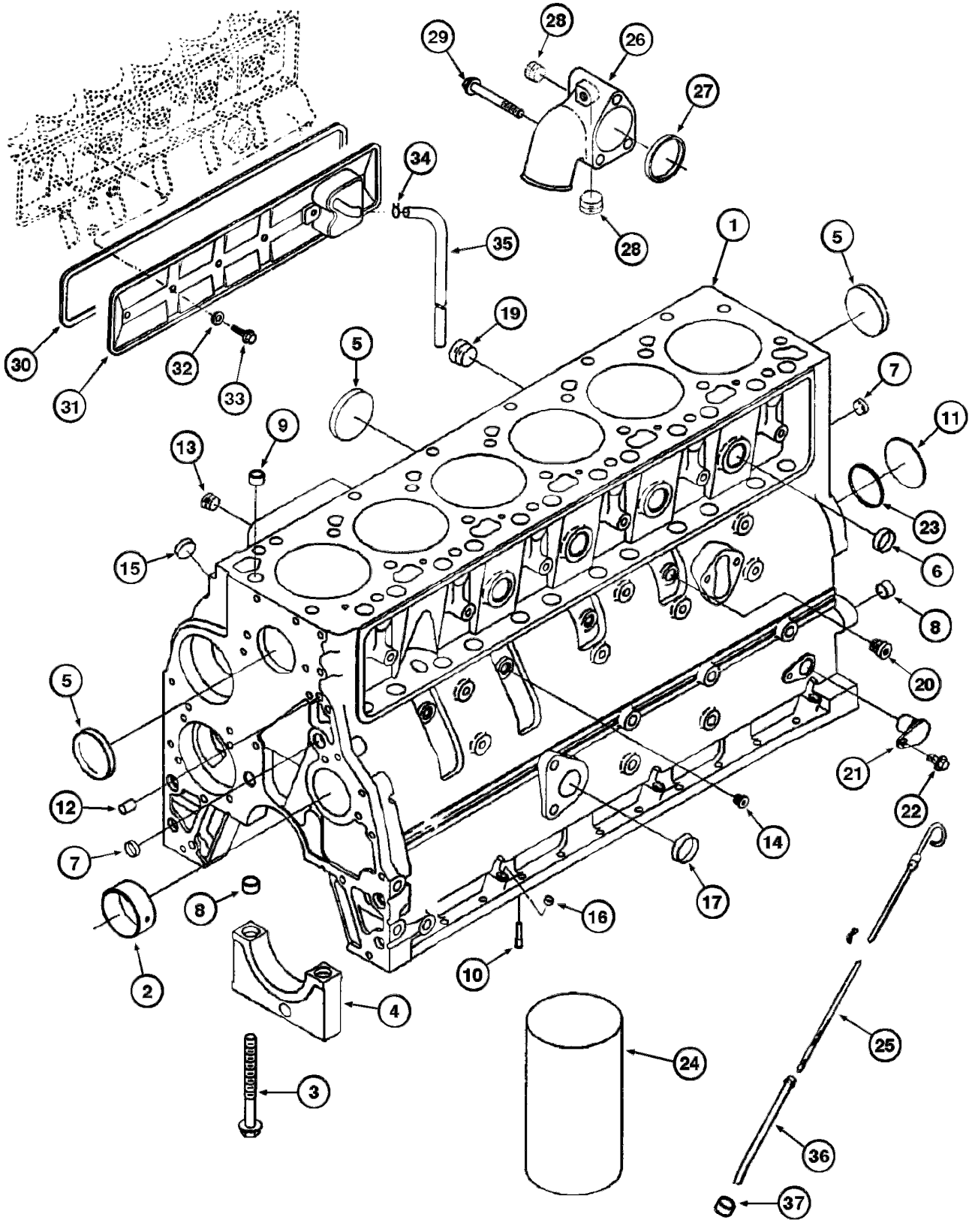

CYLINDER BLOCK
CYLINDER BLOCK
CYLINDER BLOCK
CYLINDER BLOCK

R	N	P.N.	MOD	Q	Denominação Bezeichnung	Description Description	Denominacion Beskrivelse	Descrizione Beschrijving	L.C.
		148597A1		1	CÁRTER, Assy, Includes item 1				
						CRANKCASE	CÁRTER	CARTER	2360
					KURBELGEHÄUSE	CARTER	KRUMTAPHUS	KRUKKAST	
1		**J942162**		1	CÁRTER, cylinder	CRANKCASE	CÁRTER	CARTER	2360
					KURBELGEHÄUSE	CARTER	KRUMTAPHUS	KRUKKAST	
2		**J940059**		1	BUCHA	BUSHING	CASQUILLO	BOCCOLA	095B
					BUCHSE	BAGUE	BØSNING	BUS	
3		**J927948**		16	PARAFUSO FLANGEADO,	Hex Flg Hd, M12 x 1.5 x 119			
						FLANGE BOLT	PERNO DE CORONA	BULLONE FLANGIATO	A027
					FLANSCHSCHRAUBE	VIS A EMBASE	FLANGEBOLT	FLENSBOUT	
4		**J903492**		7	MANCAL DE ROLAMENTO	BEARING CAP	TAPA DE COJINETE	CAPPELLOTTO CUSCINI	A025
					LAGERDECKEL	CHAPEAU DE ROULEME	LEJEOVERFALD	LAGERDEKSEL	
5		**J900965**		5	BUJAO	PLUG	TAPON	TAPPO	6400
					STOPFEN	BOUCHON	PLUG	PLUG	
6		**J914035**		4	BOTÃO DE FECHAMENTO	HOLE PLUG BUTTON	BOTÓN DE TAPÓN	TAPPO DEL FORO	Z355
					VERSCHLUSSSTOPFEN	BOUTON-POUSSOIR	KNAP, SPUNSHUL	AFDICHTKNOP	
7		**J900956**		3	BUJAO	PLUG	TAPON	TAPPO	6400
					STOPFEN	BOUCHON	PLUG	PLUG	
8		**J900068**		14	FLANGE DE ROLAMENTO	BEARING WASHER	ARANDELA DE COJINET	RONDELLA CUSCINETT	A142
					LAGERSCHEIBE	RONDELLE DE ROULEM	LEJESPÆNDSKIVE	LAGERRING	
		J933220		1	JOGO DE SERVICO(PACO,	parts, Includes items 9 - 23			
						PACKAGE,SERVICE	EMPAQUETADURA	CONFEZIONE, MANUT.	P663
					ERSATZPACKUNG	COLIS POUR RECHANGI	PACKAGE,SERVICE	PACKAGE,SERVICE	
9		**J902343**		1	PINO	DOWEL	SPINA	SPINA CILINDRICA	P176
					PASSTIFT	PION	DOWEL	DOWEL	
10		**J930139**		6	TAMPA DO INJETOR	NOZZLE CAP	TAPÓN DE BOQUILLA	COPERCHIO UGELLO	5770
					DÜSENKAPPE	GICLEUR	DYSEHÆTTE	DOP VAN MONDSTUK	
11		**J900687**		1	BUJAO	PLUG	TAPON	TAPPO	6400
					STOPFEN	BOUCHON	PLUG	PLUG	
12		**J900257**		2	PINO	PIN	PASADOR	PERNO	080P
					PIN	BROCHE	STIFT	PEN	
13		**E156611**		1	BUJÃO	PLUG	TAPÓN	TAPPO	050T
					STOPFEN	BOUCHON	PROP	PLUG	
14		**148572A1**		2	BUJÃO	PLUG	TAPÓN	TAPPO	050T
					STOPFEN	BOUCHON	PROP	PLUG	
15		**J920706**		1	BUJÃO	PLUG	TAPÓN	TAPPO	050T
					STOPFEN	BOUCHON	PROP	PLUG	
16		**J900955**		3	BUJÃO	PLUG	TAPÓN	TAPPO	050T
					STOPFEN	BOUCHON	PROP	PLUG	
17		**J906732**		1	BUJAO	PLUG	TAPON	TAPPO	6400
					STOPFEN	BOUCHON	PLUG	PLUG	
19		**148573A1**		1	BUJÃO	PLUG	TAPÓN	TAPPO	050T
					STOPFEN	BOUCHON	PROP	PLUG	
20		**148574A1**		1	BUJÃO	PLUG	TAPÓN	TAPPO	050T
					STOPFEN	BOUCHON	PROP	PLUG	
21		**J932296**		1	BUJAO	PLUG	TAPON	TAPPO	6400
					STOPFEN	BOUCHON	PLUG	PLUG	

02-30	01	p2	10/10

BLOCO DE CILINDROS
CYLINDER BLOCK
BLOQUE DE CILINDROS
CYLINDER BLOCK

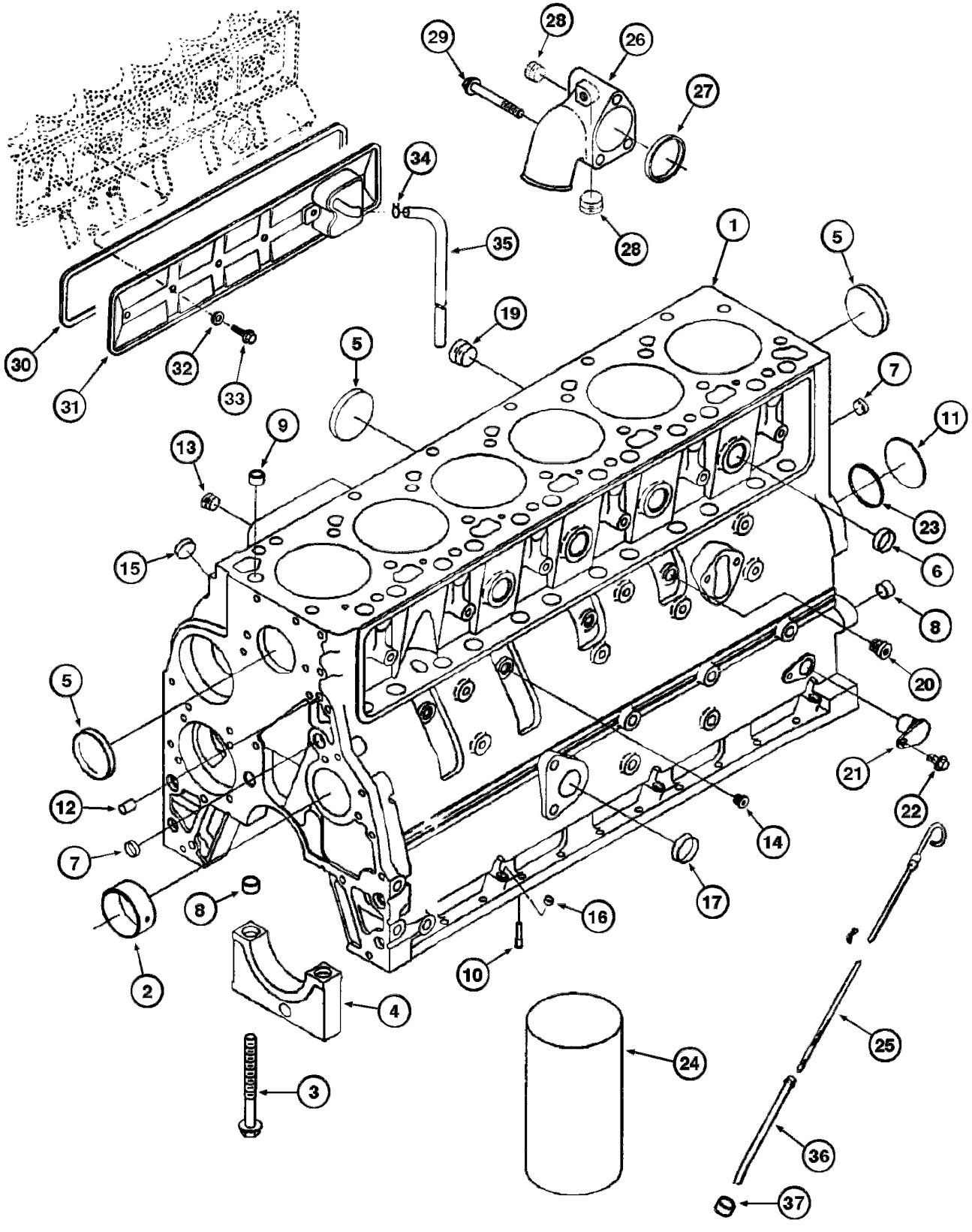

CYLINDER BLOCK
CYLINDER BLOCK
CYLINDER BLOCK
CYLINDER BLOCK

R	N	P.N.	MOD	Q	Denominação Bezeichnung	Description Description	Denominacion Beskrivelse	Descrizione Beschrijving	L.C.
22		**J900629**		1	PARAFUSO FLANGEADO, Hex Flg, M8 x 16, 8.8, Full Thd				
						FLANGE BOLT	PERNO DE CORONA	BULLONE FLANGIATO	A027
					FLANSCHSCHRAUBE	VIS A EMBASE	FLANGEBOLT	FLENSBOUT	
23		**J926047**		1	O-RING	O-RING	JUNTA TÓRICA	ANELLO TOROIDALE	055A
					O-RING	JOINT TORIQUE	O-RING	O-RING	
24		**J904166**			CAMISA	SLEEVE	CAMISA	MANICOTTO	8000
					HUELSE	CHEMISE	SLEEVE	SLEEVE	
25		**71102309**		1	HASTE DE IMPULSO	PUSH ROD	VÁSTAGO DE EMPUJE	ASTA DI SPINTA	P307
					STÖSSELSTANGE	TIGE DE POUSSEE	SKUBBESTANG	STOTERSTANG	
26		**J903103**		1	COLETOR, water	MANIFOLD	COLECTOR	COLLETTORE	198C
					VERTEILER	COLLECTEUR	MANIFOLD	VERDEELSTUK	
27		**J906697**		1	VEDADOR DE RETENCAO	SEAL	SELLO/RETEN	GUARNIZIONE TENUTA	7460
					DICHTRING	JOINT-D'ETANCHEITE	SEAL	SEAL	
28		**A77429**		2	BUJÃO	PLUG	TAPÓN	TAPPO	050T
					STOPFEN	BOUCHON	PROP	PLUG	
29		**J901757**		3	PARAFUSO FLANGEADO	FLANGE BOLT	PERNO DE CORONA	BULLONE FLANGIATO	A027
					FLANSCHSCHRAUBE	VIS A EMBASE	FLANGEBOLT	FLENSBOUT	
30		**J928832**		1	JUNTA	GASKET	JUNTA	GUARNIZIONE	3720
					DICHTUNG	JOINT	GASKET	GASKET	
31		**J927913**		1	TAMPA	COVER	TAPA	COPERCHIO	2250
					DECKEL	COUVERCLE	COVER	COVER	
32		**J928759**		4	VEDADOR DE RETENCAO	SEAL	SELLO/RETEN	GUARNIZIONE TENUTA	7460
					DICHTRING	JOINT-D'ETANCHEITE	SEAL	SEAL	
33		**J900629**		4	PARAFUSO FLANGEADO, Hex Flg, M8 x 16, 8.8, Full Thd				
						FLANGE BOLT	PERNO DE CORONA	BULLONE FLANGIATO	A027
					FLANSCHSCHRAUBE	VIS A EMBASE	FLANGEBOLT	FLENSBOUT	
34		**J904230**		1	BRACADEIRA	CLAMP	COLLAR	MORSETTO	1640
					SCHELLE	COLLIER	CLAMP	CLAMP	
35		**J918614**		1	MANGUEIRA, 435.00 mm	HOSE	TUBO	TUBO FLESSIBILE	030M
					SCHLAUCH	FLEXIBLE	SLANGE	SLANG	
36		**71102310**		1	TUBO RÍGIDO	RIGID TUBE	TUBO RÍGIDO	TUBO RIGIDO	193T
					ROHR	TUYAU RIGIDE	STIFT RØR	VASTE LEIDING	
37		**75286111**		1	BUJÃO	PLUG	TAPÓN	TAPPO	050T
					STOPFEN	BOUCHON	PROP	PLUG	

02-32	01	p1	04/12

ÁRVORE DE MANIVELAS
CRANKSHAFT
CIGUEÑAL
CRANKSHAFT

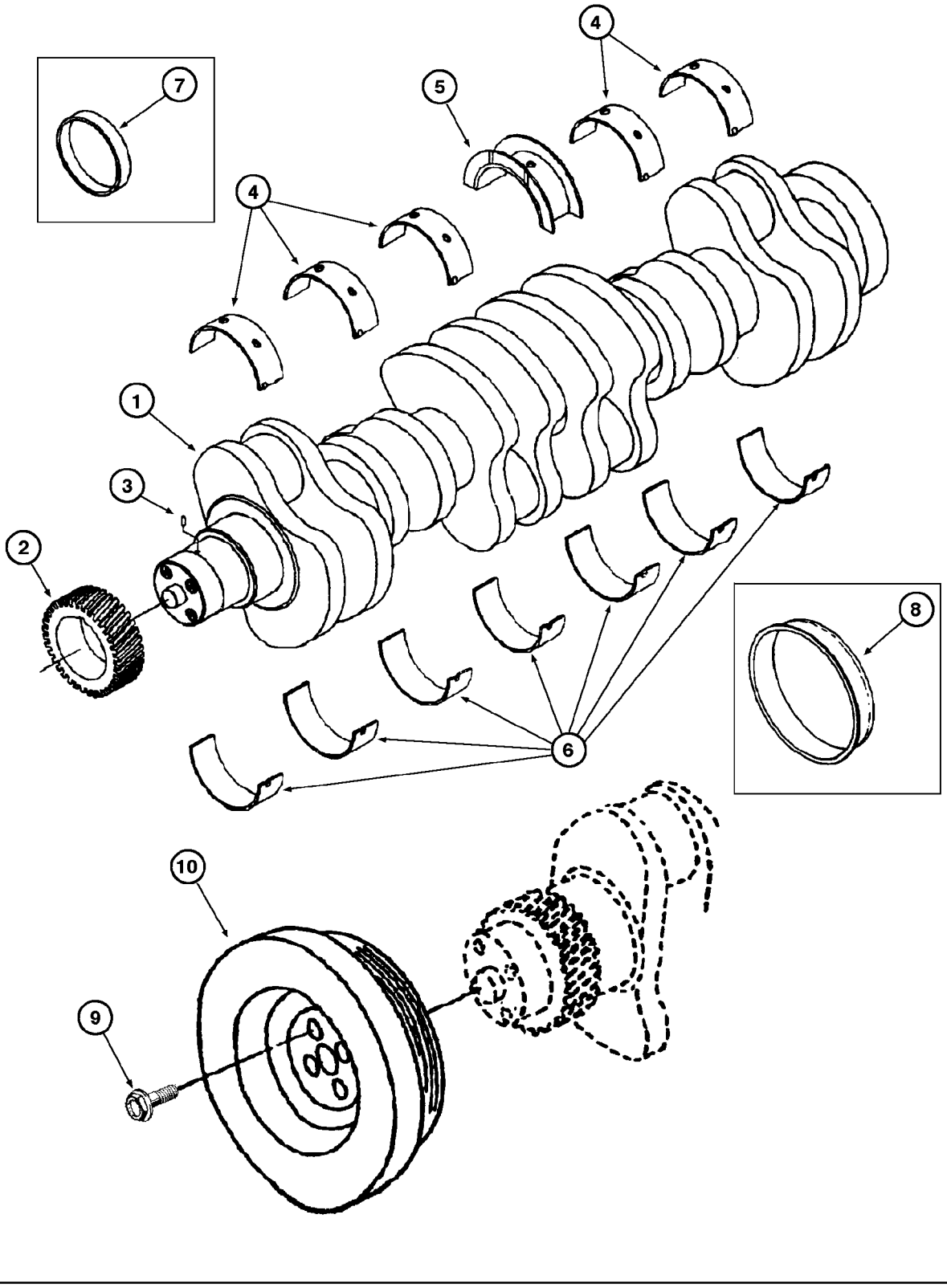

CRANKSHAFT
CRANKSHAFT
CRANKSHAFT
CRANKSHAFT

R	N	P.N.	MOD	Q	Denominação Bezeichnung	Description Description	Denominacion Beskrivelse	Descrizione Beschrijving	L.C.
1		J908032		1	VIRABREQUIM, Assy, Includes items 2, 3				
						CRANKSHAFT	CIGUENAL	ALBERO A GOMITO	2380
					KURBELWELLE	VILEBREQUIN	CRANKSHAFT	CRANKSHAFT	
2		J929027		1	PINHÃO	PINION	PIÑÓN	PIGNONE	P045
					RITZEL	PIGNON	SPIDSHJUL	PIGNON	
3		J904483		1	PINO	PIN	PASADOR	PERNO	080P
					PIN	BROCHE	STIFT	PEN	
		148575A1		1	KIT DE REVISÃO DO MOTOR, STD, Includes items 4, 5, 6				
						ENGINE OVERHAUL KIT	KIT DE REVISIÓN DEL M	KIT REVISIONE MOTORE	002K
					MOTORÜBERHOLUNGSS	KIT DE REVISION MOTEI	MOTORREVISIONSSÆT	REVISIEKIT VOOR MOTO	
4		J929016		6	ROLAMENTO	BEARING	COJINETE	CUSCINETTO	0600
					LAGER	ROULEMENT	LEJE	LAGER	
5		J927772		1	ROLAMENTO DE IMPULSÃO				
						THRUST BEARING	COJINETE DE EMPUJE	CUSCINETTO REGGISPI	342C
					DRUCKLAGER	ROULEMENT DE BUTEE	TRYKLEJE	DRUKLAGER	
6		J929021		7	ROLAMENTO	BEARING	COJINETE	CUSCINETTO	0600
					LAGER	ROULEMENT	LEJE	LAGER	
		148576A1		1	BUCHA, 0.25mm, Includes items 4, 5, 6				
						BUSHING	CASQUILLO	BOCCOLA	095B
					BUCHSE	BAGUE	BØSNING	BUS	
4		J929017		6	ROLAMENTO	BEARING	COJINETE	CUSCINETTO	0600
					LAGER	ROULEMENT	LEJE	LAGER	
5		J927773		1	ROLAMENTO FLANGEADO	FLANGED BEARING	COJINETE CON BRIDA	CUSCINETTO FLANGIAT	C006
					FLANSCHLAGER	PALIER A BRIDE	FLANGELEJE	FLENSLAGER	
6		J929022		7	ROLAMENTO	BEARING	COJINETE	CUSCINETTO	0600
					LAGER	ROULEMENT	LEJE	LAGER	
		148577A1		1	KIT DE REVISÃO DO MOTOR, 0.50mm, Includes items 4, 5, 6				
						ENGINE OVERHAUL KIT	KIT DE REVISIÓN DEL M	KIT REVISIONE MOTORE	002K
					MOTORÜBERHOLUNGSS	KIT DE REVISION MOTEI	MOTORREVISIONSSÆT	REVISIEKIT VOOR MOTO	
4		J929018		6	ROLAMENTO	BEARING	COJINETE	CUSCINETTO	0600
					LAGER	ROULEMENT	LEJE	LAGER	
5		J927774		1	ROLAMENTO FLANGEADO	FLANGED BEARING	COJINETE CON BRIDA	CUSCINETTO FLANGIAT	C006
					FLANSCHLAGER	PALIER A BRIDE	FLANGELEJE	FLENSLAGER	
6		J929023		7	ROLAMENTO	BEARING	COJINETE	CUSCINETTO	0600
					LAGER	ROULEMENT	LEJE	LAGER	
		148578A1		1	KIT DE REVISÃO DO MOTOR, 0.75mm, Includes items 4, 5, 6				
						ENGINE OVERHAUL KIT	KIT DE REVISIÓN DEL M	KIT REVISIONE MOTORE	002K
					MOTORÜBERHOLUNGSS	KIT DE REVISION MOTEI	MOTORREVISIONSSÆT	REVISIEKIT VOOR MOTO	
4		J929019		6	ROLAMENTO	BEARING	COJINETE	CUSCINETTO	0600
					LAGER	ROULEMENT	LEJE	LAGER	
5		J927775		1	ROLAMENTO FLANGEADO	FLANGED BEARING	COJINETE CON BRIDA	CUSCINETTO FLANGIAT	C006
					FLANSCHLAGER	PALIER A BRIDE	FLANGELEJE	FLENSLAGER	
6		J929024		7	ROLAMENTO	BEARING	COJINETE	CUSCINETTO	0600
					LAGER	ROULEMENT	LEJE	LAGER	
		148579A1		1	KIT DE REVISÃO DO MOTOR, 1.00mm, Includes items 4, 5, 6				
						ENGINE OVERHAUL KIT	KIT DE REVISIÓN DEL M	KIT REVISIONE MOTORE	002K
					MOTORÜBERHOLUNGSS	KIT DE REVISION MOTEI	MOTORREVISIONSSÆT	REVISIEKIT VOOR MOTO	
4		J929020		6	ROLAMENTO	BEARING	COJINETE	CUSCINETTO	0600
					LAGER	ROULEMENT	LEJE	LAGER	

ÁRVORE DE MANIVELAS
CRANKSHAFT
CIGUEÑAL
CRANKSHAFT

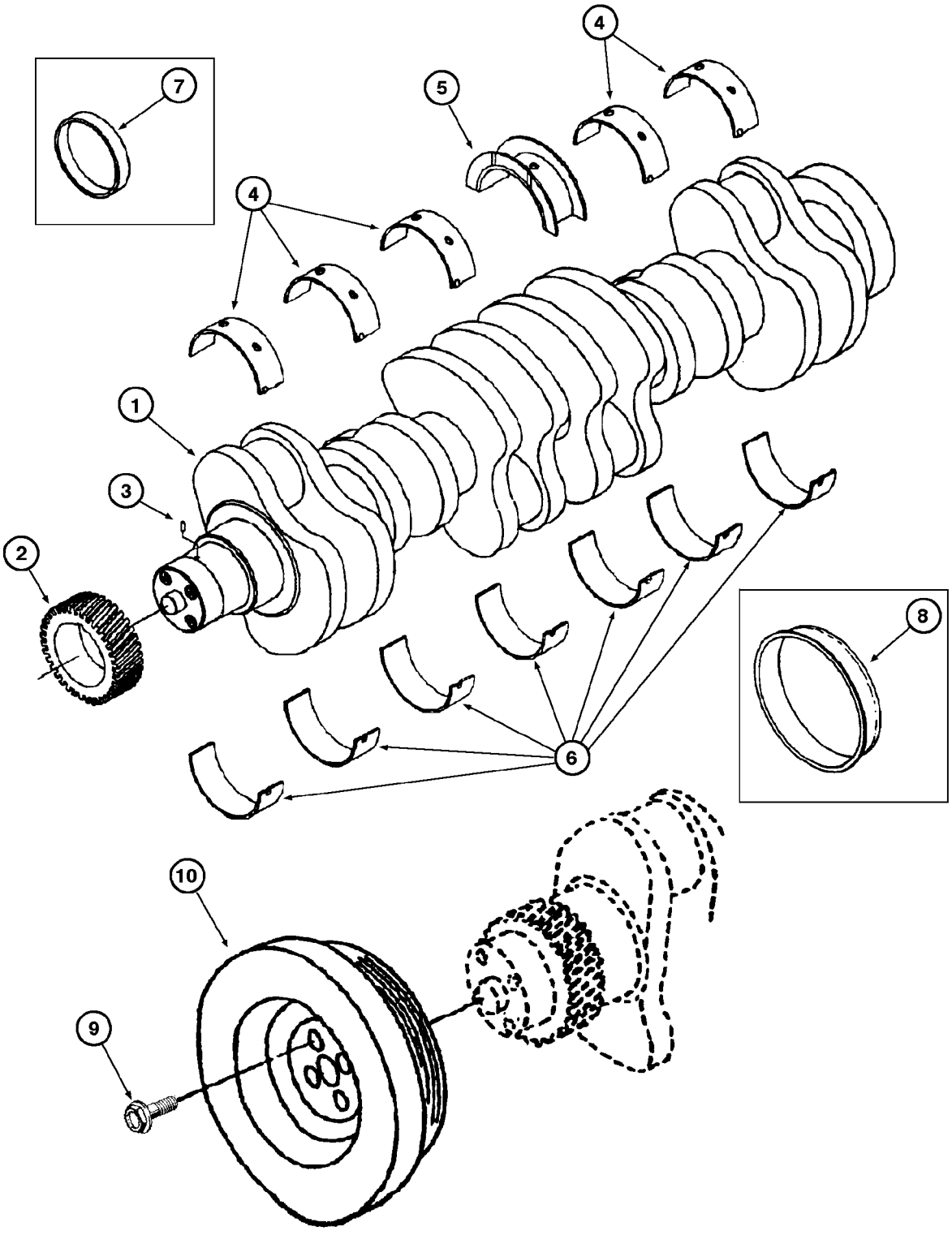

CRANKSHAFT
CRANKSHAFT
CRANKSHAFT
CRANKSHAFT

R	N	P.N.	MOD	Q	Denominação Bezeichnung	Description Description	Denominacion Beskrivelse	Descrizione Beschrijving	L.C.
5		**J927776**		1	ROLAMENTO FLANGEAD FLANSCHLAGER	FLANGED BEARING PALIER A BRIDE	COJINETE CON BRIDA FLANGELEJE	CUSCINETTO FLANGIAT FLENSLAGER	C006
6		**J929025**		7	ROLAMENTO LAGER	BEARING ROULEMENT	COJINETE LEJE	CUSCINETTO LAGER	0600
7	1	**148580A1**		1	KIT DE REVISÃO DO MOTOR MOTORÜBERHOLUNGSS	ENGINE OVERHAUL KIT KIT DE REVISION MOTEI	KIT DE REVISIÓN DEL M MOTORREVISIONSSÆT	KIT REVISIONE MOTORE REVISIEKIT VOOR MOTO	002K
8	1	**J926126**		1	FERRAMENTA WERKZEUG	TOOL OUTIL	HERRAMIENTA VÆRKTØJ	ATTREZZO WERKTUIG	9120
9		**J903857**		4	PARAFUSO SCHRAUBE	BOLT BOULON	TORNILLO SKRUE	BULLONE BOUT	0810
10		**NLS**		1	SEM SERVIÇO NICHT M ALS ERS-T LIEI	NO LONGER SERVICED OBSOLETE	SIN SERVICIO FØRES IKKE LÆNGERE	NON PIÙ FORNITO NIET MEER VERKRIJGBA	A001

(1) Somente para serviço

02-34	01	p1	11/07

VOLANTE E CARCAÇA
FLYWHEEL AND HOUSING
VOLANTE Y CARCASA
FLYWHEEL AND HOUSING

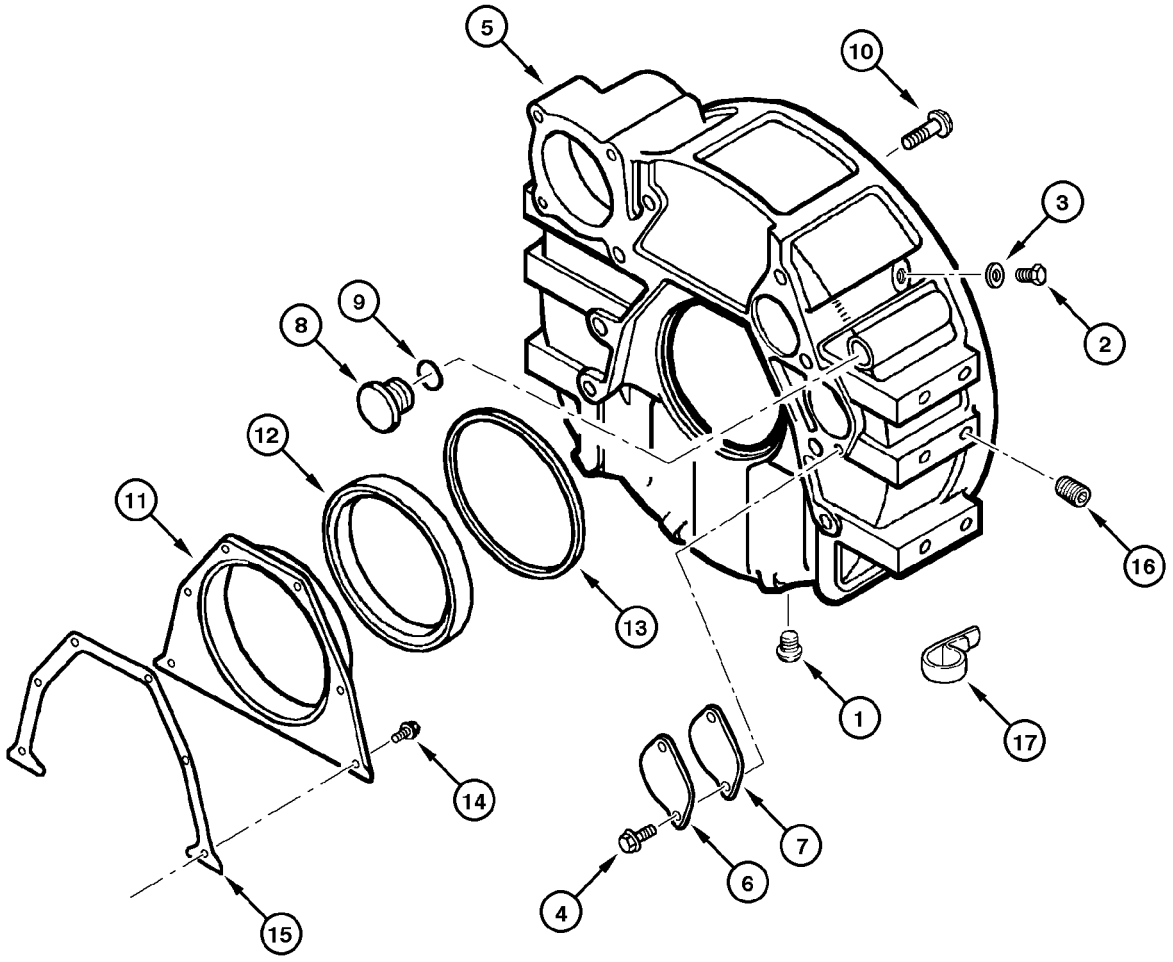

FLYWHEEL AND HOUSING
FLYWHEEL AND HOUSING
FLYWHEEL AND HOUSING
FLYWHEEL AND HOUSING

R	N	P.N.	MOD	Q	Denominação Bezeichnung	Description Description	Denominacion Beskrivelse	Descrizione Beschrijving	L.C.
1		J008469		1	BUJÃO, 3/4 NPT STOPFEN	PLUG BOUCHON	TAPÓN PROP	TAPPO PLUG	050T
2		J045782		1	BUJÃO, 3/4 - 16 UNF STOPFEN	PLUG BOUCHON	TAPÓN PROP	TAPPO PLUG	050T
3		J046201		1	O-RING O-RING	O-RING JOINT TORIQUE	JUNTA TÓRICA O-RING	ANELLO TOROIDALE O-RING	055A
4		J912078		1	PARAFUSO SCHRAUBE	SCREW VIS	TORNILLO SKRUE	VITE SCHROEF	040V
5		J357452		2	ALOJAMENTO, flywheel GEHÄUSE	HOUSING CARTER	ALOJAMIENTO HUS	ALLOGGIAMENTO HUIS	014V
6		J908095		1	PLACA PLATTE	PLATE PLAQUE	PLACA PLATE	PIASTRA PLATE	6360
7		J936027		1	JUNTA DICHTUNG	GASKET JOINT	JUNTA PAKNING	GUARNIZIONE PAKKING	123G
8		J910248		1	BUJÃO STOPFEN	PLUG BOUCHON	TAPÓN PROP	TAPPO PLUG	050T
9		J910260		1	O-RING O-RING	O-RING JOINT TORIQUE	JUNTA TÓRICA O-RING	ANELLO TOROIDALE O-RING	055A
10		J920447		8	PARAFUSO FLANGEADO FLANSCHSCHRAUBE	FLANGE BOLT VIS A EMBASE	PERNO DE CORONA FLANGEBOLT	BULLONE FLANGIATO FLENSBOUT	A027
11		J910620		1	COBERTURA ABDECKUNG	COVER COUVERCLE	CUBIERTA DÆKSEL	COPERCHIO AFSCHERMING	265C
12		J909411		1	VEDADOR DE RETENCAO DICHTRING	SEAL JOINT-D'ETANCHEITE	SELLO/RETEN SEAL	GUARNIZIONE TENUTA SEAL	7460
13		J912473		1	ANEL VEDADOR DICHTRING	SEALRING BAGUE D'ETANCHEITE	RETÉN PAKNINGSRING	ANELLO DI TENUTA KEERRING	Z125
14		J913638		6	PARAFUSO FLANGEADO, FLANSCHSCHRAUBE	Hex Flg, M6 x 15, 8.8, Full Thd FLANGE BOLT VIS A EMBASE	PERNO DE CORONA FLANGEBOLT	BULLONE FLANGIATO FLENSBOUT	A027
15		J938159		1	JUNTA DICHTUNG	GASKET JOINT	JUNTA GASKET	GUARNIZIONE GASKET	3720
16		J919807		4	PARAFUSO SCHRAUBE	SCREW VIS	TORNILLO SKRUE	VITE SCHROEF	040V
17		J928989		1	GRAMPO SCHELLE	CLIP COLLIER-CLIP	BROCHE CLIP	FERMAGLIO CLIP	1700

02-34A	01	p1	05/09

VOLANTE E CARCAÇA
FLYWHEEL AND HOUSING
VOLANTE Y CARCASA
FLYWHEEL AND HOUSING

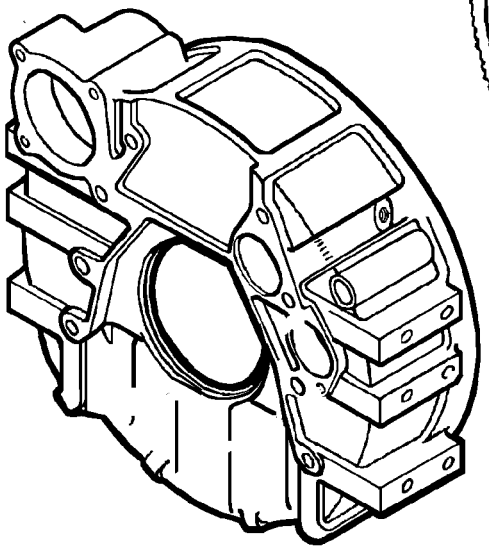

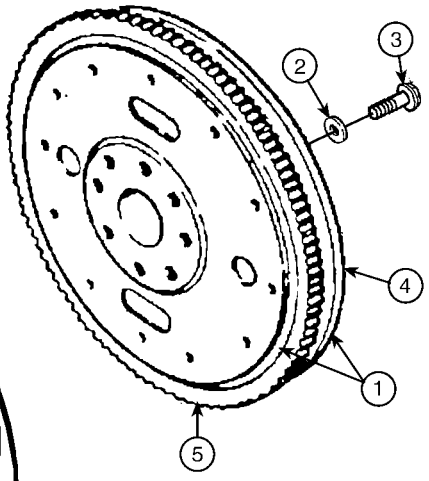

FLYWHEEL AND HOUSING
FLYWHEEL AND HOUSING
FLYWHEEL AND HOUSING
FLYWHEEL AND HOUSING

R	N	P.N.	MOD	Q	Denominação Bezeichnung	Description Description	Denominacion Beskrivelse	Descrizione Beschrijving	L.C.
1		**84231540**		1	VOLANTE DE MOTOR, Assy (Flywheel + Ring)				
						ENGINE FLYWHEEL	VOLANTE DE MOTOR	VOLANO MOTORE	048V
					MOTORSCHWUNGRAD	VOLANT MOTEUR	MOTOR SVINGHJUL	MOTORVLIEGWIEL	
2		**J900269**		8	ARRUELA PLANA	WASHER	ARANDELA	RONDELLA	131R
					UNTERLEGSCHEIBE	RONDELLE	FLADSKIVE	SLUITRING	
3		**J901395**		8	PARAFUSO, Hex, M12 x 1.25 x 32, Spc				
						SCREW	TORNILLO	VITE	040V
					SCHRAUBE	VIS	SKRUE	SCHROEF	
4		**NSS**		1	SEM SERVIÇO EM SEPARADO, FLYWHEEL				
						NOT SERVICED SEPARA	NO SE REPARA POR SE	NON FORNITO SEPARAT	064N
					NICHT A SEP ERS-T LIEI	NON FORUNI SEPAREM	SERVICERES IKKE SEPA	NIET LOS VERKRIJGBAA	
5		**87566619**		1	CREMALHEIRA	RING, FLYWHEEL	CORONA	ANELLO, INGRANAGGIO	Z284
					ZAHNKRANZ	COURONNE DENTEE EX	RING, FLYWHEEL	RING, FLYWHEEL	

02-36	01	p1	03/09

PISTÕES E BIELAS
PISTONS AND CONNECTING RODS
EMBOLOS Y BIELAS
PISTONS AND CONNECTING RODS

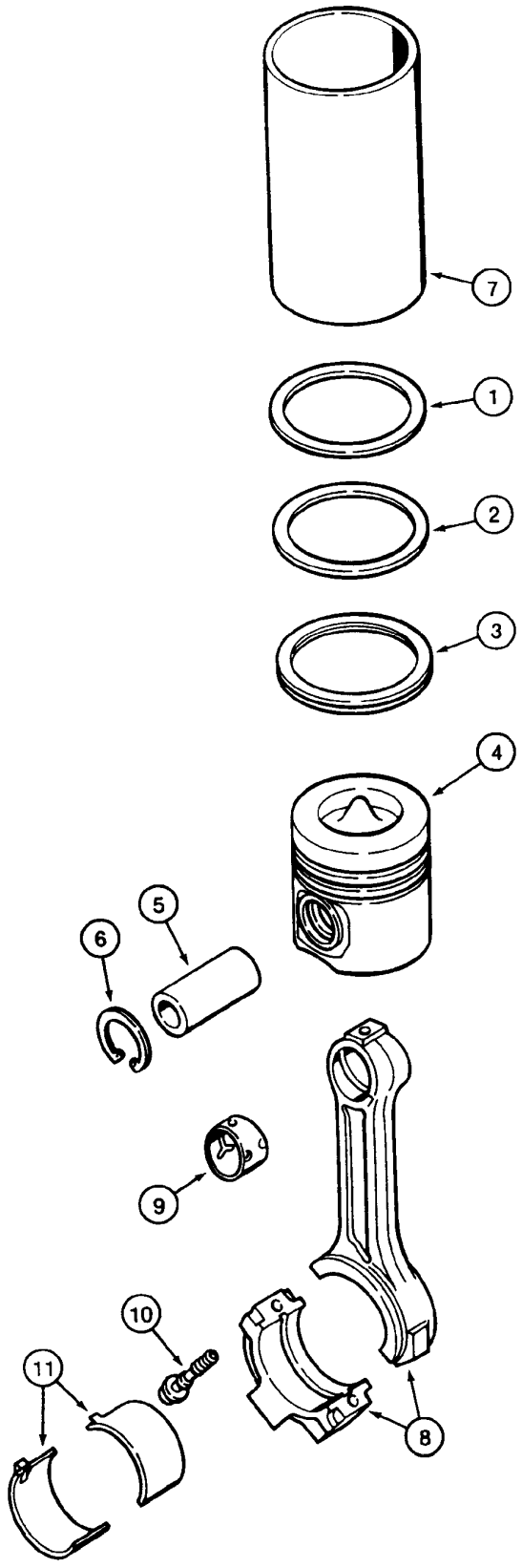

PISTONS AND CONNECTING RODS
PISTONS AND CONNECTING RODS
PISTONS AND CONNECTING RODS
PISTONS AND CONNECTING RODS

R	N	P.N.	MOD	Q	Denominação Bezeichnung	Description Description	Denominacion Beskrivelse	Descrizione Beschrijving	L.C.
		A77730		6	PISTAO, Assy STD, Includes items 1 - 6				
						PISTON	PISTON	PISTONE	6270
					KOLBEN	PISTON	PISTON	PISTON	
		A77727		1	JOGO DE PISTÃO	PISTON RING SET	JUEGO ANILLOS PISTÓN	KIT FASCIA ELAST. PIST	Z307
					KOLBENRINGSATZ	JEU SEGM. DE PISTONS	STEMPELRINGSSÆT	SET ZUIGERVEREN	
1		**NSS**		1	SEM SERVIÇO EM SEPARADO, RING				
						NOT SERVICED SEPARA	NO SE REPARA POR SE	NON FORNITO SEPARAT	064N
					NICHT A SEP ERS-T LIEI	NON FORUNI SEPAREM	SERVICERES IKKE SEPA	NIET LOS VERKRIJGBAA	
2		**NSS**		1	SEM SERVIÇO EM SEPARADO, RING				
						NOT SERVICED SEPARA	NO SE REPARA POR SE	NON FORNITO SEPARAT	064N
					NICHT A SEP ERS-T LIEI	NON FORUNI SEPAREM	SERVICERES IKKE SEPA	NIET LOS VERKRIJGBAA	
3		**NSS**		1	SEM SERVIÇO EM SEPARADO, RING				
						NOT SERVICED SEPARA	NO SE REPARA POR SE	NON FORNITO SEPARAT	064N
					NICHT A SEP ERS-T LIEI	NON FORUNI SEPAREM	SERVICERES IKKE SEPA	NIET LOS VERKRIJGBAA	
4		**NSS**		1	SEM SERVIÇO EM SEPARADO, PISTON cod 7163				
						NOT SERVICED SEPARA	NO SE REPARA POR SE	NON FORNITO SEPARAT	064N
					NICHT A SEP ERS-T LIEI	NON FORUNI SEPAREM	SERVICERES IKKE SEPA	NIET LOS VERKRIJGBAA	
5		**J901793**		1	PINO DE PISTÃO	PISTON PIN	BULÓN DEL PISTÓN	PERNO DEL PISTONE	084P
					KOLBENBOLZEN	AXE DE PISTON	STEMPELPIND	ZUIGERPEN	
6		**J901706**		2	ANEL	RING	ANILLO	ANELLO	7175
					RING	BAGUE	RING	RING	
		A77731		6	KIT DE ANÉIS E PISTÕES, Assy 0.5mm, Includes items 1 - 6				
						PISTON & RINGS KIT	KIT DE PISTONES Y ANII	KIT PIST. E FASCE ELAS	313S
					KOLBEN- UND RINGSAT.	KIT DE PISTONS+SEGMI	STEMPEL OG RINGE	KIT MET ZUIGER + ZGR\	
		A77728		1	JOGO DE PISTÃO	PISTON RING SET	JUEGO ANILLOS PISTÓN	KIT FASCIA ELAST. PIST	Z307
					KOLBENRINGSATZ	JEU SEGM. DE PISTONS	STEMPELRINGSSÆT	SET ZUIGERVEREN	
1		**NSS**		1	SEM SERVIÇO EM SEPARADO, RING				
						NOT SERVICED SEPARA	NO SE REPARA POR SE	NON FORNITO SEPARAT	064N
					NICHT A SEP ERS-T LIEI	NON FORUNI SEPAREM	SERVICERES IKKE SEPA	NIET LOS VERKRIJGBAA	
2		**NSS**		1	SEM SERVIÇO EM SEPARADO, RING				
						NOT SERVICED SEPARA	NO SE REPARA POR SE	NON FORNITO SEPARAT	064N
					NICHT A SEP ERS-T LIEI	NON FORUNI SEPAREM	SERVICERES IKKE SEPA	NIET LOS VERKRIJGBAA	
3		**NSS**		1	SEM SERVIÇO EM SEPARADO, RING				
						NOT SERVICED SEPARA	NO SE REPARA POR SE	NON FORNITO SEPARAT	064N
					NICHT A SEP ERS-T LIEI	NON FORUNI SEPAREM	SERVICERES IKKE SEPA	NIET LOS VERKRIJGBAA	
4		**NSS**		1	SEM SERVIÇO EM SEPARADO, PISTON cod 8815				
						NOT SERVICED SEPARA	NO SE REPARA POR SE	NON FORNITO SEPARAT	064N
					NICHT A SEP ERS-T LIEI	NON FORUNI SEPAREM	SERVICERES IKKE SEPA	NIET LOS VERKRIJGBAA	
5		**J901793**		1	PINO DE PISTÃO	PISTON PIN	BULÓN DEL PISTÓN	PERNO DEL PISTONE	084P
					KOLBENBOLZEN	AXE DE PISTON	STEMPELPIND	ZUIGERPEN	
6		**J901706**		2	ANEL	RING	ANILLO	ANELLO	7175
					RING	BAGUE	RING	RING	
		A77732		6	PISTAO, Assy 1.0mm, Includes items 1 - 6				
						PISTON	PISTON	PISTONE	6270
					KOLBEN	PISTON	PISTON	PISTON	
		A77729		1	JOGO DE PISTÃO	PISTON RING SET	JUEGO ANILLOS PISTÓN	KIT FASCIA ELAST. PIST	Z307
					KOLBENRINGSATZ	JEU SEGM. DE PISTONS	STEMPELRINGSSÆT	SET ZUIGERVEREN	

PISTÕES E BIELAS
PISTONS AND CONNECTING RODS
EMBOLOS Y BIELAS
PISTONS AND CONNECTING RODS

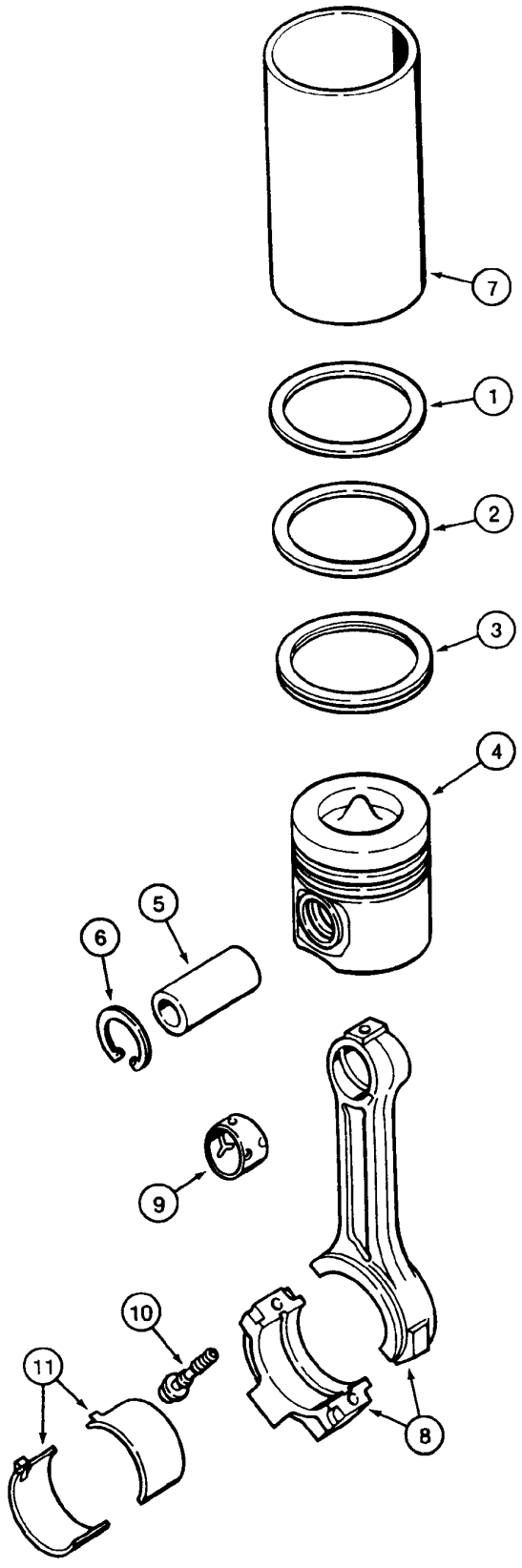

PISTONS AND CONNECTING RODS
PISTONS AND CONNECTING RODS
PISTONS AND CONNECTING RODS
PISTONS AND CONNECTING RODS

R	N	P.N.	MOD	Q	Denominação Bezeichnung	Description Description	Denominacion Beskrivelse	Descrizione Beschrijving	L.C.
1		NSS		1	SEM SERVIÇO EM SEPARADO, RING				
						NOT SERVICED SEPARA	NO SE REPARA POR SE	NON FORNITO SEPARAT	064N
					NICHT A SEP ERS-T LIEI	NON FORUNI SEPAREM	SERVICERES IKKE SEPA	NIET LOS VERKRIJGBAA	
2		NSS		1	SEM SERVIÇO EM SEPARADO, RING				
						NOT SERVICED SEPARA	NO SE REPARA POR SE	NON FORNITO SEPARAT	064N
					NICHT A SEP ERS-T LIEI	NON FORUNI SEPAREM	SERVICERES IKKE SEPA	NIET LOS VERKRIJGBAA	
3		NSS		1	SEM SERVIÇO EM SEPARADO, RING				
						NOT SERVICED SEPARA	NO SE REPARA POR SE	NON FORNITO SEPARAT	064N
					NICHT A SEP ERS-T LIEI	NON FORUNI SEPAREM	SERVICERES IKKE SEPA	NIET LOS VERKRIJGBAA	
4		NSS		1	SEM SERVIÇO EM SEPARADO, PISTON cod 8816				
						NOT SERVICED SEPARA	NO SE REPARA POR SE	NON FORNITO SEPARAT	064N
					NICHT A SEP ERS-T LIEI	NON FORUNI SEPAREM	SERVICERES IKKE SEPA	NIET LOS VERKRIJGBAA	
5		J901793		1	PINO DE PISTÃO	PISTON PIN	BULÓN DEL PISTÓN	PERNO DEL PISTONE	084P
					KOLBENBOLZEN	AXE DE PISTON	STEMPELPIND	ZUIGERPEN	
6		J901706		2	ANEL	RING	ANILLO	ANELLO	7175
					RING	BAGUE	RING	RING	
7		J904166		AR	CAMISA	SLEEVE	CAMISA	MANICOTTO	8000
					HUELSE	CHEMISE	SLEEVE	SLEEVE	
		J925232		6	ROD, CONNECTING, Assy, Includes items 8, 9, 10				
						ROD, CONNECTING	BIELA	BIELLA	P153
					PLEUELSTANGE	BIELLE	ROD, CONNECTING	ROD, CONNECTING	
8		NSS		1	SEM SERVIÇO EM SEPARADO				
						NOT SERVICED SEPARA	NO SE REPARA POR SE	NON FORNITO SEPARAT	064N
					NICHT A SEP ERS-T LIEI	NON FORUNI SEPAREM	SERVICERES IKKE SEPA	NIET LOS VERKRIJGBAA	
9		J901085		1	BUCHA	BUSHING	CASQUILLO	BOCCOLA	095B
					BUCHSE	BAGUE	BØSNING	BUS	
10		J900919		2	PARAFUSO	SCREW	TORNILLO	VITE	040V
					SCHRAUBE	VIS	SKRUE	SCHROEF	
11		A77465		6	CAMISA DO ROLAMENTO, STD				
						BEARING LINER	FORRO INTER. DE COJI	CANNA CUSCINETTO	P114
					LAGERBUCHSE	COUSSINET	LEJEFORING	LAGERVOERING	
11		A77466		6	JOGO DE ROLAMENTOS, 0.25mm				
						BEARING SET	JUEGO DE COJINETES	KIT CUSCINETTO	0620
					LAGERSATZ	JEU DE ROULEMENTS	LEJESÆT	LAGERSET	
11		A77467		6	JOGO DE ROLAMENTOS, 0.50mm				
						BEARING SET	JUEGO DE COJINETES	KIT CUSCINETTO	0620
					LAGERSATZ	JEU DE ROULEMENTS	LEJESÆT	LAGERSET	
11		A77468		6	JOGO DE ROLAMENTOS, 0.75mm				
						BEARING SET	JUEGO DE COJINETES	KIT CUSCINETTO	0620
					LAGERSATZ	JEU DE ROULEMENTS	LEJESÆT	LAGERSET	
11		A77469		6	JOGO DE ROLAMENTOS, 1.00mm				
						BEARING SET	JUEGO DE COJINETES	KIT CUSCINETTO	0620
					LAGERSATZ	JEU DE ROULEMENTS	LEJESÆT	LAGERSET	

02-38	01	p1	03/09

JOGOS DE JUNTAS
GASKET KITS
JUEGOS DE JUNTAS
GASKET KITS

(1)

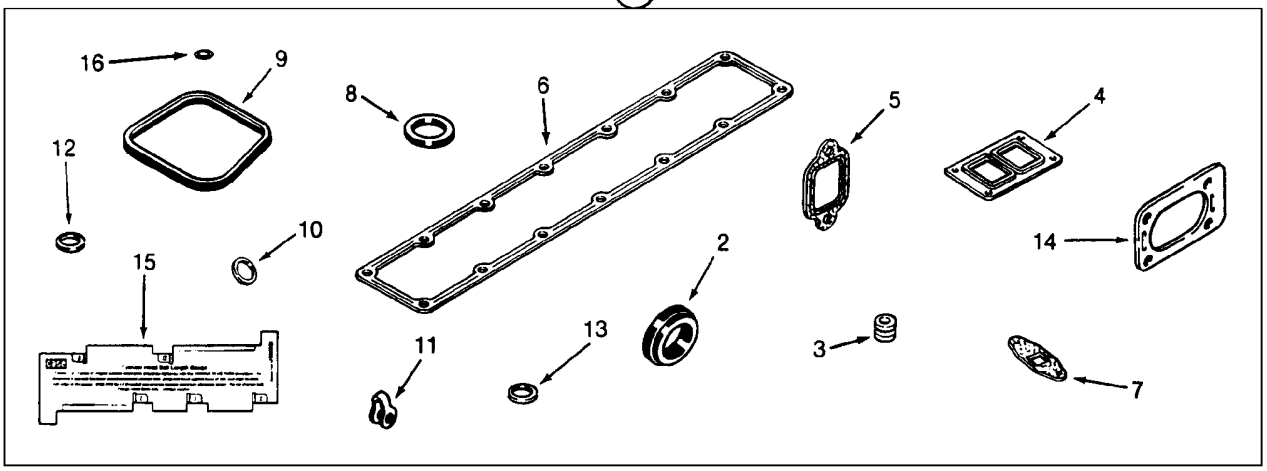

(17)

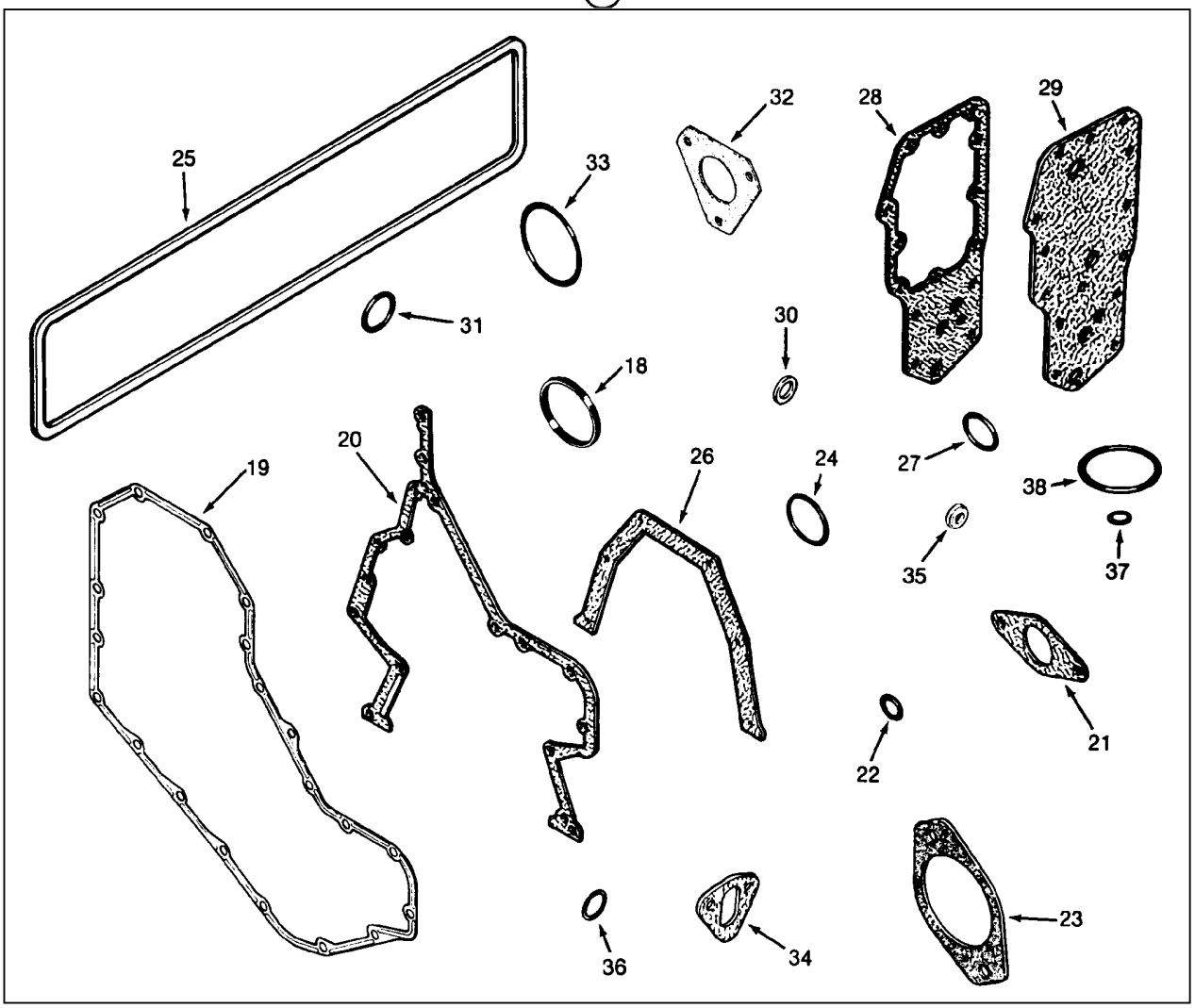

GASKET KITS
GASKET KITS
GASKET KITS
GASKET KITS

R	N	P.N.	MOD	Q	Denominação Bezeichnung	Description Description	Denominacion Beskrivelse	Descrizione Beschrijving	L.C.
1		A77793		1	KIT DE GAXETAS, Includes items 2 - 16				
						GASKET KIT	KIT DE JUNTAS	KIT GUARNIZIONI	3740
					DICHTUNGSSATZ	KIT DE JOINTS	PAKNINGSSÆT	KIT MET PAKKINGEN	
2		J923331		1	JUNTA	GASKET	JUNTA	GUARNIZIONE	3720
					DICHTUNG	JOINT	GASKET	GASKET	
3		J901097		12	VEDADOR DE RETENCAO	SEAL	SELLO/RETEN	GUARNIZIONE TENUTA	7460
					DICHTRING	JOINT-D'ETANCHEITE	SEAL	SEAL	
4		J901356		1	JUNTA	GASKET	JUNTA	GUARNIZIONE	3720
					DICHTUNG	JOINT	GASKET	GASKET	
5		J927154		6	JUNTA	GASKET	JUNTA	GUARNIZIONE	3720
					DICHTUNG	JOINT	GASKET	GASKET	
6		J914029		1	JUNTA	GASKET	JUNTA	GUARNIZIONE	3720
					DICHTUNG	JOINT	GASKET	GASKET	
7		J928919		1	JUNTA	GASKET	JUNTA	GUARNIZIONE	3720
					DICHTUNG	JOINT	GASKET	GASKET	
8		J902363		1	VEDADOR DE RETENCAO, 30 mm ID x 48 mm OD				
						SEAL	SELLO/RETEN	GUARNIZIONE TENUTA	7460
					DICHTRING	JOINT-D'ETANCHEITE	SEAL	SEAL	
9		J929795		6	JUNTA	GASKET	JUNTA	GUARNIZIONE	3720
					DICHTUNG	JOINT	GASKET	GASKET	
11		J903380		6	VEDAÇÃO	SEAL	ANILLO DE CIERRE	GUARNIZIONE; TENUTA	132A
					DICHTUNG	JOINT	PAKNING	AFDICHTING	
12		J906659		6	VEDAÇÃO	SEAL	ANILLO DE CIERRE	GUARNIZIONE; TENUTA	132A
					DICHTUNG	JOINT	PAKNING	AFDICHTING	
13		J909356		6	VEDADOR DE RETENCAO	SEAL	SELLO/RETEN	GUARNIZIONE TENUTA	7460
					DICHTRING	JOINT-D'ETANCHEITE	SEAL	SEAL	
15		J823921		1	MEDIDOR	GAUGE	INDICADOR	INDICATORE	Z211
					ANZEIGE	JAUGE	MANOMETER	METER	
16		J928406		6	ISOLADOR	ISOLATOR	AISLADOR	ISOLATORE	Z082
					ISOLATOR	ISOLANT	ISOLATOR	ISOLATIE	
17		A77861		1	KIT DE GAXETAS, block, Includes items 18 - 38				
						GASKET KIT	KIT DE JUNTAS	KIT GUARNIZIONI	3740
					DICHTUNGSSATZ	KIT DE JOINTS	PAKNINGSSÆT	KIT MET PAKKINGEN	
18		J903475		1	VEDAÇÃO	SEAL	ANILLO DE CIERRE	GUARNIZIONE; TENUTA	132A
					DICHTUNG	JOINT	PAKNING	AFDICHTING	
19		J914385		1	JUNTA	GASKET	JUNTA	GUARNIZIONE	3720
					DICHTUNG	JOINT	GASKET	GASKET	
20		J916131		1	JUNTA	GASKET	JUNTA	GUARNIZIONE	3720
					DICHTUNG	JOINT	GASKET	GASKET	
22		J913994		1	O-RING	O-RING	JUNTA TÓRICA	ANELLO TOROIDALE	055A
					O-RING	JOINT TORIQUE	O-RING	O-RING	
23		J919601		1	JUNTA	GASKET	JUNTA	GUARNIZIONE	3720
					DICHTUNG	JOINT	GASKET	GASKET	
24		238-5341		1	O-RING, -341, 70 Duro, 3.475" ID x .210" Thk				
						O-RING	JUNTA TÓRICA	ANELLO TOROIDALE	055A
					O-RING	JOINT TORIQUE	O-RING	O-RING	
25		J907617		1	JUNTA	GASKET	JUNTA	GUARNIZIONE	3720
					DICHTUNG	JOINT	GASKET	GASKET	

02-38	01	p2	03/09

JOGOS DE JUNTAS
GASKET KITS
JUEGOS DE JUNTAS
GASKET KITS

(1)

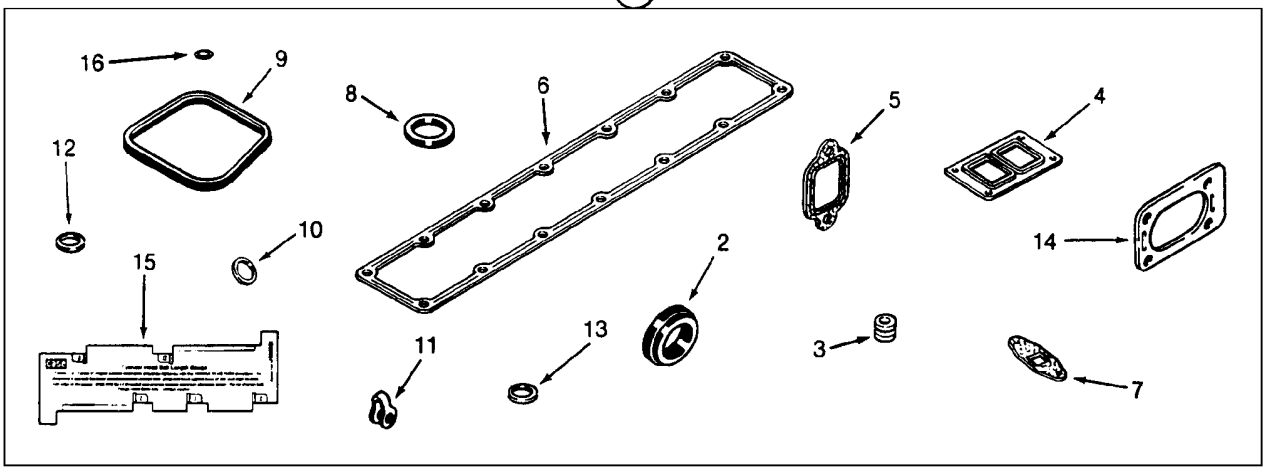

(17)

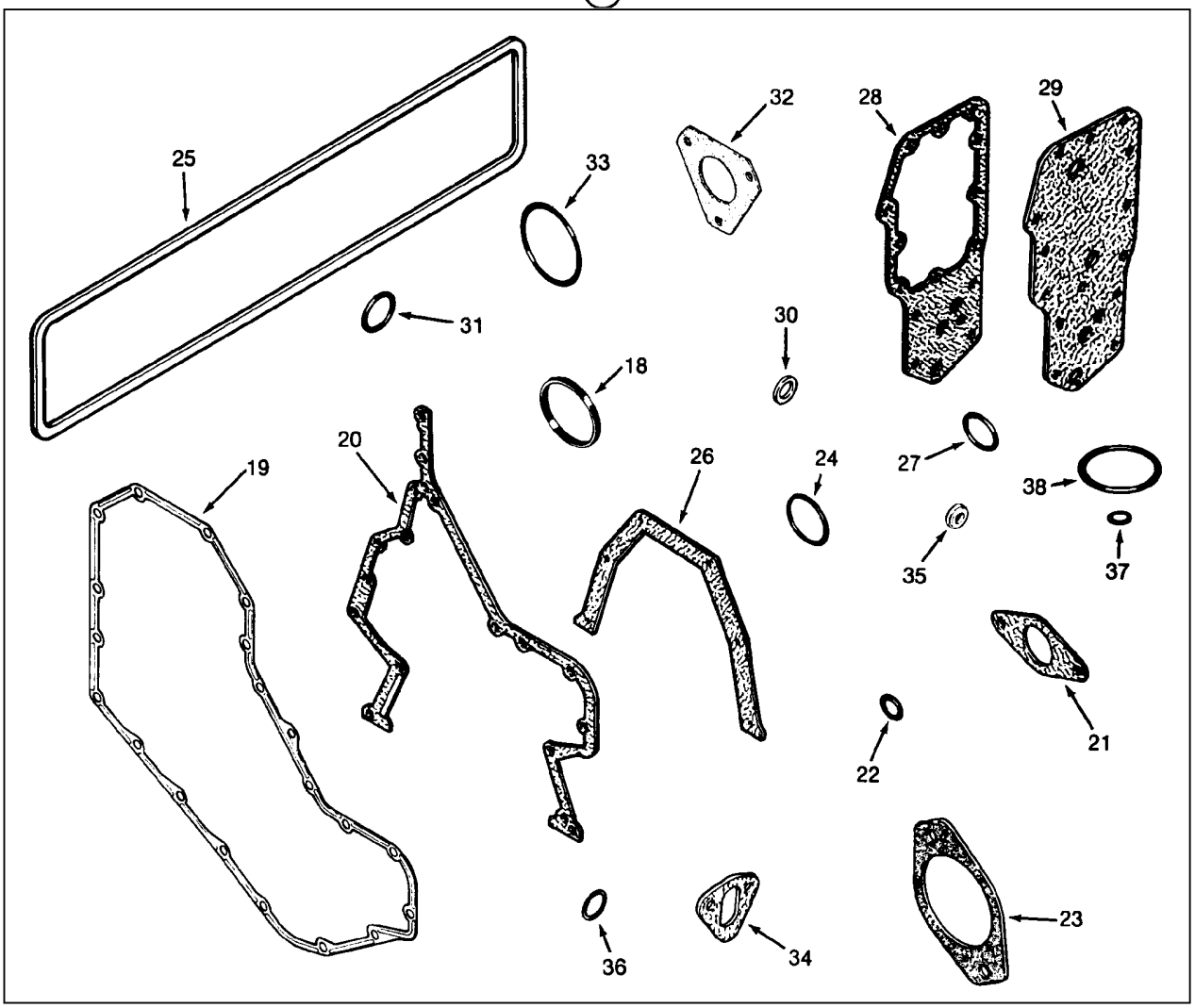

GASKET KITS
GASKET KITS
GASKET KITS
GASKET KITS

R	N	P.N.	MOD	Q	Denominação Bezeichnung	Description Description	Denominacion Beskrivelse	Descrizione Beschrijving	L.C.
26		J914386		1	JUNTA DICHTUNG	GASKET JOINT	JUNTA GASKET	GUARNIZIONE GASKET	3720
27		J906697		1	VEDADOR DE RETENCAO DICHTRING	SEAL JOINT-D'ETANCHEITE	SELLO/RETEN SEAL	GUARNIZIONE TENUTA SEAL	7460
28		J929791		1	JUNTA DICHTUNG	GASKET JOINT	JUNTA GASKET	GUARNIZIONE GASKET	3720
29		J929792		1	JUNTA DICHTUNG	GASKET JOINT	JUNTA GASKET	GUARNIZIONE GASKET	3720
30		J902425		1	ARRUELA PLANA UNTERLEGSCHEIBE	WASHER RONDELLE	ARANDELA FLADSKIVE	RONDELLA SLUITRING	131R
32		J914389		1	JUNTA DICHTUNG	GASKET JOINT	JUNTA GASKET	GUARNIZIONE GASKET	3720
33		J912473		1	ANEL VEDADOR DICHTRING	SEALRING BAGUE D'ETANCHEITE	RETÉN PAKNINGSRING	ANELLO DI TENUTA KEERRING	Z125
34		J923054		1	JUNTA DICHTUNG	GASKET JOINT	JUNTA GASKET	GUARNIZIONE GASKET	3720
35		J900267		6	VEDADOR DE RETENCAO DICHTRING	SEAL JOINT-D'ETANCHEITE	SELLO/RETEN SEAL	GUARNIZIONE TENUTA SEAL	7460
37		J906695		1	ANEL VEDADOR DICHTRING	SEALRING BAGUE D'ETANCHEITE	RETÉN PAKNINGSRING	ANELLO DI TENUTA KEERRING	Z125
38		J906694		1	ANEL VEDADOR DICHTRING	SEALRING BAGUE D'ETANCHEITE	RETÉN PAKNINGSRING	ANELLO DI TENUTA KEERRING	Z125
39	1	148608A1		1	KIT DE REVISÃO DO MOTOR, STD MOTORÜBERHOLUNGSS	ENGINE OVERHAUL KIT KIT DE REVISION MOTE	KIT DE REVISIÓN DEL M MOTORREVISIONSSÆT	KIT REVISIONE MOTORE REVISIEKIT VOOR MOTO	002K
40	1	148605A1		1	KIT DE REVISÃO DO MOTOR, 0.25 MOTORÜBERHOLUNGSS	ENGINE OVERHAUL KIT KIT DE REVISION MOTE	KIT DE REVISIÓN DEL M MOTORREVISIONSSÆT	KIT REVISIONE MOTORE REVISIEKIT VOOR MOTO	002K
41	1	148606A1		1	KIT DE REVISÃO DO MOTOR, 0.50 MOTORÜBERHOLUNGSS	ENGINE OVERHAUL KIT KIT DE REVISION MOTE	KIT DE REVISIÓN DEL M MOTORREVISIONSSÆT	KIT REVISIONE MOTORE REVISIEKIT VOOR MOTO	002K
42	1	148607A1		1	KIT DE REVISÃO DO MOTOR, STD MOTORÜBERHOLUNGSS	ENGINE OVERHAUL KIT KIT DE REVISION MOTE	KIT DE REVISIÓN DEL M MOTORREVISIONSSÆT	KIT REVISIONE MOTORE REVISIEKIT VOOR MOTO	002K

(1) Não ilustrado

SECTION INDEX
Sistema de Combustível

03-02	01	ACELERADOR E ARTICULAÇÕES
03-04	01	TANQUE DE COMBUSTÍVEL E COMPONENTES
03-06	01	SISTEMA DE INJEÇÃO DE COMBUSTÍVEL
03-08	01	BOMBA ALIMENTADORA
03-10	01	FILTRO DE COMBUSTÍVEL
03-12	01	BOMBA INJETORA
03-14	01	SOLENÓIDE DE CORTE DE COMBUSTÍVEL
03-16	01	BICO INJETOR

03-02	01	p1	11/07

ACELERADOR E ARTICULAÇÕES
ACCELERATOR AND LINKAGE
ACELERADOR Y ARTICULACIONES
ACCELERATOR AND LINKAGE

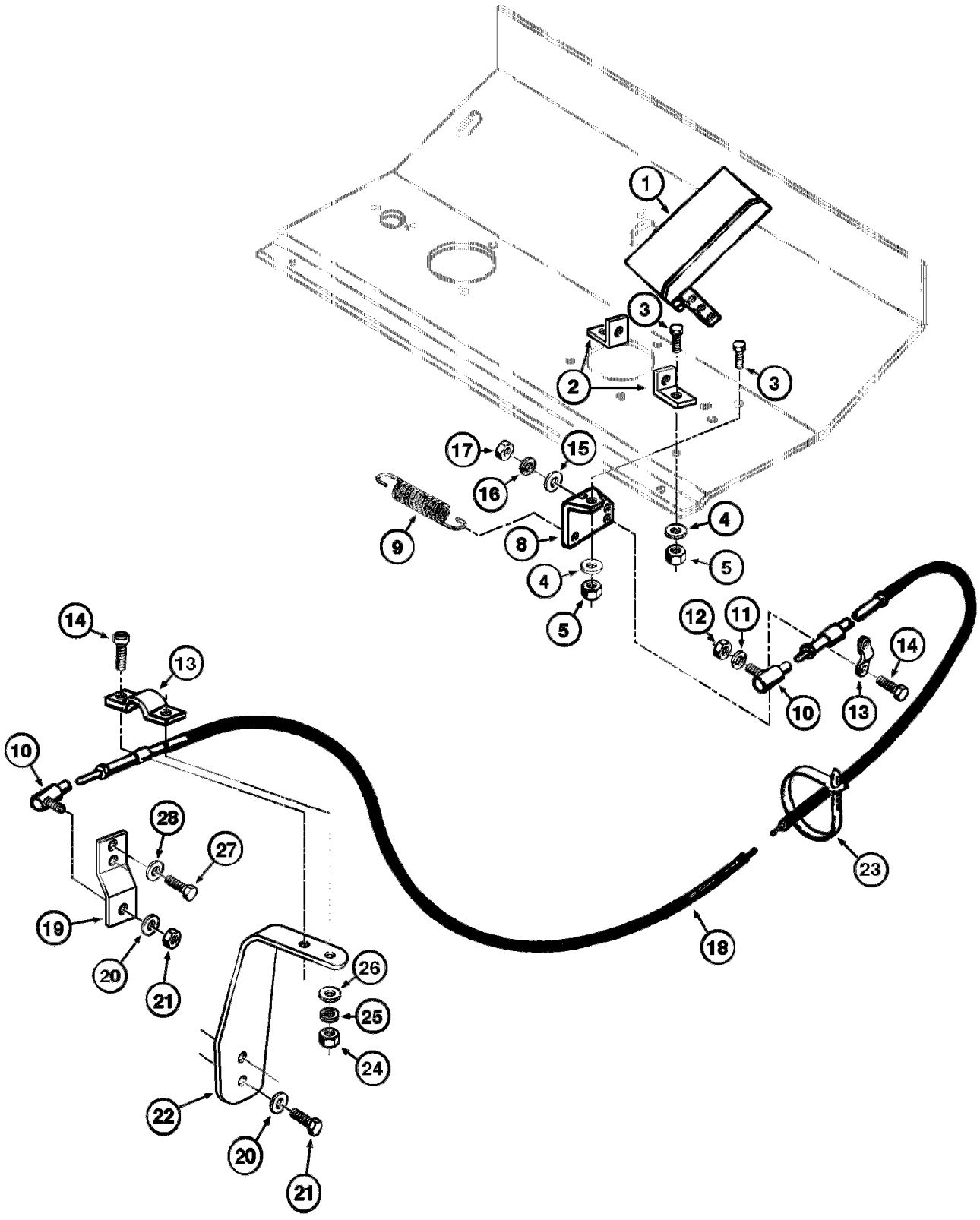

ACCELERATOR AND LINKAGE
ACCELERATOR AND LINKAGE
ACCELERATOR AND LINKAGE
ACCELERATOR AND LINKAGE

R	N	P.N.	MOD	Q	Denominação Bezeichnung	Description Description	Denominacion Beskrivelse	Descrizione Beschrijving	L.C.
1		75264025		1	PEDAL, accelerator	PEDAL	PEDAL	PEDALE	060P
					PEDAL	PEDALE	PEDAL	PEDAAL	
2		L73462		2	SUPORTE, accelerator	BRACKET	SOPORTE	STAFFA	1010
					HALTER	CONSOLE	BRACKET	BRACKET	
3		413-620		3	PARAFUSO, Hex, 3/8"-16 x 1 1/4", G5, Full Thd				
						BOLT	PERNO	BULLONE	140B
					SCHRAUBE	VIS	BOLT	BOUT	
4		495-21044		4	ARRUELA PLANA, 3/8"	WASHER	ARANDELA	RONDELLA	131R
					UNTERLEGSCHEIBE	RONDELLE	FLADSKIVE	SLUITRING	
5		231-1446		3	CONTRA PORCA, 3/8"-16, GB				
						LOCK NUT	TUERCA DE BLOQUEO	DADO DI BLOCCAGGIO	P263
					SICHERUNGSMUTTER	CONTRE-ECROU	LÅSEMØTRIK	BORGMOER	
6		614-12025		2	PARAFUSO, Hex, M12 x 25, 8.8				
						BOLT	PERNO	BULLONE	140B
					SCHRAUBE	VIS	BOLT	BOUT	
7		895-11012		2	ARRUELA PLANA, M13.5 x 24 x 2.5				
						WASHER	ARANDELA	RONDELLA	131R
					UNTERLEGSCHEIBE	RONDELLE	FLADSKIVE	SLUITRING	
8		147344A1		1	SUPORTE, acc. cable	SUPPORT	SOPORTE	SUPPORTO	300S
					STÜTZE	SUPPORT	BESLAG	STEUN	
9		E65236		1	MOLA	SPRING	RESORTE	MOLLA	100M
					FEDER	RESSORT	FJEDER	VEER	
10		A76747		2	UNIAO, cable	JOINT	ARTICULACION	GIUNTO CARDANICO	4770
					GELENK	ARTICULATION	JOINT	JOINT	
11		492-11025		2	TRAVA DA ARRUELA, 1/4"	LOCK WASHER	ARANDELA DE BLOQUE	RONDELLA DI SICUREZ	132R
					SICHERUNGSSCHEIBE	RONDELLE FREIN	LÅSESKIVE	BORGRING	
12		425-114		2	PORCA, 1/4"-28, G5	NUT	TUERCA	DADO	010D
					MUTTER	ECROU	MØTRIK	MOER	
13		L12441		2	BRACADEIRA	CLAMP	COLLAR	MORSETTO	1640
					SCHELLE	COLLIER	CLAMP	CLAMP	
14		459-11012		4	PARAFUSO, Slotted Pan Hd, #10-32 x 3/4"				
						SCREW	TORNILLO	VITE	040V
					SCHRAUBE	VIS	SKRUE	SCHROEF	
15		495-31022		2	ARRUELA PLANA, #10	WASHER	ARANDELA	RONDELLA	131R
					UNTERLEGSCHEIBE	RONDELLE	FLADSKIVE	SLUITRING	
16		492-11010		2	TRAVA DA ARRUELA, #10	LOCK WASHER	ARANDELA DE BLOQUE	RONDELLA DI SICUREZ	132R
					SICHERUNGSSCHEIBE	RONDELLE FREIN	LÅSESKIVE	BORGRING	
17		225-14210		2	PORCA, #10-32	NUT	TUERCA	DADO	010D
					MUTTER	ECROU	MØTRIK	MOER	
18		E155965		1	CABO FLEXÍVEL, accelerator				
						FLEXIBLE CABLE	CABLE FLEXIBLE	CAVO FLESSIBILE	073F
					SEILZUG	CABLE FLEXIBLE	FLEKSIBELT KABEL	FLEXIBELE KABEL	
19		E158436		1	ALAVANCA, accelerator	LEVER	PALANCA	LEVA	045L
					HEBEL	LEVIER	ARM	HEFBOOM	
20		492-11025		2	TRAVA DA ARRUELA, 1/4"	LOCK WASHER	ARANDELA DE BLOQUE	RONDELLA DI SICUREZ	132R
					SICHERUNGSSCHEIBE	RONDELLE FREIN	LÅSESKIVE	BORGRING	
21		425-114		2	PORCA, 1/4"-28, G5	NUT	TUERCA	DADO	010D
					MUTTER	ECROU	MØTRIK	MOER	

03-02	01	p2	11/07

ACELERADOR E ARTICULAÇÕES
ACCELERATOR AND LINKAGE
ACELERADOR Y ARTICULACIONES
ACCELERATOR AND LINKAGE

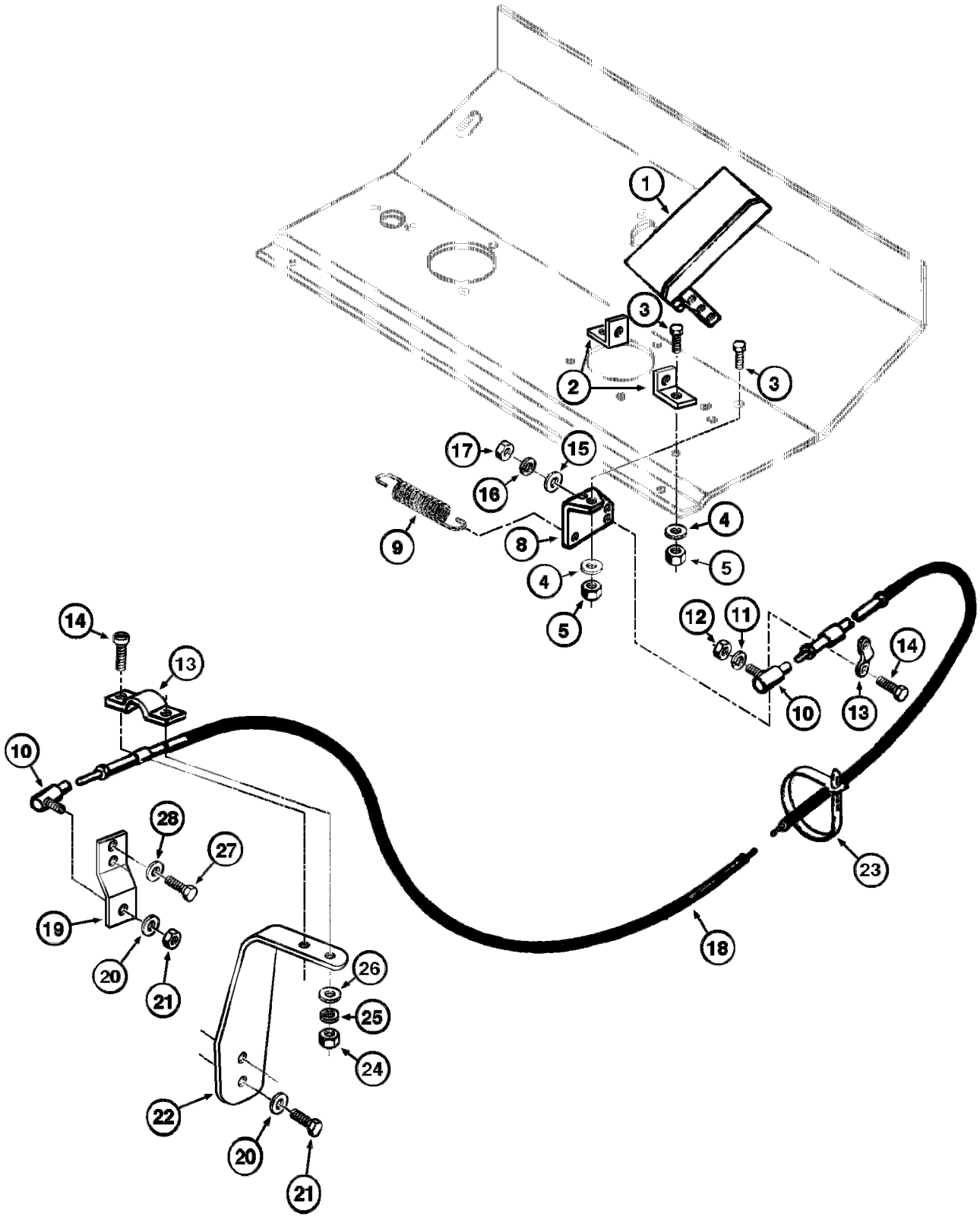

ACCELERATOR AND LINKAGE
ACCELERATOR AND LINKAGE
ACCELERATOR AND LINKAGE
ACCELERATOR AND LINKAGE

R	N	P.N.	MOD	Q	Denominação Bezeichnung	Description Description	Denominacion Beskrivelse	Descrizione Beschrijving	L.C.
22		148534A1		1	SUPORTE, acc. cable STÜTZE	SUPPORT SUPPORT	SOPORTE BESLAG	SUPPORTO STEUN	300S
23		L18331		2	PRENDEDOR DE CABOS KABELBINDER	CABLE STRAP BRIDE DE CABLE	BANDA DE CABLE KABELSTROP	FASCETTA PER CAVO BUNDELBAND	P716
24		225-14210		2	PORCA, #10-32 MUTTER	NUT ECROU	TUERCA MØTRIK	DADO MOER	010D
25		492-11010		2	TRAVA DA ARRUELA, #10 SICHERUNGSSCHEIBE	LOCK WASHER RONDELLE FREIN	ARANDELA DE BLOQUE LÅSESKIVE	RONDELLA DI SICUREZ BORGRING	132R
26		495-31022		2	ARRUELA PLANA, #10 UNTERLEGSCHEIBE	WASHER RONDELLE	ARANDELA FLADSKIVE	RONDELLA SLUITRING	131R
27		614-6012		2	PARAFUSO, Hex, M6 x 12, 8.8 SCHRAUBE	BOLT VIS	PERNO BOLT	BULLONE BOUT	140B
28		892-11006		2	TRAVA DA ARRUELA, M6 SICHERUNGSSCHEIBE	LOCK WASHER RONDELLE FREIN	ARANDELA DE BLOQUE LÅSESKIVE	RONDELLA DI SICUREZ BORGRING	132R

03-04	01	p1	03/09

TANQUE DE COMBUSTÍVEL E COMPONENTES
FUEL TANK AND RELATED PARTS
TANQUE DE COMBUSTIBLE Y COMPONENTES
FUEL TANK AND RELATED PARTS

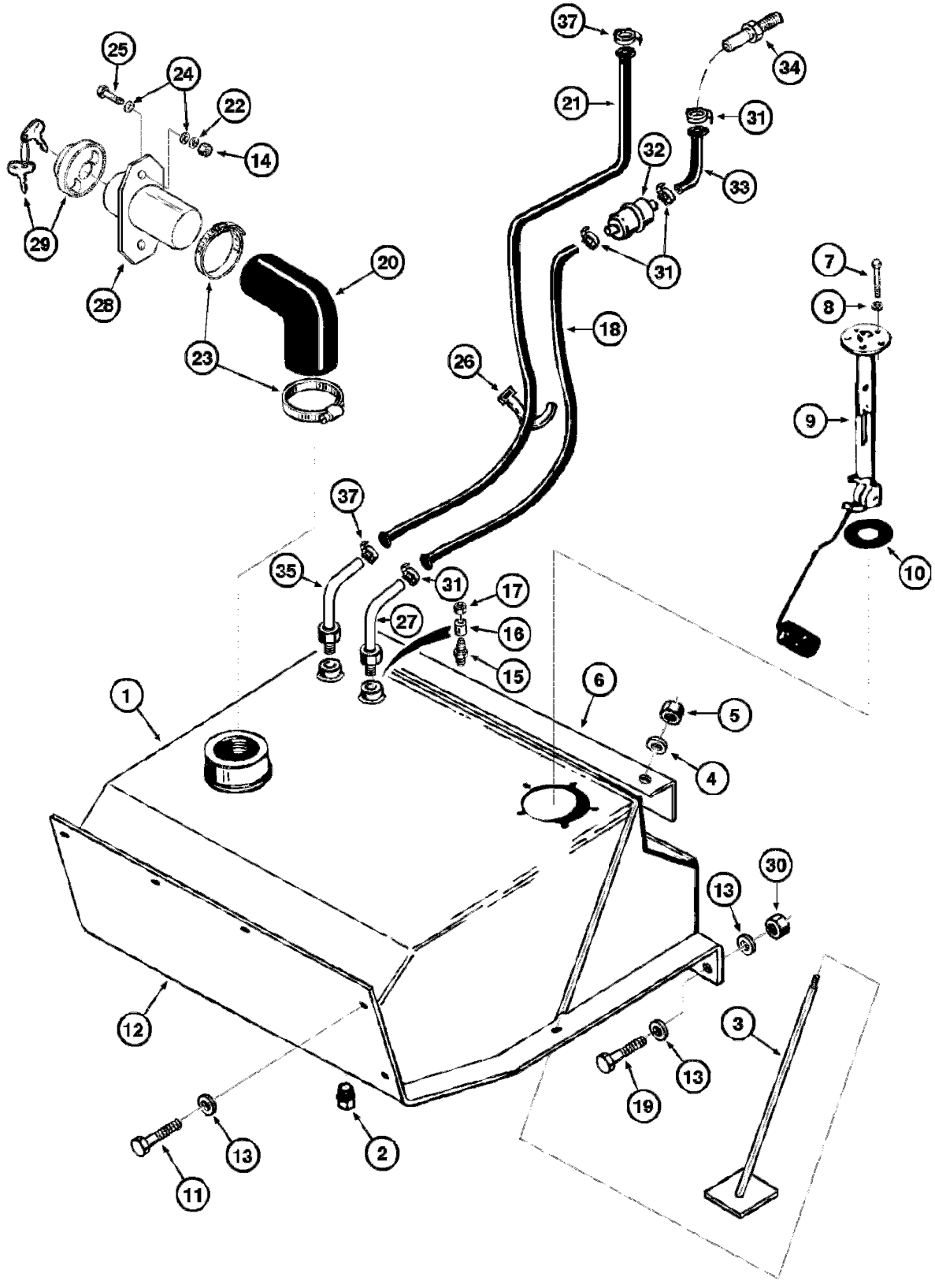

FUEL TANK AND RELATED PARTS
FUEL TANK AND RELATED PARTS
FUEL TANK AND RELATED PARTS
FUEL TANK AND RELATED PARTS

R	N	P.N.	MOD	Q	Denominação Bezeichnung	Description Description	Denominacion Beskrivelse	Descrizione Beschrijving	L.C.
1		145921A1		1	RESERVATÓRIO, Assy, Includes item 2				
						TANK	DEPÓSITO	SERBATOIO	115S
					TANK	RESERVOIR	TANK	TANK	
2		221-45		1	X	X	X	X	Z200
					X	X	X	X	
3		146240A1		2	TIRANTE	TIE-ROD	TIRANTE	TIRANTE	142T
					SPURSTANGE	TIRANT	TRÆKSTANG	TREKSTANG	
4		495-11034		2	ARRUELA PLANA, 5/16", SAE				
						WASHER	ARANDELA	RONDELLA	131R
					UNTERLEGSCHEIBE	RONDELLE	FLADSKIVE	SLUITRING	
5		231-1445		2	CONTRA PORCA, 5/16"-18, GB				
						LOCK NUT	TUERCA DE BLOQUEO	DADO DI BLOCCAGGIO	P263
					SICHERUNGSMUTTER	CONTRE-ECROU	LÅSEMØTRIK	BORGMOER	
6		146223A1		1	PLACA DE COBERTURA, fixation				
						COVER PLATE	PLACA DE CUBIERTA	PIASTRA DI COPERTUR/	110P
					ABDECKPLATTE	COUVERCLE	DÆKPLADE	AFSCHERMPLAAT	
7		463-11010		5	PARAFUSO, Hex Hd, #10-24 x 5/8"				
						SCREW	TORNILLO	VITE	040V
					SCHRAUBE	VIS	SKRUE	SCHROEF	
8		492-11010		5	TRAVA DA ARRUELA, #10	LOCK WASHER	ARANDELA DE BLOQUE(	RONDELLA DI SICUREZ/	132R
					SICHERUNGSSCHEIBE	RONDELLE FREIN	LÅSESKIVE	BORGRING	
9		148080A1		1	FLUTUADOR	FLOAT	FLOTADOR	GALLEGGIANTE	020G
					SCHWIMMER	FLOTTEUR	SVØMMER	VLOTTER	
10		A11822		1	JUNTA	GASKET	JUNTA	GUARNIZIONE	3720
					DICHTUNG	JOINT	GASKET	GASKET	
11		413-824		4	PARAFUSO, Hex, 1/2"-13 x 1 1/2", G5, Full Thd				
						BOLT	PERNO	BULLONE	140B
					SCHRAUBE	VIS	BOLT	BOUT	
12		146246A1		1	PLACA DE COBERTURA, tank				
						COVER PLATE	PLACA DE CUBIERTA	PIASTRA DI COPERTUR/	110P
					ABDECKPLATTE	COUVERCLE	DÆKPLADE	AFSCHERMPLAAT	
13		495-21056		8	ARRUELA PLANA, 1/2"	WASHER	ARANDELA	RONDELLA	131R
					UNTERLEGSCHEIBE	RONDELLE	FLADSKIVE	SLUITRING	
14		425-106		2	PORCA, 3/8"-16, G5	NUT	TUERCA	DADO	010D
					MUTTER	ECROU	MØTRIK	MOER	
15		222-638		2	CONEXÃO, 9/16"-24 x 3/8" NPT, Comp, Assy, Includes items 16, 17				
						FITTING	ACOPLAMIENTO	RACCORDO	3300
					ARMATUR	RACCORD	FITTING	AANSLUITING	
16		222-654		1	LUVA, 3/8" Tube, Comp	SLEEVE	MANGUITO	MANICOTTO	031M
					BUCHSE	CHEMISE	TRYKLEJE, KOBLING	MOF; BUS	
17		222-664		1	PORCA DE TUBAGEM, 9/16"-24, 45º Fl, Comp				
						TUBE NUT	TUERCA DE TUBO	DADO TUBO	0030
					ROHRMUTTER	ECROU DE TUYAU	SLANGEMØTRIK	BUISMOER	
18		148538A1		1	LUVA	SLEEVE	MANGUITO	MANICOTTO	031M
					BUCHSE	CHEMISE	TRYKLEJE, KOBLING	MOF; BUS	
19		413-832		2	PARAFUSO, Hex, 1/2"-13 x 2", G5				
						BOLT	PERNO	BULLONE	140B
					SCHRAUBE	VIS	BOLT	BOUT	

03-04	01	p2	03/09

TANQUE DE COMBUSTÍVEL E COMPONENTES
FUEL TANK AND RELATED PARTS
TANQUE DE COMBUSTIBLE Y COMPONENTES
FUEL TANK AND RELATED PARTS

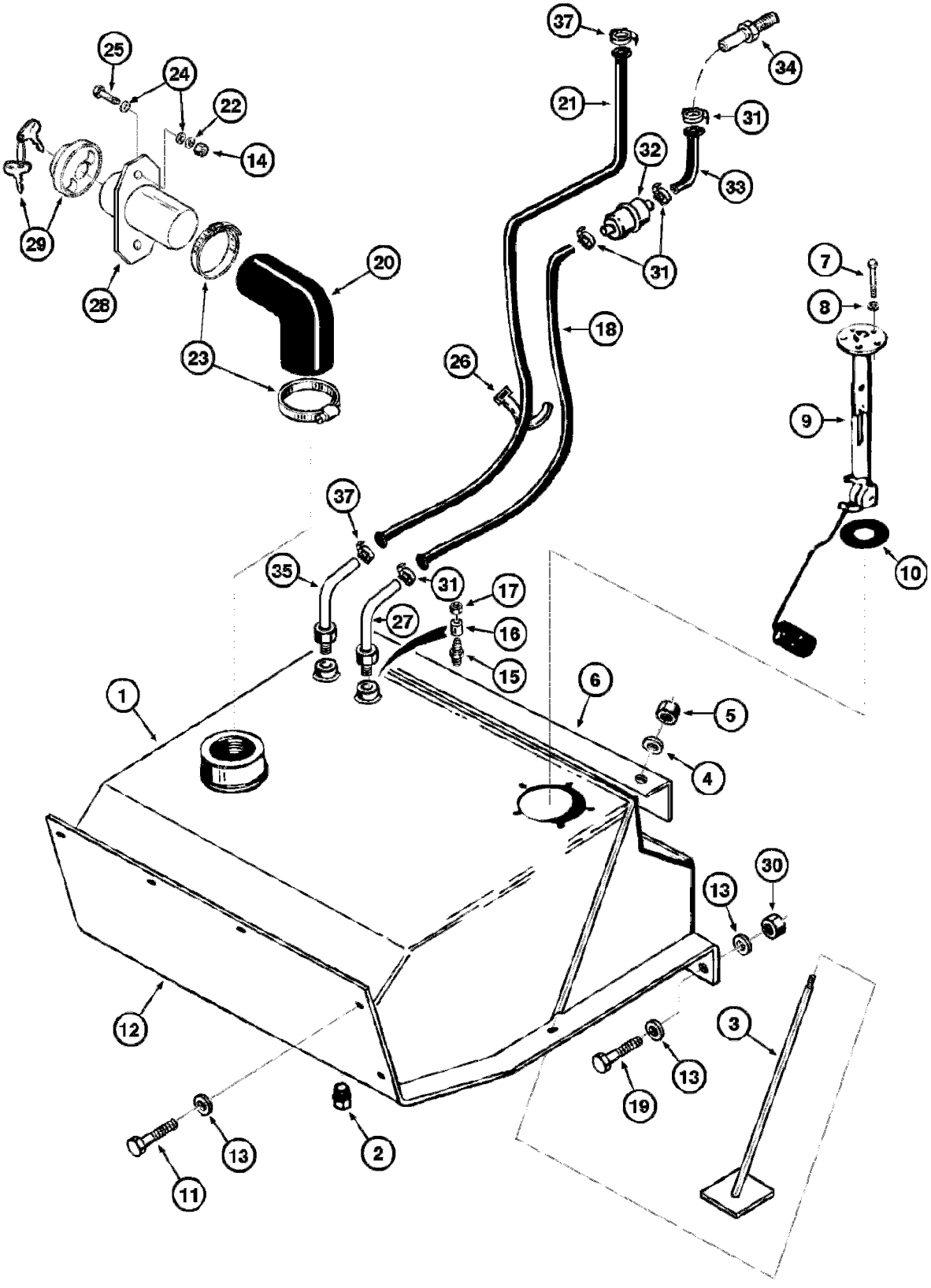

FUEL TANK AND RELATED PARTS
FUEL TANK AND RELATED PARTS
FUEL TANK AND RELATED PARTS
FUEL TANK AND RELATED PARTS

R	N	P.N.	MOD	Q	Denominação Bezeichnung	Description Description	Denominacion Beskrivelse	Descrizione Beschrijving	L.C.
20		**146241A1**		1	LUVA	SLEEVE	MANGUITO	MANICOTTO	031M
					BUCHSE	CHEMISE	TRYKLEJE, KOBLING	MOF; BUS	
21		**148538A1**		1	LUVA	SLEEVE	MANGUITO	MANICOTTO	031M
					BUCHSE	CHEMISE	TRYKLEJE, KOBLING	MOF; BUS	
22		**492-11038**		2	TRAVA DA ARRUELA, 3/8"	LOCK WASHER	ARANDELA DE BLOQUE	RONDELLA DI SICUREZ	132R
					SICHERUNGSSCHEIBE	RONDELLE FREIN	LÅSESKIVE	BORGRING	
23		**214-1464**		2	BRAÇADEIRA MANGUEIRA, #64, 3.56/4.50 Type F Worm				
						HOSE CLAMP	ABRAZADERA DE MANG	FASCETTA STRINGITUB	P729
					SCHLAUCHSCHELLE	COLLIER POUR FLEXIBL	SLANGEKLEMME	SLANGKLEM	
24		**495-11041**		4	ARRUELA PLANA, 3/8", SAE				
						WASHER	ARANDELA	RONDELLA	131R
					UNTERLEGSCHEIBE	RONDELLE	FLADSKIVE	SLUITRING	
25		**413-620**		2	PARAFUSO, Hex, 3/8"-16 x 1 1/4", G5, Full Thd				
						BOLT	PERNO	BULLONE	140B
					SCHRAUBE	VIS	BOLT	BOUT	
26		**L18331**		4	PRENDEDOR DE CABOS	CABLE STRAP	BANDA DE CABLE	FASCETTA PER CAVO	P716
					KABELBINDER	BRIDE DE CABLE	KABELSTROP	BUNDELBAND	
27		**L71206**		1	TUBO, 0.375" OD x 20, 1.8" L				
						TUBE	TUBO	TUBO	195T
					ROHR	TUBE	RØR	LEIDING	
28		**E158526**		1	TUBO, 205 mm L, filling Assy				
						TUBE	TUBO	TUBO	195T
					ROHR	TUBE	RØR	LEIDING	
29		**A65842-33**		1	COBERTURA	COVER	CUBIERTA	COPERCHIO	265C
					ABDECKUNG	COUVERCLE	DÆKSEL	AFSCHERMING	
30		**425-108**		2	PORCA DE TUBAGEM, 1/2"-13, G5				
						TUBE NUT	TUERCA DE TUBO	DADO TUBO	0030
					ROHRMUTTER	ECROU DE TUYAU	SLANGEMØTRIK	BUISMOER	
31		**214-1706**		4	BRAÇADEIRA MANGUEIRA, #6, 0.44/0.78 Type M Worm				
						HOSE CLAMP	ABRAZADERA DE MANG	FASCETTA STRINGITUB	P729
					SCHLAUCHSCHELLE	COLLIER POUR FLEXIBL	SLANGEKLEMME	SLANGKLEM	
32		**D139225**		1	FILTRO COMBUSTIVEL	FILTER, FUEL	FILTRO GAS-OIL	FILTRO, COMB	Z498
					KRAFTSTOFFILTER	FILTRE A CARBURANT	FILTER, FUEL	FILTER, FUEL	
33		**E158274**		1	MANGUEIRA COMBUSTÍVEL, 9.50 mm ID x 170.00 mm , SAE J20 30R2				
						FUEL HOSE	TUBO DE COMBUSTIBLE	TUBO FLESS. CARBURA	A056
					KRAFTSTOFFSCHLAUCH	FLEXIBLE DE CARBURA	SLANGE, BRÆNDSTOF	BRANDSTOFSLANG	
34		**217-151**		1	CONEXÃO, 3/8" Hose X 1/4" NPTF Beaded				
						FITTING	ACOPLAMIENTO	RACCORDO	3300
					ARMATUR	RACCORD	FITTING	AANSLUITING	
35		**L71206**		1	TUBO, 0.375" OD x 20, 1.8" L				
						TUBE	TUBO	TUBO	195T
					ROHR	TUBE	RØR	LEIDING	
37		**214-1706**		2	BRAÇADEIRA MANGUEIRA, #6, 0.44/0.78 Type M Worm				
						HOSE CLAMP	ABRAZADERA DE MANG	FASCETTA STRINGITUB	P729
					SCHLAUCHSCHELLE	COLLIER POUR FLEXIBL	SLANGEKLEMME	SLANGKLEM	

03-06	01	p1	04/12

SISTEMA DE INJEÇÃO DE COMBUSTÍVEL
FUEL INJECTION SYSTEM
SISTEMA DE ALIMENTACIÓN DE COMBUSTIBLE
FUEL INJECTION SYSTEM

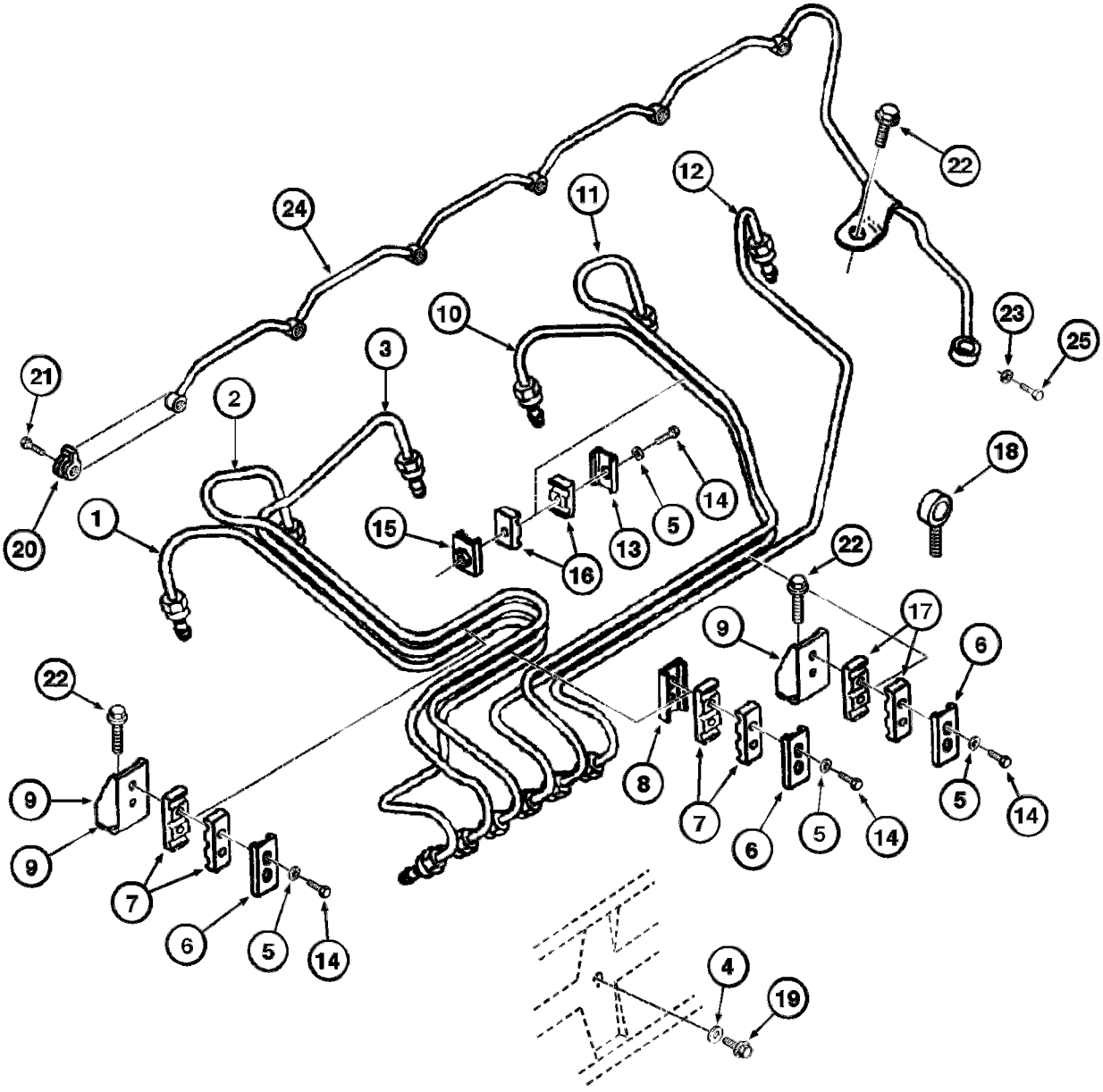

FUEL INJECTION SYSTEM
FUEL INJECTION SYSTEM
FUEL INJECTION SYSTEM
FUEL INJECTION SYSTEM

R	N	P.N.	MOD	Q	Denominação Bezeichnung	Description Description	Denominacion Beskrivelse	Descrizione Beschrijving	L.C.
1		148581A1		1	TUBO ROHR	TUBE TUBE	TUBO RØR	TUBO LEIDING	195T
2		148582A1		1	TUBO ROHR	TUBE TUBE	TUBO RØR	TUBO LEIDING	195T
3		148583A1		1	TUBO ROHR	TUBE TUBE	TUBO RØR	TUBO LEIDING	195T
4		J928759		4	VEDADOR DE RETENCAO DICHTRING	SEAL JOINT-D'ETANCHEITE	SELLO/RETEN SEAL	GUARNIZIONE TENUTA SEAL	7460
5		J903723		7	ARRUELA UNTERLEGSCHEIBE	WASHER RONDELLE	ARANDELA WASHER	RONDELLA WASHER	9720
6		J904519		3	SUPORTE STÜTZE	SUPPORT SUPPORT	SOPORTE BESLAG	SUPPORTO STEUN	300S
7		J917747		4	BRAÇADEIRA KLEMME	CLAMP COLLIER	ABRAZADERA SPÆNDEBÅND	MORSETTO KLEM	120M
8		J917716		1	TENSOR STREBE	BRACE JAMBE-DE-FORCE	TENSOR BRACE	MENARUOLA BRACE	0990
9		148584A1		2	BRAÇO ARM	ARM BRAS	BRAZO ARM	BRACCIO ARM	130B
10		148585A1		1	TUBO ROHR	TUBE TUBE	TUBO RØR	TUBO LEIDING	195T
11		148586A1		1	TUBO ROHR	TUBE TUBE	TUBO RØR	TUBO LEIDING	195T
12		148587A1		1	TUBO ROHR	TUBE TUBE	TUBO RØR	TUBO LEIDING	195T
13		CURJ904711		1	BRACADEIRA SCHELLE	CLAMP COLLIER	COLLAR CLAMP	MORSETTO CLAMP	1640
14		J917712		7	PARAFUSO SCHRAUBE	BOLT VIS	PERNO BOLT	BULLONE BOUT	140B
15		J917717		1	TENSOR STREBE	BRACE JAMBE-DE-FORCE	TENSOR BRACE	MENARUOLA BRACE	0990
16		J917746		2	BRAÇADEIRA KLEMME	CLAMP COLLIER	ABRAZADERA SPÆNDEBÅND	MORSETTO KLEM	120M
17		J917747		2	BRAÇADEIRA KLEMME	CLAMP COLLIER	ABRAZADERA SPÆNDEBÅND	MORSETTO KLEM	120M
18		148588A1		1	CONEXÃO ARMATUR	FITTING RACCORD	ACOPLAMIENTO FITTING	RACCORDO AANSLUITING	3300
19		J900629		2	PARAFUSO FLANGEADO, Hex Flg, M8 x 16, 8.8, Full Thd FLANSCHSCHRAUBE	FLANGE BOLT VIS A EMBASE	PERNO DE CORONA FLANGEBOLT	BULLONE FLANGIATO FLENSBOUT	A027
20		J903380		6	VEDAÇÃO DICHTUNG	SEAL JOINT	ANILLO DE CIERRE PAKNING	GUARNIZIONE; TENUTA AFDICHTING	132A
21		J905307		6	PARAFUSO DE BANJO, M6 x 1 x 14.3 HOHLSCHRAUBE	BANJO BOLT VIS BANJO	PERNO BANJO BANJOBOLT	BULLONE MASCHIO BANJOBOUT	090B
22		J918109		3	PARAFUSO FLANGEADO, Hex Flg Hd, M8 x 1.25 x 25 FLANSCHSCHRAUBE	FLANGE BOLT VIS A EMBASE	PERNO DE CORONA FLANGEBOLT	BULLONE FLANGIATO FLENSBOUT	A027
23		J918188		2	ARRUELA PLANA UNTERLEGSCHEIBE	WASHER RONDELLE	ARANDELA FLADSKIVE	RONDELLA SLUITRING	131R

03-06	01	p2	04/12

SISTEMA DE INJEÇÃO DE COMBUSTÍVEL
FUEL INJECTION SYSTEM
SISTEMA DE ALIMENTACIÓN DE COMBUSTIBLE
FUEL INJECTION SYSTEM

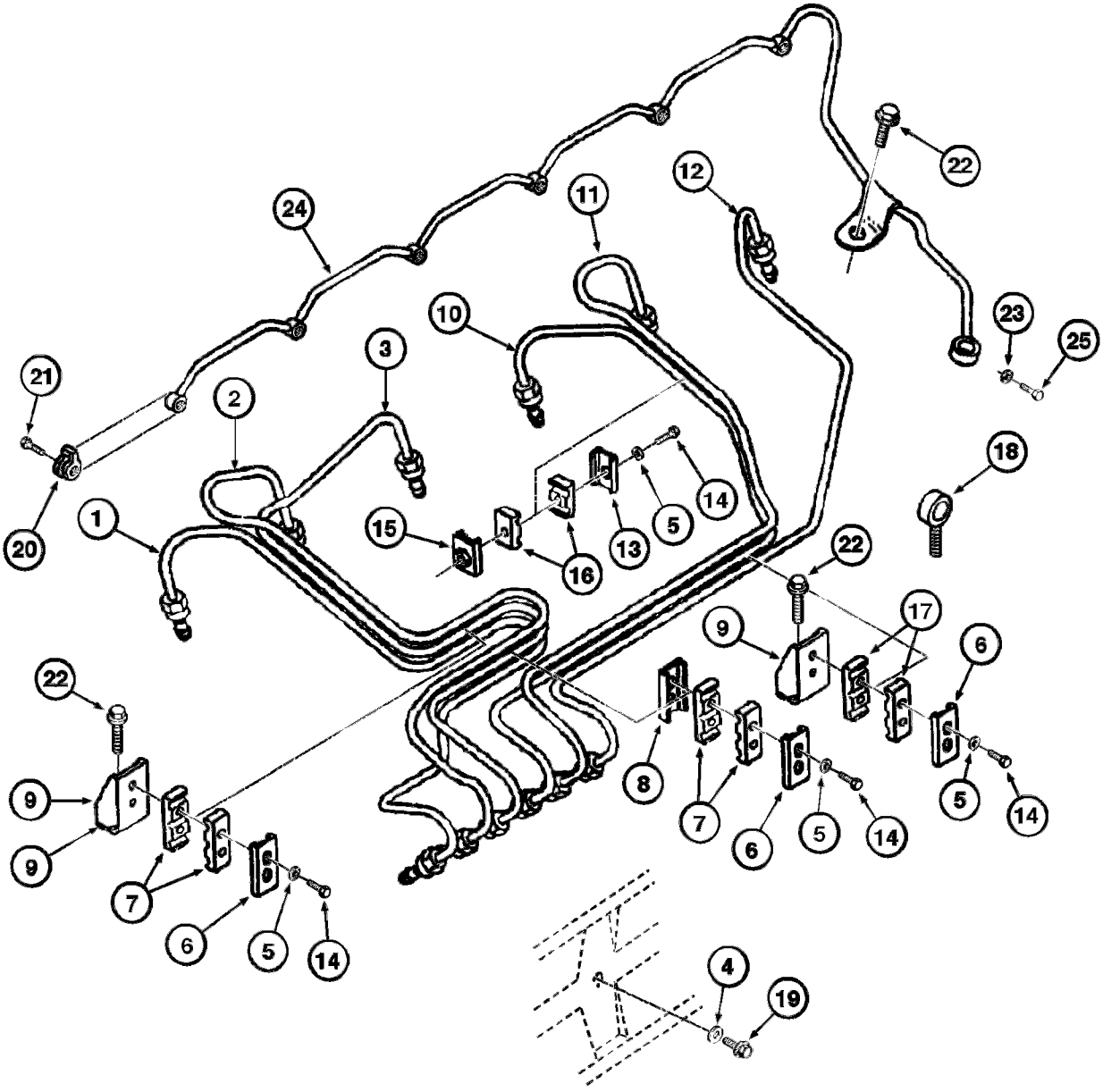

FUEL INJECTION SYSTEM
FUEL INJECTION SYSTEM
FUEL INJECTION SYSTEM
FUEL INJECTION SYSTEM

R	N	P.N.	MOD	Q	Denominação Bezeichnung	Description Description	Denominacion Beskrivelse	Descrizione Beschrijving	L.C.
24		**J926103**		1	COLECTOR, fuel ROEHRENWERK	MANIFOLD COLLECTEUR	COLECTOR MANIFOLD	COLLETTORE MANIFOLD	5450
25		**J924726**		1	PARAFUSO DE BANJO, control HOHLSCHRAUBE	BANJO BOLT VIS BANJO	PERNO BANJO BANJOBOLT	BULLONE MASCHIO BANJOBOUT	090B

03-08	01	p1	11/07

BOMBA ALIMENTADORA
LIFT PUMP
BOMBA DE ALIMENTACIÓN
LIFT PUMP

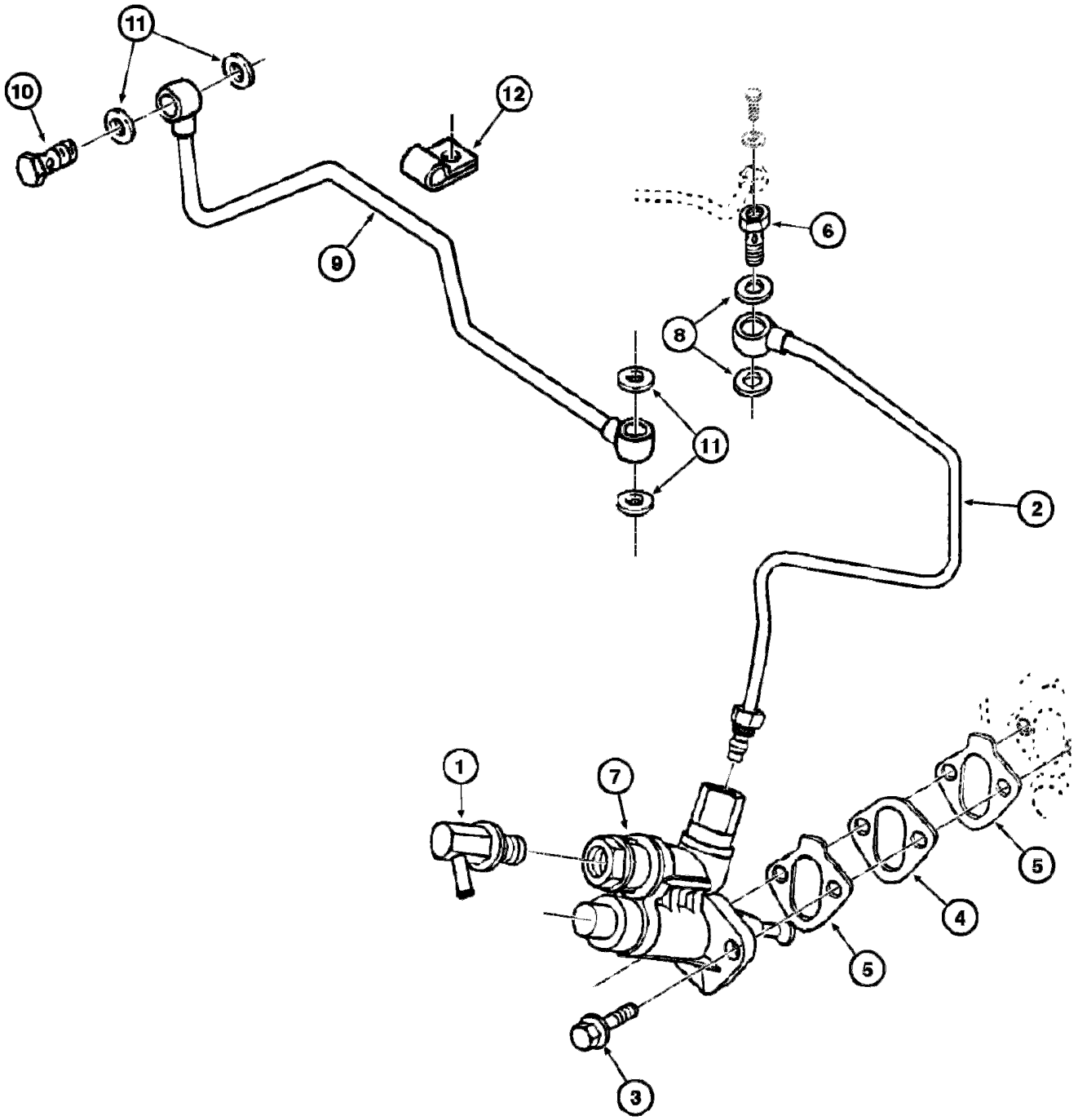

LIFT PUMP
LIFT PUMP
LIFT PUMP
LIFT PUMP

R	N	P.N.	MOD	Q	Denominação Bezeichnung	Description Description	Denominacion Beskrivelse	Descrizione Beschrijving	L.C.
1		E156409		1	CONEXÃO, 90° ARMATUR	FITTING RACCORD	ACOPLAMIENTO FITTING	RACCORDO AANSLUITING	3300
2		148591A1		1	TUBO ROHR	TUBE TUBE	TUBO RØR	TUBO LEIDING	195T
3		J900631		2	PARAFUSO FLANGEADO, FLANSCHSCHRAUBE	Hex Flg, M8 x 25, 8.8 FLANGE BOLT VIS A EMBASE	PERNO DE CORONA FLANGEBOLT	BULLONE FLANGIATO FLENSBOUT	A027
4		J914284		1	ESPACADOR ABSTANDSSTUECK	SPACER ENTRETOISE	ESPACIADOR SPACER	DISTANZIALE SPACER	8090
5		J931348		2	JUNTA DICHTUNG	GASKET JOINT	JUNTA GASKET	GUARNIZIONE GASKET	3720
6		J916361		1	PARAFUSO DE BANJO HOHLSCHRAUBE	BANJO BOLT VIS BANJO	PERNO BANJO BANJOBOLT	BULLONE MASCHIO BANJOBOUT	090B
7		J933255		1	BOMBA DE COMBUSTÍVEL KRAFTSTOFFPUMPE	FUEL PUMP POMPE A CARBURANT	BOMBA DE COMBUSTIBI BRÆNDSTOFPUMPE	POMPA CARBURANTE BRANDSTOFPOMP	154P
8		J918191		2	ANEL DE REVESTIMENTO PACKUNGSRING	PACKING RING RONDELLE D'ETANCHEI	ANILLO DE ESTANQUEID PAKNINGSRING	ANELLO DI TENUTA PAKKINGSRING	P614
9		148592A1		1	TUBO ROHR	TUBE TUBE	TUBO RØR	TUBO LEIDING	195T
10		J924725		1	PARAFUSO DE BANJO HOHLSCHRAUBE	BANJO BOLT VIS BANJO	PERNO BANJO BANJOBOLT	BULLONE MASCHIO BANJOBOUT	090B
11		J918192		4	ANEL DE REVESTIMENTO PACKUNGSRING	PACKING RING RONDELLE D'ETANCHEI	ANILLO DE ESTANQUEID PAKNINGSRING	ANELLO DI TENUTA PAKKINGSRING	P614
12		E156389		1	BRACADEIRA SCHELLE	CLAMP COLLIER	COLLAR CLAMP	MORSETTO CLAMP	1640

03-10	01	p1	04/12

FILTRO DE COMBUSTÍVEL
FUEL FILTER
FILTRO DE COMBUSTÍBLE
FUEL FILTER

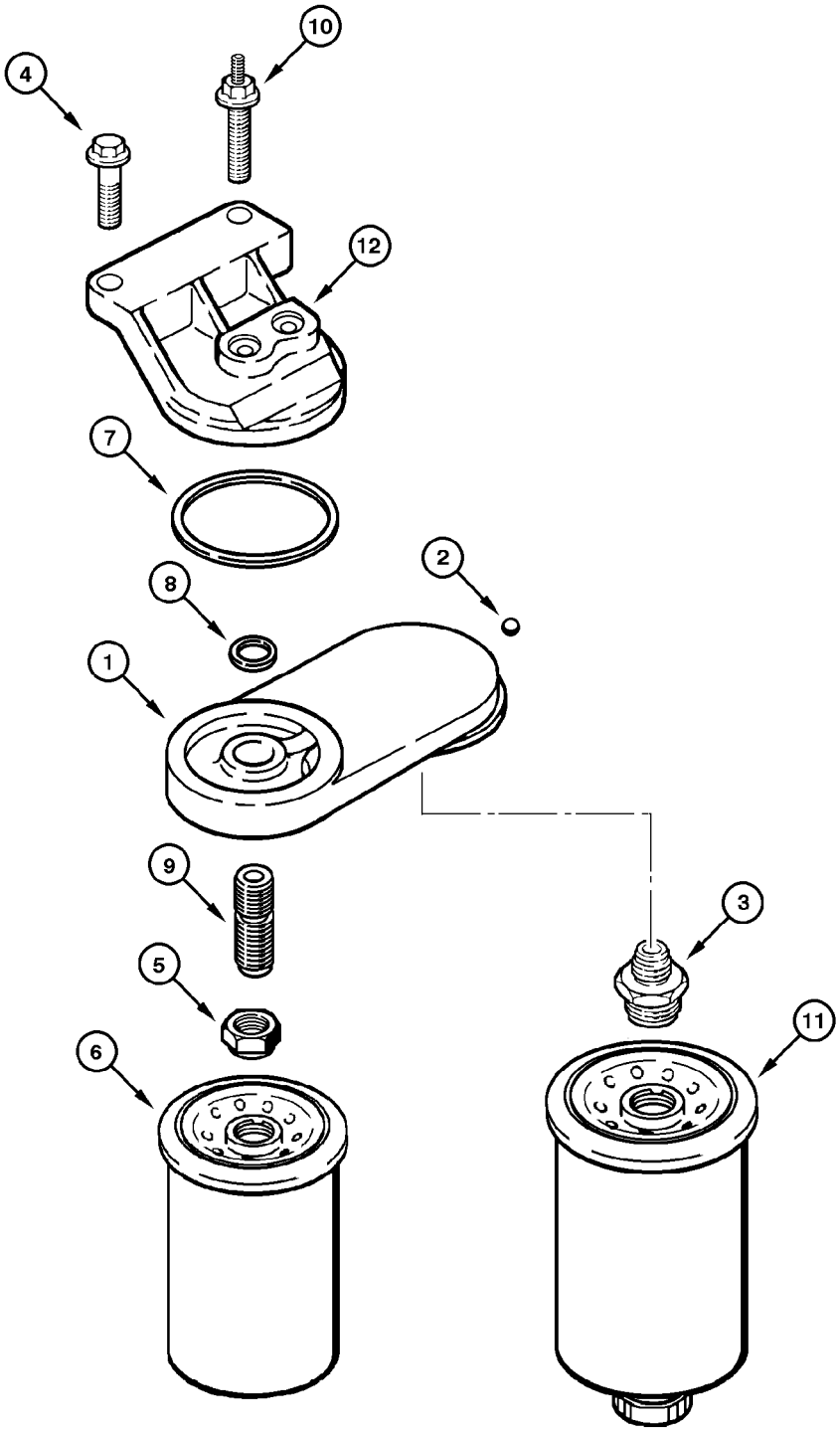

FUEL FILTER
FUEL FILTER
FUEL FILTER
FUEL FILTER

R	N	P.N.	MOD	Q	Denominação Bezeichnung	Description Description	Denominacion Beskrivelse	Descrizione Beschrijving	L.C.
1		NLS		1	SEM SERVIÇO NICHT M ALS ERS-T LIEI	NO LONGER SERVICED OBSOLETE	SIN SERVICIO FØRES IKKE LÆNGERE	NON PIÙ FORNITO NIET MEER VERKRIJGB/	A001
2		J897329		1	ESFERA KUGEL	BALL BILLE	BOLA KUGLE	SFERA KEGEL	0460
3		J936337		1	ADAPTADOR ADAPTER	ADAPTER ADAPTATEUR	ADAPTADOR ADAPTER	ADATTATORE ADAPTER	001A
4		J900632		1	PARAFUSO FLANGEADO, FLANSCHSCHRAUBE	Hex Flg, M8 x 35, 8.8 FLANGE BOLT VIS A EMBASE	PERNO DE CORONA FLANGEBOLT	BULLONE FLANGIATO FLENSBOUT	A027
5		J903293		1	PORCA MUTTER	NUT ECROU	TUERCA MØTRIK	DADO MOER	010D
6		J931063		1	FILTRO DE COMBUSTÍVEL KRAFTSTOFFFILTER	FUEL FILTER FILTRE A CARBURANT	FILTRO DE COMBUSTIBI BRÆNDSTOFFILTER	FILTRO CARBURANTE BRANDSTOFFILTER	064F
7		J906694		1	ANEL VEDADOR DICHTRING	SEALRING BAGUE D'ETANCHEITE	RETÉN PAKNINGSRING	ANELLO DI TENUTA KEERRING	Z125
8		J906695		1	ANEL VEDADOR DICHTRING	SEALRING BAGUE D'ETANCHEITE	RETÉN PAKNINGSRING	ANELLO DI TENUTA KEERRING	Z125
9		J925955		1	ADAPTADOR ADAPTER	ADAPTER ADAPTATEUR	ADAPTADOR ADAPTER	ADATTATORE ADAPTER	001A
10		J928527		1	PARAFUSO FLANGEADO FLANSCHSCHRAUBE	FLANGE BOLT VIS A EMBASE	PERNO DE CORONA FLANGEBOLT	BULLONE FLANGIATO FLENSBOUT	A027
11		J930942		1	SEPARADOR ABSCHEIDER	SEPARATOR SEPARATEUR	SEPARADOR UDSKILLER	SEPARATORE AFSCHEIDER	P062
12		J930969		1	CAPA KAPPE	CAP CHAPEAU	TAPA CAP	CAPPUCCIO CAP	1380

03-12	01	p1	08/10

BOMBA INJETORA
INJECTION PUMP
BOMBA INYECTORA
INJECTION PUMP

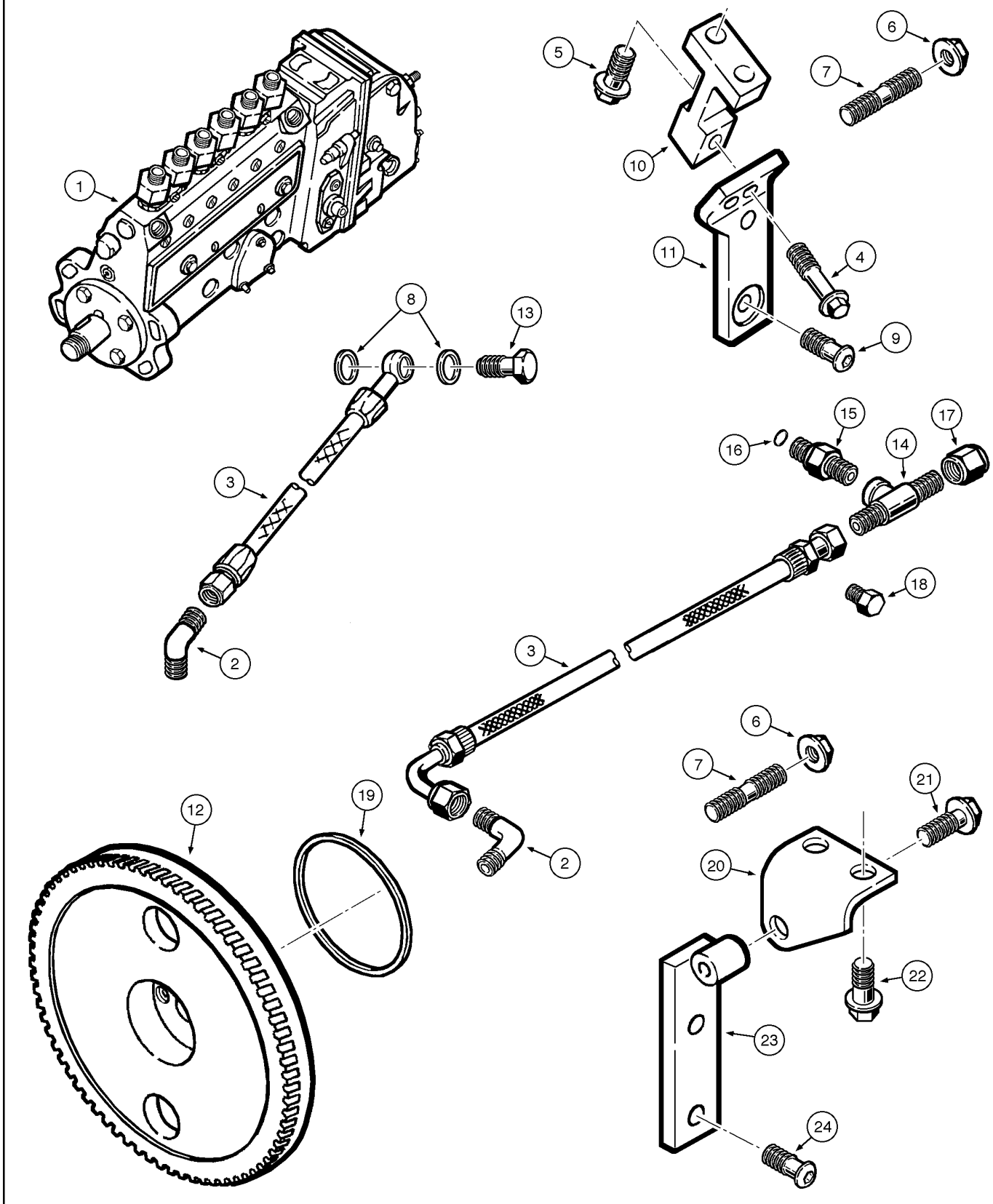

INJECTION PUMP
INJECTION PUMP
INJECTION PUMP
INJECTION PUMP

R	N	P.N.	MOD	Q	Denominação Bezeichnung	Description Description	Denominacion Beskrivelse	Descrizione Beschrijving	L.C.
1		148590A1		1	BOMBA INJEÇÃO COMBUSTÍVEL				
						FUEL INJECTION PUMP	BOMBA DE INY. DE COM	POMPA INIEZ. CARBURA	158P
					KRAFTSTOFFEINPRITZF	POMPE INJECT. CARBUI	INDSPRØJTNINGSPUMP	INSPUITPOMP	
2		E159220	a	1	COTOVELO	ELBOW	CODO	GOMITO	085G
					KNIESTÜCK	COUDE	VINKELRØR	KNIESTUK	
2		75286141	b	1	COTOVELO	ELBOW	CODO	GOMITO	085G
					KNIESTÜCK	COUDE	VINKELRØR	KNIESTUK	
3		148595A1	a	1	MANGUEIRA	HOSE	TUBO	TUBO FLESSIBILE	030M
					SCHLAUCH	FLEXIBLE	SLANGE	SLANG	
3		J918536	b	1	TUBO FLEXÍVEL, 295.00 mm				
						FLEXIBLE HOSE	TUBO FLEXIBLE	TUBO FLESSIBILE	192T
					BIEGSAMER SCHLAUCH	TUYAU FLEXIBLE	FLEKSIBEL SLANGE	FLEXIBELE SLANG	
4		J900632		1	PARAFUSO FLANGEADO,	Hex Flg, M8 x 35, 8.8			
						FLANGE BOLT	PERNO DE CORONA	BULLONE FLANGIATO	A027
					FLANSCHSCHRAUBE	VIS A EMBASE	FLANGEBOLT	FLENSBOUT	
5		J902460		2	PARAFUSO FLANGEADO,	Hex Flg, M10 x 25, 10.9			
						FLANGE BOLT	PERNO DE CORONA	BULLONE FLANGIATO	A027
					FLANSCHSCHRAUBE	VIS A EMBASE	FLANGEBOLT	FLENSBOUT	
6		J902662		4	PORCA	NUT	TUERCA	DADO	5780
					MUTTER	ECROU	NUT	NUT	
7		J907978	a	4	PRISIONEIRO	STUD	ESPARRAGO	PRIGIONIERO	P521
					STEHBOLZEN	GOUJON	STUD	STUD	
7		J937123	b	4	PRISIONEIRO	STUD	PRISIONERO	PRIGIONIERO	210P
					GEWINDEBOLZEN	GOUJON	STØTTEBOLT	TAPEIND	
8		J918190		2	VEDAÇÃO DA ARRUELA	SEALING WASHER	ARANDELA HERMÉTICA	ROSETTA DI TENUTA	133R
					DICHTSCHEIBE	RONDELLE D'ETANCHEI	TÆTNINGSSKIVE	AFDICHTRING	
9		J928231		2	PARAFUSO	SCREW	TORNILLO	VITE	7450
					SCHRAUBE	VIS	SCREW	SCREW	
10		J928407		1	TENSOR	BRACE	TENSOR	MENARUOLA	0990
					STREBE	JAMBE-DE-FORCE	BRACE	BRACE	
11		J928408		1	TENSOR	BRACE	TENSOR	MENARUOLA	0990
					STREBE	JAMBE-DE-FORCE	BRACE	BRACE	
12		J934636		1	PINHÃO	PINION	PIÑÓN	PIGNONE	P045
					RITZEL	PIGNON	SPIDSHJUL	PIGNON	
13		148596A1		1	PARAFUSO	SCREW	TORNILLO	VITE	040V
					SCHRAUBE	VIS	SKRUE	SCHROEF	
14		J933291	b	1	T	TEE	RACOR EN T	PEZZO A T	9020
					T-STÜCK	RACCORD EN T	T-STYKKE	T-STUK	
15		J932320	b	1	CONEXÃO	FITTING	ACOPLAMIENTO	RACCORDO	3300
					ARMATUR	RACCORD	FITTING	AANSLUITING	
16		J678925	b	1	O-RING	O-RING	JUNTA TÓRICA	ANELLO TOROIDALE	055A
					O-RING	JOINT TORIQUE	O-RING	O-RING	
17		J921556	b	1	CAPA, tube 7/16x20	CAP	TAPA	CAPPUCCIO	1380
					KAPPE	CHAPEAU	CAP	CAP	
18		J906619	b	1	BUJÃO, 1/8 NPT	PLUG	TAPÓN	TAPPO	050T
					STOPFEN	BOUCHON	PROP	PLUG	

(a) BSN N6AE00944
(b) ASN N6AE00945

03-12	01	p2	08/10

BOMBA INJETORA
INJECTION PUMP
BOMBA INYECTORA
INJECTION PUMP

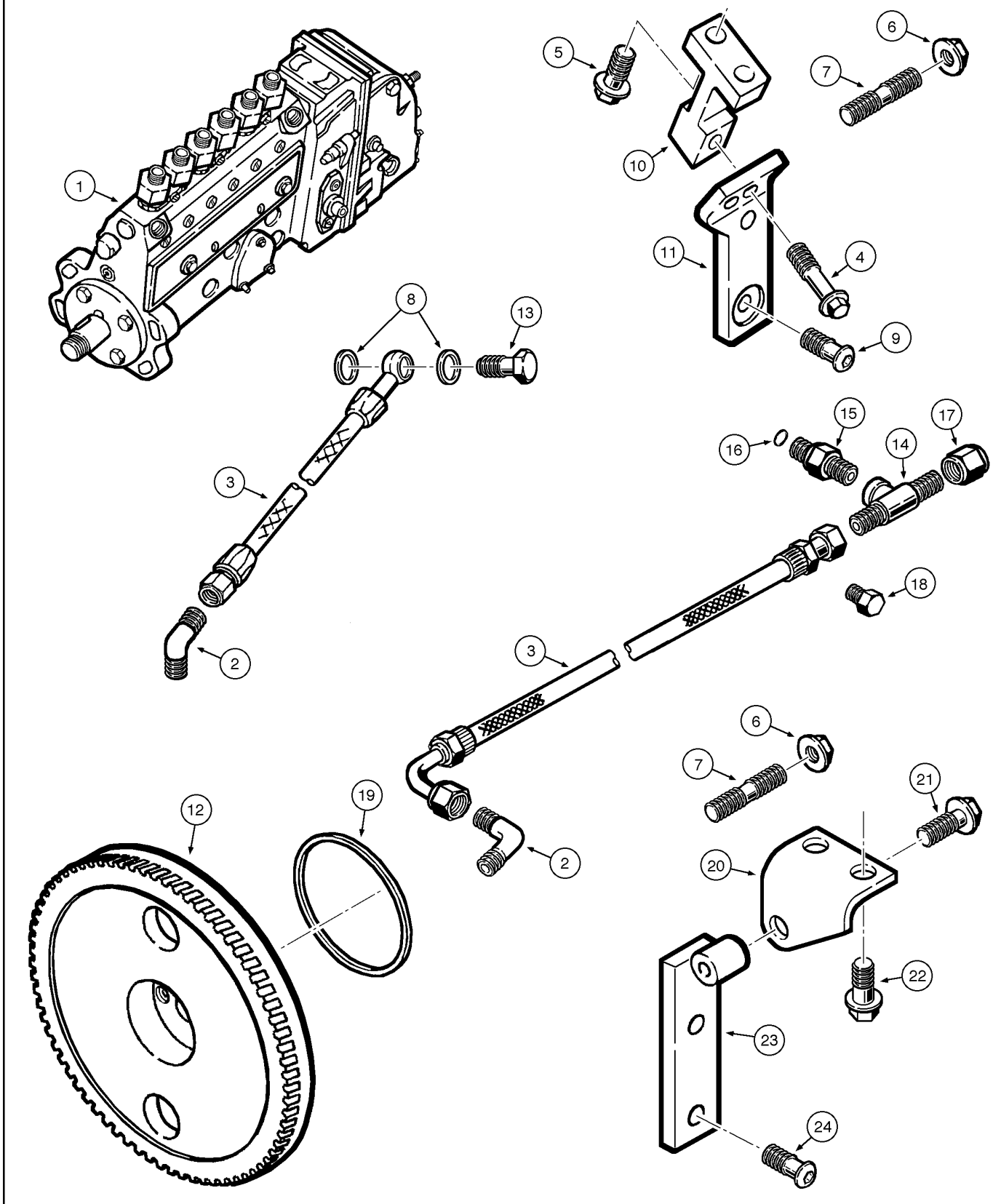

INJECTION PUMP
INJECTION PUMP
INJECTION PUMP
INJECTION PUMP

R	N	P.N.	MOD	Q	Denominação Bezeichnung	Description Description	Denominacion Beskrivelse	Descrizione Beschrijving	L.C.
19		**J935032**	a	1	VEDADOR DE RETENCAO DICHTRING	SEAL JOINT-D'ETANCHEITE	SELLO/RETEN SEAL	GUARNIZIONE TENUTA SEAL	7460
20		**J934506**	a	1	SUPORTE, pump STÜTZE	SUPPORT SUPPORT	SOPORTE BESLAG	SUPPORTO STEUN	300S
21		**J900630**	a	1	PARAFUSO, Hex Flg, M8 x 20, 8.8, Full Thd SCHRAUBE	BOLT VIS	PERNO BOLT	BULLONE BOUT	140B
22		**J900390**	a	2	PARAFUSO SCHRAUBE	SCREW VIS	TORNILLO SKRUE	VITE SCHROEF	040V
23		**J934507**	a	1	SUPORTE, pump STÜTZE	SUPPORT SUPPORT	SOPORTE BESLAG	SUPPORTO STEUN	300S
24		**J928231**	a	2	PARAFUSO SCHRAUBE	SCREW VIS	TORNILLO SCREW	VITE SCREW	7450

(a) ASN N6AE00945

03-14	01	p1	12/07

SOLENÓIDE DE CORTE DE COMBUSTÍVEL
FUEL SHUT OFF SOLENOID
SOLENÓIDE DE CORTE DE COMBUSTIBLE
FUEL SHUT OFF SOLENOID

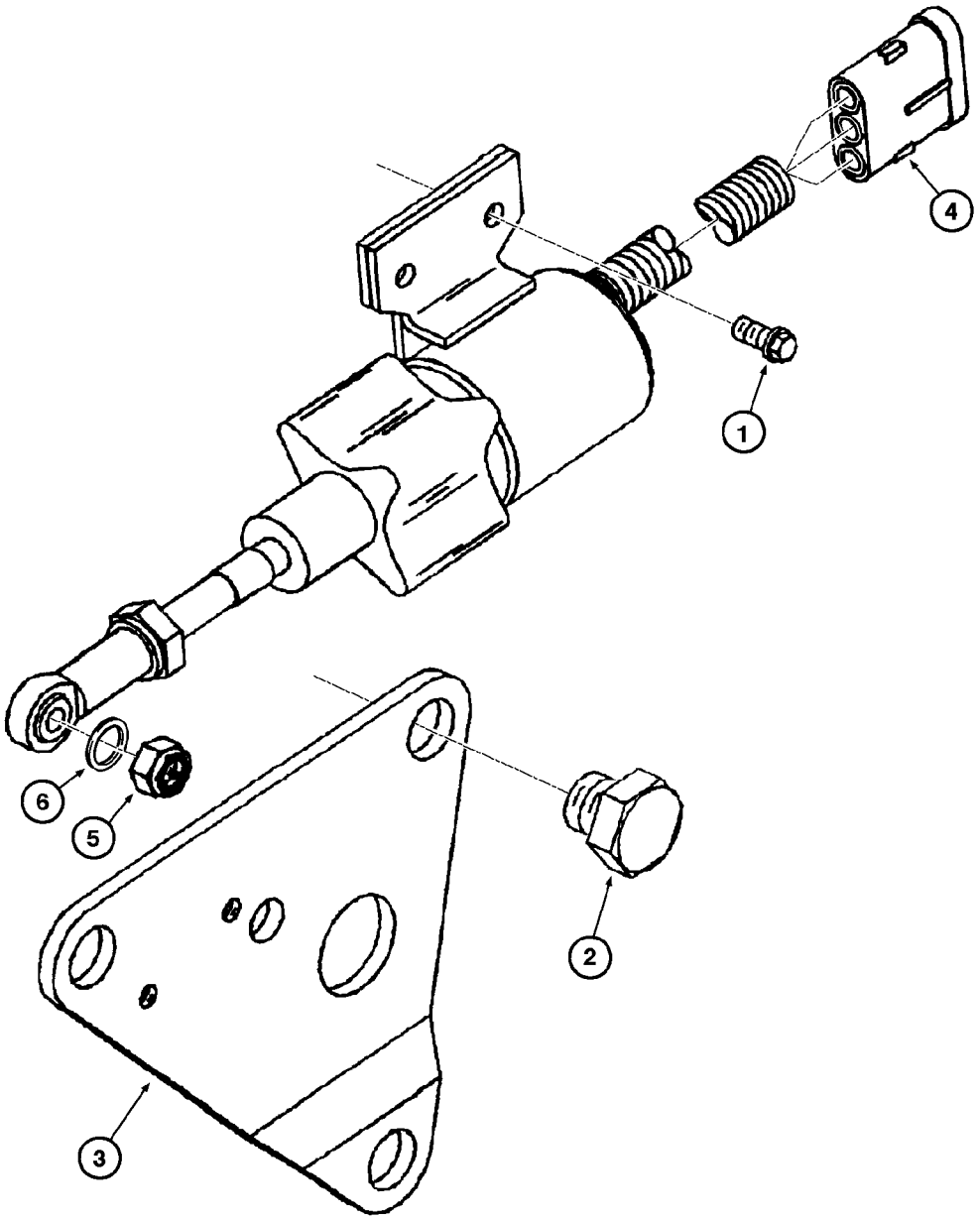

FUEL SHUT OFF SOLENOID
FUEL SHUT OFF SOLENOID
FUEL SHUT OFF SOLENOID
FUEL SHUT OFF SOLENOID

R	N	P.N.	MOD	Q	Denominação Bezeichnung	Description Description	Denominacion Beskrivelse	Descrizione Beschrijving	L.C.
1		J900626		2	PARAFUSO SCHRAUBE	SCREW VIS	TORNILLO SKRUE	VITE SCHROEF	040V
2		J929456		3	PARAFUSO, Hex, M16 x 2 x 12 SCHRAUBE	SCREW VIS	TORNILLO SKRUE	VITE SCHROEF	040V
3		J930589		1	SUPORTE STUETZE	SUPPORT SUPPORT	APOYADERO SUPPORT	SUPPORTO SUPPORT	8790
4		J358076		1	SOLENOIDE, 24V MAGNETSCHALTER	SOLENOID SOLENOIDE	SOLENOIDE MAGNETVENTIL	SOLENOIDE SOLENOÏDE	168S
5		J934021		1	PORCA MUTTER	NUT ECROU	TUERCA MØTRIK	DADO MOER	010D
6		J934022		1	ARRUELA UNTERLEGSCHEIBE	WASHER RONDELLE	ARANDELA WASHER	RONDELLA WASHER	9720

03-16	01	p1	07/08

BICO INJETOR
INJECTOR NOZZLE
BICO INYECTOR
INJECTOR NOZZLE

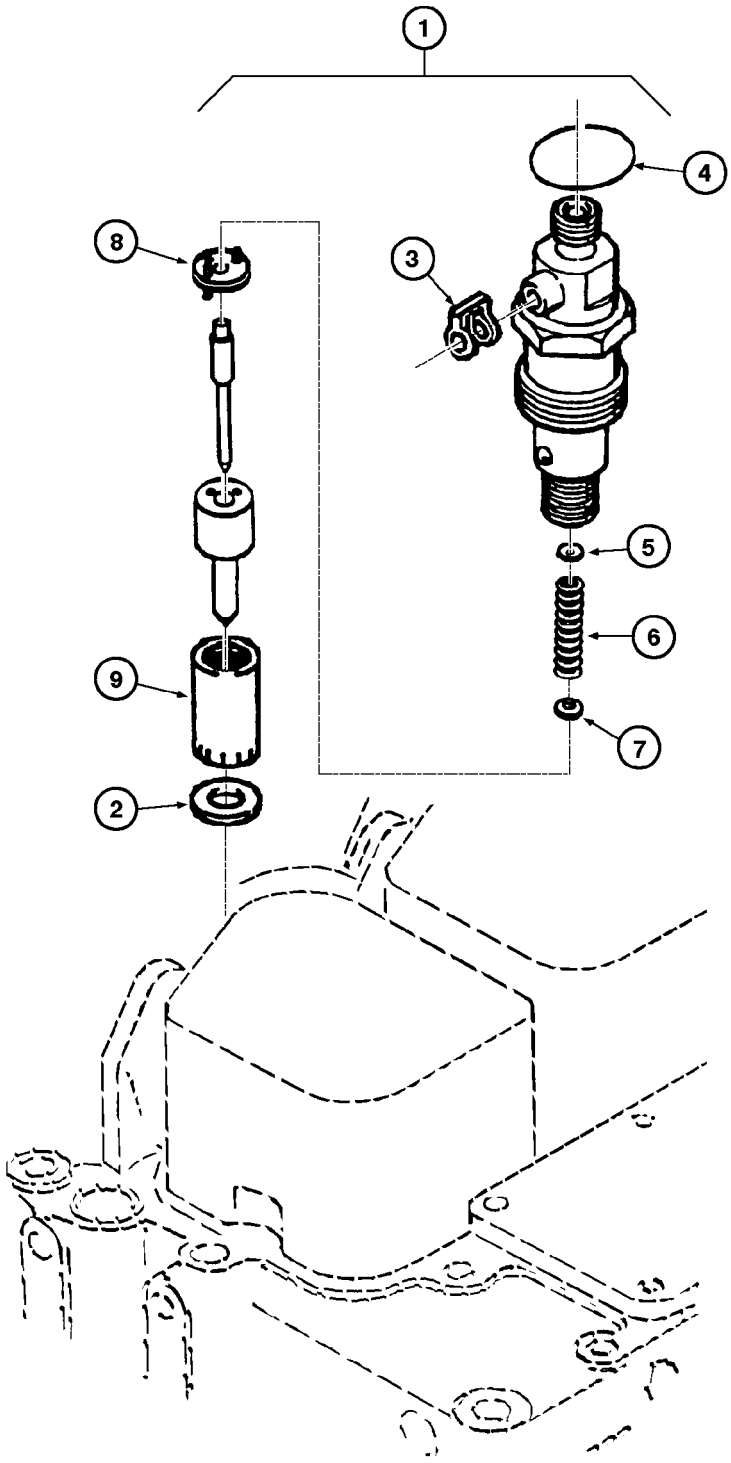

INJECTOR NOZZLE
INJECTOR NOZZLE
INJECTOR NOZZLE
INJECTOR NOZZLE

R	N	P.N.	MOD	Q	Denominação Bezeichnung	Description Description	Denominacion Beskrivelse	Descrizione Beschrijving	L.C.
1		J922409		6	INJETOR SIST COMBUSTÍVEL, Assy				
						FUEL SYSTEM INJECTO	INYECTOR DE SIST. COI	INIETT. SISTEMA CARBU	089I
					KRAFTSTOFFEINSPRITZ	INJECTEUR DE CARBUR	BRÆNDSTOFPUMPE	VERSTUIVER	
2		J900808		1	VEDADOR DE RETENCAO, nozzle				
						SEAL	SELLO/RETEN	GUARNIZIONE TENUTA	7460
					DICHTRING	JOINT-D'ETANCHEITE	SEAL	SEAL	
3		J903380		1	VEDAÇÃO	SEAL	ANILLO DE CIERRE	GUARNIZIONE; TENUTA	132A
					DICHTUNG	JOINT	PAKNING	AFDICHTING	
4		J909356		1	VEDADOR DE RETENCAO	SEAL	SELLO/RETEN	GUARNIZIONE TENUTA	7460
					DICHTRING	JOINT-D'ETANCHEITE	SEAL	SEAL	
5		J905156		AR	CALÇO DE AFINAÇÃO, 1.00mm Thk				
						SHIM	SUPLEMENTO	SPESSORE	198S
					AUSGLEICHSSCHEIBE	CALE	MELLEMLÆG	VULPLAATJE	
5		J905157		AR	CALÇO DE AFINAÇÃO, 1.04mm Thk				
						SHIM	SUPLEMENTO	SPESSORE	198S
					AUSGLEICHSSCHEIBE	CALE	MELLEMLÆG	VULPLAATJE	
5		J905158		AR	CALÇO DE AFINAÇÃO, 1.08mm Thk				
						SHIM	SUPLEMENTO	SPESSORE	198S
					AUSGLEICHSSCHEIBE	CALE	MELLEMLÆG	VULPLAATJE	
5		J905159		AR	CALÇO DE AFINAÇÃO, 1.10mm Thk				
						SHIM	SUPLEMENTO	SPESSORE	198S
					AUSGLEICHSSCHEIBE	CALE	MELLEMLÆG	VULPLAATJE	
5		J905160		AR	CALÇO DE AFINAÇÃO, 1.14mm Thk				
						SHIM	SUPLEMENTO	SPESSORE	198S
					AUSGLEICHSSCHEIBE	CALE	MELLEMLÆG	VULPLAATJE	
5		J905161		AR	CALÇO DE AFINAÇÃO, 1.18mm Thk				
						SHIM	SUPLEMENTO	SPESSORE	198S
					AUSGLEICHSSCHEIBE	CALE	MELLEMLÆG	VULPLAATJE	
5		J905162		AR	CALÇO DE AFINAÇÃO, 1.20mm Thk				
						SHIM	SUPLEMENTO	SPESSORE	198S
					AUSGLEICHSSCHEIBE	CALE	MELLEMLÆG	VULPLAATJE	
5		J905163		AR	CALÇO DE AFINAÇÃO, 1.24mm Thk				
						SHIM	SUPLEMENTO	SPESSORE	198S
					AUSGLEICHSSCHEIBE	CALE	MELLEMLÆG	VULPLAATJE	
5		J905164		AR	CALÇO DE AFINAÇÃO, 1.28mm Thk				
						SHIM	SUPLEMENTO	SPESSORE	198S
					AUSGLEICHSSCHEIBE	CALE	MELLEMLÆG	VULPLAATJE	
5		J905165		AR	CALÇO DE AFINAÇÃO, 1.30mm Thk				
						SHIM	SUPLEMENTO	SPESSORE	198S
					AUSGLEICHSSCHEIBE	CALE	MELLEMLÆG	VULPLAATJE	
5		J905166		AR	CALÇO DE AFINAÇÃO, 1.34mm Thk				
						SHIM	SUPLEMENTO	SPESSORE	198S
					AUSGLEICHSSCHEIBE	CALE	MELLEMLÆG	VULPLAATJE	
5		J905167		AR	CALÇO DE AFINAÇÃO, 1.38mm Thk				
						SHIM	SUPLEMENTO	SPESSORE	198S
					AUSGLEICHSSCHEIBE	CALE	MELLEMLÆG	VULPLAATJE	
5		J905168		AR	CALÇO DE AFINAÇÃO, 1.40mm Thk				
						SHIM	SUPLEMENTO	SPESSORE	198S
					AUSGLEICHSSCHEIBE	CALE	MELLEMLÆG	VULPLAATJE	

03-16	01	p2	07/08

BICO INJETOR
INJECTOR NOZZLE
BICO INYECTOR
INJECTOR NOZZLE

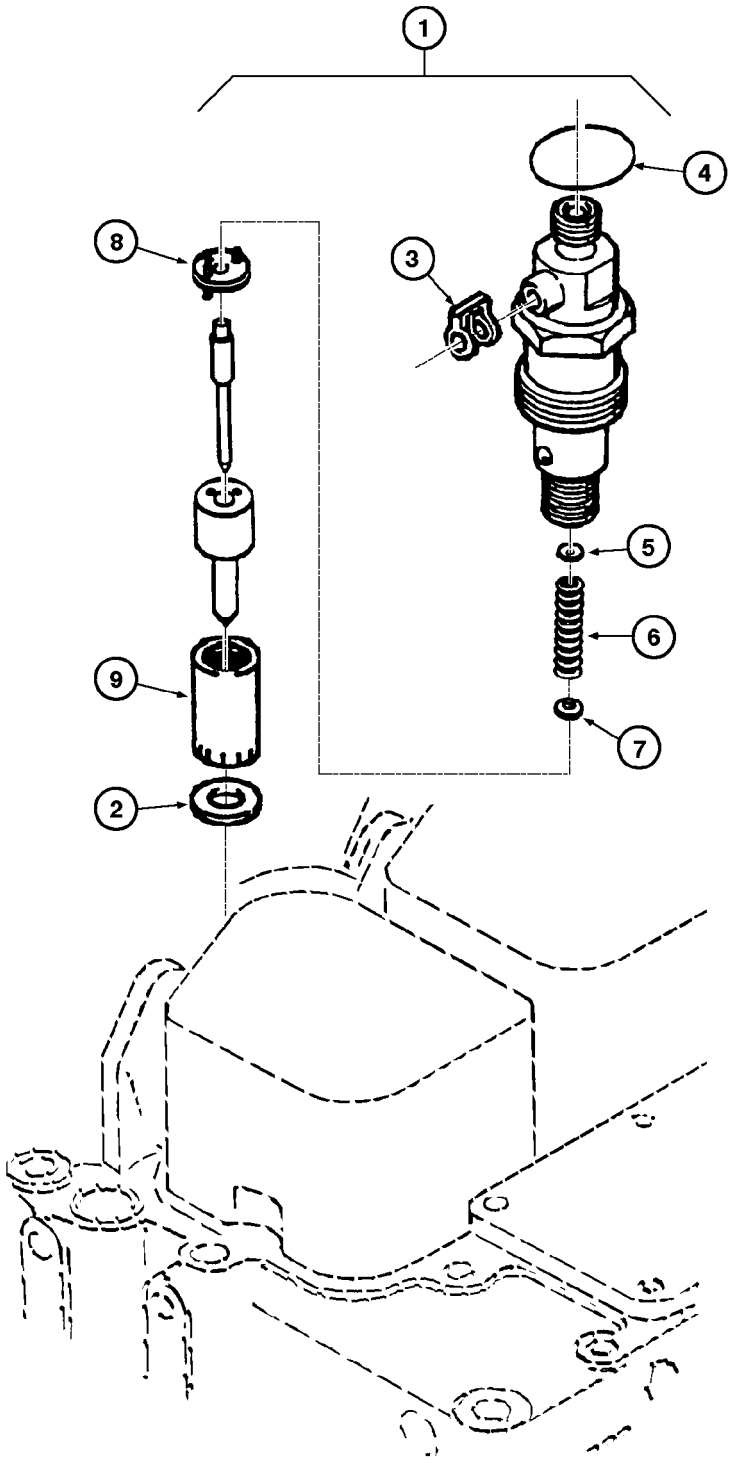

INJECTOR NOZZLE
INJECTOR NOZZLE
INJECTOR NOZZLE
INJECTOR NOZZLE

R	N	P.N.	MOD	Q	Denominação Bezeichnung	Description Description	Denominacion Beskrivelse	Descrizione Beschrijving	L.C.
5		J905169		AR	CALÇO DE AFINAÇÃO, 1.44mm Thk				
						SHIM	SUPLEMENTO	SPESSORE	198S
					AUSGLEICHSSCHEIBE	CALE	MELLEMLÆG	VULPLAATJE	
5		J905170		AR	CALÇO DE AFINAÇÃO, 1.48mm Thk				
						SHIM	SUPLEMENTO	SPESSORE	198S
					AUSGLEICHSSCHEIBE	CALE	MELLEMLÆG	VULPLAATJE	
5		J905171		AR	CALÇO DE AFINAÇÃO, 1.50mm Thk				
						SHIM	SUPLEMENTO	SPESSORE	198S
					AUSGLEICHSSCHEIBE	CALE	MELLEMLÆG	VULPLAATJE	
5		J905172		AR	CALÇO DE AFINAÇÃO, 1.54mm Thk				
						SHIM	SUPLEMENTO	SPESSORE	198S
					AUSGLEICHSSCHEIBE	CALE	MELLEMLÆG	VULPLAATJE	
5		J905173		AR	CALÇO DE AFINAÇÃO, 1.58mm Thk				
						SHIM	SUPLEMENTO	SPESSORE	198S
					AUSGLEICHSSCHEIBE	CALE	MELLEMLÆG	VULPLAATJE	
5		J905174		AR	CALÇO DE AFINAÇÃO, 1.60mm Thk				
						SHIM	SUPLEMENTO	SPESSORE	198S
					AUSGLEICHSSCHEIBE	CALE	MELLEMLÆG	VULPLAATJE	
5		J905175		AR	CALÇO DE AFINAÇÃO, 1.64mm Thk				
						SHIM	SUPLEMENTO	SPESSORE	198S
					AUSGLEICHSSCHEIBE	CALE	MELLEMLÆG	VULPLAATJE	
5		J905185		AR	CALÇO DE AFINAÇÃO, 1.94mm Thk				
						SHIM	SUPLEMENTO	SPESSORE	198S
					AUSGLEICHSSCHEIBE	CALE	MELLEMLÆG	VULPLAATJE	
5		J905176		AR	CALÇO DE AFINAÇÃO, 1.68mm Thk				
						SHIM	SUPLEMENTO	SPESSORE	198S
					AUSGLEICHSSCHEIBE	CALE	MELLEMLÆG	VULPLAATJE	
5		J905177		AR	CALÇO DE AFINAÇÃO, 1.70mm Thk				
						SHIM	SUPLEMENTO	SPESSORE	198S
					AUSGLEICHSSCHEIBE	CALE	MELLEMLÆG	VULPLAATJE	
5		J905178		AR	CALÇO DE AFINAÇÃO, 1.74mm Thk				
						SHIM	SUPLEMENTO	SPESSORE	198S
					AUSGLEICHSSCHEIBE	CALE	MELLEMLÆG	VULPLAATJE	
5		J905179		AR	CALÇO DE AFINAÇÃO, 1.76mm Thk				
						SHIM	SUPLEMENTO	SPESSORE	198S
					AUSGLEICHSSCHEIBE	CALE	MELLEMLÆG	VULPLAATJE	
5		J905180		AR	CALÇO DE AFINAÇÃO, 1.78mm Thk				
						SHIM	SUPLEMENTO	SPESSORE	198S
					AUSGLEICHSSCHEIBE	CALE	MELLEMLÆG	VULPLAATJE	
5		J905181		AR	CALÇO DE AFINAÇÃO, 1.80mm Thk				
						SHIM	SUPLEMENTO	SPESSORE	198S
					AUSGLEICHSSCHEIBE	CALE	MELLEMLÆG	VULPLAATJE	
5		J905182		AR	CALÇO DE AFINAÇÃO, 1.84mm Thk				
						SHIM	SUPLEMENTO	SPESSORE	198S
					AUSGLEICHSSCHEIBE	CALE	MELLEMLÆG	VULPLAATJE	
5		J905183		AR	CALÇO DE AFINAÇÃO, 1.88mm Thk				
						SHIM	SUPLEMENTO	SPESSORE	198S
					AUSGLEICHSSCHEIBE	CALE	MELLEMLÆG	VULPLAATJE	

03-16	01	p3	07/08

BICO INJETOR
INJECTOR NOZZLE
BICO INYECTOR
INJECTOR NOZZLE

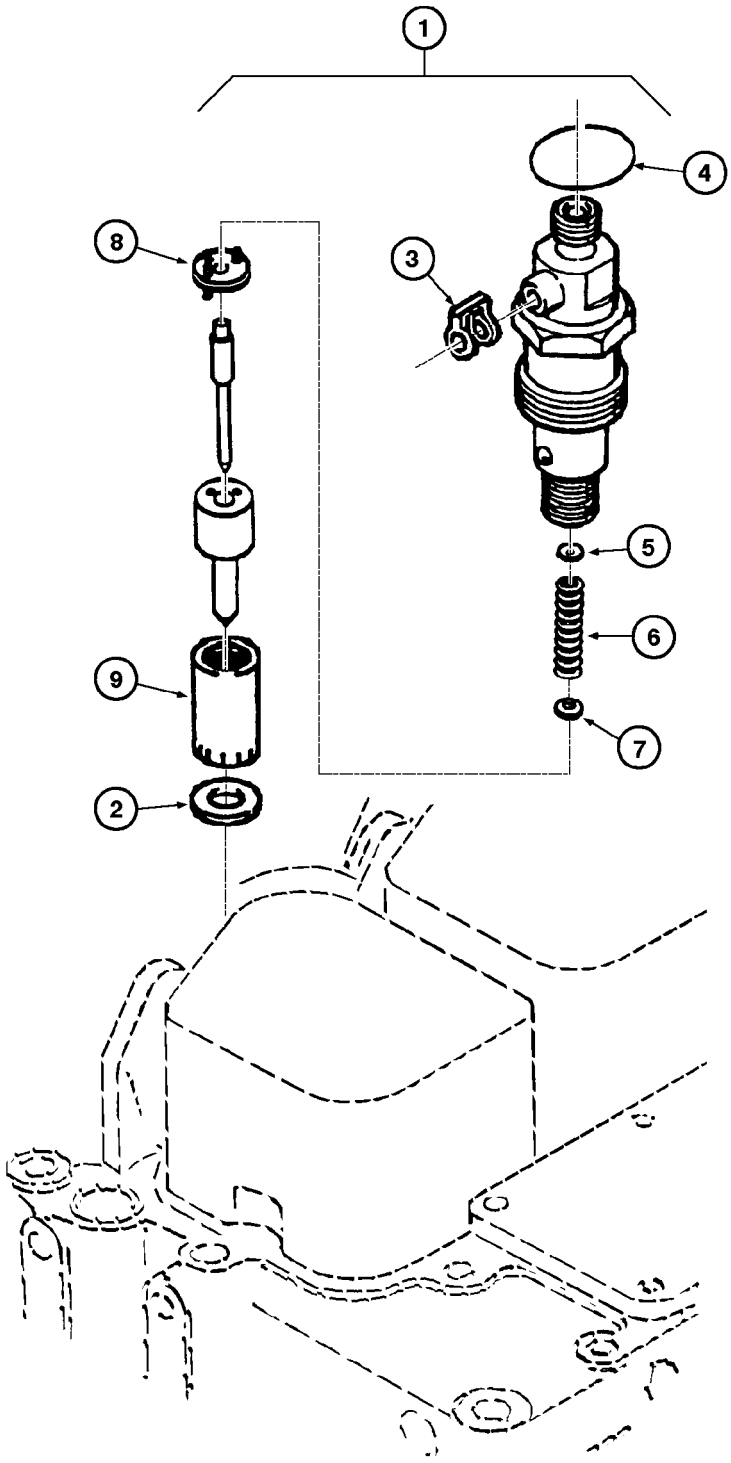

INJECTOR NOZZLE
INJECTOR NOZZLE
INJECTOR NOZZLE
INJECTOR NOZZLE

R	N	P.N.	MOD	Q	Denominação Bezeichnung	Description Description	Denominacion Beskrivelse	Descrizione Beschrijving	L.C.
5		**J905184**		AR	CALÇO DE AFINAÇÃO, 1.90mm Thk				
						SHIM	SUPLEMENTO	SPESSORE	198S
					AUSGLEICHSSCHEIBE	CALE	MELLEMLÆG	VULPLAATJE	
5		**J905186**		AR	CALÇO DE AFINAÇÃO, 1.98mm Thk				
						SHIM	SUPLEMENTO	SPESSORE	198S
					AUSGLEICHSSCHEIBE	CALE	MELLEMLÆG	VULPLAATJE	
6		**J905152**		6	MOLA	SPRING	MUELLE	MOLLA	8315
					FEDER	RESSORT	SPRING	SPRING	
7		**J905153**		6	BOBINA	SPINDLE	HUSILLO	CONTRALBERO	8215
					SPINDEL	BOBINE	SPINDLE	SPINDLE	
8		**J905154**		6	PLACA	PLATE	PLACA	PIASTRA	6360
					PLATTE	PLAQUE	PLATE	PLATE	
9		**J905155**		6	CARCAÇA	CASING	CARCASA	SCATOLA	080C
					GEHÄUSE	ENVELOPPE	HUS	BEHUIZING	

SECTION INDEX
Sistema Elétrico

04-02	01	ALTERNADOR 65A - MONTAGEM (OPCIONAL PARA MÁQUINAS STANDARD)
04-02A	01	ALTERNADOR 65A - MONTAGEM COM FILTRO (STANDARD PARA MÁQUINAS VERSÃO FERTILIZANTE)
04-04	01	ALTERNADOR 65A - CONJUNTO (OPCIONAL)
04-06	01	ALTERNADOR 45A - MONTAGEM (OPCIONAL)
04-08	01	ALTERNADOR 45A - CONJUNTO (OPCIONAL)
04-08B	01	ALTERNADOR 50A - CONJUNTO E MONTAGEM (STANDARD)
04-10	01	PAINEL DE INSTRUMENTOS
04-14	01	SISTEMA ELÉTRICO - DIANTEIRO
04-16	01	SISTEMA ELÉTRICO - MOTOR
04-18	01	INDICADOR DE DIREÇÃO
04-20	01	MOTOR DE PARTIDA E BATERIA
04-22	01	MOTOR DE PARTIDA - CONJUNTO
04-22A	01	MOTOR DE PARTIDA - CONJUNTO
04-24	01	LANTERNA TRASEIRA (STD E OPCIONAL)
04-26	01	LANTERNA DE DIREÇÃO (OPCIONAL)
04-28	01	FAROL - ROPS (OPCIONAL)
04-30	01	FAROL DIANTEIRO E TRASEIRO
04-32	01	ALARME DE RÉ

04-02	01	p1	12/09

ALTERNADOR 65A - MONTAGEM (OPCIONAL PARA MÁQUINAS STANDARD)
ALTERNATOR 65A - MOUNTING (OPTIONAL FOR STD MACHINE)
ALTERNADOR 65A - MONTAJE (OPCIONAL PARA MAQUINAS STANDARD)
ALTERNATOR 65A - MOUNTING (OPTIONAL FOR STD MACHINE)

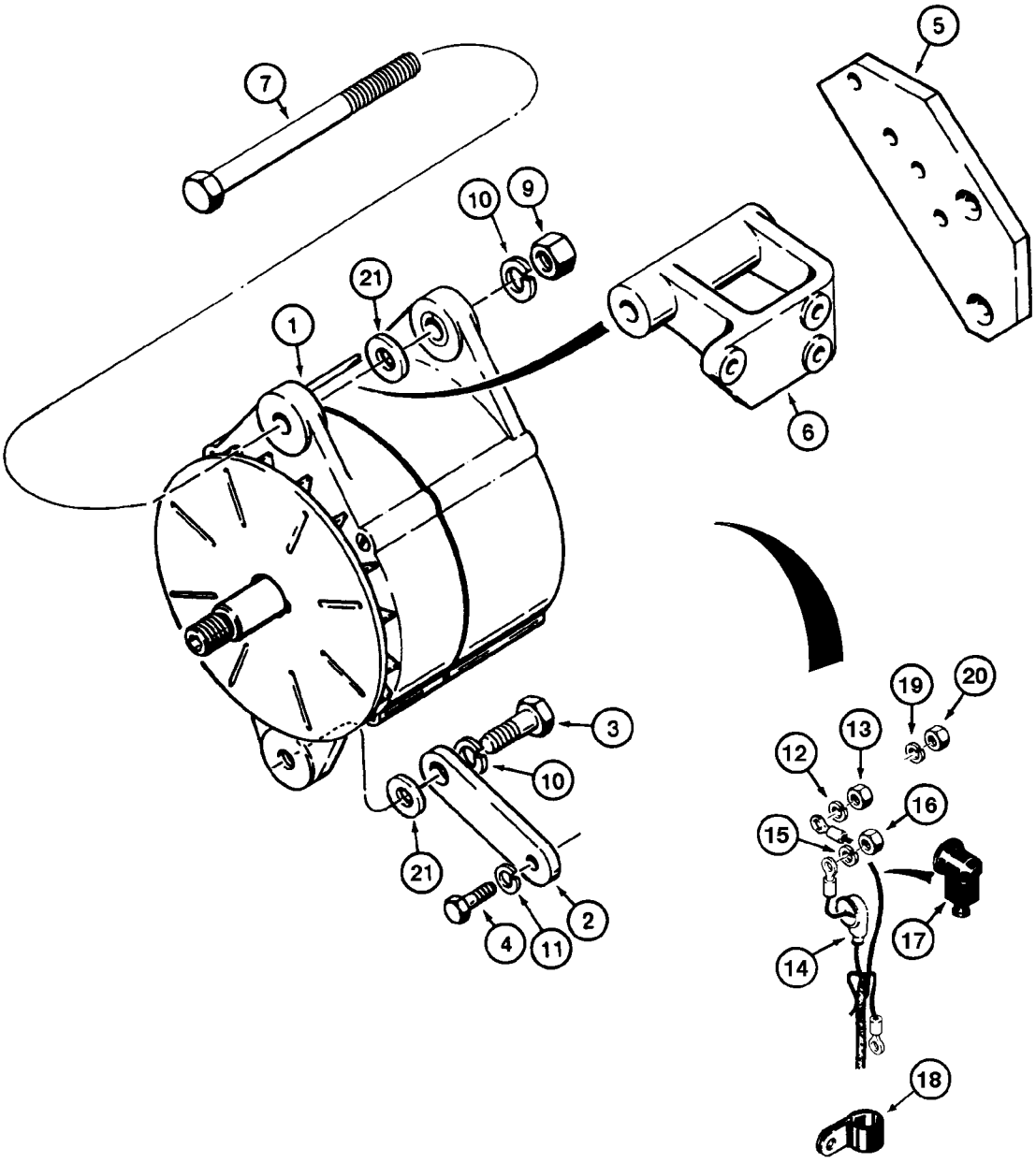

ALTERNATOR 65A - MOUNTING (OPTIONAL FOR STD MACHINE)
ALTERNATOR 65A - MOUNTING (OPTIONAL FOR STD MACHINE)
ALTERNATOR 65A - MOUNTING (OPTIONAL FOR STD MACHINE)
ALTERNATOR 65A - MOUNTING (OPTIONAL FOR STD MACHINE)

R	N	P.N.	MOD	Q	Denominação Bezeichnung	Description Description	Denominacion Beskrivelse	Descrizione Beschrijving	L.C.
1		1964860C1		1	ALTERNADOR, 65A Assy (P.4-4)				
						ALTERNATOR	ALTERNADOR	ALTERNATORE	025A
					LICHTMASCHINE	ALTERNATEUR	GENERATOR	DYNAMO	
2		J910924		1	PLACA	PLATE	PLACA	PIASTRA	6360
					PLATTE	PLAQUE	PLATE	PLATE	
3		426-820		1	PARAFUSO, Hex, 1/2"-13 x 1 1/4", G8, Full Thd				
						BOLT	PERNO	BULLONE	140B
					SCHRAUBE	VIS	BOLT	BOUT	
4		614-8025		1	PARAFUSO, Hex, M8 x 25, 8.8				
						BOLT	PERNO	BULLONE	140B
					SCHRAUBE	VIS	BOLT	BOUT	
5		J919736		1	SUPORTE	SUPPORT	APOYADERO	SUPPORTO	8790
					STUETZE	SUPPORT	SUPPORT	SUPPORT	
6		J910923		1	TENSOR	BRACE	TENSOR	MENARUOLA	0990
					STREBE	JAMBE-DE-FORCE	BRACE	BRACE	
7		426-896		1	PARAFUSO, Hex, 1/2"-13 x 6", G8				
						BOLT	PERNO	BULLONE	140B
					SCHRAUBE	VIS	BOLT	BOUT	
9		231-4248		1	CONTRA PORCA, 1/2"-13, GB				
						LOCK NUT	TUERCA DE BLOQUEO	DADO DI BLOCCAGGIO	P263
					SICHERUNGSMUTTER	CONTRE-ECROU	LÅSEMØTRIK	BORGMOER	
10		492-11050		2	TRAVA DA ARRUELA, 1/2"	LOCK WASHER	ARANDELA DE BLOQUE	RONDELLA DI SICUREZ	132R
					SICHERUNGSSCHEIBE	RONDELLE FREIN	LÅSESKIVE	BORGRING	
11		892-11008		1	TRAVA DA ARRUELA, M8	LOCK WASHER	ARANDELA DE BLOQUE	RONDELLA DI SICUREZ	132R
					SICHERUNGSSCHEIBE	RONDELLE FREIN	LÅSESKIVE	BORGRING	
12		492-11044		1	TRAVA DA ARRUELA, 7/16"				
						LOCK WASHER	ARANDELA DE BLOQUE	RONDELLA DI SICUREZ	132R
					SICHERUNGSSCHEIBE	RONDELLE FREIN	LÅSESKIVE	BORGRING	
13		425-107		1	PORCA, 7/16"-14, G5	NUT	TUERCA	DADO	010D
					MUTTER	ECROU	MØTRIK	MOER	
14		S64612		1	CAPA	BOOT	FUNDA	PARAPOLVERE	330C
					MANSCHETTE	SOUFFLET	MANCHET	HOES	
15		892-11004		1	TRAVA DA ARRUELA, M4	LOCK WASHER	ARANDELA DE BLOQUE	RONDELLA DI SICUREZ	132R
					SICHERUNGSSCHEIBE	RONDELLE FREIN	LÅSESKIVE	BORGRING	
16		825-1404		1	PORCA, M4, Cl 8	NUT	TUERCA	DADO	010D
					MUTTER	ECROU	MØTRIK	MOER	
17		L126713		1	CAPA	BOOT	FUNDA	PARAPOLVERE	330C
					MANSCHETTE	SOUFFLET	MANCHET	HOES	
18		515-23190		1	BRAÇADEIRA, 3/4", Insul, 3/8" Bolt				
						CLAMP	ABRAZADERA	MORSETTO	120M
					KLEMME	COLLIER	SPÆNDEBÅND	KLEM	
19		892-11005		1	TRAVA DA ARRUELA, M5	LOCK WASHER	ARANDELA DE BLOQUE	RONDELLA DI SICUREZ	132R
					SICHERUNGSSCHEIBE	RONDELLE FREIN	LÅSESKIVE	BORGRING	
20		825-1405		1	PORCA, M5, Cl 8	NUT	TUERCA	DADO	010D
					MUTTER	ECROU	MØTRIK	MOER	
21		495-51053		AR	ARRUELA PLANA, 1/2"	WASHER	ARANDELA	RONDELLA	131R
					UNTERLEGSCHEIBE	RONDELLE	FLADSKIVE	SLUITRING	

Montado até o nº de série N6AE00944

W20E

04-02	01	p2	12/09

ALTERNADOR 65A - MONTAGEM (OPCIONAL PARA MÁQUINAS STANDARD)
ALTERNATOR 65A - MOUNTING (OPTIONAL FOR STD MACHINE)
ALTERNADOR 65A - MONTAJE (OPCIONAL PARA MAQUINAS STANDARD)
ALTERNATOR 65A - MOUNTING (OPTIONAL FOR STD MACHINE)

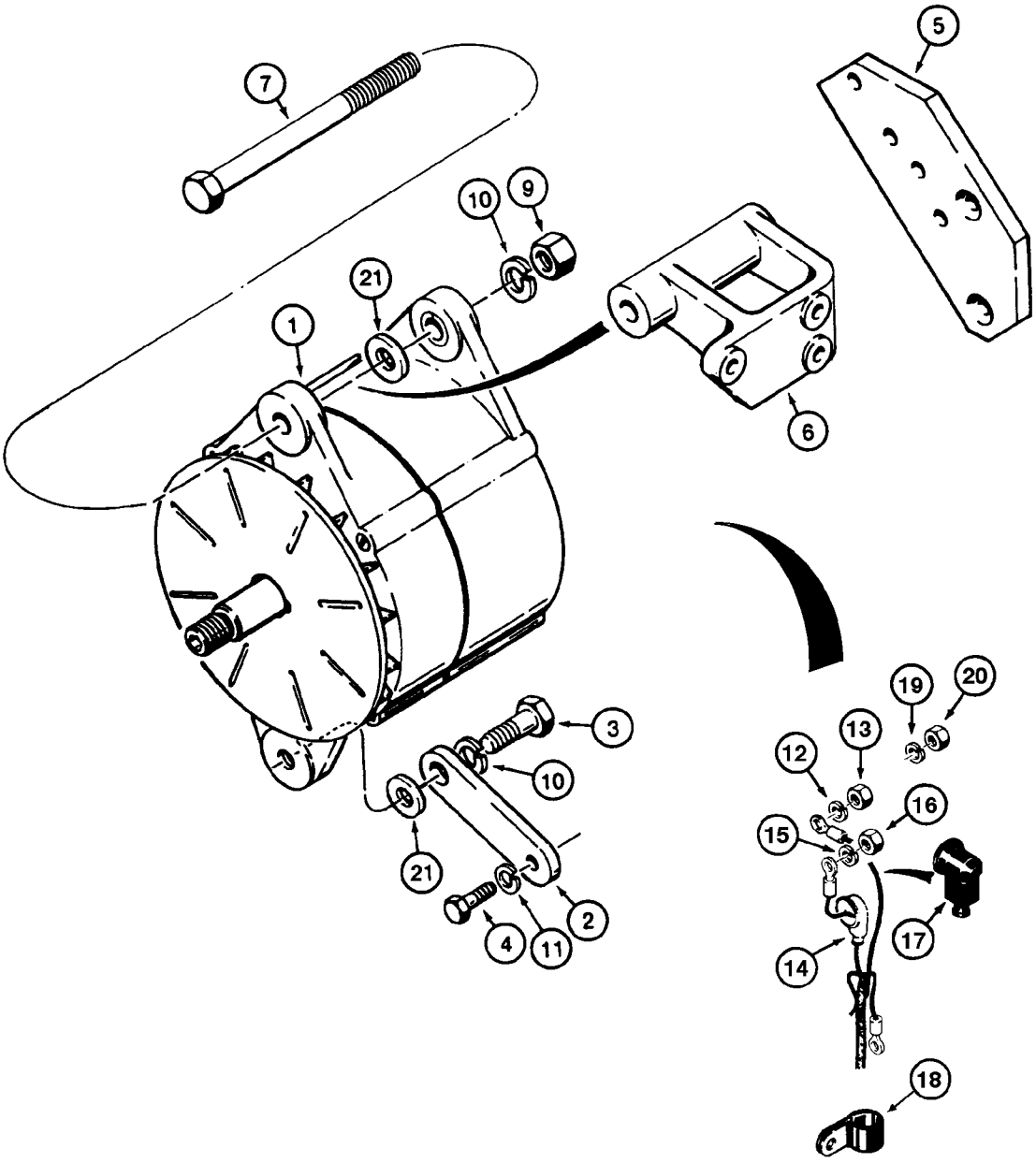

ALTERNATOR 65A - MOUNTING (OPTIONAL FOR STD MACHINE)
ALTERNATOR 65A - MOUNTING (OPTIONAL FOR STD MACHINE)
ALTERNATOR 65A - MOUNTING (OPTIONAL FOR STD MACHINE)
ALTERNATOR 65A - MOUNTING (OPTIONAL FOR STD MACHINE)

R	N	P.N.	MOD	Q	Denominação Bezeichnung	Description Description	Denominacion Beskrivelse	Descrizione Beschrijving	L.C.
21		495-11053		AR	ARRUELA PLANA, 1/2", SAE				
						WASHER	ARANDELA	RONDELLA	131R
					UNTERLEGSCHEIBE	RONDELLE	FLADSKIVE	SLUITRING	
21		895-11012		AR	ARRUELA PLANA, M13.5 x 24 x 2.5				
						WASHER	ARANDELA	RONDELLA	131R
					UNTERLEGSCHEIBE	RONDELLE	FLADSKIVE	SLUITRING	

Montado até o nº de série N6AE00944

W20E

04-02A	01	p1	01/10

ALTERNADOR 65A - MONTAGEM COM FILTRO (STANDARD PARA MÁQUINAS VERSÃO FERTILIZANTE)
ALTERNATOR 65A - MOUNTING WITH FILTER (STD FOR FERTILIZER VERSION MACHINE)
ALTERNADOR 65A - MONTAJE CON FILTRO (STANDARD PARA MAQUINAS VERSIÓN FERTILIZANTE)
ALTERNATOR 65A - MOUNTING WITH FILTER (STD FOR FERTILIZER VERSION MACHINE)

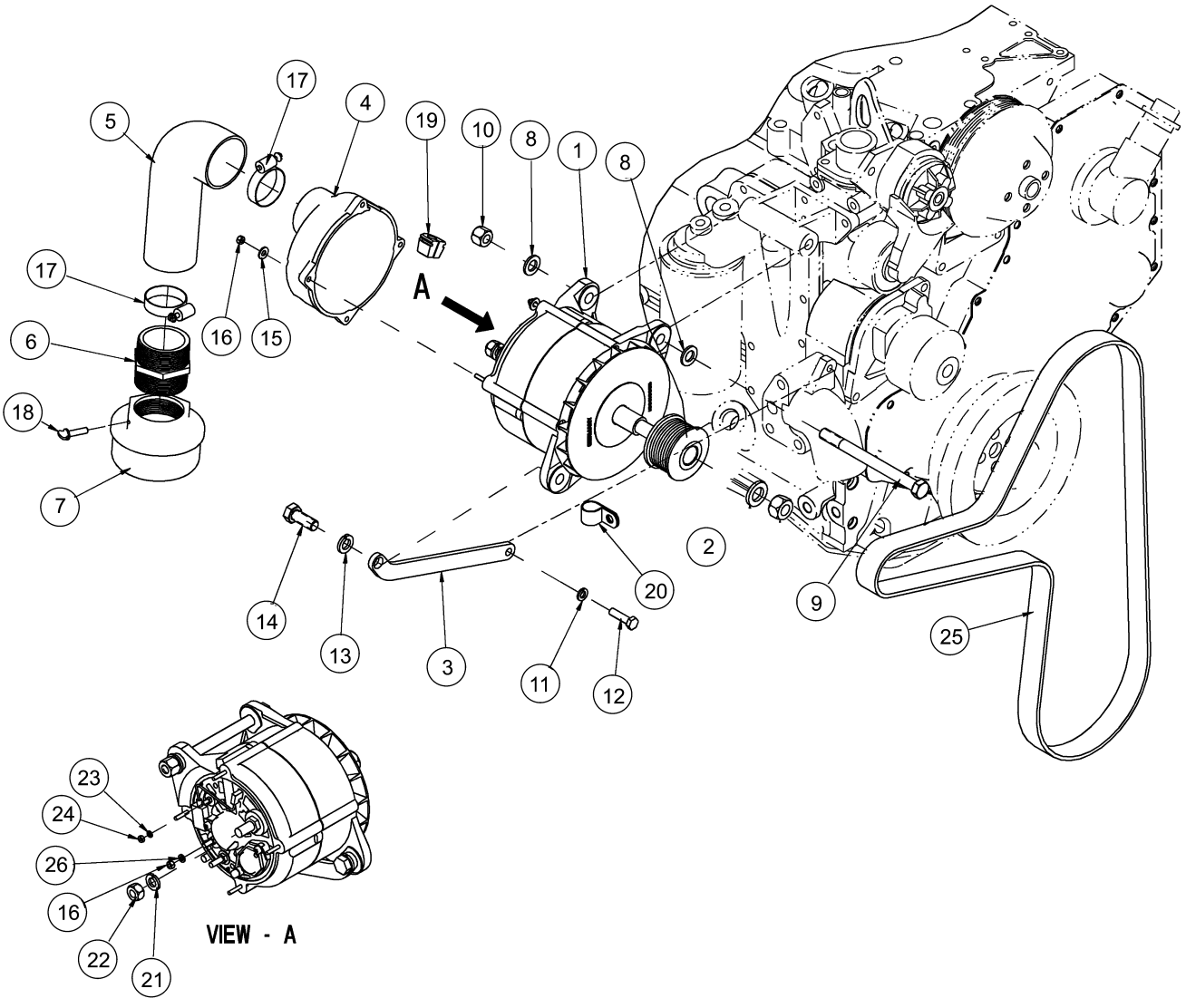

ALTERNATOR 65A - MOUNTING WITH FILTER (STD FOR FERTILIZER VERSION MACHINE)
ALTERNATOR 65A - MOUNTING WITH FILTER (STD FOR FERTILIZER VERSION MACHINE)
ALTERNATOR 65A - MOUNTING WITH FILTER (STD FOR FERTILIZER VERSION MACHINE)
ALTERNATOR 65A - MOUNTING WITH FILTER (STD FOR FERTILIZER VERSION MACHINE)

R	N	P.N.	MOD	Q	Denominação Bezeichnung	Description Description	Denominacion Beskrivelse	Descrizione Beschrijving	L.C.
1		1964860C1		1	ALTERNADOR, Bosch N1 24V 65A Assy (P.4-4)				
						ALTERNATOR	ALTERNADOR	ALTERNATORE	025A
					LICHTMASCHINE	ALTERNATEUR	GENERATOR	DYNAMO	
2		A189616		1	POLIA	PULLEY	POLEA	PULEGGIA	6560
					RIEMENSCHEIBE	POULIE	PULLEY	PULLEY	
3		75326228		1	TENSOR DE CORREIA	BELT TENSIONER	TENSOR DE CORREA	TENDICINGHIA	087T
					GURTSTRAFFER	TENDEUR DE COURROI	REMSTRAMMER	RIEMSPANNER	
4		1338890C1		1	TAMPA	COVER	TAPA	COPERCHIO	2250
					DECKEL	COUVERCLE	COVER	COVER	
5		143953A1		1	COTOVELO	ELBOW	CODO	GOMITO	2940
					KRUEMMER	COUDE	ELBOW	ELBOW	
6		87552611		1	TUBO	PIPE	TUBO	TUBO	200T
					ROHR	TUYAU	PÅFYLDNINGSSTUDS	BUIS	
7		87540645		1	TELA	SCREEN	CERNIDOR (CONJUNTO	VAGLIO	P584
					SIEB	TAMIS	SCREEN	SCREEN	
8		895-11012		2	ARRUELA PLANA, M13.5 x 24 x 2.5				
						WASHER	ARANDELA	RONDELLA	131R
					UNTERLEGSCHEIBE	RONDELLE	FLADSKIVE	SLUITRING	
9		426-896		1	PARAFUSO, Hex, 1/2"-13 x 6", G8				
						BOLT	PERNO	BULLONE	140B
					SCHRAUBE	VIS	BOLT	BOUT	
10		231-4248		1	CONTRA PORCA, 1/2"-13, GB				
						LOCK NUT	TUERCA DE BLOQUEO	DADO DI BLOCCAGGIO	P263
					SICHERUNGSMUTTER	CONTRE-ECROU	LÅSEMØTRIK	BORGMOER	
11		892-11008		1	TRAVA DA ARRUELA, M8	LOCK WASHER	ARANDELA DE BLOQUE	RONDELLA DI SICUREZ	132R
					SICHERUNGSSCHEIBE	RONDELLE FREIN	LÅSESKIVE	BORGRING	
12		614-8030		1	PARAFUSO, Hex, M8 x 30, 8.8				
						BOLT	PERNO	BULLONE	140B
					SCHRAUBE	VIS	BOLT	BOUT	
13		492-11050		1	TRAVA DA ARRUELA, 1/2"	LOCK WASHER	ARANDELA DE BLOQUE	RONDELLA DI SICUREZ	132R
					SICHERUNGSSCHEIBE	RONDELLE FREIN	LÅSESKIVE	BORGRING	
14		426-820		1	PARAFUSO, Hex, 1/2"-13 x 1 1/4", G8, Full Thd				
						BOLT	PERNO	BULLONE	140B
					SCHRAUBE	VIS	BOLT	BOUT	
15		495-31025		4	ARRUELA PLANA, 3/16"	WASHER	ARANDELA	RONDELLA	131R
					UNTERLEGSCHEIBE	RONDELLE	FLADSKIVE	SLUITRING	
16		825-1405		5	PORCA, M5, Cl 8	NUT	TUERCA	DADO	010D
					MUTTER	ECROU	MØTRIK	MOER	
17		214-1536		2	BRAÇADEIRA MANGUEIRA, #36, 1.81/2.75 Type F Worm, W/liner				
						HOSE CLAMP	ABRAZADERA DE MANG	FASCETTA STRINGITUB	P729
					SCHLAUCHSCHELLE	COLLIER POUR FLEXIBL	SLANGEKLEMME	SLANGKLEM	
18		183-112		1	PARAFUSO BORBOLETA, 1/4"-20 x 1"				
						THUMB SCREW	TUERCA DE AJUSTE MA	DADO ZIGRINATO	P373
					FLÜGELSCHRAUBE	VIS A OREILLES	FINGERSKRUE	VLEUGELSCHROEF	
19		1964826C1		1	PASSA FIL	GROMMET	ARANDELA AISLANTE	ANELLO DI TENUTA	4020
					TUELLE	PASSE-FIL	GROMMET	GROMMET	
20		515-23190		1	BRAÇADEIRA, 3/4", Insul, 3/8" Bolt				
						CLAMP	ABRAZADERA	MORSETTO	120M
					KLEMME	COLLIER	SPÆNDEBÅND	KLEM	

Montado a partir do nº de série N6AE00945

W20E

04-02A	01	p2	01/10

ALTERNADOR 65A - MONTAGEM COM FILTRO (STANDARD PARA MÁQUINAS VERSÃO FERTILIZANTE)
ALTERNATOR 65A - MOUNTING WITH FILTER (STD FOR FERTILIZER VERSION MACHINE)
ALTERNADOR 65A - MONTAJE CON FILTRO (STANDARD PARA MAQUINAS VERSIÓN FERTILIZANTE)
ALTERNATOR 65A - MOUNTING WITH FILTER (STD FOR FERTILIZER VERSION MACHINE)

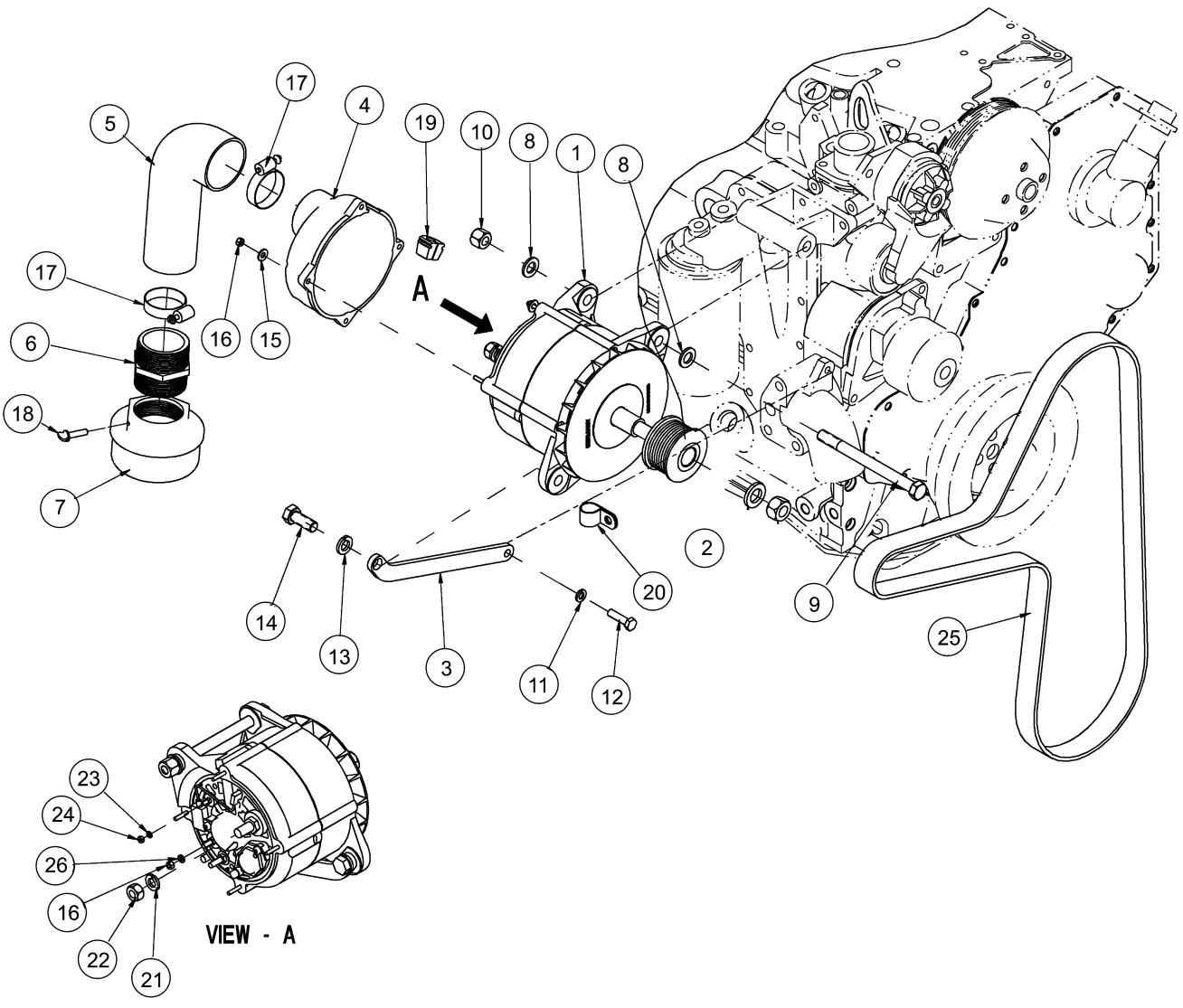

ALTERNATOR 65A - MOUNTING WITH FILTER (STD FOR FERTILIZER VERSION MACHINE)
ALTERNATOR 65A - MOUNTING WITH FILTER (STD FOR FERTILIZER VERSION MACHINE)
ALTERNATOR 65A - MOUNTING WITH FILTER (STD FOR FERTILIZER VERSION MACHINE)
ALTERNATOR 65A - MOUNTING WITH FILTER (STD FOR FERTILIZER VERSION MACHINE)

R	N	P.N.	MOD	Q	Denominação Bezeichnung	Description Description	Denominacion Beskrivelse	Descrizione Beschrijving	L.C.
21		492-11044		1	TRAVA DA ARRUELA, 7/16"				
					SICHERUNGSSCHEIBE	LOCK WASHER RONDELLE FREIN	ARANDELA DE BLOQUE LÅSESKIVE	RONDELLA DI SICUREZ BORGRING	132R
22		425-107		1	PORCA, 7/16"-14, G5 MUTTER	NUT ECROU	TUERCA MØTRIK	DADO MOER	010D
23		892-11004		1	TRAVA DA ARRUELA, M4 SICHERUNGSSCHEIBE	LOCK WASHER RONDELLE FREIN	ARANDELA DE BLOQUE LÅSESKIVE	RONDELLA DI SICUREZ BORGRING	132R
24		824-1404		1	PORCA, M4, Cl 5 MUTTER	NUT ECROU	TUERCA MØTRIK	DADO MOER	010D
25		75208262		1	CORREIA V KEILRIEMEN	V-BELT COURROIE TRAPEZOID.	CORREA TRAPEZOIDAL V-BELT	CINGHIA, TRAPEZ V-BELT	Z087
26		892-11005		1	TRAVA DA ARRUELA, M5 SICHERUNGSSCHEIBE	LOCK WASHER RONDELLE FREIN	ARANDELA DE BLOQUE LÅSESKIVE	RONDELLA DI SICUREZ BORGRING	132R

Montado a partir do nº de série N6AE00945

W20E

04-04	01	p1	12/09

ALTERNADOR 65A - CONJUNTO (OPCIONAL)
ALTERNATOR 65A - ASSEMBLY (OPTIONAL)
ALTERNADOR 65A - CONJUNTO (OPCIONAL)
ALTERNATOR 65A - ASSEMBLY (OPTIONAL)

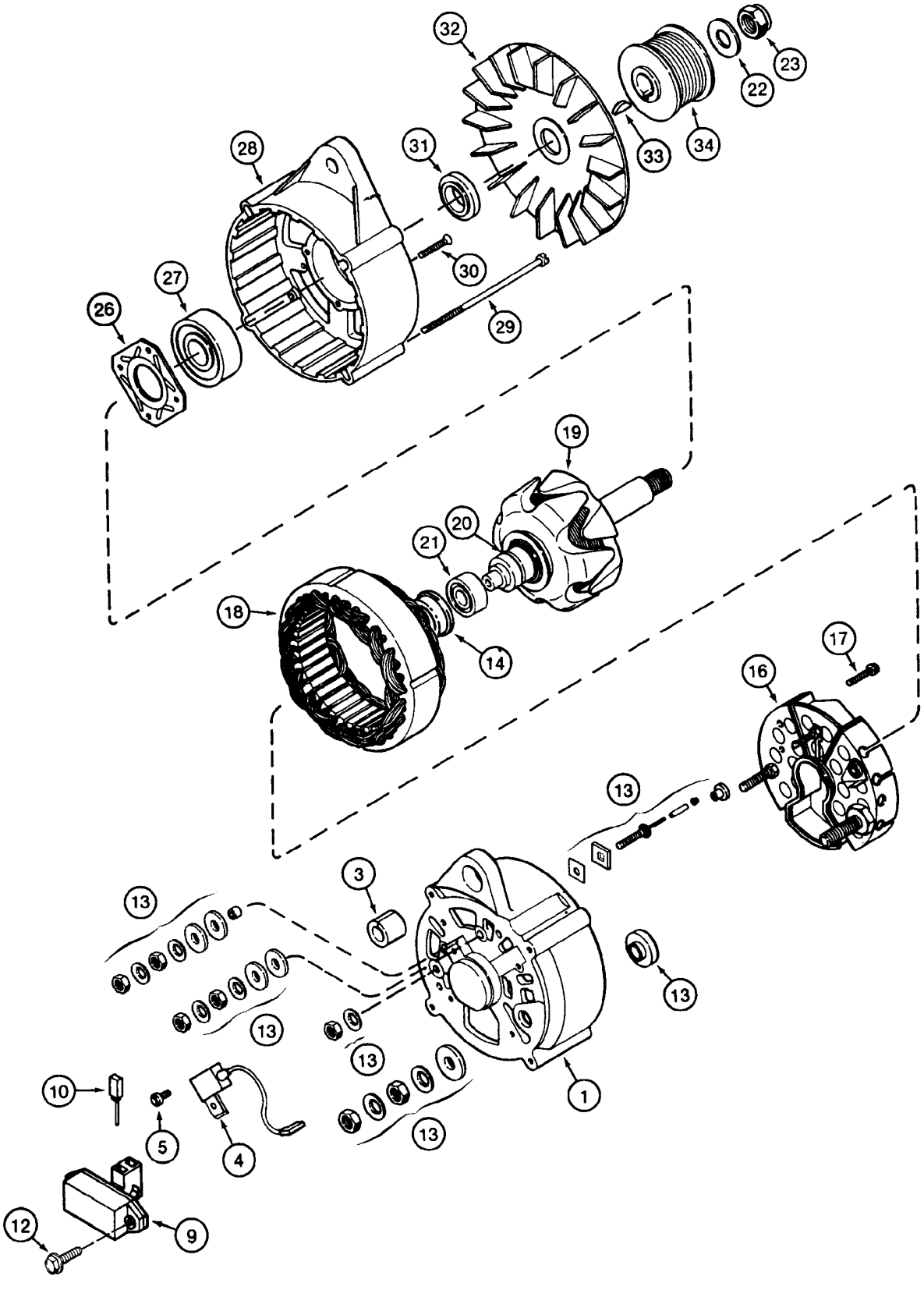

ALTERNATOR 65A - ASSEMBLY (OPTIONAL)
ALTERNATOR 65A - ASSEMBLY (OPTIONAL)
ALTERNATOR 65A - ASSEMBLY (OPTIONAL)
ALTERNATOR 65A - ASSEMBLY (OPTIONAL)

R	N	P.N.	MOD	Q	Denominação Bezeichnung	Description Description	Denominacion Beskrivelse	Descrizione Beschrijving	L.C.
		1964860C1		1	ALTERNADOR, 65A Assy,	Includes items 1 - 33			
						ALTERNATOR	ALTERNADOR	ALTERNATORE	025A
					LICHTMASCHINE	ALTERNATEUR	GENERATOR	DYNAMO	
1		**1964731C1**		1	ALOJAMENTO	HOUSING	ALOJAMIENTO	ALLOGGIAMENTO	014V
					GEHÄUSE	CARTER	HUS	HUIS	
3		**1964737C1**		1	BUCHA	BUSHING	CASQUILLO	BOCCOLA	095B
					BUCHSE	BAGUE	BØSNING	BUS	
4		**3079389R1**		1	CAPACITOR	CAPACITOR	CAPACITADOR	CONDENSATORE	1383
					KONDENSATOR	CONDENSATEUR	KONDENSATOR	CONDENSATOR	
5		**1964969C1**		1	PARAFUSO	SCREW	TORNILLO	VITE	040V
					SCHRAUBE	VIS	SKRUE	SCHROEF	
9		**1964967C1**		1	REGULADOR DE TENSÃO,	Assy			
						VOLTAGE REGULATOR	REGULADOR DE TENSIÓ	REGOLATORE DI TENSI	169R
					SPANNUNGSREGLER	REGULATEUR DE TENSI	SPÆNDINGSREGULATO	SPANNINGSREGELAAR	
10		**1964968C1**		1	ESCOVA	COMMUTATOR BRUSH	CEPILLO DE CONMUTAD	SPAZZOLA COLLETTORI	177S
					KOMMUTATORBÜRSTE	BALAI	KOMMUTATORBØRSTE	COMMUTATORBORSTEI	
12		**A186194**		2	PARAFUSO, Sltd Truss Hd,	M4 x 18, w/LW, Assy			
						SCREW	TORNILLO	VITE	040V
					SCHRAUBE	VIS	SKRUE	SCHROEF	
13		**1964738C1**		1	KIT DE REPARO	REPAIR KIT	KIT DE REPARACIÓN	KIT DI RIPARAZIONE	003K
					REPARATURSATZ	KIT DE REPARATION	REPARATIONSSÆT	REPARATIEKIT	
14		**1546477C1**		1	LUVA	SLEEVE	MANGUITO	MANICOTTO	145B
					BUCHSE	CHEMISE	BØSNING	HOES; HULS	
16		**1964965C1**		1	RETIFICADOR DE CORRE	RECTIFIER	RECTIFICADOR CORRIE	RADDRIZZATORE	6900
					GLEICHRICHTER	REDRESSEUR	RECTIFIER	RECTIFIER	
17		**A187504**		2	PARAFUSO	SCREW	TORNILLO	VITE	040V
					SCHRAUBE	VIS	SKRUE	SCHROEF	
18		**1964966C1**		1	ESTATOR	STATOR	ESTATOR	STATORE	8480
					STATOR	STATOR	STATOR	STATOR	
19		**1964964C1**		1	ROTOR	ROTOR	ROTOR	ROTORE	7350
					ROTOR	ROTOR	ROTOR	ROTOR	
20		**3079410R1**		1	ANEL	RING	ANILLO	ANELLO	7175
					RING	BAGUE	RING	RING	
21		**1964730C1**		1	ROLAMENTO ESFÉRICO,	12 mm ID x 32 mm OD x 14 mm			
						BALL BEARING	RODAMIENTO DE BOLAS	CUSCINETTO A SFERE	343C
					KUGELLAGER	ROULEMENT A BILLES	KUGLELEJE	KOGELLAGER	
22		**195-107**		1	ARRUELA PLANA, 9/16"	WASHER	ARANDELA	RONDELLA	131R
					UNTERLEGSCHEIBE	RONDELLE	FLADSKIVE	SLUITRING	
23		**131-676**		1	CONTRA PORCA, 5/8"-11,	GB			
						LOCK NUT	TUERCA DE BLOQUEO	DADO DI BLOCCAGGIO	P263
					SICHERUNGSMUTTER	CONTRE-ECROU	LÅSEMØTRIK	BORGMOER	
26		**1964727C1**		1	PLACA	PLATE	PLACA	PIASTRA	105P
					PLATTE	PLAQUE	PLADE	PLAAT	
27		**1964726C1**		1	ROLAMENTO ESFÉRICO,	22.2 mm ID x 56 mm OD x 21 mm			
						BALL BEARING	RODAMIENTO DE BOLAS	CUSCINETTO A SFERE	343C
					KUGELLAGER	ROULEMENT A BILLES	KUGLELEJE	KOGELLAGER	
28		**1964725C1**		1	ALOJAMENTO	HOUSING	ALOJAMIENTO	ALLOGGIAMENTO	014V
					GEHÄUSE	CARTER	HUS	HUIS	

04-04	01	p2	12/09

ALTERNADOR 65A - CONJUNTO (OPCIONAL)
ALTERNATOR 65A - ASSEMBLY (OPTIONAL)
ALTERNADOR 65A - CONJUNTO (OPCIONAL)
ALTERNATOR 65A - ASSEMBLY (OPTIONAL)

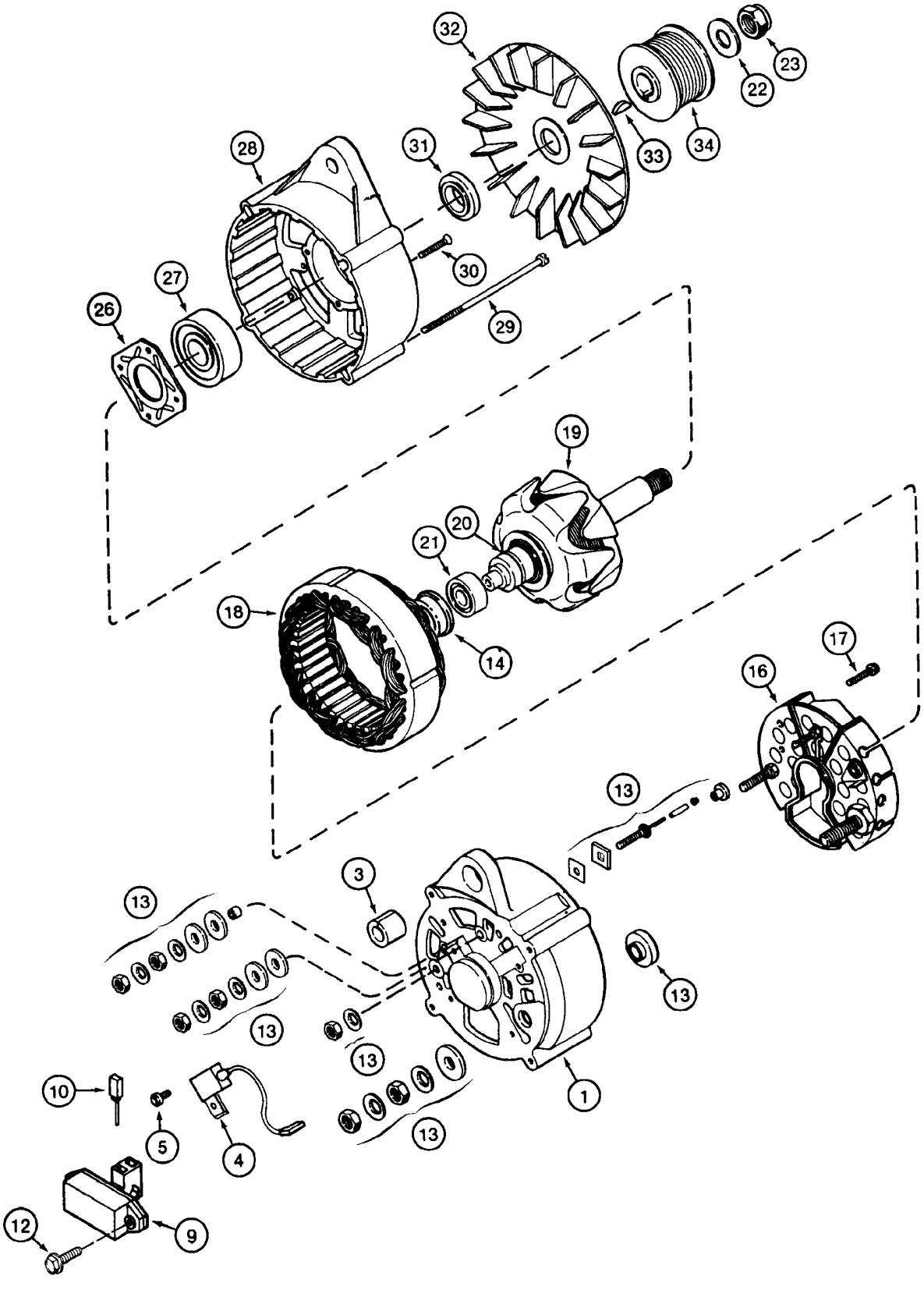

ALTERNATOR 65A - ASSEMBLY (OPTIONAL)
ALTERNATOR 65A - ASSEMBLY (OPTIONAL)
ALTERNATOR 65A - ASSEMBLY (OPTIONAL)
ALTERNATOR 65A - ASSEMBLY (OPTIONAL)

R	N	P.N.	MOD	Q	Denominação Bezeichnung	Description Description	Denominacion Beskrivelse	Descrizione Beschrijving	L.C.
29		**1964748C1**		4	PARAFUSO SCHRAUBE	SCREW VIS	TORNILLO SKRUE	VITE SCHROEF	040V
30		**1964750C1**		4	PARAFUSO SCHRAUBE	SCREW VIS	TORNILLO SKRUE	VITE SCHROEF	040V
31		**1964729C1**		1	ESPAÇADOR DISTANZSTÜCK	SPACER ENTRETOISE	SEPARADOR AFSTANDSSTYKKE	DISTANZIALE AFSTANDSSTUK	075D
32		**1964736C1**		1	VENTILADOR GEBLÄSE	FAN VENTILATEUR	VENTILADOR VENTILATOR	VENTOLA VENTILATOR	030V
33		**NSS**		1	SEM SERVIÇO EM SEPARADO, KEY NICHT A SEP ERS-T LIEI	NOT SERVICED SEPARA NON FORUNI SEPAREM	NO SE REPARA POR SE SERVICERES IKKE SEPA	NON FORNITO SEPARAT NIET LOS VERKRIJGBAA	064N
34		**A189616**		1	POLIA RIEMENSCHEIBE	PULLEY POULIE	POLEA PULLEY	PULEGGIA PULLEY	6560

04-06	01	p1	12/09

ALTERNADOR 45A - MONTAGEM (OPCIONAL)
ALTERNATOR 45A - MOUNTING (OPTIONAL)
ALTERNADOR 45A - MONTAJE (OPCIONAL)
ALTERNATOR 45A - MOUNTING (OPTIONAL)

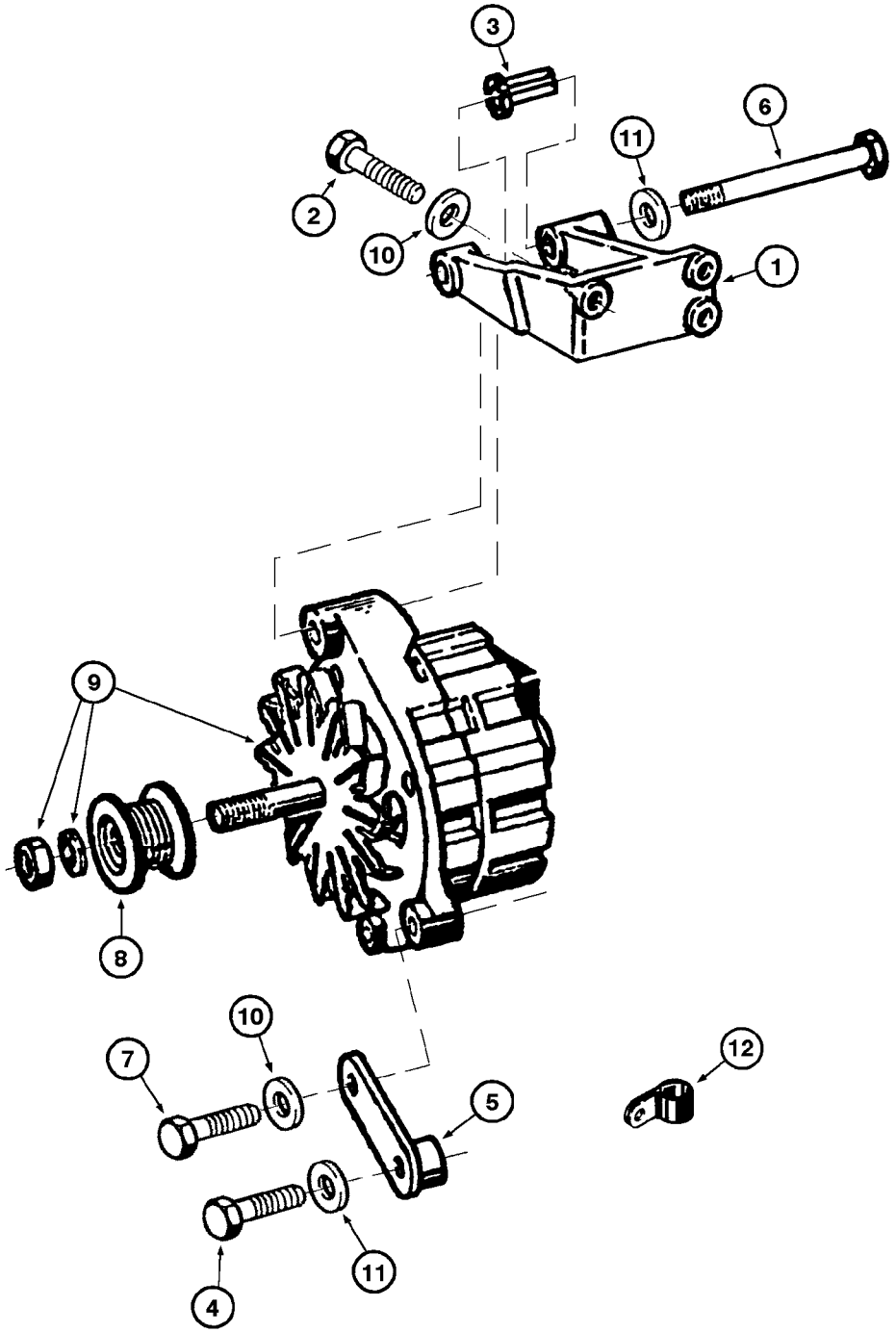

ALTERNATOR 45A - MOUNTING (OPTIONAL)
ALTERNATOR 45A - MOUNTING (OPTIONAL)
ALTERNATOR 45A - MOUNTING (OPTIONAL)
ALTERNATOR 45A - MOUNTING (OPTIONAL)

R	N	P.N.	MOD	Q	Denominação Bezeichnung	Description Description	Denominacion Beskrivelse	Descrizione Beschrijving	L.C.
1		147426A1		1	SUPORTE STÜTZE	SUPPORT SUPPORT	SOPORTE BESLAG	SUPPORTO STEUN	300S
2		614-8045		3	PARAFUSO, Hex, M8 x 45, 8.8, Full Thd				
						BOLT	PERNO	BULLONE	140B
					SCHRAUBE	VIS	BOLT	BOUT	
3		J902469		1	ESPACADOR ABSTANDSSTUECK	SPACER ENTRETOISE	ESPACIADOR SPACER	DISTANZIALE SPACER	8090
4		614-10030		1	PARAFUSO, Hex, M10 x 30, 8.8				
						BOLT	PERNO	BULLONE	140B
					SCHRAUBE	VIS	BOLT	BOUT	
5		G58842-11		1	TIRANTE SPURSTANGE	TIE-ROD TIRANT	TIRANTE TRÆKSTANG	TIRANTE TREKSTANG	142T
6		L09338-79		1	PARAFUSO SCHRAUBE	SCREW VIS	TORNILLO SKRUE	VITE SCHROEF	040V
7		614-8030		1	PARAFUSO, Hex, M8 x 30, 8.8				
						BOLT	PERNO	BULLONE	140B
					SCHRAUBE	VIS	BOLT	BOUT	
8		147452A1		1	POLIA RIEMENSCHEIBE	PULLEY POULIE	POLEA REMSKIVE	PULEGGIA RIEMSCHIJF	230P
9		E156163		1	ALTERNADOR, 45A Assy (P.4-8)				
						ALTERNATOR	ALTERNADOR	ALTERNATORE	P003
					DREHSTROMGENERAT(	ALTERNATEUR	VERSELSTR+MSGENER/	ALTERNATOR	
10		892-11008		4	TRAVA DA ARRUELA, M8 SICHERUNGSSCHEIBE	LOCK WASHER RONDELLE FREIN	ARANDELA DE BLOQUE(LÅSESKIVE	RONDELLA DI SICUREZ/ BORGRING	132R
11		892-11010		2	TRAVA DA ARRUELA, M10 SICHERUNGSSCHEIBE	LOCK WASHER RONDELLE FREIN	ARANDELA DE BLOQUE(LÅSESKIVE	RONDELLA DI SICUREZ/ BORGRING	132R
12		515-23190		1	BRAÇADEIRA, 3/4", Insul, 3/8" Bolt				
						CLAMP	ABRAZADERA	MORSETTO	120M
					KLEMME	COLLIER	SPÆNDEBÅND	KLEM	

Montado até o nº de série N6AE00944

W20E

04-08	01	p1	03/09

ALTERNADOR 45A - CONJUNTO (OPCIONAL)
ALTERNATOR 45A - ASSEMBLY (OPTIONAL)
ALTERNADOR 45A - CONJUNTO (OPCIONAL)
ALTERNATOR 45A - ASSEMBLY (OPTIONAL)

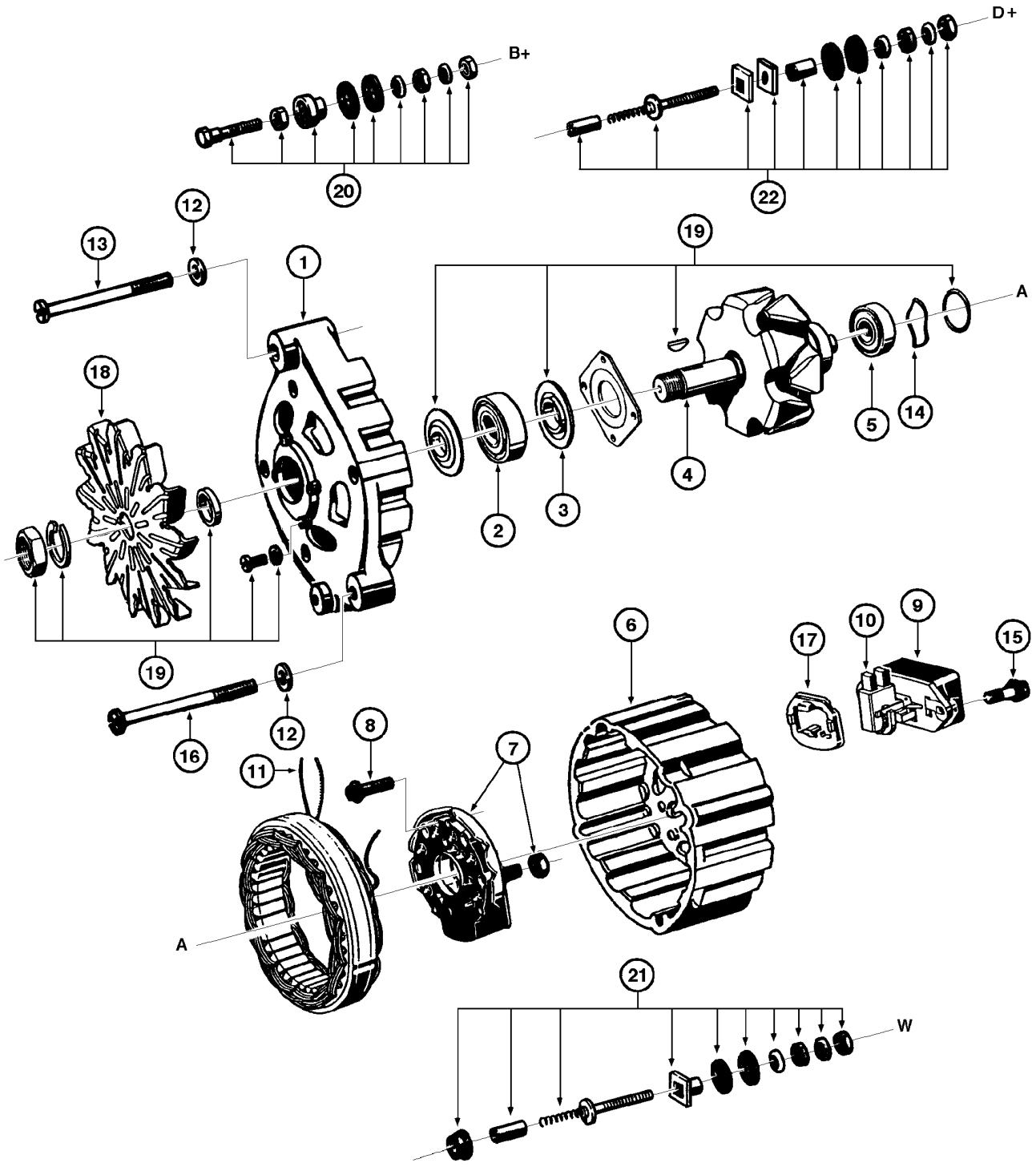

ALTERNATOR 45A - ASSEMBLY (OPTIONAL)
ALTERNATOR 45A - ASSEMBLY (OPTIONAL)
ALTERNATOR 45A - ASSEMBLY (OPTIONAL)
ALTERNATOR 45A - ASSEMBLY (OPTIONAL)

R	N	P.N.	MOD	Q	Denominação Bezeichnung	Description Description	Denominacion Beskrivelse	Descrizione Beschrijving	L.C.
		E156163	a	1	ALTERNADOR, 45A Assy, Includes items 1 - 14				
						ALTERNATOR	ALTERNADOR	ALTERNATORE	P003
					DREHSTROMGENERAT(	ALTERNATEUR	VERSELSTR+MSGENER.	ALTERNATOR	
1		**E156756**		1	FIXADOR	HOLDER	SOPORTE	SUPPORTO	174S
					HALTER	SUPPORT	HOLDER	HOUDER	
2		**E68337**		1	PEÇA DE REPOSIÇÃO	SPARE PART	PIEZA DE REPUESTO	PARTE DI RICAMBIO	8888
					ERSATZTEIL	PIECE DETACHEE	RESERVEDEL	RESERVEONDERDEEL	
3		**E68338**		1	PEÇA DE REPOSIÇÃO	SPARE PART	PIEZA DE REPUESTO	PARTE DI RICAMBIO	8888
					ERSATZTEIL	PIECE DETACHEE	RESERVEDEL	RESERVEONDERDEEL	
4		**E156755**		1	ROTOR CONJUNTO	ROTOR ASSY.	ROTOR (CONJUNTO)	GRUPPO ROTORE	P492
					ROTOR (KPLT.)	ROTOR (ASSEMBLE)	ROTOR ASSY.	ROTOR ASSY.	
5		**E156741**		1	PEÇA DE REPOSIÇÃO	SPARE PART	PIEZA DE REPUESTO	PARTE DI RICAMBIO	8888
					ERSATZTEIL	PIECE DETACHEE	RESERVEDEL	RESERVEONDERDEEL	
6		**E156757**		1	PEÇA DE REPOSIÇÃO	SPARE PART	PIEZA DE REPUESTO	PARTE DI RICAMBIO	8888
					ERSATZTEIL	PIECE DETACHEE	RESERVEDEL	RESERVEONDERDEEL	
7		**E156740**		1	PEÇA DE REPOSIÇÃO, Assy				
						SPARE PART	PIEZA DE REPUESTO	PARTE DI RICAMBIO	8888
					ERSATZTEIL	PIECE DETACHEE	RESERVEDEL	RESERVEONDERDEEL	
8		**E156747**		3	PARAFUSO	SCREW	TORNILLO	VITE	7450
					SCHRAUBE	VIS	SCREW	SCREW	
9		**E156758**		1	REGULADOR, voltage	REGULATOR	REGULADOR	REGOLATORE	6975
					REGULATOR	REGULATEUR-TENSION	REGULATOR	REGULATOR	
10		**E156753**		1	JOGO, brushes	SET	JUEGO	KIT	Z518
					SATZ	JEU	SÆT	SET	
11		**E156739**		1	ESTATOR	STATOR	ESTATOR	STATORE	8480
					STATOR	STATOR	STATOR	STATOR	
12		**E68347**		4	ARRUELA PLANA	WASHER	ARANDELA	RONDELLA	131R
					UNTERLEGSCHEIBE	RONDELLE	FLADSKIVE	SLUITRING	
13		**E156704**		3	PARAFUSO	SCREW	TORNILLO	VITE	040V
					SCHRAUBE	VIS	SKRUE	SCHROEF	
14		**NSS**		1	SEM SERVIÇO EM SEPARADO, SNAP ring				
						NOT SERVICED SEPARA	NO SE REPARA POR SE	NON FORNITO SEPARAT	064N
					NICHT A SEP ERS-T LIEI	NON FORUNI SEPAREM	SERVICERES IKKE SEPA	NIET LOS VERKRIJGBAA	
15		**E156746**		2	PEÇA DE REPOSIÇÃO	SPARE PART	PIEZA DE REPUESTO	PARTE DI RICAMBIO	8888
					ERSATZTEIL	PIECE DETACHEE	RESERVEDEL	RESERVEONDERDEEL	
16		**E156738**		1	PEÇA DE REPOSIÇÃO	SPARE PART	PIEZA DE REPUESTO	PARTE DI RICAMBIO	8888
					ERSATZTEIL	PIECE DETACHEE	RESERVEDEL	RESERVEONDERDEEL	
17		**E156737**		1	JUNTA	GASKET	JUNTA	GUARNIZIONE	123G
					DICHTUNG	JOINT	PAKNING	PAKKING	
18		**E97535**		1	VENTILADOR	FAN	VENTILADOR	VENTOLA	030V
					GEBLÄSE	VENTILATEUR	VENTILATOR	VENTILATOR	
19		**E156754**		1	JOGO, repair rotor	SET	JUEGO	KIT	Z518
					SATZ	JEU	SÆT	SET	
20		**E156750**		1	JOGO, repair B+	SET	JUEGO	KIT	Z518
					SATZ	JEU	SÆT	SET	
21		**E156752**		1	JOGO, repair W	SET	JUEGO	KIT	Z518
					SATZ	JEU	SÆT	SET	

(a) BSN N6AE00944

ALTERNADOR 45A - CONJUNTO (OPCIONAL)
ALTERNATOR 45A - ASSEMBLY (OPTIONAL)
ALTERNADOR 45A - CONJUNTO (OPCIONAL)
ALTERNATOR 45A - ASSEMBLY (OPTIONAL)

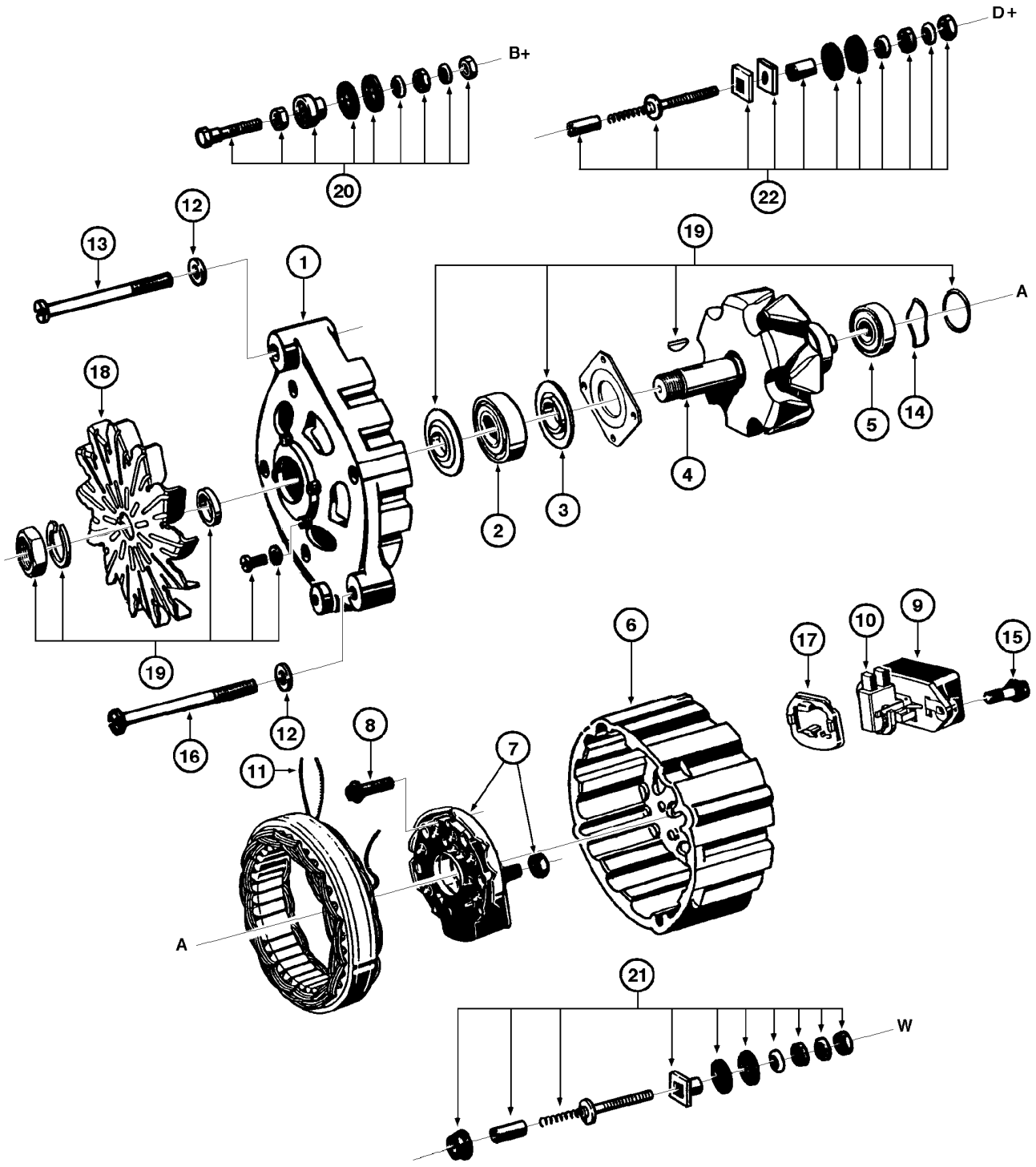

ALTERNATOR 45A - ASSEMBLY (OPTIONAL)
ALTERNATOR 45A - ASSEMBLY (OPTIONAL)
ALTERNATOR 45A - ASSEMBLY (OPTIONAL)
ALTERNATOR 45A - ASSEMBLY (OPTIONAL)

R	N	P.N.	MOD	Q	Denominação Bezeichnung	Description Description	Denominacion Beskrivelse	Descrizione Beschrijving	L.C.
22		**E156751**		1	PEÇA DE REPOSIÇÃO, repair D+				
						SPARE PART	PIEZA DE REPUESTO	PARTE DI RICAMBIO	8888
					ERSATZTEIL	PIECE DETACHEE	RESERVEDEL	RESERVEONDERDEEL	

04-08B	01	p1	03/09

ALTERNADOR 50A - CONJUNTO E MONTAGEM (STANDARD)
ALTERNATOR 50A - PARTS AND ASSEMBLY (STANDARD)
ALTERNADOR 50A - CONJUNTO Y MONTAJE (STANDARD)
ALTERNATOR 50A - PARTS AND ASSEMBLY (STANDARD)

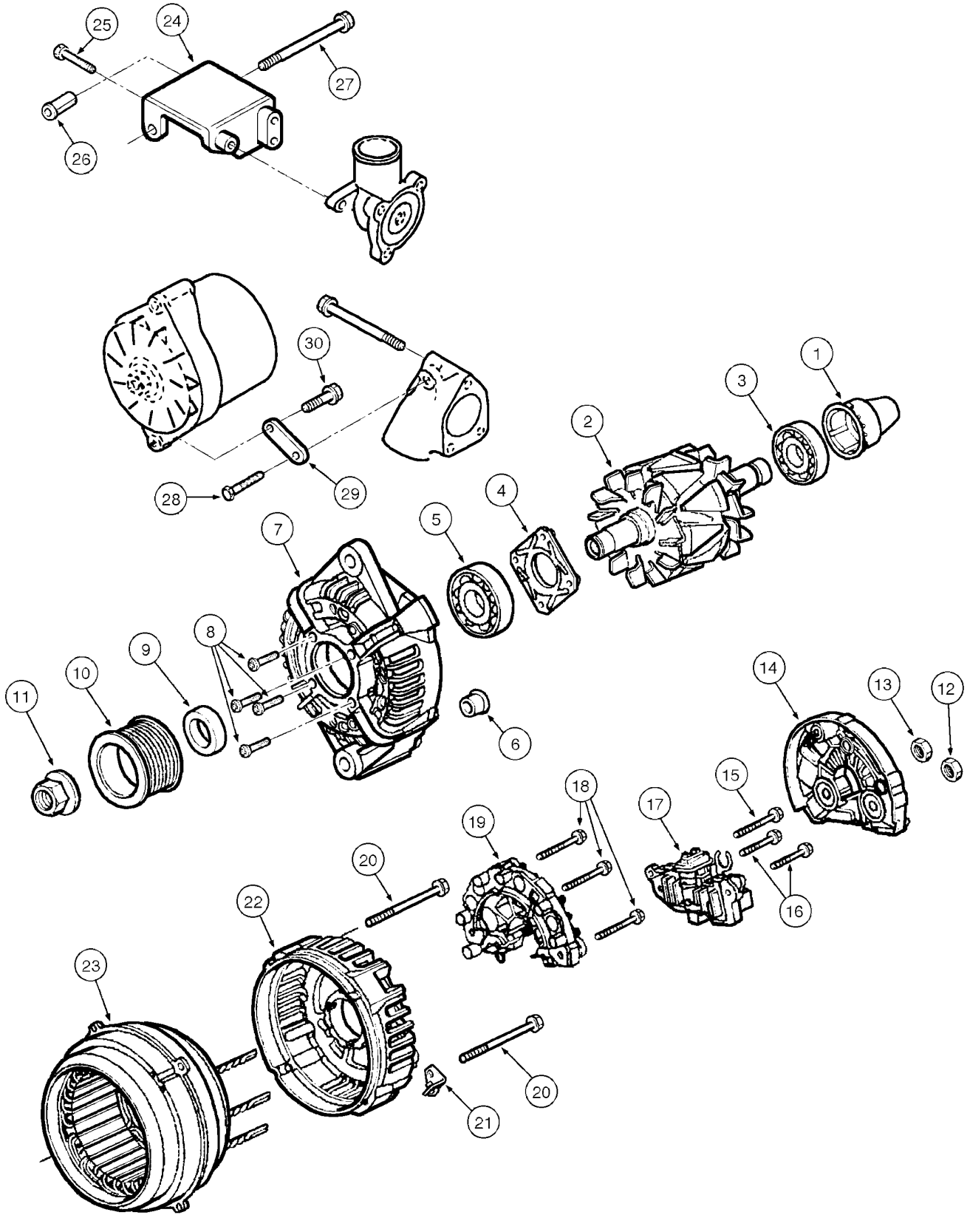

ALTERNATOR 50A - PARTS AND ASSEMBLY (STANDARD)
ALTERNATOR 50A - PARTS AND ASSEMBLY (STANDARD)
ALTERNATOR 50A - PARTS AND ASSEMBLY (STANDARD)
ALTERNATOR 50A - PARTS AND ASSEMBLY (STANDARD)

R	N	P.N.	MOD	Q	Denominação Bezeichnung	Description Description	Denominacion Beskrivelse	Descrizione Beschrijving	L.C.
		75261184	a	1	ALTERNADOR, 50A Assy, Includes items 1 - 23				
						ALTERNATOR	ALTERNADOR	ALTERNATORE	025A
					LICHTMASCHINE	ALTERNATEUR	GENERATOR	DYNAMO	
1		**87458816**		1	COBERTURA	COVER	CUBIERTA	COPERCHIO	265C
					ABDECKUNG	COUVERCLE	DÆKSEL	AFSCHERMING	
2		**87458818**		1	ROTOR	ROTOR	ROTOR	ROTORE	145R
					ROTOR	ROTOR	ROTOR	ROTOR	
3		**87458832**		1	ROLAMENTO	BEARING	COJINETE	CUSCINETTO	0600
					LAGER	ROULEMENT	LEJE	LAGER	
4		**87458812**		1	PLACA	PLATE	PLACA	PIASTRA	105P
					PLATTE	PLAQUE	PLADE	PLAAT	
5		**87458811**		1	ROLAMENTO	BEARING	COJINETE	CUSCINETTO	0600
					LAGER	ROULEMENT	LEJE	LAGER	
6		**87458817**		1	BUCHA	BUSHING	CASQUILLO	BOCCOLA	095B
					BUCHSE	BAGUE	BØSNING	BUS	
7		**87458810**		1	SUPORTE	SUPPORT	SOPORTE	SUPPORTO	300S
					STÜTZE	SUPPORT	BESLAG	STEUN	
8		**87458813**		4	PARAFUSO	SCREW	TORNILLO	VITE	040V
					SCHRAUBE	VIS	SKRUE	SCHROEF	
9		**87458814**		1	ESPAÇADOR	SPACER	SEPARADOR	DISTANZIALE	075D
					DISTANZSTÜCK	ENTRETOISE	AFSTANDSSTYKKE	AFSTANDSSTUK	
10		**87458830**		1	POLIA	PULLEY	POLEA	PULEGGIA	230P
					RIEMENSCHEIBE	POULIE	REMSKIVE	RIEMSCHIJF	
11		**87458831**		1	PORCA	NUT	TUERCA	DADO	010D
					MUTTER	ECROU	MØTRIK	MOER	
12		**87458826**		1	PORCA	NUT	TUERCA	DADO	010D
					MUTTER	ECROU	MØTRIK	MOER	
13		**87458827**		1	PORCA	NUT	TUERCA	DADO	010D
					MUTTER	ECROU	MØTRIK	MOER	
14		**87458825**		1	PROTEÇÃO	GUARD	DEFENSA	PROTEZIONE	070R
					SCHUTZABDECKUNG	PROTECTION	BESKYTTELSESSKÆRM	AFSCHERMING	
15		**87458824**		1	PARAFUSO	SCREW	TORNILLO	VITE	040V
					SCHRAUBE	VIS	SKRUE	SCHROEF	
16		**87458823**		2	PARAFUSO	SCREW	TORNILLO	VITE	040V
					SCHRAUBE	VIS	SKRUE	SCHROEF	
17		**87458822**		1	REGULADOR	REGULATOR	REGULADOR	REGOLATORE	6795
					REGLER	REGULATEUR	REGULATOR	REGELAAR	
18		**87458821**		3	PARAFUSO	SCREW	TORNILLO	VITE	040V
					SCHRAUBE	VIS	SKRUE	SCHROEF	
19		**87458820**		1	RETIFICADOR	RECTIFIER	RECTIFICADOR	RADDRIZZATORE	032R
					GLEICHRICHTER	REDRESSEUR	ENSRETTER	GELIJKRICHTER	
20		**87458828**		4	PARAFUSO	SCREW	TORNILLO	VITE	040V
					SCHRAUBE	VIS	SKRUE	SCHROEF	
21		**87458829**		2	SUPORTE	SUPPORT	SOPORTE	SUPPORTO	300S
					STÜTZE	SUPPORT	BESLAG	STEUN	
22		**87458815**		1	SUPORTE	SUPPORT	SOPORTE	SUPPORTO	300S
					STÜTZE	SUPPORT	BESLAG	STEUN	

(a) ASN N6AE00945

04-08B	01	p2	03/09

ALTERNADOR 50A - CONJUNTO E MONTAGEM (STANDARD)
ALTERNATOR 50A - PARTS AND ASSEMBLY (STANDARD)
ALTERNADOR 50A - CONJUNTO Y MONTAJE (STANDARD)
ALTERNATOR 50A - PARTS AND ASSEMBLY (STANDARD)

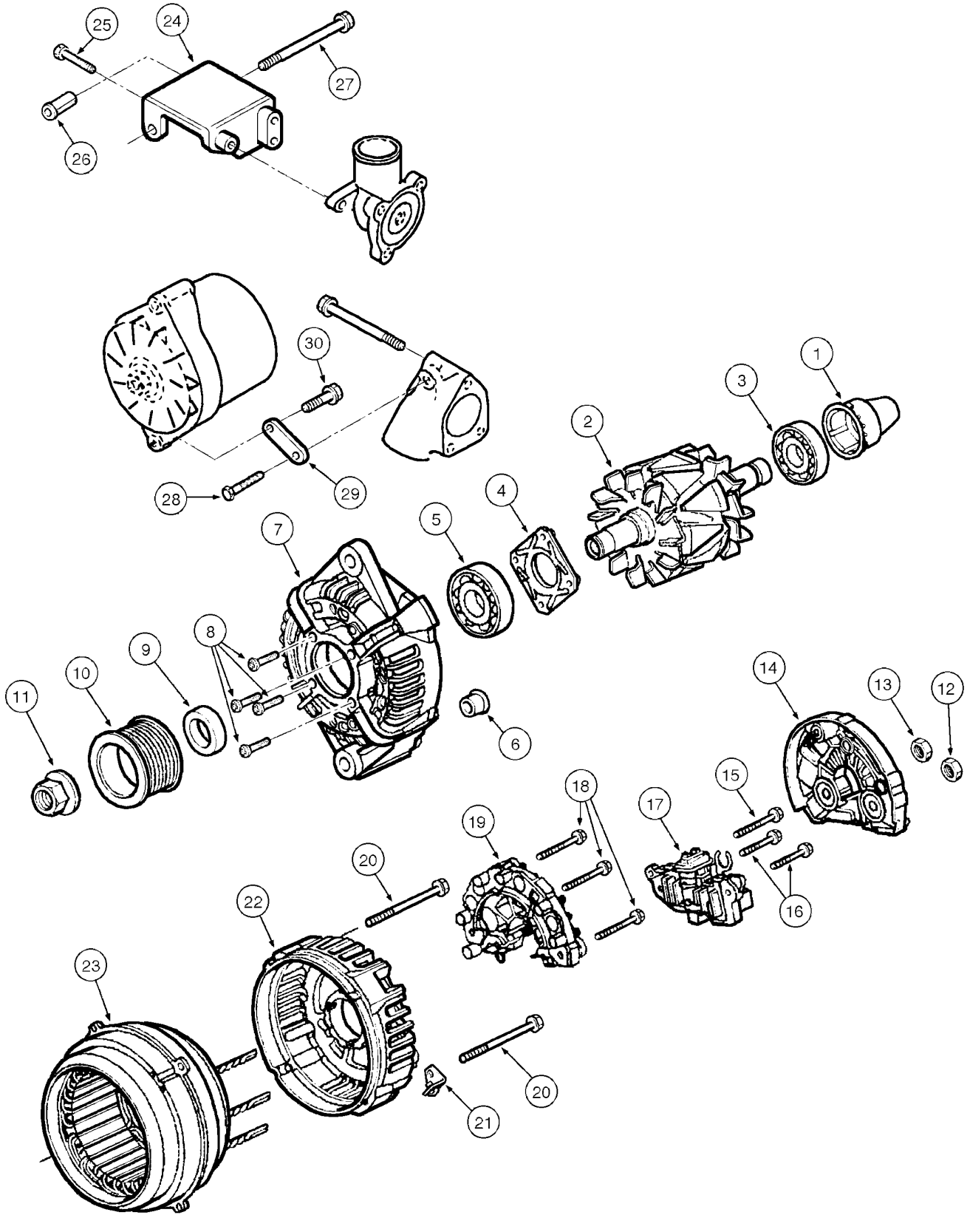

ALTERNATOR 50A - PARTS AND ASSEMBLY (STANDARD)
ALTERNATOR 50A - PARTS AND ASSEMBLY (STANDARD)
ALTERNATOR 50A - PARTS AND ASSEMBLY (STANDARD)
ALTERNATOR 50A - PARTS AND ASSEMBLY (STANDARD)

R	N	P.N.	MOD	Q	Denominação Bezeichnung	Description Description	Denominacion Beskrivelse	Descrizione Beschrijving	L.C.
23		**87458819**		1	ESTATOR ALTERNADOR LICHTMASCHINENSTAT	ALTERNATOR STATOR STATOR D'ALTERNATEL	ESTATOR DE ALTERNAI GENERATOR	STATORE ALTERNATOR STATOR VAN DYNAMO	271S
24		**J354335**		1	SUPORTE, alternator HALTERUNG	BRACKET SUPPORT	SOPORTE BESLAG	STAFFA STEUN	225S
25		**J928873**		3	PARAFUSO SCHRAUBE	BOLT VIS	PERNO BOLT	BULLONE BOUT	140B
26		**J902469**		1	ESPACADOR ABSTANDSSTUECK	SPACER ENTRETOISE	ESPACIADOR SPACER	DISTANZIALE SPACER	8090
27		**J916518**		1	PARAFUSO SCHRAUBE	BOLT VIS	PERNO BOLT	BULLONE BOUT	140B
28		**J900621**		1	PARAFUSO SCHRAUBE	BOLT VIS	PERNO BOLT	BULLONE BOUT	140B
29		**J353972**		1	BRAÇO ARM	ARM BRAS	BRAZO ARM	BRACCIO ARM	130B
30		**J900623**		1	PARAFUSO SCHRAUBE	BOLT VIS	PERNO BOLT	BULLONE BOUT	140B

04-10	01	p1	01/10

PAINEL DE INSTRUMENTOS
INSTRUMENT PANEL
PANEL DE INSTRUMIENTOS
INSTRUMENT PANEL

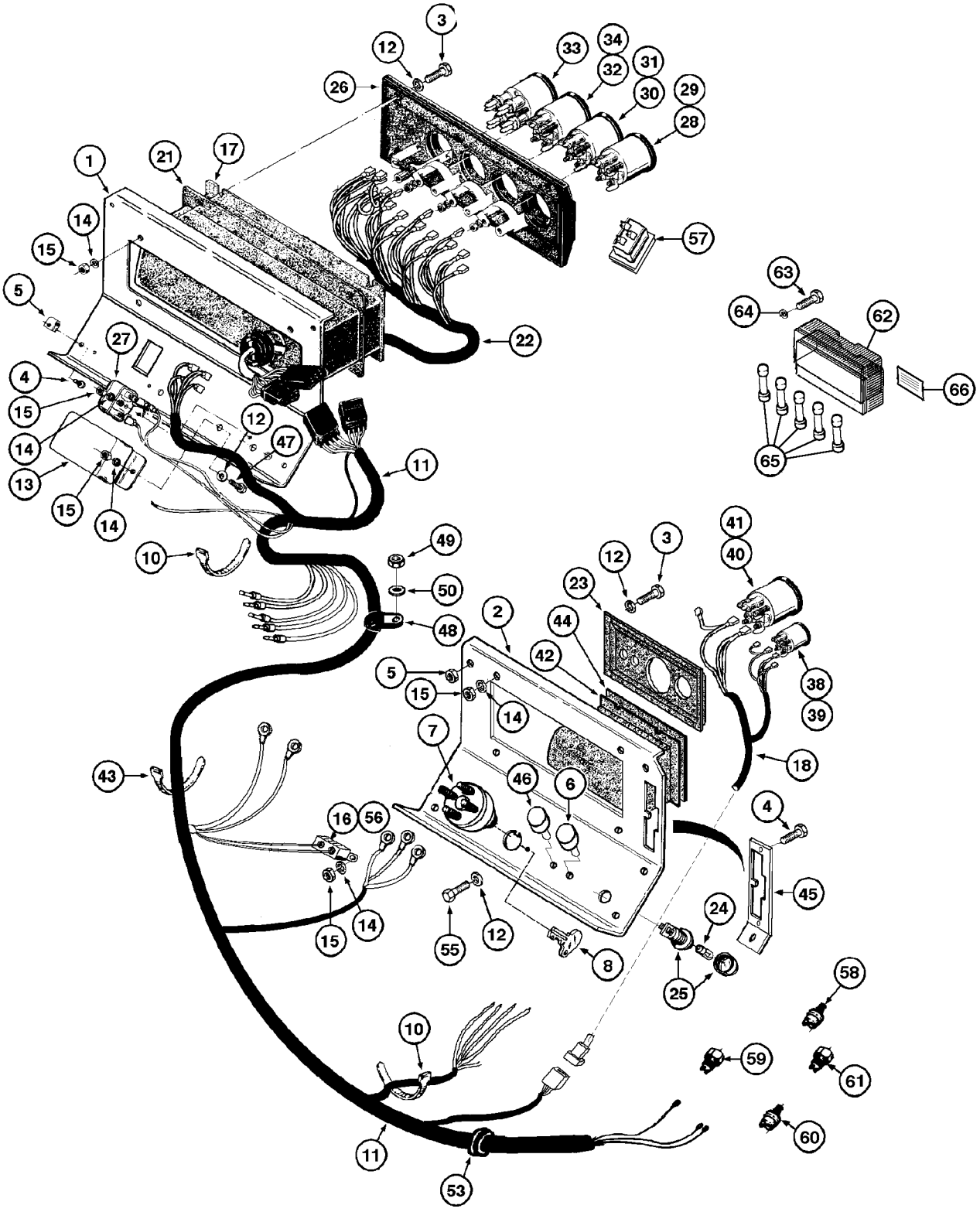

INSTRUMENT PANEL
INSTRUMENT PANEL
INSTRUMENT PANEL
INSTRUMENT PANEL

R	N	P.N.	MOD	Q	Denominação Bezeichnung	Description Description	Denominacion Beskrivelse	Descrizione Beschrijving	L.C.
1		75264020		1	PAINEL, RH PLATTE	PANEL PANNEAU	PANEL PANEL	PANNELLO PANEEL	025P
2		75264288		1	PAINEL DE INSTRUMENTOS, LH INSTRUMENTENTAFEL	INSTRUMENT PANEL TABLEAU DE BORD	PANEL DE INSTRUMENT INSTRUMENTPANEL	QUADRO STRUMENTI INSTRUMENTENPANEEL	141P
3		470-10812		10	PARAFUSO, Slotted Pan Hd, #8-32 x 3/4" SCHRAUBE	SCREW VIS	TORNILLO SKRUE	VITE SCHROEF	040V
4		440-12512		17	PARAFUSO, Cross Pan Hd, 1/4"-20 x 3/4" SCHRAUBE	SCREW VIS	TORNILLO SKRUE	VITE SCHROEF	040V
5		E60389		8	GRAMPO KLAMMER	CLIP COLLIER	ABRAZADERA KLIPS	FERMO KLEM	045F
6		73057960		1	INTERRUPTOR, lights LICHTSCHALTER	LIGHT SWITCH COMM. LUMIERES	INTERRUPTOR DE LUZ KONTAKT, LYS	INTERRUTTORE LUCI VERLICHTINGSSCHAKEL	228S
		75257834		1	INTERRUPTOR, Assy; Incl Ref 7, 8 SCHALTER	SWITCH CONTACTEUR	INTERRUPTOR KONTAKT	INTERRUTTORE SCHAKELAAR	075I
7		75325352		1	INTERRUPTOR, ignition, Without Keys, Includes item 8 SCHALTER	SWITCH CONTACTEUR	INTERRUPTOR KONTAKT	INTERRUTTORE SCHAKELAAR	075I
8		1964831C2		2	JOGO 2 CHAVES SATZ 2 SCHLÜSSEL	SET OF 2 KEYS JEU DE 2 CLES	JUEGO DE 2 LLAVES SKRUENØGLESÆT	KIT DI 2 CHIAVI SET VAN 2 SLEUTELS	Z524
10		L11541		11	PRENDEDOR DE CABOS KABELBINDER	CABLE STRAP BRIDE DE CABLE	BANDA DE CABLE KABELSTROP	FASCETTA PER CAVO BUNDELBAND	P716
11		75265110	a	1	CHICOTE, main KABELBAUM	HARNESS FAISCEAU	MAZO DE CABLES LEDNINGSNET	CABLAGGIO KABELBOOM	4160
11		87463007	b	1	CABO ELÉTRICO, main ELEKTROKABEL	ELECTRIC CABLE CABLE ELECTRIQUE	CABLE ELÉCTRICO EL-KABEL	CAVO ELETTRICO ELEKTRICITEITSKABEL	111C
11		87381043	c	1	CHICOTE KABELBAUM	HARNESS FAISCEAU	MAZO DE CABLES LEDNINGSNET	CABLAGGIO KABELBOOM	4160
11	1	84232285		1	CHICOTE, main KABELBAUM	HARNESS FAISCEAU	MAZO DE CABLES LEDNINGSNET	CABLAGGIO KABELBOOM	4160
12		495-21019		18	ARRUELA PLANA, #8 UNTERLEGSCHEIBE	WASHER RONDELLE	ARANDELA FLADSKIVE	RONDELLA SLUITRING	131R
13		149993A1		1	ALARME ALARM	ALARM ALARME	ALARMA ALARM	ALLARME ALARM	002A
14		492-11008		18	TRAVA DA ARRUELA, #8 SICHERUNGSSCHEIBE	LOCK WASHER RONDELLE FREIN	ARANDELA DE BLOQUEO LÅSESKIVE	RONDELLA DI SICUREZZ BORGRING	132R
15		225-14108		18	PORCA, #8-32 MUTTER	NUT ECROU	TUERCA MØTRIK	DADO MOER	010D
16		87444010		1	BOTÃO PUSH, circuit 25A DRUCKTASTE	PUSH BUTTON BOUTON-POUSSOIR	BOTÓN PULSADOR TRYKKNAP	PULSANTE DRUKKNOP	236P
17		E97952		1	COBERTURA ABDECKUNG	COVER COUVERTURE	COBERTURA COVER	COPERTURA COVER	271C

(1) Para Máquina Aplicação Fertilizante
(a) BSN N6AE00912
(b) ASN N6AE00913
(c) ASN N8AE00945

04-10	01	p2	01/10

PAINEL DE INSTRUMENTOS
INSTRUMENT PANEL
PANEL DE INSTRUMIENTOS
INSTRUMENT PANEL

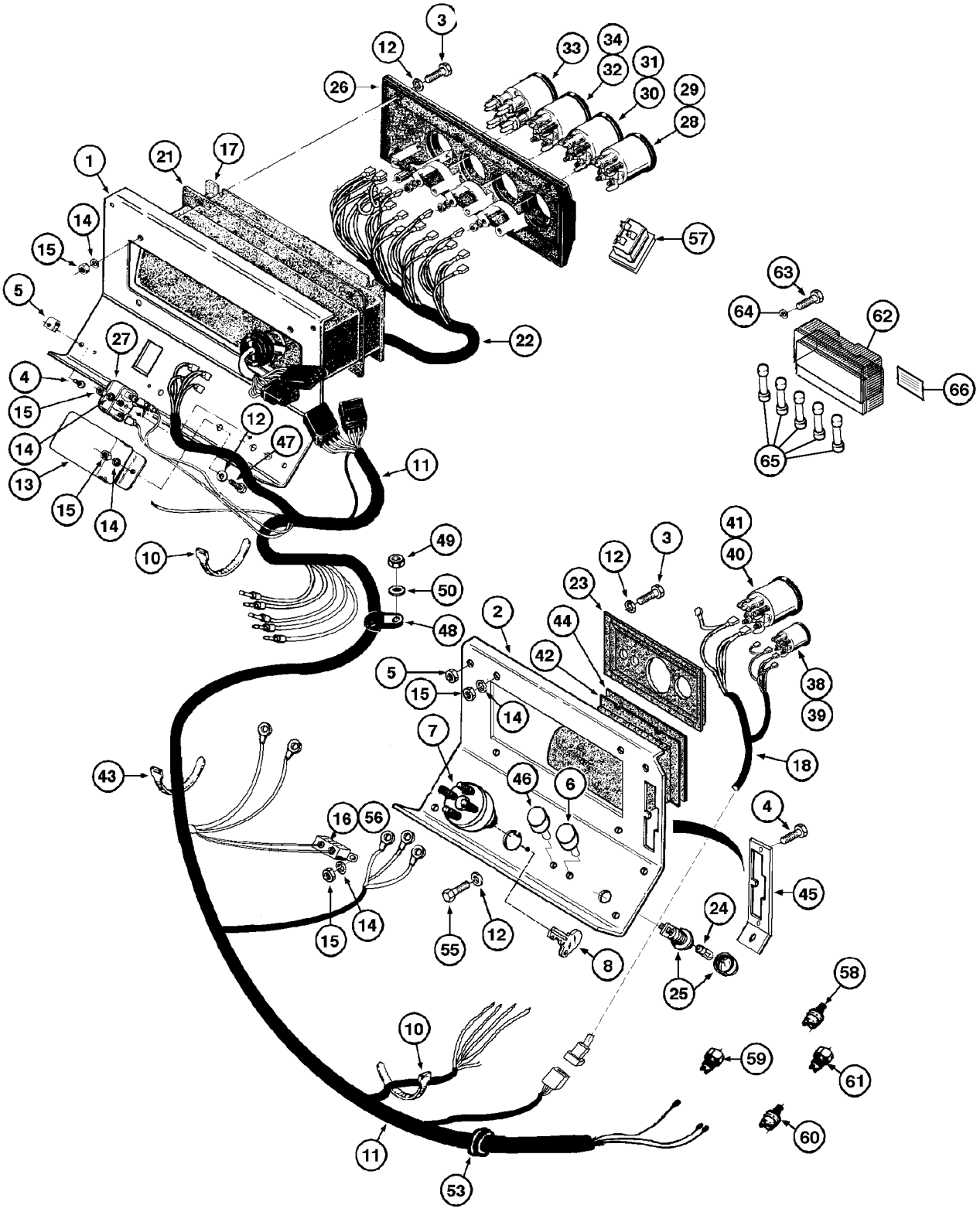

INSTRUMENT PANEL
INSTRUMENT PANEL
INSTRUMENT PANEL
INSTRUMENT PANEL

R	N	P.N.	MOD	Q	Denominação Bezeichnung	Description Description	Denominacion Beskrivelse	Descrizione Beschrijving	L.C.
18		**148057A1**		1	CHICOTE, panel LH KABELBAUM	HARNESS FAISCEAU	MAZO DE CABLES LEDNINGSNET	CABLAGGIO KABELBOOM	4160
20		**L11760**		8	DIODO DIODE	DIODE DIODE	DIODO DIODE	DIODO DIODE	P027
21		**E97953**		1	JUNTA DICHTUNG	GASKET JOINT	JUNTA PAKNING	GUARNIZIONE PAKKING	123G
22		**75263418**		1	CABO ELÉTRICO ELEKTROKABEL	ELECTRIC CABLE CABLE ELECTRIQUE	CABLE ELÉCTRICO EL-KABEL	CAVO ELETTRICO ELEKTRICITEITSKABEL	111C
23		**147386A1**		1	PAINEL, LH PLATTE	PANEL PANNEAU	PANEL PANEL	PANNELLO PANEEL	025P
24		**146916A1**		3	LÂMPADA, 24V 4W LEUCHTE	LAMP LAMPE	LÁMPARA LYGTE	SPIA LAMP	009F
25		**E96037**		3	INDICADOR ANZEIGE	INDICATOR INDICATEUR	INDICADOR INDIKATOR	INDICATORE INDICATOR	087S
26		**75264017**		1	PAINEL, RH PLATTE	PANEL PANNEAU	PANEL PANEL	PANNELLO PANEEL	025P
27		**146927A1**		6	RELÉ, 24V RELAIS	RELAY RELAIS	RELÉ RELÆ	RELÈ RELAIS	011R
28		**149041A1**		1	MEDIDOR, transm. temperature, Includes item 29 ANZEIGE	GAUGE JAUGE	INDICADOR MANOMETER	INDICATORE METER	019C
29		**147291A1**		1	LÂMPADA LEUCHTE	LAMP LAMPE	LÁMPARA LYGTE	SPIA LAMP	009F
30		**149042A1**		1	INSTRUMENTO MEDIDA, fuel, Includes item 31 MESSINSTRUMENT	MEASURING INSTRUME INSTRUMENT DE MESUI	INSTRUMENTO DE MED MÅLEINSTRUMENT	STRUMENTO DI MISURA MEETINSTRUMENT	322S
31		**147291A1**		1	LÂMPADA LEUCHTE	LAMP LAMPE	LÁMPARA LYGTE	SPIA LAMP	009F
32		**148075A1**		1	INDICADOR, temperature ANZEIGE	INDICATOR INDICATEUR	INDICADOR INDIKATOR	INDICATORE INDICATOR	087S
32		**87473703**	a	1	INDICADOR, temperature ANZEIGE	INDICATOR INDICATEUR	INDICADOR INDIKATOR	INDICATORE INDICATOR	087S
33		**75264008**		1	INTERRUPTOR, brake functions, Includes item 34 SCHALTER	SWITCH CONTACTEUR	INTERRUPTOR KONTAKT	INTERRUTTORE SCHAKELAAR	075I
34		**147291A1**		1	LÂMPADA LEUCHTE	LAMP LAMPE	LÁMPARA LYGTE	SPIA LAMP	009F
38		**148677A1**		1	HORÍMETRO, Includes item 39 BETRIEBSSTUNDENZÄH	HOURMETER HOROMETRE	CONTADOR DE HORAS TIMETÆLLER	CONTAORE URENTELLER	248C
39		**147292A1**		1	LÂMPADA LEUCHTE	LAMP LAMPE	LÁMPARA LYGTE	SPIA LAMP	009F
40		**148072A1**		1	VELOCÍMETRO, Includes item 41 DREHZAHLMESSER	TACHOMETER TACHYMETRE	VELOCÍMETRO OMDREJNINGSTÆLLER	TACHIMETRO TOERENTELLER	016T
41		**147291A1**		1	LÂMPADA LEUCHTE	LAMP LAMPE	LÁMPARA LYGTE	SPIA LAMP	009F

(a) ASN N9AE02842

04-10	01	p3	01/10

PAINEL DE INSTRUMENTOS
INSTRUMENT PANEL
PANEL DE INSTRUMIENTOS
INSTRUMENT PANEL

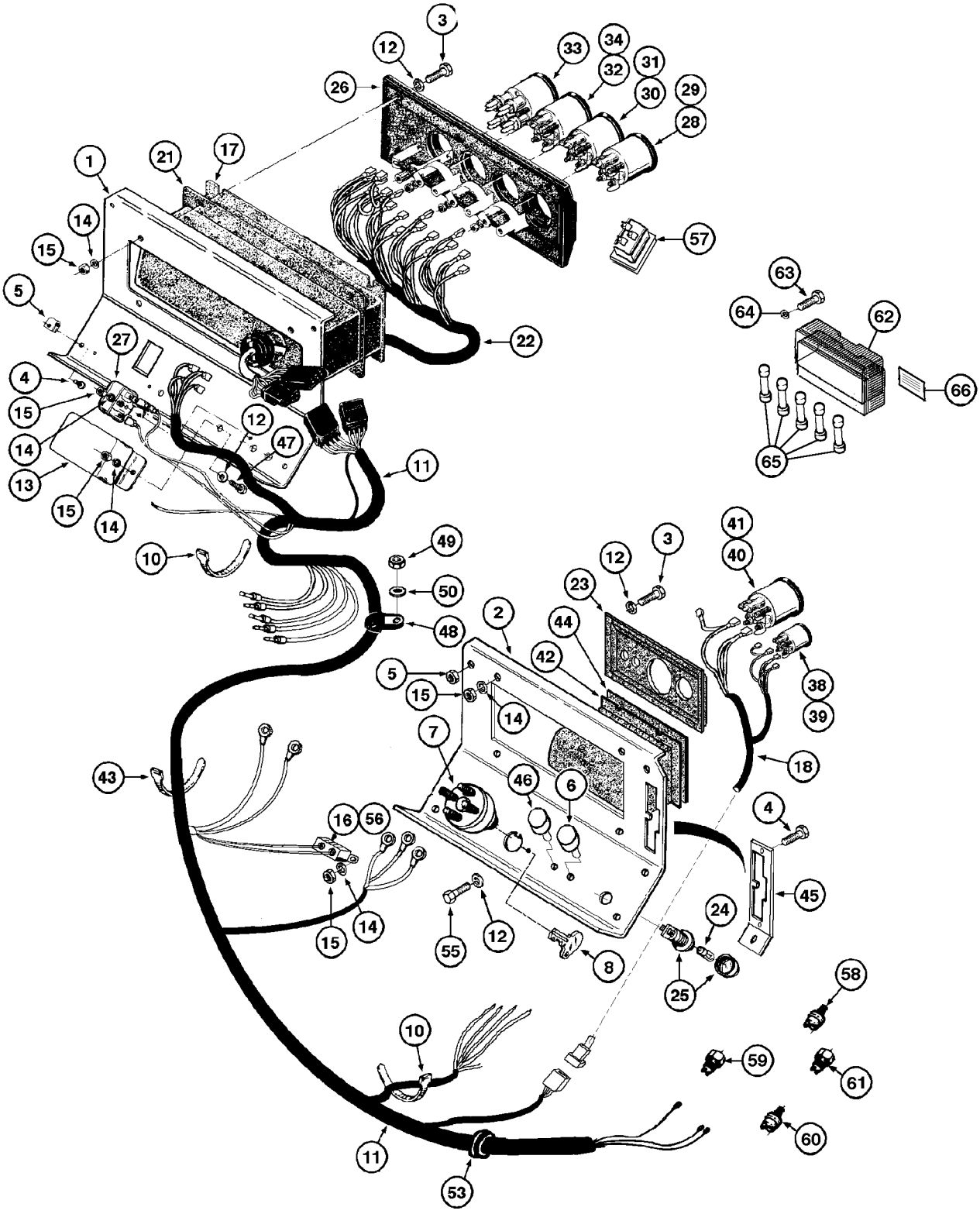

INSTRUMENT PANEL
INSTRUMENT PANEL
INSTRUMENT PANEL
INSTRUMENT PANEL

R	N	P.N.	MOD	Q	Denominação Bezeichnung	Description Description	Denominacion Beskrivelse	Descrizione Beschrijving	L.C.
42		E158644		1	COBERTURA, RH ABDECKUNG	COVER COUVERTURE	COBERTURA COVER	COPERTURA COVER	271C
43		H66842-21		1	BRACADEIRA, cables SCHELLE	CLAMP COLLIER	COLLAR CLAMP	MORSETTO CLAMP	1640
44		E158645		1	JUNTA DICHTUNG	GASKET JOINT	JUNTA PAKNING	GUARNIZIONE PAKKING	123G
45		E158893		1	PROTEÇÃO SCHUTZABDECKUNG	GUARD PROTECTION	DEFENSA BESKYTTELSESSKÆRM	PROTEZIONE AFSCHERMING	070R
46		73057960		1	INTERRUPTOR, lights LICHTSCHALTER	LIGHT SWITCH COMM. LUMIERES	INTERRUPTOR DE LUZ KONTAKT, LYS	INTERRUTTORE LUCI VERLICHTINGSSCHAKEI	228S
47		440-1088		6	PARAFUSO, Cross Pan Hd, #8-32 x 1/2" SCHRAUBE	SCREW VIS	TORNILLO SKRUE	VITE SCHROEF	040V
48		515-23254		4	BRAÇADEIRA, 1", Insul, 3/8" Bolt KLEMME	CLAMP COLLIER	ABRAZADERA SPÆNDEBÅND	MORSETTO KLEM	120M
49		425-106		5	PORCA, 3/8"-16, G5 MUTTER	NUT ECROU	TUERCA MØTRIK	DADO MOER	010D
50		495-11041		5	ARRUELA PLANA, 3/8", SAE UNTERLEGSCHEIBE	WASHER RONDELLE	ARANDELA FLADSKIVE	RONDELLA SLUITRING	131R
53		K00414-78		1	JUNTA DICHTUNG	GASKET JOINT	JUNTA PAKNING	GUARNIZIONE PAKKING	123G
55		440-1086		2	PARAFUSO, Cross Pan Hd, #8-32 x 3/8" SCHRAUBE	SCREW VIS	TORNILLO SKRUE	VITE SCHROEF	040V
56	1	147398A1		1	INTERRUPTOR DE CIRCUITO, 30A SCHUTZSCHALTER	CIRCUIT BREAKER DISJONCTEUR	INTERRUPTOR AUTOMÁ AFBRYDER	INTERRUTTORE STROOMONDERBREKEI	165R
57		75263155		1	INTERRUPTOR, declutch SCHALTER	SWITCH CONTACTEUR	INTERRUPTOR KONTAKT	INTERRUTTORE SCHAKELAAR	075I
58		70094334		1	INTERRUPTOR, brake light F1 LICHTSCHALTER	LIGHT SWITCH COMM. LUMIERES	INTERRUPTOR DE LUZ KONTAKT, LYS	INTERRUTTORE LUCI VERLICHTINGSSCHAKEI	228S
58		84228807	a	1	SENSOR, brake light F1 SENSOR	SENSOR CAPTEUR	SENSOR FØLER	SENSORE SENSOR	608S
59		75254593		1	INTERRUPTOR DE PRESSÃO, declutch F2 DRUCKSCHALTER	PRESSURE SWITCH PRESSOSTAT	INTERRUPTOR DE PRES KONTAKT, TRYK	PRESSOSTATO DRUKSCHAKELAAR	079I
60		75264019		1	INTERRUPTOR, low pressure F SCHALTER	SWITCH CONTACTEUR	INTERRUPTOR KONTAKT	INTERRUTTORE SCHAKELAAR	075I
61		85816770		1	INTERRUP FREIO ESTAC, park brake lever PARKBREMSSCHALTER	PARK BRAKE SWITCH COMM. FREIN STATIONI	INT. DE FRENO DE EST/ KONTAKT, PARKERINGS	INTERR. FRENO STAZIO PARKEERREMSCHAKEL	N46S
62		79078595		1	PORTA-FUSÍVEIS SICHERUNGSHALTER	FUSE HOLDER PORTE-FUSIBLES	PORTAFUSIBLES SIKRINGSHOLDER	PORTAFUSIBILI ZEKERINGHOUDER	188P

(1) OPCIONAL para montagem do farol do ROPS
(a) ASN NAE02680

04-10	01	p4	01/10

PAINEL DE INSTRUMENTOS
INSTRUMENT PANEL
PANEL DE INSTRUMIENTOS
INSTRUMENT PANEL

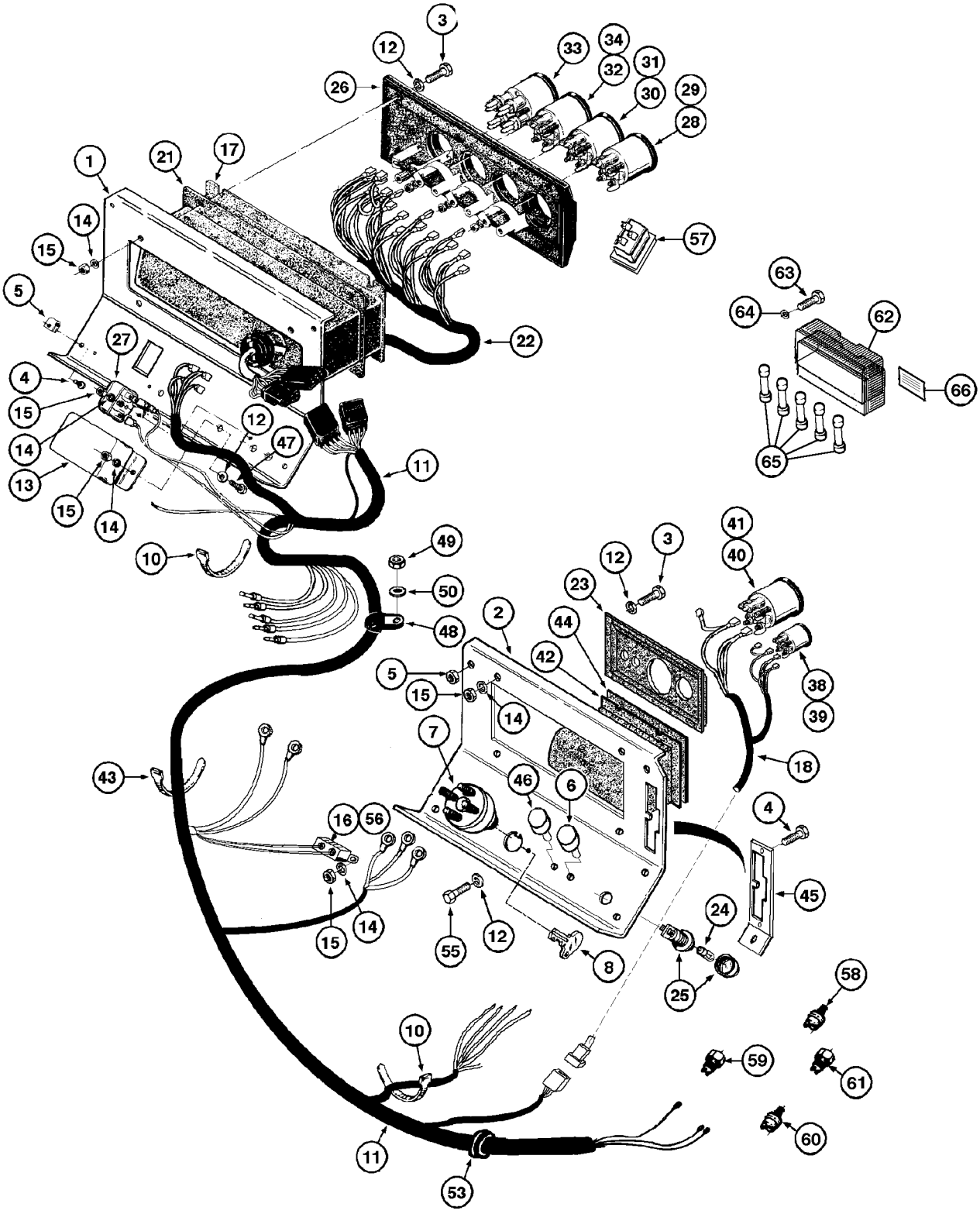

INSTRUMENT PANEL
INSTRUMENT PANEL
INSTRUMENT PANEL
INSTRUMENT PANEL

R	N	P.N.	MOD	Q	Denominação Bezeichnung	Description Description	Denominacion Beskrivelse	Descrizione Beschrijving	L.C.
63		**10374801**		2	PARAFUSO, Pan Hd, M4 x 10				
						SCREW	TORNILLO	VITE	040V
					SCHRAUBE	VIS	SKRUE	SCHROEF	
64		**70917458**		2	ARRUELA PLANA	WASHER	ARANDELA	RONDELLA	131R
					UNTERLEGSCHEIBE	RONDELLE	FLADSKIVE	SLUITRING	
65		**11055090**		2	FUSÍVEL, 15 Amp, Type A, Blue				
						FUSE	FUSIBLE	FUSIBILE	110F
					SICHERUNG	FUSIBLE	SIKRING	ZEKERING	
65		**11055190**		1	FUSÍVEL, 20 Amp, Type A, Yellow				
						FUSE	FUSIBLE	FUSIBILE	110F
					SICHERUNG	FUSIBLE	SIKRING	ZEKERING	
65		**11054890**		1	FUSÍVEL, 7.5 Amp, Type A, Brown				
						FUSE	FUSIBLE	FUSIBILE	110F
					SICHERUNG	FUSIBLE	SIKRING	ZEKERING	
65		**11054590**		1	FUSÍVEL, 3 Amp, Type A, Violet				
						FUSE	FUSIBLE	FUSIBILE	110F
					SICHERUNG	FUSIBLE	SIKRING	ZEKERING	
65		**11054990**		1	FUSÍVEL, 10 Amp, Type A, Red				
						FUSE	FUSIBLE	FUSIBILE	110F
					SICHERUNG	FUSIBLE	SIKRING	ZEKERING	
66		**75264372**		1	ADESIVO, fuse box	DECAL	CALCOMANÍA	DECALCOMANIA	012D
					AUFKLEBER	AUTOCOLLANT	TRANSFER	STICKER	

04-14	01	p1	08/11

SISTEMA ELÉTRICO - DIANTEIRO
ELECTRICAL SYSTEM - FRONT
SISTEMA ELÉCTRICO - DELANTERO
ELECTRICAL SYSTEM - FRONT

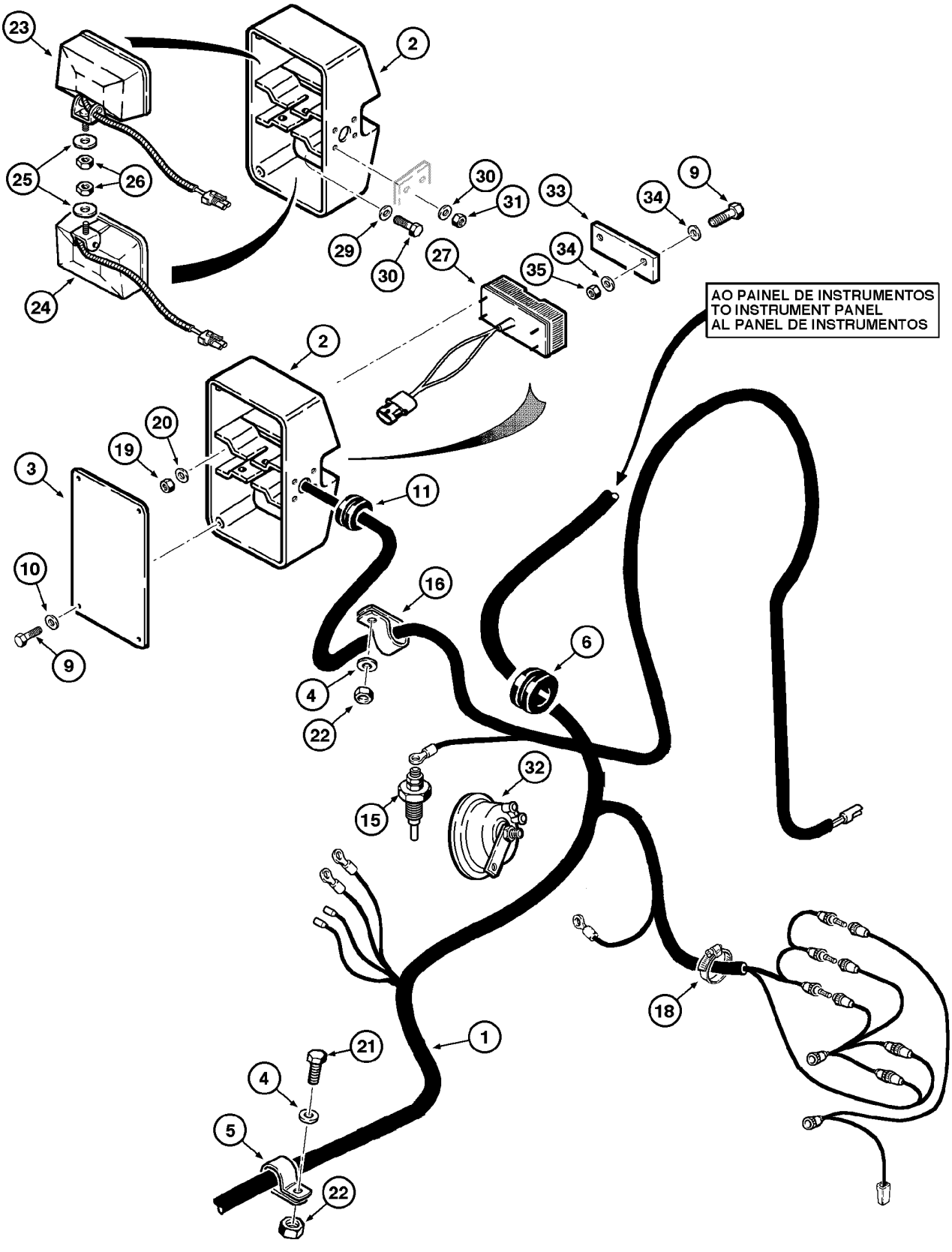

ELECTRICAL SYSTEM - FRONT
ELECTRICAL SYSTEM - FRONT
ELECTRICAL SYSTEM - FRONT
ELECTRICAL SYSTEM - FRONT

R	N	P.N.	MOD	Q	Denominação Bezeichnung	Description Description	Denominacion Beskrivelse	Descrizione Beschrijving	L.C.
1		75265110	a	1	CHICOTE, main KABELBAUM	HARNESS FAISCEAU	MAZO DE CABLES LEDNINGSNET	CABLAGGIO KABELBOOM	4160
1		87463007	b	1	CABO ELÉTRICO, main ELEKTROKABEL	ELECTRIC CABLE CABLE ELECTRIQUE	CABLE ELÉCTRICO EL-KABEL	CAVO ELETTRICO ELEKTRICITEITSKABEL	111C
1		87381043	c	1	CHICOTE, main KABELBAUM	HARNESS FAISCEAU	MAZO DE CABLES LEDNINGSNET	CABLAGGIO KABELBOOM	4160
2		L126951		2	CARCACA, headlight GEHAEUSE	HOUSING CARTER	CARCASA HOUSING	ALLOGGIAMENTO HOUSING	4540
1	1	84232285		1	CHICOTE, main KABELBAUM	HARNESS FAISCEAU	MAZO DE CABLES LEDNINGSNET	CABLAGGIO KABELBOOM	4160
3		L126959		2	TAMPA DECKEL	COVER COUVERCLE	TAPA COVER	COPERCHIO COVER	2250
4		495-11041		4	ARRUELA PLANA, 3/8", SAE UNTERLEGSCHEIBE	WASHER RONDELLE	ARANDELA FLADSKIVE	RONDELLA SLUITRING	131R
5		515-23286		2	BRAÇADEIRA, 1 1/8", Insul, 3/8" Bolt KLEMME	CLAMP COLLIER	ABRAZADERA SPÆNDEBÅND	MORSETTO KLEM	120M
6		K00414-78		1	JUNTA DICHTUNG	GASKET JOINT	JUNTA PAKNING	GUARNIZIONE PAKKING	123G
9		413-412		12	PARAFUSO, Hex, 1/4"-20 x 3/4", G5, Full Thd SCHRAUBE	BOLT VIS	PERNO BOLT	BULLONE BOUT	140B
10		492-11025		8	TRAVA DA ARRUELA, 1/4" SICHERUNGSSCHEIBE	LOCK WASHER RONDELLE FREIN	ARANDELA DE BLOQUE LÅSESKIVE	RONDELLA DI SICUREZ BORGRING	132R
11		L124504		2	PASSA FIL TUELLE	GROMMET PASSE-FIL	ARANDELA AISLANTE GROMMET	ANELLO DI TENUTA GROMMET	4020
15		N7782		1	TRANSMISSOR, hydr. filter TRANSMITTER	TRANSMITTER EMETTEUR	TRANSMISOR SENDER	TRASMETTITORE ZENDER	9250
16		515-23254		3	BRAÇADEIRA, 1", Insul, 3/8" Bolt KLEMME	CLAMP COLLIER	ABRAZADERA SPÆNDEBÅND	MORSETTO KLEM	120M
18		L18331		1	PRENDEDOR DE CABOS KABELBINDER	CABLE STRAP BRIDE DE CABLE	BANDA DE CABLE KABELSTROP	FASCETTA PER CAVO BUNDELBAND	P716
19		825-1405		8	PORCA, M5, Cl 8 MUTTER	NUT ECROU	TUERCA MØTRIK	DADO MOER	010D
20		892-11005		8	TRAVA DA ARRUELA, M5 SICHERUNGSSCHEIBE	LOCK WASHER RONDELLE FREIN	ARANDELA DE BLOQUE LÅSESKIVE	RONDELLA DI SICUREZ BORGRING	132R
21		413-616		1	PARAFUSO, Hex, 3/8"-16 x 1", G5, Full Thd SCHRAUBE	BOLT VIS	PERNO BOLT	BULLONE BOUT	140B
22		425-106		4	PORCA, 3/8"-16, G5 MUTTER	NUT ECROU	TUERCA MØTRIK	DADO MOER	010D

(1) Para Máquina Aplicação Fertilizante
(a) BSN N6AE00912
(b) ASN N6AE00913
(c) ASN N8AE00945

SISTEMA ELÉTRICO - DIANTEIRO
ELECTRICAL SYSTEM - FRONT
SISTEMA ELÉCTRICO - DELANTERO
ELECTRICAL SYSTEM - FRONT

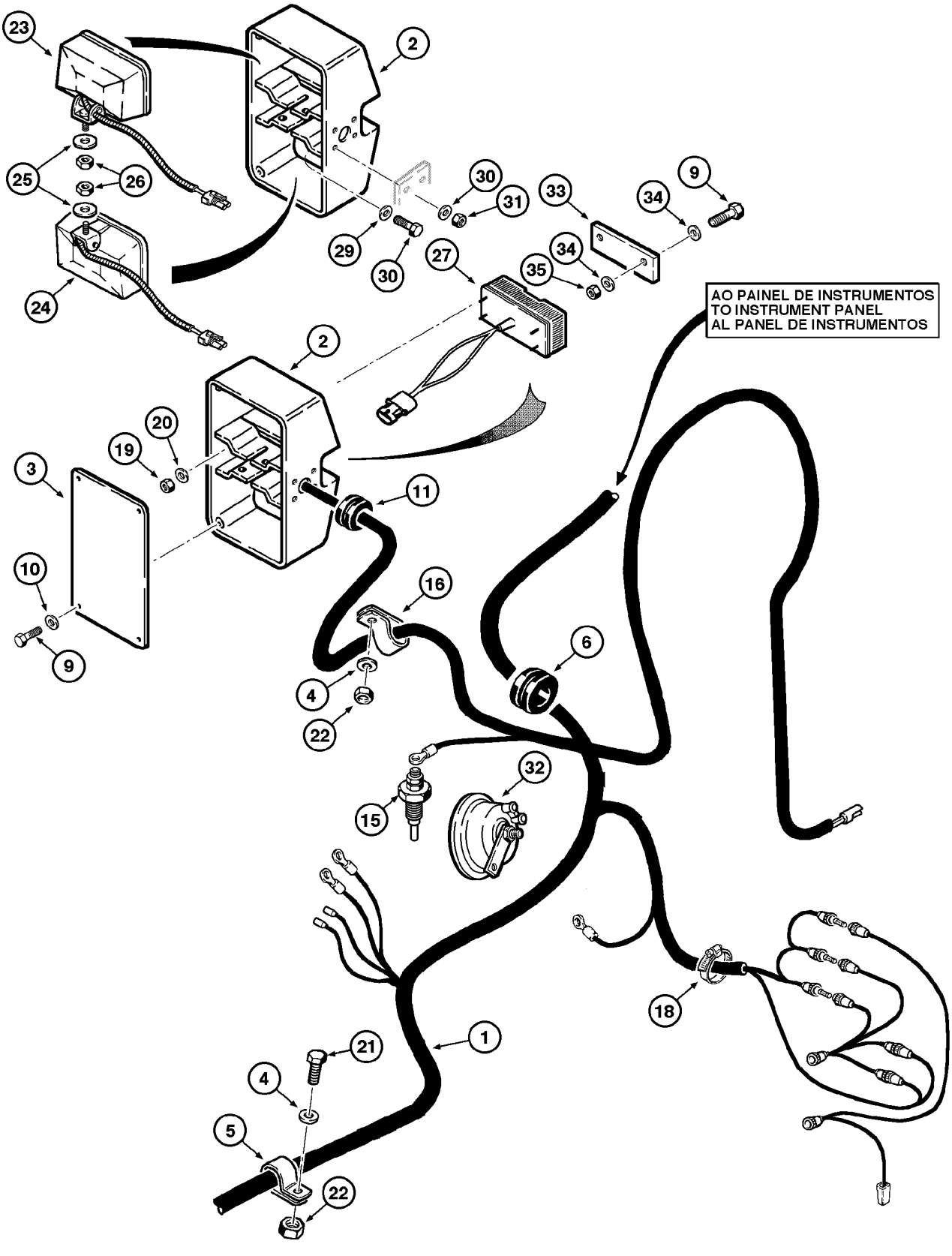

ELECTRICAL SYSTEM - FRONT
ELECTRICAL SYSTEM - FRONT
ELECTRICAL SYSTEM - FRONT
ELECTRICAL SYSTEM - FRONT

R	N	P.N.	MOD	Q	Denominação Bezeichnung	Description Description	Denominacion Beskrivelse	Descrizione Beschrijving	L.C.
23		A187519		2	FAROL CONJUNTO, Upper (P.4-30)				
						LIGHT ASSY.	FARO (CONJ)	LUCE, COMPLESSIVO	P478
					LAMPE (KPLT.)	FEU (ASSEMBLE)	LIGHT ASSY.	LIGHT ASSY.	
24		A187520		2	FAROL CONJUNTO, Lower (P.4-30)				
						LIGHT ASSY.	FARO (CONJ)	LUCE, COMPLESSIVO	P478
					LAMPE (KPLT.)	FEU (ASSEMBLE)	LIGHT ASSY.	LIGHT ASSY.	
25		495-21056		6	ARRUELA PLANA, 1/2"	WASHER	ARANDELA	RONDELLA	131R
					UNTERLEGSCHEIBE	RONDELLE	FLADSKIVE	SLUITRING	
26		131-1402		4	CONTRA PORCA, 1/2"-13, GB, Thin				
						LOCK NUT	TUERCA DE BLOQUEO	DADO DI BLOCCAGGIO	P263
					SICHERUNGSMUTTER	CONTRE-ECROU	LÅSEMØTRIK	BORGMOER	
27		REF		1	INSTRUÇÃO, LIGHT LH/RH - OPT (P.4-26)				
						INSTRUCTION	INSTRUCCIÓN	ISTRUZIONI	Z571
					ANLEITUNG	INSTRUCTION	INSTRUKTION	INSTRUCTIE	
29		413-520		8	PARAFUSO, Hex, 5/16"-18 x 1 1/4", G5				
						BOLT	PERNO	BULLONE	140B
					SCHRAUBE	VIS	BOLT	BOUT	
30		13578378		16	TRAVA DA ARRUELA	LOCK WASHER	ARANDELA DE BLOQUE	RONDELLA DI SICUREZ	132R
					SICHERUNGSSCHEIBE	RONDELLE FREIN	LÅSESKIVE	BORGRING	
31		231-1445		8	CONTRA PORCA, 5/16"-18, GB				
						LOCK NUT	TUERCA DE BLOQUEO	DADO DI BLOCCAGGIO	P263
					SICHERUNGSMUTTER	CONTRE-ECROU	LÅSEMØTRIK	BORGMOER	
32		87724783	a	1	BUZINA	HORN	BOCINA	AVVISATORE ACUSTICC	105A
					HUPE	AVERTISSEUR SONORE	HORN	CLAXON	
32		79114714	b	1	BUZINA	HORN	BOCINA	AVVISATORE ACUSTICC	105A
					HUPE	AVERTISSEUR SONORE	HORN	CLAXON	
33		147642A1		1	COBERTURA	COVER	CUBIERTA	COPERCHIO	265C
					ABDECKUNG	COUVERCLE	DÆKSEL	AFSCHERMING	
34		495-11028		8	ARRUELA PLANA, 1/4", SAE				
						WASHER	ARANDELA	RONDELLA	131R
					UNTERLEGSCHEIBE	RONDELLE	FLADSKIVE	SLUITRING	
35		425-104		4	PORCA, 1/4"-20, G5	NUT	TUERCA	DADO	010D
					MUTTER	ECROU	MØTRIK	MOER	

(a) ASN N8AE02164
(b) BSN N8AE02164

04-16	01	p1	01/09

SISTEMA ELÉTRICO - MOTOR
ELECTRICAL SYSTEM - ENGINE
SISTEMA ELÉCTRICO - MOTOR
ELECTRICAL SYSTEM - ENGINE

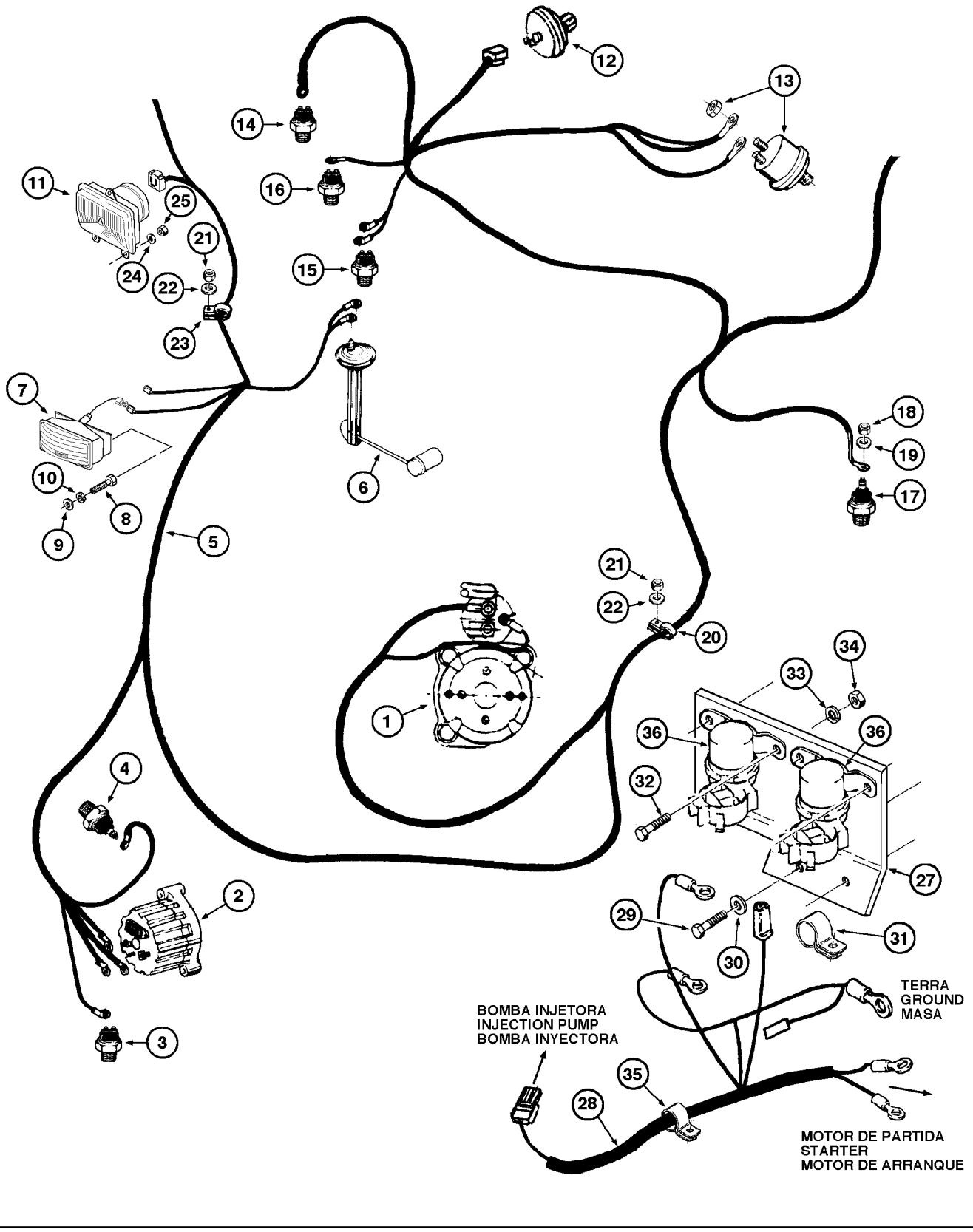

ELECTRICAL SYSTEM - ENGINE
ELECTRICAL SYSTEM - ENGINE
ELECTRICAL SYSTEM - ENGINE
ELECTRICAL SYSTEM - ENGINE

R	N	P.N.	MOD	Q	Denominação Bezeichnung	Description Description	Denominacion Beskrivelse	Descrizione Beschrijving	L.C.
1		REF		1	INSTRUÇÃO, STARTER (P.4-22)				
						INSTRUCTION	INSTRUCCIÓN	ISTRUZIONI	Z571
					ANLEITUNG	INSTRUCTION	INSTRUKTION	INSTRUCTIE	
2		REF		1	INSTRUÇÃO, ALTERNATOR (P.4-4,8,8B)				
						INSTRUCTION	INSTRUCCIÓN	ISTRUZIONI	Z571
					ANLEITUNG	INSTRUCTION	INSTRUKTION	INSTRUCTIE	
3		1983238C1		1	EMISSOR DE TEMPERATURA				
						TEMPERATURE SENDEF	EMISOR DE TEMPERATU	TRASMETT. TEMPERATU	Z366
					TEMPERATURGEBER	TRANSMETTEUR TEMPE	TEMPERATURSENDER	TEMPERATUURSENSOR	
4		E68563		1	SENSOR, engine oil	SENSOR	SENSOR	SENSORE	608S
					SENSOR	CAPTEUR	FØLER	SENSOR	
5		75265110	a	1	CHICOTE, main	HARNESS	MAZO DE CABLES	CABLAGGIO	4160
					KABELBAUM	FAISCEAU	LEDNINGSNET	KABELBOOM	
5		87463007	b	1	CABO ELÉTRICO, main	ELECTRIC CABLE	CABLE ELÉCTRICO	CAVO ELETTRICO	111C
					ELEKTROKABEL	CABLE ELECTRIQUE	EL-KABEL	ELEKTRICITEITSKABEL	
6		REF		1	INSTRUÇÃO, SENDING-UNIT (P.3-4)				
						INSTRUCTION	INSTRUCCIÓN	ISTRUZIONI	Z571
					ANLEITUNG	INSTRUCTION	INSTRUKTION	INSTRUCTIE	
5		87381043	c	1	CHICOTE, main	HARNESS	MAZO DE CABLES	CABLAGGIO	4160
					KABELBAUM	FAISCEAU	LEDNINGSNET	KABELBOOM	
7		REF		2	INSTRUÇÃO, LIGHT (P.4-24)				
						INSTRUCTION	INSTRUCCIÓN	ISTRUZIONI	Z571
					ANLEITUNG	INSTRUCTION	INSTRUKTION	INSTRUCTIE	
8		413-412		4	PARAFUSO, Hex, 1/4"-20 x 3/4", G5, Full Thd				
						BOLT	PERNO	BULLONE	140B
					SCHRAUBE	VIS	BOLT	BOUT	
9		495-11028		4	ARRUELA PLANA, 1/4", SAE				
						WASHER	ARANDELA	RONDELLA	131R
					UNTERLEGSCHEIBE	RONDELLE	FLADSKIVE	SLUITRING	
10		495-11025		4	ARRUELA PLANA, #12	WASHER	ARANDELA	RONDELLA	131R
					UNTERLEGSCHEIBE	RONDELLE	FLADSKIVE	SLUITRING	
11		A187520		2	FAROL CONJUNTO, (P.4-30)				
						LIGHT ASSY.	FARO (CONJ)	LUCE, COMPLESSIVO	P478
					LAMPE (KPLT.)	FEU (ASSEMBLE)	LIGHT ASSY.	LIGHT ASSY.	
12		E157575		1	INDICADOR	INDICATOR	INDICADOR	INDICATORE	087S
					ANZEIGE	INDICATEUR	INDIKATOR	INDICATOR	
13		L108238		1	SENSOR, oil pressure	SENSOR	SENSOR	SENSORE	608S
					SENSOR	CAPTEUR	FØLER	SENSOR	
14		REF		1	INSTRUÇÃO, SWITCH hydraulic filter (P.5-12)				
						INSTRUCTION	INSTRUCCIÓN	ISTRUZIONI	Z571
					ANLEITUNG	INSTRUCTION	INSTRUKTION	INSTRUCTIE	
15		REF		1	INSTRUÇÃO, SWITCH (P.6-30)				
						INSTRUCTION	INSTRUCCIÓN	ISTRUZIONI	Z571
					ANLEITUNG	INSTRUCTION	INSTRUKTION	INSTRUCTIE	
16		148079A1		1	SENSOR, temperature	SENSOR	SENSOR	SENSORE	608S
					SENSOR	CAPTEUR	FØLER	SENSOR	

(a) BSN N6AE00912
(b) ASN N6AE00913
(c) ASN N8AE00945

04-16	01	p2	01/09

SISTEMA ELÉTRICO - MOTOR
ELECTRICAL SYSTEM - ENGINE
SISTEMA ELÉCTRICO - MOTOR
ELECTRICAL SYSTEM - ENGINE

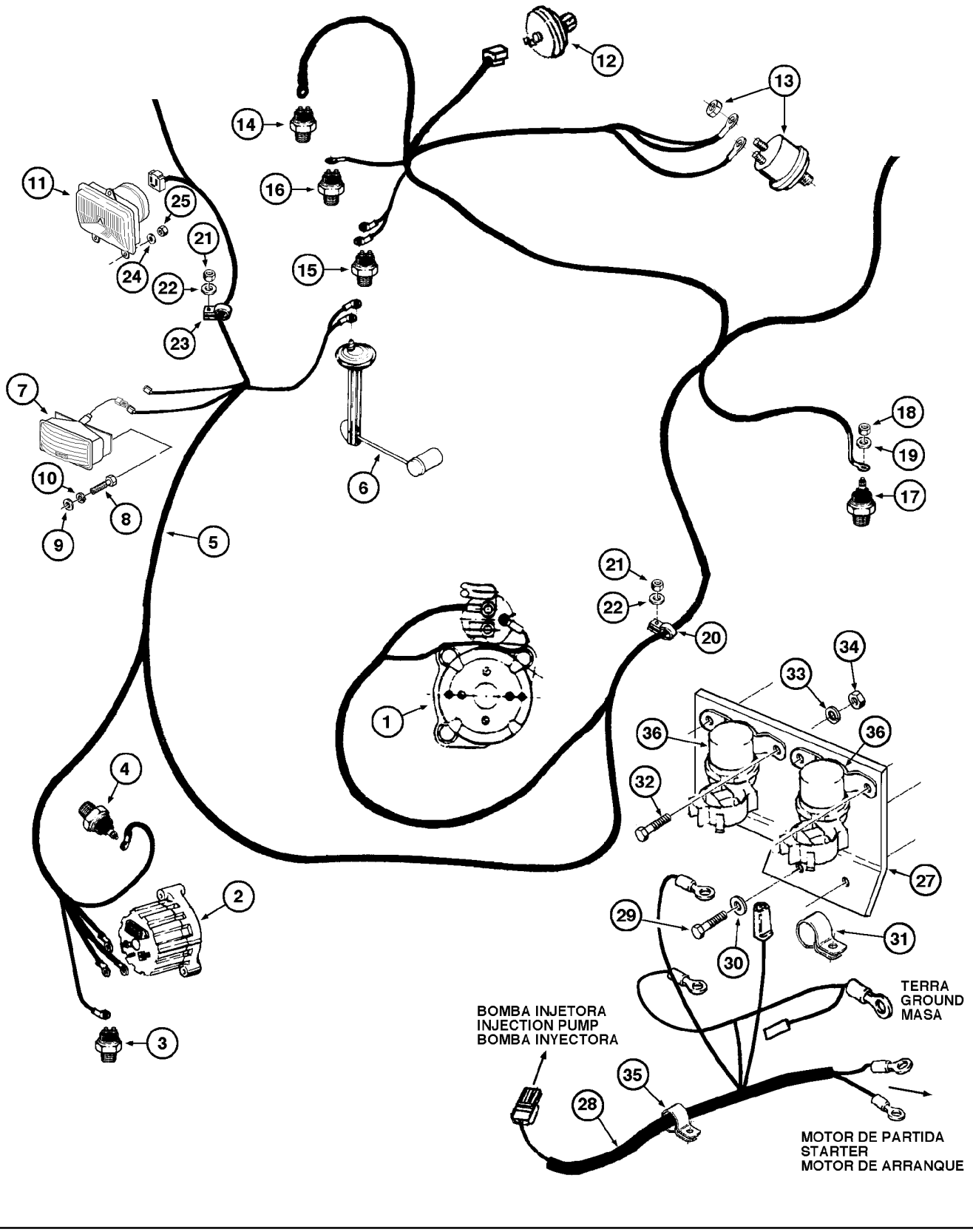

ELECTRICAL SYSTEM - ENGINE
ELECTRICAL SYSTEM - ENGINE
ELECTRICAL SYSTEM - ENGINE
ELECTRICAL SYSTEM - ENGINE

R	N	P.N.	MOD	Q	Denominação Bezeichnung	Description Description	Denominacion Beskrivelse	Descrizione Beschrijving	L.C.
17		148078A1		1	SENSOR, temperature	SENSOR	SENSOR	SENSORE	608S
					SENSOR	CAPTEUR	FØLER	SENSOR	
18		225-14210		1	PORCA, #10-32	NUT	TUERCA	DADO	010D
					MUTTER	ECROU	MØTRIK	MOER	
19		492-11010		1	TRAVA DA ARRUELA, #10	LOCK WASHER	ARANDELA DE BLOQUE	RONDELLA DI SICUREZ	132R
					SICHERUNGSSCHEIBE	RONDELLE FREIN	LÅSESKIVE	BORGRING	
20		515-23286		4	BRAÇADEIRA, 1 1/8", Insul, 3/8" Bolt				
						CLAMP	ABRAZADERA	MORSETTO	120M
					KLEMME	COLLIER	SPÆNDEBÅND	KLEM	
21		425-106		11	PORCA, 3/8"-16, G5	NUT	TUERCA	DADO	010D
					MUTTER	ECROU	MØTRIK	MOER	
22		495-11041		11	ARRUELA PLANA, 3/8", SAE				
						WASHER	ARANDELA	RONDELLA	131R
					UNTERLEGSCHEIBE	RONDELLE	FLADSKIVE	SLUITRING	
23		515-23127		9	BRAÇADEIRA, 1/2", Insul, 3/8" Bolt				
						CLAMP	ABRAZADERA	MORSETTO	120M
					KLEMME	COLLIER	SPÆNDEBÅND	KLEM	
24		131-1402		2	CONTRA PORCA, 1/2"-13,	GB, Thin			
						LOCK NUT	TUERCA DE BLOQUEO	DADO DI BLOCCAGGIO	P263
					SICHERUNGSMUTTER	CONTRE-ECROU	LÅSEMØTRIK	BORGMOER	
25		495-21056		2	ARRUELA PLANA, 1/2"	WASHER	ARANDELA	RONDELLA	131R
					UNTERLEGSCHEIBE	RONDELLE	FLADSKIVE	SLUITRING	
27		87404889		1	SUPORTE	SUPPORT	SOPORTE	SUPPORTO	300S
					STÜTZE	SUPPORT	BESLAG	STEUN	
29		614-12025		2	PARAFUSO, Hex, M12 x 25, 8.8				
						BOLT	PERNO	BULLONE	140B
					SCHRAUBE	VIS	BOLT	BOUT	
28		87405623	a	1	CABO ELÉTRICO	ELECTRIC CABLE	CABLE ELÉCTRICO	CAVO ELETTRICO	111C
					ELEKTROKABEL	CABLE ELECTRIQUE	EL-KABEL	ELEKTRICITEITSKABEL	
28		87527990	b	1	CHICOTE, injection pump	HARNESS	MAZO DE CABLES	CABLAGGIO	4160
					KABELBAUM	FAISCEAU	LEDNINGSNET	KABELBOOM	
30		896-11012		2	ARRUELA PLANA, M13.5 x 24.5 x 3, HT				
						WASHER	ARANDELA	RONDELLA	131R
					UNTERLEGSCHEIBE	RONDELLE	FLADSKIVE	SLUITRING	
31		515-25127		1	BRAÇADEIRA, 1/2", Insul, 1/2" Bolt				
						CLAMP	ABRAZADERA	MORSETTO	120M
					KLEMME	COLLIER	SPÆNDEBÅND	KLEM	
32		426-412		3	PARAFUSO, Hex, 1/4"-20 x 3/4", G8, Full Thd				
						BOLT	PERNO	BULLONE	140B
					SCHRAUBE	VIS	BOLT	BOUT	
33		492-11025		3	TRAVA DA ARRUELA, 1/4"	LOCK WASHER	ARANDELA DE BLOQUE	RONDELLA DI SICUREZ	132R
					SICHERUNGSSCHEIBE	RONDELLE FREIN	LÅSESKIVE	BORGRING	
34		425-104		3	PORCA, 1/4"-20, G5	NUT	TUERCA	DADO	010D
					MUTTER	ECROU	MØTRIK	MOER	
35		515-23286		1	BRAÇADEIRA, 1 1/8", Insul, 3/8" Bolt				
						CLAMP	ABRAZADERA	MORSETTO	120M
					KLEMME	COLLIER	SPÆNDEBÅND	KLEM	

(a) BSN N6AE01092
(b) ASN N6AE01092

04-16	01	p3	01/09

SISTEMA ELÉTRICO - MOTOR
ELECTRICAL SYSTEM - ENGINE
SISTEMA ELÉCTRICO - MOTOR
ELECTRICAL SYSTEM - ENGINE

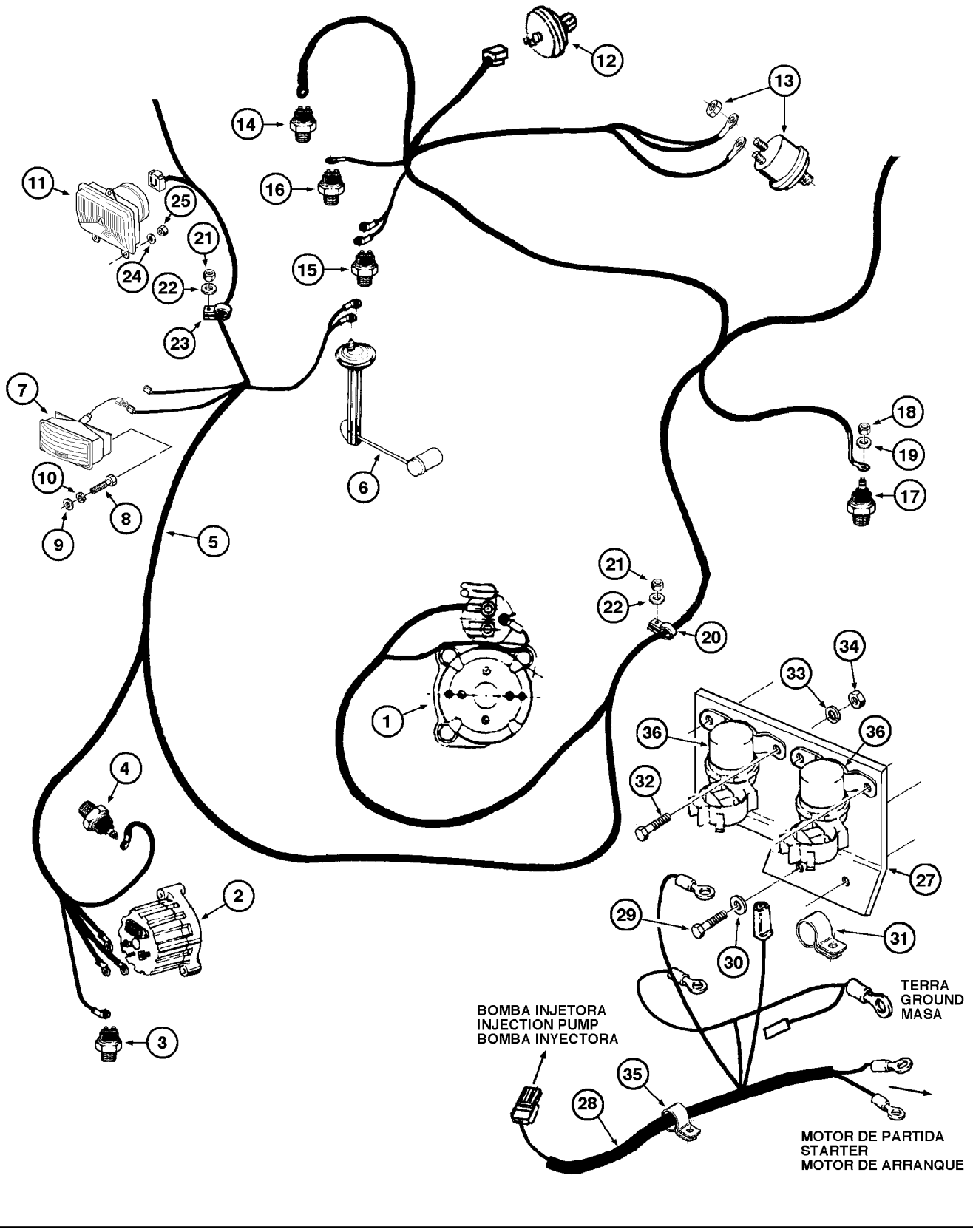

ELECTRICAL SYSTEM - ENGINE
ELECTRICAL SYSTEM - ENGINE
ELECTRICAL SYSTEM - ENGINE
ELECTRICAL SYSTEM - ENGINE

R	N	P.N.	MOD	Q	Denominação Bezeichnung	Description Description	Denominacion Beskrivelse	Descrizione Beschrijving	L.C.
36		**120398A1**	a	2	RELE RELAIS	RELAY RELAIS	RELE RELAY	REL RELAY	7025

(a) BSN N6AE01092

04-18	01	p1	12/07

INDICADOR DE DIREÇÃO
TURN SIGNAL AND FLASHER
SEÑAL DIRECCIONAL Y ALERTA
TURN SIGNAL AND FLASHER

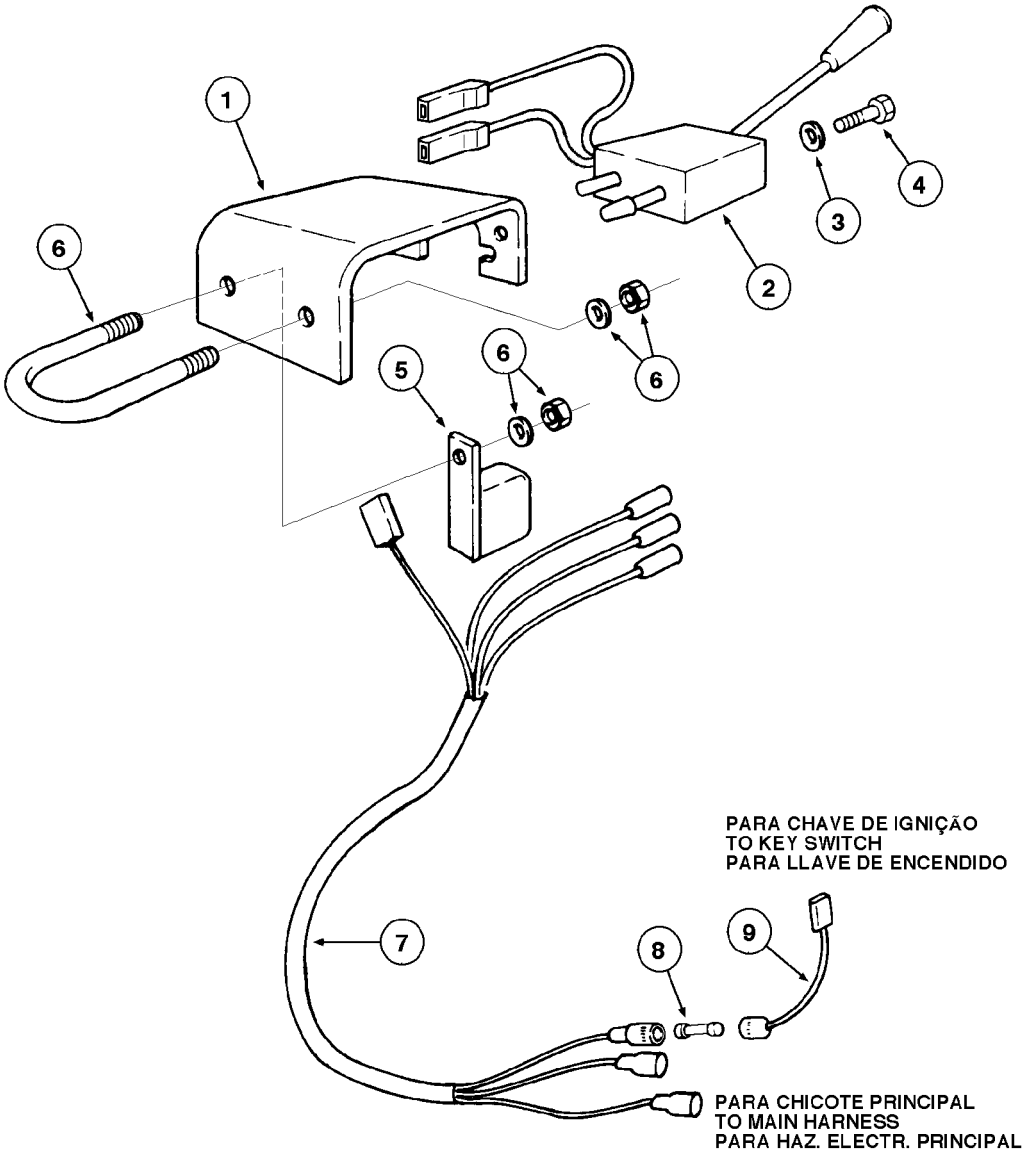

TURN SIGNAL AND FLASHER
TURN SIGNAL AND FLASHER
TURN SIGNAL AND FLASHER
TURN SIGNAL AND FLASHER

R	N	P.N.	MOD	Q	Denominação Bezeichnung	Description Description	Denominacion Beskrivelse	Descrizione Beschrijving	L.C.
1		147719A1		1	SUPORTE STÜTZE	SUPPORT SUPPORT	SOPORTE BESLAG	SUPPORTO STEUN	300S
2		1987555C1		1	INTERRUPTOR SCHALTER	SWITCH CONTACTEUR	INTERRUPTOR KONTAKT	INTERRUTTORE SCHAKELAAR	075I
3		892-11004		2	TRAVA DA ARRUELA, M4 SICHERUNGSSCHEIBE	LOCK WASHER RONDELLE FREIN	ARANDELA DE BLOQUE LÅSESKIVE	RONDELLA DI SICUREZ BORGRING	132R
4		614-4012		2	PARAFUSO, Hex, M4 x 12, 8.8, Full Thd SCHRAUBE	BOLT VIS	PERNO BOLT	BULLONE BOUT	140B
5		147722A1		1	RELÉ, 24V RELAIS	RELAY RELAIS	RELÉ RELÆ	RELÈ RELAIS	011R
6		147720A1		1	BRACADEIRA SCHELLE	CLAMP COLLIER	COLLAR CLAMP	MORSETTO CLAMP	1640
7		147723A1		1	CHICOTE KABELBAUM	HARNESS FAISCEAU	MAZO DE CABLES LEDNINGSNET	CABLAGGIO KABELBOOM	4160
8		E158994		1	FUSÍVEL, 5A SICHERUNG	FUSE FUSIBLE	FUSIBLE SIKRING	FUSIBILE ZEKERING	110F
9		E158974		1	CABO, resistor KABEL	CABLE CABLE	CABLE KABEL	CAVO KABEL	650C

OPCIONAL

W20E

04-20	01	p1	06/10

MOTOR DE PARTIDA E BATERIA
STARTER AND BATTERY
MOTOR DE ARRANQUE Y BATERIA
STARTER AND BATTERY

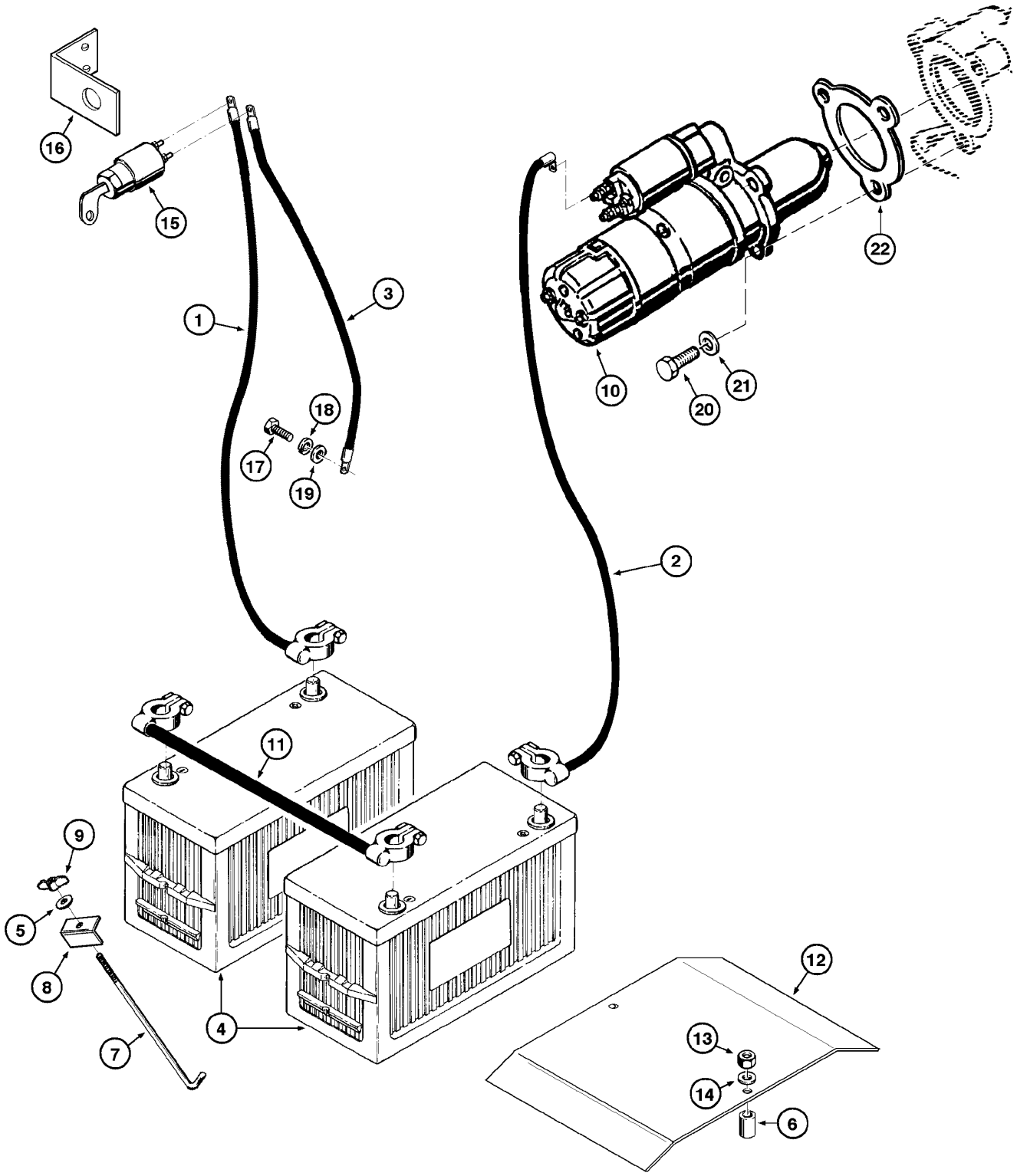

STARTER AND BATTERY
STARTER AND BATTERY
STARTER AND BATTERY
STARTER AND BATTERY

R	N	P.N.	MOD	Q	Denominação Bezeichnung	Description Description	Denominacion Beskrivelse	Descrizione Beschrijving	L.C.
1		E157471		1	CABO, ground to ignition key				
						CABLE	CABLE	CAVO	650C
					KABEL	CABLE	KABEL	KABEL	
2		145426A1		1	CABO, positive	CABLE	CABLE	CAVO	650C
					KABEL	CABLE	KABEL	KABEL	
3		147387A1		1	CABO ELÉTRICO, ground to engine				
						ELECTRIC CABLE	CABLE ELÉCTRICO	CAVO ELETTRICO	111C
					ELEKTROKABEL	CABLE ELECTRIQUE	EL-KABEL	ELEKTRICITEITSKABEL	
4		75327749		2	BATERIA, 12V 65A STD	BATTERY	BATERIA	BATTERIA	0560
					BATTERIE	BATTERIE	BATTERI	ACCU	
5		E159646		1	SUPORTE	SUPPORT	SOPORTE	SUPPORTO	300S
					STÜTZE	SUPPORT	BESLAG	STEUN	
6		E97702		2	ESPAÇADOR	SPACER	SEPARADOR	DISTANZIALE	075D
					DISTANZSTÜCK	ENTRETOISE	AFSTANDSSTYKKE	AFSTANDSSTUK	
7		T31481		1	PARAFUSO	SCREW	TORNILLO	VITE	7450
					SCHRAUBE	VIS	SCREW	SCREW	
8		495-11034		1	ARRUELA PLANA, 5/16", SAE				
						WASHER	ARANDELA	RONDELLA	131R
					UNTERLEGSCHEIBE	RONDELLE	FLADSKIVE	SLUITRING	
9		129-405		1	PORCA, 5/16"-18	NUT	TUERCA	DADO	010D
					MUTTER	ECROU	MØTRIK	MOER	
10		REF		1	INSTRUÇÃO, STARTER Assy (P.4-22)				
						INSTRUCTION	INSTRUCCIÓN	ISTRUZIONI	Z571
					ANLEITUNG	INSTRUCTION	INSTRUKTION	INSTRUCTIE	
11		E159692		1	CABO, positive to negative	CABLE	CABLE	CAVO	650C
					KABEL	CABLE	KABEL	KABEL	
12		87374074		1	COBERTURA, battery	COVER	CUBIERTA	COPERCHIO	265C
					ABDECKUNG	COUVERCLE	DÆKSEL	AFSCHERMING	
13		425-106		2	PORCA, 3/8"-16, G5	NUT	TUERCA	DADO	010D
					MUTTER	ECROU	MØTRIK	MOER	
14		495-11041		2	ARRUELA PLANA, 3/8", SAE				
						WASHER	ARANDELA	RONDELLA	131R
					UNTERLEGSCHEIBE	RONDELLE	FLADSKIVE	SLUITRING	
15		L07842-41		1	INTERRUPTOR, main	SWITCH	INTERRUPTOR	INTERRUTTORE	075I
					SCHALTER	CONTACTEUR	KONTAKT	SCHAKELAAR	
16		E159647		1	SUPORTE	SUPPORT	SOPORTE	SUPPORTO	300S
					STÜTZE	SUPPORT	BESLAG	STEUN	
16	1	84241619		1	SUPORTE	SUPPORT	SOPORTE	SUPPORTO	300S
					STÜTZE	SUPPORT	BESLAG	STEUN	
17		614-12025		1	PARAFUSO, Hex, M12 x 25, 8.8				
						BOLT	PERNO	BULLONE	140B
					SCHRAUBE	VIS	BOLT	BOUT	
18		893-11012		1	TRAVA DA ARRUELA, Ext Tooth, M12				
						LOCK WASHER	ARANDELA DE BLOQUEI	RONDELLA DI SICUREZ	132R
					SICHERUNGSSCHEIBE	RONDELLE FREIN	LÅSESKIVE	BORGRING	
19		495-11053		1	ARRUELA PLANA, 1/2", SAE				
						WASHER	ARANDELA	RONDELLA	131R
					UNTERLEGSCHEIBE	RONDELLE	FLADSKIVE	SLUITRING	

(1) Para Máquina Aplicação Fertilizante

04-20	01	p2	06/10

MOTOR DE PARTIDA E BATERIA
STARTER AND BATTERY
MOTOR DE ARRANQUE Y BATERIA
STARTER AND BATTERY

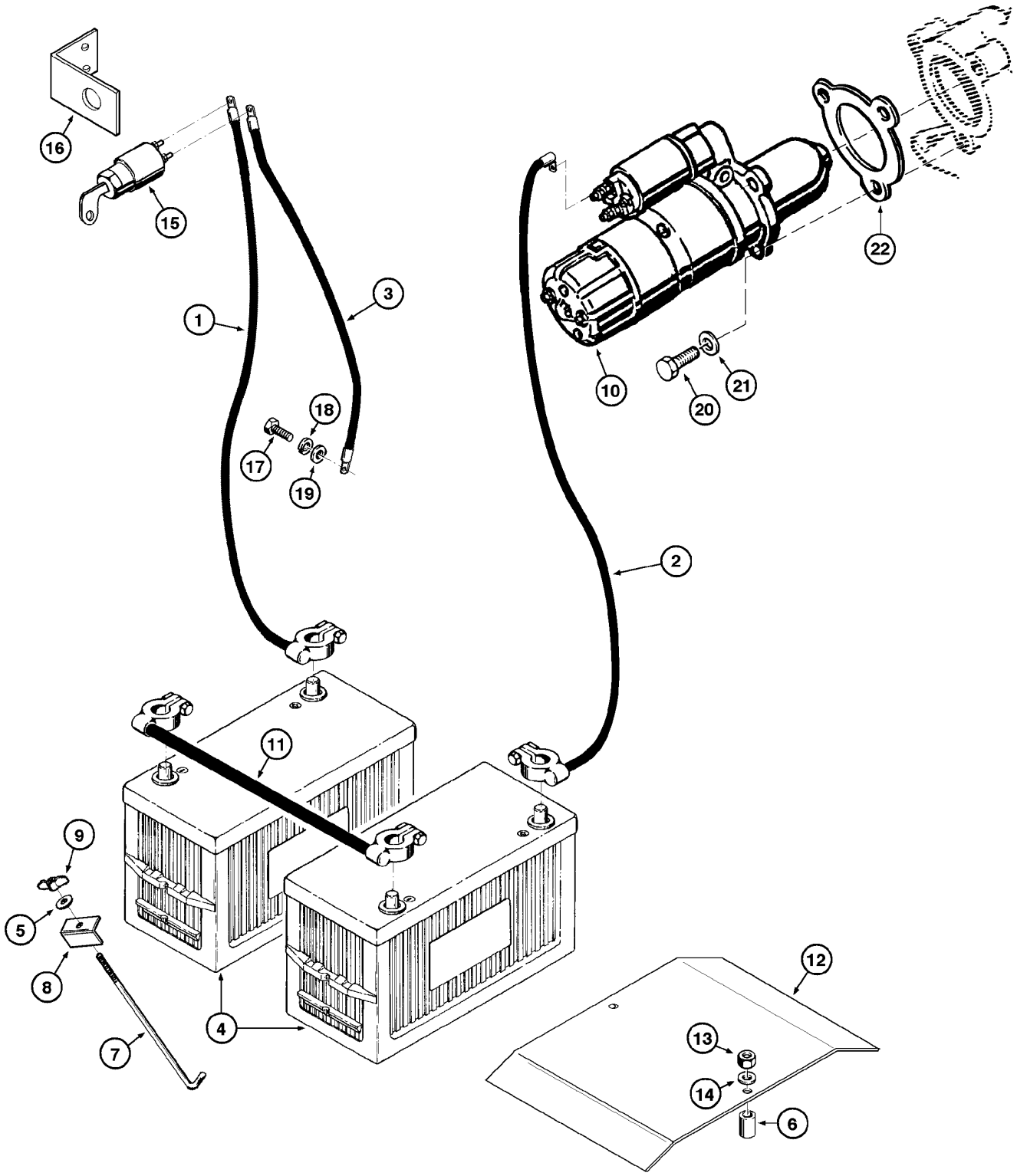

STARTER AND BATTERY
STARTER AND BATTERY
STARTER AND BATTERY
STARTER AND BATTERY

R	N	P.N.	MOD	Q	Denominação Bezeichnung	Description Description	Denominacion Beskrivelse	Descrizione Beschrijving	L.C.
20		**614-10035**		3	PARAFUSO, Hex, M10 x 35, 8.8, Full Thd				
						BOLT	PERNO	BULLONE	140B
					SCHRAUBE	VIS	BOLT	BOUT	
21		**892-11010**		3	TRAVA DA ARRUELA, M10	LOCK WASHER	ARANDELA DE BLOQUE	RONDELLA DI SICUREZ	132R
					SICHERUNGSSCHEIBE	RONDELLE FREIN	LÅSESKIVE	BORGRING	
22	1	**L112209**		1	JUNTA	GASKET	JUNTA	GUARNIZIONE	3720
					DICHTUNG	JOINT	GASKET	GASKET	

(1) Se usado

04-22	01	p1	03/09

MOTOR DE PARTIDA - CONJUNTO
STARTER - ASSEMBLY
MOTOR DE ARRANQUE - CONJUNTO
STARTER - ASSEMBLY

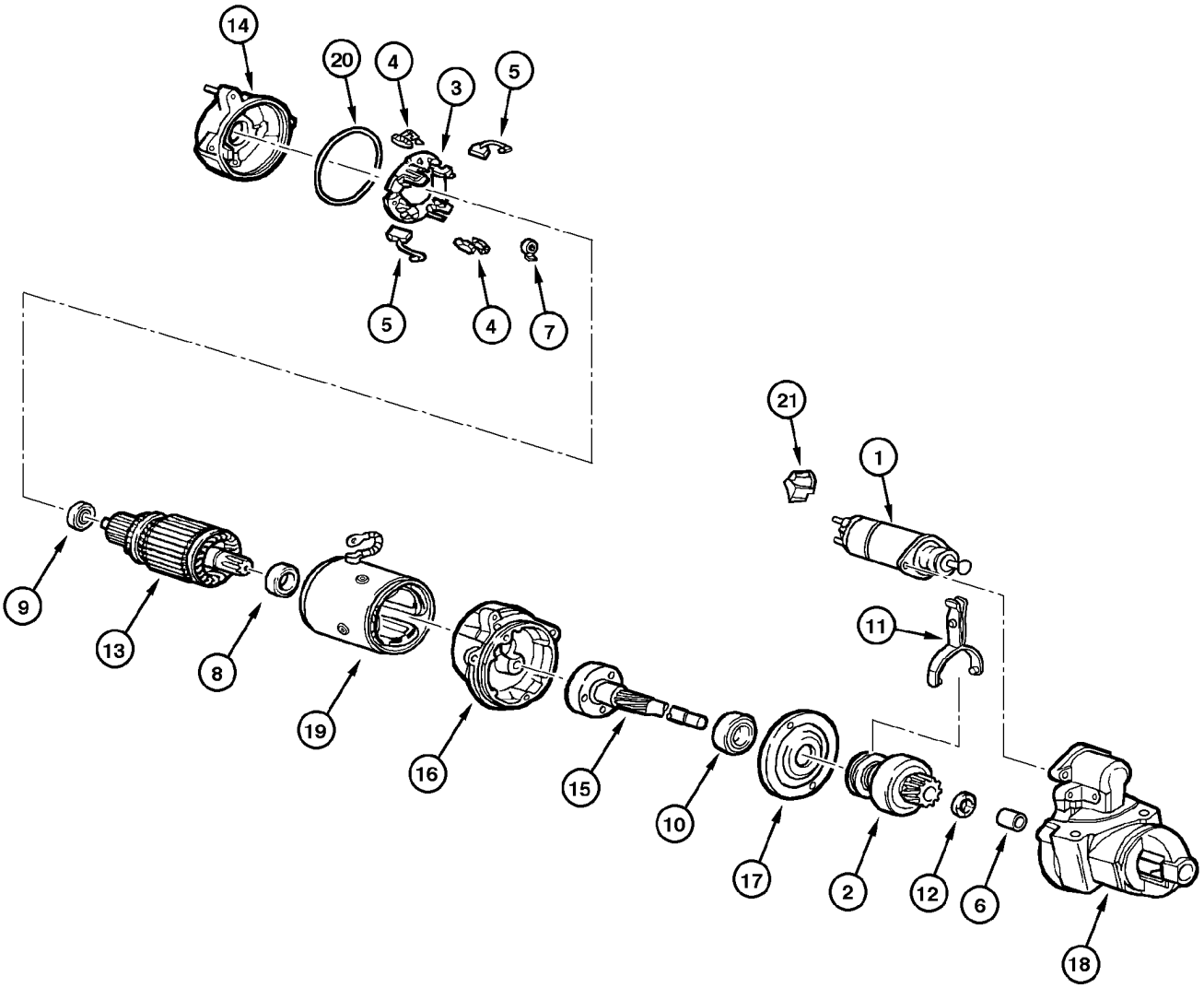

STARTER - ASSEMBLY
STARTER - ASSEMBLY
STARTER - ASSEMBLY
STARTER - ASSEMBLY

R	N	P.N.	MOD	Q	Denominação Bezeichnung	Description Description	Denominacion Beskrivelse	Descrizione Beschrijving	L.C.
		75323045		1	MOTOR DE PARTIDA, Assy, Includes items 1 - 21				
					ANLASSERMOTOR	STARTER MOTOR DEMARREUR	MOTOR DE ARRANQUE STARTMOTOR	MOTORINO DI AVVIAME STARTMOTOR	133M
1		**75313745**		1	SOLENOIDE MAGNETSCHALTER	SOLENOID SOLENOIDE	SOLENOIDE MAGNETVENTIL	SOLENOIDE SOLENOÏDE	168S
2		**75313530**		1	PINHÃO RITZEL	PINION PIGNON	PIÑÓN SPIDSHJUL	PIGNONE PIGNON	P045
3		**329745A1**		1	SUSTENTADOR HALTER	HOLDER SUPPORT	SOSTEN HOLDER	DISPOSITIVO DI SUPP HOLDER	4330
4		**75313529**		2	ESCOVA CONJUNTO BUERSTE (KPLT.)	BRUSH ASSY. BALAI (ASSEMBLE)	CEPILLO (CONJUNTO) BRUSH ASSY.	GRUPPO SPAZZOLA BRUSH ASSY.	P505
5		**75313528**		2	ESCOVA CONJUNTO BUERSTE (KPLT.)	BRUSH ASSY. BALAI (ASSEMBLE)	CEPILLO (CONJUNTO) BRUSH ASSY.	GRUPPO SPAZZOLA BRUSH ASSY.	P505
6		**329751A1**		1	BUCHA BUCHSE	BUSHING BAGUE	CASQUILLO BØSNING	BOCCOLA BUS	095B
7		**329756A1**		4	MOLA FEDER	SPRING RESSORT	MUELLE SPRING	MOLLA SPRING	8315
8		**329760A1**		1	ROLAMENTO LAGER	BEARING ROULEMENT	COJINETE LEJE	CUSCINETTO LAGER	0600
9		**329761A1**		1	ROLAMENTO LAGER	BEARING ROULEMENT	COJINETE LEJE	CUSCINETTO LAGER	0600
10		**329762A1**		1	ROLAMENTO LAGER	BEARING ROULEMENT	COJINETE LEJE	CUSCINETTO LAGER	0600
11		**329763A1**		1	ALAVANCA HEBEL	LEVER LEVIER	PALANCA ARM	LEVA HEFBOOM	045L
12		**329767A1**		1	HASTE STANGE	ROD TIGE	VARILLA STANG	ASTA STANG	090A
13		**75313526**		1	ARMADURA ANKER	ARMATURE INDUIT	INDUCIDO DYNAMOANKER	INDOTTO ARMATUUR	040I
14		**100582A1**		1	ESTRUTURA RAHMEN	FRAME BATI	BASTIDOR FRAME	TELAIO FRAME	3620
15		**329773A1**		1	EIXO WELLE	SHAFT ARBRE	ARBOL SHAFT	ALBERO SHAFT	7590
16		**100584A1**		1	SUPORTE STUETZE	SUPPORT SUPPORT	APOYADERO SUPPORT	SUPPORTO SUPPORT	8790
17		**329803A1**		1	SUPORTE, intermediate STÜTZE	SUPPORT SUPPORT	SOPORTE BESLAG	SUPPORTO STEUN	300S
18		**329800A1**		1	CARCACA, front GEHAEUSE	HOUSING CARTER	CARCASA HOUSING	ALLOGGIAMENTO HOUSING	4540
19		**75313527**		1	BOBINA SPULE	COIL BOBINE	BOBINA SPOLE	BOBINA SPOEL	083B
20		**329794A1**		1	O-RING O-RING	O-RING JOINT TORIQUE	JUNTA TÓRICA O-RING	ANELLO TOROIDALE O-RING	055A
21		**136180A1**		1	PROTETOR SCHUTZSCHILD	SHIELD GARANT	PROTECTOR SHIELD	PROTEZIONE SHIELD	7740

Até chassi N6AE01092

W20E

04-22A	01	p1	10/08

MOTOR DE PARTIDA - CONJUNTO
STARTER - ASSEMBLY
MOTOR DE ARRANQUE - CONJUNTO
STARTER - ASSEMBLY

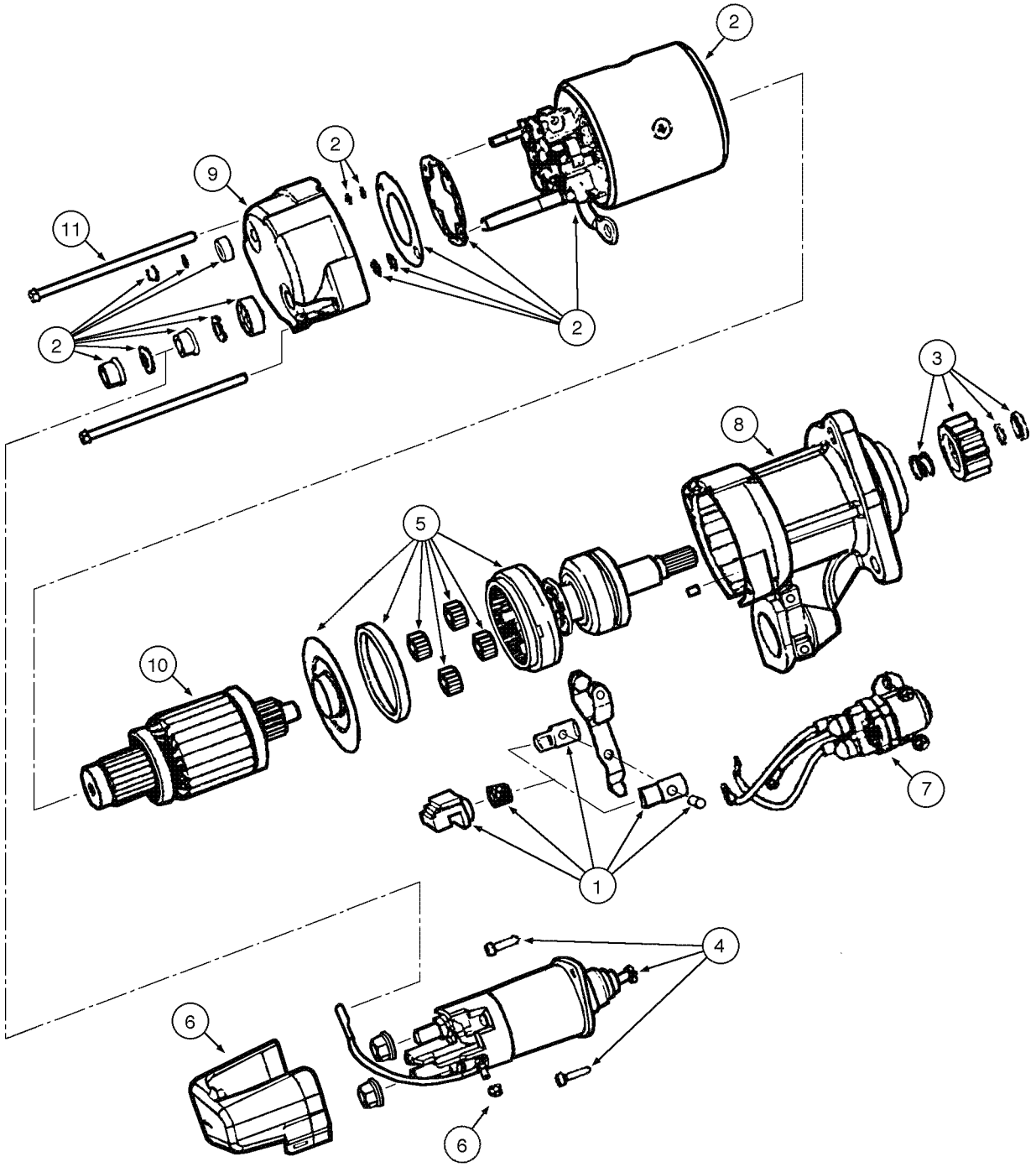

STARTER - ASSEMBLY
STARTER - ASSEMBLY
STARTER - ASSEMBLY
STARTER - ASSEMBLY

R	N	P.N.	MOD	Q	Denominação Bezeichnung	Description Description	Denominacion Beskrivelse	Descrizione Beschrijving	L.C.
		75264240		1	MOTOR DE PARTIDA, Assy				
						STARTER MOTOR	MOTOR DE ARRANQUE	MOTORINO DI AVVIAME	133M
					ANLASSERMOTOR	DEMARREUR	STARTMOTOR	STARTMOTOR	
1		**71102751**		1	KIT DE REVISÃO DO MOTOR				
						ENGINE OVERHAUL KIT	KIT DE REVISIÓN DEL M	KIT REVISIONE MOTORE	002K
					MOTORÜBERHOLUNGS	KIT DE REVISION MOTE	MOTORREVISIONSSÆT	REVISIEKIT VOOR MOTO	
2		**71102752**		1	ALOJAMENTO	HOUSING	ALOJAMIENTO	ALLOGGIAMENTO	014V
					GEHÄUSE	CARTER	HUS	HUIS	
3		**71102753**		1	KIT DE REVISÃO DO MOTOR				
						ENGINE OVERHAUL KIT	KIT DE REVISIÓN DEL M	KIT REVISIONE MOTORE	002K
					MOTORÜBERHOLUNGS	KIT DE REVISION MOTE	MOTORREVISIONSSÆT	REVISIEKIT VOOR MOTO	
4		**71102754**		1	SOLENOIDE	SOLENOID	SOLENOIDE	SOLENOIDE	168S
					MAGNETSCHALTER	SOLENOIDE	MAGNETVENTIL	SOLENOÏDE	
5		**71102755**		1	EIXO, Without pinion	SHAFT	EJE	ALBERO	016A
					WELLE	ARBRE	AKSEL	AS	
6		**71102756**		1	COBERTURA	COVER	CUBIERTA	COPERCHIO	265C
					ABDECKUNG	COUVERCLE	DÆKSEL	AFSCHERMING	
7		**71102757**		1	RELÉ, Auxiliary	RELAY	RELÉ	RELÈ	011R
					RELAIS	RELAIS	RELÆ	RELAIS	
8		**71102761**		1	FIXADOR	HOLDER	SOPORTE	SUPPORTO	174S
					HALTER	SUPPORT	HOLDER	HOUDER	
9		**71102758**		1	COBERTURA	COVER	CUBIERTA	COPERCHIO	265C
					ABDECKUNG	COUVERCLE	DÆKSEL	AFSCHERMING	
10		**71102759**		1	ARMADURA	ARMATURE	INDUCIDO	INDOTTO	040I
					ANKER	INDUIT	DYNAMOANKER	ARMATUUR	
11		**71102760**		1	PARAFUSO	SCREW	TORNILLO	VITE	040V
					SCHRAUBE	VIS	SKRUE	SCHROEF	

A partir do chassi N6AE01092

W20E

04-24	01	p1	03/09

LANTERNA TRASEIRA (STD E OPCIONAL)
TAIL LIGHT (STD AND OPTIONAL)
LINTERNA TRASERA (STD Y OPCIONAL)
TAIL LIGHT (STD AND OPTIONAL)

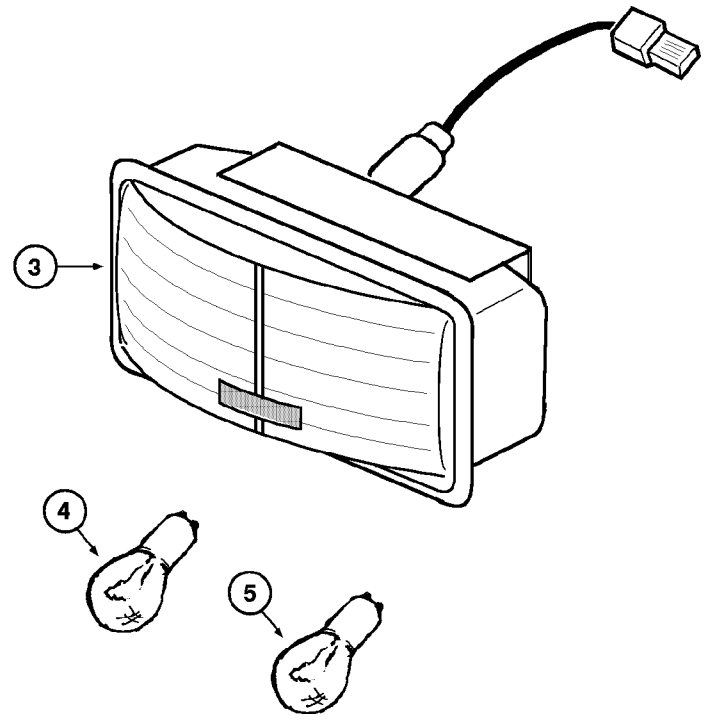

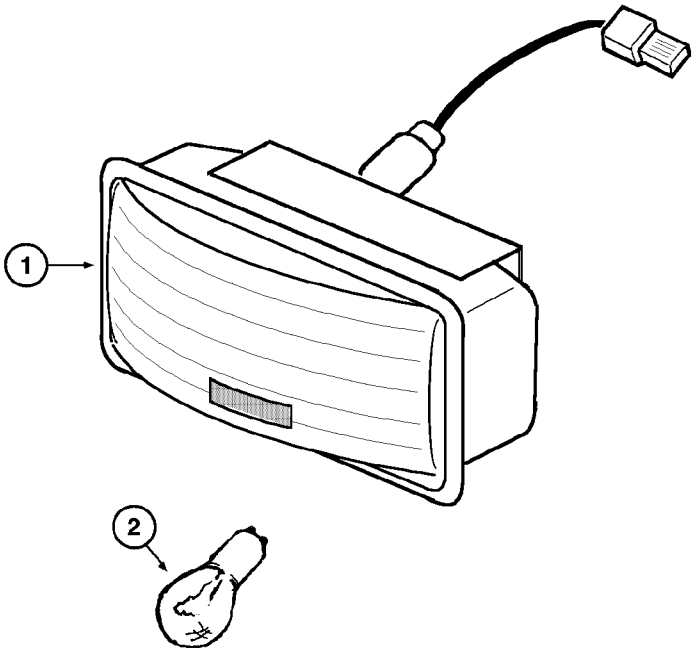

TAIL LIGHT (STD AND OPTIONAL)
TAIL LIGHT (STD AND OPTIONAL)
TAIL LIGHT (STD AND OPTIONAL)
TAIL LIGHT (STD AND OPTIONAL)

R	N	P.N.	MOD	Q	Denominação Bezeichnung	Description Description	Denominacion Beskrivelse	Descrizione Beschrijving	L.C.
		147724A1		2	LENTE, STD rear, Includes items 1, 2				
						LENS	LENTE	TRASPARENTE	170T
					STREUSCHEIBE	CABOCHON	LYGTEGLAS	GLAS	
1		**NSS**		1	SEM SERVIÇO EM SEPARADO, HOUSING				
						NOT SERVICED SEPARA	NO SE REPARA POR SE	NON FORNITO SEPARAT	064N
					NICHT A SEP ERS-T LIEI	NON FORUNI SEPAREM	SERVICERES IKKE SEPA	NIET LOS VERKRIJGBAA	
2		**E67605**		1	LÂMPADA, 21/5W	LAMP	LÁMPARA	SPIA	009F
					LEUCHTE	LAMPE	LYGTE	LAMP	
		147733A1		1	LENTE, LH opt	LENS	LENTE	TRASPARENTE	170T
					STREUSCHEIBE	CABOCHON	LYGTEGLAS	GLAS	
		147734A1		1	LENTE, RH rear opt, Includes items 3, 4, 5				
						LENS	LENTE	TRASPARENTE	170T
					STREUSCHEIBE	CABOCHON	LYGTEGLAS	GLAS	
3		**NSS**		1	SEM SERVIÇO EM SEPARADO, HOUSING				
						NOT SERVICED SEPARA	NO SE REPARA POR SE	NON FORNITO SEPARAT	064N
					NICHT A SEP ERS-T LIEI	NON FORUNI SEPAREM	SERVICERES IKKE SEPA	NIET LOS VERKRIJGBAA	
4		**E67605**		1	LÂMPADA, 21/5W Rubi	LAMP	LÁMPARA	SPIA	009F
					LEUCHTE	LAMPE	LYGTE	LAMP	
5		**148102A1**		1	LÂMPADA, 21W Ambar	LAMP	LÁMPARA	SPIA	009F
					LEUCHTE	LAMPE	LYGTE	LAMP	

04-26	01	p1	03/09

LANTERNA DE DIREÇÃO (OPCIONAL)
TURN SIGNAL (OPTIONAL)
LINTERNA DE DIRECCION (OPCIONAL)
TURN SIGNAL (OPTIONAL)

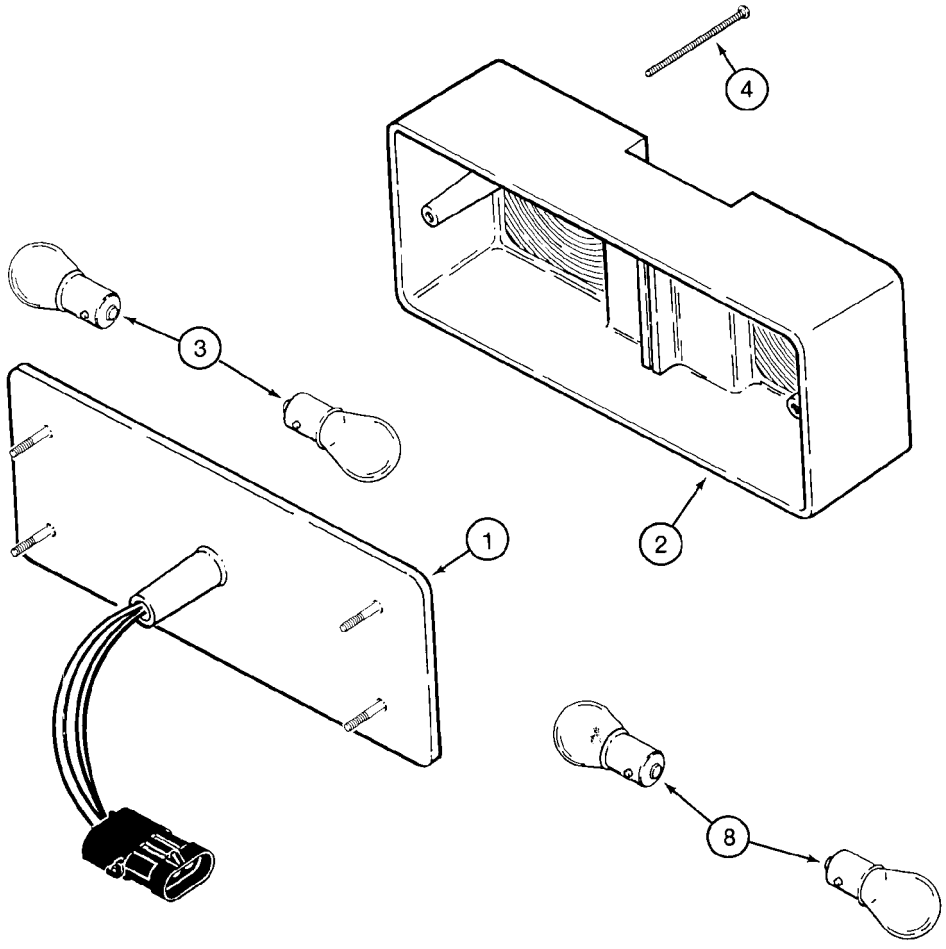

TURN SIGNAL (OPTIONAL)
TURN SIGNAL (OPTIONAL)
TURN SIGNAL (OPTIONAL)
TURN SIGNAL (OPTIONAL)

R	N	P.N.	MOD	Q	Denominação Bezeichnung	Description Description	Denominacion Beskrivelse	Descrizione Beschrijving	L.C.
		A187992		1	FAROL CONJUNTO, RH LAMPE (KPLT.)	LIGHT ASSY. FEU (ASSEMBLE)	FARO (CONJ) LIGHT ASSY.	LUCE, COMPLESSIVO LIGHT ASSY.	P478
		A187993		1	FAROL CONJUNTO, LH LAMPE (KPLT.)	LIGHT ASSY. FEU (ASSEMBLE)	FARO (CONJ) LIGHT ASSY.	LUCE, COMPLESSIVO LIGHT ASSY.	P478
1		**NSS**		1	SEM SERVIÇO EM SEPARADO, BODY, Includes items 1 - 4 NOT SERVICED SEPARA NICHT A SEP ERS-T LIEI	NON FORUNI SEPAREM	NO SE REPARA POR SE SERVICERES IKKE SEP/	NON FORNITO SEPARAT NIET LOS VERKRIJGBAA	064N
2		**A186293**		1	LENTE STREUSCHEIBE	LENS CABOCHON	LENTE LYGTEGLAS	TRASPARENTE GLAS	170T
3		**A15084**		2	LAMPADA LEUCHTE	LAMP LAMPE	LAMPARA LAMP	LAMPADA LAMP	4960
4		**226668A1**		2	PARAFUSO SCHRAUBE	SCREW VIS	TORNILLO SCREW	VITE SCREW	7450

04-28	01	p1	03/09

FAROL - ROPS (OPCIONAL)
HEADLIGHT - ROPS (OPTIONAL)
FARO - ROPS (OPCIONAL)
HEADLIGHT - ROPS (OPTIONAL)

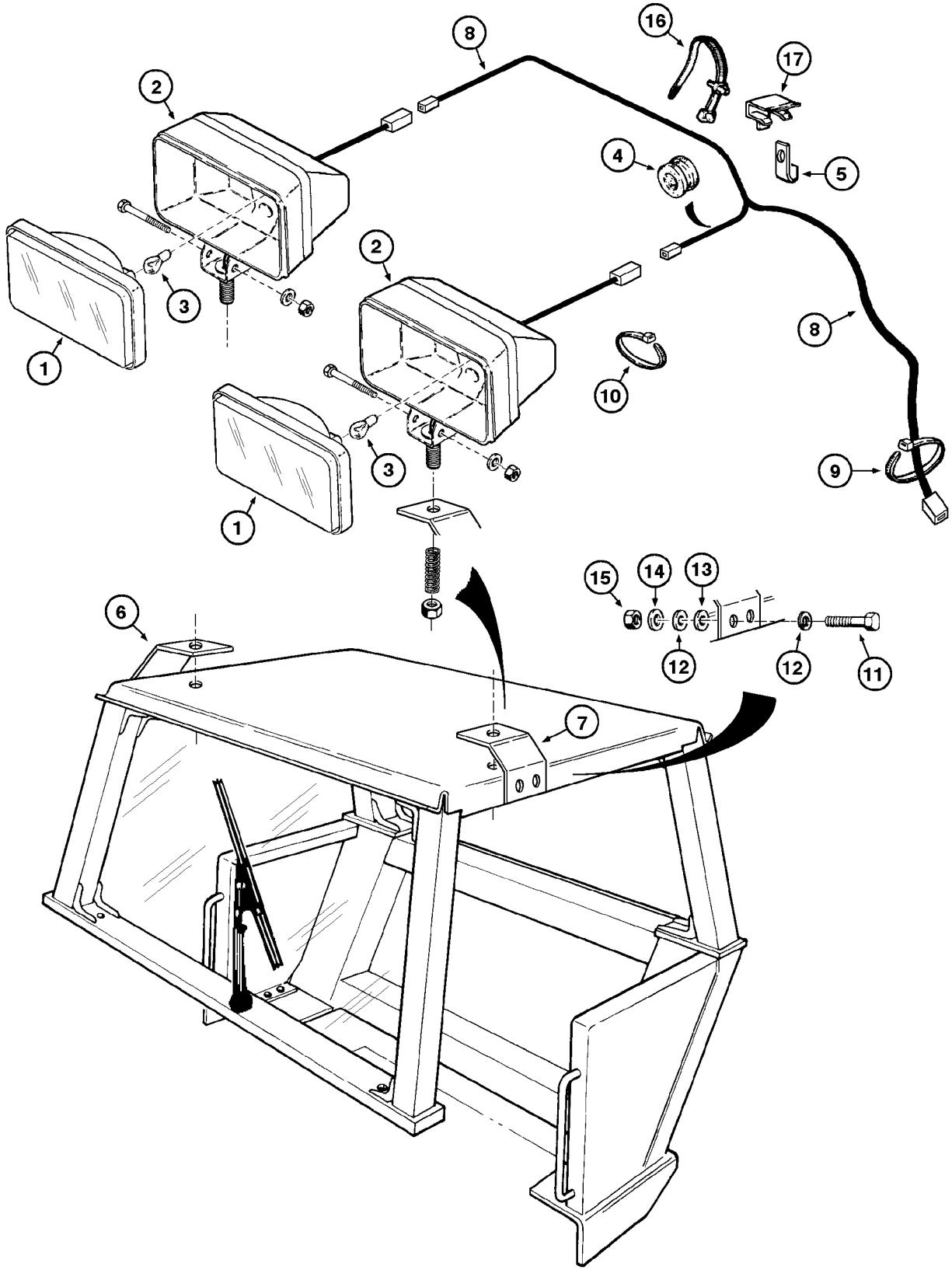

HEADLIGHT - ROPS (OPTIONAL)
HEADLIGHT - ROPS (OPTIONAL)
HEADLIGHT - ROPS (OPTIONAL)
HEADLIGHT - ROPS (OPTIONAL)

R	N	P.N.	MOD	Q	Denominação Bezeichnung	Description Description	Denominacion Beskrivelse	Descrizione Beschrijving	L.C.
		G6984278		2	LUZ, Assy, Includes items 1, 2, 3				
						LIGHT	LUZ	LUCE	Z496
					LAMPE	FEU	BELYSNING	LAMP	
1		**J6984280**		1	BLOCO, lenses	BLOCK	BLOQUE	BLOCCO	074B
					BLOCK	BLOC	MOTORBLOK	BLOK	
2		**NSS**		1	SEM SERVIÇO EM SEPARADO				
						NOT SERVICED SEPARA	NO SE REPARA POR SE	NON FORNITO SEPARAT	064N
					NICHT A SEP ERS-T LIEI	NON FORUNI SEPAREM	SERVICERES IKKE SEPA	NIET LOS VERKRIJGBAA	
3		**K69842-81**		1	LÂMPADA	LAMP	LÁMPARA	SPIA	009F
					LEUCHTE	LAMPE	LYGTE	LAMP	
4		**N27414-05**		2	JUNTA	GASKET	JUNTA	GUARNIZIONE	123G
					DICHTUNG	JOINT	PAKNING	PAKKING	
5		**E66349**		4	GRAMPO	STAPLE	GRAPA	GRAFFA	089G
					KLAMMER	AGRAFE	HÆFTEKLEMME	NIETJE	
6		**147382A1**		1	SUPORTE, headlight RH	SUPPORT	SOPORTE	SUPPORTO	300S
					STÜTZE	SUPPORT	BESLAG	STEUN	
7		**147381A1**		1	SUPORTE, headlight LH	SUPPORT	SOPORTE	SUPPORTO	300S
					STÜTZE	SUPPORT	BESLAG	STEUN	
8		**147385A1**		1	CABO ELÉTRICO, ROPS	ELECTRIC CABLE	CABLE ELÉCTRICO	CAVO ELETTRICO	111C
					ELEKTROKABEL	CABLE ELECTRIQUE	EL-KABEL	ELEKTRICITEITSKABEL	
9		**L18331**		2	PRENDEDOR DE CABOS	CABLE STRAP	BANDA DE CABLE	FASCETTA PER CAVO	P716
					KABELBINDER	BRIDE DE CABLE	KABELSTROP	BUNDELBAND	
10		**L11541**		2	PRENDEDOR DE CABOS	CABLE STRAP	BANDA DE CABLE	FASCETTA PER CAVO	P716
					KABELBINDER	BRIDE DE CABLE	KABELSTROP	BUNDELBAND	
11		**413-616**		4	PARAFUSO, Hex, 3/8"-16 x 1", G5, Full Thd				
						BOLT	PERNO	BULLONE	140B
					SCHRAUBE	VIS	BOLT	BOUT	
12		**495-11041**		8	ARRUELA PLANA, 3/8", SAE				
						WASHER	ARANDELA	RONDELLA	131R
					UNTERLEGSCHEIBE	RONDELLE	FLADSKIVE	SLUITRING	
13		**493-41039**		4	TRAVA DA ARRUELA, Ext Tooth, 3/8"				
						LOCK WASHER	ARANDELA DE BLOQUEO	RONDELLA DI SICUREZZ	132R
					SICHERUNGSSCHEIBE	RONDELLE FREIN	LÅSESKIVE	BORGRING	
14		**492-11038**		4	TRAVA DA ARRUELA, 3/8"	LOCK WASHER	ARANDELA DE BLOQUEO	RONDELLA DI SICUREZZ	132R
					SICHERUNGSSCHEIBE	RONDELLE FREIN	LÅSESKIVE	BORGRING	
15		**425-106**		4	PORCA, 3/8"-16, G5	NUT	TUERCA	DADO	010D
					MUTTER	ECROU	MØTRIK	MOER	
16		**Z20369-02**		4	BRACADEIRA	CLAMP	COLLAR	MORSETTO	1640
					SCHELLE	COLLIER	CLAMP	CLAMP	
17		**H6684221**		4	BRACADEIRA, cables	CLAMP	COLLAR	MORSETTO	1640
					SCHELLE	COLLIER	CLAMP	CLAMP	

04-30	01	p1	11/09

FAROL DIANTEIRO E TRASEIRO
HEADLIGHT - FRONT AND REAR
FARO DELANTERO Y TRASERO
HEADLIGHT - FRONT AND REAR

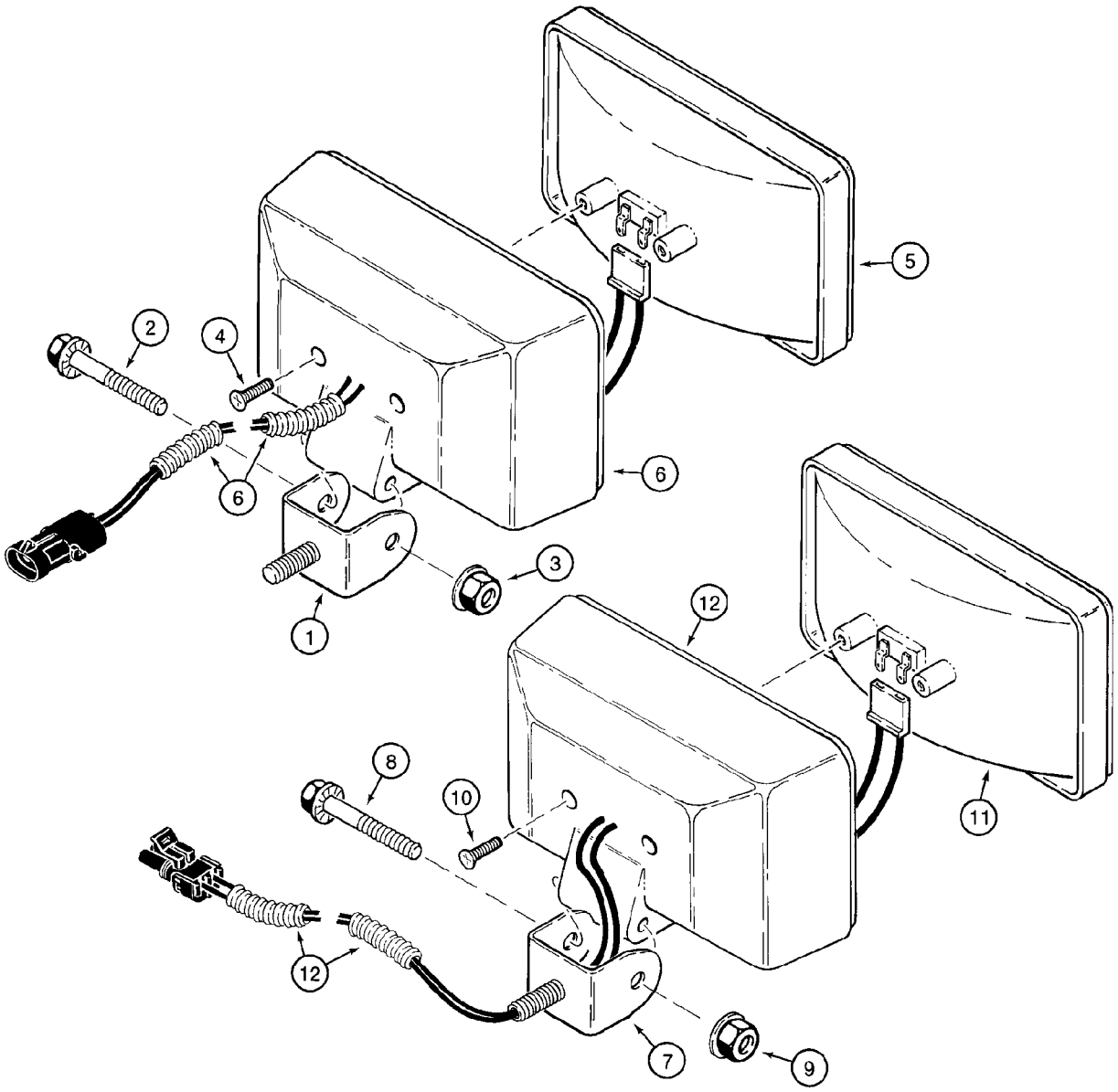

HEADLIGHT - FRONT AND REAR
HEADLIGHT - FRONT AND REAR
HEADLIGHT - FRONT AND REAR
HEADLIGHT - FRONT AND REAR

R	N	P.N.	MOD	Q	Denominação Bezeichnung	Description Description	Denominacion Beskrivelse	Descrizione Beschrijving	L.C.
		A187519		2	FAROL CONJUNTO, Upper front, Includes items 1 - 6				
						LIGHT ASSY.	FARO (CONJ)	LUCE, COMPLESSIVO	P478
					LAMPE (KPLT.)	FEU (ASSEMBLE)	LIGHT ASSY.	LIGHT ASSY.	
1		**A187913**		1	SUPORTE	SUPPORT	APOYADERO	SUPPORTO	8790
					STUETZE	SUPPORT	SUPPORT	SUPPORT	
2		**121-232**		1	PARAFUSO, Hex Flg, 5/16"-18 x 2", Serr				
						BOLT	PERNO	BULLONE	140B
					SCHRAUBE	VIS	BOLT	BOUT	
3		**231-5145**		1	PORCA FLANGEADA, Flg, USR, 5/16"-18				
						FLANGE NUT	TUERCA DE BRIDA	DADO FLANGIATO	A069
					FLANSCHMUTTER	ECROU A EMBASE	FLANGEMØTRIK	FLENSMOER	
4		**273-5048**		2	PARAFUSO, Slotted Flat Hd, #8 x 1/2"				
						SELF-TAP SCREW	TORNILLO AUTORROSC	VITE AUTOFILETTANTE	062V
					SELBSTSCHN SCHRAUE	VIS AUTOTARAUDEUSE	SELVLÅSENDE BOLT	ZELFTAPPENDE SCHRO	
5		**103654A1**		1	FAROL	HEADLIGHT	FARO	GRUPPO SPIE, TESTA	P209
					SCHEINWERFER	PHARE	HEADLIGHT	HEADLIGHT	
6		**NSS**		1	SEM SERVIÇO EM SEPARADO, HOUSING				
						NOT SERVICED SEPARA	NO SE REPARA POR SE	NON FORNITO SEPARAT	064N
					NICHT A SEP ERS-T LIEI	NON FORUNI SEPAREM	SERVICERES IKKE SEPA	NIET LOS VERKRIJGBAA	
		A187520		4	FAROL CONJUNTO, Lower front and rear, Includes items 7 - 12				
						LIGHT ASSY.	FARO (CONJ)	LUCE, COMPLESSIVO	P478
					LAMPE (KPLT.)	FEU (ASSEMBLE)	LIGHT ASSY.	LIGHT ASSY.	
7		**A187913**		1	SUPORTE	SUPPORT	APOYADERO	SUPPORTO	8790
					STUETZE	SUPPORT	SUPPORT	SUPPORT	
8		**121-232**		1	PARAFUSO, Hex Flg, 5/16"-18 x 2", Serr				
						BOLT	PERNO	BULLONE	140B
					SCHRAUBE	VIS	BOLT	BOUT	
9		**231-5145**		1	PORCA FLANGEADA, Flg, USR, 5/16"-18				
						FLANGE NUT	TUERCA DE BRIDA	DADO FLANGIATO	A069
					FLANSCHMUTTER	ECROU A EMBASE	FLANGEMØTRIK	FLENSMOER	
10		**273-5048**		2	PARAFUSO, Slotted Flat Hd, #8 x 1/2"				
						SELF-TAP SCREW	TORNILLO AUTORROSC	VITE AUTOFILETTANTE	062V
					SELBSTSCHN SCHRAUE	VIS AUTOTARAUDEUSE	SELVLÅSENDE BOLT	ZELFTAPPENDE SCHRO	
11		**103653A1**		1	FAROL	HEADLIGHT	FARO	GRUPPO SPIE, TESTA	P209
					SCHEINWERFER	PHARE	HEADLIGHT	HEADLIGHT	
12		**NSS**		1	SEM SERVIÇO EM SEPARADO, HOUSING				
						NOT SERVICED SEPARA	NO SE REPARA POR SE	NON FORNITO SEPARAT	064N
					NICHT A SEP ERS-T LIEI	NON FORUNI SEPAREM	SERVICERES IKKE SEPA	NIET LOS VERKRIJGBAA	

04-32	01	p1	08/11

ALARME DE RÉ
BACK-UP ALARM
ALARME DE MARCHA ATRÁS
BACK-UP ALARM

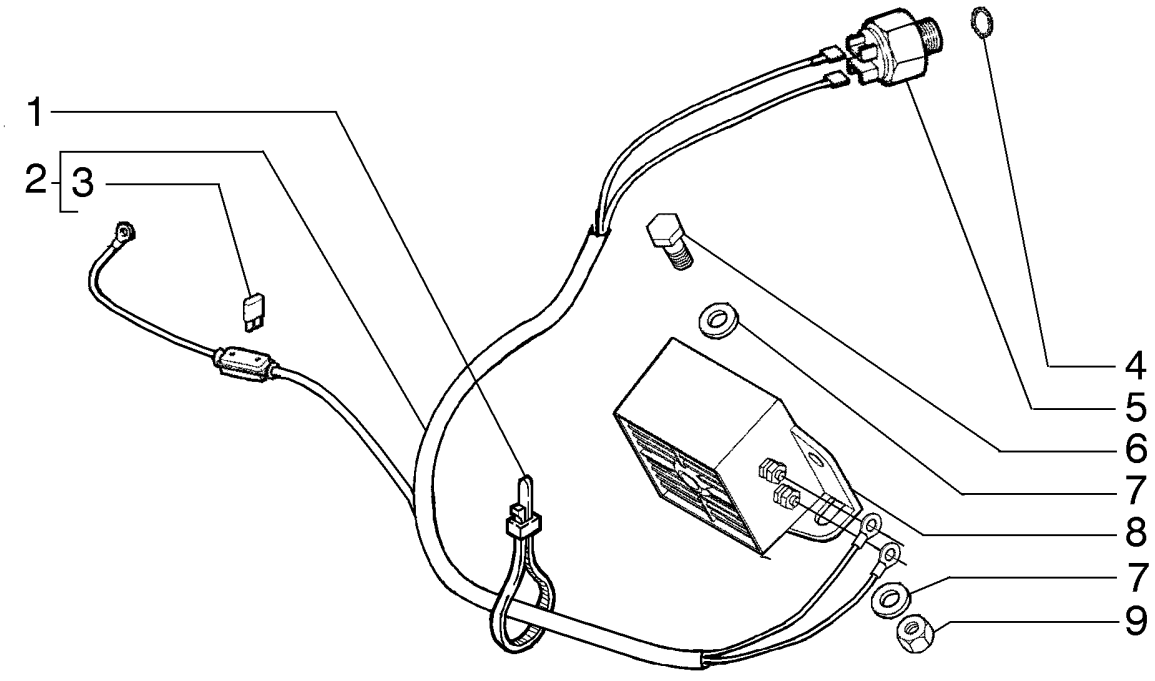

BACK-UP ALARM
BACK-UP ALARM
BACK-UP ALARM
BACK-UP ALARM

R	N	P.N.	MOD	Q	Denominação Bezeichnung	Description Description	Denominacion Beskrivelse	Descrizione Beschrijving	L.C.
1		515-23190		AR	BRAÇADEIRA, 3/4", Insul, 3/8" Bolt				
						CLAMP	ABRAZADERA	MORSETTO	120M
					KLEMME	COLLIER	SPÆNDEBÅND	KLEM	
2		75265102		1	CHICOTE	HARNESS	MAZO DE CABLES	CABLAGGIO	4160
					KABELBAUM	FAISCEAU	LEDNINGSNET	KABELBOOM	
3		11054790		1	FUSÍVEL, 5 Amp, Type A	FUSE	FUSIBLE	FUSIBILE	110F
					SICHERUNG	FUSIBLE	SIKRING	ZEKERING	
4		10296160		1	ARRUELA DE COBRE, M12.2 x 18 x 1, Copper				
						COPPER WASHER	ARANDELA DE COBRE	RONDELLA IN RAME	P674
					KUPFERUNTERLEGSCH	RONDELLE CUIVRE	KOBBERSKIVE	KOPEREN SLUITRING	
5		5108180		1	INTERRUPTOR DE PRESSÃO				
						PRESSURE SWITCH	INTERRUPTOR DE PRES	PRESSOSTATO	079I
					DRUCKSCHALTER	PRESSOSTAT	KONTAKT, TRYK	DRUKSCHAKELAAR	
6		413-516		2	PARAFUSO, Hex, 5/16"-18 x 1", G5, Full Thd				
						BOLT	PERNO	BULLONE	140B
					SCHRAUBE	VIS	BOLT	BOUT	
7		895-11008		4	ARRUELA PLANA, M8 x 16 x 1.6				
						WASHER	ARANDELA	RONDELLA	131R
					UNTERLEGSCHEIBE	RONDELLE	FLADSKIVE	SLUITRING	
8		109511A1		1	ALARME, Back-up	ALARM	ALARMA	ALLARME	002A
					ALARM	ALARME	ALARM	ALARM	
9		231-1445		2	CONTRA PORCA, 5/16"-18, GB				
						LOCK NUT	TUERCA DE BLOQUEO	DADO DI BLOCCAGGIO	P263
					SICHERUNGSMUTTER	CONTRE-ECROU	LÅSEMØTRIK	BORGMOER	

SECTION INDEX
Direção

05-02	01	BOMBA DE DIREÇÃO E VOLANTE
05-04	01	BOMBA DE DIREÇÃO AOS CILINDROS
05-06	01	UNIDADE HIDROSTÁTICA DA DIREÇÃO
05-08	01	CILINDROS DE DIREÇÃO
05-08	02	CILINDROS DE DIREÇÃO
05-10	01	LINHAS DE PRESSÃO HIDRÁULICA DA DIREÇÃO
05-12	01	CIRCUITO HIDRÁULICO DA DIREÇÃO - RETORNO

05-02	01	p1	02/12

BOMBA DE DIREÇÃO E VOLANTE
STEERING PUMP AND STEERING WHEEL
BOMBA DE LA DIRECCIÓN Y VOLANTE
STEERING PUMP AND STEERING WHEEL

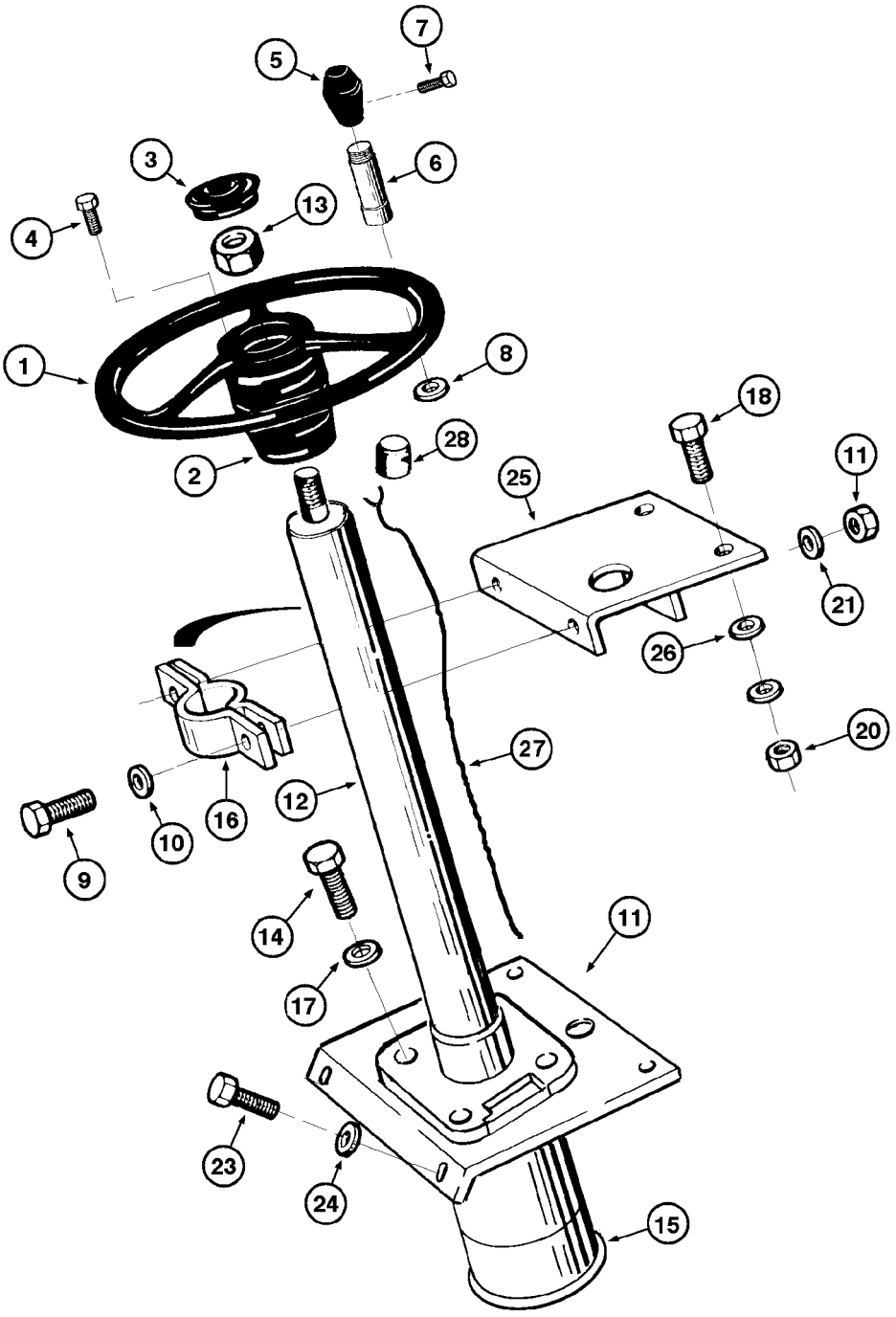

STEERING PUMP AND STEERING WHEEL
STEERING PUMP AND STEERING WHEEL
STEERING PUMP AND STEERING WHEEL
STEERING PUMP AND STEERING WHEEL

R	N	P.N.	MOD	Q	Denominação Bezeichnung	Description Description	Denominacion Beskrivelse	Descrizione Beschrijving	L.C.
1		147725A1		1	VOLANTE DE DIREÇÃO, steering Assy, Includes items 2 - 8				
						STEERING WHEEL	VOLANTE DE DIRECCIÓ	VOLANTE	050V
					LENKRAD	VOLANT	RAT	STUURWIEL	
2		NSS		1	SEM SERVIÇO EM SEPARADO, HUB with horn				
						NOT SERVICED SEPARA	NO SE REPARA POR SE	NON FORNITO SEPARAT	064N
					NICHT A SEP ERS-T LIEI	NON FORUNI SEPAREM	SERVICERES IKKE SEPA	NIET LOS VERKRIJGBAA	
3		NSS		1	SEM SERVIÇO EM SEPARADO, COVER with horn				
						NOT SERVICED SEPARA	NO SE REPARA POR SE	NON FORNITO SEPARAT	064N
					NICHT A SEP ERS-T LIEI	NON FORUNI SEPAREM	SERVICERES IKKE SEPA	NIET LOS VERKRIJGBAA	
4		413-512		1	PARAFUSO, Hex, 5/16"-18 x 3/4", G5, Full Thd				
						BOLT	PERNO	BULLONE	140B
					SCHRAUBE	VIS	BOLT	BOUT	
5		146309A1		1	MAÇANETA	KNOB	MANDO	MANOPOLA	150P
					RUNDGRIFF	BOUTON	GREB	KNOP	
6		87452376		1	PINO	PIN	PASADOR	PERNO	080P
					PIN	BROCHE	STIFT	PEN	
7		62-7106		1	PARAFUSO	SCREW	TORNILLO	VITE	040V
					SCHRAUBE	VIS	SKRUE	SCHROEF	
8		146369A1		2	ANEL DE PRESSÃO	SNAP RING	ANILLO DE RESORTE	ANELLO ELASTICO	054A
					SPRENGRING	ANNEAU D'ARRET	LÅSERING	VEERRING	
9		413-616		2	PARAFUSO, Hex, 3/8"-16 x 1", G5, Full Thd				
						BOLT	PERNO	BULLONE	140B
					SCHRAUBE	VIS	BOLT	BOUT	
10		492-11038		2	TRAVA DA ARRUELA, 3/8"	LOCK WASHER	ARANDELA DE BLOQUE	RONDELLA DI SICUREZ	132R
					SICHERUNGSSCHEIBE	RONDELLE FREIN	LÅSESKIVE	BORGRING	
11		147718A1		1	PLACA DE COBERTURA	COVER PLATE	PLACA DE CUBIERTA	PIASTRA DI COPERTUR	110P
					ABDECKPLATTE	COUVERCLE	DÆKPLADE	AFSCHERMPLAAT	
12		147727A1		1	COLUNA DE DIREÇÃO, Assy, Includes item 12A and 13				
						STEERING COLUMN	COLUMNA DE DIRECCIÓ	PIANTONE DELLO STER	103P
					LENKSÄULE	COLONNE DE DIRECTIO	RATSTAMME	STUURKOLOM	
12A		84574959		1	CABO ELÉTRICO, Sensor da Buzina				
						ELECTRIC CABLE	CABLE ELÉCTRICO	CAVO ELETTRICO	111C
					ELEKTROKABEL	CABLE ELECTRIQUE	EL-KABEL	ELEKTRICITEITSKABEL	
13		146928A1		1	PORCA	NUT	TUERCA	DADO	010D
					MUTTER	ECROU	MØTRIK	MOER	
14		413-612		4	PARAFUSO, Hex, 3/8"-16 x 3/4", G5, Full Thd				
						BOLT	PERNO	BULLONE	140B
					SCHRAUBE	VIS	BOLT	BOUT	
15		147726A1		1	UNIDADE HIDROSTÁT RECOND, Assy (P.5-6)				
						EXCHANGE HYDROSTA	UNIDAD HIDROST. INTE	UNITÀ IDROST. RIGENE	656C
					AUST-HYDROSTATIKEIN	POMPE HYDROSTATIQU	HYDRO. ENHED, OMB.	VERVANGINGSHYDROS	
16	1	147730A1		1	FIXADOR	HOLDER	SOPORTE	SUPPORTO	174S
					HALTER	SUPPORT	HOLDER	HOUDER	
17		492-11038		4	TRAVA DA ARRUELA, 3/8"	LOCK WASHER	ARANDELA DE BLOQUE	RONDELLA DI SICUREZ	132R
					SICHERUNGSSCHEIBE	RONDELLE FREIN	LÅSESKIVE	BORGRING	
18		413-616		2	PARAFUSO, Hex, 3/8"-16 x 1", G5, Full Thd				
						BOLT	PERNO	BULLONE	140B
					SCHRAUBE	VIS	BOLT	BOUT	

(1) Suporte 147730A1, substituído pelo suporte 87527850 e bucha 87487849

05-02	01	p2	02/12

BOMBA DE DIREÇÃO E VOLANTE
STEERING PUMP AND STEERING WHEEL
BOMBA DE LA DIRECCIÓN Y VOLANTE
STEERING PUMP AND STEERING WHEEL

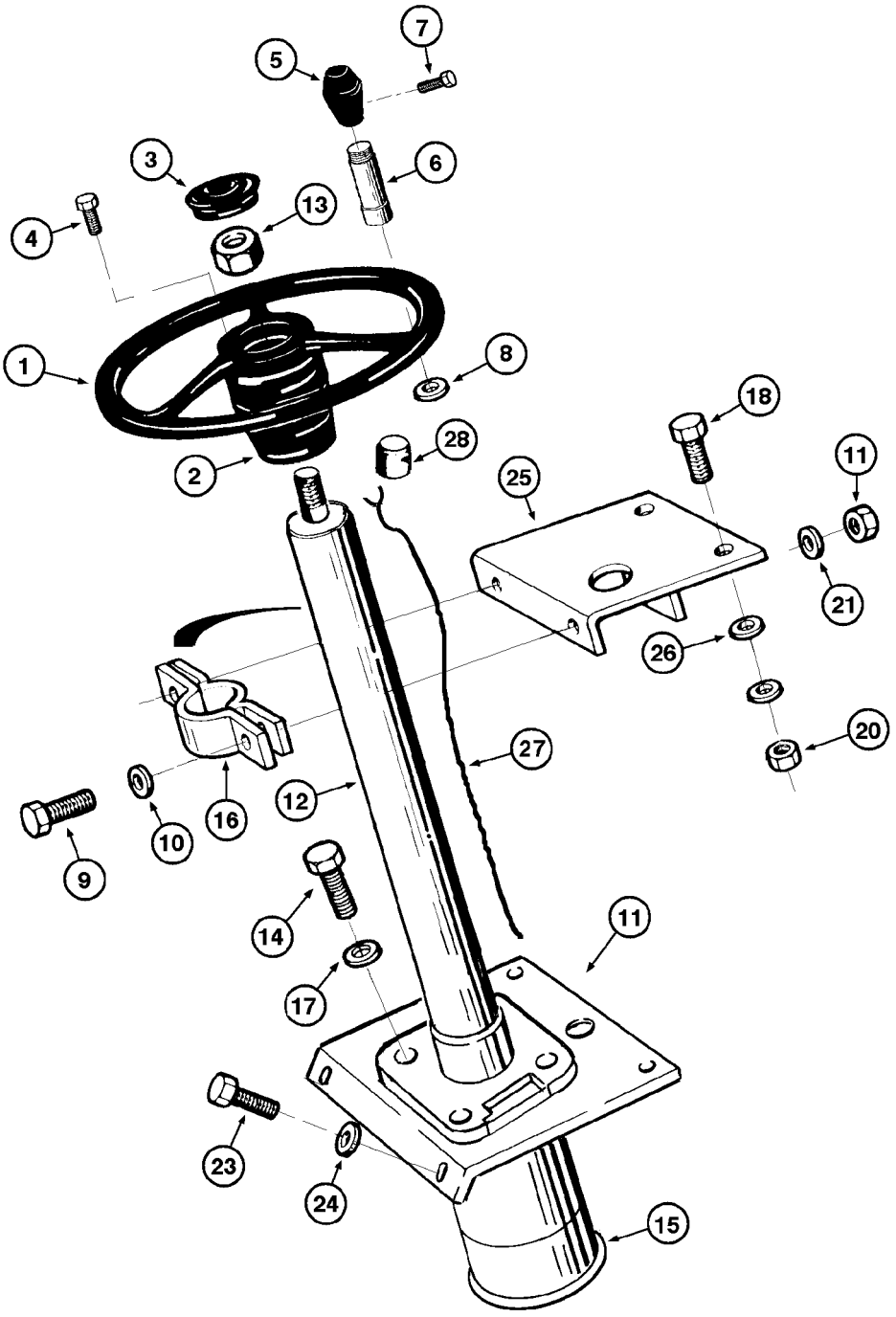

STEERING PUMP AND STEERING WHEEL
STEERING PUMP AND STEERING WHEEL
STEERING PUMP AND STEERING WHEEL
STEERING PUMP AND STEERING WHEEL

R	N	P.N.	MOD	Q	Denominação Bezeichnung	Description Description	Denominacion Beskrivelse	Descrizione Beschrijving	L.C.
19		492-11038		2	TRAVA DA ARRUELA, 3/8" SICHERUNGSSCHEIBE	LOCK WASHER RONDELLE FREIN	ARANDELA DE BLOQUE LÅSESKIVE	RONDELLA DI SICUREZ BORGRING	132R
20		425-106		2	PORCA, 3/8"-16, G5 MUTTER	NUT ECROU	TUERCA MØTRIK	DADO MOER	010D
21		425-11041		4	ARRUELA PLANA UNTERLEGSCHEIBE	WASHER RONDELLE	ARANDELA FLADSKIVE	RONDELLA SLUITRING	131R
22		425-106		2	PORCA, 3/8"-16, G5 MUTTER	NUT ECROU	TUERCA MØTRIK	DADO MOER	010D
23		413-616		4	PARAFUSO, Hex, 3/8"-16 x 1", G5, Full Thd SCHRAUBE	BOLT VIS	PERNO BOLT	BULLONE BOUT	140B
24		495-21044		4	ARRUELA PLANA, 3/8" UNTERLEGSCHEIBE	WASHER RONDELLE	ARANDELA FLADSKIVE	RONDELLA SLUITRING	131R
25		E69712		1	SUPORTE STÜTZE	SUPPORT SUPPORT	SOPORTE BESLAG	SUPPORTO STEUN	300S
26		495-21044		2	ARRUELA PLANA, 3/8" UNTERLEGSCHEIBE	WASHER RONDELLE	ARANDELA FLADSKIVE	RONDELLA SLUITRING	131R
27		148191A1		1	CHICOTE, horn KABELBAUM	HARNESS FAISCEAU	MAZO DE CABLES LEDNINGSNET	CABLAGGIO KABELBOOM	4160
28		87440060		1	ADAPTADOR, horn ADAPTER	ADAPTER ADAPTATEUR	ADAPTADOR ADAPTER	ADATTATORE ADAPTER	001A

05-04	01	p1	05/10

BOMBA DE DIREÇÃO AOS CILINDROS
STEERING PUMP TO CYLINDERS
BOMBA DE DIRECCIÓN A LOS GATOS
STEERING PUMP TO CYLINDERS

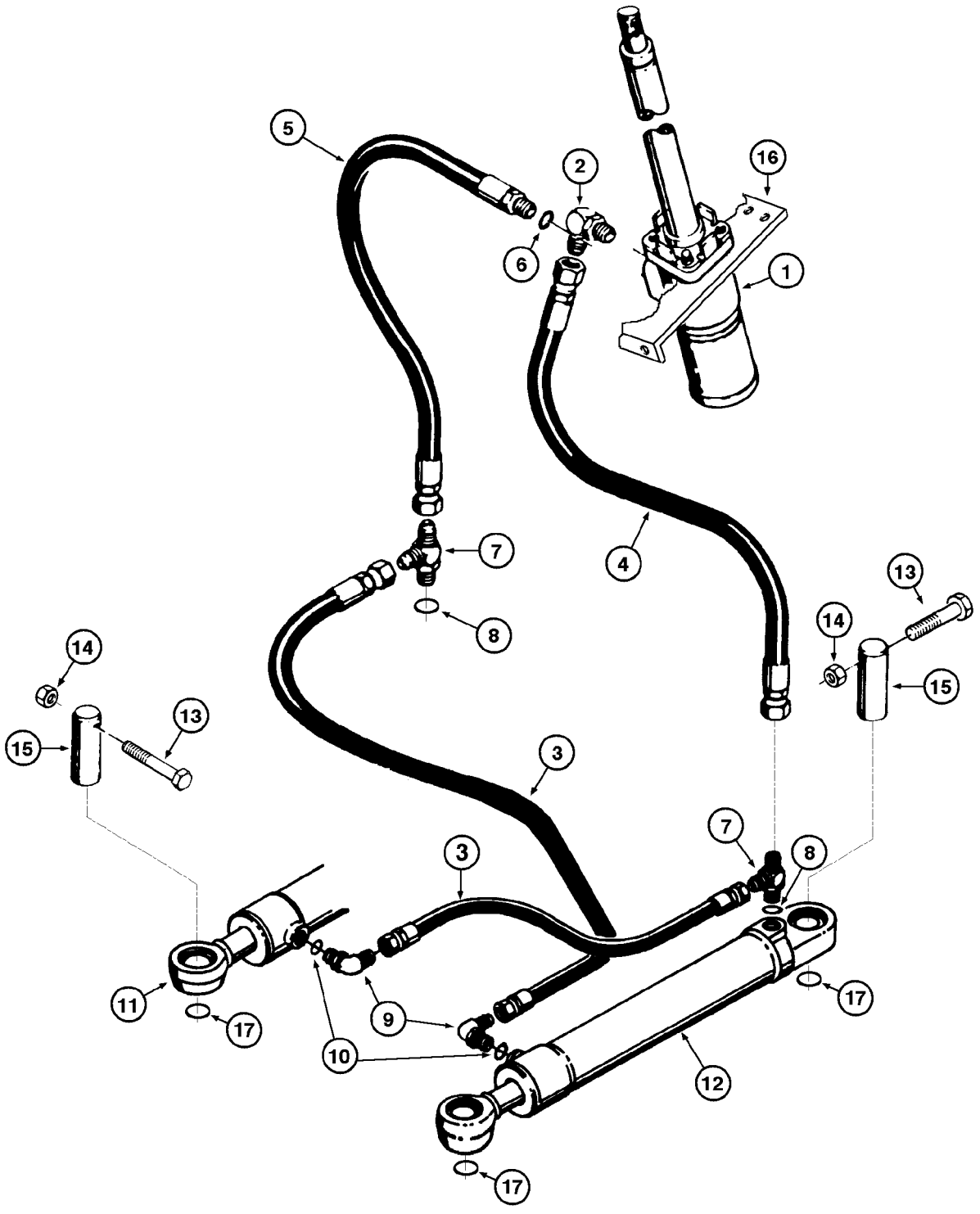

STEERING PUMP TO CYLINDERS
STEERING PUMP TO CYLINDERS
STEERING PUMP TO CYLINDERS
STEERING PUMP TO CYLINDERS

R	N	P.N.	MOD	Q	Denominação Bezeichnung	Description Description	Denominacion Beskrivelse	Descrizione Beschrijving	L.C.
1		147726A1		1	UNIDADE HIDROSTÁT	RECOND, Assy (P.5-6) EXCHANGE HYDROSTA	UNIDAD HIDROST. INTE	UNITÀ IDROST. RIGENE	656C
					AUST-HYDROSTATIKEIN	POMPE HYDROSTATIQU	HYDRO. ENHED, OMB.	VERVANGINGSHYDROS	
2		218-5136		1	COTOVELO, 45º, 3/4"-16, 37º x 3/4"-16, O-Ring ELBOW		CODO	GOMITO	085G
					KNIESTÜCK	COUDE	VINKELRØR	KNIESTUK	
3		37405		2	MANGUEIRA SCHLAUCH	HOSE FLEXIBLE	MANGUERA HOSE	TUBO FLESSIBILE HOSE	4480
4		148081A1		1	MANGUEIRA, RH SCHLAUCH	HOSE FLEXIBLE	TUBO SLANGE	TUBO FLESSIBILE SLANG	030M
5		L50015		1	MANGUEIRA, LH, Includes item 6 HOSE		MANGUERA	TUBO FLESSIBILE	4480
					SCHLAUCH	FLEXIBLE	HOSE	HOSE	
6		218-5006		1	O-RING, 0.176" ID x 0.316" OD x 0.07" O-RING		JUNTA TÓRICA	ANELLO TOROIDALE	055A
					O-RING	JOINT TORIQUE	O-RING	O-RING	
7		218-5241		2	T, 7/8"-14, 37º x 7/8"-14, O-Ring Run, Includes item 8 TEE		RACOR EN T	PEZZO A T	9020
					T-STÜCK	RACCORD EN T	T-STYKKE	T-STUK	
8		218-5007		1	O-RING, 0.239" ID x 0.379" OD x 0.07" O-RING		JUNTA TÓRICA	ANELLO TOROIDALE	055A
					O-RING	JOINT TORIQUE	O-RING	O-RING	
9		218-5107		2	COTOVELO, 90º, 7/8"-14, 37º x 7/8"-14, O-Ring, Incl. item 10 ELBOW		CODO	GOMITO	085G
					KNIESTÜCK	COUDE	VINKELRØR	KNIESTUK	
10		218-5007		1	O-RING, 0.239" ID x 0.379" OD x 0.07" O-RING		JUNTA TÓRICA	ANELLO TOROIDALE	055A
					O-RING	JOINT TORIQUE	O-RING	O-RING	
11		E69527		1	CILINDRO, LH Assy (P.5-8)	CYLINDER	CILINDRO	CILINDRO	164C
					ZYLINDER	VERIN	CYLINDER	CILINDER	
12		E69526		1	CILINDRO, RH Assy (P.5-8) CYLINDER		CILINDRO	CILINDRO	164C
					ZYLINDER	VERIN	CYLINDER	CILINDER	
13		413-660		4	PARAFUSO, Hex, 3/8"-16 x 3 3/4", G5 BOLT		PERNO	BULLONE	140B
					SCHRAUBE	VIS	BOLT	BOUT	
14		231-1446		4	CONTRA PORCA, 3/8"-16, GB LOCK NUT		TUERCA DE BLOQUEO	DADO DI BLOCCAGGIO	P263
					SICHERUNGSMUTTER	CONTRE-ECROU	LÅSEMØTRIK	BORGMOER	
15		E159033		4	PINO PIN	PIN BROCHE	PASADOR STIFT	PERNO PEN	080P
16		147718A1		1	PLACA DE COBERTURA	COVER PLATE	PLACA DE CUBIERTA	PIASTRA DI COPERTUR	110P
					ABDECKPLATTE	COUVERCLE	DÆKPLADE	AFSCHERMPLAAT	
17		419818A1		4	ARRUELA ESPECIAL	SPECIAL WASHER	ARANDELA ESPECIAL	RONDELLA SPECIALE	Z333
					SPEZIALUNTERLEGSCH	RONDELLE SPECIALE	SPECIALSKIVE	SPECIALE RING	

05-06	01	p1	03/09

UNIDADE HIDROSTÁTICA DA DIREÇÃO
STEERING HYDROSTATIC UNIT
UNIDAD HIDROSTATICA DE LA DIRECCIÓN
STEERING HYDROSTATIC UNIT

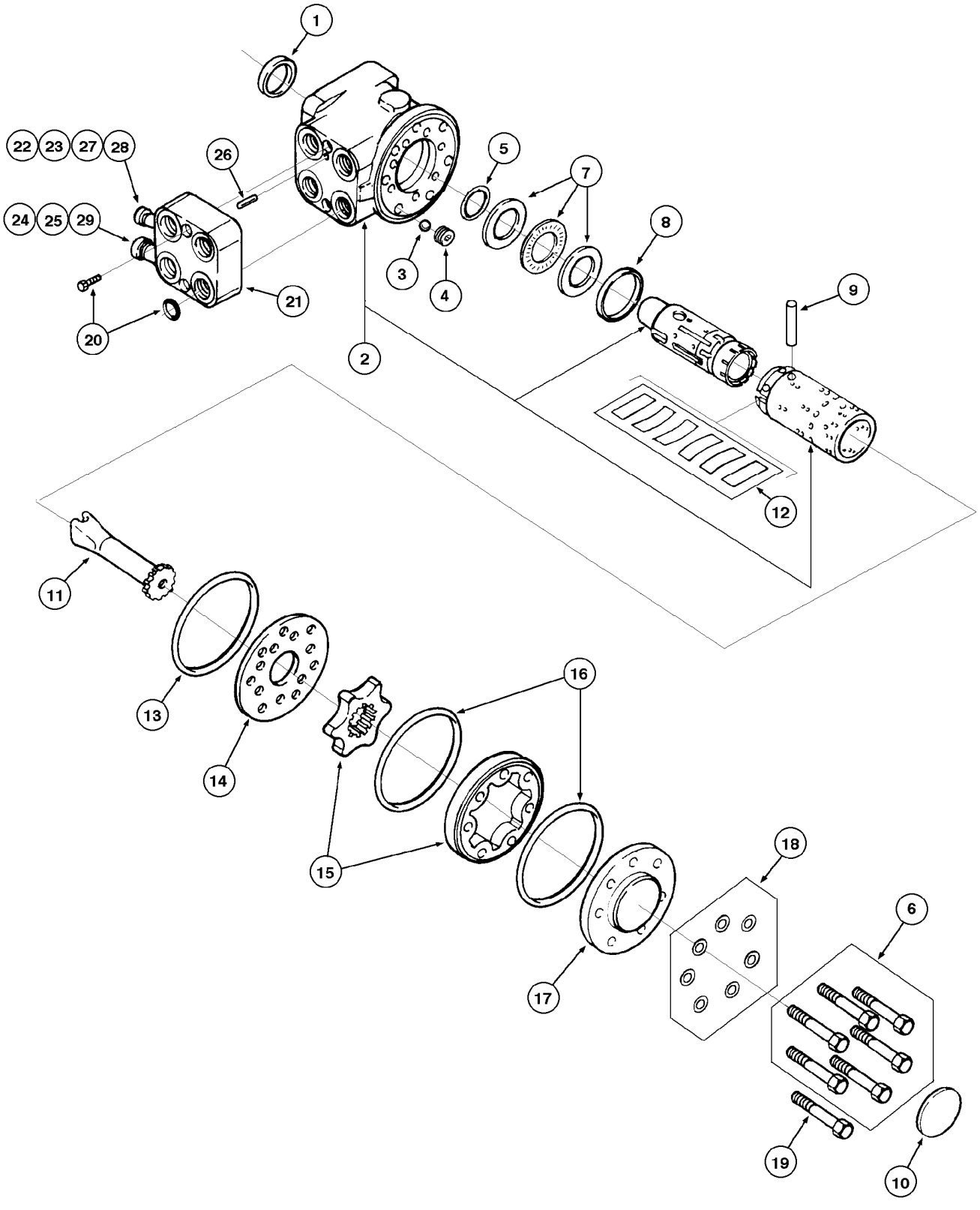

STEERING HYDROSTATIC UNIT
STEERING HYDROSTATIC UNIT
STEERING HYDROSTATIC UNIT
STEERING HYDROSTATIC UNIT

R	N	P.N.	MOD	Q	Denominação Bezeichnung	Description Description	Denominacion Beskrivelse	Descrizione Beschrijving	L.C.
		147726A1		1	UNIDADE HIDROSTÁT RECOND, Assy, Includes items 1 - 19				
						EXCHANGE HYDROSTA	UNIDAD HIDROST. INTE	UNITÀ IDROST. RIGENE	656C
					AUST-HYDROSTATIKEIN	POMPE HYDROSTATIQU	HYDRO. ENHED, OMB.	VERVANGINGSHYDROS	
		148114A1		1	UNIDADE HIDROSTÁT RECOND, Assy				
						EXCHANGE HYDROSTA	UNIDAD HIDROST. INTE	UNITÀ IDROST. RIGENE	656C
					AUST-HYDROSTATIKEIN	POMPE HYDROSTATIQU	HYDRO. ENHED, OMB.	VERVANGINGSHYDROS	
1		**F1545306**		1	ARRUELA	WASHER	ARANDELA	RONDELLA	9720
					UNTERLEGSCHEIBE	RONDELLE	WASHER	WASHER	
2		**NSS**		1	SEM SERVIÇO EM SEPARADO				
						NOT SERVICED SEPARA	NO SE REPARA POR SE	NON FORNITO SEPARAT	064N
					NICHT A SEP ERS-T LIEI	NON FORUNI SEPAREM	SERVICERES IKKE SEPA	NIET LOS VERKRIJGBAA	
3		**146894A1**		1	ESFERA	BALL	BOLA	SFERA	140S
					KUGEL	BILLE	KUGLE	KOGEL	
4		**3112272R1**		1	BUCHA	BUSHING	CASQUILLO	BOCCOLA	1140
					BUECHSE	DOUILLE	BUSHING	BUSHING	
5		**148105A1**		1	VEDAÇÃO	SEAL	ANILLO DE CIERRE	GUARNIZIONE; TENUTA	132A
					DICHTUNG	JOINT	PAKNING	AFDICHTING	
6		**E104292**		6	PARAFUSO	SCREW	TORNILLO	VITE	040V
					SCHRAUBE	VIS	SKRUE	SCHROEF	
7		**146896A1**		1	CONJUNTO DO ROLAMENTO				
						BEARING ASSY	CONJUNTO DE COJINET	COMPLESSIVO CUSCINI	341C
					LAGERBAURUPPE	ROULEMENT	LEJESAMLING	LAGEREENHEID	
8		**146897A1**		1	ANEL	RING	ANILLO	ANELLO	045A
					RING	ANNEAU	RING	RING	
9		**3112269R1**		1	PINO	PIN	BOTADOR	SPINA	6200
					STIFT	BROCHE	PIN	PIN	
10		**148106A1**		1	PLACA DE COBERTURA	COVER PLATE	PLACA DE CUBIERTA	PIASTRA DI COPERTUR	110P
					ABDECKPLATTE	COUVERCLE	DÆKPLADE	AFSCHERMPLAAT	
11		**146900A1**		1	EIXO	SHAFT	EJE	ALBERO	016A
					WELLE	ARBRE	AKSEL	AS	
12		**148107A1**		1	MOLA	SPRING	RESORTE	MOLLA	100M
					FEDER	RESSORT	FJEDER	VEER	
13		**E1630405**		1	ANEL O	O-RING	ANILLO/ARO CAUCHO	ANELLO TOROIDALE	7176
					O-RING	JOINT TORIQUE	O-RING	O-RING	
14		**146902A1**		1	PLACA DE COBERTURA	COVER PLATE	PLACA DE CUBIERTA	PIASTRA DI COPERTUR	110P
					ABDECKPLATTE	COUVERCLE	DÆKPLADE	AFSCHERMPLAAT	
15		**148108A1**		1	ENGRENAGEM	GEAR	ENGRANAJE	INGRANAGGIO	050I
					ZAHNRAD	PIGNON	TANDHJUL	TANDWIEL	
16		**3141536R1**		2	ANEL O	O-RING	ANILLO/ARO CAUCHO	ANELLO TOROIDALE	7176
					O-RING	JOINT TORIQUE	O-RING	O-RING	
17		**146904A1**		1	COBERTURA	COVER	CUBIERTA	COPERCHIO	265C
					ABDECKUNG	COUVERCLE	DÆKSEL	AFSCHERMING	
18		**146905A1**		7	ARRUELA PLANA	WASHER	ARANDELA	RONDELLA	131R
					UNTERLEGSCHEIBE	RONDELLE	FLADSKIVE	SLUITRING	
19		**E104291**		1	PARAFUSO	SCREW	TORNILLO	VITE	040V
					SCHRAUBE	VIS	SKRUE	SCHROEF	
	1	**148109A1**		1	JOGO, repair	SET	JUEGO	KIT	Z518
					SATZ	JEU	SÆT	SET	

(1) Inclui 1, 5, 13, 16, 18

05-06	01	p2	03/09

UNIDADE HIDROSTÁTICA DA DIREÇÃO
STEERING HYDROSTATIC UNIT
UNIDAD HIDROSTATICA DE LA DIRECCIÓN
STEERING HYDROSTATIC UNIT

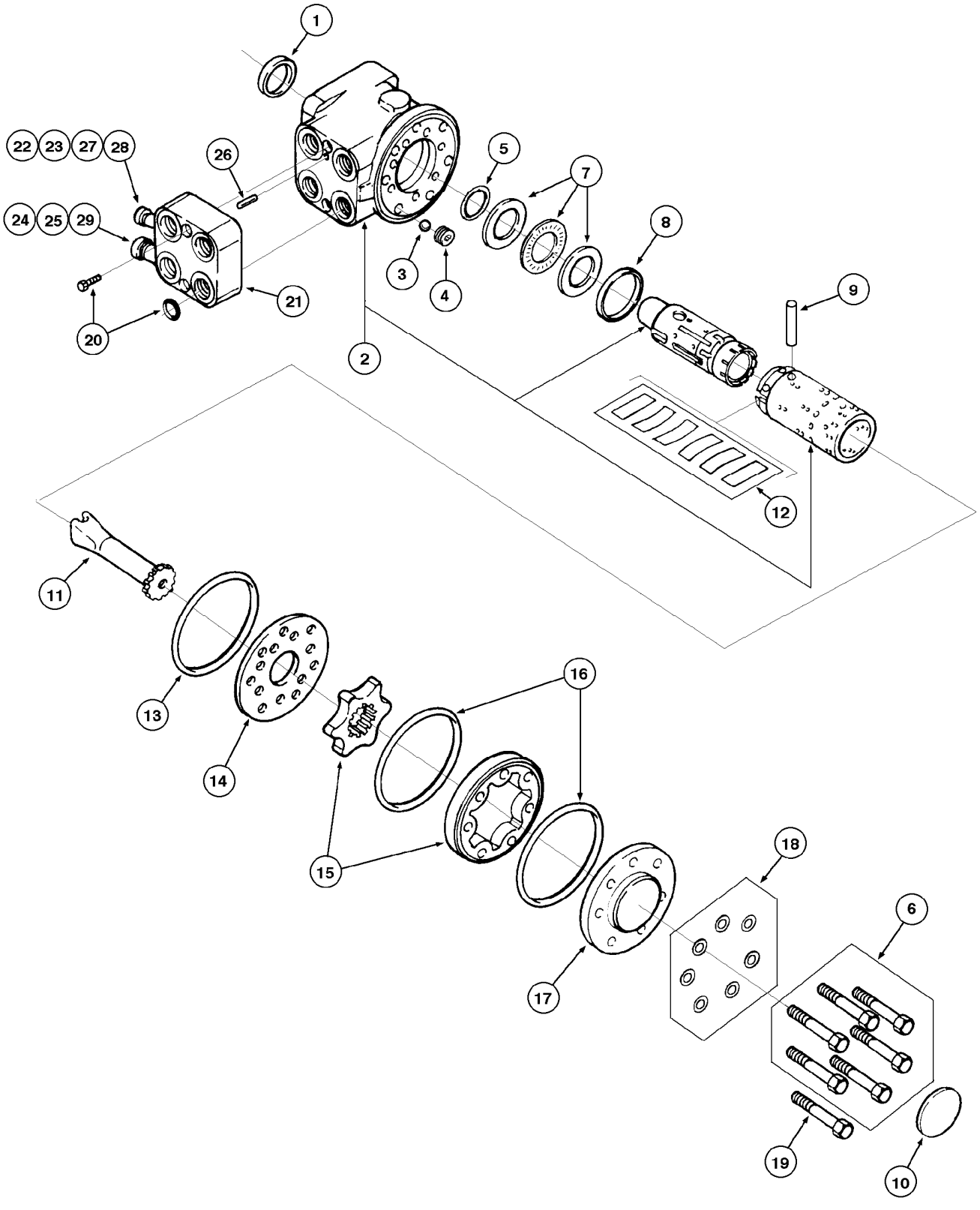

STEERING HYDROSTATIC UNIT
STEERING HYDROSTATIC UNIT
STEERING HYDROSTATIC UNIT
STEERING HYDROSTATIC UNIT

R	N	P.N.	MOD	Q	Denominação Bezeichnung	Description Description	Denominacion Beskrivelse	Descrizione Beschrijving	L.C.
		148110A1		2	BLOCO, Assy, Includes items 20 - 29				
						BLOCK	BLOQUE	BLOCCO	074B
					BLOCK	BLOC	MOTORBLOK	BLOK	
20		**148111A1**		1	JOGO	SET	JUEGO	KIT	Z518
					SATZ	JEU	SÆT	SET	
21		**NSS**		1	SEM SERVIÇO EM SEPARADO, BLOCK				
						NOT SERVICED SEPARA	NO SE REPARA POR SE	NON FORNITO SEPARAT	064N
					NICHT A SEP ERS-T LIEI	NON FORUNI SEPAREM	SERVICERES IKKE SEPA	NIET LOS VERKRIJGBAA	
22		**148112A1**		1	VÁLVULA, double	VALVE	VÁLVULA	VALVOLA	9620
					VENTIL	SOUPAPE	VENTIL	KLEP	
23		**Z13381-62**		1	MOLA	SPRING	RESORTE	MOLLA	100M
					FEDER	RESSORT	FJEDER	VEER	
24		**148113A1**		1	VÁLVULA, relief	VALVE	VÁLVULA	VALVOLA	9620
					VENTIL	SOUPAPE	VENTIL	KLEP	
25		**146911A1**		1	MOLA	SPRING	RESORTE	MOLLA	100M
					FEDER	RESSORT	FJEDER	VEER	
26		**A06360-88**		1	PINO	PIN	PASADOR	PERNO	080P
					PIN	BROCHE	STIFT	PEN	
		V39233		1	JOGO	KIT	JEUGO	KIT	4830
					PACKUNG	POCHETTE	KIT	KIT	
27		**NSS**		1	SEM SERVIÇO EM SEPARADO, O-RING				
						NOT SERVICED SEPARA	NO SE REPARA POR SE	NON FORNITO SEPARAT	064N
					NICHT A SEP ERS-T LIEI	NON FORUNI SEPAREM	SERVICERES IKKE SEPA	NIET LOS VERKRIJGBAA	
28		**NSS**		1	SEM SERVIÇO EM SEPARADO, O-RING				
						NOT SERVICED SEPARA	NO SE REPARA POR SE	NON FORNITO SEPARAT	064N
					NICHT A SEP ERS-T LIEI	NON FORUNI SEPAREM	SERVICERES IKKE SEPA	NIET LOS VERKRIJGBAA	
29		**NSS**		1	SEM SERVIÇO EM SEPARADO, O-RING				
						NOT SERVICED SEPARA	NO SE REPARA POR SE	NON FORNITO SEPARAT	064N
					NICHT A SEP ERS-T LIEI	NON FORUNI SEPAREM	SERVICERES IKKE SEPA	NIET LOS VERKRIJGBAA	

05-08	01	p1	03/09

CILINDROS DE DIREÇÃO
STEERING CYLINDERS
GATOS DE LA DIRECCIÓN
STEERING CYLINDERS

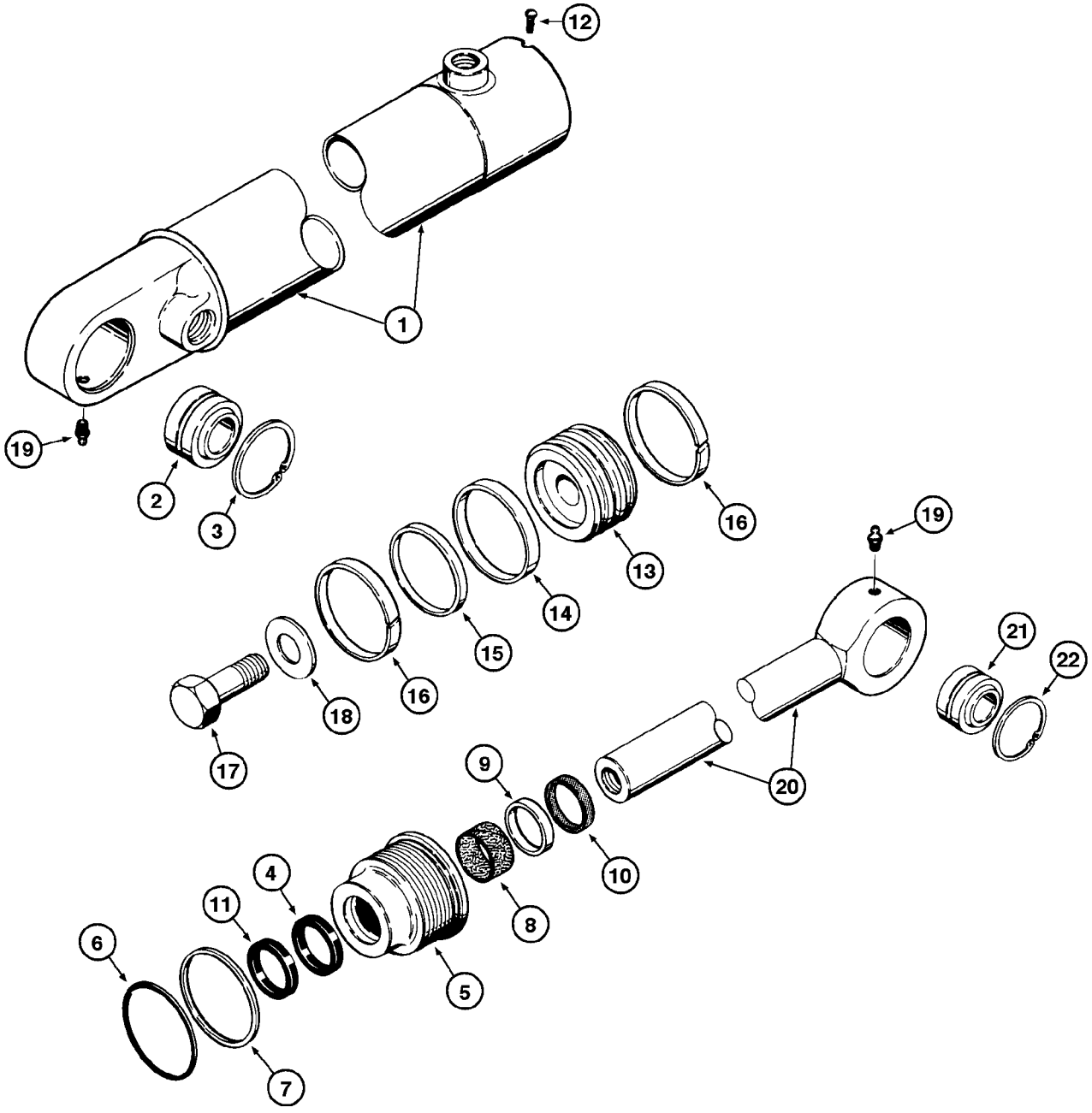

STEERING CYLINDERS
STEERING CYLINDERS
STEERING CYLINDERS
STEERING CYLINDERS

R	N	P.N.	MOD	Q	Denominação Bezeichnung	Description Description	Denominacion Beskrivelse	Descrizione Beschrijving	L.C.
		E69527		1	CILINDRO, LH, Includes items 1 - 12				
						CYLINDER	CILINDRO	CILINDRO	164C
					ZYLINDER	VERIN	CYLINDER	CILINDER	
1		**G101703**		1	TUBO, 3 mm DIA x 610.10 mm L, LH				
						TUBE	TUBO	TUBO	9400
					ROHR	TUBE	TUBE	TUBE	
1		**G101702**		1	TUBO, 3 mm DIA x 610.10 mm L, RH				
						TUBE	TUBO	TUBO	9400
					ROHR	TUBE	TUBE	TUBE	
2		**L12570**		4	BUCHA	BUSHING	CASQUILLO	BOCCOLA	1140
					BUECHSE	DOUILLE	BUSHING	BUSHING	
3		**E95303**		2	ANEL DE PRESSÃO	SNAP RING	ANILLO DE RESORTE	ANELLO ELASTICO	054A
					SPRENGRING	ANNEAU D'ARRET	LÅSERING	VEERRING	
3		**L12571**		2	ANEL DE PRESSÃO, #218, 2.321", Int, Spiral				
						SNAP RING	ANILLO DE RESORTE	ANELLO ELASTICO	054A
					SPRENGRING	ANNEAU D'ARRET	LÅSERING	VEERRING	
		E69987		1	COBERTURA, Assy	COVER	CUBIERTA	COPERCHIO	265C
					ABDECKUNG	COUVERCLE	DÆKSEL	AFSCHERMING	
4		**G107921**		1	VEDADOR DE RETENCAO	SEAL	SELLO/RETEN	GUARNIZIONE TENUTA	7460
					DICHTRING	JOINT-D'ETANCHEITE	SEAL	SEAL	
5		**NSS**		1	SEM SERVIÇO EM SEPARADO				
						NOT SERVICED SEPARA	NO SE REPARA POR SE	NON FORNITO SEPARAT	064N
					NICHT A SEP ERS-T LIEI	NON FORUNI SEPAREM	SERVICERES IKKE SEPA	NIET LOS VERKRIJGBAA	
6		**A30095**		1	O-RING, 2.984" ID x 3.262" OD x 0.139"				
						O-RING	JUNTA TÓRICA	ANELLO TOROIDALE	055A
					O-RING	JOINT TORIQUE	O-RING	O-RING	
7		**G32122**		1	ANEL	RING	ANILLO	ANELLO	7175
					RING	BAGUE	RING	RING	
8		**G102424**		1	BUCHA	BUSHING	CASQUILLO	BOCCOLA	095B
					BUCHSE	BAGUE	BØSNING	BUS	
9		**NSS**		1	SEM SERVIÇO EM SEPARADO				
						NOT SERVICED SEPARA	NO SE REPARA POR SE	NON FORNITO SEPARAT	064N
					NICHT A SEP ERS-T LIEI	NON FORUNI SEPAREM	SERVICERES IKKE SEPA	NIET LOS VERKRIJGBAA	
10		**D95142**		1	VEDAÇÃO	SEAL	ANILLO DE CIERRE	GUARNIZIONE; TENUTA	132A
					DICHTUNG	JOINT	PAKNING	AFDICHTING	
11		**G109093**		1	VEDADOR DE RETENCAO	SEAL	SELLO/RETEN	GUARNIZIONE TENUTA	7460
					DICHTRING	JOINT-D'ETANCHEITE	SEAL	SEAL	
12		**G109395**		1	PARAFUSO	SELF-TAP SCREW	TORNILLO AUTORROSC	VITE AUTOFILETTANTE	062V
					SELBSTSCHN SCHRAUE	VIS AUTOTARAUDEUSE	SELVLÅSENDE BOLT	ZELFTAPPENDE SCHRO	
		E69526		1	CILINDRO, RH, Includes items 13 - 22				
						CYLINDER	CILINDRO	CILINDRO	164C
					ZYLINDER	VERIN	CYLINDER	CILINDER	
13		**G100442**		1	PISTAO	PISTON	PISTON	PISTONE	6270
					KOLBEN	PISTON	PISTON	PISTON	
14		**G102288**		1	VEDAÇÃO	SEAL	ANILLO DE CIERRE	GUARNIZIONE; TENUTA	132A
					DICHTUNG	JOINT	PAKNING	AFDICHTING	
15		**G100444**		1	VEDADOR DE RETENCAO	SEAL	SELLO/RETEN	GUARNIZIONE TENUTA	7460
					DICHTRING	JOINT-D'ETANCHEITE	SEAL	SEAL	

05-08	01	p2	03/09

CILINDROS DE DIREÇÃO
STEERING CYLINDERS
GATOS DE LA DIRECCIÓN
STEERING CYLINDERS

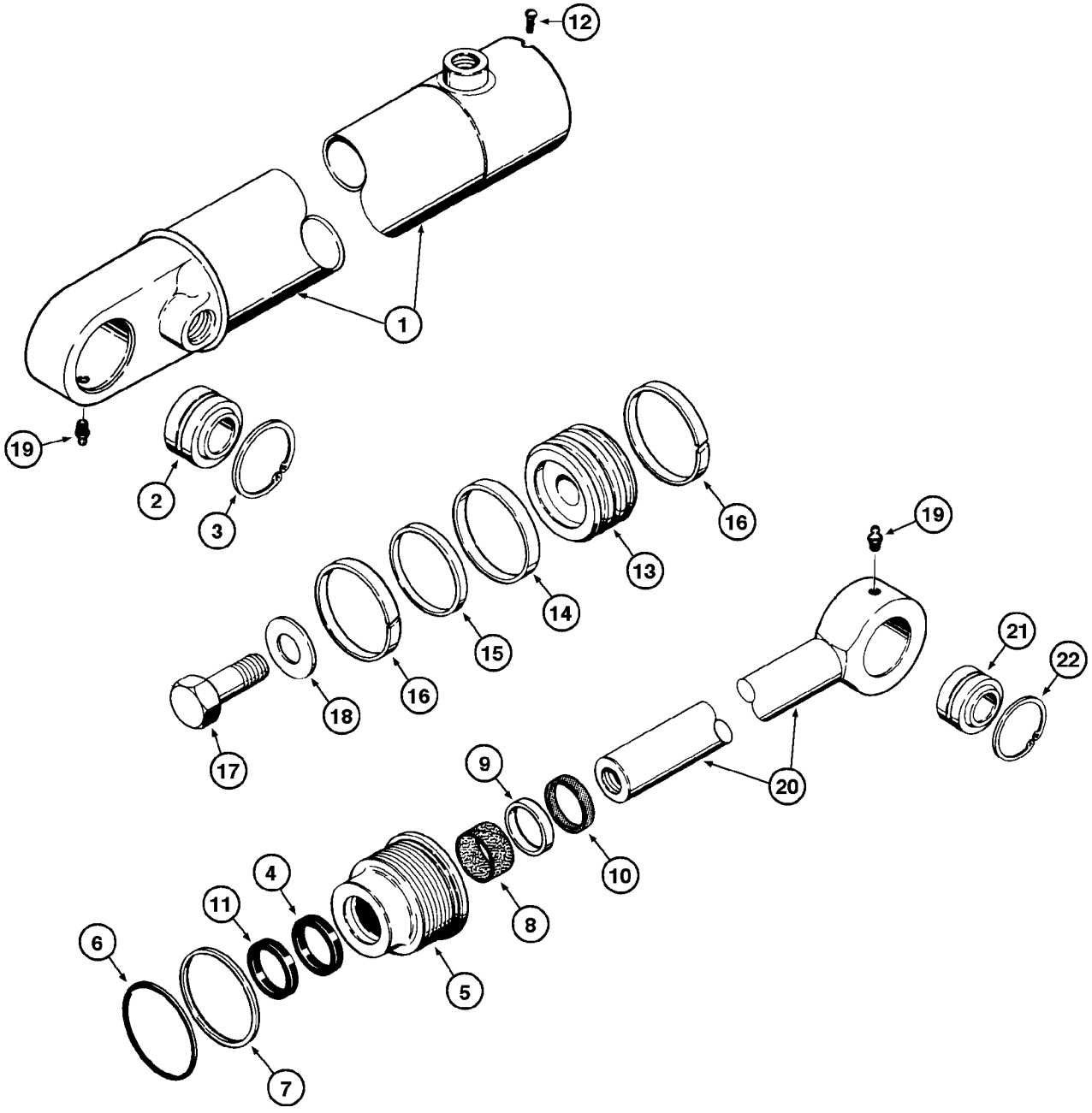

STEERING CYLINDERS
STEERING CYLINDERS
STEERING CYLINDERS
STEERING CYLINDERS

R	N	P.N.	MOD	Q	Denominação Bezeichnung	Description Description	Denominacion Beskrivelse	Descrizione Beschrijving	L.C.
16		**G100449**		2	ANEL DE DESGASTE VERSCHLEISSRING	WEAR RING BAGUE D'USURE	ANILLO DE DESGASTE SLIDRING	ANELLO ANTIUSURA SLIJTRING	A012
17		**28-1240**		1	PARAFUSO, Hex, 3/4-16 x 2 1/2", G8 SCHRAUBE	BOLT VIS	PERNO BOLT	BULLONE BOUT	140B
18		**D34666**		1	ARRUELA UNTERLEGSCHEIBE	WASHER RONDELLE	ARANDELA WASHER	RONDELLA WASHER	9720
19		**219-1**		2	GRAXEIRA, 1/8"-27 x .66 lg SCHMIERNIPPEL	LUBE NIPPLE GRAISSEUR	BOQUILLA DE LUBRICA(SMØRENIPPEL	INGRASSATORE SMEERNIPPEL	060I
20		**G33449**		1	CILINDRO, Assy ZYLINDER	CYLINDER CYLINDRE	CILINDRO CYLINDER	CILINDRO CYLINDER	2480
21		**L12570**		1	BUCHA BUECHSE	BUSHING DOUILLE	CASQUILLO BUSHING	BOCCOLA BUSHING	1140
22		**E95303**		2	ANEL DE PRESSÃO SPRENGRING	SNAP RING ANNEAU D'ARRET	ANILLO DE RESORTE LÅSERING	ANELLO ELASTICO VEERRING	054A
22		**L12571**		2	ANEL DE PRESSÃO, #218, 2.321", Int, Spiral SPRENGRING	SNAP RING ANNEAU D'ARRET	ANILLO DE RESORTE LÅSERING	ANELLO ELASTICO VEERRING	054A
	1	**G109452**		1	KIT DE GAXETAS DICHTUNGSSATZ	GASKET KIT KIT DE JOINTS	KIT DE JUNTAS PAKNINGSSÆT	KIT GUARNIZIONI KIT MET PAKKINGEN	3740

(1) Inclui 4, 6, 7, 8, 10, 11, 14, 15, 16

05-08	02	p1	05/12

CILINDROS DE DIREÇÃO
STEERING CYLINDERS
GATOS DE LA DIRECCIÓN
STEERING CYLINDERS

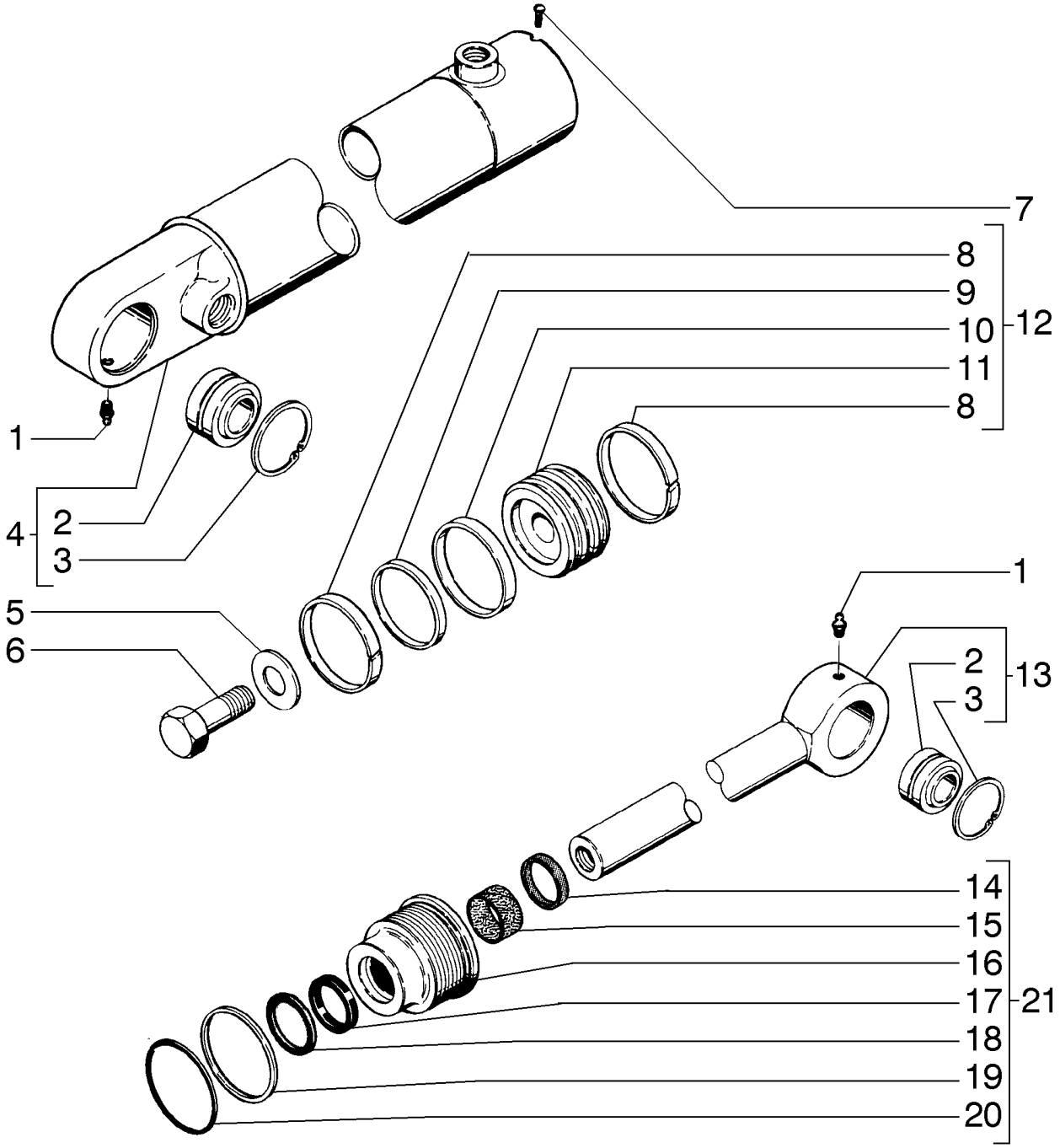

STEERING CYLINDERS
STEERING CYLINDERS
STEERING CYLINDERS
STEERING CYLINDERS

R	N	P.N.	MOD	Q	Denominação Bezeichnung	Description Description	Denominacion Beskrivelse	Descrizione Beschrijving	L.C.
		E69527		1	CILINDRO, LH ZYLINDER	CYLINDER VERIN	CILINDRO CYLINDER	CILINDRO CILINDER	164C
	1	**84545292**		1	CILINDRO HIDRÁULICO, LH HYDRAULIKZYLINDER	HYDRAULIC CYLINDER VERIN HYDRAULIQUE	CILINDRO HIDRÁULICO HYDRAULIKCYLINDER	CILINDRO IDRAULICO HYDRAULISCHE CILINDI	188C
		E69526		1	CILINDRO, RH ZYLINDER	CYLINDER VERIN	CILINDRO CYLINDER	CILINDRO CILINDER	164C
	1	**84545293**		1	CILINDRO HIDRÁULICO, RH HYDRAULIKZYLINDER	HYDRAULIC CYLINDER VERIN HYDRAULIQUE	CILINDRO HIDRÁULICO HYDRAULIKCYLINDER	CILINDRO IDRAULICO HYDRAULISCHE CILINDI	188C
1		**219-1**		2	GRAXEIRA, 1/8"-27 x .66 lg SCHMIERNIPPEL	LUBE NIPPLE GRAISSEUR	BOQUILLA DE LUBRICAC SMØRENIPPEL	INGRASSATORE SMEERNIPPEL	060I
2		**G109152**		2	BUCHA BUECHSE	BUSHING DOUILLE	CASQUILLO BUSHING	BOCCOLA BUSHING	1140
3		**E95303**		4	ANEL DE PRESSÃO SPRENGRING	SNAP RING ANNEAU D'ARRET	ANILLO DE RESORTE LÅSERING	ANELLO ELASTICO VEERRING	054A
4		**G101702**		1	TUBO, 3 mm DIA x 610.10 mm L, RH ROHR	TUBE TUBE	TUBO TUBE	TUBO TUBE	9400
4		**G101703**		1	TUBO, 3 mm DIA x 610.10 mm L, LH ROHR	TUBE TUBE	TUBO TUBE	TUBO TUBE	9400
5		**D34666**		1	ARRUELA UNTERLEGSCHEIBE	WASHER RONDELLE	ARANDELA WASHER	RONDELLA WASHER	9720
6		**28-1240**		1	PARAFUSO, Hex, 3/4-16 x 2 1/2", G8 SCHRAUBE	BOLT VIS	PERNO BOLT	BULLONE BOUT	140B
7		**G109395**		1	PARAFUSO SELBSTSCHN SCHRAUE	SELF-TAP SCREW VIS AUTOTARAUDEUSE	TORNILLO AUTORROSC SELVLÅSENDE BOLT	VITE AUTOFILETTANTE ZELFTAPPENDE SCHRO	062V
8		**G100449**		2	ANEL DE DESGASTE VERSCHLEISSRING	WEAR RING BAGUE D'USURE	ANILLO DE DESGASTE SLIDRING	ANELLO ANTIUSURA SLIJTRING	A012
9		**G100444**		1	VEDADOR DE RETENCAO DICHTRING	SEAL JOINT-D'ETANCHEITE	SELLO/RETEN SEAL	GUARNIZIONE TENUTA SEAL	7460
10		**G100443**		1	JUNTA DICHTUNG	GASKET JOINT	JUNTA PAKNING	GUARNIZIONE PAKKING	123G
11		**G100442**		1	PISTAO KOLBEN	PISTON PISTON	PISTON PISTON	PISTONE PISTON	6270
12		**G100441**		1	PISTAO, Assy KOLBEN	PISTON PISTON	PISTON PISTON	PISTONE PISTON	6270
13		**G33449**		1	CILINDRO ZYLINDER	CYLINDER CYLINDRE	CILINDRO CYLINDER	CILINDRO CYLINDER	2480
14		**D95142**		1	VEDAÇÃO DICHTUNG	SEAL JOINT	ANILLO DE CIERRE PAKNING	GUARNIZIONE; TENUTA AFDICHTING	132A
15		**G102424**		1	BUCHA BUCHSE	BUSHING BAGUE	CASQUILLO BØSNING	BOCCOLA BUS	095B
16		**{E69989}**		1					

(1) Para Máquina Aplicação Fertilizante

05-08	02	p2	05/12

CILINDROS DE DIREÇÃO
STEERING CYLINDERS
GATOS DE LA DIRECCIÓN
STEERING CYLINDERS

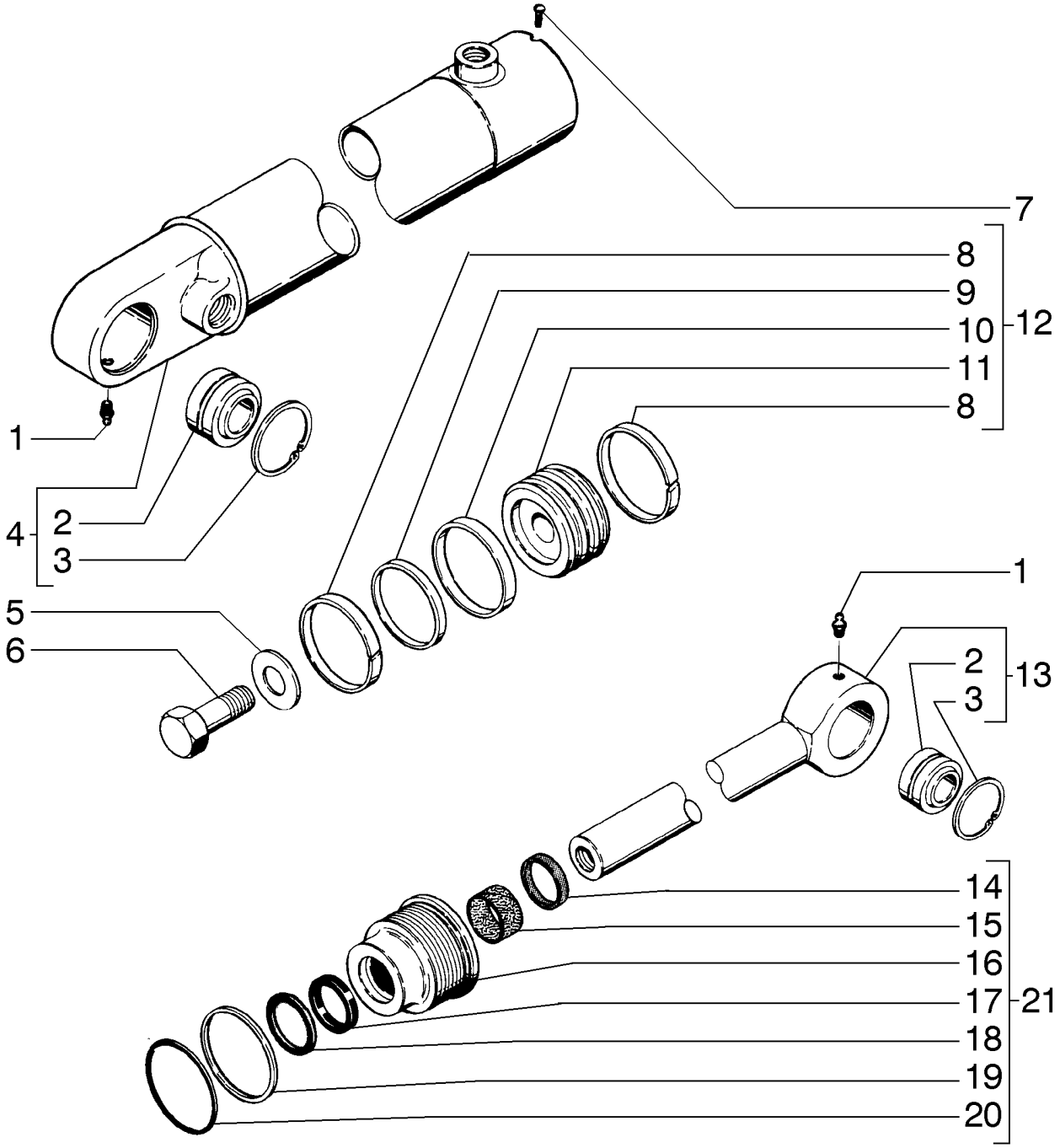

STEERING CYLINDERS
STEERING CYLINDERS
STEERING CYLINDERS
STEERING CYLINDERS

R	N	P.N.	MOD	Q	Denominação Bezeichnung	Description Description	Denominacion Beskrivelse	Descrizione Beschrijving	L.C.
17		E155306		1	VEDAÇÃO DE BORRACHA GUMMIDICHTUNG	RUBBER SEAL JOINT EN CAOUTCHOU(	JUNTA DE GOMA GUMMITÆTNING	GUARNIZIONE DI GOMM RUBBEREN AFDICHTIN(	122G
18		G109093		1	VEDADOR DE RETENCAO DICHTRING	SEAL JOINT-D'ETANCHEITE	SELLO/RETEN SEAL	GUARNIZIONE TENUTA SEAL	7460
19		G32122		1	ANEL RING	RING BAGUE	ANILLO RING	ANELLO RING	7175
20		A30095		1	O-RING, 2.984" ID x 3.262" OD x 0.139" O-RING	O-RING JOINT TORIQUE	JUNTA TÓRICA O-RING	ANELLO TOROIDALE O-RING	055A
21		1543252C1		1	KIT DE GAXETAS, Incl 8 - 10, 14, 15, 17 - 20 DICHTUNGSSATZ	GASKET KIT KIT DE JOINTS	KIT DE JUNTAS PAKNINGSSÆT	KIT GUARNIZIONI KIT MET PAKKINGEN	3740

05-10	01	p1	11/07

LINHAS DE PRESSÃO HIDRÁULICA DA DIREÇÃO
STEERING PRESSURE LINE HYDRAULICS
LINEAS DE PRESION HIDRAULICA DE LA DIRECCIÓN
STEERING PRESSURE LINE HYDRAULICS

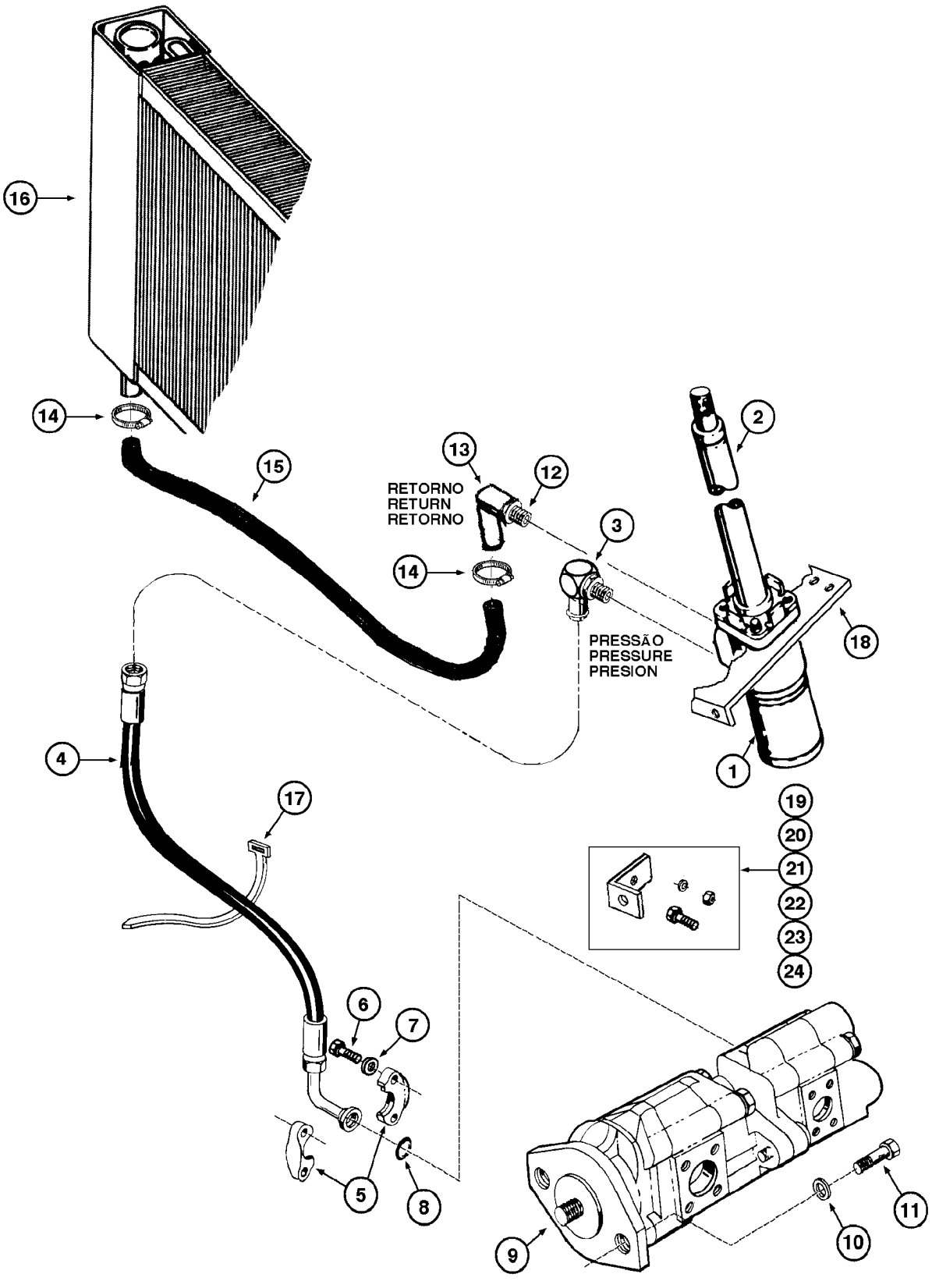

STEERING PRESSURE LINE HYDRAULICS
STEERING PRESSURE LINE HYDRAULICS
STEERING PRESSURE LINE HYDRAULICS
STEERING PRESSURE LINE HYDRAULICS

R	N	P.N.	MOD	Q	Denominação Bezeichnung	Description Description	Denominacion Beskrivelse	Descrizione Beschrijving	L.C.
1		147726A1		1	UNIDADE HIDROSTÁT	RECOND, Assy (P.5-6) EXCHANGE HYDROSTA	UNIDAD HIDROST. INTE	UNITÀ IDROST. RIGENE	656C
					AUST-HYDROSTATIKEIN	POMPE HYDROSTATIQU	HYDRO. ENHED, OMB.	VERVANGINGSHYDROS	
2		147727A1		1	COLUNA DE DIREÇÃO LENKSÄULE	STEERING COLUMN COLONNE DE DIRECTIO	COLUMNA DE DIRECCIÓ RATSTAMME	PIANTONE DELLO STER STUURKOLOM	103P
3		218-5117		1	COTOVELO, 90º, 7/8"-14,	37º x 3/4"-16, O-Ring ELBOW	CODO	GOMITO	085G
					KNIESTÜCK	COUDE	VINKELRØR	KNIESTUK	
4		E69585		1	MANGUEIRA, pressure SCHLAUCH	HOSE FLEXIBLE	TUBO SLANGE	TUBO FLESSIBILE SLANG	030M
5		A16961		2	FLANGE FLANSCH	FLANGE FLASQUE	TAPA FLANGE	FLANGIA FLANGE	3360
6		413-620		4	PARAFUSO, Hex, 3/8"-16 x 1 1/4", G5, Full Thd BOLT		PERNO	BULLONE	140B
					SCHRAUBE	VIS	BOLT	BOUT	
7		492-11038		4	TRAVA DA ARRUELA, 3/8" SICHERUNGSSCHEIBE	LOCK WASHER RONDELLE FREIN	ARANDELA DE BLOQUE LÅSESKIVE	RONDELLA DI SICUREZ BORGRING	132R
8		A7623		1	O-RING, 0.984" ID x 1.262" OD O-RING		JUNTA TÓRICA	ANELLO TOROIDALE	055A
					O-RING	JOINT TORIQUE	O-RING	O-RING	
9		REF		1	INSTRUÇÃO, PUMP hydraulic Assy (P.8-20) INSTRUCTION		INSTRUCCIÓN	ISTRUZIONI	Z571
					ANLEITUNG	INSTRUCTION	INSTRUKTION	INSTRUCTIE	
10		413-824		2	PARAFUSO, Hex, 1/2"-13 x 1 1/2", G5, Full Thd BOLT		PERNO	BULLONE	140B
					SCHRAUBE	VIS	BOLT	BOUT	
11		492-11010		2	TRAVA DA ARRUELA, #10 SICHERUNGSSCHEIBE	LOCK WASHER RONDELLE FREIN	ARANDELA DE BLOQUE LÅSESKIVE	RONDELLA DI SICUREZ BORGRING	132R
12		147728A1		1	CONEXÃO ARMATUR	FITTING RACCORD	ACOPLAMIENTO FITTING	RACCORDO AANSLUITING	3300
13		75264558		1	TUBO ROHR	TUBE TUBE	TUBO RØR	TUBO LEIDING	195T
14		214-1420		2	BRAÇADEIRA MANGUEIRA, #20, 0.81/1.75 Type F Worm HOSE CLAMP		ABRAZADERA DE MANG	FASCETTA STRINGITUB	P729
					SCHLAUCHSCHELLE	COLLIER POUR FLEXIBL	SLANGEKLEMME	SLANGKLEM	
15		L74878		1	MANGUEIRA, 1.00" ID x 82.00", SAE 100R3, return HOSE		TUBO	TUBO FLESSIBILE	030M
					SCHLAUCH	FLEXIBLE	SLANGE	SLANG	
16		E69605		1	RADIADOR, oil KÜHLER	RADIATOR RADIATEUR	RADIADOR KØLER	RADIATORE RADIATEUR	025R
17		L18331		2	PRENDEDOR DE CABOS KABELBINDER	CABLE STRAP BRIDE DE CABLE	BANDA DE CABLE KABELSTROP	FASCETTA PER CAVO BUNDELBAND	P716
18		REF		1	INSTRUÇÃO, PLATE ANLEITUNG	INSTRUCTION INSTRUCTION	INSTRUCCIÓN INSTRUKTION	ISTRUZIONI INSTRUCTIE	Z571
19		L73462		1	SUPORTE, outlet hose HALTER	BRACKET CONSOLE	SOPORTE BRACKET	STAFFA BRACKET	1010
20		413-616		2	PARAFUSO, Hex, 3/8"-16 x 1", G5, Full Thd BOLT		PERNO	BULLONE	140B
					SCHRAUBE	VIS	BOLT	BOUT	

05-10	01	p2	11/07

LINHAS DE PRESSÃO HIDRÁULICA DA DIREÇÃO
STEERING PRESSURE LINE HYDRAULICS
LINEAS DE PRESION HIDRAULICA DE LA DIRECCIÓN
STEERING PRESSURE LINE HYDRAULICS

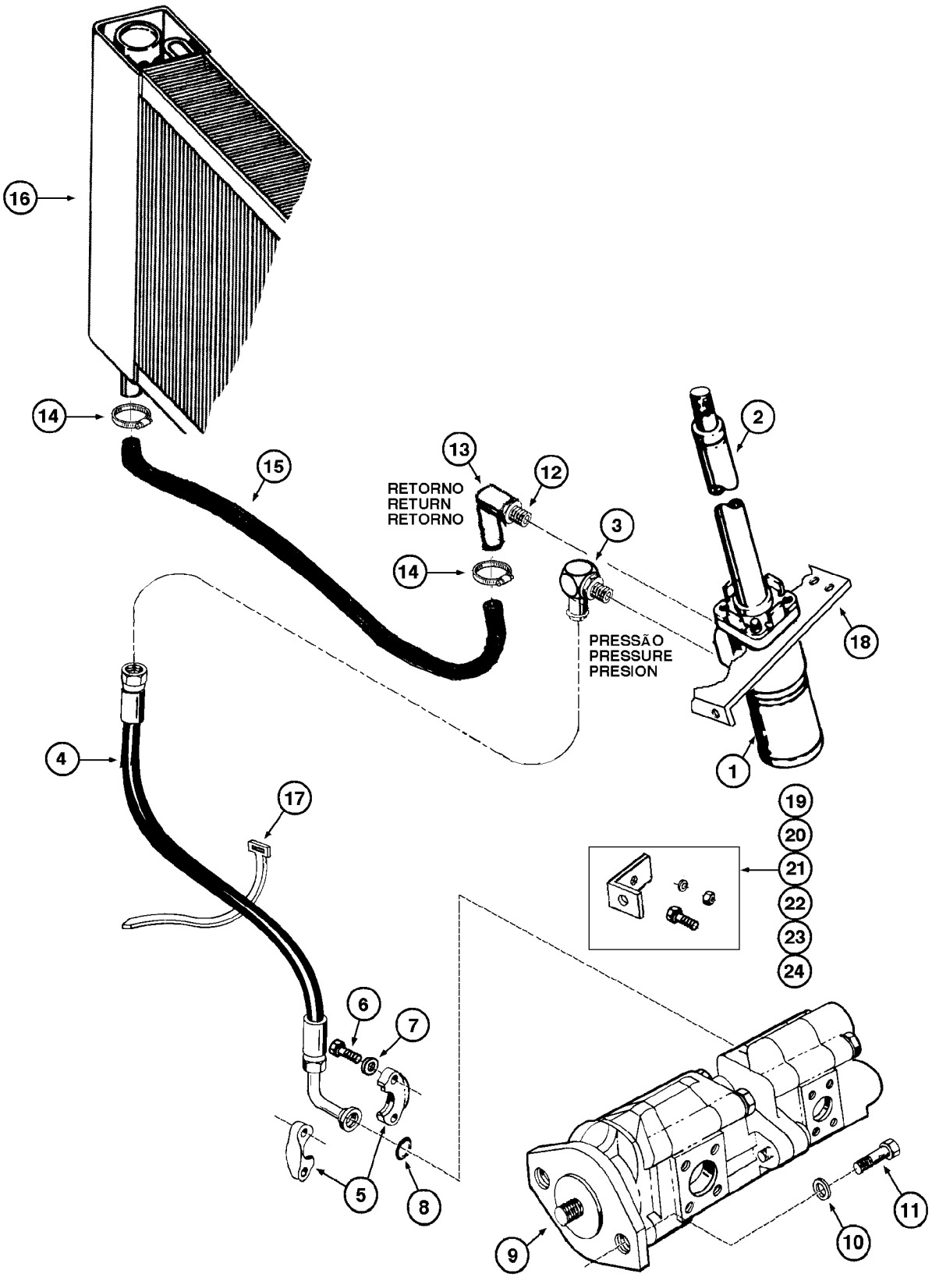

STEERING PRESSURE LINE HYDRAULICS
STEERING PRESSURE LINE HYDRAULICS
STEERING PRESSURE LINE HYDRAULICS
STEERING PRESSURE LINE HYDRAULICS

R	N	P.N.	MOD	Q	Denominação Bezeichnung	Description Description	Denominacion Beskrivelse	Descrizione Beschrijving	L.C.
21		425-106		2	PORCA, 3/8"-16, G5 MUTTER	NUT ECROU	TUERCA MØTRIK	DADO MOER	010D
22		492-11038		2	TRAVA DA ARRUELA, 3/8" SICHERUNGSSCHEIBE	LOCK WASHER RONDELLE FREIN	ARANDELA DE BLOQUE LÅSESKIVE	RONDELLA DI SICUREZ BORGRING	132R
23		495-11041		2	ARRUELA PLANA, 3/8", SAE UNTERLEGSCHEIBE	WASHER RONDELLE	ARANDELA FLADSKIVE	RONDELLA SLUITRING	131R
24		515-23381		1	BRAÇADEIRA, 1 1/2", Insul, 3/8" Bolt, outlet hose KLEMME	CLAMP COLLIER	ABRAZADERA SPÆNDEBÅND	MORSETTO KLEM	120M

05-12	01	p1	12/09

CIRCUITO HIDRÁULICO DA DIREÇÃO - RETORNO
STEERING HYDRAULICS - RETURN CIRCUITRY
CIRCUITO HIDRAULICO DE LA DIRECCIÓN - RETURNO
STEERING HYDRAULICS - RETURN CIRCUITRY

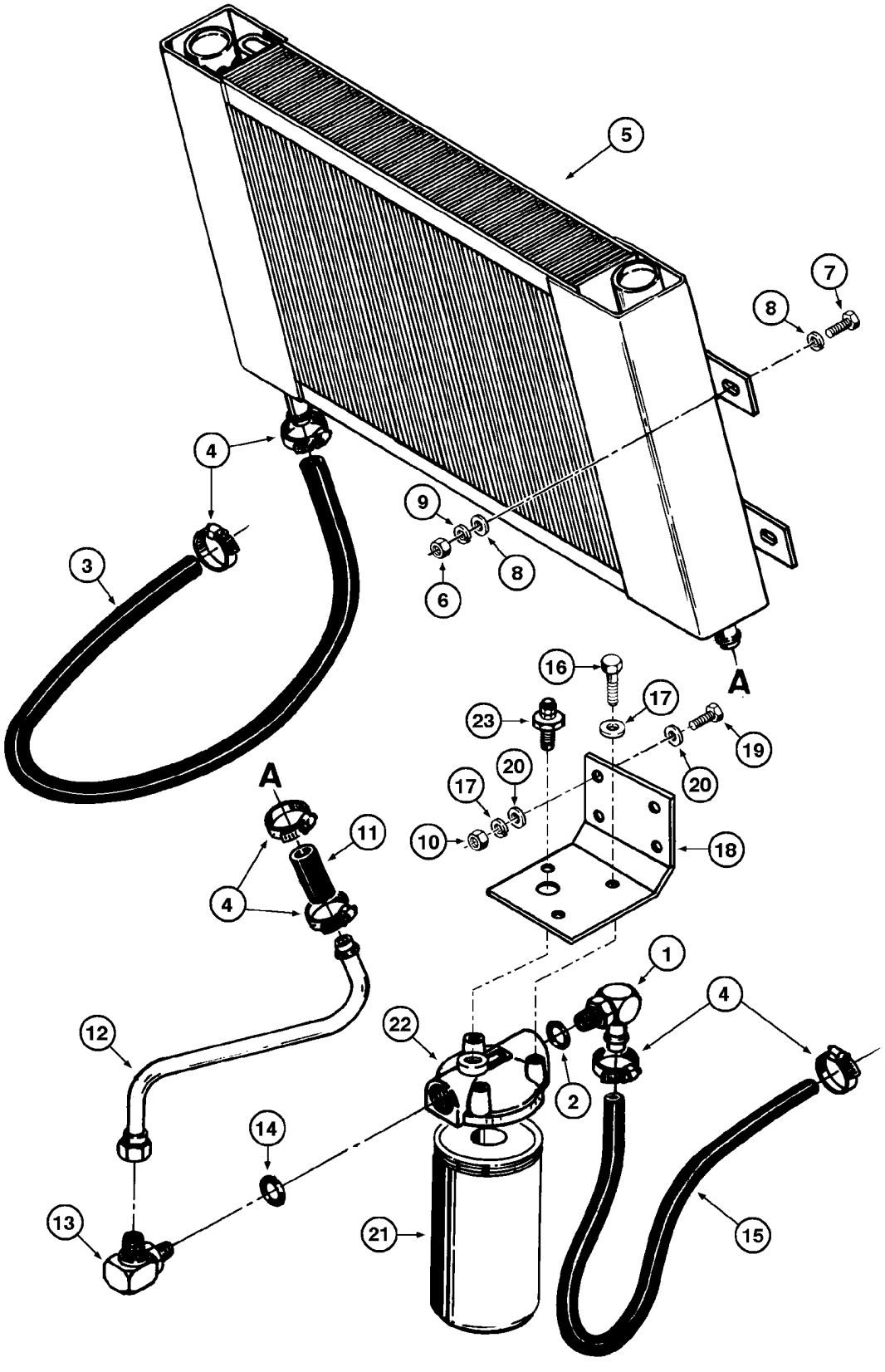

STEERING HYDRAULICS - RETURN CIRCUITRY
STEERING HYDRAULICS - RETURN CIRCUITRY
STEERING HYDRAULICS - RETURN CIRCUITRY
STEERING HYDRAULICS - RETURN CIRCUITRY

R	N	P.N.	MOD	Q	Denominação Bezeichnung	Description Description	Denominacion Beskrivelse	Descrizione Beschrijving	L.C.
1		217-352		1	CONEXÃO, 90º, 1" Hose x 1 5/16"-12 ORB Beaded, Includes item 2				
						FITTING	ACOPLAMIENTO	RACCORDO	3300
					ARMATUR	RACCORD	FITTING	AANSLUITING	
2		218-5010		1	O-RING, 0.614" ID x 0.754" OD x 0.07"				
						O-RING	JUNTA TÓRICA	ANELLO TOROIDALE	055A
					O-RING	JOINT TORIQUE	O-RING	O-RING	
3		L74878		1	MANGUEIRA, 1.00" ID x 82.00", SAE 100R3				
						HOSE	TUBO	TUBO FLESSIBILE	030M
					SCHLAUCH	FLEXIBLE	SLANGE	SLANG	
4		214-1420		6	BRAÇADEIRA MANGUEIRA, #20, 0.81/1.75 Type F Worm				
						HOSE CLAMP	ABRAZADERA DE MANG	FASCETTA STRINGITUB	P729
					SCHLAUCHSCHELLE	COLLIER POUR FLEXIBL	SLANGEKLEMME	SLANGKLEM	
5		E69605		1	RADIADOR, oil	RADIATOR	RADIADOR	RADIATORE	025R
					KÜHLER	RADIATEUR	KØLER	RADIATEUR	
6		425-106		4	PORCA, 3/8"-16, G5	NUT	TUERCA	DADO	010D
					MUTTER	ECROU	MØTRIK	MOER	
7		413-620		4	PARAFUSO, Hex, 3/8"-16 x 1 1/4", G5, Full Thd				
						BOLT	PERNO	BULLONE	140B
					SCHRAUBE	VIS	BOLT	BOUT	
8		495-21044		8	ARRUELA PLANA, 3/8"	WASHER	ARANDELA	RONDELLA	131R
					UNTERLEGSCHEIBE	RONDELLE	FLADSKIVE	SLUITRING	
9		492-11038		4	TRAVA DA ARRUELA, 3/8"	LOCK WASHER	ARANDELA DE BLOQUE	RONDELLA DI SICUREZ	132R
					SICHERUNGSSCHEIBE	RONDELLE FREIN	LÅSESKIVE	BORGRING	
10		425-106		4	PORCA, 3/8"-16, G5	NUT	TUERCA	DADO	010D
					MUTTER	ECROU	MØTRIK	MOER	
11		E66256		1	LUVA	SLEEVE	MANGUITO	MANICOTTO	031M
					BUCHSE	CHEMISE	TRYKLEJE, KOBLING	MOF; BUS	
12		E159285		1	TUBO, 25.4 mm OD x 149, 188 mm L				
						TUBE	TUBO	TUBO	195T
					ROHR	TUBE	RØR	LEIDING	
13		218-5110		1	COTOVELO, 90º, 1 5/16"-12, 37º x 1 5/16"-12, O-Ring, Incl. item 14				
						ELBOW	CODO	GOMITO	085G
					KNIESTÜCK	COUDE	VINKELRØR	KNIESTUK	
14		218-5010		1	O-RING, 0.614" ID x 0.754" OD x 0.07"				
						O-RING	JUNTA TÓRICA	ANELLO TOROIDALE	055A
					O-RING	JOINT TORIQUE	O-RING	O-RING	
15		D32678		1	MANGUEIRA	HOSE	TUBO	TUBO FLESSIBILE	030M
					SCHLAUCH	FLEXIBLE	SLANGE	SLANG	
16		413-616		3	PARAFUSO, Hex, 3/8"-16 x 1", G5, Full Thd				
						BOLT	PERNO	BULLONE	140B
					SCHRAUBE	VIS	BOLT	BOUT	
17		492-11038		7	TRAVA DA ARRUELA, 3/8"	LOCK WASHER	ARANDELA DE BLOQUE	RONDELLA DI SICUREZ	132R
					SICHERUNGSSCHEIBE	RONDELLE FREIN	LÅSESKIVE	BORGRING	
18		E159059		1	SUPORTE	SUPPORT	SOPORTE	SUPPORTO	300S
					STÜTZE	SUPPORT	BESLAG	STEUN	
19		413-616		4	PARAFUSO, Hex, 3/8"-16 x 1", G5, Full Thd				
						BOLT	PERNO	BULLONE	140B
					SCHRAUBE	VIS	BOLT	BOUT	

05-12	01	p2	12/09

CIRCUITO HIDRÁULICO DA DIREÇÃO - RETORNO
STEERING HYDRAULICS - RETURN CIRCUITRY
CIRCUITO HIDRAULICO DE LA DIRECCIÓN - RETURNO
STEERING HYDRAULICS - RETURN CIRCUITRY

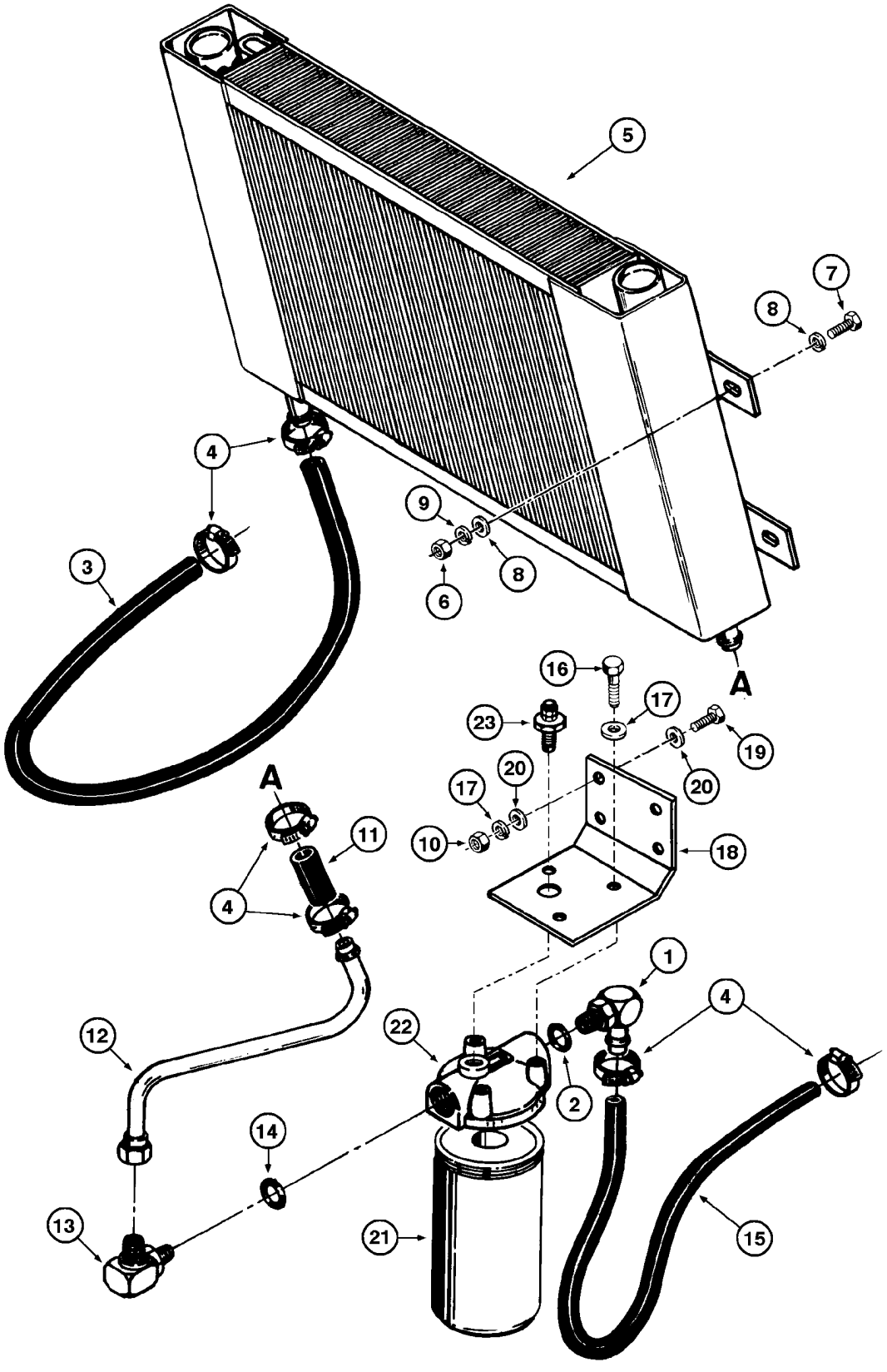

STEERING HYDRAULICS - RETURN CIRCUITRY
STEERING HYDRAULICS - RETURN CIRCUITRY
STEERING HYDRAULICS - RETURN CIRCUITRY
STEERING HYDRAULICS - RETURN CIRCUITRY

R	N	P.N.	MOD	Q	Denominação Bezeichnung	Description Description	Denominacion Beskrivelse	Descrizione Beschrijving	L.C.
20		**495-21044**		8	ARRUELA PLANA, 3/8"	WASHER	ARANDELA	RONDELLA	131R
					UNTERLEGSCHEIBE	RONDELLE	FLADSKIVE	SLUITRING	
		L114122		1	FILTRO, Assy, Includes items 21, 22, 23				
						FILTER	FILTRO	FILTRO	3240
					FILTER	FILTRE	FILTER	FILTER	
21		**A45625**		1	FILTRO DE ÓLEO HIDRÁULICO, Assy				
						HYDRAULIC OIL FILTER	FILTRO DE ACEITE HIDF	FILTRO OLIO IDRAULICO	074F
					HYDRAULIKÖLFILTER	FILTRE A HUILE HYDR.	HYDRAULIKOLIEFILTER	HYDRAULISCHE-OLIEFIL	
22		**NSS**		1	SEM SERVIÇO EM SEPARADO, HEAD				
						NOT SERVICED SEPARA	NO SE REPARA POR SE	NON FORNITO SEPARAT	064N
					NICHT A SEP ERS-T LIEI	NON FORUNI SEPAREM	SERVICERES IKKE SEPA	NIET LOS VERKRIJGBAA	
23		**N7782**		1	TRANSMISSOR	TRANSMITTER	TRANSMISOR	TRASMETTITORE	9250
					TRANSMITTER	EMETTEUR	SENDER	ZENDER	

SECTION INDEX
Trem de Potência

06-02	01	TRANSMISSÃO - CONTROLES
06-04	01	MONTAGEM E CIRCUITO HIDRÁULICO DA TRANSMISSÃO
06-06	01	CONVERSOR DE TORQUE
06-10	01	CARCAÇA DO CONVERSOR DE TORQUE
06-12	01	CARCAÇA DA CAIXA DE MUDANÇAS
06-14	01	EIXO DE SAÍDA DA TRANSMISSÃO
06-16	01	PEÇAS DO EIXO DA EMBREAGEM RÉ E 3ª
06-18	01	PEÇAS DO EIXO DA EMBREAGEM - PARA FRENTE 2ª E 1ª
06-20	01	PEÇAS DO EIXO DA EMBREAGEM - 4ª
06-22	01	EMBREAGENS
06-24	01	FILTRO E BOMBA DA TRANSMISSÃO
06-26	01	FILTRO E BOMBA DA TRANSMISSÃO
06-26A	01	FILTRO E BOMBA DA TRANSMISSÃO
06-28	01	MONTAGEM DA VÁLVULA DE CONTROLE DA TRANSMISSÃO
06-30	01	VÁLVULA DE CONTROLE DA TRANSMISSÃO
06-32	01	FREIO DE ESTACIONAMENTO - TRANSMISSÃO
06-34	01	EIXO PROPULSOR DIANTEIRO
06-36	01	EIXO PROPULSOR CENTRAL
06-38	01	EIXO PROPULSOR TRASEIRO
06-38A	01	EIXO PROPULSOR TRASEIRO
06-40	01	EIXOS DIANTEIRO E TRASEIRO (DANA) - MONTAGEM
06-42	01	EIXO DIANTEIRO - CONJUNTO
06-44	01	EIXO DIANTEIRO - CARCAÇAS
06-46	01	EIXO DIANTEIRO - PRISIONEIROS DAS CARCAÇAS
06-48	01	EIXO DIANTEIRO - DIFERENCIAL
06-50	01	EIXO DIANTEIRO - CUBO DE RODA
06-52	01	EIXO DIANTEIRO - FREIOS
06-54	01	EIXO TRASEIRO - CONJUNTO
06-56	01	EIXO TRASEIRO (STD) - CARCAÇAS
06-56A	01	EIXO TRASEIRO (HD, HEAVY DUTY) (OPCIONAL) - CARCAÇAS
06-58	01	EIXO TRASEIRO (STD) - PRISIONEIROS DAS CARCAÇAS
06-58A	01	EIXO TRASEIRO (HD, HEAVY DUTY) (OPCIONAL) - PRISIONEIROS DAS CARCAÇAS
06-60	01	EIXO TRASEIRO (STD) - DIFERENCIAL
06-60A	01	EIXO TRASEIRO (HD, HEAVY DUTY) (OPCIONAL) - DIFERENCIAL
06-62	01	EIXO TRASEIRO (STD) - CUBO DE RODA
06-62A	01	EIXO TRASEIRO (HD, HEAVY DUTY) (OPCIONAL) - CUBO DE RODA
06-64	01	EIXO TRASEIRO (STD) - FREIOS
06-64A	01	EIXO TRASEIRO (HD, HEAVY DUTY) (OPCIONAL) - FREIOS
06-66	01	RODAS E PNEUS

06-02	01	p1	07/08

TRANSMISSÃO - CONTROLES
TRASMISSION - CONTROLS
TRANSMISION - CONTROLES
TRASMISSION - CONTROLS

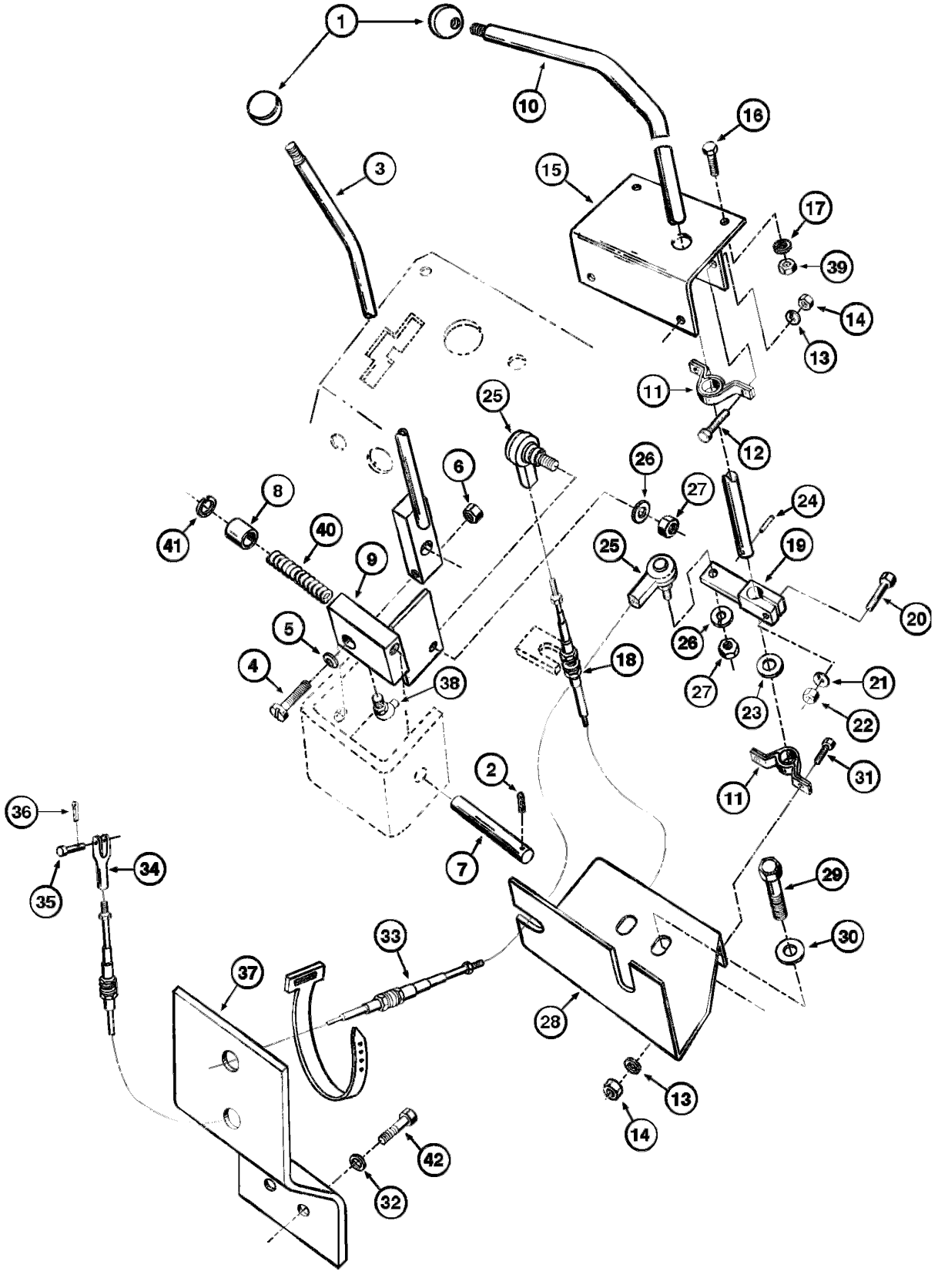

TRASMISSION - CONTROLS
TRASMISSION - CONTROLS
TRASMISSION - CONTROLS
TRASMISSION - CONTROLS

R	N	P.N.	MOD	Q	Denominação Bezeichnung	Description Description	Denominacion Beskrivelse	Descrizione Beschrijving	L.C.
1		A23885		2	MANOPLA	KNOB	PERILLA	MANOPOLA	4850
					KNAUF	BOULE DE DIRECTION	KNOB	KNOB	
2		136-159		1	GRAMPO PINO CONTRA	PINO, Int, 3/16 x .080"			
						HAIR PIN COTTER	CHAVETA DE HORQUILL	COPPIGLIA	A050
					SPLINT	GOUPILLE FENDUE	HÅRNÅLESPLIT	BORGPEN	
3		E69644		1	ALAVANCA DE CONTROLE	CONTROL LEVER	PALANCA DE CONTROL	LEVA DI COMANDO	P155
					STEUERHEBEL	LEVIER DE COMMANDE	STYRESTANG	BEDIENINGSHENDEL	
4		61-632		1	PARAFUSO ALLEN, Hex Soc Hd, 3/8"-16 x 2"				
						HEX SOC SCREW	TORNILLO DE CABEZA H	VITE A ESAGONO INCAS	A093
					INNENSECHSKANTSCHR	VIS A EMBASE HEXAGOI	SEKSKANTET SKRUE	INBUSBOUT	
5		495-11041		1	ARRUELA PLANA, 3/8", SAE				
						WASHER	ARANDELA	RONDELLA	131R
					UNTERLEGSCHEIBE	RONDELLE	FLADSKIVE	SLUITRING	
6		231-1446		1	CONTRA PORCA, 3/8"-16, GB				
						LOCK NUT	TUERCA DE BLOQUEO	DADO DI BLOCCAGGIO	P263
					SICHERUNGSMUTTER	CONTRE-ECROU	LÅSEMØTRIK	BORGMOER	
7		E69692		1	PINO	PIN	PASADOR	PERNO	080P
					PIN	BROCHE	STIFT	PEN	
8		A30709		1	MOLA VÁLVULA	VALVE SPRING	RESORTE DE VÁLVULA	MOLLA DELLA VALVOLA	P463
					VENTILFEDER	RESSORT DE SOUPAPE	VENTILFJEDER	KLEPVEER	
9		L77924		1	BLOCO	BLOCK	BLOQUE	BLOCCO	074B
					BLOCK	BLOC	MOTORBLOK	BLOK	
10		E67745		1	ALAVANCA DE CONTROLE	CONTROL LEVER	PALANCA DE CONTROL	LEVA DI COMANDO	P155
					STEUERHEBEL	LEVIER DE COMMANDE	STYRESTANG	BEDIENINGSHENDEL	
11		L71373		2	CONJUNTO DO ROLAMENTO, 0.75" ID x 0.5", Assy				
						BEARING ASSY	CONJUNTO DE COJINET	COMPLESSIVO CUSCINI	341C
					LAGERBAURUPPE	ROULEMENT	LEJESAMLING	LAGEREENHEID	
12		413-412		2	PARAFUSO, Hex, 1/4"-20 x 3/4", G5, Full Thd				
						BOLT	PERNO	BULLONE	140B
					SCHRAUBE	VIS	BOLT	BOUT	
13		492-11025		4	TRAVA DA ARRUELA, 1/4"	LOCK WASHER	ARANDELA DE BLOQUEO	RONDELLA DI SICUREZZ	132R
					SICHERUNGSSCHEIBE	RONDELLE FREIN	LÅSESKIVE	BORGRING	
14		425-104		4	PORCA, 1/4"-20, G5	NUT	TUERCA	DADO	010D
					MUTTER	ECROU	MØTRIK	MOER	
15		E69712		1	SUPORTE	SUPPORT	SOPORTE	SUPPORTO	300S
					STÜTZE	SUPPORT	BESLAG	STEUN	
16		413-616		2	PARAFUSO, Hex, 3/8"-16 x 1", G5, Full Thd				
						BOLT	PERNO	BULLONE	140B
					SCHRAUBE	VIS	BOLT	BOUT	
17		495-21044		2	ARRUELA PLANA, 3/8"	WASHER	ARANDELA	RONDELLA	131R
					UNTERLEGSCHEIBE	RONDELLE	FLADSKIVE	SLUITRING	
18		E158833		1	CABO, Assy	CABLE	CABLE	CAVO	650C
					KABEL	CABLE	KABEL	KABEL	
19		L77328		1	ALAVANCA	LEVER	PALANCA	LEVA	5110
					HEBEL	LEVIER	LEVER	LEVER	
20		413-524		1	PARAFUSO, Hex, 5/16"-18 x 1 1/2", G5				
						BOLT	PERNO	BULLONE	140B
					SCHRAUBE	VIS	BOLT	BOUT	

06-02	01	p2	07/08

TRANSMISSÃO - CONTROLES
TRASMISSION - CONTROLS
TRANSMISION - CONTROLES
TRASMISSION - CONTROLS

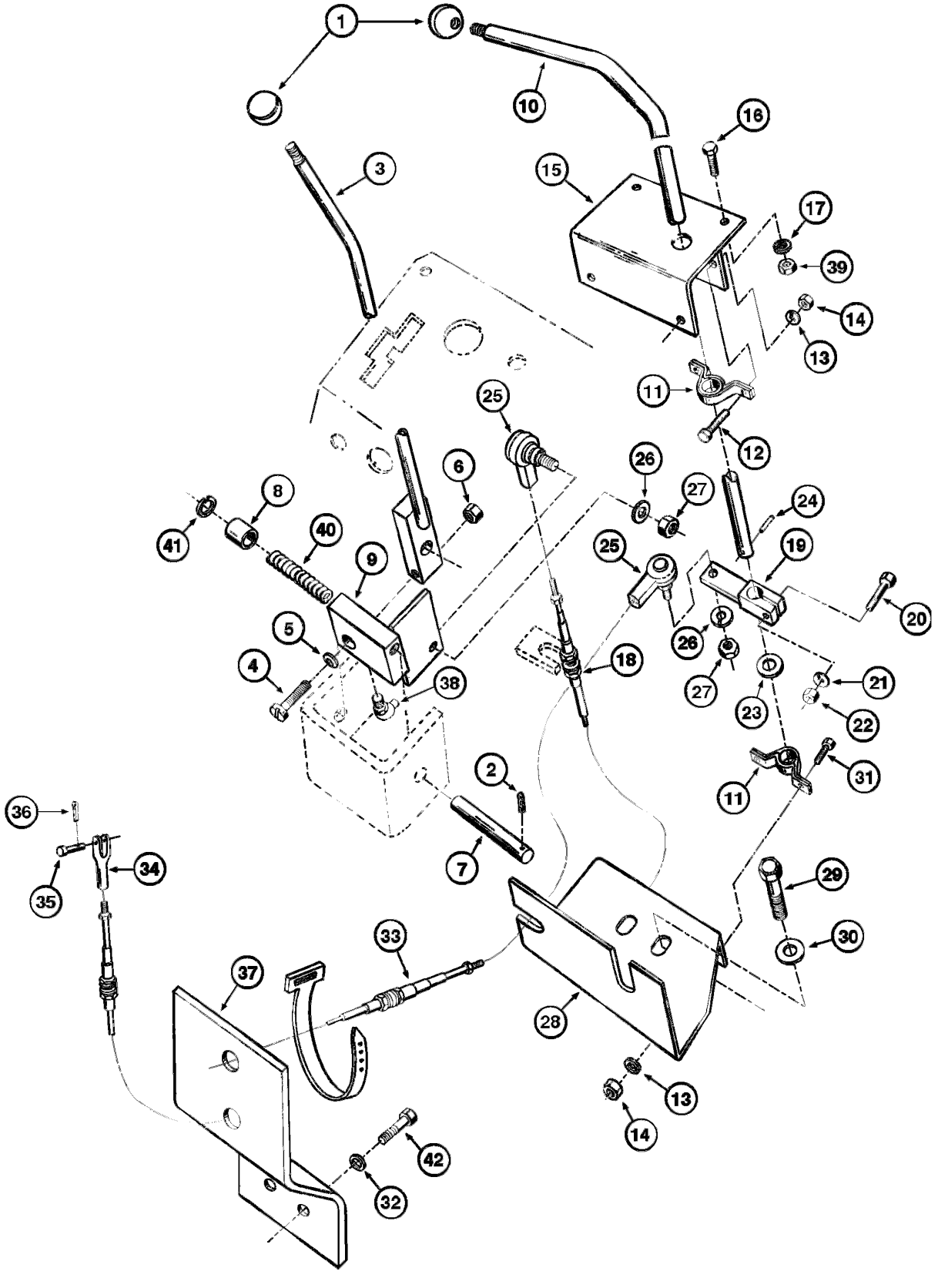

TRASMISSION - CONTROLS
TRASMISSION - CONTROLS
TRASMISSION - CONTROLS
TRASMISSION - CONTROLS

R	N	P.N.	MOD	Q	Denominação Bezeichnung	Description Description	Denominacion Beskrivelse	Descrizione Beschrijving	L.C.
21		492-11031		1	TRAVA DA ARRUELA, 5/16"	LOCK WASHER	ARANDELA DE BLOQUE	RONDELLA DI SICUREZ	132R
					SICHERUNGSSCHEIBE	RONDELLE FREIN	LÅSESKIVE	BORGRING	
22		425-105		1	PORCA, 5/16"-18, G5	NUT	TUERCA	DADO	010D
					MUTTER	ECROU	MØTRIK	MOER	
23		T22220		2	ARRUELA	WASHER	ARANDELA	RONDELLA	9720
					UNTERLEGSCHEIBE	RONDELLE	WASHER	WASHER	
24		438-11216		2	PINO DE FIXAÇÃO, 3/16" x 1", Slotted	LOCK PIN	PASADOR DE BLOQUEO	PERNO DI BLOCCAGGIC	081P
					VERRIEGELUNGSSTIFT	GOUPILLE DE BLOCAGE	LÅSETAP	BORGPEN	
25		A10329		2	JUNTA ESF+RICA	BALL JOINT	JUNTA DE ROTULA	GIUNTO SFERICO	066G
					KUGELGELENK	ROTULE	KEGELED	KOGELWRICHT	
26		492-11025		2	TRAVA DA ARRUELA, 1/4"	LOCK WASHER	ARANDELA DE BLOQUE	RONDELLA DI SICUREZ	132R
					SICHERUNGSSCHEIBE	RONDELLE FREIN	LÅSESKIVE	BORGRING	
27		425-114		2	PORCA, 1/4"-28, G5	NUT	TUERCA	DADO	010D
					MUTTER	ECROU	MØTRIK	MOER	
28		87436584		1	SUPORTE	SUPPORT	SOPORTE	SUPPORTO	300S
					STÜTZE	SUPPORT	BESLAG	STEUN	
29		413-624		2	PARAFUSO, Hex, 3/8"-16 x 1 1/2", G5	BOLT	PERNO	BULLONE	140B
					SCHRAUBE	VIS	BOLT	BOUT	
30		495-21044		2	ARRUELA PLANA, 3/8"	WASHER	ARANDELA	RONDELLA	131R
					UNTERLEGSCHEIBE	RONDELLE	FLADSKIVE	SLUITRING	
31		413-416		2	PARAFUSO, Hex, 1/4"-20 x 1", G5	BOLT	PERNO	BULLONE	140B
					SCHRAUBE	VIS	BOLT	BOUT	
32		492-11075		2	TRAVA DA ARRUELA, 3/4"	LOCK WASHER	ARANDELA DE BLOQUE	RONDELLA DI SICUREZ	132R
					SICHERUNGSSCHEIBE	RONDELLE FREIN	LÅSESKIVE	BORGRING	
33		E158832		1	CABO, Assy	CABLE	CABLE	CAVO	650C
					KABEL	CABLE	KABEL	KABEL	
34		A18709		2	BRACADEIRA CONJUNTO	CLEVIS	ABRAZADERA	FORCELLA	P472
					GABEL	CHAPE	CLEVIS	CLEVIS	
35		427-5094		2	PINO DE GARFO, 5/16" x .940", HDN	CLEVIS PIN	EJE CON CABEZA	PERNO A TESTA PIANA	P694
					GABELBOLZEN	AXE DE CHAPE	GAFFELBOLT	GAFFELPEN	
36		432-612		2	CONTRA PINO, 3/32" x 3/4"	COTTER PIN	PASADOR	COPPIGLIA	270C
					SPLINT	GOUPILLE FENDUE	SPLITBOLT	SPLITPEN	
37		E69483		1	SUPORTE	SUPPORT	SOPORTE	SUPPORTO	300S
					STÜTZE	SUPPORT	BESLAG	STEUN	
38		215-38		1	GRAXEIRA	LUBE NIPPLE	BOQUILLA DE LUBRICA	INGRASSATORE	060I
					SCHMIERNIPPEL	GRAISSEUR	SMØRENIPPEL	SMEERNIPPEL	
39		425-106		2	PORCA, 3/8"-16, G5	NUT	TUERCA	DADO	010D
					MUTTER	ECROU	MØTRIK	MOER	
40		E67846		1	ESPAÇADOR	SPACER	SEPARADOR	DISTANZIALE	075D
					DISTANZSTÜCK	ENTRETOISE	AFSTANDSSTYKKE	AFSTANDSSTUK	
41		495-21044		1	ARRUELA PLANA, 3/8"	WASHER	ARANDELA	RONDELLA	131R
					UNTERLEGSCHEIBE	RONDELLE	FLADSKIVE	SLUITRING	

06-02	01	p3	07/08

TRANSMISSÃO - CONTROLES
TRASMISSION - CONTROLS
TRANSMISION - CONTROLES
TRASMISSION - CONTROLS

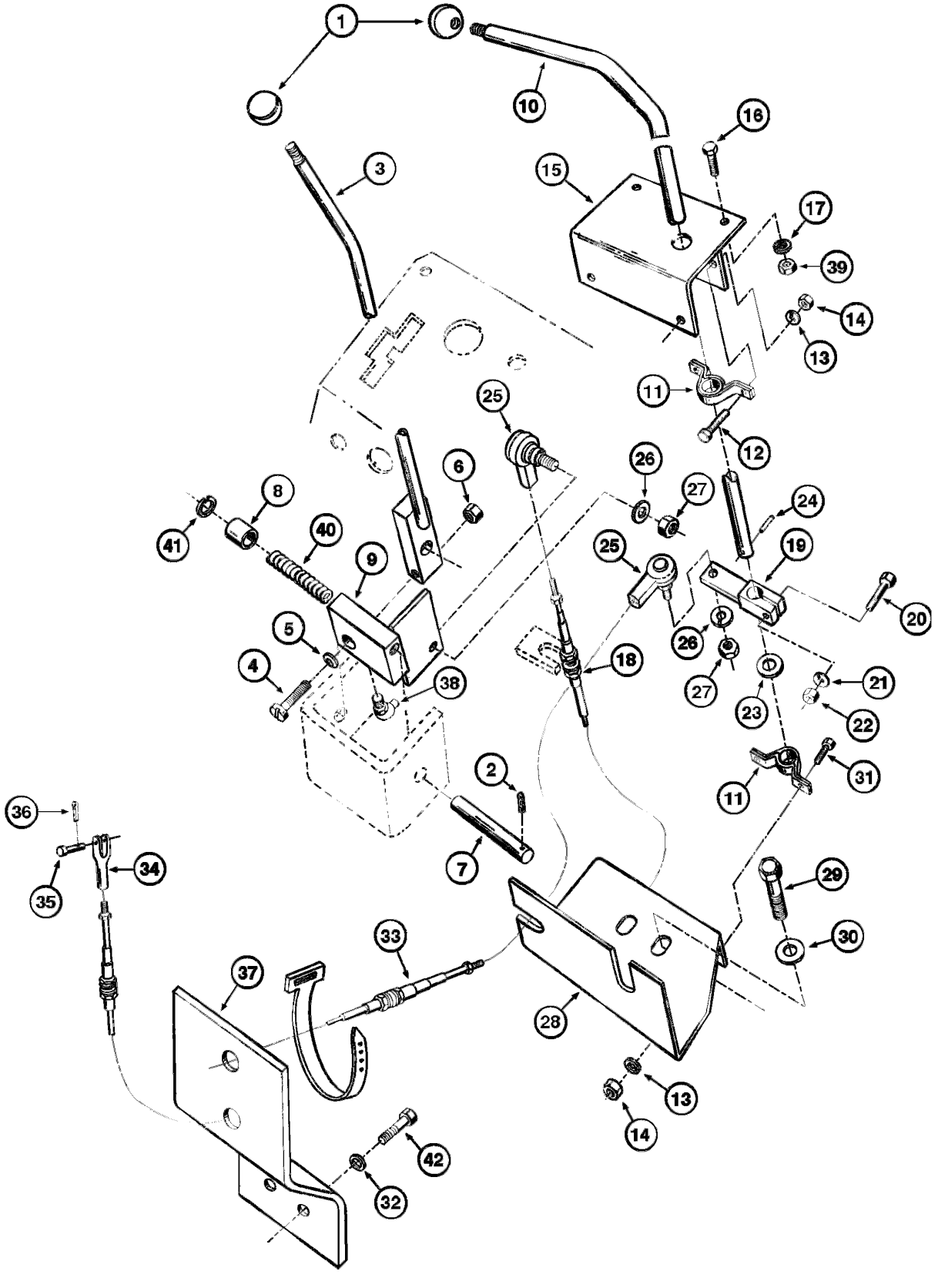

TRASMISSION - CONTROLS
TRASMISSION - CONTROLS
TRASMISSION - CONTROLS
TRASMISSION - CONTROLS

R	N	P.N.	MOD	Q	Denominação Bezeichnung	Description Description	Denominacion Beskrivelse	Descrizione Beschrijving	L.C.
42		**413-1224**		2	PARAFUSO, Hex, 3/4"-10 x 1 1/2", G5				
						BOLT	PERNO	BULLONE	140B
					SCHRAUBE	VIS	BOLT	BOUT	

06-04	01	p1	12/09

MONTAGEM E CIRCUITO HIDRÁULICO DA TRANSMISSÃO
TRANSMISSION MOUNTING AND HYDRAULIC CIRCUIT
MONTAJE Y CIRCUITO HIDRAULICO DE LA TRANSMISION
TRANSMISSION MOUNTING AND HYDRAULIC CIRCUIT

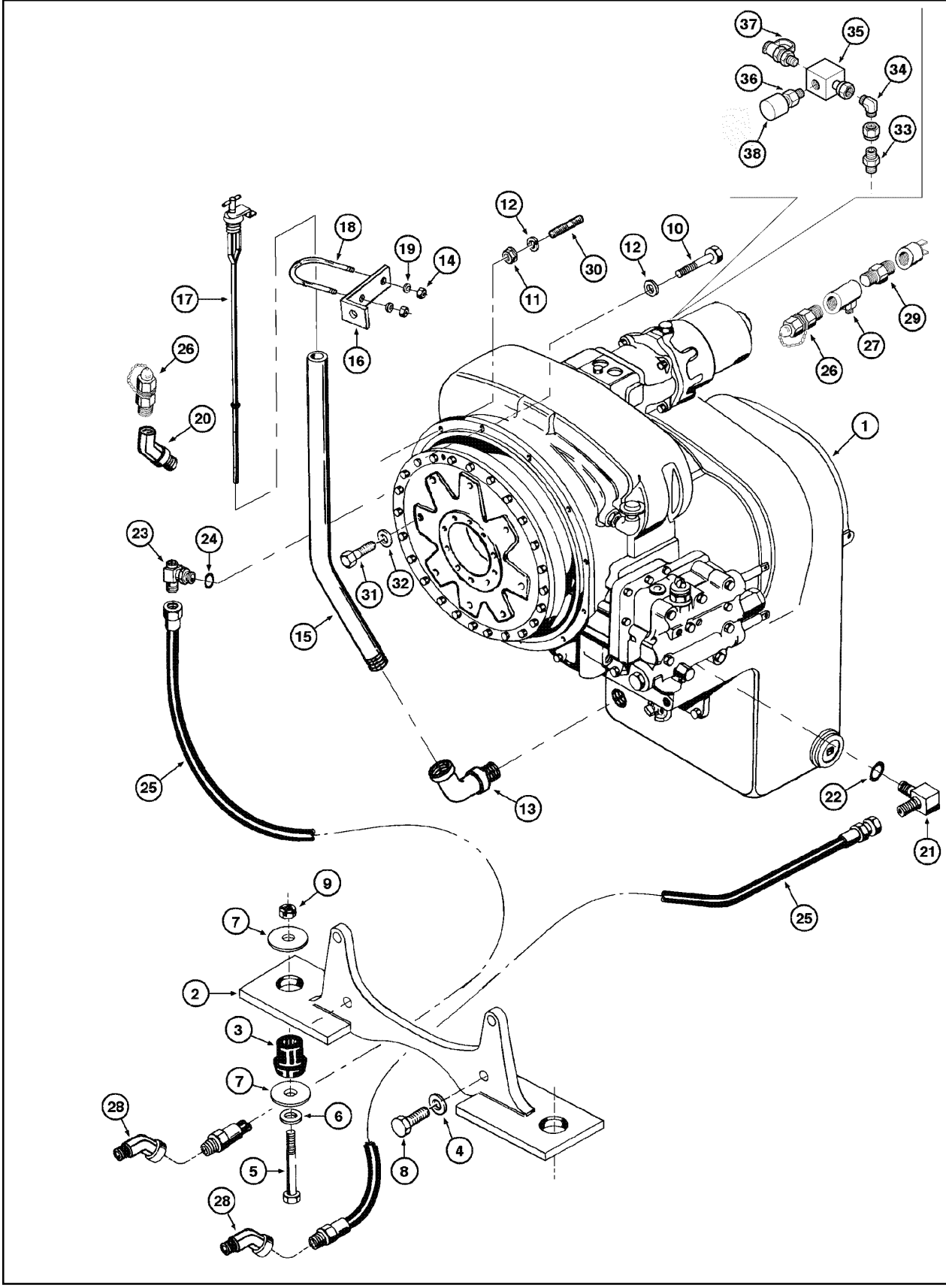

TRANSMISSION MOUNTING AND HYDRAULIC CIRCUIT
TRANSMISSION MOUNTING AND HYDRAULIC CIRCUIT
TRANSMISSION MOUNTING AND HYDRAULIC CIRCUIT
TRANSMISSION MOUNTING AND HYDRAULIC CIRCUIT

R	N	P.N.	MOD	Q	Denominação Bezeichnung	Description Description	Denominacion Beskrivelse	Descrizione Beschrijving	L.C.
1		148376A1		1	TRANSMISSÃO, Assy	TRANSMISSION	TRANSMISIÓN	TRASMISSIONE; CAMBIO	030C
					GETRIEBE	TRANSMISSION	TRANSMISSION	TRANSMISSIE	
2		E69350		1	SUPORTE	SUPPORT	SOPORTE	SUPPORTO	300S
					STÜTZE	SUPPORT	BESLAG	STEUN	
3		A19066		2	PEÇAS DE MONTAGEM	MOUNTING PARTS	PIEZAS DE MONTAJE	COMPONENTI DI MONTA	P040
					BEFESTIGUNGSTEIL	PIECES DE FIXATION	OPHÆNGSDELE	BEVESTIGINGSMIDDELE	
4		496-21081		4	ARRUELA PLANA, 13/16" x 1 1/2" x .179", HDN				
						WASHER	ARANDELA	RONDELLA	131R
					UNTERLEGSCHEIBE	RONDELLE	FLADSKIVE	SLUITRING	
5		413-1272		2	PARAFUSO, Hex, 3/4"-10 x 4 1/2", G5				
						BOLT	PERNO	BULLONE	140B
					SCHRAUBE	VIS	BOLT	BOUT	
6		495-21081		2	ARRUELA PLANA, 3/4"	WASHER	ARANDELA	RONDELLA	131R
					UNTERLEGSCHEIBE	RONDELLE	FLADSKIVE	SLUITRING	
7		A19068		4	ARRUELA	WASHER	ARANDELA	RONDELLA	9720
					UNTERLEGSCHEIBE	RONDELLE	WASHER	WASHER	
8		426-1232		4	PARAFUSO, Hex, 3/4"-10 x 2", G8				
						BOLT	PERNO	BULLONE	140B
					SCHRAUBE	VIS	BOLT	BOUT	
9		231-14412		2	CONTRA PORCA, 3/4"-10, GB				
						LOCK NUT	TUERCA DE BLOQUEO	DADO DI BLOCCAGGIO	P263
					SICHERUNGSMUTTER	CONTRE-ECROU	LÅSEMØTRIK	BORGMOER	
10		814-10060		8	PARAFUSO, Hex, M10 x 60, 8.8				
						BOLT	PERNO	BULLONE	140B
					SCHRAUBE	VIS	BOLT	BOUT	
11		825-1410		4	PORCA, M10, Cl 8	NUT	TUERCA	DADO	010D
					MUTTER	ECROU	MØTRIK	MOER	
12		892-11010		12	TRAVA DA ARRUELA, M10	LOCK WASHER	ARANDELA DE BLOQUEO	RONDELLA DI SICUREZZ	132R
					SICHERUNGSSCHEIBE	RONDELLE FREIN	LÅSESKIVE	BORGRING	
13		E158900		1	COTOVELO	ELBOW	CODO	GOMITO	085G
					KNIESTÜCK	COUDE	VINKELRØR	KNIESTUK	
14		231-1445		2	CONTRA PORCA, 5/16"-18, GB				
						LOCK NUT	TUERCA DE BLOQUEO	DADO DI BLOCCAGGIO	P263
					SICHERUNGSMUTTER	CONTRE-ECROU	LÅSEMØTRIK	BORGMOER	
15		E158899		1	TUBO, 38.1 mm OD x 700, 130 mm L				
						TUBE	TUBO	TUBO	195T
					ROHR	TUBE	RØR	LEIDING	
16		E158840		1	SUPORTE	SUPPORT	SOPORTE	SUPPORTO	300S
					STÜTZE	SUPPORT	BESLAG	STEUN	
17		L77884		1	VARETA NIVEL OLEO	DIPSTICK	VARILLA DEL NIVEL	ASTINA DI LIVELLO	P763
					PEILSTAB	JAUGE A HUILE	DIPSTICK	DIPSTICK	
18		L58066		1	PARAFUSO, Assy	BOLT	TORNILLO	BULLONE	0810
					SCHRAUBE	BOULON	SKRUE	BOUT	
19		495-21038		2	ARRUELA PLANA, 5/16"	WASHER	ARANDELA	RONDELLA	131R
					UNTERLEGSCHEIBE	RONDELLE	FLADSKIVE	SLUITRING	
20		217-1028		1	COTOVELO, 90º, 1/8"-27 Male x 1/4"-18 Female				
						ELBOW	CODO	GOMITO	085G
					KNIESTÜCK	COUDE	VINKELRØR	KNIESTUK	

06-04	01	p2	12/09

MONTAGEM E CIRCUITO HIDRÁULICO DA TRANSMISSÃO
TRANSMISSION MOUNTING AND HYDRAULIC CIRCUIT
MONTAJE Y CIRCUITO HIDRAULICO DE LA TRANSMISION
TRANSMISSION MOUNTING AND HYDRAULIC CIRCUIT

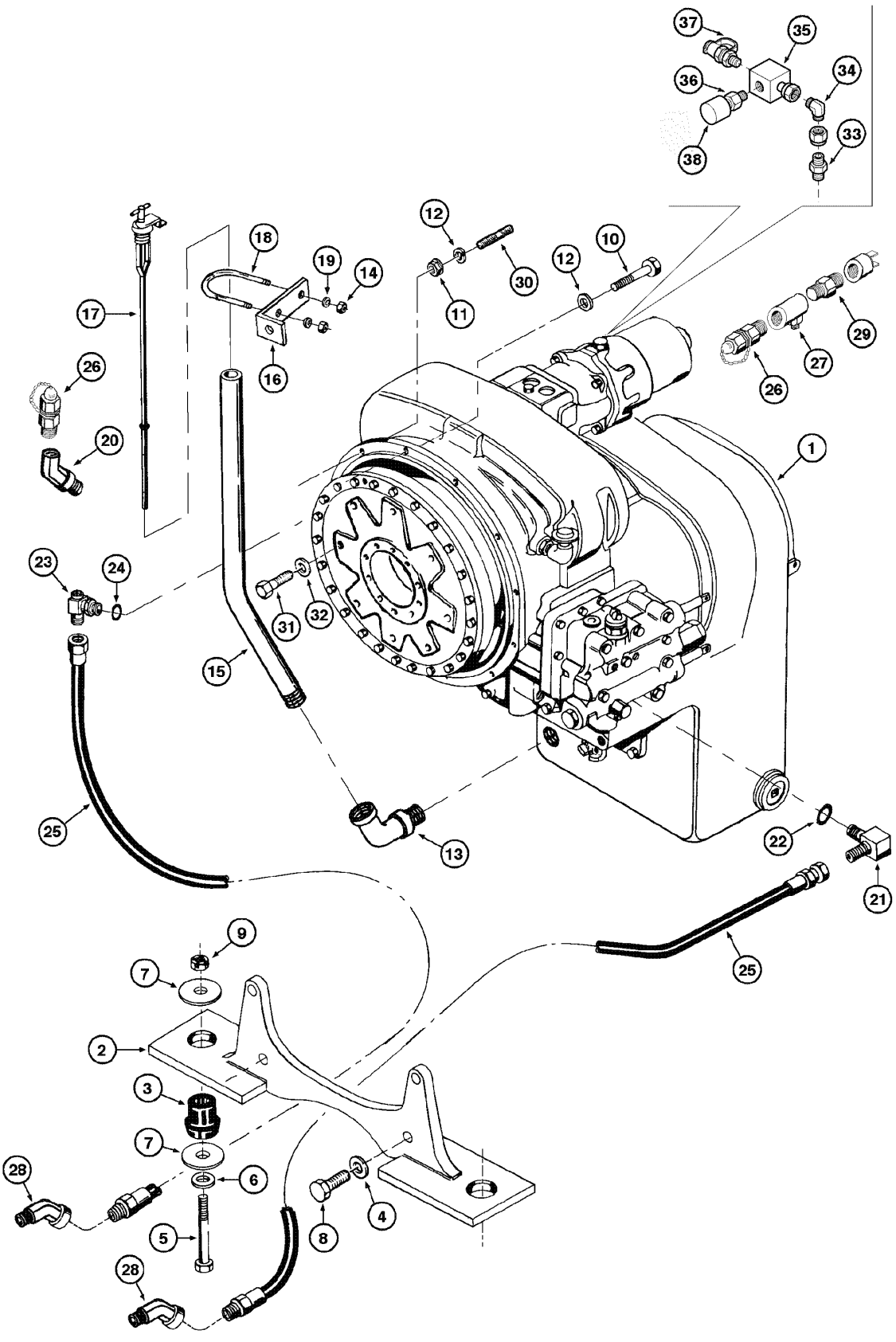

TRANSMISSION MOUNTING AND HYDRAULIC CIRCUIT
TRANSMISSION MOUNTING AND HYDRAULIC CIRCUIT
TRANSMISSION MOUNTING AND HYDRAULIC CIRCUIT
TRANSMISSION MOUNTING AND HYDRAULIC CIRCUIT

R	N	P.N.	MOD	Q	Denominação Bezeichnung	Description Description	Denominacion Beskrivelse	Descrizione Beschrijving	L.C.
21		218-5124		1	COTOVELO, 90º, 1 5/16"-12, 37º x 1 1/16"-12, O-Ring, Incl. item 22				
						ELBOW	CODO	GOMITO	085G
					KNIESTÜCK	COUDE	VINKELRØR	KNIESTUK	
22		218-5008		1	O-RING, 0.364" ID x 0.504" OD x 0.07"				
						O-RING	JUNTA TÓRICA	ANELLO TOROIDALE	055A
					O-RING	JOINT TORIQUE	O-RING	O-RING	
23		L73442		1	CONEXÃO, Includes item 24				
						FITTING	ACOPLAMIENTO	RACCORDO	3300
					ARMATUR	RACCORD	FITTING	AANSLUITING	
24		218-5008		1	O-RING, 0.364" ID x 0.504" OD x 0.07"				
						O-RING	JUNTA TÓRICA	ANELLO TOROIDALE	055A
					O-RING	JOINT TORIQUE	O-RING	O-RING	
25		E158709		2	MANGUEIRA, 19 mm ID x 1350.00 mm, SAE J517 TIPO 100R1				
						HOSE	TUBO	TUBO FLESSIBILE	030M
					SCHLAUCH	FLEXIBLE	SLANGE	SLANG	
26		87524824	a	2	NIPLE, pressure	NIPPLE	BOQUILLA	NIPPLO	A065
					NIPPEL	GRAISSEUR	NIPPEL	NIPPEL	
27		149434A1	a	1	LÂMINA	BLADE	CUCHILLA	LAMA	0700
					KLINGE	LAME	KNIV	MES	
28		218-5147		2	COTOVELO, 45º, 1 5/16"-12 x 1 1/16"-12, 37º				
						ELBOW	CODO	GOMITO	085G
					KNIESTÜCK	COUDE	VINKELRØR	KNIESTUK	
29		221-1084		1	REDUTOR, Hex, 1/4" x 1/8" NPT				
						REDUCER	REDUCTOR	RIDUTTORE	056R
					REDUZIERSTÜCK	REDUCTEUR	REDUKTION	VERLOOPSTUK	
30		E156007		4	PRISIONEIRO	STUD	ESPARREGO	PRIGIONIERO	8720
					STIFTSCHRAUBE	GOUJON	STUD	STUD	
31		414-624		8	PARAFUSO, Hex, 3/8"-24 x 1 1/2", G5				
						BOLT	PERNO	BULLONE	140B
					SCHRAUBE	VIS	BOLT	BOUT	
32		492-11038		8	TRAVA DA ARRUELA, 3/8"	LOCK WASHER	ARANDELA DE BLOQUE(	RONDELLA DI SICUREZ/	132R
					SICHERUNGSSCHEIBE	RONDELLE FREIN	LÅSESKIVE	BORGRING	
33		85802803	b	1	CONEXÃO, 9/16"-18 ORFS x 9/16"-18 ORB				
						FITTING	ACOPLAMIENTO	RACCORDO	3300
					ARMATUR	RACCORD	FITTING	AANSLUITING	
34		701-329	b	1	COTOVELO, 90º, 9/16"-18 ORFS x 9/16"-18 Fem Sw				
						ELBOW	CODO	GOMITO	085G
					KNIESTÜCK	COUDE	VINKELRØR	KNIESTUK	
35		75327264	b	1	BLOCO, Steel	BLOCK	BLOQUE	BLOCCO	074B
					BLOCK	BLOC	MOTORBLOK	BLOK	
36		75214532	b	1	CONECTOR HIDRÁUL	HYD CONNECTOR	CONECTOR HIDRÁULIC(	CONNETTORE IDRAULIC	020R
					HYDR STECKVERBINDE	CONNECTEUR HYDRAU	HYDRAULIKSTIK	HYDRAULISCHE AANSLI	
37		79087360	b	1	VÁLVULA HIDRÁULICA	HYDRAULIC VALVE	VÁLVULA HIDRÁULICA	DISTRIBUTORE IDRAULI	010V
					HYDRAULIKVENTIL	SOUPAPE HYDRAULIQU	HYDRAULIKVENTIL	HYDRAULISCHE KLEP	
38		73139080	b	1	INTERRUPTOR DE PRESSÃO				
						PRESSURE SWITCH	INTERRUPTOR DE PRES	PRESSOSTATO	079I
					DRUCKSCHALTER	PRESSOSTAT	KONTAKT, TRYK	DRUKSCHAKELAAR	

(a) BSN N6AE01094
(b) ASN N6AE01095

06-06	01	p1	11/07

CONVERSOR DE TORQUE
TORQUE CONVERTER
CONVERSOR DE TORQUE
TORQUE CONVERTER

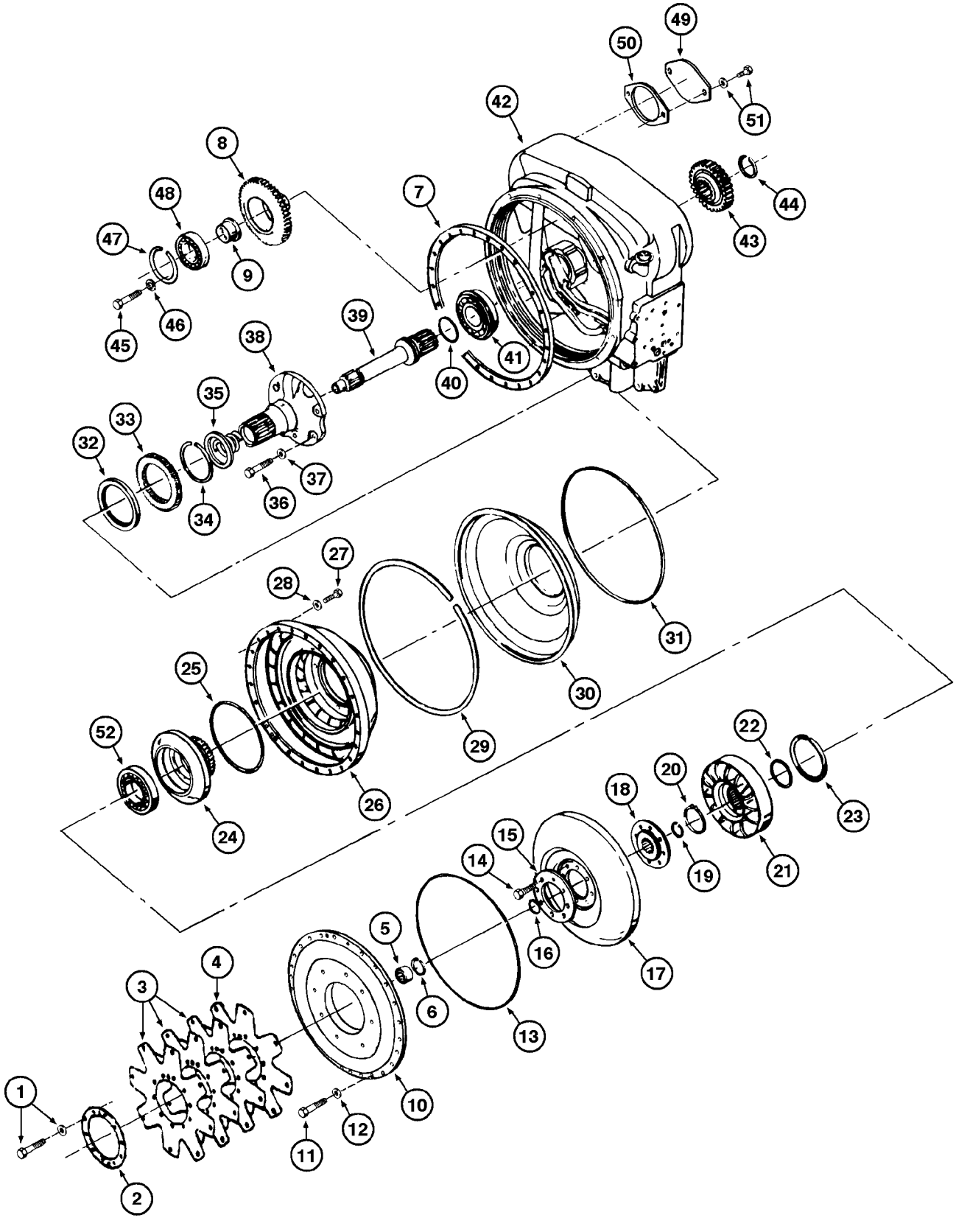

TORQUE CONVERTER
TORQUE CONVERTER
TORQUE CONVERTER
TORQUE CONVERTER

R	N	P.N.	MOD	Q	Denominação Bezeichnung	Description Description	Denominacion Beskrivelse	Descrizione Beschrijving	L.C.
1		S97319		10	PARAFUSO, & washer	BOLT	PERNO	BULLONE	140B
					SCHRAUBE	VIS	BOLT	BOUT	
2		E158746		1	PLACA DE COBERTURA, thrust				
						COVER PLATE	PLACA DE CUBIERTA	PIASTRA DI COPERTUR/	110P
					ABDECKPLATTE	COUVERCLE	DÆKPLADE	AFSCHERMPLAAT	
3		147145A1		4	PLACA DE COBERTURA, drive				
						COVER PLATE	PLACA DE CUBIERTA	PIASTRA DI COPERTUR/	110P
					ABDECKPLATTE	COUVERCLE	DÆKPLADE	AFSCHERMPLAAT	
4		147144A1		1	PLACA DE COBERTURA, drive assy				
						COVER PLATE	PLACA DE CUBIERTA	PIASTRA DI COPERTUR/	110P
					ABDECKPLATTE	COUVERCLE	DÆKPLADE	AFSCHERMPLAAT	
5		A17986		1	ROLAMENTO DE ROLETES, 0.9995" ID x 0.75"				
						ROLLER BEARING	COJINETE DE RODILLOS	CUSCINETTO A RULLINI	346C
					ROLLENLAGER	ROULEMENT A ROULEA	RULLELEJE	ROLLAGER	
6		147469A1		1	ANEL-TRAVA	LOCKING RING	ANILLO DE BLOQUEO	ANELLO DI BLOCCAGGI(	051A
					SICHERUNGSRING	BAGUE DE BLOCAGE	LÅSESKIVE	BORGRING	
7		N9083		1	ANEL	RING	ANILLO	ANELLO	7175
					RING	BAGUE	RING	RING	
8		L33465		3	PLANETARIA	GEAR WHEEL	PLANETARIO	INGRANAGIO, SATELL	Z589
					PLANETENRAD	PLANETAIRE	GEAR WHEEL	GEAR WHEEL	
9		L33463		3	SUPORTE	BRACKET	SOPORTE	STAFFA	1010
					HALTER	CONSOLE	BRACKET	BRACKET	
10		147444A1		1	COBERTURA	COVER	CUBIERTA	COPERCHIO	265C
					ABDECKUNG	COUVERCLE	DÆKSEL	AFSCHERMING	
11		113-262		24	PARAFUSO, Hex, 3/8"-16 x 1 1/8", G5, Full Thd				
						BOLT	PERNO	BULLONE	140B
					SCHRAUBE	VIS	BOLT	BOUT	
12		192-21		24	TRAVA DA ARRUELA, 3/8"	LOCK WASHER	ARANDELA DE BLOQUE(	RONDELLA DI SICUREZ/	132R
					SICHERUNGSSCHEIBE	RONDELLE FREIN	LÅSESKIVE	BORGRING	
13		T42352		1	ANEL, 11.843" ID x 0.14" Width				
						RING	ANILLO	ANELLO	7175
					RING	BAGUE	RING	RING	
14		D142272		8	PARAFUSO AUTO-TRAVANTE				
						LOCK BOLT	PERNO DE BLOQUEO	BULLONE, DI BLOCCAG(	A028
					SICHERUNGSSCHRAUB	ERGOT D'ARRET	LÅSEBOLT	BORGBOUT	
15		S300031		1	VEDADOR DE ÓLEO	OIL SEAL	JUNTA DE ACEITE	PARAOLIO	P278
					ÖLDICHTUNG	JOINT ETANCHEITE D'HI	OLIESEGL	OLIEAFDICHTING	
16		A17903		1	ANEL DE PRESSÃO, #156, Ext				
						SNAP RING	ANILLO DE RESORTE	ANELLO ELASTICO	054A
					SPRENGRING	ANNEAU D'ARRET	LÅSERING	VEERRING	
17		E105055		1	TURBINA	TURBINE	TURBINA	TURBINA	209T
					TURBINE	TURBINE	TURBINE	TURBINE	
18		A18034		1	CUBO	HUB	MAZA	MOZZO	4560
					NABE	MOYEU	HUB	HUB	
19		A17903		1	ANEL DE PRESSÃO, #156, Ext				
						SNAP RING	ANILLO DE RESORTE	ANELLO ELASTICO	054A
					SPRENGRING	ANNEAU D'ARRET	LÅSERING	VEERRING	
20		E158464		1	ANEL	RING	ANILLO	ANELLO	045A
					RING	ANNEAU	RING	RING	

06-06	01	p2	11/07

CONVERSOR DE TORQUE
TORQUE CONVERTER
CONVERSOR DE TORQUE
TORQUE CONVERTER

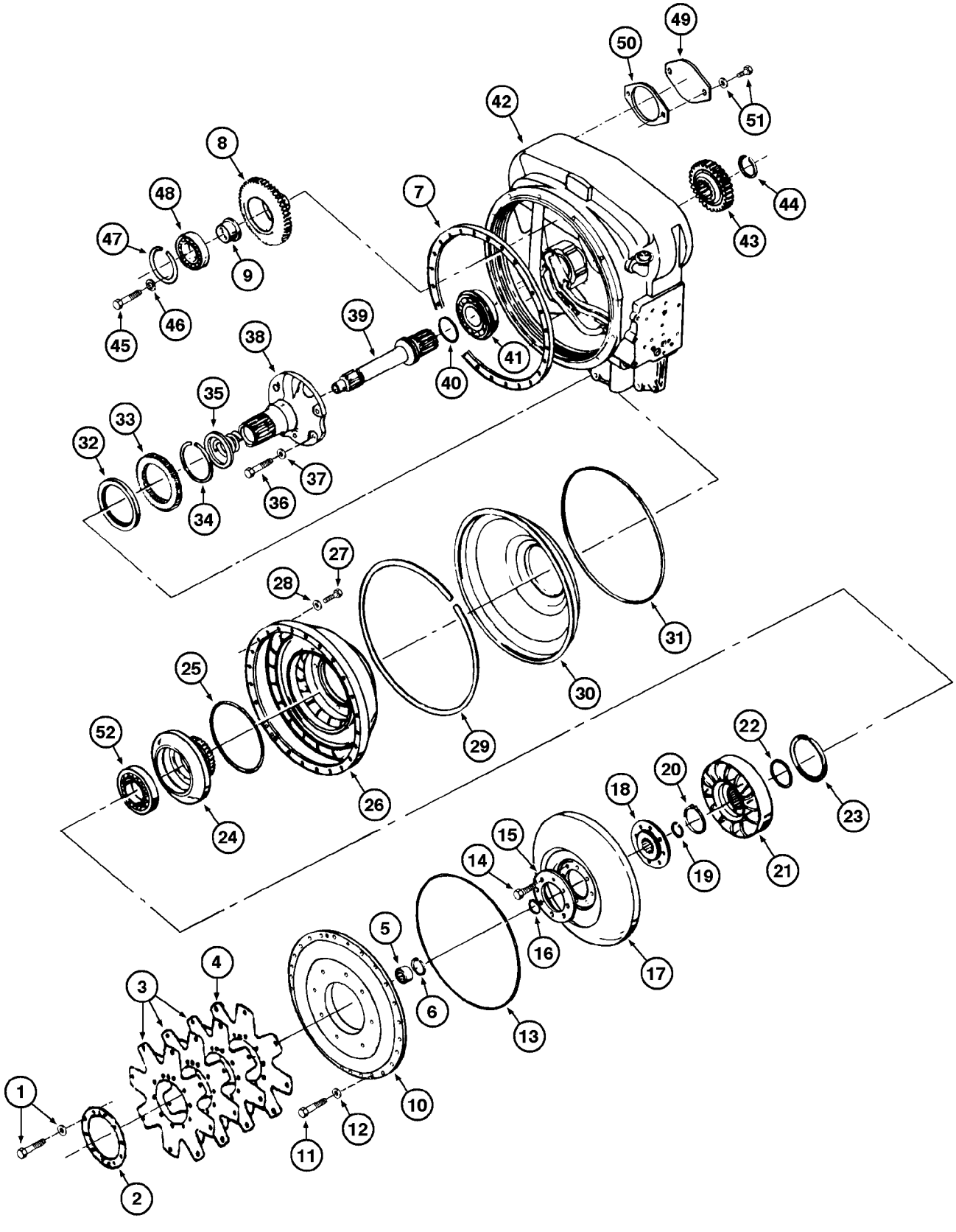

TORQUE CONVERTER
TORQUE CONVERTER
TORQUE CONVERTER
TORQUE CONVERTER

R	N	P.N.	MOD	Q	Denominação Bezeichnung	Description Description	Denominacion Beskrivelse	Descrizione Beschrijving	L.C.
21		E105059		1	ESTATOR STATOR	STATOR STATOR	ESTATOR STATOR	STATORE STATOR	8480
22		L30685		1	ESPACADOR ABSTANDSSTUECK	SPACER ENTRETOISE	ESPACIADOR SPACER	DISTANZIALE SPACER	8090
23		A17997		1	ANEL RING	RING BAGUE	ANILLO RING	ANELLO RING	7175
24		E105058		1	CUBO NABE	HUB MOYEU	CUBO NAV	MOZZO NAAF	135M
25		D58178		1	O-RING O-RING	O-RING JOINT TORIQUE	JUNTA TÓRICA O-RING	ANELLO TOROIDALE O-RING	055A
26		E105057		1	TURBINA TURBINE	TURBINE TURBINE	TURBINA TURBINE	TURBINA TURBINE	209T
27		L30051		8	PARAFUSO SPREIZSCHRAUBE	BOLT (SPREADER) BOULON TETE LARGE	PERNO (ESPARCIDOR) BOLT (SPREADER)	BULLONE, DIFFUSORE BOLT (SPREADER)	P125
28		195-29		8	ARRUELA PLANA, 7/16" UNTERLEGSCHEIBE	WASHER RONDELLE	ARANDELA FLADSKIVE	RONDELLA SLUITRING	131R
29		E158262		1	ANEL RING	RING ANNEAU	ANILLO RING	ANELLO RING	045A
30		L33459		1	DEFLETOR LEITBLECH	BAFFLE DEFLECTEUR	DEFLECTOR SKÆRMPLADE	DEFLETTORE KEERSCHOT	0420
31		L33460		1	ANEL RING	RING BAGUE	ANILLO RING	ANELLO RING	7175
32		D87224		1	VEDADOR DE RETENCAO DICHTRING	SEAL JOINT-D'ETANCHEITE	SELLO/RETEN SEAL	GUARNIZIONE TENUTA SEAL	7460
33		L33462		1	ENGRENAGEM ZAHNRAD	GEAR ENGRENAGE	ENGRANJE GEAR	INGRANAGGIO GEAR	3820
34		304052A1		1	VEDADOR DE RETENCAO DICHTRING	SEAL JOINT-D'ETANCHEITE	SELLO/RETEN SEAL	GUARNIZIONE TENUTA SEAL	7460
35		D80312		1	VEDADOR DE RETENCAO DICHTRING	SEAL JOINT-D'ETANCHEITE	SELLO/RETEN SEAL	GUARNIZIONE TENUTA SEAL	7460
36		13-820		6	PARAFUSO, Hex, 1/2"-13 x 1 1/4", G5, Full Thd SCHRAUBE	BOLT VIS	PERNO BOLT	BULLONE BOUT	140B
37		193-32		6	TRAVA DA ARRUELA, Int Tooth, 1/2" SICHERUNGSSCHEIBE	LOCK WASHER RONDELLE FREIN	ARANDELA DE BLOQUE LÅSESKIVE	RONDELLA DI SICUREZ BORGRING	132R
38		D80314		1	SUPORTE, flange HALTER	BRACKET CONSOLE	SOPORTE BRACKET	STAFFA BRACKET	1010
39		L33452		1	EIXO WELLE	SHAFT ARBRE	ARBOL SHAFT	ALBERO SHAFT	7590
40		A18012		1	ANEL RING	RING ANNEAU	ANILLO RING	ANELLO RING	045A
41		N7276		1	ROLAMENTO ESFÉRICO, 1.9685" ID x 4.587" OD x 1.063" KUGELLAGER	BALL BEARING ROULEMENT A BILLES	RODAMIENTO DE BOLA KUGLELEJE	CUSCINETTO A SFERE KOGELLAGER	343C
42		L33466		1	ALOJAMENTO GEHÄUSE	HOUSING CARTER	ALOJAMIENTO HUS	ALLOGGIAMENTO HUIS	014V
43		147447A1		1	ENGRENAGEM ZAHNRAD	GEAR PIGNON	ENGRANAJE TANDHJUL	INGRANAGGIO TANDWIEL	050I

06-06	01	p3	11/07

CONVERSOR DE TORQUE
TORQUE CONVERTER
CONVERSOR DE TORQUE
TORQUE CONVERTER

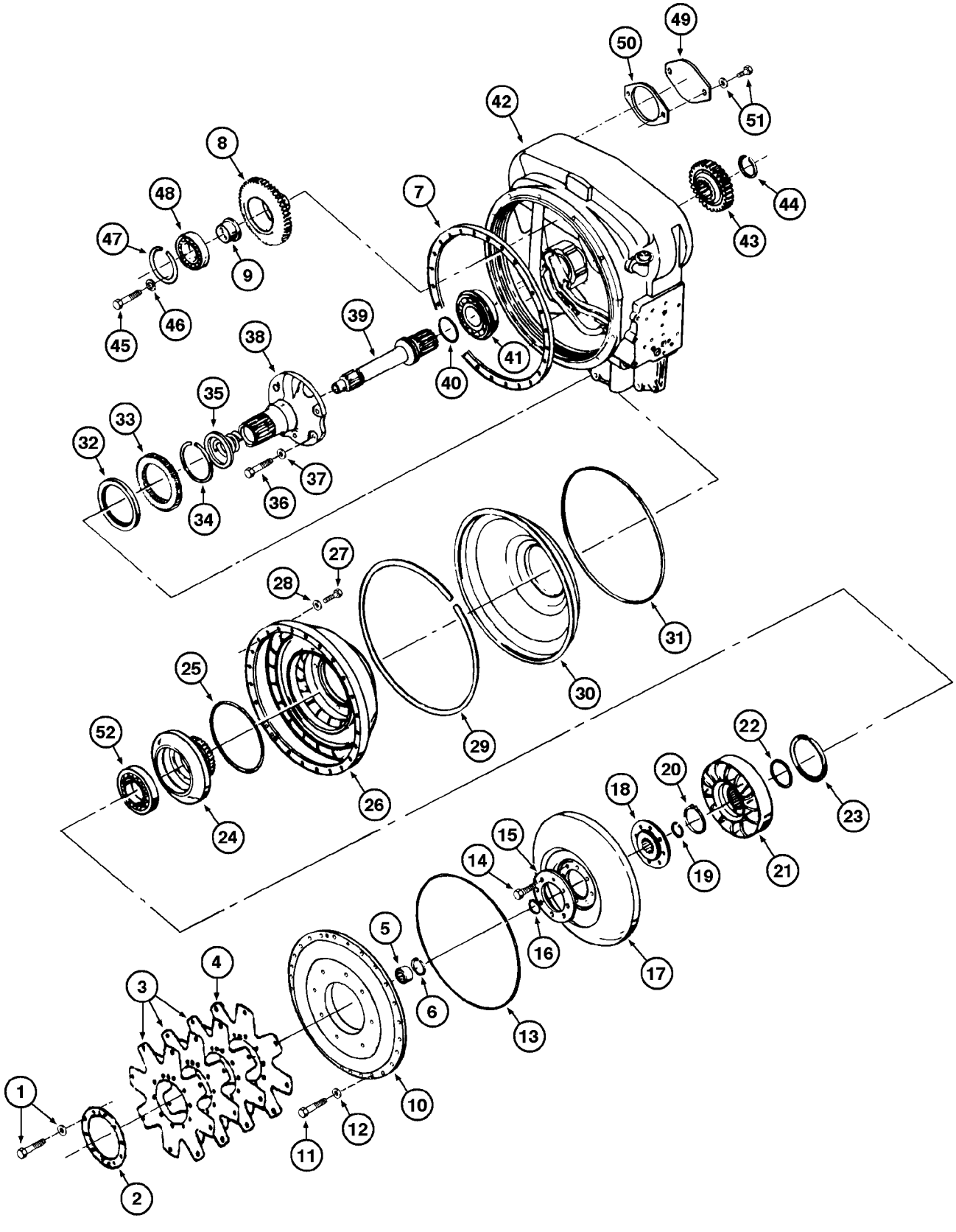

TORQUE CONVERTER
TORQUE CONVERTER
TORQUE CONVERTER
TORQUE CONVERTER

R	N	P.N.	MOD	Q	Denominação Bezeichnung	Description Description	Denominacion Beskrivelse	Descrizione Beschrijving	L.C.
44		A27089		1	ARO DE SEGURANCA SICHERUNGSRING	CIRCLIP CIRCLIP	ARO SEGURO CIRCLIP	ANELLO ELASTICO CIRCLIP	P019
45		14-720		6	PARAFUSO, Hex, 7/16"-20 x 1 1/4", G5, Full Thd SCHRAUBE	BOLT VIS	PERNO BOLT	BULLONE BOUT	140B
46		192-22		6	TRAVA DA ARRUELA, 7/16" SICHERUNGSSCHEIBE	LOCK WASHER RONDELLE FREIN	ARANDELA DE BLOQUE LÅSESKIVE	RONDELLA DI SICUREZ BORGRING	132R
47		L33464		3	ANEL TRAVA SICHERUNGSRING	RING SNAP ANNEAU-D'ARRET	ANILLO DE CIERRE RING SNAP	ANELLO ELASTICO RING SNAP	P345
48		E157336		3	CONJUNTO DO ROLAMENTO LAGERBAURUPPE	BEARING ASSY ROULEMENT	CONJUNTO DE COJINET LEJESAMLING	COMPLESSIVO CUSCINI LAGEREENHEID	341C
49		E104132		1	TAMPA DECKEL	COVER COUVERCLE	TAPA COVER	COPERCHIO COVER	2250
50		E104134		1	JUNTA DICHTUNG	GASKET JOINT	JUNTA GASKET	GUARNIZIONE GASKET	3720
51		E104133		2	PARAFUSO, and wahser SCHRAUBE	SCREW VIS	TORNILLO SKRUE	VITE SCHROEF	040V
52		147445A1		1	CONJUNTO DO ROLAMENTO LAGERBAURUPPE	BEARING ASSY ROULEMENT	CONJUNTO DE COJINET LEJESAMLING	COMPLESSIVO CUSCINI LAGEREENHEID	341C

06-10	01	p1	03/09

CARCAÇA DO CONVERSOR DE TORQUE
TORQUE CONVERTER HOUSING
CARCASA DEL CONVERSOR DE TORQUE
TORQUE CONVERTER HOUSING

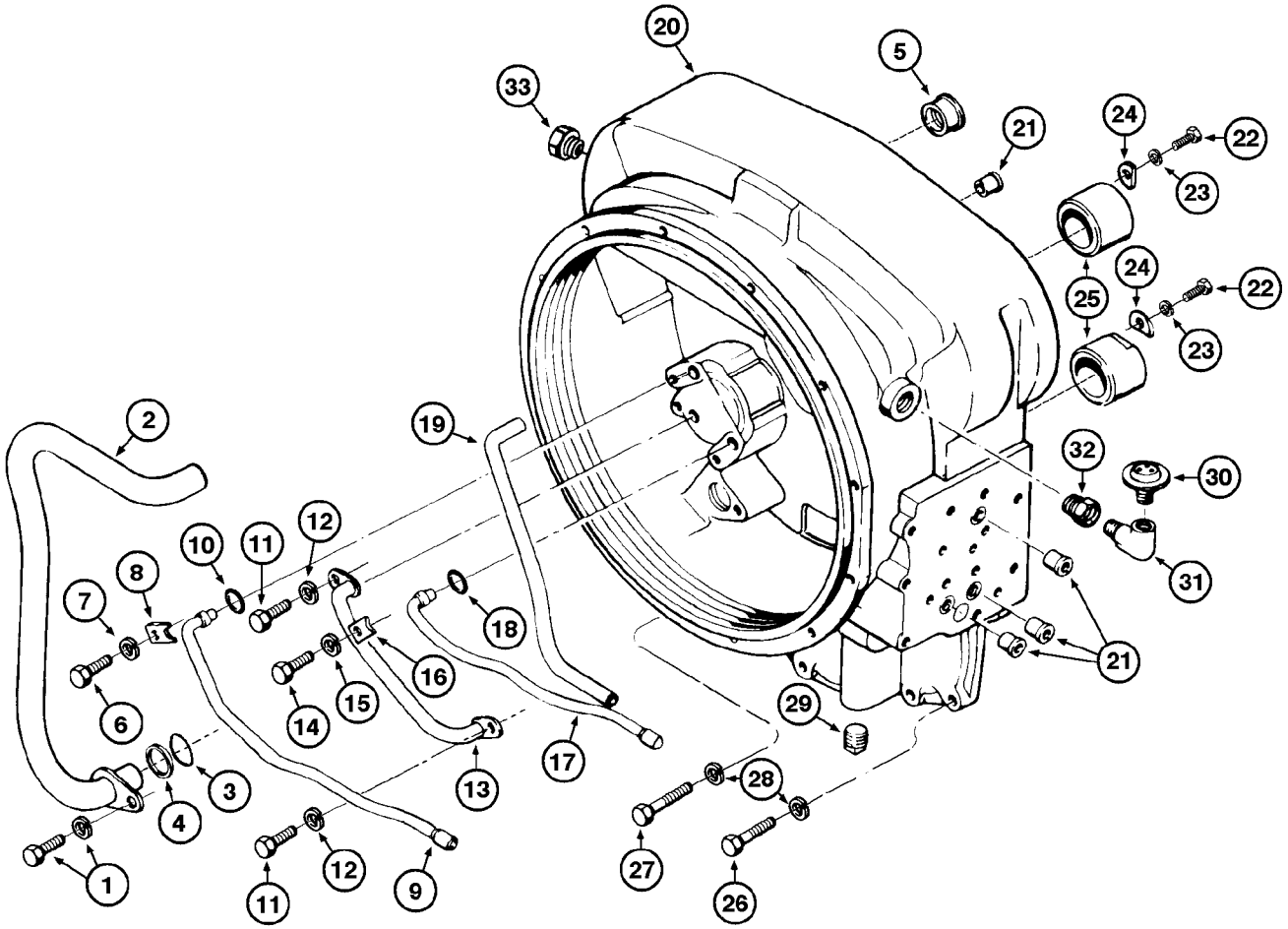

TORQUE CONVERTER HOUSING
TORQUE CONVERTER HOUSING
TORQUE CONVERTER HOUSING
TORQUE CONVERTER HOUSING

R	N	P.N.	MOD	Q	Denominação Bezeichnung	Description Description	Denominacion Beskrivelse	Descrizione Beschrijving	L.C.
		L33466		1	ALOJAMENTO, Assy, Includes items 1 - 25				
						HOUSING	ALOJAMIENTO	ALLOGGIAMENTO	014V
					GEHÄUSE	CARTER	HUS	HUIS	
1		**11447**		1	PARAFUSO, Assy	BOLT	TORNILLO	BULLONE	0810
					SCHRAUBE	BOULON	SKRUE	BOUT	
2		**L33467**		1	TUBO, 1.007" OD x 13.47, 2.19" L				
						TUBE	TUBO	TUBO	195T
					ROHR	TUBE	RØR	LEIDING	
3		**D76977**		1	VEDADOR DE ÓLEO	OIL SEAL	JUNTA DE ACEITE	PARAOLIO	P278
					ÖLDICHTUNG	JOINT ETANCHEITE D'HI	OLIESEGL	OLIEAFDICHTING	
4		**E104229**		1	JUNTA	GASKET	JUNTA	GUARNIZIONE	3720
					DICHTUNG	JOINT	GASKET	GASKET	
5		**L33468**		1	BUCHA	BUSHING	CASQUILLO	BOCCOLA	1140
					BUECHSE	DOUILLE	BUSHING	BUSHING	
6		**413-510**		1	PARAFUSO, Hex, 5/16"-18 x 5/8", G5, Full Thd				
						BOLT	PERNO	BULLONE	140B
					SCHRAUBE	VIS	BOLT	BOUT	
7		**492-11031**		1	TRAVA DA ARRUELA, 5/16"				
						LOCK WASHER	ARANDELA DE BLOQUEO	RONDELLA DI SICUREZZ	132R
					SICHERUNGSSCHEIBE	RONDELLE FREIN	LÅSESKIVE	BORGRING	
8		**L33473**		1	GRAMPO	CLIP	BROCHE	FERMAGLIO	1700
					SCHELLE	COLLIER-CLIP	CLIP	CLIP	
9		**L33470**		1	TUBO, 0.375" OD x 13.25, 3-7/32" L				
						TUBE	TUBO	TUBO	9400
					ROHR	TUBE	TUBE	TUBE	
10		**A27891**		1	O-RING, 0.362" ID x 0.568" OD x 0.103"				
						O-RING	JUNTA TÓRICA	ANELLO TOROIDALE	055A
					O-RING	JOINT TORIQUE	O-RING	O-RING	
11		**413-510**		2	PARAFUSO, Hex, 5/16"-18 x 5/8", G5, Full Thd				
						BOLT	PERNO	BULLONE	140B
					SCHRAUBE	VIS	BOLT	BOUT	
12		**492-11031**		2	TRAVA DA ARRUELA, 5/16"				
						LOCK WASHER	ARANDELA DE BLOQUEO	RONDELLA DI SICUREZZ	132R
					SICHERUNGSSCHEIBE	RONDELLE FREIN	LÅSESKIVE	BORGRING	
13		**L33469**		1	TUBO, 0.5" OD x 7.125, 3" L				
						TUBE	TUBO	TUBO	9400
					ROHR	TUBE	TUBE	TUBE	
14		**413-510**		1	PARAFUSO, Hex, 5/16"-18 x 5/8", G5, Full Thd				
						BOLT	PERNO	BULLONE	140B
					SCHRAUBE	VIS	BOLT	BOUT	
15		**492-11031**		1	TRAVA DA ARRUELA, 5/16"				
						LOCK WASHER	ARANDELA DE BLOQUEO	RONDELLA DI SICUREZZ	132R
					SICHERUNGSSCHEIBE	RONDELLE FREIN	LÅSESKIVE	BORGRING	
16		**L33473**		1	GRAMPO	CLIP	BROCHE	FERMAGLIO	1700
					SCHELLE	COLLIER-CLIP	CLIP	CLIP	
17		**L33471**		1	TUBO, 0.375" OD	TUBE	TUBO	TUBO	9400
					ROHR	TUBE	TUBE	TUBE	

06-10	01	p2	03/09

CARCAÇA DO CONVERSOR DE TORQUE
TORQUE CONVERTER HOUSING
CARCASA DEL CONVERSOR DE TORQUE
TORQUE CONVERTER HOUSING

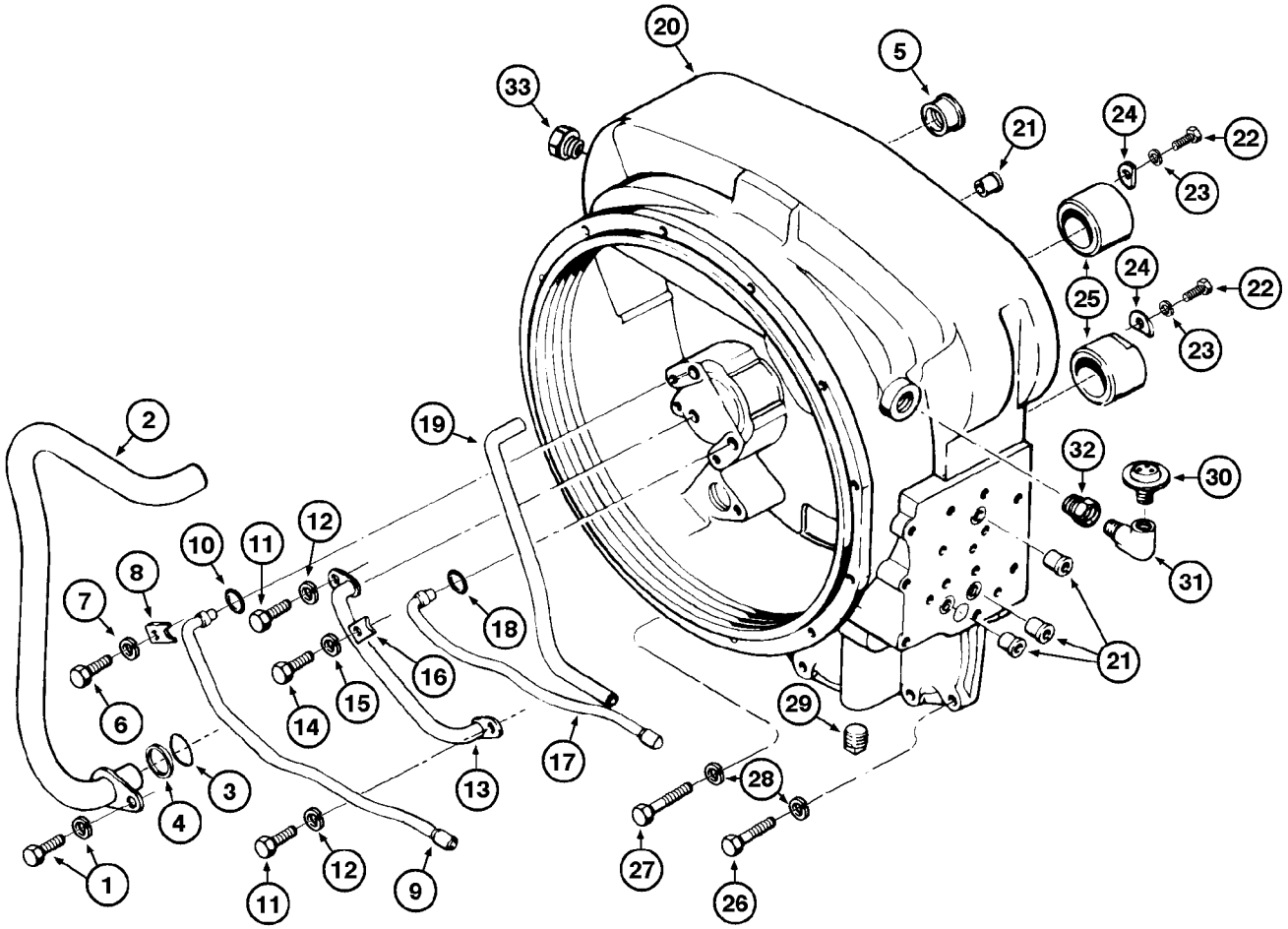

TORQUE CONVERTER HOUSING
TORQUE CONVERTER HOUSING
TORQUE CONVERTER HOUSING
TORQUE CONVERTER HOUSING

R	N	P.N.	MOD	Q	Denominação Bezeichnung	Description Description	Denominacion Beskrivelse	Descrizione Beschrijving	L.C.
18		A27891		1	O-RING, 0.362" ID x 0.568" OD x 0.103"				
						O-RING	JUNTA TÓRICA	ANELLO TOROIDALE	055A
					O-RING	JOINT TORIQUE	O-RING	O-RING	
19		L33472		1	TUBO, 7.687" L	TUBE	TUBO	TUBO	9400
					ROHR	TUBE	TUBE	TUBE	
20		REF		1	INSTRUÇÃO	INSTRUCTION	INSTRUCCIÓN	ISTRUZIONI	Z571
					ANLEITUNG	INSTRUCTION	INSTRUKTION	INSTRUCTIE	
21		A55734		4	CAMISA	SLEEVE	CAMISA	MANICOTTO	8000
					HUELSE	CHEMISE	SLEEVE	SLEEVE	
22		413-510		2	PARAFUSO, Hex, 5/16"-18 x 5/8", G5, Full Thd				
						BOLT	PERNO	BULLONE	140B
					SCHRAUBE	VIS	BOLT	BOUT	
23		492-11031		2	TRAVA DA ARRUELA, 5/16"				
						LOCK WASHER	ARANDELA DE BLOQUE(	RONDELLA DI SICUREZ	132R
					SICHERUNGSSCHEIBE	RONDELLE FREIN	LÅSESKIVE	BORGRING	
24		L33475		2	TRAVA	LOCK	CERRADURA	BLOCCAGGIO	5320
					SCHLOSS	VERROU/SERRURE	LOCK	LOCK	
25		N6903		2	CAMISA	SLEEVE	CAMISA	MANICOTTO	8000
					HUELSE	CHEMISE	SLEEVE	SLEEVE	
26		413-728		4	PARAFUSO, Hex, 7/16"-14 x 1 3/4", G5				
						BOLT	PERNO	BULLONE	140B
					SCHRAUBE	VIS	BOLT	BOUT	
27		413-744		4	PARAFUSO, Hex, 7/16"-14 x 2 3/4", G5				
						BOLT	TORNILLO	BULLONE	0810
					SCHRAUBE	BOULON	SKRUE	BOUT	
28		192-22		8	TRAVA DA ARRUELA, 7/16"				
						LOCK WASHER	ARANDELA DE BLOQUE(	RONDELLA DI SICUREZ	132R
					SICHERUNGSSCHEIBE	RONDELLE FREIN	LÅSESKIVE	BORGRING	
29		218-5156		1	BUJÃO, Hex Hd, 3/4"-16 ORB				
						PLUG	TAPÓN	TAPPO	050T
					STOPFEN	BOUCHON	PROP	PLUG	
30		N7134		1	RESPIRO	BREATHER	RESPIRADERO	STIATATOIO	1070
					ENTLUEFTER	RENIFLARD	BREATHER	BREATHER	
31		221-1413		1	COTOVELO, 90º, 3/8"-18, NPT				
						ELBOW	CODO	GOMITO	085G
					KNIESTÜCK	COUDE	VINKELRØR	KNIESTUK	
32		221-59		1	ENGATE	COUPLING	ACOPLAMIENTO	GIUNTO	Z321
					KUPPLUNG	RACCORD	KOBLING	KOPPELING	
33		221-35		1	BUJÃO DE DRENO, Sq Soc, 3/4"-14 NPTF				
						DRAIN PLUG	TAPÓN DE VACIADO	TAPPO DI SCARICO	056T
					ABLASSSCHRAUBE	BOUCHON DE VIDANGE	AFTAPNINGSPROP	AFTAPPLUG	

06-12	01	p1	05/12

CARCAÇA DA CAIXA DE MUDANÇAS
TRANSMISSION HOUSING
CARCASA DE LA CAJA DE CAMBIO
TRANSMISSION HOUSING

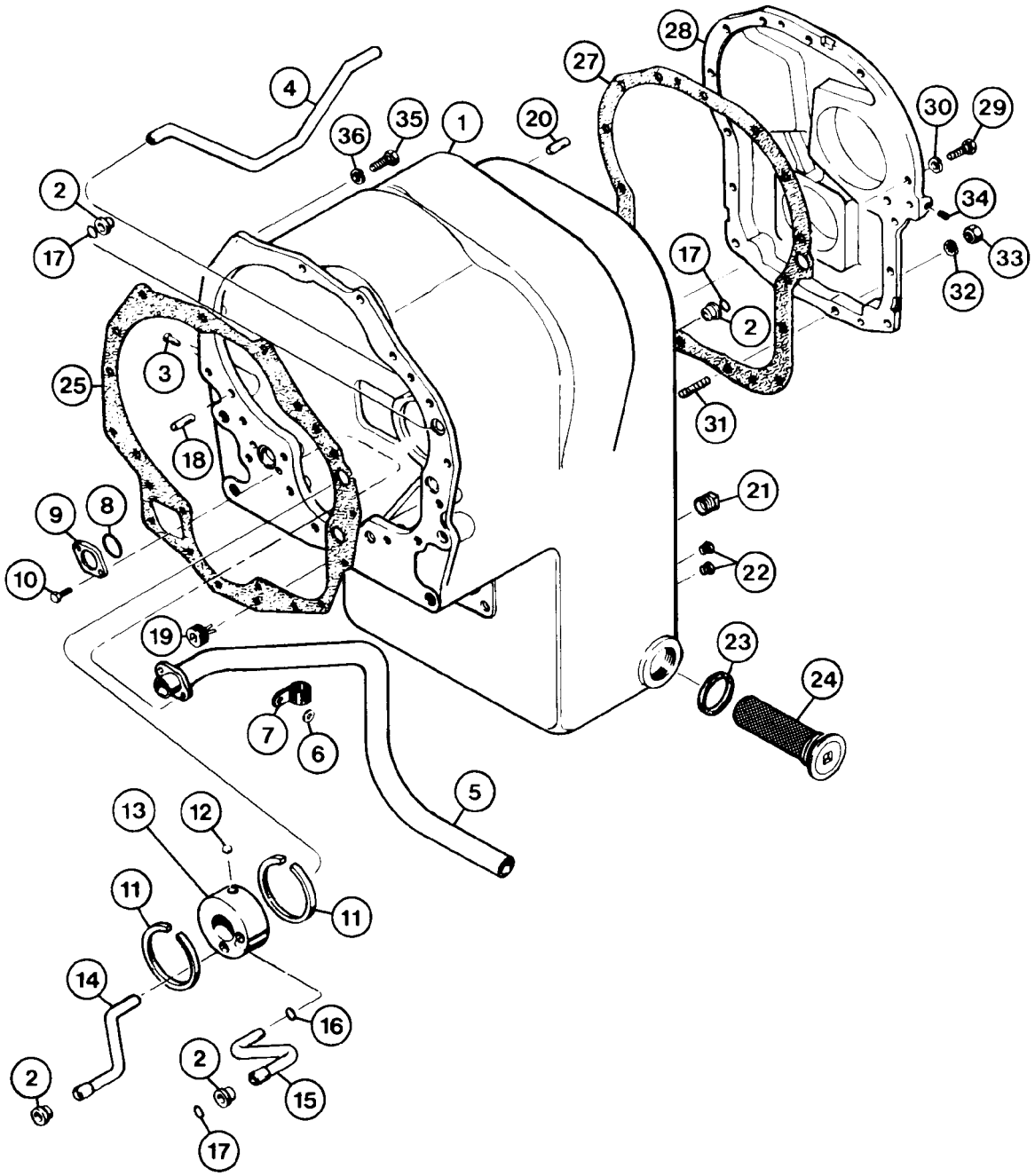

TRANSMISSION HOUSING
TRANSMISSION HOUSING
TRANSMISSION HOUSING
TRANSMISSION HOUSING

R	N	P.N.	MOD	Q	Denominação Bezeichnung	Description Description	Denominacion Beskrivelse	Descrizione Beschrijving	L.C.
		70673965		1	CAIXA, Assy, Includes items 1 - 16				
						BOX	CAJA	CASSA; SCATOLA	035S
					KASTEN; OFF KASTENA	BOITIER	KASSE	DOOS	
1		**NSS**		1	SEM SERVIÇO EM SEPARADO, HOUSING				
						NOT SERVICED SEPARA	NO SE REPARA POR SE	NON FORNITO SEPARAT	064N
					NICHT A SEP ERS-T LIEF	NON FORUNI SEPAREM	SERVICERES IKKE SEPA	NIET LOS VERKRIJGBAA	
2		**A55734**		4	CAMISA	SLEEVE	CAMISA	MANICOTTO	8000
					HUELSE	CHEMISE	SLEEVE	SLEEVE	
3		**S89629**		1	REBITE	RIVET	REMACHE	RIVETTO	055R
					NIET	RIVET	NITTE	KLINKNAGEL	
4		**S89618**		1	TUBO	TUBE	TUBO	TUBO	195T
					ROHR	TUBE	RØR	LEIDING	
5		**BHBD77003**		1	TUBO	TUBE	TUBO	TUBO	195T
					ROHR	TUBE	RØR	LEIDING	
6		**195-18**		1	ARRUELA PLANA, 1/4"	WASHER	ARANDELA	RONDELLA	131R
					UNTERLEGSCHEIBE	RONDELLE	FLADSKIVE	SLUITRING	
7		**S89625**		1	GRAMPO	STAPLE	GRAPA	GRAFFA	089G
					KLAMMER	AGRAFE	HÆFTEKLEMME	NIETJE	
8		**A29456**		1	O-RING, 1.046" ID x 1.324" OD x 0.139"				
						O-RING	JUNTA TÓRICA	ANELLO TOROIDALE	055A
					O-RING	JOINT TORIQUE	O-RING	O-RING	
9		**L33481**		1	ARRUELA	WASHER	ARANDELA	RONDELLA	9720
					UNTERLEGSCHEIBE	RONDELLE	WASHER	WASHER	
10		**114-128**		2	PARAFUSO, Locking, 5/16"-24 x 1", G5				
						BOLT	PERNO	BULLONE	140B
					SCHRAUBE	VIS	BOLT	BOUT	
11		**D47486**		2	ANEL-TRAVA	LOCKING RING	ANILLO DE BLOQUEO	ANELLO DI BLOCCAGGI	051A
					SICHERUNGSRING	BAGUE DE BLOCAGE	LÅSESKIVE	BORGRING	
12		**211-357**		1	ESFERA, 1/4" Dia	BALL	BOLA	SFERA	140S
					KUGEL	BILLE	KUGLE	KOGEL	
13		**E104171**		1	VÁLVULA	VALVE	VÁLVULA	VALVOLA	9620
					VENTIL	SOUPAPE	VENTIL	KLEP	
14		**D77032**		1	TUBO, 0.375" OD	TUBE	TUBO	TUBO	9400
					ROHR	TUBE	TUBE	TUBE	
15		**D77031**		1	TUBO	TUBE	TUBO	TUBO	9400
					ROHR	TUBE	TUBE	TUBE	
16		**A30825**		1	O-RING, 0.364" ID x 0.504" OD x 0.07"				
						O-RING	JUNTA TÓRICA	ANELLO TOROIDALE	055A
					O-RING	JOINT TORIQUE	O-RING	O-RING	
17		**L33542**		3	ANEL O, 13/16" ID x 1-1/16" OD x 1/8"				
						O-RING	ANILLO/ARO CAUCHO	ANELLO TOROIDALE	7176
					O-RING	JOINT TORIQUE	O-RING	O-RING	
18		**A17924**		2	PINO	PIN	BOTADOR	SPINA	6200
					STIFT	BROCHE	PIN	PIN	
19		**221-16**		2	BUJAO, Sq Hd, 1"-11 1/2 NPTF				
						PLUG	TAPON	TAPPO	6400
					STOPFEN	BOUCHON	PLUG	PLUG	
20		**S89619**		2	PINO	DOWEL	SPINA	SPINA CILINDRICA	P176
					PASSTIFT	PION	DOWEL	DOWEL	

06-12	01	p2	05/12

CARCAÇA DA CAIXA DE MUDANÇAS
TRANSMISSION HOUSING
CARCASA DE LA CAJA DE CAMBIO
TRANSMISSION HOUSING

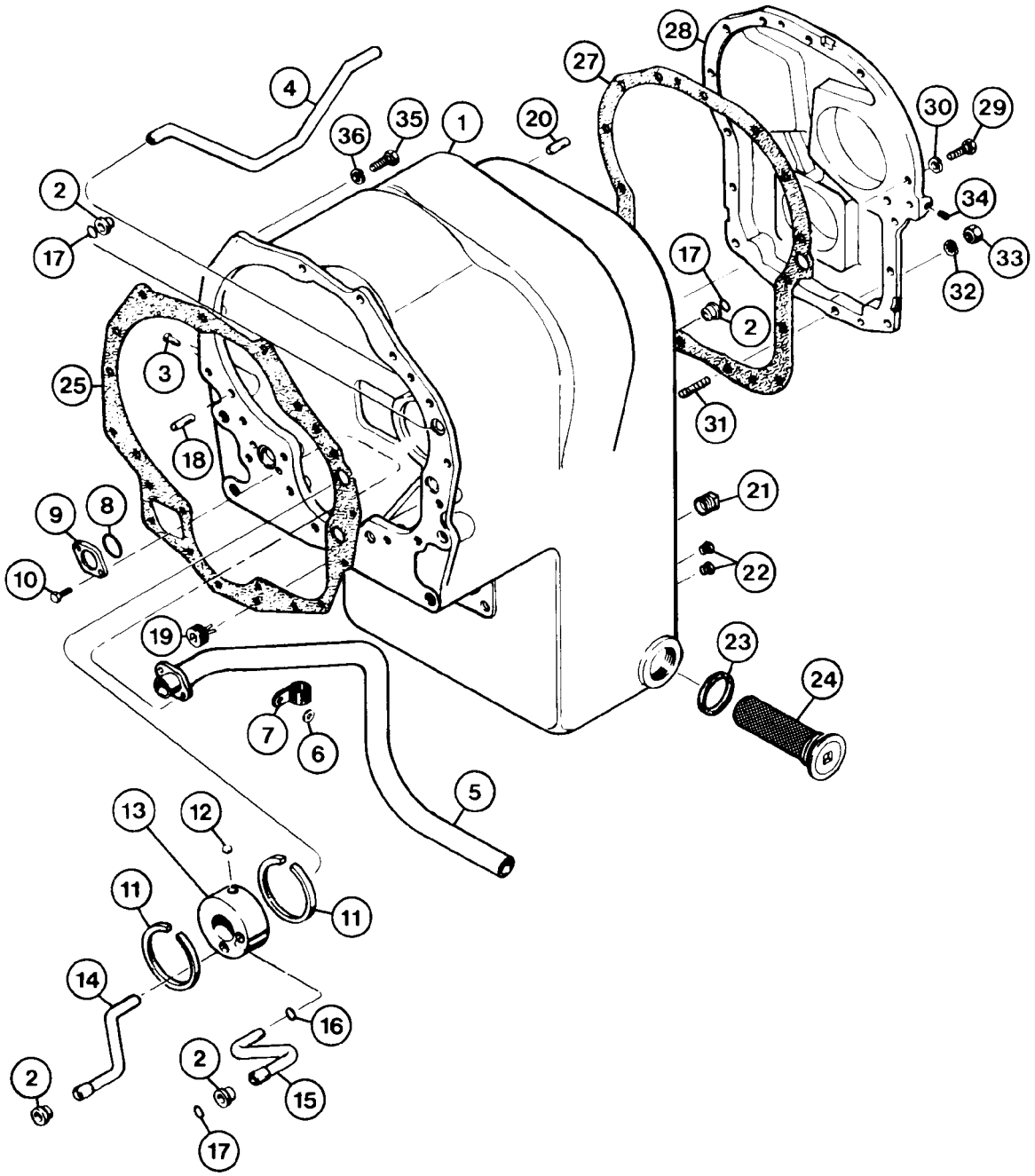

TRANSMISSION HOUSING
TRANSMISSION HOUSING
TRANSMISSION HOUSING
TRANSMISSION HOUSING

R	N	P.N.	MOD	Q	Denominação Bezeichnung	Description Description	Denominacion Beskrivelse	Descrizione Beschrijving	L.C.
21		221-659		1	BUJÃO DE DRENO, Hex Soc, 3/4" NPT				
						DRAIN PLUG	TAPÓN DE VACIADO	TAPPO DI SCARICO	056T
					ABLASSSCHRAUBE	BOUCHON DE VIDANGE	AFTAPNINGSPROP	AFTAPPLUG	
22		221-841		2	BUJAO	PLUG	TAPON	TAPPO	6400
					STOPFEN	BOUCHON	PLUG	PLUG	
23		L30039		1	JUNTA	GASKET	JUNTA	GUARNIZIONE	3720
					DICHTUNG	JOINT	GASKET	GASKET	
24		L33482		1	FILTRO TELA	FILTER SCREEN	PANTALLA DE FILTRO	FILTRO A RETE	7440
					FILTERSIEB	TAMIS-FILTRE	FILTERSI	FILTERZEEF	
25		L33476		1	JUNTA	GASKET	JUNTA	GUARNIZIONE	3720
					DICHTUNG	JOINT	GASKET	GASKET	
27		S89620		1	JUNTA	GASKET	JUNTA	GUARNIZIONE	3720
					DICHTUNG	JOINT	GASKET	GASKET	
28		N8844		1	TAMPA, rear	COVER	TAPA	COPERCHIO	2250
					DECKEL	COUVERCLE	COVER	COVER	
29		113-312		21	PARAFUSO, Hex, 7/16"-14 x 1 1/4", G5				
						BOLT	PERNO	BULLONE	140B
					SCHRAUBE	VIS	BOLT	BOUT	
30		194-7		21	ARRUELA PLANA	WASHER	ARANDELA	RONDELLA	131R
					UNTERLEGSCHEIBE	RONDELLE	FLADSKIVE	SLUITRING	
31		D77015		2	PRISIONEIRO	STUD	ESPARRAGO	PRIGIONIERO	P521
					STEHBOLZEN	GOUJON	STUD	STUD	
32		194-7		2	ARRUELA PLANA	WASHER	ARANDELA	RONDELLA	131R
					UNTERLEGSCHEIBE	RONDELLE	FLADSKIVE	SLUITRING	
33		129-530		2	PORCA, 7/16"-20, G8	NUT	TUERCA	DADO	010D
					MUTTER	ECROU	MØTRIK	MOER	
34		S117865		1	BUJAO	PLUG	TAPON	TAPPO	6400
					STOPFEN	BOUCHON	PLUG	PLUG	
35		113-362		10	PARAFUSO	SCREW	TORNILLO	VITE	040V
					SCHRAUBE	VIS	SKRUE	SCHROEF	
36		192-22		10	TRAVA DA ARRUELA, 7/16"				
						LOCK WASHER	ARANDELA DE BLOQUE	RONDELLA DI SICUREZ	132R
					SICHERUNGSSCHEIBE	RONDELLE FREIN	LÅSESKIVE	BORGRING	

06-14	01	p1	02/12

EIXO DE SAÍDA DA TRANSMISSÃO
TRANSMISSION OUTPUT SHAFT
EJE DE SALIDA DE LA TRANSMISION
TRANSMISSION OUTPUT SHAFT

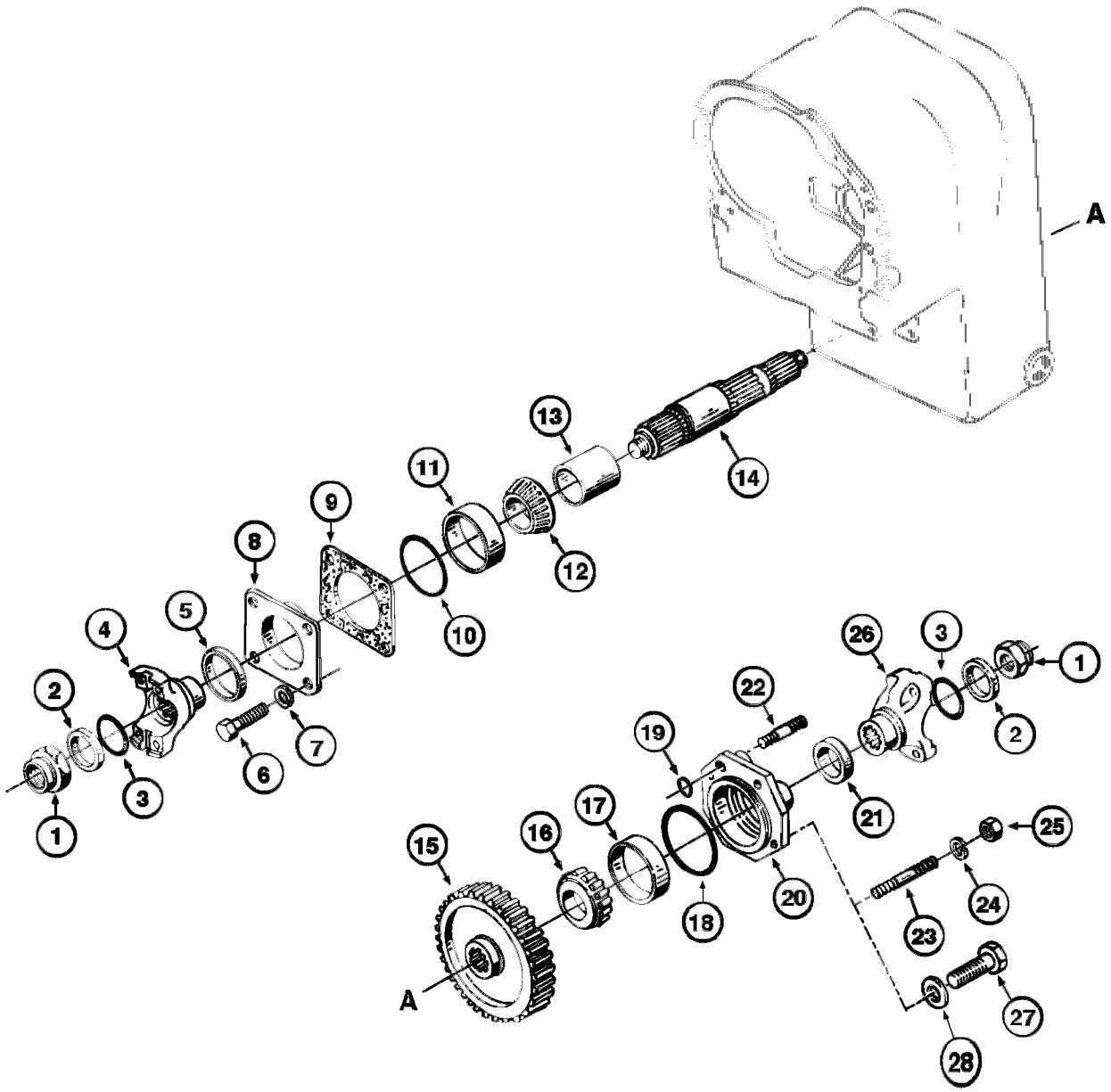

TRANSMISSION OUTPUT SHAFT
TRANSMISSION OUTPUT SHAFT
TRANSMISSION OUTPUT SHAFT
TRANSMISSION OUTPUT SHAFT

R	N	P.N.	MOD	Q	Denominação Bezeichnung	Description Description	Denominacion Beskrivelse	Descrizione Beschrijving	L.C.
1		131-487		2	CONTRA PORCA, 1 1/4"-18 SICHERUNGSMUTTER	LOCK NUT CONTRE-ECROU	TUERCA DE BLOQUEO LÅSEMØTRIK	DADO DI BLOCCAGGIO BORGMOER	P263
2		A55828		2	ARRUELA UNTERLEGSCHEIBE	WASHER RONDELLE	ARANDELA WASHER	RONDELLA WASHER	9720
3		A30916		2	O-RING, 1.475" ID x 1.875" OD x 0.21" O-RING	O-RING JOINT TORIQUE	JUNTA TÓRICA O-RING	ANELLO TOROIDALE O-RING	055A
4		E105010		1	BRACADEIRA, output KRAMPE	CLAMP CRAMPON	GRAPON CLAMP	MORSETTO CLAMP	Z458
5		D77023		1	VEDADOR DE RETENCAO DICHTRING	SEAL JOINT-D'ETANCHEITE	SELLO/RETEN SEAL	GUARNIZIONE TENUTA SEAL	7460
6		113-515		4	PARAFUSO, Hex, 9/16"-12 x 1 1/4", G5, Full Thd SCHRAUBE	BOLT VIS	PERNO BOLT	BULLONE BOUT	140B
7		492-11010		4	TRAVA DA ARRUELA, #10 SICHERUNGSSCHEIBE	LOCK WASHER RONDELLE FREIN	ARANDELA DE BLOQUE LÅSESKIVE	RONDELLA DI SICUREZ BORGRING	132R
8		S89700		1	CAPA KAPPE	CAP CHAPEAU	TAPA CAP	CAPPUCCIO CAP	1380
9		S89702		AR	CALCO, .004" Thk, (0.10 mm) AUSGLEICHSCHEIBE	SHIM CALE-REGLAGE	CALCE REGLAGE SHIM	SPESSORE SHIM	7770
9		S89703		AR	CALCO, .007" Thk, (0.18 mm) AUSGLEICHSCHEIBE	SHIM CALE-REGLAGE	CALCE REGLAGE SHIM	SPESSORE SHIM	7770
9		S89704		AR	CALCO, .010" Thk, (0.25 mm) AUSGLEICHSCHEIBE	SHIM CALE-REGLAGE	CALCE REGLAGE SHIM	SPESSORE SHIM	7770
9		S89705		AR	CALCO, .020" Thk, (0.50 mm) AUSGLEICHSCHEIBE	SHIM CALE-REGLAGE	CALCE REGLAGE SHIM	SPESSORE SHIM	7770
10		A27507		1	O-RING, 3.984" ID x 4.262" OD x 0.139" O-RING	O-RING JOINT TORIQUE	JUNTA TÓRICA O-RING	ANELLO TOROIDALE O-RING	055A
11		E157729		1	CONJUNTO DO ROLAMENTO LAGERBAURUPPE	BEARING ASSY ROULEMENT	CONJUNTO DE COJINET LEJESAMLING	COMPLESSIVO CUSCINI LAGEREENHEID	341C
12		D76994		1	CONE KONUS	CONE CONE	CONO KEGLE	CONO KEGEL	Z140
13		E68940		1	ESPAÇADOR DISTANZSTÜCK	SPACER ENTRETOISE	SEPARADOR AFSTANDSSTYKKE	DISTANZIALE AFSTANDSSTUK	075D
14		E68941		1	EIXO WELLE	SHAFT ARBRE	EJE AKSEL	ALBERO AS	016A
15		E68947		1	ENGRENAGEM ZAHNRAD	GEAR PIGNON	ENGRANAJE TANDHJUL	INGRANAGGIO TANDWIEL	050I
16		D76994		1	CONE KONUS	CONE CONE	CONO KEGLE	CONO KEGEL	Z140
17		E157730		1	CAPA ROLAMENTO LAGERABDECKUNG	BEARING COVER CACHE ROULEMENT	CUBIERTA DE COJINETE LEJEDÆKSEL	COPERCHIO CUSCINET LAGERKAP	Z421

06-14	01	p2	02/12

EIXO DE SAÍDA DA TRANSMISSÃO
TRANSMISSION OUTPUT SHAFT
EJE DE SALIDA DE LA TRANSMISION
TRANSMISSION OUTPUT SHAFT

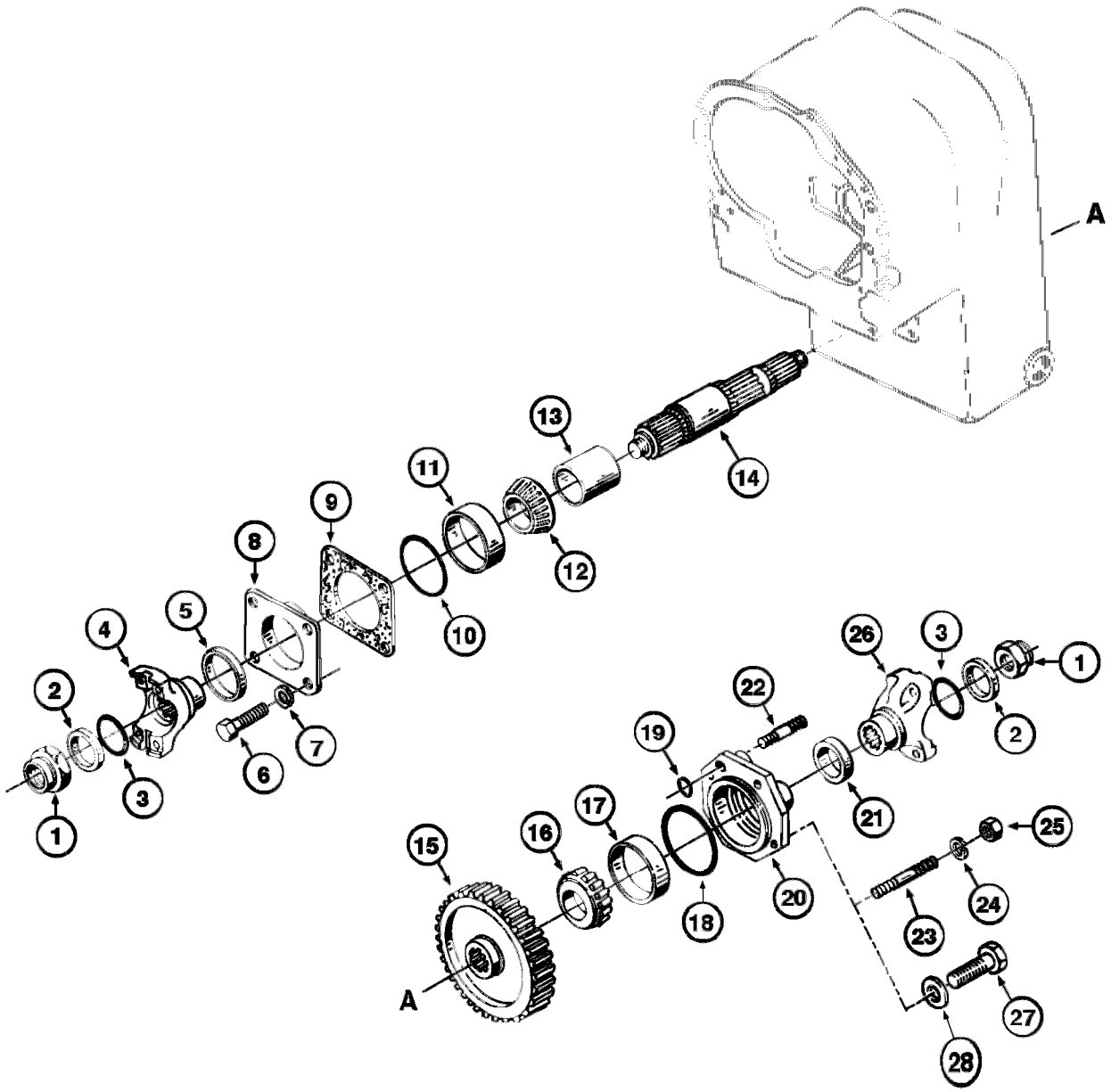

TRANSMISSION OUTPUT SHAFT
TRANSMISSION OUTPUT SHAFT
TRANSMISSION OUTPUT SHAFT
TRANSMISSION OUTPUT SHAFT

R	N	P.N.	MOD	Q	Denominação Bezeichnung	Description Description	Denominacion Beskrivelse	Descrizione Beschrijving	L.C.
18		S92346		1	ANEL O O-RING	O-RING JOINT TORIQUE	ANILLO/ARO CAUCHO O-RING	ANELLO TOROIDALE O-RING	7176
19		S89712		1	ANEL O O-RING	O-RING JOINT TORIQUE	ANILLO/ARO CAUCHO O-RING	ANELLO TOROIDALE O-RING	7176
20		D77039		1	COBERTURA ABDECKUNG	COVER COUVERCLE	CUBIERTA DÆKSEL	COPERCHIO AFSCHERMING	265C
21		A55817		1	VEDADOR DE RETENCAO DICHTRING	SEAL JOINT-D'ETANCHEITE	SELLO/RETEN SEAL	GUARNIZIONE TENUTA SEAL	7460
22		E69856		1	PRISIONEIRO GEWINDEBOLZEN	STUD GOUJON	PRISIONERO STØTTEBOLT	PRIGIONIERO TAPEIND	210P
23		E69553		3	PRISIONEIRO GEWINDEBOLZEN	STUD GOUJON	PRISIONERO STØTTEBOLT	PRIGIONIERO TAPEIND	210P
24		193-9		4	TRAVA DA ARRUELA, Ext Tooth, 5/16" SICHERUNGSSCHEIBE	LOCK WASHER RONDELLE FREIN	ARANDELA DE BLOQUE LÅSESKIVE	RONDELLA DI SICUREZ BORGRING	132R
25		129-550		4	PORCA MUTTER	NUT ECROU	TUERCA MØTRIK	DADO MOER	010D
26		REF		1	INSTRUÇÃO, FLANGE - Pag. 06.32 ANLEITUNG	INSTRUCTION INSTRUCTION	INSTRUCCIÓN INSTRUKTION	ISTRUZIONI INSTRUCTIE	Z571
27		13-928		4	PARAFUSO, Hex, 9/16"-12 x 1 3/4", G5, Full Thd SCHRAUBE	BOLT VIS	PERNO BOLT	BULLONE BOUT	140B
28		92-9		4	TRAVA DA ARRUELA, 9/16" SICHERUNGSSCHEIBE	LOCK WASHER RONDELLE FREIN	ARANDELA DE BLOQUE LÅSESKIVE	RONDELLA DI SICUREZ BORGRING	132R

06-16	01	p1	12/07

PEÇAS DO EIXO DA EMBREAGEM RÉ E 3ª
REVERSE AND THIRD CLUTCH SHAFT PARTS
PIEZAS DEL EJE DE EMBRAGUE, MARCHA ATRÁS Y 3ª
REVERSE AND THIRD CLUTCH SHAFT PARTS

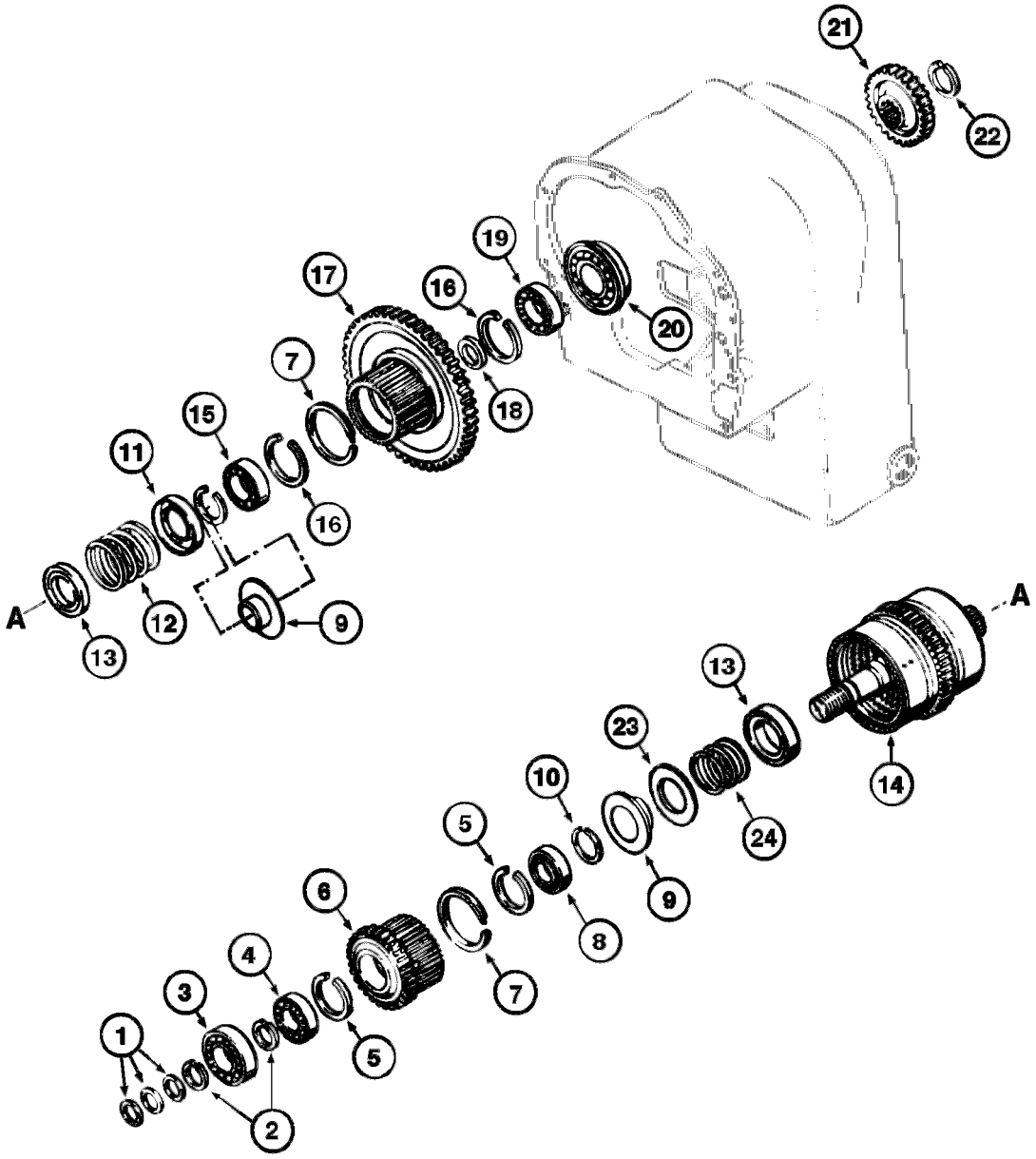

REVERSE AND THIRD CLUTCH SHAFT PARTS
REVERSE AND THIRD CLUTCH SHAFT PARTS
REVERSE AND THIRD CLUTCH SHAFT PARTS
REVERSE AND THIRD CLUTCH SHAFT PARTS

R	N	P.N.	MOD	Q	Denominação Bezeichnung	Description Description	Denominacion Beskrivelse	Descrizione Beschrijving	L.C.
1		A17925		3	MOLA FEDER	SPRING RESSORT	MUELLE SPRING	MOLLA SPRING	8315
2		L33518		2	ANEL RING	RING BAGUE	ANILLO RING	ANELLO RING	7175
3		A17912		1	ROLAMENTO ESFÉRICO, 1.5748" ID x 3.5433" OD x 0.9055" KUGELLAGER	BALL BEARING ROULEMENT A BILLES	RODAMIENTO DE BOLAS KUGLELEJE	CUSCINETTO A SFERE KOGELLAGER	343C
4		A28236		1	ROLAMENTO ESFÉRICO, 1.5743" ID x 2.6772" OD x 0.5906" KUGELLAGER	BALL BEARING ROULEMENT A BILLES	RODAMIENTO DE BOLAS KUGLELEJE	CUSCINETTO A SFERE KOGELLAGER	343C
5		L33514		2	ANEL RING	RING BAGUE	ANILLO RING	ANELLO RING	7175
6		147446A1		1	ENGRENAGEM ZAHNRAD	GEAR PIGNON	ENGRANAJE TANDHJUL	INGRANAGGIO TANDWIEL	050I
7		S300741		2	VEDADOR DE ÓLEO ÖLDICHTUNG	OIL SEAL JOINT ETANCHEITE D'HI	JUNTA DE ACEITE OLIESEGL	PARAOLIO OLIEAFDICHTING	P278
8		S89638		1	ROLAMENTO ESFÉRICO KUGELLAGER	BALL BEARING ROULEMENT A BILLES	RODAMIENTO DE BOLAS KUGLELEJE	CUSCINETTO A SFERE KOGELLAGER	343C
9		N6812		2	RETENTOR HALTER	RETAINER ARRETOIR	TOPE RETAINER	DISPOSITIVO TENUTA RETAINER	7125
10		E114328		2	ANEL TRAVA SICHERUNGSRING	RING SNAP ANNEAU-D'ARRET	ANILLO DE CIERRE RING SNAP	ANELLO ELASTICO RING SNAP	P345
11		L33488		1	RETENTOR HALTER	RETAINER ARRETOIR	TOPE RETAINER	DISPOSITIVO TENUTA RETAINER	7125
12		L33487		1	MOLA VÁLVULA VENTILFEDER	VALVE SPRING RESSORT DE SOUPAPE	RESORTE DE VÁLVULA VENTILFJEDER	MOLLA DELLA VALVOLA KLEPVEER	P463
13		S89661		2	RETENTOR HALTER	RETAINER ARRETOIR	TOPE RETAINER	DISPOSITIVO TENUTA RETAINER	7125
14		S113669		1	EMBREAGEM, and shaft Assy KUPPLUNG	CLUTCH EMBRAYAGE	EMBRAGUE CLUTCH	INNESTO CLUTCH	1740
15		S89646		1	ROLAMENTO ESFÉRICO KUGELLAGER	BALL BEARING ROULEMENT A BILLES	RODAMIENTO DE BOLAS KUGLELEJE	CUSCINETTO A SFERE KOGELLAGER	343C
16		L33516		2	ANEL RING	RING BAGUE	ANILLO RING	ANELLO RING	7175
17		D77026		1	PLANETARIA PLANETENRAD	GEAR WHEEL PLANETAIRE	PLANETARIO GEAR WHEEL	INGRANAGIO, SATELL GEAR WHEEL	Z589
18		S89649		1	ESPACADOR ABSTANDSSTUECK	SPACER ENTRETOISE	ESPACIADOR SPACER	DISTANZIALE SPACER	8090
19		D63366		1	ROLAMENTO ESFÉRICO, 1.7717" ID x 2.9528" OD x 0.6299" KUGELLAGER	BALL BEARING ROULEMENT A BILLES	RODAMIENTO DE BOLAS KUGLELEJE	CUSCINETTO A SFERE KOGELLAGER	343C
20		E157051		1	CONJUNTO DO ROLAMENTO LAGERBAURUPPE	BEARING ASSY ROULEMENT	CONJUNTO DE COJINET LEJESAMLING	COMPLESSIVO CUSCINI LAGEREENHEID	341C
21		N8417		1	ENGRENAGEM, 1st and 4th ZAHNRAD	GEAR PIGNON	ENGRANAJE TANDHJUL	INGRANAGGIO TANDWIEL	050I
22		S89666		1	RETENTOR HALTER	RETAINER ARRETOIR	TOPE RETAINER	DISPOSITIVO TENUTA RETAINER	7125

06-16	01	p2	12/07

PEÇAS DO EIXO DA EMBREAGEM RÉ E 3ª
REVERSE AND THIRD CLUTCH SHAFT PARTS
PIEZAS DEL EJE DE EMBRAGUE, MARCHA ATRÁS Y 3ª
REVERSE AND THIRD CLUTCH SHAFT PARTS

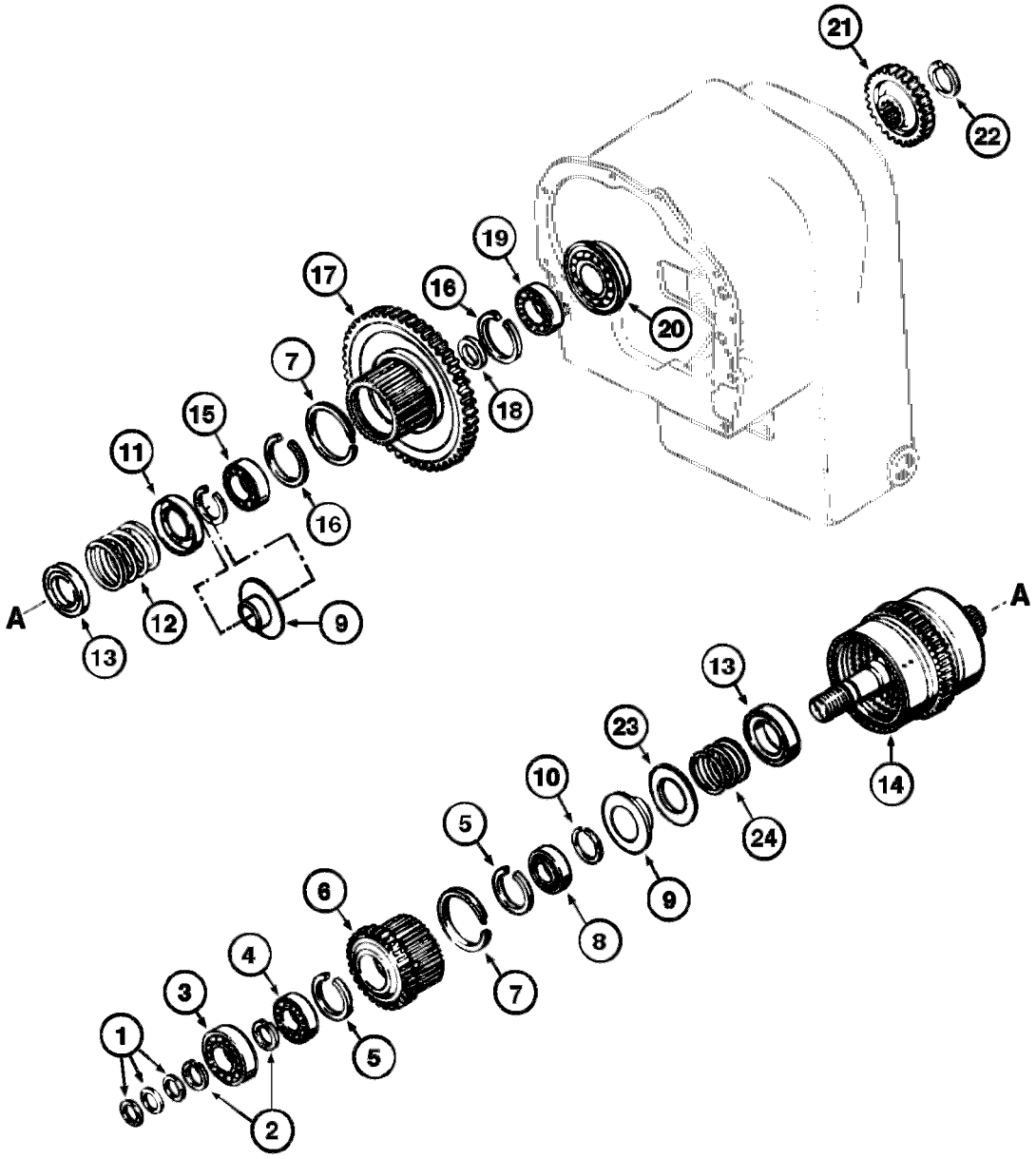

REVERSE AND THIRD CLUTCH SHAFT PARTS
REVERSE AND THIRD CLUTCH SHAFT PARTS
REVERSE AND THIRD CLUTCH SHAFT PARTS
REVERSE AND THIRD CLUTCH SHAFT PARTS

R	N	P.N.	MOD	Q	Denominação Bezeichnung	Description Description	Denominacion Beskrivelse	Descrizione Beschrijving	L.C.
23		**L33488**		1	RETENTOR HALTER	RETAINER ARRETOIR	TOPE RETAINER	DISPOSITIVO TENUTA RETAINER	7125
24		**L33487**		1	MOLA VÁLVULA VENTILFEDER	VALVE SPRING RESSORT DE SOUPAPE	RESORTE DE VÁLVULA VENTILFJEDER	MOLLA DELLA VALVOLA KLEPVEER	P463

06-18	01	p1	03/09

PEÇAS DO EIXO DA EMBREAGEM - PARA FRENTE 2ª E 1ª
FORWARD 2nd AND 1st CLUTCH SHAFT PARTS
PIEZAS DEL EJE DE EMBRAGUE - ADELANTE, 2ª Y 1ª
FORWARD 2nd AND 1st CLUTCH SHAFT PARTS

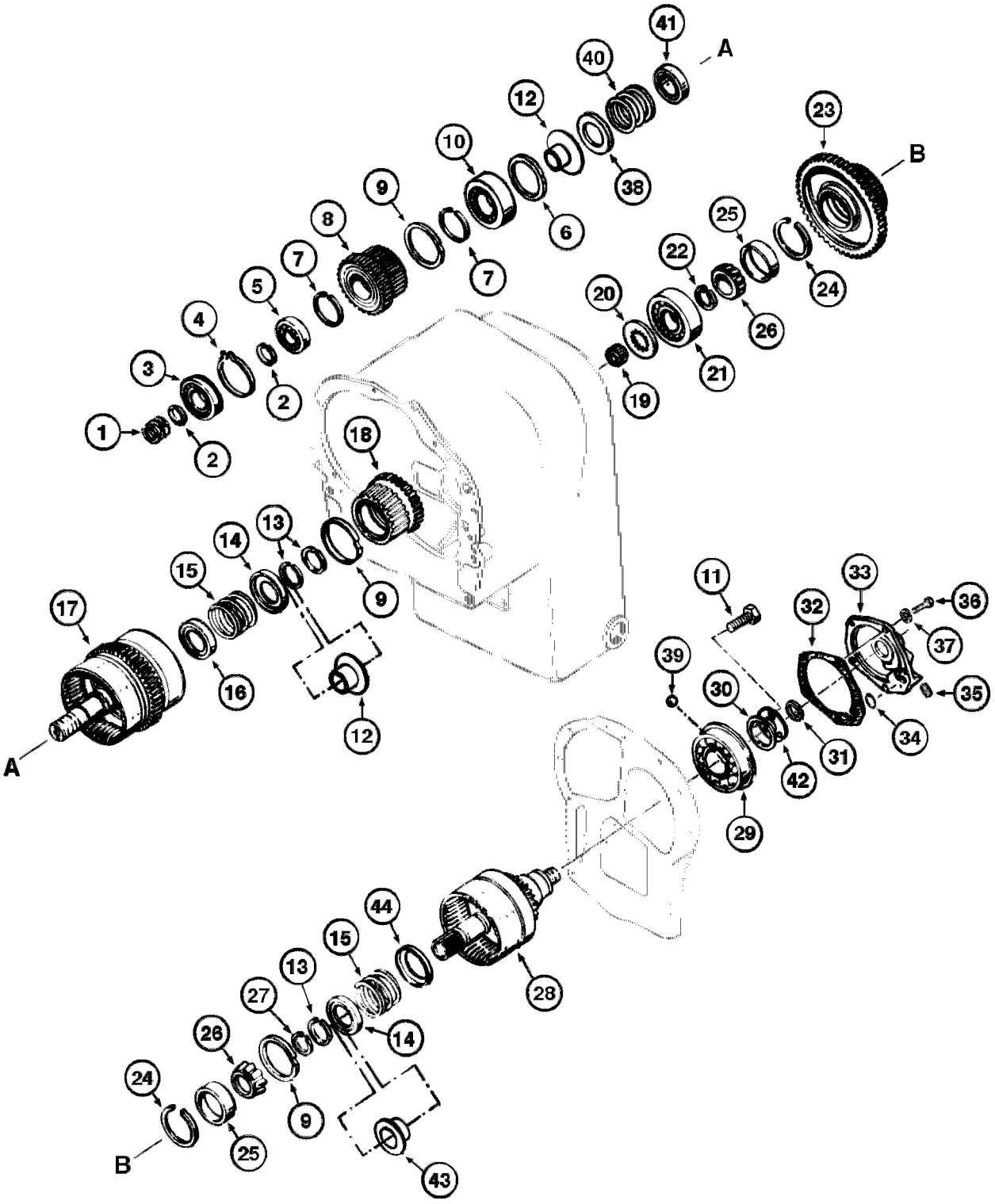

FORWARD 2nd AND 1st CLUTCH SHAFT PARTS
FORWARD 2nd AND 1st CLUTCH SHAFT PARTS
FORWARD 2nd AND 1st CLUTCH SHAFT PARTS
FORWARD 2nd AND 1st CLUTCH SHAFT PARTS

R	N	P.N.	MOD	Q	Denominação Bezeichnung	Description Description	Denominacion Beskrivelse	Descrizione Beschrijving	L.C.
1		A17925		3	MOLA FEDER	SPRING RESSORT	MUELLE SPRING	MOLLA SPRING	8315
2		L33518		2	ANEL RING	RING BAGUE	ANILLO RING	ANELLO RING	7175
3		N7259		1	ROLAMENTO ESFÉRICO KUGELLAGER	BALL BEARING ROULEMENT A BILLES	RODAMIENTO DE BOLAS KUGLELEJE	CUSCINETTO A SFERE KOGELLAGER	343C
4		S89652		1	ANEL RING	RING BAGUE	ANILLO RING	ANELLO RING	7175
5		A28236		1	ROLAMENTO ESFÉRICO, 1.5743" ID x 2.6772" OD x 0.5906" KUGELLAGER	BALL BEARING ROULEMENT A BILLES	RODAMIENTO DE BOLAS KUGLELEJE	CUSCINETTO A SFERE KOGELLAGER	343C
6		E114328		1	ANEL TRAVA SICHERUNGSRING	RING SNAP ANNEAU-D'ARRET	ANILLO DE CIERRE RING SNAP	ANELLO ELASTICO RING SNAP	P345
7		L33514		2	ANEL RING	RING BAGUE	ANILLO RING	ANELLO RING	7175
8		147446A1		1	ENGRENAGEM ZAHNRAD	GEAR PIGNON	ENGRANAJE TANDHJUL	INGRANAGGIO TANDWIEL	050I
9		S300741		3	VEDADOR DE ÓLEO ÖLDICHTUNG	OIL SEAL JOINT ETANCHEITE D'HI	JUNTA DE ACEITE OLIESEGL	PARAOLIO OLIEAFDICHTING	P278
10		S89638		1	ROLAMENTO ESFÉRICO KUGELLAGER	BALL BEARING ROULEMENT A BILLES	RODAMIENTO DE BOLAS KUGLELEJE	CUSCINETTO A SFERE KOGELLAGER	343C
11		14-614		3	PARAFUSO, Hex, 3/8"-24 x 7/8", G5, Full Thd SCHRAUBE	SCREW VIS	TORNILLO SKRUE	VITE SCHROEF	040V
12		N6812		2	RETENTOR HALTER	RETAINER ARRETOIR	TOPE RETAINER	DISPOSITIVO TENUTA RETAINER	7125
13		E114328		3	ANEL TRAVA SICHERUNGSRING	RING SNAP ANNEAU-D'ARRET	ANILLO DE CIERRE RING SNAP	ANELLO ELASTICO RING SNAP	P345
14		L33488		1	RETENTOR HALTER	RETAINER ARRETOIR	TOPE RETAINER	DISPOSITIVO TENUTA RETAINER	7125
15		L33487		2	MOLA VÁLVULA VENTILFEDER	VALVE SPRING RESSORT DE SOUPAPE	RESORTE DE VÁLVULA VENTILFJEDER	MOLLA DELLA VALVOLA KLEPVEER	P463
16		S89661		1	RETENTOR HALTER	RETAINER ARRETOIR	TOPE RETAINER	DISPOSITIVO TENUTA RETAINER	7125
17		E104122		1	PINO DO EIXO, DRUM and shaft Assy. ACHSZAPFEN	AXLE PIN PIVOT D'ESSIEU	PASADOR DE EJE AKSELPIND	PERNO DELL'ASSALE ASPEN	Z160
18		N8415		1	ENGRENAGEM ZAHNRAD	GEAR ENGRENAGE	ENGRANJE GEAR	INGRANAGGIO GEAR	3820
19		S89660		1	ROLAMENTO DE AGULHAS NADELLAGER	NEEDLE BEARING ROULEMENT A AIGUILLE	COJINETE DE AGUJAS NÅLELEJE	CUSCINETTO AD AGHI NAALDLAGER	344C
20		D77036		1	PLACA PLATTE	PLATE PLAQUE	PLACA PLATE	PIASTRA PLATE	6360
21		D77037		1	ROLAMENTO ROLETE CILÍNDR ZYLINDERROLLENLAGE	CYLINDRICAL ROLLER E ROULEMENT ROULEAU	COJINETE ROD. CILÍNDI CYLINDRISK RULLELEJE	CUSC. RULLINI CILINDR CILINDRISCH ROLLAGEI	A026
22		E104161		AR	ANEL RING	RING BAGUE	ANILLO RING	ANELLO RING	7175

06-18	01	p2	03/09

PEÇAS DO EIXO DA EMBREAGEM - PARA FRENTE 2ª E 1ª
FORWARD 2nd AND 1st CLUTCH SHAFT PARTS
PIEZAS DEL EJE DE EMBRAGUE - ADELANTE, 2ª Y 1ª
FORWARD 2nd AND 1st CLUTCH SHAFT PARTS

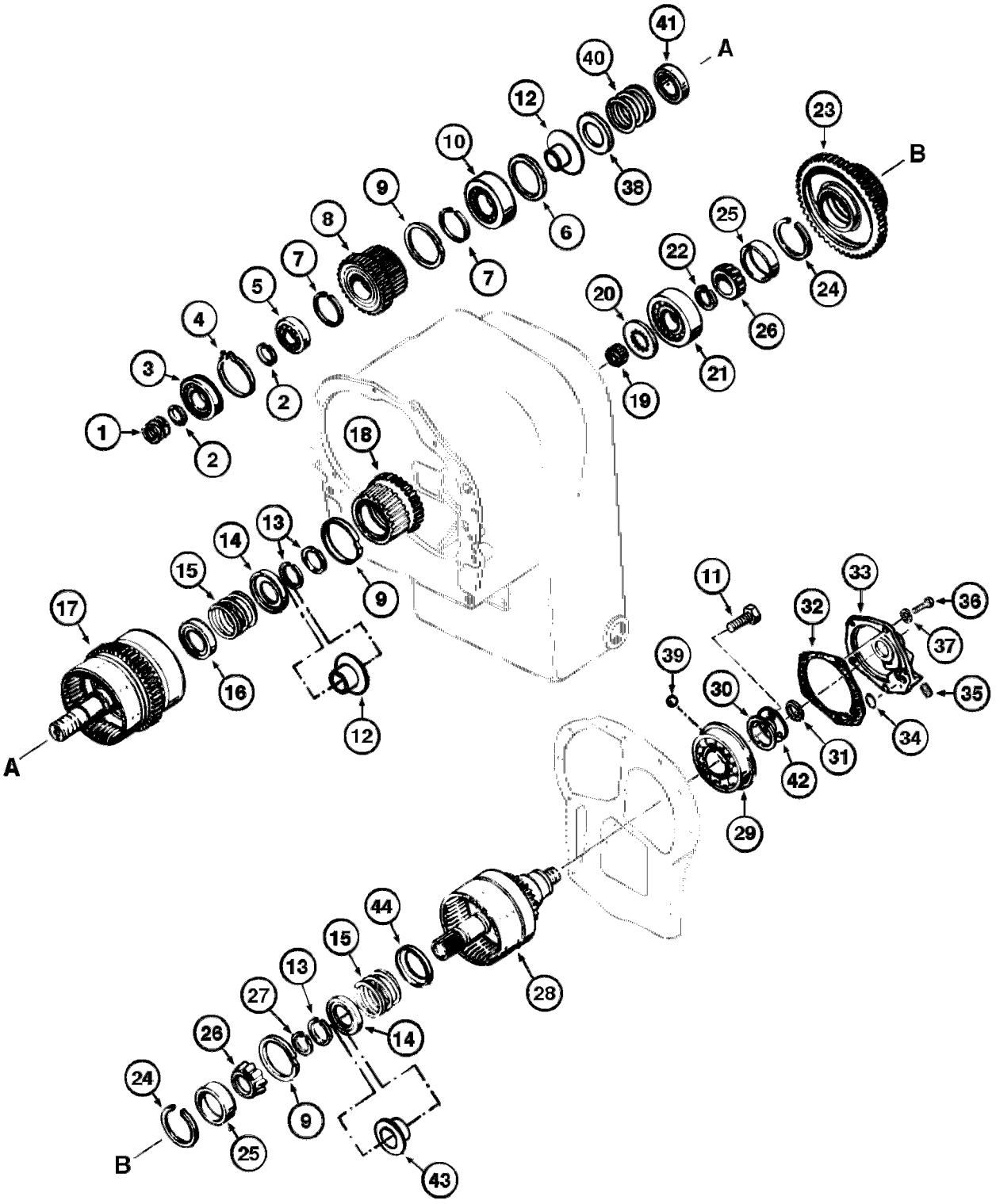

FORWARD 2nd AND 1st CLUTCH SHAFT PARTS
FORWARD 2nd AND 1st CLUTCH SHAFT PARTS
FORWARD 2nd AND 1st CLUTCH SHAFT PARTS
FORWARD 2nd AND 1st CLUTCH SHAFT PARTS

R	N	P.N.	MOD	Q	Denominação Bezeichnung	Description Description	Denominacion Beskrivelse	Descrizione Beschrijving	L.C.
22		E104162		1	ANEL	RING	ANILLO	ANELLO	045A
					RING	ANNEAU	RING	RING	
23		N8416		1	ENGRENAGEM, 1st	GEAR	ENGRANJE	INGRANAGGIO	3820
					ZAHNRAD	ENGRENAGE	GEAR	GEAR	
		D77038		1	ROLAMENTO ROLETE CÔNICO, Assy, Includes items 24, 25, 26				
						TAPERED ROLLER BEAF	COJINETE RODILLO CÓI	CUSCINETTO RULLINI C	241P
					KEGELROLLENLAGER	ROULEMENT ROUL. COI	KONISK RULLELEJE	CONISCH ROLLAGER	
24		NSS		2	SEM SERVIÇO EM SEPARADO, RING				
						NOT SERVICED SEPARA	NO SE REPARA POR SE	NON FORNITO SEPARAT	064N
					NICHT A SEP ERS-T LIEI	NON FORUNI SEPAREM	SERVICERES IKKE SEPA	NIET LOS VERKRIJGBAA	
25		NSS		2	SEM SERVIÇO EM SEPARADO, CUP				
						NOT SERVICED SEPARA	NO SE REPARA POR SE	NON FORNITO SEPARAT	064N
					NICHT A SEP ERS-T LIEI	NON FORUNI SEPAREM	SERVICERES IKKE SEPA	NIET LOS VERKRIJGBAA	
26		NSS		2	SEM SERVIÇO EM SEPARADO, CONE				
						NOT SERVICED SEPARA	NO SE REPARA POR SE	NON FORNITO SEPARAT	064N
					NICHT A SEP ERS-T LIEI	NON FORUNI SEPAREM	SERVICERES IKKE SEPA	NIET LOS VERKRIJGBAA	
27		D77040		1	ANEL	RING	ANILLO	ANELLO	7175
					RING	BAGUE	RING	RING	
28		S300037		1	TAMBOR, and shaft Assy	DRUM	TAMBOR	TAMBURA	2860
					TROMMEL	TAMBOUR	DRUM	DRUM	
29		S300039		1	ROLAMENTO DE ROLETES				
						ROLLER BEARING	COJINETE DE RODILLOS	CUSCINETTO A RULLINI	346C
					ROLLENLAGER	ROULEMENT A ROULEA	RULLELEJE	ROLLAGER	
30		N8865		1	ANEL	RING	ANILLO	ANELLO	7175
					RING	BAGUE	RING	RING	
31		N8864		1	ANEL	RING	ANILLO	ANELLO	7175
					RING	BAGUE	RING	RING	
32		S89671		1	JUNTA	GASKET	JUNTA	GUARNIZIONE	3720
					DICHTUNG	JOINT	GASKET	GASKET	
33		N8863		1	CAPA	CAP	TAPA	CAPPUCCIO	1380
					KAPPE	CHAPEAU	CAP	CAP	
34		N8537		1	O-RING, 0.487" ID x 0.693" OD x 0.103"				
						O-RING	JUNTA TÓRICA	ANELLO TOROIDALE	055A
					O-RING	JOINT TORIQUE	O-RING	O-RING	
35		S117865		1	BUJAO	PLUG	TAPON	TAPPO	6400
					STOPFEN	BOUCHON	PLUG	PLUG	
36		113-262		5	PARAFUSO, Hex, 3/8"-16 x 1 1/8", G5, Full Thd				
						BOLT	PERNO	BULLONE	140B
					SCHRAUBE	VIS	BOLT	BOUT	
37		192-21		5	TRAVA DA ARRUELA, 3/8"	LOCK WASHER	ARANDELA DE BLOQUEI	RONDELLA DI SICUREZ	132R
					SICHERUNGSSCHEIBE	RONDELLE FREIN	LÅSESKIVE	BORGRING	
38		L33488		1	RETENTOR	RETAINER	TOPE	DISPOSITIVO TENUTA	7125
					HALTER	ARRETOIR	RETAINER	RETAINER	
39		211-26		1	ESFERA, 15/32" Dia	BALL	BOLA	SFERA	140S
					KUGEL	BILLE	KUGLE	KOGEL	
40		L33487		1	MOLA VÁLVULA	VALVE SPRING	RESORTE DE VÁLVULA	MOLLA DELLA VALVOLA	P463
					VENTILFEDER	RESSORT DE SOUPAPE	VENTILFJEDER	KLEPVEER	
41		S89661		1	RETENTOR	RETAINER	TOPE	DISPOSITIVO TENUTA	7125
					HALTER	ARRETOIR	RETAINER	RETAINER	

06-18	01	p3	03/09

PEÇAS DO EIXO DA EMBREAGEM - PARA FRENTE 2ª E 1ª
FORWARD 2nd AND 1st CLUTCH SHAFT PARTS
PIEZAS DEL EJE DE EMBRAGUE - ADELANTE, 2ª Y 1ª
FORWARD 2nd AND 1st CLUTCH SHAFT PARTS

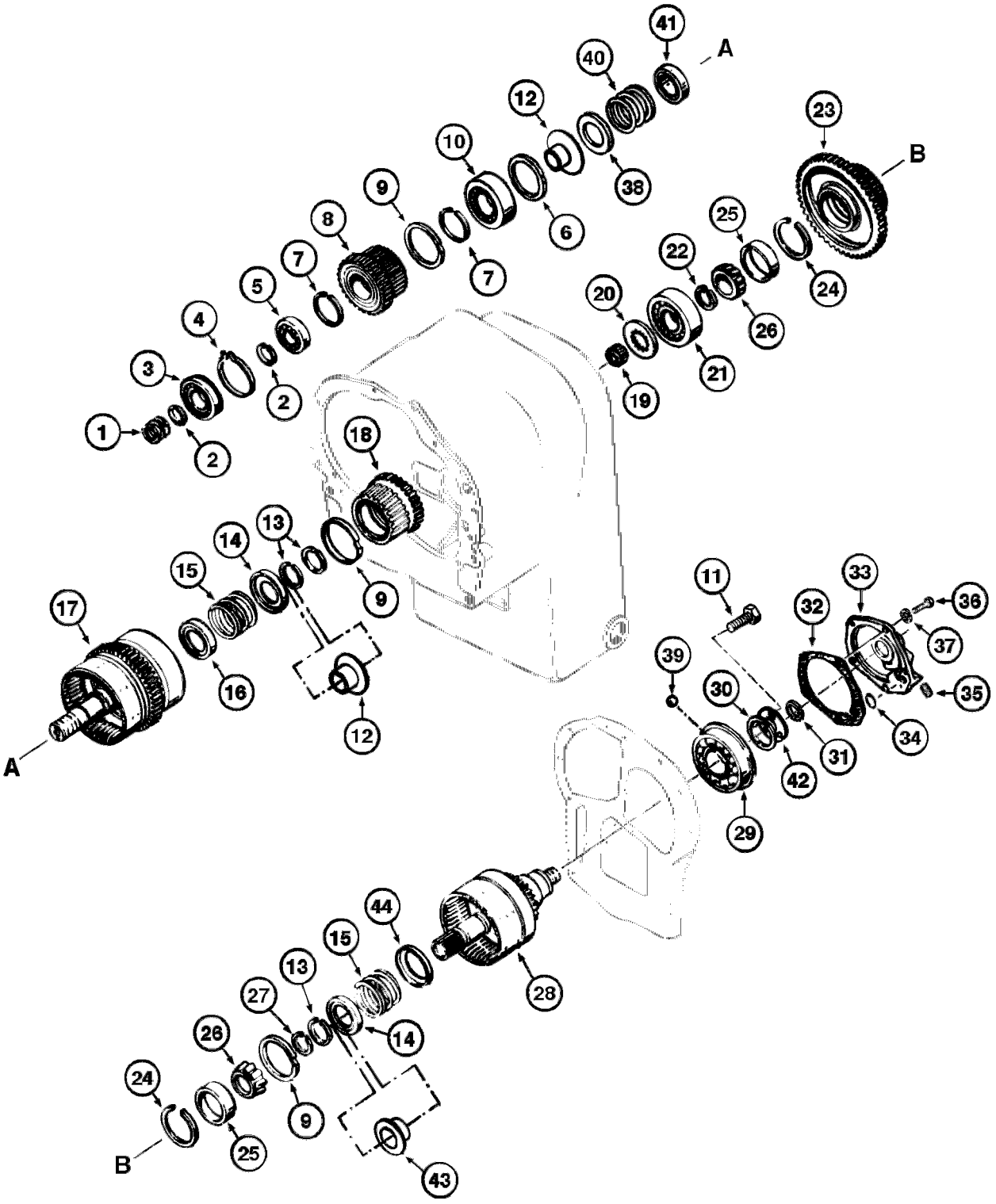

FORWARD 2nd AND 1st CLUTCH SHAFT PARTS
FORWARD 2nd AND 1st CLUTCH SHAFT PARTS
FORWARD 2nd AND 1st CLUTCH SHAFT PARTS
FORWARD 2nd AND 1st CLUTCH SHAFT PARTS

R	N	P.N.	MOD	Q	Denominação Bezeichnung	Description Description	Denominacion Beskrivelse	Descrizione Beschrijving	L.C.
42		**N8862**		1	PLACA PLATTE	PLATE PLAQUE	PLACA PLATE	PIASTRA PLATE	6360
43		**E155067**		1	KIT DE REVISÃO DO MOTOR MOTORÜBERHOLUNGSS	ENGINE OVERHAUL KIT KIT DE REVISION MOTEI	KIT DE REVISIÓN DEL M MOTORREVISIONSSÆT	KIT REVISIONE MOTORE REVISIEKIT VOOR MOTO	002K
44		**E155068**		1	ESPAÇADOR DISTANZSTÜCK	SPACER ENTRETOISE	SEPARADOR AFSTANDSSTYKKE	DISTANZIALE AFSTANDSSTUK	075D

06-20	01	p1	03/09

PEÇAS DO EIXO DA EMBREAGEM - 4ª
4th CLUTCH SHAFT PARTS
PIEZAS DEL EJE EMBRAGUE - 4ª
4th CLUTCH SHAFT PARTS

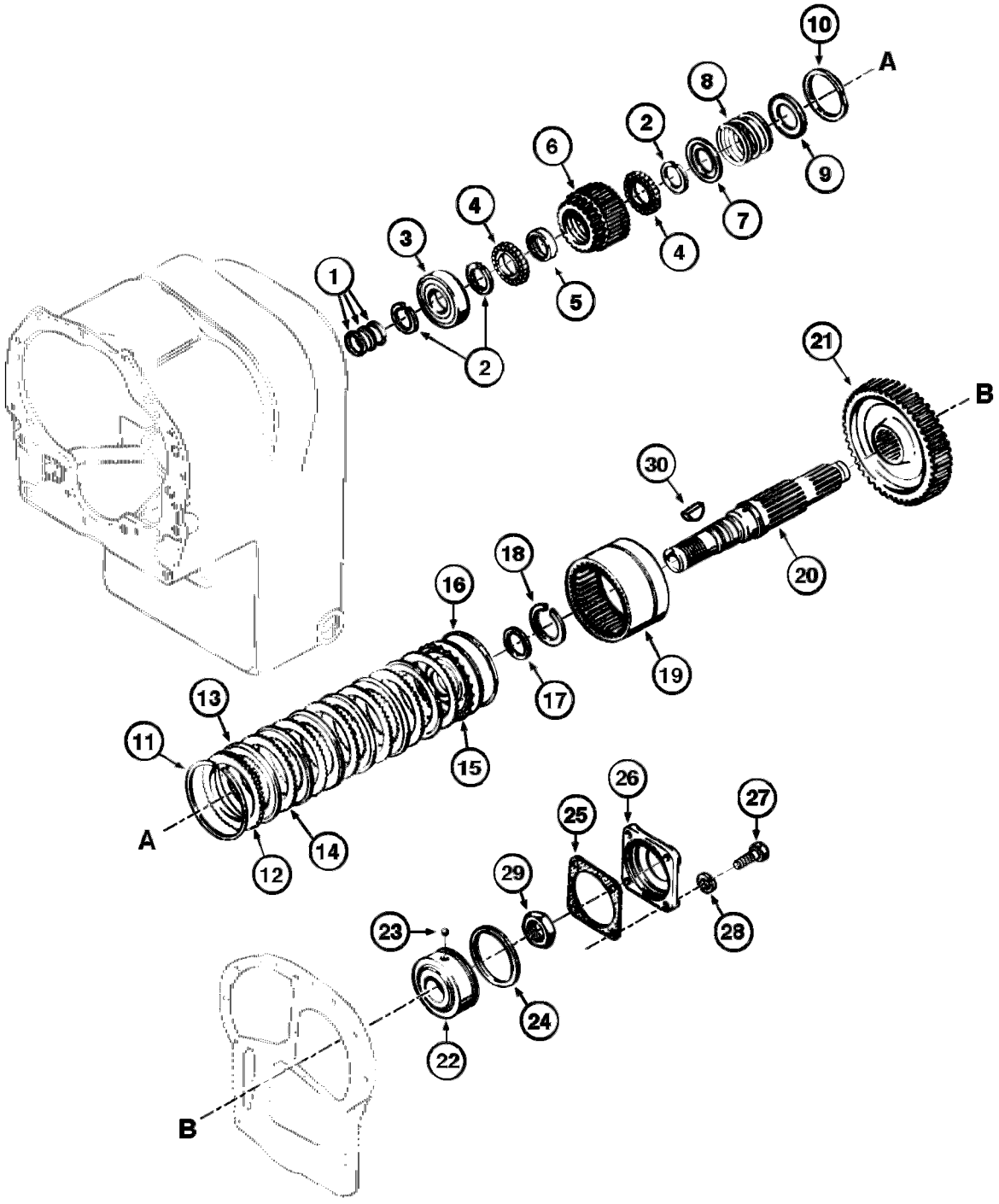

4th CLUTCH SHAFT PARTS
4th CLUTCH SHAFT PARTS
4th CLUTCH SHAFT PARTS
4th CLUTCH SHAFT PARTS

R	N	P.N.	MOD	Q	Denominação Bezeichnung	Description Description	Denominacion Beskrivelse	Descrizione Beschrijving	L.C.
1		D77016		3	ANEL RING	RING BAGUE	ANILLO RING	ANELLO RING	7175
2		S89656		3	ANEL RING	RING BAGUE	ANILLO RING	ANELLO RING	7175
3		D77018		1	ROLAMENTO ROLETE CILÍNDR ZYLINDERROLLENLAGE	CYLINDRICAL ROLLER E ROULEMENT ROULEAU)	COJINETE ROD. CILÍNDI CYLINDRISK RULLELEJE	CUSC. RULLINI CILINDR CILINDRISCH ROLLAGEI	A026
4		D77034		2	ROLAMENTO ROLETE CILÍNDR ZYLINDERROLLENLAGE	CYLINDRICAL ROLLER E ROULEMENT ROULEAU)	COJINETE ROD. CILÍNDI CYLINDRISK RULLELEJE	CUSC. RULLINI CILINDR CILINDRISCH ROLLAGEI	A026
5		D77041		1	ESPACADOR ABSTANDSSTUECK	SPACER ENTRETOISE	ESPACIADOR SPACER	DISTANZIALE SPACER	8090
6		D77043		1	ENGRENAGEM, 4th ZAHNRAD	GEAR ENGRENAGE	ENGRANJE GEAR	INGRANAGGIO GEAR	3820
7		L33488		1	RETENTOR HALTER	RETAINER ARRETOIR	TOPE RETAINER	DISPOSITIVO TENUTA RETAINER	7125
8		L33487		1	MOLA VÁLVULA VENTILFEDER	VALVE SPRING RESSORT DE SOUPAPE	RESORTE DE VÁLVULA VENTILFJEDER	MOLLA DELLA VALVOLA KLEPVEER	P463
9		S89661		1	RETENTOR HALTER	RETAINER ARRETOIR	TOPE RETAINER	DISPOSITIVO TENUTA RETAINER	7125
10		S300741		1	VEDADOR DE ÓLEO ÖLDICHTUNG	OIL SEAL JOINT ETANCHEITE D'HI	JUNTA DE ACEITE OLIESEGL	PARAOLIO OLIEAFDICHTING	P278
11		A17918		1	ANEL RING	RING BAGUE	ANILLO RING	ANELLO RING	7175
12		A17919		1	PLACA PLATTE	PLATE PLAQUE	PLACA PLATE	PIASTRA PLATE	6360
13		D55252		6	DISCO SCHEIBE	DISC DISQUE	DISCO DISC	DISCO DISC	2700
14		A17921		6	DISCO SCHEIBE	DISC DISQUE	DISCO DISC	DISCO DISC	2700
15		E158960		1	PISTÃO, Assy, Includes item 16 KOLBEN	PISTON PISTON	PISTÓN STEMPEL	PISTONE ZUIGER	235S
16		A17908		1	ANEL RING	RING BAGUE	ANILLO RING	ANELLO RING	7175
17		L33485		1	VEDADOR DE RETENCAO DICHTRING	SEAL JOINT-D'ETANCHEITE	SELLO/RETEN SEAL	GUARNIZIONE TENUTA SEAL	7460
18		S89681		1	ANEL RING	RING BAGUE	ANILLO RING	ANELLO RING	7175
19		D77025		1	CUBO, Assy NABE	HUB MOYEU	MAZA HUB	MOZZO HUB	4560
20		E68948		1	EIXO WELLE	SHAFT ARBRE	EJE AKSEL	ALBERO AS	016A
21		E68950		1	ENGRENAGEM ZAHNRAD	GEAR PIGNON	ENGRANAJE TANDHJUL	INGRANAGGIO TANDWIEL	050I
22		S89673		1	ROLAMENTO ESFÉRICO KUGELLAGER	BALL BEARING ROULEMENT A BILLES	RODAMIENTO DE BOLAS KUGLELEJE	CUSCINETTO A SFERE KOGELLAGER	343C
23		211-26		1	ESFERA, 15/32" Dia KUGEL	BALL BILLE	BOLA KUGLE	SFERA KOGEL	140S

06-20	01	p2	03/09

PEÇAS DO EIXO DA EMBREAGEM - 4ª
4th CLUTCH SHAFT PARTS
PIEZAS DEL EJE EMBRAGUE - 4ª
4th CLUTCH SHAFT PARTS

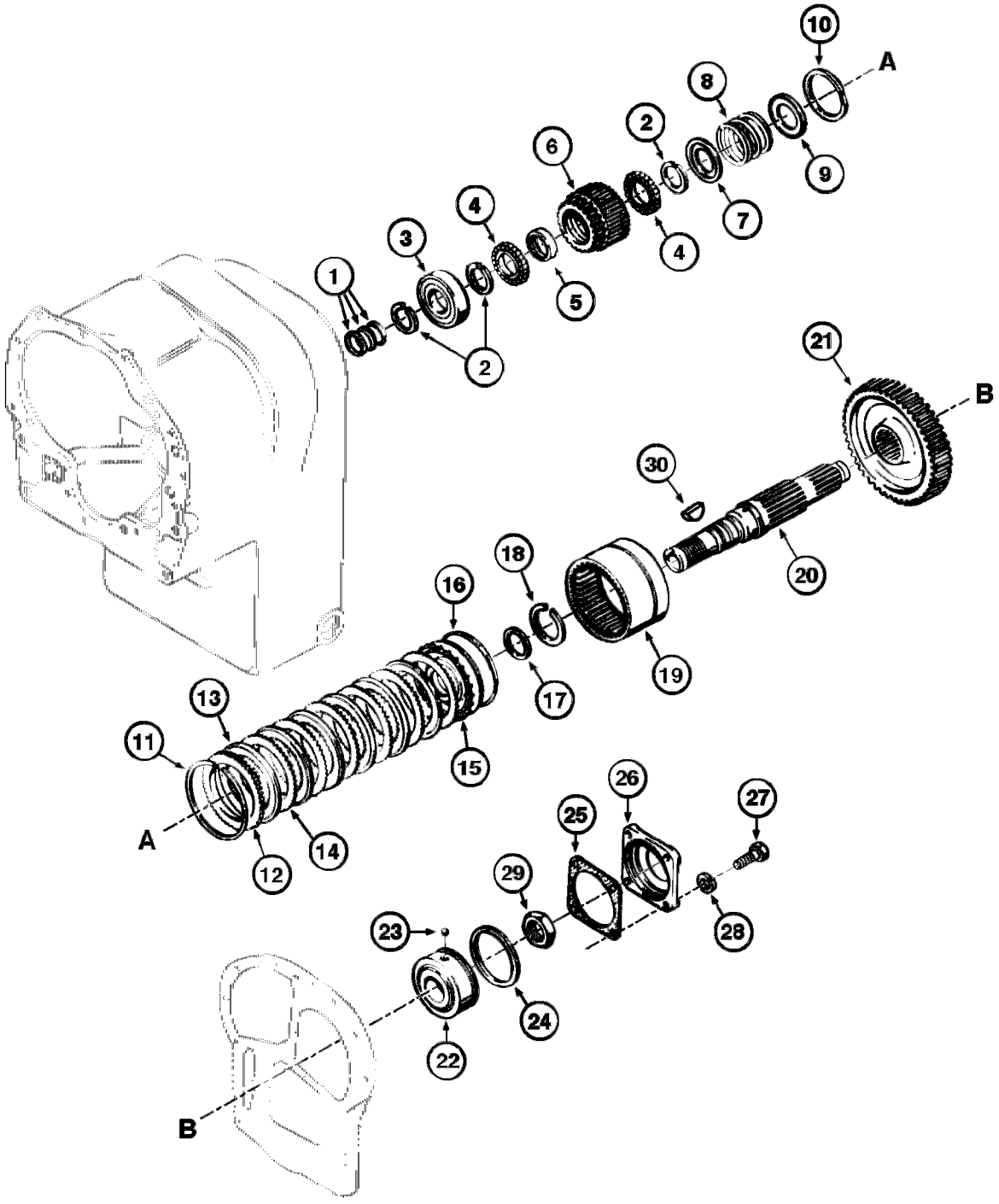

4th CLUTCH SHAFT PARTS
4th CLUTCH SHAFT PARTS
4th CLUTCH SHAFT PARTS
4th CLUTCH SHAFT PARTS

R	N	P.N.	MOD	Q	Denominação Bezeichnung	Description Description	Denominacion Beskrivelse	Descrizione Beschrijving	L.C.
24		**S89674**		1	ANEL RING	RING BAGUE	ANILLO RING	ANELLO RING	7175
25		**D77022**		1	JUNTA DICHTUNG	GASKET JOINT	JUNTA GASKET	GUARNIZIONE GASKET	3720
26		**D77029**		1	COBERTURA ABDECKUNG	COVER COUVERCLE	CUBIERTA DÆKSEL	COPERCHIO AFSCHERMING	265C
27		**113-515**		4	PARAFUSO, Hex, 9/16"-12 x 1 1/4", G5, Full Thd SCHRAUBE	BOLT VIS	PERNO BOLT	BULLONE BOUT	140B
28		**492-11010**		4	TRAVA DA ARRUELA, #10 SICHERUNGSSCHEIBE	LOCK WASHER RONDELLE FREIN	ARANDELA DE BLOQUE LÅSESKIVE	RONDELLA DI SICUREZ BORGRING	132R
29		**N8838**		1	PORCA MUTTER	NUT ECROU	TUERCA NUT	DADO NUT	5780
30		**N8869**		1	CHAVETA KEIL	KEY CLAVETTE, CLE	CHAVETA KEY	CHIAVE KEY	4820

06-22	01	p1	03/09

EMBREAGENS
CLUTCHES
EMBRAGUES
CLUTCHES

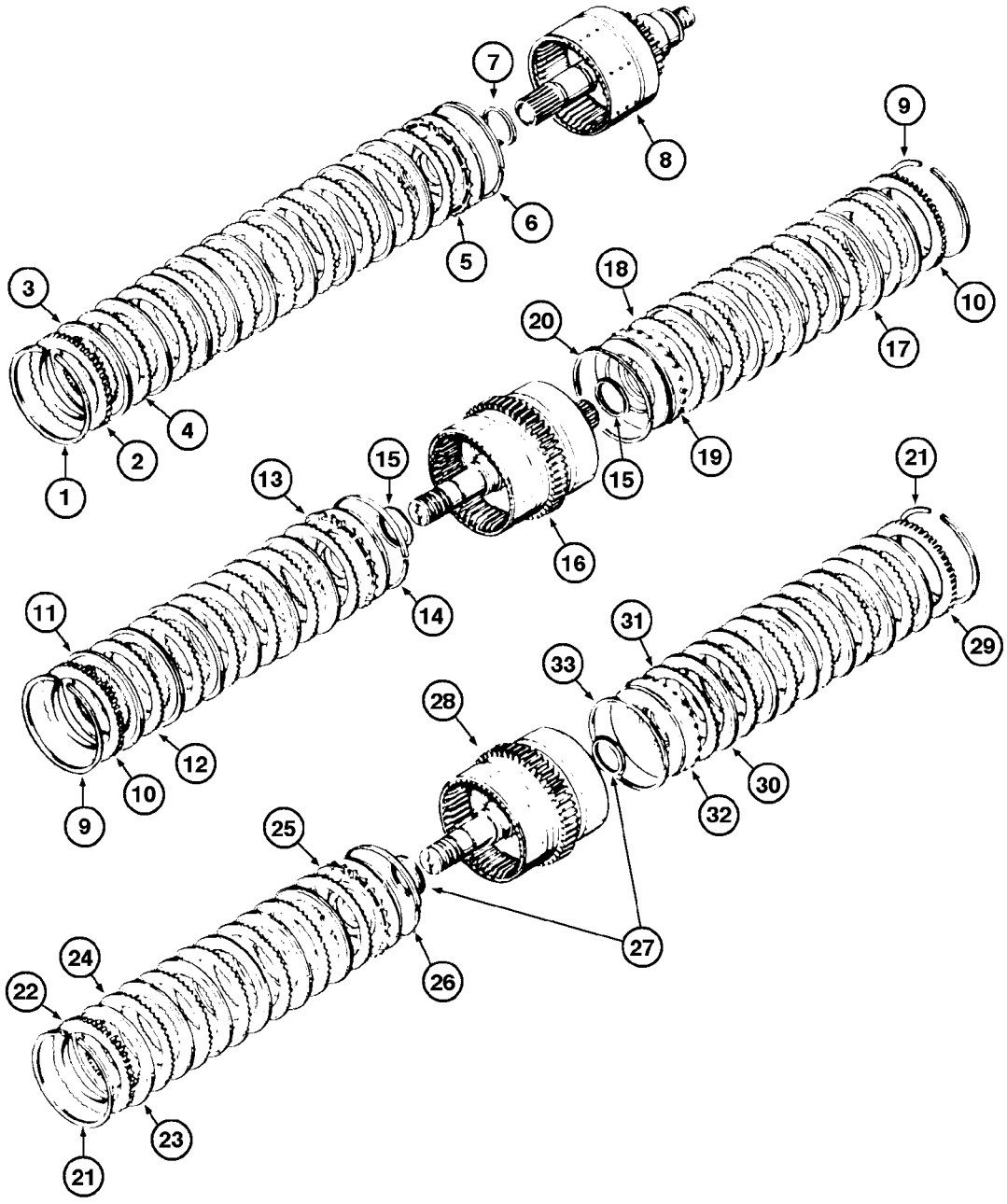

CLUTCHES
CLUTCHES
CLUTCHES
CLUTCHES

R	N	P.N.	MOD	Q	Denominação Bezeichnung	Description Description	Denominacion Beskrivelse	Descrizione Beschrijving	L.C.
1	1	**A17918**		1	ANEL RING	RING BAGUE	ANILLO RING	ANELLO RING	7175
2	1	**A17919**		1	PLACA PLATTE	PLATE PLAQUE	PLACA PLATE	PIASTRA PLATE	6360
3	1	**S94326**		9	DISCO SCHEIBE	DISC DISQUE	DISCO DISC	DISCO DISC	2700
4	1	**A17921**		9	DISCO SCHEIBE	DISC DISQUE	DISCO DISC	DISCO DISC	2700
5	1	**E158960**		1	PISTÃO KOLBEN	PISTON PISTON	PISTÓN STEMPEL	PISTONE ZUIGER	235S
6	1	**A17908**		1	ANEL RING	RING BAGUE	ANILLO RING	ANELLO RING	7175
7	1	**L33485**		1	VEDADOR DE RETENCAO DICHTRING	SEAL JOINT-D'ETANCHEITE	SELLO/RETEN SEAL	GUARNIZIONE TENUTA SEAL	7460
8	1	**S300037**		1	TAMBOR, and shaft Assy TROMMEL	DRUM TAMBOUR	TAMBOR DRUM	TAMBURA DRUM	2860
9	2	**A17918**		2	ANEL RING	RING BAGUE	ANILLO RING	ANELLO RING	7175
10	2	**A17919**		2	PLACA PLATTE	PLATE PLAQUE	PLACA PLATE	PIASTRA PLATE	6360
11	2	**D55252**		6	DISCO SCHEIBE	DISC DISQUE	DISCO DISC	DISCO DISC	2700
12	2	**A17921**		6	DISCO SCHEIBE	DISC DISQUE	DISCO DISC	DISCO DISC	2700
13	2	**E158960**		1	PISTÃO KOLBEN	PISTON PISTON	PISTÓN STEMPEL	PISTONE ZUIGER	235S
14	2	**A17908**		1	ANEL RING	RING BAGUE	ANILLO RING	ANELLO RING	7175
15	2	**L33485**		2	VEDADOR DE RETENCAO DICHTRING	SEAL JOINT-D'ETANCHEITE	SELLO/RETEN SEAL	GUARNIZIONE TENUTA SEAL	7460
16	2	**S113669**		1	EMBREAGEM, and shaft Assy KUPPLUNG	CLUTCH EMBRAYAGE	EMBRAGUE CLUTCH	INNESTO CLUTCH	1740
17	2	**D55252**		6	DISCO SCHEIBE	DISC DISQUE	DISCO DISC	DISCO DISC	2700
	2	**A17921**		6	DISCO SCHEIBE	DISC DISQUE	DISCO DISC	DISCO DISC	2700
19	2	**E158960**		1	PISTÃO KOLBEN	PISTON PISTON	PISTÓN STEMPEL	PISTONE ZUIGER	235S
20	2	**A17908**		1	ANEL RING	RING BAGUE	ANILLO RING	ANELLO RING	7175
21	3	**A17918**		2	ANEL RING	RING BAGUE	ANILLO RING	ANELLO RING	7175
22	3	**A17919**		1	PLACA PLATTE	PLATE PLAQUE	PLACA PLATE	PIASTRA PLATE	6360

(1) EMBREAGEM da 1ª
(2) EMBREAGEM da RÉ e 3ª
(3) EMBREAGEM para frente e 2ª

EMBREAGENS
CLUTCHES
EMBRAGUES
CLUTCHES

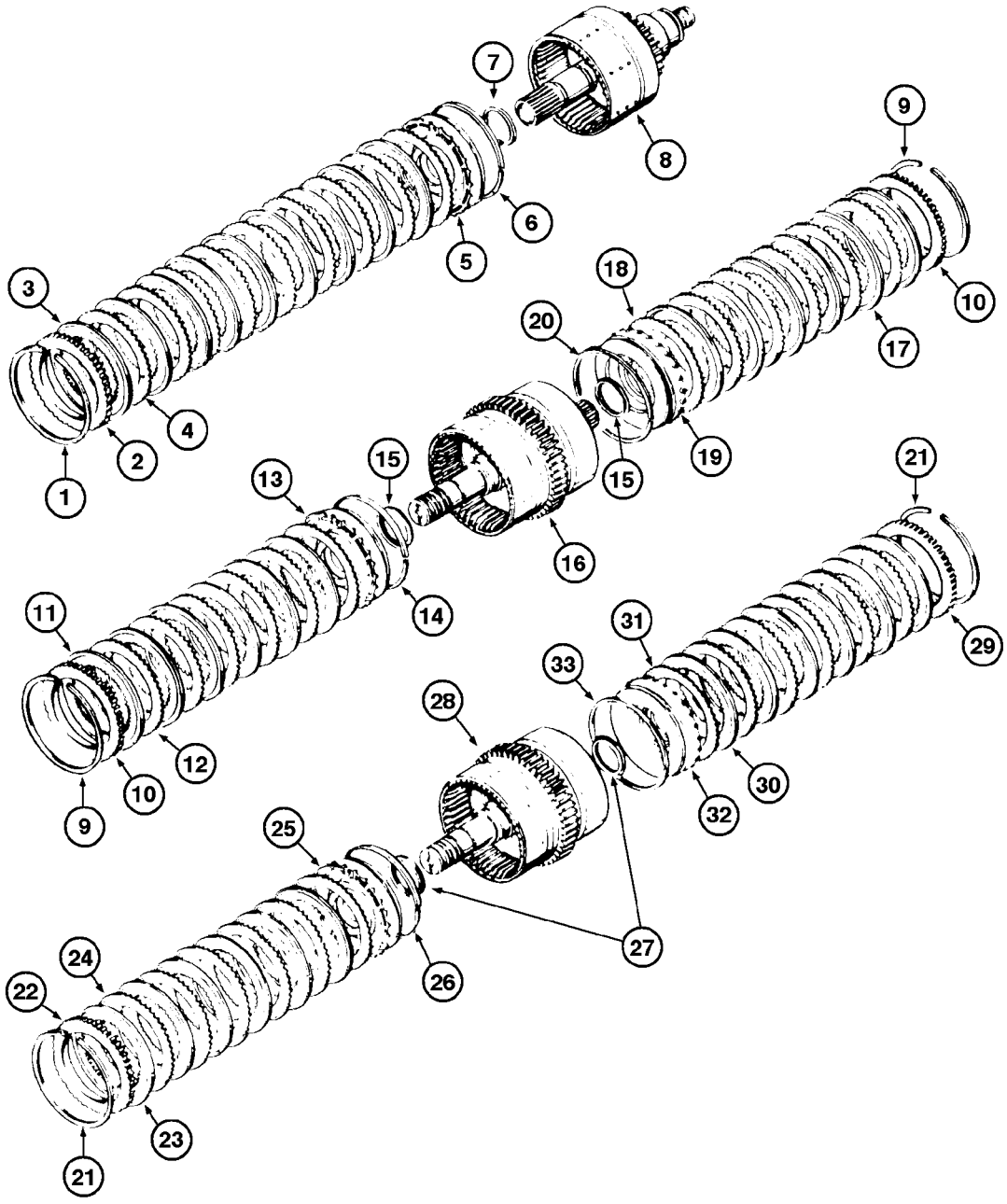

CLUTCHES
CLUTCHES
CLUTCHES
CLUTCHES

R	N	P.N.	MOD	Q	Denominação Bezeichnung	Description Description	Denominacion Beskrivelse	Descrizione Beschrijving	L.C.
23	1	**D55252**		6	DISCO SCHEIBE	DISC DISQUE	DISCO DISC	DISCO DISC	2700
24	1	**A17921**		6	DISCO SCHEIBE	DISC DISQUE	DISCO DISC	DISCO DISC	2700
25	1	**E158960**		1	PISTÃO, Includes item 26 KOLBEN	PISTON PISTON	PISTÓN STEMPEL	PISTONE ZUIGER	235S
26	1	**A17908**		1	ANEL RING	RING BAGUE	ANILLO RING	ANELLO RING	7175
27	1	**L33485**		1	VEDADOR DE RETENCAO DICHTRING	SEAL JOINT-D'ETANCHEITE	SELLO/RETEN SEAL	GUARNIZIONE TENUTA SEAL	7460
28	1	**E104122**		1	PINO DO EIXO, and drum Assy ACHSZAPFEN	AXLE PIN PIVOT D'ESSIEU	PASADOR DE EJE AKSELPIND	PERNO DELL'ASSALE ASPEN	Z160
29	1	**A17919**		1	PLACA PLATTE	PLATE PLAQUE	PLACA PLATE	PIASTRA PLATE	6360
30	1	**D55252**		6	DISCO SCHEIBE	DISC DISQUE	DISCO DISC	DISCO DISC	2700
31	1	**A17921**		6	DISCO SCHEIBE	DISC DISQUE	DISCO DISC	DISCO DISC	2700
32	1	**E158960**		1	PISTÃO KOLBEN	PISTON PISTON	PISTÓN STEMPEL	PISTONE ZUIGER	235S
33	1	**A17908**		1	ANEL RING	RING BAGUE	ANILLO RING	ANELLO RING	7175

(1) EMBREAGEM para frente e 2ª

06-24	01	p1	03/09

FILTRO E BOMBA DA TRANSMISSÃO
TRANSMISSION FILTER AND PUMP
FILTRO Y BOMBA DE LA TRANSMISSION
TRANSMISSION FILTER AND PUMP

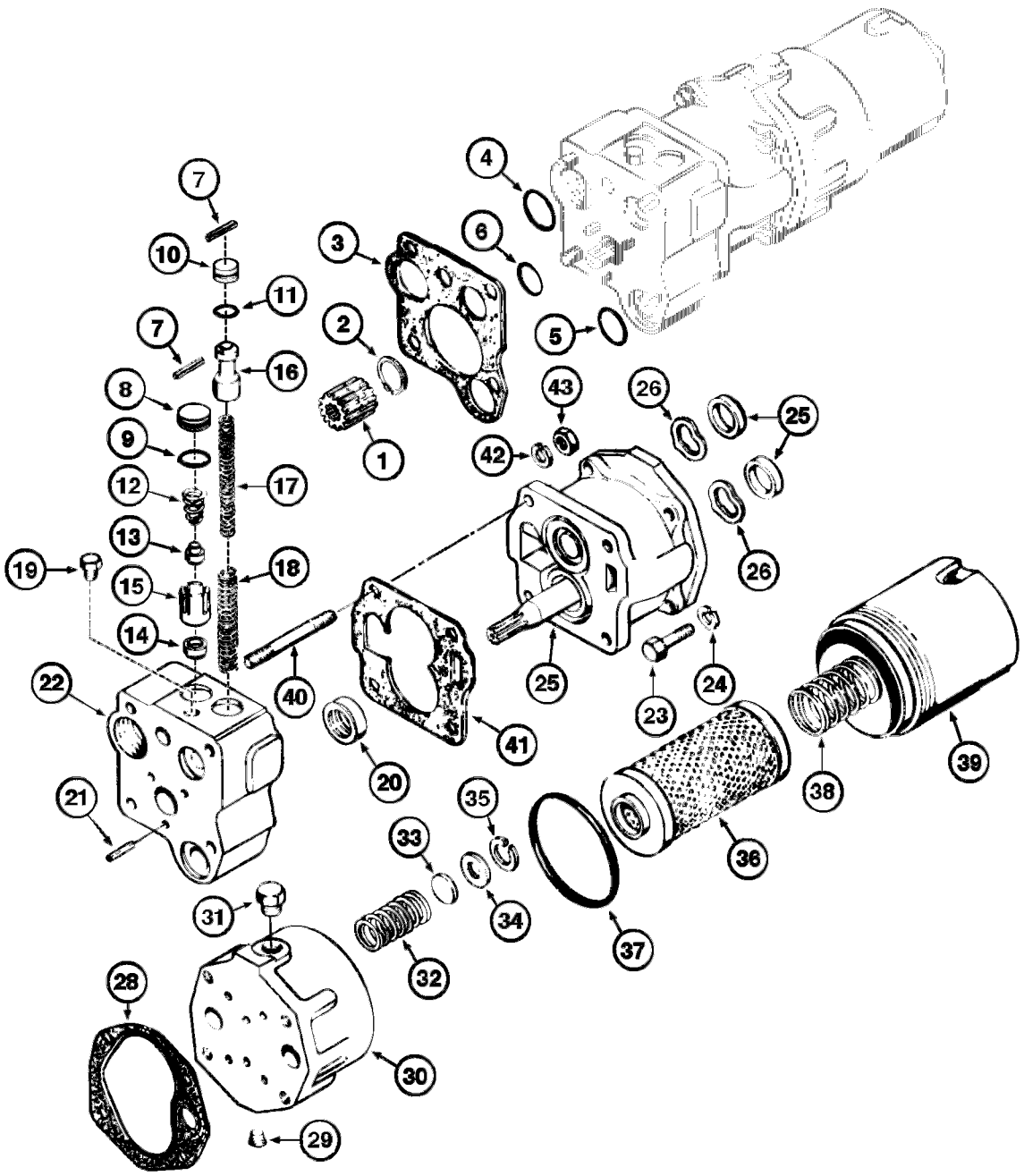

TRANSMISSION FILTER AND PUMP
TRANSMISSION FILTER AND PUMP
TRANSMISSION FILTER AND PUMP
TRANSMISSION FILTER AND PUMP

R	N	P.N.	MOD	Q	Denominação Bezeichnung	Description Description	Denominacion Beskrivelse	Descrizione Beschrijving	L.C.
1		D78317		1	PLANETARIA, Assy, Includes item 2				
						GEAR WHEEL	PLANETARIO	INGRANAGIO, SATELL	Z589
					PLANETENRAD	PLANETAIRE	GEAR WHEEL	GEAR WHEEL	
2		A18024		1	ANEL TRAVA	RING SNAP	ANILLO DE CIERRE	ANELLO ELASTICO	P345
					SICHERUNGSRING	ANNEAU-D'ARRET	RING SNAP	RING SNAP	
3		N6271		1	JUNTA	GASKET	JUNTA	GUARNIZIONE	3720
					DICHTUNG	JOINT	GASKET	GASKET	
4		L33541		1	ANEL O, 1-3/16" ID x 1-7/16" OD x 1/8"				
						O-RING	ANILLO/ARO CAUCHO	ANELLO TOROIDALE	7176
					O-RING	JOINT TORIQUE	O-RING	O-RING	
5		L33542		1	ANEL O, 13/16" ID x 1-1/16" OD x 1/8"				
						O-RING	ANILLO/ARO CAUCHO	ANELLO TOROIDALE	7176
					O-RING	JOINT TORIQUE	O-RING	O-RING	
6		L33540		1	ANEL O, 1" ID x 1-1/4" OD x 1/8" Width				
						O-RING	ANILLO/ARO CAUCHO	ANELLO TOROIDALE	7176
					O-RING	JOINT TORIQUE	O-RING	O-RING	
		L33537		1	VÁLVULA, Assy, Includes items 7 - 22				
						VALVE	VÁLVULA	VALVOLA	9620
					VENTIL	SOUPAPE	VENTIL	KLEP	
7		138-83		2	PINO DE FIXAÇÃO, 5/32" x 1 3/4", Slotted				
						LOCK PIN	PASADOR DE BLOQUEO	PERNO DI BLOCCAGGIC	081P
					VERRIEGELUNGSSTIFT	GOUPILLE DE BLOCAGE	LÅSETAP	BORGPEN	
8		D59677		1	LIMITADOR	STOP	TOPE	FERMO	8570
					ANSCHLAG	BUTEE	STOP	STOP	
9		F62114		1	O-RING, 0.674" ID x 0.88" OD				
						O-RING	JUNTA TÓRICA	ANELLO TOROIDALE	055A
					O-RING	JOINT TORIQUE	O-RING	O-RING	
10		A18038		1	LIMITADOR	STOP	TOPE	FERMO	8570
					ANSCHLAG	BUTEE	STOP	STOP	
11		E114251		1	ANEL O	O-RING	ANILLO/ARO CAUCHO	ANELLO TOROIDALE	7176
					O-RING	JOINT TORIQUE	O-RING	O-RING	
12		A18004		1	MOLA	SPRING	MUELLE	MOLLA	8315
					FEDER	RESSORT	SPRING	SPRING	
13		A18003		1	EMBOLO	PLUNGER	EMBOLO	STANTUFFO	6420
					PUMPENKOLBEN	PLONGEUR, PISTON	PLUNGER	PLUNGER	
14		D59678		1	ASSENTO	SEAT	ASIENTO	SEDILE	7480
					SITZ	SIEGE	SÆDE	STOEL	
15		D59679		1	ESPACADOR	SPACER	ESPACIADOR	DISTANZIALE	8090
					ABSTANDSSTUECK	ENTRETOISE	SPACER	SPACER	
16		L33553		1	VÁLVULA	VALVE	VÁLVULA	VALVOLA	9620
					VENTIL	SOUPAPE	VENTIL	KLEP	
17		L30048		1	MOLA VÁLVULA	VALVE SPRING	RESORTE DE VÁLVULA	MOLLA DELLA VALVOLA	P463
					VENTILFEDER	RESSORT DE SOUPAPE	VENTILFJEDER	KLEPVEER	
18		D76971		1	MOLA	SPRING	MUELLE	MOLLA	8315
					FEDER	RESSORT	SPRING	SPRING	
19		221-662		1	BUJÃO, Hex Hd, 1/4"-18	PLUG	TAPÓN	TAPPO	050T
					STOPFEN	BOUCHON	PROP	PLUG	
20		L33556		1	VEDADOR DE RETENCAO	SEAL	SELLO/RETEN	GUARNIZIONE TENUTA	7460
					DICHTRING	JOINT-D'ETANCHEITE	SEAL	SEAL	

06-24	01	p2	03/09

FILTRO E BOMBA DA TRANSMISSÃO
TRANSMISSION FILTER AND PUMP
FILTRO Y BOMBA DE LA TRANSMISSION
TRANSMISSION FILTER AND PUMP

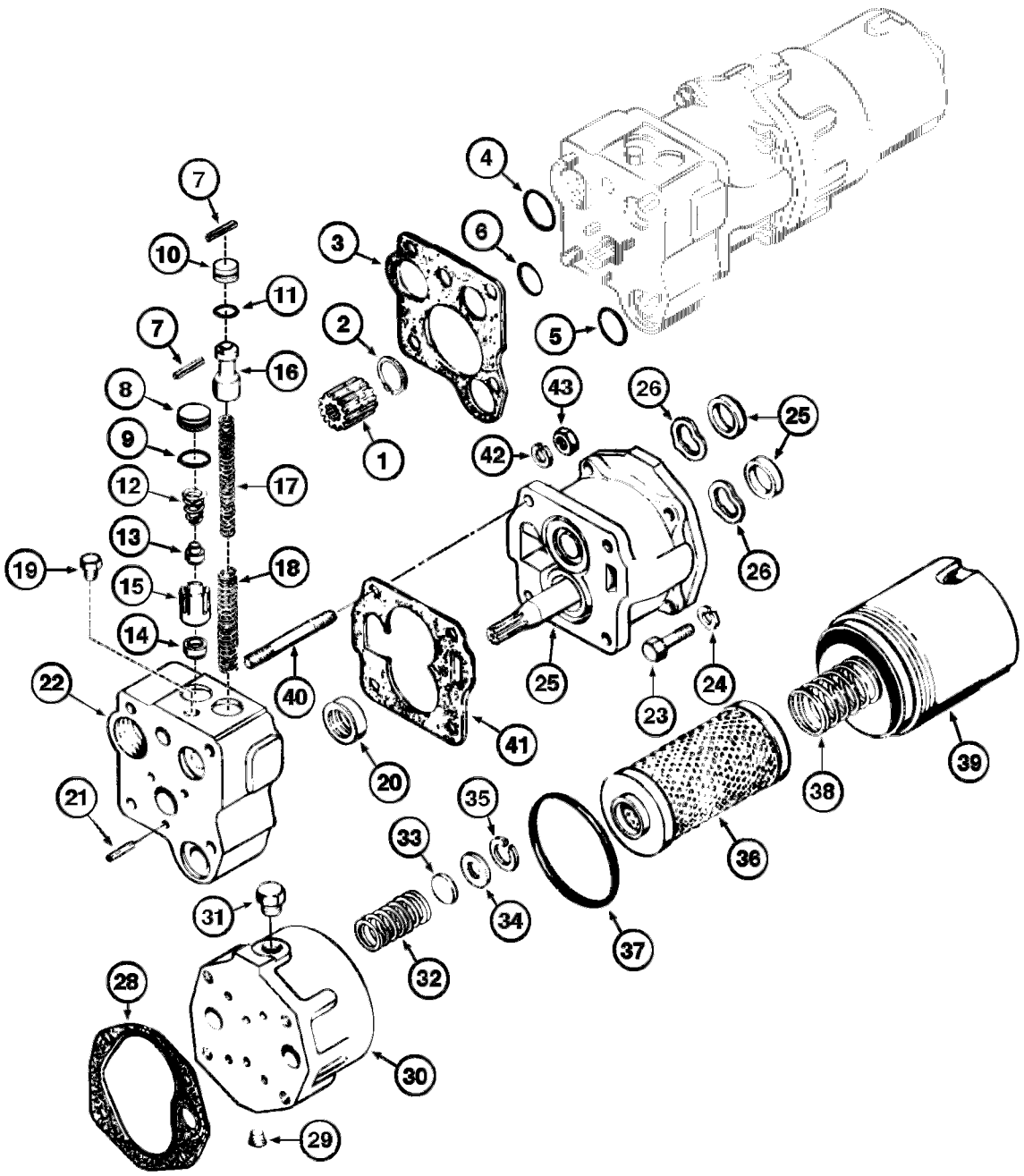

TRANSMISSION FILTER AND PUMP
TRANSMISSION FILTER AND PUMP
TRANSMISSION FILTER AND PUMP
TRANSMISSION FILTER AND PUMP

R	N	P.N.	MOD	Q	Denominação Bezeichnung	Description Description	Denominacion Beskrivelse	Descrizione Beschrijving	L.C.
21		138-127		3	PINO DE FIXAÇÃO, 1/4" x 1/2", Slotted				
						LOCK PIN	PASADOR DE BLOQUEO	PERNO DI BLOCCAGGIC	081P
					VERRIEGELUNGSSTIFT	GOUPILLE DE BLOCAGE	LÅSETAP	BORGPEN	
22		71008477		1	VÁLVULA HIDRÁULICA, HOUSING				
						HYDRAULIC VALVE	VÁLVULA HIDRÁULICA	DISTRIBUTORE IDRAULI	010V
					HYDRAULIKVENTIL	SOUPAPE HYDRAULIQU	HYDRAULIKVENTIL	HYDRAULISCHE KLEP	
		D73724		1	BOMBA, & filter Assy, Includes items 22, 24, 25, 29 - 39				
						PUMP	BOMBA	POMPA	6570
					PUMPE	POMPE	PUMPE	POMP	
23		113-311		4	PARAFUSO, Hex, 7/16"-14 x 1 1/2", G5				
						BOLT	PERNO	BULLONE	140B
					SCHRAUBE	VIS	BOLT	BOUT	
24		192-22		4	TRAVA DA ARRUELA, 7/16"				
						LOCK WASHER	ARANDELA DE BLOQUE	RONDELLA DI SICUREZ	132R
					SICHERUNGSSCHEIBE	RONDELLE FREIN	LÅSESKIVE	BORGRING	
25		D73725		1	BOMBA, Assy, Includes items 26, 27, 28				
						PUMP	BOMBA	POMPA	6570
					PUMPE	POMPE	PUMPE	POMP	
26		D73734		2	MOLA	SPRING	MUELLE	MOLLA	8315
					FEDER	RESSORT	SPRING	SPRING	
27		D73735		2	ANEL	RING	ANILLO	ANELLO	7175
					RING	BAGUE	RING	RING	
28		L33566		1	JUNTA	GASKET	JUNTA	GUARNIZIONE	3720
					DICHTUNG	JOINT	GASKET	GASKET	
29		221-662		1	BUJÃO, Hex Hd, 1/4"-18	PLUG	TAPÓN	TAPPO	050T
					STOPFEN	BOUCHON	PROP	PLUG	
30		D73733		1	ADAPTADOR	ADAPTER	ADAPTOR	ADATTATORE	0031
					ADAPTER	ADAPTEUR	ADAPTER	VERLOOPSTUK	
31		E104173		1	BUJÃO	PLUG	TAPÓN	TAPPO	050T
					STOPFEN	BOUCHON	PROP	PLUG	
32		L33571		1	MOLA VÁLVULA	VALVE SPRING	RESORTE DE VÁLVULA	MOLLA DELLA VALVOLA	P463
					VENTILFEDER	RESSORT DE SOUPAPE	VENTILFJEDER	KLEPVEER	
33		L33572		1	DISCO	DISC	DISCO	DISCO	2700
					SCHEIBE	DISQUE	DISC	DISC	
34		L33573		1	ASSENTO	SEAT	ASIENTO	SEDILE	7480
					SITZ	SIEGE	SÆDE	STOEL	
35		R16289		1	ANEL DE PRESSÃO, 1.06", Int, #106				
						SNAP RING	ANILLO DE RESORTE	ANELLO ELASTICO	054A
					SPRENGRING	ANNEAU D'ARRET	LÅSERING	VEERRING	
		D52932		1	ELEMENTO FILTRO, kit	ELEMENT, FILTER	ELEMENTO DE FILTRO	ELEMENTO DEL FILTRO	2960
					FILTERELEMENT	ELEMENT FILTRANT	ELEMENT, FILTER	ELEMENT, FILTER	
36		NSS		1	SEM SERVIÇO EM SEPARADO, ELEMENT				
						NOT SERVICED SEPARA	NO SE REPARA POR SE	NON FORNITO SEPARAT	064N
					NICHT A SEP ERS-T LIEI	NON FORUNI SEPAREM	SERVICERES IKKE SEPA	NIET LOS VERKRIJGBAA	
37		D31954		1	ANEL O	O-RING	ANILLO/ARO CAUCHO	ANELLO TOROIDALE	7176
					O-RING	JOINT TORIQUE	O-RING	O-RING	
38		L33570		1	MOLA	SPRING	MUELLE	MOLLA	8315
					FEDER	RESSORT	SPRING	SPRING	

06-24	01	p3	03/09

FILTRO E BOMBA DA TRANSMISSÃO
TRANSMISSION FILTER AND PUMP
FILTRO Y BOMBA DE LA TRANSMISSION
TRANSMISSION FILTER AND PUMP

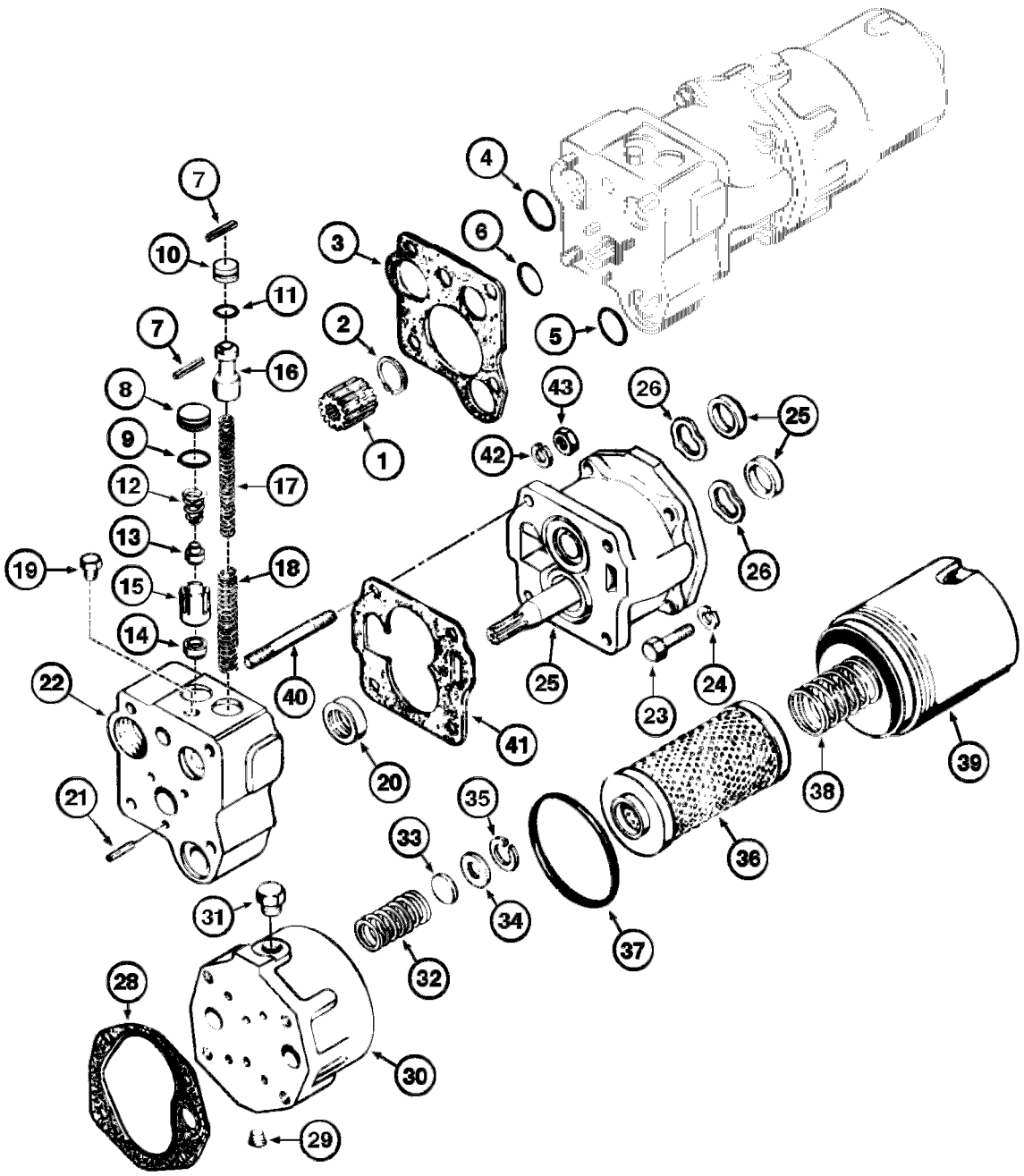

TRANSMISSION FILTER AND PUMP
TRANSMISSION FILTER AND PUMP
TRANSMISSION FILTER AND PUMP
TRANSMISSION FILTER AND PUMP

R	N	P.N.	MOD	Q	Denominação Bezeichnung	Description Description	Denominacion Beskrivelse	Descrizione Beschrijving	L.C.
39		**L33569**		1	CARCACA GEHAEUSE	HOUSING CARTER	CARCASA HOUSING	ALLOGGIAMENTO HOUSING	4540
40		**L33544**		4	PRISIONEIRO STEHBOLZEN	STUD GOUJON	ESPARRAGO STUD	PRIGIONIERO STUD	P521
41		**L33539**		1	JUNTA DICHTUNG	GASKET JOINT	JUNTA GASKET	GUARNIZIONE GASKET	3720
42		**192-22**		4	TRAVA DA ARRUELA, 7/16" SICHERUNGSSCHEIBE	LOCK WASHER RONDELLE FREIN	ARANDELA DE BLOQUE LÅSESKIVE	RONDELLA DI SICUREZ BORGRING	132R
43		**425-117**		4	PORCA, 7/16"-20, G5 MUTTER	NUT ECROU	TUERCA MØTRIK	DADO MOER	010D

06-26	01	p1	03/09

FILTRO E BOMBA DA TRANSMISSÃO
TRANSMISSION FILTER AND PUMP
FILTRO Y BOMBA DE LA TRANSMISSION
TRANSMISSION FILTER AND PUMP

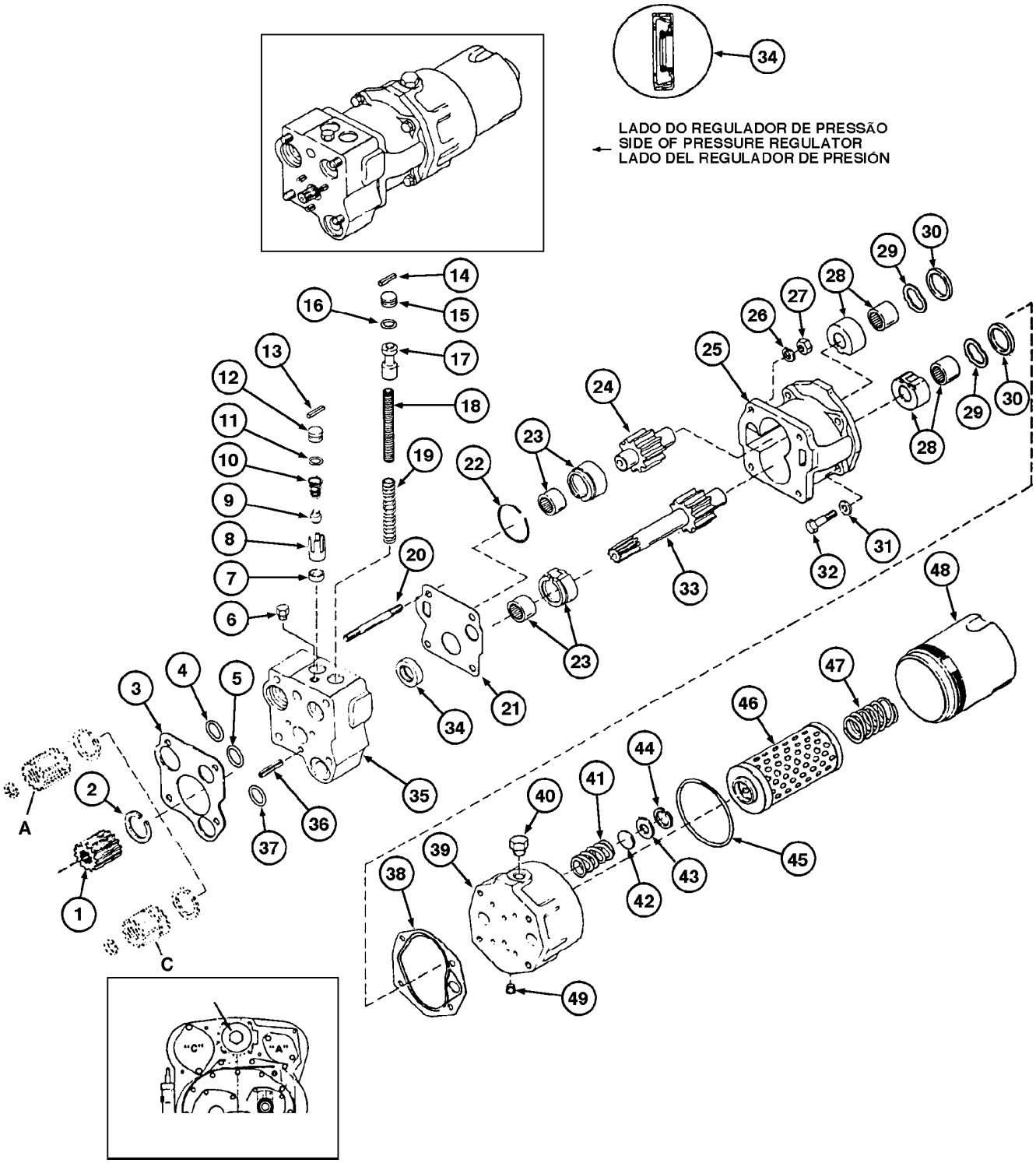

TRANSMISSION FILTER AND PUMP
TRANSMISSION FILTER AND PUMP
TRANSMISSION FILTER AND PUMP
TRANSMISSION FILTER AND PUMP

R	N	P.N.	MOD	Q	Denominação Bezeichnung	Description Description	Denominacion Beskrivelse	Descrizione Beschrijving	L.C.
1		D78317		1	PLANETARIA, Assy, Includes item 2				
						GEAR WHEEL	PLANETARIO	INGRANAGIO, SATELL	Z589
					PLANETENRAD	PLANETAIRE	GEAR WHEEL	GEAR WHEEL	
2		A18024		1	ANEL TRAVA	RING SNAP	ANILLO DE CIERRE	ANELLO ELASTICO	P345
					SICHERUNGSRING	ANNEAU-D'ARRET	RING SNAP	RING SNAP	
3		N6271		1	JUNTA	GASKET	JUNTA	GUARNIZIONE	3720
					DICHTUNG	JOINT	GASKET	GASKET	
4		L33541		1	ANEL O, 1-3/16" ID x 1-7/16" OD x 1/8"				
						O-RING	ANILLO/ARO CAUCHO	ANELLO TOROIDALE	7176
					O-RING	JOINT TORIQUE	O-RING	O-RING	
5		L33542		1	ANEL O, 13/16" ID x 1-1/16" OD x 1/8"				
						O-RING	ANILLO/ARO CAUCHO	ANELLO TOROIDALE	7176
					O-RING	JOINT TORIQUE	O-RING	O-RING	
6		221-841		1	BUJAO	PLUG	TAPON	TAPPO	6400
					STOPFEN	BOUCHON	PLUG	PLUG	
7		D59678		1	ASSENTO	SEAT	ASIENTO	SEDILE	7480
					SITZ	SIEGE	SÆDE	STOEL	
8		D59679		1	ESPACADOR	SPACER	ESPACIADOR	DISTANZIALE	8090
					ABSTANDSSTUECK	ENTRETOISE	SPACER	SPACER	
9		A18003		1	EMBOLO	PLUNGER	EMBOLO	STANTUFFO	6420
					PUMPENKOLBEN	PLONGEUR, PISTON	PLUNGER	PLUNGER	
10		A18004		1	MOLA	SPRING	MUELLE	MOLLA	8315
					FEDER	RESSORT	SPRING	SPRING	
11		F62114		1	O-RING, 0.674" ID x 0.88" OD				
						O-RING	JUNTA TÓRICA	ANELLO TOROIDALE	055A
					O-RING	JOINT TORIQUE	O-RING	O-RING	
12		D59677		1	LIMITADOR	STOP	TOPE	FERMO	8570
					ANSCHLAG	BUTEE	STOP	STOP	
13		138-139		1	PINO DE FIXAÇÃO, 1/4" x 1 5/8", Slotted				
						LOCK PIN	PASADOR DE BLOQUEO	PERNO DI BLOCCAGGIC	081P
					VERRIEGELUNGSSTIFT	GOUPILLE DE BLOCAGE	LÅSETAP	BORGPEN	
14		138-139		1	PINO DE FIXAÇÃO, 1/4" x 1 5/8", Slotted				
						LOCK PIN	PASADOR DE BLOQUEO	PERNO DI BLOCCAGGIC	081P
					VERRIEGELUNGSSTIFT	GOUPILLE DE BLOCAGE	LÅSETAP	BORGPEN	
15		A18033		1	PARAFUSO	BOLT	TORNILLO	BULLONE	0810
					SCHRAUBE	BOULON	SKRUE	BOUT	
16		E114251		1	ANEL O	O-RING	ANILLO/ARO CAUCHO	ANELLO TOROIDALE	7176
					O-RING	JOINT TORIQUE	O-RING	O-RING	
17		L33553		1	VÁLVULA	VALVE	VÁLVULA	VALVOLA	9620
					VENTIL	SOUPAPE	VENTIL	KLEP	
18		L30048		1	MOLA VÁLVULA	VALVE SPRING	RESORTE DE VÁLVULA	MOLLA DELLA VALVOLA	P463
					VENTILFEDER	RESSORT DE SOUPAPE	VENTILFJEDER	KLEPVEER	
19		D76971		1	MOLA	SPRING	MUELLE	MOLLA	8315
					FEDER	RESSORT	SPRING	SPRING	
20		L33544		4	PRISIONEIRO	STUD	ESPARRAGO	PRIGIONIERO	P521
					STEHBOLZEN	GOUJON	STUD	STUD	
21		L33539		1	JUNTA	GASKET	JUNTA	GUARNIZIONE	3720
					DICHTUNG	JOINT	GASKET	GASKET	

Até chassi N6AE01094

W20E

FILTRO E BOMBA DA TRANSMISSÃO
TRANSMISSION FILTER AND PUMP
FILTRO Y BOMBA DE LA TRANSMISSION
TRANSMISSION FILTER AND PUMP

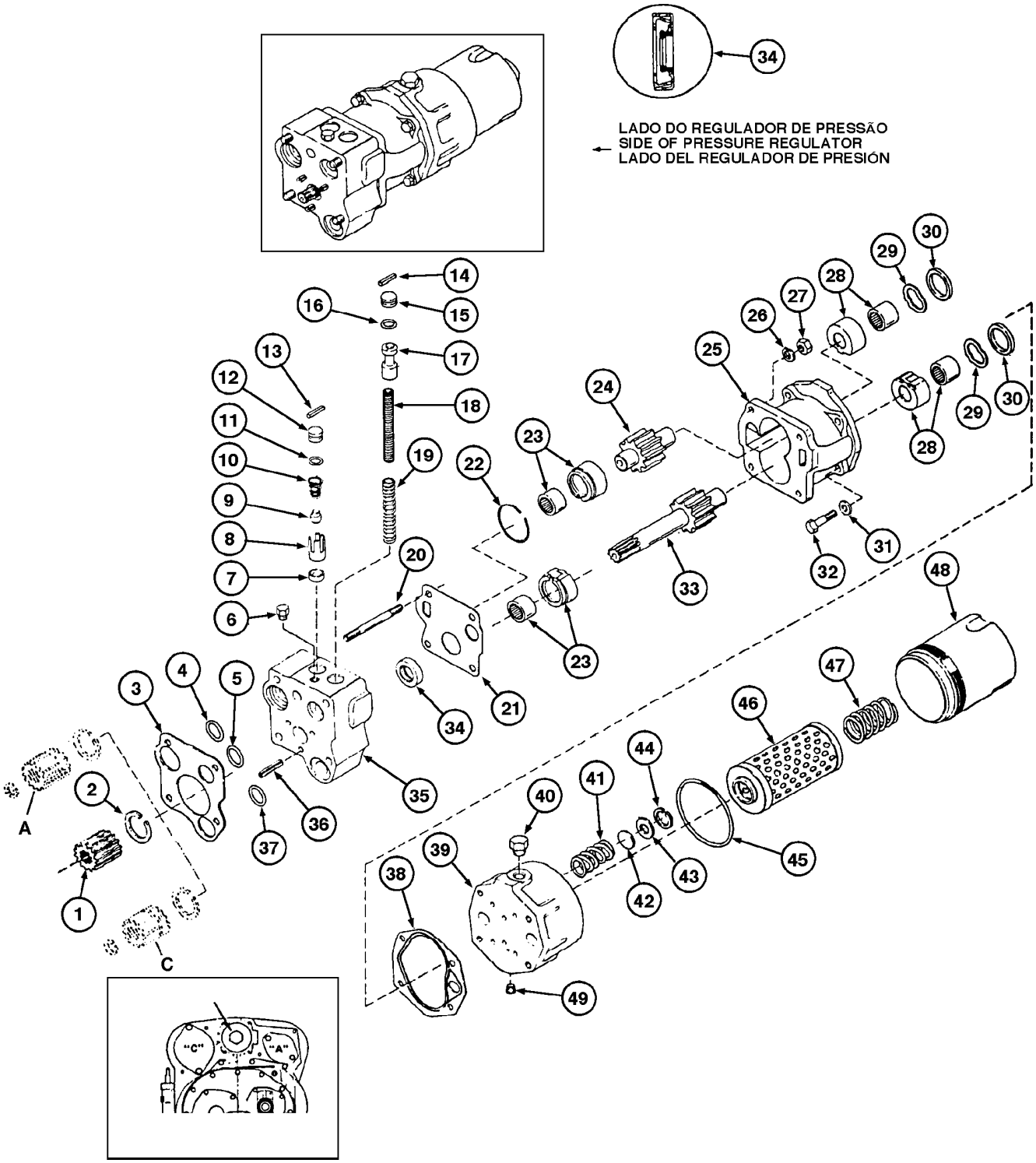

TRANSMISSION FILTER AND PUMP
TRANSMISSION FILTER AND PUMP
TRANSMISSION FILTER AND PUMP
TRANSMISSION FILTER AND PUMP

R	N	P.N.	MOD	Q	Denominação Bezeichnung	Description Description	Denominacion Beskrivelse	Descrizione Beschrijving	L.C.
	1	**D77005**		1	BOMBA, Assy, Includes items 22 - 25				
						PUMP	BOMBA	POMPA	6570
					PUMPE	POMPE	PUMPE	POMP	
22		**S300135**		1	ANEL TRAVA	RING SNAP	ANILLO DE CIERRE	ANELLO ELASTICO	P345
					SICHERUNGSRING	ANNEAU-D'ARRET	RING SNAP	RING SNAP	
23		**S300130**		2	PLACA	PLATE	PLACA	PIASTRA	6360
					PLATTE	PLAQUE	PLATE	PLATE	
24		**S300131**		1	EIXO, Assy	SHAFT	ARBOL	ALBERO	7590
					WELLE	ARBRE	SHAFT	SHAFT	
25		**NSS**		1	SEM SERVIÇO EM SEPARADO, HOUSING				
						NOT SERVICED SEPARA	NO SE REPARA POR SE	NON FORNITO SEPARAT	064N
					NICHT A SEP ERS-T LIEI	NON FORUNI SEPAREM	SERVICERES IKKE SEPA	NIET LOS VERKRIJGBAA	
26		**92-7**		4	TRAVA DA ARRUELA, 7/16"				
						LOCK WASHER	ARANDELA DE BLOQUEO	RONDELLA DI SICUREZZ	132R
					SICHERUNGSSCHEIBE	RONDELLE FREIN	LÅSESKIVE	BORGRING	
27		**129-330**		4	PORCA, 1"-14, G5, LH	NUT	TUERCA	DADO	010D
					MUTTER	ECROU	MØTRIK	MOER	
28		**S300132**		2	PLACA, Assy	PLATE	PLACA	PIASTRA	6360
					PLATTE	PLAQUE	PLATE	PLATE	
29		**D73734**		2	MOLA	SPRING	MUELLE	MOLLA	8315
					FEDER	RESSORT	SPRING	SPRING	
30		**D73735**		2	ANEL	RING	ANILLO	ANELLO	7175
					RING	BAGUE	RING	RING	
31		**192-22**		4	TRAVA DA ARRUELA, 7/16"				
						LOCK WASHER	ARANDELA DE BLOQUEO	RONDELLA DI SICUREZZ	132R
					SICHERUNGSSCHEIBE	RONDELLE FREIN	LÅSESKIVE	BORGRING	
32		**26-724**		4	PARAFUSO, Hex, 7/16"-14 x 1 1/2", G8				
						BOLT	PERNO	BULLONE	140B
					SCHRAUBE	VIS	BOLT	BOUT	
33		**S300133**		1	EIXO, Assy	SHAFT	ARBOL	ALBERO	7590
					WELLE	ARBRE	SHAFT	SHAFT	
34		**L33556**		1	VEDADOR DE RETENCAO	SEAL	SELLO/RETEN	GUARNIZIONE TENUTA	7460
					DICHTRING	JOINT-D'ETANCHEITE	SEAL	SEAL	
35	2	**L33537**		1	VÁLVULA	VALVE	VÁLVULA	VALVOLA	9620
					VENTIL	SOUPAPE	VENTIL	KLEP	
36		**138-127**		1	PINO DE FIXAÇÃO, 1/4" x 1/2", Slotted				
						LOCK PIN	PASADOR DE BLOQUEO	PERNO DI BLOCCAGGIO	081P
					VERRIEGELUNGSSTIFT	GOUPILLE DE BLOCAGE	LÅSETAP	BORGPEN	
37		**L33540**		1	ANEL O, 1" ID x 1-1/4" OD x 1/8" Width				
						O-RING	ANILLO/ARO CAUCHO	ANELLO TOROIDALE	7176
					O-RING	JOINT TORIQUE	O-RING	O-RING	
38		**L33566**		1	JUNTA	GASKET	JUNTA	GUARNIZIONE	3720
					DICHTUNG	JOINT	GASKET	GASKET	
39		**D73733**		1	ADAPTADOR	ADAPTER	ADAPTOR	ADATTATORE	0031
					ADAPTER	ADAPTEUR	ADAPTER	VERLOOPSTUK	
40		**221-841**		1	BUJAO	PLUG	TAPON	TAPPO	6400
					STOPFEN	BOUCHON	PLUG	PLUG	

(1) Inclui 28, 29, 30, 33
(2) Inclui 6 a 19, 34, 36

Até chassi N6AE01094

W20E

FILTRO E BOMBA DA TRANSMISSÃO
TRANSMISSION FILTER AND PUMP
FILTRO Y BOMBA DE LA TRANSMISSION
TRANSMISSION FILTER AND PUMP

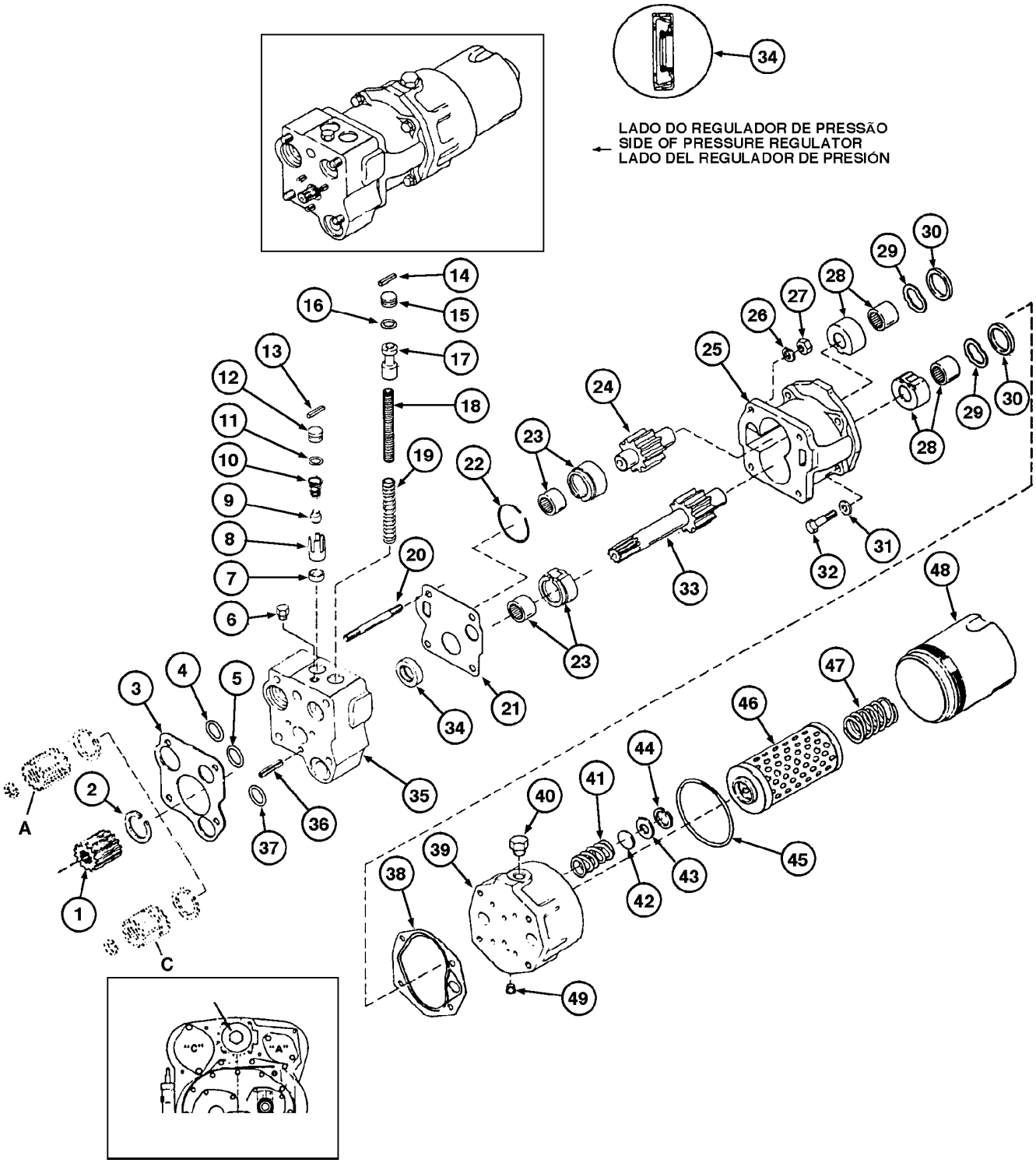

TRANSMISSION FILTER AND PUMP
TRANSMISSION FILTER AND PUMP
TRANSMISSION FILTER AND PUMP
TRANSMISSION FILTER AND PUMP

R	N	P.N.	MOD	Q	Denominação Bezeichnung	Description Description	Denominacion Beskrivelse	Descrizione Beschrijving	L.C.
41		**L33571**		1	MOLA VÁLVULA VENTILFEDER	VALVE SPRING RESSORT DE SOUPAPE	RESORTE DE VÁLVULA VENTILFJEDER	MOLLA DELLA VALVOLA KLEPVEER	P463
42		**L33572**		1	DISCO SCHEIBE	DISC DISQUE	DISCO DISC	DISCO DISC	2700
43		**L33573**		1	ASSENTO SITZ	SEAT SIEGE	ASIENTO SÆDE	SEDILE STOEL	7480
44		**R16289**		1	ANEL DE PRESSÃO, 1.06", Int, #106 SPRENGRING	SNAP RING ANNEAU D'ARRET	ANILLO DE RESORTE LÅSERING	ANELLO ELASTICO VEERRING	054A
45		**D31954**		1	ANEL O O-RING	O-RING JOINT TORIQUE	ANILLO/ARO CAUCHO O-RING	ANELLO TOROIDALE O-RING	7176
46		**S300744**		1	ELEMENTO FILTRANTE ELEMENT	ELEMENT ELEMENT	ELEMENTO ELEMENT	ELEMENTO ELEMENT	Z483
47		**L33570**		1	MOLA FEDER	SPRING RESSORT	MUELLE SPRING	MOLLA SPRING	8315
48		**L33569**		1	CARCACA GEHAEUSE	HOUSING CARTER	CARCASA HOUSING	ALLOGGIAMENTO HOUSING	4540
49		**221-850**		1	BUJÃO, Hex Soc, 1/16"-27 STOPFEN	PLUG BOUCHON	TAPÓN PROP	TAPPO PLUG	050T
50	1	**S30047**		1	BOMBA, & filter PUMPE	PUMP POMPE	BOMBA PUMPE	POMPA POMP	6570

(1) Inclui 22 a 25, 28 a 33, 38 a 49

06-26A	01	p1	04/09

FILTRO E BOMBA DA TRANSMISSÃO
TRANSMISSION FILTER AND PUMP
FILTRO Y BOMBA DE LA TRANSMISSION
TRANSMISSION FILTER AND PUMP

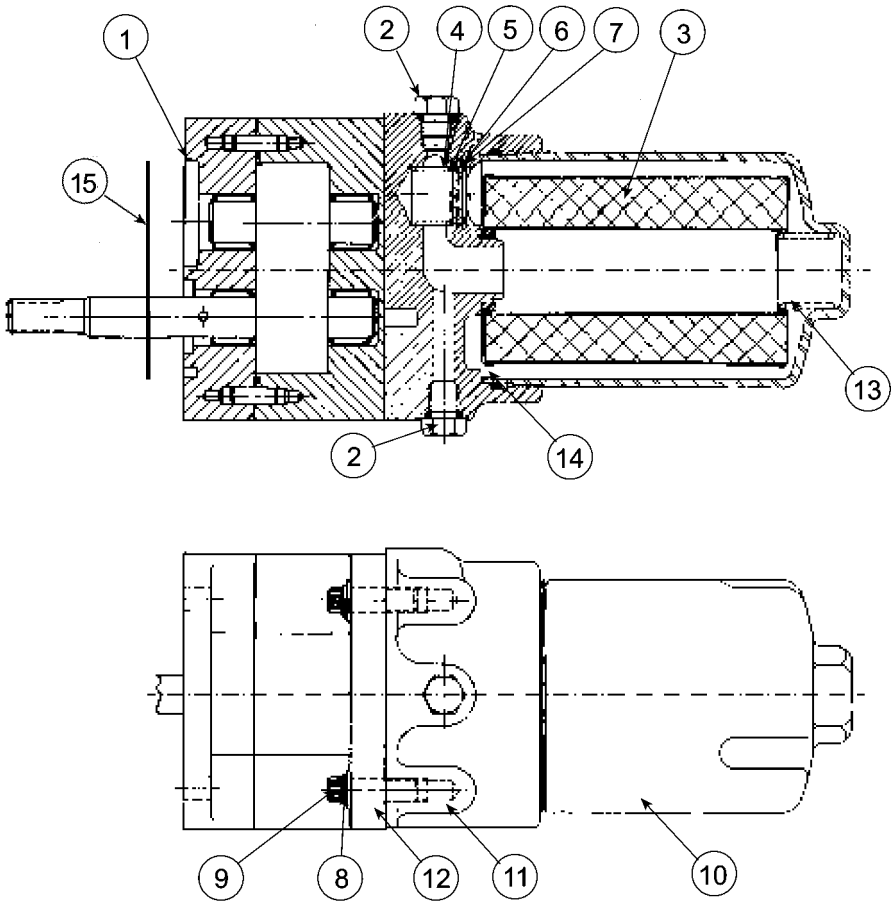

TRANSMISSION FILTER AND PUMP
TRANSMISSION FILTER AND PUMP
TRANSMISSION FILTER AND PUMP
TRANSMISSION FILTER AND PUMP

R	N	P.N.	MOD	Q	Denominação Bezeichnung	Description Description	Denominacion Beskrivelse	Descrizione Beschrijving	L.C.
	1	**71102506**		1	BOMBA, Assy	PUMP	BOMBA	POMPA	6570
					PUMPE	POMPE	PUMPE	POMP	
1		**71102505**		1	BOMBA	PUMP	BOMBA	POMPA	6570
					PUMPE	POMPE	PUMPE	POMP	
2		**NSS**		1	SEM SERVIÇO EM SEPARADO, PLUG				
						NOT SERVICED SEPARA	NO SE REPARA POR SE	NON FORNITO SEPARAT	064N
					NICHT A SEP ERS-T LIEI	NON FORUNI SEPAREM	SERVICERES IKKE SEPA	NIET LOS VERKRIJGBAA	
3		**S300073**		1	ELEMENTO FILTRANTE, filter				
						ELEMENT	ELEMENTO	ELEMENTO	Z483
					ELEMENT	ELEMENT	ELEMENT	ELEMENT	
4		**NSS**		1	SEM SERVIÇO EM SEPARADO, SPRING				
						NOT SERVICED SEPARA	NO SE REPARA POR SE	NON FORNITO SEPARAT	064N
					NICHT A SEP ERS-T LIEI	NON FORUNI SEPAREM	SERVICERES IKKE SEPA	NIET LOS VERKRIJGBAA	
5		**NSS**		1	SEM SERVIÇO EM SEPARADO, DISC				
						NOT SERVICED SEPARA	NO SE REPARA POR SE	NON FORNITO SEPARAT	064N
					NICHT A SEP ERS-T LIEI	NON FORUNI SEPAREM	SERVICERES IKKE SEPA	NIET LOS VERKRIJGBAA	
6		**NSS**		1	SEM SERVIÇO EM SEPARADO, SPACER				
						NOT SERVICED SEPARA	NO SE REPARA POR SE	NON FORNITO SEPARAT	064N
					NICHT A SEP ERS-T LIEI	NON FORUNI SEPAREM	SERVICERES IKKE SEPA	NIET LOS VERKRIJGBAA	
7		**NSS**		1	SEM SERVIÇO EM SEPARADO, RING				
						NOT SERVICED SEPARA	NO SE REPARA POR SE	NON FORNITO SEPARAT	064N
					NICHT A SEP ERS-T LIEI	NON FORUNI SEPAREM	SERVICERES IKKE SEPA	NIET LOS VERKRIJGBAA	
8		**NSS**		4	SEM SERVIÇO EM SEPARADO, WASHER				
						NOT SERVICED SEPARA	NO SE REPARA POR SE	NON FORNITO SEPARAT	064N
					NICHT A SEP ERS-T LIEI	NON FORUNI SEPAREM	SERVICERES IKKE SEPA	NIET LOS VERKRIJGBAA	
9		**NSS**		4	SEM SERVIÇO EM SEPARADO, SCREW				
						NOT SERVICED SEPARA	NO SE REPARA POR SE	NON FORNITO SEPARAT	064N
					NICHT A SEP ERS-T LIEI	NON FORUNI SEPAREM	SERVICERES IKKE SEPA	NIET LOS VERKRIJGBAA	
10		**NSS**		1	SEM SERVIÇO EM SEPARADO, HOUSING, filter cup				
						NOT SERVICED SEPARA	NO SE REPARA POR SE	NON FORNITO SEPARAT	064N
					NICHT A SEP ERS-T LIEI	NON FORUNI SEPAREM	SERVICERES IKKE SEPA	NIET LOS VERKRIJGBAA	
11		**NSS**		1	SEM SERVIÇO EM SEPARADO, BRACKET				
						NOT SERVICED SEPARA	NO SE REPARA POR SE	NON FORNITO SEPARAT	064N
					NICHT A SEP ERS-T LIEI	NON FORUNI SEPAREM	SERVICERES IKKE SEPA	NIET LOS VERKRIJGBAA	
12		**NSS**		1	SEM SERVIÇO EM SEPARADO, GASKET				
						NOT SERVICED SEPARA	NO SE REPARA POR SE	NON FORNITO SEPARAT	064N
					NICHT A SEP ERS-T LIEI	NON FORUNI SEPAREM	SERVICERES IKKE SEPA	NIET LOS VERKRIJGBAA	
13		**NSS**		1	SEM SERVIÇO EM SEPARADO, SPRING				
						NOT SERVICED SEPARA	NO SE REPARA POR SE	NON FORNITO SEPARAT	064N
					NICHT A SEP ERS-T LIEI	NON FORUNI SEPAREM	SERVICERES IKKE SEPA	NIET LOS VERKRIJGBAA	
14		**D31954**		1	ANEL O	O-RING	ANILLO/ARO CAUCHO	ANELLO TOROIDALE	7176
					O-RING	JOINT TORIQUE	O-RING	O-RING	
15		**84205181**		1	O-RING	O-RING	JUNTA TÓRICA	ANELLO TOROIDALE	055A
					O-RING	JOINT TORIQUE	O-RING	O-RING	

(1) Inclui 1 a 14

A partir do chassi N6AE01095

W20E

06-28	01	p1	05/12

MONTAGEM DA VÁLVULA DE CONTROLE DA TRANSMISSÃO
TRANSMISSION CONTROL VALVE MOUNTING
MONTAJE DE LA VALVULA DE CONTROL DE LA TRANSMISION
TRANSMISSION CONTROL VALVE MOUNTING

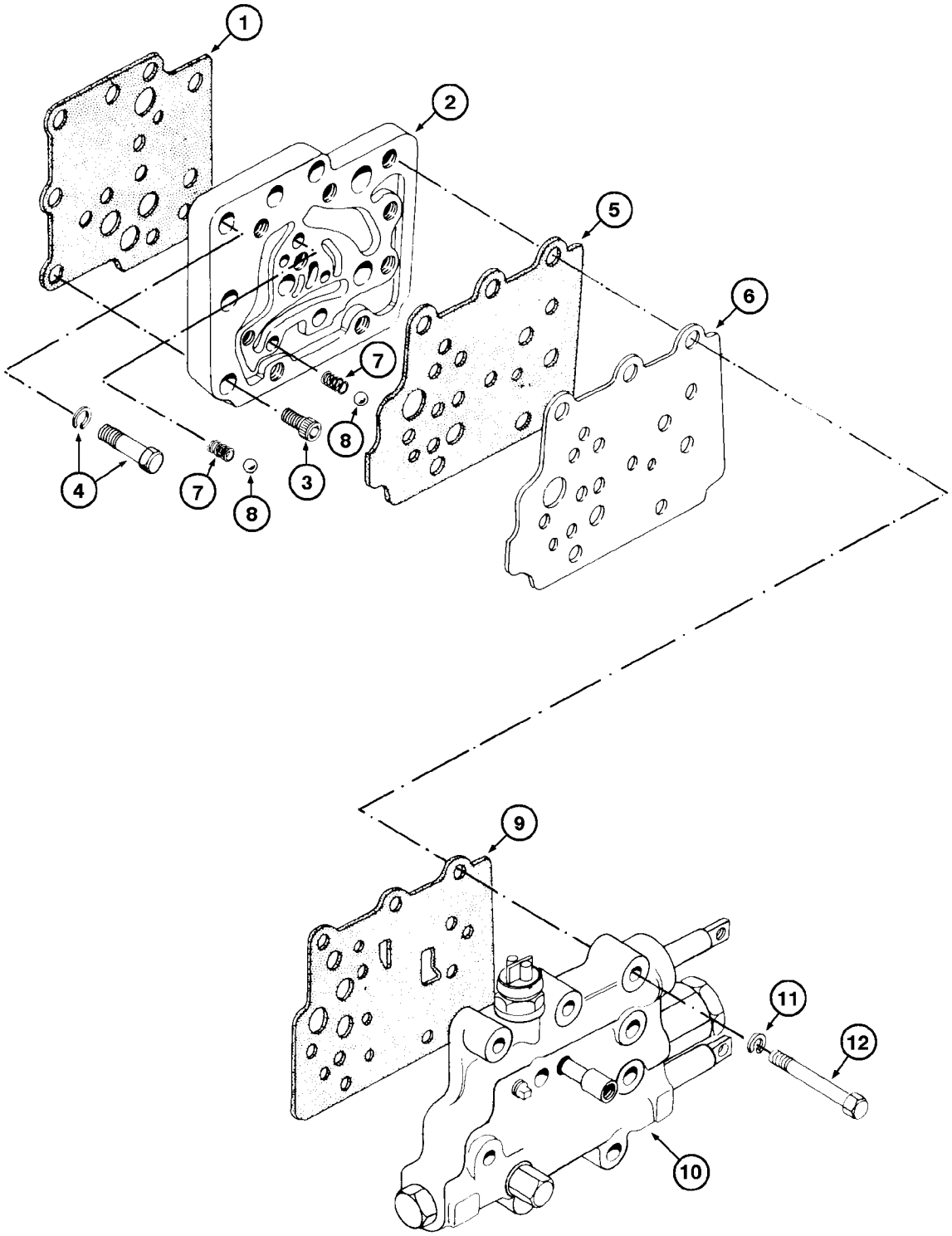

TRANSMISSION CONTROL VALVE MOUNTING
TRANSMISSION CONTROL VALVE MOUNTING
TRANSMISSION CONTROL VALVE MOUNTING
TRANSMISSION CONTROL VALVE MOUNTING

R	N	P.N.	MOD	Q	Denominação Bezeichnung	Description Description	Denominacion Beskrivelse	Descrizione Beschrijving	L.C.
1		D76997		1	JUNTA DICHTUNG	GASKET JOINT	JUNTA GASKET	GUARNIZIONE GASKET	3720
2		D77377		1	ALOJAMENTO GEHÄUSE	HOUSING CARTER	ALOJAMIENTO HUS	ALLOGGIAMENTO HUIS	014V
3		61-612		5	PARAFUSO ALLEN, Hex Soc Hd, 3/8"-16 x 3/4"				
						HEX SOC SCREW	TORNILLO DE CABEZA H	VITE A ESAGONO INCAS	A093
					INNENSECHSKANTSCHR	VIS A EMBASE HEXAGOI	SEKSKANTET SKRUE	INBUSBOUT	
4		NLS		4	SEM SERVIÇO, and washer				
						NO LONGER SERVICED	SIN SERVICIO	NON PIÙ FORNITO	A001
					NICHT M ALS ERS-T LIEI	OBSOLETE	FØRES IKKE LÆNGERE	NIET MEER VERKRIJGBA	
5		E97397		1	JUNTA DICHTUNG	GASKET JOINT	JUNTA PAKNING	GUARNIZIONE PAKKING	123G
6		E69859		1	PLACA DE COBERTURA ABDECKPLATTE	COVER PLATE COUVERCLE	PLACA DE CUBIERTA DÆKPLADE	PIASTRA DI COPERTURA AFSCHERMPLAAT	110P
7		11403		2	MOLA FEDER	SPRING RESSORT	MUELLE SPRING	MOLLA SPRING	8315
8		211-11		2	ESFERA, 3/8" Dia KUGEL	BALL BILLE	BOLA KUGLE	SFERA KOGEL	140S
9		E97397		1	JUNTA DICHTUNG	GASKET JOINT	JUNTA PAKNING	GUARNIZIONE PAKKING	123G
10		REF		1	INSTRUÇÃO, VALVE control Assy. (P.6-30)				
						INSTRUCTION	INSTRUCCIÓN	ISTRUZIONI	Z571
					ANLEITUNG	INSTRUCTION	INSTRUKTION	INSTRUCTIE	
11		S300068		9	ARRUELA UNTERLEGSCHEIBE	WASHER RONDELLE	ARANDELA WASHER	RONDELLA WASHER	9720
12		413-636		9	PARAFUSO, Hex, 3/8"-16 x 2 1/4", G5				
						BOLT	PERNO	BULLONE	140B
					SCHRAUBE	VIS	BOLT	BOUT	

06-30	01	p1	04/12

VÁLVULA DE CONTROLE DA TRANSMISSÃO
TRANSMISSION CONTROL VALVE
VALVULA DE CONTROL DE LA TRANSMISION
TRANSMISSION CONTROL VALVE

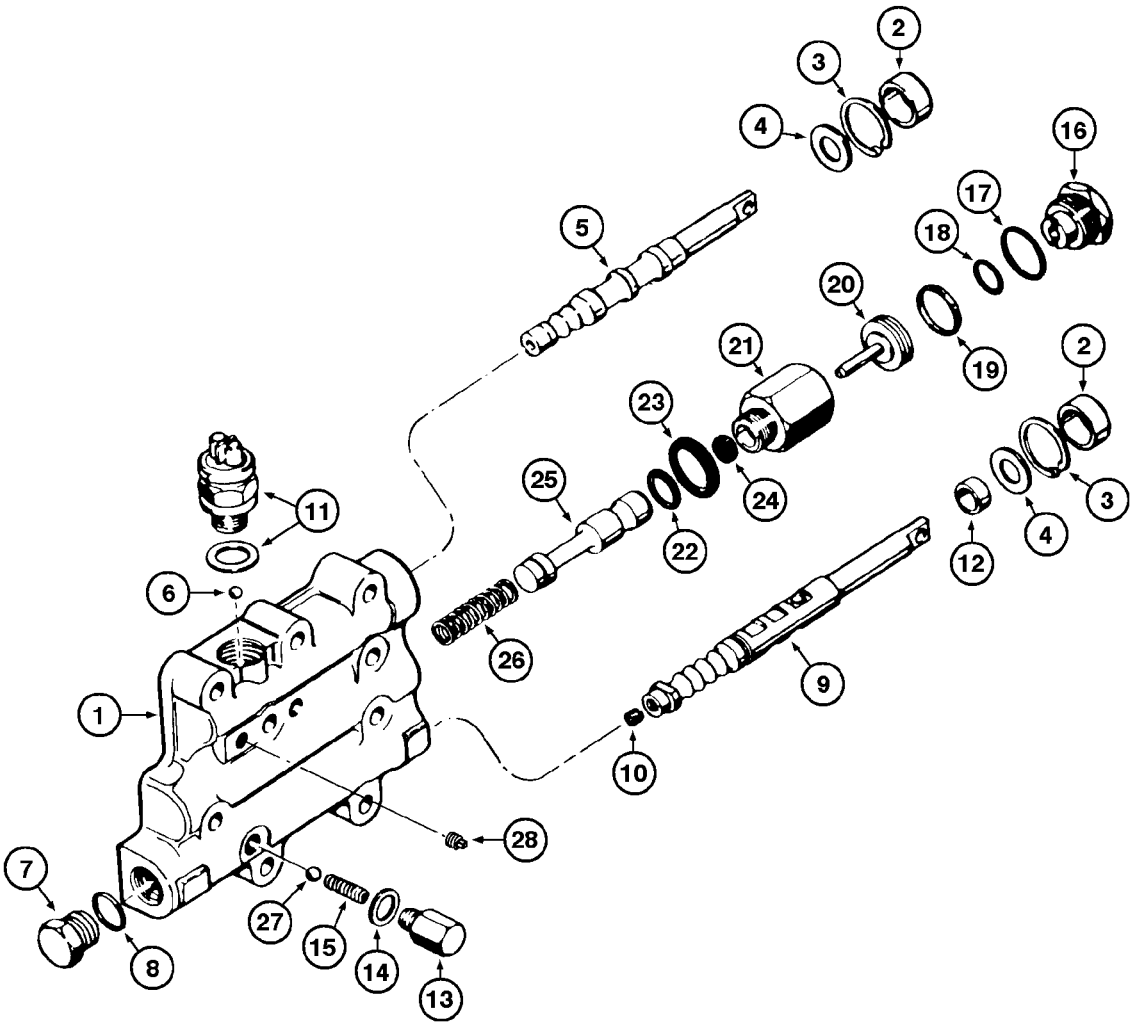

TRANSMISSION CONTROL VALVE
TRANSMISSION CONTROL VALVE
TRANSMISSION CONTROL VALVE
TRANSMISSION CONTROL VALVE

R	N	P.N.	MOD	Q	Denominação Bezeichnung	Description Description	Denominacion Beskrivelse	Descrizione Beschrijving	L.C.
1		**N9971**		1	CARCACA, Assy, Includes items 1 - 11				
						HOUSING	CARCASA	ALLOGGIAMENTO	4540
					GEHAEUSE	CARTER	HOUSING	HOUSING	
1		**NSS**		1	SEM SERVIÇO EM SEPARADO, BODY				
						NOT SERVICED SEPARA	NO SE REPARA POR SE	NON FORNITO SEPARAT	064N
					NICHT A SEP ERS-T LIEI	NON FORUNI SEPAREM	SERVICERES IKKE SEPA	NIET LOS VERKRIJGBAA	
2		**D77000**		2	VEDADOR DE RETENCAO	SEAL	SELLO/RETEN	GUARNIZIONE TENUTA	7460
					DICHTRING	JOINT-D'ETANCHEITE	SEAL	SEAL	
3		**L33563**		2	ANEL	RING	ANILLO	ANELLO	7175
					RING	BAGUE	RING	RING	
4		**L33562**		2	ARRUELA	WASHER	ARANDELA	RONDELLA	9720
					UNTERLEGSCHEIBE	RONDELLE	WASHER	WASHER	
5		**L33558**		1	CARRETEL, Forward and Reverse				
						SPOOL	CARRETE ESPACIADOR	EMBOLO GIREVOLE	8240
					SCHIEBER	TIROIR	SPOOL	SPOOL	
6		**211-11**		1	ESFERA, 3/8" Dia	BALL	BOLA	SFERA	140S
					KUGEL	BILLE	KUGLE	KOGEL	
7		**218-5157**		1	BUJÃO, Hex Hd, 7/8"-14 ORB				
						PLUG	TAPÓN	TAPPO	050T
					STOPFEN	BOUCHON	PROP	PLUG	
8		**218-5007**		1	O-RING, 0.239" ID x 0.379" OD x 0.07"				
						O-RING	JUNTA TÓRICA	ANELLO TOROIDALE	055A
					O-RING	JOINT TORIQUE	O-RING	O-RING	
9		**N9972**		1	CARRETEL	SPOOL	CARRETE ESPACIADOR	EMBOLO GIREVOLE	8240
					SCHIEBER	TIROIR	SPOOL	SPOOL	
10		**221-850**		1	BUJÃO, Hex Soc, 1/16"-27	PLUG	TAPÓN	TAPPO	050T
					STOPFEN	BOUCHON	PROP	PLUG	
11		**E155293**		1	INTERRUPTOR, start neutral				
						SWITCH	INTERRUPTOR	INTERRUTTORE	075I
					SCHALTER	CONTACTEUR	KONTAKT	SCHAKELAAR	
12		**S89735**		1	BUCHA	BUSHING	CASQUILLO	BOCCOLA	1140
					BUECHSE	DOUILLE	BUSHING	BUSHING	
13		**D77007**		1	BUJAO	PLUG	TAPON	TAPPO	6400
					STOPFEN	BOUCHON	PLUG	PLUG	
14		**D77008**		1	ARRUELA	WASHER	ARANDELA	RONDELLA	9720
					UNTERLEGSCHEIBE	RONDELLE	WASHER	WASHER	
15		**11403**		1	MOLA	SPRING	MUELLE	MOLLA	8315
					FEDER	RESSORT	SPRING	SPRING	
		L33552	a		VÁLVULA, Assy	VALVE	VÁLVULA	VALVOLA	9620
					VENTIL	SOUPAPE	VENTIL	KLEP	
	1	**73071838**	b	1	PISTÃO, Assy, Includes items 16 - 24				
						PISTON	PISTÓN	PISTONE	235S
					KOLBEN	PISTON	STEMPEL	ZUIGER	
16		**BHBL33574**	a	1	MONTAGEM DO FILTRO	FILTER ASSY	CONJUNTO DE FILTRO	FILTRO, COMPLESSIVO	P496
					FILTERBAUGRUPPE	ENSEMBLE DE FILTRE	FILTERENHED	FILTEREENHEID	

(1) Componentes não vendidos separadamente
(a) BSN N4AE00229
(b) ASN N4AE00230

VÁLVULA DE CONTROLE DA TRANSMISSÃO
TRANSMISSION CONTROL VALVE
VALVULA DE CONTROL DE LA TRANSMISION
TRANSMISSION CONTROL VALVE

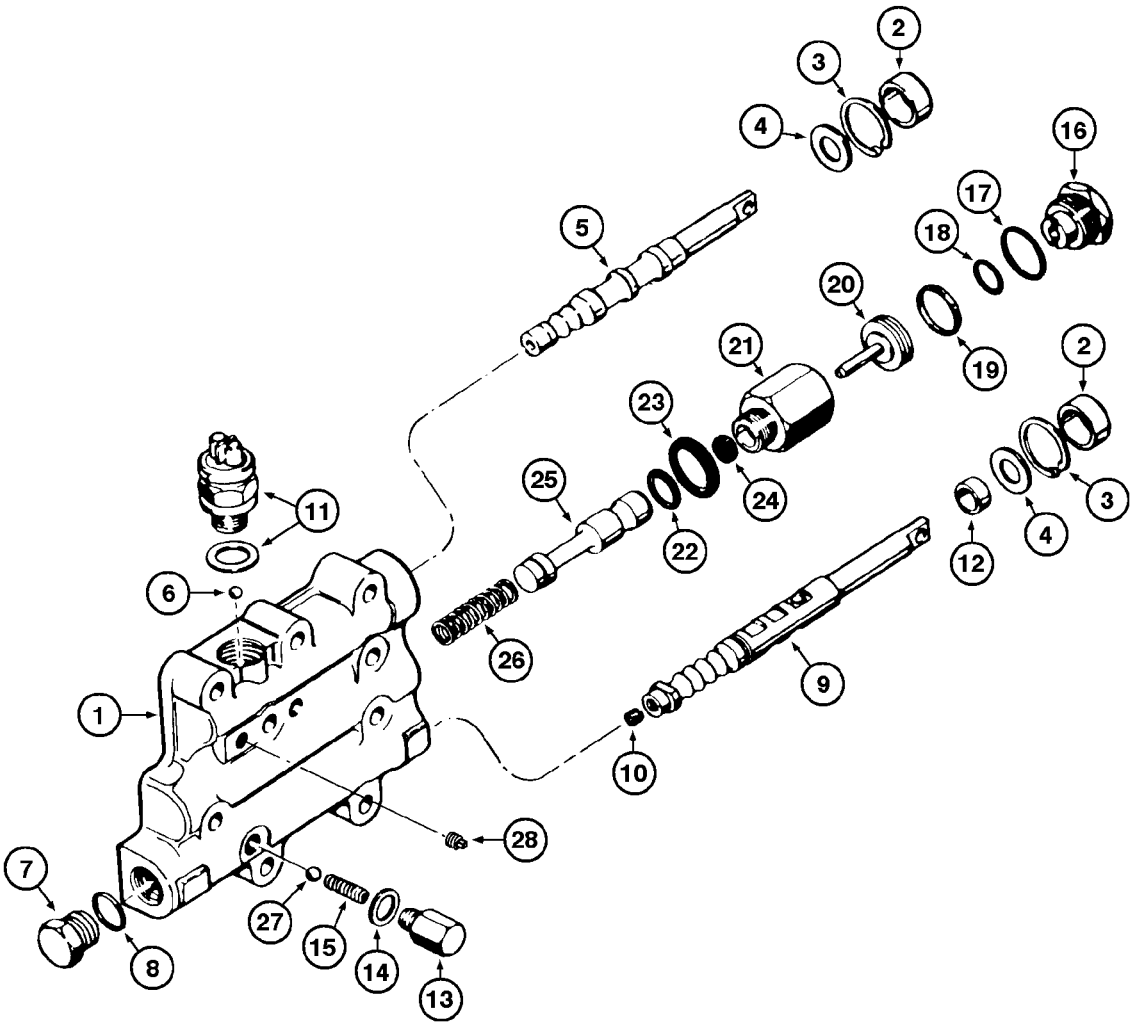

TRANSMISSION CONTROL VALVE
TRANSMISSION CONTROL VALVE
TRANSMISSION CONTROL VALVE
TRANSMISSION CONTROL VALVE

R	N	P.N.	MOD	Q	Denominação Bezeichnung	Description Description	Denominacion Beskrivelse	Descrizione Beschrijving	L.C.
17		218-5008	a	1	O-RING, 0.364" ID x 0.504" OD x 0.07"				
						O-RING	JUNTA TÓRICA	ANELLO TOROIDALE	055A
					O-RING	JOINT TORIQUE	O-RING	O-RING	
18		A7982	a	1	O-RING, 0.612" ID x 0.818" OD				
						O-RING	JUNTA TÓRICA	ANELLO TOROIDALE	055A
					O-RING	JOINT TORIQUE	O-RING	O-RING	
19		L33575	a	1	ANEL	RING	ANILLO	ANELLO	7175
					RING	BAGUE	RING	RING	
20		L33576	a	1	PISTAO	PISTON	PISTON	PISTONE	6270
					KOLBEN	PISTON	PISTON	PISTON	
21		NSS	a	1	SEM SERVIÇO EM SEPARADO, HOUSING				
						NOT SERVICED SEPARA	NO SE REPARA POR SE	NON FORNITO SEPARAT	064N
					NICHT A SEP ERS-T LIEI	NON FORUNI SEPAREM	SERVICERES IKKE SEPA	NIET LOS VERKRIJGBAA	
22		F62114	a	1	O-RING, 0.674" ID x 0.88" OD				
						O-RING	JUNTA TÓRICA	ANELLO TOROIDALE	055A
					O-RING	JOINT TORIQUE	O-RING	O-RING	
23		L30394	a	1	VEDADOR DE RETENCAO	SEAL	SELLO/RETEN	GUARNIZIONE TENUTA	7460
					DICHTRING	JOINT-D'ETANCHEITE	SEAL	SEAL	
24		D87168	a	1	VEDADOR DE RETENCAO	SEAL	SELLO/RETEN	GUARNIZIONE TENUTA	7460
					DICHTRING	JOINT-D'ETANCHEITE	SEAL	SEAL	
25		S89736		1	CARRETEL	SPOOL	CARRETE ESPACIADOR	EMBOLO GIREVOLE	8240
					SCHIEBER	TIROIR	SPOOL	SPOOL	
26		L33550		1	MOLA	SPRING	MUELLE	MOLLA	8315
					FEDER	RESSORT	SPRING	SPRING	
27		211-11		1	ESFERA, 3/8" Dia	BALL	BOLA	SFERA	140S
					KUGEL	BILLE	KUGLE	KOGEL	
28		221-660		2	BUJÃO, Hex Hd, 1/16"-27	PLUG	TAPÓN	TAPPO	050T
					STOPFEN	BOUCHON	PROP	PLUG	

(a) BSN N4AE00229

06-32	01	p1	03/09

FREIO DE ESTACIONAMENTO - TRANSMISSÃO
TRANSMISSION PARKING BRAKE
FRENO DE ESTACIONAMIENTO - TRANSMISION
TRANSMISSION PARKING BRAKE

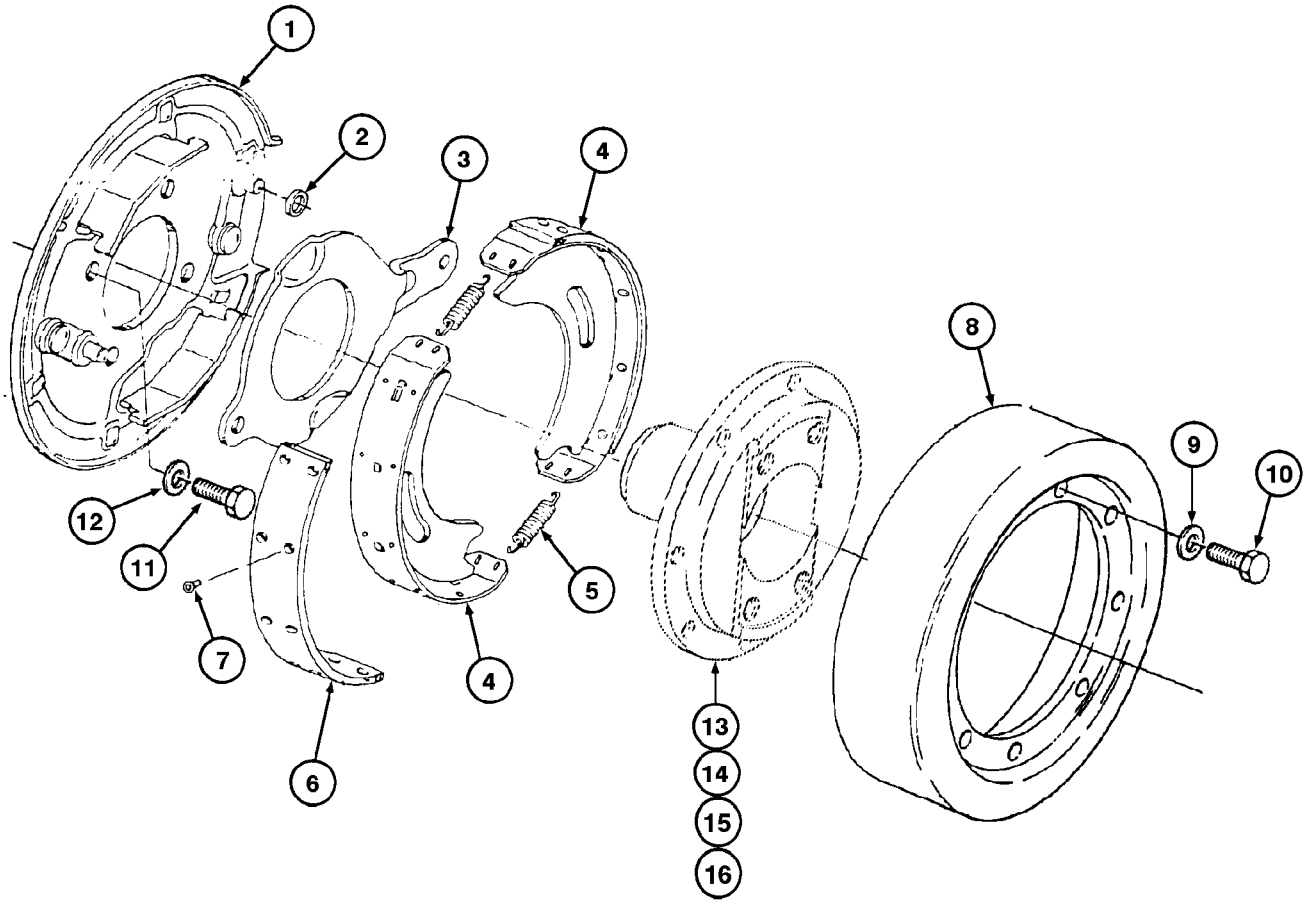

TRANSMISSION PARKING BRAKE
TRANSMISSION PARKING BRAKE
TRANSMISSION PARKING BRAKE
TRANSMISSION PARKING BRAKE

R	N	P.N.	MOD	Q	Denominação Bezeichnung	Description Description	Denominacion Beskrivelse	Descrizione Beschrijving	L.C.
		D150537		1	CONJUNTO DE FREIO, parking, Includes items 1 - 7				
					BREMSENBAUGRUPPE	BRAKE ASSY. ENSEMBLE DE FREIN	CONJUNTO DE FRENO BREMSEENHED	COMPLESSIVO FRENO REMEENHEID	P832
1		**148487A1**		1	PLACA DE COBERTURA ABDECKPLATTE	COVER PLATE COUVERCLE	PLACA DE CUBIERTA DÆKPLADE	PIASTRA DI COPERTUR AFSCHERMPLAAT	110P
2		**L33579**		1	ROLO ROLLE	ROLLER GALET/ROULEAU	RODILLO ROLLER	RULLO ROLLER	7290
3		**D60994**		1	ALAVANCA HEBEL	LEVER LEVIER	PALANCA LEVER	LEVA LEVER	5110
4		**D47524**		1	SAPATA FREIO, and lining BREMSBACKE	SHOE, BRAKE MACHOIRE-DE-FREIN	MORDAZA DE FRENO SHOE, BRAKE	CRIVELLO INF, FR SHOE, BRAKE	Z024
5		**A18134**		2	MOLA, return FEDER	SPRING RESSORT	MUELLE SPRING	MOLLA SPRING	8315
6		**D150535**		1	LONA, and rivet BELAG	LINING GARNITURE	REVESTIMIENTO FORING	RIVESTIMENTO VOERING	5260
7		**148496A1**		20	REBITE NIET	RIVET RIVET	REMACHE NITTE	RIVETTO KLINKNAGEL	055R
8		**A17982**		1	TAMBOR TROMMEL	DRUM TAMBOUR	TAMBOR DRUM	TAMBURA DRUM	2860
9		**492-11038**		6	TRAVA DA ARRUELA, 3/8" SICHERUNGSSCHEIBE	LOCK WASHER RONDELLE FREIN	ARANDELA DE BLOQUE LÅSESKIVE	RONDELLA DI SICUREZ BORGRING	132R
10		**414-612**		6	PARAFUSO, Hex, 3/8"-24 x 3/4", G5, Full Thd SCHRAUBE	BOLT VIS	PERNO BOLT	BULLONE BOUT	140B
11		**26967R1**		4	PARAFUSO SCHRAUBE	SCREW VIS	TORNILLO SKRUE	VITE SCHROEF	040V
12		**114756**		4	TRAVA DA ARRUELA, Ext Tooth, 9/16" SICHERUNGSSCHEIBE	LOCK WASHER RONDELLE FREIN	ARANDELA DE BLOQUE LÅSESKIVE	RONDELLA DI SICUREZ BORGRING	132R
13		**186671A1**		1	FLANGE, outlet FLANSCH	FLANGE FLASQUE	TAPA FLANGE	FLANGIA FLANGE	3360
14	1	**131-487**		1	CONTRA PORCA, 1 1/4"-18 SICHERUNGSMUTTER	LOCK NUT CONTRE-ECROU	TUERCA DE BLOQUEO LÅSEMØTRIK	DADO DI BLOCCAGGIO BORGMOER	P263
15	1	**A55828**		1	ARRUELA UNTERLEGSCHEIBE	WASHER RONDELLE	ARANDELA WASHER	RONDELLA WASHER	9720
16	1	**A30916**		1	O-RING, 1.475" ID x 1.875" OD x 0.21" O-RING	O-RING JOINT TORIQUE	JUNTA TÓRICA O-RING	ANELLO TOROIDALE O-RING	055A

(1) Não ilustrado

06-34	01	p1	03/09

EIXO PROPULSOR DIANTEIRO
FRONT DRIVE SHAFT
EJE CARDAN DELANTERO
FRONT DRIVE SHAFT

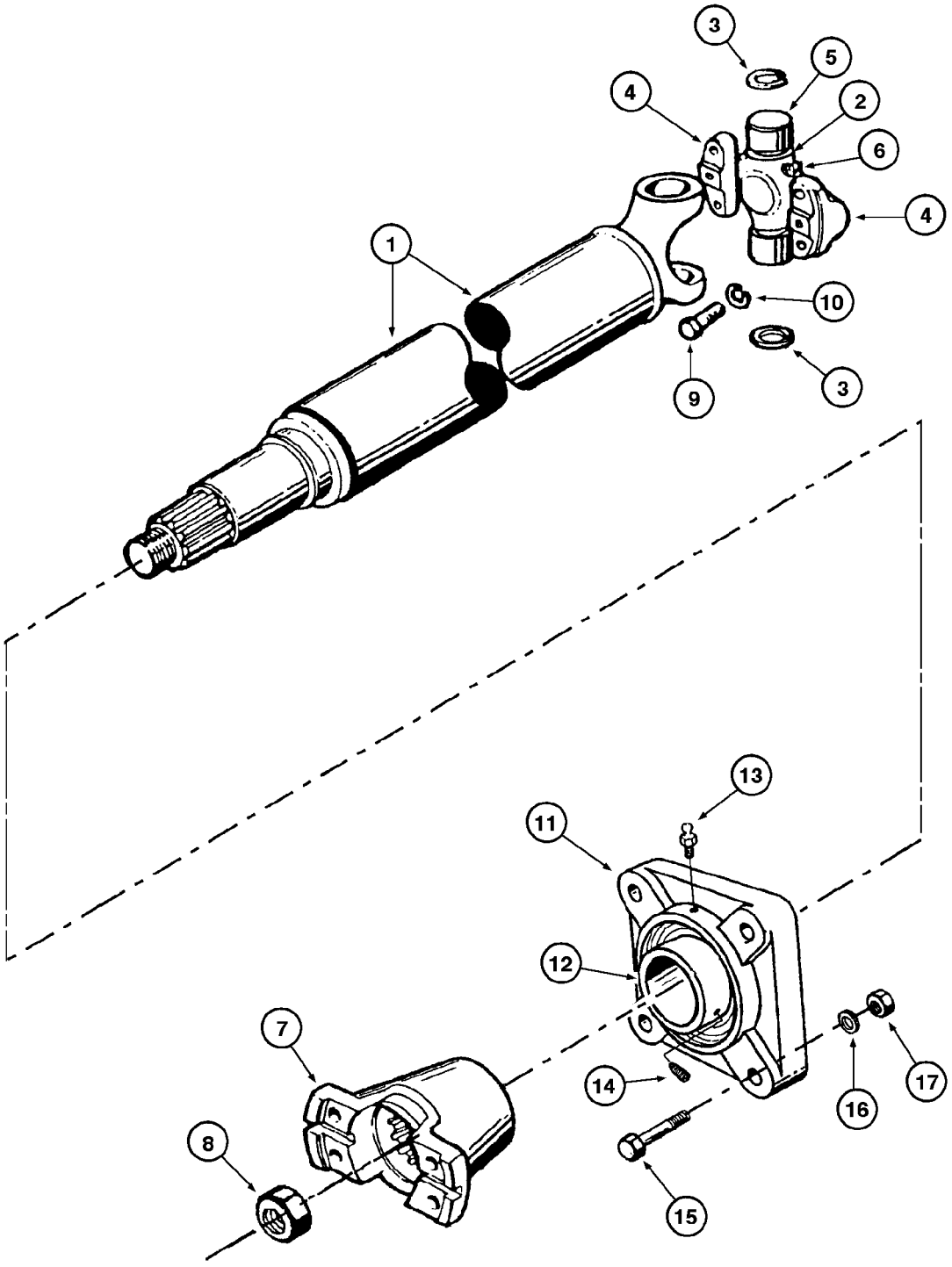

FRONT DRIVE SHAFT
FRONT DRIVE SHAFT
FRONT DRIVE SHAFT
FRONT DRIVE SHAFT

R	N	P.N.	MOD	Q	Denominação Bezeichnung	Description Description	Denominacion Beskrivelse	Descrizione Beschrijving	L.C.
		E67845		1	EIXO, front Assy, Includes item 1				
						SHAFT	EJE	ALBERO	016A
					WELLE	ARBRE	AKSEL	AS	
1		**E69391**		1	EIXO ARTICULADO, Assy.	ARTICULATED SHAFT	EJE ARTICULADO	ALBERO ARTICOLATO	019A
					GELENKWELLE	ARBRE ARTICULE	KARDANAKSEL	GELEDE AS	
		E68763		1	UNIAO, Assy, Includes items 2 - 8				
						JOINT	ARTICULACION	GIUNTO CARDANICO	4770
					GELENK	ARTICULATION	JOINT	JOINT	
2		**NSS**		1	SEM SERVIÇO EM SEPARADO, SPIDER				
						NOT SERVICED SEPARA	NO SE REPARA POR SE	NON FORNITO SEPARAT	064N
					NICHT A SEP ERS-T LIEI	NON FORUNI SEPAREM	SERVICERES IKKE SEPA	NIET LOS VERKRIJGBAA	
3		**S12065**		4	ANEL-TRAVA	LOCKING RING	ANILLO DE BLOQUEO	ANELLO DI BLOCCAGGI	051A
					SICHERUNGSRING	BAGUE DE BLOCAGE	LÅSESKIVE	BORGRING	
4		**NSS**		4	SEM SERVIÇO EM SEPARADO, BEARING				
						NOT SERVICED SEPARA	NO SE REPARA POR SE	NON FORNITO SEPARAT	064N
					NICHT A SEP ERS-T LIEI	NON FORUNI SEPAREM	SERVICERES IKKE SEPA	NIET LOS VERKRIJGBAA	
5		**NSS**		4	SEM SERVIÇO EM SEPARADO, BEARING				
						NOT SERVICED SEPARA	NO SE REPARA POR SE	NON FORNITO SEPARAT	064N
					NICHT A SEP ERS-T LIEI	NON FORUNI SEPAREM	SERVICERES IKKE SEPA	NIET LOS VERKRIJGBAA	
6		**219-10**		1	GRAXEIRA, 1/4"-28 NPT x .68" lg				
						LUBE NIPPLE	BOQUILLA DE LUBRICAC	INGRASSATORE	060I
					SCHMIERNIPPEL	GRAISSEUR	SMØRENIPPEL	SMEERNIPPEL	
7		**E61748**		1	ACOPLAMENTO	COUPLING	ACOPLAMIENTO	GIUNTO	109T
					KUPPLUNG	RACCORD	KOBLING	KOPPELING	
8		**E157824**		1	PORCA	NUT	TUERCA	DADO	010D
					MUTTER	ECROU	MØTRIK	MOER	
9		**328-632**		4	PARAFUSO	BOLT	PERNO	BULLONE	140B
					SCHRAUBE	VIS	BOLT	BOUT	
10		**492-11038**		4	TRAVA DA ARRUELA, 3/8"	LOCK WASHER	ARANDELA DE BLOQUEO	RONDELLA DI SICUREZZ	132R
					SICHERUNGSSCHEIBE	RONDELLE FREIN	LÅSESKIVE	BORGRING	
	1, 2	**E64165**		1	ROLAMENTO FLANGEADO, Assy				
						FLANGED BEARING	COJINETE CON BRIDA	CUSCINETTO FLANGIAT	C006
					FLANSCHLAGER	PALIER A BRIDE	FLANGELEJE	FLENSLAGER	
	1, 3	**E66371**		1	EIXO, Assy, Includes items 11 - 14				
						AXLE	EJE	ASSALE	087A
					ACHSE	ESSIEU	AKSEL	AS	
11	1	**NSS**		1	SEM SERVIÇO EM SEPARADO, HOUSING				
						NOT SERVICED SEPARA	NO SE REPARA POR SE	NON FORNITO SEPARAT	064N
					NICHT A SEP ERS-T LIEI	NON FORUNI SEPAREM	SERVICERES IKKE SEPA	NIET LOS VERKRIJGBAA	
12	1	**E68802**		1	ROLAMENTO	BEARING	COJINETE	CUSCINETTO	0600
					LAGER	ROULEMENT	LEJE	LAGER	
13	1	**219-1**		1	GRAXEIRA, 1/8"-27 x .66 lg	LUBE NIPPLE	BOQUILLA DE LUBRICAC	INGRASSATORE	060I
					SCHMIERNIPPEL	GRAISSEUR	SMØRENIPPEL	SMEERNIPPEL	

(1) MANCAL de apoio
(2) Montado para máquinas com Eixo Traseiro Standard
(3) Montado para máquinas com Eixo Traseiro HD (Heavy Duty) (Opcional)

06-34	01	p2	03/09

EIXO PROPULSOR DIANTEIRO
FRONT DRIVE SHAFT
EJE CARDAN DELANTERO
FRONT DRIVE SHAFT

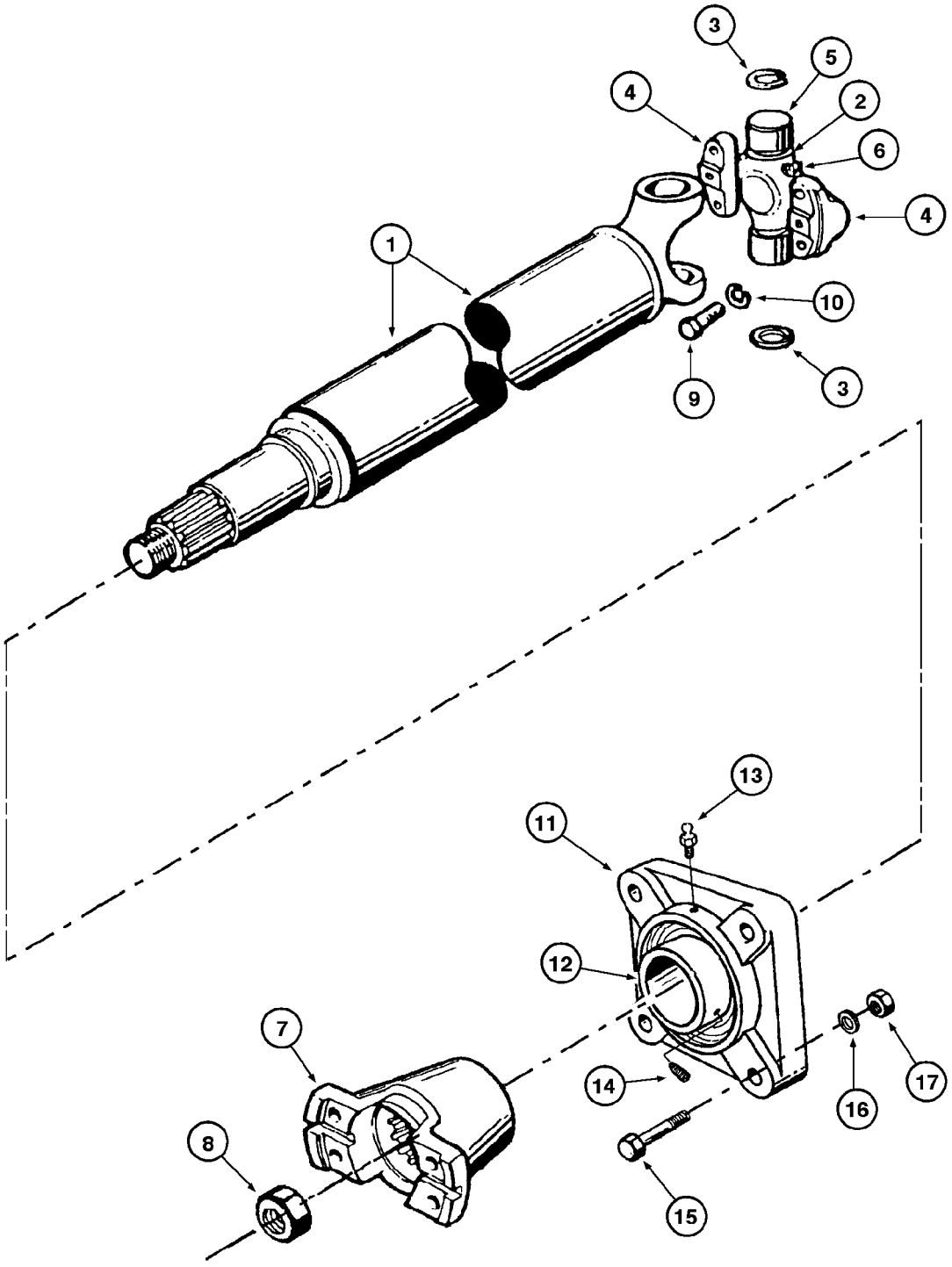

FRONT DRIVE SHAFT
FRONT DRIVE SHAFT
FRONT DRIVE SHAFT
FRONT DRIVE SHAFT

R	N	P.N.	MOD	Q	Denominação Bezeichnung	Description Description	Denominacion Beskrivelse	Descrizione Beschrijving	L.C.
14	1	**83-54**		2	PARAFUSO DE AJUSTE, Hex Soc, 5/16"-18 x 1/4", Cup Pt				
						SET SCREW	TORNILLO DE AJUSTE	VITE DI FERMO	P327
					STELLSCHRAUBE	VIS DE REGLAGE	SÆTSKRUE	STELSCHROEF	
15	1	**413-1028**		4	PARAFUSO, Hex, 5/8"-11 x 1 3/4", G5				
						BOLT	PERNO	BULLONE	140B
					SCHRAUBE	VIS	BOLT	BOUT	
16	1	**492-11062**		4	TRAVA DA ARRUELA, 5/8"	LOCK WASHER	ARANDELA DE BLOQUE	RONDELLA DI SICUREZ	132R
					SICHERUNGSSCHEIBE	RONDELLE FREIN	LÅSESKIVE	BORGRING	
17	1	**425-1010**		4	PORCA, 5/8"-11, G5	NUT	TUERCA	DADO	010D
					MUTTER	ECROU	MØTRIK	MOER	

(1) MANCAL de apoio

06-36	01	p1	03/09

EIXO PROPULSOR CENTRAL
CENTRAL DRIVE SHAFT
EJE CARDAN CENTRAL
CENTRAL DRIVE SHAFT

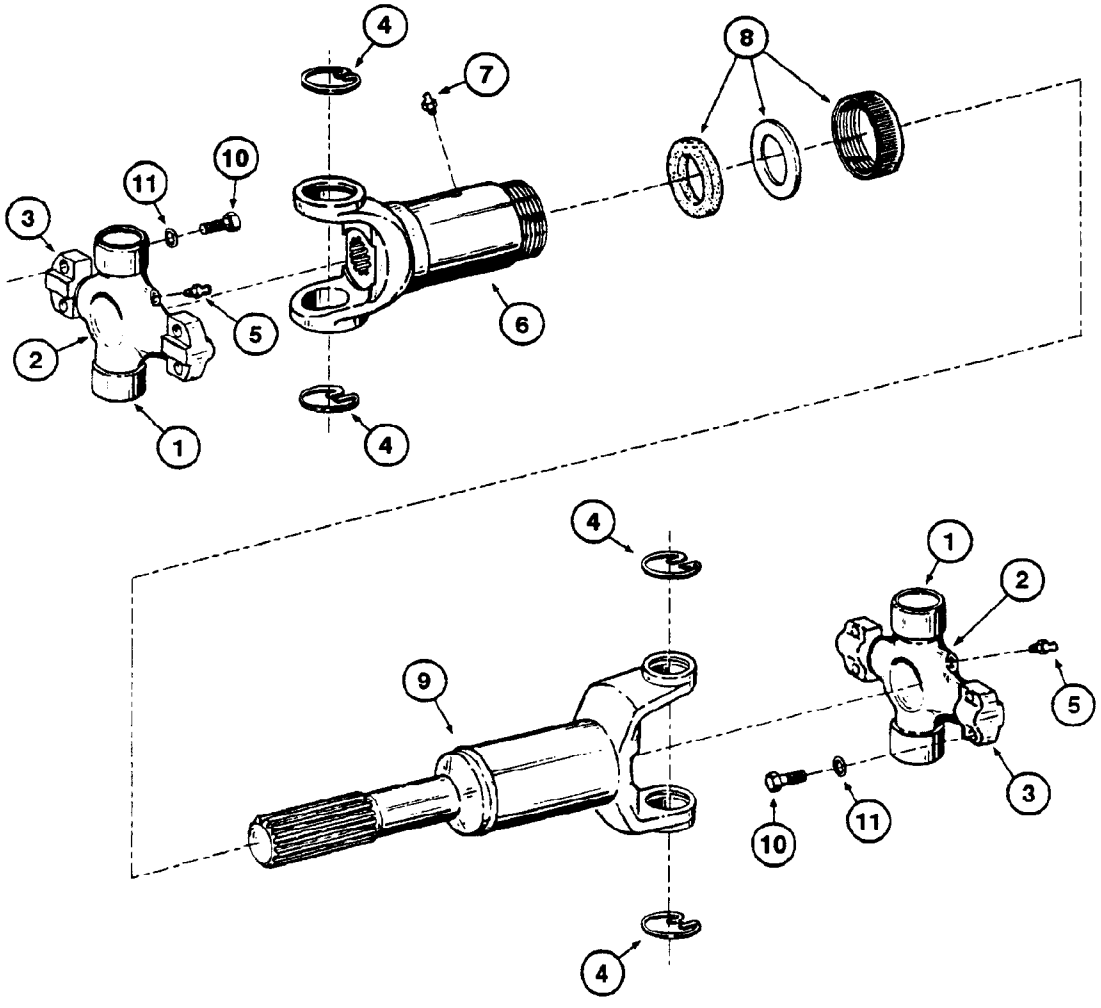

CENTRAL DRIVE SHAFT
CENTRAL DRIVE SHAFT
CENTRAL DRIVE SHAFT
CENTRAL DRIVE SHAFT

R	N	P.N.	MOD	Q	Denominação Bezeichnung	Description Description	Denominacion Beskrivelse	Descrizione Beschrijving	L.C.
		E61741		1	EIXO, Assy	SHAFT	EJE	ALBERO	016A
					WELLE	ARBRE	AKSEL	AS	
		E68763		2	UNIAO, Assy, Includes items 1 - 5				
						JOINT	ARTICULACION	GIUNTO CARDANICO	4770
					GELENK	ARTICULATION	JOINT	JOINT	
1		**NSS**		2	SEM SERVIÇO EM SEPARADO, BEARING				
						NOT SERVICED SEPARA	NO SE REPARA POR SE	NON FORNITO SEPARAT	064N
					NICHT A SEP ERS-T LIEI	NON FORUNI SEPAREM	SERVICERES IKKE SEPA	NIET LOS VERKRIJGBAA	
2		**NSS**		1	SEM SERVIÇO EM SEPARADO, SPIDER				
						NOT SERVICED SEPARA	NO SE REPARA POR SE	NON FORNITO SEPARAT	064N
					NICHT A SEP ERS-T LIEI	NON FORUNI SEPAREM	SERVICERES IKKE SEPA	NIET LOS VERKRIJGBAA	
3		**NSS**		2	SEM SERVIÇO EM SEPARADO, BEARING				
						NOT SERVICED SEPARA	NO SE REPARA POR SE	NON FORNITO SEPARAT	064N
					NICHT A SEP ERS-T LIEI	NON FORUNI SEPAREM	SERVICERES IKKE SEPA	NIET LOS VERKRIJGBAA	
4		**S12065**		2	ANEL-TRAVA	LOCKING RING	ANILLO DE BLOQUEO	ANELLO DI BLOCCAGGI	051A
					SICHERUNGSRING	BAGUE DE BLOCAGE	LÅSESKIVE	BORGRING	
5		**219-10**		1	GRAXEIRA, 1/4"-28 NPT x .68" lg				
						LUBE NIPPLE	BOQUILLA DE LUBRICA	INGRASSATORE	060I
					SCHMIERNIPPEL	GRAISSEUR	SMØRENIPPEL	SMEERNIPPEL	
		E69392		1	LUVA, Assy, Includes items 6 - 9				
						SLEEVE	MANGUITO	MANICOTTO	031M
					BUCHSE	CHEMISE	TRYKLEJE, KOBLING	MOF; BUS	
6		**NSS**		1	SEM SERVIÇO EM SEPARADO, SLEEVE				
						NOT SERVICED SEPARA	NO SE REPARA POR SE	NON FORNITO SEPARAT	064N
					NICHT A SEP ERS-T LIEI	NON FORUNI SEPAREM	SERVICERES IKKE SEPA	NIET LOS VERKRIJGBAA	
7		**219-4**		1	GRAXEIRA, 1/8"-27 NPTF, Short				
						LUBE NIPPLE	BOQUILLA DE LUBRICA	INGRASSATORE	060I
					SCHMIERNIPPEL	GRAISSEUR	SMØRENIPPEL	SMEERNIPPEL	
8		**E156183**		1	TAMPA, Assy	CAP	TAPÓN	TAPPO	052T
					KAPPE	CAPUCHON	TANKDÆKSEL	DOP	
9		**E69393**		1	TUBO, Sub-Assy	TUBE	TUBO	TUBO	195T
					ROHR	TUBE	RØR	LEIDING	
10		**328-632**		8	PARAFUSO	BOLT	PERNO	BULLONE	140B
					SCHRAUBE	VIS	BOLT	BOUT	
11		**492-11038**		8	TRAVA DA ARRUELA, 3/8"	LOCK WASHER	ARANDELA DE BLOQUE	RONDELLA DI SICUREZ	132R
					SICHERUNGSSCHEIBE	RONDELLE FREIN	LÅSESKIVE	BORGRING	

06-38	01	p1	03/09

EIXO PROPULSOR TRASEIRO
REAR DRIVE SHAFT
EJE CARDAN TRASERO
REAR DRIVE SHAFT

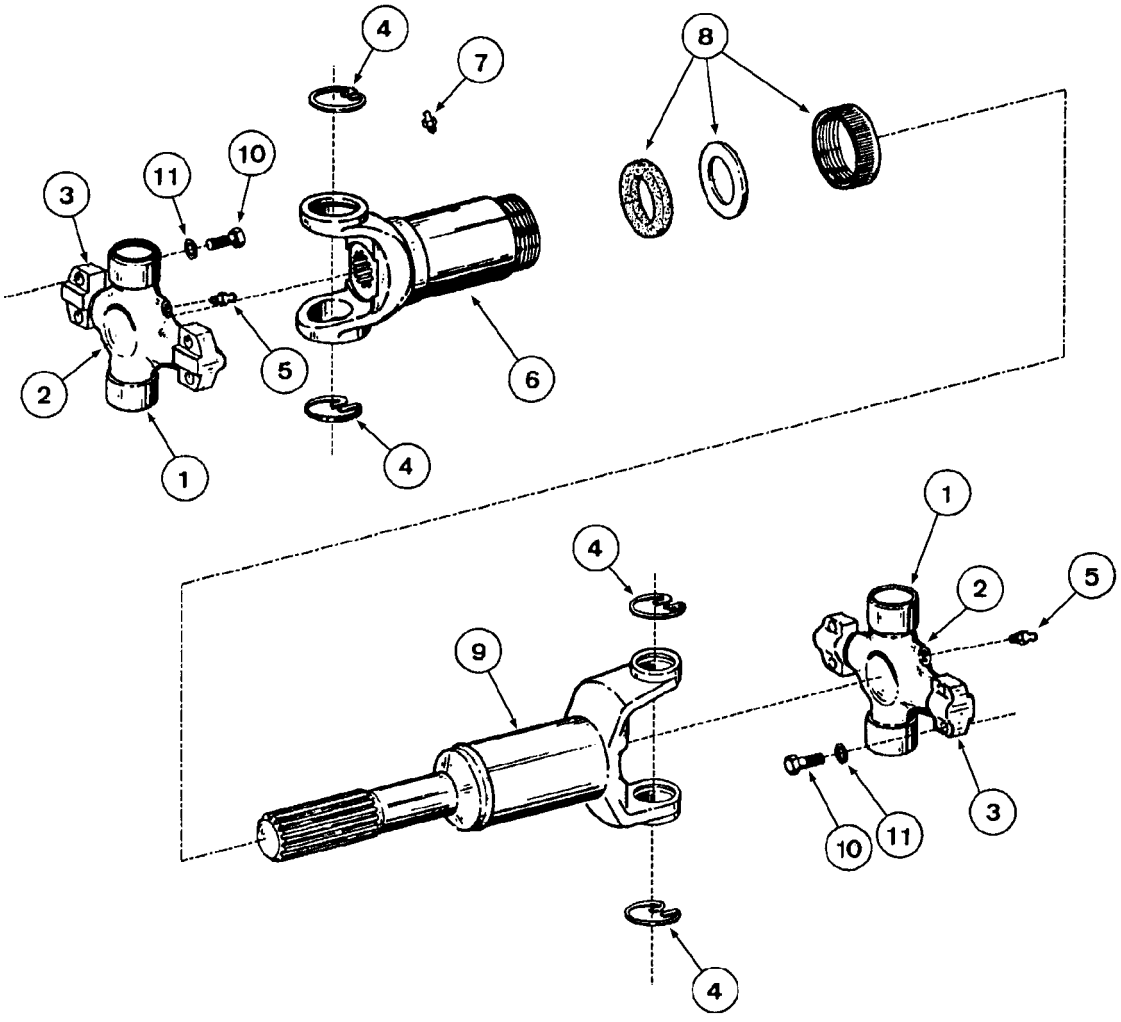

REAR DRIVE SHAFT
REAR DRIVE SHAFT
REAR DRIVE SHAFT
REAR DRIVE SHAFT

R	N	P.N.	MOD	Q	Denominação Bezeichnung	Description Description	Denominacion Beskrivelse	Descrizione Beschrijving	L.C.
	1, 2	**E68144**		1	EIXO, Assy	SHAFT	EJE	ALBERO	016A
					WELLE	ARBRE	AKSEL	AS	
		E68763		2	UNIAO, Assy, Includes items 1 - 5				
						JOINT	ARTICULACION	GIUNTO CARDANICO	4770
					GELENK	ARTICULATION	JOINT	JOINT	
1		**NSS**		2	SEM SERVIÇO EM SEPARADO, BEARING				
						NOT SERVICED SEPARA	NO SE REPARA POR SE	NON FORNITO SEPARAT	064N
					NICHT A SEP ERS-T LIEI	NON FORUNI SEPAREM	SERVICERES IKKE SEPA	NIET LOS VERKRIJGBAA	
2		**NSS**		1	SEM SERVIÇO EM SEPARADO, SPIDER				
						NOT SERVICED SEPARA	NO SE REPARA POR SE	NON FORNITO SEPARAT	064N
					NICHT A SEP ERS-T LIEI	NON FORUNI SEPAREM	SERVICERES IKKE SEPA	NIET LOS VERKRIJGBAA	
3		**NSS**		2	SEM SERVIÇO EM SEPARADO, BEARING				
						NOT SERVICED SEPARA	NO SE REPARA POR SE	NON FORNITO SEPARAT	064N
					NICHT A SEP ERS-T LIEI	NON FORUNI SEPAREM	SERVICERES IKKE SEPA	NIET LOS VERKRIJGBAA	
4		**S12065**		2	ANEL-TRAVA	LOCKING RING	ANILLO DE BLOQUEO	ANELLO DI BLOCCAGGI	051A
					SICHERUNGSRING	BAGUE DE BLOCAGE	LÅSESKIVE	BORGRING	
5		**219-10**		1	GRAXEIRA, 1/4"-28 NPT x .68" lg				
						LUBE NIPPLE	BOQUILLA DE LUBRICA	INGRASSATORE	060I
					SCHMIERNIPPEL	GRAISSEUR	SMØRENIPPEL	SMEERNIPPEL	
		E69392		1	LUVA, Assy, Includes items 6 - 9				
						SLEEVE	MANGUITO	MANICOTTO	031M
					BUCHSE	CHEMISE	TRYKLEJE, KOBLING	MOF; BUS	
6		**NSS**		1	SEM SERVIÇO EM SEPARADO, SLEEVE				
						NOT SERVICED SEPARA	NO SE REPARA POR SE	NON FORNITO SEPARAT	064N
					NICHT A SEP ERS-T LIEI	NON FORUNI SEPAREM	SERVICERES IKKE SEPA	NIET LOS VERKRIJGBAA	
7		**219-4**		1	GRAXEIRA, 1/8"-27 NPTF, Short				
						LUBE NIPPLE	BOQUILLA DE LUBRICA	INGRASSATORE	060I
					SCHMIERNIPPEL	GRAISSEUR	SMØRENIPPEL	SMEERNIPPEL	
8		**E156183**		1	TAMPA, Assy	CAP	TAPÓN	TAPPO	052T
					KAPPE	CAPUCHON	TANKDÆKSEL	DOP	
9		**E68241**		1	EIXO, Sub-Assy	SHAFT	EJE	ALBERO	016A
					WELLE	ARBRE	AKSEL	AS	
10		**328-632**		8	PARAFUSO	BOLT	PERNO	BULLONE	140B
					SCHRAUBE	VIS	BOLT	BOUT	
11		**492-11038**		8	TRAVA DA ARRUELA, 3/8"	LOCK WASHER	ARANDELA DE BLOQUE	RONDELLA DI SICUREZ	132R
					SICHERUNGSSCHEIBE	RONDELLE FREIN	LÅSESKIVE	BORGRING	

(1) Montado para máquinas com Eixo Traseiro Standard
(2) Para máquinas com Eixo Traseiro HD (Heavy Duty) (Opcional), ver 06-38A

06-38A	01	p1	12/08

EIXO PROPULSOR TRASEIRO
REAR DRIVE SHAFT
EJE CARDAN TRASERO
REAR DRIVE SHAFT

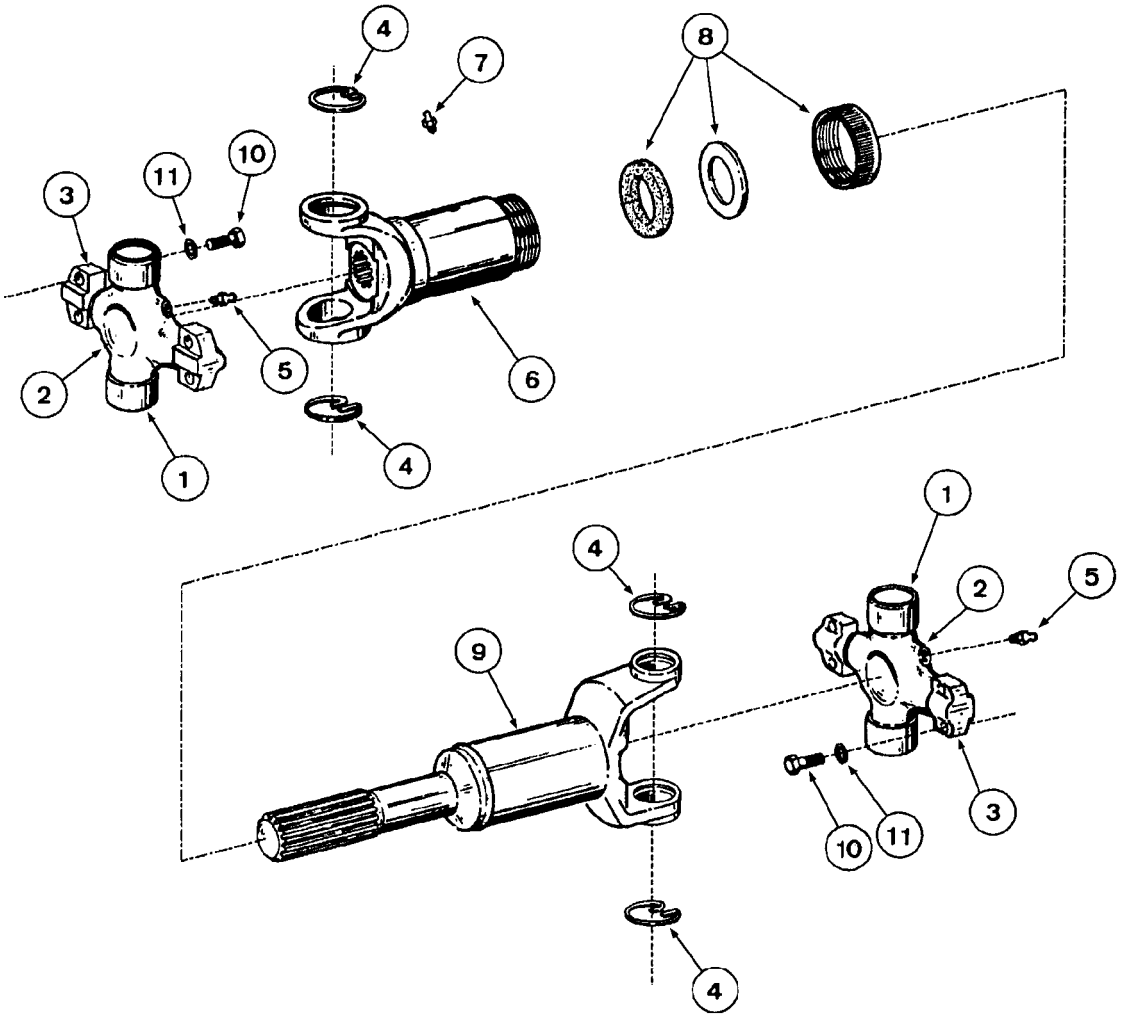

REAR DRIVE SHAFT
REAR DRIVE SHAFT
REAR DRIVE SHAFT
REAR DRIVE SHAFT

R	N	P.N.	MOD	Q	Denominação Bezeichnung	Description Description	Denominacion Beskrivelse	Descrizione Beschrijving	L.C.
	1	**75270181**		1	EIXO, Assy ACHSE	AXLE ESSIEU	EJE AKSEL	ASSALE AS	087A
		{}		2	JOINT, Assy				
1		**NSS**		2	SEM SERVIÇO EM SEPARADO, BEARING NICHT A SEP ERS-T LIEI	NOT SERVICED SEPARA NON FORUNI SEPAREM	NO SE REPARA POR SE SERVICERES IKKE SEPA	NON FORNITO SEPARAT NIET LOS VERKRIJGBAA	064N
2		**NSS**		1	SEM SERVIÇO EM SEPARADO, SPIDER NICHT A SEP ERS-T LIEI	NOT SERVICED SEPARA NON FORUNI SEPAREM	NO SE REPARA POR SE SERVICERES IKKE SEPA	NON FORNITO SEPARAT NIET LOS VERKRIJGBAA	064N
3		**NSS**		2	SEM SERVIÇO EM SEPARADO, BEARING NICHT A SEP ERS-T LIEI	NOT SERVICED SEPARA NON FORUNI SEPAREM	NO SE REPARA POR SE SERVICERES IKKE SEPA	NON FORNITO SEPARAT NIET LOS VERKRIJGBAA	064N
4		**S12065**		2	ANEL-TRAVA SICHERUNGSRING	LOCKING RING BAGUE DE BLOCAGE	ANILLO DE BLOQUEO LÅSESKIVE	ANELLO DI BLOCCAGGI BORGRING	051A
5		**219-10**		1	GRAXEIRA, 1/4"-28 NPT x .68" lg SCHMIERNIPPEL	LUBE NIPPLE GRAISSEUR	BOQUILLA DE LUBRICA SMØRENIPPEL	INGRASSATORE SMEERNIPPEL	060I
		E69392		1	LUVA, Assy BUCHSE	SLEEVE CHEMISE	MANGUITO TRYKLEJE, KOBLING	MANICOTTO MOF; BUS	031M
6		**NSS**		1	SEM SERVIÇO EM SEPARADO, SLEEVE NICHT A SEP ERS-T LIEI	NOT SERVICED SEPARA NON FORUNI SEPAREM	NO SE REPARA POR SE SERVICERES IKKE SEPA	NON FORNITO SEPARAT NIET LOS VERKRIJGBAA	064N
7		**219-4**		1	GRAXEIRA, 1/8"-27 NPTF, Short SCHMIERNIPPEL	LUBE NIPPLE GRAISSEUR	BOQUILLA DE LUBRICA SMØRENIPPEL	INGRASSATORE SMEERNIPPEL	060I
8		**E156183**		1	TAMPA, Assy KAPPE	CAP CAPUCHON	TAPÓN TANKDÆKSEL	TAPPO DOP	052T
9		**NSS**		1	SEM SERVIÇO EM SEPARADO, SHAFT, Sub-Assy NICHT A SEP ERS-T LIEI	NOT SERVICED SEPARA NON FORUNI SEPAREM	NO SE REPARA POR SE SERVICERES IKKE SEPA	NON FORNITO SEPARAT NIET LOS VERKRIJGBAA	064N
10		**328-632**		8	PARAFUSO SCHRAUBE	BOLT VIS	PERNO BOLT	BULLONE BOUT	140B
11		**492-11038**		8	TRAVA DA ARRUELA, 3/8" SICHERUNGSSCHEIBE	LOCK WASHER RONDELLE FREIN	ARANDELA DE BLOQUE LÅSESKIVE	RONDELLA DI SICUREZ BORGRING	132R

(1) Montado para máquinas com Eixo Traseiro HD (Heavy Duty) (Opcional)

Montado para máquinas com Eixo Traseiro HD (Heavy Duty) (Opcional)

W20E

EIXOS DIANTEIRO E TRASEIRO (DANA) - MONTAGEM
FRONT AND REAR AXLES (DANA) - MOUNTING
EJES DELANTERO Y TRASERO (DANA) - MONTAJE
FRONT AND REAR AXLES (DANA) - MOUNTING

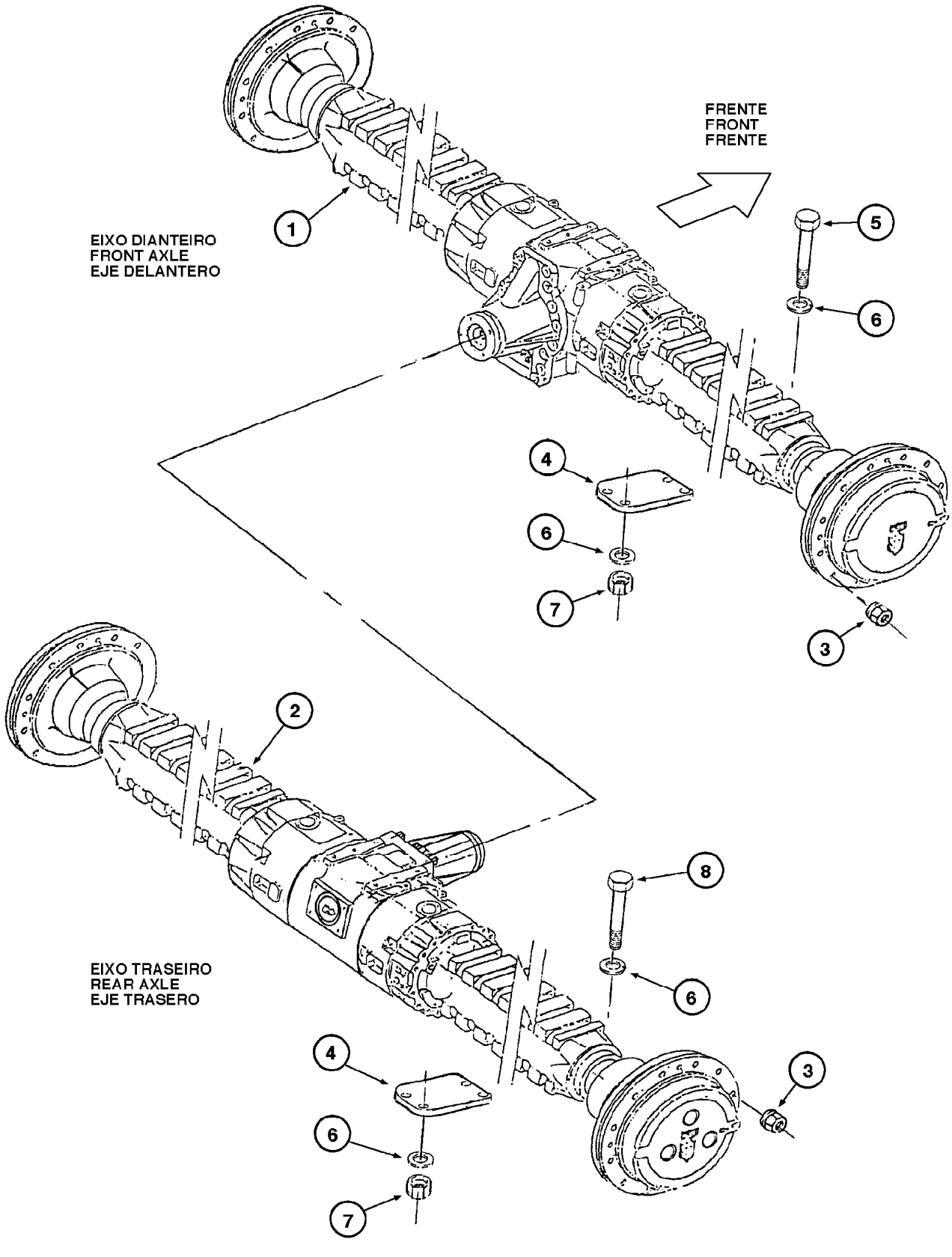

FRONT AND REAR AXLES (DANA) - MOUNTING
FRONT AND REAR AXLES (DANA) - MOUNTING
FRONT AND REAR AXLES (DANA) - MOUNTING
FRONT AND REAR AXLES (DANA) - MOUNTING

R	N	P.N.	MOD	Q	Denominação Bezeichnung	Description Description	Denominacion Beskrivelse	Descrizione Beschrijving	L.C.
1	1	148216A1		1	EIXO, front Assy (P.6-42) WELLE	SHAFT ARBRE	EJE AKSEL	ALBERO AS	016A
1	2	87520202		1	EIXO, front Assy (P.6-42) ACHSE	AXLE ESSIEU	EJE AKSEL	ASSALE AS	087A
2	1	148217A1		1	EIXO, rear Assy (P.6-54) WELLE	SHAFT ARBRE	EJE AKSEL	ALBERO AS	016A
2	2	87520201		1	EIXO, rear Assy (P.6-54) ACHSE	AXLE ESSIEU	EJE AKSEL	ASSALE AS	087A
2	3	87606958		1	EIXO, rear Assy, HD (Heavy Duty) (P.6-54) ACHSE	AXLE ESSIEU	EJE AKSEL	ASSALE AS	087A
3		748961		48	PORCA MUTTER	NUT ECROU	TUERCA MØTRIK	DADO MOER	010D
4		148220A1		4	PLACA DE COBERTURA ABDECKPLATTE	COVER PLATE COUVERCLE	PLACA DE CUBIERTA DÆKPLADE	PIASTRA DI COPERTUR AFSCHERMPLAAT	110P
5		148223A1		8	PARAFUSO SCHRAUBE	SCREW VIS	TORNILLO SKRUE	VITE SCHROEF	040V
6		D36505		32	ARRUELA UNTERLEGSCHEIBE	WASHER RONDELLE	ARANDELA WASHER	RONDELLA WASHER	9720
7		232-24016		16	CONTRA PORCA, 1"-14, GB SICHERUNGSMUTTER	LOCK NUT CONTRE-ECROU	TUERCA DE BLOQUEO LÅSEMØTRIK	DADO DI BLOCCAGGIO BORGMOER	P263
8		E158695		8	PARAFUSO SCHRAUBE	SCREW VIS	TORNILLO SKRUE	VITE SCHROEF	040V

(1) Montada até o nº de série N6AE00850 e N6AE00853 a N6AE00860
(2) Montada a partir do nº de série N6AE00861 e N6AE00851 + N6AE00852
(3) OPCIONAL

EIXO DIANTEIRO - CONJUNTO
FRONT AXLE - ASSEMBLY
EJE DELANTERO - CONJUNTO
FRONT AXLE - ASSEMBLY

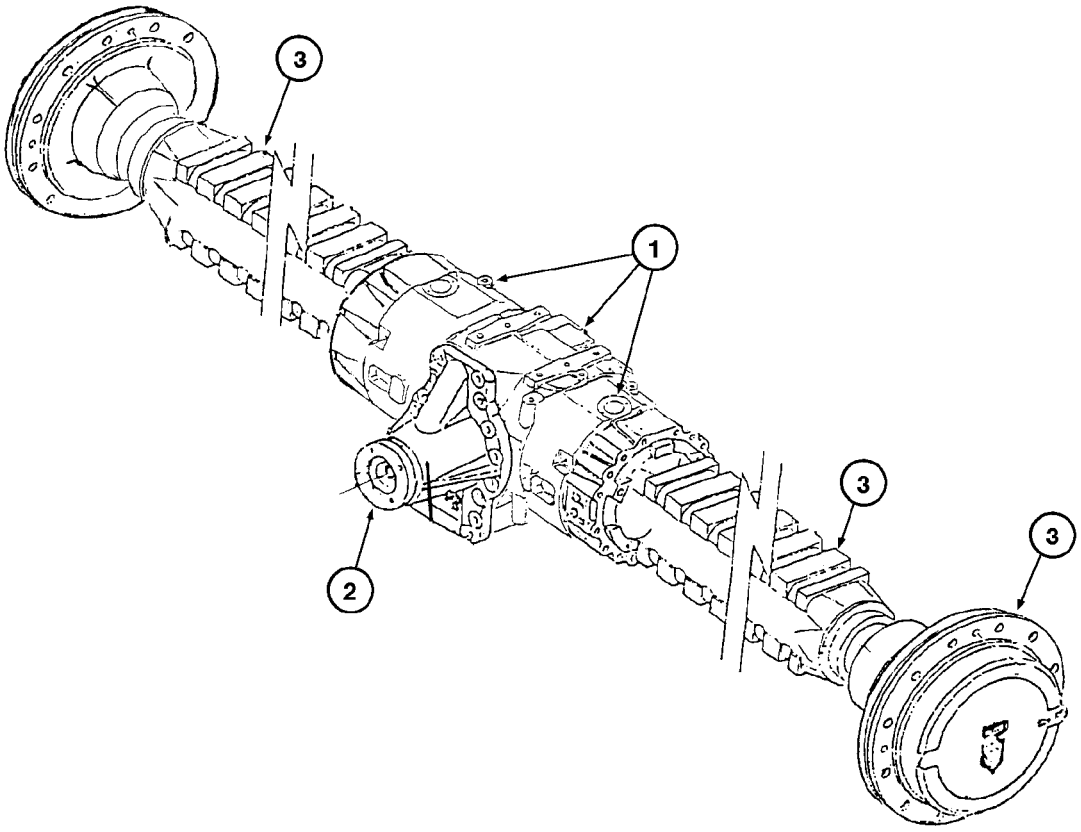

FRONT AXLE - ASSEMBLY
FRONT AXLE - ASSEMBLY
FRONT AXLE - ASSEMBLY
FRONT AXLE - ASSEMBLY

R	N	P.N.	MOD	Q	Denominação Bezeichnung	Description Description	Denominacion Beskrivelse	Descrizione Beschrijving	L.C.
	1	**148216A1**		1	EIXO, front Assy (P.6-44 to 6-52)				
						SHAFT	EJE	ALBERO	016A
					WELLE	ARBRE	AKSEL	AS	
	2	**87520202**		1	EIXO, front Assy (P.6-44 to 6-52), Includes items 1, 2, 3				
						AXLE	EJE	ASSALE	087A
					ACHSE	ESSIEU	AKSEL	AS	
1		**REF**		1	INSTRUÇÃO, HOUSING (P.6-44)				
						INSTRUCTION	INSTRUCCIÓN	ISTRUZIONI	Z571
					ANLEITUNG	INSTRUCTION	INSTRUKTION	INSTRUCTIE	
2		**REF**		1	INSTRUÇÃO, DIFFERENTIAL (P.6-48)				
						INSTRUCTION	INSTRUCCIÓN	ISTRUZIONI	Z571
					ANLEITUNG	INSTRUCTION	INSTRUKTION	INSTRUCTIE	
3		**REF**		1	INSTRUÇÃO, HUBS wheels & brakes (P.6-50)				
						INSTRUCTION	INSTRUCCIÓN	ISTRUZIONI	Z571
					ANLEITUNG	INSTRUCTION	INSTRUKTION	INSTRUCTIE	

(1) Montada até o nº de série N6AE00850 e N6AE00853 a N6AE00860
(2) Montada a partir do nº de série N6AE00861 e N6AE00851 + N6AE00852

06-44	01	p1	03/09

EIXO DIANTEIRO - CARCAÇAS
FRONT AXLE - HOUSING
EJE DELANTERO - CARCASAS
FRONT AXLE - HOUSING

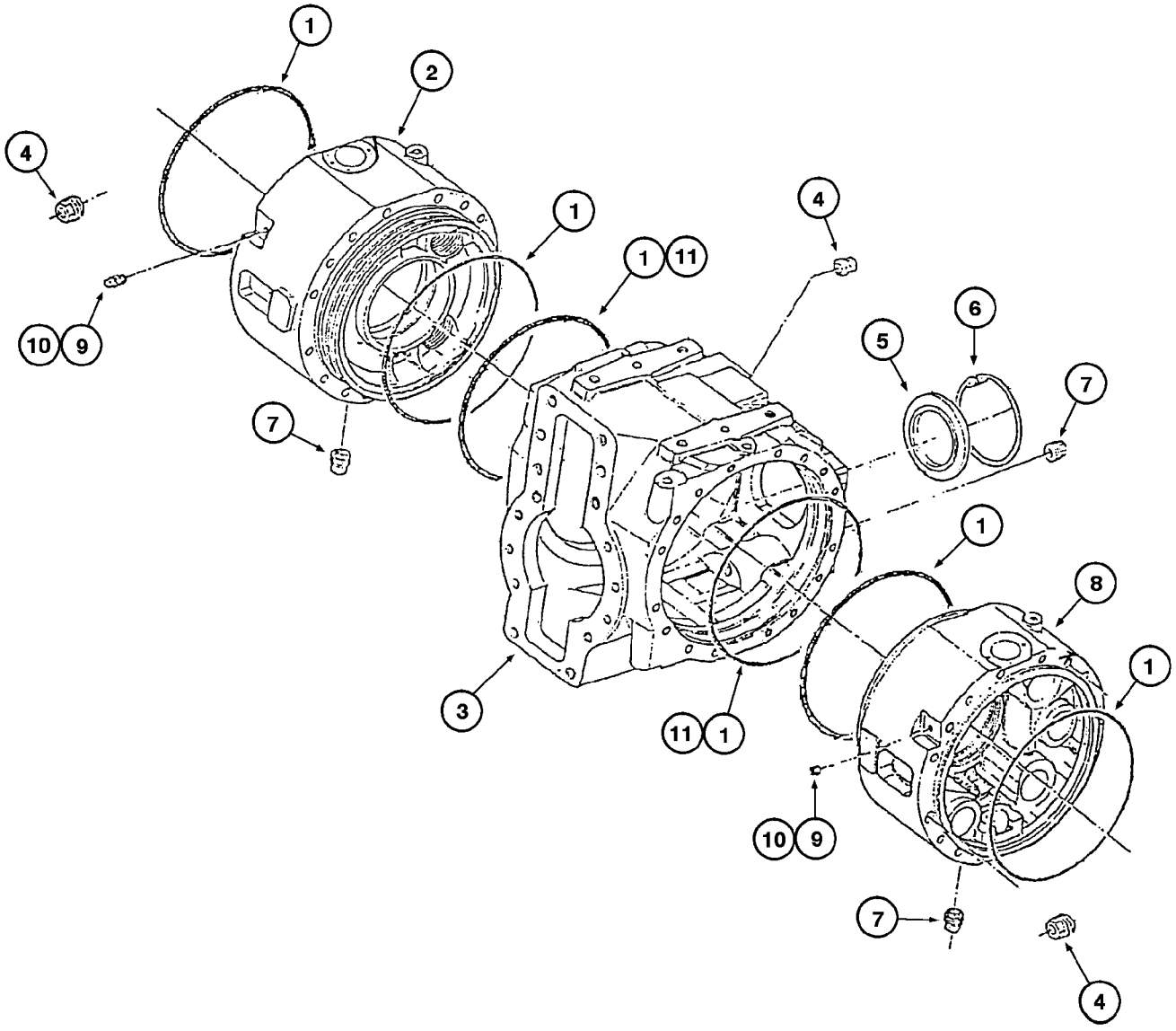

FRONT AXLE - HOUSING
FRONT AXLE - HOUSING
FRONT AXLE - HOUSING
FRONT AXLE - HOUSING

R	N	P.N.	MOD	Q	Denominação Bezeichnung	Description Description	Denominacion Beskrivelse	Descrizione Beschrijving	L.C.
	1	**148216A1**		1	EIXO, front Assy (P.6-44 to 6-52)				
						SHAFT	EJE	ALBERO	016A
					WELLE	ARBRE	AKSEL	AS	
	2	**87520202**		1	EIXO, front Assy (P.6-44 to 6-52), Includes items 1 - 11				
						AXLE	EJE	ASSALE	087A
					ACHSE	ESSIEU	AKSEL	AS	
1		**148880A1**		4	O-RING, OPC	O-RING	JUNTA TÓRICA	ANELLO TOROIDALE	055A
					O-RING	JOINT TORIQUE	O-RING	O-RING	
2		**148881A1**		1	ALOJAMENTO, middle LH	HOUSING	ALOJAMIENTO	ALLOGGIAMENTO	014V
					GEHÄUSE	CARTER	HUS	HUIS	
3		**148882A1**		1	CORPO	BODY	CUERPO	CORPO	300C
					KAROSSERIE	CORPS	HUS	HUIS	
4		**148883A1**		4	BUJÃO	PLUG	TAPÓN	TAPPO	050T
					STOPFEN	BOUCHON	PROP	PLUG	
5		**148884A1**		1	BUJÃO	PLUG	TAPÓN	TAPPO	050T
					STOPFEN	BOUCHON	PROP	PLUG	
6		**148885A1**		1	ANEL DE PRESSÃO	SNAP RING	ANILLO DE RESORTE	ANELLO ELASTICO	054A
					SPRENGRING	ANNEAU D'ARRET	LÅSERING	VEERRING	
7		**292414A1**		3	BUJAO	PLUG	TAPON	TAPPO	6400
					STOPFEN	BOUCHON	PLUG	PLUG	
8		**148886A1**		1	ALOJAMENTO, middle RH	HOUSING	ALOJAMIENTO	ALLOGGIAMENTO	014V
					GEHÄUSE	CARTER	HUS	HUIS	
9		**148887A1**		1	BUJÃO, RH	PLUG	TAPÓN	TAPPO	050T
					STOPFEN	BOUCHON	PROP	PLUG	
10		**148888A1**		1	RESPIRO, LH	BREATHER	RESPIRADERO	SFIATO	145S
					ENTLÜFTER	RENIFLARD	UDLUFTNINGSSKRUE	ONTLUCHTER	
11		**148889A1**		2	O-RING, STD	O-RING	JUNTA TÓRICA	ANELLO TOROIDALE	055A
					O-RING	JOINT TORIQUE	O-RING	O-RING	

(1) Montada até o nº de série N6AE00850 e N6AE00853 a N6AE00860
(2) Montada a partir do nº de série N6AE00861 e N6AE00851 + N6AE00852

EIXO DIANTEIRO - PRISIONEIROS DAS CARCAÇAS
FRONT AXLE - HOUSING STUDS
EJE DELANTERO - ESPARRAGOS DE LAS CARCASAS
FRONT AXLE - HOUSING STUDS

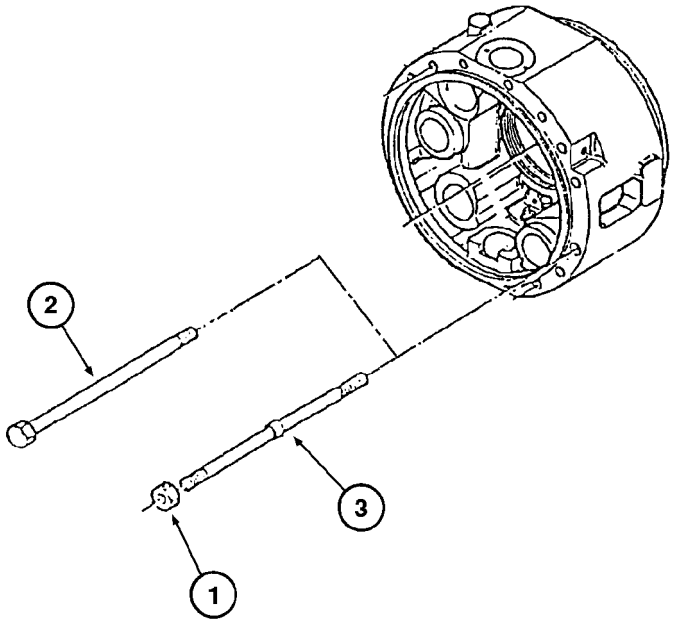

FRONT AXLE - HOUSING STUDS
FRONT AXLE - HOUSING STUDS
FRONT AXLE - HOUSING STUDS
FRONT AXLE - HOUSING STUDS

R	N	P.N.	MOD	Q	Denominação Bezeichnung	Description Description	Denominacion Beskrivelse	Descrizione Beschrijving	L.C.
	1	**148216A1**		1	EIXO, front Assy (P.6-44 to 6-52)				
						SHAFT	EJE	ALBERO	016A
					WELLE	ARBRE	AKSEL	AS	
	2	**87520202**		1	EIXO, front Assy (P.6-44 to 6-52), Includes items 1, 2, 3				
						AXLE	EJE	ASSALE	087A
					ACHSE	ESSIEU	AKSEL	AS	
1		**148890A1**		4	PORCA	NUT	TUERCA	DADO	010D
					MUTTER	ECROU	MØTRIK	MOER	
2		**148891A1**		28	PARAFUSO	SCREW	TORNILLO	VITE	040V
					SCHRAUBE	VIS	SKRUE	SCHROEF	
3		**148892A1**		4	PRISIONEIRO	STUD	PRISIONERO	PRIGIONIERO	210P
					GEWINDEBOLZEN	GOUJON	STØTTEBOLT	TAPEIND	

(1) Montada até o nº de série N6AE00850 e N6AE00853 a N6AE00860
(2) Montada a partir do nº de série N6AE00861 e N6AE00851 + N6AE00852

06-48	01	p1	03/09

EIXO DIANTEIRO - DIFERENCIAL
FRONT AXLE - DIFFERENTIAL
EJE DELANTERO - DIFERENCIAL
FRONT AXLE - DIFFERENTIAL

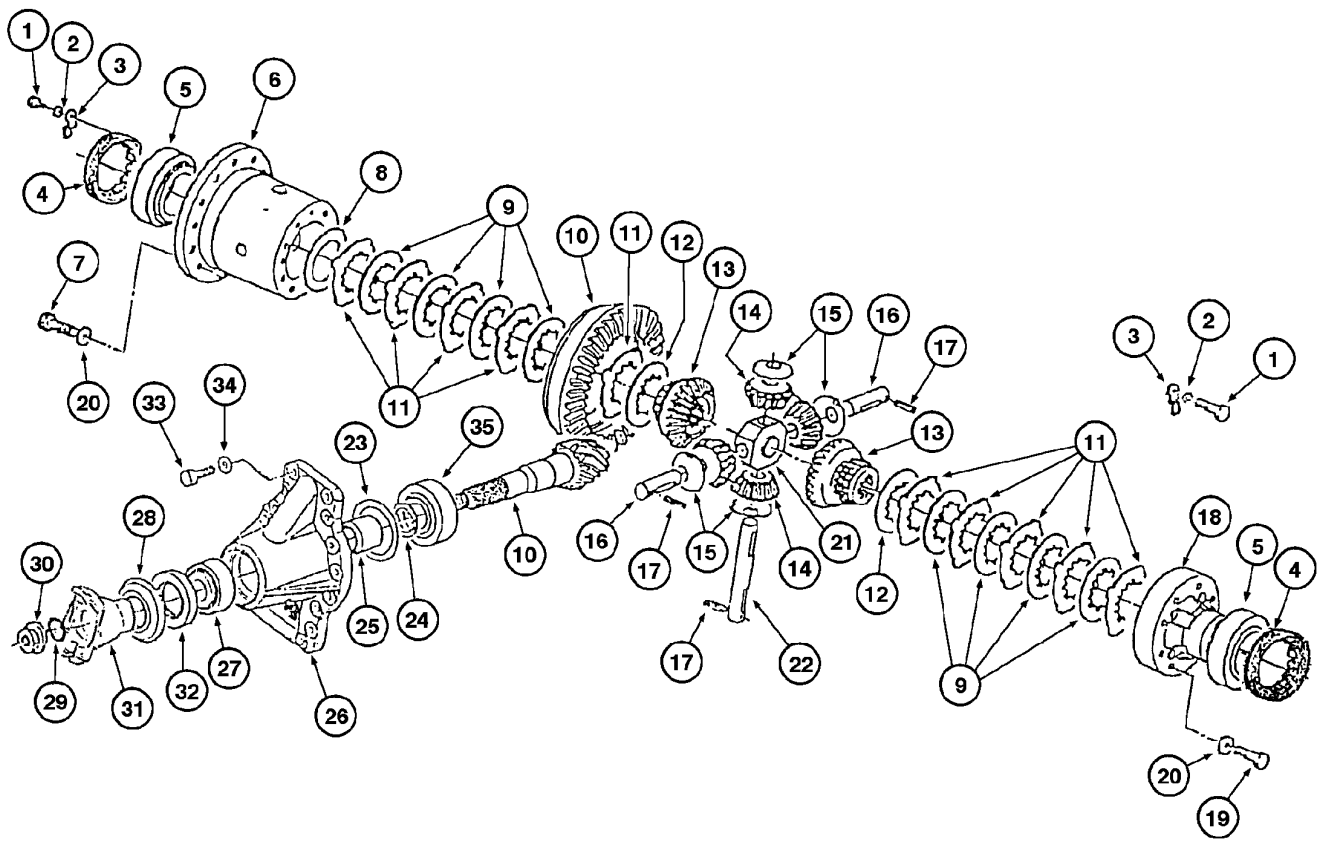

FRONT AXLE - DIFFERENTIAL
FRONT AXLE - DIFFERENTIAL
FRONT AXLE - DIFFERENTIAL
FRONT AXLE - DIFFERENTIAL

R	N	P.N.	MOD	Q	Denominação Bezeichnung	Description Description	Denominacion Beskrivelse	Descrizione Beschrijving	L.C.
	1	**148216A1**		1	EIXO, front Assy (P.6-44 to 6-52)				
						SHAFT	EJE	ALBERO	016A
					WELLE	ARBRE	AKSEL	AS	
	2	**87520202**		1	EIXO, front Assy (P.6-44 to 6-52), Includes items 1 - 35				
						AXLE	EJE	ASSALE	087A
					ACHSE	ESSIEU	AKSEL	AS	
1	3	**148893A1**		2	PARAFUSO	SCREW	TORNILLO	VITE	040V
					SCHRAUBE	VIS	SKRUE	SCHROEF	
2		**148894A1**		2	ARRUELA PLANA	WASHER	ARANDELA	RONDELLA	131R
					UNTERLEGSCHEIBE	RONDELLE	FLADSKIVE	SLUITRING	
3		**148895A1**		2	PLACA DE COBERTURA	COVER PLATE	PLACA DE CUBIERTA	PIASTRA DI COPERTUR/	110P
					ABDECKPLATTE	COUVERCLE	DÆKPLADE	AFSCHERMPLAAT	
4	3	**148896A1**		2	PORCA DE VEDAÇÃO	RING NUT	TUERCA DE ANILLA	GHIERA	050G
					RINGMUTTER	ECROU A ŒIL	GEVINDRING	RINGMOER	
5		**148897A1**		2	CONJUNTO DO ROLAMENTO				
						BEARING ASSY	CONJUNTO DE COJINET	COMPLESSIVO CUSCINI	341C
					LAGERBAURUPPE	ROULEMENT	LEJESAMLING	LAGEREENHEID	
6		**148898A1**		1	ALOJAMENTO, differential	HOUSING	ALOJAMIENTO	ALLOGGIAMENTO	014V
					GEHÄUSE	CARTER	HUS	HUIS	
7	4	**148899A1**		16	PARAFUSO	SCREW	TORNILLO	VITE	040V
					SCHRAUBE	VIS	SKRUE	SCHROEF	
8		**148900A1**		1	CALÇO DE AFINAÇÃO	SHIM	SUPLEMENTO	SPESSORE	198S
					AUSGLEICHSSCHEIBE	CALE	MELLEMLÆG	VULPLAATJE	
8		**148901A1**		1	CALÇO DE AFINAÇÃO	SHIM	SUPLEMENTO	SPESSORE	198S
					AUSGLEICHSSCHEIBE	CALE	MELLEMLÆG	VULPLAATJE	
8		**148902A1**		1	CALÇO DE AFINAÇÃO	SHIM	SUPLEMENTO	SPESSORE	198S
					AUSGLEICHSSCHEIBE	CALE	MELLEMLÆG	VULPLAATJE	
9		**148903A1**		8	DISCO	DISC	DISCO	DISCO	060D
					SCHEIBE	DISQUE	NAV	SCHIJF	
10		**148904A1**		1	COROA CÔNICA, Assy	BEVEL GEAR	PIÑÓN CÓNICO	INGRANAGGIO CONICO	285C
					KEGELRAD	PIGNON CONIQUE	KONISK TANDHJUL	CONISCH TANDWIEL	
11		**148905A1**		10	DISCO	DISC	DISCO	DISCO	060D
					SCHEIBE	DISQUE	NAV	SCHIJF	
12		**148906A1**		2	DISCO	DISC	DISCO	DISCO	060D
					SCHEIBE	DISQUE	NAV	SCHIJF	
13		**148907A1**		2	ENGRENAGEM SOLAR, planet				
						SUN GEAR	ENGRANAJE PLANETAR	RUOTA DENTATA CENTI	P365
					SONNENRAD	PIGNON SOLAIRE	SOLGEAR	ZONNEWIEL	
14		**148908A1**		4	ENGRENAGEM, satellite	GEAR	ENGRANAJE	INGRANAGGIO	050I
					ZAHNRAD	PIGNON	TANDHJUL	TANDWIEL	
15		**148909A1**		4	ARRUELA PLANA	WASHER	ARANDELA	RONDELLA	131R
					UNTERLEGSCHEIBE	RONDELLE	FLADSKIVE	SLUITRING	
16		**148910A1**		2	EIXO	SHAFT	EJE	ALBERO	016A
					WELLE	ARBRE	AKSEL	AS	

(1) Montada até o nº de série N6AE00850 e N6AE00853 a N6AE00860
(2) Montada a partir do nº de série N6AE00861 e N6AE00851 + N6AE00852
(3) Utilizar Loctite 222
(4) Utilizar Loctite 270

EIXO DIANTEIRO - DIFERENCIAL
FRONT AXLE - DIFFERENTIAL
EJE DELANTERO - DIFERENCIAL
FRONT AXLE - DIFFERENTIAL

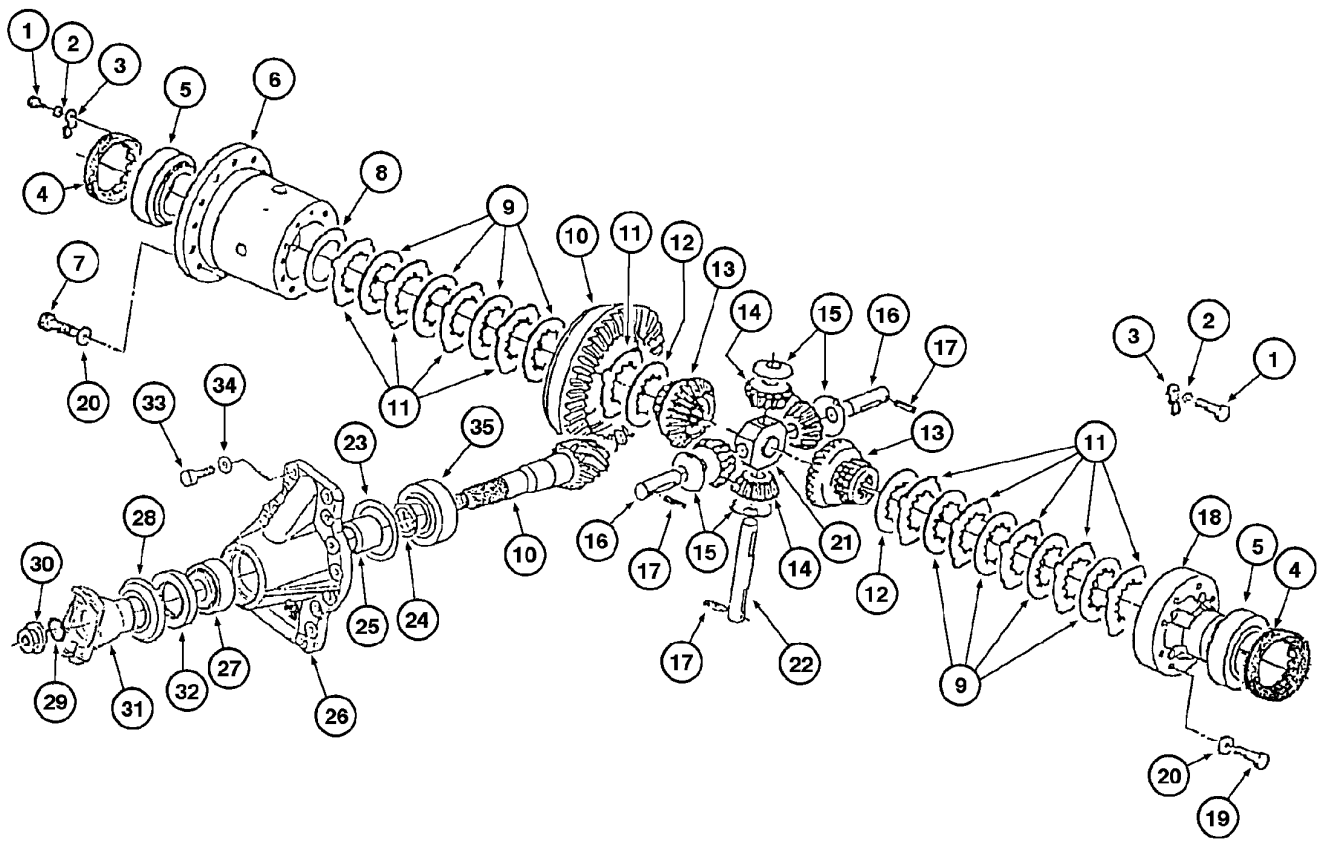

FRONT AXLE - DIFFERENTIAL
FRONT AXLE - DIFFERENTIAL
FRONT AXLE - DIFFERENTIAL
FRONT AXLE - DIFFERENTIAL

R	N	P.N.	MOD	Q	Denominação Bezeichnung	Description Description	Denominacion Beskrivelse	Descrizione Beschrijving	L.C.
17		148911A1		3	PINO ELÁSTICO SPANNSTIFT	ROLL PIN GOUPILLE ELASTIQUE	BULÓN DE GIRO SPLIT	SPINA ELASTICA ROLPEN	200S
18		148912A1		1	COBERTURA ABDECKUNG	COVER COUVERCLE	CUBIERTA DÆKSEL	COPERCHIO AFSCHERMING	265C
19		148913A1		8	PARAFUSO SCHRAUBE	SCREW VIS	TORNILLO SKRUE	VITE SCHROEF	040V
20		148914A1		24	ARRUELA PLANA UNTERLEGSCHEIBE	WASHER RONDELLE	ARANDELA FLADSKIVE	RONDELLA SLUITRING	131R
21		148915A1		1	FIXADOR, support HALTER	HOLDER SUPPORT	SOPORTE HOLDER	SUPPORTO HOUDER	174S
22		148916A1		1	PINO PIN	PIN BROCHE	PASADOR STIFT	PERNO PEN	080P
23		148917A1		1	CALÇO DE AFINAÇÃO AUSGLEICHSSCHEIBE	SHIM CALE	SUPLEMENTO MELLEMLÆG	SPESSORE VULPLAATJE	198S
23		148918A1		1	CALÇO DE AFINAÇÃO AUSGLEICHSSCHEIBE	SHIM CALE	SUPLEMENTO MELLEMLÆG	SPESSORE VULPLAATJE	198S
23		148919A1		1	CALÇO DE AFINAÇÃO AUSGLEICHSSCHEIBE	SHIM CALE	SUPLEMENTO MELLEMLÆG	SPESSORE VULPLAATJE	198S
23		148920A1		1	CALÇO DE AFINAÇÃO AUSGLEICHSSCHEIBE	SHIM CALE	SUPLEMENTO MELLEMLÆG	SPESSORE VULPLAATJE	198S
24		148921A1		5	CALÇO DE AFINAÇÃO AUSGLEICHSSCHEIBE	SHIM CALE	SUPLEMENTO MELLEMLÆG	SPESSORE VULPLAATJE	198S
24		148922A1		3	CALÇO DE AFINAÇÃO AUSGLEICHSSCHEIBE	SHIM CALE	SUPLEMENTO MELLEMLÆG	SPESSORE VULPLAATJE	198S
24		148923A1		1	CALÇO DE AFINAÇÃO AUSGLEICHSSCHEIBE	SHIM CALE	SUPLEMENTO MELLEMLÆG	SPESSORE VULPLAATJE	198S
24		148924A1		1	CALÇO DE AFINAÇÃO AUSGLEICHSSCHEIBE	SHIM CALE	SUPLEMENTO MELLEMLÆG	SPESSORE VULPLAATJE	198S
24		148925A1		1	CALÇO DE AFINAÇÃO AUSGLEICHSSCHEIBE	SHIM CALE	SUPLEMENTO MELLEMLÆG	SPESSORE VULPLAATJE	198S
25		148926A1		1	ESPAÇADOR DISTANZSTÜCK	SPACER ENTRETOISE	SEPARADOR AFSTANDSSTYKKE	DISTANZIALE AFSTANDSSTUK	075D
26		148927A1		1	COBERTURA ABDECKUNG	COVER COUVERCLE	CUBIERTA DÆKSEL	COPERCHIO AFSCHERMING	265C
27		148928A1		1	CONJUNTO DO ROLAMENTO LAGERBAURUPPE	BEARING ASSY ROULEMENT	CONJUNTO DE COJINET LEJESAMLING	COMPLESSIVO CUSCINI LAGEREENHEID	341C
28		148929A1		1	PLACA DE COBERTURA, protection ABDECKPLATTE	COVER PLATE COUVERCLE	PLACA DE CUBIERTA DÆKPLADE	PIASTRA DI COPERTUR/ AFSCHERMPLAAT	110P
29		148930A1		1	O-RING O-RING	O-RING JOINT TORIQUE	JUNTA TÓRICA O-RING	ANELLO TOROIDALE O-RING	055A
30	1	148931A1		1	PORCA MUTTER	NUT ECROU	TUERCA MØTRIK	DADO MOER	010D
31		149987A1		1	FLANGE FLANSCH	FLANGE BRIDE	BRIDA FLANGE	FLANGIA FLENS	070F
32		148933A1		1	VEDAÇÃO DICHTUNG	SEAL JOINT	ANILLO DE CIERRE PAKNING	GUARNIZIONE; TENUTA AFDICHTING	132A

(1) Utilizar Loctite 270

EIXO DIANTEIRO - DIFERENCIAL
FRONT AXLE - DIFFERENTIAL
EJE DELANTERO - DIFERENCIAL
FRONT AXLE - DIFFERENTIAL

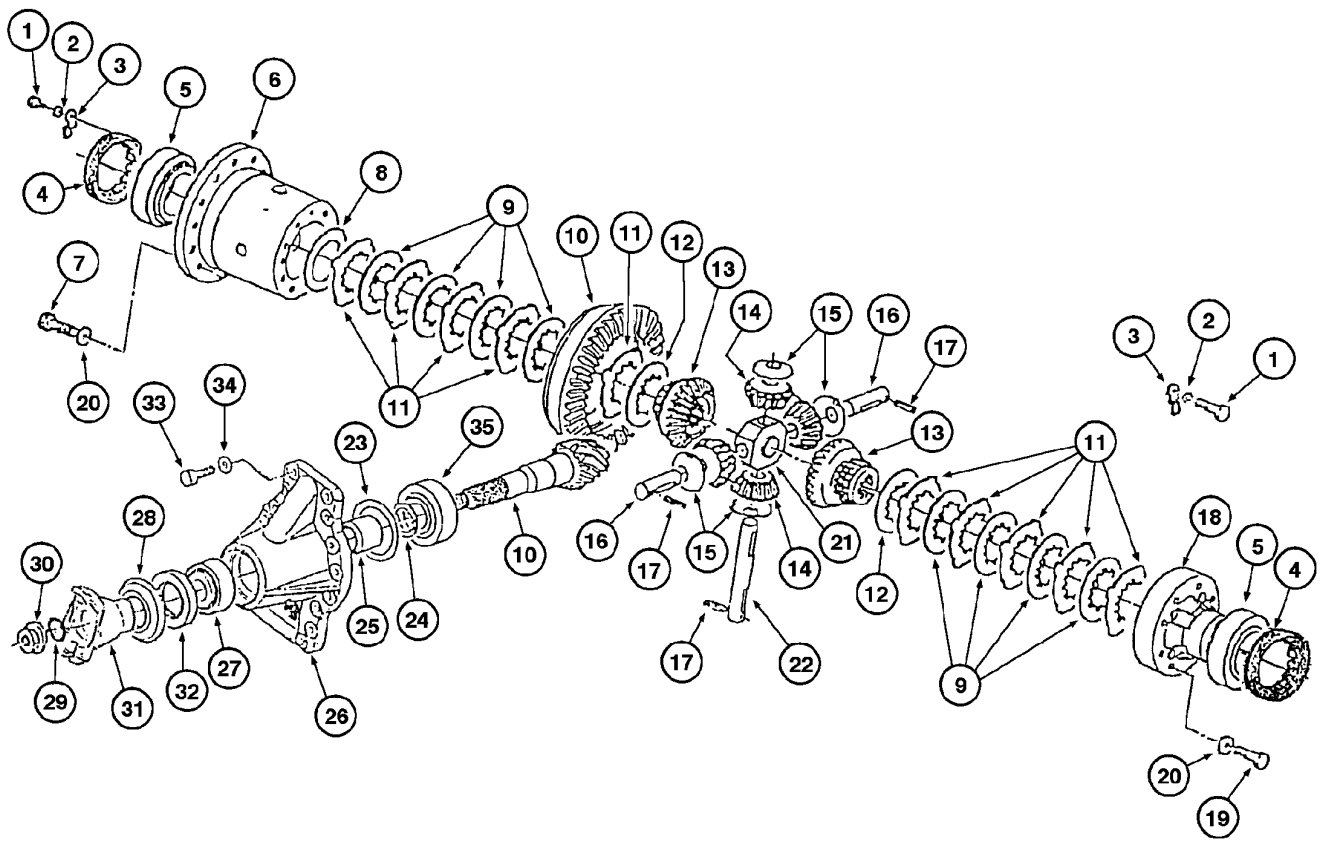

FRONT AXLE - DIFFERENTIAL
FRONT AXLE - DIFFERENTIAL
FRONT AXLE - DIFFERENTIAL
FRONT AXLE - DIFFERENTIAL

R	N	P.N.	MOD	Q	Denominação Bezeichnung	Description Description	Denominacion Beskrivelse	Descrizione Beschrijving	L.C.
33	1	**148934A1**		16	PARAFUSO SCHRAUBE	SCREW VIS	TORNILLO SKRUE	VITE SCHROEF	040V
34		**148935A1**		16	ARRUELA PLANA UNTERLEGSCHEIBE	WASHER RONDELLE	ARANDELA FLADSKIVE	RONDELLA SLUITRING	131R
35		**148936A1**		1	CONJUNTO DO ROLAMENTO LAGERBAURUPPE	BEARING ASSY ROULEMENT	CONJUNTO DE COJINET LEJESAMLING	COMPLESSIVO CUSCINI LAGEREENHEID	341C

(1) Utilizar Loctite 270

06-50	01	p1	03/09

EIXO DIANTEIRO - CUBO DE RODA
FRONT AXLE - WHEEL HUB
EJE DELANTERO - CUBO DE RUEDA
FRONT AXLE - WHEEL HUB

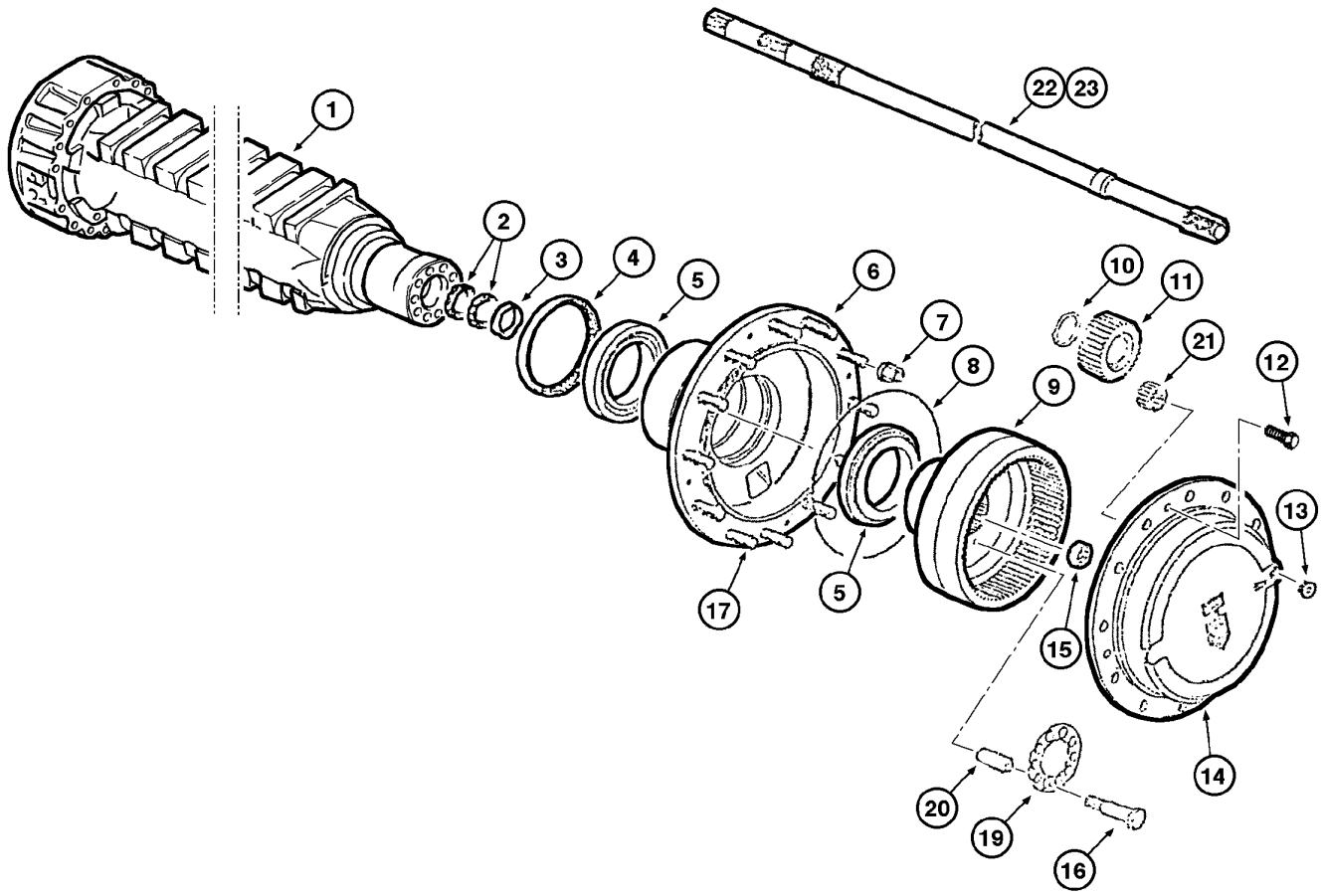

FRONT AXLE - WHEEL HUB
FRONT AXLE - WHEEL HUB
FRONT AXLE - WHEEL HUB
FRONT AXLE - WHEEL HUB

R	N	P.N.	MOD	Q	Denominação Bezeichnung	Description Description	Denominacion Beskrivelse	Descrizione Beschrijving	L.C.
	1	**148216A1**		1	EIXO, front Assy (P.6-44 to 6-52)				
						SHAFT	EJE	ALBERO	016A
					WELLE	ARBRE	AKSEL	AS	
	2	**87520202**		1	EIXO, front Assy (P.6-44 to 6-52), Includes items 1 - 23				
						AXLE	EJE	ASSALE	087A
					ACHSE	ESSIEU	AKSEL	AS	
1		**148937A1**		2	ALOJAMENTO, axle	HOUSING	ALOJAMIENTO	ALLOGGIAMENTO	014V
					GEHÄUSE	CARTER	HUS	HUIS	
2		**148938A1**		2	VEDAÇÃO DE BORRACHA	RUBBER SEAL	JUNTA DE GOMA	GUARNIZIONE DI GOMM	122G
					GUMMIDICHTUNG	JOINT EN CAOUTCHOU(	GUMMITÆTNING	RUBBEREN AFDICHTING	
3		**148939A1**		2	ANEL	RING	ANILLO	ANELLO	045A
					RING	ANNEAU	RING	RING	
4		**148940A1**		2	VEDAÇÃO	SEAL	ANILLO DE CIERRE	GUARNIZIONE; TENUTA	132A
					DICHTUNG	JOINT	PAKNING	AFDICHTING	
5		**148941A1**		4	CONJUNTO DO ROLAMENTO				
						BEARING ASSY	CONJUNTO DE COJINET	COMPLESSIVO CUSCINI	341C
					LAGERBAURUPPE	ROULEMENT	LEJESAMLING	LAGEREENHEID	
6		**148942A1**		2	CUBO, wheel	HUB	CUBO	MOZZO	135M
					NABE	MOYEU	NAV	NAAF	
7		**REF**		24	INSTRUÇÃO, NUT (P.6-40)	INSTRUCTION	INSTRUCCIÓN	ISTRUZIONI	Z571
					ANLEITUNG	INSTRUCTION	INSTRUKTION	INSTRUCTIE	
8		**148944A1**		2	O-RING	O-RING	JUNTA TÓRICA	ANELLO TOROIDALE	055A
					O-RING	JOINT TORIQUE	O-RING	O-RING	
9		**148945A1**		2	COROA DENTADA	RING GEAR	CORONA DENTADA	CORONA DENTATA	297C
					ZAHNKRANZ	COURONNE DENTEE	TANDKRANS	RINGWIEL	
10		**148946A1**		6	ANEL DE PRESSÃO	SNAP RING	ANILLO DE RESORTE	ANELLO ELASTICO	054A
					SPRENGRING	ANNEAU D'ARRET	LÅSERING	VEERRING	
11		**148947A1**		6	ENGRENAGEM, satellite	GEAR	ENGRANAJE	INGRANAGGIO	050I
					ZAHNRAD	PIGNON	TANDHJUL	TANDWIEL	
12		**148948A1**		4	PARAFUSO	SCREW	TORNILLO	VITE	040V
					SCHRAUBE	VIS	SKRUE	SCHROEF	
13		**148949A1**		2	BUJÃO	PLUG	TAPÓN	TAPPO	050T
					STOPFEN	BOUCHON	PROP	PLUG	
14		**148950A1**		2	COBERTURA, satellites	COVER	CUBIERTA	COPERCHIO	265C
					ABDECKUNG	COUVERCLE	DÆKSEL	AFSCHERMING	
15		**148951A1**		2	ARRUELA PLANA	WASHER	ARANDELA	RONDELLA	131R
					UNTERLEGSCHEIBE	RONDELLE	FLADSKIVE	SLUITRING	
16		**148952A1**		20	PARAFUSO	SCREW	TORNILLO	VITE	040V
					SCHRAUBE	VIS	SKRUE	SCHROEF	
17		**148953A1**		24	PRISIONEIRO	STUD	PRISIONERO	PRIGIONIERO	210P
					GEWINDEBOLZEN	GOUJON	STØTTEBOLT	TAPEIND	
19		**148955A1**		2	PLACA DE COBERTURA	COVER PLATE	PLACA DE CUBIERTA	PIASTRA DI COPERTUR/	110P
					ABDECKPLATTE	COUVERCLE	DÆKPLADE	AFSCHERMPLAAT	
20		**148956A1**		20	BUCHA, reducer	BUSHING	CASQUILLO	BOCCOLA	095B
					BUCHSE	BAGUE	BØSNING	BUS	

(1) Montada até o nº de série N6AE00850 e N6AE00853 a N6AE00860
(2) Montada a partir do nº de série N6AE00861 e N6AE00851 + N6AE00852

EIXO DIANTEIRO - CUBO DE RODA
FRONT AXLE - WHEEL HUB
EJE DELANTERO - CUBO DE RUEDA
FRONT AXLE - WHEEL HUB

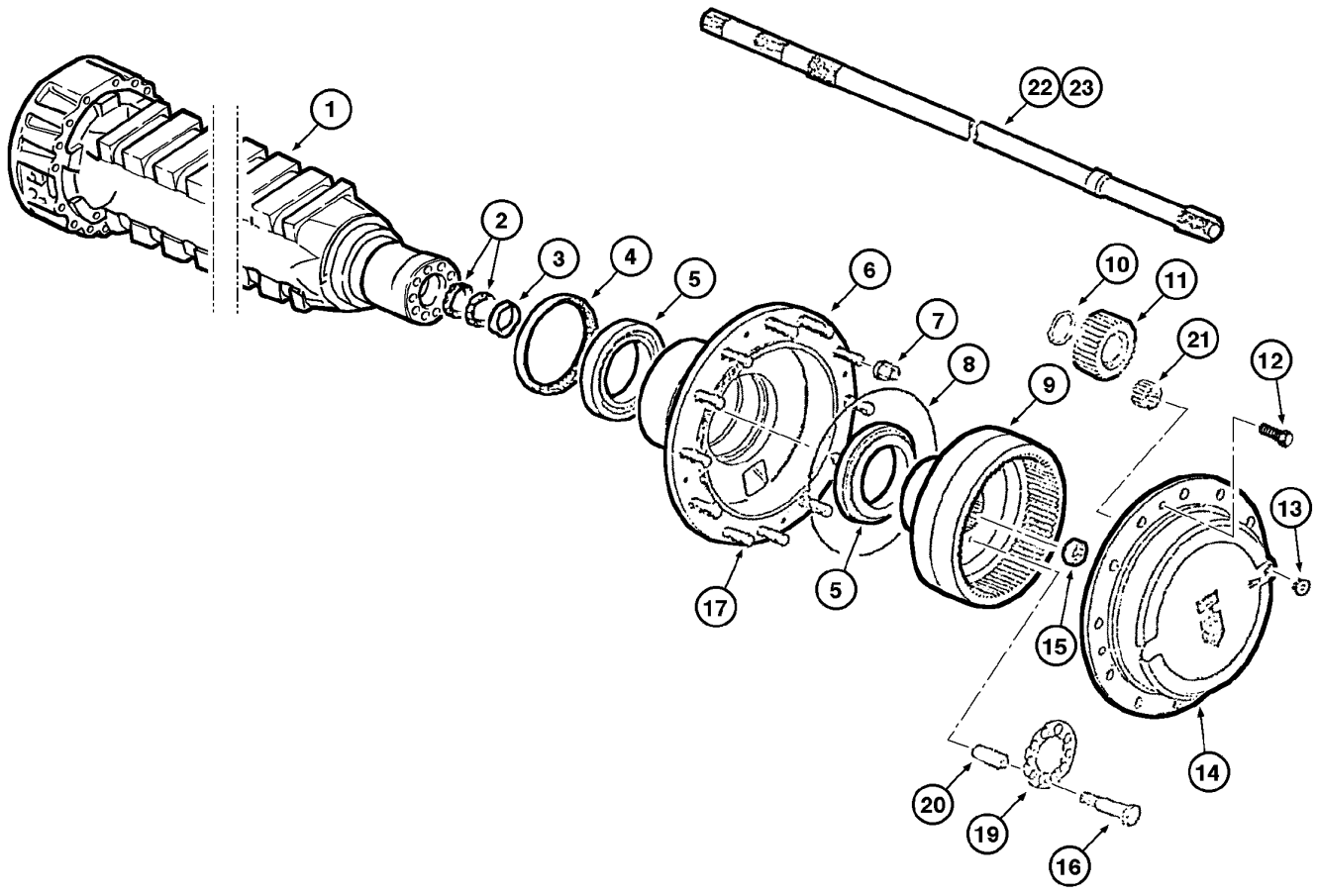

FRONT AXLE - WHEEL HUB
FRONT AXLE - WHEEL HUB
FRONT AXLE - WHEEL HUB
FRONT AXLE - WHEEL HUB

R	N	P.N.	MOD	Q	Denominação Bezeichnung	Description Description	Denominacion Beskrivelse	Descrizione Beschrijving	L.C.
21		**148957A1**		6	CONJUNTO DO ROLAMENTO LAGERBAURUPPE	BEARING ASSY ROULEMENT	CONJUNTO DE COJINET LEJESAMLING	COMPLESSIVO CUSCINI LAGEREENHEID	341C
22		**71100468**		2	SEMI-EIXO HALBWELLE	HALF SHAFT DEMI-ARBRE	SEMIEJE BAGAKSEL	SEMIASSE STEEKAS	092S
23		**71100469**		4	PINHÃO RITZEL	PINION PIGNON	PIÑÓN SPIDSHJUL	PIGNONE PIGNON	P045

06-52	01	p1	03/09

EIXO DIANTEIRO - FREIOS
FRONT AXLE - BRAKES
EJE DELANTERO - FRENOS
FRONT AXLE - BRAKES

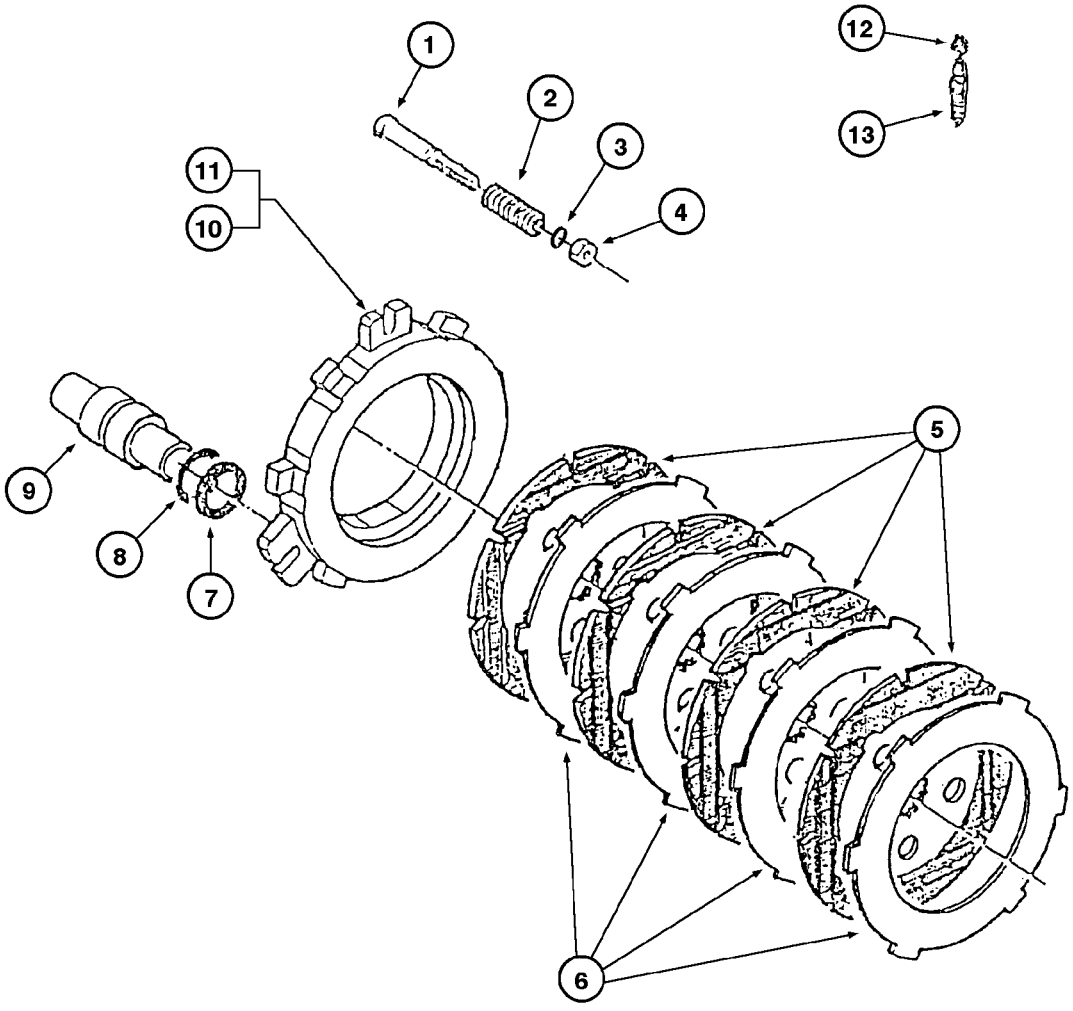

FRONT AXLE - BRAKES
FRONT AXLE - BRAKES
FRONT AXLE - BRAKES
FRONT AXLE - BRAKES

R	N	P.N.	MOD	Q	Denominação Bezeichnung	Description Description	Denominacion Beskrivelse	Descrizione Beschrijving	L.C.
	1	**148216A1**		1	EIXO, front Assy (P.6-44 to 6-52)				
						SHAFT	EJE	ALBERO	016A
					WELLE	ARBRE	AKSEL	AS	
	2	**87520202**		1	EIXO, front Assy (P.6-44 to 6-52), Includes items 1 - 13				
						AXLE	EJE	ASSALE	087A
					ACHSE	ESSIEU	AKSEL	AS	
1		**148958A1**		6	PARAFUSO	SCREW	TORNILLO	VITE	040V
					SCHRAUBE	VIS	SKRUE	SCHROEF	
2		**148959A1**		6	MOLA	SPRING	RESORTE	MOLLA	100M
					FEDER	RESSORT	FJEDER	VEER	
3		**148960A1**		6	O-RING	O-RING	JUNTA TÓRICA	ANELLO TOROIDALE	055A
					O-RING	JOINT TORIQUE	O-RING	O-RING	
4		**148961A1**		6	PORCA	NUT	TUERCA	DADO	010D
					MUTTER	ECROU	MØTRIK	MOER	
5	1	**148962A1**		8	DISCO, brake	DISC	DISCO	DISCO	060D
					SCHEIBE	DISQUE	NAV	SCHIJF	
5	2	**71102762**		8	DISCO, brake	DISC	DISCO	DISCO	060D
					SCHEIBE	DISQUE	NAV	SCHIJF	
6		**148963A1**		8	DISCO, brake	DISC	DISCO	DISCO	060D
					SCHEIBE	DISQUE	NAV	SCHIJF	
7		**148964A1**		6	O-RING	O-RING	JUNTA TÓRICA	ANELLO TOROIDALE	055A
					O-RING	JOINT TORIQUE	O-RING	O-RING	
8		**148965A1**		6	ANEL	RING	ANILLO	ANELLO	045A
					RING	ANNEAU	RING	RING	
9		**148966A1**		6	ÊMBOLO	PLUNGER	ÉMBOLO	PISTONCINO; STANTUFI	130P
					PLUNGER	PLONGEUR	STEMPEL	PLUNJER	
10		**87442581**		1	DISCO DE FREIO, RH	BRAKE DISC	DISCO DE FRENO	DISCO FRENO	064D
					BREMSSCHEIBE	DISQUE DE FREIN	BREMSESKIVE	REMSCHIJF	
11		**87442581**		1	DISCO DE FREIO, LH	BRAKE DISC	DISCO DE FRENO	DISCO FRENO	064D
					BREMSSCHEIBE	DISQUE DE FREIN	BREMSESKIVE	REMSCHIJF	
12		**148969A1**		2	BUJÃO	PLUG	TAPÓN	TAPPO	050T
					STOPFEN	BOUCHON	PROP	PLUG	
13		**148970A1**		2	PARAFUSO	SCREW	TORNILLO	VITE	040V
					SCHRAUBE	VIS	SKRUE	SCHROEF	

(1) Montada até o nº de série N6AE00850 e N6AE00853 a N6AE00860
(2) Montada a partir do nº de série N6AE00861 e N6AE00851 + N6AE00852

EIXO TRASEIRO - CONJUNTO
REAR AXLE - ASSEMBLY
EJE TRASERO - CONJUNTO
REAR AXLE - ASSEMBLY

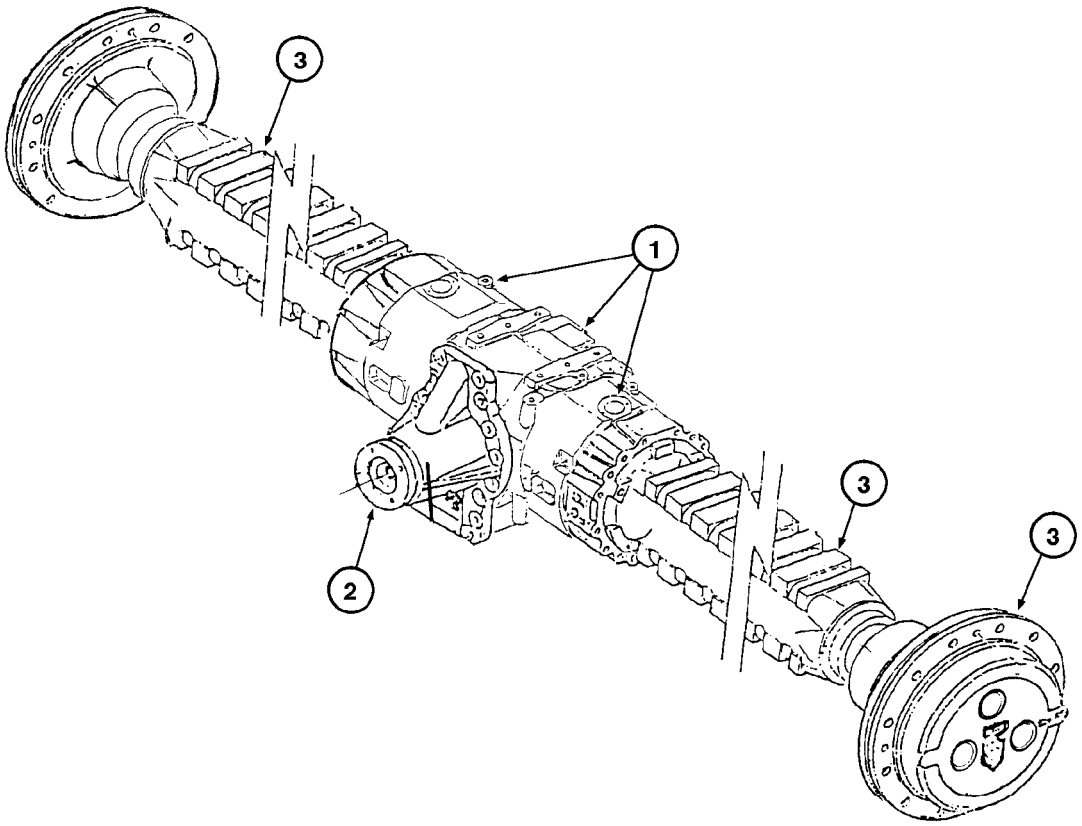

REAR AXLE - ASSEMBLY
REAR AXLE - ASSEMBLY
REAR AXLE - ASSEMBLY
REAR AXLE - ASSEMBLY

R	N	P.N.	MOD	Q	Denominação Bezeichnung	Description Description	Denominacion Beskrivelse	Descrizione Beschrijving	L.C.
	1	**148217A1**		1	EIXO, rear Assy STD (P.6-56 to 6-64)				
						SHAFT	EJE	ALBERO	016A
					WELLE	ARBRE	AKSEL	AS	
	2	**87520201**			EIXO, rear Assy STD (P.6-56 to 6-64)				
						AXLE	EJE	ASSALE	087A
					ACHSE	ESSIEU	AKSEL	AS	
	3	**87606958**		1	EIXO, rear Assy HD (Heavy Duty) (P.6-56A to 6-64A), Includes items 1, 2, 3				
						AXLE	EJE	ASSALE	087A
					ACHSE	ESSIEU	AKSEL	AS	
1		**REF**		1	INSTRUÇÃO, HOUSING middle (P.6-56)				
						INSTRUCTION	INSTRUCCIÓN	ISTRUZIONI	Z571
					ANLEITUNG	INSTRUCTION	INSTRUKTION	INSTRUCTIE	
2		**REF**		1	INSTRUÇÃO, DIFFERENTIAL Assy (P.6-60)				
						INSTRUCTION	INSTRUCCIÓN	ISTRUZIONI	Z571
					ANLEITUNG	INSTRUCTION	INSTRUKTION	INSTRUCTIE	
3		**REF**		1	INSTRUÇÃO, HUBS wheels & brakes (P.6-62)				
						INSTRUCTION	INSTRUCCIÓN	ISTRUZIONI	Z571
					ANLEITUNG	INSTRUCTION	INSTRUKTION	INSTRUCTIE	

(1) Montada até o nº de série N6AE00850 e N6AE00853 a N6AE00860
(2) Montada a partir do nº de série N6AE00861 e N6AE00851 + N6AE00852
(3) OPCIONAL

06-56	01	p1	03/09

EIXO TRASEIRO (STD) - CARCAÇAS
REAR AXLE (STD) - HOUSING
EJE TRASERO (STD) - CARCASAS
REAR AXLE (STD) - HOUSING

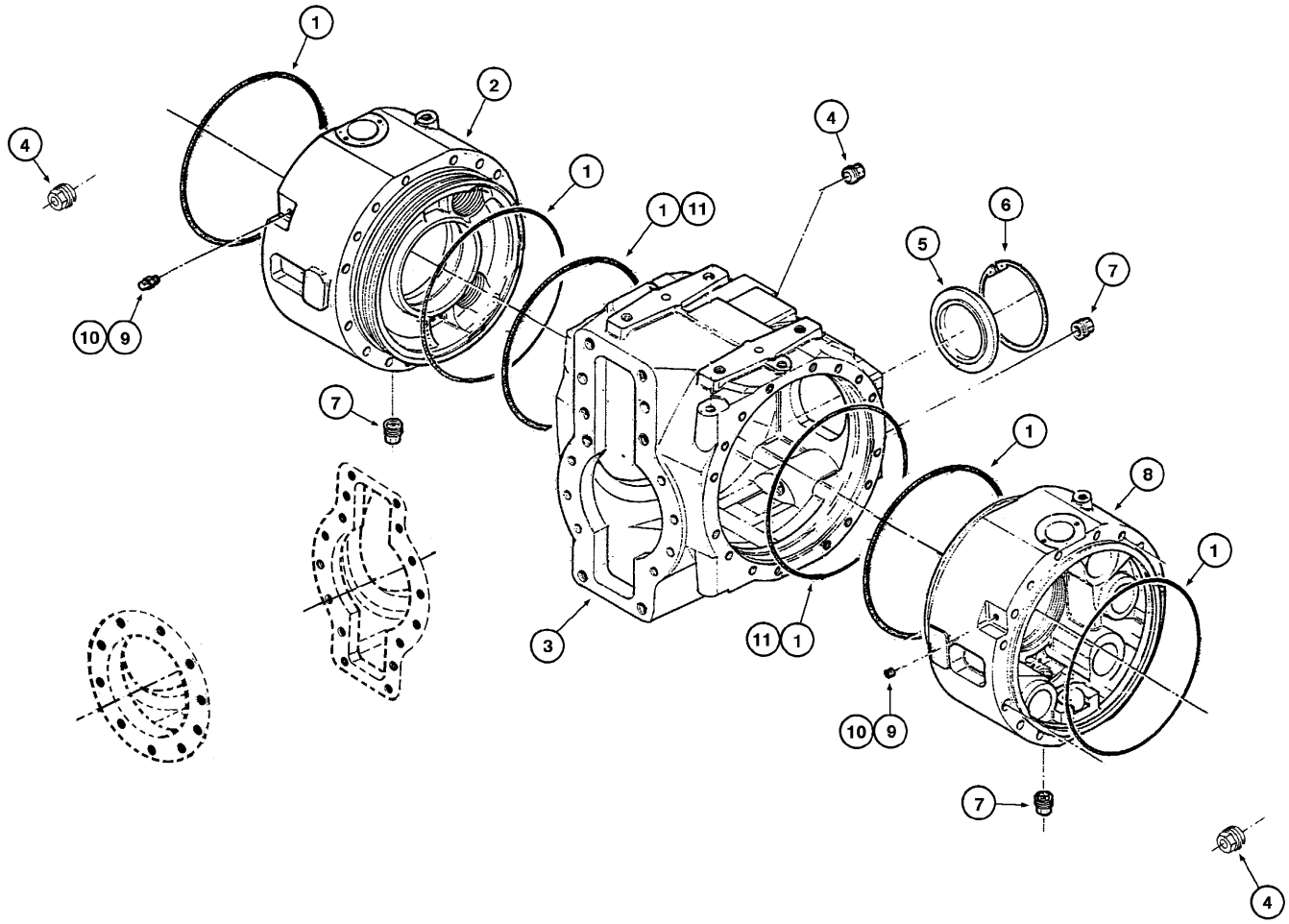

REAR AXLE (STD) - HOUSING
REAR AXLE (STD) - HOUSING
REAR AXLE (STD) - HOUSING
REAR AXLE (STD) - HOUSING

R	N	P.N.	MOD	Q	Denominação Bezeichnung	Description Description	Denominacion Beskrivelse	Descrizione Beschrijving	L.C.
	1	**148217A1**		1	EIXO, rear Assy (P.6-56 to 6-64)				
						SHAFT	EJE	ALBERO	016A
					WELLE	ARBRE	AKSEL	AS	
	2	**87520201**			EIXO, rear Assy (P.6-56 to 6-64), Includes items 1 - 11				
						AXLE	EJE	ASSALE	087A
					ACHSE	ESSIEU	AKSEL	AS	
1		**148880A1**		4	O-RING, optional	O-RING	JUNTA TÓRICA	ANELLO TOROIDALE	055A
					O-RING	JOINT TORIQUE	O-RING	O-RING	
2		**148881A1**		1	ALOJAMENTO, middle RH	HOUSING	ALOJAMIENTO	ALLOGGIAMENTO	014V
					GEHÄUSE	CARTER	HUS	HUIS	
3		**148971A1**		1	ALOJAMENTO	HOUSING	ALOJAMIENTO	ALLOGGIAMENTO	014V
					GEHÄUSE	CARTER	HUS	HUIS	
4		**148883A1**		4	BUJÃO	PLUG	TAPÓN	TAPPO	050T
					STOPFEN	BOUCHON	PROP	PLUG	
5		**148884A1**		1	BUJÃO	PLUG	TAPÓN	TAPPO	050T
					STOPFEN	BOUCHON	PROP	PLUG	
6		**148885A1**		1	ANEL DE PRESSÃO	SNAP RING	ANILLO DE RESORTE	ANELLO ELASTICO	054A
					SPRENGRING	ANNEAU D'ARRET	LÅSERING	VEERRING	
7		**292414A1**		3	BUJAO, magnetic	PLUG	TAPON	TAPPO	6400
					STOPFEN	BOUCHON	PLUG	PLUG	
8		**148886A1**		1	ALOJAMENTO, middle LH	HOUSING	ALOJAMIENTO	ALLOGGIAMENTO	014V
					GEHÄUSE	CARTER	HUS	HUIS	
9		**148887A1**		1	BUJÃO, LH	PLUG	TAPÓN	TAPPO	050T
					STOPFEN	BOUCHON	PROP	PLUG	
10		**148888A1**		1	RESPIRO, RH	BREATHER	RESPIRADERO	SFIATO	145S
					ENTLÜFTER	RENIFLARD	UDLUFTNINGSSKRUE	ONTLUCHTER	
11		**148889A1**		2	O-RING, STD	O-RING	JUNTA TÓRICA	ANELLO TOROIDALE	055A
					O-RING	JOINT TORIQUE	O-RING	O-RING	

(1) Montada até o nº de série N6AE00850 e N6AE00853 a N6AE00860
(2) Montada a partir do nº de série N6AE00861 e N6AE00851 + N6AE00852

06-56A	01	p1	12/08

EIXO TRASEIRO (HD, HEAVY DUTY) (OPCIONAL) - CARCAÇAS
REAR AXLE (HD, HEAVY DUTY) (OPTIONAL) - HOUSING
EJE TRASERO (HD, HEAVY DUTY) (OPCIONAL) - CARCASAS
REAR AXLE (HD, HEAVY DUTY) (OPTIONAL) - HOUSING

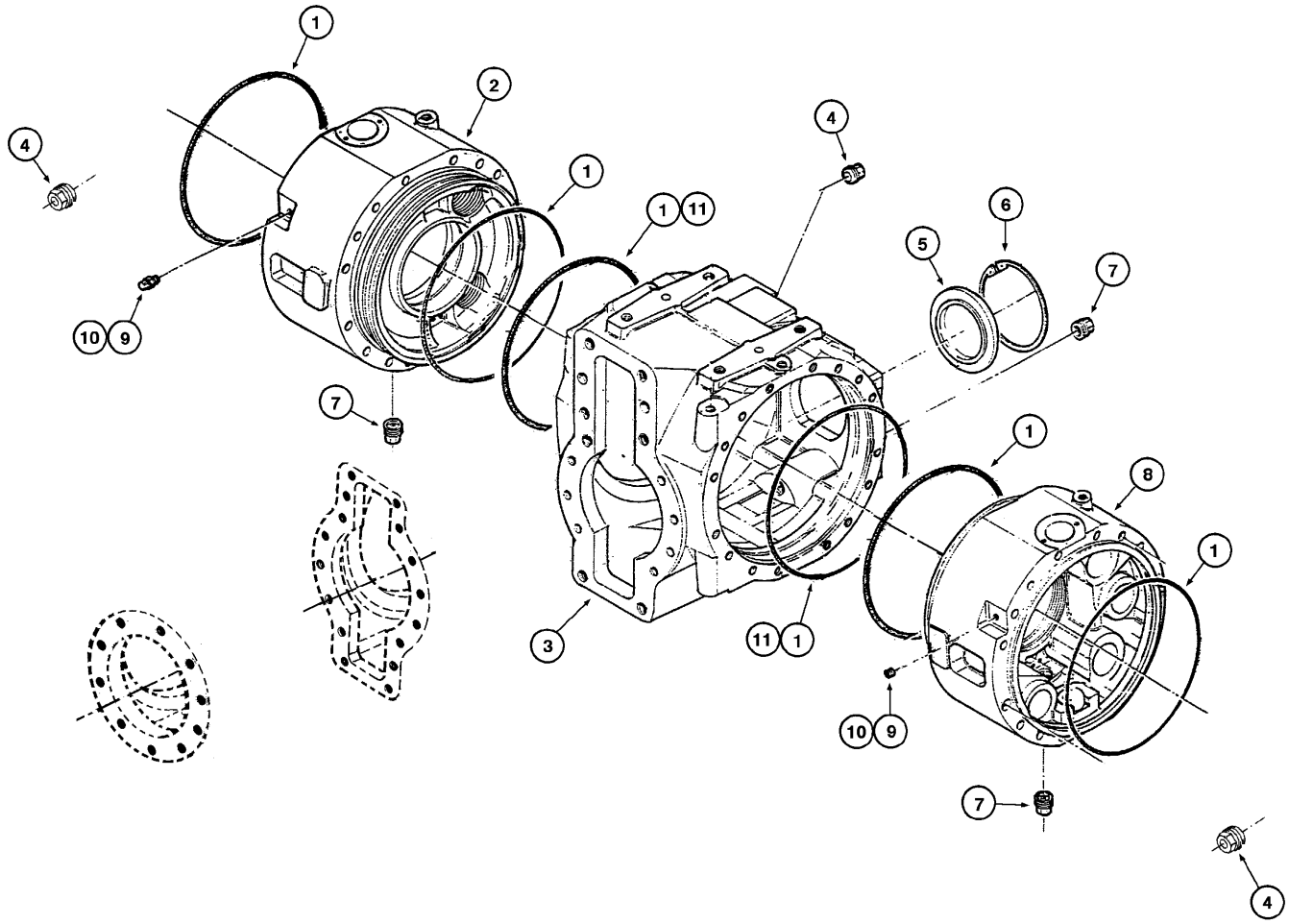

REAR AXLE (HD, HEAVY DUTY) (OPTIONAL) - HOUSING
REAR AXLE (HD, HEAVY DUTY) (OPTIONAL) - HOUSING
REAR AXLE (HD, HEAVY DUTY) (OPTIONAL) - HOUSING
REAR AXLE (HD, HEAVY DUTY) (OPTIONAL) - HOUSING

R	N	P.N.	MOD	Q	Denominação Bezeichnung	Description Description	Denominacion Beskrivelse	Descrizione Beschrijving	L.C.
		87606958		1	EIXO, rear Assy HD (Heavy Duty) (P.6-56A to 6-64A)				
						AXLE	EJE	ASSALE	087A
					ACHSE	ESSIEU	AKSEL	AS	
1		**148880A1**		2	O-RING	O-RING	JUNTA TÓRICA	ANELLO TOROIDALE	055A
					O-RING	JOINT TORIQUE	O-RING	O-RING	
2		**84185450**		1	PLACA, Intermediate, RH	PLATE	PLACA	PIASTRA	105P
					PLATTE	PLAQUE	PLADE	PLAAT	
3		**84185444**		1	ALOJAMENTO	HOUSING	ALOJAMIENTO	ALLOGGIAMENTO	014V
					GEHÄUSE	CARTER	HUS	HUIS	
4		**148883A1**		4	BUJÃO	PLUG	TAPÓN	TAPPO	050T
					STOPFEN	BOUCHON	PROP	PLUG	
5		**148884A1**		1	BUJÃO	PLUG	TAPÓN	TAPPO	050T
					STOPFEN	BOUCHON	PROP	PLUG	
6		**148885A1**		1	ANEL DE PRESSÃO	SNAP RING	ANILLO DE RESORTE	ANELLO ELASTICO	054A
					SPRENGRING	ANNEAU D'ARRET	LÅSERING	VEERRING	
7		**292414A1**		3	BUJAO, Magnet	PLUG	TAPON	TAPPO	6400
					STOPFEN	BOUCHON	PLUG	PLUG	
8		**84185453**		1	PLACA, Intermediate, LH	PLATE	PLACA	PIASTRA	105P
					PLATTE	PLAQUE	PLADE	PLAAT	
9		**148887A1**		1	BUJÃO	PLUG	TAPÓN	TAPPO	050T
					STOPFEN	BOUCHON	PROP	PLUG	
10		**148888A1**		1	RESPIRO	BREATHER	RESPIRADERO	SFIATO	145S
					ENTLÜFTER	RENIFLARD	UDLUFTNINGSSKRUE	ONTLUCHTER	
11		**148889A1**		2	O-RING	O-RING	JUNTA TÓRICA	ANELLO TOROIDALE	055A
					O-RING	JOINT TORIQUE	O-RING	O-RING	

EIXO TRASEIRO (STD) - PRISIONEIROS DAS CARCAÇAS
REAR AXLE (STD) - HOUSING STUDS
EJE TRASERO (STD) - ESPARRAGOS DE LAS CARCASAS
REAR AXLE (STD) - HOUSING STUDS

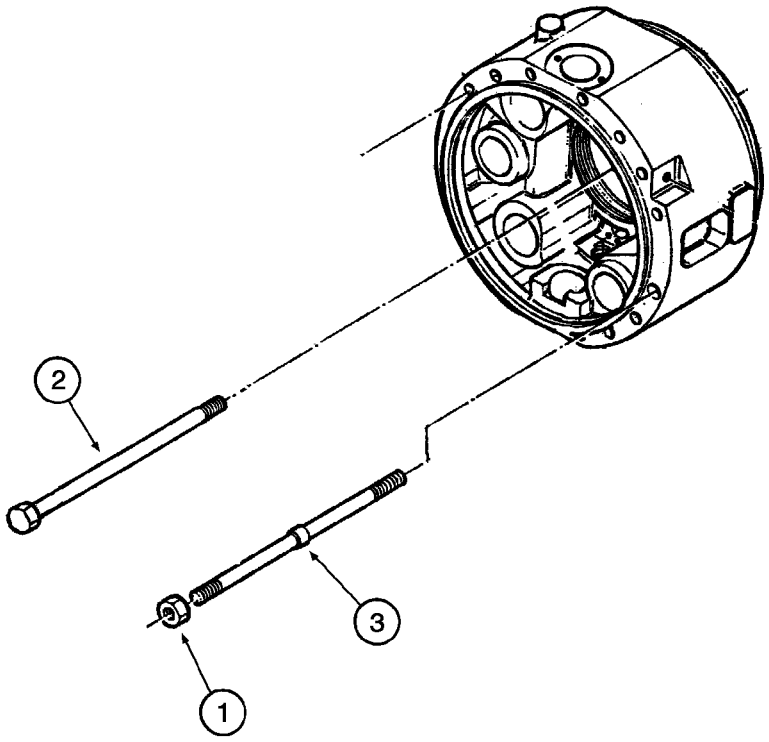

REAR AXLE (STD) - HOUSING STUDS
REAR AXLE (STD) - HOUSING STUDS
REAR AXLE (STD) - HOUSING STUDS
REAR AXLE (STD) - HOUSING STUDS

R	N	P.N.	MOD	Q	Denominação Bezeichnung	Description Description	Denominacion Beskrivelse	Descrizione Beschrijving	L.C.
	1	**148217A1**		1	EIXO, rear Assy (P.6-56 to 6-64)				
						SHAFT	EJE	ALBERO	016A
					WELLE	ARBRE	AKSEL	AS	
	2	**87520201**			EIXO, rear Assy (P.6-56 to 6-64), Includes items 1, 2, 3				
						AXLE	EJE	ASSALE	087A
					ACHSE	ESSIEU	AKSEL	AS	
1		**148890A1**		4	PORCA	NUT	TUERCA	DADO	010D
					MUTTER	ECROU	MØTRIK	MOER	
2		**148891A1**		28	PARAFUSO	SCREW	TORNILLO	VITE	040V
					SCHRAUBE	VIS	SKRUE	SCHROEF	
3		**148892A1**		4	PRISIONEIRO	STUD	PRISIONERO	PRIGIONIERO	210P
					GEWINDEBOLZEN	GOUJON	STØTTEBOLT	TAPEIND	

(1) Montada até o nº de série N6AE00850 e N6AE00853 a N6AE00860
(2) Montada a partir do nº de série N6AE00861 e N6AE00851 + N6AE00852

06-58A	01	p1	12/08

EIXO TRASEIRO (HD, HEAVY DUTY) (OPCIONAL) - PRISIONEIROS DAS CARCAÇAS
REAR AXLE (HD, HEAVY DUTY) (OPTIONAL) - HOUSING STUDS
EJE TRASERO (HD, HEAVY DUTY) (OPCIONAL) - ESPARRAGOS DE LAS CARCASAS
REAR AXLE (HD, HEAVY DUTY) (OPTIONAL) - HOUSING STUDS

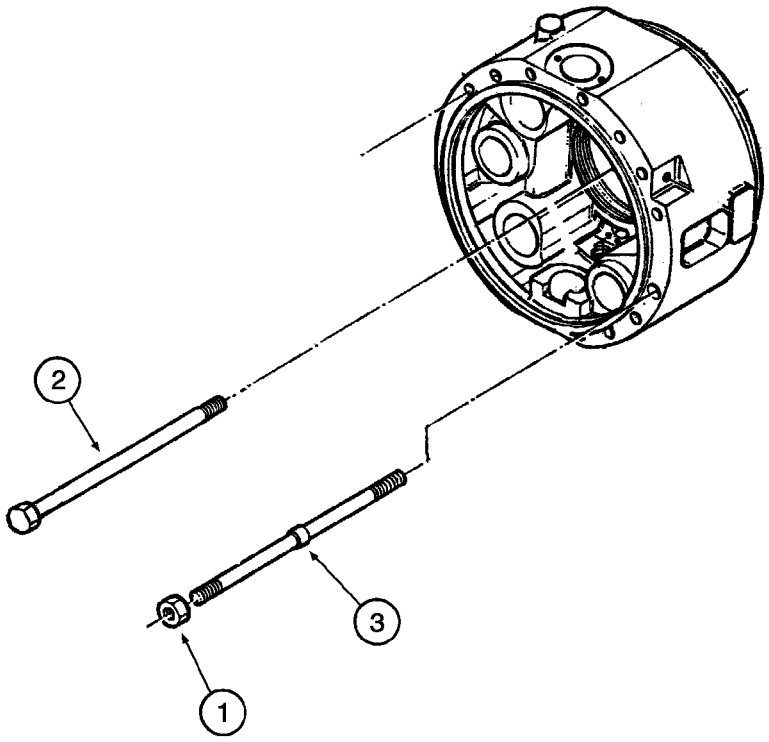

REAR AXLE (HD, HEAVY DUTY) (OPTIONAL) - HOUSING STUDS
REAR AXLE (HD, HEAVY DUTY) (OPTIONAL) - HOUSING STUDS
REAR AXLE (HD, HEAVY DUTY) (OPTIONAL) - HOUSING STUDS
REAR AXLE (HD, HEAVY DUTY) (OPTIONAL) - HOUSING STUDS

R	N	P.N.	MOD	Q	Denominação Bezeichnung	Description Description	Denominacion Beskrivelse	Descrizione Beschrijving	L.C.
		87606958		1	EIXO, rear Assy HD (Heavy Duty) (P.6-56A to 6-64A)				
						AXLE	EJE	ASSALE	087A
					ACHSE	ESSIEU	AKSEL	AS	
1		**148890A1**		4	PORCA	NUT	TUERCA	DADO	010D
					MUTTER	ECROU	MØTRIK	MOER	
2		**84185454**		28	PARAFUSO	SCREW	TORNILLO	VITE	040V
					SCHRAUBE	VIS	SKRUE	SCHROEF	
3		**148892A1**		4	PRISIONEIRO	STUD	PRISIONERO	PRIGIONIERO	210P
					GEWINDEBOLZEN	GOUJON	STØTTEBOLT	TAPEIND	

06-60	01	p1	03/09

EIXO TRASEIRO (STD) - DIFERENCIAL
REAR AXLE (STD) - DIFFERENTIAL
EJE TRASERO (STD) - DIFERENCIAL
REAR AXLE (STD) - DIFFERENTIAL

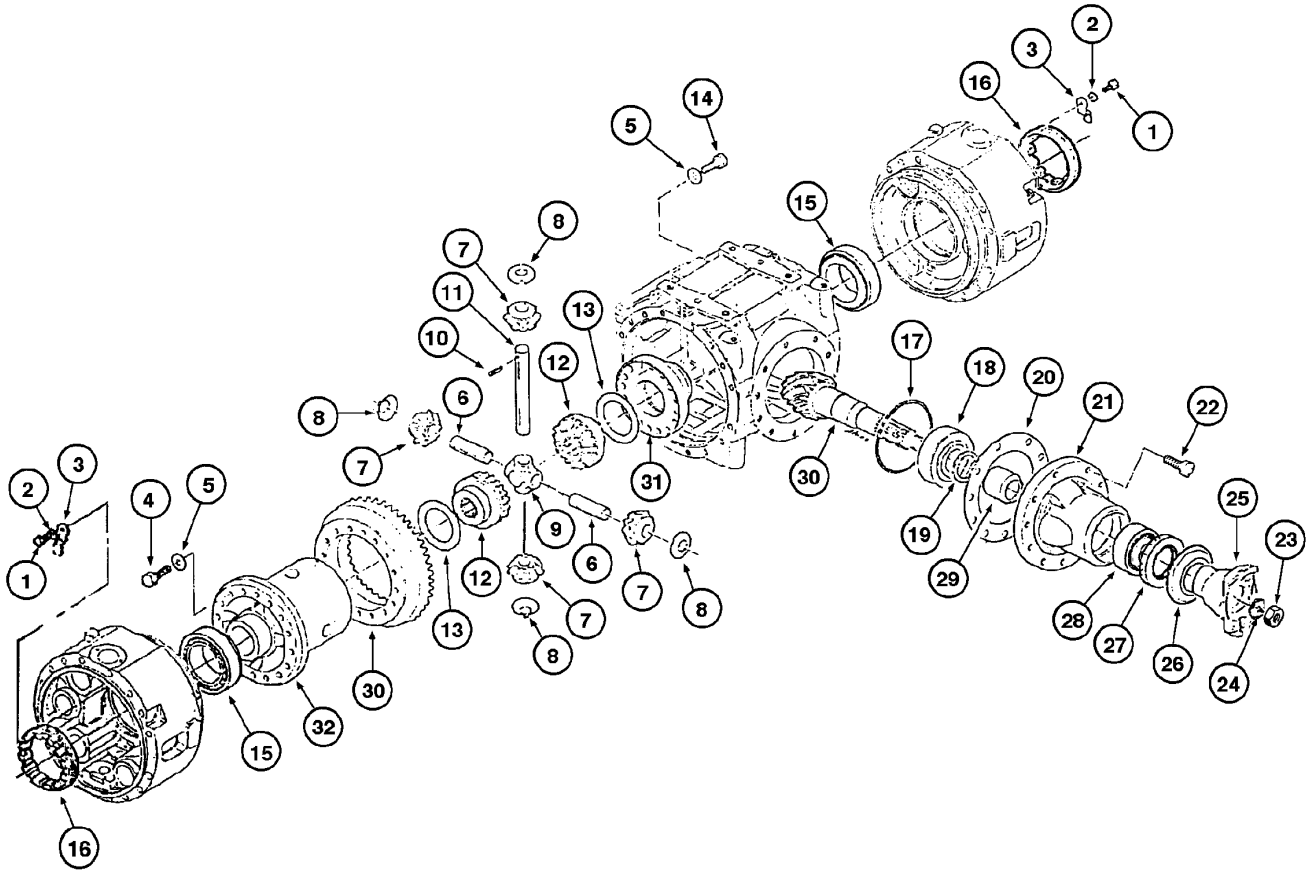

REAR AXLE (STD) - DIFFERENTIAL
REAR AXLE (STD) - DIFFERENTIAL
REAR AXLE (STD) - DIFFERENTIAL
REAR AXLE (STD) - DIFFERENTIAL

R	N	P.N.	MOD	Q	Denominação Bezeichnung	Description Description	Denominacion Beskrivelse	Descrizione Beschrijving	L.C.
	1	**148217A1**		1	EIXO, rear Assy (P.6-56 to 6-64)				
						SHAFT	EJE	ALBERO	016A
					WELLE	ARBRE	AKSEL	AS	
	2	**87520201**			EIXO, rear Assy (P.6-56 to 6-64), Includes items 1 - 32				
						AXLE	EJE	ASSALE	087A
					ACHSE	ESSIEU	AKSEL	AS	
1	3	**148893A1**		2	PARAFUSO	SCREW	TORNILLO	VITE	040V
					SCHRAUBE	VIS	SKRUE	SCHROEF	
2		**148894A1**		2	ARRUELA PLANA	WASHER	ARANDELA	RONDELLA	131R
					UNTERLEGSCHEIBE	RONDELLE	FLADSKIVE	SLUITRING	
3		**148895A1**		2	PLACA DE COBERTURA, lock				
						COVER PLATE	PLACA DE CUBIERTA	PIASTRA DI COPERTUR/	110P
					ABDECKPLATTE	COUVERCLE	DÆKPLADE	AFSCHERMPLAAT	
4	4	**148899A1**		16	PARAFUSO	SCREW	TORNILLO	VITE	040V
					SCHRAUBE	VIS	SKRUE	SCHROEF	
5		**148914A1**		24	ARRUELA PLANA	WASHER	ARANDELA	RONDELLA	131R
					UNTERLEGSCHEIBE	RONDELLE	FLADSKIVE	SLUITRING	
6		**148910A1**		2	EIXO	SHAFT	EJE	ALBERO	016A
					WELLE	ARBRE	AKSEL	AS	
7		**148908A1**		4	ENGRENAGEM, satellite	GEAR	ENGRANAJE	INGRANAGGIO	050I
					ZAHNRAD	PIGNON	TANDHJUL	TANDWIEL	
8		**148909A1**		4	ARRUELA PLANA	WASHER	ARANDELA	RONDELLA	131R
					UNTERLEGSCHEIBE	RONDELLE	FLADSKIVE	SLUITRING	
9		**148915A1**		1	FIXADOR, satellite shafts	HOLDER	SOPORTE	SUPPORTO	174S
					HALTER	SUPPORT	HOLDER	HOUDER	
10		**148911A1**		3	PINO ELÁSTICO	ROLL PIN	BULÓN DE GIRO	SPINA ELASTICA	200S
					SPANNSTIFT	GOUPILLE ELASTIQUE	SPLIT	ROLPEN	
11		**148916A1**		1	PINO	PIN	PASADOR	PERNO	080P
					PIN	BROCHE	STIFT	PEN	
12		**148972A1**		2	ENGRENAGEM SOLAR, planet				
						SUN GEAR	ENGRANAJE PLANETAR	RUOTA DENTATA CENTI	P365
					SONNENRAD	PIGNON SOLAIRE	SOLGEAR	ZONNEWIEL	
13		**148973A1**		2	ARRUELA PLANA	WASHER	ARANDELA	RONDELLA	131R
					UNTERLEGSCHEIBE	RONDELLE	FLADSKIVE	SLUITRING	
14	4	**148974A1**		8	PARAFUSO	SCREW	TORNILLO	VITE	040V
					SCHRAUBE	VIS	SKRUE	SCHROEF	
15		**148897A1**		2	CONJUNTO DO ROLAMENTO				
						BEARING ASSY	CONJUNTO DE COJINET	COMPLESSIVO CUSCINI	341C
					LAGERBAURUPPE	ROULEMENT	LEJESAMLING	LAGEREENHEID	
16	3	**148896A1**		2	PORCA DE VEDAÇÃO	RING NUT	TUERCA DE ANILLA	GHIERA	050G
					RINGMUTTER	ECROU A ŒIL	GEVINDRING	RINGMOER	
17		**148975A1**		1	ANEL	RING	ANILLO	ANELLO	045A
					RING	ANNEAU	RING	RING	

(1) Montada até o nº de série N6AE00850 e N6AE00853 a N6AE00860
(2) Montada a partir do nº de série N6AE00861 e N6AE00851 + N6AE00852
(3) Utilizar Loctite 222
(4) Utilizar Loctite 270

EIXO TRASEIRO (STD) - DIFERENCIAL
REAR AXLE (STD) - DIFFERENTIAL
EJE TRASERO (STD) - DIFERENCIAL
REAR AXLE (STD) - DIFFERENTIAL

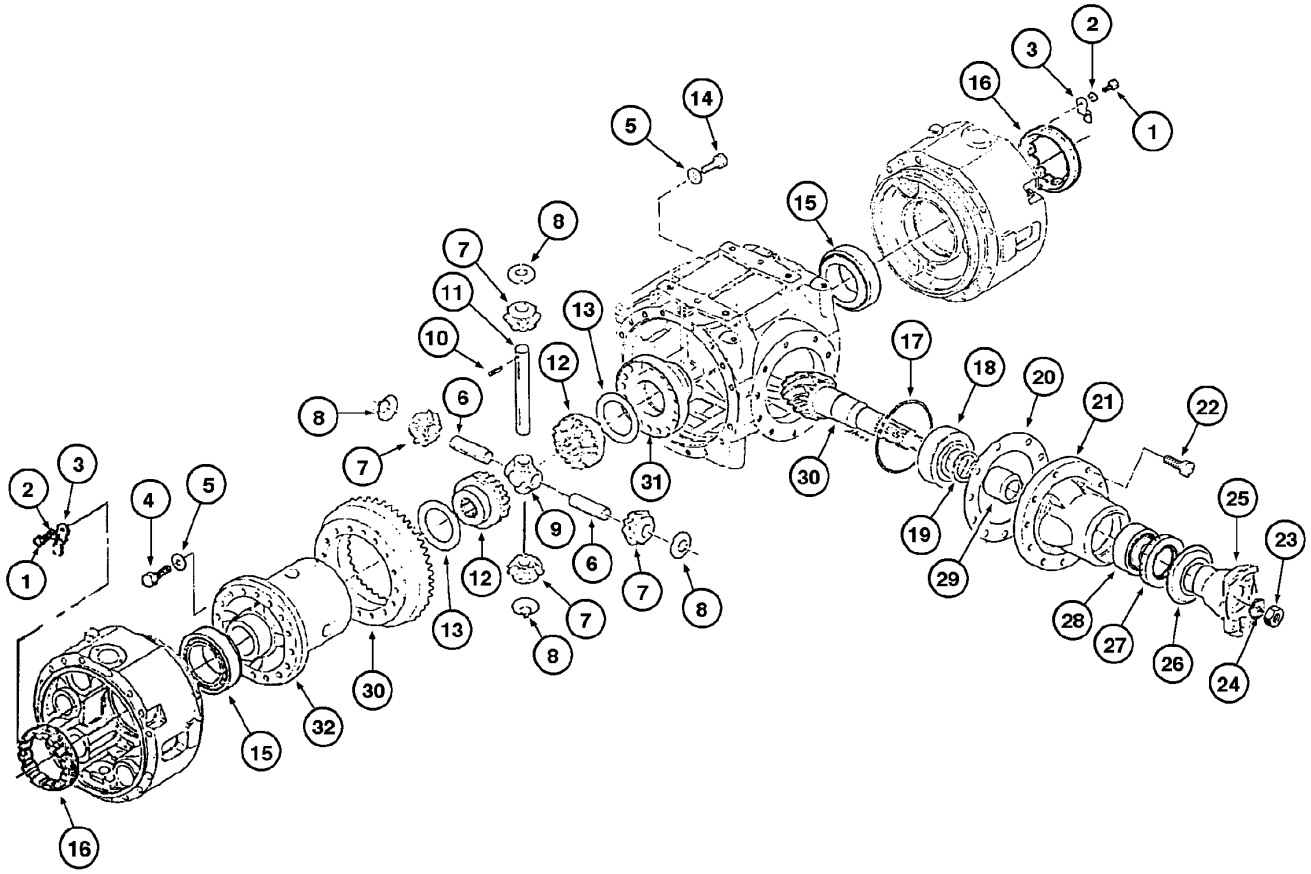

REAR AXLE (STD) - DIFFERENTIAL
REAR AXLE (STD) - DIFFERENTIAL
REAR AXLE (STD) - DIFFERENTIAL
REAR AXLE (STD) - DIFFERENTIAL

R	N	P.N.	MOD	Q	Denominação Bezeichnung	Description Description	Denominacion Beskrivelse	Descrizione Beschrijving	L.C.
18		**148928A1**		1	CONJUNTO DO ROLAMENTO				
						BEARING ASSY	CONJUNTO DE COJINET	COMPLESSIVO CUSCINI	341C
					LAGERBAURUPPE	ROULEMENT	LEJESAMLING	LAGEREENHEID	
19		**148921A1**		5	CALÇO DE AFINAÇÃO	SHIM	SUPLEMENTO	SPESSORE	198S
					AUSGLEICHSSCHEIBE	CALE	MELLEMLÆG	VULPLAATJE	
19		**148922A1**		3	CALÇO DE AFINAÇÃO	SHIM	SUPLEMENTO	SPESSORE	198S
					AUSGLEICHSSCHEIBE	CALE	MELLEMLÆG	VULPLAATJE	
19		**148923A1**		1	CALÇO DE AFINAÇÃO	SHIM	SUPLEMENTO	SPESSORE	198S
					AUSGLEICHSSCHEIBE	CALE	MELLEMLÆG	VULPLAATJE	
19		**148924A1**		1	CALÇO DE AFINAÇÃO	SHIM	SUPLEMENTO	SPESSORE	198S
					AUSGLEICHSSCHEIBE	CALE	MELLEMLÆG	VULPLAATJE	
19		**148925A1**		1	CALÇO DE AFINAÇÃO	SHIM	SUPLEMENTO	SPESSORE	198S
					AUSGLEICHSSCHEIBE	CALE	MELLEMLÆG	VULPLAATJE	
20		**148976A1**		1	CALÇO DE AFINAÇÃO	SHIM	SUPLEMENTO	SPESSORE	198S
					AUSGLEICHSSCHEIBE	CALE	MELLEMLÆG	VULPLAATJE	
20		**148977A1**		1	CALÇO DE AFINAÇÃO	SHIM	SUPLEMENTO	SPESSORE	198S
					AUSGLEICHSSCHEIBE	CALE	MELLEMLÆG	VULPLAATJE	
20		**148978A1**		1	CALÇO DE AFINAÇÃO	SHIM	SUPLEMENTO	SPESSORE	198S
					AUSGLEICHSSCHEIBE	CALE	MELLEMLÆG	VULPLAATJE	
20		**148979A1**		1	CALÇO DE AFINAÇÃO	SHIM	SUPLEMENTO	SPESSORE	198S
					AUSGLEICHSSCHEIBE	CALE	MELLEMLÆG	VULPLAATJE	
21		**148980A1**		1	FLANGE	FLANGE	BRIDA	FLANGIA	070F
					FLANSCH	BRIDE	FLANGE	FLENS	
22	1	**148981A1**		10	PARAFUSO	SCREW	TORNILLO	VITE	040V
					SCHRAUBE	VIS	SKRUE	SCHROEF	
23	1	**148931A1**		1	PORCA	NUT	TUERCA	DADO	010D
					MUTTER	ECROU	MØTRIK	MOER	
24		**148930A1**		1	O-RING	O-RING	JUNTA TÓRICA	ANELLO TOROIDALE	055A
					O-RING	JOINT TORIQUE	O-RING	O-RING	
25		**149987A1**		1	FLANGE	FLANGE	BRIDA	FLANGIA	070F
					FLANSCH	BRIDE	FLANGE	FLENS	
26		**148929A1**		1	PLACA DE COBERTURA, protection				
						COVER PLATE	PLACA DE CUBIERTA	PIASTRA DI COPERTUR/	110P
					ABDECKPLATTE	COUVERCLE	DÆKPLADE	AFSCHERMPLAAT	
27		**148933A1**		1	VEDAÇÃO	SEAL	ANILLO DE CIERRE	GUARNIZIONE; TENUTA	132A
					DICHTUNG	JOINT	PAKNING	AFDICHTING	
28		**148936A1**		1	CONJUNTO DO ROLAMENTO				
						BEARING ASSY	CONJUNTO DE COJINET	COMPLESSIVO CUSCINI	341C
					LAGERBAURUPPE	ROULEMENT	LEJESAMLING	LAGEREENHEID	
29		**148926A1**		1	ESPAÇADOR	SPACER	SEPARADOR	DISTANZIALE	075D
					DISTANZSTÜCK	ENTRETOISE	AFSTANDSSTYKKE	AFSTANDSSTUK	
30		**148982A1**		1	COROA DENTADA, Assy	RING GEAR	CORONA DENTADA	CORONA DENTATA	297C
					ZAHNKRANZ	COURONNE DENTEE	TANDKRANS	RINGWIEL	
31		**148983A1**		1	COBERTURA	COVER	CUBIERTA	COPERCHIO	265C
					ABDECKUNG	COUVERCLE	DÆKSEL	AFSCHERMING	
32		**148984A1**		1	ALOJAMENTO, differential	HOUSING	ALOJAMIENTO	ALLOGGIAMENTO	014V
					GEHÄUSE	CARTER	HUS	HUIS	

(1) Utilizar Loctite 270

06-60A	01	p1	12/08

EIXO TRASEIRO (HD, HEAVY DUTY) (OPCIONAL) - DIFERENCIAL
REAR AXLE (HD, HEAVY DUTY) (OPTIONAL) - DIFFERENTIAL
EJE TRASERO (HD, HEAVY DUTY) (OPCIONAL) - DIFERENCIAL
REAR AXLE (HD, HEAVY DUTY) (OPTIONAL) - DIFFERENTIAL

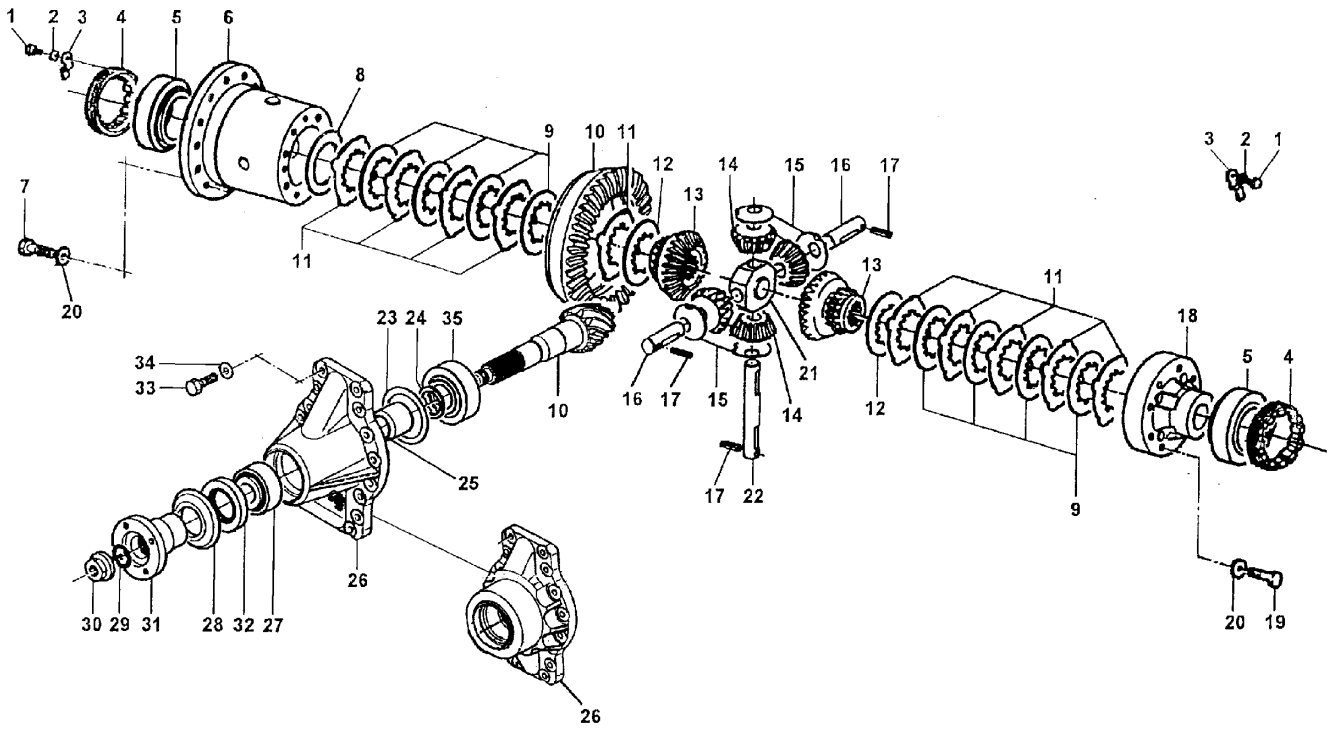

REAR AXLE (HD, HEAVY DUTY) (OPTIONAL) - DIFFERENTIAL
REAR AXLE (HD, HEAVY DUTY) (OPTIONAL) - DIFFERENTIAL
REAR AXLE (HD, HEAVY DUTY) (OPTIONAL) - DIFFERENTIAL
REAR AXLE (HD, HEAVY DUTY) (OPTIONAL) - DIFFERENTIAL

R	N	P.N.	MOD	Q	Denominação Bezeichnung	Description Description	Denominacion Beskrivelse	Descrizione Beschrijving	L.C.
		87606958		1	EIXO, rear Assy HD (Heavy Duty) (P.6-56A to 6-64A)				
						AXLE	EJE	ASSALE	087A
					ACHSE	ESSIEU	AKSEL	AS	
1		**148893A1**		2	PARAFUSO	SCREW	TORNILLO	VITE	040V
					SCHRAUBE	VIS	SKRUE	SCHROEF	
2		**84185459**		2	ARRUELA PLANA	WASHER	ARANDELA	RONDELLA	131R
					UNTERLEGSCHEIBE	RONDELLE	FLADSKIVE	SLUITRING	
3		**148895A1**		2	PLACA DE COBERTURA	COVER PLATE	PLACA DE CUBIERTA	PIASTRA DI COPERTUR/	110P
					ABDECKPLATTE	COUVERCLE	DÆKPLADE	AFSCHERMPLAAT	
4		**84185460**		2	PORCA	NUT	TUERCA	DADO	010D
					MUTTER	ECROU	MØTRIK	MOER	
5		**148897A1**		1	CONJUNTO DO ROLAMENTO				
						BEARING ASSY	CONJUNTO DE COJINET	COMPLESSIVO CUSCINI	341C
					LAGERBAURUPPE	ROULEMENT	LEJESAMLING	LAGEREENHEID	
6		**148898A1**		1	ALOJAMENTO	HOUSING	ALOJAMIENTO	ALLOGGIAMENTO	014V
					GEHÄUSE	CARTER	HUS	HUIS	
7		**148899A1**		16	PARAFUSO	SCREW	TORNILLO	VITE	040V
					SCHRAUBE	VIS	SKRUE	SCHROEF	
8		**148900A1**		1	CALÇO DE AFINAÇÃO	SHIM	SUPLEMENTO	SPESSORE	198S
					AUSGLEICHSSCHEIBE	CALE	MELLEMLÆG	VULPLAATJE	
8		**148901A1**		1	CALÇO DE AFINAÇÃO	SHIM	SUPLEMENTO	SPESSORE	198S
					AUSGLEICHSSCHEIBE	CALE	MELLEMLÆG	VULPLAATJE	
8		**148902A1**		1	CALÇO DE AFINAÇÃO	SHIM	SUPLEMENTO	SPESSORE	198S
					AUSGLEICHSSCHEIBE	CALE	MELLEMLÆG	VULPLAATJE	
9		**148903A1**		8	DISCO	DISC	DISCO	DISCO	060D
					SCHEIBE	DISQUE	NAV	SCHIJF	
10		**84185433**		1	JOGO, Bevel gear	KIT	JEUGO	KIT	4830
					PACKUNG	POCHETTE	KIT	KIT	
11		**148905A1**		10	DISCO	DISC	DISCO	DISCO	060D
					SCHEIBE	DISQUE	NAV	SCHIJF	
12		**148906A1**		2	DISCO	DISC	DISCO	DISCO	060D
					SCHEIBE	DISQUE	NAV	SCHIJF	
13		**148907A1**		2	ENGRENAGEM SOLAR	SUN GEAR	ENGRANAJE PLANETAR	RUOTA DENTATA CENTI	P365
					SONNENRAD	PIGNON SOLAIRE	SOLGEAR	ZONNEWIEL	
14		**148908A1**		4	ENGRENAGEM	GEAR	ENGRANAJE	INGRANAGGIO	050I
					ZAHNRAD	PIGNON	TANDHJUL	TANDWIEL	
15		**84185448**		4	ARRUELA PLANA	WASHER	ARANDELA	RONDELLA	131R
					UNTERLEGSCHEIBE	RONDELLE	FLADSKIVE	SLUITRING	
16		**148910A1**		2	EIXO	SHAFT	EJE	ALBERO	016A
					WELLE	ARBRE	AKSEL	AS	
17		**148911A1**		3	PINO ELÁSTICO	ROLL PIN	BULÓN DE GIRO	SPINA ELASTICA	200S
					SPANNSTIFT	GOUPILLE ELASTIQUE	SPLIT	ROLPEN	
18		**148912A1**		1	COBERTURA	COVER	CUBIERTA	COPERCHIO	265C
					ABDECKUNG	COUVERCLE	DÆKSEL	AFSCHERMING	
19		**148913A1**		8	PARAFUSO	SCREW	TORNILLO	VITE	040V
					SCHRAUBE	VIS	SKRUE	SCHROEF	
20		**148914A1**		16	ARRUELA PLANA	WASHER	ARANDELA	RONDELLA	131R
					UNTERLEGSCHEIBE	RONDELLE	FLADSKIVE	SLUITRING	

06-60A	01	p2	12/08

EIXO TRASEIRO (HD, HEAVY DUTY) (OPCIONAL) - DIFERENCIAL
REAR AXLE (HD, HEAVY DUTY) (OPTIONAL) - DIFFERENTIAL
EJE TRASERO (HD, HEAVY DUTY) (OPCIONAL) - DIFERENCIAL
REAR AXLE (HD, HEAVY DUTY) (OPTIONAL) - DIFFERENTIAL

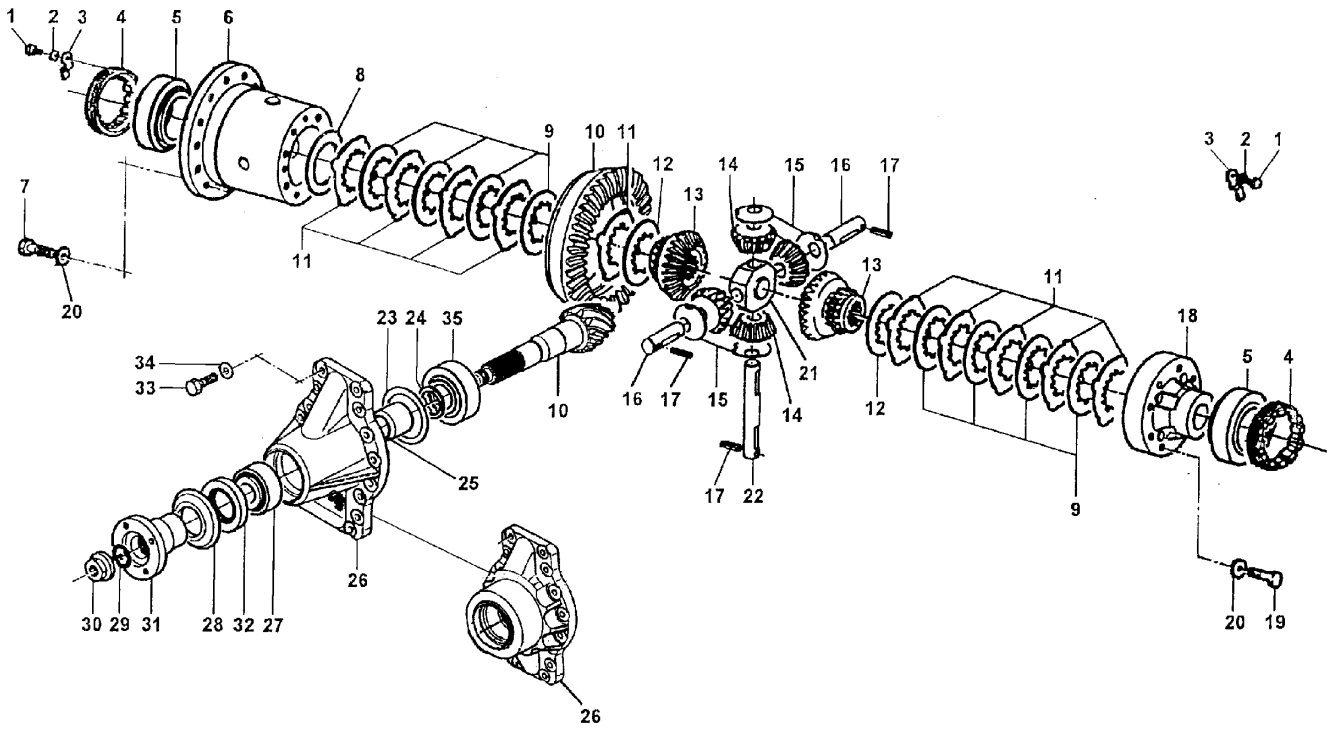

REAR AXLE (HD, HEAVY DUTY) (OPTIONAL) - DIFFERENTIAL
REAR AXLE (HD, HEAVY DUTY) (OPTIONAL) - DIFFERENTIAL
REAR AXLE (HD, HEAVY DUTY) (OPTIONAL) - DIFFERENTIAL
REAR AXLE (HD, HEAVY DUTY) (OPTIONAL) - DIFFERENTIAL

R	N	P.N.	MOD	Q	Denominação Bezeichnung	Description Description	Denominacion Beskrivelse	Descrizione Beschrijving	L.C.
21		148915A1		1	FIXADOR HALTER	HOLDER SUPPORT	SOPORTE HOLDER	SUPPORTO HOUDER	174S
22		148916A1		1	PINO PIN	PIN BROCHE	PASADOR STIFT	PERNO PEN	080P
23		148917A1		1	CALÇO DE AFINAÇÃO, 0.10 AUSGLEICHSSCHEIBE	SHIM CALE	SUPLEMENTO MELLEMLÆG	SPESSORE VULPLAATJE	198S
23		148918A1		1	CALÇO DE AFINAÇÃO, 0.20 AUSGLEICHSSCHEIBE	SHIM CALE	SUPLEMENTO MELLEMLÆG	SPESSORE VULPLAATJE	198S
23		148919A1		1	CALÇO DE AFINAÇÃO, 0.50 AUSGLEICHSSCHEIBE	SHIM CALE	SUPLEMENTO MELLEMLÆG	SPESSORE VULPLAATJE	198S
23		148920A1		1	CALÇO DE AFINAÇÃO, 0.15 AUSGLEICHSSCHEIBE	SHIM CALE	SUPLEMENTO MELLEMLÆG	SPESSORE VULPLAATJE	198S
24		148921A1		5	CALÇO DE AFINAÇÃO, 0.15 AUSGLEICHSSCHEIBE	SHIM CALE	SUPLEMENTO MELLEMLÆG	SPESSORE VULPLAATJE	198S
24		148922A1		3	CALÇO DE AFINAÇÃO, 0.20 AUSGLEICHSSCHEIBE	SHIM CALE	SUPLEMENTO MELLEMLÆG	SPESSORE VULPLAATJE	198S
24		148923A1		1	CALÇO DE AFINAÇÃO, 0.30 AUSGLEICHSSCHEIBE	SHIM CALE	SUPLEMENTO MELLEMLÆG	SPESSORE VULPLAATJE	198S
24		148924A1		1	CALÇO DE AFINAÇÃO, 0.40 AUSGLEICHSSCHEIBE	SHIM CALE	SUPLEMENTO MELLEMLÆG	SPESSORE VULPLAATJE	198S
24		148925A1		1	CALÇO DE AFINAÇÃO, 0.50 AUSGLEICHSSCHEIBE	SHIM CALE	SUPLEMENTO MELLEMLÆG	SPESSORE VULPLAATJE	198S
25		148926A1		1	ESPAÇADOR DISTANZSTÜCK	SPACER ENTRETOISE	SEPARADOR AFSTANDSSTYKKE	DISTANZIALE AFSTANDSSTUK	075D
26		148927A1		1	COBERTURA ABDECKUNG	COVER COUVERCLE	CUBIERTA DÆKSEL	COPERCHIO AFSCHERMING	265C
27		148928A1		1	CONJUNTO DO ROLAMENTO LAGERBAURUPPE	BEARING ASSY ROULEMENT	CONJUNTO DE COJINET LEJESAMLING	COMPLESSIVO CUSCINI LAGEREENHEID	341C
28		148929A1		1	PLACA DE COBERTURA ABDECKPLATTE	COVER PLATE COUVERCLE	PLACA DE CUBIERTA DÆKPLADE	PIASTRA DI COPERTUR/ AFSCHERMPLAAT	110P
29		148930A1		1	O-RING O-RING	O-RING JOINT TORIQUE	JUNTA TÓRICA O-RING	ANELLO TOROIDALE O-RING	055A
30		148931A1		1	PORCA MUTTER	NUT ECROU	TUERCA MØTRIK	DADO MOER	010D
31		148987A1		1	ARRUELA PLANA UNTERLEGSCHEIBE	WASHER RONDELLE	ARANDELA FLADSKIVE	RONDELLA SLUITRING	131R
32		148933A1		1	VEDAÇÃO DICHTUNG	SEAL JOINT	ANILLO DE CIERRE PAKNING	GUARNIZIONE; TENUTA AFDICHTING	132A

06-60A	01	p3	12/08

EIXO TRASEIRO (HD, HEAVY DUTY) (OPCIONAL) - DIFERENCIAL
REAR AXLE (HD, HEAVY DUTY) (OPTIONAL) - DIFFERENTIAL
EJE TRASERO (HD, HEAVY DUTY) (OPCIONAL) - DIFERENCIAL
REAR AXLE (HD, HEAVY DUTY) (OPTIONAL) - DIFFERENTIAL

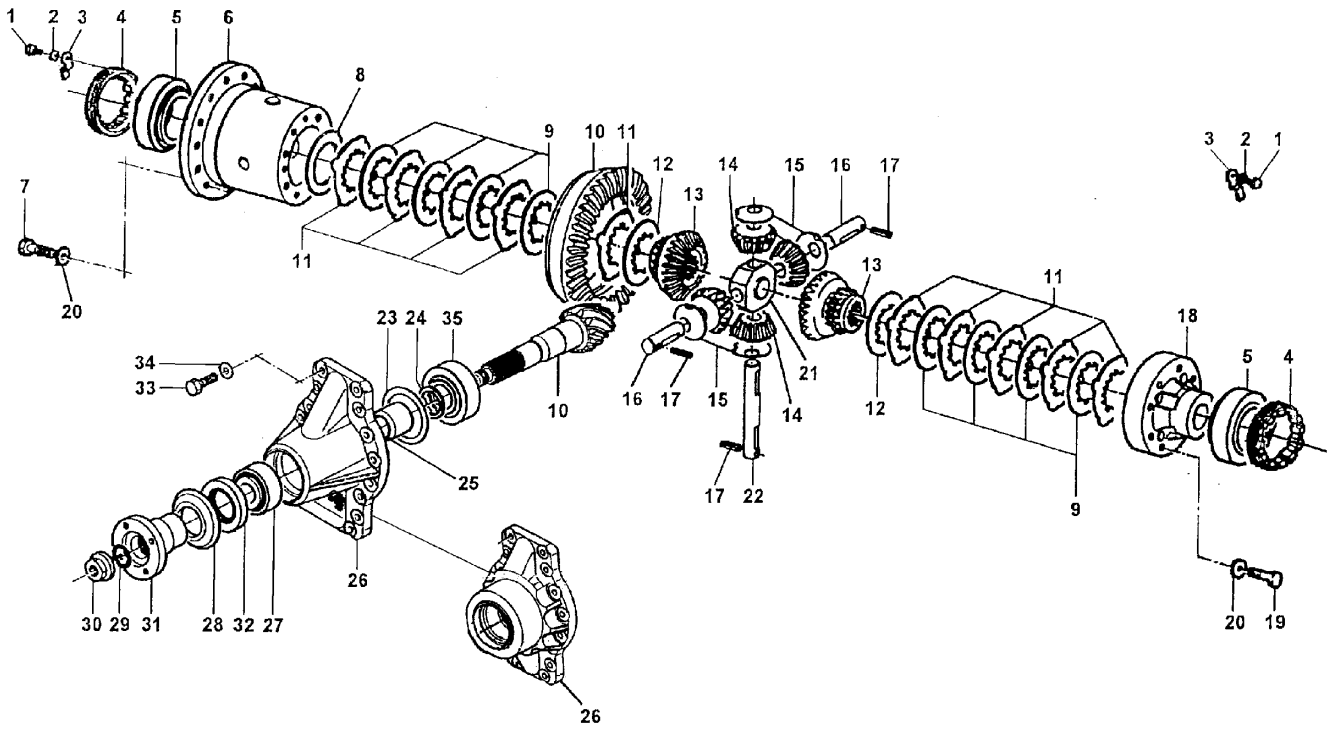

REAR AXLE (HD, HEAVY DUTY) (OPTIONAL) - DIFFERENTIAL
REAR AXLE (HD, HEAVY DUTY) (OPTIONAL) - DIFFERENTIAL
REAR AXLE (HD, HEAVY DUTY) (OPTIONAL) - DIFFERENTIAL
REAR AXLE (HD, HEAVY DUTY) (OPTIONAL) - DIFFERENTIAL

R	N	P.N.	MOD	Q	Denominação Bezeichnung	Description Description	Denominacion Beskrivelse	Descrizione Beschrijving	L.C.
33		**148934A1**		16	PARAFUSO SCHRAUBE	SCREW VIS	TORNILLO SKRUE	VITE SCHROEF	040V
34		**148935A1**		16	ARRUELA PLANA UNTERLEGSCHEIBE	WASHER RONDELLE	ARANDELA FLADSKIVE	RONDELLA SLUITRING	131R
35		**148936A1**		1	CONJUNTO DO ROLAMENTO LAGERBAURUPPE	BEARING ASSY ROULEMENT	CONJUNTO DE COJINET LEJESAMLING	COMPLESSIVO CUSCINI LAGEREENHEID	341C

06-62	01	p1	03/09

EIXO TRASEIRO (STD) - CUBO DE RODA
REAR AXLE (STD) - WHEEL HUB
EJE TRASERO (STD) - CUBO DE RUEDA
REAR AXLE (STD) - WHEEL HUB

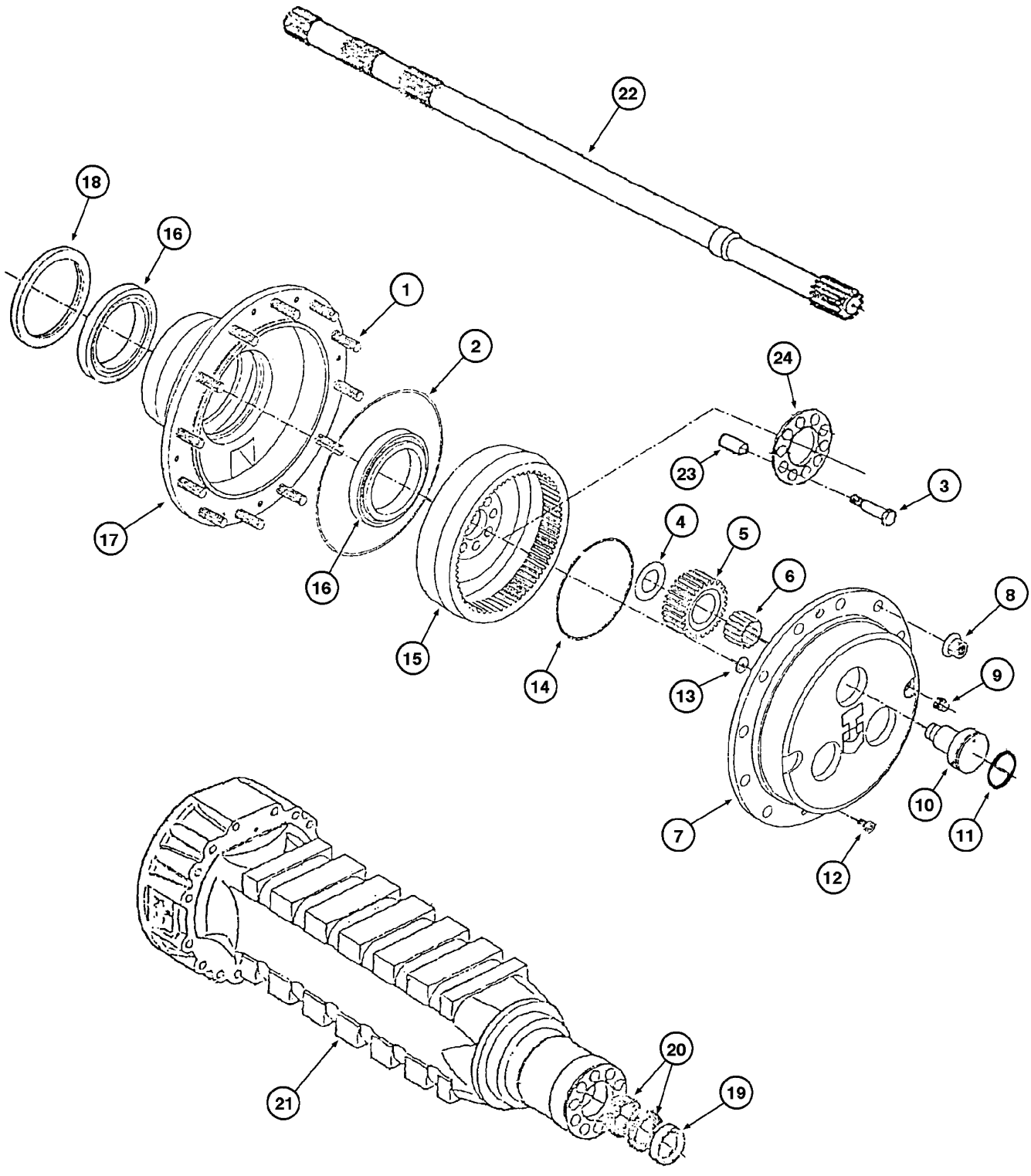

REAR AXLE (STD) - WHEEL HUB
REAR AXLE (STD) - WHEEL HUB
REAR AXLE (STD) - WHEEL HUB
REAR AXLE (STD) - WHEEL HUB

R	N	P.N.	MOD	Q	Denominação Bezeichnung	Description Description	Denominacion Beskrivelse	Descrizione Beschrijving	L.C.
	1	**148217A1**		1	EIXO, rear Assy (P.6-56 to 6-64)				
						SHAFT	EJE	ALBERO	016A
					WELLE	ARBRE	AKSEL	AS	
	2	**87520201**			EIXO, rear Assy (P.6-56 to 6-64), Includes items 1 - 24				
						AXLE	EJE	ASSALE	087A
					ACHSE	ESSIEU	AKSEL	AS	
1		**148985A1**		24	PRISIONEIRO	STUD	PRISIONERO	PRIGIONIERO	210P
					GEWINDEBOLZEN	GOUJON	STØTTEBOLT	TAPEIND	
2		**148986A1**		2	O-RING	O-RING	JUNTA TÓRICA	ANELLO TOROIDALE	055A
					O-RING	JOINT TORIQUE	O-RING	O-RING	
3		**148952A1**		20	PARAFUSO	SCREW	TORNILLO	VITE	040V
					SCHRAUBE	VIS	SKRUE	SCHROEF	
4		**149989A1**		6	ARRUELA PLANA	WASHER	ARANDELA	RONDELLA	131R
					UNTERLEGSCHEIBE	RONDELLE	FLADSKIVE	SLUITRING	
5		**148988A1**		6	PINHÃO DA RODA GUIA, satellite				
						IDLER PINION	PIÑÓN DE TENSOR	PIGNONE FOLLE	020S
					ZWISCHENZAHNRAD	PIGNON DE RENVOI	PLANETHJUL	TUSSENTANDWIEL	
6		**148989A1**		6	CONJUNTO DO ROLAMENTO				
						BEARING ASSY	CONJUNTO DE COJINET	COMPLESSIVO CUSCINI	341C
					LAGERBAURUPPE	ROULEMENT	LEJESAMLING	LAGEREENHEID	
7		**149988A1**		2	COBERTURA, satellites	COVER	CUBIERTA	COPERCHIO	265C
					ABDECKUNG	COUVERCLE	DÆKSEL	AFSCHERMING	
8		**REF**		24	INSTRUÇÃO, NUT (P.6-40)	INSTRUCTION	INSTRUCCIÓN	ISTRUZIONI	Z571
					ANLEITUNG	INSTRUCTION	INSTRUKTION	INSTRUCTIE	
9		**292414A1**		2	BUJAO, magnetic	PLUG	TAPON	TAPPO	6400
					STOPFEN	BOUCHON	PLUG	PLUG	
10		**148991A1**		6	PINO, shaft	PIN	PASADOR	PERNO	080P
					PIN	BROCHE	STIFT	PEN	
11		**148992A1**		6	O-RING	O-RING	JUNTA TÓRICA	ANELLO TOROIDALE	055A
					O-RING	JOINT TORIQUE	O-RING	O-RING	
12		**148948A1**		4	PARAFUSO	SCREW	TORNILLO	VITE	040V
					SCHRAUBE	VIS	SKRUE	SCHROEF	
13		**148993A1**		2	ARRUELA PLANA	WASHER	ARANDELA	RONDELLA	131R
					UNTERLEGSCHEIBE	RONDELLE	FLADSKIVE	SLUITRING	
14		**148994A1**		2	ANEL DE PRESSÃO	SNAP RING	ANILLO DE RESORTE	ANELLO ELASTICO	054A
					SPRENGRING	ANNEAU D'ARRET	LÅSERING	VEERRING	
15		**148995A1**		2	COROA DENTADA	RING GEAR	CORONA DENTADA	CORONA DENTATA	297C
					ZAHNKRANZ	COURONNE DENTEE	TANDKRANS	RINGWIEL	
16		**148941A1**		4	CONJUNTO DO ROLAMENTO				
						BEARING ASSY	CONJUNTO DE COJINET	COMPLESSIVO CUSCINI	341C
					LAGERBAURUPPE	ROULEMENT	LEJESAMLING	LAGEREENHEID	
17		**148996A1**		2	CUBO, wheel	HUB	CUBO	MOZZO	135M
					NABE	MOYEU	NAV	NAAF	
18		**148940A1**		2	VEDAÇÃO	SEAL	ANILLO DE CIERRE	GUARNIZIONE; TENUTA	132A
					DICHTUNG	JOINT	PAKNING	AFDICHTING	
19		**148939A1**		2	ANEL	RING	ANILLO	ANELLO	045A
					RING	ANNEAU	RING	RING	

(1) Montada até o nº de série N6AE00850 e N6AE00853 a N6AE00860
(2) Montada a partir do nº de série N6AE00861 e N6AE00851 + N6AE00852

06-62	01	p2	03/09

EIXO TRASEIRO (STD) - CUBO DE RODA
REAR AXLE (STD) - WHEEL HUB
EJE TRASERO (STD) - CUBO DE RUEDA
REAR AXLE (STD) - WHEEL HUB

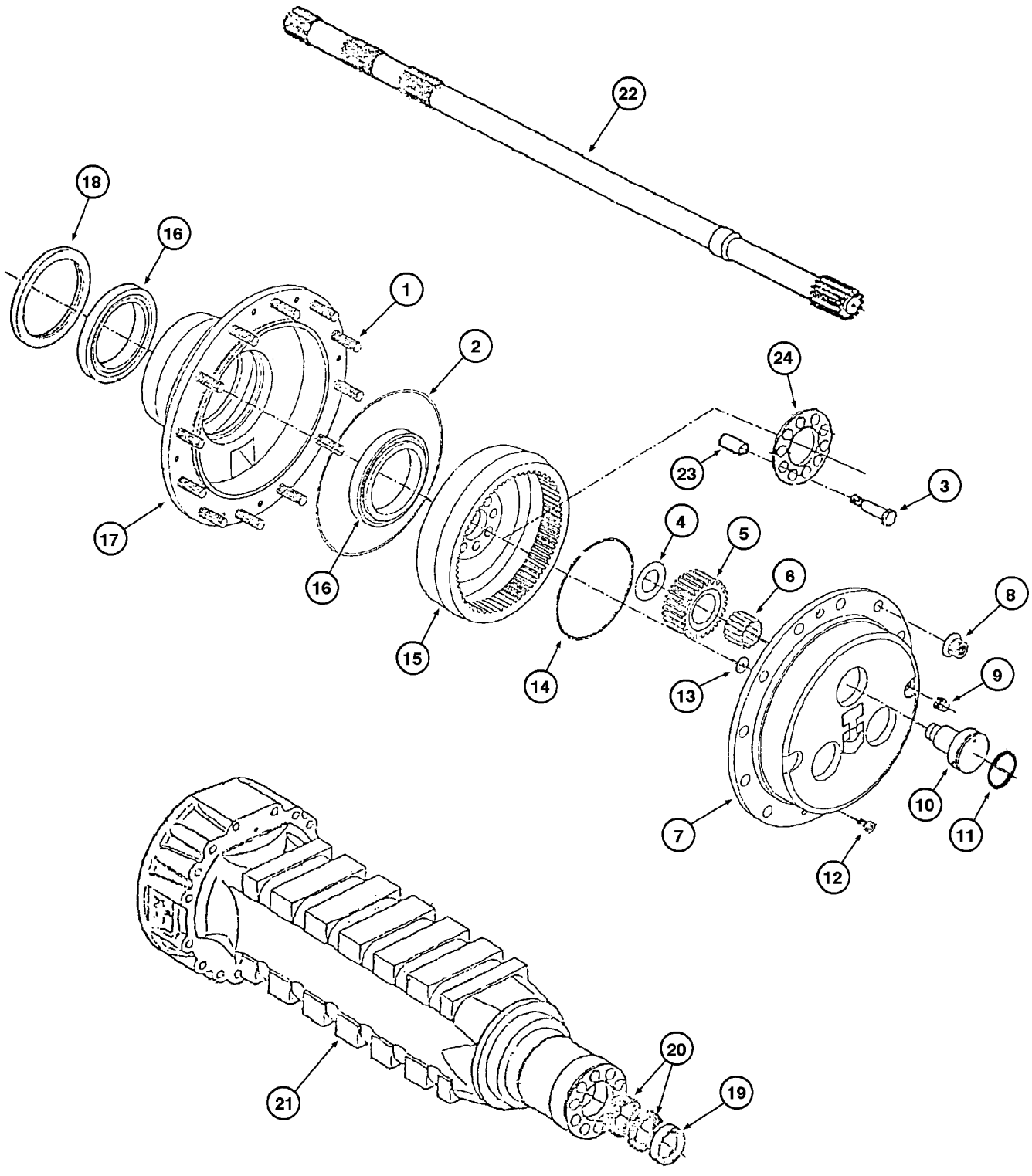

REAR AXLE (STD) - WHEEL HUB
REAR AXLE (STD) - WHEEL HUB
REAR AXLE (STD) - WHEEL HUB
REAR AXLE (STD) - WHEEL HUB

R	N	P.N.	MOD	Q	Denominação Bezeichnung	Description Description	Denominacion Beskrivelse	Descrizione Beschrijving	L.C.
20		148938A1		2	VEDAÇÃO DE BORRACHA GUMMIDICHTUNG	RUBBER SEAL JOINT EN CAOUTCHOU(	JUNTA DE GOMA GUMMITÆTNING	GUARNIZIONE DI GOMM RUBBEREN AFDICHTIN(	122G
21		148937A1		2	ALOJAMENTO, axle GEHÄUSE	HOUSING CARTER	ALOJAMIENTO HUS	ALLOGGIAMENTO HUIS	014V
22		148997A1		2	SEMI-EIXO HALBWELLE	HALF SHAFT DEMI-ARBRE	SEMIEJE BAGAKSEL	SEMIASSE STEEKAS	092S
23		148956A1		20	BUCHA, reducer BUCHSE	BUSHING BAGUE	CASQUILLO BØSNING	BOCCOLA BUS	095B
24		148955A1		2	PLACA DE COBERTURA ABDECKPLATTE	COVER PLATE COUVERCLE	PLACA DE CUBIERTA DÆKPLADE	PIASTRA DI COPERTUR/ AFSCHERMPLAAT	110P

06-62A	01	p1	12/08

EIXO TRASEIRO (HD, HEAVY DUTY) (OPCIONAL) - CUBO DE RODA
REAR AXLE (HD, HEAVY DUTY) (OPTIONAL) - WHEEL HUB
EJE TRASERO (HD, HEAVY DUTY) (OPCIONAL) - CUBO DE RUEDA
REAR AXLE (HD, HEAVY DUTY) (OPTIONAL) - WHEEL HUB

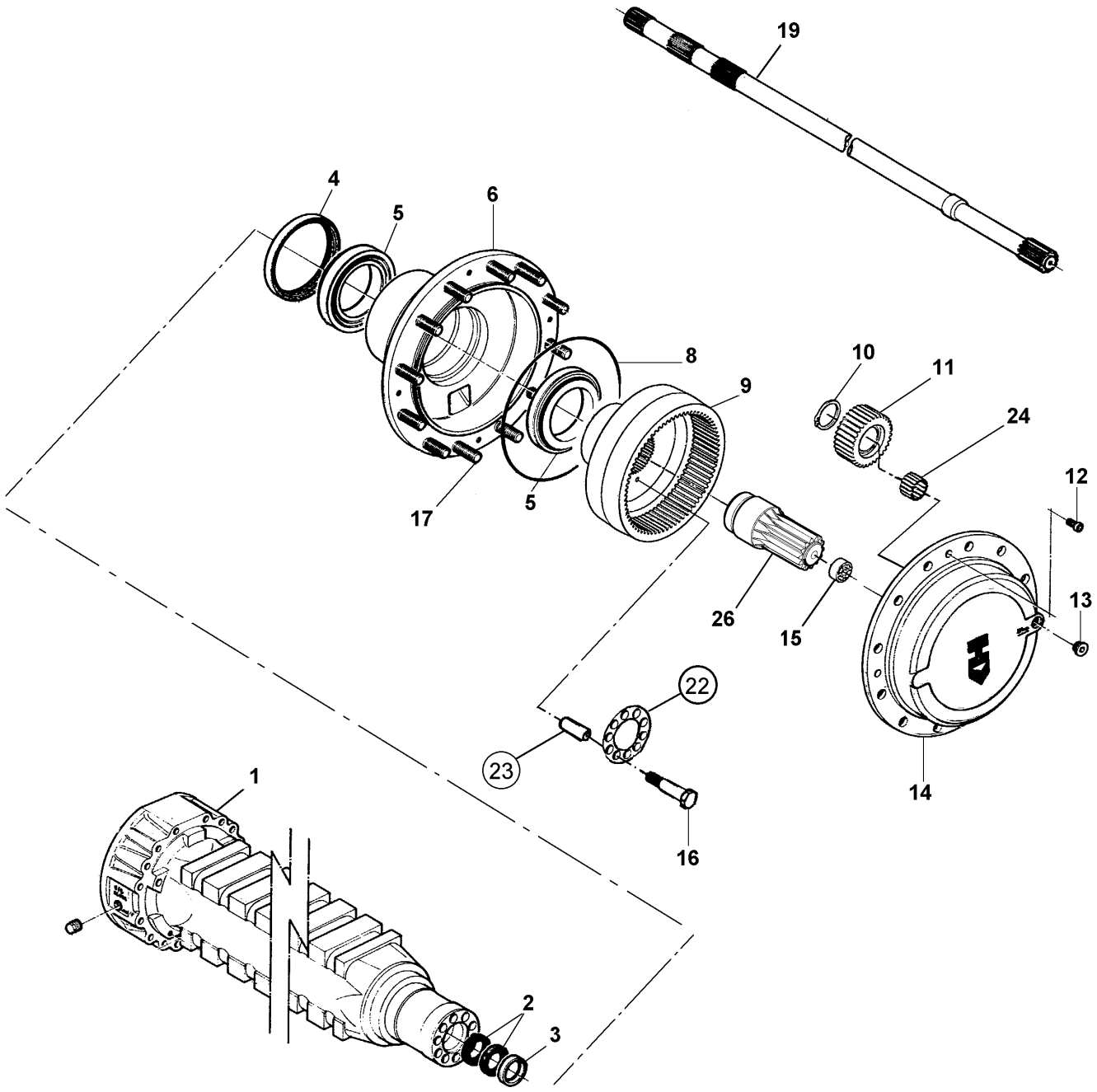

REAR AXLE (HD, HEAVY DUTY) (OPTIONAL) - WHEEL HUB
REAR AXLE (HD, HEAVY DUTY) (OPTIONAL) - WHEEL HUB
REAR AXLE (HD, HEAVY DUTY) (OPTIONAL) - WHEEL HUB
REAR AXLE (HD, HEAVY DUTY) (OPTIONAL) - WHEEL HUB

R	N	P.N.	MOD	Q	Denominação Bezeichnung	Description Description	Denominacion Beskrivelse	Descrizione Beschrijving	L.C.
		87606958		1	EIXO, rear Assy HD (Heavy Duty) (P.6-56A to 6-64A)				
						AXLE	EJE	ASSALE	087A
					ACHSE	ESSIEU	AKSEL	AS	
1		**148937A1**		2	ALOJAMENTO	HOUSING	ALOJAMIENTO	ALLOGGIAMENTO	014V
					GEHÄUSE	CARTER	HUS	HUIS	
2		**84185449**		2	VEDAÇÃO	SEAL	ANILLO DE CIERRE	GUARNIZIONE; TENUTA	132A
					DICHTUNG	JOINT	PAKNING	AFDICHTING	
3		**148939A1**		2	ANEL	RING	ANILLO	ANELLO	045A
					RING	ANNEAU	RING	RING	
4		**148940A1**		2	VEDAÇÃO	SEAL	ANILLO DE CIERRE	GUARNIZIONE; TENUTA	132A
					DICHTUNG	JOINT	PAKNING	AFDICHTING	
5		**148941A1**		4	CONJUNTO DO ROLAMENTO				
						BEARING ASSY	CONJUNTO DE COJINET	COMPLESSIVO CUSCINI	341C
					LAGERBAURUPPE	ROULEMENT	LEJESAMLING	LAGEREENHEID	
6		**148942A1**		2	CUBO	HUB	CUBO	MOZZO	135M
					NABE	MOYEU	NAV	NAAF	
8		**148944A1**		2	O-RING	O-RING	JUNTA TÓRICA	ANELLO TOROIDALE	055A
					O-RING	JOINT TORIQUE	O-RING	O-RING	
9		**148945A1**		2	COROA DENTADA	RING GEAR	CORONA DENTADA	CORONA DENTATA	297C
					ZAHNKRANZ	COURONNE DENTEE	TANDKRANS	RINGWIEL	
10		**148946A1**		6	ANEL DE PRESSÃO	SNAP RING	ANILLO DE RESORTE	ANELLO ELASTICO	054A
					SPRENGRING	ANNEAU D'ARRET	LÅSERING	VEERRING	
11		**148947A1**		6	ENGRENAGEM	GEAR	ENGRANAJE	INGRANAGGIO	050I
					ZAHNRAD	PIGNON	TANDHJUL	TANDWIEL	
12		**148948A1**		4	PARAFUSO	SCREW	TORNILLO	VITE	040V
					SCHRAUBE	VIS	SKRUE	SCHROEF	
13		**148949A1**		2	BUJÃO	PLUG	TAPÓN	TAPPO	050T
					STOPFEN	BOUCHON	PROP	PLUG	
14		**84185440**		2	ENGRENAGEM	GEAR	ENGRANAJE	INGRANAGGIO	050I
					ZAHNRAD	PIGNON	TANDHJUL	TANDWIEL	
15		**148951A1**		2	ARRUELA PLANA	WASHER	ARANDELA	RONDELLA	131R
					UNTERLEGSCHEIBE	RONDELLE	FLADSKIVE	SLUITRING	
16		**84185455**		20	PARAFUSO	SCREW	TORNILLO	VITE	040V
					SCHRAUBE	VIS	SKRUE	SCHROEF	
17		**148953A1**		24	PRISIONEIRO	STUD	PRISIONERO	PRIGIONIERO	210P
					GEWINDEBOLZEN	GOUJON	STØTTEBOLT	TAPEIND	
19		**87457083**		2	SEMI-EIXO	HALF SHAFT	SEMIEJE	SEMIASSE	092S
					HALBWELLE	DEMI-ARBRE	BAGAKSEL	STEEKAS	
22		**148955A1**		2	PLACA DE COBERTURA	COVER PLATE	PLACA DE CUBIERTA	PIASTRA DI COPERTUR/	110P
					ABDECKPLATTE	COUVERCLE	DÆKPLADE	AFSCHERMPLAAT	
23		**148956A1**		20	BUCHA	BUSHING	CASQUILLO	BOCCOLA	095B
					BUCHSE	BAGUE	BØSNING	BUS	
24		**148957A1**		6	CONJUNTO DO ROLAMENTO				
						BEARING ASSY	CONJUNTO DE COJINET	COMPLESSIVO CUSCINI	341C
					LAGERBAURUPPE	ROULEMENT	LEJESAMLING	LAGEREENHEID	
26		**87457084**		2	PINHÃO	PINION	PIÑÓN	PIGNONE	P045
					RITZEL	PIGNON	SPIDSHJUL	PIGNON	

EIXO TRASEIRO (STD) - FREIOS
REAR AXLE (STD) - BRAKES
EJE TRASERO (STD) - FRENOS
REAR AXLE (STD) - BRAKES

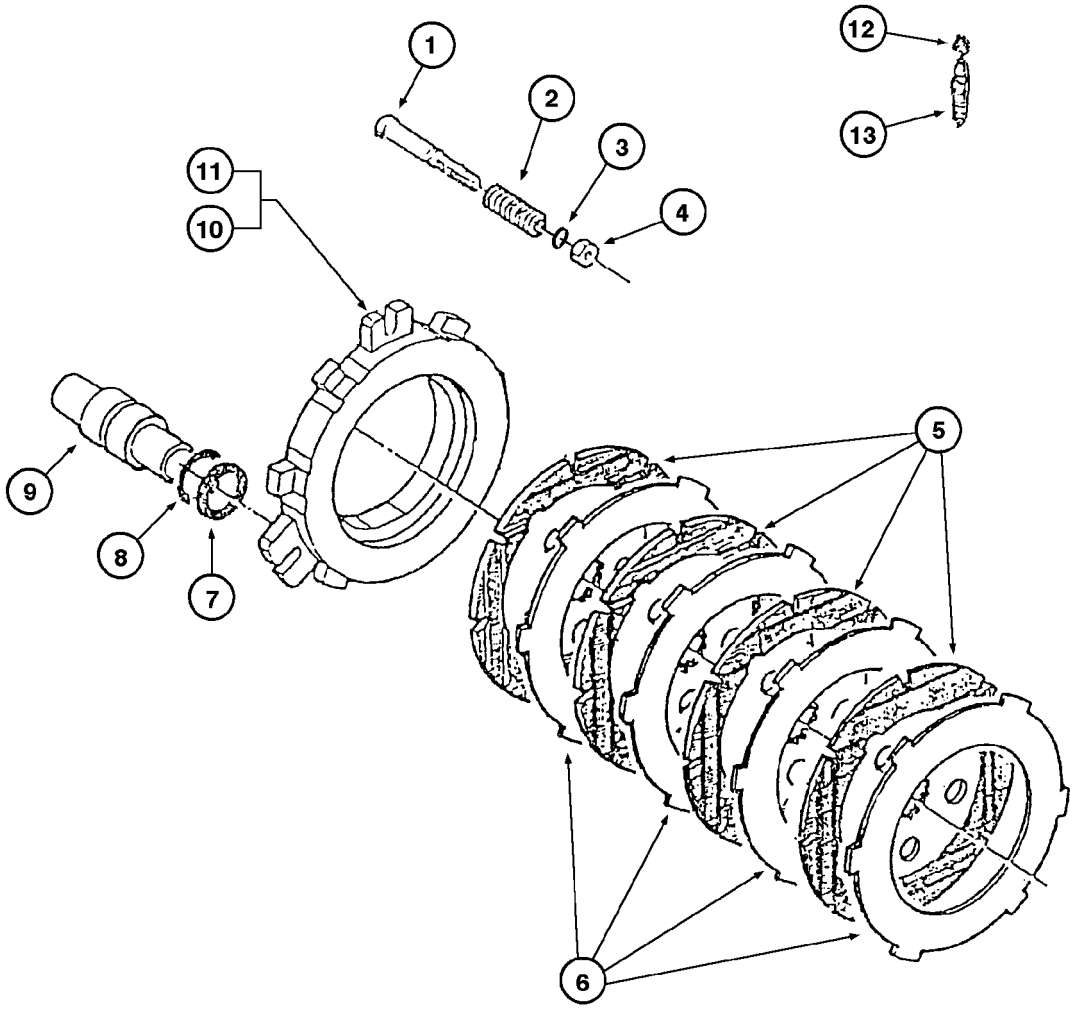

REAR AXLE (STD) - BRAKES
REAR AXLE (STD) - BRAKES
REAR AXLE (STD) - BRAKES
REAR AXLE (STD) - BRAKES

R	N	P.N.	MOD	Q	Denominação Bezeichnung	Description Description	Denominacion Beskrivelse	Descrizione Beschrijving	L.C.
	1	**148217A1**		1	EIXO, rear Assy (P.6-56 to 6-64)				
						SHAFT	EJE	ALBERO	016A
					WELLE	ARBRE	AKSEL	AS	
	2	**87520201**			EIXO, rear Assy (P.6-56 to 6-64), Includes items 1 - 13				
						AXLE	EJE	ASSALE	087A
					ACHSE	ESSIEU	AKSEL	AS	
1		**148958A1**		6	PARAFUSO	SCREW	TORNILLO	VITE	040V
					SCHRAUBE	VIS	SKRUE	SCHROEF	
2		**148959A1**		6	MOLA	SPRING	RESORTE	MOLLA	100M
					FEDER	RESSORT	FJEDER	VEER	
3		**148960A1**		6	O-RING	O-RING	JUNTA TÓRICA	ANELLO TOROIDALE	055A
					O-RING	JOINT TORIQUE	O-RING	O-RING	
4		**148961A1**		6	PORCA	NUT	TUERCA	DADO	010D
					MUTTER	ECROU	MØTRIK	MOER	
5	1	**148962A1**		8	DISCO, brake	DISC	DISCO	DISCO	060D
					SCHEIBE	DISQUE	NAV	SCHIJF	
5	2	**71102762**		8	DISCO, brake	DISC	DISCO	DISCO	060D
					SCHEIBE	DISQUE	NAV	SCHIJF	
6		**148963A1**		8	DISCO, brake	DISC	DISCO	DISCO	060D
					SCHEIBE	DISQUE	NAV	SCHIJF	
7		**148964A1**		6	O-RING	O-RING	JUNTA TÓRICA	ANELLO TOROIDALE	055A
					O-RING	JOINT TORIQUE	O-RING	O-RING	
8		**148965A1**		6	ANEL	RING	ANILLO	ANELLO	045A
					RING	ANNEAU	RING	RING	
9		**148966A1**		6	ÊMBOLO	PLUNGER	ÉMBOLO	PISTONCINO; STANTUFI	130P
					PLUNGER	PLONGEUR	STEMPEL	PLUNJER	
10		**87442581**		1	DISCO DE FREIO, LH	BRAKE DISC	DISCO DE FRENO	DISCO FRENO	064D
					BREMSSCHEIBE	DISQUE DE FREIN	BREMSESKIVE	REMSCHIJF	
11		**87442581**		1	DISCO DE FREIO, RH	BRAKE DISC	DISCO DE FRENO	DISCO FRENO	064D
					BREMSSCHEIBE	DISQUE DE FREIN	BREMSESKIVE	REMSCHIJF	
12		**148969A1**		2	BUJÃO	PLUG	TAPÓN	TAPPO	050T
					STOPFEN	BOUCHON	PROP	PLUG	
13		**148970A1**		2	PARAFUSO	SCREW	TORNILLO	VITE	040V
					SCHRAUBE	VIS	SKRUE	SCHROEF	

(1) Montada até o nº de série N6AE00850 e N6AE00853 a N6AE00860
(2) Montada a partir do nº de série N6AE00861 e N6AE00851 + N6AE00852

06-64A	01	p1	12/08

EIXO TRASEIRO (HD, HEAVY DUTY) (OPCIONAL) - FREIOS
REAR AXLE (HD, HEAVY DUTY) (OPTIONAL) - BRAKES
EJE TRASERO (HD, HEAVY DUTY) (OPCIONAL) - FRENOS
REAR AXLE (HD, HEAVY DUTY) (OPTIONAL) - BRAKES

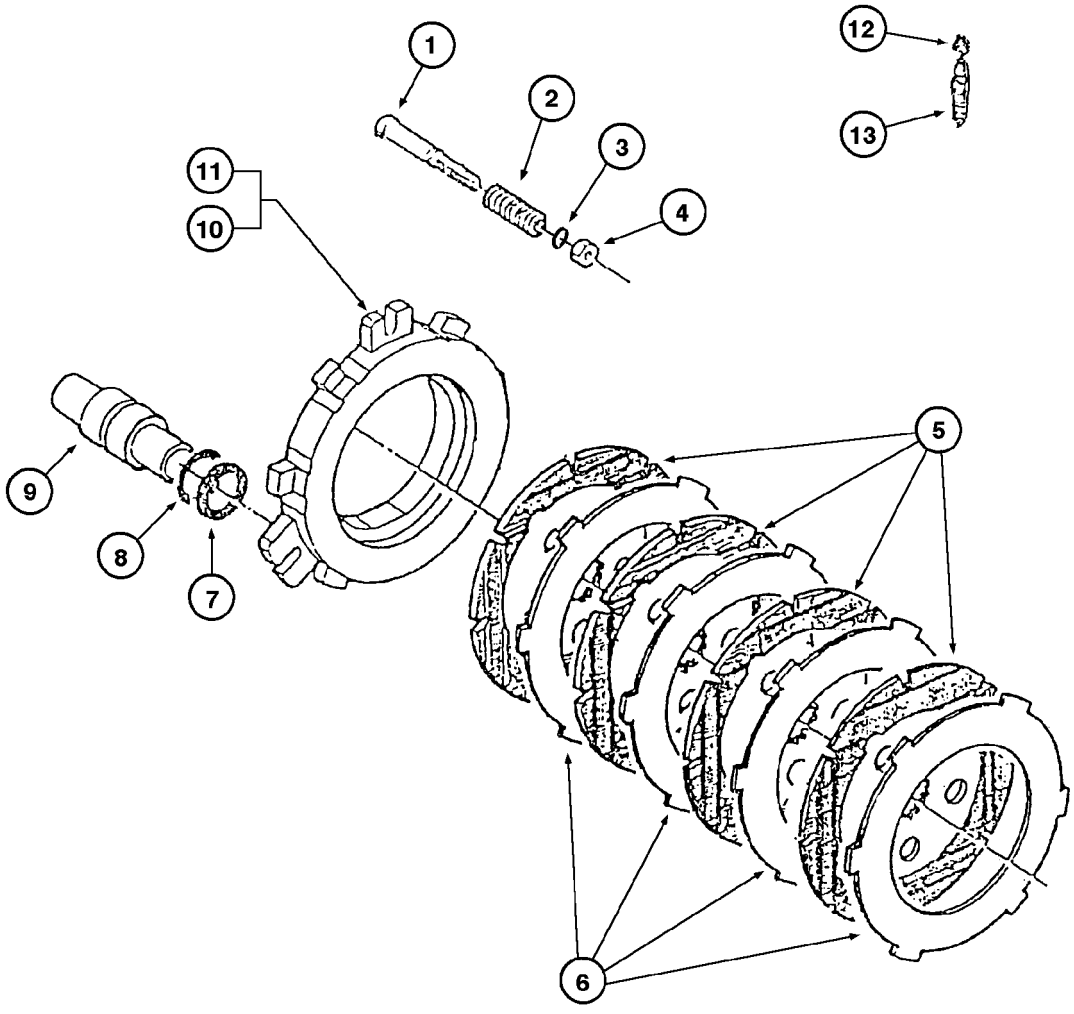

REAR AXLE (HD, HEAVY DUTY) (OPTIONAL) - BRAKES
REAR AXLE (HD, HEAVY DUTY) (OPTIONAL) - BRAKES
REAR AXLE (HD, HEAVY DUTY) (OPTIONAL) - BRAKES
REAR AXLE (HD, HEAVY DUTY) (OPTIONAL) - BRAKES

R	N	P.N.	MOD	Q	Denominação Bezeichnung	Description Description	Denominacion Beskrivelse	Descrizione Beschrijving	L.C.
		87606958		1	EIXO, rear Assy HD (Heavy Duty) (P.6-56A to 6-64A)				
						AXLE	EJE	ASSALE	087A
					ACHSE	ESSIEU	AKSEL	AS	
1		**148958A1**		6	PARAFUSO	SCREW	TORNILLO	VITE	040V
					SCHRAUBE	VIS	SKRUE	SCHROEF	
2		**148959A1**		6	MOLA	SPRING	RESORTE	MOLLA	100M
					FEDER	RESSORT	FJEDER	VEER	
3		**148960A1**		6	O-RING	O-RING	JUNTA TÓRICA	ANELLO TOROIDALE	055A
					O-RING	JOINT TORIQUE	O-RING	O-RING	
4		**148961A1**		6	PORCA	NUT	TUERCA	DADO	010D
					MUTTER	ECROU	MØTRIK	MOER	
5		**148962A1**		8	DISCO, Brake	DISC	DISCO	DISCO	060D
					SCHEIBE	DISQUE	NAV	SCHIJF	
6		**148963A1**		8	DISCO, Brake	DISC	DISCO	DISCO	060D
					SCHEIBE	DISQUE	NAV	SCHIJF	
7		**148965A1**		6	ANEL, Back-up	RING	ANILLO	ANELLO	045A
					RING	ANNEAU	RING	RING	
8		**148964A1**		6	O-RING	O-RING	JUNTA TÓRICA	ANELLO TOROIDALE	055A
					O-RING	JOINT TORIQUE	O-RING	O-RING	
9		**148966A1**		6	ÊMBOLO	PLUNGER	ÉMBOLO	PISTONCINO; STANTUFI	130P
					PLUNGER	PLONGEUR	STEMPEL	PLUNJER	
10		**87442581**		2	DISCO DE FREIO, LH	BRAKE DISC	DISCO DE FRENO	DISCO FRENO	064D
					BREMSSCHEIBE	DISQUE DE FREIN	BREMSESKIVE	REMSCHIJF	
11		**87442581**		2	DISCO DE FREIO, RH	BRAKE DISC	DISCO DE FRENO	DISCO FRENO	064D
					BREMSSCHEIBE	DISQUE DE FREIN	BREMSESKIVE	REMSCHIJF	
12		**148969A1**		2	BUJÃO	PLUG	TAPÓN	TAPPO	050T
					STOPFEN	BOUCHON	PROP	PLUG	
13		**148970A1**		2	PARAFUSO	SCREW	TORNILLO	VITE	040V
					SCHRAUBE	VIS	SKRUE	SCHROEF	

06-66	01	p1	03/09

RODAS E PNEUS
WHEELS AND TIRES
RUEDAS Y NEUMATICOS
WHEELS AND TIRES

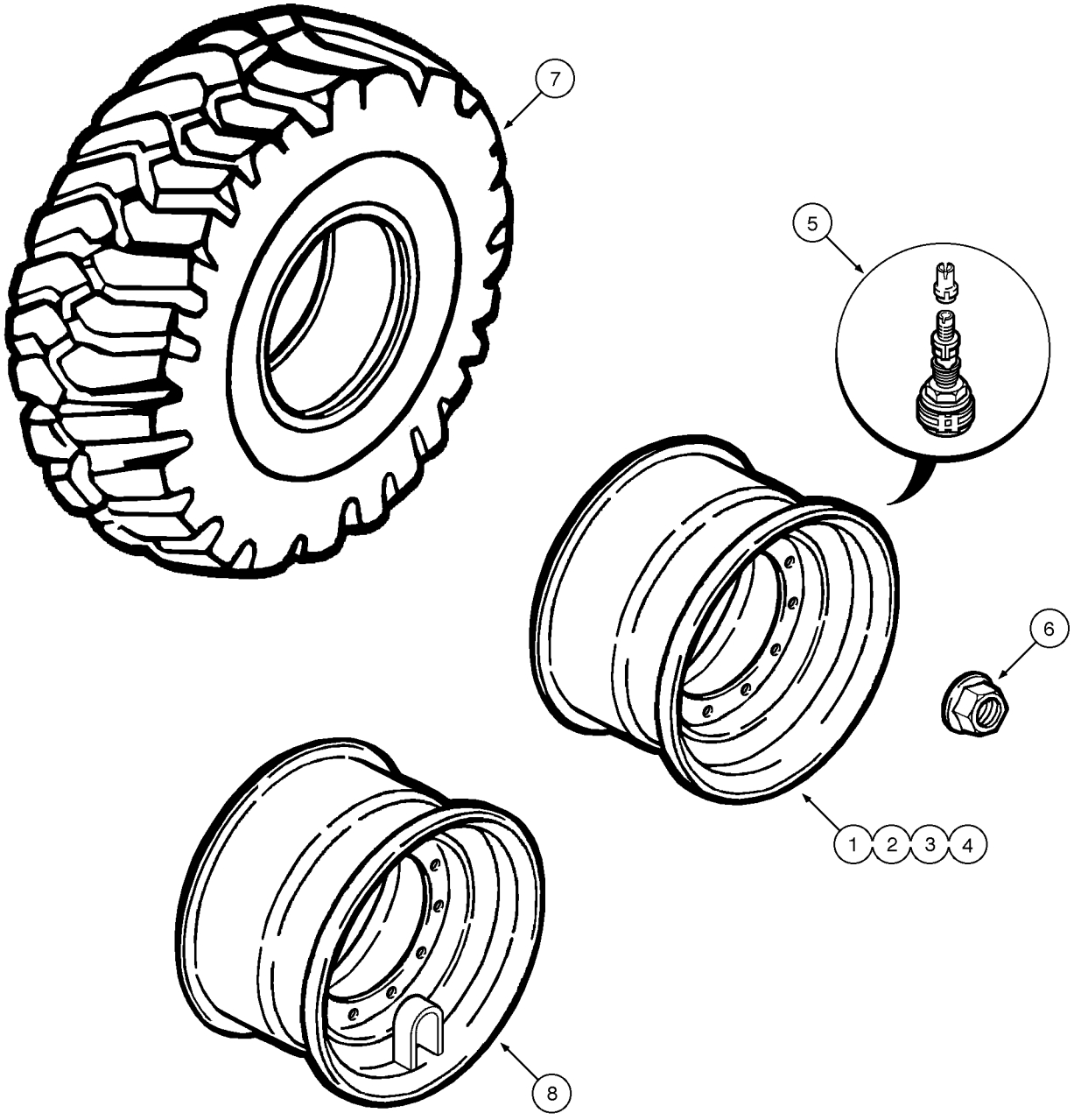

WHEELS AND TIRES
WHEELS AND TIRES
WHEELS AND TIRES
WHEELS AND TIRES

R	N	P.N.	MOD	Q	Denominação Bezeichnung	Description Description	Denominacion Beskrivelse	Descrizione Beschrijving	L.C.
		87710271		4	RODA COMPLETA, 14 x 25, 3 Pieces, Includes items 1 - 6				
						WHEEL ASSY	CONJUNTO DE RUEDA	COMPLESSIVO RUOTA	158R
					RADBAUGRUPPE	ROUE COMPLETE	HJUL, KOMPLET	WIELEENHEID	
1		**84161201**		1	RODA VEICULAR, 14 x 25	WHEEL	RUEDA	RUOTA	160R
					RAD	ROUE	HJUL	WIEL	
2		**84161500**		1	ANEL	RING	ANILLO	ANELLO	045A
					RING	ANNEAU	RING	RING	
3		**84161510**		1	ANEL	RING	ANILLO	ANELLO	045A
					RING	ANNEAU	RING	RING	
4		**84161516**		1	O-RING, 608mm ID x 2mm Width				
						O-RING	JUNTA TÓRICA	ANELLO TOROIDALE	055A
					O-RING	JOINT TORIQUE	O-RING	O-RING	
5		**A20058**		1	HASTE DA VÁLVULA	VALVE STEM	VÁSTAGO DE VÁLVULA	STELO DELLA VALVOLA	P397
					VENTILSCHAFT	TIGE DE SOUPAPE	STILKVENTIL	KLEPSTEEL	
6		**75250656**		12	PORCA	NUT	TUERCA	DADO	010D
					MUTTER	ECROU	MØTRIK	MOER	
7		**371-8251**		4	PNEU, Goodyear 17.5x25 12PR L3				
						TYRE/TIRE	NEUMÁTICO	PNEUMATICO	269C
					REIFEN	PNEUMATIQUE	DÆK	BAND	
7		**371-8252**		4	PNEU, Firestone 17.5x25 12PR L3				
						TYRE/TIRE	NEUMÁTICO	PNEUMATICO	269C
					REIFEN	PNEUMATIQUE	DÆK	BAND	
7		**147660A1**		4	PNEU, Pirelli 17.5x25 12PR L3				
						TYRE/TIRE	NEUMÁTICO	PNEUMATICO	269C
					REIFEN	PNEUMATIQUE	DÆK	BAND	
7		**371-8261**		4	PNEU, Goodyear 17.5x25 16PR L3				
						TYRE/TIRE	NEUMÁTICO	PNEUMATICO	269C
					REIFEN	PNEUMATIQUE	DÆK	BAND	
7		**371-8262**		4	PNEU, Firestone 17.5x25 16PR L3				
						TYRE/TIRE	NEUMÁTICO	PNEUMATICO	269C
					REIFEN	PNEUMATIQUE	DÆK	BAND	
7		**371-8051**		4	PNEU, Goodyear 17.5x25 12PR L2				
						TYRE/TIRE	NEUMÁTICO	PNEUMATICO	269C
					REIFEN	PNEUMATIQUE	DÆK	BAND	
7		**371-8052**		4	PNEU, Firestone 17.5x25 12PR L2				
						TYRE/TIRE	NEUMÁTICO	PNEUMATICO	269C
					REIFEN	PNEUMATIQUE	DÆK	BAND	
8		**87446988**		4	RODA VEICULAR, 14DC x 25				
						WHEEL	RUEDA	RUOTA	160R
					RAD	ROUE	HJUL	WIEL	

SECTION INDEX

Freios

07-02	01	CIRCUITO DO FREIO - PEDAL AO EIXO
07-04	01	CIRCUITO DO FREIO - PEDAL AOS ACUMULADORES
07-06	01	CIRCUITO DO FREIO - BOMBA E RESERVATÓRIO
07-08	01	PEDAL DE FREIO
07-14	01	VÁLVULA SOLENÓIDE REGULADORA DE PRESSÃO
07-16	01	FREIO DE ESTACIONAMENTO - MONTAGEM
07-18	01	FREIO DE ESTACIONAMENTO - ALAVANCA

07-02	01	p1	07/11

CIRCUITO DO FREIO - PEDAL AO EIXO
BRAKE CIRCUIT - PEDAL TO AXLE
CIRCUITO DEL FRENO - PEDAL HASTA EL EJE
BRAKE CIRCUIT - PEDAL TO AXLE

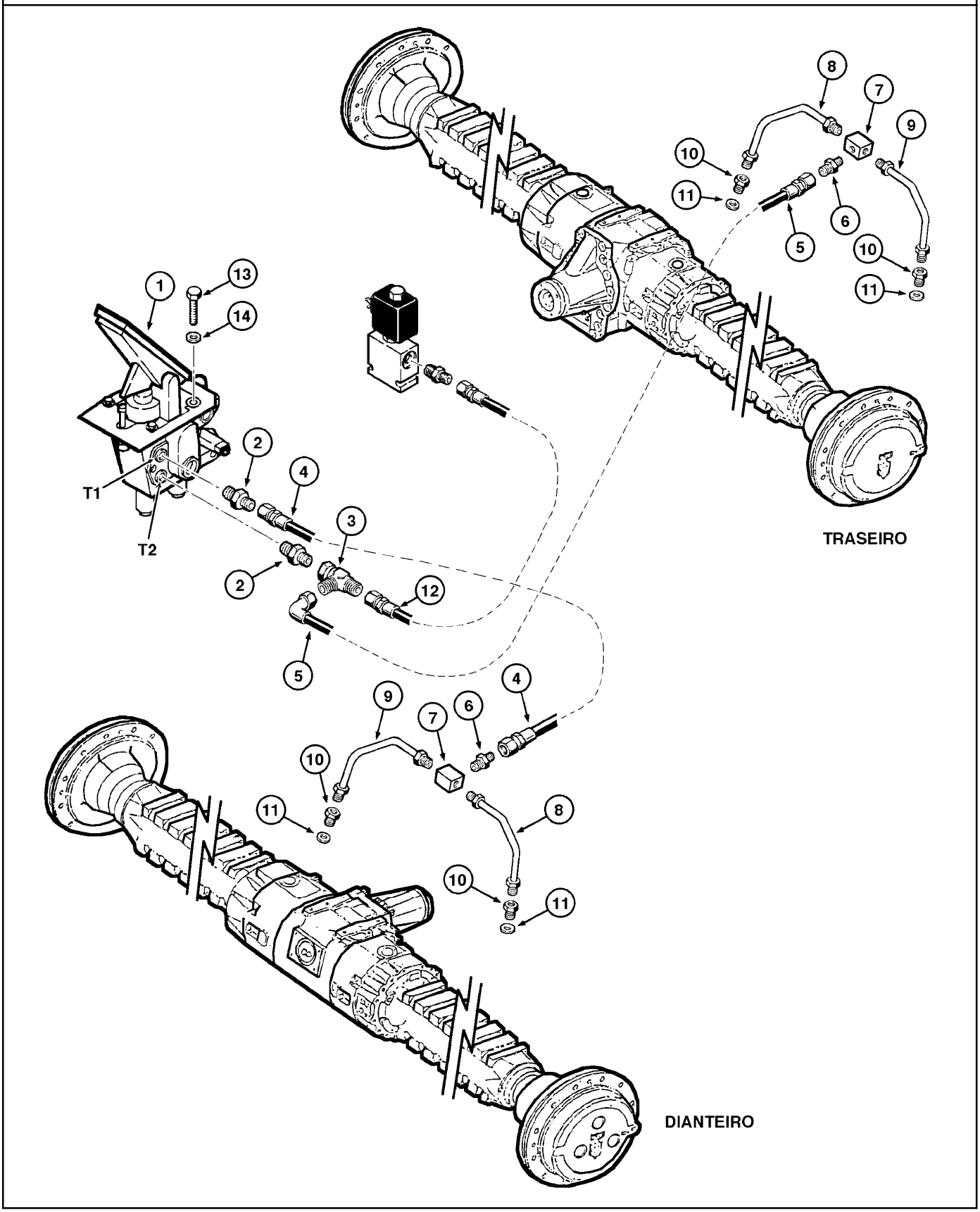

BRAKE CIRCUIT - PEDAL TO AXLE
BRAKE CIRCUIT - PEDAL TO AXLE
BRAKE CIRCUIT - PEDAL TO AXLE
BRAKE CIRCUIT - PEDAL TO AXLE

R	N	P.N.	MOD	Q	Denominação Bezeichnung	Description Description	Denominacion Beskrivelse	Descrizione Beschrijving	L.C.
1		75263986		1	PEDAL, brake Assy (P.7-8)	PEDAL	PEDAL	PEDALE	060P
					PEDAL	PEDALE	PEDAL	PEDAAL	
2		700-101		2	CONECTOR HIDRÁUL, 11/16"-16 ORFS x M14 x 1.5 ORB, Includes item 2A				
						HYD CONNECTOR	CONECTOR HIDRÁULIC(	CONNETTORE IDRAULIC	020R
					HYDR STECKVERBINDE	CONNECTEUR HYDRAU	HYDRAULIKSTIK	HYDRAULISCHE AANSLI	
2A		637-63113		1	O-RING, 11.3mm ID x 2.2mm Width				
						O-RING	JUNTA TÓRICA	ANELLO TOROIDALE	055A
					O-RING	JOINT TORIQUE	O-RING	O-RING	
2A		238-6012		1	O-RING, -012, 90 Duro, .364" ID x .070" Thk				
						O-RING	JUNTA TÓRICA	ANELLO TOROIDALE	055A
					O-RING	JOINT TORIQUE	O-RING	O-RING	
3		701-422		1	T, 11/16"-16 ORFS x 11/16"-16 Fem Sw Run, Includes item 3A				
						TEE	RACOR EN T	PEZZO A T	9020
					T-STÜCK	RACCORD EN T	T-STYKKE	T-STUK	
3A		238-6012		1	O-RING, -012, 90 Duro, .364" ID x .070" Thk				
						O-RING	JUNTA TÓRICA	ANELLO TOROIDALE	055A
					O-RING	JOINT TORIQUE	O-RING	O-RING	
4		75264001		1	MANGUEIRA, for front shaft				
						HOSE	TUBO	TUBO FLESSIBILE	030M
					SCHLAUCH	FLEXIBLE	SLANGE	SLANG	
5		75264002		1	MANGUEIRA, for rear shaft	HOSE	TUBO	TUBO FLESSIBILE	030M
					SCHLAUCH	FLEXIBLE	SLANGE	SLANG	
6		76022370		2	CONECTOR HIDRÁUL	HYD CONNECTOR	CONECTOR HIDRÁULIC(	CONNETTORE IDRAULIC	020R
					HYDR STECKVERBINDE	CONNECTEUR HYDRAU	HYDRAULIKSTIK	HYDRAULISCHE AANSLI	
7		75239697		2	BLOCO	BLOCK	BLOQUE	BLOCCO	074B
					BLOCK	BLOC	MOTORBLOK	BLOK	
8		148225A1		2	TUBO, 6.4 mm OD, 95 mm Length, brake				
						TUBE	TUBO	TUBO	195T
					ROHR	TUBE	RØR	LEIDING	
8	1	75263689		2	TUBO, brake	PIPE	TUBO	TUBO	200T
					ROHR	TUYAU	PÅFYLDNINGSSTUDS	BUIS	
9		148224A1		2	TUBO, 6.4 mm OD, 95 mm Length, brake				
						TUBE	TUBO	TUBO	195T
					ROHR	TUBE	RØR	LEIDING	
9	1	75263688		2	TUBO, brake	PIPE	TUBO	TUBO	200T
					ROHR	TUYAU	PÅFYLDNINGSSTUDS	BUIS	
10		148227A1		4	CONEXÃO	FITTING	ACOPLAMIENTO	RACCORDO	3300
					ARMATUR	RACCORD	FITTING	AANSLUITING	
11		148228A1		4	ANEL	RING	ANILLO	ANELLO	045A
					RING	ANNEAU	RING	RING	
12		75262453		1	MANGUEIRA, (port T2)	HOSE	TUBO	TUBO FLESSIBILE	030M
					SCHLAUCH	FLEXIBLE	SLANGE	SLANG	
13		16043431		4	PARAFUSO, Hex, M8 x 20, 10.9				
						SCREW	TORNILLO	VITE	040V
					SCHRAUBE	VIS	SKRUE	SCHROEF	
14		10519621		4	ARRUELA PLANA, M8 x 17 x 2				
						WASHER	ARANDELA	RONDELLA	131R
					UNTERLEGSCHEIBE	RONDELLE	FLADSKIVE	SLUITRING	

(1) Para Opcional Fertilizante

07-04	01	p1	07/11

CIRCUITO DO FREIO - PEDAL AOS ACUMULADORES
BRAKE CIRCUIT - PEDAL TO ACCUMULATORS
CIRCUITO DEL FRENO - PEDAL HASTA LOS ACUMULADORES
BRAKE CIRCUIT - PEDAL TO ACCUMULATORS

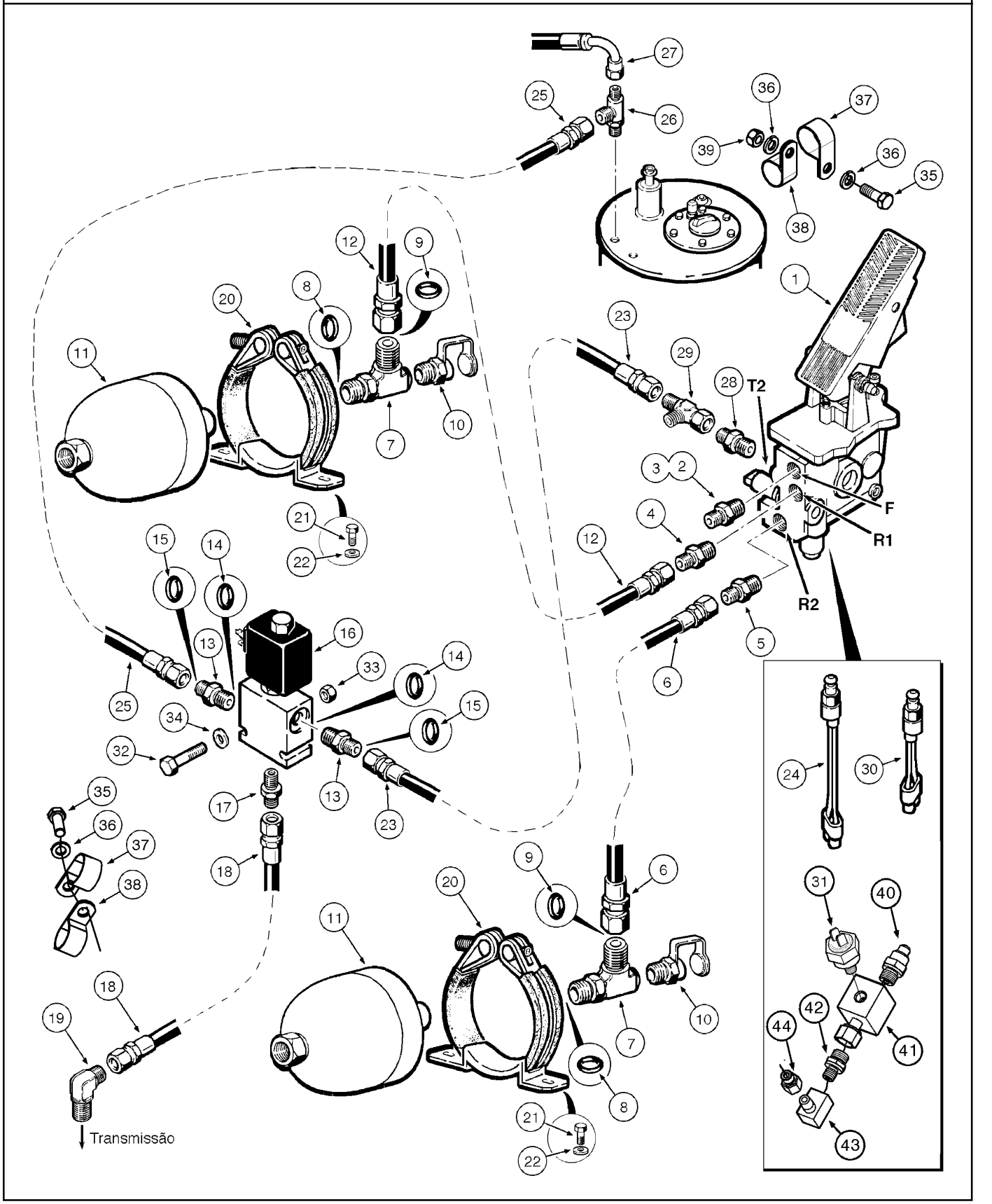

BRAKE CIRCUIT - PEDAL TO ACCUMULATORS
BRAKE CIRCUIT - PEDAL TO ACCUMULATORS
BRAKE CIRCUIT - PEDAL TO ACCUMULATORS
BRAKE CIRCUIT - PEDAL TO ACCUMULATORS

R	N	P.N.	MOD	Q	Denominação Bezeichnung	Description Description	Denominacion Beskrivelse	Descrizione Beschrijving	L.C.
1		75263986		1	PEDAL, brake Assy (P.7-8)	PEDAL	PEDAL	PEDALE	060P
					PEDAL	PEDALE	PEDAL	PEDAAL	
2		70907059		1	CONECTOR HIDRÁUL, 90º	HYD CONNECTOR	CONECTOR HIDRÁULIC(	CONNETTORE IDRAULIC	020R
					HYDR STECKVERBINDE	CONNECTEUR HYDRAU	HYDRAULIKSTIK	HYDRAULISCHE AANSLU	
3		75214532		1	CONECTOR HIDRÁUL	HYD CONNECTOR	CONECTOR HIDRÁULIC(	CONNETTORE IDRAULIC	020R
					HYDR STECKVERBINDE	CONNECTEUR HYDRAU	HYDRAULIKSTIK	HYDRAULISCHE AANSLU	
4		700-154		1	CONECTOR HIDRÁUL, 13/16"-16 ORFS x M14 x 1.5 ORB, Includes item 4A				
						HYD CONNECTOR	CONECTOR HIDRÁULIC(	CONNETTORE IDRAULIC	020R
					HYDR STECKVERBINDE	CONNECTEUR HYDRAU	HYDRAULIKSTIK	HYDRAULISCHE AANSLU	
4A		637-63113		1	O-RING, 11.3mm ID x 2.2mm Width				
						O-RING	JUNTA TÓRICA	ANELLO TOROIDALE	055A
					O-RING	JOINT TORIQUE	O-RING	O-RING	
4A		238-6012		1	O-RING, -012, 90 Duro, .364" ID x .070" Thk				
						O-RING	JUNTA TÓRICA	ANELLO TOROIDALE	055A
					O-RING	JOINT TORIQUE	O-RING	O-RING	
5		700-154		1	CONECTOR HIDRÁUL, 13/16"-16 ORFS x M14 x 1.5 ORB, Includes item 5A				
						HYD CONNECTOR	CONECTOR HIDRÁULIC(	CONNETTORE IDRAULIC	020R
					HYDR STECKVERBINDE	CONNECTEUR HYDRAU	HYDRAULIKSTIK	HYDRAULISCHE AANSLU	
5A		637-63113		1	O-RING, 11.3mm ID x 2.2mm Width				
						O-RING	JUNTA TÓRICA	ANELLO TOROIDALE	055A
					O-RING	JOINT TORIQUE	O-RING	O-RING	
5A		238-6012		1	O-RING, -012, 90 Duro, .364" ID x .070" Thk				
						O-RING	JUNTA TÓRICA	ANELLO TOROIDALE	055A
					O-RING	JOINT TORIQUE	O-RING	O-RING	
6		75264004		1	MANGUEIRA, (port R2)	HOSE	TUBO	TUBO FLESSIBILE	030M
					SCHLAUCH	FLEXIBLE	SLANGE	SLANG	
7		75239909		2	GRAXEIRA, Includes items 8, 9				
						LUBE NIPPLE	BOQUILLA DE LUBRICAC	INGRASSATORE	060I
					SCHMIERNIPPEL	GRAISSEUR	SMØRENIPPEL	SMEERNIPPEL	
8		14438085		1	O-RING, 19.3mm ID x 2.4mm				
						O-RING	JUNTA TÓRICA	ANELLO TOROIDALE	055A
					O-RING	JOINT TORIQUE	O-RING	O-RING	
9		70923952		1	O-RING	O-RING	JUNTA TÓRICA	ANELLO TOROIDALE	055A
					O-RING	JOINT TORIQUE	O-RING	O-RING	
10		79087360		2	VÁLVULA HIDRÁULICA, pressure				
						HYDRAULIC VALVE	VÁLVULA HIDRÁULICA	DISTRIBUTORE IDRAULI	010V
					HYDRAULIKVENTIL	SOUPAPE HYDRAULIQU	HYDRAULIKVENTIL	HYDRAULISCHE KLEP	
11		76028575		2	ACUMULADOR, hydraulic 1.4L				
						ACCUMULATOR	ACUMULADOR	ACCUMULATORE	037A
					DRUCKSPEICHER	ACCUMULATEUR	AKKUMULATOR	ACCUMULATOR	
12		75264003		1	MANGUEIRA, (port R1)	HOSE	TUBO	TUBO FLESSIBILE	030M
					SCHLAUCH	FLEXIBLE	SLANGE	SLANG	
13		75264623		2	CONEXÃO, Includes items 14, 15				
						FITTING	ACOPLAMIENTO	RACCORDO	3300
					ARMATUR	RACCORD	FITTING	AANSLUITING	
14		70924048		1	O-RING	O-RING	JUNTA TÓRICA	ANELLO TOROIDALE	055A
					O-RING	JOINT TORIQUE	O-RING	O-RING	
15		70923558		1	ANEL ISOLADOR	INSULATING RING	ANILLO AISLANTE	ANELLO ISOLANTE	049A
					ISOLIERRING	BAGUE ISOLANTE	ISOLERINGSSKIVE	ISOLEERRING	

07-04	01	p2	07/11

CIRCUITO DO FREIO - PEDAL AOS ACUMULADORES
BRAKE CIRCUIT - PEDAL TO ACCUMULATORS
CIRCUITO DEL FRENO - PEDAL HASTA LOS ACUMULADORES
BRAKE CIRCUIT - PEDAL TO ACCUMULATORS

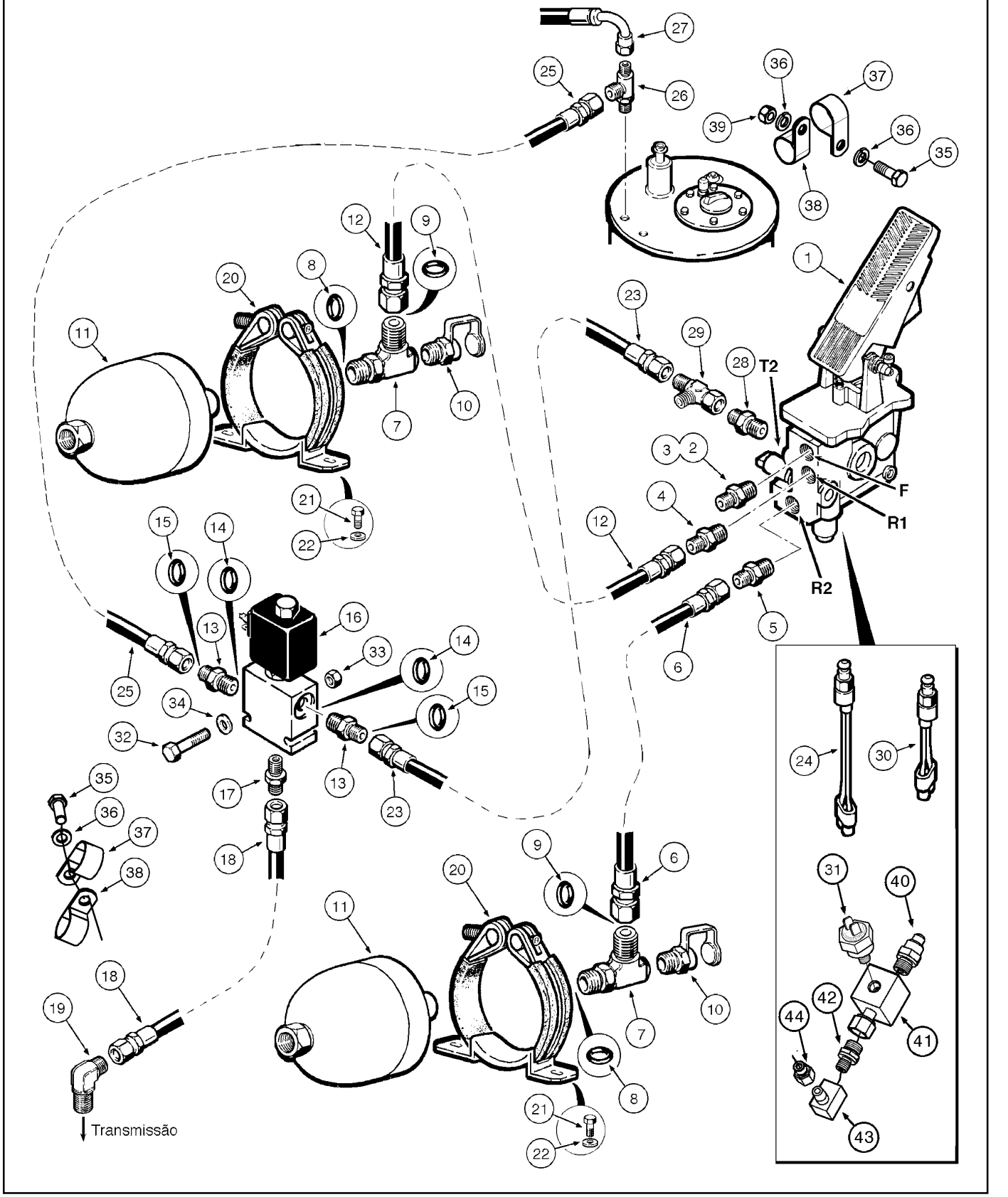

BRAKE CIRCUIT - PEDAL TO ACCUMULATORS
BRAKE CIRCUIT - PEDAL TO ACCUMULATORS
BRAKE CIRCUIT - PEDAL TO ACCUMULATORS
BRAKE CIRCUIT - PEDAL TO ACCUMULATORS

R	N	P.N.	MOD	Q	Denominação Bezeichnung	Description Description	Denominacion Beskrivelse	Descrizione Beschrijving	L.C.
16		84337035		1	VÁLVULA DO SOLENOIDE, solenoid Assy (P.7-12)				
						SOLENOID VALVE	VÁLVULA DE SOLENOID	VALVOLA A SOLENOIDE	Z337
					MAGNETVENTIL	ELECTROVANNE	MAGNETVENTIL	SOLENOÏDEKLEP	
17		75264623		1	CONEXÃO	FITTING	ACOPLAMIENTO	RACCORDO	3300
					ARMATUR	RACCORD	FITTING	AANSLUITING	
18		75325682		1	MANGUEIRA, solenoid	HOSE	TUBO	TUBO FLESSIBILE	030M
					SCHLAUCH	FLEXIBLE	SLANGE	SLANG	
19		75264022		1	CONEXÃO	FITTING	ACOPLAMIENTO	RACCORDO	3300
					ARMATUR	RACCORD	FITTING	AANSLUITING	
20		76028577		2	COLAR, accumulator	COLLAR	COLLAR	COLLARE	031F
					RINGE	COLLIER	SLANGEBÅND	KRAAG	
21		16043231		4	PARAFUSO, Hex, M8 x 16, 10.9				
						SCREW	TORNILLO	VITE	040V
					SCHRAUBE	VIS	SKRUE	SCHROEF	
22		14496531		4	ARRUELA PLANA, M8 x 17 x 1.6				
						WASHER	ARANDELA	RONDELLA	131R
					UNTERLEGSCHEIBE	RONDELLE	FLADSKIVE	SLUITRING	
23		75262453		1	MANGUEIRA, (port T2)	HOSE	TUBO	TUBO FLESSIBILE	030M
					SCHLAUCH	FLEXIBLE	SLANGE	SLANG	
24		75264019		1	INTERRUPTOR, brake lower pressure				
						SWITCH	INTERRUPTOR	INTERRUTTORE	075I
					SCHALTER	CONTACTEUR	KONTAKT	SCHAKELAAR	
25		75264622		1	MANGUEIRA, solenoid to reservoir				
						HOSE	TUBO	TUBO FLESSIBILE	030M
					SCHLAUCH	FLEXIBLE	SLANGE	SLANG	
26		78100054		1	CONECTOR HIDRÁUL	HYD CONNECTOR	CONECTOR HIDRÁULIC	CONNETTORE IDRAULIC	020R
					HYDR STECKVERBINDE	CONNECTEUR HYDRAU	HYDRAULIKSTIK	HYDRAULISCHE AANSLI	
27		75264005		1	MANGUEIRA, (port B)	HOSE	TUBO	TUBO FLESSIBILE	030M
					SCHLAUCH	FLEXIBLE	SLANGE	SLANG	
28		700-101		1	CONECTOR HIDRÁUL, 11/16"-16 ORFS x M14 x 1.5 ORB				
						HYD CONNECTOR	CONECTOR HIDRÁULIC	CONNETTORE IDRAULIC	020R
					HYDR STECKVERBINDE	CONNECTEUR HYDRAU	HYDRAULIKSTIK	HYDRAULISCHE AANSLI	
29		701-422		1	T, 11/16"-16 ORFS x 11/16"-16 Fem Sw Run				
						TEE	RACOR EN T	PEZZO A T	9020
					T-STÜCK	RACCORD EN T	T-STYKKE	T-STUK	
30		75254593		1	INTERRUPTOR DE PRESSÃO, declutch F2				
						PRESSURE SWITCH	INTERRUPTOR DE PRES	PRESSOSTATO	079I
					DRUCKSCHALTER	PRESSOSTAT	KONTAKT, TRYK	DRUKSCHAKELAAR	
31		70094334		1	INTERRUPTOR, brake light F1				
						LIGHT SWITCH	INTERRUPTOR DE LUZ	INTERRUTTORE LUCI	228S
					LICHTSCHALTER	COMM. LUMIERES	KONTAKT, LYS	VERLICHTINGSSCHAKEI	
31		84228807	a	1	SENSOR, brake light F1	SENSOR	SENSOR	SENSORE	608S
					SENSOR	CAPTEUR	FØLER	SENSOR	
32		70934150		2	PARAFUSO	SCREW	TORNILLO	VITE	040V
					SCHRAUBE	VIS	SKRUE	SCHROEF	
33		70920329		2	PORCA	NUT	TUERCA	DADO	010D
					MUTTER	ECROU	MØTRIK	MOER	

(a) ASN N9AE02680

07-04	01	p3	07/11

CIRCUITO DO FREIO - PEDAL AOS ACUMULADORES
BRAKE CIRCUIT - PEDAL TO ACCUMULATORS
CIRCUITO DEL FRENO - PEDAL HASTA LOS ACUMULADORES
BRAKE CIRCUIT - PEDAL TO ACCUMULATORS

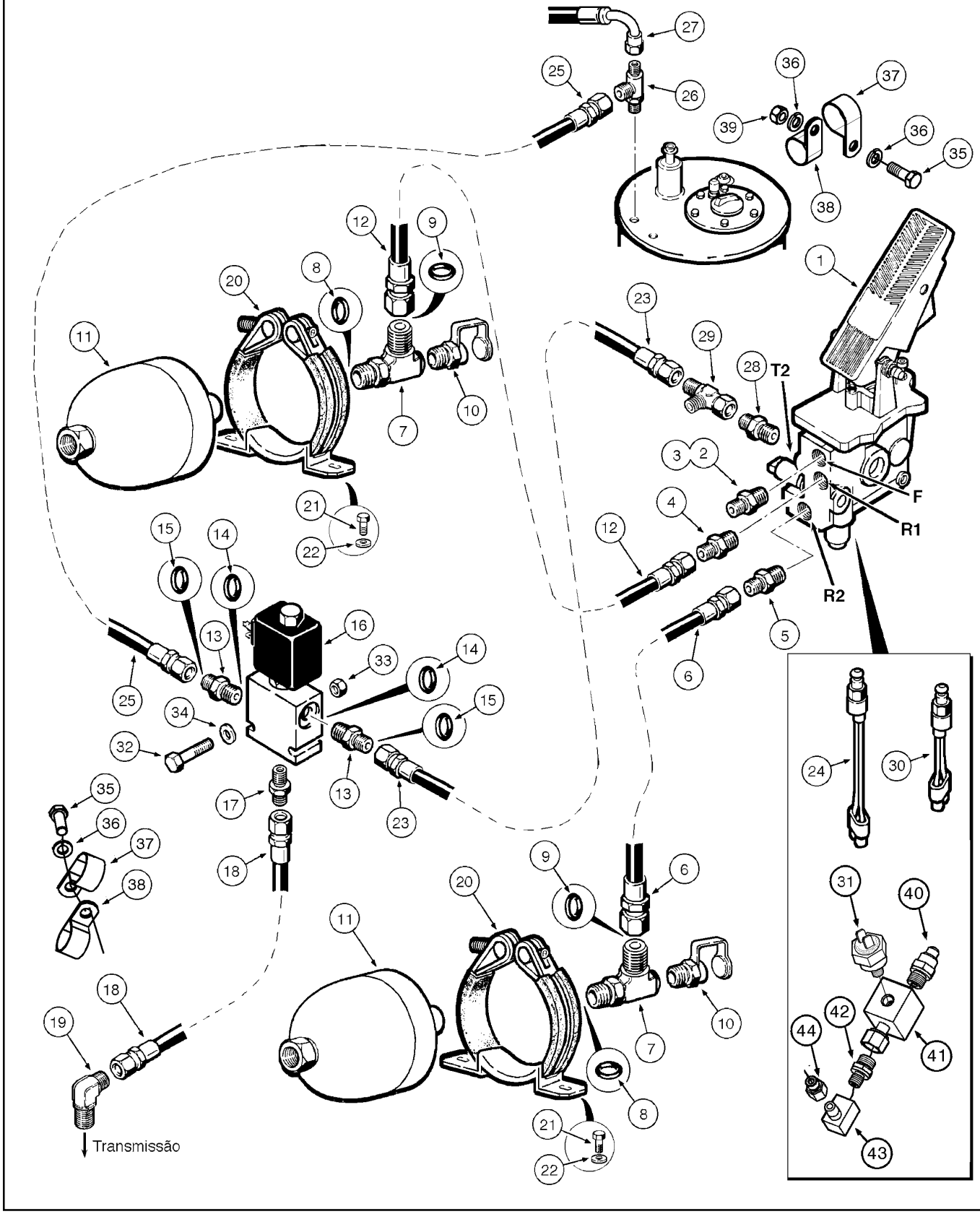

BRAKE CIRCUIT - PEDAL TO ACCUMULATORS
BRAKE CIRCUIT - PEDAL TO ACCUMULATORS
BRAKE CIRCUIT - PEDAL TO ACCUMULATORS
BRAKE CIRCUIT - PEDAL TO ACCUMULATORS

R	N	P.N.	MOD	Q	Denominação Bezeichnung	Description Description	Denominacion Beskrivelse	Descrizione Beschrijving	L.C.
34		70928190		4	ARRUELA PLANA UNTERLEGSCHEIBE	WASHER RONDELLE	ARANDELA FLADSKIVE	RONDELLA SLUITRING	131R
35		413-616		2	PARAFUSO, Hex, 3/8"-16 x 1", G5, Full Thd SCHRAUBE	BOLT VIS	PERNO BOLT	BULLONE BOUT	140B
36		492-11038		3	TRAVA DA ARRUELA, 3/8" SICHERUNGSSCHEIBE	LOCK WASHER RONDELLE FREIN	ARANDELA DE BLOQUE LÅSESKIVE	RONDELLA DI SICUREZ BORGRING	132R
37		515-23286		3	BRAÇADEIRA, 1 1/8", Insul, 3/8" Bolt KLEMME	CLAMP COLLIER	ABRAZADERA SPÆNDEBÅND	MORSETTO KLEM	120M
38		515-23254		3	BRAÇADEIRA, 1", Insul, 3/8" Bolt KLEMME	CLAMP COLLIER	ABRAZADERA SPÆNDEBÅND	MORSETTO KLEM	120M
39		425-106		1	PORCA, 3/8"-16, G5 MUTTER	NUT ECROU	TUERCA MØTRIK	DADO MOER	010D
40		79087360		1	VÁLVULA HIDRÁULICA HYDRAULIKVENTIL	HYDRAULIC VALVE SOUPAPE HYDRAULIQU	VÁLVULA HIDRÁULICA HYDRAULIKVENTIL	DISTRIBUTORE IDRAULI HYDRAULISCHE KLEP	010V
41		75327264		1	BLOCO BLOCK	BLOCK BLOC	BLOQUE MOTORBLOK	BLOCCO BLOK	074B
41		84126982		1	CONEXÃO ARMATUR	FITTING RACCORD	ACOPLAMIENTO FITTING	RACCORDO AANSLUITING	3300
42		75320693		1	CONEXÃO ARMATUR	FITTING RACCORD	ACOPLAMIENTO FITTING	RACCORDO AANSLUITING	3300
43		70907059		1	CONECTOR HIDRÁUL HYDR STECKVERBINDE	HYD CONNECTOR CONNECTEUR HYDRAU	CONECTOR HIDRÁULIC HYDRAULIKSTIK	CONNETTORE IDRAULIC HYDRAULISCHE AANSLI	020R
44		75214532		1	CONECTOR HIDRÁUL HYDR STECKVERBINDE	HYD CONNECTOR CONNECTEUR HYDRAU	CONECTOR HIDRÁULIC HYDRAULIKSTIK	CONNETTORE IDRAULIC HYDRAULISCHE AANSLI	020R

07-06	01	p1	07/11

CIRCUITO DO FREIO - BOMBA E RESERVATÓRIO
BRAKE CIRCUIT - PUMP AND RESERVOIR
CIRCUITO DEL FRENO - BOMBA Y DEPOSITO
BRAKE CIRCUIT - PUMP AND RESERVOIR

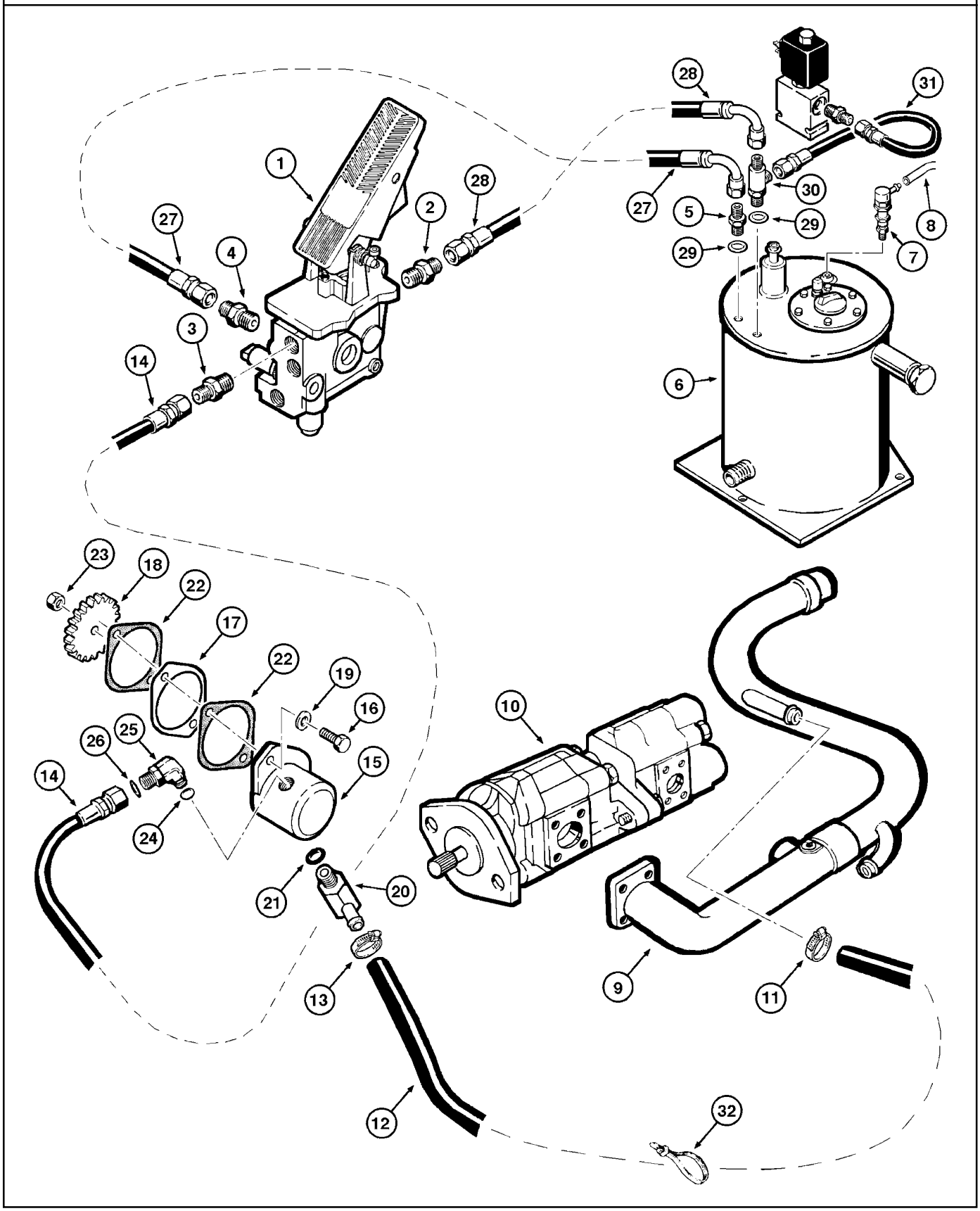

BRAKE CIRCUIT - PUMP AND RESERVOIR
BRAKE CIRCUIT - PUMP AND RESERVOIR
BRAKE CIRCUIT - PUMP AND RESERVOIR
BRAKE CIRCUIT - PUMP AND RESERVOIR

R	N	P.N.	MOD	Q	Denominação Bezeichnung	Description Description	Denominacion Beskrivelse	Descrizione Beschrijving	L.C.
1		75263986		1	PEDAL, brake Assy (P.7-8)	PEDAL	PEDAL	PEDALE	060P
					PEDAL	PEDALE	PEDAL	PEDAAL	
2		700-102		1	CONECTOR HIDRÁUL, 13/16"-16 ORFS x M18 x 1.5 ORB, Includes item 2A				
						HYD CONNECTOR	CONECTOR HIDRÁULIC	CONNETTORE IDRAULIC	020R
					HYDR STECKVERBINDE	CONNECTEUR HYDRAU	HYDRAULIKSTIK	HYDRAULISCHE AANSLU	
2A		637-63153		1	O-RING, 15.3mm ID x 2.2mm Width				
						O-RING	JUNTA TÓRICA	ANELLO TOROIDALE	055A
					O-RING	JOINT TORIQUE	O-RING	O-RING	
2A		238-6014		1	O-RING, -014, 90 Duro, .489" ID x .070" Thk				
						O-RING	JUNTA TÓRICA	ANELLO TOROIDALE	055A
					O-RING	JOINT TORIQUE	O-RING	O-RING	
3		700-162		1	CONECTOR HIDRÁUL, 13/16"-16 ORFS x M22 x 1.5 ORB, Includes item 3A				
						HYD CONNECTOR	CONECTOR HIDRÁULIC	CONNETTORE IDRAULIC	020R
					HYDR STECKVERBINDE	CONNECTEUR HYDRAU	HYDRAULIKSTIK	HYDRAULISCHE AANSLU	
3A		637-63193		1	O-RING, 19.3mm ID x 2.2mm Width				
						O-RING	JUNTA TÓRICA	ANELLO TOROIDALE	055A
					O-RING	JOINT TORIQUE	O-RING	O-RING	
3A		238-6014		1	O-RING, -014, 90 Duro, .489" ID x .070" Thk				
						O-RING	JUNTA TÓRICA	ANELLO TOROIDALE	055A
					O-RING	JOINT TORIQUE	O-RING	O-RING	
4		700-162		1	CONECTOR HIDRÁUL, 13/16"-16 ORFS x M22 x 1.5 ORB, Includes item 4A				
						HYD CONNECTOR	CONECTOR HIDRÁULIC	CONNETTORE IDRAULIC	020R
					HYDR STECKVERBINDE	CONNECTEUR HYDRAU	HYDRAULIKSTIK	HYDRAULISCHE AANSLU	
4A		637-63193		1	O-RING, 19.3mm ID x 2.2mm Width				
						O-RING	JUNTA TÓRICA	ANELLO TOROIDALE	055A
					O-RING	JOINT TORIQUE	O-RING	O-RING	
4A		238-6014		1	O-RING, -014, 90 Duro, .489" ID x .070" Thk				
						O-RING	JUNTA TÓRICA	ANELLO TOROIDALE	055A
					O-RING	JOINT TORIQUE	O-RING	O-RING	
5		75236793		2	CONECTOR HIDRÁUL	HYD CONNECTOR	CONECTOR HIDRÁULIC	CONNETTORE IDRAULIC	020R
					HYDR STECKVERBINDE	CONNECTEUR HYDRAU	HYDRAULIKSTIK	HYDRAULISCHE AANSLU	
		70928486		2	O-RING	O-RING	JUNTA TÓRICA	ANELLO TOROIDALE	055A
					O-RING	JOINT TORIQUE	O-RING	O-RING	
		70923841		2	O-RING, M12.42 ID x 1.78 Thk				
						O-RING	JUNTA TÓRICA	ANELLO TOROIDALE	055A
					O-RING	JOINT TORIQUE	O-RING	O-RING	
6		75263424		1	RESERVATÓRIO DE ÓLEO HIDR, hydraulic Assy (P.8-8)				
						HYDRAULIC OIL RESER	DEP. ACEITE HIDRÁULIC	SERBATOIO OLIO IDRAU	113S
					HYDRAULIKÖLBEHÄLTE	RESERVOIR D'HUILE HY	HYDRAULIKOLIETANK	RESERVOIR VOOR HYDI	
7		235417A2		1	RESPIRO	VENT	RESPIRADERO	BOCCHETTA	P079
					AUSSTRÖMER	BUSE D'AERATION	UDLUFTNINGSDYSE	LUCHTROOSTER	
8		E159653		1	MANGUEIRA, 7.9 mm ID x 820.00 mm				
						HOSE	TUBO	TUBO FLESSIBILE	030M
					SCHLAUCH	FLEXIBLE	SLANGE	SLANG	
9		75263354		1	TUBO, hydr. pump (P.8-2)	TUBE	TUBO	TUBO	195T
					ROHR	TUBE	RØR	LEIDING	
10		REF		1	INSTRUÇÃO, PUMP hydr. main Assy				
						INSTRUCTION	INSTRUCCIÓN	ISTRUZIONI	Z571
					ANLEITUNG	INSTRUCTION	INSTRUKTION	INSTRUCTIE	

07-06	01	p2	07/11

CIRCUITO DO FREIO - BOMBA E RESERVATÓRIO
BRAKE CIRCUIT - PUMP AND RESERVOIR
CIRCUITO DEL FRENO - BOMBA Y DEPOSITO
BRAKE CIRCUIT - PUMP AND RESERVOIR

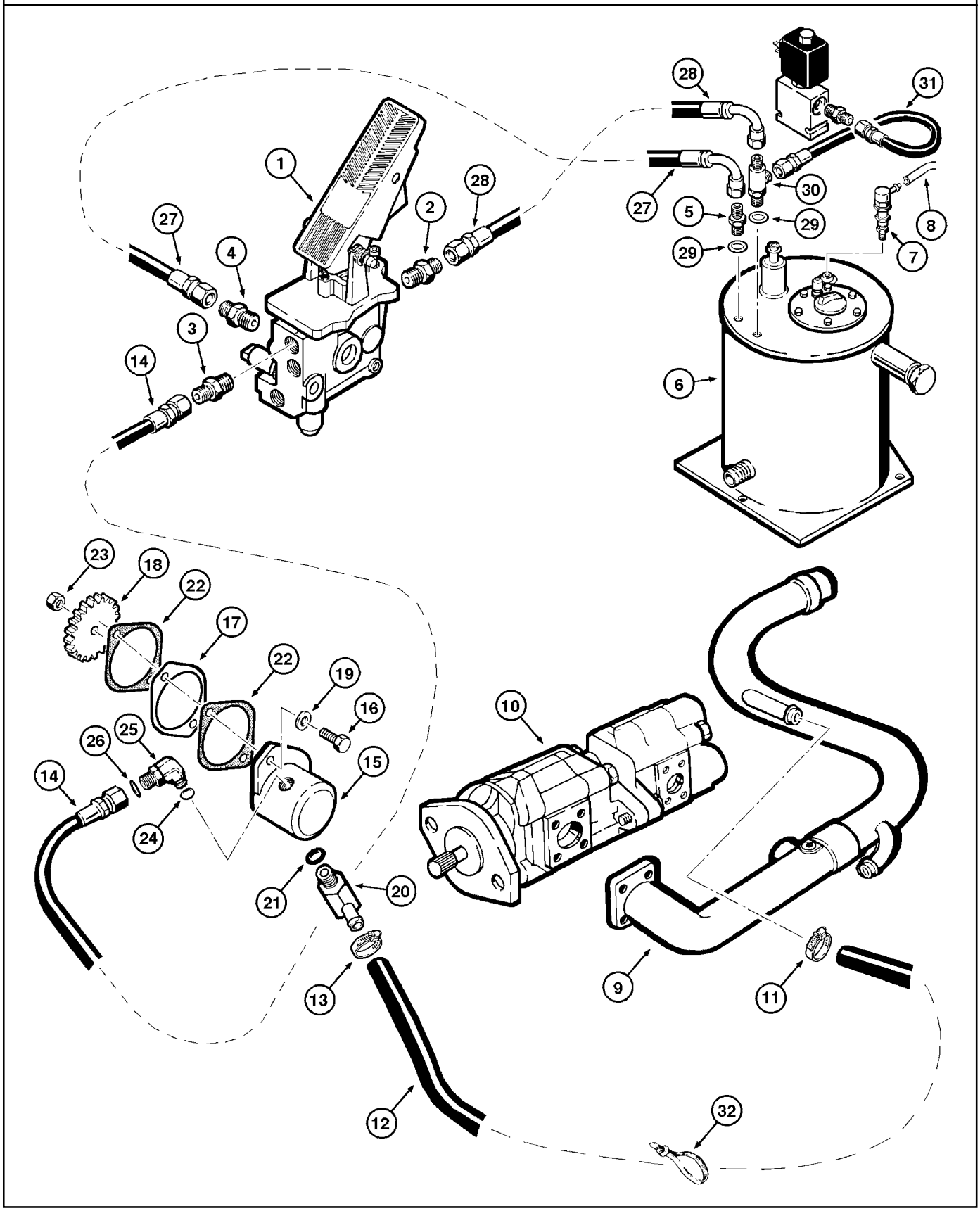

BRAKE CIRCUIT - PUMP AND RESERVOIR
BRAKE CIRCUIT - PUMP AND RESERVOIR
BRAKE CIRCUIT - PUMP AND RESERVOIR
BRAKE CIRCUIT - PUMP AND RESERVOIR

R	N	P.N.	MOD	Q	Denominação Bezeichnung	Description Description	Denominacion Beskrivelse	Descrizione Beschrijving	L.C.
11		214-1416		1	BRAÇADEIRA MANGUEIRA, #16, 0.81/1.50 Type F Worm				
						HOSE CLAMP	ABRAZADERA DE MANG	FASCETTA STRINGITUB	P729
					SCHLAUCHSCHELLE	COLLIER POUR FLEXIBL	SLANGEKLEMME	SLANGKLEM	
12		75325644		1	MANGUEIRA, 19.00 mm ID x 1750.00 mm, Brake pump - Main pump				
						HOSE	TUBO	TUBO FLESSIBILE	030M
					SCHLAUCH	FLEXIBLE	SLANGE	SLANG	
13		214-1416		1	BRAÇADEIRA MANGUEIRA, #16, 0.81/1.50 Type F Worm				
						HOSE CLAMP	ABRAZADERA DE MANG	FASCETTA STRINGITUB	P729
					SCHLAUCHSCHELLE	COLLIER POUR FLEXIBL	SLANGEKLEMME	SLANGKLEM	
14		75264006		1	MANGUEIRA, (port P)	HOSE	TUBO	TUBO FLESSIBILE	030M
					SCHLAUCH	FLEXIBLE	SLANGE	SLANG	
15		75266621		1	BOMBA DE ÓLEO DO MOTOR, brake Assy				
						ENGINE OIL PUMP	BOMBA DE ACEITE DE M	POMPA OLIO MOTORE	153P
					MOTORÖLPUMPE	POMPE A HUILE MOTEU	MOTOROLIEPUMPE	MOTOROLIEPOMP	
16		627-12035			PARAFUSO, Hex, M12 x 35, 10.9				
						BOLT	PERNO	BULLONE	140B
					SCHRAUBE	VIS	BOLT	BOUT	
17		J902603		1	ESPAÇADOR, SPACER	SPACER	SEPARADOR	DISTANZIALE	075D
					DISTANZSTÜCK	ENTRETOISE	AFSTANDSSTYKKE	AFSTANDSSTUK	
18		J969061		1	ENGRENAGEM, drive	GEAR	ENGRANAJE	INGRANAGGIO	050I
					ZAHNRAD	PIGNON	TANDHJUL	TANDWIEL	
19		892-11012		2	TRAVA DA ARRUELA, M12	LOCK WASHER	ARANDELA DE BLOQUEO	RONDELLA DI SICUREZZ	132R
					SICHERUNGSSCHEIBE	RONDELLE FREIN	LÅSESKIVE	BORGRING	
20		372029A2		1	COTOVELO	ELBOW	CODO	GOMITO	P549
					ROHRKNIE	COUDE	ELBOW	ELBOW	
21		238-6018		1	O-RING, -018, 90 Duro, .739" ID x .070" Thk				
						O-RING	JUNTA TÓRICA	ANELLO TOROIDALE	055A
					O-RING	JOINT TORIQUE	O-RING	O-RING	
22		A77441		2	JUNTA	GASKET	JUNTA	GUARNIZIONE	3720
					DICHTUNG	JOINT	GASKET	GASKET	
23		425-138		1	PORCA ENTALHADA, 1/2"-20, G8				
						SLOTTED NUT	TUERCA CON RANURAS	DADO SCANALATO	Z477
					NUTMUTTER	ECROU A CRENEAUX	KÆRVMØTRIK	SLEUFMOER	
24		637-63153		1	O-RING, 15.3mm ID x 2.2mm Width				
						O-RING	JUNTA TÓRICA	ANELLO TOROIDALE	055A
					O-RING	JOINT TORIQUE	O-RING	O-RING	
25		700-326		1	COTOVELO, 90º, 13/16"-18 ORFS x M22 x 1.5 ORB, Includes item 26				
						ELBOW	CODO	GOMITO	085G
					KNIESTÜCK	COUDE	VINKELRØR	KNIESTUK	
26		238-6014		1	O-RING, -014, 90 Duro, .489" ID x .070" Thk				
						O-RING	JUNTA TÓRICA	ANELLO TOROIDALE	055A
					O-RING	JOINT TORIQUE	O-RING	O-RING	
27		75264007		1	MANGUEIRA, (port B)	HOSE	TUBO	TUBO FLESSIBILE	030M
					SCHLAUCH	FLEXIBLE	SLANGE	SLANG	
28		75264005		1	MANGUEIRA, (port N)	HOSE	TUBO	TUBO FLESSIBILE	030M
					SCHLAUCH	FLEXIBLE	SLANGE	SLANG	
29		75255693		2	O-RING	O-RING	JUNTA TÓRICA	ANELLO TOROIDALE	055A
					O-RING	JOINT TORIQUE	O-RING	O-RING	

07-06	01	p3	07/11

CIRCUITO DO FREIO - BOMBA E RESERVATÓRIO
BRAKE CIRCUIT - PUMP AND RESERVOIR
CIRCUITO DEL FRENO - BOMBA Y DEPOSITO
BRAKE CIRCUIT - PUMP AND RESERVOIR

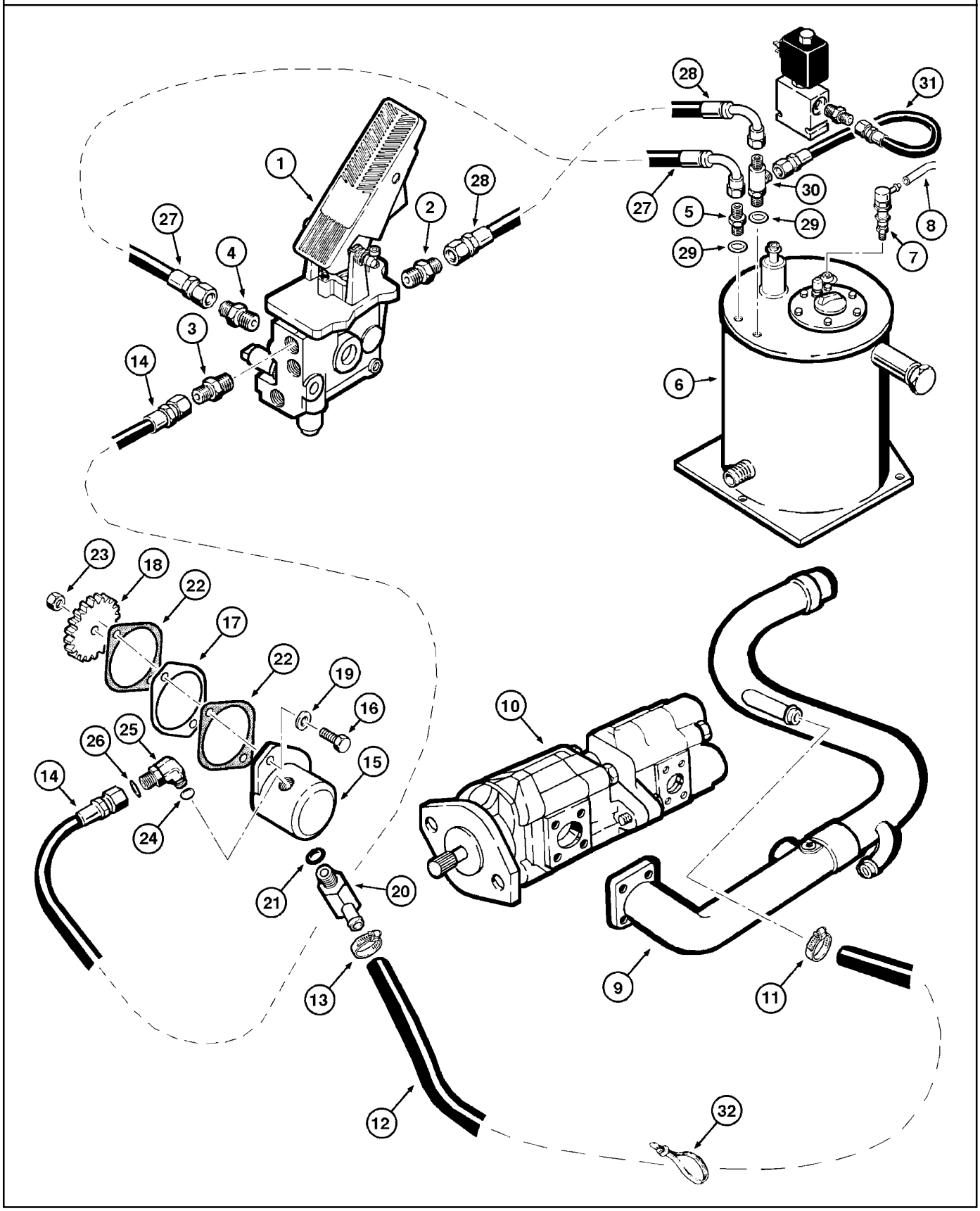

BRAKE CIRCUIT - PUMP AND RESERVOIR
BRAKE CIRCUIT - PUMP AND RESERVOIR
BRAKE CIRCUIT - PUMP AND RESERVOIR
BRAKE CIRCUIT - PUMP AND RESERVOIR

R	N	P.N.	MOD	Q	Denominação Bezeichnung	Description Description	Denominacion Beskrivelse	Descrizione Beschrijving	L.C.
30		**78100054**		1	CONECTOR HIDRÁUL HYDR STECKVERBINDE	HYD CONNECTOR CONNECTEUR HYDRAU	CONECTOR HIDRÁULIC HYDRAULIKSTIK	CONNETTORE IDRAULIC HYDRAULISCHE AANSLU	020R
31		**75264622**		1	MANGUEIRA, solenoid to reservoir SCHLAUCH	HOSE FLEXIBLE	TUBO SLANGE	TUBO FLESSIBILE SLANG	030M
32		**L18331**		2	PRENDEDOR DE CABOS, nylon KABELBINDER	CABLE STRAP BRIDE DE CABLE	BANDA DE CABLE KABELSTROP	FASCETTA PER CAVO BUNDELBAND	P716

07-08	01	p1	03/09

PEDAL DE FREIO
BRAKE PEDAL
PEDAL DEL FRENO
BRAKE PEDAL

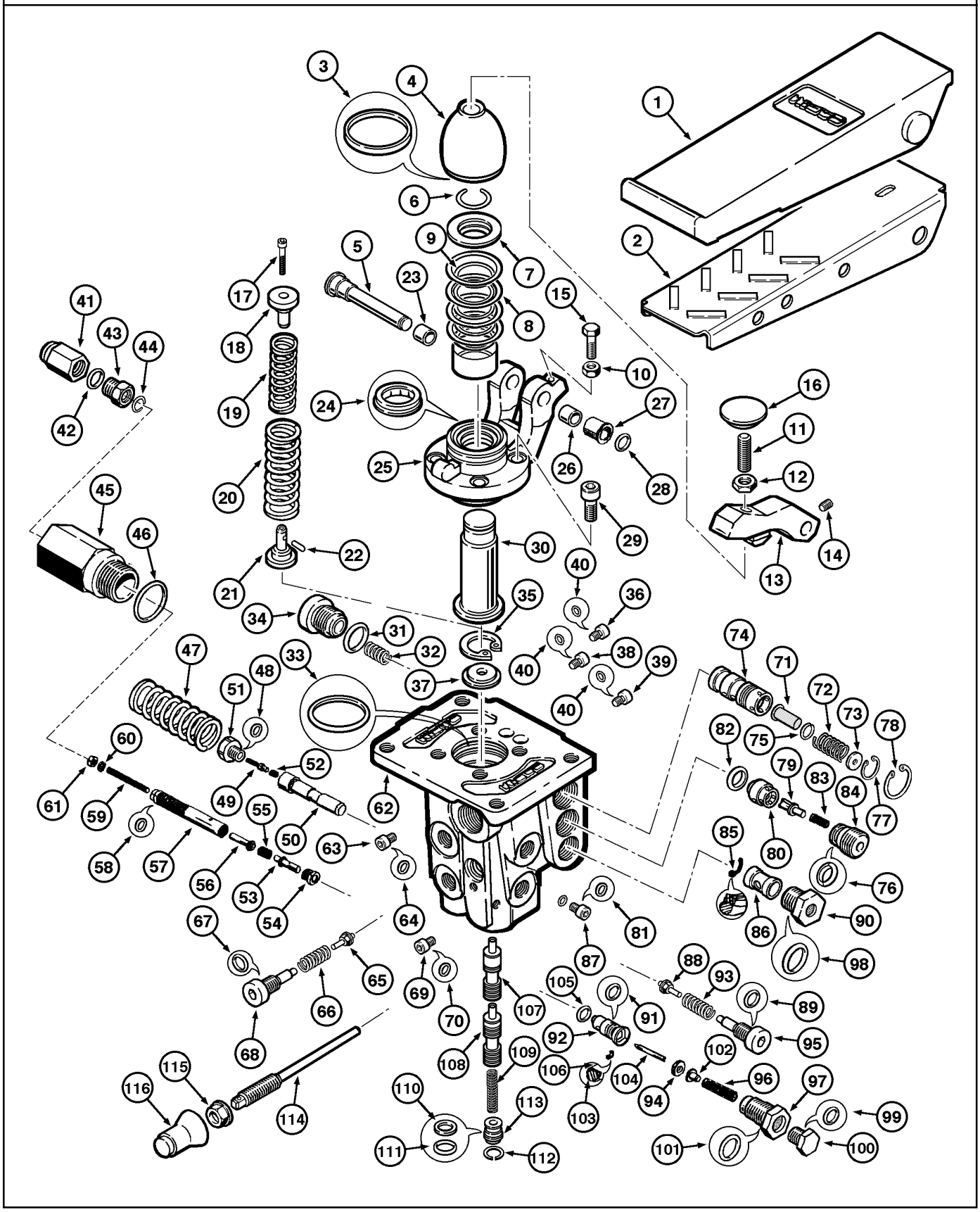

BRAKE PEDAL
BRAKE PEDAL
BRAKE PEDAL
BRAKE PEDAL

R	N	P.N.	MOD	Q	Denominação Bezeichnung	Description Description	Denominacion Beskrivelse	Descrizione Beschrijving	L.C.
		75263986		1	PEDAL, brake Assy, Includes items 1 - 116				
						PEDAL	PEDAL	PEDALE	060P
					PEDAL	PEDALE	PEDAL	PEDAAL	
1		**NSS**		1	SEM SERVIÇO EM SEPARADO, PAD cover				
						NOT SERVICED SEPARA	NO SE REPARA POR SE	NON FORNITO SEPARAT	064N
					NICHT A SEP ERS-T LIEI	NON FORUNI SEPAREM	SERVICERES IKKE SEPA	NIET LOS VERKRIJGBAA	
2		**NSS**		1	SEM SERVIÇO EM SEPARADO, PEDAL				
						NOT SERVICED SEPARA	NO SE REPARA POR SE	NON FORNITO SEPARAT	064N
					NICHT A SEP ERS-T LIEI	NON FORUNI SEPAREM	SERVICERES IKKE SEPA	NIET LOS VERKRIJGBAA	
3		**NSS**		1	SEM SERVIÇO EM SEPARADO, RING				
						NOT SERVICED SEPARA	NO SE REPARA POR SE	NON FORNITO SEPARAT	064N
					NICHT A SEP ERS-T LIEI	NON FORUNI SEPAREM	SERVICERES IKKE SEPA	NIET LOS VERKRIJGBAA	
4		**NSS**		1	SEM SERVIÇO EM SEPARADO, COVER				
						NOT SERVICED SEPARA	NO SE REPARA POR SE	NON FORNITO SEPARAT	064N
					NICHT A SEP ERS-T LIEI	NON FORUNI SEPAREM	SERVICERES IKKE SEPA	NIET LOS VERKRIJGBAA	
5		**NSS**		1	SEM SERVIÇO EM SEPARADO, ROD				
						NOT SERVICED SEPARA	NO SE REPARA POR SE	NON FORNITO SEPARAT	064N
					NICHT A SEP ERS-T LIEI	NON FORUNI SEPAREM	SERVICERES IKKE SEPA	NIET LOS VERKRIJGBAA	
6		**NSS**		1	SEM SERVIÇO EM SEPARADO, RING retainer				
						NOT SERVICED SEPARA	NO SE REPARA POR SE	NON FORNITO SEPARAT	064N
					NICHT A SEP ERS-T LIEI	NON FORUNI SEPAREM	SERVICERES IKKE SEPA	NIET LOS VERKRIJGBAA	
7		**NSS**		1	SEM SERVIÇO EM SEPARADO, RING				
						NOT SERVICED SEPARA	NO SE REPARA POR SE	NON FORNITO SEPARAT	064N
					NICHT A SEP ERS-T LIEI	NON FORUNI SEPAREM	SERVICERES IKKE SEPA	NIET LOS VERKRIJGBAA	
8		**NSS**		1	SEM SERVIÇO EM SEPARADO, RING				
						NOT SERVICED SEPARA	NO SE REPARA POR SE	NON FORNITO SEPARAT	064N
					NICHT A SEP ERS-T LIEI	NON FORUNI SEPAREM	SERVICERES IKKE SEPA	NIET LOS VERKRIJGBAA	
9		**NSS**		1	SEM SERVIÇO EM SEPARADO, RING				
						NOT SERVICED SEPARA	NO SE REPARA POR SE	NON FORNITO SEPARAT	064N
					NICHT A SEP ERS-T LIEI	NON FORUNI SEPAREM	SERVICERES IKKE SEPA	NIET LOS VERKRIJGBAA	
10		**NSS**		1	SEM SERVIÇO EM SEPARADO, NUT				
						NOT SERVICED SEPARA	NO SE REPARA POR SE	NON FORNITO SEPARAT	064N
					NICHT A SEP ERS-T LIEI	NON FORUNI SEPAREM	SERVICERES IKKE SEPA	NIET LOS VERKRIJGBAA	
11		**NSS**		1	SEM SERVIÇO EM SEPARADO, STUD				
						NOT SERVICED SEPARA	NO SE REPARA POR SE	NON FORNITO SEPARAT	064N
					NICHT A SEP ERS-T LIEI	NON FORUNI SEPAREM	SERVICERES IKKE SEPA	NIET LOS VERKRIJGBAA	
12		**NSS**		1	SEM SERVIÇO EM SEPARADO, NUT				
						NOT SERVICED SEPARA	NO SE REPARA POR SE	NON FORNITO SEPARAT	064N
					NICHT A SEP ERS-T LIEI	NON FORUNI SEPAREM	SERVICERES IKKE SEPA	NIET LOS VERKRIJGBAA	
13		**NSS**		1	SEM SERVIÇO EM SEPARADO, BASE				
						NOT SERVICED SEPARA	NO SE REPARA POR SE	NON FORNITO SEPARAT	064N
					NICHT A SEP ERS-T LIEI	NON FORUNI SEPAREM	SERVICERES IKKE SEPA	NIET LOS VERKRIJGBAA	
14		**NSS**		1	SEM SERVIÇO EM SEPARADO, PLUG				
						NOT SERVICED SEPARA	NO SE REPARA POR SE	NON FORNITO SEPARAT	064N
					NICHT A SEP ERS-T LIEI	NON FORUNI SEPAREM	SERVICERES IKKE SEPA	NIET LOS VERKRIJGBAA	
15		**NSS**		1	SEM SERVIÇO EM SEPARADO, BOLT				
						NOT SERVICED SEPARA	NO SE REPARA POR SE	NON FORNITO SEPARAT	064N
					NICHT A SEP ERS-T LIEI	NON FORUNI SEPAREM	SERVICERES IKKE SEPA	NIET LOS VERKRIJGBAA	

07-08	01	p2	03/09

PEDAL DE FREIO
BRAKE PEDAL
PEDAL DEL FRENO
BRAKE PEDAL

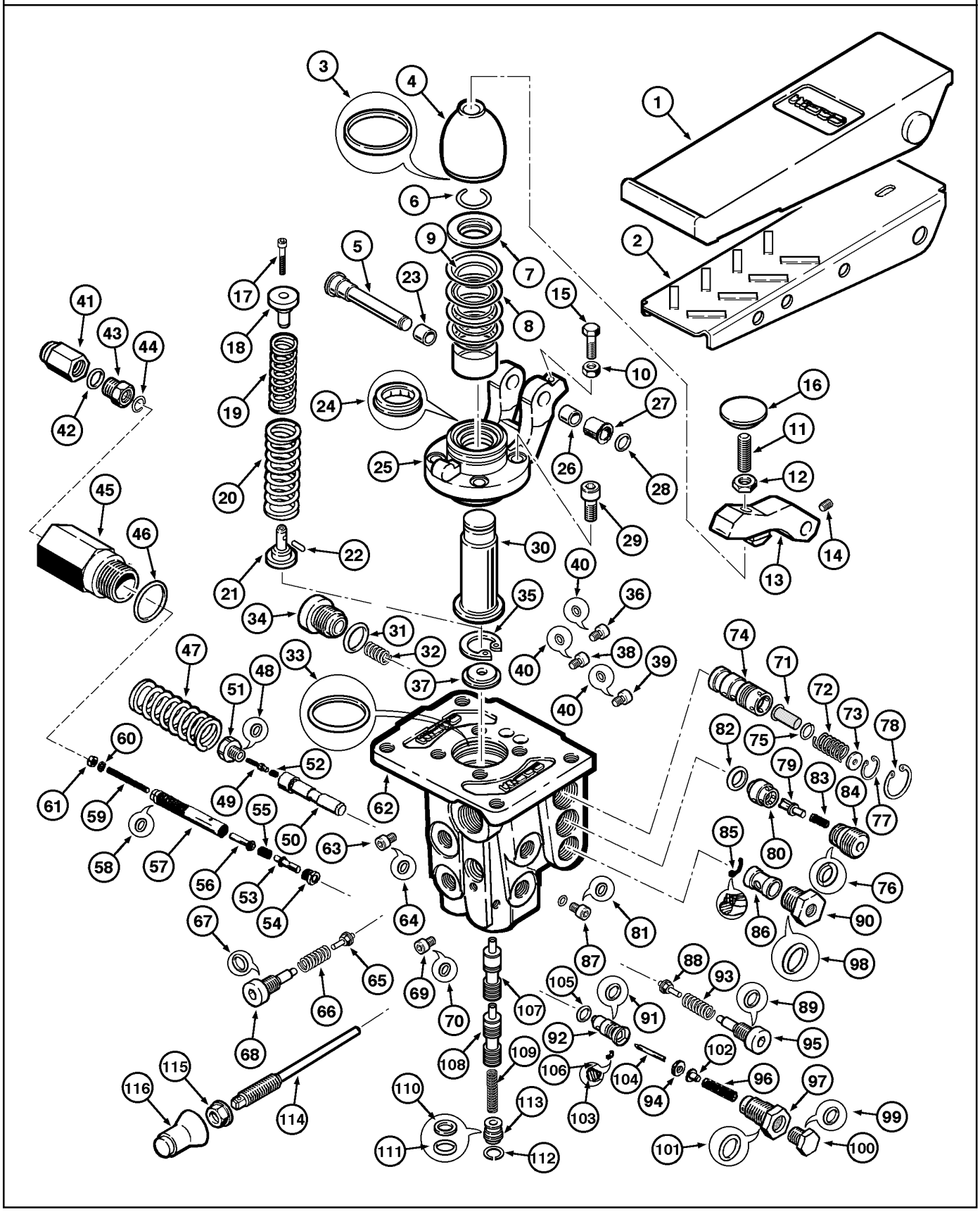

BRAKE PEDAL
BRAKE PEDAL
BRAKE PEDAL
BRAKE PEDAL

R	N	P.N.	MOD	Q	Denominação Bezeichnung	Description Description	Denominacion Beskrivelse	Descrizione Beschrijving	L.C.
16		**NSS**		1	SEM SERVIÇO EM SEPARADO, STOP				
						NOT SERVICED SEPARA	NO SE REPARA POR SE	NON FORNITO SEPARAT	064N
					NICHT A SEP ERS-T LIEI	NON FORUNI SEPAREM	SERVICERES IKKE SEPA	NIET LOS VERKRIJGBAA	
17		**NSS**		1	SEM SERVIÇO EM SEPARADO, BOLT				
						NOT SERVICED SEPARA	NO SE REPARA POR SE	NON FORNITO SEPARAT	064N
					NICHT A SEP ERS-T LIEI	NON FORUNI SEPAREM	SERVICERES IKKE SEPA	NIET LOS VERKRIJGBAA	
18		**NSS**		1	SEM SERVIÇO EM SEPARADO, SEAT spring				
						NOT SERVICED SEPARA	NO SE REPARA POR SE	NON FORNITO SEPARAT	064N
					NICHT A SEP ERS-T LIEI	NON FORUNI SEPAREM	SERVICERES IKKE SEPA	NIET LOS VERKRIJGBAA	
19		**NSS**		1	SEM SERVIÇO EM SEPARADO, SPRING				
						NOT SERVICED SEPARA	NO SE REPARA POR SE	NON FORNITO SEPARAT	064N
					NICHT A SEP ERS-T LIEI	NON FORUNI SEPAREM	SERVICERES IKKE SEPA	NIET LOS VERKRIJGBAA	
20		**NSS**		1	SEM SERVIÇO EM SEPARADO, SPRING				
						NOT SERVICED SEPARA	NO SE REPARA POR SE	NON FORNITO SEPARAT	064N
					NICHT A SEP ERS-T LIEI	NON FORUNI SEPAREM	SERVICERES IKKE SEPA	NIET LOS VERKRIJGBAA	
21		**NSS**		1	SEM SERVIÇO EM SEPARADO, GUIDE spring				
						NOT SERVICED SEPARA	NO SE REPARA POR SE	NON FORNITO SEPARAT	064N
					NICHT A SEP ERS-T LIEI	NON FORUNI SEPAREM	SERVICERES IKKE SEPA	NIET LOS VERKRIJGBAA	
22		**NSS**		1	SEM SERVIÇO EM SEPARADO, PIN				
						NOT SERVICED SEPARA	NO SE REPARA POR SE	NON FORNITO SEPARAT	064N
					NICHT A SEP ERS-T LIEI	NON FORUNI SEPAREM	SERVICERES IKKE SEPA	NIET LOS VERKRIJGBAA	
23		**NSS**		1	SEM SERVIÇO EM SEPARADO, BUSHING				
						NOT SERVICED SEPARA	NO SE REPARA POR SE	NON FORNITO SEPARAT	064N
					NICHT A SEP ERS-T LIEI	NON FORUNI SEPAREM	SERVICERES IKKE SEPA	NIET LOS VERKRIJGBAA	
24		**NSS**		1	SEM SERVIÇO EM SEPARADO, RING				
						NOT SERVICED SEPARA	NO SE REPARA POR SE	NON FORNITO SEPARAT	064N
					NICHT A SEP ERS-T LIEI	NON FORUNI SEPAREM	SERVICERES IKKE SEPA	NIET LOS VERKRIJGBAA	
25		**NSS**		1	SEM SERVIÇO EM SEPARADO, BRACKET				
						NOT SERVICED SEPARA	NO SE REPARA POR SE	NON FORNITO SEPARAT	064N
					NICHT A SEP ERS-T LIEI	NON FORUNI SEPAREM	SERVICERES IKKE SEPA	NIET LOS VERKRIJGBAA	
26		**NSS**		1	SEM SERVIÇO EM SEPARADO, BUSHING				
						NOT SERVICED SEPARA	NO SE REPARA POR SE	NON FORNITO SEPARAT	064N
					NICHT A SEP ERS-T LIEI	NON FORUNI SEPAREM	SERVICERES IKKE SEPA	NIET LOS VERKRIJGBAA	
27		**NSS**		1	SEM SERVIÇO EM SEPARADO, BUSHING				
						NOT SERVICED SEPARA	NO SE REPARA POR SE	NON FORNITO SEPARAT	064N
					NICHT A SEP ERS-T LIEI	NON FORUNI SEPAREM	SERVICERES IKKE SEPA	NIET LOS VERKRIJGBAA	
28		**NSS**		1	SEM SERVIÇO EM SEPARADO, RING lock				
						NOT SERVICED SEPARA	NO SE REPARA POR SE	NON FORNITO SEPARAT	064N
					NICHT A SEP ERS-T LIEI	NON FORUNI SEPAREM	SERVICERES IKKE SEPA	NIET LOS VERKRIJGBAA	
29		**NSS**		4	SEM SERVIÇO EM SEPARADO, BOLT				
						NOT SERVICED SEPARA	NO SE REPARA POR SE	NON FORNITO SEPARAT	064N
					NICHT A SEP ERS-T LIEI	NON FORUNI SEPAREM	SERVICERES IKKE SEPA	NIET LOS VERKRIJGBAA	
30		**NSS**		1	SEM SERVIÇO EM SEPARADO, SHAFT				
						NOT SERVICED SEPARA	NO SE REPARA POR SE	NON FORNITO SEPARAT	064N
					NICHT A SEP ERS-T LIEI	NON FORUNI SEPAREM	SERVICERES IKKE SEPA	NIET LOS VERKRIJGBAA	
31		**NSS**		1	SEM SERVIÇO EM SEPARADO, RING seal				
						NOT SERVICED SEPARA	NO SE REPARA POR SE	NON FORNITO SEPARAT	064N
					NICHT A SEP ERS-T LIEI	NON FORUNI SEPAREM	SERVICERES IKKE SEPA	NIET LOS VERKRIJGBAA	

07-08	01	p3	03/09

PEDAL DE FREIO
BRAKE PEDAL
PEDAL DEL FRENO
BRAKE PEDAL

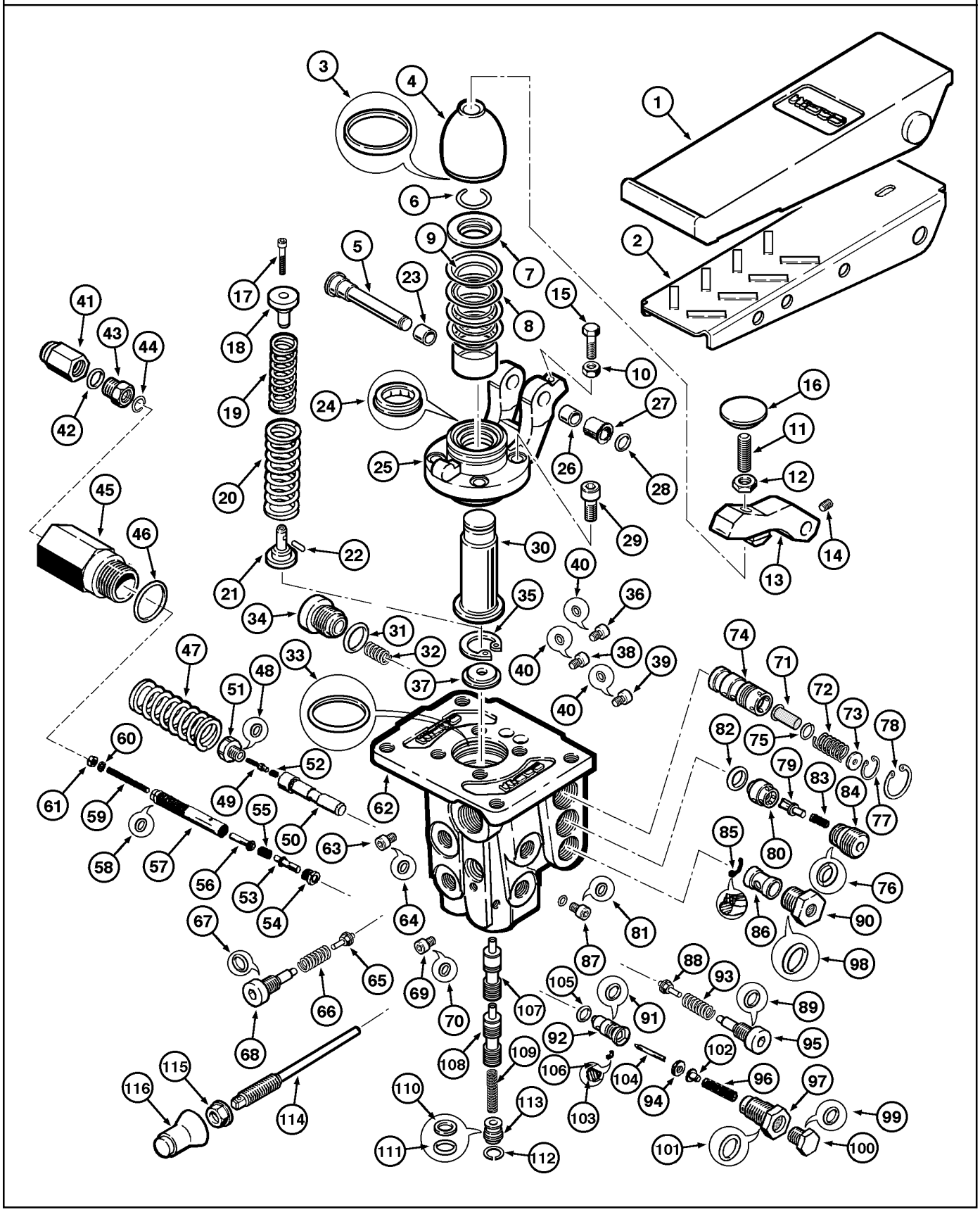

BRAKE PEDAL
BRAKE PEDAL
BRAKE PEDAL
BRAKE PEDAL

R	N	P.N.	MOD	Q	Denominação Bezeichnung	Description Description	Denominacion Beskrivelse	Descrizione Beschrijving	L.C.
32		NSS		1	SEM SERVIÇO EM SEPARADO, SPRING				
						NOT SERVICED SEPARA	NO SE REPARA POR SE	NON FORNITO SEPARAT	064N
					NICHT A SEP ERS-T LIEI	NON FORUNI SEPAREM	SERVICERES IKKE SEPA	NIET LOS VERKRIJGBAA	
33		NSS		1	SEM SERVIÇO EM SEPARADO, RING				
						NOT SERVICED SEPARA	NO SE REPARA POR SE	NON FORNITO SEPARAT	064N
					NICHT A SEP ERS-T LIEI	NON FORUNI SEPAREM	SERVICERES IKKE SEPA	NIET LOS VERKRIJGBAA	
34		NSS		1	SEM SERVIÇO EM SEPARADO, PLUG				
						NOT SERVICED SEPARA	NO SE REPARA POR SE	NON FORNITO SEPARAT	064N
					NICHT A SEP ERS-T LIEI	NON FORUNI SEPAREM	SERVICERES IKKE SEPA	NIET LOS VERKRIJGBAA	
35		NSS		1	SEM SERVIÇO EM SEPARADO, RING lock				
						NOT SERVICED SEPARA	NO SE REPARA POR SE	NON FORNITO SEPARAT	064N
					NICHT A SEP ERS-T LIEI	NON FORUNI SEPAREM	SERVICERES IKKE SEPA	NIET LOS VERKRIJGBAA	
36		NSS		1	SEM SERVIÇO EM SEPARADO, PLUG				
						NOT SERVICED SEPARA	NO SE REPARA POR SE	NON FORNITO SEPARAT	064N
					NICHT A SEP ERS-T LIEI	NON FORUNI SEPAREM	SERVICERES IKKE SEPA	NIET LOS VERKRIJGBAA	
37		NSS		1	SEM SERVIÇO EM SEPARADO, TRHUST				
						NOT SERVICED SEPARA	NO SE REPARA POR SE	NON FORNITO SEPARAT	064N
					NICHT A SEP ERS-T LIEI	NON FORUNI SEPAREM	SERVICERES IKKE SEPA	NIET LOS VERKRIJGBAA	
38		NSS		1	SEM SERVIÇO EM SEPARADO, PLUG				
						NOT SERVICED SEPARA	NO SE REPARA POR SE	NON FORNITO SEPARAT	064N
					NICHT A SEP ERS-T LIEI	NON FORUNI SEPAREM	SERVICERES IKKE SEPA	NIET LOS VERKRIJGBAA	
39		NSS		1	SEM SERVIÇO EM SEPARADO, PLUG				
						NOT SERVICED SEPARA	NO SE REPARA POR SE	NON FORNITO SEPARAT	064N
					NICHT A SEP ERS-T LIEI	NON FORUNI SEPAREM	SERVICERES IKKE SEPA	NIET LOS VERKRIJGBAA	
40		NSS		3	SEM SERVIÇO EM SEPARADO, RING seal				
						NOT SERVICED SEPARA	NO SE REPARA POR SE	NON FORNITO SEPARAT	064N
					NICHT A SEP ERS-T LIEI	NON FORUNI SEPAREM	SERVICERES IKKE SEPA	NIET LOS VERKRIJGBAA	
41		NSS		1	SEM SERVIÇO EM SEPARADO, COVER				
						NOT SERVICED SEPARA	NO SE REPARA POR SE	NON FORNITO SEPARAT	064N
					NICHT A SEP ERS-T LIEI	NON FORUNI SEPAREM	SERVICERES IKKE SEPA	NIET LOS VERKRIJGBAA	
42		NSS		1	SEM SERVIÇO EM SEPARADO, RING				
						NOT SERVICED SEPARA	NO SE REPARA POR SE	NON FORNITO SEPARAT	064N
					NICHT A SEP ERS-T LIEI	NON FORUNI SEPAREM	SERVICERES IKKE SEPA	NIET LOS VERKRIJGBAA	
43		NSS		1	SEM SERVIÇO EM SEPARADO, NUT				
						NOT SERVICED SEPARA	NO SE REPARA POR SE	NON FORNITO SEPARAT	064N
					NICHT A SEP ERS-T LIEI	NON FORUNI SEPAREM	SERVICERES IKKE SEPA	NIET LOS VERKRIJGBAA	
44		NSS		1	SEM SERVIÇO EM SEPARADO, RING				
						NOT SERVICED SEPARA	NO SE REPARA POR SE	NON FORNITO SEPARAT	064N
					NICHT A SEP ERS-T LIEI	NON FORUNI SEPAREM	SERVICERES IKKE SEPA	NIET LOS VERKRIJGBAA	
45		NSS		1	SEM SERVIÇO EM SEPARADO, BODY				
						NOT SERVICED SEPARA	NO SE REPARA POR SE	NON FORNITO SEPARAT	064N
					NICHT A SEP ERS-T LIEI	NON FORUNI SEPAREM	SERVICERES IKKE SEPA	NIET LOS VERKRIJGBAA	
46		NSS		1	SEM SERVIÇO EM SEPARADO, RING seal				
						NOT SERVICED SEPARA	NO SE REPARA POR SE	NON FORNITO SEPARAT	064N
					NICHT A SEP ERS-T LIEI	NON FORUNI SEPAREM	SERVICERES IKKE SEPA	NIET LOS VERKRIJGBAA	
47		NSS		1	SEM SERVIÇO EM SEPARADO, SPRING				
						NOT SERVICED SEPARA	NO SE REPARA POR SE	NON FORNITO SEPARAT	064N
					NICHT A SEP ERS-T LIEI	NON FORUNI SEPAREM	SERVICERES IKKE SEPA	NIET LOS VERKRIJGBAA	

07-08	01	p4	03/09

PEDAL DE FREIO
BRAKE PEDAL
PEDAL DEL FRENO
BRAKE PEDAL

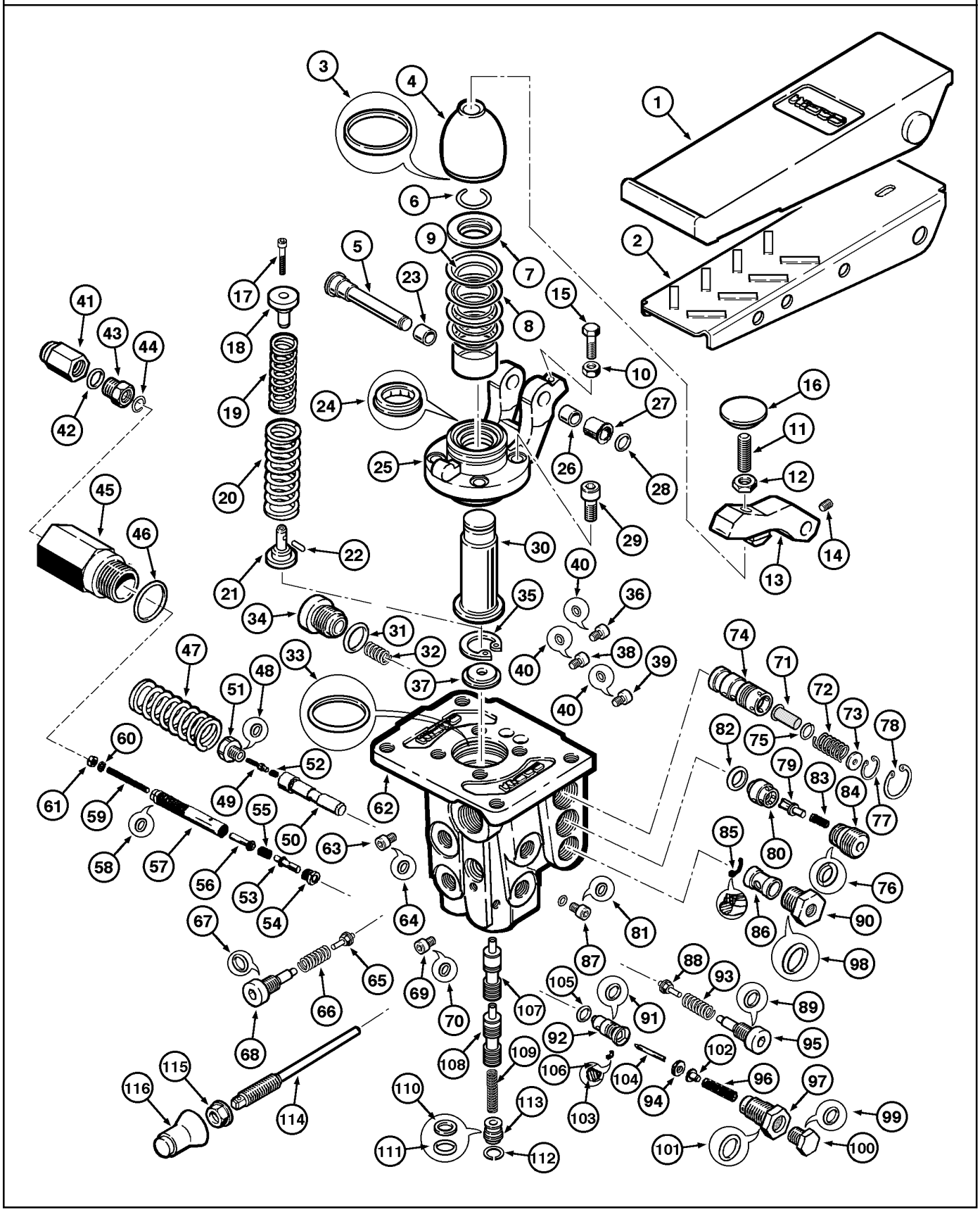

BRAKE PEDAL
BRAKE PEDAL
BRAKE PEDAL
BRAKE PEDAL

R	N	P.N.	MOD	Q	Denominação Bezeichnung	Description Description	Denominacion Beskrivelse	Descrizione Beschrijving	L.C.
48		**NSS**		1	SEM SERVIÇO EM SEPARADO, RING				
						NOT SERVICED SEPARA	NO SE REPARA POR SE	NON FORNITO SEPARAT	064N
					NICHT A SEP ERS-T LIEI	NON FORUNI SEPAREM	SERVICERES IKKE SEPA	NIET LOS VERKRIJGBAA	
49		**NSS**		1	SEM SERVIÇO EM SEPARADO, SPOOL				
						NOT SERVICED SEPARA	NO SE REPARA POR SE	NON FORNITO SEPARAT	064N
					NICHT A SEP ERS-T LIEI	NON FORUNI SEPAREM	SERVICERES IKKE SEPA	NIET LOS VERKRIJGBAA	
50		**NSS**		1	SEM SERVIÇO EM SEPARADO, GUIDE				
						NOT SERVICED SEPARA	NO SE REPARA POR SE	NON FORNITO SEPARAT	064N
					NICHT A SEP ERS-T LIEI	NON FORUNI SEPAREM	SERVICERES IKKE SEPA	NIET LOS VERKRIJGBAA	
51		**NSS**		1	SEM SERVIÇO EM SEPARADO, TRHUST				
						NOT SERVICED SEPARA	NO SE REPARA POR SE	NON FORNITO SEPARAT	064N
					NICHT A SEP ERS-T LIEI	NON FORUNI SEPAREM	SERVICERES IKKE SEPA	NIET LOS VERKRIJGBAA	
52		**NSS**		1	SEM SERVIÇO EM SEPARADO, SPRING				
						NOT SERVICED SEPARA	NO SE REPARA POR SE	NON FORNITO SEPARAT	064N
					NICHT A SEP ERS-T LIEI	NON FORUNI SEPAREM	SERVICERES IKKE SEPA	NIET LOS VERKRIJGBAA	
53		**NSS**		1	SEM SERVIÇO EM SEPARADO, SPOOL				
						NOT SERVICED SEPARA	NO SE REPARA POR SE	NON FORNITO SEPARAT	064N
					NICHT A SEP ERS-T LIEI	NON FORUNI SEPAREM	SERVICERES IKKE SEPA	NIET LOS VERKRIJGBAA	
54		**NSS**		1	SEM SERVIÇO EM SEPARADO, PLUG				
						NOT SERVICED SEPARA	NO SE REPARA POR SE	NON FORNITO SEPARAT	064N
					NICHT A SEP ERS-T LIEI	NON FORUNI SEPAREM	SERVICERES IKKE SEPA	NIET LOS VERKRIJGBAA	
55		**NSS**		1	SEM SERVIÇO EM SEPARADO, SPRING				
						NOT SERVICED SEPARA	NO SE REPARA POR SE	NON FORNITO SEPARAT	064N
					NICHT A SEP ERS-T LIEI	NON FORUNI SEPAREM	SERVICERES IKKE SEPA	NIET LOS VERKRIJGBAA	
56		**NSS**		1	SEM SERVIÇO EM SEPARADO, SPOOL				
						NOT SERVICED SEPARA	NO SE REPARA POR SE	NON FORNITO SEPARAT	064N
					NICHT A SEP ERS-T LIEI	NON FORUNI SEPAREM	SERVICERES IKKE SEPA	NIET LOS VERKRIJGBAA	
57		**NSS**		1	SEM SERVIÇO EM SEPARADO, SEAT				
						NOT SERVICED SEPARA	NO SE REPARA POR SE	NON FORNITO SEPARAT	064N
					NICHT A SEP ERS-T LIEI	NON FORUNI SEPAREM	SERVICERES IKKE SEPA	NIET LOS VERKRIJGBAA	
58		**NSS**		1	SEM SERVIÇO EM SEPARADO, RING				
						NOT SERVICED SEPARA	NO SE REPARA POR SE	NON FORNITO SEPARAT	064N
					NICHT A SEP ERS-T LIEI	NON FORUNI SEPAREM	SERVICERES IKKE SEPA	NIET LOS VERKRIJGBAA	
59		**NSS**		1	SEM SERVIÇO EM SEPARADO, FUSE				
						NOT SERVICED SEPARA	NO SE REPARA POR SE	NON FORNITO SEPARAT	064N
					NICHT A SEP ERS-T LIEI	NON FORUNI SEPAREM	SERVICERES IKKE SEPA	NIET LOS VERKRIJGBAA	
60		**NSS**		1	SEM SERVIÇO EM SEPARADO, RING				
						NOT SERVICED SEPARA	NO SE REPARA POR SE	NON FORNITO SEPARAT	064N
					NICHT A SEP ERS-T LIEI	NON FORUNI SEPAREM	SERVICERES IKKE SEPA	NIET LOS VERKRIJGBAA	
61		**NSS**		1	SEM SERVIÇO EM SEPARADO, NUT				
						NOT SERVICED SEPARA	NO SE REPARA POR SE	NON FORNITO SEPARAT	064N
					NICHT A SEP ERS-T LIEI	NON FORUNI SEPAREM	SERVICERES IKKE SEPA	NIET LOS VERKRIJGBAA	
62		**NSS**		1	SEM SERVIÇO EM SEPARADO, HOUSING valve				
						NOT SERVICED SEPARA	NO SE REPARA POR SE	NON FORNITO SEPARAT	064N
					NICHT A SEP ERS-T LIEI	NON FORUNI SEPAREM	SERVICERES IKKE SEPA	NIET LOS VERKRIJGBAA	
63		**NSS**		1	SEM SERVIÇO EM SEPARADO, PLUG				
						NOT SERVICED SEPARA	NO SE REPARA POR SE	NON FORNITO SEPARAT	064N
					NICHT A SEP ERS-T LIEI	NON FORUNI SEPAREM	SERVICERES IKKE SEPA	NIET LOS VERKRIJGBAA	

07-08	01	p5	03/09

PEDAL DE FREIO
BRAKE PEDAL
PEDAL DEL FRENO
BRAKE PEDAL

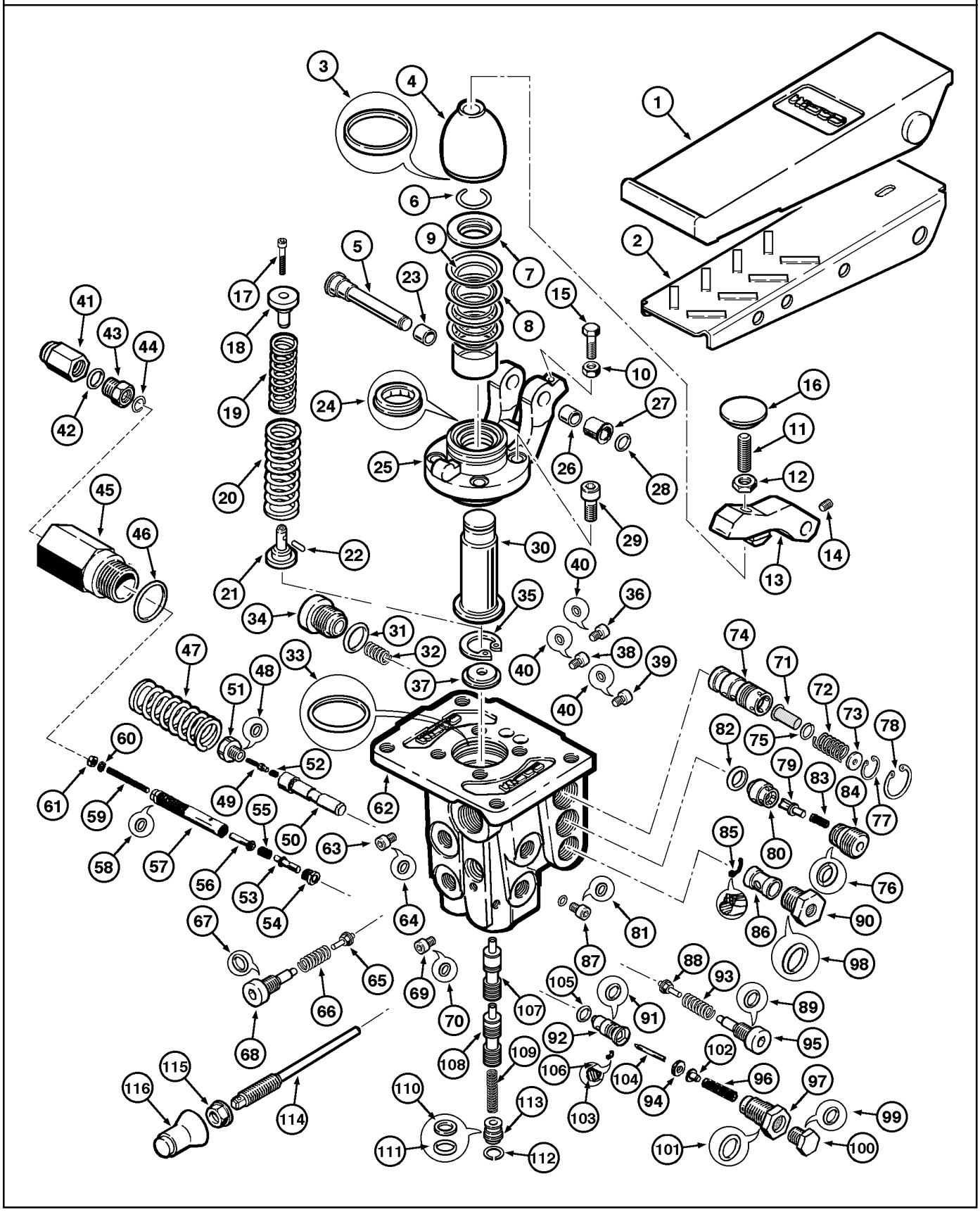

BRAKE PEDAL
BRAKE PEDAL
BRAKE PEDAL
BRAKE PEDAL

R	N	P.N.	MOD	Q	Denominação Bezeichnung	Description Description	Denominacion Beskrivelse	Descrizione Beschrijving	L.C.
64		**NSS**		1	SEM SERVIÇO EM SEPARADO, RING seal				
						NOT SERVICED SEPARA	NO SE REPARA POR SE	NON FORNITO SEPARAT	064N
					NICHT A SEP ERS-T LIEI	NON FORUNI SEPAREM	SERVICERES IKKE SEPA	NIET LOS VERKRIJGBAA	
65		**NSS**		1	SEM SERVIÇO EM SEPARADO, VALVE				
						NOT SERVICED SEPARA	NO SE REPARA POR SE	NON FORNITO SEPARAT	064N
					NICHT A SEP ERS-T LIEI	NON FORUNI SEPAREM	SERVICERES IKKE SEPA	NIET LOS VERKRIJGBAA	
66		**NSS**		1	SEM SERVIÇO EM SEPARADO, SPRING				
						NOT SERVICED SEPARA	NO SE REPARA POR SE	NON FORNITO SEPARAT	064N
					NICHT A SEP ERS-T LIEI	NON FORUNI SEPAREM	SERVICERES IKKE SEPA	NIET LOS VERKRIJGBAA	
67		**NSS**		1	SEM SERVIÇO EM SEPARADO, RING seal				
						NOT SERVICED SEPARA	NO SE REPARA POR SE	NON FORNITO SEPARAT	064N
					NICHT A SEP ERS-T LIEI	NON FORUNI SEPAREM	SERVICERES IKKE SEPA	NIET LOS VERKRIJGBAA	
68		**NSS**		1	SEM SERVIÇO EM SEPARADO, BODY valve				
						NOT SERVICED SEPARA	NO SE REPARA POR SE	NON FORNITO SEPARAT	064N
					NICHT A SEP ERS-T LIEI	NON FORUNI SEPAREM	SERVICERES IKKE SEPA	NIET LOS VERKRIJGBAA	
69		**NSS**		1	SEM SERVIÇO EM SEPARADO, PLUG				
						NOT SERVICED SEPARA	NO SE REPARA POR SE	NON FORNITO SEPARAT	064N
					NICHT A SEP ERS-T LIEI	NON FORUNI SEPAREM	SERVICERES IKKE SEPA	NIET LOS VERKRIJGBAA	
70		**NSS**		1	SEM SERVIÇO EM SEPARADO, RING seal				
						NOT SERVICED SEPARA	NO SE REPARA POR SE	NON FORNITO SEPARAT	064N
					NICHT A SEP ERS-T LIEI	NON FORUNI SEPAREM	SERVICERES IKKE SEPA	NIET LOS VERKRIJGBAA	
71		**NSS**		1	SEM SERVIÇO EM SEPARADO, GUIDE				
						NOT SERVICED SEPARA	NO SE REPARA POR SE	NON FORNITO SEPARAT	064N
					NICHT A SEP ERS-T LIEI	NON FORUNI SEPAREM	SERVICERES IKKE SEPA	NIET LOS VERKRIJGBAA	
72		**NSS**		1	SEM SERVIÇO EM SEPARADO, SPRING				
						NOT SERVICED SEPARA	NO SE REPARA POR SE	NON FORNITO SEPARAT	064N
					NICHT A SEP ERS-T LIEI	NON FORUNI SEPAREM	SERVICERES IKKE SEPA	NIET LOS VERKRIJGBAA	
73		**NSS**		1	SEM SERVIÇO EM SEPARADO, RING				
						NOT SERVICED SEPARA	NO SE REPARA POR SE	NON FORNITO SEPARAT	064N
					NICHT A SEP ERS-T LIEI	NON FORUNI SEPAREM	SERVICERES IKKE SEPA	NIET LOS VERKRIJGBAA	
74		**NSS**		1	SEM SERVIÇO EM SEPARADO, BODY				
						NOT SERVICED SEPARA	NO SE REPARA POR SE	NON FORNITO SEPARAT	064N
					NICHT A SEP ERS-T LIEI	NON FORUNI SEPAREM	SERVICERES IKKE SEPA	NIET LOS VERKRIJGBAA	
75		**NSS**		1	SEM SERVIÇO EM SEPARADO, RING				
						NOT SERVICED SEPARA	NO SE REPARA POR SE	NON FORNITO SEPARAT	064N
					NICHT A SEP ERS-T LIEI	NON FORUNI SEPAREM	SERVICERES IKKE SEPA	NIET LOS VERKRIJGBAA	
76		**NSS**		1	SEM SERVIÇO EM SEPARADO, RING seal				
						NOT SERVICED SEPARA	NO SE REPARA POR SE	NON FORNITO SEPARAT	064N
					NICHT A SEP ERS-T LIEI	NON FORUNI SEPAREM	SERVICERES IKKE SEPA	NIET LOS VERKRIJGBAA	
77		**NSS**		1	SEM SERVIÇO EM SEPARADO, RING lock				
						NOT SERVICED SEPARA	NO SE REPARA POR SE	NON FORNITO SEPARAT	064N
					NICHT A SEP ERS-T LIEI	NON FORUNI SEPAREM	SERVICERES IKKE SEPA	NIET LOS VERKRIJGBAA	
78		**NSS**		1	SEM SERVIÇO EM SEPARADO, RING lock				
						NOT SERVICED SEPARA	NO SE REPARA POR SE	NON FORNITO SEPARAT	064N
					NICHT A SEP ERS-T LIEI	NON FORUNI SEPAREM	SERVICERES IKKE SEPA	NIET LOS VERKRIJGBAA	
79		**NSS**		1	SEM SERVIÇO EM SEPARADO, SPOOL				
						NOT SERVICED SEPARA	NO SE REPARA POR SE	NON FORNITO SEPARAT	064N
					NICHT A SEP ERS-T LIEI	NON FORUNI SEPAREM	SERVICERES IKKE SEPA	NIET LOS VERKRIJGBAA	

07-08	01	p6	03/09

PEDAL DE FREIO
BRAKE PEDAL
PEDAL DEL FRENO
BRAKE PEDAL

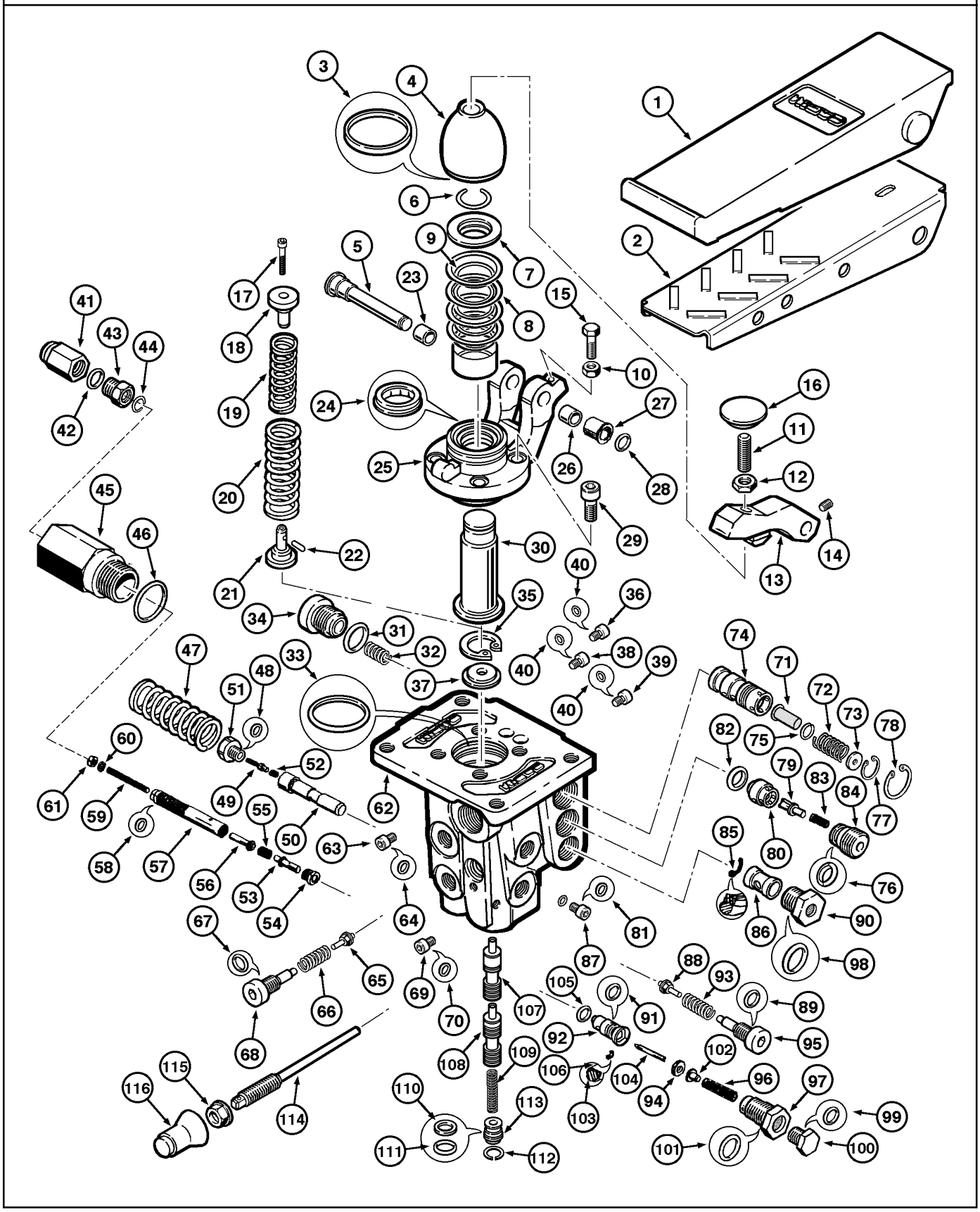

BRAKE PEDAL
BRAKE PEDAL
BRAKE PEDAL
BRAKE PEDAL

R	N	P.N.	MOD	Q	Denominação Bezeichnung	Description Description	Denominacion Beskrivelse	Descrizione Beschrijving	L.C.
80		**NSS**		1	SEM SERVIÇO EM SEPARADO, SEAT				
						NOT SERVICED SEPARA	NO SE REPARA POR SE	NON FORNITO SEPARAT	064N
					NICHT A SEP ERS-T LIEI	NON FORUNI SEPAREM	SERVICERES IKKE SEPA	NIET LOS VERKRIJGBAA	
81		**NSS**		1	SEM SERVIÇO EM SEPARADO, RING seal				
						NOT SERVICED SEPARA	NO SE REPARA POR SE	NON FORNITO SEPARAT	064N
					NICHT A SEP ERS-T LIEI	NON FORUNI SEPAREM	SERVICERES IKKE SEPA	NIET LOS VERKRIJGBAA	
82		**NSS**		1	SEM SERVIÇO EM SEPARADO, RING seal				
						NOT SERVICED SEPARA	NO SE REPARA POR SE	NON FORNITO SEPARAT	064N
					NICHT A SEP ERS-T LIEI	NON FORUNI SEPAREM	SERVICERES IKKE SEPA	NIET LOS VERKRIJGBAA	
83		**NSS**		1	SEM SERVIÇO EM SEPARADO, SPRING				
						NOT SERVICED SEPARA	NO SE REPARA POR SE	NON FORNITO SEPARAT	064N
					NICHT A SEP ERS-T LIEI	NON FORUNI SEPAREM	SERVICERES IKKE SEPA	NIET LOS VERKRIJGBAA	
84		**NSS**		1	SEM SERVIÇO EM SEPARADO, PLUG				
						NOT SERVICED SEPARA	NO SE REPARA POR SE	NON FORNITO SEPARAT	064N
					NICHT A SEP ERS-T LIEI	NON FORUNI SEPAREM	SERVICERES IKKE SEPA	NIET LOS VERKRIJGBAA	
85		**NSS**		1	SEM SERVIÇO EM SEPARADO, SEAL				
						NOT SERVICED SEPARA	NO SE REPARA POR SE	NON FORNITO SEPARAT	064N
					NICHT A SEP ERS-T LIEI	NON FORUNI SEPAREM	SERVICERES IKKE SEPA	NIET LOS VERKRIJGBAA	
86		**NSS**		1	SEM SERVIÇO EM SEPARADO, BODY				
						NOT SERVICED SEPARA	NO SE REPARA POR SE	NON FORNITO SEPARAT	064N
					NICHT A SEP ERS-T LIEI	NON FORUNI SEPAREM	SERVICERES IKKE SEPA	NIET LOS VERKRIJGBAA	
87		**NSS**		1	SEM SERVIÇO EM SEPARADO, PLUG				
						NOT SERVICED SEPARA	NO SE REPARA POR SE	NON FORNITO SEPARAT	064N
					NICHT A SEP ERS-T LIEI	NON FORUNI SEPAREM	SERVICERES IKKE SEPA	NIET LOS VERKRIJGBAA	
88		**NSS**		1	SEM SERVIÇO EM SEPARADO, SPOOL				
						NOT SERVICED SEPARA	NO SE REPARA POR SE	NON FORNITO SEPARAT	064N
					NICHT A SEP ERS-T LIEI	NON FORUNI SEPAREM	SERVICERES IKKE SEPA	NIET LOS VERKRIJGBAA	
89		**NSS**		1	SEM SERVIÇO EM SEPARADO, RING seal				
						NOT SERVICED SEPARA	NO SE REPARA POR SE	NON FORNITO SEPARAT	064N
					NICHT A SEP ERS-T LIEI	NON FORUNI SEPAREM	SERVICERES IKKE SEPA	NIET LOS VERKRIJGBAA	
90		**NSS**		1	SEM SERVIÇO EM SEPARADO, PLUG				
						NOT SERVICED SEPARA	NO SE REPARA POR SE	NON FORNITO SEPARAT	064N
					NICHT A SEP ERS-T LIEI	NON FORUNI SEPAREM	SERVICERES IKKE SEPA	NIET LOS VERKRIJGBAA	
91		**NSS**		1	SEM SERVIÇO EM SEPARADO, RING seal				
						NOT SERVICED SEPARA	NO SE REPARA POR SE	NON FORNITO SEPARAT	064N
					NICHT A SEP ERS-T LIEI	NON FORUNI SEPAREM	SERVICERES IKKE SEPA	NIET LOS VERKRIJGBAA	
92		**NSS**		1	SEM SERVIÇO EM SEPARADO, BODY				
						NOT SERVICED SEPARA	NO SE REPARA POR SE	NON FORNITO SEPARAT	064N
					NICHT A SEP ERS-T LIEI	NON FORUNI SEPAREM	SERVICERES IKKE SEPA	NIET LOS VERKRIJGBAA	
93		**NSS**		1	SEM SERVIÇO EM SEPARADO, SPRING				
						NOT SERVICED SEPARA	NO SE REPARA POR SE	NON FORNITO SEPARAT	064N
					NICHT A SEP ERS-T LIEI	NON FORUNI SEPAREM	SERVICERES IKKE SEPA	NIET LOS VERKRIJGBAA	
94		**NSS**		1	SEM SERVIÇO EM SEPARADO, WASHER				
						NOT SERVICED SEPARA	NO SE REPARA POR SE	NON FORNITO SEPARAT	064N
					NICHT A SEP ERS-T LIEI	NON FORUNI SEPAREM	SERVICERES IKKE SEPA	NIET LOS VERKRIJGBAA	
95		**NSS**		1	SEM SERVIÇO EM SEPARADO, PLUG				
						NOT SERVICED SEPARA	NO SE REPARA POR SE	NON FORNITO SEPARAT	064N
					NICHT A SEP ERS-T LIEI	NON FORUNI SEPAREM	SERVICERES IKKE SEPA	NIET LOS VERKRIJGBAA	

07-08	01	p7	03/09

PEDAL DE FREIO
BRAKE PEDAL
PEDAL DEL FRENO
BRAKE PEDAL

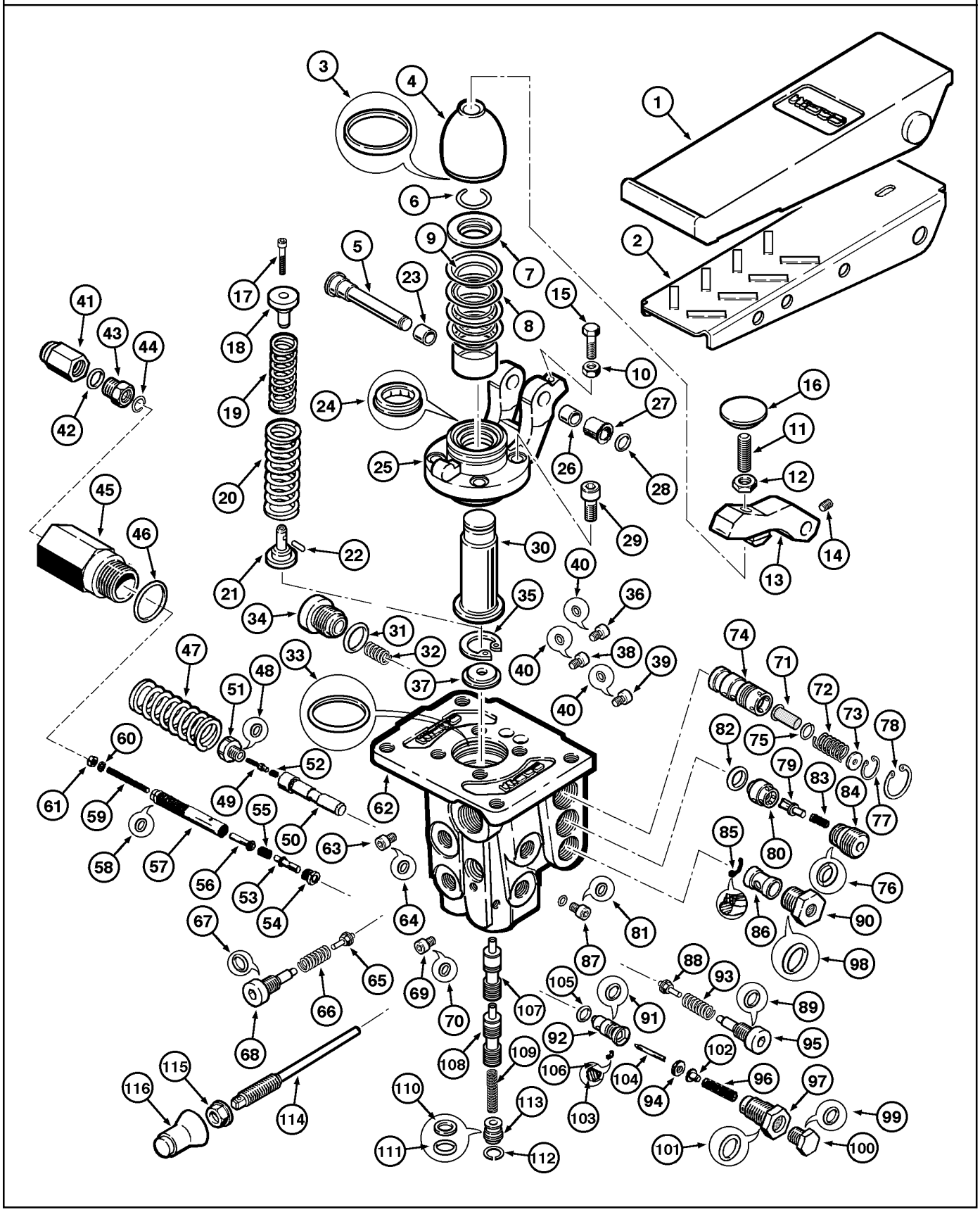

BRAKE PEDAL
BRAKE PEDAL
BRAKE PEDAL
BRAKE PEDAL

R	N	P.N.	MOD	Q	Denominação Bezeichnung	Description Description	Denominacion Beskrivelse	Descrizione Beschrijving	L.C.
96		**NSS**		1	SEM SERVIÇO EM SEPARADO, SPRING				
						NOT SERVICED SEPARA	NO SE REPARA POR SE	NON FORNITO SEPARAT	064N
					NICHT A SEP ERS-T LIEI	NON FORUNI SEPAREM	SERVICERES IKKE SEPA	NIET LOS VERKRIJGBAA	
97		**NSS**		1	SEM SERVIÇO EM SEPARADO, PLUG				
						NOT SERVICED SEPARA	NO SE REPARA POR SE	NON FORNITO SEPARAT	064N
					NICHT A SEP ERS-T LIEI	NON FORUNI SEPAREM	SERVICERES IKKE SEPA	NIET LOS VERKRIJGBAA	
98		**NSS**		1	SEM SERVIÇO EM SEPARADO, RING seal				
						NOT SERVICED SEPARA	NO SE REPARA POR SE	NON FORNITO SEPARAT	064N
					NICHT A SEP ERS-T LIEI	NON FORUNI SEPAREM	SERVICERES IKKE SEPA	NIET LOS VERKRIJGBAA	
99		**NSS**		1	SEM SERVIÇO EM SEPARADO, RING seal				
						NOT SERVICED SEPARA	NO SE REPARA POR SE	NON FORNITO SEPARAT	064N
					NICHT A SEP ERS-T LIEI	NON FORUNI SEPAREM	SERVICERES IKKE SEPA	NIET LOS VERKRIJGBAA	
100		**NSS**		1	SEM SERVIÇO EM SEPARADO, PLUG				
						NOT SERVICED SEPARA	NO SE REPARA POR SE	NON FORNITO SEPARAT	064N
					NICHT A SEP ERS-T LIEI	NON FORUNI SEPAREM	SERVICERES IKKE SEPA	NIET LOS VERKRIJGBAA	
101		**NSS**		1	SEM SERVIÇO EM SEPARADO, RING seal				
						NOT SERVICED SEPARA	NO SE REPARA POR SE	NON FORNITO SEPARAT	064N
					NICHT A SEP ERS-T LIEI	NON FORUNI SEPAREM	SERVICERES IKKE SEPA	NIET LOS VERKRIJGBAA	
102		**NSS**		1	SEM SERVIÇO EM SEPARADO, GUIDE spring				
						NOT SERVICED SEPARA	NO SE REPARA POR SE	NON FORNITO SEPARAT	064N
					NICHT A SEP ERS-T LIEI	NON FORUNI SEPAREM	SERVICERES IKKE SEPA	NIET LOS VERKRIJGBAA	
103		**NSS**		1	SEM SERVIÇO EM SEPARADO, RING seal internal				
						NOT SERVICED SEPARA	NO SE REPARA POR SE	NON FORNITO SEPARAT	064N
					NICHT A SEP ERS-T LIEI	NON FORUNI SEPAREM	SERVICERES IKKE SEPA	NIET LOS VERKRIJGBAA	
104		**NSS**		1	SEM SERVIÇO EM SEPARADO, ROD				
						NOT SERVICED SEPARA	NO SE REPARA POR SE	NON FORNITO SEPARAT	064N
					NICHT A SEP ERS-T LIEI	NON FORUNI SEPAREM	SERVICERES IKKE SEPA	NIET LOS VERKRIJGBAA	
105		**NSS**		1	SEM SERVIÇO EM SEPARADO, RING seal				
						NOT SERVICED SEPARA	NO SE REPARA POR SE	NON FORNITO SEPARAT	064N
					NICHT A SEP ERS-T LIEI	NON FORUNI SEPAREM	SERVICERES IKKE SEPA	NIET LOS VERKRIJGBAA	
106		**NSS**		1	SEM SERVIÇO EM SEPARADO, RING seal external				
						NOT SERVICED SEPARA	NO SE REPARA POR SE	NON FORNITO SEPARAT	064N
					NICHT A SEP ERS-T LIEI	NON FORUNI SEPAREM	SERVICERES IKKE SEPA	NIET LOS VERKRIJGBAA	
107		**NSS**		1	SEM SERVIÇO EM SEPARADO, SPOOL				
						NOT SERVICED SEPARA	NO SE REPARA POR SE	NON FORNITO SEPARAT	064N
					NICHT A SEP ERS-T LIEI	NON FORUNI SEPAREM	SERVICERES IKKE SEPA	NIET LOS VERKRIJGBAA	
108		**NSS**		1	SEM SERVIÇO EM SEPARADO, SPOOL				
						NOT SERVICED SEPARA	NO SE REPARA POR SE	NON FORNITO SEPARAT	064N
					NICHT A SEP ERS-T LIEI	NON FORUNI SEPAREM	SERVICERES IKKE SEPA	NIET LOS VERKRIJGBAA	
109		**NSS**		1	SEM SERVIÇO EM SEPARADO, SPRING				
						NOT SERVICED SEPARA	NO SE REPARA POR SE	NON FORNITO SEPARAT	064N
					NICHT A SEP ERS-T LIEI	NON FORUNI SEPAREM	SERVICERES IKKE SEPA	NIET LOS VERKRIJGBAA	
110		**NSS**		1	SEM SERVIÇO EM SEPARADO, RING seal				
						NOT SERVICED SEPARA	NO SE REPARA POR SE	NON FORNITO SEPARAT	064N
					NICHT A SEP ERS-T LIEI	NON FORUNI SEPAREM	SERVICERES IKKE SEPA	NIET LOS VERKRIJGBAA	
111		**NSS**		1	SEM SERVIÇO EM SEPARADO, RING seal				
						NOT SERVICED SEPARA	NO SE REPARA POR SE	NON FORNITO SEPARAT	064N
					NICHT A SEP ERS-T LIEI	NON FORUNI SEPAREM	SERVICERES IKKE SEPA	NIET LOS VERKRIJGBAA	

07-08	01	p8	03/09

PEDAL DE FREIO
BRAKE PEDAL
PEDAL DEL FRENO
BRAKE PEDAL

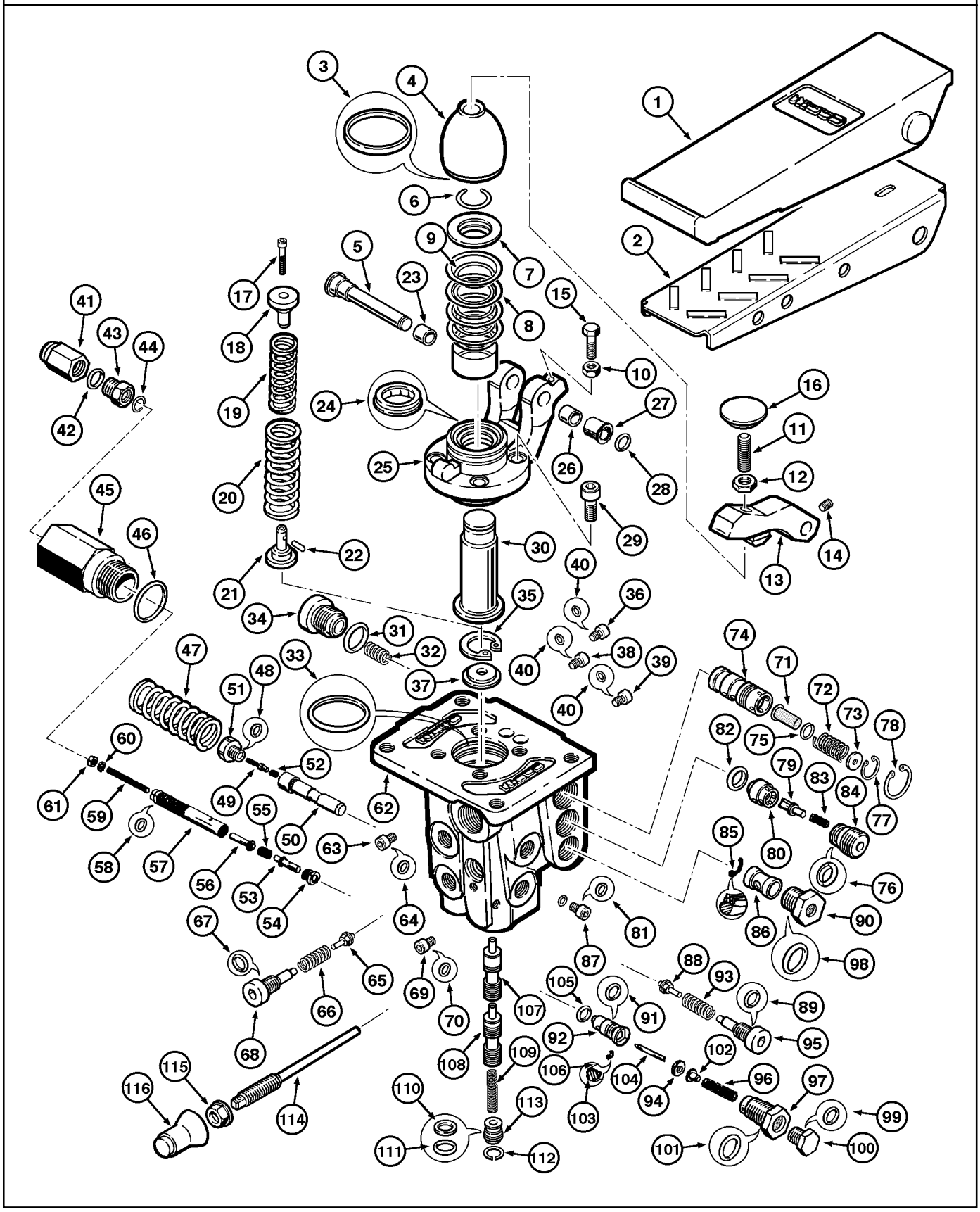

BRAKE PEDAL
BRAKE PEDAL
BRAKE PEDAL
BRAKE PEDAL

R	N	P.N.	MOD	Q	Denominação Bezeichnung	Description Description	Denominacion Beskrivelse	Descrizione Beschrijving	L.C.
112		**NSS**		1	SEM SERVIÇO EM SEPARADO, RING retainer				
						NOT SERVICED SEPARA	NO SE REPARA POR SE	NON FORNITO SEPARAT	064N
					NICHT A SEP ERS-T LIEI	NON FORUNI SEPAREM	SERVICERES IKKE SEPA	NIET LOS VERKRIJGBAA	
113		**NSS**		1	SEM SERVIÇO EM SEPARADO, PLUG				
						NOT SERVICED SEPARA	NO SE REPARA POR SE	NON FORNITO SEPARAT	064N
					NICHT A SEP ERS-T LIEI	NON FORUNI SEPAREM	SERVICERES IKKE SEPA	NIET LOS VERKRIJGBAA	
114		**NSS**		1	SEM SERVIÇO EM SEPARADO, ROD				
						NOT SERVICED SEPARA	NO SE REPARA POR SE	NON FORNITO SEPARAT	064N
					NICHT A SEP ERS-T LIEI	NON FORUNI SEPAREM	SERVICERES IKKE SEPA	NIET LOS VERKRIJGBAA	
115		**NSS**		1	SEM SERVIÇO EM SEPARADO, NUT				
						NOT SERVICED SEPARA	NO SE REPARA POR SE	NON FORNITO SEPARAT	064N
					NICHT A SEP ERS-T LIEI	NON FORUNI SEPAREM	SERVICERES IKKE SEPA	NIET LOS VERKRIJGBAA	
116		**NSS**		1	SEM SERVIÇO EM SEPARADO, TERMINAL				
						NOT SERVICED SEPARA	NO SE REPARA POR SE	NON FORNITO SEPARAT	064N
					NICHT A SEP ERS-T LIEI	NON FORUNI SEPAREM	SERVICERES IKKE SEPA	NIET LOS VERKRIJGBAA	
	1	**87453545**		1	KIT DE REVISÃO DO MOTOR				
						ENGINE OVERHAUL KIT	KIT DE REVISIÓN DEL M	KIT REVISIONE MOTORE	002K
					MOTORÜBERHOLUNGSS	KIT DE REVISION MOTEI	MOTORREVISIONSSÆT	REVISIEKIT VOOR MOTO	
	2	**87453546**		1	KIT DE REVISÃO DO MOTOR				
						ENGINE OVERHAUL KIT	KIT DE REVISIÓN DEL M	KIT REVISIONE MOTORE	002K
					MOTORÜBERHOLUNGSS	KIT DE REVISION MOTEI	MOTORREVISIONSSÆT	REVISIEKIT VOOR MOTO	

(1) Inclui 4,24,31,33,40,42,44,46,48,64,65,67,70,75,76,81,82,85,88,89,91,98,100,101,103,105,106,110,111,115
(2) Inclui 8,9,17,18,19,20,21,22,32,52,55,72,83,93,109

07-14	01	p1	12/07

VÁLVULA SOLENÓIDE REGULADORA DE PRESSÃO
SOLENOID VALVE - PRESSURE REGULATOR
VÁLVULA SOLENÓIDE REGULADORA DE PRESION
SOLENOID VALVE - PRESSURE REGULATOR

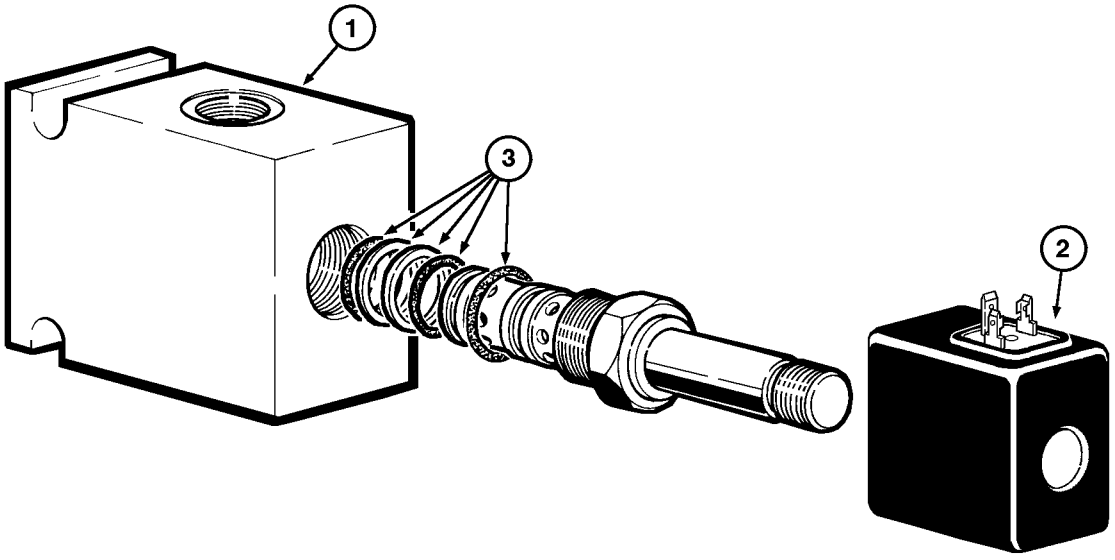

SOLENOID VALVE - PRESSURE REGULATOR
SOLENOID VALVE - PRESSURE REGULATOR
SOLENOID VALVE - PRESSURE REGULATOR
SOLENOID VALVE - PRESSURE REGULATOR

R	N	P.N.	MOD	Q	Denominação Bezeichnung	Description Description	Denominacion Beskrivelse	Descrizione Beschrijving	L.C.
		75264621		1	VÁLVULA, solenoid Assy VENTIL	VALVE SOUPAPE	VÁLVULA VENTIL	VALVOLA KLEP	9620
1		**71101722**		1	ALOJAMENTO, valve GEHÄUSE	HOUSING CARTER	ALOJAMIENTO HUS	ALLOGGIAMENTO HUIS	014V
2		**71101721**		1	ADAPTADOR, valve ADAPTER	ADAPTER ADAPTATEUR	ADAPTADOR ADAPTER	ADATTATORE ADAPTER	001A
3		**71101723**		1	BOBINA, 24V SPULE	COIL BOBINE	BOBINA SPOLE	BOBINA SPOEL	083B
		71101724		1	PARA-SOL, coil SONNENBLENDE	SUN VISOR VISIERE	VISERA SOLSKÆRM	VISIERA PARASOLE ZONNEKLEP	080R

07-16	01	p1	07/11

FREIO DE ESTACIONAMENTO - MONTAGEM
PARKING BRAKE - ASSEMLBY
FRENO DE ESTACIONAMIENTO - MONTAJE
PARKING BRAKE - ASSEMLBY

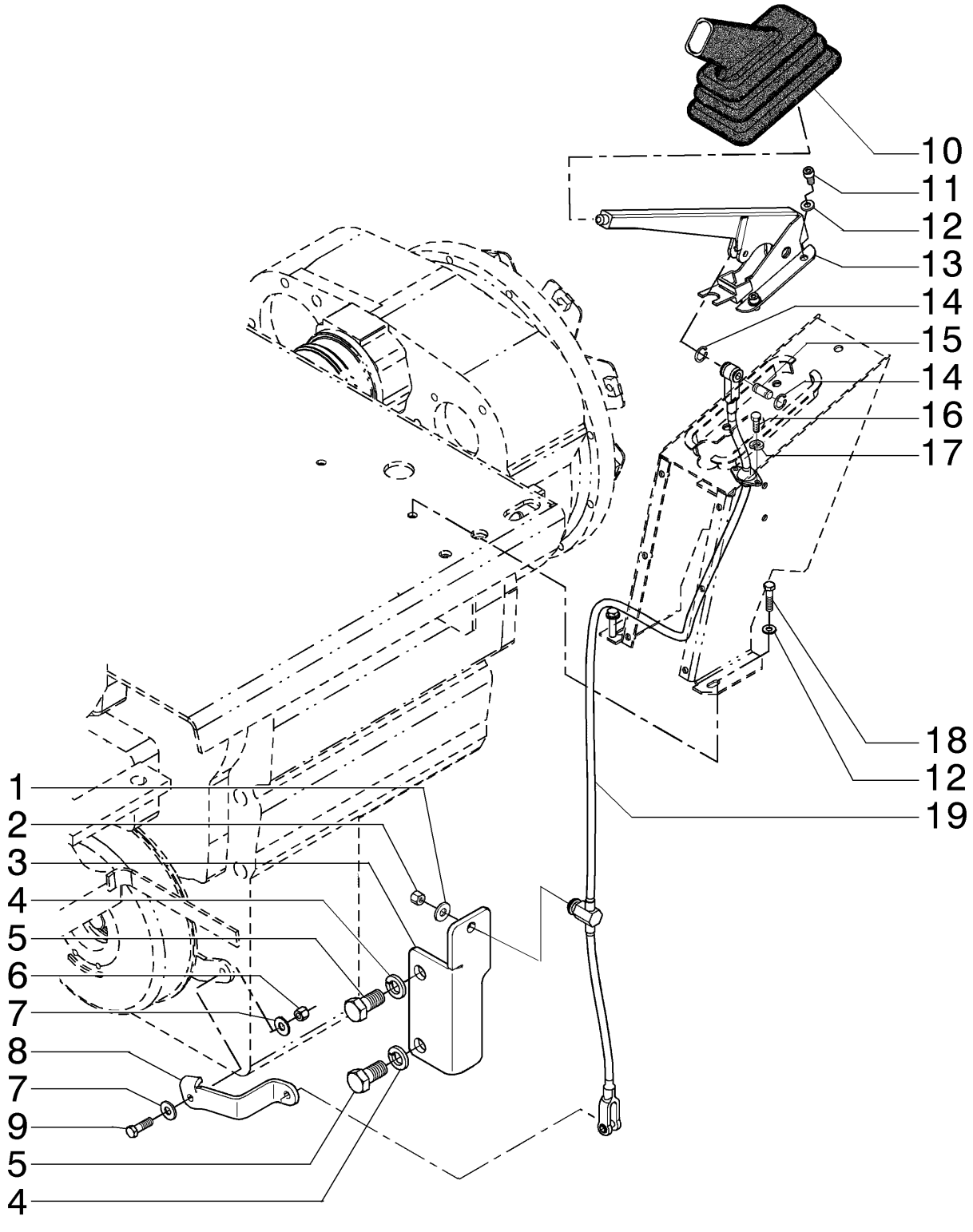

PARKING BRAKE - ASSEMLBY
PARKING BRAKE - ASSEMLBY
PARKING BRAKE - ASSEMLBY
PARKING BRAKE - ASSEMLBY

R	N	P.N.	MOD	Q	Denominação Bezeichnung	Description Description	Denominacion Beskrivelse	Descrizione Beschrijving	L.C.
1		12646921		1	ARRUELA PLANA, M12 x 28 x 3				
						WASHER	ARANDELA	RONDELLA	131R
					UNTERLEGSCHEIBE	RONDELLE	FLADSKIVE	SLUITRING	
2		16105011		1	CONTRA PORCA	LOCK NUT	TUERCA DE BLOQUEO	DADO DI BLOCCAGGIO	P263
					SICHERUNGSMUTTER	CONTRE-ECROU	LÅSEMØTRIK	BORGMOER	
3		75264625		1	SUPORTE	SUPPORT	SOPORTE	SUPPORTO	300S
					STÜTZE	SUPPORT	BESLAG	STEUN	
4		492-11075		2	TRAVA DA ARRUELA, 3/4"	LOCK WASHER	ARANDELA DE BLOQUE	RONDELLA DI SICUREZ	132R
					SICHERUNGSSCHEIBE	RONDELLE FREIN	LÅSESKIVE	BORGRING	
5		413-1224		2	PARAFUSO, Hex, 3/4"-10 x 1 1/2", G5				
						BOLT	PERNO	BULLONE	140B
					SCHRAUBE	VIS	BOLT	BOUT	
6		231-1446		1	CONTRA PORCA, 3/8"-16, GB				
						LOCK NUT	TUERCA DE BLOQUEO	DADO DI BLOCCAGGIO	P263
					SICHERUNGSMUTTER	CONTRE-ECROU	LÅSEMØTRIK	BORGMOER	
7		495-21044		2	ARRUELA PLANA, 3/8"	WASHER	ARANDELA	RONDELLA	131R
					UNTERLEGSCHEIBE	RONDELLE	FLADSKIVE	SLUITRING	
8		75264624		1	SUPORTE	SUPPORT	SOPORTE	SUPPORTO	300S
					STÜTZE	SUPPORT	BESLAG	STEUN	
9		426-620		1	PARAFUSO, Hex, 3/8"-16 x 1 1/4", G8, Full Thd				
						BOLT	PERNO	BULLONE	140B
					SCHRAUBE	VIS	BOLT	BOUT	
10		5106733		1	CAPA	BOOT	FUNDA	PARAPOLVERE	330C
					MANSCHETTE	SOUFFLET	MANCHET	HOES	
11		14306231		4	PARAFUSO, Hex Soc Hd, M8 x 16, 10.9				
						SCREW	TORNILLO	VITE	040V
					SCHRAUBE	VIS	SKRUE	SCHROEF	
12		10519621		8	ARRUELA PLANA, M8 x 17 x 2				
						WASHER	ARANDELA	RONDELLA	131R
					UNTERLEGSCHEIBE	RONDELLE	FLADSKIVE	SLUITRING	
13		85827832		1	ALAVANCA	LEVER	PALANCA	LEVA	045L
					HEBEL	LEVIER	ARM	HEFBOOM	
14		11087976		2	ANEL ELÁSTICO, Ext., M8, BLO				
						CIRCLIP	ARANDELA DE RETENCI	ANELLO ELASTICO	056A
					SICHERUNGSRING	CIRCLIP	LÅSERING	BORGVEER	
15		9969207		1	PINO	PIN	PASADOR	PERNO	080P
					PIN	BROCHE	STIFT	PEN	
16		895-11006		2	ARRUELA PLANA, M6	WASHER	ARANDELA	RONDELLA	131R
					UNTERLEGSCHEIBE	RONDELLE	FLADSKIVE	SLUITRING	
17		627-6020		2	PARAFUSO, Hex, M6 x 20, 10.9, Full Thd				
						BOLT	PERNO	BULLONE	140B
					SCHRAUBE	VIS	BOLT	BOUT	
18		827-8035		2	PARAFUSO, Hex, M8 x 35, 10.9				
						BOLT	PERNO	BULLONE	140B
					SCHRAUBE	VIS	BOLT	BOUT	
19		87357032		1	CABO, Includes Items 1, 2, 14, 15				
						CABLE	CABLE	CAVO	650C
					KABEL	CABLE	KABEL	KABEL	

07-18	01	p1	07/11

FREIO DE ESTACIONAMENTO - ALAVANCA
PARKING BRAKE - LEVER
FRENO DE ESTACIONAMIENTO - PALANCA
PARKING BRAKE - LEVER

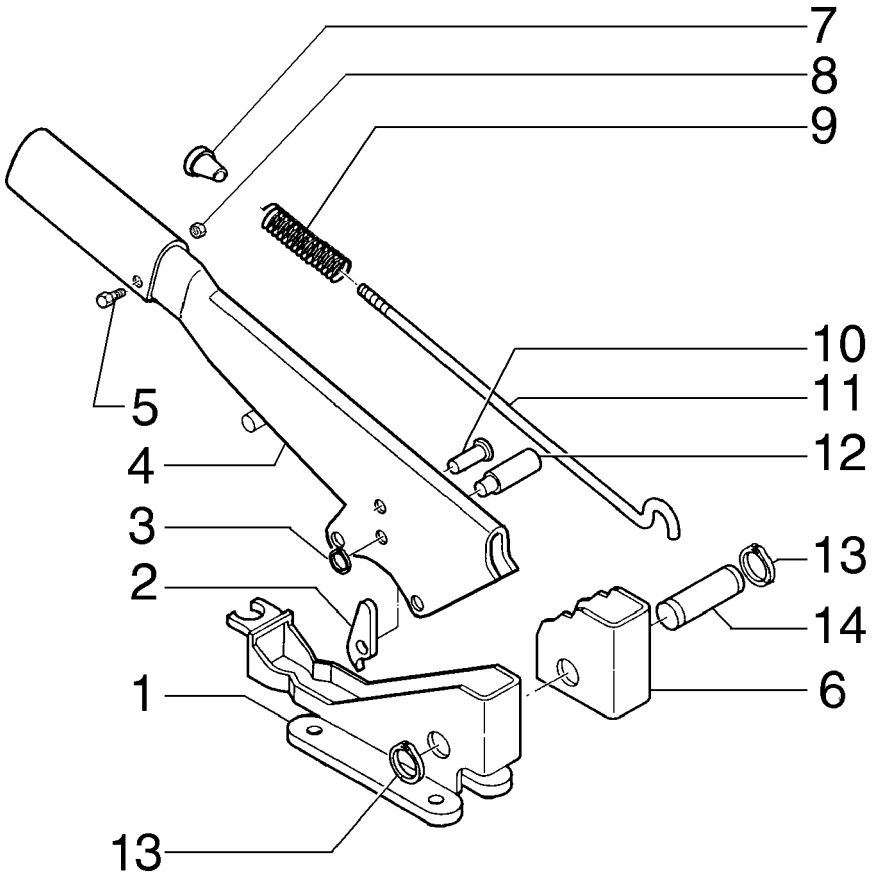

PARKING BRAKE - LEVER
PARKING BRAKE - LEVER
PARKING BRAKE - LEVER
PARKING BRAKE - LEVER

R	N	P.N.	MOD	Q	Denominação Bezeichnung	Description Description	Denominacion Beskrivelse	Descrizione Beschrijving	L.C.
		85827832		1	ALAVANCA, Assy HEBEL	LEVER LEVIER	PALANCA ARM	LEVA HEFBOOM	045L
1		**85805441**		1	SUPORTE STÜTZE	SUPPORT SUPPORT	SOPORTE BESLAG	SUPPORTO STEUN	300S
2		**5110155**		2	TRINCO SPERRKLINKE	PAWL CLIQUET	TRINQUETE PAL	NOTTOLINO D'ARRESTC PAL	050N
3		**11065476**		1	ANEL DE PRESSÃO, M6, Ext SPRENGRING	SNAP RING ANNEAU D'ARRET	ANILLO DE RESORTE LÅSERING	ANELLO ELASTICO VEERRING	054A
4		**85827834**		1	ALAVANCA HEBEL	LEVER LEVIER	PALANCA ARM	LEVA HEFBOOM	045L
5		**13272319**		1	PARAFUSO SCHRAUBE	SCREW VIS	TORNILLO SKRUE	VITE SCHROEF	040V
6		**87584592**		1	PLACA PLATTE	PLATE PLAQUE	PLACA PLADE	PIASTRA PLAAT	105P
7		**4985122**		1	BOTÃO TASTE	BUTTON BOUTON	BOTÓN KNAP	PULSANTE KNOP	120B
8		**10794012**		1	PORCA MUTTER	NUT ECROU	TUERCA MØTRIK	DADO MOER	010D
9		**5105729**		1	MOLA FEDER	SPRING RESSORT	RESORTE FJEDER	MOLLA VEER	100M
10		**4988275**		1	PINO PIN	PIN BROCHE	PASADOR STIFT	PERNO PEN	080P
11		**85827833**		1	HASTE DE NÍVEL MESSSTAB	DIPSTICK JAUGE DE NIVEAU	VARILLA DE NIVEL MÅLEPIND	ASTINA DI LIVELLO PEILSTOK	091A
12		**5131437**		1	PINO PIN	PIN BROCHE	PASADOR STIFT	PERNO PEN	080P
13		**13400776**		2	ANEL-TRAVA SICHERUNGSRING	LOCKING RING BAGUE DE BLOCAGE	ANILLO DE BLOQUEO LÅSESKIVE	ANELLO DI BLOCCAGGI BORGRING	051A
14		**4985127**		1	REBITE NIET	RIVET RIVET	REMACHE NITTE	RIVETTO KLINKNAGEL	055R

SECTION INDEX
Sistema Hidráulico

08-02	01	SISTEMA HIDRÁULICO PRIMÁRIO - PÁ CARREGADEIRA E DIREÇÃO
08-04	01	CIRCUITO HIDRÁULICO - BOMBA À VÁLVULA
08-06	01	VÁLVULA DE CONTROLE AO RESERVATÓRIO HIDRÁULICO - RETORNO
08-06A	01	VÁLVULA DE CONTROLE AO RESERVATÓRIO HIDRÁULICO COM VÁLVULA DE RETENÇÃO, MONTAGEM - RETORNO
08-08	01	RESERVATÓRIO HIDRÁULICO E PEÇAS COMPONENTES
08-10	01	PÁ CARREGADEIRA - CIRCUITO HIDRÁULICO DE LEVANTAMENTO
08-12	01	PÁ CARREGADEIRA - CIRCUITO HIDRÁULICO DE BASCULAMENTO
08-14	01	PÁ CARREGADEIRA - CIRCUITO HIDRÁULICO SEÇÃO OPCIONAL (PARKER)
08-14A	01	PÁ CARREGADEIRA - CIRCUITO HIDRÁULICO DO ACOPLAMENTO
08-14B	01	PÁ CARREGADEIRA - CIRCUITO HIDRÁULICO SEÇÃO OPCIONAL (REXROTH)
08-16	01	CILINDROS DE LEVANTAMENTO
08-18	01	CILINDROS DE INCLINAÇÃO
08-20	01	BOMBA HIDRÁULICA - CONJUNTO ULICA
08-22	01	CONTROLE DA CARREGADEIRA (2 CARRETÉIS & 1 ALAVANCA - PARKER)
08-22B	01	CONTROLE DA CARREGADEIRA (2 CARRETÉIS & 1 ALAVANCA - REXROTH)
08-24	01	CONTROLE DA CARREGADEIRA (2 CARRETÉIS & 2 ALAVANCAS - PARKER)
08-24B	01	CONTROLE DA CARREGADEIRA (2 CARRETÉIS & 2 ALAVANCAS - REXROTH)
08-26	01	CONTROLE DA CARREGADEIRA (3 CARRETÉIS & 2 ALAVANCAS - PARKER)
08-28	01	CONTROLE DA CARREGADEIRA (3 CARRETÉIS & 3 ALAVANCAS - PARKER)
08-28B	01	CONTROLE DA CARREGADEIRA (3 CARRETÉIS & 3 ALAVANCAS - REXROTH)
08-30	01	CONTROLES DE POSICIONAMENTO - RETORNO DA CAÇAMBA
08-32	01	CONTROLE DE ALTURA DA CAÇAMBA
08-34	01	VÁLVULA DE CONTROLE DA CARREGADEIRA (2 CARRETÉIS - PARKER)
08-36	01	VÁLVULA DE CONTROLE DA CARREGADEIRA (SEÇÃO DE ADMISSÃO E SAÍDA - PARKER)
08-38	01	VÁLVULA DE CONTROLE DA CARREGADEIRA (SEÇÃO DA CAÇAMBA - PARKER)
08-40	01	VÁLVULA DE CONTROLE DA CARREGADEIRA (SEÇÃO DE LEVANTAMENTO - PARKER)
08-42	01	VÁLVULA DE CONTROLE DA CARREGADEIRA (SEÇÃO DE FECHAMENTO - PARKER)
08-44	01	VÁLVULA DE ALÍVIO (PARKER)
08-46	01	VÁLVULA CONTRA PRESSÃO (PARKER)
08-48	01	VÁLVULA DE ALÍVIO (PARKER)
08-50	01	VÁLVULA ANTICAVITAÇÃO (PARKER)
08-52	01	VÁLVULA DE CONTROLE - POSICIONADOR (SEÇÃO DA CAÇAMBA - PARKER)
08-54	01	VÁLVULA ANTICAVITAÇÃO (PARKER)
08-56	01	VÁLVULA DE CONTROLE - POSICIONADOR (SEÇÃO LEVANTAMENTO - PARKER)
08-58	01	VÁLVULA ANTICAVITAÇÃO (PARKER)
08-60	01	VÁLVULA DE CONTROLE DA CARREGADEIRA (3 CARRETÉIS - PARKER)
08-62	01	VÁLVULA DE CONTROLE DA CARREGADEIRA (SEÇÃO AUXILIAR - PARKER)
08-64	01	VÁLVULA DE CONTROLE - POSICIONADOR (SEÇÃO AUXILIAR - PARKER)
08-66	01	VÁLVULA DE CONTROLE DA CARREGADEIRA (2 CARRETÉIS - REXROTH)
08-68	01	VÁLVULA DE CONTROLE DA CARREGADEIRA (3 CARRETÉIS - REXROTH)
08-70	01	VÁLVULA DE ALÍVIO (REXROTH)
08-72	01	VÁLVULA ANTICAVITAÇÃO (REXROTH)
08-74	01	VÁLVULA DE ALÍVIO E ANTI-CAVITAÇÃO (REXROTH)

08-02	01	p1	11/07

SISTEMA HIDRÁULICO PRIMÁRIO - PÁ CARREGADEIRA E DIREÇÃO
PRIMARY HYDRAULIC CIRCUIT - LOADER AND STEERING
SISTEMA HIDRAULICO PRIMARIO - PALA CARGADORA Y DIRECCIÓN
PRIMARY HYDRAULIC CIRCUIT - LOADER AND STEERING

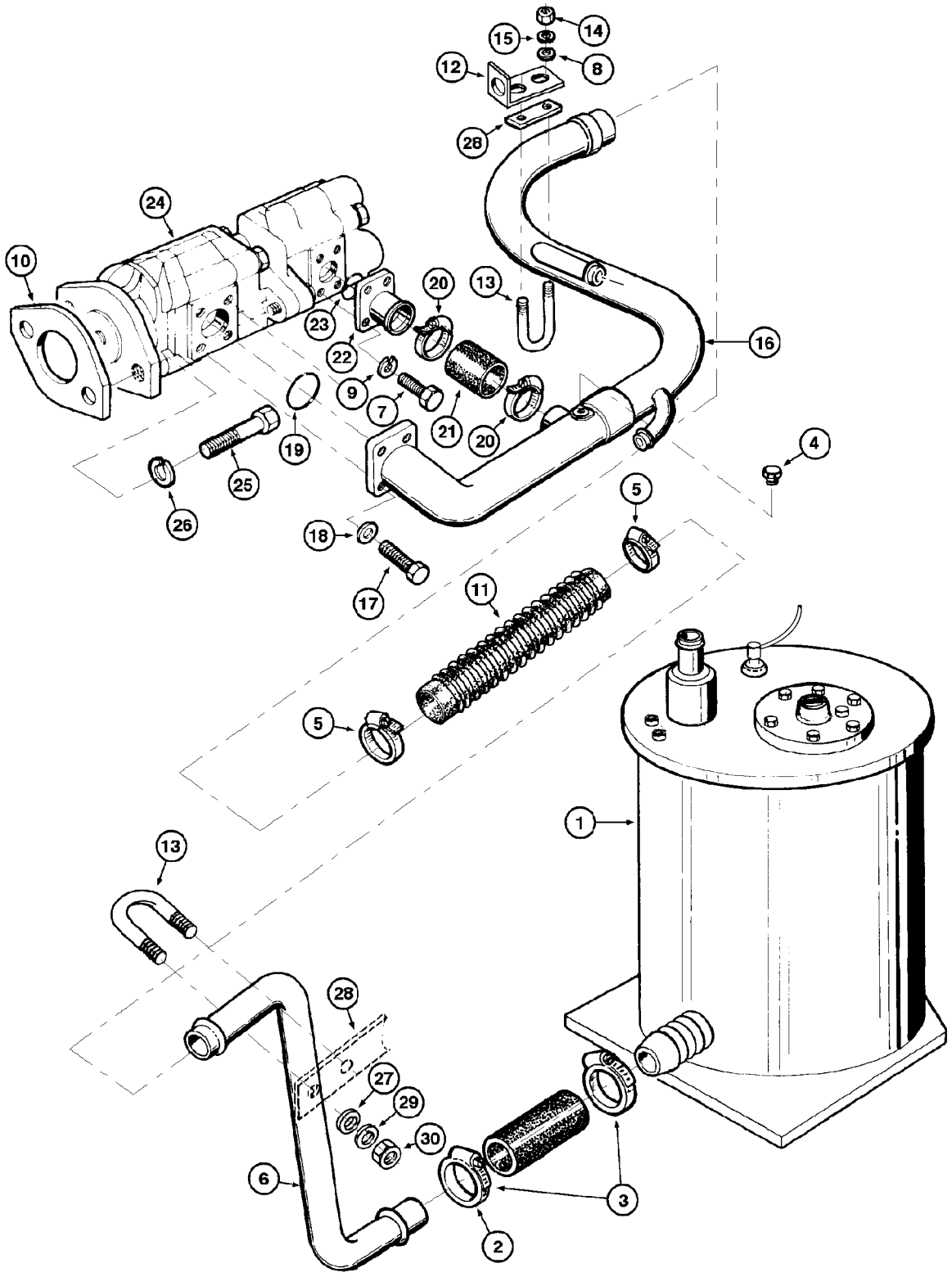

PRIMARY HYDRAULIC CIRCUIT - LOADER AND STEERING
PRIMARY HYDRAULIC CIRCUIT - LOADER AND STEERING
PRIMARY HYDRAULIC CIRCUIT - LOADER AND STEERING
PRIMARY HYDRAULIC CIRCUIT - LOADER AND STEERING

R	N	P.N.	MOD	Q	Denominação Bezeichnung	Description Description	Denominacion Beskrivelse	Descrizione Beschrijving	L.C.
1		REF		1	INSTRUÇÃO, RESERVOIR Assy (P.8-8)				
						INSTRUCTION	INSTRUCCIÓN	ISTRUZIONI	Z571
					ANLEITUNG	INSTRUCTION	INSTRUKTION	INSTRUCTIE	
2		L74461		1	MANGUEIRA HIDRÁULICA, 2.00" ID x 5.00", SAE 100R1 Type A				
						HYDRAULIC HOSE	TUBO HIDRÁULICO	TUBO FLESSIBILE IDRAU	A058
					HYDRAULIKSCHLAUCH	FLEXIBLE HYDRAULIQUI	SLANGE, HYDRAULIK	HYDRAULISCHE SLANG	
3		214-3148		2	BRAÇADEIRA MANGUEIRA, 2.25/3.125 HD Worm				
						HOSE CLAMP	ABRAZADERA DE MANG	FASCETTA STRINGITUB	P729
					SCHLAUCHSCHELLE	COLLIER POUR FLEXIBL	SLANGEKLEMME	SLANGKLEM	
4		217-405		1	BUJÃO, Hex Hd, 1/4"-18 NPTF				
						PLUG	TAPÓN	TAPPO	050T
					STOPFEN	BOUCHON	PROP	PLUG	
5		214-2144		2	BRAÇADEIRA, #44, 2.25"-2.56", T-Bolt				
						CLAMP	ABRAZADERA	MORSETTO	120M
					KLEMME	COLLIER	SPÆNDEBÅND	KLEM	
6		E96371		1	TUBO, 2" OD, suction	TUBE	TUBO	TUBO	195T
					ROHR	TUBE	RØR	LEIDING	
7		61-716		4	PARAFUSO ALLEN, Hex Soc Hd, 7/16"-14 x 1"				
						HEX SOC SCREW	TORNILLO DE CABEZA H	VITE A ESAGONO INCAS	A093
					INNENSECHSKANTSCHR	VIS A EMBASE HEXAGOI	SEKSKANTET SKRUE	INBUSBOUT	
8		495-21038		2	ARRUELA PLANA, 5/16"	WASHER	ARANDELA	RONDELLA	131R
					UNTERLEGSCHEIBE	RONDELLE	FLADSKIVE	SLUITRING	
9		492-11044		4	TRAVA DA ARRUELA, 7/16"				
						LOCK WASHER	ARANDELA DE BLOQUEO	RONDELLA DI SICUREZZ	132R
					SICHERUNGSSCHEIBE	RONDELLE FREIN	LÅSESKIVE	BORGRING	
10		D53692		1	JUNTA	GASKET	JUNTA	GUARNIZIONE	3720
					DICHTUNG	JOINT	GASKET	GASKET	
11		146266A1		1	MANGUEIRA	HOSE	TUBO	TUBO FLESSIBILE	030M
					SCHLAUCH	FLEXIBLE	SLANGE	SLANG	
12		E95063		1	SUPORTE	SUPPORT	SOPORTE	SUPPORTO	300S
					STÜTZE	SUPPORT	BESLAG	STEUN	
13		E155913		2	CAVILHA	U-BOLT	HORQUILLA	BULLONE A U	100C
					U-SCHRAUBE	BOULON EN U	BØJLESKRUE	VEERKLEM	
14		492-11031		4	TRAVA DA ARRUELA, 5/16"				
						LOCK WASHER	ARANDELA DE BLOQUEO	RONDELLA DI SICUREZZ	132R
					SICHERUNGSSCHEIBE	RONDELLE FREIN	LÅSESKIVE	BORGRING	
15		425-105		4	PORCA, 5/16"-18, G5	NUT	TUERCA	DADO	010D
					MUTTER	ECROU	MØTRIK	MOER	
16		75263354		1	TUBO	TUBE	TUBO	TUBO	195T
					ROHR	TUBE	RØR	LEIDING	
17		61-816		4	PARAFUSO ALLEN, Hex Soc Hd, 1/2"-13 x 1"				
						HEX SOC SCREW	TORNILLO DE CABEZA H	VITE A ESAGONO INCAS	A093
					INNENSECHSKANTSCHR	VIS A EMBASE HEXAGOI	SEKSKANTET SKRUE	INBUSBOUT	
18		492-11050		4	TRAVA DA ARRUELA, 1/2"	LOCK WASHER	ARANDELA DE BLOQUEO	RONDELLA DI SICUREZZ	132R
					SICHERUNGSSCHEIBE	RONDELLE FREIN	LÅSESKIVE	BORGRING	
19		238-5225		1	O-RING, -225, 70 Duro, 1.859" ID x .139" Thk				
						O-RING	JUNTA TÓRICA	ANELLO TOROIDALE	055A
					O-RING	JOINT TORIQUE	O-RING	O-RING	

08-02	01	p2	11/07

SISTEMA HIDRÁULICO PRIMÁRIO - PÁ CARREGADEIRA E DIREÇÃO
PRIMARY HYDRAULIC CIRCUIT - LOADER AND STEERING
SISTEMA HIDRAULICO PRIMARIO - PALA CARGADORA Y DIRECCIÓN
PRIMARY HYDRAULIC CIRCUIT - LOADER AND STEERING

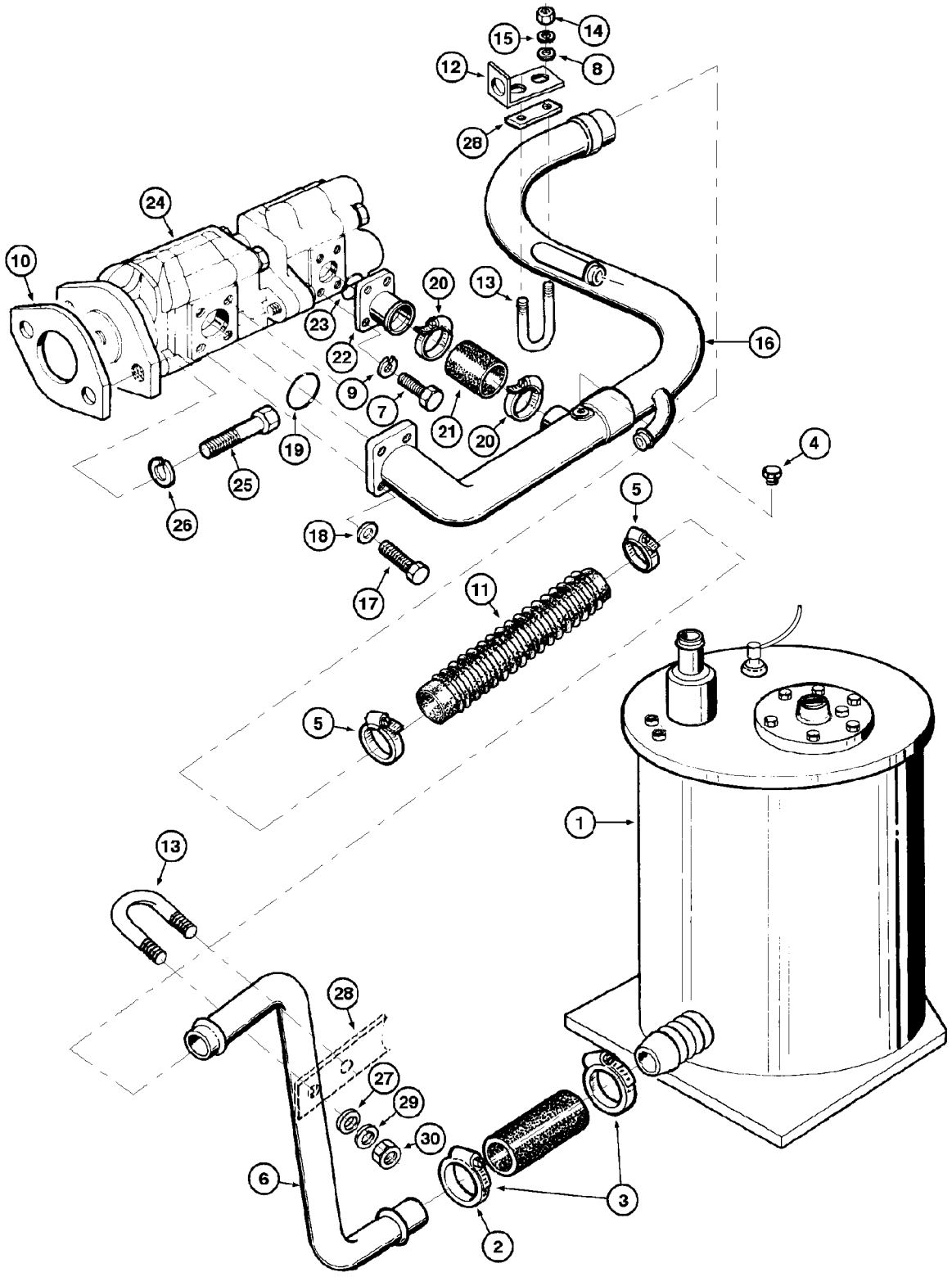

PRIMARY HYDRAULIC CIRCUIT - LOADER AND STEERING
PRIMARY HYDRAULIC CIRCUIT - LOADER AND STEERING
PRIMARY HYDRAULIC CIRCUIT - LOADER AND STEERING
PRIMARY HYDRAULIC CIRCUIT - LOADER AND STEERING

R	N	P.N.	MOD	Q	Denominação Bezeichnung	Description Description	Denominacion Beskrivelse	Descrizione Beschrijving	L.C.
20		214-1428		2	BRAÇADEIRA MANGUEIRA, #28, 1.31/2.25 Type F Worm				
						HOSE CLAMP	ABRAZADERA DE MANG	FASCETTA STRINGITUB	P729
					SCHLAUCHSCHELLE	COLLIER POUR FLEXIBL	SLANGEKLEMME	SLANGKLEM	
21		E68025		1	LUVA	SLEEVE	MANGUITO	MANICOTTO	031M
					BUCHSE	CHEMISE	TRYKLEJE, KOBLING	MOF; BUS	
22		E68029		1	FLANGE	FLANGE	BRIDA	FLANGIA	070F
					FLANSCH	BRIDE	FLANGE	FLENS	
23		238-5222		1	O-RING, -222, 70 Duro, 1.484" ID x .139" Thk				
						O-RING	JUNTA TÓRICA	ANELLO TOROIDALE	055A
					O-RING	JOINT TORIQUE	O-RING	O-RING	
24		REF		1	INSTRUÇÃO, PUMP hydraulic Assy (P.8-20)				
						INSTRUCTION	INSTRUCCIÓN	ISTRUZIONI	Z571
					ANLEITUNG	INSTRUCTION	INSTRUKTION	INSTRUCTIE	
25		413-1024		2	PARAFUSO, Hex, 5/8"-11 x 1 1/2", G5, Full Thd				
						BOLT	PERNO	BULLONE	140B
					SCHRAUBE	VIS	BOLT	BOUT	
26		492-11062		2	TRAVA DA ARRUELA, 5/8"	LOCK WASHER	ARANDELA DE BLOQUE	RONDELLA DI SICUREZ	132R
					SICHERUNGSSCHEIBE	RONDELLE FREIN	LÅSESKIVE	BORGRING	
27		495-21038		2	ARRUELA PLANA, 5/16"	WASHER	ARANDELA	RONDELLA	131R
					UNTERLEGSCHEIBE	RONDELLE	FLADSKIVE	SLUITRING	
28		E155914		2	SUPORTE	SUPPORT	SOPORTE	SUPPORTO	300S
					STÜTZE	SUPPORT	BESLAG	STEUN	

08-04	01	p1	12/08

CIRCUITO HIDRÁULICO - BOMBA À VÁLVULA
HYDRAULIC CIRCUIT - PUMP TO VALVE
CIRCUITO HIDRAULICO - BOMBA A LA VALVULA
HYDRAULIC CIRCUIT - PUMP TO VALVE

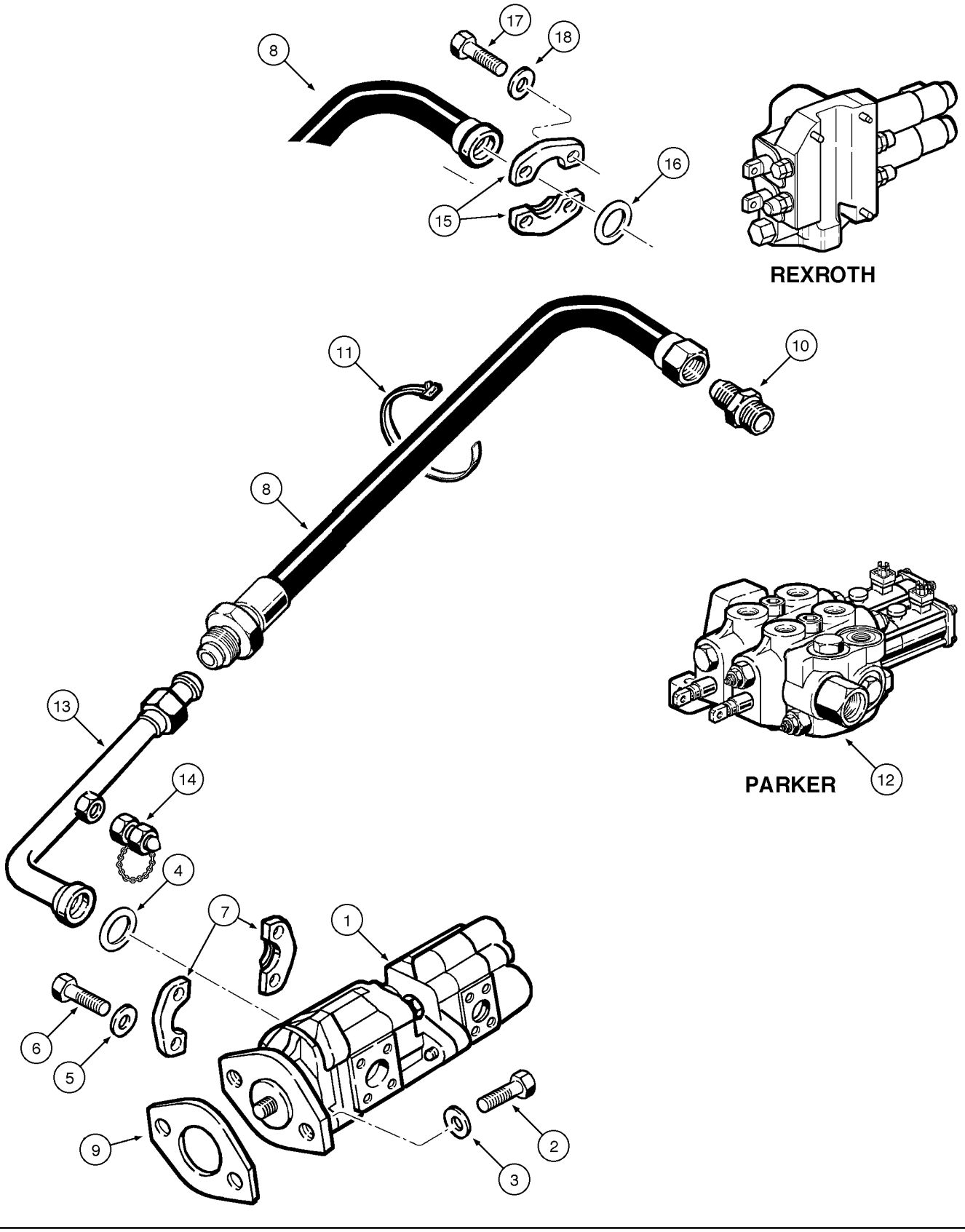

HYDRAULIC CIRCUIT - PUMP TO VALVE
HYDRAULIC CIRCUIT - PUMP TO VALVE
HYDRAULIC CIRCUIT - PUMP TO VALVE
HYDRAULIC CIRCUIT - PUMP TO VALVE

R	N	P.N.	MOD	Q	Denominação Bezeichnung	Description Description	Denominacion Beskrivelse	Descrizione Beschrijving	L.C.
1		REF		1	INSTRUÇÃO, PUMP Assy (P.8-20)				
						INSTRUCTION	INSTRUCCIÓN	ISTRUZIONI	Z571
					ANLEITUNG	INSTRUCTION	INSTRUKTION	INSTRUCTIE	
2		413-1024		2	PARAFUSO, Hex, 5/8"-11 x 1 1/2", G5, Full Thd				
						BOLT	PERNO	BULLONE	140B
					SCHRAUBE	VIS	BOLT	BOUT	
3		492-11062		2	TRAVA DA ARRUELA, 5/8"	LOCK WASHER	ARANDELA DE BLOQUE(	RONDELLA DI SICUREZ/	132R
					SICHERUNGSSCHEIBE	RONDELLE FREIN	LÅSESKIVE	BORGRING	
4		238-5222		1	O-RING, -222, 70 Duro, 1.484" ID x .139" Thk				
						O-RING	JUNTA TÓRICA	ANELLO TOROIDALE	055A
					O-RING	JOINT TORIQUE	O-RING	O-RING	
5		492-11044		4	TRAVA DA ARRUELA, 7/16"				
						LOCK WASHER	ARANDELA DE BLOQUE(	RONDELLA DI SICUREZ/	132R
					SICHERUNGSSCHEIBE	RONDELLE FREIN	LÅSESKIVE	BORGRING	
6		413-724		4	PARAFUSO, Hex, 7/16"-14 x 1 1/2", G5				
						BOLT	PERNO	BULLONE	140B
					SCHRAUBE	VIS	BOLT	BOUT	
7		A12301		2	FLANGE	FLANGE	BRIDA	FLANGIA	070F
					FLANSCH	BRIDE	FLANGE	FLENS	
8	1	E155261	a	1	MANGUEIRA	HOSE	TUBO	TUBO FLESSIBILE	030M
					SCHLAUCH	FLEXIBLE	SLANGE	SLANG	
8	2	87462914	b	1	MANGUEIRA	HOSE	TUBO	TUBO FLESSIBILE	030M
					SCHLAUCH	FLEXIBLE	SLANGE	SLANG	
9		D53692		1	JUNTA	GASKET	JUNTA	GUARNIZIONE	3720
					DICHTUNG	JOINT	GASKET	GASKET	
10	1	218-5086	a	1	CONECTOR HIDRÁUL, 1 5/16"-12, 37º x 1 5/8"-12, O-Ring				
						HYD CONNECTOR	CONECTOR HIDRÁULIC(	CONNETTORE IDRAULIC	020R
					HYDR STECKVERBINDE	CONNECTEUR HYDRAU	HYDRAULIKSTIK	HYDRAULISCHE AANSLI	
11		L18331			PRENDEDOR DE CABOS	CABLE STRAP	BANDA DE CABLE	FASCETTA PER CAVO	P716
					KABELBINDER	BRIDE DE CABLE	KABELSTROP	BUNDELBAND	
12	1	REF	a	1	INSTRUÇÃO, VALVE Assy (P.8-34/60)				
						INSTRUCTION	INSTRUCCIÓN	ISTRUZIONI	Z571
					ANLEITUNG	INSTRUCTION	INSTRUKTION	INSTRUCTIE	
12	2	REF	b	1	INSTRUÇÃO, VALVE Assy (P.8-66/68)				
						INSTRUCTION	INSTRUCCIÓN	ISTRUZIONI	Z571
					ANLEITUNG	INSTRUCTION	INSTRUKTION	INSTRUCTIE	
13		87527102		1	CORTA-CHAMA	SPARK ARRESTER	PROTECTOR DE CHISP/	PARASCINTILLE	195S
					FUNKENFÄNGER	PARE-ETINCELLE	ILDSLUKKER	VONKVANGER	
14		79087360		1	VÁLVULA HIDRÁULICA	HYDRAULIC VALVE	VÁLVULA HIDRÁULICA	DISTRIBUTORE IDRAULI	010V
					HYDRAULIKVENTIL	SOUPAPE HYDRAULIQU	HYDRAULIKVENTIL	HYDRAULISCHE KLEP	
15	2	70921116	b	2	SEMI-FLANGE	HALF-FLANGE	SEMIBRIDA	SEMIFLANGIA	417S
					FLANSCHHÄLFTE	DEMI-BRIDE	FLANGEHALVDEL	FLENSHELFT	
16	2	14463780	b	1	O-RING, 32.92mm ID x 3.53" Width				
						O-RING	JUNTA TÓRICA	ANELLO TOROIDALE	055A
					O-RING	JOINT TORIQUE	O-RING	O-RING	

(1) Parker
(2) Rexroth
(a) BSN N6AE00912
(b) ASN N6AE00913

08-04	01	p2	12/08

CIRCUITO HIDRÁULICO - BOMBA À VÁLVULA
HYDRAULIC CIRCUIT - PUMP TO VALVE
CIRCUITO HIDRAULICO - BOMBA A LA VALVULA
HYDRAULIC CIRCUIT - PUMP TO VALVE

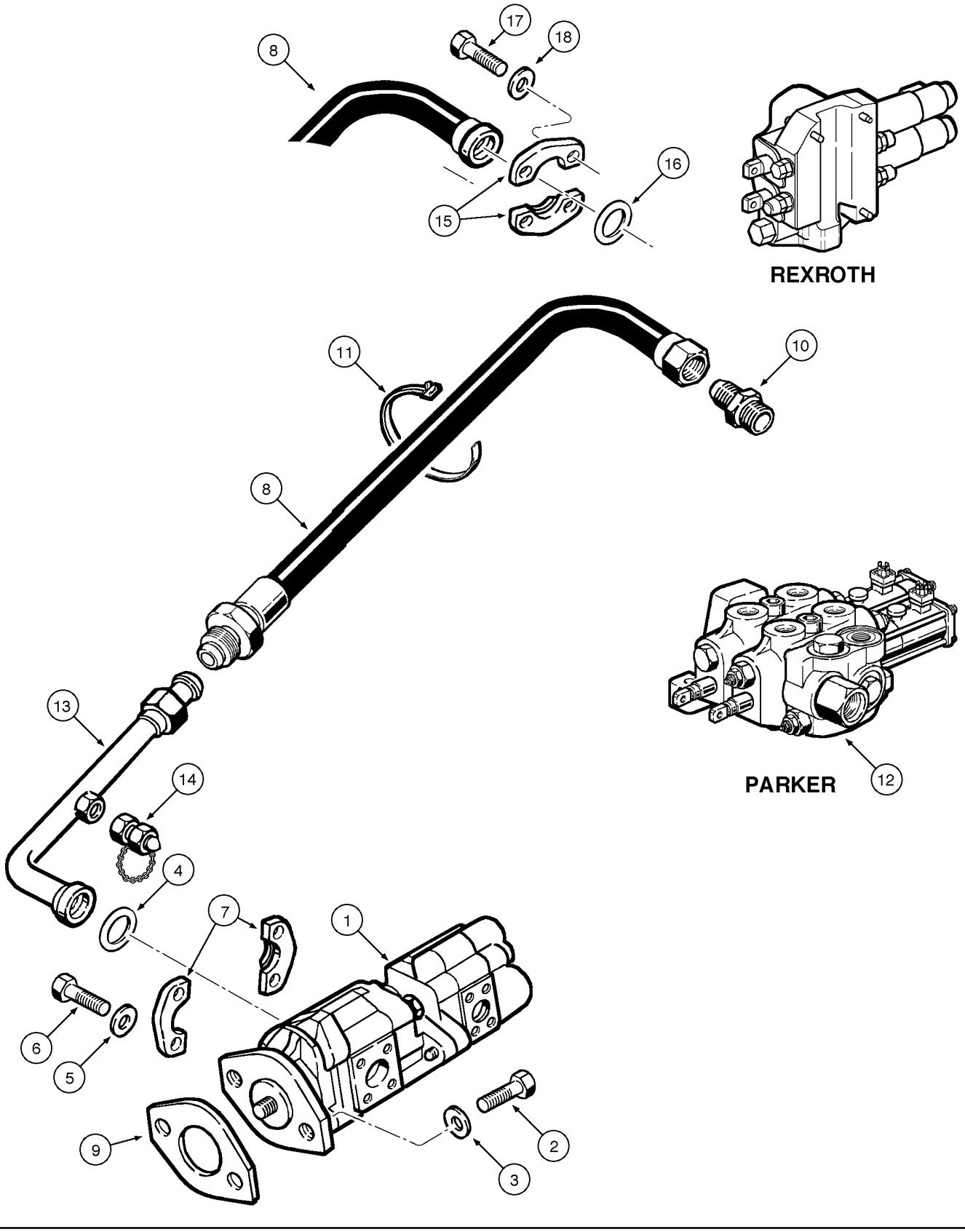

HYDRAULIC CIRCUIT - PUMP TO VALVE
HYDRAULIC CIRCUIT - PUMP TO VALVE
HYDRAULIC CIRCUIT - PUMP TO VALVE
HYDRAULIC CIRCUIT - PUMP TO VALVE

R	N	P.N.	MOD	Q	Denominação Bezeichnung	Description Description	Denominacion Beskrivelse	Descrizione Beschrijving	L.C.
17	1	**14420231**	a	4	PARAFUSO, Hex Soc Hd, M10 x 30, 10.9 SCHRAUBE	SCREW VIS	TORNILLO SKRUE	VITE SCHROEF	040V
18	1	**892-11010**	a	4	TRAVA DA ARRUELA, M10 SICHERUNGSSCHEIBE	LOCK WASHER RONDELLE FREIN	ARANDELA DE BLOQUE LÅSESKIVE	RONDELLA DI SICUREZ BORGRING	132R

(1) Rexroth
(a) ASN N6AE00913

08-06	01	p1	12/09

VÁLVULA DE CONTROLE AO RESERVATÓRIO HIDRÁULICO - RETORNO
CONTROL VALVE TO HYDRAULIC RESERVOIR - RETURN
VALVULA DE CONTROL A EL RESERVATORIO HIDRAULICO - RETORNO
CONTROL VALVE TO HYDRAULIC RESERVOIR - RETURN

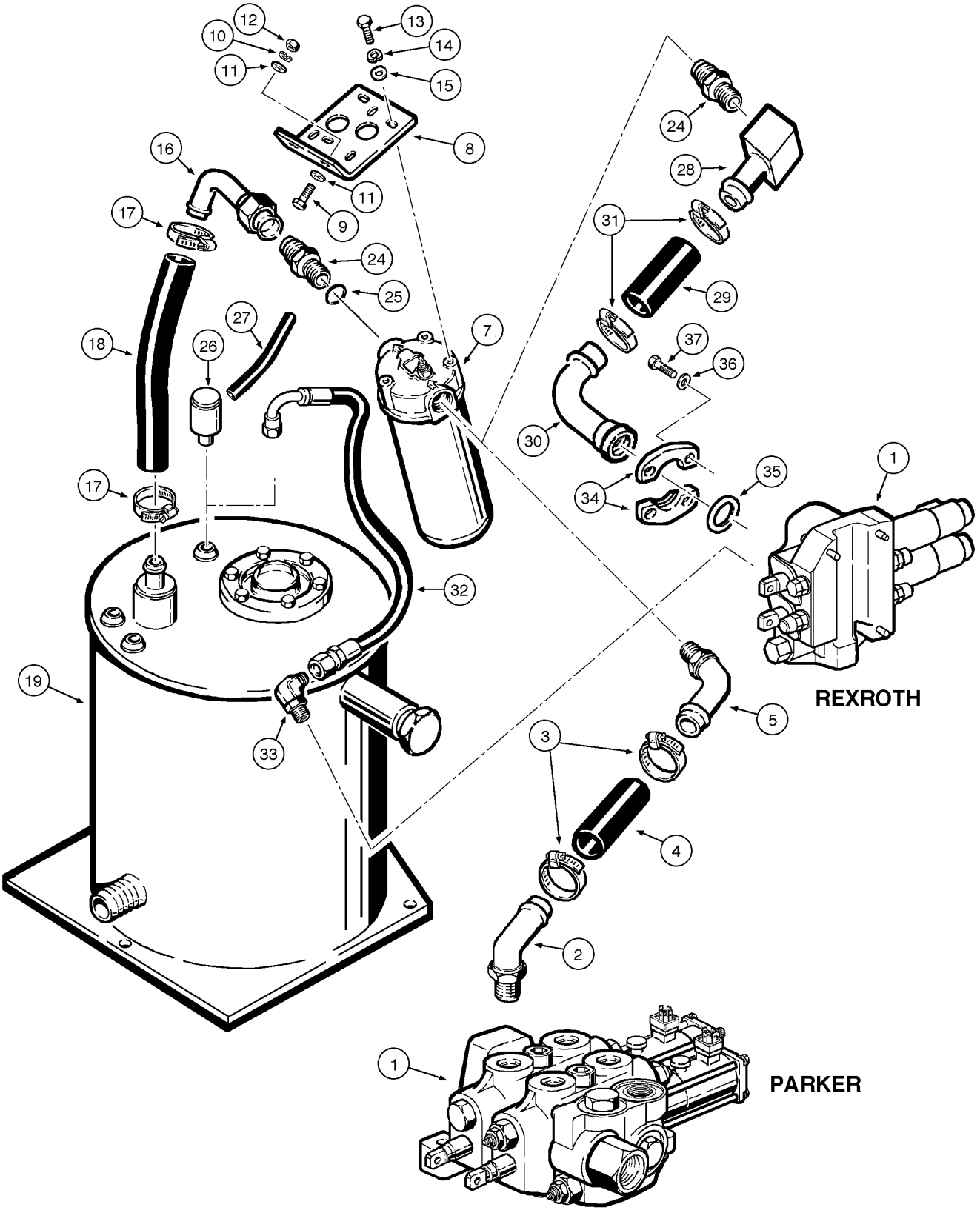

CONTROL VALVE TO HYDRAULIC RESERVOIR - RETURN
CONTROL VALVE TO HYDRAULIC RESERVOIR - RETURN
CONTROL VALVE TO HYDRAULIC RESERVOIR - RETURN
CONTROL VALVE TO HYDRAULIC RESERVOIR - RETURN

R	N	P.N.	MOD	Q	Denominação Bezeichnung	Description Description	Denominacion Beskrivelse	Descrizione Beschrijving	L.C.
1	1	REF	a	1	INSTRUÇÃO, VALVE Assy (P.8-34/60)				
						INSTRUCTION	INSTRUCCIÓN	ISTRUZIONI	Z571
					ANLEITUNG	INSTRUCTION	INSTRUKTION	INSTRUCTIE	
1	2	REF	b	1	INSTRUÇÃO, VALVE Assy (P.8-66/68)				
						INSTRUCTION	INSTRUCCIÓN	ISTRUZIONI	Z571
					ANLEITUNG	INSTRUCTION	INSTRUKTION	INSTRUCTIE	
2	1	75323722	a	1	CONECTOR HIDRÁUL	HYD CONNECTOR	CONECTOR HIDRÁULIC	CONNETTORE IDRAULIC	020R
					HYDR STECKVERBINDE	CONNECTEUR HYDRAU	HYDRAULIKSTIK	HYDRAULISCHE AANSLU	
3	1	353036A1	a	1	BRACADEIRA	CLAMP	COLLAR	MORSETTO	1640
					SCHELLE	COLLIER	CLAMP	CLAMP	
4	1	87426781	a	1	MANGUEIRA	HOSE	TUBO	TUBO FLESSIBILE	030M
					SCHLAUCH	FLEXIBLE	SLANGE	SLANG	
5	1	217-320	a	1	CONEXÃO, 45º, 1 1/4" Hose x 1 5/16"-12 ORB Beaded				
						FITTING	ACOPLAMIENTO	RACCORDO	3300
					ARMATUR	RACCORD	FITTING	AANSLUITING	
7	3	L114122		1	FILTRO, Assy (P.5-12)	FILTER	FILTRO	FILTRO	3240
					FILTER	FILTRE	FILTER	FILTER	
8		L106692		1	SUPORTE	BRACKET	SOPORTE	STAFFA	1010
					HALTER	CONSOLE	BRACKET	BRACKET	
9		413-620		2	PARAFUSO, Hex, 3/8"-16 x 1 1/4", G5, Full Thd				
						BOLT	PERNO	BULLONE	140B
					SCHRAUBE	VIS	BOLT	BOUT	
10		492-11038		2	TRAVA DA ARRUELA, 3/8"	LOCK WASHER	ARANDELA DE BLOQUE	RONDELLA DI SICUREZ	132R
					SICHERUNGSSCHEIBE	RONDELLE FREIN	LÅSESKIVE	BORGRING	
11		495-21044		4	ARRUELA PLANA, 3/8"	WASHER	ARANDELA	RONDELLA	131R
					UNTERLEGSCHEIBE	RONDELLE	FLADSKIVE	SLUITRING	
12		425-106		2	PORCA, 3/8"-16, G5	NUT	TUERCA	DADO	010D
					MUTTER	ECROU	MØTRIK	MOER	
13		413-616		3	PARAFUSO, Hex, 3/8"-16 x 1", G5, Full Thd				
						BOLT	PERNO	BULLONE	140B
					SCHRAUBE	VIS	BOLT	BOUT	
14		492-11038		3	TRAVA DA ARRUELA, 3/8"	LOCK WASHER	ARANDELA DE BLOQUE	RONDELLA DI SICUREZ	132R
					SICHERUNGSSCHEIBE	RONDELLE FREIN	LÅSESKIVE	BORGRING	
15		495-21044		3	ARRUELA PLANA, 3/8"	WASHER	ARANDELA	RONDELLA	131R
					UNTERLEGSCHEIBE	RONDELLE	FLADSKIVE	SLUITRING	
16		L107308		1	TUBO, 102, 127 mm L	TUBE	TUBO	TUBO	195T
					ROHR	TUBE	RØR	LEIDING	
17		353036A1		2	BRACADEIRA	CLAMP	COLLAR	MORSETTO	1640
					SCHELLE	COLLIER	CLAMP	CLAMP	
18		L107328		1	MANGUEIRA, 31.75 mm ID x 229.00 mm, SAE 100R3 Type A				
						HOSE	TUBO	TUBO FLESSIBILE	030M
					SCHLAUCH	FLEXIBLE	SLANGE	SLANG	

(1) Parker
(2) Rexroth
(3) Filtro L114122 composto de Elemento (A45625) ; Cabeçote (NSS) ; Interruptor (N7782)
(a) BSN N6AE00912
(b) ASN N6AE00913

08-06	01	p2	12/09

VÁLVULA DE CONTROLE AO RESERVATÓRIO HIDRÁULICO - RETORNO
CONTROL VALVE TO HYDRAULIC RESERVOIR - RETURN
VALVULA DE CONTROL A EL RESERVATORIO HIDRAULICO - RETORNO
CONTROL VALVE TO HYDRAULIC RESERVOIR - RETURN

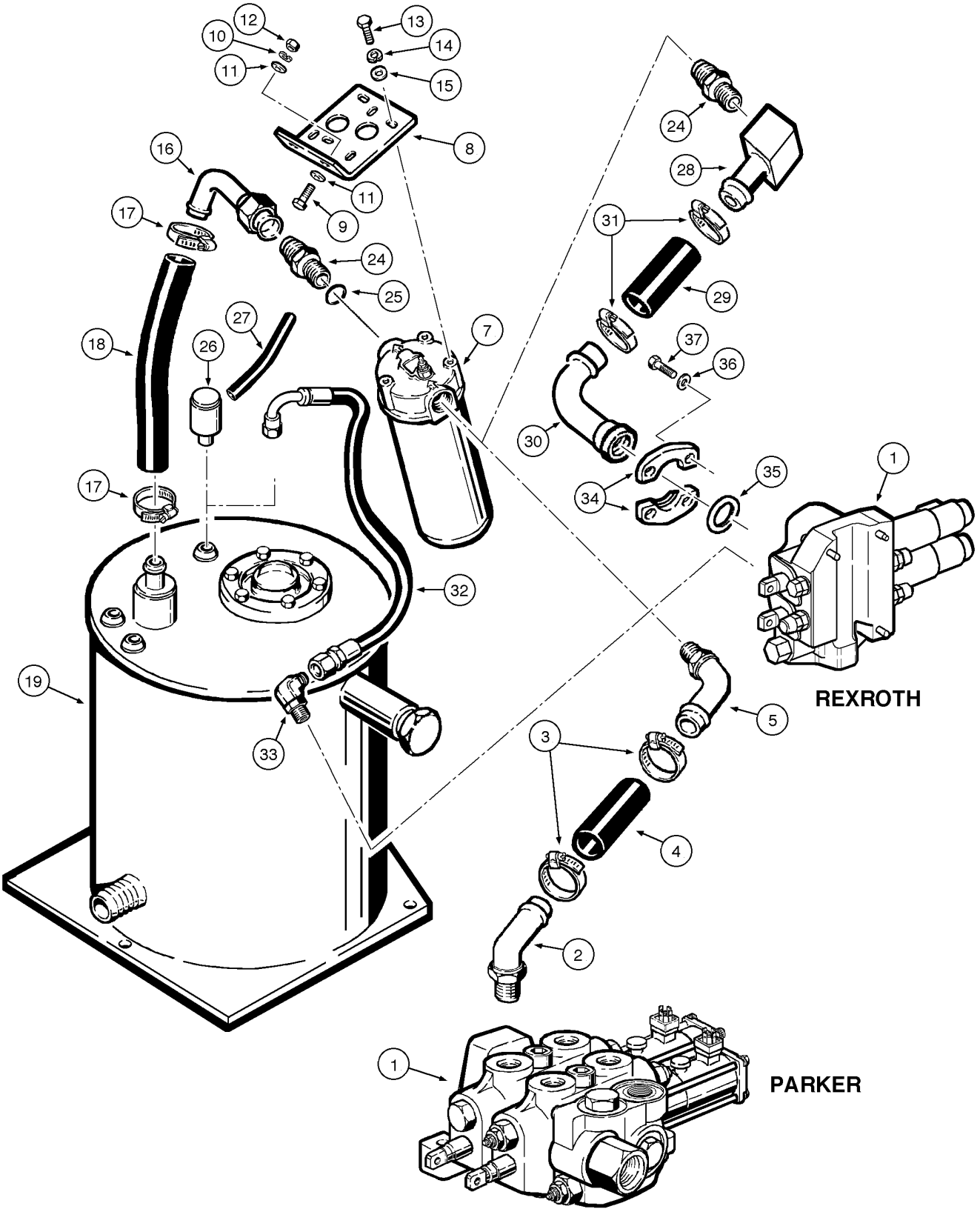

CONTROL VALVE TO HYDRAULIC RESERVOIR - RETURN
CONTROL VALVE TO HYDRAULIC RESERVOIR - RETURN
CONTROL VALVE TO HYDRAULIC RESERVOIR - RETURN
CONTROL VALVE TO HYDRAULIC RESERVOIR - RETURN

R	N	P.N.	MOD	Q	Denominação Bezeichnung	Description Description	Denominacion Beskrivelse	Descrizione Beschrijving	L.C.
19		REF		1	INSTRUÇÃO, RESERVOIR (P.8-8)				
						INSTRUCTION	INSTRUCCIÓN	ISTRUZIONI	Z571
					ANLEITUNG	INSTRUCTION	INSTRUKTION	INSTRUCTIE	
24	1	218-5039		1	CONECTOR HIDRÁUL, 1 5/8"-12, 37° x 1 5/16"-12, O-Ring, Includes item 25				
						HYD CONNECTOR	CONECTOR HIDRÁULIC(	CONNETTORE IDRAULIC	020R
					HYDR STECKVERBINDE	CONNECTEUR HYDRAU	HYDRAULIKSTIK	HYDRAULISCHE AANSLU	
25		218-5010		1	O-RING, 0.614" ID x 0.754" OD x 0.07"				
						O-RING	JUNTA TÓRICA	ANELLO TOROIDALE	055A
					O-RING	JOINT TORIQUE	O-RING	O-RING	
26		235417A2		1	RESPIRO	VENT	RESPIRADERO	BOCCHETTA	P079
					AUSSTRÖMER	BUSE D'AERATION	UDLUFTNINGSDYSE	LUCHTROOSTER	
27		L107328		1	MANGUEIRA, 31.75 mm ID x 229.00 mm, SAE 100R3 Type A				
						HOSE	TUBO	TUBO FLESSIBILE	030M
					SCHLAUCH	FLEXIBLE	SLANGE	SLANG	
28	2, 1	70931240	a	1	COTOVELO	ELBOW	CODO	GOMITO	085G
					KNIESTÜCK	COUDE	VINKELRØR	KNIESTUK	
29	2, 1	87699790	a	1	TUBO FLEXÍVEL, return	FLEXIBLE HOSE	TUBO FLEXIBLE	TUBO FLESSIBILE	192T
					BIEGSAMER SCHLAUCH	TUYAU FLEXIBLE	FLEKSIBEL SLANGE	FLEXIBELE SLANG	
30	2, 1	87699786	a	1	FLANGE, return	FLANGE	BRIDA	FLANGIA	070F
					FLANSCH	BRIDE	FLANGE	FLENS	
31	2, 1	353036A1	a	2	BRACADEIRA	CLAMP	COLLAR	MORSETTO	1640
					SCHELLE	COLLIER	CLAMP	CLAMP	
32	2	87462973	a	1	MANGUEIRA, drain	HOSE	TUBO	TUBO FLESSIBILE	030M
					SCHLAUCH	FLEXIBLE	SLANGE	SLANG	
33	2	700-332	a	1	COTOVELO, 90º, 13/16"-18 ORFS x M14 x 1.5 ORB				
						ELBOW	CODO	GOMITO	085G
					KNIESTÜCK	COUDE	VINKELRØR	KNIESTUK	
34	2, 1	70921116	a	2	SEMI-FLANGE	HALF-FLANGE	SEMIBRIDA	SEMIFLANGIA	417S
					FLANSCHHÄLFTE	DEMI-BRIDE	FLANGEHALVDEL	FLENSHELFT	
35	2, 1	14463780	a	1	O-RING, 32.92mm ID x 3.53" Width				
						O-RING	JUNTA TÓRICA	ANELLO TOROIDALE	055A
					O-RING	JOINT TORIQUE	O-RING	O-RING	
36	2, 1	892-11010	a	4	TRAVA DA ARRUELA, M10	LOCK WASHER	ARANDELA DE BLOQUE(	RONDELLA DI SICUREZ	132R
					SICHERUNGSSCHEIBE	RONDELLE FREIN	LÅSESKIVE	BORGRING	
37	2, 1	14420231	a	4	PARAFUSO, Hex Soc Hd, M10 x 30, 10.9				
						SCREW	TORNILLO	VITE	040V
					SCHRAUBE	VIS	SKRUE	SCHROEF	

(1) Montagem sem válvula de retenção. Para montagem do sistema com válvula de retenção ver página 08-06A.
(2) Rexroth
(a) ASN N6AE00913

08-06A	01	p1	12/09

VÁLVULA DE CONTROLE AO RESERVATÓRIO HIDRÁULICO COM VÁLVULA DE RETENÇÃO, MONTAGEM - RETORNO
CONTROL VALVE TO HYDRAULIC RESERVOIR WITH CHECK VALVE, ASSEMBLY - RETURN
VALVULA DE CONTROL A EL RESERVATORIO HIDRAULICO CON VALVULA DE RETENCIÓN, MONTAGE - RETORNO
CONTROL VALVE TO HYDRAULIC RESERVOIR WITH CHECK VALVE, ASSEMBLY - RETURN

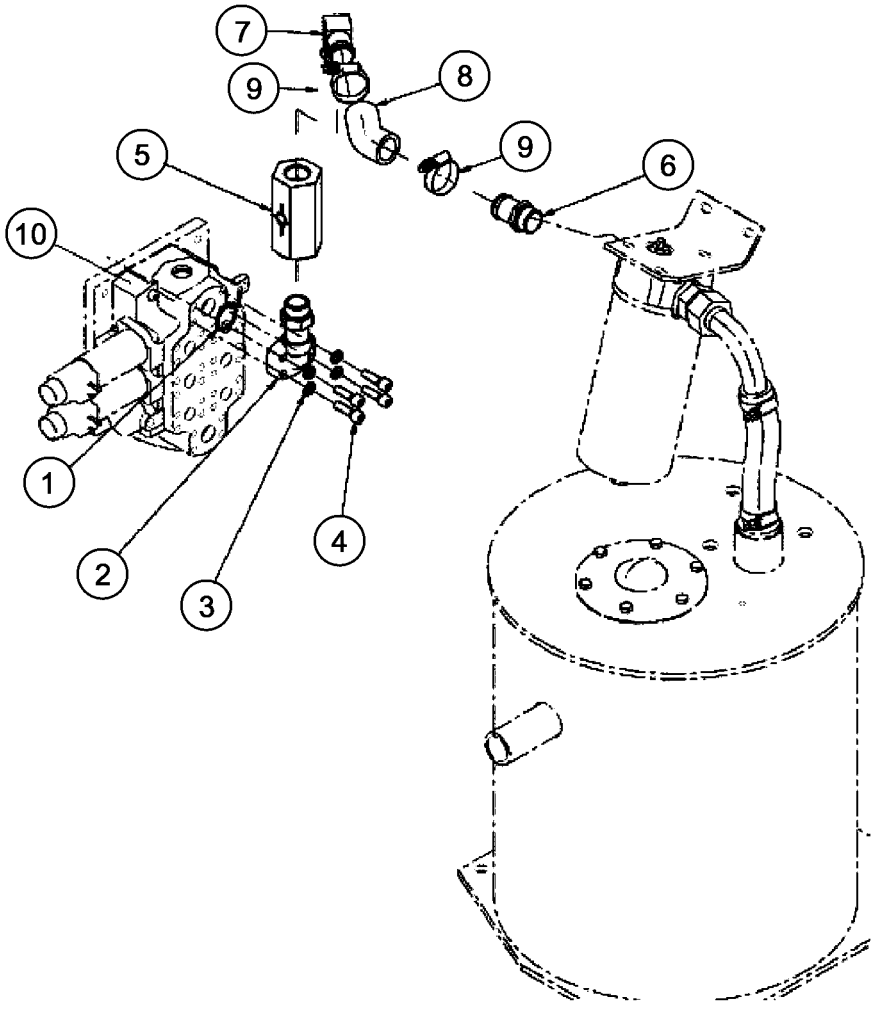

CONTROL VALVE TO HYDRAULIC RESERVOIR WITH CHECK VALVE, ASSEMBLY - RETURN
CONTROL VALVE TO HYDRAULIC RESERVOIR WITH CHECK VALVE, ASSEMBLY - RETURN
CONTROL VALVE TO HYDRAULIC RESERVOIR WITH CHECK VALVE, ASSEMBLY - RETURN
CONTROL VALVE TO HYDRAULIC RESERVOIR WITH CHECK VALVE, ASSEMBLY - RETURN

R	N	P.N.	MOD	Q	Denominação Bezeichnung	Description Description	Denominacion Beskrivelse	Descrizione Beschrijving	L.C.
1		14463780		1	O-RING, 32.92mm ID x 3.53" Width				
					O-RING	JOINT TORIQUE	O-RING	O-RING	
2		87699786		1	FLANGE	FLANGE	BRIDA	FLANGIA	070F
					FLANSCH	BRIDE	FLANGE	FLENS	
3		892-11010		4	TRAVA DA ARRUELA, M10	LOCK WASHER	ARANDELA DE BLOQUE	RONDELLA DI SICUREZ	132R
					SICHERUNGSSCHEIBE	RONDELLE FREIN	LÅSESKIVE	BORGRING	
4		14420331		4	PARAFUSO, Hex Soc Hd, M10 x 35, 10.9				
						SCREW	TORNILLO	VITE	040V
					SCHRAUBE	VIS	SKRUE	SCHROEF	
5		87699789		1	VÁLVULA DE DESCARGA	BLEEDER VALVE	VÁLVULA DE PURGA	VALVOLA DI SPURGO	9630
					ENTLÜFTUNGSVENTIL	VALVE DE PURGE	BLØDERVENTIL	ONTLUCHTINGSVENTIE	
6		217-184		1	CONEXÃO, 1 1/4" Hose X 1 5/16"-12 ORB, Beaded				
						FITTING	ACOPLAMIENTO	RACCORDO	3300
					ARMATUR	RACCORD	FITTING	AANSLUITING	
7		70931240		1	COTOVELO	ELBOW	CODO	GOMITO	085G
					KNIESTÜCK	COUDE	VINKELRØR	KNIESTUK	
8		87699790		1	TUBO FLEXÍVEL	FLEXIBLE HOSE	TUBO FLEXIBLE	TUBO FLESSIBILE	192T
					BIEGSAMER SCHLAUCH	TUYAU FLEXIBLE	FLEKSIBEL SLANGE	FLEXIBELE SLANG	
9		353036A1		2	BRACADEIRA	CLAMP	COLLAR	MORSETTO	1640
					SCHELLE	COLLIER	CLAMP	CLAMP	
10		REF		1	INSTRUÇÃO, VALVE Assy, 2 and 3 spool, See pages 08-66, 08-68				
						INSTRUCTION	INSTRUCCIÓN	ISTRUZIONI	Z571
					ANLEITUNG	INSTRUCTION	INSTRUKTION	INSTRUCTIE	

08-08	01	p1	07/10

RESERVATÓRIO HIDRÁULICO E PEÇAS COMPONENTES
HYDRAULIC RESERVOIR AND RELATED PARTS
RESERVATORIO HIDRAULICO Y PIEZAS COMPONENTES
HYDRAULIC RESERVOIR AND RELATED PARTS

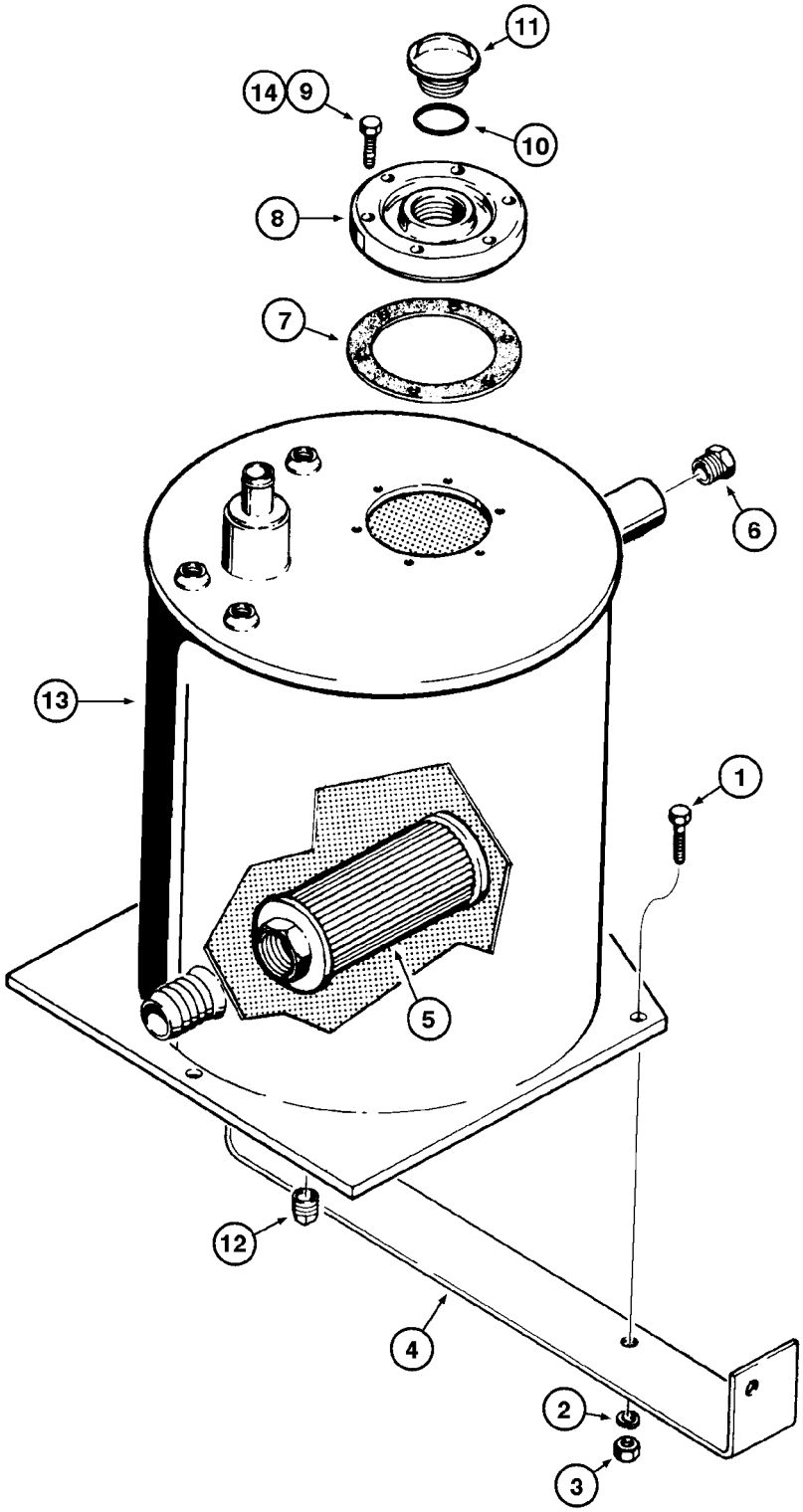

HYDRAULIC RESERVOIR AND RELATED PARTS
HYDRAULIC RESERVOIR AND RELATED PARTS
HYDRAULIC RESERVOIR AND RELATED PARTS
HYDRAULIC RESERVOIR AND RELATED PARTS

R	N	P.N.	MOD	Q	Denominação Bezeichnung	Description Description	Denominacion Beskrivelse	Descrizione Beschrijving	L.C.
1		413-1028		5	PARAFUSO, Hex, 5/8"-11 x 1 3/4", G5				
						BOLT	PERNO	BULLONE	140B
					SCHRAUBE	VIS	BOLT	BOUT	
2		492-11062		5	TRAVA DA ARRUELA, 5/8"	LOCK WASHER	ARANDELA DE BLOQUE	RONDELLA DI SICUREZ	132R
					SICHERUNGSSCHEIBE	RONDELLE FREIN	LÅSESKIVE	BORGRING	
3		425-1010		5	PORCA, 5/8"-11, G5	NUT	TUERCA	DADO	010D
					MUTTER	ECROU	MØTRIK	MOER	
4		L51640		1	SUPORTE	BRACKET	SOPORTE	STAFFA	1010
					HALTER	CONSOLE	BRACKET	BRACKET	
5		L104990		1	FILTRO TELA	FILTER SCREEN	PANTALLA DE FILTRO	FILTRO A RETE	7440
					FILTERSIEB	TAMIS-FILTRE	FILTERSI	FILTERZEEF	
6		E157313		1	INDICADOR, gauge	INDICATOR	INDICADOR	INDICATORE	087S
					ANZEIGE	INDICATEUR	INDIKATOR	INDICATOR	
	1	75263424	a	1	RESERVATÓRIO DE ÓLEO HIDR, Assy				
						HYDRAULIC OIL RESER	DEP. ACEITE HIDRÁULIC	SERBATOIO OLIO IDRAU	113S
					HYDRAULIKÖLBEHÄLTE	RESERVOIR D'HUILE HY	HYDRAULIKOLIETANK	RESERVOIR VOOR HYDI	
	2	87398516	b	1	TANQUE DE COMBUSTÍVEL, Assy, Includes items 7 - 13				
						FUEL TANK	DEPÓSITO DE COMBUS	SERBATOIO CARBURAN	P550
					KRAFTSTOFFTANK	RESERVOIR DE CARBUI	BRÆNDSTOFTANK	BRANDSTOFTANK	
7		D50547		1	JUNTA	GASKET	JUNTA	GUARNIZIONE	3720
					DICHTUNG	JOINT	GASKET	GASKET	
8	1	D34977	a	1	CAPA	CAP	TAPA	CAPPUCCIO	1380
					KAPPE	CHAPEAU	CAP	CAP	
	3	87619335			COBERTURA	COVER	CUBIERTA	COPERCHIO	265C
					ABDECKUNG	COUVERCLE	DÆKSEL	AFSCHERMING	
	2	87393927	b		COBERTURA	COVER	CUBIERTA	COPERCHIO	265C
					ABDECKUNG	COUVERCLE	DÆKSEL	AFSCHERMING	
9		413-614		6	PARAFUSO, Hex, 3/8"-16 x 7/8", G5, Full Thd				
						BOLT	PERNO	BULLONE	140B
					SCHRAUBE	VIS	BOLT	BOUT	
10		A7552		1	O-RING, 1.975" ID x 2.395" OD				
						O-RING	JUNTA TÓRICA	ANELLO TOROIDALE	055A
					O-RING	JOINT TORIQUE	O-RING	O-RING	
11		L100349		1	BUJAO	PLUG	TAPON	TAPPO	6400
					STOPFEN	BOUCHON	PLUG	PLUG	
12		221-677		1	BUJÃO DE DRENO, Sq Hd, 3/4" NPT				
						DRAIN PLUG	TAPÓN DE VACIADO	TAPPO DI SCARICO	056T
					ABLASSSCHRAUBE	BOUCHON DE VIDANGE	AFTAPNINGSPROP	AFTAPPLUG	
13		NSS		1	SEM SERVIÇO EM SEPARADO, RESERVOIR				
						NOT SERVICED SEPARA	NO SE REPARA POR SE	NON FORNITO SEPARAT	064N
					NICHT A SEP ERS-T LIEI	NON FORUNI SEPAREM	SERVICERES IKKE SEPA	NIET LOS VERKRIJGBAA	
14		345-87		AR	LOCTITE	LOCTITE	LOCTITE	LOCTITE	P712
					LOCTITE	LOCTITE	LOCTITE	LOCTITE	

(1) Parker
(2) Rexroth
(3) PARA VÁLVULA DESVIADORA
(a) BSN N6AE00912
(b) ASN N6AE00913

08-10	01	p1	02/12

PÁ CARREGADEIRA - CIRCUITO HIDRÁULICO DE LEVANTAMENTO
LOADER - LIFT HYDRAULIC CIRCUIT
CARGADORA - CIRCUITO HIDRAULICO DE ELEVACIÓN
LOADER - LIFT HYDRAULIC CIRCUIT

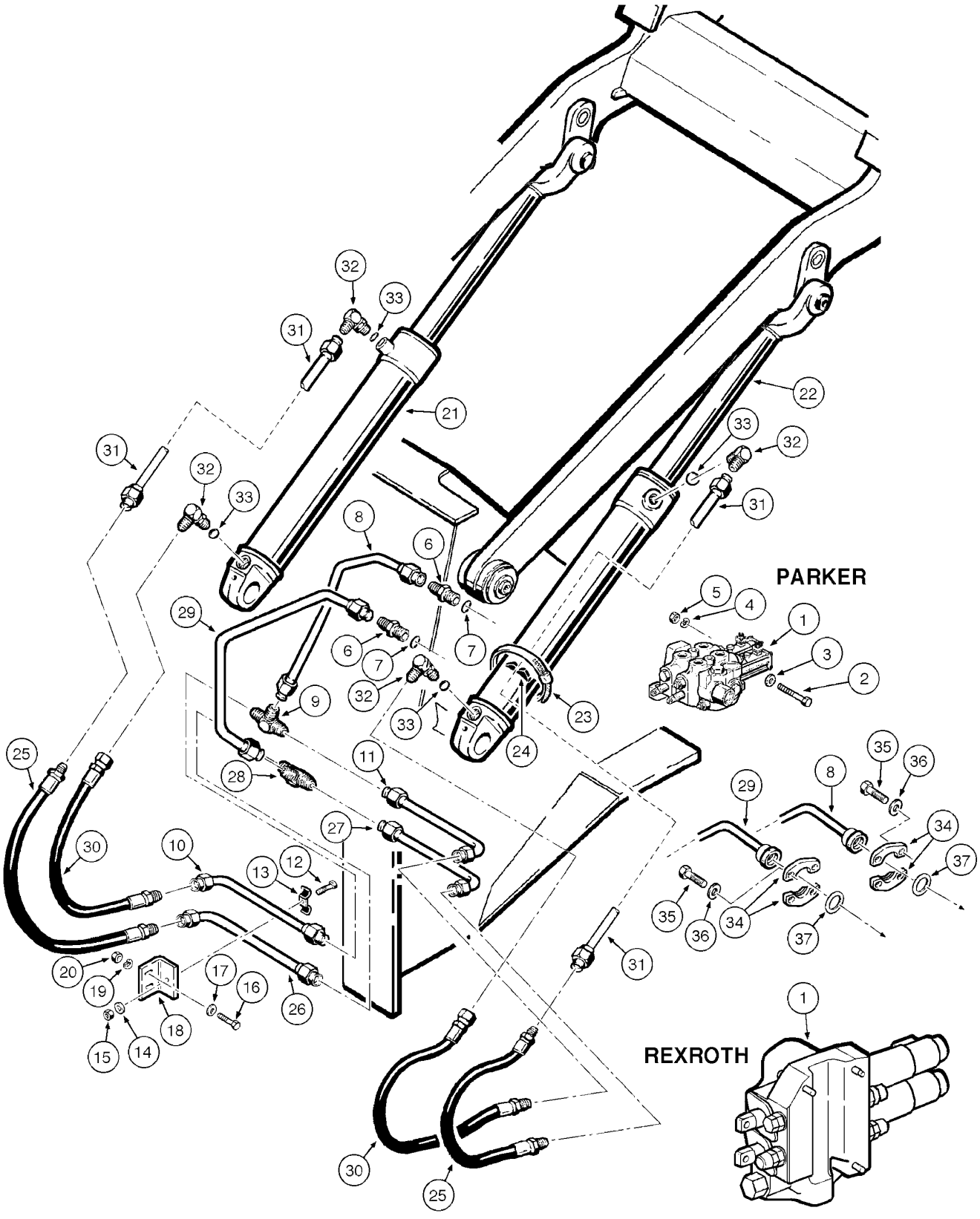

LOADER - LIFT HYDRAULIC CIRCUIT
LOADER - LIFT HYDRAULIC CIRCUIT
LOADER - LIFT HYDRAULIC CIRCUIT
LOADER - LIFT HYDRAULIC CIRCUIT

R	N	P.N.	MOD	Q	Denominação Bezeichnung	Description Description	Denominacion Beskrivelse	Descrizione Beschrijving	L.C.
1	1	REF	a	1	INSTRUÇÃO, VALVE Assy (P.8-34/60)				
						INSTRUCTION	INSTRUCCIÓN	ISTRUZIONI	Z571
					ANLEITUNG	INSTRUCTION	INSTRUKTION	INSTRUCTIE	
1	2	REF	b	1	INSTRUÇÃO, VALVE Assy (P.8-66/68)				
						INSTRUCTION	INSTRUCCIÓN	ISTRUZIONI	Z571
					ANLEITUNG	INSTRUCTION	INSTRUKTION	INSTRUCTIE	
2		413-888		3	PARAFUSO, Hex, 1/2"-13 x 5 1/2", G5				
						BOLT	PERNO	BULLONE	140B
					SCHRAUBE	VIS	BOLT	BOUT	
3		495-21056		3	ARRUELA PLANA, 1/2"	WASHER	ARANDELA	RONDELLA	131R
					UNTERLEGSCHEIBE	RONDELLE	FLADSKIVE	SLUITRING	
4		492-11010		3	TRAVA DA ARRUELA, #10	LOCK WASHER	ARANDELA DE BLOQUE	RONDELLA DI SICUREZ	132R
					SICHERUNGSSCHEIBE	RONDELLE FREIN	LÅSESKIVE	BORGRING	
5		425-108		3	PORCA DE TUBAGEM, 1/2"-13, G5				
						TUBE NUT	TUERCA DE TUBO	DADO TUBO	0030
					ROHRMUTTER	ECROU DE TUYAU	SLANGEMØTRIK	BUISMOER	
6	1	218-5110	a	2	COTOVELO, 90º, 1 5/16"-12, 37º x 1 5/16"-12, O-Ring, Incl. item 7				
						ELBOW	CODO	GOMITO	085G
					KNIESTÜCK	COUDE	VINKELRØR	KNIESTUK	
7	1	237-6016	a	1	O-RING, 0.614" ID x 0.754" OD x 0.07"				
						O-RING	JUNTA TÓRICA	ANELLO TOROIDALE	055A
					O-RING	JOINT TORIQUE	O-RING	O-RING	
8	1	149202A1	a	1	TUBO	TUBE	TUBO	TUBO	195T
					ROHR	TUBE	RØR	LEIDING	
8	2	87462903	b	1	TUBO	TUBE	TUBO	TUBO	195T
					ROHR	TUBE	RØR	LEIDING	
9		218-598		1	T, 1 5/16"-12 37º	TEE	RACOR EN T	PEZZO A T	9020
					T-STÜCK	RACCORD EN T	T-STYKKE	T-STUK	
10		L47431		1	TUBO, 1" OD x 18.2, 4.2" L	TUBE	TUBO	TUBO	9400
					ROHR	TUBE	TUBE	TUBE	
11		L47426		1	TUBO, 1" OD x 16.7, 4.2" L	TUBE	TUBO	TUBO	195T
					ROHR	TUBE	RØR	LEIDING	
12		413-628		2	PARAFUSO, Hex, 3/8"-16 x 1 3/4", G5				
						BOLT	PERNO	BULLONE	140B
					SCHRAUBE	VIS	BOLT	BOUT	
13		R15257		2	BRACADEIRA	CLAMP	COLLAR	MORSETTO	1640
					SCHELLE	COLLIER	CLAMP	CLAMP	
14		492-11038		2	TRAVA DA ARRUELA, 3/8"	LOCK WASHER	ARANDELA DE BLOQUE	RONDELLA DI SICUREZ	132R
					SICHERUNGSSCHEIBE	RONDELLE FREIN	LÅSESKIVE	BORGRING	
15		425-106		2	PORCA, 3/8"-16, G5	NUT	TUERCA	DADO	010D
					MUTTER	ECROU	MØTRIK	MOER	
16		413-624		4	PARAFUSO, Hex, 3/8"-16 x 1 1/2", G5				
						BOLT	PERNO	BULLONE	140B
					SCHRAUBE	VIS	BOLT	BOUT	

(1) Parker
(2) Rexroth
(a) BSN N6AE00912
(b) ASN N6AE00913

08-10	01	p2	02/12

PÁ CARREGADEIRA - CIRCUITO HIDRÁULICO DE LEVANTAMENTO
LOADER - LIFT HYDRAULIC CIRCUIT
CARGADORA - CIRCUITO HIDRAULICO DE ELEVACIÓN
LOADER - LIFT HYDRAULIC CIRCUIT

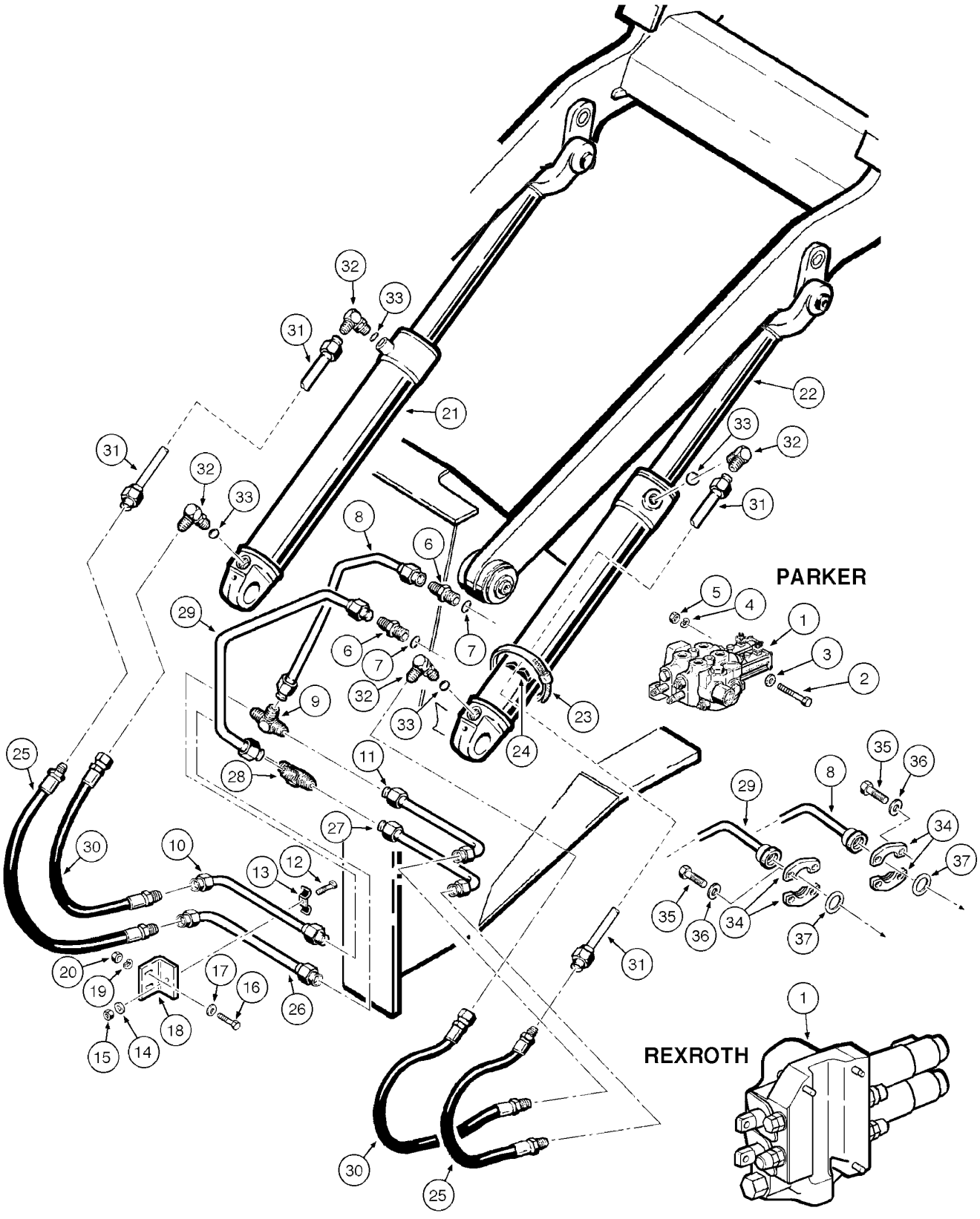

LOADER - LIFT HYDRAULIC CIRCUIT
LOADER - LIFT HYDRAULIC CIRCUIT
LOADER - LIFT HYDRAULIC CIRCUIT
LOADER - LIFT HYDRAULIC CIRCUIT

R	N	P.N.	MOD	Q	Denominação Bezeichnung	Description Description	Denominacion Beskrivelse	Descrizione Beschrijving	L.C.
17		**495-21044**		4	ARRUELA PLANA, 3/8"	WASHER	ARANDELA	RONDELLA	131R
					UNTERLEGSCHEIBE	RONDELLE	FLADSKIVE	SLUITRING	
18		**L47468**		2	SUPORTE	BRACKET	SOPORTE	STAFFA	1010
					HALTER	CONSOLE	BRACKET	BRACKET	
19		**492-11038**		4	TRAVA DA ARRUELA, 3/8"	LOCK WASHER	ARANDELA DE BLOQUE	RONDELLA DI SICUREZ	132R
					SICHERUNGSSCHEIBE	RONDELLE FREIN	LÅSESKIVE	BORGRING	
20		**425-106**		4	PORCA, 3/8"-16, G5	NUT	TUERCA	DADO	010D
					MUTTER	ECROU	MØTRIK	MOER	
21		**REF**		1	INSTRUÇÃO, CYLINDER Assy LH (P.8-16)				
						INSTRUCTION	INSTRUCCIÓN	ISTRUZIONI	Z571
					ANLEITUNG	INSTRUCTION	INSTRUKTION	INSTRUCTIE	
22		**REF**		1	INSTRUÇÃO, CYLINDER Assy RH (P.8-16)				
						INSTRUCTION	INSTRUCCIÓN	ISTRUZIONI	Z571
					ANLEITUNG	INSTRUCTION	INSTRUKTION	INSTRUCTIE	
23		**214-14100**		2	BRAÇADEIRA MANGUEIRA, #100, 5.88/6.75 Type F Worm				
						HOSE CLAMP	ABRAZADERA DE MANG	FASCETTA STRINGITUB	P729
					SCHLAUCHSCHELLE	COLLIER POUR FLEXIBL	SLANGEKLEMME	SLANGKLEM	
24		**L79937**		2	SELA	SADDLE	SILLA	SLITTA; SELLA	7420
					SATTEL	SELLE	SADDEL	ZADEL	
25		**L111301**		2	MANGUEIRA, 0.75" ID x 36.00", SAE 100R1				
						HOSE	TUBO	TUBO FLESSIBILE	030M
					SCHLAUCH	FLEXIBLE	SLANGE	SLANG	
26		**L47453**		1	TUBO, 1" OD x 22.2, 4.2" L	TUBE	TUBO	TUBO	9400
					ROHR	TUBE	TUBE	TUBE	
27		**L47426**		1	TUBO, 1" OD x 16.7, 4.2" L	TUBE	TUBO	TUBO	195T
					ROHR	TUBE	RØR	LEIDING	
28		**218-598**		1	T, 1 5/16"-12 37°	TEE	RACOR EN T	PEZZO A T	9020
					T-STÜCK	RACCORD EN T	T-STYKKE	T-STUK	
29	1	**149204A1**	a	1	TUBO	TUBE	TUBO	TUBO	195T
					ROHR	TUBE	RØR	LEIDING	
29	2	**87462905**	b	1	TUBO	TUBE	TUBO	TUBO	195T
					ROHR	TUBE	RØR	LEIDING	
30		**L111302**		2	MANGUEIRA	HOSE	MANGUERA	TUBO FLESSIBILE	4480
					SCHLAUCH	FLEXIBLE	HOSE	HOSE	
31		**L78024**		2	TUBO, 0.75" OD x 33.5, 1.2" L				
						PIPE	TUBO	TUBAZIONE	6240
					ROHR	TUYAU	PIPE	PIPE	
32		**218-5108**		4	COTOVELO, 90º, 1 1/16"-12, 37º x 1 1/16"-12, O-Ring, Incl. item 33				
						ELBOW	CODO	GOMITO	085G
					KNIESTÜCK	COUDE	VINKELRØR	KNIESTUK	
33		**218-5008**		1	O-RING, 0.364" ID x 0.504" OD x 0.07"				
						O-RING	JUNTA TÓRICA	ANELLO TOROIDALE	055A
					O-RING	JOINT TORIQUE	O-RING	O-RING	
34	2	**70921115**	b	4	SEMI-FLANGE	HALF-FLANGE	SEMIBRIDA	SEMIFLANGIA	417S
					FLANSCHHÄLFTE	DEMI-BRIDE	FLANGEHALVDEL	FLENSHELFT	

(1) Parker
(2) Rexroth
(a) BSN N6AE00912
(b) ASN N6AE00913

08-10	01	p3	02/12

PÁ CARREGADEIRA - CIRCUITO HIDRÁULICO DE LEVANTAMENTO
LOADER - LIFT HYDRAULIC CIRCUIT
CARGADORA - CIRCUITO HIDRAULICO DE ELEVACIÓN
LOADER - LIFT HYDRAULIC CIRCUIT

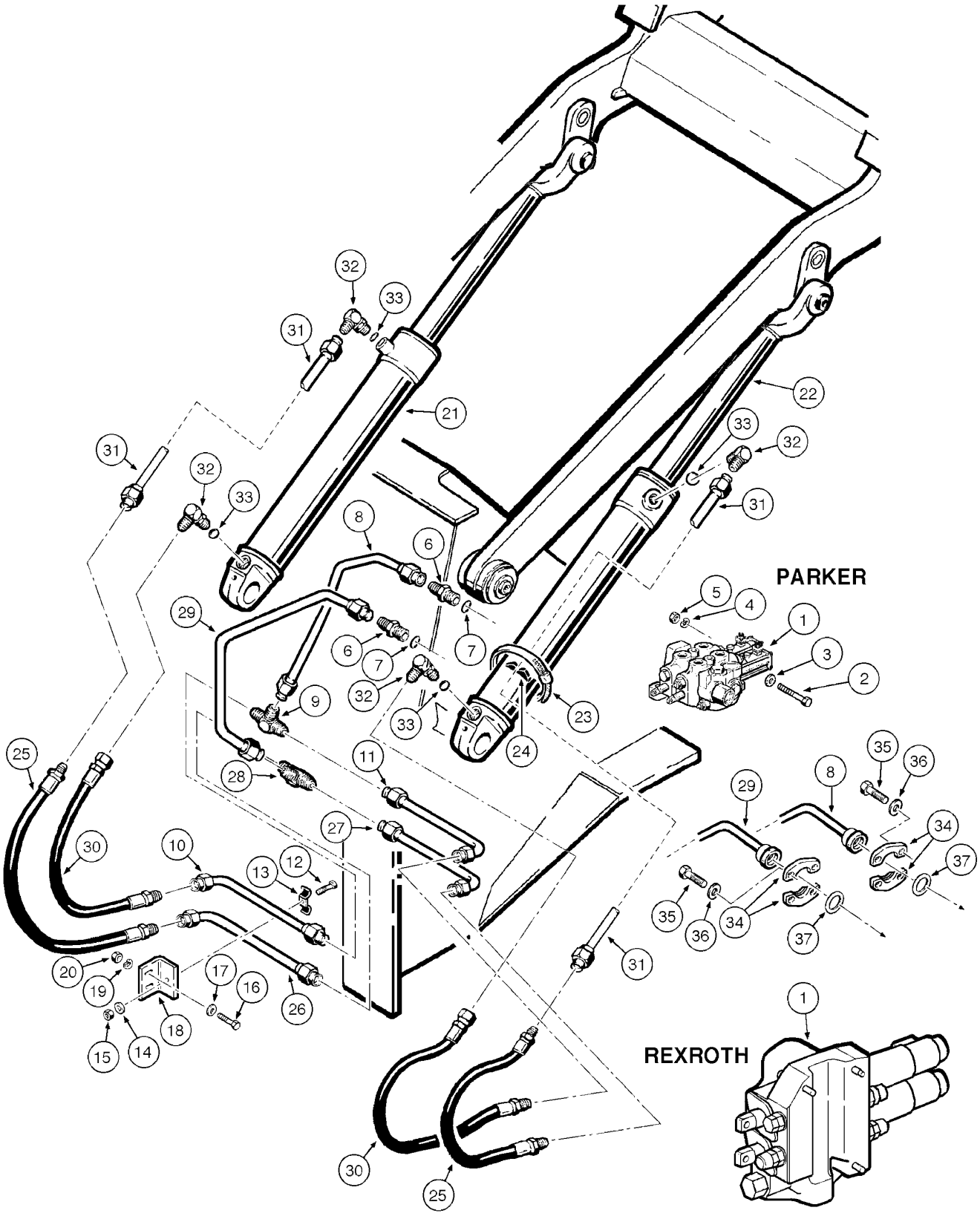

LOADER - LIFT HYDRAULIC CIRCUIT
LOADER - LIFT HYDRAULIC CIRCUIT
LOADER - LIFT HYDRAULIC CIRCUIT
LOADER - LIFT HYDRAULIC CIRCUIT

R	N	P.N.	MOD	Q	Denominação Bezeichnung	Description Description	Denominacion Beskrivelse	Descrizione Beschrijving	L.C.
35	1	**14420231**	a	8	PARAFUSO, Hex Soc Hd, M10 x 30, 10.9				
						SCREW	TORNILLO	VITE	040V
					SCHRAUBE	VIS	SKRUE	SCHROEF	
36	1	**892-11010**	a	8	TRAVA DA ARRUELA, M10	LOCK WASHER	ARANDELA DE BLOQUE	RONDELLA DI SICUREZ	132R
					SICHERUNGSSCHEIBE	RONDELLE FREIN	LÅSESKIVE	BORGRING	
37	1	**14463280**	a	2	O-RING, 24.99mm ID x 3.53" Width				
						O-RING	JUNTA TÓRICA	ANELLO TOROIDALE	055A
					O-RING	JOINT TORIQUE	O-RING	O-RING	

(1) Rexroth
(a) ASN N6AE00913

08-12	01	p1	12/09

PÁ CARREGADEIRA - CIRCUITO HIDRÁULICO DE BASCULAMENTO
LOADER - TILT HYDRAULIC CIRCUIT
CARGADORA - CIRCUITO HIDRAULICO DE VACIADO
LOADER - TILT HYDRAULIC CIRCUIT

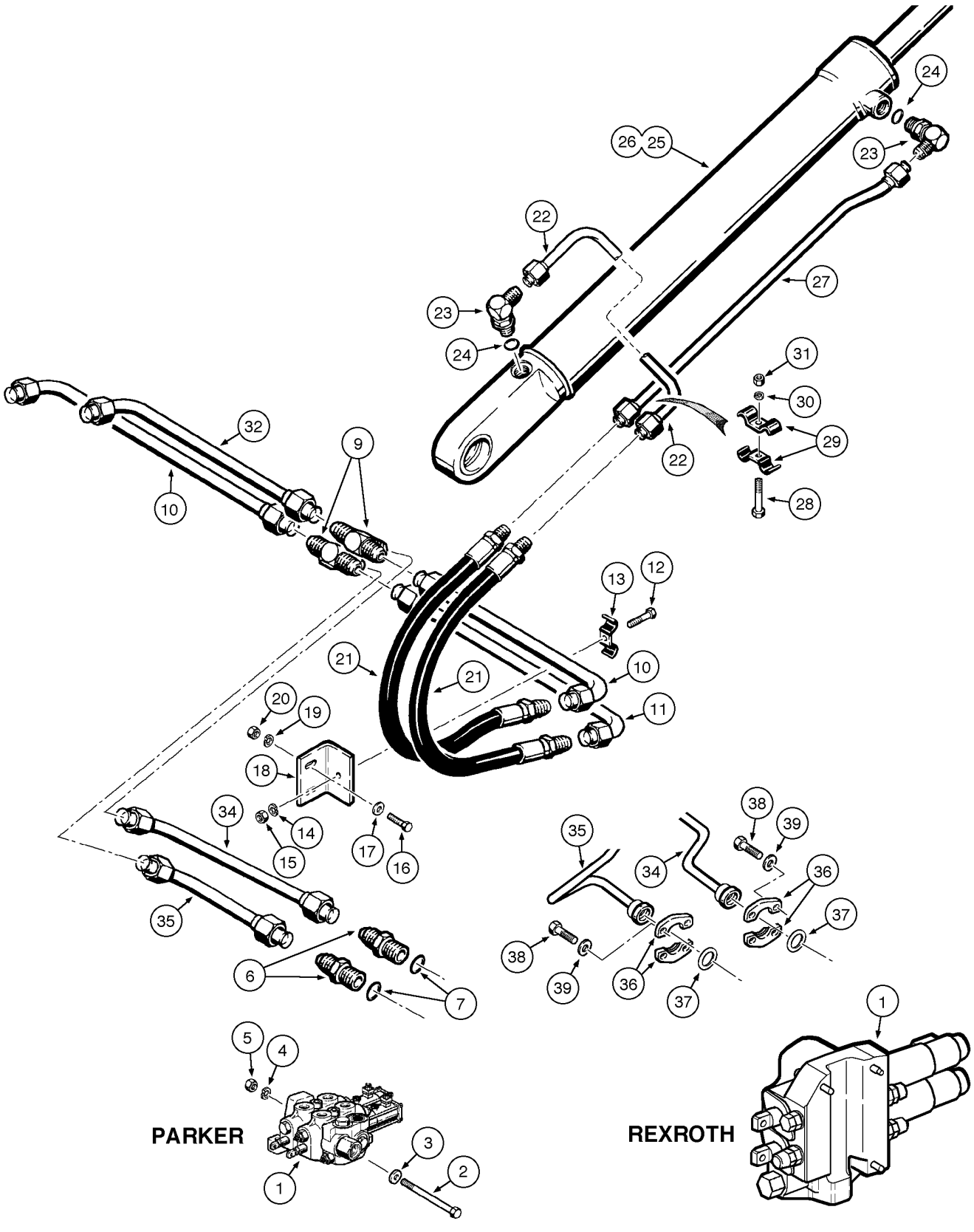

LOADER - TILT HYDRAULIC CIRCUIT
LOADER - TILT HYDRAULIC CIRCUIT
LOADER - TILT HYDRAULIC CIRCUIT
LOADER - TILT HYDRAULIC CIRCUIT

R	N	P.N.	MOD	Q	Denominação Bezeichnung	Description Description	Denominacion Beskrivelse	Descrizione Beschrijving	L.C.
1	1	REF	a	1	INSTRUÇÃO, VALVE Assy (P.8-34/60)				
						INSTRUCTION	INSTRUCCIÓN	ISTRUZIONI	Z571
					ANLEITUNG	INSTRUCTION	INSTRUKTION	INSTRUCTIE	
1	2	REF	b	1	INSTRUÇÃO, VALVE Assy (P.8-66/68)				
						INSTRUCTION	INSTRUCCIÓN	ISTRUZIONI	Z571
					ANLEITUNG	INSTRUCTION	INSTRUKTION	INSTRUCTIE	
2		413-888		3	PARAFUSO, Hex, 1/2"-13 x 5 1/2", G5				
						BOLT	PERNO	BULLONE	140B
					SCHRAUBE	VIS	BOLT	BOUT	
3		495-21056		3	ARRUELA PLANA, 1/2"	WASHER	ARANDELA	RONDELLA	131R
					UNTERLEGSCHEIBE	RONDELLE	FLADSKIVE	SLUITRING	
4		492-11010		3	TRAVA DA ARRUELA, #10	LOCK WASHER	ARANDELA DE BLOQUE(	RONDELLA DI SICUREZ	132R
					SICHERUNGSSCHEIBE	RONDELLE FREIN	LÅSESKIVE	BORGRING	
5		425-108		3	PORCA DE TUBAGEM, 1/2"-13, G5				
						TUBE NUT	TUERCA DE TUBO	DADO TUBO	0030
					ROHRMUTTER	ECROU DE TUYAU	SLANGEMØTRIK	BUISMOER	
6	1	218-5069	a	2	CONECTOR HIDRÁUL, 1 5/16"-12, 37º x 1 5/16"-12, O-Ring, Incl. item 7				
						HYD CONNECTOR	CONECTOR HIDRÁULIC(	CONNETTORE IDRAULIC	020R
					HYDR STECKVERBINDE	CONNECTEUR HYDRAU	HYDRAULIKSTIK	HYDRAULISCHE AANSLI	
7	1	218-5010	a	1	O-RING, 0.614" ID x 0.754" OD x 0.07"				
						O-RING	JUNTA TÓRICA	ANELLO TOROIDALE	055A
					O-RING	JOINT TORIQUE	O-RING	O-RING	
9		218-598		2	T, 1 5/16"-12 37º	TEE	RACOR EN T	PEZZO A T	9020
					T-STÜCK	RACCORD EN T	T-STYKKE	T-STUK	
10		L47419		2	TUBO, 1" OD x 23.5, 4.2" L	TUBE	TUBO	TUBO	9400
					ROHR	TUBE	TUBE	TUBE	
11		L47453		1	TUBO, 1" OD x 22.2, 4.2" L	TUBE	TUBO	TUBO	9400
					ROHR	TUBE	TUBE	TUBE	
12		413-624		2	PARAFUSO, Hex, 3/8"-16 x 1 1/2", G5				
						BOLT	PERNO	BULLONE	140B
					SCHRAUBE	VIS	BOLT	BOUT	
13		R15257		2	BRACADEIRA	CLAMP	COLLAR	MORSETTO	1640
					SCHELLE	COLLIER	CLAMP	CLAMP	
14		492-11038		2	TRAVA DA ARRUELA, 3/8"	LOCK WASHER	ARANDELA DE BLOQUE(	RONDELLA DI SICUREZ	132R
					SICHERUNGSSCHEIBE	RONDELLE FREIN	LÅSESKIVE	BORGRING	
15		425-106		2	PORCA, 3/8"-16, G5	NUT	TUERCA	DADO	010D
					MUTTER	ECROU	MØTRIK	MOER	
16		413-624		4	PARAFUSO, Hex, 3/8"-16 x 1 1/2", G5				
						BOLT	PERNO	BULLONE	140B
					SCHRAUBE	VIS	BOLT	BOUT	
17		495-21044		4	ARRUELA PLANA, 3/8"	WASHER	ARANDELA	RONDELLA	131R
					UNTERLEGSCHEIBE	RONDELLE	FLADSKIVE	SLUITRING	
18		L47468		2	SUPORTE	BRACKET	SOPORTE	STAFFA	1010
					HALTER	CONSOLE	BRACKET	BRACKET	

(1) Parker
(2) Rexroth
(a) BSN N6AE00912
(b) ASN N6AE00913

08-12	01	p2	12/09

PÁ CARREGADEIRA - CIRCUITO HIDRÁULICO DE BASCULAMENTO
LOADER - TILT HYDRAULIC CIRCUIT
CARGADORA - CIRCUITO HIDRAULICO DE VACIADO
LOADER - TILT HYDRAULIC CIRCUIT

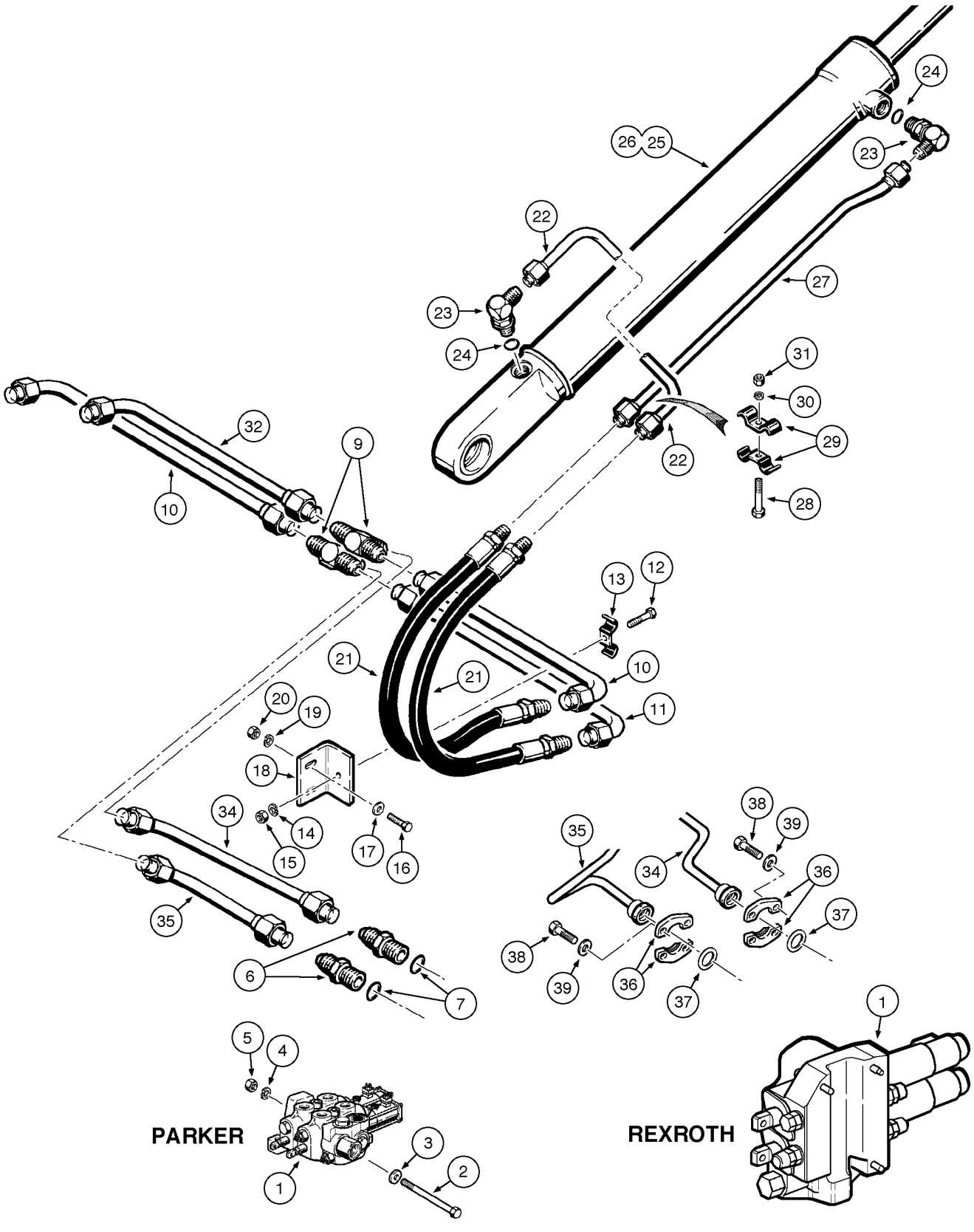

LOADER - TILT HYDRAULIC CIRCUIT
LOADER - TILT HYDRAULIC CIRCUIT
LOADER - TILT HYDRAULIC CIRCUIT
LOADER - TILT HYDRAULIC CIRCUIT

R	N	P.N.	MOD	Q	Denominação Bezeichnung	Description Description	Denominacion Beskrivelse	Descrizione Beschrijving	L.C.
19		**492-11038**		4	TRAVA DA ARRUELA, 3/8"	LOCK WASHER	ARANDELA DE BLOQUE	RONDELLA DI SICUREZ	132R
					SICHERUNGSSCHEIBE	RONDELLE FREIN	LÅSESKIVE	BORGRING	
20		**425-106**		4	PORCA, 3/8"-16, G5	NUT	TUERCA	DADO	010D
					MUTTER	ECROU	MØTRIK	MOER	
21		**L111301**		4	MANGUEIRA, 0.75" ID x 36.00", SAE 100R1				
						HOSE	TUBO	TUBO FLESSIBILE	030M
					SCHLAUCH	FLEXIBLE	SLANGE	SLANG	
22		**L47633**		2	TUBO, 0.75" OD	TUBE	TUBO	TUBO	9400
					ROHR	TUBE	TUBE	TUBE	
23		**218-5108**		4	COTOVELO, 90º, 1 1/16"-12, 37º x 1 1/16"-12, O-Ring, Incl. item 24				
						ELBOW	CODO	GOMITO	085G
					KNIESTÜCK	COUDE	VINKELRØR	KNIESTUK	
24		**218-5008**		1	O-RING, 0.364" ID x 0.504" OD x 0.07"				
						O-RING	JUNTA TÓRICA	ANELLO TOROIDALE	055A
					O-RING	JOINT TORIQUE	O-RING	O-RING	
25		**REF**		1	INSTRUÇÃO, CYLINDER Assy RH (P.8-18)				
						INSTRUCTION	INSTRUCCIÓN	ISTRUZIONI	Z571
					ANLEITUNG	INSTRUCTION	INSTRUKTION	INSTRUCTIE	
26		**REF**		1	INSTRUÇÃO, CYLINDER Assy LH (P.8-18)				
						INSTRUCTION	INSTRUCCIÓN	ISTRUZIONI	Z571
					ANLEITUNG	INSTRUCTION	INSTRUKTION	INSTRUCTIE	
27		**L77794**		2	TUBO, 0.75" OD x 27.6, 0.9" L				
						PIPE	TUBO	TUBAZIONE	6240
					ROHR	TUYAU	PIPE	PIPE	
28		**413-620**		2	PARAFUSO, Hex, 3/8"-16 x 1 1/4", G5, Full Thd				
						BOLT	PERNO	BULLONE	140B
					SCHRAUBE	VIS	BOLT	BOUT	
29		**R15257**		4	BRACADEIRA	CLAMP	COLLAR	MORSETTO	1640
					SCHELLE	COLLIER	CLAMP	CLAMP	
30		**492-11038**		2	TRAVA DA ARRUELA, 3/8"	LOCK WASHER	ARANDELA DE BLOQUE	RONDELLA DI SICUREZ	132R
					SICHERUNGSSCHEIBE	RONDELLE FREIN	LÅSESKIVE	BORGRING	
31		**425-106**		2	PORCA, 3/8"-16, G5	NUT	TUERCA	DADO	010D
					MUTTER	ECROU	MØTRIK	MOER	
32		**L47431**		1	TUBO, 1" OD x 18.2, 4.2" L	TUBE	TUBO	TUBO	9400
					ROHR	TUBE	TUBE	TUBE	
34	1	**149198A1**	a	1	TUBO	TUBE	TUBO	TUBO	195T
					ROHR	TUBE	RØR	LEIDING	
34	2	**87462909**	b		TUBO	TUBE	TUBO	TUBO	195T
					ROHR	TUBE	RØR	LEIDING	
35	1	**149200A1**	a	1	TUBO	TUBE	TUBO	TUBO	195T
					ROHR	TUBE	RØR	LEIDING	
35	2	**87462907**	b		TUBO	TUBE	TUBO	TUBO	195T
					ROHR	TUBE	RØR	LEIDING	
36	2	**70921115**	b	4	SEMI-FLANGE	HALF-FLANGE	SEMIBRIDA	SEMIFLANGIA	417S
					FLANSCHHÄLFTE	DEMI-BRIDE	FLANGEHALVDEL	FLENSHELFT	

(1) Parker
(2) Rexroth
(a) BSN N6AE00912
(b) ASN N6AE00913

08-12	01	p3	12/09

PÁ CARREGADEIRA - CIRCUITO HIDRÁULICO DE BASCULAMENTO
LOADER - TILT HYDRAULIC CIRCUIT
CARGADORA - CIRCUITO HIDRAULICO DE VACIADO
LOADER - TILT HYDRAULIC CIRCUIT

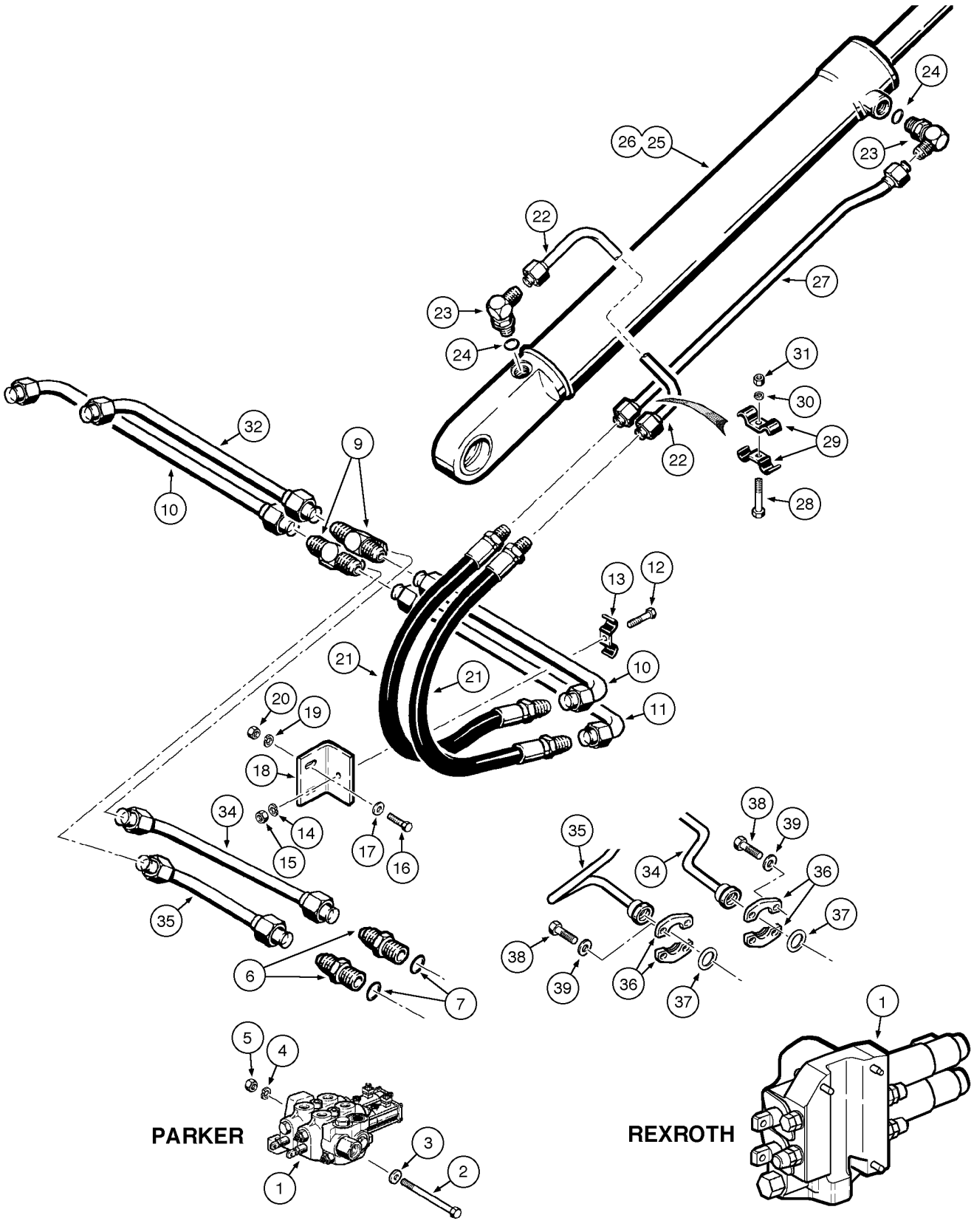

LOADER - TILT HYDRAULIC CIRCUIT
LOADER - TILT HYDRAULIC CIRCUIT
LOADER - TILT HYDRAULIC CIRCUIT
LOADER - TILT HYDRAULIC CIRCUIT

R	N	P.N.	MOD	Q	Denominação Bezeichnung	Description Description	Denominacion Beskrivelse	Descrizione Beschrijving	L.C.
37	1	**14463280**	a	2	O-RING, 24.99mm ID x 3.53" Width				
						O-RING	JUNTA TÓRICA	ANELLO TOROIDALE	055A
					O-RING	JOINT TORIQUE	O-RING	O-RING	
38	1	**14420231**	a	8	PARAFUSO, Hex Soc Hd, M10 x 30, 10.9				
						SCREW	TORNILLO	VITE	040V
					SCHRAUBE	VIS	SKRUE	SCHROEF	
39	1	**892-11010**	a	8	TRAVA DA ARRUELA, M10	LOCK WASHER	ARANDELA DE BLOQUE	RONDELLA DI SICUREZ	132R
					SICHERUNGSSCHEIBE	RONDELLE FREIN	LÅSESKIVE	BORGRING	

(1) Rexroth
(a) ASN N6AE00913

08-14	01	p1	12/09

PÁ CARREGADEIRA - CIRCUITO HIDRÁULICO SEÇÃO OPCIONAL (PARKER)
LOADER - HYDRAULIC CIRCUIT OPTIONAL SECTION (PARKER)
CARGADORA - CIRCUITO HIDRAULICO DE LA SECIÓN FACULTATIVA (PARKER)
LOADER - HYDRAULIC CIRCUIT OPTIONAL SECTION (PARKER)

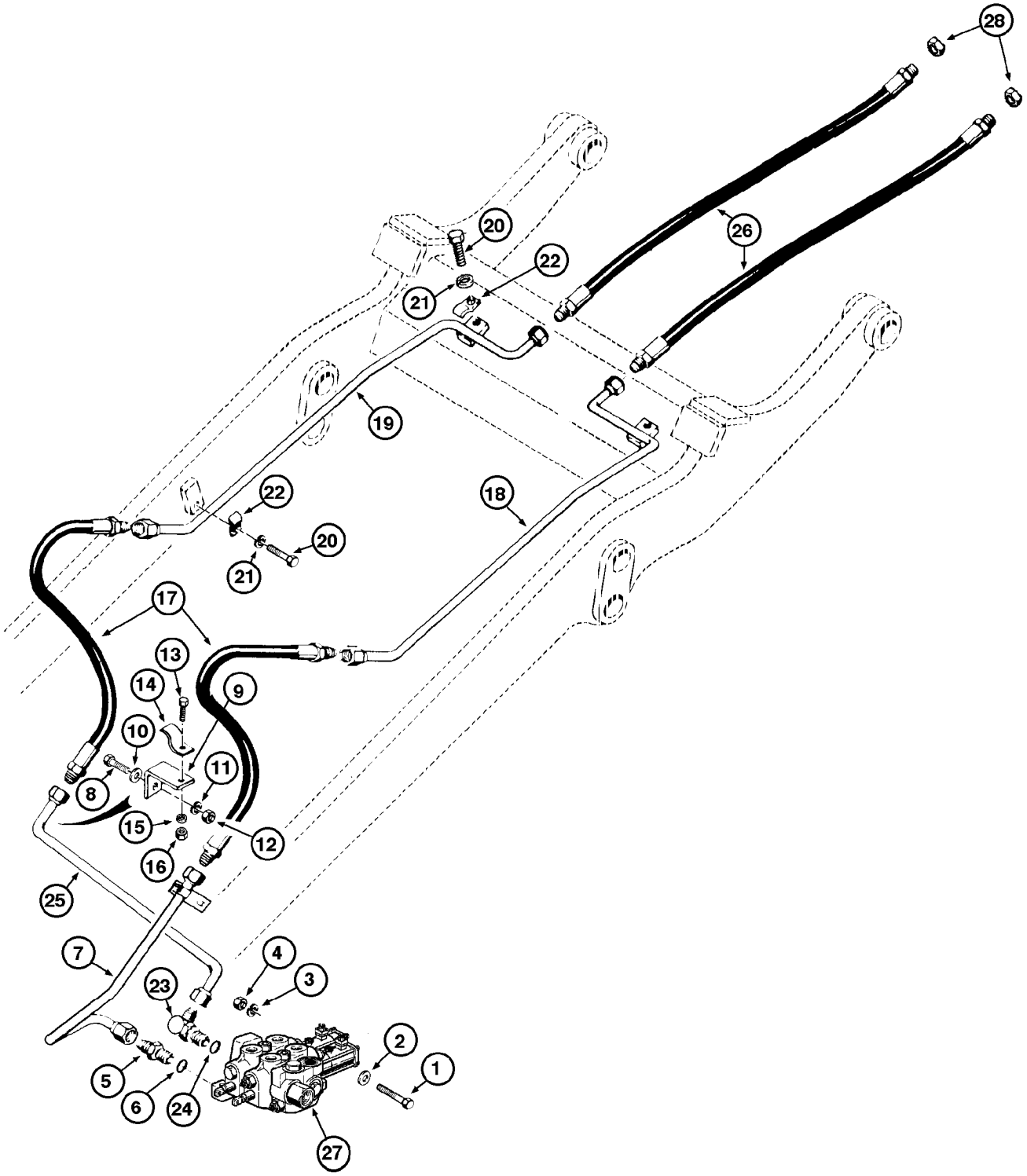

LOADER - HYDRAULIC CIRCUIT OPTIONAL SECTION (PARKER)
LOADER - HYDRAULIC CIRCUIT OPTIONAL SECTION (PARKER)
LOADER - HYDRAULIC CIRCUIT OPTIONAL SECTION (PARKER)
LOADER - HYDRAULIC CIRCUIT OPTIONAL SECTION (PARKER)

R	N	P.N.	MOD	Q	Denominação Bezeichnung	Description Description	Denominacion Beskrivelse	Descrizione Beschrijving	L.C.
1		413-888		3	PARAFUSO, Hex, 1/2"-13 x 5 1/2", G5				
						BOLT	PERNO	BULLONE	140B
					SCHRAUBE	VIS	BOLT	BOUT	
2		495-21056		3	ARRUELA PLANA, 1/2"	WASHER	ARANDELA	RONDELLA	131R
					UNTERLEGSCHEIBE	RONDELLE	FLADSKIVE	SLUITRING	
3		492-11010		3	TRAVA DA ARRUELA, #10	LOCK WASHER	ARANDELA DE BLOQUE	RONDELLA DI SICUREZ	132R
					SICHERUNGSSCHEIBE	RONDELLE FREIN	LÅSESKIVE	BORGRING	
4		425-108		3	PORCA DE TUBAGEM, 1/2"-13, G5				
						TUBE NUT	TUERCA DE TUBO	DADO TUBO	0030
					ROHRMUTTER	ECROU DE TUYAU	SLANGEMØTRIK	BUISMOER	
5		218-5069		1	CONECTOR HIDRÁUL, 1 5/16"-12, 37º x 1 5/16"-12, O-Ring, Incl. item 6				
						HYD CONNECTOR	CONECTOR HIDRÁULIC	CONNETTORE IDRAULIC	020R
					HYDR STECKVERBINDE	CONNECTEUR HYDRAU	HYDRAULIKSTIK	HYDRAULISCHE AANSLI	
6		218-5010		1	O-RING, 0.614" ID x 0.754" OD x 0.07"				
						O-RING	JUNTA TÓRICA	ANELLO TOROIDALE	055A
					O-RING	JOINT TORIQUE	O-RING	O-RING	
7		L48796		1	TUBO, 1" OD	PIPE	TUBO	TUBAZIONE	6240
					ROHR	TUYAU	PIPE	PIPE	
8		413-624		2	PARAFUSO, Hex, 3/8"-16 x 1 1/2", G5				
						BOLT	PERNO	BULLONE	140B
					SCHRAUBE	VIS	BOLT	BOUT	
9		L106929		2	SUPORTE	BRACKET	SOPORTE	STAFFA	1010
					HALTER	CONSOLE	BRACKET	BRACKET	
10		495-21044		2	ARRUELA PLANA, 3/8"	WASHER	ARANDELA	RONDELLA	131R
					UNTERLEGSCHEIBE	RONDELLE	FLADSKIVE	SLUITRING	
11		492-11038		2	TRAVA DA ARRUELA, 3/8"	LOCK WASHER	ARANDELA DE BLOQUE	RONDELLA DI SICUREZ	132R
					SICHERUNGSSCHEIBE	RONDELLE FREIN	LÅSESKIVE	BORGRING	
12		425-106		2	PORCA, 3/8"-16, G5	NUT	TUERCA	DADO	010D
					MUTTER	ECROU	MØTRIK	MOER	
13		413-616		2	PARAFUSO, Hex, 3/8"-16 x 1", G5, Full Thd				
						BOLT	PERNO	BULLONE	140B
					SCHRAUBE	VIS	BOLT	BOUT	
14		A12308		2	BRACADEIRA	CLAMP	COLLAR	MORSETTO	1640
					SCHELLE	COLLIER	CLAMP	CLAMP	
15		492-11038		2	TRAVA DA ARRUELA, 3/8"	LOCK WASHER	ARANDELA DE BLOQUE	RONDELLA DI SICUREZ	132R
					SICHERUNGSSCHEIBE	RONDELLE FREIN	LÅSESKIVE	BORGRING	
16		425-106		2	PORCA, 3/8"-16, G5	NUT	TUERCA	DADO	010D
					MUTTER	ECROU	MØTRIK	MOER	
17		L111301		2	MANGUEIRA, 0.75" ID x 36.00", SAE 100R1				
						HOSE	TUBO	TUBO FLESSIBILE	030M
					SCHLAUCH	FLEXIBLE	SLANGE	SLANG	
18		L107316		1	TUBO, 0.75" OD	PIPE	TUBO	TUBAZIONE	6240
					ROHR	TUYAU	PIPE	PIPE	
19		L107314		1	TUBO	PIPE	TUBO	TUBAZIONE	6240
					ROHR	TUYAU	PIPE	PIPE	
20		413-612		4	PARAFUSO, Hex, 3/8"-16 x 3/4", G5, Full Thd				
						BOLT	PERNO	BULLONE	140B
					SCHRAUBE	VIS	BOLT	BOUT	

Parker - Montada até o nº de série N6AE00912

W20E

08-14	01	p2	12/09

PÁ CARREGADEIRA - CIRCUITO HIDRÁULICO SEÇÃO OPCIONAL (PARKER)
LOADER - HYDRAULIC CIRCUIT OPTIONAL SECTION (PARKER)
CARGADORA - CIRCUITO HIDRAULICO DE LA SECIÓN FACULTATIVA (PARKER)
LOADER - HYDRAULIC CIRCUIT OPTIONAL SECTION (PARKER)

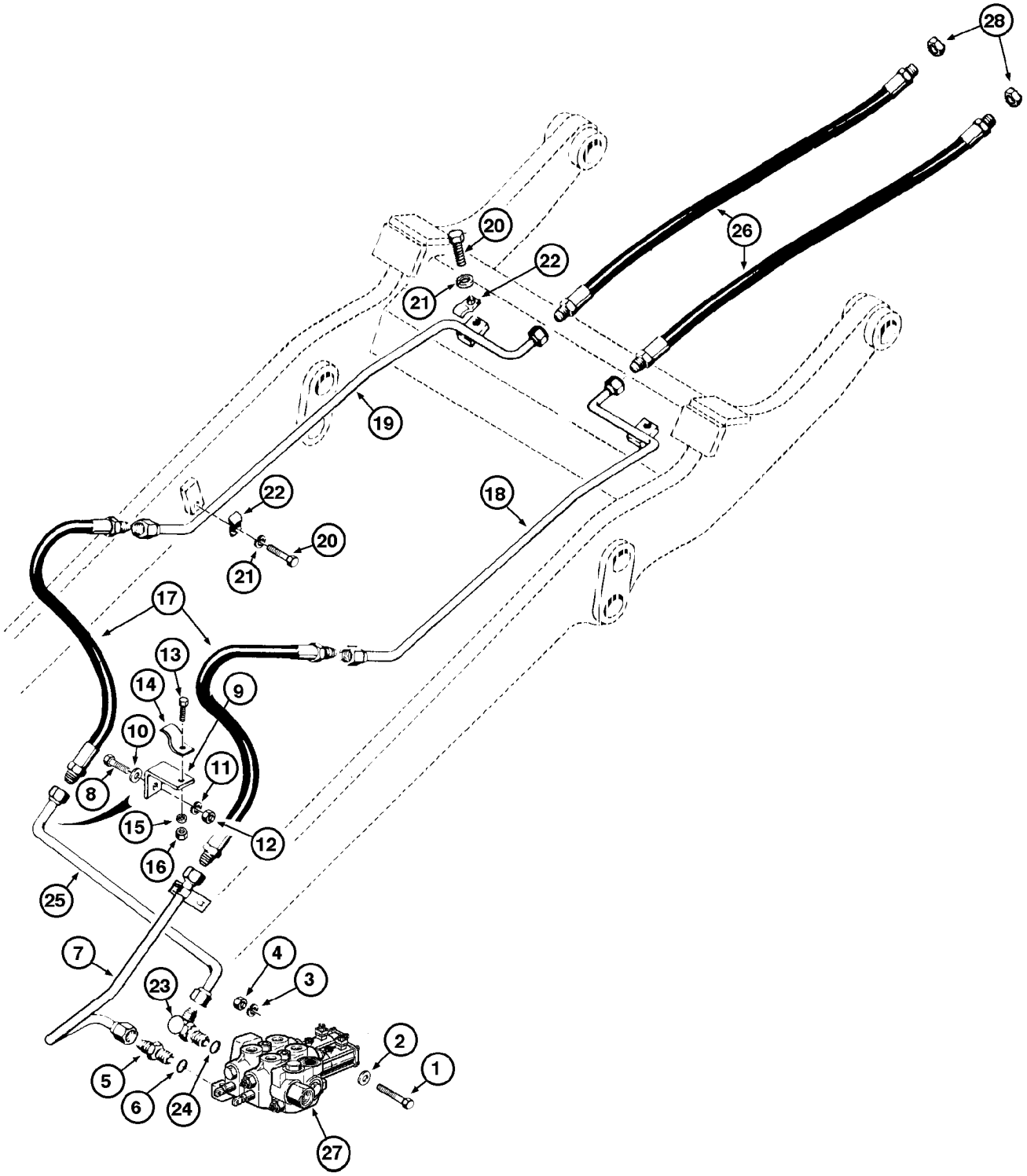

LOADER - HYDRAULIC CIRCUIT OPTIONAL SECTION (PARKER)
LOADER - HYDRAULIC CIRCUIT OPTIONAL SECTION (PARKER)
LOADER - HYDRAULIC CIRCUIT OPTIONAL SECTION (PARKER)
LOADER - HYDRAULIC CIRCUIT OPTIONAL SECTION (PARKER)

R	N	P.N.	MOD	Q	Denominação Bezeichnung	Description Description	Denominacion Beskrivelse	Descrizione Beschrijving	L.C.
21		**492-11038**		4	TRAVA DA ARRUELA, 3/8" SICHERUNGSSCHEIBE	LOCK WASHER RONDELLE FREIN	ARANDELA DE BLOQUE LÅSESKIVE	RONDELLA DI SICUREZ BORGRING	132R
22		**D41165**		4	BRACADEIRA SCHELLE	CLAMP COLLIER	COLLAR CLAMP	MORSETTO CLAMP	1640
23		**218-5110**		1	COTOVELO, 90º, 1 5/16"-12, 37º x 1 5/16"-12, O-Ring, Incl. item 24 KNIESTÜCK	ELBOW COUDE	CODO VINKELRØR	GOMITO KNIESTUK	085G
24		**218-5010**		1	O-RING, 0.614" ID x 0.754" OD x 0.07" O-RING	O-RING JOINT TORIQUE	JUNTA TÓRICA O-RING	ANELLO TOROIDALE O-RING	055A
25		**L107221**		1	TUBO, 1" OD ROHR	PIPE TUYAU	TUBO PÅFYLDNINGSSTUDS	TUBO BUIS	200T
26		**L50719**		2	MANGUEIRA SCHLAUCH	HOSE FLEXIBLE	MANGUERA HOSE	TUBO FLESSIBILE HOSE	4480
27		**REF**		1	INSTRUÇÃO, VALVE Assy (P.8-34) ANLEITUNG	INSTRUCTION INSTRUCTION	INSTRUCCIÓN INSTRUKTION	ISTRUZIONI INSTRUCTIE	Z571
28		**218-756**		2	TAMPA, 37º, 7/8"-14 KAPPE	CAP CAPUCHON	TAPÓN TANKDÆKSEL	TAPPO DOP	052T

Parker - Montada até o nº de série N6AE00912

W20E

08-14A	01	p1	07/10

PÁ CARREGADEIRA - CIRCUITO HIDRÁULICO DO ACOPLAMENTO
LOADER - COUPLER LOCK HYDRAULIC CIRCUIT
CARGADORA - CIRCUITO HIDRAULICO DEL ACOPLAMIENTO
LOADER - COUPLER LOCK HYDRAULIC CIRCUIT

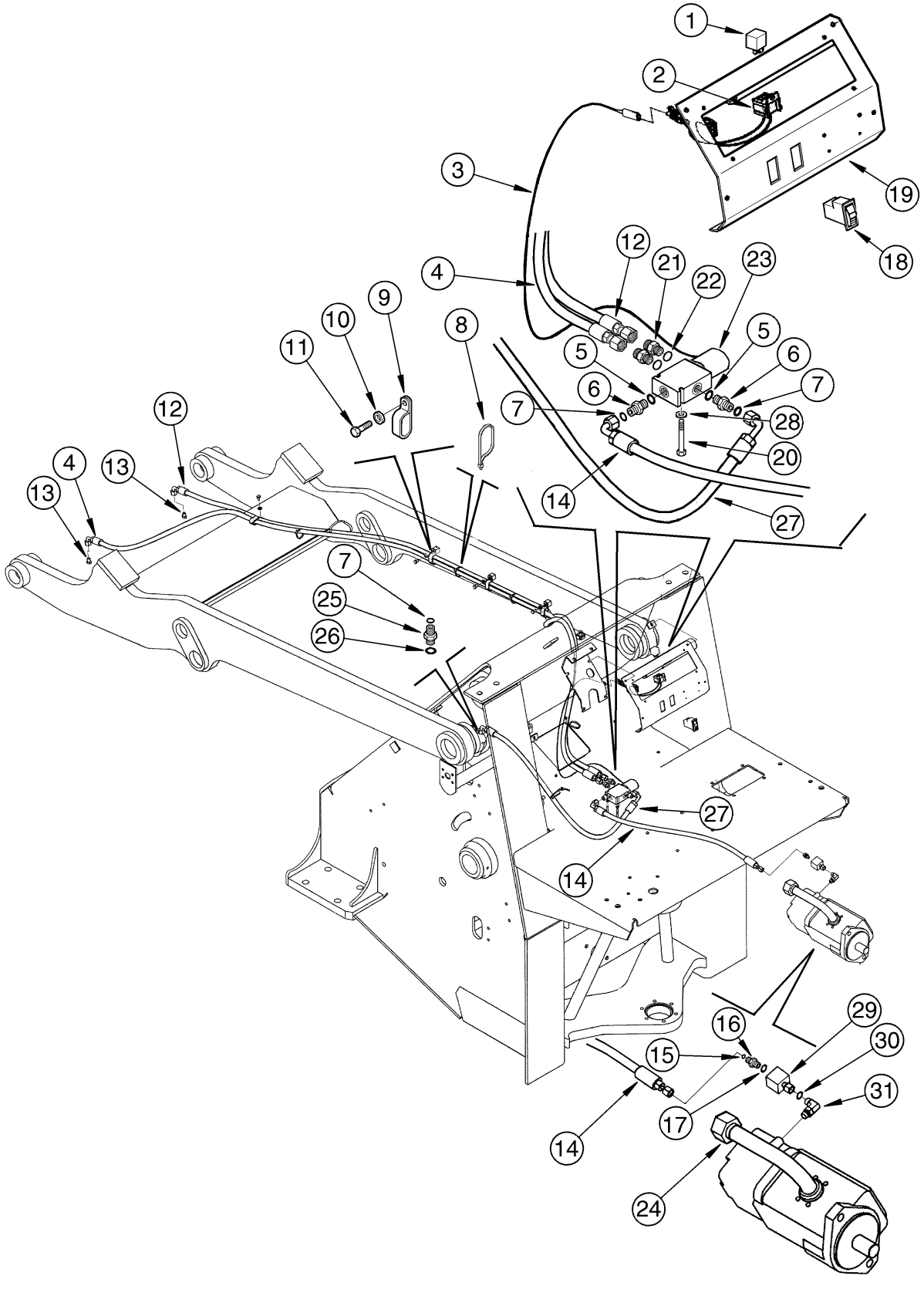

LOADER - COUPLER LOCK HYDRAULIC CIRCUIT
LOADER - COUPLER LOCK HYDRAULIC CIRCUIT
LOADER - COUPLER LOCK HYDRAULIC CIRCUIT
LOADER - COUPLER LOCK HYDRAULIC CIRCUIT

R	N	P.N.	MOD	Q	Denominação Bezeichnung	Description Description	Denominacion Beskrivelse	Descrizione Beschrijving	L.C.
1		146927A1		1	RELÉ RELAIS	RELAY RELAIS	RELÉ RELÆ	RELÈ RELAIS	011R
2		87626668		1	CHICOTE KABELBAUM	HARNESS FAISCEAU	MAZO DE CABLES LEDNINGSNET	CABLAGGIO KABELBOOM	4160
3		87626669		1	CHICOTE KABELBAUM	HARNESS FAISCEAU	MAZO DE CABLES LEDNINGSNET	CABLAGGIO KABELBOOM	4160
4		75326233		1	MANGUEIRA SCHLAUCH	HOSE FLEXIBLE	TUBO SLANGE	TUBO FLESSIBILE SLANG	030M
5		76021244		2	O-RING O-RING	O-RING JOINT TORIQUE	JUNTA TÓRICA O-RING	ANELLO TOROIDALE O-RING	055A
6		76022370		2	CONECTOR HIDRÁUL HYDR STECKVERBINDE	HYD CONNECTOR CONNECTEUR HYDRAU	CONECTOR HIDRÁULIC HYDRAULIKSTIK	CONNETTORE IDRAULIC HYDRAULISCHE AANSLU	020R
7		70924048		3	O-RING O-RING	O-RING JOINT TORIQUE	JUNTA TÓRICA O-RING	ANELLO TOROIDALE O-RING	055A
8		75201642		AR	BRAÇADEIRA KLEMME	CLAMP COLLIER	ABRAZADERA SPÆNDEBÅND	MORSETTO KLEM	120M
9		L101181		4	BRAÇADEIRA KLEMME	CLAMP COLLIER	ABRAZADERA SPÆNDEBÅND	MORSETTO KLEM	120M
10		10519621		4	ARRUELA PLANA, M8 x 17 x 2 UNTERLEGSCHEIBE	WASHER RONDELLE	ARANDELA FLADSKIVE	RONDELLA SLUITRING	131R
11		16043031		4	PARAFUSO, Hex, M8 x 12, 10.9, Full Thd SCHRAUBE	BOLT VIS	PERNO BOLT	BULLONE BOUT	140B
12		75326234		1	MANGUEIRA SCHLAUCH	HOSE FLEXIBLE	TUBO SLANGE	TUBO FLESSIBILE SLANG	030M
13		218-774		2	BUJÃO, 9/16"-18, 37º STOPFEN	PLUG BOUCHON	TAPÓN PROP	TAPPO PLUG	050T
14		87547288		1	CONJ. MANGUEIRA SCHLAUCHBAUGRUPPE	HOSE ASSY. ENSEMBLE DE FLEXIBLE	CONJUNTO DE TUBOS SLANGEENHED	COMPLESS. TUBO FLES SLANGEENHEID	P457
15		70923952		1	O-RING O-RING	O-RING JOINT TORIQUE	JUNTA TÓRICA O-RING	ANELLO TOROIDALE O-RING	055A
16		75320693		1	CONEXÃO ARMATUR	FITTING RACCORD	ACOPLAMIENTO FITTING	RACCORDO AANSLUITING	3300
17		71101819		1	KIT DE REVISÃO DO MOTOR MOTORÜBERHOLUNGSS	ENGINE OVERHAUL KIT KIT DE REVISION MOTEI	KIT DE REVISIÓN DEL M MOTORREVISIONSSÆT	KIT REVISIONE MOTORE REVISIEKIT VOOR MOTO	002K
18		75324429		1	INTERRUPTOR SCHALTER	SWITCH CONTACTEUR	INTERRUPTOR KONTAKT	INTERRUTTORE SCHAKELAAR	075I
19		87619336		1	PAINEL DE INSTRUMENTOS INSTRUMENTENTAFEL	INSTRUMENT PANEL TABLEAU DE BORD	PANEL DE INSTRUMENT INSTRUMENTPANEL	QUADRO STRUMENTI INSTRUMENTENPANEEL	141P
20		10903731		2	PARAFUSO, Hex, M6 x 55, 10.9 SCHRAUBE	BOLT VIS	PERNO BOLT	BULLONE BOUT	140B
21		70922522		2	CONECTOR HIDRÁUL HYDR STECKVERBINDE	HYD CONNECTOR CONNECTEUR HYDRAU	CONECTOR HIDRÁULIC HYDRAULIKSTIK	CONNETTORE IDRAULIC HYDRAULISCHE AANSLU	020R

Opcional

W20E

08-14A	01	p2	07/10

PÁ CARREGADEIRA - CIRCUITO HIDRÁULICO DO ACOPLAMENTO
LOADER - COUPLER LOCK HYDRAULIC CIRCUIT
CARGADORA - CIRCUITO HIDRAULICO DEL ACOPLAMIENTO
LOADER - COUPLER LOCK HYDRAULIC CIRCUIT

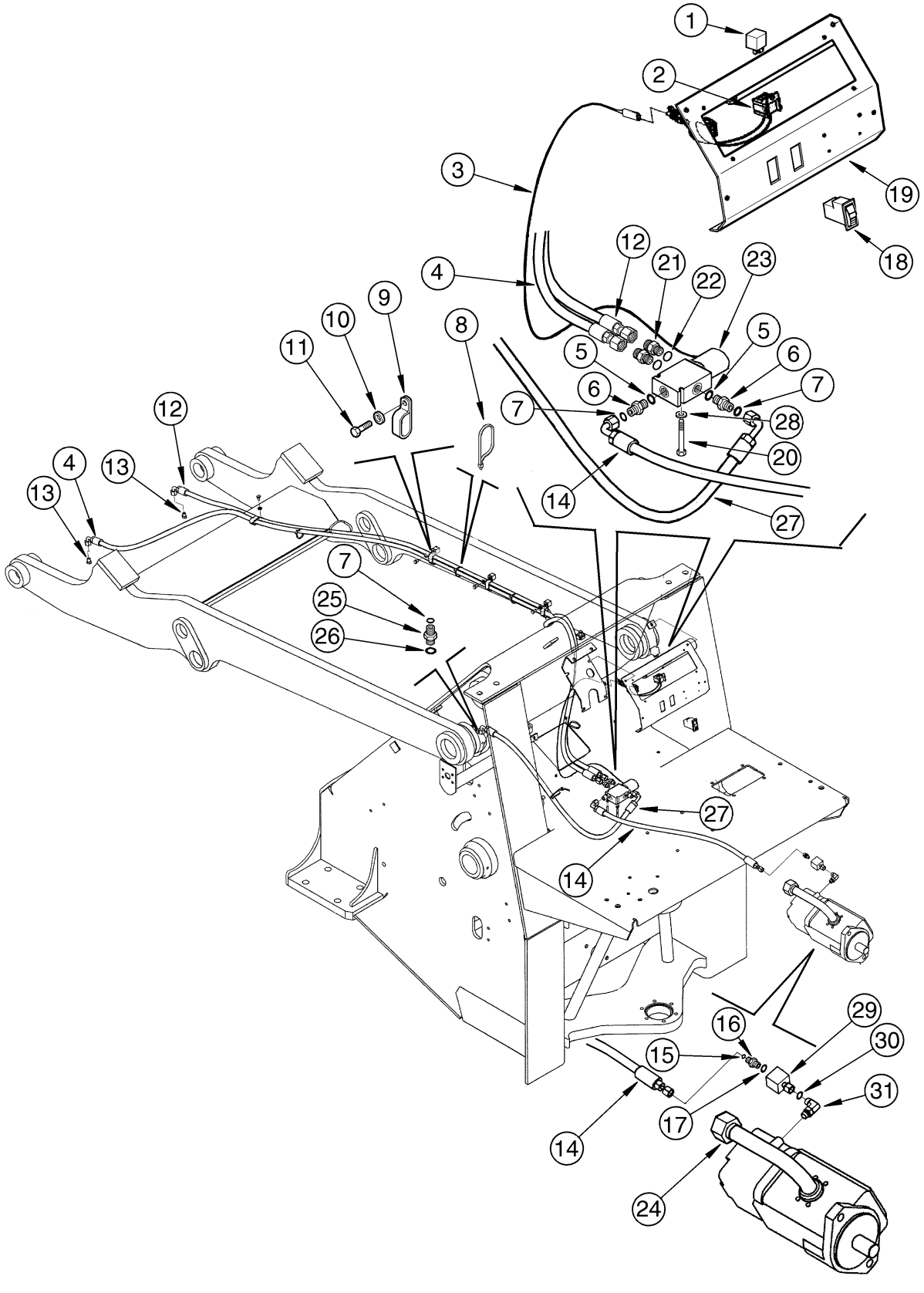

LOADER - COUPLER LOCK HYDRAULIC CIRCUIT
LOADER - COUPLER LOCK HYDRAULIC CIRCUIT
LOADER - COUPLER LOCK HYDRAULIC CIRCUIT
LOADER - COUPLER LOCK HYDRAULIC CIRCUIT

R	N	P.N.	MOD	Q	Denominação Bezeichnung	Description Description	Denominacion Beskrivelse	Descrizione Beschrijving	L.C.
22		70921885		2	O-RING, 6-1, 90 Duro, .468" ID x .078" Thk				
					O-RING	JOINT TORIQUE	O-RING	O-RING	
23		73124881		1	VÁLVULA HIDRÁULICA	HYDRAULIC VALVE	VÁLVULA HIDRÁULICA	DISTRIBUTORE IDRAULI	010V
					HYDRAULIKVENTIL	SOUPAPE HYDRAULIQU	HYDRAULIKVENTIL	HYDRAULISCHE KLEP	
24		87527102		1	CORTA-CHAMA	SPARK ARRESTER	PROTECTOR DE CHISP/	PARASCINTILLE	195S
					FUNKENFÄNGER	PARE-ETINCELLE	ILDSLUKKER	VONKVANGER	
25		76022819		1	BRACADEIRA	CLAMP	COLLAR	MORSETTO	1640
					SCHELLE	COLLIER	CLAMP	CLAMP	
26		70928486		1	O-RING	O-RING	JUNTA TÓRICA	ANELLO TOROIDALE	055A
					O-RING	JOINT TORIQUE	O-RING	O-RING	
27		87547289		1	CONJ. MANGUEIRA	HOSE ASSY.	CONJUNTO DE TUBOS	COMPLESS. TUBO FLES	P457
					SCHLAUCHBAUGRUPPE	ENSEMBLE DE FLEXIBLE	SLANGEENHED	SLANGEENHEID	
28		12639701		2	ARRUELA PLANA, M6 x 11 x 1				
						WASHER	ARANDELA	RONDELLA	131R
					UNTERLEGSCHEIBE	RONDELLE	FLADSKIVE	SLUITRING	
29		75327264		1	BLOCO	BLOCK	BLOQUE	BLOCCO	074B
					BLOCK	BLOC	MOTORBLOK	BLOK	
30		238-6011		1	O-RING, -011, 90 Duro, .301" ID x .070" Thk				
						O-RING	JUNTA TÓRICA	ANELLO TOROIDALE	055A
					O-RING	JOINT TORIQUE	O-RING	O-RING	
31		700-378		1	COTOVELO, 90º, 9/16"-18 ORFS x M14 x 1.5 ORB				
						ELBOW	CODO	GOMITO	085G
					KNIESTÜCK	COUDE	VINKELRØR	KNIESTUK	

Opcional

W20E

08-14B	01	p1	01/09

PÁ CARREGADEIRA - CIRCUITO HIDRÁULICO SEÇÃO OPCIONAL (REXROTH)
LOADER - HYDRAULIC CIRCUIT OPTIONAL SECTION (REXROTH)
CARGADORA - CIRCUITO HIDRAULICO DE LA SECIÓN FACULTATIVA (REXROTH)
LOADER - HYDRAULIC CIRCUIT OPTIONAL SECTION (REXROTH)

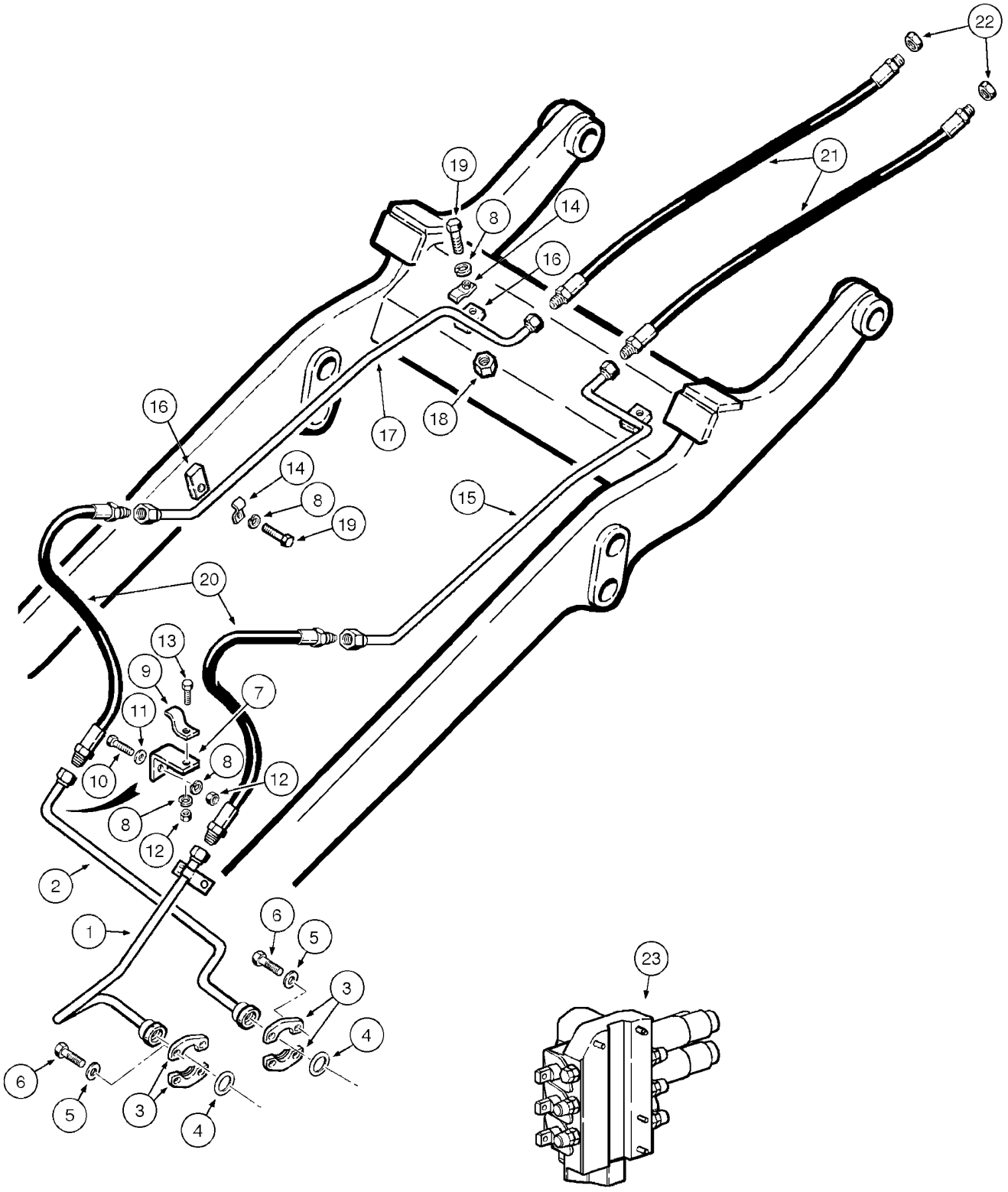

LOADER - HYDRAULIC CIRCUIT OPTIONAL SECTION (REXROTH)
LOADER - HYDRAULIC CIRCUIT OPTIONAL SECTION (REXROTH)
LOADER - HYDRAULIC CIRCUIT OPTIONAL SECTION (REXROTH)
LOADER - HYDRAULIC CIRCUIT OPTIONAL SECTION (REXROTH)

R	N	P.N.	MOD	Q	Denominação Bezeichnung	Description Description	Denominacion Beskrivelse	Descrizione Beschrijving	L.C.
1		87462918		1	TUBO, RH ROHR	TUBE TUBE	TUBO RØR	TUBO LEIDING	195T
2		87462920		1	TUBO, LH ROHR	TUBE TUBE	TUBO RØR	TUBO LEIDING	195T
3		70921115		4	SEMI-FLANGE FLANSCHHÄLFTE	HALF-FLANGE DEMI-BRIDE	SEMIBRIDA FLANGEHALVDEL	SEMIFLANGIA FLENSHELFT	417S
4		14463280		2	O-RING, 24.99mm ID x 3.53" Width O-RING	O-RING JOINT TORIQUE	JUNTA TÓRICA O-RING	ANELLO TOROIDALE O-RING	055A
5		892-11010		8	TRAVA DA ARRUELA, M10 SICHERUNGSSCHEIBE	LOCK WASHER RONDELLE FREIN	ARANDELA DE BLOQUE LÅSESKIVE	RONDELLA DI SICUREZ BORGRING	132R
6		14420231		8	PARAFUSO, Hex Soc Hd, M10 x 30, 10.9 SCHRAUBE	SCREW VIS	TORNILLO SKRUE	VITE SCHROEF	040V
7		L106929		2	SUPORTE HALTER	BRACKET CONSOLE	SOPORTE BRACKET	STAFFA BRACKET	1010
8		492-11038		8	TRAVA DA ARRUELA, 3/8" SICHERUNGSSCHEIBE	LOCK WASHER RONDELLE FREIN	ARANDELA DE BLOQUE LÅSESKIVE	RONDELLA DI SICUREZ BORGRING	132R
9		A12308		2	BRACADEIRA SCHELLE	CLAMP COLLIER	COLLAR CLAMP	MORSETTO CLAMP	1640
10		413-624		2	PARAFUSO, Hex, 3/8"-16 x 1 1/2", G5 SCHRAUBE	BOLT VIS	PERNO BOLT	BULLONE BOUT	140B
11		495-21044		2	ARRUELA PLANA, 3/8" UNTERLEGSCHEIBE	WASHER RONDELLE	ARANDELA FLADSKIVE	RONDELLA SLUITRING	131R
12		425-106		4	PORCA, 3/8"-16, G5 MUTTER	NUT ECROU	TUERCA MØTRIK	DADO MOER	010D
13		413-616		2	PARAFUSO, Hex, 3/8"-16 x 1", G5, Full Thd SCHRAUBE	BOLT VIS	PERNO BOLT	BULLONE BOUT	140B
14		D41165		4	BRACADEIRA SCHELLE	CLAMP COLLIER	COLLAR CLAMP	MORSETTO CLAMP	1640
15		L107316		1	TUBO, 0.75" OD, RH ROHR	PIPE TUYAU	TUBO PIPE	TUBAZIONE PIPE	6240
16		L103817		4	SUPORTE STÜTZE	SUPPORT SUPPORT	SOPORTE BESLAG	SUPPORTO STEUN	300S
17		L107314		1	TUBO, LH ROHR	PIPE TUYAU	TUBO PIPE	TUBAZIONE PIPE	6240
18		131-856		4	PORCA DE TUBAGEM, Ret, J, 3/8"-16 ROHRMUTTER	TUBE NUT ECROU DE TUYAU	TUERCA DE TUBO SLANGEMØTRIK	DADO TUBO BUISMOER	0030
19		413-612		4	PARAFUSO, Hex, 3/8"-16 x 3/4", G5, Full Thd SCHRAUBE	BOLT VIS	PERNO BOLT	BULLONE BOUT	140B
20		L111301		2	MANGUEIRA, 0.75" ID x 36.00", SAE 100R1 SCHLAUCH	HOSE FLEXIBLE	TUBO SLANGE	TUBO FLESSIBILE SLANG	030M
21		L50719		2	MANGUEIRA, tilt and lift SCHLAUCH	HOSE FLEXIBLE	MANGUERA HOSE	TUBO FLESSIBILE HOSE	4480

Rexroth - Montada a partir do nº de série N6AE00913

W20E

08-14B	01	p2	01/09

PÁ CARREGADEIRA - CIRCUITO HIDRÁULICO SEÇÃO OPCIONAL (REXROTH)
LOADER - HYDRAULIC CIRCUIT OPTIONAL SECTION (REXROTH)
CARGADORA - CIRCUITO HIDRAULICO DE LA SECIÓN FACULTATIVA (REXROTH)
LOADER - HYDRAULIC CIRCUIT OPTIONAL SECTION (REXROTH)

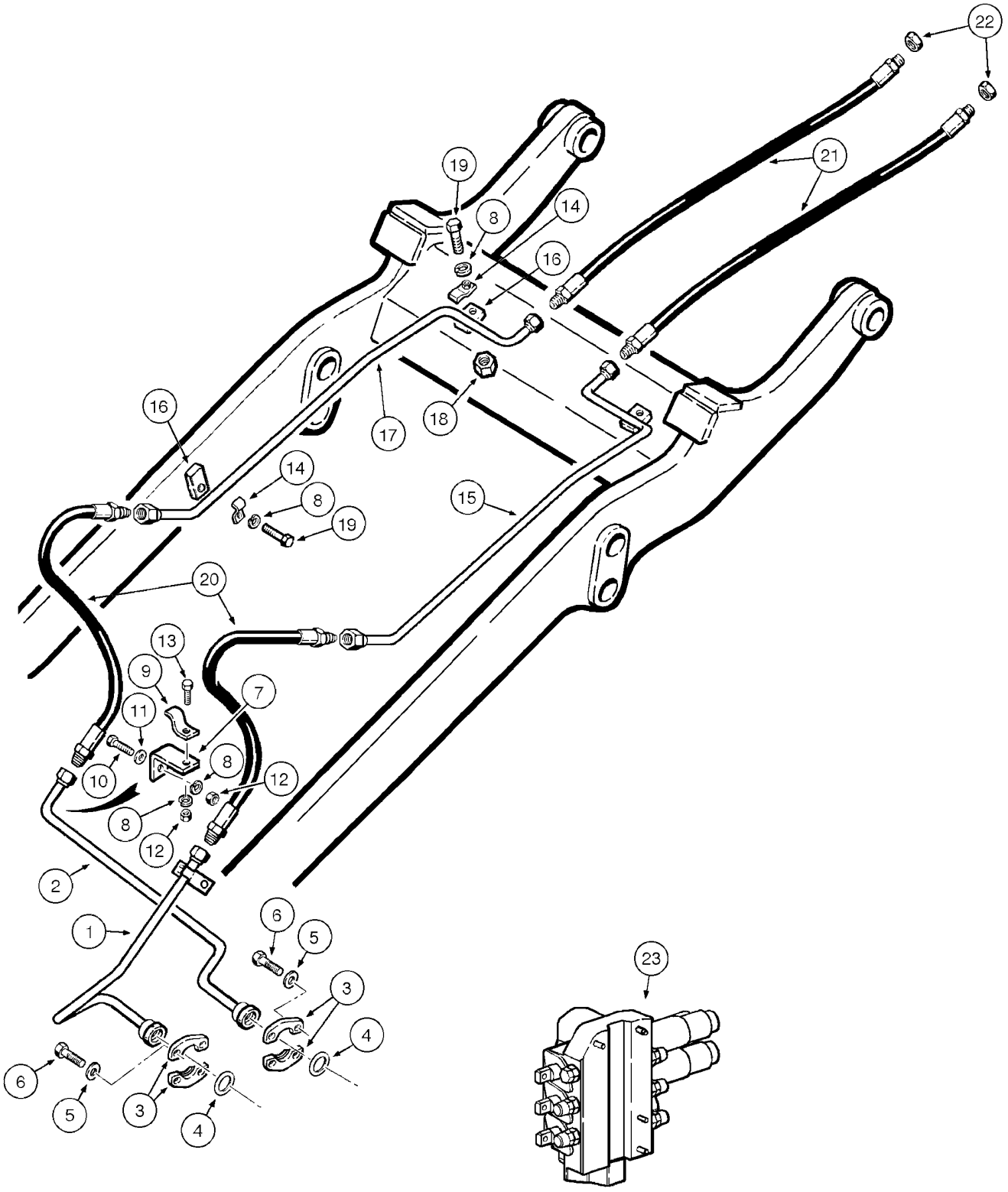

LOADER - HYDRAULIC CIRCUIT OPTIONAL SECTION (REXROTH)
LOADER - HYDRAULIC CIRCUIT OPTIONAL SECTION (REXROTH)
LOADER - HYDRAULIC CIRCUIT OPTIONAL SECTION (REXROTH)
LOADER - HYDRAULIC CIRCUIT OPTIONAL SECTION (REXROTH)

R	N	P.N.	MOD	Q	Denominação Bezeichnung	Description Description	Denominacion Beskrivelse	Descrizione Beschrijving	L.C.
22		**218-756**		2	TAMPA, 37º, 7/8"-14 KAPPE	CAP CAPUCHON	TAPÓN TANKDÆKSEL	TAPPO DOP	052T
23		**REF**		1	INSTRUÇÃO, VALVE 3 Spool (P.8-68)				
						INSTRUCTION	INSTRUCCIÓN	ISTRUZIONI	Z571
					ANLEITUNG	INSTRUCTION	INSTRUKTION	INSTRUCTIE	

Rexroth - Montada a partir do nº de série N6AE00913

W20E

08-16	01	p1	03/09

CILINDROS DE LEVANTAMENTO
LIFT CYLINDERS
GATOS DE ELEVACIÓN
LIFT CYLINDERS

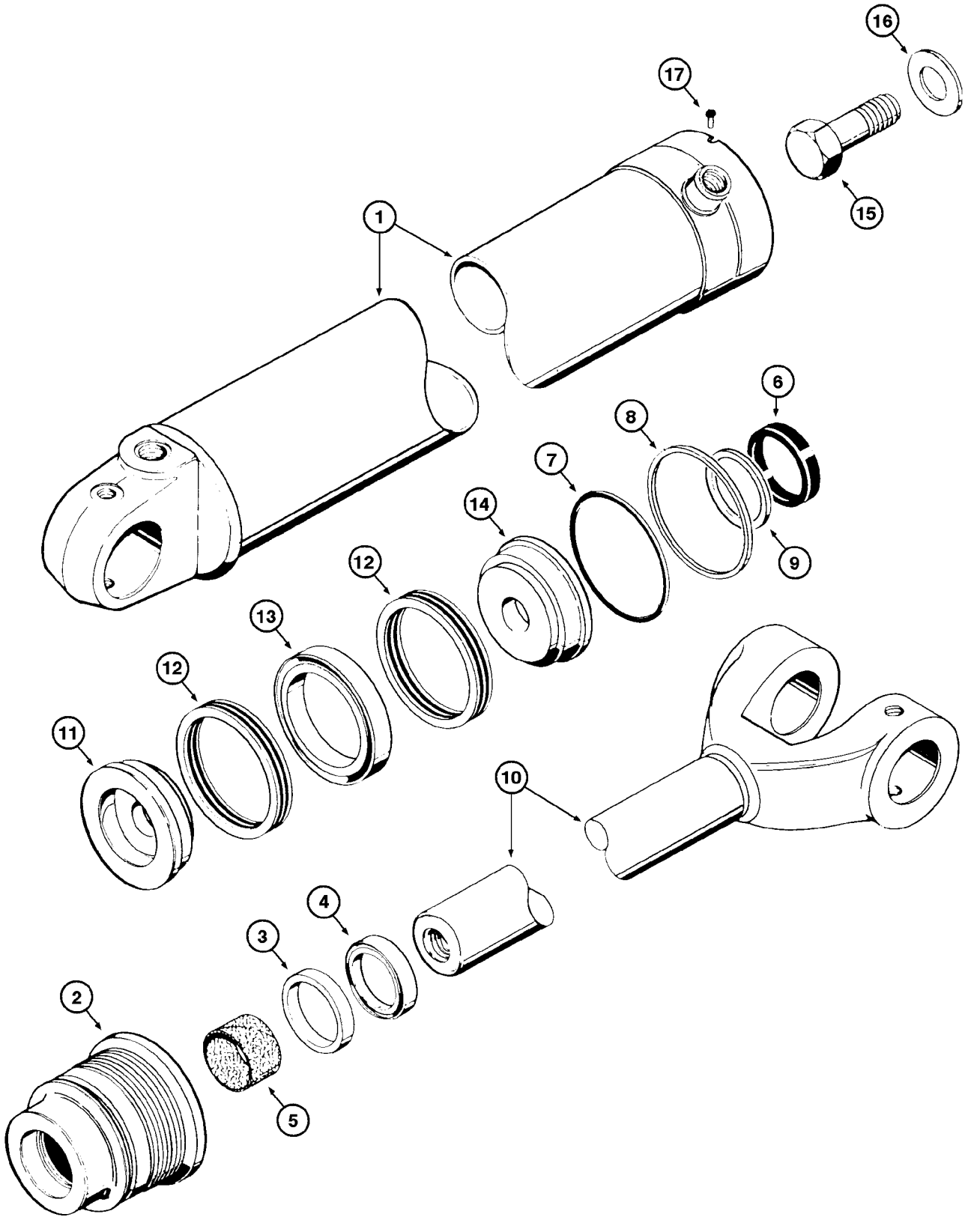

LIFT CYLINDERS
LIFT CYLINDERS
LIFT CYLINDERS
LIFT CYLINDERS

R	N	P.N.	MOD	Q	Denominação Bezeichnung	Description Description	Denominacion Beskrivelse	Descrizione Beschrijving	L.C.
		E69538		1	CILINDRO, RH, Includes item 1 - 17				
						CYLINDER	CILINDRO	CILINDRO	164C
					ZYLINDER	VERIN	CYLINDER	CILINDER	
		E69539		1	CILINDRO, LH, Includes item 1 - 17				
						CYLINDER	CILINDRO	CILINDRO	164C
					ZYLINDER	VERIN	CYLINDER	CILINDER	
1		**G101716**		1	TUBO, 5 mm DIA x 1008.88 mm L, RH				
						TUBE	TUBO	TUBO	9400
					ROHR	TUBE	TUBE	TUBE	
1		**G101717**		1	TUBO, 5 mm DIA x 1008.88 mm L, LH				
						TUBE	TUBO	TUBO	9400
					ROHR	TUBE	TUBE	TUBE	
		E69990		1	COBERTURA, Assy	COVER	CUBIERTA	COPERCHIO	265C
					ABDECKUNG	COUVERCLE	DÆKSEL	AFSCHERMING	
2		**NSS**		1	SEM SERVIÇO EM SEPARADO, COVER				
						NOT SERVICED SEPARA	NO SE REPARA POR SE	NON FORNITO SEPARAT	064N
					NICHT A SEP ERS-T LIEI	NON FORUNI SEPAREM	SERVICERES IKKE SEPA	NIET LOS VERKRIJGBAA	
3		**NSS**		1	SEM SERVIÇO EM SEPARADO, RING				
						NOT SERVICED SEPARA	NO SE REPARA POR SE	NON FORNITO SEPARAT	064N
					NICHT A SEP ERS-T LIEI	NON FORUNI SEPAREM	SERVICERES IKKE SEPA	NIET LOS VERKRIJGBAA	
4		**D95146**		1	VEDAÇÃO DO LIMPADOR	WIPER SEAL	JUNTA ROZANTE	GUARNIZIONE, RASCHIA	Z350
					ABSTREIFDICHTUNG	JOINT RACLEUR	SKRABERING	RUITENWISSERAFDICHT	
5		**G102427**		1	BUCHA	BUSHING	CASQUILLO	BOCCOLA	095B
					BUCHSE	BAGUE	BØSNING	BUS	
6		**G109228**		1	VEDAÇÃO	SEAL	ANILLO DE CIERRE	GUARNIZIONE; TENUTA	132A
					DICHTUNG	JOINT	PAKNING	AFDICHTING	
7		**39738**		1	O-RING, 4.609" ID x 0.139" Width				
						O-RING	JUNTA TÓRICA	ANELLO TOROIDALE	055A
					O-RING	JOINT TORIQUE	O-RING	O-RING	
8		**S92639**		1	ANEL	RING	ANILLO	ANELLO	7175
					RING	BAGUE	RING	RING	
9		**G107998**		1	VEDADOR DE RETENCAO	SEAL	SELLO/RETEN	GUARNIZIONE TENUTA	7460
					DICHTRING	JOINT-D'ETANCHEITE	SEAL	SEAL	
10		**G100526**		1	HASTE	ROD	VARILLA	ASTA	7250
					STANGE	TRINGLE	ROD	ROD	
11		**D48562**		1	PISTAO	PISTON	PISTON	PISTONE	6270
					KOLBEN	PISTON	PISTON	PISTON	
12		**D47206**		2	EMBALAGEM	PACKING	EMPAQUETADURA	IMBALLAGGIO	5950
					PACKMATERIAL; PACKU	GARNITURE	EMBALLAGE	PAKKING	
13		**D47211**		1	FLANGE DE ROLAMENTO, 3.756" ID x 4.988" OD x 0.748"				
						BEARING WASHER	ARANDELA DE COJINET	RONDELLA CUSCINETT	A142
					LAGERSCHEIBE	RONDELLE DE ROULEM	LEJESPÆNDSKIVE	LAGERRING	
14		**G100530**		1	PISTAO	PISTON	PISTON	PISTONE	6270
					KOLBEN	PISTON	PISTON	PISTON	
15		**28-1048**		1	PARAFUSO, Hex, 5/8"-18 x 3", G8				
						BOLT	PERNO	BULLONE	140B
					SCHRAUBE	VIS	BOLT	BOUT	
16		**G104989**		1	ARRUELA	WASHER	ARANDELA	RONDELLA	9720
					UNTERLEGSCHEIBE	RONDELLE	WASHER	WASHER	

08-16	01	p2	03/09

CILINDROS DE LEVANTAMENTO
LIFT CYLINDERS
GATOS DE ELEVACIÓN
LIFT CYLINDERS

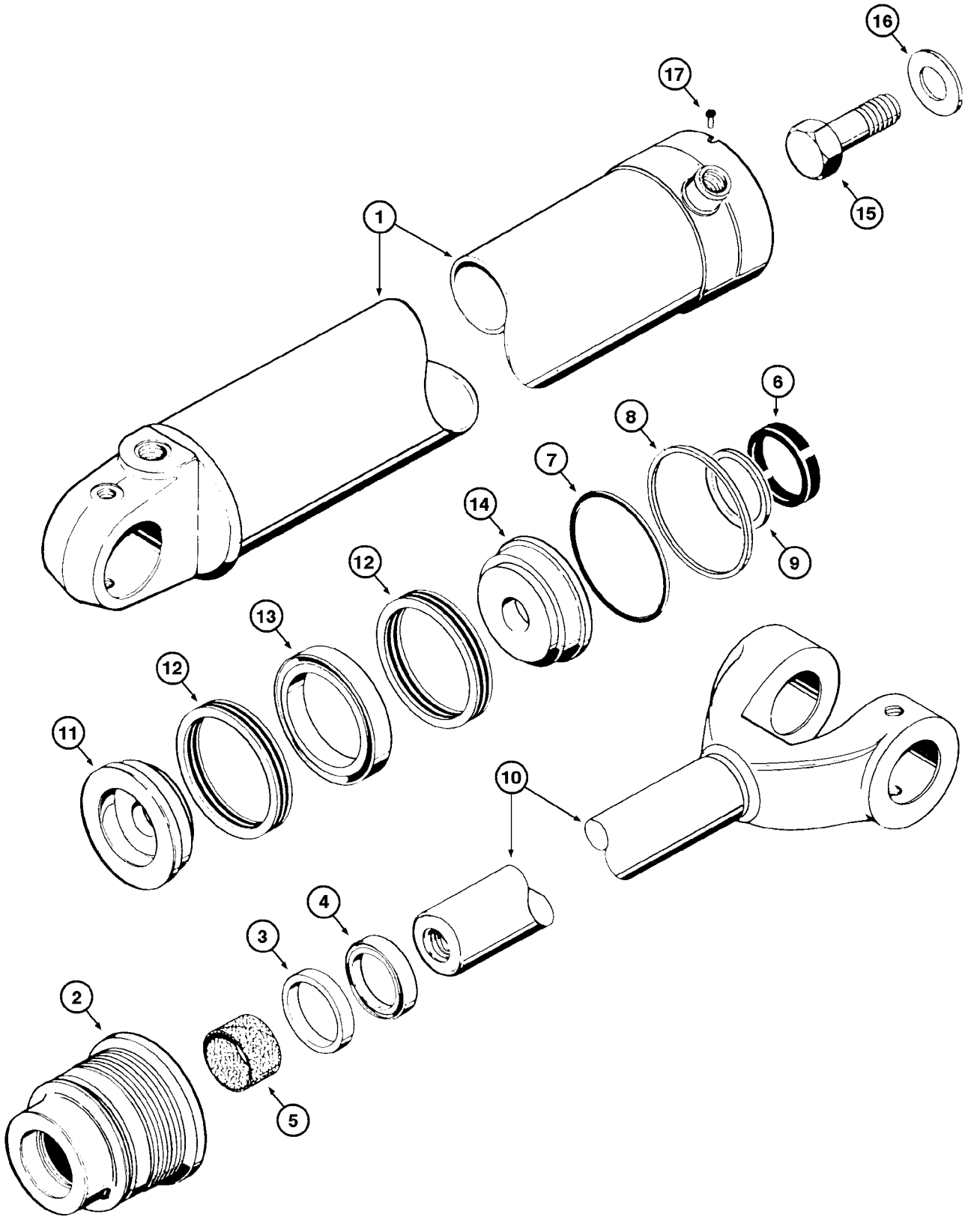

LIFT CYLINDERS
LIFT CYLINDERS
LIFT CYLINDERS
LIFT CYLINDERS

R	N	P.N.	MOD	Q	Denominação Bezeichnung	Description Description	Denominacion Beskrivelse	Descrizione Beschrijving	L.C.
17		**G109395**		1	PARAFUSO SELBSTSCHN SCHRAUE	SELF-TAP SCREW VIS AUTOTARAUDEUSE	TORNILLO AUTORROSC SELVLÅSENDE BOLT	VITE AUTOFILETTANTE ZELFTAPPENDE SCHRO	062V
		E96002		1	JOGO, repair SATZ	SET JEU	JUEGO SÆT	KIT SET	Z518

08-18	01	p1	03/09

CILINDROS DE INCLINAÇÃO
TILT CYLINDERS
GATOS DE INCLINACIÓN
TILT CYLINDERS

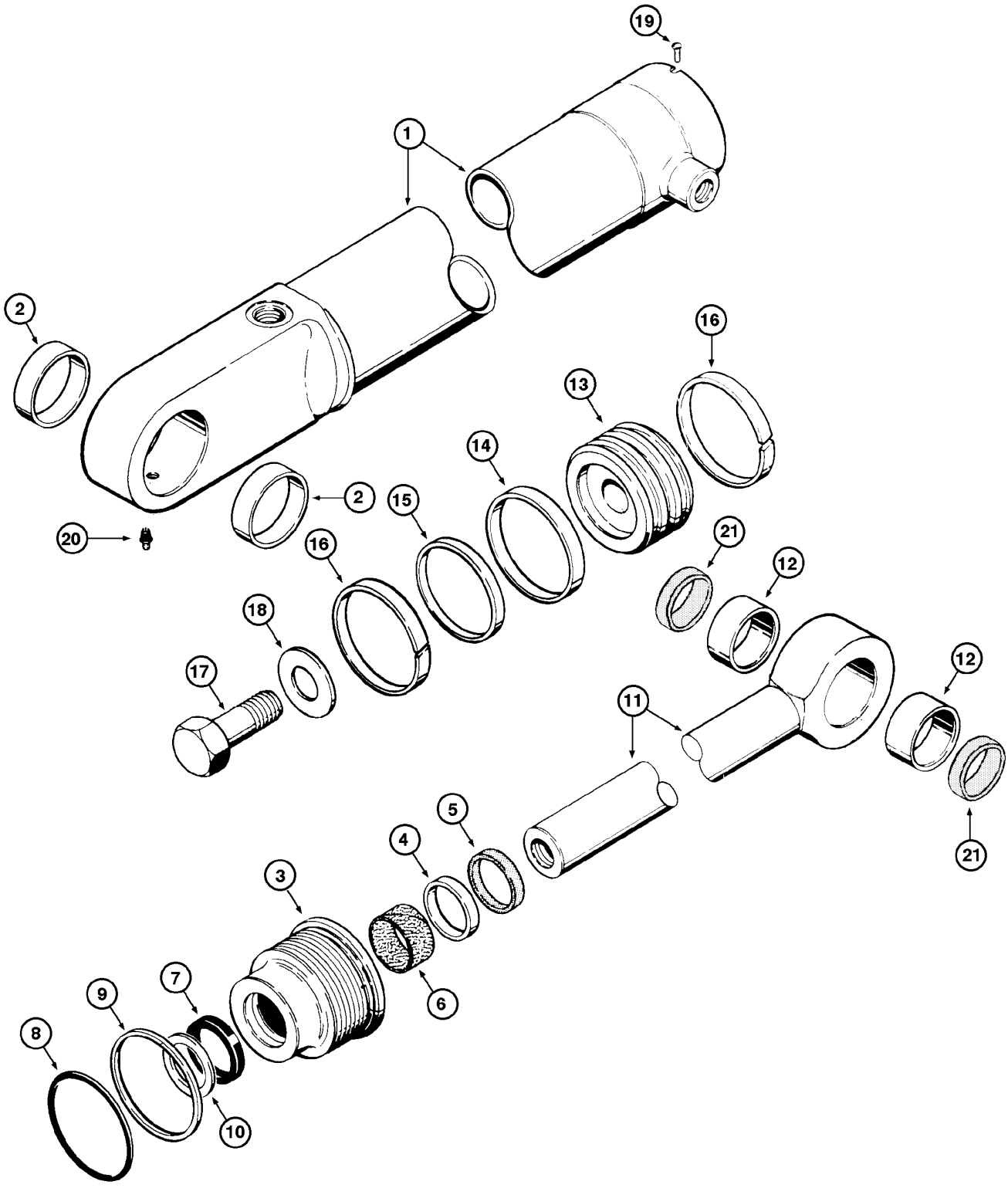

TILT CYLINDERS
TILT CYLINDERS
TILT CYLINDERS
TILT CYLINDERS

R	N	P.N.	MOD	Q	Denominação Bezeichnung	Description Description	Denominacion Beskrivelse	Descrizione Beschrijving	L.C.
		87403954		1	CILINDRO, RH, Includes item 1 - 21				
						CYLINDER	CILINDRO	CILINDRO	164C
					ZYLINDER	VERIN	CYLINDER	CILINDER	
		87403955		1	CILINDRO, LH, Includes item 1 - 21				
						CYLINDER	CILINDRO	CILINDRO	164C
					ZYLINDER	VERIN	CYLINDER	CILINDER	
1		**146991A1**		1	TUBO, 1052.6 mm Length, RH				
						TUBE	TUBO	TUBO	195T
					ROHR	TUBE	RØR	LEIDING	
1		**G101707**		1	CILINDRO, 4 mm DIA x 1051.05 mm L, LH				
						CYLINDER	CILINDRO	CILINDRO	164C
					ZYLINDER	VERIN	CYLINDER	CILINDER	
2		**D44543**		2	BUCHA	BUSHING	CASQUILLO	BOCCOLA	1140
					BUECHSE	DOUILLE	BUSHING	BUSHING	
		E69984		1	COBERTURA, Assy	COVER	CUBIERTA	COPERCHIO	265C
					ABDECKUNG	COUVERCLE	DÆKSEL	AFSCHERMING	
3		**NSS**		1	SEM SERVIÇO EM SEPARADO, GLAND				
						NOT SERVICED SEPARA	NO SE REPARA POR SE	NON FORNITO SEPARAT	064N
					NICHT A SEP ERS-T LIEI	NON FORUNI SEPAREM	SERVICERES IKKE SEPA	NIET LOS VERKRIJGBAA	
4		**NSS**		1	SEM SERVIÇO EM SEPARADO, RING				
						NOT SERVICED SEPARA	NO SE REPARA POR SE	NON FORNITO SEPARAT	064N
					NICHT A SEP ERS-T LIEI	NON FORUNI SEPAREM	SERVICERES IKKE SEPA	NIET LOS VERKRIJGBAA	
5		**D95144**		1	PROTEÇÃO VEDADORA	SEAL PROTECTION	PROTECCIÓN DE JUNTA	PROTEZIONE GUARNIZI	291C
					DICHTUNGSSCHUTZ	PROTECTION DE JOINT	PAKNINGSDÆKSEL	AFDICHTINGSBESCHER	
6		**G101533**		1	ANEL DE DESGASTE	WEAR RING	ANILLO DE DESGASTE	ANELLO ANTIUSURA	A012
					VERSCHLEISSRING	BAGUE D'USURE	SLIDRING	SLIJTRING	
7		**G107923**		1	VEDADOR DE RETENCAO	SEAL	SELLO/RETEN	GUARNIZIONE TENUTA	7460
					DICHTRING	JOINT-D'ETANCHEITE	SEAL	SEAL	
8		**A27507**		1	O-RING, 3.984" ID x 4.262" OD x 0.139"				
						O-RING	JUNTA TÓRICA	ANELLO TOROIDALE	055A
					O-RING	JOINT TORIQUE	O-RING	O-RING	
9		**G32176**		1	ANEL DE SEGURANÇA	BACK-UP RING	ANILLO DE SEGURIDAD	ANELLO DI SOSTEGNO	Z334
					STÜTZRING	BAGUE ANTI-EXTRUSIO	RESERVERING	ONDERLEGRING	
10		**G107997**		1	VEDADOR DE RETENCAO	SEAL	SELLO/RETEN	GUARNIZIONE TENUTA	7460
					DICHTRING	JOINT-D'ETANCHEITE	SEAL	SEAL	
11		**E158805**		1	HASTE, Assy	ROD	VARILLA	ASTA	090A
					STANGE	TIGE	STANG	STANG	
12		**E158752**		2	BUCHA	BUSHING	CASQUILLO	BOCCOLA	095B
					BUCHSE	BAGUE	BØSNING	BUS	
13		**G100438**		1	PISTAO	PISTON	PISTON	PISTONE	6270
					KOLBEN	PISTON	PISTON	PISTON	
14		**G102285**		1	VEDADOR DE RETENCAO	SEAL	SELLO/RETEN	GUARNIZIONE TENUTA	7460
					DICHTRING	JOINT-D'ETANCHEITE	SEAL	SEAL	
15		**G100440**		1	ANEL	RING	ANILLO	ANELLO	7175
					RING	BAGUE	RING	RING	
16		**G100448**		2	ANEL	RING	ANILLO	ANELLO	7175
					RING	BAGUE	RING	RING	

08-18	01	p2	03/09

CILINDROS DE INCLINAÇÃO
TILT CYLINDERS
GATOS DE INCLINACIÓN
TILT CYLINDERS

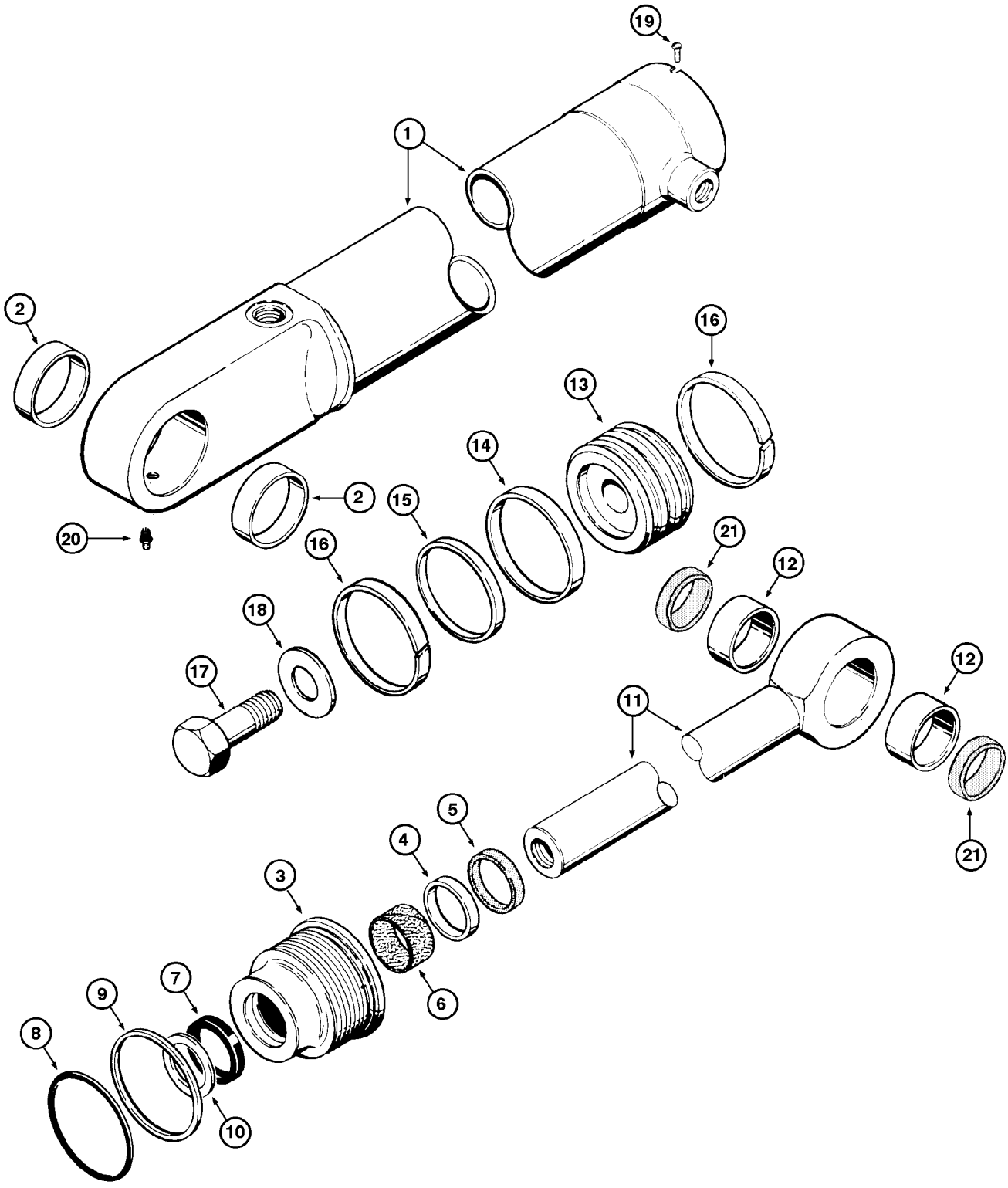

TILT CYLINDERS
TILT CYLINDERS
TILT CYLINDERS
TILT CYLINDERS

R	N	P.N.	MOD	Q	Denominação Bezeichnung	Description Description	Denominacion Beskrivelse	Descrizione Beschrijving	L.C.
17		**28-2048**		1	PARAFUSO, Hex, 1 1/4"-12 x 3", G8				
						BOLT	PERNO	BULLONE	140B
					SCHRAUBE	VIS	BOLT	BOUT	
18		**G104989**		1	ARRUELA	WASHER	ARANDELA	RONDELLA	9720
					UNTERLEGSCHEIBE	RONDELLE	WASHER	WASHER	
19		**G109395**		1	PARAFUSO	SELF-TAP SCREW	TORNILLO AUTORROSC	VITE AUTOFILETTANTE	062V
					SELBSTSCHN SCHRAUE	VIS AUTOTARAUDEUSE	SELVLÅSENDE BOLT	ZELFTAPPENDE SCHRO	
20		**219-1**		1	GRAXEIRA, 1/8"-27 x .66 lg	LUBE NIPPLE	BOQUILLA DE LUBRICA(	INGRASSATORE	060I
					SCHMIERNIPPEL	GRAISSEUR	SMØRENIPPEL	SMEERNIPPEL	
21		**D95144**		2	PROTEÇÃO VEDADORA	SEAL PROTECTION	PROTECCIÓN DE JUNTA	PROTEZIONE GUARNIZI	291C
					DICHTUNGSSCHUTZ	PROTECTION DE JOINT	PAKNINGSDÆKSEL	AFDICHTINGSBESCHER	
	1	**G109423**		1	KIT DE GAXETAS, repair	GASKET KIT	KIT DE JUNTAS	KIT GUARNIZIONI	3740
					DICHTUNGSSATZ	KIT DE JOINTS	PAKNINGSSÆT	KIT MET PAKKINGEN	

(1) Inclui 5,6,7,8,9,10,14,15,16

08-20	01	p1	03/09

BOMBA HIDRÁULICA - CONJUNTO□ULICA
HYDRAULIC PUMP - ASSEMBLY
BOMBA HIDRAULICA - CONJUNTO
HYDRAULIC PUMP - ASSEMBLY

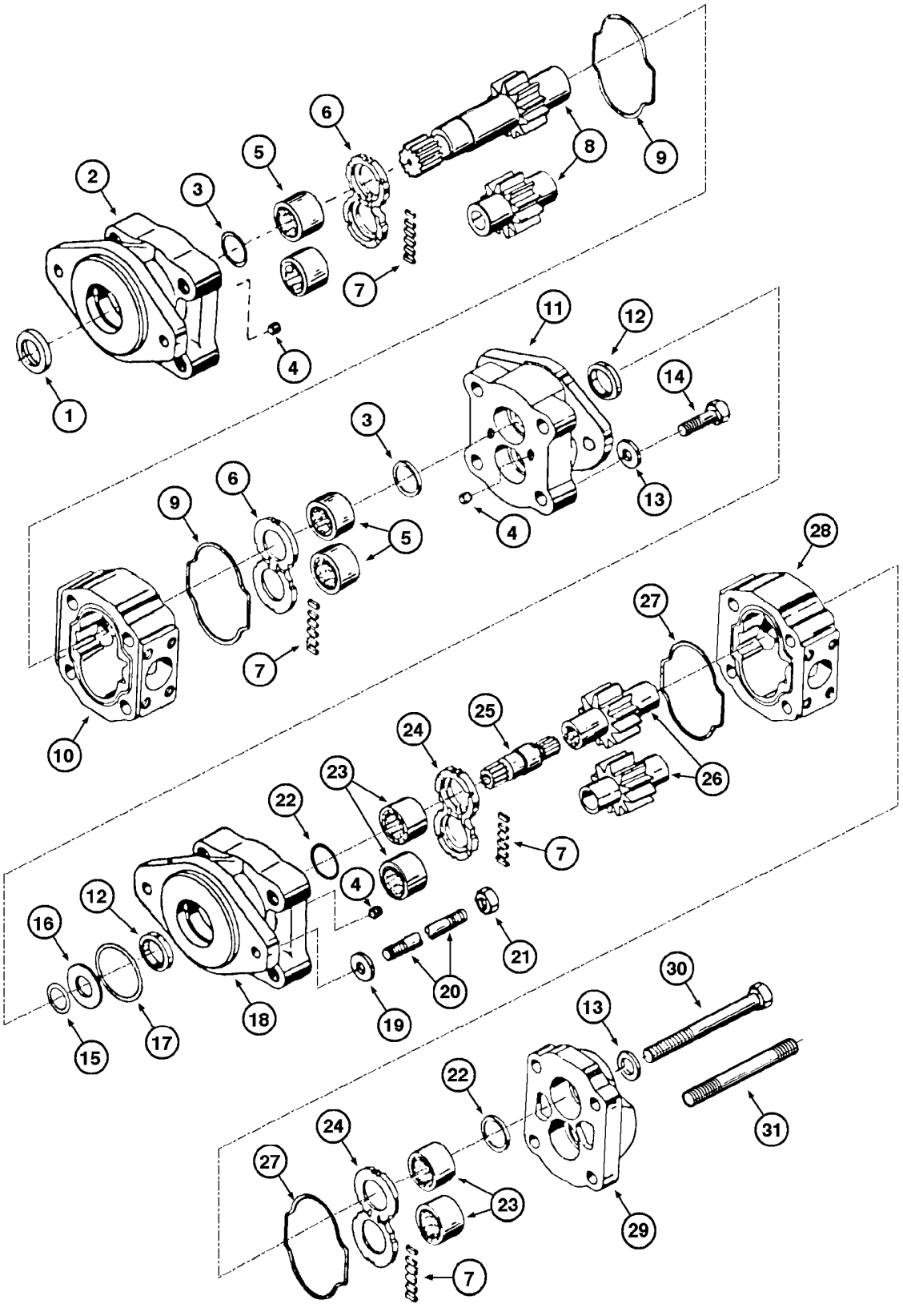

HYDRAULIC PUMP - ASSEMBLY
HYDRAULIC PUMP - ASSEMBLY
HYDRAULIC PUMP - ASSEMBLY
HYDRAULIC PUMP - ASSEMBLY

R	N	P.N.	MOD	Q	Denominação Bezeichnung	Description Description	Denominacion Beskrivelse	Descrizione Beschrijving	L.C.
		E69484		1	BOMBA HIDRÁULICA, hydraulic Assy, Includes items 1 - 31				
						HYDRAULIC PUMP	BOMBA HIDRÁULICO	POMPA IDRAULICA	155P
					HYDRAULIKPUMPE	POMPE HYDRAULIQUE	HYDRAULIKPUMPE	HYDRAULISCHE POMP	
1		**L32318**		1	VEDADOR DE RETENCAO	SEAL	SELLO/RETEN	GUARNIZIONE TENUTA	7460
					DICHTRING	JOINT-D'ETANCHEITE	SEAL	SEAL	
2		**W14024**		1	FLANGE	FLANGE	BRIDA	FLANGIA	070F
					FLANSCH	BRIDE	FLANGE	FLENS	
3		**NSS**		2	SEM SERVIÇO EM SEPARADO, SEAL				
						NOT SERVICED SEPARA	NO SE REPARA POR SE	NON FORNITO SEPARAT	064N
					NICHT A SEP ERS-T LIEI	NON FORUNI SEPAREM	SERVICERES IKKE SEPA	NIET LOS VERKRIJGBAA	
4		**L32320**		3	BUJAO	PLUG	TAPON	TAPPO	6400
					STOPFEN	BOUCHON	PLUG	PLUG	
5		**NSS**		4	SEM SERVIÇO EM SEPARADO, BEARING				
						NOT SERVICED SEPARA	NO SE REPARA POR SE	NON FORNITO SEPARAT	064N
					NICHT A SEP ERS-T LIEI	NON FORUNI SEPAREM	SERVICERES IKKE SEPA	NIET LOS VERKRIJGBAA	
6		**NSS**		2	SEM SERVIÇO EM SEPARADO, PLATE				
						NOT SERVICED SEPARA	NO SE REPARA POR SE	NON FORNITO SEPARAT	064N
					NICHT A SEP ERS-T LIEI	NON FORUNI SEPAREM	SERVICERES IKKE SEPA	NIET LOS VERKRIJGBAA	
7		**NSS**		2	SEM SERVIÇO EM SEPARADO, SEAL				
						NOT SERVICED SEPARA	NO SE REPARA POR SE	NON FORNITO SEPARAT	064N
					NICHT A SEP ERS-T LIEI	NON FORUNI SEPAREM	SERVICERES IKKE SEPA	NIET LOS VERKRIJGBAA	
8		**S114704**		1	ENGRENAGEM, kit	GEAR	ENGRANJE	INGRANAGGIO	3820
					ZAHNRAD	ENGRENAGE	GEAR	GEAR	
9		**NSS**		2	SEM SERVIÇO EM SEPARADO, GASKET				
						NOT SERVICED SEPARA	NO SE REPARA POR SE	NON FORNITO SEPARAT	064N
					NICHT A SEP ERS-T LIEI	NON FORUNI SEPAREM	SERVICERES IKKE SEPA	NIET LOS VERKRIJGBAA	
10		**E68635**		1	ALOJAMENTO	HOUSING	ALOJAMIENTO	ALLOGGIAMENTO	014V
					GEHÄUSE	CARTER	HUS	HUIS	
11		**S93899**		1	FLANGE	FLANGE	BRIDA	FLANGIA	070F
					FLANSCH	BRIDE	FLANGE	FLENS	
12		**L32418**		2	VEDADOR DE RETENCAO	SEAL	SELLO/RETEN	GUARNIZIONE TENUTA	7460
					DICHTRING	JOINT-D'ETANCHEITE	SEAL	SEAL	
13		**D31957**		6	ARRUELA	WASHER	ARANDELA	RONDELLA	9720
					UNTERLEGSCHEIBE	RONDELLE	WASHER	WASHER	
14		**426-1080**		4	PARAFUSO, Hex, 5/8"-11 x 5", G8				
						BOLT	PERNO	BULLONE	140B
					SCHRAUBE	VIS	BOLT	BOUT	
15		**A14515**		1	O-RING, 1.859" ID x 2.137" OD x 0.139"				
						O-RING	JUNTA TÓRICA	ANELLO TOROIDALE	055A
					O-RING	JOINT TORIQUE	O-RING	O-RING	
16		**S93900**		1	ANEL	RING	ANILLO	ANELLO	045A
					RING	ANNEAU	RING	RING	
17		**A14506**		1	O-RING, 2.234" ID x 2.512" OD x 0.139"				
						O-RING	JUNTA TÓRICA	ANELLO TOROIDALE	055A
					O-RING	JOINT TORIQUE	O-RING	O-RING	
18		**S93901**		1	FLANGE	FLANGE	BRIDA	FLANGIA	070F
					FLANSCH	BRIDE	FLANGE	FLENS	
19		**95-12**		2	ARRUELA PLANA, 3/4"	WASHER	ARANDELA	RONDELLA	131R
					UNTERLEGSCHEIBE	RONDELLE	FLADSKIVE	SLUITRING	

08-20	01	p2	03/09

BOMBA HIDRÁULICA - CONJUNTO□ULICA
HYDRAULIC PUMP - ASSEMBLY
BOMBA HIDRAULICA - CONJUNTO
HYDRAULIC PUMP - ASSEMBLY

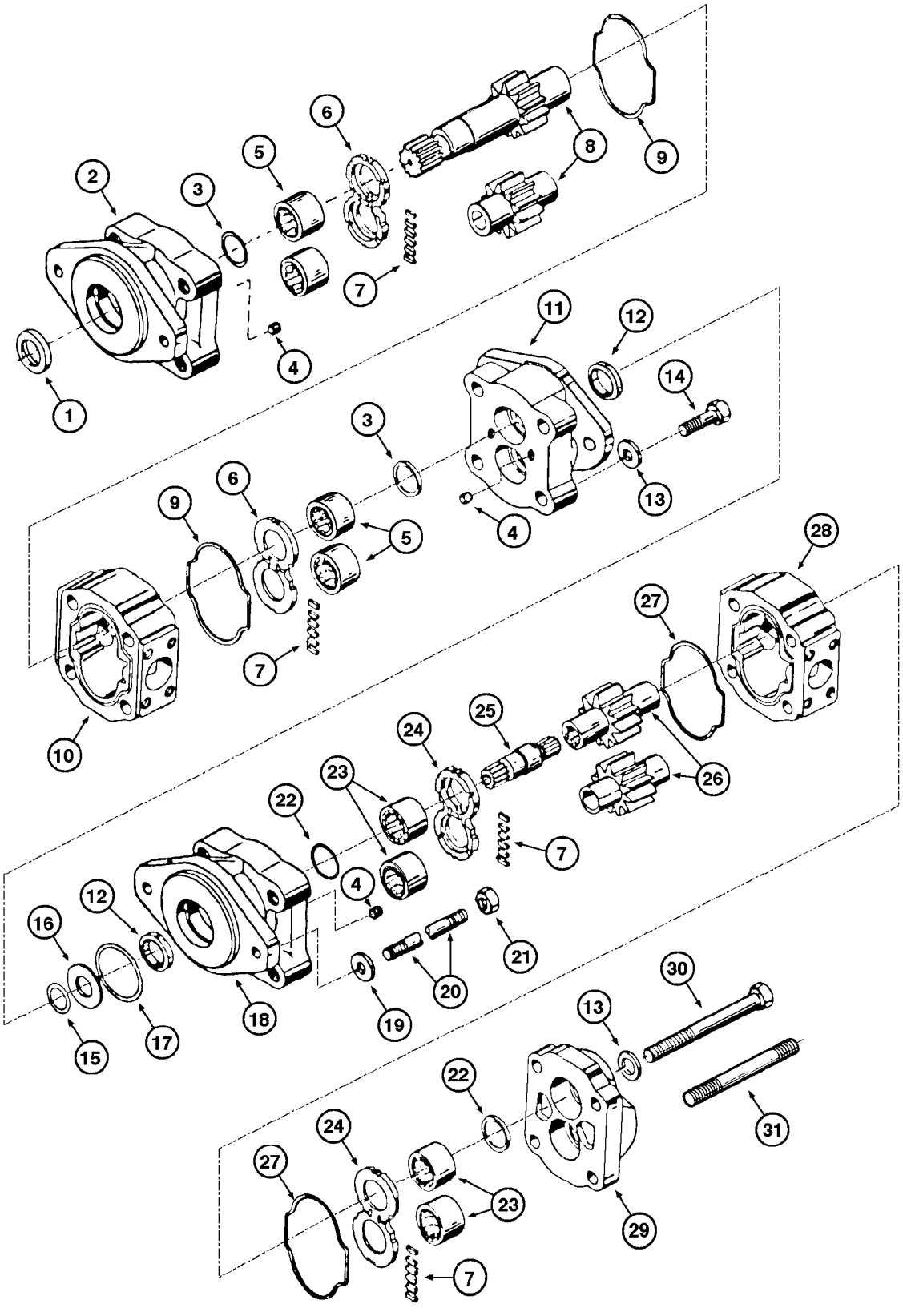

HYDRAULIC PUMP - ASSEMBLY
HYDRAULIC PUMP - ASSEMBLY
HYDRAULIC PUMP - ASSEMBLY
HYDRAULIC PUMP - ASSEMBLY

R	N	P.N.	MOD	Q	Denominação Bezeichnung	Description Description	Denominacion Beskrivelse	Descrizione Beschrijving	L.C.
20		**E68636**		2	PRISIONEIRO GEWINDEBOLZEN	STUD GOUJON	PRISIONERO STØTTEBOLT	PRIGIONIERO TAPEIND	210P
21		**425-168**		2	PORCA, 1/2"-13, G5, Hvy MUTTER	NUT ECROU	TUERCA MØTRIK	DADO MOER	010D
22		**NSS**		2	SEM SERVIÇO EM SEPARADO, SEAL NICHT A SEP ERS-T LIEI	NOT SERVICED SEPARA NON FORUNI SEPAREM	NO SE REPARA POR SE SERVICERES IKKE SEPA	NON FORNITO SEPARAT NIET LOS VERKRIJGBAA	064N
23		**NSS**		4	SEM SERVIÇO EM SEPARADO, BEARING NICHT A SEP ERS-T LIEI	NOT SERVICED SEPARA NON FORUNI SEPAREM	NO SE REPARA POR SE SERVICERES IKKE SEPA	NON FORNITO SEPARAT NIET LOS VERKRIJGBAA	064N
24		**NSS**		2	SEM SERVIÇO EM SEPARADO, PLATE NICHT A SEP ERS-T LIEI	NOT SERVICED SEPARA NON FORUNI SEPAREM	NO SE REPARA POR SE SERVICERES IKKE SEPA	NON FORNITO SEPARAT NIET LOS VERKRIJGBAA	064N
25		**S93903**		1	EIXO WELLE	SHAFT ARBRE	EJE AKSEL	ALBERO AS	016A
26		**E69865**		1	JOGO, gear SATZ	SET JEU	JUEGO SÆT	KIT SET	Z518
27		**NSS**		2	SEM SERVIÇO EM SEPARADO, GASKET NICHT A SEP ERS-T LIEI	NOT SERVICED SEPARA NON FORUNI SEPAREM	NO SE REPARA POR SE SERVICERES IKKE SEPA	NON FORNITO SEPARAT NIET LOS VERKRIJGBAA	064N
28		**E68637**		1	ALOJAMENTO GEHÄUSE	HOUSING CARTER	ALOJAMIENTO HUS	ALLOGGIAMENTO HUIS	014V
29		**L32110**		1	COBERTURA ABDECKUNG	COVER COUVERCLE	CUBIERTA DÆKSEL	COPERCHIO AFSCHERMING	265C
30		**426-1072**		2	PARAFUSO, Hex, 5/8"-11 x 4 1/2", G8 SCHRAUBE	BOLT VIS	PERNO BOLT	BULLONE BOUT	140B
31		**E69843**		2	PRISIONEIRO GEWINDEBOLZEN	STUD GOUJON	PRISIONERO STØTTEBOLT	PRIGIONIERO TAPEIND	210P
	1	**E68638**		1	KIT DE REPARO REPARATURSATZ	REPAIR KIT KIT DE REPARATION	KIT DE REPARACIÓN REPARATIONSSÆT	KIT DI RIPARAZIONE REPARATIEKIT	003K
	2	**E97242**		1	KIT DE REPARO REPARATURSATZ	REPAIR KIT KIT DE REPARATION	KIT DE REPARACIÓN REPARATIONSSÆT	KIT DI RIPARAZIONE REPARATIEKIT	003K

(1) Inclui 1,3,7,9,12,17,22,27
(2) Inclui 1,3,5,6,7,9,12,17,22,23,24,27

08-22	01	p1	12/07

CONTROLE DA CARREGADEIRA (2 CARRETÉIS & 1 ALAVANCA - PARKER)
LOADER CONTROL (2 SPOOL & 1 LEVER - PARKER)
CONTROL DE LA CARGADORA (2 CARRETES & 1 PALANCA - PARKER)
LOADER CONTROL (2 SPOOL & 1 LEVER - PARKER)

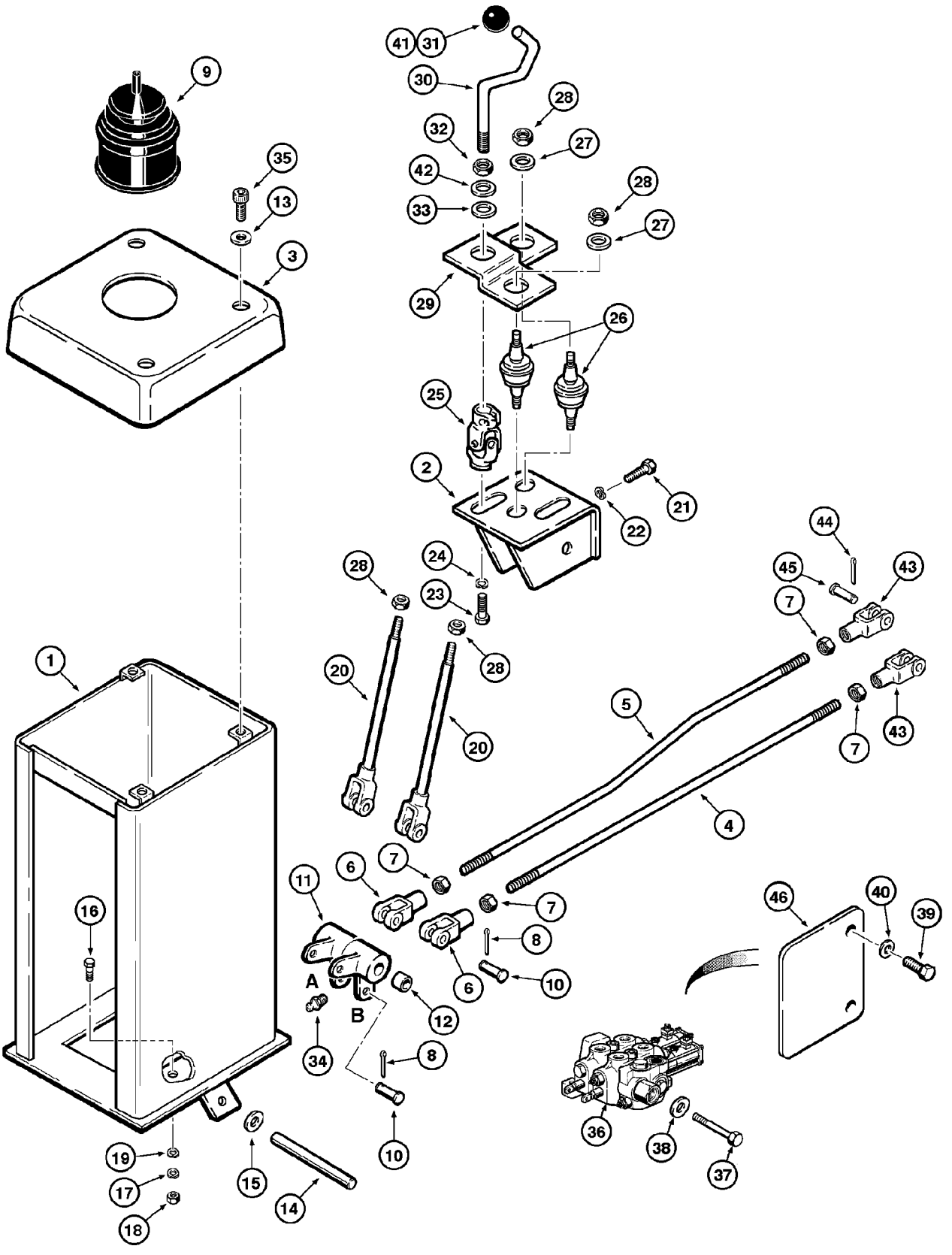

LOADER CONTROL (2 SPOOL & 1 LEVER - PARKER)
LOADER CONTROL (2 SPOOL & 1 LEVER - PARKER)
LOADER CONTROL (2 SPOOL & 1 LEVER - PARKER)
LOADER CONTROL (2 SPOOL & 1 LEVER - PARKER)

R	N	P.N.	MOD	Q	Denominação Bezeichnung	Description Description	Denominacion Beskrivelse	Descrizione Beschrijving	L.C.
1		147417A1		1	CHAPA STAHLPLATTE	STEEL PLATE PLAQUE D'ACIER	PLACA DE ACERO STÅLPLADE	PIASTRA D'ACCIAIO STALEN PLAAT	015L
2		147419A1		1	SUPORTE STÜTZE	SUPPORT SUPPORT	SOPORTE BESLAG	SUPPORTO STEUN	300S
3		146426A1		1	COBERTURA ABDECKUNG	COVER COUVERCLE	CUBIERTA DÆKSEL	COPERCHIO AFSCHERMING	265C
4		146425A1		1	HASTE, control STANGE	ROD TIGE	VARILLA STANG	ASTA STANG	090A
5		146424A1		1	HASTE, control STANGE	ROD TIGE	VARILLA STANG	ASTA STANG	090A
6		213-128		2	GARFO AJUSTÁVEL, 1/2"-20 x 3" EINSTELLBARER SCHÄ	ADJUSTABLE CLEVIS CHAPE DE REGLAGE	MOSQUETÓN AJUSTABL JUSTERBAR GAFFEL	FORCELLA ATTACCO RI VERSTELBARE GAFFEL	1680
7		425-158		4	PORCA, Jam, 1/2"-20, G5 MUTTER	NUT ECROU	TUERCA MØTRIK	DADO MOER	010D
8		432-816		4	CONTRA PINO, 1/8" x 1" SPLINT	COTTER PIN GOUPILLE FENDUE	PASADOR SPLITBOLT	COPPIGLIA SPLITPEN	270C
9		146427A1		1	CAPA MANSCHETTE	BOOT SOUFFLET	FUNDA MANCHET	PARAPOLVERE HOES	330C
10		427-8136		4	PINO DE GARFO, 1/2" x 1.360" GABELBOLZEN	CLEVIS PIN AXE DE CHAPE	EJE CON CABEZA GAFFELBOLT	PERNO A TESTA PIANA GAFFELPEN	P694
11		147415A1		2	CUBO NABE	HUB MOYEU	CUBO NAV	MOZZO NAAF	135M
12		L55379		1	BUCHA BUECHSE	BUSHING DOUILLE	CASQUILLO BUSHING	BOCCOLA BUSHING	1140
13		495-31022		3	ARRUELA PLANA, #10 UNTERLEGSCHEIBE	WASHER RONDELLE	ARANDELA FLADSKIVE	RONDELLA SLUITRING	131R
14		L102849		1	EIXO WELLE	SHAFT ARBRE	EJE AKSEL	ALBERO AS	016A
15		195-2083		2	ARRUELA UNTERLEGSCHEIBE	WASHER RONDELLE	ARANDELA WASHER	RONDELLA WASHER	9720
16		413-620		4	PARAFUSO, Hex, 3/8"-16 x 1 1/4", G5, Full Thd SCHRAUBE	BOLT VIS	PERNO BOLT	BULLONE BOUT	140B
17		492-11038		4	TRAVA DA ARRUELA, 3/8" SICHERUNGSSCHEIBE	LOCK WASHER RONDELLE FREIN	ARANDELA DE BLOQUE LÅSESKIVE	RONDELLA DI SICUREZ BORGRING	132R
18		425-106		4	PORCA, 3/8"-16, G5 MUTTER	NUT ECROU	TUERCA MØTRIK	DADO MOER	010D
19		495-11041		4	ARRUELA PLANA, 3/8", SAE UNTERLEGSCHEIBE	WASHER RONDELLE	ARANDELA FLADSKIVE	RONDELLA SLUITRING	131R
20		147422A1		2	ALAVANCA DE CONTROL STEUERHEBEL	CONTROL LEVER LEVIER DE COMMANDE	PALANCA DE CONTROL STYRESTANG	LEVA DI COMANDO BEDIENINGSHENDEL	P155
21		413-416		4	PARAFUSO, Hex, 1/4"-20 x 1", G5 SCHRAUBE	BOLT VIS	PERNO BOLT	BULLONE BOUT	140B

Parker - Montada até o nº de série N6AE00912

W20E

08-22	01	p2	12/07

CONTROLE DA CARREGADEIRA (2 CARRETÉIS & 1 ALAVANCA - PARKER)
LOADER CONTROL (2 SPOOL & 1 LEVER - PARKER)
CONTROL DE LA CARGADORA (2 CARRETES & 1 PALANCA - PARKER)
LOADER CONTROL (2 SPOOL & 1 LEVER - PARKER)

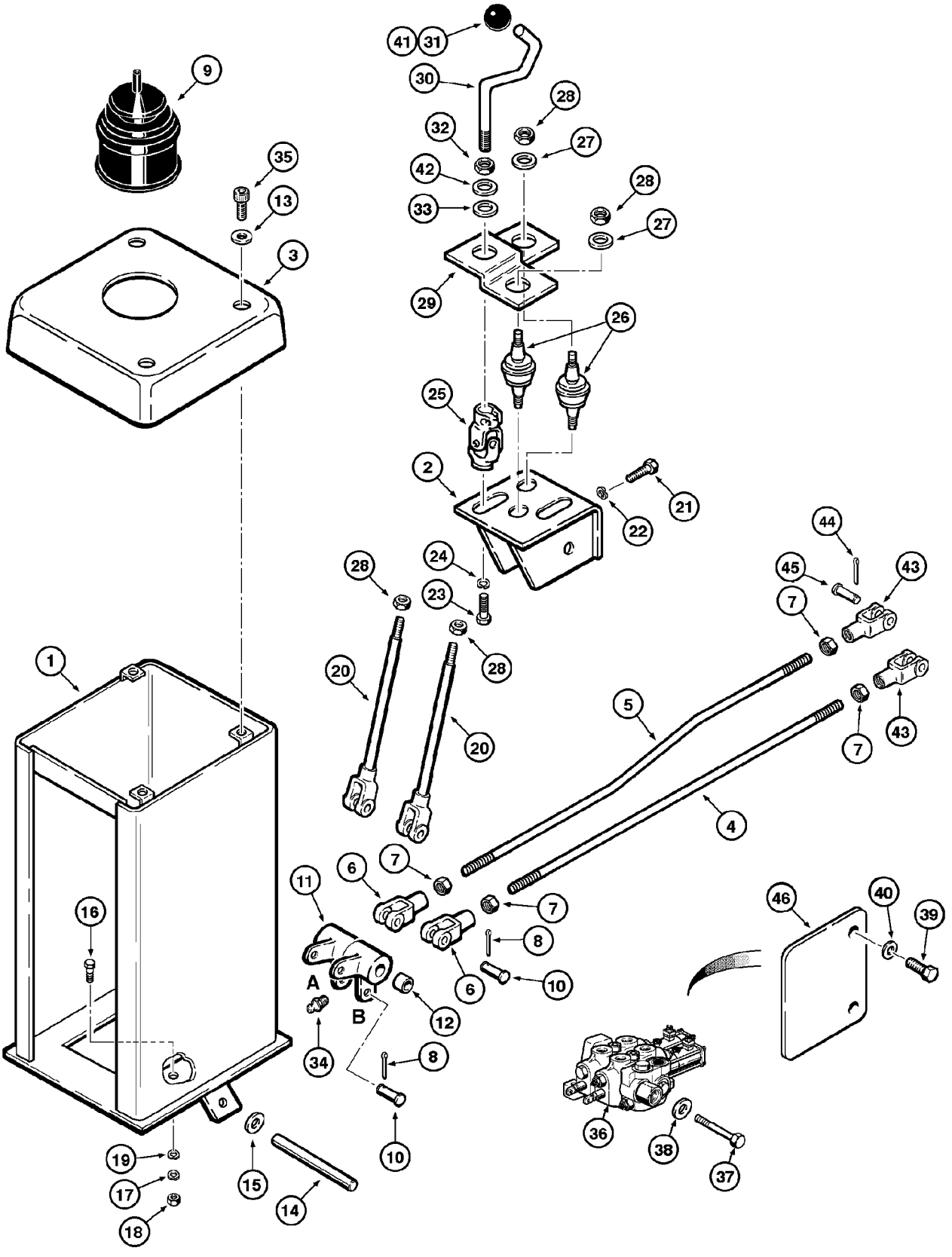

LOADER CONTROL (2 SPOOL & 1 LEVER - PARKER)
LOADER CONTROL (2 SPOOL & 1 LEVER - PARKER)
LOADER CONTROL (2 SPOOL & 1 LEVER - PARKER)
LOADER CONTROL (2 SPOOL & 1 LEVER - PARKER)

R	N	P.N.	MOD	Q	Denominação Bezeichnung	Description Description	Denominacion Beskrivelse	Descrizione Beschrijving	L.C.
22		495-11028		4	ARRUELA PLANA, 1/4", SAE				
						WASHER	ARANDELA	RONDELLA	131R
					UNTERLEGSCHEIBE	RONDELLE	FLADSKIVE	SLUITRING	
23		413-88		1	PARAFUSO, Hex, 1/2"-13 x 1/2", G5, Full Thd				
						BOLT	PERNO	BULLONE	140B
					SCHRAUBE	VIS	BOLT	BOUT	
24		495-21056		1	ARRUELA PLANA, 1/2"	WASHER	ARANDELA	RONDELLA	131R
					UNTERLEGSCHEIBE	RONDELLE	FLADSKIVE	SLUITRING	
25		147416A1		1	JUNTA, universal	GASKET	JUNTA	GUARNIZIONE	123G
					DICHTUNG	JOINT	PAKNING	PAKKING	
26		146483A1		2	EIXO	SHAFT	EJE	ALBERO	016A
					WELLE	ARBRE	AKSEL	AS	
27		495-11034		2	ARRUELA PLANA, 5/16", SAE				
						WASHER	ARANDELA	RONDELLA	131R
					UNTERLEGSCHEIBE	RONDELLE	FLADSKIVE	SLUITRING	
28		E34113		4	PORCA	NUT	TUERCA	DADO	010D
					MUTTER	ECROU	MØTRIK	MOER	
29		146412A1		1	BASE	BASE	BASE	BASE	021B
					SOCKEL	BASE	BUNDPLADE	BASIS	
30		147039A1		1	HASTE, control	ROD	VARILLA	ASTA	090A
					STANGE	TIGE	STANG	STANG	
31		L56064		1	MANOPLA	KNOB	PERILLA	MANOPOLA	4850
					KNAUF	BOULE DE DIRECTION	KNOB	KNOB	
32		425-1510		1	PORCA, Jam, 5/8"-18, G5	NUT	TUERCA	DADO	010D
					MUTTER	ECROU	MØTRIK	MOER	
33		495-11066		1	ARRUELA PLANA, 5/8", SAE				
						WASHER	ARANDELA	RONDELLA	131R
					UNTERLEGSCHEIBE	RONDELLE	FLADSKIVE	SLUITRING	
34		219-1		2	GRAXEIRA, 1/8"-27 x .66 lg	LUBE NIPPLE	BOQUILLA DE LUBRICAC	INGRASSATORE	060I
					SCHMIERNIPPEL	GRAISSEUR	SMØRENIPPEL	SMEERNIPPEL	
35		459-11012		3	PARAFUSO, Slotted Pan Hd, #10-32 x 3/4"				
						SCREW	TORNILLO	VITE	040V
					SCHRAUBE	VIS	SKRUE	SCHROEF	
36		REF		1	INSTRUÇÃO, VALVE 2 Spool (P.8-34)				
						INSTRUCTION	INSTRUCCIÓN	ISTRUZIONI	Z571
					ANLEITUNG	INSTRUCTION	INSTRUKTION	INSTRUCTIE	
37		413-888		3	PARAFUSO, Hex, 1/2"-13 x 5 1/2", G5				
						BOLT	PERNO	BULLONE	140B
					SCHRAUBE	VIS	BOLT	BOUT	
38		495-21056		3	ARRUELA PLANA, 1/2"	WASHER	ARANDELA	RONDELLA	131R
					UNTERLEGSCHEIBE	RONDELLE	FLADSKIVE	SLUITRING	
39		413-824		3	PARAFUSO, Hex, 1/2"-13 x 1 1/2", G5, Full Thd				
						BOLT	PERNO	BULLONE	140B
					SCHRAUBE	VIS	BOLT	BOUT	
40		495-21056		3	ARRUELA PLANA, 1/2"	WASHER	ARANDELA	RONDELLA	131R
					UNTERLEGSCHEIBE	RONDELLE	FLADSKIVE	SLUITRING	
41		345-49		AR	LOCTITE	LOCTITE	LOCTITE	LOCTITE	P712
					LOCTITE	LOCTITE	LOCTITE	LOCTITE	

Parker - Montada até o nº de série N6AE00912

W20E

08-22	01	p3	12/07

CONTROLE DA CARREGADEIRA (2 CARRETÉIS & 1 ALAVANCA - PARKER)
LOADER CONTROL (2 SPOOL & 1 LEVER - PARKER)
CONTROL DE LA CARGADORA (2 CARRETES & 1 PALANCA - PARKER)
LOADER CONTROL (2 SPOOL & 1 LEVER - PARKER)

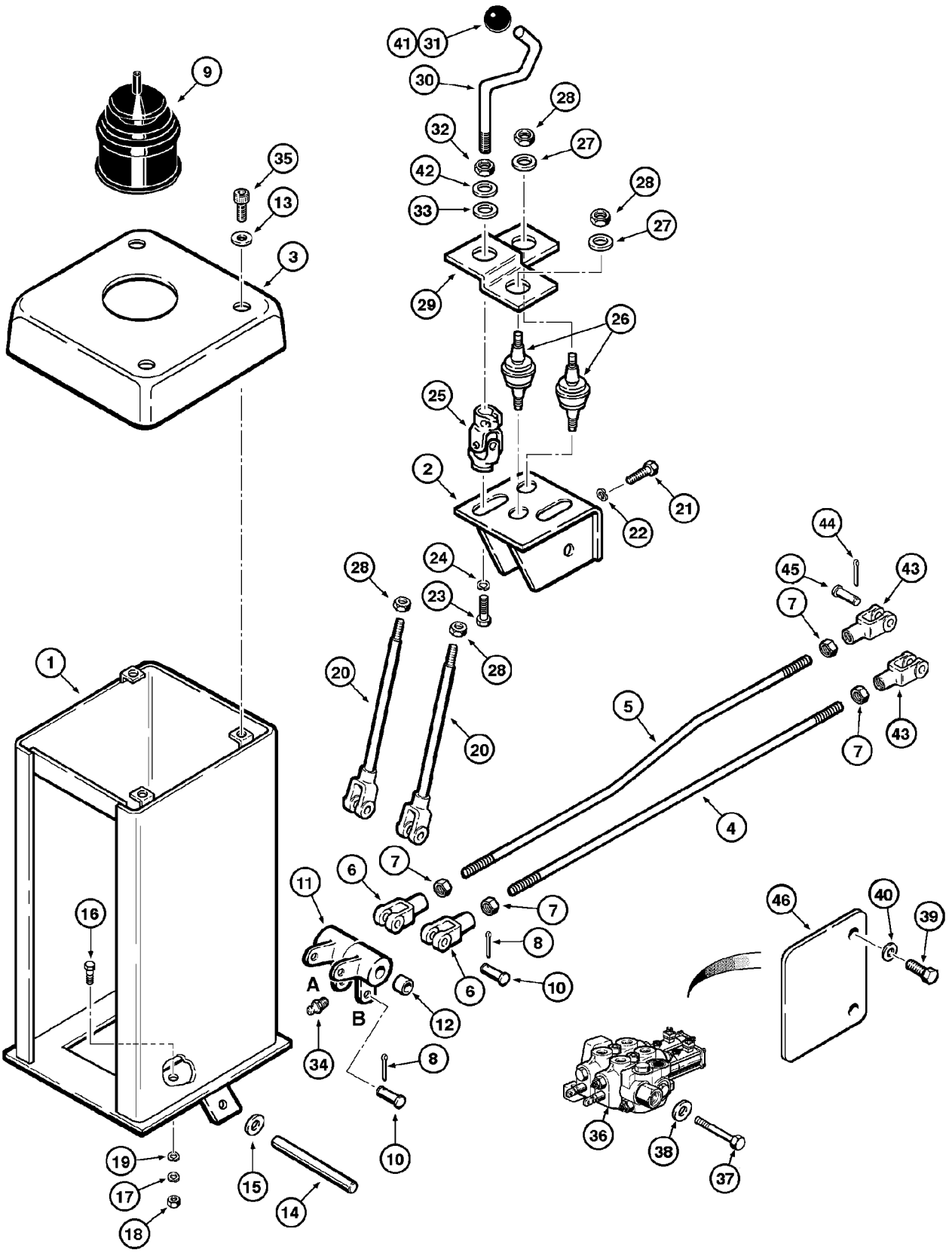

LOADER CONTROL (2 SPOOL & 1 LEVER - PARKER)
LOADER CONTROL (2 SPOOL & 1 LEVER - PARKER)
LOADER CONTROL (2 SPOOL & 1 LEVER - PARKER)
LOADER CONTROL (2 SPOOL & 1 LEVER - PARKER)

R	N	P.N.	MOD	Q	Denominação Bezeichnung	Description Description	Denominacion Beskrivelse	Descrizione Beschrijving	L.C.
42		**493-21065**		1	TRAVA DA ARRUELA, Int Tooth, 5/8"				
						LOCK WASHER	ARANDELA DE BLOQUE	RONDELLA DI SICUREZ	132R
					SICHERUNGSSCHEIBE	RONDELLE FREIN	LÅSESKIVE	BORGRING	
43		**149208A1**		2	GARFO	YOKE	ARTICULACIÓN	FORCELLA	085F
					GABEL	CHAPE	GAFFEL	GAFFEL	
44		**432-612**		2	CONTRA PINO, 3/32" x 3/4"				
						COTTER PIN	PASADOR	COPPIGLIA	270C
					SPLINT	GOUPILLE FENDUE	SPLITBOLT	SPLITPEN	
44		**427-5094**		2	PINO DE GARFO, 5/16" x .940", HDN				
						CLEVIS PIN	EJE CON CABEZA	PERNO A TESTA PIANA	P694
					GABELBOLZEN	AXE DE CHAPE	GAFFELBOLT	GAFFELPEN	
46		**149206A1**		1	PLACA, valve	PLATE	PLACA	PIASTRA	105P
					PLATTE	PLAQUE	PLADE	PLAAT	

Parker - Montada até o nº de série N6AE00912

W20E

08-22B	01	p1	01/09

CONTROLE DA CARREGADEIRA (2 CARRETÉIS & 1 ALAVANCA - REXROTH)
LOADER CONTROL (2 SPOOL & 1 LEVER - REXROTH)
CONTROL DE LA CARGADORA (2 CARRETES & 1 PALANCA - REXROTH)
LOADER CONTROL (2 SPOOL & 1 LEVER - REXROTH)

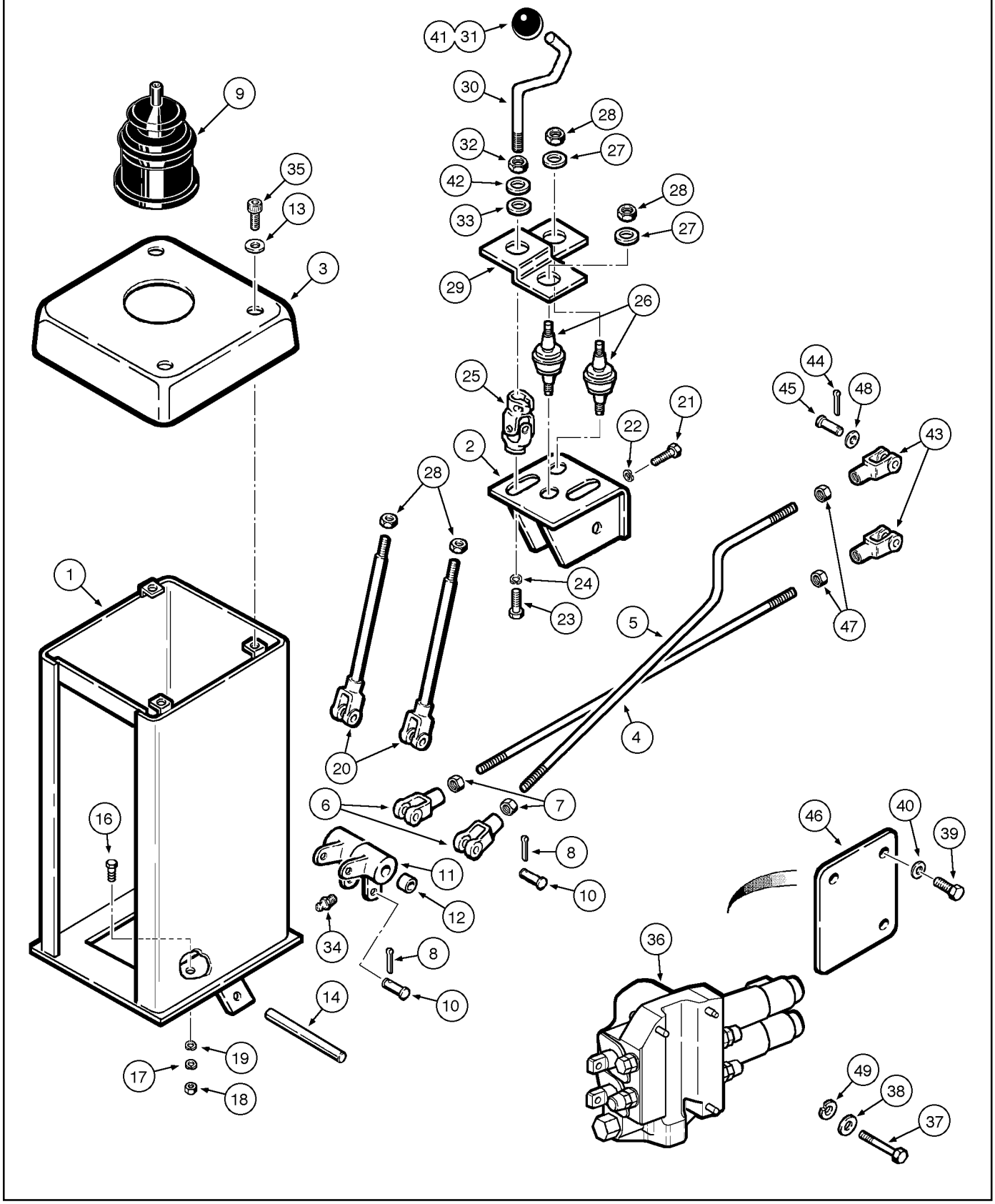

LOADER CONTROL (2 SPOOL & 1 LEVER - REXROTH)
LOADER CONTROL (2 SPOOL & 1 LEVER - REXROTH)
LOADER CONTROL (2 SPOOL & 1 LEVER - REXROTH)
LOADER CONTROL (2 SPOOL & 1 LEVER - REXROTH)

R	N	P.N.	MOD	Q	Denominação Bezeichnung	Description Description	Denominacion Beskrivelse	Descrizione Beschrijving	L.C.
1		147417A1		1	CHAPA STAHLPLATTE	STEEL PLATE PLAQUE D'ACIER	PLACA DE ACERO STÅLPLADE	PIASTRA D'ACCIAIO STALEN PLAAT	015L
2		147419A1		1	SUPORTE STÜTZE	SUPPORT SUPPORT	SOPORTE BESLAG	SUPPORTO STEUN	300S
3		146426A1		1	COBERTURA ABDECKUNG	COVER COUVERCLE	CUBIERTA DÆKSEL	COPERCHIO AFSCHERMING	265C
4		87462916		1	TIRANTE, arm control SPURSTANGE	TIE-ROD TIRANT	TIRANTE TRÆKSTANG	TIRANTE TREKSTANG	142T
5		87462915		1	TIRANTE, bucket control SPURSTANGE	TIE-ROD TIRANT	TIRANTE TRÆKSTANG	TIRANTE TREKSTANG	142T
6		213-128		2	GARFO AJUSTÁVEL, 1/2"-20 x 3" EINSTELLBARER SCHÄ	ADJUSTABLE CLEVIS CHAPE DE REGLAGE	MOSQUETÓN AJUSTABL JUSTERBAR GAFFEL	FORCELLA ATTACCO RI VERSTELBARE GAFFEL	1680
7		425-158		4	PORCA, Jam, 1/2"-20, G5 MUTTER	NUT ECROU	TUERCA MØTRIK	DADO MOER	010D
8		432-816		4	CONTRA PINO, 1/8" x 1" SPLINT	COTTER PIN GOUPILLE FENDUE	PASADOR SPLITBOLT	COPPIGLIA SPLITPEN	270C
9		146427A1		1	CAPA MANSCHETTE	BOOT SOUFFLET	FUNDA MANCHET	PARAPOLVERE HOES	330C
10		427-8136		4	PINO DE GARFO, 1/2" x 1.360" GABELBOLZEN	CLEVIS PIN AXE DE CHAPE	EJE CON CABEZA GAFFELBOLT	PERNO A TESTA PIANA GAFFELPEN	P694
11		147415A1		2	CUBO NABE	HUB MOYEU	CUBO NAV	MOZZO NAAF	135M
12		L55379		1	BUCHA BUECHSE	BUSHING DOUILLE	CASQUILLO BUSHING	BOCCOLA BUSHING	1140
13		495-31022		3	ARRUELA PLANA, #10 UNTERLEGSCHEIBE	WASHER RONDELLE	ARANDELA FLADSKIVE	RONDELLA SLUITRING	131R
14		L102849		1	EIXO WELLE	SHAFT ARBRE	EJE AKSEL	ALBERO AS	016A
16		413-620		4	PARAFUSO, Hex, 3/8"-16 x 1 1/4", G5, Full Thd SCHRAUBE	BOLT VIS	PERNO BOLT	BULLONE BOUT	140B
17		492-11038		4	TRAVA DA ARRUELA, 3/8" SICHERUNGSSCHEIBE	LOCK WASHER RONDELLE FREIN	ARANDELA DE BLOQUE LÅSESKIVE	RONDELLA DI SICUREZ BORGRING	132R
18		425-106		4	PORCA, 3/8"-16, G5 MUTTER	NUT ECROU	TUERCA MØTRIK	DADO MOER	010D
19		495-11041		4	ARRUELA PLANA, 3/8", SAE UNTERLEGSCHEIBE	WASHER RONDELLE	ARANDELA FLADSKIVE	RONDELLA SLUITRING	131R
20		87398200		2	TIRANTE, control SPURSTANGE	TIE-ROD TIRANT	TIRANTE TRÆKSTANG	TIRANTE TREKSTANG	142T
21		413-416		4	PARAFUSO, Hex, 1/4"-20 x 1", G5 SCHRAUBE	BOLT VIS	PERNO BOLT	BULLONE BOUT	140B
22		495-11028		4	ARRUELA PLANA, 1/4", SAE UNTERLEGSCHEIBE	WASHER RONDELLE	ARANDELA FLADSKIVE	RONDELLA SLUITRING	131R

Rexroth - Montada a partir do nº de série N6AE00913

W20E

08-22B	01	p2	01/09

CONTROLE DA CARREGADEIRA (2 CARRETÉIS & 1 ALAVANCA - REXROTH)
LOADER CONTROL (2 SPOOL & 1 LEVER - REXROTH)
CONTROL DE LA CARGADORA (2 CARRETES & 1 PALANCA - REXROTH)
LOADER CONTROL (2 SPOOL & 1 LEVER - REXROTH)

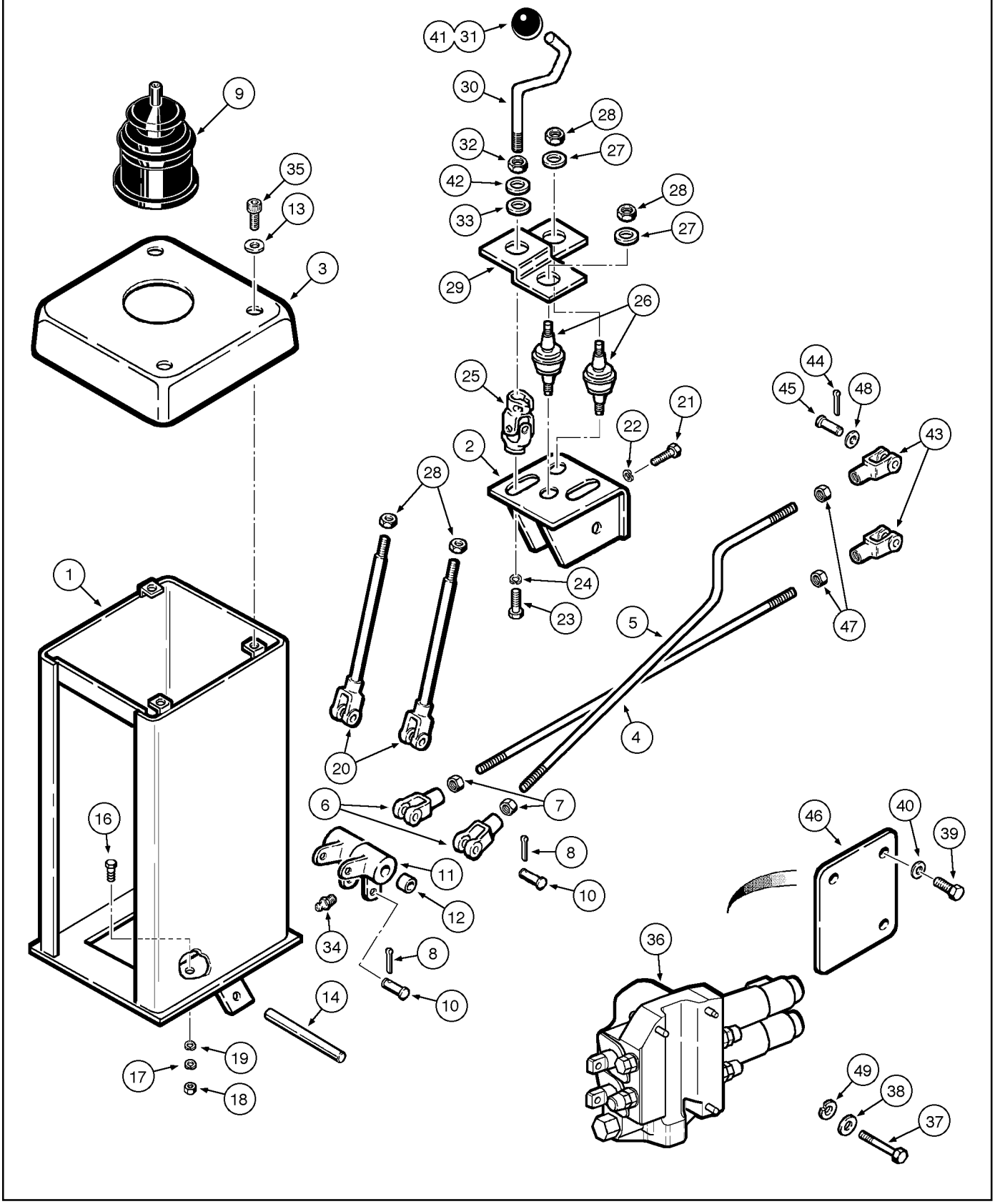

LOADER CONTROL (2 SPOOL & 1 LEVER - REXROTH)
LOADER CONTROL (2 SPOOL & 1 LEVER - REXROTH)
LOADER CONTROL (2 SPOOL & 1 LEVER - REXROTH)
LOADER CONTROL (2 SPOOL & 1 LEVER - REXROTH)

R	N	P.N.	MOD	Q	Denominação Bezeichnung	Description Description	Denominacion Beskrivelse	Descrizione Beschrijving	L.C.
23		413-88		1	PARAFUSO, Hex, 1/2"-13 x 1/2", G5, Full Thd				
						BOLT	PERNO	BULLONE	140B
					SCHRAUBE	VIS	BOLT	BOUT	
24		495-21056		1	ARRUELA PLANA, 1/2"	WASHER	ARANDELA	RONDELLA	131R
					UNTERLEGSCHEIBE	RONDELLE	FLADSKIVE	SLUITRING	
25		147416A1		1	JUNTA, universal	GASKET	JUNTA	GUARNIZIONE	123G
					DICHTUNG	JOINT	PAKNING	PAKKING	
26		146483A1		2	EIXO	SHAFT	EJE	ALBERO	016A
					WELLE	ARBRE	AKSEL	AS	
27		495-11034		2	ARRUELA PLANA, 5/16", SAE				
						WASHER	ARANDELA	RONDELLA	131R
					UNTERLEGSCHEIBE	RONDELLE	FLADSKIVE	SLUITRING	
28		P0034113E		4	PORCA	NUT	TUERCA	DADO	010D
					MUTTER	ECROU	MØTRIK	MOER	
29		146412A1		1	BASE	BASE	BASE	BASE	021B
					SOCKEL	BASE	BUNDPLADE	BASIS	
30		87398199		1	HASTE, control	ROD	VARILLA	ASTA	090A
					STANGE	TIGE	STANG	STANG	
31		L56064		1	MANOPLA	KNOB	PERILLA	MANOPOLA	4850
					KNAUF	BOULE DE DIRECTION	KNOB	KNOB	
32		425-1510		1	PORCA, Jam, 5/8"-18, G5	NUT	TUERCA	DADO	010D
					MUTTER	ECROU	MØTRIK	MOER	
33		495-11066		1	ARRUELA PLANA, 5/8", SAE				
						WASHER	ARANDELA	RONDELLA	131R
					UNTERLEGSCHEIBE	RONDELLE	FLADSKIVE	SLUITRING	
34		219-1		2	GRAXEIRA, 1/8"-27 x .66 lg	LUBE NIPPLE	BOQUILLA DE LUBRICAC	INGRASSATORE	060I
					SCHMIERNIPPEL	GRAISSEUR	SMØRENIPPEL	SMEERNIPPEL	
35		459-11012		3	PARAFUSO, Slotted Pan Hd, #10-32 x 3/4"				
						SCREW	TORNILLO	VITE	040V
					SCHRAUBE	VIS	SKRUE	SCHROEF	
36		REF		1	INSTRUÇÃO, VALVE 2 Spool (P.8-66)				
						INSTRUCTION	INSTRUCCIÓN	ISTRUZIONI	Z571
					ANLEITUNG	INSTRUCTION	INSTRUKTION	INSTRUCTIE	
37		14359331		3	PARAFUSO	SCREW	TORNILLO	VITE	040V
					SCHRAUBE	VIS	SKRUE	SCHROEF	
38		895-11008		3	ARRUELA PLANA, M8 x 16 x 1.6				
						WASHER	ARANDELA	RONDELLA	131R
					UNTERLEGSCHEIBE	RONDELLE	FLADSKIVE	SLUITRING	
39		413-824		3	PARAFUSO, Hex, 1/2"-13 x 1 1/2", G5, Full Thd				
						BOLT	PERNO	BULLONE	140B
					SCHRAUBE	VIS	BOLT	BOUT	
40		495-21056		3	ARRUELA PLANA, 1/2"	WASHER	ARANDELA	RONDELLA	131R
					UNTERLEGSCHEIBE	RONDELLE	FLADSKIVE	SLUITRING	
41		345-49		AR	LOCTITE	LOCTITE	LOCTITE	LOCTITE	P712
					LOCTITE	LOCTITE	LOCTITE	LOCTITE	
42		493-21065		1	TRAVA DA ARRUELA, Int Tooth, 5/8"				
						LOCK WASHER	ARANDELA DE BLOQUE	RONDELLA DI SICUREZ	132R
					SICHERUNGSSCHEIBE	RONDELLE FREIN	LÅSESKIVE	BORGRING	

Rexroth - Montada a partir do nº de série N6AE00913

W20E

08-22B	01	p3	01/09

CONTROLE DA CARREGADEIRA (2 CARRETÉIS & 1 ALAVANCA - REXROTH)
LOADER CONTROL (2 SPOOL & 1 LEVER - REXROTH)
CONTROL DE LA CARGADORA (2 CARRETES & 1 PALANCA - REXROTH)
LOADER CONTROL (2 SPOOL & 1 LEVER - REXROTH)

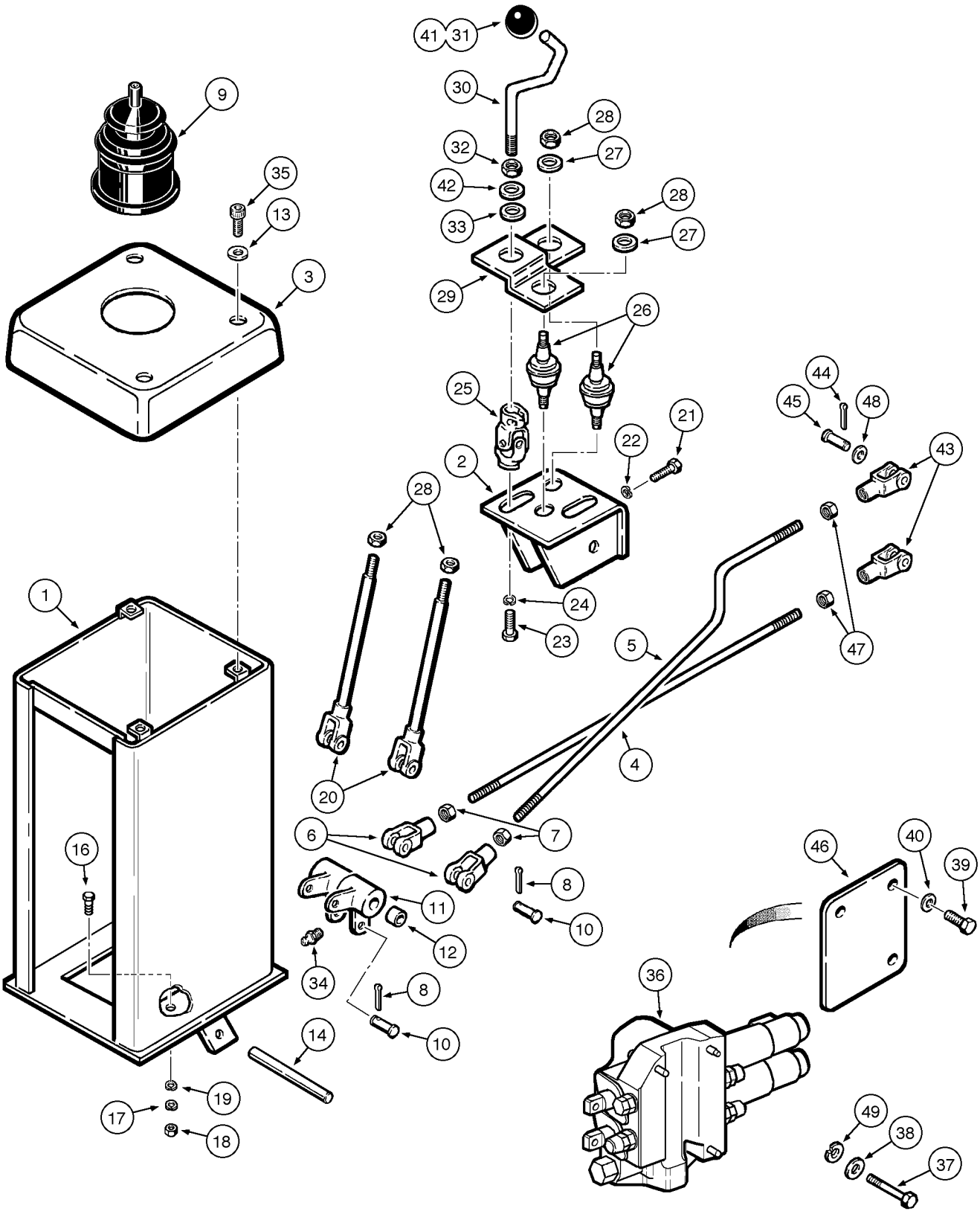

LOADER CONTROL (2 SPOOL & 1 LEVER - REXROTH)
LOADER CONTROL (2 SPOOL & 1 LEVER - REXROTH)
LOADER CONTROL (2 SPOOL & 1 LEVER - REXROTH)
LOADER CONTROL (2 SPOOL & 1 LEVER - REXROTH)

R	N	P.N.	MOD	Q	Denominação Bezeichnung	Description Description	Denominacion Beskrivelse	Descrizione Beschrijving	L.C.
43		**10000871**		2	GARFO GABEL	YOKE CHAPE	ARTICULACIÓN GAFFEL	FORCELLA GAFFEL	085F
44		**10796301**		2	CONTRA PINO, M3.2 x 12 SPLINT	COTTER PIN GOUPILLE FENDUE	PASADOR SPLITBOLT	COPPIGLIA SPLITPEN	270C
45		**10033410**		2	PINO PIN	PIN BROCHE	PASADOR STIFT	PERNO PEN	080P
46		**87462913**		1	PLACA DE COBERTURA, valve ABDECKPLATTE	COVER PLATE COUVERCLE	PLACA DE CUBIERTA DÆKPLADE	PIASTRA DI COPERTUR AFSCHERMPLAAT	110P
47		**12164721**		2	PORCA, M10 x 1.25, Cl 10 MUTTER	NUT ECROU	TUERCA MØTRIK	DADO MOER	010D
48		**12638621**		2	ARRUELA PLANA UNTERLEGSCHEIBE	WASHER RONDELLE	ARANDELA FLADSKIVE	RONDELLA SLUITRING	131R
49		**10615679**		1	TRAVA DA ARRUELA, Ext Tooth, M8 SICHERUNGSSCHEIBE	LOCK WASHER RONDELLE FREIN	ARANDELA DE BLOQUE LÅSESKIVE	RONDELLA DI SICUREZ BORGRING	132R

Rexroth - Montada a partir do nº de série N6AE00913

W20E

08-24	01	p1	07/10

CONTROLE DA CARREGADEIRA (2 CARRETÉIS & 2 ALAVANCAS - PARKER)
LOADER CONTROL (2 SPOOL & 2 LEVERS - PARKER)
CONTROL DE LA CARGADORA (2 CARRETES & 2 PALANCAS - PARKER)
LOADER CONTROL (2 SPOOL & 2 LEVERS - PARKER)

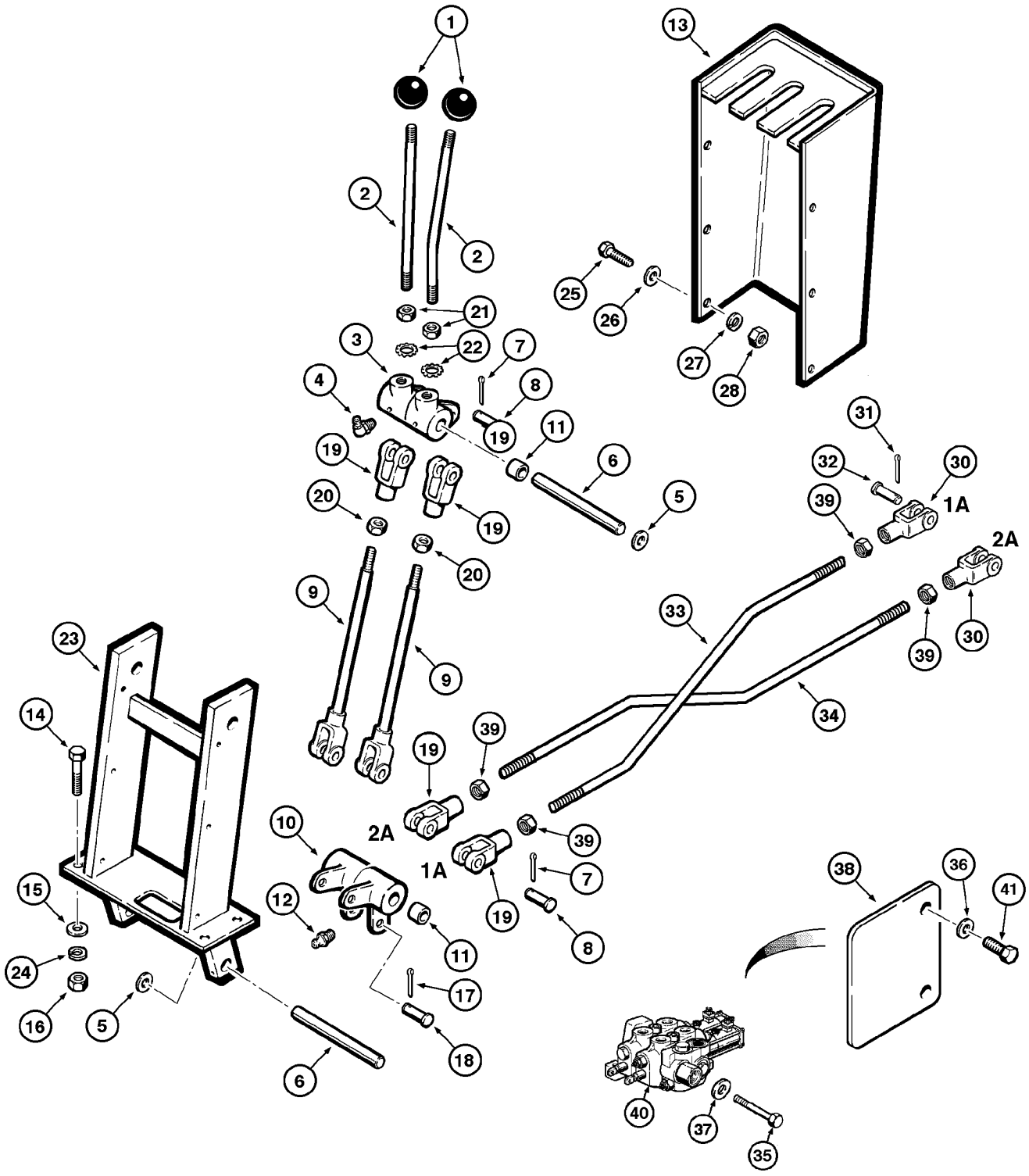

LOADER CONTROL (2 SPOOL & 2 LEVERS - PARKER)
LOADER CONTROL (2 SPOOL & 2 LEVERS - PARKER)
LOADER CONTROL (2 SPOOL & 2 LEVERS - PARKER)
LOADER CONTROL (2 SPOOL & 2 LEVERS - PARKER)

R	N	P.N.	MOD	Q	Denominação Bezeichnung	Description Description	Denominacion Beskrivelse	Descrizione Beschrijving	L.C.
1		L 56064		2	MANILHA GRIFF	HANDLE POIGNEE	MANECILLA HÅNDTAG	MANIGLIA HENDEL	020M
2		L 59087		2	TIRANTE FILETADO SPURSTANGE MIT GEW	THREADED TIE-ROD TIRANT FILETE	TIRANTE ROSCADO GEVINDSTANG	TIRANTE FILETTATO TREKSTANG M. SCHROI	141T
3		L 59090		2	ALAVANCA EM ÂNGULO WINKELHEBEL	BELLCRANK LEVIER DE RENVOI	PALANCA ACODADA VINKEVÆGTSTANG	LEVA A SQUADRA TUIMELAAR	048L
4		219-1		2	GRAXEIRA, 1/8"-27 x .66 lg SCHMIERNIPPEL	LUBE NIPPLE GRAISSEUR	BOQUILLA DE LUBRICAC SMØRENIPPEL	INGRASSATORE SMEERNIPPEL	060I
5		195-2083		AR	ARRUELA UNTERLEGSCHEIBE	WASHER RONDELLE	ARANDELA WASHER	RONDELLA WASHER	9720
6		L102849		2	EIXO WELLE	SHAFT ARBRE	EJE AKSEL	ALBERO AS	016A
7		432-816		2	CONTRA PINO, 1/8" x 1" SPLINT	COTTER PIN GOUPILLE FENDUE	PASADOR SPLITBOLT	COPPIGLIA SPLITPEN	270C
8		427-8136		2	PINO DE GARFO, 1/2" x 1.360" GABELBOLZEN	CLEVIS PIN AXE DE CHAPE	EJE CON CABEZA GAFFELBOLT	PERNO A TESTA PIANA GAFFELPEN	P694
9		L 59968		2	TIRANTE FILETADO SPURSTANGE MIT GEW	THREADED TIE-ROD TIRANT FILETE	TIRANTE ROSCADO GEVINDSTANG	TIRANTE FILETTATO TREKSTANG M. SCHROI	141T
10		147415A1		2	CUBO NABE	HUB MOYEU	CUBO NAV	MOZZO NAAF	135M
11		L 55379		2	ESPAÇADOR TUBO DISTANZROHR	TUBE SPACER TUBE ENTRETOISE	ESPACIADOR DE TUBO SLANGE, AFSTANDSSTY	DISTANZIALE TUBO AFSTANDSSTUK V. LEID	Z038
12		219-1		2	GRAXEIRA, 1/8"-27 x .66 lg SCHMIERNIPPEL	LUBE NIPPLE GRAISSEUR	BOQUILLA DE LUBRICAC SMØRENIPPEL	INGRASSATORE SMEERNIPPEL	060I
13		E 67101		1	ALOJAMENTO GEHÄUSE	HOUSING CARTER	ALOJAMIENTO HUS	ALLOGGIAMENTO HUIS	014V
14		413-620		4	PARAFUSO, Hex, 3/8"-16 x 1 1/4", G5, Full Thd SCHRAUBE	BOLT VIS	PERNO BOLT	BULLONE BOUT	140B
15		495-11041		8	ARRUELA PLANA, 3/8", SAE UNTERLEGSCHEIBE	WASHER RONDELLE	ARANDELA FLADSKIVE	RONDELLA SLUITRING	131R
16		425-106		4	PORCA, 3/8"-16, G5 MUTTER	NUT ECROU	TUERCA MØTRIK	DADO MOER	010D
17		432-816		4	CONTRA PINO, 1/8" x 1" SPLINT	COTTER PIN GOUPILLE FENDUE	PASADOR SPLITBOLT	COPPIGLIA SPLITPEN	270C
18		427-8136		4	PINO DE GARFO, 1/2" x 1.360" GABELBOLZEN	CLEVIS PIN AXE DE CHAPE	EJE CON CABEZA GAFFELBOLT	PERNO A TESTA PIANA GAFFELPEN	P694
19		213-128		4	GARFO AJUSTÁVEL, 1/2"-20 x 3" EINSTELLBARER SCHÄK	ADJUSTABLE CLEVIS CHAPE DE REGLAGE	MOSQUETÓN AJUSTABL JUSTERBAR GAFFEL	FORCELLA ATTACCO RE VERSTELBARE GAFFEL	1680
20		425-158		2	PORCA, Jam, 1/2"-20, G5 MUTTER	NUT ECROU	TUERCA MØTRIK	DADO MOER	010D
21		425-1510		2	PORCA, Jam, 5/8"-18, G5 MUTTER	NUT ECROU	TUERCA MØTRIK	DADO MOER	010D

Parker - Montada até o nº de série N6AE00912

W20E

08-24	01	p2	07/10

CONTROLE DA CARREGADEIRA (2 CARRETÉIS & 2 ALAVANCAS - PARKER)
LOADER CONTROL (2 SPOOL & 2 LEVERS - PARKER)
CONTROL DE LA CARGADORA (2 CARRETES & 2 PALANCAS - PARKER)
LOADER CONTROL (2 SPOOL & 2 LEVERS - PARKER)

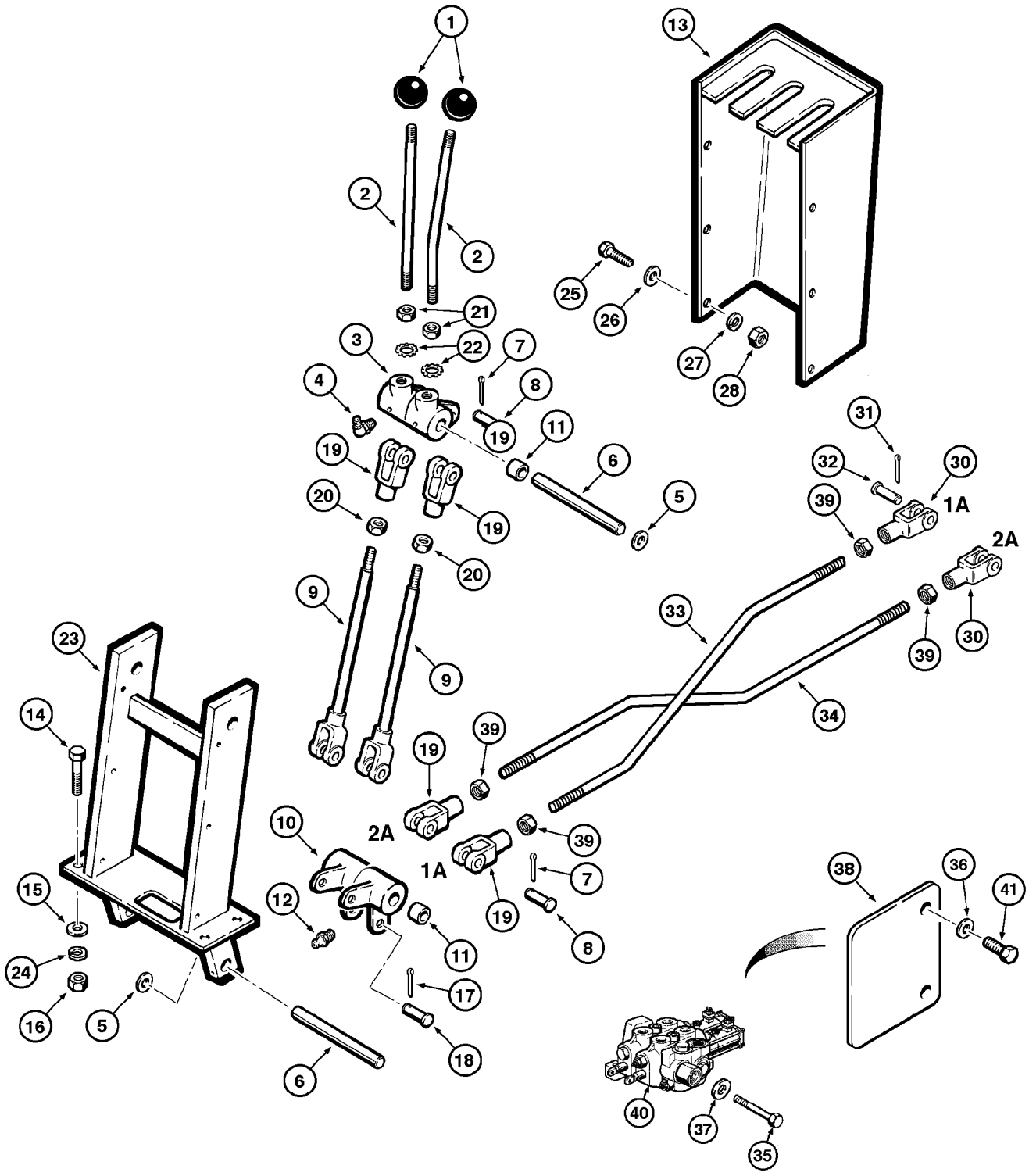

LOADER CONTROL (2 SPOOL & 2 LEVERS - PARKER)
LOADER CONTROL (2 SPOOL & 2 LEVERS - PARKER)
LOADER CONTROL (2 SPOOL & 2 LEVERS - PARKER)
LOADER CONTROL (2 SPOOL & 2 LEVERS - PARKER)

R	N	P.N.	MOD	Q	Denominação Bezeichnung	Description Description	Denominacion Beskrivelse	Descrizione Beschrijving	L.C.
22		493-21065		2	TRAVA DA ARRUELA, Int Tooth, 5/8"	LOCK WASHER	ARANDELA DE BLOQUE	RONDELLA DI SICUREZ	132R
					SICHERUNGSSCHEIBE	RONDELLE FREIN	LÅSESKIVE	BORGRING	
23		147580A1		1	SUPORTE, Assy	SUPPORT	SOPORTE	SUPPORTO	300S
					STÜTZE	SUPPORT	BESLAG	STEUN	
24		492-11038		4	TRAVA DA ARRUELA, 3/8"	LOCK WASHER	ARANDELA DE BLOQUE	RONDELLA DI SICUREZ	132R
					SICHERUNGSSCHEIBE	RONDELLE FREIN	LÅSESKIVE	BORGRING	
25		182-130		6	PARAFUSO	SCREW	TORNILLO	VITE	040V
					SCHRAUBE	VIS	SKRUE	SCHROEF	
26		495-31022		6	ARRUELA PLANA, #10	WASHER	ARANDELA	RONDELLA	131R
					UNTERLEGSCHEIBE	RONDELLE	FLADSKIVE	SLUITRING	
27		492-11010		6	TRAVA DA ARRUELA, #10	LOCK WASHER	ARANDELA DE BLOQUE	RONDELLA DI SICUREZ	132R
					SICHERUNGSSCHEIBE	RONDELLE FREIN	LÅSESKIVE	BORGRING	
28		225-14110		6	PORCA, #10-24	NUT	TUERCA	DADO	010D
					MUTTER	ECROU	MØTRIK	MOER	
29	1	148007A1		1	ADESIVO, 2 spool	DECAL	CALCOMANÍA	DECALCOMANIA	012D
					AUFKLEBER	AUTOCOLLANT	TRANSFER	STICKER	
30		149208A1		2	GARFO	YOKE	ARTICULACIÓN	FORCELLA	085F
					GABEL	CHAPE	GAFFEL	GAFFEL	
31		432-612		2	CONTRA PINO, 3/32" x 3/4"	COTTER PIN	PASADOR	COPPIGLIA	270C
					SPLINT	GOUPILLE FENDUE	SPLITBOLT	SPLITPEN	
32		427-5094		2	PINO DE GARFO, 5/16" x .940", HDN	CLEVIS PIN	EJE CON CABEZA	PERNO A TESTA PIANA	P694
					GABELBOLZEN	AXE DE CHAPE	GAFFELBOLT	GAFFELPEN	
33		146425A1		1	HASTE	ROD	VARILLA	ASTA	090A
					STANGE	TIGE	STANG	STANG	
34		146424A1		1	HASTE	ROD	VARILLA	ASTA	090A
					STANGE	TIGE	STANG	STANG	
35		413-832		3	PARAFUSO, Hex, 1/2"-13 x 2", G5	BOLT	PERNO	BULLONE	140B
					SCHRAUBE	VIS	BOLT	BOUT	
36		495-21056		3	ARRUELA PLANA, 1/2"	WASHER	ARANDELA	RONDELLA	131R
					UNTERLEGSCHEIBE	RONDELLE	FLADSKIVE	SLUITRING	
37		492-11050		3	TRAVA DA ARRUELA, 1/2"	LOCK WASHER	ARANDELA DE BLOQUE	RONDELLA DI SICUREZ	132R
					SICHERUNGSSCHEIBE	RONDELLE FREIN	LÅSESKIVE	BORGRING	
38		149206A1		1	PLACA	PLATE	PLACA	PIASTRA	105P
					PLATTE	PLAQUE	PLADE	PLAAT	
39		425-158		4	PORCA, Jam, 1/2"-20, G5	NUT	TUERCA	DADO	010D
					MUTTER	ECROU	MØTRIK	MOER	
40		REF		1	INSTRUÇÃO, VALVE 2 Spool (P.8-34)	INSTRUCTION	INSTRUCCIÓN	ISTRUZIONI	Z571
					ANLEITUNG	INSTRUCTION	INSTRUKTION	INSTRUCTIE	
41		413-824		3	PARAFUSO, Hex, 1/2"-13 x 1 1/2", G5, Full Thd	BOLT	PERNO	BULLONE	140B
					SCHRAUBE	VIS	BOLT	BOUT	

(1) Não ilustrado

Parker - Montada até o nº de série N6AE00912

W20E

08-24B	01	p1	07/10

CONTROLE DA CARREGADEIRA (2 CARRETÉIS & 2 ALAVANCAS - REXROTH)
LOADER CONTROL (2 SPOOL & 2 LEVERS - REXROTH)
CONTROL DE LA CARGADORA (2 CARRETES & 2 PALANCAS - REXROTH)
LOADER CONTROL (2 SPOOL & 2 LEVERS - REXROTH)

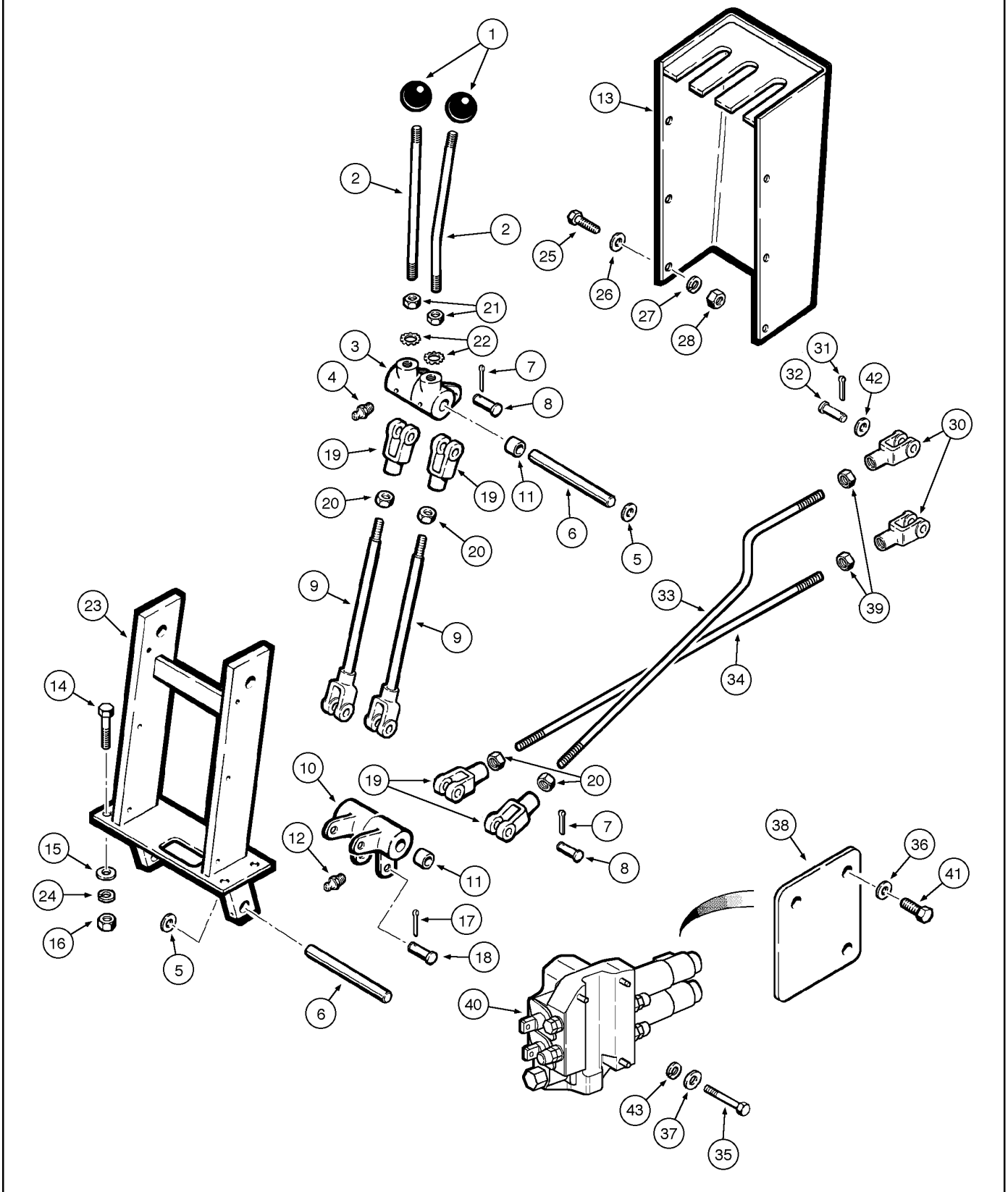

LOADER CONTROL (2 SPOOL & 2 LEVERS - REXROTH)
LOADER CONTROL (2 SPOOL & 2 LEVERS - REXROTH)
LOADER CONTROL (2 SPOOL & 2 LEVERS - REXROTH)
LOADER CONTROL (2 SPOOL & 2 LEVERS - REXROTH)

R	N	P.N.	MOD	Q	Denominação Bezeichnung	Description Description	Denominacion Beskrivelse	Descrizione Beschrijving	L.C.
1		L 56064		2	MANILHA GRIFF	HANDLE POIGNEE	MANECILLA HÅNDTAG	MANIGLIA HENDEL	020M
2		L 59087		2	TIRANTE FILETADO SPURSTANGE MIT GEW	THREADED TIE-ROD TIRANT FILETE	TIRANTE ROSCADO GEVINDSTANG	TIRANTE FILETTATO TREKSTANG M. SCHROI	141T
3		L 59090		2	ALAVANCA EM ÂNGULO, lever WINKELHEBEL	BELLCRANK LEVIER DE RENVOI	PALANCA ACODADA VINKEVÆGTSTANG	LEVA A SQUADRA TUIMELAAR	048L
4		219-1		2	GRAXEIRA, 1/8"-27 x .66 lg SCHMIERNIPPEL	LUBE NIPPLE GRAISSEUR	BOQUILLA DE LUBRICAC SMØRENIPPEL	INGRASSATORE SMEERNIPPEL	060I
5		195-2083		AR	ARRUELA UNTERLEGSCHEIBE	WASHER RONDELLE	ARANDELA WASHER	RONDELLA WASHER	9720
6		L102849		2	EIXO WELLE	SHAFT ARBRE	EJE AKSEL	ALBERO AS	016A
7		432-816		2	CONTRA PINO, 1/8" x 1" SPLINT	COTTER PIN GOUPILLE FENDUE	PASADOR SPLITBOLT	COPPIGLIA SPLITPEN	270C
8		427-8136		2	PINO DE GARFO, 1/2" x 1.360" GABELBOLZEN	CLEVIS PIN AXE DE CHAPE	EJE CON CABEZA GAFFELBOLT	PERNO A TESTA PIANA GAFFELPEN	P694
9		L 59968		2	TIRANTE FILETADO SPURSTANGE MIT GEW	THREADED TIE-ROD TIRANT FILETE	TIRANTE ROSCADO GEVINDSTANG	TIRANTE FILETTATO TREKSTANG M. SCHROI	141T
10		147415A1		2	CUBO NABE	HUB MOYEU	CUBO NAV	MOZZO NAAF	135M
11		L 55379		2	ESPAÇADOR TUBO DISTANZROHR	TUBE SPACER TUBE ENTRETOISE	ESPACIADOR DE TUBO SLANGE, AFSTANDSSTY	DISTANZIALE TUBO AFSTANDSSTUK V. LEID	Z038
12		219-1		2	GRAXEIRA, 1/8"-27 x .66 lg SCHMIERNIPPEL	LUBE NIPPLE GRAISSEUR	BOQUILLA DE LUBRICAC SMØRENIPPEL	INGRASSATORE SMEERNIPPEL	060I
13		E 67101		1	ALOJAMENTO GEHÄUSE	HOUSING CARTER	ALOJAMIENTO HUS	ALLOGGIAMENTO HUIS	014V
14		413-620		4	PARAFUSO, Hex, 3/8"-16 x 1 1/4", G5, Full Thd SCHRAUBE	BOLT VIS	PERNO BOLT	BULLONE BOUT	140B
15		495-11041		8	ARRUELA PLANA, 3/8", SAE UNTERLEGSCHEIBE	WASHER RONDELLE	ARANDELA FLADSKIVE	RONDELLA SLUITRING	131R
16		425-106		4	PORCA, 3/8"-16, G5 MUTTER	NUT ECROU	TUERCA MØTRIK	DADO MOER	010D
17		432-816		4	CONTRA PINO, 1/8" x 1" SPLINT	COTTER PIN GOUPILLE FENDUE	PASADOR SPLITBOLT	COPPIGLIA SPLITPEN	270C
18		427-8136		4	PINO DE GARFO, 1/2" x 1.360" GABELBOLZEN	CLEVIS PIN AXE DE CHAPE	EJE CON CABEZA GAFFELBOLT	PERNO A TESTA PIANA GAFFELPEN	P694
19		213-128		4	GARFO AJUSTÁVEL, 1/2"-20 x 3" EINSTELLBARER SCHÄK	ADJUSTABLE CLEVIS CHAPE DE REGLAGE	MOSQUETÓN AJUSTABL JUSTERBAR GAFFEL	FORCELLA ATTACCO RE VERSTELBARE GAFFEL	1680
20		425-158		4	PORCA, Jam, 1/2"-20, G5 MUTTER	NUT ECROU	TUERCA MØTRIK	DADO MOER	010D
21		425-1510		2	PORCA, Jam, 5/8"-18, G5 MUTTER	NUT ECROU	TUERCA MØTRIK	DADO MOER	010D

Rexroth - Montada a partir do nº de série N6AE00913

W20E

08-24B	01	p2	07/10

CONTROLE DA CARREGADEIRA (2 CARRETÉIS & 2 ALAVANCAS - REXROTH)
LOADER CONTROL (2 SPOOL & 2 LEVERS - REXROTH)
CONTROL DE LA CARGADORA (2 CARRETES & 2 PALANCAS - REXROTH)
LOADER CONTROL (2 SPOOL & 2 LEVERS - REXROTH)

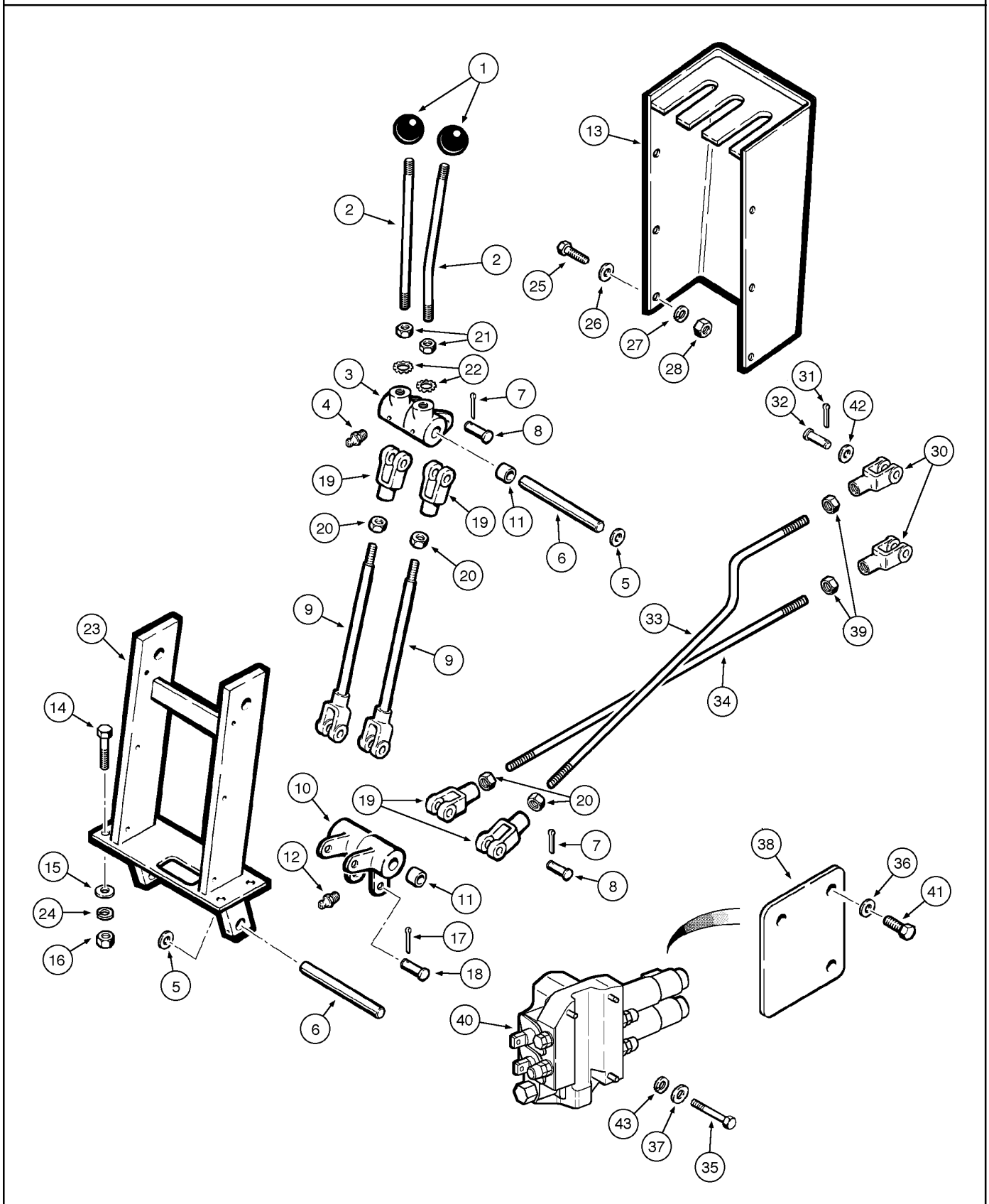

LOADER CONTROL (2 SPOOL & 2 LEVERS - REXROTH)
LOADER CONTROL (2 SPOOL & 2 LEVERS - REXROTH)
LOADER CONTROL (2 SPOOL & 2 LEVERS - REXROTH)
LOADER CONTROL (2 SPOOL & 2 LEVERS - REXROTH)

R	N	P.N.	MOD	Q	Denominação Bezeichnung	Description Description	Denominacion Beskrivelse	Descrizione Beschrijving	L.C.
22		**493-21065**		2	TRAVA DA ARRUELA, Int Tooth, 5/8"	LOCK WASHER	ARANDELA DE BLOQUE	RONDELLA DI SICUREZ	132R
					SICHERUNGSSCHEIBE	RONDELLE FREIN	LÅSESKIVE	BORGRING	
23		**147580A1**		1	SUPORTE, Assy	SUPPORT	SOPORTE	SUPPORTO	300S
					STÜTZE	SUPPORT	BESLAG	STEUN	
24		**492-11038**		4	TRAVA DA ARRUELA, 3/8"	LOCK WASHER	ARANDELA DE BLOQUE	RONDELLA DI SICUREZ	132R
					SICHERUNGSSCHEIBE	RONDELLE FREIN	LÅSESKIVE	BORGRING	
25		**182-130**		6	PARAFUSO	SCREW	TORNILLO	VITE	040V
					SCHRAUBE	VIS	SKRUE	SCHROEF	
26		**495-31022**		6	ARRUELA PLANA, #10	WASHER	ARANDELA	RONDELLA	131R
					UNTERLEGSCHEIBE	RONDELLE	FLADSKIVE	SLUITRING	
27		**492-11010**		6	TRAVA DA ARRUELA, #10	LOCK WASHER	ARANDELA DE BLOQUE	RONDELLA DI SICUREZ	132R
					SICHERUNGSSCHEIBE	RONDELLE FREIN	LÅSESKIVE	BORGRING	
28		**225-14110**		6	PORCA, #10-24	NUT	TUERCA	DADO	010D
					MUTTER	ECROU	MØTRIK	MOER	
29	1	**148007A1**		1	ADESIVO, 2 spool	DECAL	CALCOMANÍA	DECALCOMANIA	012D
					AUFKLEBER	AUTOCOLLANT	TRANSFER	STICKER	
30		**10000871**		2	GARFO	YOKE	ARTICULACIÓN	FORCELLA	085F
					GABEL	CHAPE	GAFFEL	GAFFEL	
31		**10796301**		2	CONTRA PINO, M3.2 x 12	COTTER PIN	PASADOR	COPPIGLIA	270C
					SPLINT	GOUPILLE FENDUE	SPLITBOLT	SPLITPEN	
32		**10033410**		2	PINO	PIN	PASADOR	PERNO	080P
					PIN	BROCHE	STIFT	PEN	
33		**87462916**		1	TIRANTE, arm control	TIE-ROD	TIRANTE	TIRANTE	142T
					SPURSTANGE	TIRANT	TRÆKSTANG	TREKSTANG	
34		**87462915**		1	TIRANTE, bucket control	TIE-ROD	TIRANTE	TIRANTE	142T
					SPURSTANGE	TIRANT	TRÆKSTANG	TREKSTANG	
35		**14359331**		3	PARAFUSO	SCREW	TORNILLO	VITE	040V
					SCHRAUBE	VIS	SKRUE	SCHROEF	
36		**495-21056**		3	ARRUELA PLANA, 1/2"	WASHER	ARANDELA	RONDELLA	131R
					UNTERLEGSCHEIBE	RONDELLE	FLADSKIVE	SLUITRING	
37		**895-11008**		3	ARRUELA PLANA, M8 x 16 x 1.6	WASHER	ARANDELA	RONDELLA	131R
					UNTERLEGSCHEIBE	RONDELLE	FLADSKIVE	SLUITRING	
38		**87462913**		1	PLACA DE COBERTURA	COVER PLATE	PLACA DE CUBIERTA	PIASTRA DI COPERTUR	110P
					ABDECKPLATTE	COUVERCLE	DÆKPLADE	AFSCHERMPLAAT	
39		**12164721**		4	PORCA, M10 x 1.25, Cl 10	NUT	TUERCA	DADO	010D
					MUTTER	ECROU	MØTRIK	MOER	
40		**REF**		1	INSTRUÇÃO, VALVE 2 Spool (P.8-66)	INSTRUCTION	INSTRUCCIÓN	ISTRUZIONI	Z571
					ANLEITUNG	INSTRUCTION	INSTRUKTION	INSTRUCTIE	
41		**413-824**		3	PARAFUSO, Hex, 1/2"-13 x 1 1/2", G5, Full Thd	BOLT	PERNO	BULLONE	140B
					SCHRAUBE	VIS	BOLT	BOUT	
42		**12638621**		2	ARRUELA PLANA	WASHER	ARANDELA	RONDELLA	131R
					UNTERLEGSCHEIBE	RONDELLE	FLADSKIVE	SLUITRING	

(1) Não ilustrado

Rexroth - Montada a partir do nº de série N6AE00913

W20E

08-24B	01	p3	07/10

CONTROLE DA CARREGADEIRA (2 CARRETÉIS & 2 ALAVANCAS - REXROTH)
LOADER CONTROL (2 SPOOL & 2 LEVERS - REXROTH)
CONTROL DE LA CARGADORA (2 CARRETES & 2 PALANCAS - REXROTH)
LOADER CONTROL (2 SPOOL & 2 LEVERS - REXROTH)

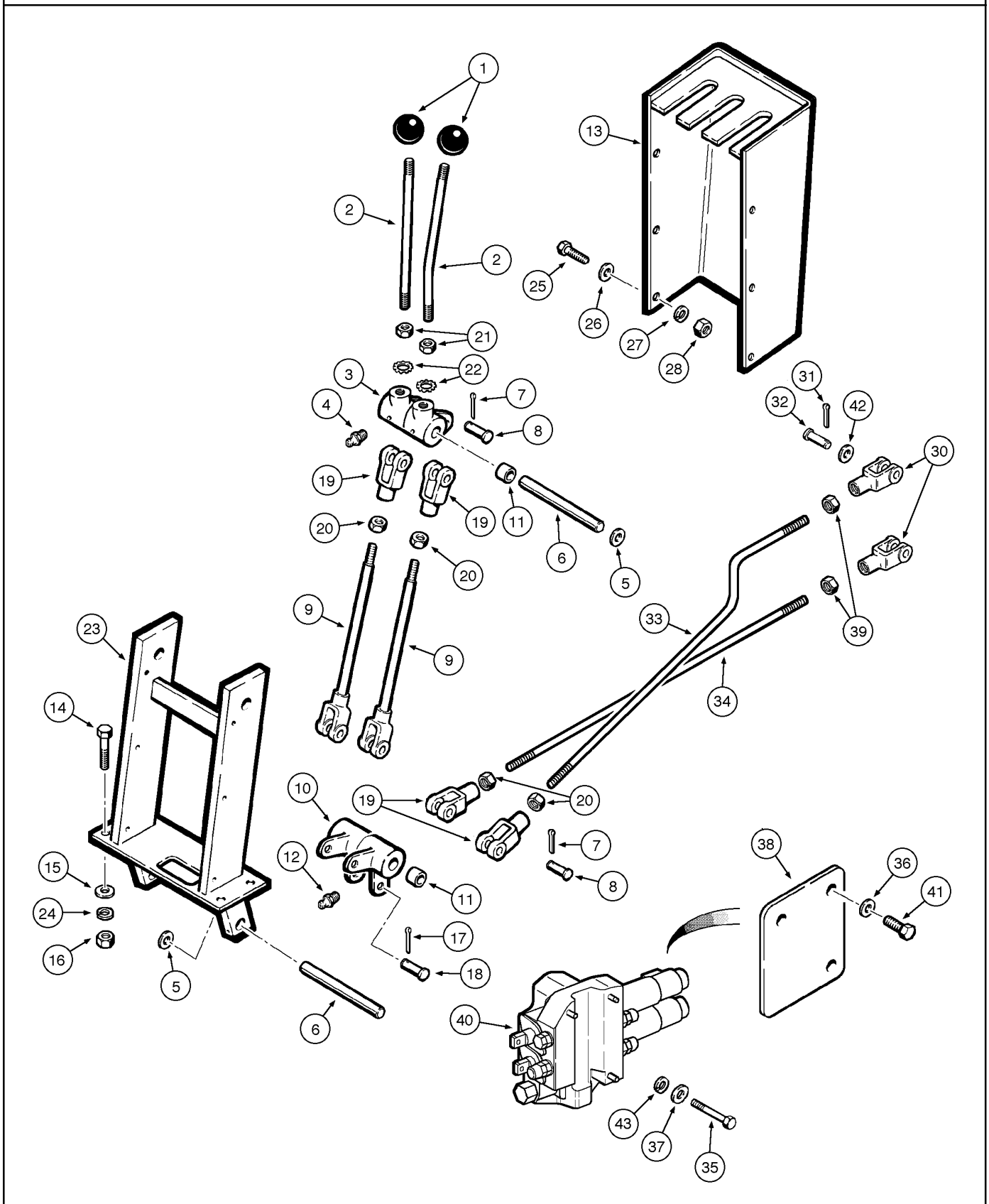

LOADER CONTROL (2 SPOOL & 2 LEVERS - REXROTH)
LOADER CONTROL (2 SPOOL & 2 LEVERS - REXROTH)
LOADER CONTROL (2 SPOOL & 2 LEVERS - REXROTH)
LOADER CONTROL (2 SPOOL & 2 LEVERS - REXROTH)

R	N	P.N.	MOD	Q	Denominação Bezeichnung	Description Description	Denominacion Beskrivelse	Descrizione Beschrijving	L.C.
43		**10615679**		1	TRAVA DA ARRUELA, Ext Tooth, M8 SICHERUNGSSCHEIBE	LOCK WASHER RONDELLE FREIN	ARANDELA DE BLOQUE LÅSESKIVE	RONDELLA DI SICUREZ BORGRING	132R

Rexroth - Montada a partir do nº de série N6AE00913

W20E

08-26	01	p1	12/07

CONTROLE DA CARREGADEIRA (3 CARRETÉIS & 2 ALAVANCAS - PARKER)
LOADER CONTROL (3 SPOOL & 2 LEVERS - PARKER)
CONTROL DE LA CARGADORA (3 CARRETES & 2 PALANCAS - PARKER)
LOADER CONTROL (3 SPOOL & 2 LEVERS - PARKER)

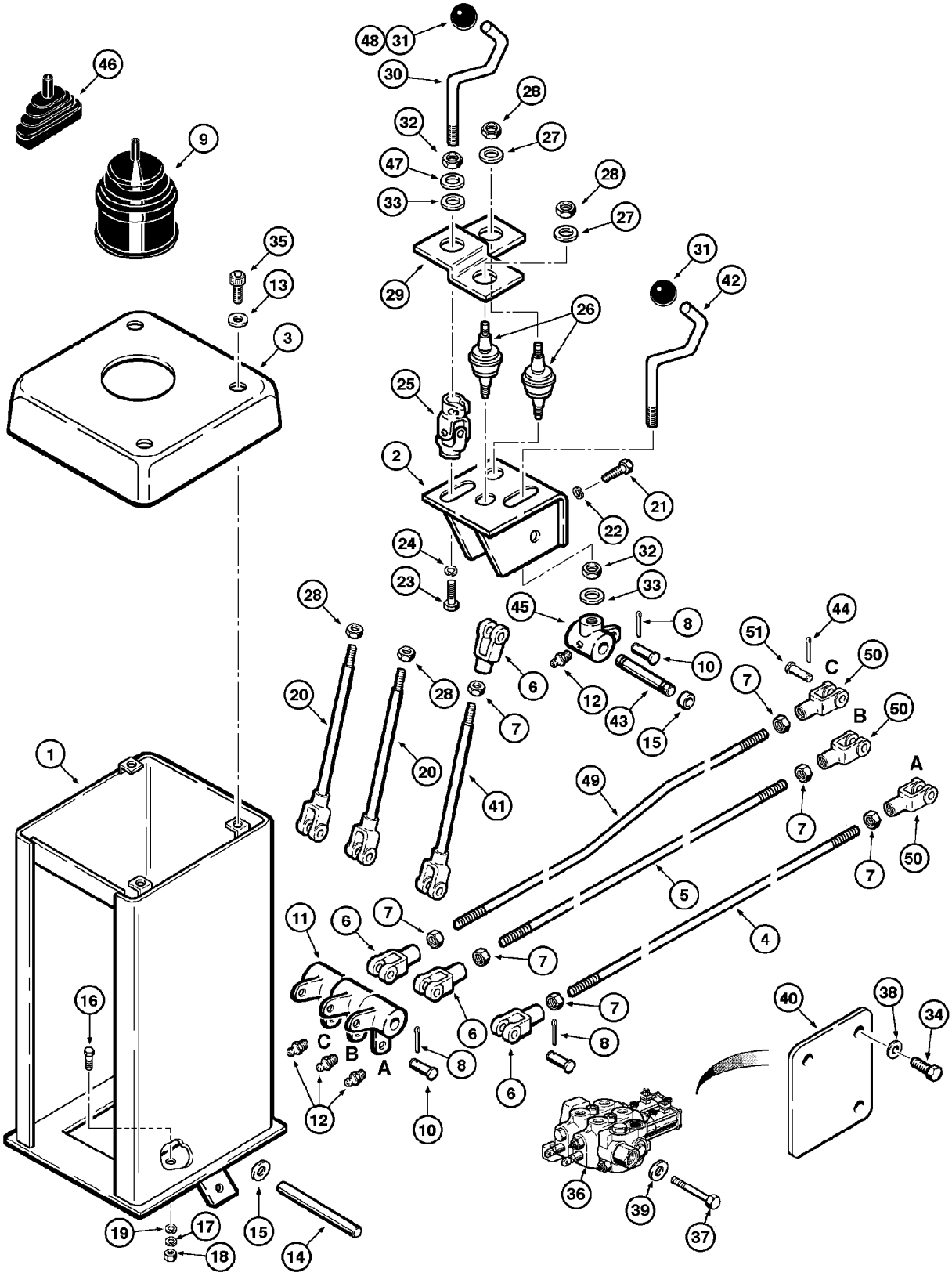

LOADER CONTROL (3 SPOOL & 2 LEVERS - PARKER)
LOADER CONTROL (3 SPOOL & 2 LEVERS - PARKER)
LOADER CONTROL (3 SPOOL & 2 LEVERS - PARKER)
LOADER CONTROL (3 SPOOL & 2 LEVERS - PARKER)

R	N	P.N.	MOD	Q	Denominação Bezeichnung	Description Description	Denominacion Beskrivelse	Descrizione Beschrijving	L.C.
1		147417A1		1	CHAPA STAHLPLATTE	STEEL PLATE PLAQUE D'ACIER	PLACA DE ACERO STÅLPLADE	PIASTRA D'ACCIAIO STALEN PLAAT	015L
2		147419A1		1	SUPORTE STÜTZE	SUPPORT SUPPORT	SOPORTE BESLAG	SUPPORTO STEUN	300S
3		146426A1		1	COBERTURA ABDECKUNG	COVER COUVERCLE	CUBIERTA DÆKSEL	COPERCHIO AFSCHERMING	265C
4		146425A1		1	HASTE, control STANGE	ROD TIGE	VARILLA STANG	ASTA STANG	090A
5		146424A1		1	HASTE, control STANGE	ROD TIGE	VARILLA STANG	ASTA STANG	090A
6		213-128		4	GARFO AJUSTÁVEL, 1/2"-20 x 3" EINSTELLBARER SCHÄ	ADJUSTABLE CLEVIS CHAPE DE REGLAGE	MOSQUETÓN AJUSTABL JUSTERBAR GAFFEL	FORCELLA ATTACCO RI VERSTELBARE GAFFEL	1680
7		425-158		4	PORCA, Jam, 1/2"-20, G5 MUTTER	NUT ECROU	TUERCA MØTRIK	DADO MOER	010D
8		432-816		7	CONTRA PINO, 1/8" x 1" SPLINT	COTTER PIN GOUPILLE FENDUE	PASADOR SPLITBOLT	COPPIGLIA SPLITPEN	270C
9		146427A1		1	CAPA MANSCHETTE	BOOT SOUFFLET	FUNDA MANCHET	PARAPOLVERE HOES	330C
10		427-8136		7	PINO DE GARFO, 1/2" x 1.360" GABELBOLZEN	CLEVIS PIN AXE DE CHAPE	EJE CON CABEZA GAFFELBOLT	PERNO A TESTA PIANA GAFFELPEN	P694
11		147415A1		3	CUBO NABE	HUB MOYEU	CUBO NAV	MOZZO NAAF	135M
12		219-1		4	GRAXEIRA, 1/8"-27 x .66 lg SCHMIERNIPPEL	LUBE NIPPLE GRAISSEUR	BOQUILLA DE LUBRICAC SMØRENIPPEL	INGRASSATORE SMEERNIPPEL	060I
13		495-31022		3	ARRUELA PLANA, #10 UNTERLEGSCHEIBE	WASHER RONDELLE	ARANDELA FLADSKIVE	RONDELLA SLUITRING	131R
14		L102849		1	EIXO WELLE	SHAFT ARBRE	EJE AKSEL	ALBERO AS	016A
15		195-2083		4	ARRUELA UNTERLEGSCHEIBE	WASHER RONDELLE	ARANDELA WASHER	RONDELLA WASHER	9720
16		413-620		4	PARAFUSO, Hex, 3/8"-16 x 1 1/4", G5, Full Thd SCHRAUBE	BOLT VIS	PERNO BOLT	BULLONE BOUT	140B
17		492-11038		4	TRAVA DA ARRUELA, 3/8" SICHERUNGSSCHEIBE	LOCK WASHER RONDELLE FREIN	ARANDELA DE BLOQUEO LÅSESKIVE	RONDELLA DI SICUREZZ BORGRING	132R
18		425-106		4	PORCA, 3/8"-16, G5 MUTTER	NUT ECROU	TUERCA MØTRIK	DADO MOER	010D
19		495-11041		4	ARRUELA PLANA, 3/8", SAE UNTERLEGSCHEIBE	WASHER RONDELLE	ARANDELA FLADSKIVE	RONDELLA SLUITRING	131R
20		147422A1		2	ALAVANCA DE CONTROLE STEUERHEBEL	CONTROL LEVER LEVIER DE COMMANDE	PALANCA DE CONTROL STYRESTANG	LEVA DI COMANDO BEDIENINGSHENDEL	P155
21		413-416		4	PARAFUSO, Hex, 1/4"-20 x 1", G5 SCHRAUBE	BOLT VIS	PERNO BOLT	BULLONE BOUT	140B

Parker - Montada até o nº de série N6AE00912

W20E

08-26	01	p2	12/07

CONTROLE DA CARREGADEIRA (3 CARRETÉIS & 2 ALAVANCAS - PARKER)
LOADER CONTROL (3 SPOOL & 2 LEVERS - PARKER)
CONTROL DE LA CARGADORA (3 CARRETES & 2 PALANCAS - PARKER)
LOADER CONTROL (3 SPOOL & 2 LEVERS - PARKER)

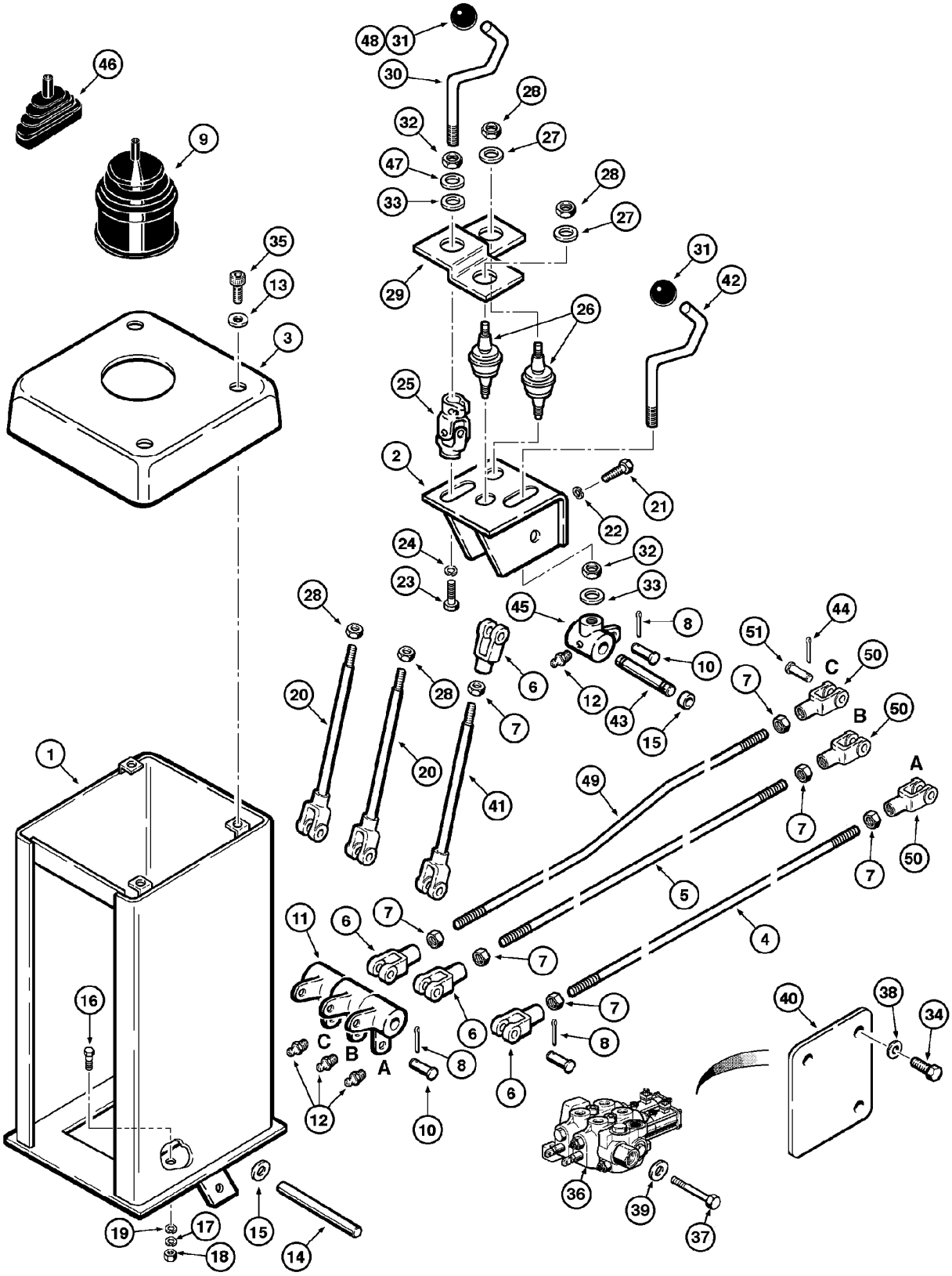

LOADER CONTROL (3 SPOOL & 2 LEVERS - PARKER)
LOADER CONTROL (3 SPOOL & 2 LEVERS - PARKER)
LOADER CONTROL (3 SPOOL & 2 LEVERS - PARKER)
LOADER CONTROL (3 SPOOL & 2 LEVERS - PARKER)

R	N	P.N.	MOD	Q	Denominação Bezeichnung	Description Description	Denominacion Beskrivelse	Descrizione Beschrijving	L.C.
22		495-11028		4	ARRUELA PLANA, 1/4", SAE				
						WASHER	ARANDELA	RONDELLA	131R
					UNTERLEGSCHEIBE	RONDELLE	FLADSKIVE	SLUITRING	
23		413-88		1	PARAFUSO, Hex, 1/2"-13 x 1/2", G5, Full Thd				
						BOLT	PERNO	BULLONE	140B
					SCHRAUBE	VIS	BOLT	BOUT	
24		495-21056		1	ARRUELA PLANA, 1/2"	WASHER	ARANDELA	RONDELLA	131R
					UNTERLEGSCHEIBE	RONDELLE	FLADSKIVE	SLUITRING	
25		147416A1		1	JUNTA, universal	GASKET	JUNTA	GUARNIZIONE	123G
					DICHTUNG	JOINT	PAKNING	PAKKING	
26		146483A1		2	EIXO	SHAFT	EJE	ALBERO	016A
					WELLE	ARBRE	AKSEL	AS	
27		495-11034		2	ARRUELA PLANA, 5/16", SAE				
						WASHER	ARANDELA	RONDELLA	131R
					UNTERLEGSCHEIBE	RONDELLE	FLADSKIVE	SLUITRING	
28		E34113		4	PORCA	NUT	TUERCA	DADO	010D
					MUTTER	ECROU	MØTRIK	MOER	
29		146412A1		1	BASE	BASE	BASE	BASE	021B
					SOCKEL	BASE	BUNDPLADE	BASIS	
30		147039A1		1	HASTE, control	ROD	VARILLA	ASTA	090A
					STANGE	TIGE	STANG	STANG	
31		L56064		2	MANOPLA	KNOB	PERILLA	MANOPOLA	4850
					KNAUF	BOULE DE DIRECTION	KNOB	KNOB	
32		425-1510		2	PORCA, Jam, 5/8"-18, G5	NUT	TUERCA	DADO	010D
					MUTTER	ECROU	MØTRIK	MOER	
33		493-21065		2	TRAVA DA ARRUELA, Int Tooth, 5/8"				
						LOCK WASHER	ARANDELA DE BLOQUE	RONDELLA DI SICUREZ	132R
					SICHERUNGSSCHEIBE	RONDELLE FREIN	LÅSESKIVE	BORGRING	
34		413-824		3	PARAFUSO, Hex, 1/2"-13 x 1 1/2", G5, Full Thd				
						BOLT	PERNO	BULLONE	140B
					SCHRAUBE	VIS	BOLT	BOUT	
35		459-11012		3	PARAFUSO, Slotted Pan Hd, #10-32 x 3/4"				
						SCREW	TORNILLO	VITE	040V
					SCHRAUBE	VIS	SKRUE	SCHROEF	
36		REF		1	INSTRUÇÃO, VALVE Assy. (P.8-60)				
						INSTRUCTION	INSTRUCCIÓN	ISTRUZIONI	Z571
					ANLEITUNG	INSTRUCTION	INSTRUKTION	INSTRUCTIE	
37		432-832		3	CONTRA PINO, 1/8" x 2"	COTTER PIN	PASADOR	COPPIGLIA	270C
					SPLINT	GOUPILLE FENDUE	SPLITBOLT	SPLITPEN	
38		495-21056		3	ARRUELA PLANA, 1/2"	WASHER	ARANDELA	RONDELLA	131R
					UNTERLEGSCHEIBE	RONDELLE	FLADSKIVE	SLUITRING	
39		492-11050		3	TRAVA DA ARRUELA, 1/2"	LOCK WASHER	ARANDELA DE BLOQUE	RONDELLA DI SICUREZ	132R
					SICHERUNGSSCHEIBE	RONDELLE FREIN	LÅSESKIVE	BORGRING	
40		87437660		1	PLACA	PLATE	PLACA	PIASTRA	105P
					PLATTE	PLAQUE	PLADE	PLAAT	
41		147424A1		1	ALAVANCA	LEVER	PALANCA	LEVA	045L
					HEBEL	LEVIER	ARM	HEFBOOM	
42		147040A1		1	ALAVANCA	LEVER	PALANCA	LEVA	045L
					HEBEL	LEVIER	ARM	HEFBOOM	

Parker - Montada até o nº de série N6AE00912

W20E

08-26	01	p3	12/07

CONTROLE DA CARREGADEIRA (3 CARRETÉIS & 2 ALAVANCAS - PARKER)
LOADER CONTROL (3 SPOOL & 2 LEVERS - PARKER)
CONTROL DE LA CARGADORA (3 CARRETES & 2 PALANCAS - PARKER)
LOADER CONTROL (3 SPOOL & 2 LEVERS - PARKER)

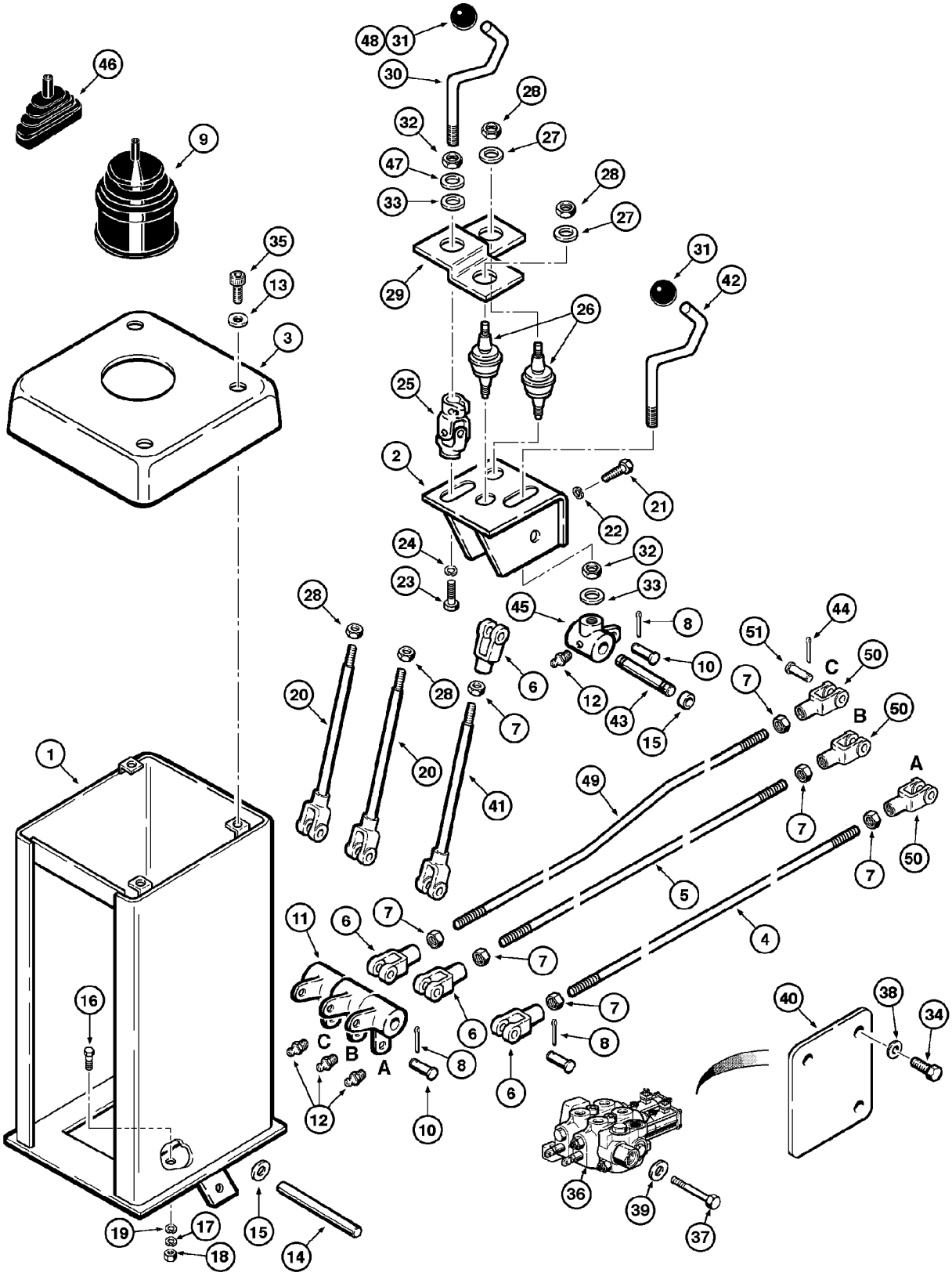

LOADER CONTROL (3 SPOOL & 2 LEVERS - PARKER)
LOADER CONTROL (3 SPOOL & 2 LEVERS - PARKER)
LOADER CONTROL (3 SPOOL & 2 LEVERS - PARKER)
LOADER CONTROL (3 SPOOL & 2 LEVERS - PARKER)

R	N	P.N.	MOD	Q	Denominação Bezeichnung	Description Description	Denominacion Beskrivelse	Descrizione Beschrijving	L.C.
43		**146450A1**		1	EIXO WELLE	SHAFT ARBRE	EJE AKSEL	ALBERO AS	016A
44		**432-612**		3	CONTRA PINO, 3/32" x 3/4"				
						COTTER PIN	PASADOR	COPPIGLIA	270C
					SPLINT	GOUPILLE FENDUE	SPLITBOLT	SPLITPEN	
45		**L59090**		1	IMERSOR LÖFFELSTIEL	DIPPER BALANCIER	BRAZO DEL CUCHARÓN ARM	CUCCHIAIA LEPEL	P011
46		**146439A1**		1	CAPA MANSCHETTE	BOOT SOUFFLET	FUNDA MANCHET	PARAPOLVERE HOES	330C
47		**495-11066**		1	ARRUELA PLANA, 5/8", SAE				
						WASHER	ARANDELA	RONDELLA	131R
					UNTERLEGSCHEIBE	RONDELLE	FLADSKIVE	SLUITRING	
48		**345-49**		AR	LOCTITE LOCTITE	LOCTITE LOCTITE	LOCTITE LOCTITE	LOCTITE LOCTITE	P712
49		**87433214**		1	HASTE, control STANGE	ROD TIGE	VARILLA STANG	ASTA STANG	090A
50		**149208A1**		3	GARFO GABEL	YOKE CHAPE	ARTICULACIÓN GAFFEL	FORCELLA GAFFEL	085F
51		**427-5094**		3	PINO DE GARFO, 5/16" x .940", HDN				
						CLEVIS PIN	EJE CON CABEZA	PERNO A TESTA PIANA	P694
					GABELBOLZEN	AXE DE CHAPE	GAFFELBOLT	GAFFELPEN	

Parker - Montada até o nº de série N6AE00912

W20E

08-28	01	p1	07/10

CONTROLE DA CARREGADEIRA (3 CARRETÉIS & 3 ALAVANCAS - PARKER)
LOADER CONTROL (3 SPOOL & 3 LEVERS - PARKER)
CONTROL DE LA CARGADORA (3 CARRETES & 3 PALANCAS - PARKER)
LOADER CONTROL (3 SPOOL & 3 LEVERS - PARKER)

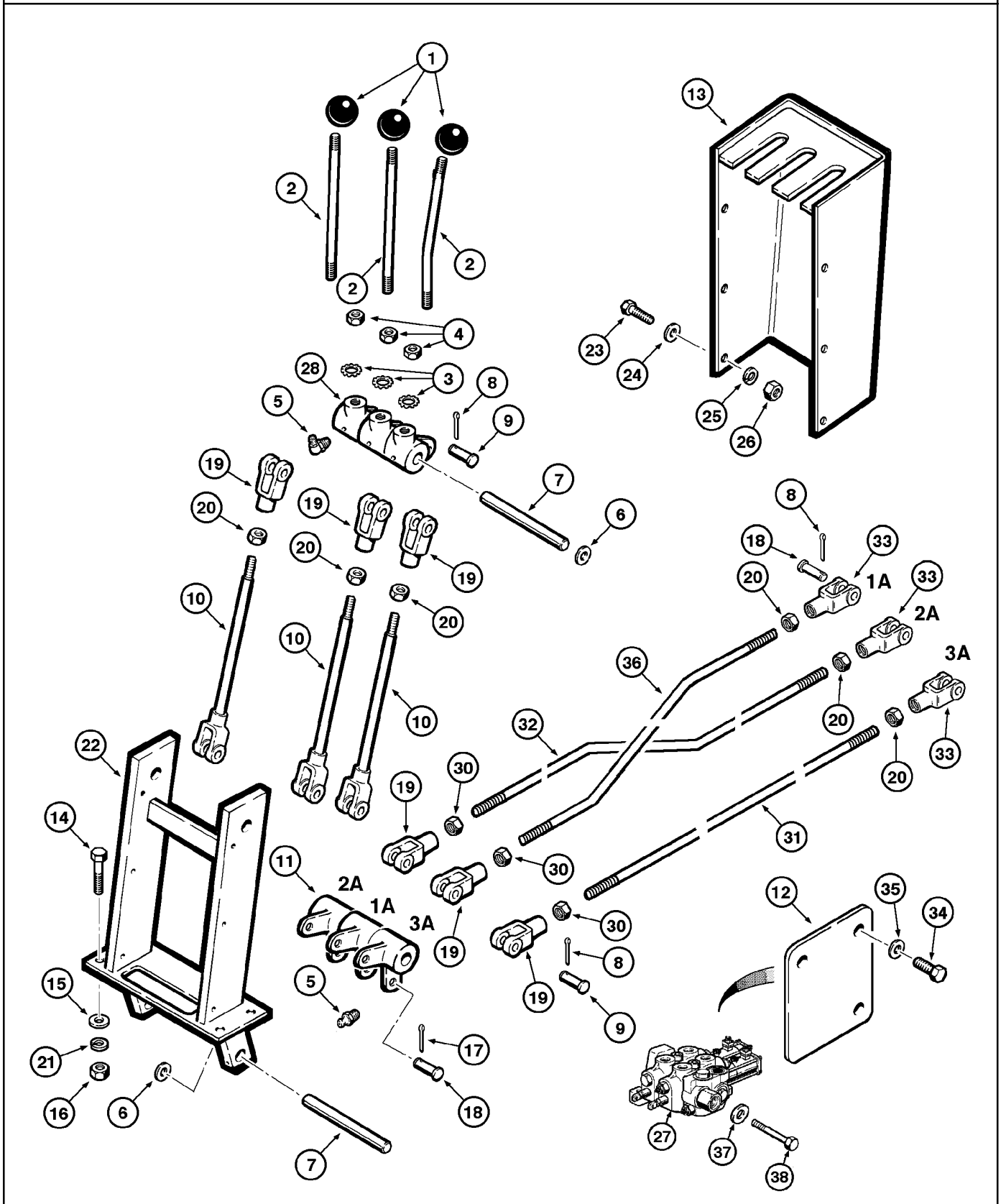

LOADER CONTROL (3 SPOOL & 3 LEVERS - PARKER)
LOADER CONTROL (3 SPOOL & 3 LEVERS - PARKER)
LOADER CONTROL (3 SPOOL & 3 LEVERS - PARKER)
LOADER CONTROL (3 SPOOL & 3 LEVERS - PARKER)

R	N	P.N.	MOD	Q	Denominação Bezeichnung	Description Description	Denominacion Beskrivelse	Descrizione Beschrijving	L.C.
1		L 56064		3	MANILHA GRIFF	HANDLE POIGNEE	MANECILLA HÅNDTAG	MANIGLIA HENDEL	020M
2		L 59087		3	TIRANTE FILETADO SPURSTANGE MIT GEW	THREADED TIE-ROD TIRANT FILETE	TIRANTE ROSCADO GEVINDSTANG	TIRANTE FILETTATO TREKSTANG M. SCHROI	141T
3		493-21065		3	TRAVA DA ARRUELA, Int Tooth, 5/8"				
					SICHERUNGSSCHEIBE	LOCK WASHER RONDELLE FREIN	ARANDELA DE BLOQUE LÅSESKIVE	RONDELLA DI SICUREZ BORGRING	132R
4		425-1510		3	PORCA, Jam, 5/8"-18, G5 MUTTER	NUT ECROU	TUERCA MØTRIK	DADO MOER	010D
5		219-1		6	GRAXEIRA, 1/8"-27 x .66 lg SCHMIERNIPPEL	LUBE NIPPLE GRAISSEUR	BOQUILLA DE LUBRICA SMØRENIPPEL	INGRASSATORE SMEERNIPPEL	060I
6		195-2083		AR	ARRUELA UNTERLEGSCHEIBE	WASHER RONDELLE	ARANDELA WASHER	RONDELLA WASHER	9720
7		L102849		2	EIXO WELLE	SHAFT ARBRE	EJE AKSEL	ALBERO AS	016A
8		432-816		9	CONTRA PINO, 1/8" x 1" SPLINT	COTTER PIN GOUPILLE FENDUE	PASADOR SPLITBOLT	COPPIGLIA SPLITPEN	270C
9		427-8136		9	PINO DE GARFO, 1/2" x 1.360"				
					GABELBOLZEN	CLEVIS PIN AXE DE CHAPE	EJE CON CABEZA GAFFELBOLT	PERNO A TESTA PIANA GAFFELPEN	P694
10		L 59968		3	TIRANTE FILETADO SPURSTANGE MIT GEW	THREADED TIE-ROD TIRANT FILETE	TIRANTE ROSCADO GEVINDSTANG	TIRANTE FILETTATO TREKSTANG M. SCHROI	141T
11		147415A1		3	CUBO NABE	HUB MOYEU	CUBO NAV	MOZZO NAAF	135M
12		87437660		1	PLACA PLATTE	PLATE PLAQUE	PLACA PLADE	PIASTRA PLAAT	105P
13		E 67101		1	ALOJAMENTO GEHÄUSE	HOUSING CARTER	ALOJAMIENTO HUS	ALLOGGIAMENTO HUIS	014V
14		413-620		4	PARAFUSO, Hex, 3/8"-16 x 1 1/4", G5, Full Thd				
					SCHRAUBE	BOLT VIS	PERNO BOLT	BULLONE BOUT	140B
15		495-11041		8	ARRUELA PLANA, 3/8", SAE				
					UNTERLEGSCHEIBE	WASHER RONDELLE	ARANDELA FLADSKIVE	RONDELLA SLUITRING	131R
16		425-106		4	PORCA, 3/8"-16, G5 MUTTER	NUT ECROU	TUERCA MØTRIK	DADO MOER	010D
17		432-612		3	CONTRA PINO, 3/32" x 3/4"				
					SPLINT	COTTER PIN GOUPILLE FENDUE	PASADOR SPLITBOLT	COPPIGLIA SPLITPEN	270C
18		427-5094		3	PINO DE GARFO, 5/16" x .940", HDN				
					GABELBOLZEN	CLEVIS PIN AXE DE CHAPE	EJE CON CABEZA GAFFELBOLT	PERNO A TESTA PIANA GAFFELPEN	P694
19		213-128		6	GARFO AJUSTÁVEL, 1/2"-20 x 3"				
					EINSTELLBARER SCHÄ	ADJUSTABLE CLEVIS CHAPE DE REGLAGE	MOSQUETÓN AJUSTABL JUSTERBAR GAFFEL	FORCELLA ATTACCO RI VERSTELBARE GAFFEL	1680
20		425-158		9	PORCA, Jam, 1/2"-20, G5 MUTTER	NUT ECROU	TUERCA MØTRIK	DADO MOER	010D
21		492-11038		4	TRAVA DA ARRUELA, 3/8" SICHERUNGSSCHEIBE	LOCK WASHER RONDELLE FREIN	ARANDELA DE BLOQUE LÅSESKIVE	RONDELLA DI SICUREZ BORGRING	132R

Parker - Montada até o nº de série N6AE00912

W20E

08-28	01	p2	07/10

CONTROLE DA CARREGADEIRA (3 CARRETÉIS & 3 ALAVANCAS - PARKER)
LOADER CONTROL (3 SPOOL & 3 LEVERS - PARKER)
CONTROL DE LA CARGADORA (3 CARRETES & 3 PALANCAS - PARKER)
LOADER CONTROL (3 SPOOL & 3 LEVERS - PARKER)

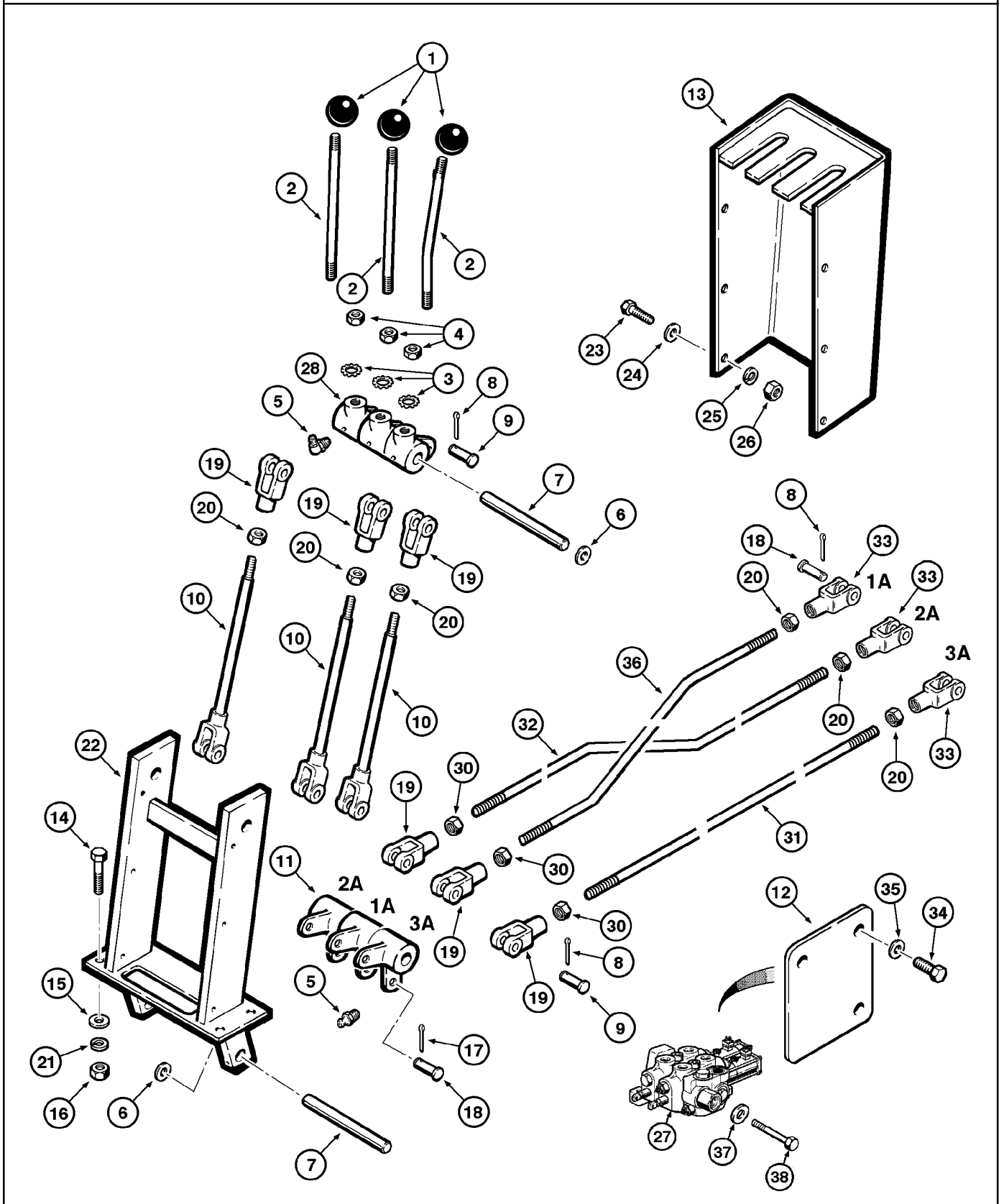

LOADER CONTROL (3 SPOOL & 3 LEVERS - PARKER)
LOADER CONTROL (3 SPOOL & 3 LEVERS - PARKER)
LOADER CONTROL (3 SPOOL & 3 LEVERS - PARKER)
LOADER CONTROL (3 SPOOL & 3 LEVERS - PARKER)

R	N	P.N.	MOD	Q	Denominação Bezeichnung	Description Description	Denominacion Beskrivelse	Descrizione Beschrijving	L.C.
22		147580A1		1	SUPORTE, Assy	SUPPORT	SOPORTE	SUPPORTO	300S
					STÜTZE	SUPPORT	BESLAG	STEUN	
23		182-130		6	PARAFUSO	SCREW	TORNILLO	VITE	040V
					SCHRAUBE	VIS	SKRUE	SCHROEF	
24		495-31022		1 2	ARRUELA PLANA, #10	WASHER	ARANDELA	RONDELLA	131R
					UNTERLEGSCHEIBE	RONDELLE	FLADSKIVE	SLUITRING	
25		492-11010		6	TRAVA DA ARRUELA, #10	LOCK WASHER	ARANDELA DE BLOQUE	RONDELLA DI SICUREZ	132R
					SICHERUNGSSCHEIBE	RONDELLE FREIN	LÅSESKIVE	BORGRING	
26		225-14110		6	PORCA, #10-24	NUT	TUERCA	DADO	010D
					MUTTER	ECROU	MØTRIK	MOER	
27		REF		1	INSTRUÇÃO, VALVE 3 spool (P.8-60)				
						INSTRUCTION	INSTRUCCIÓN	ISTRUZIONI	Z571
					ANLEITUNG	INSTRUCTION	INSTRUKTION	INSTRUCTIE	
28		L 59090		3	ALAVANCA EM ÂNGULO	BELLCRANK	PALANCA ACODADA	LEVA A SQUADRA	048L
					WINKELHEBEL	LEVIER DE RENVOI	VINKEVÆGTSTANG	TUIMELAAR	
29		148008A1		1	ADESIVO, 3 spool	DECAL	CALCOMANÍA	DECALCOMANIA	012D
					AUFKLEBER	AUTOCOLLANT	TRANSFER	STICKER	
30		425-158		3	PORCA, Jam, 1/2"-20, G5	NUT	TUERCA	DADO	010D
					MUTTER	ECROU	MØTRIK	MOER	
31		146424A1		1	HASTE	ROD	VARILLA	ASTA	090A
					STANGE	TIGE	STANG	STANG	
32		146425A1		1	HASTE	ROD	VARILLA	ASTA	090A
					STANGE	TIGE	STANG	STANG	
33		149208A1		3	GARFO	YOKE	ARTICULACIÓN	FORCELLA	085F
					GABEL	CHAPE	GAFFEL	GAFFEL	
34		413-824		3	PARAFUSO, Hex, 1/2"-13 x 1 1/2", G5, Full Thd				
						BOLT	PERNO	BULLONE	140B
					SCHRAUBE	VIS	BOLT	BOUT	
35		495-21056		3	ARRUELA PLANA, 1/2"	WASHER	ARANDELA	RONDELLA	131R
					UNTERLEGSCHEIBE	RONDELLE	FLADSKIVE	SLUITRING	
36		87433214		1	HASTE	ROD	VARILLA	ASTA	090A
					STANGE	TIGE	STANG	STANG	
37		492-11050		3	TRAVA DA ARRUELA, 1/2"	LOCK WASHER	ARANDELA DE BLOQUE	RONDELLA DI SICUREZ	132R
					SICHERUNGSSCHEIBE	RONDELLE FREIN	LÅSESKIVE	BORGRING	
38		413-832		3	PARAFUSO, Hex, 1/2"-13 x 2", G5				
						BOLT	PERNO	BULLONE	140B
					SCHRAUBE	VIS	BOLT	BOUT	

Parker - Montada até o nº de série N6AE00912

W20E

08-28B	01	p1	07/10

CONTROLE DA CARREGADEIRA (3 CARRETÉIS & 3 ALAVANCAS - REXROTH)
LOADER CONTROL (3 SPOOL & 3 LEVERS - REXROTH)
CONTROL DE LA CARGADORA (3 CARRETES & 3 PALANCAS - REXROTH)
LOADER CONTROL (3 SPOOL & 3 LEVERS - REXROTH)

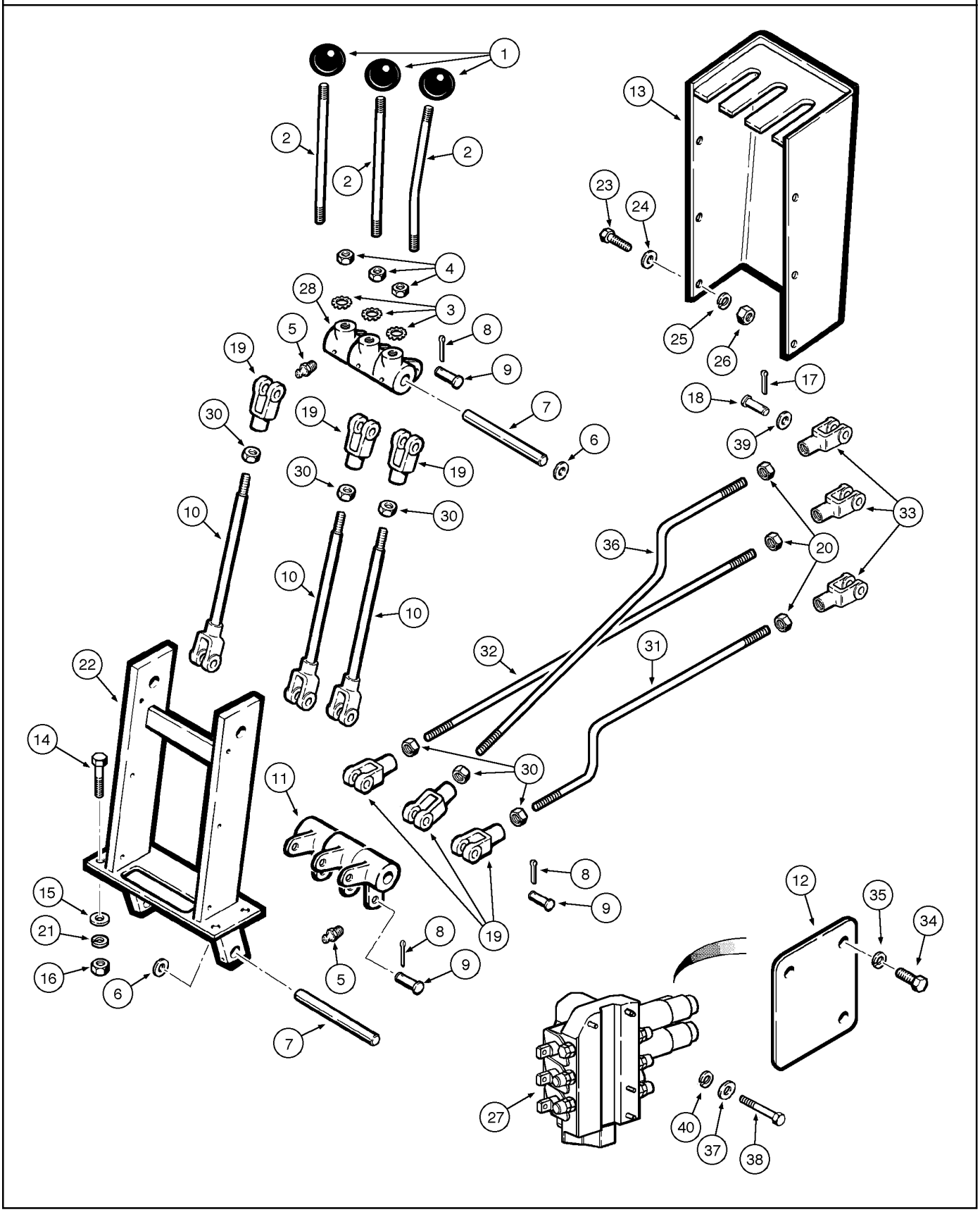

LOADER CONTROL (3 SPOOL & 3 LEVERS - REXROTH)
LOADER CONTROL (3 SPOOL & 3 LEVERS - REXROTH)
LOADER CONTROL (3 SPOOL & 3 LEVERS - REXROTH)
LOADER CONTROL (3 SPOOL & 3 LEVERS - REXROTH)

R	N	P.N.	MOD	Q	Denominação Bezeichnung	Description Description	Denominacion Beskrivelse	Descrizione Beschrijving	L.C.
1		L 56064		3	MANILHA GRIFF	HANDLE POIGNEE	MANECILLA HÅNDTAG	MANIGLIA HENDEL	020M
2		L 59087		3	TIRANTE FILETADO SPURSTANGE MIT GEW	THREADED TIE-ROD TIRANT FILETE	TIRANTE ROSCADO GEVINDSTANG	TIRANTE FILETTATO TREKSTANG M. SCHROI	141T
3		493-21065		3	TRAVA DA ARRUELA, Int Tooth, 5/8"				
					SICHERUNGSSCHEIBE	LOCK WASHER RONDELLE FREIN	ARANDELA DE BLOQUE LÅSESKIVE	RONDELLA DI SICUREZ BORGRING	132R
4		425-1510		3	PORCA, Jam, 5/8"-18, G5 MUTTER	NUT ECROU	TUERCA MØTRIK	DADO MOER	010D
5		219-1		6	GRAXEIRA, 1/8"-27 x .66 lg SCHMIERNIPPEL	LUBE NIPPLE GRAISSEUR	BOQUILLA DE LUBRICA SMØRENIPPEL	INGRASSATORE SMEERNIPPEL	060I
6		195-2083		AR	ARRUELA UNTERLEGSCHEIBE	WASHER RONDELLE	ARANDELA WASHER	RONDELLA WASHER	9720
7		L102849		2	EIXO WELLE	SHAFT ARBRE	EJE AKSEL	ALBERO AS	016A
8		432-816		9	CONTRA PINO, 1/8" x 1" SPLINT	COTTER PIN GOUPILLE FENDUE	PASADOR SPLITBOLT	COPPIGLIA SPLITPEN	270C
9		427-8136		9	PINO DE GARFO, 1/2" x 1.360"				
					GABELBOLZEN	CLEVIS PIN AXE DE CHAPE	EJE CON CABEZA GAFFELBOLT	PERNO A TESTA PIANA GAFFELPEN	P694
10		L 59968		3	TIRANTE FILETADO SPURSTANGE MIT GEW	THREADED TIE-ROD TIRANT FILETE	TIRANTE ROSCADO GEVINDSTANG	TIRANTE FILETTATO TREKSTANG M. SCHROI	141T
11		147415A1		3	CUBO NABE	HUB MOYEU	CUBO NAV	MOZZO NAAF	135M
12		87462913		1	PLACA DE COBERTURA ABDECKPLATTE	COVER PLATE COUVERCLE	PLACA DE CUBIERTA DÆKPLADE	PIASTRA DI COPERTUR AFSCHERMPLAAT	110P
13		E 67101		1	ALOJAMENTO GEHÄUSE	HOUSING CARTER	ALOJAMIENTO HUS	ALLOGGIAMENTO HUIS	014V
14		413-620		4	PARAFUSO, Hex, 3/8"-16 x 1 1/4", G5, Full Thd				
					SCHRAUBE	BOLT VIS	PERNO BOLT	BULLONE BOUT	140B
15		495-11041		8	ARRUELA PLANA, 3/8", SAE				
					UNTERLEGSCHEIBE	WASHER RONDELLE	ARANDELA FLADSKIVE	RONDELLA SLUITRING	131R
16		425-106		4	PORCA, 3/8"-16, G5 MUTTER	NUT ECROU	TUERCA MØTRIK	DADO MOER	010D
17		10796301		3	CONTRA PINO, M3.2 x 12 SPLINT	COTTER PIN GOUPILLE FENDUE	PASADOR SPLITBOLT	COPPIGLIA SPLITPEN	270C
18		10033410		3	PINO PIN	PIN BROCHE	PASADOR STIFT	PERNO PEN	080P
19		213-128		6	GARFO AJUSTÁVEL, 1/2"-20 x 3"				
					EINSTELLBARER SCHÄ	ADJUSTABLE CLEVIS CHAPE DE REGLAGE	MOSQUETÓN AJUSTABL JUSTERBAR GAFFEL	FORCELLA ATTACCO RI VERSTELBARE GAFFEL	1680
20		12164721		9	PORCA, M10 x 1.25, Cl 10 MUTTER	NUT ECROU	TUERCA MØTRIK	DADO MOER	010D
21		492-11038		4	TRAVA DA ARRUELA, 3/8" SICHERUNGSSCHEIBE	LOCK WASHER RONDELLE FREIN	ARANDELA DE BLOQUE LÅSESKIVE	RONDELLA DI SICUREZ BORGRING	132R
22		147580A1		1	SUPORTE, Assy STÜTZE	SUPPORT SUPPORT	SOPORTE BESLAG	SUPPORTO STEUN	300S

Rexroth - Montada a partir do nº de série N6AE00913

W20E

08-28B	01	p2	07/10

CONTROLE DA CARREGADEIRA (3 CARRETÉIS & 3 ALAVANCAS - REXROTH)
LOADER CONTROL (3 SPOOL & 3 LEVERS - REXROTH)
CONTROL DE LA CARGADORA (3 CARRETES & 3 PALANCAS - REXROTH)
LOADER CONTROL (3 SPOOL & 3 LEVERS - REXROTH)

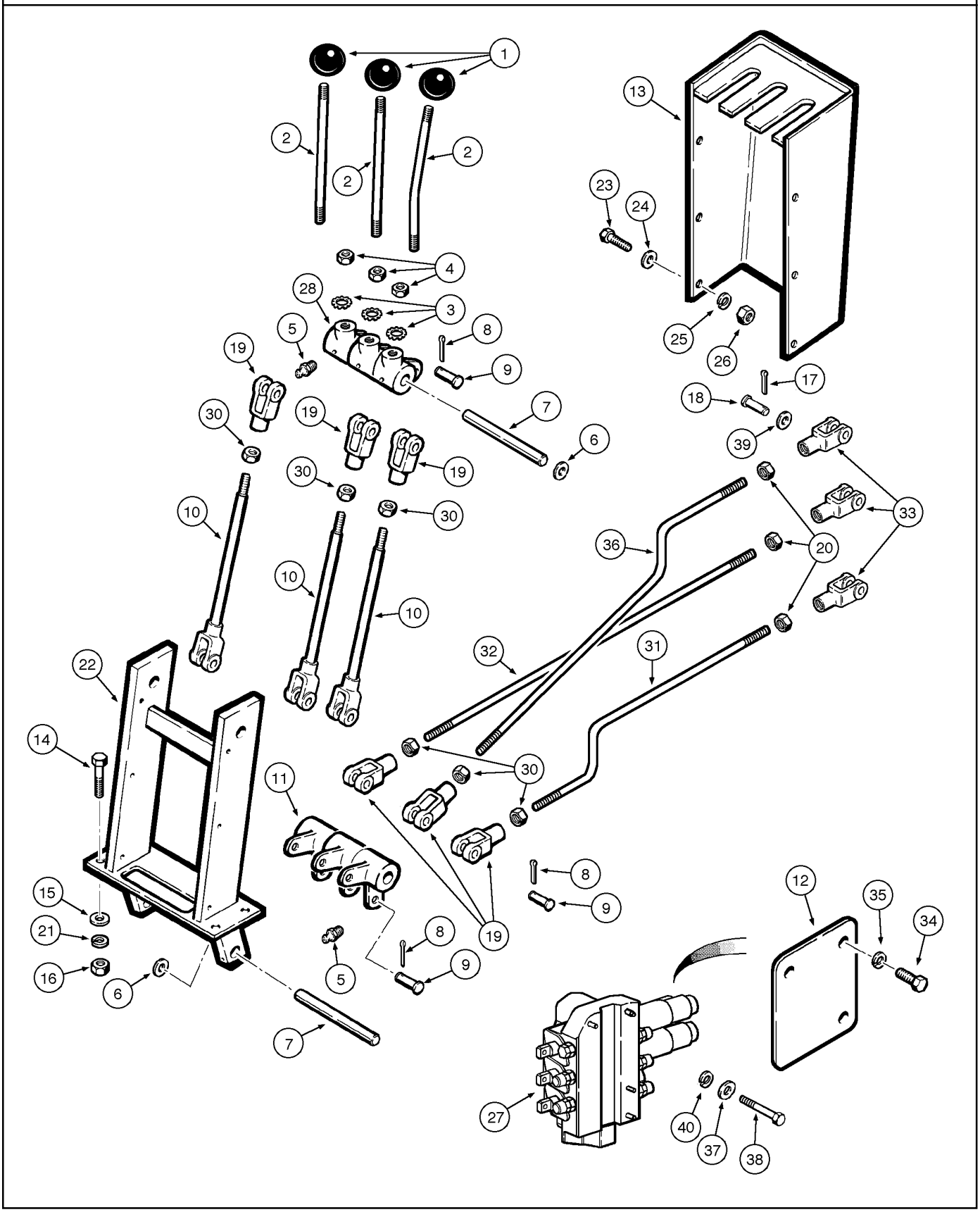

LOADER CONTROL (3 SPOOL & 3 LEVERS - REXROTH)
LOADER CONTROL (3 SPOOL & 3 LEVERS - REXROTH)
LOADER CONTROL (3 SPOOL & 3 LEVERS - REXROTH)
LOADER CONTROL (3 SPOOL & 3 LEVERS - REXROTH)

R	N	P.N.	MOD	Q	Denominação Bezeichnung	Description Description	Denominacion Beskrivelse	Descrizione Beschrijving	L.C.
23		182-130		6	PARAFUSO SCHRAUBE	SCREW VIS	TORNILLO SKRUE	VITE SCHROEF	040V
24		495-31022		1 2	ARRUELA PLANA, #10 UNTERLEGSCHEIBE	WASHER RONDELLE	ARANDELA FLADSKIVE	RONDELLA SLUITRING	131R
25		492-11010		6	TRAVA DA ARRUELA, #10 SICHERUNGSSCHEIBE	LOCK WASHER RONDELLE FREIN	ARANDELA DE BLOQUE LÅSESKIVE	RONDELLA DI SICUREZ BORGRING	132R
26		225-14110		6	PORCA, #10-24 MUTTER	NUT ECROU	TUERCA MØTRIK	DADO MOER	010D
27		REF		1	INSTRUÇÃO, VALVE 3 spool (P.8-68) ANLEITUNG	INSTRUCTION INSTRUCTION	INSTRUCCIÓN INSTRUKTION	ISTRUZIONI INSTRUCTIE	Z571
28		L 59090		3	ALAVANCA EM ÂNGULO, lever WINKELHEBEL	BELLCRANK LEVIER DE RENVOI	PALANCA ACODADA VINKEVÆGTSTANG	LEVA A SQUADRA TUIMELAAR	048L
29		148008A1		1	ADESIVO, 3 spool AUFKLEBER	DECAL AUTOCOLLANT	CALCOMANÍA TRANSFER	DECALCOMANIA STICKER	012D
30		425-158		6	PORCA, Jam, 1/2"-20, G5 MUTTER	NUT ECROU	TUERCA MØTRIK	DADO MOER	010D
31		87462917		1	TIRANTE, aux control SPURSTANGE	TIE-ROD TIRANT	TIRANTE TRÆKSTANG	TIRANTE TREKSTANG	142T
32		87462915		1	TIRANTE, bucket control SPURSTANGE	TIE-ROD TIRANT	TIRANTE TRÆKSTANG	TIRANTE TREKSTANG	142T
33		10000871		3	GARFO GABEL	YOKE CHAPE	ARTICULACIÓN GAFFEL	FORCELLA GAFFEL	085F
34		413-824		3	PARAFUSO, Hex, 1/2"-13 x 1 1/2", G5, Full Thd SCHRAUBE	BOLT VIS	PERNO BOLT	BULLONE BOUT	140B
35		495-21056		3	ARRUELA PLANA, 1/2" UNTERLEGSCHEIBE	WASHER RONDELLE	ARANDELA FLADSKIVE	RONDELLA SLUITRING	131R
36		87462916		1	TIRANTE, arm control SPURSTANGE	TIE-ROD TIRANT	TIRANTE TRÆKSTANG	TIRANTE TREKSTANG	142T
37		895-11008		3	ARRUELA PLANA, M8 x 16 x 1.6 UNTERLEGSCHEIBE	WASHER RONDELLE	ARANDELA FLADSKIVE	RONDELLA SLUITRING	131R
38		14359331		3	PARAFUSO SCHRAUBE	SCREW VIS	TORNILLO SKRUE	VITE SCHROEF	040V
39		12638621		3	ARRUELA PLANA UNTERLEGSCHEIBE	WASHER RONDELLE	ARANDELA FLADSKIVE	RONDELLA SLUITRING	131R
40		10615679		1	TRAVA DA ARRUELA, Ext Tooth, M8 SICHERUNGSSCHEIBE	LOCK WASHER RONDELLE FREIN	ARANDELA DE BLOQUE LÅSESKIVE	RONDELLA DI SICUREZ BORGRING	132R

Rexroth - Montada a partir do nº de série N6AE00913

W20E

08-30	01	p1	11/07

CONTROLES DE POSICIONAMENTO - RETORNO DA CAÇAMBA
POSITIONNING CONTROLS - RETURN TO DIG
CONTROLES DE POSICIONAMENTO - RETORNO DE LA CUCHARA
POSITIONNING CONTROLS - RETURN TO DIG

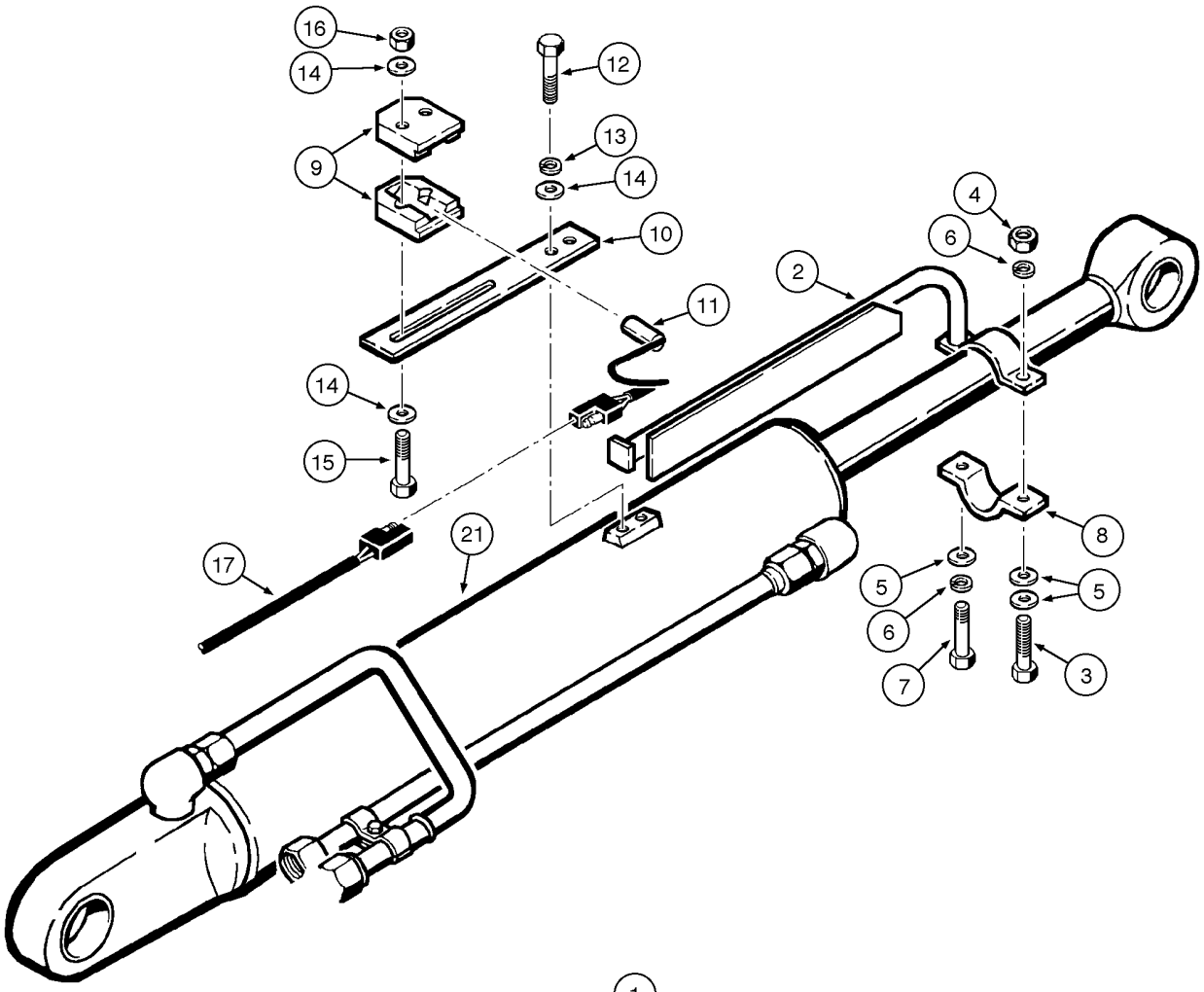

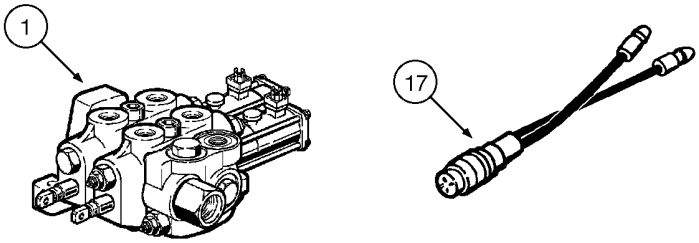

PARKER

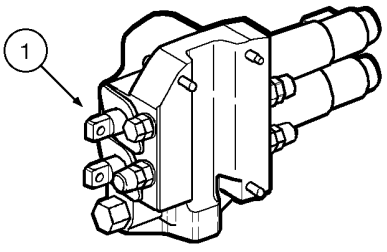

REXROTH

POSITIONNING CONTROLS - RETURN TO DIG
POSITIONNING CONTROLS - RETURN TO DIG
POSITIONNING CONTROLS - RETURN TO DIG
POSITIONNING CONTROLS - RETURN TO DIG

R	N	P.N.	MOD	Q	Denominação Bezeichnung	Description Description	Denominacion Beskrivelse	Descrizione Beschrijving	L.C.
1	1	REF	a	1	INSTRUÇÃO, VALVE Assy (P.8-34/60)				
						INSTRUCTION	INSTRUCCIÓN	ISTRUZIONI	Z571
					ANLEITUNG	INSTRUCTION	INSTRUKTION	INSTRUCTIE	
1	2	REF	b	1	INSTRUÇÃO, VALVE Assy (P.8-66/68)				
						INSTRUCTION	INSTRUCCIÓN	ISTRUZIONI	Z571
					ANLEITUNG	INSTRUCTION	INSTRUKTION	INSTRUCTIE	
2		87403953		1	INDICADOR	INDICATOR	INDICADOR	INDICATORE	087S
					ANZEIGE	INDICATEUR	INDIKATOR	INDICATOR	
3		413-620		1	PARAFUSO, Hex, 3/8"-16 x 1 1/4", G5, Full Thd				
						BOLT	PERNO	BULLONE	140B
					SCHRAUBE	VIS	BOLT	BOUT	
4		425-106		1	PORCA, 3/8"-16, G5	NUT	TUERCA	DADO	010D
					MUTTER	ECROU	MØTRIK	MOER	
5		495-11041		3	ARRUELA PLANA, 3/8", SAE				
						WASHER	ARANDELA	RONDELLA	131R
					UNTERLEGSCHEIBE	RONDELLE	FLADSKIVE	SLUITRING	
6		492-11038		2	TRAVA DA ARRUELA, 3/8"	LOCK WASHER	ARANDELA DE BLOQUE	RONDELLA DI SICUREZ	132R
					SICHERUNGSSCHEIBE	RONDELLE FREIN	LÅSESKIVE	BORGRING	
7		413-612		1	PARAFUSO, Hex, 3/8"-16 x 3/4", G5, Full Thd				
						BOLT	PERNO	BULLONE	140B
					SCHRAUBE	VIS	BOLT	BOUT	
8		L55773		1	BRACADEIRA	CLAMP	COLLAR	MORSETTO	1640
					SCHELLE	COLLIER	CLAMP	CLAMP	
9		L117005		2	BRACADEIRA	CLAMP	COLLAR	MORSETTO	1640
					SCHELLE	COLLIER	CLAMP	CLAMP	
10		87403959		1	SUPORTE	SUPPORT	SOPORTE	SUPPORTO	300S
					STÜTZE	SUPPORT	BESLAG	STEUN	
11		R47120		1	INTERRUPTOR	SWITCH	INTERRUPTOR	COMMUTATORE	8850
					SCHALTER	INTERRUPTEUR	SWITCH	SWITCH	
12		413-412		2	PARAFUSO, Hex, 1/4"-20 x 3/4", G5, Full Thd				
						BOLT	PERNO	BULLONE	140B
					SCHRAUBE	VIS	BOLT	BOUT	
13		492-11025		2	TRAVA DA ARRUELA, 1/4"	LOCK WASHER	ARANDELA DE BLOQUE	RONDELLA DI SICUREZ	132R
					SICHERUNGSSCHEIBE	RONDELLE FREIN	LÅSESKIVE	BORGRING	
14		495-21031		6	ARRUELA PLANA, 1/4"	WASHER	ARANDELA	RONDELLA	131R
					UNTERLEGSCHEIBE	RONDELLE	FLADSKIVE	SLUITRING	
15		413-436		2	PARAFUSO, Hex, 1/4"-20 x 2 1/4", G5				
						BOLT	PERNO	BULLONE	140B
					SCHRAUBE	VIS	BOLT	BOUT	
16		231-1444		2	CONTRA PORCA, 1/4"-20, GB				
						LOCK NUT	TUERCA DE BLOQUEO	DADO DI BLOCCAGGIO	P263
					SICHERUNGSMUTTER	CONTRE-ECROU	LÅSEMØTRIK	BORGMOER	
17		REF		1	INSTRUÇÃO, HARNESS main (P.4-10/14/16)				
						INSTRUCTION	INSTRUCCIÓN	ISTRUZIONI	Z571
					ANLEITUNG	INSTRUCTION	INSTRUKTION	INSTRUCTIE	

(1) Parker
(2) Rexroth
(a) BSN N6AE00912
(b) ASN N6AE00913

08-30	01	p2	11/07

CONTROLES DE POSICIONAMENTO - RETORNO DA CAÇAMBA
POSITIONNING CONTROLS - RETURN TO DIG
CONTROLES DE POSICIONAMENTO - RETORNO DE LA CUCHARA
POSITIONNING CONTROLS - RETURN TO DIG

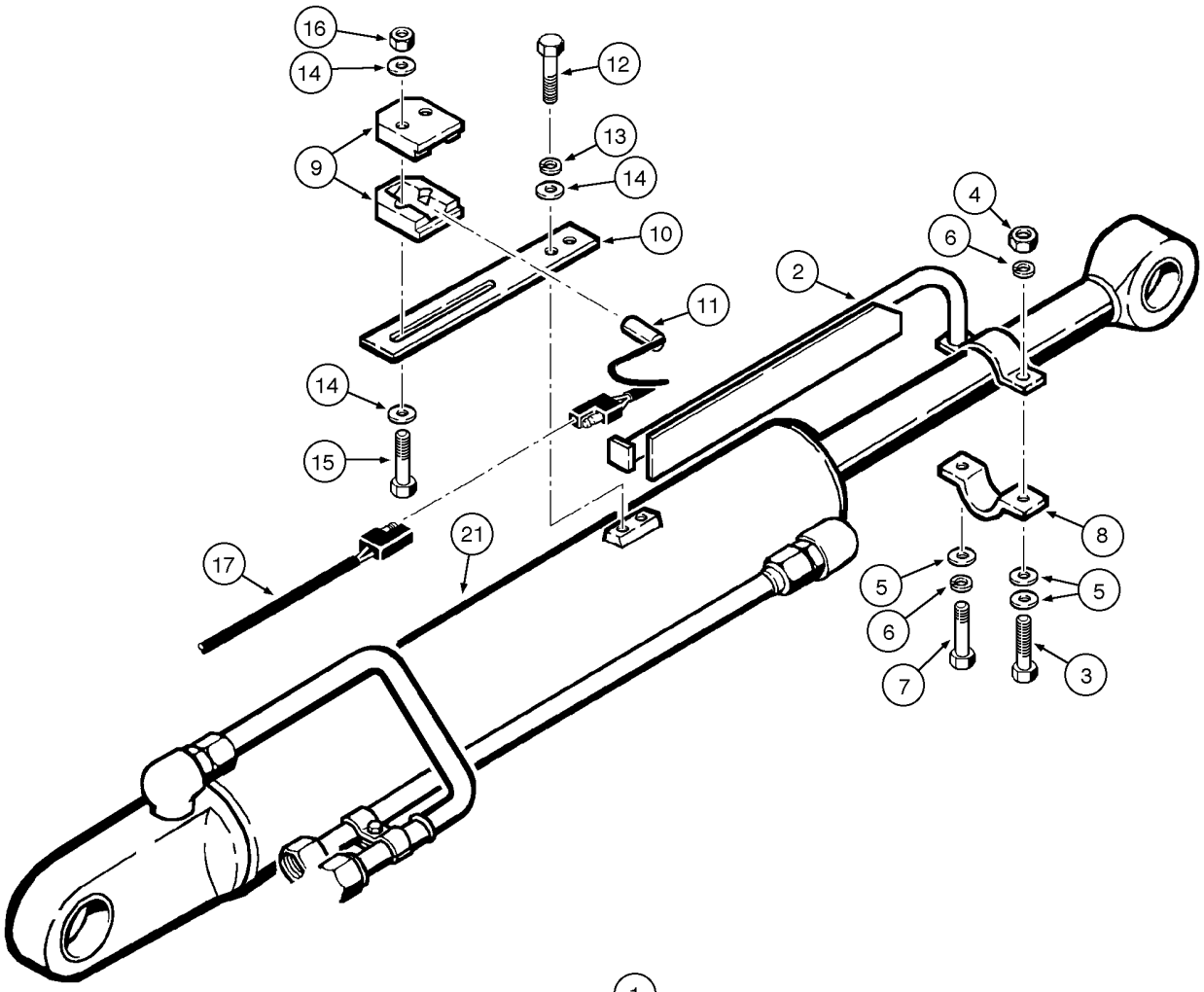

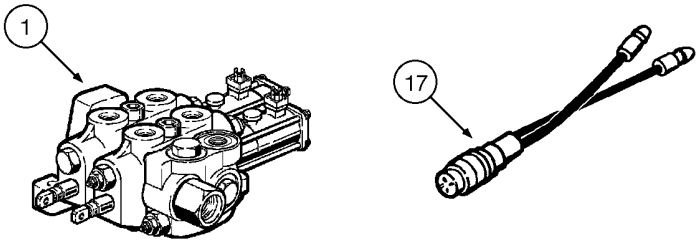

PARKER

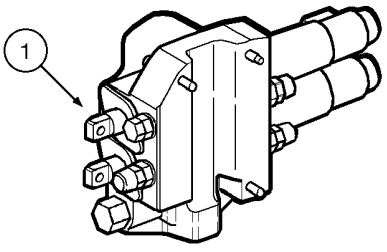

REXROTH

POSITIONNING CONTROLS - RETURN TO DIG
POSITIONNING CONTROLS - RETURN TO DIG
POSITIONNING CONTROLS - RETURN TO DIG
POSITIONNING CONTROLS - RETURN TO DIG

R	N	P.N.	MOD	Q	Denominação Bezeichnung	Description Description	Denominacion Beskrivelse	Descrizione Beschrijving	L.C.
21		REF		1	INSTRUÇÃO, CYLINDER (P.8-18)				
						INSTRUCTION	INSTRUCCIÓN	ISTRUZIONI	Z571
					ANLEITUNG	INSTRUCTION	INSTRUKTION	INSTRUCTIE	

08-32	01	p1	11/07

CONTROLE DE ALTURA DA CAÇAMBA
LOADER BUCKET HEIGHT CONTROL
CONTROL DE ALTURA DE LA CUCHARA
LOADER BUCKET HEIGHT CONTROL

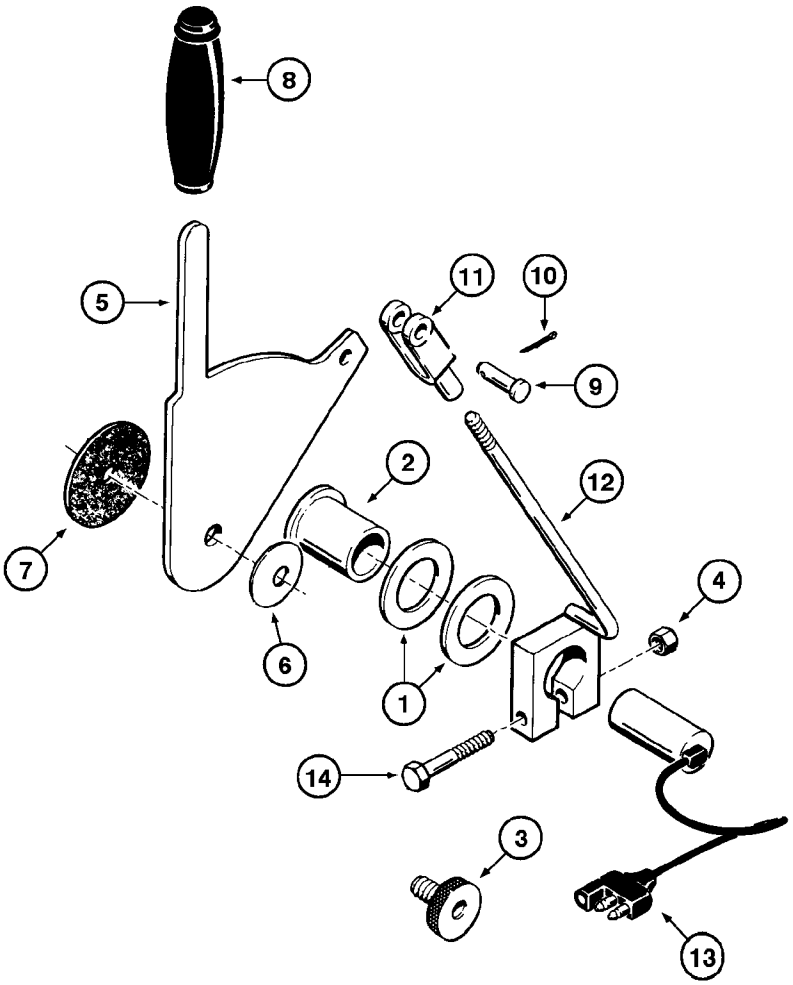

LOADER BUCKET HEIGHT CONTROL
LOADER BUCKET HEIGHT CONTROL
LOADER BUCKET HEIGHT CONTROL
LOADER BUCKET HEIGHT CONTROL

R	N	P.N.	MOD	Q	Denominação Bezeichnung	Description Description	Denominacion Beskrivelse	Descrizione Beschrijving	L.C.
1		L115161		2	ARRUELA UNTERLEGSCHEIBE	WASHER RONDELLE	ARANDELA WASHER	RONDELLA WASHER	9720
2		L115321		1	BUCHA BUECHSE	BUSHING DOUILLE	CASQUILLO BUSHING	BOCCOLA BUSHING	1140
3		L115576		1	PARAFUSO SCHRAUBE	SCREW VIS	TORNILLO SCREW	VITE SCREW	7450
4		231-1444		1	CONTRA PORCA, 1/4"-20, GB SICHERUNGSMUTTER	LOCK NUT CONTRE-ECROU	TUERCA DE BLOQUEO LÅSEMØTRIK	DADO DI BLOCCAGGIO BORGMOER	P263
5		L112439		1	ALAVANCA HEBEL	LEVER LEVIER	PALANCA LEVER	LEVA LEVER	5110
6		R14771		1	ARRUELA UNTERLEGSCHEIBE	WASHER RONDELLE	ARANDELA WASHER	RONDELLA WASHER	9720
7		R15071		1	DISCO, friction SCHEIBE	DISC DISQUE	DISCO DISC	DISCO DISC	2700
8		L52477		1	MAÇANETA GRIFF	GRIP POIGNEE	MANGO GREB	IMPUGNATURA GRIPTANG	4000
9		427-6106		1	PINO DE GARFO, 3/8" x 1 1/16" GABELBOLZEN	CLEVIS PIN AXE DE CHAPE	EJE CON CABEZA GAFFELBOLT	PERNO A TESTA PIANA GAFFELPEN	P694
10		432-616		1	CONTRA PINO, 3/32" x 1" SPLINT	COTTER PIN GOUPILLE FENDUE	PASADOR SPLITBOLT	COPPIGLIA SPLITPEN	270C
11		213-126		1	GARFO AJUSTÁVEL, 3/8"-24 x 2 1/2" EINSTELLBARER SCHÄ	ADJUSTABLE CLEVIS CHAPE DE REGLAGE	MOSQUETÓN AJUSTABL JUSTERBAR GAFFEL	FORCELLA ATTACCO RI VERSTELBARE GAFFEL	1680
12		E159912		1	HASTE STANGE	ROD TIGE	VARILLA STANG	ASTA STANG	090A
13		R47120		1	INTERRUPTOR, height control SCHALTER	SWITCH INTERRUPTEUR	INTERRUPTOR SWITCH	COMMUTATORE SWITCH	8850
14		413-436		1	PARAFUSO, Hex, 1/4"-20 x 2 1/4", G5 SCHRAUBE	BOLT VIS	PERNO BOLT	BULLONE BOUT	140B

08-34	01	p1	03/09

VÁLVULA DE CONTROLE DA CARREGADEIRA (2 CARRETÉIS - PARKER)
LOADER CONTROL VALVE (2 SPOOL - PARKER)
VALVULA DE CONTROL DE LA CARGADORA (2 CARRETES - PARKER)
LOADER CONTROL VALVE (2 SPOOL - PARKER)

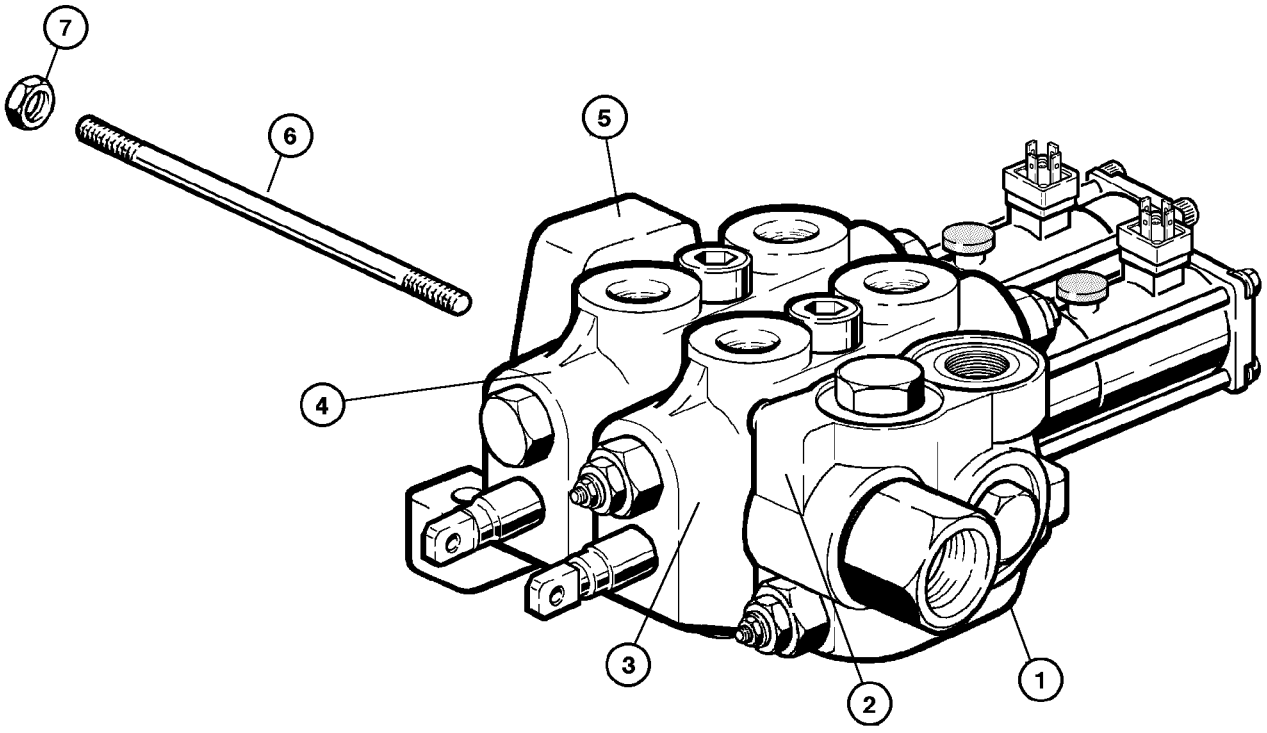

LOADER CONTROL VALVE (2 SPOOL - PARKER)
LOADER CONTROL VALVE (2 SPOOL - PARKER)
LOADER CONTROL VALVE (2 SPOOL - PARKER)
LOADER CONTROL VALVE (2 SPOOL - PARKER)

R	N	P.N.	MOD	Q	Denominação Bezeichnung	Description Description	Denominacion Beskrivelse	Descrizione Beschrijving	L.C.
		87423667		1	VÁLVULA, 2 spool Assy, Includes items 1 - 6				
						VALVE	VÁLVULA	VALVOLA	9620
					VENTIL	SOUPAPE	VENTIL	KLEP	
1		**87444081**		1	VÁLVULA, inlet and outlet (P.8-36)				
						VALVE	VÁLVULA	VALVOLA	9620
					VENTIL	SOUPAPE	VENTIL	KLEP	
2		**87444082**		1	VÁLVULA, bucket (P.8-38)	VALVE	VÁLVULA	VALVOLA	9620
					VENTIL	SOUPAPE	VENTIL	KLEP	
3		**87444083**		1	VÁLVULA, lift (P.8-40)	VALVE	VÁLVULA	VALVOLA	9620
					VENTIL	SOUPAPE	VENTIL	KLEP	
4		**87444084**		1	VÁLVULA, closing (P.8-42)	VALVE	VÁLVULA	VALVOLA	9620
					VENTIL	SOUPAPE	VENTIL	KLEP	
5		**87438674**		4	TIRANTE	TIE-ROD	TIRANTE	TIRANTE	142T
					SPURSTANGE	TIRANT	TRÆKSTANG	TREKSTANG	
6		**87438675**		4	PORCA	NUT	TUERCA	DADO	010D
					MUTTER	ECROU	MØTRIK	MOER	

Parker - Montada até o nº de série N6AE00912

08-36	01	p1	03/09

VÁLVULA DE CONTROLE DA CARREGADEIRA (SEÇÃO DE ADMISSÃO E SAÍDA - PARKER)
LOADER CONTROL VALVE (INLET AND OUTLET SECTION - PARKER)
VALVULA DE CONTROL DE LA CARGADORA (SECCIÓN DE ADMISIÓN Y SALIDA - PARKER)
LOADER CONTROL VALVE (INLET AND OUTLET SECTION - PARKER)

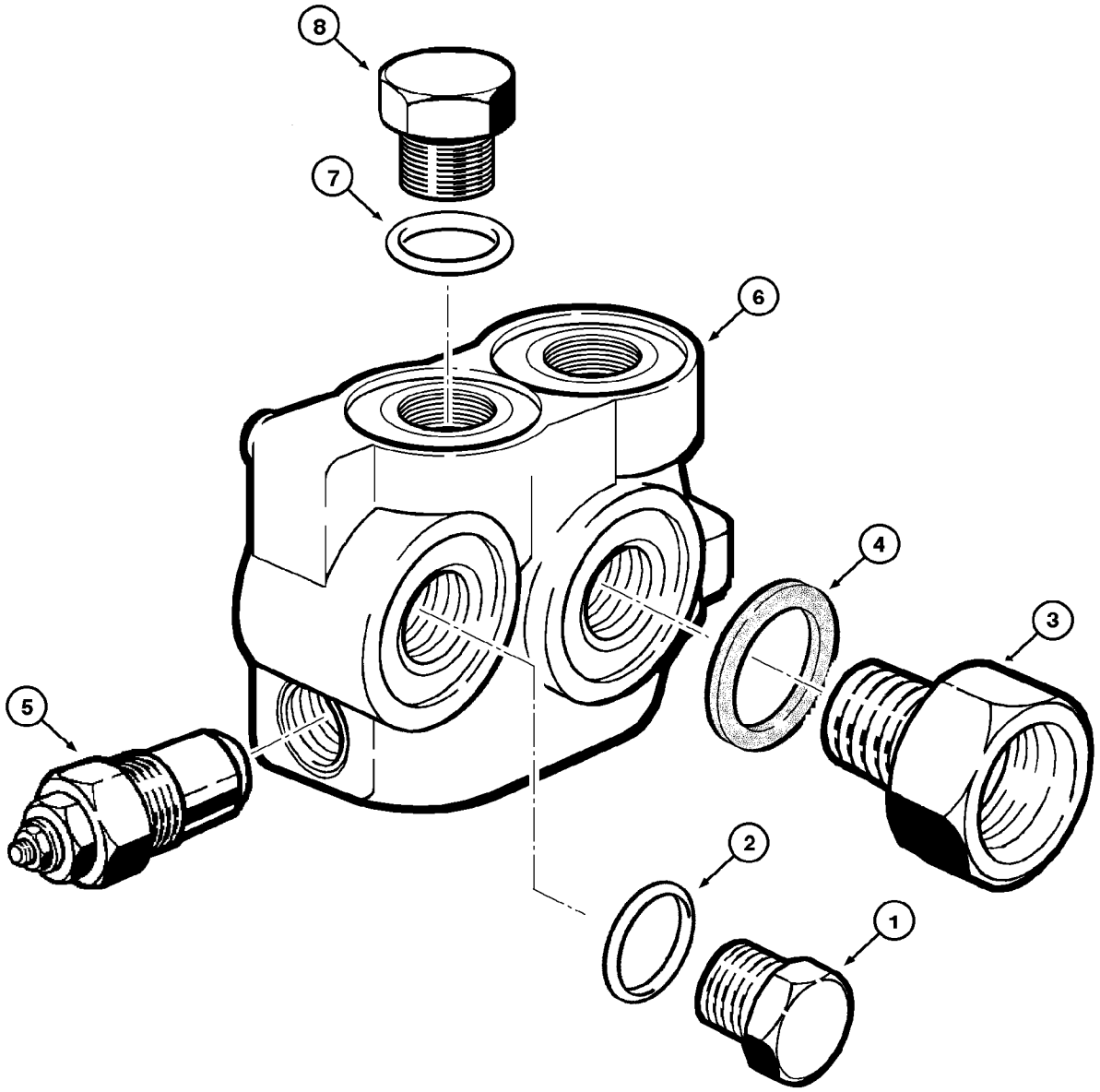

LOADER CONTROL VALVE (INLET AND OUTLET SECTION - PARKER)
LOADER CONTROL VALVE (INLET AND OUTLET SECTION - PARKER)
LOADER CONTROL VALVE (INLET AND OUTLET SECTION - PARKER)
LOADER CONTROL VALVE (INLET AND OUTLET SECTION - PARKER)

R	N	P.N.	MOD	Q	Denominação Bezeichnung	Description Description	Denominacion Beskrivelse	Descrizione Beschrijving	L.C.
		87444081		1	VÁLVULA, inlet and outlet Assy, Includes items 1 - 8				
						VALVE	VÁLVULA	VALVOLA	9620
					VENTIL	SOUPAPE	VENTIL	KLEP	
1		**218-5158**		1	BUJÃO, Hex Hd, 1 1/16"-12 ORB				
						PLUG	TAPÓN	TAPPO	050T
					STOPFEN	BOUCHON	PROP	PLUG	
2		**237-6012**		1	O-RING, 0.364" ID x 0.504" OD x 0.07"				
						O-RING	JUNTA TÓRICA	ANELLO TOROIDALE	055A
					O-RING	JOINT TORIQUE	O-RING	O-RING	
3		**71100770**		1	VÁLVULA, back-pressure (P.8-46)				
						VALVE	VÁLVULA	VALVOLA	9620
					VENTIL	SOUPAPE	VENTIL	KLEP	
4		**87436372**		1	O-RING	O-RING	JUNTA TÓRICA	ANELLO TOROIDALE	055A
					O-RING	JOINT TORIQUE	O-RING	O-RING	
5		**71100764**		1	VÁLVULA, relief (P.8-44)	VALVE	VÁLVULA	VALVOLA	9620
					VENTIL	SOUPAPE	VENTIL	KLEP	
6		**NSS**		1	SEM SERVIÇO EM SEPARADO, BODY				
						NOT SERVICED SEPARA	NO SE REPARA POR SE	NON FORNITO SEPARAT	064N
					NICHT A SEP ERS-T LIEI	NON FORUNI SEPAREM	SERVICERES IKKE SEPA	NIET LOS VERKRIJGBAA	
7		**218-5158**		1	BUJÃO, Hex Hd, 1 1/16"-12 ORB				
						PLUG	TAPÓN	TAPPO	050T
					STOPFEN	BOUCHON	PROP	PLUG	
8		**237-6012**		1	O-RING, 0.364" ID x 0.504" OD x 0.07"				
						O-RING	JUNTA TÓRICA	ANELLO TOROIDALE	055A
					O-RING	JOINT TORIQUE	O-RING	O-RING	

Parker - Montada até o nº de série N6AE00912

W20E

08-38	01	p1	03/09

VÁLVULA DE CONTROLE DA CARREGADEIRA (SEÇÃO DA CAÇAMBA - PARKER)
LOADER CONTROL VALVE (BUCKET SECTION - PARKER)
VALVULA DE CONTROL DE LA CARGADORA (SECCIÓN DE LA CUCHARA - PARKER)
LOADER CONTROL VALVE (BUCKET SECTION - PARKER)

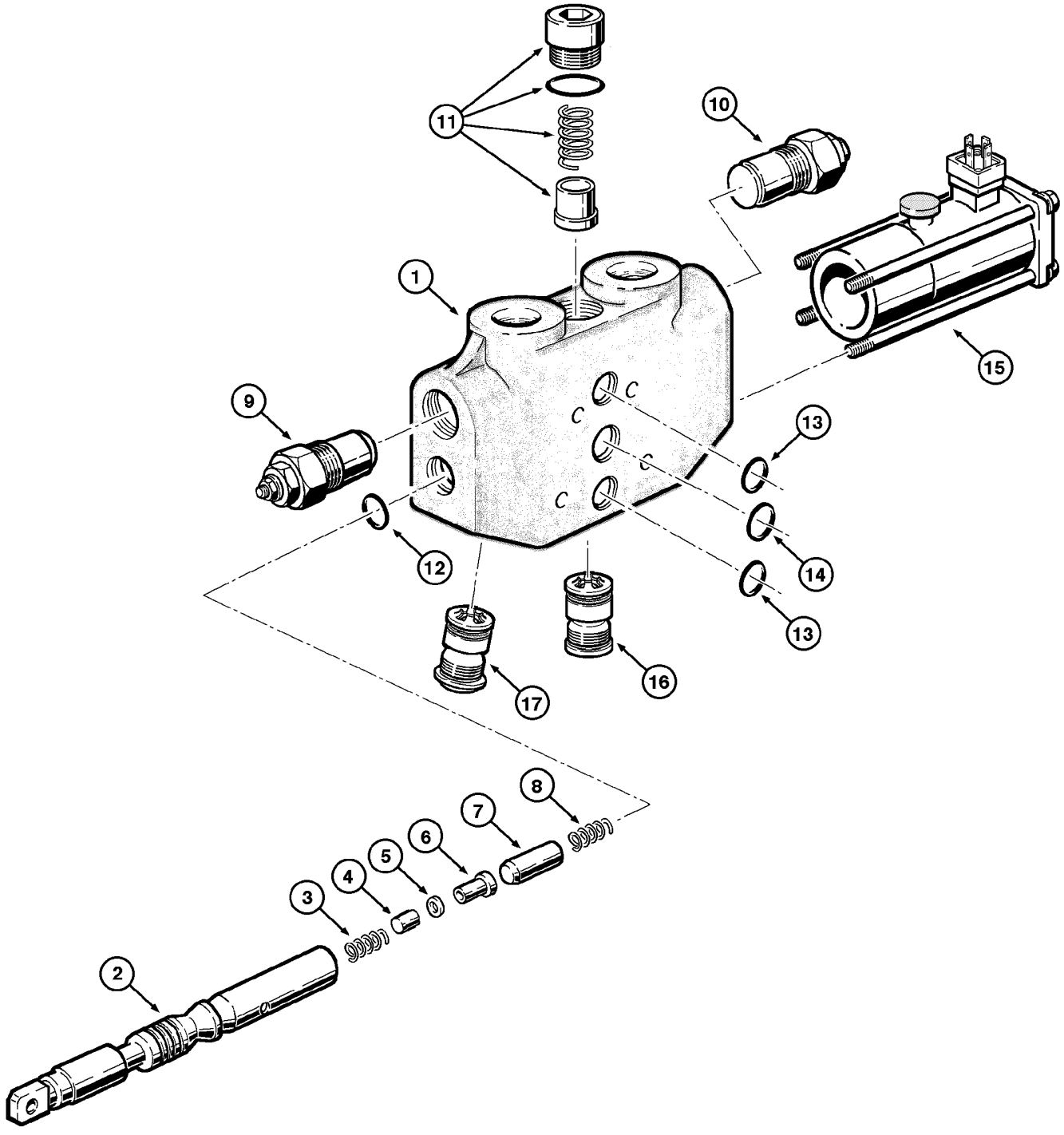

LOADER CONTROL VALVE (BUCKET SECTION - PARKER)
LOADER CONTROL VALVE (BUCKET SECTION - PARKER)
LOADER CONTROL VALVE (BUCKET SECTION - PARKER)
LOADER CONTROL VALVE (BUCKET SECTION - PARKER)

R	N	P.N.	MOD	Q	Denominação Bezeichnung	Description Description	Denominacion Beskrivelse	Descrizione Beschrijving	L.C.
		87444082		1	VÁLVULA, Bucket Assy, Includes items 1 - 17				
						VALVE	VÁLVULA	VALVOLA	9620
					VENTIL	SOUPAPE	VENTIL	KLEP	
1		**NSS**		1	SEM SERVIÇO EM SEPARADO, HOUSING				
						NOT SERVICED SEPARA	NO SE REPARA POR SE	NON FORNITO SEPARAT	064N
					NICHT A SEP ERS-T LIEI	NON FORUNI SEPAREM	SERVICERES IKKE SEPA	NIET LOS VERKRIJGBAA	
2		**NSS**		1	SEM SERVIÇO EM SEPARADO, SPOOL				
						NOT SERVICED SEPARA	NO SE REPARA POR SE	NON FORNITO SEPARAT	064N
					NICHT A SEP ERS-T LIEI	NON FORUNI SEPAREM	SERVICERES IKKE SEPA	NIET LOS VERKRIJGBAA	
3		**87437740**		1	MOLA	SPRING	RESORTE	MOLLA	100M
					FEDER	RESSORT	FJEDER	VEER	
4		**87437741**		1	ÊMBOLO	PLUNGER	ÉMBOLO	PISTONCINO; STANTUFI	130P
					PLUNGER	PLONGEUR	STEMPEL	PLUNJER	
5		**87436269**		1	O-RING	O-RING	JUNTA TÓRICA	ANELLO TOROIDALE	055A
					O-RING	JOINT TORIQUE	O-RING	O-RING	
6		**87436272**		1	BUJÃO LUBRIFICADOR	OILER FABRIC	TEJIDO DE ENGRASADO	TAMPONE DI LUBRIFICA	026T
					SCHMIERTUCH	FEUTRE DE GRAISSAGE	SMØREFILT	SMEERVILT	
7		**87436273**		1	ÊMBOLO	PLUNGER	ÉMBOLO	PISTONCINO; STANTUFI	130P
					PLUNGER	PLONGEUR	STEMPEL	PLUNJER	
8		**87436274**		1	MOLA	SPRING	RESORTE	MOLLA	100M
					FEDER	RESSORT	FJEDER	VEER	
9		**REF**		1	INSTRUÇÃO, VALVE relief 1650 PSI (P.8-48)				
						INSTRUCTION	INSTRUCCIÓN	ISTRUZIONI	Z571
					ANLEITUNG	INSTRUCTION	INSTRUKTION	INSTRUCTIE	
10		**REF**		1	INSTRUÇÃO, VALVE relief 2750 PSI (P.8-48)				
						INSTRUCTION	INSTRUCCIÓN	ISTRUZIONI	Z571
					ANLEITUNG	INSTRUCTION	INSTRUKTION	INSTRUCTIE	
11		**87436265**		1	VÁLVULA, load retainer	VALVE	VÁLVULA	VALVOLA	9620
					VENTIL	SOUPAPE	VENTIL	KLEP	
12		**87436267**		2	O-RING	O-RING	JUNTA TÓRICA	ANELLO TOROIDALE	055A
					O-RING	JOINT TORIQUE	O-RING	O-RING	
13		**87437737**		2	O-RING	O-RING	JUNTA TÓRICA	ANELLO TOROIDALE	055A
					O-RING	JOINT TORIQUE	O-RING	O-RING	
14		**87437738**		1	O-RING	O-RING	JUNTA TÓRICA	ANELLO TOROIDALE	055A
					O-RING	JOINT TORIQUE	O-RING	O-RING	
15		**71100769**		1	VÁLVULA, bucket (P.8-52)	VALVE	VÁLVULA	VALVOLA	9620
					VENTIL	SOUPAPE	VENTIL	KLEP	
16		**71100768**		1	VÁLVULA, anti-cavitation (P.8-50)				
						VALVE	VÁLVULA	VALVOLA	9620
					VENTIL	SOUPAPE	VENTIL	KLEP	
17		**71100763**		2	VÁLVULA, anti-cavitation (P.8-54)				
						VALVE	VÁLVULA	VALVOLA	9620
					VENTIL	SOUPAPE	VENTIL	KLEP	

Parker - Montada até o nº de série N6AE00912

W20E

08-40	01	p1	03/09

VÁLVULA DE CONTROLE DA CARREGADEIRA (SEÇÃO DE LEVANTAMENTO - PARKER)
LOADER CONTROL VALVE (LIFT SECTION - PARKER)
VALVULA DE CONTROL DE LA CARGADORA (SECCIÓN DE LEVANTAMIENTO - PARKER)
LOADER CONTROL VALVE (LIFT SECTION - PARKER)

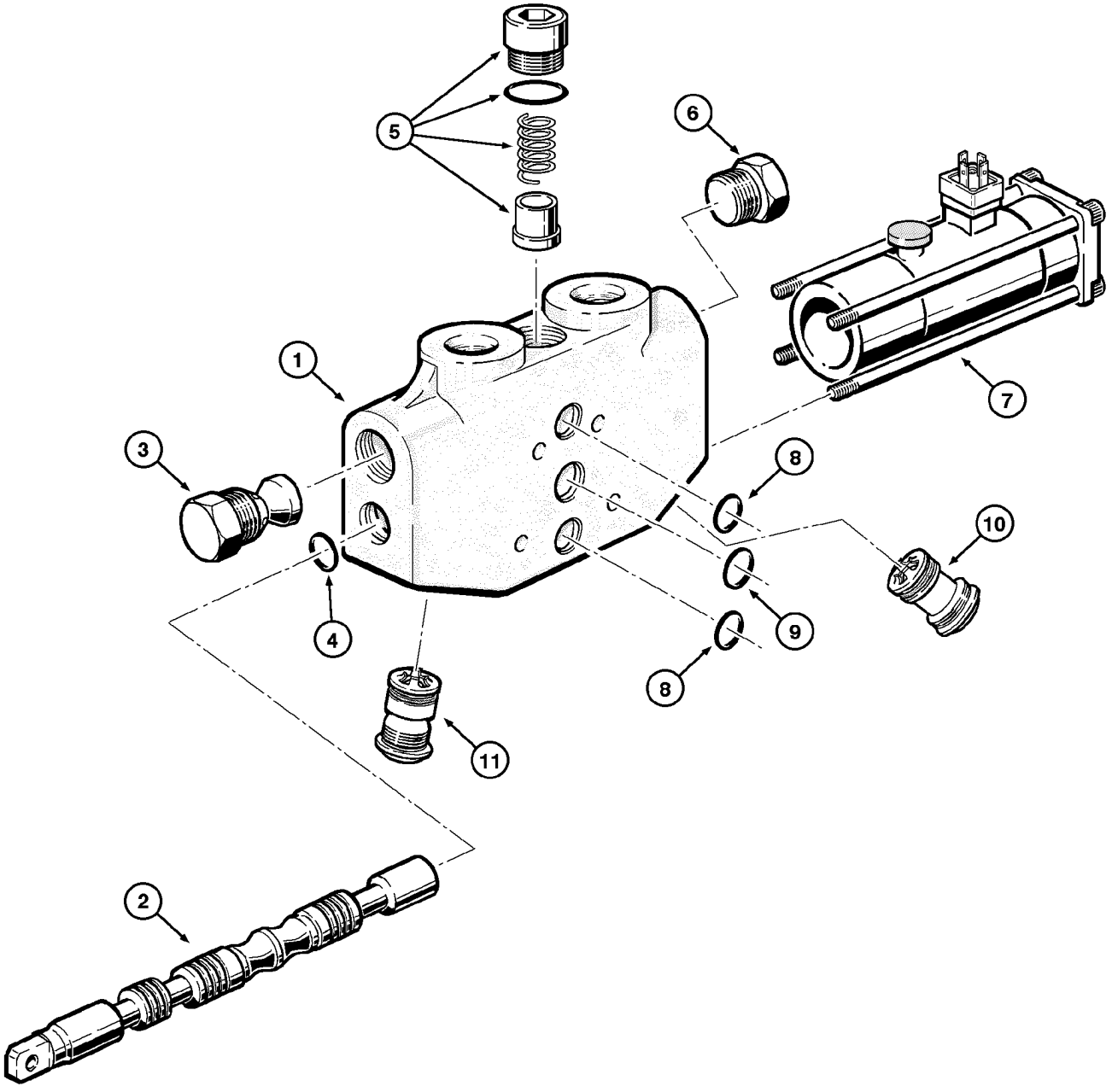

LOADER CONTROL VALVE (LIFT SECTION - PARKER)
LOADER CONTROL VALVE (LIFT SECTION - PARKER)
LOADER CONTROL VALVE (LIFT SECTION - PARKER)
LOADER CONTROL VALVE (LIFT SECTION - PARKER)

R	N	P.N.	MOD	Q	Denominação Bezeichnung	Description Description	Denominacion Beskrivelse	Descrizione Beschrijving	L.C.
		87444083		1	VÁLVULA, Lift Assy, Includes item 1 - 10				
						VALVE	VÁLVULA	VALVOLA	9620
					VENTIL	SOUPAPE	VENTIL	KLEP	
1		**NSS**		1	SEM SERVIÇO EM SEPARADO, HOUSING				
						NOT SERVICED SEPARA	NO SE REPARA POR SE	NON FORNITO SEPARAT	064N
					NICHT A SEP ERS-T LIEI	NON FORUNI SEPAREM	SERVICERES IKKE SEPA	NIET LOS VERKRIJGBAA	
2		**NSS**		1	SEM SERVIÇO EM SEPARADO, SPOOL				
						NOT SERVICED SEPARA	NO SE REPARA POR SE	NON FORNITO SEPARAT	064N
					NICHT A SEP ERS-T LIEI	NON FORUNI SEPAREM	SERVICERES IKKE SEPA	NIET LOS VERKRIJGBAA	
3		**71100766**		1	VÁLVULA, anti-cavitation (P.8-58)				
						VALVE	VÁLVULA	VALVOLA	9620
					VENTIL	SOUPAPE	VENTIL	KLEP	
4		**87436267**		2	O-RING	O-RING	JUNTA TÓRICA	ANELLO TOROIDALE	055A
					O-RING	JOINT TORIQUE	O-RING	O-RING	
5		**87436265**		1	VÁLVULA, load retainer	VALVE	VÁLVULA	VALVOLA	9620
					VENTIL	SOUPAPE	VENTIL	KLEP	
6		**87436266**		1	BUJÃO LUBRIFICADOR	OILER FABRIC	TEJIDO DE ENGRASADO	TAMPONE DI LUBRIFICA	026T
					SCHMIERTUCH	FEUTRE DE GRAISSAGE	SMØREFILT	SMEERVILT	
7		**71100767**		1	VÁLVULA, lift (P.8-56)	VALVE	VÁLVULA	VALVOLA	9620
					VENTIL	SOUPAPE	VENTIL	KLEP	
8		**87437737**		2	O-RING	O-RING	JUNTA TÓRICA	ANELLO TOROIDALE	055A
					O-RING	JOINT TORIQUE	O-RING	O-RING	
9		**87437738**		1	O-RING	O-RING	JUNTA TÓRICA	ANELLO TOROIDALE	055A
					O-RING	JOINT TORIQUE	O-RING	O-RING	
11		**71100763**		1	VÁLVULA, anti-cavitation (P.8-54)				
						VALVE	VÁLVULA	VALVOLA	9620
					VENTIL	SOUPAPE	VENTIL	KLEP	
10		**87436268**		1	BUJÃO LUBRIFICADOR	OILER FABRIC	TEJIDO DE ENGRASADO	TAMPONE DI LUBRIFICA	026T
					SCHMIERTUCH	FEUTRE DE GRAISSAGE	SMØREFILT	SMEERVILT	

Parker - Montada até o nº de série N6AE00912

W20E

VÁLVULA DE CONTROLE DA CARREGADEIRA (SEÇÃO DE FECHAMENTO - PARKER)
LOADER CONTROL VALVE (CLOSING SECTION - PARKER)
VALVULA DE CONTROL DE LA CARGADORA (SECCIÓN DE CERRAMIENTO - PARKER)
LOADER CONTROL VALVE (CLOSING SECTION - PARKER)

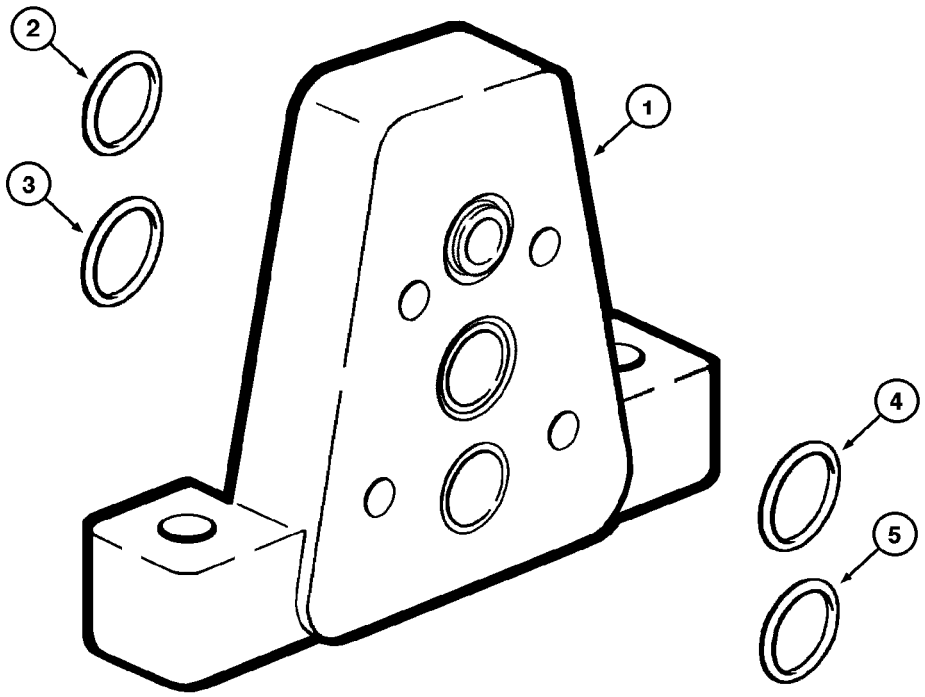

LOADER CONTROL VALVE (CLOSING SECTION - PARKER)
LOADER CONTROL VALVE (CLOSING SECTION - PARKER)
LOADER CONTROL VALVE (CLOSING SECTION - PARKER)
LOADER CONTROL VALVE (CLOSING SECTION - PARKER)

R	N	P.N.	MOD	Q	Denominação Bezeichnung	Description Description	Denominacion Beskrivelse	Descrizione Beschrijving	L.C.
		87444084		1	VÁLVULA, Closing Assy, Includes item 1 - 5				
						VALVE	VÁLVULA	VALVOLA	9620
					VENTIL	SOUPAPE	VENTIL	KLEP	
1		**NSS**		1	SEM SERVIÇO EM SEPARADO, HOUSING				
						NOT SERVICED SEPARA	NO SE REPARA POR SE	NON FORNITO SEPARAT	064N
					NICHT A SEP ERS-T LIEI	NON FORUNI SEPAREM	SERVICERES IKKE SEPA	NIET LOS VERKRIJGBAA	
2		**87436276**		1	O-RING	O-RING	JUNTA TÓRICA	ANELLO TOROIDALE	055A
					O-RING	JOINT TORIQUE	O-RING	O-RING	
3		**87436275**		1	BUJÃO LUBRIFICADOR	OILER FABRIC	TEJIDO DE ENGRASADO	TAMPONE DI LUBRIFICA	026T
					SCHMIERTUCH	FEUTRE DE GRAISSAGE	SMØREFILT	SMEERVILT	
4		**87437737**		2	O-RING	O-RING	JUNTA TÓRICA	ANELLO TOROIDALE	055A
					O-RING	JOINT TORIQUE	O-RING	O-RING	
5		**87437738**		1	O-RING	O-RING	JUNTA TÓRICA	ANELLO TOROIDALE	055A
					O-RING	JOINT TORIQUE	O-RING	O-RING	

Parker - Montada até o nº de série N6AE00912

W20E

08-44	01	p1	03/09

VÁLVULA DE ALÍVIO (PARKER)
LOADER RELIEF VALVE (PARKER)
VALVULA DE ALÍVIO (PARKER)
LOADER RELIEF VALVE (PARKER)

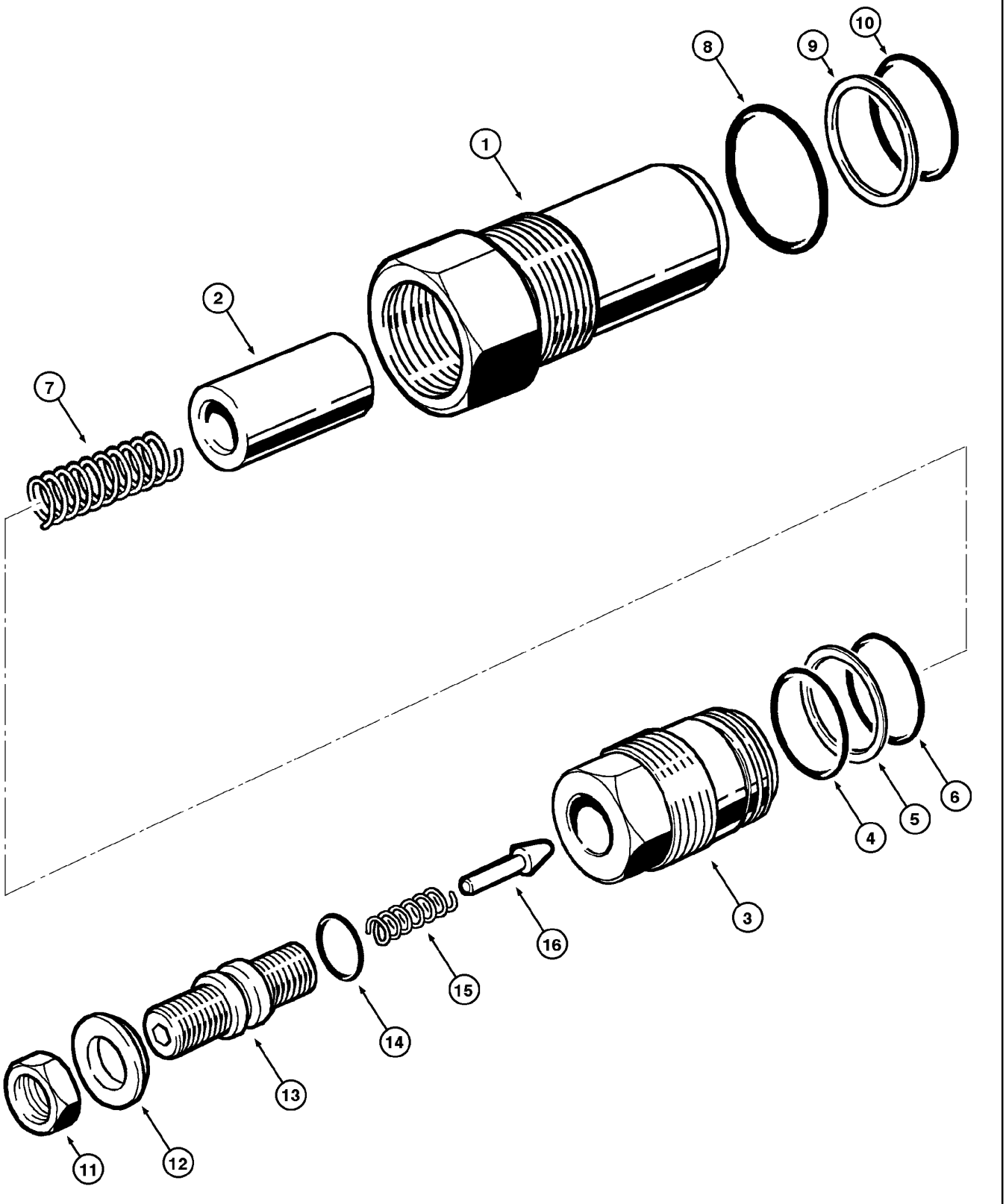

LOADER RELIEF VALVE (PARKER)
LOADER RELIEF VALVE (PARKER)
LOADER RELIEF VALVE (PARKER)
LOADER RELIEF VALVE (PARKER)

R	N	P.N.	MOD	Q	Denominação Bezeichnung	Description Description	Denominacion Beskrivelse	Descrizione Beschrijving	L.C.
		71100764		1	VÁLVULA, relief Assy, Includes item 1 - 16				
						VALVE	VÁLVULA	VALVOLA	9620
					VENTIL	SOUPAPE	VENTIL	KLEP	
1		**NSS**		1	SEM SERVIÇO EM SEPARADO, HOUSING				
						NOT SERVICED SEPARA	NO SE REPARA POR SE	NON FORNITO SEPARAT	064N
					NICHT A SEP ERS-T LIEI	NON FORUNI SEPAREM	SERVICERES IKKE SEPA	NIET LOS VERKRIJGBAA	
2		**87436311**		1	ÊMBOLO	PLUNGER	ÉMBOLO	PISTONCINO; STANTUFI	130P
					PLUNGER	PLONGEUR	STEMPEL	PLUNJER	
3		**NSS**		1	SEM SERVIÇO EM SEPARADO, HOUSING				
						NOT SERVICED SEPARA	NO SE REPARA POR SE	NON FORNITO SEPARAT	064N
					NICHT A SEP ERS-T LIEI	NON FORUNI SEPAREM	SERVICERES IKKE SEPA	NIET LOS VERKRIJGBAA	
4		**87436305**		1	O-RING	O-RING	JUNTA TÓRICA	ANELLO TOROIDALE	055A
					O-RING	JOINT TORIQUE	O-RING	O-RING	
5		**87436306**		1	ANEL	RING	ANILLO	ANELLO	045A
					RING	ANNEAU	RING	RING	
6		**87436307**		1	O-RING	O-RING	JUNTA TÓRICA	ANELLO TOROIDALE	055A
					O-RING	JOINT TORIQUE	O-RING	O-RING	
7		**87436308**		1	MOLA	SPRING	RESORTE	MOLLA	100M
					FEDER	RESSORT	FJEDER	VEER	
8		**87436313**		1	O-RING	O-RING	JUNTA TÓRICA	ANELLO TOROIDALE	055A
					O-RING	JOINT TORIQUE	O-RING	O-RING	
9		**87436309**		1	ANEL	RING	ANILLO	ANELLO	045A
					RING	ANNEAU	RING	RING	
10		**87436310**		1	O-RING	O-RING	JUNTA TÓRICA	ANELLO TOROIDALE	055A
					O-RING	JOINT TORIQUE	O-RING	O-RING	
11		**87436302**		1	CONTRA PORCA	LOCK NUT	TUERCA DE BLOQUEO	DADO DI BLOCCAGGIO	P263
					SICHERUNGSMUTTER	CONTRE-ECROU	LÅSEMØTRIK	BORGMOER	
12		**87436303**		1	ARRUELA PLANA	WASHER	ARANDELA	RONDELLA	131R
					UNTERLEGSCHEIBE	RONDELLE	FLADSKIVE	SLUITRING	
13		**87436315**		1	PARAFUSO	SCREW	TORNILLO	VITE	040V
					SCHRAUBE	VIS	SKRUE	SCHROEF	
14		**87436314**		1	O-RING	O-RING	JUNTA TÓRICA	ANELLO TOROIDALE	055A
					O-RING	JOINT TORIQUE	O-RING	O-RING	
15		**87436304**		1	MOLA	SPRING	RESORTE	MOLLA	100M
					FEDER	RESSORT	FJEDER	VEER	
16		**87436312**		1	ÊMBOLO	PLUNGER	ÉMBOLO	PISTONCINO; STANTUFI	130P
					PLUNGER	PLONGEUR	STEMPEL	PLUNJER	
		87436318		1	KIT DE REVISÃO DO MOTOR				
						ENGINE OVERHAUL KIT	KIT DE REVISIÓN DEL M	KIT REVISIONE MOTORE	002K
					MOTORÜBERHOLUNGSS	KIT DE REVISION MOTEI	MOTORREVISIONSSÆT	REVISIEKIT VOOR MOTO	

Parker - Montada até o nº de série N6AE00912

W20E

08-46	01	p1	03/09

VÁLVULA CONTRA PRESSÃO (PARKER)
LOADER BACK PRESSURE VALVE (PARKER)
VALVULA CONTRA PRESIÓN (PARKER)
LOADER BACK PRESSURE VALVE (PARKER)

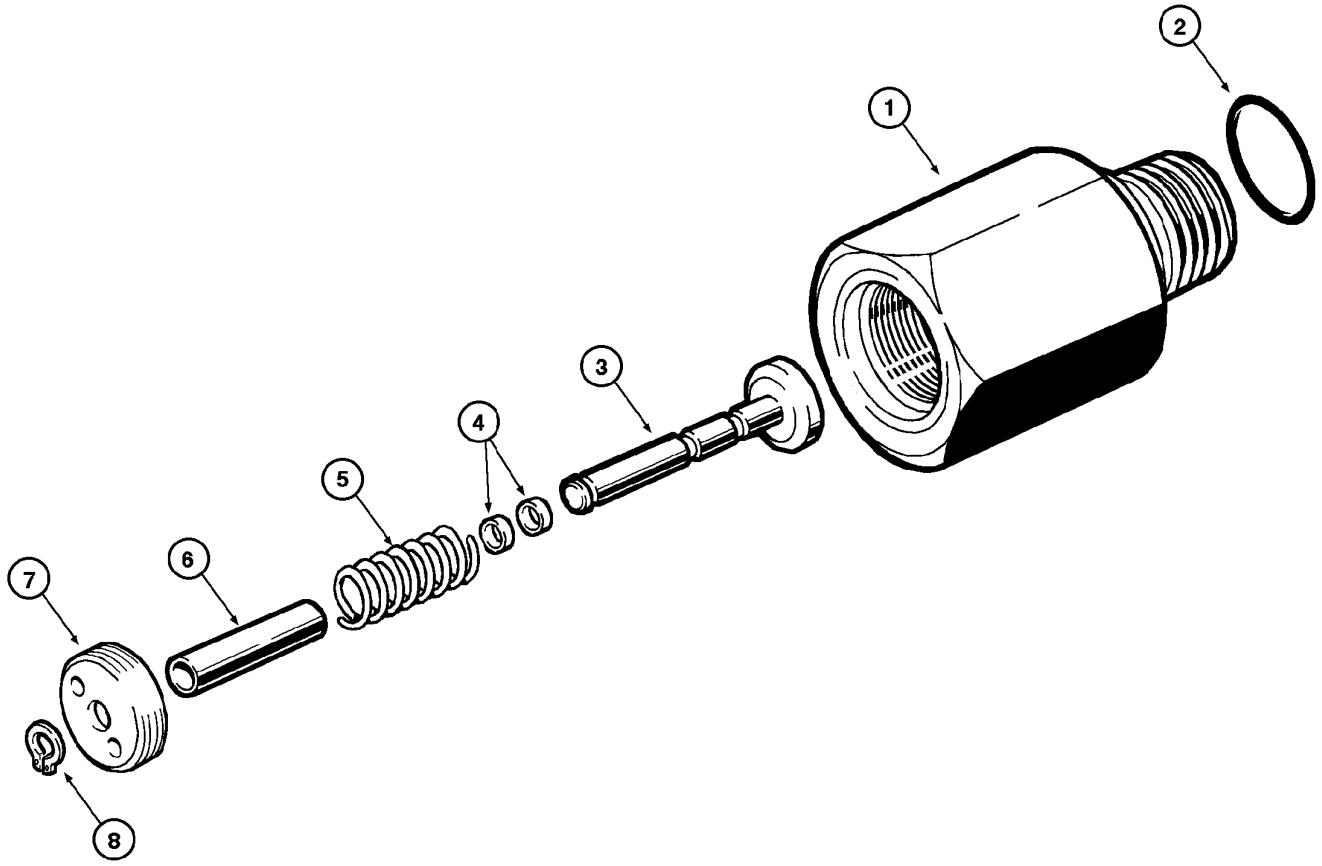

LOADER BACK PRESSURE VALVE (PARKER)
LOADER BACK PRESSURE VALVE (PARKER)
LOADER BACK PRESSURE VALVE (PARKER)
LOADER BACK PRESSURE VALVE (PARKER)

R	N	P.N.	MOD	Q	Denominação Bezeichnung	Description Description	Denominacion Beskrivelse	Descrizione Beschrijving	L.C.
		71100770		1	VÁLVULA, back pressure Assy, Includes item 1 - 8				
					VALVE	VÁLVULA	VALVOLA		9620
					VENTIL	SOUPAPE	VENTIL	KLEP	
1		**NSS**		1	SEM SERVIÇO EM SEPARADO, HOUSING				
					NOT SERVICED SEPARA	NO SE REPARA POR SE		NON FORNITO SEPARAT	064N
					NICHT A SEP ERS-T LIEI	NON FORUNI SEPAREM	SERVICERES IKKE SEPA	NIET LOS VERKRIJGBAA	
2		**87436372**		1	O-RING	O-RING	JUNTA TÓRICA	ANELLO TOROIDALE	055A
					O-RING	JOINT TORIQUE	O-RING	O-RING	
3		**87436371**		1	ÊMBOLO	PLUNGER	ÉMBOLO	PISTONCINO; STANTUFI	130P
					PLUNGER	PLONGEUR	STEMPEL	PLUNJER	
4		**87436373**		2	ANEL	RING	ANILLO	ANELLO	045A
					RING	ANNEAU	RING	RING	
5		**87436377**		1	MOLA	SPRING	RESORTE	MOLLA	100M
					FEDER	RESSORT	FJEDER	VEER	
6		**87436376**		1	TUBO	TUBE	TUBO	TUBO	195T
					ROHR	TUBE	RØR	LEIDING	
7		**87436375**		1	DISCO, friction	DISC	DISCO	DISCO	060D
					SCHEIBE	DISQUE	NAV	SCHIJF	
8		**87436374**		1	ANEL DE PRESSÃO	SNAP RING	ANILLO DE RESORTE	ANELLO ELASTICO	054A
					SPRENGRING	ANNEAU D'ARRET	LÅSERING	VEERRING	

Parker - Montada até o nº de série N6AE00912

W20E

08-48	01	p1	03/09

VÁLVULA DE ALÍVIO (PARKER)
LOADER RELIEF VALVE (PARKER)
VALVULA DE ALÍVIO (PARKER)
LOADER RELIEF VALVE (PARKER)

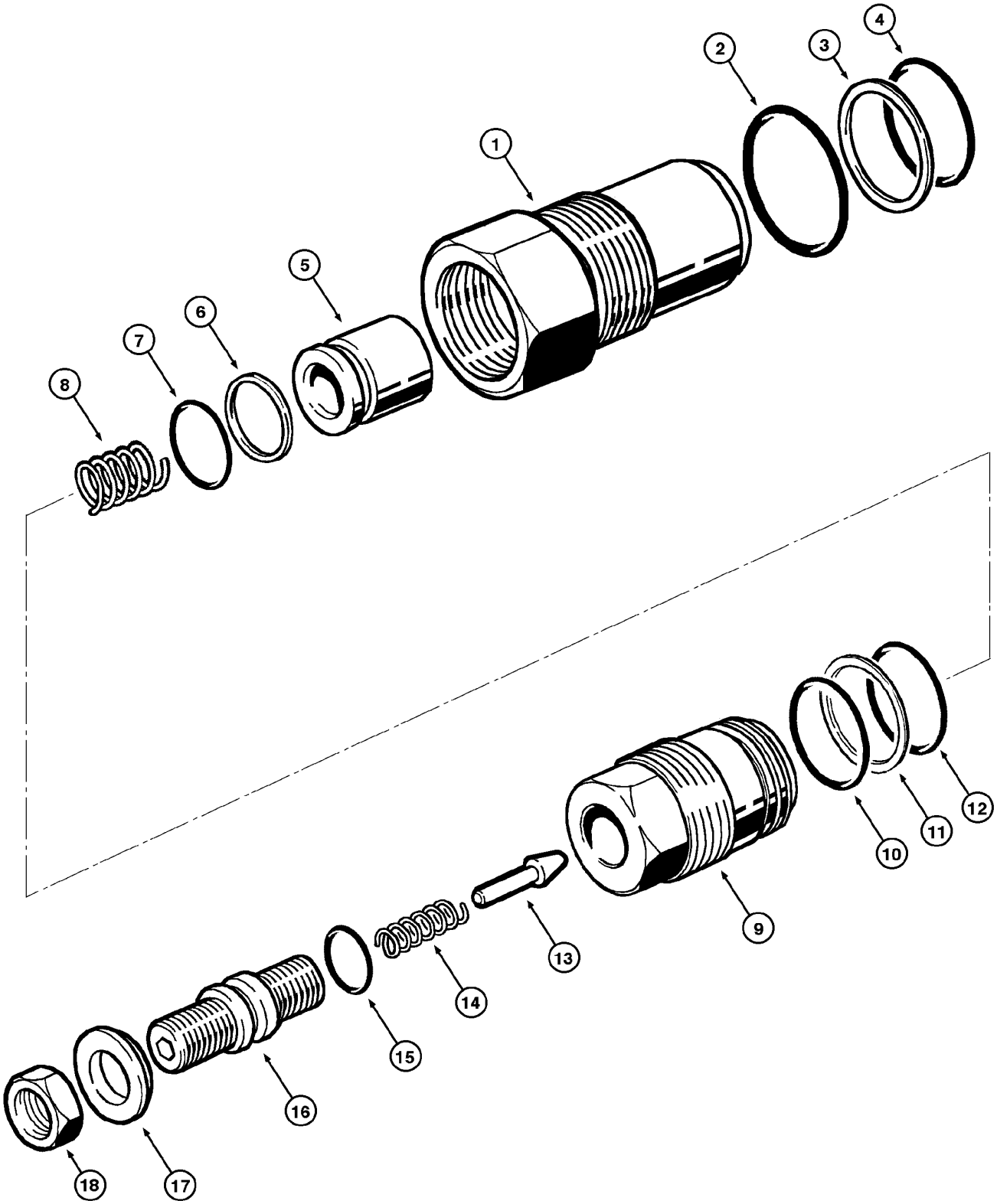

LOADER RELIEF VALVE (PARKER)
LOADER RELIEF VALVE (PARKER)
LOADER RELIEF VALVE (PARKER)
LOADER RELIEF VALVE (PARKER)

R	N	P.N.	MOD	Q	Denominação Bezeichnung	Description Description	Denominacion Beskrivelse	Descrizione Beschrijving	L.C.
		87436604		1	VÁLVULA, relief 1650 PSI,	Includes item 1 - 18			
						VALVE	VÁLVULA	VALVOLA	9620
					VENTIL	SOUPAPE	VENTIL	KLEP	
		87436605		1	VÁLVULA, relief 2750 PSI,	Includes item 1 - 18			
						VALVE	VÁLVULA	VALVOLA	9620
					VENTIL	SOUPAPE	VENTIL	KLEP	
1		**NSS**		1	SEM SERVIÇO EM SEPARADO,	HOUSING			
						NOT SERVICED SEPARA	NO SE REPARA POR SE	NON FORNITO SEPARAT	064N
					NICHT A SEP ERS-T LIEI	NON FORUNI SEPAREM	SERVICERES IKKE SEPA	NIET LOS VERKRIJGBAA	
2		**87436320**		1	O-RING	O-RING	JUNTA TÓRICA	ANELLO TOROIDALE	055A
					O-RING	JOINT TORIQUE	O-RING	O-RING	
3		**87436323**		1	ANEL	RING	ANILLO	ANELLO	045A
					RING	ANNEAU	RING	RING	
4		**87436324**		1	O-RING	O-RING	JUNTA TÓRICA	ANELLO TOROIDALE	055A
					O-RING	JOINT TORIQUE	O-RING	O-RING	
5		**87436325**		1	ÊMBOLO	PLUNGER	ÉMBOLO	PISTONCINO; STANTUFI	130P
					PLUNGER	PLONGEUR	STEMPEL	PLUNJER	
6		**87436335**		1	ANEL	RING	ANILLO	ANELLO	045A
					RING	ANNEAU	RING	RING	
7		**87436334**		1	O-RING	O-RING	JUNTA TÓRICA	ANELLO TOROIDALE	055A
					O-RING	JOINT TORIQUE	O-RING	O-RING	
8		**87436322**		1	MOLA	SPRING	RESORTE	MOLLA	100M
					FEDER	RESSORT	FJEDER	VEER	
9		**NSS**		1	SEM SERVIÇO EM SEPARADO,	HOUSING			
						NOT SERVICED SEPARA	NO SE REPARA POR SE	NON FORNITO SEPARAT	064N
					NICHT A SEP ERS-T LIEI	NON FORUNI SEPAREM	SERVICERES IKKE SEPA	NIET LOS VERKRIJGBAA	
10		**87436321**		1	ANEL	RING	ANILLO	ANELLO	045A
					RING	ANNEAU	RING	RING	
11		**87436328**		1	O-RING	O-RING	JUNTA TÓRICA	ANELLO TOROIDALE	055A
					O-RING	JOINT TORIQUE	O-RING	O-RING	
12		**87436326**		1	O-RING	O-RING	JUNTA TÓRICA	ANELLO TOROIDALE	055A
					O-RING	JOINT TORIQUE	O-RING	O-RING	
13		**87436312**		1	ÊMBOLO	PLUNGER	ÉMBOLO	PISTONCINO; STANTUFI	130P
					PLUNGER	PLONGEUR	STEMPEL	PLUNJER	
14		**87436330**		1	MOLA	SPRING	RESORTE	MOLLA	100M
					FEDER	RESSORT	FJEDER	VEER	
15		**87436314**		1	O-RING	O-RING	JUNTA TÓRICA	ANELLO TOROIDALE	055A
					O-RING	JOINT TORIQUE	O-RING	O-RING	
16		**87436315**		1	PARAFUSO	SCREW	TORNILLO	VITE	040V
					SCHRAUBE	VIS	SKRUE	SCHROEF	
17		**87436303**		1	ARRUELA PLANA	WASHER	ARANDELA	RONDELLA	131R
					UNTERLEGSCHEIBE	RONDELLE	FLADSKIVE	SLUITRING	
18		**87436332**		1	CONTRA PORCA	LOCK NUT	TUERCA DE BLOQUEO	DADO DI BLOCCAGGIO	P263
					SICHERUNGSMUTTER	CONTRE-ECROU	LÅSEMØTRIK	BORGMOER	
		87436336		1	KIT DE REVISÃO DO MOTOR				
						ENGINE OVERHAUL KIT	KIT DE REVISIÓN DEL M	KIT REVISIONE MOTORE	002K
					MOTORÜBERHOLUNGS	KIT DE REVISION MOTE	MOTORREVISIONSSÆT	REVISIEKIT VOOR MOTO	

Parker - Montada até o nº de série N6AE00912

W20E

08-50	01	p1	03/09

VÁLVULA ANTICAVITAÇÃO (PARKER)
LOADER ANTICAVITATION VALVE (PARKER)
VALVULA ANTICAVITACIÓN (PARKER)
LOADER ANTICAVITATION VALVE (PARKER)

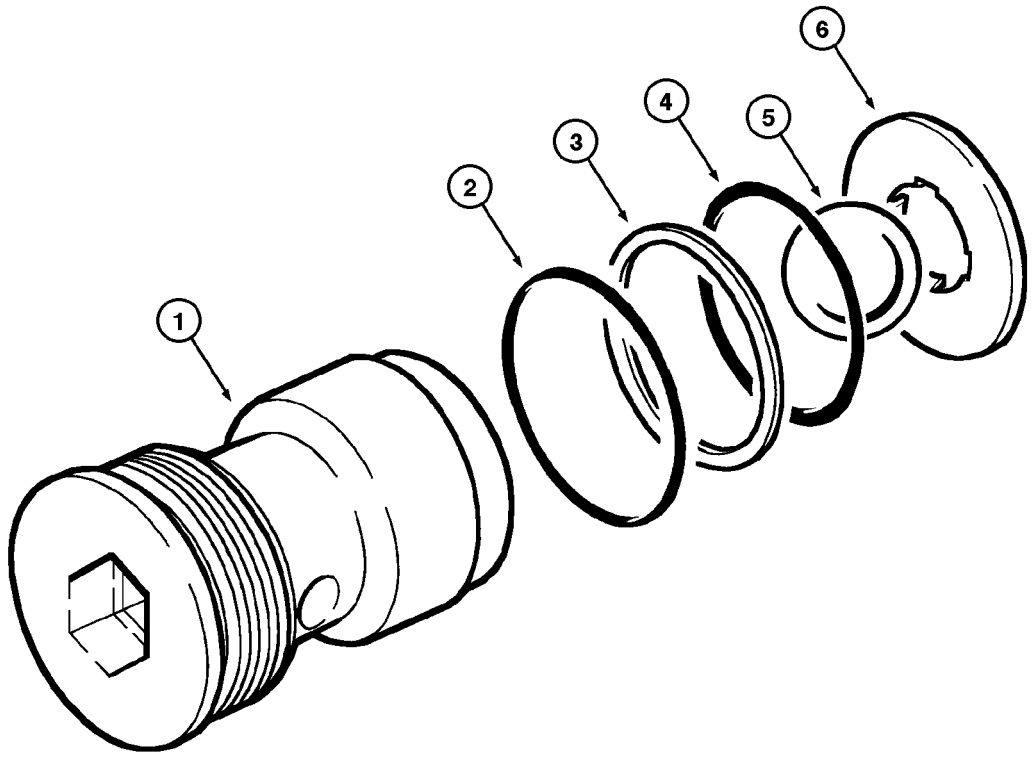

LOADER ANTICAVITATION VALVE (PARKER)
LOADER ANTICAVITATION VALVE (PARKER)
LOADER ANTICAVITATION VALVE (PARKER)
LOADER ANTICAVITATION VALVE (PARKER)

R	N	P.N.	MOD	Q	Denominação Bezeichnung	Description Description	Denominacion Beskrivelse	Descrizione Beschrijving	L.C.
		71100768		1	VÁLVULA, anticavitation Assy, Includes item 1 - 6				
						VALVE	VÁLVULA	VALVOLA	9620
					VENTIL	SOUPAPE	VENTIL	KLEP	
1		**NSS**		1	SEM SERVIÇO EM SEPARADO, HOUSING				
						NOT SERVICED SEPARA	NO SE REPARA POR SE	NON FORNITO SEPARAT	064N
					NICHT A SEP ERS-T LIEI	NON FORUNI SEPAREM	SERVICERES IKKE SEPA	NIET LOS VERKRIJGBAA	
2		**87436367**		1	O-RING	O-RING	JUNTA TÓRICA	ANELLO TOROIDALE	055A
					O-RING	JOINT TORIQUE	O-RING	O-RING	
3		**87436368**		1	ANEL	RING	ANILLO	ANELLO	045A
					RING	ANNEAU	RING	RING	
4		**87436326**		1	O-RING	O-RING	JUNTA TÓRICA	ANELLO TOROIDALE	055A
					O-RING	JOINT TORIQUE	O-RING	O-RING	
5		**87436369**		1	ESFERA	BALL	BOLA	SFERA	140S
					KUGEL	BILLE	KUGLE	KOGEL	
6		**87436370**		1	ARRUELA PLANA	WASHER	ARANDELA	RONDELLA	131R
					UNTERLEGSCHEIBE	RONDELLE	FLADSKIVE	SLUITRING	

Parker - Montada até o nº de série N6AE00912

W20E

08-52	01	p1	03/09

VÁLVULA DE CONTROLE - POSICIONADOR (SEÇÃO DA CAÇAMBA - PARKER)
LOADER CONTROL VALVE - POSITIONER (BUCKET SECTION - PARKER)
VALVULA DE CONTROL - POSICIONADOR (SECCIÓN DE LA CUCHARA - PARKER)
LOADER CONTROL VALVE - POSITIONER (BUCKET SECTION - PARKER)

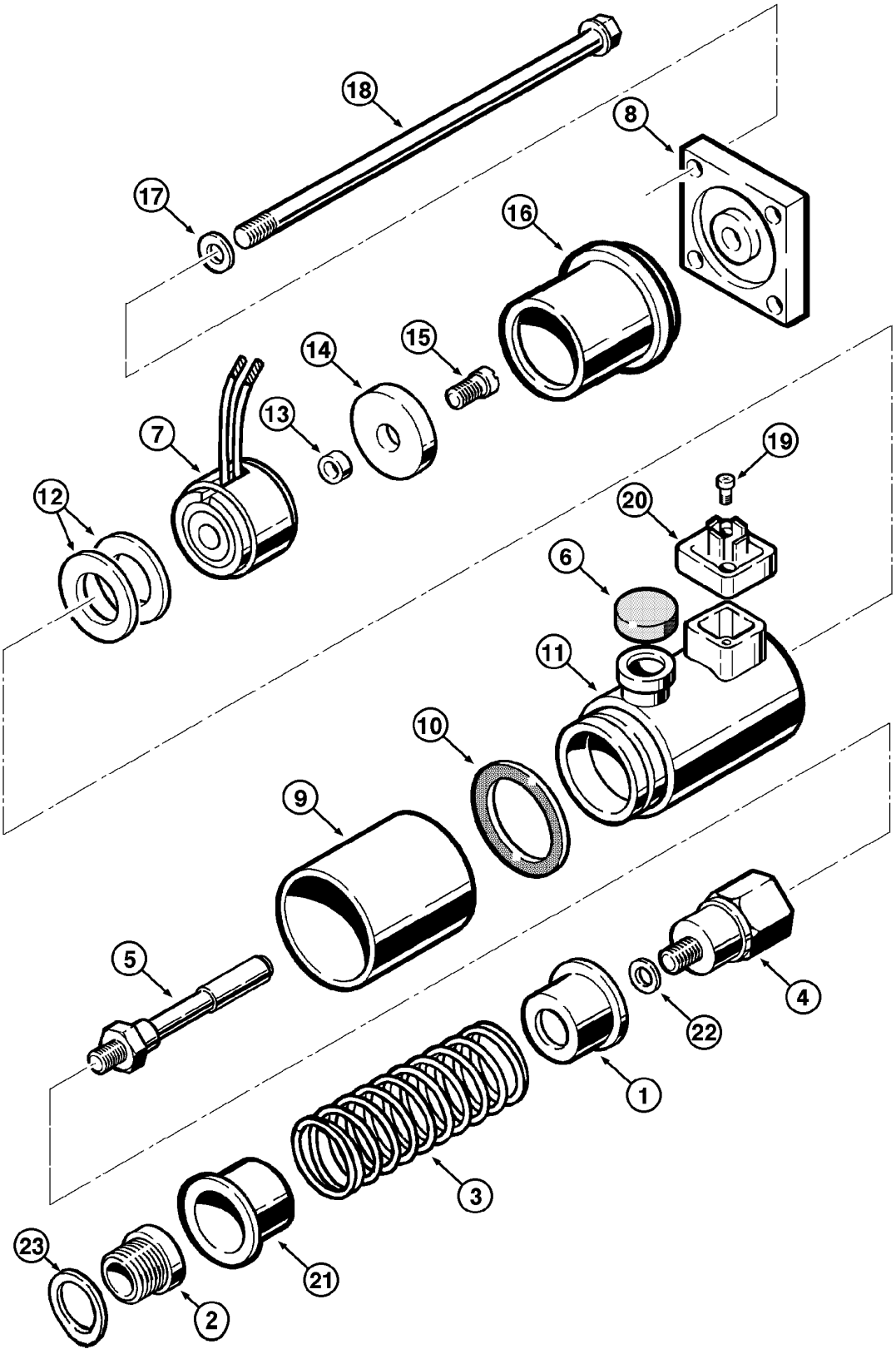

LOADER CONTROL VALVE - POSITIONER (BUCKET SECTION - PARKER)
LOADER CONTROL VALVE - POSITIONER (BUCKET SECTION - PARKER)
LOADER CONTROL VALVE - POSITIONER (BUCKET SECTION - PARKER)
LOADER CONTROL VALVE - POSITIONER (BUCKET SECTION - PARKER)

R	N	P.N.	MOD	Q	Denominação Bezeichnung	Description Description	Denominacion Beskrivelse	Descrizione Beschrijving	L.C.
		71100769		1	VÁLVULA, Bucket Assy, Includes item 1 - 23				
						VALVE	VÁLVULA	VALVOLA	9620
					VENTIL	SOUPAPE	VENTIL	KLEP	
1		**87436277**		1	LIMITADOR DE MOVIMENTO				
						TRAVEL LIMITER	LIMITADOR DE CARRER	LIMITATORE DI CORSA	056L
					WEGBEGRENZER	LIMITEUR DE DEPLACEM	FARTPILOT	BEGRENZER	
2		**87436278**		1	BUJÃO LUBRIFICADOR	OILER FABRIC	TEJIDO DE ENGRASADO	TAMPONE DI LUBRIFICA	026T
					SCHMIERTUCH	FEUTRE DE GRAISSAGE	SMØREFILT	SMEERVILT	
3		**87436279**		1	MOLA	SPRING	RESORTE	MOLLA	100M
					FEDER	RESSORT	FJEDER	VEER	
4		**87436280**		1	ADAPTADOR	ADAPTER	ADAPTADOR	ADATTATORE	001A
					ADAPTER	ADAPTATEUR	ADAPTER	ADAPTER	
5		**87436281**		1	EXTENSÃO	EXTENSION	EXTENSIÓN	PROLUNGA	226P
					ERWEITERUNG	RALLONGE	FORLÆNGNING	VERLENGSTUK	
6		**87436282**		1	COBERTURA	COVER	CUBIERTA	COPERCHIO	265C
					ABDECKUNG	COUVERCLE	DÆKSEL	AFSCHERMING	
7		**71100771**		1	BOBINA, Assy	COIL	BOBINA	BOBINA	083B
					SPULE	BOBINE	SPOLE	SPOEL	
8		**87436283**		1	COBERTURA	COVER	CUBIERTA	COPERCHIO	265C
					ABDECKUNG	COUVERCLE	DÆKSEL	AFSCHERMING	
9		**NSS**		1	SEM SERVIÇO EM SEPARADO, HOUSING				
						NOT SERVICED SEPARA	NO SE REPARA POR SE	NON FORNITO SEPARAT	064N
					NICHT A SEP ERS-T LIEI	NON FORUNI SEPAREM	SERVICERES IKKE SEPA	NIET LOS VERKRIJGBAA	
10		**87436284**		1	O-RING	O-RING	JUNTA TÓRICA	ANELLO TOROIDALE	055A
					O-RING	JOINT TORIQUE	O-RING	O-RING	
11		**NSS**		1	SEM SERVIÇO EM SEPARADO, HOUSING				
						NOT SERVICED SEPARA	NO SE REPARA POR SE	NON FORNITO SEPARAT	064N
					NICHT A SEP ERS-T LIEI	NON FORUNI SEPAREM	SERVICERES IKKE SEPA	NIET LOS VERKRIJGBAA	
12		**87436285**		2	MOLA	SPRING	RESORTE	MOLLA	100M
					FEDER	RESSORT	FJEDER	VEER	
13		**87436286**		1	JUNTA ESFÉRICA	BALL JOINT	RÓTULA	GIUNTO SFERICO	070G
					KUGELGELENK	JOINT A ROTULE	KUGLELED	KOGELGEWRICHT	
14		**87436289**		1	ADAPTADOR	ADAPTER	ADAPTADOR	ADATTATORE	001A
					ADAPTER	ADAPTATEUR	ADAPTER	ADAPTER	
15		**87436290**		1	PARAFUSO	SCREW	TORNILLO	VITE	040V
					SCHRAUBE	VIS	SKRUE	SCHROEF	
16		**87436291**		1	ESPAÇADOR	SPACER	SEPARADOR	DISTANZIALE	075D
					DISTANZSTÜCK	ENTRETOISE	AFSTANDSSTYKKE	AFSTANDSSTUK	
17		**87436292**		4	ARRUELA PLANA	WASHER	ARANDELA	RONDELLA	131R
					UNTERLEGSCHEIBE	RONDELLE	FLADSKIVE	SLUITRING	
18		**87436293**		4	PARAFUSO	SCREW	TORNILLO	VITE	040V
					SCHRAUBE	VIS	SKRUE	SCHROEF	
19		**87436294**		2	PARAFUSO	SCREW	TORNILLO	VITE	040V
					SCHRAUBE	VIS	SKRUE	SCHROEF	
20		**87436295**		1	PINO	PIN	PASADOR	PERNO	080P
					PIN	BROCHE	STIFT	PEN	
21		**87436296**		1	LIMITADOR DE MOVIMENTO				
						TRAVEL LIMITER	LIMITADOR DE CARRER	LIMITATORE DI CORSA	056L
					WEGBEGRENZER	LIMITEUR DE DEPLACEM	FARTPILOT	BEGRENZER	

Parker - Montada até o nº de série N6AE00912

W20E

08-52	01	p2	03/09

VÁLVULA DE CONTROLE - POSICIONADOR (SEÇÃO DA CAÇAMBA - PARKER)
LOADER CONTROL VALVE - POSITIONER (BUCKET SECTION - PARKER)
VALVULA DE CONTROL - POSICIONADOR (SECCIÓN DE LA CUCHARA - PARKER)
LOADER CONTROL VALVE - POSITIONER (BUCKET SECTION - PARKER)

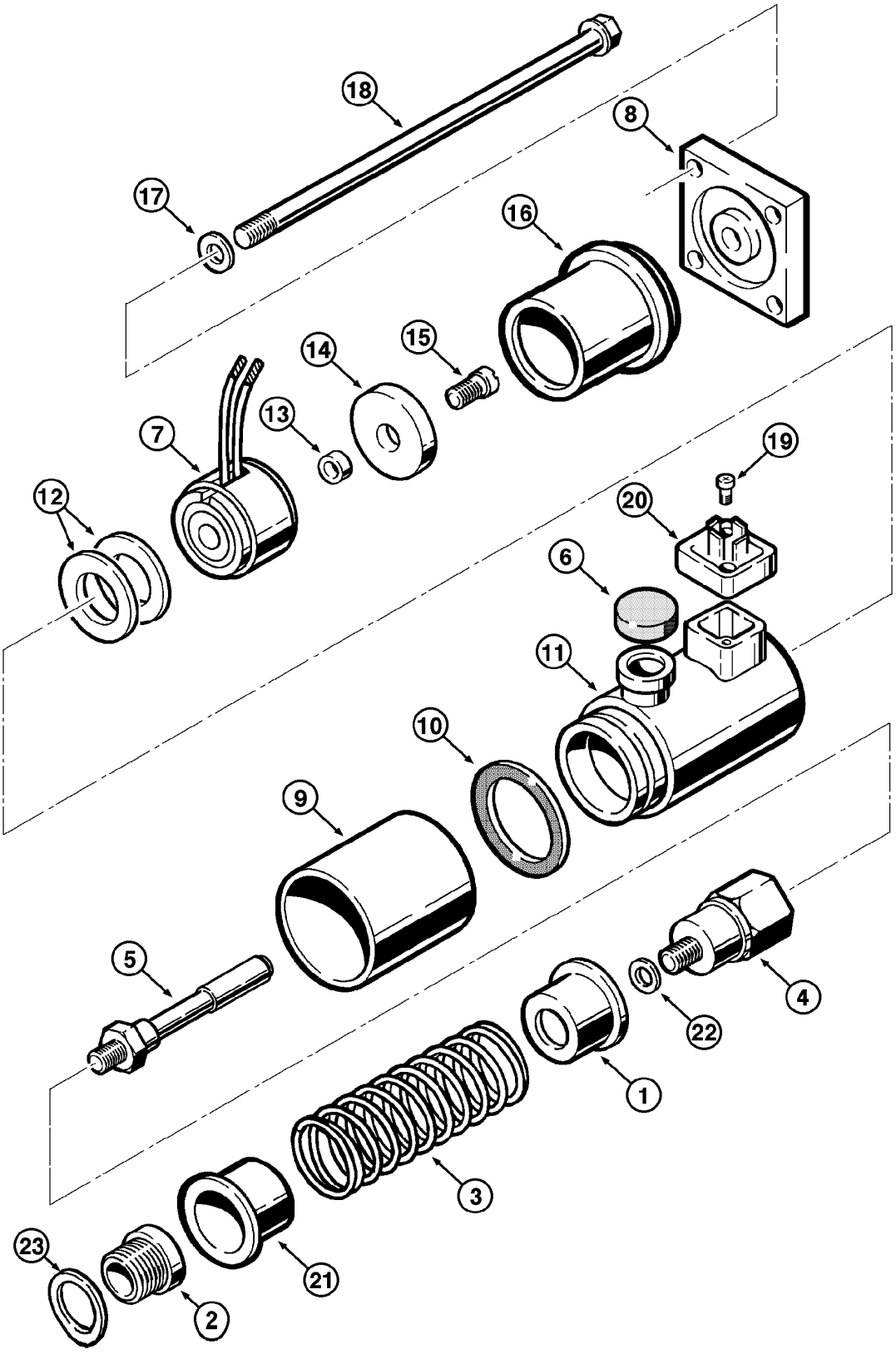

LOADER CONTROL VALVE - POSITIONER (BUCKET SECTION - PARKER)
LOADER CONTROL VALVE - POSITIONER (BUCKET SECTION - PARKER)
LOADER CONTROL VALVE - POSITIONER (BUCKET SECTION - PARKER)
LOADER CONTROL VALVE - POSITIONER (BUCKET SECTION - PARKER)

R	N	P.N.	MOD	Q	Denominação Bezeichnung	Description Description	Denominacion Beskrivelse	Descrizione Beschrijving	L.C.
22		**87436297**		1	O-RING O-RING	O-RING JOINT TORIQUE	JUNTA TÓRICA O-RING	ANELLO TOROIDALE O-RING	055A
23		**87436298**		1	O-RING O-RING	O-RING JOINT TORIQUE	JUNTA TÓRICA O-RING	ANELLO TOROIDALE O-RING	055A

08-54	01	p1	03/09

VÁLVULA ANTICAVITAÇÃO (PARKER)
LOADER ANTICAVITATION VALVE (PARKER)
VALVULA ANTICAVITACIÓN (PARKER)
LOADER ANTICAVITATION VALVE (PARKER)

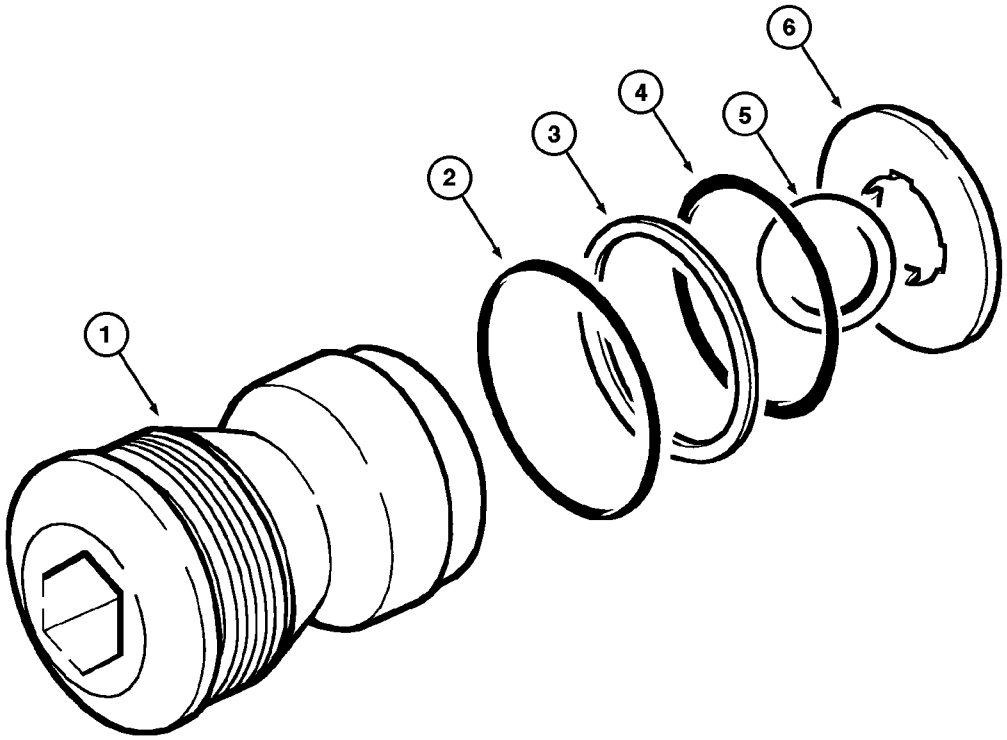

LOADER ANTICAVITATION VALVE (PARKER)
LOADER ANTICAVITATION VALVE (PARKER)
LOADER ANTICAVITATION VALVE (PARKER)
LOADER ANTICAVITATION VALVE (PARKER)

R	N	P.N.	MOD	Q	Denominação Bezeichnung	Description Description	Denominacion Beskrivelse	Descrizione Beschrijving	L.C.
		71100763		1	VÁLVULA, anticavitation Assy, Includes item 1 - 6				
						VALVE	VÁLVULA	VALVOLA	9620
					VENTIL	SOUPAPE	VENTIL	KLEP	
1		**NSS**		1	SEM SERVIÇO EM SEPARADO, HOUSING				
						NOT SERVICED SEPARA	NO SE REPARA POR SE	NON FORNITO SEPARAT	064N
					NICHT A SEP ERS-T LIEI	NON FORUNI SEPAREM	SERVICERES IKKE SEPA	NIET LOS VERKRIJGBAA	
2		**87436310**		1	O-RING	O-RING	JUNTA TÓRICA	ANELLO TOROIDALE	055A
					O-RING	JOINT TORIQUE	O-RING	O-RING	
3		**87436379**		1	ANEL	RING	ANILLO	ANELLO	045A
					RING	ANNEAU	RING	RING	
4		**87436307**		1	O-RING	O-RING	JUNTA TÓRICA	ANELLO TOROIDALE	055A
					O-RING	JOINT TORIQUE	O-RING	O-RING	
5		**87436380**		1	ESFERA	BALL	BOLA	SFERA	140S
					KUGEL	BILLE	KUGLE	KOGEL	
6		**87436381**		1	ARRUELA PLANA	WASHER	ARANDELA	RONDELLA	131R
					UNTERLEGSCHEIBE	RONDELLE	FLADSKIVE	SLUITRING	
		87436382		1	KIT DE REVISÃO DO MOTOR				
						ENGINE OVERHAUL KIT	KIT DE REVISIÓN DEL M	KIT REVISIONE MOTORE	002K
					MOTORÜBERHOLUNGSS	KIT DE REVISION MOTE	MOTORREVISIONSSÆT	REVISIEKIT VOOR MOTO	

Parker - Montada até o nº de série N6AE00912

W20E

08-56	01	p1	03/09

VÁLVULA DE CONTROLE - POSICIONADOR (SEÇÃO LEVANTAMENTO - PARKER)
LOADER CONTROL VALVE - POSITIONER (LIFT SECTION - PARKER)
VALVULA DE CONTROL - POSICIONADOR (SECCIÓN LEVANTAMIENTO - PARKER)
LOADER CONTROL VALVE - POSITIONER (LIFT SECTION - PARKER)

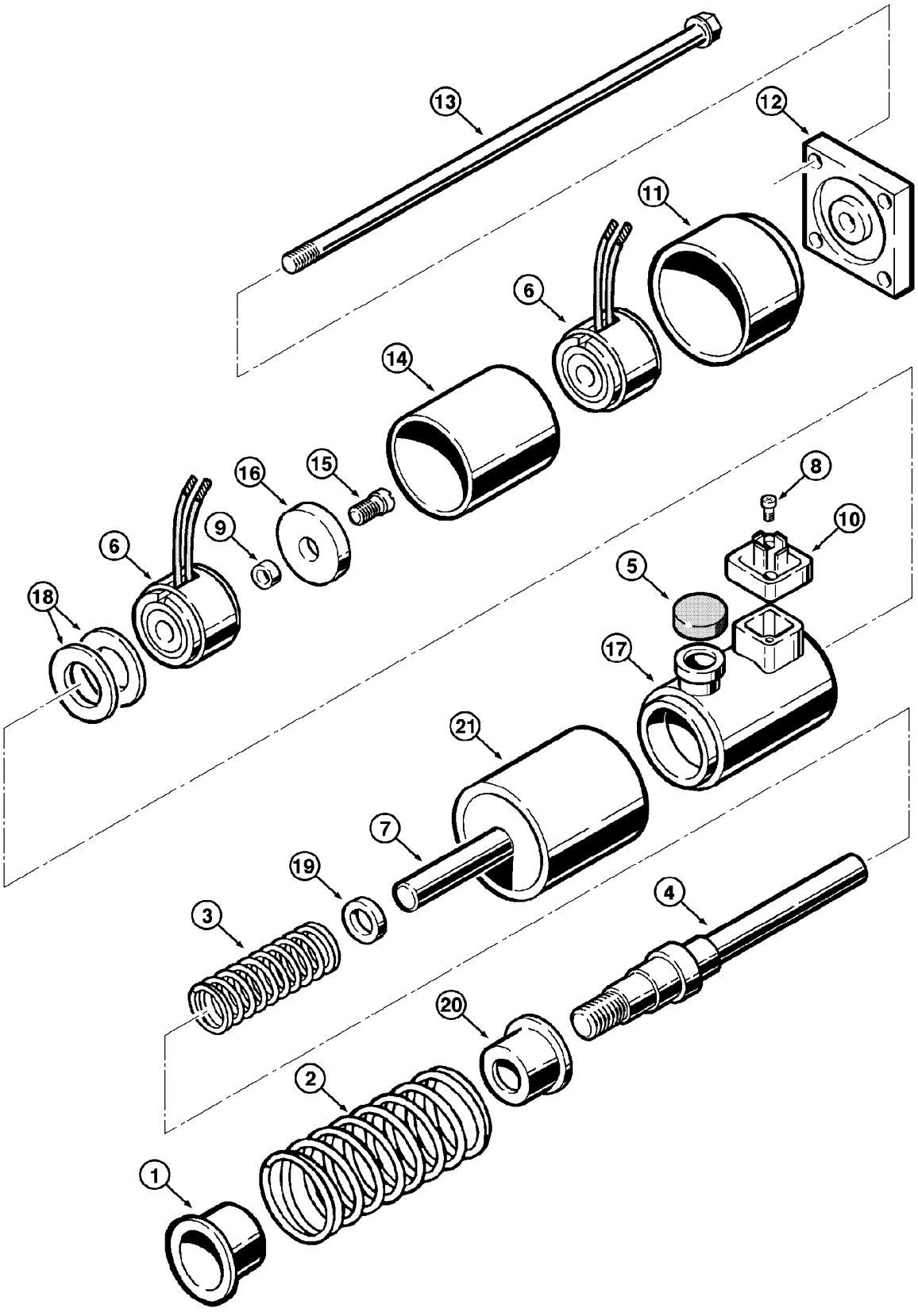

LOADER CONTROL VALVE - POSITIONER (LIFT SECTION - PARKER)
LOADER CONTROL VALVE - POSITIONER (LIFT SECTION - PARKER)
LOADER CONTROL VALVE - POSITIONER (LIFT SECTION - PARKER)
LOADER CONTROL VALVE - POSITIONER (LIFT SECTION - PARKER)

R	N	P.N.	MOD	Q	Denominação Bezeichnung	Description Description	Denominacion Beskrivelse	Descrizione Beschrijving	L.C.
		71100767		1	VÁLVULA, lift, Includes item 1 - 21				
						VALVE	VÁLVULA	VALVOLA	9620
					VENTIL	SOUPAPE	VENTIL	KLEP	
1		**87436355**		1	LIMITADOR DE MOVIMENTO				
						TRAVEL LIMITER	LIMITADOR DE CARRER	LIMITATORE DI CORSA	056L
					WEGBEGRENZER	LIMITEUR DE DEPLACEM	FARTPILOT	BEGRENZER	
2		**87436356**		1	MOLA	SPRING	RESORTE	MOLLA	100M
					FEDER	RESSORT	FJEDER	VEER	
3		**87436357**		1	MOLA	SPRING	RESORTE	MOLLA	100M
					FEDER	RESSORT	FJEDER	VEER	
4		**87436358**		1	EXTENSÃO	EXTENSION	EXTENSIÓN	PROLUNGA	226P
					ERWEITERUNG	RALLONGE	FORLÆNGNING	VERLENGSTUK	
5		**87436282**		1	COBERTURA	COVER	CUBIERTA	COPERCHIO	265C
					ABDECKUNG	COUVERCLE	DÆKSEL	AFSCHERMING	
6		**71100771**		2	BOBINA, Assy	COIL	BOBINA	BOBINA	083B
					SPULE	BOBINE	SPOLE	SPOEL	
7		**87436360**		1	TUBO	TUBE	TUBO	TUBO	195T
					ROHR	TUBE	RØR	LEIDING	
8		**87436294**		2	PARAFUSO	SCREW	TORNILLO	VITE	040V
					SCHRAUBE	VIS	SKRUE	SCHROEF	
9		**87436286**		1	JUNTA ESFÉRICA	BALL JOINT	RÓTULA	GIUNTO SFERICO	070G
					KUGELGELENK	JOINT A ROTULE	KUGLELED	KOGELGEWRICHT	
10		**87436295**		1	PINO	PIN	PASADOR	PERNO	080P
					PIN	BROCHE	STIFT	PEN	
11		**87436361**		1	BUCHA	BUSHING	CASQUILLO	BOCCOLA	095B
					BUCHSE	BAGUE	BØSNING	BUS	
12		**87436283**		1	COBERTURA	COVER	CUBIERTA	COPERCHIO	265C
					ABDECKUNG	COUVERCLE	DÆKSEL	AFSCHERMING	
13		**87436362**		4	PARAFUSO	SCREW	TORNILLO	VITE	040V
					SCHRAUBE	VIS	SKRUE	SCHROEF	
14		**87436363**		1	ESPAÇADOR	SPACER	SEPARADOR	DISTANZIALE	075D
					DISTANZSTÜCK	ENTRETOISE	AFSTANDSSTYKKE	AFSTANDSSTUK	
15		**87436290**		1	PARAFUSO	SCREW	TORNILLO	VITE	040V
					SCHRAUBE	VIS	SKRUE	SCHROEF	
16		**87436289**		1	ADAPTADOR	ADAPTER	ADAPTADOR	ADATTATORE	001A
					ADAPTER	ADAPTATEUR	ADAPTER	ADAPTER	
17		**NSS**		1	SEM SERVIÇO EM SEPARADO, HOUSING				
						NOT SERVICED SEPARA	NO SE REPARA POR SE	NON FORNITO SEPARAT	064N
					NICHT A SEP ERS-T LIEI	NON FORUNI SEPAREM	SERVICERES IKKE SEPA	NIET LOS VERKRIJGBAA	
18		**87436285**		1	MOLA	SPRING	RESORTE	MOLLA	100M
					FEDER	RESSORT	FJEDER	VEER	
19		**87436365**		1	ARRUELA PLANA	WASHER	ARANDELA	RONDELLA	131R
					UNTERLEGSCHEIBE	RONDELLE	FLADSKIVE	SLUITRING	
20		**87436366**		1	LIMITADOR DE MOVIMENTO				
						TRAVEL LIMITER	LIMITADOR DE CARRER	LIMITATORE DI CORSA	056L
					WEGBEGRENZER	LIMITEUR DE DEPLACEM	FARTPILOT	BEGRENZER	
21		**NSS**		1	SEM SERVIÇO EM SEPARADO, HOUSING				
						NOT SERVICED SEPARA	NO SE REPARA POR SE	NON FORNITO SEPARAT	064N
					NICHT A SEP ERS-T LIEI	NON FORUNI SEPAREM	SERVICERES IKKE SEPA	NIET LOS VERKRIJGBAA	

Parker - Montada até o nº de série N6AE00912

W20E

08-58	01	p1	03/09

VÁLVULA ANTICAVITAÇÃO (PARKER)
LOADER ANTICAVITATION VALVE (PARKER)
VALVULA ANTICAVITACIÓN (PARKER)
LOADER ANTICAVITATION VALVE (PARKER)

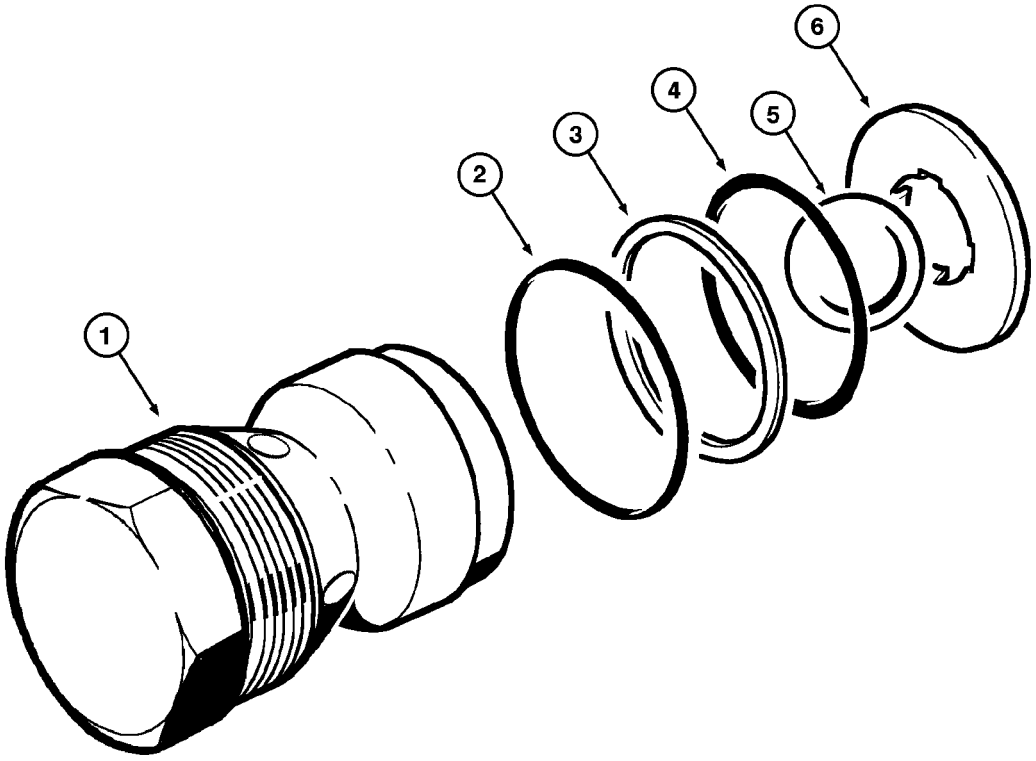

LOADER ANTICAVITATION VALVE (PARKER)
LOADER ANTICAVITATION VALVE (PARKER)
LOADER ANTICAVITATION VALVE (PARKER)
LOADER ANTICAVITATION VALVE (PARKER)

R	N	P.N.	MOD	Q	Denominação Bezeichnung	Description Description	Denominacion Beskrivelse	Descrizione Beschrijving	L.C.
		71100766		1	VÁLVULA, Includes item 1 - 6				
						VALVE	VÁLVULA	VALVOLA	9620
					VENTIL	SOUPAPE	VENTIL	KLEP	
1		**NSS**		1	SEM SERVIÇO EM SEPARADO, HOUSING				
						NOT SERVICED SEPARA	NO SE REPARA POR SE	NON FORNITO SEPARAT	064N
					NICHT A SEP ERS-T LIEI	NON FORUNI SEPAREM	SERVICERES IKKE SEPA	NIET LOS VERKRIJGBAA	
2		**NSS**		1	SEM SERVIÇO EM SEPARADO, RING seal				
						NOT SERVICED SEPARA	NO SE REPARA POR SE	NON FORNITO SEPARAT	064N
					NICHT A SEP ERS-T LIEI	NON FORUNI SEPAREM	SERVICERES IKKE SEPA	NIET LOS VERKRIJGBAA	
3		**NSS**		1	SEM SERVIÇO EM SEPARADO, RING back up				
						NOT SERVICED SEPARA	NO SE REPARA POR SE	NON FORNITO SEPARAT	064N
					NICHT A SEP ERS-T LIEI	NON FORUNI SEPAREM	SERVICERES IKKE SEPA	NIET LOS VERKRIJGBAA	
4		**NSS**		1	SEM SERVIÇO EM SEPARADO, RING seal				
						NOT SERVICED SEPARA	NO SE REPARA POR SE	NON FORNITO SEPARAT	064N
					NICHT A SEP ERS-T LIEI	NON FORUNI SEPAREM	SERVICERES IKKE SEPA	NIET LOS VERKRIJGBAA	
5		**NSS**		1	SEM SERVIÇO EM SEPARADO, BALL				
						NOT SERVICED SEPARA	NO SE REPARA POR SE	NON FORNITO SEPARAT	064N
					NICHT A SEP ERS-T LIEI	NON FORUNI SEPAREM	SERVICERES IKKE SEPA	NIET LOS VERKRIJGBAA	
6		**NSS**		1	SEM SERVIÇO EM SEPARADO, WASHER				
						NOT SERVICED SEPARA	NO SE REPARA POR SE	NON FORNITO SEPARAT	064N
					NICHT A SEP ERS-T LIEI	NON FORUNI SEPAREM	SERVICERES IKKE SEPA	NIET LOS VERKRIJGBAA	
		87436299		1	KIT DE REVISÃO DO MOTOR				
						ENGINE OVERHAUL KIT	KIT DE REVISIÓN DEL M	KIT REVISIONE MOTORE	002K
					MOTORÜBERHOLUNGSS	KIT DE REVISION MOTE	MOTORREVISIONSSÆT	REVISIEKIT VOOR MOTO	

Parker - Montada até o nº de série N6AE00912

W20E

VÁLVULA DE CONTROLE DA CARREGADEIRA (3 CARRETÉIS - PARKER)
LOADER CONTROL VALVE (3 SPOOL - PARKER)
VALVULA DE CONTROL DE LA CARGADORA (3 CARRETES - PARKER)
LOADER CONTROL VALVE (3 SPOOL - PARKER)

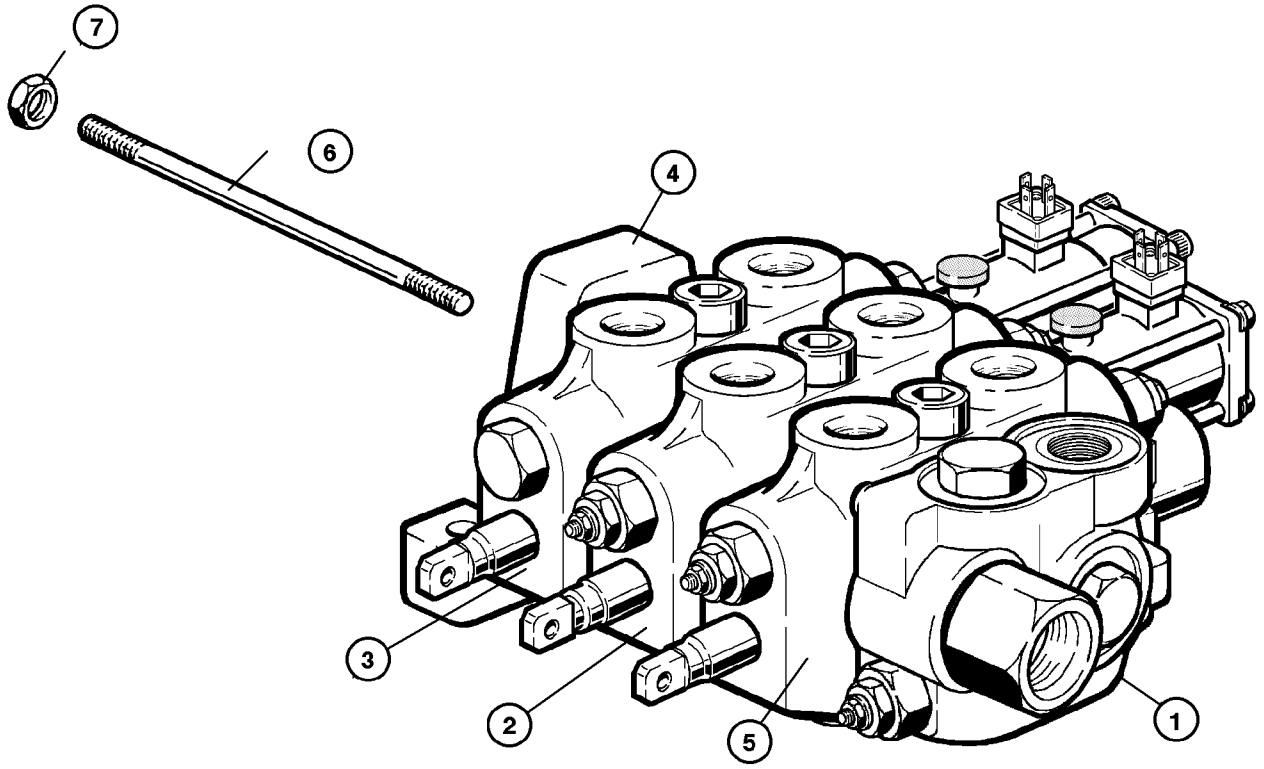

LOADER CONTROL VALVE (3 SPOOL - PARKER)
LOADER CONTROL VALVE (3 SPOOL - PARKER)
LOADER CONTROL VALVE (3 SPOOL - PARKER)
LOADER CONTROL VALVE (3 SPOOL - PARKER)

R	N	P.N.	MOD	Q	Denominação Bezeichnung	Description Description	Denominacion Beskrivelse	Descrizione Beschrijving	L.C.
		75261833		1	VÁLVULA, 3 spool Assy OPT, Includes item 1 - 7				
						VALVE	VÁLVULA	VALVOLA	9620
					VENTIL	SOUPAPE	VENTIL	KLEP	
1		**87444081**		1	VÁLVULA, inlet and outlet (P.8-36)				
						VALVE	VÁLVULA	VALVOLA	9620
					VENTIL	SOUPAPE	VENTIL	KLEP	
2		**87444082**		1	VÁLVULA, bucket (P.8-38)	VALVE	VÁLVULA	VALVOLA	9620
					VENTIL	SOUPAPE	VENTIL	KLEP	
3		**87444083**		1	VÁLVULA, lift (P.8-40)	VALVE	VÁLVULA	VALVOLA	9620
					VENTIL	SOUPAPE	VENTIL	KLEP	
4		**87444084**		1	VÁLVULA, closing (P.8-42)	VALVE	VÁLVULA	VALVOLA	9620
					VENTIL	SOUPAPE	VENTIL	KLEP	
5		**87444085**		1	VÁLVULA, auxiliary (P.8-62)				
						VALVE	VÁLVULA	VALVOLA	9620
					VENTIL	SOUPAPE	VENTIL	KLEP	
6		**87438674**		4	TIRANTE	TIE-ROD	TIRANTE	TIRANTE	142T
					SPURSTANGE	TIRANT	TRÆKSTANG	TREKSTANG	
7		**87438675**		4	PORCA	NUT	TUERCA	DADO	010D
					MUTTER	ECROU	MØTRIK	MOER	

Parker - Montada até o nº de série N6AE00912

W20E

08-62	01	p1	03/09

VÁLVULA DE CONTROLE DA CARREGADEIRA (SEÇÃO AUXILIAR - PARKER)
LOADER CONTROL VALVE (AUXILIARY SECTION - PARKER)
VALVULA DE CONTROL DE LA CARGADORA (SECCIÓN AUXILIAR - PARKER)
LOADER CONTROL VALVE (AUXILIARY SECTION - PARKER)

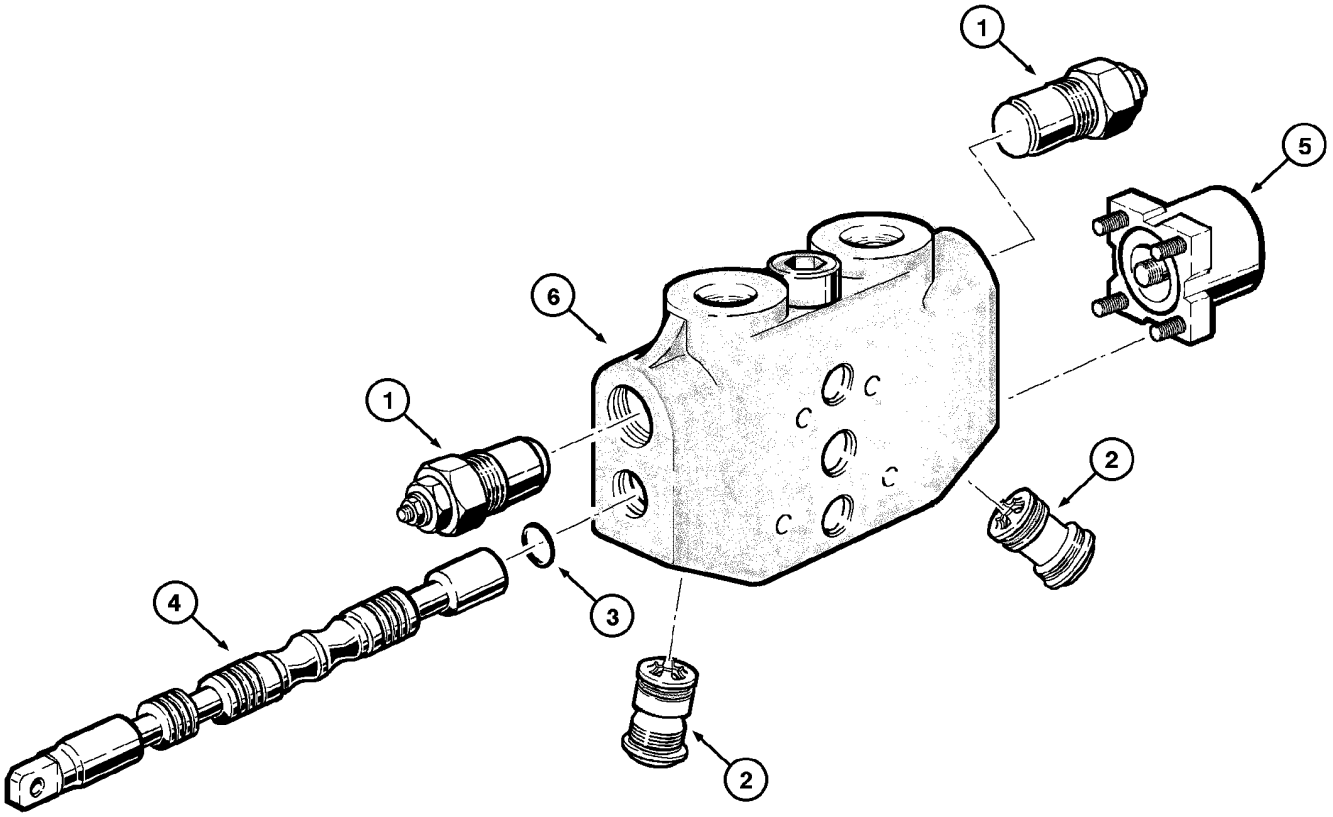

LOADER CONTROL VALVE (AUXILIARY SECTION - PARKER)
LOADER CONTROL VALVE (AUXILIARY SECTION - PARKER)
LOADER CONTROL VALVE (AUXILIARY SECTION - PARKER)
LOADER CONTROL VALVE (AUXILIARY SECTION - PARKER)

R	N	P.N.	MOD	Q	Denominação Bezeichnung	Description Description	Denominacion Beskrivelse	Descrizione Beschrijving	L.C.
		87444085		1	VÁLVULA, auxiliary Assy, Includes item 1 - 6				
						VALVE	VÁLVULA	VALVOLA	9620
					VENTIL	SOUPAPE	VENTIL	KLEP	
1		**87436605**		2	VÁLVULA, relief 2750 PSI (P.8-48)				
						VALVE	VÁLVULA	VALVOLA	9620
					VENTIL	SOUPAPE	VENTIL	KLEP	
2		**71100763**		2	VÁLVULA, anticavitation (P.8-54)				
						VALVE	VÁLVULA	VALVOLA	9620
					VENTIL	SOUPAPE	VENTIL	KLEP	
3		**87436267**		2	O-RING	O-RING	JUNTA TÓRICA	ANELLO TOROIDALE	055A
					O-RING	JOINT TORIQUE	O-RING	O-RING	
4		**NSS**		1	SEM SERVIÇO EM SEPARADO, SPOOL				
						NOT SERVICED SEPARA	NO SE REPARA POR SE	NON FORNITO SEPARAT	064N
					NICHT A SEP ERS-T LIEI	NON FORUNI SEPAREM	SERVICERES IKKE SEPA	NIET LOS VERKRIJGBAA	
5		**87438660**		1	NIVELADOR, (P.8-64)	LEVELLING DEVICE	DISPOSITIVO EQUILIBRA	DISPOSITIVO LIVELLAMI	065L
					NIVELLIERVORRICHTUN	CORRECTEUR DE DEVE	NIVEAUREGULATOR	NIVELEERSYSTEEM	
6		**NSS**		1	SEM SERVIÇO EM SEPARADO, BODY				
						NOT SERVICED SEPARA	NO SE REPARA POR SE	NON FORNITO SEPARAT	064N
					NICHT A SEP ERS-T LIEI	NON FORUNI SEPAREM	SERVICERES IKKE SEPA	NIET LOS VERKRIJGBAA	

Parker - Montada até o nº de série N6AE00912

W20E

08-64	01	p1	03/09

VÁLVULA DE CONTROLE - POSICIONADOR (SEÇÃO AUXILIAR - PARKER)
LOADER CONTROL VALVE - POSITIONER (AUXILIARY SECTION - PARKER)
VALVULA DE CONTROL - POSICIONADOR (SECCIÓN AUXILIAR - PARKER)
LOADER CONTROL VALVE - POSITIONER (AUXILIARY SECTION - PARKER)

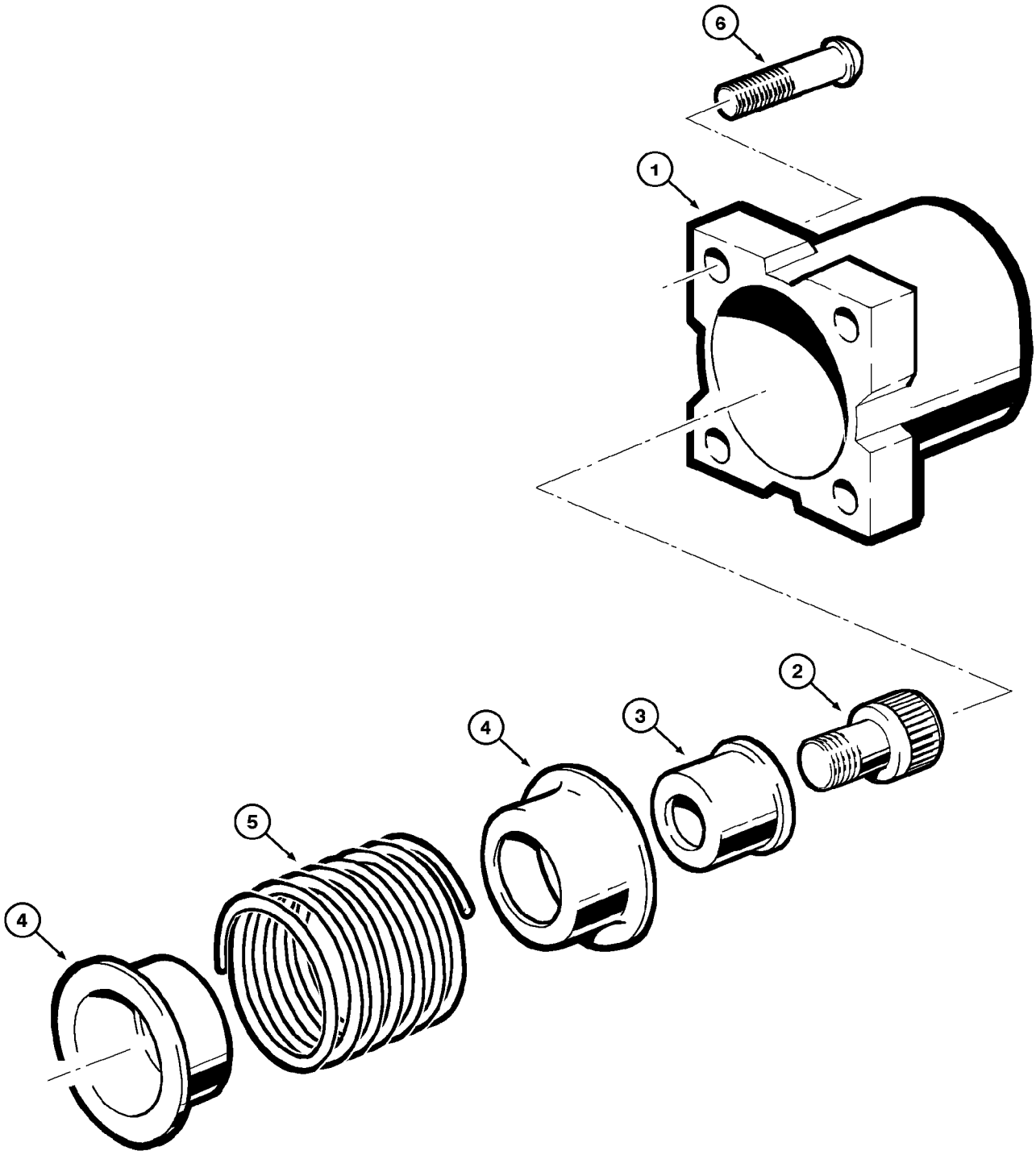

LOADER CONTROL VALVE - POSITIONER (AUXILIARY SECTION - PARKER)
LOADER CONTROL VALVE - POSITIONER (AUXILIARY SECTION - PARKER)
LOADER CONTROL VALVE - POSITIONER (AUXILIARY SECTION - PARKER)
LOADER CONTROL VALVE - POSITIONER (AUXILIARY SECTION - PARKER)

R	N	P.N.	MOD	Q	Denominação Bezeichnung	Description Description	Denominacion Beskrivelse	Descrizione Beschrijving	L.C.
		87438660		1	NIVELADOR, Assy, Includes item 1 - 6				
						LEVELLING DEVICE	DISPOSITIVO EQUILIBR/	DISPOSITIVO LIVELLAMI	065L
					NIVELLIERVORRICHTUN	CORRECTEUR DE DEVE	NIVEAUREGULATOR	NIVELEERSYSTEEM	
1		**87438668**		1	COBERTURA	COVER	CUBIERTA	COPERCHIO	265C
					ABDECKUNG	COUVERCLE	DÆKSEL	AFSCHERMING	
2		**87438669**		1	PARAFUSO	SCREW	TORNILLO	VITE	040V
					SCHRAUBE	VIS	SKRUE	SCHROEF	
3		**87438670**		1	COLAR	COLLAR	COLLAR	COLLARE	031F
					RINGE	COLLIER	SLANGEBÅND	KRAAG	
4		**87438671**		2	LIMITADOR DE MOVIMENTO				
						TRAVEL LIMITER	LIMITADOR DE CARRER	LIMITATORE DI CORSA	056L
					WEGBEGRENZER	LIMITEUR DE DEPLACEM	FARTPILOT	BEGRENZER	
5		**87438672**		1	MOLA	SPRING	RESORTE	MOLLA	100M
					FEDER	RESSORT	FJEDER	VEER	
6		**87438673**		4	PARAFUSO	SCREW	TORNILLO	VITE	040V
					SCHRAUBE	VIS	SKRUE	SCHROEF	

Parker - Montada até o nº de série N6AE00912

W20E

08-66	01	p1	03/09

VÁLVULA DE CONTROLE DA CARREGADEIRA (2 CARRETÉIS - REXROTH)
LOADER CONTROL VALVE (2 SPOOL - REXROTH)
VALVULA DE CONTROL DE LA CARGADORA (2 CARRETES - REXROTH)
LOADER CONTROL VALVE (2 SPOOL - REXROTH)

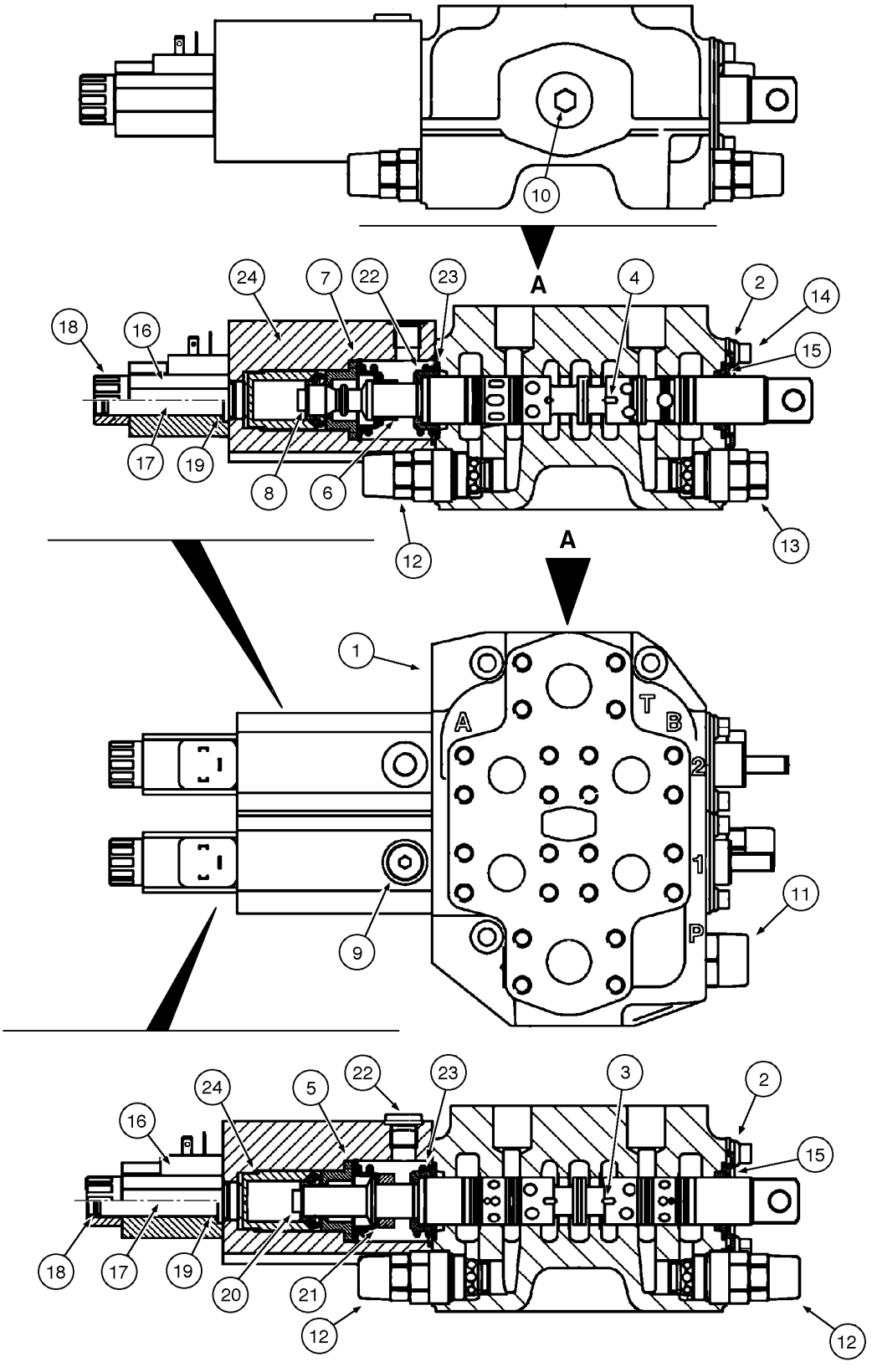

LOADER CONTROL VALVE (2 SPOOL - REXROTH)
LOADER CONTROL VALVE (2 SPOOL - REXROTH)
LOADER CONTROL VALVE (2 SPOOL - REXROTH)
LOADER CONTROL VALVE (2 SPOOL - REXROTH)

R	N	P.N.	MOD	Q	Denominação Bezeichnung	Description Description	Denominacion Beskrivelse	Descrizione Beschrijving	L.C.
		75265122		1	VÁLVULA CONTROLE, Assy (2 spool) (P.8-66, 8-70 to 8-74), Includes item 1 - 24				
						CONTROL VALVE	VÁLVULA DE CONTROL	DISTRIBUTORE IDRAULI	083D
					STEUERVENTIL	DISTRIBUTEUR	STYREVENTIL	REGELKLEP	
1		**NSS**		1	SEM SERVIÇO EM SEPARADO, BODY				
						NOT SERVICED SEPARA	NO SE REPARA POR SE	NON FORNITO SEPARAT	064N
					NICHT A SEP ERS-T LIEI	NON FORUNI SEPAREM	SERVICERES IKKE SEPA	NIET LOS VERKRIJGBAA	
2		**71103021**		2	FLANGE	FLANGE	BRIDA	FLANGIA	070F
					FLANSCH	BRIDE	FLANGE	FLENS	
3		**NSS**		1	SEM SERVIÇO EM SEPARADO, SPOOL bucket				
						NOT SERVICED SEPARA	NO SE REPARA POR SE	NON FORNITO SEPARAT	064N
					NICHT A SEP ERS-T LIEI	NON FORUNI SEPAREM	SERVICERES IKKE SEPA	NIET LOS VERKRIJGBAA	
4		**NSS**		1	SEM SERVIÇO EM SEPARADO, SPOOL lift				
						NOT SERVICED SEPARA	NO SE REPARA POR SE	NON FORNITO SEPARAT	064N
					NICHT A SEP ERS-T LIEI	NON FORUNI SEPAREM	SERVICERES IKKE SEPA	NIET LOS VERKRIJGBAA	
5		**NSS**		1	SEM SERVIÇO EM SEPARADO, SPRING DISC				
						NOT SERVICED SEPARA	NO SE REPARA POR SE	NON FORNITO SEPARAT	064N
					NICHT A SEP ERS-T LIEI	NON FORUNI SEPAREM	SERVICERES IKKE SEPA	NIET LOS VERKRIJGBAA	
6		**NSS**		1	SEM SERVIÇO EM SEPARADO, BUSHING				
						NOT SERVICED SEPARA	NO SE REPARA POR SE	NON FORNITO SEPARAT	064N
					NICHT A SEP ERS-T LIEI	NON FORUNI SEPAREM	SERVICERES IKKE SEPA	NIET LOS VERKRIJGBAA	
7		**NSS**		1	SEM SERVIÇO EM SEPARADO, SPRING DISC				
						NOT SERVICED SEPARA	NO SE REPARA POR SE	NON FORNITO SEPARAT	064N
					NICHT A SEP ERS-T LIEI	NON FORUNI SEPAREM	SERVICERES IKKE SEPA	NIET LOS VERKRIJGBAA	
8		**NSS**		1	SEM SERVIÇO EM SEPARADO, PIN				
						NOT SERVICED SEPARA	NO SE REPARA POR SE	NON FORNITO SEPARAT	064N
					NICHT A SEP ERS-T LIEI	NON FORUNI SEPAREM	SERVICERES IKKE SEPA	NIET LOS VERKRIJGBAA	
9		**71103024**		1	BUJÃO	PLUG	TAPÓN	TAPPO	050T
					STOPFEN	BOUCHON	PROP	PLUG	
10		**71103025**		1	BUJÃO	PLUG	TAPÓN	TAPPO	050T
					STOPFEN	BOUCHON	PROP	PLUG	
11		**71103026**		1	VÁLVULA, relief 22 K2-1X/420YM Assy (P.8-70)				
						VALVE	VÁLVULA	VALVOLA	9620
					VENTIL	SOUPAPE	VENTIL	KLEP	
12		**8604568**		3	VÁLVULA HIDRÁULICA, relief/anti-cavitation 16 K2-2X/420 VFB Assy (P.8-74)				
						HYDRAULIC VALVE	VÁLVULA HIDRÁULICA	DISTRIBUTORE IDRAULI	010V
					HYDRAULIKVENTIL	SOUPAPE HYDRAULIQU	HYDRAULIKVENTIL	HYDRAULISCHE KLEP	
13		**71103027**		1	VÁLVULA, anti-cavitation 16B1-2X/VFB Assy (P.8-72)				
						VALVE	VÁLVULA	VALVOLA	9620
					VENTIL	SOUPAPE	VENTIL	KLEP	
14		**71102734**		8	PARAFUSO	SCREW	TORNILLO	VITE	040V
					SCHRAUBE	VIS	SKRUE	SCHROEF	
15		**79107889**		2	KIT DE VEDAÇÃO	SEAL KIT	KIT DE JUNTAS	KIT GUARNIZIONI	630S
					DICHTUNGSSATZ	KIT DE JOINTS	PAKNINGSSÆT	KIT MET AFDICHTINGEN	
16		**71103028**		2	SOLENOIDE	SOLENOID	SOLENOIDE	SOLENOIDE	168S
					MAGNETSCHALTER	SOLENOIDE	MAGNETVENTIL	SOLENOÏDE	
17		**71103029**		2	TUBO	TUBE	TUBO	TUBO	195T
					ROHR	TUBE	RØR	LEIDING	
18		**71103030**		2	PORCA	NUT	TUERCA	DADO	010D
					MUTTER	ECROU	MØTRIK	MOER	

Rexroth - Montada a partir do nº de série N6AE00913

W20E

VÁLVULA DE CONTROLE DA CARREGADEIRA (2 CARRETÉIS - REXROTH)
LOADER CONTROL VALVE (2 SPOOL - REXROTH)
VALVULA DE CONTROL DE LA CARGADORA (2 CARRETES - REXROTH)
LOADER CONTROL VALVE (2 SPOOL - REXROTH)

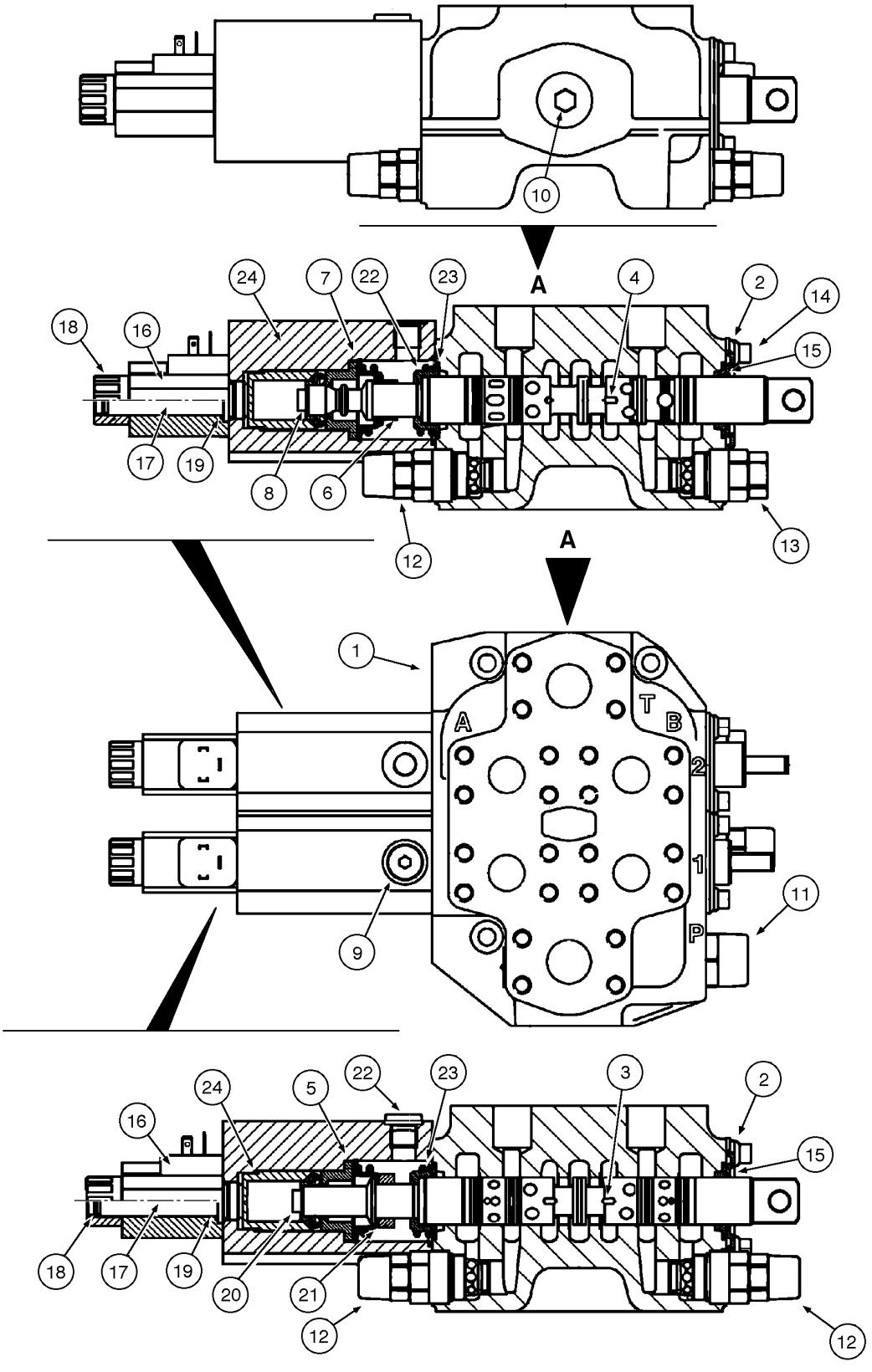

LOADER CONTROL VALVE (2 SPOOL - REXROTH)
LOADER CONTROL VALVE (2 SPOOL - REXROTH)
LOADER CONTROL VALVE (2 SPOOL - REXROTH)
LOADER CONTROL VALVE (2 SPOOL - REXROTH)

R	N	P.N.	MOD	Q	Denominação Bezeichnung	Description Description	Denominacion Beskrivelse	Descrizione Beschrijving	L.C.
19		**8604973**		2	O-RING O-RING	O-RING JOINT TORIQUE	JUNTA TÓRICA O-RING	ANELLO TOROIDALE O-RING	055A
20		**NSS**		1	SEM SERVIÇO EM SEPARADO, PIN NOT SERVICED SEPARA NICHT A SEP ERS-T LIEI	NON FORUNI SEPAREM	NO SE REPARA POR SE SERVICERES IKKE SEPA	NON FORNITO SEPARAT NIET LOS VERKRIJGBAA	064N
21		**NSS**		1	SEM SERVIÇO EM SEPARADO, RING NOT SERVICED SEPARA NICHT A SEP ERS-T LIEI	NON FORUNI SEPAREM	NO SE REPARA POR SE SERVICERES IKKE SEPA	NON FORNITO SEPARAT NIET LOS VERKRIJGBAA	064N
22		**NSS**		2	SEM SERVIÇO EM SEPARADO, SPRING DISC NOT SERVICED SEPARA NICHT A SEP ERS-T LIEI	NON FORUNI SEPAREM	NO SE REPARA POR SE SERVICERES IKKE SEPA	NON FORNITO SEPARAT NIET LOS VERKRIJGBAA	064N
23		**NSS**		2	SEM SERVIÇO EM SEPARADO, SPRING compression NOT SERVICED SEPARA NICHT A SEP ERS-T LIEI	NON FORUNI SEPAREM	NO SE REPARA POR SE SERVICERES IKKE SEPA	NON FORNITO SEPARAT NIET LOS VERKRIJGBAA	064N
24		**71103031**		2	COBERTURA ABDECKUNG	COVER COUVERCLE	CUBIERTA DÆKSEL	COPERCHIO AFSCHERMING	265C
	1	**71103377**		1	KIT DE GAXETAS, Service DICHTUNGSSATZ	GASKET KIT KIT DE JOINTS	KIT DE JUNTAS PAKNINGSSÆT	KIT GUARNIZIONI KIT MET PAKKINGEN	3740

(1) Inclui itens 1 a 3 (página 08-70), itens 1 a 4 (página 08-74), item 15 (esta página) e anel-o 42,52x2,62 (Q=2, não ilustrado)

08-68	01	p1	03/09

VÁLVULA DE CONTROLE DA CARREGADEIRA (3 CARRETÉIS - REXROTH)
LOADER CONTROL VALVE (3 SPOOL - REXROTH)
VALVULA DE CONTROL DE LA CARGADORA (3 CARRETES - REXROTH)
LOADER CONTROL VALVE (3 SPOOL - REXROTH)

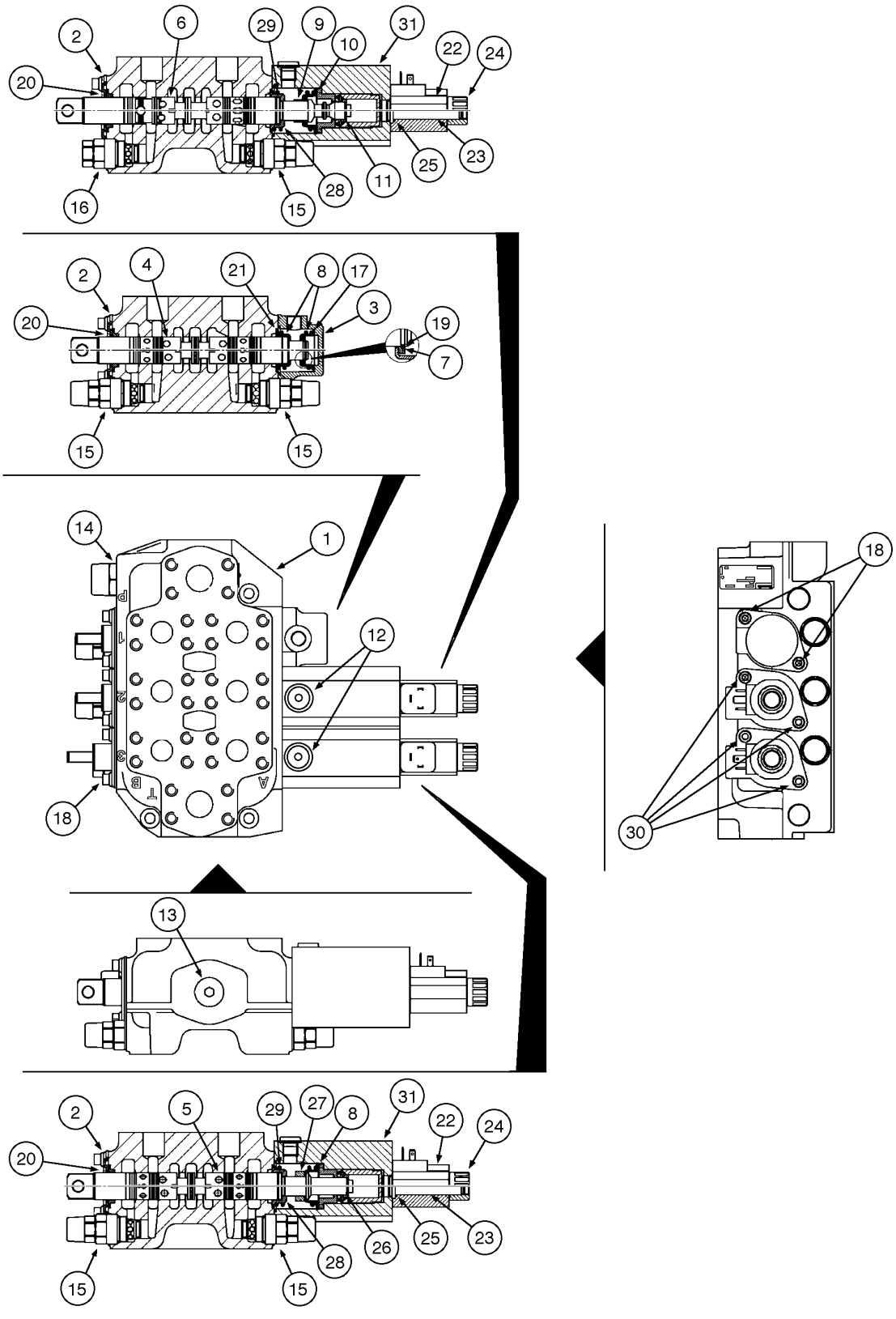

LOADER CONTROL VALVE (3 SPOOL - REXROTH)
LOADER CONTROL VALVE (3 SPOOL - REXROTH)
LOADER CONTROL VALVE (3 SPOOL - REXROTH)
LOADER CONTROL VALVE (3 SPOOL - REXROTH)

R	N	P.N.	MOD	Q	Denominação Bezeichnung	Description Description	Denominacion Beskrivelse	Descrizione Beschrijving	L.C.
		75265123		1	VÁLVULA CONTROLE, Assy (3 spool) (P.8-68, 8-70 to 8-74), Includes item 1 - 31				
						CONTROL VALVE	VÁLVULA DE CONTROL	DISTRIBUTORE IDRAULI	083D
					STEUERVENTIL	DISTRIBUTEUR	STYREVENTIL	REGELKLEP	
1		**NSS**		1	SEM SERVIÇO EM SEPARADO, BODY				
						NOT SERVICED SEPARA	NO SE REPARA POR SE	NON FORNITO SEPARAT	064N
					NICHT A SEP ERS-T LIEI	NON FORUNI SEPAREM	SERVICERES IKKE SEPA	NIET LOS VERKRIJGBAA	
2		**71103021**		2	FLANGE	FLANGE	BRIDA	FLANGIA	070F
					FLANSCH	BRIDE	FLANGE	FLENS	
3		**71103033**		1	COBERTURA	COVER	CUBIERTA	COPERCHIO	265C
					ABDECKUNG	COUVERCLE	DÆKSEL	AFSCHERMING	
4		**NSS**		1	SEM SERVIÇO EM SEPARADO, SPOOL auxiliar				
						NOT SERVICED SEPARA	NO SE REPARA POR SE	NON FORNITO SEPARAT	064N
					NICHT A SEP ERS-T LIEI	NON FORUNI SEPAREM	SERVICERES IKKE SEPA	NIET LOS VERKRIJGBAA	
5		**NSS**		1	SEM SERVIÇO EM SEPARADO, SPOOL bucket				
						NOT SERVICED SEPARA	NO SE REPARA POR SE	NON FORNITO SEPARAT	064N
					NICHT A SEP ERS-T LIEI	NON FORUNI SEPAREM	SERVICERES IKKE SEPA	NIET LOS VERKRIJGBAA	
6		**NSS**		1	SEM SERVIÇO EM SEPARADO, SPOOL lift				
						NOT SERVICED SEPARA	NO SE REPARA POR SE	NON FORNITO SEPARAT	064N
					NICHT A SEP ERS-T LIEI	NON FORUNI SEPAREM	SERVICERES IKKE SEPA	NIET LOS VERKRIJGBAA	
7		**NSS**		1	SEM SERVIÇO EM SEPARADO, RING				
						NOT SERVICED SEPARA	NO SE REPARA POR SE	NON FORNITO SEPARAT	064N
					NICHT A SEP ERS-T LIEI	NON FORUNI SEPAREM	SERVICERES IKKE SEPA	NIET LOS VERKRIJGBAA	
8		**NSS**		3	SEM SERVIÇO EM SEPARADO, SPRING DISC				
						NOT SERVICED SEPARA	NO SE REPARA POR SE	NON FORNITO SEPARAT	064N
					NICHT A SEP ERS-T LIEI	NON FORUNI SEPAREM	SERVICERES IKKE SEPA	NIET LOS VERKRIJGBAA	
9		**NSS**		1	SEM SERVIÇO EM SEPARADO, BUSHING				
						NOT SERVICED SEPARA	NO SE REPARA POR SE	NON FORNITO SEPARAT	064N
					NICHT A SEP ERS-T LIEI	NON FORUNI SEPAREM	SERVICERES IKKE SEPA	NIET LOS VERKRIJGBAA	
10		**NSS**		1	SEM SERVIÇO EM SEPARADO, SPRING DISC				
						NOT SERVICED SEPARA	NO SE REPARA POR SE	NON FORNITO SEPARAT	064N
					NICHT A SEP ERS-T LIEI	NON FORUNI SEPAREM	SERVICERES IKKE SEPA	NIET LOS VERKRIJGBAA	
11		**NSS**		1	SEM SERVIÇO EM SEPARADO, PIN				
						NOT SERVICED SEPARA	NO SE REPARA POR SE	NON FORNITO SEPARAT	064N
					NICHT A SEP ERS-T LIEI	NON FORUNI SEPAREM	SERVICERES IKKE SEPA	NIET LOS VERKRIJGBAA	
12		**71103024**		1	BUJÃO	PLUG	TAPÓN	TAPPO	050T
					STOPFEN	BOUCHON	PROP	PLUG	
13		**71103025**		1	BUJÃO	PLUG	TAPÓN	TAPPO	050T
					STOPFEN	BOUCHON	PROP	PLUG	
14		**71103026**		1	VÁLVULA, relief 22 K2-1X/420YM Assy (P.8-70)				
						VALVE	VÁLVULA	VALVOLA	9620
					VENTIL	SOUPAPE	VENTIL	KLEP	
15		**8604568**		3	VÁLVULA HIDRÁULICA, relief/anti-cavitation 16 K2-2X/420 VFB Assy (P.8-74)				
						HYDRAULIC VALVE	VÁLVULA HIDRÁULICA	DISTRIBUTORE IDRAULI	010V
					HYDRAULIKVENTIL	SOUPAPE HYDRAULIQU	HYDRAULIKVENTIL	HYDRAULISCHE KLEP	
16		**71103027**		1	VÁLVULA, anti-cavitation 16B1-2X/VFB Assy (P.8-72)				
						VALVE	VÁLVULA	VALVOLA	9620
					VENTIL	SOUPAPE	VENTIL	KLEP	

VÁLVULA DE CONTROLE DA CARREGADEIRA (3 CARRETÉIS - REXROTH)
LOADER CONTROL VALVE (3 SPOOL - REXROTH)
VALVULA DE CONTROL DE LA CARGADORA (3 CARRETES - REXROTH)
LOADER CONTROL VALVE (3 SPOOL - REXROTH)

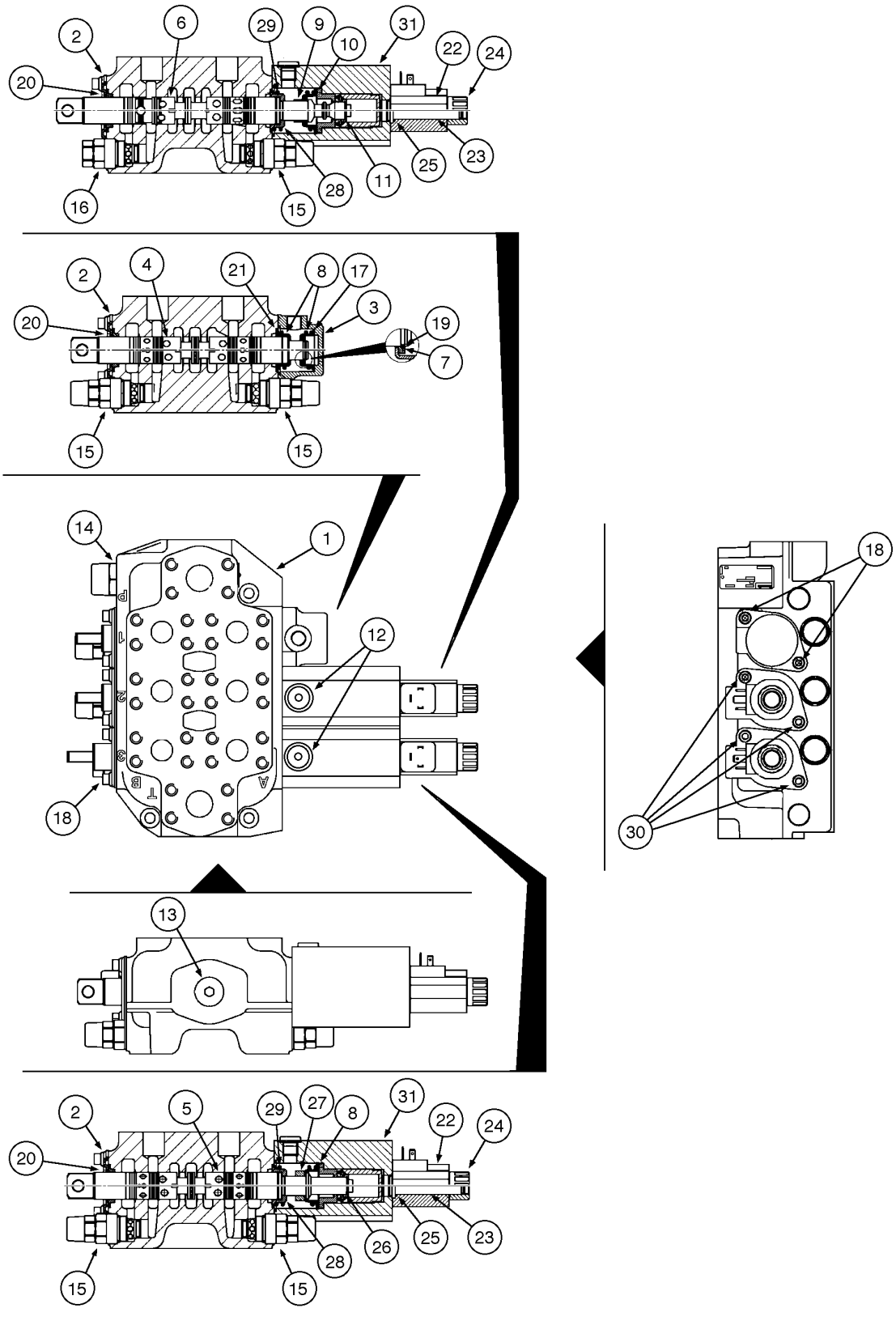

LOADER CONTROL VALVE (3 SPOOL - REXROTH)
LOADER CONTROL VALVE (3 SPOOL - REXROTH)
LOADER CONTROL VALVE (3 SPOOL - REXROTH)
LOADER CONTROL VALVE (3 SPOOL - REXROTH)

R	N	P.N.	MOD	Q	Denominação Bezeichnung	Description Description	Denominacion Beskrivelse	Descrizione Beschrijving	L.C.
17		**NSS**		1	SEM SERVIÇO EM SEPARADO, SPRING compression				
						NOT SERVICED SEPARA	NO SE REPARA POR SE	NON FORNITO SEPARAT	064N
					NICHT A SEP ERS-T LIEI	NON FORUNI SEPAREM	SERVICERES IKKE SEPA	NIET LOS VERKRIJGBAA	
18		**71102734**		8	PARAFUSO	SCREW	TORNILLO	VITE	040V
					SCHRAUBE	VIS	SKRUE	SCHROEF	
19		**NSS**		1	SEM SERVIÇO EM SEPARADO, RING spring				
						NOT SERVICED SEPARA	NO SE REPARA POR SE	NON FORNITO SEPARAT	064N
					NICHT A SEP ERS-T LIEI	NON FORUNI SEPAREM	SERVICERES IKKE SEPA	NIET LOS VERKRIJGBAA	
20		**79107889**		2	KIT DE VEDAÇÃO	SEAL KIT	KIT DE JUNTAS	KIT GUARNIZIONI	630S
					DICHTUNGSSATZ	KIT DE JOINTS	PAKNINGSSÆT	KIT MET AFDICHTINGEN	
21		**NSS**		1	SEM SERVIÇO EM SEPARADO, O-RING				
						NOT SERVICED SEPARA	NO SE REPARA POR SE	NON FORNITO SEPARAT	064N
					NICHT A SEP ERS-T LIEI	NON FORUNI SEPAREM	SERVICERES IKKE SEPA	NIET LOS VERKRIJGBAA	
22		**71103028**		2	SOLENOIDE	SOLENOID	SOLENOIDE	SOLENOIDE	168S
					MAGNETSCHALTER	SOLENOIDE	MAGNETVENTIL	SOLENOÏDE	
23		**71103029**		2	TUBO	TUBE	TUBO	TUBO	195T
					ROHR	TUBE	RØR	LEIDING	
24		**71103030**		2	PORCA	NUT	TUERCA	DADO	010D
					MUTTER	ECROU	MØTRIK	MOER	
25		**8604973**		2	O-RING	O-RING	JUNTA TÓRICA	ANELLO TOROIDALE	055A
					O-RING	JOINT TORIQUE	O-RING	O-RING	
26		**NSS**		1	SEM SERVIÇO EM SEPARADO, PIN				
						NOT SERVICED SEPARA	NO SE REPARA POR SE	NON FORNITO SEPARAT	064N
					NICHT A SEP ERS-T LIEI	NON FORUNI SEPAREM	SERVICERES IKKE SEPA	NIET LOS VERKRIJGBAA	
27		**NSS**		1	SEM SERVIÇO EM SEPARADO, RING				
						NOT SERVICED SEPARA	NO SE REPARA POR SE	NON FORNITO SEPARAT	064N
					NICHT A SEP ERS-T LIEI	NON FORUNI SEPAREM	SERVICERES IKKE SEPA	NIET LOS VERKRIJGBAA	
28		**NSS**		2	SEM SERVIÇO EM SEPARADO, SPRING DISC				
						NOT SERVICED SEPARA	NO SE REPARA POR SE	NON FORNITO SEPARAT	064N
					NICHT A SEP ERS-T LIEI	NON FORUNI SEPAREM	SERVICERES IKKE SEPA	NIET LOS VERKRIJGBAA	
29		**NSS**		2	SEM SERVIÇO EM SEPARADO, SPRING compression				
						NOT SERVICED SEPARA	NO SE REPARA POR SE	NON FORNITO SEPARAT	064N
					NICHT A SEP ERS-T LIEI	NON FORUNI SEPAREM	SERVICERES IKKE SEPA	NIET LOS VERKRIJGBAA	
30		**71103032**		4	PARAFUSO	SCREW	TORNILLO	VITE	040V
					SCHRAUBE	VIS	SKRUE	SCHROEF	
31		**71103034**		2	COBERTURA	COVER	CUBIERTA	COPERCHIO	265C
					ABDECKUNG	COUVERCLE	DÆKSEL	AFSCHERMING	
	1	**71103378**		1	KIT DE GAXETAS, Service	GASKET KIT	KIT DE JUNTAS	KIT GUARNIZIONI	3740
					DICHTUNGSSATZ	KIT DE JOINTS	PAKNINGSSÆT	KIT MET PAKKINGEN	

(1) Inclui itens 1 a 3 (página 08-70), itens 1 a 4 (página 08-74), item 20 (esta página), anel-o 40,94x2,62 (Q=1, não ilustrado) e anel-o 2,52x2,62 (Q=1, não ilustrado)

08-70	01	p1	01/12

VÁLVULA DE ALÍVIO (REXROTH)
LOADER RELIEF VALVE (REXROTH)
VALVULA ALÍVIO (REXROTH)VALVULA DE ALÍVIO (REXROTH)
LOADER RELIEF VALVE (REXROTH)

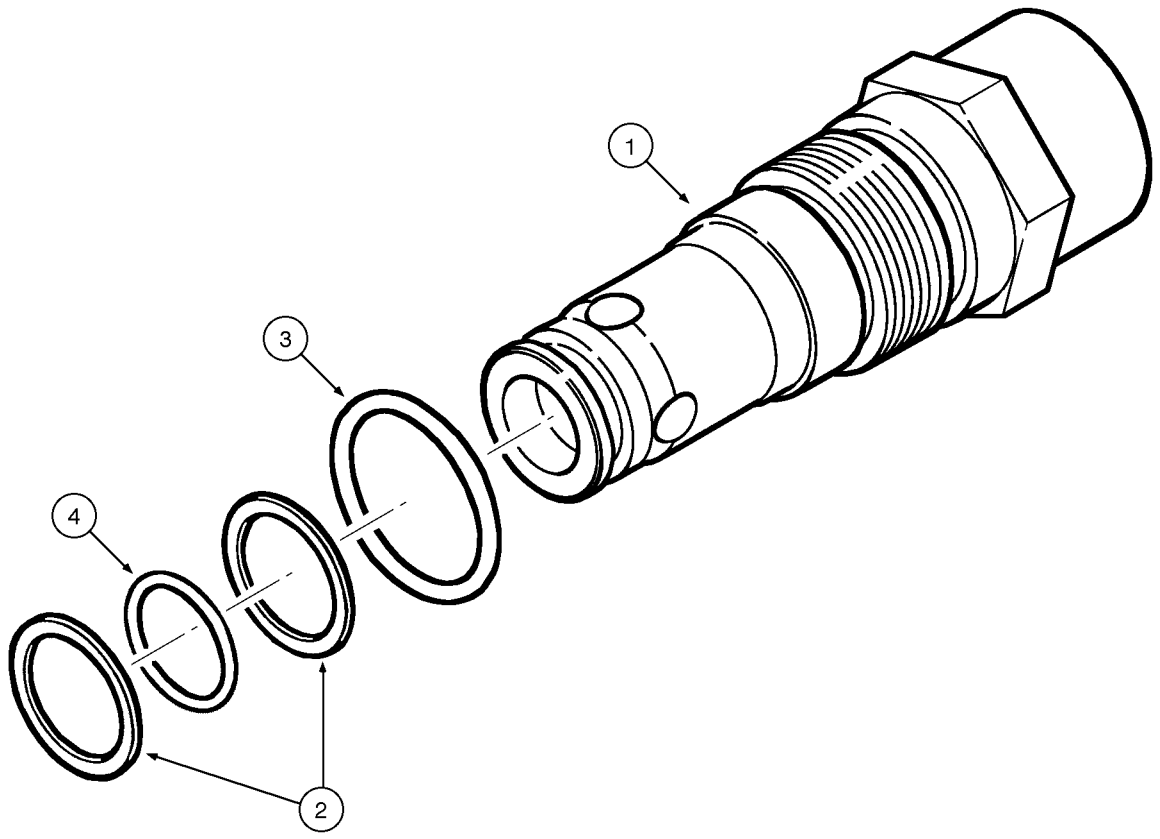

LOADER RELIEF VALVE (REXROTH)
LOADER RELIEF VALVE (REXROTH)
LOADER RELIEF VALVE (REXROTH)
LOADER RELIEF VALVE (REXROTH)

R	N	P.N.	MOD	Q	Denominação Bezeichnung	Description Description	Denominacion Beskrivelse	Descrizione Beschrijving	L.C.
		71103026		1	VÁLVULA, relief 22 K2-1X/420YM Assy				
						VALVE	VÁLVULA	VALVOLA	9620
					VENTIL	SOUPAPE	VENTIL	KLEP	
		71103035		1	KIT DE REVISÃO DO MOTOR, Includes items 1, 2, 3				
						ENGINE OVERHAUL KIT	KIT DE REVISIÓN DEL M	KIT REVISIONE MOTORE	002K
					MOTORÜBERHOLUNGSS	KIT DE REVISION MOTEI	MOTORREVISIONSSÆT	REVISIEKIT VOOR MOTO	
1		**NSS**		1	SEM SERVIÇO EM SEPARADO, O-RING				
						NOT SERVICED SEPARA	NO SE REPARA POR SE	NON FORNITO SEPARAT	064N
					NICHT A SEP ERS-T LIEI	NON FORUNI SEPAREM	SERVICERES IKKE SEPA	NIET LOS VERKRIJGBAA	
2		**NSS**		2	SEM SERVIÇO EM SEPARADO, RING thrust				
						NOT SERVICED SEPARA	NO SE REPARA POR SE	NON FORNITO SEPARAT	064N
					NICHT A SEP ERS-T LIEI	NON FORUNI SEPAREM	SERVICERES IKKE SEPA	NIET LOS VERKRIJGBAA	
3		**NSS**		1	SEM SERVIÇO EM SEPARADO, O-RING				
						NOT SERVICED SEPARA	NO SE REPARA POR SE	NON FORNITO SEPARAT	064N
					NICHT A SEP ERS-T LIEI	NON FORUNI SEPAREM	SERVICERES IKKE SEPA	NIET LOS VERKRIJGBAA	

08-72	01	p1	03/09

VÁLVULA ANTICAVITAÇÃO (REXROTH)
LOADER ANTICAVITATION VALVE (REXROTH)
VALVULA ANTICAVITACIÓN (REXROTH)
LOADER ANTICAVITATION VALVE (REXROTH)

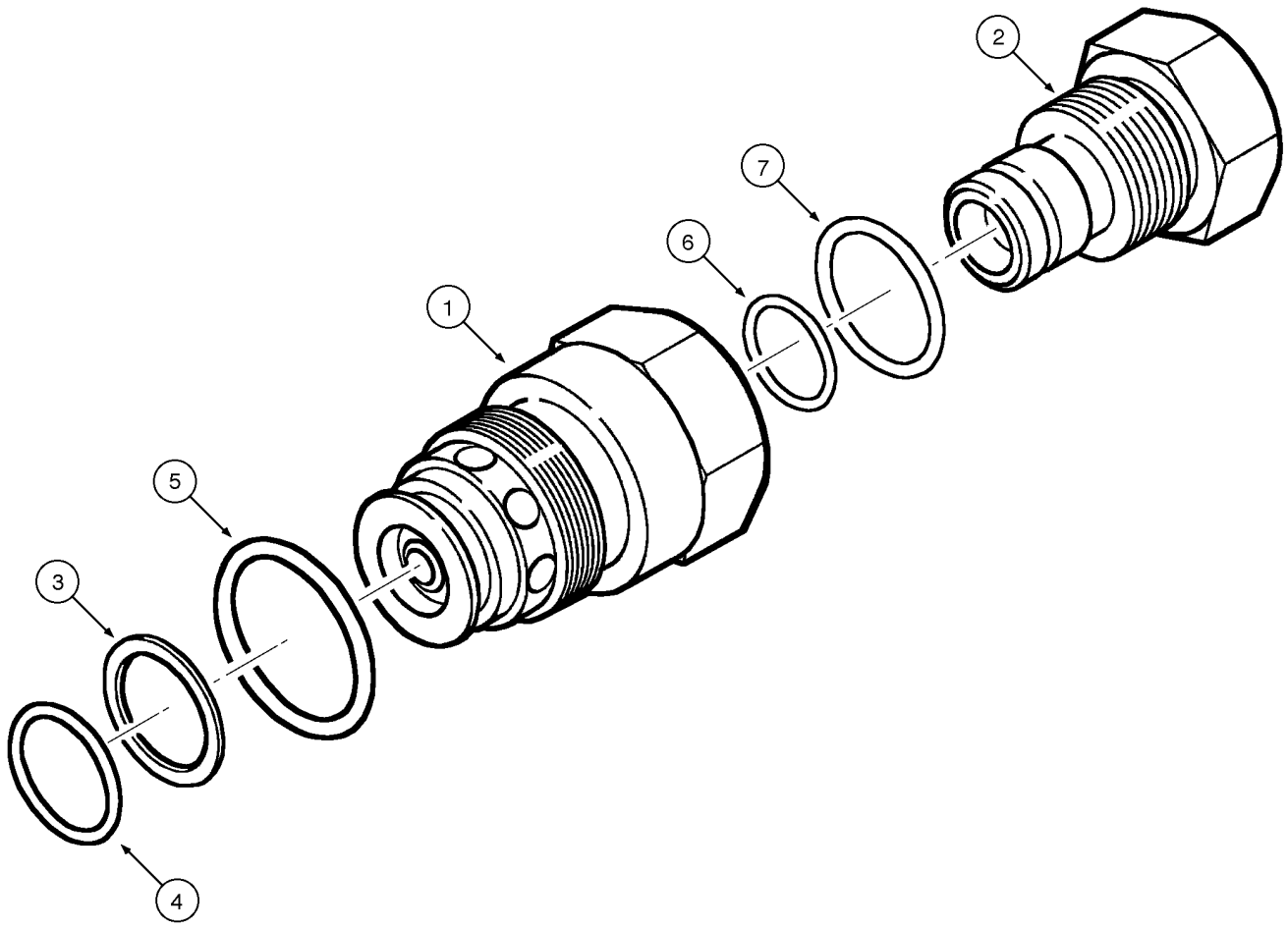

LOADER ANTICAVITATION VALVE (REXROTH)
LOADER ANTICAVITATION VALVE (REXROTH)
LOADER ANTICAVITATION VALVE (REXROTH)
LOADER ANTICAVITATION VALVE (REXROTH)

R	N	P.N.	MOD	Q	Denominação Bezeichnung	Description Description	Denominacion Beskrivelse	Descrizione Beschrijving	L.C.
		71103027		1	VÁLVULA, anti-cavitation 16B1-2X/VFB Assy				
						VALVE	VÁLVULA	VALVOLA	9620
					VENTIL	SOUPAPE	VENTIL	KLEP	
		71103036		1	KIT DE REVISÃO DO MOTOR, Includes items 1 - 5				
						ENGINE OVERHAUL KIT	KIT DE REVISIÓN DEL M	KIT REVISIONE MOTORE	002K
					MOTORÜBERHOLUNGSS	KIT DE REVISION MOTEI	MOTORREVISIONSSÆT	REVISIEKIT VOOR MOTO	
1		**NSS**		1	SEM SERVIÇO EM SEPARADO, RING seal				
						NOT SERVICED SEPARA	NO SE REPARA POR SE	NON FORNITO SEPARAT	064N
					NICHT A SEP ERS-T LIEI	NON FORUNI SEPAREM	SERVICERES IKKE SEPA	NIET LOS VERKRIJGBAA	
2		**NSS**		1	SEM SERVIÇO EM SEPARADO, O-RING				
						NOT SERVICED SEPARA	NO SE REPARA POR SE	NON FORNITO SEPARAT	064N
					NICHT A SEP ERS-T LIEI	NON FORUNI SEPAREM	SERVICERES IKKE SEPA	NIET LOS VERKRIJGBAA	
3		**NSS**		1	SEM SERVIÇO EM SEPARADO, RING thrust				
						NOT SERVICED SEPARA	NO SE REPARA POR SE	NON FORNITO SEPARAT	064N
					NICHT A SEP ERS-T LIEI	NON FORUNI SEPAREM	SERVICERES IKKE SEPA	NIET LOS VERKRIJGBAA	
4		**NSS**		1	SEM SERVIÇO EM SEPARADO, O-RING				
						NOT SERVICED SEPARA	NO SE REPARA POR SE	NON FORNITO SEPARAT	064N
					NICHT A SEP ERS-T LIEI	NON FORUNI SEPAREM	SERVICERES IKKE SEPA	NIET LOS VERKRIJGBAA	
5		**NSS**		1	SEM SERVIÇO EM SEPARADO, O-RING				
						NOT SERVICED SEPARA	NO SE REPARA POR SE	NON FORNITO SEPARAT	064N
					NICHT A SEP ERS-T LIEI	NON FORUNI SEPAREM	SERVICERES IKKE SEPA	NIET LOS VERKRIJGBAA	

08-74	01	p1	03/09

VÁLVULA DE ALÍVIO E ANTI-CAVITAÇÃO (REXROTH)
LOADER RELIEF AND ANTICAVITATION VALVE (REXROTH)
VALVULA DE ALÍVIO Y ANTICAVITACIÓN (REXROTH)
LOADER RELIEF AND ANTICAVITATION VALVE (REXROTH)

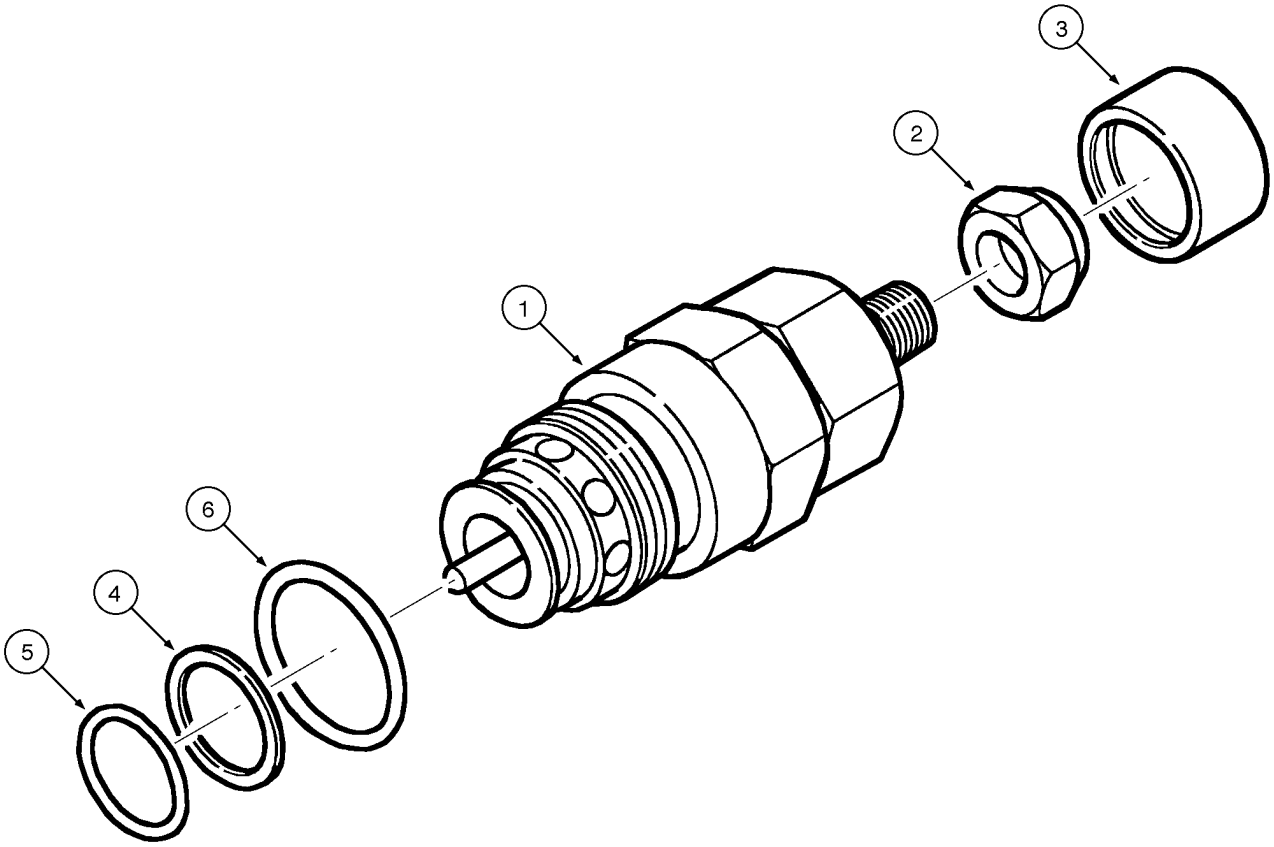

LOADER RELIEF AND ANTICAVITATION VALVE (REXROTH)
LOADER RELIEF AND ANTICAVITATION VALVE (REXROTH)
LOADER RELIEF AND ANTICAVITATION VALVE (REXROTH)
LOADER RELIEF AND ANTICAVITATION VALVE (REXROTH)

R	N	P.N.	MOD	Q	Denominação Bezeichnung	Description Description	Denominacion Beskrivelse	Descrizione Beschrijving	L.C.
		8604568		1	VÁLVULA HIDRÁULICA, relief/anti-cavitation 16 K2-2X/420 VFB Assy				
						HYDRAULIC VALVE	VÁLVULA HIDRÁULICA	DISTRIBUTORE IDRAULI	010V
					HYDRAULIKVENTIL	SOUPAPE HYDRAULIQU	HYDRAULIKVENTIL	HYDRAULISCHE KLEP	
		71103037		1	KIT DE REVISÃO DO MOTOR, Includes items 1 - 4				
						ENGINE OVERHAUL KIT	KIT DE REVISIÓN DEL M	KIT REVISIONE MOTORE	002K
					MOTORÜBERHOLUNGSS	KIT DE REVISION MOTEI	MOTORREVISIONSSÆT	REVISIEKIT VOOR MOTO	
1		**NSS**		1	SEM SERVIÇO EM SEPARADO, NUT lock				
						NOT SERVICED SEPARA	NO SE REPARA POR SE	NON FORNITO SEPARAT	064N
					NICHT A SEP ERS-T LIEI	NON FORUNI SEPAREM	SERVICERES IKKE SEPA	NIET LOS VERKRIJGBAA	
2		**NSS**		1	SEM SERVIÇO EM SEPARADO, O-RING				
						NOT SERVICED SEPARA	NO SE REPARA POR SE	NON FORNITO SEPARAT	064N
					NICHT A SEP ERS-T LIEI	NON FORUNI SEPAREM	SERVICERES IKKE SEPA	NIET LOS VERKRIJGBAA	
3		**NSS**		2	SEM SERVIÇO EM SEPARADO, RING thrust				
						NOT SERVICED SEPARA	NO SE REPARA POR SE	NON FORNITO SEPARAT	064N
					NICHT A SEP ERS-T LIEI	NON FORUNI SEPAREM	SERVICERES IKKE SEPA	NIET LOS VERKRIJGBAA	
4		**NSS**		1	SEM SERVIÇO EM SEPARADO, O-RING				
						NOT SERVICED SEPARA	NO SE REPARA POR SE	NON FORNITO SEPARAT	064N
					NICHT A SEP ERS-T LIEI	NON FORUNI SEPAREM	SERVICERES IKKE SEPA	NIET LOS VERKRIJGBAA	

Rexroth - Montada a partir do nº de série N6AE00913

W20E

SECTION INDEX
Chassi

09-02	01	ESTRUTURA DE LEVANTAMENTO DA CARREGADEIRA E COMPONENTES
09-04	01	CAÇAMBAS DA CARREGADEIRA
09-04A	01	CAÇAMBAS DA CARREGADEIRA 2.25 YD3 COM DENTES
09-06	01	CAÇAMBAS DA CARREGADEIRA 4 EM 1 (OPCIONAL)
09-08	01	CILINDROS DAS MADÍBULAS - CAÇAMBA 4 EM 1
09-10	01	CHASSI TRASEIRO, BALANCIM E CONTRAPESO
09-12	01	GRADE E MÁSCARA
09-14	01	CAPUZ DO MOTOR
09-16	01	PÁRA-LAMAS
09-18	01	CHASSI DIANTEIRO
09-20	01	COMPARTIMENTO DO OPERADOR
09-22	01	PROTEÇÃO CONTRA CAPOTAMENTO (ROPS E CABINA)
09-24	01	PROTEÇÃO CONTRA CAPOTAMENTO E CABINA COM VIDROS (STANDARD)
09-24	02	PROTEÇÃO CONTRA CAPOTAMENTO - VIDROS (STANDARD)
09-24	03	CABINE - VIDROS (STANDARD)
09-24	04	PROTEÇÃO CONTRA CAPOTAMENTO - VEDAÇÃO (STANDARD)
09-24	05	PROTEÇÃO CONTRA CAPOTAMENTO
09-26	01	CABINA COM SISTEMA DE CLIMATIZAÇÃO - FIXAÇÃO (OPCIONAL)
09-26	02	CABINA COMPLETA
09-28	01	CABINA COM SISTEMA DE CLIMATIZAÇÃO - COMPONENTES (OPCIONAL)
09-28	02	CABINA COMPLETA - PORTA
09-28	03	CABINA COMPLETA - JANELA
09-28	04	CABINA COMPLETA - REVESTIMENTOS
09-28	05	CABINA COMPLETA - LIMPADOR E LAVADOR DE PARA-BRISA
09-28	06	CABINA COMPLETA - REVESTIMENTO DO FREIO DE ESTACIONAMENTO
09-28	07	CABINA COMPLETA - SISTEMA ELÉTRICO
09-30	01	SISTEMA DE AR CONDICIONADO
09-30	02	SISTEMA DE AR CONDICIONADO
09-30	03	SISTEMA DE AR CONDICIONADO
09-30	04	SISTEMA DE AR CONDICIONADO
09-30	05	SISTEMA DE AQUECIMENTO
09-30	06	CABINE - AR CONCIONADO E AQUECEDOR
09-30	07	CABINE - AQUECEDOR
09-30B	01	CLIMATIZADOR - TAMPAS E FILTROS
09-30D	01	CLIMATIZADOR - TAMPA E VENTILADOR
09-30F	01	CLIMATIZADOR - CONJUNTO
09-30H	01	CLIMATIZADOR - PAINEL
09-32	01	RETROVISOR EXTERNO - OPCIONAL
09-32	01	RETROVISOR EXTERNO - OPCIONAL
09-32	02	LUZ ROTATIVA
09-34	01	BANCO DO OPERADOR - SUPORTE
09-36	01	BANCO DO OPERADOR - CONJUNTO
09-40	01	DECALQUES
09-44	01	DECALQUES - REFLETIVOS

09-02	01	p1	07/10

ESTRUTURA DE LEVANTAMENTO DA CARREGADEIRA E COMPONENTES
LOADER LIFT FRAME AND RELATED PARTS
ESTRUTURA DE ELEVACIÓN DE LA CARGADORA Y COMPONENTES
LOADER LIFT FRAME AND RELATED PARTS

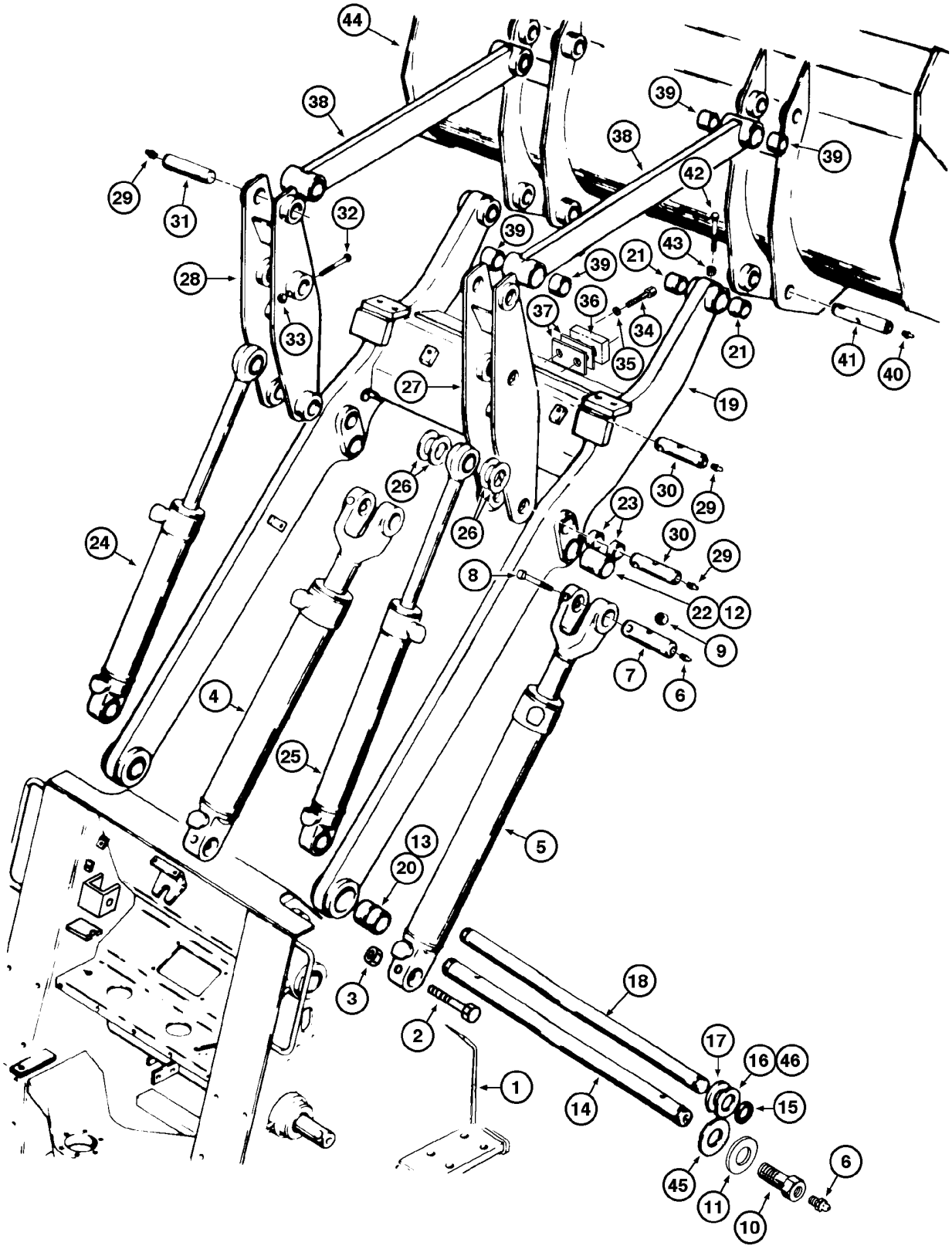

LOADER LIFT FRAME AND RELATED PARTS
LOADER LIFT FRAME AND RELATED PARTS
LOADER LIFT FRAME AND RELATED PARTS
LOADER LIFT FRAME AND RELATED PARTS

R	N	P.N.	MOD	Q	Denominação Bezeichnung	Description Description	Denominacion Beskrivelse	Descrizione Beschrijving	L.C.
1		REF		1	INSTRUÇÃO, FRAME Front (P.9-18)				
						INSTRUCTION	INSTRUCCIÓN	ISTRUZIONI	Z571
					ANLEITUNG	INSTRUCTION	INSTRUKTION	INSTRUCTIE	
2		426-1088		2	PARAFUSO, Hex, 5/8"-11 x 5 1/2", G8				
						BOLT	PERNO	BULLONE	140B
					SCHRAUBE	VIS	BOLT	BOUT	
3		231-14410		2	CONTRA PORCA, 5/8"-11, GB				
						LOCK NUT	TUERCA DE BLOQUEO	DADO DI BLOCCAGGIO	P263
					SICHERUNGSMUTTER	CONTRE-ECROU	LÅSEMØTRIK	BORGMOER	
4		REF		1	INSTRUÇÃO, CYLINDER Assy LH (P.8-16)				
						INSTRUCTION	INSTRUCCIÓN	ISTRUZIONI	Z571
					ANLEITUNG	INSTRUCTION	INSTRUKTION	INSTRUCTIE	
5		REF		1	INSTRUÇÃO, CYLINDER Assy RH (P.8-16)				
						INSTRUCTION	INSTRUCCIÓN	ISTRUZIONI	Z571
					ANLEITUNG	INSTRUCTION	INSTRUKTION	INSTRUCTIE	
6		219-1		3	GRAXEIRA, 1/8"-27 x .66 lg	LUBE NIPPLE	BOQUILLA DE LUBRICAC	INGRASSATORE	060I
					SCHMIERNIPPEL	GRAISSEUR	SMØRENIPPEL	SMEERNIPPEL	
7		E159036		2	PINO	PIN	PASADOR	PERNO	080P
					PIN	BROCHE	STIFT	PEN	
8		426-1088		2	PARAFUSO, Hex, 5/8"-11 x 5 1/2", G8				
						BOLT	PERNO	BULLONE	140B
					SCHRAUBE	VIS	BOLT	BOUT	
9		231-14410		2	CONTRA PORCA, 5/8"-11, GB				
						LOCK NUT	TUERCA DE BLOQUEO	DADO DI BLOCCAGGIO	P263
					SICHERUNGSMUTTER	CONTRE-ECROU	LÅSEMØTRIK	BORGMOER	
10		E96391		2	PARAFUSO	SCREW	TORNILLO	VITE	040V
					SCHRAUBE	VIS	SKRUE	SCHROEF	
11		E96437		2	ARRUELA PLANA	WASHER	ARANDELA	RONDELLA	131R
					UNTERLEGSCHEIBE	RONDELLE	FLADSKIVE	SLUITRING	
12		D95146		4	VEDAÇÃO DO LIMPADOR	WIPER SEAL	JUNTA ROZANTE	GUARNIZIONE, RASCHIA	Z350
					ABSTREIFDICHTUNG	JOINT RACLEUR	SKRABERING	RUITENWISSERAFDICHT	
13		D95148		4	JUNTA	GASKET	JUNTA	GUARNIZIONE	123G
					DICHTUNG	JOINT	PAKNING	PAKKING	
14		E96436		1	EIXO	SHAFT	EJE	ALBERO	016A
					WELLE	ARBRE	AKSEL	AS	
15		L16015		2	ANEL	RING	ANILLO	ANELLO	7175
					RING	BAGUE	RING	RING	
16		L47700		AR	ARRUELA	WASHER	ARANDELA	RONDELLA	9720
					UNTERLEGSCHEIBE	RONDELLE	WASHER	WASHER	
17		L47701		AR	ARRUELA	WASHER	ARANDELA	RONDELLA	9720
					UNTERLEGSCHEIBE	RONDELLE	WASHER	WASHER	
18		L47565		1	EIXO	SHAFT	ARBOL	ALBERO	7590
					WELLE	ARBRE	SHAFT	SHAFT	
	1	87616663		1	BRAÇO DE LEVANTAMENTO, STD Assy				
						LIFT ARM	BRAZO DE ELEVACIÓN	BRACCIO DI SOLLEVAMI	133B
					HUBARM	BRAS DE RELEVAGE	LØFTEARM	HEFARM	
		87403957		1	BRAÇO, STD Assy	ARM	BRAZO	BRACCIO	130B
					ARM	BRAS	ARM	ARM	

(1) PARA VÁLVULA DESVIADORA

09-02	01	p2	07/10

ESTRUTURA DE LEVANTAMENTO DA CARREGADEIRA E COMPONENTES
LOADER LIFT FRAME AND RELATED PARTS
ESTRUTURA DE ELEVACIÓN DE LA CARGADORA Y COMPONENTES
LOADER LIFT FRAME AND RELATED PARTS

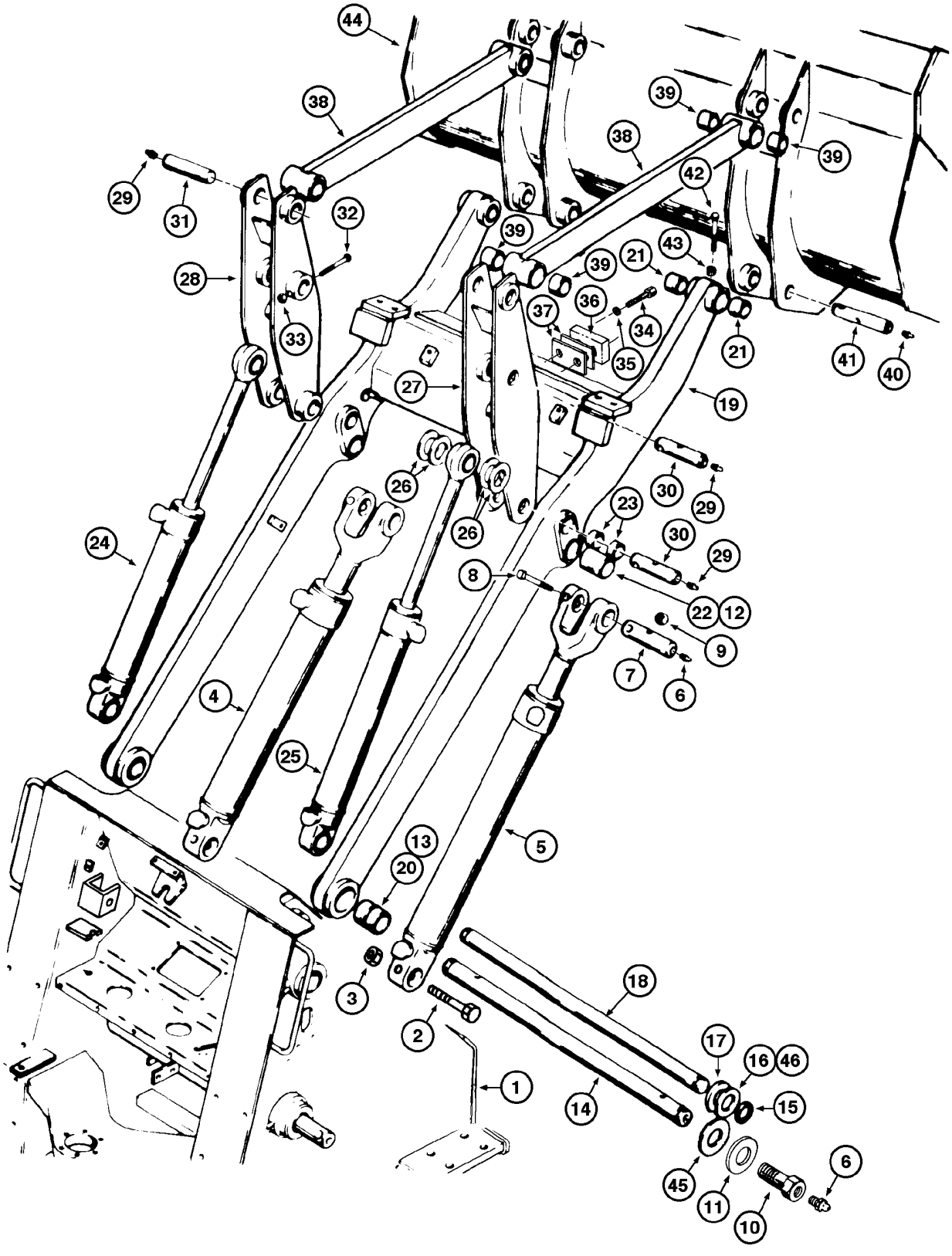

LOADER LIFT FRAME AND RELATED PARTS
LOADER LIFT FRAME AND RELATED PARTS
LOADER LIFT FRAME AND RELATED PARTS
LOADER LIFT FRAME AND RELATED PARTS

R	N	P.N.	MOD	Q	Denominação Bezeichnung	Description Description	Denominacion Beskrivelse	Descrizione Beschrijving	L.C.
	1	**87442408**		1	BRAÇO, Reinforced Assy, Includes items 19 - 22				
						ARM	BRAZO	BRACCIO	130B
					ARM	BRAS	ARM	ARM	
19		**NSS**		1	SEM SERVIÇO EM SEPARADO, ARM				
						NOT SERVICED SEPARA	NO SE REPARA POR SE	NON FORNITO SEPARAT	064N
					NICHT A SEP ERS-T LIEI	NON FORUNI SEPAREM	SERVICERES IKKE SEPA	NIET LOS VERKRIJGBAA	
20		**E158734**		2	BUCHA	BUSHING	CASQUILLO	BOCCOLA	095B
					BUCHSE	BAGUE	BØSNING	BUS	
21		**L72998**		8	BUCHA	BUSHING	CASQUILLO	BOCCOLA	1140
					BUECHSE	DOUILLE	BUSHING	BUSHING	
22		**L105214**		2	BUCHA	BUSHING	CASQUILLO	BOCCOLA	1140
					BUECHSE	DOUILLE	BUSHING	BUSHING	
23		**D95144**		16	PROTEÇÃO VEDADORA	SEAL PROTECTION	PROTECCIÓN DE JUNTA	PROTEZIONE GUARNIZI	291C
					DICHTUNGSSCHUTZ	PROTECTION DE JOINT	PAKNINGSDÆKSEL	AFDICHTINGSBESCHER	
24		**REF**		1	INSTRUÇÃO, CYLINDER Assy LH (P.8-18)				
						INSTRUCTION	INSTRUCCIÓN	ISTRUZIONI	Z571
					ANLEITUNG	INSTRUCTION	INSTRUKTION	INSTRUCTIE	
25		**REF**		1	INSTRUÇÃO, CYLINDER Assy RH (P.8-18)				
						INSTRUCTION	INSTRUCCIÓN	ISTRUZIONI	Z571
					ANLEITUNG	INSTRUCTION	INSTRUKTION	INSTRUCTIE	
26		**L45013**		AR	ARRUELA, 1.892mm	WASHER	ARANDELA	RONDELLA	9720
					UNTERLEGSCHEIBE	RONDELLE	WASHER	WASHER	
26		**L47423**			ARRUELA, 3.175mm	WASHER	ARANDELA	RONDELLA	9720
					UNTERLEGSCHEIBE	RONDELLE	WASHER	WASHER	
26		**L47424**			ARRUELA, 4.762mm	WASHER	ARANDELA	RONDELLA	9720
					UNTERLEGSCHEIBE	RONDELLE	WASHER	WASHER	
27		**87403960**		1	ARTICULAÇÃO, RH	ARTICULATION	ARTICULACIÓN	SNODO	165S
					GELENK	ARTICULATION	LEDFORBINDELSE	GELEDING	
28		**87403961**		1	ARTICULAÇÃO, LH	ARTICULATION	ARTICULACIÓN	SNODO	165S
					GELENK	ARTICULATION	LEDFORBINDELSE	GELEDING	
29		**219-1**		6	GRAXEIRA, 1/8"-27 x .66 lg	LUBE NIPPLE	BOQUILLA DE LUBRICAC	INGRASSATORE	060I
					SCHMIERNIPPEL	GRAISSEUR	SMØRENIPPEL	SMEERNIPPEL	
30		**E159038**		4	PINO	PIN	PASADOR	PERNO	080P
					PIN	BROCHE	STIFT	PEN	
31		**E159035**		2	PINO	PIN	PASADOR	PERNO	080P
					PIN	BROCHE	STIFT	PEN	
32		**426-876**		6	PARAFUSO, Hex, 1/2"-13 x 4 3/4", G8				
						BOLT	PERNO	BULLONE	140B
					SCHRAUBE	VIS	BOLT	BOUT	
33		**231-1448**		6	PORCA, 1/2"-13, GB	NUT	TUERCA	DADO	010D
					MUTTER	ECROU	MØTRIK	MOER	
34		**61-824**		4	PARAFUSO, Hex Soc Hd, 1/2"-13 x 1 1/2"				
						SCREW	TORNILLO	VITE	040V
					SCHRAUBE	VIS	SKRUE	SCHROEF	
35		**492-11050**		4	TRAVA DA ARRUELA, 1/2"	LOCK WASHER	ARANDELA DE BLOQUE	RONDELLA DI SICUREZ	132R
					SICHERUNGSSCHEIBE	RONDELLE FREIN	LÅSESKIVE	BORGRING	
36		**87403956**		2	BLOCO	BLOCK	BLOQUE	BLOCCO	074B
					BLOCK	BLOC	MOTORBLOK	BLOK	

(1) Braço reforçado opcional para madereira e pedreira

09-02	01	p3	07/10

ESTRUTURA DE LEVANTAMENTO DA CARREGADEIRA E COMPONENTES
LOADER LIFT FRAME AND RELATED PARTS
ESTRUTURA DE ELEVACIÓN DE LA CARGADORA Y COMPONENTES
LOADER LIFT FRAME AND RELATED PARTS

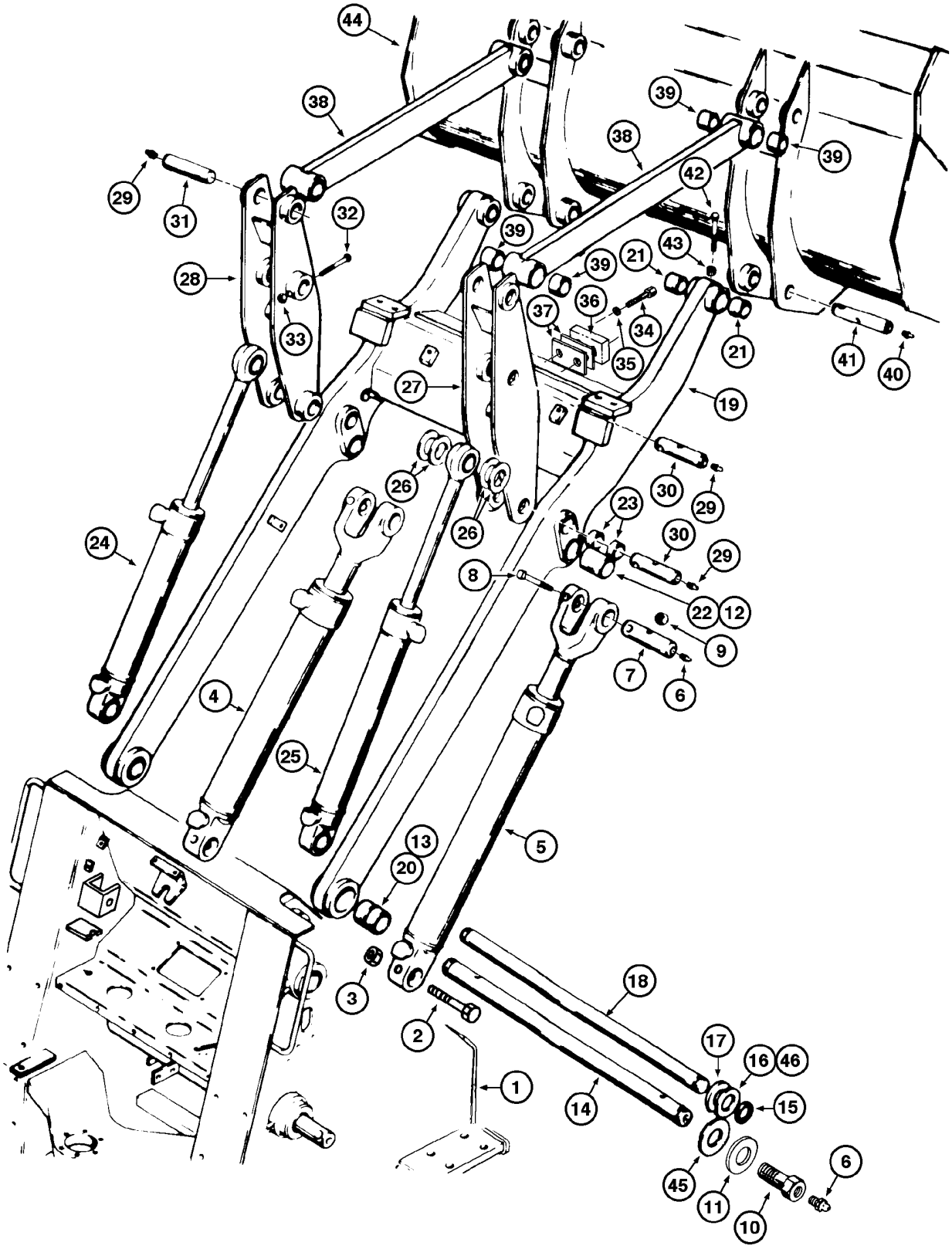

LOADER LIFT FRAME AND RELATED PARTS
LOADER LIFT FRAME AND RELATED PARTS
LOADER LIFT FRAME AND RELATED PARTS
LOADER LIFT FRAME AND RELATED PARTS

R	N	P.N.	MOD	Q	Denominação Bezeichnung	Description Description	Denominacion Beskrivelse	Descrizione Beschrijving	L.C.
37		L14452		AR	PEÇA DE REPOSIÇÃO ERSATZTEIL	SPARE PART PIECE DETACHEE	PIEZA DE REPUESTO RESERVEDEL	PARTE DI RICAMBIO RESERVEONDERDEEL	8888
38		87403958		2	BRAÇO, Includes item 39 ARM	ARM BRAS	BRAZO ARM	BRACCIO ARM	130B
39		L72998		4	BUCHA BUECHSE	BUSHING DOUILLE	CASQUILLO BUSHING	BOCCOLA BUSHING	1140
40		219-1		4	GRAXEIRA, 1/8"-27 x .66 lg SCHMIERNIPPEL	LUBE NIPPLE GRAISSEUR	BOQUILLA DE LUBRICA(SMØRENIPPEL	INGRASSATORE SMEERNIPPEL	060I
41		E159037		4	PINO PIN	PIN BROCHE	PASADOR STIFT	PERNO PEN	080P
42		426-1072		4	PARAFUSO, Hex, 5/8"-11 x 4 1/2", G8 SCHRAUBE	BOLT VIS	PERNO BOLT	BULLONE BOUT	140B
43		231-14410		4	CONTRA PORCA, 5/8"-11, GB SICHERUNGSMUTTER	LOCK NUT CONTRE-ECROU	TUERCA DE BLOQUEO LÅSEMØTRIK	DADO DI BLOCCAGGIO BORGMOER	P263
44		REF		1	INSTRUÇÃO, BUCKET (P.9-4) ANLEITUNG	INSTRUCTION INSTRUCTION	INSTRUCCIÓN INSTRUKTION	ISTRUZIONI INSTRUCTIE	Z571
45		146651A1		AR	ARRUELA PLANA UNTERLEGSCHEIBE	WASHER RONDELLE	ARANDELA FLADSKIVE	RONDELLA SLUITRING	131R
46		L103855		AR	ARRUELA UNTERLEGSCHEIBE	WASHER RONDELLE	ARANDELA WASHER	RONDELLA WASHER	9720
		E95176		1	KIT DE REVISÃO DO MOTOR MOTORÜBERHOLUNGS	ENGINE OVERHAUL KIT KIT DE REVISION MOTE	KIT DE REVISIÓN DEL M MOTORREVISIONSSÆT	KIT REVISIONE MOTORE REVISIEKIT VOOR MOT(	002K

09-04	01	p1	03/09

CAÇAMBAS DA CARREGADEIRA
LOADER BUCKETS
CUCHARAS DE LA CARGADORA
LOADER BUCKETS

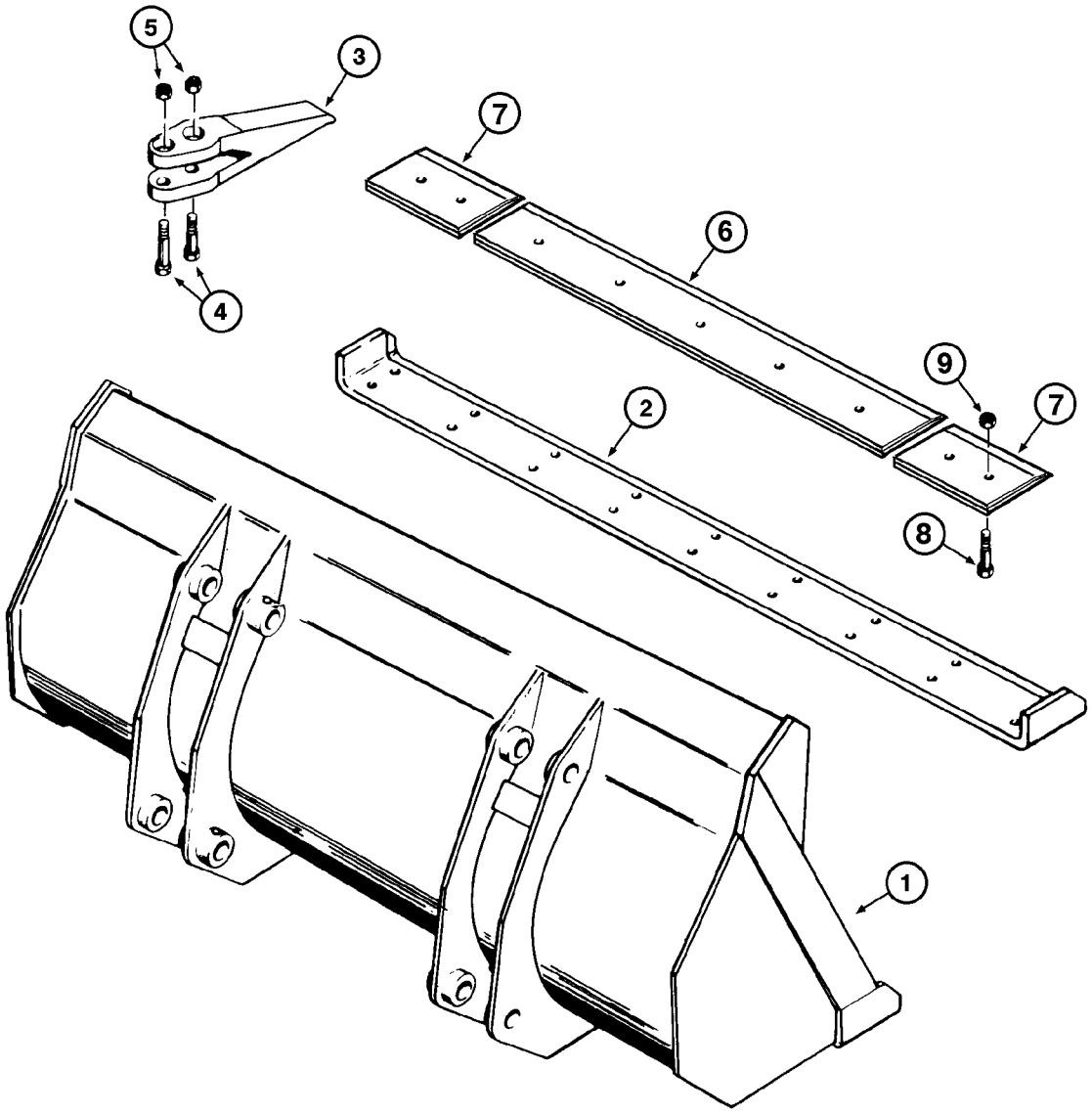

LOADER BUCKETS
LOADER BUCKETS
LOADER BUCKETS
LOADER BUCKETS

R	N	P.N.	MOD	Q	Denominação Bezeichnung	Description Description	Denominacion Beskrivelse	Descrizione Beschrijving	L.C.
		87404059		1	CAÇAMBA, Assy 1.53m3 [2cu.yd], Includes items 1, 2				
						BUCKET	CUCHARA	BENNA	035B
					LÖFFEL	GODET	SKOVL	GRAAFBAK	
1		**NSS**		1	SEM SERVIÇO EM SEPARADO, BUCKET				
						NOT SERVICED SEPARA	NO SE REPARA POR SE	NON FORNITO SEPARAT	064N
					NICHT A SEP ERS-T LIEI	NON FORUNI SEPAREM	SERVICERES IKKE SEPA	NIET LOS VERKRIJGBAA	
2		**87448565**		1	SUPORTE DO ARADO	MOLDBOARD	VERTEDERA	VERSOIO	5600
					STREICHBLECH	VERSOIR	FORMBRÆT	RISTER	
		87403952		1	CAÇAMBA, Assy 1.72m3 [2-1/4cu.yd], Includes items 1, 2				
						BUCKET	CUCHARA	BENNA	035B
					LÖFFEL	GODET	SKOVL	GRAAFBAK	
1		**NSS**		1	SEM SERVIÇO EM SEPARADO, BUCKET				
						NOT SERVICED SEPARA	NO SE REPARA POR SE	NON FORNITO SEPARAT	064N
					NICHT A SEP ERS-T LIEI	NON FORUNI SEPAREM	SERVICERES IKKE SEPA	NIET LOS VERKRIJGBAA	
2		**87448565**		1	SUPORTE DO ARADO	MOLDBOARD	VERTEDERA	VERSOIO	5600
					STREICHBLECH	VERSOIR	FORMBRÆT	RISTER	
		87404060		1	CAÇAMBA, Assy 1.9m3 [2-1/2cu.yd], Includes items 1, 2				
						BUCKET	CUCHARA	BENNA	035B
					LÖFFEL	GODET	SKOVL	GRAAFBAK	
1		**NSS**		1	SEM SERVIÇO EM SEPARADO, BUCKET				
						NOT SERVICED SEPARA	NO SE REPARA POR SE	NON FORNITO SEPARAT	064N
					NICHT A SEP ERS-T LIEI	NON FORUNI SEPAREM	SERVICERES IKKE SEPA	NIET LOS VERKRIJGBAA	
2		**87448565**		1	SUPORTE DO ARADO	MOLDBOARD	VERTEDERA	VERSOIO	5600
					STREICHBLECH	VERSOIR	FORMBRÆT	RISTER	
		87433608		1	CAÇAMBA, Assy 1.99mm3 [2,6cu.yd], Includes items 1, 2				
						BUCKET	CUCHARA	BENNA	035B
					LÖFFEL	GODET	SKOVL	GRAAFBAK	
1		**NSS**		1	SEM SERVIÇO EM SEPARADO, BUCKET				
						NOT SERVICED SEPARA	NO SE REPARA POR SE	NON FORNITO SEPARAT	064N
					NICHT A SEP ERS-T LIEI	NON FORUNI SEPAREM	SERVICERES IKKE SEPA	NIET LOS VERKRIJGBAA	
2		**87448565**		1	SUPORTE DO ARADO	MOLDBOARD	VERTEDERA	VERSOIO	5600
					STREICHBLECH	VERSOIR	FORMBRÆT	RISTER	
		87431316		1	CAÇAMBA, Assy 2.9mm3 [3cu.yd], Includes items 1, 2				
						BUCKET	CUCHARA	BENNA	035B
					LÖFFEL	GODET	SKOVL	GRAAFBAK	
1		**NSS**		1	SEM SERVIÇO EM SEPARADO, BUCKET				
						NOT SERVICED SEPARA	NO SE REPARA POR SE	NON FORNITO SEPARAT	064N
					NICHT A SEP ERS-T LIEI	NON FORUNI SEPAREM	SERVICERES IKKE SEPA	NIET LOS VERKRIJGBAA	
2		**87448565**		1	SUPORTE DO ARADO	MOLDBOARD	VERTEDERA	VERSOIO	5600
					STREICHBLECH	VERSOIR	FORMBRÆT	RISTER	
3	1, 2	**87404063**		9	DENTE DA NAVALHA, Assy				
						BUCKET TOOTH	DIENTE DE CUCHARA	DENTI BENNA	089D
					LÖFFELZAHN	DENT DE GODET	SKOVLTAND	TAND VAN BAK	
4	2	**E158385**		18	PARAFUSO	SCREW	TORNILLO	VITE	040V
					SCHRAUBE	VIS	SKRUE	SCHROEF	
5	2	**E157656**		18	PORCA	NUT	TUERCA	DADO	010D
					MUTTER	ECROU	MØTRIK	MOER	

(1) Dente cinza montado nas caçambas 87404059, 87403952, 87404060, 87433608
(2) DENTES DA CAÇAMBA

09-04	01	p2	03/09

CAÇAMBAS DA CARREGADEIRA
LOADER BUCKETS
CUCHARAS DE LA CARGADORA
LOADER BUCKETS

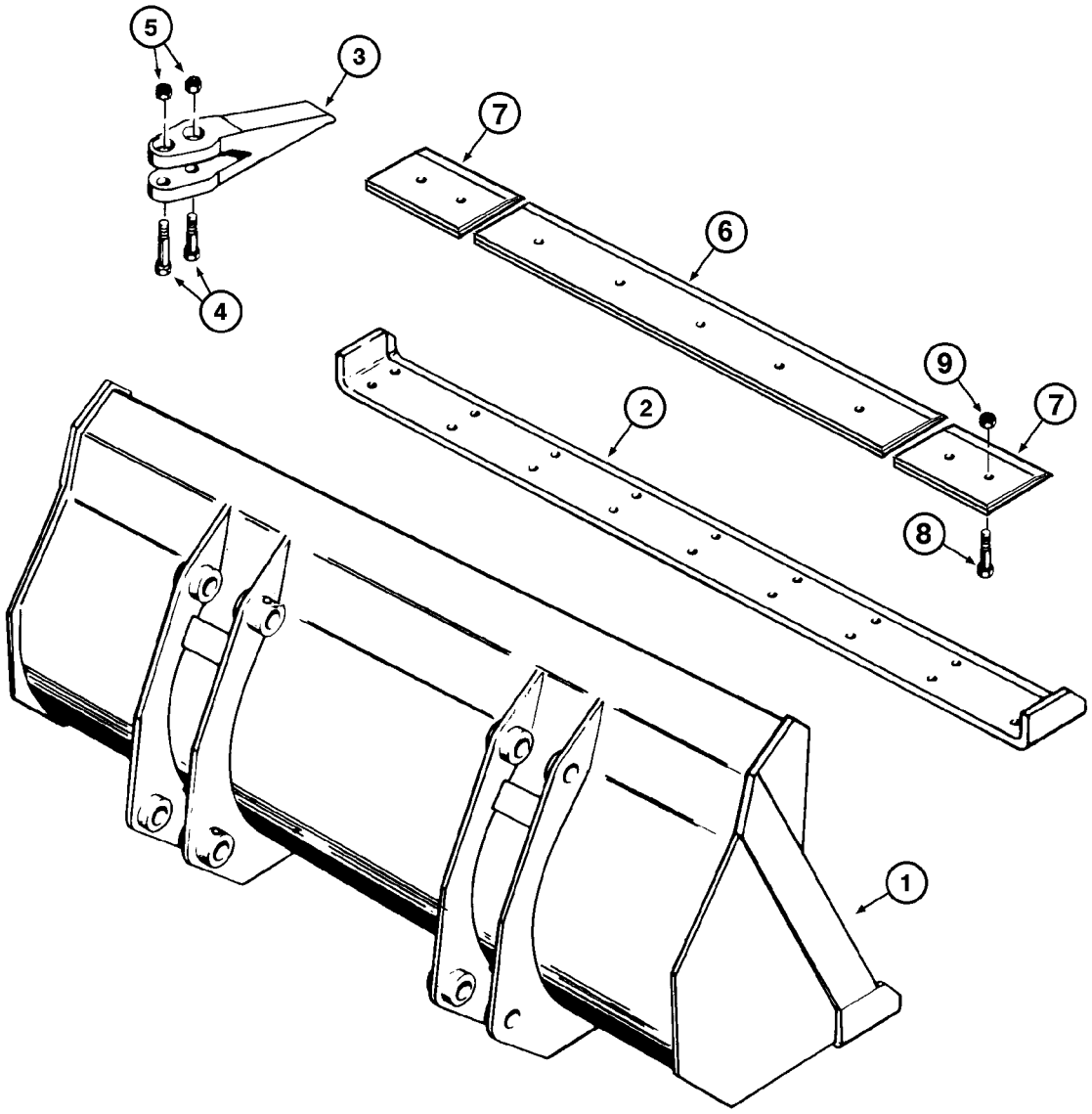

LOADER BUCKETS
LOADER BUCKETS
LOADER BUCKETS
LOADER BUCKETS

R	N	P.N.	MOD	Q	Denominação Bezeichnung	Description Description	Denominacion Beskrivelse	Descrizione Beschrijving	L.C.
6	1, 2	**87426014**		1	BORDA CORTANTE, reversible central gray				
						CUTTING EDGE	BORDE DE CORTE	BORDO TAGLIENTE	018T
					SCHNEIDKANTE	BORD TRANCHANT	SKÆREKANT	SNIJRAND	
7	1, 2	**87426013**		2	BORDA CORTANTE, reversible lateral gray				
						CUTTING EDGE	BORDE DE CORTE	BORDO TAGLIENTE	018T
					SCHNEIDKANTE	BORD TRANCHANT	SKÆREKANT	SNIJRAND	
8	2	**79042494**		9	PARAFUSO	SCREW	TORNILLO	VITE	040V
					SCHRAUBE	VIS	SKRUE	SCHROEF	
9	2	**12164521**		9	PORCA, Hex, M24, 2mm Pitch, 19.00mm High, Cl 10, ZND				
						NUT	TUERCA	DADO	010D
					MUTTER	ECROU	MØTRIK	MOER	

(1) Faca reversível opcional cor cinza para caçambas cinza conjs. 87404059, 87403952, 87404060, 87433608, 87431316

(2) DENTES DA CAÇAMBA

09-04A	01	p1	07/10

CAÇAMBAS DA CARREGADEIRA 2.25 YD3 COM DENTES
LOADER BUCKETS 2.25 YD3 WITH TEETH
CUCHARAS DE LA CARGADORA 2.25 YD3 CON DIENTES
LOADER BUCKETS 2.25 YD3 WITH TEETH

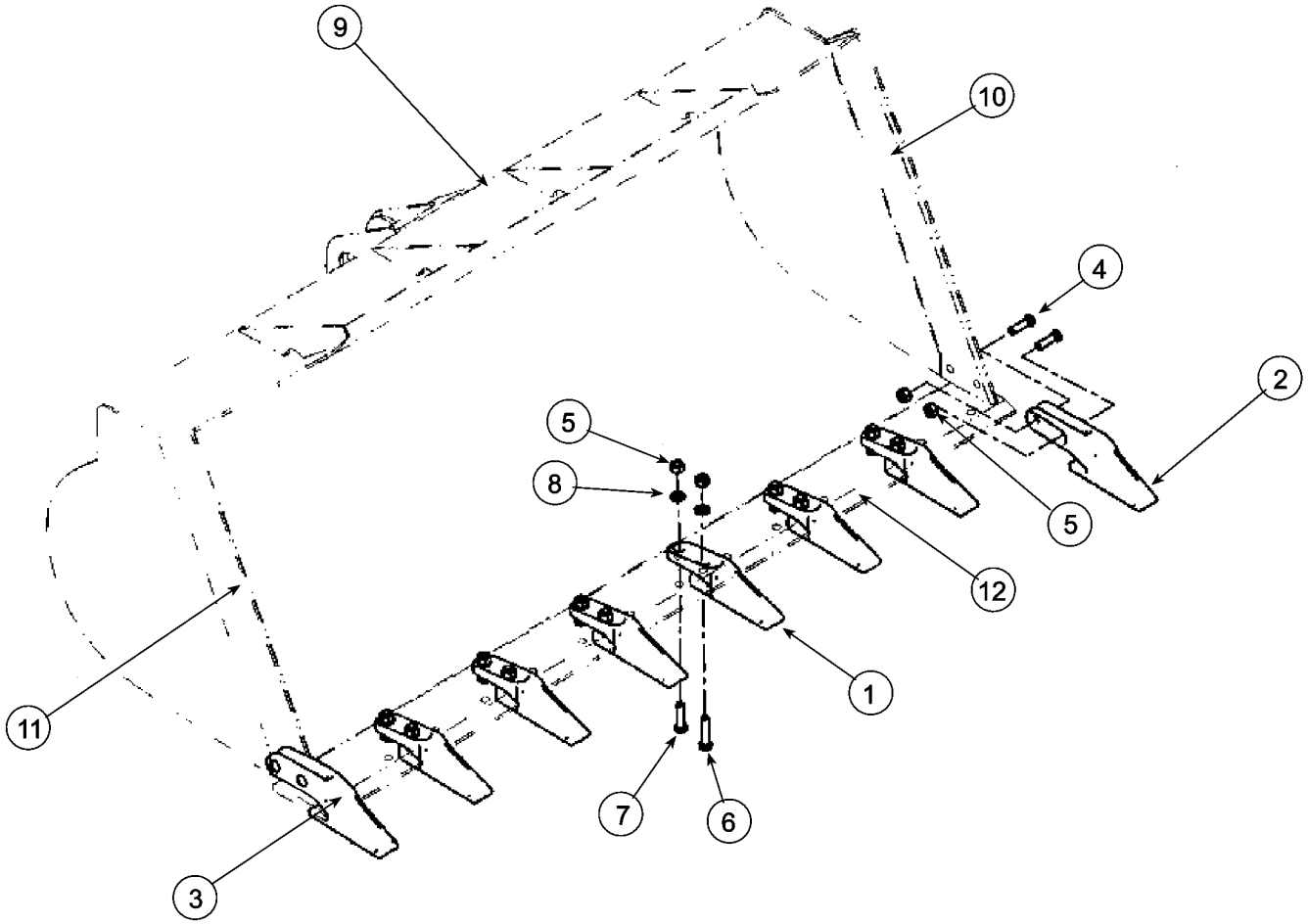

LOADER BUCKETS 2.25 YD3 WITH TEETH
LOADER BUCKETS 2.25 YD3 WITH TEETH
LOADER BUCKETS 2.25 YD3 WITH TEETH
LOADER BUCKETS 2.25 YD3 WITH TEETH

R	N	P.N.	MOD	Q	Denominação Bezeichnung	Description Description	Denominacion Beskrivelse	Descrizione Beschrijving	L.C.
1		86992662		6	DENTE DA NAVALHA, Central				
						BUCKET TOOTH	DIENTE DE CUCHARA	DENTI BENNA	089D
					LÖFFELZAHN	DENT DE GODET	SKOVLTAND	TAND VAN BAK	
2		86992663		1	DENTE DA NAVALHA, Side LH				
						BUCKET TOOTH	DIENTE DE CUCHARA	DENTI BENNA	089D
					LÖFFELZAHN	DENT DE GODET	SKOVLTAND	TAND VAN BAK	
3		86992664		1	DENTE DA NAVALHA, Side RH				
						BUCKET TOOTH	DIENTE DE CUCHARA	DENTI BENNA	089D
					LÖFFELZAHN	DENT DE GODET	SKOVLTAND	TAND VAN BAK	
4		420-21244		4	PARAFUSO DE ARADO, 3/4"-10 x 2 3/4", G8				
						PLOW BOLT	PERNO DE ARADO	BULLONE SCANALATO	P128
					PFLUGSCHRAUBE	BOULON DE CHARRUE	PLOVRIGEL	PLOEGBOUT	
5		425-1612		16	PORCA, 3/4"-10, G5, Hvy	NUT	TUERCA	DADO	010D
					MUTTER	ECROU	MØTRIK	MOER	
6		426-1252		6	PARAFUSO, Hex, 3/4"-10 x 3 1/4", G8				
						BOLT	PERNO	BULLONE	140B
					SCHRAUBE	VIS	BOLT	BOUT	
7		426-1244		6	PARAFUSO, Hex, 3/4"-10 x 2 3/4", G8				
						BOLT	PERNO	BULLONE	140B
					SCHRAUBE	VIS	BOLT	BOUT	
8		496-11081		12	ARRUELA PLANA, 13/16" x 1 1/2" x .134", HDN				
						WASHER	ARANDELA	RONDELLA	131R
					UNTERLEGSCHEIBE	RONDELLE	FLADSKIVE	SLUITRING	
9	1	87380915		1	CAÇAMBA, 2.25 YD3, Assy	BUCKET	CUCHARA	BENNA	035B
					LÖFFEL	GODET	SKOVL	GRAAFBAK	
10		362252A1		1	SUPORTE DO ARADO, Side LH				
						MOLDBOARD	VERTEDERA	VERSOIO	5600
					STREICHBLECH	VERSOIR	FORMBRÆT	RISTER	
11		362251A1		1	SUPORTE DO ARADO, Side RH				
						MOLDBOARD	VERTEDERA	VERSOIO	5600
					STREICHBLECH	VERSOIR	FORMBRÆT	RISTER	
12		360949A1		1	SUPORTE DO ARADO, Central				
						MOLDBOARD	VERTEDERA	VERSOIO	5600
					STREICHBLECH	VERSOIR	FORMBRÆT	RISTER	

(1) Inclui items 10 a 12

09-06	01	p1	03/09

CAÇAMBAS DA CARREGADEIRA 4 EM 1 (OPCIONAL)
LOADER 4 IN 1 BUCKETS (OPTIONAL)
CUCHARAS DE LA CARGADORA 4 EN 1 (OPCIONAL)
LOADER 4 IN 1 BUCKETS (OPTIONAL)

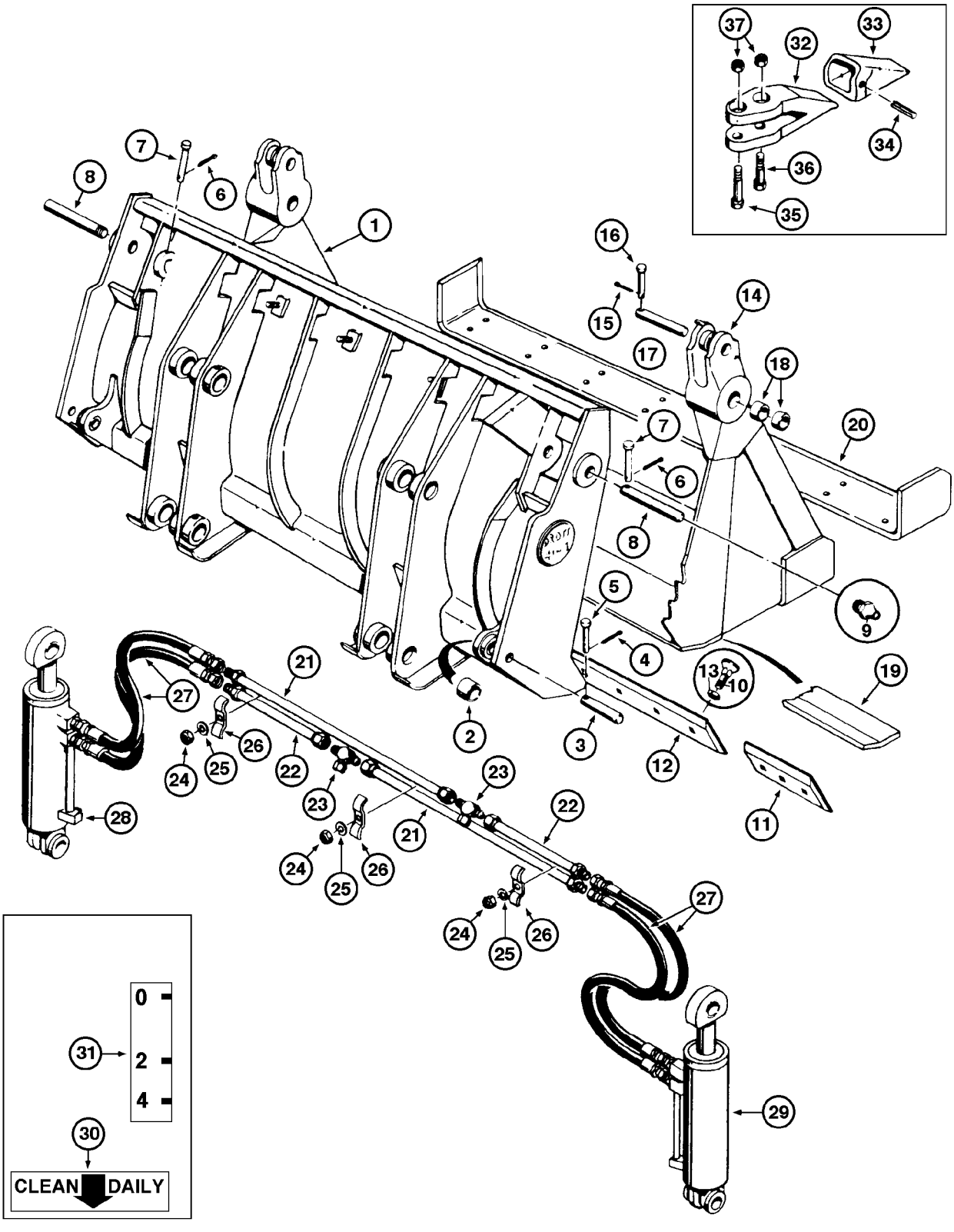

LOADER 4 IN 1 BUCKETS (OPTIONAL)
LOADER 4 IN 1 BUCKETS (OPTIONAL)
LOADER 4 IN 1 BUCKETS (OPTIONAL)
LOADER 4 IN 1 BUCKETS (OPTIONAL)

R	N	P.N.	MOD	Q	Denominação Bezeichnung	Description Description	Denominacion Beskrivelse	Descrizione Beschrijving	L.C.
		87404062		1	CAÇAMBA, Assy 1.34m3 [1.75cu.yd]				
						BUCKET	CUCHARA	BENNA	035B
					LÖFFEL	GODET	SKOVL	GRAAFBAK	
		87404061		1	CAÇAMBA, Assy 1.15m3 [1.5cu.yd]				
						BUCKET	CUCHARA	BENNA	035B
					LÖFFEL	GODET	SKOVL	GRAAFBAK	
		S602031		1	PEÇA DE REPOSIÇÃO, Assy, Includes items 1 - 31				
						SPARE PART	PIEZA DE REPUESTO	PARTE DI RICAMBIO	8888
					ERSATZTEIL	PIECE DETACHEE	RESERVEDEL	RESERVEONDERDEEL	
1		**NSS**		1	SEM SERVIÇO EM SEPARADO, EDGE cutting				
						NOT SERVICED SEPARA	NO SE REPARA POR SE	NON FORNITO SEPARAT	064N
					NICHT A SEP ERS-T LIEI	NON FORUNI SEPAREM	SERVICERES IKKE SEPA	NIET LOS VERKRIJGBAA	
2		**S23796**		2	BUCHA	BUSHING	CASQUILLO	BOCCOLA	1140
					BUECHSE	DOUILLE	BUSHING	BUSHING	
3		**S46134**		2	PINO	PIN	BOTADOR	SPINA	6200
					STIFT	BROCHE	PIN	PIN	
4		**132-48**		2	CONTRA PINO, 1/8" x 1"	COTTER PIN	PASADOR	COPPIGLIA	270C
					SPLINT	GOUPILLE FENDUE	SPLITBOLT	SPLITPEN	
5		**S10815**		2	PINO	PIN	BOTADOR	SPINA	6200
					STIFT	BROCHE	PIN	PIN	
6		**132-48**		2	CONTRA PINO, 1/8" x 1"	COTTER PIN	PASADOR	COPPIGLIA	270C
					SPLINT	GOUPILLE FENDUE	SPLITBOLT	SPLITPEN	
7		**S10786**		2	PINO DE GARFO	CLEVIS PIN	EJE CON CABEZA	PERNO A TESTA PIANA	P694
					GABELBOLZEN	AXE DE CHAPE	GAFFELBOLT	GAFFELPEN	
8		**S29582**		2	PINO	PIN	BOTADOR	SPINA	6200
					STIFT	BROCHE	PIN	PIN	
9		**219-1**		1	GRAXEIRA, 1/8"-27 x .66 lg	LUBE NIPPLE	BOQUILLA DE LUBRICAC	INGRASSATORE	060I
					SCHMIERNIPPEL	GRAISSEUR	SMØRENIPPEL	SMEERNIPPEL	
10		**19-1232**		18	PARAFUSO, 3/4"-10 x 2", G5				
						CARRIAGE BOLT	PERNO ALOMADO	BULLONE A TESTA TONI	P123
					SCHLOSSSCHRAUBE	VIS A TETE BOMBEE	BRÆDDEBOLT	SLOTBOUT	
11		**S46223**		2	PONTA, cutting side	POINT	PUNTA	PUNTO	6460
					SPITZE	POINTE	POINT	POINT	
12		**A17654**		1	BORDA, cutting center	EDGE	BORDE	BORDO	Z085
					KANTE	BORD	KANT	RAND	
13		**425-1012**		18	PORCA, 3/4"-10, G5	NUT	TUERCA	DADO	010D
					MUTTER	ECROU	MØTRIK	MOER	
		N6744		1	PINÇA, Assy	CLAW	GARRA	GANCIO	P144
					KLAUE	GRIFFE	KLO	KLAUW	
14		**NSS**		1	SEM SERVIÇO EM SEPARADO, CLAM				
						NOT SERVICED SEPARA	NO SE REPARA POR SE	NON FORNITO SEPARAT	064N
					NICHT A SEP ERS-T LIEI	NON FORUNI SEPAREM	SERVICERES IKKE SEPA	NIET LOS VERKRIJGBAA	
15		**132-48**		2	CONTRA PINO, 1/8" x 1"	COTTER PIN	PASADOR	COPPIGLIA	270C
					SPLINT	GOUPILLE FENDUE	SPLITBOLT	SPLITPEN	
16		**141-332**		2	PINO	PIN	PASADOR	PERNO	080P
					PIN	BROCHE	STIFT	PEN	
17		**S18633**		2	PINO DO EIXO	AXLE PIN	PASADOR DE EJE	PERNO DELL'ASSALE	Z160
					ACHSZAPFEN	PIVOT D'ESSIEU	AKSELPIND	ASPEN	

CAÇAMBAS DA CARREGADEIRA 4 EM 1 (OPCIONAL)
LOADER 4 IN 1 BUCKETS (OPTIONAL)
CUCHARAS DE LA CARGADORA 4 EN 1 (OPCIONAL)
LOADER 4 IN 1 BUCKETS (OPTIONAL)

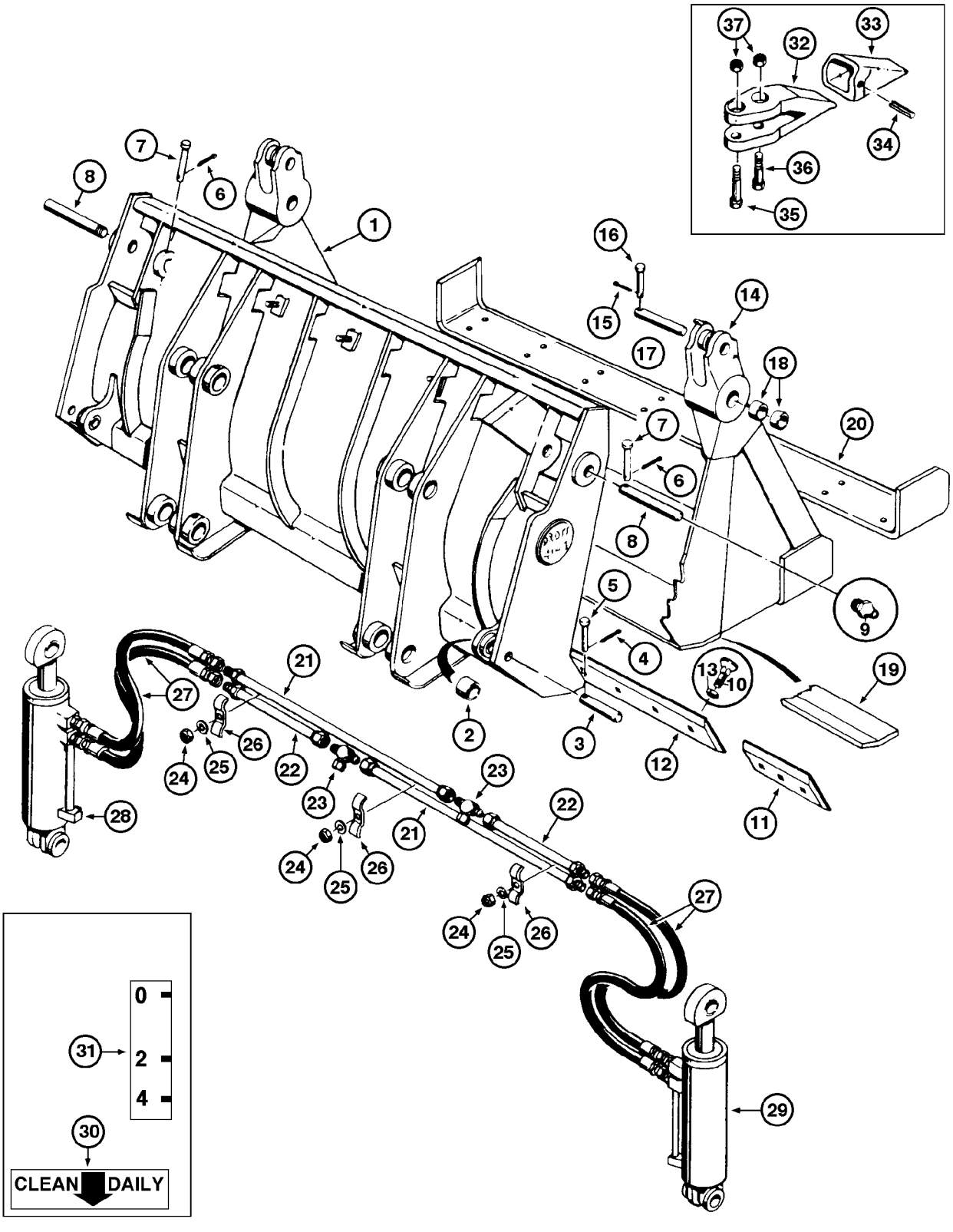

LOADER 4 IN 1 BUCKETS (OPTIONAL)
LOADER 4 IN 1 BUCKETS (OPTIONAL)
LOADER 4 IN 1 BUCKETS (OPTIONAL)
LOADER 4 IN 1 BUCKETS (OPTIONAL)

R	N	P.N.	MOD	Q	Denominação Bezeichnung	Description Description	Denominacion Beskrivelse	Descrizione Beschrijving	L.C.
18		A18662		4	BUCHA	BUSHING	CASQUILLO	BOCCOLA	1140
					BUECHSE	DOUILLE	BUSHING	BUSHING	
19		S60047		1	PLACA CONJUNTO	PLATE ASSY.	PLACA (CONJUNTO)	PIASTRA, COMPLESSIV(	P433
					PLATTE (KPLT.)	PLAQUE (ASSEMBLEE)	PLATE ASSY.	PLATE ASSY.	
20		A17657		1	BORDA, cutting front	EDGE	BORDE	BORDO	Z085
					KANTE	BORD	KANT	RAND	
21		S218812		2	PORCA, 0.625" OD x 35" L, long				
						NUT	TUERCA	DADO	5780
					MUTTER	ECROU	NUT	NUT	
22		A18675		2	TUBO, short	TUBE	TUBO	TUBO	195T
					ROHR	TUBE	RØR	LEIDING	
23		218-842		2	T, 37º, 7/8"-14 x 7/8"-14, Fem Sw Br				
						TEE	RACOR EN T	PEZZO A T	9020
					T-STÜCK	RACCORD EN T	T-STYKKE	T-STUK	
24		425-106		3	PORCA, 3/8"-16, G5	NUT	TUERCA	DADO	010D
					MUTTER	ECROU	MØTRIK	MOER	
25		92-6		3	TRAVA DA ARRUELA, 3/8"	LOCK WASHER	ARANDELA DE BLOQUE(	RONDELLA DI SICUREZ/	132R
					SICHERUNGSSCHEIBE	RONDELLE FREIN	LÅSESKIVE	BORGRING	
26		S78067		3	FREIO	SHIN	BRIDA	BORDO FRONTALE	7775
					SHIN	VENTRE DU VERSOIR	LASK	RISTERVOORSTUK	
27		S8577		4	MANGUEIRA	HOSE	MANGUERA	TUBO FLESSIBILE	4480
					SCHLAUCH	FLEXIBLE	HOSE	HOSE	
28		REF		1	INSTRUÇÃO, CYLINDER Assy LH (P.9-8)				
						INSTRUCTION	INSTRUCCIÓN	ISTRUZIONI	Z571
					ANLEITUNG	INSTRUCTION	INSTRUKTION	INSTRUCTIE	
29		REF		1	INSTRUÇÃO, CYLINDER Assy RH (P.9-8)				
						INSTRUCTION	INSTRUCCIÓN	ISTRUZIONI	Z571
					ANLEITUNG	INSTRUCTION	INSTRUKTION	INSTRUCTIE	
30		S45226		2	DECALCOMANIA	DECAL	CALCOMANIA	AUTOADESIVO	P903
					ABZIEHBILD	DECALCOMANIE	DECAL	DECAL	
31		S81109		1	DECALCOMANIA	DECAL	CALCOMANIA	AUTOADESIVO	P903
					ABZIEHBILD	DECALCOMANIE	DECAL	DECAL	
	1	87404064		9	DENTE, Assy	TOOTH	DIENTE	DENTI	9130
					ZAHN	DENT	TAND	TAND	
32	1	NSS		1	SEM SERVIÇO EM SEPARADO, SHANK				
						NOT SERVICED SEPARA	NO SE REPARA POR SE	NON FORNITO SEPARAT	064N
					NICHT A SEP ERS-T LIEI	NON FORUNI SEPAREM	SERVICERES IKKE SEPA	NIET LOS VERKRIJGBAA	
33	1	A17667		1	PONTA DE DENTE	TIP	PUNTA DE DIENTE	PUNTA	P377
					SPITZE	EMBOUT	SPIDS	PUNT	
34	1	138-316		1	PINO DE FIXAÇÃO, 1/2" x 2 1/2", Slotted				
						LOCK PIN	PASADOR DE BLOQUEO	PERNO DI BLOCCAGGIC	081P
					VERRIEGELUNGSSTIFT	GOUPILLE DE BLOCAGE	LÅSETAP	BORGPEN	
35	1	413-1056		1	PARAFUSO, Hex, 5/8"-11 x 3 1/2", G5				
						BOLT	PERNO	BULLONE	140B
					SCHRAUBE	VIS	BOLT	BOUT	
36	1	413-1048		1	PARAFUSO, Hex, 5/8"-11 x 3", G5				
						BOLT	PERNO	BULLONE	140B
					SCHRAUBE	VIS	BOLT	BOUT	

(1) DENTES DA CAÇAMBA

CAÇAMBAS DA CARREGADEIRA 4 EM 1 (OPCIONAL)
LOADER 4 IN 1 BUCKETS (OPTIONAL)
CUCHARAS DE LA CARGADORA 4 EN 1 (OPCIONAL)
LOADER 4 IN 1 BUCKETS (OPTIONAL)

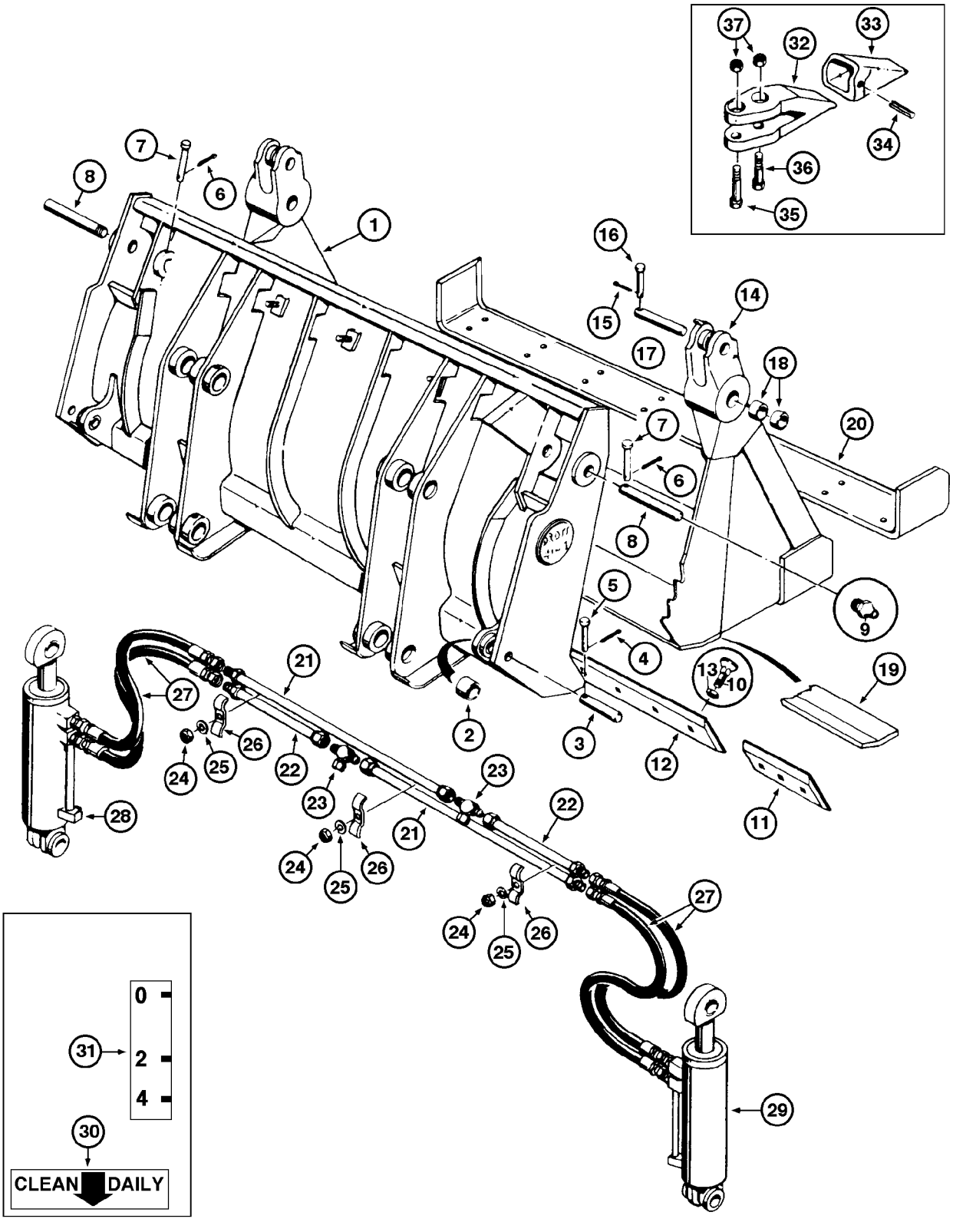

LOADER 4 IN 1 BUCKETS (OPTIONAL)
LOADER 4 IN 1 BUCKETS (OPTIONAL)
LOADER 4 IN 1 BUCKETS (OPTIONAL)
LOADER 4 IN 1 BUCKETS (OPTIONAL)

R	N	P.N.	MOD	Q	Denominação Bezeichnung	Description Description	Denominacion Beskrivelse	Descrizione Beschrijving	L.C.
37	1	**425-1010**		2	PORCA, 5/8"-11, G5 MUTTER	NUT ECROU	TUERCA MØTRIK	DADO MOER	010D

(1) DENTES DA CAÇAMBA

09-08	01	p1	03/09

CILINDROS DAS MADÍBULAS - CAÇAMBA 4 EM 1
CLAM CYLINDERS - 4 IN 1 BUCKETS
GATOS DE LA ALMEJA - CUCHARA 4 EN 1
CLAM CYLINDERS - 4 IN 1 BUCKETS

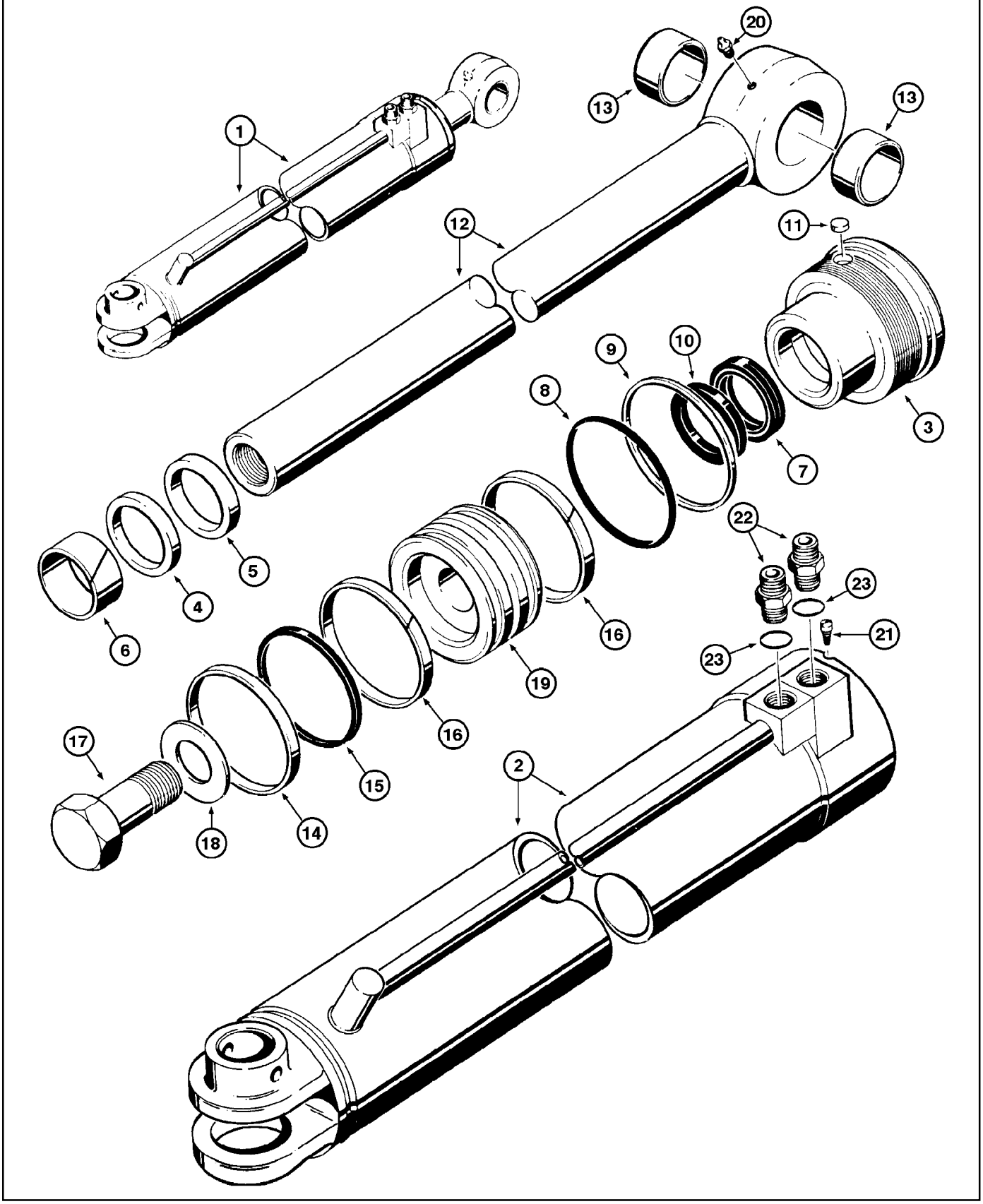

CLAM CYLINDERS - 4 IN 1 BUCKETS
CLAM CYLINDERS - 4 IN 1 BUCKETS
CLAM CYLINDERS - 4 IN 1 BUCKETS
CLAM CYLINDERS - 4 IN 1 BUCKETS

R	N	P.N.	MOD	Q	Denominação Bezeichnung	Description Description	Denominacion Beskrivelse	Descrizione Beschrijving	L.C.
1		G101564		1	BLOCO CILINDRO, Assy RH, Includes items 2 - 23				
						CYLINDER BLOCK	BLOQUE CILINDRICO	BOZZELLO, CILINDRO	P643
					ZYLINDERBLOCK	BLOC-CYLINDRE	CYLINDER BLOCK	CYLINDER BLOCK	
1		G101565		1	BLOCO CILINDRO, Assy LH, Includes items 2 - 23				
						CYLINDER BLOCK	BLOQUE CILINDRICO	BOZZELLO, CILINDRO	P643
					ZYLINDERBLOCK	BLOC-CYLINDRE	CYLINDER BLOCK	CYLINDER BLOCK	
2		G31964		1	TUBO HIDRÁULICO, 18.69" L, RH				
						HYD. TUBE	TUBO HIDRÁULICO	TUBO IDRAULICO	190T
					HYDRAULIKLEITUNG	TUYAU HYDRAULIQUE	HYD. RØR	HYDRAULISCHE LEIDIN(	
2		G31965		1	TUBO HIDRÁULICO, LH	HYD. TUBE	TUBO HIDRÁULICO	TUBO IDRAULICO	190T
					HYDRAULIKLEITUNG	TUYAU HYDRAULIQUE	HYD. RØR	HYDRAULISCHE LEIDIN(	
		G104407		1	PACOTE DE ESTOPA, Assy				
						GLAND	PRENSAESTOPAS	PREMISTOPPA	3880
					STOPFBUCHSE	PRESSE-ETOUPE	PAKNINGSDÅSE	PAKKING	
3		NSS		1	SEM SERVIÇO EM SEPARADO, COVER				
						NOT SERVICED SEPARA	NO SE REPARA POR SE	NON FORNITO SEPARAT	064N
					NICHT A SEP ERS-T LIEI	NON FORUNI SEPAREM	SERVICERES IKKE SEPA	NIET LOS VERKRIJGBAA	
4		NSS		1	SEM SERVIÇO EM SEPARADO, SNAP ring				
						NOT SERVICED SEPARA	NO SE REPARA POR SE	NON FORNITO SEPARAT	064N
					NICHT A SEP ERS-T LIEI	NON FORUNI SEPAREM	SERVICERES IKKE SEPA	NIET LOS VERKRIJGBAA	
5		D95144		1	PROTEÇÃO VEDADORA	SEAL PROTECTION	PROTECCIÓN DE JUNTA	PROTEZIONE GUARNIZI	291C
					DICHTUNGSSCHUTZ	PROTECTION DE JOINT	PAKNINGSDÆKSEL	AFDICHTINGSBESCHER	
6		G101533		1	ANEL DE DESGASTE	WEAR RING	ANILLO DE DESGASTE	ANELLO ANTIUSURA	A012
					VERSCHLEISSRING	BAGUE D'USURE	SLIDRING	SLIJTRING	
7		D36971		1	ANEL	RING	ANILLO	ANELLO	7175
					RING	BAGUE	RING	RING	
8		A27507		1	O-RING, 3.984" ID x 4.262" OD x 0.139"				
						O-RING	JUNTA TÓRICA	ANELLO TOROIDALE	055A
					O-RING	JOINT TORIQUE	O-RING	O-RING	
9		G32176		1	ANEL DE SEGURANÇA	BACK-UP RING	ANILLO DE SEGURIDAD	ANELLO DI SOSTEGNO	Z334
					STÜTZRING	BAGUE ANTI-EXTRUSIOI	RESERVERING	ONDERLEGRING	
10		G107997		1	VEDADOR DE RETENCAO	SEAL	SELLO/RETEN	GUARNIZIONE TENUTA	7460
					DICHTRING	JOINT-D'ETANCHEITE	SEAL	SEAL	
11		G102569		1	BUJAO	PLUG	TAPON	TAPPO	6400
					STOPFEN	BOUCHON	PLUG	PLUG	
12		G33626		1	HASTE, Assy	ROD	VARILLA	ASTA	7250
					STANGE	TRINGLE	ROD	ROD	
13		D33127		1	BUCHA	BUSHING	CASQUILLO	BOCCOLA	1140
					BUECHSE	DOUILLE	BUSHING	BUSHING	
14		G102285		1	VEDADOR DE RETENCAO	SEAL	SELLO/RETEN	GUARNIZIONE TENUTA	7460
					DICHTRING	JOINT-D'ETANCHEITE	SEAL	SEAL	
15		G100440		1	ANEL	RING	ANILLO	ANELLO	7175
					RING	BAGUE	RING	RING	
16		G100448		1	ANEL	RING	ANILLO	ANELLO	7175
					RING	BAGUE	RING	RING	
17		28-2040		1	PARAFUSO, Hex, 1 1/4"-12 x 2 1/2", G8				
						BOLT	PERNO	BULLONE	140B
					SCHRAUBE	VIS	BOLT	BOUT	

09-08	01	p2	03/09

CILINDROS DAS MADÍBULAS - CAÇAMBA 4 EM 1
CLAM CYLINDERS - 4 IN 1 BUCKETS
GATOS DE LA ALMEJA - CUCHARA 4 EN 1
CLAM CYLINDERS - 4 IN 1 BUCKETS

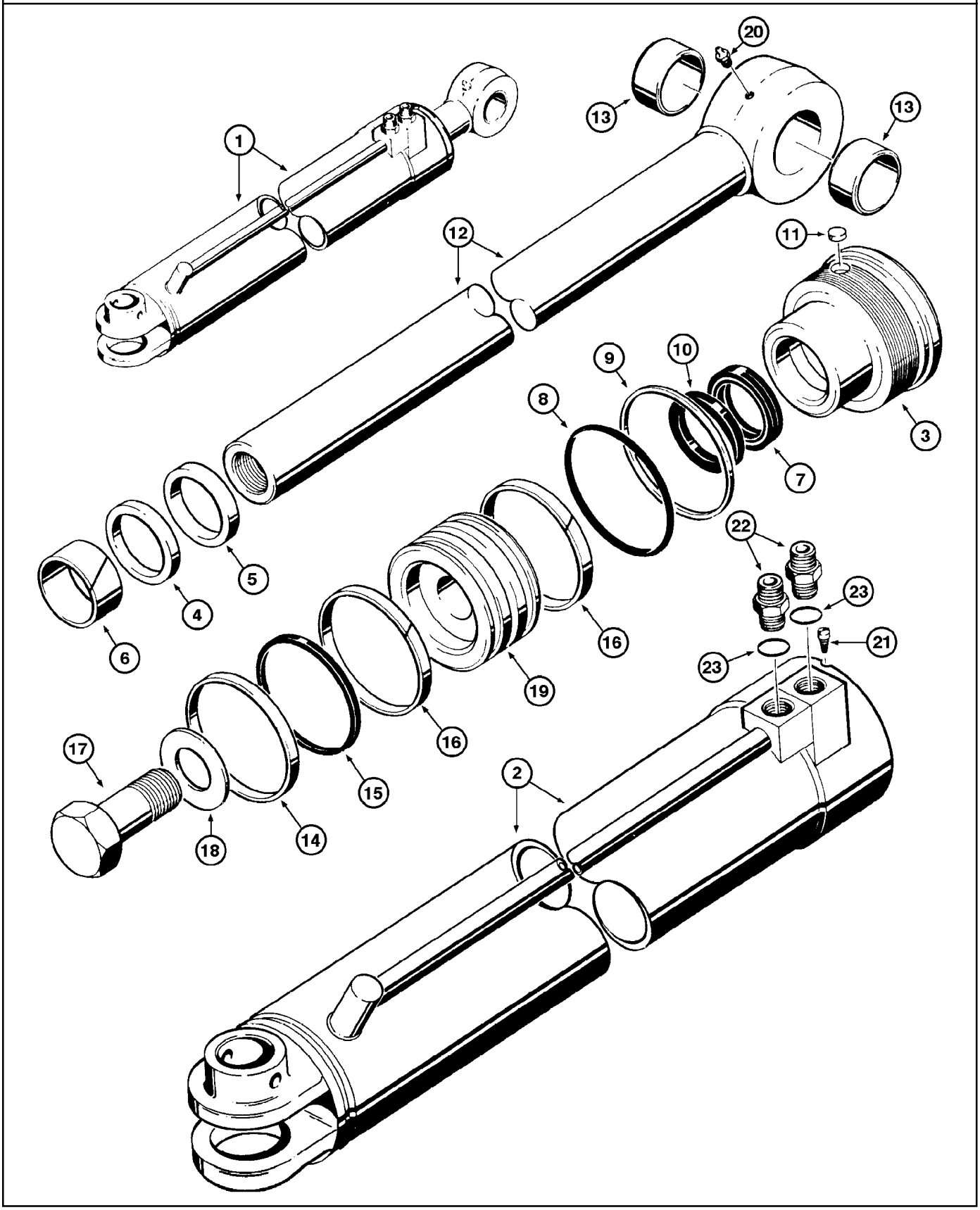

CLAM CYLINDERS - 4 IN 1 BUCKETS
CLAM CYLINDERS - 4 IN 1 BUCKETS
CLAM CYLINDERS - 4 IN 1 BUCKETS
CLAM CYLINDERS - 4 IN 1 BUCKETS

R	N	P.N.	MOD	Q	Denominação Bezeichnung	Description Description	Denominacion Beskrivelse	Descrizione Beschrijving	L.C.
18		G105980		1	ARRUELA UNTERLEGSCHEIBE	WASHER RONDELLE	ARANDELA WASHER	RONDELLA WASHER	9720
19		G100438		1	PISTAO KOLBEN	PISTON PISTON	PISTON PISTON	PISTONE PISTON	6270
20		219-1		1	GRAXEIRA, 1/8"-27 x .66 lg SCHMIERNIPPEL	LUBE NIPPLE GRAISSEUR	BOQUILLA DE LUBRICA(SMØRENIPPEL	INGRASSATORE SMEERNIPPEL	060I
21		187-1031		1	PARAFUSO, Slotted Pan Hd, #8 x 1/4" SELBSTSCHN SCHRAUE	SELF-TAP SCREW VIS AUTOTARAUDEUSE	TORNILLO AUTORROSC SELVLÅSENDE BOLT	VITE AUTOFILETTANTE ZELFTAPPENDE SCHRO	062V
22		218-5066		1	CONECTOR HIDRÁUL, 7/8"-14, 37º x 3/4"-16, O-Ring HYDR STECKVERBINDE	HYD CONNECTOR CONNECTEUR HYDRAU	CONECTOR HIDRÁULIC(HYDRAULIKSTIK	CONNETTORE IDRAULIC HYDRAULISCHE AANSLI	020R
23		218-5007		1	O-RING, 0.239" ID x 0.379" OD x 0.07" O-RING	O-RING JOINT TORIQUE	JUNTA TÓRICA O-RING	ANELLO TOROIDALE O-RING	055A
	1	G105545		1	VEDADOR DE RETENCAO DICHTRING	SEAL JOINT-D'ETANCHEITE	SELLO/RETEN SEAL	GUARNIZIONE TENUTA SEAL	7460

(1) Inclui 5,6,7,8,9,10,11,14,15,16

09-10	01	p1	03/09

CHASSI TRASEIRO, BALANCIM E CONTRAPESO
REAR FRAME, TRUNNION AND COUNTERWEIGHT
BASTIDOR TRASERO, BALANCIM Y CONTRAPESO
REAR FRAME, TRUNNION AND COUNTERWEIGHT

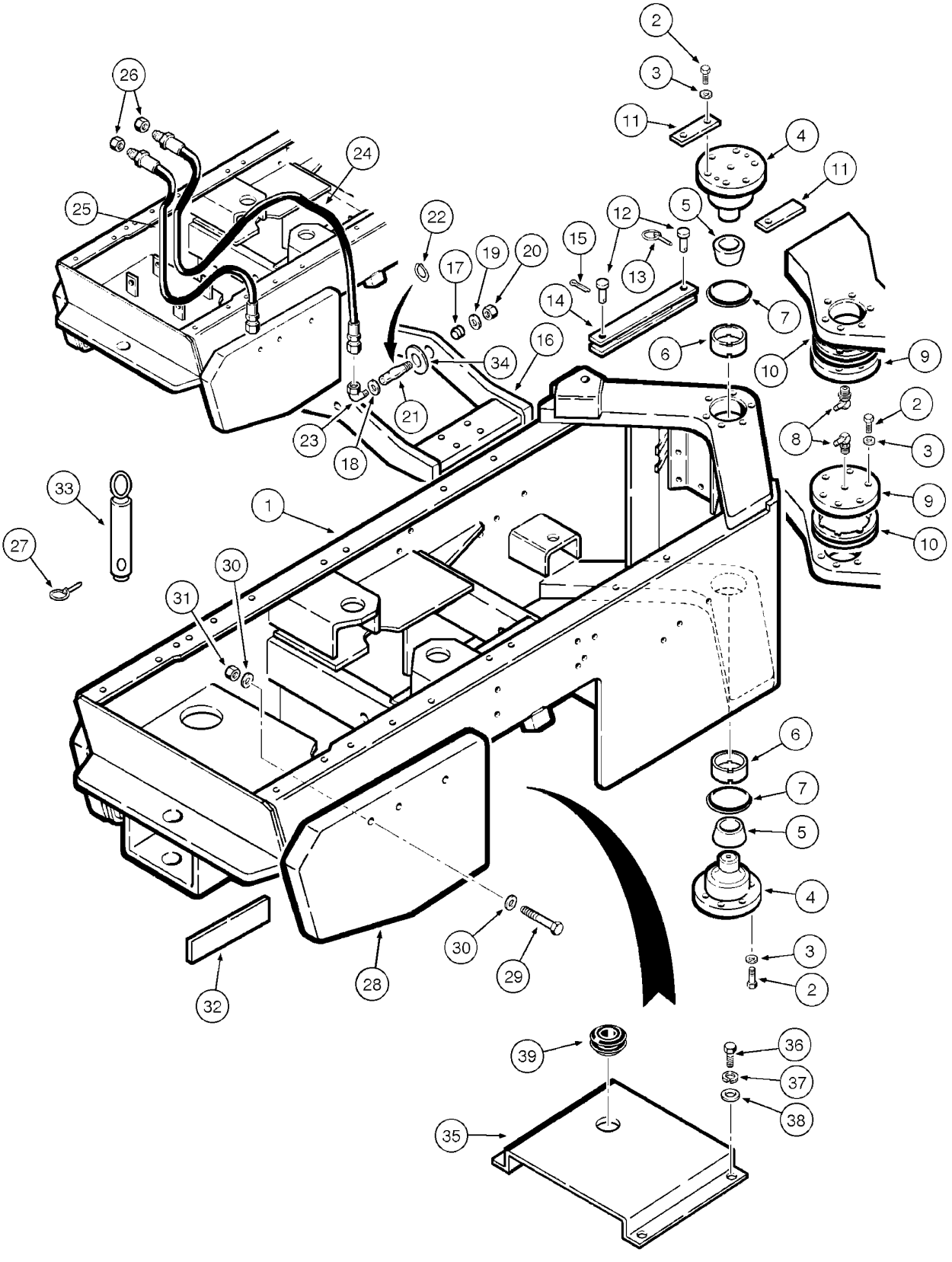

REAR FRAME, TRUNNION AND COUNTERWEIGHT
REAR FRAME, TRUNNION AND COUNTERWEIGHT
REAR FRAME, TRUNNION AND COUNTERWEIGHT
REAR FRAME, TRUNNION AND COUNTERWEIGHT

R	N	P.N.	MOD	Q	Denominação Bezeichnung	Description Description	Denominacion Beskrivelse	Descrizione Beschrijving	L.C.
1		147265A1		1	ESTRUTURA, rear Assy RAHMEN	FRAME CHASSIS	BASTIDOR RAMME	TELAIO FRAME	072I
2		426-1032		2 4	PARAFUSO, Hex, 5/8"-11 x 2", G8 SCHRAUBE	BOLT VIS	PERNO BOLT	BULLONE BOUT	140B
3		492-11062		2 4	TRAVA DA ARRUELA, 5/8" SICHERUNGSSCHEIBE	LOCK WASHER RONDELLE FREIN	ARANDELA DE BLOQUE LÅSESKIVE	RONDELLA DI SICUREZ BORGRING	132R
		L17468		2	BOBINA, Includes items 4, 5, 6 SPINDEL	SPINDLE BOBINE	HUSILLO SPINDLE	CONTRALBERO SPINDLE	8215
4		NSS		1	SEM SERVIÇO EM SEPARADO, PIN NICHT A SEP ERS-T LIEI	NOT SERVICED SEPARA NON FORUNI SEPAREM	NO SE REPARA POR SE SERVICERES IKKE SEPA	NON FORNITO SEPARAT NIET LOS VERKRIJGBAA	064N
5		L17462		1	ROLAMENTO LAGER	BEARING ROULEMENT	COJINETE LEJE	CUSCINETTO LAGER	0600
6		L17463		2	ROLAMENTO LAGER	BEARING ROULEMENT	COJINETE LEJE	CUSCINETTO LAGER	0600
7		A30895		2	O-RING, 3.6" ID x 4.02" OD x 0.21" O-RING	O-RING JOINT TORIQUE	JUNTA TÓRICA O-RING	ANELLO TOROIDALE O-RING	055A
8		219-37		2	GRAXEIRA, 45º, 1/4" NPT x .81" lg SCHMIERNIPPEL	LUBE NIPPLE GRAISSEUR	BOQUILLA DE LUBRICAC SMØRENIPPEL	INGRASSATORE SMEERNIPPEL	060I
9		L107161		2	CAPA KAPPE	CAP CHAPEAU	TAPA CAP	CAPPUCCIO CAP	1380
10		L17318			CALCO, 0.37mm AUSGLEICHSCHEIBE	SHIM CALE-REGLAGE	CALCE REGLAGE SHIM	SPESSORE SHIM	7770
10		L17213			CALCO, .0359" Thk, (0.912 mm) AUSGLEICHSCHEIBE	SHIM CALE-REGLAGE	CALCE REGLAGE SHIM	SPESSORE SHIM	7770
10		L17212			CALCO, .0598" Thk, (1.519 mm) AUSGLEICHSCHEIBE	SHIM CALE-REGLAGE	CALCE REGLAGE SHIM	SPESSORE SHIM	7770
11		L47536		1	SUPORTE HALTER	BRACKET CONSOLE	SOPORTE BRACKET	STAFFA BRACKET	1010
12		L14050		2	PINO PIN	PIN BROCHE	PASADOR STIFT	PERNO PEN	080P
13		A30338		1	PINO PIN	PIN BROCHE	PASADOR STIFT	PERNO PEN	080P
14		L47533		1	BARRA, Assy STAB	BAR BARRE	BARRA BJ¦KE	BARRA STAAF	0500
15		432-1624		1	CONTRA PINO, 1/4" x 1 1/2", TRUNNION SPLINT	COTTER PIN GOUPILLE FENDUE	PASADOR SPLITBOLT	COPPIGLIA SPLITPEN	270C
		87441222		1	BALANCIM, Includes items 16, 17 SCHWINGE	ROCKER CULBUTEUR	BASCULADOR VIPPEARM	BILANCIERE TUIMELAAR	P055

09-10	01	p2	03/09

CHASSI TRASEIRO, BALANCIM E CONTRAPESO
REAR FRAME, TRUNNION AND COUNTERWEIGHT
BASTIDOR TRASERO, BALANCIM Y CONTRAPESO
REAR FRAME, TRUNNION AND COUNTERWEIGHT

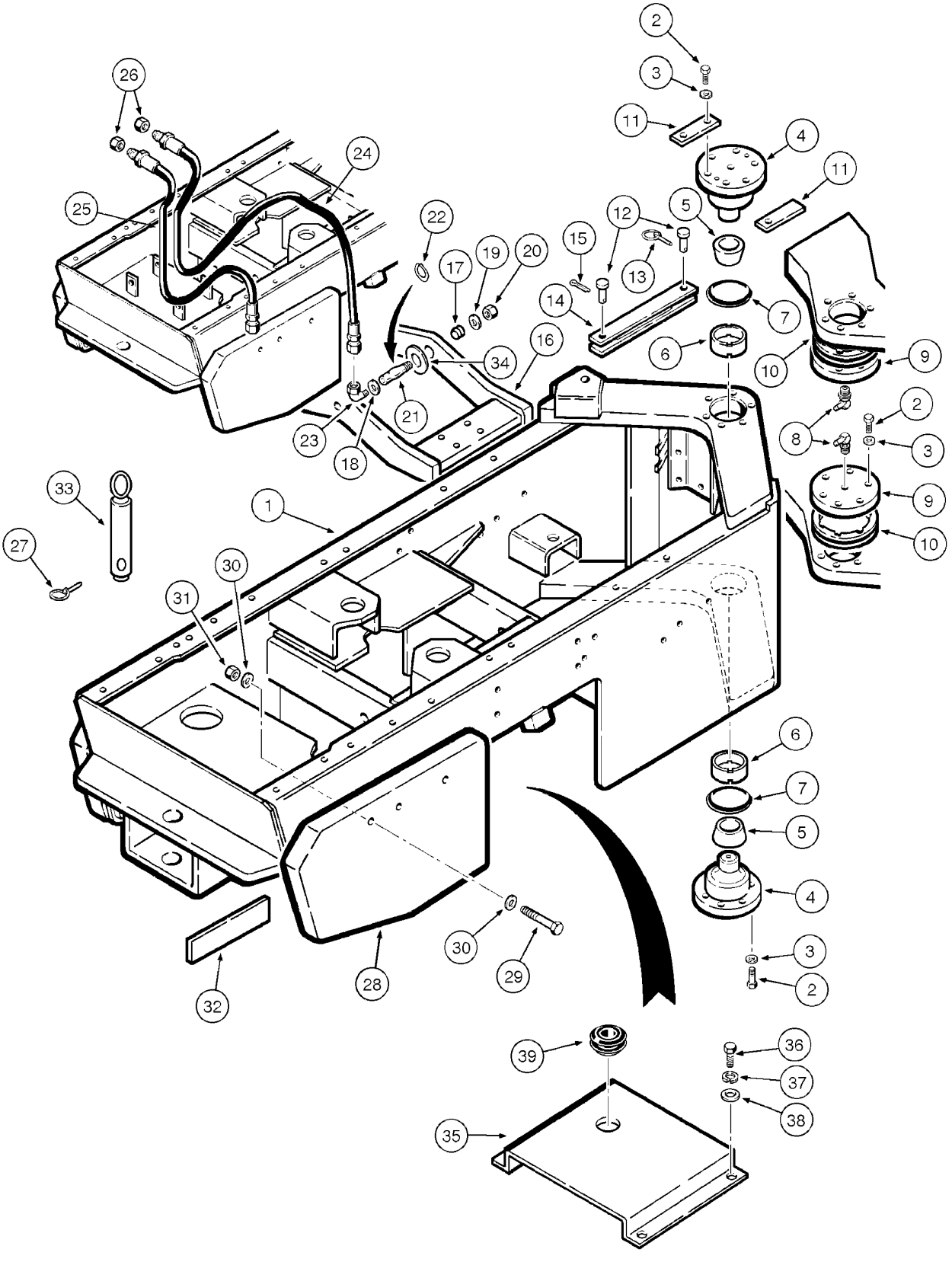

REAR FRAME, TRUNNION AND COUNTERWEIGHT
REAR FRAME, TRUNNION AND COUNTERWEIGHT
REAR FRAME, TRUNNION AND COUNTERWEIGHT
REAR FRAME, TRUNNION AND COUNTERWEIGHT

R	N	P.N.	MOD	Q	Denominação Bezeichnung	Description Description	Denominacion Beskrivelse	Descrizione Beschrijving	L.C.
16		NSS		1	SEM SERVIÇO EM SEPARADO				
						NOT SERVICED SEPARA	NO SE REPARA POR SE	NON FORNITO SEPARAT	064N
					NICHT A SEP ERS-T LIEI	NON FORUNI SEPAREM	SERVICERES IKKE SEPA	NIET LOS VERKRIJGBAA	
17		L46480		2	BUCHA	BUSHING	CASQUILLO	BOCCOLA	1140
					BUECHSE	DOUILLE	BUSHING	BUSHING	
18		L47423		AR	ARRUELA	WASHER	ARANDELA	RONDELLA	9720
					UNTERLEGSCHEIBE	RONDELLE	WASHER	WASHER	
19		L47224		2	ARRUELA	WASHER	ARANDELA	RONDELLA	9720
					UNTERLEGSCHEIBE	RONDELLE	WASHER	WASHER	
20		131-43		2	CONTRA PORCA, 1 1/2"-12	LOCK NUT	TUERCA DE BLOQUEO	DADO DI BLOCCAGGIO	P263
					SICHERUNGSMUTTER	CONTRE-ECROU	LÅSEMØTRIK	BORGMOER	
21		87441219		2	PINO	PIN	PASADOR	PERNO	080P
					PIN	BROCHE	STIFT	PEN	
22		E62733		2	ANEL DE PRESSÃO	SNAP RING	ANILLO DE RESORTE	ANELLO ELASTICO	054A
					SPRENGRING	ANNEAU D'ARRET	LÅSERING	VEERRING	
23		218-5450		2	COTOVELO, 90º, 7/16"-20	ORB x 1/8" NPT Fem			
						ELBOW	CODO	GOMITO	085G
					KNIESTÜCK	COUDE	VINKELRØR	KNIESTUK	
24		E156845		1	LUVA	SLEEVE	MANGUITO	MANICOTTO	031M
					BUCHSE	CHEMISE	TRYKLEJE, KOBLING	MOF; BUS	
25		E61241		1	MANGUEIRA	HOSE	TUBO	TUBO FLESSIBILE	030M
					SCHLAUCH	FLEXIBLE	SLANGE	SLANG	
26		425-116		2	PORCA, 3/8"-24, G5	NUT	TUERCA	DADO	010D
					MUTTER	ECROU	MØTRIK	MOER	
27		A56393		1	PINO	PIN	BOTADOR	SPINA	6200
					STIFT	BROCHE	PIN	PIN	
28		149158A1		1	PESO, RH	WEIGHT	LASTRE	PESO; ZAVORRA	010Z
					GEWICHT	POIDS	FRONTVÆGT	GEWICHT	
28		149159A1		1	PESO, LH	WEIGHT	LASTRE	PESO; ZAVORRA	010Z
					GEWICHT	POIDS	FRONTVÆGT	GEWICHT	
29		26-16152		4	PARAFUSO, Hex, 1"-8 x 9 1/2", G8				
						BOLT	PERNO	BULLONE	140B
					SCHRAUBE	VIS	BOLT	BOUT	
30		D36505		8	ARRUELA	WASHER	ARANDELA	RONDELLA	9720
					UNTERLEGSCHEIBE	RONDELLE	WASHER	WASHER	
31		425-1016		4	PORCA, 1"-8, G5	NUT	TUERCA	DADO	010D
					MUTTER	ECROU	MØTRIK	MOER	
32		E97264			CALÇO DE AFINAÇÃO, 1.5mm Thk				
						SHIM	SUPLEMENTO	SPESSORE	198S
					AUSGLEICHSSCHEIBE	CALE	MELLEMLÆG	VULPLAATJE	
33		147658A1		1	PINO	PIN	PASADOR	PERNO	080P
					PIN	BROCHE	STIFT	PEN	
34		L47424		AR	ARRUELA	WASHER	ARANDELA	RONDELLA	9720
					UNTERLEGSCHEIBE	RONDELLE	WASHER	WASHER	
35		87436185		1	PLACA, deflector	PLATE	PLACA	PIASTRA	105P
					PLATTE	PLAQUE	PLADE	PLAAT	
36		413-616		4	PARAFUSO, Hex, 3/8"-16 x 1", G5, Full Thd				
						BOLT	PERNO	BULLONE	140B
					SCHRAUBE	VIS	BOLT	BOUT	

09-10	01	p3	03/09

CHASSI TRASEIRO, BALANCIM E CONTRAPESO
REAR FRAME, TRUNNION AND COUNTERWEIGHT
BASTIDOR TRASERO, BALANCIM Y CONTRAPESO
REAR FRAME, TRUNNION AND COUNTERWEIGHT

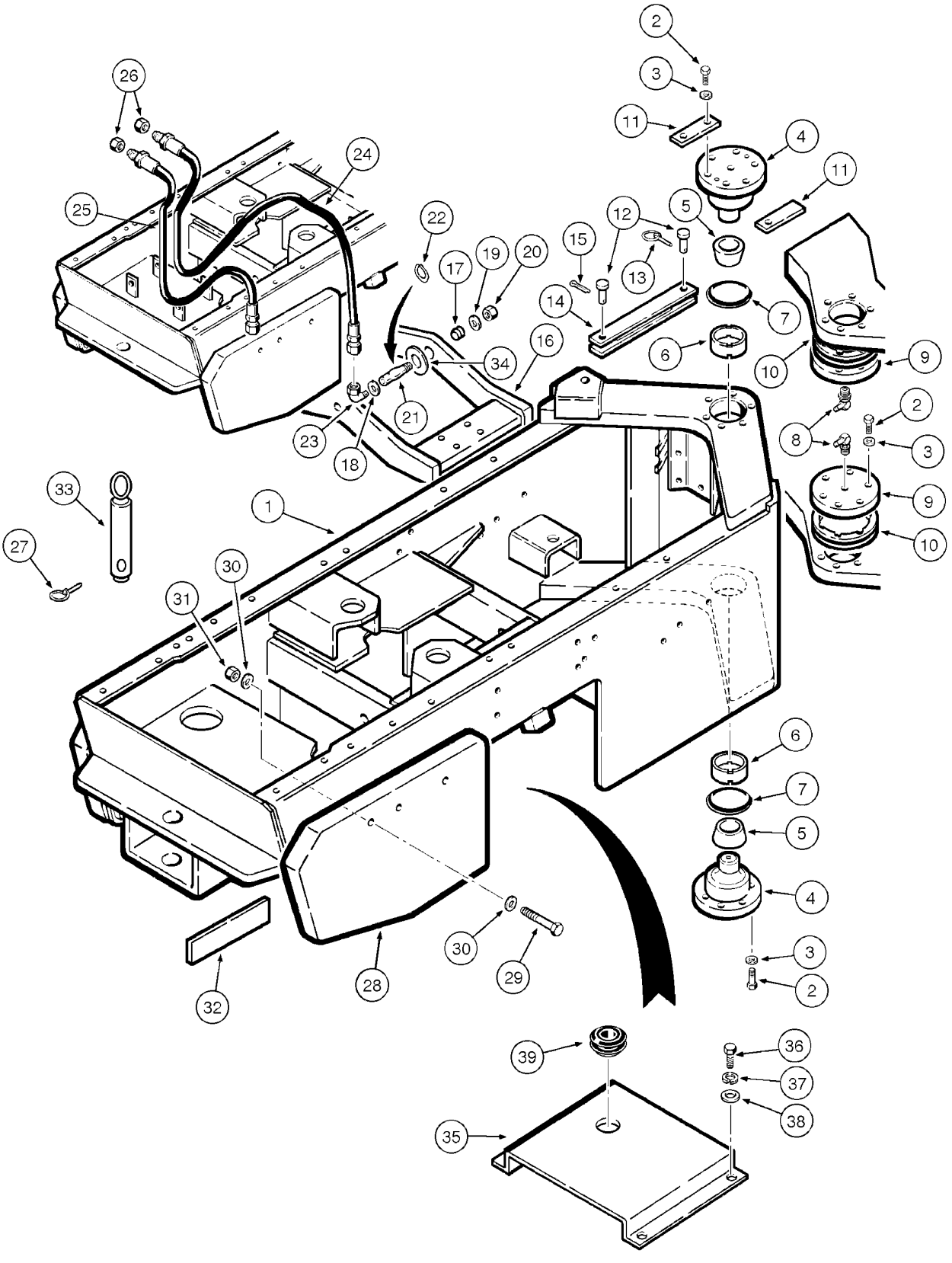

REAR FRAME, TRUNNION AND COUNTERWEIGHT
REAR FRAME, TRUNNION AND COUNTERWEIGHT
REAR FRAME, TRUNNION AND COUNTERWEIGHT
REAR FRAME, TRUNNION AND COUNTERWEIGHT

R	N	P.N.	MOD	Q	Denominação Bezeichnung	Description Description	Denominacion Beskrivelse	Descrizione Beschrijving	L.C.
37		**492-11038**		4	TRAVA DA ARRUELA, 3/8" SICHERUNGSSCHEIBE	LOCK WASHER RONDELLE FREIN	ARANDELA DE BLOQUE LÅSESKIVE	RONDELLA DI SICUREZ BORGRING	132R
38		**495-21044**		4	ARRUELA PLANA, 3/8" UNTERLEGSCHEIBE	WASHER RONDELLE	ARANDELA FLADSKIVE	RONDELLA SLUITRING	131R
39		**10398680**		1	CASQUILHO ISOLADOR TÜLLE	GROMMET PASSE-FIL	PASACABLES RING	ANELLO PASSACAVO DOORVOERTULE	131A

09-12	01	p1	11/07

GRADE E MÁSCARA
GRILLE AND SHROULD
PARILLA Y CUBIERTA
GRILLE AND SHROULD

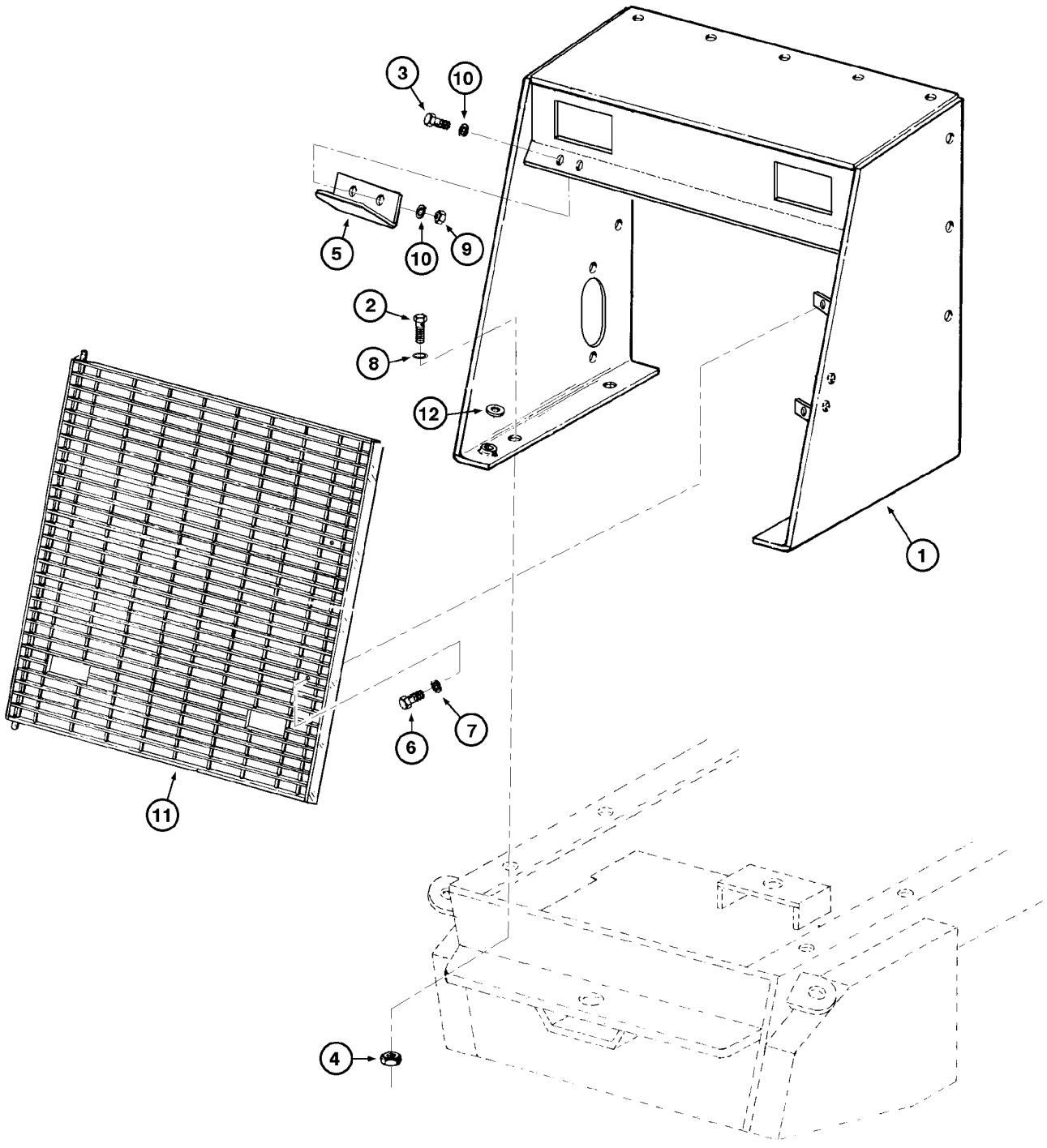

GRILLE AND SHROULD
GRILLE AND SHROULD
GRILLE AND SHROULD
GRILLE AND SHROULD

R	N	P.N.	MOD	Q	Denominação Bezeichnung	Description Description	Denominacion Beskrivelse	Descrizione Beschrijving	L.C.
1		147635A1		1	PROTEÇÃO	GUARD	DEFENSA	PROTEZIONE	070R
					SCHUTZABDECKUNG	PROTECTION	BESKYTTELSESSKÆRM	AFSCHERMING	
2		413-1028		4	PARAFUSO, Hex, 5/8"-11 x 1 3/4", G5				
						BOLT	PERNO	BULLONE	140B
					SCHRAUBE	VIS	BOLT	BOUT	
3		413-516		2	PARAFUSO, Hex, 5/16"-18 x 1", G5, Full Thd				
						BOLT	PERNO	BULLONE	140B
					SCHRAUBE	VIS	BOLT	BOUT	
4		425-1010		4	PORCA, 5/8"-11, G5	NUT	TUERCA	DADO	010D
					MUTTER	ECROU	MØTRIK	MOER	
5		E159504		1	SUPORTE	SUPPORT	SOPORTE	SUPPORTO	300S
					STÜTZE	SUPPORT	BESLAG	STEUN	
6		413-628		2	PARAFUSO, Hex, 3/8"-16 x 1 3/4", G5				
						BOLT	PERNO	BULLONE	140B
					SCHRAUBE	VIS	BOLT	BOUT	
7		495-21044		2	ARRUELA PLANA, 3/8"	WASHER	ARANDELA	RONDELLA	131R
					UNTERLEGSCHEIBE	RONDELLE	FLADSKIVE	SLUITRING	
8		496-21066		4	ARRUELA PLANA, 21/32" x 1 5/16" x .150"				
						WASHER	ARANDELA	RONDELLA	131R
					UNTERLEGSCHEIBE	RONDELLE	FLADSKIVE	SLUITRING	
9		231-1445		2	CONTRA PORCA, 5/16"-18, GB				
						LOCK NUT	TUERCA DE BLOQUEO	DADO DI BLOCCAGGIO	P263
					SICHERUNGSMUTTER	CONTRE-ECROU	LÅSEMØTRIK	BORGMOER	
10		495-21038		4	ARRUELA PLANA, 5/16"	WASHER	ARANDELA	RONDELLA	131R
					UNTERLEGSCHEIBE	RONDELLE	FLADSKIVE	SLUITRING	
11		147693A1		1	GRELHA	GRILLE	REJILLA	GRIGLIA	101G
					GRILL	CALANDRE	GITTER	GRILLE	
12		495-11053		5	ARRUELA PLANA, 1/2", SAE				
						WASHER	ARANDELA	RONDELLA	131R
					UNTERLEGSCHEIBE	RONDELLE	FLADSKIVE	SLUITRING	

09-14	01	p1	06/11

CAPUZ DO MOTOR
HOOD
CAPOT DEL MOTOR
HOOD

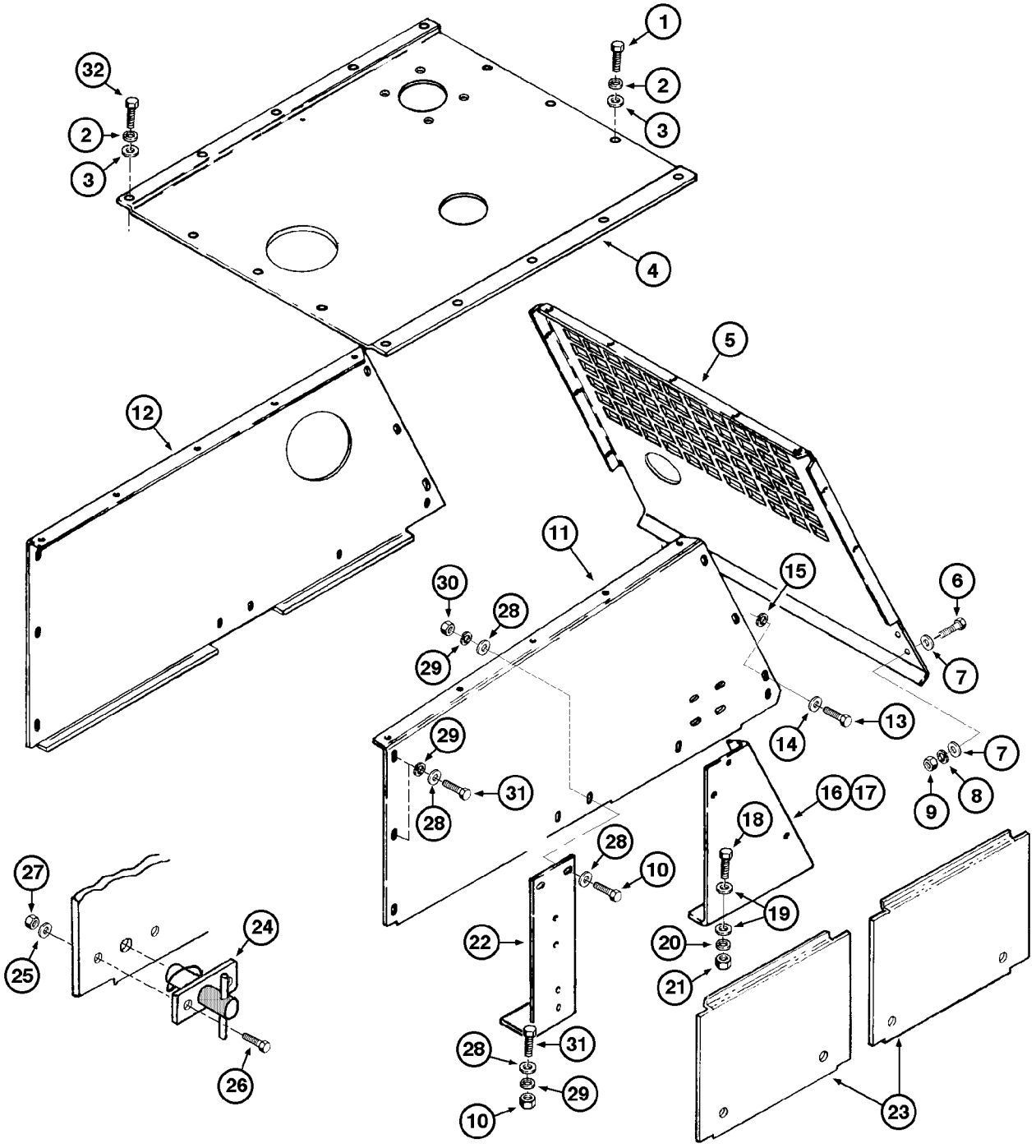

HOOD
HOOD
HOOD
HOOD

R	N	P.N.	MOD	Q	Denominação Bezeichnung	Description Description	Denominacion Beskrivelse	Descrizione Beschrijving	L.C.
1		413-616		21	PARAFUSO, Hex, 3/8"-16 x 1", G5, Full Thd				
						BOLT	PERNO	BULLONE	140B
					SCHRAUBE	VIS	BOLT	BOUT	
2		492-11038		16	TRAVA DA ARRUELA, 3/8"	LOCK WASHER	ARANDELA DE BLOQUE	RONDELLA DI SICUREZ	132R
					SICHERUNGSSCHEIBE	RONDELLE FREIN	LÅSESKIVE	BORGRING	
3		495-21044		16	ARRUELA PLANA, 3/8"	WASHER	ARANDELA	RONDELLA	131R
					UNTERLEGSCHEIBE	RONDELLE	FLADSKIVE	SLUITRING	
4		87519414		1	CAPÔ, upper	HOOD	CUBIERTA	COFANO	4360
					HAUBE	CAPOT	HJELMPLADE	KAP	
4	1	84236932		1	COBERTURA, upper	COVER	CUBIERTA	COPERCHIO	265C
					ABDECKUNG	COUVERCLE	DÆKSEL	AFSCHERMING	
4	2	75263237		1	CAPÔ, upper	HOOD	CUBIERTA	COFANO	4360
					HAUBE	CAPOT	HJELMPLADE	KAP	
5		E158561		1	COBERTURA, front	COVER	COBERTURA	COPERTURA	271C
					ABDECKUNG	COUVERTURE	COVER	COVER	
5	1, 3	87607906		1	CABINE, front	CAB	CABINA	CABINA	008C
					KABINE	CABINE	KABINE	CABINE	
5	1, 4	87620330		1	PROTEÇÃO, front	GUARD	DEFENSA	PROTEZIONE	070R
					SCHUTZABDECKUNG	PROTECTION	BESKYTTELSESSKÆRM	AFSCHERMING	
6		413-620		4	PARAFUSO, Hex, 3/8"-16 x 1 1/4", G5, Full Thd				
						BOLT	PERNO	BULLONE	140B
					SCHRAUBE	VIS	BOLT	BOUT	
7		495-21044		8	ARRUELA PLANA, 3/8"	WASHER	ARANDELA	RONDELLA	131R
					UNTERLEGSCHEIBE	RONDELLE	FLADSKIVE	SLUITRING	
8		492-11038		4	TRAVA DA ARRUELA, 3/8"	LOCK WASHER	ARANDELA DE BLOQUE	RONDELLA DI SICUREZ	132R
					SICHERUNGSSCHEIBE	RONDELLE FREIN	LÅSESKIVE	BORGRING	
9		231-1446		12	CONTRA PORCA, 3/8"-16, GB				
						LOCK NUT	TUERCA DE BLOQUEO	DADO DI BLOCCAGGIO	P263
					SICHERUNGSMUTTER	CONTRE-ECROU	LÅSEMØTRIK	BORGMOER	
10		413-620		4	PARAFUSO, Hex, 3/8"-16 x 1 1/4", G5, Full Thd				
						BOLT	PERNO	BULLONE	140B
					SCHRAUBE	VIS	BOLT	BOUT	
11		E61312		1	PLACA, LH	PLATE	PLACA	PIASTRA	105P
					PLATTE	PLAQUE	PLADE	PLAAT	
11	2	75263243		1	PLACA DE COBERTURA, LH				
						COVER PLATE	PLACA DE CUBIERTA	PIASTRA DI COPERTUR	110P
					ABDECKPLATTE	COUVERCLE	DÆKPLADE	AFSCHERMPLAAT	
13		413-616		14	PARAFUSO, Hex, 3/8"-16 x 1", G5, Full Thd				
						BOLT	PERNO	BULLONE	140B
					SCHRAUBE	VIS	BOLT	BOUT	
14		495-21044		14	ARRUELA PLANA, 3/8"	WASHER	ARANDELA	RONDELLA	131R
					UNTERLEGSCHEIBE	RONDELLE	FLADSKIVE	SLUITRING	
12		149059A1		1	ADAPTADOR, RH	ADAPTER	ADAPTADOR	ADATTATORE	001A
					ADAPTER	ADAPTATEUR	ADAPTER	ADAPTER	

(1) A Partir do Cassi NAAE15535
(2) Para Opcional Fertilizante
(3) With HV/CA
(4) Com Aquecedor

09-14	01	p2	06/11

CAPUZ DO MOTOR
HOOD
CAPOT DEL MOTOR
HOOD

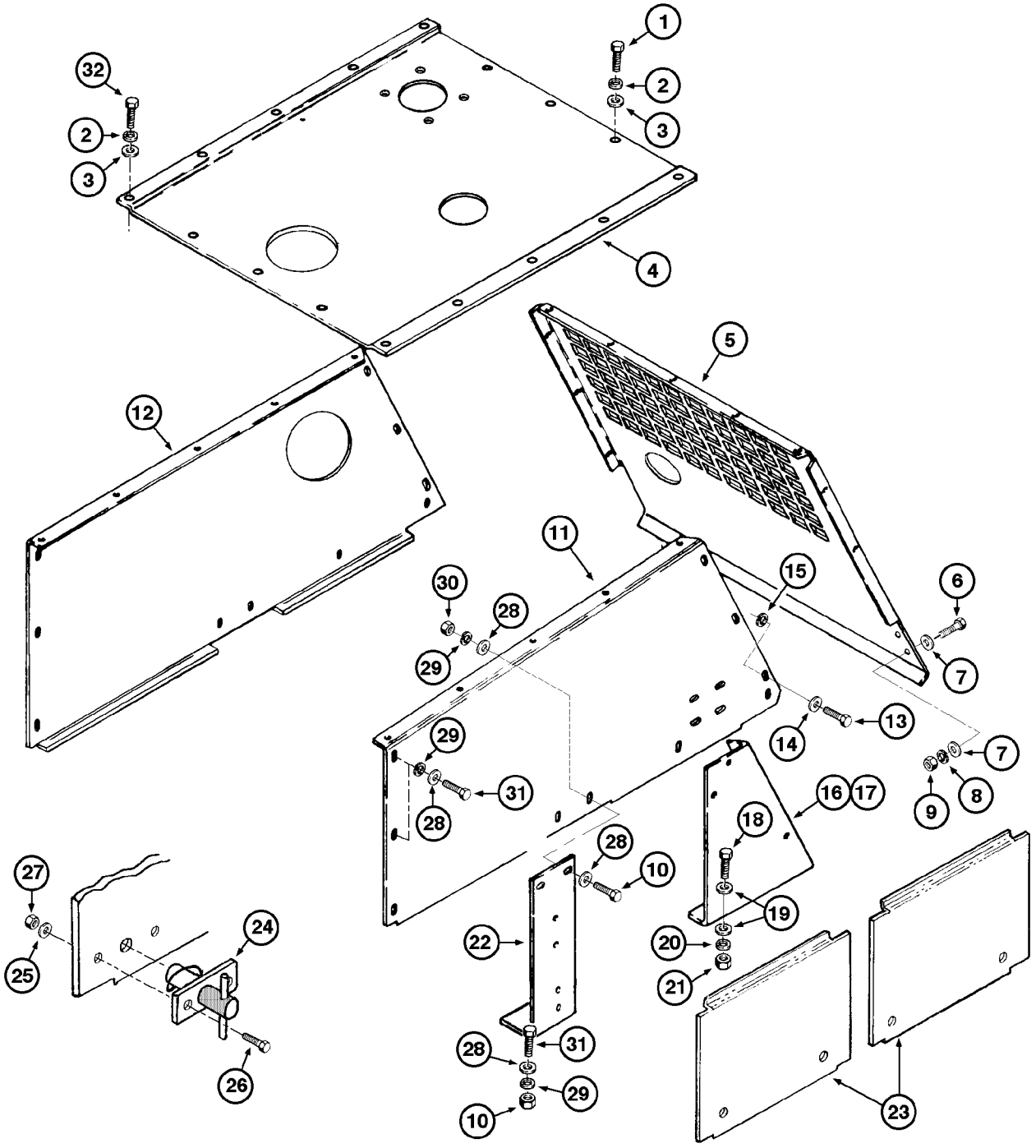

HOOD
HOOD
HOOD
HOOD

R	N	P.N.	MOD	Q	Denominação Bezeichnung	Description Description	Denominacion Beskrivelse	Descrizione Beschrijving	L.C.
12	1	**75263244**		1	PLACA DE COBERTURA, RH				
						COVER PLATE	PLACA DE CUBIERTA	PIASTRA DI COPERTUR/	110P
					ABDECKPLATTE	COUVERCLE	DÆKPLADE	AFSCHERMPLAAT	
15		**492-11038**		14	TRAVA DA ARRUELA, 3/8"	LOCK WASHER	ARANDELA DE BLOQUE(	RONDELLA DI SICUREZ/	132R
					SICHERUNGSSCHEIBE	RONDELLE FREIN	LÅSESKIVE	BORGRING	
16		**E155230**		1	SUPORTE, RH	SUPPORT	SOPORTE	SUPPORTO	300S
					STÜTZE	SUPPORT	BESLAG	STEUN	
17		**E155231**		1	SUPORTE, LH	SUPPORT	SOPORTE	SUPPORTO	300S
					STÜTZE	SUPPORT	BESLAG	STEUN	
18		**413-828**		4	PARAFUSO, Hex, 1/2"-13 x 1 3/4", G5				
						BOLT	PERNO	BULLONE	140B
					SCHRAUBE	VIS	BOLT	BOUT	
19		**495-21056**		8	ARRUELA PLANA, 1/2"	WASHER	ARANDELA	RONDELLA	131R
					UNTERLEGSCHEIBE	RONDELLE	FLADSKIVE	SLUITRING	
20		**492-11050**		4	TRAVA DA ARRUELA, 1/2"	LOCK WASHER	ARANDELA DE BLOQUE(	RONDELLA DI SICUREZ/	132R
					SICHERUNGSSCHEIBE	RONDELLE FREIN	LÅSESKIVE	BORGRING	
21		**231-1448**		4	PORCA, 1/2"-13, GB	NUT	TUERCA	DADO	010D
					MUTTER	ECROU	MØTRIK	MOER	
22		**148542A1**		2	PLACA, central	PLATE	PLACA	PIASTRA	105P
					PLATTE	PLAQUE	PLADE	PLAAT	
23		**E158767**		4	PAINEL, side, Includes items 24 - 27				
						PANEL	PANEL	PANNELLO	025P
					PLATTE	PANNEAU	PANEL	PANEEL	
24		**L102515**		2	TRINCO	LATCH	CERROJO	DISPOSITIVO CHIUSURA	5020
					RIEGEL	LOQUET	LATCH	LATCH	
25		**492-11044**		4	TRAVA DA ARRUELA, 7/16"				
						LOCK WASHER	ARANDELA DE BLOQUE(	RONDELLA DI SICUREZ/	132R
					SICHERUNGSSCHEIBE	RONDELLE FREIN	LÅSESKIVE	BORGRING	
26		**463-11010**		4	PARAFUSO, Hex Hd, #10-24 x 5/8"				
						SCREW	TORNILLO	VITE	040V
					SCHRAUBE	VIS	SKRUE	SCHROEF	
27		**131-67**		4	CONTRA PORCA	LOCK NUT	TUERCA DE BLOQUEO	DADO DI BLOCCAGGIO	P263
					SICHERUNGSMUTTER	CONTRE-ECROU	LÅSEMØTRIK	BORGMOER	
28		**495-21044**		16	ARRUELA PLANA, 3/8"	WASHER	ARANDELA	RONDELLA	131R
					UNTERLEGSCHEIBE	RONDELLE	FLADSKIVE	SLUITRING	
29		**492-11038**		12	TRAVA DA ARRUELA, 3/8"	LOCK WASHER	ARANDELA DE BLOQUE(	RONDELLA DI SICUREZ/	132R
					SICHERUNGSSCHEIBE	RONDELLE FREIN	LÅSESKIVE	BORGRING	
30		**425-106**		6	PORCA, 3/8"-16, G5	NUT	TUERCA	DADO	010D
					MUTTER	ECROU	MØTRIK	MOER	
31		**413-624**		8	PARAFUSO, Hex, 3/8"-16 x 1 1/2", G5				
						BOLT	PERNO	BULLONE	140B
					SCHRAUBE	VIS	BOLT	BOUT	
32		**413-620**		2	PARAFUSO, Hex, 3/8"-16 x 1 1/4", G5, Full Thd				
						BOLT	PERNO	BULLONE	140B
					SCHRAUBE	VIS	BOLT	BOUT	

(1) Para Opcional Fertilizante

09-16	01	p1	12/07

PÁRA-LAMAS
FENDERS
GUARDABARROS
FENDERS

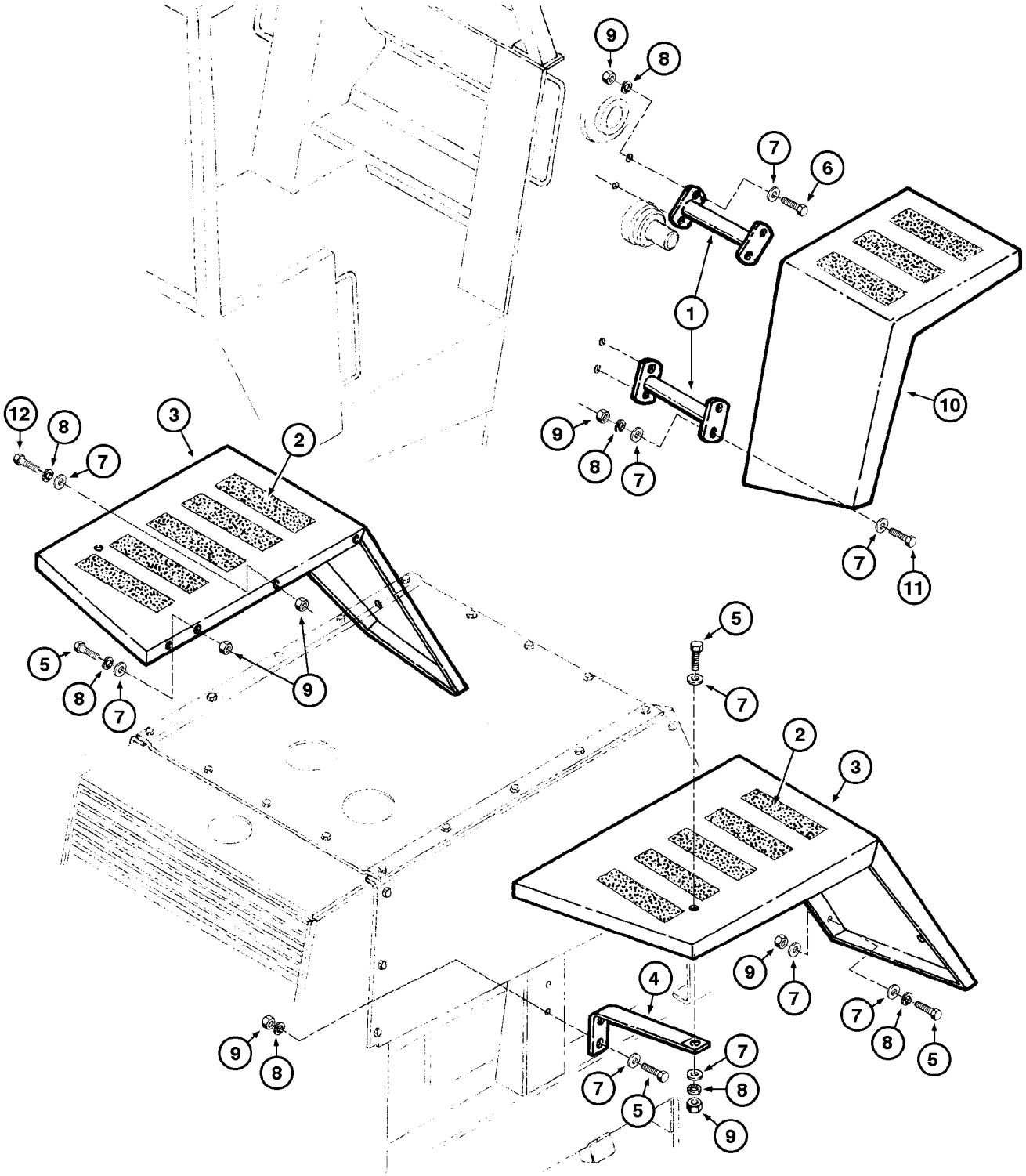

FENDERS
FENDERS
FENDERS
FENDERS

R	N	P.N.	MOD	Q	Denominação Bezeichnung	Description Description	Denominacion Beskrivelse	Descrizione Beschrijving	L.C.
1		E157073		4	SUPORTE	SUPPORT	SOPORTE	SUPPORTO	300S
					STÜTZE	SUPPORT	BESLAG	STEUN	
2		D55216		16	FAIXA ANTI-DERRAPANTE	ANTI-SKID STRIP	BANDA ANTIDESLIZAMIE	NASTRO ANTISDRUCCI(	407S
					GLEITSCHUTZSTREIFEN	BANDE ANTI-DERAPANT	SKRIDSIKKER STRIMME	ANTISLIPSTROOK	
3		L105705		2	PARALAMA, rear	FENDER	GUARDA FANGO	PARAFANGO	3180
					KOTFLUEGEL HINTEN	AILE	FENDER	FENDER	
4		L104139		2	TENSOR	BRACE	TENSOR	MENARUOLA	0990
					STREBE	JAMBE-DE-FORCE	BRACE	BRACE	
5		413-620		12	PARAFUSO, Hex, 3/8"-16 x 1 1/4", G5, Full Thd				
						BOLT	PERNO	BULLONE	140B
					SCHRAUBE	VIS	BOLT	BOUT	
6		413-628		8	PARAFUSO, Hex, 3/8"-16 x 1 3/4", G5				
						BOLT	PERNO	BULLONE	140B
					SCHRAUBE	VIS	BOLT	BOUT	
7		495-21044		62	ARRUELA PLANA, 3/8"	WASHER	ARANDELA	RONDELLA	131R
					UNTERLEGSCHEIBE	RONDELLE	FLADSKIVE	SLUITRING	
8		492-11038		38	TRAVA DA ARRUELA, 3/8"	LOCK WASHER	ARANDELA DE BLOQUE(	RONDELLA DI SICUREZ/	132R
					SICHERUNGSSCHEIBE	RONDELLE FREIN	LÅSESKIVE	BORGRING	
9		425-106		38	PORCA, 3/8"-16, G5	NUT	TUERCA	DADO	010D
					MUTTER	ECROU	MØTRIK	MOER	
10		E157807		2	PARA-LAMA TRASEIRO, front				
						REAR FENDER	GUARDABARROS TRASI	PARAFANGO POSTERIO	031P
					HECKKOTFLÜGEL	AILE ARRIERE	BAGSKÆRM	SPATBORD ACHTER	
11		413-624		8	PARAFUSO, Hex, 3/8"-16 x 1 1/2", G5				
						BOLT	PERNO	BULLONE	140B
					SCHRAUBE	VIS	BOLT	BOUT	
12		413-620		2	PARAFUSO, Hex, 3/8"-16 x 1 1/4", G5, Full Thd				
						BOLT	PERNO	BULLONE	140B
					SCHRAUBE	VIS	BOLT	BOUT	

09-18	01	p1	07/10

CHASSI DIANTEIRO
FRONT FRAME
BASTIDOR DELANTERO
FRONT FRAME

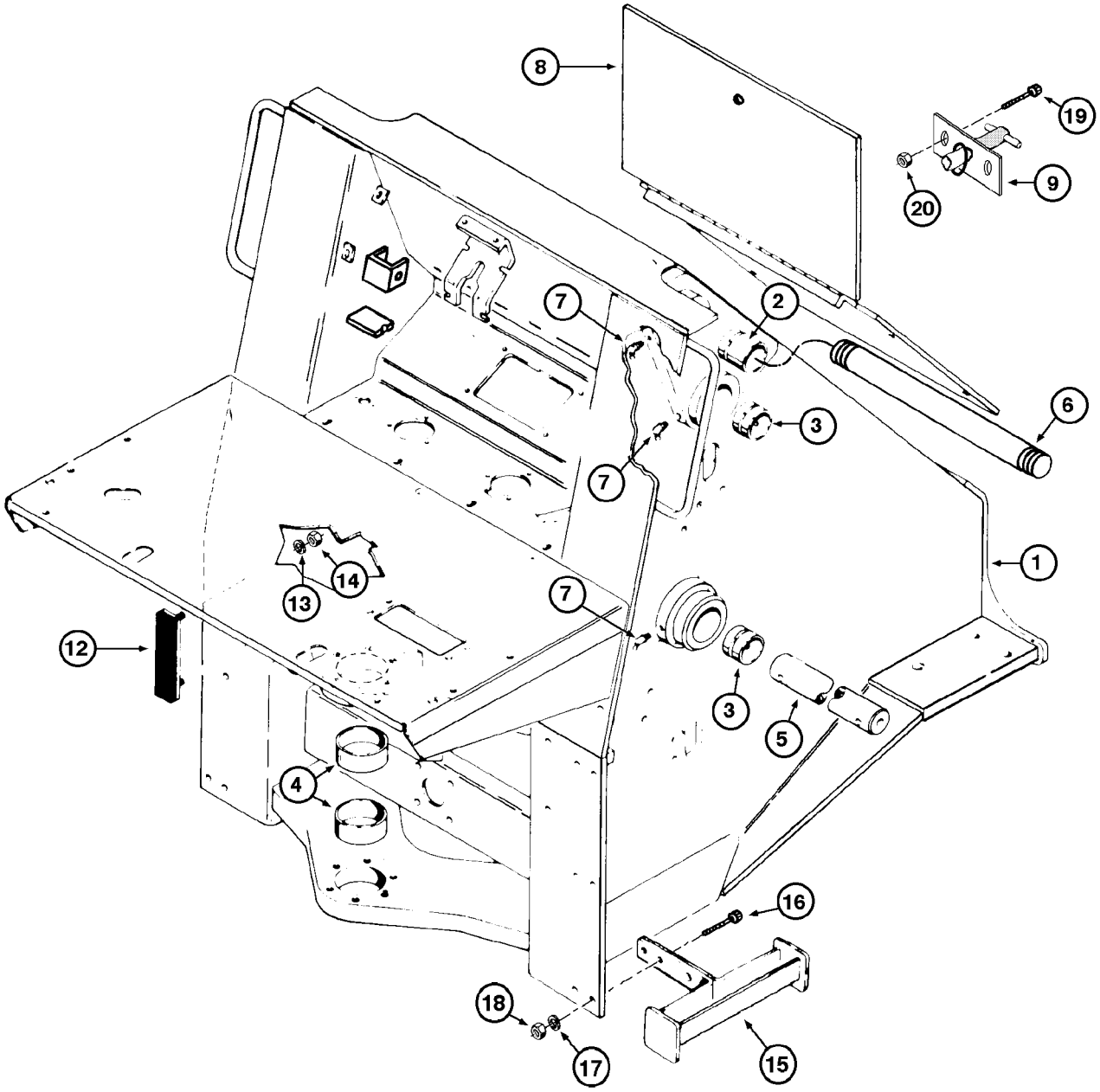

FRONT FRAME
FRONT FRAME
FRONT FRAME
FRONT FRAME

R	N	P.N.	MOD	Q	Denominação Bezeichnung	Description Description	Denominacion Beskrivelse	Descrizione Beschrijving	L.C.
		75263997		1	ESTRUTURA, Assy, Includes items 1 - 6				
						FRAME	BASTIDOR	TELAIO	072I
					RAHMEN	CHASSIS	RAMME	FRAME	
	1	**87616662**		1	SUPORTE, Assy, Includes items 1 - 6				
						SUPPORT	SOPORTE	SUPPORTO	300S
					STÜTZE	SUPPORT	BESLAG	STEUN	
1		**NSS**		1	SEM SERVIÇO EM SEPARADO, FRAME				
						NOT SERVICED SEPARA	NO SE REPARA POR SE	NON FORNITO SEPARAT	064N
					NICHT A SEP ERS-T LIEI	NON FORUNI SEPAREM	SERVICERES IKKE SEPA	NIET LOS VERKRIJGBAA	
2		**L117466**		2	ESPACADOR	SPACER	ESPACIADOR	DISTANZIALE	8090
					ABSTANDSSTUECK	ENTRETOISE	SPACER	SPACER	
3		**L117465**		4	BUCHA	BUSHING	CASQUILLO	BOCCOLA	1140
					BUECHSE	DOUILLE	BUSHING	BUSHING	
4		**L17466**		2	BUCHA	BUSHING	CASQUILLO	BOCCOLA	095B
					BUCHSE	BAGUE	BØSNING	BUS	
5		**L47564**		1	EIXO	SHAFT	ARBOL	ALBERO	7590
					WELLE	ARBRE	SHAFT	SHAFT	
6		**L47565**		1	EIXO	SHAFT	ARBOL	ALBERO	7590
					WELLE	ARBRE	SHAFT	SHAFT	
7		**219-36**		6	GRAXEIRA, 45º, 1/8" NPT x 7/8" lg				
						LUBE NIPPLE	BOQUILLA DE LUBRICAC	INGRASSATORE	060I
					SCHMIERNIPPEL	GRAISSEUR	SMØRENIPPEL	SMEERNIPPEL	
8	2	**148813A1**		1	PORTA	DOOR	PUERTA	SPORTELLO	180P
					TÜR	PORTE	DØR	PORTIER	
8	3, 4	**87368223**		1	COBERTURA, Replaces 148813A1				
						COVER	CUBIERTA	COPERCHIO	265C
					ABDECKUNG	COUVERCLE	DÆKSEL	AFSCHERMING	
9		**L102515**		3	TRINCO, Assy	LATCH	CERROJO	DISPOSITIVO CHIUSURA	5020
					RIEGEL	LOQUET	LATCH	LATCH	
12		**L47997**		2	BATENTE ELÁSTICO	ELASTIC STOP	TOPE ELÁSTICO	FERMO ELASTICO	079A
					ELASTISCHER ANSCHLA	BUTEE ELASTIQUE	FJEDRENDE STOP	ELASTISCHE AANSLAG	
13		**495-21044**		4	ARRUELA PLANA, 3/8"	WASHER	ARANDELA	RONDELLA	131R
					UNTERLEGSCHEIBE	RONDELLE	FLADSKIVE	SLUITRING	
14		**425-106**		4	PORCA, 3/8"-16, G5	NUT	TUERCA	DADO	010D
					MUTTER	ECROU	MØTRIK	MOER	
15		**E158946**		4	ESCADA	LADDER	ESCALERA	SCALA	033S
					LEITER	ECHELLE	STIGE	LADDER	
16		**413-832**		8	PARAFUSO, Hex, 1/2"-13 x 2", G5				
						BOLT	PERNO	BULLONE	140B
					SCHRAUBE	VIS	BOLT	BOUT	
17		**495-21056**		8	ARRUELA PLANA, 1/2"	WASHER	ARANDELA	RONDELLA	131R
					UNTERLEGSCHEIBE	RONDELLE	FLADSKIVE	SLUITRING	
18		**425-108**		8	PORCA DE TUBAGEM, 1/2"-13, G5				
						TUBE NUT	TUERCA DE TUBO	DADO TUBO	0030
					ROHRMUTTER	ECROU DE TUYAU	SLANGEMØTRIK	BUISMOER	

(1) PARA VÁLVULA DESVIADORA
(2) Com dobradiça
(3) Sem dobradiça
(4) Não ilustrado

09-18	01	p2	07/10

CHASSI DIANTEIRO
FRONT FRAME
BASTIDOR DELANTERO
FRONT FRAME

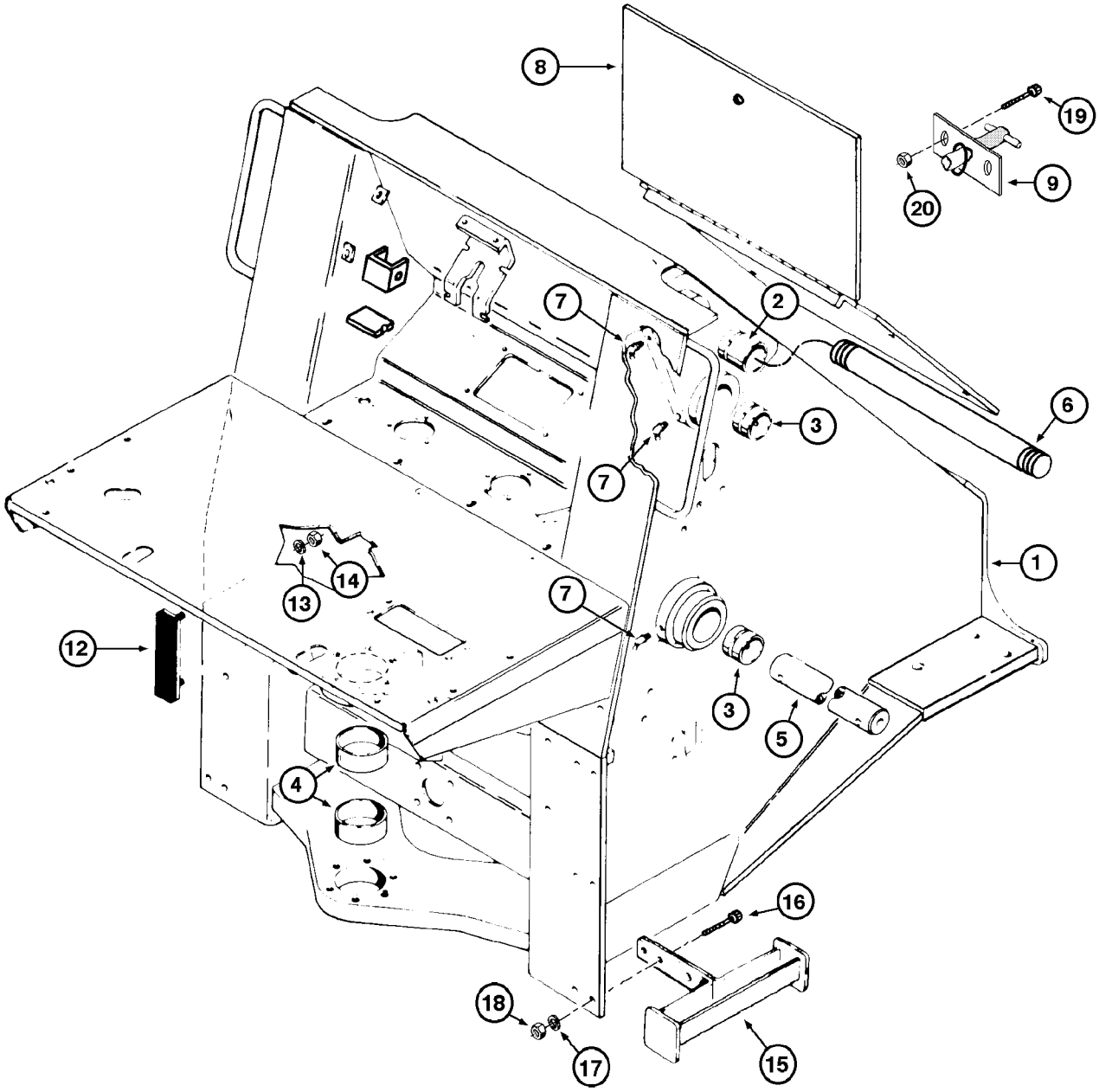

FRONT FRAME
FRONT FRAME
FRONT FRAME
FRONT FRAME

R	N	P.N.	MOD	Q	Denominação Bezeichnung	Description Description	Denominacion Beskrivelse	Descrizione Beschrijving	L.C.
19		**463-11010**		4	PARAFUSO, Hex Hd, #10-24 x 5/8"				
						SCREW	TORNILLO	VITE	040V
					SCHRAUBE	VIS	SKRUE	SCHROEF	
20		**231-14409**		4	CONTRA PORCA, #10-24, GB				
						LOCK NUT	TUERCA DE BLOQUEO	DADO DI BLOCCAGGIO	P263
					SICHERUNGSMUTTER	CONTRE-ECROU	LÅSEMØTRIK	BORGMOER	

09-20	01	p1	12/09

COMPARTIMENTO DO OPERADOR
OPERATORS COMPARTMENT
COMPARTIMENTO DEL OPERADOR
OPERATORS COMPARTMENT

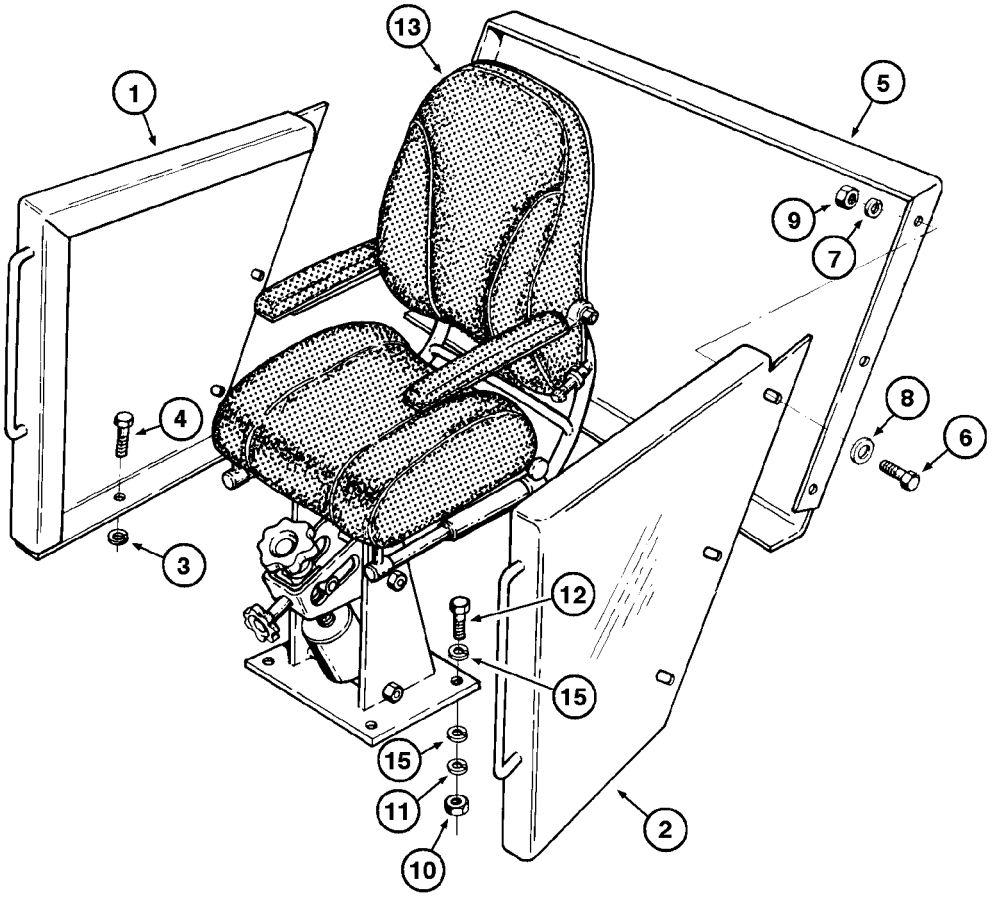

OPERATORS COMPARTMENT
OPERATORS COMPARTMENT
OPERATORS COMPARTMENT
OPERATORS COMPARTMENT

R	N	P.N.	MOD	Q	Denominação Bezeichnung	Description Description	Denominacion Beskrivelse	Descrizione Beschrijving	L.C.
1		L101294		1	LATERAL CONJUNTO, side Assy RH				
						SIDE ASSY.	LADO (CONJ)	GRUPPO LATERALE	P525
					SEITE (KPLT.)	COTE (ASSEMBLE)	SIDE ASSY.	SIDE ASSY.	
2		L101295		1	LATERAL CONJUNTO, side Assy LH				
						SIDE ASSY.	LADO (CONJ)	GRUPPO LATERALE	P525
					SEITE (KPLT.)	COTE (ASSEMBLE)	SIDE ASSY.	SIDE ASSY.	
3		492-11050		4	TRAVA DA ARRUELA, 1/2"	LOCK WASHER	ARANDELA DE BLOQUE	RONDELLA DI SICUREZ	132R
					SICHERUNGSSCHEIBE	RONDELLE FREIN	LÅSESKIVE	BORGRING	
4		413-820		4	PARAFUSO, Hex, 1/2"-13 x 1 1/4", G5, Full Thd				
						BOLT	PERNO	BULLONE	140B
					SCHRAUBE	VIS	BOLT	BOUT	
5		L77024		1	PLACA, rear	PLATE	PLACA	PIASTRA	105P
					PLATTE	PLAQUE	PLADE	PLAAT	
6		413-616		6	PARAFUSO, Hex, 3/8"-16 x 1", G5, Full Thd				
						BOLT	PERNO	BULLONE	140B
					SCHRAUBE	VIS	BOLT	BOUT	
7		492-11038		6	TRAVA DA ARRUELA, 3/8"	LOCK WASHER	ARANDELA DE BLOQUE	RONDELLA DI SICUREZ	132R
					SICHERUNGSSCHEIBE	RONDELLE FREIN	LÅSESKIVE	BORGRING	
8		495-21044		6	ARRUELA PLANA, 3/8"	WASHER	ARANDELA	RONDELLA	131R
					UNTERLEGSCHEIBE	RONDELLE	FLADSKIVE	SLUITRING	
9		425-106		6	PORCA, 3/8"-16, G5	NUT	TUERCA	DADO	010D
					MUTTER	ECROU	MØTRIK	MOER	
10		425-106		4	PORCA, 3/8"-16, G5	NUT	TUERCA	DADO	010D
					MUTTER	ECROU	MØTRIK	MOER	
11		892-11010		4	TRAVA DA ARRUELA, M10	LOCK WASHER	ARANDELA DE BLOQUE	RONDELLA DI SICUREZ	132R
					SICHERUNGSSCHEIBE	RONDELLE FREIN	LÅSESKIVE	BORGRING	
12		11107531		4	PARAFUSO, Hex, M10 x 65, 10.9				
						BOLT	PERNO	BULLONE	140B
					SCHRAUBE	VIS	BOLT	BOUT	
13		REF		1	INSTRUÇÃO, SEAT Assy (P.9-34)				
						INSTRUCTION	INSTRUCCIÓN	ISTRUZIONI	Z571
					ANLEITUNG	INSTRUCTION	INSTRUKTION	INSTRUCTIE	
14	1	E158829		1	TAMPA	CAP	TAPÓN	TAPPO	052T
					KAPPE	CAPUCHON	TANKDÆKSEL	DOP	
15		895-15010		8	ARRUELA PLANA, M11 x 24 x 2				
						WASHER	ARANDELA	RONDELLA	131R
					UNTERLEGSCHEIBE	RONDELLE	FLADSKIVE	SLUITRING	

(1) Não ilustrado

09-22	01	p1	07/09

PROTEÇÃO CONTRA CAPOTAMENTO (ROPS E CABINA)
ROPS CANOPY AND CABIN
PROTECCIÓN CONTRA VUELCO (ROPS Y CABINA)
ROPS CANOPY AND CABIN

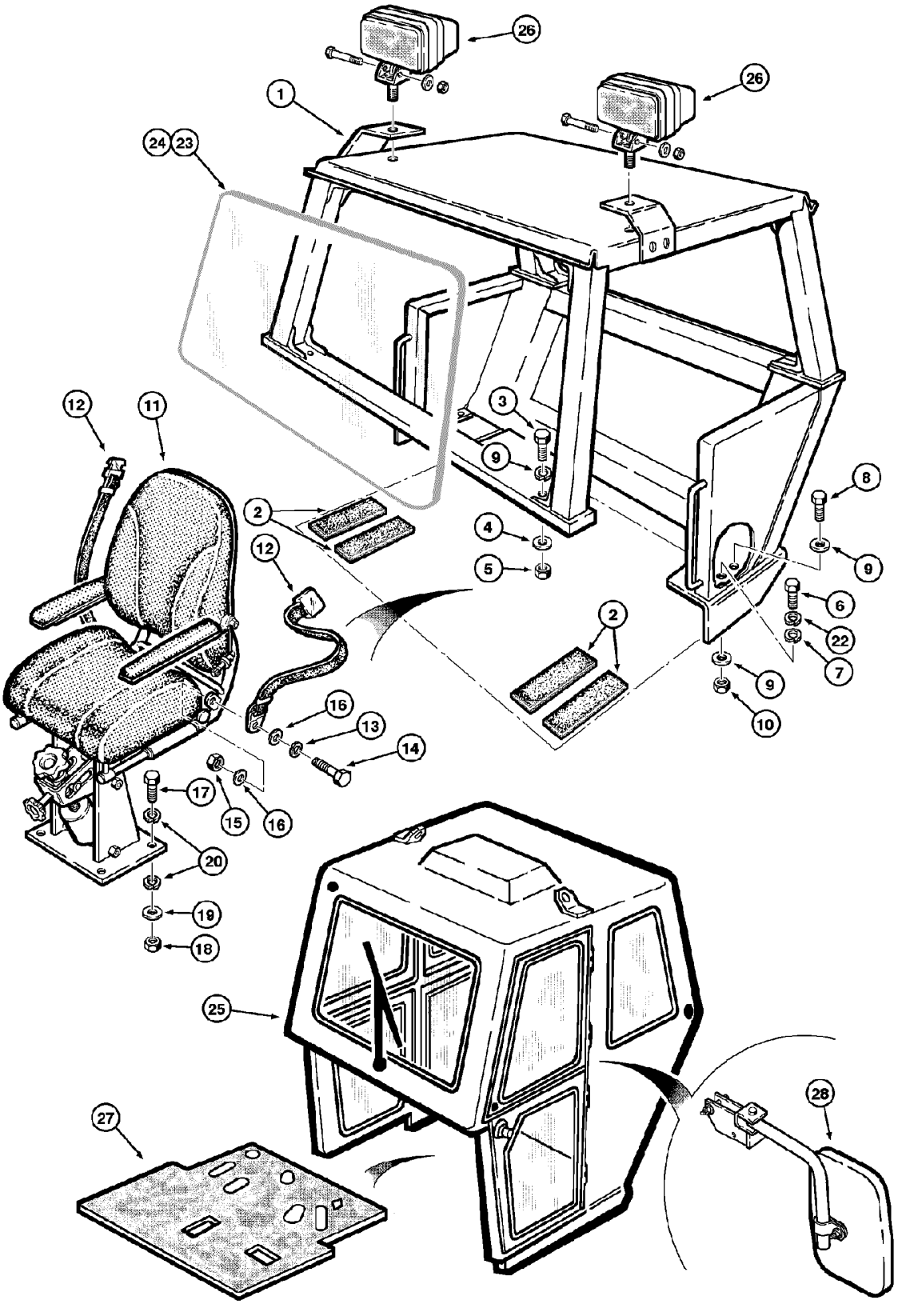

ROPS CANOPY AND CABIN
ROPS CANOPY AND CABIN
ROPS CANOPY AND CABIN
ROPS CANOPY AND CABIN

R	N	P.N.	MOD	Q	Denominação Bezeichnung	Description Description	Denominacion Beskrivelse	Descrizione Beschrijving	L.C.
1		75264218		1	CHASSI DE SEGURANÇA, gray with windows STD (P.9-24)				
						ROPS	SIST. PROT. ANTIVUELC	TELAIO DI SICUREZZA F	078T
					ROPS	PAVILLON DE SECURITE	FØRERVÆRN	ROPS	
1		75264073		1	CABINE, gray conditioner OPC (P.9-26)				
						CAB	CABINA	CABINA	008C
					KABINE	CABINE	KABINE	CABINE	
1		75264074		1	CABINE, gray fertilizer OPC	CAB	CABINA	CABINA	008C
					KABINE	CABINE	KABINE	CABINE	
2		D55216		4	FAIXA ANTI-DERRAPANTE	ANTI-SKID STRIP	BANDA ANTIDESLIZAMIE	NASTRO ANTISDRUCCI(	407S
					GLEITSCHUTZSTREIFEN	BANDE ANTI-DERAPANT	SKRIDSIKKER STRIMME	ANTISLIPSTROOK	
1		87610664	a	1	TOLDO, Assy Open Cab	CANOPY	CUBIERTA	TETTUCCIO	139B
					SCHUTZDACH	TOIT	FØRERVÆRN	OVERKAPPING	
3		426-1252		2	PARAFUSO, Hex, 3/4"-10 x 3 1/4", G8				
						BOLT	PERNO	BULLONE	140B
					SCHRAUBE	VIS	BOLT	BOUT	
4		496-21081		2	ARRUELA PLANA, 13/16" x 1 1/2" x .179", HDN				
						WASHER	ARANDELA	RONDELLA	131R
					UNTERLEGSCHEIBE	RONDELLE	FLADSKIVE	SLUITRING	
5		232-14412		2	CONTRA PORCA, 3/4"-10, GB				
						LOCK NUT	TUERCA DE BLOQUEO	DADO DI BLOCCAGGIO	P263
					SICHERUNGSMUTTER	CONTRE-ECROU	LÅSEMØTRIK	BORGMOER	
6		413-828		2	PARAFUSO, Hex, 1/2"-13 x 1 3/4", G5				
						BOLT	PERNO	BULLONE	140B
					SCHRAUBE	VIS	BOLT	BOUT	
7		492-11050		2	TRAVA DA ARRUELA, 1/2"	LOCK WASHER	ARANDELA DE BLOQUE(	RONDELLA DI SICUREZ/	132R
					SICHERUNGSSCHEIBE	RONDELLE FREIN	LÅSESKIVE	BORGRING	
8		426-1240		2	PARAFUSO, Hex, 3/4"-10 x 2 1/2", G8				
						BOLT	PERNO	BULLONE	140B
					SCHRAUBE	VIS	BOLT	BOUT	
9		K43287-47		4	ARRUELA PLANA	WASHER	ARANDELA	RONDELLA	131R
					UNTERLEGSCHEIBE	RONDELLE	FLADSKIVE	SLUITRING	
10		232-14412		2	CONTRA PORCA, 3/4"-10, GB				
						LOCK NUT	TUERCA DE BLOQUEO	DADO DI BLOCCAGGIO	P263
					SICHERUNGSMUTTER	CONTRE-ECROU	LÅSEMØTRIK	BORGMOER	
11		REF		1	INSTRUÇÃO, SEAT Assy (P.9-34)				
						INSTRUCTION	INSTRUCCIÓN	ISTRUZIONI	Z571
					ANLEITUNG	INSTRUCTION	INSTRUKTION	INSTRUCTIE	
12		REF		1	INSTRUÇÃO, SEAT-BELT Assy (P.9-36), Includes items 13 - 16				
						INSTRUCTION	INSTRUCCIÓN	ISTRUZIONI	Z571
					ANLEITUNG	INSTRUCTION	INSTRUKTION	INSTRUCTIE	
13		192-21		2	TRAVA DA ARRUELA, 3/8"	LOCK WASHER	ARANDELA DE BLOQUE(	RONDELLA DI SICUREZ/	132R
					SICHERUNGSSCHEIBE	RONDELLE FREIN	LÅSESKIVE	BORGRING	
14		113-207		2	PARAFUSO, Hex, 3/8"-16 x 1", G5, Full Thd				
						BOLT	PERNO	BULLONE	140B
					SCHRAUBE	VIS	BOLT	BOUT	
15		129-103		2	PORCA DE TUBAGEM, 3/8"-16, G5				
						TUBE NUT	TUERCA DE TUBO	DADO TUBO	0030
					ROHRMUTTER	ECROU DE TUYAU	SLANGEMØTRIK	BUISMOER	

(a) ASN N9AE02680

09-22	01	p2	07/09

PROTEÇÃO CONTRA CAPOTAMENTO (ROPS E CABINA)
ROPS CANOPY AND CABIN
PROTECCIÓN CONTRA VUELCO (ROPS Y CABINA)
ROPS CANOPY AND CABIN

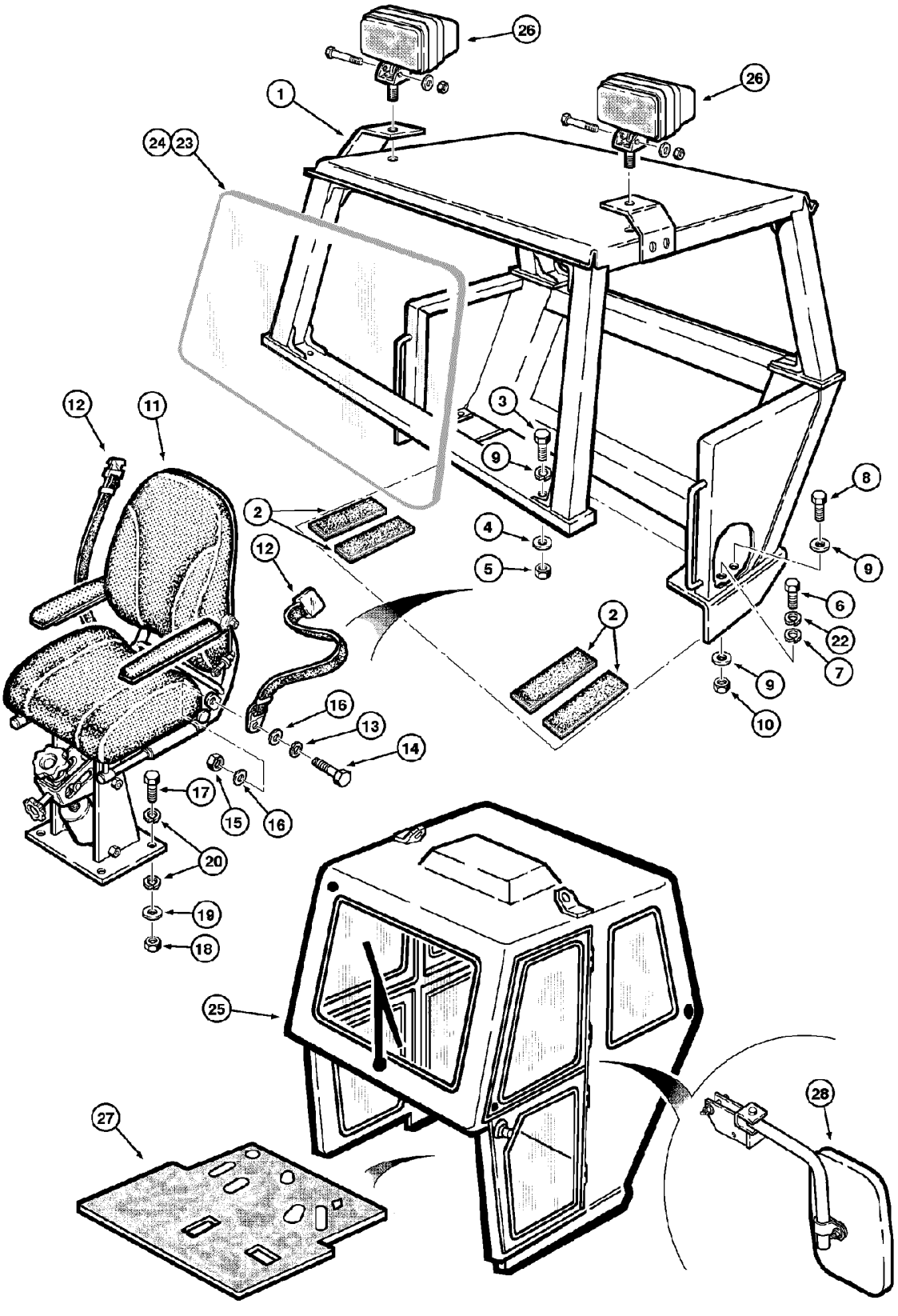

ROPS CANOPY AND CABIN
ROPS CANOPY AND CABIN
ROPS CANOPY AND CABIN
ROPS CANOPY AND CABIN

R	N	P.N.	MOD	Q	Denominação Bezeichnung	Description Description	Denominacion Beskrivelse	Descrizione Beschrijving	L.C.
16		**195-525**		4	ARRUELA PLANA, 3/8", SAE				
						WASHER	ARANDELA	RONDELLA	131R
					UNTERLEGSCHEIBE	RONDELLE	FLADSKIVE	SLUITRING	
17		**413-624**		4	PARAFUSO, Hex, 3/8"-16 x 1 1/2", G5				
						BOLT	PERNO	BULLONE	140B
					SCHRAUBE	VIS	BOLT	BOUT	
18		**425-106**		4	PORCA, 3/8"-16, G5	NUT	TUERCA	DADO	010D
					MUTTER	ECROU	MØTRIK	MOER	
19		**492-11038**		4	TRAVA DA ARRUELA, 3/8"	LOCK WASHER	ARANDELA DE BLOQUE	RONDELLA DI SICUREZ	132R
					SICHERUNGSSCHEIBE	RONDELLE FREIN	LÅSESKIVE	BORGRING	
20		**495-21044**		8	ARRUELA PLANA, 3/8"	WASHER	ARANDELA	RONDELLA	131R
					UNTERLEGSCHEIBE	RONDELLE	FLADSKIVE	SLUITRING	
21	1	**E158819**		1	TAMPA	CAP	TAPÓN	TAPPO	052T
					KAPPE	CAPUCHON	TANKDÆKSEL	DOP	
22		**495-21056**		2	ARRUELA PLANA, 1/2"	WASHER	ARANDELA	RONDELLA	131R
					UNTERLEGSCHEIBE	RONDELLE	FLADSKIVE	SLUITRING	
23		**REF**		1	INSTRUÇÃO, WINDSHIELD Assy (P.9-24)				
						INSTRUCTION	INSTRUCCIÓN	ISTRUZIONI	Z571
					ANLEITUNG	INSTRUCTION	INSTRUKTION	INSTRUCTIE	
24		**REF**		1	INSTRUÇÃO, GLASS (P.9-24)				
						INSTRUCTION	INSTRUCCIÓN	ISTRUZIONI	Z571
					ANLEITUNG	INSTRUCTION	INSTRUKTION	INSTRUCTIE	
25	2	**REF**		1	INSTRUÇÃO, CAB Assy (P.9-26)				
						INSTRUCTION	INSTRUCCIÓN	ISTRUZIONI	Z571
					ANLEITUNG	INSTRUCTION	INSTRUKTION	INSTRUCTIE	
26		**REF**		2	INSTRUÇÃO, HEADLIGHT Assy (P.4-28)				
						INSTRUCTION	INSTRUCCIÓN	ISTRUZIONI	Z571
					ANLEITUNG	INSTRUCTION	INSTRUKTION	INSTRUCTIE	
27	3	**87425997**		1	TAPETE	MAT	ALFOMBRILLA	TAPPETINO	030T
					MATTE	TAPIS	MÅTTE	MAT	
27	4	**75265131**		1	TAPETE	MAT	ALFOMBRILLA	TAPPETINO	030T
					MATTE	TAPIS	MÅTTE	MAT	
28		**REF**		2	INSTRUÇÃO, MIRROR rear view (P.9-32)				
						INSTRUCTION	INSTRUCCIÓN	ISTRUZIONI	Z571
					ANLEITUNG	INSTRUCTION	INSTRUKTION	INSTRUCTIE	

(1) Não ilustrado
(2) OPCIONAL
(3) Para Cabine ou ROPS com Sistema de Freio a Ar
(4) Para Cabine ou ROPS com Sistema de Freio Hidráulico

09-24	01	p1	06/09

PROTEÇÃO CONTRA CAPOTAMENTO E CABINA COM VIDROS (STANDARD)
ROPS CANOPY AND CABIN WITH WINDOWS (STANDARD)
PROTECCIÓN CONTRA VUELCO Y CABINA CON CRISTALES (STANDARD)
ROPS CANOPY AND CABIN WITH WINDOWS (STANDARD)

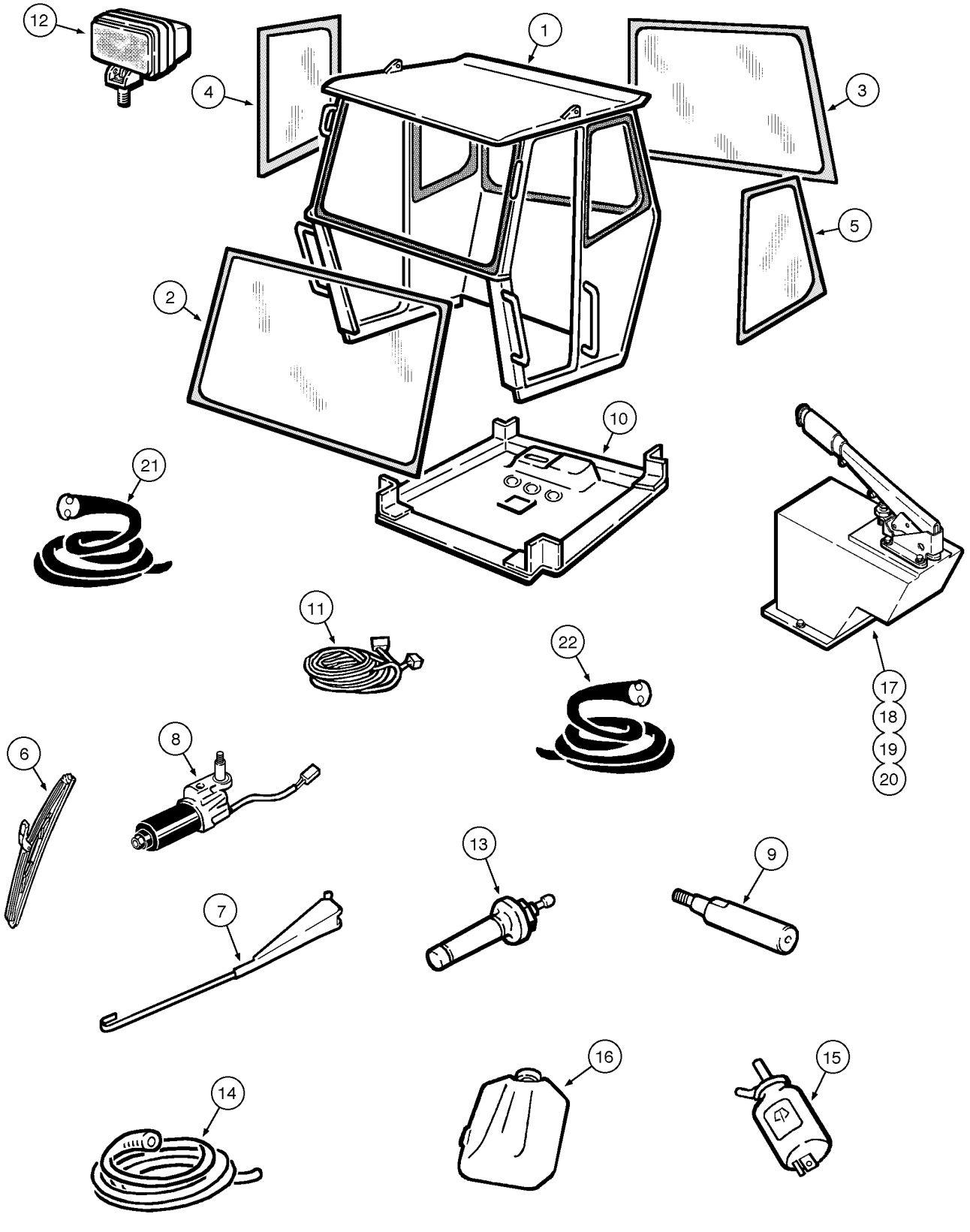

ROPS CANOPY AND CABIN WITH WINDOWS (STANDARD)
ROPS CANOPY AND CABIN WITH WINDOWS (STANDARD)
ROPS CANOPY AND CABIN WITH WINDOWS (STANDARD)
ROPS CANOPY AND CABIN WITH WINDOWS (STANDARD)

R	N	P.N.	MOD	Q	Denominação Bezeichnung	Description Description	Denominacion Beskrivelse	Descrizione Beschrijving	L.C.
		75264218		1	CHASSI DE SEGURANÇA, Assy, Includes items 1 - 19				
						ROPS	SIST. PROT. ANTIVUELC	TELAIO DI SICUREZZA F	078T
					ROPS	PAVILLON DE SECURITE	FØRERVÆRN	ROPS	
1		**NSS**		1	SEM SERVIÇO EM SEPARADO, STRUCTURE welded				
						NOT SERVICED SEPARA	NO SE REPARA POR SE	NON FORNITO SEPARAT	064N
					NICHT A SEP ERS-T LIEI	NON FORUNI SEPAREM	SERVICERES IKKE SEPA	NIET LOS VERKRIJGBAA	
2		**87452953**		1	VIDRO, front	GLASS	VIDRIO	CRISTALLO	038V
					GLAS	VITRE	GLAS	GLAS	
3		**87452954**		1	VIDRO, rear	GLASS	VIDRIO	CRISTALLO	038V
					GLAS	VITRE	GLAS	GLAS	
4		**87452955**		1	VIDRO, rear LH	GLASS	VIDRIO	CRISTALLO	038V
					GLAS	VITRE	GLAS	GLAS	
5		**87452956**		1	VIDRO, rear RH	GLASS	VIDRIO	CRISTALLO	038V
					GLAS	VITRE	GLAS	GLAS	
6		**87452924**		1	LÂMINA, wiper	BLADE	CUCHILLA	LAMA	0700
					KLINGE	LAME	KNIV	MES	
7		**87452925**		1	LIMPADOR PARA-BRISA, wiper				
						WINDSHIELD WASHER	ARANDELA DE LIMPIAPA	LAVACRISTALLI	Z537
					FRONTSCHEIBENWASC	LAVE GLACE	FORRUDEVISKER	RUITENSPROEIER VÓÓI	
8		**87452926**		1	MOTOR ELÉTRICO PEQUENO, wiper				
						SMALL ELECTRIC MOTC	MOTOR ELÉCTRICO PE(	MOTORINO ELETTRICO	137M
					KLEINER ELEKTROMOT(	PETIT MOTEUR ELECTR	LILLE EL-MOTOR	KLEINE ELEKTROMOTOI	
9		**87452922**		1	EIXO, drive	SHAFT	EJE	ALBERO	016A
					WELLE	ARBRE	AKSEL	AS	
10		**87452935**		1	COBERTURA, roof	COVER	CUBIERTA	COPERCHIO	265C
					ABDECKUNG	COUVERCLE	DÆKSEL	AFSCHERMING	
11		**87452959**		1	CABO ELÉTRICO	ELECTRIC CABLE	CABLE ELÉCTRICO	CAVO ELETTRICO	111C
					ELEKTROKABEL	CABLE ELECTRIQUE	EL-KABEL	ELEKTRICITEITSKABEL	
12	1	**87461045**		1	LUZ	LIGHT	LUZ	LUCE	Z496
					LAMPE	FEU	BELYSNING	LAMP	
13		**87453317**		1	LIMPADOR DO PARA-BRISA				
						WINDSHIELD WIPER	LIMPIAPARABRISAS	TERGICRISTALLI	Z493
					FRONTSCHEIBENWISCH	ESSUIE-GLACE	FORRUDEVISKER	RUITENWISSER VÓÓR	
14		**87453318**		1	MANGUEIRA	HOSE	TUBO	TUBO FLESSIBILE	030M
					SCHLAUCH	FLEXIBLE	SLANGE	SLANG	
15		**87453316**		1	MOTOR ELÉTRICO PEQUENO, washer				
						SMALL ELECTRIC MOTC	MOTOR ELÉCTRICO PE(	MOTORINO ELETTRICO	137M
					KLEINER ELEKTROMOT(	PETIT MOTEUR ELECTR	LILLE EL-MOTOR	KLEINE ELEKTROMOTOI	
16		**87453315**		1	RESERVATÓRIO, washer	TANK	DEPÓSITO	SERBATOIO	115S
					TANK	RESERVOIR	TANK	TANK	
17		**87461299**		1	CONSOLE	CONSOLE	CONSOLA	CONSOLE	080M
					KONSOLE	CONSOLE	KONSOL	CONSOLE	
18		**87461301**		1	SUPORTE, boot	SUPPORT	SOPORTE	SUPPORTO	300S
					STÜTZE	SUPPORT	BESLAG	STEUN	
19		**87461300**		1	SENSOR, brake	SENSOR	SENSOR	SENSORE	608S
					SENSOR	CAPTEUR	FØLER	SENSOR	
20		**5106733**		1	CAPA	BOOT	FUNDA	PARAPOLVERE	330C
					MANSCHETTE	SOUFFLET	MANCHET	HOES	

(1) OPCIONAL

09-24	01	p2	06/09

PROTEÇÃO CONTRA CAPOTAMENTO E CABINA COM VIDROS (STANDARD)
ROPS CANOPY AND CABIN WITH WINDOWS (STANDARD)
PROTECCIÓN CONTRA VUELCO Y CABINA CON CRISTALES (STANDARD)
ROPS CANOPY AND CABIN WITH WINDOWS (STANDARD)

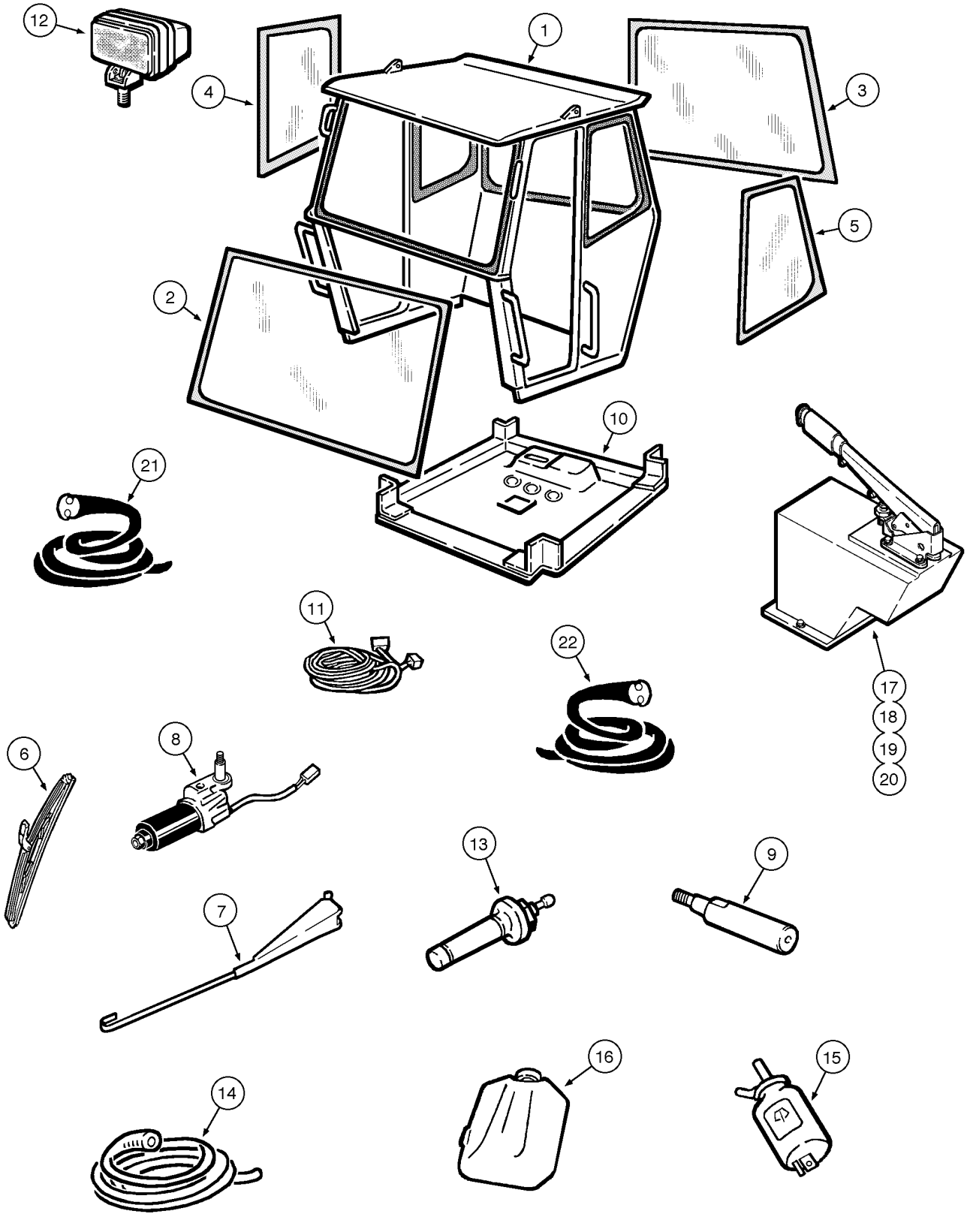

ROPS CANOPY AND CABIN WITH WINDOWS (STANDARD)
ROPS CANOPY AND CABIN WITH WINDOWS (STANDARD)
ROPS CANOPY AND CABIN WITH WINDOWS (STANDARD)
ROPS CANOPY AND CABIN WITH WINDOWS (STANDARD)

R	N	P.N.	MOD	Q	Denominação Bezeichnung	Description Description	Denominacion Beskrivelse	Descrizione Beschrijving	L.C.
21		75265355		1	VEDAÇÃO DE BORRACHA GUMMIDICHTUNG	RUBBER SEAL JOINT EN CAOUTCHOU(	JUNTA DE GOMA GUMMITÆTNING	GUARNIZIONE DI GOMM RUBBEREN AFDICHTIN(	122G
22		75265356		1	VEDAÇÃO DE BORRACHA GUMMIDICHTUNG	RUBBER SEAL JOINT EN CAOUTCHOU(	JUNTA DE GOMA GUMMITÆTNING	GUARNIZIONE DI GOMM RUBBEREN AFDICHTIN(	122G

09-24	02	p1	07/09

PROTEÇÃO CONTRA CAPOTAMENTO - VIDROS (STANDARD)
ROPS CANOPY - GLASSES (STANDARD)
PROTECCIÓN CONTRA VUELCO - CRISTALES (STANDARD)
ROPS CANOPY - GLASSES (STANDARD)

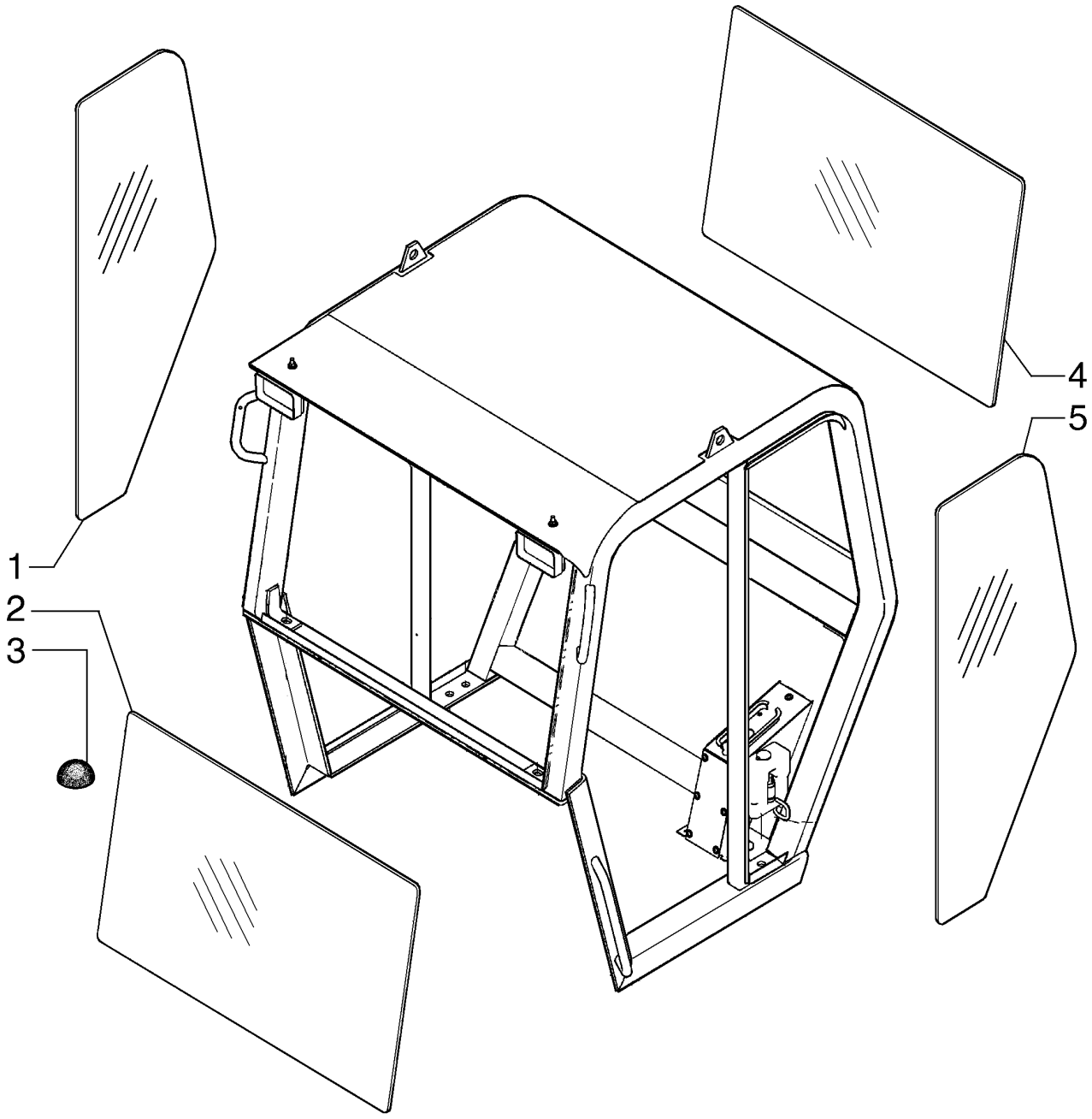

ROPS CANOPY - GLASSES (STANDARD)
ROPS CANOPY - GLASSES (STANDARD)
ROPS CANOPY - GLASSES (STANDARD)
ROPS CANOPY - GLASSES (STANDARD)

R	N	P.N.	MOD	Q	Denominação Bezeichnung	Description Description	Denominacion Beskrivelse	Descrizione Beschrijving	L.C.
1		87603364		1	VIDRO GLAS	GLASS VITRE	VIDRIO GLAS	CRISTALLO GLAS	038V
2		87603363		1	VIDRO GLAS	GLASS VITRE	VIDRIO GLAS	CRISTALLO GLAS	038V
3		391827A1		4	ESPACADOR ABSTANDSSTUECK	SPACER ENTRETOISE	ESPACIADOR SPACER	DISTANZIALE SPACER	8090
4		87603360		1	VIDRO GLAS	GLASS VITRE	VIDRIO GLAS	CRISTALLO GLAS	038V
5		87603359		1	VIDRO GLAS	GLASS VITRE	VIDRIO GLAS	CRISTALLO GLAS	038V

A partir do Chassi N9AE02680

W20E

09-24	03	p1	07/09

CABINE - VIDROS (STANDARD)
CABIN - GLASSES (STANDARD)
CABINA - CRISTALES (STANDARD)
CABIN - GLASSES (STANDARD)

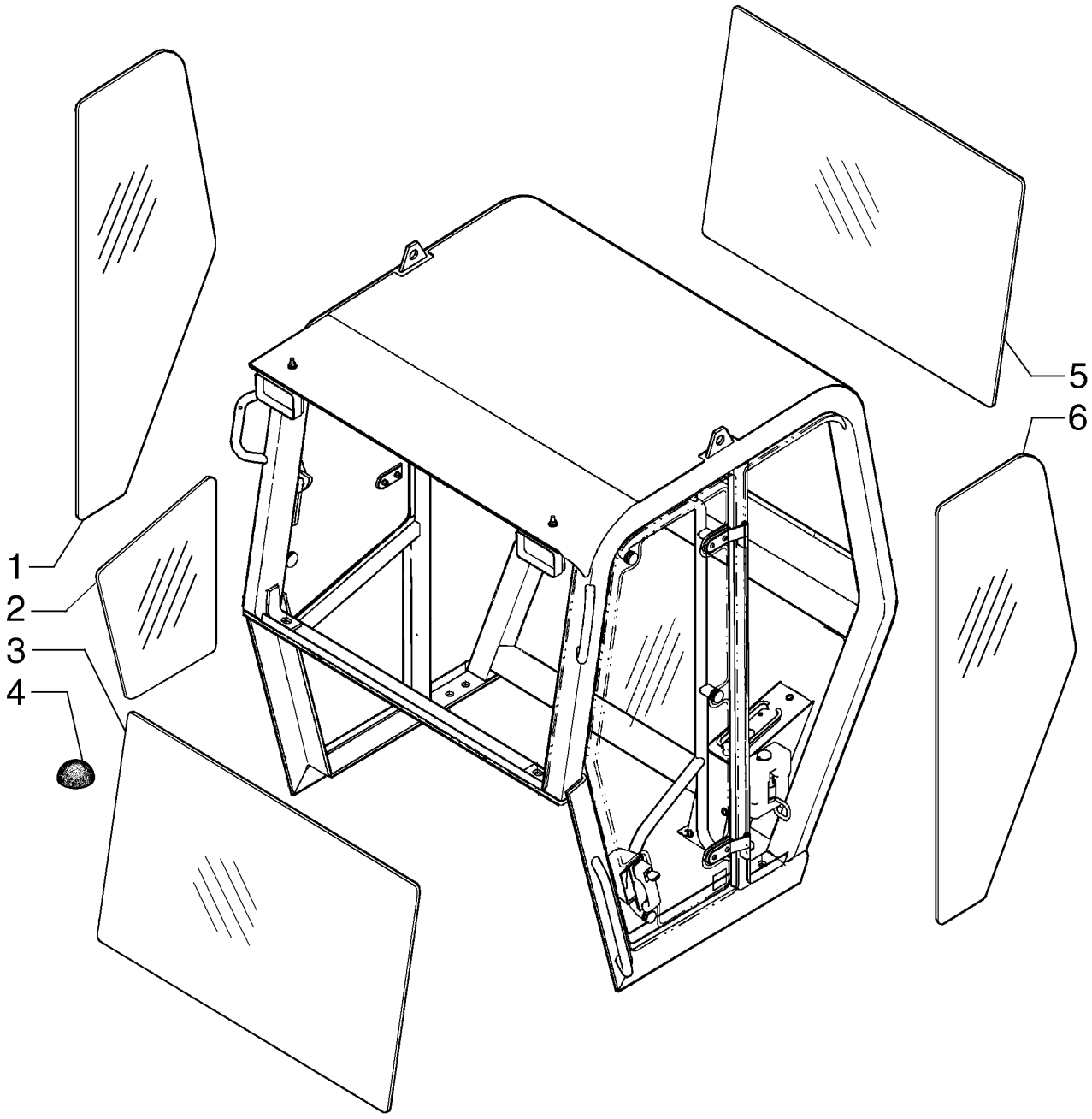

CABIN - GLASSES (STANDARD)
CABIN - GLASSES (STANDARD)
CABIN - GLASSES (STANDARD)
CABIN - GLASSES (STANDARD)

R	N	P.N.	MOD	Q	Denominação Bezeichnung	Description Description	Denominacion Beskrivelse	Descrizione Beschrijving	L.C.
1		87603364		1	VIDRO GLAS	GLASS VITRE	VIDRIO GLAS	CRISTALLO GLAS	038V
2		87603361		1	VIDRO GLAS	GLASS VITRE	VIDRIO GLAS	CRISTALLO GLAS	038V
3		87603363		1	VIDRO GLAS	GLASS VITRE	VIDRIO GLAS	CRISTALLO GLAS	038V
4		391827A1		4	ESPACADOR ABSTANDSSTUECK	SPACER ENTRETOISE	ESPACIADOR SPACER	DISTANZIALE SPACER	8090
5		87603360		1	VIDRO GLAS	GLASS VITRE	VIDRIO GLAS	CRISTALLO GLAS	038V
6		87603359		1	VIDRO GLAS	GLASS VITRE	VIDRIO GLAS	CRISTALLO GLAS	038V

A Partir do Chassi N9AE02680

W20E

09-24	04	p1	12/09

PROTEÇÃO CONTRA CAPOTAMENTO - VEDAÇÃO (STANDARD)
ROPS CANOPY - SEALING (STANDARD)
PROTECCIÓN CONTRA VUELCO - VEDACION (STANDARD)
ROPS CANOPY - SEALING (STANDARD)

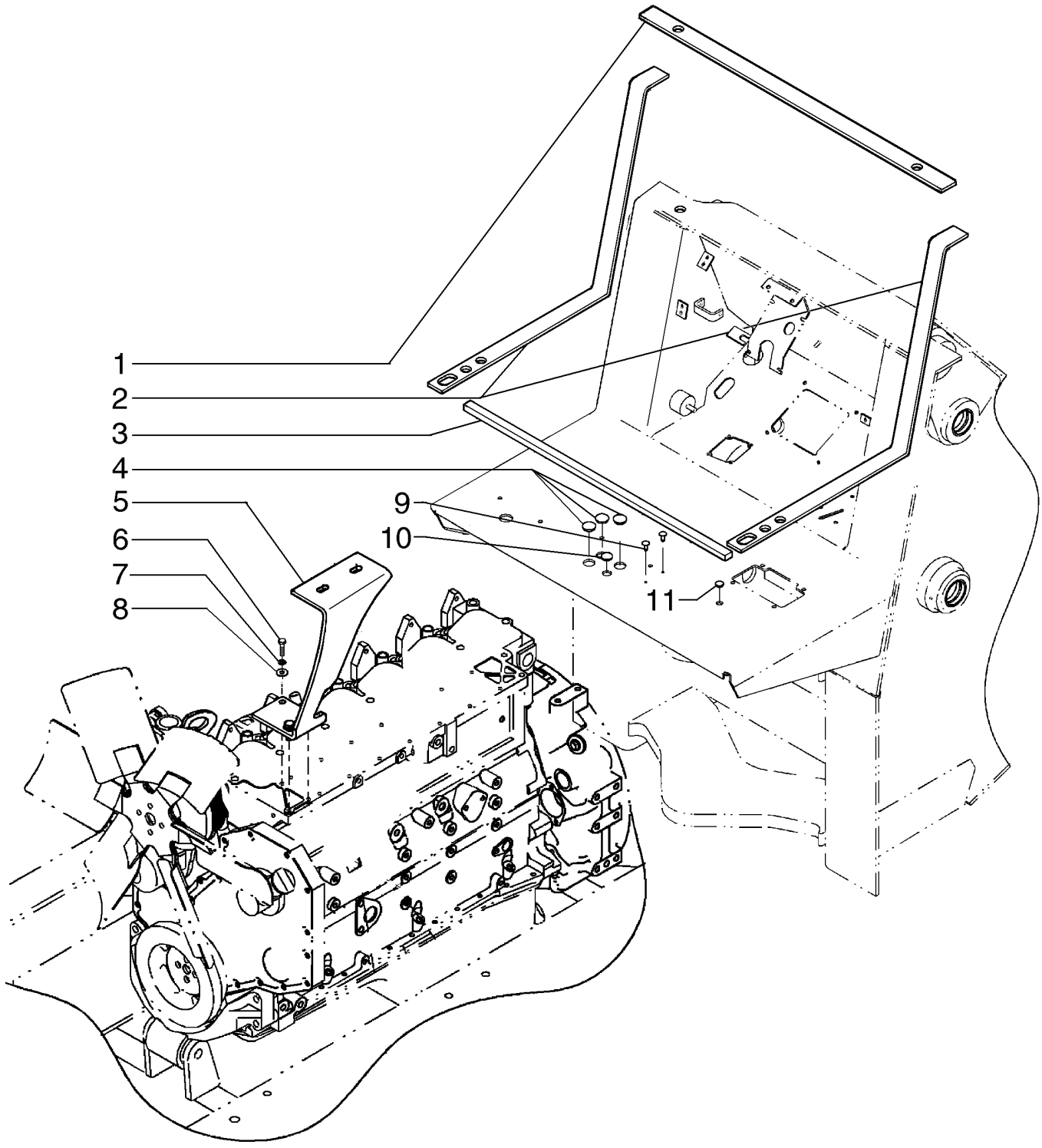

ROPS CANOPY - SEALING (STANDARD)
ROPS CANOPY - SEALING (STANDARD)
ROPS CANOPY - SEALING (STANDARD)
ROPS CANOPY - SEALING (STANDARD)

R	N	P.N.	MOD	Q	Denominação Bezeichnung	Description Description	Denominacion Beskrivelse	Descrizione Beschrijving	L.C.
1		87626798		1	VEDAÇÃO DICHTUNG	SEAL JOINT	ANILLO DE CIERRE PAKNING	GUARNIZIONE; TENUTA AFDICHTING	132A
2		87610661		2	VEDAÇÃO DICHTUNG	SEAL JOINT	ANILLO DE CIERRE PAKNING	GUARNIZIONE; TENUTA AFDICHTING	132A
3		87610662		1	VEDAÇÃO DICHTUNG	SEAL JOINT	ANILLO DE CIERRE PAKNING	GUARNIZIONE; TENUTA AFDICHTING	132A
4		70926266		3	BUJÃO STOPFEN	PLUG BOUCHON	TAPÓN PROP	TAPPO PLUG	050T
5		148547A1		1	SUPORTE STÜTZE	SUPPORT SUPPORT	SOPORTE BESLAG	SUPPORTO STEUN	300S
6		614-10030		2	PARAFUSO, Hex, M10 x 30, 8.8 SCHRAUBE	BOLT VIS	PERNO BOLT	BULLONE BOUT	140B
7		892-11010		2	TRAVA DA ARRUELA, M10 SICHERUNGSSCHEIBE	LOCK WASHER RONDELLE FREIN	ARANDELA DE BLOQUE LÅSESKIVE	RONDELLA DI SICUREZ BORGRING	132R
8		895-11010		2	ARRUELA PLANA, M10 x 20 x 2 UNTERLEGSCHEIBE	WASHER RONDELLE	ARANDELA FLADSKIVE	RONDELLA SLUITRING	131R
9		14590887		2	BOTÃO DE BORRACHA GUMMITÜLLE	RUBBER BUTTON BOUTON EN CAOUTCHO	BOTÓN DE GOMA GUMMIPROP	PULSANTE IN GOMMA RUBBEREN KNOP	121B
10		353-412		1	BUJÃO, Dome, 1.093" hole, Nylon STOPFEN	PLUG BOUCHON	TAPÓN PROP	TAPPO PLUG	050T
11		70928956		1	BUJÃO STOPFEN	PLUG BOUCHON	TAPÓN PROP	TAPPO PLUG	050T

A Partir do Chassi N9AE02680

W20E

09-24	05	p1	09/09

PROTEÇÃO CONTRA CAPOTAMENTO
ROPS CANOPY
PROTECCION CONTRA VUELCO
ROPS CANOPY

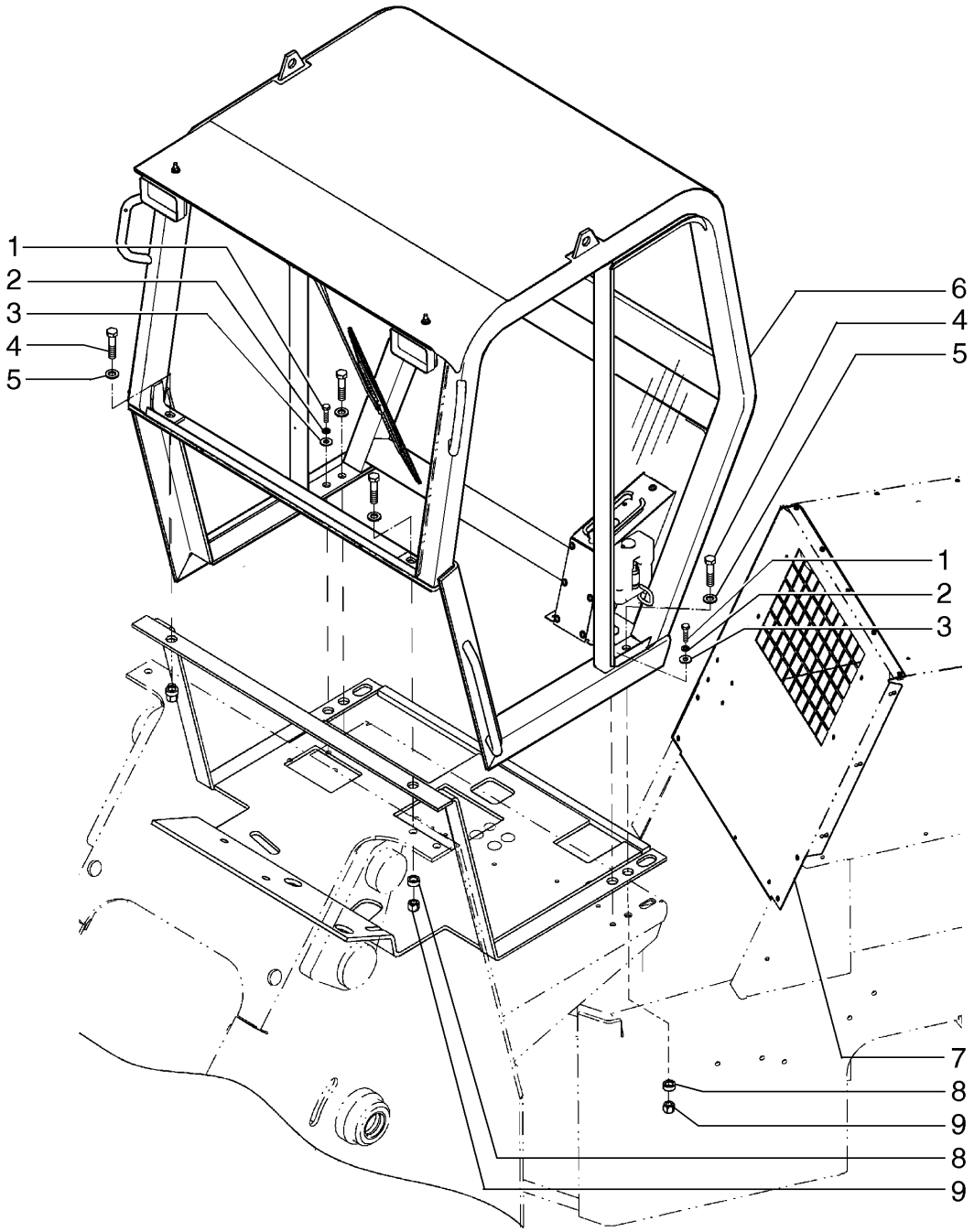

ROPS CANOPY
ROPS CANOPY
ROPS CANOPY
ROPS CANOPY

R	N	P.N.	MOD	Q	Denominação Bezeichnung	Description Description	Denominacion Beskrivelse	Descrizione Beschrijving	L.C.
1		413-828		2	PARAFUSO, Hex, 1/2"-13 x 1 3/4", G5				
						BOLT	PERNO	BULLONE	140B
					SCHRAUBE	VIS	BOLT	BOUT	
2		492-11050		2	TRAVA DA ARRUELA, 1/2"	LOCK WASHER	ARANDELA DE BLOQUE	RONDELLA DI SICUREZ	132R
					SICHERUNGSSCHEIBE	RONDELLE FREIN	LÅSESKIVE	BORGRING	
3		495-21056		2	ARRUELA PLANA, 1/2"	WASHER	ARANDELA	RONDELLA	131R
					UNTERLEGSCHEIBE	RONDELLE	FLADSKIVE	SLUITRING	
4		426-1252		4	PARAFUSO, Hex, 3/4"-10 x 3 1/4", G8				
						BOLT	PERNO	BULLONE	140B
					SCHRAUBE	VIS	BOLT	BOUT	
5		495-21081		4	ARRUELA PLANA, 3/4"	WASHER	ARANDELA	RONDELLA	131R
					UNTERLEGSCHEIBE	RONDELLE	FLADSKIVE	SLUITRING	
6		87610664		1	TOLDO	CANOPY	CUBIERTA	TETTUCCIO	139B
					SCHUTZDACH	TOIT	FØRERVÆRN	OVERKAPPING	
7		87620330		1	PROTEÇÃO	GUARD	DEFENSA	PROTEZIONE	070R
					SCHUTZABDECKUNG	PROTECTION	BESKYTTELSESSKÆRM	AFSCHERMING	
8		P4328747K		4	ARRUELA PLANA	WASHER	ARANDELA	RONDELLA	131R
					UNTERLEGSCHEIBE	RONDELLE	FLADSKIVE	SLUITRING	
9		232-14412		4	CONTRA PORCA, 3/4"-10,	GB			
						LOCK NUT	TUERCA DE BLOQUEO	DADO DI BLOCCAGGIO	P263
					SICHERUNGSMUTTER	CONTRE-ECROU	LÅSEMØTRIK	BORGMOER	

A Partir do Chassi N9AE02680

W20E

09-26	01	p1	07/09

CABINA COM SISTEMA DE CLIMATIZAÇÃO - FIXAÇÃO (OPCIONAL)
CAB COMPLETE - MOUNTING (OPTIONAL)
CABINA COMPLETA - SUJECIÓN (OPCIONAL)
CAB COMPLETE - MOUNTING (OPTIONAL)

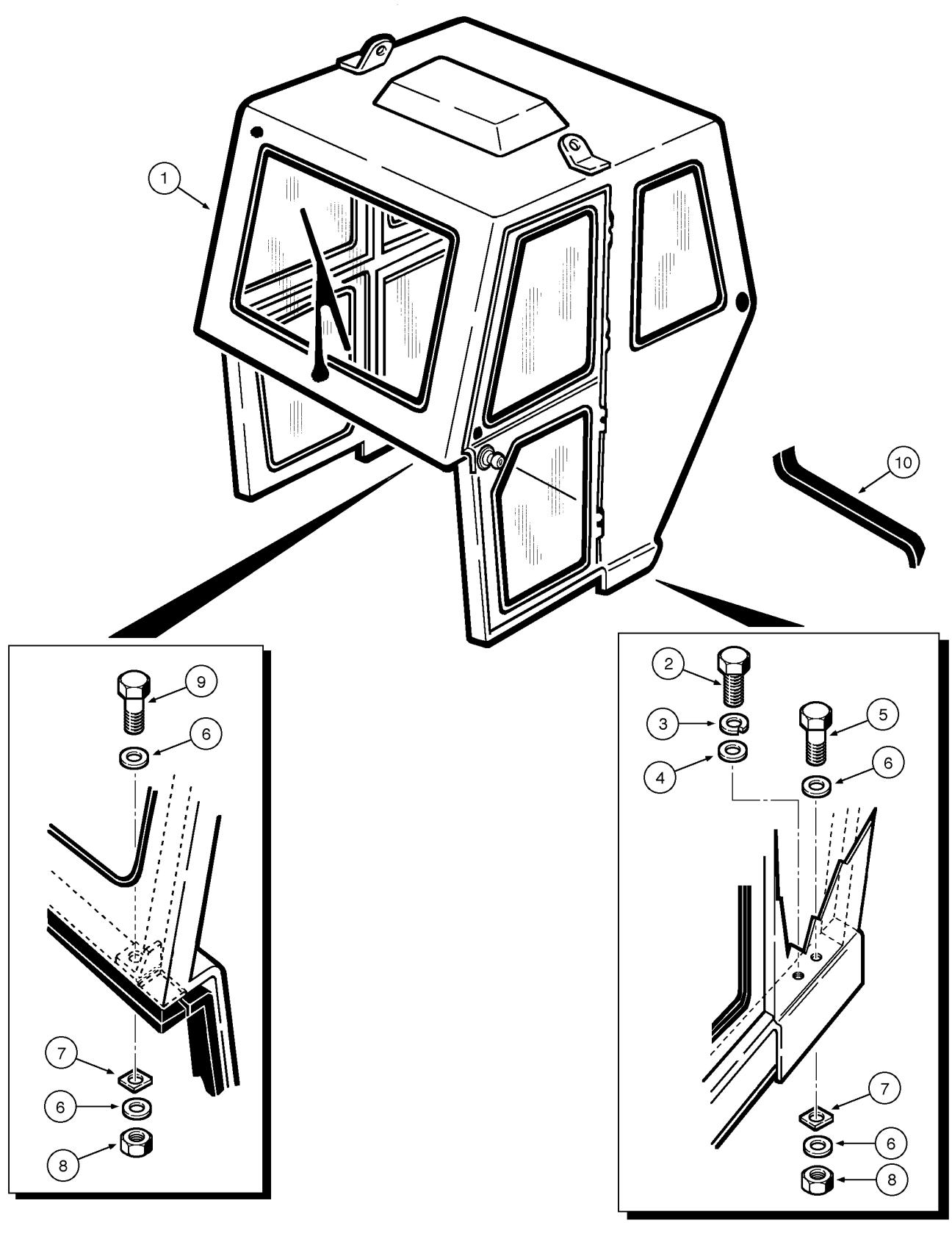

CAB COMPLETE - MOUNTING (OPTIONAL)
CAB COMPLETE - MOUNTING (OPTIONAL)
CAB COMPLETE - MOUNTING (OPTIONAL)
CAB COMPLETE - MOUNTING (OPTIONAL)

R	N	P.N.	MOD	Q	Denominação Bezeichnung	Description Description	Denominacion Beskrivelse	Descrizione Beschrijving	L.C.
1		75264073		1	CABINE, Assy (P.9-28)	CAB	CABINA	CABINA	008C
					KABINE	CABINE	KABINE	CABINE	
2		413-828		2	PARAFUSO, Hex, 1/2"-13 x 1 3/4", G5				
						BOLT	PERNO	BULLONE	140B
					SCHRAUBE	VIS	BOLT	BOUT	
1		87607906	a	1	CABINE	CAB	CABINA	CABINA	008C
					KABINE	CABINE	KABINE	CABINE	
3		492-11050		2	TRAVA DA ARRUELA, 1/2"	LOCK WASHER	ARANDELA DE BLOQUE(	RONDELLA DI SICUREZ/	132R
					SICHERUNGSSCHEIBE	RONDELLE FREIN	LÅSESKIVE	BORGRING	
4		495-21056		2	ARRUELA PLANA, 1/2"	WASHER	ARANDELA	RONDELLA	131R
					UNTERLEGSCHEIBE	RONDELLE	FLADSKIVE	SLUITRING	
5		426-1240		2	PARAFUSO, Hex, 3/4"-10 x 2 1/2", G8				
						BOLT	PERNO	BULLONE	140B
					SCHRAUBE	VIS	BOLT	BOUT	
6		496-21081		8	ARRUELA PLANA, 13/16" x 1 1/2" x .179", HDN				
						WASHER	ARANDELA	RONDELLA	131R
					UNTERLEGSCHEIBE	RONDELLE	FLADSKIVE	SLUITRING	
7		452-734		4	ARRUELA PLANA	WASHER	ARANDELA	RONDELLA	131R
					UNTERLEGSCHEIBE	RONDELLE	FLADSKIVE	SLUITRING	
8		232-14412		4	CONTRA PORCA, 3/4"-10,	GB			
						LOCK NUT	TUERCA DE BLOQUEO	DADO DI BLOCCAGGIO	P263
					SICHERUNGSMUTTER	CONTRE-ECROU	LÅSEMØTRIK	BORGMOER	
9		426-1252		2	PARAFUSO, Hex, 3/4"-10 x 3 1/4", G8				
						BOLT	PERNO	BULLONE	140B
					SCHRAUBE	VIS	BOLT	BOUT	
10		75265355		1	VEDAÇÃO DE BORRACHA	RUBBER SEAL	JUNTA DE GOMA	GUARNIZIONE DI GOMM	122G
					GUMMIDICHTUNG	JOINT EN CAOUTCHOU(	GUMMITÆTNING	RUBBEREN AFDICHTINC	
11		75265356		1	VEDAÇÃO DE BORRACHA	RUBBER SEAL	JUNTA DE GOMA	GUARNIZIONE DI GOMM	122G
					GUMMIDICHTUNG	JOINT EN CAOUTCHOU(	GUMMITÆTNING	RUBBEREN AFDICHTINC	

(a) ASN N9AE02680

09-26	02	p1	08/11

CABINA COMPLETA
CAB COMPLETE
CABINA COMPLETA
CAB COMPLETE

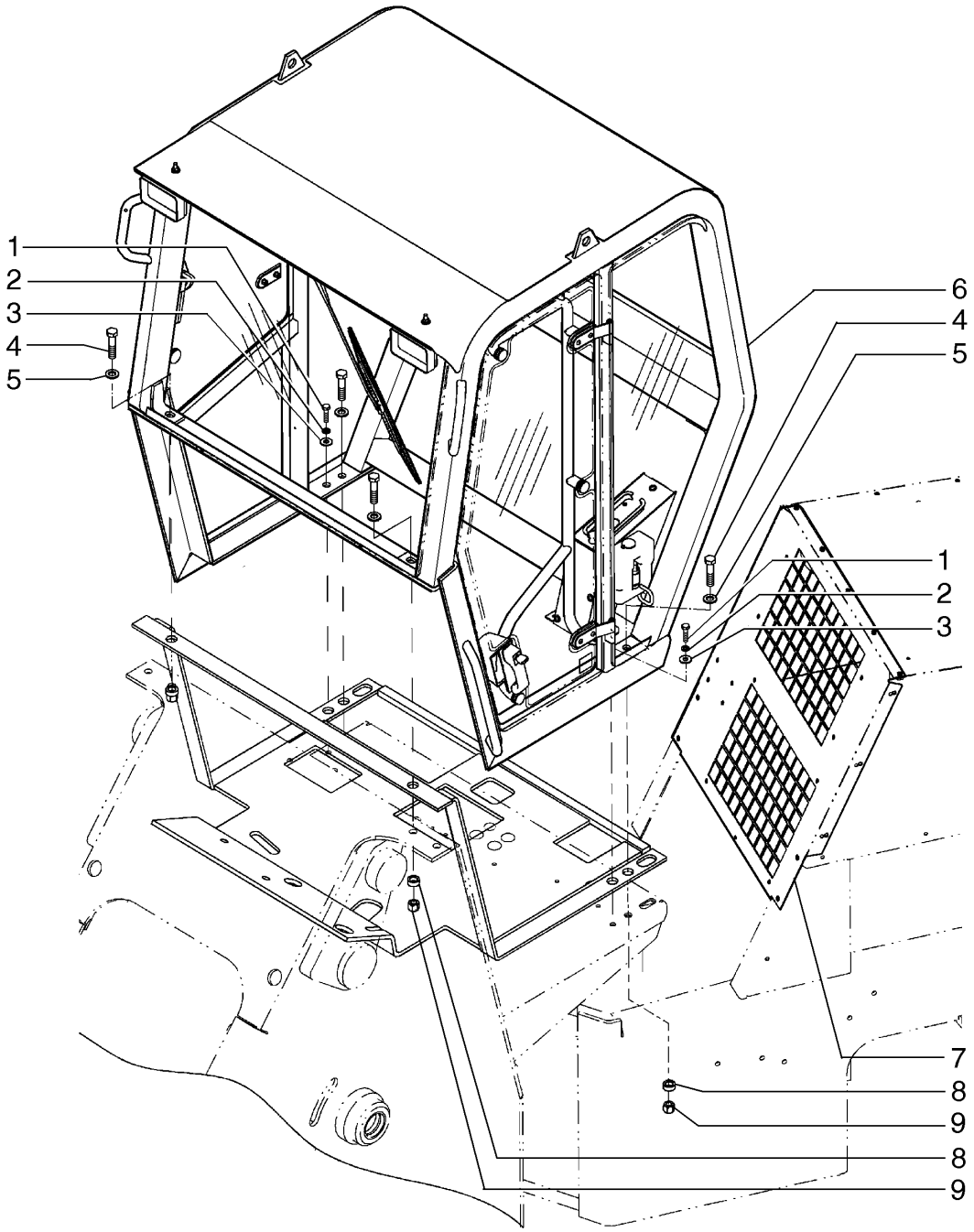

CAB COMPLETE
CAB COMPLETE
CAB COMPLETE
CAB COMPLETE

R	N	P.N.	MOD	Q	Denominação Bezeichnung	Description Description	Denominacion Beskrivelse	Descrizione Beschrijving	L.C.
1		**413-828**		2	PARAFUSO, Hex, 1/2"-13 x 1 3/4", G5				
					BOLT	PERNO	BULLONE		140B
					SCHRAUBE	VIS	BOLT	BOUT	
2		**492-11050**		2	TRAVA DA ARRUELA, 1/2"	LOCK WASHER	ARANDELA DE BLOQUE	RONDELLA DI SICUREZ	132R
					SICHERUNGSSCHEIBE	RONDELLE FREIN	LÅSESKIVE	BORGRING	
3		**495-21056**		2	ARRUELA PLANA, 1/2"	WASHER	ARANDELA	RONDELLA	131R
					UNTERLEGSCHEIBE	RONDELLE	FLADSKIVE	SLUITRING	
4		**426-1252**		4	PARAFUSO, Hex, 3/4"-10 x 3 1/4", G8				
					BOLT	PERNO	BULLONE		140B
					SCHRAUBE	VIS	BOLT	BOUT	
5		**495-21081**		4	ARRUELA PLANA, 3/4"	WASHER	ARANDELA	RONDELLA	131R
					UNTERLEGSCHEIBE	RONDELLE	FLADSKIVE	SLUITRING	
6		**87607906**		1	CABINE	CAB	CABINA	CABINA	008C
					KABINE	CABINE	KABINE	CABINE	
6	1	**84208319**		1	CABINE	CAB	CABINA	CABINA	008C
					KABINE	CABINE	KABINE	CABINE	
7		**87620330**		1	PROTEÇÃO, HV	GUARD	DEFENSA	PROTEZIONE	070R
					SCHUTZABDECKUNG	PROTECTION	BESKYTTELSESSKÆRM	AFSCHERMING	
7		**87628972**		1	PROTEÇÃO, HV/AC	GUARD	DEFENSA	PROTEZIONE	070R
					SCHUTZABDECKUNG	PROTECTION	BESKYTTELSESSKÆRM	AFSCHERMING	
7	1	**84208320**		1	PAINEL, HV/AC	PANEL	PANEL	PANNELLO	025P
					PLATTE	PANNEAU	PANEL	PANEEL	
8		**P4328747K**		4	ARRUELA PLANA	WASHER	ARANDELA	RONDELLA	131R
					UNTERLEGSCHEIBE	RONDELLE	FLADSKIVE	SLUITRING	
9		**232-14412**		4	CONTRA PORCA, 3/4"-10,	GB			
						LOCK NUT	TUERCA DE BLOQUEO	DADO DI BLOCCAGGIO	P263
					SICHERUNGSMUTTER	CONTRE-ECROU	LÅSEMØTRIK	BORGMOER	

(1) Para Máquina Aplicação Fertilizante

A Partir do Chassi N9AE02680

W20E

09-28	01	p1	10/11

CABINA COM SISTEMA DE CLIMATIZAÇÃO - COMPONENTES (OPCIONAL)
CAB COMPLETE - COMPONENTS (OPTIONAL)
CABINA COMPLETA - COMPONENTES (OPCIONAL)
CAB COMPLETE - COMPONENTS (OPTIONAL)

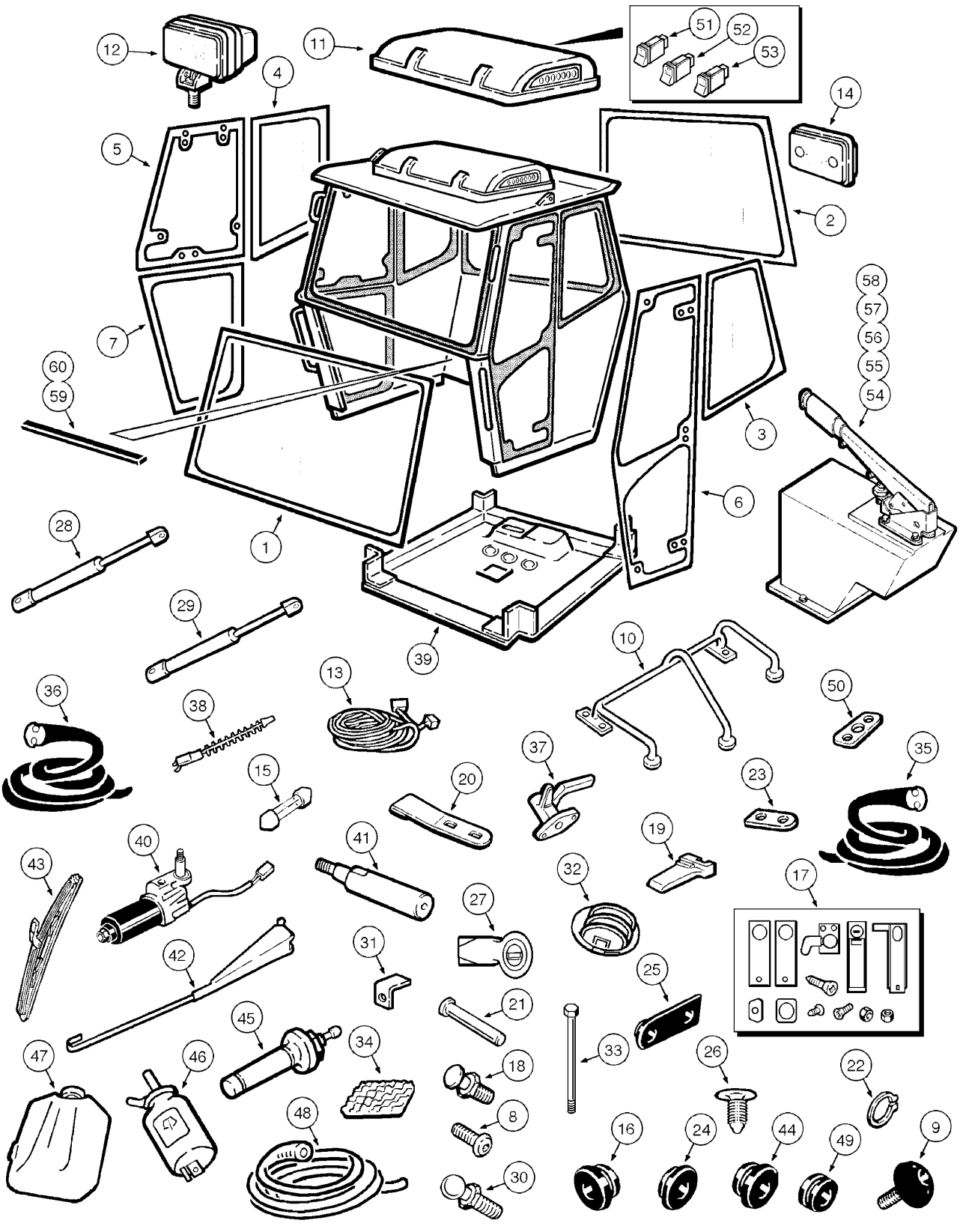

CAB COMPLETE - COMPONENTS (OPTIONAL)
CAB COMPLETE - COMPONENTS (OPTIONAL)
CAB COMPLETE - COMPONENTS (OPTIONAL)
CAB COMPLETE - COMPONENTS (OPTIONAL)

R	N	P.N.	MOD	Q	Denominação Bezeichnung	Description Description	Denominacion Beskrivelse	Descrizione Beschrijving	L.C.
		75264073			CABINE, full (P.9-28 to 30H), Includes items 1 - 60				
						CAB	CABINA	CABINA	008C
					KABINE	CABINE	KABINE	CABINE	
1		**87452953**		1	VIDRO, front windshield	GLASS	VIDRIO	CRISTALLO	038V
					GLAS	VITRE	GLAS	GLAS	
2		**87452954**		1	VIDRO, rear windshield	GLASS	VIDRIO	CRISTALLO	038V
					GLAS	VITRE	GLAS	GLAS	
3		**87452955**		1	VIDRO, rear LH	GLASS	VIDRIO	CRISTALLO	038V
					GLAS	VITRE	GLAS	GLAS	
4		**87452956**		1	VIDRO, rear RH	GLASS	VIDRIO	CRISTALLO	038V
					GLAS	VITRE	GLAS	GLAS	
5		**87452957**		1	VIDRO, window	GLASS	VIDRIO	CRISTALLO	038V
					GLAS	VITRE	GLAS	GLAS	
6		**87452958**		1	PORTA DA CABINE, door	CABIN DOOR	PUERTA DE CABINA	SPORTELLO CABINA	Z596
					KABINENTÜR	PORTIERE DE LA CABIN	KABINEDØR	CABINEPORTIER	
7		**87452951**		1	VIDRO, lower RH	GLASS	VIDRIO	CRISTALLO	038V
					GLAS	VITRE	GLAS	GLAS	
8		**NSS**		6	SEM SERVIÇO EM SEPARADO				
						NOT SERVICED SEPARA	NO SE REPARA POR SE	NON FORNITO SEPARAT	064N
					NICHT A SEP ERS-T LIEF	NON FORUNI SEPAREM	SERVICERES IKKE SEPA	NIET LOS VERKRIJGBAA	
9		**87452937**		4	PARAFUSO, windows	SCREW	TORNILLO	VITE	040V
					SCHRAUBE	VIS	SKRUE	SCHROEF	
10		**87452962**		1	CORRIMÃO, door	HANDRAIL	PASAMANO	CORRIMANO	015M
					HANDLAUF	MAIN COURANTE	GELÆNDER	HANDGREEP	
11		**87452961**		1	AR-CONDICIONADO, (P.9-30A)				
						AIR CONDITIONER	AIRE ACONDICIONADO	CONDIZIONATORE ARIA	0080
					KLIMAANLAGE	CLIMATISEUR	AIRCONDITION	AIRCONDITIONING	
12	1	**87453311**		2	FAROL	HEADLAMP	FARO	FARO	220P
					FRONTSCHEINWERFER	FEU	HOVEDLAMPE	KOPLAMP	
13		**87452959**		1	CABO ELÉTRICO, cabin	ELECTRIC CABLE	CABLE ELÉCTRICO	CAVO ELETTRICO	111C
					ELEKTROKABEL	CABLE ELECTRIQUE	EL-KABEL	ELEKTRICITEITSKABEL	
14		**87452928**		1	LÂMPADA, courtesy	LAMP	LÁMPARA	SPIA	009F
					LEUCHTE	LAMPE	LYGTE	LAMP	
15		**87452927**		1	LÂMPADA, 24V	LAMP	LÁMPARA	SPIA	009F
					LEUCHTE	LAMPE	LYGTE	LAMP	
16		**87453313**		4	JUNTA, light harness	GASKET	JUNTA	GUARNIZIONE	123G
					DICHTUNG	JOINT	PAKNING	PAKKING	
17		**87452948**		1	DISPOSITIVO DE TRAVAMENTO				
						LOCKING DEVICE	DISPOSITIVO DE BLOQU	DISPOSITIVO DI BLOCA(	Z404
					SPERRVORRICHTUNG	DISPOSITIF VERROUILL	LÅSEANORDNING	VERGRENDELING	
18		**87452950**		1	PINO, doorlock	PIN	PASADOR	PERNO	080P
					PIN	BROCHE	STIFT	PEN	
19		**87452929**		1	COBERTURA, lock	COVER	CUBIERTA	COPERCHIO	265C
					ABDECKUNG	COUVERCLE	DÆKSEL	AFSCHERMING	
20		**87452940**		4	DOBRADIÇA	HINGE	BISAGRA	CERNIERA	140C
					SCHARNIER	CHARNIERE	HÆNGSEL	SCHARNIER	
21		**87452944**		4	PINO, hinge	PIN	PASADOR	PERNO	080P
					PIN	BROCHE	STIFT	PEN	

(1) OPCIONAL

09-28	01	p2	10/11

CABINA COM SISTEMA DE CLIMATIZAÇÃO - COMPONENTES (OPCIONAL)
CAB COMPLETE - COMPONENTS (OPTIONAL)
CABINA COMPLETA - COMPONENTES (OPCIONAL)
CAB COMPLETE - COMPONENTS (OPTIONAL)

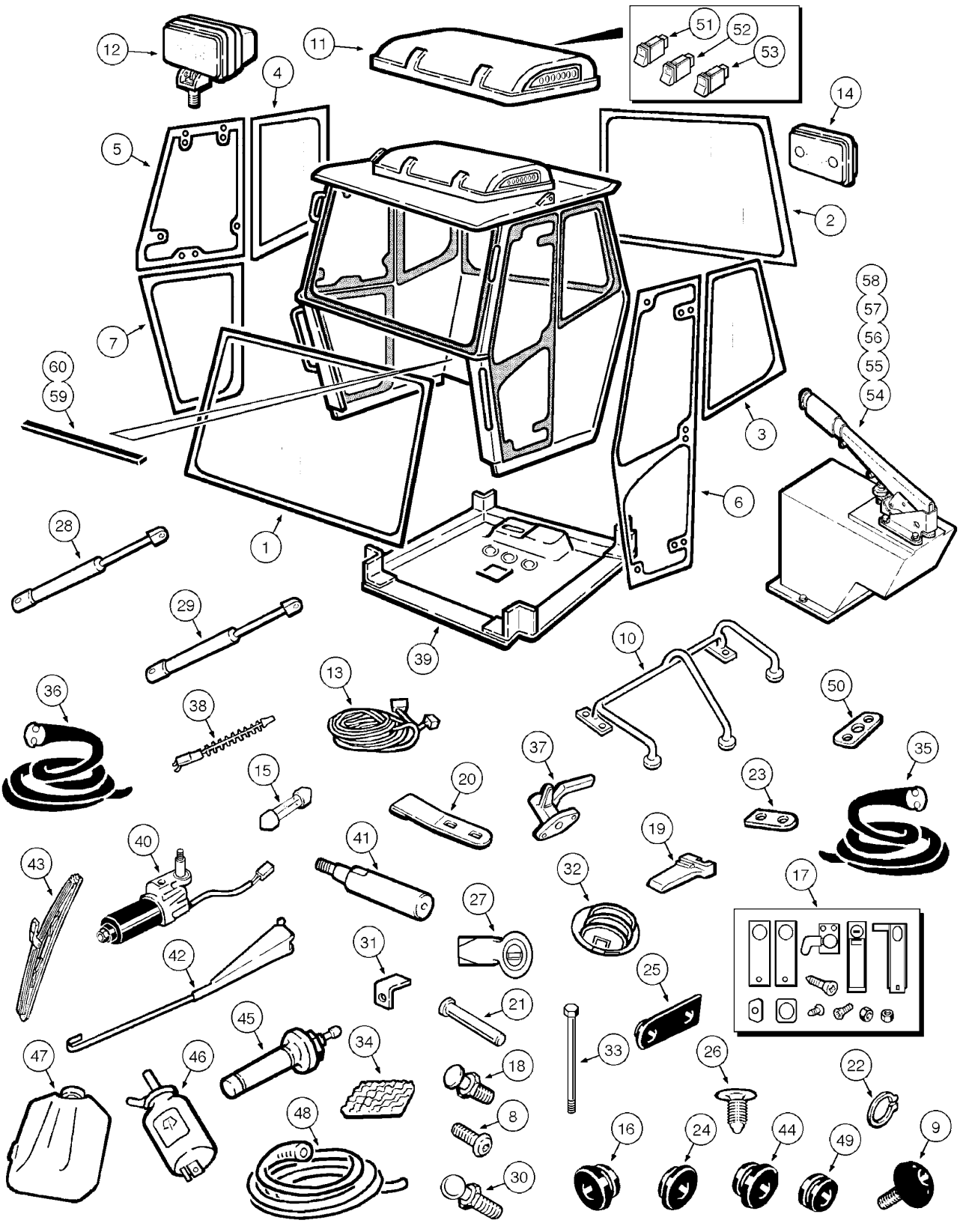

CAB COMPLETE - COMPONENTS (OPTIONAL)
CAB COMPLETE - COMPONENTS (OPTIONAL)
CAB COMPLETE - COMPONENTS (OPTIONAL)
CAB COMPLETE - COMPONENTS (OPTIONAL)

R	N	P.N.	MOD	Q	Denominação Bezeichnung	Description Description	Denominacion Beskrivelse	Descrizione Beschrijving	L.C.
22		87452945		4	ANEL DE PRESSÃO SPRENGRING	SNAP RING ANNEAU D'ARRET	ANILLO DE RESORTE LÅSERING	ANELLO ELASTICO VEERRING	054A
23		87452931		2	SUPORTE, hinge STÜTZE	SUPPORT SUPPORT	SOPORTE BESLAG	SUPPORTO STEUN	300S
24		87452942		6	COXIM KISSEN	CUSHION COUSSIN	COJÍN PUDE	CUSCINO KUSSEN	2460
25		87452943		4	PROTEÇÃO SCHUTZABDECKUNG	GUARD PROTECTION	DEFENSA BESKYTTELSESSKÆRM	PROTEZIONE AFSCHERMING	070R
26		87452949		10	BOTÃO TASTE	BUTTON BOUTON	BOTÓN KNAP	PULSANTE KNOP	120B
27		87453312		1	DISPOSITIVO DE TRAVAMENTO SPERRVORRICHTUNG	LOCKING DEVICE DISPOSITIF VERROUILL.	DISPOSITIVO DE BLOQU LÅSEANORDNING	DISPOSITIVO DI BLOCA(VERGRENDELING	Z404
28		87452930		2	AMORTECEDOR, window STOSSDÄMPFER	SHOCK ABSORBER AMORTISSEUR	AMORTIGUADOR STØDDÆMPER	AMMORTIZZATORE SCHOKDEMPER	036A
29		87452952		1	AMORTECEDOR, door STOSSDÄMPFER	SHOCK ABSORBER AMORTISSEUR	AMORTIGUADOR STØDDÆMPER	AMMORTIZZATORE SCHOKDEMPER	036A
30		87452941		6	PARAFUSO, shock absorver SCHRAUBE	SCREW VIS	TORNILLO SKRUE	VITE SCHROEF	040V
31		87452960		2	SUPORTE, shock absorver STÜTZE	SUPPORT SUPPORT	SOPORTE BESLAG	SUPPORTO STEUN	300S
32		87452923		3	DIFUSOR, air STREUSCHEIBE	DIFFUSER DIFFUSEUR	DIFUSOR SPREDEDYSE	DIFFUSORE VERDELER	045D
33		87452934		1	PARAFUSO SCHRAUBE	SCREW VIS	TORNILLO SKRUE	VITE SCHROEF	040V
34		87452933		1	PAINEL PLATTE	PANEL PANNEAU	PANEL PANEL	PANNELLO PANEEL	025P
35		87452932		2	JUNTA, door/window DICHTUNG	GASKET JOINT	JUNTA PAKNING	GUARNIZIONE PAKKING	123G
36		87452946		2	JUNTA, roof headliner DICHTUNG	GASKET JOINT	JUNTA PAKNING	GUARNIZIONE PAKKING	123G
37		87452938		1	MAÇANETA, window RUNDGRIFF	KNOB BOUTON	MANDO GREB	MANOPOLA KNOP	150P
38		87452939		10	GRAMPO KLAMMER	CLIP COLLIER	ABRAZADERA KLIPS	FERMO KLEM	045F
39		87452935		1	COBERTURA, roof ABDECKUNG	COVER COUVERCLE	CUBIERTA DÆKSEL	COPERCHIO AFSCHERMING	265C
40		87452926		1	MOTOR ELÉTRICO PEQUENO, wiper KLEINER ELEKTROMOT(	SMALL ELECTRIC MOTC PETIT MOTEUR ELECTR	MOTOR ELÉCTRICO PE(LILLE EL-MOTOR	MOTORINO ELETTRICO KLEINE ELEKTROMOTOI	137M
41		87452922		1	EIXO, wiper motor WELLE	SHAFT ARBRE	EJE AKSEL	ALBERO AS	016A
42		87452925		1	LIMPADOR PARA-BRISA, wiper FRONTSCHEIBENWASC	WINDSHIELD WASHER LAVE GLACE	ARANDELA DE LIMPIAPA FORRUDEVISKER	LAVACRISTALLI RUITENSPROEIER VÓÓI	Z537
43		87452924		1	LÂMINA, wiper KLINGE	BLADE LAME	CUCHILLA KNIV	LAMA MES	0700

09-28	01	p3	10/11

CABINA COM SISTEMA DE CLIMATIZAÇÃO - COMPONENTES (OPCIONAL)
CAB COMPLETE - COMPONENTS (OPTIONAL)
CABINA COMPLETA - COMPONENTES (OPCIONAL)
CAB COMPLETE - COMPONENTS (OPTIONAL)

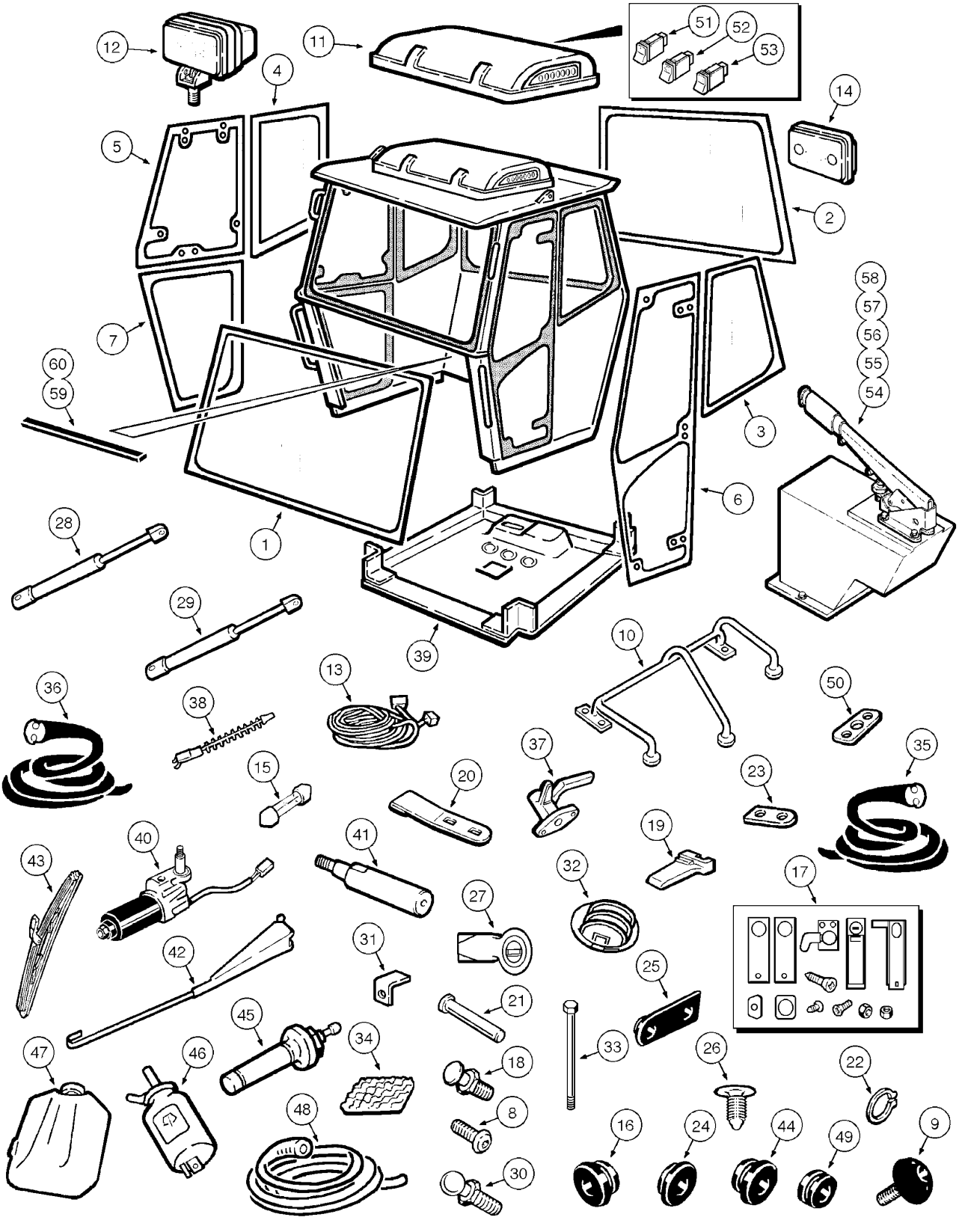

CAB COMPLETE - COMPONENTS (OPTIONAL)
CAB COMPLETE - COMPONENTS (OPTIONAL)
CAB COMPLETE - COMPONENTS (OPTIONAL)
CAB COMPLETE - COMPONENTS (OPTIONAL)

R	N	P.N.	MOD	Q	Denominação Bezeichnung	Description Description	Denominacion Beskrivelse	Descrizione Beschrijving	L.C.
44		87452947		1	BUJÃO, wiper shaft STOPFEN	PLUG BOUCHON	TAPÓN PROP	TAPPO PLUG	050T
45		87453317		1	LIMPADOR DO PARA-BRISA FRONTSCHEIBENWISCH	WINDSHIELD WIPER ESSUIE-GLACE	LIMPIAPARABRISAS FORRUDEVISKER	TERGICRISTALLI RUITENWISSER VÓÓR	Z493
46		87453316		1	MOTOR ELÉTRICO PEQUENO, washer KLEINER ELEKTROMOT(	SMALL ELECTRIC MOTC PETIT MOTEUR ELECTR	MOTOR ELÉCTRICO PE(LILLE EL-MOTOR	MOTORINO ELETTRICO KLEINE ELEKTROMOTOI	137M
47		87453315		1	RESERVATÓRIO, washer TANK	TANK RESERVOIR	DEPÓSITO TANK	SERBATOIO TANK	115S
48		87453318		1	MANGUEIRA, washer SCHLAUCH	HOSE FLEXIBLE	TUBO SLANGE	TUBO FLESSIBILE SLANG	030M
49		87453314		2	JUNTA, washer DICHTUNG	GASKET JOINT	JUNTA PAKNING	GUARNIZIONE PAKKING	123G
50		87452936		1	PLACA DE COBERTURA, glass protection ABDECKPLATTE	COVER PLATE COUVERCLE	PLACA DE CUBIERTA DÆKPLADE	PIASTRA DI COPERTUR/ AFSCHERMPLAAT	110P
51		71102466		1	INTERRUPTOR, washer SCHALTER	SWITCH CONTACTEUR	INTERRUPTOR KONTAKT	INTERRUTTORE SCHAKELAAR	075I
52		71102464		1	INTERRUPTOR, wipper SCHALTER	SWITCH CONTACTEUR	INTERRUPTOR KONTAKT	INTERRUTTORE SCHAKELAAR	075I
53		71102465		1	INTERRUPTOR SCHALTER	SWITCH CONTACTEUR	INTERRUPTOR KONTAKT	INTERRUTTORE SCHAKELAAR	075I
54		87461299		1	CONSOLE, lever KONSOLE	CONSOLE CONSOLE	CONSOLA KONSOL	CONSOLE CONSOLE	080M
55		87461301		1	SUPORTE, boot STÜTZE	SUPPORT SUPPORT	SOPORTE BESLAG	SUPPORTO STEUN	300S
56		5106733		1	CAPA MANSCHETTE	BOOT SOUFFLET	FUNDA MANCHET	PARAPOLVERE HOES	330C
57		87461300		1	SENSOR, parking brake SENSOR	SENSOR CAPTEUR	SENSOR FØLER	SENSORE SENSOR	608S
58		REF		1	INSTRUÇÃO, LEVER parking brake (p.7-16) ANLEITUNG	INSTRUCTION INSTRUCTION	INSTRUCCIÓN INSTRUKTION	ISTRUZIONI INSTRUCTIE	Z571
59		75265355		1	VEDAÇÃO DE BORRACHA GUMMIDICHTUNG	RUBBER SEAL JOINT EN CAOUTCHOU(	JUNTA DE GOMA GUMMITÆTNING	GUARNIZIONE DI GOMM RUBBEREN AFDICHTINC	122G
60		75265356		1	VEDAÇÃO DE BORRACHA GUMMIDICHTUNG	RUBBER SEAL JOINT EN CAOUTCHOU(	JUNTA DE GOMA GUMMITÆTNING	GUARNIZIONE DI GOMM RUBBEREN AFDICHTINC	122G

09-28	02	p1	11/11

CABINA COMPLETA - PORTA
CAB COMPLETE - DOOR
CABINA COMPLETA - PUERTA
CAB COMPLETE - DOOR

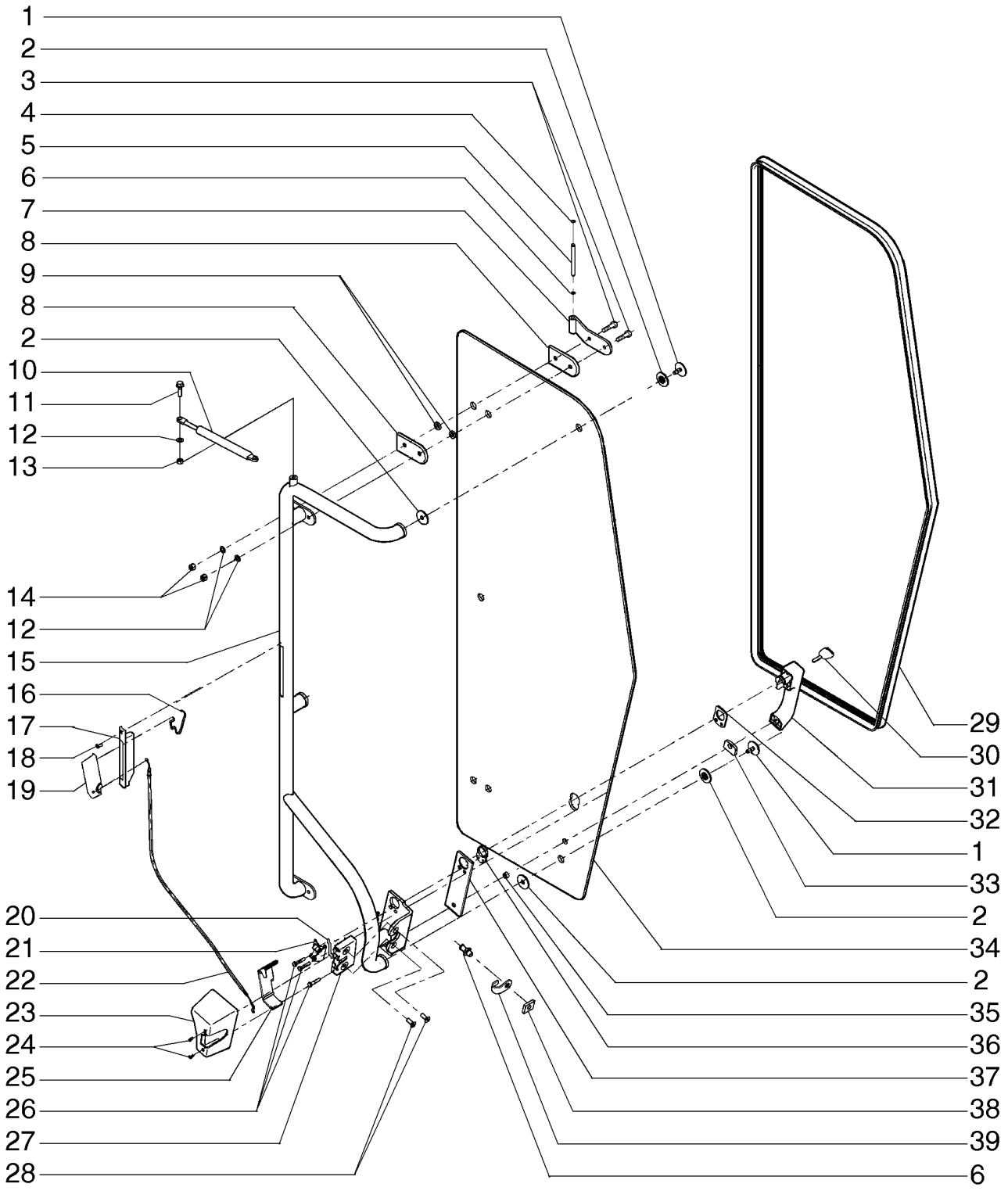

CAB COMPLETE - DOOR
CAB COMPLETE - DOOR
CAB COMPLETE - DOOR
CAB COMPLETE - DOOR

R	N	P.N.	MOD	Q	Denominação Bezeichnung	Description Description	Denominacion Beskrivelse	Descrizione Beschrijving	L.C.
1		82013304		3	PARAFUSO, M8 x 22 SCHRAUBE	SCREW VIS	TORNILLO SKRUE	VITE SCHROEF	040V
2		81868323		6	ARRUELA PLANA UNTERLEGSCHEIBE	WASHER RONDELLE	ARANDELA FLADSKIVE	RONDELLA SLUITRING	131R
3		87604054		4	PARAFUSO SCHRAUBE	SCREW VIS	TORNILLO SKRUE	VITE SCHROEF	040V
4		11065674		4	ANEL ELÁSTICO, M8 SICHERUNGSRING	CIRCLIP CIRCLIP	ARANDELA DE RETENCI LÅSERING	ANELLO ELASTICO BORGVEER	056A
5		87604055		2	PINO PIN	PIN BROCHE	PASADOR STIFT	PERNO PEN	080P
6		84253768		1	PINO PIN	PIN BROCHE	PASADOR STIFT	PERNO PEN	080P
7		87603366		2	PLACA PLATTE	PLATE PLAQUE	PLACA PLADE	PIASTRA PLAAT	105P
8		82016389		4	JUNTA DICHTUNG	GASKET JOINT	JUNTA PAKNING	GUARNIZIONE PAKKING	123G
9		87610593		4	BUCHA BUCHSE	BUSHING BAGUE	CASQUILLO BØSNING	BOCCOLA BUS	095B
10		84195650		1	AMORTECEDOR STOSSDÄMPFER	SHOCK ABSORBER AMORTISSEUR	AMORTIGUADOR STØDDÆMPER	AMMORTIZZATORE SCHOKDEMPER	036A
11		555-14		2	PARAFUSO SCHRAUBE	BOLT VIS	PERNO BOLT	BULLONE BOUT	140B
12		895-11008		6	ARRUELA PLANA, M8 x 16 x 1.6 UNTERLEGSCHEIBE	WASHER RONDELLE	ARANDELA FLADSKIVE	RONDELLA SLUITRING	131R
13		16100811		2	PORCA, Hex, M8, 6.80mm, Cl 8, ZND MUTTER	NUT ECROU	TUERCA MØTRIK	DADO MOER	010D
14		832-10408		4	CONTRA PORCA, M8 x 1.25, Cl 8 SICHERUNGSMUTTER	LOCK NUT CONTRE-ECROU	TUERCA DE BLOQUEO LÅSEMØTRIK	DADO DI BLOCCAGGIO BORGMOER	P263
15		87602141		1	CORRIMÃO HANDLAUF	HANDRAIL MAIN COURANTE	PASAMANO GELÆNDER	CORRIMANO HANDGREEP	015M
16		82035974		1	MOLA FEDER	SPRING RESSORT	RESORTE FJEDER	MOLLA VEER	100M
17		82016408		1	ALOJAMENTO GEHÄUSE	HOUSING CARTER	ALOJAMIENTO HUS	ALLOGGIAMENTO HUIS	014V
18		15688004		1	PARAFUSO, Pan Hd, M8 x 13 SCHRAUBE	SCREW VIS	TORNILLO SKRUE	VITE SCHROEF	040V
19		82016406		1	ALAVANCA HEBEL	LEVER LEVIER	PALANCA ARM	LEVA HEFBOOM	045L
20		87338383		1	HASTE STANGE	ROD TIGE	VARILLA STANG	ASTA STANG	090A
21		82018477		1	SUPORTE HALTERUNG	BRACKET SUPPORT	SOPORTE BESLAG	STAFFA STEUN	225S
22		87604051		1	CABO KABEL	CABLE CABLE	CABLE KABEL	CAVO KABEL	650C

A Partir do Chassi N9AE02680

W20E

09-28	02	p2	11/11

CABINA COMPLETA - PORTA
CAB COMPLETE - DOOR
CABINA COMPLETA - PUERTA
CAB COMPLETE - DOOR

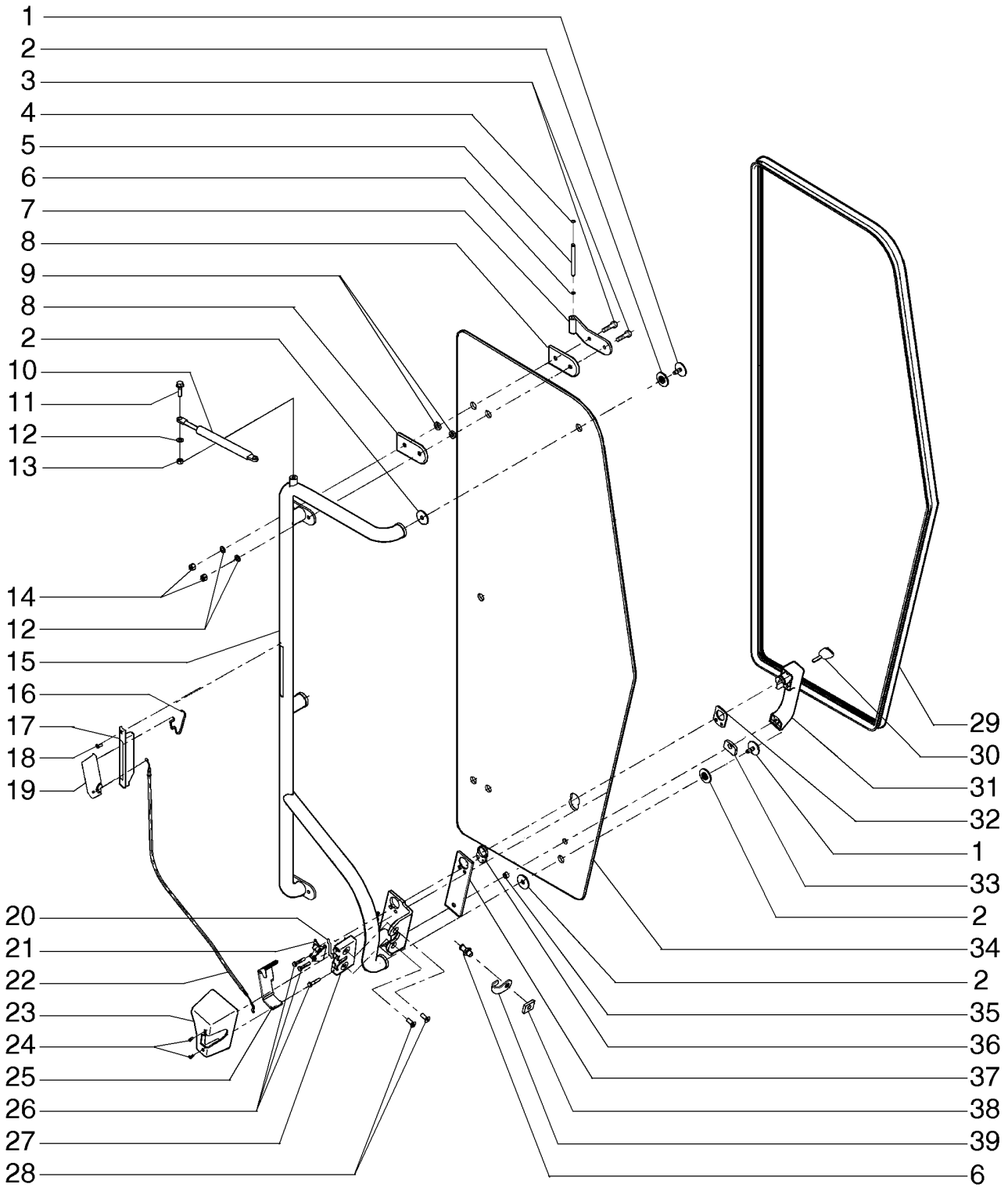

CAB COMPLETE - DOOR
CAB COMPLETE - DOOR
CAB COMPLETE - DOOR
CAB COMPLETE - DOOR

R	N	P.N.	MOD	Q	Denominação Bezeichnung	Description Description	Denominacion Beskrivelse	Descrizione Beschrijving	L.C.
23		82016450		1	COBERTURA ABDECKUNG	COVER COUVERCLE	CUBIERTA DÆKSEL	COPERCHIO AFSCHERMING	265C
24		83956457		2	PARAFUSO, M4 x 10, 4.8 SENKKOPFSCHRAUBE	COUNTERSUNK SCREW VIS A TETE FRAISEE	TORNILLO AVELLANADO UNDERSÆNKET SKRUE	VITE SVASATA VERZONKEN SCHROEF	044V
25		82018466		1	COBERTURA ABDECKUNG	COVER COUVERCLE	CUBIERTA DÆKSEL	COPERCHIO AFSCHERMING	265C
26		16050621		3	PARAFUSO, Hex, M6 x 30.00mm, Cl 8.8, ZND SCHRAUBE	SCREW VIS	TORNILLO SKRUE	VITE SCHROEF	040V
27		82017323		1	TRINCO VERRIEGELUNG	LATCH LOQUET	PESTILLO PAL	CHIUSURA A SCATTO GRENDEL	156C
28		14442034		2	PARAFUSO, CSK, Soc Hd, M8 x 20, Cl 10.9 SCHRAUBE	SCREW VIS	TORNILLO SKRUE	VITE SCHROEF	040V
29		87604052		1	VEDAÇÃO DICHTUNG	SEAL JOINT	ANILLO DE CIERRE PAKNING	GUARNIZIONE; TENUTA AFDICHTING	132A
30		87612765		1	CHAVE SCHLÜSSEL	KEY CLE	LLAVE KILE	CHIAVE SLEUTEL	P830
31		82019604		1	MANILHA GRIFF	HANDLE POIGNEE	MANECILLA HÅNDTAG	MANIGLIA HENDEL	020M
32		82010403		1	JUNTA DICHTUNG	GASKET JOINT	JUNTA PAKNING	GUARNIZIONE PAKKING	123G
33		82010402		1	JUNTA DICHTUNG	GASKET JOINT	JUNTA PAKNING	GUARNIZIONE PAKKING	123G
34		87603365		1	VIDRO GLAS	GLASS VITRE	VIDRIO GLAS	CRISTALLO GLAS	038V
35		83961987		1	ESPAÇADOR DISTANZSTÜCK	SPACER ENTRETOISE	SEPARADOR AFSTANDSSTYKKE	DISTANZIALE AFSTANDSSTUK	075D
36		83994024		1	JUNTA DICHTUNG	GASKET JOINT	JUNTA PAKNING	GUARNIZIONE PAKKING	123G
37		82016392		1	JUNTA DICHTUNG	GASKET JOINT	JUNTA PAKNING	GUARNIZIONE PAKKING	123G
38		83994378		1	PORCA MUTTER	NUT ECROU	TUERCA MØTRIK	DADO MOER	010D
39		82019370		1	COBERTURA ABDECKUNG	COVER COUVERCLE	CUBIERTA DÆKSEL	COPERCHIO AFSCHERMING	265C

A Partir do Chassi N9AE02680

W20E

09-28	03	p1	07/09

CABINA COMPLETA - JANELA
CAB COMPLETE - WINDOW
CABINA COMPLETA - VENTANA
CAB COMPLETE - WINDOW

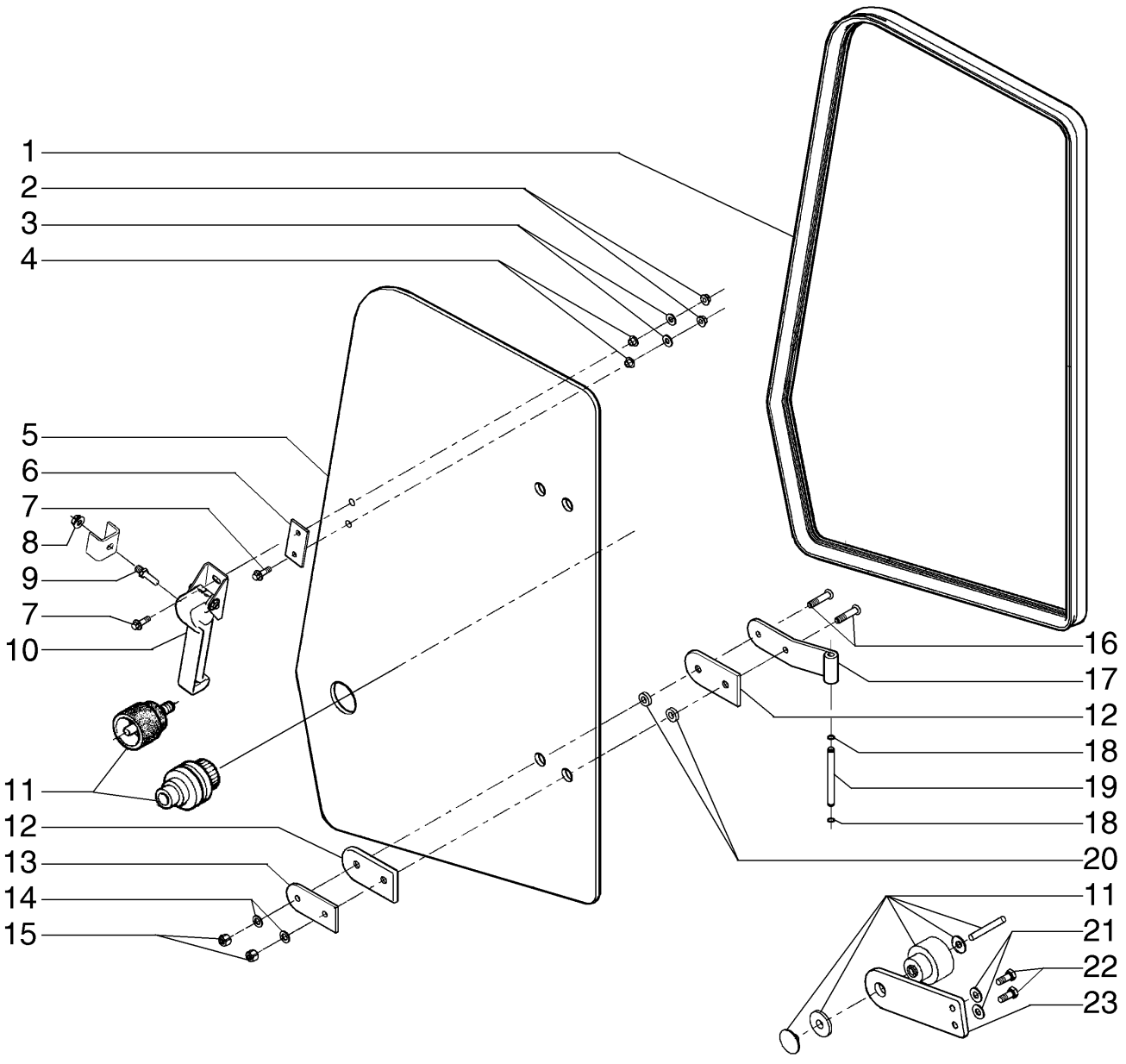

CAB COMPLETE - WINDOW
CAB COMPLETE - WINDOW
CAB COMPLETE - WINDOW
CAB COMPLETE - WINDOW

R	N	P.N.	MOD	Q	Denominação Bezeichnung	Description Description	Denominacion Beskrivelse	Descrizione Beschrijving	L.C.
1		87604053		1	VEDAÇÃO DICHTUNG	SEAL JOINT	ANILLO DE CIERRE PAKNING	GUARNIZIONE; TENUTA AFDICHTING	132A
2		97005C1		2	PORCA MUTTER	NUT ECROU	TUERCA NUT	DADO NUT	5780
3		225913A1		2	ARRUELA UNTERLEGSCHEIBE	WASHER RONDELLE	ARANDELA WASHER	RONDELLA WASHER	9720
4		109171C1		2	BUCHA BUECHSE	BUSHING DOUILLE	CASQUILLO BUSHING	BOCCOLA BUSHING	1140
5		87606945		1	VIDRO GLAS	GLASS VITRE	VIDRIO GLAS	CRISTALLO GLAS	038V
6		194190A2		1	JUNTA DICHTUNG	GASKET JOINT	JUNTA GASKET	GUARNIZIONE GASKET	3720
7		97006C1		2	PARAFUSO SCHRAUBE	BOLT VIS	PERNO BOLT	BULLONE BOUT	140B
8		825-5148		1	PORCA, M8, Flg Ser MUTTER	NUT ECROU	TUERCA MØTRIK	DADO MOER	010D
9		117724A1		1	PINO PIN	PIN BROCHE	PASADOR STIFT	PERNO PEN	080P
10		317171A1		1	ALAVANCA HEBEL	LEVER LEVIER	PALANCA ARM	LEVA HEFBOOM	045L
11		85804617		1	KIT SATZ	KIT KIT	KIT SÆT	KIT KIT	305C
12		82016389		4	JUNTA DICHTUNG	GASKET JOINT	JUNTA PAKNING	GUARNIZIONE PAKKING	123G
13		87606946		2	PLACA PLATTE	PLATE PLAQUE	PLACA PLADE	PIASTRA PLAAT	105P
14		895-11008		4	ARRUELA PLANA, M8 x 16 x 1.6 UNTERLEGSCHEIBE	WASHER RONDELLE	ARANDELA FLADSKIVE	RONDELLA SLUITRING	131R
15		832-10408		4	CONTRA PORCA, M8 x 1.25, Cl 8 SICHERUNGSMUTTER	LOCK NUT CONTRE-ECROU	TUERCA DE BLOQUEO LÅSEMØTRIK	DADO DI BLOCCAGGIO BORGMOER	P263
16		87604054		4	PARAFUSO SCHRAUBE	SCREW VIS	TORNILLO SKRUE	VITE SCHROEF	040V
17		87603366		2	PLACA PLATTE	PLATE PLAQUE	PLACA PLADE	PIASTRA PLAAT	105P
18		11065674		4	ANEL ELÁSTICO, M8 SICHERUNGSRING	CIRCLIP CIRCLIP	ARANDELA DE RETENCI LÅSERING	ANELLO ELASTICO BORGVEER	056A
19		87604055		2	PINO PIN	PIN BROCHE	PASADOR STIFT	PERNO PEN	080P
20		87610593		4	BUCHA BUCHSE	BUSHING BAGUE	CASQUILLO BØSNING	BOCCOLA BUS	095B
21		895-15008		2	ARRUELA PLANA, M8 x 20 x 1.6 UNTERLEGSCHEIBE	WASHER RONDELLE	ARANDELA FLADSKIVE	RONDELLA SLUITRING	131R
22		627-8020		2	PARAFUSO, Hex, M8 x 20, 10.9 SCHRAUBE	BOLT VIS	PERNO BOLT	BULLONE BOUT	140B

A Partir do Chassi N9AE02680

W20E

09-28	03	p2	07/09

CABINA COMPLETA - JANELA
CAB COMPLETE - WINDOW
CABINA COMPLETA - VENTANA
CAB COMPLETE - WINDOW

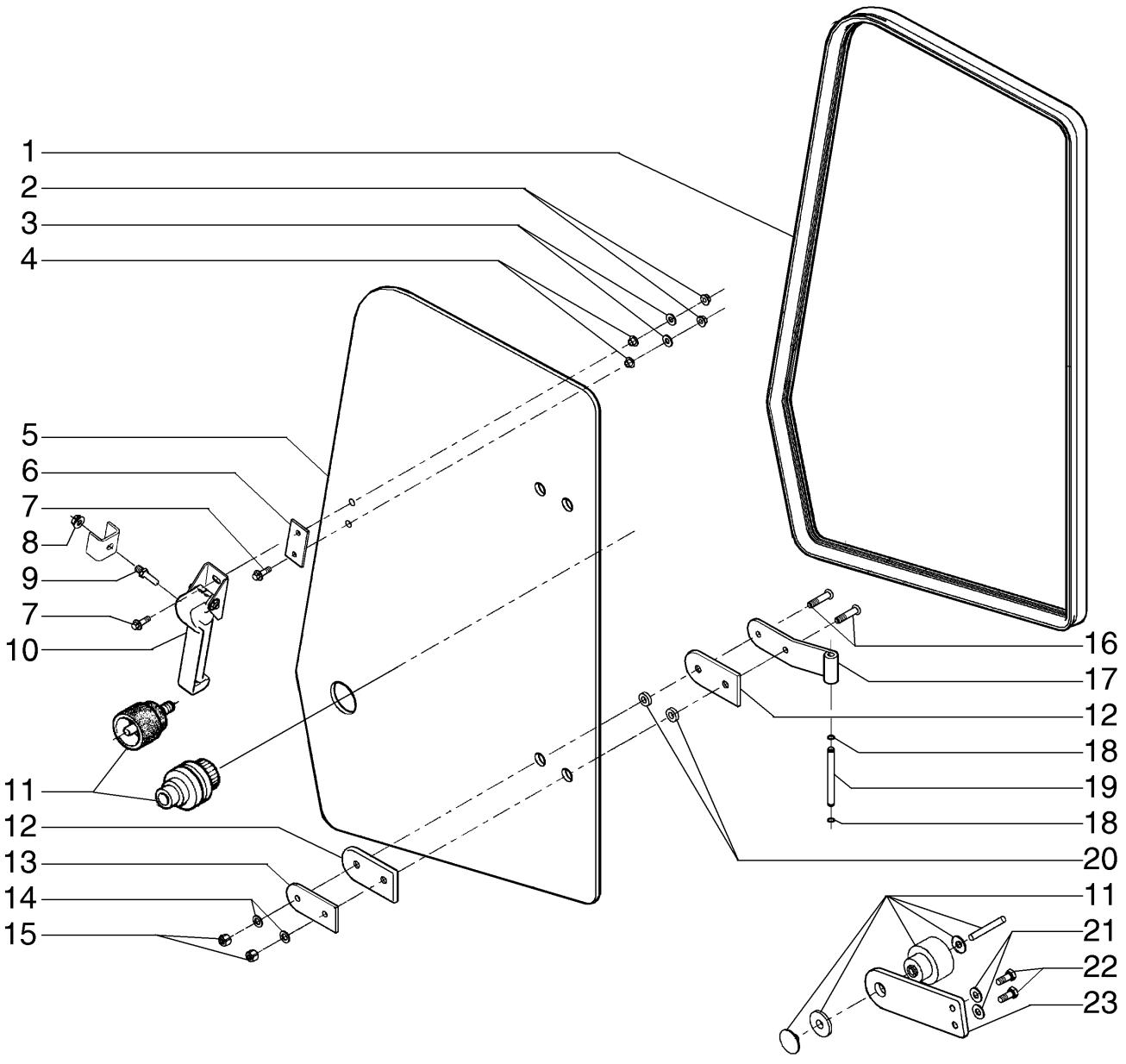

CAB COMPLETE - WINDOW
CAB COMPLETE - WINDOW
CAB COMPLETE - WINDOW
CAB COMPLETE - WINDOW

R	N	P.N.	MOD	Q	Denominação Bezeichnung	Description Description	Denominacion Beskrivelse	Descrizione Beschrijving	L.C.
23		**84196198**		1	SUPORTE STÜTZE	SUPPORT SUPPORT	SOPORTE BESLAG	SUPPORTO STEUN	300S

A Partir do Chassi N9AE02680

W20E

09-28	04	p1	07/09

CABINA COMPLETA - REVESTIMENTOS
CAB COMPLETE - COVERING
CABINA COMPLETA - REVESTIMIENTOS
CAB COMPLETE - COVERING

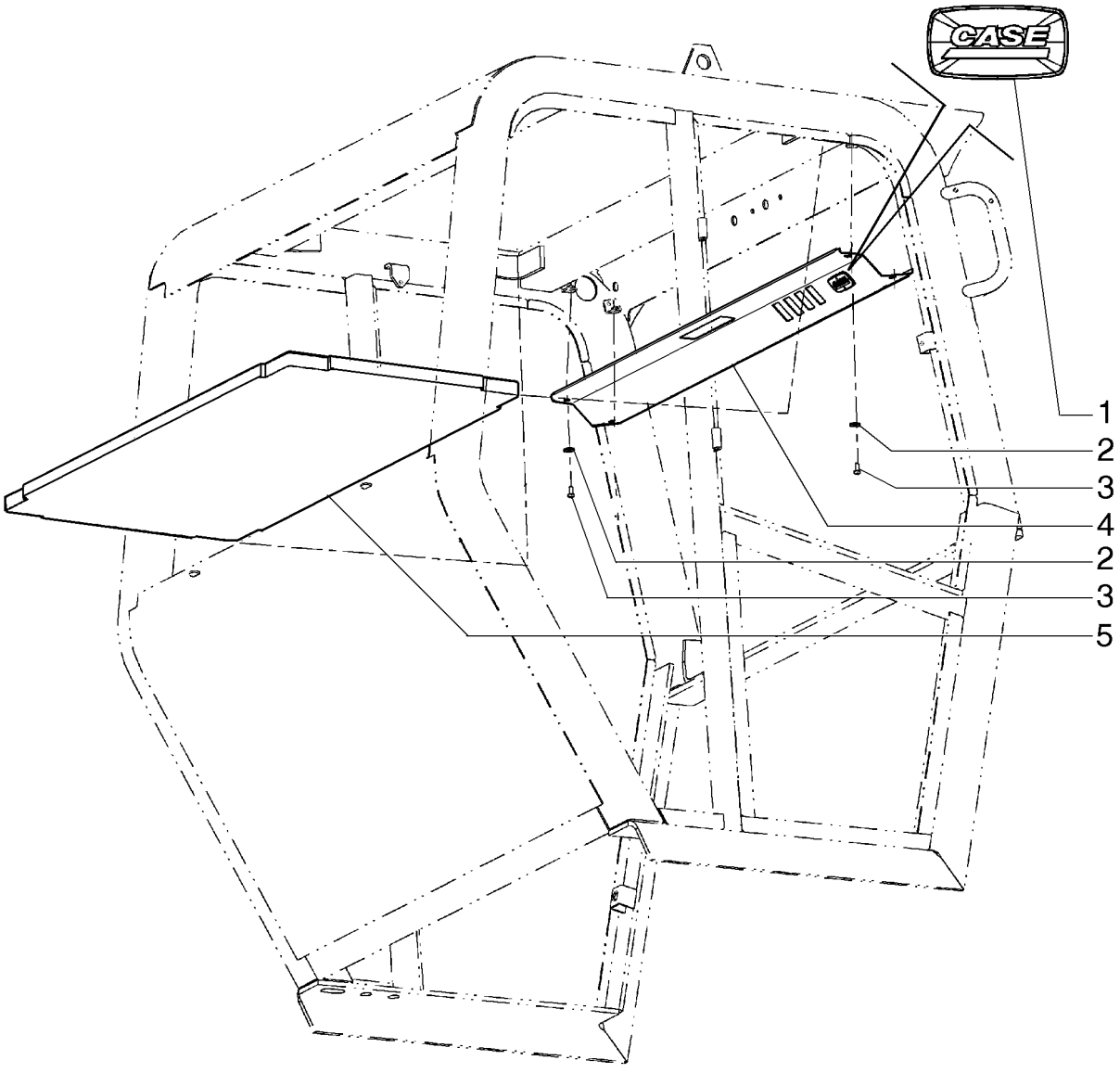

CAB COMPLETE - COVERING
CAB COMPLETE - COVERING
CAB COMPLETE - COVERING
CAB COMPLETE - COVERING

R	N	P.N.	MOD	Q	Denominação Bezeichnung	Description Description	Denominacion Beskrivelse	Descrizione Beschrijving	L.C.
1		87607914		1	ADESIVO AUFKLEBER	DECAL AUTOCOLLANT	CALCOMANÍA TRANSFER	DECALCOMANIA STICKER	012D
2		1990502C1		4	ARRUELA UNTERLEGSCHEIBE	WASHER RONDELLE	ARANDELA WASHER	RONDELLA WASHER	9720
3		297850A1		4	PARAFUSO, Cross Pan Hd, M6 x 16 SCHRAUBE	SCREW VIS	TORNILLO SKRUE	VITE SCHROEF	040V
4		87603357		1	PROTEÇÃO SCHUTZABDECKUNG	GUARD PROTECTION	DEFENSA BESKYTTELSESSKÆRM	PROTEZIONE AFSCHERMING	070R
5		87603358		1	PROTEÇÃO SCHUTZABDECKUNG	GUARD PROTECTION	DEFENSA BESKYTTELSESSKÆRM	PROTEZIONE AFSCHERMING	070R

A Partir do Chassi N9AE02680

W20E

09-28	05	p1	12/09

CABINA COMPLETA - LIMPADOR E LAVADOR DE PARA-BRISA
CAB COMPLETE - WINDSHIELD WIPER AND WASHER
CABINA COMPLETA - LIMPIAVIDROS Y LAVIAVIDROS
CAB COMPLETE - WINDSHIELD WIPER AND WASHER

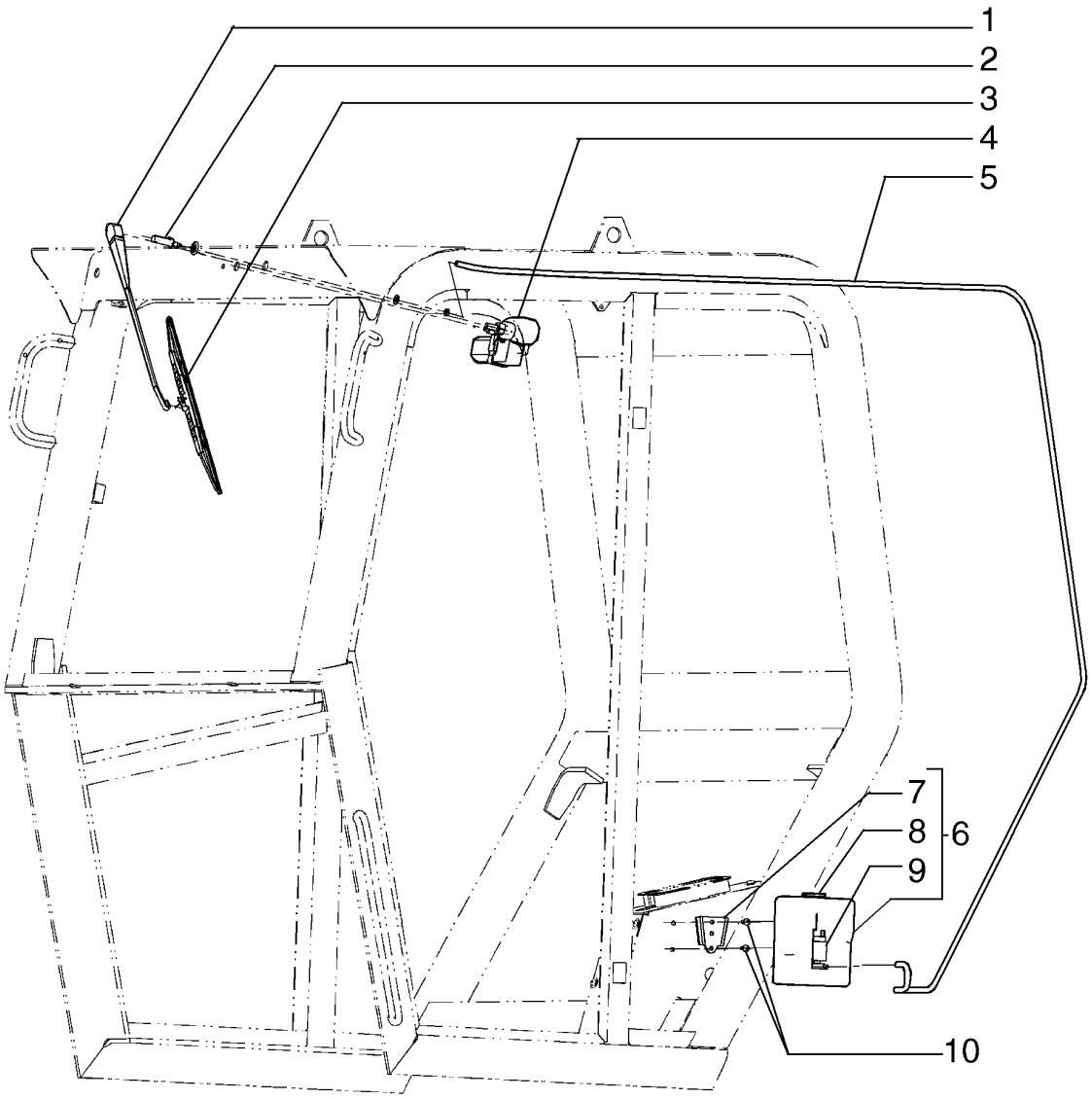

CAB COMPLETE - WINDSHIELD WIPER AND WASHER
CAB COMPLETE - WINDSHIELD WIPER AND WASHER
CAB COMPLETE - WINDSHIELD WIPER AND WASHER
CAB COMPLETE - WINDSHIELD WIPER AND WASHER

R	N	P.N.	MOD	Q	Denominação Bezeichnung	Description Description	Denominacion Beskrivelse	Descrizione Beschrijving	L.C.
1		87323535		1	PALHETA LIMPADOR WISCHERBLATT	WIPER BLADE LAME D'ESSUIE-GLACE	RASQUETA LIMPIAPARA VISKERBLAD	SPAZZOLA TERGICRIST. RUITENWISSERBLAD	175S
2		82030999		1	JATO DÜSE	JET GICLEUR	BOQUILLA JET	UGELLO SPROEIER	4740
3		87323534		1	PALHETA LIMPADOR WISCHERBLATT	WIPER BLADE LAME D'ESSUIE-GLACE	RASQUETA LIMPIAPARA VISKERBLAD	SPAZZOLA TERGICRIST. RUITENWISSERBLAD	175S
4		87607582		1	MOTOR MOTOR	MOTOR MOTEUR	MOTOR MOTOR	MOTORINO; MOTORE MOTOR	Z560
5		31-2370		1	MANGUEIRA, 4.7752 mm ID x 3302.00 mm SCHLAUCH	HOSE FLEXIBLE	MANGUERA HOSE	TUBO FLESSIBILE HOSE	4480
6		87607803		1	RESERVATÓRIO BEHÄLTER	RESERVOIR RESERVOIR	DEPÓSITO BEHOLDER	SERBATOIO RESERVOIR	7050
7		87572037		1	SUPORTE STÜTZE	SUPPORT SUPPORT	SOPORTE BESLAG	SUPPORTO STEUN	300S
8		75286905		1	COBERTURA ABDECKUNG	COVER COUVERCLE	CUBIERTA DÆKSEL	COPERCHIO AFSCHERMING	265C
9		75286901		1	BOMBA DE ÁGUA WASSERPUMPE	WATER PUMP POMPE A EAU	BOMBA DE AGUA VANDPUMPE	POMPA ACQUA WATERPOMP	152P
10		297850A1		2	PARAFUSO, Cross Pan Hd, M6 x 16 SCHRAUBE	SCREW VIS	TORNILLO SKRUE	VITE SCHROEF	040V

A Partir do Chassi N9AE02680

W20E

09-28	06	p1	12/09

CABINA COMPLETA - REVESTIMENTO DO FREIO DE ESTACIONAMENTO
CAB COMPLETE - PARKING BRAKE COVERING
CABINA COMPLETA - REVESTIMIENTO DO FRENO
CAB COMPLETE - PARKING BRAKE COVERING

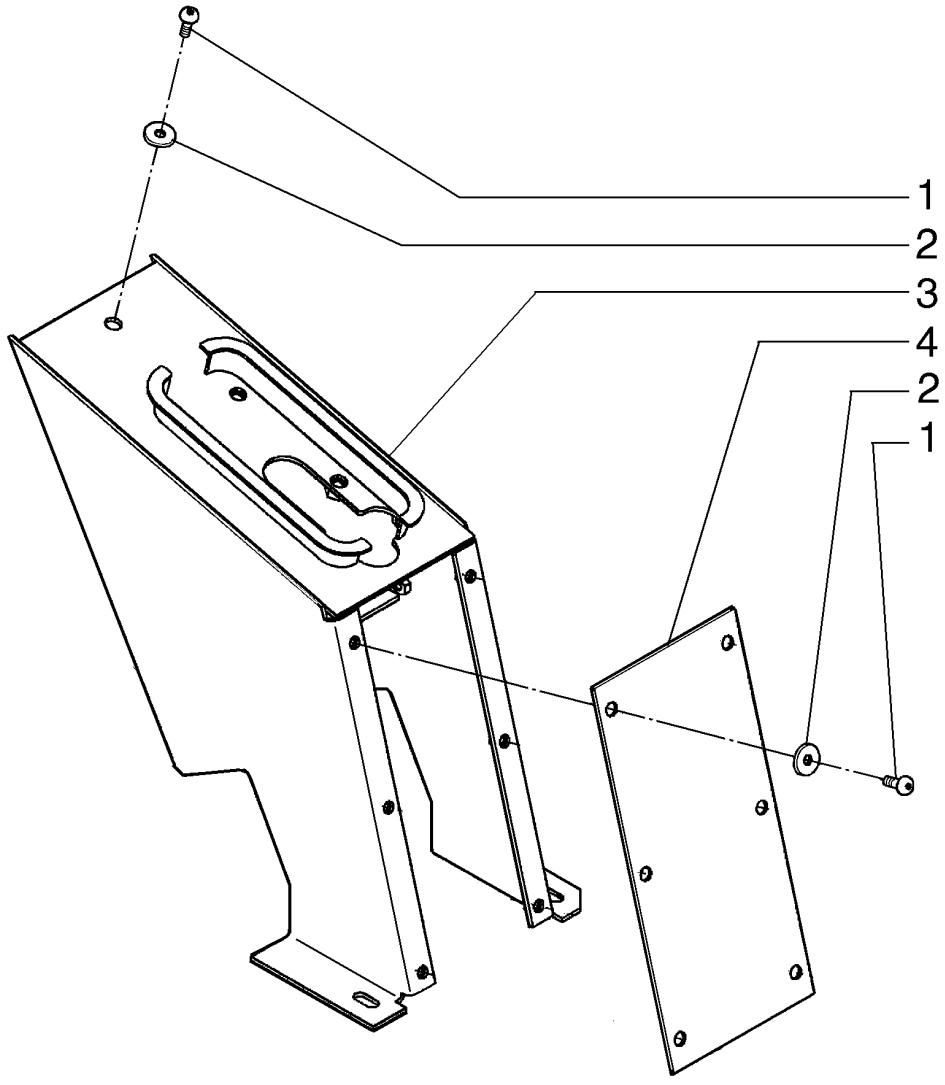

CAB COMPLETE - PARKING BRAKE COVERING
CAB COMPLETE - PARKING BRAKE COVERING
CAB COMPLETE - PARKING BRAKE COVERING
CAB COMPLETE - PARKING BRAKE COVERING

R	N	P.N.	MOD	Q	Denominação Bezeichnung	Description Description	Denominacion Beskrivelse	Descrizione Beschrijving	L.C.
1		**297850A1**		7	PARAFUSO, Cross Pan Hd, M6 x 16				
						SCREW	TORNILLO	VITE	040V
					SCHRAUBE	VIS	SKRUE	SCHROEF	
2		**1990502C1**		7	ARRUELA	WASHER	ARANDELA	RONDELLA	9720
					UNTERLEGSCHEIBE	RONDELLE	WASHER	WASHER	
3		**89604093**		1	PARADA	STOP	TOPE	ARRESTO; FERMO	080A
					STOP	BUTEE	STOP	AANSLAG	
4		**87604100**		1	COBERTURA	COVER	CUBIERTA	COPERCHIO	265C
					ABDECKUNG	COUVERCLE	DÆKSEL	AFSCHERMING	

A Partir do Chassi N9AE02680

W20E

09-28	07	p1	07/09

CABINA COMPLETA - SISTEMA ELÉTRICO
CAB COMPLETE - ELECTRIC SYSTEM
CABINA COMPLETA - SISTEMA ELECTRICO
CAB COMPLETE - ELECTRIC SYSTEM

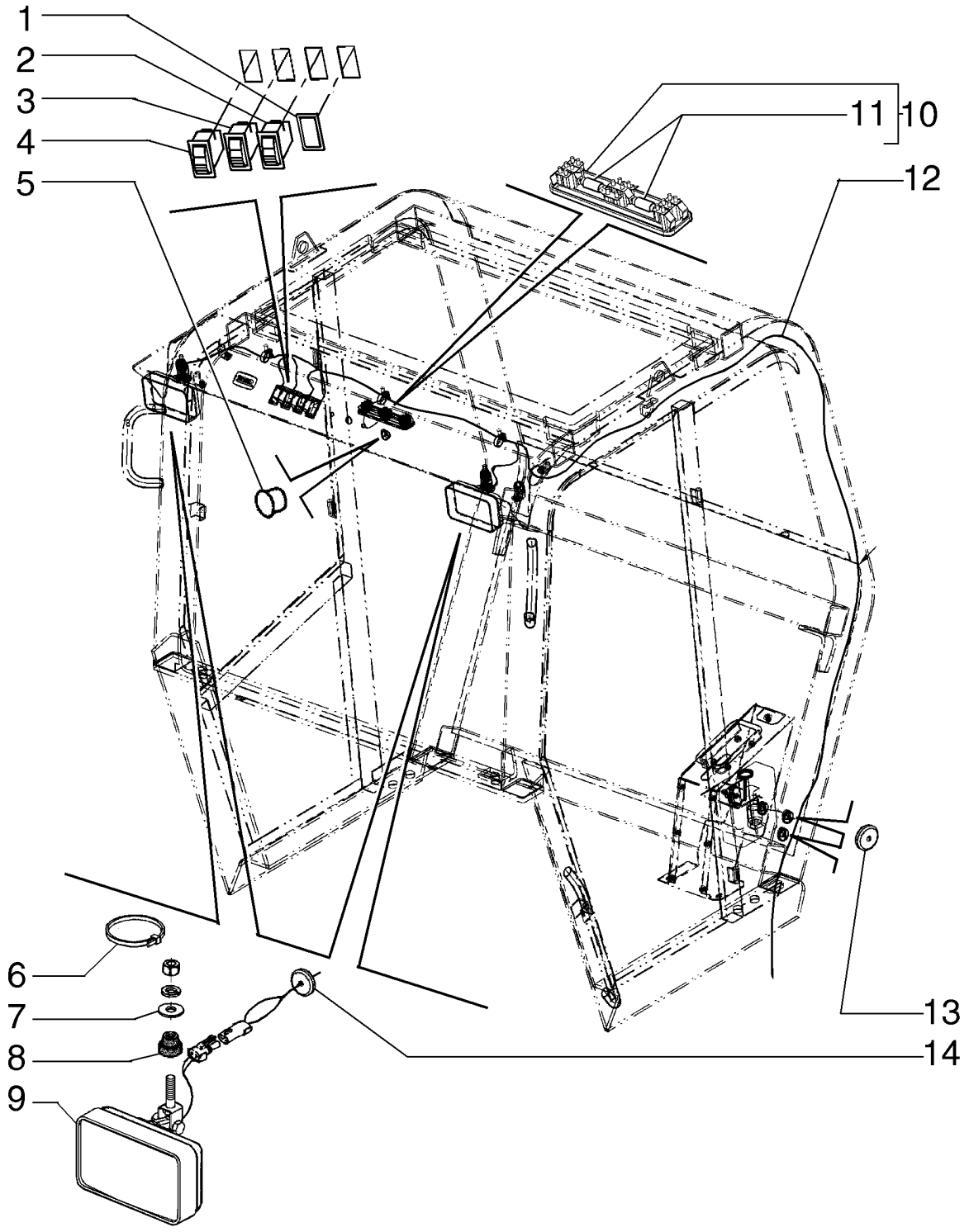

CAB COMPLETE - ELECTRIC SYSTEM
CAB COMPLETE - ELECTRIC SYSTEM
CAB COMPLETE - ELECTRIC SYSTEM
CAB COMPLETE - ELECTRIC SYSTEM

R	N	P.N.	MOD	Q	Denominação Bezeichnung	Description Description	Denominacion Beskrivelse	Descrizione Beschrijving	L.C.
1		5151033		1	BUJÃO DE PLÁSTICO KUNSTSTOFFSTOPFEN	PLASTIC PLUG BOUCHON EN PLASTIQU	TAPÓN DE PLÁSTICO PLASTPROP	TAPPO IN PLASTICA KUNSTSTOFPLUG	Z412
2		75251045		1	INTERRUPTOR LICHTSCHALTER	LIGHT SWITCH COMM. LUMIERES	INTERRUPTOR DE LUZ KONTAKT, LYS	INTERRUTTORE LUCI VERLICHTINGSSCHAKEI	228S
3		75251075		1	INTERRUPTOR SCHEIBENWISCHERSCH	WINDSHIELD WIPER SW COMMUTATEUR ESSUIE	INT. DE LIMPIAPARABRI KONTAKT, VISKER	INTERRUTT. TERGICRIS RUITENWISSERSCHAKE	229S
4		75251052		1	INTERRUP LAVAD PARA-BRISA SCHLTR F SCHEIBENW-	WINDSHIELD WASHER S COMMUTATEUR LAVE G	INT. DE LAVAPARABRIS/ KONTAKT, SPRINKLER	INTERRUTT. LAVACRIST RUITENSPROEIERSCHA	C042
5		353-408		1	BUJÃO, Dome, .750" hole, Nylon STOPFEN	PLUG BOUCHON	TAPÓN PROP	TAPPO PLUG	050T
6		5143428		3	PRENDEDOR DE CABOS, M10 x 116 KABELBINDER	CABLE STRAP BRIDE DE CABLE	BANDA DE CABLE KABELSTROP	FASCETTA PER CAVO BUNDELBAND	P716
7		12646821		2	ARRUELA PLANA, M10 x 25 x 2 UNTERLEGSCHEIBE	WASHER RONDELLE	ARANDELA FLADSKIVE	RONDELLA SLUITRING	131R
8		79089658		2	PASTILHA UNTERLAGE	PAD COUSSIN	PASTILLA BREMSEKLODS	CUSCINO; TAMPONE BLOK	060T
9		87453264		2	LUZ LAMPE	LIGHT FEU	LUZ BELYSNING	LUCE LAMP	Z496
10		394799A1		1	FAROL CONJUNTO LAMPE (KPLT.)	LIGHT ASSY. FEU (ASSEMBLE)	FARO (CONJ) LIGHT ASSY.	LUCE, COMPLESSIVO LIGHT ASSY.	P478
11		395185A1		2	LAMPADA GLUEHLAMPE	BULB AMPOULE	AMPOLLA BULB	LAMPADINA BULB	P904
12		87608168		1	CHICOTE KABELBAUM	HARNESS FAISCEAU	MAZO DE CABLES LEDNINGSNET	CABLAGGIO KABELBOOM	4160
13		248-1370		3	CASQUILHO ISOLADOR TÜLLE	GROMMET PASSE-FIL	PASACABLES RING	ANELLO PASSACAVO DOORVOERTULE	131A
14		248-1237		2	CASQUILHO ISOLADOR, 1/4" ID x 1" Groove Dia, Diag Cut TÜLLE	GROMMET PASSE-FIL	PASACABLES RING	ANELLO PASSACAVO DOORVOERTULE	131A

A Parti do Chassi N9AE02680

W20E

09-30	01	p1	09/09

SISTEMA DE AR CONDICIONADO
CONDITIONER AIR SYSTEM
SISTEMA DE AIRE CONDICIONADO
CONDITIONER AIR SYSTEM

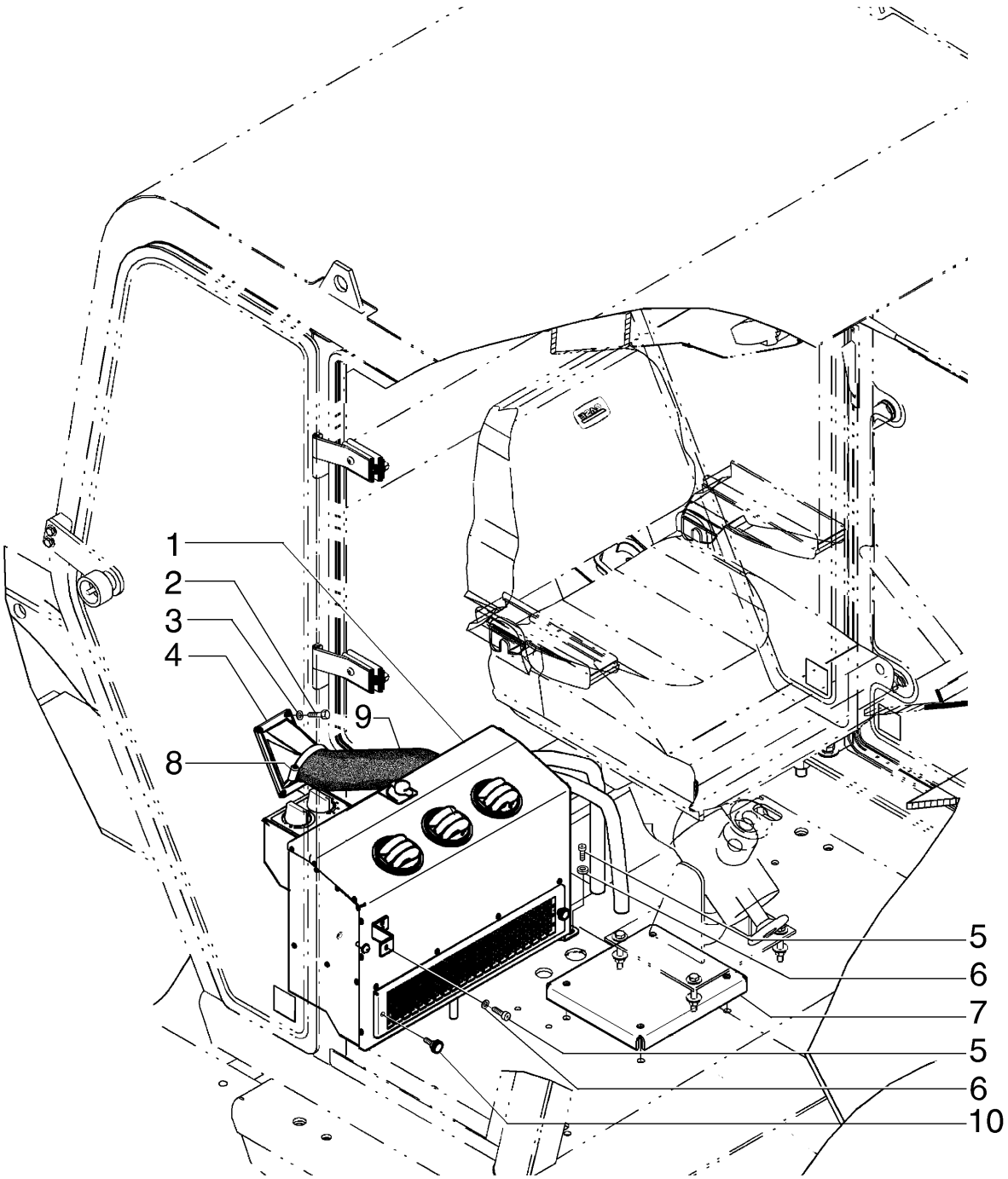

CONDITIONER AIR SYSTEM
CONDITIONER AIR SYSTEM
CONDITIONER AIR SYSTEM
CONDITIONER AIR SYSTEM

R	N	P.N.	MOD	Q	Denominação Bezeichnung	Description Description	Denominacion Beskrivelse	Descrizione Beschrijving	L.C.
1		87674002		1	EVAPORADOR VERDAMPFER	EVAPORATOR EVAPORATEUR	EVAPORADOR FORDAMPER	EVAPORATORE VERDAMPER	064E
2		760-14113		4	PARAFUSO, Pan Hd, M3.5 x 13 SELBSTSCHN SCHRAUE	SELF-TAP SCREW VIS AUTOTARAUDEUSE	TORNILLO AUTORROSC SELVLÅSENDE BOLT	VITE AUTOFILETTANTE ZELFTAPPENDE SCHRO	062V
3		895-11004		4	ARRUELA PLANA, M4 UNTERLEGSCHEIBE	WASHER RONDELLE	ARANDELA FLADSKIVE	RONDELLA SLUITRING	131R
4		87674035		1	DUTO LEITUNG	DUCT CONDUITE	CONDUCTO KANAL	CONDOTTO KANAAL	223C
5		239105A1		3	PARAFUSO, Cross Pan Hd, M6 x 20 SCHRAUBE	SCREW VIS	TORNILLO SKRUE	VITE SCHROEF	040V
6		225913A1		3	ARRUELA UNTERLEGSCHEIBE	WASHER RONDELLE	ARANDELA WASHER	RONDELLA WASHER	9720
7		87674017		1	SUPORTE STÜTZE	SUPPORT SUPPORT	SOPORTE BESLAG	SUPPORTO STEUN	300S
8		79083848		2	BRAÇADEIRA MANGUEIRA, M60-80 SCHLAUCHSCHELLE	HOSE CLAMP COLLIER POUR FLEXIBL	ABRAZADERA DE MANG SLANGEKLEMME	FASCETTA STRINGITUB SLANGKLEM	P729
9		84235827		1	MANGUEIRA SCHLAUCH	HOSE FLEXIBLE	TUBO SLANGE	TUBO FLESSIBILE SLANG	030M
10		87674036		2	PARAFUSO SCHRAUBE	SCREW VIS	TORNILLO SKRUE	VITE SCHROEF	040V

A Partir do Chassi N9AE02680

W20E

09-30	02	p1	08/11

SISTEMA DE AR CONDICIONADO
CONDITIONER AIR SYSTEM
SISTEMA DE AIRE CONDICIONADO
CONDITIONER AIR SYSTEM

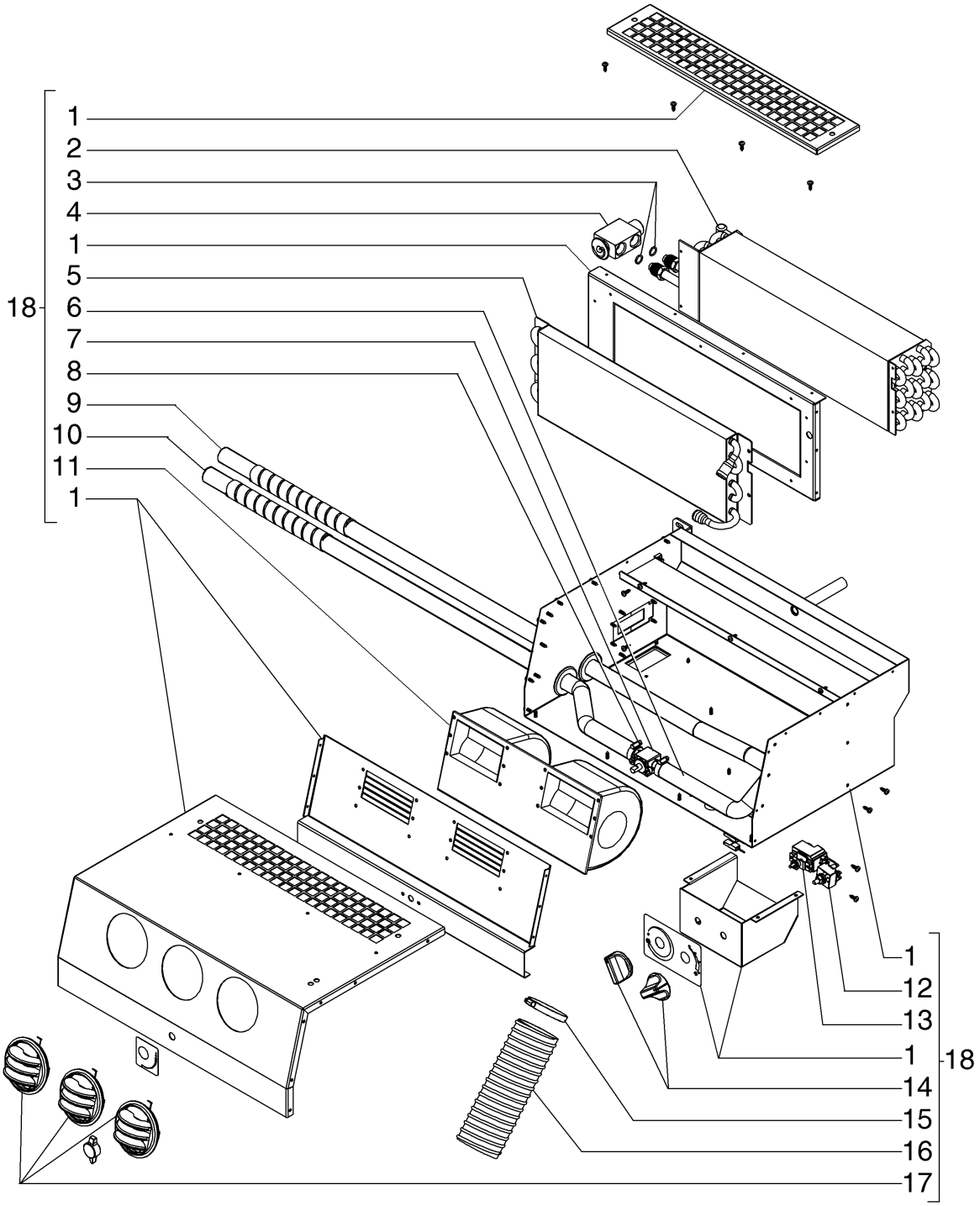

CONDITIONER AIR SYSTEM
CONDITIONER AIR SYSTEM
CONDITIONER AIR SYSTEM
CONDITIONER AIR SYSTEM

R	N	P.N.	MOD	Q	Denominação Bezeichnung	Description Description	Denominacion Beskrivelse	Descrizione Beschrijving	L.C.
1		**87674010**		1	PROTEÇÃO SCHUTZABDECKUNG	GUARD PROTECTION	DEFENSA BESKYTTELSESSKÆRM	PROTEZIONE AFSCHERMING	070R
2		**87674011**		1	CONDENSADOR KONDENSATOR	CONDENSER CONDENSATEUR	CONDENSADOR KONDENSATOR	CONDENSATORE CONDENSOR	220C
3		**9827058**		2	O-RING, 10.82mm ID x 1.78mm Width O-RING		JUNTA TÓRICA	ANELLO TOROIDALE	055A
					O-RING	JOINT TORIQUE	O-RING	O-RING	
4		**75252027**		1	VÁLVULA HIDRÁULICA HYDRAULIKVENTIL	HYDRAULIC VALVE SOUPAPE HYDRAULIQU	VÁLVULA HIDRÁULICA HYDRAULIKVENTIL	DISTRIBUTORE IDRAULI HYDRAULISCHE KLEP	010V
5		**87674013**		1	CONDENSADOR KONDENSATOR	CONDENSER CONDENSATEUR	CONDENSADOR KONDENSATOR	CONDENSATORE CONDENSOR	220C
6		**87674008**		1	TUBO ROHR	TUBE TUBE	TUBO RØR	TUBO LEIDING	195T
7		**87674005**		1	SENSOR SENSOR	SENSOR CAPTEUR	SENSOR FØLER	SENSORE SENSOR	608S
8		**214-1416**		4	BRAÇADEIRA MANGUEIRA, #16, 0.81/1.50 Type F Worm HOSE CLAMP		ABRAZADERA DE MANG	FASCETTA STRINGITUB	P729
					SCHLAUCHSCHELLE	COLLIER POUR FLEXIBL	SLANGEKLEMME	SLANGKLEM	
9		**87674009**		1	MANGUEIRA AR CONDICIONADO, 15.75" mm ID, 3400.00 mm A/C HOSE		TUBO A/A	TUBO FLESSIBILE A/C	A054
					KLIMAANLAGENSCHLAU	FLEXIBLE CLIMATISATIC	SLANGE, AIRCONDITION	SLANG VOOR AIRCO	
10		**87674007**		1	MANGUEIRA AR CONDICIONADO, 15.75" mm ID, 3150.00 mm A/C HOSE		TUBO A/A	TUBO FLESSIBILE A/C	A054
					KLIMAANLAGENSCHLAU	FLEXIBLE CLIMATISATIC	SLANGE, AIRCONDITION	SLANG VOOR AIRCO	
11		**87674003**		1	COLETOR DE EXAUSTÃO AUSPUFFKRÜMMER	EXHAUST MANIFOLD COLLECTEUR D'ECHAPF	COLECTOR DE ESCAPE UDSTØDNINGSMANIFOL	COLLETTORE DI SCARIC UITLAATSPRUITSTUK	230C
12		**87674014**		1	CONEXÃO ARMATUR	FITTING RACCORD	ACOPLAMIENTO FITTING	RACCORDO AANSLUITING	3300
13		**87674006**		1	CONEXÃO ARMATUR	FITTING RACCORD	ACOPLAMIENTO FITTING	RACCORDO AANSLUITING	3300
14		**87674015**		2	REGULADOR REGLER	REGULATOR REGULATEUR	REGULADOR REGULATOR	REGOLATORE REGELAAR	6795
15		**79083848**		2	BRAÇADEIRA MANGUEIRA, M60-80 HOSE CLAMP		ABRAZADERA DE MANG	FASCETTA STRINGITUB	P729
					SCHLAUCHSCHELLE	COLLIER POUR FLEXIBL	SLANGEKLEMME	SLANGKLEM	
16		**84235827**		1	MANGUEIRA SCHLAUCH	HOSE FLEXIBLE	TUBO SLANGE	TUBO FLESSIBILE SLANG	030M
17		**87674004**		3	COBERTURA ABDECKUNG	COVER COUVERCLE	CUBIERTA DÆKSEL	COPERCHIO AFSCHERMING	265C
18		**87674002**		1	EVAPORADOR VERDAMPFER	EVAPORATOR EVAPORATEUR	EVAPORADOR FORDAMPER	EVAPORATORE VERDAMPER	064E
18	1	**{87674001}**		1					

(1) Para Máquina Aplicação Fertilizante

A Partir do Chassi N9AE02680

W20E

09-30	03	p1	05/12

SISTEMA DE AR CONDICIONADO
CONDITIONER AIR SYSTEM
SISTEMA DE AIRE CONDICIONADO
CONDITIONER AIR SYSTEM

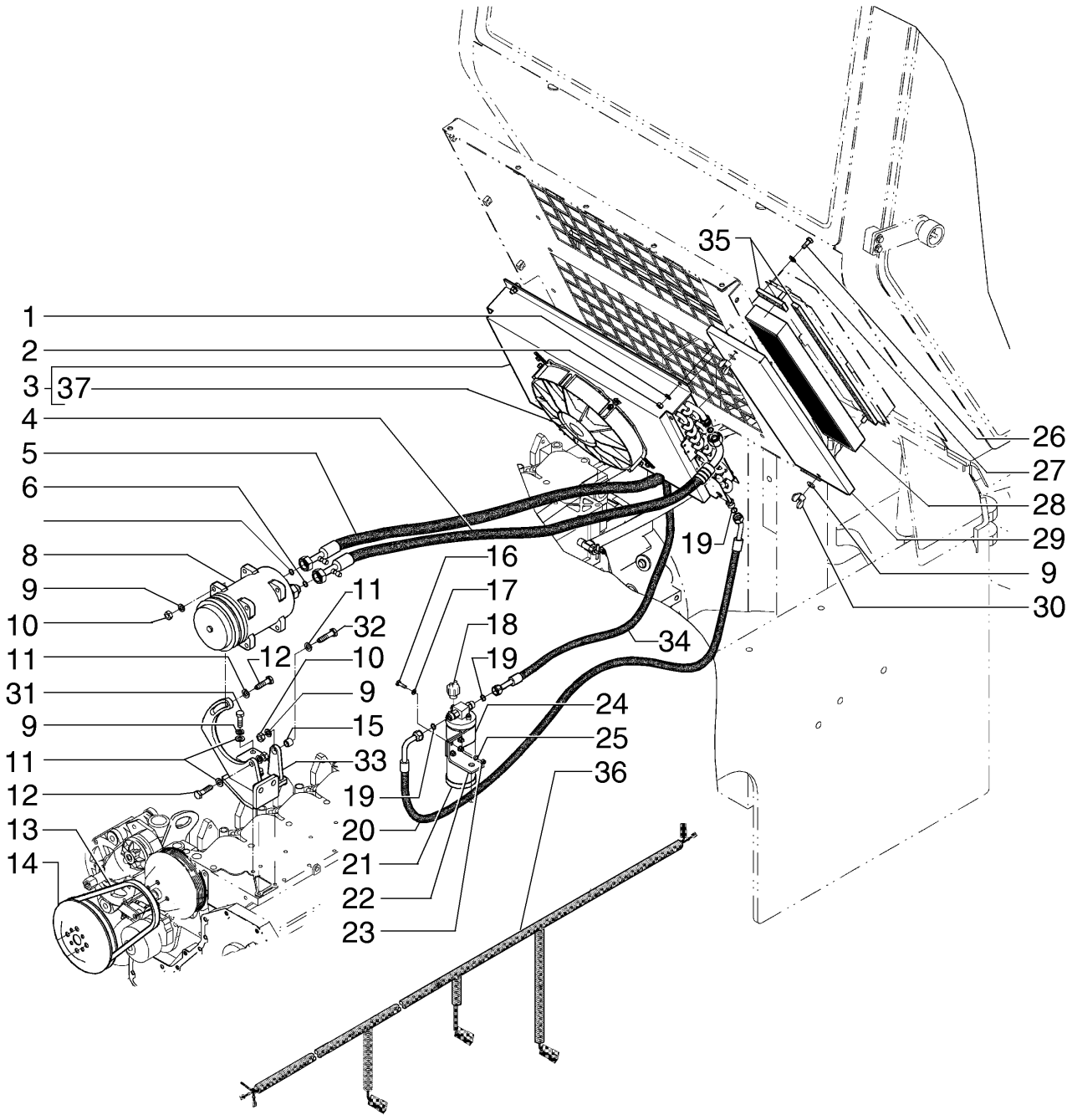

CONDITIONER AIR SYSTEM
CONDITIONER AIR SYSTEM
CONDITIONER AIR SYSTEM
CONDITIONER AIR SYSTEM

R	N	P.N.	MOD	Q	Denominação Bezeichnung	Description Description	Denominacion Beskrivelse	Descrizione Beschrijving	L.C.
1		10516671		4	TRAVA DA ARRUELA SICHERUNGSSCHEIBE	LOCK WASHER RONDELLE FREIN	ARANDELA DE BLOQUE LÅSESKIVE	RONDELLA DI SICUREZ BORGRING	132R
2		16100811		4	PORCA, Hex, M8, 6.80mm, Cl 8, ZND MUTTER	NUT ECROU	TUERCA MØTRIK	DADO MOER	010D
3		87674037		1	CONDENSADOR KONDENSATOR	CONDENSER CONDENSATEUR	CONDENSADOR KONDENSATOR	CONDENSATORE CONDENSOR	220C
3	1	84282756		1	CONDENSADOR KONDENSATOR	CONDENSER CONDENSATEUR	CONDENSADOR KONDENSATOR	CONDENSATORE CONDENSOR	220C
4		87674041		1	MANGUEIRA SCHLAUCH	HOSE FLEXIBLE	TUBO SLANGE	TUBO FLESSIBILE SLANG	030M
5		87674042		1	MANGUEIRA SCHLAUCH	HOSE FLEXIBLE	TUBO SLANGE	TUBO FLESSIBILE SLANG	030M
6		9827058		2	O-RING, 10.82mm ID x 1.78mm Width O-RING	O-RING JOINT TORIQUE	JUNTA TÓRICA O-RING	ANELLO TOROIDALE O-RING	055A
7		9827059		2	O-RING, 14mm ID x 1.78mm Width O-RING	O-RING JOINT TORIQUE	JUNTA TÓRICA O-RING	ANELLO TOROIDALE O-RING	055A
8		87673999		1	COMPRESSOR KOMPRESSOR	COMPRESSOR COMPRESSEUR	COMPRESOR KOMPRESSOR	COMPRESSORE COMPRESSOR	1860
9		892-11010		8	TRAVA DA ARRUELA, M10 SICHERUNGSSCHEIBE	LOCK WASHER RONDELLE FREIN	ARANDELA DE BLOQUE LÅSESKIVE	RONDELLA DI SICUREZ BORGRING	132R
10		12164721		3	PORCA, M10 x 1.25, Cl 10 MUTTER	NUT ECROU	TUERCA MØTRIK	DADO MOER	010D
11		895-11010		6	ARRUELA PLANA, M10 x 20 x 2 UNTERLEGSCHEIBE	WASHER RONDELLE	ARANDELA FLADSKIVE	RONDELLA SLUITRING	131R
12		11234731		2	PARAFUSO, Hex, M10 x 1.25 x 45, 10.9 SCHRAUBE	SCREW VIS	TORNILLO SKRUE	VITE SCHROEF	040V
13		379461A1		1	CORREIA, 12.70 mm W x 950.00 mm L RIEMEN	BELT COURROIE	CORREA REM	CINGHIA RIEM	174C
14		75286359		1	POLIA RIEMENSCHEIBE	PULLEY POULIE	POLEA REMSKIVE	PULEGGIA RIEMSCHIJF	230P
15		79114762		1	BUCHA BUCHSE	BUSHING BAGUE	CASQUILLO BØSNING	BOCCOLA BUS	095B
16		614-6020		4	PARAFUSO, Hex, M6 x 20, 8.8 SCHRAUBE	BOLT VIS	PERNO BOLT	BULLONE BOUT	140B
17		895-11006		7	ARRUELA PLANA, M6 UNTERLEGSCHEIBE	WASHER RONDELLE	ARANDELA FLADSKIVE	RONDELLA SLUITRING	131R
18		87674059		1	TERMOSTATO THERMOSTAT	THERMOSTAT THERMOSTAT	TERMOSTATO TERMOSTAT	TERMOSTATO THERMOSTAAT	096T
19		9827060		4	O-RING, 7.65mm ID x 1.78mm Width O-RING	O-RING JOINT TORIQUE	JUNTA TÓRICA O-RING	ANELLO TOROIDALE O-RING	055A

(1) Para Máquina Aplicação Fertilizante

A Partir do Chassi N9AE02680

W20E

09-30	03	p2	05/12

SISTEMA DE AR CONDICIONADO
CONDITIONER AIR SYSTEM
SISTEMA DE AIRE CONDICIONADO
CONDITIONER AIR SYSTEM

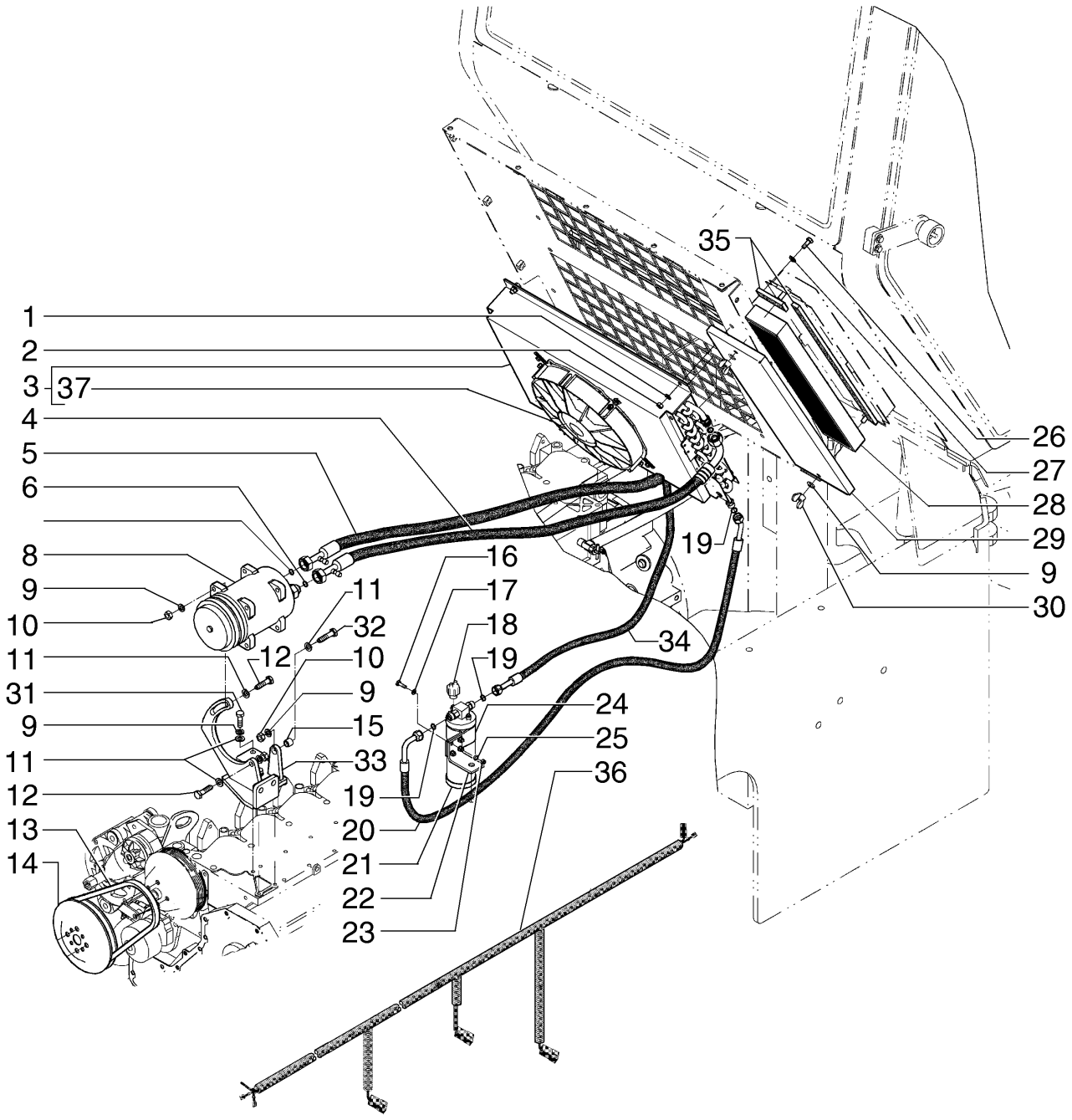

CONDITIONER AIR SYSTEM
CONDITIONER AIR SYSTEM
CONDITIONER AIR SYSTEM
CONDITIONER AIR SYSTEM

R	N	P.N.	MOD	Q	Denominação Bezeichnung	Description Description	Denominacion Beskrivelse	Descrizione Beschrijving	L.C.
20		**87674044**		1	MANGUEIRA SCHLAUCH	HOSE FLEXIBLE	TUBO SLANGE	TUBO FLESSIBILE SLANG	030M
21		**75251998**		1	FILTRO FILTER	FILTER FILTRE	FILTRO FILTER	FILTRO FILTER	065F
22		**84204221**		1	SUPORTE STÜTZE	SUPPORT SUPPORT	SOPORTE BESLAG	SUPPORTO STEUN	300S
23		**829-1406**		7	PORCA, M6, Cl 10 MUTTER	NUT ECROU	TUERCA MØTRIK	DADO MOER	010D
24		**84204219**		1	BRAÇADEIRA KLEMME	CLAMP COLLIER	ABRAZADERA SPÆNDEBÅND	MORSETTO KLEM	120M
25		**892-11006**		7	TRAVA DA ARRUELA, M6 SICHERUNGSSCHEIBE	LOCK WASHER RONDELLE FREIN	ARANDELA DE BLOQUE LÅSESKIVE	RONDELLA DI SICUREZ BORGRING	132R
26		**614-8020**		4	PARAFUSO, Hex, M8 x 20, 8.8 BOLT SCHRAUBE	 PERNO VIS	 BULLONE BOLT	 BULLONE BOUT	140B
27		**10519621**		4	ARRUELA PLANA, M8 x 17 x 2 WASHER UNTERLEGSCHEIBE	 ARANDELA RONDELLE	 RONDELLA FLADSKIVE	 RONDELLA SLUITRING	131R
28		**75313571**		1	FILTRO FILTER	FILTER FILTRE	FILTRO FILTER	FILTRO FILTER	065F
29		**87638154**		1	COBERTURA ABDECKUNG	COVER COUVERCLE	CUBIERTA DÆKSEL	COPERCHIO AFSCHERMING	265C
30		**30586R1**		2	PORCA BORBOLETA FLUEGELMUTTER	NUT, WING ECROU A AILETTES	TUERCA MARIPOSA NUT, WING	DADO AD ALETTE NUT, WING	P411
31		**614-10030**		3	PARAFUSO, Hex, M10 x 30, 8.8 BOLT SCHRAUBE	 PERNO VIS	 BULLONE BOLT	 BULLONE BOUT	140B
32		**11234731**		1	PARAFUSO, Hex, M10 x 1.25 x 45, 10.9 SCREW SCHRAUBE	 TORNILLO VIS	 VITE SKRUE	 VITE SCHROEF	040V
33		**84384319**		1	SUPORTE STÜTZE	SUPPORT SUPPORT	SOPORTE BESLAG	SUPPORTO STEUN	300S
33	1	**84384321**		1	SUPORTE STÜTZE	SUPPORT SUPPORT	SOPORTE BESLAG	SUPPORTO STEUN	300S
34		**87674043**		1	MANGUEIRA SCHLAUCH	HOSE FLEXIBLE	TUBO SLANGE	TUBO FLESSIBILE SLANG	030M
35		**84236958**		1	ISOLADOR GUMMIISOLATOR	RUBBER INSULATOR ISOLANT EN CAOUTCHO	AISLADOR DE GOMA GUMMIISOLATOR	ISOLANTE IN GOMMA RUBBEREN ISOLATIE	Z346
36		**87674016**		1	CHICOTE KABELBAUM	HARNESS FAISCEAU	MAZO DE CABLES LEDNINGSNET	CABLAGGIO KABELBOOM	4160
37		**87674039**		1	VENTILADOR GEBLÄSE	FAN VENTILATEUR	VENTILADOR VENTILATOR	VENTOLA VENTILATOR	030V

(1) Para Máquina Aplicação Fertilizante

A Partir do Chassi N9AE02680

W20E

09-30	04	p1	09/09

SISTEMA DE AR CONDICIONADO
CONDITIONER AIR SYSTEM
SISTEMA DE AIRE CONDICIONADO
CONDITIONER AIR SYSTEM

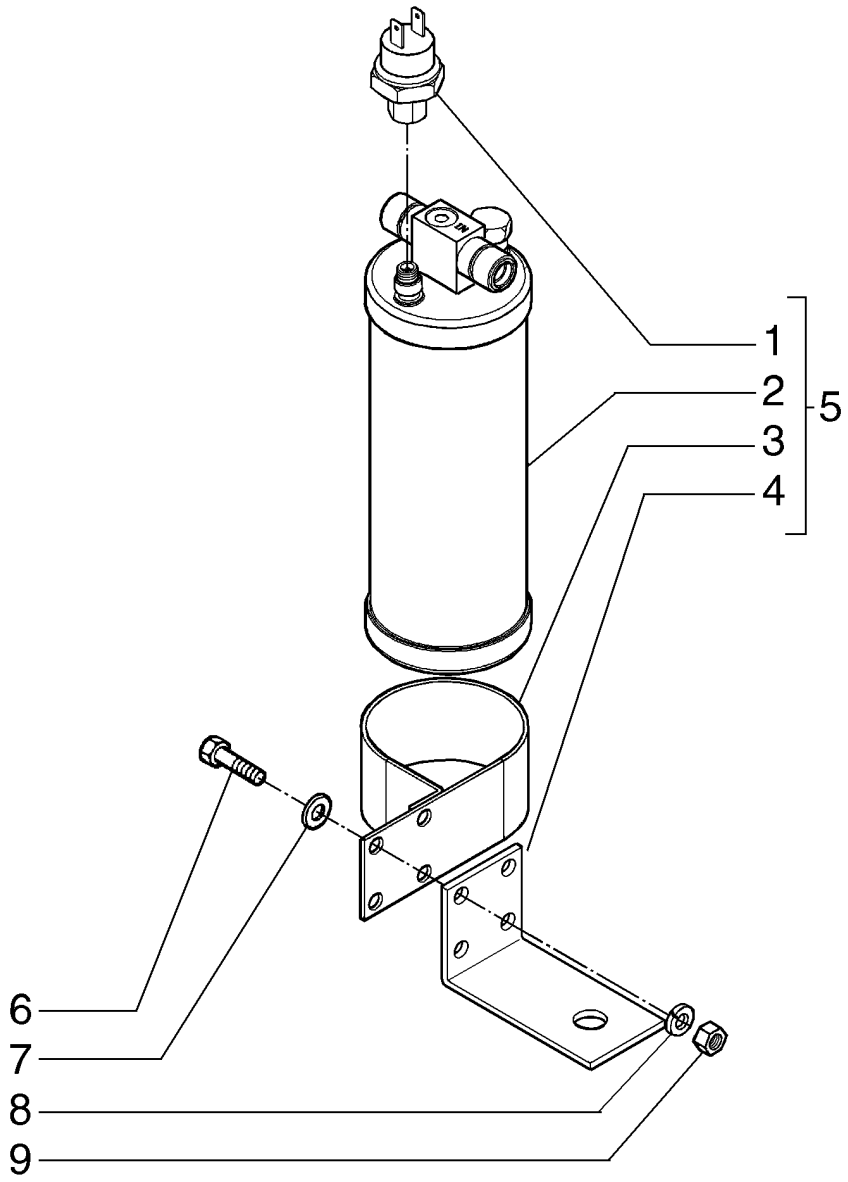

CONDITIONER AIR SYSTEM
CONDITIONER AIR SYSTEM
CONDITIONER AIR SYSTEM
CONDITIONER AIR SYSTEM

R	N	P.N.	MOD	Q	Denominação Bezeichnung	Description Description	Denominacion Beskrivelse	Descrizione Beschrijving	L.C.
1		87674059		1	TERMOSTATO THERMOSTAT	THERMOSTAT THERMOSTAT	TERMOSTATO TERMOSTAT	TERMOSTATO THERMOSTAAT	096T
2		75251998		1	FILTRO FILTER	FILTER FILTRE	FILTRO FILTER	FILTRO FILTER	065F
3		84204219		1	BRAÇADEIRA KLEMME	CLAMP COLLIER	ABRAZADERA SPÆNDEBÅND	MORSETTO KLEM	120M
4		84204221		1	SUPORTE STÜTZE	SUPPORT SUPPORT	SOPORTE BESLAG	SUPPORTO STEUN	300S
5		87674058		1	FILTRO FILTER	FILTER FILTRE	FILTRO FILTER	FILTRO FILTER	065F
6		614-6020		4	PARAFUSO, Hex, M6 x 20, 8.8 SCHRAUBE	BOLT VIS	PERNO BOLT	BULLONE BOUT	140B
7		895-11006		4	ARRUELA PLANA, M6 UNTERLEGSCHEIBE	WASHER RONDELLE	ARANDELA FLADSKIVE	RONDELLA SLUITRING	131R
8		892-11006		4	TRAVA DA ARRUELA, M6 SICHERUNGSSCHEIBE	LOCK WASHER RONDELLE FREIN	ARANDELA DE BLOQUE LÅSESKIVE	RONDELLA DI SICUREZ BORGRING	132R
9		829-1406		4	PORCA, M6, Cl 10 MUTTER	NUT ECROU	TUERCA MØTRIK	DADO MOER	010D

A Partir do Chassi N9AE02680

W20E

09-30	05	p1	04/11

SISTEMA DE AQUECIMENTO
HEATHER SYSTEM
SISTEMA DE CALEFACION
HEATHER SYSTEM

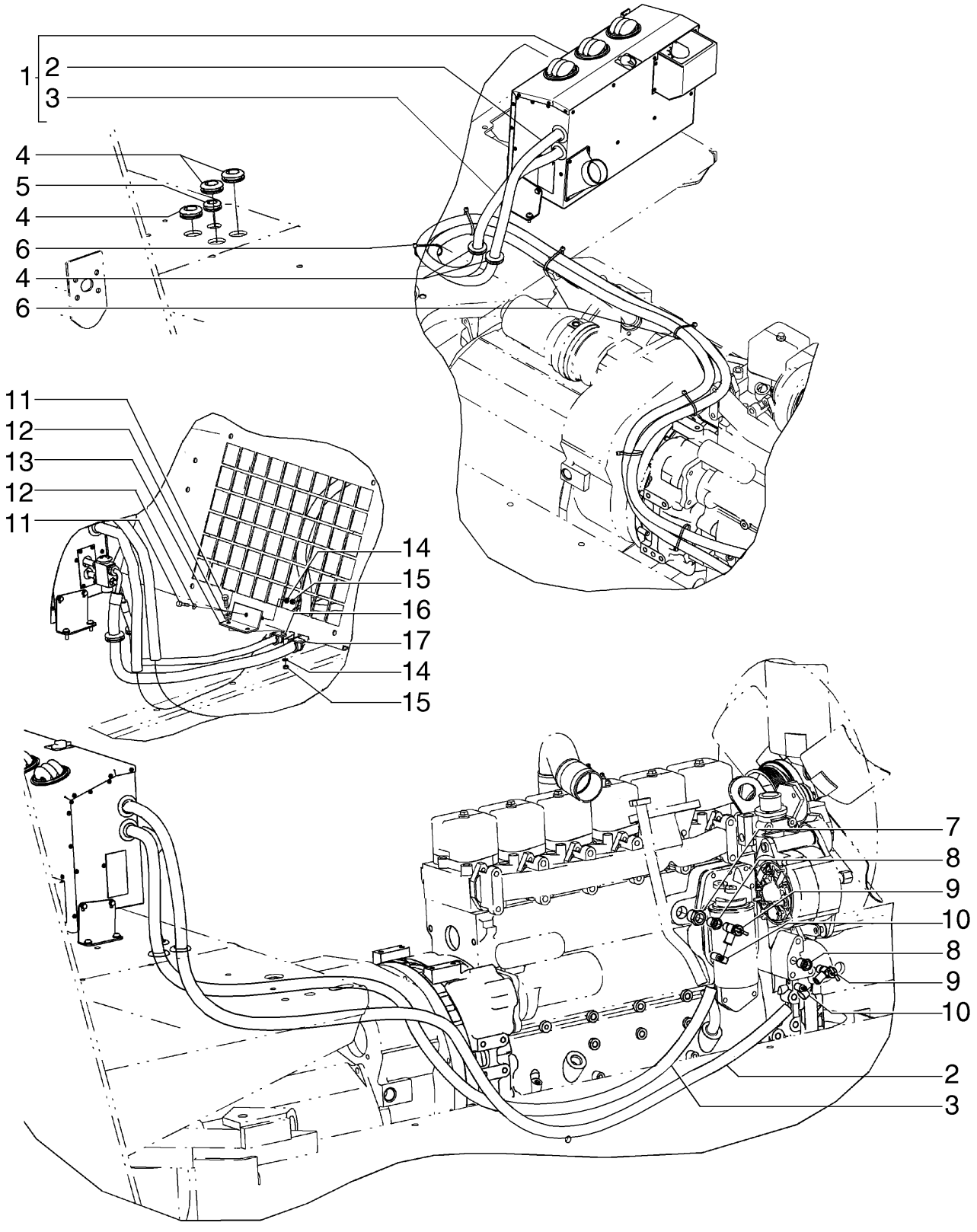

HEATHER SYSTEM
HEATHER SYSTEM
HEATHER SYSTEM
HEATHER SYSTEM

R	N	P.N.	MOD	Q	Denominação Bezeichnung	Description Description	Denominacion Beskrivelse	Descrizione Beschrijving	L.C.
1		87674018		1	EXTREMIDADE ENDE	END EXTREMITE	EXTREMIDAD ENDE	ESTREMITÀ UITEINDE	3010
2		87674007		1	MANGUEIRA AR CONDICIONADO, 15.75" mm ID, 3150.00 mm				
						A/C HOSE	TUBO A/A	TUBO FLESSIBILE A/C	A054
					KLIMAANLAGENSCHLAU	FLEXIBLE CLIMATISATIC	SLANGE, AIRCONDITION	SLANG VOOR AIRCO	
3		87674009		1	MANGUEIRA AR CONDICIONADO, 15.75" mm ID, 3400.00 mm				
						A/C HOSE	TUBO A/A	TUBO FLESSIBILE A/C	A054
					KLIMAANLAGENSCHLAU	FLEXIBLE CLIMATISATIC	SLANGE, AIRCONDITION	SLANG VOOR AIRCO	
4		87369667		3	CASQUILHO ISOLADOR	GROMMET	PASACABLES	ANELLO PASSACAVO	131A
					TÜLLE	PASSE-FIL	RING	DOORVOERTULE	
5		248-13107		1	CASQUILHO ISOLADOR, 3/4" ID x 1 1/16" Groove Dia, Str Cut				
						GROMMET	PASACABLES	ANELLO PASSACAVO	131A
					TÜLLE	PASSE-FIL	RING	DOORVOERTULE	
6		L11541		7	PRENDEDOR DE CABOS	CABLE STRAP	BANDA DE CABLE	FASCETTA PER CAVO	P716
					KABELBINDER	BRIDE DE CABLE	KABELSTROP	BUNDELBAND	
7		70901828		1	BUCHA	BUSHING	CASQUILLO	BOCCOLA	095B
					BUCHSE	BAGUE	BØSNING	BUS	
8		70901835		2	BUCHA	BUSHING	CASQUILLO	BOCCOLA	095B
					BUCHSE	BAGUE	BØSNING	BUS	
9		87674057		2	VÁLVULA	VALVE	VÁLVULA	VALVOLA	9620
					VENTIL	SOUPAPE	VENTIL	KLEP	
10		214-1410		2	BRAÇADEIRA MANGUEIRA, #10, 0.56/1.06 Type F Worm				
						HOSE CLAMP	ABRAZADERA DE MANG	FASCETTA STRINGITUB	P729
					SCHLAUCHSCHELLE	COLLIER POUR FLEXIBL	SLANGEKLEMME	SLANGKLEM	
11		614-6016		3	PARAFUSO, Hex, M6 x 16, 8.8				
						BOLT	PERNO	BULLONE	140B
					SCHRAUBE	VIS	BOLT	BOUT	
12		895-11006		7	ARRUELA PLANA, M6	WASHER	ARANDELA	RONDELLA	131R
					UNTERLEGSCHEIBE	RONDELLE	FLADSKIVE	SLUITRING	
13		84204155		1	SUPORTE	SUPPORT	SOPORTE	SUPPORTO	300S
					STÜTZE	SUPPORT	BESLAG	STEUN	
14		892-11006		7	TRAVA DA ARRUELA, M6	LOCK WASHER	ARANDELA DE BLOQUE	RONDELLA DI SICUREZ	132R
					SICHERUNGSSCHEIBE	RONDELLE FREIN	LÅSESKIVE	BORGRING	
15		829-1406		7	PORCA, M6, Cl 10	NUT	TUERCA	DADO	010D
					MUTTER	ECROU	MØTRIK	MOER	
16		87591913		1	BRAÇADEIRA	CLAMP	ABRAZADERA	MORSETTO	120M
					KLEMME	COLLIER	SPÆNDEBÅND	KLEM	
17		87612756		1	BRAÇADEIRA	CLAMP	ABRAZADERA	MORSETTO	120M
					KLEMME	COLLIER	SPÆNDEBÅND	KLEM	

A Partir do Chassi N9AE02680

W20E

09-30	06	p1	09/09

CABINE - AR CONCIONADO E AQUECEDOR
CAB - CONDITIONER AIR AND HEATHER
CABINA - AIR CONCIONADO Y CALENTADOR
CAB - CONDITIONER AIR AND HEATHER

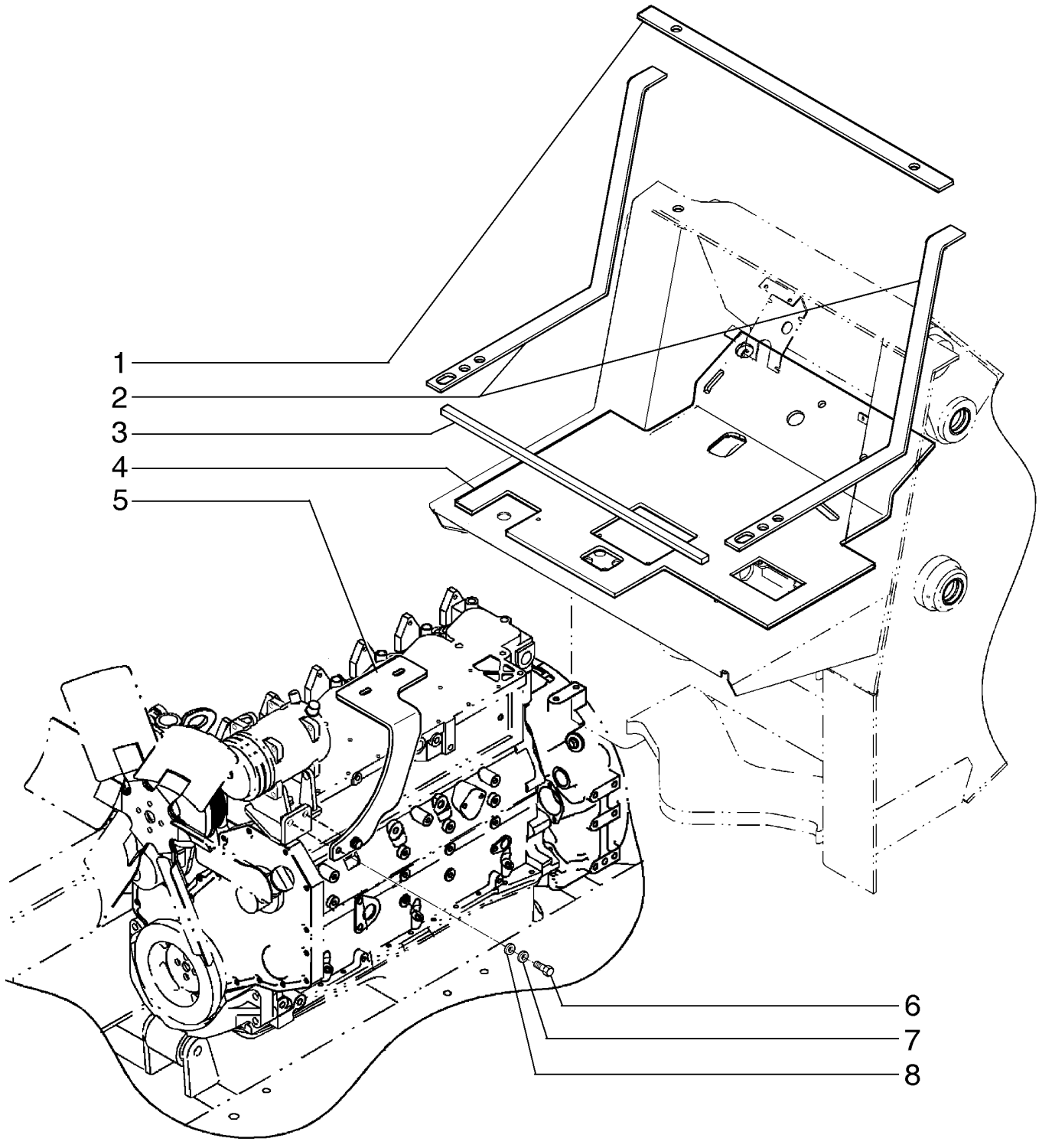

CAB - CONDITIONER AIR AND HEATHER
CAB - CONDITIONER AIR AND HEATHER
CAB - CONDITIONER AIR AND HEATHER
CAB - CONDITIONER AIR AND HEATHER

R	N	P.N.	MOD	Q	Denominação Bezeichnung	Description Description	Denominacion Beskrivelse	Descrizione Beschrijving	L.C.
1		87626798		1	VEDAÇÃO DICHTUNG	SEAL JOINT	ANILLO DE CIERRE PAKNING	GUARNIZIONE; TENUTA AFDICHTING	132A
2		87610661		2	VEDAÇÃO DICHTUNG	SEAL JOINT	ANILLO DE CIERRE PAKNING	GUARNIZIONE; TENUTA AFDICHTING	132A
3		87610662		1	VEDAÇÃO DICHTUNG	SEAL JOINT	ANILLO DE CIERRE PAKNING	GUARNIZIONE; TENUTA AFDICHTING	132A
4		87629452		1	TAPETE MATTE	MAT TAPIS	ALFOMBRILLA MÅTTE	TAPPETINO MAT	030T
5		87611301		1	SUPORTE STÜTZE	SUPPORT SUPPORT	SOPORTE BESLAG	SUPPORTO STEUN	300S
6		614-10030		2	PARAFUSO, Hex, M10 x 30, 8.8 SCHRAUBE	BOLT VIS	PERNO BOLT	BULLONE BOUT	140B
7		892-11010		2	TRAVA DA ARRUELA, M10 SICHERUNGSSCHEIBE	LOCK WASHER RONDELLE FREIN	ARANDELA DE BLOQUE LÅSESKIVE	RONDELLA DI SICUREZ BORGRING	132R
8		895-11010		2	ARRUELA PLANA, M10 x 20 x 2 UNTERLEGSCHEIBE	WASHER RONDELLE	ARANDELA FLADSKIVE	RONDELLA SLUITRING	131R

A Partir do Chassi N9AE02680

W20E

09-30	07	p1	12/09

CABINE - AQUECEDOR
CAB - HEATHER
CABINA - CALENTADOR
CAB - HEATHER

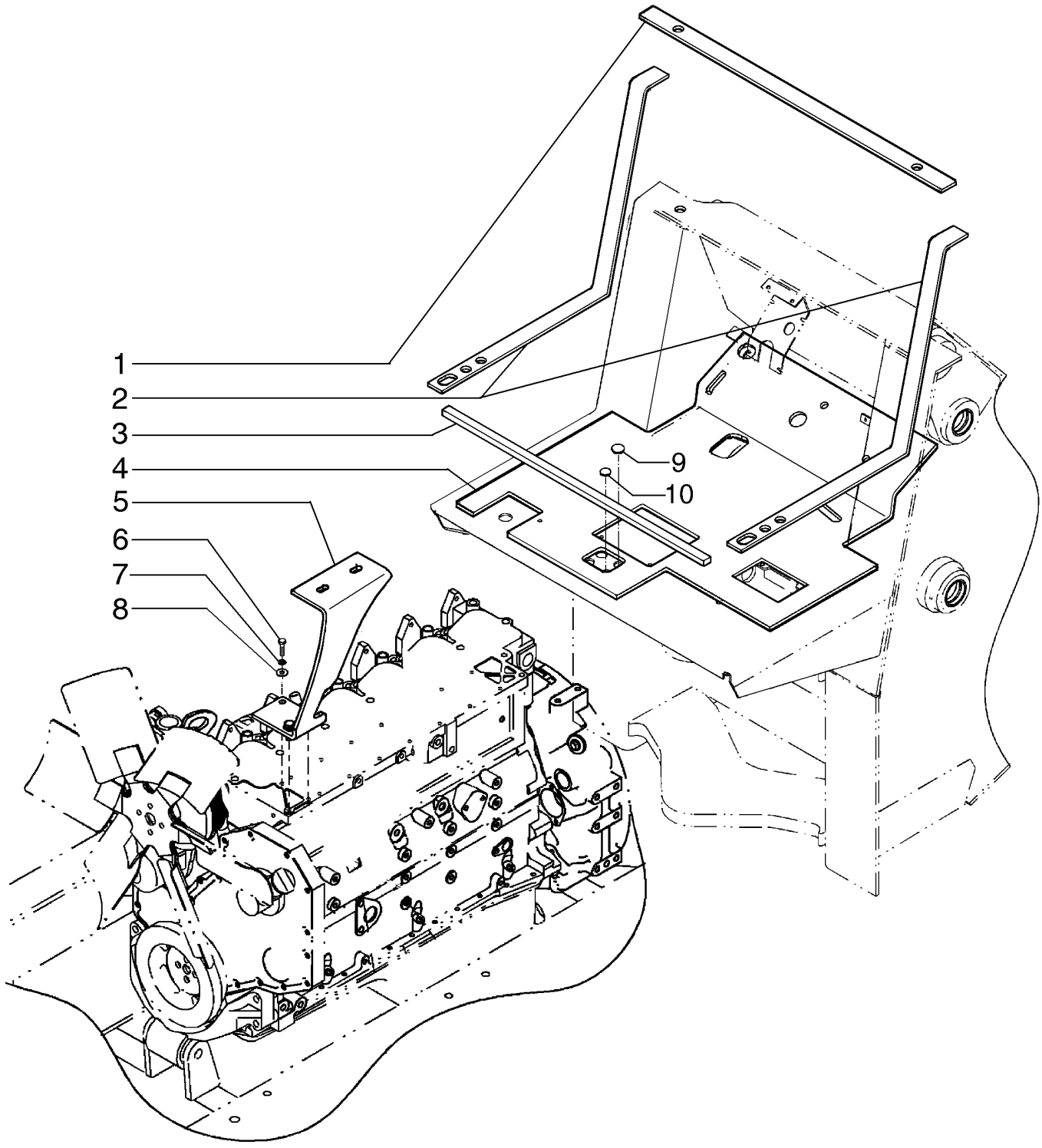

CAB - HEATHER
CAB - HEATHER
CAB - HEATHER
CAB - HEATHER

R	N	P.N.	MOD	Q	Denominação Bezeichnung	Description Description	Denominacion Beskrivelse	Descrizione Beschrijving	L.C.
1		87626798		1	VEDAÇÃO DICHTUNG	SEAL JOINT	ANILLO DE CIERRE PAKNING	GUARNIZIONE; TENUTA AFDICHTING	132A
2		87610661		2	VEDAÇÃO DICHTUNG	SEAL JOINT	ANILLO DE CIERRE PAKNING	GUARNIZIONE; TENUTA AFDICHTING	132A
3		87610662		1	VEDAÇÃO DICHTUNG	SEAL JOINT	ANILLO DE CIERRE PAKNING	GUARNIZIONE; TENUTA AFDICHTING	132A
4		87629452		1	TAPETE MATTE	MAT TAPIS	ALFOMBRILLA MÅTTE	TAPPETINO MAT	030T
5		148547A1		1	SUPORTE STÜTZE	SUPPORT SUPPORT	SOPORTE BESLAG	SUPPORTO STEUN	300S
6		614-10030		2	PARAFUSO, Hex, M10 x 30, 8.8 SCHRAUBE	BOLT VIS	PERNO BOLT	BULLONE BOUT	140B
7		892-11010		2	TRAVA DA ARRUELA, M10 SICHERUNGSSCHEIBE	LOCK WASHER RONDELLE FREIN	ARANDELA DE BLOQUE LÅSESKIVE	RONDELLA DI SICUREZ BORGRING	132R
8		895-11010		2	ARRUELA PLANA, M10 x 20 x 2 UNTERLEGSCHEIBE	WASHER RONDELLE	ARANDELA FLADSKIVE	RONDELLA SLUITRING	131R
9		70926266		1	BUJÃO STOPFEN	PLUG BOUCHON	TAPÓN PROP	TAPPO PLUG	050T
10		353-412		1	BUJÃO, Dome, 1.093" hole, Nylon STOPFEN	PLUG BOUCHON	TAPÓN PROP	TAPPO PLUG	050T

A Partir do Chassi N9AE02680

W20E

09-30B	01	p1	04/08

CLIMATIZADOR - TAMPAS E FILTROS
CLIMATIZING EQUIPMENT - COVERS AND FILTER
CLIMATIZADOR - CUBIERTAS Y FILTROS
CLIMATIZING EQUIPMENT - COVERS AND FILTER

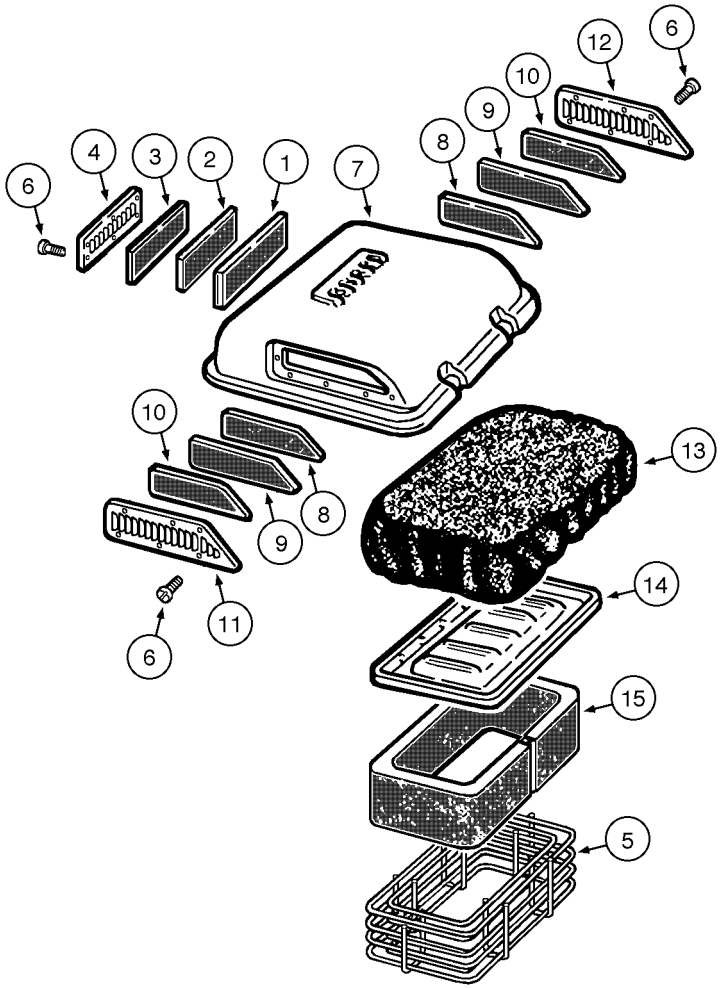

CLIMATIZING EQUIPMENT - COVERS AND FILTER
CLIMATIZING EQUIPMENT - COVERS AND FILTER
CLIMATIZING EQUIPMENT - COVERS AND FILTER
CLIMATIZING EQUIPMENT - COVERS AND FILTER

R	N	P.N.	MOD	Q	Denominação Bezeichnung	Description Description	Denominacion Beskrivelse	Descrizione Beschrijving	L.C.
	1	**87452961**		1	AR-CONDICIONADO KLIMAANLAGE	AIR CONDITIONER CLIMATISEUR	AIRE ACONDICIONADO AIRCONDITION	CONDIZIONATORE ARIA AIRCONDITIONING	0080
1	2	**87463050**		1	FILTRO FILTER	FILTER FILTRE	FILTRO FILTER	FILTRO FILTER	065F
2		**87463071**		1	FILTRO FILTER	FILTER FILTRE	FILTRO FILTER	FILTRO FILTER	065F
3		**87463072**		1	FILTRO FILTER	FILTER FILTRE	FILTRO FILTER	FILTRO FILTER	065F
4		**87463051**		1	COBERTURA, rear filter ABDECKUNG	COVER COUVERCLE	CUBIERTA DÆKSEL	COPERCHIO AFSCHERMING	265C
5		**71102256**		1	GRELHA, filter GRILL	GRILLE CALANDRE	REJILLA GITTER	GRIGLIA GRILLE	101G
6		**87463053**		22	PARAFUSO SCHRAUBE	SCREW VIS	TORNILLO SKRUE	VITE SCHROEF	040V
7		**71102253**		1	COBERTURA, upper ABDECKUNG	COVER COUVERCLE	CUBIERTA DÆKSEL	COPERCHIO AFSCHERMING	265C
7	3	**87462145**		1	TRINCO, cover SPERRKLINKE	PAWL CLIQUET	TRINQUETE PAL	NOTTOLINO D'ARRESTO PAL	050N
8	2	**87463055**		2	FILTRO FILTER	FILTER FILTRE	FILTRO FILTER	FILTRO FILTER	065F
9		**87463056**		2	FILTRO FILTER	FILTER FILTRE	FILTRO FILTER	FILTRO FILTER	065F
10		**87463057**		2	KIT DE REVISÃO DO MOTOR MOTORÜBERHOLUNGSS	ENGINE OVERHAUL KIT KIT DE REVISION MOTEI	KIT DE REVISIÓN DEL M MOTORREVISIONSSÆT	KIT REVISIONE MOTORE REVISIEKIT VOOR MOTO	002K
11		**71102257**		1	COBERTURA, RH ABDECKUNG	COVER COUVERCLE	CUBIERTA DÆKSEL	COPERCHIO AFSCHERMING	265C
12		**71102258**		1	COBERTURA, LH ABDECKUNG	COVER COUVERCLE	CUBIERTA DÆKSEL	COPERCHIO AFSCHERMING	265C
13		**71102254**		1	CONJ PRÉ-FILTRO DE AR LUFTVORREINIGERBAU	AIR PRE-CLEANER ASSY PREFILTRE A AIR	CONJ. PREFILTRO DE A LUFT FORFILTER KPL.	COMPLESS. PREFILTRO LUCHTVOORFILTEREEN	201P
14		**87463061**		1	COBERTURA, pre filter ABDECKUNG	COVER COUVERCLE	CUBIERTA DÆKSEL	COPERCHIO AFSCHERMING	265C
15		**71102255**		1	FILTRO FILTER	FILTER FILTRE	FILTRO FILTER	FILTRO FILTER	065F

(1) Inclui os itens das páginas 9-30D, 30F, 30H
(2) OPCIONAL
(3) Não ilustrado

09-30D	01	p1	11/07

CLIMATIZADOR - TAMPA E VENTILADOR
CLIMATIZING EQUIPMENT - COVER AND FAN
CLIMATIZADOR - CUBIERTA Y VENTILADOR
CLIMATIZING EQUIPMENT - COVER AND FAN

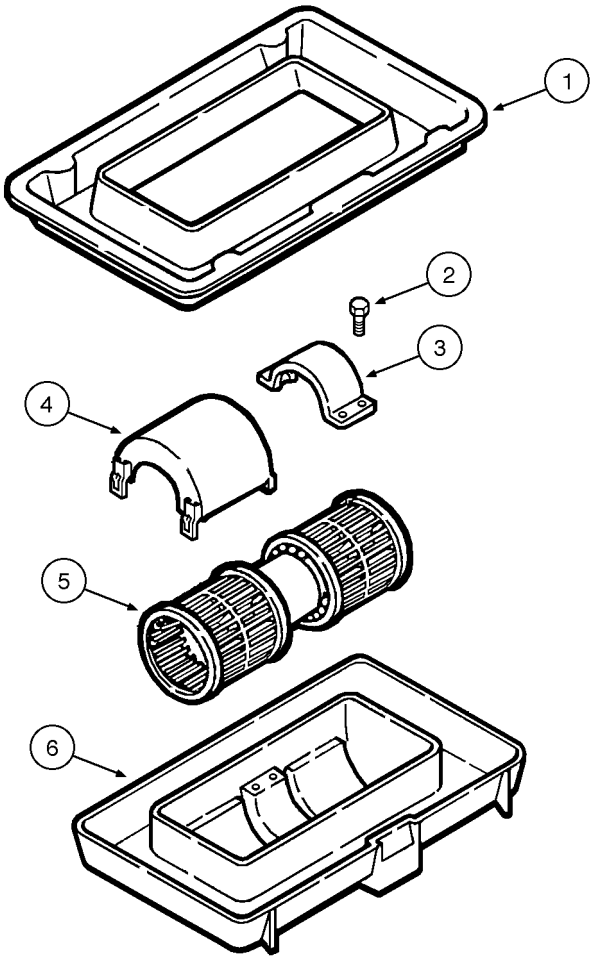

CLIMATIZING EQUIPMENT - COVER AND FAN
CLIMATIZING EQUIPMENT - COVER AND FAN
CLIMATIZING EQUIPMENT - COVER AND FAN
CLIMATIZING EQUIPMENT - COVER AND FAN

R	N	P.N.	MOD	Q	Denominação Bezeichnung	Description Description	Denominacion Beskrivelse	Descrizione Beschrijving	L.C.
	1	**87452961**		1	AR-CONDICIONADO KLIMAANLAGE	AIR CONDITIONER CLIMATISEUR	AIRE ACONDICIONADO AIRCONDITION	CONDIZIONATORE ARIA AIRCONDITIONING	0080
1		**87463063**		1	COBERTURA, motor ABDECKUNG	COVER COUVERCLE	CUBIERTA DÆKSEL	COPERCHIO AFSCHERMING	265C
2		**87463064**		4	PARAFUSO SCHRAUBE	SCREW VIS	TORNILLO SKRUE	VITE SCHROEF	040V
3		**87463065**		1	FIXADOR HALTER	HOLDER SUPPORT	SOPORTE HOLDER	SUPPORTO HOUDER	174S
4		**87463066**		1	COBERTURA, protection ABDECKUNG	COVER COUVERCLE	CUBIERTA DÆKSEL	COPERCHIO AFSCHERMING	265C
5		**87461883**		1	MOTOR ELÉTRICO PEQUENO, fan KLEINER ELEKTROMOT(	SMALL ELECTRIC MOTC PETIT MOTEUR ELECTR	MOTOR ELÉCTRICO PE(LILLE EL-MOTOR	MOTORINO ELETTRICO KLEINE ELEKTROMOTOI	137M
6		**87463068**		1	COBERTURA, lower ABDECKUNG	COVER COUVERCLE	CUBIERTA DÆKSEL	COPERCHIO AFSCHERMING	265C

(1) Inclui os itens das páginas 9-30D, 30F, 30H

09-30F	01	p1	01/09

CLIMATIZADOR - CONJUNTO
CLIMATIZING EQUIPMENT - ASSEMBLY
CLIMATIZADOR - CONJUNTO
CLIMATIZING EQUIPMENT - ASSEMBLY

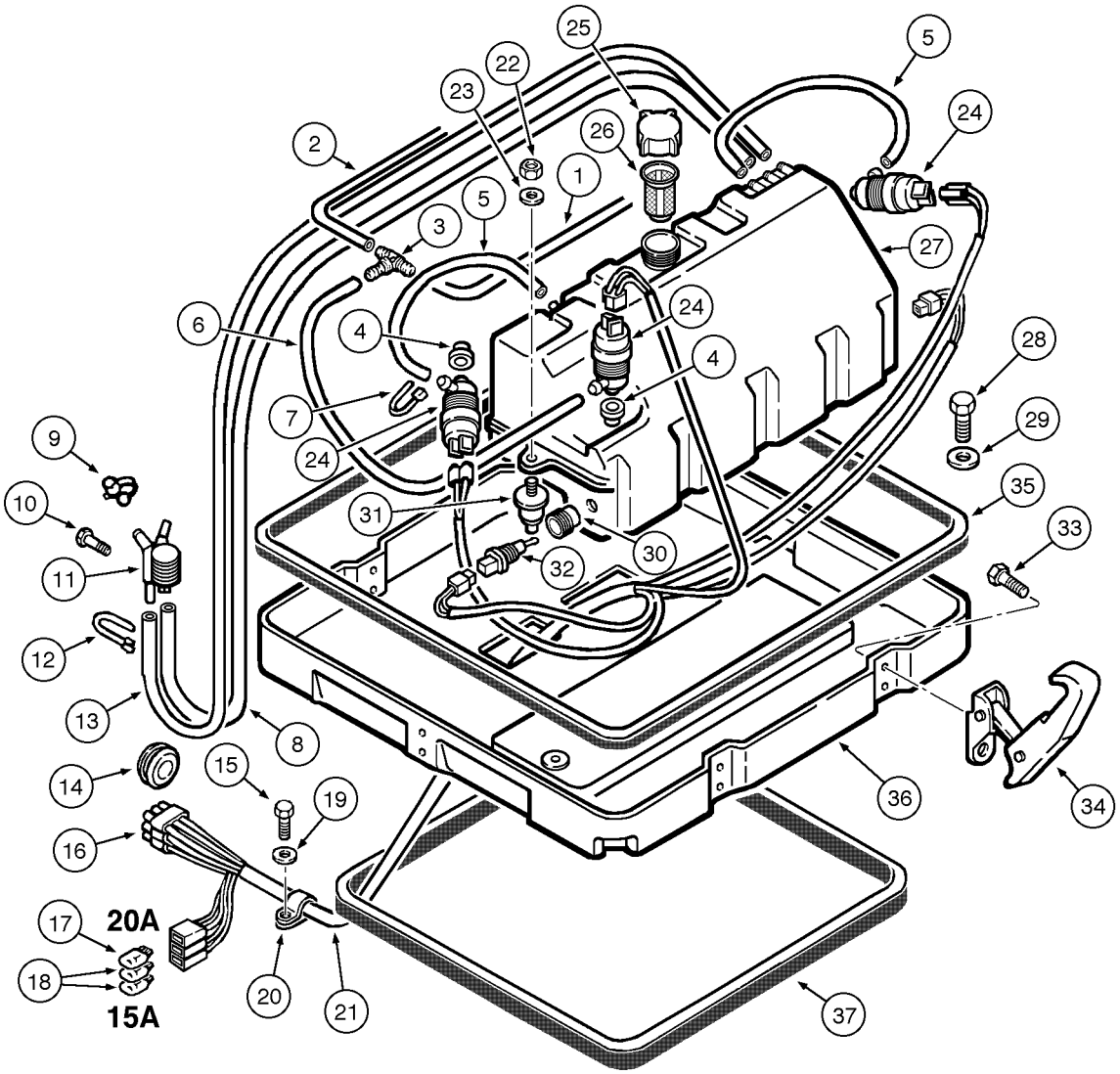

CLIMATIZING EQUIPMENT - ASSEMBLY
CLIMATIZING EQUIPMENT - ASSEMBLY
CLIMATIZING EQUIPMENT - ASSEMBLY
CLIMATIZING EQUIPMENT - ASSEMBLY

R	N	P.N.	MOD	Q	Denominação Bezeichnung	Description Description	Denominacion Beskrivelse	Descrizione Beschrijving	L.C.
	1	**87452961**		1	AR-CONDICIONADO KLIMAANLAGE	AIR CONDITIONER CLIMATISEUR	AIRE ACONDICIONADO AIRCONDITION	CONDIZIONATORE ARIA AIRCONDITIONING	0080
1		**87463020**		1	MANGUEIRA SCHLAUCH	HOSE FLEXIBLE	TUBO SLANGE	TUBO FLESSIBILE SLANG	030M
2		**87463020**		1	MANGUEIRA SCHLAUCH	HOSE FLEXIBLE	TUBO SLANGE	TUBO FLESSIBILE SLANG	030M
3		**87463021**		1	CONECTOR HIDRÁUL HYDR STECKVERBINDE	HYD CONNECTOR CONNECTEUR HYDRAU	CONECTOR HIDRÁULIC HYDRAULIKSTIK	CONNETTORE IDRAULIC HYDRAULISCHE AANSLU	020R
4		**87463022**		3	CONECTOR HIDRÁUL HYDR STECKVERBINDE	HYD CONNECTOR CONNECTEUR HYDRAU	CONECTOR HIDRÁULIC HYDRAULIKSTIK	CONNETTORE IDRAULIC HYDRAULISCHE AANSLU	020R
5		**87463023**		2	MANGUEIRA SCHLAUCH	HOSE FLEXIBLE	TUBO SLANGE	TUBO FLESSIBILE SLANG	030M
6		**87463023**		1	MANGUEIRA SCHLAUCH	HOSE FLEXIBLE	TUBO SLANGE	TUBO FLESSIBILE SLANG	030M
7		**87463024**		1	GRAMPO KLAMMER	CLIP COLLIER	ABRAZADERA KLIPS	FERMO KLEM	045F
8		**87463025**		1	MANGUEIRA SCHLAUCH	HOSE FLEXIBLE	TUBO SLANGE	TUBO FLESSIBILE SLANG	030M
9		**87463026**		1	COBERTURA ABDECKUNG	COVER COUVERCLE	CUBIERTA DÆKSEL	COPERCHIO AFSCHERMING	265C
10		**87463027**		1	PARAFUSO SCHRAUBE	SCREW VIS	TORNILLO SKRUE	VITE SCHROEF	040V
11		**87463028**		1	CONEXÃO ARMATUR	FITTING RACCORD	ACOPLAMIENTO FITTING	RACCORDO AANSLUITING	3300
12		**87463029**		1	GRAMPO KLAMMER	CLIP COLLIER	ABRAZADERA KLIPS	FERMO KLEM	045F
13		**87463030**		1	MANGUEIRA SCHLAUCH	HOSE FLEXIBLE	TUBO SLANGE	TUBO FLESSIBILE SLANG	030M
14		**87463073**		1	JUNTA DICHTUNG	GASKET JOINT	JUNTA PAKNING	GUARNIZIONE PAKKING	123G
15		**87463074**		1	PARAFUSO SCHRAUBE	SCREW VIS	TORNILLO SKRUE	VITE SCHROEF	040V
16		**87463031**		1	CONECTOR ELÉTR ELEKTR STECKVERBIND	ELEC CONNECTOR CONNECTEUR ELECTRI	CONECTOR ELÉCTRICC EL-STIK	CONNETTORE ELETTRI CONNECTOR	235C
17		**87463032**		1	FUSÍVEL, 20A SICHERUNG	FUSE FUSIBLE	FUSIBLE SIKRING	FUSIBILE ZEKERING	110F
18		**87463033**		2	FUSÍVEL, 150A SICHERUNG	FUSE FUSIBLE	FUSIBLE SIKRING	FUSIBILE ZEKERING	110F
19		**87463075**		1	ARRUELA PLANA UNTERLEGSCHEIBE	WASHER RONDELLE	ARANDELA FLADSKIVE	RONDELLA SLUITRING	131R
20		**87463034**		1	GRAMPO KLAMMER	CLIP COLLIER	ABRAZADERA KLIPS	FERMO KLEM	045F
21		**87463035**		1	CABO ELÉTRICO ELEKTROKABEL	ELECTRIC CABLE CABLE ELECTRIQUE	CABLE ELÉCTRICO EL-KABEL	CAVO ELETTRICO ELEKTRICITEITSKABEL	111C
22		**87463036**		1	PORCA MUTTER	NUT ECROU	TUERCA MØTRIK	DADO MOER	010D
23		**87463076**		1	ARRUELA PLANA UNTERLEGSCHEIBE	WASHER RONDELLE	ARANDELA FLADSKIVE	RONDELLA SLUITRING	131R

(1) Inclui os itens das páginas 9-30D, 30F, 30H

09-30F	01	p2	01/09

CLIMATIZADOR - CONJUNTO
CLIMATIZING EQUIPMENT - ASSEMBLY
CLIMATIZADOR - CONJUNTO
CLIMATIZING EQUIPMENT - ASSEMBLY

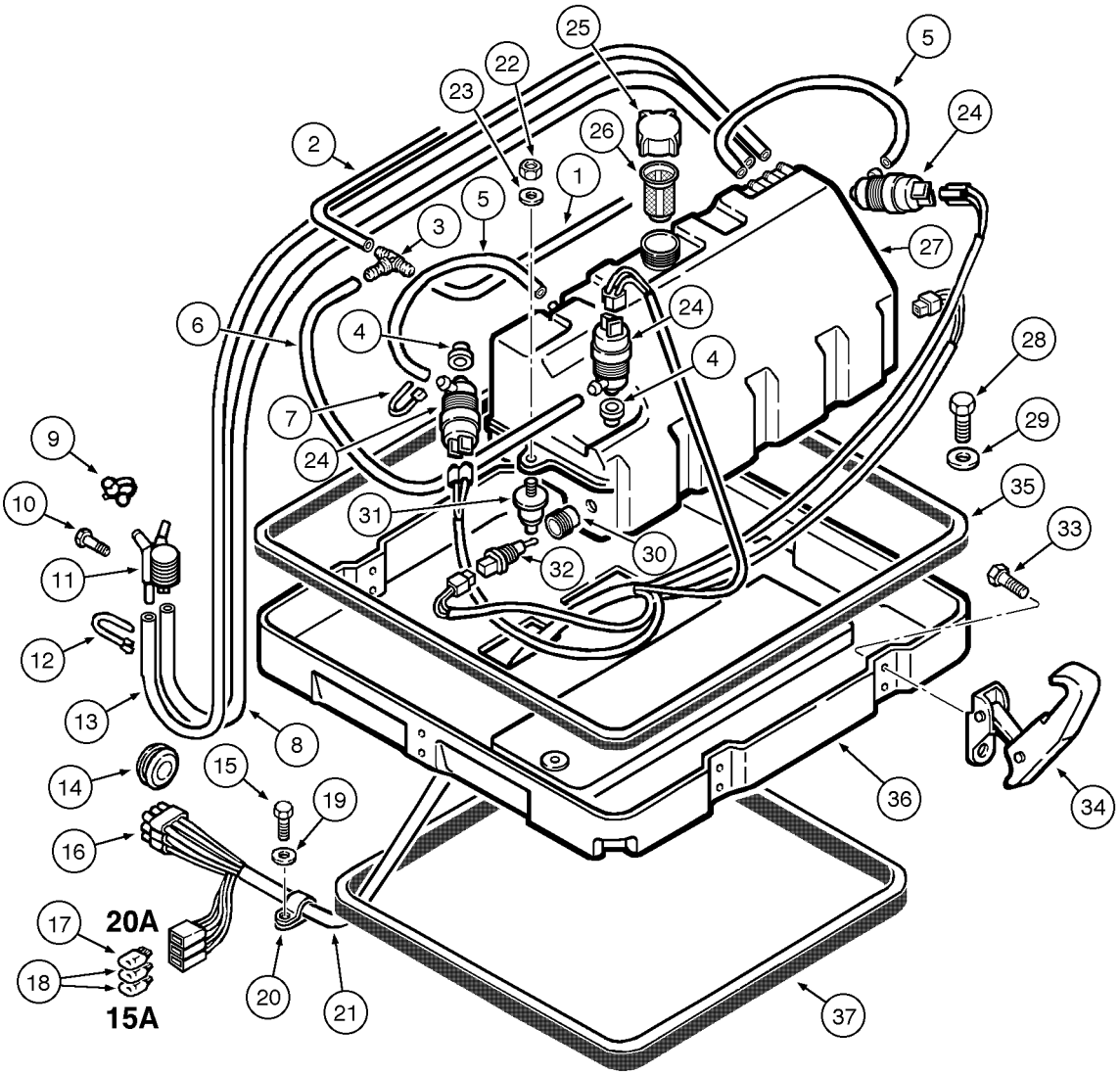

CLIMATIZING EQUIPMENT - ASSEMBLY
CLIMATIZING EQUIPMENT - ASSEMBLY
CLIMATIZING EQUIPMENT - ASSEMBLY
CLIMATIZING EQUIPMENT - ASSEMBLY

R	N	P.N.	MOD	Q	Denominação Bezeichnung	Description Description	Denominacion Beskrivelse	Descrizione Beschrijving	L.C.
24		87463037		3	BOMBA DE ÁGUA, water WASSERPUMPE	WATER PUMP POMPE A EAU	BOMBA DE AGUA VANDPUMPE	POMPA ACQUA WATERPOMP	152P
25		87463038		1	COBERTURA, reservoir ABDECKUNG	COVER COUVERCLE	CUBIERTA DÆKSEL	COPERCHIO AFSCHERMING	265C
26		87463039		1	FILTRO, reservoir FILTER	FILTER FILTRE	FILTRO FILTER	FILTRO FILTER	065F
27		87463040		1	RESERVATÓRIO TANK	TANK RESERVOIR	DEPÓSITO TANK	SERBATOIO TANK	115S
28		87463077		1	PARAFUSO SCHRAUBE	SCREW VIS	TORNILLO SKRUE	VITE SCHROEF	040V
29		87463041		1	ARRUELA PLANA UNTERLEGSCHEIBE	WASHER RONDELLE	ARANDELA FLADSKIVE	RONDELLA SLUITRING	131R
30		87463042		1	PARA-SOL SONNENBLENDE	SUN VISOR VISIERE	VISERA SOLSKÆRM	VISIERA PARASOLE ZONNEKLEP	080R
31		87463043		1	COXIM KISSEN	CUSHION COUSSIN	COJÍN PUDE	CUSCINO KUSSEN	2460
32		87463044		1	SENSOR, level SENSOR	SENSOR CAPTEUR	SENSOR FØLER	SENSORE SENSOR	608S
33		87463045		8	PARAFUSO SCHRAUBE	SCREW VIS	TORNILLO SKRUE	VITE SCHROEF	040V
34		87463046		4	GRAMPO, cover KLAMMER	CLIP COLLIER	ABRAZADERA KLIPS	FERMO KLEM	045F
35		87463047		1	JUNTA DICHTUNG	GASKET JOINT	JUNTA PAKNING	GUARNIZIONE PAKKING	123G
36		87463048		1	COBERTURA, lower ABDECKUNG	COVER COUVERCLE	CUBIERTA DÆKSEL	COPERCHIO AFSCHERMING	265C
37		87463049		1	JUNTA DICHTUNG	GASKET JOINT	JUNTA PAKNING	GUARNIZIONE PAKKING	123G

09-30H	01	p1	11/07

CLIMATIZADOR - PAINEL
CLIMATIZING EQUIPMENT - PANEL
CLIMATIZADOR - PANEL
CLIMATIZING EQUIPMENT - PANEL

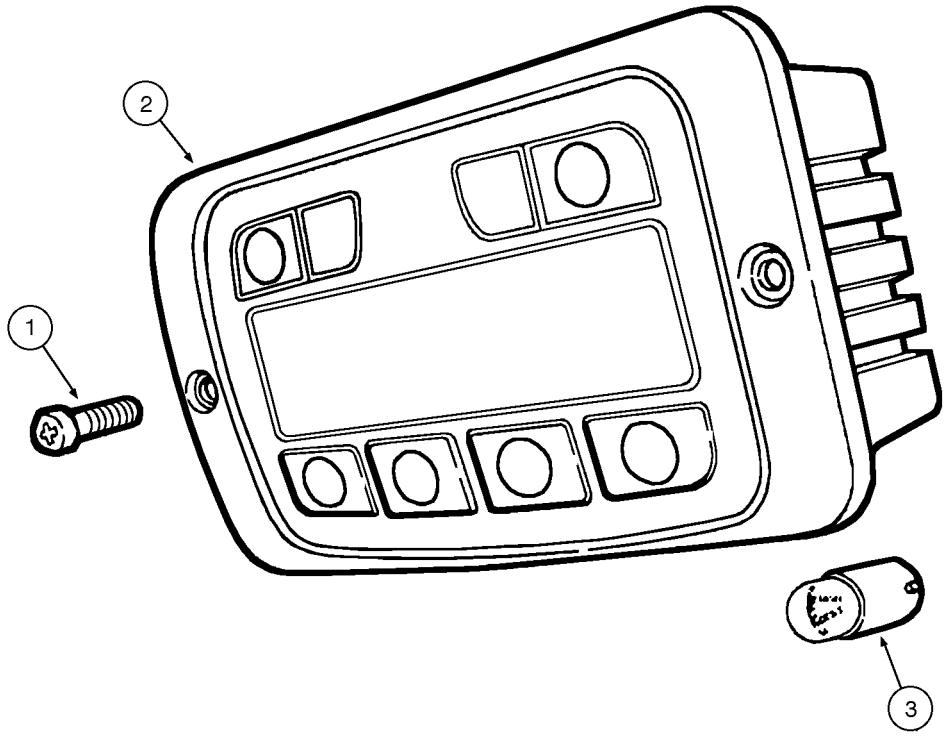

CLIMATIZING EQUIPMENT - PANEL
CLIMATIZING EQUIPMENT - PANEL
CLIMATIZING EQUIPMENT - PANEL
CLIMATIZING EQUIPMENT - PANEL

R	N	P.N.	MOD	Q	Denominação Bezeichnung	Description Description	Denominacion Beskrivelse	Descrizione Beschrijving	L.C.
	1	**87452961**			AR-CONDICIONADO KLIMAANLAGE	AIR CONDITIONER CLIMATISEUR	AIRE ACONDICIONADO AIRCONDITION	CONDIZIONATORE ARIA AIRCONDITIONING	0080
1		**87463078**		2	PARAFUSO SCHRAUBE	SCREW VIS	TORNILLO SKRUE	VITE SCHROEF	040V
2		**87461884**		1	INTERRUPTOR SCHALTER	SWITCH CONTACTEUR	INTERRUPTOR KONTAKT	INTERRUTTORE SCHAKELAAR	075I
3		**87463070**		1	LÂMPADA GLÜHLAMPE	BULB AMPOULE	BOMBILLA PÆRE	LAMPADINA LAMP	030L

(1) Inclui os itens das páginas 9-30D, 30F, 30H

09-32	01	p1	03/10

RETROVISOR EXTERNO - OPCIONAL
EXTERNAL REAR VIEW MIRROR - OPTION
RETROVISOR EXTERNO - OPCCIÓN
EXTERNAL REAR VIEW MIRROR - OPTION

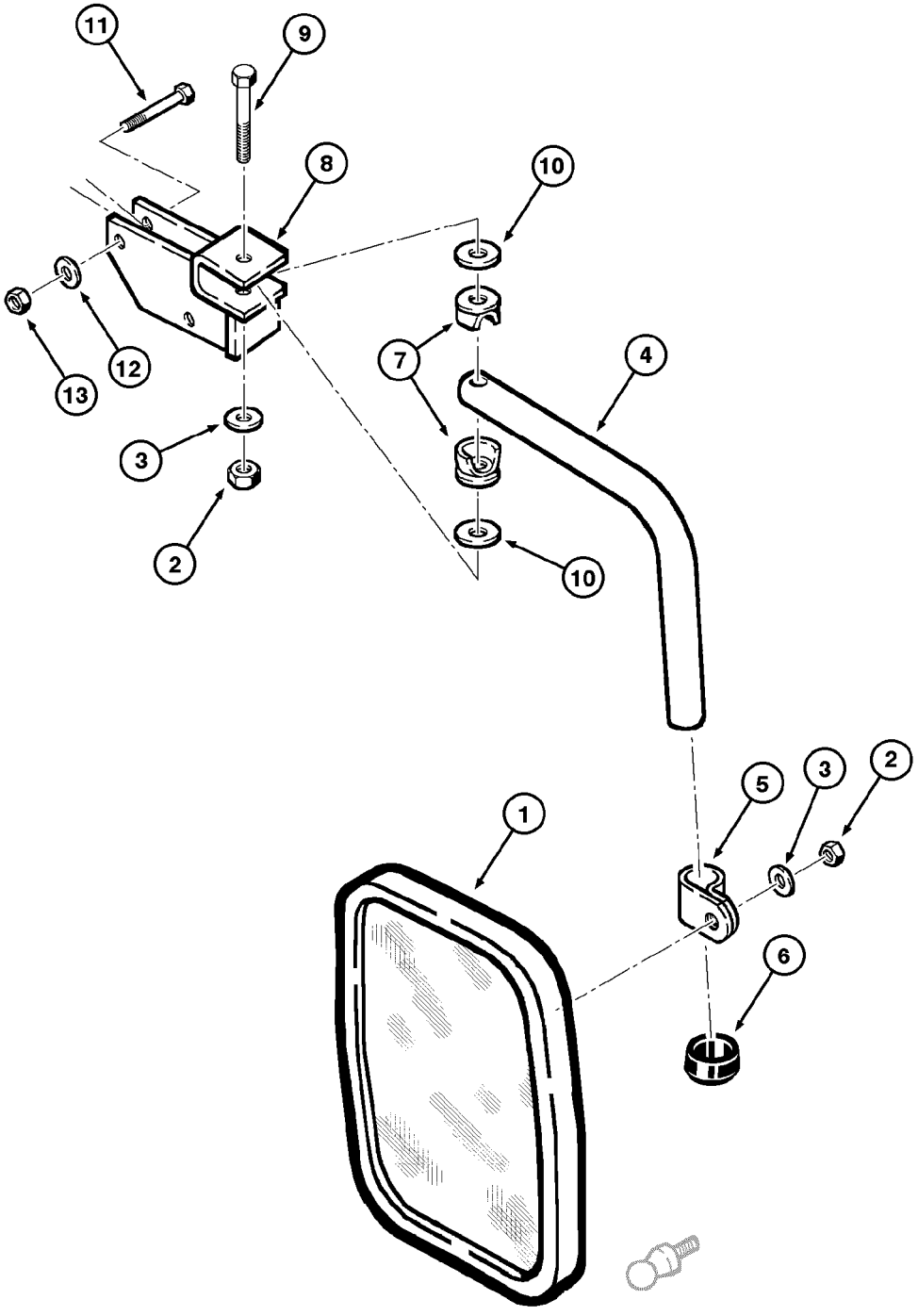

EXTERNAL REAR VIEW MIRROR - OPTION
EXTERNAL REAR VIEW MIRROR - OPTION
EXTERNAL REAR VIEW MIRROR - OPTION
EXTERNAL REAR VIEW MIRROR - OPTION

R	N	P.N.	MOD	Q	Denominação Bezeichnung	Description Description	Denominacion Beskrivelse	Descrizione Beschrijving	L.C.
1		1283403C1		2	ESPELHO SPIEGEL	MIRROR RETROVISEUR	ESPEJO SPEJL	SPECCHIETTO SPIEGEL	5580
2		326364A1		2	PORCA MUTTER	NUT ECROU	TUERCA NUT	DADO NUT	5780
3		326365A1		2	ARRUELA UNTERLEGSCHEIBE	WASHER RONDELLE	ARANDELA WASHER	RONDELLA WASHER	9720
4		1977805C1		2	BRAÇO ARM	ARM BRAS	BRAZO ARM	BRACCIO ARM	130B
5		70927264		2	COLAR RINGE	COLLAR COLLIER	COLLAR SLANGEBÅND	COLLARE KRAAG	031F
6		1977833C1		2	TAMPA KAPPE	CAP CAPUCHON	TAPÓN TANKDÆKSEL	TAPPO DOP	052T
7		1977831C1		4	ARGOLA DE FIXAÇÃO BEFESTIGUNGSKLEMME	MOUNTING CLIP COLLIER-DE-FIXATION	ABRAZADERA DE MONT MONTERINGSKLEMME	GRAFFA DI MONTAGGIC BEVESTIGINGSKLEM	Z445
8		198061A1		2	SUPORTE, mirror STUETZE	SUPPORT SUPPORT	APOYADERO SUPPORT	SUPPORTO SUPPORT	8790
9		326362A1		2	PARAFUSO SCHRAUBE	BOLT BOULON	TORNILLO SKRUE	BULLONE BOUT	0810
10		1977832C1		4	ARRUELA UNTERLEGSCHEIBE	WASHER RONDELLE	ARANDELA WASHER	RONDELLA WASHER	9720
11		326361A1		4	PARAFUSO SCHRAUBE	BOLT BOULON	TORNILLO SKRUE	BULLONE BOUT	0810
12		297865A1		4	ARRUELA UNTERLEGSCHEIBE	WASHER RONDELLE	ARANDELA WASHER	RONDELLA WASHER	9720
13		326363A1		4	PORCA MUTTER	NUT ECROU	TUERCA NUT	DADO NUT	5780

09-32	01	p1	03/10

RETROVISOR EXTERNO - OPCIONAL
EXTERNAL REAR VIEW MIRROR - OPTION
RETROVISOR EXTERNO - OPCCIÓN
EXTERNAL REAR VIEW MIRROR - OPTION

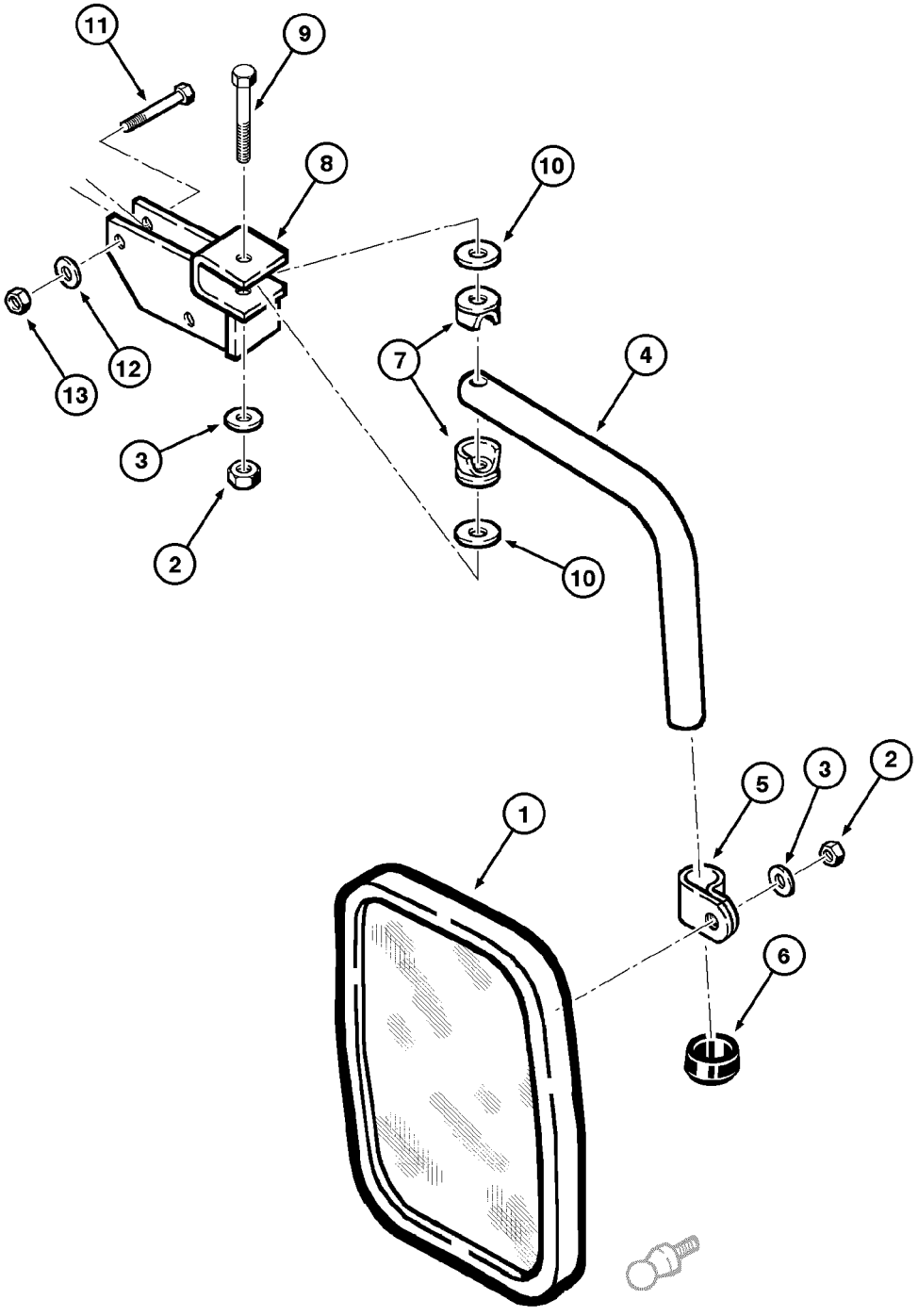

EXTERNAL REAR VIEW MIRROR - OPTION
EXTERNAL REAR VIEW MIRROR - OPTION
EXTERNAL REAR VIEW MIRROR - OPTION
EXTERNAL REAR VIEW MIRROR - OPTION

R	N	P.N.	MOD	Q	Denominação Bezeichnung	Description Description	Denominacion Beskrivelse	Descrizione Beschrijving	L.C.
1		1283403C1		2	ESPELHO SPIEGEL	MIRROR RETROVISEUR	ESPEJO SPEJL	SPECCHIETTO SPIEGEL	5580
2		326364A1		2	PORCA MUTTER	NUT ECROU	TUERCA NUT	DADO NUT	5780
3		326365A1		2	ARRUELA UNTERLEGSCHEIBE	WASHER RONDELLE	ARANDELA WASHER	RONDELLA WASHER	9720
4		1977805C1		2	BRAÇO ARM	ARM BRAS	BRAZO ARM	BRACCIO ARM	130B
5		70927264		2	COLAR RINGE	COLLAR COLLIER	COLLAR SLANGEBÅND	COLLARE KRAAG	031F
6		1977833C1		2	TAMPA KAPPE	CAP CAPUCHON	TAPÓN TANKDÆKSEL	TAPPO DOP	052T
7		1977831C1		4	ARGOLA DE FIXAÇÃO BEFESTIGUNGSKLEMME	MOUNTING CLIP COLLIER-DE-FIXATION	ABRAZADERA DE MONT MONTERINGSKLEMME	GRAFFA DI MONTAGGIC BEVESTIGINGSKLEM	Z445
8		198061A1		2	SUPORTE, mirror STUETZE	SUPPORT SUPPORT	APOYADERO SUPPORT	SUPPORTO SUPPORT	8790
9		326362A1		2	PARAFUSO SCHRAUBE	BOLT BOULON	TORNILLO SKRUE	BULLONE BOUT	0810
10		1977832C1		4	ARRUELA UNTERLEGSCHEIBE	WASHER RONDELLE	ARANDELA WASHER	RONDELLA WASHER	9720
11		326361A1		4	PARAFUSO SCHRAUBE	BOLT BOULON	TORNILLO SKRUE	BULLONE BOUT	0810
12		297865A1		4	ARRUELA UNTERLEGSCHEIBE	WASHER RONDELLE	ARANDELA WASHER	RONDELLA WASHER	9720
13		326363A1		4	PORCA MUTTER	NUT ECROU	TUERCA NUT	DADO NUT	5780

09-32	02	p1	08/09

LUZ ROTATIVA
ROTATING BEACON
LUZ ROTATIVA
ROTATING BEACON

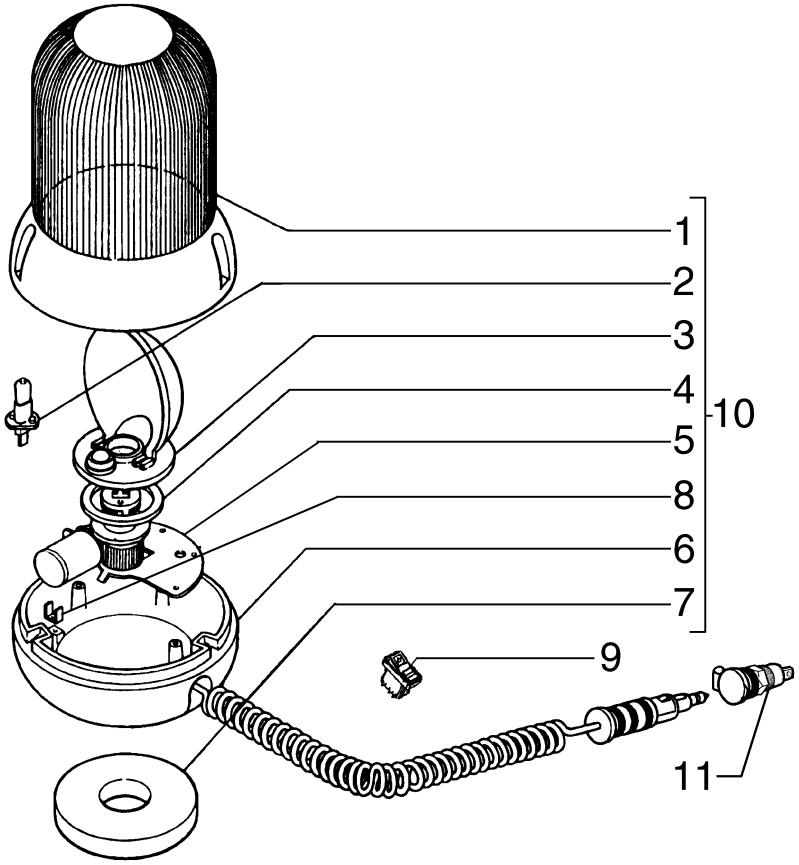

ROTATING BEACON
ROTATING BEACON
ROTATING BEACON
ROTATING BEACON

R	N	P.N.	MOD	Q	Denominação Bezeichnung	Description Description	Denominacion Beskrivelse	Descrizione Beschrijving	L.C.
1		76042349		1	LENTE STREUSCHEIBE	LENS CABOCHON	LENTE LYGTEGLAS	TRASPARENTE GLAS	170T
2		14151195		1	LÂMPADA GLÜHLAMPE	BULB AMPOULE	BOMBILLA PÆRE	LAMPADINA LAMP	030L
3		76042350		1	REFLETOR REFLEKTOR	REFLECTOR CATADIOPTRE	REFLECTOR BAGREFLEKS	RIFLETTORE REFLECTOR	090C
4		76042351		1	CORREIA RIEMEN	BELT COURROIE	CORREA REM	CINGHIA RIEM	174C
5		76042352		1	MOTOR ELÉTRICO PEQUENO KLEINER ELEKTROMOT(	SMALL ELECTRIC MOTC PETIT MOTEUR ELECTR	MOTOR ELÉCTRICO PE(LILLE EL-MOTOR	MOTORINO ELETTRICO KLEINE ELEKTROMOTOI	137M
6		76042354		1	CORPO KAROSSERIE	BODY CORPS	CUERPO HUS	CORPO HUIS	300C
7		76042355		1	IMÃ MAGNET	MAGNET AIMANT	IMÁN MAGNET	MAGNETE MAGNEET	012M
8		76042353		1	REGULADOR DE TENSÃO, mirror SPANNUNGSREGLER	VOLTAGE REGULATOR REGULATEUR DE TENSI	REGULADOR DE TENSIÓ SPÆNDINGSREGULATO	REGOLATORE DI TENSI(SPANNINGSREGELAAR	169R
9		75251040		1	INTERRUPTOR SCHALTER	SWITCH CONTACTEUR	INTERRUPTOR KONTAKT	INTERRUTTORE SCHAKELAAR	075I
10		76041998		1	LÂMPADA INTERMITENTE BLINKEREINHEIT	FLASHER UNIT CENTRALE CLIGNOTAN	UNIDAD INTERMITENTE BLINKLAMPE	UNITÀ LAMPEGGIATORE KNIPPERAUTOMAAT	035L
11		79090991		1	TOMADA ELÉTRICA STECKDOSE	POWER SOCKET PRISE DE COURANT	ZÓCALO DE CORRIENTE STRØMUDTAG	PRESA DI CORRENTE CONTACTDOOS	205P

09-34	01	p1	03/09

BANCO DO OPERADOR - SUPORTE
OPERATORS SEAT - SUPPORT
ASIENTO DEL OPERADOR - SOPORTE
OPERATORS SEAT - SUPPORT

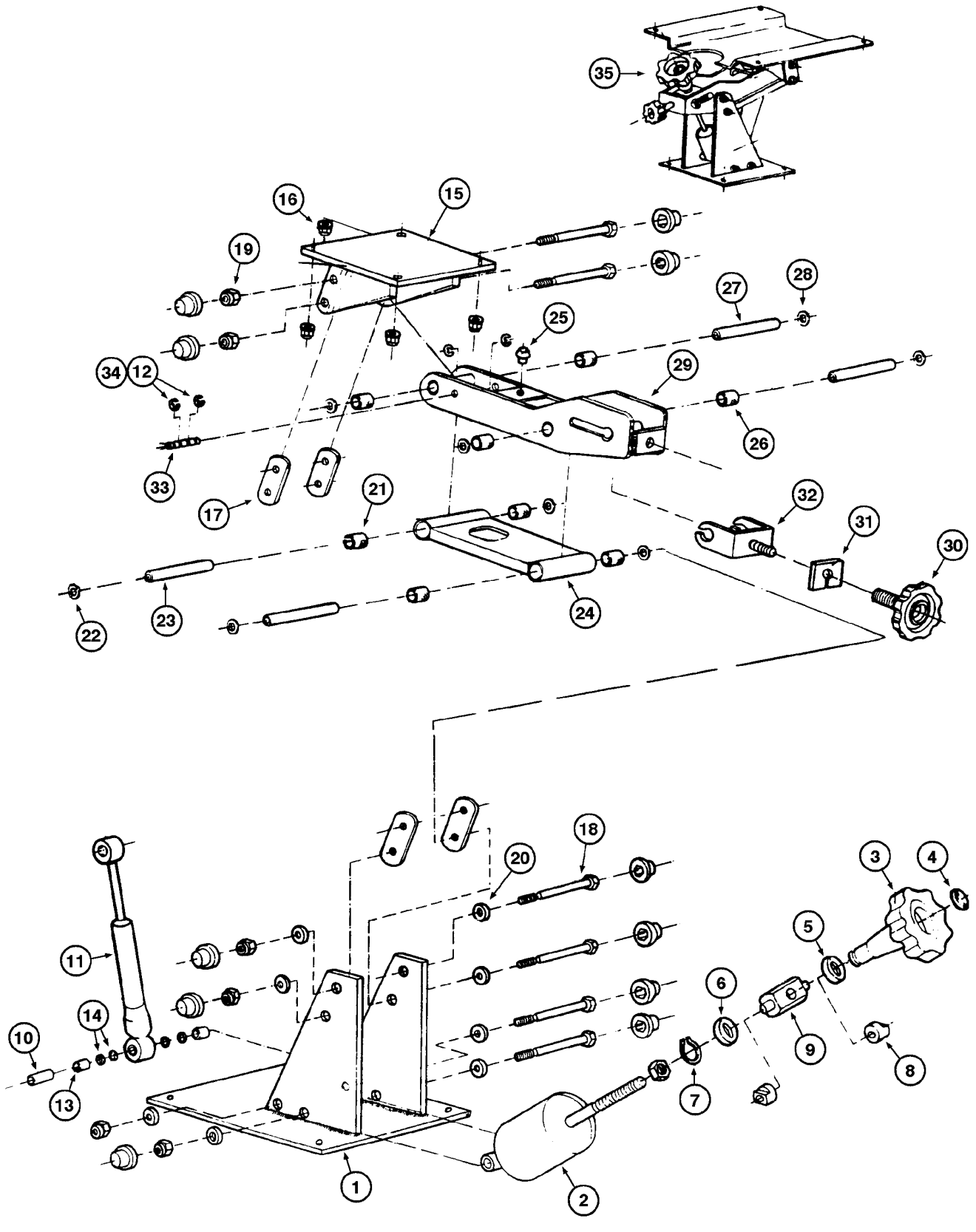

OPERATORS SEAT - SUPPORT
OPERATORS SEAT - SUPPORT
OPERATORS SEAT - SUPPORT
OPERATORS SEAT - SUPPORT

R	N	P.N.	MOD	Q	Denominação Bezeichnung	Description Description	Denominacion Beskrivelse	Descrizione Beschrijving	L.C.
		146694A1		1	ASSENTO, operator Assy (P.9-34), Includes items 1 - 35				
						SEAT	ASIENTO	SEDILE	7480
					SITZ	SIEGE	SÆDE	STOEL	
1		**147080A1**		1	KIT DE REVISÃO DO MOTOR				
						ENGINE OVERHAUL KIT	KIT DE REVISIÓN DEL M	KIT REVISIONE MOTORE	002K
					MOTORÜBERHOLUNGSS	KIT DE REVISION MOTEI	MOTORREVISIONSSÆT	REVISIEKIT VOOR MOTO	
2		**147067A1**		1	CAIXA DE MOLAS, spring	SPRING BOX	CAJA DE RESORTE	SET MOLLE	Z407
					FEDERKASTEN	BOITE A RESSORT	FJEDERKASSE	VEERKAST	
		147082A1		1	KIT DE REVISÃO DO MOTOR, Assy, Includes items 3 - 7				
						ENGINE OVERHAUL KIT	KIT DE REVISIÓN DEL M	KIT REVISIONE MOTORE	002K
					MOTORÜBERHOLUNGSS	KIT DE REVISION MOTEI	MOTORREVISIONSSÆT	REVISIEKIT VOOR MOTO	
3		**NSS**		1	SEM SERVIÇO EM SEPARADO, KNOB				
						NOT SERVICED SEPARA	NO SE REPARA POR SE	NON FORNITO SEPARAT	064N
					NICHT A SEP ERS-T LIEI	NON FORUNI SEPAREM	SERVICERES IKKE SEPA	NIET LOS VERKRIJGBAA	
4		**147083A1**		1	KIT DE REVISÃO DO MOTOR				
						ENGINE OVERHAUL KIT	KIT DE REVISIÓN DEL M	KIT REVISIONE MOTORE	002K
					MOTORÜBERHOLUNGSS	KIT DE REVISION MOTEI	MOTORREVISIONSSÆT	REVISIEKIT VOOR MOTO	
5		**NSS**		1	SEM SERVIÇO EM SEPARADO, WASHER				
						NOT SERVICED SEPARA	NO SE REPARA POR SE	NON FORNITO SEPARAT	064N
					NICHT A SEP ERS-T LIEI	NON FORUNI SEPAREM	SERVICERES IKKE SEPA	NIET LOS VERKRIJGBAA	
6		**NSS**		1	SEM SERVIÇO EM SEPARADO, WASHER				
						NOT SERVICED SEPARA	NO SE REPARA POR SE	NON FORNITO SEPARAT	064N
					NICHT A SEP ERS-T LIEI	NON FORUNI SEPAREM	SERVICERES IKKE SEPA	NIET LOS VERKRIJGBAA	
7		**NSS**		1	SEM SERVIÇO EM SEPARADO, SNAP ring				
						NOT SERVICED SEPARA	NO SE REPARA POR SE	NON FORNITO SEPARAT	064N
					NICHT A SEP ERS-T LIEI	NON FORUNI SEPAREM	SERVICERES IKKE SEPA	NIET LOS VERKRIJGBAA	
		147081A1		1	KIT DE REVISÃO DO MOTOR, Assy, Includes items 8, 9				
						ENGINE OVERHAUL KIT	KIT DE REVISIÓN DEL M	KIT REVISIONE MOTORE	002K
					MOTORÜBERHOLUNGSS	KIT DE REVISION MOTEI	MOTORREVISIONSSÆT	REVISIEKIT VOOR MOTO	
8		**147069A1**		2	KIT DE REVISÃO DO MOTOR				
						ENGINE OVERHAUL KIT	KIT DE REVISIÓN DEL M	KIT REVISIONE MOTORE	002K
					MOTORÜBERHOLUNGSS	KIT DE REVISION MOTEI	MOTORREVISIONSSÆT	REVISIEKIT VOOR MOTO	
9		**NSS**		1	SEM SERVIÇO EM SEPARADO, SHAFT				
						NOT SERVICED SEPARA	NO SE REPARA POR SE	NON FORNITO SEPARAT	064N
					NICHT A SEP ERS-T LIEI	NON FORUNI SEPAREM	SERVICERES IKKE SEPA	NIET LOS VERKRIJGBAA	
		147099A1		1	KIT DE REVISÃO DO MOTOR, Assy, Includes items 10 - 14				
						ENGINE OVERHAUL KIT	KIT DE REVISIÓN DEL M	KIT REVISIONE MOTORE	002K
					MOTORÜBERHOLUNGSS	KIT DE REVISION MOTEI	MOTORREVISIONSSÆT	REVISIEKIT VOOR MOTO	
10		**NSS**		2	SEM SERVIÇO EM SEPARADO, SPACER				
						NOT SERVICED SEPARA	NO SE REPARA POR SE	NON FORNITO SEPARAT	064N
					NICHT A SEP ERS-T LIEI	NON FORUNI SEPAREM	SERVICERES IKKE SEPA	NIET LOS VERKRIJGBAA	
11		**NSS**		1	SEM SERVIÇO EM SEPARADO, SHOCK absorver				
						NOT SERVICED SEPARA	NO SE REPARA POR SE	NON FORNITO SEPARAT	064N
					NICHT A SEP ERS-T LIEI	NON FORUNI SEPAREM	SERVICERES IKKE SEPA	NIET LOS VERKRIJGBAA	
12		**NSS**		4	SEM SERVIÇO EM SEPARADO, SNAP ring				
						NOT SERVICED SEPARA	NO SE REPARA POR SE	NON FORNITO SEPARAT	064N
					NICHT A SEP ERS-T LIEI	NON FORUNI SEPAREM	SERVICERES IKKE SEPA	NIET LOS VERKRIJGBAA	

09-34	01	p2	03/09

BANCO DO OPERADOR - SUPORTE
OPERATORS SEAT - SUPPORT
ASIENTO DEL OPERADOR - SOPORTE
OPERATORS SEAT - SUPPORT

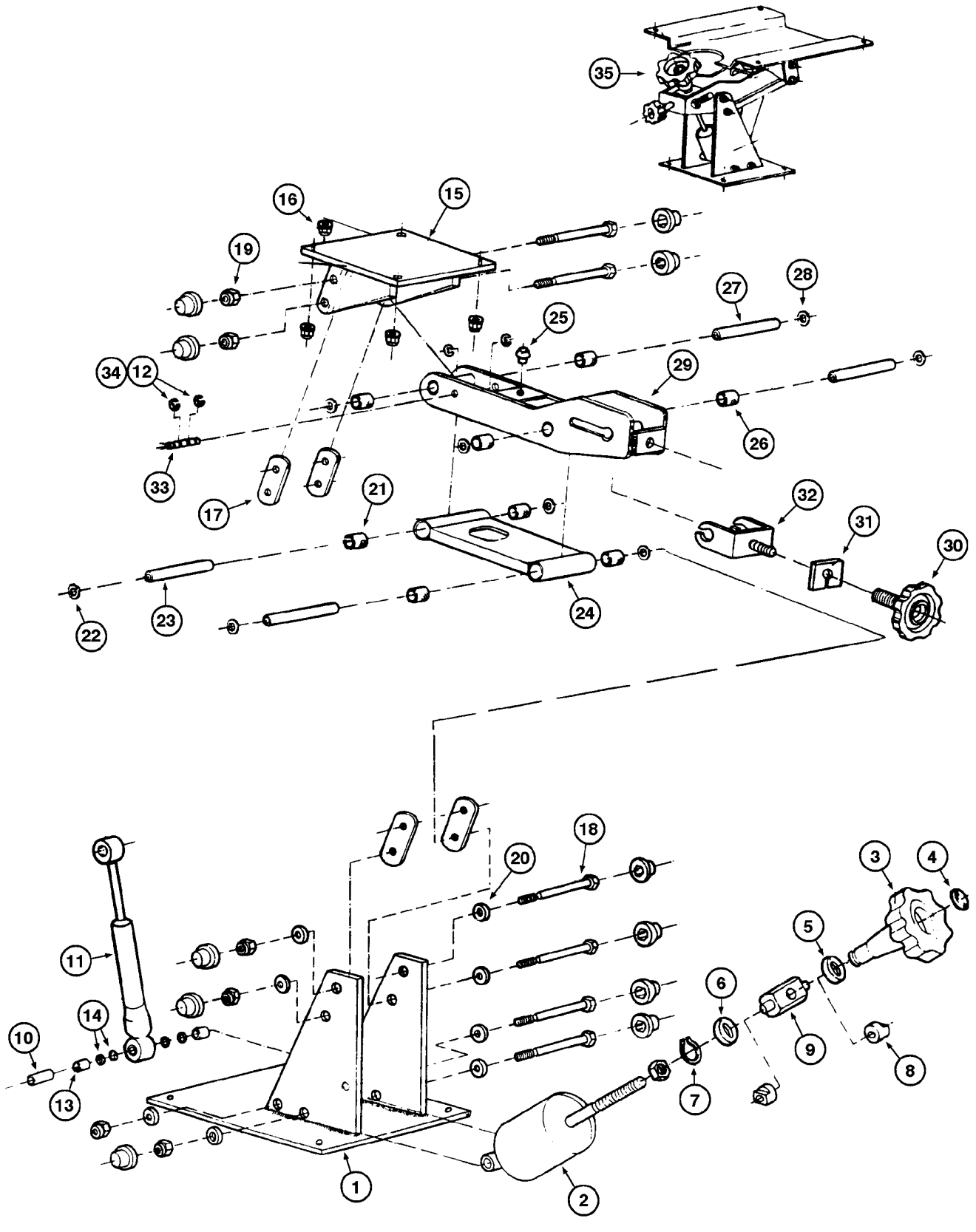

OPERATORS SEAT - SUPPORT
OPERATORS SEAT - SUPPORT
OPERATORS SEAT - SUPPORT
OPERATORS SEAT - SUPPORT

R	N	P.N.	MOD	Q	Denominação Bezeichnung	Description Description	Denominacion Beskrivelse	Descrizione Beschrijving	L.C.
13		**NSS**		2	SEM SERVIÇO EM SEPARADO, BUSHING				
					NOT SERVICED SEPARA	NO SE REPARA POR SE	NON FORNITO SEPARAT		064N
					NICHT A SEP ERS-T LIEI	NON FORUNI SEPAREM	SERVICERES IKKE SEPA	NIET LOS VERKRIJGBAA	
14		**NSS**		4	SEM SERVIÇO EM SEPARADO, WASHER				
					NOT SERVICED SEPARA	NO SE REPARA POR SE	NON FORNITO SEPARAT		064N
					NICHT A SEP ERS-T LIEI	NON FORUNI SEPAREM	SERVICERES IKKE SEPA	NIET LOS VERKRIJGBAA	
		147085A1		1	KIT DE REVISÃO DO MOTOR, rail, Includes items 15, 16				
					ENGINE OVERHAUL KIT	KIT DE REVISIÓN DEL M	KIT REVISIONE MOTORE		002K
					MOTORÜBERHOLUNGSS	KIT DE REVISION MOTEI	MOTORREVISIONSSÆT	REVISIEKIT VOOR MOTO	
15		**NSS**		1	SEM SERVIÇO EM SEPARADO, BASE				
					NOT SERVICED SEPARA	NO SE REPARA POR SE	NON FORNITO SEPARAT		064N
					NICHT A SEP ERS-T LIEI	NON FORUNI SEPAREM	SERVICERES IKKE SEPA	NIET LOS VERKRIJGBAA	
16		**NSS**		4	SEM SERVIÇO EM SEPARADO, NUT				
					NOT SERVICED SEPARA	NO SE REPARA POR SE	NON FORNITO SEPARAT		064N
					NICHT A SEP ERS-T LIEI	NON FORUNI SEPAREM	SERVICERES IKKE SEPA	NIET LOS VERKRIJGBAA	
		147086A1		1	KIT DE REVISÃO DO MOTOR, Assy, Includes items 17 - 20				
					ENGINE OVERHAUL KIT	KIT DE REVISIÓN DEL M	KIT REVISIONE MOTORE		002K
					MOTORÜBERHOLUNGSS	KIT DE REVISION MOTEI	MOTORREVISIONSSÆT	REVISIEKIT VOOR MOTO	
17		**NSS**		4	SEM SERVIÇO EM SEPARADO, PLATE support				
					NOT SERVICED SEPARA	NO SE REPARA POR SE	NON FORNITO SEPARAT		064N
					NICHT A SEP ERS-T LIEI	NON FORUNI SEPAREM	SERVICERES IKKE SEPA	NIET LOS VERKRIJGBAA	
18		**NSS**		5	SEM SERVIÇO EM SEPARADO, BOLT				
					NOT SERVICED SEPARA	NO SE REPARA POR SE	NON FORNITO SEPARAT		064N
					NICHT A SEP ERS-T LIEI	NON FORUNI SEPAREM	SERVICERES IKKE SEPA	NIET LOS VERKRIJGBAA	
19		**NSS**		5	SEM SERVIÇO EM SEPARADO, NUT				
					NOT SERVICED SEPARA	NO SE REPARA POR SE	NON FORNITO SEPARAT		064N
					NICHT A SEP ERS-T LIEI	NON FORUNI SEPAREM	SERVICERES IKKE SEPA	NIET LOS VERKRIJGBAA	
20		**NSS**		8	SEM SERVIÇO EM SEPARADO, WASHER				
					NOT SERVICED SEPARA	NO SE REPARA POR SE	NON FORNITO SEPARAT		064N
					NICHT A SEP ERS-T LIEI	NON FORUNI SEPAREM	SERVICERES IKKE SEPA	NIET LOS VERKRIJGBAA	
		147084A1		1	KIT DE REVISÃO DO MOTOR, Assy, Includes items 21 - 24				
					ENGINE OVERHAUL KIT	KIT DE REVISIÓN DEL M	KIT REVISIONE MOTORE		002K
					MOTORÜBERHOLUNGSS	KIT DE REVISION MOTEI	MOTORREVISIONSSÆT	REVISIEKIT VOOR MOTO	
21		**NSS**		4	SEM SERVIÇO EM SEPARADO, BUSHING				
					NOT SERVICED SEPARA	NO SE REPARA POR SE	NON FORNITO SEPARAT		064N
					NICHT A SEP ERS-T LIEI	NON FORUNI SEPAREM	SERVICERES IKKE SEPA	NIET LOS VERKRIJGBAA	
22		**NSS**		4	SEM SERVIÇO EM SEPARADO, WASHER				
					NOT SERVICED SEPARA	NO SE REPARA POR SE	NON FORNITO SEPARAT		064N
					NICHT A SEP ERS-T LIEI	NON FORUNI SEPAREM	SERVICERES IKKE SEPA	NIET LOS VERKRIJGBAA	
23		**NSS**		2	SEM SERVIÇO EM SEPARADO, SPACER				
					NOT SERVICED SEPARA	NO SE REPARA POR SE	NON FORNITO SEPARAT		064N
					NICHT A SEP ERS-T LIEI	NON FORUNI SEPAREM	SERVICERES IKKE SEPA	NIET LOS VERKRIJGBAA	
24		**NSS**		1	SEM SERVIÇO EM SEPARADO, BRACKET				
					NOT SERVICED SEPARA	NO SE REPARA POR SE	NON FORNITO SEPARAT		064N
					NICHT A SEP ERS-T LIEI	NON FORUNI SEPAREM	SERVICERES IKKE SEPA	NIET LOS VERKRIJGBAA	
		147088A1		1	KIT DE REVISÃO DO MOTOR, Assy, Includes items 25 - 29				
					ENGINE OVERHAUL KIT	KIT DE REVISIÓN DEL M	KIT REVISIONE MOTORE		002K
					MOTORÜBERHOLUNGSS	KIT DE REVISION MOTEI	MOTORREVISIONSSÆT	REVISIEKIT VOOR MOTO	

09-34	01	p3	03/09

BANCO DO OPERADOR - SUPORTE
OPERATORS SEAT - SUPPORT
ASIENTO DEL OPERADOR - SOPORTE
OPERATORS SEAT - SUPPORT

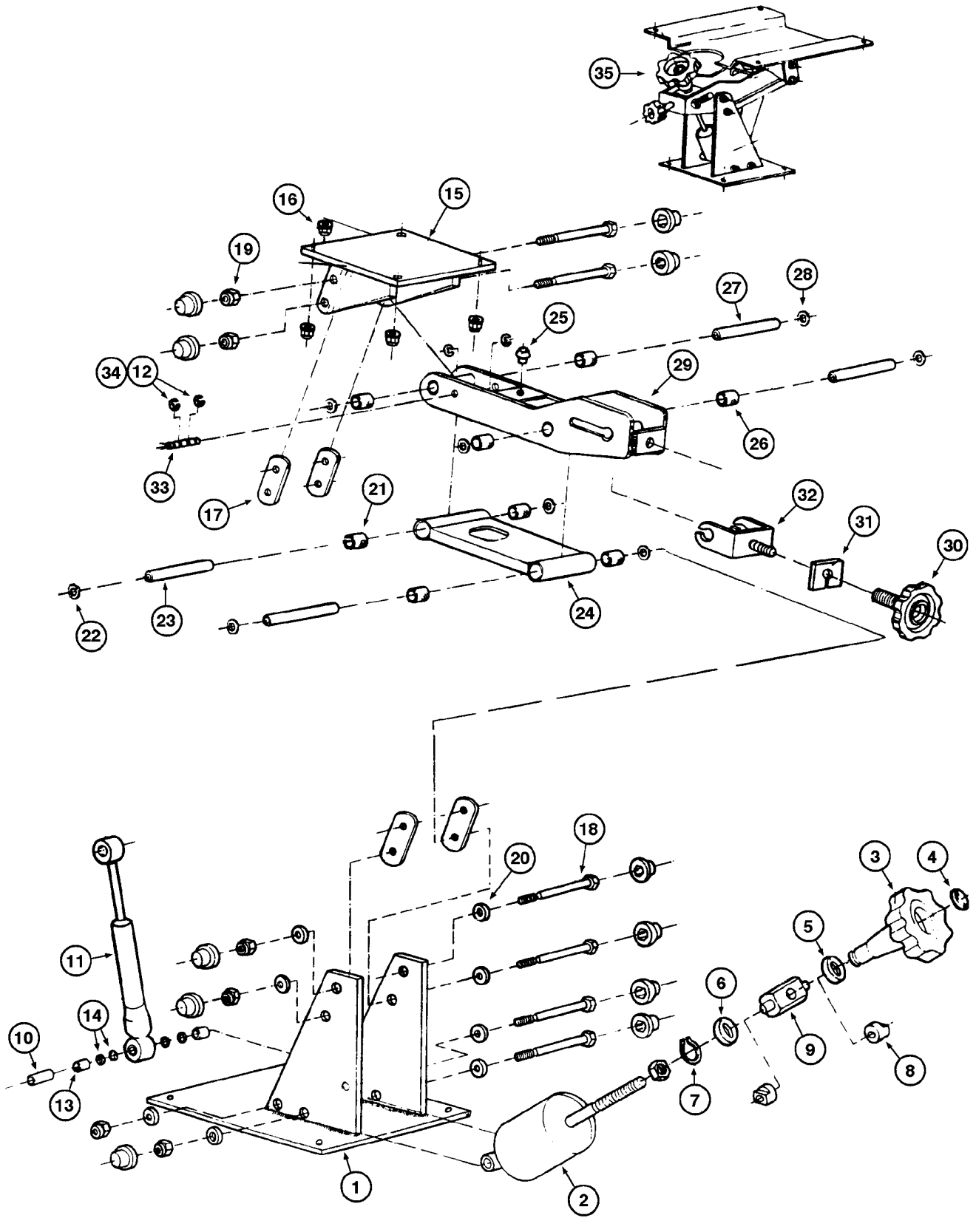

OPERATORS SEAT - SUPPORT
OPERATORS SEAT - SUPPORT
OPERATORS SEAT - SUPPORT
OPERATORS SEAT - SUPPORT

R	N	P.N.	MOD	Q	Denominação Bezeichnung	Description Description	Denominacion Beskrivelse	Descrizione Beschrijving	L.C.
25		NSS		1	SEM SERVIÇO EM SEPARADO, PAD				
						NOT SERVICED SEPARA	NO SE REPARA POR SE	NON FORNITO SEPARAT	064N
					NICHT A SEP ERS-T LIEI	NON FORUNI SEPAREM	SERVICERES IKKE SEPA	NIET LOS VERKRIJGBAA	
26		NSS		4	SEM SERVIÇO EM SEPARADO, BUSHING				
						NOT SERVICED SEPARA	NO SE REPARA POR SE	NON FORNITO SEPARAT	064N
					NICHT A SEP ERS-T LIEI	NON FORUNI SEPAREM	SERVICERES IKKE SEPA	NIET LOS VERKRIJGBAA	
27		NSS		2	SEM SERVIÇO EM SEPARADO, SPACER				
						NOT SERVICED SEPARA	NO SE REPARA POR SE	NON FORNITO SEPARAT	064N
					NICHT A SEP ERS-T LIEI	NON FORUNI SEPAREM	SERVICERES IKKE SEPA	NIET LOS VERKRIJGBAA	
28		NSS		4	SEM SERVIÇO EM SEPARADO, WASHER				
						NOT SERVICED SEPARA	NO SE REPARA POR SE	NON FORNITO SEPARAT	064N
					NICHT A SEP ERS-T LIEI	NON FORUNI SEPAREM	SERVICERES IKKE SEPA	NIET LOS VERKRIJGBAA	
29		NSS		1	SEM SERVIÇO EM SEPARADO, TRUNNION				
						NOT SERVICED SEPARA	NO SE REPARA POR SE	NON FORNITO SEPARAT	064N
					NICHT A SEP ERS-T LIEI	NON FORUNI SEPAREM	SERVICERES IKKE SEPA	NIET LOS VERKRIJGBAA	
		147068A1			KIT DE REVISÃO DO MOTOR, Assy, Includes items 30, 31, 32				
						ENGINE OVERHAUL KIT	KIT DE REVISIÓN DEL M	KIT REVISIONE MOTORE	002K
					MOTORÜBERHOLUNGSS	KIT DE REVISION MOTEI	MOTORREVISIONSSÆT	REVISIEKIT VOOR MOTO	
30		NSS		1	SEM SERVIÇO EM SEPARADO, BUTTON				
						NOT SERVICED SEPARA	NO SE REPARA POR SE	NON FORNITO SEPARAT	064N
					NICHT A SEP ERS-T LIEI	NON FORUNI SEPAREM	SERVICERES IKKE SEPA	NIET LOS VERKRIJGBAA	
31		NSS		1	SEM SERVIÇO EM SEPARADO, PAD				
						NOT SERVICED SEPARA	NO SE REPARA POR SE	NON FORNITO SEPARAT	064N
					NICHT A SEP ERS-T LIEI	NON FORUNI SEPAREM	SERVICERES IKKE SEPA	NIET LOS VERKRIJGBAA	
32		147089A1		1	KIT DE REVISÃO DO MOTOR, adjusting				
						ENGINE OVERHAUL KIT	KIT DE REVISIÓN DEL M	KIT REVISIONE MOTORE	002K
					MOTORÜBERHOLUNGSS	KIT DE REVISION MOTEI	MOTORREVISIONSSÆT	REVISIEKIT VOOR MOTO	
		147087A1		1	KIT DE REVISÃO DO MOTOR, shock absorver, Includes items 33, 34				
						ENGINE OVERHAUL KIT	KIT DE REVISIÓN DEL M	KIT REVISIONE MOTORE	002K
					MOTORÜBERHOLUNGSS	KIT DE REVISION MOTEI	MOTORREVISIONSSÆT	REVISIEKIT VOOR MOTO	
33		NSS		1	SEM SERVIÇO EM SEPARADO, SHAFT				
						NOT SERVICED SEPARA	NO SE REPARA POR SE	NON FORNITO SEPARAT	064N
					NICHT A SEP ERS-T LIEI	NON FORUNI SEPAREM	SERVICERES IKKE SEPA	NIET LOS VERKRIJGBAA	
34		NSS		4	SEM SERVIÇO EM SEPARADO, SNAP ring				
						NOT SERVICED SEPARA	NO SE REPARA POR SE	NON FORNITO SEPARAT	064N
					NICHT A SEP ERS-T LIEI	NON FORUNI SEPAREM	SERVICERES IKKE SEPA	NIET LOS VERKRIJGBAA	
35		147164A1		1	SUPORTE, Assy	SUPPORT	SOPORTE	SUPPORTO	300S
					STÜTZE	SUPPORT	BESLAG	STEUN	

09-36	01	p1	03/09

BANCO DO OPERADOR - CONJUNTO
OPERATORS SEAT - ASSEMBLY
ASIENTO DEL OPERADOR - CONJUNTO
OPERATORS SEAT - ASSEMBLY

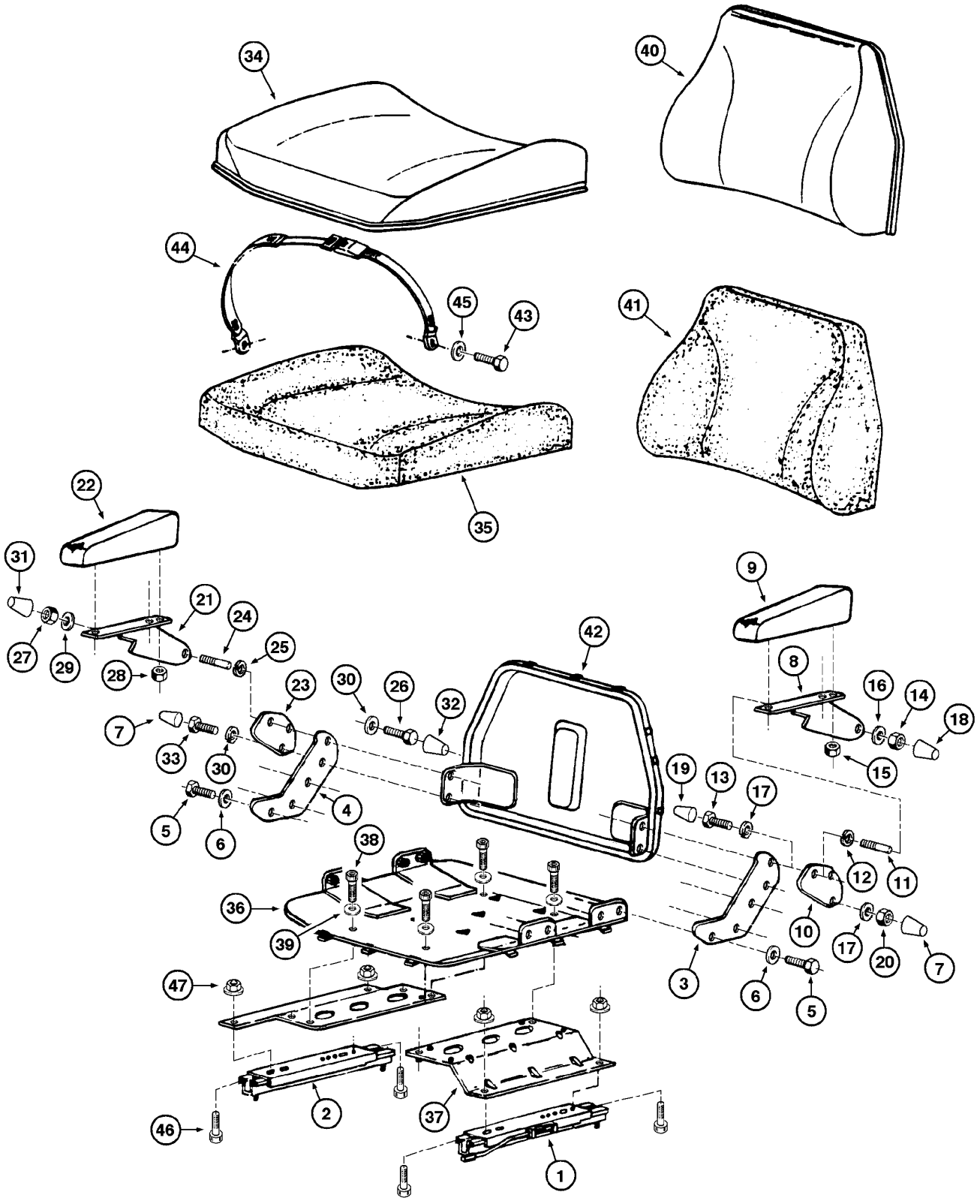

OPERATORS SEAT - ASSEMBLY
OPERATORS SEAT - ASSEMBLY
OPERATORS SEAT - ASSEMBLY
OPERATORS SEAT - ASSEMBLY

R	N	P.N.	MOD	Q	Denominação Bezeichnung	Description Description	Denominacion Beskrivelse	Descrizione Beschrijving	L.C.
		146694A1		1	ASSENTO, operator Assy SITZ	SEAT SIEGE	ASIENTO SÆDE	SEDILE STOEL	7480
1		**147029A1**		1	SUPORTE ASSENTO SITZHALATERUNG	SEAT SUPPORT SUPPORT DE SIEGE	SOPORTE DE ASIENTO SÆDEAFSTIVER	SUPPORTO SEDILE STOELSTEUN	P773
2		**147028A1**		1	SUPORTE ASSENTO SITZHALATERUNG	SEAT SUPPORT SUPPORT DE SIEGE	SOPORTE DE ASIENTO SÆDEAFSTIVER	SUPPORTO SEDILE STOELSTEUN	P773
		147090A1		1	ACESSÓRIO BANCO, Assy, Includes items 3 - 7 SITZZUBEHÖR	SEAT ACCESSORY ACCESSOIRES DE SIEGI	ACCESORIOS DE ASIEN SÆDETILBEHOR	ACCESSORI SEDILE STOELACCESSOIRE	022A
3		**NSS**		1	SEM SERVIÇO EM SEPARADO, BRACKET LH NICHT A SEP ERS-T LIEI	NOT SERVICED SEPARA NON FORUNI SEPAREM	NO SE REPARA POR SE SERVICERES IKKE SEPA	NON FORNITO SEPARAT NIET LOS VERKRIJGBAA	064N
4		**NSS**		1	SEM SERVIÇO EM SEPARADO, BRACKET RH NICHT A SEP ERS-T LIEI	NOT SERVICED SEPARA NON FORUNI SEPAREM	NO SE REPARA POR SE SERVICERES IKKE SEPA	NON FORNITO SEPARAT NIET LOS VERKRIJGBAA	064N
5		**NSS**		8	SEM SERVIÇO EM SEPARADO, BOLT NICHT A SEP ERS-T LIEI	NOT SERVICED SEPARA NON FORUNI SEPAREM	NO SE REPARA POR SE SERVICERES IKKE SEPA	NON FORNITO SEPARAT NIET LOS VERKRIJGBAA	064N
6		**NSS**		8	SEM SERVIÇO EM SEPARADO, WASHER NICHT A SEP ERS-T LIEI	NOT SERVICED SEPARA NON FORUNI SEPAREM	NO SE REPARA POR SE SERVICERES IKKE SEPA	NON FORNITO SEPARAT NIET LOS VERKRIJGBAA	064N
7		**NSS**		8	SEM SERVIÇO EM SEPARADO, COVER NICHT A SEP ERS-T LIEI	NOT SERVICED SEPARA NON FORUNI SEPAREM	NO SE REPARA POR SE SERVICERES IKKE SEPA	NON FORNITO SEPARAT NIET LOS VERKRIJGBAA	064N
		147091A1		1	ACESSÓRIO BANCO, RH Assy, Includes items 8 - 20 SITZZUBEHÖR	SEAT ACCESSORY ACCESSOIRES DE SIEGI	ACCESORIOS DE ASIEN SÆDETILBEHOR	ACCESSORI SEDILE STOELACCESSOIRE	022A
8		**NSS**		1	SEM SERVIÇO EM SEPARADO, BRACKET RH NICHT A SEP ERS-T LIEI	NOT SERVICED SEPARA NON FORUNI SEPAREM	NO SE REPARA POR SE SERVICERES IKKE SEPA	NON FORNITO SEPARAT NIET LOS VERKRIJGBAA	064N
9		**NSS**		1	SEM SERVIÇO EM SEPARADO, FOAM armrest NICHT A SEP ERS-T LIEI	NOT SERVICED SEPARA NON FORUNI SEPAREM	NO SE REPARA POR SE SERVICERES IKKE SEPA	NON FORNITO SEPARAT NIET LOS VERKRIJGBAA	064N
10		**NSS**		1	SEM SERVIÇO EM SEPARADO, BRACKET swing NICHT A SEP ERS-T LIEI	NOT SERVICED SEPARA NON FORUNI SEPAREM	NO SE REPARA POR SE SERVICERES IKKE SEPA	NON FORNITO SEPARAT NIET LOS VERKRIJGBAA	064N
11		**NSS**		1	SEM SERVIÇO EM SEPARADO, SPACER NICHT A SEP ERS-T LIEI	NOT SERVICED SEPARA NON FORUNI SEPAREM	NO SE REPARA POR SE SERVICERES IKKE SEPA	NON FORNITO SEPARAT NIET LOS VERKRIJGBAA	064N
12		**NSS**		1	SEM SERVIÇO EM SEPARADO, WASHER NICHT A SEP ERS-T LIEI	NOT SERVICED SEPARA NON FORUNI SEPAREM	NO SE REPARA POR SE SERVICERES IKKE SEPA	NON FORNITO SEPARAT NIET LOS VERKRIJGBAA	064N
13		**NSS**		1	SEM SERVIÇO EM SEPARADO, BOLT NICHT A SEP ERS-T LIEI	NOT SERVICED SEPARA NON FORUNI SEPAREM	NO SE REPARA POR SE SERVICERES IKKE SEPA	NON FORNITO SEPARAT NIET LOS VERKRIJGBAA	064N
14		**NSS**		1	SEM SERVIÇO EM SEPARADO, NUT NICHT A SEP ERS-T LIEI	NOT SERVICED SEPARA NON FORUNI SEPAREM	NO SE REPARA POR SE SERVICERES IKKE SEPA	NON FORNITO SEPARAT NIET LOS VERKRIJGBAA	064N

09-36	01	p2	03/09

BANCO DO OPERADOR - CONJUNTO
OPERATORS SEAT - ASSEMBLY
ASIENTO DEL OPERADOR - CONJUNTO
OPERATORS SEAT - ASSEMBLY

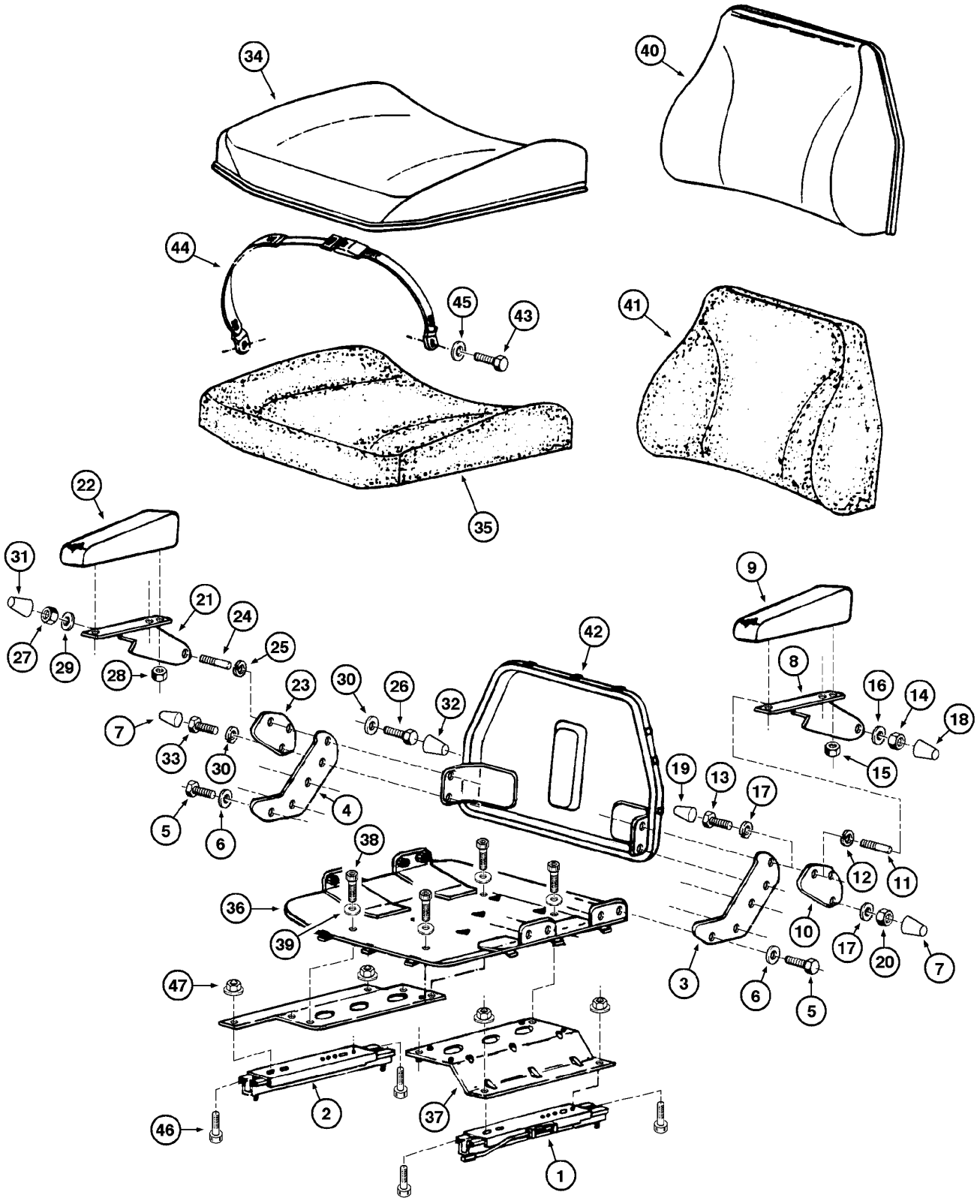

OPERATORS SEAT - ASSEMBLY
OPERATORS SEAT - ASSEMBLY
OPERATORS SEAT - ASSEMBLY
OPERATORS SEAT - ASSEMBLY

R	N	P.N.	MOD	Q	Denominação Bezeichnung	Description Description	Denominacion Beskrivelse	Descrizione Beschrijving	L.C.
15		**NSS**		2	SEM SERVIÇO EM SEPARADO, NUT				
						NOT SERVICED SEPARA	NO SE REPARA POR SE	NON FORNITO SEPARAT	064N
					NICHT A SEP ERS-T LIEI	NON FORUNI SEPAREM	SERVICERES IKKE SEPA	NIET LOS VERKRIJGBAA	
16		**NSS**		1	SEM SERVIÇO EM SEPARADO, WASHER				
						NOT SERVICED SEPARA	NO SE REPARA POR SE	NON FORNITO SEPARAT	064N
					NICHT A SEP ERS-T LIEI	NON FORUNI SEPAREM	SERVICERES IKKE SEPA	NIET LOS VERKRIJGBAA	
17		**NSS**		2	SEM SERVIÇO EM SEPARADO, WASHER lock				
						NOT SERVICED SEPARA	NO SE REPARA POR SE	NON FORNITO SEPARAT	064N
					NICHT A SEP ERS-T LIEI	NON FORUNI SEPAREM	SERVICERES IKKE SEPA	NIET LOS VERKRIJGBAA	
18		**NSS**		1	SEM SERVIÇO EM SEPARADO, COVER with flange				
						NOT SERVICED SEPARA	NO SE REPARA POR SE	NON FORNITO SEPARAT	064N
					NICHT A SEP ERS-T LIEI	NON FORUNI SEPAREM	SERVICERES IKKE SEPA	NIET LOS VERKRIJGBAA	
19		**NSS**		1	SEM SERVIÇO EM SEPARADO, COVER without flange				
						NOT SERVICED SEPARA	NO SE REPARA POR SE	NON FORNITO SEPARAT	064N
					NICHT A SEP ERS-T LIEI	NON FORUNI SEPAREM	SERVICERES IKKE SEPA	NIET LOS VERKRIJGBAA	
20		**NSS**		2	SEM SERVIÇO EM SEPARADO, BOLT				
						NOT SERVICED SEPARA	NO SE REPARA POR SE	NON FORNITO SEPARAT	064N
					NICHT A SEP ERS-T LIEI	NON FORUNI SEPAREM	SERVICERES IKKE SEPA	NIET LOS VERKRIJGBAA	
		147092A1		1	ACESSÓRIO BANCO, LH Assy, Includes items 21 - 33				
						SEAT ACCESSORY	ACCESORIOS DE ASIEN	ACCESSORI SEDILE	022A
					SITZZUBEHÖR	ACCESSOIRES DE SIEG	SÆDETILBEHOR	STOELACCESSOIRE	
21		**NSS**		1	SEM SERVIÇO EM SEPARADO, BRACKET LH				
						NOT SERVICED SEPARA	NO SE REPARA POR SE	NON FORNITO SEPARAT	064N
					NICHT A SEP ERS-T LIEI	NON FORUNI SEPAREM	SERVICERES IKKE SEPA	NIET LOS VERKRIJGBAA	
22		**NSS**		1	SEM SERVIÇO EM SEPARADO, FOAM armrest				
						NOT SERVICED SEPARA	NO SE REPARA POR SE	NON FORNITO SEPARAT	064N
					NICHT A SEP ERS-T LIEI	NON FORUNI SEPAREM	SERVICERES IKKE SEPA	NIET LOS VERKRIJGBAA	
23		**NSS**		1	SEM SERVIÇO EM SEPARADO, BRACKET swing				
						NOT SERVICED SEPARA	NO SE REPARA POR SE	NON FORNITO SEPARAT	064N
					NICHT A SEP ERS-T LIEI	NON FORUNI SEPAREM	SERVICERES IKKE SEPA	NIET LOS VERKRIJGBAA	
24		**NSS**		1	SEM SERVIÇO EM SEPARADO, SPACER				
						NOT SERVICED SEPARA	NO SE REPARA POR SE	NON FORNITO SEPARAT	064N
					NICHT A SEP ERS-T LIEI	NON FORUNI SEPAREM	SERVICERES IKKE SEPA	NIET LOS VERKRIJGBAA	
25		**NSS**		1	SEM SERVIÇO EM SEPARADO, WASHER				
						NOT SERVICED SEPARA	NO SE REPARA POR SE	NON FORNITO SEPARAT	064N
					NICHT A SEP ERS-T LIEI	NON FORUNI SEPAREM	SERVICERES IKKE SEPA	NIET LOS VERKRIJGBAA	
26		**NSS**		1	SEM SERVIÇO EM SEPARADO, BOLT				
						NOT SERVICED SEPARA	NO SE REPARA POR SE	NON FORNITO SEPARAT	064N
					NICHT A SEP ERS-T LIEI	NON FORUNI SEPAREM	SERVICERES IKKE SEPA	NIET LOS VERKRIJGBAA	
27		**NSS**		1	SEM SERVIÇO EM SEPARADO, NUT				
						NOT SERVICED SEPARA	NO SE REPARA POR SE	NON FORNITO SEPARAT	064N
					NICHT A SEP ERS-T LIEI	NON FORUNI SEPAREM	SERVICERES IKKE SEPA	NIET LOS VERKRIJGBAA	
28		**NSS**		2	SEM SERVIÇO EM SEPARADO, NUT				
						NOT SERVICED SEPARA	NO SE REPARA POR SE	NON FORNITO SEPARAT	064N
					NICHT A SEP ERS-T LIEI	NON FORUNI SEPAREM	SERVICERES IKKE SEPA	NIET LOS VERKRIJGBAA	
29		**NSS**		1	SEM SERVIÇO EM SEPARADO, WASHER				
						NOT SERVICED SEPARA	NO SE REPARA POR SE	NON FORNITO SEPARAT	064N
					NICHT A SEP ERS-T LIEI	NON FORUNI SEPAREM	SERVICERES IKKE SEPA	NIET LOS VERKRIJGBAA	

09-36	01	p3	03/09

BANCO DO OPERADOR - CONJUNTO
OPERATORS SEAT - ASSEMBLY
ASIENTO DEL OPERADOR - CONJUNTO
OPERATORS SEAT - ASSEMBLY

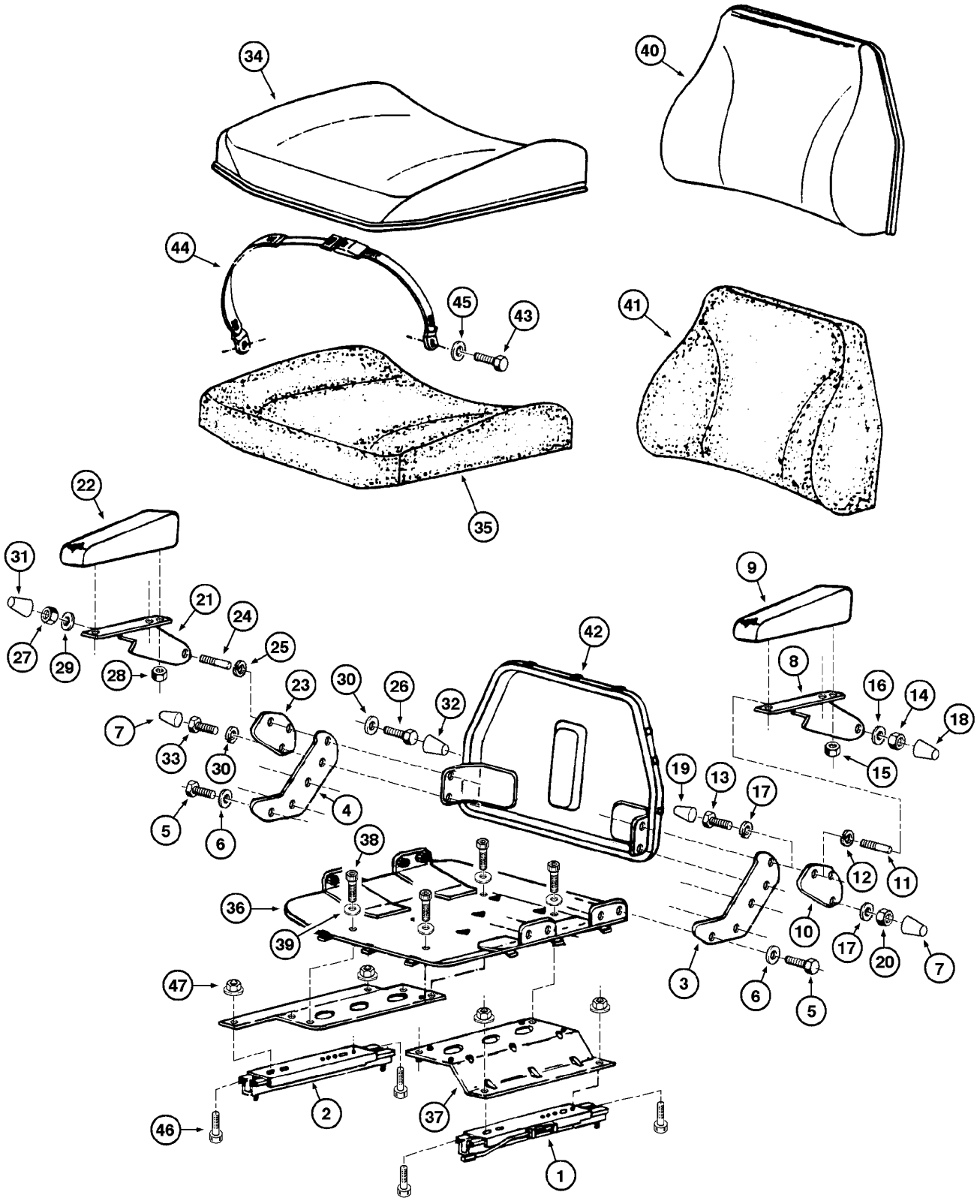

OPERATORS SEAT - ASSEMBLY
OPERATORS SEAT - ASSEMBLY
OPERATORS SEAT - ASSEMBLY
OPERATORS SEAT - ASSEMBLY

R	N	P.N.	MOD	Q	Denominação Bezeichnung	Description Description	Denominacion Beskrivelse	Descrizione Beschrijving	L.C.
30		**NSS**		1	SEM SERVIÇO EM SEPARADO, WASHER lock				
						NOT SERVICED SEPARA	NO SE REPARA POR SE	NON FORNITO SEPARAT	064N
					NICHT A SEP ERS-T LIEI	NON FORUNI SEPAREM	SERVICERES IKKE SEPA	NIET LOS VERKRIJGBAA	
31		**NSS**		1	SEM SERVIÇO EM SEPARADO, COVER with flange				
						NOT SERVICED SEPARA	NO SE REPARA POR SE	NON FORNITO SEPARAT	064N
					NICHT A SEP ERS-T LIEI	NON FORUNI SEPAREM	SERVICERES IKKE SEPA	NIET LOS VERKRIJGBAA	
32		**NSS**		1	SEM SERVIÇO EM SEPARADO, COVER without flange				
						NOT SERVICED SEPARA	NO SE REPARA POR SE	NON FORNITO SEPARAT	064N
					NICHT A SEP ERS-T LIEI	NON FORUNI SEPAREM	SERVICERES IKKE SEPA	NIET LOS VERKRIJGBAA	
33		**NSS**		2	SEM SERVIÇO EM SEPARADO, BOLT				
						NOT SERVICED SEPARA	NO SE REPARA POR SE	NON FORNITO SEPARAT	064N
					NICHT A SEP ERS-T LIEI	NON FORUNI SEPAREM	SERVICERES IKKE SEPA	NIET LOS VERKRIJGBAA	
		147093A1		1	ACESSÓRIO BANCO, Assy	SEAT ACCESSORY	ACCESORIOS DE ASIEN	ACCESSORI SEDILE	022A
					SITZZUBEHÖR	ACCESSOIRES DE SIEGI	SÆDETILBEHOR	STOELACCESSOIRE	
		147094A1		1	ACESSÓRIO BANCO, and foam Assy, Includes items 34 - 39				
						SEAT ACCESSORY	ACCESORIOS DE ASIEN	ACCESSORI SEDILE	022A
					SITZZUBEHÖR	ACCESSOIRES DE SIEGI	SÆDETILBEHOR	STOELACCESSOIRE	
34		**147095A1**		1	ACESSÓRIO BANCO	SEAT ACCESSORY	ACCESORIOS DE ASIEN	ACCESSORI SEDILE	022A
					SITZZUBEHÖR	ACCESSOIRES DE SIEGI	SÆDETILBEHOR	STOELACCESSOIRE	
35		**NSS**		1	SEM SERVIÇO EM SEPARADO, FOAM				
						NOT SERVICED SEPARA	NO SE REPARA POR SE	NON FORNITO SEPARAT	064N
					NICHT A SEP ERS-T LIEI	NON FORUNI SEPAREM	SERVICERES IKKE SEPA	NIET LOS VERKRIJGBAA	
36		**NSS**		1	SEM SERVIÇO EM SEPARADO, PLATE seat				
						NOT SERVICED SEPARA	NO SE REPARA POR SE	NON FORNITO SEPARAT	064N
					NICHT A SEP ERS-T LIEI	NON FORUNI SEPAREM	SERVICERES IKKE SEPA	NIET LOS VERKRIJGBAA	
37		**NSS**		1	SEM SERVIÇO EM SEPARADO, BASE rail				
						NOT SERVICED SEPARA	NO SE REPARA POR SE	NON FORNITO SEPARAT	064N
					NICHT A SEP ERS-T LIEI	NON FORUNI SEPAREM	SERVICERES IKKE SEPA	NIET LOS VERKRIJGBAA	
38		**NSS**		4	SEM SERVIÇO EM SEPARADO, BOLT				
						NOT SERVICED SEPARA	NO SE REPARA POR SE	NON FORNITO SEPARAT	064N
					NICHT A SEP ERS-T LIEI	NON FORUNI SEPAREM	SERVICERES IKKE SEPA	NIET LOS VERKRIJGBAA	
39		**NSS**		4	SEM SERVIÇO EM SEPARADO, WASHER lock				
						NOT SERVICED SEPARA	NO SE REPARA POR SE	NON FORNITO SEPARAT	064N
					NICHT A SEP ERS-T LIEI	NON FORUNI SEPAREM	SERVICERES IKKE SEPA	NIET LOS VERKRIJGBAA	
		147096A1		1	ACESSÓRIO BANCO, Assy	SEAT ACCESSORY	ACCESORIOS DE ASIEN	ACCESSORI SEDILE	022A
					SITZZUBEHÖR	ACCESSOIRES DE SIEGI	SÆDETILBEHOR	STOELACCESSOIRE	
		147097A1		1	ACESSÓRIO BANCO, and foam Assy, Includes items 40, 41, 42				
						SEAT ACCESSORY	ACCESORIOS DE ASIEN	ACCESSORI SEDILE	022A
					SITZZUBEHÖR	ACCESSOIRES DE SIEGI	SÆDETILBEHOR	STOELACCESSOIRE	
40		**147098A1**		1	ACESSÓRIO BANCO	SEAT ACCESSORY	ACCESORIOS DE ASIEN	ACCESSORI SEDILE	022A
					SITZZUBEHÖR	ACCESSOIRES DE SIEGI	SÆDETILBEHOR	STOELACCESSOIRE	
41		**NSS**		1	SEM SERVIÇO EM SEPARADO, FOAM				
						NOT SERVICED SEPARA	NO SE REPARA POR SE	NON FORNITO SEPARAT	064N
					NICHT A SEP ERS-T LIEI	NON FORUNI SEPAREM	SERVICERES IKKE SEPA	NIET LOS VERKRIJGBAA	
42		**NSS**			SEM SERVIÇO EM SEPARADO, PLATE cushion				
						NOT SERVICED SEPARA	NO SE REPARA POR SE	NON FORNITO SEPARAT	064N
					NICHT A SEP ERS-T LIEI	NON FORUNI SEPAREM	SERVICERES IKKE SEPA	NIET LOS VERKRIJGBAA	

09-36	01	p4	03/09

BANCO DO OPERADOR - CONJUNTO
OPERATORS SEAT - ASSEMBLY
ASIENTO DEL OPERADOR - CONJUNTO
OPERATORS SEAT - ASSEMBLY

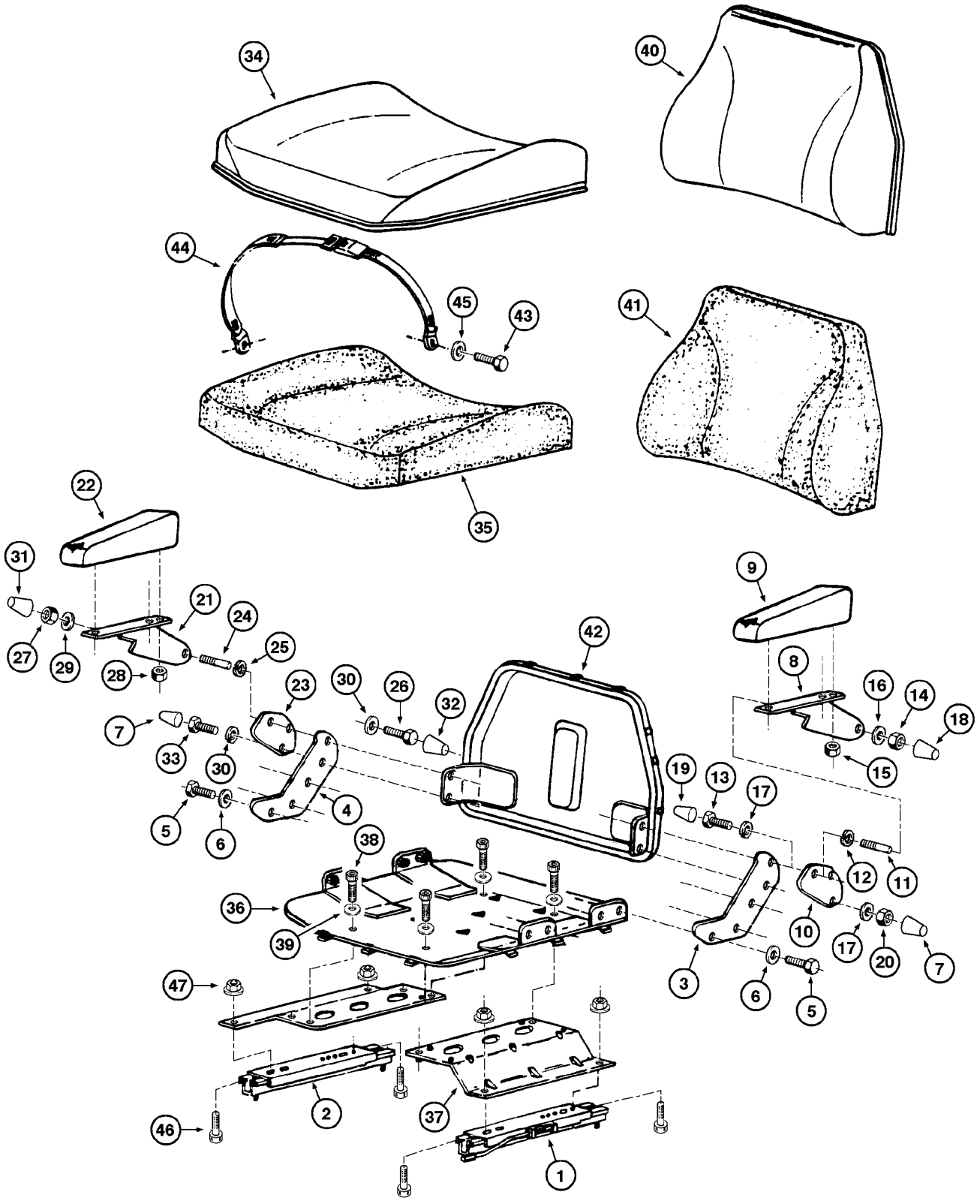

OPERATORS SEAT - ASSEMBLY
OPERATORS SEAT - ASSEMBLY
OPERATORS SEAT - ASSEMBLY
OPERATORS SEAT - ASSEMBLY

R	N	P.N.	MOD	Q	Denominação Bezeichnung	Description Description	Denominacion Beskrivelse	Descrizione Beschrijving	L.C.
		147035A1		1	CINTO DE SEGURANÇA, 48.00 mm W, Assy, Includes items 43, 44, 45				
						SEAT BELT	CINTURÓN DE SEGURID	CINTURA DI SICUREZZA	182C
					SICHERHEITSGURT	CEINTURE DE SECURIT	SIKKERHEDSBÆLTE	VEILIGHEIDSGORDEL	
43		**NSS**		2	SEM SERVIÇO EM SEPARADO, BOLT				
						NOT SERVICED SEPARA	NO SE REPARA POR SE	NON FORNITO SEPARAT	064N
					NICHT A SEP ERS-T LIEI	NON FORUNI SEPAREM	SERVICERES IKKE SEPA	NIET LOS VERKRIJGBAA	
44		**NSS**		1	SEM SERVIÇO EM SEPARADO, SEAT-BELT				
						NOT SERVICED SEPARA	NO SE REPARA POR SE	NON FORNITO SEPARAT	064N
					NICHT A SEP ERS-T LIEI	NON FORUNI SEPAREM	SERVICERES IKKE SEPA	NIET LOS VERKRIJGBAA	
45		**NSS**		4	SEM SERVIÇO EM SEPARADO, WASHER				
						NOT SERVICED SEPARA	NO SE REPARA POR SE	NON FORNITO SEPARAT	064N
					NICHT A SEP ERS-T LIEI	NON FORUNI SEPAREM	SERVICERES IKKE SEPA	NIET LOS VERKRIJGBAA	
		147030A1		1	ACESSÓRIO BANCO, Includes items 46, 47				
						SEAT ACCESSORY	ACCESORIOS DE ASIEN	ACCESSORI SEDILE	022A
					SITZZUBEHÖR	ACCESSOIRES DE SIEG	SÆDETILBEHOR	STOELACCESSOIRE	
46		**NSS**		4	SEM SERVIÇO EM SEPARADO, BOLT				
						NOT SERVICED SEPARA	NO SE REPARA POR SE	NON FORNITO SEPARAT	064N
					NICHT A SEP ERS-T LIEI	NON FORUNI SEPAREM	SERVICERES IKKE SEPA	NIET LOS VERKRIJGBAA	
47		**NSS**		4	SEM SERVIÇO EM SEPARADO, NUT				
						NOT SERVICED SEPARA	NO SE REPARA POR SE	NON FORNITO SEPARAT	064N
					NICHT A SEP ERS-T LIEI	NON FORUNI SEPAREM	SERVICERES IKKE SEPA	NIET LOS VERKRIJGBAA	

09-40	01	p1	09/11

DECALQUES
DECALS
CALCOMANIAS
DECALS



DECALS
DECALS
DECALS
DECALS

R	N	P.N.	MOD	Q	Denominação Bezeichnung	Description Description	Denominacion Beskrivelse	Descrizione Beschrijving	L.C.
1		E156333		1	DECALCOMANIA ABZIEHBILD	DECAL DECALCOMANIE	CALCOMANIA DECAL	AUTOADESIVO DECAL	P903
2		E156375		1	DECALCOMANIA ABZIEHBILD	DECAL DECALCOMANIE	CALCOMANIA DECAL	AUTOADESIVO DECAL	P903
3		321-2418		1	ADESIVO, portuguese AUFKLEBER	DECAL AUTOCOLLANT	CALCOMANÍA TRANSFER	DECALCOMANIA STICKER	012D
3		321-1980		1	DECALCOMANIA, english ABZIEHBILD	DECAL DECALCOMANIE	CALCOMANIA DECAL	AUTOADESIVO DECAL	P903
3		321-5760		1	ADESIVO, spanish AUFKLEBER	DECAL AUTOCOLLANT	CALCOMANÍA TRANSFER	DECALCOMANIA STICKER	012D
4		84319013		1	FAIXA ANTI-DERRAPANTE GLEITSCHUTZSTREIFEN	ANTI-SKID STRIP BANDE ANTI-DERAPANT	BANDA ANTIDESLIZAMIE SKRIDSIKKER STRIMME	NASTRO ANTISDRUCCI(ANTISLIPSTROOK	407S
5		E97146		1	ADESIVO, portuguese AUFKLEBER	DECAL AUTOCOLLANT	CALCOMANÍA TRANSFER	DECALCOMANIA STICKER	012D
5		321-6666		1	DECALCOMANIA, english ABZIEHBILD	DECAL DECALCOMANIE	CALCOMANIA DECAL	AUTOADESIVO DECAL	P903
5		E97147		1	ADESIVO, spanish AUFKLEBER	DECAL AUTOCOLLANT	CALCOMANÍA TRANSFER	DECALCOMANIA STICKER	012D
6		321-5753		2	ADESIVO, portuguese AUFKLEBER	DECAL AUTOCOLLANT	CALCOMANÍA TRANSFER	DECALCOMANIA STICKER	012D
6		321-3205		2	DECALCOMANIA, english ABZIEHBILD	DECAL DECALCOMANIE	CALCOMANIA DECAL	AUTOADESIVO DECAL	P903
6		321-4664		2	ADESIVO, spanish AUFKLEBER	DECAL AUTOCOLLANT	CALCOMANÍA TRANSFER	DECALCOMANIA STICKER	012D
7		84279037		1	PLACA DE COBERTURA ABDECKPLATTE	COVER PLATE COUVERCLE	PLACA DE CUBIERTA DÆKPLADE	PIASTRA DI COPERTUR/ AFSCHERMPLAAT	110P
10		E155741		1	ADESIVO, portuguese AUFKLEBER	DECAL AUTOCOLLANT	CALCOMANÍA TRANSFER	DECALCOMANIA STICKER	012D
10		321-3060		1	DECALCOMANIA, english ABZIEHBILD	DECAL DECALCOMANIE	CALCOMANIA DECAL	AUTOADESIVO DECAL	P903
10		E155742		1	ADESIVO, spanish AUFKLEBER	DECAL AUTOCOLLANT	CALCOMANÍA TRANSFER	DECALCOMANIA STICKER	012D
11		E156341		1	ADESIVO, portuguese AUFKLEBER	DECAL AUTOCOLLANT	CALCOMANÍA TRANSFER	DECALCOMANIA STICKER	012D
11		L112444		1	DECALCOMANIA, english ABZIEHBILD	DECAL DECALCOMANIE	CALCOMANIA DECAL	AUTOADESIVO DECAL	P903
11		E156345		1	ADESIVO, spanish AUFKLEBER	DECAL AUTOCOLLANT	CALCOMANÍA TRANSFER	DECALCOMANIA STICKER	012D
12		148276A1		1	ADESIVO AUFKLEBER	DECAL AUTOCOLLANT	CALCOMANÍA TRANSFER	DECALCOMANIA STICKER	012D
13		E158968		1	ADESIVO, portuguese AUFKLEBER	DECAL AUTOCOLLANT	CALCOMANÍA TRANSFER	DECALCOMANIA STICKER	012D
13		E158969		1	ADESIVO, english AUFKLEBER	DECAL AUTOCOLLANT	CALCOMANÍA TRANSFER	DECALCOMANIA STICKER	012D
13		E158970		1	ADESIVO, spanish AUFKLEBER	DECAL AUTOCOLLANT	CALCOMANÍA TRANSFER	DECALCOMANIA STICKER	012D
14		E96598		1	ADESIVO, portuguese and english AUFKLEBER	DECAL AUTOCOLLANT	CALCOMANÍA TRANSFER	DECALCOMANIA STICKER	012D

DECALQUES
DECALS
CALCOMANIAS
DECALS



DECALS
DECALS
DECALS
DECALS

R	N	P.N.	MOD	Q	Denominação Bezeichnung	Description Description	Denominacion Beskrivelse	Descrizione Beschrijving	L.C.
15		**84246439**		1	ADESIVO AUFKLEBER	DECAL AUTOCOLLANT	CALCOMANÍA TRANSFER	DECALCOMANIA STICKER	012D
16		**321-5754**		1	ADESIVO, portuguese AUFKLEBER	DECAL AUTOCOLLANT	CALCOMANÍA TRANSFER	DECALCOMANIA STICKER	012D
16		**321-3061**		1	ADESIVO, english AUFKLEBER	DECAL AUTOCOLLANT	CALCOMANÍA TRANSFER	DECALCOMANIA STICKER	012D
16		**321-3450**		1	ADESIVO, spanish AUFKLEBER	DECAL AUTOCOLLANT	CALCOMANÍA TRANSFER	DECALCOMANIA STICKER	012D
17		**321-3916**		2	ADESIVO, portuguese AUFKLEBER	DECAL AUTOCOLLANT	CALCOMANÍA TRANSFER	DECALCOMANIA STICKER	012D
17		**321-3596**		2	DECALCOMANIA, english ABZIEHBILD	DECAL DECALCOMANIE	CALCOMANIA DECAL	AUTOADESIVO DECAL	P903
17		**321-4661**		2	ADESIVO, spanish AUFKLEBER	DECAL AUTOCOLLANT	CALCOMANÍA TRANSFER	DECALCOMANIA STICKER	012D
18		**321-4135**		1	ADESIVO, portuguese AUFKLEBER	DECAL AUTOCOLLANT	CALCOMANÍA TRANSFER	DECALCOMANIA STICKER	012D
18		**321-3705**		1	DECALCOMANIA, english ABZIEHBILD	DECAL DECALCOMANIE	CALCOMANIA DECAL	AUTOADESIVO DECAL	P903
18		**321-4058**		1	ADESIVO, spanish AUFKLEBER	DECAL AUTOCOLLANT	CALCOMANÍA TRANSFER	DECALCOMANIA STICKER	012D
19		**147458A1**		1	ADESIVO, portuguese AUFKLEBER	DECAL AUTOCOLLANT	CALCOMANÍA TRANSFER	DECALCOMANIA STICKER	012D
19		**147459A1**		1	ADESIVO, english AUFKLEBER	DECAL AUTOCOLLANT	CALCOMANÍA TRANSFER	DECALCOMANIA STICKER	012D
19		**147460A1**		1	ADESIVO, spanish AUFKLEBER	DECAL AUTOCOLLANT	CALCOMANÍA TRANSFER	DECALCOMANIA STICKER	012D
21		**E155743**		2	ADESIVO, portuguese AUFKLEBER	DECAL AUTOCOLLANT	CALCOMANÍA TRANSFER	DECALCOMANIA STICKER	012D
21		**E155744**		2	ADESIVO, english AUFKLEBER	DECAL AUTOCOLLANT	CALCOMANÍA TRANSFER	DECALCOMANIA STICKER	012D
21		**E158366**		2	ADESIVO, spanish AUFKLEBER	DECAL AUTOCOLLANT	CALCOMANÍA TRANSFER	DECALCOMANIA STICKER	012D
24		**E155314**		1	ADESIVO AUFKLEBER	DECAL AUTOCOLLANT	CALCOMANÍA TRANSFER	DECALCOMANIA STICKER	012D
24		**L117520**		1	DECALCOMANIA ABZIEHBILD	DECAL DECALCOMANIE	CALCOMANIA DECAL	AUTOADESIVO DECAL	P903
24		**E155315**		1	ADESIVO AUFKLEBER	DECAL AUTOCOLLANT	CALCOMANÍA TRANSFER	DECALCOMANIA STICKER	012D
26		**E158941**		1	ADESIVO, portuguese AUFKLEBER	DECAL AUTOCOLLANT	CALCOMANÍA TRANSFER	DECALCOMANIA STICKER	012D
26		**E158942**		1	ADESIVO, english AUFKLEBER	DECAL AUTOCOLLANT	CALCOMANÍA TRANSFER	DECALCOMANIA STICKER	012D
26		**E158943**		1	ADESIVO, spanish AUFKLEBER	DECAL AUTOCOLLANT	CALCOMANÍA TRANSFER	DECALCOMANIA STICKER	012D
27		**148007A1**		1	ADESIVO, 2 levers STD AUFKLEBER	DECAL AUTOCOLLANT	CALCOMANÍA TRANSFER	DECALCOMANIA STICKER	012D
28		**148008A1**		1	ADESIVO, 3 levers OPC AUFKLEBER	DECAL AUTOCOLLANT	CALCOMANÍA TRANSFER	DECALCOMANIA STICKER	012D

DECALQUES
DECALS
CALCOMANIAS
DECALS



DECALS
DECALS
DECALS
DECALS

R	N	P.N.	MOD	Q	Denominação Bezeichnung	Description Description	Denominacion Beskrivelse	Descrizione Beschrijving	L.C.
29		**334016A1**		1	DECALCOMANIA, portuguese				
						DECAL	CALCOMANIA	AUTOADESIVO	P903
					ABZIEHBILD	DECALCOMANIE	DECAL	DECAL	
29		**334015A1**		1	DECALCOMANIA, english	DECAL	CALCOMANIA	AUTOADESIVO	P903
					ABZIEHBILD	DECALCOMANIE	DECAL	DECAL	
29		**328904A1**		1	DECALCOMANIA, spanish	DECAL	CALCOMANIA	AUTOADESIVO	P903
					ABZIEHBILD	DECALCOMANIE	DECAL	DECAL	
30		**329019A1**		1	DECALCOMANIA	DECAL	CALCOMANIA	AUTOADESIVO	P903
					ABZIEHBILD	DECALCOMANIE	DECAL	DECAL	
31		**321-2403**		1	ADESIVO, portuguese	DECAL	CALCOMANÍA	DECALCOMANIA	012D
					AUFKLEBER	AUTOCOLLANT	TRANSFER	STICKER	
31		**321-229**		1	DECALCOMANIA, english	DECAL	CALCOMANIA	AUTOADESIVO	P903
					ABZIEHBILD	DECALCOMANIE	DECAL	DECAL	
31		**321-3435**		1	ADESIVO, spanish	ADHESIVE	ADHESIVO	ADESIVO	P001
					KLEBER	ADHESIF	ADHESIVE	ADHESIVE	

09-44	01	p1	08/11

DECALQUES - REFLETIVOS
DECALS - REFLECTIVE
CALCOMANIAS - REFLECTIVOS
DECALS - REFLECTIVE

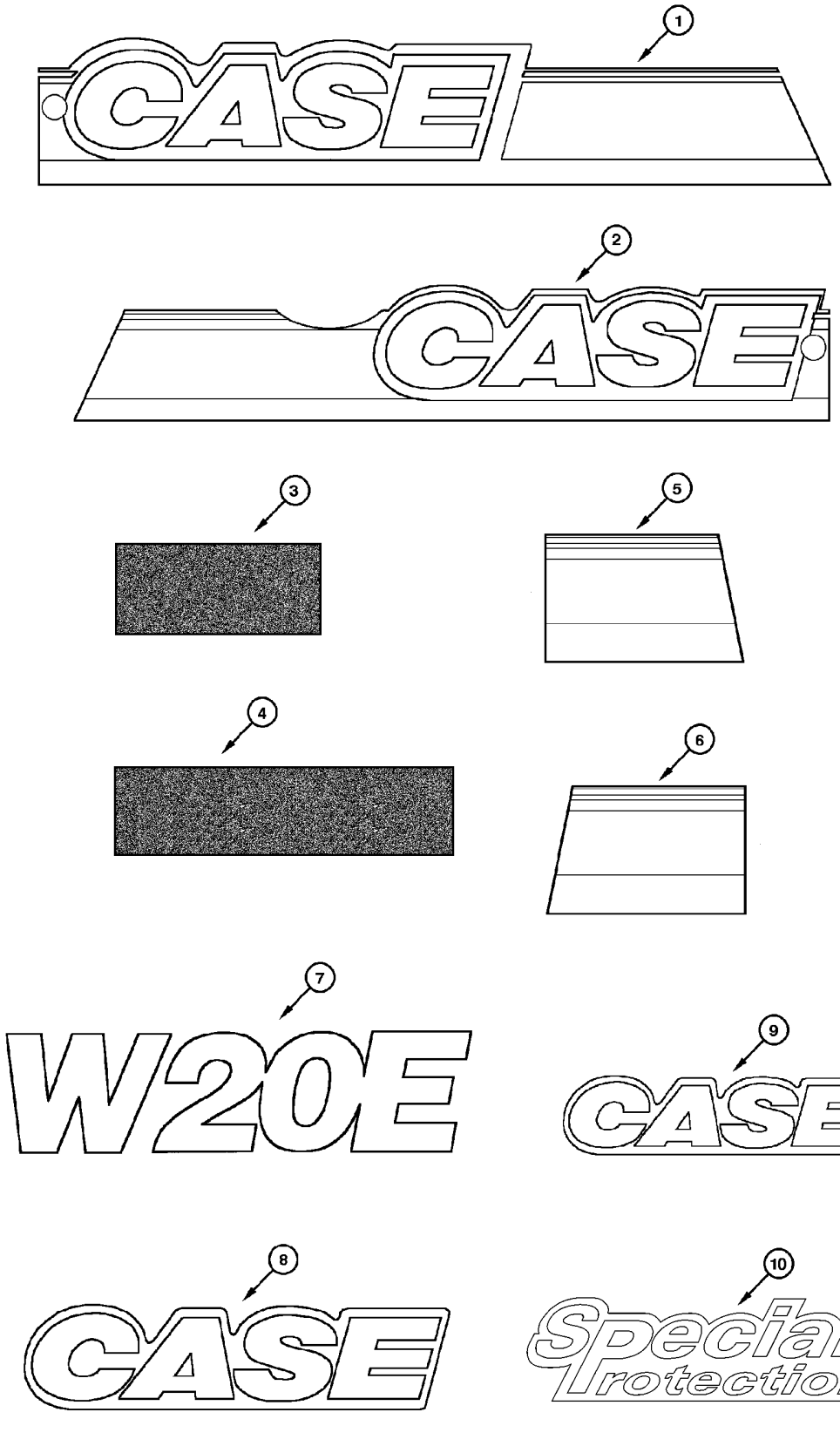

DECALS - REFLECTIVE
DECALS - REFLECTIVE
DECALS - REFLECTIVE
DECALS - REFLECTIVE

R	N	P.N.	MOD	Q	Denominação Bezeichnung	Description Description	Denominacion Beskrivelse	Descrizione Beschrijving	L.C.
1		149811A2		1	ADESIVO, CASE RH AUFKLEBER	DECAL AUTOCOLLANT	CALCOMANÍA TRANSFER	DECALCOMANIA STICKER	012D
2		149810A2		1	ADESIVO, CASE LH AUFKLEBER	DECAL AUTOCOLLANT	CALCOMANÍA TRANSFER	DECALCOMANIA STICKER	012D
3		L71193		1	CINTA ANTI DESLIZANT, Pedal ZWISCHENLAGE	PAD PLAQUE DE GARNISSAG	CINTA ANTIDESLIZANTE PAD	IMBOTTITURA PAD	5980
4		D55216		3	FAIXA ANTI-DERRAPANTE, Floor GLEITSCHUTZSTREIFEN	ANTI-SKID STRIP BANDE ANTI-DERAPANT	BANDA ANTIDESLIZAMIE SKRIDSIKKER STRIMME	NASTRO ANTISDRUCCI(ANTISLIPSTROOK	407S
5		149812A2		1	ADESIVO, LH AUFKLEBER	DECAL AUTOCOLLANT	CALCOMANÍA TRANSFER	DECALCOMANIA STICKER	012D
6		149813A2		1	ADESIVO, RH AUFKLEBER	DECAL AUTOCOLLANT	CALCOMANÍA TRANSFER	DECALCOMANIA STICKER	012D
7		149822A1		2	ADESIVO, W20E AUFKLEBER	DECAL AUTOCOLLANT	CALCOMANÍA TRANSFER	DECALCOMANIA STICKER	012D
8		149823A2		1	ADESIVO, CASE front AUFKLEBER	DECAL AUTOCOLLANT	CALCOMANÍA TRANSFER	DECALCOMANIA STICKER	012D
9		149824A2		1	ADESIVO, CASE rear AUFKLEBER	DECAL AUTOCOLLANT	CALCOMANÍA TRANSFER	DECALCOMANIA STICKER	012D
10		87758942		1	ADESIVO, Optional for Fertilizer Application AUFKLEBER	DECAL AUTOCOLLANT	CALCOMANÍA TRANSFER	DECALCOMANIA STICKER	012D

Number	Figure	Sequence	Ref.
{}	06-38A	01	
{87674001}	09-30	02	18
{E69989}	05-08	02	16
10000871	08-22B	01	43
	08-24B	01	30
	08-28B	01	33
10033410	08-22B	01	45
	08-24B	01	32
	08-28B	01	18
100582A1	04-22	01	14
100584A1	04-22	01	16
10296160	04-32	01	4
103653A1	04-30	01	11
103654A1	04-30	01	5
10374801	04-10	01	63
10398680	09-10	01	39
10516671	09-30	03	1
10519621	07-02	01	14
	07-16	01	12
	08-14A	01	10
	09-30	03	27
10615679	08-22B	01	49
	08-24B	01	43
	08-28B	01	40
10794012	07-18	01	8
10796301	08-22B	01	44
	08-24B	01	31
	08-28B	01	17
10903731	08-14A	01	20
109171C1	09-28	03	4
109511A1	04-32	01	8
11054590	04-10	01	65
11054790	04-32	01	3
11054890	04-10	01	65
11054990	04-10	01	65
11055090	04-10	01	65
11055190	04-10	01	65
11065476	07-18	01	3
11065674	09-28	02	4
	09-28	03	18
11087976	07-16	01	14
11107031	02-06C	01	6
11107531	09-20	01	12
11234731	09-30	03	12
	09-30	03	32
113-207	09-22	01	14
113-262	06-06	01	11
	06-18	01	36
113-311	06-24	01	23
113-312	06-12	01	29
113-362	06-12	01	35
113-515	06-14	01	6
	06-20	01	27
114-128	06-12	01	10
11403	06-28	01	7
	06-30	01	15
11447	06-10	01	1
114756	06-32	01	12
117724A1	09-28	03	9
120398A1	04-16	01	36
121-232	04-30	01	2
	04-30	01	8
12164521	09-04	01	9
12164721	08-22B	01	47
	08-24B	01	39
	08-28B	01	20
	09-30	03	10
12179490	02-06B	01	17
	02-06B	02	17
12638621	08-22B	01	48
	08-24B	01	42
	08-28B	01	39
12639701	08-14A	01	28
12646821	09-28	07	7
12646921	07-16	01	1
1283403C1	09-32	01	1
	09-32	01	1
129-103	09-22	01	15
129-330	06-26	01	27
129-405	04-20	01	9
129-530	06-12	01	33
129-550	06-14	01	25
13-820	06-06	01	36
13-928	06-14	01	27
131-1402	04-14	01	26
	04-16	01	24
131-43	09-10	01	20
131-487	06-14	01	1
	06-32	01	14
131-67	09-14	01	27
131-676	04-04	01	23
131-856	08-14B	01	18
132-48	09-06	01	15
	09-06	01	4
	09-06	01	6
13272319	07-18	01	5
1338890C1	04-02A	01	4
13400776	07-18	01	13
13578378	04-14	01	30
136-159	06-02	01	2
136180A1	04-22	01	21
138-127	06-24	01	21
	06-26	01	36
138-139	06-26	01	13
	06-26	01	14
138-316	09-06	01	34
138-83	06-24	01	7
14-614	06-18	01	11
14-720	06-06	01	45
141-332	09-06	01	16
14151195	09-32	02	2
14306231	07-16	01	11
14359331	08-22B	01	37
	08-24B	01	35
	08-28B	01	38
143953A1	04-02A	01	5
14420231	08-04	01	17
	08-06	01	37
	08-10	01	35
	08-12	01	38
	08-14B	01	6
14420331	08-06A	01	4
14438085	07-04	01	8
14442034	09-28	02	28
14463280	08-10	01	37
	08-12	01	37
	08-14B	01	4
14463780	08-04	01	16
	08-06	01	35
	08-06A	01	1
14496531	07-04	01	22
145426A1	04-20	01	2
14590887	09-24	04	9
145921A1	03-04	01	1
146223A1	03-04	01	6
146240A1	03-04	01	3
146241A1	03-04	01	20
146246A1	03-04	01	12
146266A1	08-02	01	11
146309A1	05-02	01	5
146369A1	05-02	01	8
146412A1	08-22	01	29
	08-22B	01	29
	08-26	01	29
146424A1	08-22	01	5
	08-24	01	34
	08-26	01	5
	08-28	01	31
146425A1	08-22	01	4
	08-24	01	33
	08-26	01	4
	08-28	01	32
146426A1	08-22	01	3
	08-22B	01	3
	08-26	01	3
146427A1	08-22	01	9
	08-22B	01	9
	08-26	01	9
146439A1	08-26	01	46
146450A1	08-26	01	43
146483A1	08-22	01	26
	08-22B	01	26
	08-26	01	26
146651A1	09-02	01	45
146694A1	09-34	01	
	09-36	01	
146894A1	05-06	01	3
146896A1	05-06	01	7

Number	Figure	Sequence	Ref.	Number	Figure	Sequence	Ref.
146897A1	05-06	01	8	147446A1	06-16	01	6
146900A1	05-06	01	11		06-18	01	8
146902A1	05-06	01	14	147447A1	06-06	01	43
146904A1	05-06	01	17	147452A1	04-06	01	8
146905A1	05-06	01	18	147458A1	09-40	01	19
146911A1	05-06	01	25	147459A1	09-40	01	19
146916A1	04-10	01	24	147460A1	09-40	01	19
146927A1	04-10	01	27	147469A1	06-06	01	6
	08-14A	01	1	147490A1	02-14	01	26
146928A1	05-02	01	13	147580A1	08-24	01	23
146991A1	08-18	01	1		08-24B	01	23
147028A1	09-36	01	2		08-28	01	22
147029A1	09-36	01	1		08-28B	01	22
147030A1	09-36	01		147635A1	09-12	01	1
147035A1	09-36	01		147642A1	04-14	01	33
147039A1	08-22	01	30	147658A1	09-10	01	33
	08-26	01	30	147660A1	06-66	01	7
147040A1	08-26	01	42	147693A1	02-06B	01	27
147067A1	09-34	01	2		02-06B	02	27
147068A1	09-34	01			09-12	01	11
147069A1	09-34	01	8	147718A1	05-02	01	11
147080A1	09-34	01	1		05-04	01	16
147081A1	09-34	01		147719A1	04-18	01	1
147082A1	09-34	01		147720A1	04-18	01	6
147083A1	09-34	01	4	147722A1	04-18	01	5
147084A1	09-34	01		147723A1	04-18	01	7
147085A1	09-34	01		147724A1	04-24	01	
147086A1	09-34	01		147725A1	05-02	01	1
147087A1	09-34	01		147726A1	05-02	01	15
147088A1	09-34	01			05-04	01	1
147089A1	09-34	01	32		05-06	01	
147090A1	09-36	01			05-10	01	1
147091A1	09-36	01		147727A1	05-02	01	12
147092A1	09-36	01			05-10	01	2
147093A1	09-36	01		147728A1	05-10	01	12
147094A1	09-36	01		147730A1	05-02	01	16
147095A1	09-36	01	34	147733A1	04-24	01	
147096A1	09-36	01		147734A1	04-24	01	
147097A1	09-36	01		148007A1	08-24	01	29
147098A1	09-36	01	40		08-24B	01	29
147099A1	09-34	01			09-40	01	27
147144A1	06-06	01	4	148008A1	08-28	01	29
147145A1	06-06	01	3		08-28B	01	29
147164A1	09-34	01	35		09-40	01	28
147265A1	09-10	01	1	148057A1	04-10	01	18
147271A1	02-06	01	19	148072A1	04-10	01	40
147272A1	02-06	01	8	148075A1	04-10	01	32
147291A1	04-10	01	29	148078A1	04-16	01	17
	04-10	01	31	148079A1	04-16	01	16
	04-10	01	34	148080A1	03-04	01	9
	04-10	01	41	148081A1	05-04	01	4
147292A1	04-10	01	39	148102A1	04-24	01	5
147344A1	03-02	01	8	148103A1	02-06	01	1
147354A1	02-06	01	10	148104A1	02-06	01	1
147355A1	02-06	01	11	148105A1	05-06	01	5
147356A1	02-06	01	1	148106A1	05-06	01	10
147381A1	04-28	01	7	148107A1	05-06	01	12
147382A1	04-28	01	6	148108A1	05-06	01	15
147385A1	04-28	01	8	148109A1	05-06	01	
147386A1	04-10	01	23	148110A1	05-06	01	
147387A1	04-20	01	3	148111A1	05-06	01	20
147398A1	04-10	01	56	148112A1	05-06	01	22
147415A1	08-22	01	11	148113A1	05-06	01	24
	08-22B	01	11	148114A1	05-06	01	
	08-24	01	10	148191A1	05-02	01	27
	08-24B	01	10	148216A1	06-40	01	1
	08-26	01	11		06-42	01	
	08-28	01	11		06-44	01	
	08-28B	01	11		06-46	01	
147416A1	08-22	01	25		06-48	01	
	08-22B	01	25		06-50	01	
	08-26	01	25		06-52	01	
147417A1	08-22	01	1	148217A1	06-40	01	2
	08-22B	01	1		06-54	01	
	08-26	01	1		06-56	01	
147419A1	08-22	01	2		06-58	01	
	08-22B	01	2		06-60	01	
	08-26	01	2		06-62	01	
147422A1	08-22	01	20		06-64	01	
	08-26	01	20	148220A1	06-40	01	4
147424A1	08-26	01	41	148223A1	06-40	01	5
147426A1	04-06	01	1	148224A1	07-02	01	9
147444A1	06-06	01	10	148225A1	07-02	01	8
147445A1	06-06	01	52	148227A1	07-02	01	10

Number	Figure	Sequence	Ref.	Number	Figure	Sequence	Ref.
148228A1	07-02	01	11	148894A1	06-48	01	2
148276A1	09-40	01	12		06-60	01	2
148376A1	06-04	01	1	148895A1	06-48	01	3
148487A1	06-32	01	1		06-60	01	3
148496A1	06-32	01	7		06-60A	01	3
148534A1	03-02	01	22	148896A1	06-48	01	4
148538A1	03-04	01	18		06-60	01	16
	03-04	01	21	148897A1	06-48	01	5
148542A1	09-14	01	22		06-60	01	15
148547A1	02-10	01	3		06-60A	01	5
	09-24	04	5	148898A1	06-48	01	6
	09-30	07	5		06-60A	01	6
148570A1	02-12	01		148899A1	06-48	01	7
148571A1	02-18	01	1		06-60	01	4
148572A1	02-30	01	14		06-60A	01	7
148573A1	02-30	01	19	148900A1	06-48	01	8
148574A1	02-30	01	20		06-60A	01	8
148575A1	02-32	01		148901A1	06-48	01	8
148576A1	02-32	01			06-60A	01	8
148577A1	02-32	01		148902A1	06-48	01	8
148578A1	02-32	01			06-60A	01	8
148579A1	02-32	01		148903A1	06-48	01	9
148580A1	02-32	01	7		06-60A	01	9
148581A1	03-06	01	1	148904A1	06-48	01	10
148582A1	03-06	01	2	148905A1	06-48	01	11
148583A1	03-06	01	3		06-60A	01	11
148584A1	03-06	01	9	148906A1	06-48	01	12
148585A1	03-06	01	10		06-60A	01	12
148586A1	03-06	01	11	148907A1	06-48	01	13
148587A1	03-06	01	12		06-60A	01	13
148588A1	03-06	01	18	148908A1	06-48	01	14
148590A1	03-12	01	1		06-60	01	7
148591A1	03-08	01	2		06-60A	01	14
148592A1	03-08	01	9	148909A1	06-48	01	15
148595A1	03-12	01	3		06-60	01	8
148596A1	03-12	01	13	148910A1	06-48	01	16
148597A1	02-30	01			06-60	01	6
148599A1	02-24	01	6		06-60A	01	16
148600A1	02-24	01		148911A1	06-48	01	17
148601A1	02-24	01	6		06-60	01	10
148602A1	02-24	01	6		06-60A	01	17
148605A1	02-38	01	40	148912A1	06-48	01	18
148606A1	02-38	01	41		06-60A	01	18
148607A1	02-38	01	42	148913A1	06-48	01	19
148608A1	02-38	01	39		06-60A	01	19
148677A1	04-10	01	38	148914A1	06-48	01	20
148813A1	09-18	01	8		06-60	01	5
148880A1	06-44	01	1		06-60A	01	20
	06-56	01	1	148915A1	06-48	01	21
	06-56A	01	1		06-60	01	9
148881A1	06-44	01	2		06-60A	01	21
	06-56	01	2	148916A1	06-48	01	22
148882A1	06-44	01	3		06-60	01	11
148883A1	06-44	01	4		06-60A	01	22
	06-56	01	4	148917A1	06-48	01	23
	06-56A	01	4		06-60A	01	23
148884A1	06-44	01	5	148918A1	06-48	01	23
	06-56	01	5		06-60A	01	23
	06-56A	01	5	148919A1	06-48	01	23
148885A1	06-44	01	6		06-60A	01	23
	06-56	01	6	148920A1	06-48	01	23
	06-56A	01	6		06-60A	01	23
148886A1	06-44	01	8	148921A1	06-48	01	24
	06-56	01	8		06-60	01	19
148887A1	06-44	01	9		06-60A	01	24
	06-56	01	9	148922A1	06-48	01	24
	06-56A	01	9		06-60	01	19
148888A1	06-44	01	10		06-60A	01	24
	06-56	01	10	148923A1	06-48	01	24
	06-56A	01	10		06-60	01	19
148889A1	06-44	01	11		06-60A	01	24
	06-56	01	11	148924A1	06-48	01	24
	06-56A	01	11		06-60	01	19
148890A1	06-46	01	1		06-60A	01	24
	06-58	01	1	148925A1	06-48	01	24
	06-58A	01	1		06-60	01	19
148891A1	06-46	01	2		06-60A	01	24
	06-58	01	2	148926A1	06-48	01	25
148892A1	06-46	01	3		06-60	01	29
	06-58	01	3		06-60A	01	25
	06-58A	01	3	148927A1	06-48	01	26
148893A1	06-48	01	1		06-60A	01	26
	06-60	01	1	148928A1	06-48	01	27
	06-60A	01	1		06-60	01	18

Number	Figure	Sequence	Ref.	Number	Figure	Sequence	Ref.
148928A1	06-60A	01	27	148964A1	06-64A	01	8
148929A1	06-48	01	28	148965A1	06-52	01	8
	06-60	01	26		06-64	01	8
	06-60A	01	28		06-64A	01	7
148930A1	06-48	01	29	148966A1	06-52	01	9
	06-60	01	24		06-64	01	9
	06-60A	01	29		06-64A	01	9
148931A1	06-48	01	30	148969A1	06-52	01	12
	06-60	01	23		06-64	01	12
	06-60A	01	30		06-64A	01	12
148933A1	06-48	01	32	148970A1	06-52	01	13
	06-60	01	27		06-64	01	13
	06-60A	01	32		06-64A	01	13
148934A1	06-48	01	33	148971A1	06-56	01	3
	06-60A	01	33	148972A1	06-60	01	12
148935A1	06-48	01	34	148973A1	06-60	01	13
	06-60A	01	34	148974A1	06-60	01	14
148936A1	06-48	01	35	148975A1	06-60	01	17
	06-60	01	28	148976A1	06-60	01	20
	06-60A	01	35	148977A1	06-60	01	20
148937A1	06-50	01	1	148978A1	06-60	01	20
	06-62	01	21	148979A1	06-60	01	20
	06-62A	01	1	148980A1	06-60	01	21
148938A1	06-50	01	2	148981A1	06-60	01	22
	06-62	01	20	148982A1	06-60	01	30
148939A1	06-50	01	3	148983A1	06-60	01	31
	06-62	01	19	148984A1	06-60	01	32
	06-62A	01	3	148985A1	06-62	01	1
148940A1	06-50	01	4	148986A1	06-62	01	2
	06-62	01	18	148987A1	06-60A	01	31
	06-62A	01	4	148988A1	06-62	01	5
148941A1	06-50	01	5	148989A1	06-62	01	6
	06-62	01	16	148991A1	06-62	01	10
	06-62A	01	5	148992A1	06-62	01	11
148942A1	06-50	01	6	148993A1	06-62	01	13
	06-62A	01	6	148994A1	06-62	01	14
148944A1	06-50	01	8	148995A1	06-62	01	15
	06-62A	01	8	148996A1	06-62	01	17
148945A1	06-50	01	9	148997A1	06-62	01	22
	06-62A	01	9	149041A1	04-10	01	28
148946A1	06-50	01	10	149042A1	04-10	01	30
	06-62A	01	10	149056A1	02-08	01	
148947A1	06-50	01	11	149059A1	09-14	01	12
	06-62A	01	11	149062A1	02-08	01	8
148948A1	06-50	01	12	149086A1	02-08	01	15
	06-62	01	12	149087A1	02-08	01	14
	06-62A	01	12	149141A1	02-08	01	12
148949A1	06-50	01	13	149154A1	02-08	01	18
	06-62A	01	13	149158A1	09-10	01	28
148950A1	06-50	01	14	149159A1	09-10	01	28
148951A1	06-50	01	15	149166A1	00-00		2
	06-62A	01	15		02-08	01	2
148952A1	06-50	01	16	149167A1	00-00		1
	06-62	01	3		02-08	01	3
148953A1	06-50	01	17	149168A1	02-08	01	5
	06-62A	01	17	149169A1	02-08	01	4
148955A1	06-50	01	19	149171A1	02-08	01	16
	06-62	01	24	149172A1	02-08	01	17
	06-62A	01	22	149198A1	08-12	01	34
148956A1	06-50	01	20	149200A1	08-12	01	35
	06-62	01	23	149202A1	08-10	01	8
	06-62A	01	23	149204A1	08-10	01	29
148957A1	06-50	01	21	149206A1	08-22	01	46
	06-62A	01	24		08-24	01	38
148958A1	06-52	01	1	149208A1	08-22	01	43
	06-64	01	1		08-24	01	30
	06-64A	01	1		08-26	01	50
148959A1	06-52	01	2		08-28	01	33
	06-64	01	2	149434A1	06-04	01	27
	06-64A	01	2	149810A2	09-44	01	2
148960A1	06-52	01	3	149811A2	09-44	01	1
	06-64	01	3	149812A2	09-44	01	5
	06-64A	01	3	149813A2	09-44	01	6
148961A1	06-52	01	4	149822A1	09-44	01	7
	06-64	01	4	149823A2	09-44	01	8
	06-64A	01	4	149824A2	09-44	01	9
148962A1	06-52	01	5	149987A1	06-48	01	31
	06-64	01	5		06-60	01	25
	06-64A	01	5	149988A1	06-62	01	7
148963A1	06-52	01	6	149989A1	06-62	01	4
	06-64	01	6	149993A1	04-10	01	13
	06-64A	01	6	1543252C1	05-08	02	21
148964A1	06-52	01	7	1546477C1	04-04	01	14
	06-64	01	7	15688004	09-28	02	18

Number	Figure	Sequence	Ref.	Number	Figure	Sequence	Ref.
16043031	08-14A	01	11	213-128	08-24	01	19
16043231	07-04	01	21		08-24B	01	19
16043431	07-02	01	13		08-26	01	6
16050621	09-28	02	26		08-28	01	19
16100811	09-28	02	13		08-28B	01	19
	09-30	03	2	214-1410	09-30	05	10
16105011	07-16	01	2	214-14100	08-10	01	23
182-130	08-24	01	25	214-1416	02-06B	01	24
	08-24B	01	25		02-06B	02	24
	08-28	01	23		02-16	01	16
	08-28B	01	23		07-06	01	11
183-112	04-02A	01	18		07-06	01	13
186671A1	06-32	01	13		09-30	02	8
187-1031	09-08	01	21	214-1420	05-10	01	14
19-1232	09-06	01	10		05-12	01	4
192-21	06-06	01	12	214-1428	02-06	01	27
	06-18	01	37		02-06B	01	11
	09-22	01	13		02-06B	02	11
192-22	06-06	01	46		08-02	01	20
	06-10	01	28	214-1436	02-06	01	9
	06-12	01	36	214-1464	03-04	01	23
	06-24	01	24	214-1536	04-02A	01	17
	06-24	01	42	214-1540	02-16	01	25
	06-26	01	31	214-1704	02-06	01	5
193-32	06-06	01	37	214-1706	03-04	01	31
193-9	06-14	01	24		03-04	01	37
194-7	06-12	01	30	214-21108	02-08	01	6
	06-12	01	32	214-2144	08-02	01	5
194190A2	09-28	03	6	214-3148	08-02	01	3
195-107	04-04	01	22	214-3240	02-16	01	22
195-18	06-12	01	6	215-38	06-02	01	38
195-2083	08-22	01	15	217-1028	02-06B	01	6
	08-24	01	5		02-06B	02	6
	08-24B	01	5		06-04	01	20
	08-26	01	15	217-103	02-06	01	3
	08-28	01	6	217-150	02-06	01	6
	08-28B	01	6	217-151	03-04	01	34
195-29	06-06	01	28	217-184	08-06A	01	6
195-525	09-22	01	16	217-320	08-06	01	5
1964725C1	04-04	01	28	217-352	05-12	01	1
1964726C1	04-04	01	27	217-405	02-10	01	17
1964727C1	04-04	01	26		08-02	01	4
1964729C1	04-04	01	31	218-5006	05-04	01	6
1964730C1	04-04	01	21	218-5007	05-04	01	10
1964731C1	04-04	01	1		05-04	01	8
1964736C1	04-04	01	32		06-30	01	8
1964737C1	04-04	01	3		09-08	01	23
1964738C1	04-04	01	13	218-5008	06-04	01	22
1964748C1	04-04	01	29		06-04	01	24
1964750C1	04-04	01	30		06-30	01	17
1964826C1	04-02A	01	19		08-10	01	33
1964831C2	04-10	01	8		08-12	01	24
1964860C1	04-02	01	1	218-5010	05-12	01	14
	04-02A	01	1		05-12	01	2
	04-04	01			08-06	01	25
1964964C1	04-04	01	19		08-12	01	7
1964965C1	04-04	01	16		08-14	01	24
1964966C1	04-04	01	18		08-14	01	6
1964967C1	04-04	01	9	218-5039	08-06	01	24
1964968C1	04-04	01	10	218-5066	09-08	01	22
1964969C1	04-04	01	5	218-5069	08-12	01	6
1977805C1	09-32	01	4		08-14	01	5
	09-32	01	4	218-5086	08-04	01	10
1977831C1	09-32	01	7	218-5107	05-04	01	9
	09-32	01	7	218-5108	08-10	01	32
1977832C1	09-32	01	10		08-12	01	23
	09-32	01	10	218-5110	05-12	01	13
1977833C1	09-32	01	6		08-10	01	6
	09-32	01	6		08-14	01	23
198061A1	09-32	01	8	218-5117	05-10	01	3
	09-32	01	8	218-5124	06-04	01	21
1983238C1	04-16	01	3	218-5136	05-04	01	2
1987555C1	04-18	01	2	218-5147	06-04	01	28
1990502C1	09-28	04	2	218-5156	06-10	01	29
	09-28	06	2	218-5157	06-30	01	7
211-11	06-28	01	8	218-5158	08-36	01	1
	06-30	01	27		08-36	01	7
	06-30	01	6	218-5241	05-04	01	7
211-26	06-18	01	39	218-5450	09-10	01	23
	06-20	01	23	218-598	08-10	01	28
211-357	06-12	01	12		08-10	01	9
213-126	08-32	01	11		08-12	01	9
213-128	08-22	01	6	218-755	02-02	01	10
	08-22B	01	6	218-756	08-14	01	28

Number	Figure	Sequence	Ref.	Number	Figure	Sequence	Ref.
218-756	08-14B	01	22	231-1448	02-06	01	26
218-774	08-14A	01	13		02-06A	01	11
218-842	09-06	01	23		02-06A	02	11
219-1	05-08	01	19		09-02	01	33
	05-08	02	1		09-14	01	21
	06-34	01	13	231-4248	04-02	01	9
	08-18	01	20		04-02A	01	10
	08-22	01	34	231-5145	04-30	01	3
	08-22B	01	34		04-30	01	9
	08-24	01	12	232-14412	09-22	01	10
	08-24	01	4		09-22	01	5
	08-24B	01	12		09-24	05	9
	08-24B	01	4		09-26	01	8
	08-26	01	12		09-26	02	9
	08-28	01	5	232-24016	06-40	01	7
	08-28B	01	5	235417A2	07-06	01	7
	09-02	01	29		08-06	01	26
	09-02	01	40	237-6012	08-36	01	2
	09-02	01	6		08-36	01	8
	09-06	01	9	237-6016	08-10	01	7
	09-08	01	20	238-5013	02-16	01	10
219-10	06-34	01	6	238-5222	08-02	01	23
	06-36	01	5		08-04	01	4
	06-38	01	5	238-5225	08-02	01	19
	06-38A	01	5	238-5341	02-38	01	24
219-36	09-18	01	7	238-6011	08-14A	01	30
219-37	09-10	01	8	238-6012	07-02	01	2A
219-4	06-36	01	7		07-02	01	3A
	06-38	01	7		07-04	01	4A
	06-38A	01	7		07-04	01	5A
221-1084	06-04	01	29	238-6014	07-06	01	26
221-1087	02-06	01	7		07-06	01	2A
221-1413	06-10	01	31		07-06	01	3A
221-16	06-12	01	19		07-06	01	4A
221-35	06-10	01	33	238-6018	07-06	01	21
221-446	02-24	01	24	239105A1	09-30	01	5
221-45	03-04	01	2	248-1237	09-28	07	14
221-59	06-10	01	32	248-13107	09-30	05	5
221-659	06-12	01	21	248-1370	09-28	07	13
221-660	06-30	01	28	26-16152	09-10	01	29
221-662	06-24	01	19	26-724	06-26	01	32
	06-24	01	29	26967R1	06-32	01	11
221-677	08-08	01	12	273-5048	04-30	01	10
221-841	06-12	01	22		04-30	01	4
	06-26	01	40	28-1048	08-16	01	15
	06-26	01	6	28-1240	05-08	01	17
221-850	06-26	01	49		05-08	02	6
	06-30	01	10	28-2040	09-08	01	17
222-638	03-04	01	15	28-2048	08-18	01	17
222-654	03-04	01	16	292414A1	06-44	01	7
222-664	03-04	01	17		06-56	01	7
225-14108	04-10	01	15		06-56A	01	7
225-14110	08-24	01	28		06-62	01	9
	08-24B	01	28	297850A1	09-28	04	3
	08-28	01	26		09-28	05	10
	08-28B	01	26		09-28	06	1
225-14210	03-02	01	17	297865A1	09-32	01	12
	03-02	01	24		09-32	01	12
	04-16	01	18	304052A1	06-06	01	34
225913A1	09-28	03	3	30586R1	09-30	03	30
	09-30	01	6	307149A1	02-06B	01	37
226668A1	04-26	01	4		02-06B	02	37
231-14409	09-18	01	20	3079389R1	04-04	01	4
231-14410	09-02	01	3	3079410R1	04-04	01	20
	09-02	01	43	31-2370	09-28	05	5
	09-02	01	9	3112269R1	05-06	01	9
231-14412	02-02	01	8	3112272R1	05-06	01	4
	06-04	01	9	3141536R1	05-06	01	16
231-1444	08-30	01	16	317171A1	09-28	03	10
	08-32	01	4	321-1980	09-40	01	3
231-1445	02-06B	01	33	321-229	09-40	01	31
	02-06B	02	33	321-2403	09-40	01	31
	03-04	01	5	321-2418	09-40	01	3
	04-14	01	31	321-3060	09-40	01	10
	04-32	01	9	321-3061	09-40	01	16
	06-04	01	14	321-3205	09-40	01	6
	09-12	01	9	321-3435	09-40	01	31
231-1446	02-06	01	20	321-3450	09-40	01	16
	03-02	01	5	321-3596	09-40	01	17
	05-04	01	14	321-3705	09-40	01	18
	06-02	01	6	321-3916	09-40	01	17
	07-16	01	6	321-4058	09-40	01	18
	09-14	01	9	321-4135	09-40	01	18
231-1448	02-06	01	16	321-4661	09-40	01	17

Number	Figure	Sequence	Ref.	Number	Figure	Sequence	Ref.
321-4664	09-40	01	6	413-416	06-02	01	31
321-5753	09-40	01	6		08-22	01	21
321-5754	09-40	01	16		08-22B	01	21
321-5760	09-40	01	3		08-26	01	21
321-6666	09-40	01	5	413-436	08-30	01	15
326361A1	09-32	01	11		08-32	01	14
	09-32	01	11	413-510	06-10	01	11
326362A1	09-32	01	9		06-10	01	14
	09-32	01	9		06-10	01	22
326363A1	09-32	01	13		06-10	01	6
	09-32	01	13	413-512	05-02	01	4
326364A1	09-32	01	2	413-516	02-06B	01	32
	09-32	01	2		02-06B	02	32
326365A1	09-32	01	3		04-32	01	6
	09-32	01	3		09-12	01	3
328-632	06-34	01	9	413-520	04-14	01	29
	06-36	01	10	413-524	06-02	01	20
	06-38	01	10	413-612	05-02	01	14
	06-38A	01	10		08-14	01	20
328904A1	09-40	01	29		08-14B	01	19
329019A1	09-40	01	30		08-30	01	7
329745A1	04-22	01	3	413-614	08-08	01	9
329751A1	04-22	01	6	413-616	04-14	01	21
329756A1	04-22	01	7		04-28	01	11
329760A1	04-22	01	8		05-02	01	18
329761A1	04-22	01	9		05-02	01	23
329762A1	04-22	01	10		05-02	01	9
329763A1	04-22	01	11		05-10	01	20
329767A1	04-22	01	12		05-12	01	16
329773A1	04-22	01	15		05-12	01	19
329794A1	04-22	01	20		06-02	01	16
329800A1	04-22	01	18		07-04	01	35
329803A1	04-22	01	17		08-06	01	13
334015A1	09-40	01	29		08-14	01	13
334016A1	09-40	01	29		08-14B	01	13
345-49	08-22	01	41		09-10	01	36
	08-22B	01	41		09-14	01	1
	08-26	01	48		09-14	01	13
345-87	08-08	01	14		09-20	01	6
347611A3	02-06A	01	1	413-620	02-06	01	17
	02-06A	02	1		02-10	01	7
353-408	09-28	07	5		03-02	01	3
353-412	09-24	04	10		03-04	01	25
	09-30	07	10		05-10	01	6
353036A1	08-06	01	17		05-12	01	7
	08-06	01	3		08-06	01	9
	08-06	01	31		08-12	01	28
	08-06A	01	9		08-22	01	16
360949A1	09-04A	01	12		08-22B	01	16
362251A1	09-04A	01	11		08-24	01	14
362252A1	09-04A	01	10		08-24B	01	14
371-8051	06-66	01	7		08-26	01	16
371-8052	06-66	01	7		08-28	01	14
371-8251	06-66	01	7		08-28B	01	14
371-8252	06-66	01	7		08-30	01	3
371-8261	06-66	01	7		09-14	01	10
371-8262	06-66	01	7		09-14	01	32
372029A2	07-06	01	20		09-14	01	6
37405	05-04	01	3		09-16	01	12
379461A1	09-30	03	13		09-16	01	5
391827A1	09-24	02	3	413-624	06-02	01	29
	09-24	03	4		08-10	01	16
394799A1	09-28	07	10		08-12	01	12
395185A1	09-28	07	11		08-12	01	16
39519	02-06C	01	10		08-14	01	8
39738	08-16	01	7		08-14B	01	10
401430A1	02-06A	01	2		09-14	01	31
	02-06A	02	2		09-16	01	11
413-1024	08-02	01	25		09-22	01	17
	08-04	01	2	413-628	02-06B	01	30
413-1028	06-34	01	15		02-06B	02	30
	08-08	01	1		08-10	01	12
	09-12	01	2		09-12	01	6
413-1032	02-06A	01	18		09-16	01	6
	02-06A	02	18	413-636	06-28	01	12
413-1048	09-06	01	36	413-660	05-04	01	13
413-1056	09-06	01	35	413-724	08-04	01	6
413-1224	06-02	01	42	413-728	06-10	01	26
	07-16	01	5	413-744	06-10	01	27
413-1272	06-04	01	5	413-820	09-20	01	4
413-412	04-14	01	9	413-824	03-04	01	11
	04-16	01	8		05-10	01	10
	06-02	01	12		08-22	01	39
	08-30	01	12		08-22B	01	39

Number	Figure	Sequence	Ref.
413-824	08-24	01	41
	08-24B	01	41
	08-26	01	34
	08-28	01	34
	08-28B	01	34
413-828	09-14	01	18
	09-22	01	6
	09-24	05	1
	09-26	01	2
	09-26	02	1
413-832	03-04	01	19
	08-24	01	35
	08-28	01	38
	09-18	01	16
413-840	02-06	01	12
	02-06	01	24
	02-06A	01	10
	02-06A	02	10
413-88	08-22	01	23
	08-22B	01	23
	08-26	01	23
413-888	08-10	01	2
	08-12	01	2
	08-14	01	1
	08-22	01	37
414-612	06-32	01	10
414-624	06-04	01	31
419818A1	05-04	01	17
420-21244	09-04A	01	4
425-1010	02-06A	01	19
	02-06A	02	19
	06-34	01	17
	08-08	01	3
	09-06	01	37
	09-12	01	4
425-1012	09-06	01	13
425-1016	09-10	01	31
425-104	04-14	01	35
	04-16	01	34
	06-02	01	14
425-105	06-02	01	22
	08-02	01	15
425-106	02-10	01	10
	03-04	01	14
	04-10	01	49
	04-14	01	22
	04-16	01	21
	04-20	01	13
	04-28	01	15
	05-02	01	20
	05-02	01	22
	05-10	01	21
	05-12	01	10
	05-12	01	6
	06-02	01	39
	07-04	01	39
	08-06	01	12
	08-10	01	15
	08-10	01	20
	08-12	01	15
	08-12	01	20
	08-12	01	31
	08-14	01	12
	08-14	01	16
	08-14B	01	12
	08-22	01	18
	08-22B	01	18
	08-24	01	16
	08-24B	01	16
	08-26	01	18
	08-28	01	16
	08-28B	01	16
	08-30	01	4
	09-06	01	24
	09-14	01	30
	09-16	01	9
	09-18	01	14
	09-20	01	10
	09-20	01	9
	09-22	01	18
425-107	04-02	01	13
	04-02A	01	22
425-108	03-04	01	30
	08-10	01	5
425-108	08-12	01	5
	08-14	01	4
	09-18	01	18
425-11041	05-02	01	21
425-114	03-02	01	12
	03-02	01	21
	06-02	01	27
425-116	02-26	01	27
	02-26	01	31
	09-10	01	26
425-117	06-24	01	43
425-138	07-06	01	23
425-1510	08-22	01	32
	08-22B	01	32
	08-24	01	21
	08-24B	01	21
	08-26	01	32
	08-28	01	4
	08-28B	01	4
425-158	08-22	01	7
	08-22B	01	7
	08-24	01	20
	08-24	01	39
	08-24B	01	20
	08-26	01	7
	08-28	01	20
	08-28	01	30
	08-28B	01	30
425-1612	09-04A	01	5
425-168	08-20	01	21
426-1032	09-10	01	2
426-1072	08-20	01	30
	09-02	01	42
426-1080	08-20	01	14
426-1088	09-02	01	2
	09-02	01	8
426-1232	06-04	01	8
426-1240	09-22	01	8
	09-26	01	5
426-1244	09-04A	01	7
426-1252	09-04A	01	6
	09-22	01	3
	09-24	05	4
	09-26	01	9
	09-26	02	4
426-1296	02-02	01	6
426-412	04-16	01	32
426-620	07-16	01	9
426-820	04-02	01	3
	04-02A	01	14
426-876	09-02	01	32
426-896	04-02	01	7
	04-02A	01	9
427-5094	06-02	01	35
	08-22	01	44
	08-24	01	32
	08-26	01	51
	08-28	01	18
427-6106	08-32	01	9
427-8136	08-22	01	10
	08-22B	01	10
	08-24	01	18
	08-24	01	8
	08-24B	01	18
	08-24B	01	8
	08-26	01	10
	08-28	01	9
	08-28B	01	9
432-1624	09-10	01	15
432-612	06-02	01	36
	08-22	01	44
	08-24	01	31
	08-26	01	44
	08-28	01	17
432-616	08-32	01	10
432-816	08-22	01	8
	08-22B	01	8
	08-24	01	17
	08-24	01	7
	08-24B	01	17
	08-24B	01	7
	08-26	01	8
	08-28	01	8
	08-28B	01	8

Number	Figure	Sequence	Ref.
432-832	08-26	01	37
438-11216	06-02	01	24
440-1086	04-10	01	55
440-1088	04-10	01	47
440-12512	04-10	01	4
452-734	09-26	01	7
459-11012	03-02	01	14
	08-22	01	35
	08-22B	01	35
	08-26	01	35
463-11010	03-04	01	7
	09-14	01	26
	09-18	01	19
470-10812	04-10	01	3
492-11008	04-10	01	14
492-11010	03-02	01	16
	03-02	01	25
	03-04	01	8
	04-16	01	19
	05-10	01	11
	06-14	01	7
	06-20	01	28
	08-10	01	4
	08-12	01	4
	08-14	01	3
	08-24	01	27
	08-24B	01	27
	08-28	01	25
	08-28B	01	25
492-11025	03-02	01	11
	03-02	01	20
	04-14	01	10
	04-16	01	33
	06-02	01	13
	06-02	01	26
	08-30	01	13
492-11031	06-02	01	21
	06-10	01	12
	06-10	01	15
	06-10	01	23
	06-10	01	7
	08-02	01	14
492-11038	02-10	01	9
	03-04	01	22
	04-28	01	14
	05-02	01	10
	05-02	01	17
	05-02	01	19
	05-10	01	22
	05-10	01	7
	05-12	01	17
	05-12	01	9
	06-04	01	32
	06-32	01	9
	06-34	01	10
	06-36	01	11
	06-38	01	11
	06-38A	01	11
	07-04	01	36
	08-06	01	10
	08-06	01	14
	08-10	01	14
	08-10	01	19
	08-12	01	14
	08-12	01	19
	08-12	01	30
	08-14	01	11
	08-14	01	15
	08-14	01	21
	08-14B	01	8
	08-22	01	17
	08-22B	01	17
	08-24	01	24
	08-24B	01	24
	08-26	01	17
	08-28	01	21
	08-28B	01	21
	08-30	01	6
	09-10	01	37
	09-14	01	15
	09-14	01	2
	09-14	01	29
	09-14	01	8
	09-16	01	8
492-11038	09-20	01	7
	09-22	01	19
492-11044	04-02	01	12
	04-02A	01	21
	08-02	01	9
	08-04	01	5
	09-14	01	25
492-11050	04-02	01	10
	04-02A	01	13
	08-02	01	18
	08-24	01	37
	08-26	01	39
	08-28	01	37
	09-02	01	35
	09-14	01	20
	09-20	01	3
	09-22	01	7
	09-24	05	2
	09-26	01	3
	09-26	02	2
492-11062	06-34	01	16
	08-02	01	26
	08-04	01	3
	08-08	01	2
	09-10	01	3
492-11075	06-02	01	32
	07-16	01	4
493-21065	08-22	01	42
	08-22B	01	42
	08-24	01	22
	08-24B	01	22
	08-26	01	33
	08-28	01	3
	08-28B	01	3
493-41039	04-28	01	13
495-11025	04-16	01	10
495-11028	04-14	01	34
	04-16	01	9
	08-22	01	22
	08-22B	01	22
	08-26	01	22
495-11034	03-04	01	4
	04-20	01	8
	08-22	01	27
	08-22B	01	27
	08-26	01	27
495-11041	03-04	01	24
	04-10	01	50
	04-14	01	4
	04-16	01	22
	04-20	01	14
	04-28	01	12
	05-10	01	23
	06-02	01	5
	08-22	01	19
	08-22B	01	19
	08-24	01	15
	08-24B	01	15
	08-26	01	19
	08-28	01	15
	08-28B	01	15
	08-30	01	5
495-11053	02-06	01	15
	02-06	01	23
	02-06A	01	8
	02-06A	02	8
	02-06B	01	25
	02-06B	02	25
	04-02	01	21
	04-20	01	19
	09-12	01	12
495-11066	08-22	01	33
	08-22B	01	33
	08-26	01	47
495-21019	04-10	01	12
495-21031	08-30	01	14
495-21038	02-06B	01	31
	02-06B	02	31
	06-04	01	19
	08-02	01	27
	08-02	01	8
	09-12	01	10
495-21044	02-06	01	18
	02-06B	01	29

Number	Figure	Sequence	Ref.	Number	Figure	Sequence	Ref.
495-21044	02-06B	02	29	5106733	07-16	01	10
	02-10	01	8		09-24	01	20
	03-02	01	4		09-28	01	56
	05-02	01	24	5108180	04-32	01	5
	05-02	01	26	5110155	07-18	01	2
	05-12	01	20	5131437	07-18	01	12
	05-12	01	8	5143428	09-28	07	6
	06-02	01	17	515-23127	04-16	01	23
	06-02	01	30	515-23190	04-02	01	18
	06-02	01	41		04-02A	01	20
	07-16	01	7		04-06	01	12
	08-06	01	11		04-32	01	1
	08-06	01	15	515-23254	04-10	01	48
	08-10	01	17		04-14	01	16
	08-12	01	17		07-04	01	38
	08-14	01	10	515-23286	04-14	01	5
	08-14B	01	11		04-16	01	20
	09-10	01	38		04-16	01	35
	09-12	01	7		07-04	01	37
	09-14	01	14	515-23381	05-10	01	24
	09-14	01	28	515-25127	04-16	01	31
	09-14	01	3	5151033	09-28	07	1
	09-14	01	7	555-14	09-28	02	11
	09-16	01	7	61-612	06-28	01	3
	09-18	01	13	61-632	06-02	01	4
	09-20	01	8	61-716	08-02	01	7
	09-22	01	20	61-816	08-02	01	17
495-21056	03-04	01	13	61-824	09-02	01	34
	04-14	01	25	614-10030	02-10	01	11
	04-16	01	25		04-06	01	4
	08-10	01	3		09-24	04	6
	08-12	01	3		09-30	03	31
	08-14	01	2		09-30	06	6
	08-22	01	24		09-30	07	6
	08-22	01	38	614-10035	04-20	01	20
	08-22	01	40	614-12025	03-02	01	6
	08-22B	01	24		04-16	01	29
	08-22B	01	40		04-20	01	17
	08-24	01	36	614-4012	04-18	01	4
	08-24B	01	36	614-6012	03-02	01	27
	08-26	01	24	614-6016	09-30	05	11
	08-26	01	38	614-6020	09-30	03	16
	08-28	01	35		09-30	04	6
	08-28B	01	35	614-8020	09-30	03	26
	09-14	01	19	614-8025	04-02	01	4
	09-18	01	17	614-8030	04-02A	01	12
	09-22	01	22		04-06	01	7
	09-24	05	3	614-8045	04-06	01	2
	09-26	01	4	62-7106	05-02	01	7
	09-26	02	3	627-10035	02-06C	01	5
495-21081	06-04	01	6	627-10040	02-06A	01	27
	09-24	05	5		02-06C	01	9
	09-26	02	5	627-12035	07-06	01	16
495-31022	03-02	01	15	627-6020	07-16	01	17
	03-02	01	26	627-6025	02-06A	02	27
	08-22	01	13	627-8020	02-06A	01	5
	08-22B	01	13		02-06A	02	5
	08-24	01	26		09-28	03	22
	08-24B	01	26	627-8025	02-06A	01	13
	08-26	01	13		02-06A	02	13
	08-28	01	24	637-63113	07-02	01	2A
	08-28B	01	24		07-04	01	4A
495-31025	04-02A	01	15		07-04	01	5A
495-31056	02-06	01	13	637-63153	07-06	01	24
	02-06	01	22		07-06	01	2A
	02-06	01	25	637-63193	07-06	01	3A
	02-06A	01	9		07-06	01	4A
	02-06A	02	9	700-101	07-02	01	2
495-51053	04-02	01	21		07-04	01	28
496-11081	09-04A	01	8	700-102	07-06	01	2
496-21041	02-04	01	5	700-154	07-04	01	4
	02-04A	01	4		07-04	01	5
496-21053	02-02	01	5	700-162	07-06	01	3
496-21066	02-06A	01	17		07-06	01	4
	02-06A	02	17	700-326	07-06	01	25
	09-12	01	8	700-332	08-06	01	33
496-21081	06-04	01	4	700-378	08-14A	01	31
	09-22	01	4	70094334	04-10	01	58
	09-26	01	6		07-04	01	31
496-81000	02-02	01	7	701-329	06-04	01	34
4985122	07-18	01	7	701-422	07-02	01	3
4985127	07-18	01	14		07-04	01	29
4988275	07-18	01	10	70639314	02-06A	01	24
5105729	07-18	01	9		02-06A	02	24

Number	Figure	Sequence	Ref.	Number	Figure	Sequence	Ref.
70673965	06-12	01		71102752	04-22A	01	2
70901828	09-30	05	7	71102753	04-22A	01	3
70901835	09-30	05	8	71102754	04-22A	01	4
70904269	02-06B	01	15	71102755	04-22A	01	5
	02-06B	02	15	71102756	04-22A	01	6
70907059	07-04	01	2	71102757	04-22A	01	7
	07-04	01	43	71102758	04-22A	01	9
70917458	04-10	01	64	71102759	04-22A	01	10
70920329	07-04	01	33	71102760	04-22A	01	11
70921115	08-10	01	34	71102761	04-22A	01	8
	08-12	01	36	71102762	06-52	01	5
	08-14B	01	3		06-64	01	5
70921116	08-04	01	15	71103021	08-66	01	2
	08-06	01	34		08-68	01	2
70921885	08-14A	01	22	71103024	08-66	01	9
70922522	08-14A	01	21		08-68	01	12
70923558	07-04	01	15	71103025	08-66	01	10
70923841	07-06	01			08-68	01	13
70923952	07-04	01	9	71103026	08-66	01	11
	08-14A	01	15		08-68	01	14
70924026	02-06B	01	8		08-70	01	
	02-06B	02	8	71103027	08-66	01	13
70924048	07-04	01	14		08-68	01	16
	08-14A	01	7		08-72	01	
70926266	09-24	04	4	71103028	08-66	01	16
	09-30	07	9		08-68	01	22
70927264	09-32	01	5	71103029	08-66	01	17
	09-32	01	5		08-68	01	23
70927312	02-06B	01	23	71103030	08-66	01	18
	02-06B	02	23		08-68	01	24
70927605	02-06B	01	18	71103031	08-66	01	24
	02-06B	02	18	71103032	08-68	01	30
70928190	07-04	01	34	71103033	08-68	01	3
70928486	07-06	01		71103034	08-68	01	31
	08-14A	01	26	71103035	08-70	01	
70928956	09-24	04	11	71103036	08-72	01	
70931240	08-06	01	28	71103037	08-74	01	
	08-06A	01	7	71103143	02-16	01	1
70931713	02-06B	01	16	71103377	08-66	01	
	02-06B	02	16	71103378	08-68	01	
70934150	07-04	01	32	71104378	00-00		
71008477	06-24	01	22	73057960	04-10	01	46
71100468	06-50	01	22		04-10	01	6
71100469	06-50	01	23	73071838	06-30	01	
71100643	02-14	01	28	73124881	08-14A	01	23
71100763	08-38	01	17	73139080	06-04	01	38
	08-40	01	11	748961	06-40	01	3
	08-54	01		75201642	08-14A	01	8
	08-62	01	2	75208262	04-02A	01	25
71100764	08-36	01	5	75214532	06-04	01	36
	08-44	01			07-04	01	3
71100766	08-40	01	3		07-04	01	44
	08-58	01		75236793	07-06	01	5
71100767	08-40	01	7	75238459	02-06B	01	10
	08-56	01			02-06B	02	10
71100768	08-38	01	16	75238575	02-06B	01	21
	08-50	01			02-06B	02	21
71100769	08-38	01	15	75239697	07-02	01	7
	08-52	01		75239909	07-04	01	7
71100770	08-36	01	3	75250656	06-66	01	6
	08-46	01		75251040	09-32	02	9
71100771	08-52	01	7	75251045	09-28	07	2
	08-56	01	6	75251052	09-28	07	4
71101721	07-14	01	2	75251075	09-28	07	3
71101722	07-14	01	1	75251998	09-30	03	21
71101723	07-14	01	3		09-30	04	2
71101724	07-14	01		75252027	09-30	02	4
71101819	08-14A	01	17	75254593	04-10	01	59
71102253	09-30B	01	7		07-04	01	30
71102254	09-30B	01	13	75255693	07-06	01	29
71102255	09-30B	01	15	75257834	04-10	01	
71102256	09-30B	01	5	75261184	04-08B	01	
71102257	09-30B	01	11	75261833	08-60	01	
71102258	09-30B	01	12	75262453	07-02	01	12
71102309	02-30	01	25		07-04	01	23
71102310	02-30	01	36	75263155	04-10	01	57
71102464	09-28	01	52	75263179	02-02	01	1
71102465	09-28	01	53	75263237	09-14	01	4
71102466	09-28	01	51	75263243	09-14	01	11
71102505	06-26A	01	1	75263244	09-14	01	12
71102506	06-26A	01		75263354	07-06	01	9
71102734	08-66	01	14		08-02	01	16
	08-68	01	18	75263418	04-10	01	22
71102751	04-22A	01	1	75263424	07-06	01	6

Number	Figure	Sequence	Ref.	Number	Figure	Sequence	Ref.
75263424	08-08	01		75327264	07-04	01	41
75263688	07-02	01	9		08-14A	01	29
75263689	07-02	01	8	75327563	02-06B	01	13
75263986	07-02	01	1		02-06B	02	13
	07-04	01	1	75327749	04-20	01	4
	07-06	01	1	760-14113	09-30	01	2
	07-08	01		76021244	08-14A	01	5
75263997	09-18	01		76022370	07-02	01	6
75264001	07-02	01	4		08-14A	01	6
75264002	07-02	01	5	76022819	08-14A	01	25
75264003	07-04	01	12	76028575	07-04	01	11
75264004	07-04	01	6	76028577	07-04	01	20
75264005	07-04	01	27	76041998	09-32	02	10
	07-06	01	28	76042349	09-32	02	1
75264006	07-06	01	14	76042350	09-32	02	3
75264007	07-06	01	27	76042351	09-32	02	4
75264008	04-10	01	33	76042352	09-32	02	5
75264017	04-10	01	26	76042353	09-32	02	8
75264019	04-10	01	60	76042354	09-32	02	6
	07-04	01	24	76042355	09-32	02	7
75264020	04-10	01	1	78100054	07-04	01	26
75264022	07-04	01	19		07-06	01	30
75264025	03-02	01	1	79042494	09-04	01	8
75264073	09-22	01	1	79078595	04-10	01	62
	09-26	01	1	79083848	09-30	01	8
	09-28	01			09-30	02	15
75264074	09-22	01	1	79087360	02-06B	01	7
75264218	09-22	01	1		02-06B	02	7
	09-24	01			06-04	01	37
75264240	04-22A	01			07-04	01	10
75264288	04-10	01	2		07-04	01	40
75264372	04-10	01	66		08-04	01	14
75264558	05-10	01	13	79089658	09-28	07	8
75264621	07-14	01		79090991	09-32	02	11
75264622	07-04	01	25	79107889	08-66	01	15
	07-06	01	31		08-68	01	20
75264623	07-04	01	13	79114714	04-14	01	32
	07-04	01	17	79114762	09-30	03	15
75264624	07-16	01	8	813-8075	02-26	01	22
75264625	07-16	01	3	814-10050	02-04	01	4
75265102	04-32	01	2	814-10060	06-04	01	10
75265110	04-10	01	11	814-10070	02-04A	01	3
	04-14	01	1	814-12070	02-02	01	4
	04-16	01	5	814-8035	02-08	01	10
75265122	08-66	01		81868323	09-28	02	2
75265123	08-68	01		82010402	09-28	02	33
75265131	09-22	01	27	82010403	09-28	02	32
75265355	09-24	01	21	82013304	09-28	02	1
	09-26	01	10	82016389	09-28	02	8
	09-28	01	59		09-28	03	12
75265356	09-24	01	22	82016392	09-28	02	37
	09-26	01	11	82016406	09-28	02	19
	09-28	01	60	82016408	09-28	02	17
75266621	07-06	01	15	82016450	09-28	02	23
75268191	02-10	01	1	82017323	09-28	02	27
75270181	06-38A	01		82018466	09-28	02	25
75286111	02-30	01	37	82018477	09-28	02	21
75286141	03-12	01	2	82019370	09-28	02	39
75286359	09-30	03	14	82019604	09-28	02	31
75286901	09-28	05	9	82030999	09-28	05	2
75286905	09-28	05	8	82035974	09-28	02	16
75289104	00-00		13	824-1404	04-02A	01	24
75289105	00-00		6	825-1404	04-02	01	16
75313526	04-22	01	13	825-1405	04-02	01	20
75313527	04-22	01	19		04-02A	01	16
75313528	04-22	01	5		04-14	01	19
75313529	04-22	01	4	825-1410	06-04	01	11
75313530	04-22	01	2	825-5148	09-28	03	8
75313571	09-30	03	28	827-8035	07-16	01	18
75313745	04-22	01	1	829-1406	09-30	03	23
75320693	07-04	01	42		09-30	04	9
	08-14A	01	16		09-30	05	15
75323045	04-22	01		829-1408	02-08	01	9
75323722	08-06	01	2	83-54	06-34	01	14
75324429	08-14A	01	18	832-10406	02-06A	02	30
75325352	04-10	01	7	832-10408	02-06A	01	14
75325644	07-06	01	12		02-06A	02	14
75325682	07-04	01	18		09-28	02	14
75326228	04-02A	01	3		09-28	03	15
75326233	08-14A	01	4	832-10410	02-06C	01	8
75326234	08-14A	01	12	83956457	09-28	02	24
75326369	02-06A	01	30	83961987	09-28	02	35
75327024	02-06A	01	31	83994024	09-28	02	36
75327264	06-04	01	35	83994378	09-28	02	38

Number	Figure	Sequence	Ref.	Number	Figure	Sequence	Ref.
84126982	07-04	01	41	8604973	08-66	01	19
84161201	06-66	01	1		08-68	01	25
84161500	06-66	01	2	86992662	09-04A	01	1
84161510	06-66	01	3	86992663	09-04A	01	2
84161516	06-66	01	4	86992664	09-04A	01	3
84180843	02-04A	01	1	87323534	09-28	05	3
84185433	06-60A	01	10	87323535	09-28	05	1
84185440	06-62A	01	14	87338383	09-28	02	20
84185444	06-56A	01	3	87357032	07-16	01	19
84185448	06-60A	01	15	87365988	02-06A	01	26
84185449	06-62A	01	2	87368223	09-18	01	8
84185450	06-56A	01	2	87369667	09-30	05	4
84185453	06-56A	01	8	87373373	02-06A	01	3
84185454	06-58A	01	2		02-06A	02	3
84185455	06-62A	01	16	87373400	02-06C	01	3
84185459	06-60A	01	2	87374055	02-06B	01	1
84185460	06-60A	01	4		02-06B	02	1
84195650	09-28	02	10	87374057	02-06B	01	2
84196198	09-28	03	23		02-06B	02	2
84204155	09-30	05	13	87374058	02-06B	01	3
84204219	09-30	03	24		02-06B	02	3
	09-30	04	3	87374060	02-06B	01	4
84204221	09-30	03	22		02-06B	02	4
	09-30	04	4	87374063	02-06B	01	9
84205181	06-26A	01	15		02-06B	02	9
84208319	09-26	02	6	87374066	02-06B	01	20
84208320	09-26	02	7		02-06B	02	20
84227067	02-06A	02	26	87374072	02-06B	01	34
84228807	04-10	01	58		02-06B	02	34
	07-04	01	31	87374074	04-20	01	12
84231540	02-34A	01	1	87374097	02-06B	01	19
84232285	04-10	01	11		02-06B	02	19
	04-14	01	1	87380915	09-04A	01	9
84233974	02-06A	02	25	87381043	04-10	01	11
84234092	02-06B	01	36		04-14	01	1
	02-06B	02	26		04-16	01	5
84234095	02-06B	01	26	87393927	08-08	01	
	02-06B	02	36	87398199	08-22B	01	30
84235827	09-30	01	9	87398200	08-22B	01	20
	09-30	02	16	87398516	08-08	01	
84236932	09-14	01	4	87403209	00-00		7
84236958	09-30	03	35	87403952	09-04	01	
84241619	04-20	01	16	87403953	08-30	01	2
84246439	09-40	01	15	87403954	08-18	01	
84253768	09-28	02	6	87403955	08-18	01	
84279037	09-40	01	7	87403956	09-02	01	36
84282756	09-30	03	3	87403957	09-02	01	
84319013	09-40	01	4	87403958	09-02	01	38
84337035	07-04	01	16	87403959	08-30	01	10
84374426	00-00		5	87403960	09-02	01	27
84384319	09-30	03	33	87403961	09-02	01	28
84384321	09-30	03	33	87404059	09-04	01	
844-10025	02-10	01	16	87404060	09-04	01	
844-10070	02-12	01	11	87404061	09-06	01	
844-12030	02-24	01	20	87404062	09-06	01	
845-8016	02-14	01	27	87404063	09-04	01	3
	02-14	01	7	87404064	09-06	01	
845-8020	02-16	01	14	87404889	04-16	01	27
	02-24	01	23	87405623	04-16	01	28
845-8025	02-12	01	12	87423667	08-34	01	
	02-24	01	18	87425997	09-22	01	27
845-8035	02-20	01	9	87426013	09-04	01	7
845-8040	02-12	01	7	87426014	09-04	01	6
	02-24	01	13	87426781	08-06	01	4
845-8050	02-14	01	6	87431316	09-04	01	
845-8060	02-14	01	23	87433214	08-26	01	49
845-8090	02-24	01	12		08-28	01	36
84545292	05-08	02		87433608	09-04	01	
84545293	05-08	02		87436185	09-10	01	35
84574959	05-02	01	12A	87436265	08-38	01	11
854-12025	02-14	01	11		08-40	01	5
85802803	06-04	01	33	87436266	08-40	01	6
85804617	09-28	03	11	87436267	08-38	01	12
85805441	07-18	01	1		08-40	01	4
85816770	04-10	01	61		08-62	01	3
85827832	07-16	01	13	87436268	08-40	01	10
	07-18	01		87436269	08-38	01	5
85827833	07-18	01	11	87436272	08-38	01	6
85827834	07-18	01	4	87436273	08-38	01	7
86026037	02-06B	01	12	87436274	08-38	01	8
	02-06B	02	12	87436275	08-42	01	3
8604568	08-66	01	12	87436276	08-42	01	2
	08-68	01	15	87436277	08-52	01	1
	08-74	01		87436278	08-52	01	2

Number	Figure	Sequence	Ref.	Number	Figure	Sequence	Ref.
87436279	08-52	01	3	87436379	08-54	01	3
87436280	08-52	01	4	87436380	08-54	01	5
87436281	08-52	01	5	87436381	08-54	01	6
87436282	08-52	01	6	87436382	08-54	01	
	08-56	01	5	87436584	06-02	01	28
87436283	08-52	01	8	87436604	08-48	01	
	08-56	01	12	87436605	08-48	01	
87436284	08-52	01	10		08-62	01	1
87436285	08-52	01	12	87437660	08-26	01	40
	08-56	01	18		08-28	01	12
87436286	08-52	01	13	87437737	08-38	01	13
	08-56	01	9		08-40	01	8
87436289	08-52	01	14		08-42	01	4
	08-56	01	16	87437738	08-38	01	14
87436290	08-52	01	15		08-40	01	9
	08-56	01	15		08-42	01	5
87436291	08-52	01	16	87437740	08-38	01	3
87436292	08-52	01	17	87437741	08-38	01	4
87436293	08-52	01	18	87438660	08-62	01	5
87436294	08-52	01	19		08-64	01	
	08-56	01	8	87438668	08-64	01	1
87436295	08-52	01	20	87438669	08-64	01	2
	08-56	01	10	87438670	08-64	01	3
87436296	08-52	01	21	87438671	08-64	01	4
87436297	08-52	01	22	87438672	08-64	01	5
87436298	08-52	01	23	87438673	08-64	01	6
87436299	08-58	01		87438674	08-34	01	5
87436302	08-44	01	11		08-60	01	6
87436303	08-44	01	12	87438675	08-34	01	6
	08-48	01	17		08-60	01	7
87436304	08-44	01	15	87440060	05-02	01	28
87436305	08-44	01	4	87441219	09-10	01	21
87436306	08-44	01	5	87441222	09-10	01	
87436307	08-44	01	6	87442408	09-02	01	
	08-54	01	4	87442581	06-52	01	10
87436308	08-44	01	7		06-52	01	11
87436309	08-44	01	9		06-64	01	10
87436310	08-44	01	10		06-64	01	11
	08-54	01	2		06-64A	01	10
87436311	08-44	01	2		06-64A	01	11
87436312	08-44	01	16	87444010	04-10	01	16
	08-48	01	13	87444081	08-34	01	1
87436313	08-44	01	8		08-36	01	
87436314	08-44	01	14		08-60	01	1
	08-48	01	15	87444082	08-34	01	2
87436315	08-44	01	13		08-38	01	
	08-48	01	16		08-60	01	2
87436318	08-44	01		87444083	08-34	01	3
87436320	08-48	01	2		08-40	01	
87436321	08-48	01	10		08-60	01	3
87436322	08-48	01	8	87444084	08-34	01	4
87436323	08-48	01	3		08-42	01	
87436324	08-48	01	4		08-60	01	4
87436325	08-48	01	5	87444085	08-60	01	5
87436326	08-48	01	12		08-62	01	
	08-50	01	4	87446988	06-66	01	8
87436328	08-48	01	11	87448565	09-04	01	2
87436330	08-48	01	14		09-04	01	2
87436332	08-48	01	18		09-04	01	2
87436334	08-48	01	7		09-04	01	2
87436335	08-48	01	6		09-04	01	2
87436336	08-48	01		87452376	05-02	01	6
87436355	08-56	01	1	87452922	09-24	01	9
87436356	08-56	01	2		09-28	01	41
87436357	08-56	01	3	87452923	09-28	01	32
87436358	08-56	01	4	87452924	09-24	01	6
87436360	08-56	01	7		09-28	01	43
87436361	08-56	01	11	87452925	09-24	01	7
87436362	08-56	01	13		09-28	01	42
87436363	08-56	01	14	87452926	09-24	01	8
87436365	08-56	01	19		09-28	01	40
87436366	08-56	01	20	87452927	09-28	01	15
87436367	08-50	01	2	87452928	09-28	01	14
87436368	08-50	01	3	87452929	09-28	01	19
87436369	08-50	01	5	87452930	09-28	01	28
87436370	08-50	01	6	87452931	09-28	01	23
87436371	08-46	01	3	87452932	09-28	01	35
87436372	08-36	01	4	87452933	09-28	01	34
	08-46	01	2	87452934	09-28	01	33
87436373	08-46	01	4	87452935	09-24	01	10
87436374	08-46	01	8		09-28	01	39
87436375	08-46	01	7	87452936	09-28	01	50
87436376	08-46	01	6	87452937	09-28	01	9
87436377	08-46	01	5	87452938	09-28	01	37

Number	Figure	Sequence	Ref.
87452939	09-28	01	38
87452940	09-28	01	20
87452941	09-28	01	30
87452942	09-28	01	24
87452943	09-28	01	25
87452944	09-28	01	21
87452945	09-28	01	22
87452946	09-28	01	36
87452947	09-28	01	44
87452948	09-28	01	17
87452949	09-28	01	26
87452950	09-28	01	18
87452951	09-28	01	7
87452952	09-28	01	29
87452953	09-24	01	2
	09-28	01	1
87452954	09-24	01	3
	09-28	01	2
87452955	09-24	01	4
	09-28	01	3
87452956	09-24	01	5
	09-28	01	4
87452957	09-28	01	5
87452958	09-28	01	6
87452959	09-24	01	11
	09-28	01	13
87452960	09-28	01	31
87452961	09-28	01	11
	09-30B	01	
	09-30D	01	
	09-30F	01	
	09-30H	01	
87452962	09-28	01	10
87453264	09-28	07	9
87453311	09-28	01	12
87453312	09-28	01	27
87453313	09-28	01	16
87453314	09-28	01	49
87453315	09-24	01	16
	09-28	01	47
87453316	09-24	01	15
	09-28	01	46
87453317	09-24	01	13
	09-28	01	45
87453318	09-24	01	14
	09-28	01	48
87453545	07-08	01	
87453546	07-08	01	
87457083	06-62A	01	19
87457084	06-62A	01	26
87458810	04-08B	01	7
87458811	04-08B	01	5
87458812	04-08B	01	4
87458813	04-08B	01	8
87458814	04-08B	01	9
87458815	04-08B	01	22
87458816	04-08B	01	1
87458817	04-08B	01	6
87458818	04-08B	01	2
87458819	04-08B	01	23
87458820	04-08B	01	19
87458821	04-08B	01	18
87458822	04-08B	01	17
87458823	04-08B	01	16
87458824	04-08B	01	15
87458825	04-08B	01	14
87458826	04-08B	01	12
87458827	04-08B	01	13
87458828	04-08B	01	20
87458829	04-08B	01	21
87458830	04-08B	01	10
87458831	04-08B	01	11
87458832	04-08B	01	3
87461045	09-24	01	12
87461299	09-24	01	17
	09-28	01	54
87461300	09-24	01	19
	09-28	01	57
87461301	09-24	01	18
	09-28	01	55
87461883	09-30D	01	5
87461884	09-30H	01	2
87462145	09-30B	01	7
87462400	02-08	01	13
87462903	08-10	01	8
87462905	08-10	01	29
87462907	08-12	01	35
87462909	08-12	01	34
87462913	08-22B	01	46
	08-24B	01	38
	08-28B	01	12
87462914	08-04	01	8
87462915	08-22B	01	5
	08-24B	01	34
	08-28B	01	32
87462916	08-22B	01	4
	08-24B	01	33
	08-28B	01	36
87462917	08-28B	01	31
87462918	08-14B	01	1
87462920	08-14B	01	2
87462973	08-06	01	32
87463007	04-10	01	11
	04-14	01	1
	04-16	01	5
87463020	09-30F	01	1
	09-30F	01	2
87463021	09-30F	01	3
87463022	09-30F	01	4
87463023	09-30F	01	5
	09-30F	01	6
87463024	09-30F	01	7
87463025	09-30F	01	8
87463026	09-30F	01	9
87463027	09-30F	01	10
87463028	09-30F	01	11
87463029	09-30F	01	12
87463030	09-30F	01	13
87463031	09-30F	01	16
87463032	09-30F	01	17
87463033	09-30F	01	18
87463034	09-30F	01	20
87463035	09-30F	01	21
87463036	09-30F	01	22
87463037	09-30F	01	24
87463038	09-30F	01	25
87463039	09-30F	01	26
87463040	09-30F	01	27
87463041	09-30F	01	29
87463042	09-30F	01	30
87463043	09-30F	01	31
87463044	09-30F	01	32
87463045	09-30F	01	33
87463046	09-30F	01	34
87463047	09-30F	01	35
87463048	09-30F	01	36
87463049	09-30F	01	37
87463050	09-30B	01	1
87463051	09-30B	01	4
87463053	09-30B	01	6
87463055	09-30B	01	8
87463056	09-30B	01	9
87463057	09-30B	01	10
87463061	09-30B	01	14
87463063	09-30D	01	1
87463064	09-30D	01	2
87463065	09-30D	01	3
87463066	09-30D	01	4
87463068	09-30D	01	6
87463070	09-30H	01	3
87463071	09-30B	01	2
87463072	09-30B	01	3
87463073	09-30F	01	14
87463074	09-30F	01	15
87463075	09-30F	01	19
87463076	09-30F	01	23
87463077	09-30F	01	28
87463078	09-30H	01	1
87473703	04-10	01	32
87519414	09-14	01	4
87519712	02-06A	01	20
	02-06A	02	20
87520201	06-40	01	2
	06-54	01	
	06-56	01	
	06-58	01	
	06-60	01	
	06-62	01	

Number	Figure	Sequence	Ref.
87520201	06-64	01	
87520202	06-40	01	1
	06-42	01	
	06-44	01	
	06-46	01	
	06-48	01	
	06-50	01	
	06-52	01	
87521194	02-06A	01	25
87524824	02-06B	01	35
	02-06B	02	35
	06-04	01	26
87527102	08-04	01	13
	08-14A	01	24
87527990	04-16	01	28
87530003	02-02	01	1
87539346	02-06A	01	6
	02-06A	02	6
87539392	02-06A	01	16
	02-06A	02	16
87540645	04-02A	01	7
87547288	08-14A	01	14
87547289	08-14A	01	27
87549269	02-06C	01	1
87549271	02-06C	01	4
87549276	02-06C	01	2
87552611	04-02A	01	6
87566619	02-34A	01	5
87572037	09-28	05	7
87584592	07-18	01	6
87591913	09-30	05	16
87602141	09-28	02	15
87603357	09-28	04	4
87603358	09-28	04	5
87603359	09-24	02	5
	09-24	03	6
87603360	09-24	02	4
	09-24	03	5
87603361	09-24	03	2
87603363	09-24	02	2
	09-24	03	3
87603364	09-24	02	1
	09-24	03	1
87603365	09-28	02	34
87603366	09-28	02	7
	09-28	03	17
87604051	09-28	02	22
87604052	09-28	02	29
87604053	09-28	03	1
87604054	09-28	02	3
	09-28	03	16
87604055	09-28	02	5
	09-28	03	19
87604100	09-28	06	4
87606945	09-28	03	5
87606946	09-28	03	13
87606958	06-40	01	2
	06-54	01	
	06-56A	01	
	06-58A	01	
	06-60A	01	
	06-62A	01	
	06-64A	01	
87607582	09-28	05	4
87607803	09-28	05	6
87607906	09-14	01	5
	09-26	01	1
	09-26	02	6
87607914	09-28	04	1
87608168	09-28	07	12
87610593	09-28	02	9
	09-28	03	20
87610661	09-24	04	2
	09-30	06	2
	09-30	07	2
87610662	09-24	04	3
	09-30	06	3
	09-30	07	3
87610664	09-22	01	1
	09-24	05	6
87611301	09-30	06	5
87612756	09-30	05	17
87612765	09-28	02	30
87616662	09-18	01	
87616663	09-02	01	
87619335	08-08	01	
87619336	08-14A	01	19
87620330	09-14	01	5
	09-24	05	7
	09-26	02	7
87626668	08-14A	01	2
87626669	08-14A	01	3
87626798	09-24	04	1
	09-30	06	1
	09-30	07	1
87628972	09-26	02	7
87629452	09-30	06	4
	09-30	07	4
87638154	09-30	03	29
87667271	02-06A	01	22
	02-06A	02	22
87667376	02-06A	01	28
	02-06A	02	28
87671721	02-06A	01	23
	02-06A	02	23
87673999	09-30	03	8
87674002	09-30	01	1
	09-30	02	18
87674003	09-30	02	11
87674004	09-30	02	17
87674005	09-30	02	7
87674006	09-30	02	13
87674007	09-30	02	10
	09-30	05	2
87674008	09-30	02	6
87674009	09-30	02	9
	09-30	05	3
87674010	09-30	02	1
87674011	09-30	02	2
87674013	09-30	02	5
87674014	09-30	02	12
87674015	09-30	02	14
87674016	09-30	03	36
87674017	09-30	01	7
87674018	09-30	05	1
87674035	09-30	01	4
87674036	09-30	01	10
87674037	09-30	03	3
87674039	09-30	03	37
87674041	09-30	03	4
87674042	09-30	03	5
87674043	09-30	03	34
87674044	09-30	03	20
87674057	09-30	05	9
87674058	09-30	04	5
87674059	09-30	03	18
	09-30	04	1
87699786	08-06	01	30
	08-06A	01	2
87699789	08-06A	01	5
87699790	08-06	01	29
	08-06A	01	8
87710271	06-66	01	
87724783	04-14	01	32
87758942	09-44	01	10
892-11004	04-02	01	15
	04-02A	01	23
	04-18	01	3
892-11005	04-02	01	19
	04-02A	01	26
	04-14	01	20
892-11006	03-02	01	28
	09-30	03	25
	09-30	04	8
	09-30	05	14
892-11008	02-06A	01	4
	02-06A	02	4
	04-02	01	11
	04-02A	01	11
	04-06	01	10
892-11010	02-10	01	12
	04-06	01	11
	04-20	01	21
	06-04	01	12
	08-04	01	18
	08-06	01	36
	08-06A	01	3
	08-10	01	36

Number	Figure	Sequence	Ref.
892-11010	08-12	01	39
	08-14B	01	5
	09-20	01	11
	09-24	04	7
	09-30	03	9
	09-30	06	7
	09-30	07	7
892-11012	07-06	01	19
893-11012	04-20	01	18
895-11004	09-30	01	3
895-11006	07-16	01	16
	09-30	03	17
	09-30	04	7
	09-30	05	12
895-11008	04-32	01	7
	08-22B	01	38
	08-24B	01	37
	08-28B	01	37
	09-28	02	12
	09-28	03	14
895-11010	02-10	01	13
	09-24	04	8
	09-30	03	11
	09-30	06	8
	09-30	07	8
895-11012	03-02	01	7
	04-02	01	21
	04-02A	01	8
895-15008	02-06A	01	12
	02-06A	02	12
	02-08	01	11
	09-28	03	21
895-15010	09-20	01	15
896-11006	02-06A	02	15
896-11008	02-06A	02	31
896-11010	02-06A	01	15
	02-06C	01	7
896-11012	04-16	01	30
89604093	09-28	06	3
92-6	09-06	01	25
92-7	06-26	01	26
92-9	06-14	01	28
95-12	08-20	01	19
97005C1	09-28	03	2
97006C1	09-28	03	7
9827058	09-30	02	3
	09-30	03	6
9827059	09-30	03	7
9827060	09-30	03	19
9969207	07-16	01	15
A06360-88	05-06	01	26
A10329	06-02	01	25
A11822	03-04	01	10
A12301	08-04	01	7
A12308	08-14	01	14
	08-14B	01	9
A14506	08-20	01	17
A14515	08-20	01	15
A15084	04-26	01	3
A16961	05-10	01	5
A170241	02-06A	01	29
	02-06A	02	29
A171099	02-06B	01	14
	02-06B	02	14
A17654	09-06	01	12
A17657	09-06	01	20
A17667	09-06	01	33
A17903	06-06	01	16
	06-06	01	19
A17908	06-20	01	16
	06-22	01	14
	06-22	01	20
	06-22	01	26
	06-22	01	33
	06-22	01	6
A17912	06-16	01	3
A17918	06-20	01	11
	06-22	01	1
	06-22	01	21
	06-22	01	9
A17919	06-20	01	12
	06-22	01	10
	06-22	01	2
	06-22	01	22
A17919	06-22	01	29
A17921	06-20	01	14
	06-22	01	
	06-22	01	12
	06-22	01	24
	06-22	01	31
	06-22	01	4
A17924	06-12	01	18
A17925	06-16	01	1
	06-18	01	1
A17982	06-32	01	8
A17986	06-06	01	5
A17997	06-06	01	23
A18003	06-24	01	13
	06-26	01	9
A18004	06-24	01	12
	06-26	01	10
A18012	06-06	01	40
A18024	06-24	01	2
	06-26	01	2
A18033	06-26	01	15
A18034	06-06	01	18
A18038	06-24	01	10
A18134	06-32	01	5
A184545	02-04A	01	2
A186194	04-04	01	12
A186293	04-26	01	2
A18662	09-06	01	18
A18675	09-06	01	22
A18709	06-02	01	34
A187504	04-04	01	17
A187519	04-14	01	23
	04-30	01	
A187520	04-14	01	24
	04-16	01	11
	04-30	01	
A187913	04-30	01	1
	04-30	01	7
A187992	04-26	01	
A187993	04-26	01	
A189402	02-04	01	3
A189616	04-02A	01	2
	04-04	01	34
A190656	02-04	01	2
A19066	06-04	01	3
A19068	06-04	01	7
A20058	06-66	01	5
A23885	06-02	01	1
A27089	06-06	01	44
A27507	06-14	01	10
	08-18	01	8
	09-08	01	8
A27891	06-10	01	10
	06-10	01	18
A28236	06-16	01	4
	06-18	01	5
A29456	06-12	01	8
A30095	05-08	01	6
	05-08	02	20
A30338	09-10	01	13
A30709	06-02	01	8
A30825	06-12	01	16
A30895	09-10	01	7
A30916	06-14	01	3
	06-32	01	16
A45625	05-12	01	21
A55734	06-10	01	21
	06-12	01	2
A55817	06-14	01	21
A55828	06-14	01	2
	06-32	01	15
A56393	09-10	01	27
A65842-33	03-04	01	29
A7552	08-08	01	10
A7623	05-10	01	8
A76747	03-02	01	10
A77429	02-26	01	3
	02-30	01	28
A77441	07-06	01	22
A77465	02-36	01	11
A77466	02-36	01	11
A77467	02-36	01	11
A77468	02-36	01	11
A77469	02-36	01	11

Number	Figure	Sequence	Ref.	Number	Figure	Sequence	Ref.
A77490	02-22	01		D77016	06-20	01	1
A77505	02-26	01	5	D77018	06-20	01	3
A77676	02-22	01		D77022	06-20	01	25
A77727	02-36	01		D77023	06-14	01	5
A77728	02-36	01		D77025	06-20	01	19
A77729	02-36	01		D77026	06-16	01	17
A77730	00-00		8	D77029	06-20	01	26
	02-36	01		D77031	06-12	01	15
A77731	02-36	01		D77032	06-12	01	14
A77732	02-36	01		D77034	06-20	01	4
A77783	02-26	01	2	D77036	06-18	01	20
A77793	02-38	01	1	D77037	06-18	01	21
A77861	02-38	01	17	D77038	06-18	01	
A7982	06-30	01	18	D77039	06-14	01	20
BHBD77003	06-12	01	5	D77040	06-18	01	27
BHBL33574	06-30	01	16	D77041	06-20	01	5
C5884230	00-00		8	D77043	06-20	01	6
CASJ900250	02-26	01	6	D77377	06-28	01	2
CASL125989	02-02	01	9	D78317	06-24	01	1
CURJ904711	03-06	01	13		06-26	01	1
D139225	03-04	01	32	D80312	06-06	01	35
D142272	06-06	01	14	D80314	06-06	01	38
D150535	06-32	01	6	D87168	06-30	01	24
D150537	06-32	01		D87224	06-06	01	32
D31954	06-24	01	37	D95142	05-08	01	10
	06-26	01	45		05-08	02	14
	06-26A	01	14	D95144	08-18	01	21
D31957	08-20	01	13		08-18	01	5
D32678	05-12	01	15		09-02	01	23
D33127	09-08	01	13		09-08	01	5
D34666	05-08	01	18	D95146	08-16	01	4
	05-08	02	5		09-02	01	12
D34977	08-08	01	8	D95148	09-02	01	13
D36505	06-40	01	6	E 67101	08-24	01	13
	09-10	01	30		08-24B	01	13
D36971	09-08	01	7		08-28	01	13
D41165	08-14	01	22		08-28B	01	13
	08-14B	01	14	E104122	06-18	01	17
D44543	08-18	01	2		06-22	01	28
D47206	08-16	01	12	E104132	06-06	01	49
D47211	08-16	01	13	E104133	06-06	01	51
D47486	06-12	01	11	E104134	06-06	01	50
D47524	06-32	01	4	E104161	06-18	01	22
D48562	08-16	01	11	E104162	06-18	01	22
D50547	08-08	01	7	E104171	06-12	01	13
D52932	06-24	01		E104173	06-24	01	31
D53692	08-02	01	10	E104229	06-10	01	4
	08-04	01	9	E104291	05-06	01	19
D55216	09-16	01	2	E104292	05-06	01	6
	09-22	01	2	E105010	06-14	01	4
	09-44	01	4	E105055	06-06	01	17
D55252	06-20	01	13	E105057	06-06	01	26
	06-22	01	11	E105058	06-06	01	24
	06-22	01	17	E105059	06-06	01	21
	06-22	01	23	E114251	06-24	01	11
	06-22	01	30		06-26	01	16
D58178	06-06	01	25	E114328	06-16	01	10
D59677	06-24	01	8		06-18	01	13
	06-26	01	12		06-18	01	6
D59678	06-24	01	14	E155067	06-18	01	43
	06-26	01	7	E155068	06-18	01	44
D59679	06-24	01	15	E155230	09-14	01	16
	06-26	01	8	E155231	09-14	01	17
D60994	06-32	01	3	E155261	08-04	01	8
D63366	06-16	01	19	E155293	06-30	01	11
D73724	06-24	01		E155306	05-08	02	17
D73725	06-24	01	25	E155314	09-40	01	24
D73733	06-24	01	30	E155315	09-40	01	24
	06-26	01	39	E155741	09-40	01	10
D73734	06-24	01	26	E155742	09-40	01	10
	06-26	01	29	E155743	09-40	01	21
D73735	06-24	01	27	E155744	09-40	01	21
	06-26	01	30	E155913	08-02	01	13
D76971	06-24	01	18	E155914	08-02	01	28
	06-26	01	19	E155965	03-02	01	18
D76977	06-10	01	3	E156007	06-04	01	30
D76994	06-14	01	12	E156163	04-06	01	9
	06-14	01	16		04-08	01	
D76997	06-28	01	1	E156183	06-36	01	8
D77000	06-30	01	2		06-38	01	8
D77005	06-26	01			06-38A	01	8
D77007	06-30	01	13	E156333	09-40	01	1
D77008	06-30	01	14	E156341	09-40	01	11
D77015	06-12	01	31	E156345	09-40	01	11

Number	Figure	Sequence	Ref.	Number	Figure	Sequence	Ref.
E156375	09-40	01	2	E159504	02-06B	02	28
E156389	03-08	01	12		09-12	01	5
E156409	03-08	01	1	E159646	04-20	01	5
E156611	02-30	01	13	E159647	04-20	01	16
E156704	04-08	01	13	E159653	07-06	01	8
E156737	04-08	01	17	E159690	02-06	01	21
E156738	04-08	01	16		02-06A	01	21
E156739	04-08	01	11		02-06A	02	21
E156740	04-08	01	7	E159692	04-20	01	11
E156741	04-08	01	5	E159912	08-32	01	12
E156746	04-08	01	15	E1630405	05-06	01	13
E156747	04-08	01	8	E34113	08-22	01	28
E156750	04-08	01	20		08-26	01	28
E156751	04-08	01	22	E60048	02-06	01	2
E156752	04-08	01	21	E60389	04-10	01	5
E156753	04-08	01	10	E61241	09-10	01	25
E156754	04-08	01	19	E61312	09-14	01	11
E156755	04-08	01	4	E61741	06-36	01	
E156756	04-08	01	1	E61748	06-34	01	7
E156757	04-08	01	6	E62733	09-10	01	22
E156758	04-08	01	9	E64165	06-34	01	
E156845	09-10	01	24	E65236	03-02	01	9
E157051	06-16	01	20	E66256	05-12	01	11
E157073	09-16	01	1	E66349	04-28	01	5
E157313	08-08	01	6	E66371	06-34	01	
E157331	02-10	01	5	E67605	04-24	01	2
E157336	06-06	01	48		04-24	01	4
E157471	04-20	01	1	E67745	06-02	01	10
E157575	04-16	01	12	E67845	06-34	01	
E157656	09-04	01	5	E67846	06-02	01	40
E157729	06-14	01	11	E67923	02-10	01	6
E157730	06-14	01	17	E68025	08-02	01	21
E157807	09-16	01	10	E68029	08-02	01	22
E157824	06-34	01	8	E68144	06-38	01	
E158262	06-06	01	29	E68241	06-38	01	9
E158274	03-04	01	33	E68337	04-08	01	2
E158366	09-40	01	21	E68338	04-08	01	3
E158385	09-04	01	4	E68347	04-08	01	12
E158436	03-02	01	19	E68563	04-16	01	4
E158464	06-06	01	20	E68635	08-20	01	10
E158526	03-04	01	28	E68636	08-20	01	20
E158561	09-14	01	5	E68637	08-20	01	28
E158644	04-10	01	42	E68638	08-20	01	
E158645	04-10	01	44	E68763	06-34	01	
E158695	06-40	01	8		06-36	01	
E158709	06-04	01	25		06-38	01	
E158734	09-02	01	20	E68802	06-34	01	12
E158746	06-06	01	2	E68940	06-14	01	13
E158752	08-18	01	12	E68941	06-14	01	14
E158767	09-14	01	23	E68947	06-14	01	15
E158805	08-18	01	11	E68948	06-20	01	20
E158819	09-22	01	21	E68950	06-20	01	21
E158829	09-20	01	14	E69350	06-04	01	2
E158832	06-02	01	33	E69391	06-34	01	1
E158833	06-02	01	18	E69392	06-36	01	
E158840	06-04	01	16		06-38	01	
E158893	04-10	01	45		06-38A	01	
E158899	06-04	01	15	E69393	06-36	01	9
E158900	06-04	01	13	E69483	06-02	01	37
E158941	09-40	01	26	E69484	08-20	01	
E158942	09-40	01	26	E69526	05-04	01	12
E158943	09-40	01	26		05-08	01	
E158946	09-18	01	15		05-08	02	
E158960	06-20	01	15	E69527	05-04	01	11
	06-22	01	13		05-08	01	
	06-22	01	19		05-08	02	
	06-22	01	25	E69538	08-16	01	
	06-22	01	32	E69539	08-16	01	
	06-22	01	5	E69553	06-14	01	23
E158968	09-40	01	13	E69585	05-10	01	4
E158969	09-40	01	13	E69605	05-10	01	16
E158970	09-40	01	13		05-12	01	5
E158974	04-18	01	9	E69644	06-02	01	3
E158994	04-18	01	8	E69692	06-02	01	7
E159033	05-04	01	15	E69712	05-02	01	25
E159035	09-02	01	31		06-02	01	15
E159036	09-02	01	7	E69843	08-20	01	31
E159037	09-02	01	41	E69856	06-14	01	22
E159038	09-02	01	30	E69859	06-28	01	6
E159059	05-12	01	18	E69865	08-20	01	26
E159220	03-12	01	2	E69984	08-18	01	
E159285	05-12	01	12	E69987	05-08	01	
E159292	02-06	01	4	E69990	08-16	01	
E159504	02-06B	01	28	E95063	08-02	01	12

Number	Figure	Sequence	Ref.
E95176	09-02	01	
E95303	05-08	01	22
	05-08	01	3
	05-08	02	3
E96002	08-16	01	
E96037	04-10	01	25
E96371	08-02	01	6
E96391	09-02	01	10
E96436	09-02	01	14
E96437	09-02	01	11
E96598	09-40	01	14
E97146	09-40	01	5
E97147	09-40	01	5
E97242	08-20	01	
E97264	09-10	01	32
E97397	06-28	01	5
	06-28	01	9
E97535	04-08	01	18
E97671	02-10	01	2
E97702	04-20	01	6
E97952	04-10	01	17
E97953	04-10	01	21
F1545306	05-06	01	1
F62114	06-24	01	9
	06-26	01	11
	06-30	01	22
G100438	08-18	01	13
	09-08	01	19
G100440	08-18	01	15
	09-08	01	15
G100441	05-08	02	12
G100442	05-08	01	13
	05-08	02	11
G100443	05-08	02	10
G100444	05-08	01	15
	05-08	02	9
G100448	08-18	01	16
	09-08	01	16
G100449	05-08	01	16
	05-08	02	8
G100526	08-16	01	10
G100530	08-16	01	14
G101533	08-18	01	6
	09-08	01	6
G101564	09-08	01	1
G101565	09-08	01	1
G101702	05-08	01	1
	05-08	02	4
G101703	05-08	01	1
	05-08	02	4
G101707	08-18	01	1
G101716	08-16	01	1
G101717	08-16	01	1
G102285	08-18	01	14
	09-08	01	14
G102288	05-08	01	14
G102424	05-08	01	8
	05-08	02	15
G102427	08-16	01	5
G102569	09-08	01	11
G104407	09-08	01	
G104989	08-16	01	16
	08-18	01	18
G105545	09-08	01	
G105980	09-08	01	18
G107921	05-08	01	4
G107923	08-18	01	7
G107997	08-18	01	10
	09-08	01	10
G107998	08-16	01	9
G109093	05-08	01	11
	05-08	02	18
G109152	05-08	02	2
G109228	08-16	01	6
G109395	05-08	01	12
	05-08	02	7
	08-16	01	17
	08-18	01	19
G109423	08-18	01	
G109452	05-08	01	
G31964	09-08	01	2
G31965	09-08	01	2
G32122	05-08	01	7
	05-08	02	19
G32176	08-18	01	9
	09-08	01	9
G33449	05-08	01	20
	05-08	02	13
G33626	09-08	01	12
G58842-11	04-06	01	5
G6984278	04-28	01	
H66842-21	04-10	01	43
H6684221	04-28	01	17
J008469	02-34	01	1
J045782	02-34	01	2
J046201	02-34	01	3
J280911	02-26	01	35
J286277	02-12	01	
J286278	00-00		4
J353972	04-08B	01	29
J354335	04-08B	01	24
J357452	02-34	01	5
J358076	03-14	01	4
J358097	02-14	01	23
J545652	02-18	01	
J678925	03-12	01	16
J6984280	04-28	01	1
J709861	02-16	01	3
J818823	02-16	01	4
J818824	02-16	01	2
J823921	02-38	01	15
J897329	03-10	01	2
J900068	02-30	01	8
J900227	02-28	01	6
J900242	02-26	01	32
J900245	02-26	01	33
J900257	02-14	01	8
	02-30	01	12
J900267	02-38	01	35
J900269	02-34A	01	2
J900299	02-26	01	7
J900390	03-12	01	22
J900621	04-08B	01	28
J900623	04-08B	01	30
J900626	03-14	01	1
J900629	02-30	01	22
	02-30	01	33
	03-06	01	19
J900630	02-22	01	17
	03-12	01	21
J900631	03-08	01	3
J900632	03-10	01	4
	03-12	01	4
J900677	02-22	01	2
J900687	02-30	01	11
J900706	02-26	01	26
	02-26	01	30
J900709	02-14	01	18
J900808	03-16	01	2
J900919	02-36	01	10
J900955	02-30	01	16
J900956	02-24	01	25
	02-30	01	7
J900965	02-30	01	5
J901085	02-36	01	9
J901097	02-26	01	9
	02-38	01	3
J901356	02-16	01	3
	02-38	01	4
J901395	02-34A	01	3
J901683	02-16	01	5
J901706	02-36	01	6
	02-36	01	6
	02-36	01	6
J901757	02-30	01	29
J901793	02-36	01	5
	02-36	01	5
	02-36	01	5
J902332	02-28	01	7
J902343	02-30	01	9
J902363	02-38	01	8
J902425	02-22	01	10
	02-22	01	16
	02-38	01	30
J902460	03-12	01	5
J902469	04-06	01	3
	04-08B	01	26
J902603	07-06	01	17

Number	Figure	Sequence	Ref.	Number	Figure	Sequence	Ref.
J902662	03-12	01	6	J907555	02-26	01	21
J903103	02-30	01	26	J907617	02-38	01	25
J903242	02-28	01	3	J907769	02-12	01	
J903293	03-10	01	5	J907860	02-22	01	4
J903380	02-38	01	11	J907978	03-12	01	7
	03-06	01	20	J907998	02-14	01	14
	03-16	01	3	J908032	02-32	01	1
J903475	02-14	01	25	J908086	02-16	01	
	02-38	01	18	J908095	02-34	01	6
J903492	02-30	01	4	J908118	02-24	01	19
J903652	02-10	01	4	J909355	02-20	01	2
J903723	03-06	01	5	J909356	02-38	01	13
J903744	02-16	01	11		03-16	01	4
J903757	02-24	01	14	J909411	02-34	01	12
J903761	02-10	01	15	J910248	02-34	01	8
J903857	02-32	01	9	J910260	02-34	01	9
J903924	02-14	01	15	J910620	02-34	01	11
J904105	02-26	01	16	J910739	02-12	01	
J904166	00-00		9	J910810	02-26	01	28
	02-30	01	24	J910811	02-26	01	24
	02-36	01	7	J910815	02-26	01	20
J904230	02-30	01	34	J910923	02-24	01	15
J904369	02-28	01	2		04-02	01	6
J904408	02-26	01	12	J910924	04-02	01	2
J904409	02-26	01	13	J910991	02-10	01	14
J904483	02-32	01	3	J911566	02-04	01	1
J904519	03-06	01	6		02-04A	01	5
J904849	02-14	01	17		02-12	01	13
J905113	02-22	01	14	J911575	02-12	01	13
J905152	03-16	01	6	J911922	02-12	01	6
J905153	03-16	01	7	J911923	02-12	01	
J905154	03-16	01	8	J911924	02-12	01	
J905155	03-16	01	9	J912078	02-34	01	4
J905156	03-16	01	5	J912183	02-16	01	15
J905157	03-16	01	5	J912473	02-34	01	13
J905158	03-16	01	5		02-38	01	33
J905159	03-16	01	5	J912558	02-24	01	22
J905160	03-16	01	5	J912772	02-14	01	22
J905161	03-16	01	5	J913638	02-34	01	14
J905162	03-16	01	5	J913994	02-14	01	16
J905163	03-16	01	5		02-38	01	22
J905164	03-16	01	5	J913995	02-14	01	13
J905165	03-16	01	5	J914029	02-38	01	6
J905166	03-16	01	5	J914035	02-30	01	6
J905167	03-16	01	5	J914284	03-08	01	4
J905168	03-16	01	5	J914385	02-38	01	19
J905169	03-16	01	5	J914386	02-38	01	26
J905170	03-16	01	5	J914388	02-16	01	12
J905171	03-16	01	5	J914389	02-38	01	32
J905172	03-16	01	5	J914462	02-12	01	5
J905173	03-16	01	5	J914868	02-14	01	9
J905174	03-16	01	5	J915703	02-22	01	6
J905175	03-16	01	5	J915772	02-14	01	12
J905176	03-16	01	5	J915787	02-20	01	5
J905177	03-16	01	5	J916131	02-14	01	5
J905178	03-16	01	5		02-38	01	20
J905179	03-16	01	5	J916165	02-16	01	26
J905180	03-16	01	5	J916166	02-16	01	23
J905181	03-16	01	5	J916361	03-08	01	6
J905182	03-16	01	5	J916518	04-08B	01	27
J905183	03-16	01	5	J916664	02-02	01	2
J905184	03-16	01	5	J917712	03-06	01	14
J905185	03-16	01	5	J917716	03-06	01	8
J905186	03-16	01	5	J917717	03-06	01	15
J905307	03-06	01	21	J917746	03-06	01	16
J906206	02-26	01	14	J917747	03-06	01	17
J906619	02-20	01	3		03-06	01	7
	02-26	01	4	J918109	02-16	01	21
	03-12	01	18		03-06	01	22
J906659	02-38	01	12	J918188	03-06	01	23
J906694	02-38	01	38	J918190	03-12	01	8
	03-10	01	7	J918191	03-08	01	8
J906695	02-38	01	37	J918192	03-08	01	11
	03-10	01	8	J918428	02-20	01	8
J906697	02-24	01	11	J918536	03-12	01	3
	02-30	01	27	J918562	02-16	01	8
	02-38	01	27	J918579	02-16	01	13
J906698	02-12	01	3	J918614	02-30	01	35
J906732	02-30	01	17	J918673	02-14	01	3
J906773	02-16	01	19	J918674	02-14	01	1
J906854	02-26	01	15	J918944	02-12	01	10
J906973	02-16	01	24	J918954	02-20	01	
J907049	02-24	01	5	J919601	02-14	01	10
J907185	02-16	01	18		02-38	01	23
J907555	02-26	01	21				
J907617	02-38	01	25				
J907769	02-12	01					
J907860	02-22	01	4				
J907978	03-12	01	7				
J907998	02-14	01	14				
J908032	02-32	01	1				
J908086	02-16	01					
J908095	02-34	01	6				
J908118	02-24	01	19				
J909355	02-20	01	2				
J909356	02-38	01	13				
	03-16	01	4				
J909411	02-34	01	12				
J910248	02-34	01	8				
J910260	02-34	01	9				
J910620	02-34	01	11				
J910739	02-12	01					
J910810	02-26	01	28				
J910811	02-26	01	24				
J910815	02-26	01	20				
J910923	02-24	01	15				
	04-02	01	6				
J910924	04-02	01	2				
J910991	02-10	01	14				
J911566	02-04	01	1				
	02-04A	01	5				
	02-12	01	13				
J911575	02-12	01	13				
J911922	02-12	01	6				
J911923	02-12	01					
J911924	02-12	01					
J912078	02-34	01	4				
J912183	02-16	01	15				
J912473	02-34	01	13				
	02-38	01	33				
J912558	02-24	01	22				
J912772	02-14	01	22				
J913638	02-34	01	14				
J913994	02-14	01	16				
	02-38	01	22				
J913995	02-14	01	13				
J914029	02-38	01	6				
J914035	02-30	01	6				
J914284	03-08	01	4				
J914385	02-38	01	19				
J914386	02-38	01	26				
J914388	02-16	01	12				
J914389	02-38	01	32				
J914462	02-12	01	5				
J914868	02-14	01	9				
J915703	02-22	01	6				
J915772	02-14	01	12				
J915787	02-20	01	5				
J916131	02-14	01	5				
	02-38	01	20				
J916165	02-16	01	26				
J916166	02-16	01	23				
J916361	03-08	01	6				
J916518	04-08B	01	27				
J916664	02-02	01	2				
J917712	03-06	01	14				
J917716	03-06	01	8				
J917717	03-06	01	15				
J917746	03-06	01	16				
J917747	03-06	01	17				
	03-06	01	7				
J918109	02-16	01	21				
	03-06	01	22				
J918188	03-06	01	23				
J918190	03-12	01	8				
J918191	03-08	01	8				
J918192	03-08	01	11				
J918428	02-20	01	8				
J918536	03-12	01	3				
J918562	02-16	01	8				
J918579	02-16	01	13				
J918614	02-30	01	35				
J918673	02-14	01	3				
J918674	02-14	01	1				
J918944	02-12	01	10				
J918954	02-20	01					
J919601	02-14	01	10				
	02-38	01	23				

Number	Figure	Sequence	Ref.	Number	Figure	Sequence	Ref.
J919683	02-14	01	13	J929791	02-38	01	28
J919687	02-16	01	9	J929792	02-38	01	29
J919736	04-02	01	5	J929795	02-38	01	9
J919807	02-34	01	16	J930139	02-30	01	10
J920123	02-24	01	21	J930249	02-16	01	7
J920400	02-22	01	8	J930589	03-14	01	3
J920447	02-34	01	10	J930906	02-24	01	3
J920706	02-30	01	15	J930942	00-00		11
J920773	02-22	01	12		03-10	01	11
J920779	02-26	01	17	J930969	03-10	01	12
J920780	02-26	01	17	J931063	00-00		10
J920781	02-26	01	23		03-10	01	6
J920867	02-26	01	10	J931346	02-22	01	13
J920868	02-26	01	11	J931347	02-16	01	20
J921556	03-12	01	17	J931348	03-08	01	5
J921558	02-20	01	12	J931349	02-22	01	5
J921640	02-26	01	34	J931350	02-16	01	12
J921992	02-22	01	3	J931623	02-26	01	18
J922409	03-16	01	1	J932120	02-14	01	4
J923044	02-12	01		J932296	02-30	01	21
J923054	02-38	01	34	J932320	03-12	01	15
J923262	02-26	01	19	J933220	02-30	01	
J923331	02-24	01	17	J933255	03-08	01	7
	02-38	01	2	J933291	03-12	01	14
J924147	02-22	01	11	J933615	02-20	01	4
J924148	02-22	01	9	J934021	03-14	01	5
J924389	02-16	01	27	J934022	03-14	01	6
J924473	02-24	01	10	J934506	03-12	01	20
J924595	02-14	01	24	J934507	03-12	01	23
J924725	03-08	01	10	J934636	03-12	01	12
J924726	03-06	01	25	J935032	03-12	01	19
J924962	02-14	01	27	J935581	02-14	01	1
J925009	02-20	01	7	J935959	02-14	01	18
J925186	02-12	01	9	J936027	02-34	01	7
J925207	02-12	01	8	J936337	03-10	01	3
J925232	02-36	01		J937123	03-12	01	7
J925955	03-10	01	9	J937404	00-00		5
J926047	02-30	01	23		02-22	01	1
J926103	03-06	01	24	J937743	00-00		12
J926126	02-32	01	8		02-20	01	10
J926700	02-26	01	8	J938156	02-14	01	5
J926846	02-14	01	7	J938159	02-34	01	15
J926863	02-14	01	6	J940059	02-28	01	2
J927154	02-16	01	6		02-30	01	2
	02-38	01	5	J941981	02-12	01	4
J927155	02-28	01	5	J942162	02-30	01	1
J927293	02-26	01		J942914	02-20	01	13
J927772	02-32	01	5	J942915	02-20	01	11
J927773	02-32	01	5	J964422	02-14	01	4
J927774	02-32	01	5	J967188	02-12	01	10
J927775	02-32	01	5	J969061	07-06	01	18
J927776	02-32	01	5	K00414-78	04-10	01	53
J927913	02-30	01	31		04-14	01	6
J927948	02-30	01	3	K43287-47	09-22	01	9
J928231	03-12	01	24	K69842-81	04-28	01	3
	03-12	01	9	L 55379	08-24	01	11
J928404	02-24	01	2		08-24B	01	11
J928406	02-24	01	4	L 56064	08-24	01	1
	02-38	01	16		08-24B	01	1
J928407	03-12	01	10		08-28	01	1
J928408	03-12	01	11		08-28B	01	1
J928527	03-10	01	10	L 59087	08-24	01	2
J928759	02-30	01	32		08-24B	01	2
	03-06	01	4		08-28	01	2
J928832	02-30	01	30		08-28B	01	2
J928873	04-08B	01	25	L 59090	08-24	01	3
J928919	02-38	01	7		08-24B	01	3
J928989	02-34	01	17		08-28	01	28
J929016	02-32	01	4		08-28B	01	28
J929017	02-32	01	4	L 59968	08-24	01	9
J929018	02-32	01	4		08-24B	01	9
J929019	02-32	01	4		08-28	01	10
J929020	02-32	01	4		08-28B	01	10
J929021	02-32	01	6	L07842-41	04-20	01	15
J929022	02-32	01	6	L09338-79	04-06	01	6
J929023	02-32	01	6	L100349	08-08	01	11
J929024	02-32	01	6	L101181	08-14A	01	9
J929025	02-32	01	6	L101294	09-20	01	1
J929027	02-32	01	2	L101295	09-20	01	2
J929028	02-28	01	8	L102515	09-14	01	24
J929042	02-28	01	1		09-18	01	9
J929456	03-14	01	2	L102849	08-22	01	14
J929457	02-20	01	6		08-22B	01	14
J929735	02-26	01	1		08-24	01	6

Number	Figure	Sequence	Ref.	Number	Figure	Sequence	Ref.
L102849	08-24B	01	6	L32418	08-20	01	12
	08-26	01	14	L33452	06-06	01	39
	08-28	01	7	L33459	06-06	01	30
	08-28B	01	7	L33460	06-06	01	31
L103817	08-14B	01	16	L33462	06-06	01	33
L103855	09-02	01	46	L33463	06-06	01	9
L104139	09-16	01	4	L33464	06-06	01	47
L104990	08-08	01	5	L33465	06-06	01	8
L105214	09-02	01	22	L33466	06-06	01	42
L105705	09-16	01	3		06-10	01	
L106692	08-06	01	8	L33467	06-10	01	2
L106929	08-14	01	9	L33468	06-10	01	5
	08-14B	01	7	L33469	06-10	01	13
L107161	09-10	01	9	L33470	06-10	01	9
L107221	08-14	01	25	L33471	06-10	01	17
L107308	08-06	01	16	L33472	06-10	01	19
L107314	08-14	01	19	L33473	06-10	01	16
	08-14B	01	17		06-10	01	8
L107316	08-14	01	18	L33475	06-10	01	24
	08-14B	01	15	L33476	06-12	01	25
L107328	08-06	01	18	L33481	06-12	01	9
	08-06	01	27	L33482	06-12	01	24
L108238	04-16	01	13	L33485	06-20	01	17
L111301	08-10	01	25		06-22	01	15
	08-12	01	21		06-22	01	27
	08-14	01	17		06-22	01	7
	08-14B	01	20	L33487	06-16	01	12
L111302	08-10	01	30		06-16	01	24
L112209	04-20	01	22		06-18	01	15
L112439	08-32	01	5		06-18	01	40
L112444	09-40	01	11		06-20	01	8
L114122	05-12	01		L33488	06-16	01	11
	08-06	01	7		06-16	01	23
L115161	08-32	01	1		06-18	01	14
L115321	08-32	01	2		06-18	01	38
L11541	04-10	01	10		06-20	01	7
	04-28	01	10	L33514	06-16	01	5
	09-30	05	6		06-18	01	7
L115548	02-06B	01	22	L33516	06-16	01	16
	02-06B	02	22	L33518	06-16	01	2
L115576	08-32	01	3		06-18	01	2
L116820	02-08	01	7	L33537	06-24	01	
L117005	08-30	01	9		06-26	01	35
L117465	09-18	01	3	L33539	06-24	01	41
L117466	09-18	01	2		06-26	01	21
L117520	09-40	01	24	L33540	06-24	01	6
L11760	04-10	01	20		06-26	01	37
L124020	02-02	01	3	L33541	06-24	01	4
L12441	03-02	01	13		06-26	01	4
L124504	04-14	01	11	L33542	06-12	01	17
L12570	05-08	01	2		06-24	01	5
	05-08	01	21		06-26	01	5
L12571	05-08	01	22	L33544	06-24	01	40
	05-08	01	3		06-26	01	20
L126713	04-02	01	17	L33550	06-30	01	26
L126951	04-14	01	2	L33552	06-30	01	
L126959	04-14	01	3	L33553	06-24	01	16
L127411	02-02	01			06-26	01	17
L14050	09-10	01	12	L33556	06-24	01	20
L14452	09-02	01	37		06-26	01	34
L16015	09-02	01	15	L33558	06-30	01	5
L17212	09-10	01	10	L33562	06-30	01	4
L17213	09-10	01	10	L33563	06-30	01	3
L17318	09-10	01	10	L33566	06-24	01	28
L17462	09-10	01	5		06-26	01	38
L17463	09-10	01	6	L33569	06-24	01	39
L17466	09-18	01	4		06-26	01	48
L17468	09-10	01		L33570	06-24	01	38
L18331	03-02	01	23		06-26	01	47
	03-04	01	26	L33571	06-24	01	32
	04-14	01	18		06-26	01	41
	04-28	01	9	L33572	06-24	01	33
	05-10	01	17		06-26	01	42
	07-06	01	32	L33573	06-24	01	34
	08-04	01	11		06-26	01	43
L30039	06-12	01	23	L33575	06-30	01	19
L30048	06-24	01	17	L33576	06-30	01	20
	06-26	01	18	L33579	06-32	01	2
L30051	06-06	01	27	L45013	09-02	01	26
L30394	06-30	01	23	L46480	09-10	01	17
L30685	06-06	01	22	L46821	02-06	01	14
L32110	08-20	01	29		02-06A	01	7
L32318	08-20	01	1		02-06A	02	7
L32320	08-20	01	4	L47224	09-10	01	19

Number	Figure	Sequence	Ref.	Number	Figure	Sequence	Ref.
L47419	08-12	01	10	NLS	03-10	01	1
L47423	09-02	01	26		06-28	01	4
	09-10	01	18	NSS	02-08	01	1
L47424	09-02	01	26		02-12	01	1
	09-10	01	34		02-12	01	2
L47426	08-10	01	11		02-14	01	19
	08-10	01	27		02-14	01	20
L47431	08-10	01	10		02-14	01	21
	08-12	01	32		02-16	01	17
L47453	08-10	01	26		02-18	01	10
	08-12	01	11		02-18	01	11
L47468	08-10	01	18		02-18	01	12
	08-12	01	18		02-18	01	13
L47533	09-10	01	14		02-18	01	14
L47536	09-10	01	11		02-18	01	15
L47564	09-18	01	5		02-18	01	16
L47565	09-02	01	18		02-18	01	17
	09-18	01	6		02-18	01	18
L47633	08-12	01	22		02-18	01	19
L47700	09-02	01	16		02-18	01	2
L47701	09-02	01	17		02-18	01	20
L47997	09-18	01	12		02-18	01	21
L48796	08-14	01	7		02-18	01	22
L50015	05-04	01	5		02-18	01	23
L50719	08-14	01	26		02-18	01	24
	08-14B	01	21		02-18	01	25
L51640	08-08	01	4		02-18	01	26
L52477	08-32	01	8		02-18	01	3
L55379	08-22	01	12		02-18	01	4
	08-22B	01	12		02-18	01	5
L55773	08-30	01	8		02-18	01	6
L56064	08-22	01	31		02-18	01	7
	08-22B	01	31		02-18	01	8
	08-26	01	31		02-18	01	9
L58066	06-04	01	18		02-20	01	1
L59090	08-26	01	45		02-22	01	15
L71193	09-44	01	3		02-24	01	16
L71206	03-04	01	27		02-26	01	25
	03-04	01	35		02-26	01	29
L71373	06-02	01	11		02-34A	01	4
L72998	09-02	01	21		02-36	01	1
	09-02	01	39		02-36	01	1
L73442	02-06B	01	5		02-36	01	1
	02-06B	02	5		02-36	01	2
	06-04	01	23		02-36	01	2
L73462	03-02	01	2		02-36	01	2
	05-10	01	19		02-36	01	3
L74461	08-02	01	2		02-36	01	3
L74878	05-10	01	15		02-36	01	3
	05-12	01	3		02-36	01	4
L77024	09-20	01	5		02-36	01	4
L77328	06-02	01	19		02-36	01	4
L77794	08-12	01	27		02-36	01	8
L77884	06-04	01	17		04-04	01	33
L77924	06-02	01	9		04-08	01	14
L78024	08-10	01	31		04-24	01	1
L79937	08-10	01	24		04-24	01	3
N27414-05	04-28	01	4		04-26	01	1
N6271	06-24	01	3		04-28	01	2
	06-26	01	3		04-30	01	12
N6744	09-06	01			04-30	01	6
N6812	06-16	01	9		05-02	01	2
	06-18	01	12		05-02	01	3
N6903	06-10	01	25		05-06	01	2
N7134	06-10	01	30		05-06	01	21
N7259	06-18	01	3		05-06	01	27
N7276	06-06	01	41		05-06	01	28
N7782	04-14	01	15		05-06	01	29
	05-12	01	23		05-08	01	5
N8415	06-18	01	18		05-08	01	9
N8416	06-18	01	23		05-12	01	22
N8417	06-16	01	21		06-12	01	1
N8537	06-18	01	34		06-18	01	24
N8838	06-20	01	29		06-18	01	25
N8844	06-12	01	28		06-18	01	26
N8862	06-18	01	42		06-24	01	36
N8863	06-18	01	33		06-26	01	25
N8864	06-18	01	31		06-26A	01	10
N8865	06-18	01	30		06-26A	01	11
N8869	06-20	01	30		06-26A	01	12
N9083	06-06	01	7		06-26A	01	13
N9971	06-30	01	1		06-26A	01	2
N9972	06-30	01	9		06-26A	01	4
NLS	02-32	01	10		06-26A	01	5

Number	Figure	Sequence	Ref.	Number	Figure	Sequence	Ref.
NSS	06-26A	01	6	NSS	07-08	01	5
	06-26A	01	7		07-08	01	50
	06-26A	01	8		07-08	01	51
	06-26A	01	9		07-08	01	52
	06-30	01	1		07-08	01	53
	06-30	01	21		07-08	01	54
	06-34	01	11		07-08	01	55
	06-34	01	2		07-08	01	56
	06-34	01	4		07-08	01	57
	06-34	01	5		07-08	01	58
	06-36	01	1		07-08	01	59
	06-36	01	2		07-08	01	6
	06-36	01	3		07-08	01	60
	06-36	01	6		07-08	01	61
	06-38	01	1		07-08	01	62
	06-38	01	2		07-08	01	63
	06-38	01	3		07-08	01	64
	06-38	01	6		07-08	01	65
	06-38A	01	1		07-08	01	66
	06-38A	01	2		07-08	01	67
	06-38A	01	3		07-08	01	68
	06-38A	01	6		07-08	01	69
	06-38A	01	9		07-08	01	7
	07-08	01	1		07-08	01	70
	07-08	01	10		07-08	01	71
	07-08	01	100		07-08	01	72
	07-08	01	101		07-08	01	73
	07-08	01	102		07-08	01	74
	07-08	01	103		07-08	01	75
	07-08	01	104		07-08	01	76
	07-08	01	105		07-08	01	77
	07-08	01	106		07-08	01	78
	07-08	01	107		07-08	01	79
	07-08	01	108		07-08	01	8
	07-08	01	109		07-08	01	80
	07-08	01	11		07-08	01	81
	07-08	01	110		07-08	01	82
	07-08	01	111		07-08	01	83
	07-08	01	112		07-08	01	84
	07-08	01	113		07-08	01	85
	07-08	01	114		07-08	01	86
	07-08	01	115		07-08	01	87
	07-08	01	116		07-08	01	88
	07-08	01	12		07-08	01	89
	07-08	01	13		07-08	01	9
	07-08	01	14		07-08	01	90
	07-08	01	15		07-08	01	91
	07-08	01	16		07-08	01	92
	07-08	01	17		07-08	01	93
	07-08	01	18		07-08	01	94
	07-08	01	19		07-08	01	95
	07-08	01	2		07-08	01	96
	07-08	01	20		07-08	01	97
	07-08	01	21		07-08	01	98
	07-08	01	22		07-08	01	99
	07-08	01	23		08-08	01	13
	07-08	01	24		08-16	01	2
	07-08	01	25		08-16	01	3
	07-08	01	26		08-18	01	3
	07-08	01	27		08-18	01	4
	07-08	01	28		08-20	01	22
	07-08	01	29		08-20	01	23
	07-08	01	3		08-20	01	24
	07-08	01	30		08-20	01	27
	07-08	01	31		08-20	01	3
	07-08	01	32		08-20	01	5
	07-08	01	33		08-20	01	6
	07-08	01	34		08-20	01	7
	07-08	01	35		08-20	01	9
	07-08	01	36		08-36	01	6
	07-08	01	37		08-38	01	1
	07-08	01	38		08-38	01	2
	07-08	01	39		08-40	01	1
	07-08	01	4		08-40	01	2
	07-08	01	40		08-42	01	1
	07-08	01	41		08-44	01	1
	07-08	01	42		08-44	01	3
	07-08	01	43		08-46	01	1
	07-08	01	44		08-48	01	1
	07-08	01	45		08-48	01	9
	07-08	01	46		08-50	01	1
	07-08	01	47		08-52	01	11
	07-08	01	48		08-52	01	9
	07-08	01	49		08-54	01	1

Number	Figure	Sequence	Ref.	Number	Figure	Sequence	Ref.
NSS	08-56	01	17	NSS	09-34	01	29
	08-56	01	21		09-34	01	3
	08-58	01	1		09-34	01	30
	08-58	01	2		09-34	01	31
	08-58	01	3		09-34	01	33
	08-58	01	4		09-34	01	34
	08-58	01	5		09-34	01	5
	08-58	01	6		09-34	01	6
	08-62	01	4		09-34	01	7
	08-62	01	6		09-34	01	9
	08-66	01	1		09-36	01	10
	08-66	01	20		09-36	01	11
	08-66	01	21		09-36	01	12
	08-66	01	22		09-36	01	13
	08-66	01	23		09-36	01	14
	08-66	01	3		09-36	01	15
	08-66	01	4		09-36	01	16
	08-66	01	5		09-36	01	17
	08-66	01	6		09-36	01	18
	08-66	01	7		09-36	01	19
	08-66	01	8		09-36	01	20
	08-68	01	1		09-36	01	21
	08-68	01	10		09-36	01	22
	08-68	01	11		09-36	01	23
	08-68	01	17		09-36	01	24
	08-68	01	19		09-36	01	25
	08-68	01	21		09-36	01	26
	08-68	01	26		09-36	01	27
	08-68	01	27		09-36	01	28
	08-68	01	28		09-36	01	29
	08-68	01	29		09-36	01	3
	08-68	01	4		09-36	01	30
	08-68	01	5		09-36	01	31
	08-68	01	6		09-36	01	32
	08-68	01	7		09-36	01	33
	08-68	01	8		09-36	01	35
	08-68	01	9		09-36	01	36
	08-70	01	1		09-36	01	37
	08-70	01	2		09-36	01	38
	08-70	01	3		09-36	01	39
	08-72	01	1		09-36	01	4
	08-72	01	2		09-36	01	41
	08-72	01	3		09-36	01	42
	08-72	01	4		09-36	01	43
	08-72	01	5		09-36	01	44
	08-74	01	1		09-36	01	45
	08-74	01	2		09-36	01	46
	08-74	01	3		09-36	01	47
	08-74	01	4		09-36	01	5
	09-02	01	19		09-36	01	6
	09-04	01	1		09-36	01	7
	09-04	01	1		09-36	01	8
	09-04	01	1		09-36	01	9
	09-04	01	1	P0034113E	08-22B	01	28
	09-04	01	1	P4328747K	09-24	05	8
	09-06	01	1		09-26	02	8
	09-06	01	14	R14771	08-32	01	6
	09-06	01	32	R15071	08-32	01	7
	09-08	01	3	R15257	08-10	01	13
	09-08	01	4		08-12	01	13
	09-10	01	16		08-12	01	29
	09-10	01	4	R16289	06-24	01	35
	09-18	01	1		06-26	01	44
	09-24	01	1	R47120	08-30	01	11
	09-28	01	8		08-32	01	13
	09-34	01	10	REF	02-24	01	1
	09-34	01	11		04-14	01	27
	09-34	01	12		04-16	01	1
	09-34	01	13		04-16	01	14
	09-34	01	14		04-16	01	15
	09-34	01	15		04-16	01	2
	09-34	01	16		04-16	01	6
	09-34	01	17		04-16	01	7
	09-34	01	18		04-20	01	10
	09-34	01	19		05-10	01	18
	09-34	01	20		05-10	01	9
	09-34	01	21		06-10	01	20
	09-34	01	22		06-14	01	26
	09-34	01	23		06-28	01	10
	09-34	01	24		06-42	01	1
	09-34	01	25		06-42	01	2
	09-34	01	26		06-42	01	3
	09-34	01	27		06-50	01	7
	09-34	01	28		06-54	01	1

Number	Figure	Sequence	Ref.
REF	06-54	01	2
	06-54	01	3
	06-62	01	8
	07-06	01	10
	08-02	01	1
	08-02	01	24
	08-04	01	1
	08-04	01	12
	08-04	01	12
	08-06	01	1
	08-06	01	1
	08-06	01	19
	08-06A	01	10
	08-10	01	1
	08-10	01	1
	08-10	01	21
	08-10	01	22
	08-12	01	1
	08-12	01	1
	08-12	01	25
	08-12	01	26
	08-14	01	27
	08-14B	01	23
	08-22	01	36
	08-22B	01	36
	08-24	01	40
	08-24B	01	40
	08-26	01	36
	08-28	01	27
	08-28B	01	27
	08-30	01	1
	08-30	01	1
	08-30	01	17
	08-30	01	21
	08-38	01	10
	08-38	01	9
	09-02	01	1
	09-02	01	24
	09-02	01	25
	09-02	01	4
	09-02	01	44
	09-02	01	5
	09-06	01	28
	09-06	01	29
	09-20	01	13
	09-22	01	11
	09-22	01	12
	09-22	01	23
	09-22	01	24
	09-22	01	25
	09-22	01	26
	09-22	01	28
	09-28	01	58
S10786	09-06	01	7
S10815	09-06	01	5
S113669	06-16	01	14
	06-22	01	16
S114704	08-20	01	8
S117865	06-12	01	34
	06-18	01	35
S12065	06-34	01	3
	06-36	01	4
	06-38	01	4
	06-38A	01	4
S18633	09-06	01	17
S218812	09-06	01	21
S23796	09-06	01	2
S29582	09-06	01	8
S300031	06-06	01	15
S300037	06-18	01	28
	06-22	01	8
S300039	06-18	01	29
S300068	06-28	01	11
S300073	06-26A	01	3
S300130	06-26	01	23
S300131	06-26	01	24
S300132	06-26	01	28
S300133	06-26	01	33
S300135	06-26	01	22
S30047	06-26	01	50
S300741	06-16	01	7
	06-18	01	9
	06-20	01	10
S300744	06-26	01	46
S45226	09-06	01	30
S46134	09-06	01	3
S46223	09-06	01	11
S60047	09-06	01	19
S602031	09-06	01	
S64612	04-02	01	14
S78067	09-06	01	26
S81109	09-06	01	31
S8577	09-06	01	27
S89618	06-12	01	4
S89619	06-12	01	20
S89620	06-12	01	27
S89625	06-12	01	7
S89629	06-12	01	3
S89638	06-16	01	8
	06-18	01	10
S89646	06-16	01	15
S89649	06-16	01	18
S89652	06-18	01	4
S89656	06-20	01	2
S89660	06-18	01	19
S89661	06-16	01	13
	06-18	01	16
	06-18	01	41
	06-20	01	9
S89666	06-16	01	22
S89671	06-18	01	32
S89673	06-20	01	22
S89674	06-20	01	24
S89681	06-20	01	18
S89700	06-14	01	8
S89702	06-14	01	9
S89703	06-14	01	9
S89704	06-14	01	9
S89705	06-14	01	9
S89712	06-14	01	19
S89735	06-30	01	12
S89736	06-30	01	25
S92346	06-14	01	18
S92639	08-16	01	8
S93899	08-20	01	11
S93900	08-20	01	16
S93901	08-20	01	18
S93903	08-20	01	25
S94326	06-22	01	3
S97319	06-06	01	1
T22220	06-02	01	23
T31481	04-20	01	7
T42352	06-06	01	13
V39233	05-06	01	
W14024	08-20	01	2
Z13381-62	05-06	01	23
Z20369-02	04-28	01	16